416C Backhoe

CATERPILLAR

Loader Center Pivot, Single Tilt,

RUTHZIL TRATOR COMERCIAL DE PEÇAS LTDA 11 97083-6812 ROLANDO

Powered By 3054

4ZN16044-50156

154-5471 AXLE GP-DRIVE & STEERING -FRONT -S/N 4ZN16044-50156
RATIO 13.74 --PART OF 154-5467 AXLE & MTG GP-DRIVE & STEERING

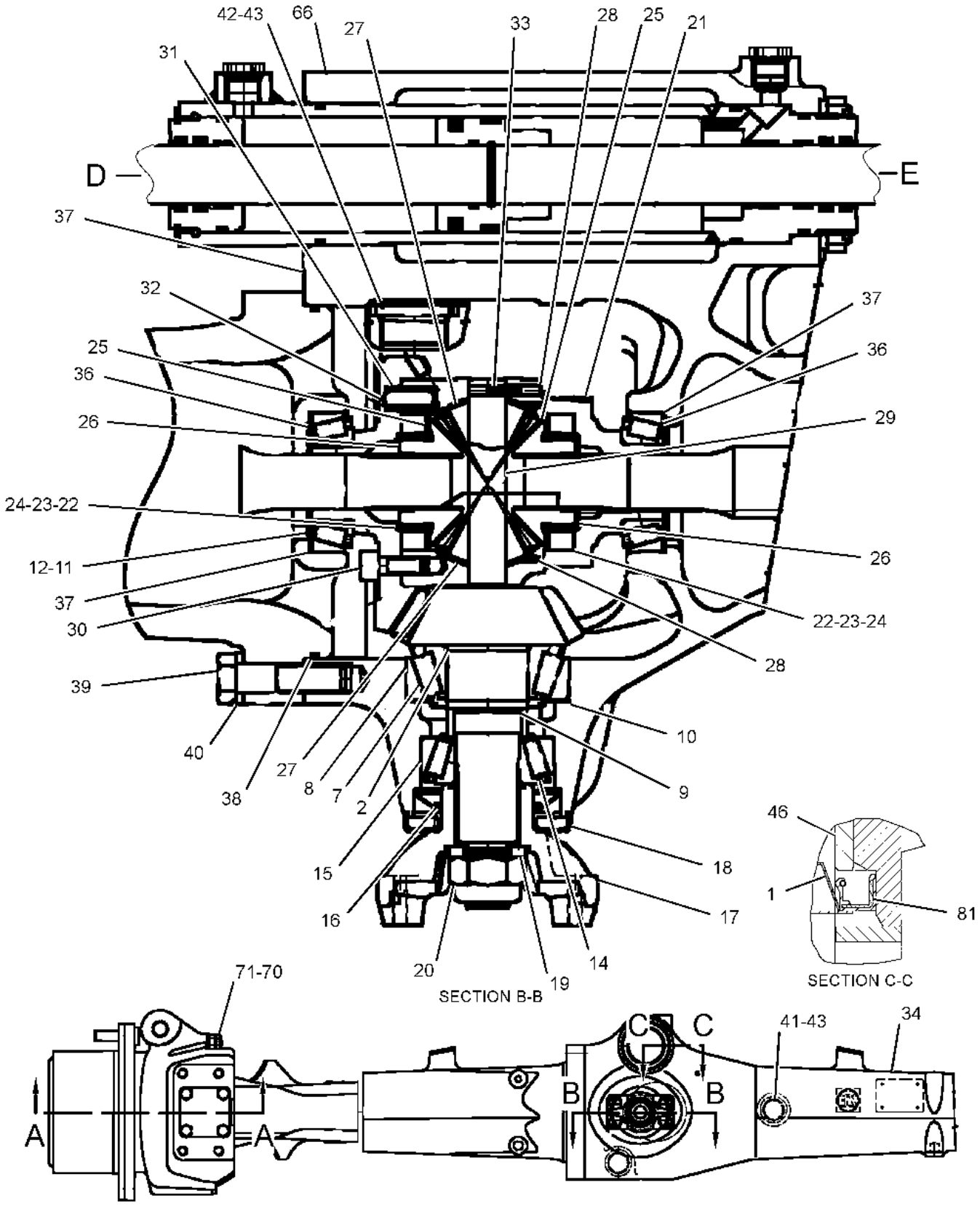

REFER TO ALL ILLUSTRATIONS OF
THIS GROUP FOR AUXILIARY VIEWS

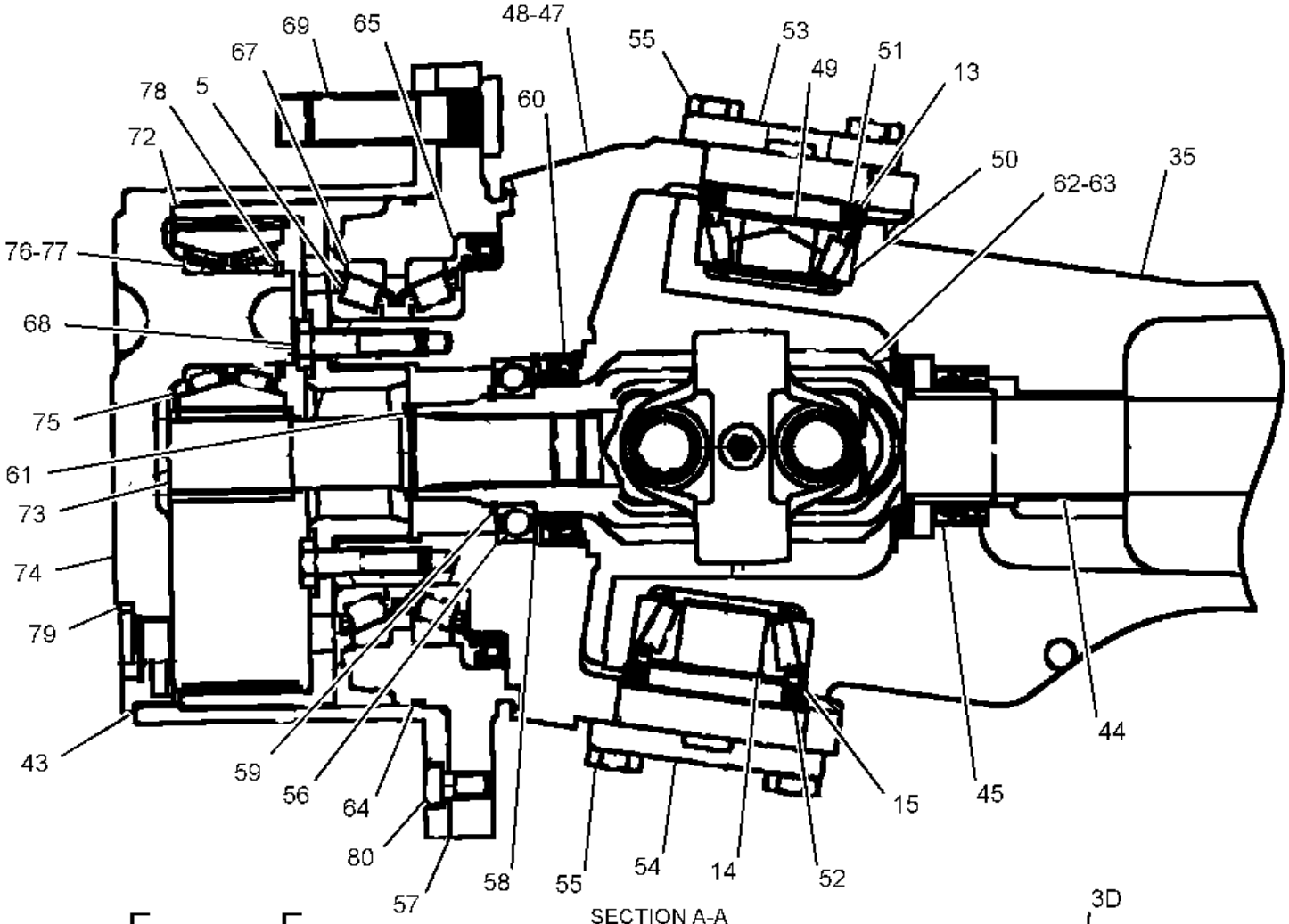

SECTION A-A

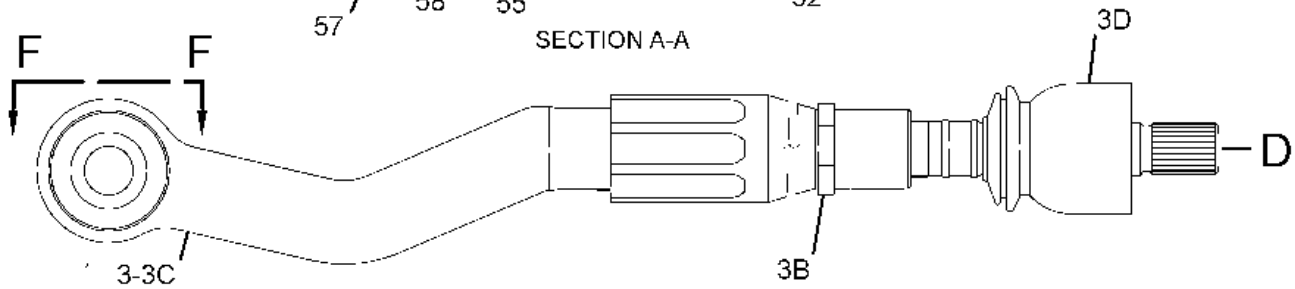

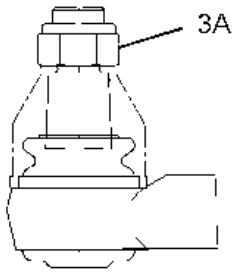

VIEW F-F

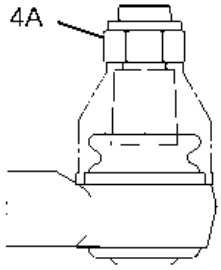

VIEW G-G

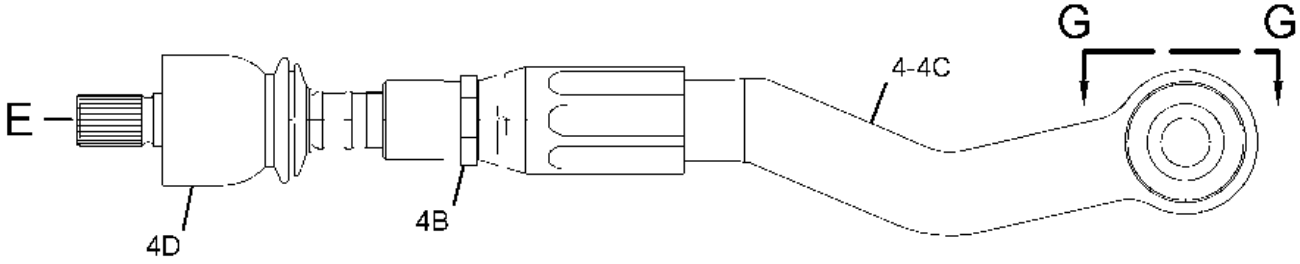

1 NPR 1 9X-3999 2 CAP-PLUG

2 NPR 1 117-6108 1 GEAR SET-BEVEL

3 NPR 2 229-2949 1 TIE ROD AS (LH)

3A NPR 2 237-7962 1 NUT

3B NPR 2 236-4482 1 NUT

3C NPR 2 236-4479 1 BALL JOINT (LH)

3D NPR 2 236-4481 1 JOINT

4 NPR 2 229-2950 1 TIE ROD AS (RH)

4A NPR 2 237-7962 1 NUT

4B NPR 2 236-4482 1 NUT

4C NPR 2 236-4480 1 BALL JOINT (RH)

4D NPR 2 236-4481 1 JOINT

5 NPR 2 178-8608 4 CONE-TAPERED

7 NPR 1 3N-4969 1 CONE-BEARING (TAPERED ROLLER)

8 NPR 1 3N-6408 1 CUP-BEARING (TAPERED ROLLER)

9 NPR B 1 130-6689 1 RING (15.1-MM THK)

NPR B 1 130-6690 1 RING (15.2-MM THK)

NPR B 1 130-6691 1 RING (15.26-MM THK)

NPR B 1 130-6693 1 RING (15.3-MM THK)

NPR B 1 130-6694 1 RING (15.33-MM THK)

NPR B 1 130-6695 1 RING (15.36-MM THK)

NPR B 1 130-6696 1 RING (15.38-MM THK)

NPR B 1 130-6697 1 RING (15.4-MM THK)

NPR B 1 130-6698 1 RING (15.43-MM THK)

NPR B 1 130-6699 1 RING (15.46-MM THK)

NPR B 1 130-6701 1 RING (15.48-MM THK)

NPR B 1 130-6702 1 RING (15.5-MM THK)

NPR B 1 130-6703 1 RING (15.53-MM THK)

NPR B 1 130-6704 1 RING (15.56-MM THK)

NPR B 1 130-6705 1 RING (15.58-MM THK)

NPR B 1 130-6706 1 RING (15.6-MM THK)

NPR B 1 130-6707 1 RING (15.63-MM THK)

NPR B 1 130-6708 1 RING (15.66-MM THK)

NPR B 1 130-6709 1 RING (15.68-MM THK)

NPR B 1 130-6710 1 RING (15.7-MM THK)

NPR B 1 130-6711 1 RING (15.73-MM THK)

NPR B 1 130-6712 1 RING (15.8-MM THK)

NPR B 1 130-6713 1 RING (15.83-MM THK)

NPR B 1 130-6714 1 RING (15.86-MM THK)

NPR B 1 130-6715 1 RING (15.9-MM THK)

NPR B 1 130-6716 1 RING (15.93-MM THK)

NPR B 1 130-6718 1 RING (15.96-MM THK)

NPR B 1 130-6719 1 RING (16-MM THK)

NPR B 1 130-6720 1 RING (16.03-MM THK)

NPR B 1 130-6721 1 RING (16.06-MM THK)

NPR B 1 130-6722 1 RING (16.1-MM THK)

NPR B 1 130-6724 1 RING (16.13-MM THK)

NPR B 1 130-6725 1 RING (16.16-MM THK)

NPR B 1 130-6726 1 RING (16.2-MM THK)

NPR B 1 130-6727 1 RING (16.23-MM)

NPR B 1 130-6728 1 RING (16.26-MM THK)

NPR B 1 130-6729 1 RING (16.3-MM THK)

NPR B 1 130-6731 1 RING (16.4-MM THK)

NPR B 1 130-6732 1 RING (16.76-MM THK)

10 NPR B 1 054-6459 1 SHIM (1-MM THK)

NPR B 1 054-6460 1 SHIM (1.05-MM THK)

NPR B 1 054-6461 1 SHIM (1.1-MM THK)

NPR B 1 054-6462 1 SHIM (1.15-MM THK)

NPR B 1 054-6463 1 SHIM (1.2-MM THK)

NPR B 1 054-6464 1 SHIM (1.25-MM THK)

NPR B 1 054-6465 1 SHIM (1.3-MM THK)

NPR B 1 054-6466 1 SHIM (1.35-MM THK)

NPR B 1 054-6467 1 SHIM (1.4-MM THK)

NPR B 1 054-6468 1 SHIM (1.45-MM THK)

NPR B 1 054-6469 1 SHIM (1.5-MM THK)

NPR B 1 054-6470 1 SHIM (1.55-MM THK)

NR B 1 054-6471 1 SHIM (1.6-MM THK)

NPR B 1 054-6472 1 SHIM (0.95-MM THK)

NPR B 1 054-6477 1 SHIM (0.85-MM THK)

NPR B 1 054-6476 1 SHIM (0.75-MM THK)

NPR B 1 054-6475 1 SHIM (0.7-MM THK)

NPR B 1 054-6474 1 SHIM (0.65-MM THK)

NPR B 1 054-6473 1 SHIM (0.9-MM THK)

11 NPR B 1 130-6798 2 SHIM (1-MM THK)

NPR B 1 130-6800 2 SHIM (1.1-MM THK)

NPR B 1 130-6804 2 SHIM (1.3-MM THK)

NPR B 1 130-6805 2 SHIM (1.35-MM THK)

NPR B 1 130-6806 2 SHIM (1.4-MM THK)

NPR B 1 130-6808 2 SHIM (1.5-MM THK)

NPR B 1 130-6809 2 SHIM (1.55-MM THK)

NPR B 1 130-6810 2 SHIM (1.6-MM THK)

NPR B 1 130-6811 2 SHIM (1.65-MM THK)

NPR B 1 130-6812 2 SHIM (1.7-MM THK)

NPR B 1 130-6813 2 SHIM (1.75-MM THK)

NPR B 1 130-6814 2 SHIM (1.8-MM THK)

NPR B 1 130-6815 2 SHIM (1.85-MM THK)

NPR B 1 130-6816 2 SHIM (1.9-MM THK)

NPR B 1 130-6820 2 SHIM (2.1-MM THK)

12 NPR B 1 130-6799 2 WASHER (1.05-MM THK)

NPR B 1 130-6801 2 WASHER (62.2X75X1.15-MM THK)

NPR B 1 130-6802 2 WASHER (62.2X75X1.2-MM THK)

NPR B 1 130-6803 2 WASHER (62.2X75X1.25-MM THK)

NPR B 1 130-6807 2 WASHER (1.45-MM THK)

NPR B 1 130-6817 2 WASHER (62.2X75X1.95-MM THK)

NPR B 1 130-6818 2 WASHER (62.2X75X2-MM THK)

NPR B 1 130-6819 2 WASHER (62.2X75X2.05-MM THK)

13 NPR B 2 130-7008 2 SHIM (0.2-MM THK)

NPR B 2 130-7009 2 SHIM (0.3-MM THK)

NPR B 2 130-7010 2 SHIM (0.4-MM THK)

NPR B 2 130-7011 2 SHIM (0.6-MM THK)

NPR B 2 130-7012 2 SHIM (0.8-MM THK)

NPR B 2 130-7013 2 SHIM (1-MM THK)

NPR B 2 130-7015 2 SHIM (1.6-MM THK)

NPR B 2 130-7017 2 SHIM (2-MM THK)

14 NPR 1,2 008-1902 3 CONE-BEARING

15 NPR 1,2 6S-3051 3 CUP-BEARING

16 NPR 1 055-1986 1 SEAL-LIP TYPE

17 NPR 1 130-7046 1 FLANGE

18 NPR 1 130-7028 1 PLATE

19 NPR 1 054-6480 1 DISC

20 NPR M 1 130-3005 1 NUT (M24X2-THD)

21 NPR 1 130-7024 1 CASE

22	NPR	1	130-7048	2	RING (13.5-MM THK)
23	NPR	1	130-7049	2	RING (13.6-MM THK)
24	NPR	1	130-7050	2	RING (13.7-MM THK)
25	NPR M	1	130-3000	2	WASHER (M53.2X71.9X1.9-MM THK)
26	NPR	1	119-7035	2	GEAR
27	NPR	1	128-7855	2	GEAR-PINION
28	NPR	1	9R-6994	2	WASHER-THRUST
29	NPR	1	119-7036	1	PIN
30	NPR M	1	105-3484	12	BOLT-SOCKET HEAD (M10X1.5X25-MM)
31	NPR	1	130-3010	4	PIN
32	NPR	1	082-3077	4	PIN
33	NPR	1	130-6675	1	PIN
34	NPR	1	174-5698	1	HOUSING
35	NPR	2	119-7056	1	HOUSING
36	NPR	1	003-7501	2	CONE-BEARING
37	NPR	1	6V-2200	2	CUP-BEARING
38	NPR	1	054-6847	1	SEAL-O-RING
39	NPR M	1	6V-3303	15	BOLT (M16X2X60-MM)
40	NPR	1	054-6526	15	DISC
41	NPR	1	9R-3175	1	PLUG
42	NPR	1	130-6673	1	PLUG
43	NPR	1,2	9X-0796	4	SEAL-O-RING
44	NPR	2	130-2998	2	BUSHING
45	NPR	2	130-6877	2	SEAL
46	NPR	1	154-5404	2	BEARING
47	NPR	2	130-7031	1	HOUSING (LH)
48	NPR	2	119-7057	1	HOUSING (RH)
49	NPR	2	077-3918	2	BEARING
50	NPR	2	031-0426	2	CUP-BEARING
51	NPR	2	119-7046	2	SEAL
52	NPR	2	119-7047	2	SEAL
53	NPR	2	119-7038	2	PIN
54	NPR	2	130-7026	2	PIN
55	NPR	2	130-6677	16	BOLT
56	NPR	2	5P-9439	2	BALL BEARING
57	NPR	2	119-7053	2	FLANGE
58	NPR	2	131-3816	2	RING

59	NPR	2	7X-5771	2	RING-RETAINING
60	NPR	2	119-7045	2	SEAL
61	NPR	2	054-6589	2	CLIP
62	NPR Y	2	130-3013	1	SHAFT GP-DRIVE (RH)
63	NPR Y	2	130-3014	1	SHAFT GP-DRIVE (LH)
64	NPR	2	9X-0640	2	SEAL-O-RING
65	NPR	2	130-6879	2	SEAL
66	NPR Y	1	178-7190	1	CYLINDER GP-STEERING
67	NPR	2	2S-0480	4	CUP-TAPERED ROLLER
68	NPR M	2	130-3008	16	BOLT (M10X45-MM)
69	NPR	2	130-7047	16	STUD
70	NPR M	1	119-7060	2	SCREW
71	NPR	1	130-3007	2	NUT
72	NPR	2	119-7040	2	GEAR-RING
73	NPR	2	119-7042	2	SHAFT
74	NPR	2	130-7027	2	CARRIER
75	NPR	2	169-4160	6	GEAR
76	NPR	2	169-4161	6	CONE-BEARING
77	NPR	2	169-4162	6	CONE-BEARING
78	NPR	2	130-6878	6	RING
79	NPR	2	119-7061	2	PLUG
80	NPR M	2	9R-3168	4	SCREW (M10X20-MM)
81	NPR	1	154-5405	2	SEAL-LIP TYPE

Key: B - USE AS REQUIRED M - METRIC PART Y - SEPARATE ILLUSTRATION

174-5206 AXLE GP-DRIVE & STEERING --S/N 4ZN16044-50156
PART OF 154-5467 AXLE & MTG GP-DRIVE & STEERING

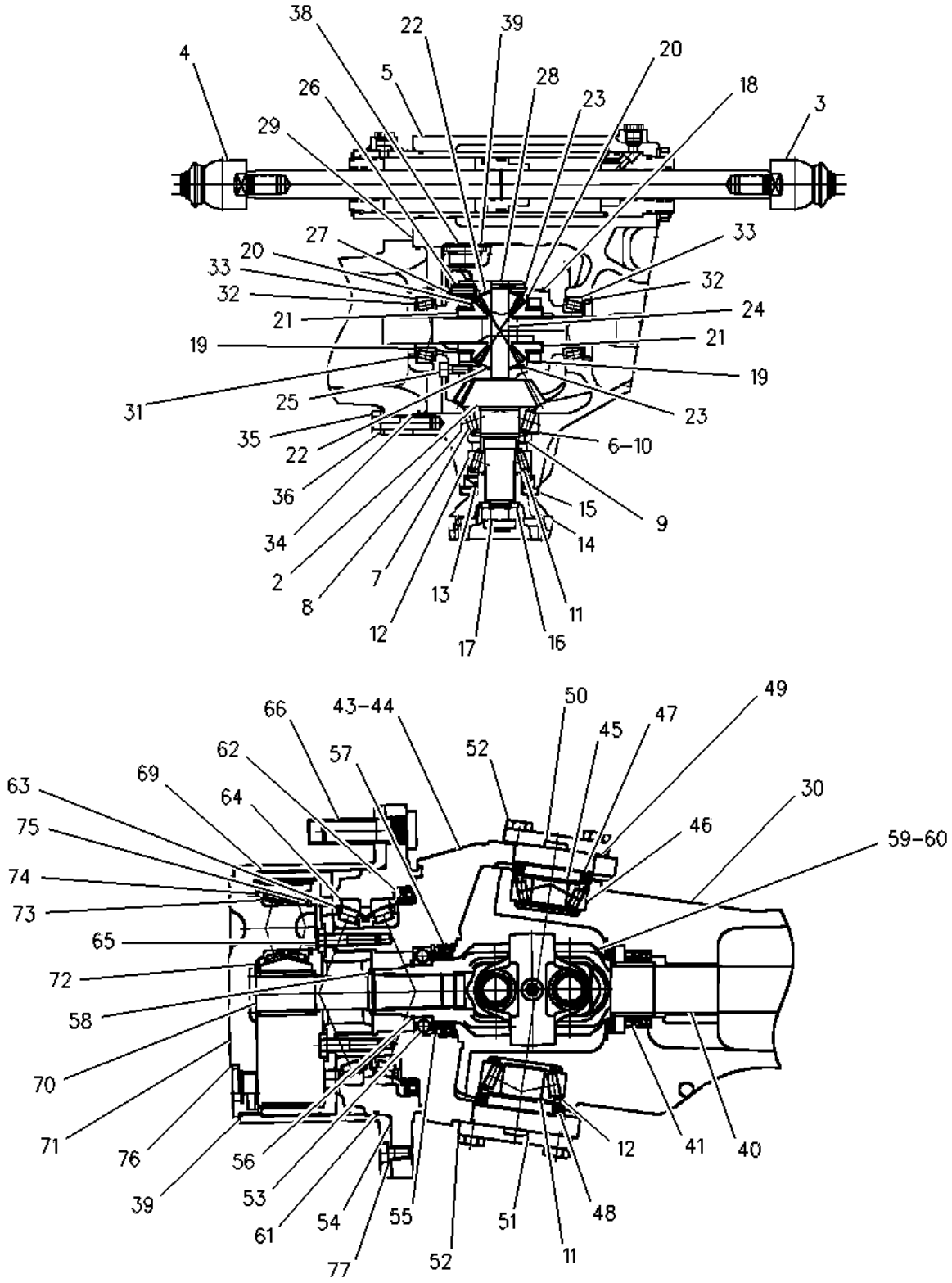

2 NPR 1 117-6108 1 GEAR SET-BEVEL

3 NPR 1 130-3809 1 TIE ROD AS (RH)

NPR M 1 130-5010 1 LOCKNUT (M22X1.5-THD)

NPR 1 130-6674 1 CLAMP

NPR 1 130-6880 1 BALL JOINT

NPR 1 130-7043 1 JOINT

4 NPR 1 130-3012 1 TIE ROD AS (LH)

NPR M 1 130-5010 1 LOCKNUT (M22X1.5-THD)

NPR 1 130-6674 1 CLAMP

NPR 1 130-6881 1 BALL JOINT

NPR 1 130-7043 1 JOINT

5 NPR 1 130-3011 1 CYLINDER GP-STEERING

NPR 1 130-6876 1 KIT-SEAL

NPR 1 130-6882 1 CYLINDER

NPR 1 130-6883 1 ROD

NPR 1 130-6884 1 RING-SNAP

NPR 1 130-7023 1 RING

NPR 1 130-8143 1 GUIDE

6 NPR 1 130-3850 1 SHIM (0.8-MM THK)

7 NPR 1 3N-4969 1 CONE-BEARING (TAPERED ROLLER)

8 NPR 1 3N-6408 1 CUP-BEARING (TAPERED ROLLER)

9 NPR 1 130-6689 1 RING (15.1-MM THK)

NPR 1 130-6690 1 RING (15.2-MM THK)

NPR 1 130-6691 1 RING (15.26-MM THK)

NPR 1 130-6693 1 RING (15.3-MM THK)

NPR 1 130-6694 1 RING (15.33-MM THK)

NPR 1 130-6695 1 RING (15.36-MM THK)

NPR 1 130-6696 1 RING (15.38-MM THK)

NPR 1 130-6697 1 RING (15.4-MM THK)

NPR 1 130-6698 1 RING (15.43-MM THK)

NPR 1 130-6699 1 RING (15.46-MM THK)

NPR 1 130-6701 1 RING (15.48-MM THK)

NPR 1 130-6702 1 RING (15.5-MM THK)

NPR 1 130-6703 1 RING (15.53-MM THK)

NPR 1 130-6704 1 RING (15.56-MM THK)

NPR 1 130-6705 1 RING (15.58-MM THK)

NPR 1 130-6706 1 RING (15.6-MM THK)

NPR 1 130-6707 1 RING (15.63-MM THK)

NPR 1 130-6708 1 RING (15.66-MM THK)

NPR 1 130-6709 1 RING (15.68-MM THK)

NPR 1 130-6710 1 RING (15.7-MM THK)

NPR 1 130-6711 1 RING (15.73-MM THK)

NPR 1 130-6712 1 RING (15.8-MM THK)

NPR 1 130-6713 1 RING (15.83-MM THK)

NPR 1 130-6714 1 RING (15.86-MM THK)

NPR 1 130-6715 1 RING (15.9-MM THK)

NPR 1 130-6716 1 RING (15.93-MM THK)

NPR 1 130-6718 1 RING (15.96-MM THK)

NPR 1 130-6719 1 RING (16-MM THK)

NPR 1 130-6720 1 RING (16.03-MM THK)

NPR 1 130-6721 1 RING (16.06-MM THK)

NPR 1 130-6722 1 RING (16.1-MM THK)

NPR 1 130-6724 1 RING (16.13-MM THK)

NPR 1 130-6725 1 RING (16.16-MM THK)

NPR 1 130-6726 1 RING (16.2-MM THK)

NPR 1 130-6727 1 RING (16.23-MM)

NPR 1 130-6728 1 RING (16.26-MM THK)

NPR 1 130-6729 1 RING (16.3-MM THK)

NPR 1 130-6731 1 RING (16.4-MM THK)

NPR 1 130-6732 1 RING (16.76-MM THK)

10 NPR 1 054-6459 1 SHIM (1-MM THK)

NPR 1 054-6460 1 SHIM (1.05-MM THK)

NPR 1 054-6461 1 SHIM (1.1-MM THK)

NPR 1 054-6462 1 SHIM (1.15-MM THK)

NPR 1 054-6463 1 SHIM (1.2-MM THK)

NPR 1 054-6464 1 SHIM (1.25-MM THK)

NPR 1 054-6465 1 SHIM (1.3-MM THK)

NPR 1 054-6466 1 SHIM (1.35-MM THK)

NPR 1 054-6467 1 SHIM (1.4-MM THK)

NPR 1 054-6468 1 SHIM (1.45-MM THK)

NPR 1 054-6469 1 SHIM (1.5-MM THK)

NPR 1 054-6470 1 SHIM (1.55-MM THK)

NPR 1 054-6471 1 SHIM (1.6-MM THK)

NPR 1 054-6472 1 SHIM (0.95-MM THK)

NPR 1 054-6473 1 SHIM (0.9-MM THK)

NPR 1 054-6474 1 SHIM (0.65-MM THK)

NPR 1 054-6475 1 SHIM (0.7-MM THK)

	NPR	1	054-6476	1	SHIM (0.75-MM THK)
	NPR	1	054-6477	1	SHIM (0.85-MM THK)
11	NPR	1	008-1902	3	CONE-BEARING
12	NPR	1	6S-3051	3	CUP-BEARING
13	NPR	1	055-1986	1	SEAL-LIP TYPE
14	NPR	1	130-7046	1	FLANGE
15	NPR	1	130-7028	1	PLATE
16	NPR	1	054-6480	1	DISC
17	NPR M	1	130-3005	1	NUT (M24X2-THD)(M24X2)
18	NPR	1	130-7024	1	CASE
19	NPR	1	130-7048	2	RING (13.5-MM THK)
	NPR	1	130-7049	2	RING (13.6-MM THK)
	NPR	1	130-7050	2	RING (13.7-MM THK)
20	NPR M	1	130-3000	2	WASHER (M53.2X71.9X1.9-MM THK)
21	NPR	1	119-7035	2	GEAR (24 TEETH)
22	NPR	1	128-7855	2	GEAR-PINION
23	NPR	1	9R-6994	2	WASHER-THRUST
24	NPR	1	119-7036	1	PIN
25	NPR M	1	105-3484	12	BOLT-SOCKET HEAD (M10X1.5X25-MM)
26	NPR	1	130-3010	4	PIN
27	NPR	1	082-3077	4	PIN
28	NPR	1	130-6675	1	PIN
29	NPR	1	119-7055	1	HOUSING
30	NPR	1	119-7056	1	HOUSING
31	NPR	1	130-6798	2	SHIM (1-MM THK)

NPR 1 130-6799 2 WASHER (1.05-MM THK)

NPR 1 130-6800 2 SHIM (1.1-MM THK)

NPR 1 130-6801 2 WASHER (62.2X75X1.15-MM THK)

NPR 1 130-6802 2 WASHER (62.2X75X1.2-MM THK)

NPR 1 130-6803 2 WASHER (62.2X75X1.25-MM THK)

NPR 1 130-6804 2 SHIM (1.3-MM THK)

NPR 1 130-6805 2 SHIM (1.35-MM THK)

NPR 1 130-6806 2 SHIM (1.4-MM THK)

NPR 1 130-6807 2 WASHER (1.45-MM THK)

NPR 1 130-6808 2 SHIM (1.5-MM THK)

NPR 1 130-6809 2 SHIM (1.55-MM THK)

NPR 1 130-6810 2 SHIM (1.6-MM THK)

NPR 1 130-6811 2 SHIM (1.65-MM THK)

NPR 1 130-6812 2 SHIM (1.7-MM THK)

NPR 1 130-6813 2 SHIM (1.75-MM THK)

NPR 1 130-6814 2 SHIM (1.8-MM THK)

NPR 1 130-6815 2 SHIM (1.85-MM THK)

NPR 1 130-6816 2 SHIM (1.9-MM THK)

NPR 1 130-6817 2 WASHER (62.2X75X1.95-MM THK)

NPR 1 130-6818 2 WASHER (62.2X75X2-MM THK)

NPR 1 130-6819 2 WASHER (62.2X75X2.05-MM THK)

NPR 1 130-6820 2 SHIM (2.1-MM THK)

32 NPR 1 003-7501 2 CONE-BEARING

33 NPR 1 6V-2200 2 CUP-BEARING

34 NPR 1 054-6847 1 SEAL-O-RING

35	NPR M	1	6V-3303	15	BOLT (M16X2X60-MM)
36	NPR	1	054-6526	15	DISC
37	NPR	1	9R-3175	1	PLUG
38	NPR	1	130-6673	1	PLUG
39	NPR	1	9X-0796	4	SEAL-O-RING
40	NPR	1	130-2998	2	BUSHING
41	NPR	1	130-6877	2	SEAL
42	NPR	1	154-5404	2	BEARING
43	NPR	1	130-7031	1	HOUSING
44	NPR	1	119-7057	1	HOUSING
45	NPR	1	077-3918	2	BEARING
46	NPR	1	031-0426	2	CUP-BEARING
47	NPR	1	119-7046	2	SEAL
48	NPR	1	119-7047	2	SEAL
49	NPR	1	130-7008	2	SHIM (0.2-MM THK)
	NPR	1	130-7009	2	SHIM (0.3-MM THK)
	NPR	1	130-7010	2	SHIM (0.4-MM THK)
	NPR	1	130-7011	2	SHIM (0.6-MM THK)
	NPR	1	130-7012	2	SHIM (0.8-MM THK)
	NPR	1	130-7013	2	SHIM (1-MM THK)
	NPR	1	130-7015	2	SHIM (1.6-MM THK)
	NPR	1	130-7017	2	SHIM (2-MM THK)
50	NPR	1	119-7038	2	PIN
51	NPR	1	130-7026	2	PIN
52	NPR	1	130-6677	16	BOLT

53 NPR 1 5P-9439 2 BALL BEARING

54 NPR 1 119-7053 2 FLANGE

55 NPR 1 131-3816 2 RING

56 NPR 1 7X-5771 2 RING-RETAINING

57 NPR 1 119-7045 2 SEAL

58 NPR 1 054-6589 2 CLIP

59 NPR Y 1 130-3013 1 SHAFT GP-DRIVE (RH)

NPR 1 138-8526 1 YOKE

NPR 1 138-8527 2 SPIDER

NPR 1 138-8528 1 SHAFT (PLANETARY)

NPR 1 138-8529 1 SHAFT-AXLE (RH)

NPR 1 138-8530 1 BUSHING

NPR 1 138-8531 1 GUARD

60 NPR Y 1 130-3014 1 SHAFT GP-DRIVE (LH)

NPR 1 138-8526 1 YOKE

NPR 1 138-8527 2 SPIDER

NPR 1 138-8528 1 SHAFT (PLANETARY)

NPR 1 138-8530 1 BUSHING

NPR 1 138-8531 1 GUARD

NPR 1 138-8532 1 SHAFT-AXLE (LH)

NPR 1 130-3809 1 TIE ROD AS (RH)

NPR M 1 130-5010 1 LOCKNUT (M22X1.5-THD)

NPR 1 130-6674 1 CLAMP

NPR 1 130-6880 1 BALL JOINT

NPR 1 130-7043 1 JOINT

61	NPR	1	9X-0640	2	SEAL-O-RING
62	NPR	1	130-6879	2	SEAL
63	NPR	1	6V-0832	4	CONE
64	NPR	1	2S-0480	4	CUP-TAPERED ROLLER
65	NPR M	1	130-3008	16	BOLT (M10X45-MM)
66	NPR	1	130-7047	16	STUD
67	NPR M	1	119-7060	2	SCREW
68	NPR	1	130-3007	2	NUT
69	NPR	1	119-7040	2	GEAR-RING
70	NPR	1	119-7042	2	SHAFT
71	NPR	1	130-7027	2	CARRIER
72	NPR	1	169-4160	6	GEAR
73	NPR	1	169-4161	6	CONE-BEARING
74	NPR	1	169-4162	6	CONE-BEARING
75	NPR	1	130-6878	6	RING
76	NPR	1	119-7061	2	PLUG
77	NPR M	1	9R-3168	4	SCREW (M10X20-MM)
79	NPR	1	154-5405	2	SEAL-LIP TYPE
80	NPR	1	174-4623	2	SLEEVE

Key:

M - METRIC PART
Y - Separate Illustration

156-2853 AXLE GP-REAR --S/N 4ZN16044-50156---18.5/1 RATIO
PART OF 107-3716 AXLE & MTG GP-REAR

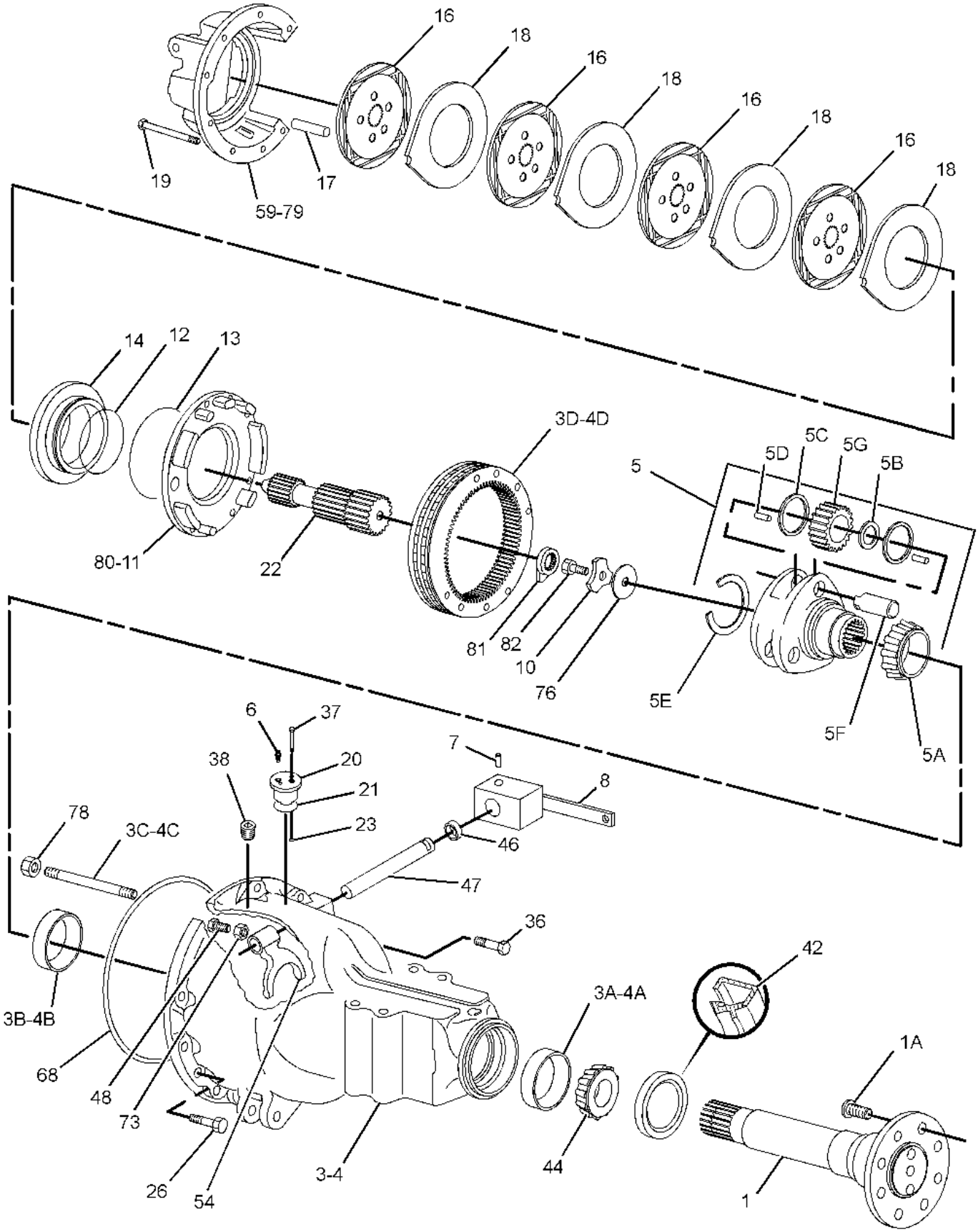

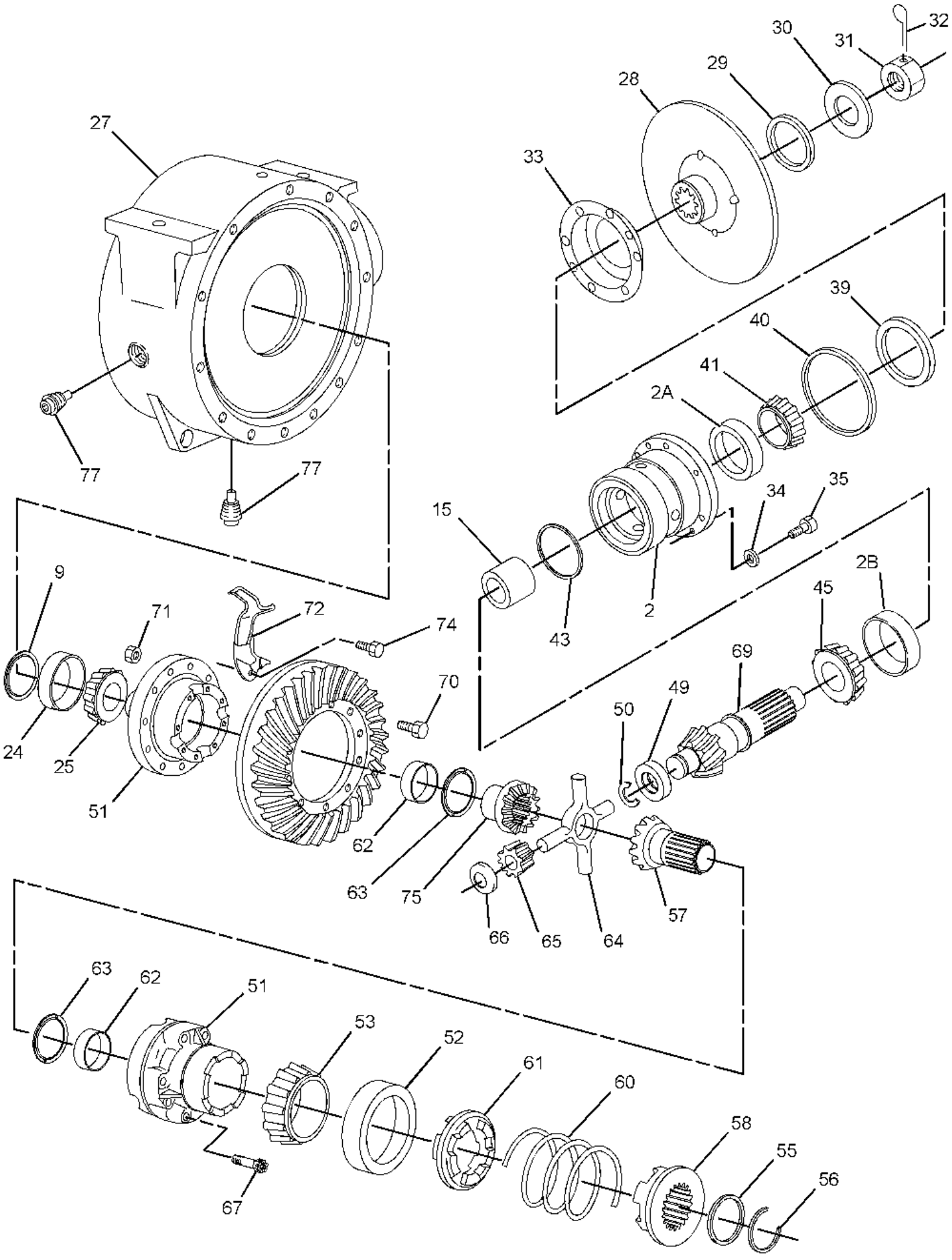
27
28
29
30
31
32
33
39
40
41
2A
77
77
15
34
35
1
2
43
2B
45
9
71
72
74
70
69
49
50
24
25
51
62
63
75
66
65
64
57
63
62
51
53
52
61
60
58
55
56
67

1 NPR 1 118-5837 2 SHAFT AS

(EACH INCLUDES)

1A NPR 1 9R-5219 8 BOLT-SPECIAL

2 NPR 2 9R-2407 1 RETAINER AS

2A NPR 2 3N-6408 1 CUP-BEARING (TAPERED ROLLER)

2B NPR 2 4K-5843 1 CUP-BEARING (TAPERED ROLLER)

3 1 156-1928 1 HOUSING AS-LH

3A NPR 1 6Y-7652 1 CUP-BEARING (TAPERED ROLLER)

3B NPR 1 8S-9151 1 CUP-BEARING

3C 1 156-1929 2 STUD

3D 1 156-1930 1 GEAR-RING (56-TEETH)

4 1 156-2571 1 HOUSING AS-RH

4A NPR 1 6Y-7652 1 CUP-BEARING (TAPERED ROLLER)

4B NPR 1 8S-9151 1 CUP-BEARING

4C 1 156-1929 2 STUD

4D 1 156-1930 1 GEAR-RING (56-TEETH)

5 NPR 1 186-4117 2 CARRIER AS

(EACH INCLUDES)

5A NPR 1 7T-6652 1 CONE-BEARING (TAPERED ROLLER)

5B NPR 1 9R-2417 3 WASHER (33.07X48.38X1.06-MM THK)

5C NPR 1 9R-2418 6 WASHER (32.94X57.21X0.78-MM THK)

5D NPR 1 9R-2419 3 KIT-BEARING

5E NPR 1 9R-2420 1 RETAINER

5F NPR 1 9R-2421 3 SHAFT

5G NPR 1 186-4118 3 GEAR-PLANETARY (20-TEETH)

6 NPR 1 9F-2167 2 SCREW-PURGE (3/8-24-THD)

7 NPR 1 9R-0883 1 PIN

8 NPR 1 9R-0823 1 LEVER AS

9 NPR B 2 9R-2427 1 SHIM (0.965-MM THK)

NPR B 2 9R-2428 1 SHIM (1.118-MM THK)

NPR B 2 9R-2429 1 SHIM (1.27-MM THK)

NPR B 2 9R-2430 1 SHIM (1.422-MM THK)

NPR B 2 9R-2431 1 SHIM (1.575-MM THK)

NPR B 2 9R-2432 1 SHIM (1.727-MM THK)

NPR B 2 9R-2433 1 SHIM (1.88-MM THK)

NPR B 2 9R-2434 1 SHIM (2.032-MM THK)

10 NPR 1 9R-2425 2 WASHER (23.088X69.6X9.52-MM THK)

11 NPR 1 156-2572 1 HOUSING-REAR BRAKE (RH)

12 NPR 1 9R-9410 2 SEAL-REAR BRAKE

13 NPR 1 9R-9409 2 SEAL-REAR BRAKE

14 NPR 1 9R-9408 2 PISTON-REAR BRAKE

15 NPR B 2 9R-2446 1 SPACER (45.86X50.98X31.858-MM THK)

NPR B 2 9R-2447 1 SPACER (45.86X50.98X31.908-MM THK)

NPR B 2 9R-2448 1 SPACER (45.86X50.98X31.959-MM THK)

NPR B 2 9R-2449 1 SPACER (45.86X50.98X32.01-MM THK)

NPR B 2 9R-2450 1 SPACER (45.86X50.98X32.061-MM THK)

NPR B 2 9R-2451 1 SPACER (45.86X50.98X32.112-MM THK)

NPR B 2 9R-2452 1 SPACER (45.86X50.98X32.162-MM THK)

NPR B 2 9R-2453 1 SPACER (45.86X50.98X32.213-MM THK)

NPR B 2 9R-2454 1 SPACER (45.86X50.98X32.264-MM THK)

	NPR B	2	9R-2455	1	SPACER (45.86X50.98X32.315-MM THK)
	NPR B	2	9R-2456	1	SPACER (45.86X50.98X32.366-MM THK)
	NPR B	2	9R-2457	1	SPACER (45.86X50.98X32.416-MM THK)
	NPR B	2	9R-2458	1	SPACER (45.86X50.98X32.467-MM THK)
	NPR B	2	9R-2459	1	SPACER (45.86X50.98X32.518-MM THK)
	NPR B	2	9R-2460	1	SPACER (45.86X50.98X32.569-MM THK)
16	NPR	1	230-4017	8	DISC-BRAKE
17	NPR	1	9R-2474	2	PIN
18	NPR	1	9R-9401	8	PLATE
19	NPR	1	8S-4740	12	BOLT (9/16-12X5-IN)
20	NPR	1	9R-9398	2	MANIFOLD-BRAKE TUBE
21	NPR	1	8H-1607	2	SEAL-O-RING
22	NPR	1	9R-2424	2	GEAR (16-TEETH)
23	NPR	1	8M-8157	4	SEAL-O-RING
24	NPR	2	2A-4576	1	CUP-BEARING
25	NPR	2	5L-9656	1	CONE-BEARING (TAPERED ROLLER)
26	NPR	1	9X-8880	25	BOLT (5/8-11X2-IN)
27	NPR	2	9R-2508	1	HOUSING
28	NPR	2	113-1147	1	FLANGE
29	NPR	2	9R-2497	1	SEAL
30	NPR	2	9R-2501	1	WASHER (32.5X60.5X5.6-MM THK)
31	NPR	2	9R-2502	1	NUT (1-1/4-18-THD)
32	NPR	2	3B-5302	1	PIN-COTTER
33	NPR	2	9R-2498	1	RETAINER
34	NPR	2	3B-4509	6	LOCKWASHER

35 NPR 2 3K-3379 6 BOLT (9/16-12X1-IN)

36 NPR 1 9X-8883 1 BOLT (5/8-11X2.75-IN)

37 NPR 1 5L-9018 4 BOLT-SOCKET HEAD (1/4-20X1.75-IN)

38 NPR 1 8T-6760 2 PLUG-PIPE

39 NPR 2 9R-2499 1 SEAL AS

40 NPR 2 9R-2496 1 SEAL

41 NPR 2 7T-6653 1 CONE-BEARING (TAPERED ROLLER)

42 NPR 1 118-5839 2 SEAL-REAR AXLE

43 NPR 2 9R-2512 1 SEAL

44 NPR 1 030-1957 2 CONE-BEARING (TAPERED ROLLER)

45 NPR 2 7T-6654 1 CONE-BEARING (TAPERED ROLLER)

46 NPR 1 9R-2505 1 SEAL

47 NPR 1 9R-2504 1 SHAFT

48 NPR M 1 9R-2507 1 SCREW-SPECIAL

49 NPR 2 7T-7621 1 BEARING AS

50 NPR 2 9R-2494 1 RING

51 NPR 2 9R-2480 1 CASE AS

52 NPR 2 2S-0480 1 CUP-TAPERED ROLLER

53 NPR 2 2S-0479 1 CONE-BEARING (TAPERED ROLLER)

54 NPR 1 9R-2506 1 FORK

55 NPR 2 9R-2492 1 WASHER (64.389X78.74X3.124-MM THK)

56 NPR 2 9R-2493 1 RING

57 NPR 2 9R-2488 1 GEAR (16-TEETH)

58 NPR 2 9R-2482 1 COUPLING

59 NPR 1 278-0223 1 HOUSING-BRAKE

60 NPR 2 9R-2486 1 SPRING

61 NPR 2 9R-2483 1 ADAPTER

62 NPR 2 9R-2484 2 BUSHING-TERMINAL

63 NPR 2 9R-2490 2 WASHER (76.2X101.6X1.524-MM THK)

64 NPR 2 9R-2491 1 SPIDER

65 NPR 2 9R-9403 4 PINION

66 NPR 2 9R-2489 4 WASHER-SPRING

67 NPR 2 9R-2485 8 BOLT (1/2-13X2.87-IN)

68 NPR 1 9R-2495 2 SEAL

69 NPR 2 9R-5241 1 GEAR SET (REAR AXLE)

70 NPR M 2 9R-6671 12 BOLT (1/2-20X1.62-IN)

71 NPR 2 2M-2570 12 LOCKNUT (1/2-20-THD)

72 NPR 2 9R-2503 1 BLOCK

73 NPR 1 2L-6267 1 LOCKNUT (3/8-24-THD)

74 NPR 2 0T-0318 2 BOLT (7/16-14X1-IN)

75 NPR 2 9R-2487 1 GEAR (16-TEETH)

76 NPR B 1 9R-2435 2 SPACER (22.86X53.85X1.25-MM THK)

NPR B 1 9R-2436 2 SPACER (22.86X53.85X1.35-MM THK)

NPR B 1 9R-2437 2 SPACER (22.86X53.85X1.45-MM THK)

NPR B 1 9R-2438 2 SPACER (22.86X53.85X1.55-MM THK)

NPR B 1 9R-2439 2 SPACER (22.86X53.85X1.65-MM THK)

NPR B 1 9R-2440 2 SPACER (22.86X53.85X1.75-MM THK)

NPR B 1 9R-2441 2 SPACER (22.86X53.85X1.85-MM THK)

NPR B 1 9R-2442 2 SPACER (22.86X53.85X1.96-MM THK)

NPR B 1 9R-2443 2 SPACER (22.86X53.85X2.06-MM THK)

NPR B 1 9R-2444 2 SPACER (22.86X53.85X2.16-MM THK)

NPR B 1 9R-2445 2 SPACER (22.86X53.85X2.26-MM THK)

77 NPR 2 9R-6602 2 PLUG-MAGNETIC (REAR AXLE)

78 NPR 1 5P-0540 4 NUT-HEX FULL (9/16-18-THD)

79 NPR 1 278-0224 1 HOUSING-BRAKE

80 1 156-1933 1 HOUSING-REAR BRAKE (LH)

81 NPR 1 9R-2426 2 LOCK

82 NPR M 1 9R-2466 2 BOLT (7/8-14X2.2-IN)

Key: B - USE AS REQUIRED M - METRIC PART

129-0138 BRAKE GP-PARKING --S/N 4ZN16044-50156
PART OF 154-5495 CONTROL GP-PARKING BRAKE

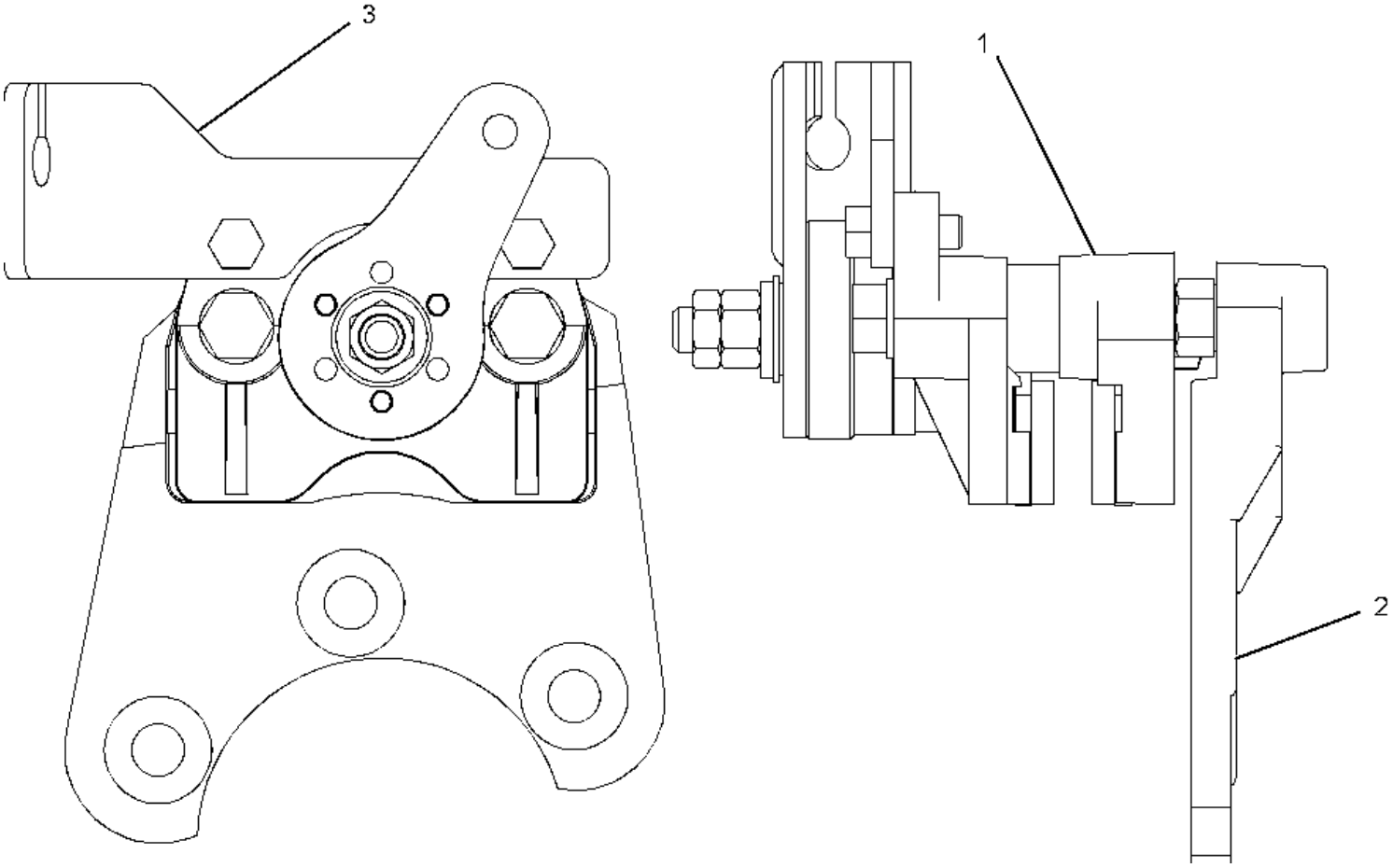

1 NPR 230-3809 1 BRAKE AS

NPR 230-3810 1 KIT-BRAKE LINING

(INCLUDES LINING & SPRING)

NPR 230-3811 1 KIT-BRAKE CALIPER

(INCLUDES SLEEVE/BOLTS, SLEEVE PROTECTORS, WASHERS, NUTS, BOLT, LINNING AS, BOOT, SEALS, & SPRING)

NPR 166-9413 1 KIT-CAM (COUNTERCLOCKWISE)

(INCLUDES CAM, BEARING, & RETAINER)

2 NPR 124-9464 1 BRACKET

3 NPR 130-7282 1 BRACKET

154-5495 CONTROL GP-PARKING BRAKE --S/N 4ZN16044-50156
PART OF 154-5436 POWER TRAIN AR

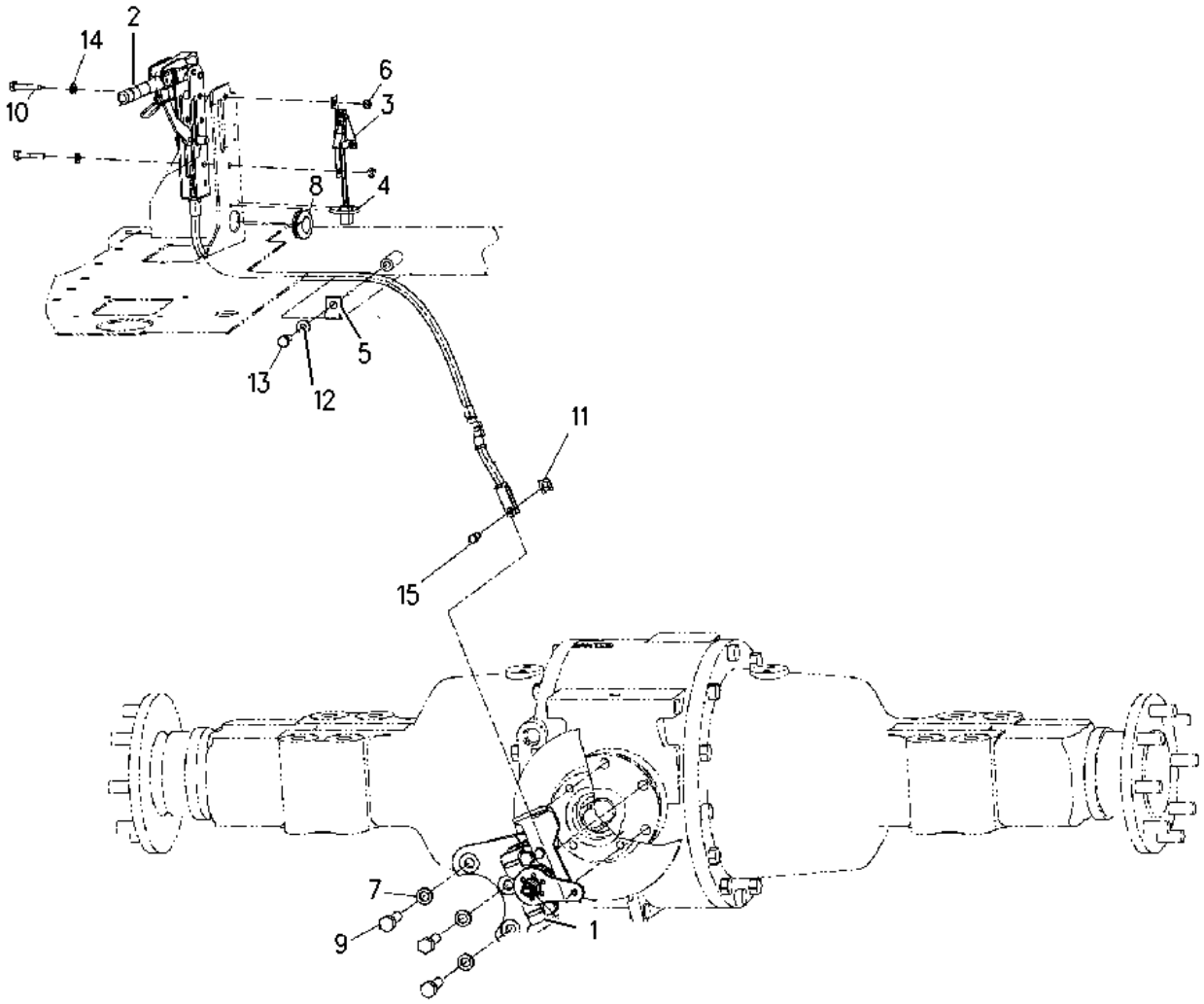

1	NPR Y	129-0138	1	BRAKE GP-PARKING
2	NPR Y	163-0754	1	CONTROL GP-PARKING BRAKE
3	NPR	154-5416	1	SWITCH AS (PARKING BRAKE ALARM)
	NPR	102-8807	1	KIT-CONNECTING PLUG (2-PIN)
	(kIT INCLUDES PLUG AS AND WEDGE)			
4	NPR	3S-2093	1	STRAP-CABLE
5	NPR	9S-1350	1	CLIP
6	NPR M	6V-9189	2	LOCKNUT (M8X1.25-THD)
7	NPR	7M-0242	3	WASHER-HARD (15.1X25.4X5-MM THK)
8	NPR	7M-3361	1	GROMMET
9	NPR	8S-4734	3	BOLT (9/16-12X2-IN)
10	NPR M	8T-0276	2	BOLT (M8X1.25X45-MM)
11	NPR	9R-2807	1	CLIP
12	NPR	8T-4121	1	WASHER-HARD (11X21X2.5-MM THK)
13	NPR M	8T-4137	1	BOLT (M10X1.5X20-MM)
14	NPR	8T-4224	2	WASHER-HARD (8.8X16X2-MM THK)
15	NPR	9R-2806	1	PIN

Key: M - METRIC PART Y - SEPARATE ILLUSTRATION

163-0754 CONTROL GP-PARKING BRAKE
S/N 4ZN16044-50156---PART OF 154-5495 CONTROL GP-PARKING BRAKE

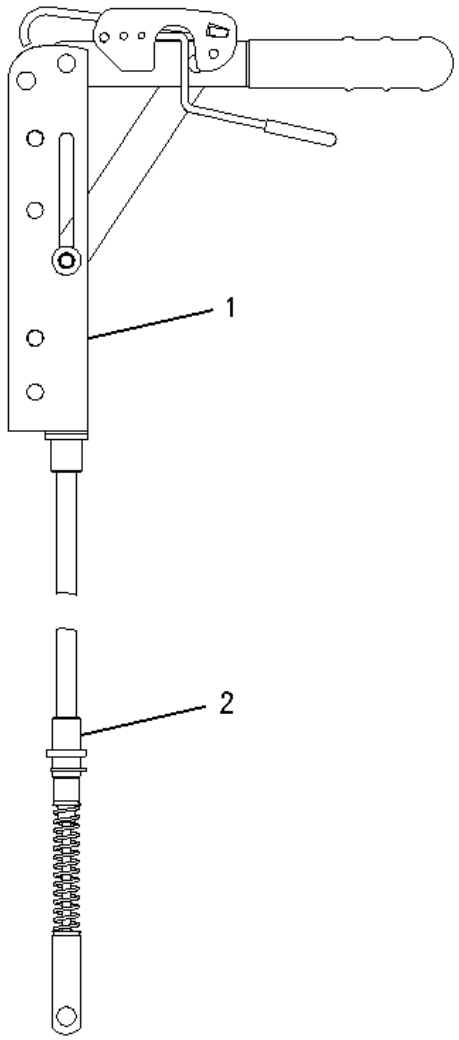

1 NPR Y 163-0753 1 LEVER GP-HAND CONTROL

2 NPR 163-0755 1 CABLE GP

NPR 6V-8759 1 RING-RETAINING

Key: Y - SEPARATE ILLUSTRATION

104-5727 CONTROL GP-SERVICE BRAKE --S/N 4ZN16044-50156
PART OF 154-5436 POWER TRAIN AR

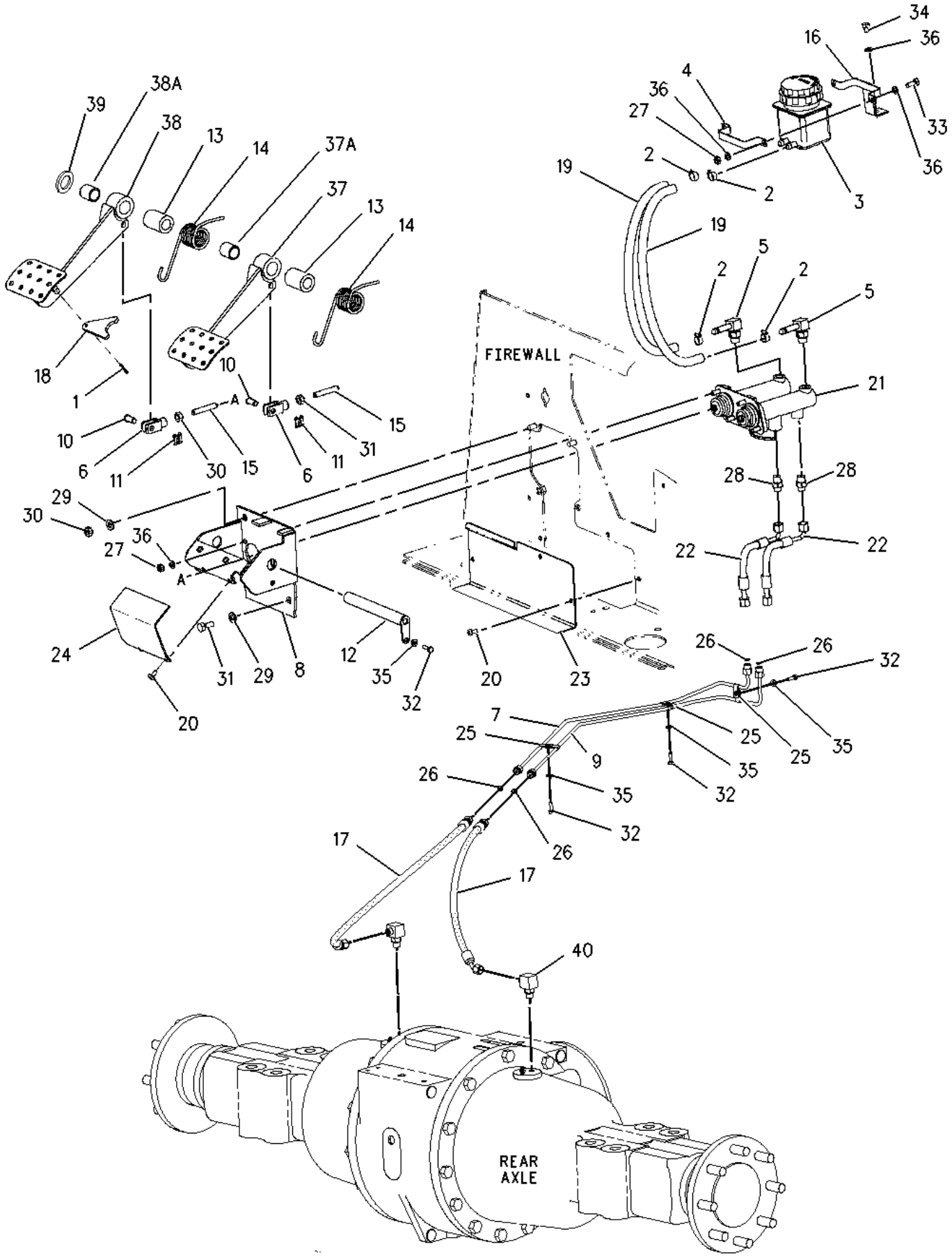

1 NPR 1H-1200 1 PIN-SPRING

2 NPR 1P-4278 4 CLAMP-HOSE

3 NPR Y 4E-8619 1 RESERVOIR GP-BRAKE

4 NPR 5G-8108 1 CLAMP

5 NPR 150-3024 2 ELBOW GP

(EACH INCLUDES)

NPR 3J-1907 1 SEAL-O-RING

NPR 5P-4924 1 ELBOW

6 NPR 8T-4815 2 ROD END

7 NPR 8Y-7196 1 TUBE AS-BRAKE

8 NPR 8Y-7197 1 BRACKET AS

NPR M 6V-9632 3 NUT-WELD (M6X1-THD)

9 NPR 8Y-7198 1 TUBE AS

10 NPR 9R-2806 2 PIN

11 NPR 9R-2807 2 CLIP

12 NPR 9R-8184 1 PIN AS

13 NPR 9R-8185 2 SPACER (51-MM THK)

14 NPR 9R-8186 2 SPRING

15 NPR 9R-8189 2 PUSHROD

16 NPR 9R-9334 1 BRACKET AS

NPR 5G-8108 1 CLAMP

17 NPR I 155-8154 2 HOSE AS

18 NPR 104-5497 1 PLATE

19 NPR E 5P-1442 HOSE (95-CM)

20 NPR M 9X-2043 5 SCREW-TRUSS HEAD (M6X1X14-MM)

21 NPR 123-3426 1 CYLINDER AS-BRAKE MASTER

NPR 113-5049 1 TUBE AS

22 NPR I 124-2821 2 HOSE AS

23 NPR J 124-3544 1 PLATE

24 NPR 131-3137 1 PLATE

25 NPR 1A-5350 6 CLIP

26 NPR 4J-5477 4 SEAL-O-RING

27 NPR M 5C-7261 6 NUT (M8X1.25-THD)

28 NPR 148-8325 2 CONNECTOR AS

(EACH INCLUDES)

NPR 3J-1907 1 SEAL-O-RING

NPR 4J-5477 1 SEAL-O-RING

NPR 6V-8641 1 CONNECTOR

29 NPR 8T-4121 4 WASHER-HARD (11X21X2.5-MM THK)

30 NPR M 8T-4133 4 NUT (M10X1.5-THD)

31 NPR M 8T-4136 2 BOLT (M10X1.5X25-MM)

32 NPR M 8T-4138 4 BOLT (M6X1X20-MM)

33 NPR M 8T-4189 2 BOLT (M8X1.25X20-MM)

34 NPR M 8T-4200 1 BOLT (M8X1.25X16-MM)

35 NPR 8T-4205 4 WASHER-HARD (7.2X14.5X2-MM THK)

36 NPR 8T-4224 9 WASHER-HARD (8.8X16X2-MM THK)

37 NPR 154-5401 1 PEDAL AS-RH

37A NPR 091-4471 1 BEARING-SLEEVE

38 NPR 154-5400 1 PEDAL AS-LH

38A NPR 091-4471 1 BEARING-SLEEVE

39 NPR 9R-2751 1 WASHER (22.5X40X3-IN THK)

40 NPR 148-8368 2 ELBOW AS (45 DEGREE)

(EACH INCLUDES)

NPR 3J-1907 1 SEAL-O-RING

NPR 4J-5477 1 SEAL-O-RING

NPR 6V-8627 1 ELBOW

AVAILABLE REPAIR KIT(S):

NPR 113-5048 1 KIT-BRAKE CYLINDER

(INCLUDES COVER, VALVE, INSERT, CIRCLIP, SEALS, WASHER, & GREASE)

Key: E - ORDER BY THE CENTIMETER I - REFER TO HYDRAULIC INFORMATION SYSTEM
J - KITS MARKED J AVAILABLE FOR PARTS MARKED J M - METRIC PART
Y - SEPARATE ILLUSTRATION

163-0753 LEVER GP-HAND CONTROL
S/N 4ZN16044-50156
PART OF 163-0754 CONTROL GP-PARKING BRAKE

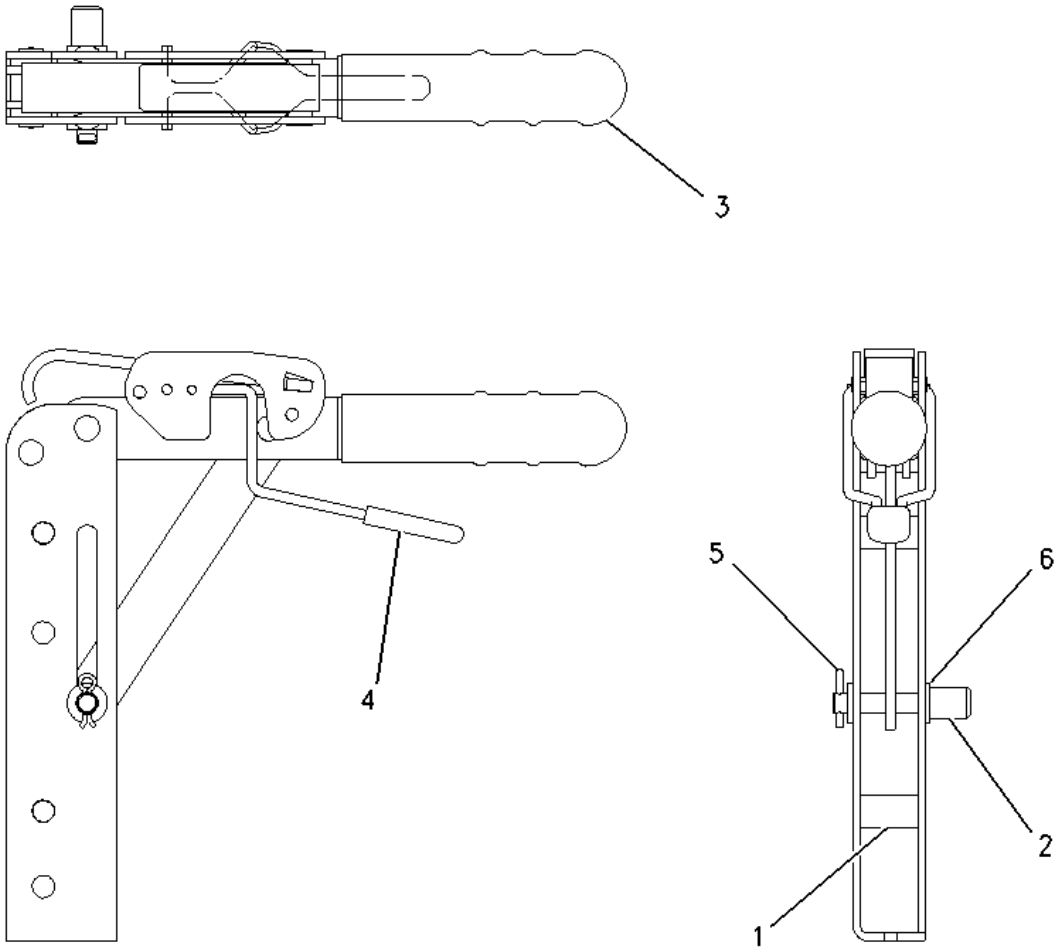

1	**NPR**	**7R-8239**	**2**	**SPACER**
2	**NPR**	**039-9133**	**1**	**PIN**
3	**NPR**	**164-9598**	**1**	**GRIP**
4	**NPR**	**164-9599**	**1**	**COVER**
5	**NPR**	**3B-4610**	**1**	**PIN-COTTER**
6	**NPR**	**8T-4224**	**2**	**WASHER-HARD (8.8X16X2MM THK)**

4E-8619 RESERVOIR GP-BRAKE
S/N 4ZN16044-50156
PART OF 104-5727 CONTROL GP-SERVICE BRAKE

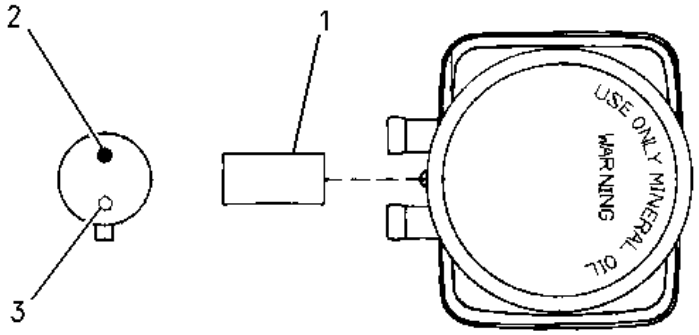

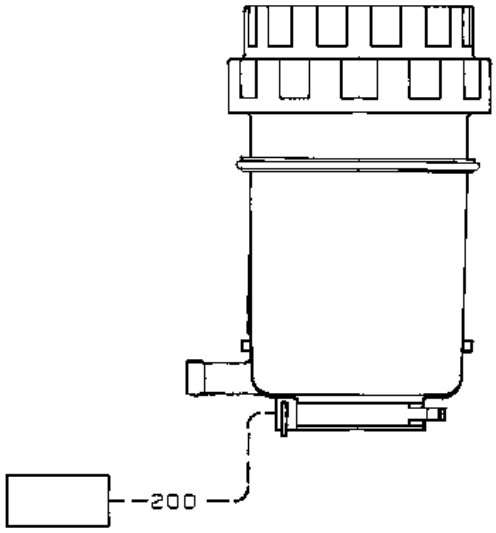

1 NPR 7N-9737 1 HOUSING-PLUG

2 NPR 7N-7780 1 PIN-CONNECTOR

3 NPR 7N-7779 1 SOCKET-CONNECTOR

NPR F 8R-6263 1 INDICATOR AS

AVAILABLE REPAIR KIT(S):

159-7907 1 KIT-BRAKE RESERVOIR

(INCLUDES CAP & DIAPHRAM)

Key: F - NOT SHOWN

154-5465 AXLE GP-FRONT -S/N 4ZN16044-50156
PART OF 154-5447 DRIVE AR-BACKHOE LOADER

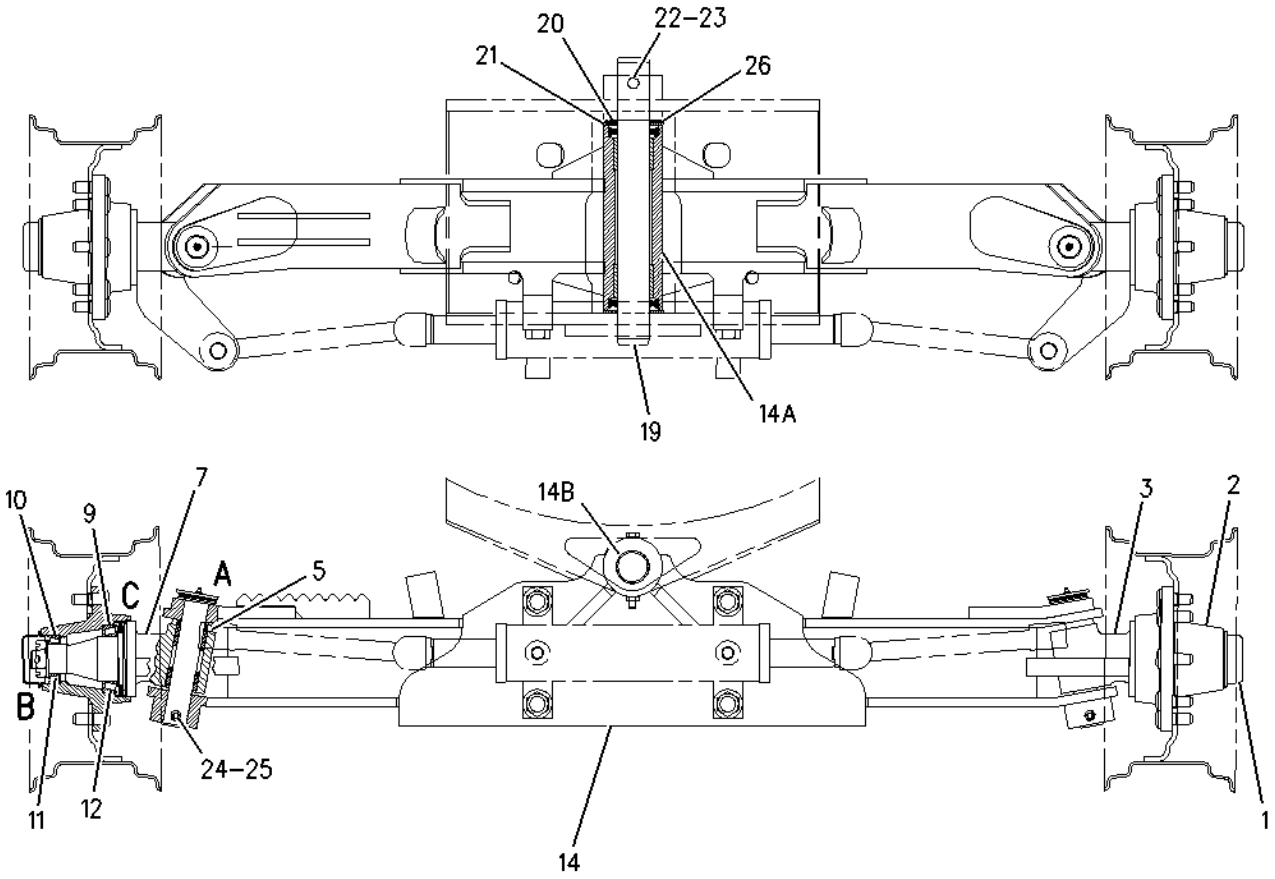

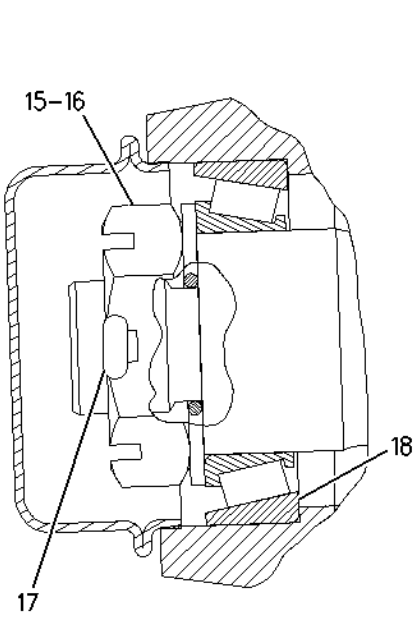

VIEW OF AREA B

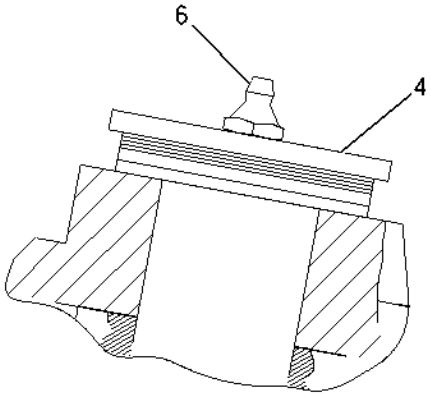

VIEW OF AREA A

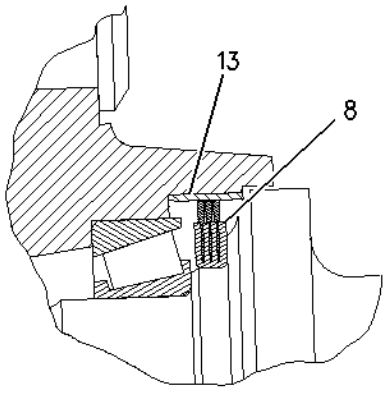

VIEW OF AREA C

1 NPR 9R-7821 2 CAP

2 NPR 9R-0313 2 HUB AS

(EACH INCLUDES)

	NPR	8T-6653	8	STUD
3	NPR	128-4125	1	SPINDLE AS-RH
	NPR	9R-1917	2	BEARING-SLEEVE
4	NPR	160-1014	2	PIN AS
5	NPR	9R-8544	2	WASHER (41X82X10-MM THK)
6	NPR	3B-8489	2	FITTING-GREASE
7	NPR	128-4126	1	SPINDLE AS-LH
	NPR	9R-1917	2	BEARING-SLEEVE
8	NPR	8T-9025	2	SEAL
9	NPR	9S-7950	2	CONE-BEARING
10	NPR	9S-3582	2	CONE-BEARING
11	NPR	9S-3581	2	CUP-BEARING
12	NPR	9S-7949	2	CUP-BEARING
13	NPR	6V-8145	2	SLEEVE
14	NPR	169-3242	1	AXLE AS
14A	NPR	183-2358	2	BEARING
14B	NPR	154-5405	2	SEAL-LIP TYPE
15	NPR	009-3020	2	WASHER-THRUST (35X63.5X3.14-MM THK)
16	NPR M	8T-3990	2	NUT (M30X2-THD)
17	NPR	3B-4631	2	PIN-COTTER
18	NPR	8B-4967	2	SEAL-O-RING
19	NPR	112-9629	1	PIN
20	NPR B	1K-7082	1	WASHER (2.266X4X0.031-IN THK)
21	NPR	165-8996	2	WASHER-THRUST (55.5X100.5X5-MM THK)
22	NPR M	8T-5041	1	BOLT (M12X1.75X120-MM)
23	NPR M	8T-8549	1	LOCKNUT (M12X1.75-THD)
24	NPR M	8T-4198	2	BOLT (M10X1.5X100-MM)
25	NPR M	6V-7744	2	LOCKNUT (M10X1.15-THD)
26	NPR B	9R-9702	2	WASHER (56X100X1.6-MM THK)

Key: B - USE AS REQUIRED M - METRIC PART

167-4235 CYLINDER GP-STEERING ---S/N 4ZN16099-50156
69.85MM BORE 224MM STROKE. POWER SHIFT
PART OF 117-8537 STEERING GP-HYDRAULIC

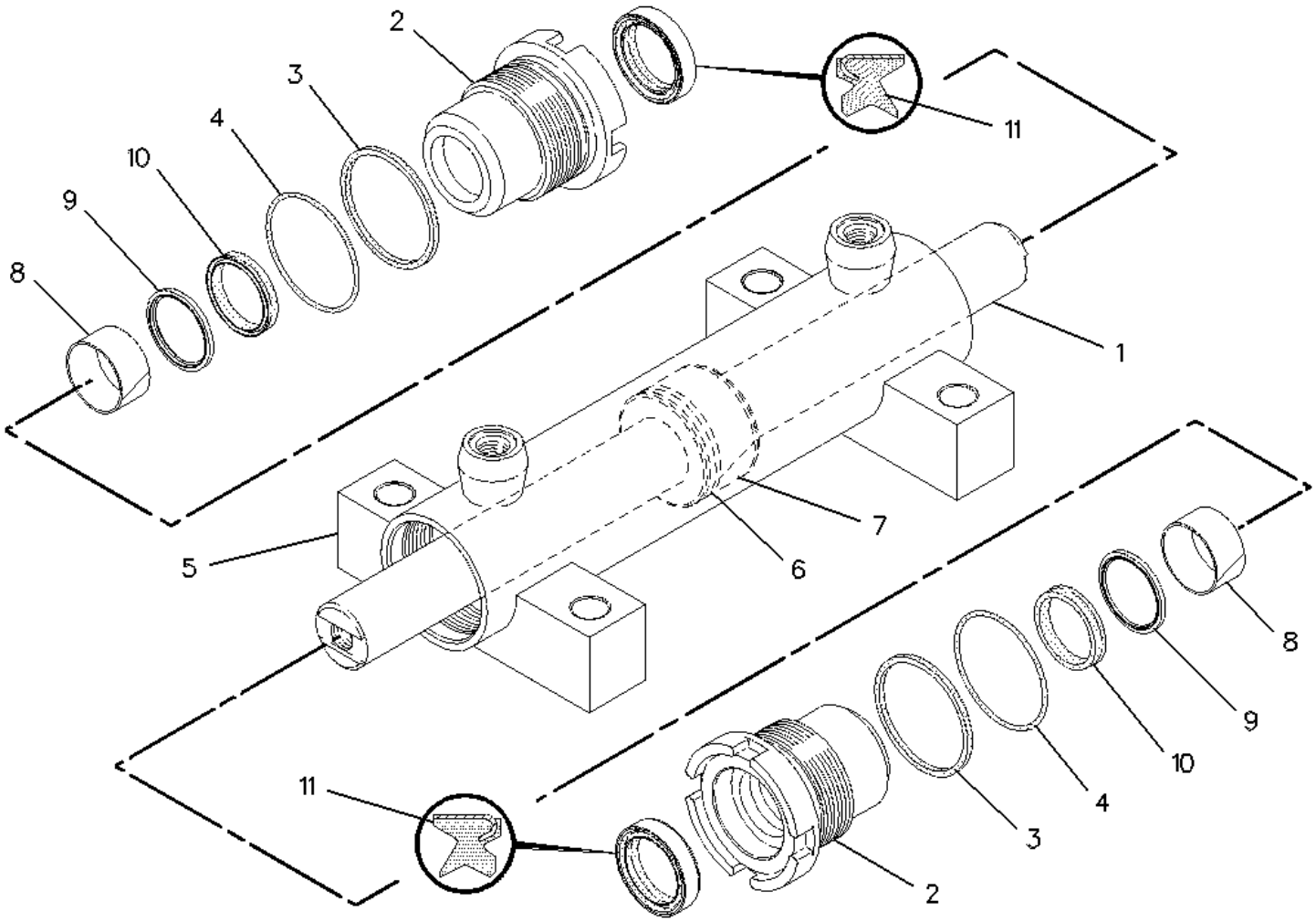

1	NPR	169-0445	1	ROD AS
2	NPR	151-5349	2	HEAD
3	NPR JL	4J-9225	2	RING-BACKUP
4	NPR JL	175-7895	2	SEAL-O-RING
5	NPR	169-0444	1	CYLINDER AS
6	NPR JL	166-5295	1	SEAL AS
7	NPR JL	8J-0112	1	RING-WEAR
8	NPR JL	4T-6907	2	RING-WEAR
9	NPR J	167-2191	2	SEAL AS-BUFFER
10	NPR JL	167-2300	2	SEAL-U-CUP
11	NPR L	231-3539	2	SEAL-WIPER

AVAILABLE REPAIR KIT(S):
NPR J 235-0351 1 KIT-SEAL
(INCLUDES RINGS & SEALS)
NPR L 235-0352 1 KIT-SEAL
(INCLUDES RINGS & SEALS)

Key: J - KIT MARKED J SERVICES PARTS MARKED J
L - KIT MARKED L SERVICES PARTS MARKED L

ELECTRICAL

SYSTEM

7E-4644 MOUNTING GP-ALTERNATOR --S/N 4ZN16044-50156
PART OF 143-1311, 154-5384 INSTALLATION AR-ENGINE

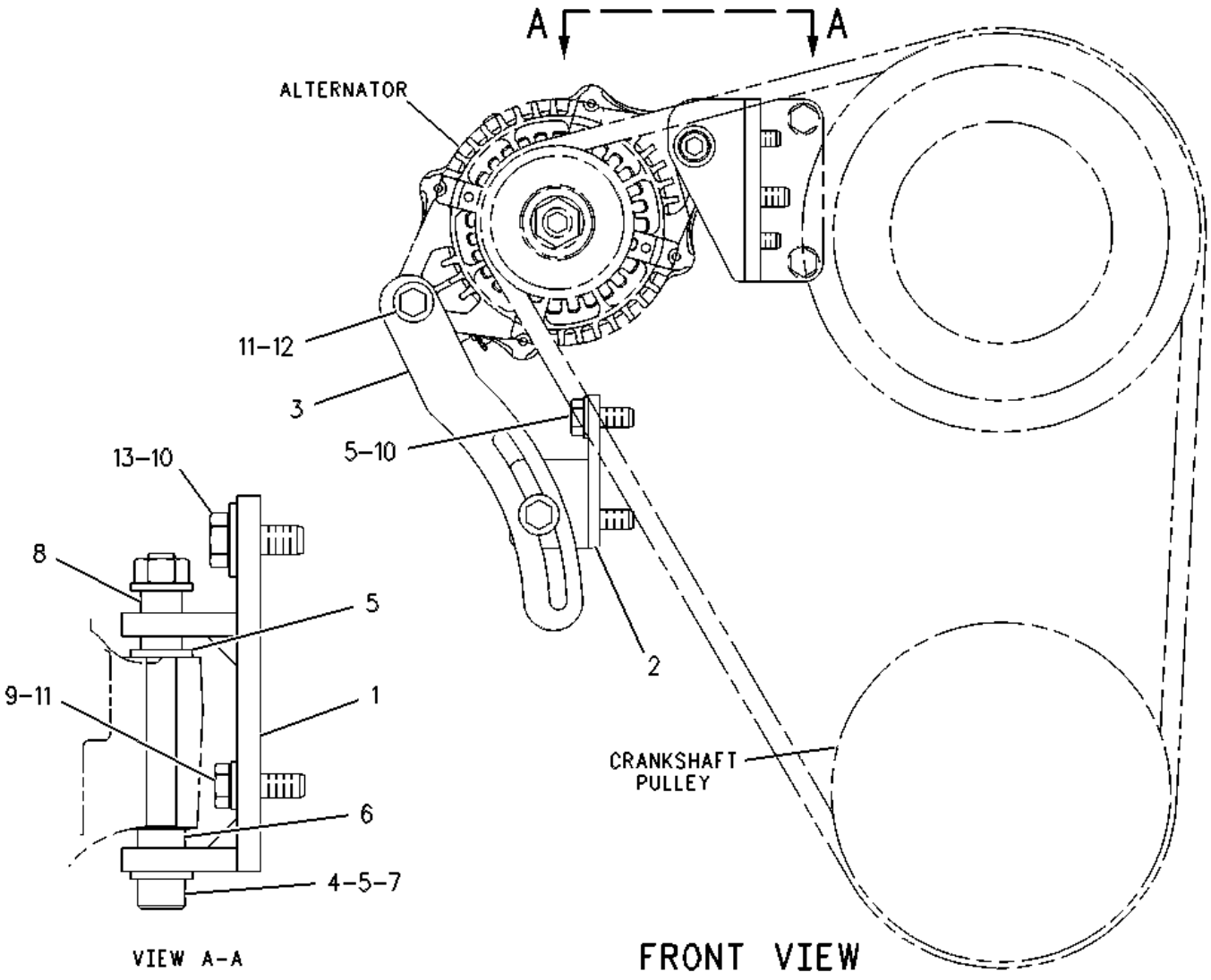

1 NPR 116-3864 1 BRACKET AS

2 NPR 116-3865 1 BRACKET AS

NPR M 8T-3612 1 NUT-WELD (M8X1.25-THD)

3 NPR 116-3866 1 STRAP

4 NPR M 8T-0272 1 BOLT-SOCKET HEAD (M10X1.5X110-MM)

5 NPR 8T-4121 5 WASHER-HARD (11X21X2.5-MM THK)

6 NPR 5B-0486 1 SPACER

7 NPR M 8T-4133 1 NUT (M10X1.5-THD)

8 NPR 7C-9465 1 SPACER (11.1X14.3X20-MM THK)

9	NPR	8T-4224	2	WASHER-HARD (8.8X16X2-MM THK)
10	NPR M	8T-4136	3	BOLT (M10X1.5X25-MM)
11	NPR M	8T-4908	4	BOLT (M8X1.25X25-MM)
12	NPR	5P-4116	2	WASHER-HARD (8.8X20.5X2-MM THK)
13	NPR	7X-7729	1	WASHER (11X25X3-MM THK)

Key:

M - METRIC PART

130-1427 MOUNTING GP-ALTERNATOR --S/N 7BJ1-UP; 5HK81000-99999; 9RM1-UP
PART OF 106-5001, 106-5002, 122-8803, 122-8804 ENGINE AR-PRIMARY

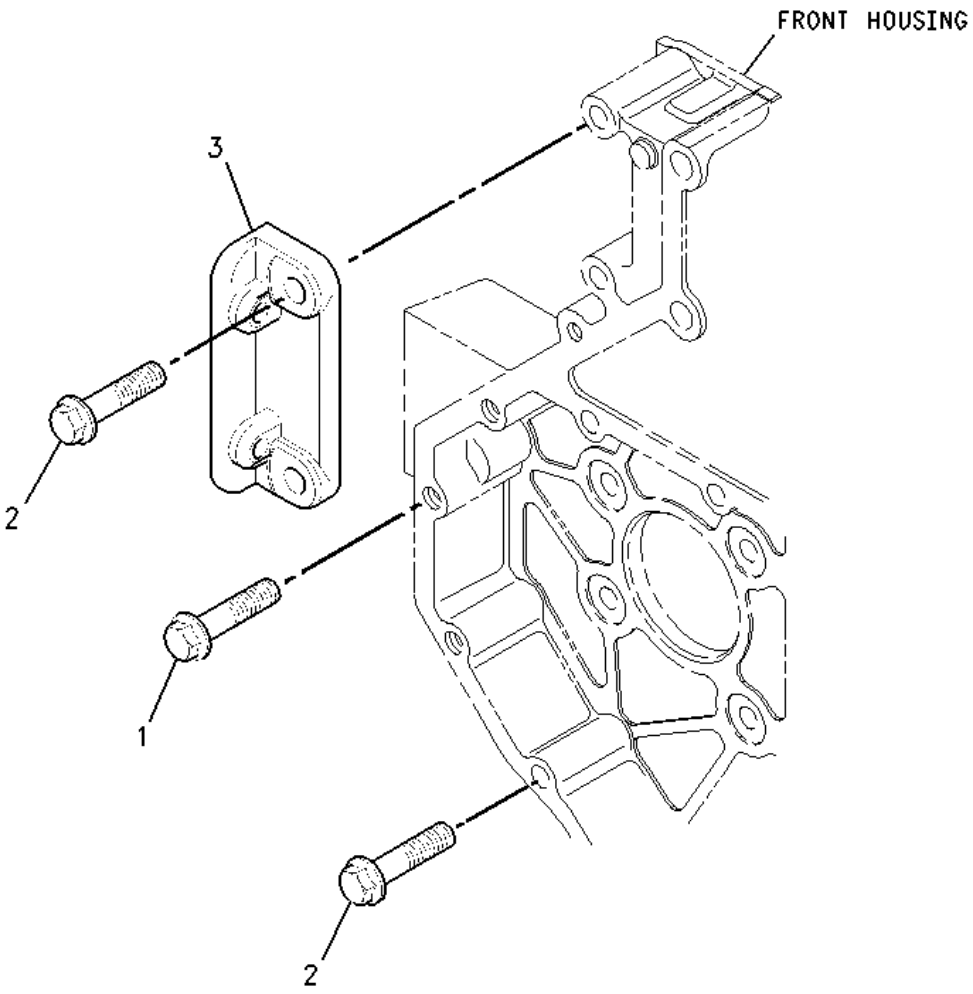

1 NPR M 6I-0254 2 BOLT (M8X1.25X30-MM)

2 NPR 6I-0839 3 BOLT (M8X1.25X70-MM)

3 NPR 101-3802 1 BRACKET

Key: M - METRIC PART

105-2812 ALTERNATOR GP-CHARGING ---S/N 4ZN16044-50156
12 VOLT, 55 AMP --PART OF 121-5830, 137-3507 ALTERNATOR GP-CHARGING

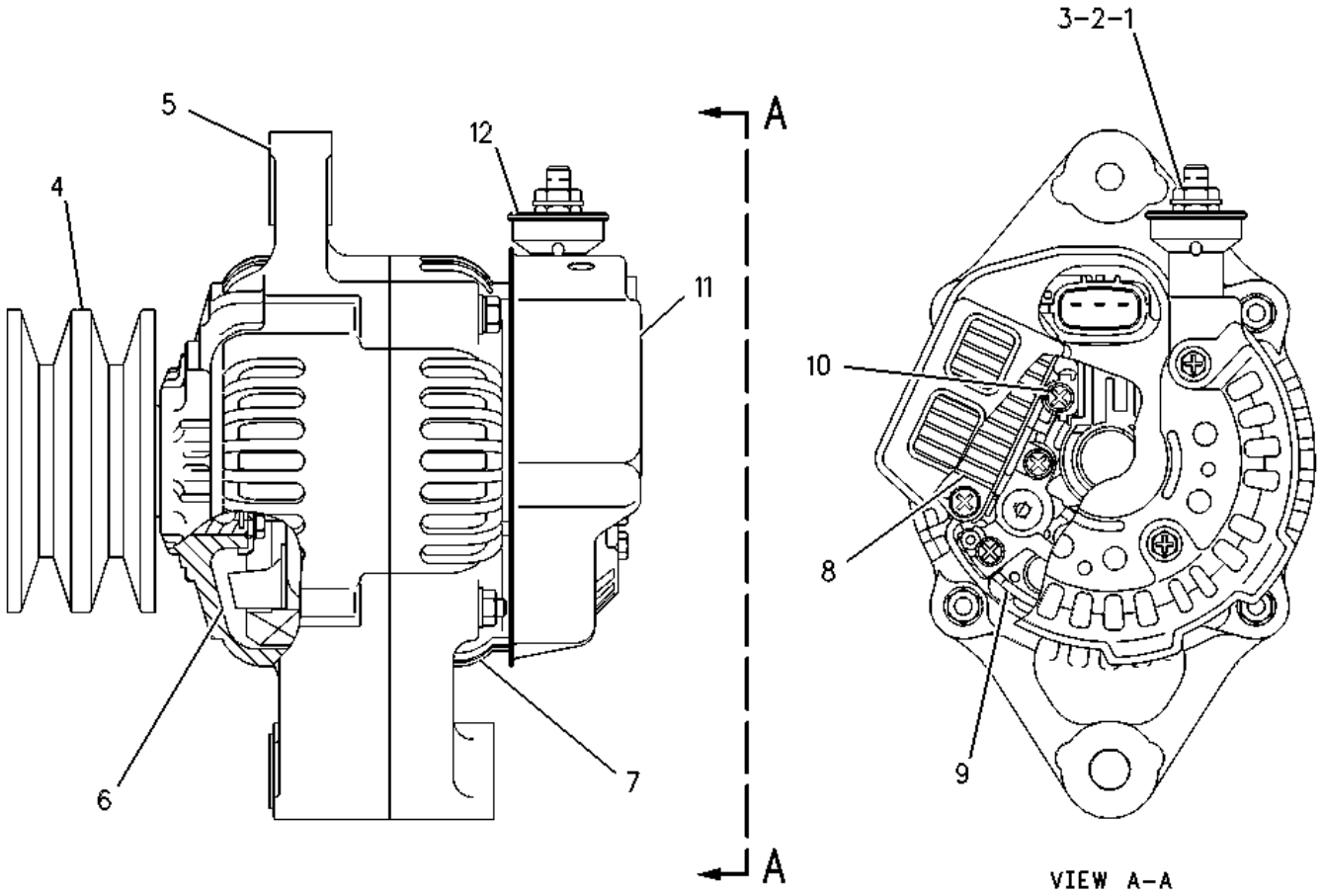

1	**NPR M**	**5C-2890**	**1**	**NUT (M6X1-THD)**
2	**NPR**	**8T-4205**	**1**	**WASHER-HARD (7.2X14.5X2-MM THK)**
3	**NPR**	**1H-3244**	**1**	**LOCKWASHER**
4	**NPR**	**114-2863**	**1**	**PULLEY-ALTERNATOR**
5	**NPR**	**114-2865**	**1**	**FRAME AS-ALTERNATOR**
6	**NPR**	**114-2866**	**1**	**ROTOR AS-ALTERNATOR**
7	**NPR**	**114-2867**	**1**	**FRAME-ALTERNATOR**
8	**NPR**	**114-2868**	**1**	**REGULATOR AS-ALTERNATOR**
9	**NPR**	**114-2869**	**1**	**RECTIFIER AS-ALTERNATOR**

10 NPR 114-2870 1 HOLDER AS

11 NPR 114-2871 1 COVER-ALTERNATOR

12 NPR 114-2872 1 BUSHING-ALTERNATOR

AVAILABLE REPAIR KIT(S):

NPR 114-2873 1 KIT-ALTERNATOR BEARING

(INCLUDES BEARINGS, COVERS, PLATE, SCREW, AND WASHER)

NPR 114-2874 1 KIT-ALTERNATOR HARDWARE

(INCLUDES NUTS AND BOLTS)

NPR 114-2875 1 KIT-ALTERNATOR HARDWARE

(INCLUDES SCREWS)

Key:

M - METRIC PART

105-2813 ALTERNATOR GP-CHARGING --S/N 4ZN16044-50156
12 VOLT, 90 AMPERES --PART OF 121-5831, 121-5832 ALTERNATOR GP-CHARGING

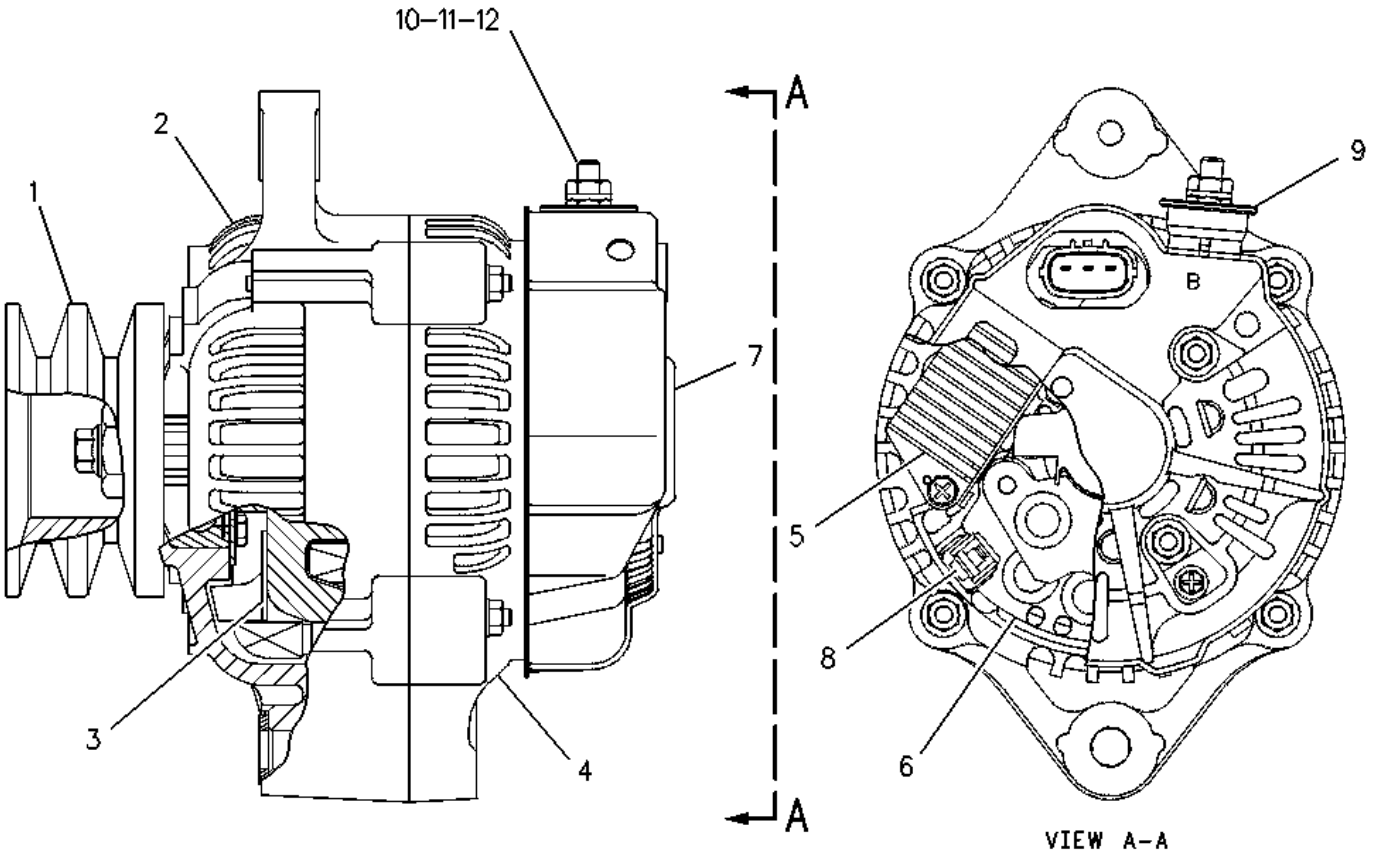

1	**NPR**	**113-4457**	**1**	**PULLEY-ALTERNATOR**
2	**NPR**	**113-4459**	**1**	**FRAME AS-ALTERNATOR (TOP)**
3	**NPR**	**113-4460**	**1**	**ROTOR AS-ALTERNATOR**
4	**NPR**	**113-4461**	**1**	**FRAME AS-ALTERNATOR (BOTTOM)**
5	**NPR**	**113-4462**	**1**	**REGULATOR AS-ALTERNATOR**
6	**NPR**	**113-4463**	**1**	**RECTIFIER AS-ALTERNATOR**
7	**NPR**	**113-4464**	**1**	**COVER-ALTERNATOR**
8	**NPR**	**113-4469**	**4**	**BUSHING-ALTERNATOR**
9	**NPR**	**113-4470**	**1**	**BUSHING-ALTERNATOR**

10 NPR M 5C-2890 1 NUT (M6X1-THD)

11 NPR 8T-4205 1 WASHER-HARD (7.2X14.5X2-MM THK)

12 NPR 1H-3244 1 LOCKWASHER

AVAILABLE REPAIR KIT(S):

NPR 113-4465 1 KIT-ALTERNATOR BEARING

(INCLUDES COVERS, BEARINGS, WASHER, PLATE, AND SCREWS)

NPR 113-4466 1 KIT-REPAIR (ALTERNATOR BRUSHES)

(INCLUDES SEALS AND HOLDER ASSEMBLY)

NPR 113-4467 1 KIT-ALTERNATOR TERMINAL

(INCLUDES NUTS, PLATE, AND SCREW)

NPR 113-4468 1 KIT-ALTERNATOR HARDWARE

(INCLUDES SCREWS)

Key:

M - METRIC PART

121-5830 ALTERNATOR GP-CHARGING
S/N 4ZN16044-50156

NPR RY 105-2812 1 ALTERNATOR GP-CHARGING

R NPR 0R-9273 1 ALTERNATOR GP

NPR 2P-4191 1 V-BELT

Key: R - REMFG PART MAY BE AVAILABLE Y - SEPARATE ILLUSTRATION

121-5831 ALTERNATOR GP-CHARGING
S/N 4ZN16044-50156

NPR RY 105-2813 1 ALTERNATOR GP-CHARGING

R NPR 0R-9274 1 ALTERNATOR GP

NPR 7W-3896 1 V-BELT SET (INCLUDES 2 BELTS)

Key: Y - SEPARATE ILLUSTRATION

121-5832 ALTERNATOR GP-CHARGING
S/N 4ZN16044-50156

NPR RY 105-2813 1 ALTERNATOR GP-CHARGING

R NPR 0R-9274 1 ALTERNATOR GP

NPR 4N-8597 1 V-BELT SET (INCLUDES 2 BELTS)

Key: Y - SEPARATE ILLUSTRATION

137-3507 ALTERNATOR GP-CHARGING
S/N 4ZN16044-50156

NPR RY 105-2812 1 ALTERNATOR GP-CHARGING

R NPR 0R-9273 1 ALTERNATOR GP

NPR 4N-8597 1 V-BELT SET (INCLUDES 2-BELTS)

Key: R - REMFG PART MAY BE AVAILABLE Y - SEPARATE ILLUSTRATION

119-8016 BATTERY GP --S/N 4ZN20803-50156--DUAL BATTERY

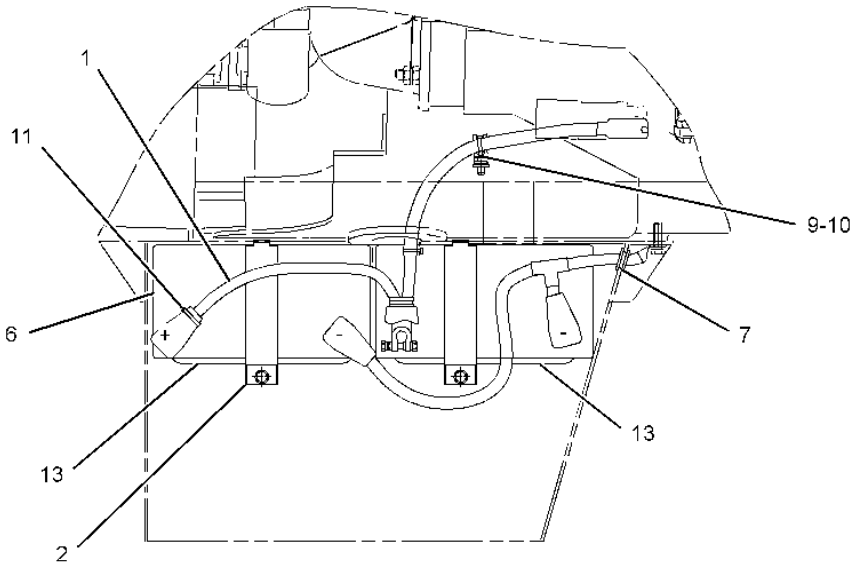

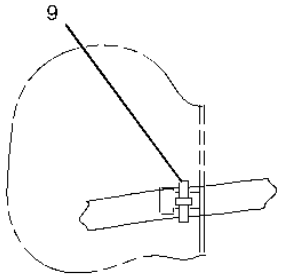

VIEW
A-A

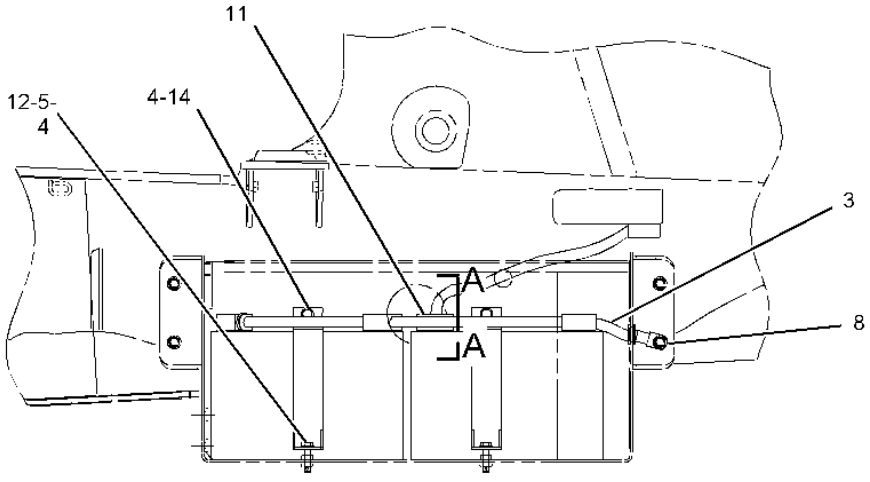

1 NPR 141-1658 1 CABLE AS-BATTERY (POSITIVE)

NPR BE 5P-0761 CABLE (00-GA, RED)

NPR 1S-7252 1 TERMINAL-RING (FOR 3/8-IN BOLT)

NPR BE 8Y-8081 TUBE-CONVOLUTED

NPR 7T-9987 1 COVER-TERMINAL (RED)

	NPR	8N-0869	1	COVER-TERMINAL (RED)(RING)
	NPR	3T-3349	1	STUD (M18X57.5-MM)
	NPR	1M-6120	2	NUT (5/16-18-THD)
2	NPR C	178-9242	2	BRACKET AS
3	NPR	130-8293	1	CABLE AS-BATTERY (NEGATIVE)
	NPR BE	5P-0747		CABLE (00-GA, BLACK)(46CM)
4	NPR	7X-7729	4	WASHER (11X25X3-MM THK)
5	NPR M	8T-5005	2	BOLT (M10X1.5X70-MM)
6	NPR	3T-5760	2	BATTERY (12-VOLT, MAINTENANCE FREE)
7	NPR	4H-2558	1	GROMMET
8	NPR	8T-4223	1	WASHER-HARD (13.5X25.5X3-MM THK)
9	NPR	7K-1181	2	STRAP-CABLE
10	NPR	4P-8134	1	CLIP
11	NPR	3S-2093	2	STRAP-CABLE
12	NPR M	8T-4133	2	NUT (M10X1.5-THD)
13	NPR	038-9317	2	TREAD-NONSKID
14	NPR M	8T-4137	2	BOLT (M10X1.5X20-MM)

Key: B - USE AS REQUIRED C - CHANGE FROM PREVIOUS TYPE E - ORDER BY THE CENTIMETER
M - METRIC PART

122-5865 BATTERY GP --S/N 4ZN20803-50156
CANNOT BE USED WITH 119-8016

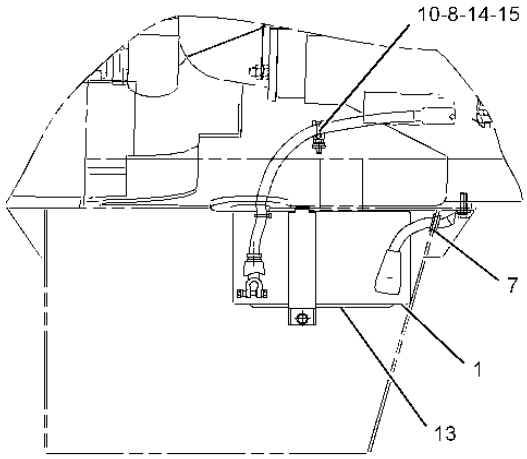

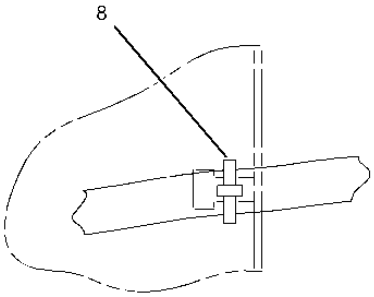

VIEW A-A

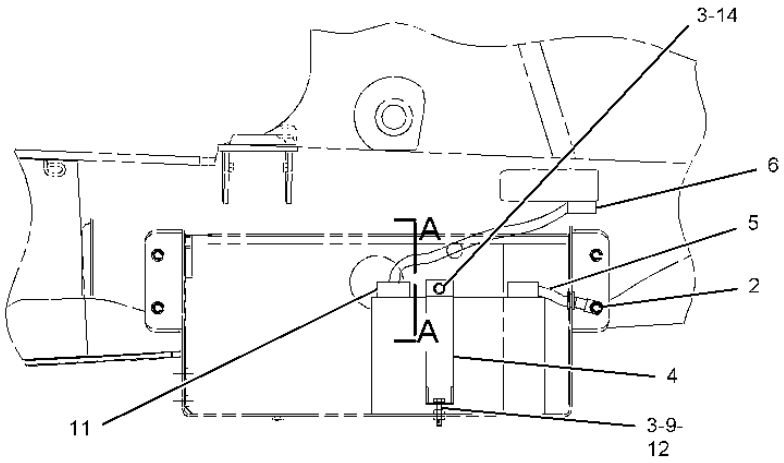

1 NPR 3T-5760 1 BATTERY (12-VOLT, MAINTENANCE FREE)

2 NPR 8T-4223 1 WASHER-HARD (13.5X25.5X3-MM THK)

3 NPR 7X-7729 2 WASHER (11X25X3-MM THK)

4 NPR C 178-9242 1 BRACKET AS

5 NPR 130-8292 1 CABLE AS-BATTERY (NEGATIVE)

NPR BE 5P-0747 CABLE (00-GA, BLACK)

NPR 1S-7251 1 TERMINAL-RING (FOR 1/2-IN BOLT)

NPR 7N-5274 1 COVER-TERMINAL (BLACK)

6	NPR	141-1656	1	CABLE AS-BATTERY (POSITIVE)
	NPR	1S-7252	1	TERMINAL-RING (FOR 3/8-IN BOLT)
	NPR BE	5P-0761		CABLE (00-GA, RED)
	NPR	8N-0869	1	COVER-TERMINAL (RED)
	NPR BE	8Y-8081		TUBE-CONVOLUTED
7	NPR	4H-2558	1	GROMMET
8	NPR	7K-1181	2	STRAP-CABLE
9	NPR M	8T-5005	1	BOLT (M10X1.5X70-MM)
10	NPR	4P-8134	1	CLIP
11	NPR	3S-2093	1	STRAP-CABLE
12	NPR M	8T-4133	1	NUT (M10X1.5-THD)
13	NPR	038-9317	1	TREAD-NONSKID
14	NPR M	8T-4137	2	BOLT (M10X1.5X20-MM)
15	NPR	8T-4121	1	WASHER-HARD (11X21X2.5-MM THK)

Key:
B - USE AS REQUIRED--- C - CHANGE FROM PREVIOUS TYPE -- E - ORDER BY THE CENTIMETER
M - METRIC PART

166-0658 HEATER GP-JACKET WATER --S/N 4ZN16044-50156
120 VOLT

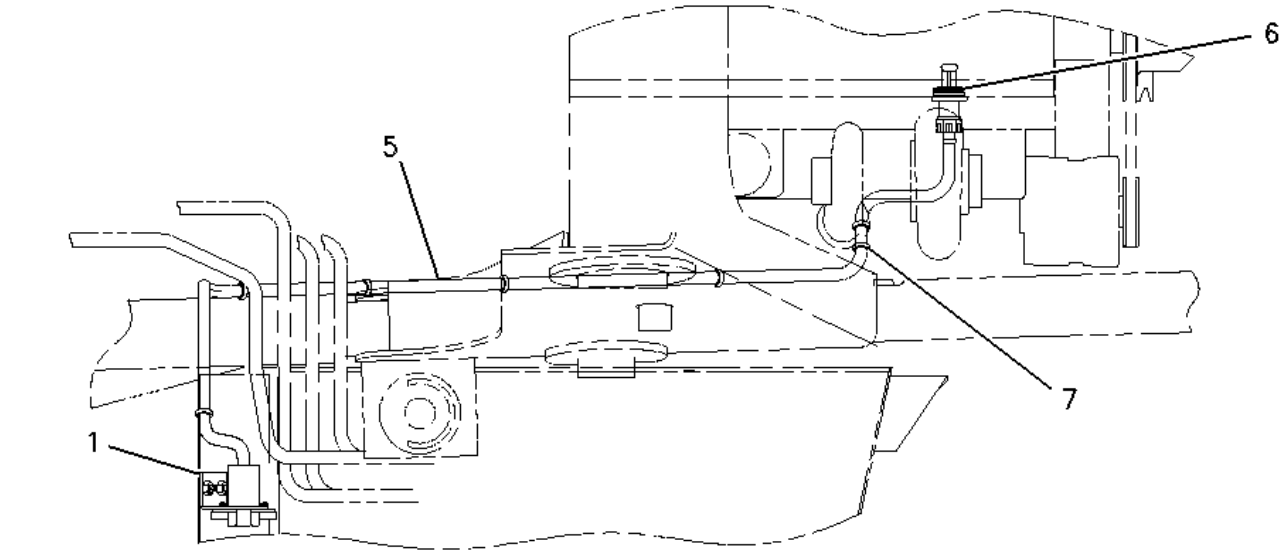

TOP VIEW

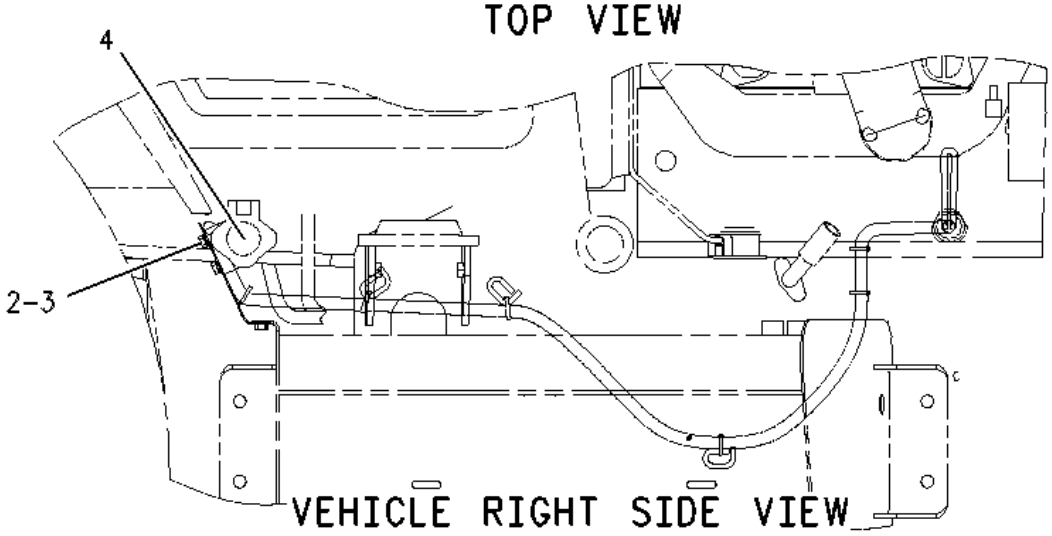

VEHICLE RIGHT SIDE VIEW

1 NPR 165-8357 1 BRACKET AS

NPR M 8T-3612 2 NUT-WELD (M8X1.25-THD)

2 NPR M 8T-4189 2 BOLT (M8X1.25X20-MM)

3 NPR 8T-4224 2 WASHER-HARD (8.8X16X2-MM THK)

4 NPR 130-0165 1 RECEPTACLE AS

NPR 1M-1230 2 NUT & LOCK AS (10-32-THD)

NPR 168-4511 2 SCREW-PAN HEAD (10-32X1-IN)

5 NPR 161-4150 1 CORD AS (JACKET WATER HEATER)

6 NPR J 161-8198 1 ELEMENT AS-JACKET WATER HEATER (120-VOLT, 1250-WATT)

7 NPR 3S-2093 7 STRAP-CABLE

AVAILABLE REPAIR KIT(S):
NPR 161-8200 1 KIT-SEAL

(INCLUDES SEAL, RETAINERS, SPACER, AND RING)

Key: J - KIT MARKED J IS AVAILABLE FOR PART MARKED J M - METRIC PART

179-5772 INSTALLATION GP-A/C SHUTOFF -KIT -S/N 4ZN16044-50156

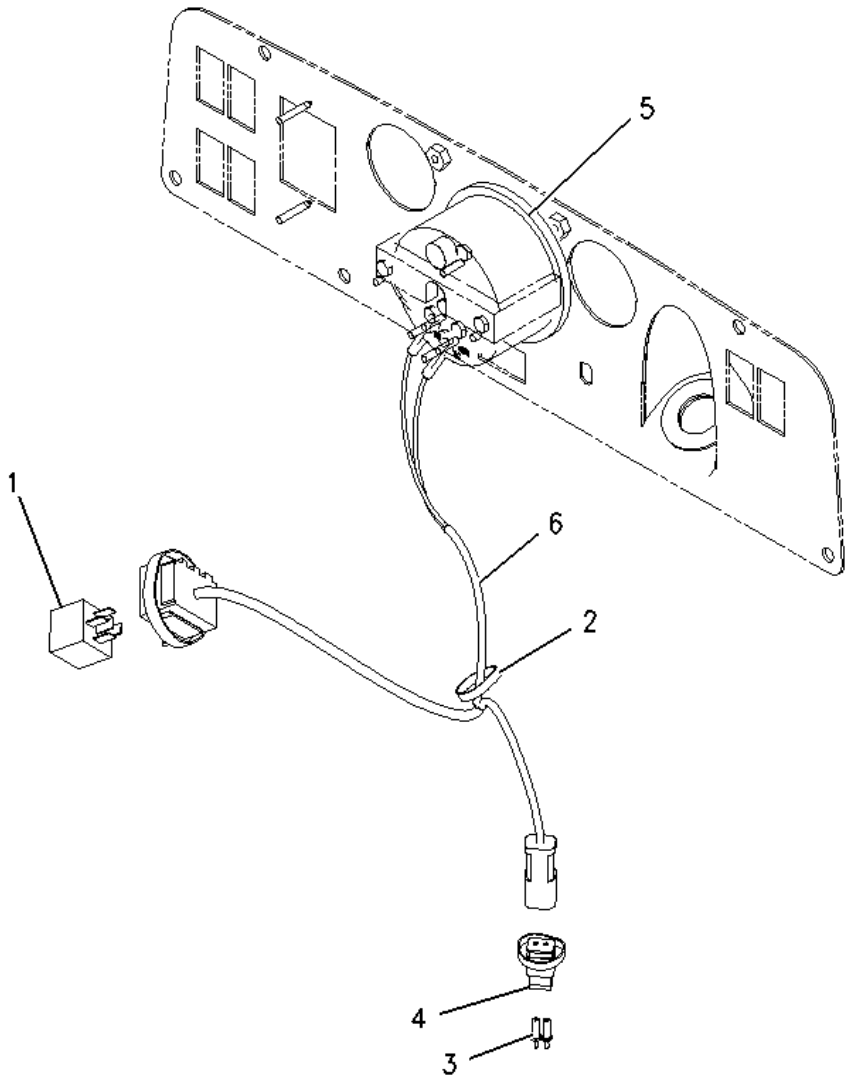

1 NPR 3E-9362 1 RELAY AS (12-VOLT)

2 NPR 3S-2093 3 STRAP-CABLE

3 NPR 8T-8730 2 SOCKET-CONNECTOR

4 NPR 155-2270 1 KIT-CONNECTING PLUG (2-PIN)

(INCLUDES WEDGE AND PLUG)

5 NPR 172-3576 1 TACHOMETER GP

NPR 4B-2043 6 NUT (8-32-THD)

NPR 9B-7233 6 LOCKWASHER

NPR 122-7137 1 LAMP (12-VOLT)

6 NPR 179-5771 1 HARNESS AS-HEATER & AIR COND

NPR 102-8802 1 KIT-RECEPTACLE (2-PIN)

(INCLUDES WEDGE AND RECEPTACLE)

115-1716 LAMP GP-SIGNAL --S/N 4ZN16044-50156
PART OF 104-3908, 122-9359 LIGHTING GP-FLOOD & SIGNAL

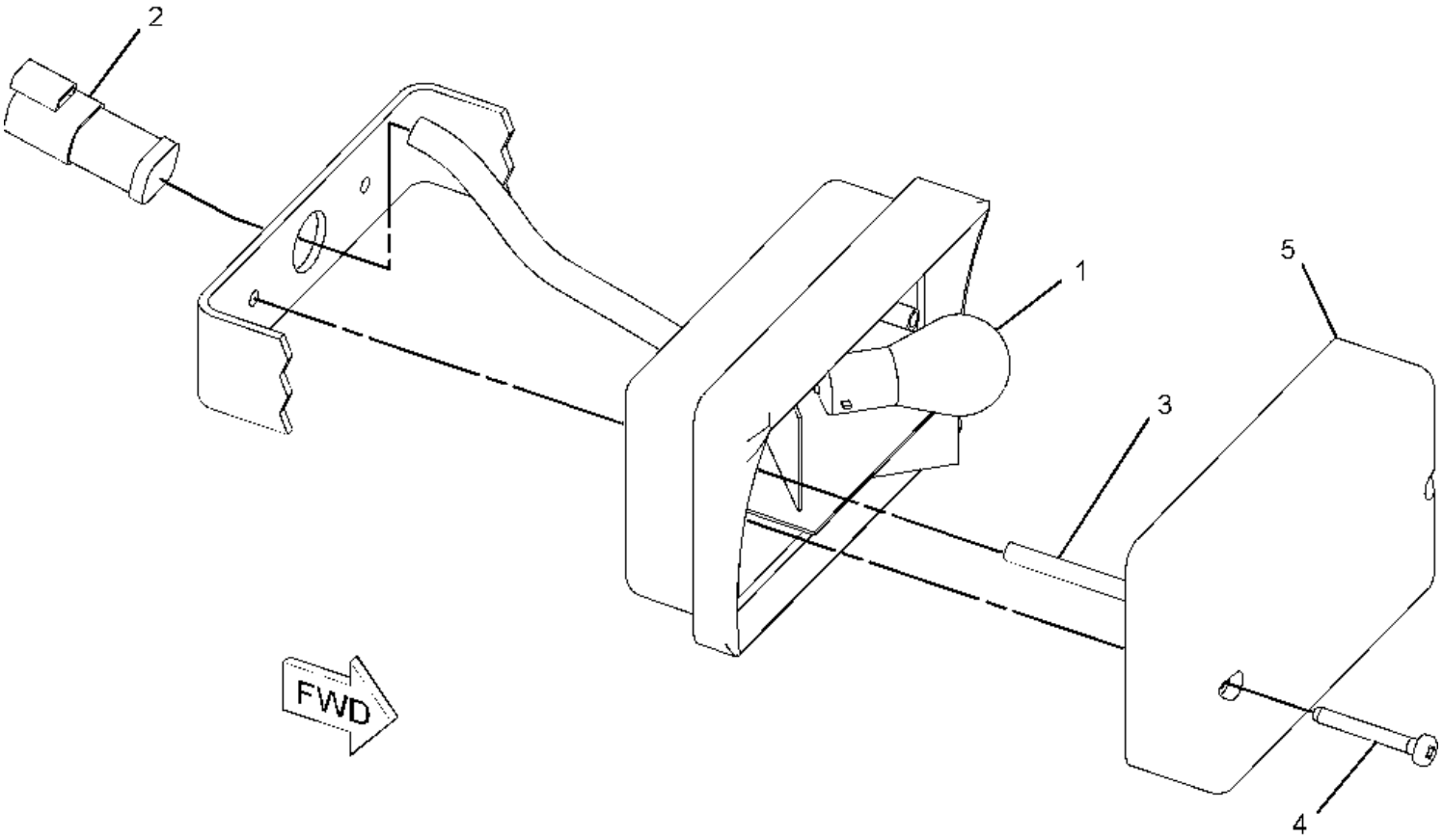

1	NPR	9W-3326	1	LAMP (12-VOLT, 21-WATT)
2	NPR	102-8802	1	KIT-RECEPTACLE (2-PIN)
		(KIT INCLUDES RECEPTACLE AS. & WEDGE)		
3	NPR M	173-2685	2	SCREW-FLAT HEAD (M5X0.8X50-MM)
4	NPR	173-8340	2	SCREW-PAN HEAD (8-16X1.25-IN)
5	NPR	174-8957	1	LENS (AMBER)

Key: M - METRIC PART

115-1715 LAMP GP-STOP & TAIL ---S/N 4ZN16044-50156
PART OF 104-3908, 122-9359 LIGHTING GP-FLOOD & SIGNAL

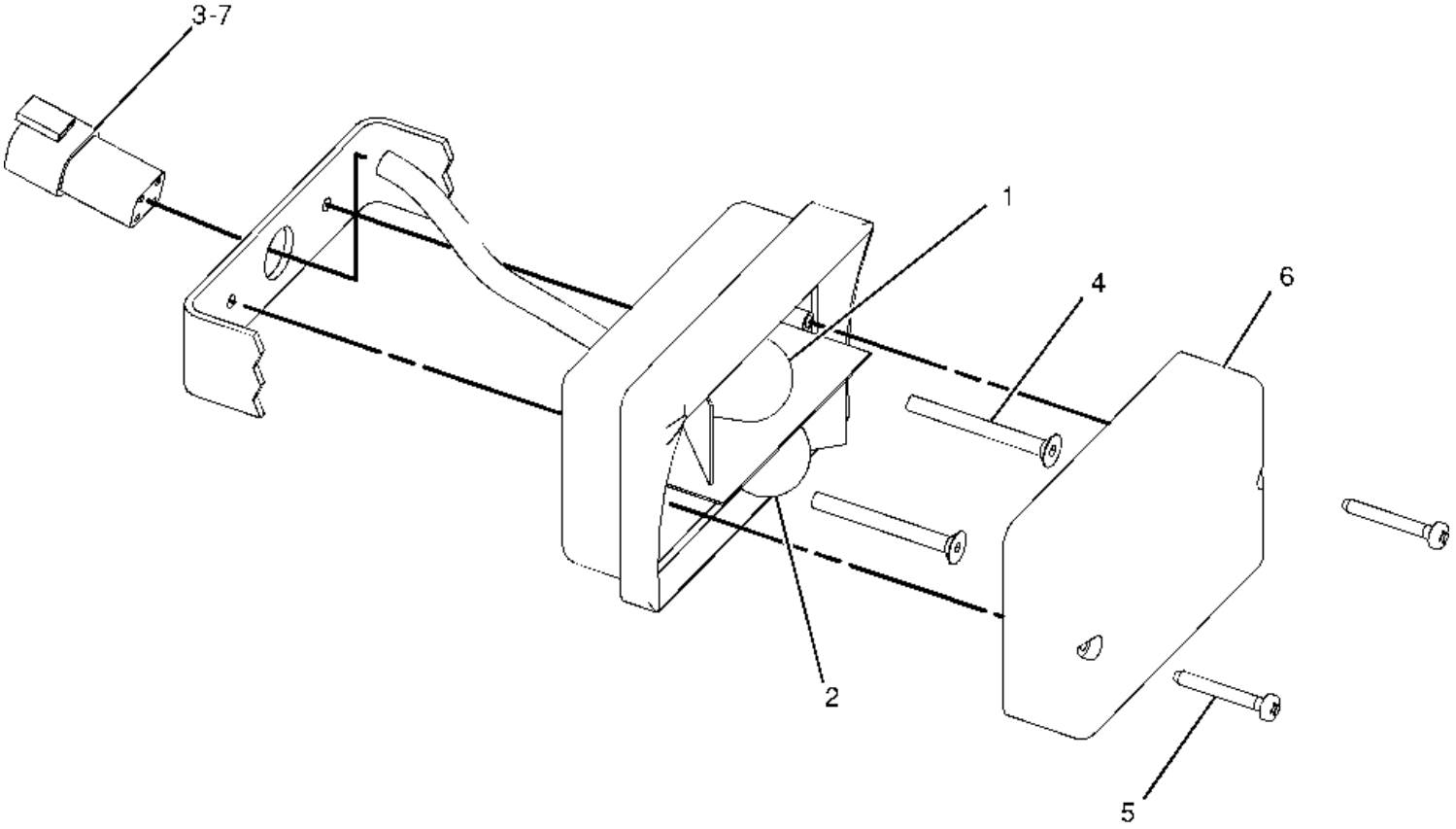

1	**NPR**	**3C-6516**	**1**	**LAMP (12-VOLT, 21/5-WATT)**
2	**NPR**	**9W-3326**	**1**	**LAMP (12-VOLT, 21-WATT)**
3	**NPR**	**102-8804**	**1**	**KIT-RECEPTACLE (4-PIN)**
	(INCLUDES RECEPTACLE AS & WEDGE)			
4	**NPR M**	**173-2685**	**2**	**SCREW-FLAT HEAD (M5X0.8X50-MM)**
5	**NPR**	**173-8340**	**2**	**SCREW-PAN HEAD (8-16X1.25-IN)**
6	**NPR**	**174-8958**	**1**	**LENS (RED, AMBER)**
7	**NPR**	**186-3735**	**4**	**PIN-CONNECTOR (16-GA TO 18-GA)**

Key: M - METRIC PART

180-3663 LAMP GP-WARNING BEACON -FIXED MOUNT
S/N 4ZN21216-50156--PART OF 141-8292 LIGHTING GP-WARNING BEACON

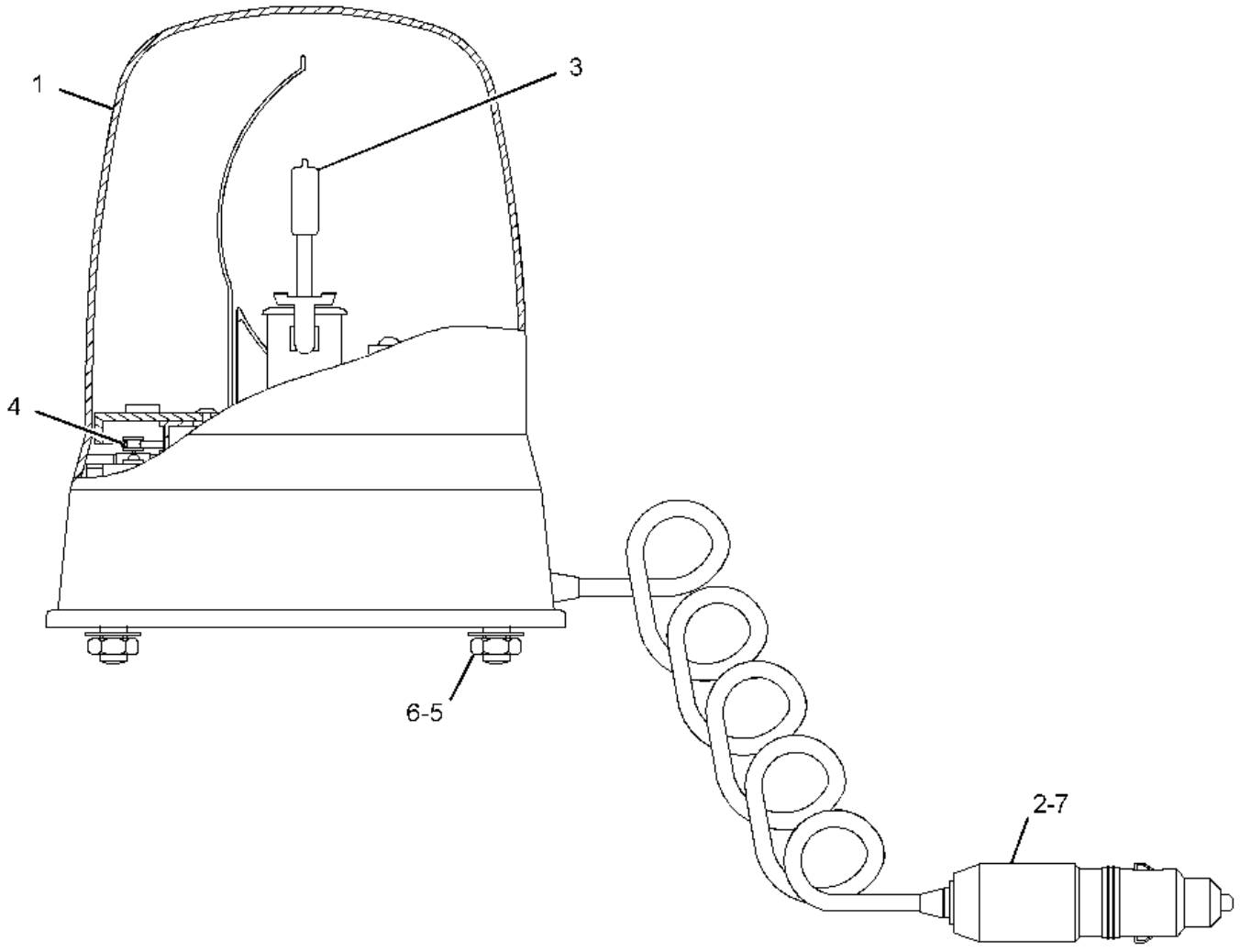

1 NPR 272-9800 1 LENS (AMBER, WARNING BEACON)

2 NPR 179-5434 1 PLUG AS

NPR 3K-8782 1 FUSE (10-AMPERE)

3 NPR 9X-8118 1 LAMP (12-VOLT, 55-WATT, HID)

4 NPR 9X-8139 1 BELT-DRIVE

5 NPR M 5C-2890 3 NUT (M6X1-THD)

6 NPR 8T-4205 3 WASHER-HARD (7.2X14.5X2-MM THK)

7 NPR 3K-8782 1 FUSE (10-AMPERE)

Key: M - METRIC PART

180-3664 LAMP GP-WARNING BEACON -MAGNETIC MOUNT
S/N 4ZN21216-50156--PART OF 104-9502 LIGHTING GP-WARNING BEACON

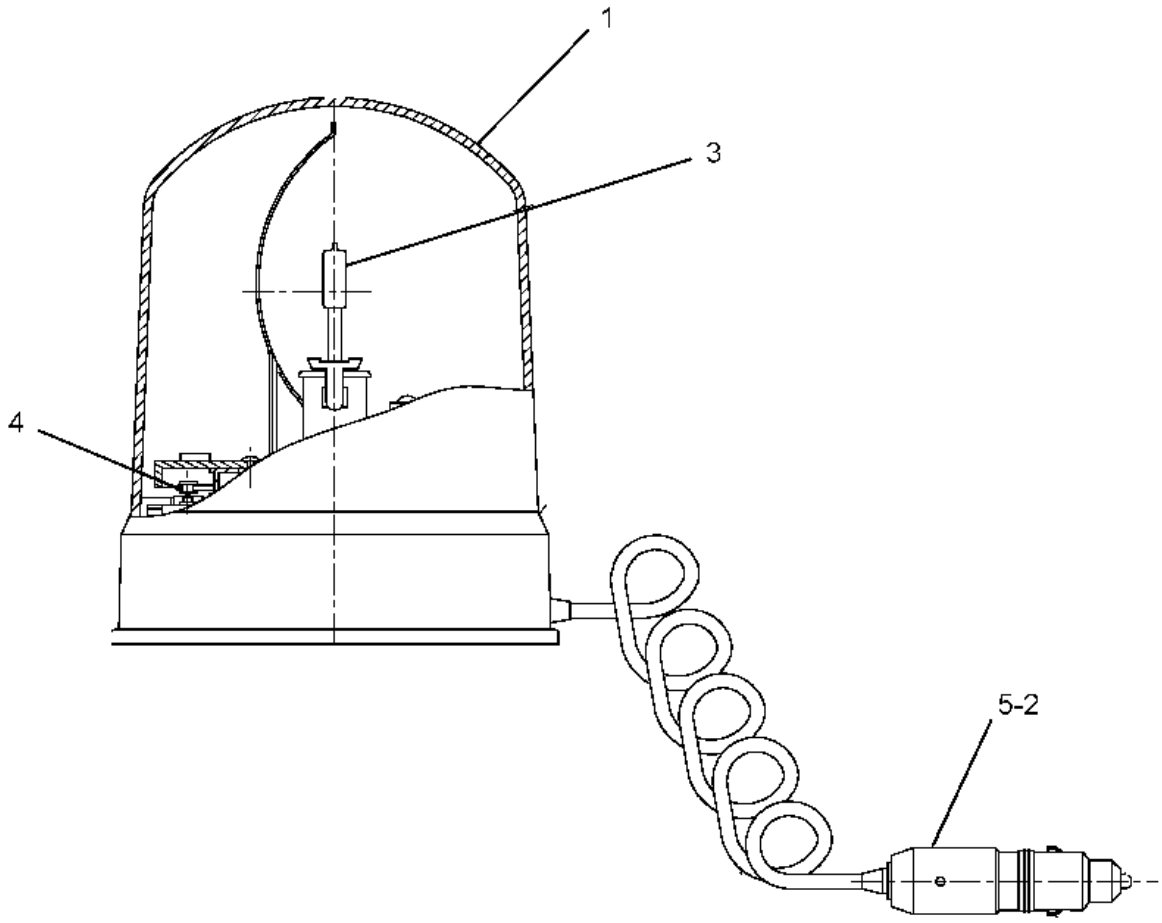

1	**NPR**	**272-9800**	**1**	**LENS (AMBER, WARNING BEACON)**
2	**NPR**	**179-5434**	**1**	**PLUG AS**
	NPR	**3K-8782**	**1**	**FUSE (10-AMPERE)**
3	**NPR**	**9X-8118**	**1**	**LAMP (12-VOLT, 55-WATT, HID)**
4	**NPR**	**9X-8139**	**1**	**BELT-DRIVE**
5	**NPR**	**3K-8782**	**1**	**FUSE (10-AMPERE)**

104-3908 LIGHTING GP-FLOOD & SIGNAL --S/N 4ZN16044-50156

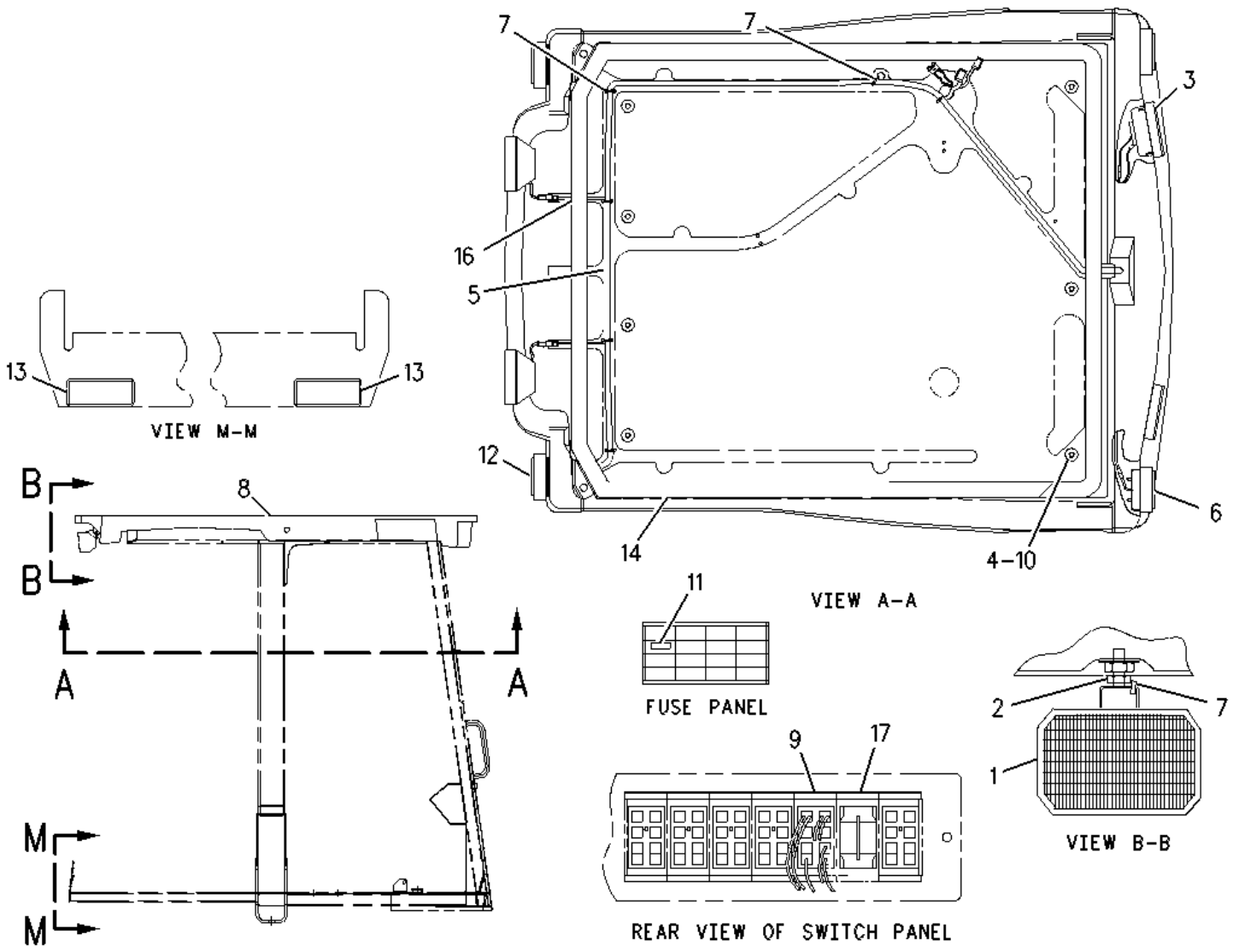

1 NPR 154-7986 2 LAMP GP-FLOOD

(EACH INCLUDES)

NPR 9W-0607 1 LAMP (12-VOLT, 55-WATT)

2 NPR M 8T-4133 2 NUT (M10X1.5-THD)

3 NPR 105-8069 2 LAMP GP-FLOOD

(EACH INCLUDES)

NPR 9W-0607 1 LAMP (12-VOLT, 55-WATT)

NPR 142-5789 4 SCREW

4 NPR M 8T-5093 7 BOLT-LOCKING (M8X1.25X25-MM)

5 NPR 9R-9899 1 HARNESS AS

NPR 155-2270 4 KIT-CONNECTING PLUG (2-PIN)

NPR 155-2271 3 KIT-CONNECTING PLUG (4-PIN)

(EACH PLUG KIT INCLUDES PLUG AS, WEDGE & INTERFACE SEAL)

6 NPR Y 115-1716 2 LAMP GP-SIGNAL (FRONT, CAB)

7 NPR 3S-2093 11 STRAP-CABLE

8 NPR 104-3912 1 ROOF

9 NPR 109-2349 1 SWITCH AS-ROCKER (REAR FLOOD LAMP)

NPR 111-7899 1 GASKET

10 NPR 156-0283 7 WASHER-HARD (8.4X35X2.5-MM THK)

11 NPR 113-8490 1 FUSE (10-AMPERE)

12 NPR Y 115-1715 2 LAMP GP-STOP & TAIL

13 NPR 9R-1499 2 REFLECTOR

14 NPR BD 141-0924 SEAL (6-M)

16 NPR 155-6457 2 MOUNT

17 NPR 109-2356 1 PLUG

Key: B - USE AS REQUIRED D - ORDER BY THE METER M - METRIC PART Y - SEPARATE ILLUSTRATION

122-9359 LIGHTING GP-FLOOD & SIGNAL --S/N 4ZN16044-50156

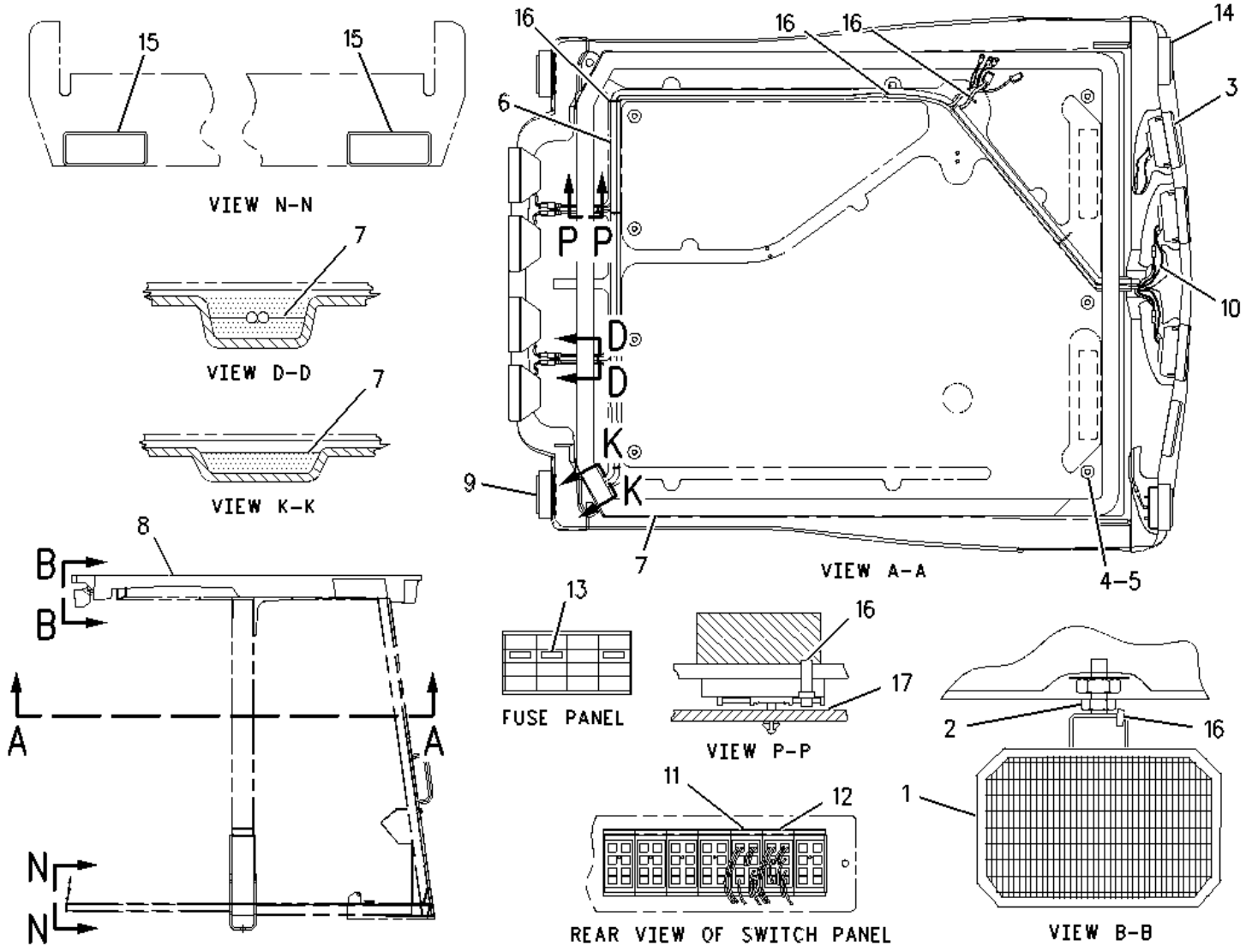

1 NPR 154-7986 4 LAMP GP-FLOOD

(EACH INCLUDES)

NPR 9W-0607 1 LAMP (12-VOLT, 55-WATT)

2 NPR M 8T-4133 4 NUT (M10X1.5-THD)

3 NPR 105-8069 4 LAMP GP-FLOOD

(EACH INCLUDES)

NPR 9W-0607 1 LAMP (12-VOLT, 55-WATT)

NPR 142-5789 4 SCREW

4 NPR M 8T-5093 7 BOLT-LOCKING (M8X1.25X25-MM)

5 NPR 156-0283 7 WASHER-HARD (8.4X35X2.5-MM THK)

6 NPR 9R-9899 1 HARNESS AS (ROADING/LIGHTS/CANOPY)

NPR 155-2270 4 KIT-CONNECTING PLUG (2-PIN)

NPR 155-2271 3 KIT-CONNECTING PLUG (4-PIN)

NPR 155-2274 1 KIT-CONNECTING PLUG (6-PIN)

(EACH PLUG KIT INCLUDES PLUG AS, WEDGE & INTERFACE SEAL)

7 NPR D 141-0924 SEAL (6 METERS)

8 NPR 122-9356 1 ROOF

9 NPR Y 115-1715 2 LAMP GP-STOP & TAIL

NPR 102-8804 1 KIT-RECEPTACLE (4-PIN)

(INCLUDES RECEPTACLE AS & WEDGE)

NPR 174-8958 1 LENS (RED, AMBER)

10 NPR 104-9509 1 HARNESS AS (ROADING/LIGHTS/CANOPY)

NPR 155-2270 2 KIT-CONNECTING PLUG (2-PIN)

(EACH INCLUDES PLUG AS, WEDGE & INTERFACE SEAL)

11 NPR 109-2357 1 SWITCH AS (AUX REAR FLOOD LAMPS)

NPR 111-7899 1 GASKET

12 NPR 109-2347 1 SWITCH AS-ROCKER (AUX FRONT FLOOD LAMPS)

NPR 111-7899 1 GASKET

13 NPR 113-8490 3 FUSE (10-AMPERE)

14 NPR Y 115-1716 2 LAMP GP-SIGNAL (FRONT, CAB)

(EACH INCLUDES)

NPR 9W-3326 1 LAMP (12-VOLT, 21-WATT)

NPR 102-8802 1 KIT-RECEPTACLE (2-PIN)

(INCLUDES RECEPTACLE AS & WEDGE)

NPR M 173-2685 2 SCREW-FLAT HEAD (M5X0.8X50-MM)

NPR 173-8340 2 SCREW-PAN HEAD (8-16X1.25-IN)

NPR 174-8957 1 LENS (AMBER)

15 NPR 9R-1499 2 REFLECTOR

16 NPR 3S-2093 14 STRAP-CABLE

17 NPR 155-6457 2 MOUNT

Key: D - ORDER BY THE METER M - METRIC PART Y - SEPARATE ILLUSTRATION

104-9502 LIGHTING GP-WARNING BEACON --S/N 4ZN21216-50156
MAGNETIC MOUNT

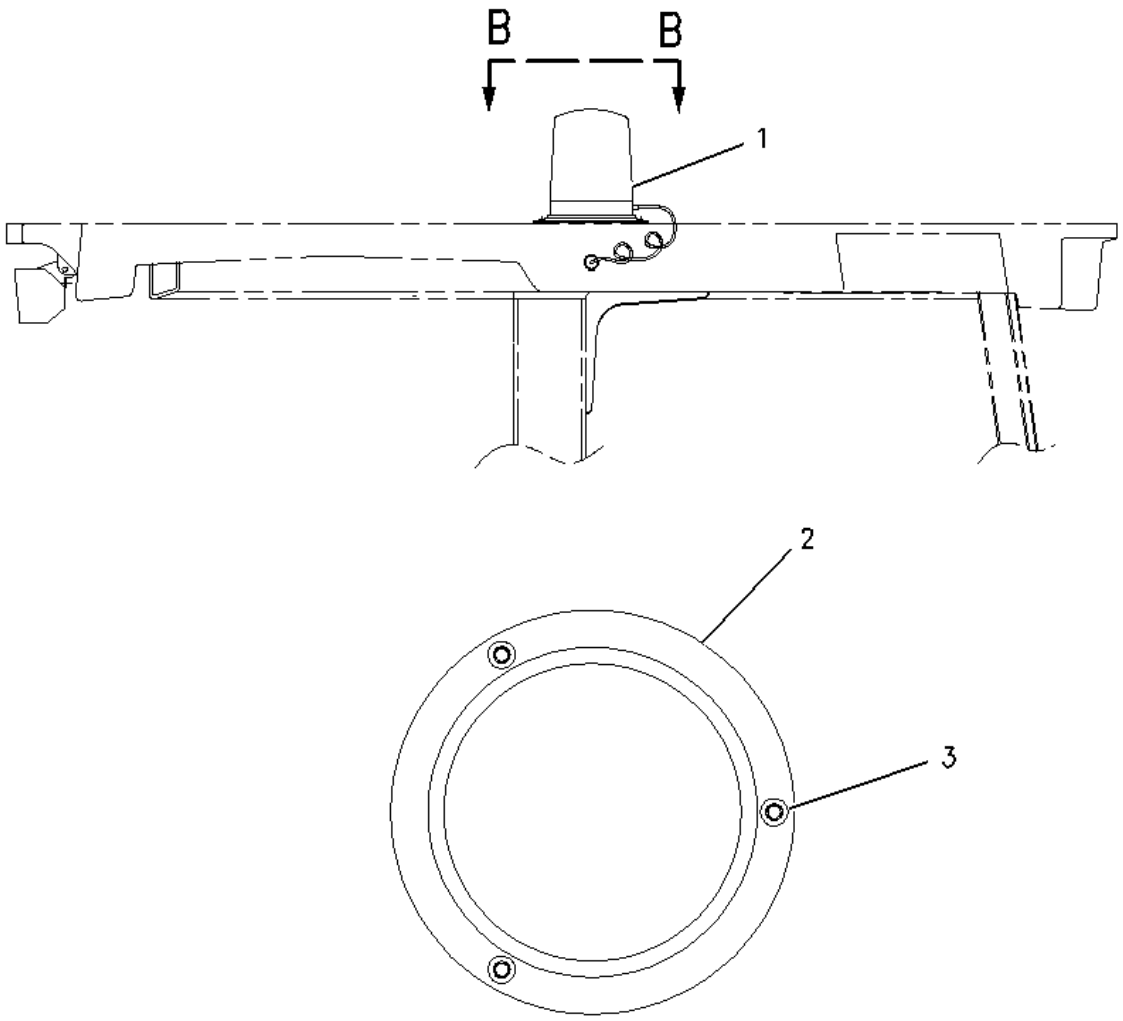

VIEW B-B

1 NPR CY 180-3664 1 LAMP GP-WARNING BEACON (12-VOLT, AMBER)

2 NPR 104-9504 1 PLATE

3 NPR M 135-7242 3 SCREW-PAN HEAD (M5X2.3X18.8-MM)

Key:

C - CHANGE FROM PREVIOUS TYPE
M - METRIC PART
Y - SEPARATE ILLUSTRATION

141-8292 LIGHTING GP-WARNING BEACON -FIXED MOUNT
S/N 4ZN21216-50156

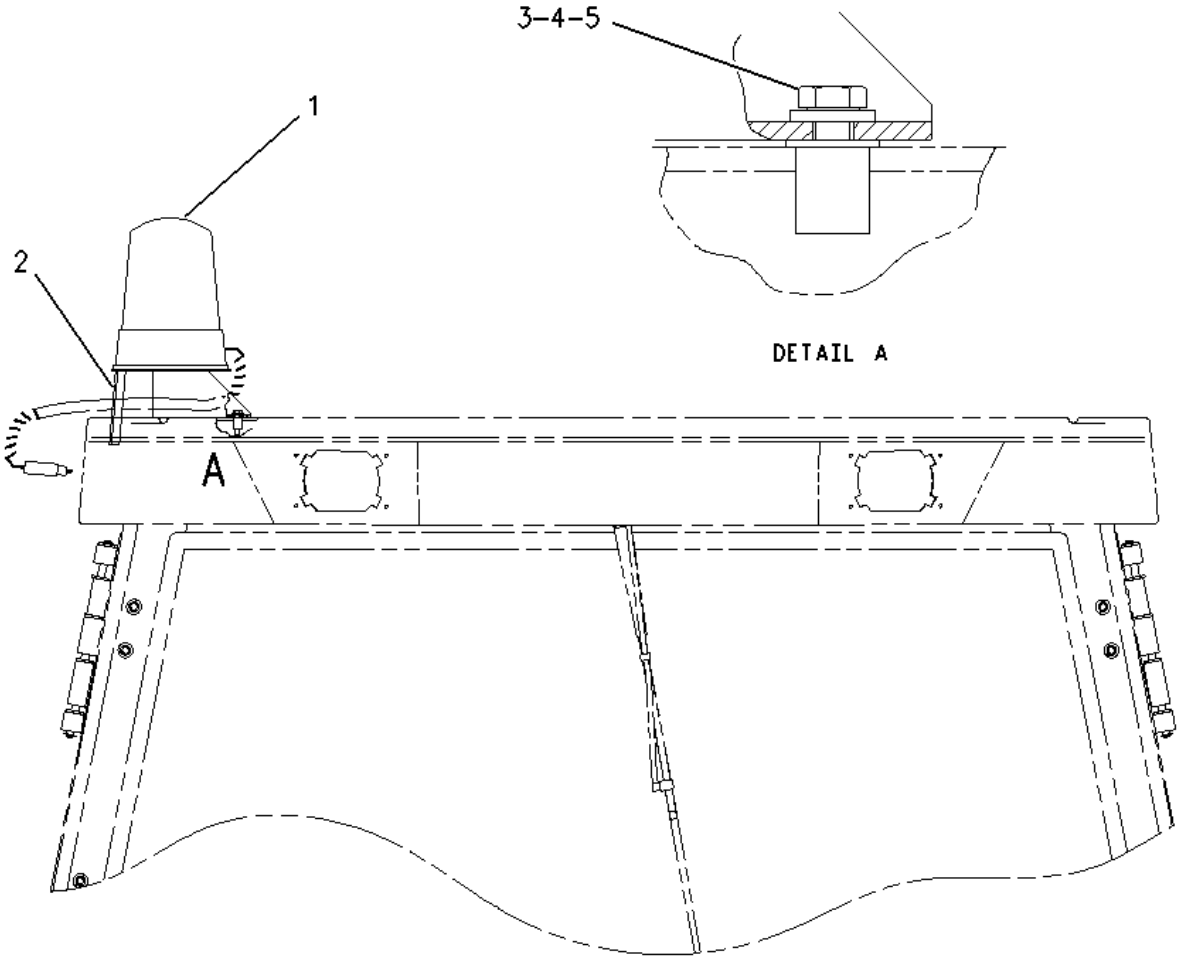

FRONT VIEW

1 NPR CY 180-3663 1 LAMP GP-WARNING BEACON (FIXED)

2 NPR 114-4916 1 BRACKET AS

3 NPR 146-0218 3 NUT (M6X1-THD)

4 NPR M 132-0111 3 SCREW (M6X1X35-MM)

5 NPR 8T-4205 3 WASHER-HARD (7.2X14.5X2-MM THK)

Key: C - CHANGE FROM PREVIOUS TYPE M - METRIC PART
Y - SEPARATE ILLUSTRATION

162-7270 KIT-ACCESSORY RELAY --S/N 4ZN16044-50156
FIELD INSTALLATION

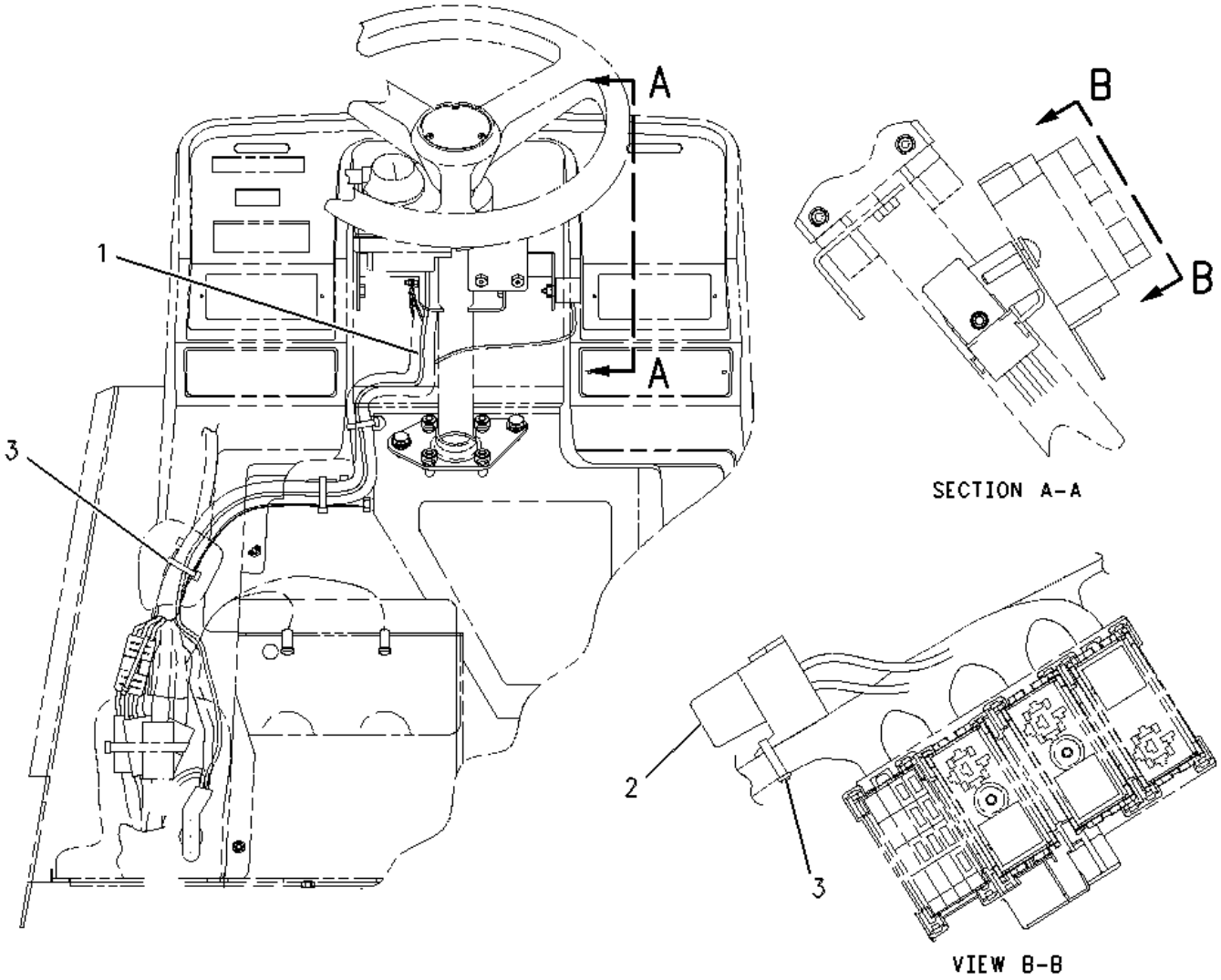

1 161-6370 1 HARNESS AS-WIRING (ACCESSORY RELAY)

2 NPR 3E-9362 1 RELAY AS (12-VOLT)

3 NPR 3S-2093 16 STRAP-CABLE

189-5746 SENSOR GP-SPEED -LOW OUTPUT --S/N 4ZN16044-50156
PART OF 147-0200, 147-0204, 192-0849 TRANSMISSION GP-POWER SHIFT

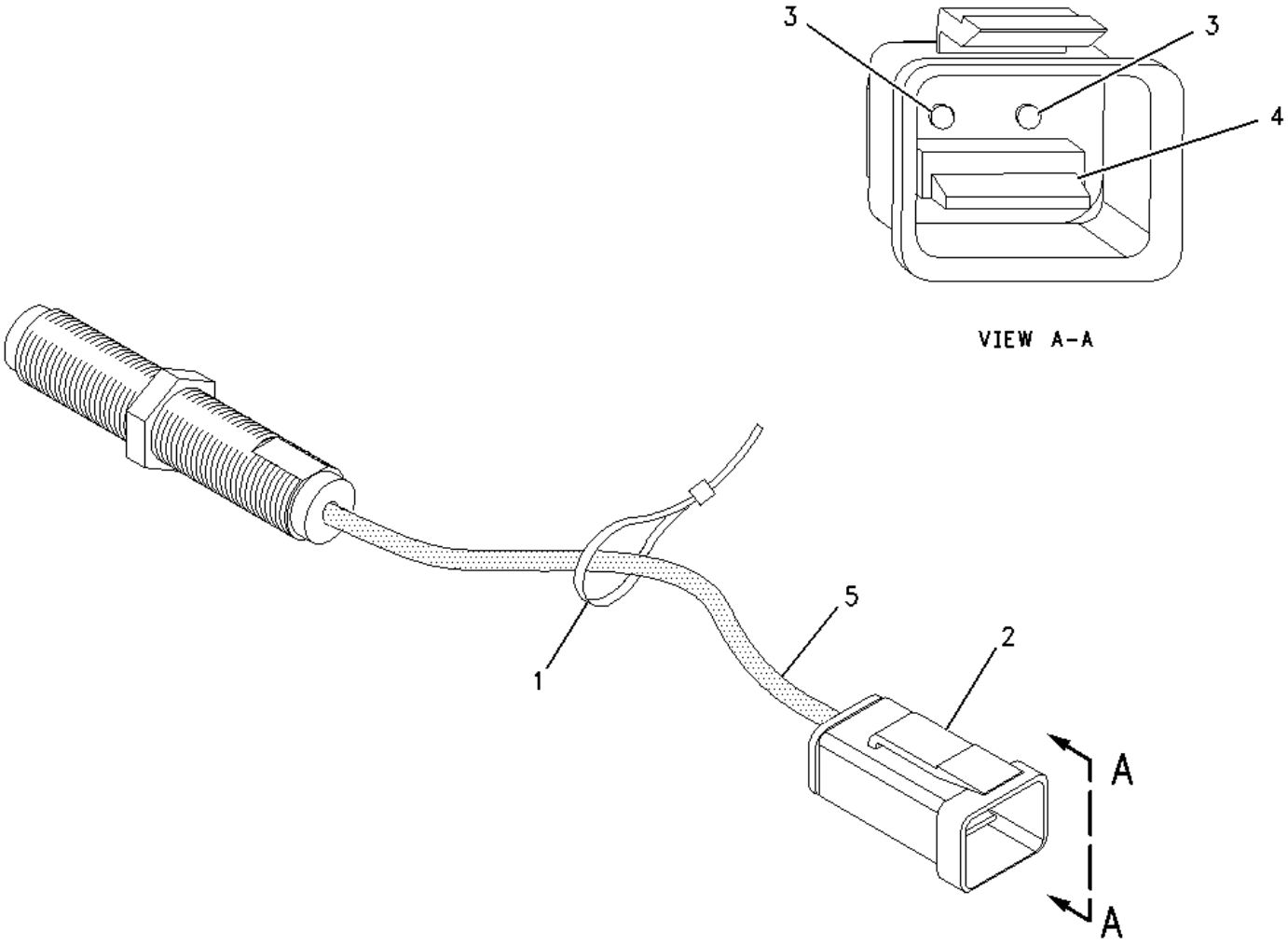

1 NPR 171-5349 1 STRAP-MARKER

2 NPR 102-8802 1 KIT-RECEPTACLE (2-PIN)

(NCLUDES RECEPTACLE AS AND WEDGE)

3 NPR 186-3735 2 PIN-CONNECTOR (16-GA TO 18-GA)

4 NPR 3E-3365 1 WEDGE-RECEPTACLE LOCK (2-PIN)

5 NPR E 9X-1386 SLEEVE (14-CM)

Key: E - ORDER BY THE CENTIMETER

6I-0779 STARTING AID GP --S/N 5HK81000-99999; 9RM1-UP
PART OF 106-5001 ENGINE AR-PRIMARY

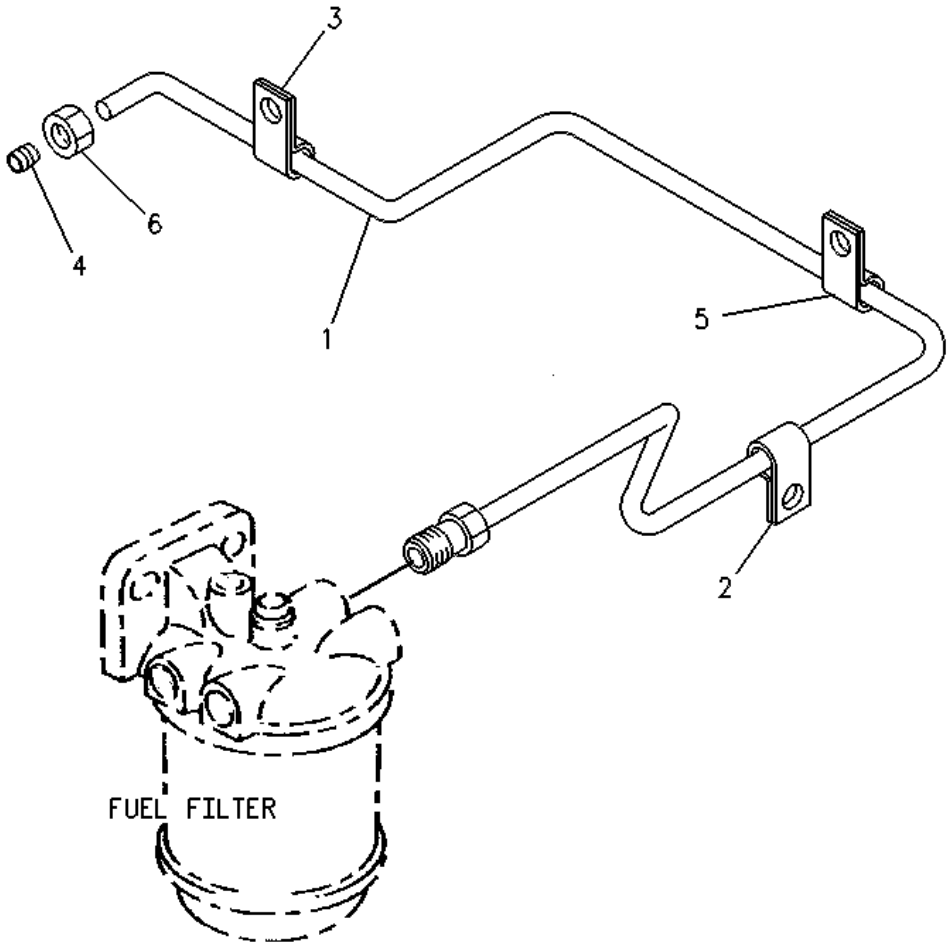

1	**NPR**	**6I-0780**	**1**	**LINE AS**
2	**NPR**	**7W-4539**	**1**	**CLIP**
3	**NPR**	**105-3154**	**1**	**CLIP**
4	**NPR**	**067-6999**	**1**	**OLIVE**
5	**NPR**	**101-3986**	**1**	**CLIP**
6	**NPR**	**067-6998**	**1**	**NUT (3/8-24-THD)**

130-4650 STARTING AID GP –HEATER---S/N 5HK81000-99999; 9RM1-UP
PART OF 106-5001, 106-5002 ENGINE AR-PRIMARY

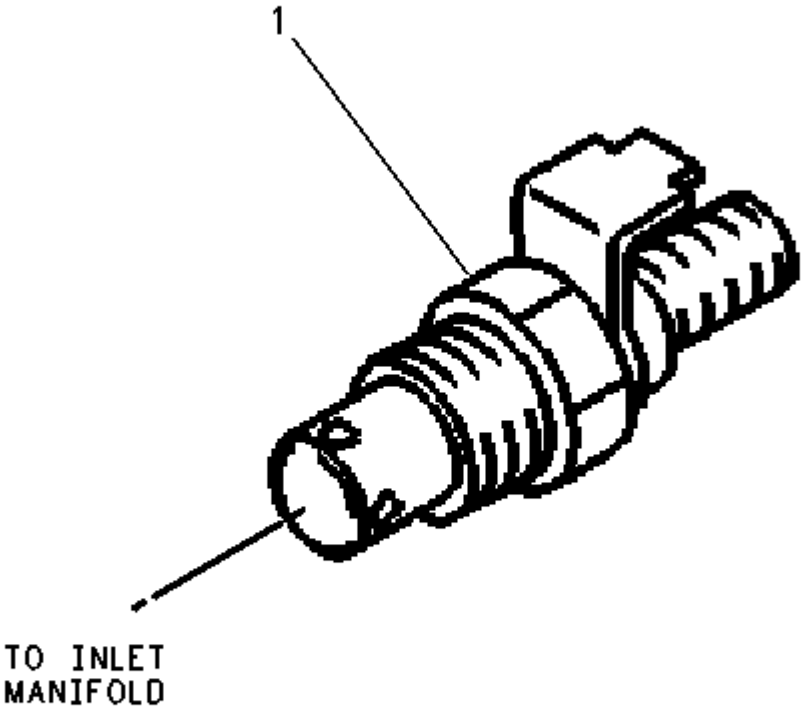

1 NPR 035-8059 1 HEATER (AIR INLET)

130-4815 STARTING AID GP ---S/N 9RM1-UP
PART OF 106-5002 ENGINE AR-PRIMARY

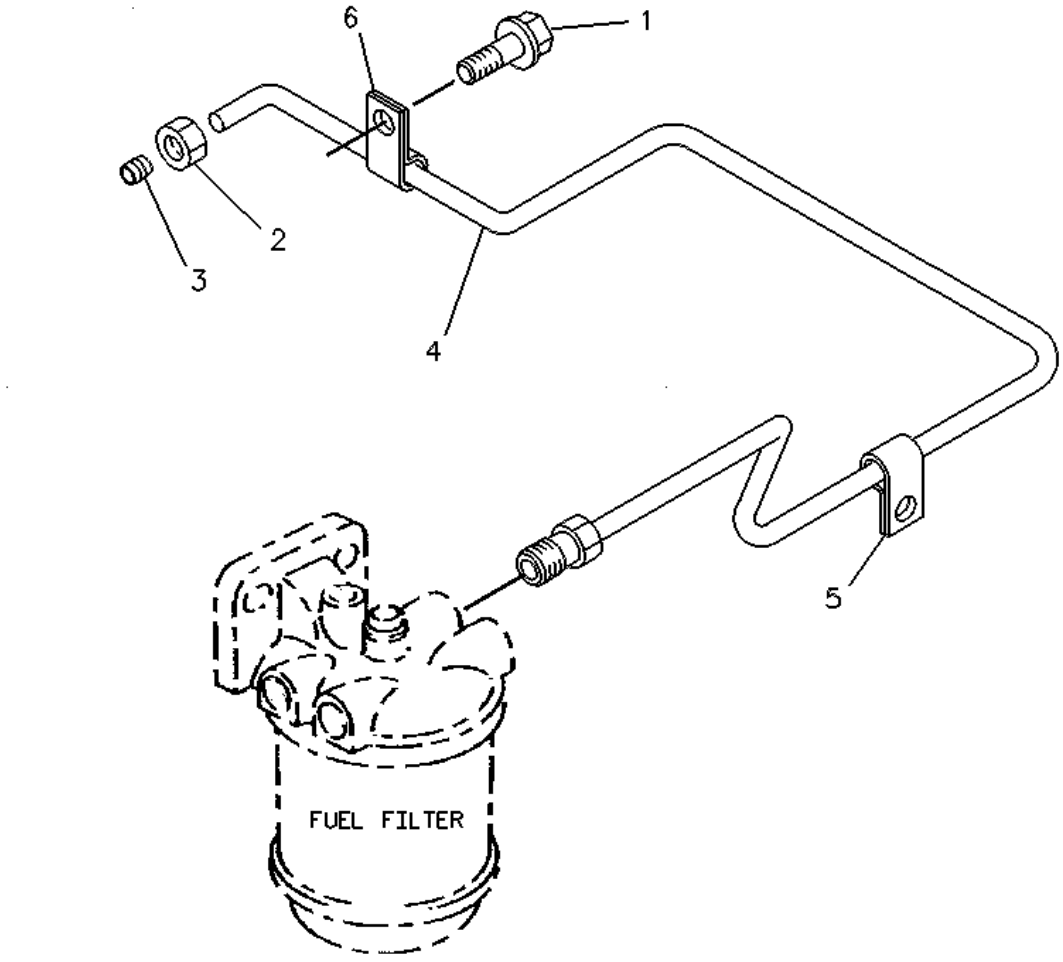

1	**NPR**	**6I-4200**	**1**	**BOLT (M10X1.5X16-MM)**
2	**NPR**	**067-6998**	**1**	**NUT (3/8-24-THD)**
3	**NPR**	**067-6999**	**1**	**OLIVE**
4	**NPR I**	**6I-1150**	**1**	**LINE AS**
5	**NPR**	**7W-4539**	**1**	**CLIP**
6	**NPR**	**105-3154**	**1**	**CLIP**

Key: I - REFER TO HYDRAULIC INFORMATION SYSTEM

148-9687 STARTING AID GP -LINES --S/N 7BJ1-UP; 5HK81000-99999
PART OF 122-8803, 122-8804 ENGINE AR-PRIMARY

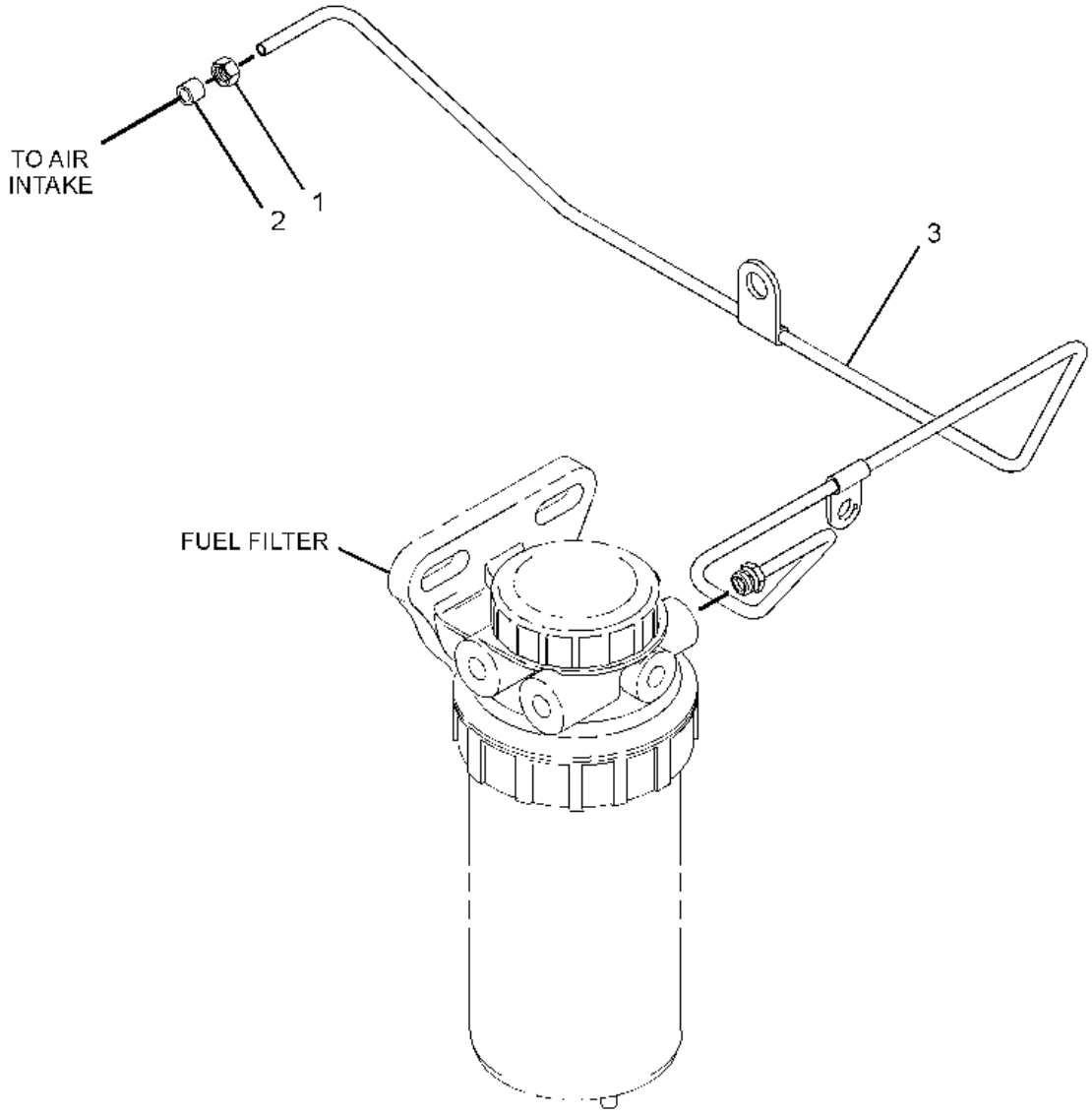

1	**NPR**	**067-6998**	**1**	**NUT (3/8-24-THD)**
2	**NPR**	**067-6999**	**1**	**OLIVE**
3	**NPR**	**169-6761**	**1**	**TUBE AS**

221-7683 STARTING AID GP -HEATER
S/N 7BJ1-UP; 5HK81000-99999
PART OF 122-8803, 122-8804 ENGINE AR-PRIMARY

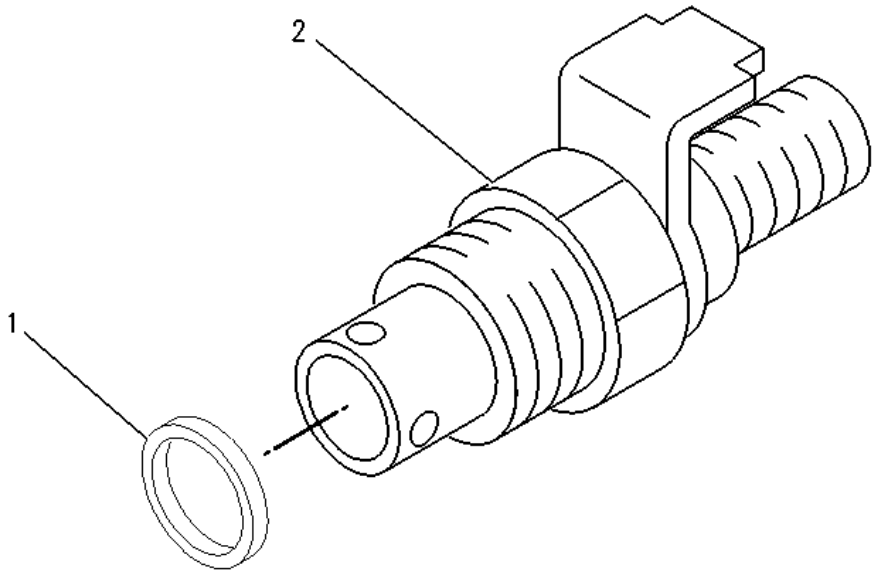

1	**NPR**	**127-2956**	**1**	**WASHER**
2	**NPR**	**186-4272**	**1**	**HEATER (AIR INLET)**

243-2999 STARTING AID GP -LINES --S/N 7BJ74538-UP
PART OF 122-8803, 122-8804 ENGINE AR-PRIMARY

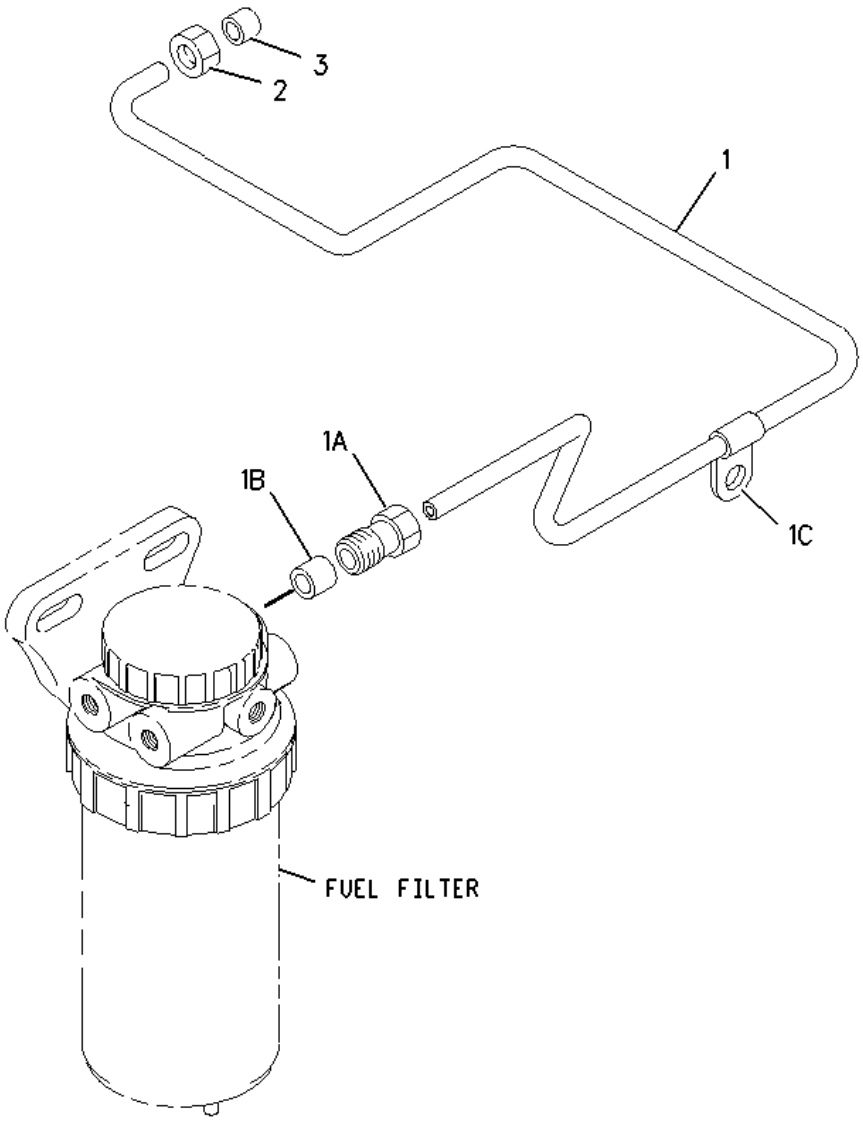

1		**144-8971**	**1**	**TUBE AS**
2	**NPR**	**067-6998**	**1**	**NUT (3/8-24-THD)**
3	**NPR**	**067-6999**	**1**	**OLIVE**

130-4654 MOUNTING GP-STARTING MOTOR
S/N 7BJ1-UP; 5HK81000-99999; 9RM1-UP
PART OF 106-5001, 106-5002, 122-8803, 122-8804 ENGINE AR-PRIMARY

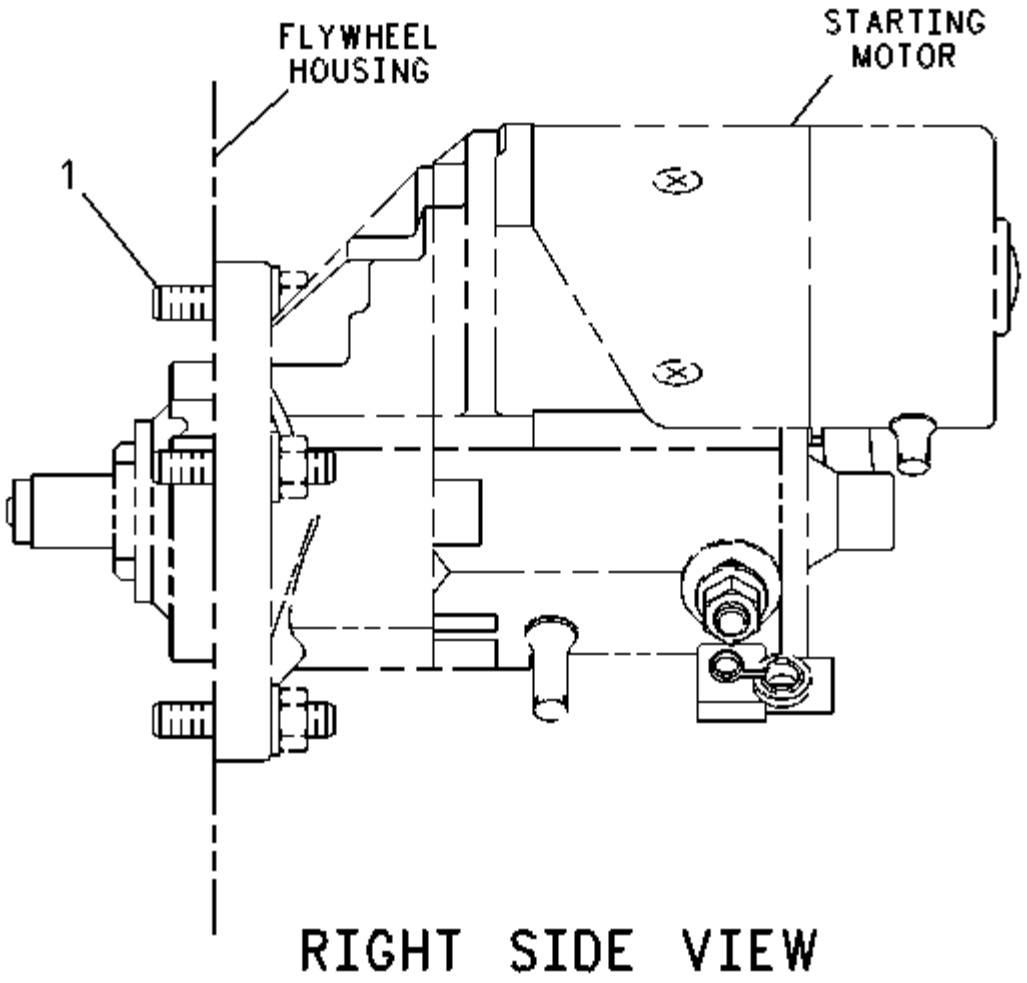

1 NPR 6I-0364 3 STUD (M10X1.5X30-MM)

112-1767 STARTING MOTOR GP-ELECTRIC
S/N 4ZN16044-50156
PART OF 143-1311, 154-5384 INSTALLATION AR-ENGINE

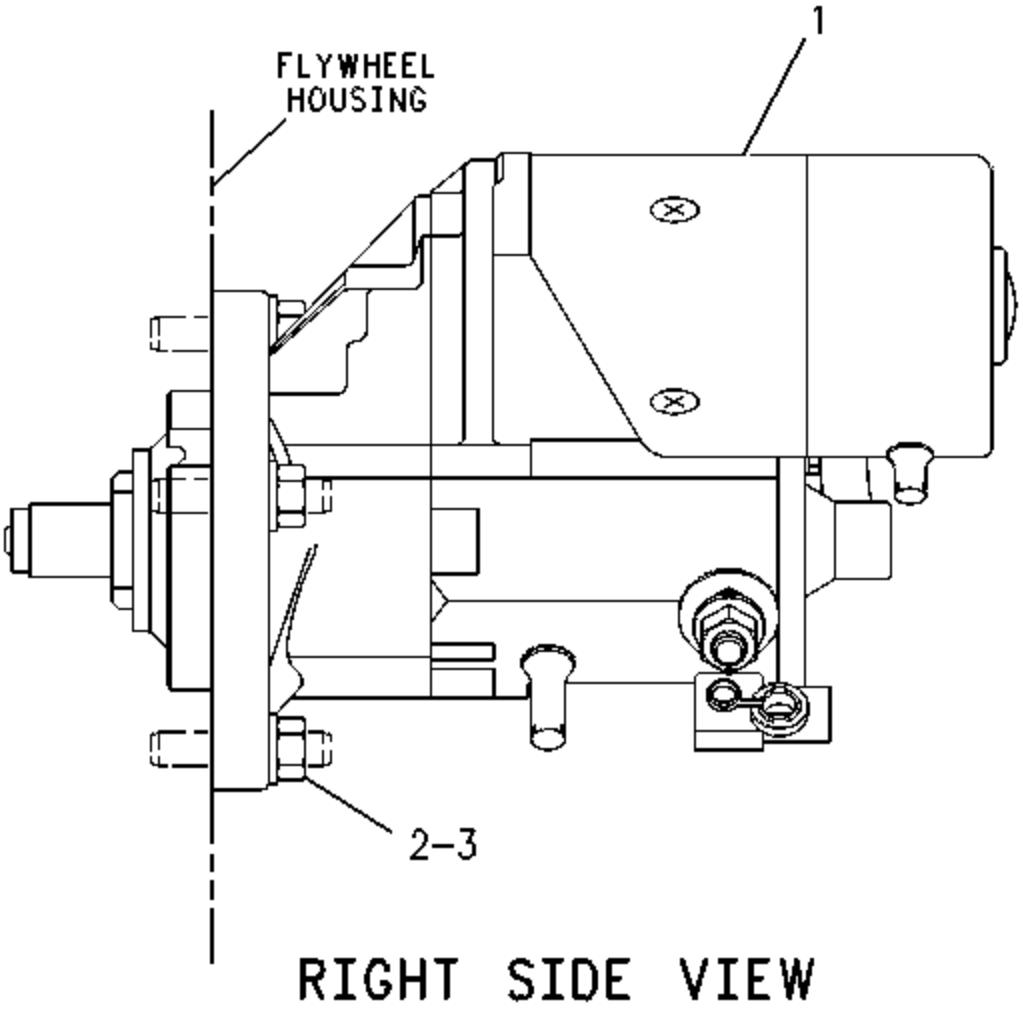

1 NPR RCY 143-0539 1 STARTING MOTOR GP-ELECTRIC

R NPR 0R-4316 1 MOTOR GP-ELEC

2 NPR 8T-4121 3 WASHER-HARD (11X21X2.5-MM THK)

3 NPR M 8T-4133 3 NUT (M10X1.5-THD)

Key: C - CHANGE FROM PREVIOUS TYPE M - METRIC PART
R - REMFG PART MAY BE AVAILABLE Y - SEPARATE ILLUSTRATION

143-0539 STARTING MOTOR GP-ELECTRIC -12-VOLT
S/N 4ZN16044-50156
PART OF 112-1767 STARTING MOTOR GP-ELECTRIC

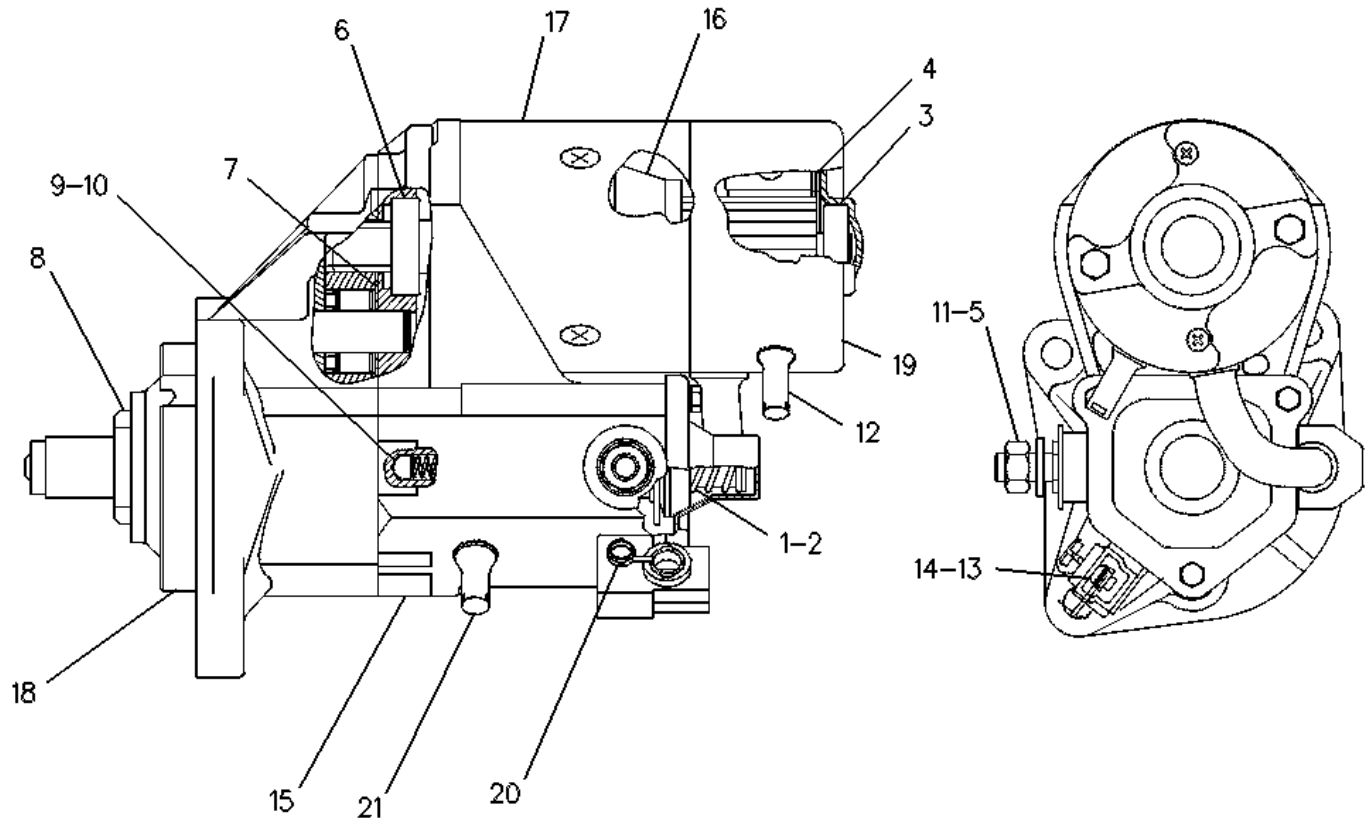

1	**NPR**	**8C-9778**	**1**	**PLUNGER AS**
2	**NPR**	**8C-9783**	**1**	**GASKET**
3	**NPR**	**2P-8104**	**1**	**BEARING**
4	**NPR**	**7T-6092**	**1**	**HOLDER AS-BRUSH**
5	**NPR M**	**8T-4133**	**2**	**NUT (M10X1.5-THD)**
6	**NPR**	**7T-6088**	**1**	**BEARING AS**
7	**NPR**	**7T-6087**	**1**	**WASHER**
8	**NPR**	**7T-6093**	**1**	**CLUTCH AS**
9	**NPR**	**8J-4455**	**1**	**BALL**

10 NPR 7T-6090 1 SPRING

11 NPR 8T-4121 2 WASHER-HARD (11X21X2.5-MM THK)

12 NPR 3E-5153 1 COVER-STARTING MOTOR

13 NPR M 9X-2036 1 SCREW-PAN HEAD

14 NPR 8F-1434 1 LOCKWASHER

15 NPR 100-4113 1 SWITCH AS (STARTING MOTOR)(12-VOLT)

16 NPR 100-4119 1 ARMATURE AS

17 NPR 100-4118 1 CASE AS-STARTING MOTOR

18 NPR 100-4115 1 HOUSING-STARTING MOTOR

19 NPR 143-1344 1 FRAME-STARTER

20 NPR 100-3685 1 CAP

21 NPR 3E-5154 1 BUSHING-STARTING MOTOR

AVAILABLE REPAIR KIT(S):

NPR 7T-6099 1 KIT-GEAR (STARTING MOTOR)

(INCLUDES RETAINER, PINION & ROLLERS)

NPR 146-6729 1 KIT-HARDWARE (STARTING MOTOR)

(INCLUDES BOLTS, SCREWS, SCREW ASSEMBLIES & PLATE)

NPR 100-4112 1 KIT-CONTACT (STARTING MOTOR)

(INCLUDES NUT, WASHERS, SEAL, BUSHINGS, PLATE & BOLT)

Key:

M - METRIC PART

130-4653 SWITCH GP-PRESSURE -ENGINE OIL
S/N 7BJ1-UP; 5HK81000-99999; 9RM1-UP
PART OF 106-5001, 106-5002, 122-8803, 122-8804 ENGINE AR-PRIMARY

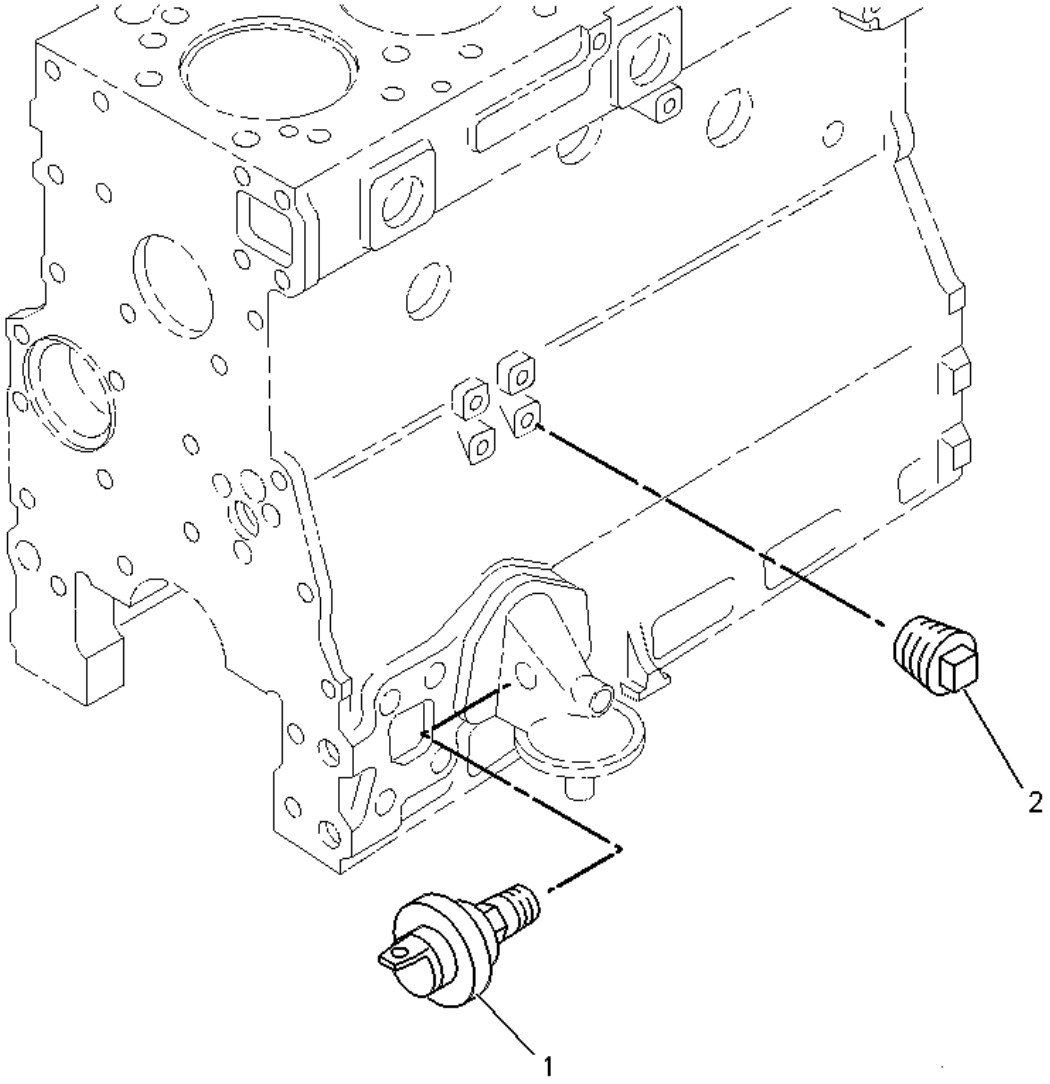

1	**NPR**	**253-7910**	**1**	**SWITCH AS-PRESSURE (ENGINE OIL)**
2	**NPR**	**035-8063**	**1**	**PLUG**

141-7885 VALVE GP-BACKHOE NEUTRALIZER
S/N 4ZN16044-50156

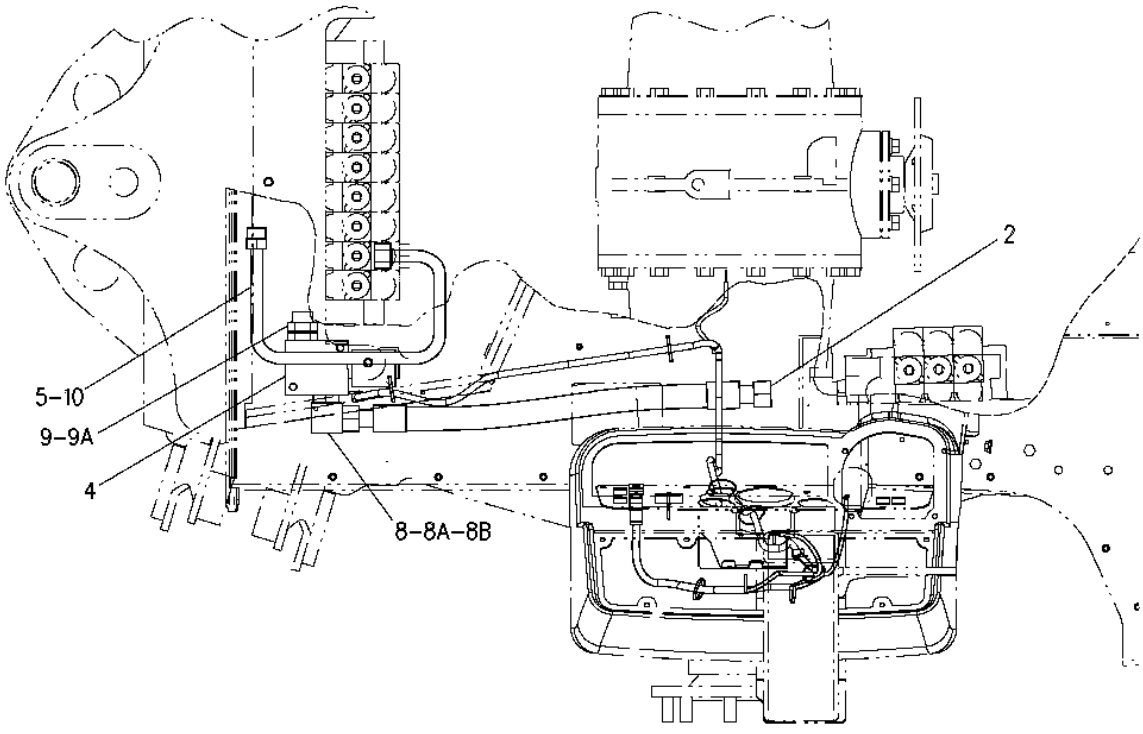

TOP VIEW

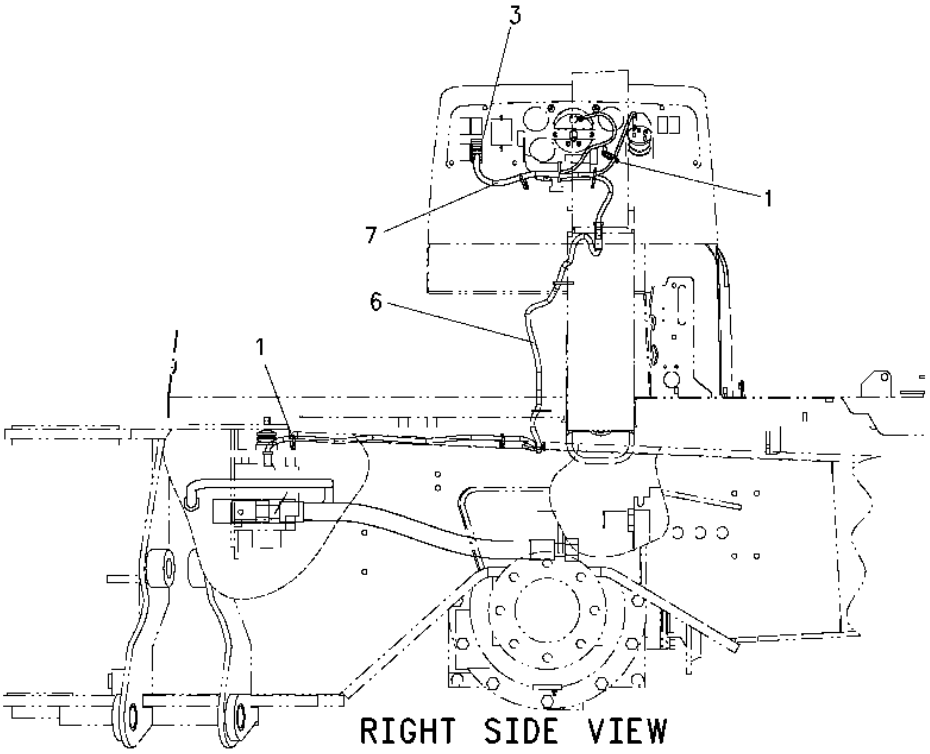

RIGHT SIDE VIEW

1 NPR 3S-2093 8 STRAP-CABLE

2 NPR I 117-3235 1 HOSE AS

3 NPR 130-6584 1 SWITCH AS-ROCKER (HYDRAULIC LOCKOUT)

	NPR	111-7899	1	GASKET
4	NPR Y	138-1976	1	VALVE GP-SHUTOFF
5	NPR	141-7533	1	TUBE AS
6	NPR	141-9474	1	HARNESS AS
	NPR	155-2270	1	KIT-CONNECTING PLUG (2-PIN)
	(INCLUDES PLUG AS, WEDGE, & INTERFACE SEAL)			
	NPR	102-8802	1	KIT-RECEPTACLE (2-PIN)
	(INCLUDES RECEPTACLE AS & WEDGE)			
7	NPR	153-2785	1	HARNESS AS
	NPR	155-2270	1	KIT-CONNECTING PLUG (2-PIN)
	(INCLUDES PLUG AS, WEDGE, & INTERFACE SEAL)			
	NPR	8L-8413	2	STRAP-CABLE
	NPR	111-7898	1	CONNECTOR
	NPR	112-9611	4	TERMINAL-BLADE
8	NPR	5K-9090	1	SEAL-O-RING
8A	NPR	6V-9008	1	ELBOW
8B	NPR	7M-8485	1	SEAL-O-RING
9	NPR	7M-8485	2	SEAL-O-RING
9A	NPR	113-4676	2	CONNECTOR
10	NPR	6V-9746	1	SEAL-O-RING

Key:

I - REFER TO HYDRAULIC INFORMATION SYSTEM
Y - SEPARATE ILLUSTRATION

121-4036 VALVE GP-SOLENOID --S/N 4ZN16044-50156
12-VOLT,TORQUE CONVERTER INLET
PART OF 111-7814, 192-0844 TRANSMISSION GP-DIRECT DRIVE, 147-0200, 147-0204, 192-0849 TRANSMISSION GP-POWER SHIFT

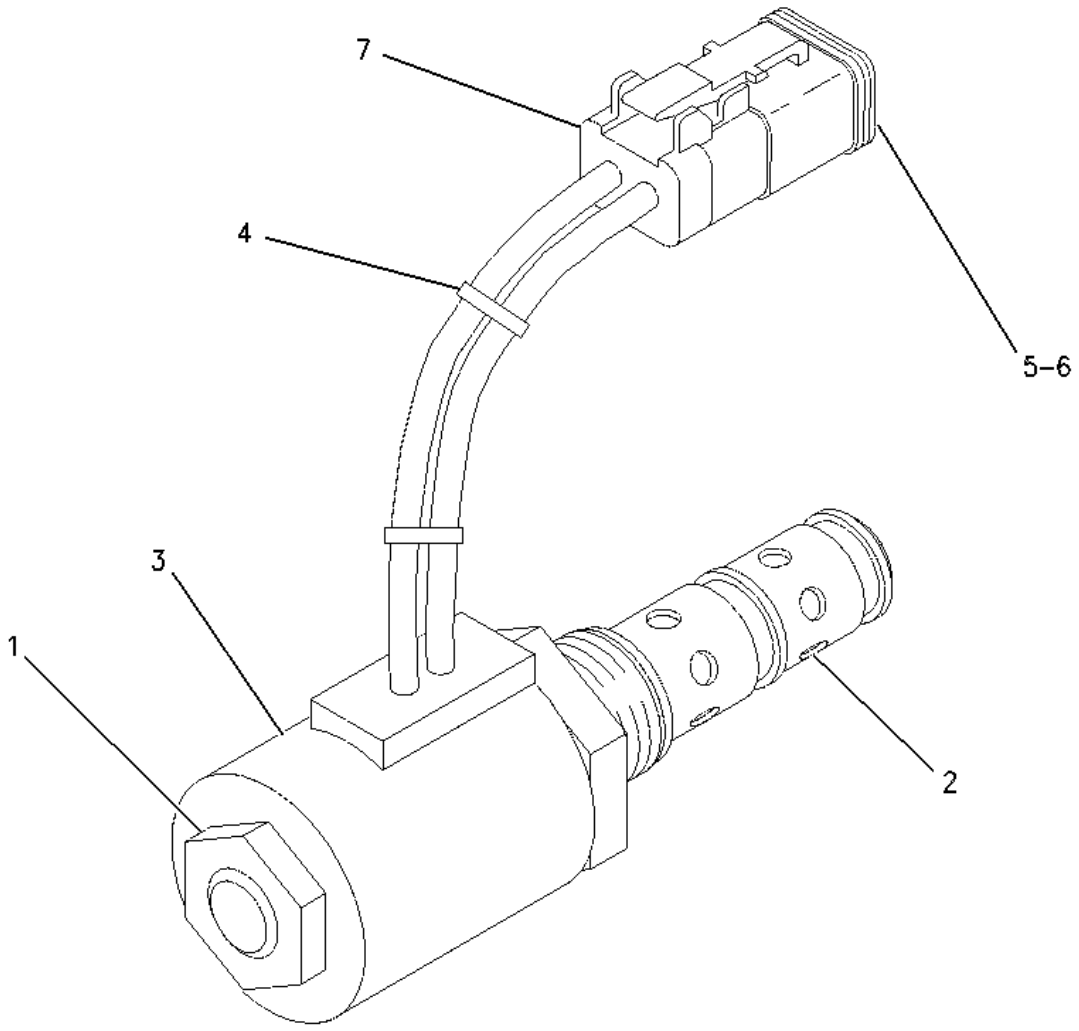

1	NPR	3J-9196	1	NUT-JAM (1/2-20-THD)
2	NPR	122-1672	1	CARTRIDGE AS
3	NPR	130-0013	1	COIL AS
4	NPR	1S-9593	2	STRAP-CABLE
5	NPR	3E-3362	1	WEDGE-PLUG LOCK (2-PIN)
6	NPR	186-3736	2	SOCKET-CONNECTOR (16-GA TO 18-GA)
7	NPR	155-2270	1	KIT-CONNECTING PLUG (2-PIN)

(INCLUDES PLUG AS & WEDGE)

AVAILABLE REPAIR KIT(S):

NPR 122-1135 1 KIT-SEAL

(INCLUDES RINGS & SEALS)

142-1468 VALVE GP-SOLENOID ---S/N 4ZN16044-50156
12 VOLT DIRECT CURRENT --PART OF 111-7814, 111-7815 TRANSMISSION GP-DIRECT DRIVE

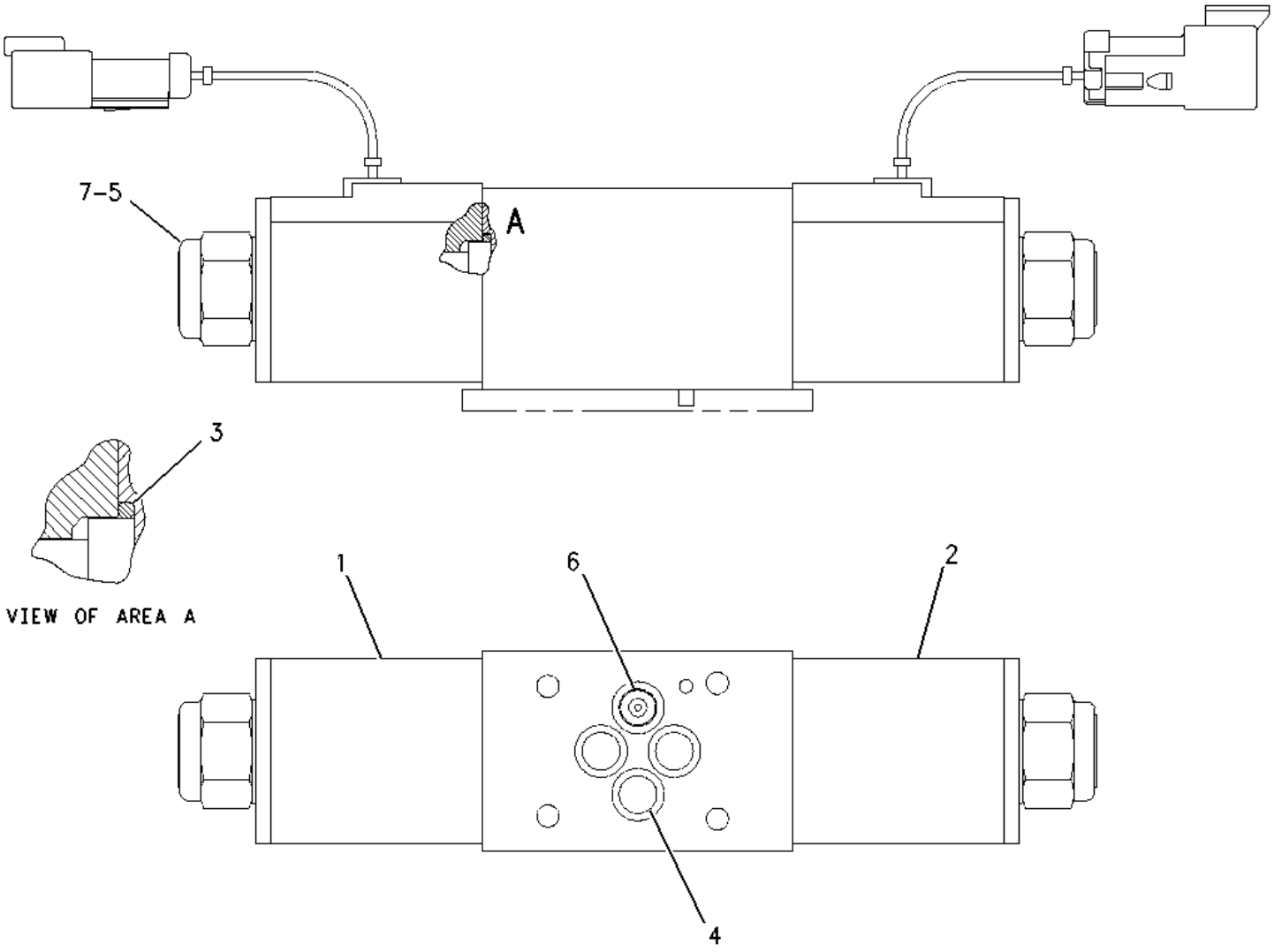

1 NPR 117-2911 1 COIL AS (FORWARD)

NPR 1S-9593 2 STRAP-CABLE

NPR 102-8802 1 KIT-RECEPTACLE (2-PIN)

(INCLUDES RECEPTACLE AS & WEDGE)

NPR 3E-3365 1 WEDGE-RECEPTACLE LOCK (2-PIN)

NPR 186-3735 2 PIN-CONNECTOR (16-GA TO 18-GA)

2 NPR 130-0912 1 COIL AS (REVERSE)

NPR 1S-9593 2 STRAP-CABLE

NPR 102-8803 1 KIT-RECEPTACLE (3-PIN)

(INCLUDES RECEPTACLE AS & WEDGE)

	NPR	3E-3371	1	WEDGE-RECEPTACLE LOCK (3-PIN)
	NPR	186-3735	2	PIN-CONNECTOR (16-GA TO 18-GA)
	NPR	8T-8737	1	PLUG-SEAL
3	NPR	061-8639	2	SEAL-O-RING
4	NPR	8L-2779	4	SEAL-O-RING
5	NPR	143-4988	2	LOCKNUT
6	NPR	143-6227	1	PLUG-ORIFICE
7	NPR	143-4655	2	WASHER (M18.4X24.8X0.8-MM)

142-1468 VALVE GP-SOLENOID -S/N 4ZN16044-50156
12 VOLT DIRECT CURRENT
PART OF 111-7814, 111-7815, 192-0842, 192-0844 TRANSMISSION GP-DIRECT DRIVE
Type 2

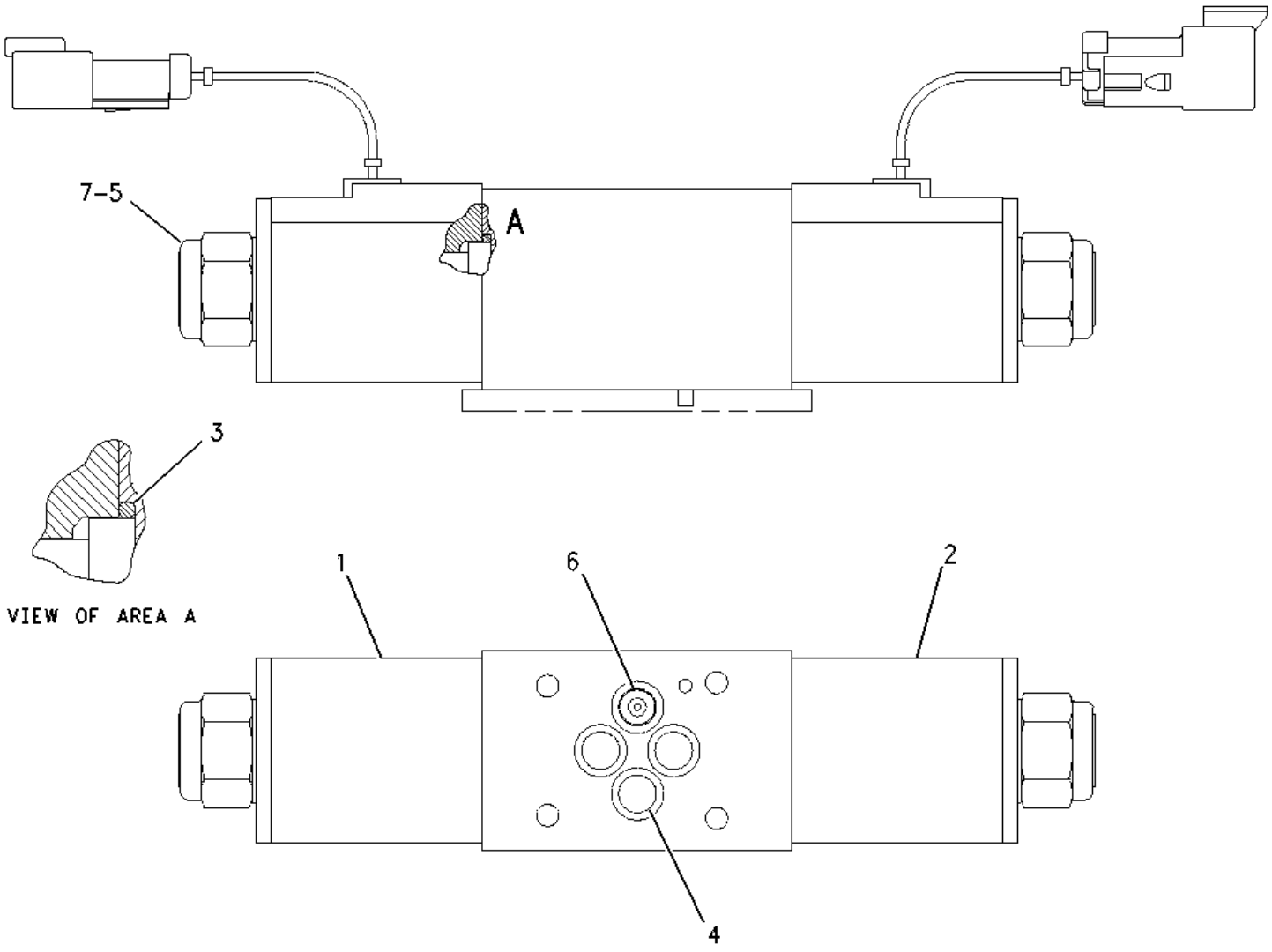

1 NPR 117-2911 1 COIL AS

NPR 1S-9593 2 STRAP-CABLE

NPR 102-8802 1 KIT-RECEPTACLE (2-PIN)

(INCLUDES RECEPTACLE AS & WEDGE)

NPR 3E-3365 1 WEDGE-RECEPTACLE LOCK (2-PIN)

NPR 186-3735 2 PIN-CONNECTOR (16-GA TO 18-GA)

2 NPR 130-0912 1 COIL AS

NPR 1S-9593 2 STRAP-CABLE

	NPR	102-8803	1	KIT-RECEPTACLE (3-PIN)
		(INCLUDES RECEPTACLE AS & WEDGE)		
	NPR	3E-3371	1	WEDGE-RECEPTACLE LOCK (3-PIN)
	NPR	186-3735	2	PIN-CONNECTOR (16-GA TO 18-GA)
	NPR	8T-8737	1	PLUG-SEAL
3	NPR	061-8639	2	SEAL-O-RING
4	NPR	8L-2779	4	SEAL-O-RING
5	NPR	202-0040	2	NUT-LOCKING
6	NPR	143-6227	1	PLUG-ORIFICE
7	NPR	143-4655	2	WASHER (M18.4X24.8X0.8-MM)

148-8986 VALVE GP-SOLENOID ---S/N 4ZN16044-50156
PART OF 147-0200, 147-0204, 192-0849 TRANSMISSION GP-POWER SHIFT

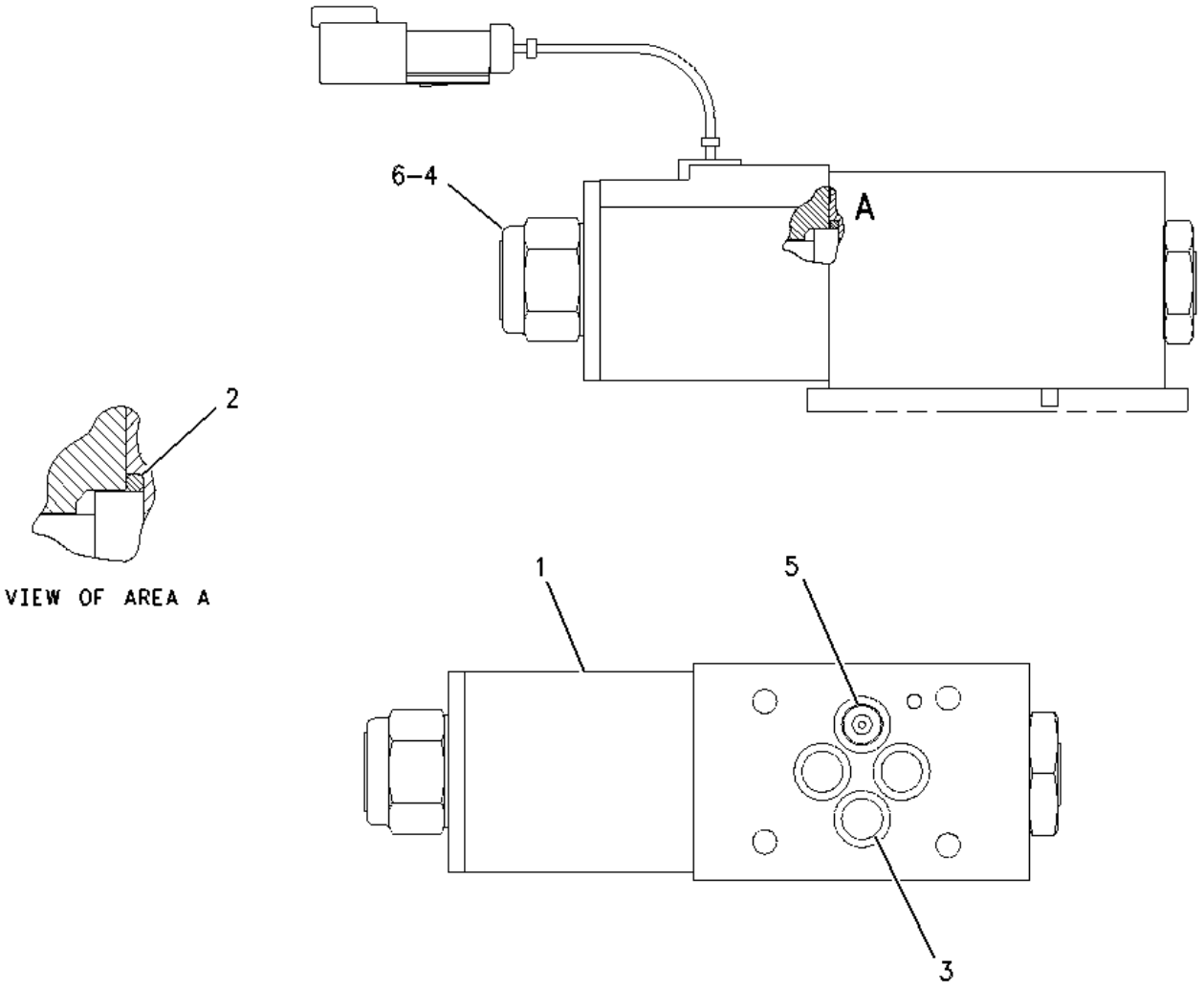

1	NPR	117-2911	1	COIL AS
	NPR	1S-9593	2	STRAP-CABLE
	NPR	102-8802	1	KIT-RECEPTACLE (2-PIN)
	(INCLUDES RECEPTACLE AS & WEDGE)			
	NPR	186-3735	2	PIN-CONNECTOR (16-GA TO 18-GA)
2	NPR	061-8639	2	SEAL-O-RING
3	NPR	8L-2779	4	SEAL-O-RING
4	NPR	202-0040	1	NUT-LOCKING
5	NPR	150-4932	1	PLUG-ORIFICE
6	NPR	143-4655	1	WASHER (M18.4X24.8X0.8-MM)

148-8988 VALVE GP-SOLENOID ----S/N 4ZN16044-50156
PART OF 147-0200, 147-0204, 192-0849 TRANSMISSION GP-POWER SHIFT

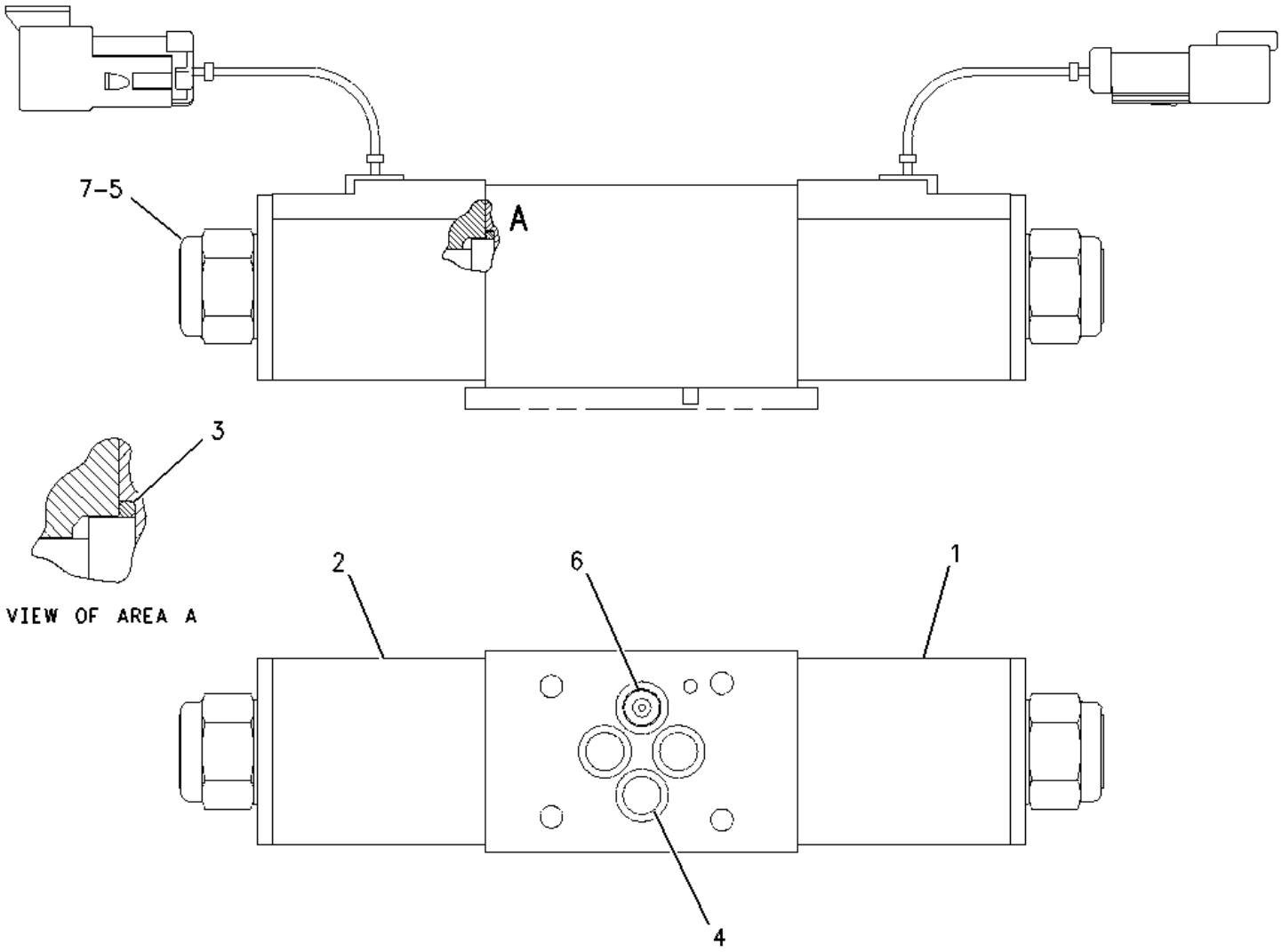

1 NPR 117-2911 1 COIL AS

NPR 1S-9593 2 STRAP-CABLE

NPR 102-8802 1 KIT-RECEPTACLE (2-PIN)

(KIT INCLUDES RECEPTACLE AS AND WEDGE)

NPR 186-3735 2 PIN-CONNECTOR (16-GA TO 18-GA)

2 NPR 130-0912 1 COIL AS

NPR 1S-9593 2 STRAP-CABLE

NPR 102-8803 1 KIT-RECEPTACLE (3-PIN)

(KIT INCLUDES RECEPTACLE AS AND WEDGE)

	NPR	186-3735	2	PIN-CONNECTOR (16-GA TO 18-GA)
	NPR	8T-8737	1	PLUG-SEAL
3	NPR	061-8639	2	SEAL-O-RING
4	NPR	8L-2779	4	SEAL-O-RING
5	NPR	202-0040	1	NUT-LOCKING
6	NPR	150-4932	1	PLUG-ORIFICE
7	NPR	143-4655	2	WASHER (M18.4X24.8X0.8-MM)

238-1966 VALVE GP-SOLENOID ---S/N 4ZN20525-50156
12-VOLT --PART OF 147-0200, 147-0204 TRANSMISSION GP-POWER SHIFT

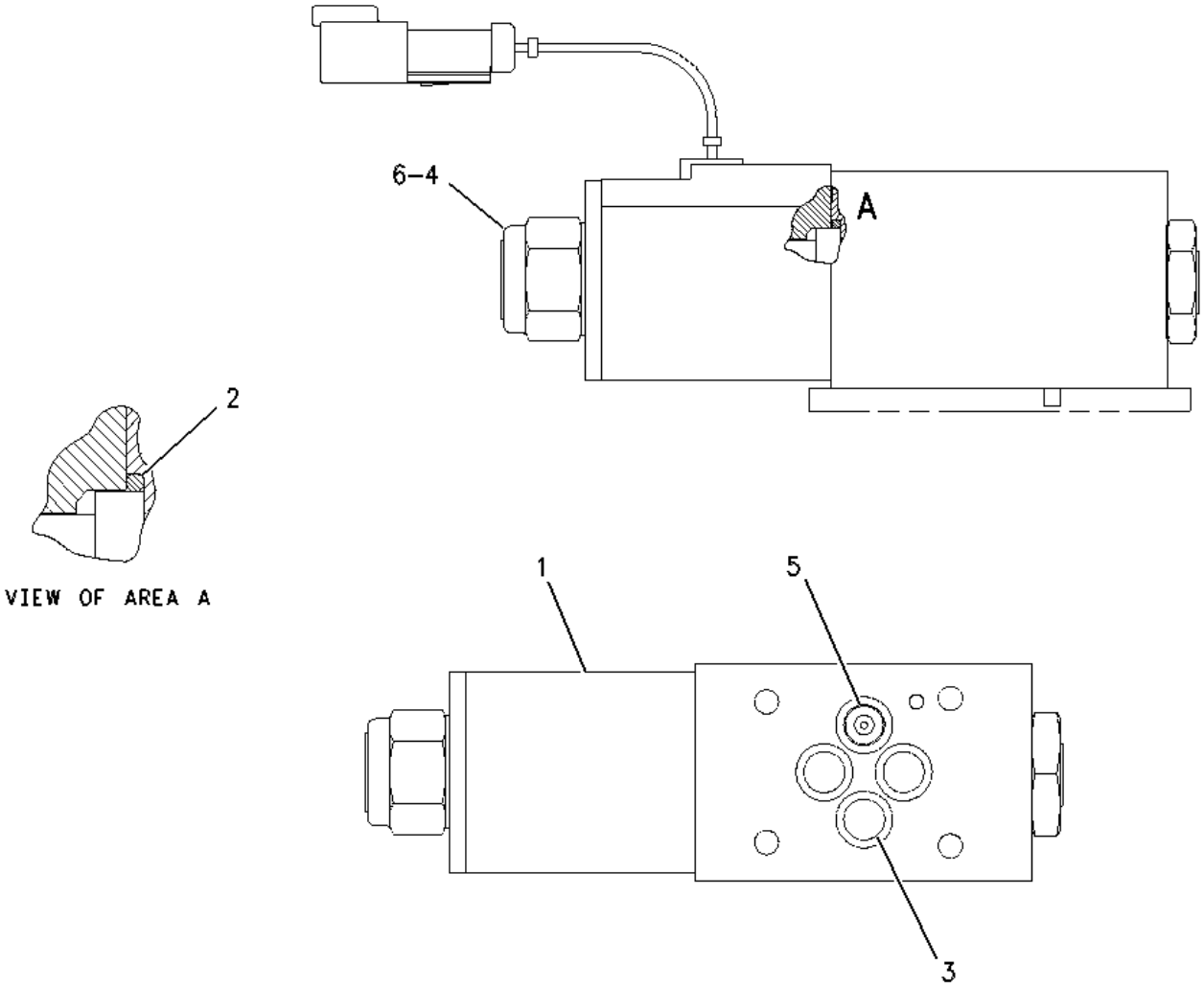

1 NPR 117-2911 1 COIL AS

NPR 1S-9593 2 STRAP-CABLE

NPR 102-8802 1 KIT-RECEPTACLE (2-PIN)

(INCLUDES RECEPTACLE AS & WEDGE)

NPR 186-3735 2 PIN-CONNECTOR (16-GA TO 18-GA)

2 NPR 061-8639 2 SEAL-O-RING

3 NPR 8L-2779 4 SEAL-O-RING

4 NPR 202-0040 1 NUT-LOCKING

5 NPR 150-4932 1 PLUG-ORIFICE

6 NPR 143-4655 1 WASHER (M18.4X24.8X0.8-MM)

238-1967 VALVE GP-SOLENOID --S/N 4ZN20525-50156
12-VOLT
PART OF 147-0200 TRANSMISSION GP-POWER SHIFT

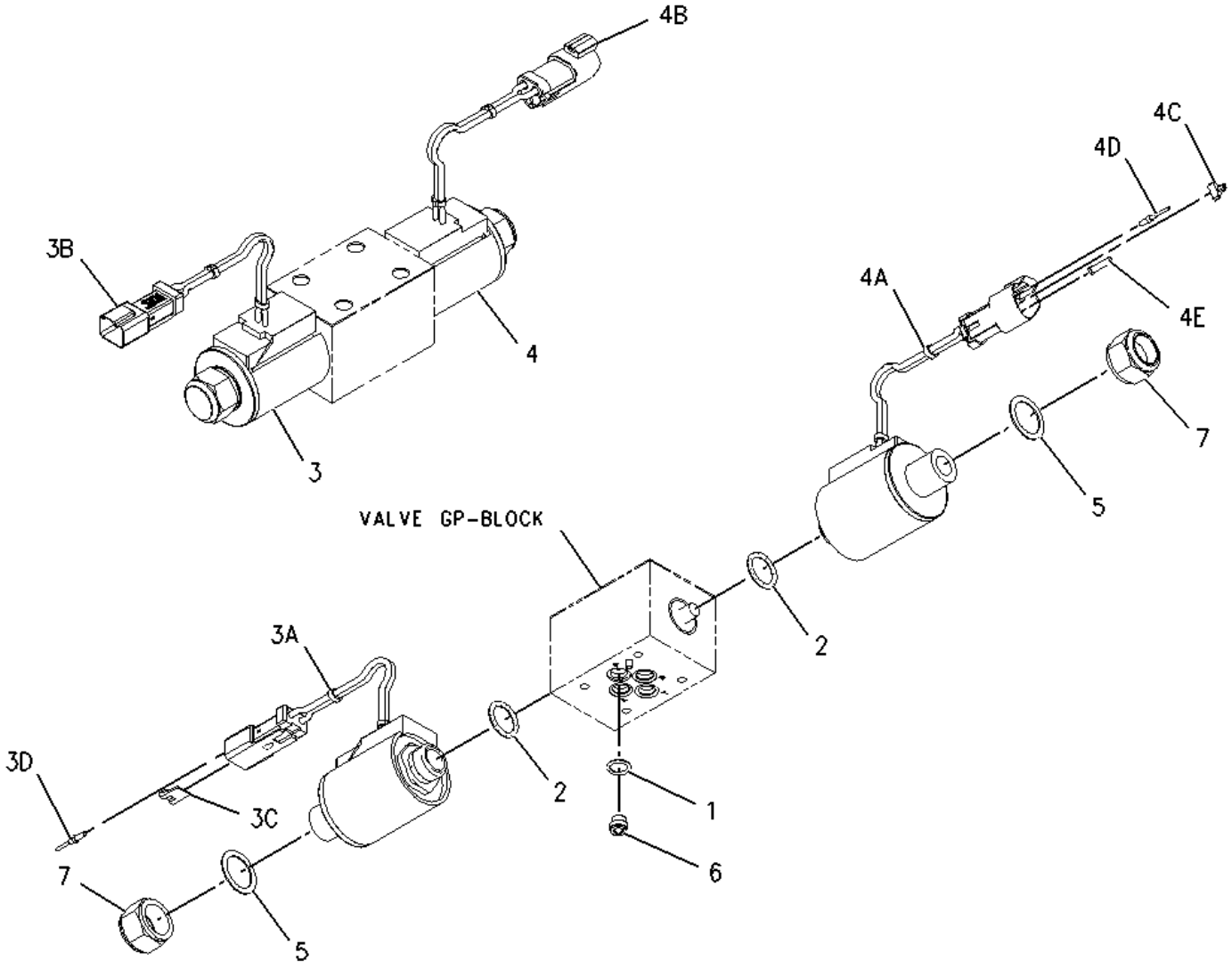

1 NPR 8L-2779 4 SEAL-O-RING

2 NPR 061-8639 2 SEAL-O-RING

3 NPR 117-2911 1 COIL AS

3A NPR 1S-9593 2 STRAP-CABLE

3B NPR 102-8802 1 KIT-RECEPTACLE (2-PIN)

(INCLUDES RECEPTACLE AS & WEDGE)

3C NPR 3E-3365 1 WEDGE-RECEPTACLE LOCK (2-PIN)

3D NPR 8T-8729 2 PIN-CONNECTOR

4 NPR 130-0912 1 COIL AS

4A	NPR	1S-9593	2	STRAP-CABLE
4B	NPR	102-8803	1	KIT-RECEPTACLE (3-PIN)
		(INCLUDES RECEPTACLE AS & WEDGE)		
4C	NPR	3E-3371	1	WEDGE-RECEPTACLE LOCK (3-PIN)
4D	NPR	8T-8729	2	PIN-CONNECTOR
4E	NPR	8T-8737	1	PLUG-SEAL
5	NPR	143-4655	2	WASHER (M18.4X24.8X0.8-MM)
6	NPR	150-4932	1	PLUG-ORIFICE
7	NPR	202-0040	2	NUT-LOCKING

138-1976 VALVE GP-SHUTOFF ---S/N 4ZN16044-50156
PART OF 141-7885 VALVE GP-BACKHOE NEUTRALIZER

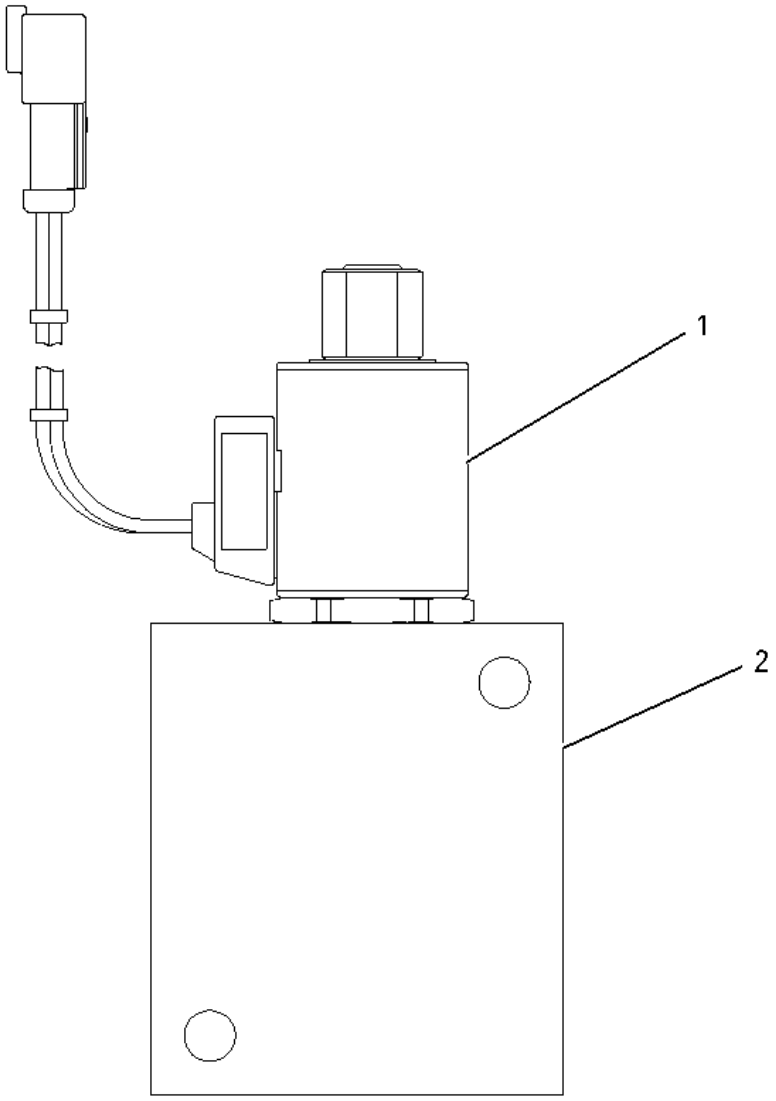

1 NPR 138-1975 1 VALVE GP-SOLENOID

NPR 3G-8175 1 KIT-SEAL

NPR 127-4402 1 COIL AS

NPR 1S-9593 2 STRAP-CABLE

NPR 102-8802 1 KIT-RECEPTACLE (2-PIN)

(INCLUDES WEDGE & RECEPTACLE)

NPR 186-3735 2 PIN-CONNECTOR (16-GA TO 18-GA)

NPR 127-4404 1 NUT (1/2-20-THD)

NPR 138-1974 1 VALVE AS

2 NPR 127-4405 1 MANIFOLD
159-4914 WARNING GP-BACKUP --S/N 4ZN21598-50156

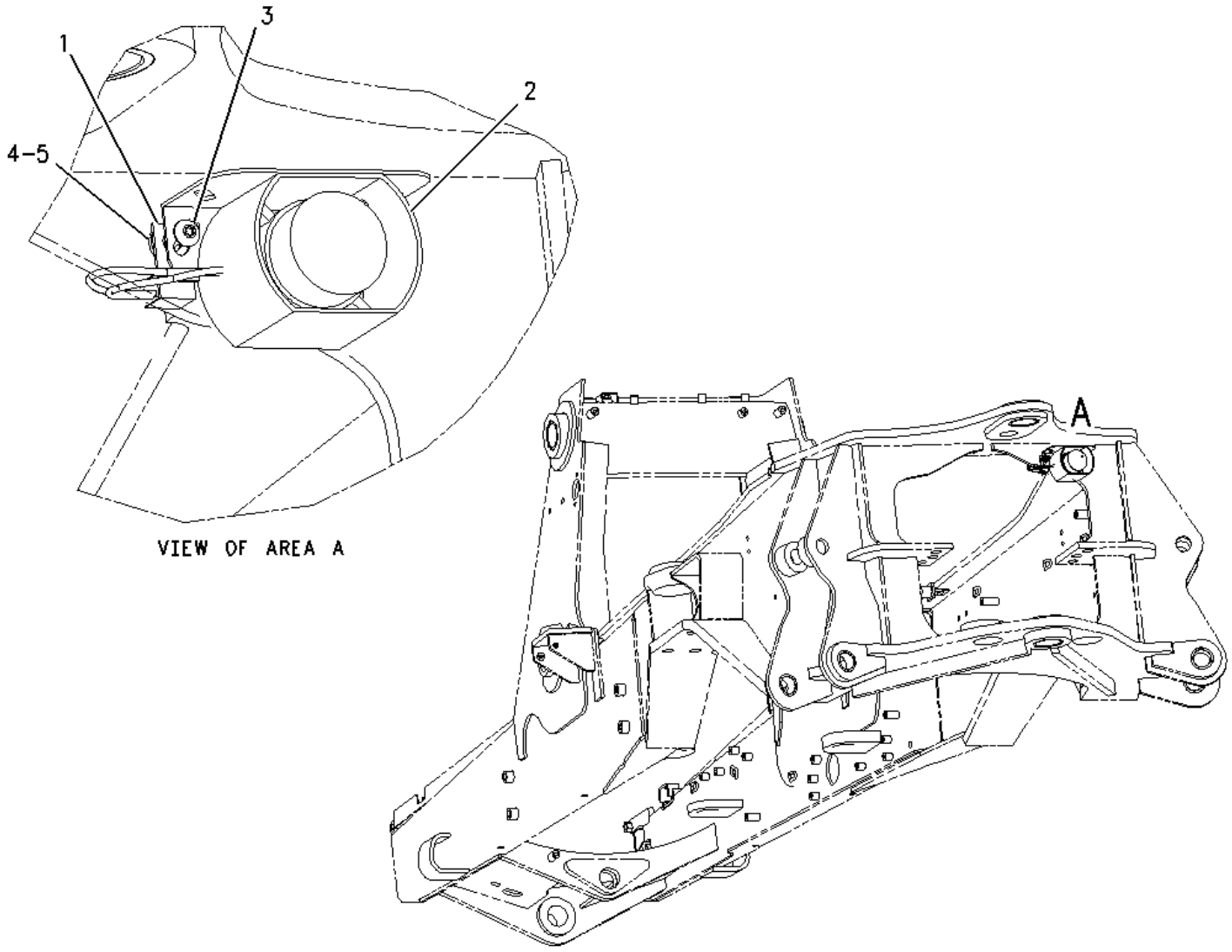

1 NPR C 9U-2277 1 CLIP AS

NPR 8C-3334 1 RIVET-TUBULAR

2 NPR 154-5428 1 ALARM AS

NPR 102-8802 KIT-RECEPTACLE (2-PIN)

(INCLUDES RECEPTACLE & WEDGE)

3 NPR CM 111-4627 2 SCREW-MACHINE (M6X1X30-MM)

4 NPR CM 8T-4134 1 NUT (M6X1-THD)

5 NPR C 9X-6165 1 WASHER (6.5X22X2.5-MM THK)

Key: C - CHANGE FROM PREVIOUS TYPE M - METRIC PART

179-5772 INSTALLATION GP-A/C SHUTOFF -KIT --S/N 4ZN16044-50156

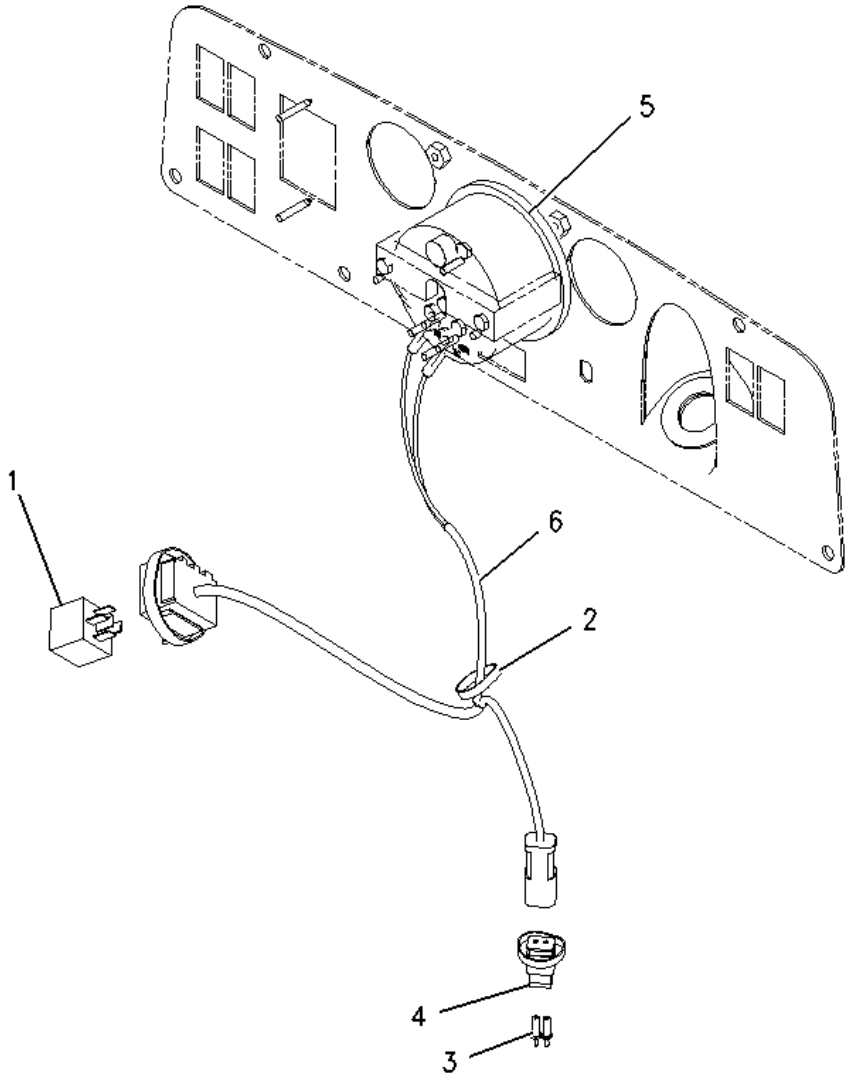

1	NPR	3E-9362	1	RELAY AS (12-VOLT)
2	NPR	3S-2093	3	STRAP-CABLE
3	NPR	8T-8730	2	SOCKET-CONNECTOR
4	NPR	155-2270	1	KIT-CONNECTING PLUG (2-PIN)
		(INCLUDES WEDGE AND PLUG)		
5	NPR	172-3576	1	TACHOMETER GP
	NPR	4B-2043	6	NUT (8-32-THD)
	NPR	9B-7233	6	LOCKWASHER
	NPR	122-7137	1	LAMP (12-VOLT)
6	NPR	179-5771	1	HARNESS AS-HEATER & AIR COND
	NPR	102-8802	1	KIT-RECEPTACLE (2-PIN)
		(INCLUDES WEDGE AND RECEPTACLE)		

162-7270 KIT-ACCESSORY RELAY
S/N 4ZN16044-50156---FIELD INSTALLATION

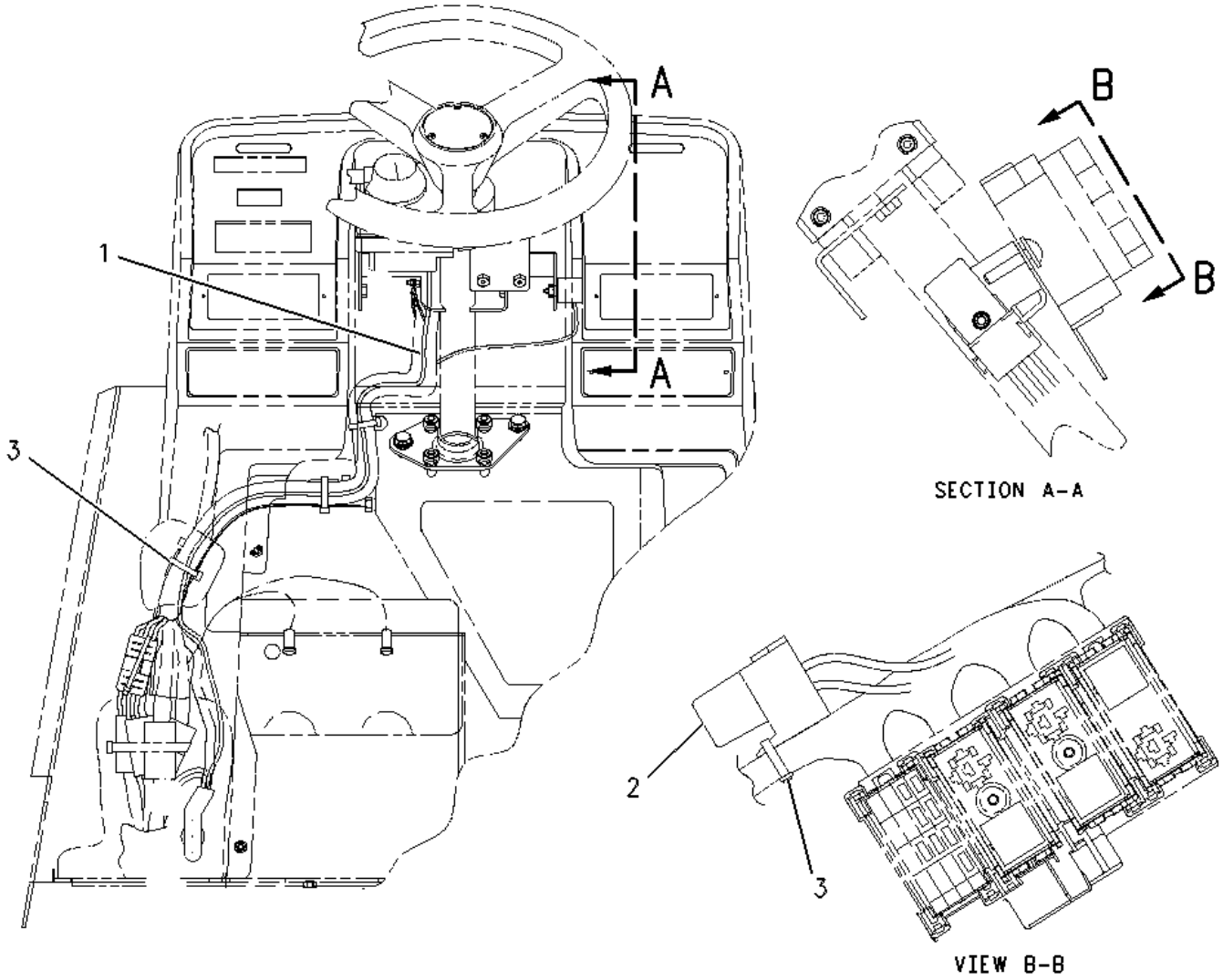

1 161-6370 1 HARNESS AS-WIRING (ACCESSORY RELAY)

2 NPR 3E-9362 1 RELAY AS (12-VOLT)

3 NPR 3S-2093 16 STRAP-CABLE

104-9499 WIRING GP-AIR CONDITIONER --S/N 4ZN21039-50156
PART OF 144-2221, 145-7168 AIR CONDITIONER AR

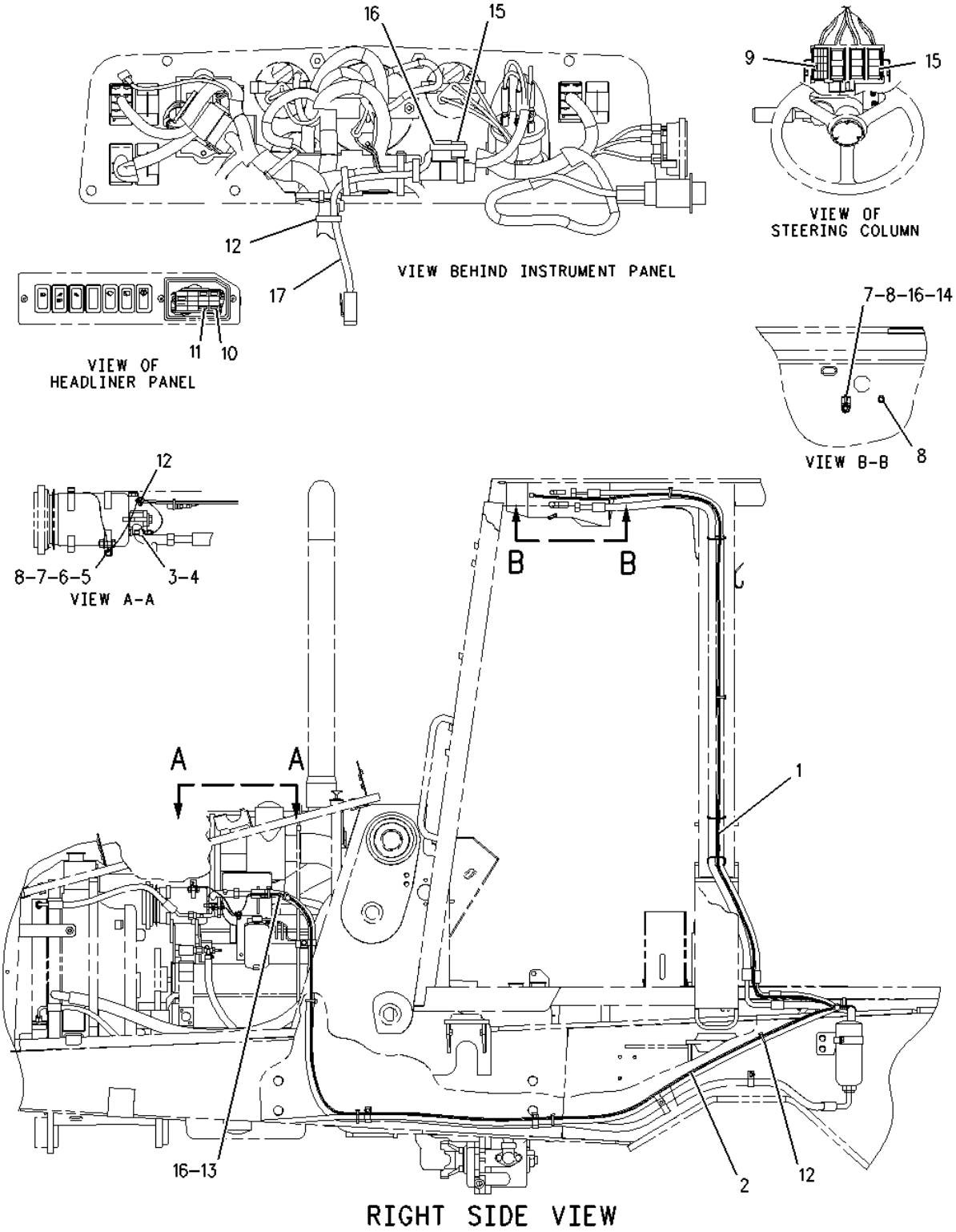

1 NPR C 183-6296 1 HARNESS AS-HEATER & AIR COND

NPR 102-8802 2 KIT-RECEPTACLE (2-PIN)

(INCLUDES WEDGE & RECEPTACLE)

NPR 155-2270 1 KIT-CONNECTING PLUG (2-PIN)

(INCLUDES WEDGE & PLUG)

2 NPR 142-3026 1 HARNESS AS-HEATER & AIR COND (AIR CONDITIONER COMPRESSOR)

NPR 102-8802 1 KIT-RECEPTACLE (2-PIN)

(INCLUDES WEDGE & RECEPTACLE)

NPR 155-2270 3 KIT-CONNECTING PLUG (2-PIN)

(INCLUDES WEDGE & PLUG)

3 NPR 114-5333 1 SWITCH AS-PRESSURE

NPR 186-3735 2 PIN-CONNECTOR (16-GA TO 18-GA)

NPR 3E-3365 1 WEDGE-RECEPTACLE LOCK (2-PIN)

NPR 102-8802 1 KIT-RECEPTACLE (2-PIN)

(INCLUDES RECEPTACLE AS & WEDGE)

4 NPR 9X-7378 1 SEAL-O-RING

5 NPR 9U-2277 1 CLIP AS

NPR 8C-3334 1 RIVET-TUBULAR

6 NPR M 8T-4195 1 BOLT (M10X1.5X30-MM)

7 NPR 8T-4121 4 WASHER-HARD (11X21X2.5-MM THK)

8 NPR M 8T-4133 3 NUT (M10X1.5-THD)

9 NPR 113-8493 1 FUSE (25-AMPERE)

10 NPR 113-8492 1 FUSE (20-AMPERE)

11 NPR 113-8490 1 FUSE (10-AMPERE)

12 NPR 3S-2093 15 STRAP-CABLE

13 NPR 106-8704 1 SUPPRESSOR AS-ARC

NPR 102-8802 1 KIT-RECEPTACLE (2-PIN)

(INCLUDES RECEPTACLE AS & WEDGE)

	NPR	3E-3365	1	WEDGE-RECEPTACLE LOCK (2-PIN)
	NPR	186-3735	2	PIN-CONNECTOR (16-GA TO 18-GA)
14	NPR	4P-7581	1	CLIP
15	NPR	3E-9362	2	RELAY AS (12-VOLT)
16	NPR	6K-0806	4	STRAP-CABLE
17	NPR C	179-5771	1	HARNESS AS-HEATER & AIR COND
	NPR	102-8802	1	KIT-RECEPTACLE (2-PIN)

(INCLUDES WEDGE & RECEPTACLE)

Key:

C - CHANGE FROM PREVIOUS TYPE
M - METRIC PART

105-5158 WIRING GP-CAB ---S/N 4ZN16044-50156
PART OF 154-5473 CAB AR-ENCLOSED ROPS
Type 1

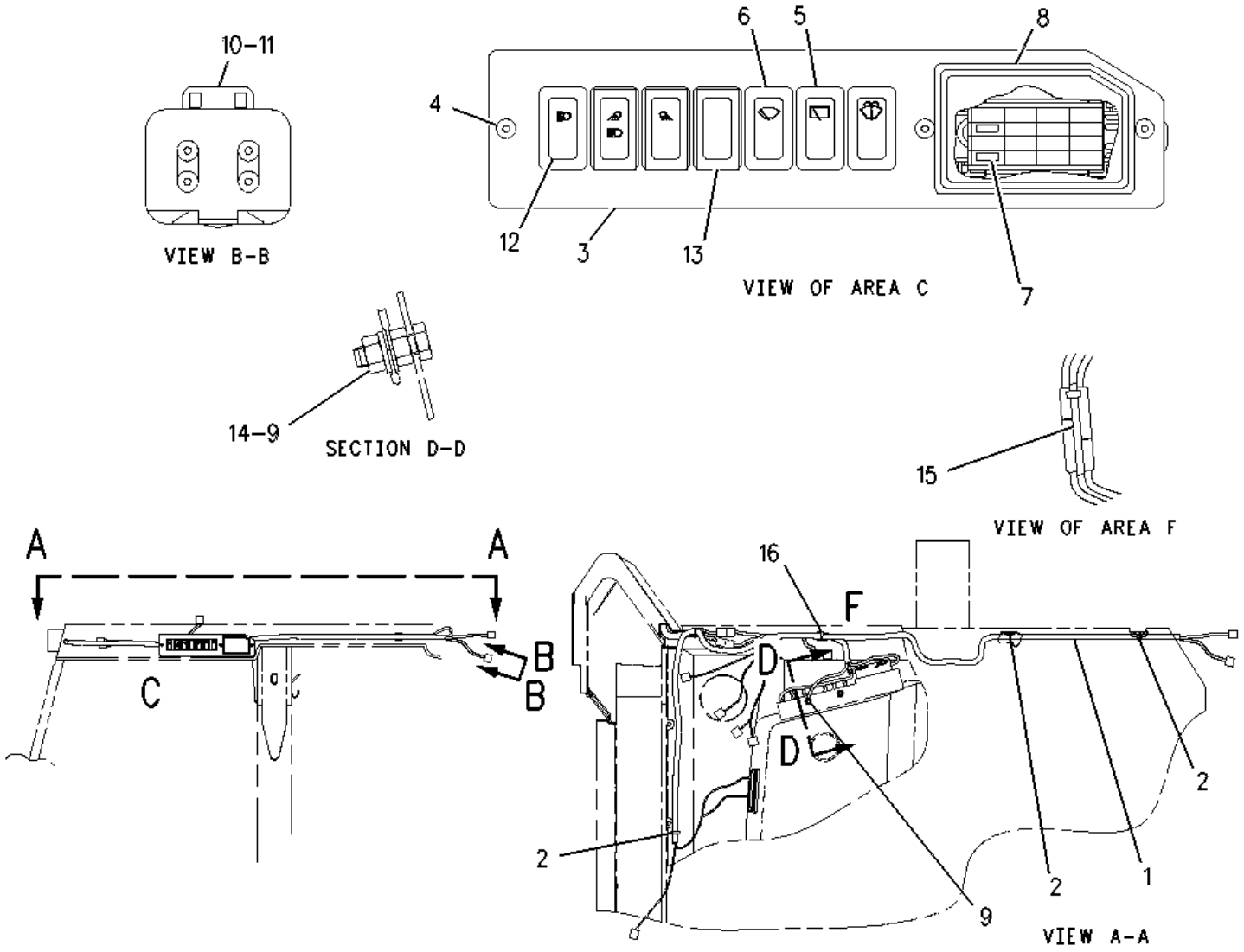

1 NPR 163-4120 1 HARNESS AS-CAB

2 NPR 3S-2093 3 STRAP-CABLE

3 NPR 105-5157 1 PLATE

4 NPR M 9X-1046 3 SCREW (M4X0.7X18-MM)

5 NPR 118-0366 1 SWITCH AS-ROCKER (REAR WIPER)

NPR 111-7899 1 GASKET

6 NPR 109-2344 1 SWITCH AS-ROCKER (FRONT WIPER)

NPR 111-7899 1 GASKET

7 NPR 113-8490 2 FUSE (10-AMPERE)

8 NPR 104-3905 1 COVER-FUSE

9 NPR M 8T-4133 1 NUT (M10X1.5-THD)

10 NPR 102-8804 1 KIT-RECEPTACLE (4-PIN)

(INCLUDES WEDGE & RECEPTACLE)

11 NPR 3E-3377 1 WEDGE-RECEPTACLE LOCK (4-PIN)

12 NPR 109-2346 1 SWITCH AS-ROCKER (ROADING LIGHTS)

NPR 111-7899 1 GASKET

13 NPR 109-2356 2 PLUG

14 NPR 8T-4121 1 WASHER-HARD (11X21X2.5-MM THK)

15 NPR 6K-0806 1 STRAP-CABLE

16 NPR 7K-1181 1 STRAP-CABLE

Key:

M - METRIC PART

105-5158 WIRING GP-CAB ---S/N 4ZN16044-50156
PART OF 154-5473 CAB AR-ENCLOSED ROPS
Type 2

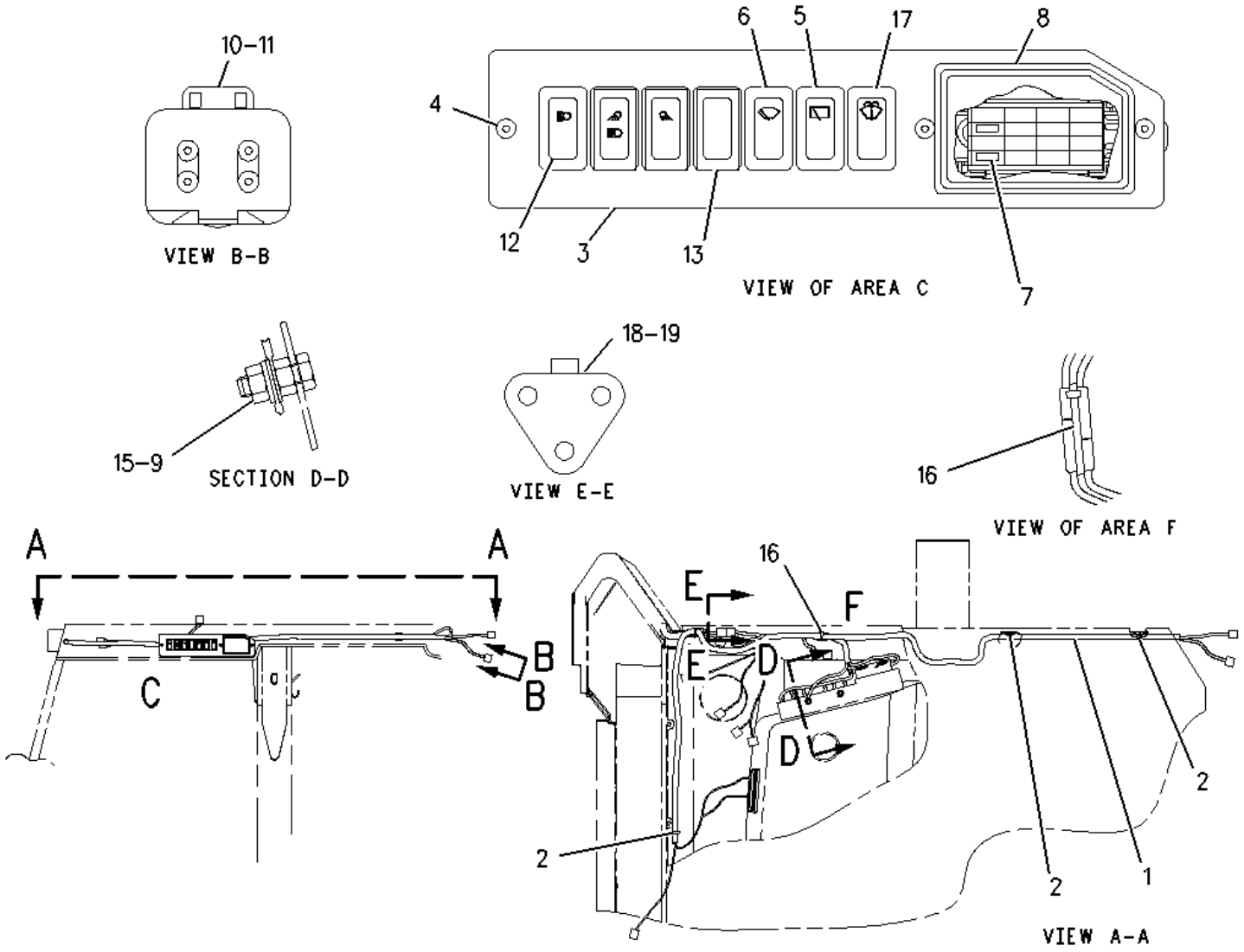

1	**NPR**	**185-8025**	**1**	**HARNESS AS**
	NPR	**102-8803**	**1**	**KIT-RECEPTACLE (3-PIN)**
	NPR	**102-8805**	**1**	**KIT-RECEPTACLE (6-PIN)**
	(EACH INCLUDES RECEPTACLE AS & WEDGE)			
	NPR	**3S-2093**	**20**	**STRAP-CABLE**
	NPR	**9R-6247**	**8**	**STRAP-CABLE**
	NPR	**124-9636**	**1**	**BLOCK-MINIFUSE**
	NPR	**155-2274**	**2**	**KIT-CONNECTING PLUG (6-PIN)**

(EACH INCLUDES PLUG AS, WEDGE & INTERFACE SEAL)

2 NPR 3S-2093 3 STRAP-CABLE

3 NPR 105-5157 1 PLATE

4 NPR M 9X-1046 3 SCREW (M4X0.7X18-MM)

5 NPR 118-0366 1 SWITCH AS-ROCKER (REAR WIPER)

NPR 111-7899 1 GASKET

6 NPR 109-2344 1 SWITCH AS-ROCKER (FRONT WIPER)

NPR 111-7899 1 GASKET

7 NPR 113-8490 2 FUSE (10-AMPERE)

8 NPR 104-3905 1 COVER-FUSE

9 NPR M 8T-4133 1 NUT (M10X1.5-THD)

10 NPR 102-8804 1 KIT-RECEPTACLE (4-PIN)

(INCLUDES RECEPTACLE & WEDGE)

11 NPR 3E-3377 1 WEDGE-RECEPTACLE LOCK (4-PIN)

12 NPR 109-2346 1 SWITCH AS-ROCKER (ROADING LIGHTS)

NPR 111-7899 1 GASKET

13 NPR 109-2356 1 PLUG

15 NPR 8T-4121 1 WASHER-HARD (11X21X2.5-MM THK)

16 NPR 6K-0806 2 STRAP-CABLE

17 NPR 109-2352 1 SWITCH AS (WASHER)

NPR 111-7899 1 GASKET

18 NPR 155-2260 1 KIT-CONNECTING PLUG (3-PIN)

(INCLUDES PLUG & WEDGE)

19 NPR 3E-3368 1 WEDGE-PLUG LOCK (3-PIN)

Key:

M - METRIC PART

154-5413 WIRING GP-CAB
S/N 4ZN16999-50156
PART OF 154-5473 CAB AR-ENCLOSED ROPS, 163-9194 CANOPY AR-OPEN ROPS

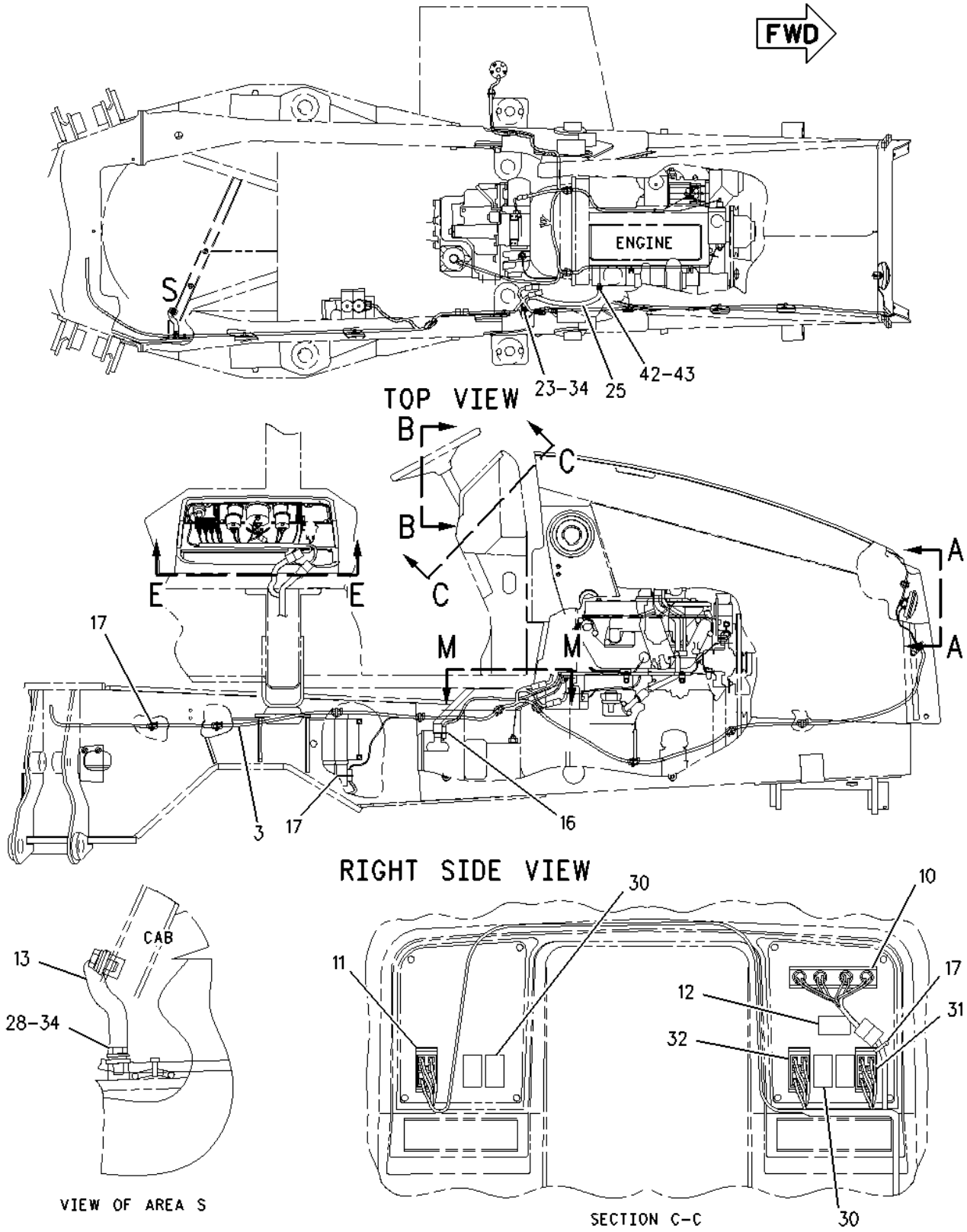

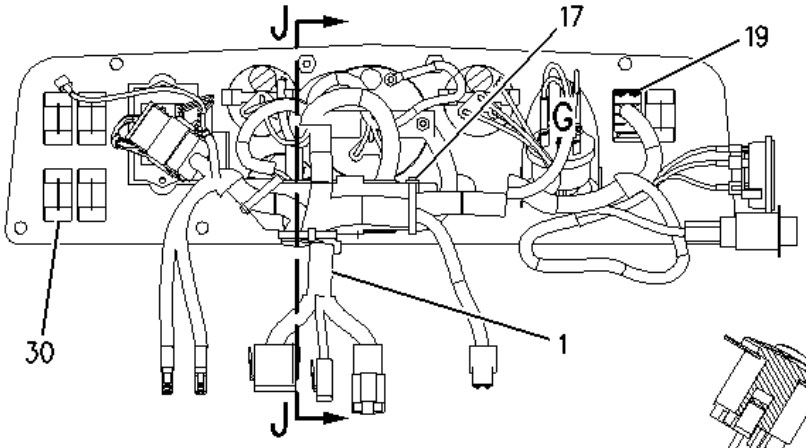

SECTION E-E

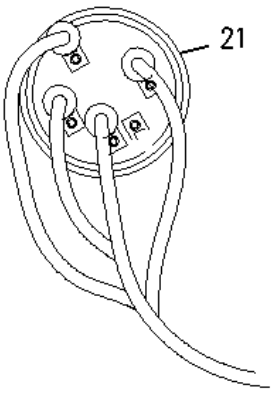

VIEW OF AREA G

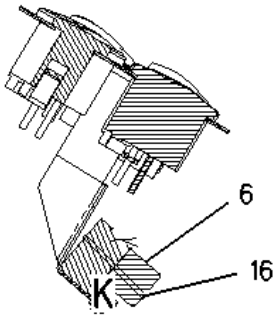

SECTION J-J

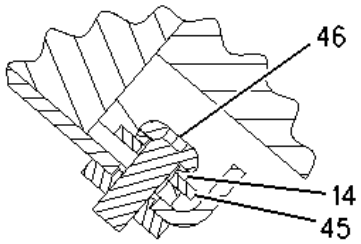

VIEW OF AREA K

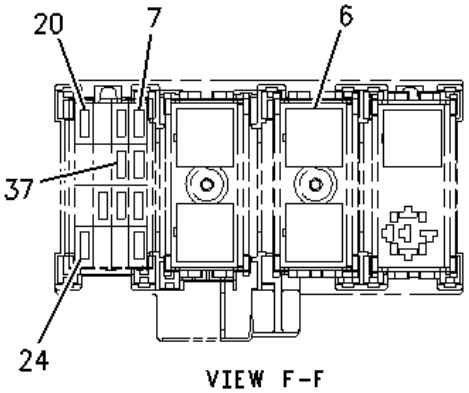

VIEW F-F

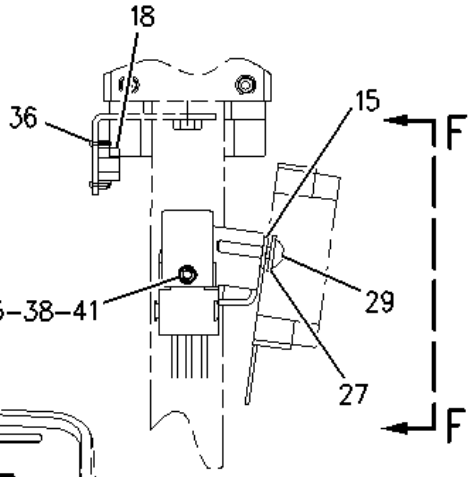

SECTION D-D

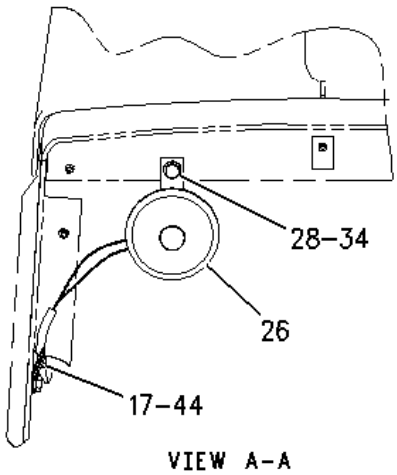

VIEW A-A

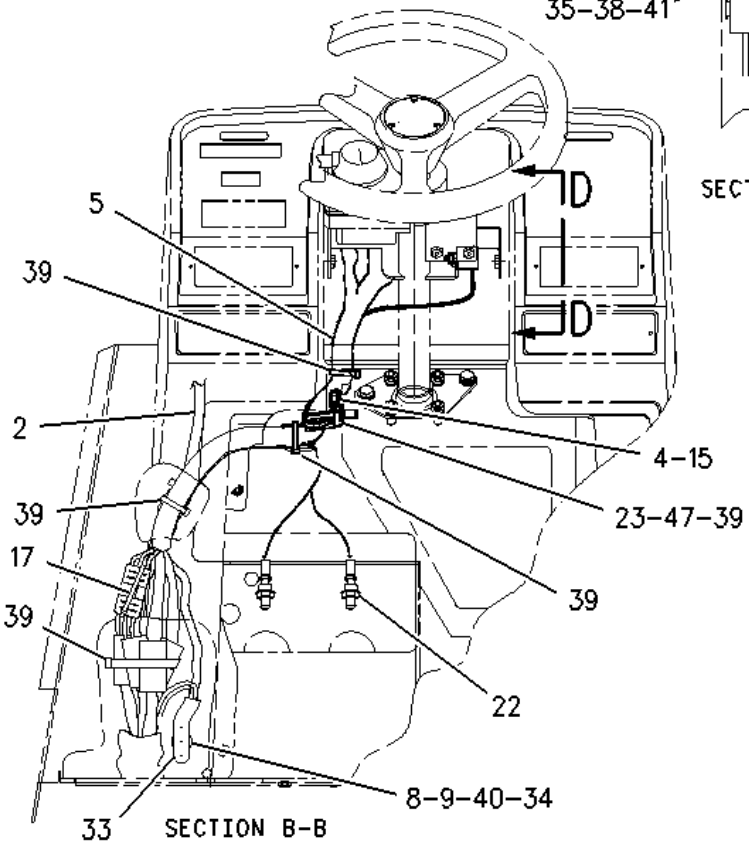

SECTION B-B

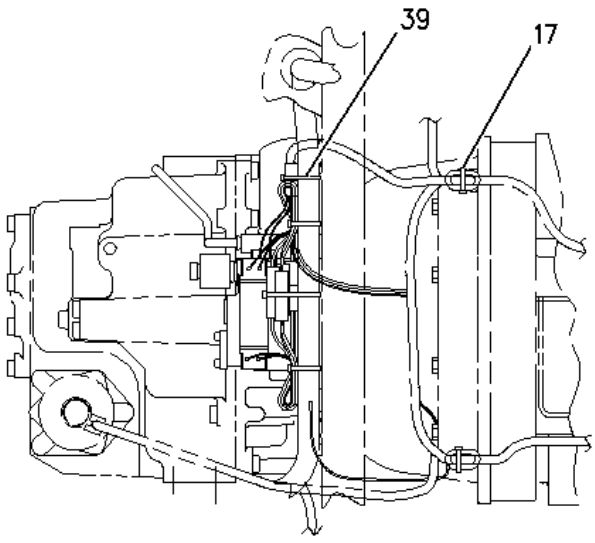

SECTION M-M

1 NPR 2 149-0192 1 HARNESS AS (SIDE CONSOLE)

NPR 2 155-2270 1 KIT-CONNECTING PLUG (2-PIN)

(INCLUDES PLUG & WEDGE)

NPR 2 102-8806 1 KIT-RECEPTACLE (8-PIN)

(INCLUDES RECEPTACLE & WEDGE)

NPR 2 155-2255 2 KIT-CONNECTING PLUG (12-PIN)

(INCLUDES PLUG AND WEDGE)

2 NPR 2 9R-9906 1 HARNESS AS-PANEL (FRONT)

NPR 2 155-2274 1 KIT-CONNECTING PLUG (6-PIN)

(INCLUDES PLUG & WEDGE)

NPR 2 102-8805 1 KIT-RECEPTACLE (6-PIN)

(INCLUDES RECEPTACLE & WEDGE)

NPR 2 102-8806 1 KIT-RECEPTACLE (8-PIN)

(INCLUDES RECEPTACLE & WEDGE)

3 NPR 1 154-5429 1 HARNESS AS-CHASSIS (FRAME)

NPR 1 155-2270 2 KIT-CONNECTING PLUG (2-PIN)

(INCLUDES PLUG & WEDGE)

NPR 1 155-2260 1 KIT-CONNECTING PLUG (3-PIN)

(INCLUDES PLUG & WEDGE)

NPR 1 155-2274 1 KIT-CONNECTING PLUG (6-PIN)

(INCLUDES PLUG & WEDGE)

4 NPR M 2 5C-7261 1 NUT (M8X1.25-THD)

5 NPR 2 161-6624 1 HARNESS AS-WIRING (STEERING COLUMN)

NPR 2 155-2271 1 KIT-CONNECTING PLUG (4-PIN)

(INCLUDES PLUG & WEDGE)

NPR 2 155-2265 1 KIT-CONNECTING PLUG (8-PIN)

(INCLUDES PLUG & WEDGE)

NPR 2 155-2255 2 KIT-CONNECTING PLUG (12-PIN)

(INCLUDES PLUG & WEDGE)

6 NPR 2 3E-9362 6 RELAY AS (12-VOLT)

7 NPR 2 113-8491 2 FUSE (15-AMPERE)

8 NPR M 2 8T-5432 2 BOLT (M5X0.8X16-MM)

9 NPR 2 114-4516 1 BLOCK

10 NPR 1 114-4520 1 PANEL

11 NPR 1 106-6570 1 SWITCH AS-ROCKER (HORN)

NPR 1 111-7899 1 GASKET

12 NPR 1 106-6571 1 SWITCH AS-ROCKER (TURN SIGNAL)

NPR 1 111-7899 1 GASKET

13 NPR 1 7G-1060 1 STRAP AS-GROUND

14 NPR 2 3B-4501 1 LOCKWASHER

15 NPR 2 8T-4224 4 WASHER-HARD (8.8X16X2-MM THK)

16 NPR B 1,2 6K-0806 2 STRAP-CABLE

17 NPR B 1,2 3S-2093 18 STRAP-CABLE

18 NPR 2 9M-9085 1 CIRCUIT BREAKER AS (15-AMPERE)

NPR 2 6V-8376 2 SCREW-MACHINE (8-32X0.25-IN)

NPR 2 9B-7233 2 LOCKWASHER

19 NPR 2 106-6569 1 SWITCH AS-ROCKER (STARTING AID)

NPR 2 111-7899 1 GASKET

20 NPR 2 124-3548 1 FUSE (30-AMPERE)

21 NPR J 2 163-2660 1 SWITCH GP-START

NPR 2 6V-8362 4 SCREW-MACHINE (8-32X0.31-IN)

NPR 2 7T-6799 1 NUT-MOUNTING (1-32-THD)

NPR 2 9B-7233 4 LOCKWASHER

22 NPR 2 105-8034 2 SWITCH AS-LIMIT

23 NPR M 1,2 8T-4137 2 BOLT (M10X1.5X20-MM)

24 NPR 2 113-8493 1 FUSE (25-AMPERE)

25 NPR 1 7Y-3883 1 CABLE AS

NPR 1 1S-7251 2 TERMINAL-RING (FOR 1/2-IN BOLT)

NPR 1 5P-0747 10 CABLE (00-GA, BLACK)

26 NPR 2 7T-0635 1 HORN AS (12-VOLT)

NPR M 2 8C-7581 2 SCREW-MACHINE (M4X0.7X8-MM)

NPR 2 9B-7233 2 LOCKWASHER

NPR 2 096-6166 2 WASHER-HARD (4.5X9X1-MM THK)

27 NPR 2 5P-4115 2 WASHER-HARD (7.2X19X2-MM THK)

28 NPR M 1,2 8T-4136 3 BOLT (M10X1.5X25-MM)

29 NPR M 2 9X-2045 2 SCREW-TRUSS HEAD (M6X1X20-MM)

30 NPR 1,2 109-2356 11 PLUG

31 NPR 1 106-6567 1 SWITCH AS-ROCKER (HAZARD WARNING LIGHTS)

NPR 1 111-7899 1 GASKET

32 NPR 1 114-4521 1 SWITCH AS-ROCKER (TRANSMISSION NEUTRAL LOCK)

NPR 1 111-7899 1 GASKET

33 NPR 2 8N-0869 1 COVER-TERMINAL (RED)

34 NPR B 1,2 8T-4121 5 WASHER-HARD (11X21X2.5-MM THK)

35 NPR 2 7T-4848 1 FLASHER AS (12-VOLT)

36	NPR	2	1Y-7486	2	SCREW (10-24X0.875-IN)
37	NPR	2	113-8490	6	FUSE (10-AMPERE)
38	NPR	2	8T-0328	1	WASHER-HARD (5.5X10X1-MM THK)
39	NPR B	2	7K-1181	9	STRAP-CABLE
40	NPR	2	3Y-8491	1	NUT-FULL (3/8-16-THD)
41	NPR M	2	099-0822	1	BOLT-SOCKET HEAD (M5X0.8X10-MM)
42	NPR	1	8T-4223	1	WASHER-HARD (13.5X25.5X3-MM THK)
43	NPR M	1	8T-4179	1	BOLT (M12X1.75X20-MM)
44	NPR	2	4P-7581	1	CLIP
45	NPR	2	4B-4863	1	WASHER (4.7X11X1.2-MM THK)
46	NPR M	2	138-8454	1	SCREW-TRUSS HEAD (M4X0.7X10-MM)
47	NPR	2	4P-8134	1	CLIP

Key:

B - USE AS REQUIRED
J - REQUIRES A 5P8500 KEY
M - METRIC PART

145-5936 WIRING GP-ENGINE --S/N 4ZN16044-50156
PART OF 158-6064 ENGINE AR
Type 1

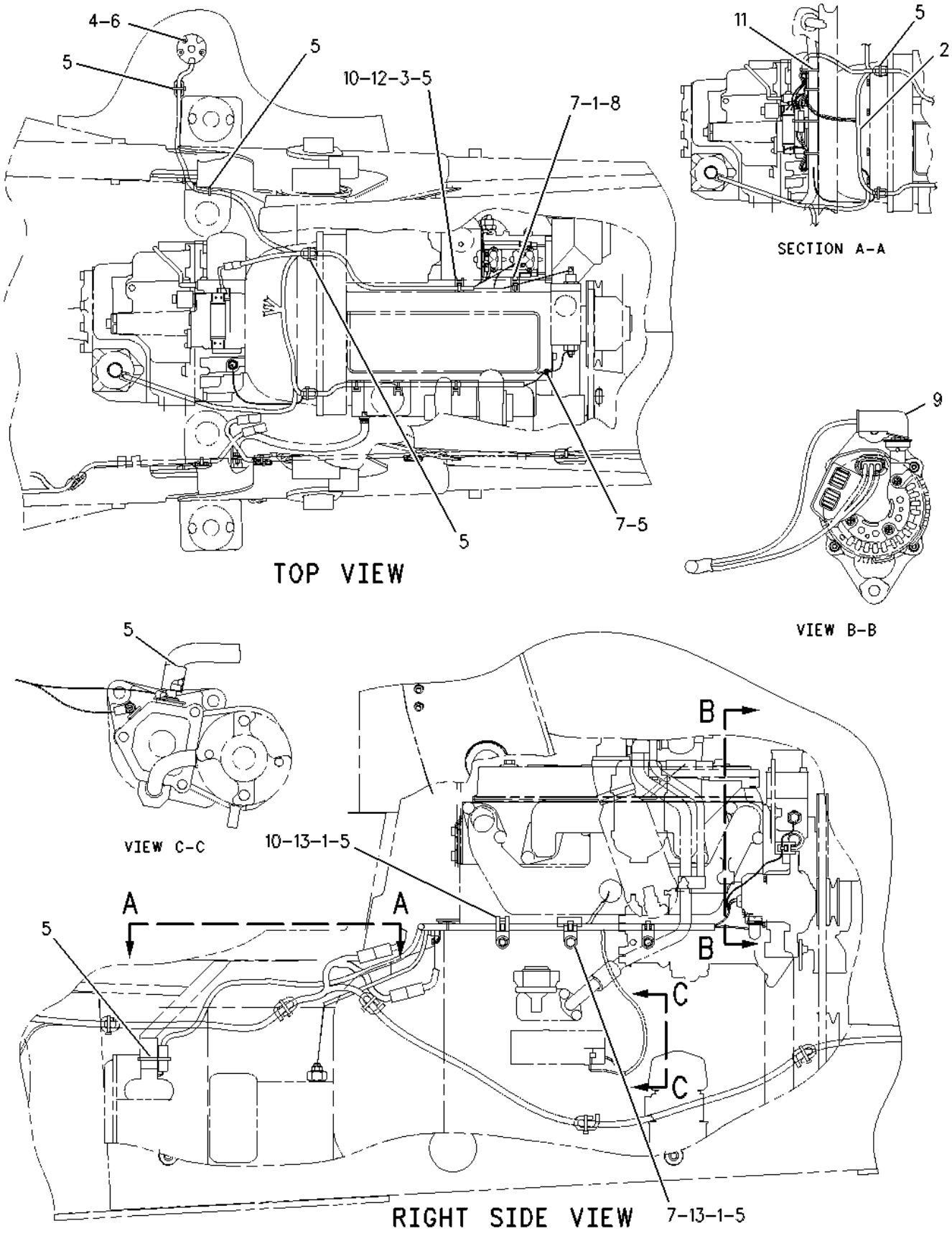

1 NPR 8T-4121 4 WASHER-HARD (11X21X2.5-MM THK)

2	NPR	9R-9903	1	HARNESS AS
3	NPR	5P-4116	1	WASHER-HARD (8.8X20.5X2-MM THK)
4	NPR	131-0232	1	COVER
5	NPR B	3S-2093	12	STRAP-CABLE
6	NPR M	123-4950	3	SCREW-PAN HEAD (M6X1X16-MM)
7	NPR	4P-8134	4	CLIP
8	NPR M	8T-4136	1	BOLT (M10X1.5X25-MM)
9	NPR	8T-8799	1	BOOT
10	NPR	4P-7581	2	CLIP
11	NPR	7K-1181	4	STRAP-CABLE
12	NPR M	8T-4200	1	BOLT (M8X1.25X16-MM)
13	NPR M	8T-4137	3	BOLT (M10X1.5X20-MM)

Key:

B - USE AS REQUIRED
M - METRIC PART

145-5936 WIRING GP-ENGINE ---S/N 4ZN16044-50156
PART OF 158-6064 ENGINE AR
Type 2

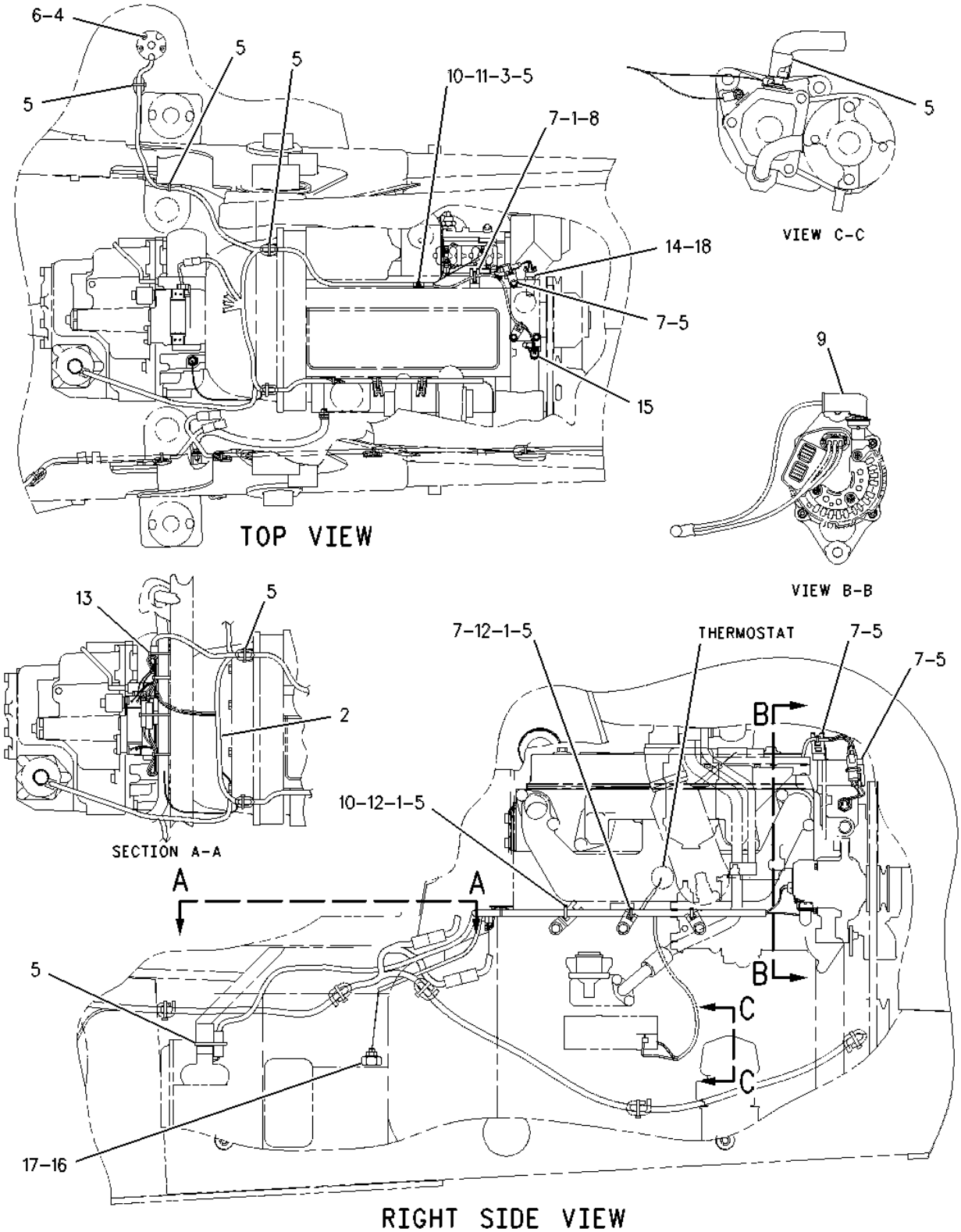

1 NPR 8T-4121 4 WASHER-HARD (11X21X2.5-MM THK)

2 NPR C 178-3771 1 HARNESS AS-ENGINE

NPR 155-2270 4 KIT-CONNECTING PLUG (2-PIN)

(INCLUDES PLUG AS & WEDGE)

NPR 102-8802 1 KIT-RECEPTACLE (2-PIN)

(INCLUDES RECEPTACLE AS & WEDGE)

NPR 155-2271 1 KIT-CONNECTING PLUG (4-PIN)

(INCLUDES PLUG AS & WEDGE)

NPR 102-8806 1 KIT-RECEPTACLE (8-PIN)

(INCLUDES RECEPTACLE AS & WEDGE)

3 NPR 5P-4116 1 WASHER-HARD (8.8X20.5X2-MM THK)

4 NPR 131-0232 1 COVER

5 NPR B 3S-2093 14 STRAP-CABLE

6 NPR M 123-4950 3 SCREW-PAN HEAD (M6X1X16-MM)

7 NPR 4P-8134 6 CLIP

8 NPR M 8T-4136 1 BOLT (M10X1.5X25-MM)

9 NPR 8T-8799 1 BOOT

10 NPR 4P-7581 2 CLIP

11 NPR M 8T-4200 1 BOLT (M8X1.25X16-MM)

12 NPR M 8T-4137 3 BOLT (M10X1.5X20-MM)

13 NPR 7K-1181 4 STRAP-CABLE

14 NPR 6T-2665 1 SWITCH AS-TEMPERATURE (COOLANT)

NPR 6V-8376 2 SCREW-MACHINE (8-32X0.25-IN)

NPR 9B-7233 2 LOCKWASHER

15 NPR 175-3070 1 SENDER AS-TEMPERATURE (12-VOLT)(12 VOLT) (COOLANT)

NPR 8T-8729 2 PIN-CONNECTOR

NPR 102-8802 1 KIT-RECEPTACLE (2-PIN)

(INCLUDES RECEPTACLE AS & WEDGE)

16 NPR 4W-9972 1 SENDER AS-TEMPERATURE (12-VOLT)(12 VOLT) (CONVERTER)

NPR 4B-2049 1 NUT (10-32-THD)

NPR 8F-1434 1 LOCKWASHER

NPR 8T-0328 1 WASHER-HARD (5.5X10X1-MM THK)

17 NPR 3J-1907 1 SEAL-O-RING

18 NPR 183-2530 1 WIRE AS

Key:

B - USE AS REQUIRED
C - CHANGE FROM PREVIOUS TYPE
M - METRIC PART

145-5937 WIRING GP-ENGINE --S/N 4ZN17780-50156
PART OF 158-6063, 158-6065 ENGINE AR

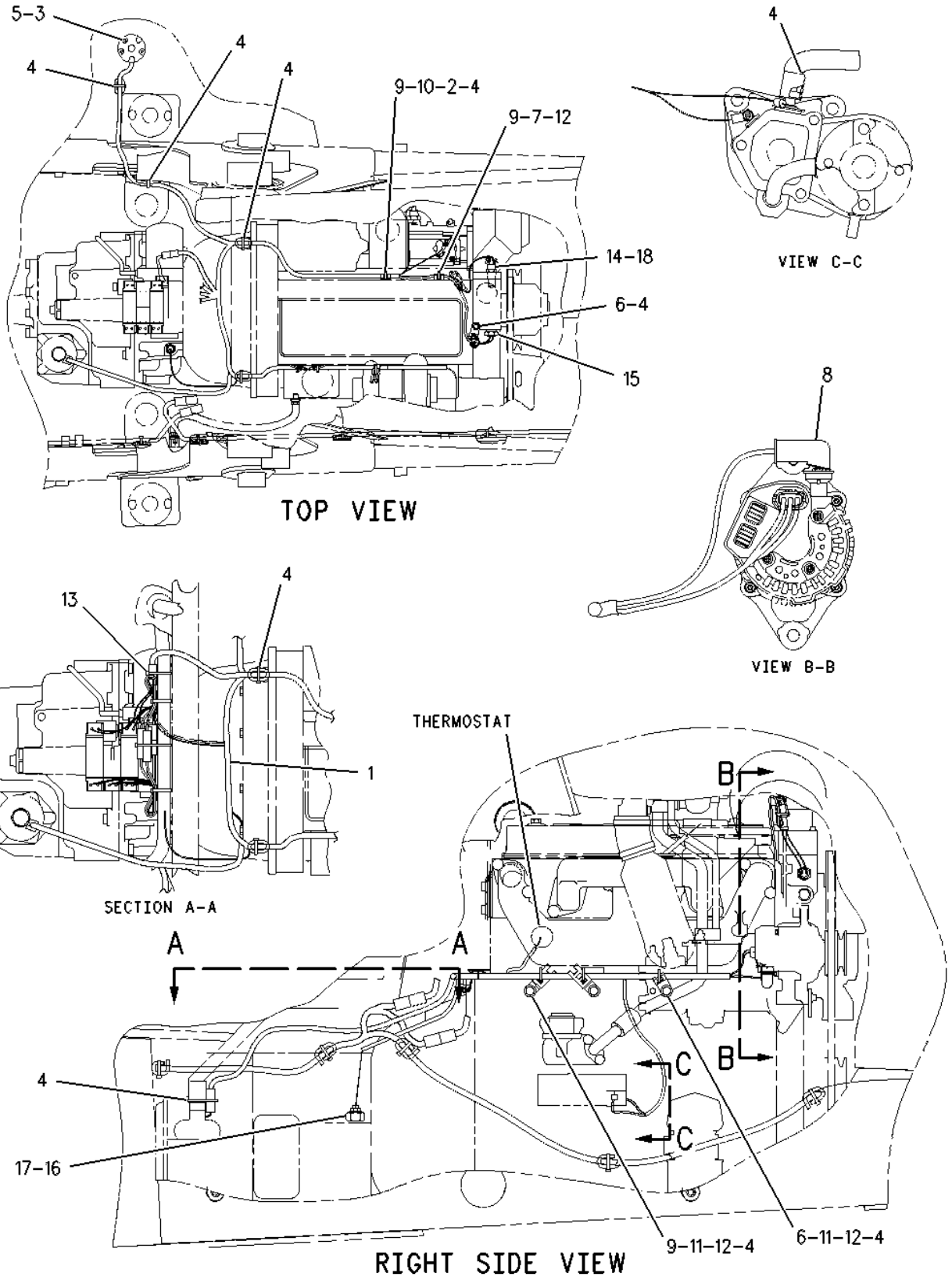

1 NPR C 178-3771 1 HARNESS AS-ENGINE

NPR 102-8807 4 KIT-CONNECTING PLUG (2-PIN)

	NPR	155-2270	4	KIT-CONNECTING PLUG (2-PIN)
	NPR	155-2271	1	KIT-CONNECTING PLUG (4-PIN)
	(EACH INCLUDES PLUG AS, WEDGE & INTERFACE SEAL)			
	NPR	102-8802	1	KIT-RECEPTACLE (2-PIN)
	NPR	102-8809	1	KIT-CONNECTING PLUG (4-PIN)
	NPR	102-8806	1	KIT-RECEPTACLE (8-PIN)
	(EACH INCLUDES RECEPTACLE AS & WEDGE)			
2	NPR	5P-4116	1	WASHER-HARD (8.8X20.5X2-MM THK)
3	NPR	131-0232	1	COVER
4	NPR B	3S-2093	12	STRAP-CABLE
5	NPR M	123-4950	3	SCREW-PAN HEAD (M6X1X16-MM)
6	NPR	4P-8134	2	CLIP
7	NPR M	8T-4136	1	BOLT (M10X1.5X25-MM)
8	NPR	8T-8799	1	BOOT
9	NPR	4P-7581	4	CLIP
10	NPR M	8T-4200	1	BOLT (M8X1.25X16-MM)
11	NPR M	8T-4137	3	BOLT (M10X1.5X20-MM)
12	NPR	8T-4121	4	WASHER-HARD (11X21X2.5-MM THK)
13	NPR	7K-1181	4	STRAP-CABLE
14	NPR	6T-2665	1	SWITCH AS-TEMPERATURE (COOLANT)
	NPR	6V-8376	2	SCREW-MACHINE (8-32X0.25-IN)
	NPR	9B-7233	2	LOCKWASHER
15	NPR	175-3070	1	SENDER AS-TEMPERATURE (12-VOLT)(ENGINE COOLANT)
	NPR	8T-8729	2	PIN-CONNECTOR
	NPR	102-8802	1	KIT-RECEPTACLE (2-PIN)

(INCLUDES RECEPTACLE AS & WEDGE)

16	NPR	4W-9972	1	SENDER AS-TEMPERATURE (12-VOLT)(TORQUE CONVERTER OIL)
	NPR	4B-2049	1	NUT (10-32-THD)
	NPR	8F-1434	1	LOCKWASHER
	NPR	8T-0328	1	WASHER-HARD (5.5X10X1-MM THK)
17	NPR	3J-1907	1	SEAL-O-RING
18	NPR	183-2530	1	WIRE AS

Key:

B - USE AS REQUIRED
C - CHANGE FROM PREVIOUS TYPE
M - METRIC PART

145-5938 WIRING GP-ENGINE --S/N 4ZN16044-50156
PART OF 158-6062 ENGINE AR
Type 1

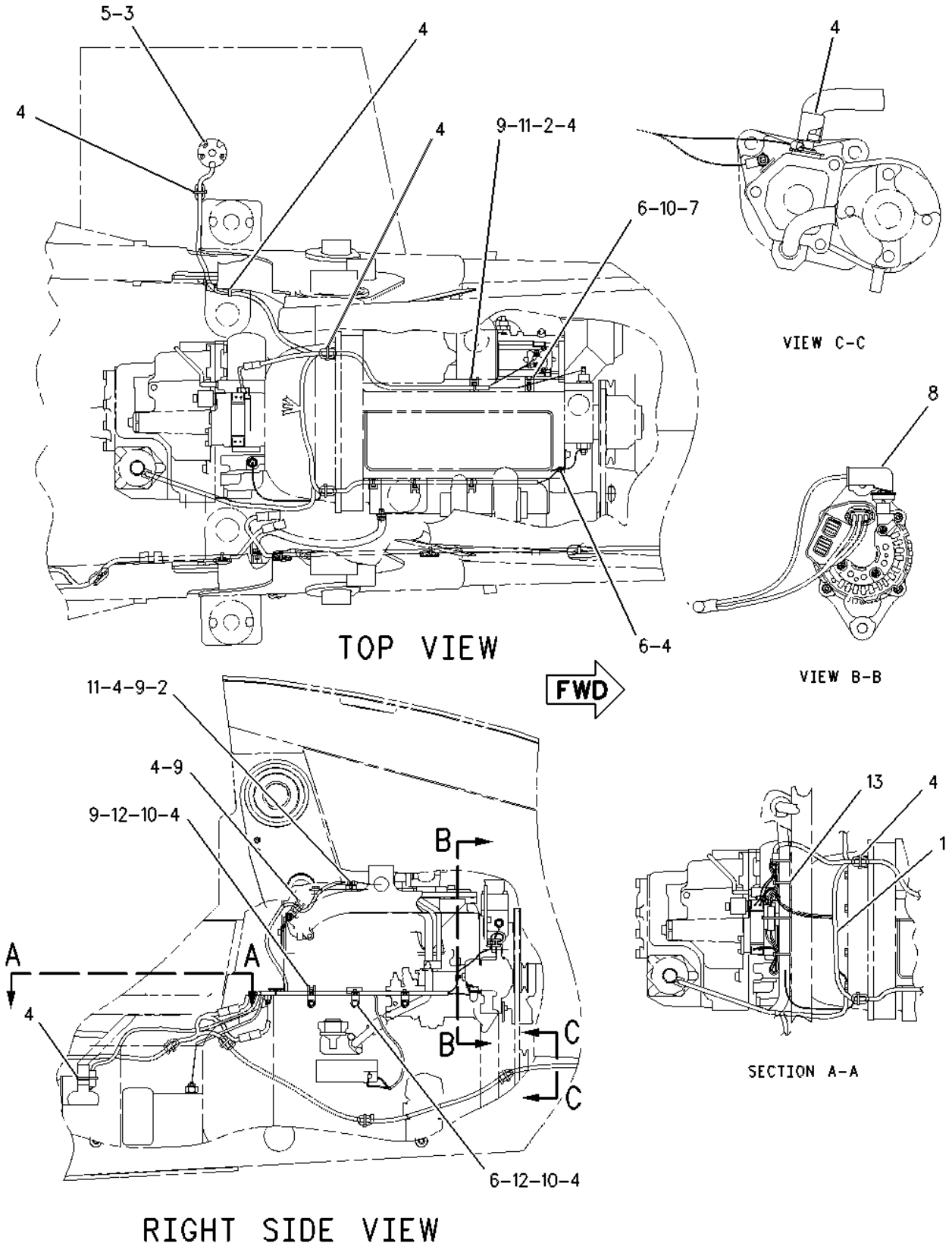

1 NPR 9R-9903 1 HARNESS AS

	NPR	102-8809	1	KIT-CONNECTING PLUG (4-PIN)
	NPR	102-8807	1	KIT-CONNECTING PLUG (2-PIN)
	NPR	102-8806	1	KIT-RECEPTACLE (8-PIN)
2	NPR	5P-4116	2	WASHER-HARD (8.8X20.5X2-MM THK)
3	NPR	131-0232	1	COVER
4	NPR B	3S-2093	14	STRAP-CABLE
5	NPR M	123-4950	3	SCREW-PAN HEAD (M6X1X16-MM)
6	NPR	4P-8134	4	CLIP
7	NPR M	8T-4136	1	BOLT (M10X1.5X25-MM)
8	NPR	8T-8799	1	BOOT
9	NPR	4P-7581	4	CLIP
10	NPR	8T-4121	4	WASHER-HARD (11X21X2.5-MM THK)
11	NPR M	8T-4200	2	BOLT (M8X1.25X16-MM)
12	NPR M	8T-4137	3	BOLT (M10X1.5X20-MM)
13	NPR	7K-1181	4	STRAP-CABLE

Key:

B - USE AS REQUIRED
M - METRIC PART

145-5938 WIRING GP-ENGINE ---S/N 4ZN16044-50156
PART OF 158-6062 ENGINE AR
Type 2

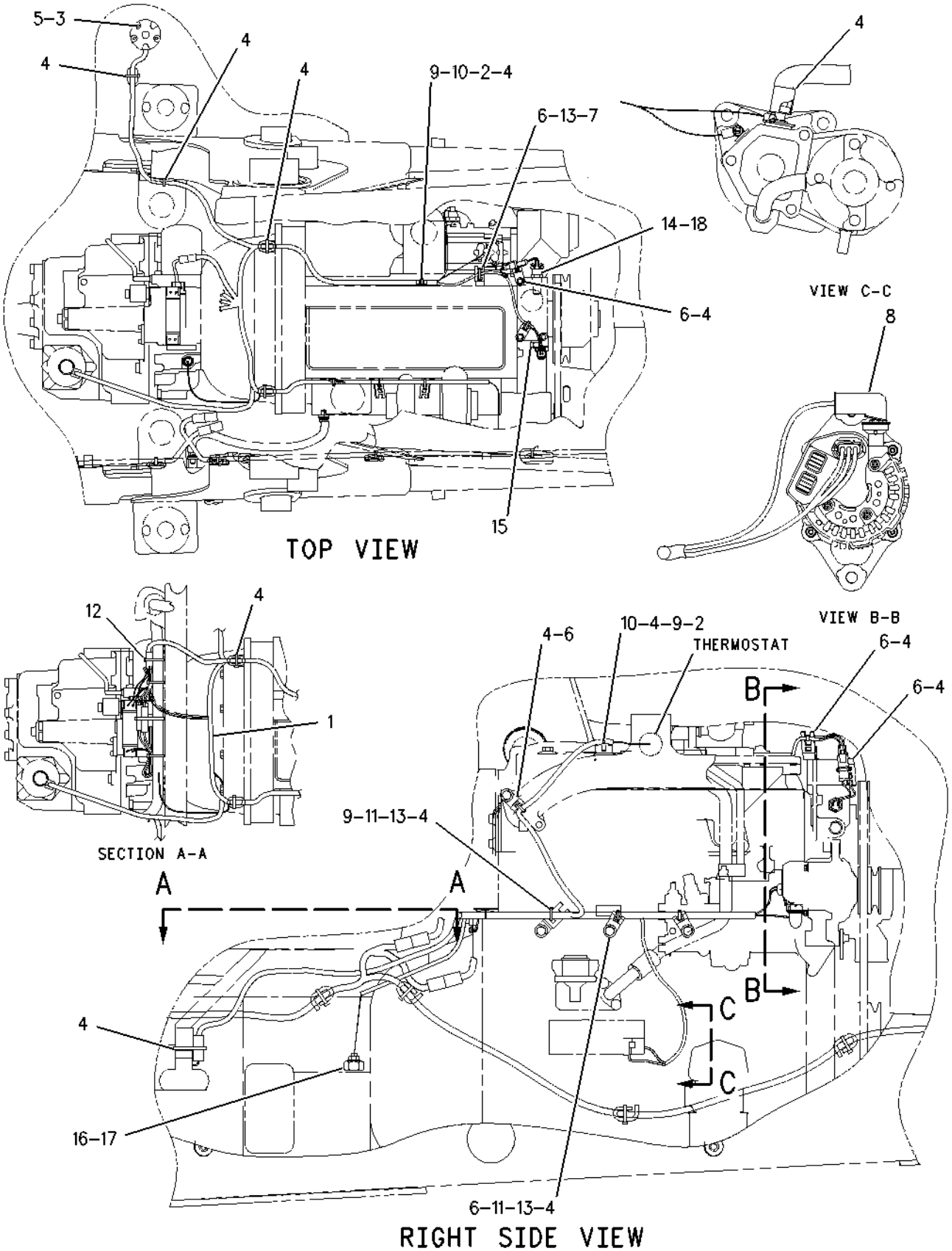

1 NPR C 178-3771 1 HARNESS AS-ENGINE

NPR 155-2270 4 KIT-CONNECTING PLUG (2-PIN)

(INCLUDES PLUG AS & WEDGE)

NPR 102-8802 1 KIT-RECEPTACLE (2-PIN)

(INCLUDES RECEPTACLE AS & WEDGE)

NPR 155-2271 1 KIT-CONNECTING PLUG (4-PIN)

(INCLUDES PLUG AS & WEDGE)

NPR 102-8806 1 KIT-RECEPTACLE (8-PIN)

(INCLUDES RECEPTACLE AS & WEDGE)

2 NPR 5P-4116 2 WASHER-HARD (8.8X20.5X2-MM THK)

3 NPR 131-0232 1 COVER

4 NPR B 3S-2093 16 STRAP-CABLE

5 NPR M 123-4950 3 SCREW-PAN HEAD (M6X1X16-MM)

6 NPR 4P-8134 7 CLIP

7 NPR M 8T-4136 1 BOLT (M10X1.5X25-MM)

8 NPR 8T-8799 1 BOOT

9 NPR 4P-7581 3 CLIP

10 NPR M 8T-4200 2 BOLT (M8X1.25X16-MM)

11 NPR M 8T-4137 3 BOLT (M10X1.5X20-MM)

12 NPR 7K-1181 4 STRAP-CABLE

13 NPR 8T-4121 4 WASHER-HARD (11X21X2.5-MM THK)

14 NPR 6T-2665 1 SWITCH AS-TEMPERATURE (COOLANT)

NPR 6V-8376 2 SCREW-MACHINE (8-32X0.25-IN)

NPR 9B-7233 2 LOCKWASHER

15 NPR 175-3070 1 SENDER AS-TEMPERATURE (12-VOLT)(12 VOLT) (COOLANT)

NPR 8T-8729 2 PIN-CONNECTOR

NPR 102-8802 1 KIT-RECEPTACLE (2-PIN)

(INCLUDES RECEPTACLE AS & WEDGE)

16 NPR 4W-9972 1 SENDER AS-TEMPERATURE (12-VOLT)(12 VOLT) (CONVERTER)

NPR 4B-2049 1 NUT (10-32-THD)

NPR 8F-1434 1 LOCKWASHER

NPR 8T-0328 1 WASHER-HARD (5.5X10X1-MM THK)

17 NPR 3J-1907 1 SEAL-O-RING

18 NPR 183-2530 1 WIRE AS

Key:

B - USE AS REQUIRED
C - CHANGE FROM PREVIOUS TYPE
M - METRIC PART

122-1645 WIRING GP-KICKOUT & POSITIONER
S/N 4ZN16044-50156--PART OF 107-3313 LOADER AR
ALSO AN ATTACHMENT

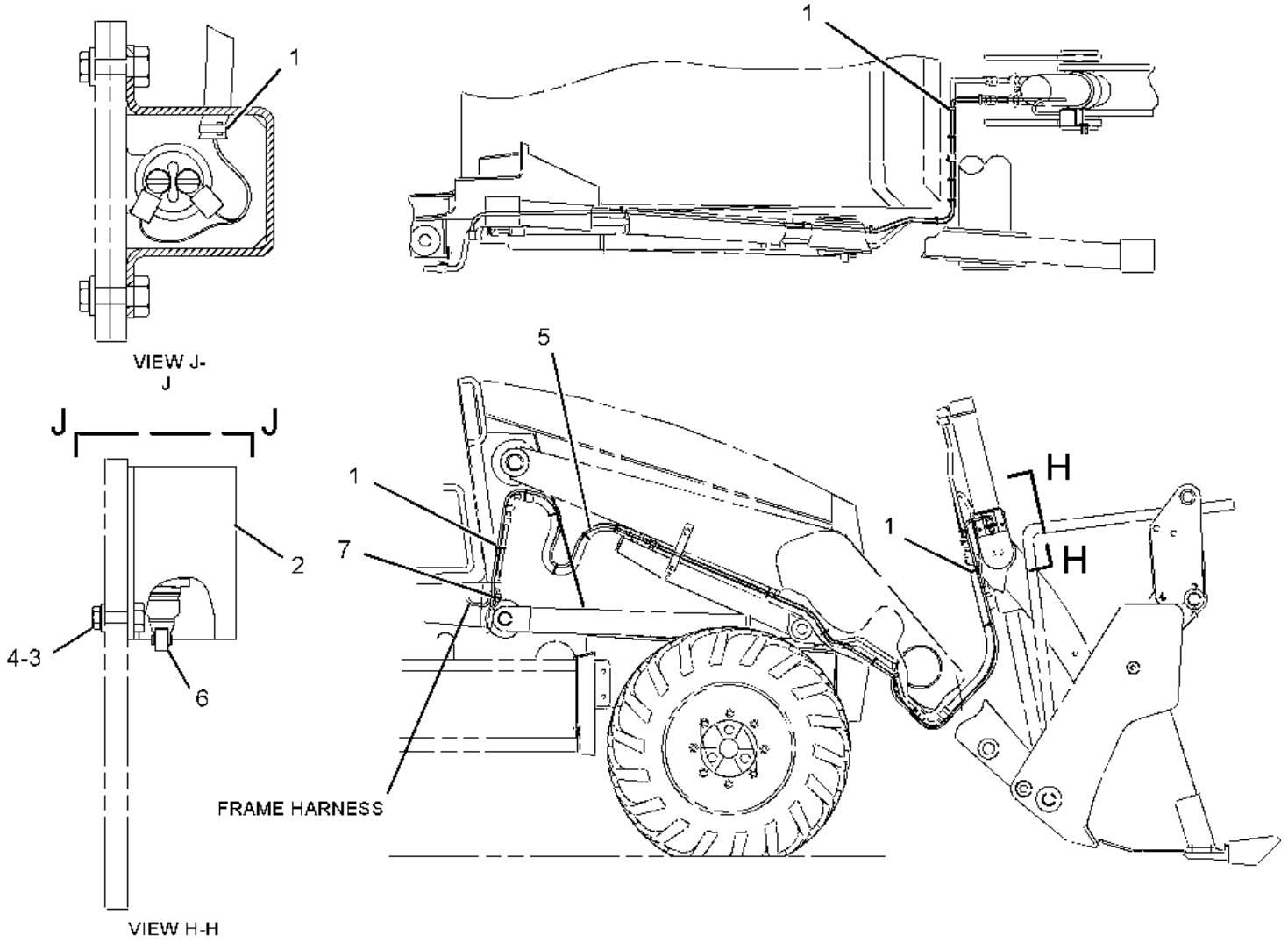

1 NPR 3S-2093 37 STRAP-CABLE

2 NPR 118-7790 1 BRACKET AS

NPR M 6V-9632 2 NUT-WELD (M6X1-THD)

3 NPR M 8T-4138 2 BOLT (M6X1X20-MM)

4 NPR 8T-4205 2 WASHER-HARD (7.2X14.5X2-MM THK)

5 NPR 107-5605 1 HARNESS AS-WIRING (KICKOUT, POSITIONER)

NPR 102-8803 1 KIT-RECEPTACLE (3-PIN)

(INCLUDES RECEPTACLE & WEDGE)

6	NPR	206-1486	1	SWITCH AS-ROLLER (KICKOUT, POSITIONER)
	NPR	2H-3922	1	LOCKWASHER
	NPR	6V-8363	2	SCREW (10-32X0.312-IN)
	NPR	6V-8370	1	NUT-HEX (3/4-32-THD)
	NPR	8F-1434	2	LOCKWASHER
	NPR	9X-0199	1	BOOT-SWITCH
7	NPR	7K-1181	1	STRAP-CABLE

Key:

M - METRIC PART

105-5153 WIRING GP-LIGHTING -FLOODLIGHT
S/N 4ZN16044-50156
PART OF 163-9194 CANOPY AR-OPEN ROPS

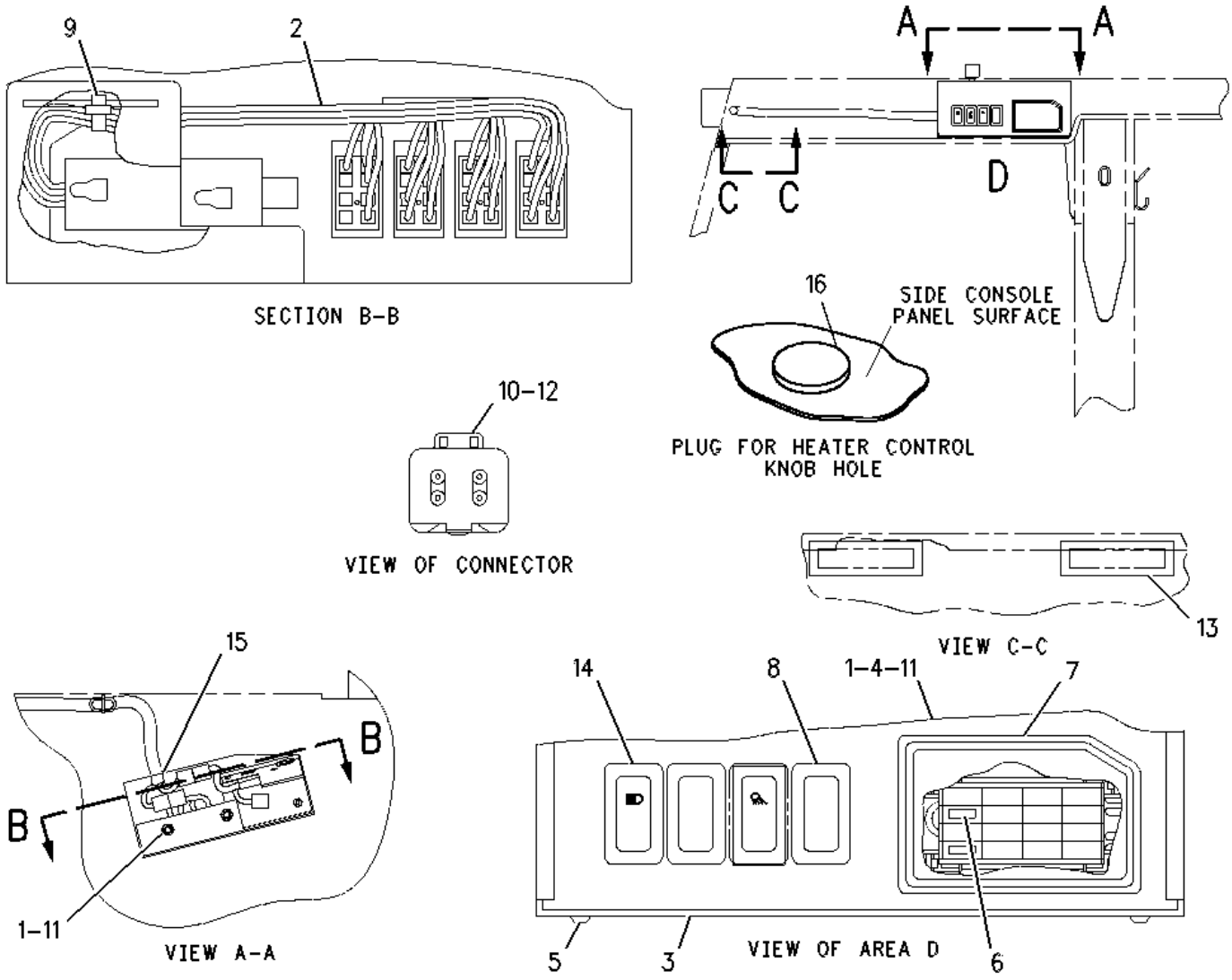

1 NPR 8T-4121 3 WASHER-HARD (11X21X2.5-MM THK)

2 NPR 9R-9900 1 HARNESS AS-LIGHTING (FLOODLIGHT)

3 NPR 130-1280 1 COVER

4 NPR 105-5154 1 BRACKET AS

NPR 5D-9629 2 ROD

NPR M 6V-9632 2 NUT-WELD (M6X1-THD)

5 NPR M 9X-2043 2 SCREW-TRUSS HEAD (M6X1X14-MM)

6 NPR 113-8490 2 FUSE (10-AMPERE)

7 NPR 104-3905 1 COVER-FUSE

8 NPR 109-2356 1 PLUG

9 NPR 3S-2093 1 STRAP-CABLE

10 NPR 102-8804 1 KIT-RECEPTACLE (4-PIN)

(INCLUDES RECEPTACLE & WEDGE)

11 NPR M 8T-4133 3 NUT (M10X1.5-THD)

12 NPR 3E-3377 1 WEDGE-RECEPTACLE LOCK (4-PIN)

13 NPR 104-5964 2 FILM

14 NPR 109-2346 1 SWITCH AS-ROCKER (ROADING LIGHTS)

NPR 111-7899 1 GASKET

15 NPR 6K-0806 1 STRAP-CABLE

16 NPR 9J-1874 1 PLUG

Key:

M - METRIC PART

104-5969 WIRING GP-POWER RECEPTACLE -WARNING BEACON
S/N 4ZN16044-50156
PART OF 142-6107 WIRING GP-POWER RECEPTACLE

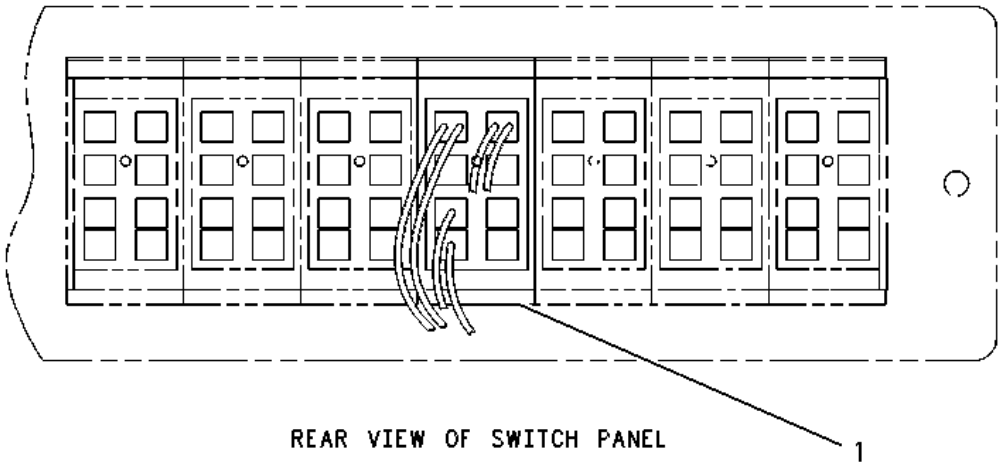

REAR VIEW OF SWITCH PANEL

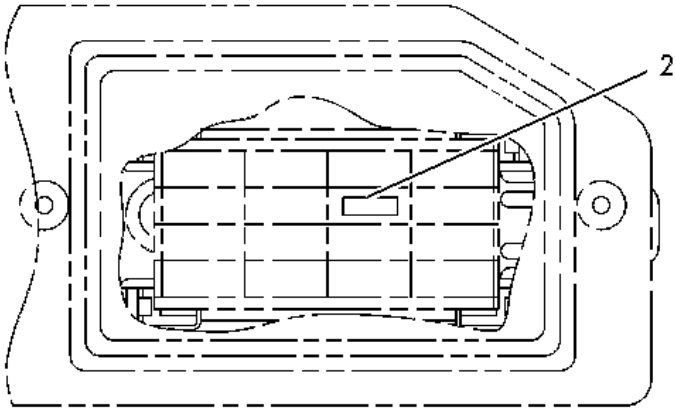

FRONT VIEW OF SWITCH PANEL

1 NPR 109-2350 1 SWITCH AS-ROCKER (WARNING BEACON, POWER RECEP)(BEACON/POWER RECEPTACLE)

NPR 111-7899 1 GASKET

2 NPR 113-8490 1 FUSE (10-AMPERE)

124-8958 WIRING GP-POWER RECEPTACLE -INSTRUMENT PANEL
S/N 4ZN21312-50156

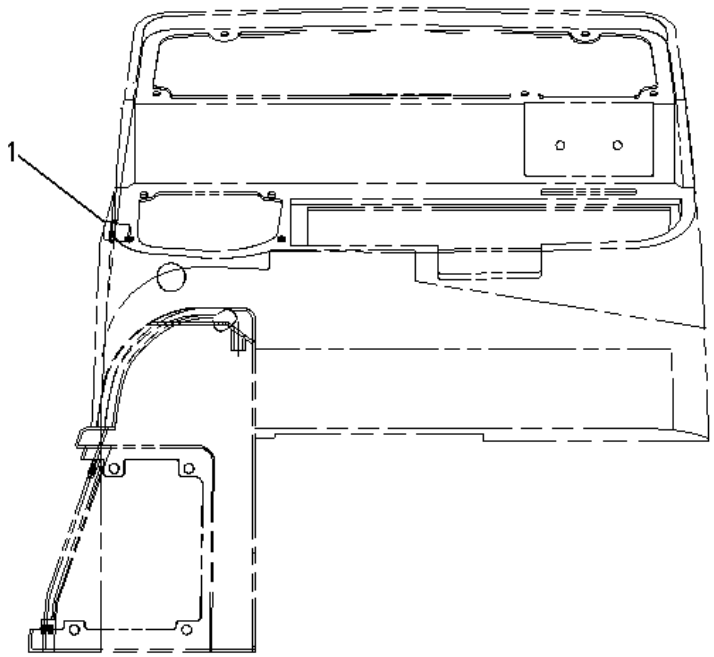

1 NPR C 178-7539 1 RECEPTACLE AS (POWER SUPPLY)

Key: C - CHANGE FROM PREVIOUS TYPE

142-6107 WIRING GP-POWER RECEPTACLE -WARNING BEACON
S/N 4ZN21216-50156

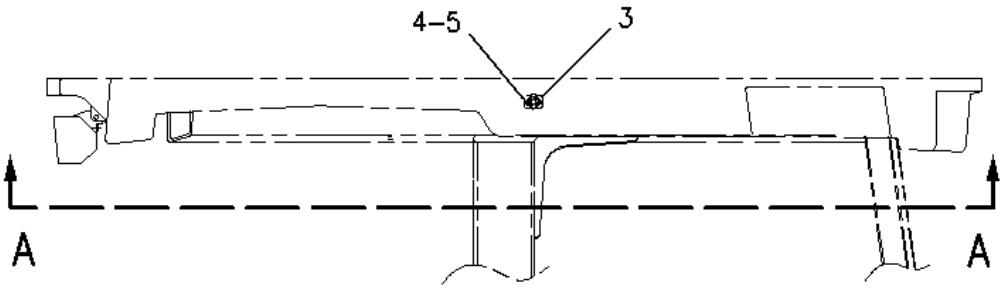

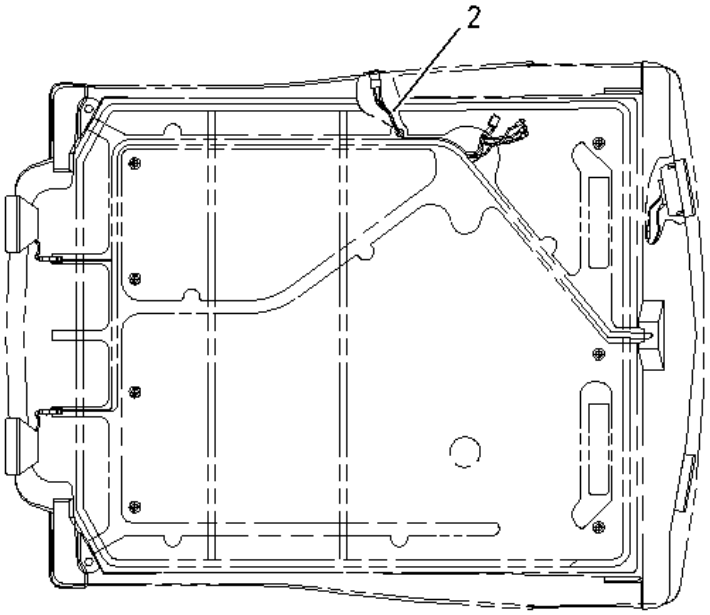

VIEW A-A

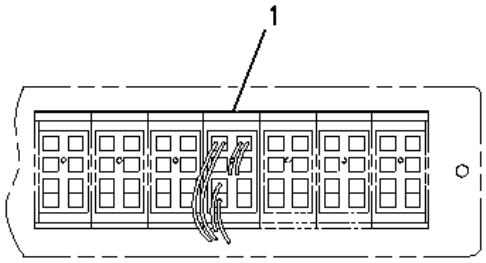

REAR VIEW

1	**NPR Y**	**104-5969**	**1**	**WIRING GP-POWER RECEPTACLE**
2	**NPR C**	**186-2573**	**1**	**HARNESS AS-CAB (WARNING BEACON, POWER RECEP)**
3	**NPR C**	**178-7539**	**1**	**RECEPTACLE AS (POWER SUPPLY)**
4	**NPR C**	**3E-6922**	**2**	**SCREW-RECESS FLAT HEAD (NO 6X19X12.7-MM)**
5	**NPR C**	**179-5435**	**1**	**FLANGE**

Key:

C - CHANGE FROM PREVIOUS TYPE
Y - SEPARATE ILLUSTRATION

163-9198 WIRING GP-POWER SHIFT --S/N 4ZN16044-50156
PART OF 159-4962, 159-4963, 159-4964, 159-4965 CONTROL AR-POWER SHIFT TMSN

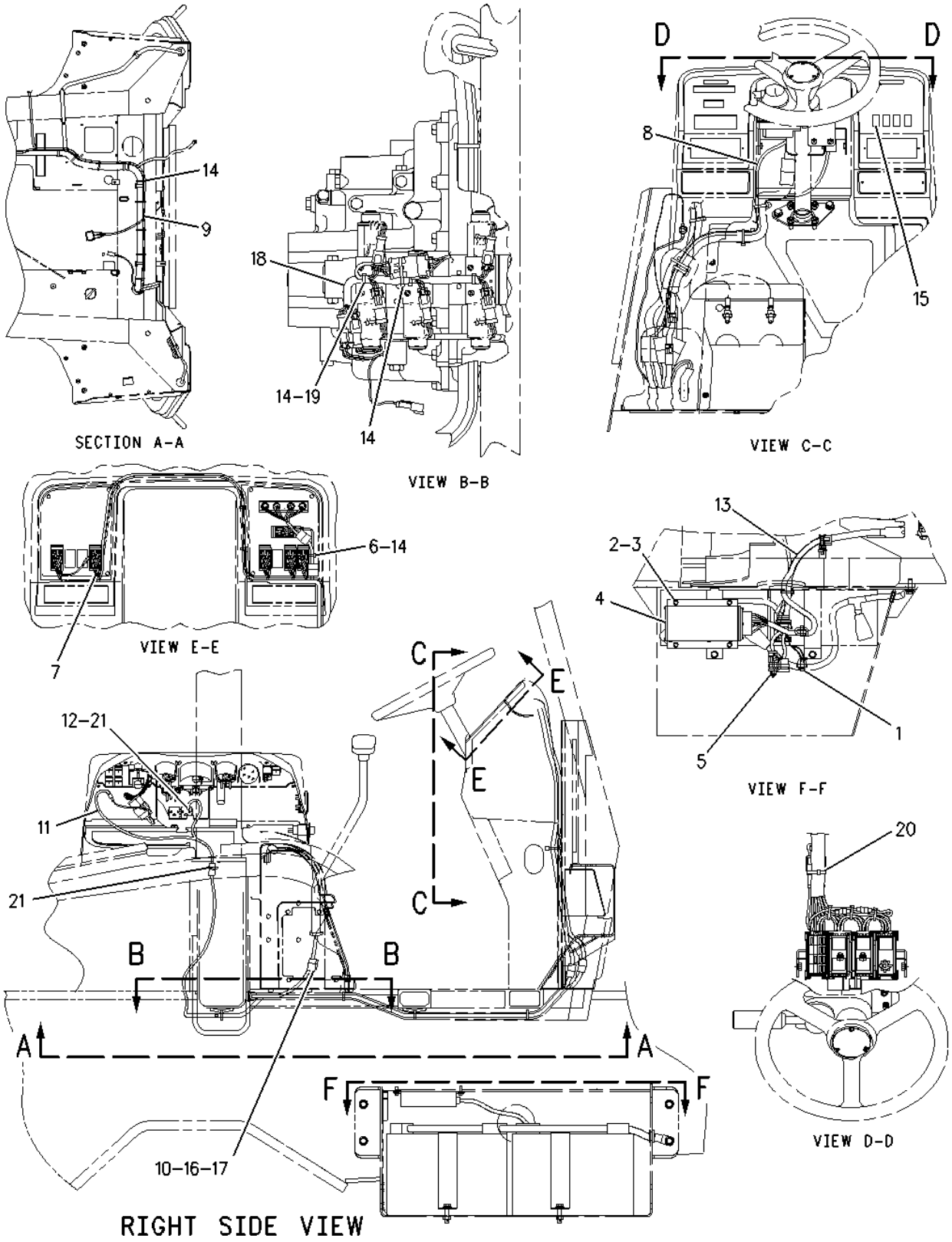

1 NPR 3E-8679 1 DIODE AS-LIGHT

2 NPR M 5C-9553 4 BOLT (M6X1X16-MM)

3 NPR 9X-8256 4 WASHER (6.6X12X2-MM THK)

4 NPR R 155-4085 1 CONTROL GP-TMSN ELECTRONIC

R NPR 10R-5889 1 CONTROL GP

5 NPR 145-6900 1 PLUG AS-CODE

NPR 102-8806 1 KIT-RECEPTACLE (8-PIN)

(INCLUDES RECEPTACLE AS & WEDGE)

NPR 3E-3389 1 WEDGE-RECEPTACLE LOCK

NPR 186-3735 4 PIN-CONNECTOR (16-GA TO 18-GA)

NPR 8T-8737 4 PLUG-SEAL

6 NPR 146-9437 1 HARNESS AS-CONSOLE (FRONT)

NPR 155-2274 1 KIT-CONNECTING PLUG (6-PIN)

(INCLUDES PLUG AS & WEDGE)

NPR 102-8805 1 KIT-RECEPTACLE (6-PIN)

(INCLUDES RECEPTACLE AS & WEDGE)

7 NPR 146-5719 1 HARNESS AS-CONSOLE (FRONT, FIFTH GEAR LOCKOUT)

NPR 102-8808 1 KIT-CONNECTING PLUG (3-PIN)

(INCLUDES PLUG AS & WEDGE)

8 NPR 140-8477 1 HARNESS AS-PLATFORM

NPR 155-2270 1 KIT-CONNECTING PLUG (2-PIN)

(INCLUDES RECEPTACLE AS & WEDGE)

NPR 102-8801 1 KIT-RECEPTACLE (12-PIN)

(INCLUDES PLUG AS & WEDGE)

NPR 141-2977 1 KIT-CONNECTING PLUG

9 NPR 142-1276 1 HARNESS AS-CHASSIS

NPR 102-8802 3 KIT-RECEPTACLE (2-PIN)

NPR 102-8803 1 KIT-RECEPTACLE (3-PIN)

NPR 102-8806 1 KIT-RECEPTACLE (8-PIN)

NPR 102-8801 1 KIT-RECEPTACLE (12-PIN)

(EACH INCLUDES RECEPTACLE AS & WEDGE)

NPR 155-2270 2 KIT-CONNECTING PLUG (2-PIN)

NPR 102-8808 1 KIT-CONNECTING PLUG (3-PIN)

NPR 155-2255 1 KIT-CONNECTING PLUG (12-PIN)

(EACH INCLUDES PLUG AS & WEDGE)

10 NPR 9R-9868 1 SWITCH GP-PUSH BUTTON (NEUTRALIZER, DOWNSHIFT)

NPR 9W-0625 1 SWITCH AS

11 NPR 142-1277 1 HARNESS AS-CONSOLE (SIDE)

NPR 102-8803 1 KIT-RECEPTACLE (3-PIN)

(INCLUDES RECEPTACLE AS & WEDGE)

12 NPR 3E-9362 1 RELAY AS (12-VOLT)

13 NPR 163-9197 1 HARNESS AS-POWER

NPR 102-8805 1 KIT-RECEPTACLE (6-PIN)

(INCLUDES RECEPTACLE AS & WEDGE)

NPR 155-2265 1 KIT-CONNECTING PLUG (8-PIN)

NPR 155-2265 1 KIT-CONNECTING PLUG (8-PIN)

NPR 155-2255 1 KIT-CONNECTING PLUG (12-PIN)

(EACH INCLUDES PLUG AS, WEDGE, AND INTERFACE SEAL)

14 NPR 3S-2093 25 STRAP-CABLE

15 NPR 146-8464 1 SWITCH AS-ROCKER (FIFTH GEAR LOCKOUT)

NPR 111-7899 1 GASKET

16 NPR 3E-3365 1 WEDGE-RECEPTACLE LOCK (2-PIN)

17 NPR 102-8802 1 KIT-RECEPTACLE (2-PIN)

(INCLUDES RECEPTACLE AS & WEDGE)

18 NPR 151-7453 1 HARNESS AS-TRANSMISSION

NPR 155-2270 4 KIT-CONNECTING PLUG (2-PIN)

(INCLUDES PLUG AS, WEDGE, & INTERFACE SEAL)

NPR 155-2260 2 KIT-CONNECTING PLUG (3-PIN)

(INCLUDES PLUG AS, WEDGES, AND INTERFACE SEAL)

NPR 102-8802 1 KIT-RECEPTACLE (2-PIN)

NPR 102-8801 1 KIT-RECEPTACLE (12-PIN)

(INCLUDES RECEPTACLE AS & WEDGE)

19 NPR 155-8522 3 MOUNT

20 NPR 7K-1181 1 STRAP-CABLE

21 NPR 6K-0806 2 STRAP-CABLE

Key:

M - METRIC PART

163-9227 WIRING GP-RIDE CONTROL ---S/N 4ZN16044-50156
PART OF 154-5419 CONTROL AR-RIDE

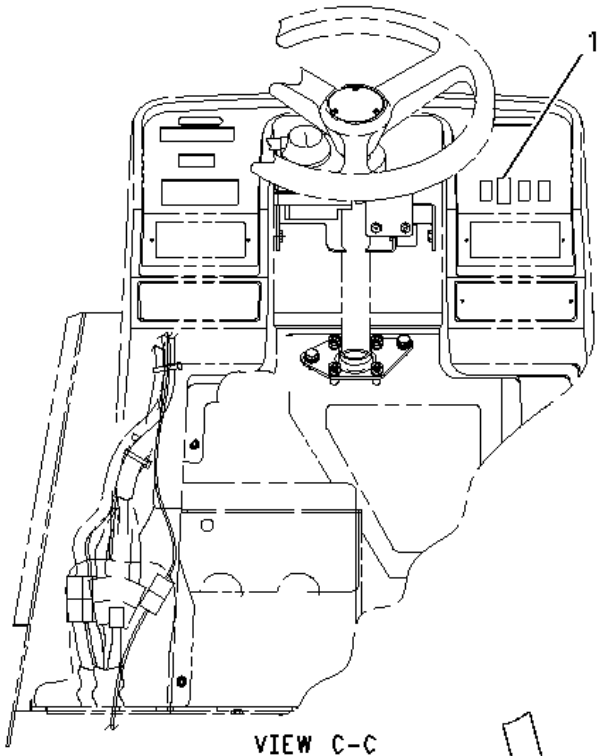

VIEW C-C

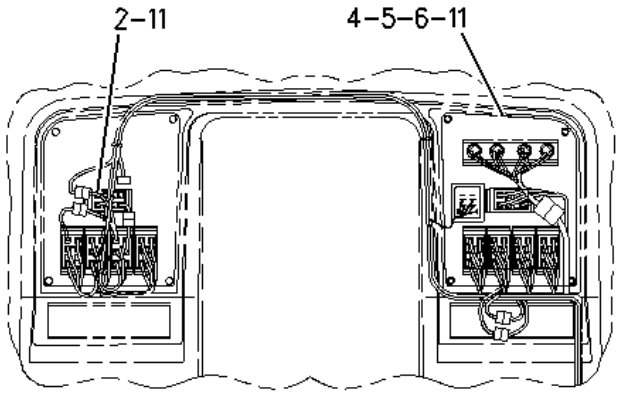

SECTION D-D

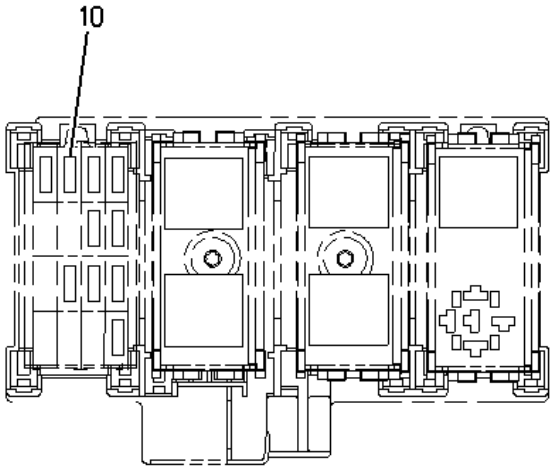

VIEW E-E

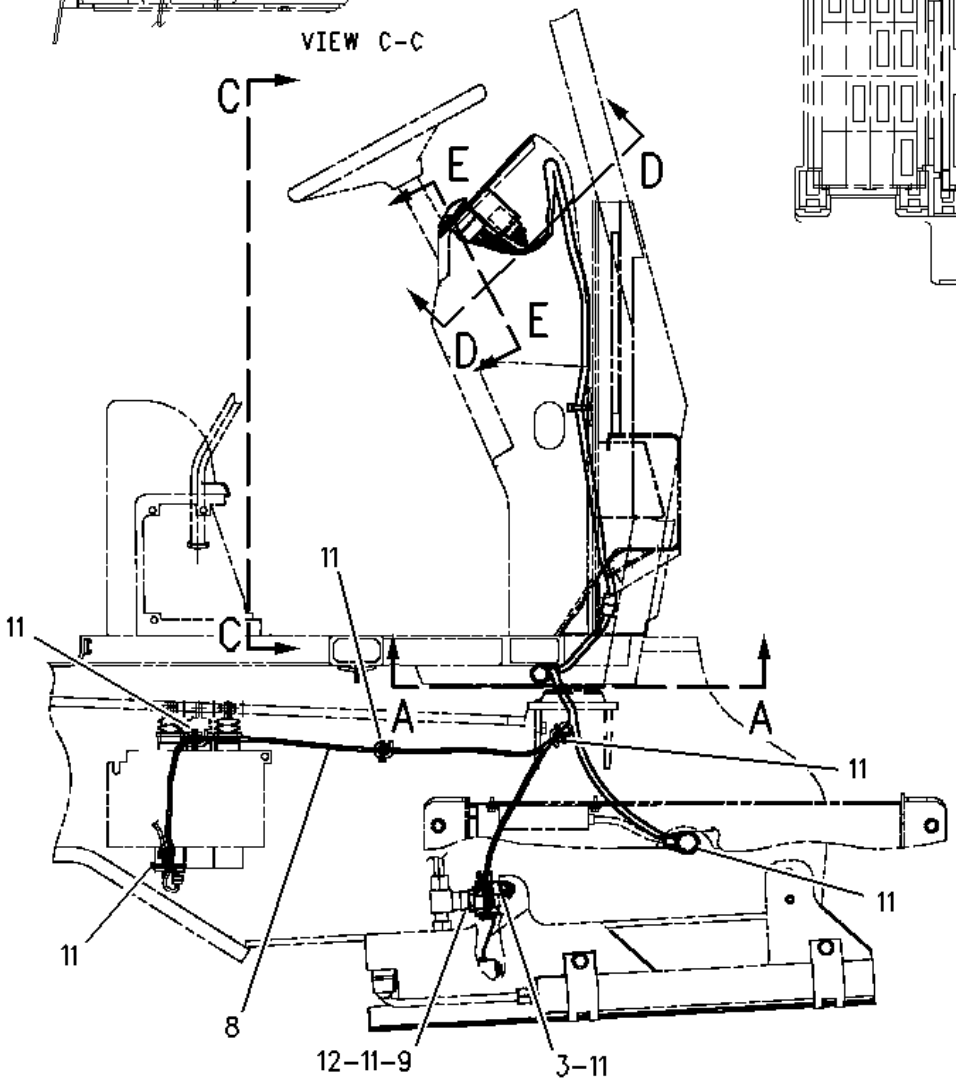

RIGHT SIDE VIEW

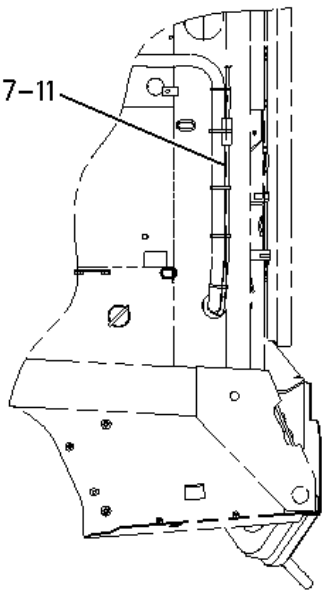

SECTION A-A

1 NPR 163-4534 1 SWITCH AS-ROCKER (RIDE CONTROL)

NPR 111-7899 1 GASKET

2 NPR 163-1390 1 HARNESS AS-RIDE CONTROL (FRONT CONSOLE)

NPR 102-8807 1 KIT-CONNECTING PLUG (2-PIN)

(INCLUDES PLUG AS & WEDGE)

NPR 155-2265 1 KIT-CONNECTING PLUG (8-PIN)

(INCLUDES PLUG AS, WEDGE, & INTERFACE SEAL)`

3 NPR 4P-8134 1 CLIP

4 NPR 3E-7572 1 RELAY AS

5 NPR 9W-0267 1 CLIP-RELAY

6 NPR 106-8704 1 SUPPRESSOR AS-ARC

NPR 102-8802 1 KIT-RECEPTACLE (2-PIN)

(INCLUDES RECEPTACLE AS & WEDGE)

NPR 3E-3365 1 WEDGE-RECEPTACLE LOCK (2-PIN)

NPR 186-3735 2 PIN-CONNECTOR (16-GA TO 18-GA)

7 NPR 163-3136 1 HARNESS AS-RIDE CONTROL (PLATFORM)

NPR 155-2265 1 KIT-CONNECTING PLUG (8-PIN)

(INCLUDES PLUG AS, WEDGE, & INTERFACE SEAL)

NPR 102-8806 1 KIT-RECEPTACLE (8-PIN)

(INCLUDES RECEPTACLE & WEDGE)

8 NPR 197-3174 1 HARNESS AS-RIDE CONTROL (CHASSIS)

NPR 155-2270 1 KIT-CONNECTING PLUG (2-PIN)

NPR 155-2274 1 KIT-CONNECTING PLUG (6-PIN)

(INCLUDES PLUG AS, WEDGE, & INTERFACE SEAL)`

NPR 155-2260 1 KIT-CONNECTING PLUG (3-PIN)

(INCLUDES PLUG AS, WEDGES, & INTERFACE SEAL)

	NPR	102-8806	1	KIT-RECEPTACLE (8-PIN)
	NPR	102-8803	1	KIT-RECEPTACLE (3-PIN)
		(INCLUDES RECEPTACLE AS & WEDGE)		
9	NPR	131-9203	1	SWITCH AS-PRESSURE (RIDE CONTROL)
	NPR	102-8803	1	KIT-RECEPTACLE (3-PIN)
		(INCLUDES RECEPTACLE AS & WEDGE)		
	NPR	3E-3371	1	WEDGE-RECEPTACLE LOCK (3-PIN)
	NPR	186-3735	3	PIN-CONNECTOR (16-GA TO 18-GA)
10	NPR	113-8491	1	FUSE (15-AMPERE)
11	NPR	3S-2093	17	STRAP-CABLE
12	NPR	3J-1907	1	SEAL-O-RING

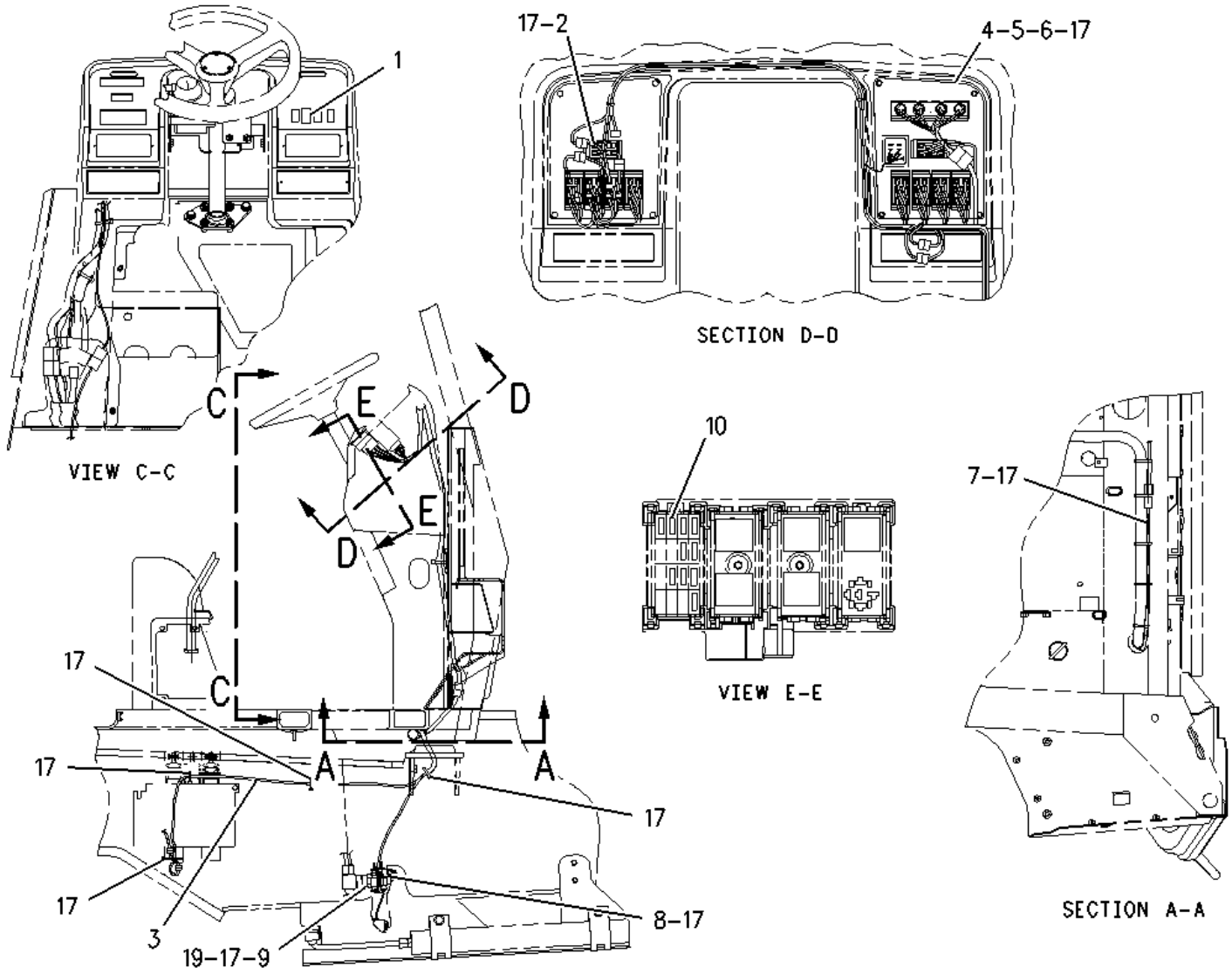

1 NPR 163-4535 1 SWITCH AS (RIDE CONTROL)

NPR 111-7899 1 GASKET

2 NPR 163-1391 1 HARNESS AS-RIDE CONTROL (FRONT INSTRUMENT PANEL)

NPR 155-2270 1 KIT-CONNECTING PLUG (2-PIN)

(KIT SERVICES PLUG AS. AND WEDGE)

NPR 155-2274 1 KIT-CONNECTING PLUG (6-PIN)

(INCLUDES PLUG AS. AND WEDGE)

NPR 3S-2093 21 STRAP-CABLE

3 NPR 197-3173 1 HARNESS AS-RIDE CONTROL (FRAME)

NPR 155-2270 1 KIT-CONNECTING PLUG (2-PIN)

(INCLUDES PLUG AS. AND WEDGE)

NPR 155-2260 2 KIT-CONNECTING PLUG (3-PIN)

(INCLUDES PLUG AS. AND WEDGE)

NPR 102-8803 1 KIT-RECEPTACLE (3-PIN)

(INCLUDES RECEPTACLE AS. AND WEDGE)

NPR 102-8805 1 KIT-RECEPTACLE (6-PIN)

(INCLUDES RECEPTACLE AS. AND WEDGE)

NPR 8T-8737 1 PLUG-SEAL

4 NPR 3E-7572 1 RELAY AS

5 NPR 9W-0267 1 CLIP-RELAY

6 NPR 106-8704 1 SUPPRESSOR AS-ARC

NPR 102-8802 1 KIT-RECEPTACLE (2-PIN)

(INCLUDES RECEPTACLE AS. AND WEDGE)

NPR 3E-3365 1 WEDGE-RECEPTACLE LOCK (2-PIN)

NPR 186-3735 2 PIN-CONNECTOR (16-GA TO 18-GA)

7 NPR 163-3137 1 HARNESS AS-RIDE CONTROL (PLATFORM)

NPR 155-2270 1 KIT-CONNECTING PLUG (2-PIN)

(INCLUDES PLUG AS. AND WEDGE)

NPR 155-2274 1 KIT-CONNECTING PLUG (6-PIN)

(INCLUDES PLUG AS. AND WEDGE)

NPR 102-8805 1 KIT-RECEPTACLE (6-PIN)

(INCLUDES RECEPTACLE AS. AND WEDGE)

NPR 3S-2093 1 STRAP-CABLE

8 NPR 4P-8134 1 CLIP (SLOT)

9 NPR 131-9203 1 SWITCH AS-PRESSURE

	NPR	102-8803	1	KIT-RECEPTACLE (3-PIN)
		(INCLUDES RECEPTACLE AS. AND WEDGE)		
	NPR	3E-3371	1	WEDGE-RECEPTACLE LOCK (3-PIN)
	NPR	186-3735	3	PIN-CONNECTOR (16-GA TO 18-GA)
10	NPR	113-8491	1	FUSE (15-AMPERE)
17	NPR	3S-2093	16	STRAP-CABLE
19	NPR	3J-1907	1	SEAL-O-RING

PART OF 163-9209 KIT-RIDE CONTROL

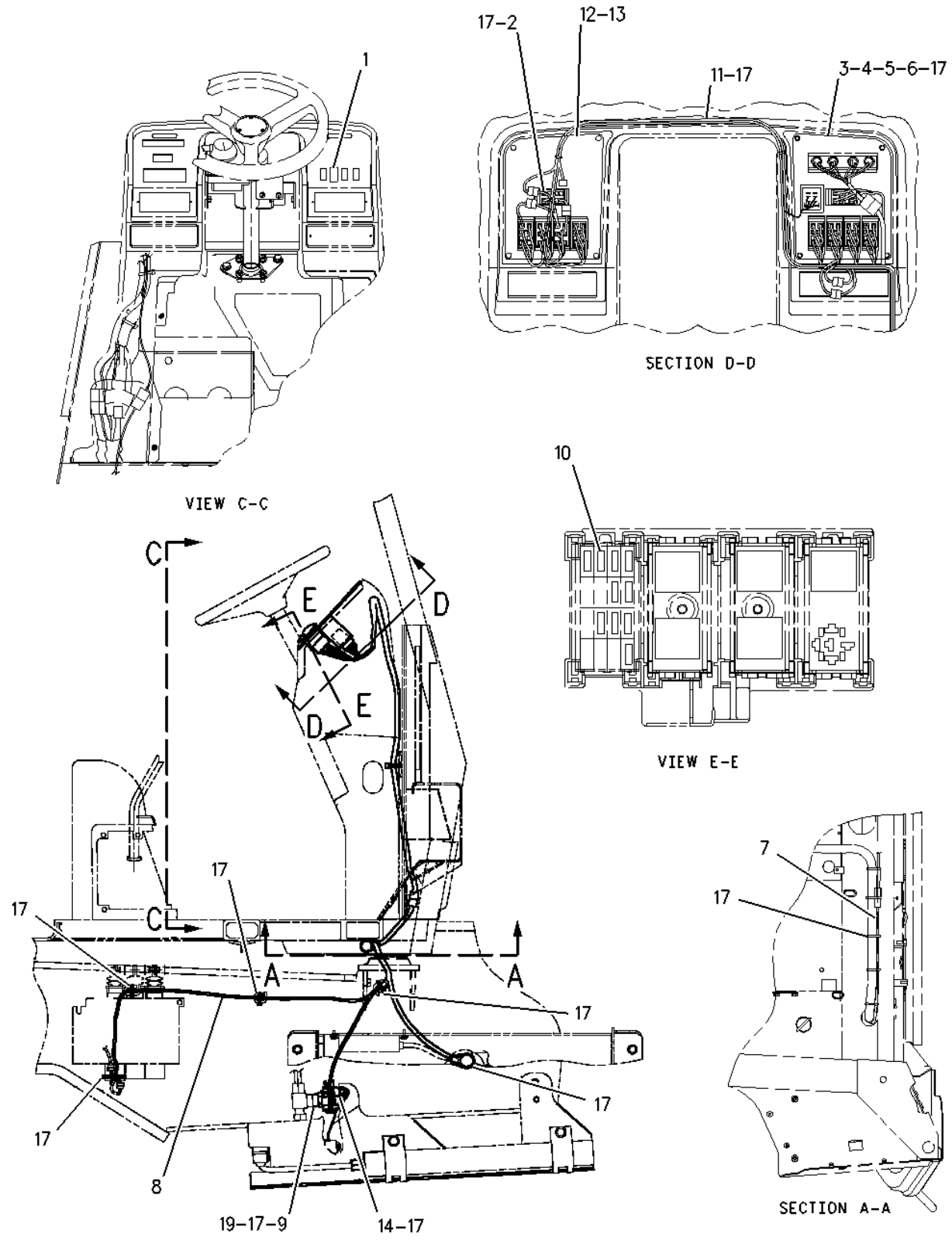

1 NPR 163-4535 1 SWITCH AS (RIDE CONTROL)

NPR 111-7899 1 GASKET

2 NPR 163-1391 1 HARNESS AS-RIDE CONTROL (FRONT INSTRUMENT PANEL)

NPR 155-2270 1 KIT-CONNECTING PLUG (2-PIN)

(KIT SERVICES PLUG AS. AND WEDGE)

NPR 155-2274 1 KIT-CONNECTING PLUG (6-PIN)

(KIT SERVICES PLUG AS. AND WEDGE)

NPR 3S-2093 21 STRAP-CABLE

3 NPR 163-4531 1 PLATE AS (LH)

4 NPR 3E-7572 1 RELAY AS

5 NPR 9W-0267 1 CLIP-RELAY

6 NPR 106-8704 1 SUPPRESSOR AS-ARC

NPR 102-8802 1 KIT-RECEPTACLE (2-PIN)

(KIT SERVICES RECEPTACLE AS. AND WEDGE)

NPR 3E-3365 1 WEDGE-RECEPTACLE LOCK (2-PIN)

NPR 186-3735 2 PIN-CONNECTOR (16-GA TO 18-GA)

7 NPR 163-3137 1 HARNESS AS-RIDE CONTROL (PLATFORM)

NPR 155-2270 1 KIT-CONNECTING PLUG (2-PIN)

(KIT SERVICES PLUG AS. AND WEDGE)

NPR 155-2274 1 KIT-CONNECTING PLUG (6-PIN)

(KIT SERVICES PLUG AS. AND WEDGE)

NPR 102-8805 1 KIT-RECEPTACLE (6-PIN)

(KIT SERVICES RECEPTACLE AS. AND WEDGE)

NPR 3S-2093 1 STRAP-CABLE

8 NPR 197-3173 1 HARNESS AS-RIDE CONTROL (FRAME)

NPR 155-2270 1 KIT-CONNECTING PLUG (2-PIN)

(KIT SERVICES PLUG AS. AND WEDGE)

NPR 155-2260 1 KIT-CONNECTING PLUG (3-PIN)

				(KIT SERVICES PLUG AS. AND WEDGE)
	NPR	102-8803	1	KIT-RECEPTACLE (3-PIN)
				(KIT SERVICES RECEPTACLE AS. AND WEDGE)
	NPR	102-8805	1	KIT-RECEPTACLE (6-PIN)
				(KIT SERVICES RECEPTACLE AS. AND WEDGE)
	NPR	8T-8737	1	PLUG-SEAL
9	NPR	131-9203	1	SWITCH AS-PRESSURE
	NPR	102-8803	1	KIT-RECEPTACLE (3-PIN)
				(KIT SERVICES RECEPTACLE AS. AND WEDGE)
	NPR	3E-3371	1	WEDGE-RECEPTACLE LOCK (3-PIN)
	NPR	186-3735	3	PIN-CONNECTOR (16-GA TO 18-GA)
10	NPR	113-8491	1	FUSE (15-AMPERE)
11	NPR	145-9986	1	HARNESS AS-PANEL (QUICK COUPLER SWITCHES, SOL)
	NPR	155-2274	1	KIT-CONNECTING PLUG (6-PIN)
				(KIT SERVICES PLUG AS. AND WEDGE)
	NPR	3S-2093	14	STRAP-CABLE
	NPR	8T-8737	1	PLUG-SEAL
12	NPR	163-4532	1	PLATE AS (RH)
13	NPR	163-4533	1	PLATE (RH)
14	NPR	4P-8134	1	CLIP
17	NPR	3S-2093	21	STRAP-CABLE
19	NPR	3J-1907	1	SEAL-O-RING

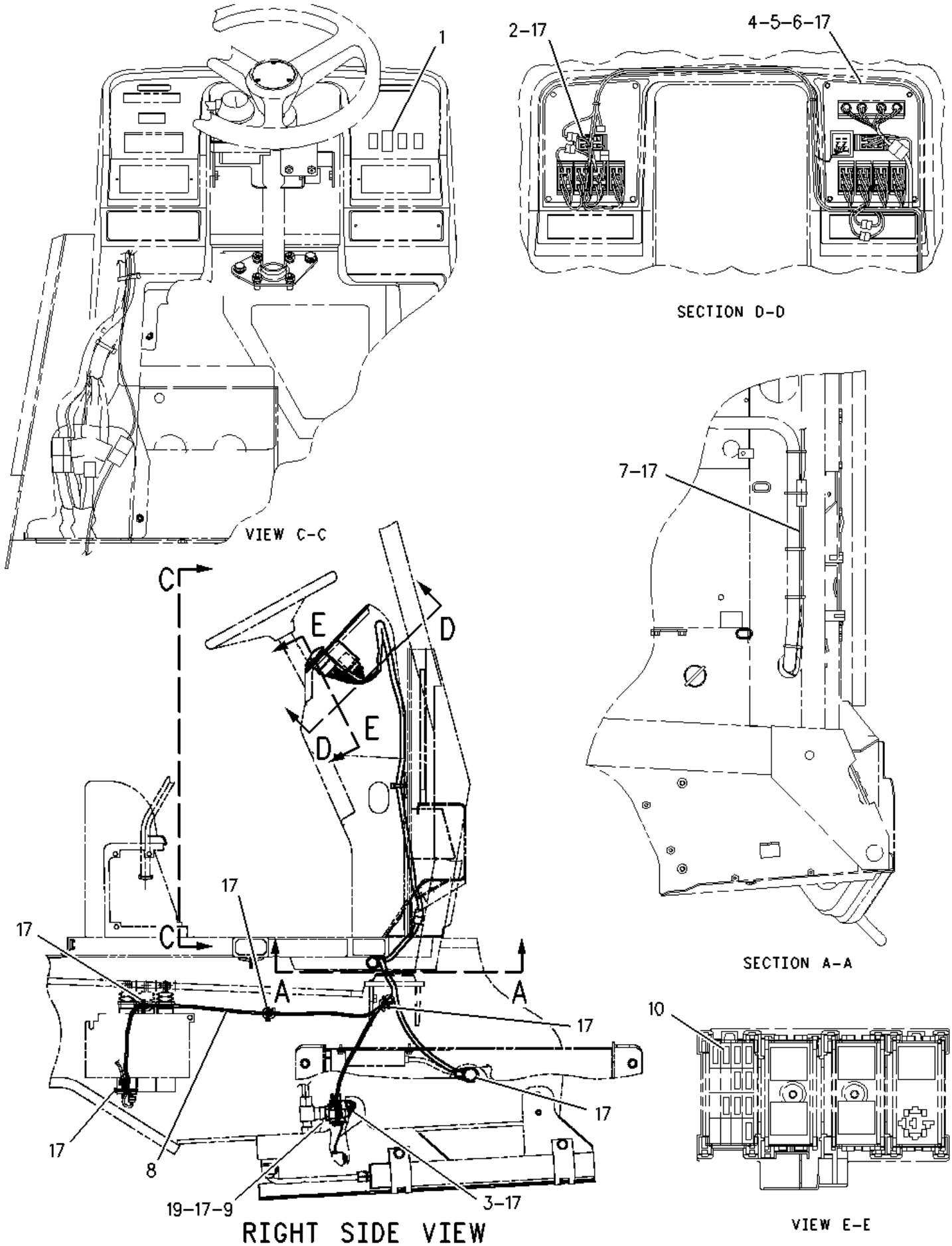

RIGHT SIDE VIEW

1 NPR 175-6769 1 SWITCH AS-ROCKER (RIDE CONTROL)

NPR 111-7899 1 GASKET

2 NPR 163-1390 1 HARNESS AS-RIDE CONTROL (FRONT CONSOLE)

NPR 155-2270 1 KIT-CONNECTING PLUG (2-PIN)

NPR 155-2265 1 KIT-CONNECTING PLUG (8-PIN)

(EACH INCLUDES PLUG AS, WEDGE, & INTERFACE SEAL)

3 NPR 4P-8134 1 CLIP

4 NPR 3E-7572 1 RELAY AS

5 NPR 9W-0267 1 CLIP-RELAY

6 NPR 106-8704 1 SUPPRESSOR AS-ARC

NPR 102-8802 1 KIT-RECEPTACLE (2-PIN)

(INCLUDES RECEPTACLE AS & WEDGE)

NPR 186-3735 2 PIN-CONNECTOR (16-GA TO 18-GA)

7 NPR 163-3136 1 HARNESS AS-RIDE CONTROL (PLATFORM)

NPR 155-2265 1 KIT-CONNECTING PLUG (8-PIN)

(INCLUDES PLUG AS, WEDGE, & INTERFACE SEAL)

NPR 102-8806 1 KIT-RECEPTACLE (8-PIN)

(INCLUDES RECEPTACLE AS & WEDGE)

8 NPR 197-3174 1 HARNESS AS-RIDE CONTROL (CHASSIS)

NPR 155-2270 1 KIT-CONNECTING PLUG (2-PIN)

NPR 155-2274 1 KIT-CONNECTING PLUG (6-PIN)

(EACH INCLUDES PLUG AS, WEDGE, & INTERFACE SEAL)

NPR 155-2260 2 KIT-CONNECTING PLUG (3-PIN)

(INCLUDES PLUG AS, WEDGES, & INTERFACE SEAL)

NPR 102-8803 1 KIT-RECEPTACLE (3-PIN)

NPR 102-8806 1 KIT-RECEPTACLE (8-PIN)

	(EACH INCLUDES RECEPTACLE AS & WEDGE)			
9	NPR	131-9203	1	SWITCH AS-PRESSURE
	NPR	102-8803	1	KIT-RECEPTACLE (3-PIN)
	(INCLUDES RECEPTACLE AS & WEDGE)			
	NPR	186-3735	3	PIN-CONNECTOR (16-GA TO 18-GA)
10	NPR	113-8491	1	FUSE (15-AMPERE)
17	NPR	3S-2093	17	STRAP-CABLE
19	NPR	3J-1907	1	SEAL-O-RING

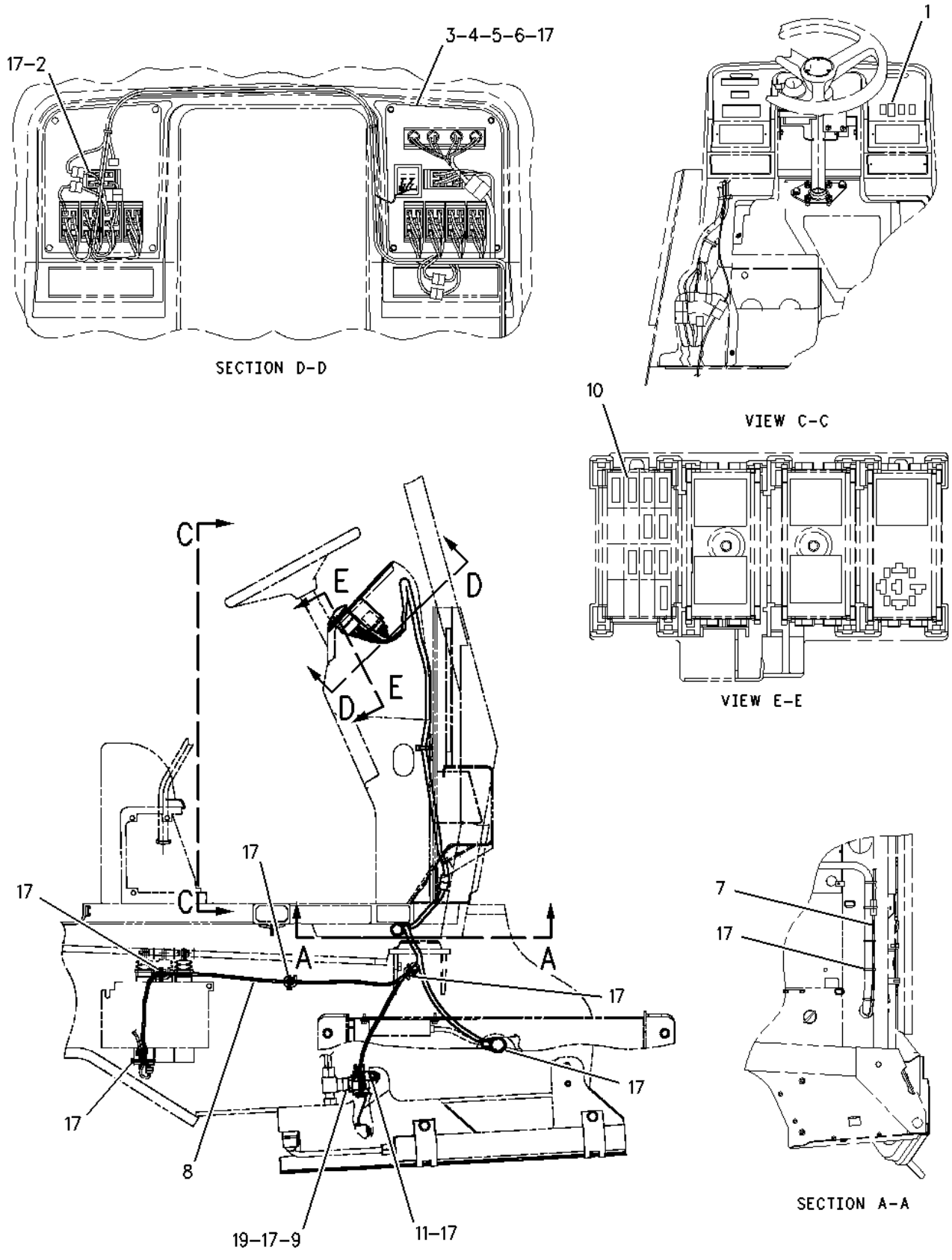

1 NPR 175-6769 1 SWITCH AS-ROCKER (RIDE CONTROL)

NPR 111-7899 1 GASKET

2 NPR 163-1390 1 HARNESS AS-RIDE CONTROL (FRONT CONSOLE)

NPR 155-2270 1 KIT-CONNECTING PLUG (2-PIN)

NPR 155-2265 1 KIT-CONNECTING PLUG (8-PIN)

(INCLUDES PLUG AS, WEDGE, & INTERFACE SEAL)

3 NPR 163-4531 1 PLATE AS (LH)

4 NPR 3E-7572 1 RELAY AS

5 NPR 9W-0267 1 CLIP-RELAY

6 NPR 106-8704 1 SUPPRESSOR AS-ARC

NPR 102-8802 1 KIT-RECEPTACLE (2-PIN)

(INCLUDES RECEPTACLE & WEDGE)

NPR 3E-3365 1 WEDGE-RECEPTACLE LOCK (2-PIN)

NPR 186-3735 2 PIN-CONNECTOR (16-GA TO 18-GA)

7 NPR 163-3136 1 HARNESS AS-RIDE CONTROL (PLATFORM)

NPR 155-2265 1 KIT-CONNECTING PLUG (8-PIN)

(INCLUDES PLIG AS, WEDGE, & INTERFACE SEAL)

NPR 102-8806 1 KIT-RECEPTACLE (8-PIN)

(INCLUDES RECEPTACLE AS & WEDGE)

8 NPR 197-3174 1 HARNESS AS-RIDE CONTROL (CHASSIS)

NPR 155-2270 1 KIT-CONNECTING PLUG (2-PIN)

NPR 155-2274 1 KIT-CONNECTING PLUG (6-PIN)

(EACH INCLUDES PLUG AS, WEDGE, & INTERFACE SEAL)

NPR 155-2260 2 KIT-CONNECTING PLUG (3-PIN)

(INCLUDES PLUG AS, WEDGES, & INTERFACE SEAL)

NPR 102-8803 1 KIT-RECEPTACLE (3-PIN)

NPR 102-8806 1 KIT-RECEPTACLE (8-PIN)

(INCLUDES RECEPTACLE AS & WEDGE)

9	NPR	131-9203	1	SWITCH AS-PRESSURE (RIDE CONTROL)
	NPR	102-8803	1	KIT-RECEPTACLE (3-PIN)
	(INCLUDES RECEPTACLE AS & WEDGE)			
	NPR	3E-3371	1	WEDGE-RECEPTACLE LOCK (3-PIN)
	NPR	186-3735	3	PIN-CONNECTOR (16-GA TO 18-GA)
10	NPR	113-8491	1	FUSE (15-AMPERE)
11	NPR	4P-8134	1	CLIP
17	NPR	3S-2093	17	STRAP-CABLE
19	NPR	3J-1907	1	SEAL-O-RING

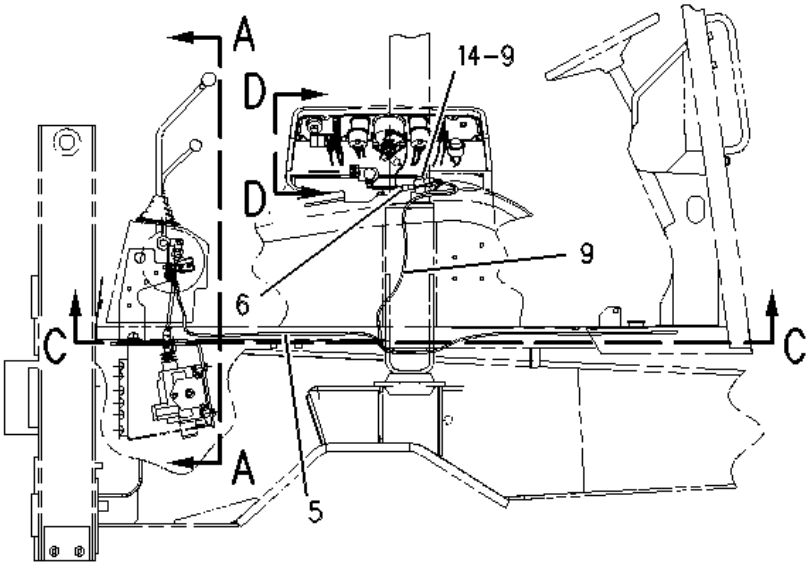

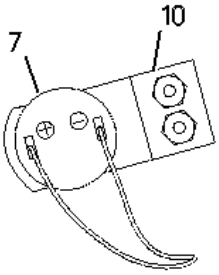

VIEW E-E

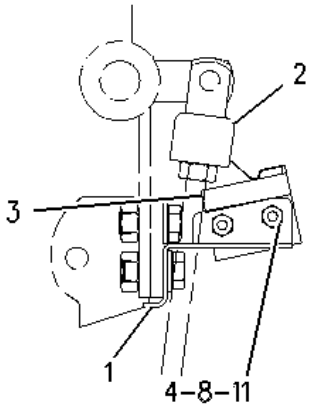

VIEW B-B

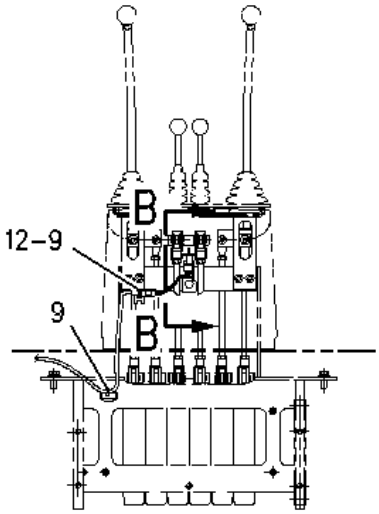

VIEW A-A

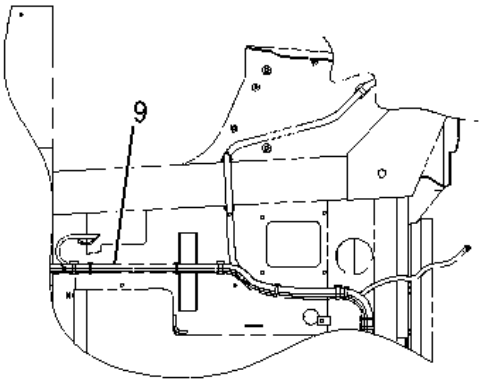

VIEW C-C

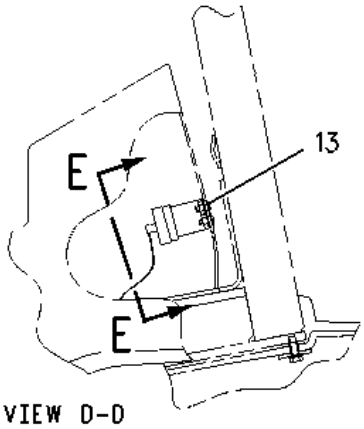

VIEW D-D

1 NPR 136-6876 1 BRACKET

2 NPR 155-6228 2 PLATE

3 NPR 142-3340 1 SWITCH AS-LIMIT (STABILIZER)

NPR 102-8802 1 KIT-RECEPTACLE (2-PIN)

(INCLUDES RECEPTACLE AS & WEDGE)

4 NPR M 8T-3998 2 BOLT (M4X0.7X12-MM)

5 NPR 136-7432 1 HARNESS AS-WIRING (STABILIZER)

NPR 102-8802 1 KIT-RECEPTACLE (2-PIN)

NPR 102-8803 1 KIT-RECEPTACLE (3-PIN)

(EACH INCLUDES RECEPTACLE & WEDGE)

NPR 155-2270 4 KIT-CONNECTING PLUG (2-PIN)

				(INCLUDES PLUG AS, WEDGE, & INTERFACE SEAL)
	NPR	155-2260	2	KIT-CONNECTING PLUG (3-PIN)
				(INCLUDES PLUG AS, WEDGES, & INTERFACE SEAL)
6	NPR	136-7430	1	HARNESS AS-PANEL (STABILIZER)
	NPR	155-2270	1	KIT-CONNECTING PLUG (2-PIN)
				(INCLUDES PLUG AS, WEDGE, & INTERFACE SEAL)
7	NPR	136-5185	1	ALARM-WARNING
8	NPR	4B-4863	4	WASHER (4.7X11X1.2-MM THK)
9	NPR	3S-2093	20	STRAP-CABLE
10	NPR	136-7437	1	BRACKET AS
	NPR M	6V-9632	2	NUT-WELD (M6X1-THD)
11	NPR M	5C-8312	2	NUT (M4X0.7-THD)
12	NPR	4P-8134	1	CLIP
13	NPR M	9X-2043	2	SCREW-TRUSS HEAD (M6X1X14-MM)
14	NPR	106-8704	2	SUPPRESSOR AS-ARC
				(EACH INCLUDES)
	NPR	3E-3365	1	WEDGE-RECEPTACLE LOCK (2-PIN)
	NPR	186-3735	2	PIN-CONNECTOR (16-GA TO 18-GA)
	NPR	102-8802	1	KIT-RECEPTACLE (2-PIN)
				(INCLUDES RECEPTACLE AS & WEDGE)

Key:

M - METRIC PART

147-2732 WIRING GP-STABILIZER ALARM --S/N 4ZN16044-50156
PART OF 159-4964, 159-4965 CONTROL AR-POWER SHIFT TMSN

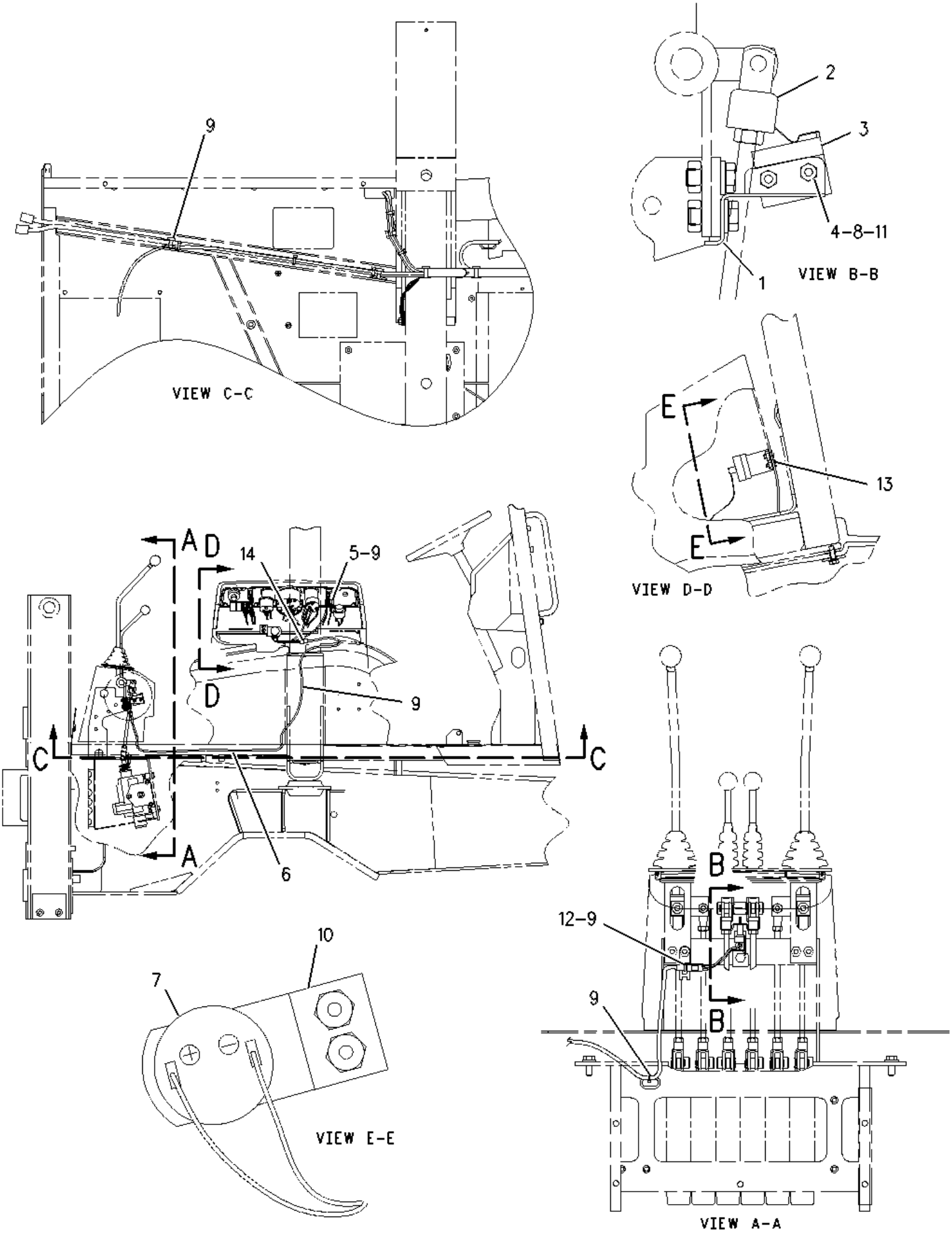

1 NPR 136-6876 1 BRACKET

2 NPR 155-6228 2 PLATE

3 NPR 142-3340 1 SWITCH AS-LIMIT (STABILIZER)

NPR 102-8802 1 KIT-RECEPTACLE (2-PIN)

(INCLUDES RECEPTACLE AS & WEDGE)

4 NPR M 8T-3998 2 BOLT (M4X0.7X12-MM)

5 NPR 3E-9362 1 RELAY AS (12-VOLT)

6 NPR 147-2741 1 HARNESS AS-WIRING (STABILIZER)

NPR 155-2270 1 KIT-CONNECTING PLUG (2-PIN)

(INCLUDES PLUG AS, WEDGE, & INTERFACE SEAL)

NPR 102-8802 1 KIT-RECEPTACLE (2-PIN)

(INCLUDES RECEPTACLE AS & WEDGE)

7 NPR 136-5185 1 ALARM-WARNING (STABILIZER)

8 NPR 4B-4863 4 WASHER (4.7X11X1.2-MM THK)

9 NPR 3S-2093 10 STRAP-CABLE

10 NPR 136-7437 1 BRACKET AS

NPR M 6V-9632 2 NUT-WELD (M6X1-THD)

11 NPR M 5C-8312 2 NUT (M4X0.7-THD)

12 NPR 4P-8134 1 CLIP

13 NPR M 9X-2043 2 SCREW-TRUSS HEAD (M6X1X14-MM)

14 NPR 147-2740 1 HARNESS AS-PANEL (STABILIZER)

NPR 155-2270 1 KIT-CONNECTING PLUG (2-PIN)

NPR 155-2260 1 KIT-CONNECTING PLUG (3-PIN)

NPR 102-8803 1 KIT-RECEPTACLE (3-PIN)

(INCLUDES RECEPTACLE & WEDGE)

Key: M - METRIC PART

141-7885 VALVE GP-BACKHOE NEUTRALIZER --S/N 4ZN16044-50156

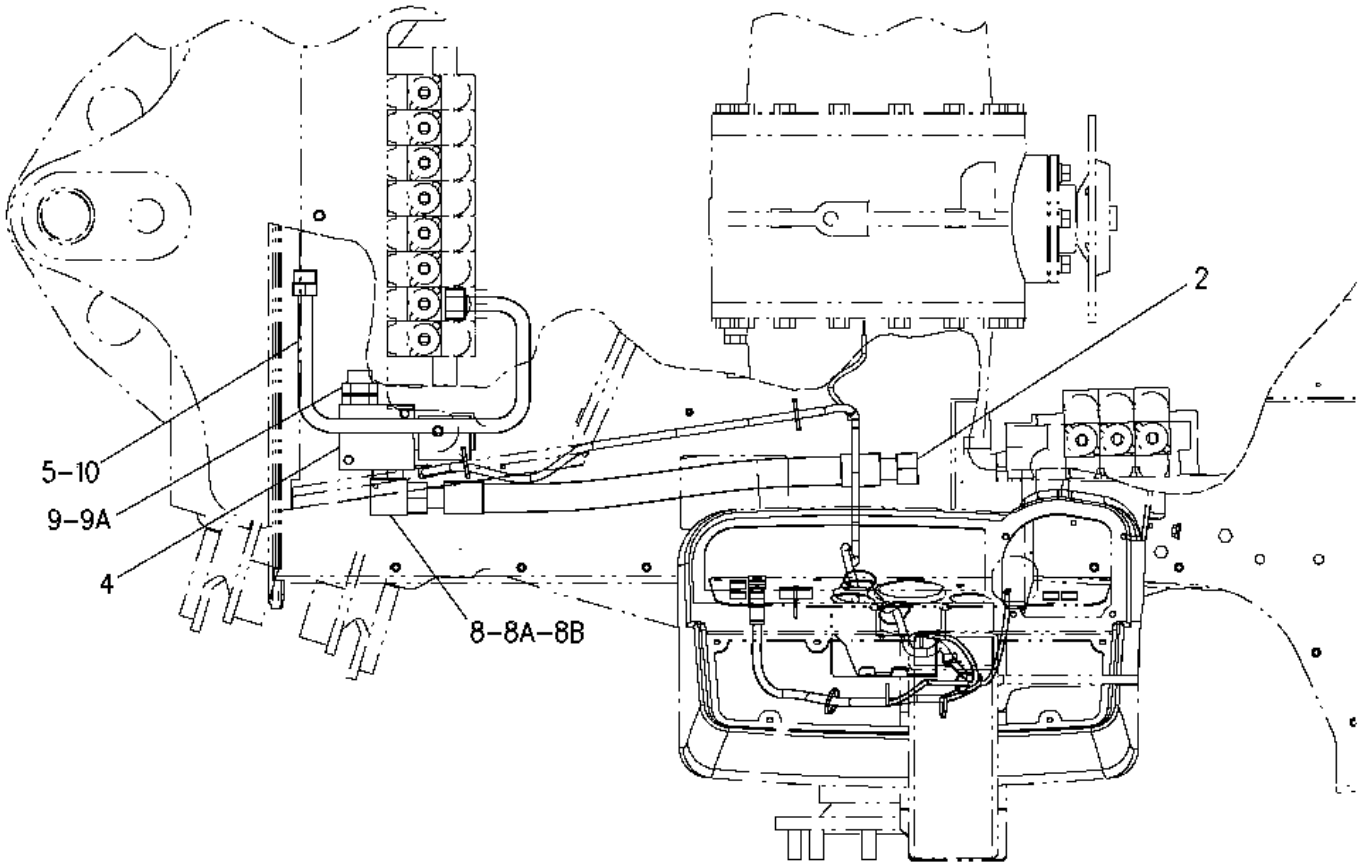

TOP VIEW

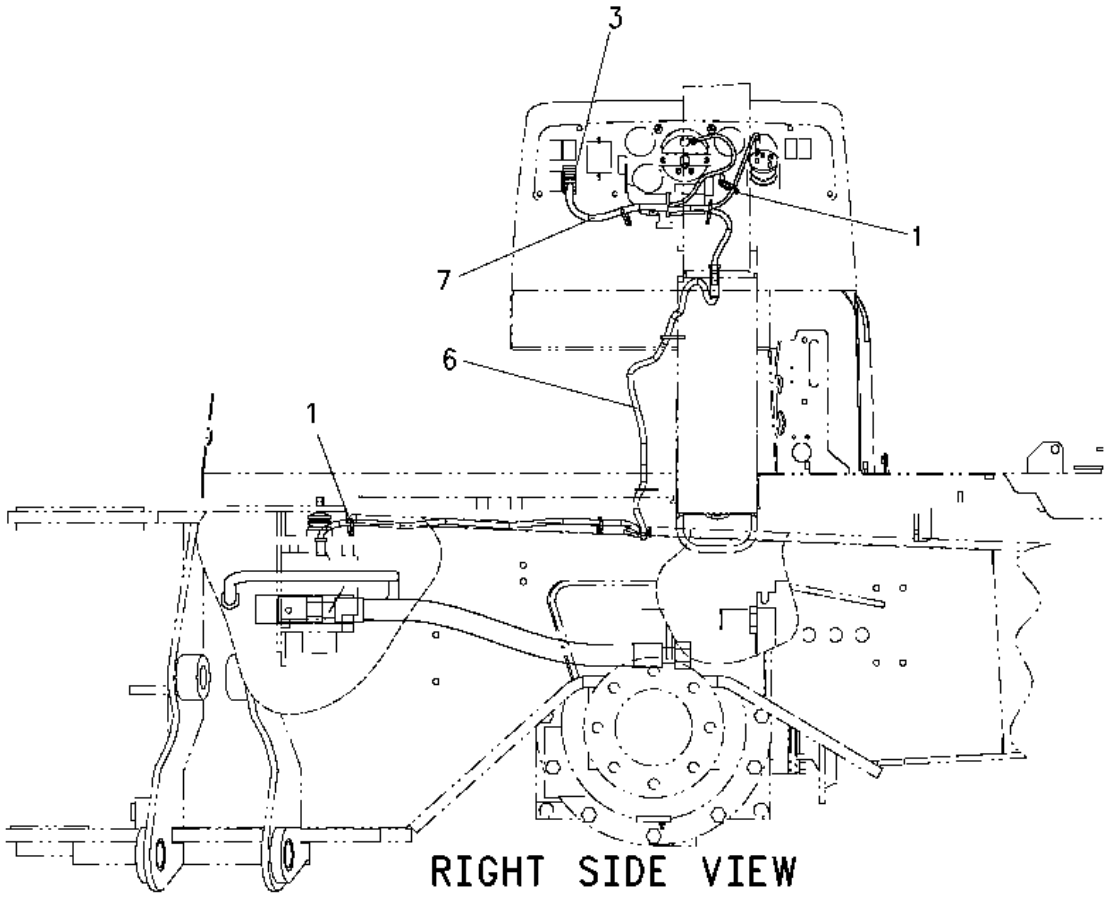

RIGHT SIDE VIEW

1 NPR 3S-2093 8 STRAP-CABLE

2 NPR I 117-3235 1 HOSE AS

3 NPR 130-6584 1 SWITCH AS-ROCKER (HYDRAULIC LOCKOUT)

NPR 111-7899 1 GASKET

4 NPR Y 138-1976 1 VALVE GP-SHUTOFF

5 NPR 141-7533 1 TUBE AS

6 NPR 141-9474 1 HARNESS AS

NPR 155-2270 1 KIT-CONNECTING PLUG (2-PIN)

(INCLUDES PLUG AS, WEDGE, & INTERFACE SEAL)

NPR 102-8802 1 KIT-RECEPTACLE (2-PIN)

(INCLUDES RECEPTACLE AS & WEDGE)

7 NPR 153-2785 1 HARNESS AS

NPR 155-2270 1 KIT-CONNECTING PLUG (2-PIN)

(INCLUDES PLUG AS, WEDGE, & INTERFACE SEAL)

NPR 8L-8413 2 STRAP-CABLE

NPR 111-7898 1 CONNECTOR

NPR 112-9611 4 TERMINAL-BLADE

8 NPR 5K-9090 1 SEAL-O-RING

8A NPR 6V-9008 1 ELBOW

8B NPR 7M-8485 1 SEAL-O-RING

9 NPR 7M-8485 2 SEAL-O-RING

9A NPR 113-4676 2 CONNECTOR

10 NPR 6V-9746 1 SEAL-O-RING

Key:

I - REFER TO HYDRAULIC INFORMATION SYSTEM
Y - SEPARATE ILLUSTRATION

POWER

TRAIN

PART OF 154-5449 DRIVE AR-BACKHOE LOADER--Type 1

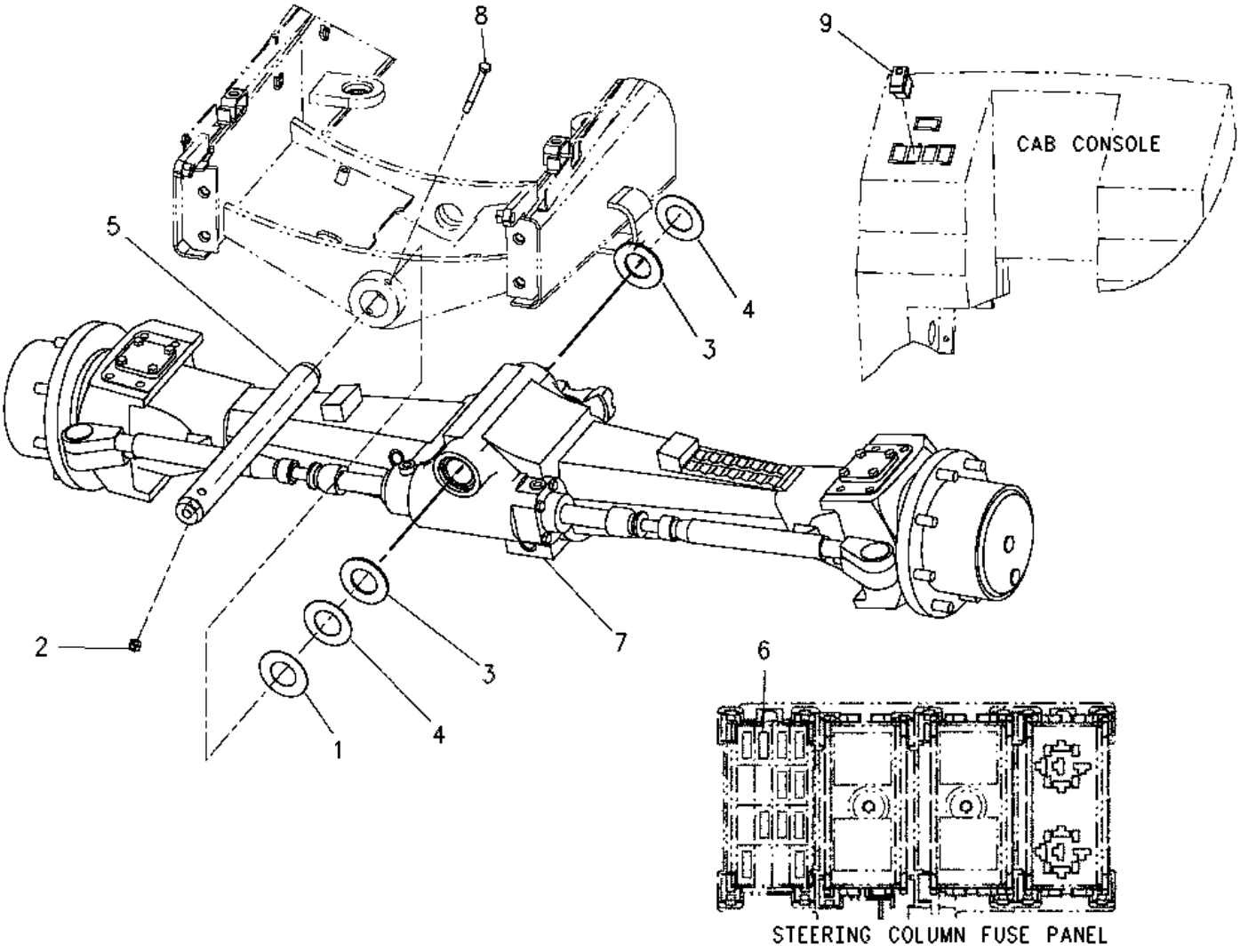

1	NPR	1K-7082	1	WASHER (2X4X1/32-IN THK)
2	NPR M	8T-8549	1	LOCKNUT (M12X1.75-THD)
3	NPR	165-8996	2	WASHER-THRUST (55.5X100.5X5-MM THK)
4	NPR	9R-9702	2	WASHER (56X100X1.6-MM THK)
5	NPR	112-9629	1	PIN
6	NPR	113-8491	1	FUSE (15-AMPERE)
7	NPR Y	154-5471	1	AXLE GP-DRIVE & STEERING
8	NPR M	8T-5041	1	BOLT (M12X1.75X120-MM)
9	NPR	106-6568	1	SWITCH AS (AWD)
	NPR	111-7899	1	GASKET

Key: M - METRIC PART Y - SEPARATE ILLUSTRATION

154-5467 AXLE & MTG GP-DRIVE & STEERING --S/N 4ZN16044-50156

PART OF 154-5449 DRIVE AR-BACKHOE LOADER---Type 2

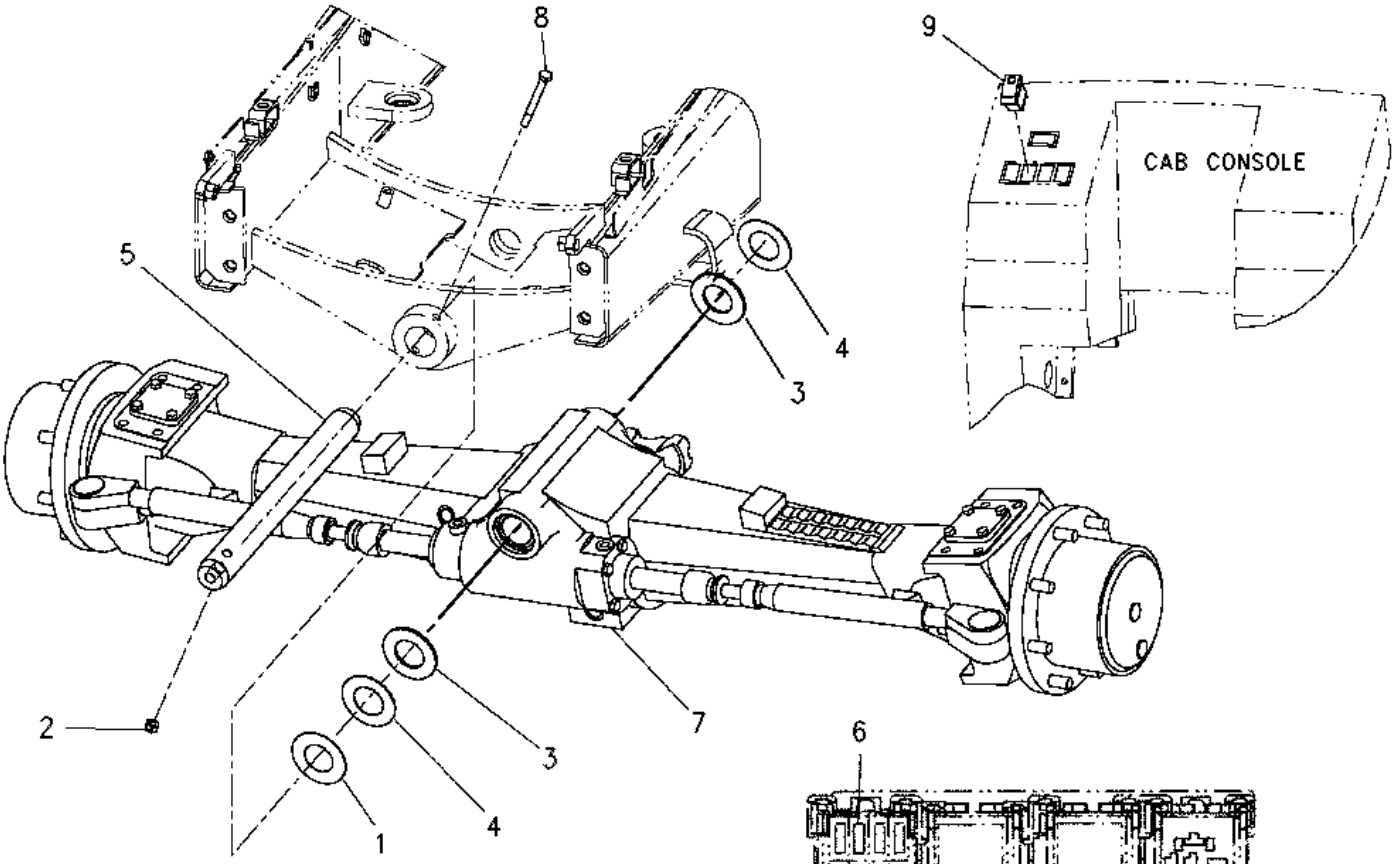

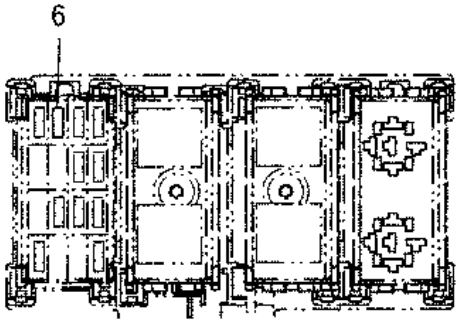

STEERING COLUMN FUSE PANEL

1 NPR 1K-7082 1 WASHER (2X4X1/32-IN THK)

2 NPR M 8T-8549 1 LOCKNUT (M12X1.75-THD)

3 NPR 165-8996 2 WASHER-THRUST (55.5X100.5X5-MM THK)

4 NPR 9R-9702 2 WASHER (56X100X1.6-MM THK)

5 NPR 112-9629 1 PIN

6 NPR 113-8491 1 FUSE (15-AMPERE)

7 NPR CY 174-5206 1 AXLE GP-DRIVE & STEERING

8 NPR M 8T-5041 1 BOLT (M12X1.75X120-MM)

9 NPR 106-6568 1 SWITCH AS (AWD)

NPR 111-7899 1 GASKET

Key: C - CHANGE FROM PREVIOUS TYPE M - METRIC PART Y - SEPARATE ILLUSTRATION

154-5467 AXLE & MTG GP-DRIVE & STEERING --S/N 4ZN16044-50156

PART OF 154-5449 DRIVE AR-BACKHOE LOADER--Type 3

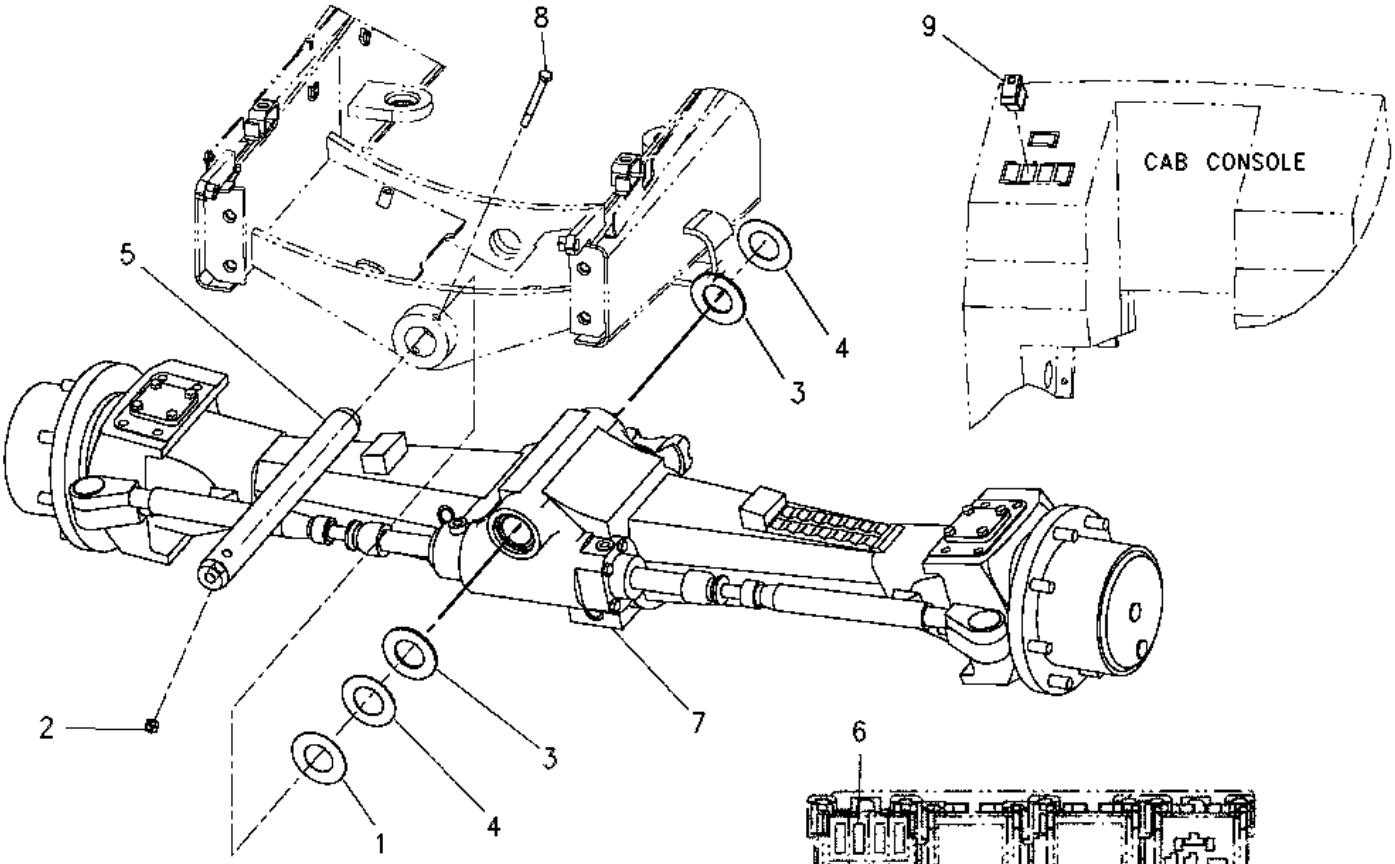

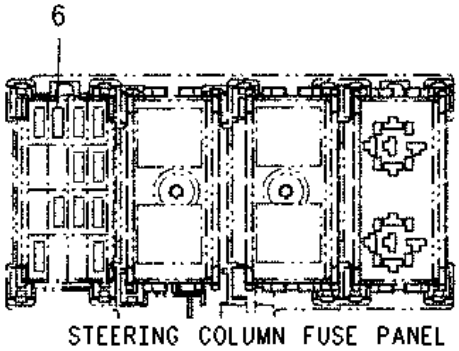

1	NPR	1K-7082	1	WASHER (2X4X1/32-IN THK)
2	NPR M	8T-8549	1	LOCKNUT (M12X1.75-THD)
3	NPR	165-8996	2	WASHER-THRUST (55.5X100.5X5-MM THK)
4	NPR	9R-9702	2	WASHER (56X100X1.6-MM THK)
5	NPR	112-9629	1	PIN
6	NPR	113-8491	1	FUSE (15-AMPERE)
7	NPR CY	154-5471	1	AXLE GP-DRIVE & STEERING
8	NPR M	8T-5041	1	BOLT (M12X1.75X120-MM)
9	NPR	106-6568	1	SWITCH AS (AWD)
	NPR	111-7899	1	GASKET

Key: C - CHANGE FROM PREVIOUS TYPE M - METRIC PART Y - SEPARATE ILLUSTRATION

107-3716 AXLE & MTG GP-REAR ---S/N 4ZN16044-50156

PART OF 154-5447, 154-5449 DRIVE AR-BACKHOE LOADER

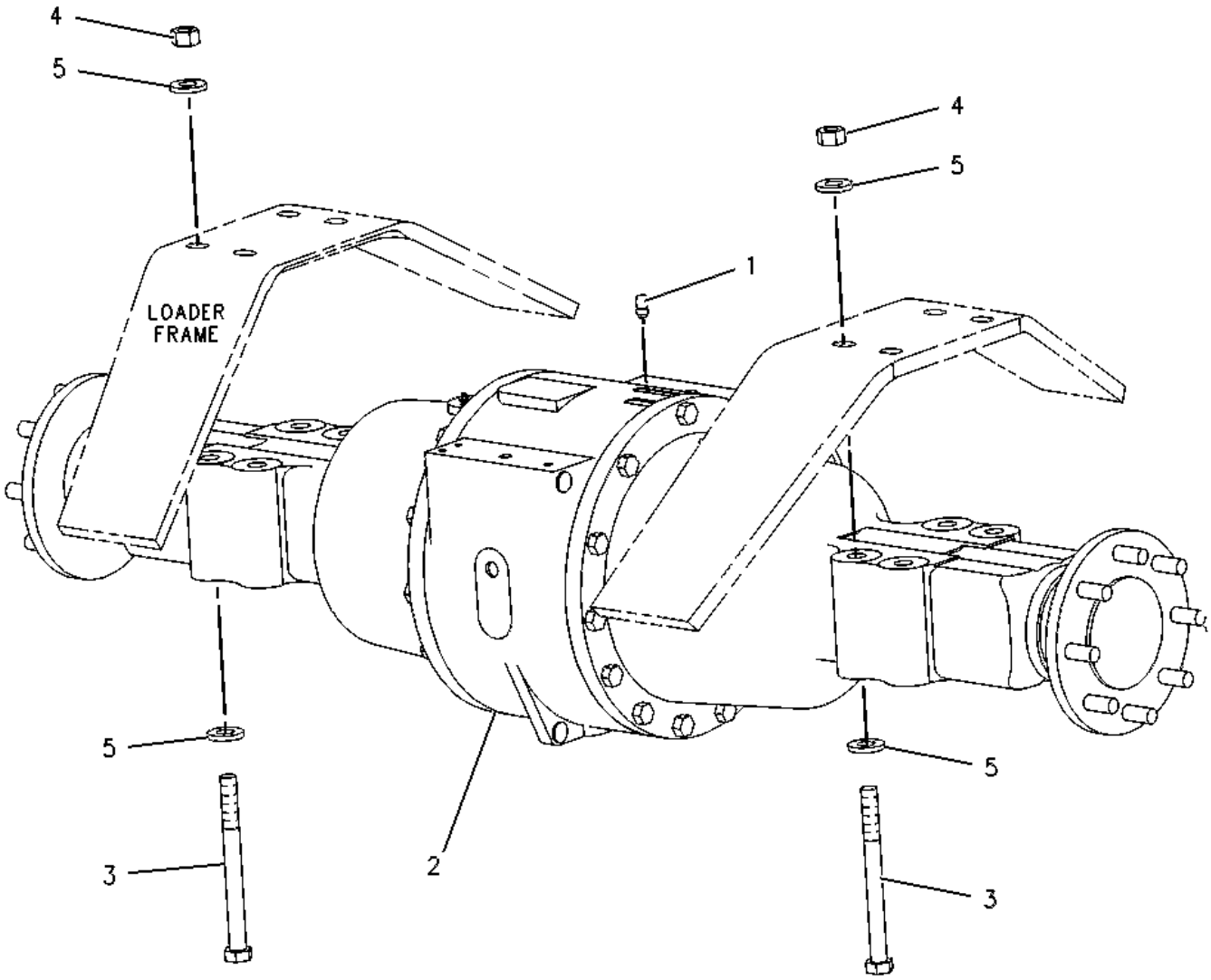

1	NPR	5F-5434	1	VALVE AS-RELIEF
2	NPR Y	156-2853	1	AXLE GP-REAR
3	NPR M	7X-2570	8	BOLT (M20X2.5X220-MM)
4	NPR M	8T-4131	8	NUT (M20X2.5-THD)
5	NPR	8T-5439	16	WASHER (21.5X45X6-MM THK)

Key: M - METRIC PART Y - SEPARATE ILLUSTRATION

154-5471 AXLE GP-DRIVE & STEERING -FRONT ---S/N 4ZN16044-50156

RATIO 13.74 --PART OF 154-5467 AXLE & MTG GP-DRIVE & STEERING

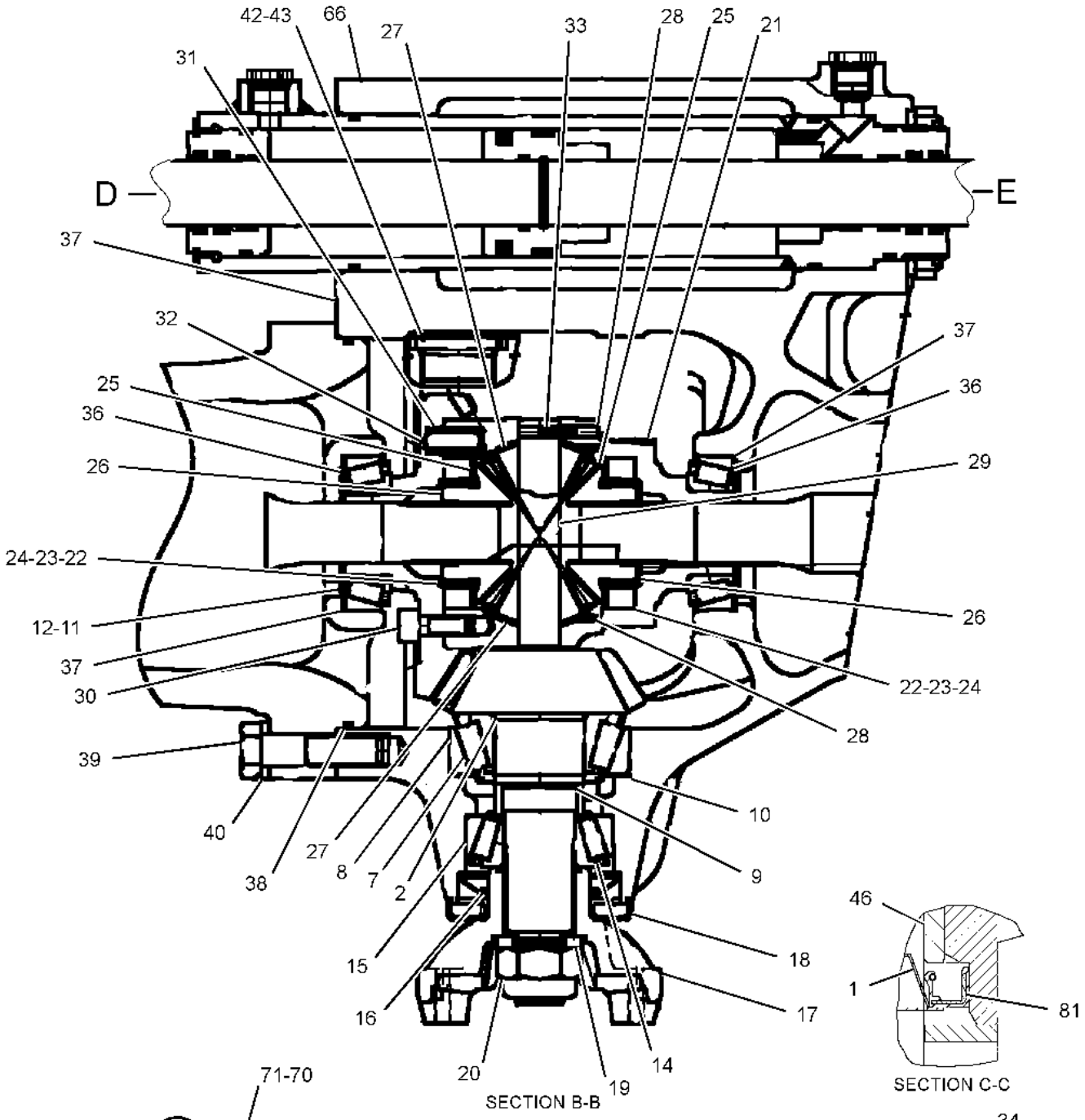

REFER TO ALL ILLUSTRATIONS OF
THIS GROUP FOR AUXILIARY VIEWS

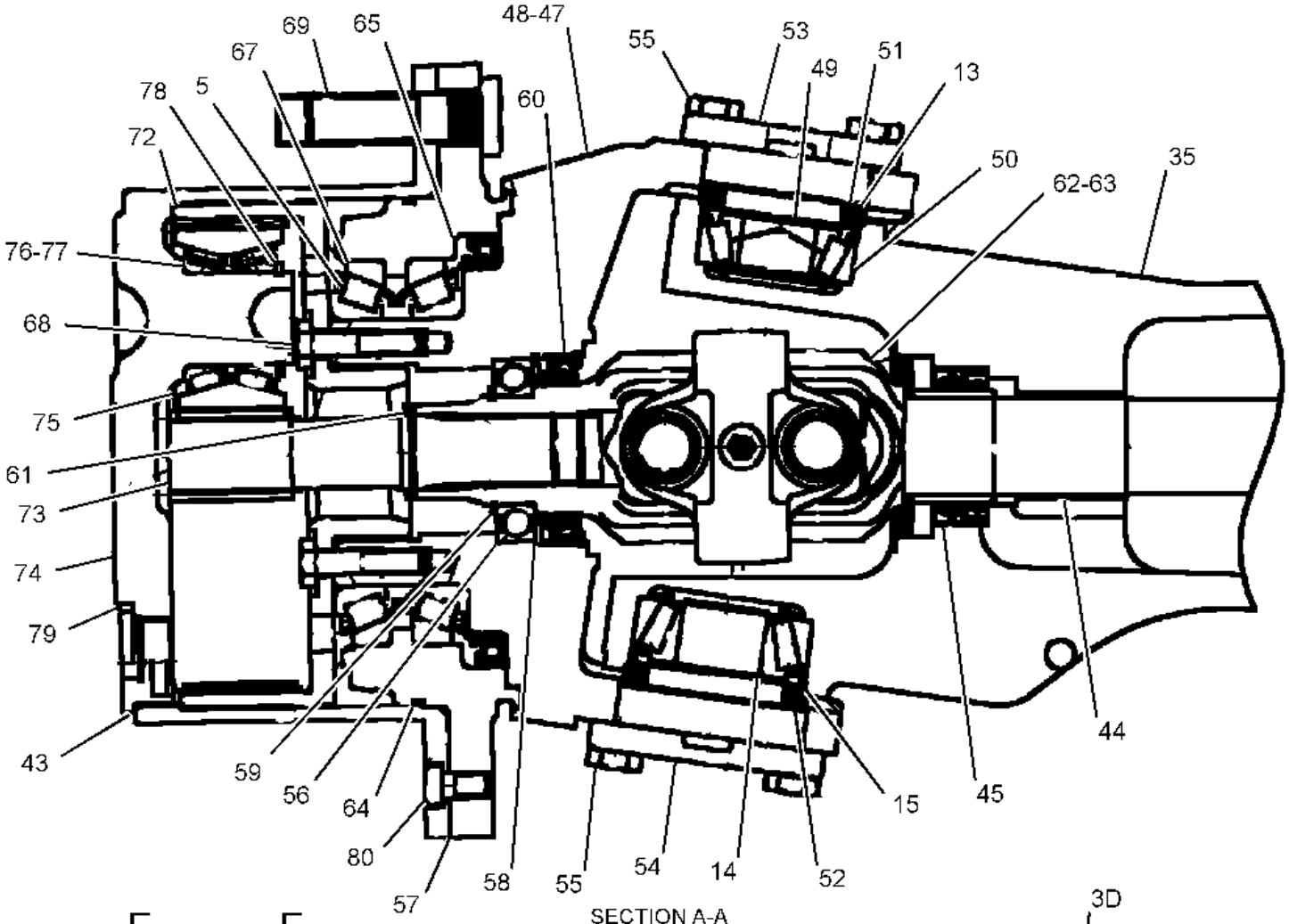

SECTION A-A

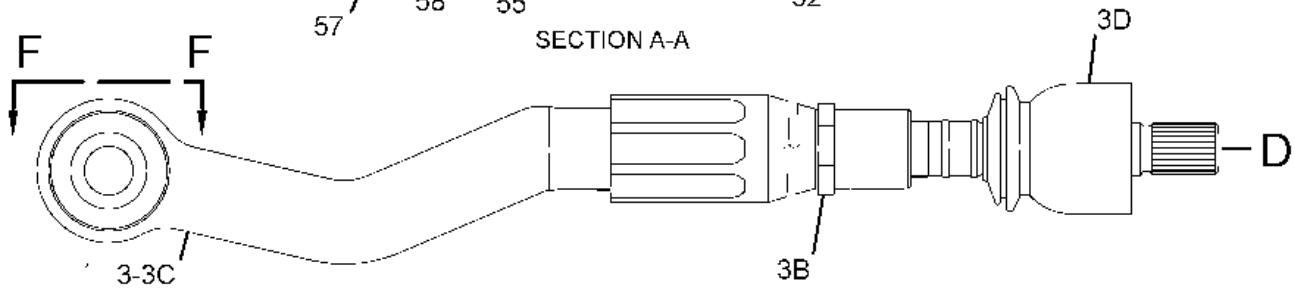

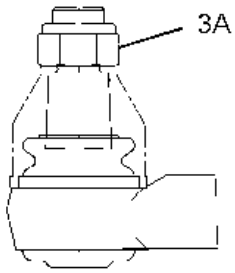

VIEW F-F

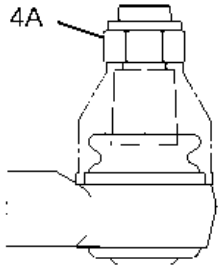

VIEW G-G

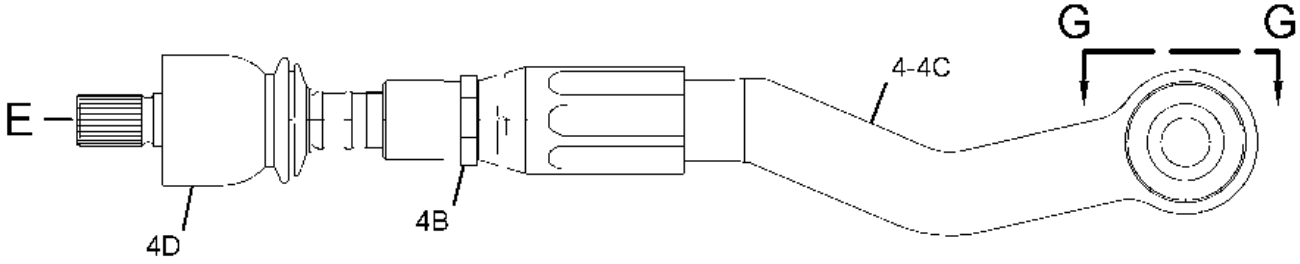

1	NPR	1	9X-3999	2	CAP-PLUG
2	NPR	1	117-6108	1	GEAR SET-BEVEL
3	NPR	2	229-2949	1	TIE ROD AS (LH)
3A	NPR	2	237-7962	1	NUT
3B	NPR	2	236-4482	1	NUT
3C	NPR	2	236-4479	1	BALL JOINT (LH)
3D	NPR	2	236-4481	1	JOINT
4	NPR	2	229-2950	1	TIE ROD AS (RH)
4A	NPR	2	237-7962	1	NUT
4B	NPR	2	236-4482	1	NUT
4C	NPR	2	236-4480	1	BALL JOINT (RH)
4D	NPR	2	236-4481	1	JOINT
5	NPR	2	178-8608	4	CONE-TAPERED
7	NPR	1	3N-4969	1	CONE-BEARING (TAPERED ROLLER)
8	NPR	1	3N-6408	1	CUP-BEARING (TAPERED ROLLER)
9	NPR B	1	130-6689	1	RING (15.1-MM THK)
	NPR B	1	130-6690	1	RING (15.2-MM THK)
	NPR B	1	130-6691	1	RING (15.26-MM THK)
	NPR B	1	130-6693	1	RING (15.3-MM THK)
	NPR B	1	130-6694	1	RING (15.33-MM THK)
	NPR B	1	130-6695	1	RING (15.36-MM THK)
	NPR B	1	130-6696	1	RING (15.38-MM THK)
	NPR B	1	130-6697	1	RING (15.4-MM THK)
	NPR B	1	130-6698	1	RING (15.43-MM THK)
	NPR B	1	130-6699	1	RING (15.46-MM THK)

NPR B 1 130-6701 1 RING (15.48-MM THK)

NPR B 1 130-6702 1 RING (15.5-MM THK)

NPR B 1 130-6703 1 RING (15.53-MM THK)

NPR B 1 130-6704 1 RING (15.56-MM THK)

NPR B 1 130-6705 1 RING (15.58-MM THK)

NPR B 1 130-6706 1 RING (15.6-MM THK)

NPR B 1 130-6707 1 RING (15.63-MM THK)

NPR B 1 130-6708 1 RING (15.66-MM THK)

NPR B 1 130-6709 1 RING (15.68-MM THK)

NPR B 1 130-6710 1 RING (15.7-MM THK)

NPR B 1 130-6711 1 RING (15.73-MM THK)

NPR B 1 130-6712 1 RING (15.8-MM THK)

NPR B 1 130-6713 1 RING (15.83-MM THK)

NPR B 1 130-6714 1 RING (15.86-MM THK)

NPR B 1 130-6715 1 RING (15.9-MM THK)

NPR B 1 130-6716 1 RING (15.93-MM THK)

NPR B 1 130-6718 1 RING (15.96-MM THK)

NPR B 1 130-6719 1 RING (16-MM THK)

NPR B 1 130-6720 1 RING (16.03-MM THK)

NPR B 1 130-6721 1 RING (16.06-MM THK)

NPR B 1 130-6722 1 RING (16.1-MM THK)

NPR B 1 130-6724 1 RING (16.13-MM THK)

NPR B 1 130-6725 1 RING (16.16-MM THK)

NPR B 1 130-6726 1 RING (16.2-MM THK)

NPR B 1 130-6727 1 RING (16.23-MM)

NPR B 1 130-6728 1 RING (16.26-MM THK)

NPR B 1 130-6729 1 RING (16.3-MM THK)

NPR B 1 130-6731 1 RING (16.4-MM THK)

NPR B 1 130-6732 1 RING (16.76-MM THK)

10 NPR B 1 054-6459 1 SHIM (1-MM THK)

NPR B 1 054-6460 1 SHIM (1.05-MM THK)

NPR B 1 054-6461 1 SHIM (1.1-MM THK)

NPR B 1 054-6462 1 SHIM (1.15-MM THK)

NPR B 1 054-6463 1 SHIM (1.2-MM THK)

NPR B 1 054-6464 1 SHIM (1.25-MM THK)

NPR B 1 054-6465 1 SHIM (1.3-MM THK)

NPR B 1 054-6466 1 SHIM (1.35-MM THK)

NPR B 1 054-6467 1 SHIM (1.4-MM THK)

NPR B 1 054-6468 1 SHIM (1.45-MM THK)

NPR B 1 054-6469 1 SHIM (1.5-MM THK)

NPR B 1 054-6470 1 SHIM (1.55-MM THK)

NPR B 1 054-6471 1 SHIM (1.6-MM THK)

NPR B 1 054-6472 1 SHIM (0.95-MM THK)

NPR B 1 054-6477 1 SHIM (0.85-MM THK)

NPR B 1 054-6476 1 SHIM (0.75-MM THK)

NPR B 1 054-6475 1 SHIM (0.7-MM THK)

NPR B 1 054-6474 1 SHIM (0.65-MM THK)

NPR B 1 054-6473 1 SHIM (0.9-MM THK)

11 NPR B 1 130-6798 2 SHIM (1-MM THK)

NPR B 1 130-6800 2 SHIM (1.1-MM THK)

NPR B 1 130-6804 2 SHIM (1.3-MM THK)

NPR B 1 130-6805 2 SHIM (1.35-MM THK)

NPR B 1 130-6806 2 SHIM (1.4-MM THK)

NPR B 1 130-6808 2 SHIM (1.5-MM THK)

NPR B 1 130-6809 2 SHIM (1.55-MM THK)

NPR B 1 130-6810 2 SHIM (1.6-MM THK)

NPR B 1 130-6811 2 SHIM (1.65-MM THK)

NPR B 1 130-6812 2 SHIM (1.7-MM THK)

NPR B 1 130-6813 2 SHIM (1.75-MM THK)

NPR B 1 130-6814 2 SHIM (1.8-MM THK)

NPR B 1 130-6815 2 SHIM (1.85-MM THK)

NPR B 1 130-6816 2 SHIM (1.9-MM THK)

NPR B 1 130-6820 2 SHIM (2.1-MM THK)

12 NPR B 1 130-6799 2 WASHER (1.05-MM THK)

NPR B 1 130-6801 2 WASHER (62.2X75X1.15-MM THK)

NPR B 1 130-6802 2 WASHER (62.2X75X1.2-MM THK)

NPR B 1 130-6803 2 WASHER (62.2X75X1.25-MM THK)

NPR B 1 130-6807 2 WASHER (1.45-MM THK)

NPR B 1 130-6817 2 WASHER (62.2X75X1.95-MM THK)

NPR B 1 130-6818 2 WASHER (62.2X75X2-MM THK)

NPR B 1 130-6819 2 WASHER (62.2X75X2.05-MM THK)

13 NPR B 2 130-7008 2 SHIM (0.2-MM THK)

NPR B 2 130-7009 2 SHIM (0.3-MM THK)

NPR B 2 130-7010 2 SHIM (0.4-MM THK)

NPR B 2 130-7011 2 SHIM (0.6-MM THK)

	NPR B	2	130-7012	2	SHIM (0.8-MM THK)
	NPR B	2	130-7013	2	SHIM (1-MM THK)
	NPR B	2	130-7015	2	SHIM (1.6-MM THK)
	NPR B	2	130-7017	2	SHIM (2-MM THK)
14	NPR	1,2	008-1902	3	CONE-BEARING
15	NPR	1,2	6S-3051	3	CUP-BEARING
16	NPR	1	055-1986	1	SEAL-LIP TYPE
17	NPR	1	130-7046	1	FLANGE
18	NPR	1	130-7028	1	PLATE
19	NPR	1	054-6480	1	DISC
20	NPR M	1	130-3005	1	NUT (M24X2-THD)
21	NPR	1	130-7024	1	CASE
22	NPR	1	130-7048	2	RING (13.5-MM THK)
23	NPR	1	130-7049	2	RING (13.6-MM THK)
24	NPR	1	130-7050	2	RING (13.7-MM THK)
25	NPR M	1	130-3000	2	WASHER (M53.2X71.9X1.9-MM THK)
26	NPR	1	119-7035	2	GEAR
27	NPR	1	128-7855	2	GEAR-PINION
28	NPR	1	9R-6994	2	WASHER-THRUST
29	NPR	1	119-7036	1	PIN
30	NPR M	1	105-3484	12	BOLT-SOCKET HEAD (M10X1.5X25-MM)
31	NPR	1	130-3010	4	PIN
32	NPR	1	082-3077	4	PIN
33	NPR	1	130-6675	1	PIN
34	NPR	1	174-5698	1	HOUSING

35	NPR	2	119-7056	1	HOUSING
36	NPR	1	003-7501	2	CONE-BEARING
37	NPR	1	6V-2200	2	CUP-BEARING
38	NPR	1	054-6847	1	SEAL-O-RING
39	NPR M	1	6V-3303	15	BOLT (M16X2X60-MM)
40	NPR	1	054-6526	15	DISC
41	NPR	1	9R-3175	1	PLUG
42	NPR	1	130-6673	1	PLUG
43	NPR	1,2	9X-0796	4	SEAL-O-RING
44	NPR	2	130-2998	2	BUSHING
45	NPR	2	130-6877	2	SEAL
46	NPR	1	154-5404	2	BEARING
47	NPR	2	130-7031	1	HOUSING (LH)
48	NPR	2	119-7057	1	HOUSING (RH)
49	NPR	2	077-3918	2	BEARING
50	NPR	2	031-0426	2	CUP-BEARING
51	NPR	2	119-7046	2	SEAL
52	NPR	2	119-7047	2	SEAL
53	NPR	2	119-7038	2	PIN
54	NPR	2	130-7026	2	PIN
55	NPR	2	130-6677	16	BOLT
56	NPR	2	5P-9439	2	BALL BEARING
57	NPR	2	119-7053	2	FLANGE
58	NPR	2	131-3816	2	RING
59	NPR	2	7X-5771	2	RING-RETAINING

60	NPR	2	119-7045	2	SEAL
61	NPR	2	054-6589	2	CLIP
62	NPR Y	2	130-3013	1	SHAFT GP-DRIVE (RH)
63	NPR Y	2	130-3014	1	SHAFT GP-DRIVE (LH)
64	NPR	2	9X-0640	2	SEAL-O-RING
65	NPR	2	130-6879	2	SEAL
66	NPR Y	1	178-7190	1	CYLINDER GP-STEERING
67	NPR	2	2S-0480	4	CUP-TAPERED ROLLER
68	NPR M	2	130-3008	16	BOLT (M10X45-MM)
69	NPR	2	130-7047	16	STUD
70	NPR M	1	119-7060	2	SCREW
71	NPR	1	130-3007	2	NUT
72	NPR	2	119-7040	2	GEAR-RING
73	NPR	2	119-7042	2	SHAFT
74	NPR	2	130-7027	2	CARRIER
75	NPR	2	169-4160	6	GEAR
76	NPR	2	169-4161	6	CONE-BEARING
77	NPR	2	169-4162	6	CONE-BEARING
78	NPR	2	130-6878	6	RING
79	NPR	2	119-7061	2	PLUG
80	NPR M	2	9R-3168	4	SCREW (M10X20-MM)
81	NPR	1	154-5405	2	SEAL-LIP TYPE

Key:

B - USE AS REQUIRED
M - METRIC PART
Y - SEPARATE ILLUSTRATION

174-5206 AXLE GP-DRIVE & STEERING ---S/N 4ZN16044-50156
PART OF 154-5467 AXLE & MTG GP-DRIVE & STEERING

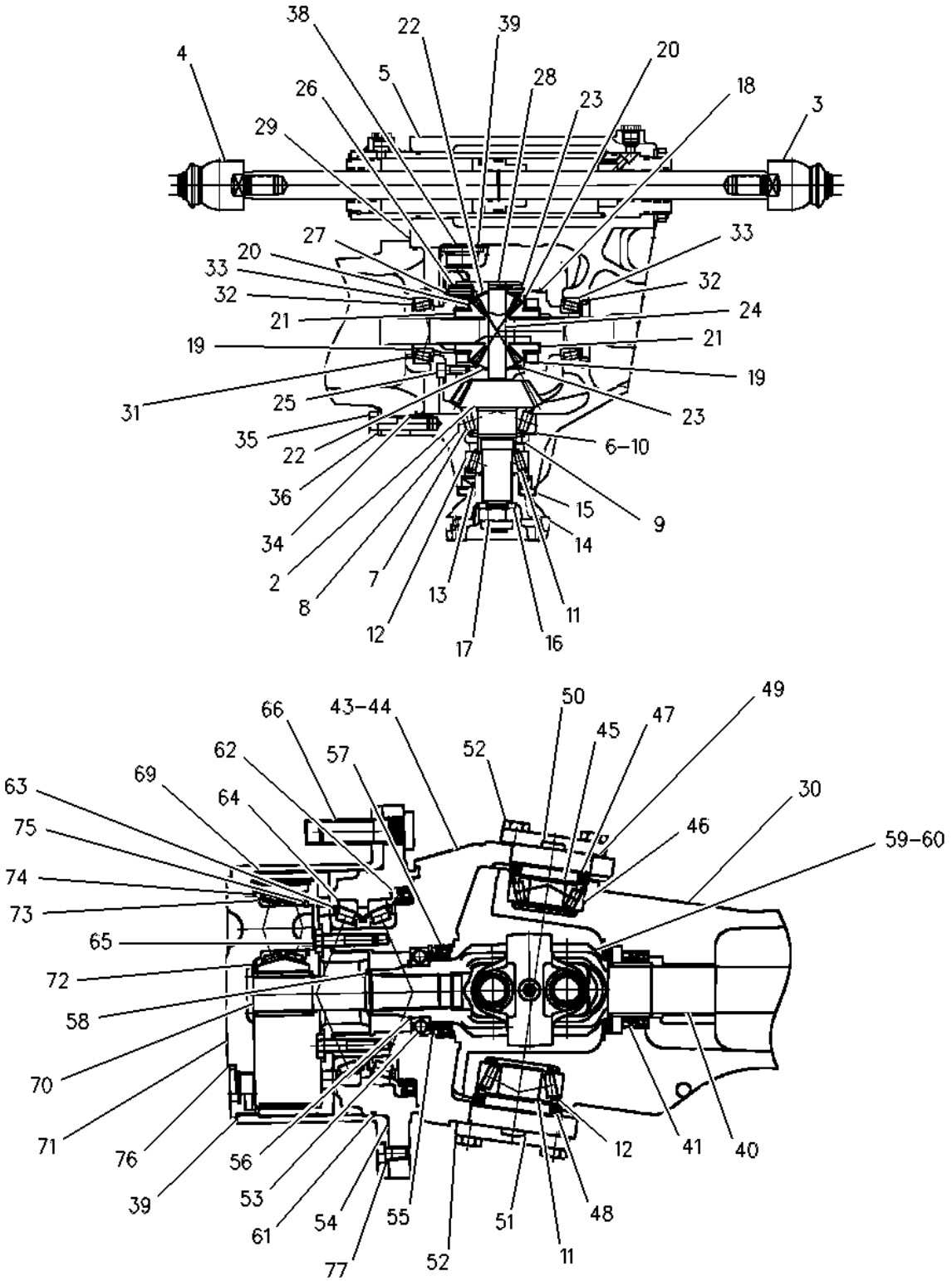

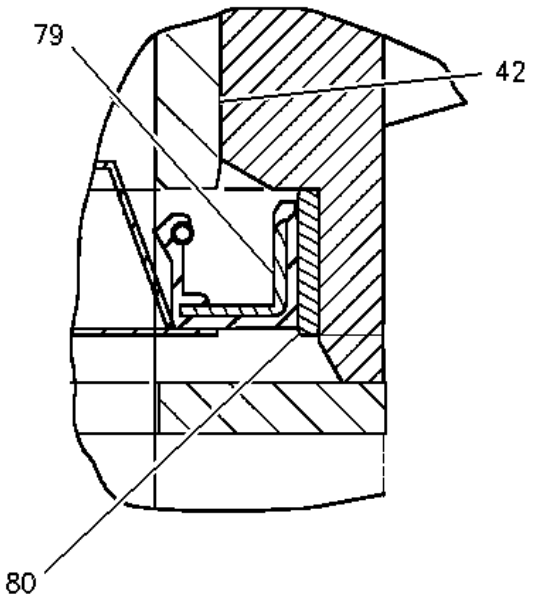

SECTION B-B

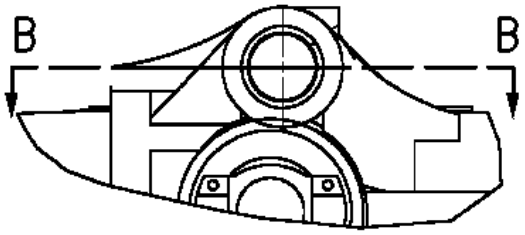

VIEW OF AREA A

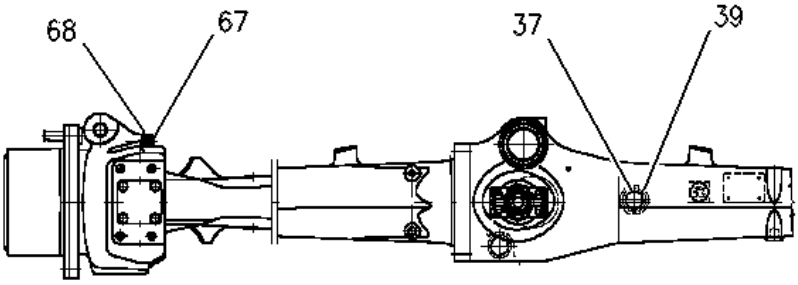

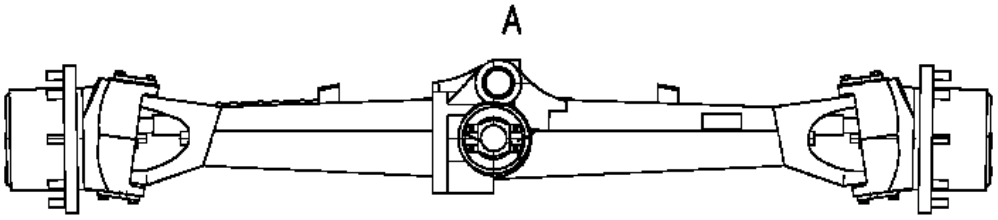

2 NPR 1 117-6108 1 GEAR SET-BEVEL

3 NPR 1 130-3809 1 TIE ROD AS (RH)

NPR M 1 130-5010 1 LOCKNUT (M22X1.5-THD)

NPR 1 130-6674 1 CLAMP

NPR 1 130-6880 1 BALL JOINT

NPR 1 130-7043 1 JOINT

4 NPR 1 130-3012 1 TIE ROD AS (LH)

NPR M 1 130-5010 1 LOCKNUT (M22X1.5-THD)

NPR 1 130-6674 1 CLAMP

NPR 1 130-6881 1 BALL JOINT

NPR 1 130-7043 1 JOINT

5 NPR 1 130-3011 1 CYLINDER GP-STEERING

NPR 1 130-6876 1 KIT-SEAL

NPR 1 130-6882 1 CYLINDER

NPR 1 130-6883 1 ROD

NPR 1 130-6884 1 RING-SNAP

NPR 1 130-7023 1 RING

NPR 1 130-8143 1 GUIDE

6 NPR 1 130-3850 1 SHIM (0.8-MM THK)

7 NPR 1 3N-4969 1 CONE-BEARING (TAPERED ROLLER)

8 NPR 1 3N-6408 1 CUP-BEARING (TAPERED ROLLER)

9 NPR 1 130-6689 1 RING (15.1-MM THK)

NPR 1 130-6690 1 RING (15.2-MM THK)

NPR 1 130-6691 1 RING (15.26-MM THK)

NPR 1 130-6693 1 RING (15.3-MM THK)

NPR 1 130-6694 1 RING (15.33-MM THK)

NPR 1 130-6695 1 RING (15.36-MM THK)

NPR 1 130-6696 1 RING (15.38-MM THK)

NPR 1 130-6697 1 RING (15.4-MM THK)

NPR 1 130-6698 1 RING (15.43-MM THK)

NPR 1 130-6699 1 RING (15.46-MM THK)

NPR 1 130-6701 1 RING (15.48-MM THK)

NPR 1 130-6702 1 RING (15.5-MM THK)

NPR 1 130-6703 1 RING (15.53-MM THK)

NPR 1 130-6704 1 RING (15.56-MM THK)

NPR 1 130-6705 1 RING (15.58-MM THK)

NPR 1 130-6706 1 RING (15.6-MM THK)

NPR 1 130-6707 1 RING (15.63-MM THK)

NPR 1 130-6708 1 RING (15.66-MM THK)

NPR 1 130-6709 1 RING (15.68-MM THK)

NPR 1 130-6710 1 RING (15.7-MM THK)

NPR 1 130-6711 1 RING (15.73-MM THK)

NPR 1 130-6712 1 RING (15.8-MM THK)

NPR 1 130-6713 1 RING (15.83-MM THK)

NPR 1 130-6714 1 RING (15.86-MM THK)

NPR 1 130-6715 1 RING (15.9-MM THK)

NPR 1 130-6716 1 RING (15.93-MM THK)

NPR 1 130-6718 1 RING (15.96-MM THK)

NPR 1 130-6719 1 RING (16-MM THK)

NPR 1 130-6720 1 RING (16.03-MM THK)

NPR 1 130-6721 1 RING (16.06-MM THK)

NPR 1 130-6722 1 RING (16.1-MM THK)

NPR 1 130-6724 1 RING (16.13-MM THK)

NPR 1 130-6725 1 RING (16.16-MM THK)

NPR 1 130-6726 1 RING (16.2-MM THK)

NPR 1 130-6727 1 RING (16.23-MM)

NPR 1 130-6728 1 RING (16.26-MM THK)

NPR 1 130-6729 1 RING (16.3-MM THK)

NPR 1 130-6731 1 RING (16.4-MM THK)

NPR 1 130-6732 1 RING (16.76-MM THK)

10 NPR 1 054-6459 1 SHIM (1-MM THK)

NPR 1 054-6460 1 SHIM (1.05-MM THK)

NPR 1 054-6461 1 SHIM (1.1-MM THK)

NPR 1 054-6462 1 SHIM (1.15-MM THK)

NPR 1 054-6463 1 SHIM (1.2-MM THK)

NPR 1 054-6464 1 SHIM (1.25-MM THK)

NPR 1 054-6465 1 SHIM (1.3-MM THK)

NPR 1 054-6466 1 SHIM (1.35-MM THK)

NPR 1 054-6467 1 SHIM (1.4-MM THK)

NPR 1 054-6468 1 SHIM (1.45-MM THK)

NPR 1 054-6469 1 SHIM (1.5-MM THK)

NPR 1 054-6470 1 SHIM (1.55-MM THK)

NPR 1 054-6471 1 SHIM (1.6-MM THK)

NPR 1 054-6472 1 SHIM (0.95-MM THK)

NPR 1 054-6473 1 SHIM (0.9-MM THK)

	NPR	1	054-6474	1	SHIM (0.65-MM THK)
	NPR	1	054-6475	1	SHIM (0.7-MM THK)
	NPR	1	054-6476	1	SHIM (0.75-MM THK)
	NPR	1	054-6477	1	SHIM (0.85-MM THK)
11	NPR	1	008-1902	3	CONE-BEARING
12	NPR	1	6S-3051	3	CUP-BEARING
13	NPR	1	055-1986	1	SEAL-LIP TYPE
14	NPR	1	130-7046	1	FLANGE
15	NPR	1	130-7028	1	PLATE
16	NPR	1	054-6480	1	DISC
17	NPR M	1	130-3005	1	NUT (M24X2-THD)(M24X2)
18	NPR	1	130-7024	1	CASE
19	NPR	1	130-7048	2	RING (13.5-MM THK)
	NPR	1	130-7049	2	RING (13.6-MM THK)
	NPR	1	130-7050	2	RING (13.7-MM THK)
20	NPR M	1	130-3000	2	WASHER (M53.2X71.9X1.9-MM THK)
21	NPR	1	119-7035	2	GEAR (24 TEETH)
22	NPR	1	128-7855	2	GEAR-PINION
23	NPR	1	9R-6994	2	WASHER-THRUST
24	NPR	1	119-7036	1	PIN
25	NPR M	1	105-3484	12	BOLT-SOCKET HEAD (M10X1.5X25-MM)
26	NPR	1	130-3010	4	PIN
27	NPR	1	082-3077	4	PIN
28	NPR	1	130-6675	1	PIN
29	NPR	1	119-7055	1	HOUSING

30 NPR 1 119-7056 1 HOUSING

31 NPR 1 130-6798 2 SHIM (1-MM THK)

NPR 1 130-6799 2 WASHER (1.05-MM THK)

NPR 1 130-6800 2 SHIM (1.1-MM THK)

NPR 1 130-6801 2 WASHER (62.2X75X1.15-MM THK)

NPR 1 130-6802 2 WASHER (62.2X75X1.2-MM THK)

NPR 1 130-6803 2 WASHER (62.2X75X1.25-MM THK)

NPR 1 130-6804 2 SHIM (1.3-MM THK)

NPR 1 130-6805 2 SHIM (1.35-MM THK)

NPR 1 130-6806 2 SHIM (1.4-MM THK)

NPR 1 130-6807 2 WASHER (1.45-MM THK)

NPR 1 130-6808 2 SHIM (1.5-MM THK)

NPR 1 130-6809 2 SHIM (1.55-MM THK)

NPR 1 130-6810 2 SHIM (1.6-MM THK)

NPR 1 130-6811 2 SHIM (1.65-MM THK)

NPR 1 130-6812 2 SHIM (1.7-MM THK)

NPR 1 130-6813 2 SHIM (1.75-MM THK)

NPR 1 130-6814 2 SHIM (1.8-MM THK)

NPR 1 130-6815 2 SHIM (1.85-MM THK)

NPR 1 130-6816 2 SHIM (1.9-MM THK)

NPR 1 130-6817 2 WASHER (62.2X75X1.95-MM THK)

NPR 1 130-6818 2 WASHER (62.2X75X2-MM THK)

NPR 1 130-6819 2 WASHER (62.2X75X2.05-MM THK)

NPR 1 130-6820 2 SHIM (2.1-MM THK)

32 NPR 1 003-7501 2 CONE-BEARING

33 NPR 1 6V-2200 2 CUP-BEARING

34 NPR 1 054-6847 1 SEAL-O-RING

35 NPR M 1 6V-3303 15 BOLT (M16X2X60-MM)

36 NPR 1 054-6526 15 DISC

37 NPR 1 9R-3175 1 PLUG

38 NPR 1 130-6673 1 PLUG

39 NPR 1 9X-0796 4 SEAL-O-RING

40 NPR 1 130-2998 2 BUSHING

41 NPR 1 130-6877 2 SEAL

42 NPR 1 154-5404 2 BEARING

43 NPR 1 130-7031 1 HOUSING

44 NPR 1 119-7057 1 HOUSING

45 NPR 1 077-3918 2 BEARING

46 NPR 1 031-0426 2 CUP-BEARING

47 NPR 1 119-7046 2 SEAL

48 NPR 1 119-7047 2 SEAL

49 NPR 1 130-7008 2 SHIM (0.2-MM THK)

NPR 1 130-7009 2 SHIM (0.3-MM THK)

NPR 1 130-7010 2 SHIM (0.4-MM THK)

NPR 1 130-7011 2 SHIM (0.6-MM THK)

NPR 1 130-7012 2 SHIM (0.8-MM THK)

NPR 1 130-7013 2 SHIM (1-MM THK)

NPR 1 130-7015 2 SHIM (1.6-MM THK)

NPR 1 130-7017 2 SHIM (2-MM THK)

50 NPR 1 119-7038 2 PIN

51 NPR 1 130-7026 2 PIN

52 NPR 1 130-6677 16 BOLT

53 NPR 1 5P-9439 2 BALL BEARING

54 NPR 1 119-7053 2 FLANGE

55 NPR 1 131-3816 2 RING

56 NPR 1 7X-5771 2 RING-RETAINING

57 NPR 1 119-7045 2 SEAL

58 NPR 1 054-6589 2 CLIP

59 NPR Y 1 130-3013 1 SHAFT GP-DRIVE (RH)

NPR 1 138-8526 1 YOKE

NPR 1 138-8527 2 SPIDER

NPR 1 138-8528 1 SHAFT (PLANETARY)

NPR 1 138-8529 1 SHAFT-AXLE (RH)

NPR 1 138-8530 1 BUSHING

NPR 1 138-8531 1 GUARD

60 NPR Y 1 130-3014 1 SHAFT GP-DRIVE (LH)

NPR 1 138-8526 1 YOKE

NPR 1 138-8527 2 SPIDER

NPR 1 138-8528 1 SHAFT (PLANETARY)

NPR 1 138-8530 1 BUSHING

NPR 1 138-8531 1 GUARD

NPR 1 138-8532 1 SHAFT-AXLE (LH)

NPR 1 130-3809 1 TIE ROD AS (RH)

NPR M 1 130-5010 1 LOCKNUT (M22X1.5-THD)

NPR 1 130-6674 1 CLAMP

	NPR	1	130-6880	1	BALL JOINT
	NPR	1	130-7043	1	JOINT
61	NPR	1	9X-0640	2	SEAL-O-RING
62	NPR	1	130-6879	2	SEAL
63	NPR	1	6V-0832	4	CONE
64	NPR	1	2S-0480	4	CUP-TAPERED ROLLER
65	NPR M	1	130-3008	16	BOLT (M10X45-MM)
66	NPR	1	130-7047	16	STUD
67	NPR M	1	119-7060	2	SCREW
68	NPR	1	130-3007	2	NUT
69	NPR	1	119-7040	2	GEAR-RING
70	NPR	1	119-7042	2	SHAFT
71	NPR	1	130-7027	2	CARRIER
72	NPR	1	169-4160	6	GEAR
73	NPR	1	169-4161	6	CONE-BEARING
74	NPR	1	169-4162	6	CONE-BEARING
75	NPR	1	130-6878	6	RING
76	NPR	1	119-7061	2	PLUG
77	NPR M	1	9R-3168	4	SCREW (M10X20-MM)
79	NPR	1	154-5405	2	SEAL-LIP TYPE
80	NPR	1	174-4623	2	SLEEVE

Key:

M - METRIC PART
Y - Separate Illustration

156-2853 AXLE GP-REAR ---S/N 4ZN16044-50156
18.5/1 RATIO --PART OF 107-3716 AXLE & MTG GP-REAR

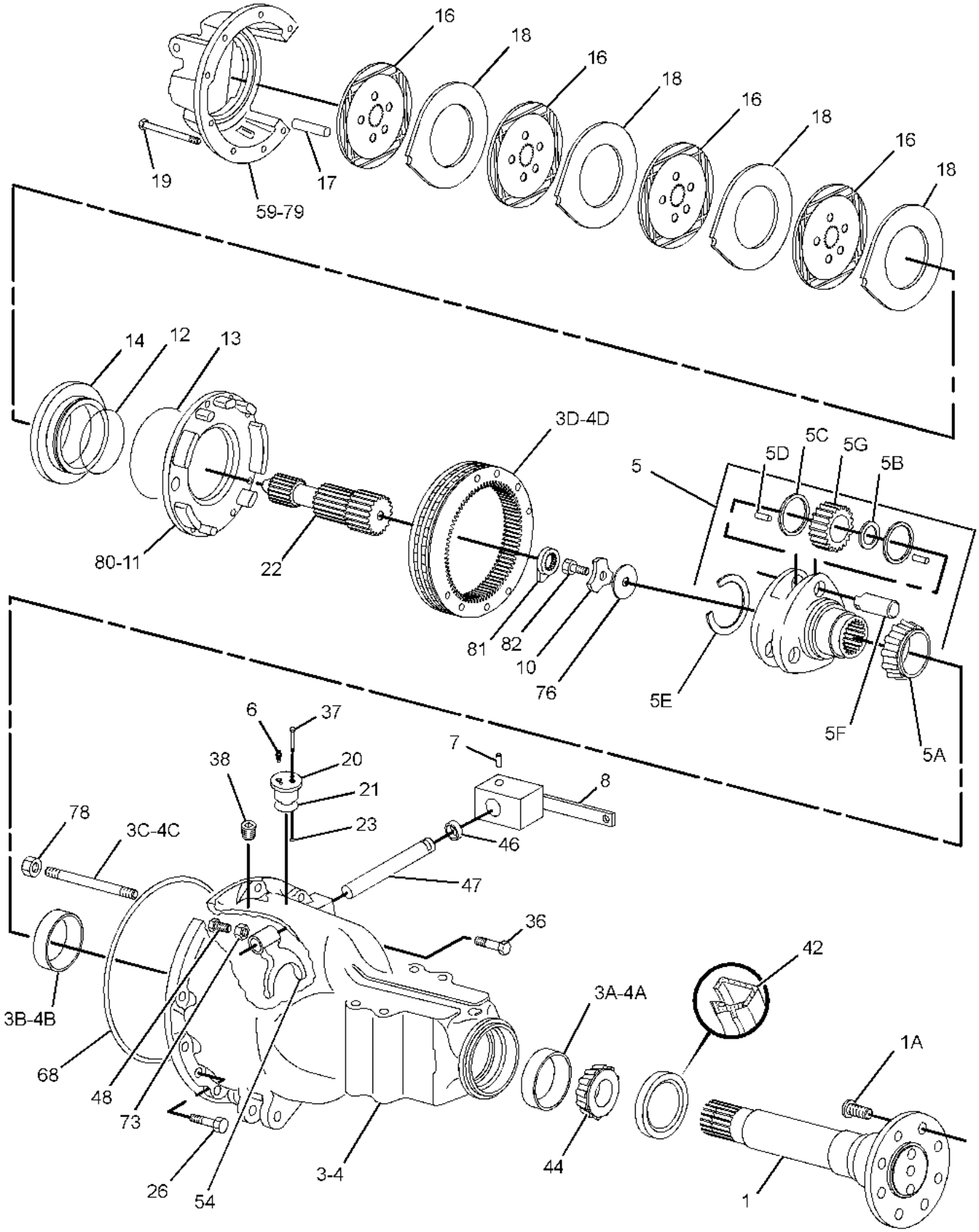

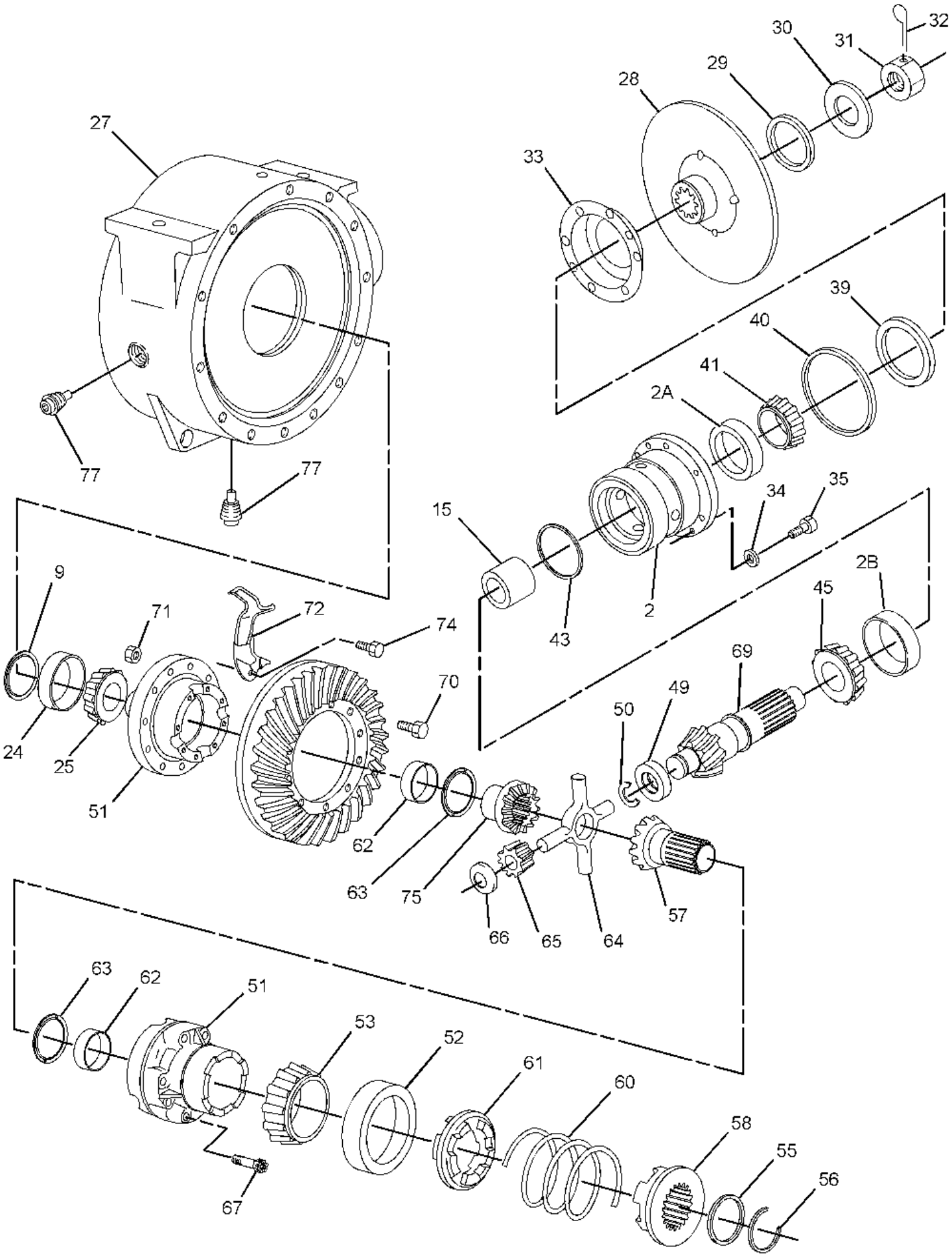
27
28
29
30
31
32
33
39
40
41
2A
77
77
15
34
35
1
2
43
2B
45
9
71
72
74
70
69
49
50
24
25
51
62
63
75
66
65
64
57
63
62
51
53
52
61
60
58
55
56
67

1 NPR 1 118-5837 2 SHAFT AS

(EACH INCLUDES)

1A NPR 1 9R-5219 8 BOLT-SPECIAL

2 NPR 2 9R-2407 1 RETAINER AS

2A NPR 2 3N-6408 1 CUP-BEARING (TAPERED ROLLER)

2B NPR 2 4K-5843 1 CUP-BEARING (TAPERED ROLLER)

3 1 156-1928 1 HOUSING AS-LH

3A NPR 1 6Y-7652 1 CUP-BEARING (TAPERED ROLLER)

3B NPR 1 8S-9151 1 CUP-BEARING

3C 1 156-1929 2 STUD

3D 1 156-1930 1 GEAR-RING (56-TEETH)

4 1 156-2571 1 HOUSING AS-RH

4A NPR 1 6Y-7652 1 CUP-BEARING (TAPERED ROLLER)

4B NPR 1 8S-9151 1 CUP-BEARING

4C 1 156-1929 2 STUD

4D 1 156-1930 1 GEAR-RING (56-TEETH)

5 NPR 1 186-4117 2 CARRIER AS

(EACH INCLUDES)

5A NPR 1 7T-6652 1 CONE-BEARING (TAPERED ROLLER)

5B NPR 1 9R-2417 3 WASHER (33.07X48.38X1.06-MM THK)

5C NPR 1 9R-2418 6 WASHER (32.94X57.21X0.78-MM THK)

5D NPR 1 9R-2419 3 KIT-BEARING

5E NPR 1 9R-2420 1 RETAINER

5F NPR 1 9R-2421 3 SHAFT

5G NPR 1 186-4118 3 GEAR-PLANETARY (20-TEETH)

6 NPR 1 9F-2167 2 SCREW-PURGE (3/8-24-THD)

7 NPR 1 9R-0883 1 PIN

8 NPR 1 9R-0823 1 LEVER AS

9 NPR B 2 9R-2427 1 SHIM (0.965-MM THK)

NPR B 2 9R-2428 1 SHIM (1.118-MM THK)

NPR B 2 9R-2429 1 SHIM (1.27-MM THK)

NPR B 2 9R-2430 1 SHIM (1.422-MM THK)

NPR B 2 9R-2431 1 SHIM (1.575-MM THK)

NPR B 2 9R-2432 1 SHIM (1.727-MM THK)

NPR B 2 9R-2433 1 SHIM (1.88-MM THK)

NPR B 2 9R-2434 1 SHIM (2.032-MM THK)

10 NPR 1 9R-2425 2 WASHER (23.088X69.6X9.52-MM THK)

11 NPR 1 156-2572 1 HOUSING-REAR BRAKE (RH)

12 NPR 1 9R-9410 2 SEAL-REAR BRAKE

13 NPR 1 9R-9409 2 SEAL-REAR BRAKE

14 NPR 1 9R-9408 2 PISTON-REAR BRAKE

15 NPR B 2 9R-2446 1 SPACER (45.86X50.98X31.858-MM THK)

NPR B 2 9R-2447 1 SPACER (45.86X50.98X31.908-MM THK)

NPR B 2 9R-2448 1 SPACER (45.86X50.98X31.959-MM THK)

NPR B 2 9R-2449 1 SPACER (45.86X50.98X32.01-MM THK)

NPR B 2 9R-2450 1 SPACER (45.86X50.98X32.061-MM THK)

NPR B 2 9R-2451 1 SPACER (45.86X50.98X32.112-MM THK)

NPR B 2 9R-2452 1 SPACER (45.86X50.98X32.162-MM THK)

NPR B 2 9R-2453 1 SPACER (45.86X50.98X32.213-MM THK)

NPR B 2 9R-2454 1 SPACER (45.86X50.98X32.264-MM THK)

NPR B 2 9R-2455 1 SPACER (45.86X50.98X32.315-MM THK)

NPR B 2 9R-2456 1 SPACER (45.86X50.98X32.366-MM THK)

NPR B 2 9R-2457 1 SPACER (45.86X50.98X32.416-MM THK)

NPR B 2 9R-2458 1 SPACER (45.86X50.98X32.467-MM THK)

NPR B 2 9R-2459 1 SPACER (45.86X50.98X32.518-MM THK)

NPR B 2 9R-2460 1 SPACER (45.86X50.98X32.569-MM THK)

16 NPR 1 230-4017 8 DISC-BRAKE

17 NPR 1 9R-2474 2 PIN

18 NPR 1 9R-9401 8 PLATE

19	NPR	1	8S-4740	12	BOLT (9/16-12X5-IN)
20	NPR	1	9R-9398	2	MANIFOLD-BRAKE TUBE
21	NPR	1	8H-1607	2	SEAL-O-RING
22	NPR	1	9R-2424	2	GEAR (16-TEETH)
23	NPR	1	8M-8157	4	SEAL-O-RING
24	NPR	2	2A-4576	1	CUP-BEARING
25	NPR	2	5L-9656	1	CONE-BEARING (TAPERED ROLLER)
26	NPR	1	9X-8880	25	BOLT (5/8-11X2-IN)
27	NPR	2	9R-2508	1	HOUSING
28	NPR	2	113-1147	1	FLANGE
29	NPR	2	9R-2497	1	SEAL
30	NPR	2	9R-2501	1	WASHER (32.5X60.5X5.6-MM THK)
31	NPR	2	9R-2502	1	NUT (1-1/4-18-THD)
32	NPR	2	3B-5302	1	PIN-COTTER
33	NPR	2	9R-2498	1	RETAINER
34	NPR	2	3B-4509	6	LOCKWASHER
35	NPR	2	3K-3379	6	BOLT (9/16-12X1-IN)
36	NPR	1	9X-8883	1	BOLT (5/8-11X2.75-IN)
37	NPR	1	5L-9018	4	BOLT-SOCKET HEAD (1/4-20X1.75-IN)
38	NPR	1	8T-6760	2	PLUG-PIPE
39	NPR	2	9R-2499	1	SEAL AS
40	NPR	2	9R-2496	1	SEAL
41	NPR	2	7T-6653	1	CONE-BEARING (TAPERED ROLLER)
42	NPR	1	118-5839	2	SEAL-REAR AXLE
43	NPR	2	9R-2512	1	SEAL

44 NPR 1 030-1957 2 CONE-BEARING (TAPERED ROLLER)

45 NPR 2 7T-6654 1 CONE-BEARING (TAPERED ROLLER)

46 NPR 1 9R-2505 1 SEAL

47 NPR 1 9R-2504 1 SHAFT

48 NPR M 1 9R-2507 1 SCREW-SPECIAL

49 NPR 2 7T-7621 1 BEARING AS

50 NPR 2 9R-2494 1 RING

51 NPR 2 9R-2480 1 CASE AS

52 NPR 2 2S-0480 1 CUP-TAPERED ROLLER

53 NPR 2 2S-0479 1 CONE-BEARING (TAPERED ROLLER)

54 NPR 1 9R-2506 1 FORK

55 NPR 2 9R-2492 1 WASHER (64.389X78.74X3.124-MM THK)

56 NPR 2 9R-2493 1 RING

57 NPR 2 9R-2488 1 GEAR (16-TEETH)

58 NPR 2 9R-2482 1 COUPLING

59 NPR 1 278-0223 1 HOUSING-BRAKE

60 NPR 2 9R-2486 1 SPRING

61 NPR 2 9R-2483 1 ADAPTER

62 NPR 2 9R-2484 2 BUSHING-TERMINAL

63 NPR 2 9R-2490 2 WASHER (76.2X101.6X1.524-MM THK)

64 NPR 2 9R-2491 1 SPIDER

65 NPR 2 9R-9403 4 PINION

66 NPR 2 9R-2489 4 WASHER-SPRING

67 NPR 2 9R-2485 8 BOLT (1/2-13X2.87-IN)

68 NPR 1 9R-2495 2 SEAL

69 NPR 2 9R-5241 1 GEAR SET (REAR AXLE)

70 NPR M 2 9R-6671 12 BOLT (1/2-20X1.62-IN)

71 NPR 2 2M-2570 12 LOCKNUT (1/2-20-THD)

72 NPR 2 9R-2503 1 BLOCK

73 NPR 1 2L-6267 1 LOCKNUT (3/8-24-THD)

74 NPR 2 0T-0318 2 BOLT (7/16-14X1-IN)

75 NPR 2 9R-2487 1 GEAR (16-TEETH)

76 NPR B 1 9R-2435 2 SPACER (22.86X53.85X1.25-MM THK)

NPR B 1 9R-2436 2 SPACER (22.86X53.85X1.35-MM THK)

NPR B 1 9R-2437 2 SPACER (22.86X53.85X1.45-MM THK)

NPR B 1 9R-2438 2 SPACER (22.86X53.85X1.55-MM THK)

NPR B 1 9R-2439 2 SPACER (22.86X53.85X1.65-MM THK)

NPR B 1 9R-2440 2 SPACER (22.86X53.85X1.75-MM THK)

NPR B 1 9R-2441 2 SPACER (22.86X53.85X1.85-MM THK)

NPR B 1 9R-2442 2 SPACER (22.86X53.85X1.96-MM THK)

NPR B 1 9R-2443 2 SPACER (22.86X53.85X2.06-MM THK)

NPR B 1 9R-2444 2 SPACER (22.86X53.85X2.16-MM THK)

NPR B 1 9R-2445 2 SPACER (22.86X53.85X2.26-MM THK)

77 NPR 2 9R-6602 2 PLUG-MAGNETIC (REAR AXLE)

78 NPR 1 5P-0540 4 NUT-HEX FULL (9/16-18-THD)

79 NPR 1 278-0224 1 HOUSING-BRAKE

80 1 156-1933 1 HOUSING-REAR BRAKE (LH)

81 NPR 1 9R-2426 2 LOCK

82 NPR M 1 9R-2466 2 BOLT (7/8-14X2.2-IN)

Key: B - USE AS REQUIRED M - METRIC PART

150-1281 CHART-WHEEL & TIRE -FRONT --S/N 4ZN16044-50156

WHEEL GP TIRE	GROUP LH/RH*	RIM P/N	RIM DESCRIPTION	TIRE P/N**	TIRE DESCRIPTION	TIRE NAME	PLY RATING	APPLICATION	416 NACD	416 COSA	426 NACD	426 COSA	436 NACD	436 COSA	428 COSA	438 COSA
133-3213	9R-2822	9R-0315	W8L X 16	9R-1956	11L X 16	F-3 LABORER	12	2WD	O/SIT	O/SIT	S	S	S	S	S	
9R-2986	9R-2938	9R-2937	W11 X 16.1	9R-2939	14.5/75 X 16.1	F-3 LABORER	10	2WD			O	O	O	O	O	
133-3212	9R-1306	9R-1572	9 X 20	9R-2050	10.5 X 20	R4 IND SG	10	AWD		SA		SA			SA	
	9R-2769															
133-3215	9R-6479	135-0770	9 X 18	9R-6481	12.5/80-18	1-3 SG LUG	10	AWD		AO		AO		AO	AO	SA
	9R-6480															
133-3217	9R-6191	135-0770	9 X 18	9R-6194	12.5/80-18	1-3 SG IMP	10	AWD		AO		AO		AO	AO	AO
	9R-6192															
133-3219	102-1381	135-0786	9 X 18 W/VSP	9R-6481	12.5/80-18	1-3 SG LUG	10	AWD	SA	AO	SA	AO	SA	AO	AO	AO
	102-1382															
133-3220	102-1372	135-0786	9 X 18 W/VSP	9R-6194	12.5/80-18	1-3 SG IMP	10	AWD		AO		AO		AO	AO	AO
	102-1375															
112-9335	112-9336	135-0786	9 X 18 W/VSP	112-9338	340/80R18	IT510	RADIAL	AWD	AO	AO	AO	AO	AO	AO	AO	AO
	112-9337															
127-4277	127-4281	135-0786	9 X 18 W/VSP	127-4283	335/80R18	XM27	RADIAL	AWD		AO		AO		AO	AO	AO
	127-4282															

NOTE A:

S = STANDARD 2WD
O = OPTIONAL 2WD
SA = STANDARD AWD
AO = OPTIONAL AWD
SIT = STANDARD 2WD IT LINKAGE

NOTE B:

ALL TIRE WHEEL GROUPS ALSO CONTAIN HEX FLANGE NUT 141-7221 (16-20 AS NEEDED). 141-7221 HEX FLANGE NUT IS A REPLACEMENT FOR 6B6682 FULL NUT.

NOTE C:

ALL LH/RH WHEEL GROUPS ALSO CONTAIN TIRE VALVE GROUP 6D0337 (1). EACH VALVE GROUP INCLUDES: CORE HOUSING ASSEMBLY WITH CAP AND CORE VALVES, AND SPUD ASSEMBLY WITH GROMMET, RING WASHER AND NUT.

(FOR USAGE REFER TO CHART)

1	**NPR**	**9R-0315**	**1**	**WHEEL AS**
2	**NPR**	**9R-1572**	**1**	**WHEEL AS**
3	**NPR**	**9R-2937**	**1**	**WHEEL AS**
4	**NPR**	**135-0770**	**1**	**WHEEL AS**
5	**NPR**	**135-0786**	**1**	**WHEEL AS (FRONT)**
6	**NPR**	**141-7221**		**NUT-HEX FLANGE (3/4-16-THD)**
7	**NPR Y**	**6D-0337**	**1**	**VALVE GP-TIRE**
	NPR	**6D-0443**	**1**	**HOUSING AS-CORE**
	NPR	**2D-2628**	**1**	**CORE-VALVE**
	NPR	**2D-2633**	**1**	**CAP**
	NPR	**8D-2707**	**2**	**SPUD AS**
	NPR	**2D-2629**	**1**	**GROMMET**
	NPR	**2D-2630**	**1**	**WASHER**
	NPR	**2D-2631**	**1**	**NUT (0.482-26-THD)**

CONTACT LOCAL CATERPILLAR DEALERSHIP FOR TIRE REPLACEMENT

Key:

Y - Separate Illustration

150-4377 CHART-WHEEL & TIRE -REAR ---S/N 4ZN16044-50156

WHEEL GP TIRE	GROUP LH/RH*	RIM P/N	RIM DESCRIPTION	TIRE P/N**	TIRE DESCRIPTION	TIRE NAME	PLY RATING	APPLICATION	416 NACD	416 COSA	426 NACD	426 COSA	436 NACD	436 COSA	428 COSA	438 COSA
118-9009	119-7792	112-4412	W15L X 28	146-8318	16.9 X 28	R4	10	2WD		S		S			S	
	119-7793															
112-9339	112-9340	112-4412	W15L X 28	146-8319	16.9 X 28	R4	12	2WD/AWD		EO/SA		EO/SA		SA	EO/SA	
	112-9341							E-STICK								
118-8997	119-7767	112-4412	W15L X 28	9R-5499	16.9 X 28	R1 TRACTION	12	2WD/AWD		EO/SA		EO/SA		AO	EO/SA	
	119-7768							E-STICK								
127-4295	127-4300	119-7776	W15L X 28	127-4312	16.9R28	IT510 GYR	RADIAL	2WD/AWD		EO/AO		EO/AO		AO	EO/AO	
	127-4306							E-STICK								
127-4296	127-4301	119-7776	W15L X 28	127-4311	16.9R28	XM27 MICHELIN	RADIAL	2WD/AWD		EO/AO		EO/AO		AO	EO/AO	
	127-4307							E-STICK								
119-7773	119-7771	119-7776	W15L X 28	146-8319	16.9 X 28	R4	12	2WD/AWD		EO/AO		EO/AO		AO	O/AO	
	119-7772							E-STICK								
127-4297	127-4302	102-8682	W15L X 28	127-4312	16.9R28	IT510 GYR	RADIAL	AWS				AWSO		AWSO	AWSO	AWSO
	127-4308															
127-4298	127-4304	102-8682	W15L X 28	127-4311	16.9R28	XM27 MICHELIN	RADIAL	AWS				AWSO		AWSO	AWSO	AWSO
	127-4309															
133-7593	102-8680	102-8682	W15L X 28	146-8318	16.9 X 28	R4	10	AWS				AWS		AWSO	AWS	AWSO
	102-8681								CANNOT USE WITH E-STICK							
133-7594	110-8782	102-8682	W15L X 28	146-8319	16.9 X 28	R4	12	AWS				AWSO		AWSO	AWSO	AWSO
	110-8781															
119-7782	119-7783	119-7785	W16L X 26	135-5893	18.4/15 X 26	R4 SG IND	12	2WD/AWD						AO		SA
	119-7784							E-STICK								
127-4286	127-4291	119-7785	W16L X 26	127-4294	18.4/15 X 26	XM27 MICHELIN	RADIAL	2WD/AWD						AO		AO
	124-4292							E-STICK								
134-9447	102-8669	102-8670	W16L X 26	135-5893	18.4/15 X 26	R4 SG IND	12	AWS						AWS	AWSO	AWS
	102-8668															
112-9328	119-7762	112-4410	W15L X 24	9R-0601	16.9 X 24	IT 525	10	2WD/E-STICK	EO		EO					
	119-7763															
112-9331	112-9332	112-4411	DW16L X 24	9R-1882	19.5L X 24	IT 525	10	2WD/AWD	EO/AO		EO/AO		S/SA			
	112-9334							E-STICK								
127-4285	127-4289	112-4411	DW16L X 24	127-4293	19.5R X 24	IT 510	RADIAL	2WD/AWD	EO/AO		EO/AO		EO/AO			
	127-4290							E-STICK								
137-5100	116-4661	114-5632	W16L X 24	9R-1882	19.5L X 24	IT 525	10	AWS			AWS		AWS			
	116-4662							E-STICK								
127-4318	127-4320	114-5632	DW16L X 24	127-4293	19.5R X 24	IT 510	RADIAL	AWS			AWSO		AWSO			
	127-4322							E-STICK								
119-7786	119-7787	119-7789	DW18L X 24	9R-3659	21L X 24	IT 525	12	2WD/AWD			EO/AO		EO/AO			
	119-7788							E-STICK								
178-7227	178-7228	119-7776	W15I X 28	178-7230	16.9 X 28	R4 SG IND	12	2WD/AWD								
	178-7229							E-STICK								

NOTE A:

S = STANDARD 2WD
O = OPTIONAL 2WD
EO = E-STICK OR OPTIONAL 2WD
SA = STANDARD AWD AND E-STICK
AO = OPTIONAL AWD AND E-STICK
AWS = AWS STANDARD AND E-STICK
AWSO = AWS OPTIONAL AND E-STICK

NOTE B:

ALL TIRE WHEEL GROUPS ALSO CONTAIN HEX FLANGE NUT 141-7221 (16-20 AS NEEDED). 141-7221 HEX FLANGE NUT IS A REPLACEMENT FOR 6B6682 FULL NUT.

NOTE C:

ALL LH/RH WHEEL GROUPS ALSO CONTAIN TIRE VALVE GROUP 6D0337 (1). EACH VALVE GROUP INCLUDES: CORE HOUSING ASSEMBLY WITH CAP AND CORE VALVES, AND SPUD ASSEMBLY WITH GROMMET, RING WASHER AND NUT.

(FOR USAGE REFER TO CHART)

1	NPR	102-8670	1	WHEEL AS (REAR)
2	NPR	102-8682	1	WHEEL AS
3	NPR	112-4410	1	WHEEL AS
4	NPR	112-4411	1	WHEEL AS (REAR)
5	NPR	112-4412	1	WHEEL AS
6	NPR	114-5632	1	WHEEL AS
7	NPR	119-7776	1	WHEEL AS (REAR)
8	NPR	119-7785	1	WHEEL AS (REAR)
9	NPR	119-7789	1	WHEEL AS
10	NPR	141-7221		NUT-HEX FLANGE (3/4-16-THD)
11	NPR Y	6D-0337	1	VALVE GP-TIRE
	NPR	6D-0443	1	HOUSING AS-CORE
	NPR	2D-2628	1	CORE-VALVE
	NPR	2D-2633	1	CAP
	NPR	8D-2707	2	SPUD AS
	NPR	2D-2629	1	GROMMET
	NPR	2D-2630	1	WASHER
	NPR	2D-2631	1	NUT (0.482-26-THD)

CONTACT LOCAL CATERPILLAR DEALER FOR PROPER TIRE REPLACEMENT

Key: Y - Separate Illustration

6D-0337 VALVE GP-TIRE ---S/N 4ZN16044-50156
PART OF 102-1381, 102-1382, 112-9332, 112-9334, 9R-2822 WHEEL & TIRE GP

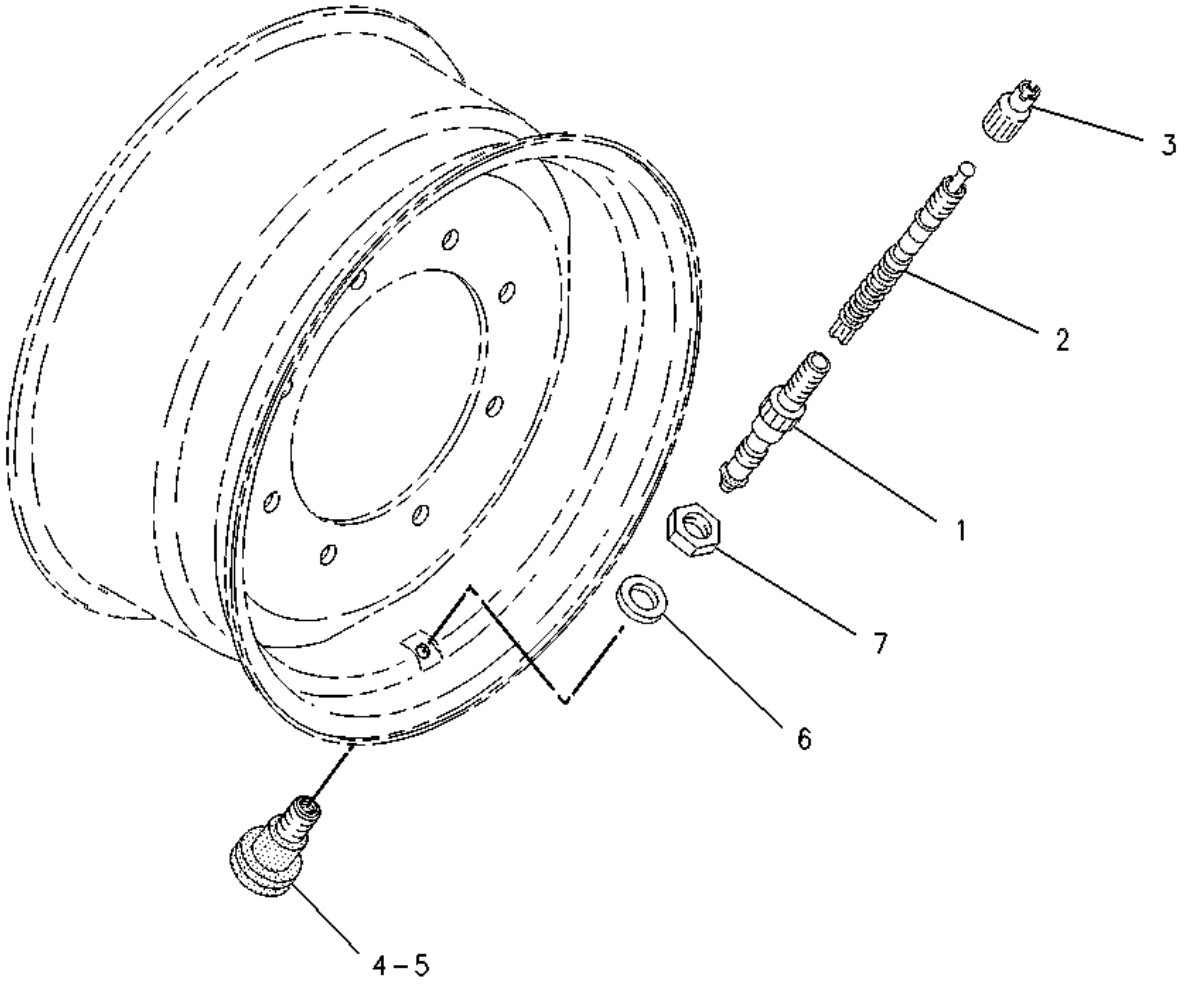

1	**NPR**	**6D-0443**	**1**	**HOUSING AS-CORE**
2	**NPR**	**2D-2628**	**1**	**CORE-VALVE**
3	**NPR**	**2D-2633**	**1**	**CAP**
4	**NPR**	**8D-2707**	**1**	**SPUD AS**
5	**NPR**	**2D-2629**	**1**	**GROMMET**
6	**NPR**	**2D-2630**	**1**	**WASHER**
7	**NPR**	**2D-2631**	**1**	**NUT (0.482-26-THD)**

9R-2822 WHEEL & TIRE GP -FRONT ---S/N 4ZN16044-50156 (8X16) --PART OF 133-3213 WHEEL & TIRE GP

NPR Y	6D-0337	1	VALVE GP-TIRE
NPR	9R-0315	1	WHEEL AS (FRONT)
NPR	9R-1956	1	TIRE (11L-16)

Key: Y - SEPARATE ILLUSTRATION

102-1381 WHEEL & TIRE GP -RH --S/N 4ZN16044-50156 (9X18) --PART OF 133-3219 WHEEL & TIRE GP

NPR Y	6D-0337	1	VALVE GP-TIRE
NPR	135-0786	1	WHEEL AS (FRONT)
NPR	9R-6481	1	TIRE (12.5/80-18)

Key: Y - SEPARATE ILLUSTRATION

102-1382 WHEEL & TIRE GP -LH -S/N 4ZN16044-50156 (9X18) -PART OF 133-3219 WHEEL & TIRE GP

NPR Y	6D-0337	1	VALVE GP-TIRE
NPR	135-0786	1	WHEEL AS (FRONT)
NPR	9R-6481	1	TIRE (12.5/80-18)

Key: Y - SEPARATE ILLUSTRATION

112-9331 WHEEL & TIRE GP -REAR --S/N 4ZN16044-50156 PART OF 185-2891, 185-2892 WHEEL & TIRE AR

NPR Y	112-9334	1	WHEEL & TIRE GP (RH)
NPR Y	112-9332	1	WHEEL & TIRE GP (LH)
NPR	141-7221	16	NUT-HEX FLANGE (3/4-16-THD)

Key: Y - SEPARATE ILLUSTRATION

112-9332 WHEEL & TIRE GP -LH --S/N 4ZN16044-50156 16X24 --PART OF 112-9331 WHEEL & TIRE GP

NPR Y	6D-0337	1	VALVE GP-TIRE
NPR	9R-1882	1	TIRE (19.5L-24)
NPR	112-4411	1	WHEEL AS (REAR)

Key: Y - SEPARATE ILLUSTRATION

112-9334 WHEEL & TIRE GP -RH --S/N 4ZN16044-50156 16X24 --PART OF 112-9331 WHEEL & TIRE GP

NPR Y	6D-0337	1	VALVE GP-TIRE
NPR	9R-1882	1	TIRE (19.5L-24)
NPR	112-4411	1	WHEEL AS (REAR)

Key: Y - SEPARATE ILLUSTRATION

133-3213 WHEEL & TIRE GP -FRONT
S/N 4ZN16044-50156
PART OF 185-2891 WHEEL & TIRE AR

NPR Y	9R-2822	2	WHEEL & TIRE GP (FRONT)
NPR	141-7221	16	NUT-HEX FLANGE (3/4-16-THD)

Key: Y - SEPARATE ILLUSTRATION

133-3219 WHEEL & TIRE GP -FRONT --S/N 4ZN16044-50156
PART OF 185-2892 WHEEL & TIRE AR

NPR Y	102-1381	1	WHEEL & TIRE GP (RH)
NPR Y	102-1382	1	WHEEL & TIRE GP (LH)
NPR	141-7221	16	NUT-HEX FLANGE (3/4-16-THD)

Key: Y - SEPARATE ILLUSTRATION

121-4036 VALVE GP-SOLENOID --S/N 4ZN16044-50156
12-VOLT,TORQUE CONVERTER INLET
PART OF 111-7814, 192-0844 TRANSMISSION GP-DIRECT DRIVE, 147-0200, 147-0204, 192-0849 TRANSMISSION GP-POWER SHIFT

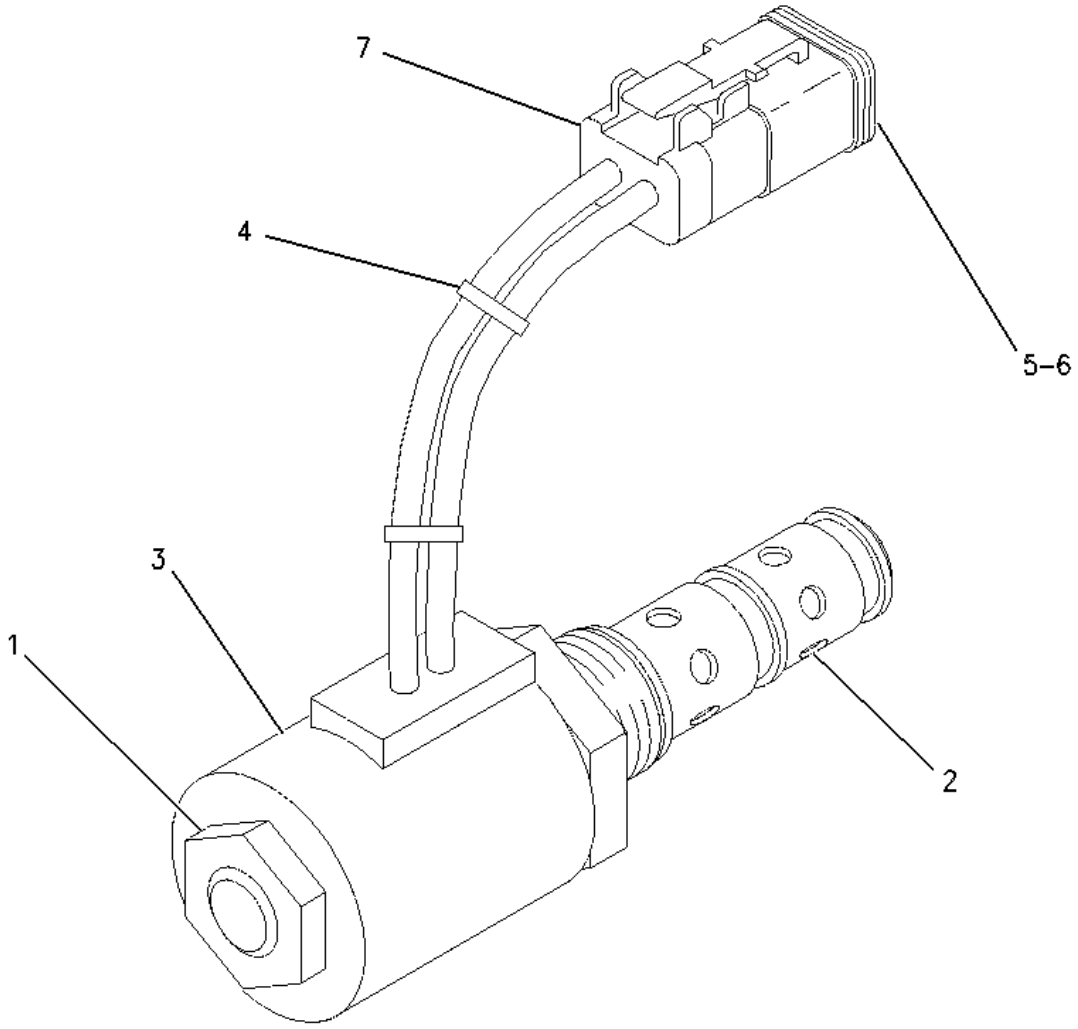

1	NPR	3J-9196	1	NUT-JAM (1/2-20-THD)
2	NPR	122-1672	1	CARTRIDGE AS
3	NPR	130-0013	1	COIL AS
4	NPR	1S-9593	2	STRAP-CABLE
5	NPR	3E-3362	1	WEDGE-PLUG LOCK (2-PIN)
6	NPR	186-3736	2	SOCKET-CONNECTOR (16-GA TO 18-GA)
7	NPR	155-2270	1	KIT-CONNECTING PLUG (2-PIN)

(INCLUDES PLUG AS & WEDGE)

AVAILABLE REPAIR KIT(S):

NPR 122-1135 1 KIT-SEAL

(INCLUDES RINGS & SEALS)

142-1468 VALVE GP-SOLENOID --S/N 4ZN16044-50156
12 VOLT DIRECT CURRENT --PART OF 111-7814, 111-7815 TRANSMISSION GP-DIRECT DRIVE
Type 1

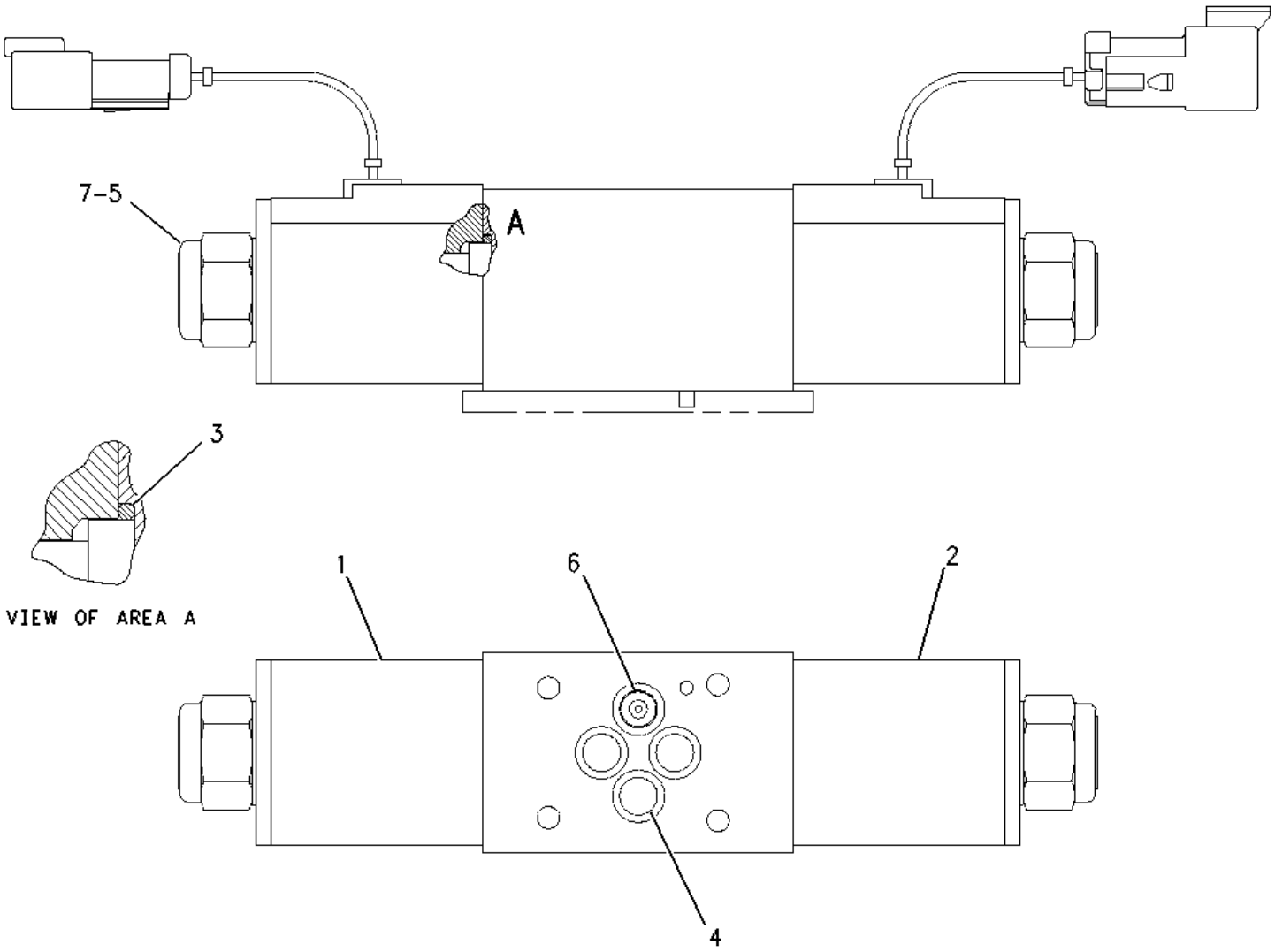

1 NPR 117-2911 1 COIL AS (FORWARD)

NPR 1S-9593 2 STRAP-CABLE

NPR 102-8802 1 KIT-RECEPTACLE (2-PIN)

(INCLUDES RECEPTACLE AS & WEDGE)

NPR 3E-3365 1 WEDGE-RECEPTACLE LOCK (2-PIN)

NPR 186-3735 2 PIN-CONNECTOR (16-GA TO 18-GA)

2 NPR 130-0912 1 COIL AS (REVERSE)

NPR 1S-9593 2 STRAP-CABLE

NPR 102-8803 1 KIT-RECEPTACLE (3-PIN)

(INCLUDES RECEPTACLE AS & WEDGE)

	NPR	3E-3371	1	WEDGE-RECEPTACLE LOCK (3-PIN)
	NPR	186-3735	2	PIN-CONNECTOR (16-GA TO 18-GA)
	NPR	8T-8737	1	PLUG-SEAL
3	NPR	061-8639	2	SEAL-O-RING
4	NPR	8L-2779	4	SEAL-O-RING
5	NPR	143-4988	2	LOCKNUT
6	NPR	143-6227	1	PLUG-ORIFICE
7	NPR	143-4655	2	WASHER (M18.4X24.8X0.8-MM)

142-1468 VALVE GP-SOLENOID ---S/N 4ZN16044-50156
12 VOLT DIRECT CURRENT -PART OF 111-7814, 111-7815, 192-0842, 192-0844 TRANSMISSION GP-DIRECT DRIVE
Type 2

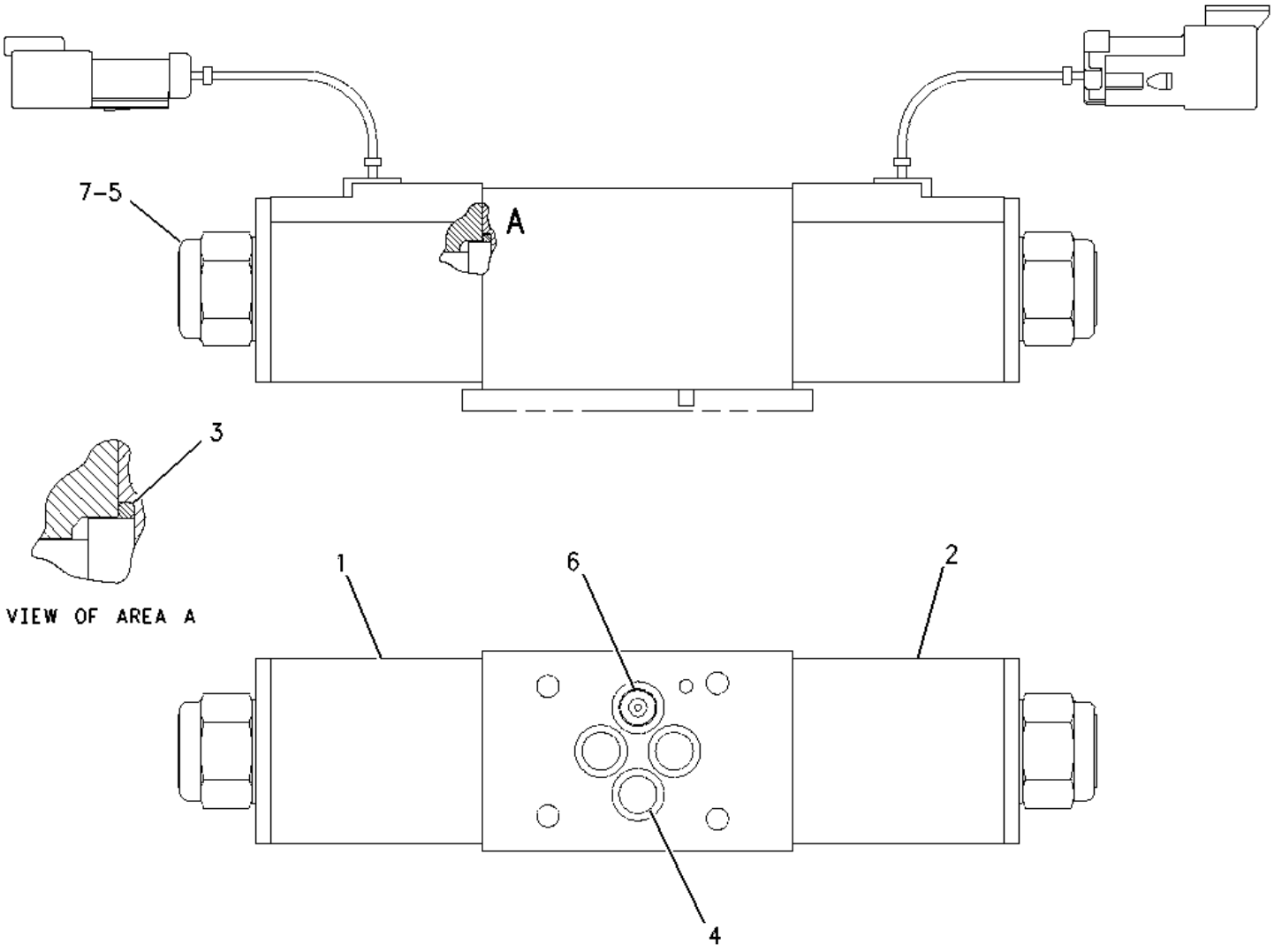

1 NPR 117-2911 1 COIL AS

NPR 1S-9593 2 STRAP-CABLE

NPR 102-8802 1 KIT-RECEPTACLE (2-PIN)

(INCLUDES RECEPTACLE AS & WEDGE)

NPR 3E-3365 1 WEDGE-RECEPTACLE LOCK (2-PIN)

NPR 186-3735 2 PIN-CONNECTOR (16-GA TO 18-GA)

2 NPR 130-0912 1 COIL AS

NPR 1S-9593 2 STRAP-CABLE

NPR 102-8803 1 KIT-RECEPTACLE (3-PIN)

(INCLUDES RECEPTACLE AS & WEDGE)

	NPR	3E-3371	1	WEDGE-RECEPTACLE LOCK (3-PIN)
	NPR	186-3735	2	PIN-CONNECTOR (16-GA TO 18-GA)
	NPR	8T-8737	1	PLUG-SEAL
3	NPR	061-8639	2	SEAL-O-RING
4	NPR	8L-2779	4	SEAL-O-RING
5	NPR	202-0040	2	NUT-LOCKING
6	NPR	143-6227	1	PLUG-ORIFICE
7	NPR	143-4655	2	WASHER (M18.4X24.8X0.8-MM)

148-8986 VALVE GP-SOLENOID--S/N 4ZN16044-50156
PART OF 147-0200, 147-0204, 192-0849 TRANSMISSION GP-POWER SHIFT

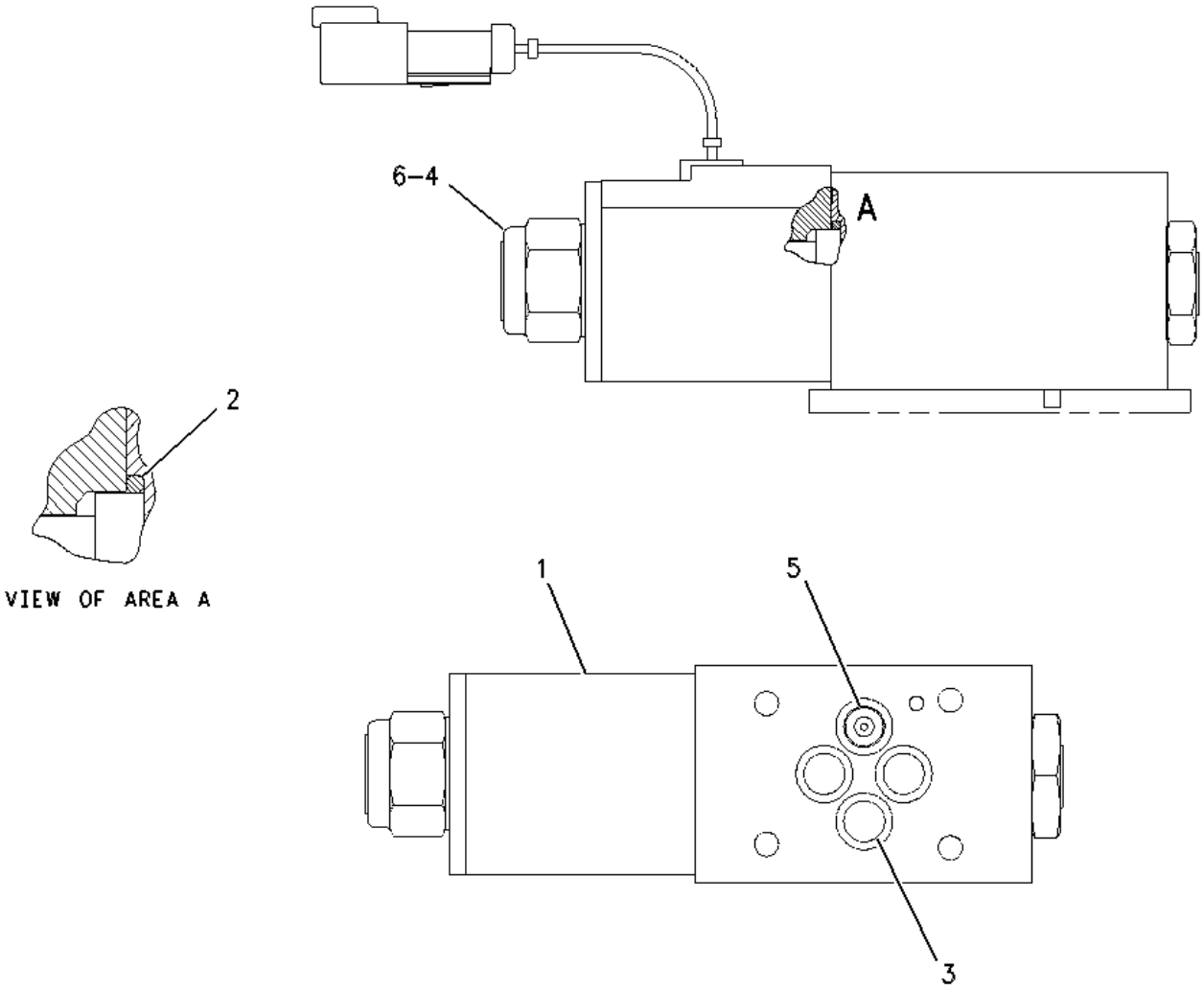

1 NPR 117-2911 1 COIL AS

NPR 1S-9593 2 STRAP-CABLE

NPR 102-8802 1 KIT-RECEPTACLE (2-PIN)

(INCLUDES RECEPTACLE AS & WEDGE)

NPR 186-3735 2 PIN-CONNECTOR (16-GA TO 18-GA)

2 NPR 061-8639 2 SEAL-O-RING

3 NPR 8L-2779 4 SEAL-O-RING

4 NPR 202-0040 1 NUT-LOCKING

5 NPR 150-4932 1 PLUG-ORIFICE

6 NPR 143-4655 1 WASHER (M18.4X24.8X0.8-MM)

148-8988 VALVE GP-SOLENOID --S/N 4ZN16044-50156
PART OF 147-0200, 147-0204, 192-0849 TRANSMISSION GP-POWER SHIFT

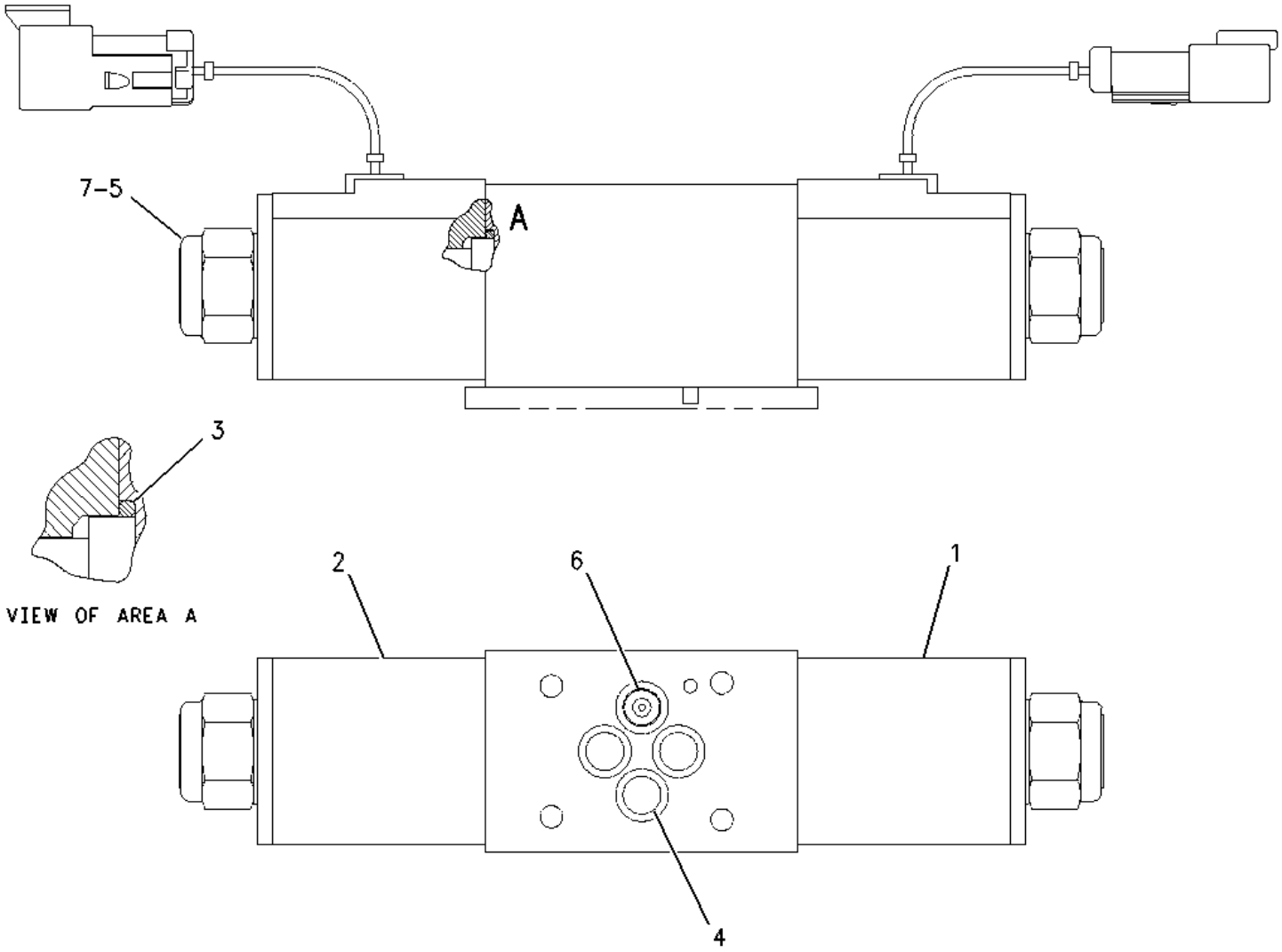

1 NPR 117-2911 1 COIL AS

NPR 1S-9593 2 STRAP-CABLE

NPR 102-8802 1 KIT-RECEPTACLE (2-PIN)

(KIT INCLUDES RECEPTACLE AS AND WEDGE)

NPR 186-3735 2 PIN-CONNECTOR (16-GA TO 18-GA)

2 NPR 130-0912 1 COIL AS

NPR 1S-9593 2 STRAP-CABLE

NPR 102-8803 1 KIT-RECEPTACLE (3-PIN)

(KIT INCLUDES RECEPTACLE AS AND WEDGE)

	NPR	186-3735	2	PIN-CONNECTOR (16-GA TO 18-GA)
	NPR	8T-8737	1	PLUG-SEAL
3	NPR	061-8639	2	SEAL-O-RING
4	NPR	8L-2779	4	SEAL-O-RING
5	NPR	202-0040	1	NUT-LOCKING
6	NPR	150-4932	1	PLUG-ORIFICE
7	NPR	143-4655	2	WASHER (M18.4X24.8X0.8-MM)

238-1966 VALVE GP-SOLENOID --S/N 4ZN20525-50156--12-VOLT
PART OF 147-0200, 147-0204 TRANSMISSION GP-POWER SHIFT

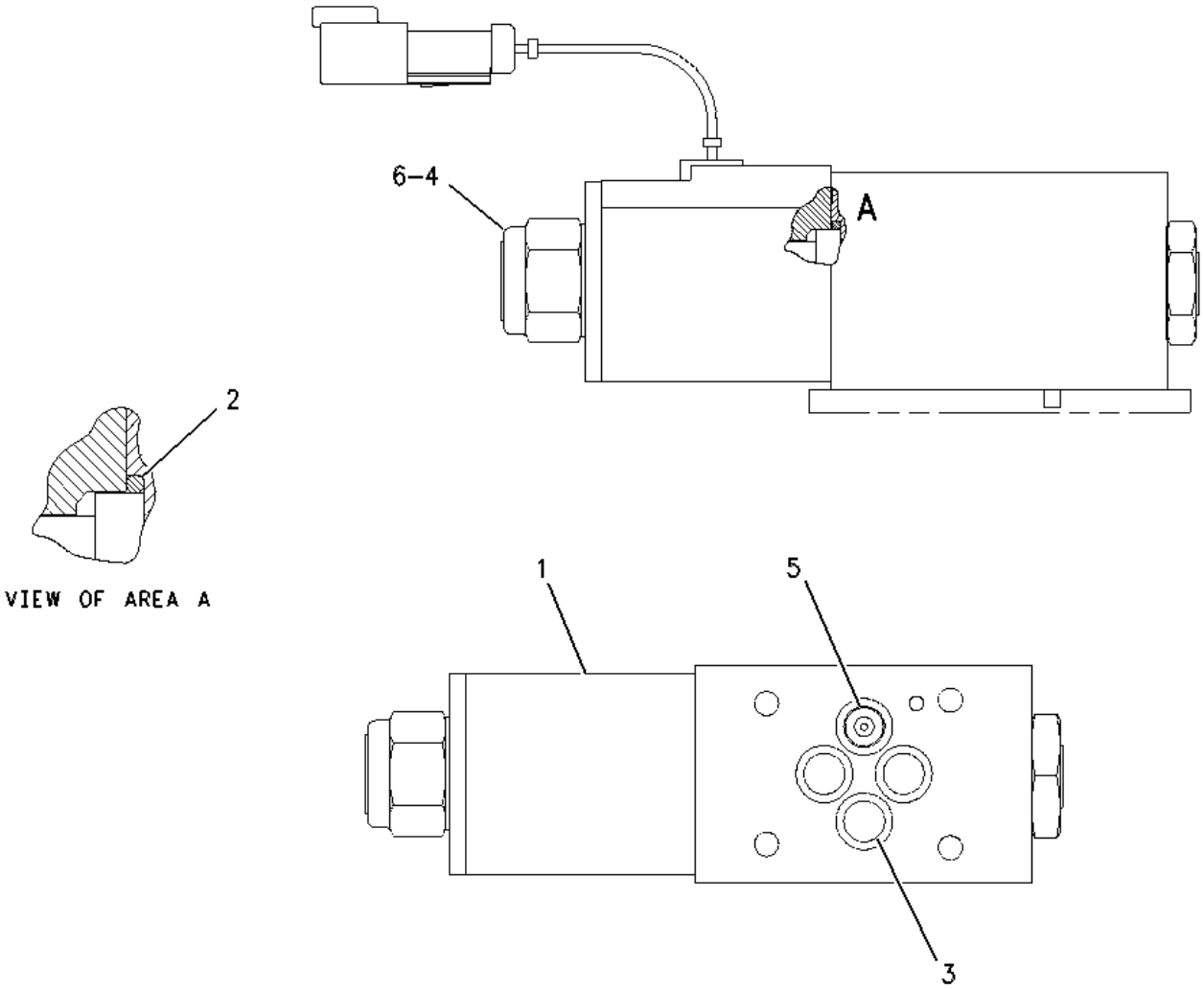

1	NPR	117-2911	1	COIL AS
	NPR	1S-9593	2	STRAP-CABLE
	NPR	102-8802	1	KIT-RECEPTACLE (2-PIN)
	(INCLUDES RECEPTACLE AS & WEDGE)			
	NPR	186-3735	2	PIN-CONNECTOR (16-GA TO 18-GA)
2	NPR	061-8639	2	SEAL-O-RING
3	NPR	8L-2779	4	SEAL-O-RING
4	NPR	202-0040	1	NUT-LOCKING
5	NPR	150-4932	1	PLUG-ORIFICE
6	NPR	143-4655	1	WASHER (M18.4X24.8X0.8-MM)

238-1967 VALVE GP-SOLENOID--S/N 4ZN20525-50156--12-VOLT
PART OF 147-0200 TRANSMISSION GP-POWER SHIFT

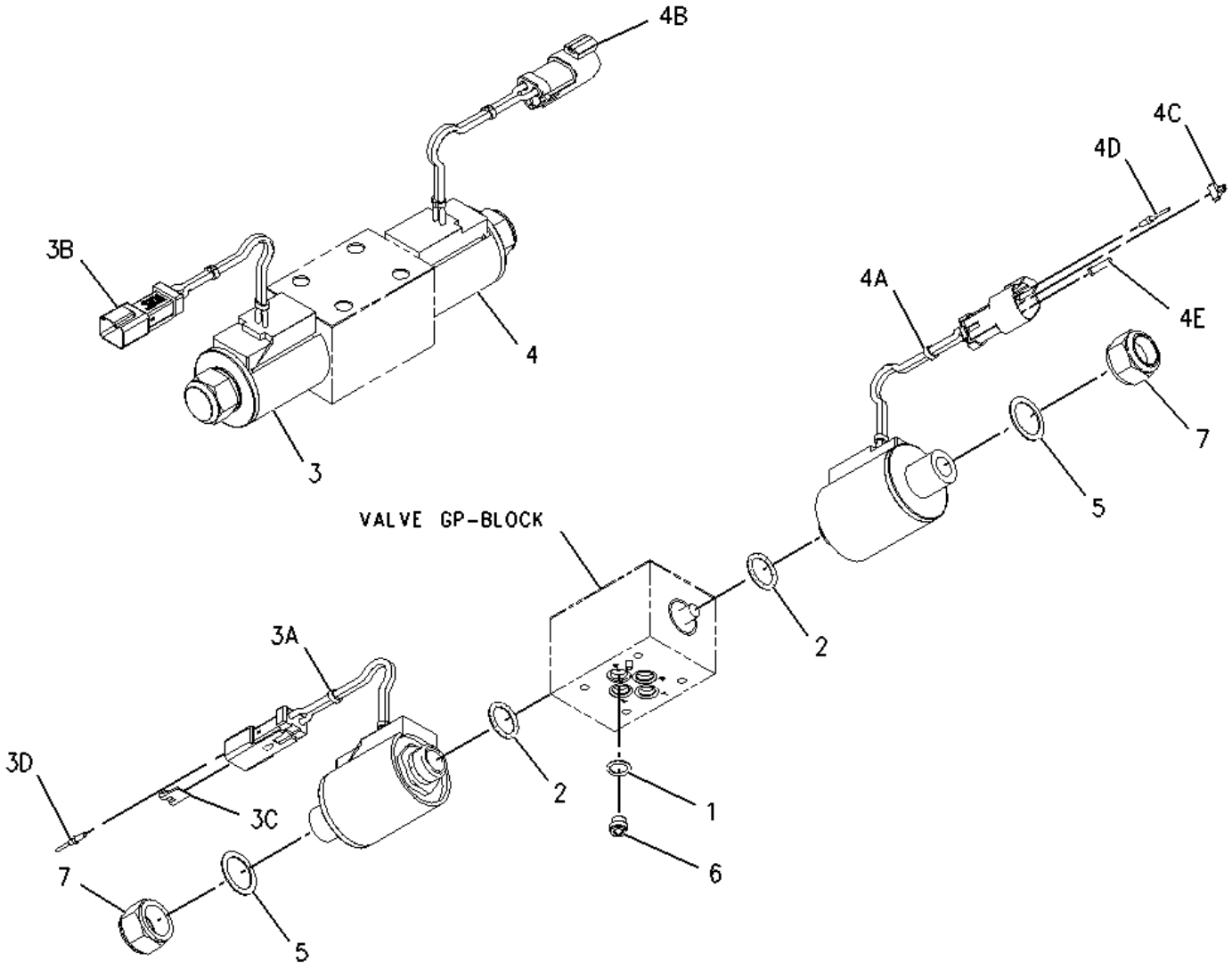

1 NPR 8L-2779 4 SEAL-O-RING

2 NPR 061-8639 2 SEAL-O-RING

3 NPR 117-2911 1 COIL AS

3A NPR 1S-9593 2 STRAP-CABLE

3B NPR 102-8802 1 KIT-RECEPTACLE (2-PIN)

(INCLUDES RECEPTACLE AS & WEDGE)

3C NPR 3E-3365 1 WEDGE-RECEPTACLE LOCK (2-PIN)

3D NPR 8T-8729 2 PIN-CONNECTOR

4 NPR 130-0912 1 COIL AS

4A NPR 1S-9593 2 STRAP-CABLE

4B	NPR	102-8803	1	KIT-RECEPTACLE (3-PIN)
		(INCLUDES RECEPTACLE AS & WEDGE)		
4C	NPR	3E-3371	1	WEDGE-RECEPTACLE LOCK (3-PIN)
4D	NPR	8T-8729	2	PIN-CONNECTOR
4E	NPR	8T-8737	1	PLUG-SEAL
5	NPR	143-4655	2	WASHER (M18.4X24.8X0.8-MM)
6	NPR	150-4932	1	PLUG-ORIFICE
7	NPR	202-0040	2	NUT-LOCKING

143-0782 MOUNTING GP-ENGINE & TMSN --S/N 4ZN16044-50156--PART OF 140-6156, 140-6157 POWER TRAIN AR

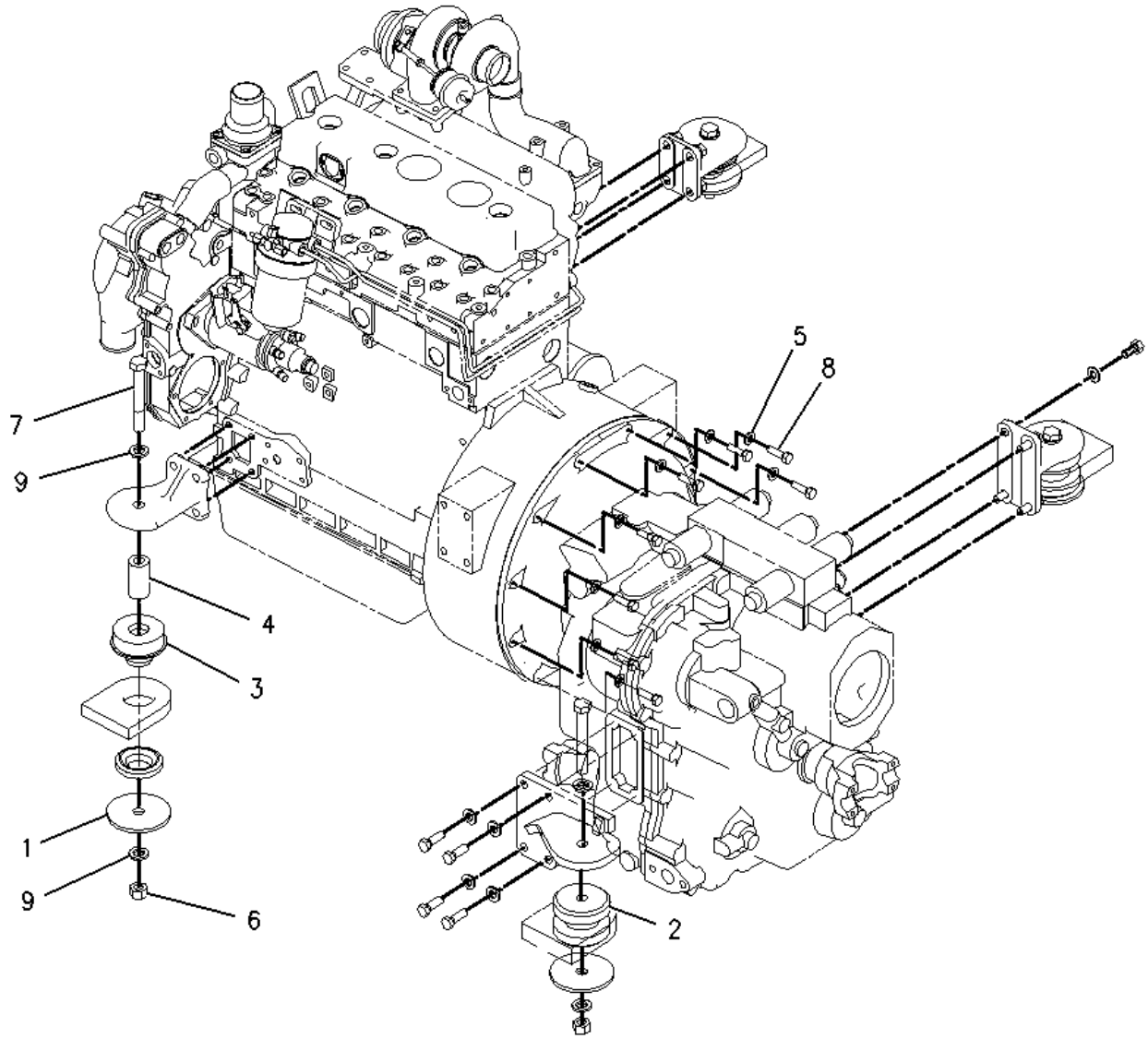

1 NPR 3E-4892 4 WASHER (16.75X100X6-MM THK)

2 NPR 3E-4924 2 MOUNTING AS

3 NPR 6Y-9915 2 MOUNT AS

4 NPR 9W-9953 2 SLEEVE

5 NPR 8T-4121 12 WASHER-HARD (11X21X2.5-MM THK)

6 NPR M 8T-4132 4 NUT (M16X2-THD)

7 NPR M 8T-4174 4 BOLT (M16X2X120-MM)

8 NPR M 8T-4196 12 BOLT (M10X1.5X35-MM)

9 NPR 9X-8257 8 WASHER (17.5X30X3.5-MM THK)

Key:

M - METRIC PART

143-0788 MOUNTING GP-ENGINE & TMSN --S/N 4ZN16044-50156--POWER SHIFT
PART OF 159-4962, 159-4963, 159-4964, 159-4965 CONTROL AR-POWER SHIFT TMSN

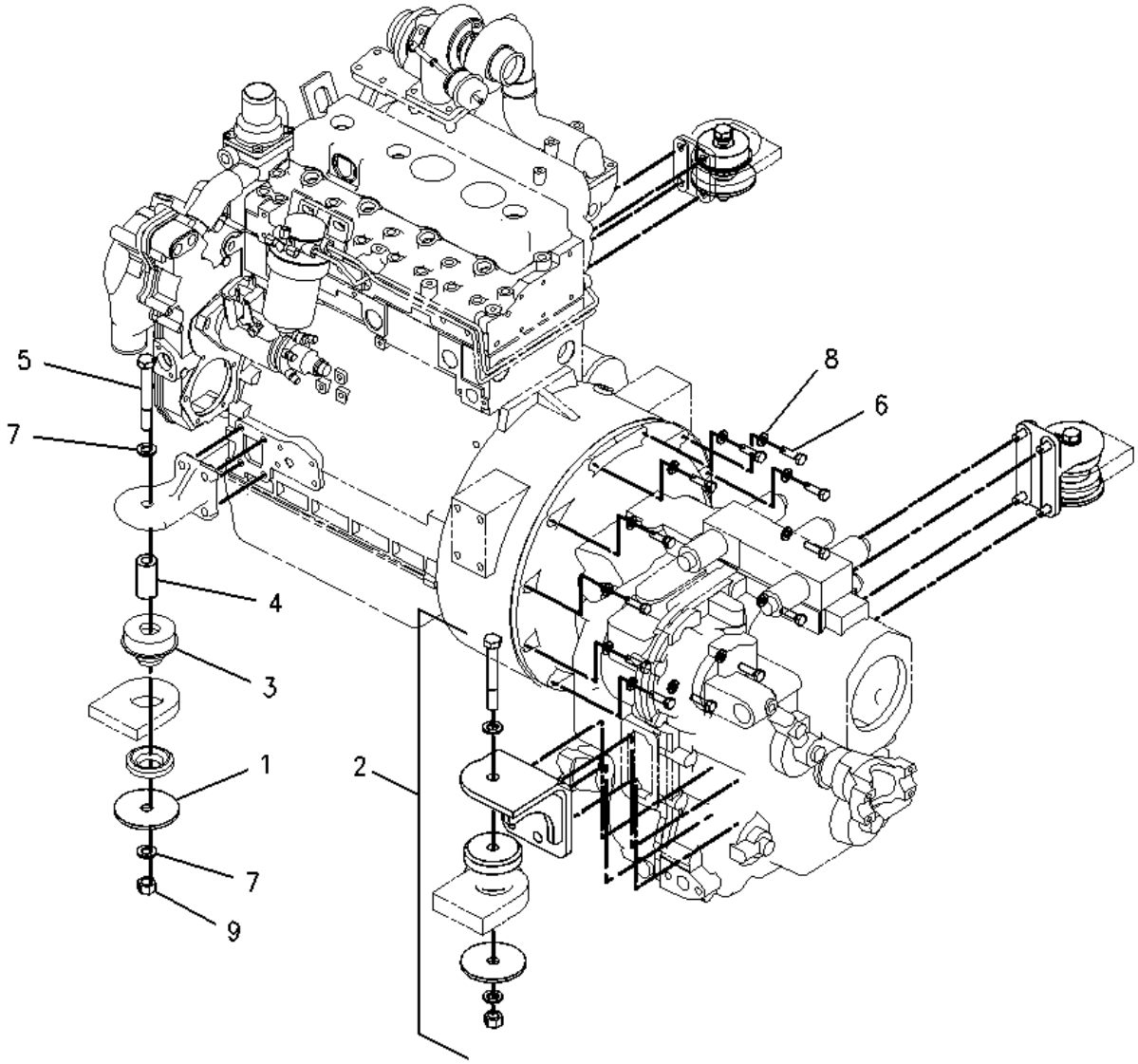

1	NPR	3E-4892	4	WASHER (16.75X100X6-MM THK)
2	NPR	3E-4924	2	MOUNTING AS
3	NPR	6Y-9915	2	MOUNT AS
4	NPR	9W-9953	2	SLEEVE
5	NPR M	8T-4174	4	BOLT (M16X2X120-MM)
6	NPR M	8T-4196	12	BOLT (M10X1.5X35-MM)
7	NPR	9X-8257	8	WASHER (17.5X30X3.5-MM THK)
8	NPR	8T-4121	12	WASHER-HARD (11X21X2.5-MM THK)
9	NPR M	8T-4132	4	NUT (M16X2-THD)

Key: M - METRIC PART

189-5746 SENSOR GP-SPEED -LOW OUTPUT --S/N 4ZN16044-50156
PART OF 147-0200, 147-0204, 192-0849 TRANSMISSION GP-POWER SHIFT

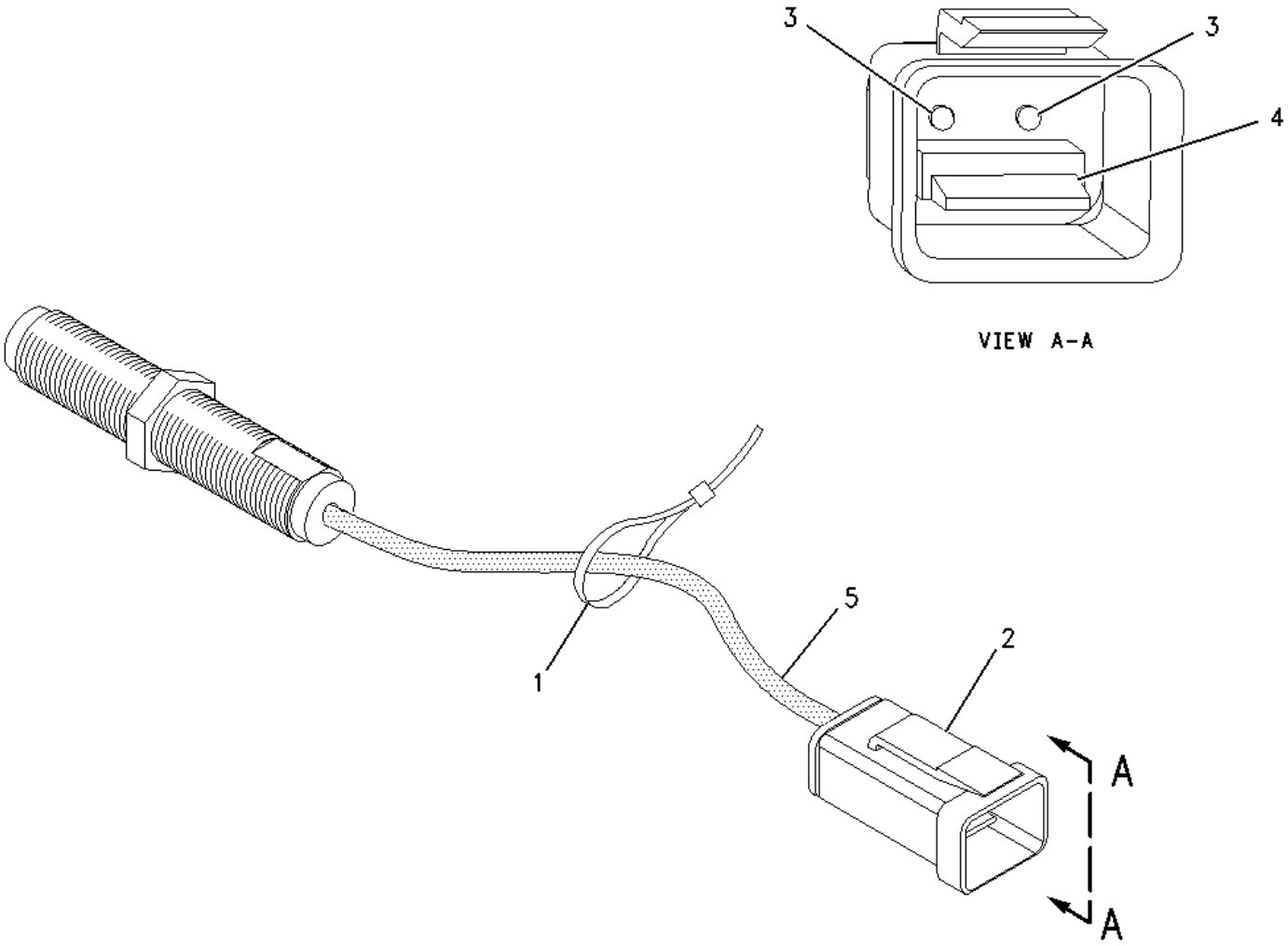

1 NPR 171-5349 1 STRAP-MARKER

2 NPR 102-8802 1 KIT-RECEPTACLE (2-PIN)

(INCLUDES RECEPTACLE AS AND WEDGE)

3 NPR 186-3735 2 PIN-CONNECTOR (16-GA TO 18-GA)

4 NPR 3E-3365 1 WEDGE-RECEPTACLE LOCK (2-PIN)

5 NPR E 9X-1386 SLEEVE (14-CM)

Key:

E - ORDER BY THE CENTIMETER

202-7431 TRANSMISSION & MOUNTING GP -ALL WHEEL DRIVE
S/N 4ZN16044-50156
PART OF 107-3762 TRANSMISSION AR-DIRECT DRIVE

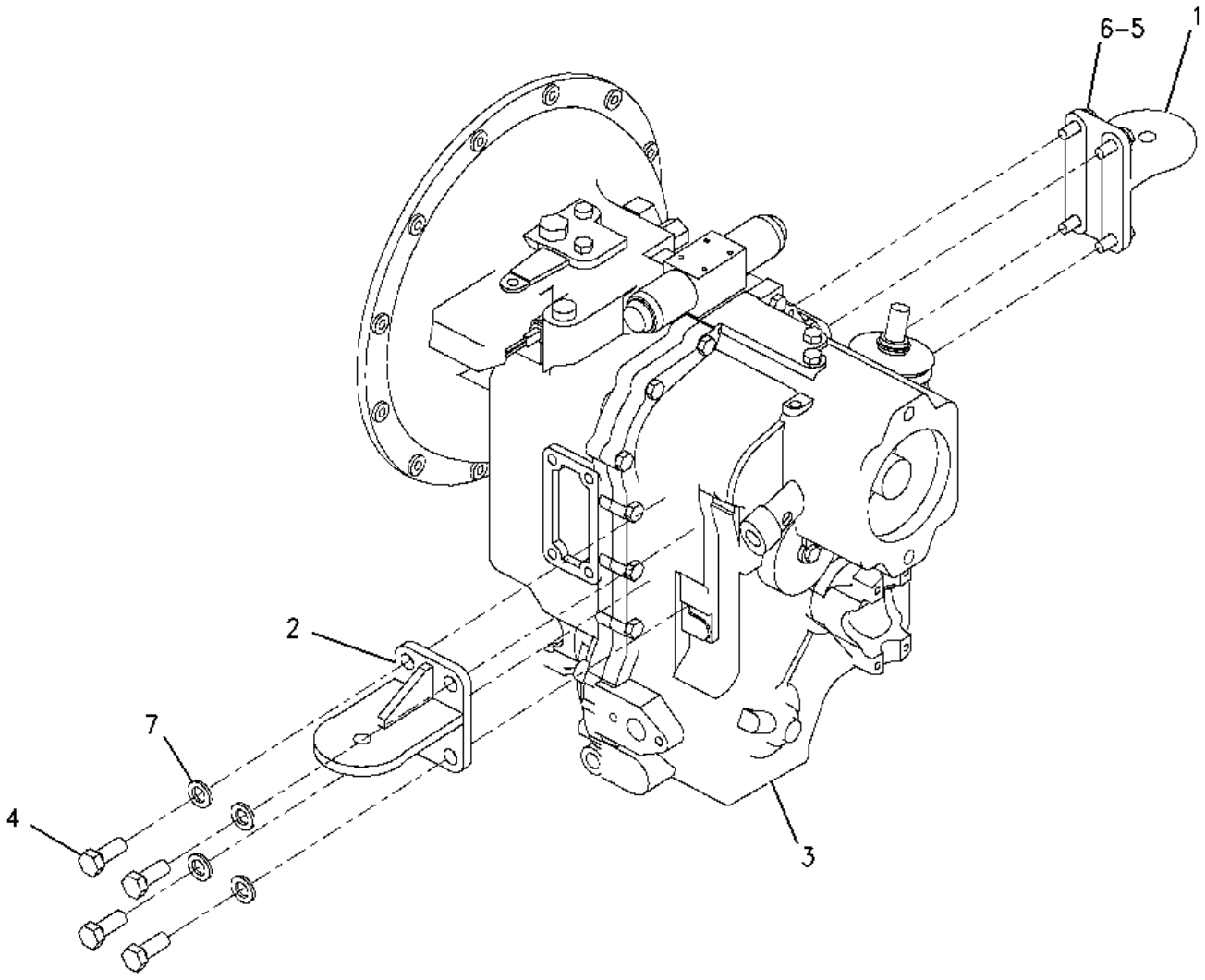

1 NPR 113-9221 1 SUPPORT AS (RH)

2 NPR 138-7137 1 SUPPORT AS (LH)

3 NPR Y 192-0844 1 TRANSMISSION GP-DIRECT DRIVE (ALL WHEEL DRIVE)

4 NPR M 7X-2553 4 BOLT (M16X2X40-MM)

5 NPR 8T-4223 4 WASHER-HARD (13.5X25.5X3-MM THK)

6 NPR M 8T-4956 4 BOLT (M12X1.75X35-MM)

7 NPR 9X-8257 4 WASHER (17.5X30X3.5-MM THK)

Key:

M - METRIC PART
Y - SEPARATE ILLUSTRATION

202-7432 TRANSMISSION & MOUNTING GP -ALL WHEEL DRIVE
S/N 4ZN16044-50156
PART OF 142-4437 TRANSMISSION AR-POWER SHIFT

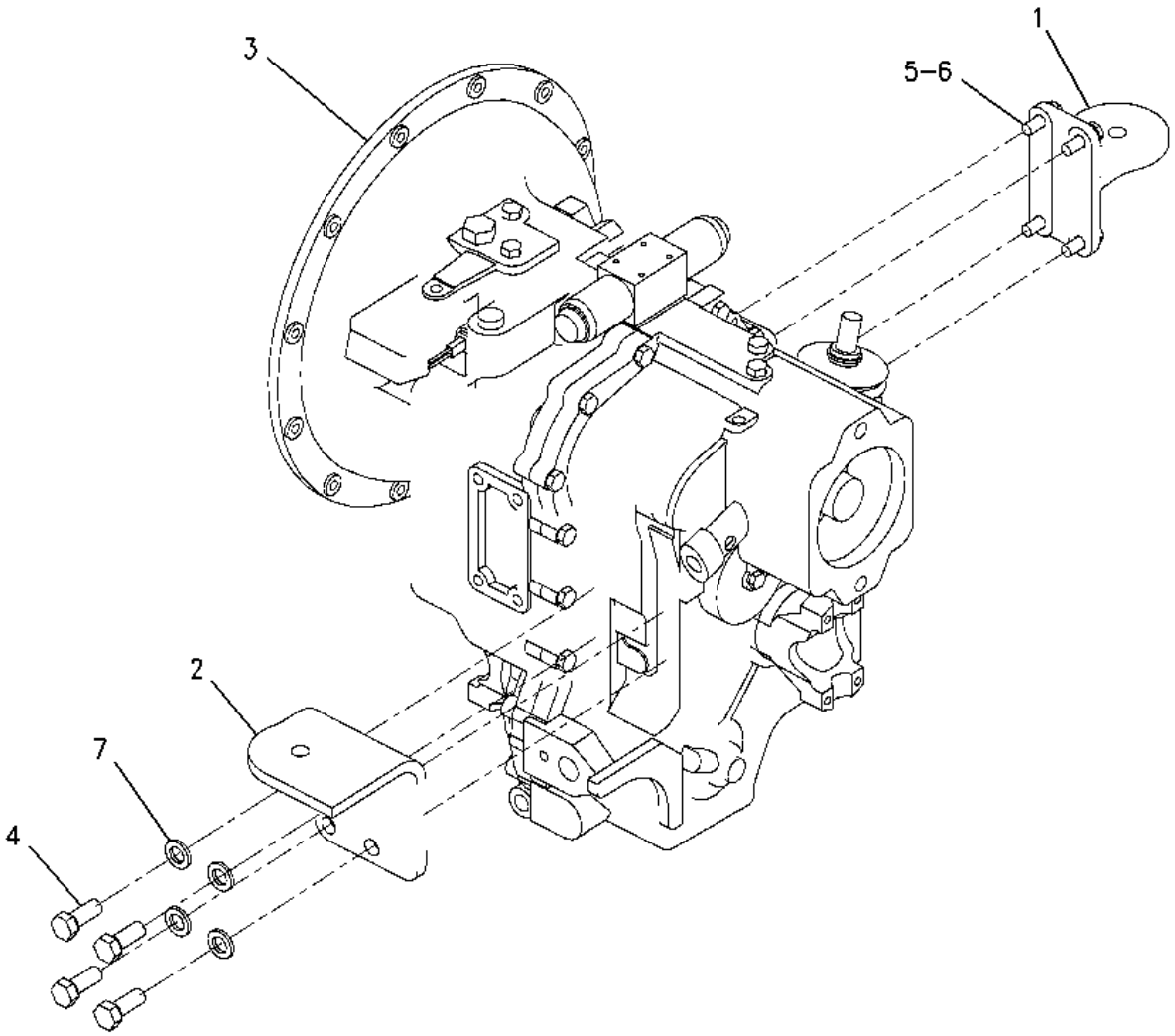

1 NPR 113-9221 1 SUPPORT AS (RH)

2 NPR 138-7138 1 SUPPORT AS (LH)

3 NPR Y 192-0849 1 TRANSMISSION GP-POWER SHIFT (ALL WHEEL DRIVE)

4 NPR M 7X-2553 4 BOLT (M16X2X40-MM)

5 NPR 8T-4223 4 WASHER-HARD (13.5X25.5X3-MM THK)

6 NPR M 8T-4956 4 BOLT (M12X1.75X35-MM)

7 NPR 9X-8257 4 WASHER (17.5X30X3.5-MM THK)

Key:

M - METRIC PART
Y - SEPARATE ILLUSTRATION

107-3761 TRANSMISSION AR-DIRECT DRIVE --S/N 4ZN16044-50156
PART OF 140-6156 POWER TRAIN AR

NPR Y 111-7815 1 TRANSMISSION GP-DIRECT DRIVE

S/N 4ZN16044-23964

NPR Y 192-0842 1 TRANSMISSION GP-DIRECT DRIVE (2-WHEEL DRIVE)

S/N 4ZN23965-23991

NPR Y 202-7430 1 TRANSMISSION & MOUNTING GP

S/N 4ZN23992-50156

NPR Y 111-7907 1 DRIVE GP-FLEXIBLE COUPLING

NPR 140-7393 1 TORQUE CONVERTER AS

Key: Y - SEPARATE ILLUSTRATION

107-3762 TRANSMISSION AR-DIRECT DRIVE --S/N 4ZN16044-50156
PART OF 140-6157 POWER TRAIN AR

NPR Y 111-7907 1 DRIVE GP-FLEXIBLE COUPLING

NPR Y 111-7814 1 TRANSMISSION GP-DIRECT DRIVE

-OR-

NPR Y 202-7431 1 TRANSMISSION & MOUNTING GP

NPR 140-7393 1 TORQUE CONVERTER AS

Key: Y - SEPARATE ILLUSTRATION

142-4436 TRANSMISSION AR-POWER SHIFT
S/N 4ZN16044-50156
PART OF 159-4962, 159-4964 CONTROL AR-POWER SHIFT TMSN

NPR Y 111-7907 1 DRIVE GP-FLEXIBLE COUPLING

NPR Y 147-0200 1 TRANSMISSION GP-POWER SHIFT

NPR 140-7393 1 TORQUE CONVERTER AS

Key: Y - SEPARATE ILLUSTRATION

142-4437 TRANSMISSION AR-POWER SHIFT
S/N 4ZN16044-50156
PART OF 159-4963, 159-4965 CONTROL AR-POWER SHIFT TMSN

NPR Y 111-7907 1 DRIVE GP-FLEXIBLE COUPLING

NPR Y 147-0204 1 TRANSMISSION GP-POWER SHIFT

-OR-

NPR Y 202-7432 1 TRANSMISSION & MOUNTING GP

NPR 140-7393 1 TORQUE CONVERTER AS

111-7814 TRANSMISSION GP-DIRECT DRIVE --S/N 4ZN20525-50156
PART OF 107-3762 TRANSMISSION AR-DIRECT DRIVE--Type 1

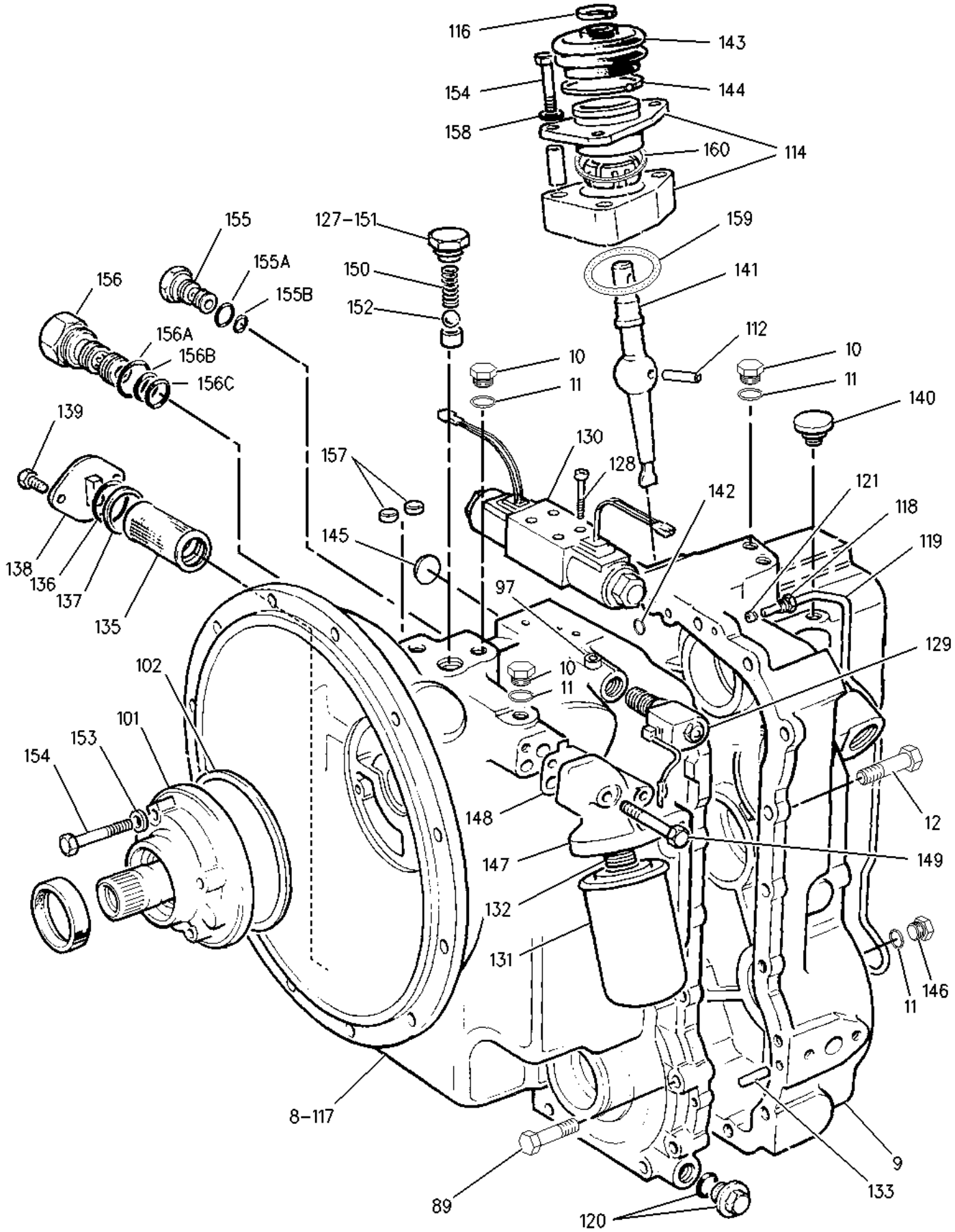

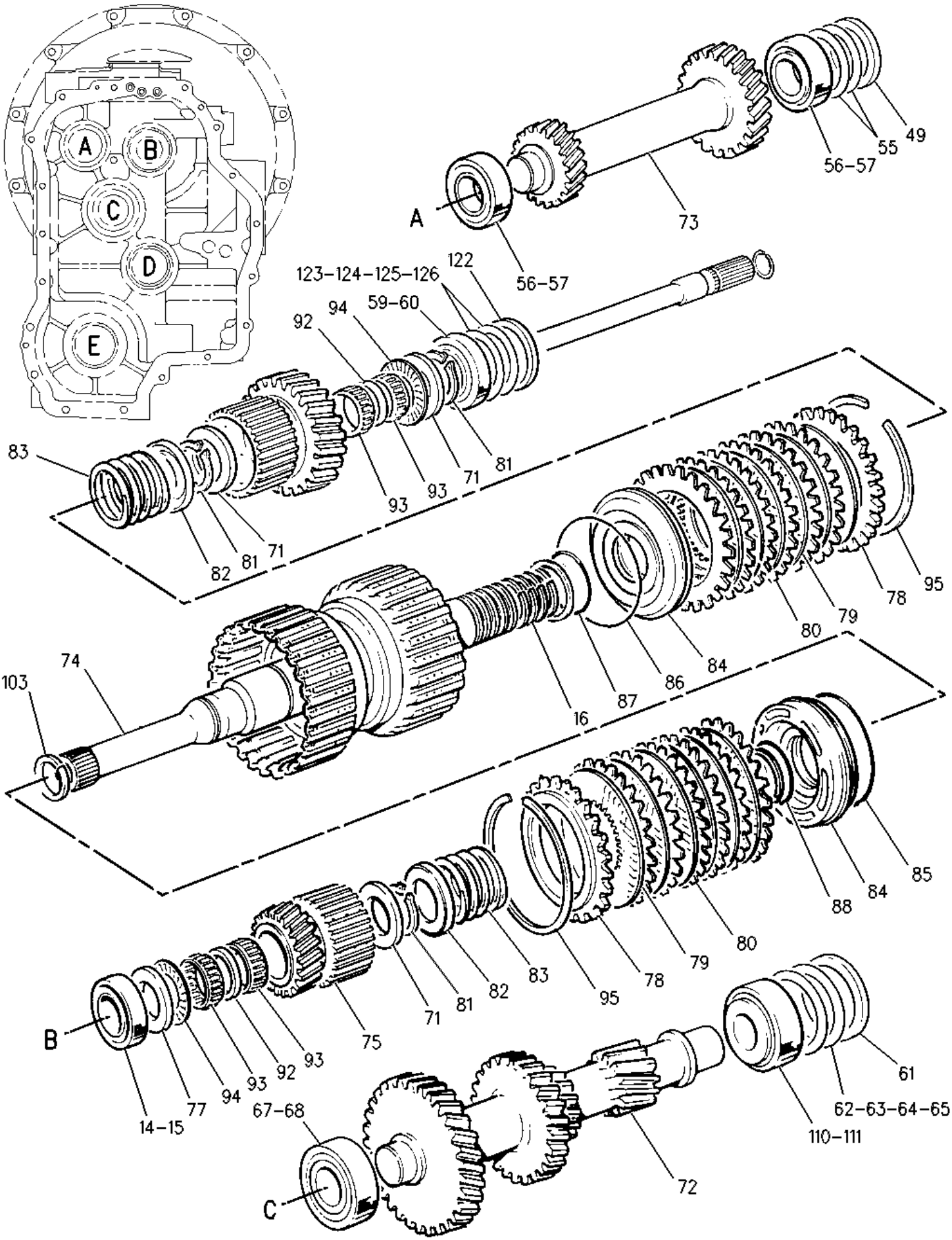
A
B
C
D
E
49
55
56-57
73
A
56-57
122
123-124-125-126
59-60
94
92
83
93
93
71
81
82
81
71
78
95
80
79
84
86
87
16
74
103
85
84
88
80
79
78
95
83
82
81
71
75
B
93
92
93
94
77
14-15
67-68
C
72
61
62-63-64-65
110-111

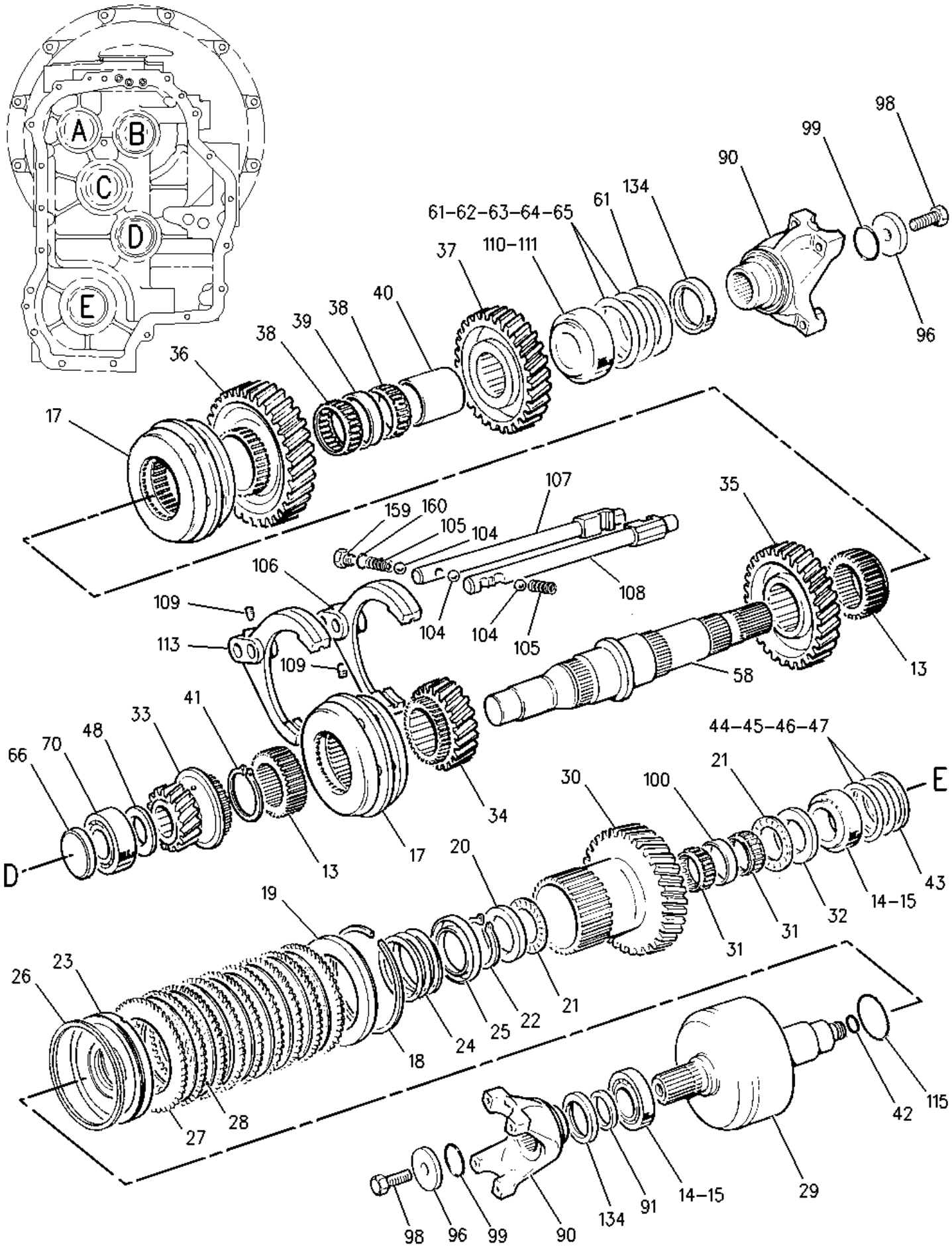
A
B
C
D
E
98
99
90
61
134
61-62-63-64-65
37
110-111
40
38
39
38
36
17
96
107
159
160
105
104
35
106
109
113
104
104
105
108
109
58
13
41
33
48
70
66
44-45-46-47
21
E
30
100
20
34
17
13
D
43
14-15
32
31
31
19
26
23
18
24
25
22
21
27
28
42
115
29
91
14-15
134
98
96
99
90

8 NPR 1 120-9590 1 CASE AS

9 NPR 1 156-9275 1 CASE-REAR TRANSMISSION

10 NPR 1 9S-4191 11 PLUG-O RING

11 NPR 1 3J-1907 12 SEAL-O-RING

12 NPR M 1 6V-8335 14 BOLT-SELF-LOCKING (M10X1.5X40-MM)

13 NPR 3 7T-3022 2 SLEEVE

14 NPR 2,3 123-8906 3 CUP-TAPERED ROLLER

15 NPR 2,3 123-8905 2 CUP-TAPERED ROLLER

16 NPR 2 9U-8886 4 RING-SEAL

17 NPR 3 7T-3021 2 SYNCHRONIZER GP

18 NPR 3 121-0490 1 RING-RETAINING

19 NPR 3 121-0630 1 RETAINER

20 NPR 3 121-0697 1 WASHER-THRUST (45X65X5-MM THK)

21 NPR 3 172-6050 2 BEARING-SPECIAL

22 NPR 3 095-0927 1 RING-RETAINING

23 NPR 3 121-0714 1 PISTON

24 NPR 3 178-9566 1 SPRING-PISTON

25 NPR 3 121-0885 1 RETAINER

26 NPR 3 6T-9196 1 SEAL

27 NPR 3 6T-9194 9 PLATE

28 NPR 3 6Y-7957 8 DISC-FRICTION

29 NPR 3 121-0900 1 SHAFT AS-OUTPUT (FRONT)

30 NPR 3 121-0904 1 GEAR AS (36-TEETH)

31 NPR 3 123-8912 2 BEARING-ROLLER

32 NPR 3 122-1877 1 WASHER-THRUST (40X65X4-MM THK)

33	NPR	3	121-1223	1	GEAR (35-TEETH)
34	NPR	3	121-1251	1	GEAR (28-TEETH)
35	NPR	3	117-4650	1	GEAR (37-TEETH)
36	NPR	3	6T-9160	1	GEAR (43-TEETH)
37	NPR	3	121-1253	1	GEAR (37-TEETH)
38	NPR	3	6V-8500	2	BEARING
39	NPR	3	7T-3017	1	SPACER (52.5X59X9.6-MM THK)
40	NPR	3	7T-3018	1	SLEEVE
41	NPR	3	6Y-2326	1	RING
42	NPR	3	122-1878	1	RING-SEAL
43	NPR	3	122-1879	1	SPACER (58X67.5X2-MM THK)
44	NPR B	3	104-3288		SHIM (0.05-MM THK)
45	NPR B	3	121-2059		SHIM (0.08-MM THK)
46	NPR B	3	121-2060		SHIM (0.18-MM THK)
47	NPR B	3	121-2061		SHIM (0.6-MM THK)
48	NPR	3	121-2062	1	WASHER-THRUST (35X55X4-MM THK)
49	NPR	2	7T-3034	1	SPACER (56.9X64.5X1.98-MM)
50	NPR B	2	6T-9144		SHIM (0.051-MM THK)
51	NPR B	2	6T-9147		SHIM (0.076-MM THK)
52	NPR B	2	6T-9146		SHIM (0.127-MM THK)
53	NPR B	2	6T-9145		SHIM (0.178-MM THK)
54	NPR B	2	6T-9143		SHIM (0.381-MM THK)
55	NPR B	2	6T-9142		SHIM (0.508-MM THK)
56	NPR	2	005-0469	2	CUP-BEARING
57	NPR	2	005-0471	2	CONE-BEARING

58	NPR	3	121-2063	1	SHAFT-OUTPUT (REAR)
59	NPR	2	123-8910	1	CUP-TAPERED ROLLER
60	NPR	2	123-8909	1	CONE-BEARING
61	NPR B	2,3	7T-2646	2	SPACER (66X79.5X2.02-MM THK)
62	NPR B	2,3	6T-9166	2	SHIM (0.051-MM THK)
63	NPR B	2,3	6T-9165	2	SHIM (0.076-MM THK)
64	NPR B	2,3	6T-9164	2	SHIM (0.178-MM THK)
65	NPR B	2,3	6T-9163	2	SHIM (0.599-MM THK)
66	NPR	3	7T-3051	1	PLUG
67	NPR	2	8T-1580	1	CUP
68	NPR	2	8T-1581	1	CONE
69	NPR	3	6Y-2737	1	CUP-BEARING
70	NPR	3	6Y-2736	1	CONE-BEARING
71	NPR	2	121-2500	3	WASHER-THRUST (50X70X4-MM THK)
72	NPR	2	121-2511	1	SHAFT
73	NPR	2	121-2537	1	SHAFT-REVERSE
74	NPR	2	121-2545	1	SHAFT AS-INPUT
	NPR	2	123-0714	1	BEARING
	NPR	2	123-2920	3	PLUG
75	NPR	2	121-2603	1	GEAR (24-TEETH)
76	NPR	2	121-2604	1	GEAR (27-TEETH)
77	NPR	2	121-0694	1	WASHER-THRUST (40X70X4-MM THK)
78	NPR	2	122-1882	2	PLATE-END
79	NPR	2	122-1881	12	PLATE-CLUTCH
80	NPR	2	122-1880	12	DISC

81 NPR 2 6V-8757 3 RING-RETAINING

82 NPR 2 121-2801 2 RETAINER

83 NPR 2 121-2802 2 SPRING

84 NPR 2 121-2803 2 PISTON

85 NPR 2 122-1875 2 SEAL

86 NPR 2 122-1874 2 SEAL-O-RING

87 NPR 2 122-6783 2 RING-SEAL

88 NPR 2 6V-4368 2 SEAL-O-RING

89 NPR M 1 121-9875 4 BOLT (M10X1.5X55-MM)

90 NPR 3 122-6787 2 YOKE AS

(EACH INCLUDES)

NPR 3 123-1377 1 GUARD

91 NPR 3 122-1883 1 SPACER (38X45X5-MM THK)

92 NPR 2 122-1885 2 SPACER (51X55X4-MM THK)

93 NPR 2 123-8913 4 BEARING-ROLLER

94 NPR 2 172-5317 2 BEARING-SPECIAL

95 NPR 2 122-3649 2 RING-RETAINING

96 NPR 3 7T-3195 2 WASHER (12.3X47X6.35-MM THK)

97 NPR 1 123-2920 1 PLUG

98 NPR M 3 6V-8097 2 BOLT (M12X1.75X30-MM)

99 NPR 3 5P-8066 2 SEAL-O-RING

100 NPR 3 122-1884 1 SPACER (45X49X8-MM THK)

101 NPR 1 121-7385 1 PUMP GP-TRANSMISSION

102 NPR 1 7X-4741 1 SEAL

103 NPR 2 122-1886 1 RING-SEAL

104 NPR 3 014-5645 3 BALL

105 NPR 3 6Y-1341 2 SPRING

106 NPR 3 121-7403 1 FORK-SHIFT

107 NPR 3 121-7389 1 ROD AS-GEARSHIFT

108 NPR 3 121-7390 1 ROD AS-GEARSHIFT

109 NPR 3 7T-3249 2 SCREW (3/8-24X0.75-IN)

110 NPR 2,3 123-8907 2 CONE-BEARING

111 NPR 2,3 123-8908 2 CUP-TAPERED ROLLER

112 NPR 1 7T-3109 1 PIN

113 NPR 3 121-7404 1 FORK-SHIFT

114 NPR 1 127-3017 1 SEAT AS

115 NPR 3 6V-5100 1 SEAL-O-RING

116 NPR 1 3S-2093 1 STRAP-CABLE

117 NPR B 1 1U-8846 1 SEALANT-GASKET

118 NPR 1 123-2919 2 NUT (M11X1-THD)

119 NPR 1 122-1876 1 TUBE

120 NPR 1 6Y-1896 1 PLUG AS

NPR 1 5P-6718 1 SEAL-O-RING

121 NPR 1 123-2918 2 SLEEVE

122 NPR 2 121-7398 1 SPACER (70X79.5X2-MM THK)

123 NPR B 2 121-7399 SHIM (0.05-MM THK)

124 NPR B 2 121-7400 SHIM (0.08-MM THK)

125 NPR B 2 121-7401 SHIM (0.18-MM THK)

126 NPR B 2 121-7402 SHIM (0.6-MM THK)

127 NPR 1 121-1252 1 HOUSING

128 NPR M 1 9X-6615 4 BOLT (M5X0.8X30-MM)

129 NPR Y 1 121-4036 1 VALVE GP-SOLENOID (ALL WHEEL DRIVE)

130 NPR Y 1 142-1468 1 VALVE GP-SOLENOID (DIRECTION)

131 NPR 1 119-4740 1 FILTER AS-OIL (STANDARD EFFICIENCY)

132 NPR 1 3G-6927 1 ADAPTER

133 NPR 1 7T-3253 2 DOWEL

134 NPR 3 8T-2193 2 SEAL-LIP TYPE

135 NPR 1 7T-2651 1 STRAINER

136 NPR 1 4F-7952 1 SEAL-O-RING

137 NPR 1 9W-5460 1 RING

138 NPR 1 106-9861 1 PLATE-COVER

139 NPR M 1 6V-8210 2 BOLT (M8X1.25X16-MM)

140 NPR 1 7T-3251 1 BREATHER

141 NPR 1 121-7391 1 LEVER

142 NPR 1 120-9762 4 SEAL-O-RING

143 NPR 1 7T-3111 1 COVER

144 NPR 1 6K-0806 1 STRAP-CABLE

145 NPR 1 1H-9721 1 PLUG-EXPANSION

146 NPR 1 122-6785 1 PLUG AS

147 NPR 1 7T-3119 1 HOUSING

148 NPR 1 6Y-2035 1 GASKET

149 NPR M 1 6V-7731 2 BOLT (M10X1.5X70-MM)

150 NPR 1 121-0709 1 SPRING

151 NPR 1 3D-2824 1 SEAL-O-RING

152 NPR 1 6B-8208 1 BALL

153 NPR 1 9P-9150 4 WASHER (8.25X18X0.84-MM THK)

154 NPR M 1 8C-5748 7 BOLT (M8X1.25X55-MM)

155 NPR 1 121-7396 1 VALVE GP-RELIEF (TORQUE CONVERTER INLET)

155A NPR 1 6V-4589 1 SEAL-O-RING

155B NPR 1 8L-2746 1 SEAL-O-RING

156 NPR 1 121-7405 1 VALVE GP-RELIEF (CLUTCH PRESSURE)

156A NPR 1 7X-4744 1 SEAL-O-RING

156B NPR 1 6V-9178 1 SEAL-O-RING

156C NPR 1 106-9586 1 SEAL-O-RING

157 NPR 1 122-3652 2 PLUG

158 NPR 1 9M-1974 3 WASHER-HARD (8.8X16X2-MM THK)

159 NPR 1 175-0054 1 SEAL-O-RING

160 NPR 1 174-9711 1 GASKET

Key:

B - USE AS REQUIRED
M - METRIC PART
Y - SEPARATE ILLUSTRATION

111-7814 TRANSMISSION GP-DIRECT DRIVE--S/N 4ZN20525-50156
PART OF 107-3762 TRANSMISSION AR-DIRECT DRIVE---ype 2

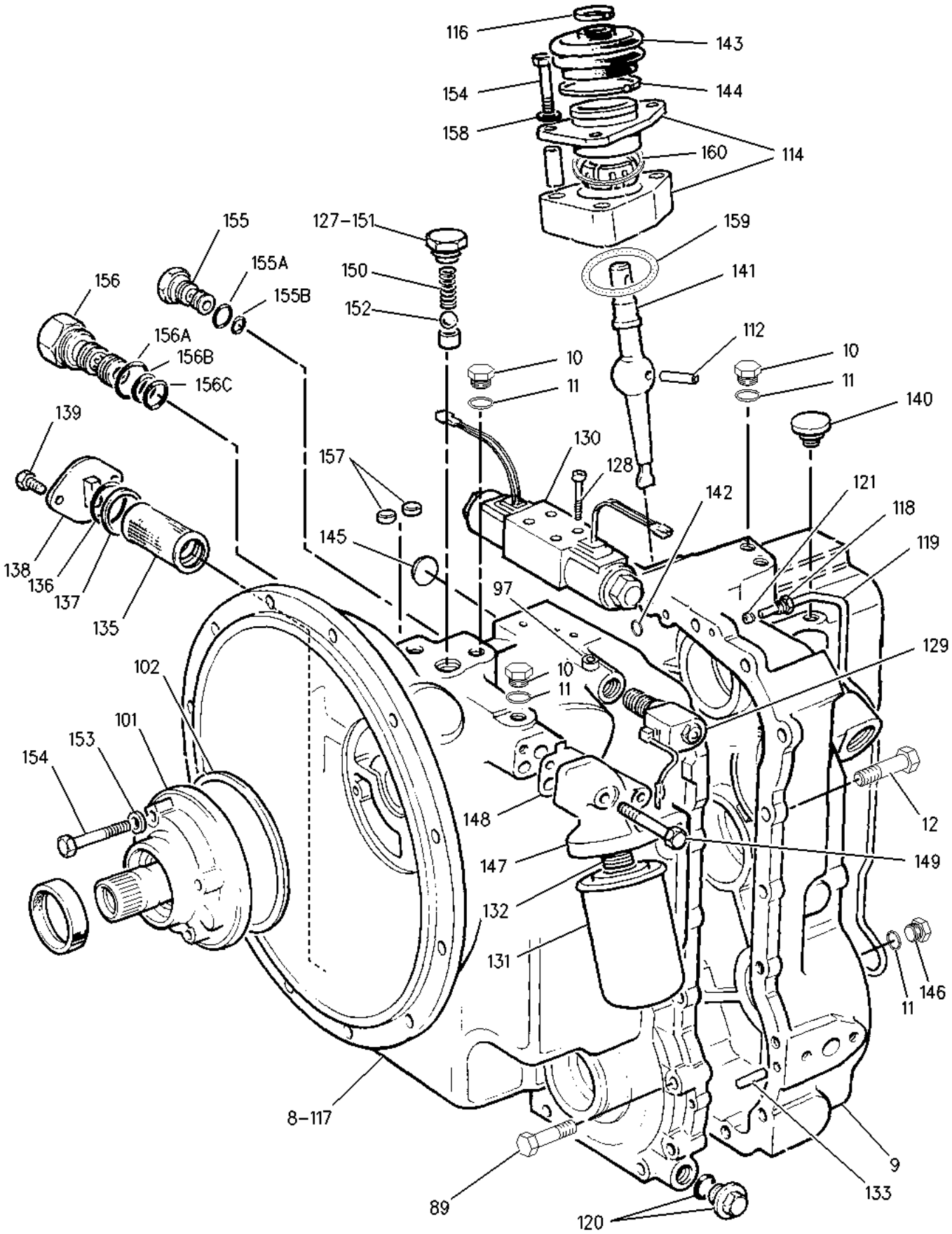

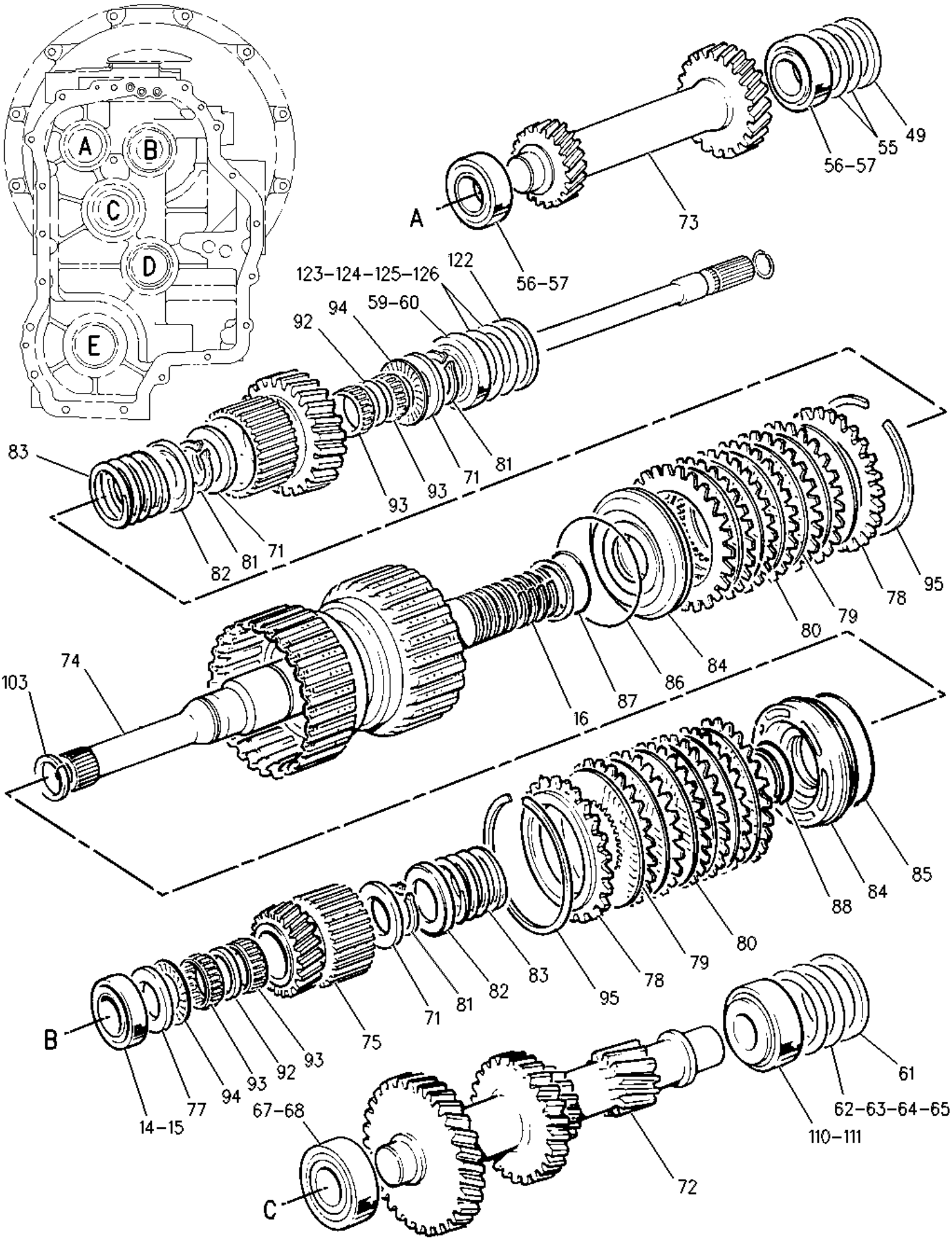
A
B
C
D
E
49
55
56-57
73
A
56-57
122
123-124-125-126
59-60
94
92
83
93
93
71
81
82
81
71
78
95
80
79
84
86
87
16
74
103
85
84
88
80
79
78
95
83
82
81
71
75
B
93
92
93
94
77
14-15
67-68
C
72
61
62-63-64-65
110-111

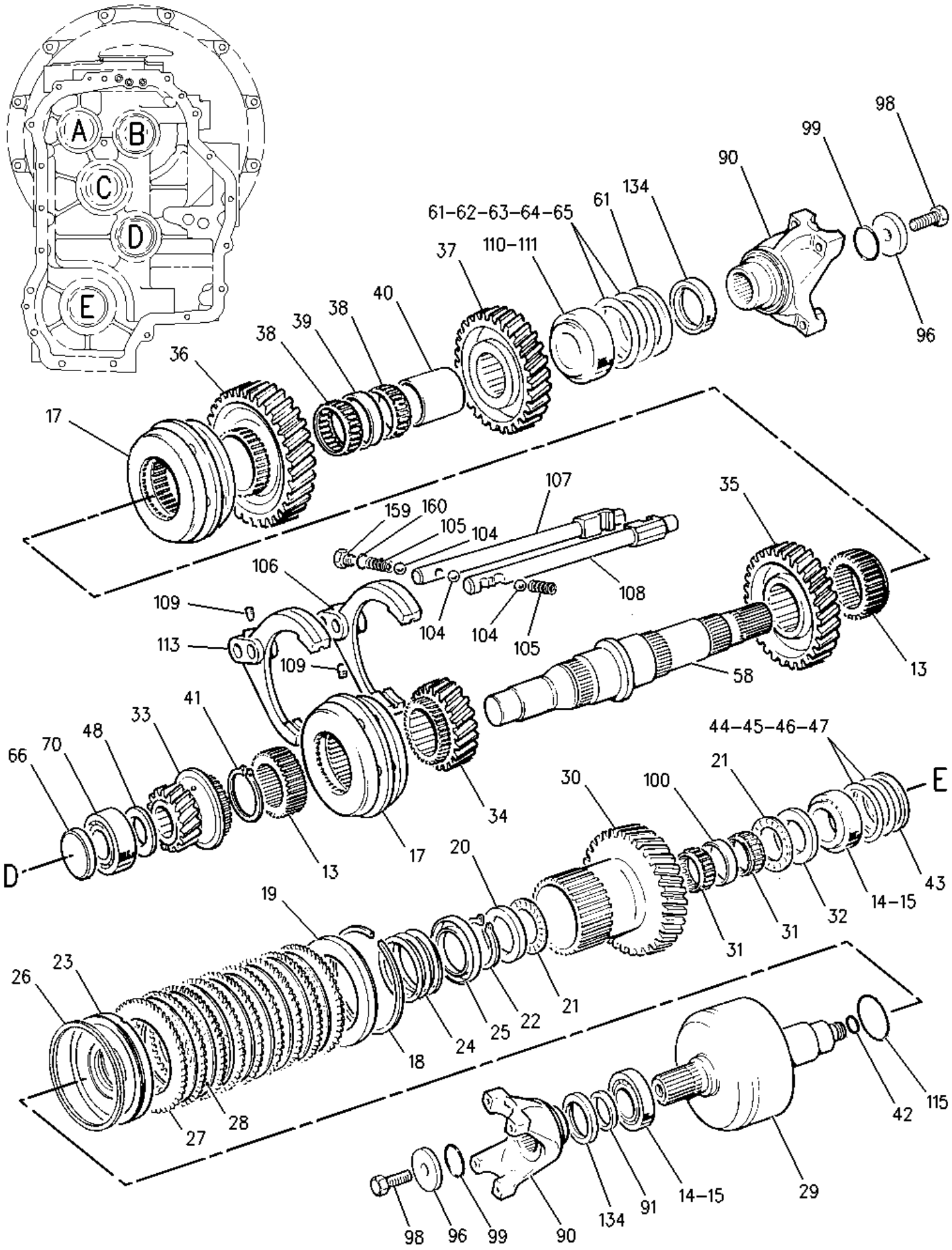
A
B
C
D
E
98
99
90
61-62-63-64-65
61
134
37
110-111
40
38
39
38
36
17
96
107
159
160
105
104
35
106
109
113
104
104
105
108
109
58
13
41
33
48
70
66
44-45-46-47
21
E
30
100
20
34
17
13
D
19
23
26
31
31
32
14-15
43
22
21
25
24
18
28
27
42
115
29
14-15
91
134
98
96
99
90

9	NPR	1	156-9275	1	CASE-REAR TRANSMISSION
10	NPR	1	9S-4191	11	PLUG-O RING
11	NPR	1	3J-1907	12	SEAL-O-RING
12	NPR M	1	6V-8335	14	BOLT-SELF-LOCKING (M10X1.5X40-MM)
13	NPR	3	7T-3022	2	SLEEVE
14	NPR	2,3	123-8906	3	CUP-TAPERED ROLLER
15	NPR	2,3	123-8905	2	CUP-TAPERED ROLLER
16	NPR	2	9U-8886	4	RING-SEAL
17	NPR	3	7T-3021	2	SYNCHRONIZER GP
18	NPR	3	161-3249	1	RING-RETAINING
19	NPR	3	121-0630	1	RETAINER
20	NPR	3	121-0697	1	WASHER-THRUST (45X65X5-MM THK)
21	NPR	3	172-6050	2	BEARING-SPECIAL
22	NPR	3	095-0927	1	RING-RETAINING
23	NPR	3	121-0714	1	PISTON
24	NPR	3	178-9566	1	SPRING-PISTON
25	NPR	3	121-0885	1	RETAINER
26	NPR	3	6T-9196	1	SEAL
27	NPR	3	6T-9194	9	PLATE
28	NPR	3	6Y-7957	8	DISC-FRICTION
29	NPR	3	190-9767	1	SHAFT AS (OUTPUT)
30	NPR	3	121-0904	1	GEAR AS (36-TEETH)
31	NPR	3	123-8912	2	BEARING-ROLLER
32	NPR	3	122-1877	1	WASHER-THRUST (40X65X4-MM THK)
33	NPR	3	211-6758	1	GEAR (19-TEETH)

34	NPR	3	121-1251	1	GEAR (28-TEETH)
35	NPR	3	117-4650	1	GEAR (37-TEETH)
36	NPR	3	6T-9160	1	GEAR (43-TEETH)
37	NPR	3	121-1253	1	GEAR (37-TEETH)
38	NPR	3	6V-8500	2	BEARING
39	NPR	3	7T-3017	1	SPACER (52.5X59X9.6-MM THK)
40	NPR	3	7T-3018	1	SLEEVE
41	NPR	3	6Y-2326	1	RING
42	NPR	3	122-1878	1	RING-SEAL
43	NPR	3	122-1879	1	SPACER (58X67.5X2-MM THK)
44	NPR B	3	104-3288	1	SHIM (0.05-MM THK)
45	NPR B	3	121-2059	1	SHIM (0.08-MM THK)
46	NPR B	3	121-2060	1	SHIM (0.18-MM THK)
47	NPR B	3	121-2061	1	SHIM (0.6-MM THK)
48	NPR	3	121-2062	1	WASHER-THRUST (35X55X4-MM THK)
49	NPR	2	7T-3034	1	SPACER (56.9X64.5X1.98-MM)
50	NPR B	2	6T-9144	1	SHIM (0.051-MM THK)
51	NPR B	2	6T-9147	1	SHIM (0.076-MM THK)
52	NPR B	2	6T-9146	1	SHIM (0.127-MM THK)
53	NPR B	2	6T-9145	1	SHIM (0.178-MM THK)
54	NPR B	2	6T-9143	1	SHIM (0.381-MM THK)
55	NPR B	2	6T-9142	1	SHIM (0.508-MM THK)
56	NPR	2	005-0469	2	CUP-BEARING
57	NPR	2	005-0471	2	CONE-BEARING
58	NPR	3	211-6759	1	SHAFT (OUTPUT)

59	NPR	2	123-8910	1	CUP-TAPERED ROLLER
60	NPR	2	123-8909	1	CONE-BEARING
61	NPR B	2,3	7T-2646	2	SPACER (66X79.5X2.02-MM THK)
62	NPR B	2,3	6T-9166	2	SHIM (0.051-MM THK)
63	NPR B	2,3	6T-9165	2	SHIM (0.076-MM THK)
64	NPR B	2,3	6T-9164	2	SHIM (0.178-MM THK)
65	NPR B	2,3	6T-9163	2	SHIM (0.599-MM THK)
66	NPR	3	7T-3051	1	PLUG
67	NPR	2	8T-1580	1	CUP
68	NPR	2	8T-1581	1	CONE
69	NPR	3	6Y-2737	1	CUP-BEARING
70	NPR	3	6Y-2736	1	CONE-BEARING
71	NPR	2	121-2500	3	WASHER-THRUST (50X70X4-MM THK)
72	NPR	2	121-2511	1	SHAFT
73	NPR	2	121-2537	1	SHAFT-REVERSE
74	NPR	2	121-2545	1	SHAFT AS-INPUT
	NPR	2	123-0714	1	BEARING
	NPR	2	123-2920	3	PLUG
75	NPR	2	121-2603	1	GEAR (24-TEETH)
76	NPR	2	121-2604	1	GEAR (27-TEETH)
77	NPR	2	121-0694	1	WASHER-THRUST (40X70X4-MM THK)
78	NPR	2	122-1882	2	PLATE-END
79	NPR	2	122-1881	12	PLATE-CLUTCH
80	NPR	2	122-1880	12	DISC
81	NPR	2	6V-8757	3	RING-RETAINING

82 NPR 2 121-2801 2 RETAINER

83 NPR 2 121-2802 2 SPRING

84 NPR 2 121-2803 2 PISTON

85 NPR 2 122-1875 2 SEAL

86 NPR 2 122-1874 2 SEAL-O-RING

87 NPR 2 122-6783 2 RING-SEAL

88 NPR 2 6V-4368 2 SEAL-O-RING

89 NPR M 1 121-9875 4 BOLT (M10X1.5X55-MM)

90 NPR 3 122-6787 2 YOKE AS

(EACH INCLUDES)

NPR 3 123-1377 1 GUARD

91 NPR 3 122-1883 1 SPACER (38X45X5-MM THK)

92 NPR 2 122-1885 2 SPACER (51X55X4-MM THK)

93 NPR 2 123-8913 4 BEARING-ROLLER

94 NPR 2 172-5317 2 BEARING-SPECIAL

95 NPR 2 122-3649 2 RING-RETAINING

96 NPR 3 7T-3195 2 WASHER (12.3X47X6.35-MM THK)

97 NPR 1 123-2920 1 PLUG

98 NPR M 3 6V-8097 2 BOLT (M12X1.75X30-MM)

99 NPR 3 5P-8066 2 SEAL-O-RING

100 NPR 3 122-1884 1 SPACER (45X49X8-MM THK)

101 NPR 1 121-7385 1 PUMP GP-TRANSMISSION

102 NPR 1 7X-4741 1 SEAL

103 NPR 2 122-1886 1 RING-SEAL

104 NPR 3 014-5645 3 BALL

105 NPR 3 6Y-1341 2 SPRING

106 NPR 3 121-7403 1 FORK-SHIFT

107 NPR 3 121-7389 1 ROD AS-GEARSHIFT

108 NPR 3 121-7390 1 ROD AS-GEARSHIFT

109 NPR 3 7T-3249 2 SCREW (3/8-24X0.75-IN)

110 NPR 2,3 123-8907 2 CONE-BEARING

111 NPR 2,3 123-8908 2 CUP-TAPERED ROLLER

112 NPR 1 7T-3109 1 PIN

113 NPR 3 121-7404 1 FORK-SHIFT

114 NPR 1 127-3017 1 SEAT AS

115 NPR 3 6V-5100 1 SEAL-O-RING

116 NPR 1 3S-2093 1 STRAP-CABLE

117 NPR B 1 1U-8846 1 SEALANT-GASKET

118 NPR 1 123-2919 2 NUT (M11X1-THD)

119 NPR 1 122-1876 1 TUBE

120 NPR 1 6Y-1896 1 PLUG AS

NPR 1 5P-6718 1 SEAL-O-RING

121 NPR 1 123-2918 2 SLEEVE

122 NPR 2 121-7398 1 SPACER (70X79.5X2-MM THK)

123 NPR B 2 121-7399 1 SHIM (0.05-MM THK)

124 NPR B 2 121-7400 1 SHIM (0.08-MM THK)

125 NPR B 2 121-7401 1 SHIM (0.18-MM THK)

126 NPR B 2 121-7402 1 SHIM (0.6-MM THK)

127 NPR 1 121-1252 1 HOUSING

128 NPR M 1 9X-6615 4 BOLT (M5X0.8X30-MM)

129 NPR Y 1 121-4036 1 VALVE GP-SOLENOID (ALL WHEEL DRIVE)

130 NPR Y 1 142-1468 1 VALVE GP-SOLENOID (DIRECTION)

131 NPR 1 119-4740 1 FILTER AS-OIL (STANDARD EFFICIENCY)

132 NPR 1 3G-6927 1 ADAPTER

133 NPR 1 7T-3253 2 DOWEL

134 NPR 3 8T-2193 2 SEAL-LIP TYPE

135 NPR 1 7T-2651 1 STRAINER

136 NPR 1 4F-7952 1 SEAL-O-RING

137 NPR 1 9W-5460 1 RING

138 NPR 1 106-9861 1 PLATE-COVER

139 NPR M 1 6V-8210 2 BOLT (M8X1.25X16-MM)

140 NPR 1 7T-3251 1 BREATHER

141 NPR 1 121-7391 1 LEVER

142 NPR 1 120-9762 4 SEAL-O-RING

143 NPR 1 7T-3111 1 COVER

144 NPR 1 6K-0806 1 STRAP-CABLE

145 NPR 1 1H-9721 1 PLUG-EXPANSION

146 NPR 1 122-6785 1 PLUG AS

147 NPR 1 7T-3119 1 HOUSING

148 NPR 1 6Y-2035 1 GASKET

149 NPR M 1 6V-7731 2 BOLT (M10X1.5X70-MM)

150 NPR 1 121-0709 1 SPRING

151 NPR 1 3D-2824 1 SEAL-O-RING

152 NPR 1 6B-8208 1 BALL

153 NPR 1 9P-9150 4 WASHER (8.25X18X0.84-MM THK)

154 NPR M 1 8C-5748 7 BOLT (M8X1.25X55-MM)

155 NPR 1 121-7396 1 VALVE GP-RELIEF (TORQUE CONVERTER INLET)

155A NPR 1 6V-4589 1 SEAL-O-RING

155B NPR 1 8L-2746 1 SEAL-O-RING

156 NPR 1 121-7405 1 VALVE GP-RELIEF (CLUTCH PRESSURE)

156A NPR 1 7X-4744 1 SEAL-O-RING

156B NPR 1 6V-9178 1 SEAL-O-RING

156C NPR 1 106-9586 1 SEAL-O-RING

157 NPR 1 122-3652 2 PLUG

158 NPR 1 9M-1974 3 WASHER-HARD (8.8X16X2-MM THK)

159 NPR 1 175-0054 1 SEAL-O-RING

160 NPR 1 174-9711 1 GASKET

Key:

B - USE AS REQUIRED
M - METRIC PART
Y - SEPARATE ILLUSTRATION

111-7815 TRANSMISSION GP-DIRECT DRIVE ---S/N 4ZN20525-23964
PART OF 107-3761 TRANSMISSION AR-DIRECT DRIVE

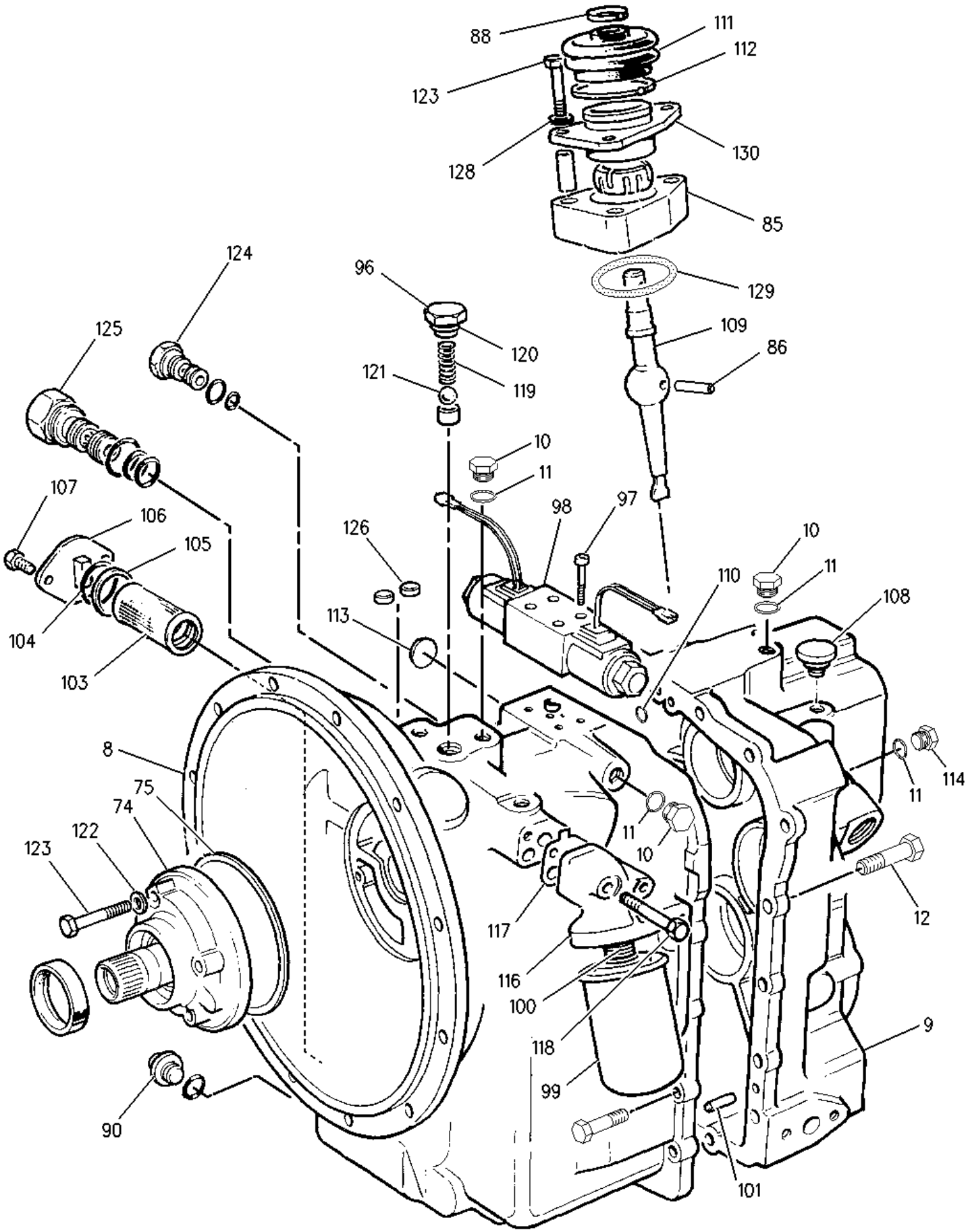

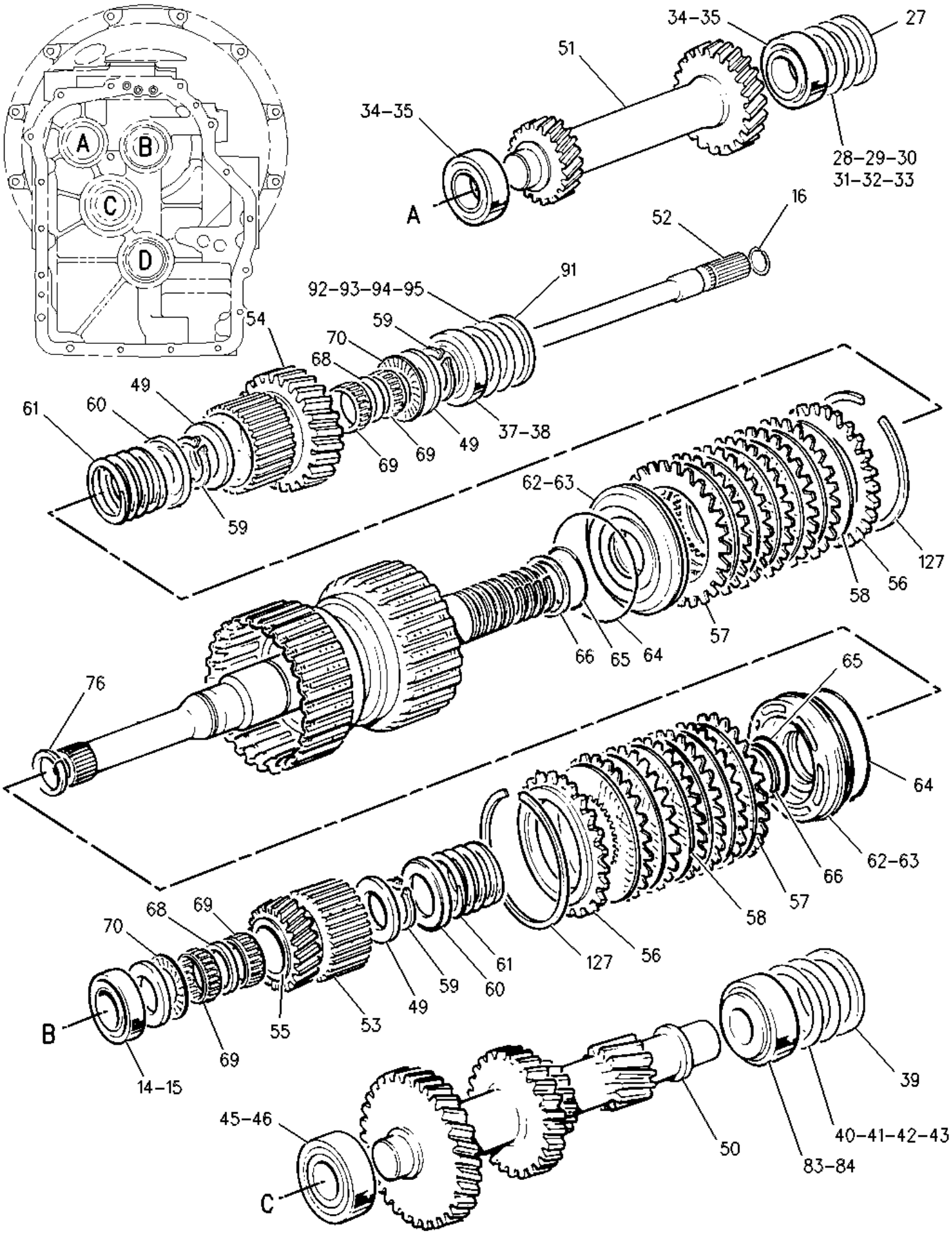
A
B
C
D
34-35
27
51
34-35
28-29-30
31-32-33
A
52
16
91
92-93-94-95
59
70
68
54
49
61
60
69
69
49
37-38
59
62-63
127
58
56
57
66
65
64
76
65
64
62-63
66
58
57
56
127
61
60
59
49
53
55
68
69
70
69
B
14-15
45-46
C
50
39
40-41-42-43
83-84

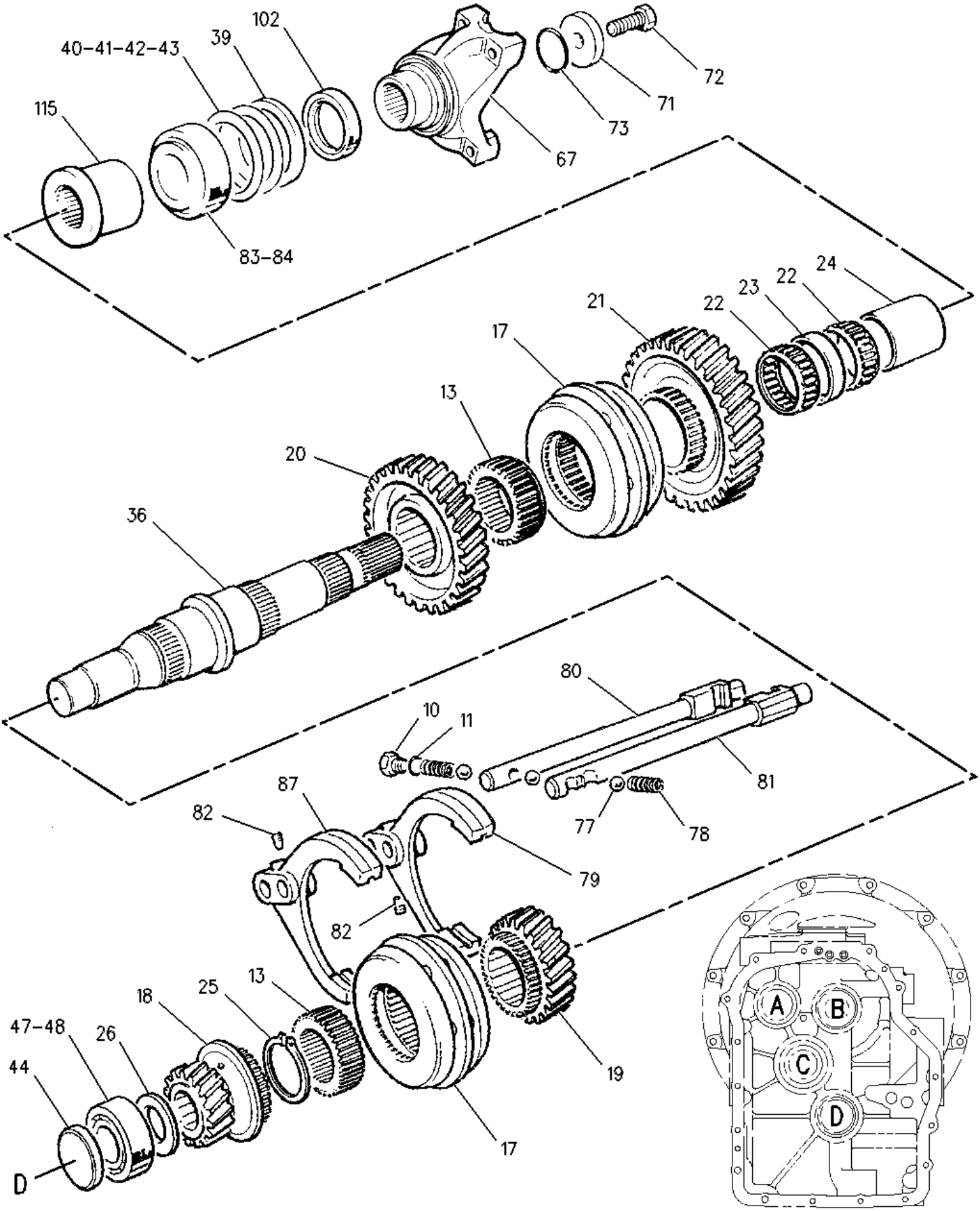
40-41-42-43
39
102
115
67
72
71
73
83-84
24
22
23
22
21
17
13
20
36
80
10
11
81
87
82
77
78
79
82
13
25
18
47-48
26
44
19
17
D
A
B
C
D

8	NPR	1	124-6082	1	CASE AS-TRANSMISSION
9	NPR	1	156-9276	1	CASE-TRANSMISSION
10	NPR	1,3	9S-4191	11	PLUG-O RING
11	NPR	1,3	3J-1907	12	SEAL-O-RING
12	NPR M	1	6V-8335	17	BOLT-SELF-LOCKING (M10X1.5X40-MM)
13	NPR	3	7T-3022	2	SLEEVE
14	NPR	2	123-8906	1	CUP-TAPERED ROLLER
15	NPR	2	123-8905	1	CUP-TAPERED ROLLER
16	NPR	2	9U-8886	4	RING-SEAL
17	NPR	3	7T-3021	2	SYNCHRONIZER GP
18	NPR	3	121-1223	1	GEAR (35-TEETH)
19	NPR	3	121-1251	1	GEAR (28-TEETH)
20	NPR	3	117-4650	1	GEAR (37-TEETH)
21	NPR	3	6T-9160	1	GEAR (43-TEETH)
22	NPR	3	6V-8500	2	BEARING
23	NPR	3	7T-3017	1	SPACER (52.5X59X9.6-MM THK)
24	NPR	3	7T-3018	1	SLEEVE
25	NPR	3	6Y-2326	1	RING
26	NPR	3	121-2062	1	WASHER-THRUST (35X55X4-MM THK)
27	NPR B	2	7T-3034	1	SPACER (56.9X64.5X1.98-MM)
28	NPR B	2	6T-9144	1	SHIM (0.051-MM THK)
29	NPR B	2	6T-9147	1	SHIM (0.076-MM THK)
30	NPR B	2	6T-9146	1	SHIM (0.127-MM THK)
31	NPR B	2	6T-9145	1	SHIM (0.178-MM THK)
32	NPR B	2	6T-9143	1	SHIM (0.381-MM THK)

33	NPR B	2	6T-9142	1	SHIM (0.508-MM THK)
34	NPR	2	005-0469	2	CUP-BEARING
35	NPR	2	005-0471	2	CONE-BEARING
36	NPR	3	121-2063	1	SHAFT-OUTPUT (REAR)
37	NPR	2	123-8910	1	CUP-TAPERED ROLLER
38	NPR	2	123-8909	1	CONE-BEARING
39	NPR B	2	7T-2646	2	SPACER (66X79.5X2.02-MM THK)
40	NPR B	2	6T-9166	2	SHIM (0.051-MM THK)
41	NPR B	2	6T-9165	2	SHIM (0.076-MM THK)
42	NPR B	2	6T-9164	2	SHIM (0.178-MM THK)
43	NPR	2	6T-9163	2	SHIM (0.599-MM THK)
44	NPR	3	7T-3051	1	PLUG
45	NPR	2	8T-1580	1	CUP
46	NPR	2	8T-1581	1	CONE
47	NPR	3	6Y-2737	1	CUP-BEARING
48	NPR	3	6Y-2736	1	CONE-BEARING
49	NPR	2	121-2500	3	WASHER-THRUST (50X70X4-MM THK)
50	NPR	2	121-2511	1	SHAFT
51	NPR	2	121-2537	1	SHAFT-REVERSE
52	NPR	2	121-2545	1	SHAFT AS-INPUT
	NPR	2	123-0714	1	BEARING
	NPR	2	123-2920	3	PLUG
53	NPR	2	121-2603	1	GEAR (24-TEETH)
54	NPR	2	121-2604	1	GEAR (27-TEETH)
55	NPR	2	121-0694	1	WASHER-THRUST (40X70X4-MM THK)

56 NPR 2 122-1882 2 PLATE-END

57 NPR 2 122-1881 12 PLATE-CLUTCH

58 NPR 2 122-1880 12 DISC

59 NPR 2 6V-8757 3 RING-RETAINING

60 NPR 2 121-2801 2 RETAINER

61 NPR 2 121-2802 2 SPRING

62 NPR 2 121-2803 2 PISTON

63 NPR 2 122-1875 2 SEAL

64 NPR 2 122-1874 2 SEAL-O-RING

65 NPR 2 122-6783 2 RING-SEAL

66 NPR 2 6V-4368 2 SEAL-O-RING

67 NPR 3 122-6787 1 YOKE AS

NPR 3 123-1377 1 GUARD

68 NPR 2 122-1885 2 SPACER (51X55X4-MM THK)

69 NPR 2 123-8913 4 BEARING-ROLLER

70 NPR 2 172-5317 2 BEARING-SPECIAL

71 NPR 3 7T-3195 1 WASHER (12.3X47X6.35-MM THK)

72 NPR M 3 6V-8097 1 BOLT (M12X1.75X30-MM)

73 NPR 3 5P-8066 1 SEAL-O-RING

74 NPR 1 121-7385 1 PUMP GP-TRANSMISSION

NPR 1 124-6612 1 SEAL-LIP TYPE

75 NPR 1 7X-4741 1 SEAL

76 NPR 2 122-1886 1 RING-SEAL

77 NPR 3 014-5645 3 BALL

78 NPR 3 6Y-1341 2 SPRING

79	NPR	3	121-7403	1	FORK-SHIFT
80	NPR	3	121-7389	1	ROD AS-GEARSHIFT
81	NPR	3	121-7390	1	ROD AS-GEARSHIFT
82	NPR	3	7T-3249	2	SCREW (3/8-24X0.75-IN)
83	NPR	2,3	123-8907	2	CONE-BEARING
84	NPR	3	123-8908	2	CUP-TAPERED ROLLER
85	NPR	1	127-3017	1	SEAT AS
86	NPR	1	7T-3109	1	PIN
87	NPR	3	121-7404	1	FORK-SHIFT
88	NPR	1	3S-2093	1	STRAP-CABLE
90	NPR	1	6Y-1896	1	PLUG AS
91	NPR	2	121-7398	1	SPACER (70X79.5X2-MM THK)
92	NPR B	2	121-7399	1	SHIM (0.05-MM THK)
93	NPR B	2	121-7400	1	SHIM (0.08-MM THK)
94	NPR B	2	121-7401	1	SHIM (0.18-MM THK)
95	NPR B	2	121-7402	1	SHIM (0.6-MM THK)
96	NPR	1	121-1252	1	HOUSING
97	NPR M	1	9X-6615	4	BOLT (M5X0.8X30-MM)
98	NPR Y	1	142-1468	1	VALVE GP-SOLENOID (DIRECTION)
99	NPR	1	119-4740	1	FILTER AS-OIL (STANDARD EFFICIENCY)
100	NPR	1	3G-6927	1	ADAPTER
101	NPR	1	7T-3253	2	DOWEL
102	NPR	3	8T-2193	1	SEAL-LIP TYPE
103	NPR	1	7T-2651	1	STRAINER
104	NPR	1	4F-7952	1	SEAL-O-RING

105 NPR 1 9W-5460 1 RING

106 NPR 1 106-9861 1 PLATE-COVER

107 NPR M 1 6V-8210 2 BOLT (M8X1.25X16-MM)

108 NPR 1 7T-3251 1 BREATHER

109 NPR 1 121-7391 1 LEVER

110 NPR 1 120-9762 3 SEAL-O-RING

111 NPR 1 7T-3111 1 COVER

112 NPR 1 6K-0806 1 STRAP-CABLE

113 NPR 1 1H-9721 1 PLUG-EXPANSION

114 NPR 1 122-6785 1 PLUG AS

115 NPR 3 6Y-2936 1 SPACER (60X72X32-MM THK)

116 NPR 1 7T-3119 1 HOUSING

117 NPR 1 6Y-2035 1 GASKET

118 NPR M 1 6V-7731 2 BOLT (M10X1.5X70-MM)

119 NPR 1 121-0709 1 SPRING

120 NPR 1 3D-2824 1 SEAL-O-RING

121 NPR 1 6B-8208 1 BALL

122 NPR 1 9P-9150 4 WASHER (8.25X18X0.84-MM THK)

123 NPR M 1 8C-5748 7 BOLT (M8X1.25X55-MM)

124 NPR 1 121-7396 1 VALVE GP-RELIEF (TORQUE CONVERTER INLET)

NPR 1 6V-4589 1 SEAL-O-RING

NPR 1 8L-2746 1 SEAL-O-RING

125 NPR 1 121-7405 1 VALVE GP-RELIEF (CLUTCH PRESSURE)

NPR 1 6V-9178 1 SEAL-O-RING

NPR 1 7X-4744 1 SEAL-O-RING

	NPR	1	106-9586	1	SEAL-O-RING
126	NPR	1	122-3652	2	PLUG
127	NPR	2	122-3649	2	RING-RETAINING
128	NPR	1	9M-1974	3	WASHER-HARD (8.8X16X2-MM THK)
129	NPR	1	175-0054	1	SEAL-O-RING
130	NPR	1	174-9711	1	GASKET

Key:

B - USE AS REQUIRED
M - METRIC PART
Y - SEPARATE ILLUSTRATION

192-0844 TRANSMISSION GP-DIRECT DRIVE -ALL WHEEL DRIVE S/N 4ZN16044-50156
PART OF 202-7431 TRANSMISSION & MOUNTING GP

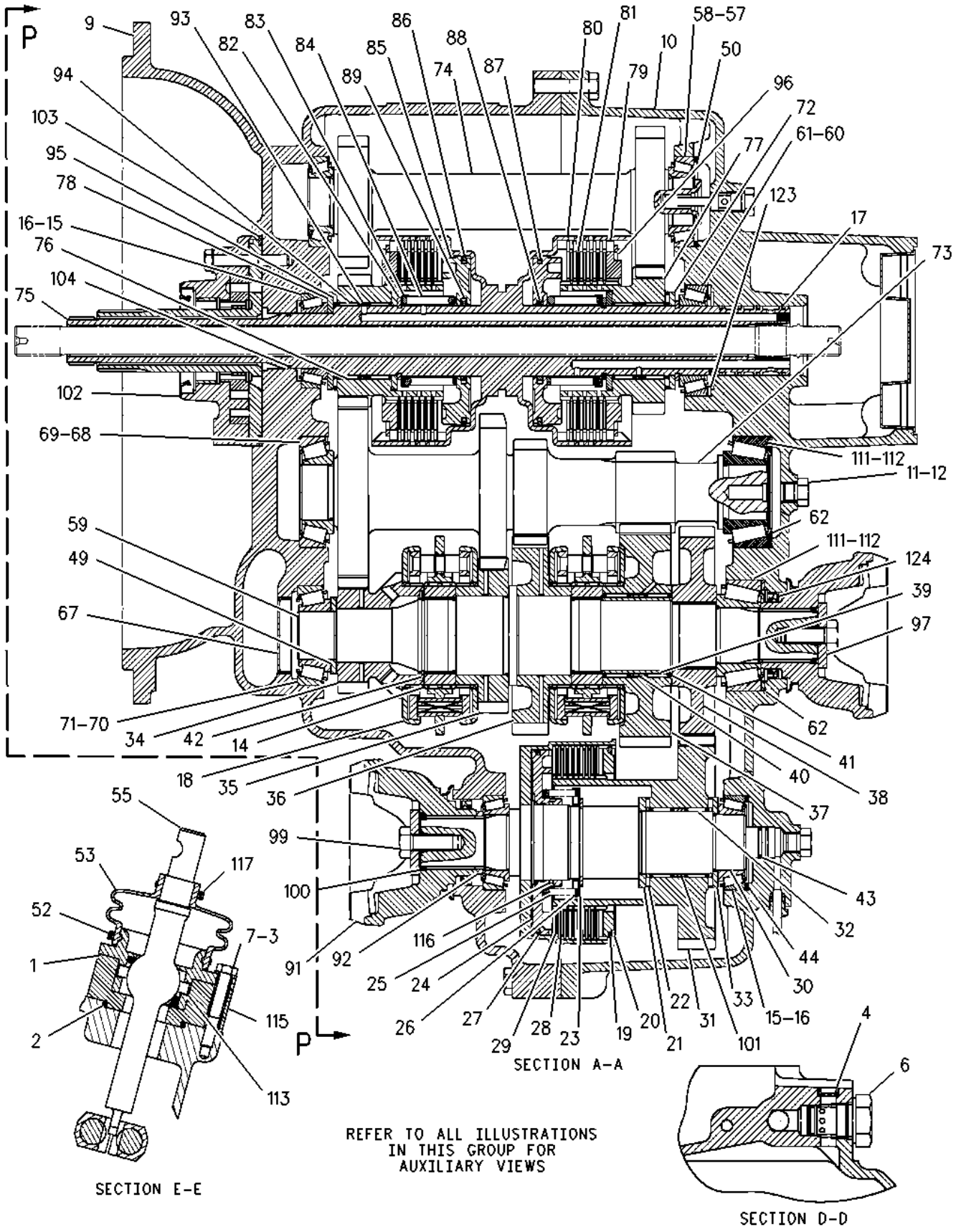

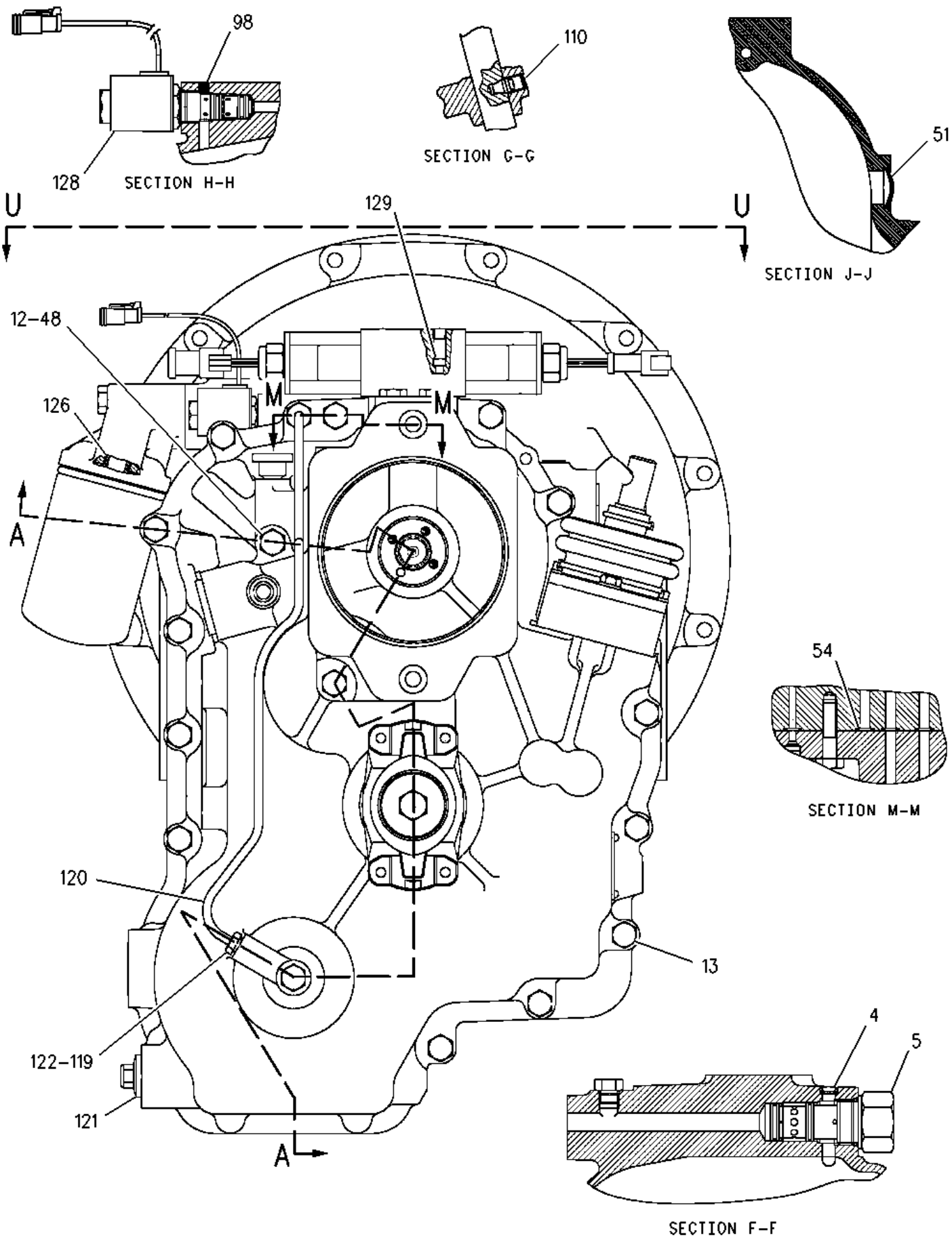
98
128
SECTION H-H
110
SECTION G-G
51
SECTION J-J
U
U
129
12-48
126
M
M
A
A
54
SECTION M-M
120
13
122-119
121
4
5
SECTION F-F

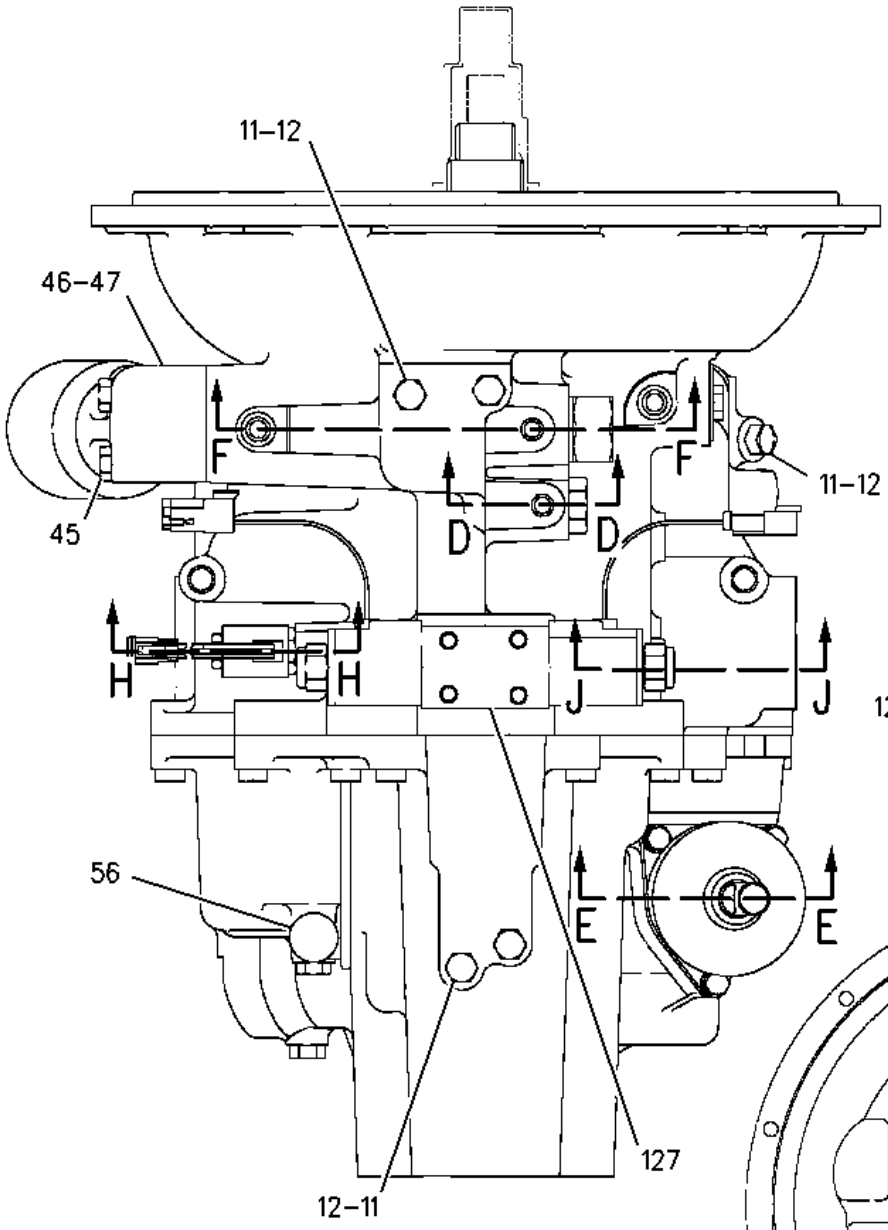

VIEW U-U

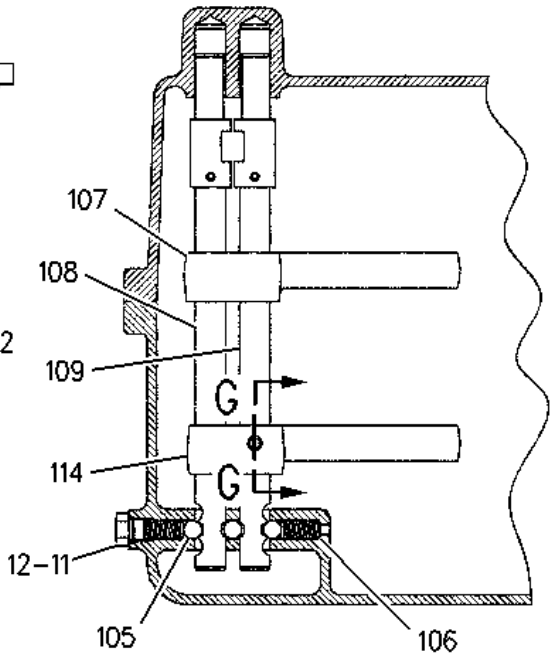

SECTION B-B

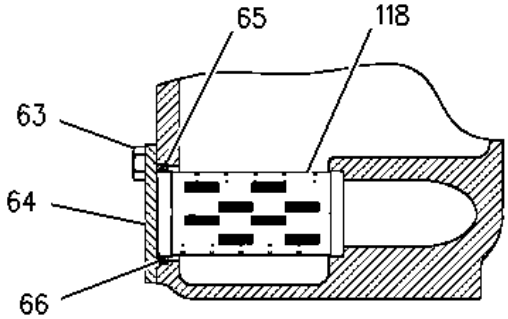

SECTION C-C

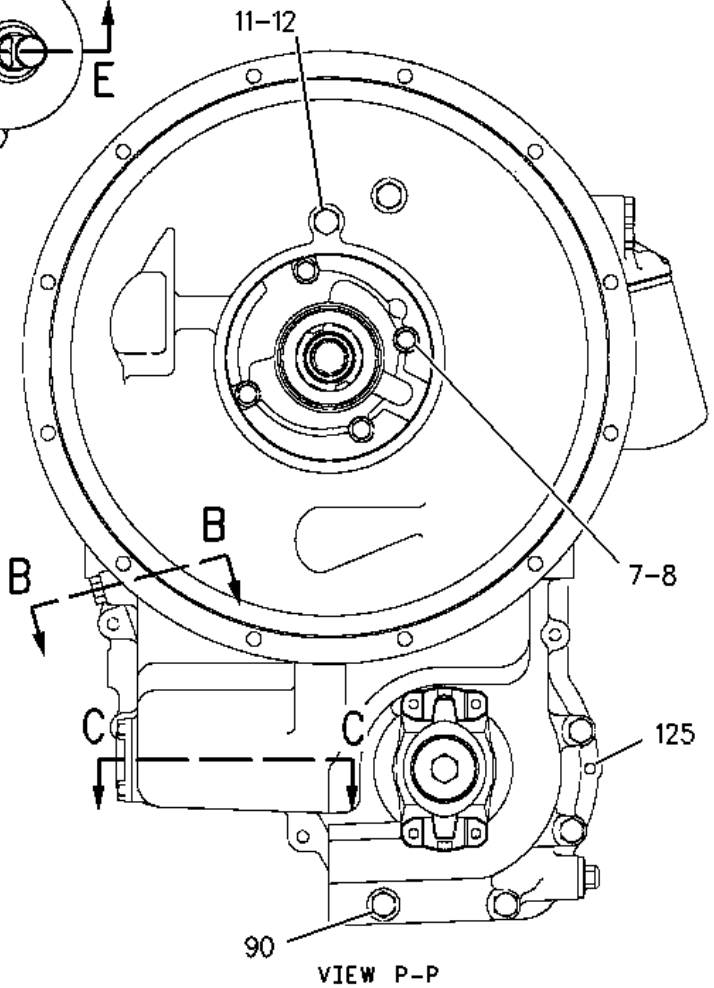

VIEW P-P

1 NPR 1 174-9711 1 GASKET

2 NPR 1 175-0054 1 SEAL-O-RING

3 NPR 1 9M-1974 3 WASHER-HARD (8.8X16X2-MM THK)

4 NPR 1,2 122-3652 2 PLUG

5 NPR 2 121-7405 1 VALVE GP-RELIEF (CLUTCH PRESSURE)

NPR 2 6V-9178 1 SEAL-O-RING

NPR 2 7X-4744 1 SEAL-O-RING

NPR 2 106-9586 1 SEAL-O-RING

6 NPR 1 121-7396 1 VALVE GP-RELIEF (TORQUE CONVERTER INLET)

NPR 1 6V-4589 1 SEAL-O-RING

NPR 1 8L-2746 1 SEAL-O-RING

7 NPR M 1,3 8C-5748 7 BOLT (M8X1.25X55-MM)

8 NPR 3 9P-9150 4 WASHER (8.25X18X0.84-MM THK)

9 NPR 1 192-0845 1 CASE-FRONT TRANSMISSION

10 NPR 1 156-9275 1 CASE-REAR TRANSMISSION

11 NPR 1,3 9S-4191 10 PLUG-O RING

12 NPR 1,2,3 3J-1907 11 SEAL-O-RING

13 NPR M 2 6V-8335 14 BOLT-SELF-LOCKING (M10X1.5X40-MM)

14 NPR 1 7T-3022 2 SLEEVE

15 NPR 1 123-8906 3 CUP-TAPERED ROLLER

16 NPR 1 123-8905 3 CUP-TAPERED ROLLER

17 NPR 1 9U-8886 4 RING-SEAL

18 NPR 1 7T-3021 2 SYNCHRONIZER GP

19 NPR 1 161-3249 1 RING-RETAINING

20 NPR 1 121-0630 1 RETAINER

21 NPR 1 121-0697 1 WASHER-THRUST (45X65X5-MM THK)

22 NPR 1 172-6050 2 BEARING-SPECIAL

23 NPR 1 095-0927 1 RING-RETAINING

24 NPR 1 121-0714 1 PISTON

25 NPR 1 178-9566 1 SPRING-PISTON

26 NPR 1 121-0885 1 RETAINER

27 NPR 1 6T-9196 1 SEAL

28 NPR 1 6T-9194 9 PLATE

29	NPR	1	6Y-7957	8	DISC-FRICTION
30	NPR	1	190-9767	1	SHAFT AS (OUTPUT)
31	NPR	1	121-0904	1	GEAR AS (36-TEETH)
32	NPR	1	123-8912	2	BEARING-ROLLER
33	NPR	1	122-1877	1	WASHER-THRUST (40X65X4-MM THK)
34	NPR	1	211-6758	1	GEAR (19-TEETH)
35	NPR	1	121-1251	1	GEAR (28-TEETH)
36	NPR	1	117-4650	1	GEAR (37-TEETH)
37	NPR	1	6T-9160	1	GEAR (43-TEETH)
38	NPR	1	121-1253	1	GEAR (37-TEETH)
39	NPR	1	6V-8500	2	BEARING
40	NPR	1	7T-3017	1	SPACER (52.5X59X9.6-MM THK)
41	NPR	1	7T-3018	1	SLEEVE
42	NPR	1	6Y-2326	1	RING
43	NPR	1	122-1878	1	RING-SEAL
44	NPR	1	122-1879	1	SPACER (58X67.5X2-MM THK)
	NPR B	1	104-3288	1	SHIM (0.05-MM THK)
	NPR B	1	121-2059	1	SHIM (0.08-MM THK)
	NPR B	1	121-2060	1	SHIM (0.18-MM THK)
	NPR B	1	121-2061	1	SHIM (0.6-MM THK)
45	NPR M	3	6V-7731	2	BOLT (M10X1.5X70-MM)
46	NPR	3	6Y-2035	1	GASKET
47	NPR	3	7T-3119	1	HOUSING
48	NPR	2	122-6785	1	PLUG AS
49	NPR	1	121-2062	1	WASHER-THRUST (35X55X4-MM THK)

50	NPR	1	7T-3034	1	SPACER (56.9X64.5X1.98-MM)
	NPR B	1	6T-9144	1	SHIM (0.051-MM THK)
	NPR B	1	6T-9147	1	SHIM (0.076-MM THK)
	NPR B	1	6T-9146	1	SHIM (0.127-MM THK)
	NPR B	1	6T-9145	1	SHIM (0.178-MM THK)
	NPR B	1	6T-9143	1	SHIM (0.381-MM THK)
	NPR B	1	6T-9142	1	SHIM (0.508-MM THK)
51	NPR	2	1H-9721	1	PLUG-EXPANSION
52	NPR	1	6K-0806	1	STRAP-CABLE
53	NPR	1	7T-3111	1	COVER
54	NPR	2	120-9762	4	SEAL-O-RING
55	NPR	1	121-7391	1	LEVER
56	NPR	3	7T-3251	1	BREATHER
57	NPR	1	005-0469	2	CUP-BEARING
58	NPR	1	005-0471	2	CONE-BEARING
59	NPR	1	211-6759	1	SHAFT (OUTPUT)(REAR)
60	NPR	1	123-8910	1	CUP-TAPERED ROLLER
61	NPR	1	123-8909	1	CONE-BEARING
62	NPR	1	7T-2646	2	SPACER (66X79.5X2.02-MM THK)
	NPR B	1	6T-9166	2	SHIM (0.051-MM THK)
	NPR B	1	6T-9165	2	SHIM (0.076-MM THK)
	NPR B	1	6T-9164	2	SHIM (0.178-MM THK)
	NPR B	1	6T-9163	2	SHIM (0.599-MM THK)
63	NPR M	3	6V-8210	2	BOLT (M8X1.25X16-MM)
64	NPR	3	106-9861	1	PLATE-COVER

65 NPR 3 9W-5460 1 RING

66 NPR 3 4F-7952 1 SEAL-O-RING

67 NPR 1 7T-3051 1 PLUG

68 NPR 1 8T-1580 1 CUP

69 NPR 1 8T-1581 1 CONE

70 NPR 1 6Y-2737 1 CUP-BEARING

71 NPR 1 6Y-2736 1 CONE-BEARING

72 NPR 1 121-2500 3 WASHER-THRUST (50X70X4-MM THK)

73 NPR 1 121-2511 1 SHAFT

74 NPR 1 121-2537 1 SHAFT-REVERSE

75 NPR 1 121-2545 1 SHAFT AS-INPUT

NPR 1 123-0714 1 BEARING

NPR 1 123-2920 3 PLUG

76 NPR 1 121-2603 1 GEAR (24-TEETH)

77 NPR 1 121-2604 1 GEAR (27-TEETH)

78 NPR 1 121-0694 1 WASHER-THRUST (40X70X4-MM THK)

79 NPR 1 122-1882 2 PLATE-END

80 NPR 1 122-1881 12 PLATE-CLUTCH

81 NPR 1 122-1880 12 DISC

82 NPR 1 6V-8757 3 RING-RETAINING

83 NPR 1 121-2801 2 RETAINER

84 NPR 1 121-2802 2 SPRING

85 NPR 1 121-2803 2 PISTON

86 NPR 1 122-1875 2 SEAL

87 NPR 1 122-1874 2 SEAL-O-RING

88 NPR 1 122-6783 2 RING-SEAL

89 NPR 1 6V-4368 2 SEAL-O-RING

90 NPR M 3 121-9875 4 BOLT (M10X1.5X55-MM)

91 NPR 1 122-6787 2 YOKE AS

(EACH INCLUDES)

NPR 1 123-1377 1 GUARD

92 NPR 1 122-1883 1 SPACER (38X45X5-MM THK)

93 NPR 1 122-1885 2 SPACER (51X55X4-MM THK)

94 NPR 1 123-8913 4 BEARING-ROLLER

95 NPR 1 172-5317 2 BEARING-SPECIAL

96 NPR 1 122-3649 2 RING-RETAINING

97 NPR 1 7T-3195 2 WASHER (12.3X47X6.35-MM THK)

98 NPR 2 123-2920 1 PLUG

99 NPR M 1 6V-8097 2 BOLT (M12X1.75X30-MM)

100 NPR 1 5P-8066 2 SEAL-O-RING

101 NPR 1 122-1884 1 SPACER (45X49X8-MM THK)

102 NPR 1 121-7385 1 PUMP GP-TRANSMISSION

NPR 1 124-6612 1 SEAL-LIP TYPE

103 NPR 1 7X-4741 1 SEAL

104 NPR 1 122-1886 1 RING-SEAL

105 NPR 3 014-5645 3 BALL

106 NPR 3 6Y-1341 2 SPRING

107 NPR 3 121-7403 1 FORK-SHIFT

108 NPR 3 121-7389 1 ROD AS-GEARSHIFT

109 NPR 3 121-7390 1 ROD AS-GEARSHIFT

110 NPR 2 7T-3249 2 SCREW (3/8-24X0.75-IN)

111 NPR 1 123-8907 2 CONE-BEARING

112 NPR 1 123-8908 2 CUP-TAPERED ROLLER

113 NPR 1 7T-3109 1 PIN

114 NPR 3 121-7404 1 FORK-SHIFT

115 NPR 1 127-3017 1 SEAT AS

116 NPR 1 6V-5100 1 SEAL-O-RING

117 NPR 1 3S-2093 1 STRAP-CABLE

118 NPR 3 7T-2651 1 STRAINER

119 NPR 2 123-2919 2 NUT (M11X1-THD)

120 NPR 2 122-1876 1 TUBE

121 NPR 2 6Y-1896 1 PLUG AS

NPR 2 5P-6718 1 SEAL-O-RING

122 NPR 2 123-2918 2 SLEEVE

123 NPR 1 121-7398 1 SPACER (70X79.5X2-MM THK)

NPR B 1 121-7399 1 SHIM (0.05-MM THK)

NPR B 1 121-7400 1 SHIM (0.08-MM THK)

NPR B 1 121-7401 1 SHIM (0.18-MM THK)

NPR B 1 121-7402 1 SHIM (0.6-MM THK)

124 NPR 1 8T-2193 2 SEAL-LIP TYPE

125 NPR 3 7T-3253 2 DOWEL

126 NPR 2 3G-6927 1 ADAPTER

127 NPR Y 3 142-1468 1 VALVE GP-SOLENOID (DIRECTION)

128 NPR Y 2 121-4036 1 VALVE GP-SOLENOID (ALL WHEEL DRIVE)

129 NPR M 2 9X-6615 4 BOLT (M5X0.8X30-MM)

1U8846 SEALANT IS REQUIRED

Key: B - USE AS REQUIRED M - METRIC PART Y - SEPARATE ILLUSTRATION

147-0200 TRANSMISSION GP-POWER SHIFT -S/N 4ZN20525-50156
PART OF 142-4436 TRANSMISSION AR-POWER SHIFT

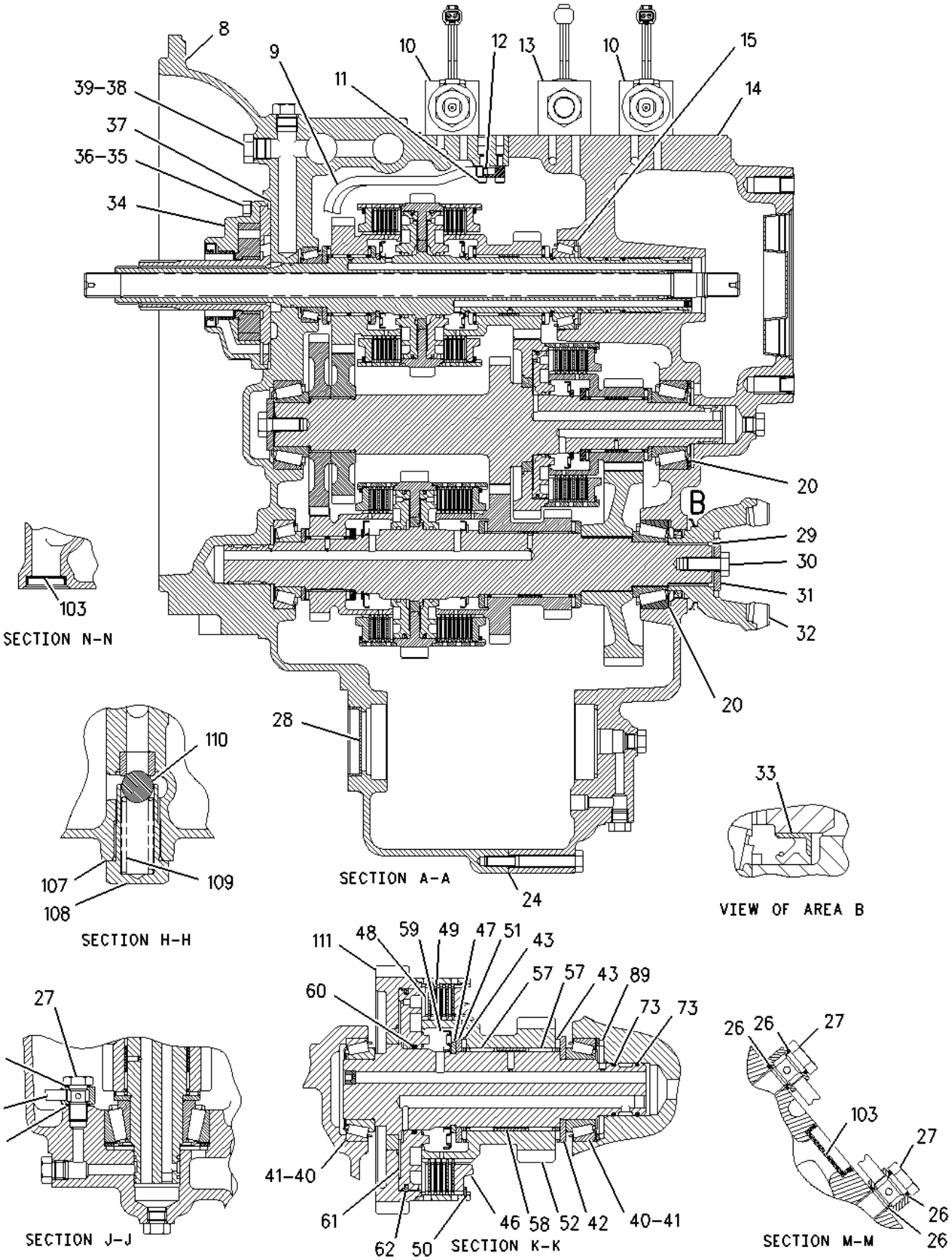

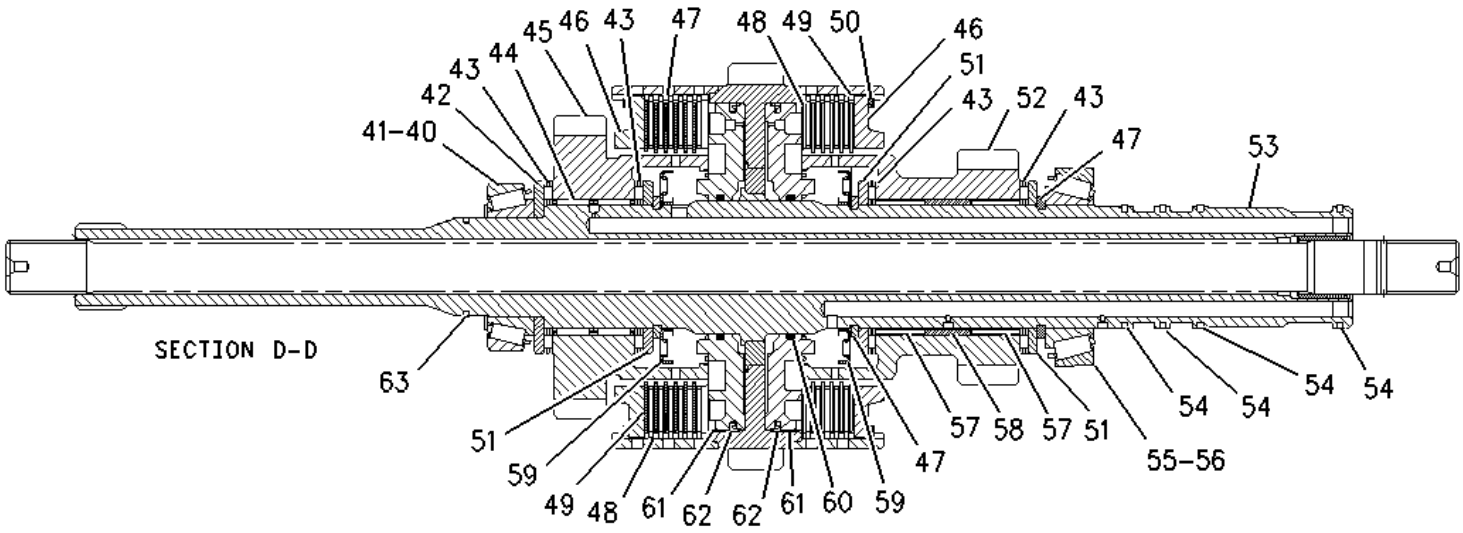
SECTION D-D
41-40
42
43
44
45
46
43
47
48
49
50
46
51
43
52
43
47
53
63
51
59
49
48
61
62
62
61
60
59
47
57
58
57
51
55-56
54
54
54
54

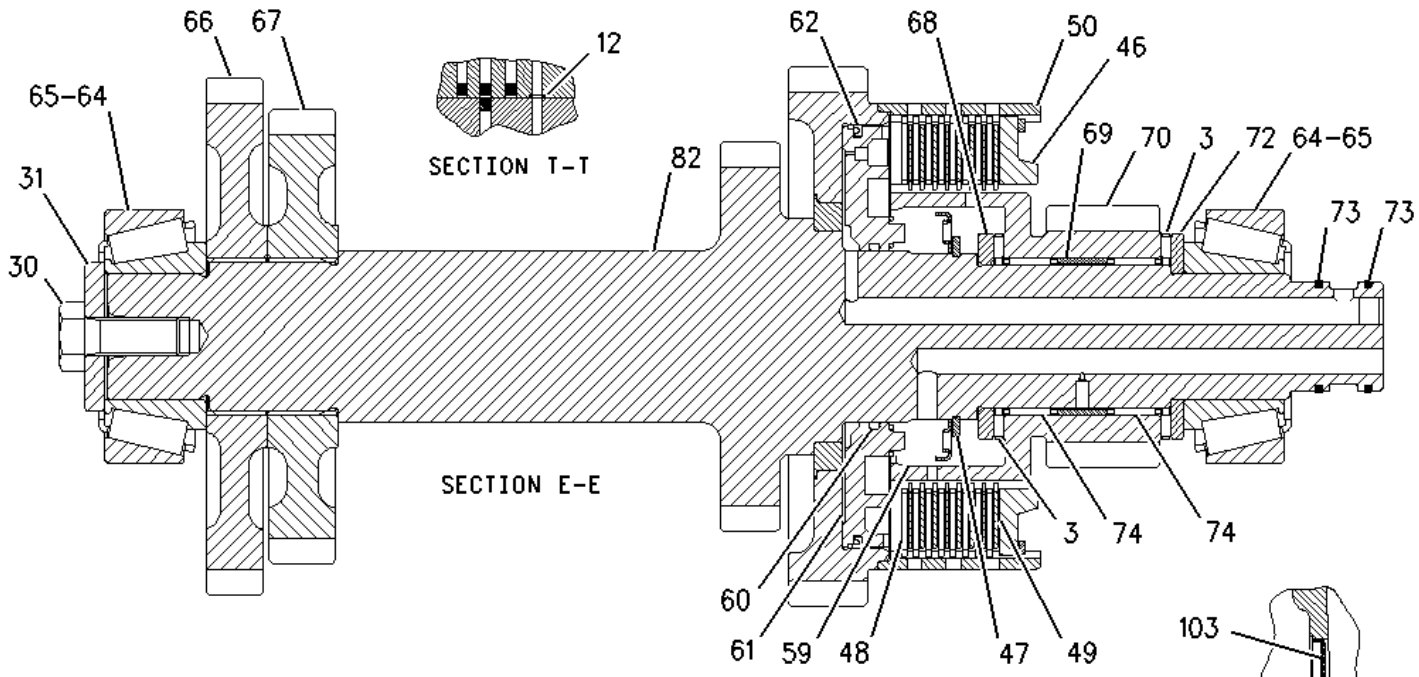
66
67
65-64
31
30
12
SECTION T-T
82
SECTION E-E
62
68
50
46
69
70
3
72
64-65
73
73
3
74
74
60
61
59
48
47
49

103
SECTION U-U

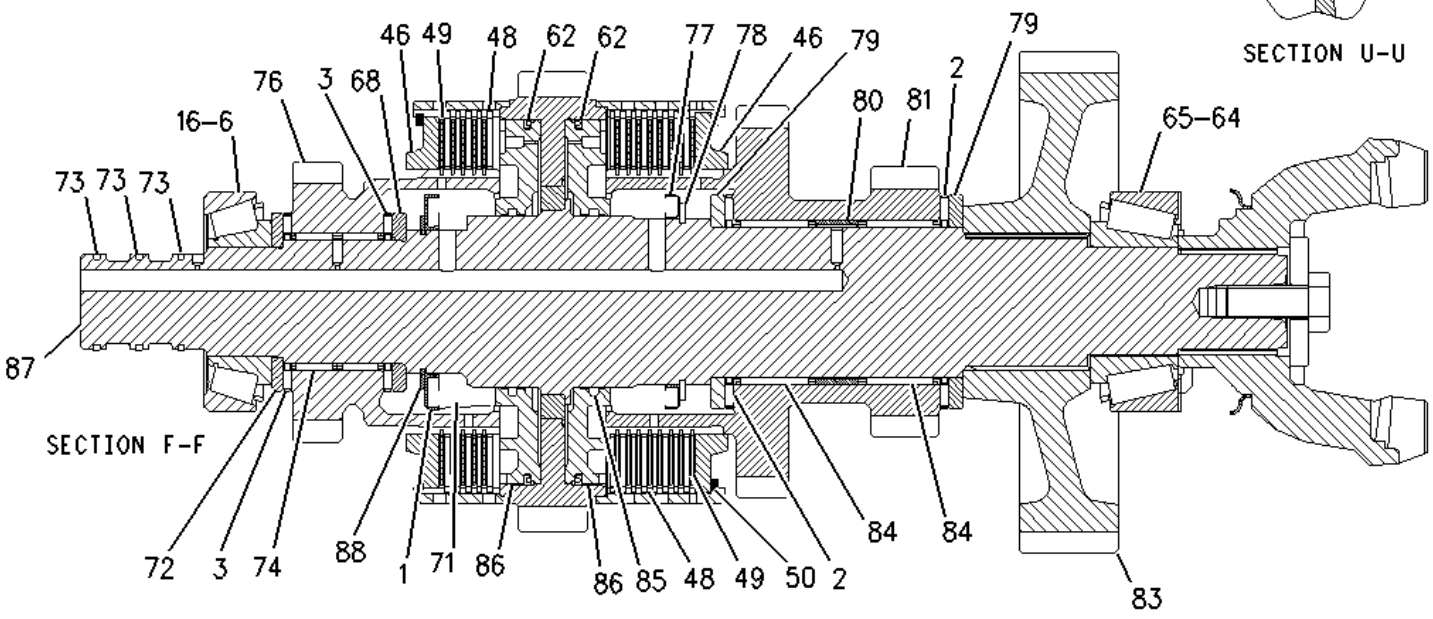
46
49
48
62
62
77
78
46
79
79
2
80
81
76
3
68
16-6
65-64
73
73
73
87
SECTION F-F
72
3
74
88
1
71
86
86
85
48
49
50
2
84
84
83

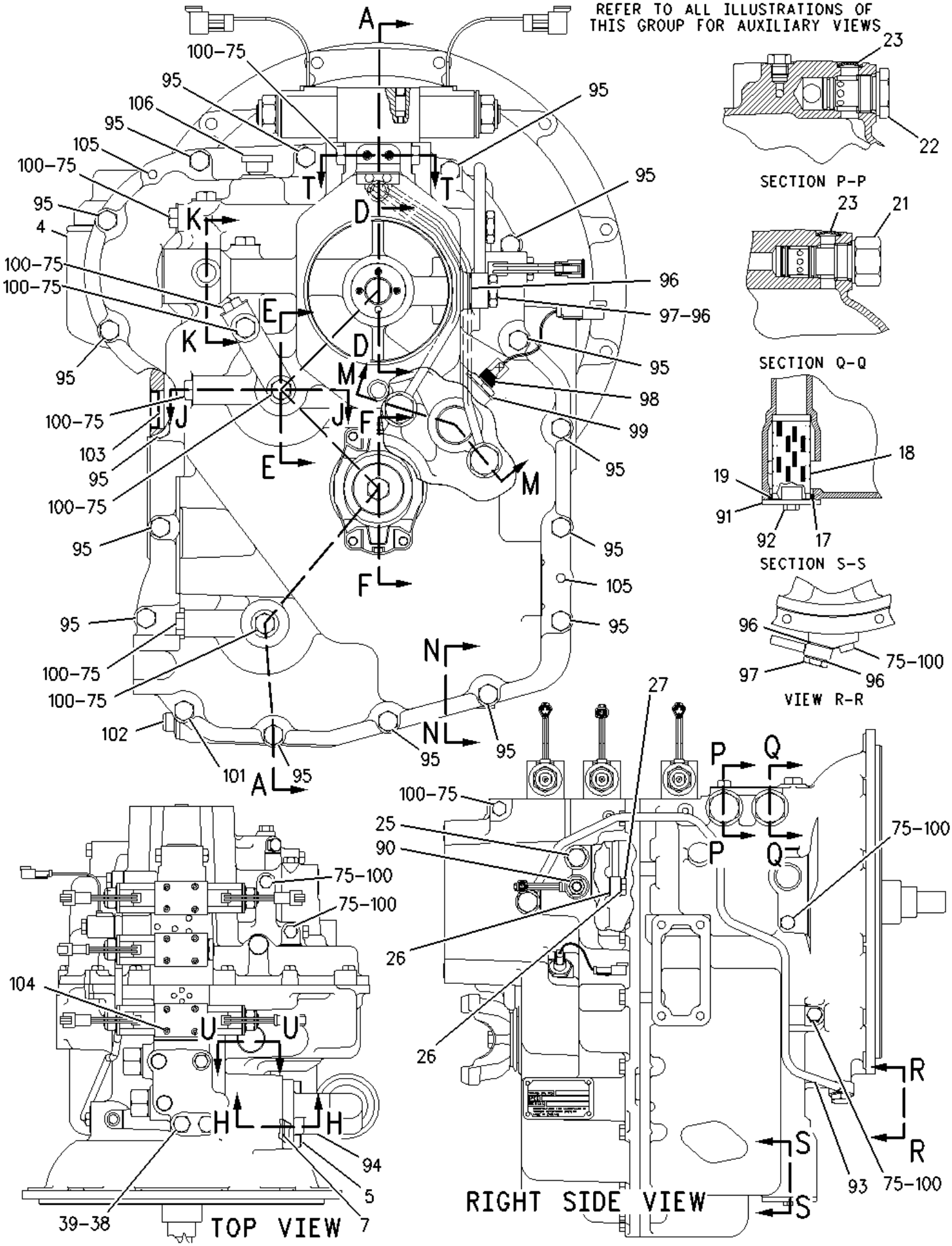
REFER TO ALL ILLUSTRATIONS OF THIS GROUP FOR AUXILIARY VIEWS
SECTION P-P
SECTION Q-Q
SECTION S-S
VIEW R-R
TOP VIEW
RIGHT SIDE VIEW
A
D
E
F
J
K
M
N
P
Q
R
S
T
U
100-75
95
106
105
4
103
102
101
104
39-38
94
5
7
96
97-96
98
99
105
18
19
91
92
17
75-100
27
25
90
26
93
23
22
21

1 NPR 2 121-0885 1 RETAINER

2 NPR 2 172-6743 2 BEARING-SPECIAL

3 NPR 2 172-6050 4 BEARING-SPECIAL

4 NPR 3 119-4740 1 FILTER AS-OIL (STANDARD EFFICIENCY)

5 NPR M 3 8T-0271 2 BOLT-SOCKET HEAD (M10X1.5X35-MM)

6 NPR 2 8T-1581 1 CONE

7 NPR 3 150-7732 2 SEAL-O-RING

8 NPR 1 147-0245 1 CASE AS-FRONT

NPR 1 9W-0717 4 PLUG

NPR 1 147-0268 4 PLUG

9 NPR 1 147-0218 1 TUBE AS-TRANSFER

10 NPR Y 1 238-1967 2 VALVE GP-SOLENOID (FORWARD)

11 NPR M 1 8C-8545 2 BOLT-SOCKET HEAD (M5X0.8X20-MM)

12 NPR 1,2 120-9762 5 SEAL-O-RING

13 NPR Y 1 238-1966 1 VALVE GP-SOLENOID (REVERSE)

14 NPR 1 147-0253 1 CASE AS-REAR

NPR 1 9W-0717 11 PLUG

15 NPR 1 121-7398 1 SPACER (70X79.5X2-MM THK)

NPR B 1 121-7402 1 SHIM (0.6-MM THK)

NPR B 1 121-7401 1 SHIM (0.18-MM THK)

NPR B 1 121-7400 1 SHIM (0.08-MM THK)

NPR B 1 121-7399 1 SHIM (0.05-MM THK)

16 NPR 2 8T-1580 1 CUP

17 NPR 3 4F-7952 1 SEAL-O-RING

18 NPR 3 7T-2651 1 STRAINER

19 NPR 3 9W-5460 1 RING

20 NPR 1 7T-2646 2 SPACER (66X79.5X2.02-MM THK)

NPR B 1 6T-9166 2 SHIM (0.051-MM THK)

NPR B 1 6T-9165 2 SHIM (0.076-MM THK)

NPR B 1 6T-9163 2 SHIM (0.599-MM THK)

NPR B 1 6T-9164 2 SHIM (0.178-MM THK)

21 NPR Y 3 147-0209 1 VALVE GP-RELIEF (CLUTCH PRESSURE)

22 NPR 3 121-7396 1 VALVE GP-RELIEF (CLUTCH 2 SOLENOID)

NPR 3 6V-4589 1 SEAL-O-RING

NPR 3 8L-2746 1 SEAL-O-RING

23 NPR 3 6T-9202 2 PLUG

24 NPR 1 1U-8846 1 SEALANT-GASKET

25 NPR 3 147-0221 1 PLUG-VALVE

26 NPR 1,3 7W-3556 8 WASHER (14.27X20.57X1.5-MM THK)

27 NPR 1,3 147-0234 4 BOLT (9/16-18X0.83-IN)

28 NPR 1 147-0239 1 PLUG-CUP

29 NPR 1 5P-8066 1 SEAL-O-RING

30 NPR M 1,2 6V-8097 2 BOLT (M12X1.75X30-MM)

31 NPR 1,2 7T-3195 2 WASHER (12.3X47X6.35-MM THK)

32 NPR 1 122-6787 1 YOKE AS

NPR 1 123-1377 1 GUARD

33 NPR 1 216-2267 1 SEAL-LIP TYPE

34 NPR 1 121-7385 1 PUMP GP-TRANSMISSION

NPR 1 124-6612 1 SEAL-LIP TYPE

35 NPR 1 9P-9150 4 WASHER (8.25X18X0.84-MM THK)

36 NPR M 1 8C-5748 4 BOLT (M8X1.25X55-MM)

37 NPR 1 7X-4741 1 SEAL

38 NPR 1,3 9S-4185 3 PLUG-O RING

39 NPR 1,3 3K-0360 3 SEAL-O-RING

40 NPR 1,2 123-8906 3 CUP-TAPERED ROLLER

41 NPR 1,2 123-8905 3 CUP-TAPERED ROLLER

42 NPR 1,2 121-0694 2 WASHER-THRUST (40X70X4-MM THK)

43 NPR 1,2 172-5317 6 BEARING-SPECIAL

44 NPR 2 123-8913 2 BEARING-ROLLER

45 NPR 2 147-0224 1 GEAR (45/32-TEETH)

46 NPR 1,2 8E-5707 6 PLATE-END

47 NPR 1,2 6V-8757 5 RING-RETAINING

48 NPR 1,2 274-4553 37 DISC-CLUTCH

49 NPR 1,2 6Y-7929 37 DISC-FRICTION

50 NPR 1,2 274-8638 6 RING-RETAINING

51 NPR 1,2 121-2500 4 WASHER-THRUST (50X70X4-MM THK)

52 NPR 1,2 147-0202 2 GEAR (45/24-TEETH)

53 NPR 2 147-0257 1 SHAFT AS-INPUT

NPR 2 123-2920 3 PLUG

54 NPR 2 9U-8886 4 RING-SEAL

55 NPR 2 123-8910 1 CUP-TAPERED ROLLER

56 NPR 2 123-8909 1 CONE-BEARING

57 NPR 1,2 7T-6655 4 BEARING

58 NPR 1,2 147-0259 2 SPACER (51.1X54.9X18.7-MM THK)

59 NPR 1,2 147-0238 4 SPRING AS

60 NPR 1,2 6V-5100 4 SEAL-O-RING

61 NPR 1,2 147-0228 4 PISTON-CLUTCH

62 NPR 1,2 6T-9196 6 SEAL

63 NPR 2 122-1886 1 RING-SEAL

64 NPR 2 123-8907 3 CONE-BEARING

65 NPR 2 123-8908 3 CUP-TAPERED ROLLER

66 NPR 2 147-0212 1 GEAR (42-TEETH)

67 NPR 2 147-0216 1 GEAR (38-TEETH)

68 NPR 2 147-0203 2 WASHER-THRUST (45.3X65X5-MM THK)

69 NPR 2 147-0258 1 SPACER (46X50X16-MM THK)

70 NPR 2 147-0215 1 GEAR (45/19-TEETH)

71 NPR 2 178-9566 2 SPRING-PISTON

72 NPR 2 122-1877 2 WASHER-THRUST (40X65X4-MM THK)

73 NPR 1,2 6Y-1192 7 RING-SEAL

74 NPR 2 123-8912 4 BEARING-ROLLER

75 NPR 3 9S-4191 14 PLUG-O RING

76 NPR 2 147-0264 1 GEAR (45/28-TEETH)

77 NPR 2 147-0260 1 RETAINER-SPRING

78 NPR 2 095-0928 1 RING-RETAINING (EXTERNAL)

79 NPR 2 147-0205 2 WASHER (55X78X5-MM THK)

80 NPR 2 147-0248 1 SPACER (56.2X60X15.8-MM THK)

81 NPR 2 157-2090 1 GEAR (38-TEETH)

82 NPR 2 173-0332 1 SHAFT AS (COUNTERSHAFT)

NPR 2 163-9091 1 PLUG

83 NPR 2 147-0242 1 GEAR (48-TEETH)

84 NPR 2 150-3757 2 BEARING

85 NPR 2 009-2062 2 SEAL-O-RING

86 NPR 2 157-2088 2 PISTON AS

87 NPR 2 147-0261 1 SHAFT AS-OUTPUT (REAR)

NPR 2 9W-0717 2 PLUG

88 NPR 2 095-0927 1 RING-RETAINING

89 NPR 1 122-1879 1 SPACER (58X67.5X2-MM THK)

NPR B 1 104-3288 1 SHIM (0.05-MM THK)

NPR B 1 121-2059 1 SHIM (0.08-MM THK)

NPR B 1 121-2060 1 SHIM (0.18-MM THK)

NPR B 1 121-2061 1 SHIM (0.6-MM THK)

90 NPR Y 3 121-4036 1 VALVE GP-SOLENOID (TORQUE CONVERTER INLET)

91 NPR 3 106-9861 1 PLATE-COVER

92 NPR M 3 6V-8210 2 BOLT (M8X1.25X16-MM)

93 NPR 3 147-0236 1 TUBE AS-TRANSFER

94 NPR 3 147-0211 1 ELBOW AS

NPR 3 3G-6927 1 ADAPTER

95 NPR M 3 6V-8335 16 BOLT-SELF-LOCKING (M10X1.5X40-MM)

96 NPR 3 147-0262 4 WASHER (19.1X24.1X1.5-MM THK)

97 NPR 3 147-0266 2 BOLT (3/4-16X1.417-IN)

98 NPR Y 3 189-5746 1 SENSOR GP-SPEED (MAGNETIC, LOW OUTPUT)

99 NPR 3 1V-6341 1 SEAL

100 NPR 3 3J-1907 14 SEAL-O-RING

101 NPR M 3 8T-0643 1 BOLT (M10X1.5X80-MM)

102 NPR 3 6Y-1896 1 PLUG AS

NPR 3 5P-6718 1 SEAL-O-RING

103 NPR 1,2,3 205-9244 4 PLUG

104 NPR M 3 9X-6615 12 BOLT (M5X0.8X30-MM)

105 NPR 3 7T-3253 2 DOWEL

106 NPR 3 7T-3251 1 BREATHER

107 NPR 1 7X-4744 1 SEAL-O-RING

108 NPR 1 147-0255 1 HOUSING-SPRING

109 NPR 1 147-0206 1 SPRING

110 NPR 1 2H-3698 1 BALL

111 NPR 1 147-0256 1 SHAFT AS-REVERSE

NPR 1 9W-0717 1 PLUG

NPR 1 147-0270 1 ORIFICE

112 NPR 1 147-0226 1 TUBE AS

Key: B - USE AS REQUIRED M - METRIC PART Y - SEPARATE ILLUSTRATION

147-0204 TRANSMISSION GP-POWER SHIFT -S/N 4ZN20525-50156
PART OF 142-4437 TRANSMISSION AR-POWER SHIFT

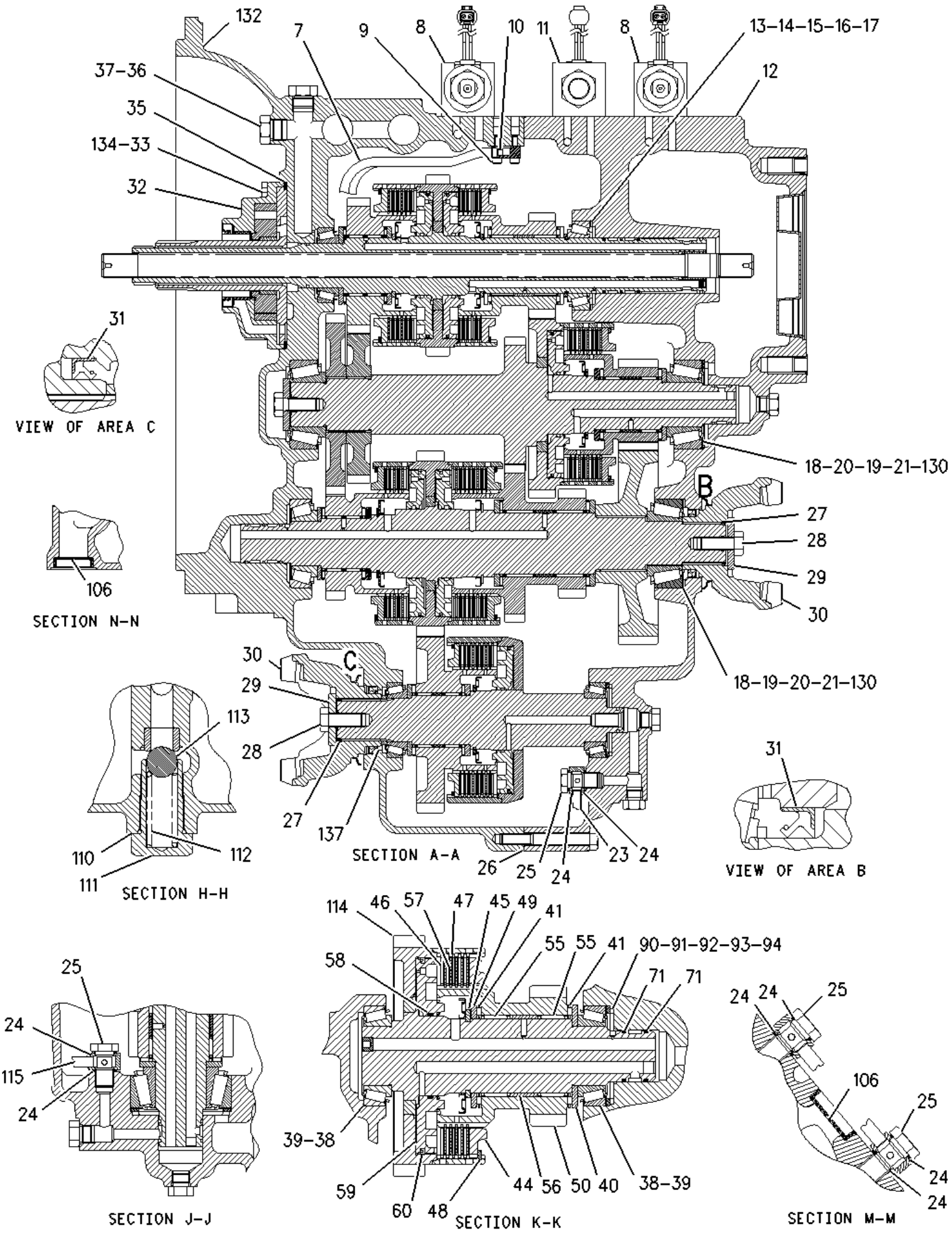
132
7
9
8
10
11
8
13-14-15-16-17
12
37-36
35
134-33
32
31
VIEW OF AREA C
18-20-19-21-130
B
27
28
29
30
106
SECTION N-N
18-19-20-21-130
30
29
C
28
27
137
SECTION A-A
26
25
24
23
24
113
110
112
111
SECTION H-H
31
VIEW OF AREA B
114
46
57
47
45
49
41
55
55
41
90-91-92-93-94
58
71
71
25
24
115
24
SECTION J-J
39-38
59
60
48
44
56
50
40
38-39
SECTION K-K
24
24
25
106
25
24
24
SECTION M-M

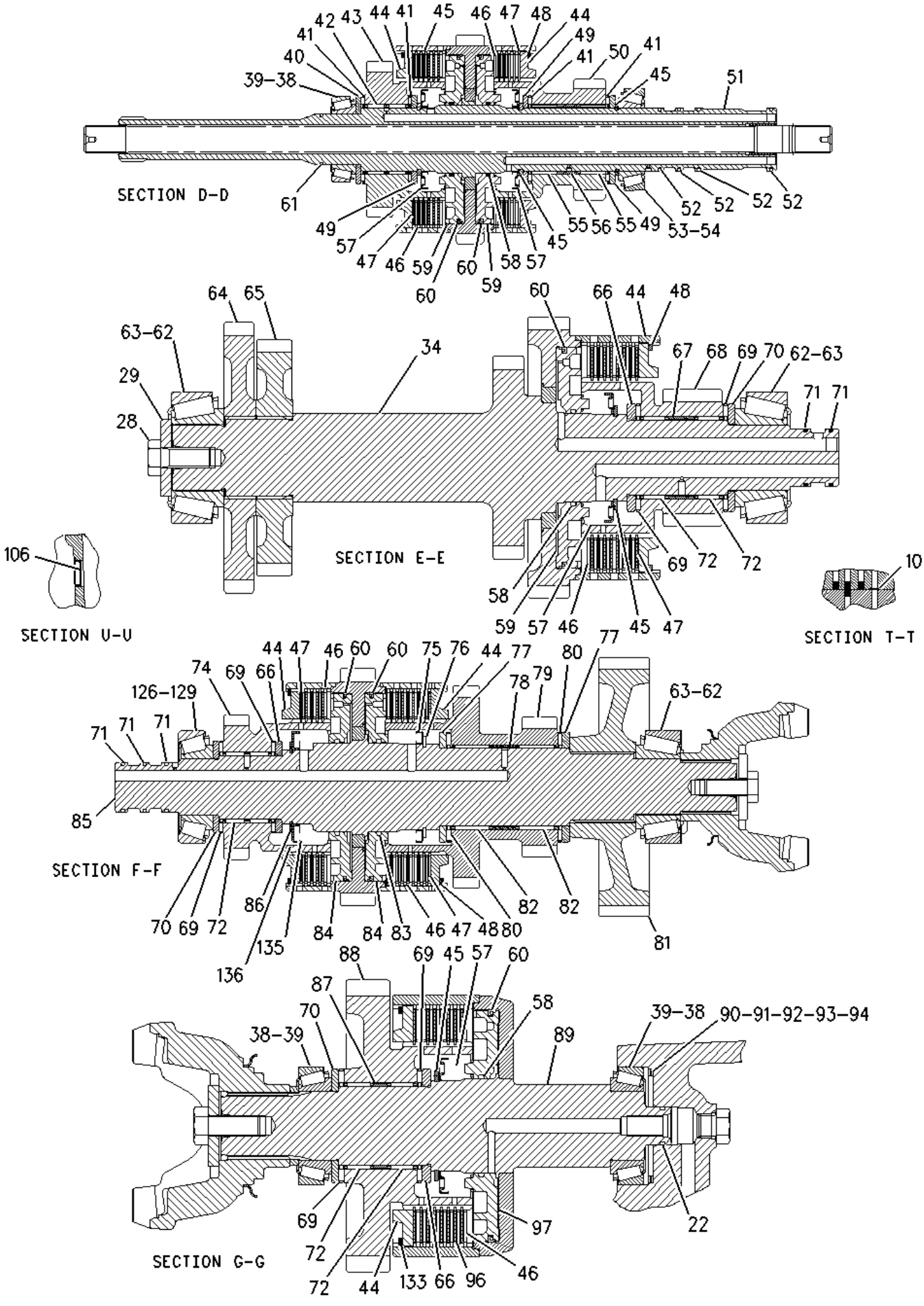
SECTION D-D
SECTION E-E
SECTION U-U
SECTION T-T
SECTION F-F
SECTION G-G

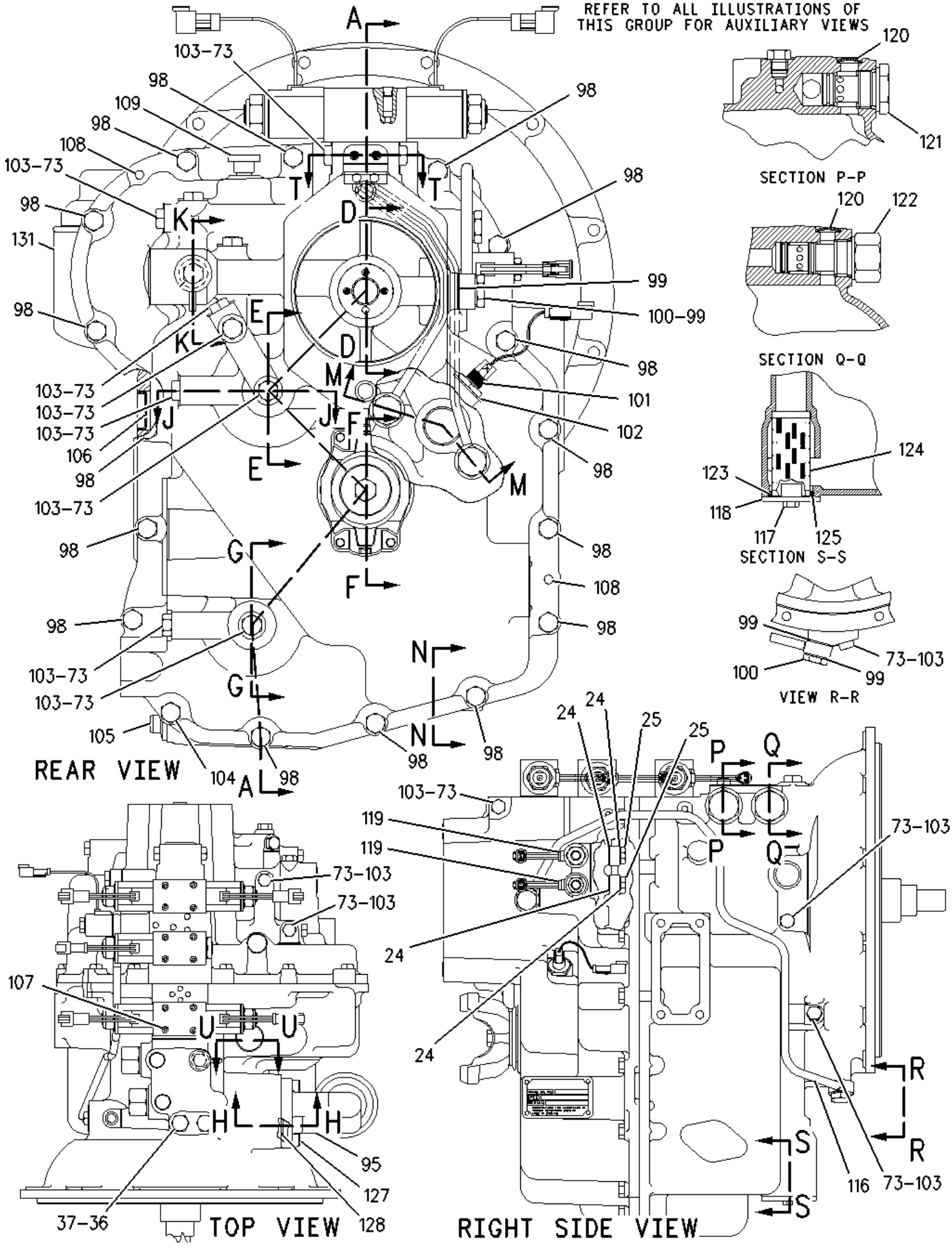
REFER TO ALL ILLUSTRATIONS OF THIS GROUP FOR AUXILIARY VIEWS
SECTION P-P
SECTION Q-Q
SECTION S-S
VIEW R-R
REAR VIEW
TOP VIEW
RIGHT SIDE VIEW
103-73
98
109
108
131
106
99
100-99
101
102
124
123
118
117
125
120
122
121
105
104
95
127
128
37-36
107
119
24
25
73-103
116

7 NPR 1 147-0218 1 TUBE AS-TRANSFER

8 NPR Y 1 148-8988 2 VALVE GP-SOLENOID (FORWARD HIGH)

9 NPR M 1 8C-8545 2 BOLT-SOCKET HEAD (M5X0.8X20-MM)

10 NPR 1,2 120-9762 5 SEAL-O-RING

11 NPR Y 1 238-1966 1 VALVE GP-SOLENOID (REVERSE)

12 NPR 1 147-0253 1 CASE AS-REAR

NPR 1 9W-0717 11 PLUG

13 NPR 1 121-7398 1 SPACER (70X79.5X2-MM THK)

14 NPR B 1 121-7402 1 SHIM (0.6-MM THK)

15 NPR B 1 121-7401 1 SHIM (0.18-MM THK)

16 NPR B 1 121-7400 1 SHIM (0.08-MM THK)

17 NPR B 1 121-7399 1 SHIM (0.05-MM THK)

18 NPR 1 7T-2646 2 SPACER (66X79.5X2.02-MM THK)

19 NPR B 1 6T-9166 2 SHIM (0.051-MM THK)

20 NPR B 1 6T-9165 2 SHIM (0.076-MM THK)

21 NPR B 1 6T-9164 2 SHIM (0.178-MM THK)

22 NPR 2 122-1878 1 RING-SEAL

23 NPR 1 147-0201 1 TUBE AS

24 NPR 1,3 7W-3556 12 WASHER (14.27X20.57X1.5-MM THK)

25 NPR 1,3 147-0234 6 BOLT (9/16-18X0.83-IN)

26 NPR B 1 1U-8846 1 SEALANT-GASKET

27 NPR 1 5P-8066 2 SEAL-O-RING

28 NPR M 1,2 6V-8097 3 BOLT (M12X1.75X30-MM)

29 NPR 1,2 7T-3195 3 WASHER (12.3X47X6.35-MM THK)

30 NPR 1 122-6787 2 YOKE AS

(EACH AS INCLUDES)

NPR 1 123-1377 1 GUARD

31 NPR 1 216-2267 2 SEAL-LIP TYPE

32 NPR 1 121-7385 1 PUMP GP-TRANSMISSION

NPR 1 124-6612 1 SEAL-LIP TYPE

33 NPR 1 9P-9150 4 WASHER (8.25X18X0.84-MM THK)

34 NPR 2 173-0332 1 SHAFT AS (COUNTERSHAFT)

NPR 2 163-9091 1 PLUG

35 NPR 1 7X-4741 1 SEAL

36 NPR 1,3 9S-4185 3 PLUG-O RING

37 NPR 1,3 3K-0360 3 SEAL-O-RING

38 NPR 1,2 123-8906 5 CUP-TAPERED ROLLER

39 NPR 1,2 123-8905 5 CUP-TAPERED ROLLER

40 NPR 1,2 121-0694 2 WASHER-THRUST (40X70X4-MM THK)

41 NPR 1,2 172-5317 6 BEARING-SPECIAL

42 NPR 2 123-8913 2 BEARING-ROLLER

43 NPR 2 147-0224 1 GEAR (45/32-TEETH)

44 NPR 1,2 8E-5707 7 PLATE-END

45 NPR 1,2 6V-8757 6 RING-RETAINING

46 NPR 1,2 6T-9194 45 PLATE

47 NPR 1,2 6Y-7929 37 DISC-FRICTION

48 NPR 1,2 274-8638 6 RING-RETAINING

49 NPR 1,2 121-2500 4 WASHER-THRUST (50X70X4-MM THK)

50 NPR 1,2 147-0202 2 GEAR (45/24-TEETH)

51 NPR 2 147-0257 1 SHAFT AS-INPUT

NPR 2 123-2920 3 PLUG

52 NPR 2 9U-8886 4 RING-SEAL

53 NPR 2 123-8910 1 CUP-TAPERED ROLLER

54 NPR 2 123-8909 1 CONE-BEARING

55 NPR 1,2 7T-6655 4 BEARING

56 NPR 1,2 147-0259 2 SPACER (51.1X54.9X18.7-MM THK)

57 NPR 1,2 147-0238 5 SPRING AS

58 NPR 1,2 6V-5100 5 SEAL-O-RING

59 NPR 1,2 147-0228 4 PISTON-CLUTCH

60 NPR 1,2 6T-9196 7 SEAL

61 NPR 2 122-1886 1 RING-SEAL

62 NPR 2 123-8907 3 CONE-BEARING

63 NPR 2 123-8908 3 CUP-TAPERED ROLLER

64 NPR 2 147-0212 1 GEAR (42-TEETH)

65 NPR 2 147-0216 1 GEAR (38-TEETH)

66 NPR 2 147-0203 3 WASHER-THRUST (45.3X65X5-MM THK)

67 NPR 2 147-0258 1 SPACER (46X50X16-MM THK)

68 NPR 2 147-0215 1 GEAR (45/19-TEETH)

69 NPR 2 172-6050 6 BEARING-SPECIAL

70 NPR 2 122-1877 3 WASHER-THRUST (40X65X4-MM THK)

71 NPR 1,2 6Y-1192 7 RING-SEAL

72 NPR 2 123-8912 6 BEARING-ROLLER

73 NPR 3 9S-4191 14 PLUG-O RING

74 NPR 2 147-0264 1 GEAR (45/28-TEETH)

75 NPR 2 147-0260 1 RETAINER-SPRING (16.36MM ID)

76 NPR 2 095-0928 1 RING-RETAINING (EXTERNAL)

77 NPR 2 147-0205 2 WASHER (55X78X5-MM THK)

78 NPR 2 147-0248 1 SPACER (56.2X60X15.8-MM THK)

79 NPR 2 157-2090 1 GEAR (38-TEETH)

80 NPR 2 172-6743 2 BEARING-SPECIAL

81 NPR 2 147-0242 1 GEAR (48-TEETH)

82 NPR 2 150-3757 2 BEARING

83 NPR 2 009-2062 2 SEAL-O-RING

84 NPR 2 157-2088 2 PISTON AS

85 NPR 2 147-0261 1 SHAFT AS-OUTPUT (REAR)

NPR 2 9W-0717 2 PLUG

86 NPR 2 095-0927 1 RING-RETAINING

87 NPR 2 122-1884 1 SPACER (45X49X8-MM THK)

88 NPR 2 147-0210 1 GEAR (45/36-TEETH)

89 NPR 2 147-0207 1 SHAFT AS-OUTPUT (FRONT)

90 NPR 1,2 122-1879 2 SPACER (58X67.5X2-MM THK)

91 NPR B 1,2 104-3288 2 SHIM (0.05-MM THK)

92 NPR B 1,2 121-2059 2 SHIM (0.08-MM THK)

93 NPR B 1,2 121-2060 2 SHIM (0.18-MM THK)

94 NPR B 1,2 121-2061 2 SHIM (0.6-MM THK)

95 NPR 3 147-0211 1 ELBOW AS

NPR 3 3G-6927 1 ADAPTER

96 NPR 2 6Y-7957 8 DISC-FRICTION

97 NPR 2 147-0227 1 PISTON-CLUTCH

98 NPR M 3 6V-8335 16 BOLT-SELF-LOCKING (M10X1.5X40-MM)

99 NPR 3 147-0262 4 WASHER (19.1X24.1X1.5-MM THK)

100 NPR 3 147-0266 2 BOLT (3/4-16X1.417-IN)

101 NPR Y 3 189-5746 1 SENSOR GP-SPEED (TRANSMISSION OUTPUT)

102 NPR 3 1V-6341 1 SEAL

103 NPR 3 3J-1907 14 SEAL-O-RING

104 NPR M 3 8T-0643 1 BOLT (M10X1.5X80-MM)

105 NPR 3 6Y-1896 1 PLUG AS

NPR 3 5P-6718 1 SEAL-O-RING

106 NPR 1,2,3 205-9244 4 PLUG

107 NPR M 3 9X-6615 12 BOLT (M5X0.8X30-MM)

108 NPR 3 7T-3253 2 DOWEL

109 NPR 3 7T-3251 1 BREATHER

110 NPR 1 7X-4744 1 SEAL-O-RING

111 NPR 1 147-0255 1 HOUSING-SPRING

112 NPR 1 147-0206 1 SPRING

113 NPR 1 2H-3698 1 BALL

114 NPR 1 147-0256 1 SHAFT AS-REVERSE

NPR 1 9W-0717 1 PLUG

NPR 1 147-0270 1 ORIFICE

115 NPR 1 147-0226 1 TUBE AS

116 NPR 3 147-0236 1 TUBE AS-TRANSFER

117 NPR M 3 6V-8210 2 BOLT (M8X1.25X16-MM)

118 NPR 3 106-9861 1 PLATE-COVER

119 NPR Y 3 121-4036 2 VALVE GP-SOLENOID (TORQUE CONVERTER INLET)

120 NPR 3 6T-9202 2 PLUG

121 NPR 3 121-7396 1 VALVE GP-RELIEF (CLUTCH 2 SOLENOID)

NPR 3 6V-4589 1 SEAL-O-RING

NPR 3 8L-2746 1 SEAL-O-RING

122 NPR Y 3 147-0209 1 VALVE GP-RELIEF (CLUTCH PRESSURE)

123 NPR 3 9W-5460 1 RING

124 NPR 3 7T-2651 1 STRAINER

125 NPR 3 4F-7952 1 SEAL-O-RING

126 NPR 2 8T-1580 1 CUP

127 NPR M 3 8T-0271 2 BOLT-SOCKET HEAD (M10X1.5X35-MM)

128 NPR 3 150-7732 2 SEAL-O-RING

129 NPR 2 8T-1581 1 CONE

130 NPR B 1 6T-9163 2 SHIM (0.599-MM THK)

131 NPR 3 119-4740 1 FILTER AS-OIL (STANDARD EFFICIENCY)

132 NPR 1 147-0245 1 CASE AS-FRONT

NPR 1 9W-0717 4 PLUG

NPR 1 147-0268 4 PLUG

133 NPR 2 161-3249 1 RING-RETAINING

134 NPR M 1 8C-5748 4 BOLT (M8X1.25X55-MM)

135 NPR 1 178-9566 2 SPRING-PISTON

136 NPR 2 121-0885 1 RETAINER

137 NPR 1 122-1883 1 SPACER (38X45X5-MM THK)

Key: B - USE AS REQUIRED M - METRIC PART Y - SEPARATE ILLUSTRATION

192-0849 TRANSMISSION GP-POWER SHIFT -ALL WHEEL DRIVE
S/N 4ZN16044-50156---PART OF 202-7432 TRANSMISSION & MOUNTING GP

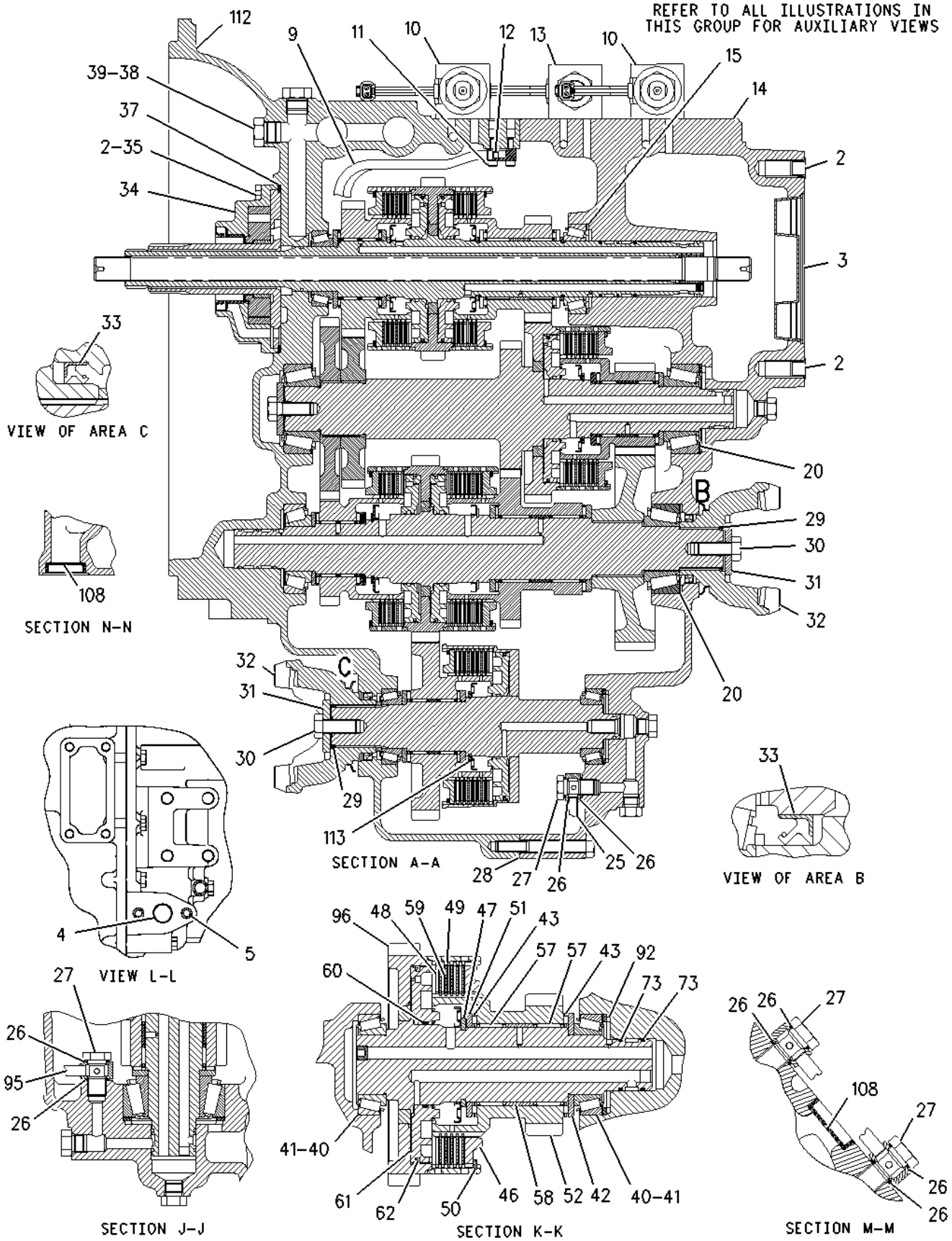

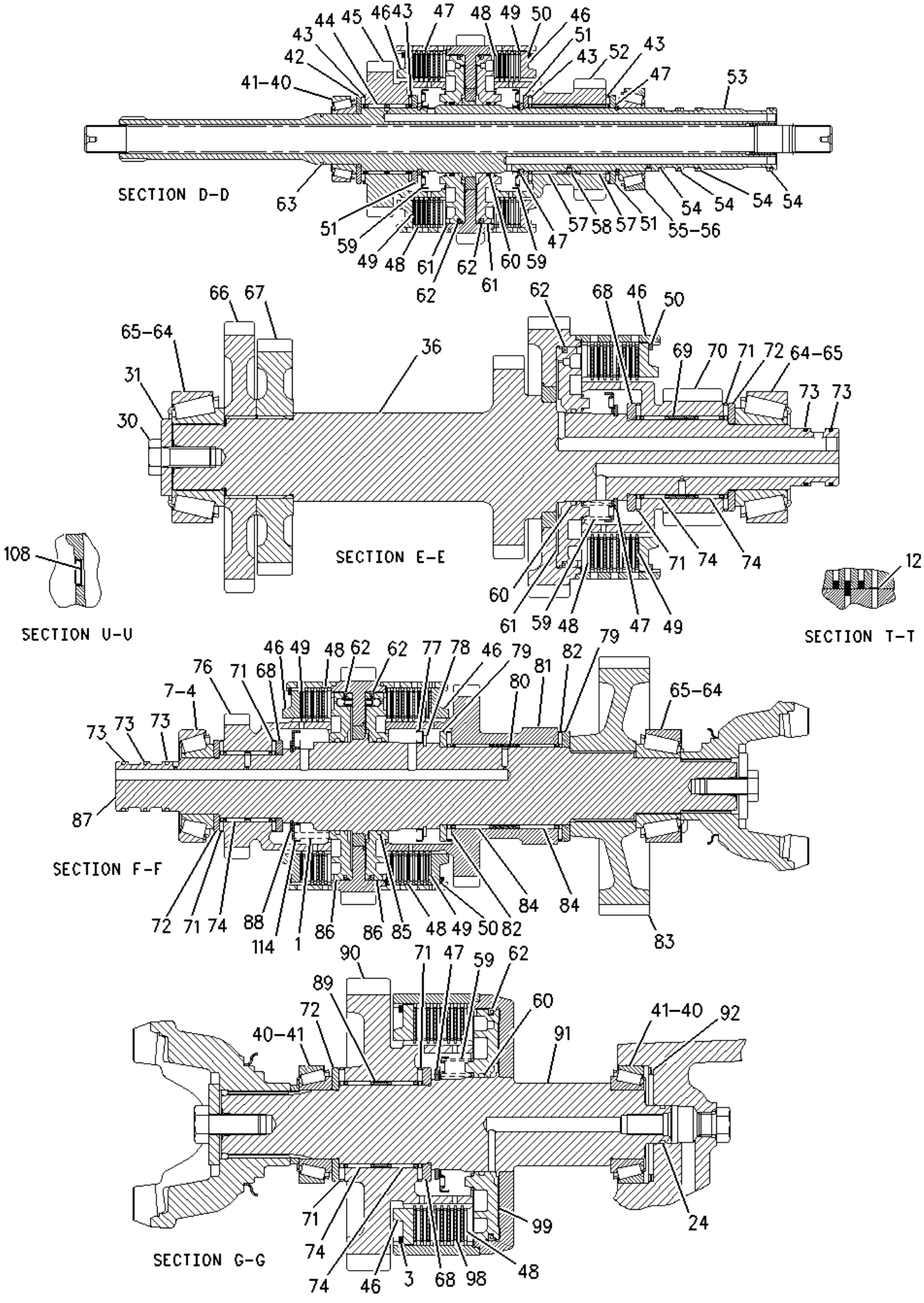
SECTION D-D
SECTION E-E
SECTION U-U
SECTION T-T
SECTION F-F
SECTION G-G

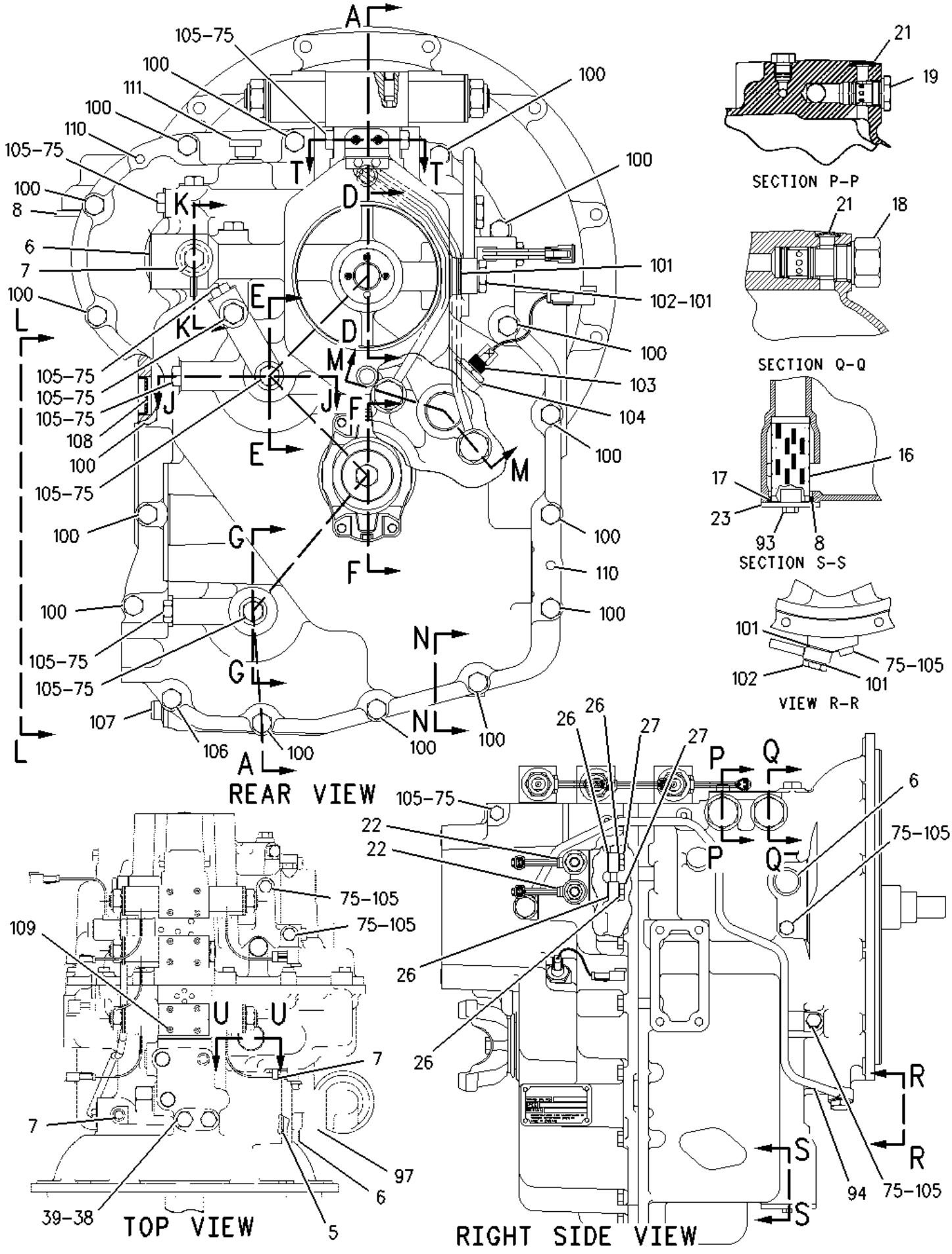

1 NPR 2 178-9566 2 SPRING-PISTON

2 NPR M 1 8C-5748 4 BOLT (M8X1.25X55-MM)

3 NPR 1,2 161-3249 1 RING-RETAINING

4 NPR 1,2 8T-1581 1 CONE

5 NPR 1,3 150-7732 2 SEAL-O-RING

6 NPR M 3 8T-0271 2 BOLT-SOCKET HEAD (M10X1.5X35-MM)

7 NPR 2,3 8T-1580 1 CUP

8 NPR 3 4F-7952 1 SEAL-O-RING

9 NPR 1 147-0218 1 TUBE AS-TRANSFER

10 NPR Y 1 148-8988 2 VALVE GP-SOLENOID (FORWARD LOW)

11 NPR M 1 8C-8545 2 BOLT-SOCKET HEAD (M5X0.8X20-MM)

12 NPR 1,2 120-9762 5 SEAL-O-RING

13 NPR Y 1 148-8986 1 VALVE GP-SOLENOID (REVERSE)

14 NPR 1 147-0253 1 CASE AS-REAR

NPR 1 9W-0717 11 PLUG

15 NPR 1 121-7398 1 SPACER (70X79.5X2-MM THK)

NPR B 1 121-7402 1 SHIM (0.6-MM THK)

NPR B 1 121-7401 1 SHIM (0.18-MM THK)

NPR B 1 121-7400 1 SHIM (0.08-MM THK)

NPR B 1 121-7399 1 SHIM (0.05-MM THK)

16 NPR 3 7T-2651 1 STRAINER

17 NPR 3 9W-5460 1 RING

18 NPR Y 3 147-0209 1 VALVE GP-RELIEF (FORWARD HIGH)

19 NPR 3 121-7396 1 VALVE GP-RELIEF (CLUTCH 2 SOLENOID)

NPR 3 6V-4589 1 SEAL-O-RING

NPR 3 8L-2746 1 SEAL-O-RING

20 NPR 1 7T-2646 2 SPACER (66X79.5X2.02-MM THK)

NPR B 1 6T-9166 2 SHIM (0.051-MM THK)

NPR B 1 6T-9165 2 SHIM (0.076-MM THK)

NPR B 1 6T-9164 2 SHIM (0.178-MM THK)

NPR 1 6T-9163 2 SHIM (0.599-MM THK)

21 NPR 3 6T-9202 2 PLUG

22 NPR Y 3 121-4036 2 VALVE GP-SOLENOID (TORQUE CONVERTER INLET)

23 NPR 3 106-9861 1 PLATE-COVER

24 NPR 2 122-1878 1 RING-SEAL

25 NPR 1 147-0201 1 TUBE AS

26 NPR 1,3 7W-3556 12 WASHER (14.27X20.57X1.5-MM THK)

27 NPR 1,3 147-0234 6 BOLT (9/16-18X0.83-IN)

28 NPR B 1 1U-8846 SEALANT-GASKET

29 NPR 1 5P-8066 2 SEAL-O-RING

30 NPR M 1,2 6V-8097 3 BOLT (M12X1.75X30-MM)

31 NPR 1,2 7T-3195 3 WASHER (12.3X47X6.35-MM THK)

32 NPR 1 122-6787 2 YOKE AS

NPR 1 123-1377 1 GUARD

33 NPR 1 8T-2193 2 SEAL-LIP TYPE

34 NPR 1 121-7385 1 PUMP GP-TRANSMISSION

NPR 1 124-6612 1 SEAL-LIP TYPE

35 NPR 1 9P-9150 4 WASHER (8.25X18X0.84-MM THK)

36 NPR 2 173-0332 1 SHAFT AS (COUNTERSHAFT)

NPR 2 163-9091 1 PLUG

37 NPR 1 7X-4741 1 SEAL

38	NPR	1,3	9S-4185	3	PLUG-O RING
39	NPR	1,3	3K-0360	3	SEAL-O-RING
40	NPR	1,2	123-8906	5	CUP-TAPERED ROLLER
41	NPR	1,2	123-8905	5	CUP-TAPERED ROLLER
42	NPR	1,2	121-0694	2	WASHER-THRUST (40X70X4-MM THK)
43	NPR	1,2	172-5317	6	BEARING-SPECIAL
44	NPR	2	123-8913	2	BEARING-ROLLER
45	NPR	2	147-0224	1	GEAR (45/32-TEETH)
46	NPR	1,2	8E-5707	7	PLATE-END
47	NPR	1,2	6V-8757	6	RING-RETAINING
48	NPR	1,2	6T-9194	45	PLATE
49	NPR	1,2	6Y-7929	37	DISC-FRICTION
50	NPR	1,2	9U-8875	6	RING-RETAINING
51	NPR	1,2	121-2500	4	WASHER-THRUST (50X70X4-MM THK)
52	NPR	1,2	147-0202	2	GEAR (45/24-TEETH)
53	NPR	2	147-0257	1	SHAFT AS-INPUT
	NPR	2	123-2920	3	PLUG
54	NPR	2	9U-8886	4	RING-SEAL
55	NPR	2	123-8910	1	CUP-TAPERED ROLLER
56	NPR	2	123-8909	1	CONE-BEARING
57	NPR	1,2	7T-6655	4	BEARING
58	NPR	1,2	147-0259	2	SPACER (51.1X54.9X18.7-MM THK)
59	NPR	1,2	147-0238	5	SPRING AS
60	NPR	1,2	6V-5100	5	SEAL-O-RING
61	NPR	1,2	147-0228	4	PISTON-CLUTCH

62 NPR 1,2 6T-9196 7 SEAL

63 NPR 2 122-1886 1 RING-SEAL

64 NPR 2 123-8907 3 CONE-BEARING

65 NPR 2 123-8908 3 CUP-TAPERED ROLLER

66 NPR 2 147-0212 1 GEAR (42-TEETH)

67 NPR 2 147-0216 1 GEAR (38-TEETH)

68 NPR 2 147-0203 3 WASHER-THRUST (45.3X65X5-MM THK)

69 NPR 2 147-0258 1 SPACER (46X50X16-MM THK)

70 NPR 2 147-0215 1 GEAR (45/19-TEETH)

71 NPR 2 172-6050 6 BEARING-SPECIAL

72 NPR 2 122-1877 3 WASHER-THRUST (40X65X4-MM THK)

73 NPR 1,2 6Y-1192 7 RING-SEAL

74 NPR 2 123-8912 6 BEARING-ROLLER

75 NPR 3 9S-4191 14 PLUG-O RING

76 NPR 2 147-0264 1 GEAR (45/28-TEETH)

77 NPR 2 147-0260 1 RETAINER-SPRING

78 NPR 2 095-0928 1 RING-RETAINING (EXTERNAL)

79 NPR 2 147-0205 2 WASHER (55X78X5-MM THK)

80 NPR 2 147-0248 1 SPACER (56.2X60X15.8-MM THK)

81 NPR 2 157-2090 1 GEAR (38-TEETH)

82 NPR 2 172-6743 2 BEARING-SPECIAL

83 NPR 2 147-0242 1 GEAR (48-TEETH)

84 NPR 2 150-3757 2 BEARING

85 NPR 2 009-2062 2 SEAL-O-RING

86 NPR 2 157-2088 2 PISTON AS

87 NPR 2 147-0261 1 SHAFT AS-OUTPUT (REAR)

NPR 2 9W-0717 2 PLUG

88 NPR 2 095-0927 1 RING-RETAINING

89 NPR 2 122-1884 1 SPACER (45X49X8-MM THK)

90 NPR 2 147-0210 1 GEAR (45/36-TEETH)

91 NPR 2 147-0207 1 SHAFT AS-OUTPUT (FRONT)

92 NPR 1,2 122-1879 2 SPACER (58X67.5X2-MM THK)

NPR B 1,2 104-3288 2 SHIM (0.05-MM THK)

NPR B 1,2 121-2059 2 SHIM (0.08-MM THK)

NPR B 1,2 121-2060 2 SHIM (0.18-MM THK)

NPR B 1,2 121-2061 2 SHIM (0.6-MM THK)

93 NPR M 3 6V-8210 2 BOLT (M8X1.25X16-MM)

94 NPR 3 147-0236 1 TUBE AS-TRANSFER

95 NPR 1 147-0226 1 TUBE AS

96 NPR 1 147-0256 1 SHAFT AS-REVERSE

NPR 1 9W-0717 1 PLUG

NPR 1 147-0270 1 ORIFICE

97 NPR 3 147-0211 1 ELBOW AS

NPR 3 3G-6927 1 ADAPTER

98 NPR 2 6Y-7957 8 DISC-FRICTION

99 NPR 2 147-0227 1 PISTON-CLUTCH

100 NPR M 3 6V-8335 16 BOLT-SELF-LOCKING (M10X1.5X40-MM)

101 NPR 3 147-0262 4 WASHER (19.1X24.1X1.5-MM THK)

102 NPR 3 147-0266 2 BOLT (3/4-16X1.417-IN)

103 NPR Y 3 189-5746 1 SENSOR GP-SPEED

104 NPR 3 1V-6341 1 SEAL

105 NPR 3 3J-1907 14 SEAL-O-RING

106 NPR M 3 8T-0643 1 BOLT (M10X1.5X80-MM)

107 NPR 3 6Y-1896 1 PLUG AS

NPR 3 5P-6718 1 SEAL-O-RING

108 NPR 1,2,3 205-9244 4 PLUG

109 NPR M 3 9X-6615 12 BOLT (M5X0.8X30-MM)

110 NPR 3 7T-3253 2 DOWEL

111 NPR 3 7T-3251 1 BREATHER

112 NPR 1 192-0850 1 CASE AS

NPR 1 9W-0717 4 PLUG

NPR 1 147-0268 4 PLUG

113 NPR 1 122-1883 1 SPACER (38X45X5-MM THK)

114 NPR 2 121-0885 1 RETAINER

Key: B - USE AS REQUIRED M - METRIC PART Y - SEPARATE ILLUSTRATION

113-1151 SHAFT GP-DRIVE -REAR --S/N 4ZN16044-50156
PART OF 154-5436 POWER TRAIN AR

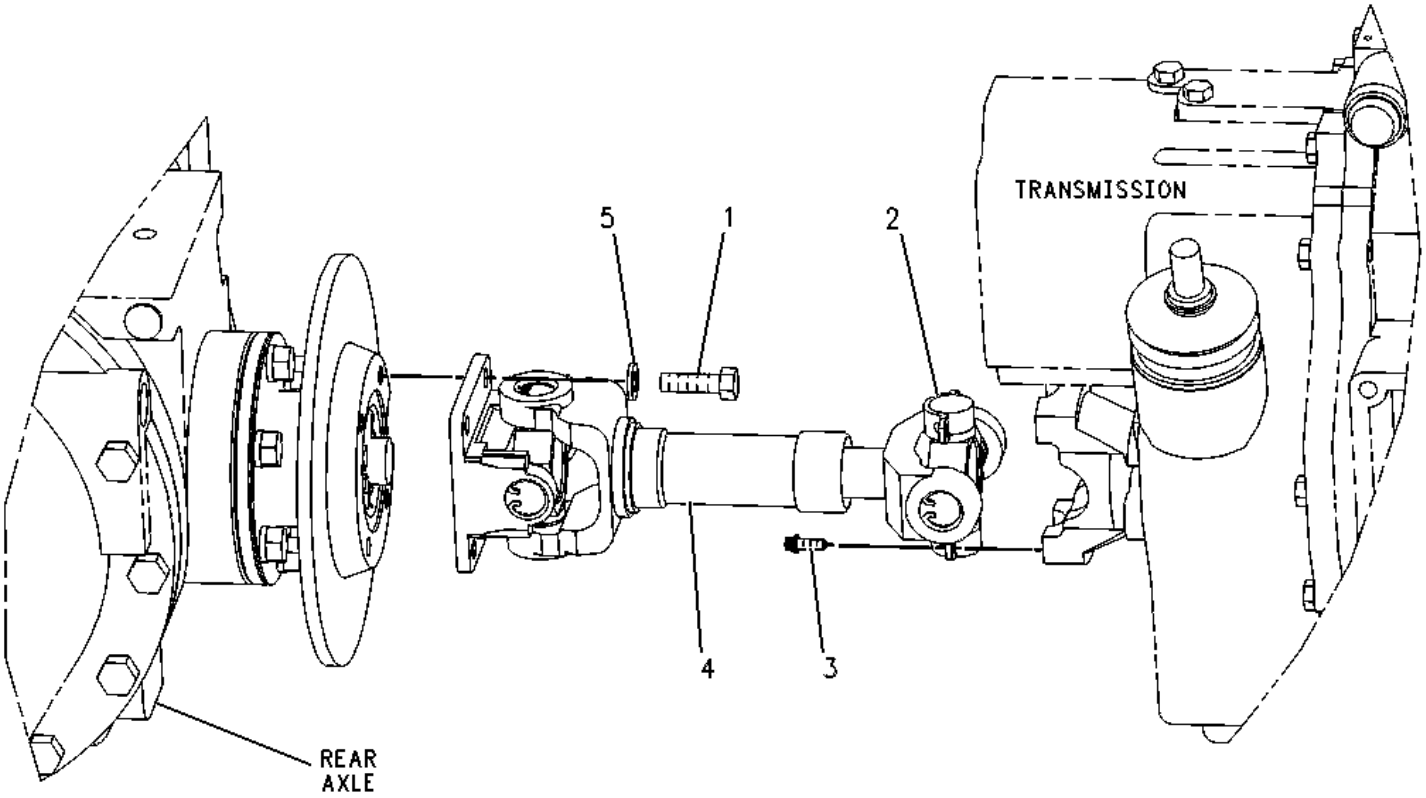

1 NPR 8T-0799 4 BOLT (1/2-20X1.5-IN)

2 NPR 5V-2545 2 STRAP

3 NPR M 107-6826 4 BOLT (M24X19.1-MM)

4 NPR J 113-1150 1 SHAFT AS-MAIN

5 NPR 8T-4223 4 WASHER-HARD (13.5X25.5X3-MM THK)

AVAILABLE REPAIR KIT(S):
NPR J 117-9887 1 KIT-SPIDER & BEARING

Key: J - KIT(S) MARKED J AVAILABLE FOR PART(S) MARKED J M - METRIC PART

113-1153 SHAFT GP-DRIVE -FRONT --S/N 4ZN16044-50156
PART OF 140-6157 POWER TRAIN AR

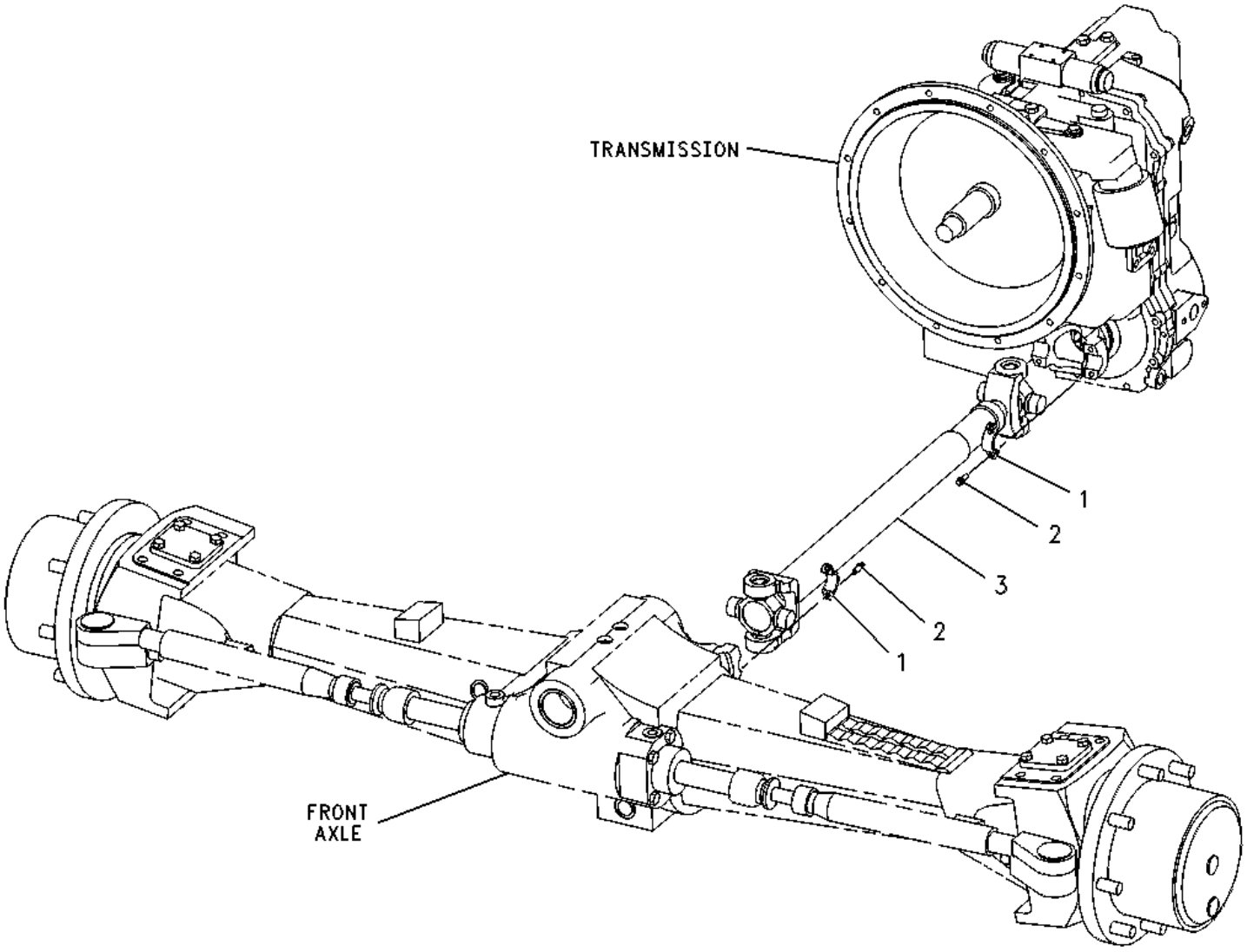

1 NPR 5V-2545 4 STRAP

2 NPR M 107-6826 8 BOLT (M24X19.1-MM)

3 NPR J 113-1149 1 SHAFT AS-DRIVE-FRONT

AVAILABLE REPAIR KIT(S):

NPR J 117-9887 1 KIT-SPIDER & BEARING

Key: J - KIT(S) MARKED J AVAILABLE FOR PART(S) MARKED J M - METRIC PART

130-3013 SHAFT GP-DRIVE -RH --S/N 4ZN16044-50156
PART OF 154-5471 AXLE GP-DRIVE & STEERING

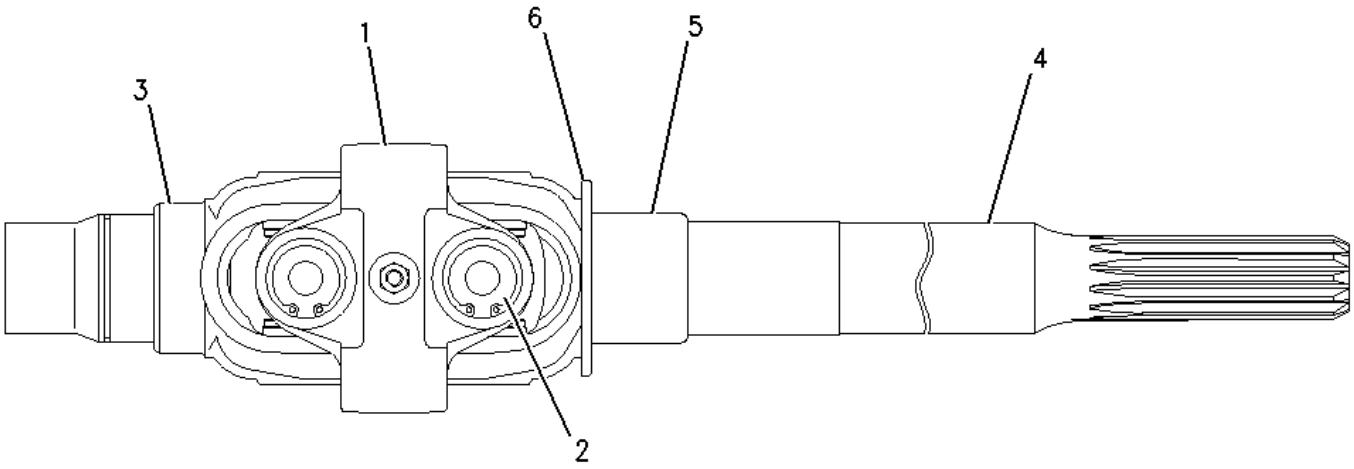

1	**NPR**	**138-8526**	**1**	**YOKE**
2	**NPR**	**138-8527**	**2**	**SPIDER**
3	**NPR**	**138-8528**	**1**	**SHAFT (PLANETARY)**
4	**NPR**	**138-8529**	**1**	**SHAFT-AXLE (RH)**
5	**NPR**	**138-8530**	**1**	**BUSHING**
6	**NPR**	**138-8531**	**1**	**GUARD**

130-3014 SHAFT GP-DRIVE -LH --S/N 4ZN16044-50156
PART OF 154-5471 AXLE GP-DRIVE & STEERING

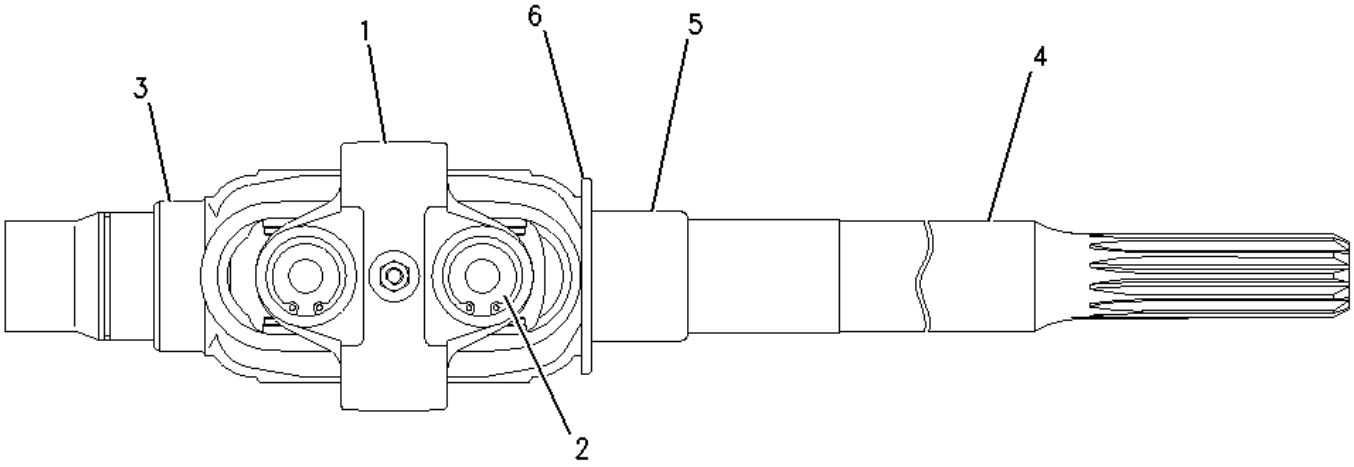

1	**NPR**	**138-8526**	**1**	**YOKE**
2	**NPR**	**138-8527**	**2**	**SPIDER**
3	**NPR**	**138-8528**	**1**	**SHAFT (PLANETARY)**
4	**NPR**	**138-8532**	**1**	**SHAFT-AXLE (LH)**
5	**NPR**	**138-8530**	**1**	**BUSHING**
6	**NPR**	**138-8531**	**1**	**GUARD**

138-4559 SHAFT GP-DRIVE -FRONT --S/N 4ZN16044-50156
PART OF 159-4963, 159-4965 CONTROL AR-POWER SHIFT TMSN

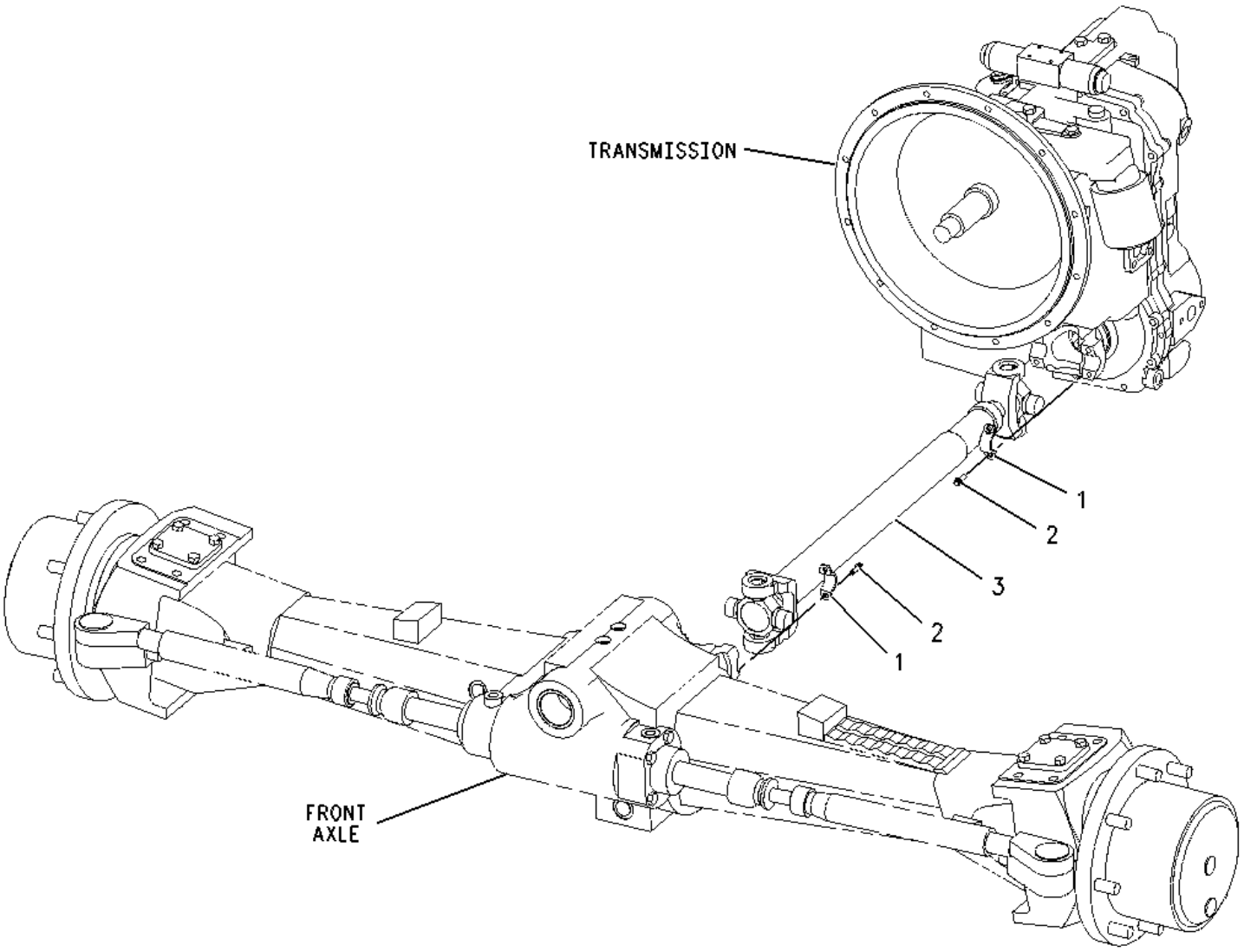

1 NPR 5V-2545 4 STRAP

2 NPR M 107-6826 8 BOLT (M24X19.1-MM)

3 NPR J 138-4560 1 SHAFT AS

AVAILABLE REPAIR KIT(S):

NPR J 117-9887 1 KIT-SPIDER & BEARING

Key: J - KIT(S) MARKED J AVAILABLE FOR PART(S) MARKED J M - METRIC PART

9R-1233 GUARD GP-DRIVE SHAFT ---S/N 4ZN16044-50156

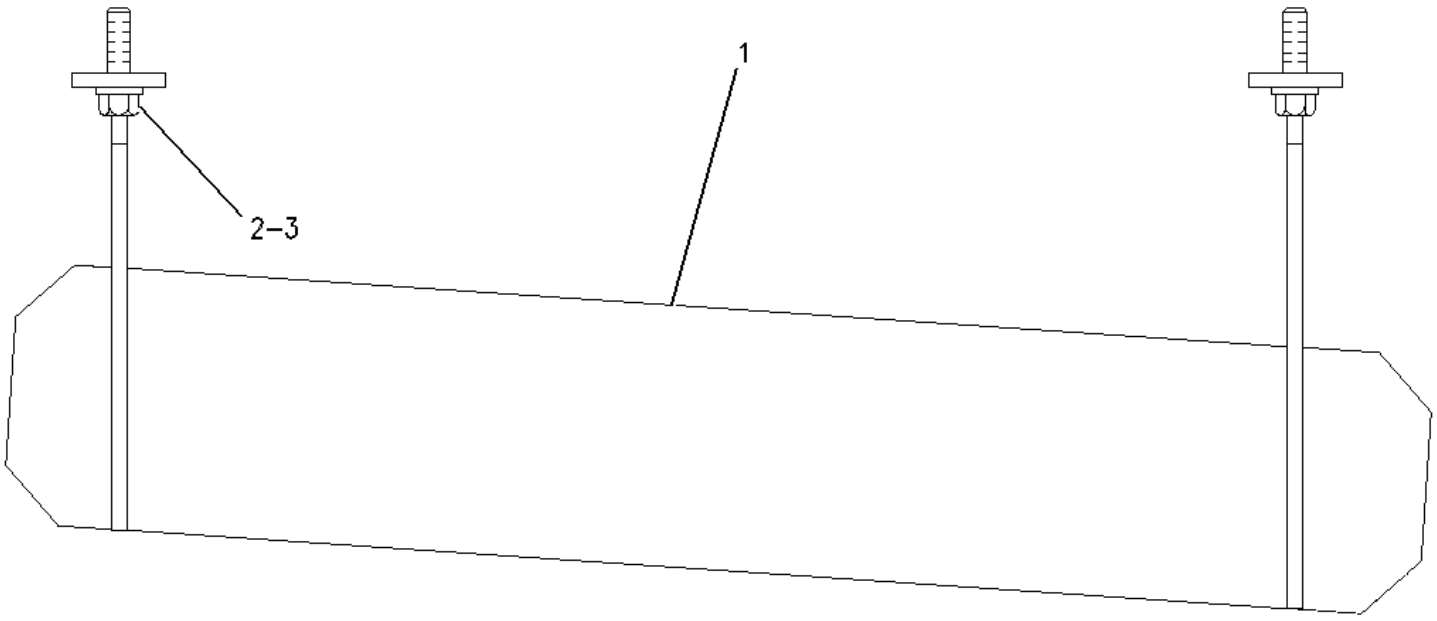

1	NPR	213-8481	1	GUARD AS
2	NPR M	8T-4183	4	BOLT (M12X1.75X40-MM)
3	NPR	8T-4223	4	WASHER-HARD (13.5X25.5X3-MM THK)

Key: M - METRIC PART

8Y-7483 FILLER GP-POWER TRAIN OIL -ALL WHEEL DRIVE --S/N 4ZN16044-50156
PART OF 140-6157 POWER TRAIN AR

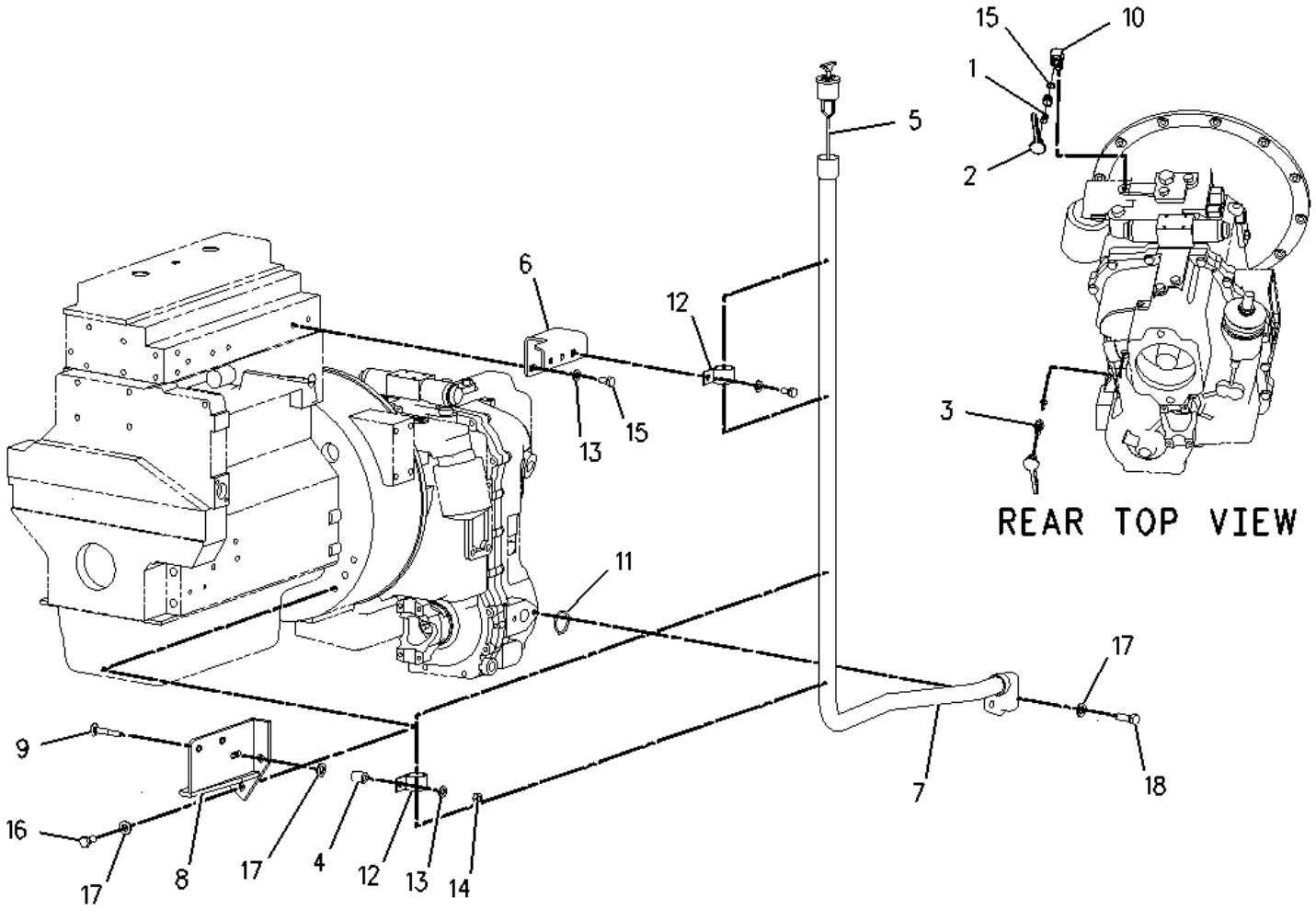

1	NPR	3J-1907	2	SEAL-O-RING
2	NPR	6V-0852	2	CAP-DUST
3	NPR	6V-3965	2	FITTING
4	NPR	7C-8246	1	SPACER (10.5X20X24-MM THK)
5	NPR	104-8566	1	GAUGE AS-OIL LEVEL (DIPSTICK) (TRANSMISSION)
6	NPR	112-6219	1	BRACKET AS
	NPR M	8T-3490	1	NUT-WELD (M10X1.5-THD)
	NPR M	8T-3490	2	NUT-WELD (M10X1.5-THD)
7	NPR	125-0851	1	TUBE AS
8	NPR	146-1816	1	BRACKET AS
	NPR M	8T-3490	2	NUT-WELD (M10X1.5-THD)
9	NPR M	148-1899	1	BOLT-CARRIAGE (M10X1.5X60-MM)
10	NPR	150-3065	1	ADAPTER AS
	NPR	3J-1907	1	SEAL-O-RING

	NPR	6V-0484	1	ADAPTER-O-RING
11	NPR	4J-0522	1	SEAL-O-RING
12	NPR	5P-7854	2	CLIP
13	NPR	8T-4121	4	WASHER-HARD (11X21X2.5-MM THK)
14	NPR M	8T-4133	1	NUT (M10X1.5-THD)
15	NPR M	8T-4137	3	BOLT (M10X1.5X20-MM)
16	NPR M	8T-4192	2	BOLT (M12X1.75X25-MM)
17	NPR	8T-4223	5	WASHER-HARD (13.5X25.5X3-MM THK)
18	NPR M	8T-4956	2	BOLT (M12X1.75X35-MM)

Key: M - METRIC PART

136-3110 FILLER GP-POWER TRAIN OIL -2-WHEEL DRIVE --S/N 4ZN16044-50156
PART OF 140-6156 POWER TRAIN AR

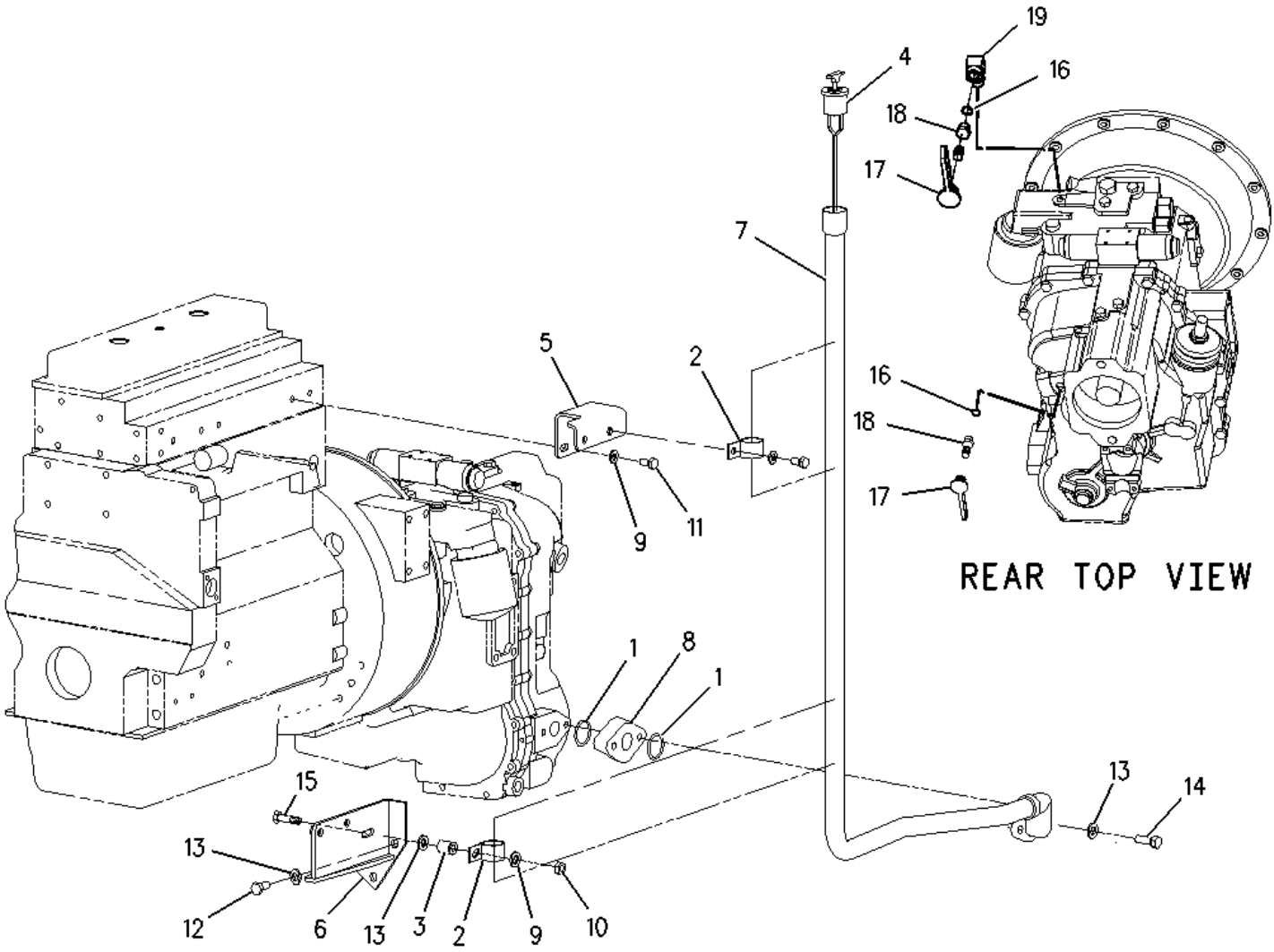

1 NPR 4J-0522 2 SEAL-O-RING

2 NPR 5P-7854 2 CLIP

3 NPR 7C-8246 1 SPACER (10.5X20X24-MM THK)

4 NPR 104-8566 1 GAUGE AS-OIL LEVEL (DIPSTICK) (TRANSMISSION)

5 NPR 112-6219 1 BRACKET AS

NPR M 8T-3490 1 NUT-WELD (M10X1.5-THD)

NPR M 8T-3612 2 NUT-WELD (M8X1.25-THD)

6 NPR 146-1816 1 BRACKET AS

NPR M 8T-3490 2 NUT-WELD (M10X1.5-THD)

7 NPR 125-0851 1 TUBE AS

8	NPR	136-3112	1	SPACER
9	NPR	8T-4121	4	WASHER-HARD (11X21X2.5-MM THK)
10	NPR M	8T-4133	1	NUT (M10X1.5-THD)
11	NPR M	8T-4137	3	BOLT (M10X1.5X20-MM)
12	NPR M	8T-4192	2	BOLT (M12X1.75X25-MM)
13	NPR	8T-4223	5	WASHER-HARD (13.5X25.5X3-MM THK)
14	NPR M	8T-4194	2	BOLT (M12X1.75X50-MM)
15	NPR M	148-1899	1	BOLT-CARRIAGE (M10X1.5X60-MM)
16	NPR	3J-1907	2	SEAL-O-RING
17	NPR	6V-0852	2	CAP-DUST
18	NPR	6V-3965	2	FITTING
19	NPR	150-3065	1	ADAPTER AS
	NPR	3J-1907	1	SEAL-O-RING
	NPR	6V-0484	1	ADAPTER-O-RING

Key:

M - METRIC PART

138-7381 FILLER GP-POWER TRAIN OIL -POWER SHIFT --S/N 4ZN16044-50156
PART OF 159-4962, 159-4963, 159-4964, 159-4965 CONTROL AR-POWER SHIFT TMSN

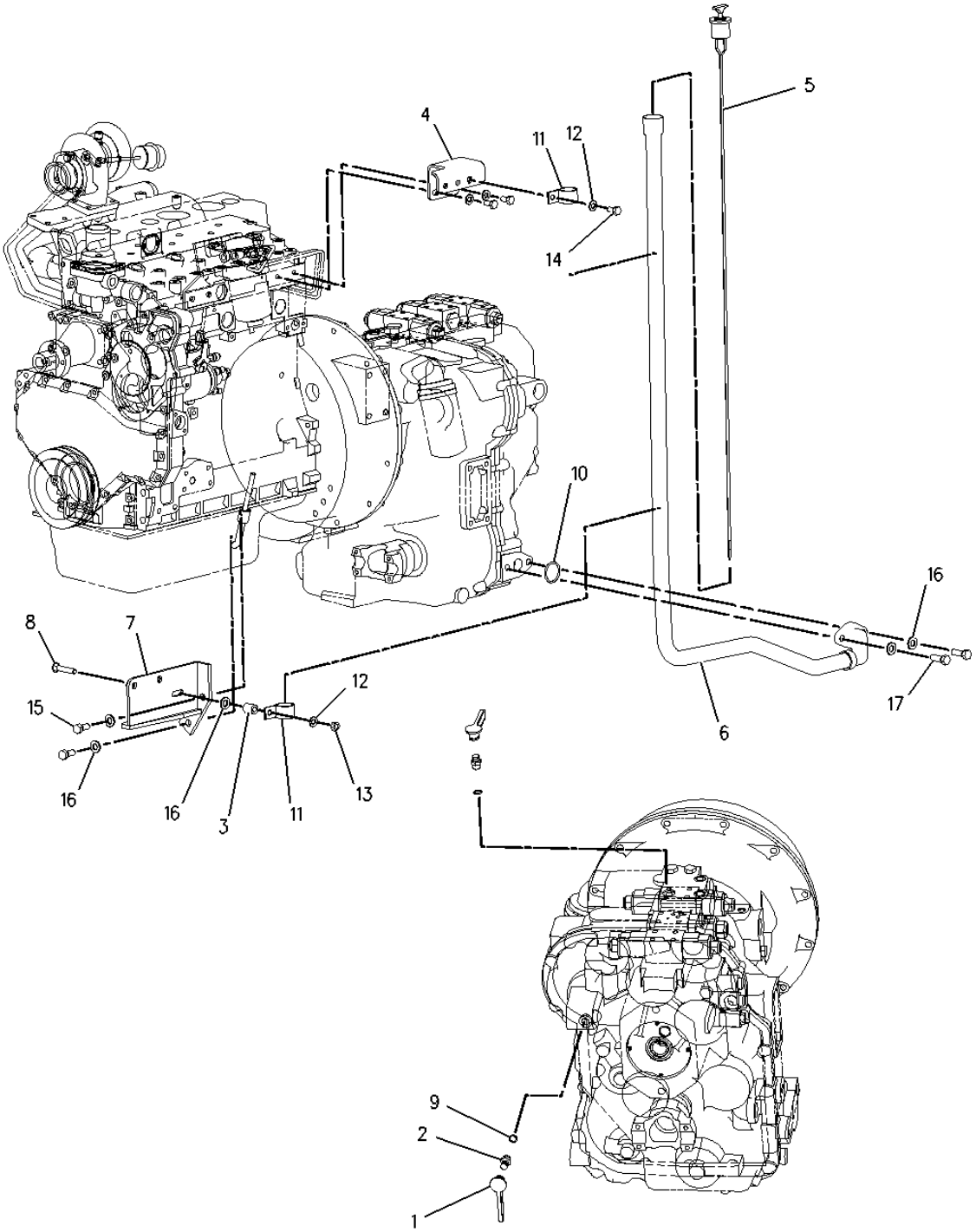

1	**NPR**	**6V-0852**	**2**	**CAP-DUST**
2	**NPR**	**6V-3965**	**2**	**FITTING**
3	**NPR**	**7C-8246**	**1**	**SPACER (10.5X20X24-MM THK)**
4	**NPR**	**112-6219**	**1**	**BRACKET AS**
	NPR M	**8T-3490**	**1**	**NUT-WELD (M10X1.5-THD)**

	NPR M	8T-3612	2	NUT-WELD (M8X1.25-THD)
5	NPR	138-7378	1	GAUGE AS-OIL LEVEL (DIPSTICK) (TRANSMISSION)
6	NPR	138-7380	1	TUBE AS
7	NPR	146-1816	1	BRACKET AS
	NPR M	8T-3490	1	NUT-WELD (M10X1.5-THD)
8	NPR M	148-1899	1	BOLT-CARRIAGE (M10X1.5X60-MM)
9	NPR	3J-1907	2	SEAL-O-RING
10	NPR	4J-0522	1	SEAL-O-RING
11	NPR	5P-7854	2	CLIP
12	NPR	8T-4121	4	WASHER-HARD (11X21X2.5-MM THK)
13	NPR M	8T-4133	1	NUT (M10X1.5-THD)
14	NPR M	8T-4137	3	BOLT (M10X1.5X20-MM)
15	NPR M	8T-4192	2	BOLT (M12X1.75X25-MM)
16	NPR	8T-4223	5	WASHER-HARD (13.5X25.5X3-MM THK)
17	NPR M	8T-4956	2	BOLT (M12X1.75X35-MM)

Key:

M - METRIC PART

111-7907 DRIVE GP-FLEXIBLE COUPLING --S/N 4ZN16044-50156
PART OF 107-3761, 107-3762 TRANSMISSION AR-DIRECT DRIVE, 142-4436, 142-4437 TRANSMISSION AR-POWER SHIFT

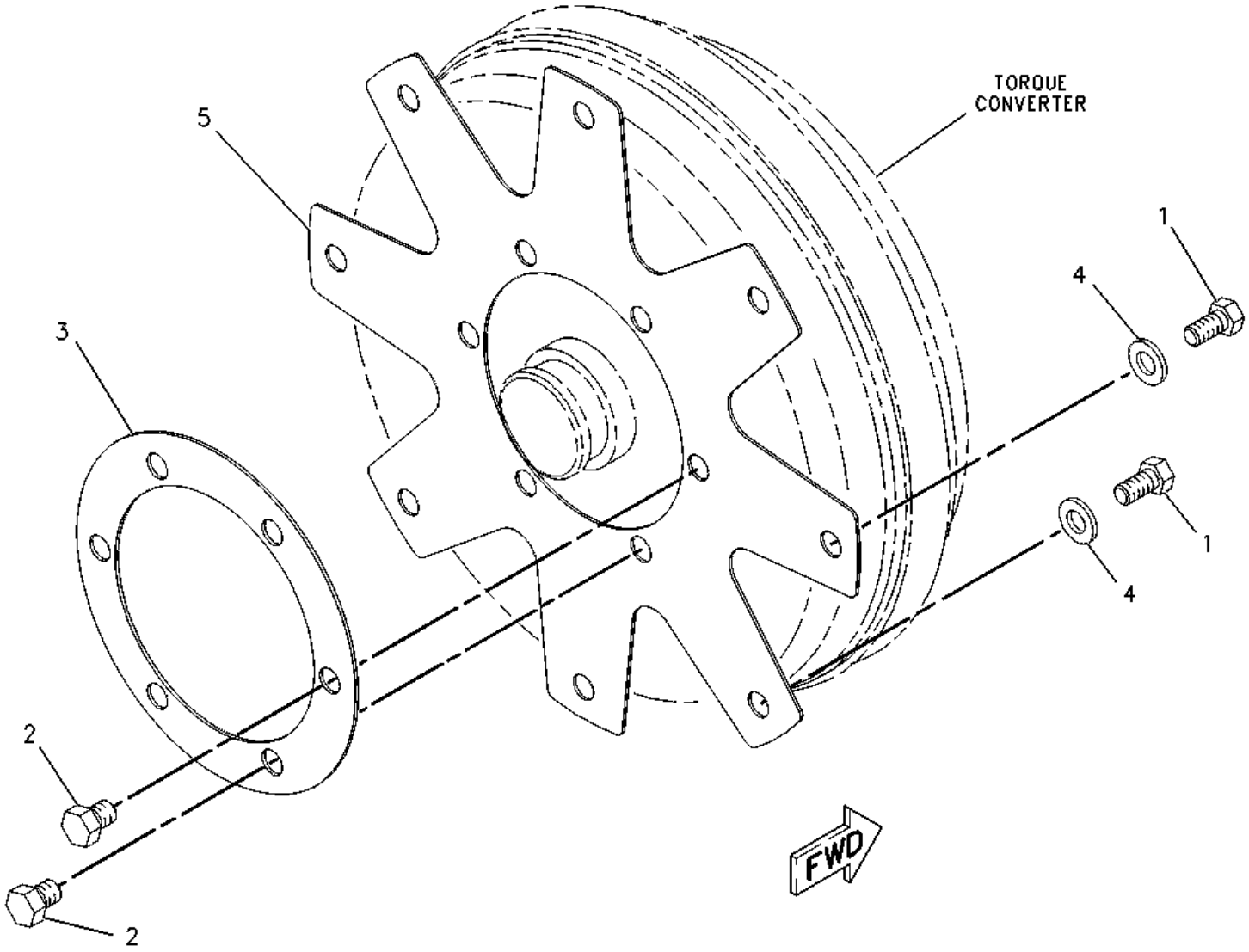

1 NPR M 8T-4200 8 BOLT (M8X1.25X16-MM)

2 NPR M 6V-8455 6 BOLT (M10X1.5X16-MM)

3 NPR 117-9713 1 PLATE-CONVERTER REINFORCEMENT

4 NPR 8T-4224 8 WASHER-HARD (8.8X16X2-MM THK)

5 NPR 111-7906 1 PLATE-CONVERTER DRIVE

Key: M - METRIC PART

143-0786 LINES GP-POWER TRAIN COOLER --S/N 4ZN16044-50156
PART OF 140-6156, 140-6157 POWER TRAIN AR

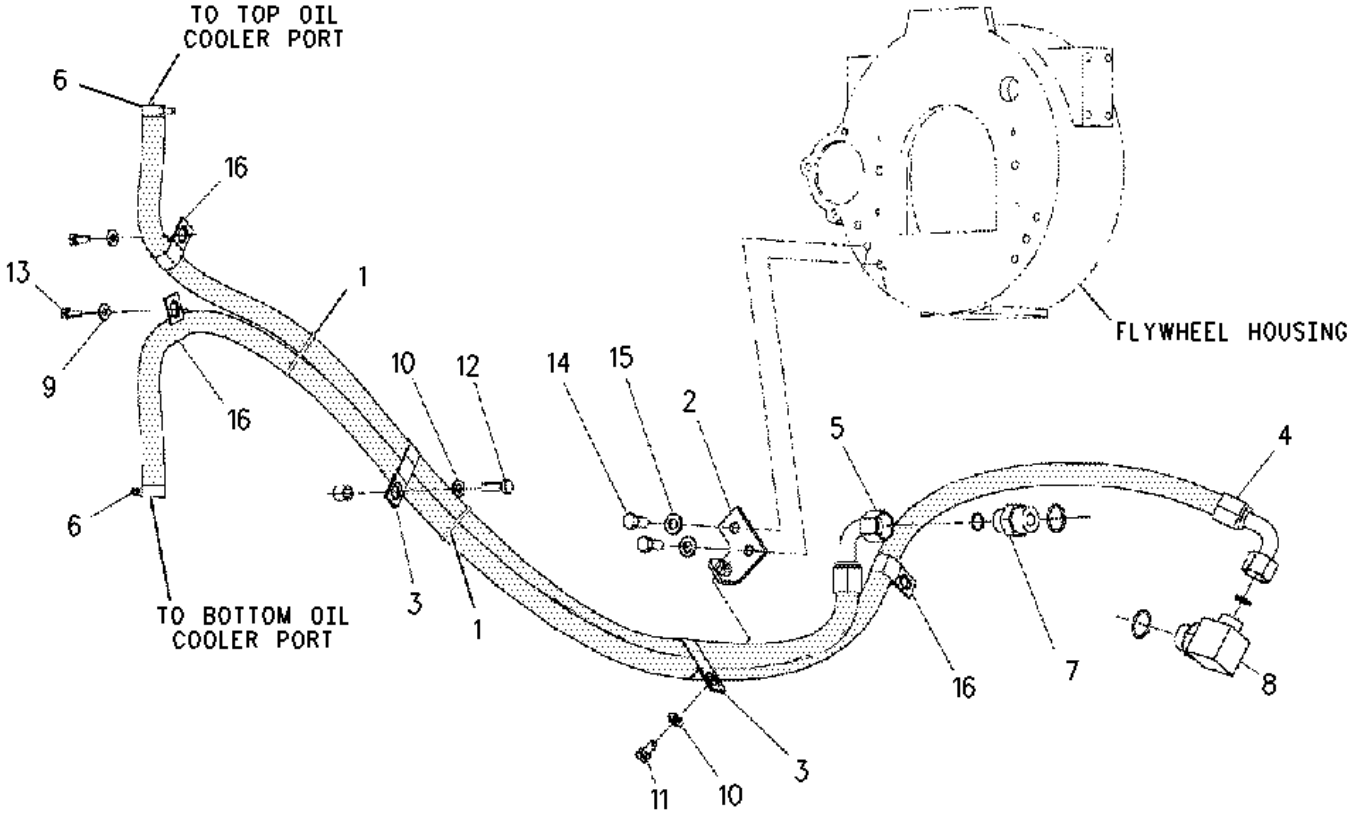

1	NPR B	7K-1181	2	STRAP-CABLE
2	NPR	118-7286	1	BRACKET AS
3	NPR	130-9984	2	CLIP (SLOT)
4	NPR I	138-6904	1	HOSE AS
5	NPR I	138-6913	1	HOSE AS
6		159-0186	2	CLAMP
7	NPR	148-8339	1	CONNECTOR AS
	NPR	6V-8716	1	CONNECTOR
	NPR	6V-9746	1	SEAL-O-RING
	NPR	7M-8485	1	SEAL-O-RING

8	NPR	148-8360	1	ELBOW AS
	NPR	6V-9182	1	ELBOW
	NPR	6V-9746	1	SEAL-O-RING
	NPR	7M-8485	1	SEAL-O-RING
9	NPR	5P-4116	2	WASHER-HARD (8.8X20.5X2-MM THK)
10	NPR	8T-4121	2	WASHER-HARD (11X21X2.5-MM THK)
11	NPR M	8T-4136	1	BOLT (M10X1.5X25-MM)
12	NPR M	8T-4137	1	BOLT (M10X1.5X20-MM)
13	NPR M	8T-4189	2	BOLT (M8X1.25X20-MM)
14	NPR M	8T-4192	2	BOLT (M12X1.75X25-MM)
15	NPR	8T-4223	2	WASHER-HARD (13.5X25.5X3-MM THK)
16	NPR	8T-7529	3	CLIP (SLOT)

Key:

B - USE AS REQUIRED
I - REFER TO HYDRAULIC INFORMATION SYSTEM
M - METRIC PART

143-0789 LINES GP-POWER TRAIN COOLER -POWER SHIFT --S/N 4ZN16044-50156
PART OF 159-4962, 159-4963, 159-4964, 159-4965 CONTROL AR-POWER SHIFT TMSN

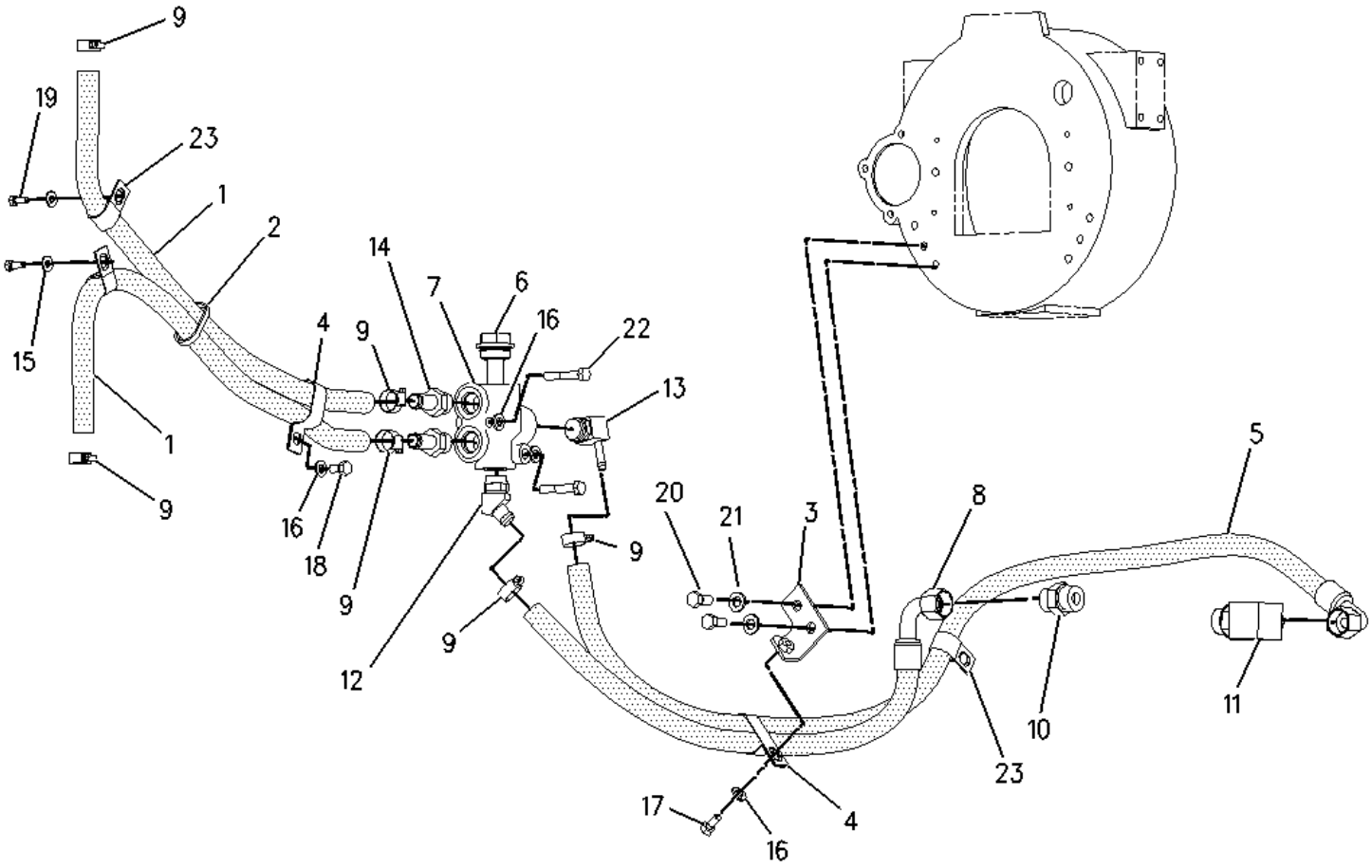

1 NPR E 136-1955 HOSE (77-CM EACH)

2 NPR 7K-1181 1 STRAP-CABLE

3 NPR 118-7286 1 BRACKET AS

NPR M 8T-3490 NUT-WELD (M10X1.5-THD)

4 NPR 130-9984 2 CLIP

5 NPR I 138-6914 1 HOSE AS

6 NPR 150-3370 1 REGULATOR AS-TMSN TEMPERATURE

NPR 154-0875 1 SEAL-O-RING

7 NPR 150-3374 1 MANIFOLD

8 NPR I 153-3761 1 HOSE AS

9 159-0186 6 CLAMP

10 NPR 148-8339 1 CONNECTOR AS

NPR 6V-8716 1 CONNECTOR

NPR 6V-9746 1 SEAL-O-RING

NPR 7M-8485 1 SEAL-O-RING

11 NPR 148-8360 1 ELBOW AS

NPR 6V-9182 1 ELBOW

NPR 6V-9746 1 SEAL-O-RING

NPR 7M-8485 1 SEAL-O-RING

12 NPR 153-9909 1 FITTING AS

NPR 3E-4075 1 FITTING

NPR 3D-2824 1 SEAL-O-RING

13 NPR 153-9910 1 ELBOW AS

NPR 032-8487 1 ELBOW

NPR 3D-2824 1 SEAL-O-RING

14 NPR 153-9911 2 FITTING AS

(EACH INCLUDES)

NPR 033-6783 1 FITTING

NPR 3D-2824 1 SEAL-O-RING

15 NPR 5P-4116 2 WASHER-HARD (8.8X20.5X2-MM THK)

16 NPR 7X-7729 4 WASHER (11X25X3-MM THK)

17 NPR M 8T-4136 1 BOLT (M10X1.5X25-MM)

18 NPR M 8T-4137 1 BOLT (M10X1.5X20-MM)

19 NPR M 8T-4189 2 BOLT (M8X1.25X20-MM)

20 NPR M 8T-4192 2 BOLT (M12X1.75X25-MM)

21 NPR 8T-4223 2 WASHER-HARD (13.5X25.5X3-MM THK)

22 NPR M 8T-6466 2 BOLT (M10X1.5X60-MM)

23 NPR 8T-7529 3 CLIP (SLOT)

Key: E - ORDER BY THE CENTIMETER I - REFER TO HYDRAULIC INFORMATION SYSTEM
M - METRIC PART

8Y-7481 CONTROL GP-DIFFERENTIAL LOCK ---S/N 4ZN16044-50156
PART OF 154-5436 POWER TRAIN AR

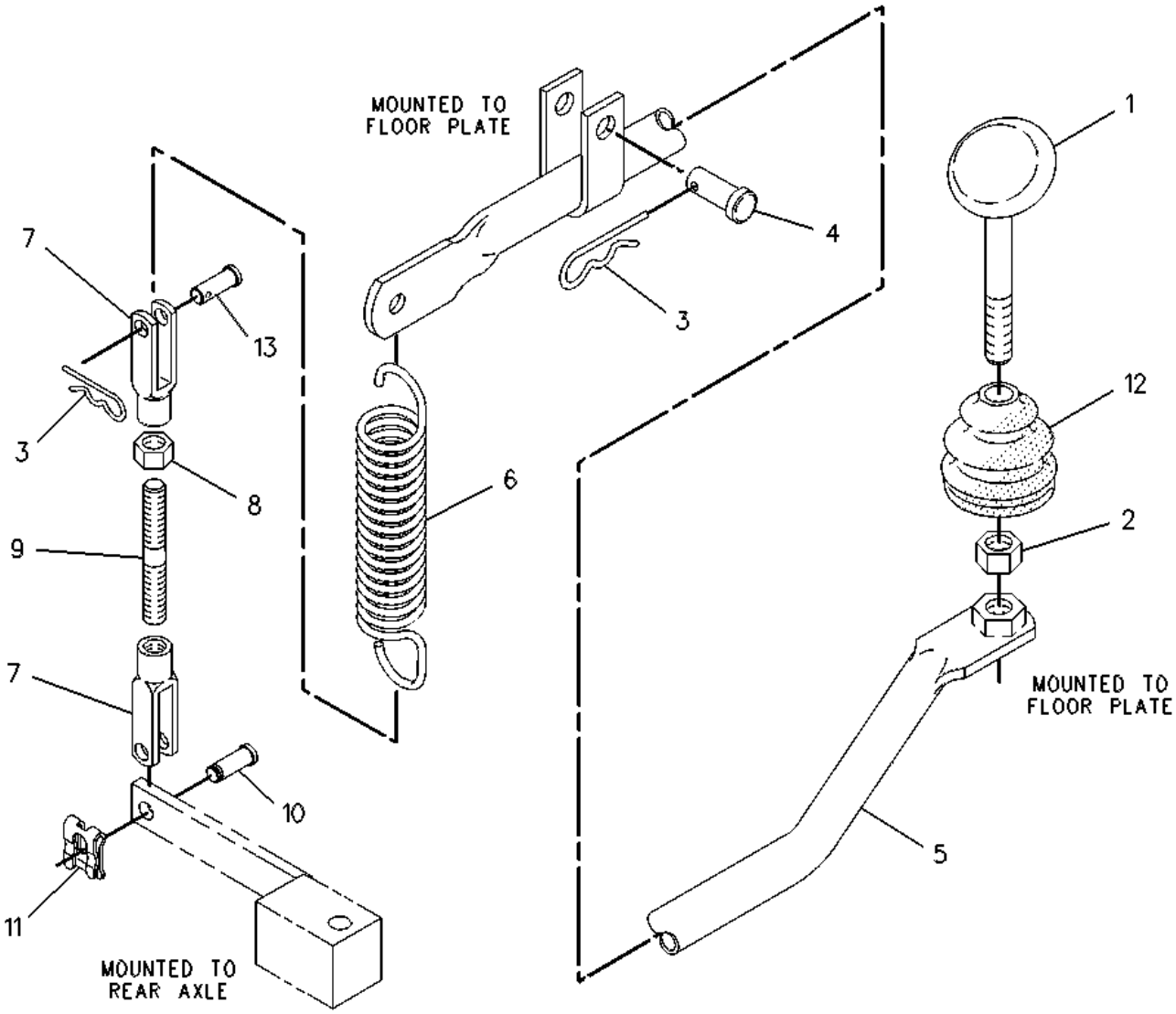

1	NPR	9R-5567	1	PLATE AS
2	NPR M	8T-4244	1	NUT (M12X1.75-THD)
3	NPR	5P-0372	2	LOCK PIN
4	NPR	8B-1419	1	PIN-CLEVIS
5	NPR	191-9113	1	ROD AS
6	NPR	103-4867	1	SPRING
7	NPR	8T-4815	2	ROD END
8	NPR M	8T-4133	1	NUT (M10X1.5-THD)
9	NPR	9R-3051	1	ROD
10	NPR	9R-2806	1	PIN
11	NPR	9R-2807	1	CLIP
12	NPR	9R-1581	1	BOOT
13	NPR	8C-4987	1	PIN-CLEVIS

Key: M - METRIC PART

FRAME

AND

BODY

106-1395 BOX GP-BATTERY --S/N 4ZN16044-50156
PART OF 140-6156, 140-6157 POWER TRAIN AR--Type 1

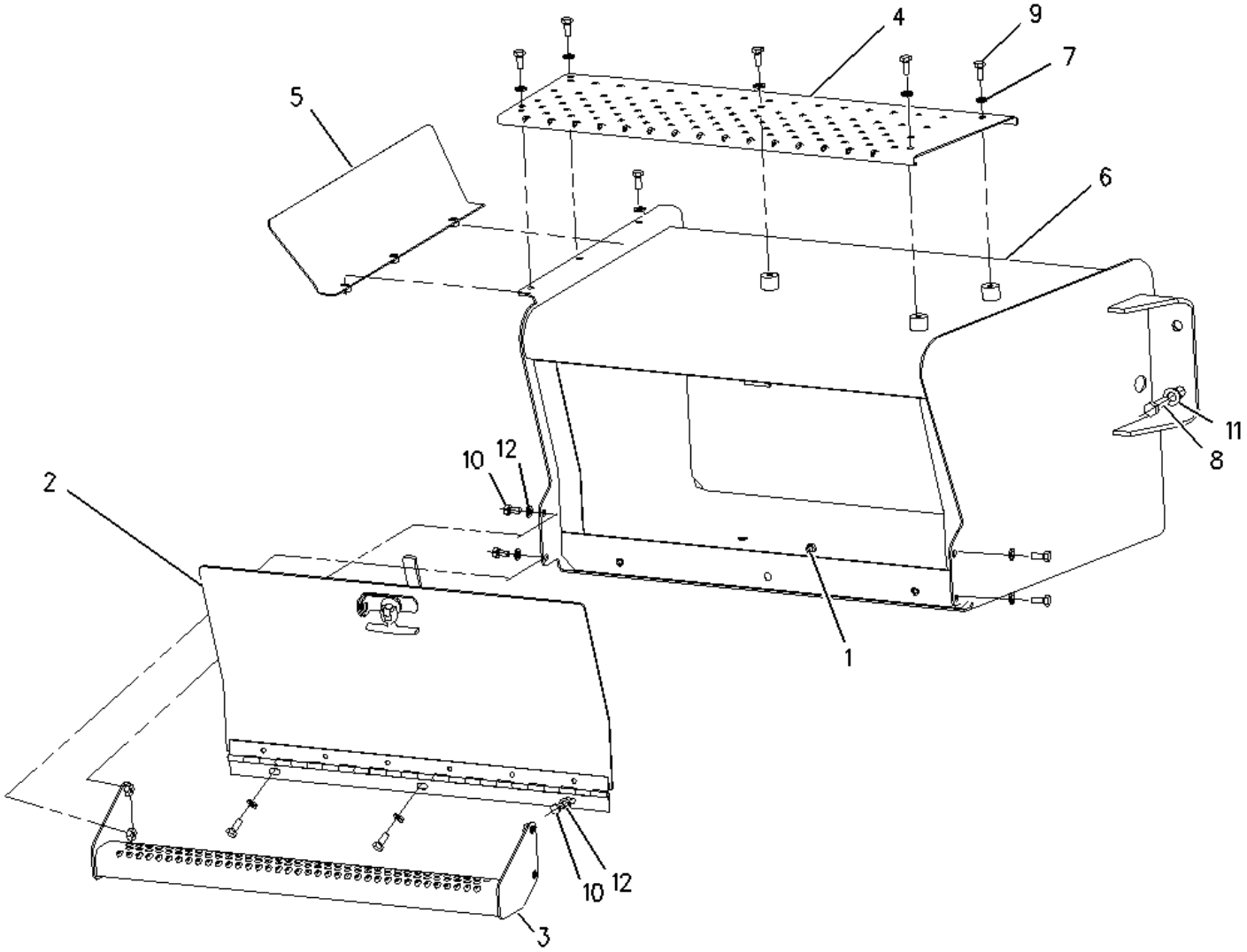

1	NPR M	8T-7963	1	LOCKNUT (M8X1.25-THD)
2	NPR Y	118-6842	1	DOOR GP-BATTERY
3	NPR	118-6847	1	STEP AS
4	NPR	118-6854	1	TREAD
5	NPR	149-7680	1	PLATE AS
6	NPR	149-9214	1	BOX AS-BATTERY
7	NPR	5P-4116	6	WASHER-HARD (8.8X20.5X2-MM THK)
8	NPR M	8T-4183	4	BOLT (M12X1.75X40-MM)
9	NPR M	8T-4189	6	BOLT (M8X1.25X20-MM)
10	NPR M	8T-4200	7	BOLT (M8X1.25X16-MM)
11	NPR	8T-4223	4	WASHER-HARD (13.5X25.5X3-MM THK)
12	NPR	8T-4224	7	WASHER-HARD (8.8X16X2-MM THK)

Key: M - METRIC PART Y - SEPARATE ILLUSTRATION

106-1395 BOX GP-BATTERY --S/N 4ZN16044-50156
PART OF 140-6156, 140-6157 POWER TRAIN AR--Type 2

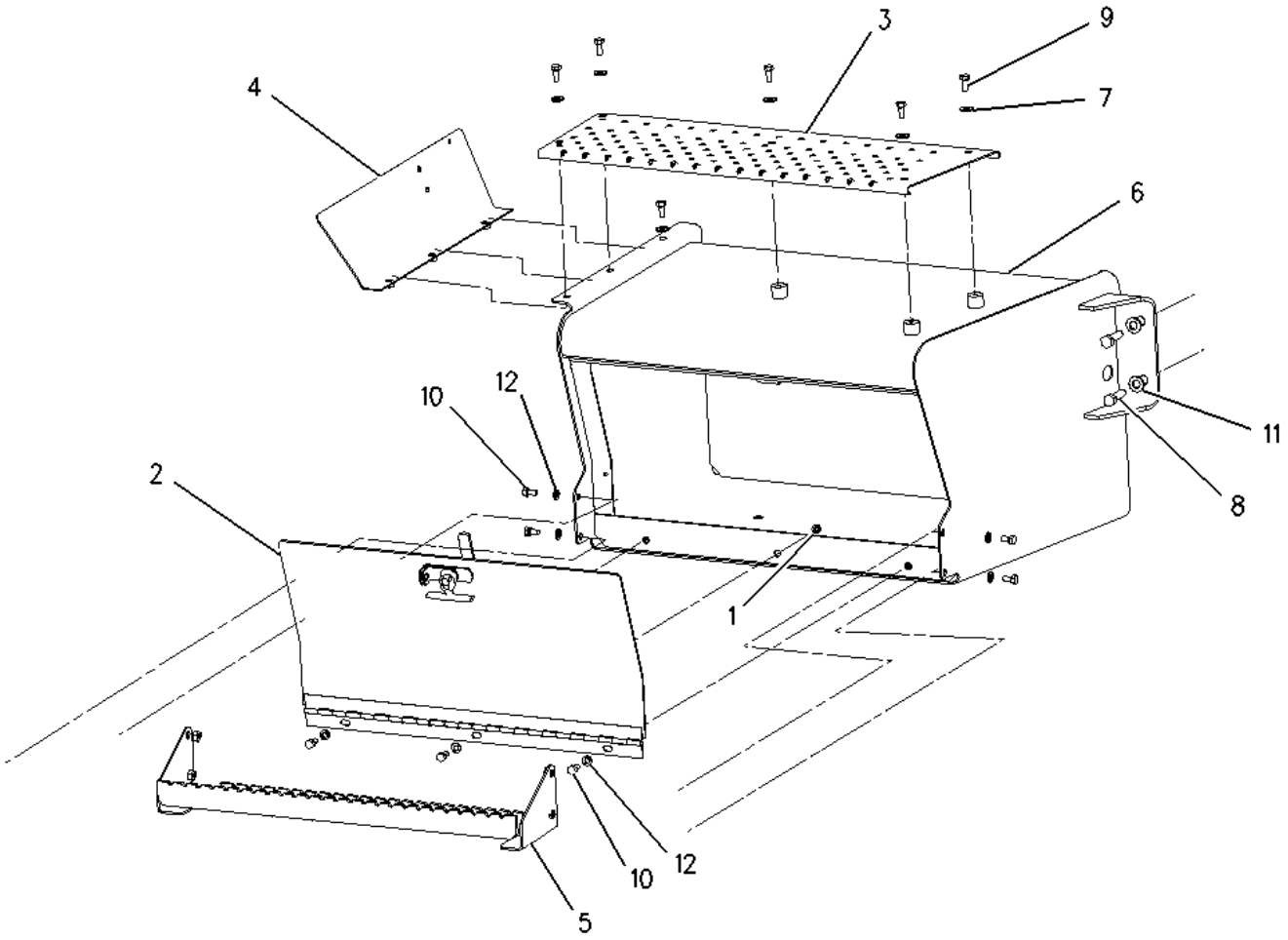

1	NPR M	8T-7963	1	LOCKNUT (M8X1.25-THD)
2	NPR Y	118-6842	1	DOOR GP-BATTERY
3	NPR	118-6854	1	TREAD
4	NPR	149-7680	1	PLATE AS
5	NPR C	164-3876	1	STEP AS
6	NPR	180-5393	1	BOX AS-BATTERY
	NPR M	8T-3490	4	NUT-WELD (M10X1.5-THD)
	NPR M	8T-3612	2	NUT-WELD (M8X1.25-THD)
7	NPR	5P-4116	6	WASHER-HARD (8.8X20.5X2-MM THK)
8	NPR M	8T-4183	4	BOLT (M12X1.75X40-MM)
9	NPR M	8T-4189	6	BOLT (M8X1.25X20-MM)
10	NPR M	8T-4200	7	BOLT (M8X1.25X16-MM)
11	NPR	8T-4223	4	WASHER-HARD (13.5X25.5X3-MM THK)
12	NPR	8T-4224	7	WASHER-HARD (8.8X16X2-MM THK)

Key: C - CHANGE FROM PREVIOUS TYPE M - METRIC PART Y - SEPARATE ILLUSTRATION

139-3559 BOX GP-BATTERY --S/N 4ZN20803-50156
POWER SHIFT --PART OF 159-4962, 159-4963, 159-4964, 159-4965 CONTROL AR-POWER SHIFT TMSN

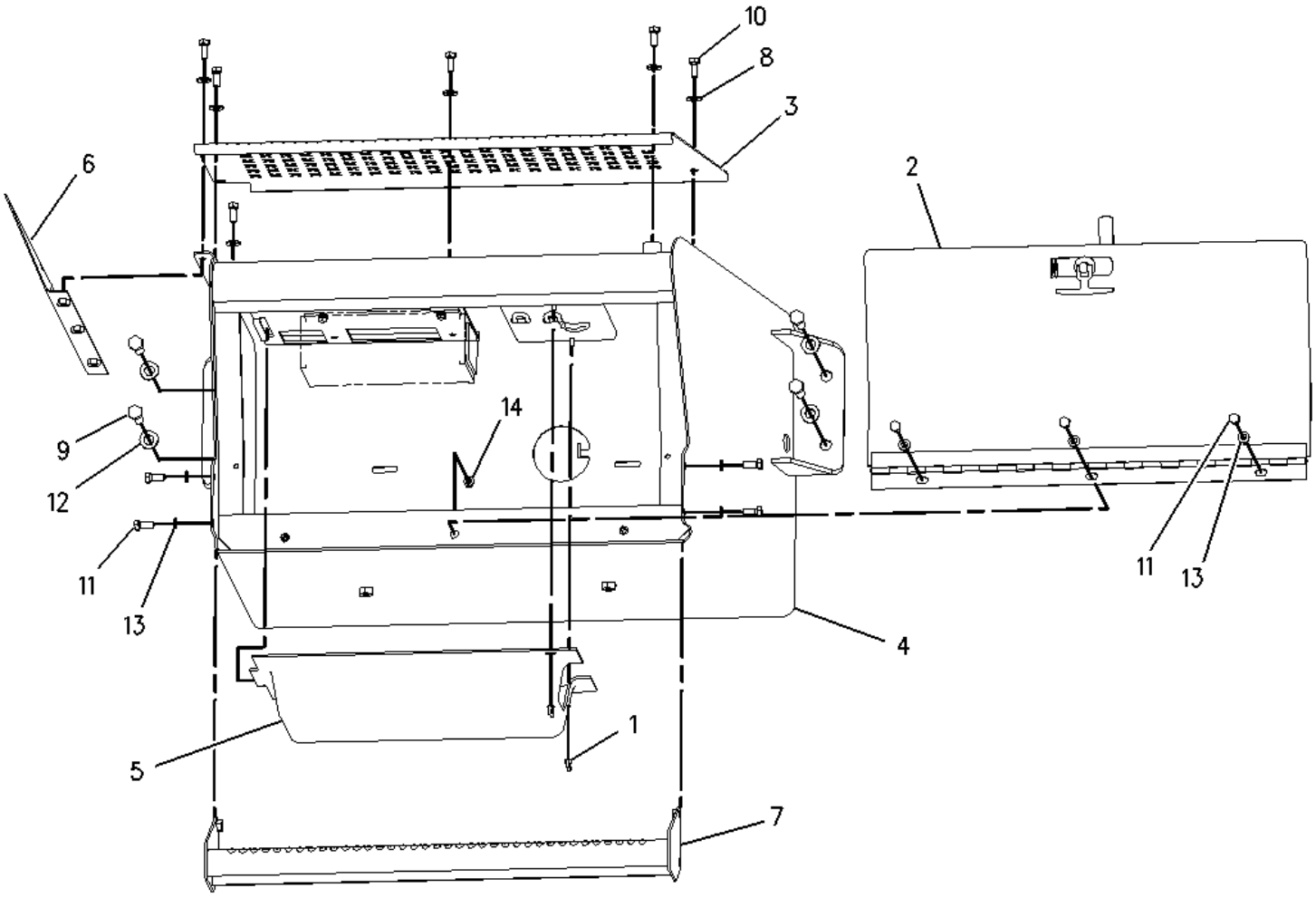

1 NPR M 8T-2910 2 NUT-WING (M6X1-THD)

2 NPR Y 118-6842 1 DOOR GP-BATTERY

3 NPR 118-6854 1 TREAD

4 NPR 139-3558 1 BOX AS-BATTERY

5 NPR 139-3562 1 COVER

6 NPR 149-7680 1 PLATE AS

7 NPR C 164-3876 1 STEP AS

8 NPR 5P-4116 6 WASHER-HARD (8.8X20.5X2-MM THK)

9 NPR M 8T-4183 4 BOLT (M12X1.75X40-MM)

10 NPR M 8T-4189 6 BOLT (M8X1.25X20-MM)

11 NPR M 8T-4200 7 BOLT (M8X1.25X16-MM)

12 NPR 8T-4223 4 WASHER-HARD (13.5X25.5X3-MM THK)

13 NPR 8T-4224 7 WASHER-HARD (8.8X16X2-MM THK)

14 NPR M 8T-7963 1 LOCKNUT (M8X1.25-THD)

Key:

C - CHANGE FROM PREVIOUS TYPE
M - METRIC PART
Y - SEPARATE ILLUSTRATION

112-1809 BUMPER GP-FRONT --S/N 4ZN16044-50156

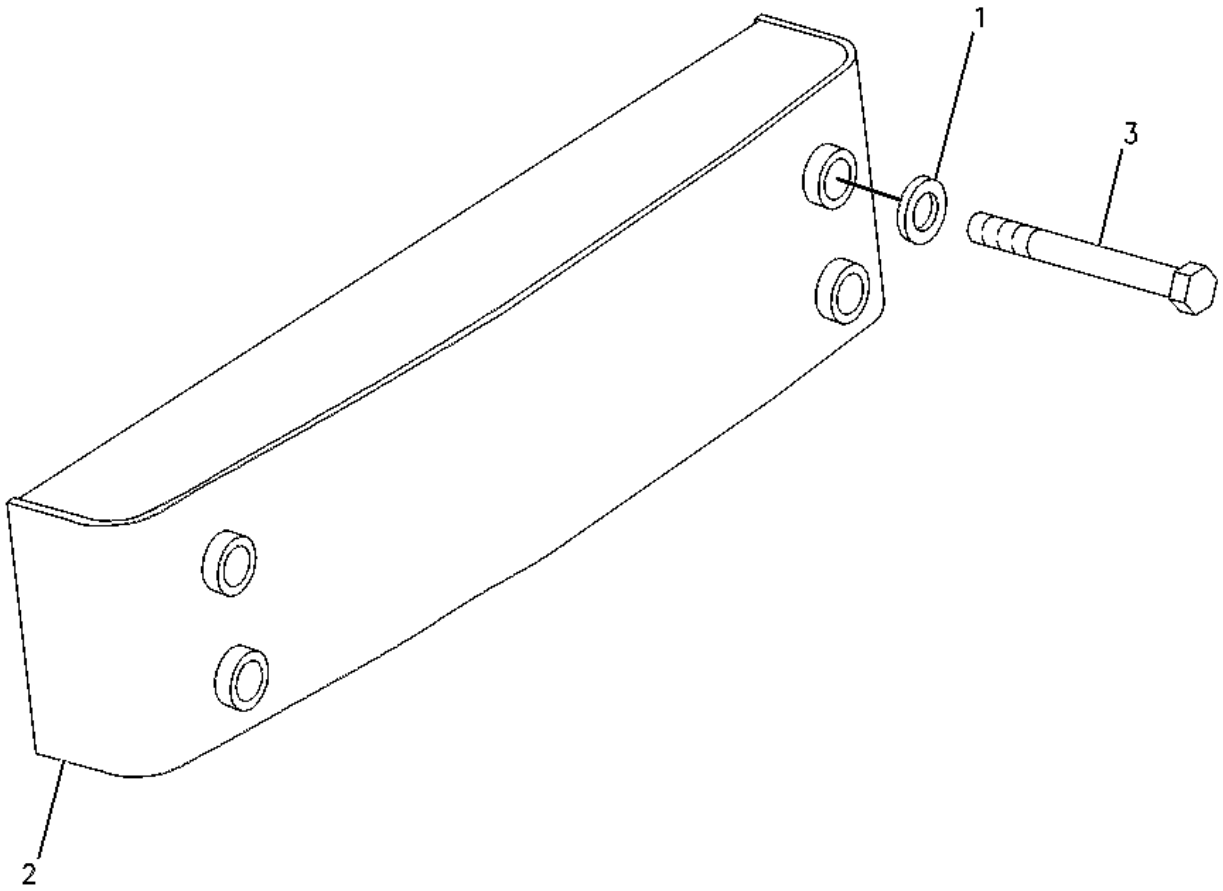

1 NPR 7X-0572 4 WASHER-HARD (24X44.5X6-MM THK)

2 NPR 113-4495 1 BUMPER AS

3 NPR M 7X-2568 4 BOLT (M20X2.5X180-MM)

Key: M - METRIC PART

106-5878 COUNTERWEIGHT GP ---S/N 4ZN16044-50156
145-KG (319-LB)

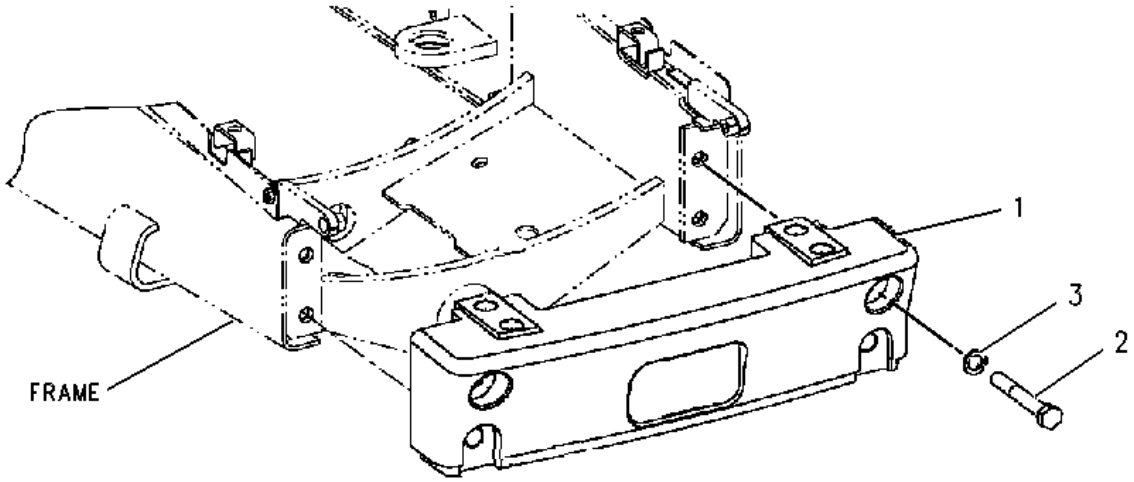

1 NPR 112-4417 1 COUNTERWEIGHT (145-KG (319-LB))

2 NPR M 8C-8478 4 BOLT (M20X2.5X140-MM)

3 NPR 8T-4123 4 WASHER-PLATED (22X35X3.5-MM THK)

Key:

M - METRIC PART

106-5879 COUNTERWEIGHT GP --S/N 4ZN16044-50156--249-KG (550-LB)

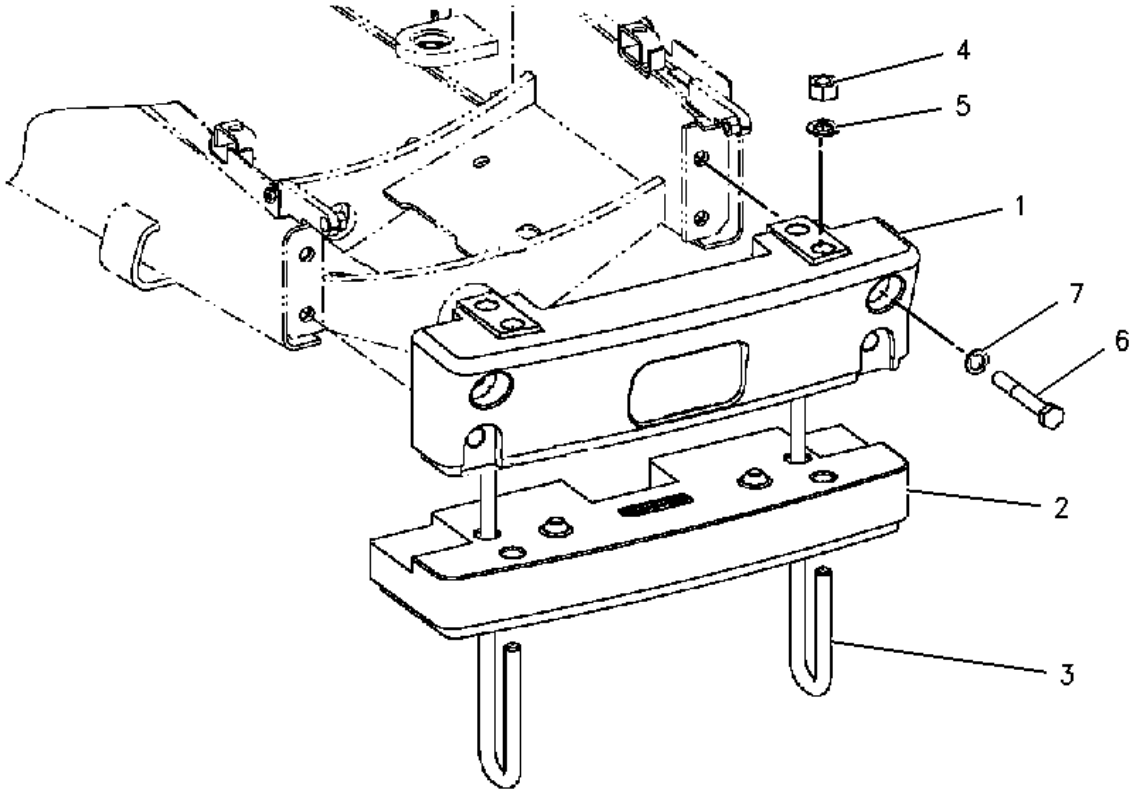

1 NPR 112-4417 1 COUNTERWEIGHT (145-KG (319-LB))

2 NPR 112-4418 1 COUNTERWEIGHT (104-KG (229-LB))

3 NPR 113-7906 2 U-BOLT

4 NPR M 8T-4001 4 NUT (M24X3-THD)

5 NPR 8T-4167 4 WASHER-HARD (26X44X4-MM THK)

6 NPR M 8C-8478 4 BOLT (M20X2.5X140-MM)

7 NPR 8T-4123 4 WASHER-PLATED (22X35X3.5-MM THK)

Key:

M - METRIC PART

106-5880 COUNTERWEIGHT GP --S/N 4ZN16044-50156--354-KG (780-LB)

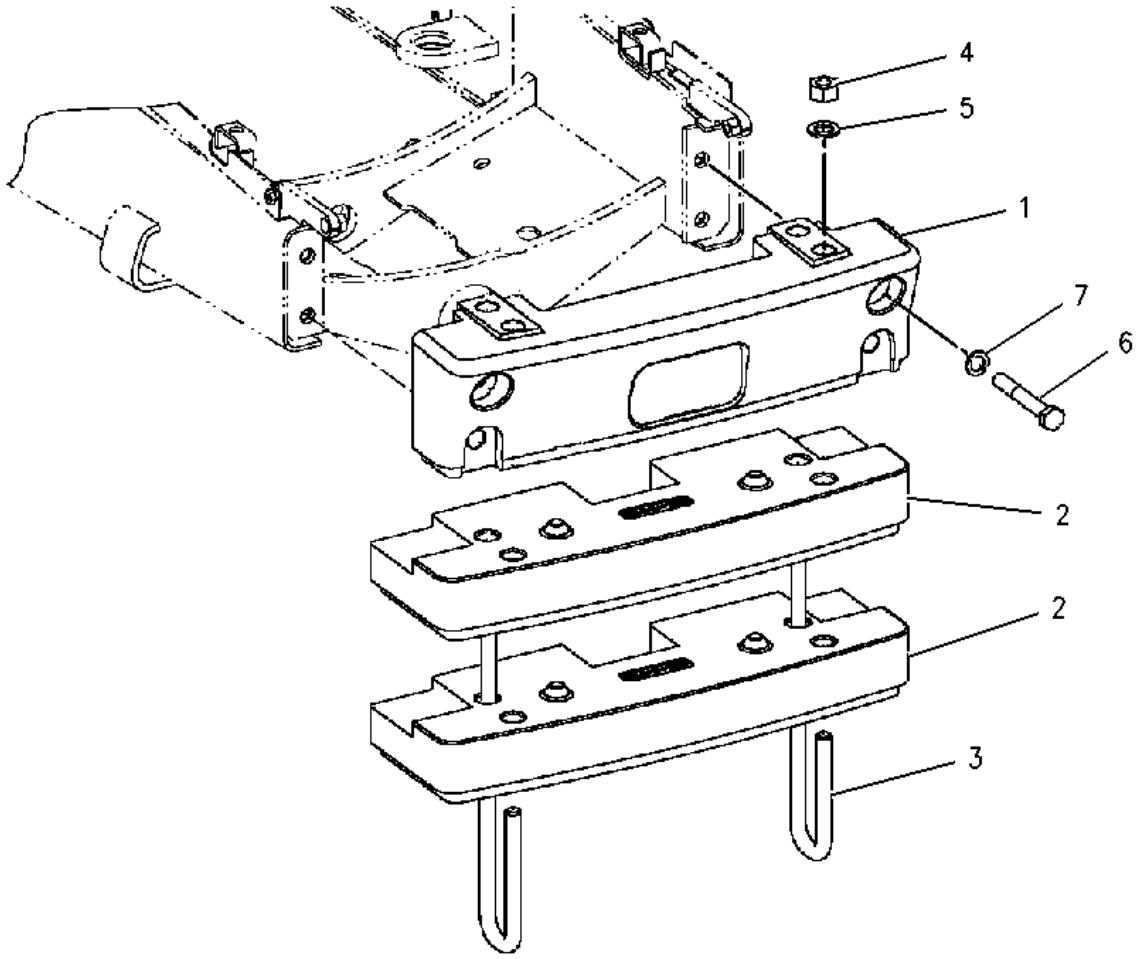

1 NPR 112-4417 1 COUNTERWEIGHT (145-KG (319-LB))

2 NPR 112-4418 2 COUNTERWEIGHT (104-KG (229-LB))

3 NPR 113-7905 2 U-BOLT

4 NPR M 8T-4001 4 NUT (M24X3-THD)

5 NPR 8T-4167 4 WASHER-HARD (26X44X4-MM THK)

6 NPR M 8C-8478 4 BOLT (M20X2.5X140-MM)

7 NPR 8T-4123 4 WASHER-PLATED (22X35X3.5-MM THK)

Key: M - METRIC PART

106-5881 COUNTERWEIGHT GP ---S/N 4ZN16044-50156---459-KG (1010-LB)

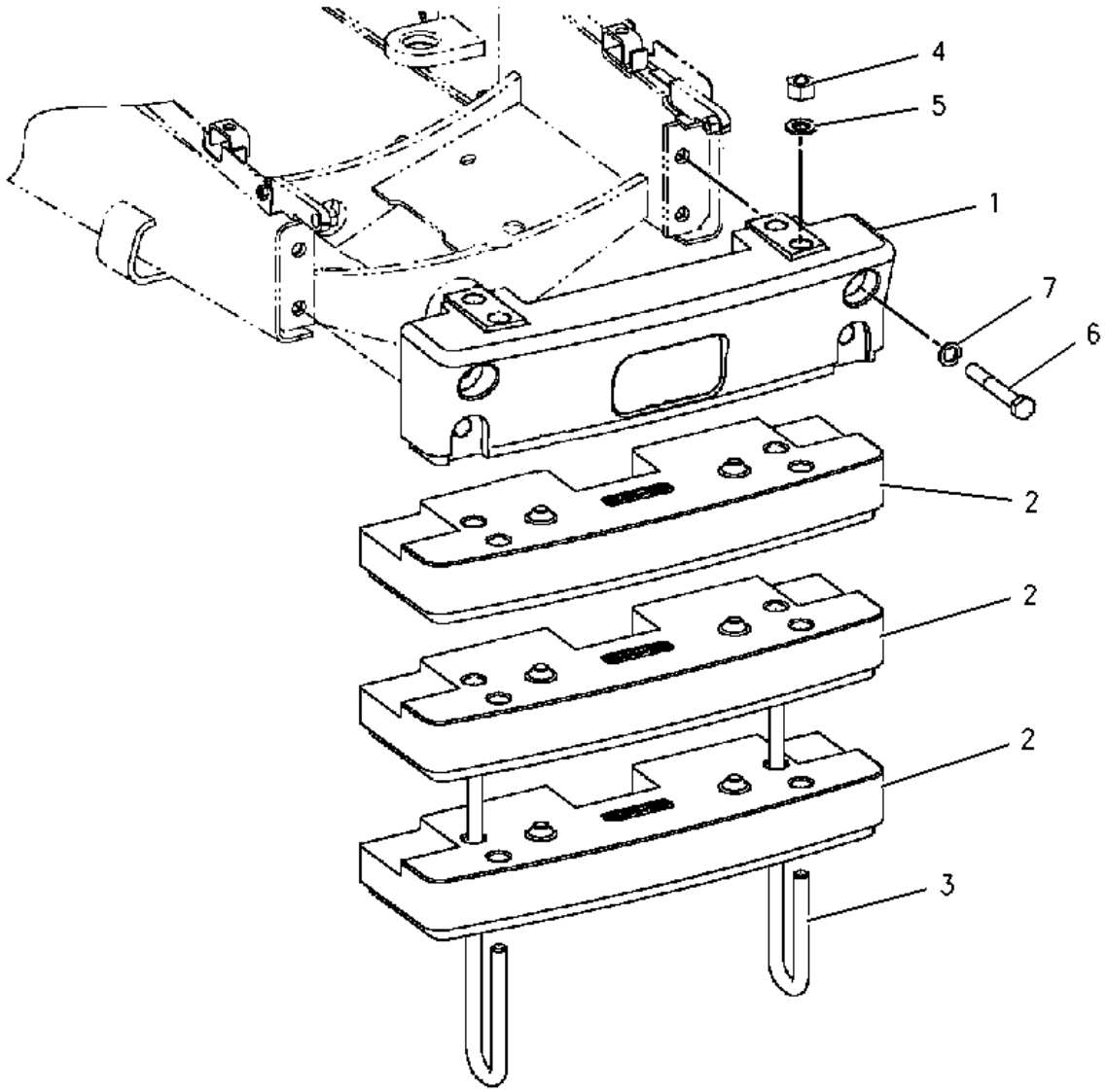

1 NPR 112-4417 1 COUNTERWEIGHT (145-KG (319-LB))

2 NPR 112-4418 3 COUNTERWEIGHT (104-KG (229-LB))

3 NPR 113-2662 2 U-BOLT

4 NPR M 8T-4001 4 NUT (M24X3-THD)

5 NPR 8T-4167 4 WASHER-HARD (26X44X4-MM THK)

6 NPR M 8C-8478 4 BOLT (M20X2.5X140-MM)

7 NPR 8T-4123 4 WASHER-PLATED (22X35X3.5-MM THK)

Key: M - METRIC PART

120-8482 COUNTERWEIGHT GP --S/N 4ZN16044-50156----572-KG (1260-LB)

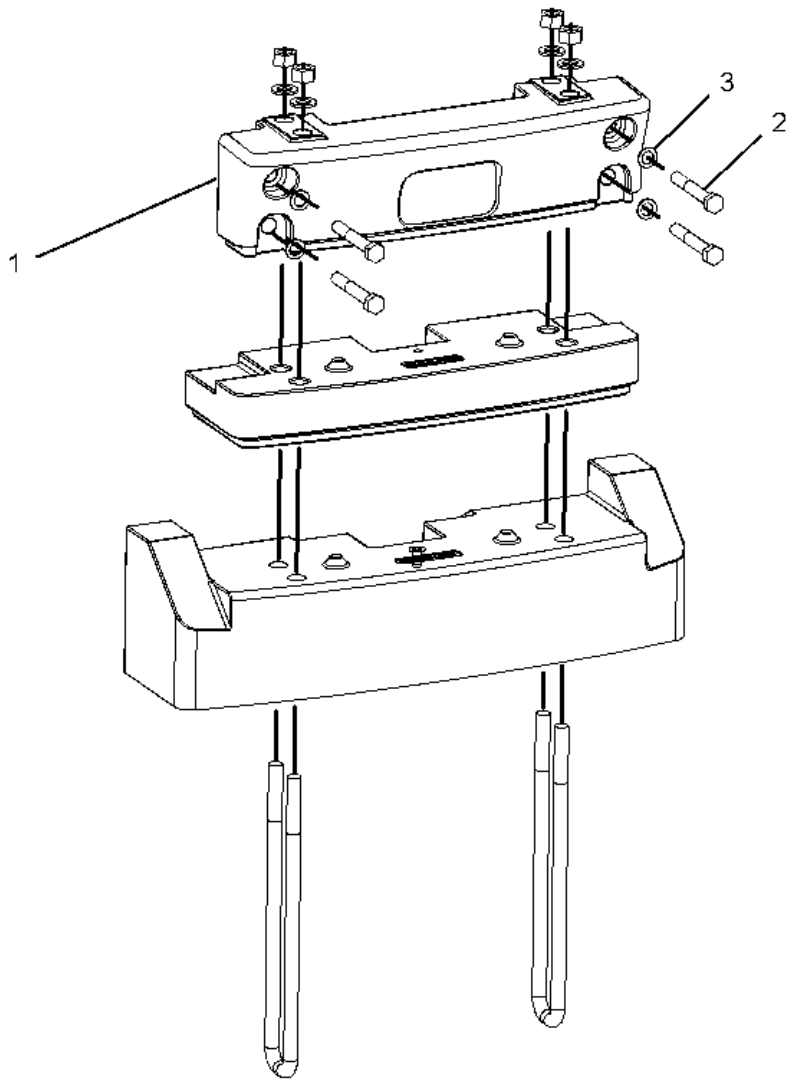

1 NPR Y 240-0020 1 COUNTERWEIGHT GP (572-KG (1260-LB))

2 NPR M 8C-8478 4 BOLT (M20X2.5X140-MM)

3 NPR 8T-4123 4 WASHER-PLATED (22X35X3.5-MM THK)

Key:

M - METRIC PART
Y - SEPARATE ILLUSTRATION

240-0020 COUNTERWEIGHT GP--S/N 4ZN16044-50156--572-KG (1260-LB)
PART OF 120-8482 COUNTERWEIGHT GP

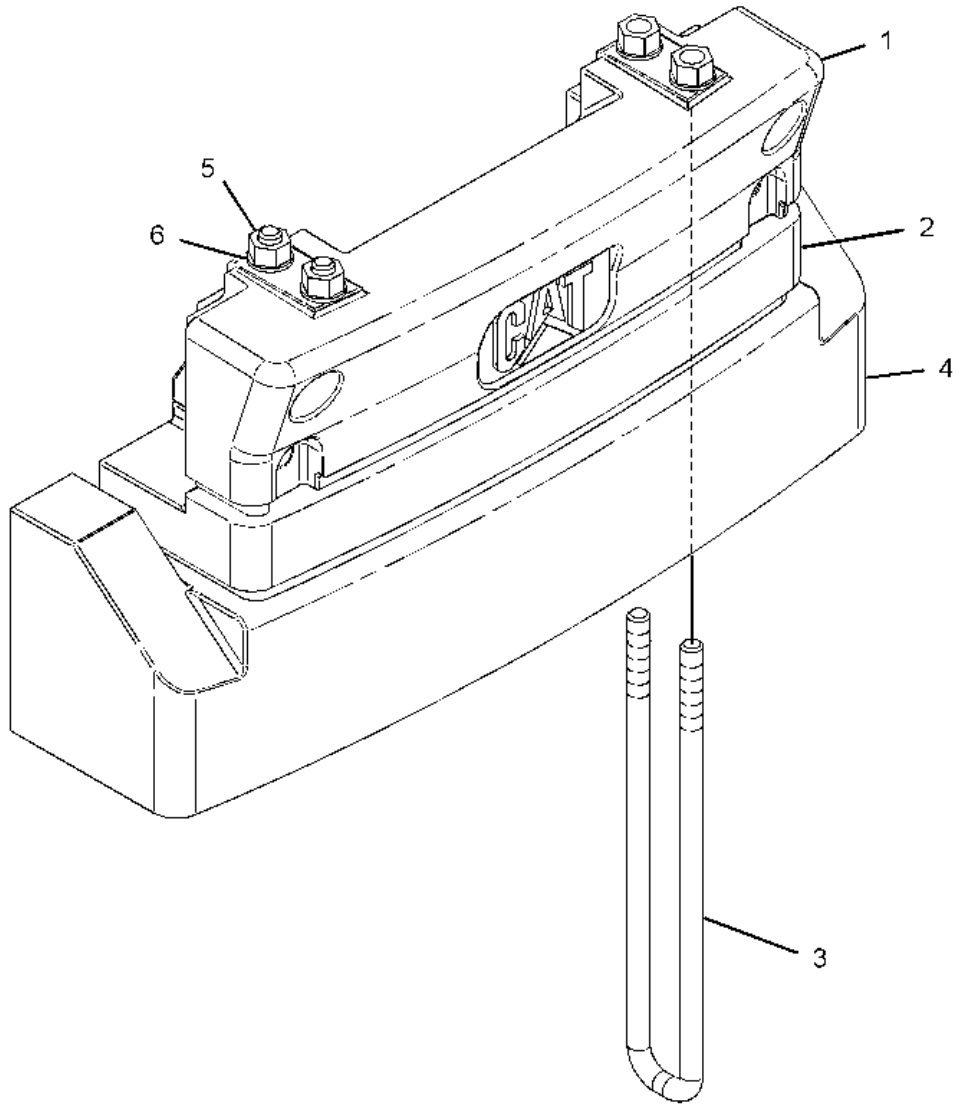

1	**NPR**	**112-4417**	**1**	**COUNTERWEIGHT (145-KG (319-LB))**
2	**NPR**	**112-4418**	**1**	**COUNTERWEIGHT (104-KG (229-LB))**
3	**NPR**	**113-2662**	**2**	**U-BOLT**
4	**NPR**	**201-0190**	**1**	**COUNTERWEIGHT AS (318-KG (700-LB))**
5	**NPR M**	**8T-4001**	**4**	**NUT (M24X3-THD)**
6	**NPR**	**8T-4167**	**4**	**WASHER-HARD (26X44X4-MM THK)**

Key: M - METRIC PART

118-6842 DOOR GP-BATTERY ---S/N 4ZN16044-50156
PART OF 106-1395, 139-3559 BOX GP-BATTERY

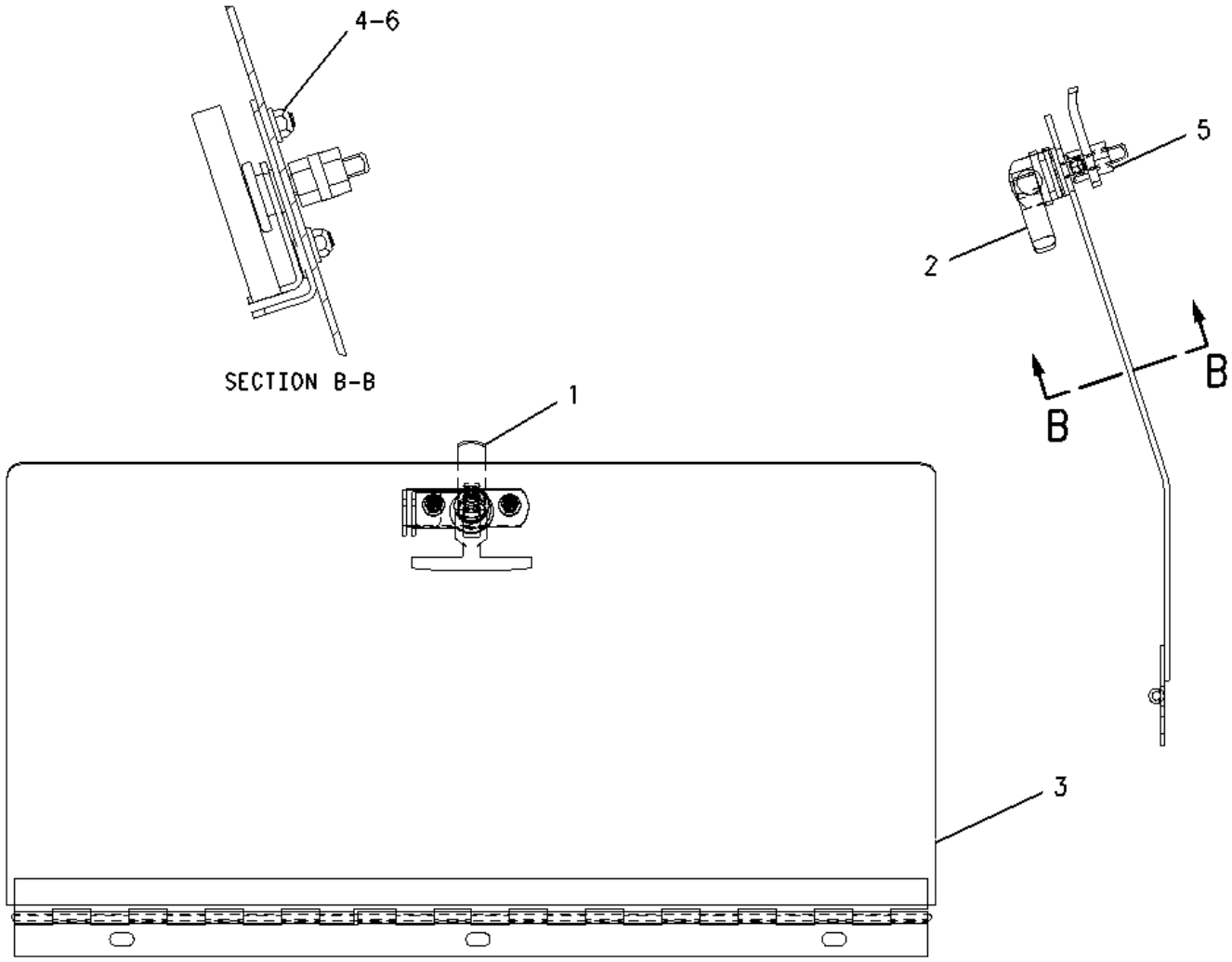

1 NPR 8C-8522 1 PAWL-LATCH

2 NPR 129-4741 1 LATCH AS-T-BAR

3 NPR 151-2963 1 DOOR AS

4 NPR M 6V-7743 2 LOCKNUT (M6X1-THD)

5 NPR M 8T-4133 2 NUT (M10X1.5-THD)

6 NPR 8T-4205 2 WASHER-HARD (7.2X14.5X2-MM THK)

Key:

M - METRIC PART

104-3913 FLOORPLATE GP --S/N 4ZN16044-50156---PART OF 163-9194 CANOPY AR-OPEN ROPS

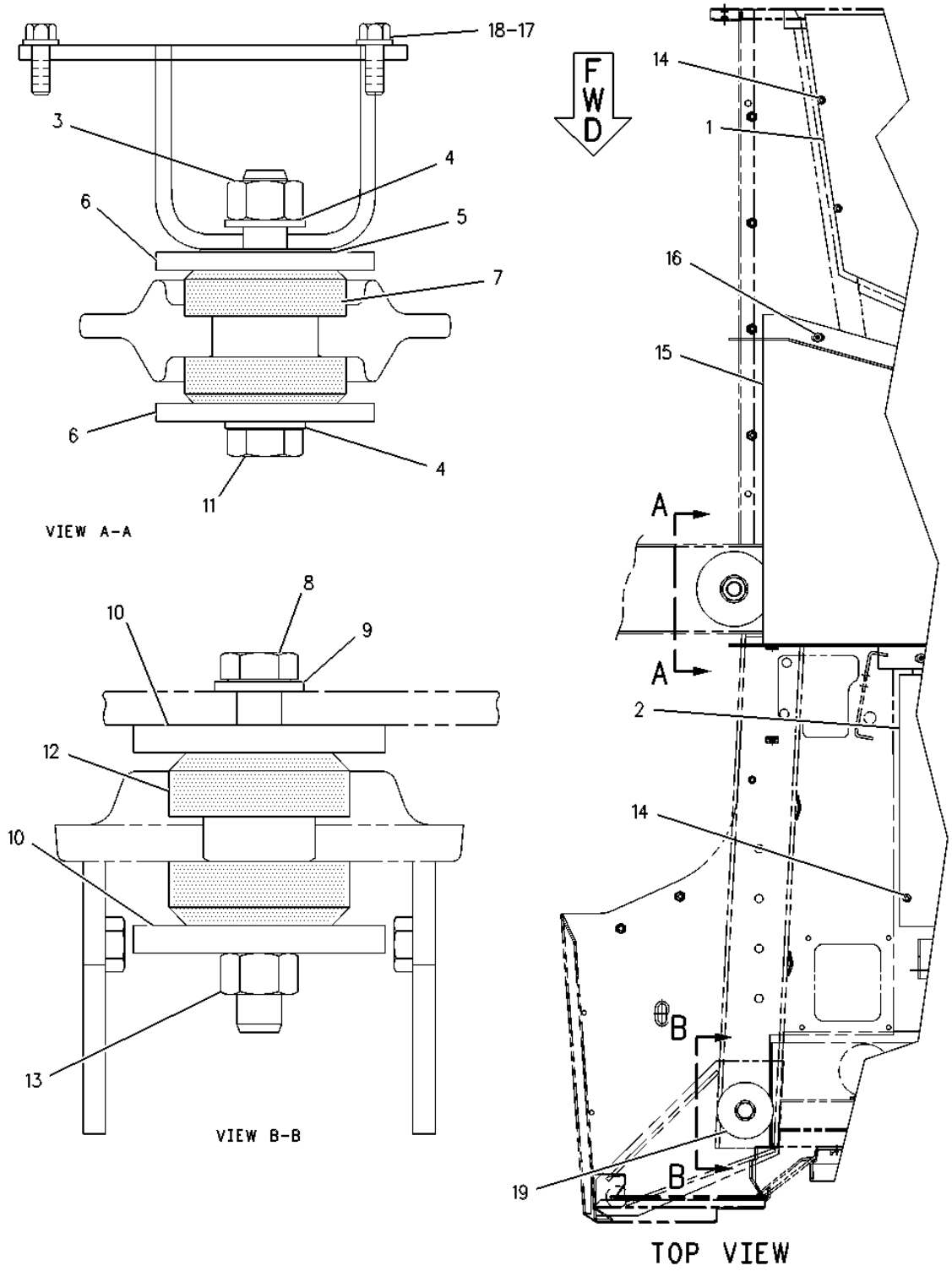

1 NPR 104-3914 1 FLOORPLATE AS

NPR M 6V-9632 4 NUT-WELD (M6X1-THD)

2 NPR 104-3915 1 FLOORPLATE

3 NPR M 8T-4001 2 NUT (M24X3-THD)

4	NPR	8T-4167	4	WASHER-HARD (26X44X4-MM THK)
5	NPR B	9R-0393	6	SHIM (1.6-MM THK)
6	NPR	9R-9869	4	WASHER-HARD (26X120X10-MM THK)
7	NPR	9R-0394	2	MOUNT AS
8	NPR M	8T-4174	2	BOLT (M16X2X120-MM)
9	NPR	8T-4122	2	WASHER-HARD (17X32X3.5-MM THK)
10	NPR	8C-3291	4	WASHER (17X90X10-MM THK)
11	NPR M	8T-4649	2	BOLT (M24X3X140-MM)
12	NPR	118-2990	2	MOUNT AS
13	NPR M	8T-4132	2	NUT (M16X2-THD)
14	NPR M	131-3985	8	SCREW (M6X1-THD)
15	NPR	104-3916	1	PLATE AS
16	NPR M	9X-2043	3	SCREW-TRUSS HEAD (M6X1X14-MM)
17	NPR M	8T-4183	4	BOLT (M12X1.75X40-MM)
18	NPR	8T-4223	4	WASHER-HARD (13.5X25.5X3-MM THK)
19	NPR	1L-6377	2	BUTTON-PLUG

Key:

B - USE AS REQUIRED
M - METRIC PART

104-6045 FLOORPLATE GP --S/N 4ZN16044-50156--PART OF 154-5473 CAB AR-ENCLOSED ROPS

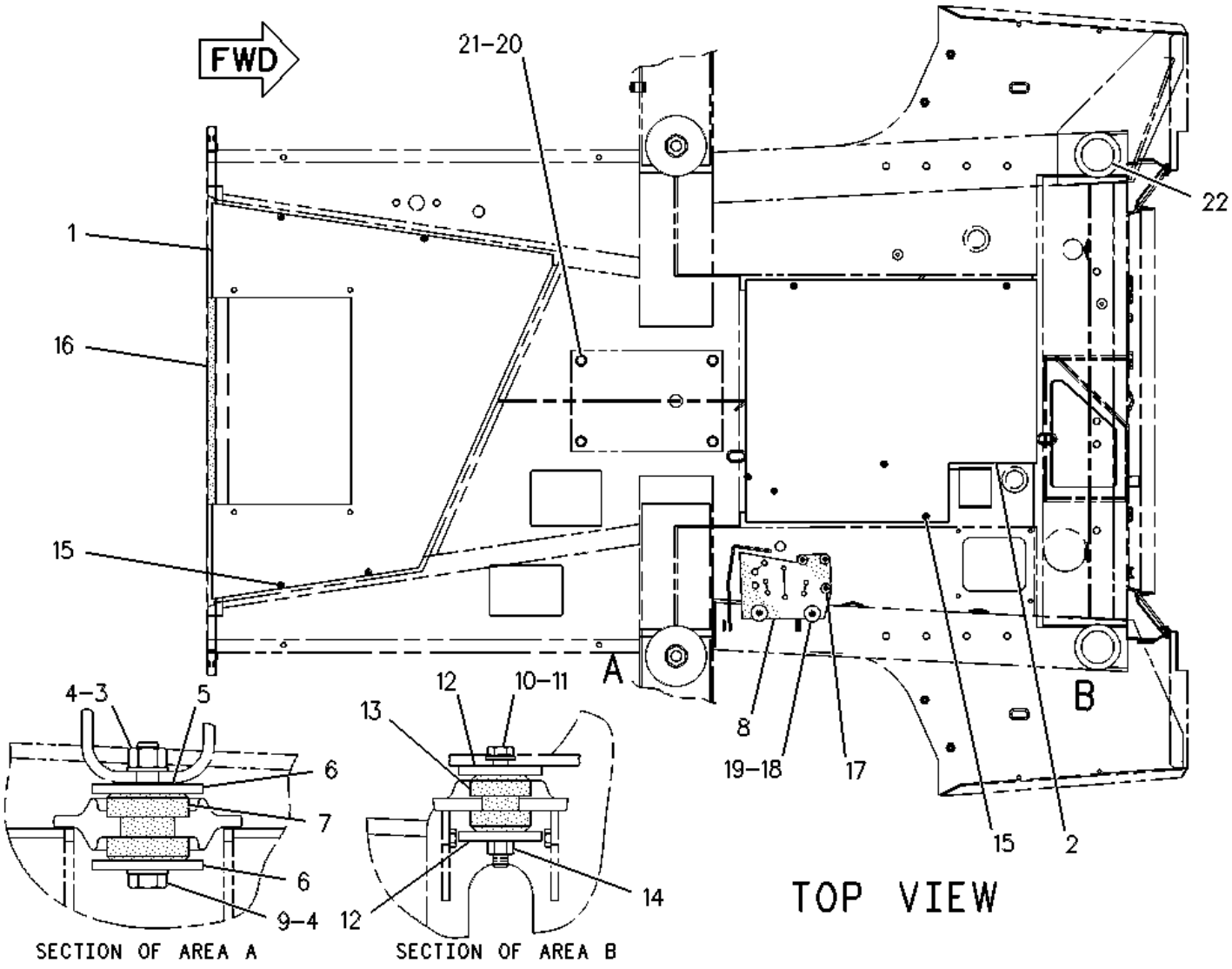

1	NPR	104-3914	1	FLOORPLATE AS
2	NPR	104-3915	1	FLOORPLATE
3	NPR M	8T-4001	2	NUT (M24X3-THD)
4	NPR	8T-4167	4	WASHER-HARD (26X44X4-MM THK)
5	NPR B	9R-0393	6	SHIM (1.6-MM THK)
6	NPR	9R-9869	4	WASHER-HARD (26X120X10-MM THK)
7	NPR	9R-0394	2	MOUNT AS
8	NPR	104-3904	1	SEAL
9	NPR M	8T-4649	2	BOLT (M24X3X140-MM)
10	NPR M	8T-4174	2	BOLT (M16X2X120-MM)
11	NPR	8T-4122	2	WASHER-HARD (17X32X3.5-MM THK)
12	NPR	8C-3291	4	WASHER (17X90X10-MM THK)
13	NPR	118-2990	2	MOUNT AS
14	NPR M	8T-4132	2	NUT (M16X2-THD)
15	NPR M	131-3985	8	SCREW (M6X1-THD)

16	NPR E	9X-6383		SEAL (4.1CM)
17	NPR	9R-9901	3	FASTENER (CLIP)
18	NPR	5P-9287	2	WASHER-HARD (7.2X32X2-MM THK)
19	NPR M	6V-7743	2	LOCKNUT (M6X1-THD)
20	NPR M	8T-4183	4	BOLT (M12X1.75X40-MM)
21	NPR	8T-4223	4	WASHER-HARD (13.5X25.5X3-MM THK)
22	NPR	1L-6377	2	BUTTON-PLUG

Key: B - USE AS REQUIRED E - ORDER BY THE CENTIMETER M - METRIC PART

143-0766 FRAME AS-LOADER ---S/N 4ZN16044-50156
PART OF 143-0762 FRAME GP-LOADER

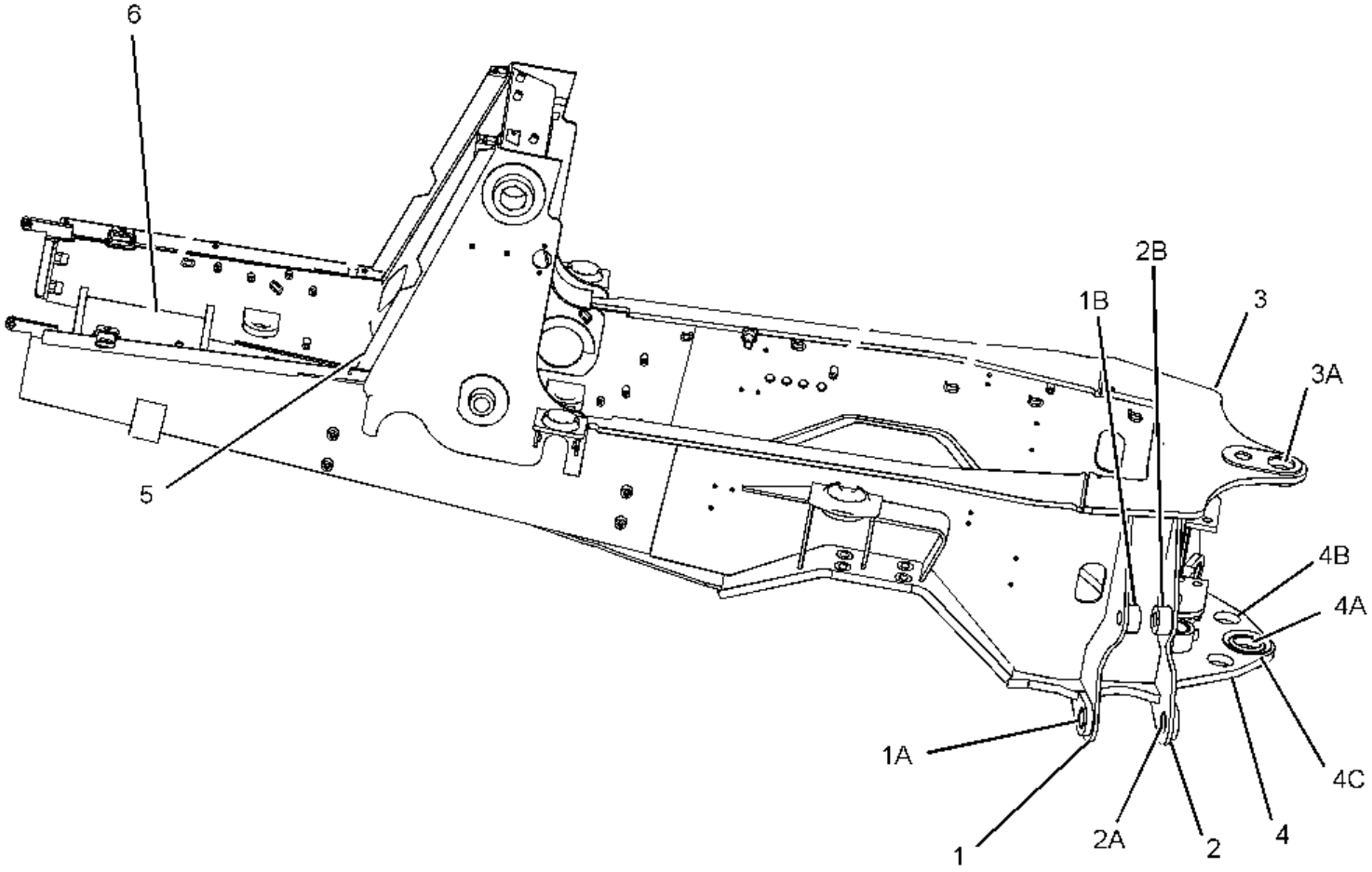

1 NPR 131-5134 2 BRACKET AS

(EACH INCLUDES)

1A NPR 9R-0431 1 BEARING-SLEEVE

1B NPR 9R-0203 1 BOSS

2 NPR 131-5133 2 BRACKET AS

(EACH INCLUDES)

2A NPR 9R-0431 1 BEARING-SLEEVE

2B NPR 9R-0203 1 BOSS

3 NPR 131-5128 1 PLATE AS

3A NPR 102-4560 1 BEARING-SLEEVE

4 NPR 131-5127 1 PLATE AS

4A NPR 9R-0413 1 BEARING-SLEEVE

4B NPR 9R-4110 2 BEARING-SLEEVE

4C NPR 9R-0366 1 WASHER (80X140X5-MM THK)

5 NPR 115-1785 2 PLATE

6 NPR 111-3832 1 SUPPORT AS

143-0762 FRAME GP-LOADER ----S/N 4ZN16044-50156---PART OF 154-5483 CHASSIS AR

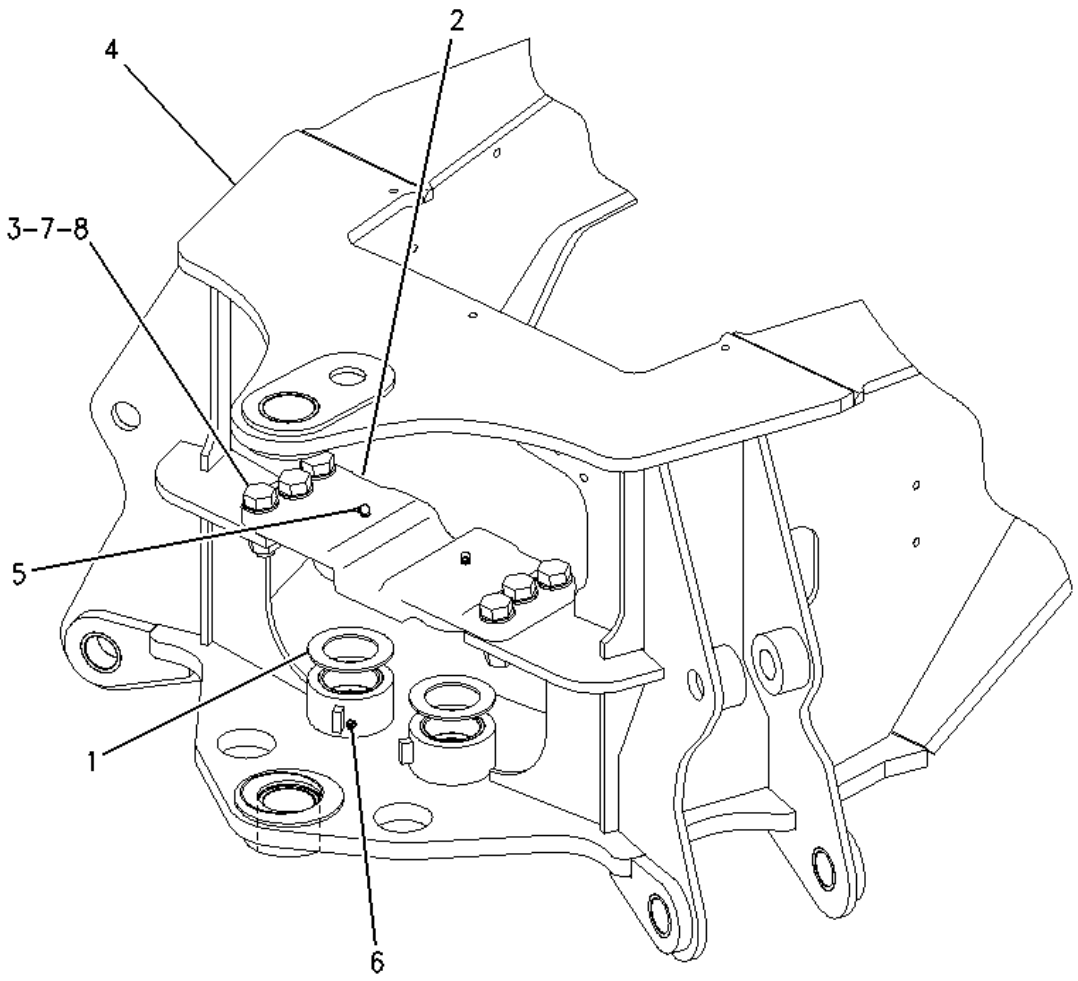

1 NPR 9R-0481 2 WASHER (71X110X4-MM THK)

2 NPR 9R-7701 1 CAP AS

NPR 9R-4110 2 BEARING-SLEEVE

3 NPR M 114-6099 6 BOLT (M24X3X80-MM)

4 NPR Y 143-0766 1 FRAME AS-LOADER

5 NPR 3B-8488 2 FITTING-GREASE

6 NPR 3B-8489 2 FITTING-GREASE

7 NPR M 8T-4001 6 NUT (M24X3-THD)

8 NPR 8T-4167 12 WASHER-HARD (26X44X4-MM THK)

Key: M - METRIC PART Y - SEPARATE ILLUSTRATION

159-2654 FRAME GP-SWING ---S/N 4ZN16044-50156---PART OF 154-5483 CHASSIS AR

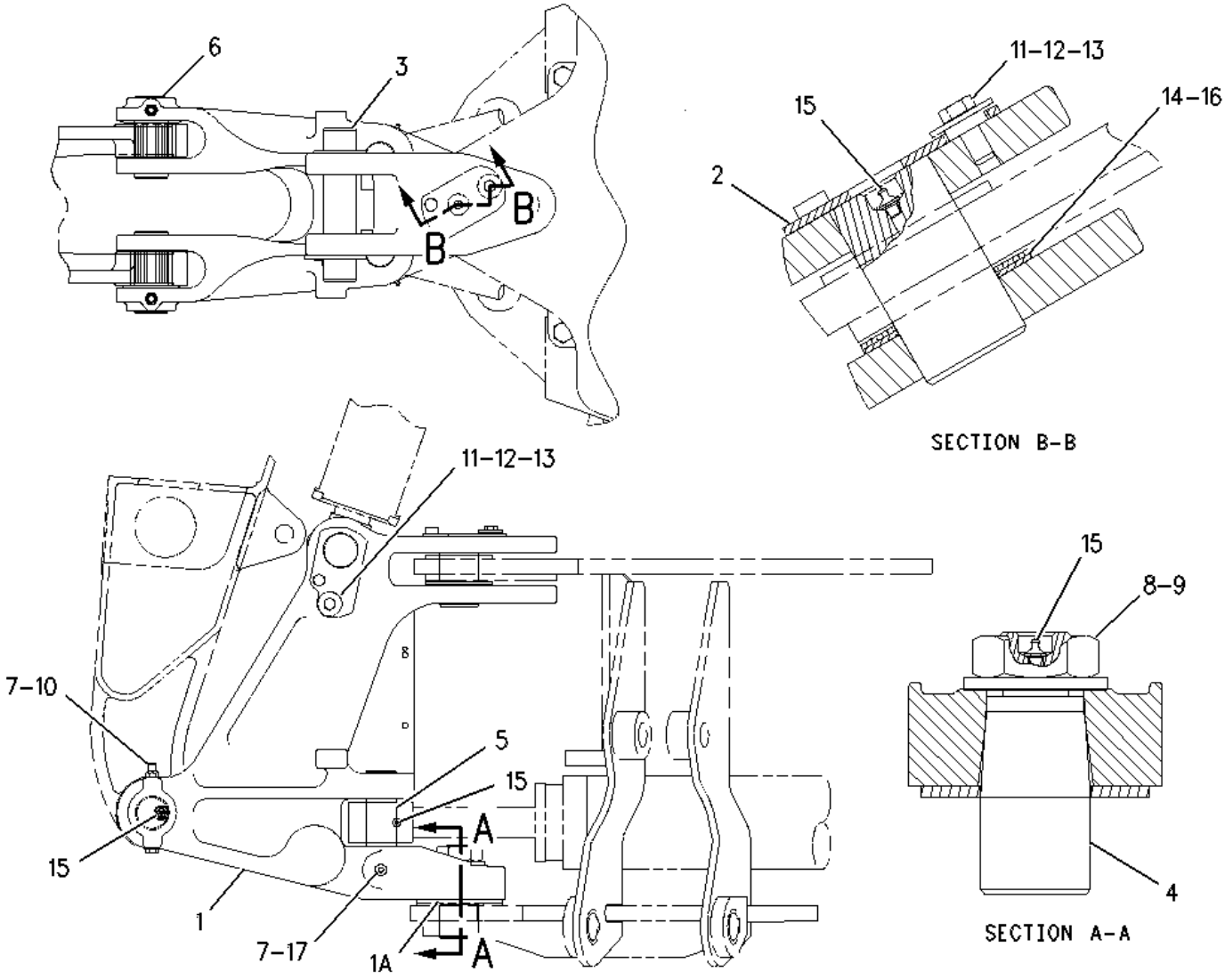

1 NPR 9R-7710 1 FRAME AS

1A NPR 9R-0366 1 WASHER (80X140X5-MM THK)

2 NPR 9R-8577 1 PIN AS

3 NPR 9R-8580 1 PIN AS

4 NPR 9R-0234 1 PIN

5 NPR 9R-8579 2 PIN

6 NPR 130-0485 2 PIN

7 NPR M 6V-7687 4 LOCKNUT (M12X1.75-THD)

8 NPR M 8T-3652 1 NUT (M42X25-THD)(M42X2 THD)

9 NPR 8T-4837 1 WASHER (48X85X6-MM THK)

10 NPR M 8T-5412 2 BOLT (M12X1.75X140-MM)(M12X1.75X140MM)

11 NPR M 8T-4139 2 BOLT (M12X1.75X30-MM)

12 NPR 8T-4821 2 WASHER (13.5X40X3-MM THK)

13 NPR 9R-7882 2 SPACER (14X25X7-MM THK)

14 NPR B 9R-5429 2 SPACER (67.5X120X3-MM THK)

15 NPR 3B-8489 6 FITTING-GREASE

16 NPR B 9R-8291 2 SPACER (66X125X1-MM THK)

17 NPR 123-7034 1 ROD

Key: B - USE AS REQUIRED-- M - METRIC PART

9R-1233 GUARD GP-DRIVE SHAFT
S/N 4ZN16044-50156

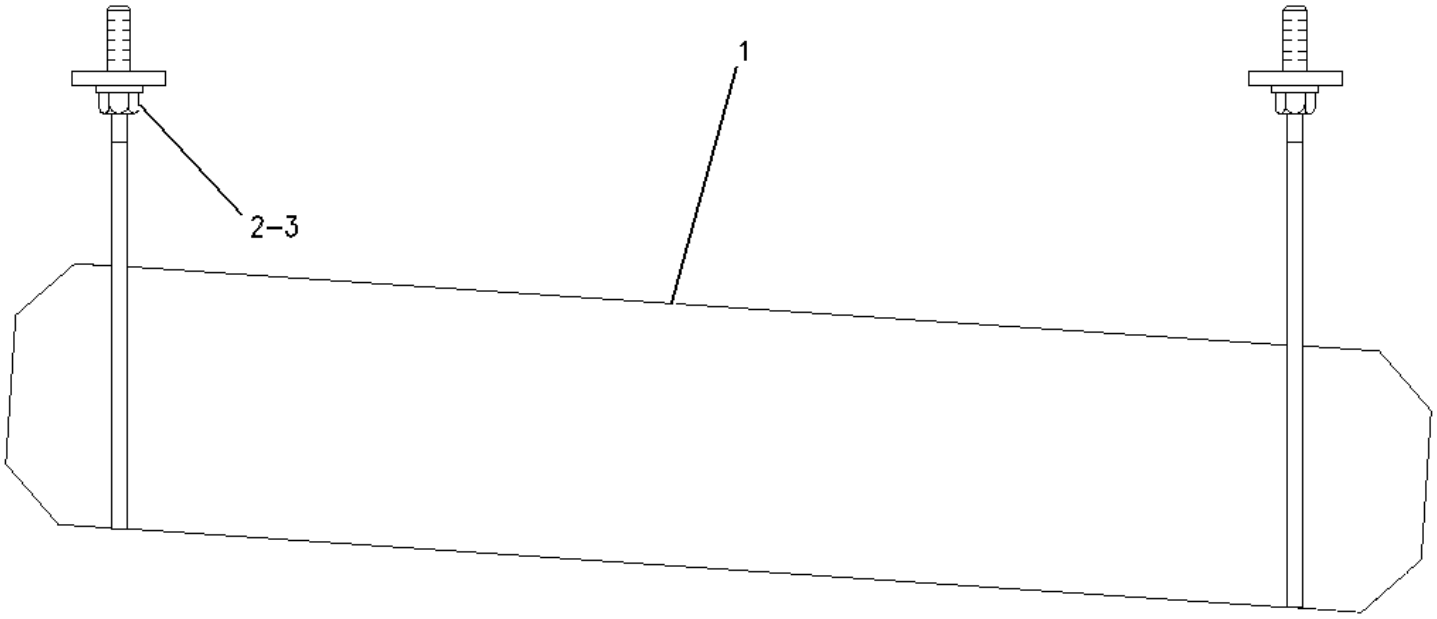

1 NPR 213-8481 1 GUARD AS

2 NPR M 8T-4183 4 BOLT (M12X1.75X40-MM)

3 NPR 8T-4223 4 WASHER-HARD (13.5X25.5X3-MM THK)

Key:

M - METRIC PART

133-3361 GUARD GP-CYLINDER -STABILIZER ---S/N 4ZN16044-50156
FOR USE WITH 9R-6007, 9R-1085, 116-4942

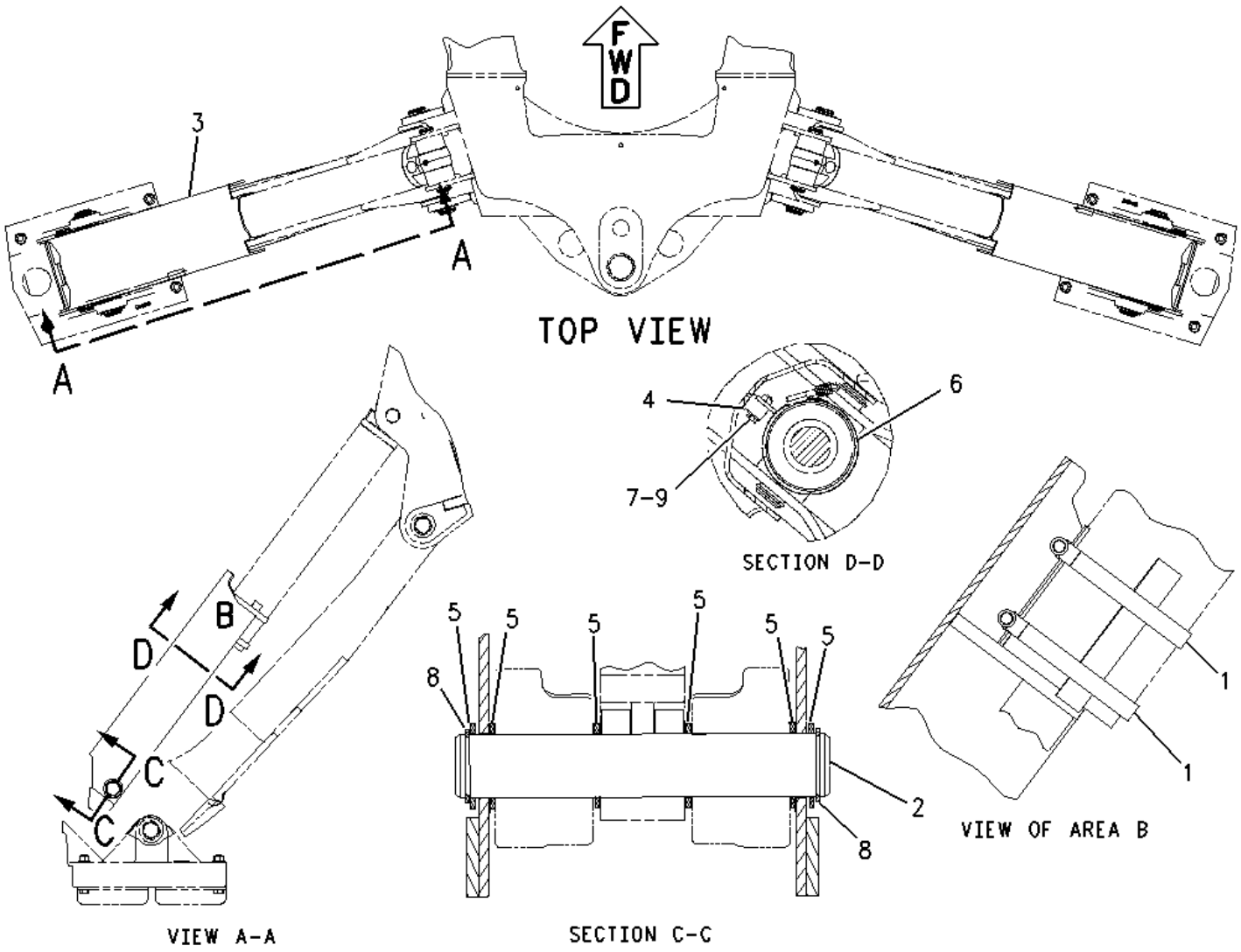

1 NPR 8T-4986 4 CLAMP-HOSE

2 NPR 130-1638 2 PIN

3 NPR 130-1640 2 GUARD AS

4 NPR 188-3953 2 PAD

5 NPR B 9R-0109 12 WASHER (41X64X3-MM THK)

6 NPR 201-5812 2 PLATE AS

(EACH INCLUDES)

NPR M 8T-3612 2 NUT-WELD (M8X1.25-THD)

NPR 201-5810 1 PLATE

7 NPR 5P-4116 2 WASHER-HARD (8.8X20.5X2-MM THK)

8 NPR 6V-8144 4 RING-RETAINING

9 NPR M 7X-2537 2 BOLT (M8X1.25X35-MM)

Key: B - USE AS REQUIRED M - METRIC PART

135-4744 GUARD GP-CYLINDER -STABILIZER ---S/N 4ZN16044-50156-FOR USE WITH 9R-6007

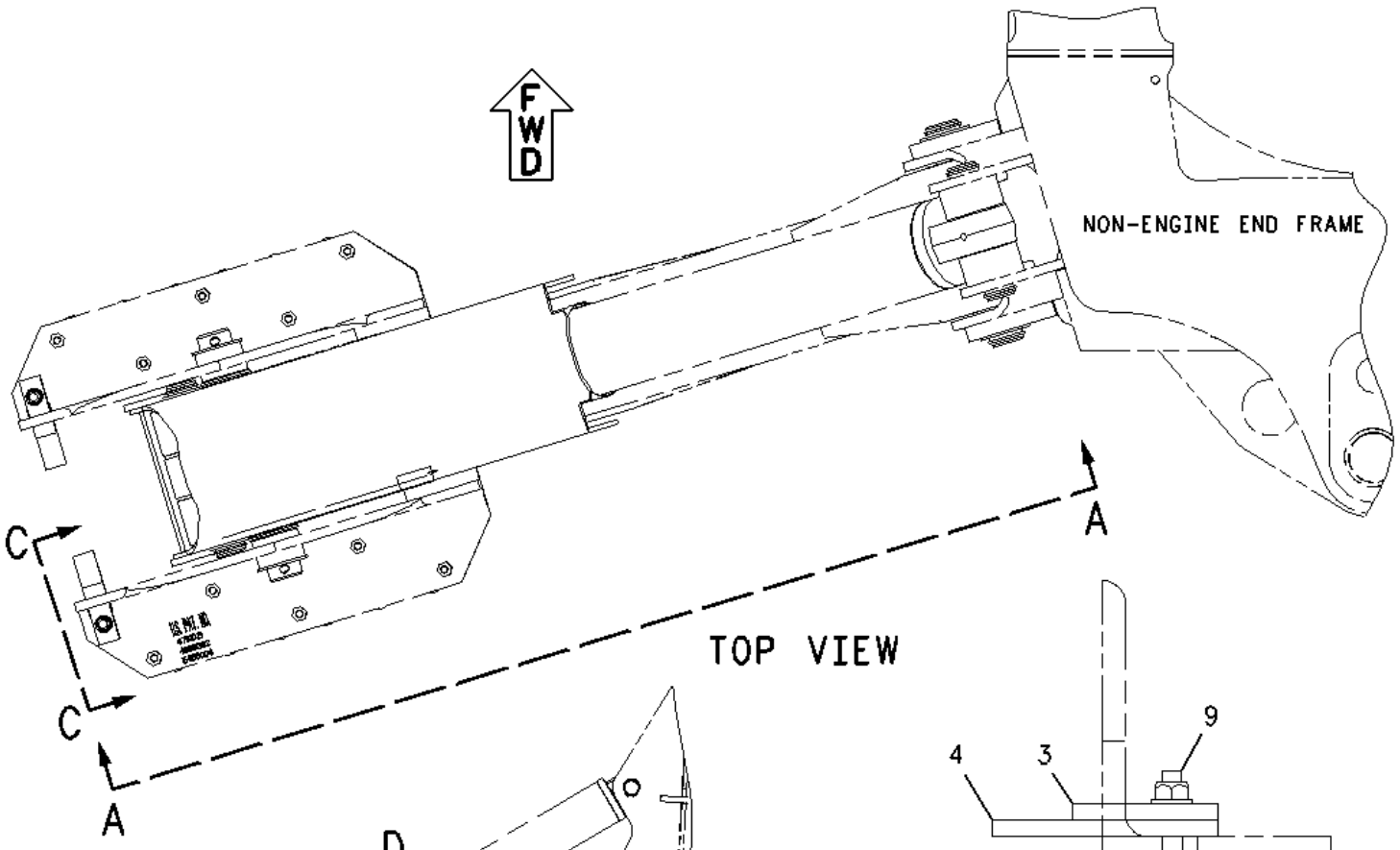

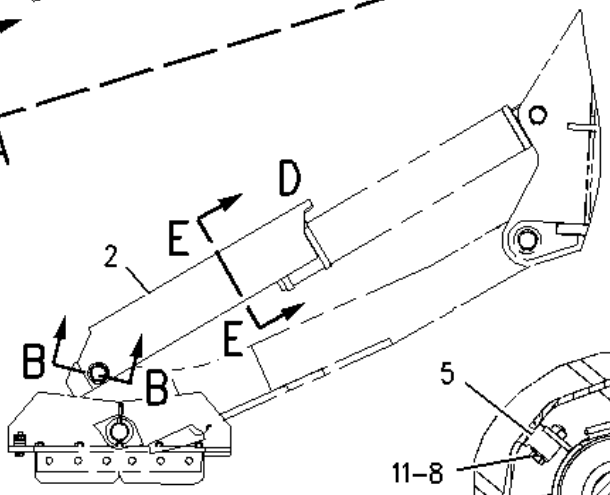

VIEW A-A

VIEW C-C

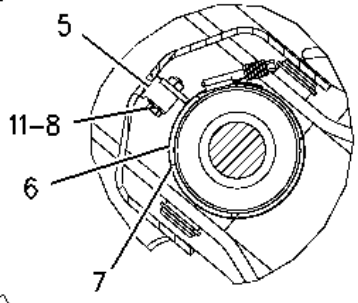

SECTION E-E

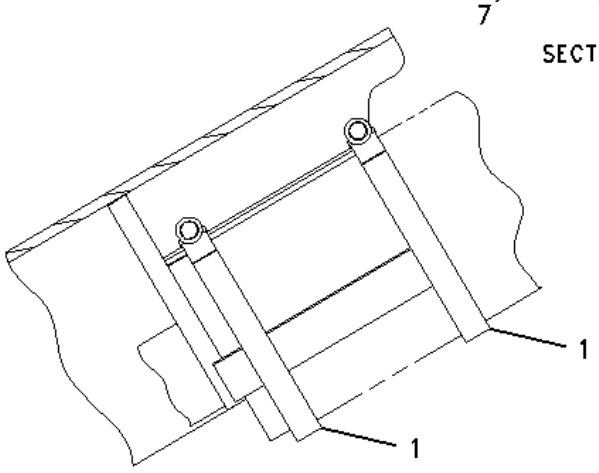

VIEW OF AREA D

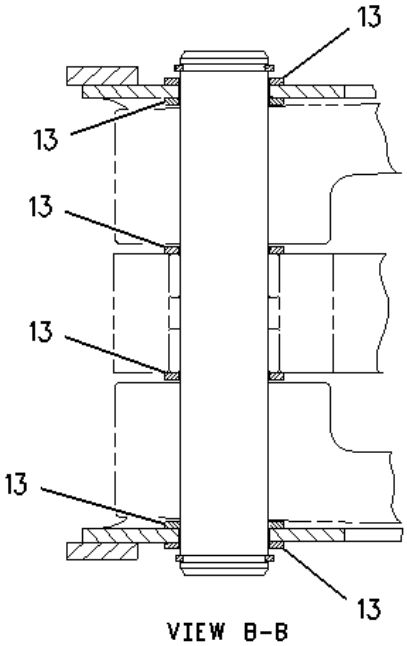

VIEW B-B

1	NPR	8T-4986	4	CLAMP-HOSE
2	NPR	130-1640	2	GUARD AS
3	NPR	146-1589	4	LATCH
4	NPR	146-1590	4	LATCH
5	NPR	188-3953	2	PAD
6	NPR	201-5810	2	PLATE
7	NPR	201-5812	2	PLATE AS
	NPR M	8T-3612	2	NUT-WELD (M8X1.25-THD)
	NPR	201-5810	1	PLATE
8	NPR	5P-4116	2	WASHER-HARD (8.8X20.5X2-MM THK)
9	NPR	6V-5729	4	LOCKNUT (7/16-14 THD)
10	NPR	7X-0310	4	BOLT (7/16-14X2-IN)
11	NPR M	7X-2537	2	BOLT (M8X1.25X35-MM)
12	NPR	8T-5360	8	WASHER (12X22.5X2.5-MM THK)
13	NPR B	9R-0109	12	WASHER (41X64X3-MM THK)

Key: B - USE AS REQUIRED M - METRIC PART

132-5981 COVER GP-HOOD --S/N 4ZN16044-50156
PART OF 163-9194 CANOPY AR-OPEN ROPS

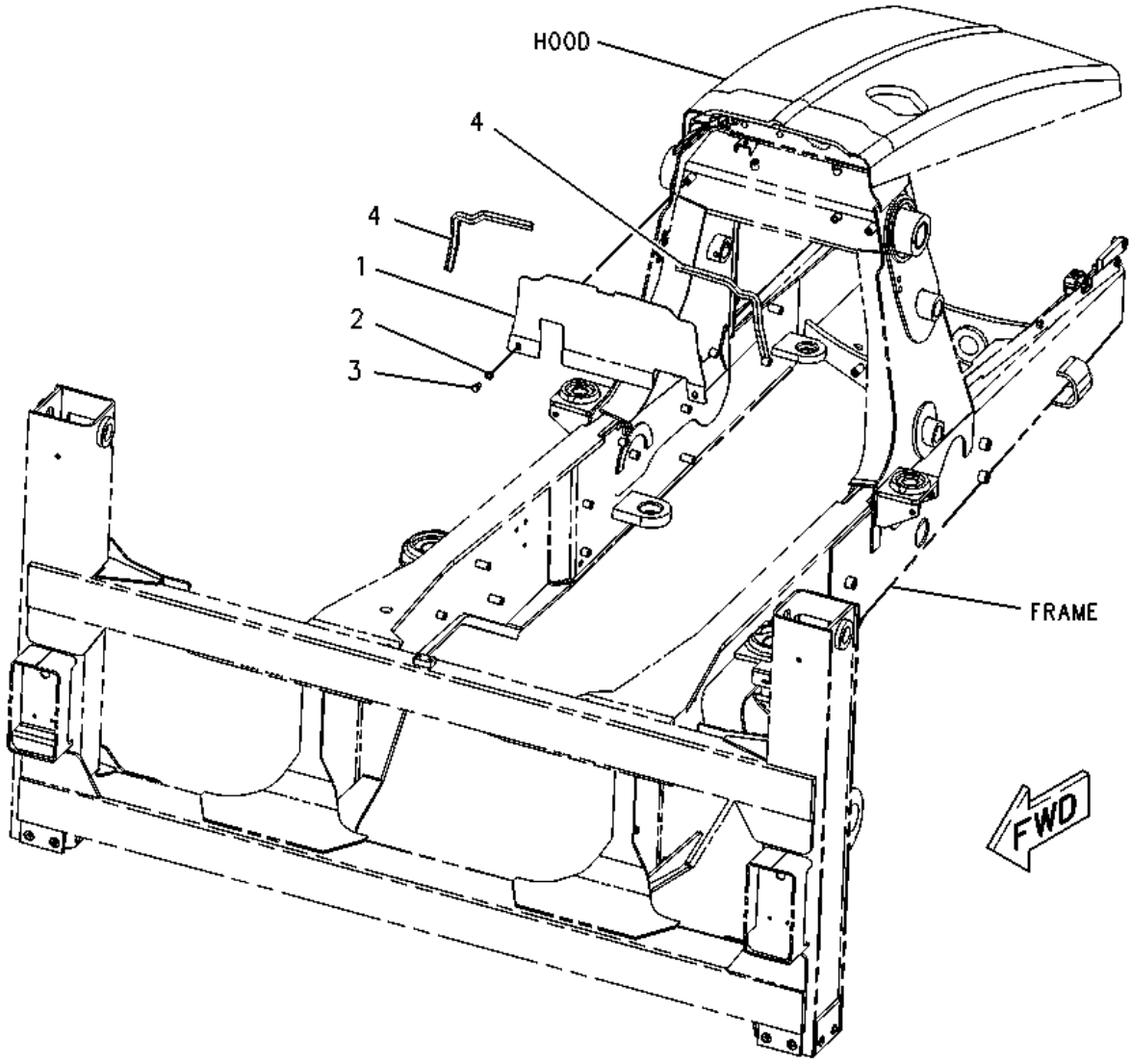

1 NPR 190-5135 1 PLATE

2 NPR 8T-4121 2 WASHER-HARD (11X21X2.5-MM THK)

3 NPR M 8T-4137 2 BOLT (M10X1.5X20-MM)

4 NPR BE 126-8472 SEAL

Key: B - USE AS REQUIRED E - ORDER BY THE CENTIMETER M - METRIC PART

143-0909 HOOD & GUARD GP --S/N 4ZN16044-50156
PART OF 154-5483 CHASSIS AR

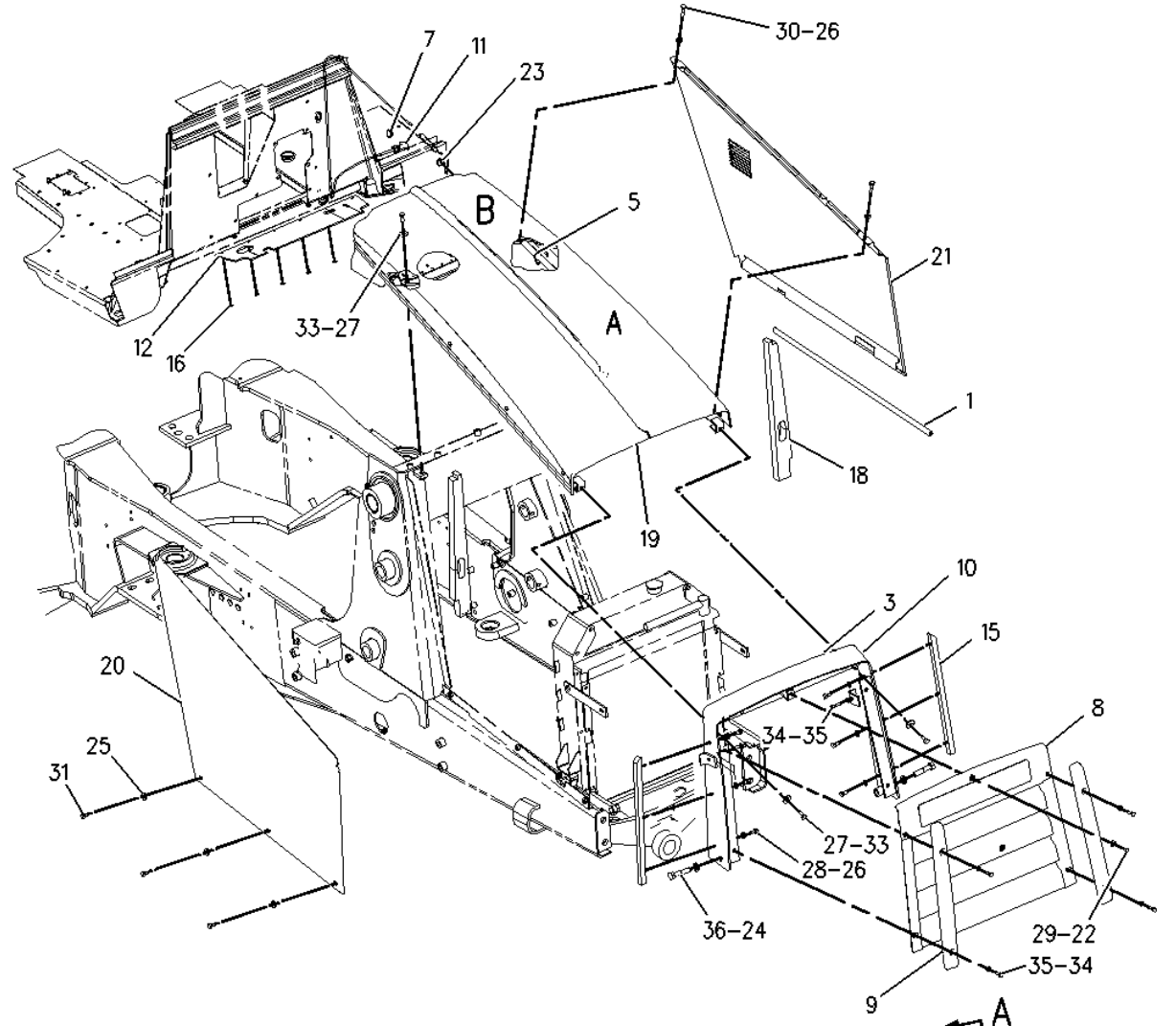

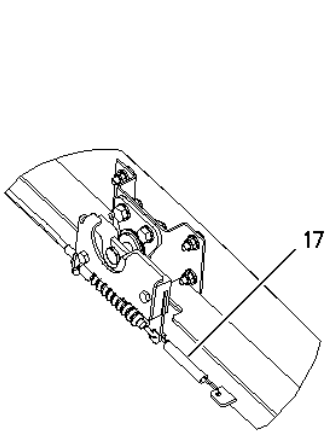

VIEW OF AREA A

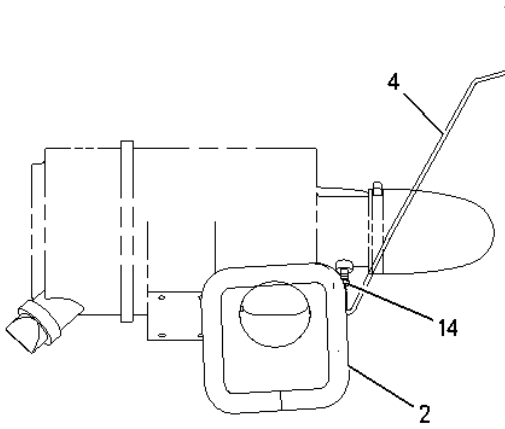

VIEW OF AREA B

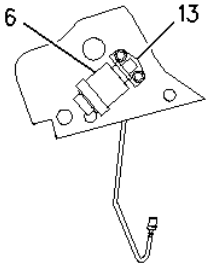

VIEW A-A

1 NPR BE 3E-6600 SEAL

2 NPR BE 123-3827 SEAL

3 NPR BE 179-5571 SEAL

4 NPR D 6V-1363 HOSE (0.5M)

5	NPR	3S-2093	1	STRAP-CABLE
6	NPR	7W-7417	1	INDICATOR AS
7	NPR	9R-2620	1	PLUG
8	NPR	112-4414	1	GRILL AS
9	NPR	112-4415	2	BUMPER AS
10	NPR	112-4416	1	GUARD AS
11	NPR	113-1645	1	CABLE AS
12	NPR	116-7164	1	BAFFLE
13	NPR	119-6723	1	FITTING
14	NPR	123-0275	2	FITTING (FILTER)
15	NPR	123-0428	2	BAR
16	NPR	123-4065	6	RIVET-POP
17	NPR	135-9886	1	SPRING
18	NPR	141-7514	2	BAFFLE
19	NPR Y	143-2911	1	HOOD GP-ENGINE
20	NPR	145-4476	1	ENCLOSURE GP (RH)
	NPR BE	3E-6600		SEAL
21	NPR	145-4477	1	ENCLOSURE GP (LH)
	NPR BE	177-4122		SEAL
22	NPR	5P-4115	1	WASHER-HARD (7.2X19X2-MM THK)
23	NPR	6P-6590	1	GROMMET
24	NPR M	7X-2554	2	BOLT (M16X2X70-MM)
25	NPR	7X-7729	3	WASHER (11X25X3-MM THK)
26	NPR	8T-4121	8	WASHER-HARD (11X21X2.5-MM THK)
27	NPR M	8T-4136	4	BOLT (M10X1.5X25-MM)

28	NPR M	8T-4137	6	BOLT (M10X1.5X20-MM)
29	NPR M	8T-4138	3	BOLT (M6X1X20-MM)
30	NPR M	8T-4182	2	BOLT (M10X1.5X45-MM)
31	NPR M	8T-4191	3	BOLT (M10X1.5X16-MM)
32	NPR	8T-4205	2	WASHER-HARD (7.2X14.5X2-MM THK)
33	NPR	8T-4222	4	WASHER-PLATED (11X32X2.5-MM THK)
34	NPR	8T-4224	6	WASHER-HARD (8.8X16X2-MM THK)
35	NPR M	8T-7547	6	BOLT (M8X1.25X30-MM)
36	NPR	9X-8257	2	WASHER (17.5X30X3.5-MM THK)

Key:

B - USE AS REQUIRED
D - ORDER BY THE METER
E - ORDER BY THE CENTIMETER
M - METRIC PART
Y - SEPARATE ILLUSTRATION

143-2911 HOOD GP-ENGINE --S/N 4ZN16044-50156--PART OF 143-0909 HOOD & GUARD GP

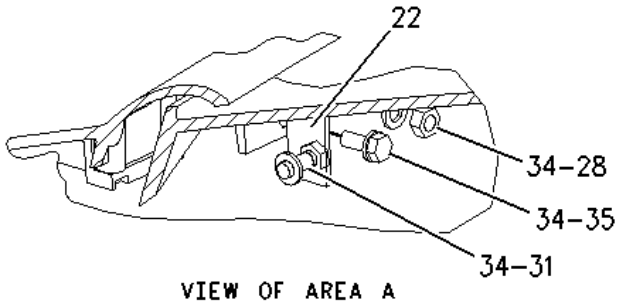

VIEW OF AREA A

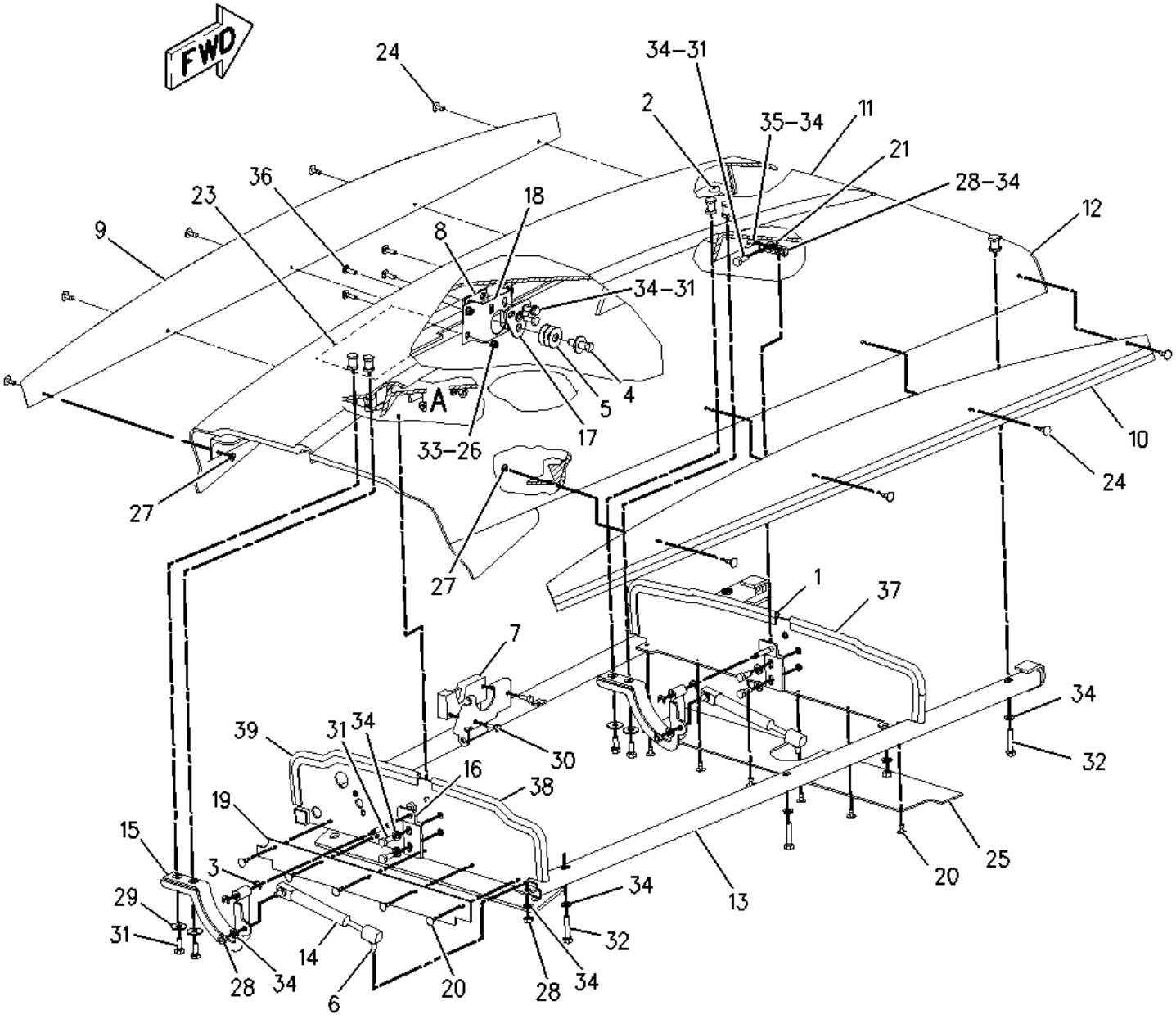

1	NPR BE	126-8472		SEAL
2	NPR	4V-5091	2	GROMMET
3	NPR	5D-4822	4	RING-RETAINING
4	NPR	5V-8309	1	STRIKER AS
5	NPR B	8T-0318	3	SHIM (0.8-MM THK)
6	NPR	8T-2444	4	STUD-BALL
7	NPR	8Y-6998	1	LATCH AS-ROTARY
8	NPR	9R-4784	1	PLATE AS
	NPR M	8T-3612	2	NUT-WELD (M8X1.25-THD)
9	NPR	110-4271	1	FILM-STRIPE
10	NPR	110-4272	1	FILM-STRIPE
11	NPR	113-1643	1	HOOD AS (LH)
	NPR	8T-9501	6	SCREW (10-16X0.75-IN)
12	NPR	113-1644	1	HOOD AS (RH)
13	NPR	113-1649	1	SUPPORT AS-HOOD
	NPR M	8T-3490	2	NUT-WELD (M10X1.5-THD)
	NPR	7T-0525	2	SHIM (3-MM THK)
14	NPR	114-8861	2	SPRING AS-GAS
15	NPR	114-8972	2	HINGE AS (LH)
16	NPR	114-8973	2	HINGE AS (RH)
17	NPR	115-5219	1	PLATE AS
	NPR	1F-0750	2	NUT-WELD (3/8-16-THD)
18	NPR	115-5220	1	PLATE
19	NPR	122-5923	1	BAFFLE
20	NPR	123-4065	11	RIVET-POP

21	NPR	131-0827	1	PLATE (LH)
22	NPR	131-0828	1	PLATE (RH)
23	NPR	132-3895	1	FILM-INSTRUCTION (LUBRICANTS)
24	NPR	139-3785	9	RIVET-POP
25	NPR	141-7515	1	BAFFLE
26	NPR M	129-3178	4	LOCKNUT (M6X1-THD)
27	NPR	4B-4274	9	WASHER (5.5X13X1.2-MM THK)
28	NPR M	5C-7261	6	NUT (M8X1.25-THD)
29	NPR	7X-0579	4	WASHER-HARD (8.8X25.5X2-MM THK)
30	NPR M	8T-4181	2	BOLT (M6X1X20-MM)
31	NPR M	8T-4189	12	BOLT (M8X1.25X20-MM)
32	NPR M	8T-4197	3	BOLT (M8X1.25X40-MM)
33	NPR	8T-4205	4	WASHER-HARD (7.2X14.5X2-MM THK)
34	NPR	8T-4224	19	WASHER-HARD (8.8X16X2-MM THK)
35	NPR M	8T-5091	2	BOLT (M8X1.25X20-MM)
36	NPR M	9X-2045	4	SCREW-TRUSS HEAD (M6X1X20-MM)
37	NPR BE	126-8472		SEAL
38	NPR BE	126-8472		SEAL
39	NPR BE	126-8472		SEAL

Key:

B - USE AS REQUIRED
E - ORDER BY THE CENTIMETER
M - METRIC PART

IMPLEMENTS

129-9121 ARM GP-LIFT --S/N 4ZN16044-50156
PART OF 107-3313 LOADER AR

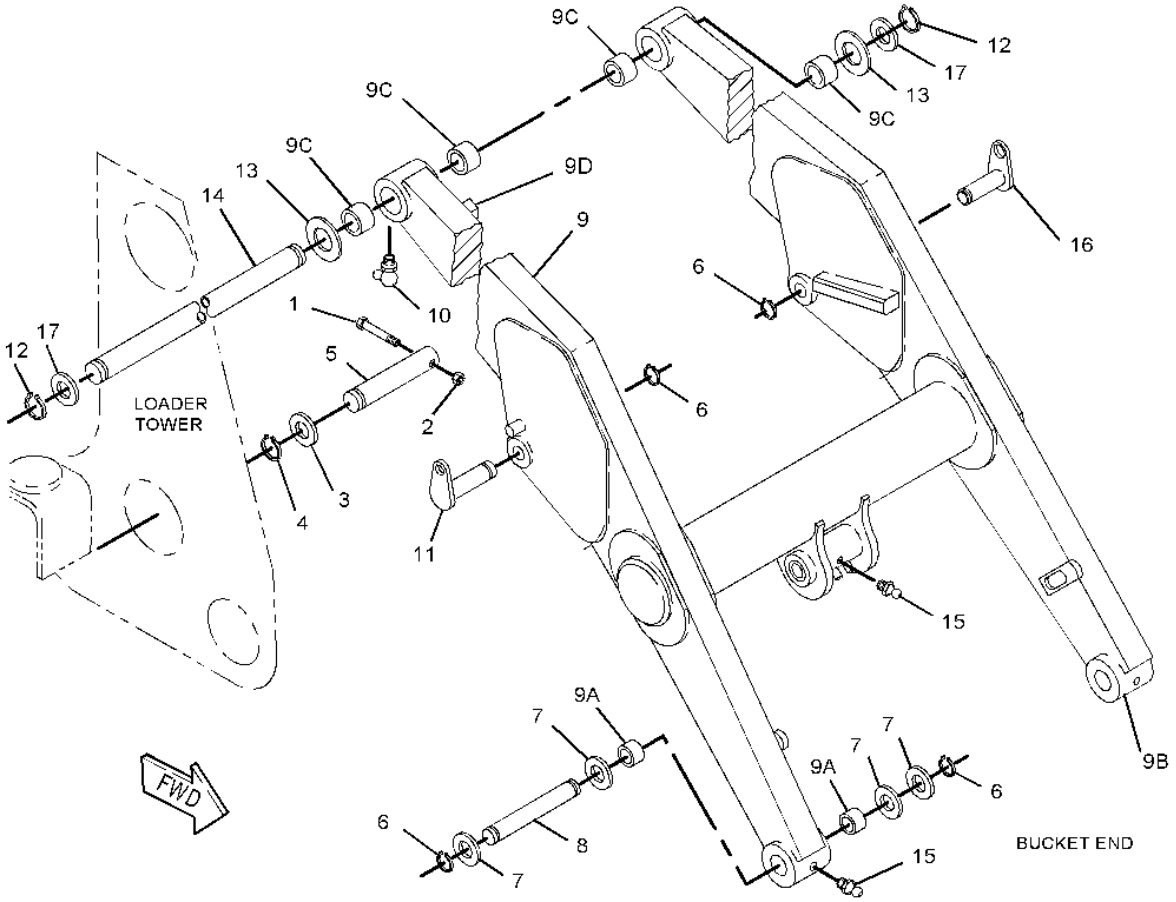

1 NPR M 8T-4176 2 BOLT (M12X1.75X90-MM)

2 NPR M 6V-7687 2 LOCKNUT (M12X1.75-THD)

3 NPR 9R-0158 2 WASHER (46X69X3-MM THK)

4 NPR 6V-3213 2 RING-RETAINING

5	NPR	130-5451	2	PIN
6	NPR	6V-8144	6	RING-RETAINING
7	NPR B	9R-0109	8	WASHER (41X64X3-MM THK)
8	NPR	9R-3182	2	PIN
9	NPR	129-9120	1	ARM & BEARING AS-LIFT
9A	NPR	9R-0111	4	BEARING-SLEEVE
9B	NPR	9R-0119	2	BOSS
9C	NPR	9R-6690	4	BEARING-SLEEVE
9D	NPR	112-4498	1	BOSS
10	NPR	3B-8488	2	FITTING-GREASE
11	NPR	9R-9373	1	PIN AS
12	NPR	127-8987	2	RING-RETAINING
13	NPR B	9R-8390	2	SPACER (61X98X1-MM THK)
14	NPR	128-5010	1	PIN
15	NPR	3B-8489	3	FITTING-GREASE
16	NPR	132-6496	1	PIN AS
17	NPR B	9R-4066	2	WASHER (61X98X4-MM THK)

Key:

B - USE AS REQUIRED
M - METRIC PART

159-2657 MOUNTING GP-STICK ---S/N 4ZN16044-50156
PART OF 154-5309, 154-5311, 154-5312, 154-5314 BACKHOE AR-EXTENDABLE STICK--Type 1

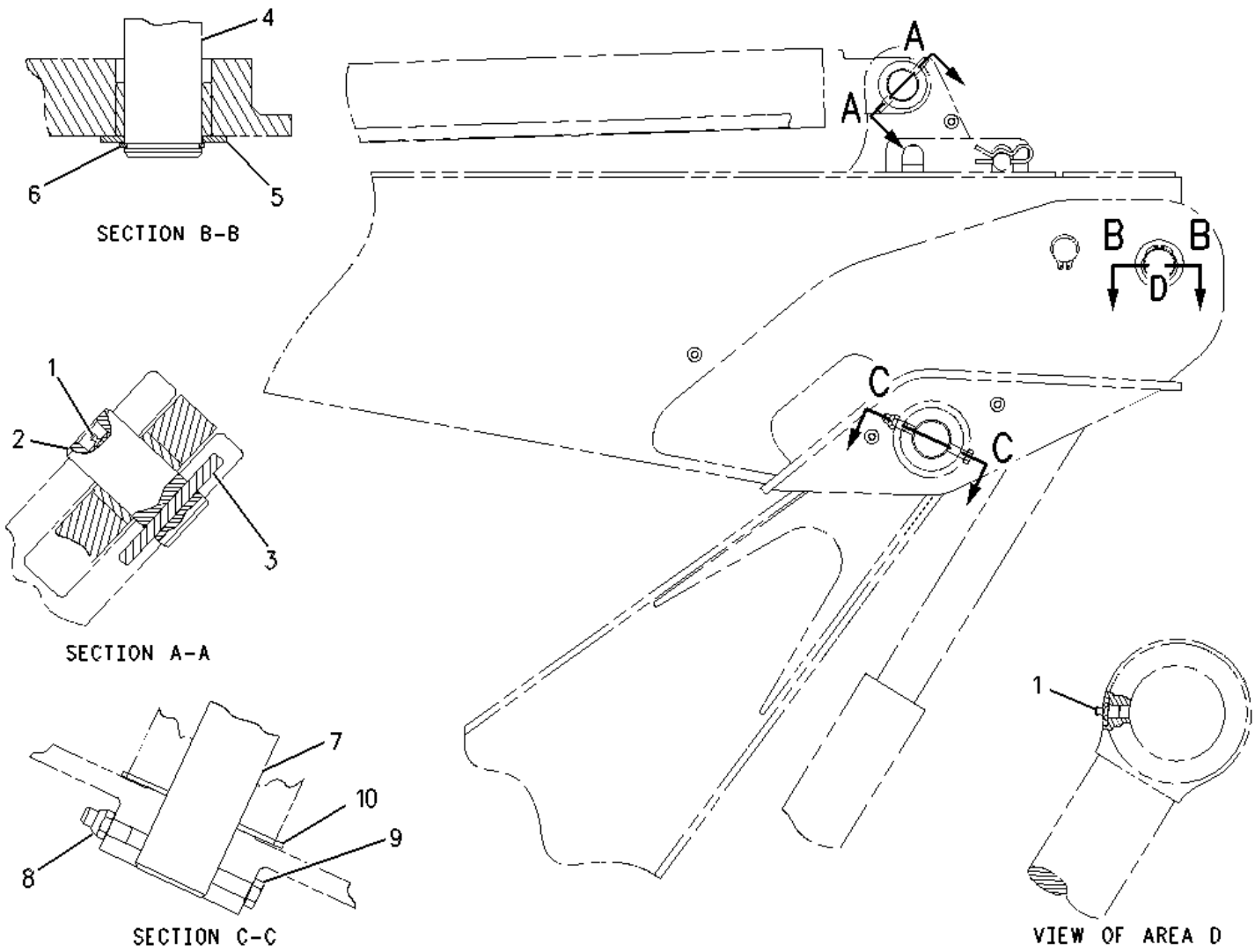

1	**NPR**	**3B-8489**	**2**	**FITTING-GREASE**
2	**NPR**	**9R-6163**	**1**	**PIN**
3	**NPR**	**2K-3549**	**1**	**PIN-SPRING**
4	**NPR**	**9R-8206**	**1**	**PIN**
5	**NPR**	**9R-1502**	**2**	**WASHER (56X90X4-MM THK)**
6	**NPR**	**6V-8344**	**2**	**RING-RETAINING**
7	**NPR**	**159-0961**	**1**	**PIN**
8	**NPR M**	**6V-7687**	**1**	**LOCKNUT (M12X1.75-THD)**
9	**NPR M**	**8T-5001**	**1**	**BOLT (M12X1.75X130-MM)**
10	**NPR**	**124-0360**	**3**	**WASHER-THRUST**

Key: M - METRIC PART

159-2657 MOUNTING GP-STICK ---S/N 4ZN16044-50156
PART OF 154-5309, 154-5311, 154-5312, 154-5314 BACKHOE AR-EXTENDABLE STICK--Type 2

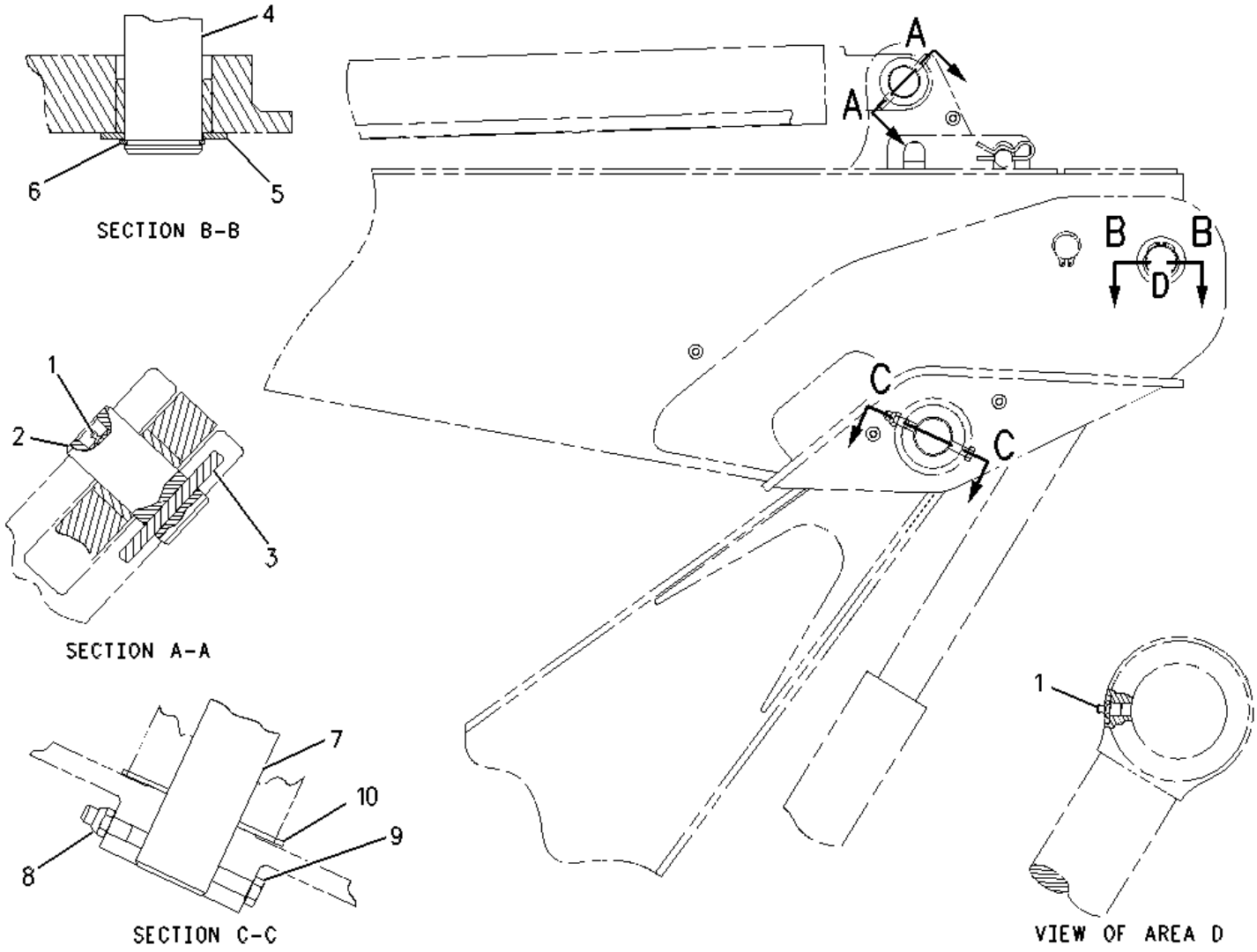

1	**NPR**	**3B-8489**	**2**	**FITTING-GREASE**
2	**NPR**	**9R-6163**	**1**	**PIN**
3	**NPR**	**2K-3549**	**1**	**PIN-SPRING**
4	**NPR C**	**152-9735**	**1**	**PIN**
5	**NPR**	**9R-1502**	**2**	**WASHER (56X90X4-MM THK)**
6	**NPR**	**6V-8344**	**2**	**RING-RETAINING**
7	**NPR**	**159-0961**	**1**	**PIN**
8	**NPR M**	**6V-7687**	**1**	**LOCKNUT (M12X1.75-THD)**
9	**NPR M**	**8T-5001**	**1**	**BOLT (M12X1.75X130-MM)**
10	**NPR**	**124-0360**	**3**	**WASHER-THRUST**

Key: C - CHANGE FROM PREVIOUS TYPE M - METRIC PART

9R-9107 STICK GP-EXTENDABLE ----S/N 4ZN16044-50156

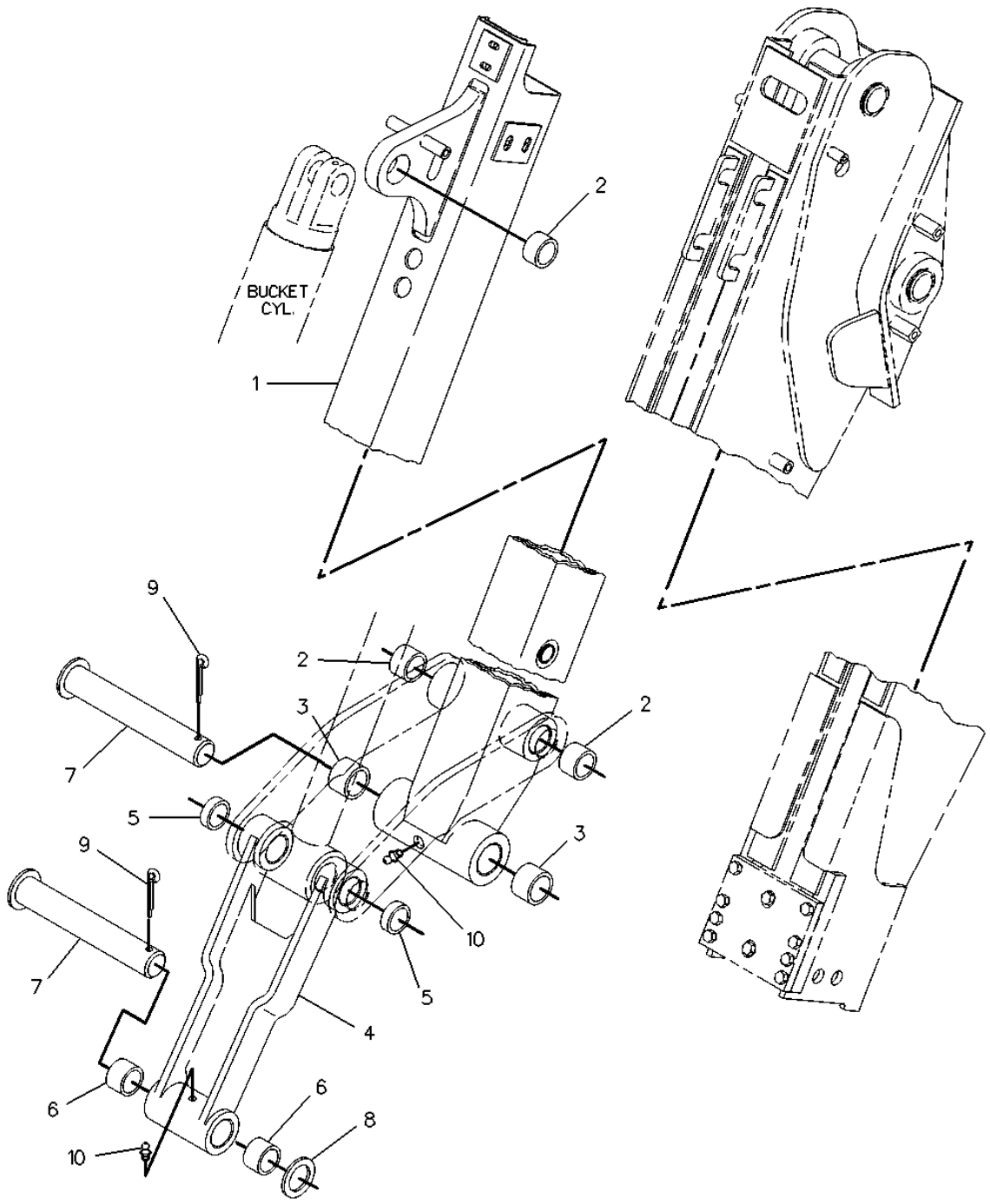

1	**NPR**	**9R-9104**	**1**	**EXTENSION AS**
2	**NPR**	**9R-0411**	**3**	**BEARING-SLEEVE**
3	**NPR**	**9R-7891**	**2**	**BEARING-SLEEVE**
4	**NPR**	**9R-9103**	**1**	**LINK AS**

5	NPR	9R-0153	4	BEARING-SLEEVE
6	NPR	9R-7891	2	BEARING-SLEEVE
7	NPR	9R-9105	2	PIN AS
8	NPR	9R-0158	1	WASHER (46X69X3-MM THK)
9	NPR	3B-5319	2	PIN-COTTER
10	NPR	3B-8489	2	FITTING-GREASE

159-5035 STICK GP-EXTENDABLE--S/N 4ZN16044-50156
PART OF 154-5309, 154-5311, 154-5312, 154-5314 BACKHOE AR-EXTENDABLE STICK

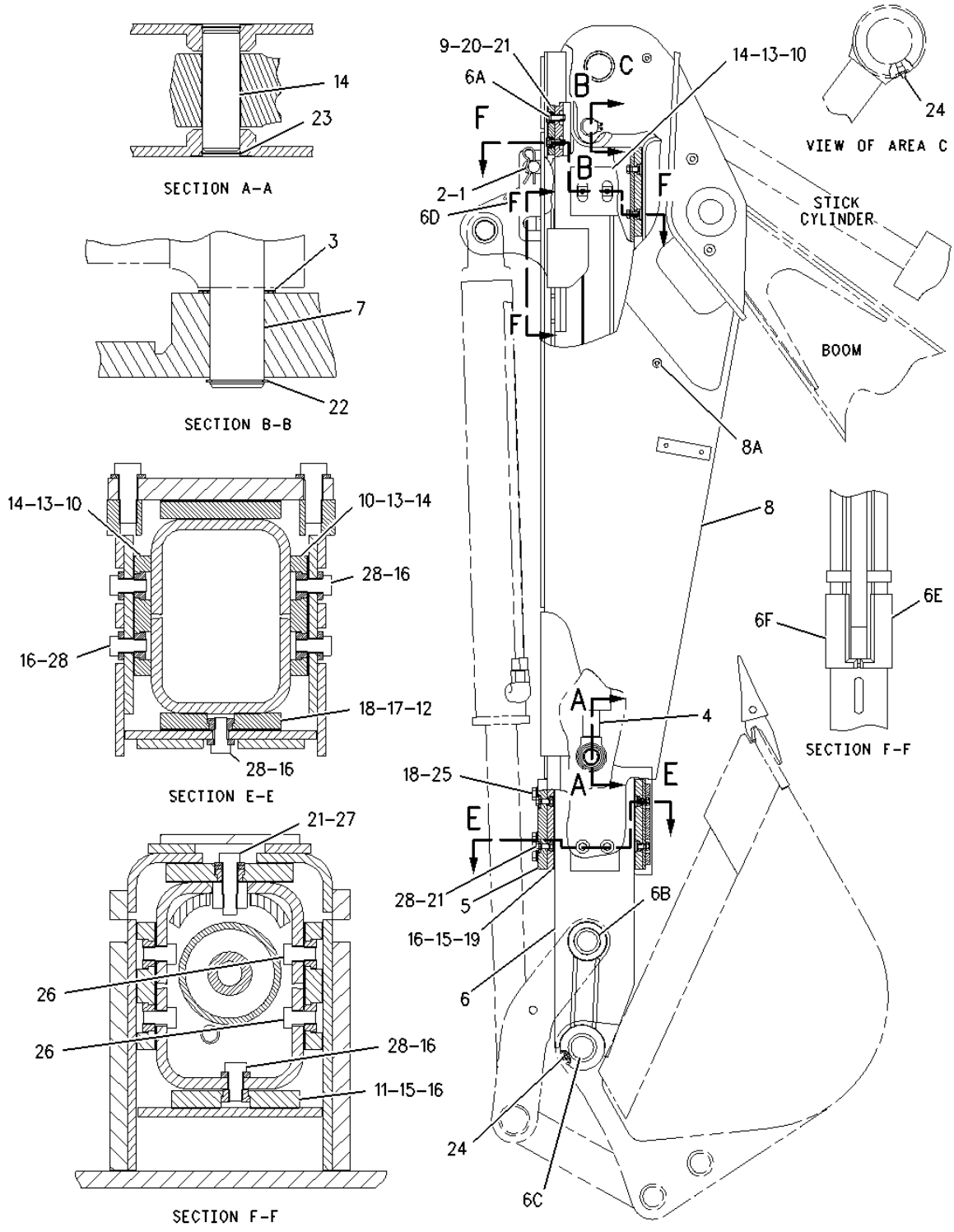

1 NPR 9R-2958 1 PIN

2 NPR 9R-2959 2 CLIP

3 NPR B 117-0754 4 SHIM (1-MM THK)

4 NPR Y 155-6586 1 CYLINDER GP-EXTENDABLE STICK

5 159-4930 1 PLATE

6		159-4931	1	EXTENSION AS
6A	NPR	9R-0162	2	BEARING-SLEEVE
6B	NPR	9R-0411	3	BEARING-SLEEVE
6C	NPR	9R-3092	2	BEARING-SLEEVE
6D	NPR	9R-9254	2	BOSS
6E	NPR	164-3354	1	PLATE (RH)
6F	NPR	169-5781	1	PLATE (LH)
7	NPR	173-7757	1	PIN
8	NPR	177-0842	1	HOUSING AS
8A	NPR	9R-9254		BOSS
9	NPR	187-3825	1	PAD AS
10	NPR	187-3826	4	PAD AS
11	NPR	187-3827	1	PAD AS
12	NPR	187-3828	1	PAD AS
13	NPR B	187-3832	16	SHIM (1-MM THK)
	NPR B	187-3833	4	SHIM (0.5-MM THK)
14	NPR	9R-2956	1	PIN
15	NPR B	187-3834	6	SHIM (1-MM THK)
	NPR B	187-3835	4	SHIM (0.5-MM THK)
16	NPR	8T-7971	8	WASHER-HARD (13.5X25.5X5-MM THK)
17	NPR B	187-3836	3	SHIM (1-MM THK)
	NPR B	187-3837	2	SHIM (0.5-MM THK)
18	NPR M	8T-7338	6	BOLT (M16X2X45-MM)
19	NPR	192-1699	1	PAD AS
20	NPR B	198-0014	3	SHIM (1-MM THK)

	NPR B	198-0015	2	SHIM (0.5-MM THK)
21	NPR	8T-4223	6	WASHER-HARD (13.5X25.5X3-MM THK)
22	NPR	1J-6474	2	RING-RETAINING
23	NPR	1L-3768	2	RING-RETAINING
24	NPR	3B-8489	2	FITTING-GREASE
25	NPR	8T-4122	6	WASHER-HARD (17X32X3.5-MM THK)
26	NPR M	8T-4179	4	BOLT (M12X1.75X20-MM)
27	NPR M	8T-4184	2	BOLT (M12X1.75X45-MM)
28	NPR M	8T-4192	10	BOLT (M12X1.75X25-MM)

Key:

B - USE AS REQUIRED
M - METRIC PART
Y - SEPARATE ILLUSTRATION

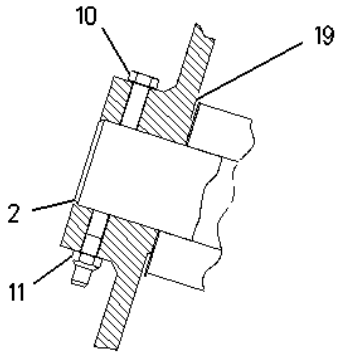

SECTION A-A

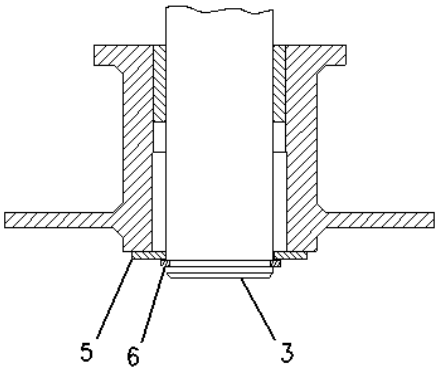

SECTION B-B

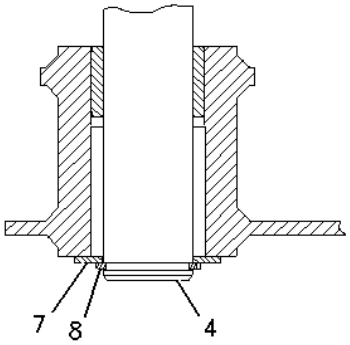

SECTION C-C

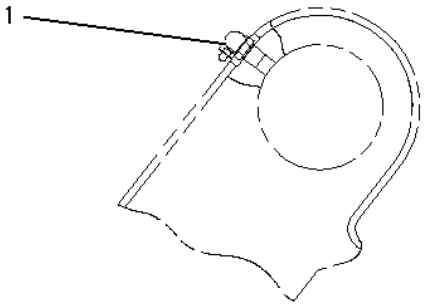

VIEW OF AREA F

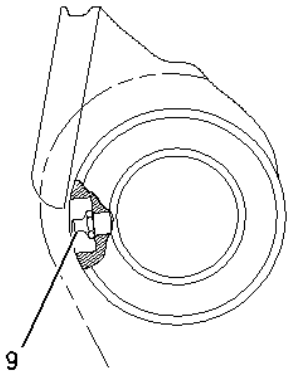

VIEW OF AREA D

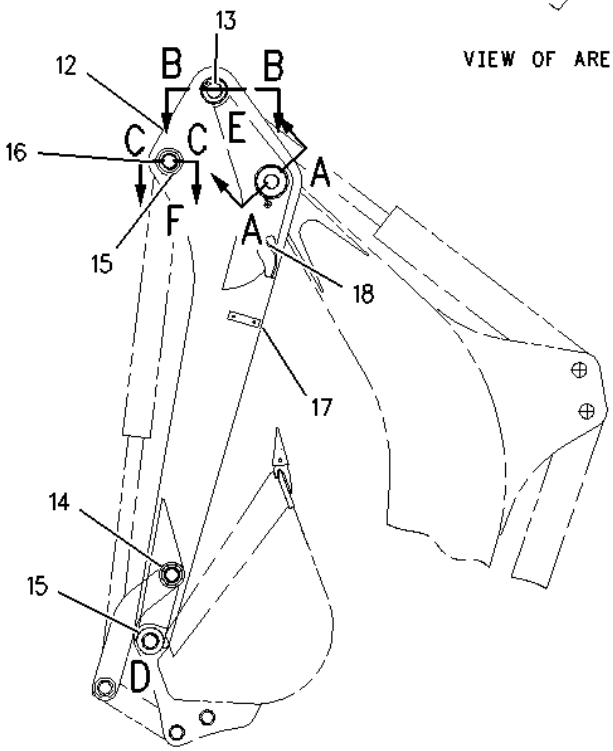

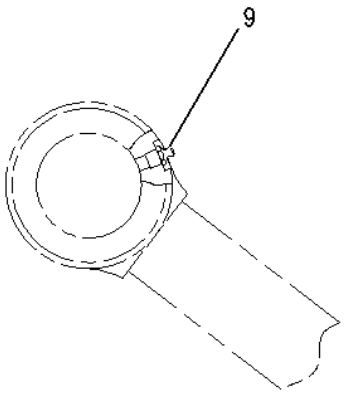

VIEW OF AREA E

1 NPR 3B-8488 1 FITTING-GREASE

2 NPR 9R-8664 1 PIN

3 NPR 9R-8663 1 PIN

4 NPR 9R-8662 1 PIN

5	NPR	9R-1502	2	WASHER (56X90X4-MM THK)
6	NPR	6V-8344	2	RING-RETAINING
7	NPR	9R-1510	2	WASHER (51X82X4-MM THK)
8	NPR	6V-4364	2	RING-RETAINING
9	NPR	3B-8489	2	FITTING-GREASE
10	NPR M	8T-5001	1	BOLT (M12X1.75X130-MM)
11	NPR M	6V-7687	1	LOCKNUT (M12X1.75-THD)
12	NPR	122-0776	1	STICK AS
13	NPR	9R-0139	2	BEARING-SLEEVE
14	NPR	9R-0411	2	BEARING-SLEEVE
15	NPR	9R-3092	4	BEARING-SLEEVE
16	NPR	106-0421	2	BOSS
17	NPR	107-6711	2	BLOCK
18	NPR	179-9961	1	PLUG-PROTECTIVE
19	NPR	124-0360	3	WASHER-THRUST

Key: M - METRIC PART

133-3362 PAD & GUARD GP-STABILIZER -STREET -S/N 4ZN16044-50156

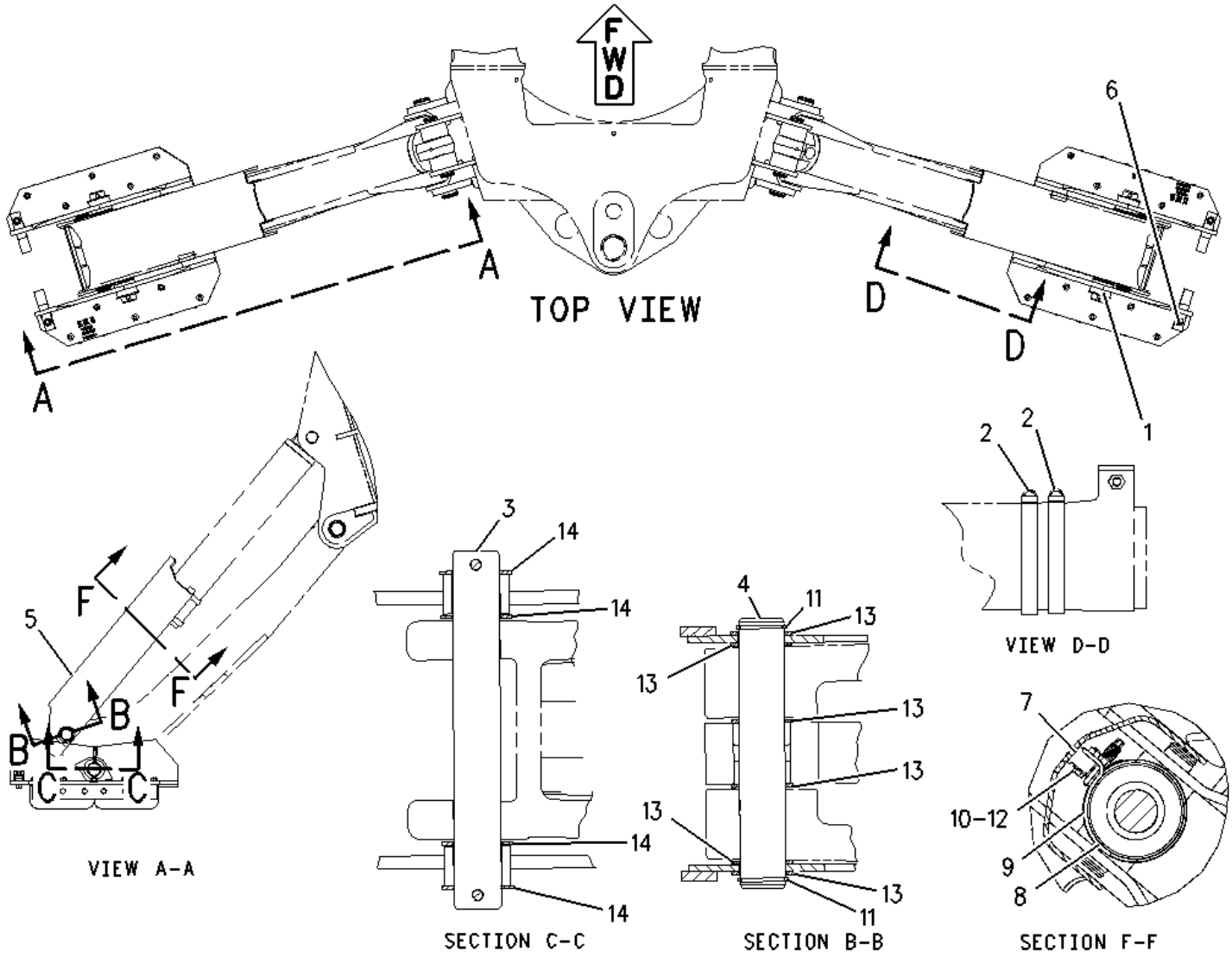

1	NPR	3B-5322	4	PIN-COTTER
2	NPR	8T-4986	4	CLAMP-HOSE
3	NPR	130-1637	2	SHAFT
4	NPR	130-1638	2	PIN
5	NPR	130-1640	2	GUARD AS
6	NPR Y	135-2876	2	PAD GP-STABILIZER (STREET)
7	NPR	188-3953	2	PAD
8	NPR	201-5810	2	PLATE
9	NPR	201-5812	2	PLATE AS
10	NPR	5P-4116	2	WASHER-HARD (8.8X20.5X2-MM THK)
11	NPR	6V-8144	4	RING-RETAINING
12	NPR M	7X-2537	2	BOLT (M8X1.25X35-MM)
13	NPR B	9R-0109	12	WASHER (41X64X3-MM THK)
14	NPR B	9R-0158	8	WASHER (46X69X3-MM THK)

Key: B - USE AS REQUIRED M - METRIC PART Y - SEPARATE ILLUSTRATION

133-3366 PAD & GUARD GP-STABILIZER –STREET--S/N 4ZN16044-50156

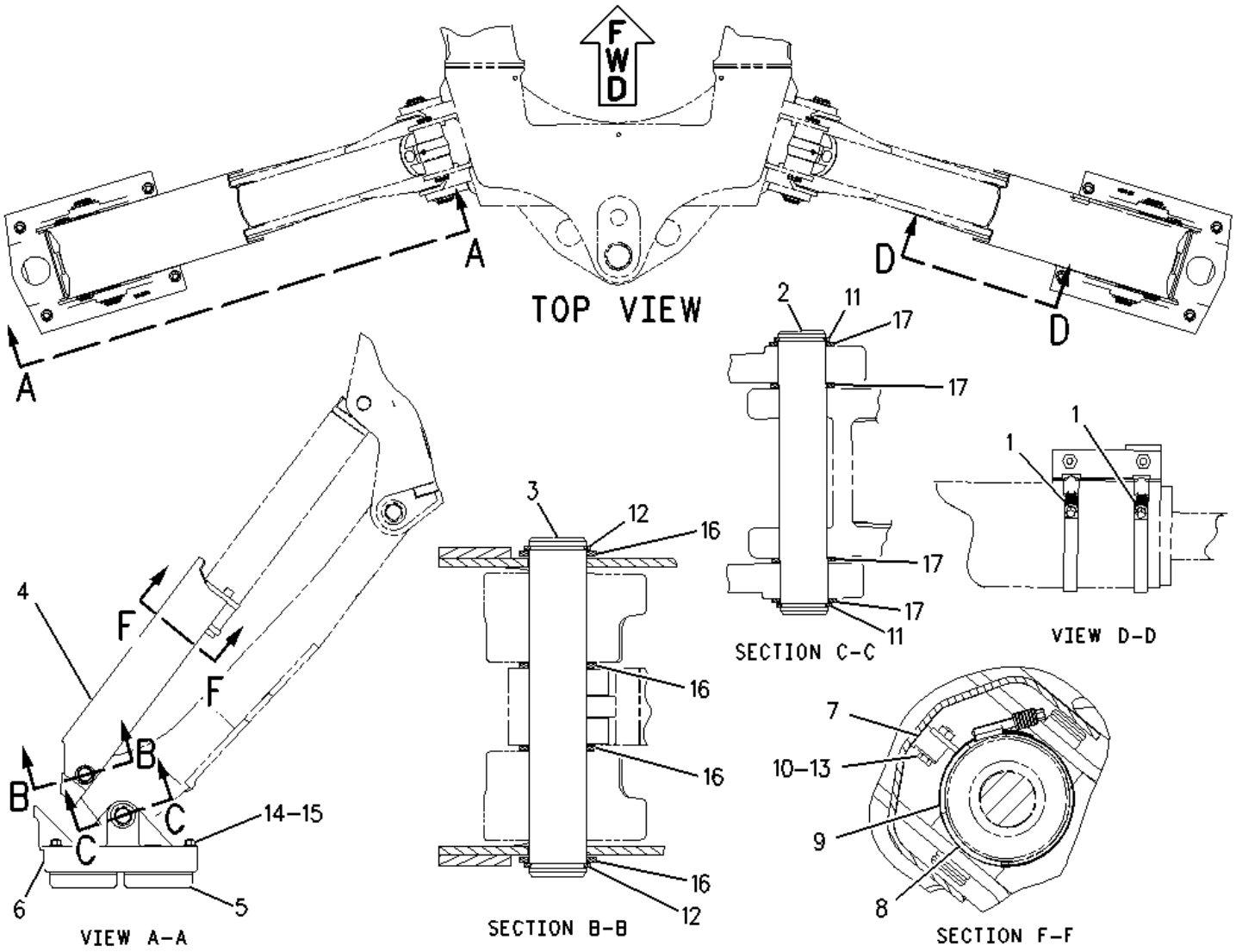

1 NPR 8T-4986 4 CLAMP-HOSE

2 NPR 9R-0424 2 PIN

3 NPR 130-1638 2 PIN

4 NPR 130-1640 2 GUARD AS

5 NPR 141-5150 4 PAD AS-STABILIZER (STREET)

6 NPR 141-6208 2 PAD-STABILIZER

7 NPR 188-3953 2 PAD

8 NPR 201-5810 2 PLATE

9 NPR 201-5812 2 PLATE AS

10 NPR 5P-4116 2 WASHER-HARD (8.8X20.5X2-MM THK)

11	NPR	6V-3213	4	RING-RETAINING
12	NPR	6V-8144	4	RING-RETAINING
13	NPR M	7X-2537	2	BOLT (M8X1.25X35-MM)
14	NPR	8T-4122	12	WASHER-HARD (17X32X3.5-MM THK)
15	NPR M	8T-4132	12	NUT (M16X2-THD)
16	NPR B	9R-0109	12	WASHER (41X64X3-MM THK)
17	NPR B	9R-0158	8	WASHER (46X69X3-MM THK)

Key:

B - USE AS REQUIRED
M - METRIC PART

9R-1085 PAD & MTG GP-STABILIZER -STREET --/N 4ZN16044-50156

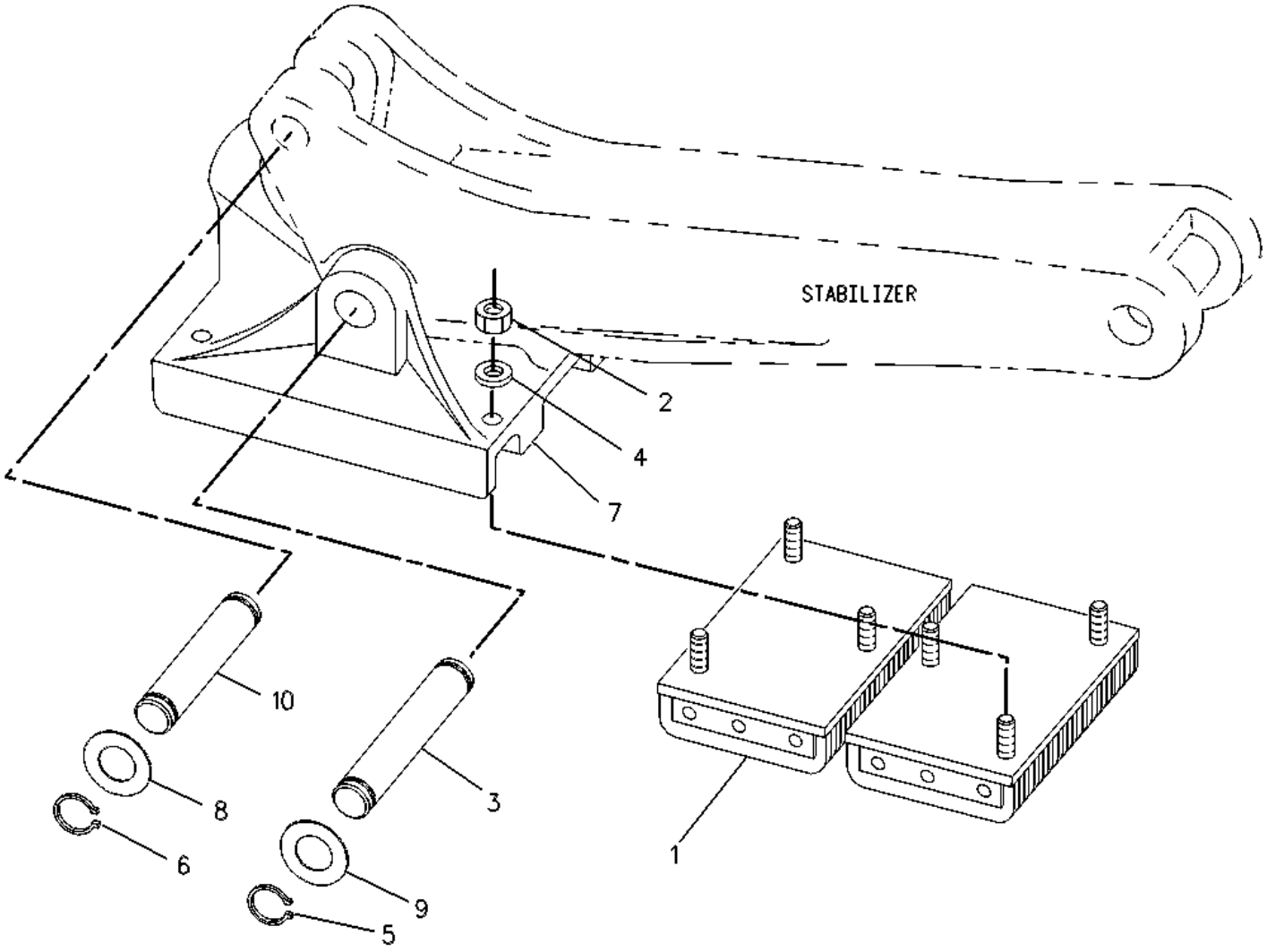

1 NPR 141-5150 4 PAD AS-STABILIZER (STREET)

2 NPR M 8T-4132 12 NUT (M16X2-THD)

3 NPR 9R-0424 2 PIN

4 NPR 8T-4122 12 WASHER-HARD (17X32X3.5-MM THK)

5 NPR 6V-3213 4 RING-RETAINING

6 NPR 6V-8144 4 RING-RETAINING

7 NPR C 141-6208 2 PAD-STABILIZER

8 NPR BC 9R-0109 8 WASHER (41X64X3-MM THK)

9 NPR BC 9R-0158 8 WASHER (46X69X3-MM THK)

10 NPR 9R-0422 2 PIN

Key: B - USE AS REQUIRED C - CHANGE FROM PREVIOUS TYPE M - METRIC PART

133-3363 PAD & GUARD GP-STABILIZER ---S/N 4ZN16044-50156

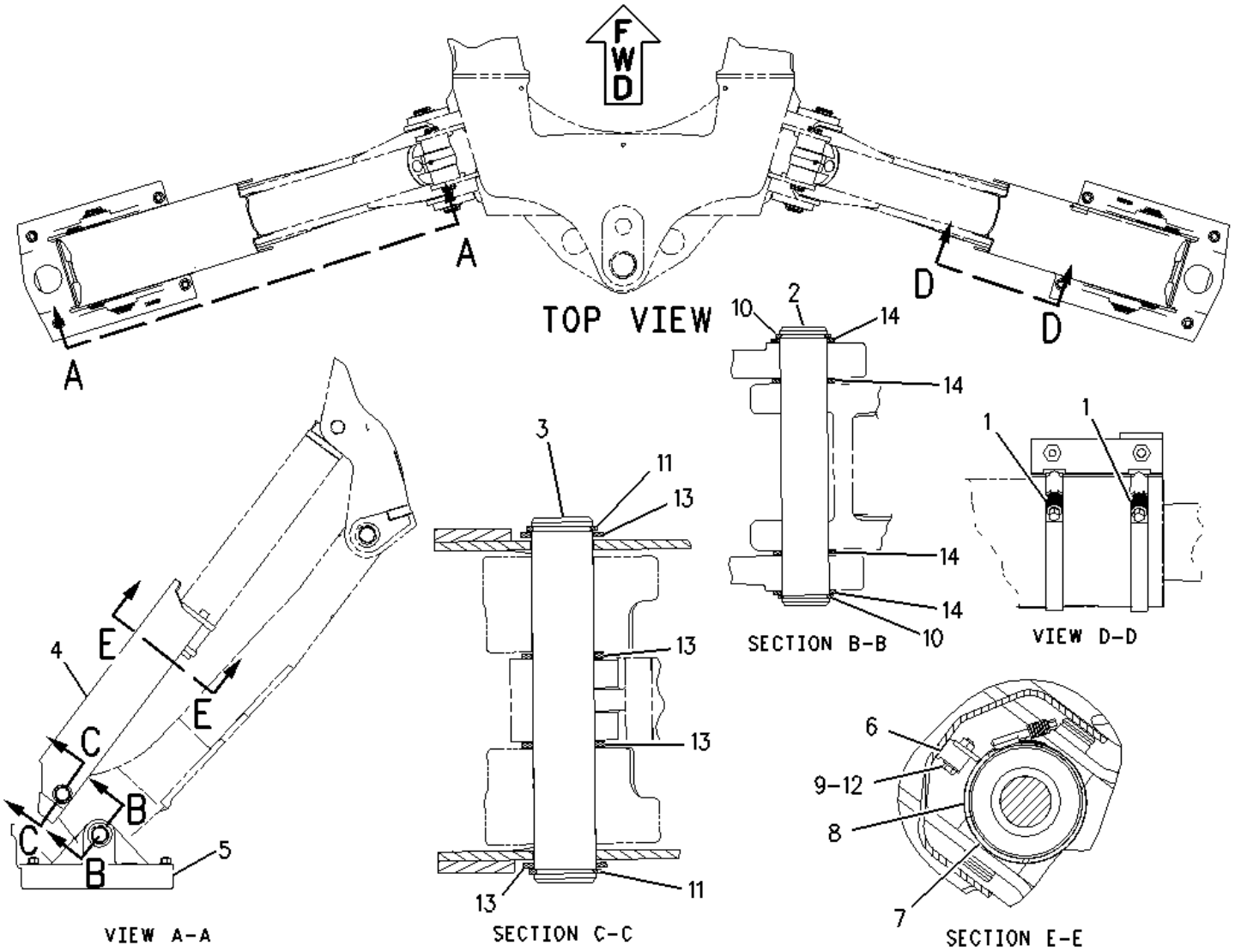

1	NPR	8T-4986	4	CLAMP-HOSE
2	NPR	9R-0424	2	PIN
3	NPR	130-1638	2	PIN
4	NPR	130-1640	2	GUARD AS
5	NPR	141-6208	2	PAD-STABILIZER
6	NPR	188-3953	2	PAD
7	NPR	201-5810	2	PLATE
8	NPR	201-5812	2	PLATE AS
9	NPR	5P-4116	2	WASHER-HARD (8.8X20.5X2-MM THK)
10	NPR	6V-3213	4	RING-RETAINING
11	NPR	6V-8144	4	RING-RETAINING
12	NPR M	7X-2537	2	BOLT (M8X1.25X35-MM)
13	NPR	9R-0109	12	WASHER (41X64X3-MM THK)
14	NPR	9R-0158	8	WASHER (46X69X3-MM THK)

Key: M - METRIC PART

9R-0041 STABILIZER GP-BACKHOE ---S/N 4ZN16044-50156--PART OF 154-5483 CHASSIS AR

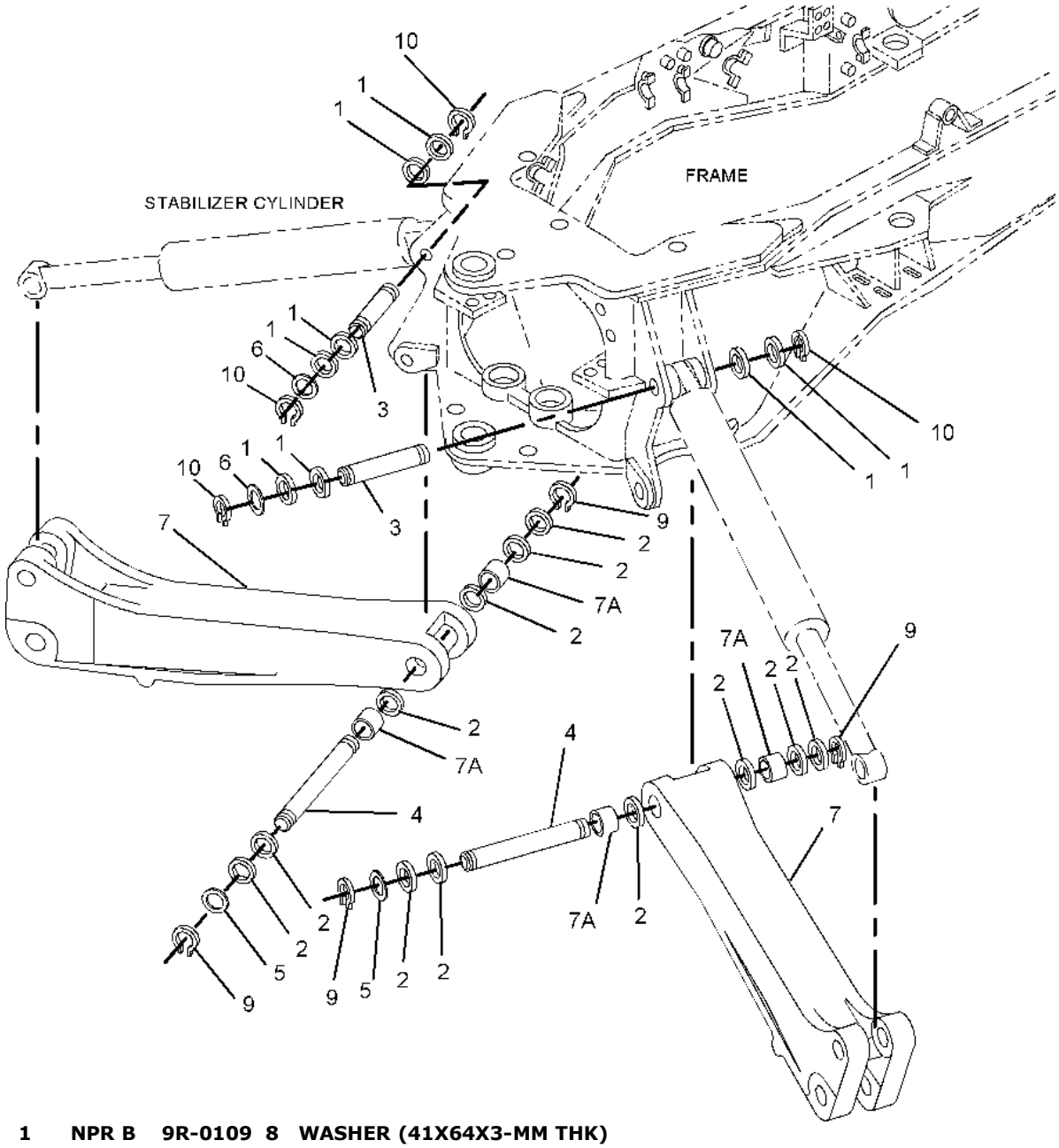

1 NPR B 9R-0109 8 WASHER (41X64X3-MM THK)
2 NPR B 9R-0158 14 WASHER (46X69X3-MM THK)
3 NPR 9R-0423 2 PIN
4 NPR 9R-0424 2 PIN
5 NPR B 111-4337 2 WASHER (46X70X1-MM THK)
6 NPR B 119-4594 2 WASHER (41X64X1-MM THK)
7 NPR 130-0777 2 STABILIZER AS
(EACH INCLUDES)
7A NPR 9R-0411 2 BEARING-SLEEVE
9 NPR 6V-3213 4 RING-RETAINING
10 NPR 6V-8144 4 RING-RETAINING
Key: B - USE AS REQUIRED

135-2876 PAD GP-STABILIZER -STREET --S/N 4ZN16044-50156
PART OF 133-3362 PAD & GUARD GP-STABILIZER

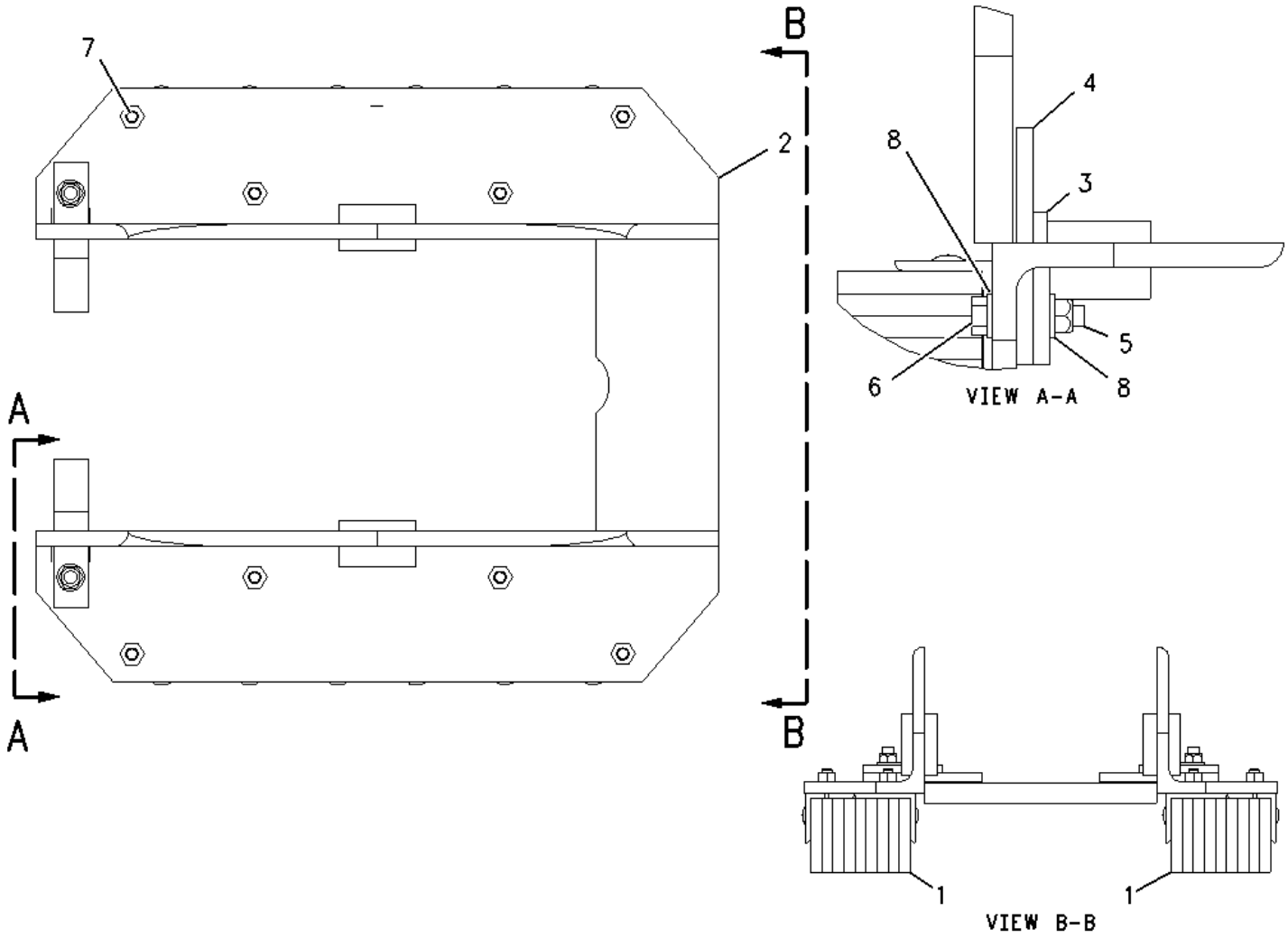

1	**NPR**	**9R-5555**	**2**	**PAD AS-STABILIZER (STREET)**
2	**NPR**	**130-1642**	**1**	**PAD AS-STABILIZER**
3	**NPR**	**146-1589**	**2**	**LATCH**
4	**NPR**	**146-1590**	**2**	**LATCH**
5	**NPR**	**6V-5729**	**2**	**LOCKNUT (7/16-14-THD)**
6	**NPR**	**7X-0310**	**2**	**BOLT (7/16-14X2-IN)**
7	**NPR**	**7X-0447**	**8**	**NUT (7/16-14-THD)**
8	**NPR**	**8T-5360**	**4**	**WASHER (12X22.5X2.5-MM THK)**

9R-6062 PAD GP-STABILIZER -STREET --S/N 4ZN16044-50156
PART OF 9R-6007 PAD & MTG GP-STABILIZER

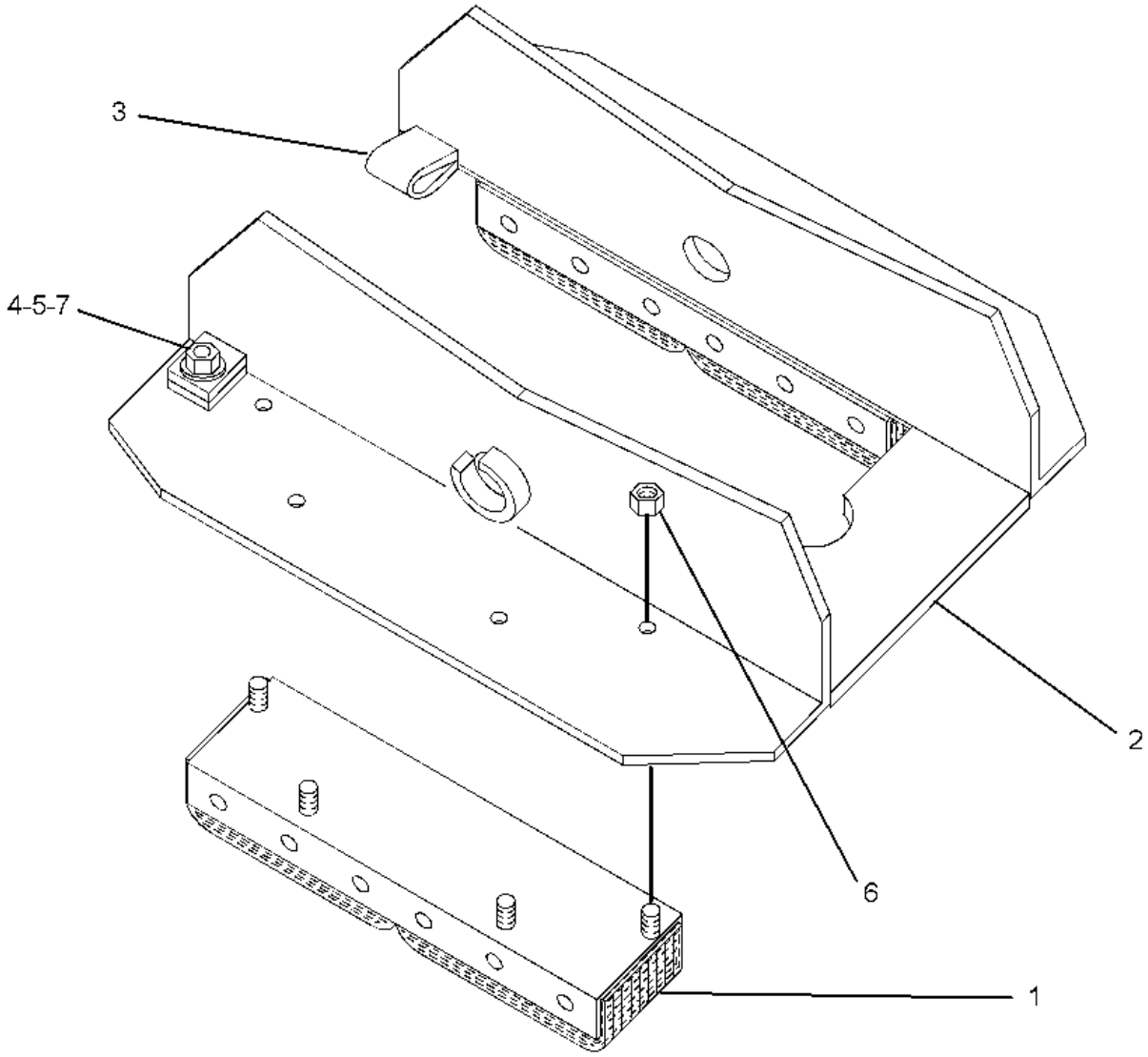

1	**NPR**	**9R-5555**	**2**	**PAD AS-STABILIZER (STREET)**
2	**NPR**	**130-1642**	**1**	**PAD AS-STABILIZER**
3	**NPR C**	**146-1591**	**2**	**LATCH**
4	**NPR**	**6V-5729**	**2**	**LOCKNUT (7/16-14-THD)**
5	**NPR**	**7X-0310**	**2**	**BOLT (7/16-14X2-IN)**
6	**NPR**	**7X-0447**	**8**	**NUT (7/16-14-THD)**
7	**NPR**	**8T-5360**	**4**	**WASHER (12X22.5X2.5-MM THK)**

Key: C - CHANGE FROM PREVIOUS TYPE

116-4942 PAD & MTG GP-STABILIZER ----S/N 4ZN16044-50156

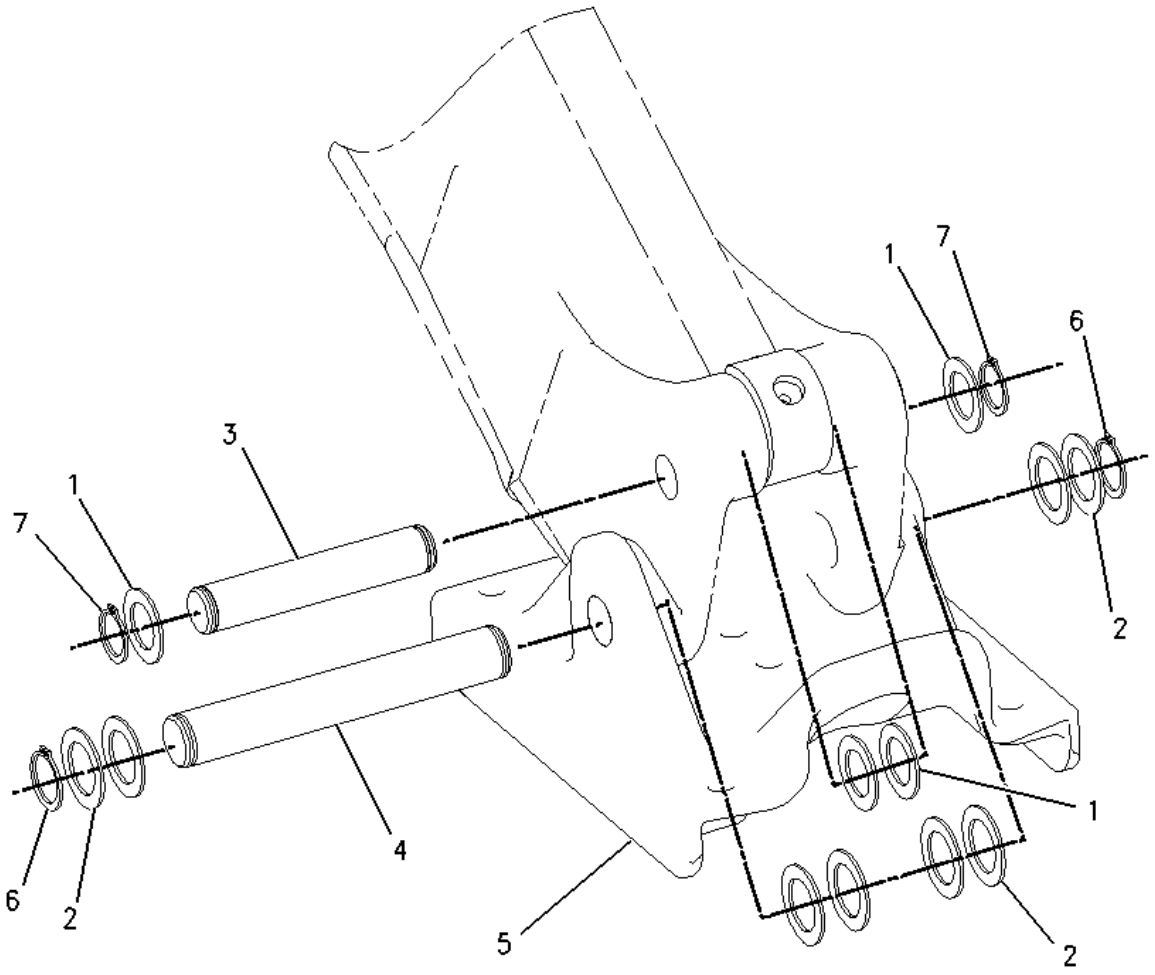

1	NPR BC	9R-0109	12	WASHER (41X64X3-MM THK)
2	NPR BC	9R-0158	14	WASHER (46X69X3-MM THK)
3	NPR	9R-0422	2	PIN
4	NPR	9R-0424	2	PIN
5	NPR C	141-6208	2	PAD-STABILIZER
6	NPR	6V-3213	4	RING-RETAINING
7	NPR	6V-8144	4	RING-RETAINING

Key: B - USE AS REQUIRED C - CHANGE FROM PREVIOUS TYPE

9R-6007 PAD & MTG GP-STABILIZER -STREET --S/N 4ZN16044-50156--Type 2

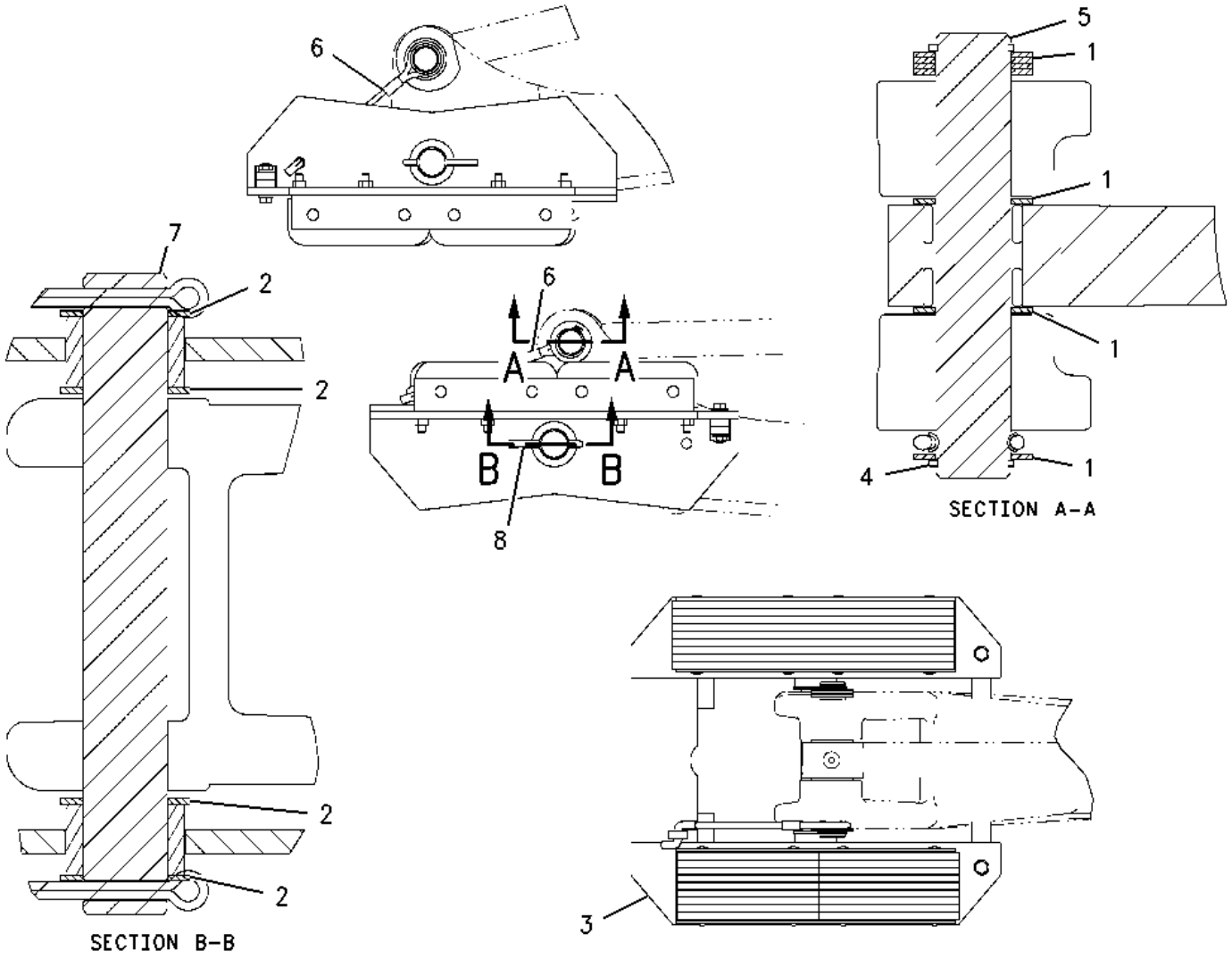

1	**NPR**	**B**	**9R-0109**	**14 WASHER (41X64X3-MM THK)**
2	**NPR**	**B**	**9R-0158**	**8 WASHER (46X69X3-MM THK)**
3	**NPR**	**Y**	**9R-6062**	**2 PAD GP-STABILIZER (STREET)**
4	**NPR**		**6V-8144**	**4 RING-RETAINING**
5	**NPR**		**130-1638**	**2 PIN**
6	**NPR**		**188-5004**	**2 CABLE AS**
7	**NPR**		**130-1637**	**2 SHAFT**
8	**NPR**		**3B-5322**	**4 PIN-COTTER**

Key: B - USE AS REQUIRED Y - SEPARATE ILLUSTRATION

9R-6007 PAD & MTG GP-STABILIZER -STREET --S/N 4ZN16044-50156--Type 1

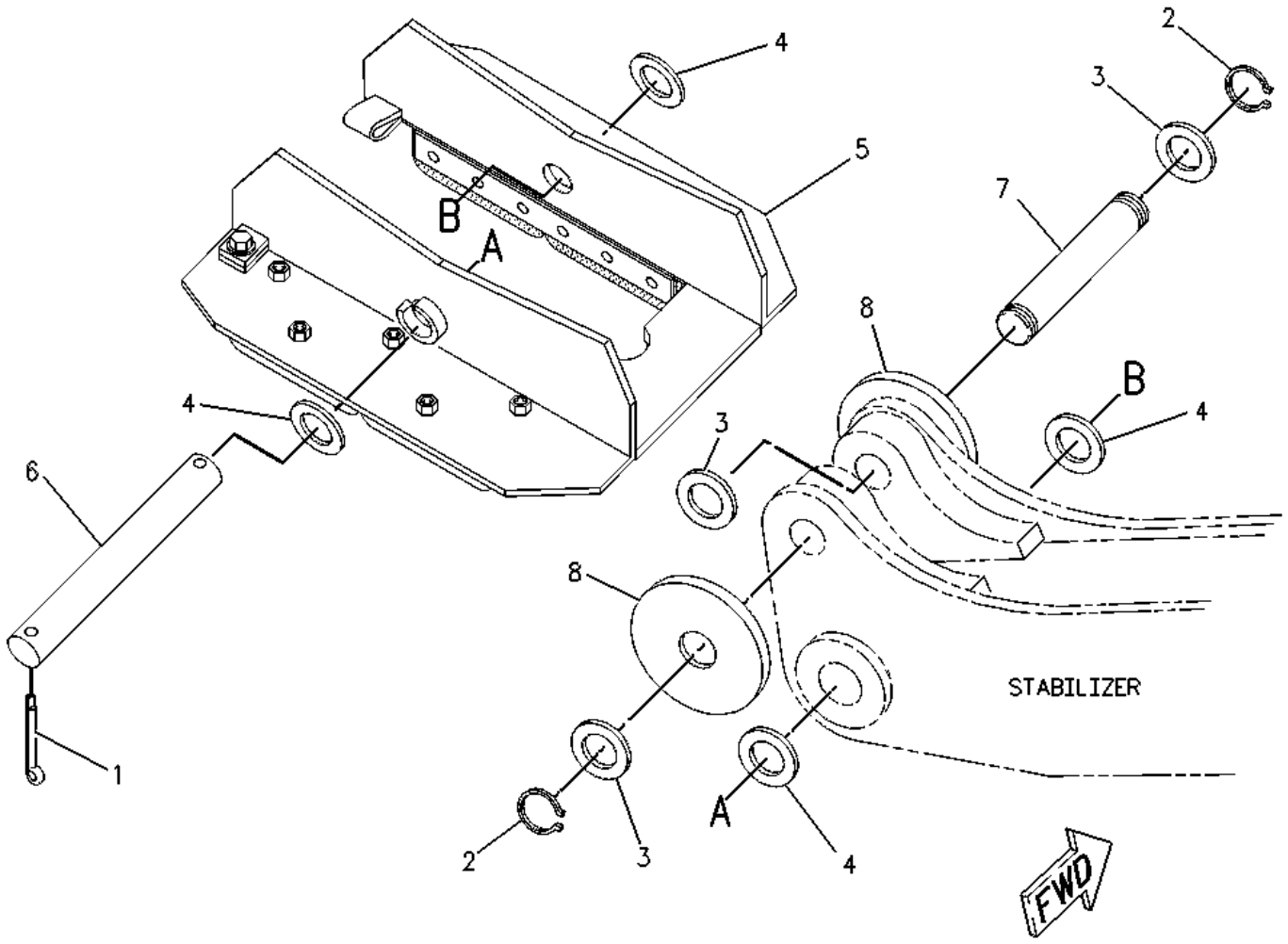

1	**NPR**	**3B-5322**	**4**	**PIN-COTTER**
2	**NPR**	**6V-8144**	**4**	**RING-RETAINING**
3	**NPR B**	**9R-0109**	**8**	**WASHER (41X64X3-MM THK)**
4	**NPR B**	**9R-0158**	**8**	**WASHER (46X69X3-MM THK)**
5	**NPR Y**	**9R-6062**	**2**	**PAD GP-STABILIZER (STREET)**
6	**NPR**	**130-1637**	**2**	**SHAFT**
7	**NPR**	**130-1638**	**2**	**PIN**
8	**NPR**	**130-1639**	**4**	**PLATE**

Key: B - USE AS REQUIRED Y - SEPARATE ILLUSTRATION

9R-8039 LOCK GP-TRANSPORT --S/N 4ZN16044-50156

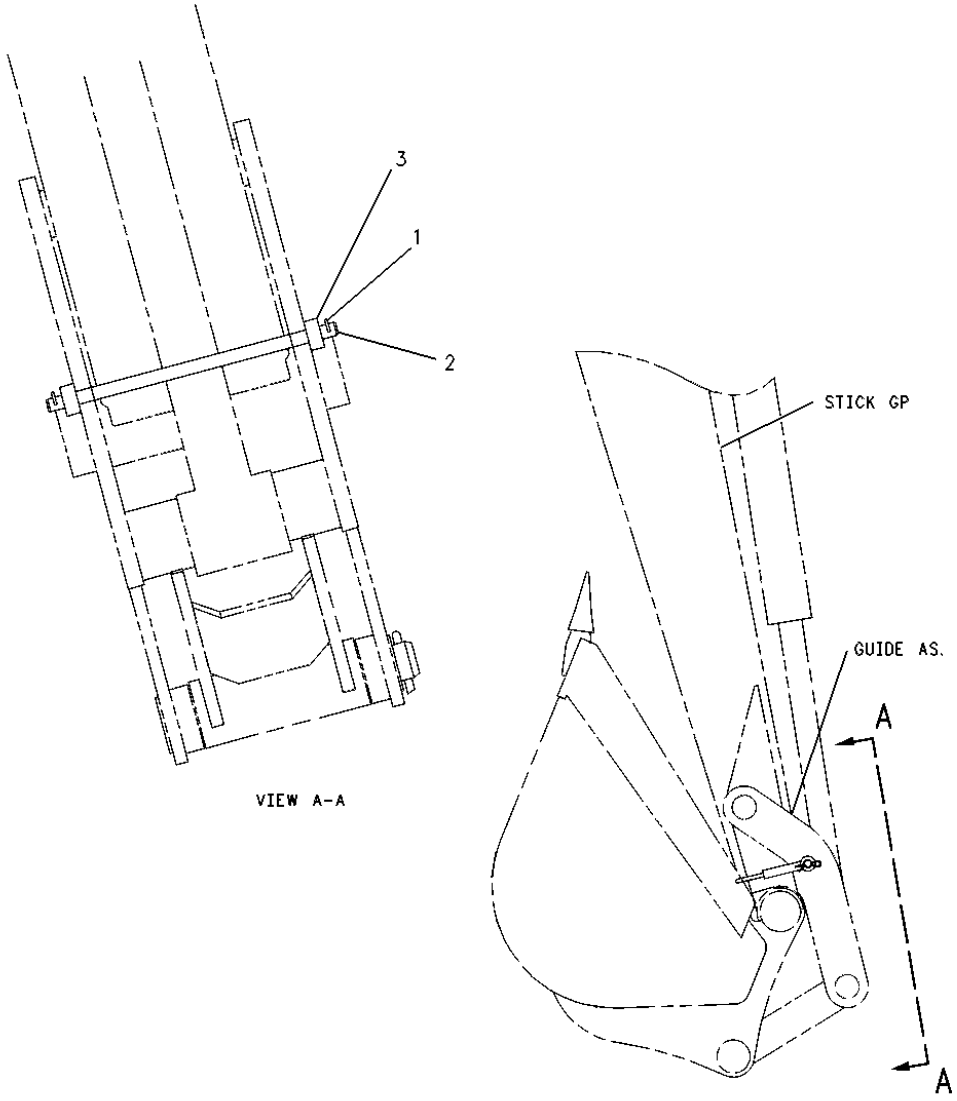

1	**NPR**	**9R-5301**	**3**	**PIN-COTTER**
2	**NPR**	**9R-9028**	**1**	**PIN**
3	**NPR**	**9R-9027**	**1**	**CABLE AS**

9R-9723 LOCK GP-TRANSPORT --S/N 4ZN16044-50156---PART OF 154-5483 CHASSIS AR--Type 1

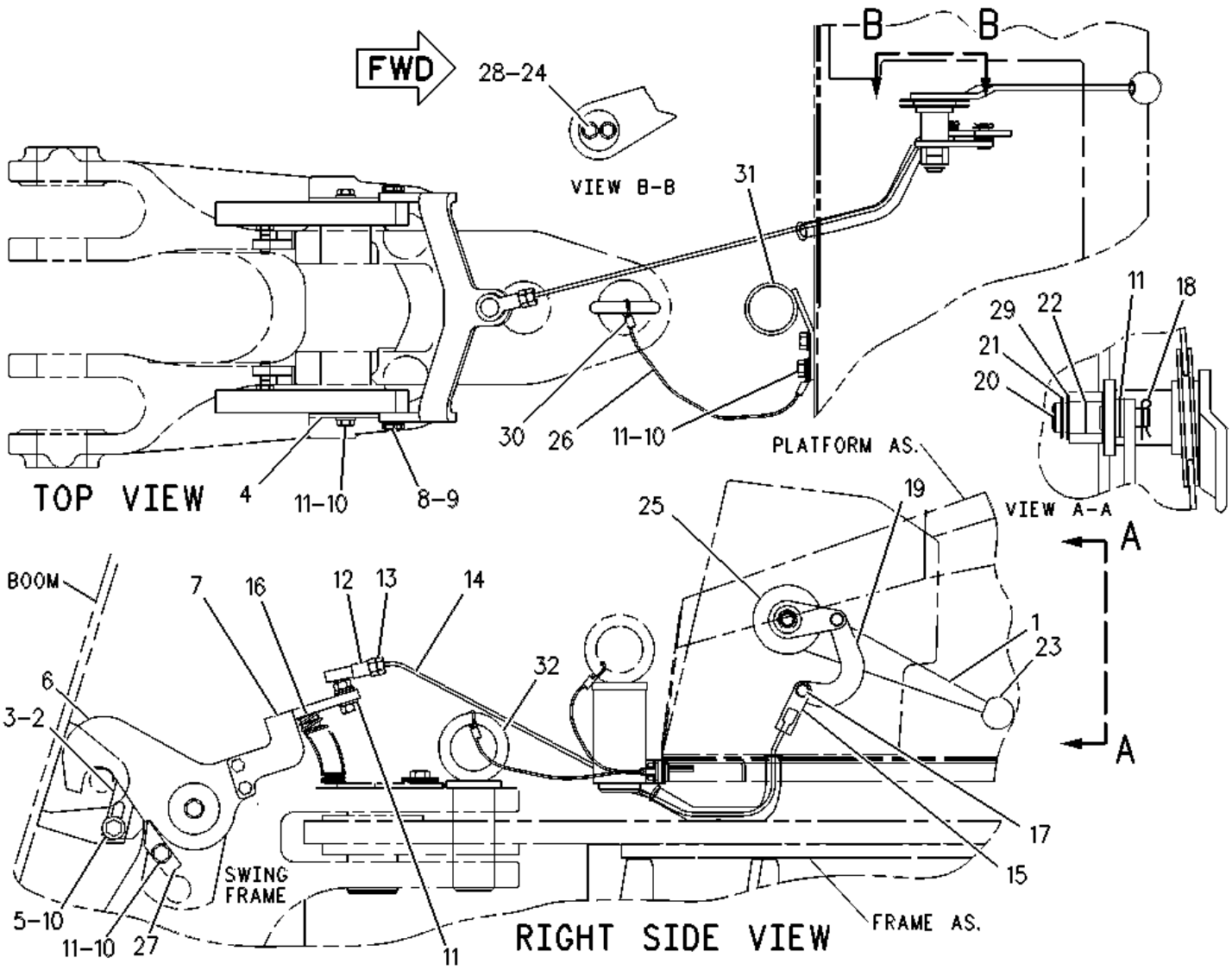

1 NPR 9R-9729 1 HANDLE AS

2 NPR 8Y-7203 1 WEDGE

3 NPR 8Y-7204 1 WEDGE

4 NPR 9R-8760 2 PLATE

5 NPR 7X-7729 2 WASHER (11X25X3-MM THK)

6 NPR 9R-8599 2 PLATE

7 NPR 9R-8757 1 BRACKET

8 NPR M 8T-4908 4 BOLT (M8X1.25X25-MM)

9 NPR 8T-4224 4 WASHER-HARD (8.8X16X2-MM THK)

10 NPR M 8T-4136 7 BOLT (M10X1.5X25-MM)

11	NPR	8T-4121	11	WASHER-HARD (11X21X2.5-MM THK)
12	NPR	8T-4766	1	ROD END
13	NPR M	8T-4133	2	NUT (M10X1.5-THD)
14	NPR	117-8774	1	CABLE AS
15	NPR	117-9649	1	YOKE
16	NPR	101-4017	1	SPRING
17	NPR	9R-3135	1	PIN
18	NPR	9R-2807	2	CLIP
19	NPR	9R-9727	1	PLATE
20	NPR	9R-9725	1	LEVER AS
21	NPR	2R-0364	1	RING-RETAINING
22	NPR	9R-8165	2	BEARING
23	NPR	8T-3984	1	KNOB
24	NPR M	2W-9499	2	BOLT (M6X1X40-MM)
25	NPR	9R-8175	1	BOOT
26	NPR	134-0143	1	CABLE (2.38-GA)
27	NPR	102-1940	1	STOP
28	NPR	8T-4205	2	WASHER-HARD (7.2X14.5X2-MM THK)
29	NPR B	1K-0502	1	WASHER (16.3X25.4X1.2-MM THK)
30	NPR	5P-7958	1	SLEEVE-CABLE SPLICE
31	NPR	131-8775	1	BRACKET AS
32	NPR	9R-8594	1	PIN AS

Key:

B - USE AS REQUIRED
M - METRIC PART

9R-9723 LOCK GP-TRANSPORT --S/N 4ZN16044-50156--PART OF 154-5483 CHASSIS AR--Type 2

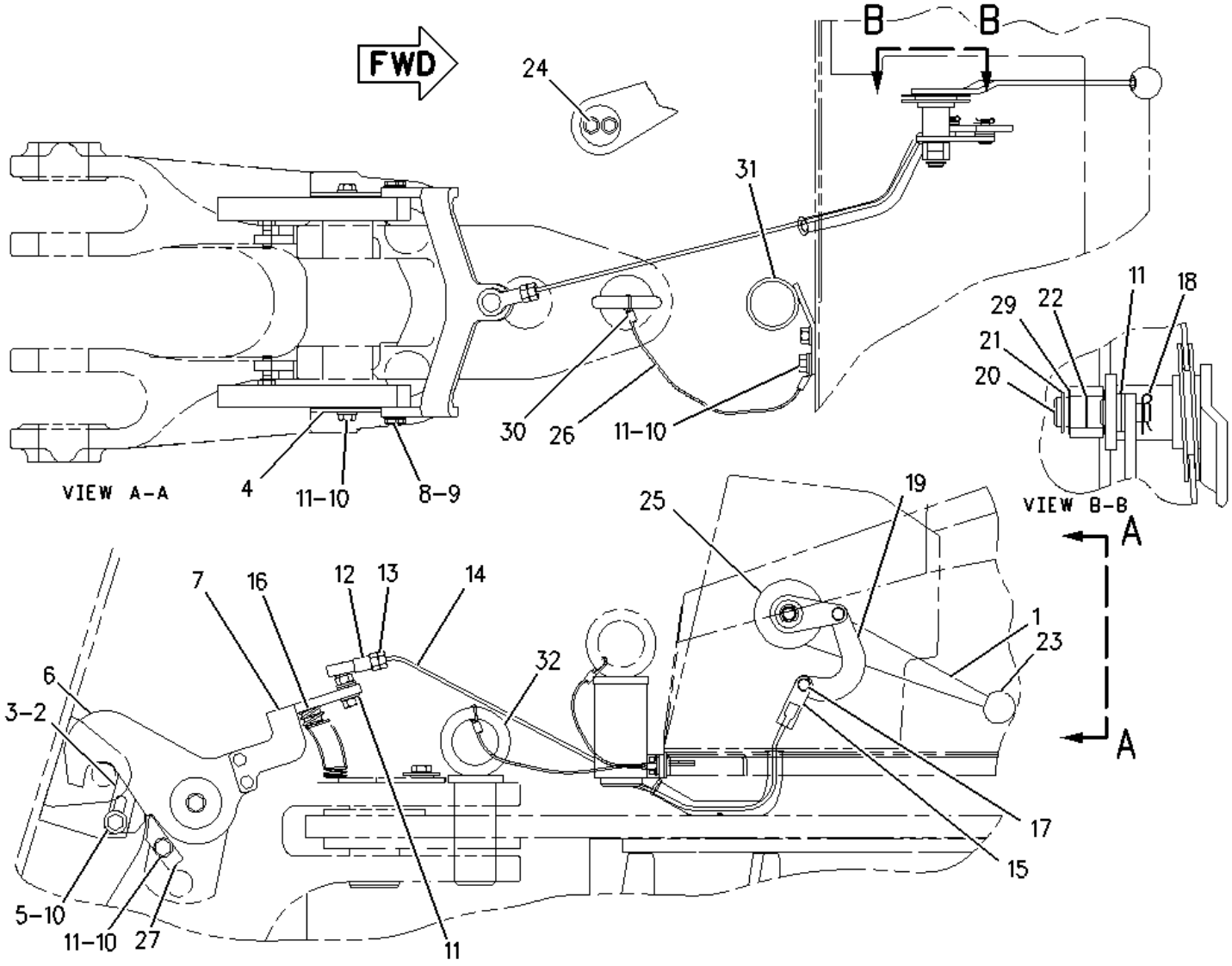

1 NPR 172-5771 1 HANDLE AS

2 NPR 8Y-7203 1 WEDGE

3 NPR 8Y-7204 1 WEDGE

4 NPR 9R-8760 2 PLATE

5 NPR 7X-7729 2 WASHER (11X25X3-MM THK)

6 NPR 9R-8599 2 PLATE

7 NPR 9R-8757 1 BRACKET

8 NPR M 8T-4908 4 BOLT (M8X1.25X25-MM)

9 NPR 8T-4224 4 WASHER-HARD (8.8X16X2-MM THK)

10 NPR M 8T-4136 7 BOLT (M10X1.5X25-MM)

11 NPR 8T-4121 11 WASHER-HARD (11X21X2.5-MM THK)

12 NPR 8T-4766 1 ROD END

13 NPR M 8T-4133 2 NUT (M10X1.5-THD)

14 NPR 174-2365 1 CABLE AS

15	NPR	117-9649	1	YOKE
16	NPR	101-4017	1	SPRING
17	NPR	9R-3135	1	PIN
18	NPR	9R-2807	2	CLIP
19	NPR	9R-9727	1	PLATE
20	NPR	172-5772	1	LEVER AS
21	NPR	2R-0364	1	RING-RETAINING
22	NPR	9R-8165	2	BEARING
23	NPR	8T-3984	1	KNOB
24	NPR M	172-4018	2	BOLT-SOCKET HEAD (M8X1.25X35-MM)
25	NPR	9R-8175	1	BOOT
26	NPR	134-0143	1	CABLE (2.38-GA)
27	NPR	102-1940	1	STOP
29	NPR B	1K-0502	1	WASHER (16.3X25.4X1.2-MM THK)
30	NPR	5P-7958	1	SLEEVE-CABLE SPLICE
31	NPR	131-8775	1	BRACKET AS
32	NPR	9R-8594	1	PIN AS

Key: B - USE AS REQUIRED M - METRIC PART

122-8037 LOCK GP-TRANSPORT --S/N 4ZN16044-50156

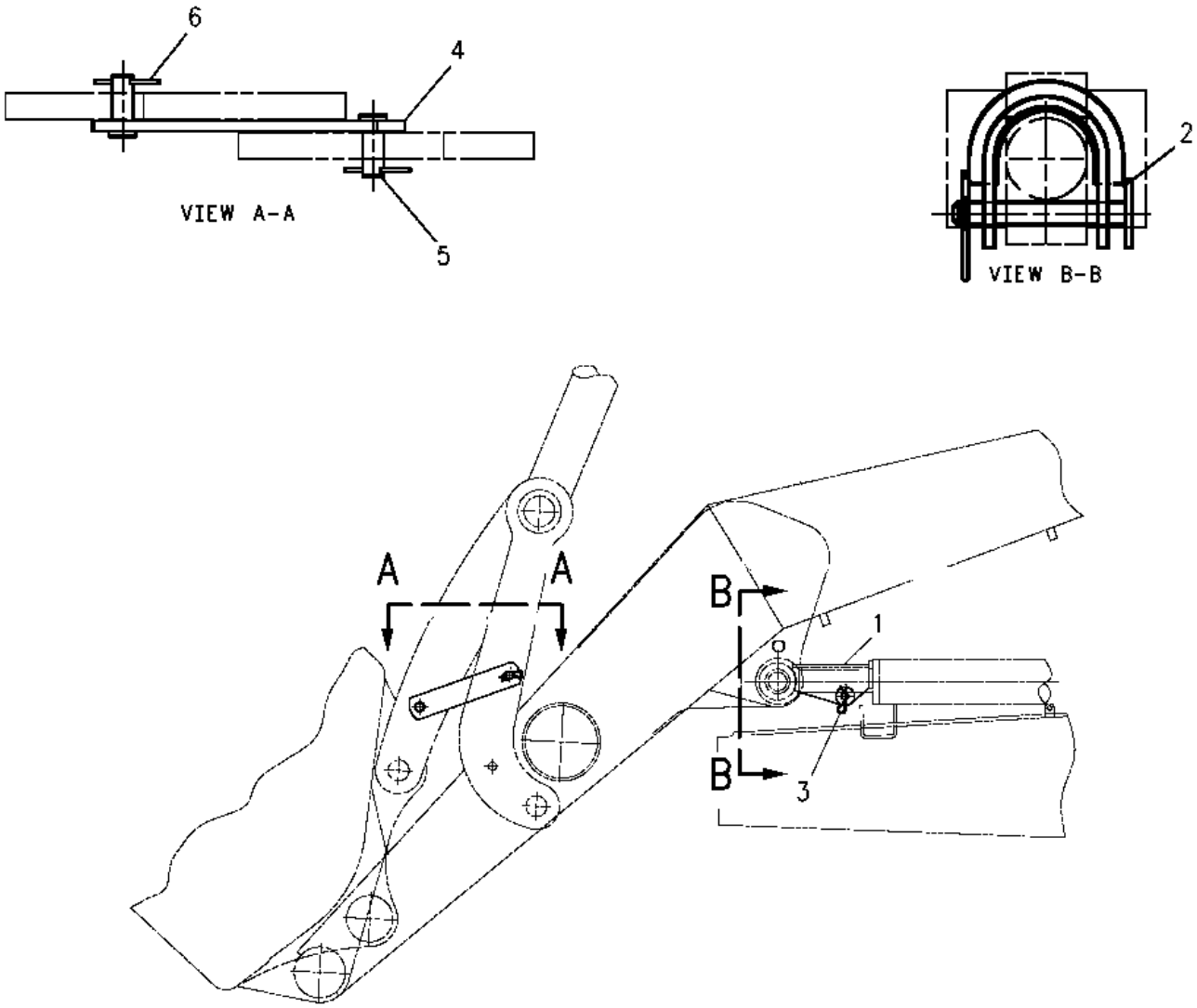

1	**NPR**	**122-8032**	**1**	**BRACE AS**
2	**NPR**	**113-9090**	**1**	**PIN AS**
3	**NPR**	**9R-5301**	**1**	**PIN-COTTER**
4	**NPR**	**9R-6140**	**1**	**LINK**
5	**NPR**	**9S-1315**	**1**	**PIN-CLEVIS**
6	**NPR**	**6S-6646**	**1**	**PIN**

9R-7581 LINKAGE GP-BACKHOE BUCKET --S/N 4ZN16044-50156
PART OF 154-5309, 154-5311, 154-5312, 154-5314 BACKHOE AR-EXTENDABLE STICK, 154-5300, 154-5302, 154-5303, 154-5305, 154-5306, 154-5308 BACKHOE AR-STANDARD STICK

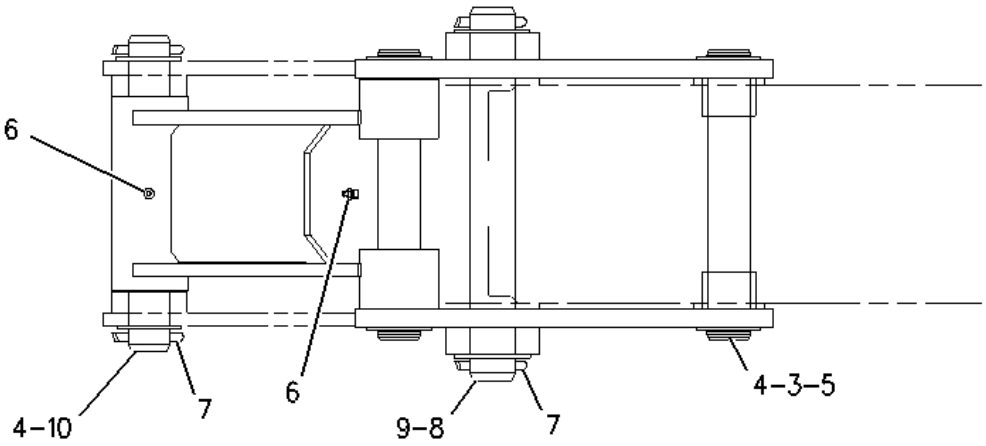

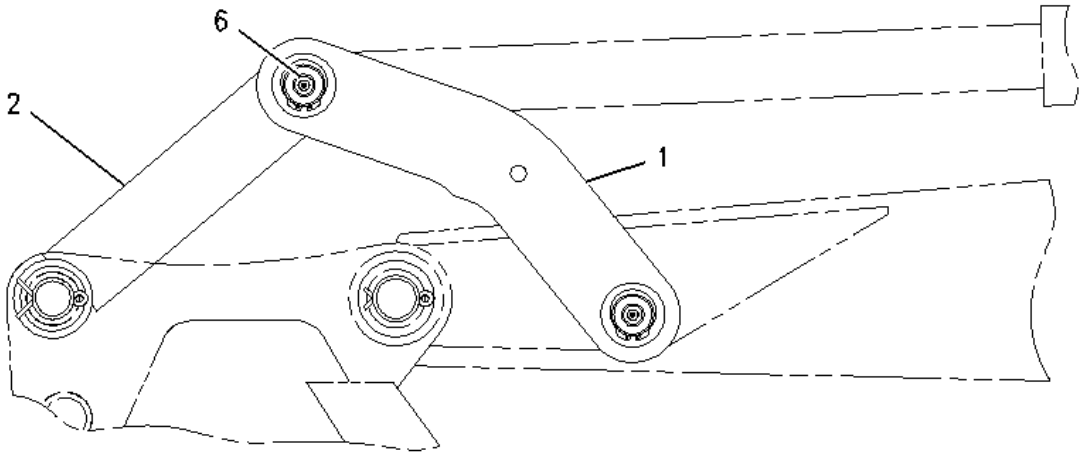

1 NPR 9R-8724 2 GUIDE AS

(EACH INCLUDES)

NPR 9R-0153 2 BEARING-SLEEVE

2 NPR 9R-7699 1 LINK AS

NPR 9R-0147 2 BEARING-SLEEVE

NPR 9R-0153 4 BEARING-SLEEVE

3 NPR 9R-7696 2 PIN

4 NPR 9R-0158 9 WASHER (46X69X3-MM THK)

5 NPR 6V-3213 4 RING-RETAINING

6 NPR 3B-8489 6 FITTING-GREASE

7 NPR 3B-5319 4 PIN-COTTER

8 NPR 9R-6162 1 PIN

9 NPR 9R-1510 2 WASHER (51X82X4-MM THK)

10 NPR B 154-5279 1 PIN

Key:

B - USE AS REQUIRED

9R-9140 LINKAGE GP-LOADER BUCKET --S/N 4ZN16044-50156
PART OF 107-3313 LOADER AR

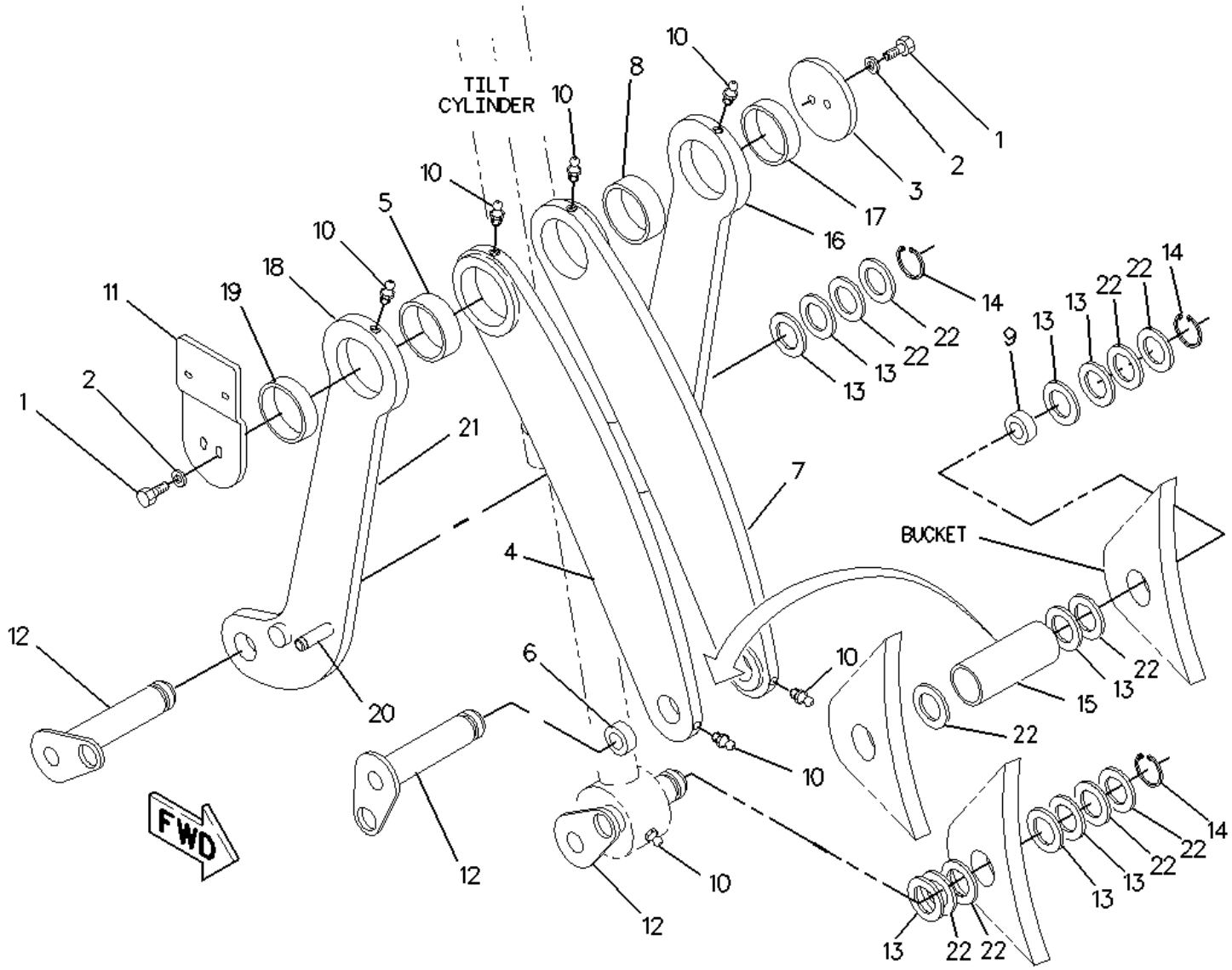

1 NPR M 8T-4137 4 BOLT (M10X1.5X20-MM)

2 NPR 8T-4121 4 WASHER-HARD (11X21X2.5-MM THK)

3 NPR 101-0117 1 PLATE

4 NPR 9R-5834 1 LINK AS (RH)

5 NPR 9R-1107 1 BEARING

6 NPR 9R-5828 1 BEARING-SLEEVE

7 NPR 9R-5835 1 LINK AS (LH)

8 NPR 9R-1107 1 BEARING

9 NPR 9R-5828 1 BEARING-SLEEVE

10 NPR 3B-8489 7 FITTING-GREASE

11	NPR	118-7789	1	PLATE
12	NPR	9R-4494	3	PIN AS
13	NPR B	9R-0158	8	WASHER (46X69X3-MM THK)
14	NPR	6V-3213	3	RING-RETAINING
15	NPR	9R-4482	1	SPACER (52.7X60.3X99-MM)
16	NPR	9R-5063	1	GUIDE AS
17	NPR	9R-1104	1	BEARING
18	NPR	9R-9152	1	GUIDE AS (RH)
19	NPR	9R-1104	1	BEARING
20	NPR	9R-3933	1	PIN
21	NPR	9R-9153	1	GUIDE
22	NPR B	111-4337	10	WASHER (46X70X1-MM THK)

Key:

B - USE AS REQUIRED
M - METRIC PART

9R-0036 BRACE GP-LIFT CYLINDER --S/N 4ZN16044-50156--PART OF 107-3313 LOADER AR

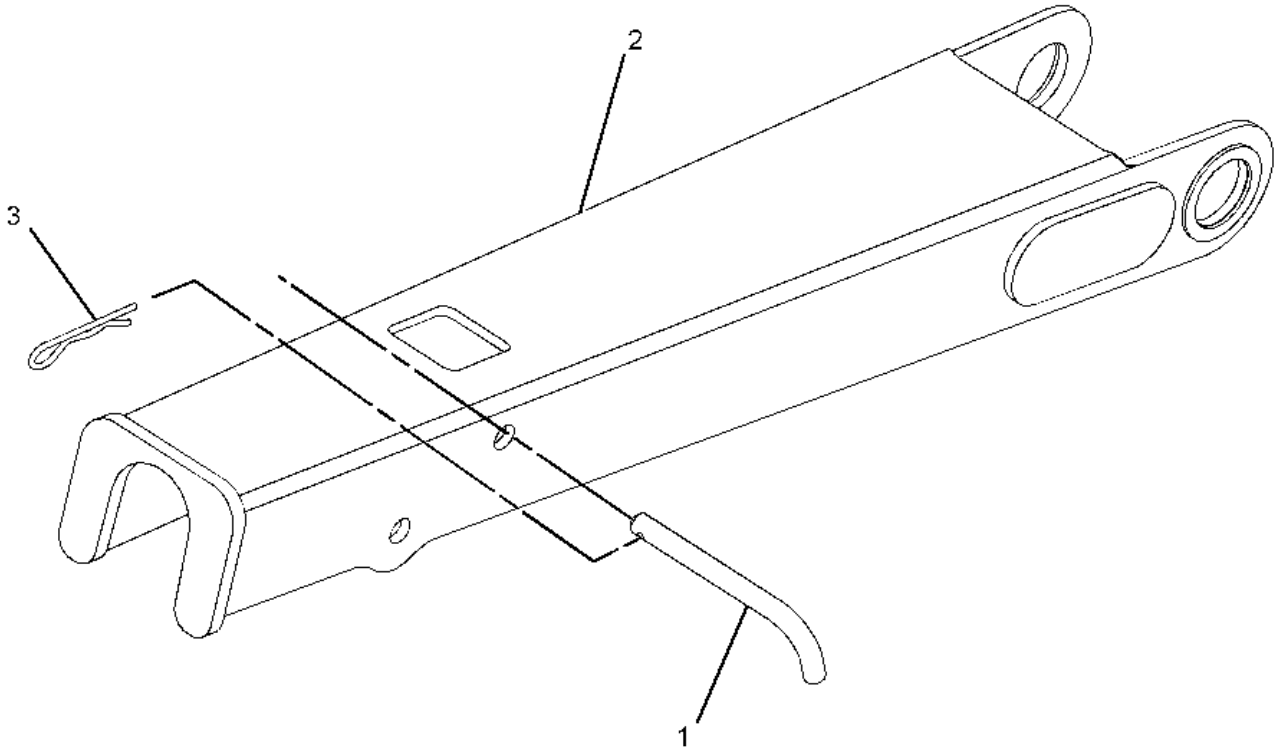

1	**NPR**	**9R-0189**	**1**	**PIN**
2	**NPR**	**132-6497**	**1**	**BRACE AS**
3	**NPR C**	**9R-5301**	**1**	**PIN-COTTER**

Key: C - CHANGE FROM PREVIOUS TYPE

159-2798 BOOM GP --S/N 4ZN16044-50156
PART OF 154-5309, 154-5311 BACKHOE AR-EXTENDABLE STICK, 154-5300, 154-5302, 154-5306, 154-5308 BACKHOE AR-STANDARD STICK

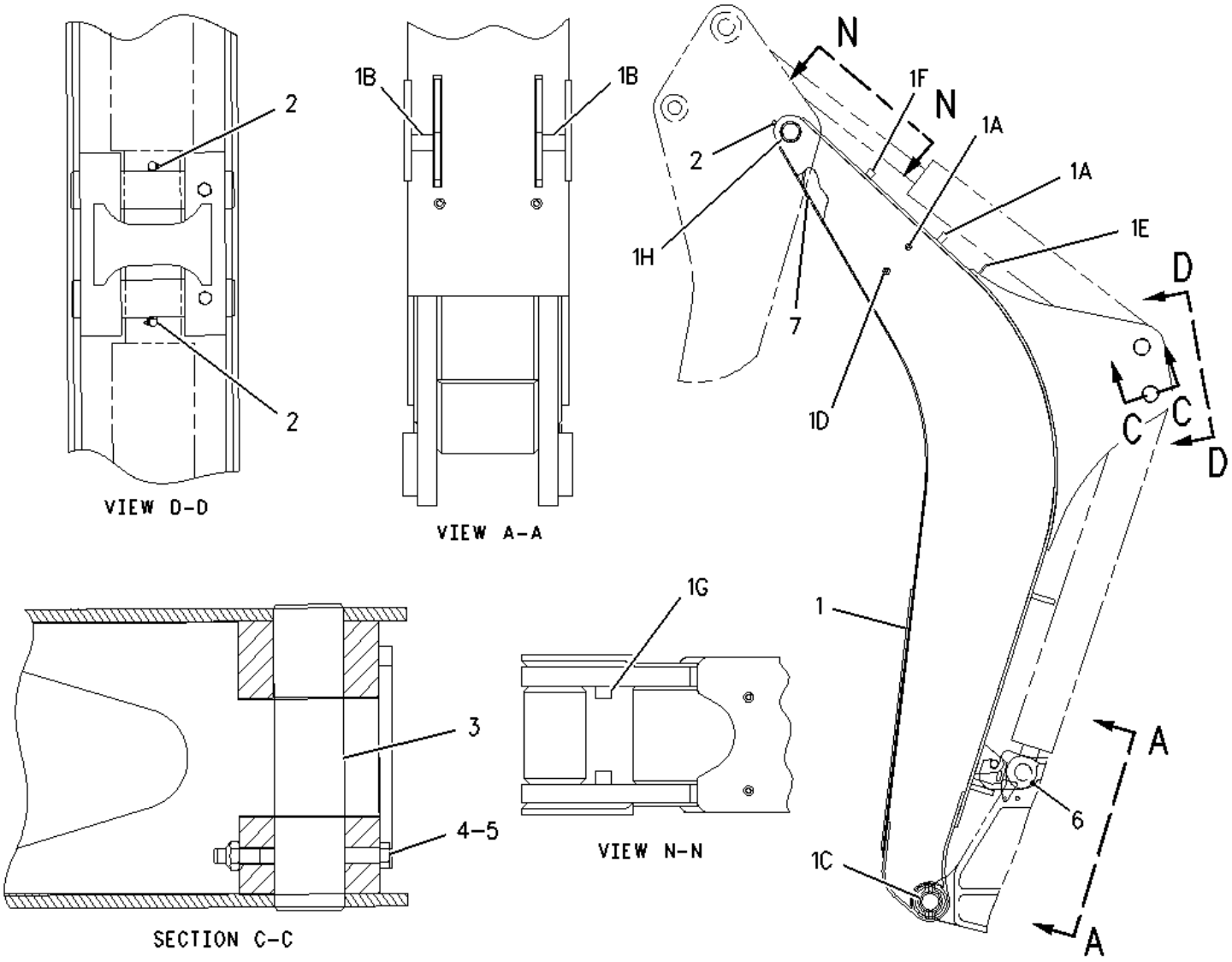

1 NPR 152-7728 1 BOOM AS

1A NPR 8Y-4489 4 BOSS-THREADED

1B NPR 9R-8523 2 PIN

1C NPR 9R-9475 2 BEARING-SLEEVE

1D NPR 106-0421 2 BOSS

1E NPR 106-0424 1 PLATE

1F NPR M 111-0483 2 BOSS (M10X1.5-MM-THD)

1G NPR 174-6812 2 BOSS

1H NPR 9R-0170 2 BEARING

2 NPR 3B-8488 3 FITTING-GREASE

3 NPR 9R-9812 2 PIN

4 NPR M 8T-5001 2 BOLT (M12X1.75X130-MM)

5 NPR M 6V-7687 2 LOCKNUT (M12X1.75-THD)

6 NPR 3B-8489 1 FITTING-GREASE

7 NPR 179-9961 1 PLUG-PROTECTIVE

Key:

M - METRIC PART

159-2799 BOOM GP --S/N 4ZN16044-50156
PART OF 154-5312, 154-5314 BACKHOE AR-EXTENDABLE STICK, 154-5303, 154-5305 BACKHOE AR-STANDARD STICK

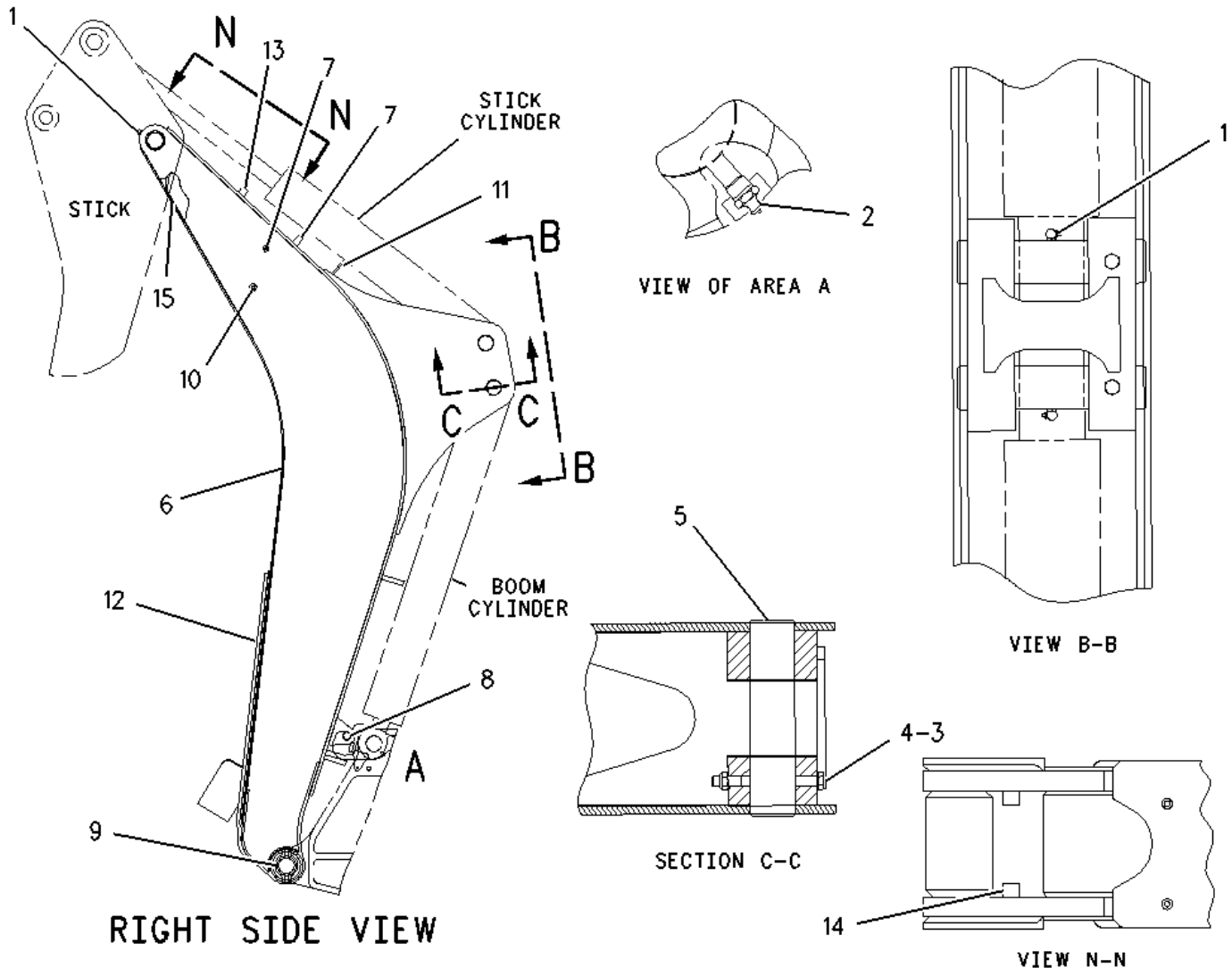

1	**NPR**	**3B-8488**	**3**	**FITTING-GREASE**
2	**NPR**	**3B-8489**	**1**	**FITTING-GREASE**
3	**NPR M**	**6V-7687**	**2**	**LOCKNUT (M12X1.75-THD)**
4	**NPR M**	**8T-5001**	**2**	**BOLT (M12X1.75X130-MM)**
5	**NPR**	**9R-9812**	**2**	**PIN**
6	**NPR**	**159-2795**	**1**	**BOOM AS**
7	**NPR**	**8Y-4489**	**4**	**BOSS-THREADED**
8	**NPR**	**9R-8523**	**2**	**PIN**
9	**NPR**	**9R-9475**	**2**	**BEARING-SLEEVE**

10	**NPR**	**106-0421**	**2**	**BOSS**
11	**NPR**	**106-0424**	**1**	**PLATE**
12	**NPR**	**106-0425**	**1**	**PLATE AS (WORK TOOL REST)**
13	**NPR M**	**111-0483**	**2**	**BOSS (M10X1.5-MM-THD)**
14	**NPR**	**174-6812**	**2**	**BOSS**
15	**NPR**	**179-9961**	**1**	**PLUG-PROTECTIVE**

Key:

M - METRIC PART

STEERING

SYSTEM

154-5467 AXLE & MTG GP-DRIVE & STEERING -S/N 4ZN16044-50156
PART OF 154-5449 DRIVE AR-BACKHOE LOADER-Type 1

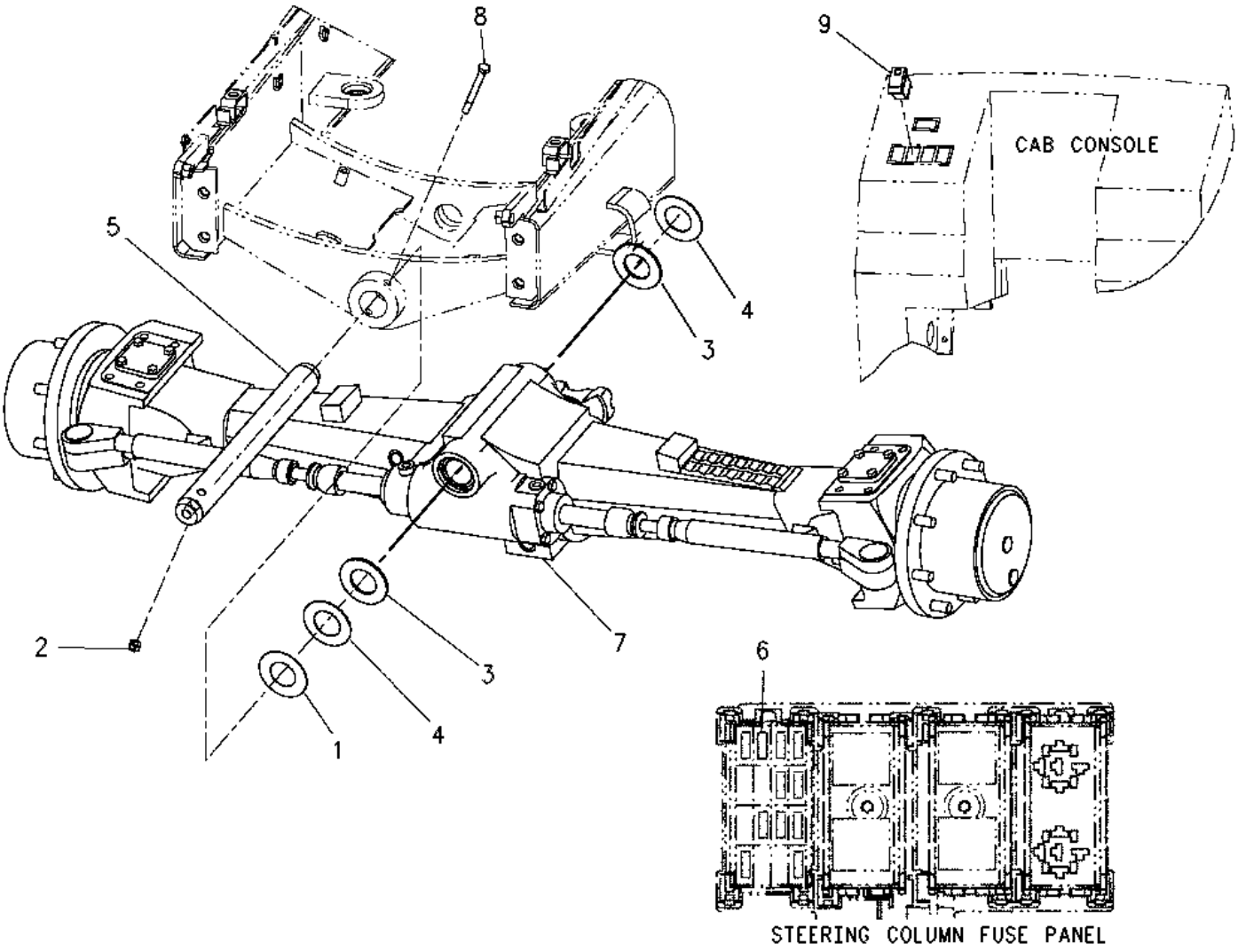

1	NPR	1K-7082	1	WASHER (2X4X1/32-IN THK)
2	NPR M	8T-8549	1	LOCKNUT (M12X1.75-THD)
3	NPR	165-8996	2	WASHER-THRUST (55.5X100.5X5-MM THK)
4	NPR	9R-9702	2	WASHER (56X100X1.6-MM THK)
5	NPR	112-9629	1	PIN
6	NPR	113-8491	1	FUSE (15-AMPERE)
7	NPR Y	154-5471	1	AXLE GP-DRIVE & STEERING
8	NPR M	8T-5041	1	BOLT (M12X1.75X120-MM)
9	NPR	106-6568	1	SWITCH AS (AWD)
	NPR	111-7899	1	GASKET

Key: M - METRIC PART Y - SEPARATE ILLUSTRATION

154-5467 AXLE & MTG GP-DRIVE & STEERING --S/N 4ZN16044-50156
PART OF 154-5449 DRIVE AR-BACKHOE LOADER--Type 2

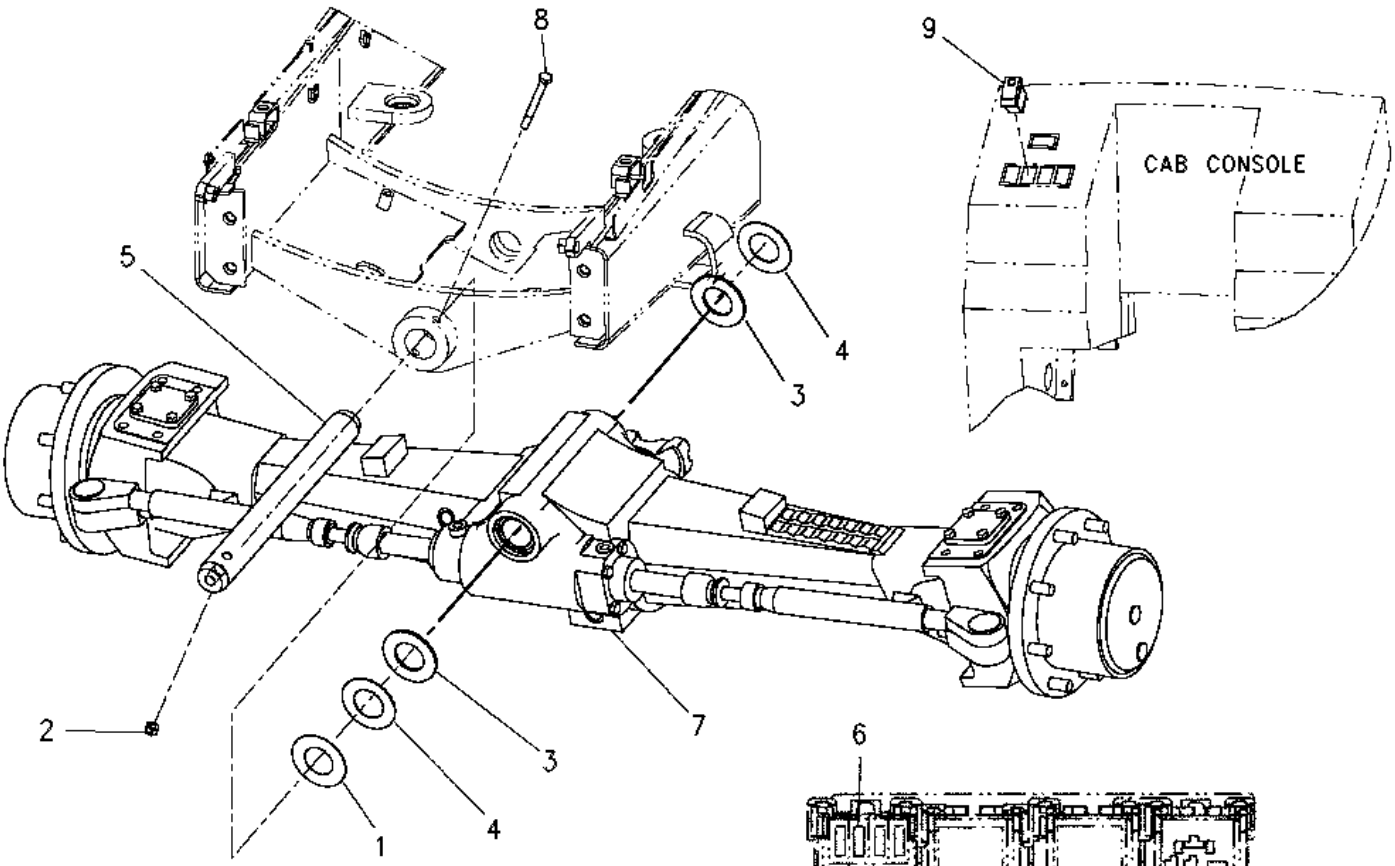

1	NPR	1K-7082	1	WASHER (2X4X1/32-IN THK)
2	NPR M	8T-8549	1	LOCKNUT (M12X1.75-THD)
3	NPR	165-8996	2	WASHER-THRUST (55.5X100.5X5-MM THK)
4	NPR	9R-9702	2	WASHER (56X100X1.6-MM THK)
5	NPR	112-9629	1	PIN
6	NPR	113-8491	1	FUSE (15-AMPERE)
7	NPR CY	174-5206	1	AXLE GP-DRIVE & STEERING
8	NPR M	8T-5041	1	BOLT (M12X1.75X120-MM)
9	NPR	106-6568	1	SWITCH AS (AWD)
	NPR	111-7899	1	GASKET

Key: C - CHANGE FROM PREVIOUS TYPE M - METRIC PART Y - SEPARATE ILLUSTRATION

154-5467 AXLE & MTG GP-DRIVE & STEERING -S/N 4ZN16044-50156
PART OF 154-5449 DRIVE AR-BACKHOE LOADER--Type 3

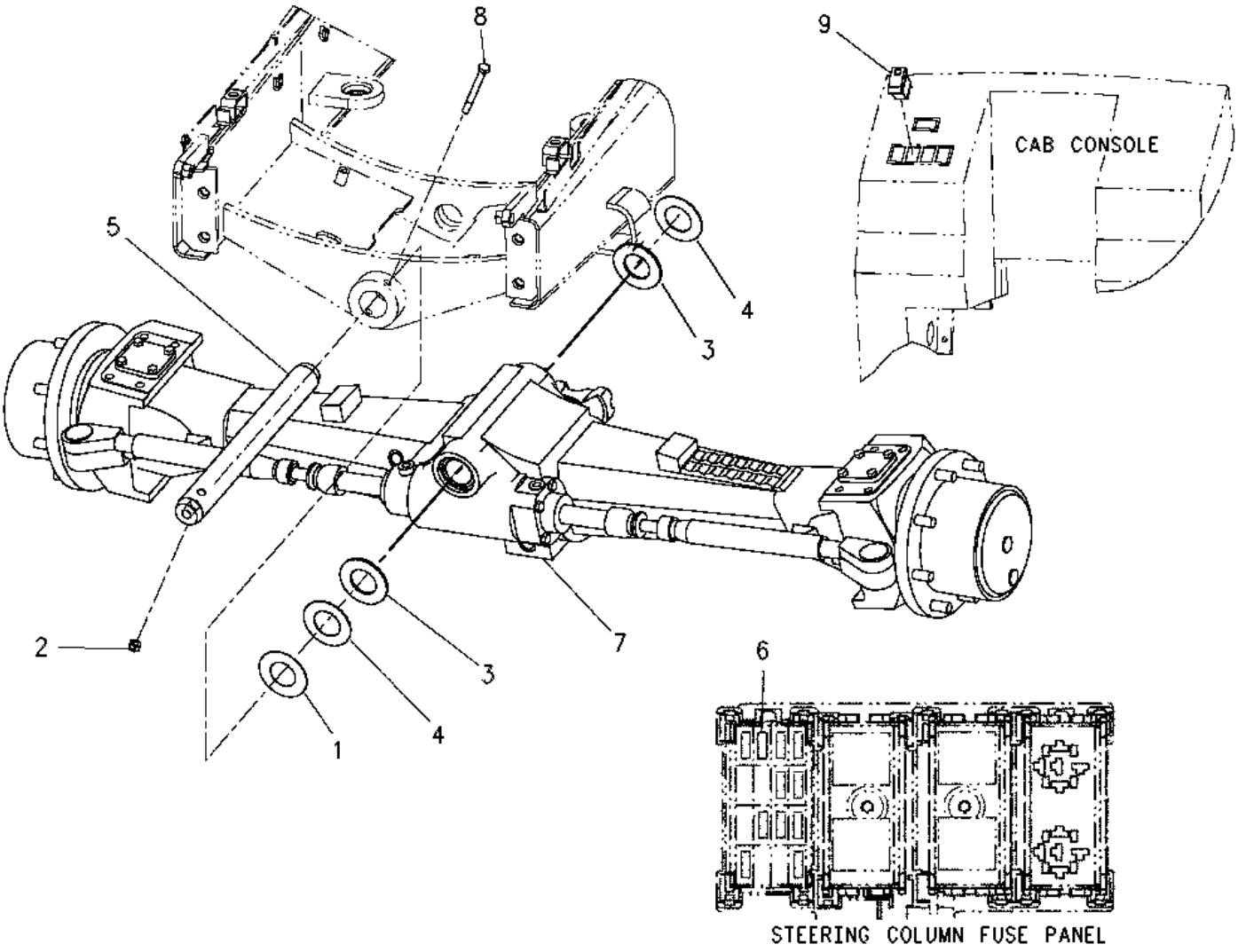

1	NPR	1K-7082	1	WASHER (2X4X1/32-IN THK)
2	NPR M	8T-8549	1	LOCKNUT (M12X1.75-THD)
3	NPR	165-8996	2	WASHER-THRUST (55.5X100.5X5-MM THK)
4	NPR	9R-9702	2	WASHER (56X100X1.6-MM THK)
5	NPR	112-9629	1	PIN
6	NPR	113-8491	1	FUSE (15-AMPERE)
7	NPR CY	154-5471	1	AXLE GP-DRIVE & STEERING
8	NPR M	8T-5041	1	BOLT (M12X1.75X120-MM)
9	NPR	106-6568	1	SWITCH AS (AWD)
	NPR	111-7899	1	GASKET

Key: C - CHANGE FROM PREVIOUS TYPE M - METRIC PART Y - SEPARATE ILLUSTRATION

154-5465 AXLE GP-FRONT --S/N 4ZN16044-50156--PART OF 154-5447 DRIVE AR-BACKHOE LOADER

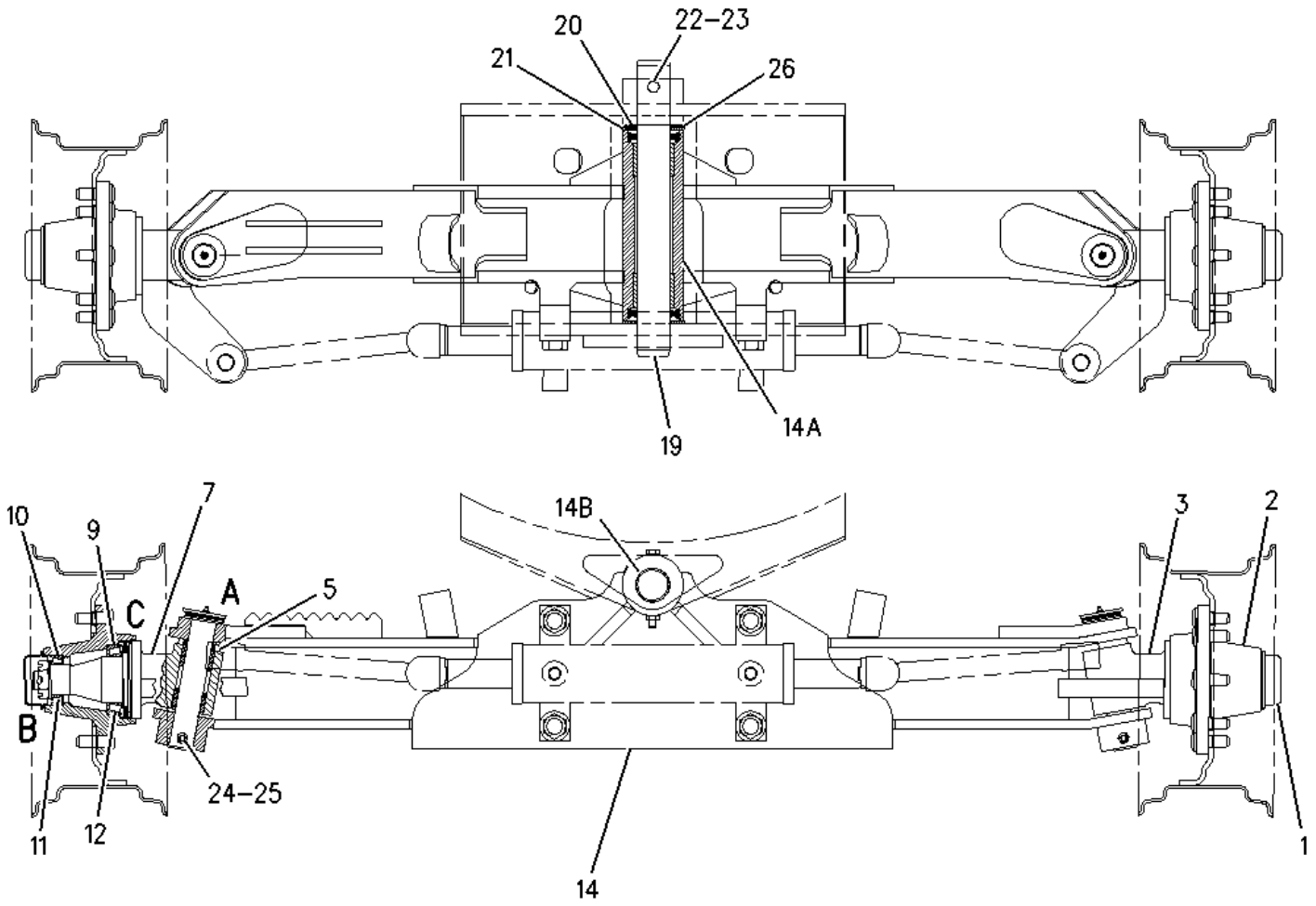

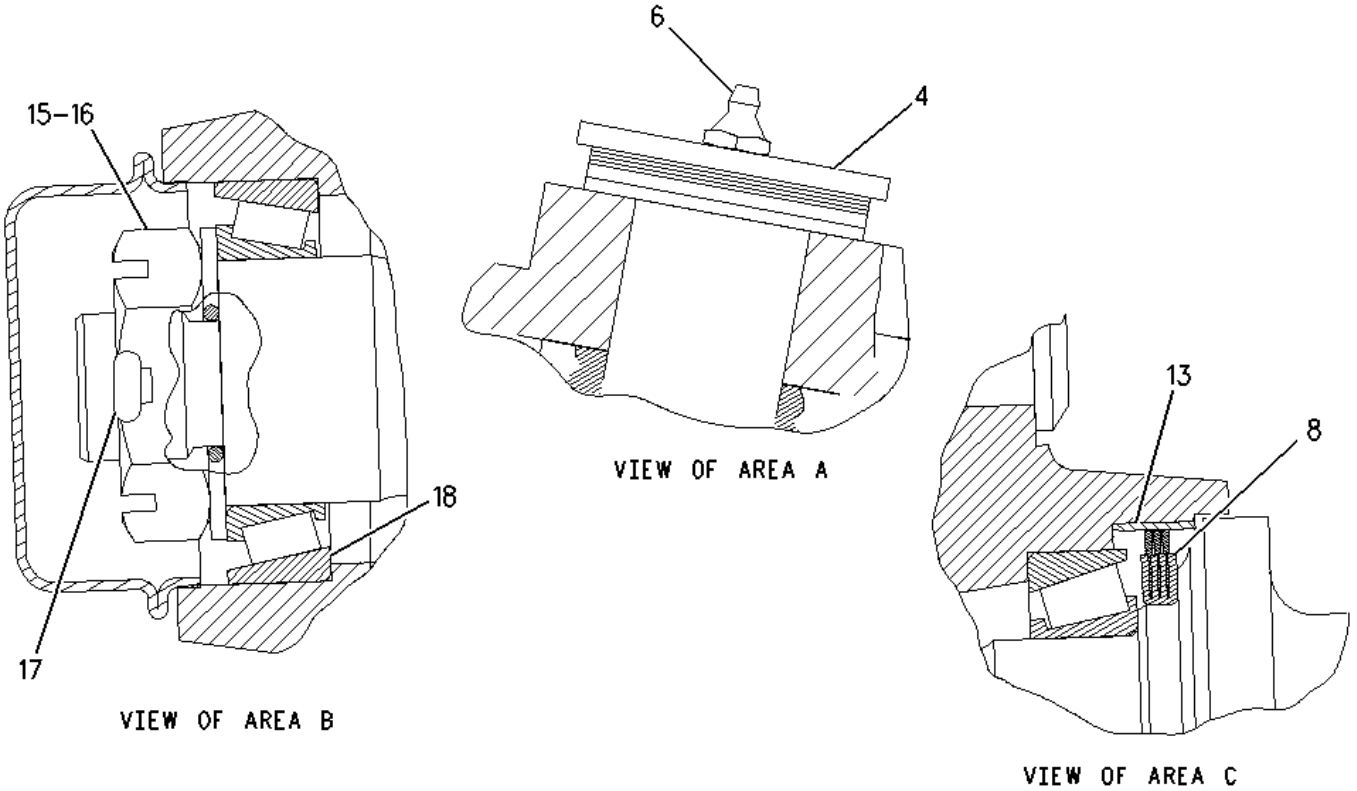

2 NPR 9R-0313 2 HUB AS

(EACH INCLUDES)

NPR 8T-6653 8 STUD

3 NPR 128-4125 1 SPINDLE AS-RH

NPR 9R-1917 2 BEARING-SLEEVE

4 NPR 160-1014 2 PIN AS

5 NPR 9R-8544 2 WASHER (41X82X10-MM THK)

6 NPR 3B-8489 2 FITTING-GREASE

7 NPR 128-4126 1 SPINDLE AS-LH

NPR 9R-1917 2 BEARING-SLEEVE

8 NPR 8T-9025 2 SEAL

9 NPR 9S-7950 2 CONE-BEARING

10 NPR 9S-3582 2 CONE-BEARING

11 NPR 9S-3581 2 CUP-BEARING

12 NPR 9S-7949 2 CUP-BEARING

13 NPR 6V-8145 2 SLEEVE

14 NPR 169-3242 1 AXLE AS

14A NPR 183-2358 2 BEARING

14B NPR 154-5405 2 SEAL-LIP TYPE

15 NPR 009-3020 2 WASHER-THRUST (35X63.5X3.14-MM THK)

16 NPR M 8T-3990 2 NUT (M30X2-THD)

17 NPR 3B-4631 2 PIN-COTTER

18 NPR 8B-4967 2 SEAL-O-RING

19 NPR 112-9629 1 PIN

20 NPR B 1K-7082 1 WASHER (2.266X4X0.031-IN THK)

21 NPR 165-8996 2 WASHER-THRUST (55.5X100.5X5-MM THK)

22 NPR M 8T-5041 1 BOLT (M12X1.75X120-MM)

23 NPR M 8T-8549 1 LOCKNUT (M12X1.75-THD)

24 NPR M 8T-4198 2 BOLT (M10X1.5X100-MM)

25 NPR M 6V-7744 2 LOCKNUT (M10X1.15-THD)

26 NPR B 9R-9702 2 WASHER (56X100X1.6-MM THK)

Key: B - USE AS REQUIRED M - METRIC PART

174-5206 AXLE GP-DRIVE & STEERING --S/N 4ZN16044-50156
PART OF 154-5467 AXLE & MTG GP-DRIVE & STEERING

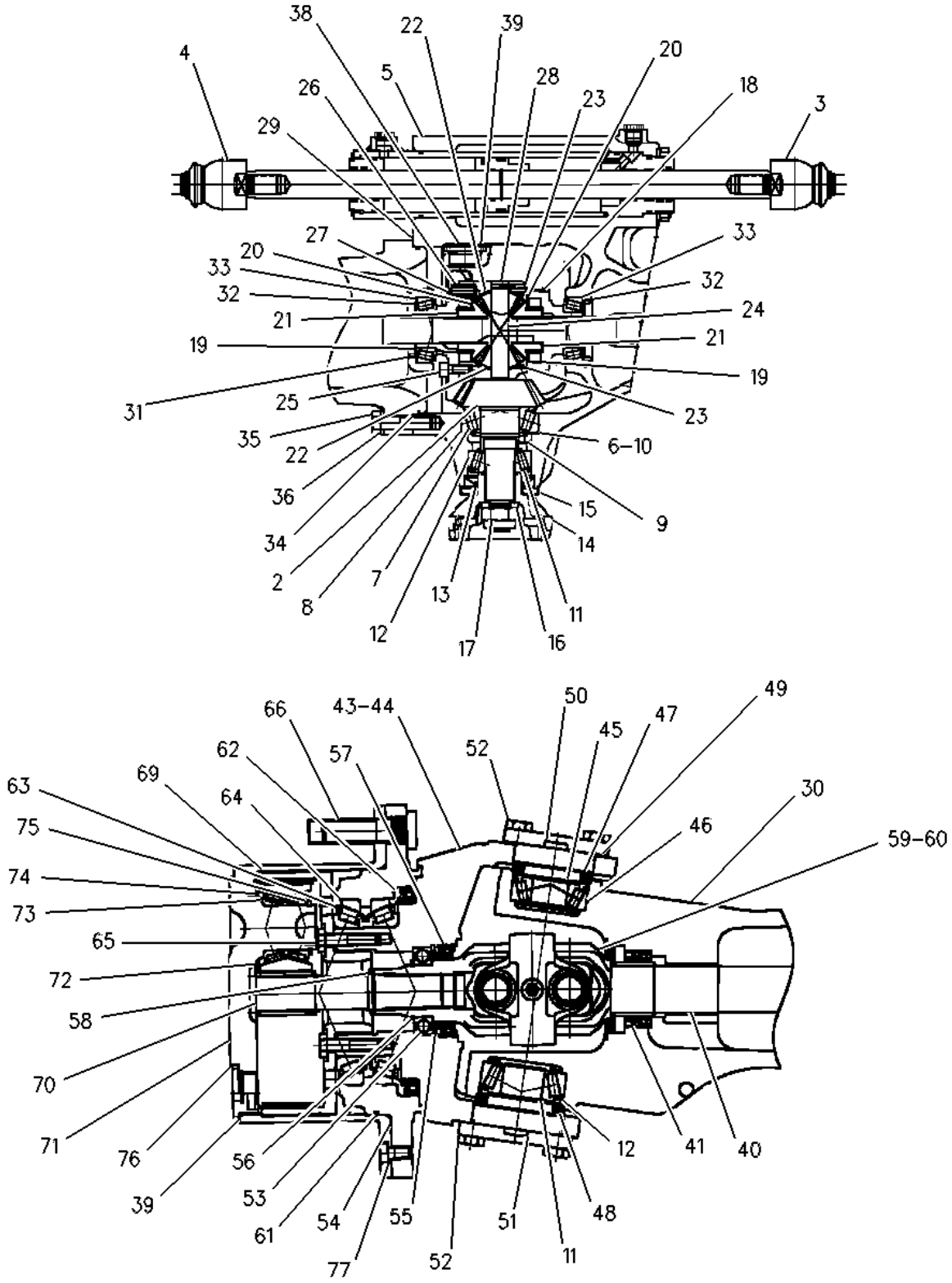

2 NPR 1 117-6108 1 GEAR SET-BEVEL

3 NPR 1 130-3809 1 TIE ROD AS (RH)

NPR M 1 130-5010 1 LOCKNUT (M22X1.5-THD)

NPR 1 130-6674 1 CLAMP

NPR 1 130-6880 1 BALL JOINT

NPR 1 130-7043 1 JOINT

4 NPR 1 130-3012 1 TIE ROD AS (LH)

NPR M 1 130-5010 1 LOCKNUT (M22X1.5-THD)

NPR 1 130-6674 1 CLAMP

NPR 1 130-6881 1 BALL JOINT

NPR 1 130-7043 1 JOINT

5 NPR 1 130-3011 1 CYLINDER GP-STEERING

NPR 1 130-6876 1 KIT-SEAL

NPR 1 130-6882 1 CYLINDER

NPR 1 130-6883 1 ROD

NPR 1 130-6884 1 RING-SNAP

NPR 1 130-7023 1 RING

NPR 1 130-8143 1 GUIDE

6 NPR 1 130-3850 1 SHIM (0.8-MM THK)

7 NPR 1 3N-4969 1 CONE-BEARING (TAPERED ROLLER)

8 NPR 1 3N-6408 1 CUP-BEARING (TAPERED ROLLER)

9 NPR 1 130-6689 1 RING (15.1-MM THK)

NPR 1 130-6690 1 RING (15.2-MM THK)

NPR 1 130-6691 1 RING (15.26-MM THK)

NPR 1 130-6693 1 RING (15.3-MM THK)

NPR 1 130-6694 1 RING (15.33-MM THK)

NPR 1 130-6695 1 RING (15.36-MM THK)

NPR 1 130-6696 1 RING (15.38-MM THK)

NPR 1 130-6697 1 RING (15.4-MM THK)

NPR 1 130-6698 1 RING (15.43-MM THK)

NPR 1 130-6699 1 RING (15.46-MM THK)

NPR 1 130-6701 1 RING (15.48-MM THK)

NPR 1 130-6702 1 RING (15.5-MM THK)

NPR 1 130-6703 1 RING (15.53-MM THK)

NPR 1 130-6704 1 RING (15.56-MM THK)

NPR 1 130-6705 1 RING (15.58-MM THK)

NPR 1 130-6706 1 RING (15.6-MM THK)

NPR 1 130-6707 1 RING (15.63-MM THK)

NPR 1 130-6708 1 RING (15.66-MM THK)

NPR 1 130-6709 1 RING (15.68-MM THK)

NPR 1 130-6710 1 RING (15.7-MM THK)

NPR 1 130-6711 1 RING (15.73-MM THK)

NPR 1 130-6712 1 RING (15.8-MM THK)

NPR 1 130-6713 1 RING (15.83-MM THK)

NPR 1 130-6714 1 RING (15.86-MM THK)

NPR 1 130-6715 1 RING (15.9-MM THK)

NPR 1 130-6716 1 RING (15.93-MM THK)

NPR 1 130-6718 1 RING (15.96-MM THK)

NPR 1 130-6719 1 RING (16-MM THK)

NPR 1 130-6720 1 RING (16.03-MM THK)

NPR 1 130-6721 1 RING (16.06-MM THK)

NPR 1 130-6722 1 RING (16.1-MM THK)

NPR 1 130-6724 1 RING (16.13-MM THK)

NPR 1 130-6725 1 RING (16.16-MM THK)

NPR 1 130-6726 1 RING (16.2-MM THK)

NPR 1 130-6727 1 RING (16.23-MM)

NPR 1 130-6728 1 RING (16.26-MM THK)

NPR 1 130-6729 1 RING (16.3-MM THK)

NPR 1 130-6731 1 RING (16.4-MM THK)

NPR 1 130-6732 1 RING (16.76-MM THK)

10 NPR 1 054-6459 1 SHIM (1-MM THK)

NPR 1 054-6460 1 SHIM (1.05-MM THK)

NPR 1 054-6461 1 SHIM (1.1-MM THK)

NPR 1 054-6462 1 SHIM (1.15-MM THK)

NPR 1 054-6463 1 SHIM (1.2-MM THK)

NPR 1 054-6464 1 SHIM (1.25-MM THK)

NPR 1 054-6465 1 SHIM (1.3-MM THK)

NPR 1 054-6466 1 SHIM (1.35-MM THK)

NPR 1 054-6467 1 SHIM (1.4-MM THK)

NPR 1 054-6468 1 SHIM (1.45-MM THK)

NPR 1 054-6469 1 SHIM (1.5-MM THK)

NPR 1 054-6470 1 SHIM (1.55-MM THK)

NPR 1 054-6471 1 SHIM (1.6-MM THK)

NPR 1 054-6472 1 SHIM (0.95-MM THK)

NPR 1 054-6473 1 SHIM (0.9-MM THK)

NPR 1 054-6474 1 SHIM (0.65-MM THK)

NPR 1 054-6475 1 SHIM (0.7-MM THK)

NPR 1 054-6476 1 SHIM (0.75-MM THK)

NPR 1 054-6477 1 SHIM (0.85-MM THK)

11 NPR 1 008-1902 3 CONE-BEARING

12 NPR 1 6S-3051 3 CUP-BEARING

13 NPR 1 055-1986 1 SEAL-LIP TYPE

14 NPR 1 130-7046 1 FLANGE

15 NPR 1 130-7028 1 PLATE

16 NPR 1 054-6480 1 DISC

17 NPR M 1 130-3005 1 NUT (M24X2-THD)(M24X2)

18 NPR 1 130-7024 1 CASE

19 NPR 1 130-7048 2 RING (13.5-MM THK)

NPR 1 130-7049 2 RING (13.6-MM THK)

NPR 1 130-7050 2 RING (13.7-MM THK)

20 NPR M 1 130-3000 2 WASHER (M53.2X71.9X1.9-MM THK)

21 NPR 1 119-7035 2 GEAR (24 TEETH)

22 NPR 1 128-7855 2 GEAR-PINION

23 NPR 1 9R-6994 2 WASHER-THRUST

24 NPR 1 119-7036 1 PIN

25 NPR M 1 105-3484 12 BOLT-SOCKET HEAD (M10X1.5X25-MM)

26 NPR 1 130-3010 4 PIN

27 NPR 1 082-3077 4 PIN

28 NPR 1 130-6675 1 PIN

29 NPR 1 119-7055 1 HOUSING

30 NPR 1 119-7056 1 HOUSING

31 NPR 1 130-6798 2 SHIM (1-MM THK)

NPR 1 130-6799 2 WASHER (1.05-MM THK)

NPR 1 130-6800 2 SHIM (1.1-MM THK)

NPR 1 130-6801 2 WASHER (62.2X75X1.15-MM THK)

NPR 1 130-6802 2 WASHER (62.2X75X1.2-MM THK)

NPR 1 130-6803 2 WASHER (62.2X75X1.25-MM THK)

NPR 1 130-6804 2 SHIM (1.3-MM THK)

NPR 1 130-6805 2 SHIM (1.35-MM THK)

NPR 1 130-6806 2 SHIM (1.4-MM THK)

NPR 1 130-6807 2 WASHER (1.45-MM THK)

NPR 1 130-6808 2 SHIM (1.5-MM THK)

NPR 1 130-6809 2 SHIM (1.55-MM THK)

NPR 1 130-6810 2 SHIM (1.6-MM THK)

NPR 1 130-6811 2 SHIM (1.65-MM THK)

NPR 1 130-6812 2 SHIM (1.7-MM THK)

NPR 1 130-6813 2 SHIM (1.75-MM THK)

NPR 1 130-6814 2 SHIM (1.8-MM THK)

NPR 1 130-6815 2 SHIM (1.85-MM THK)

NPR 1 130-6816 2 SHIM (1.9-MM THK)

NPR 1 130-6817 2 WASHER (62.2X75X1.95-MM THK)

NPR 1 130-6818 2 WASHER (62.2X75X2-MM THK)

NPR 1 130-6819 2 WASHER (62.2X75X2.05-MM THK)

NPR 1 130-6820 2 SHIM (2.1-MM THK)

32 NPR 1 003-7501 2 CONE-BEARING

33 NPR 1 6V-2200 2 CUP-BEARING

34 NPR 1 054-6847 1 SEAL-O-RING

35 NPR M 1 6V-3303 15 BOLT (M16X2X60-MM)

36	NPR	1	054-6526	15	DISC
37	NPR	1	9R-3175	1	PLUG
38	NPR	1	130-6673	1	PLUG
39	NPR	1	9X-0796	4	SEAL-O-RING
40	NPR	1	130-2998	2	BUSHING
41	NPR	1	130-6877	2	SEAL
42	NPR	1	154-5404	2	BEARING
43	NPR	1	130-7031	1	HOUSING
44	NPR	1	119-7057	1	HOUSING
45	NPR	1	077-3918	2	BEARING
46	NPR	1	031-0426	2	CUP-BEARING
47	NPR	1	119-7046	2	SEAL
48	NPR	1	119-7047	2	SEAL
49	NPR	1	130-7008	2	SHIM (0.2-MM THK)
	NPR	1	130-7009	2	SHIM (0.3-MM THK)
	NPR	1	130-7010	2	SHIM (0.4-MM THK)
	NPR	1	130-7011	2	SHIM (0.6-MM THK)
	NPR	1	130-7012	2	SHIM (0.8-MM THK)
	NPR	1	130-7013	2	SHIM (1-MM THK)
	NPR	1	130-7015	2	SHIM (1.6-MM THK)
	NPR	1	130-7017	2	SHIM (2-MM THK)
50	NPR	1	119-7038	2	PIN
51	NPR	1	130-7026	2	PIN
52	NPR	1	130-6677	16	BOLT
53	NPR	1	5P-9439	2	BALL BEARING

54 NPR 1 119-7053 2 FLANGE

55 NPR 1 131-3816 2 RING

56 NPR 1 7X-5771 2 RING-RETAINING

57 NPR 1 119-7045 2 SEAL

58 NPR 1 054-6589 2 CLIP

59 NPR Y 1 130-3013 1 SHAFT GP-DRIVE (RH)

NPR 1 138-8526 1 YOKE

NPR 1 138-8527 2 SPIDER

NPR 1 138-8528 1 SHAFT (PLANETARY)

NPR 1 138-8529 1 SHAFT-AXLE (RH)

NPR 1 138-8530 1 BUSHING

NPR 1 138-8531 1 GUARD

60 NPR Y 1 130-3014 1 SHAFT GP-DRIVE (LH)

NPR 1 138-8526 1 YOKE

NPR 1 138-8527 2 SPIDER

NPR 1 138-8528 1 SHAFT (PLANETARY)

NPR 1 138-8530 1 BUSHING

NPR 1 138-8531 1 GUARD

NPR 1 138-8532 1 SHAFT-AXLE (LH)

NPR 1 130-3809 1 TIE ROD AS (RH)

NPR M 1 130-5010 1 LOCKNUT (M22X1.5-THD)

NPR 1 130-6674 1 CLAMP

NPR 1 130-6880 1 BALL JOINT

NPR 1 130-7043 1 JOINT

61 NPR 1 9X-0640 2 SEAL-O-RING

62	NPR	1	130-6879	2	SEAL
63	NPR	1	6V-0832	4	CONE
64	NPR	1	2S-0480	4	CUP-TAPERED ROLLER
65	NPR M	1	130-3008	16	BOLT (M10X45-MM)
66	NPR	1	130-7047	16	STUD
67	NPR M	1	119-7060	2	SCREW
68	NPR	1	130-3007	2	NUT
69	NPR	1	119-7040	2	GEAR-RING
70	NPR	1	119-7042	2	SHAFT
71	NPR	1	130-7027	2	CARRIER
72	NPR	1	169-4160	6	GEAR
73	NPR	1	169-4161	6	CONE-BEARING
74	NPR	1	169-4162	6	CONE-BEARING
75	NPR	1	130-6878	6	RING
76	NPR	1	119-7061	2	PLUG
77	NPR M	1	9R-3168	4	SCREW (M10X20-MM)
79	NPR	1	154-5405	2	SEAL-LIP TYPE
80	NPR	1	174-4623	2	SLEEVE

Key: M - METRIC PART Y - Separate Illustration

154-5471 AXLE GP-DRIVE & STEERING -FRONT -S/N 4ZN16044-50156
RATIO 13.74 --PART OF 154-5467 AXLE & MTG GP-DRIVE & STEERING

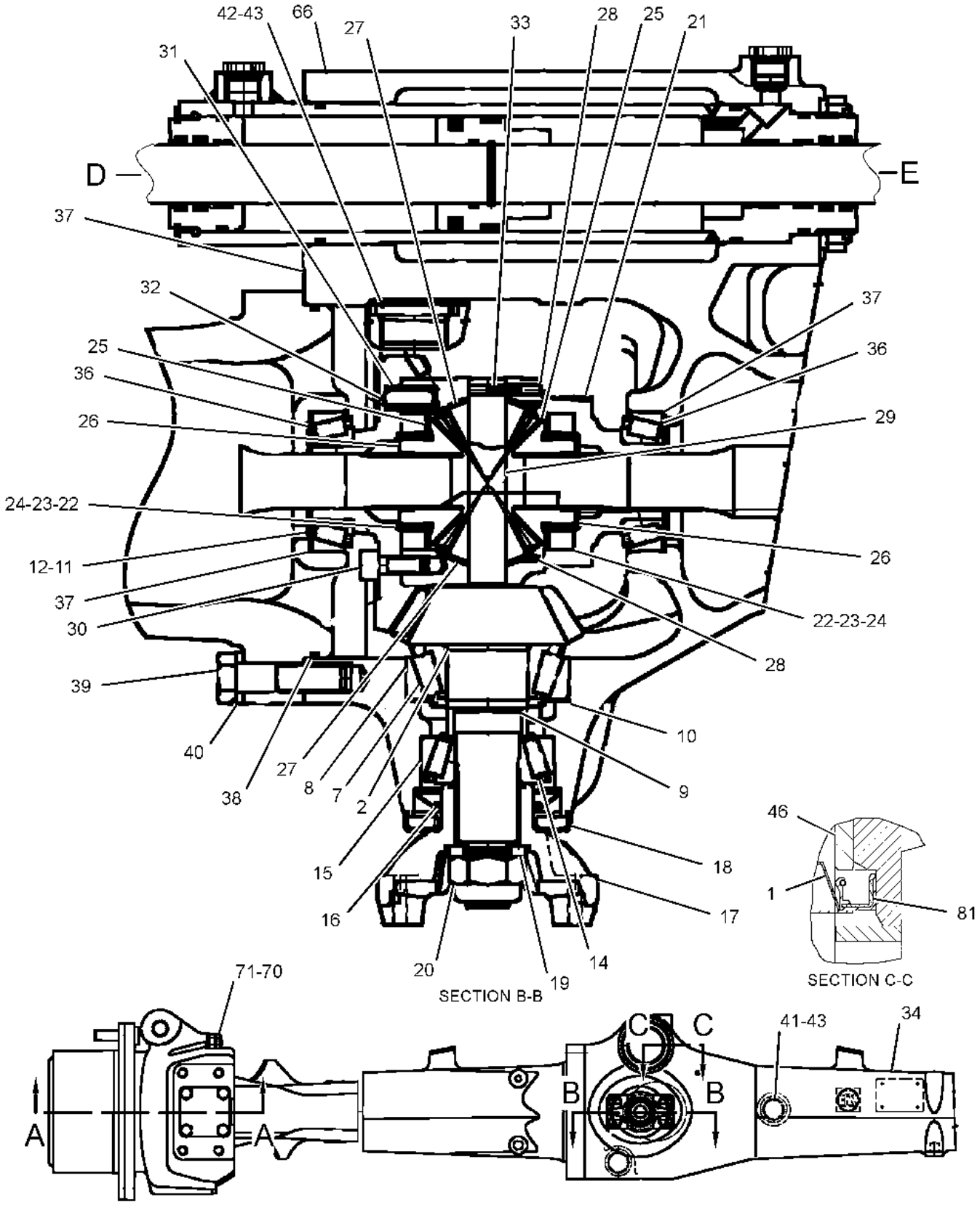

REFER TO ALL ILLUSTRATIONS OF
THIS GROUP FOR AUXILIARY VIEWS

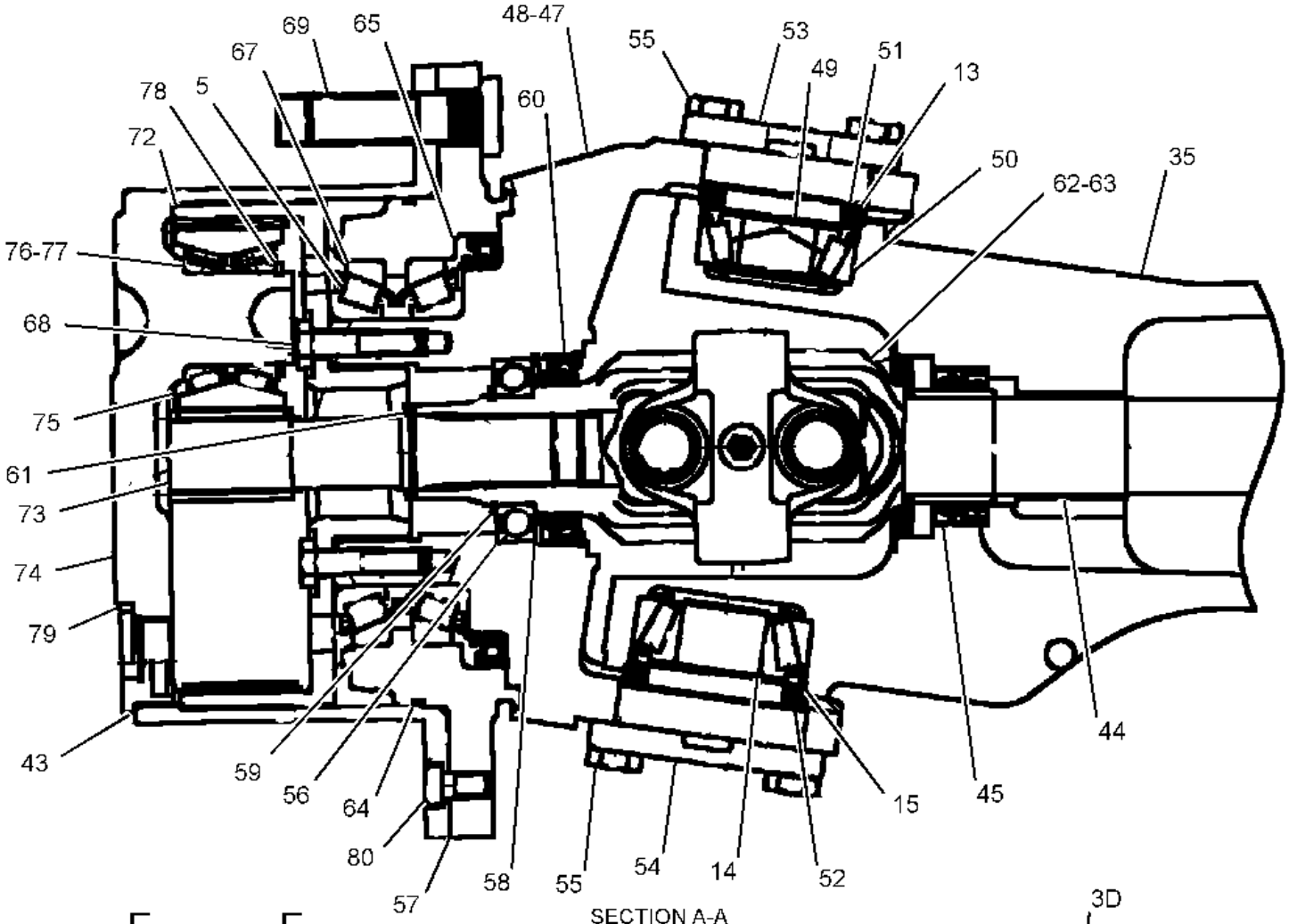

SECTION A-A

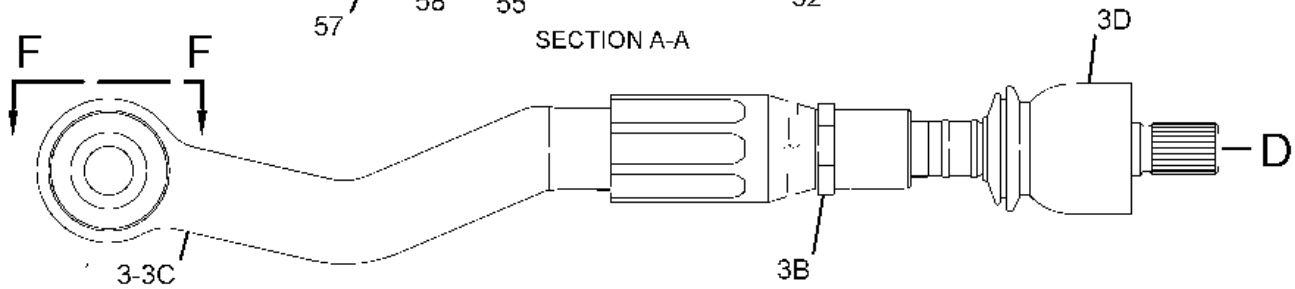

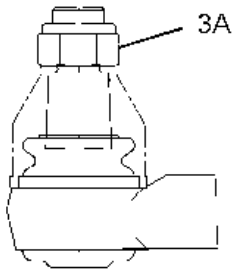

VIEW F-F

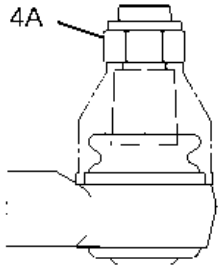

VIEW G-G

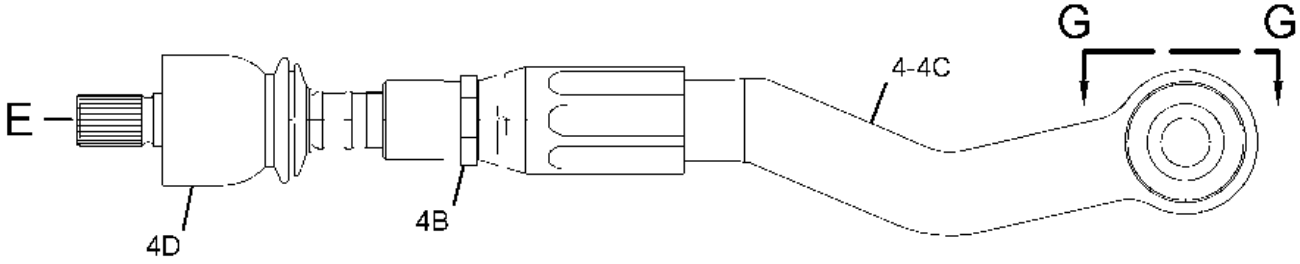

1 NPR 1 9X-3999 2 CAP-PLUG

2 NPR 1 117-6108 1 GEAR SET-BEVEL

3 NPR 2 229-2949 1 TIE ROD AS (LH)

3A NPR 2 237-7962 1 NUT

3B NPR 2 236-4482 1 NUT

3C NPR 2 236-4479 1 BALL JOINT (LH)

3D NPR 2 236-4481 1 JOINT

4 NPR 2 229-2950 1 TIE ROD AS (RH)

4A NPR 2 237-7962 1 NUT

4B NPR 2 236-4482 1 NUT

4C NPR 2 236-4480 1 BALL JOINT (RH)

4D NPR 2 236-4481 1 JOINT

5 NPR 2 178-8608 4 CONE-TAPERED

7 NPR 1 3N-4969 1 CONE-BEARING (TAPERED ROLLER)

8 NPR 1 3N-6408 1 CUP-BEARING (TAPERED ROLLER)

9 NPR B 1 130-6689 1 RING (15.1-MM THK)

NPR B 1 130-6690 1 RING (15.2-MM THK)

NPR B 1 130-6691 1 RING (15.26-MM THK)

NPR B 1 130-6693 1 RING (15.3-MM THK)

NPR B 1 130-6694 1 RING (15.33-MM THK)

NPR B 1 130-6695 1 RING (15.36-MM THK)

NPR B 1 130-6696 1 RING (15.38-MM THK)

NPR B 1 130-6697 1 RING (15.4-MM THK)

NPR B 1 130-6698 1 RING (15.43-MM THK)

NPR B 1 130-6699 1 RING (15.46-MM THK)

NPR B 1 130-6701 1 RING (15.48-MM THK)

NPR B 1 130-6702 1 RING (15.5-MM THK)

NPR B 1 130-6703 1 RING (15.53-MM THK)

NPR B 1 130-6704 1 RING (15.56-MM THK)

NPR B 1 130-6705 1 RING (15.58-MM THK)

NPR B 1 130-6706 1 RING (15.6-MM THK)

NPR B 1 130-6707 1 RING (15.63-MM THK)

NPR B 1 130-6708 1 RING (15.66-MM THK)

NPR B 1 130-6709 1 RING (15.68-MM THK)

NPR B 1 130-6710 1 RING (15.7-MM THK)

NPR B 1 130-6711 1 RING (15.73-MM THK)

NPR B 1 130-6712 1 RING (15.8-MM THK)

NPR B 1 130-6713 1 RING (15.83-MM THK)

NPR B 1 130-6714 1 RING (15.86-MM THK)

NPR B 1 130-6715 1 RING (15.9-MM THK)

NPR B 1 130-6716 1 RING (15.93-MM THK)

NPR B 1 130-6718 1 RING (15.96-MM THK)

NPR B 1 130-6719 1 RING (16-MM THK)

NPR B 1 130-6720 1 RING (16.03-MM THK)

NPR B 1 130-6721 1 RING (16.06-MM THK)

NPR B 1 130-6722 1 RING (16.1-MM THK)

NPR B 1 130-6724 1 RING (16.13-MM THK)

NPR B 1 130-6725 1 RING (16.16-MM THK)

NPR B 1 130-6726 1 RING (16.2-MM THK)

NPR B 1 130-6727 1 RING (16.23-MM)

NPR B 1 130-6728 1 RING (16.26-MM THK)

NPR B 1 130-6729 1 RING (16.3-MM THK)

NPR B 1 130-6731 1 RING (16.4-MM THK)

NPR B 1 130-6732 1 RING (16.76-MM THK)

10 NPR B 1 054-6459 1 SHIM (1-MM THK)

NPR B 1 054-6460 1 SHIM (1.05-MM THK)

NPR B 1 054-6461 1 SHIM (1.1-MM THK)

NPR B 1 054-6462 1 SHIM (1.15-MM THK)

NPR B 1 054-6463 1 SHIM (1.2-MM THK)

NPR B 1 054-6464 1 SHIM (1.25-MM THK)

NPR B 1 054-6465 1 SHIM (1.3-MM THK)

NPR B 1 054-6466 1 SHIM (1.35-MM THK)

NPR B 1 054-6467 1 SHIM (1.4-MM THK)

NPR B 1 054-6468 1 SHIM (1.45-MM THK)

NPR B 1 054-6469 1 SHIM (1.5-MM THK)

NPR B 1 054-6470 1 SHIM (1.55-MM THK)

NR B 1 054-6471 1 SHIM (1.6-MM THK)

NPR B 1 054-6472 1 SHIM (0.95-MM THK)

NPR B 1 054-6477 1 SHIM (0.85-MM THK)

NPR B 1 054-6476 1 SHIM (0.75-MM THK)

NPR B 1 054-6475 1 SHIM (0.7-MM THK)

NPR B 1 054-6474 1 SHIM (0.65-MM THK)

NPR B 1 054-6473 1 SHIM (0.9-MM THK)

11 NPR B 1 130-6798 2 SHIM (1-MM THK)

NPR B 1 130-6800 2 SHIM (1.1-MM THK)

NPR B 1 130-6804 2 SHIM (1.3-MM THK)

NPR B 1 130-6805 2 SHIM (1.35-MM THK)

NPR B 1 130-6806 2 SHIM (1.4-MM THK)

NPR B 1 130-6808 2 SHIM (1.5-MM THK)

NPR B 1 130-6809 2 SHIM (1.55-MM THK)

NPR B 1 130-6810 2 SHIM (1.6-MM THK)

NPR B 1 130-6811 2 SHIM (1.65-MM THK)

NPR B 1 130-6812 2 SHIM (1.7-MM THK)

NPR B 1 130-6813 2 SHIM (1.75-MM THK)

NPR B 1 130-6814 2 SHIM (1.8-MM THK)

NPR B 1 130-6815 2 SHIM (1.85-MM THK)

NPR B 1 130-6816 2 SHIM (1.9-MM THK)

NPR B 1 130-6820 2 SHIM (2.1-MM THK)

12 NPR B 1 130-6799 2 WASHER (1.05-MM THK)

NPR B 1 130-6801 2 WASHER (62.2X75X1.15-MM THK)

NPR B 1 130-6802 2 WASHER (62.2X75X1.2-MM THK)

NPR B 1 130-6803 2 WASHER (62.2X75X1.25-MM THK)

NPR B 1 130-6807 2 WASHER (1.45-MM THK)

NPR B 1 130-6817 2 WASHER (62.2X75X1.95-MM THK)

NPR B 1 130-6818 2 WASHER (62.2X75X2-MM THK)

NPR B 1 130-6819 2 WASHER (62.2X75X2.05-MM THK)

13 NPR B 2 130-7008 2 SHIM (0.2-MM THK)

NPR B 2 130-7009 2 SHIM (0.3-MM THK)

NPR B 2 130-7010 2 SHIM (0.4-MM THK)

NPR B 2 130-7011 2 SHIM (0.6-MM THK)

NPR B 2 130-7012 2 SHIM (0.8-MM THK)

NPR B 2 130-7013 2 SHIM (1-MM THK)

NPR B 2 130-7015 2 SHIM (1.6-MM THK)

NPR B 2 130-7017 2 SHIM (2-MM THK)

14 NPR 1,2 008-1902 3 CONE-BEARING

15 NPR 1,2 6S-3051 3 CUP-BEARING

16 NPR 1 055-1986 1 SEAL-LIP TYPE

17 NPR 1 130-7046 1 FLANGE

18 NPR 1 130-7028 1 PLATE

19 NPR 1 054-6480 1 DISC

20 NPR M 1 130-3005 1 NUT (M24X2-THD)

21 NPR 1 130-7024 1 CASE

22	NPR	1	130-7048	2	RING (13.5-MM THK)
23	NPR	1	130-7049	2	RING (13.6-MM THK)
24	NPR	1	130-7050	2	RING (13.7-MM THK)
25	NPR M	1	130-3000	2	WASHER (M53.2X71.9X1.9-MM THK)
26	NPR	1	119-7035	2	GEAR
27	NPR	1	128-7855	2	GEAR-PINION
28	NPR	1	9R-6994	2	WASHER-THRUST
29	NPR	1	119-7036	1	PIN
30	NPR M	1	105-3484	12	BOLT-SOCKET HEAD (M10X1.5X25-MM)
31	NPR	1	130-3010	4	PIN
32	NPR	1	082-3077	4	PIN
33	NPR	1	130-6675	1	PIN
34	NPR	1	174-5698	1	HOUSING
35	NPR	2	119-7056	1	HOUSING
36	NPR	1	003-7501	2	CONE-BEARING
37	NPR	1	6V-2200	2	CUP-BEARING
38	NPR	1	054-6847	1	SEAL-O-RING
39	NPR M	1	6V-3303	15	BOLT (M16X2X60-MM)
40	NPR	1	054-6526	15	DISC
41	NPR	1	9R-3175	1	PLUG
42	NPR	1	130-6673	1	PLUG
43	NPR	1,2	9X-0796	4	SEAL-O-RING
44	NPR	2	130-2998	2	BUSHING
45	NPR	2	130-6877	2	SEAL
46	NPR	1	154-5404	2	BEARING
47	NPR	2	130-7031	1	HOUSING (LH)
48	NPR	2	119-7057	1	HOUSING (RH)
49	NPR	2	077-3918	2	BEARING
50	NPR	2	031-0426	2	CUP-BEARING
51	NPR	2	119-7046	2	SEAL
52	NPR	2	119-7047	2	SEAL
53	NPR	2	119-7038	2	PIN
54	NPR	2	130-7026	2	PIN
55	NPR	2	130-6677	16	BOLT
56	NPR	2	5P-9439	2	BALL BEARING
57	NPR	2	119-7053	2	FLANGE
58	NPR	2	131-3816	2	RING

59	NPR	2	7X-5771	2	RING-RETAINING
60	NPR	2	119-7045	2	SEAL
61	NPR	2	054-6589	2	CLIP
62	NPR Y	2	130-3013	1	SHAFT GP-DRIVE (RH)
63	NPR Y	2	130-3014	1	SHAFT GP-DRIVE (LH)
64	NPR	2	9X-0640	2	SEAL-O-RING
65	NPR	2	130-6879	2	SEAL
66	NPR Y	1	178-7190	1	CYLINDER GP-STEERING
67	NPR	2	2S-0480	4	CUP-TAPERED ROLLER
68	NPR M	2	130-3008	16	BOLT (M10X45-MM)
69	NPR	2	130-7047	16	STUD
70	NPR M	1	119-7060	2	SCREW
71	NPR	1	130-3007	2	NUT
72	NPR	2	119-7040	2	GEAR-RING
73	NPR	2	119-7042	2	SHAFT
74	NPR	2	130-7027	2	CARRIER
75	NPR	2	169-4160	6	GEAR
76	NPR	2	169-4161	6	CONE-BEARING
77	NPR	2	169-4162	6	CONE-BEARING
78	NPR	2	130-6878	6	RING
79	NPR	2	119-7061	2	PLUG
80	NPR M	2	9R-3168	4	SCREW (M10X20-MM)
81	NPR	1	154-5405	2	SEAL-LIP TYPE

Key: B - USE AS REQUIRED M - METRIC PART Y - SEPARATE ILLUSTRATION

117-8537 STEERING GP-HYDRAULIC --S/N 4ZN16099-50156
PART OF 154-5447 DRIVE AR-BACKHOE LOADER

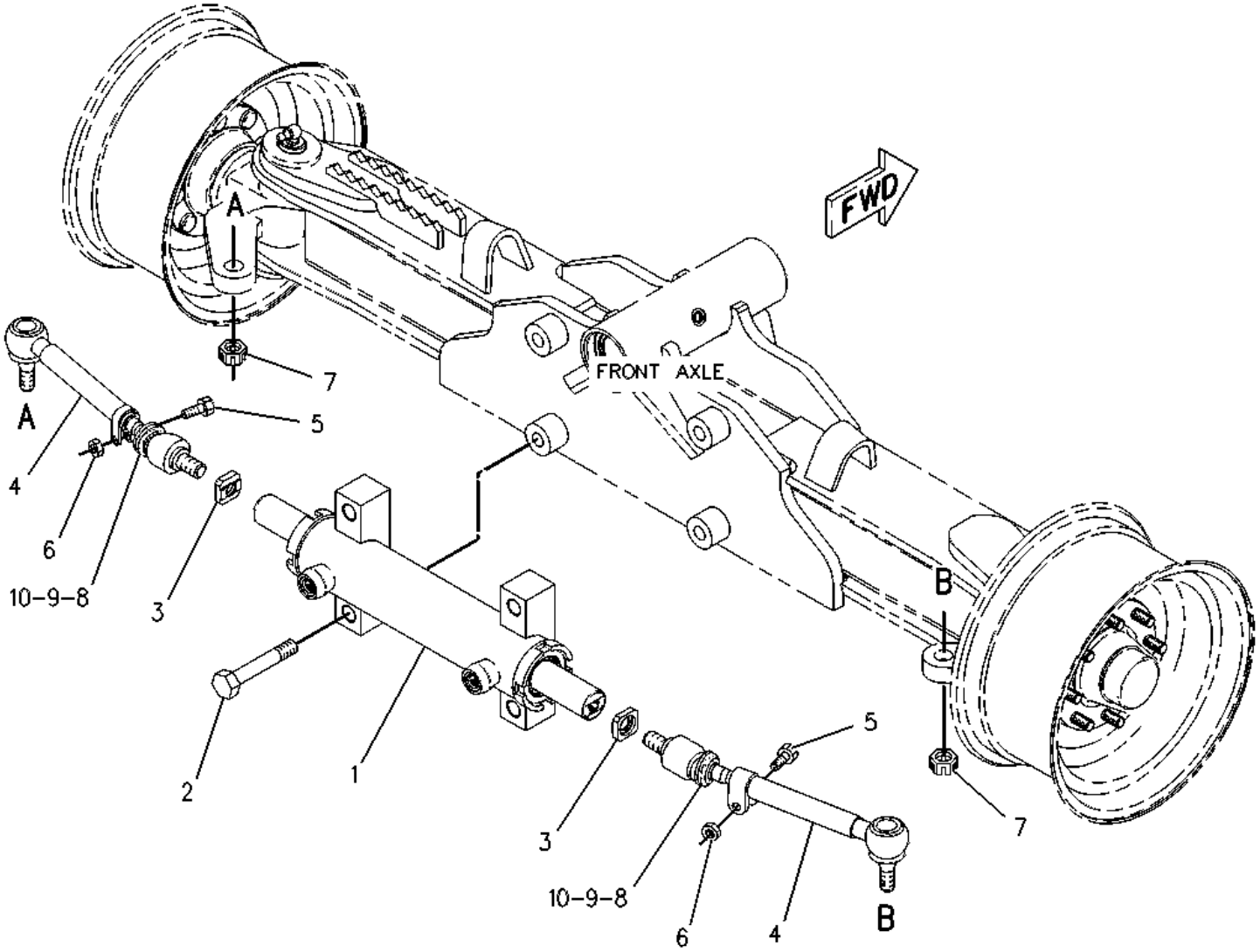

1	NPR Y	167-4235	1	CYLINDER GP-STEERING
2	NPR M	7X-2577	4	BOLT (M24X3X90-MM)
3	NPR	9R-2634	2	PLATE
4	NPR	128-4128	2	TIE ROD GP
5	NPR M	8T-4182	1	BOLT (M10X1.5X45-MM)
6	NPR M	6V-7744	1	LOCKNUT (M10X1.5-THD)
7	NPR M	130-5010	1	LOCKNUT (M22X1.5-THD)
8	NPR	101-0032	1	BOOT
9	NPR	101-0034	1	RING
10	NPR	101-0036	1	RING

Key: M - METRIC PART Y - SEPARATE ILLUSTRATION

149-4098 LOCK GP-STEERING CYLINDER -ANTI-THEFT, 2-WHEEL DRIVE
S/N 4ZN16044-50156

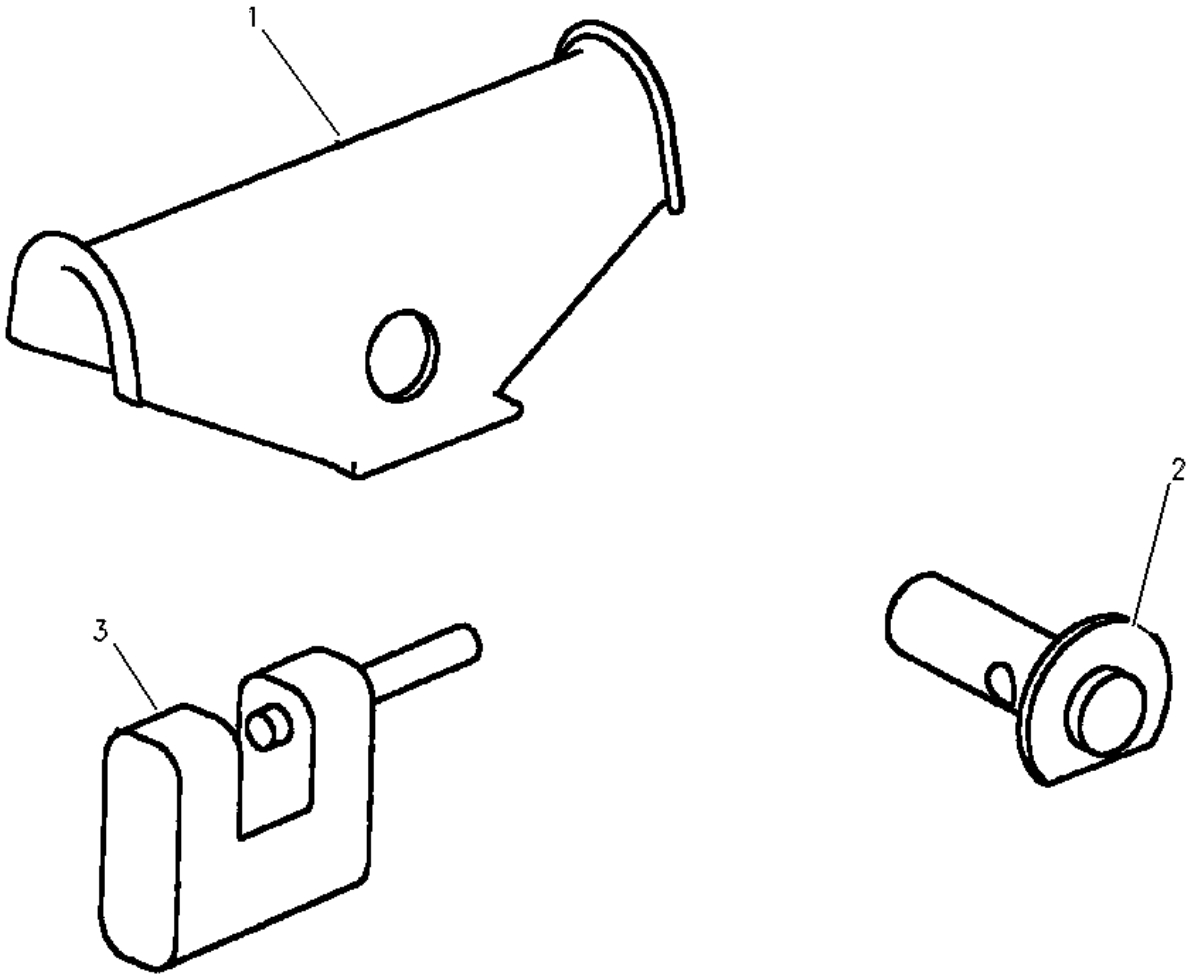

1	**NPR**	**149-4115**	**1**	**SLEEVE-STEERING LOCK**
2	**NPR**	**149-4118**	**1**	**PIN**
3	**NPR**	**149-4119**	**1**	**PADLOCK**

178-7190 CYLINDER GP-STEERING --S/N 4ZN16044-50156
PART OF 154-5471 AXLE GP-DRIVE & STEERING

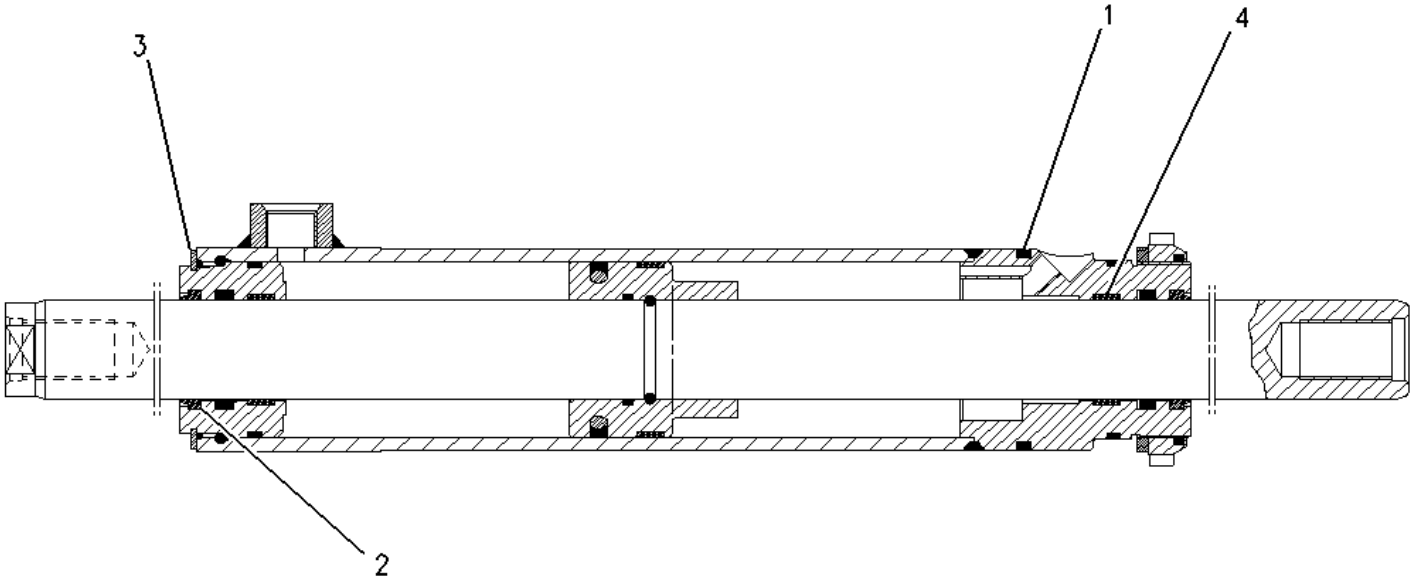

1	**NPR**	**130-6884**	**1**	**RING-SNAP**
2	**NPR**	**130-8143**	**1**	**GUIDE**
3	**NPR**	**095-0928**	**1**	**RING-RETAINING**
4	**NPR**	**178-7189**	**1**	**KIT-SEAL**

(INCLUDES WIPER,NUT,RINGS AND SEALS)

167-4235 CYLINDER GP-STEERING --S/N 4ZN16099-50156
69.85MM BORE 224MM STROKE. POWER SHIFT --PART OF 117-8537 STEERING GP-HYDRAULIC

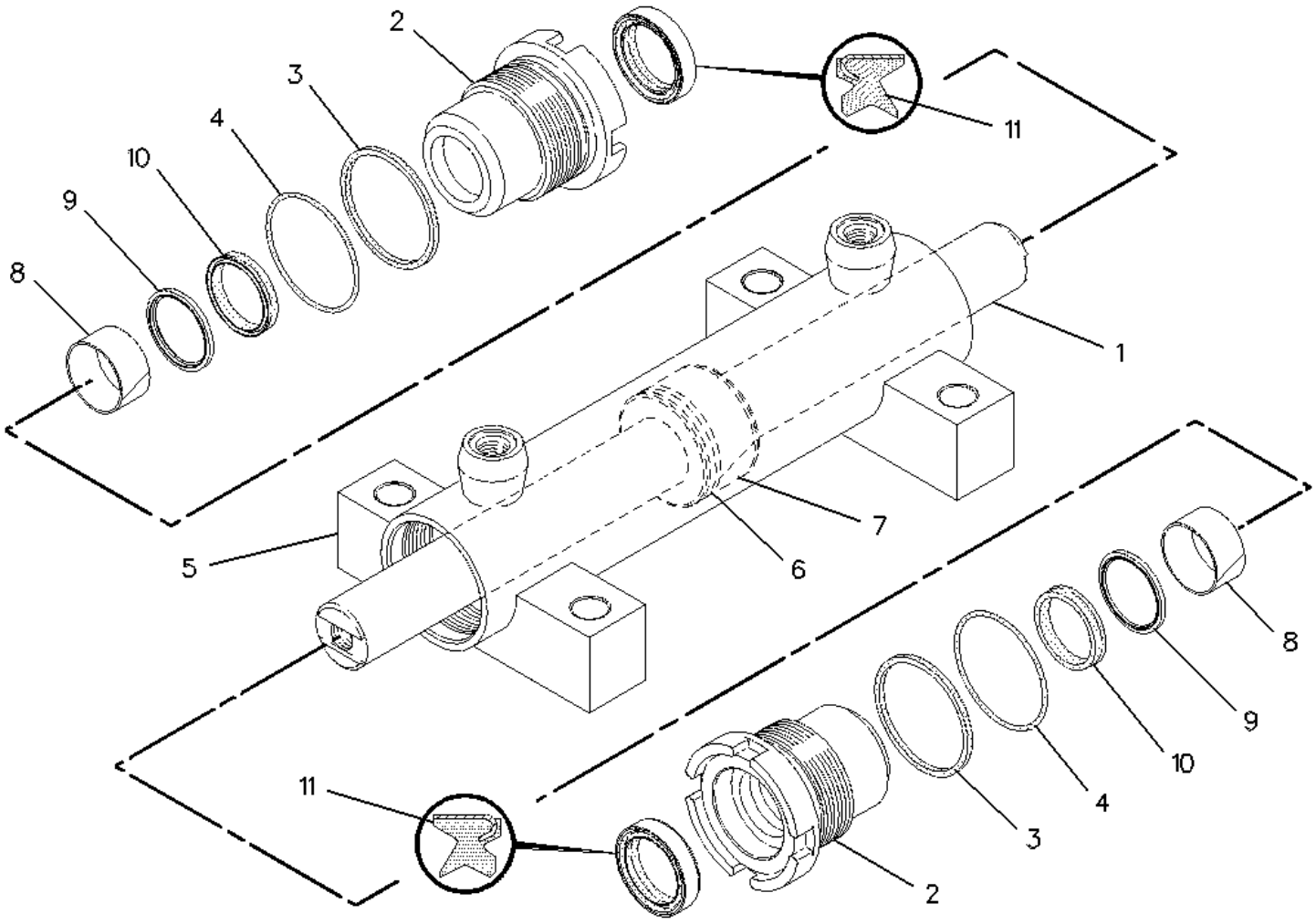

1	**NPR**	**169-0445**	**1**	**ROD AS**
2	**NPR**	**151-5349**	**2**	**HEAD**
3	**NPR JL**	**4J-9225**	**2**	**RING-BACKUP**
4	**NPR JL**	**175-7895**	**2**	**SEAL-O-RING**
5	**NPR**	**169-0444**	**1**	**CYLINDER AS**
6	**NPR JL**	**166-5295**	**1**	**SEAL AS**
7	**NPR JL**	**8J-0112**	**1**	**RING-WEAR**
8	**NPR JL**	**4T-6907**	**2**	**RING-WEAR**
9	**NPR J**	**167-2191**	**2**	**SEAL AS-BUFFER**
10	**NPR JL**	**167-2300**	**2**	**SEAL-U-CUP**
11	**NPR L**	**231-3539**	**2**	**SEAL-WIPER**

AVAILABLE REPAIR KIT(S): NPR J 235-0351 1 KIT-SEAL
(INCLUDES RINGS & SEALS) NPR L 235-0352 1 KIT-SEAL
(INCLUDES RINGS & SEALS)

Key: J - KIT MARKED J SERVICES PARTS MARKED J L - KIT MARKED L SERVICES PARTS MARKED L

8Y-7473 LINES GP-STEERING ---S/N 4ZN16044-50156
PART OF 154-5447 DRIVE AR-BACKHOE LOADER

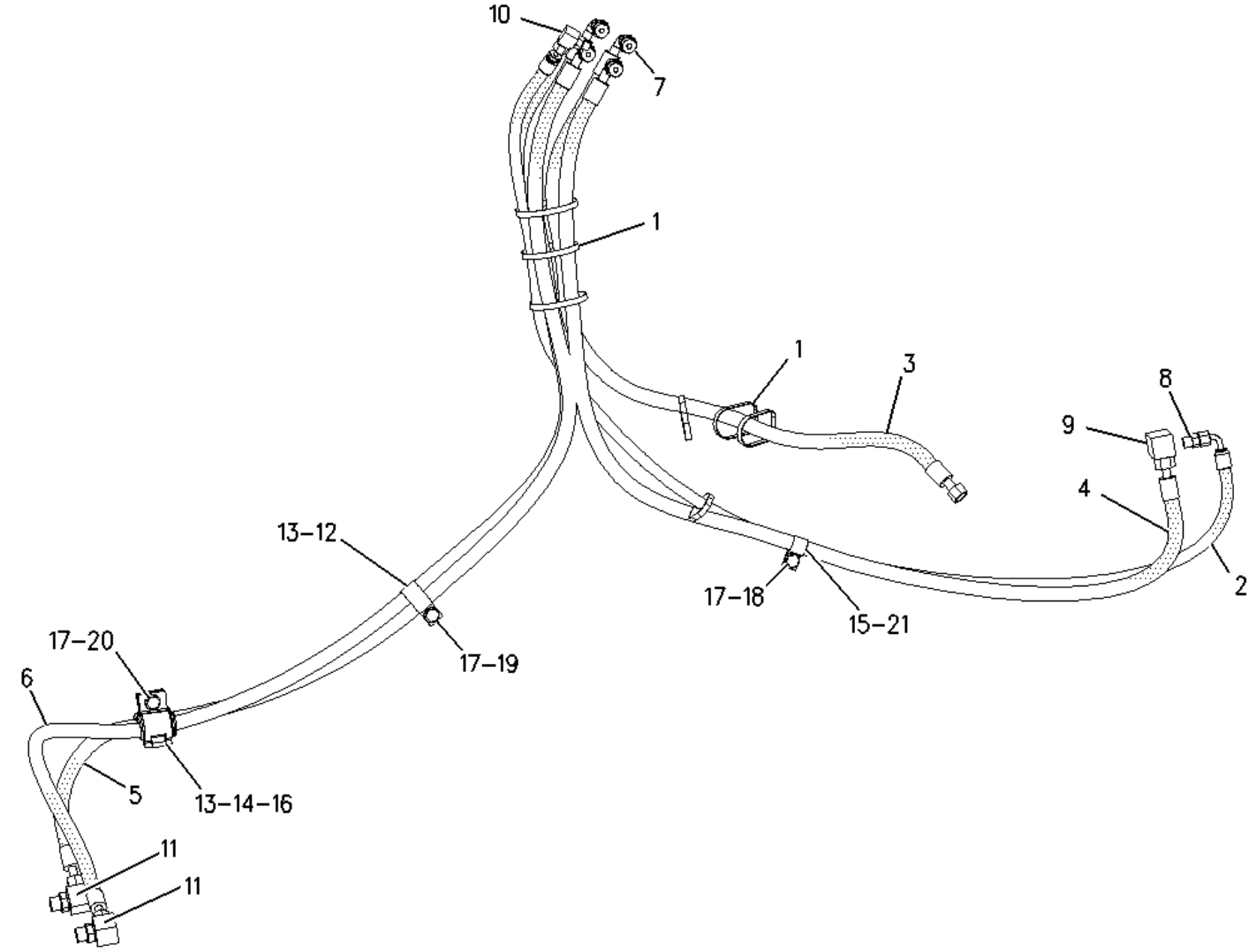

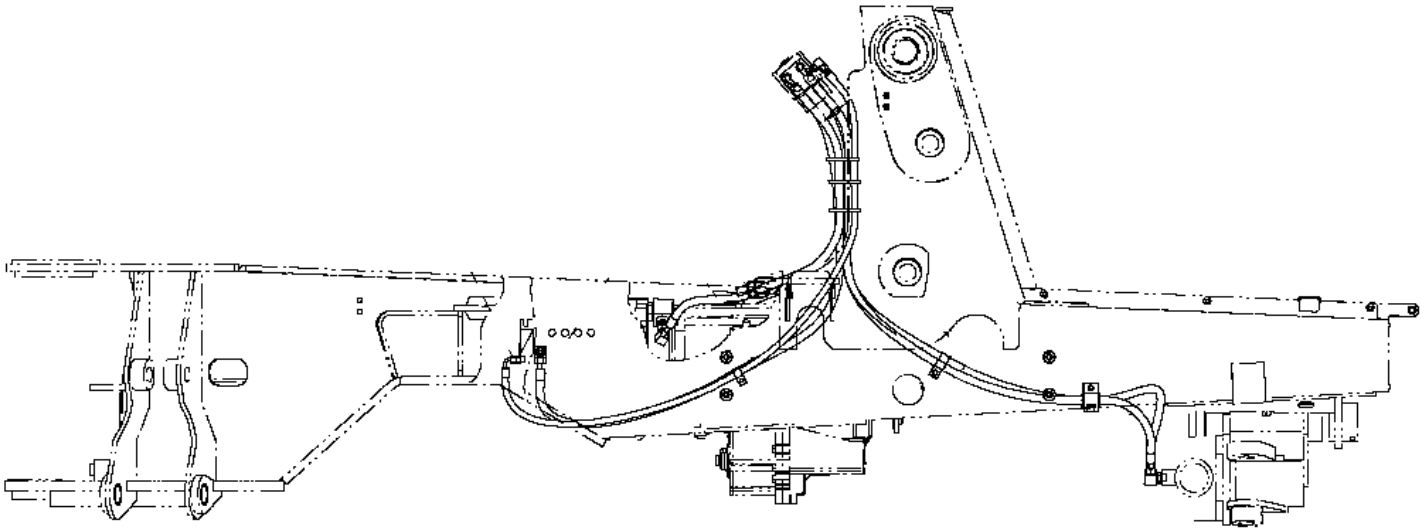

1 NPR 7K-1181 7 STRAP-CABLE

2 NPR I 117-3242 1 HOSE AS

3 NPR I 117-3258 1 HOSE AS

4 NPR I 117-3259 1 HOSE AS

5 NPR I 120-4543 1 HOSE AS

6 NPR I 120-4544 1 HOSE AS

7 NPR 148-8318 4 CONNECTOR AS

(EACH INCLUDES)

NPR 3K-0360 1 SEAL-O-RING

NPR 6V-8397 1 SEAL-O-RING

NPR 6V-8634 1 CONNECTOR

8 NPR 148-8325 1 CONNECTOR AS

NPR 3J-1907 1 SEAL-O-RING

NPR 4J-5477 1 SEAL-O-RING

NPR 6V-8641 1 CONNECTOR

9 NPR 148-8346 1 ELBOW AS

NPR 3K-0360 1 SEAL-O-RING

NPR 6V-8398 1 SEAL-O-RING

NPR 8T-1686 1 ELBOW

10 NPR 148-8369 1 ELBOW AS

NPR 3J-7354 1 SEAL-O-RING

NPR 4J-5477 1 SEAL-O-RING

NPR 6V-8628 1 ELBOW

11 NPR 148-8374 2 ELBOW AS

(EACH INCLUDES)

	NPR	3K-0360	1	SEAL-O-RING
	NPR	6V-8397	1	SEAL-O-RING
	NPR	6V-8723	1	ELBOW
12	NPR	5K-5338	1	CLIP
13	NPR	5P-7462	2	CLIP (SLOT)
14	NPR	5P-7463	2	CLIP (TAB)
15	NPR	6D-4246	1	CLIP
16	NPR	6V-0683	2	GROMMET
17	NPR	8T-4121	3	WASHER-HARD (11X21X2.5-MM THK)
18	NPR M	8T-4136	1	BOLT (M10X1.5X25-MM)
19	NPR M	8T-4137	1	BOLT (M10X1.5X20-MM)
20	NPR M	8T-4186	1	BOLT (M10X1.5X40-MM)
21	NPR	9M-8406	1	CLIP

Key:

I - REFER TO HYDRAULIC INFORMATION SYSTEM
M - METRIC PART

119-8152 LINES GP-STEERING ---S/N 4ZN16044-50156--ALL WHEEL DRIVE
PART OF 154-5449 DRIVE AR-BACKHOE LOADER

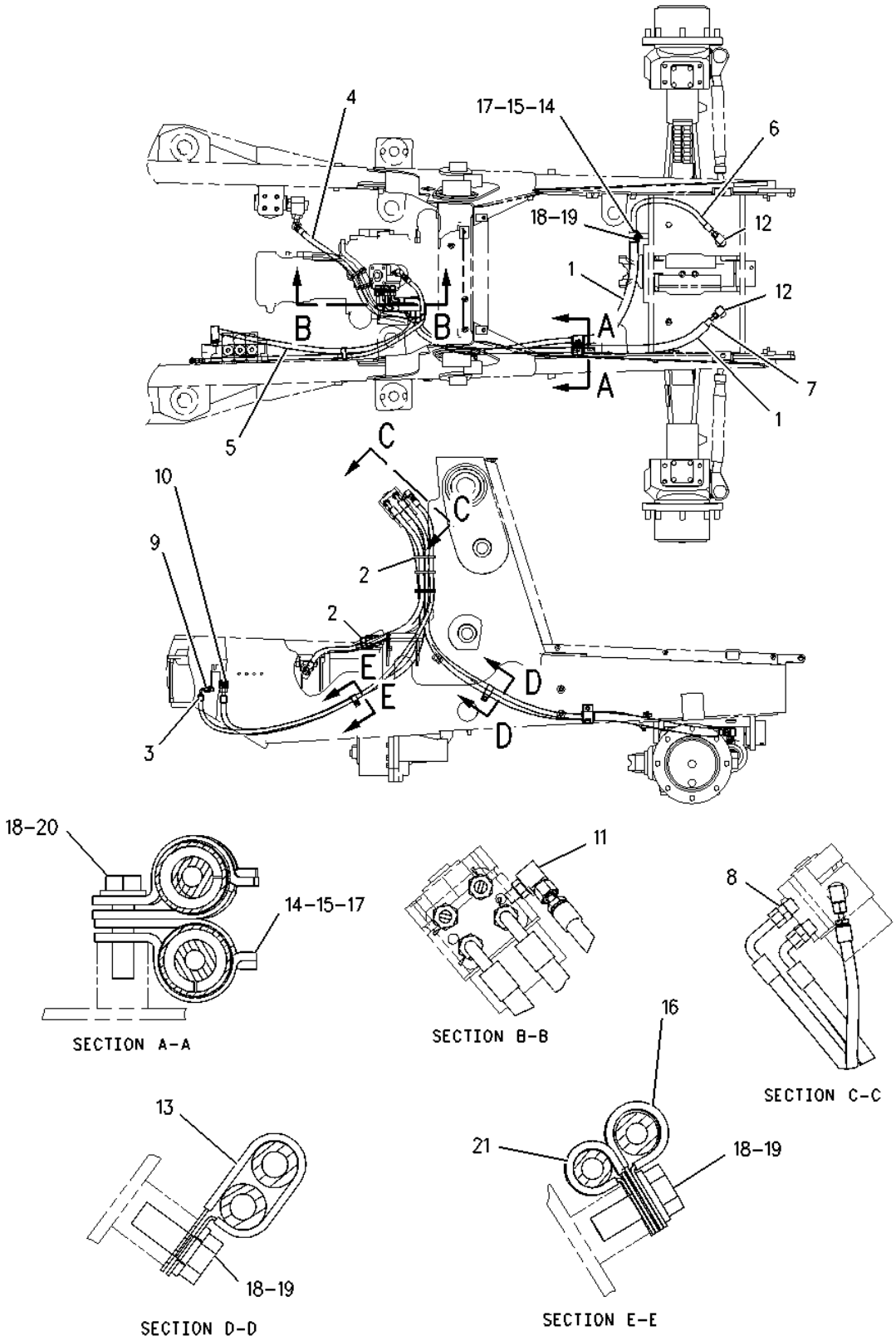

1 NPR BE 149-7371 SLEEVE-ABRASION

2 NPR 7K-1181 7 STRAP-CABLE

3 NPR I 117-3242 1 HOSE AS

4 NPR I 117-3258 1 HOSE AS

5 NPR I 117-3259 1 HOSE AS

6 NPR I 117-3261 1 HOSE AS

7 NPR I 120-4544 1 HOSE AS

8 NPR 148-8318 4 CONNECTOR AS

(EACH INCLUDES)

NPR 3K-0360 1 SEAL-O-RING

NPR 6V-8397 1 SEAL-O-RING

NPR 6V-8634 1 CONNECTOR

9 NPR 148-8325 1 CONNECTOR AS

NPR 3J-1907 1 SEAL-O-RING

NPR 4J-5477 1 SEAL-O-RING

NPR 6V-8641 1 CONNECTOR

10 NPR 148-8346 1 ELBOW AS

NPR 3K-0360 1 SEAL-O-RING

NPR 8T-1686 1 ELBOW

NPR 6V-8398 1 SEAL-O-RING

11 NPR 148-8369 1 ELBOW AS

NPR 3J-7354 1 SEAL-O-RING

NPR 4J-5477 1 SEAL-O-RING

NPR 6V-8628 1 ELBOW

12 NPR 148-8374 2 ELBOW AS

(EACH INCLUDES)

NPR 3K-0360 1 SEAL-O-RING

NPR 6V-8397 1 SEAL-O-RING

	NPR	6V-8723	1	ELBOW
13	NPR	5K-5338	1	CLIP
14	NPR	5P-7462	3	CLIP (SLOT)
15	NPR	5P-7463	3	CLIP (TAB)
16	NPR	6D-4246	1	CLIP
17	NPR	6V-0683	3	GROMMET
18	NPR	8T-4121	4	WASHER-HARD (11X21X2.5-MM THK)
19	NPR M	8T-4136	3	BOLT (M10X1.5X25-MM)
20	NPR M	8T-4186	1	BOLT (M10X1.5X40-MM)
21	NPR	9M-8406	1	CLIP

Key:

B - USE AS REQUIRED
E - ORDER BY THE CENTIMETER
I - REFER TO HYDRAULIC INFORMATION SYSTEM
M - METRIC PART

163-0059 PUMP GP-METERING --S/N 4ZN16044-50156
PART OF 154-5447, 154-5449 DRIVE AR-BACKHOE LOADER

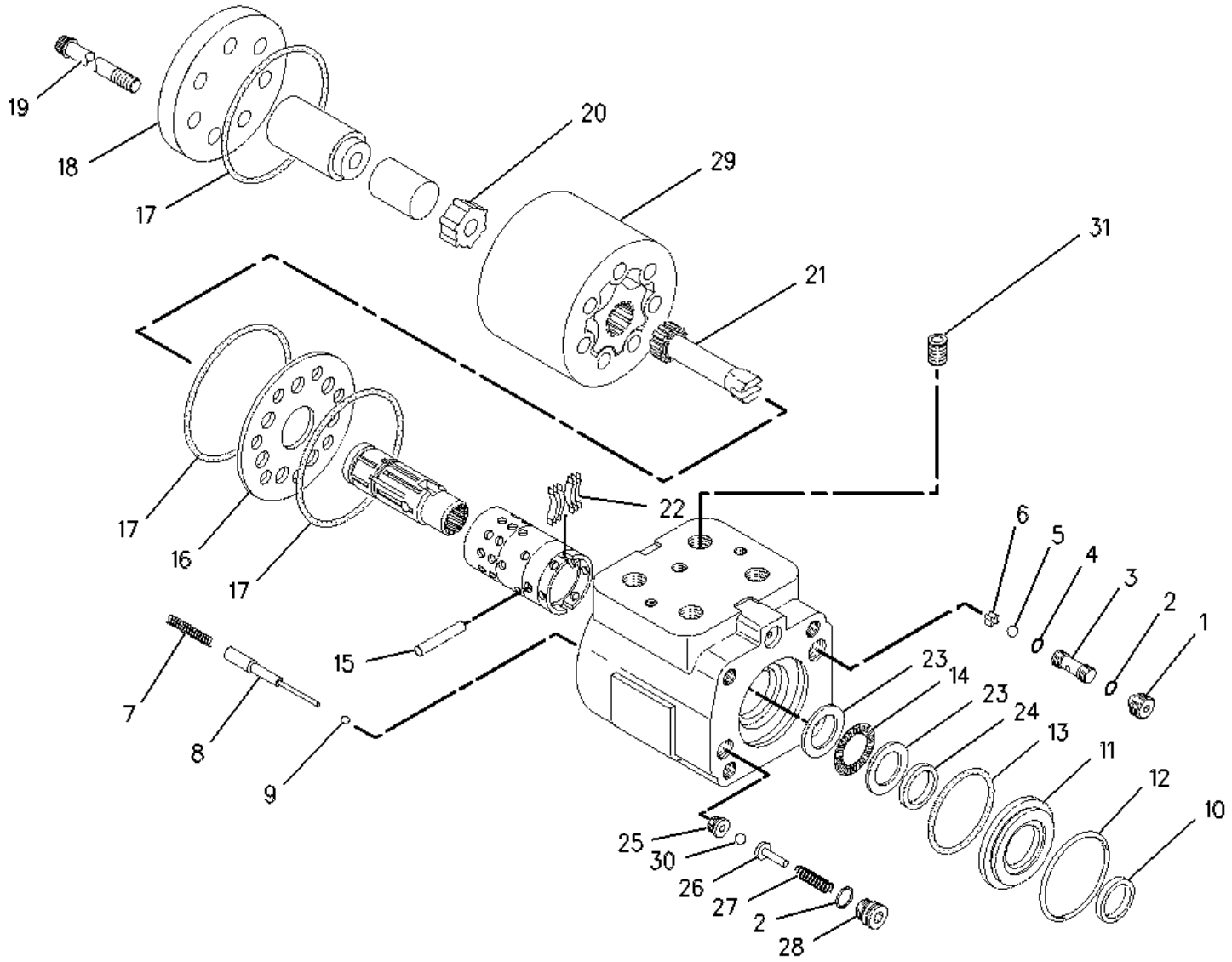

1	**NPR**	**3G-6906**	**1**	**SCREW (9/16-18X0.559-IN)**
2	**NPR**	**1H-1023**	**3**	**SEAL-O-RING**
3	**NPR**	**3G-6907**	**1**	**SEAT**
4	**NPR**	**5F-9144**	**1**	**SEAL-O-RING**
5	**NPR**	**6S-7827**	**1**	**BALL**
6	**NPR**	**6S-7826**	**1**	**RETAINER-BALL**
7	**NPR**	**114-5325**	**2**	**SPRING**
8	**NPR**	**114-5326**	**2**	**PLUG**
9	**NPR**	**114-5332**	**2**	**BALL**
10	**NPR**	**8F-5340**	**1**	**SEAL-LIP TYPE**

11	NPR	9J-8076	1	BUSHING-TERMINAL
12	NPR	9J-5442	1	RING-RETAINING
13	NPR	7F-8267	1	SEAL-O-RING
14	NPR	5L-1100	1	BEARING-THRUST
15	NPR	7J-8009	1	PIN
16	NPR	114-5190	1	SPACER (23.8X55.9X4-MM THK)
17	NPR	9J-5686	3	SEAL-O-RING
18	NPR	114-5180	1	CAP
19	NPR	119-8086	7	BOLT (5/16-24X1.75-IN)
20	NPR	3G-4461	1	SPACER (0.241-IN THK)
21	NPR	7J-6839	1	DRIVE-CONTROL END
22	NPR	9T-8560	1	KIT-SPRING
23	NPR	3G-6891	2	RACE
24	NPR	7J-6833	1	SEAL
25	NPR	114-5337	2	SEAT-VALVE
26	NPR	114-5342	2	RETAINER-BALL
27	NPR	114-5075	2	SPRING
28	NPR	114-5347	2	PLUG
29	NPR	9T-1083	1	GEROTOR AS
30	NPR	114-5339	2	BALL
31	NPR	114-5132	1	VALVE AS-CHECK

AVAILABLE REPAIR KIT(S):

NPR	118-4341	1	KIT-SEAL

(INCLUDES SEALS)

117-8537 STEERING GP-HYDRAULIC -S/N 4ZN16099-50156
PART OF 154-5447 DRIVE AR-BACKHOE LOADER

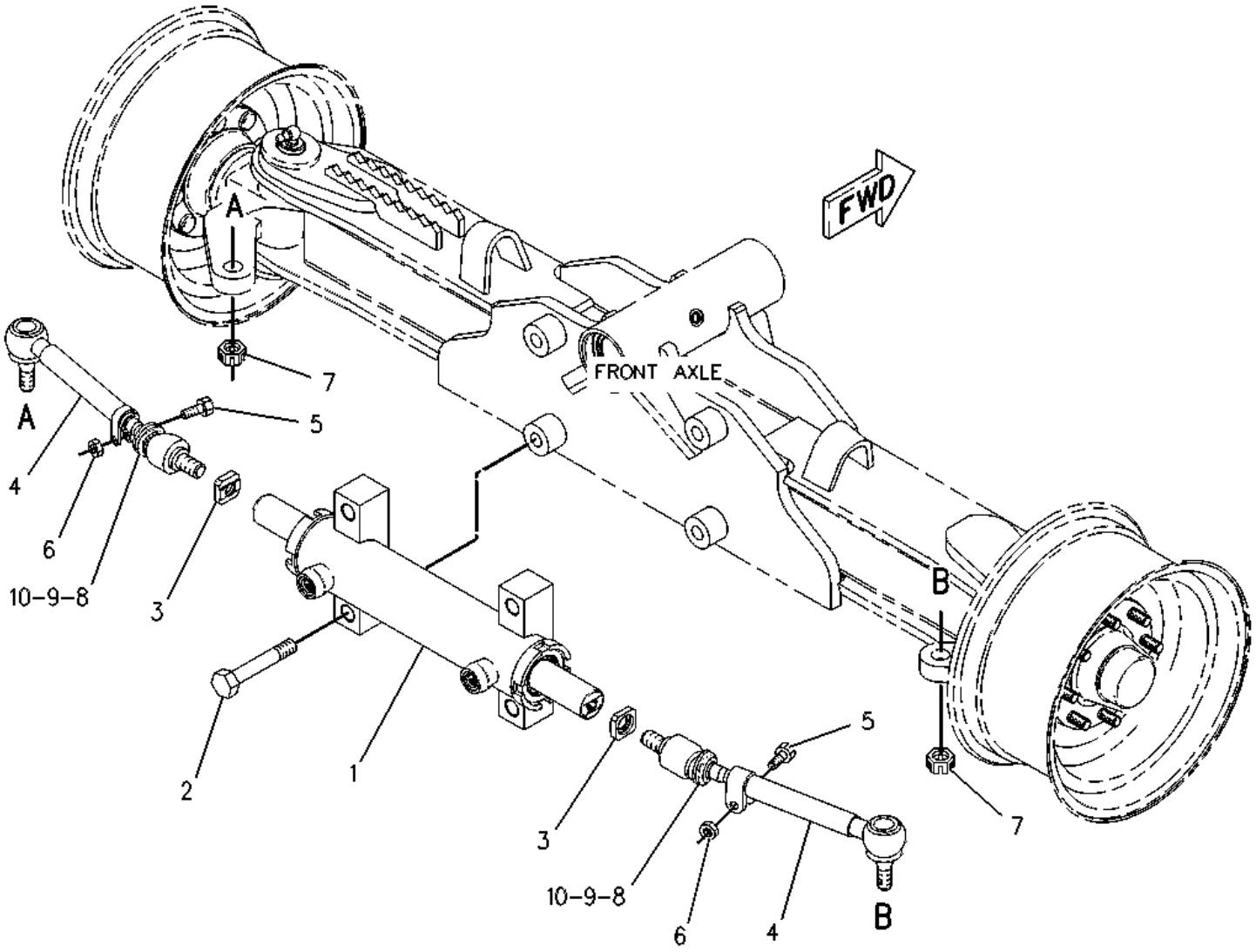

1	NPR	Y	167-4235	1 CYLINDER GP-STEERING
2	NPR	M	7X-2577	4 BOLT (M24X3X90-MM)
3	NPR		9R-2634	2 PLATE
4	NPR		128-4128	2 TIE ROD GP
5	NPR	M	8T-4182	1 BOLT (M10X1.5X45-MM)
6	NPR	M	6V-7744	1 LOCKNUT (M10X1.5-THD)
7	NPR	M	130-5010	1 LOCKNUT (M22X1.5-THD)
8	NPR		101-0032	1 BOOT
9	NPR		101-0034	1 RING
10	NPR		101-0036	1 RING

Key: M - METRIC PART Y - SEPARATE ILLUSTRATION

153-7369 KNOB GP-STEERING ---S/N 4ZN16044-50156--STEERING WHEEL

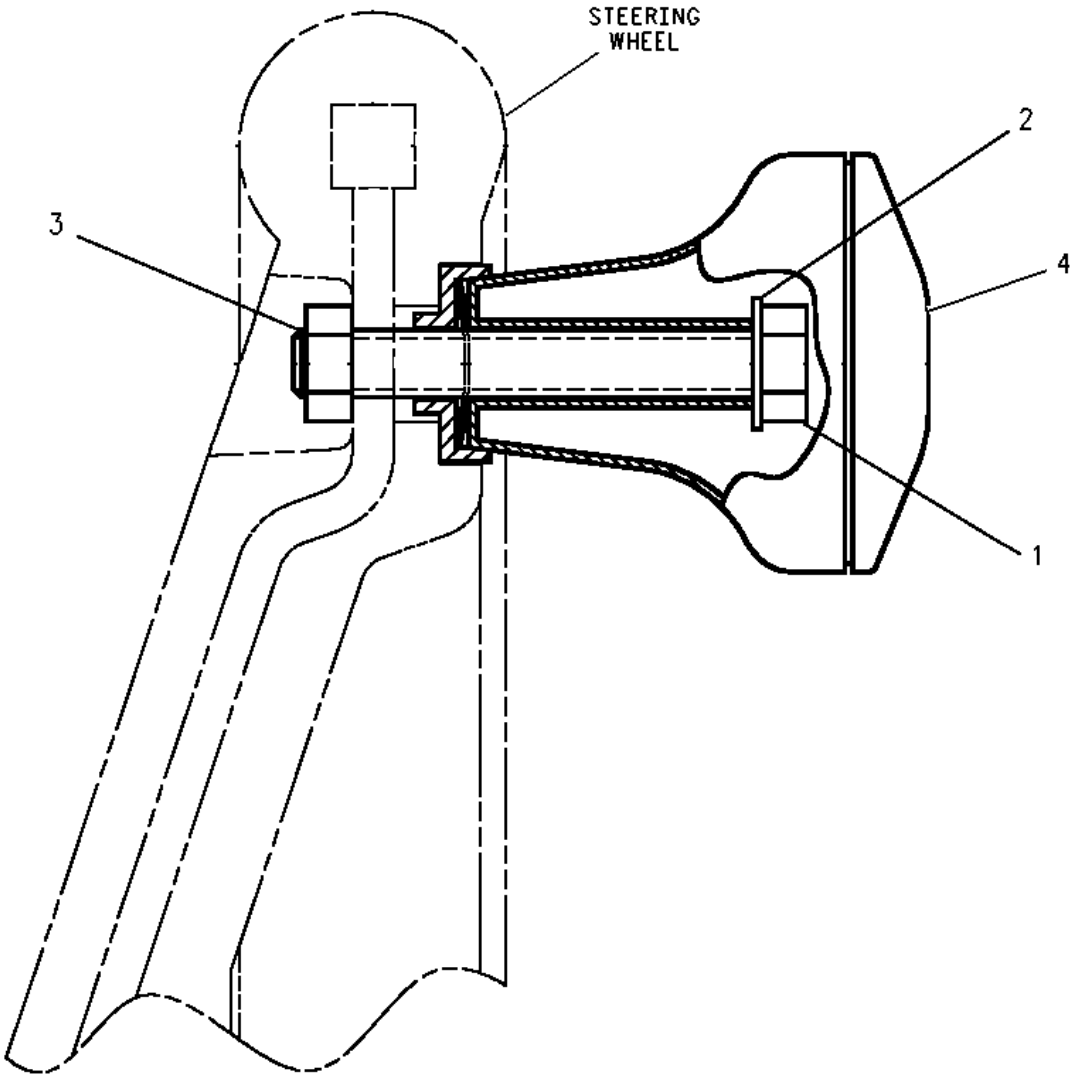

1 NPR M 8T-6869 1 BOLT (M8X1.25X60-MM)

2 NPR 8T-4224 1 WASHER-HARD (8.8X16X2-MM THK)

3 NPR M 5C-7261 1 NUT (M8X1.25-THD)

4 Z 1 KNOB

Key: M - METRIC PART Z - NOT SERVICED SEPARATELY

153-9580 STEERING WHEEL GP -S/N 4ZN16044-50156
PART OF 159-4922, 159-4923, 159-4924, 159-4925 CONTROL GP-STEERING & TMSN

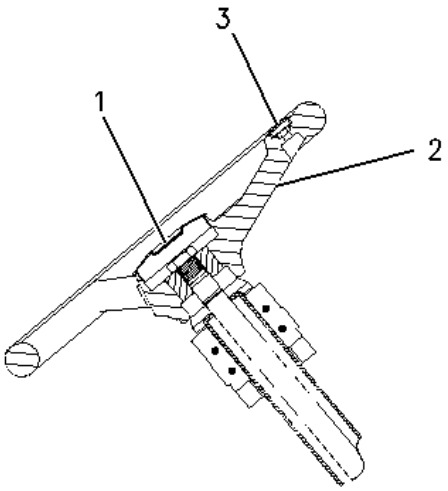

SECTION A-A

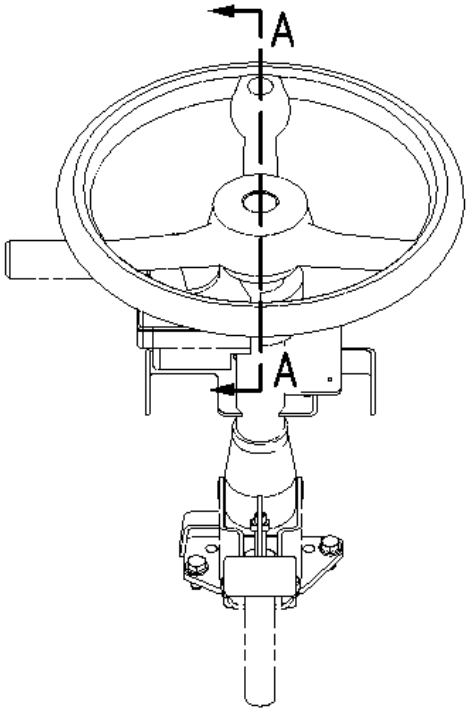

1 NPR 8R-2916 1 COVER AS (CAT, STEERING WHEEL)

2 NPR 145-9291 1 STEERING WHEEL AS

3 NPR 153-7368 1 PLUG

117-8537 STEERING GP-HYDRAULIC -S/N 4ZN16099-50156
PART OF 154-5447 DRIVE AR-BACKHOE LOADER

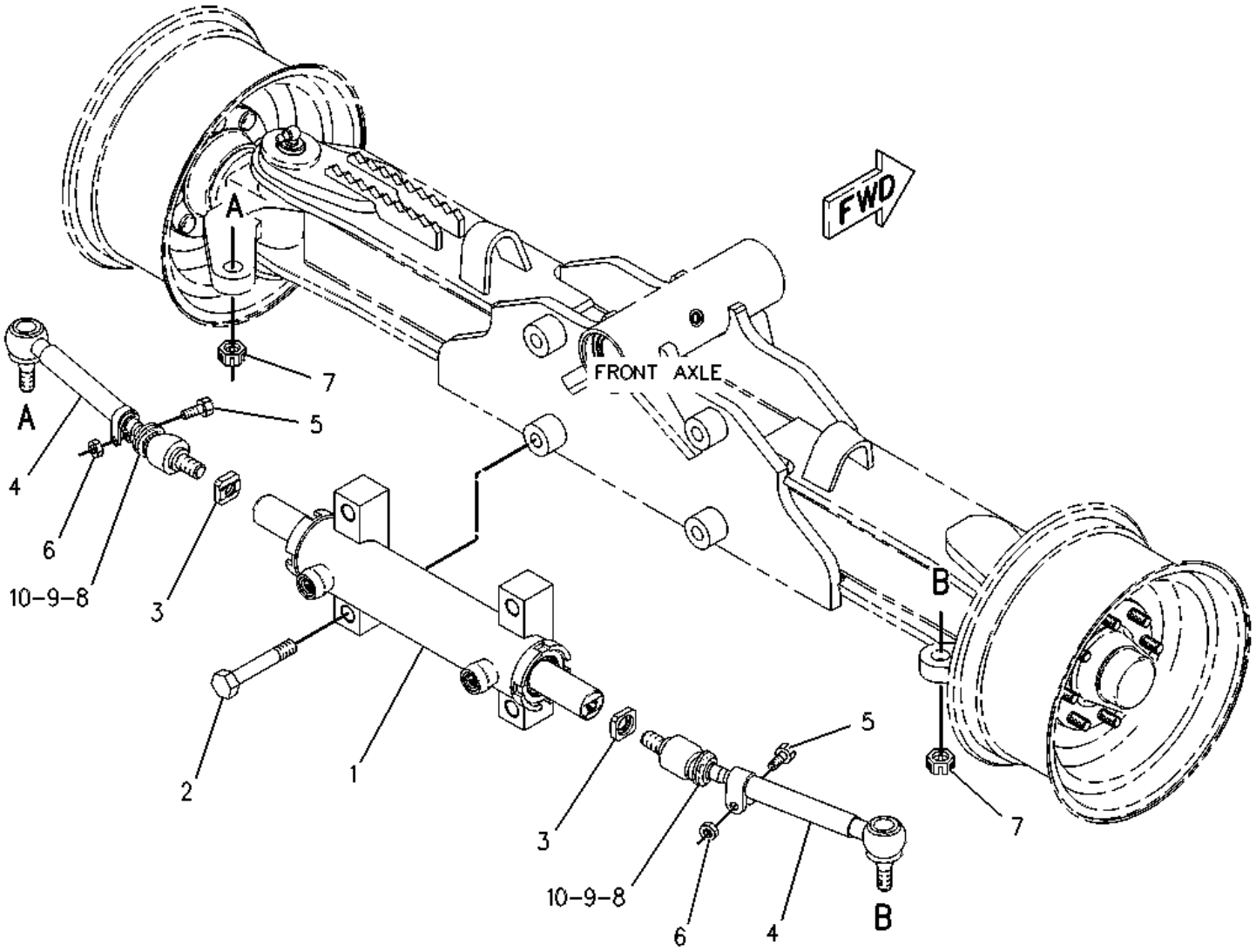

1	NPR	Y	167-4235	1 CYLINDER GP-STEERING
2	NPR	M	7X-2577	4 BOLT (M24X3X90-MM)
3	NPR		9R-2634	2 PLATE
4	NPR		128-4128	2 TIE ROD GP
5	NPR	M	8T-4182	1 BOLT (M10X1.5X45-MM)
6	NPR	M	6V-7744	1 LOCKNUT (M10X1.5-THD)
7	NPR	M	130-5010	1 LOCKNUT (M22X1.5-THD)
8	NPR		101-0032	1 BOOT
9	NPR		101-0034	1 RING
10	NPR		101-0036	1 RING

Key: M - METRIC PART Y - SEPARATE ILLUSTRATION

180-9624 VALVE GP-PRIORITY --S/N 4ZN16044-50156
PART OF 180-9135 VALVE GP-BANK 2, 180-9136 VALVE GP-BANK 3

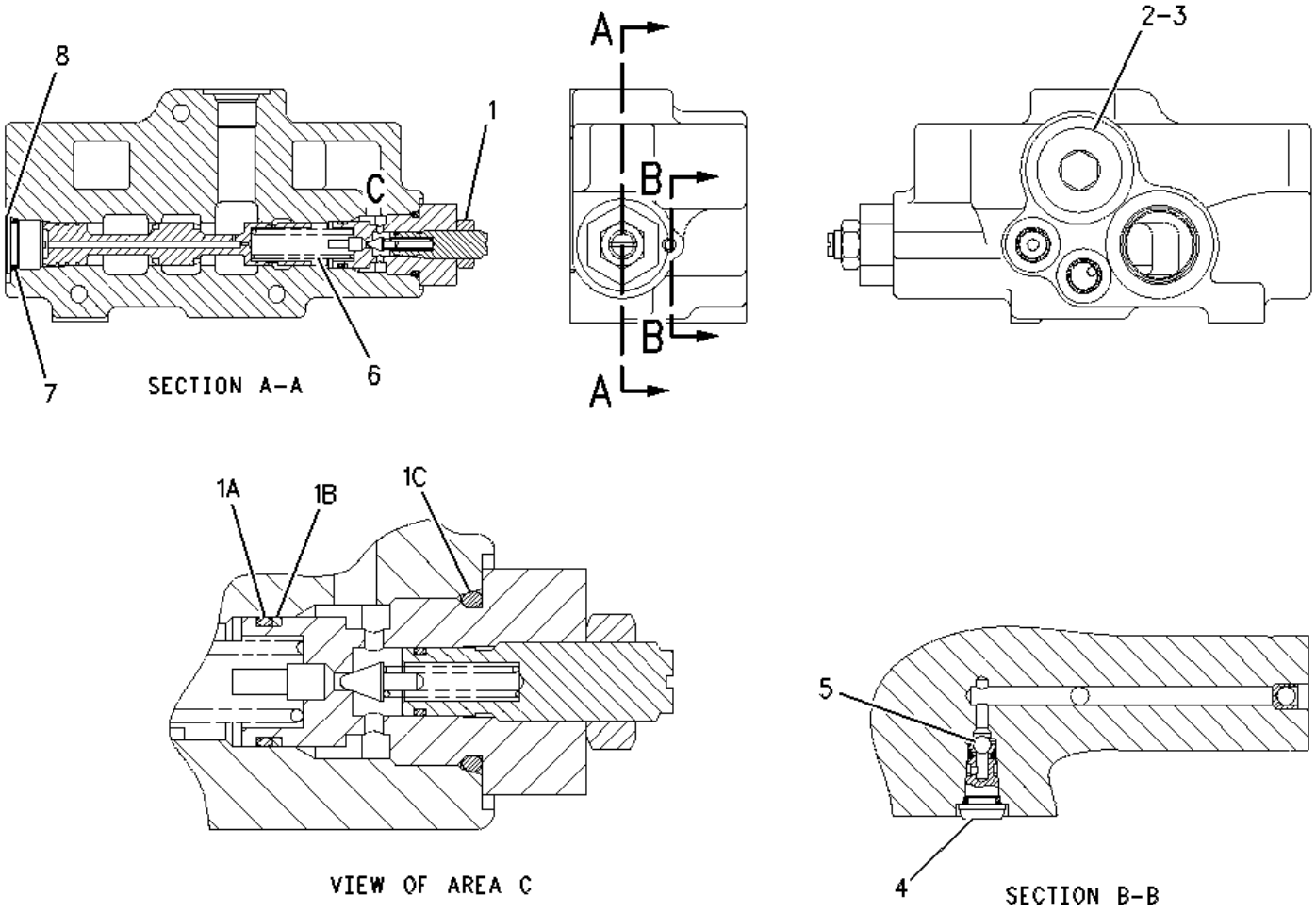

1	NPR	9T-0655	1	VALVE GP-RELIEF
1A	NPR	1S-8947	1	SEAL-O-RING
1B	NPR	9T-0656	1	RING
1C	NPR	3D-2824	1	SEAL-O-RING
2	NPR	9S-9334	1	PLUG
3	NPR	7M-8485	1	SEAL-O-RING
4	NPR	180-9157	1	SEAT AS
	NPR	4T-7807	1	RING-BACKUP
	NPR	7J-0204	1	SEAL-O-RING
	NPR	8T-2360	1	SEAL-O-RING
5	NPR	5B-9318	1	BALL
6	NPR	103-4754	1	SPRING
7	NPR	2M-9780	1	SEAL-O-RING
8	NPR	9S-8006	1	PLUG-O RING

159-7543 VALVE GP-PRIORITY --S/N 4ZN16044-50156
PART OF 159-7559 VALVE GP-BANK 2, 159-7560 VALVE GP-BANK 3

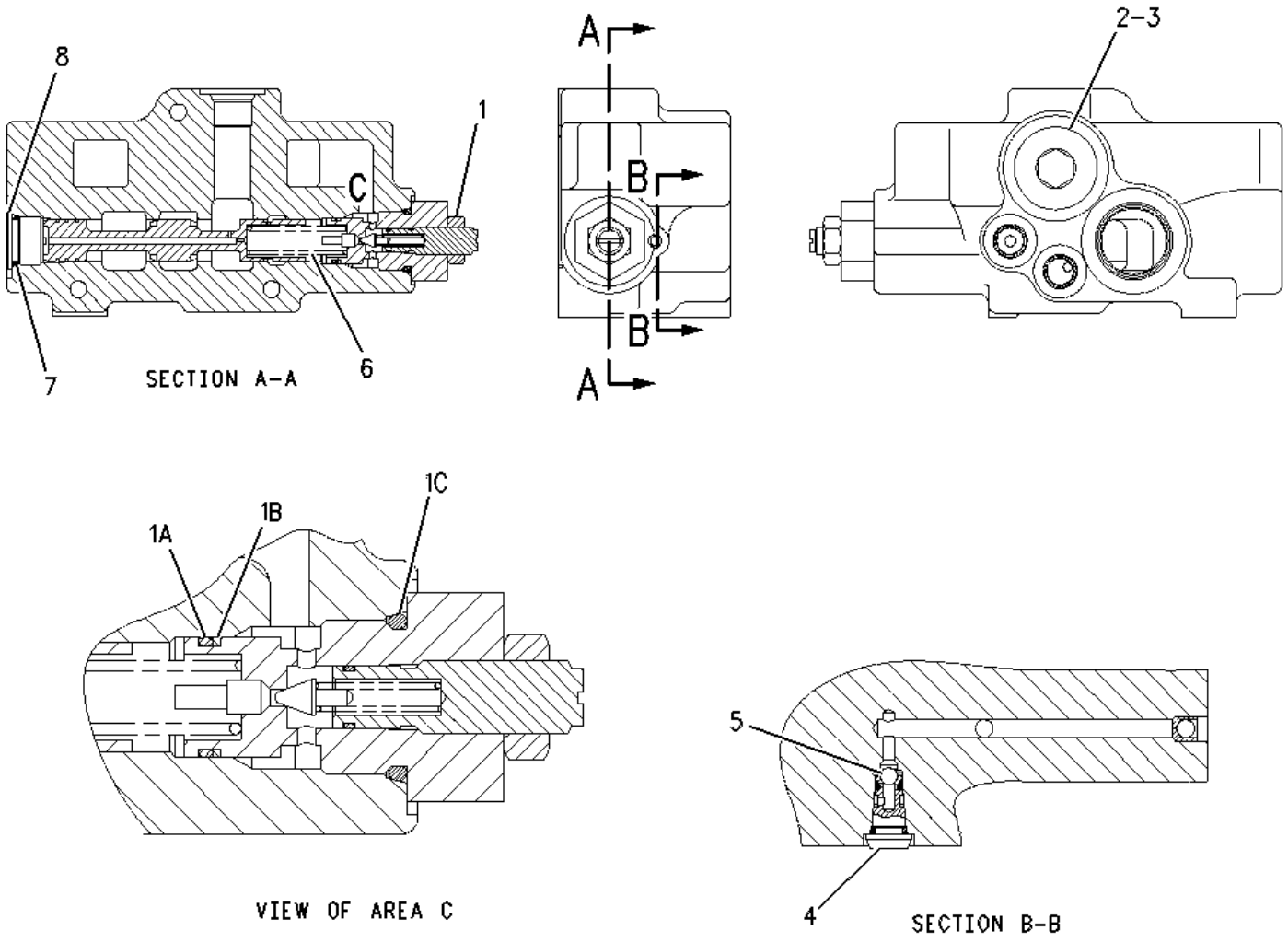

1	NPR	9T-0655	1	VALVE GP-RELIEF
1A	NPR	1S-8947	1	SEAL-O-RING
1B	NPR	9T-0656	1	RING
1C	NPR	3D-2824	1	SEAL-O-RING
2	NPR	9S-9334	1	PLUG
3	NPR	7M-8485	1	SEAL-O-RING
4	NPR	126-5476	1	SEAT AS-SHUTTLE
	NPR	4T-7807	1	RING-BACKUP
	NPR	7J-0204	1	SEAL-O-RING
	NPR	8T-2360	1	SEAL-O-RING
5	NPR	5B-9318	1	BALL
6	NPR	103-4754	1	SPRING
7	NPR	2M-9780	1	SEAL-O-RING
8	NPR	9S-8006	1	PLUG-O RING

AIR INLET AND EXHAUST SYSTEM

112-9689 AIR CLEANER GP --S/N 4ZN16044-50156
PART OF 130-1470 AIR CLEANER GP

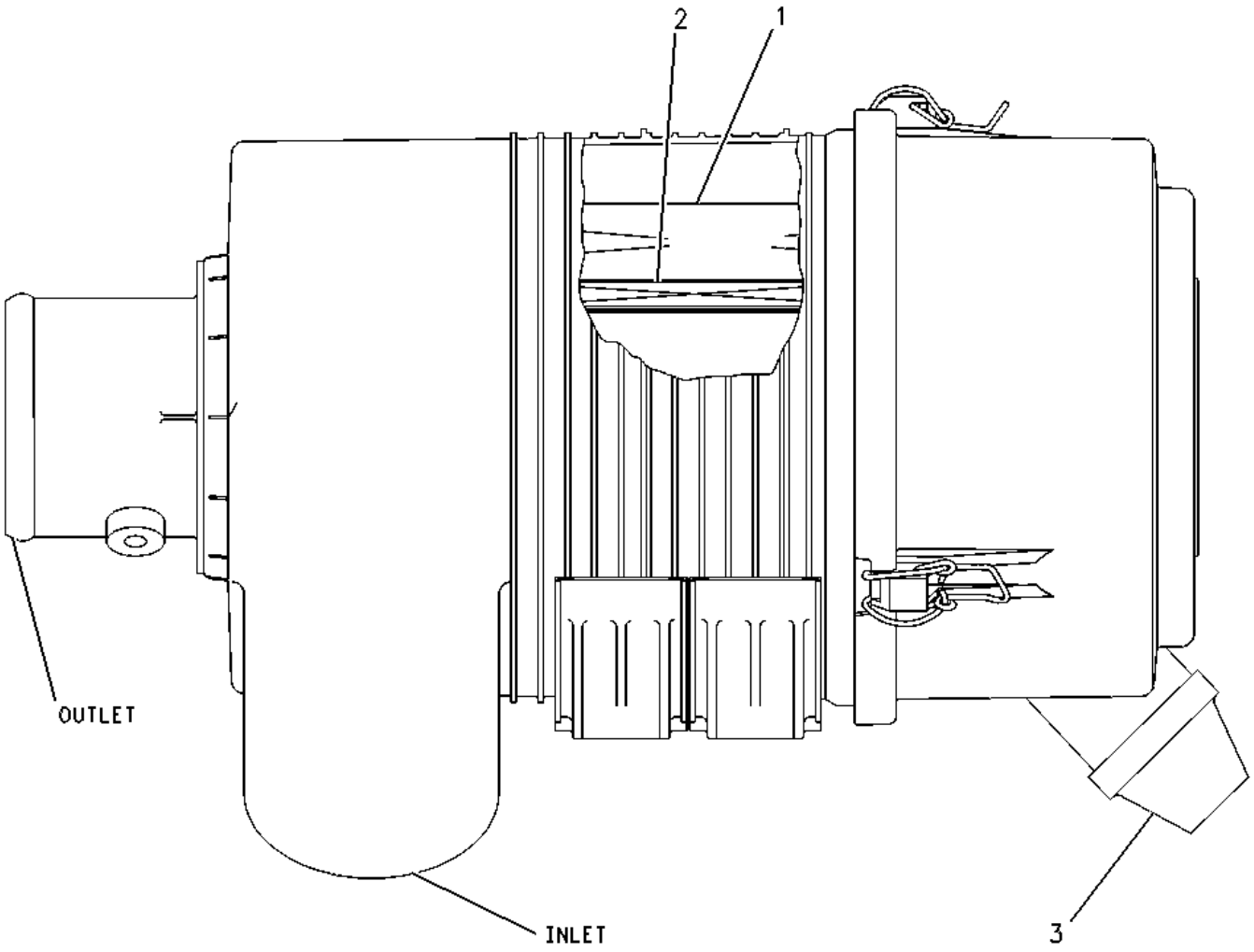

1	**NPR**	**110-6326**	**1**	**FILTER ELEMENT AS-AIR (PRIMARY)**
2	**NPR**	**110-6331**	**1**	**FILTER ELEMENT AS-AIR (SECONDARY)**
3	**NPR**	**112-9717**	**1**	**VALVE-VACUATOR**

130-1470 AIR CLEANER GP --S/N 4ZN16044-50156
PART OF 154-5479, 193-2143 SUPPRESSION AR-SOUND

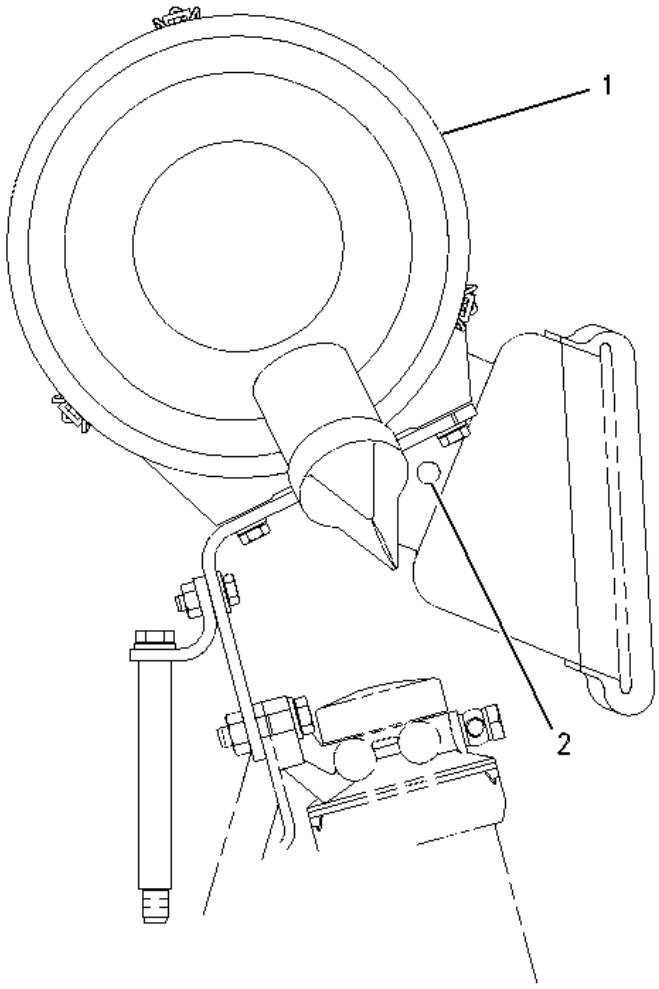

1 NPR Y 112-9689 1 AIR CLEANER GP

2 NPR 7M-1530 3 RIVET-POP

Key: Y - SEPARATE ILLUSTRATION

7E-4631 LINES GP-AIR ---S/N 4ZN16044-50156--PART OF 158-6062 ENGINE AR

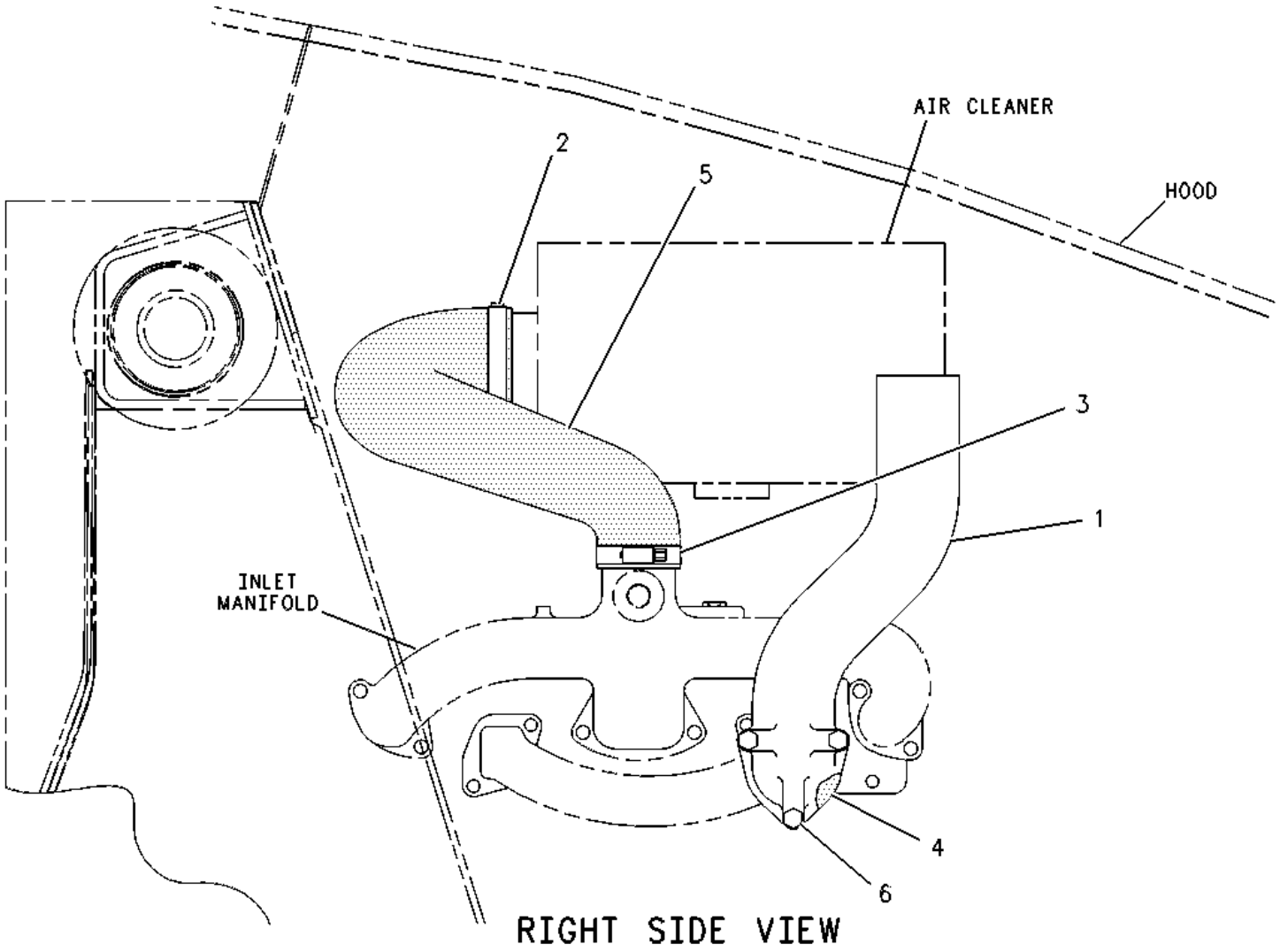

1 NPR 4W-2088 1 ELBOW

2 NPR 8T-6726 1 CLAMP-HOSE

3 NPR 3E-7419 1 CLAMP-HOSE

4 NPR 7W-4581 1 GASKET-TURBOCHARGER

5 NPR 112-9313 1 HOSE-INLET MANIFOLD

6 NPR M 8T-4178 3 BOLT (M10X1.50X90MM)

Key: M - METRIC PART

7E-4634 LINES GP-AIR ---S/N 4ZN16044-50156
PART OF 158-6064 ENGINE AR

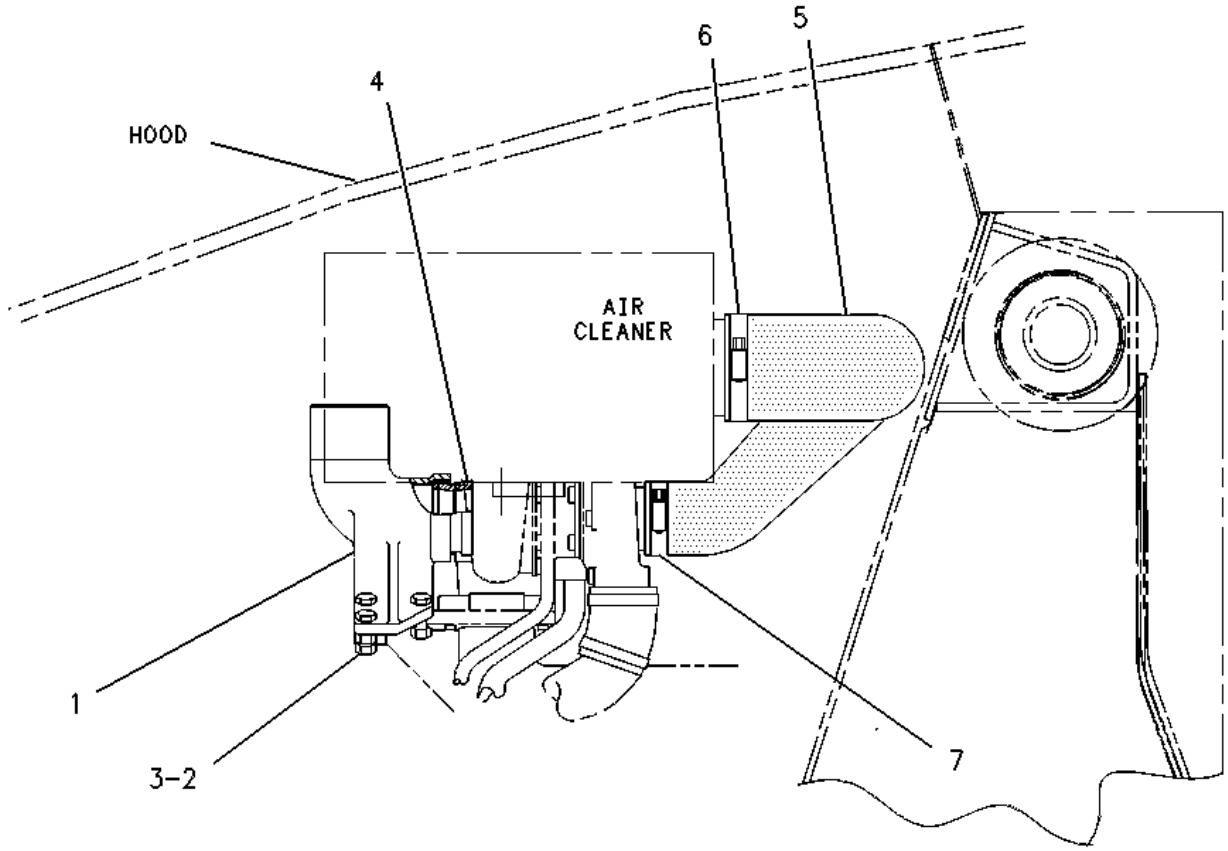

LEFT SIDE VIEW

1 NPR 4P-1660 1 ELBOW-EXHAUST

2 NPR M 8T-4196 3 BOLT (M10X1.5X35-MM)

3 NPR M 8T-4133 3 NUT (M10X1.5-THD)

4 NPR 4P-1665 1 SLEEVE-OUTLET

5 NPR 112-9311 1 HOSE-TURBOCHARGER

6 NPR 8T-6726 1 CLAMP-HOSE

7 NPR 3E-7419 1 CLAMP-HOSE

Key: M - METRIC PART

138-6899 LINES GP-AIR --S/N 4ZN16044-50156
PART OF 158-6063, 158-6065 ENGINE AR

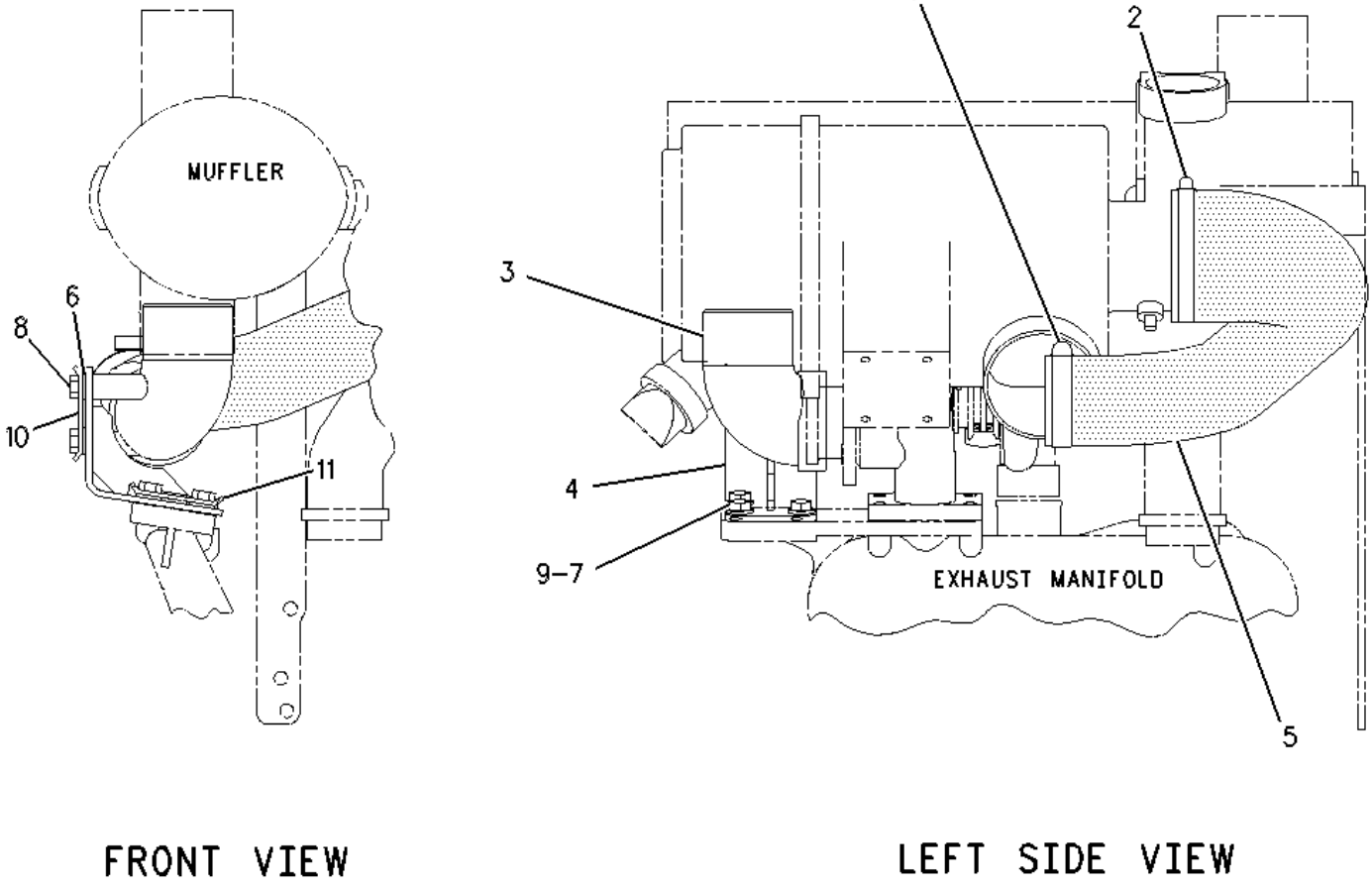

FRONT VIEW

LEFT SIDE VIEW

1	NPR	5P-4868	1	CLAMP-HOSE
2	NPR	8T-6726	1	CLAMP-HOSE
3	NPR	138-6900	1	ELBOW-EXHAUST
4	NPR	138-6901	1	BRACKET AS
5	NPR	138-6903	1	HOSE-MANIFOLD
6	NPR	5P-4116	3	WASHER-HARD (8.8X20.5X2-MM THK)
7	NPR	8T-4121	3	WASHER-HARD (11X21X2.5-MM THK)
8	NPR M	8T-4189	3	BOLT (M8X1.25X20-MM)
9	NPR M	8T-4136	3	BOLT (M10X1.5X25-MM)
10		157-6133	1	LOCK
11		157-6139	1	LOCK

Key: M - METRIC PART

167-8258 LINES GP-AIR --S/N 4ZN16044-50156
EMISSIONS ENGINE --PART OF 158-6063, 158-6065 ENGINE AR

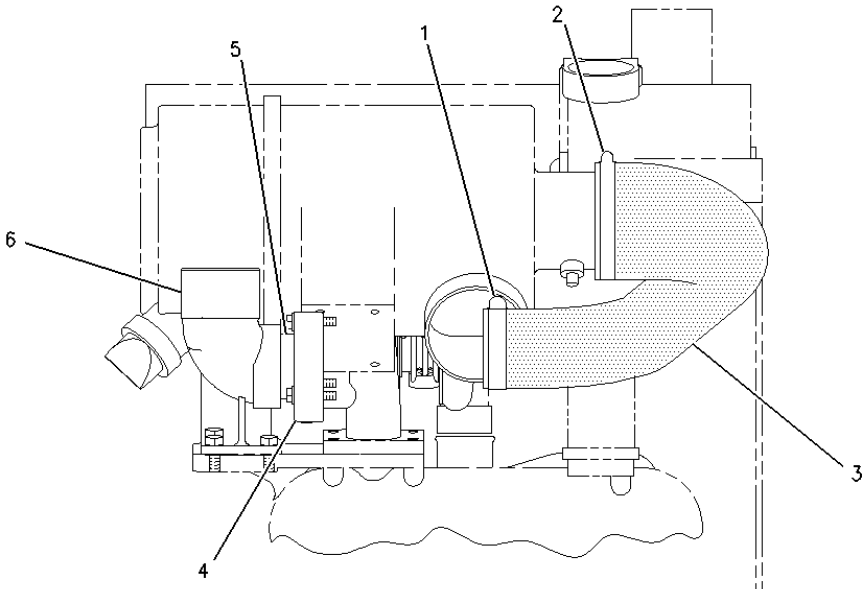

LEFT SIDE VIEW

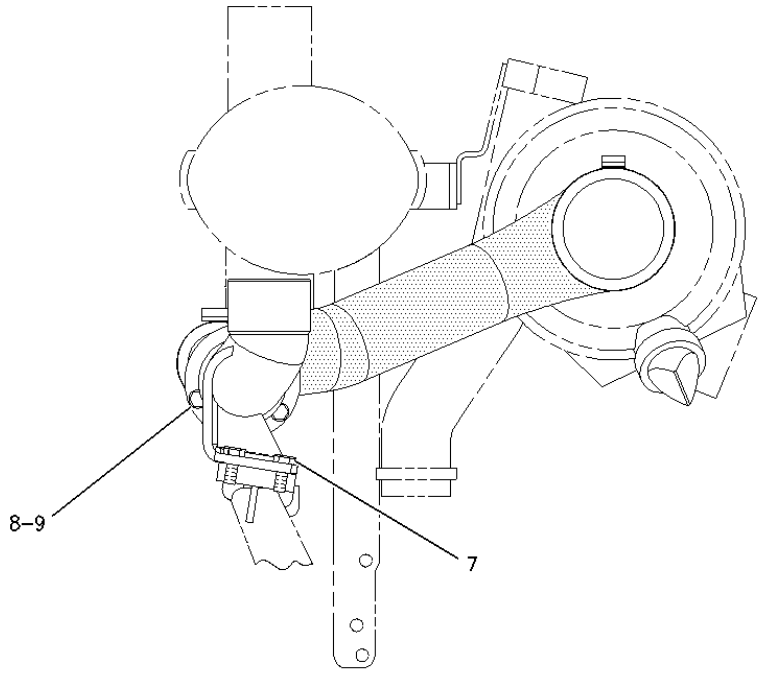

FRONT VIEW

1	NPR	5P-4868	1	CLAMP-HOSE
2	NPR	8T-6726	1	CLAMP-HOSE
3	NPR	138-6903	1	HOSE-MANIFOLD
4	NPR	167-8259	1	ADAPTER-EXHAUST
5	NPR	167-8260	1	COUPLING-EXHAUST
6	NPR	167-8261	1	ELBOW-EXHAUST
7	NPR M	8T-4136	3	BOLT (M10X1.5X25-MM)
8	NPR M	8T-4197	3	BOLT (M8X1.25X40-MM)
9	NPR	8T-4224	3	WASHER-HARD (8.8X16X2-MM THK)

Key: M - METRIC PART

6I-0561 MANIFOLD GP-EXHAUST -S/N 5HK81000-99999; 9RM1-UP
PART OF 106-5001 ENGINE AR-PRIMARY

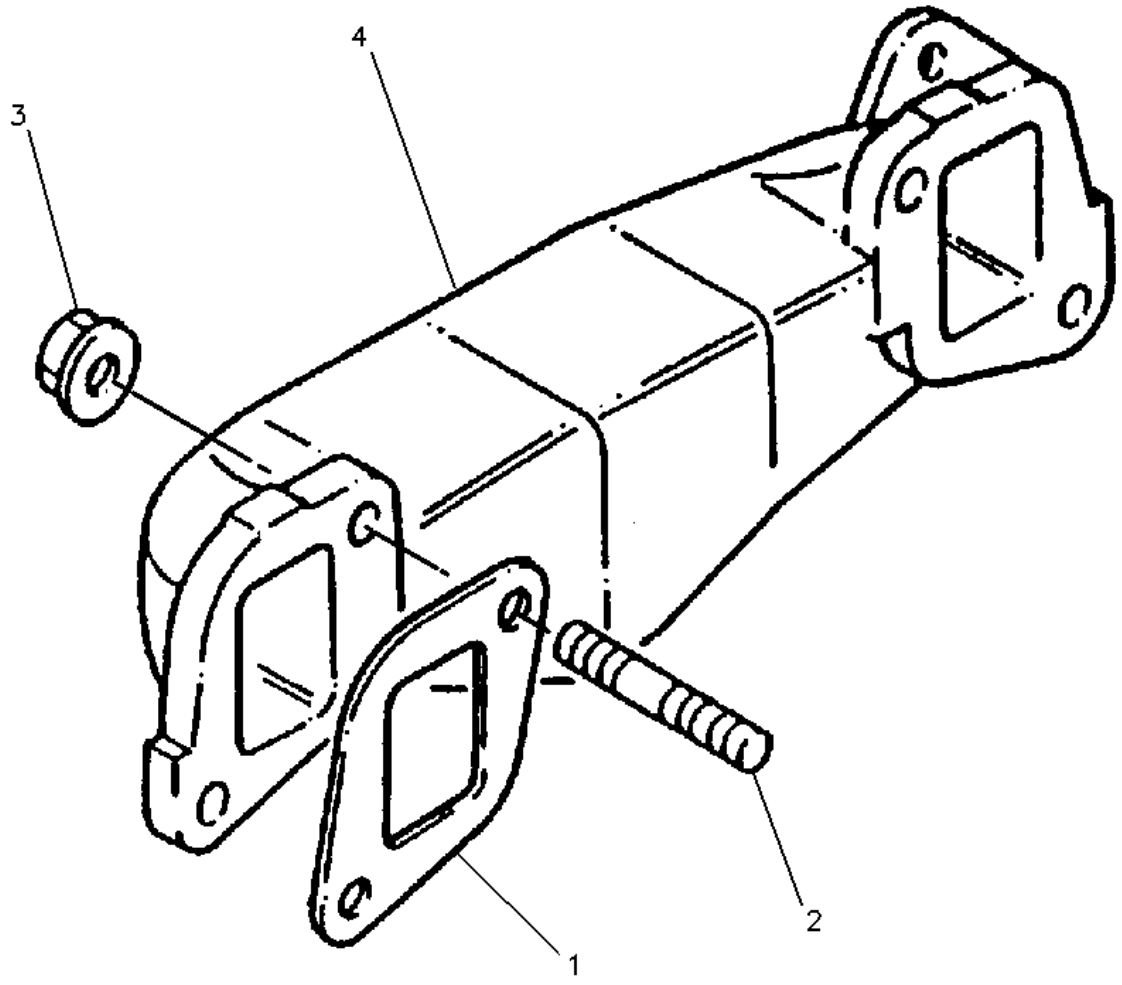

1	**NPR**	**035-8218**	**2**	**GASKET**
2	**NPR**	**155-4833**	**4**	**STUD**
3	**NPR**	**6I-0563**	**4**	**NUT**
4	**NPR**	**6I-0567**	**1**	**MANIFOLD-EXHAUST**

130-1424 MANIFOLD GP-INLET & EXHAUST -S/N 9RM1-UP
PART OF 106-5002 ENGINE AR-PRIMARY

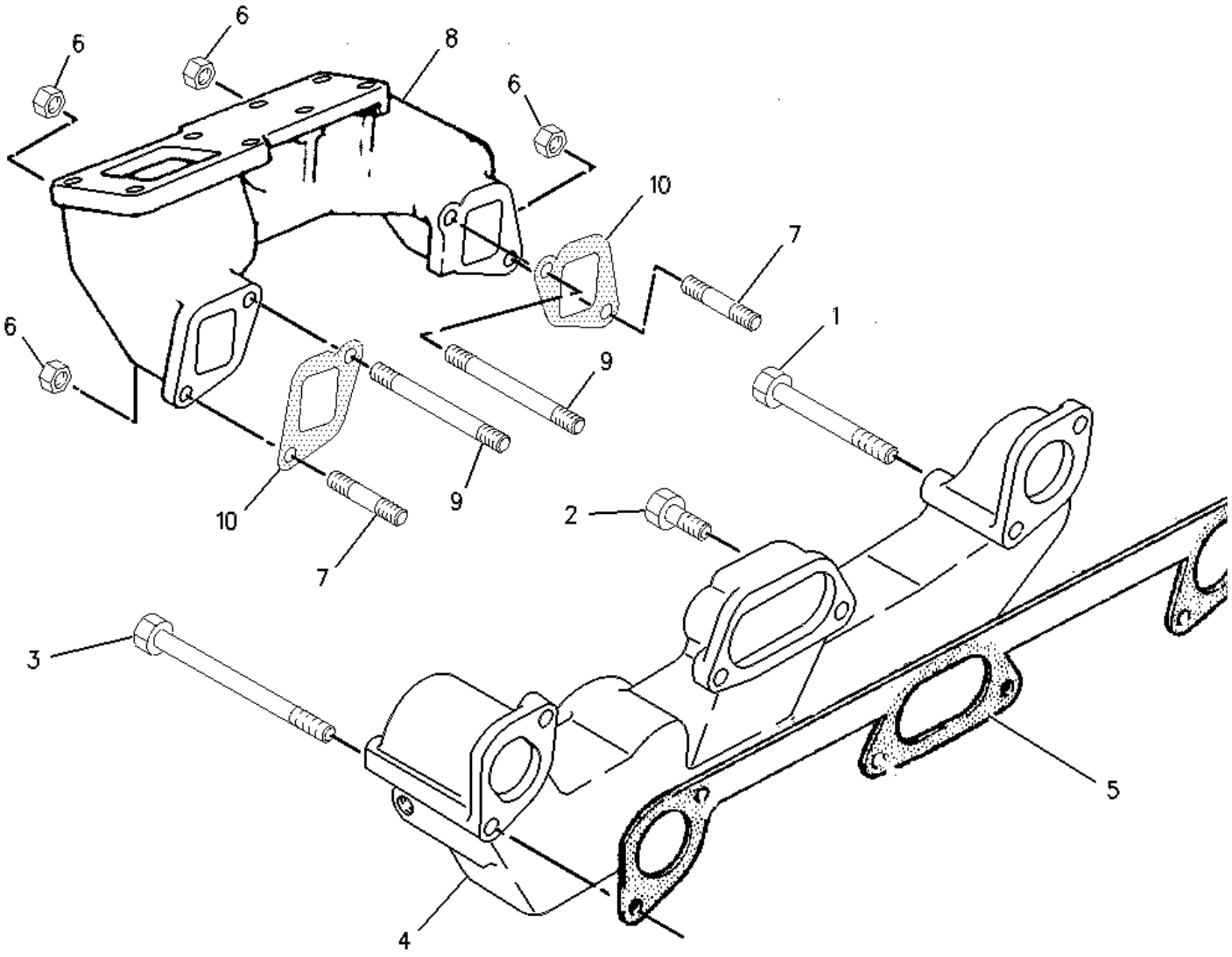

1	NPR	6I-0302	4	BOLT (M10X1.5X25-MM)
2	NPR	6I-1109	1	BOLT
3	NPR	6I-1110	1	BOLT
4	NPR	105-2498	1	MANIFOLD-INLET
5	NPR	142-2414	1	GASKET
6	NPR	6I-0563	6	NUT
7	NPR	6I-0364	2	STUD (M10X1.5X30-MM)
8	NPR	130-1425	1	MANIFOLD-EXHAUST
9	NPR	130-1426	2	STUD
10	NPR	035-8218	2	GASKET

6I-0528 MANIFOLD GP-INLET ---S/N 5HK81000-99999; 9RM1-UP
PART OF 106-5001 ENGINE AR-PRIMARY

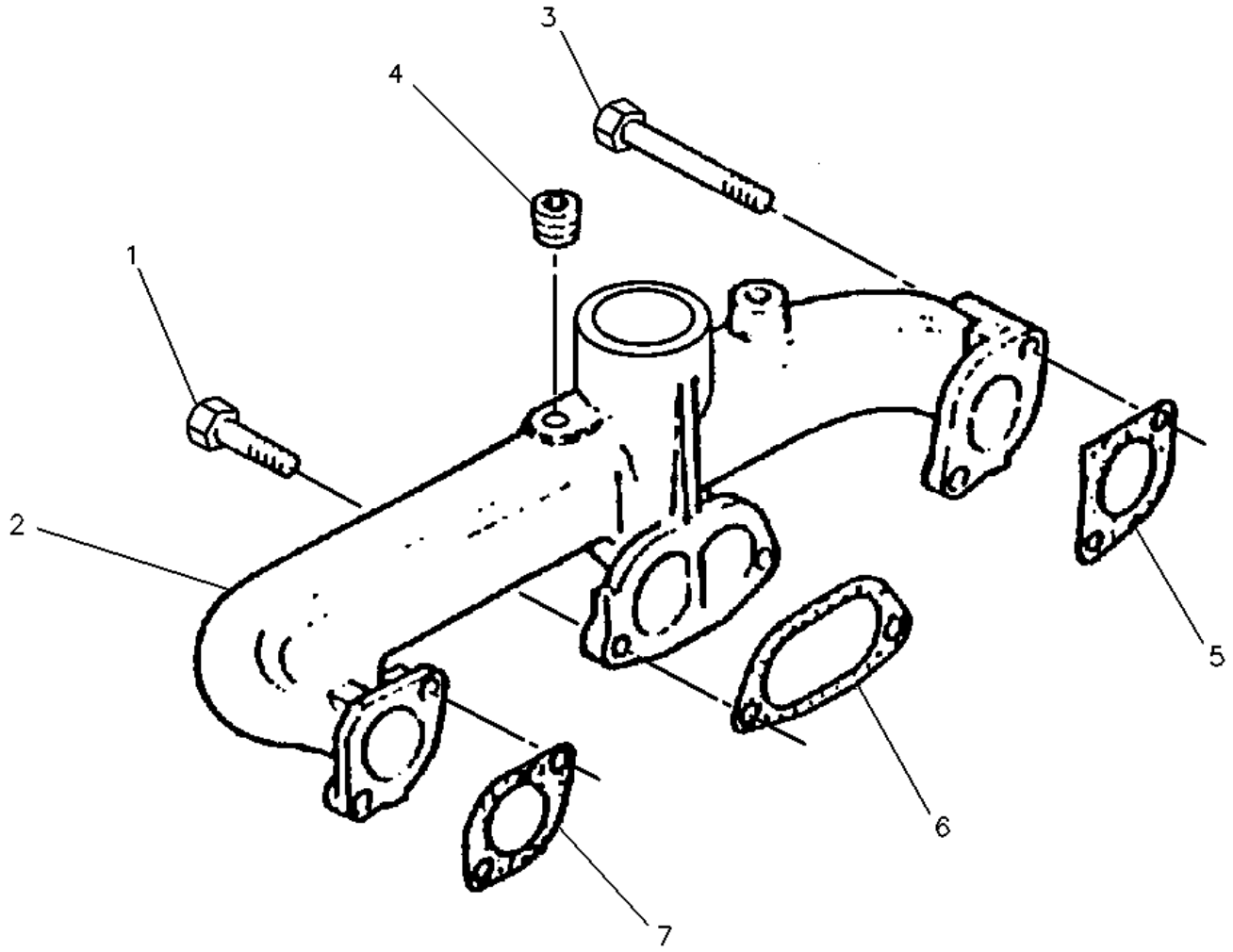

1	**NPR**	**6I-0302**	**5**	**BOLT**
2	**NPR**	**6I-0529**	**1**	**MANIFOLD-INLET**
3	**NPR**	**105-4173**	**1**	**BOLT**
4	**NPR**	**7C-2851**	**1**	**PLUG**
5	**NPR**	**7W-2569**	**1**	**GASKET-INDUCTION**
6	**NPR**	**7W-2570**	**1**	**GASKET**
7	**NPR**	**7W-2571**	**1**	**GASKET-INDUCTION**

130-1424 MANIFOLD GP-INLET & EXHAUST --S/N 9RM1-UP
PART OF 106-5002 ENGINE AR-PRIMARY

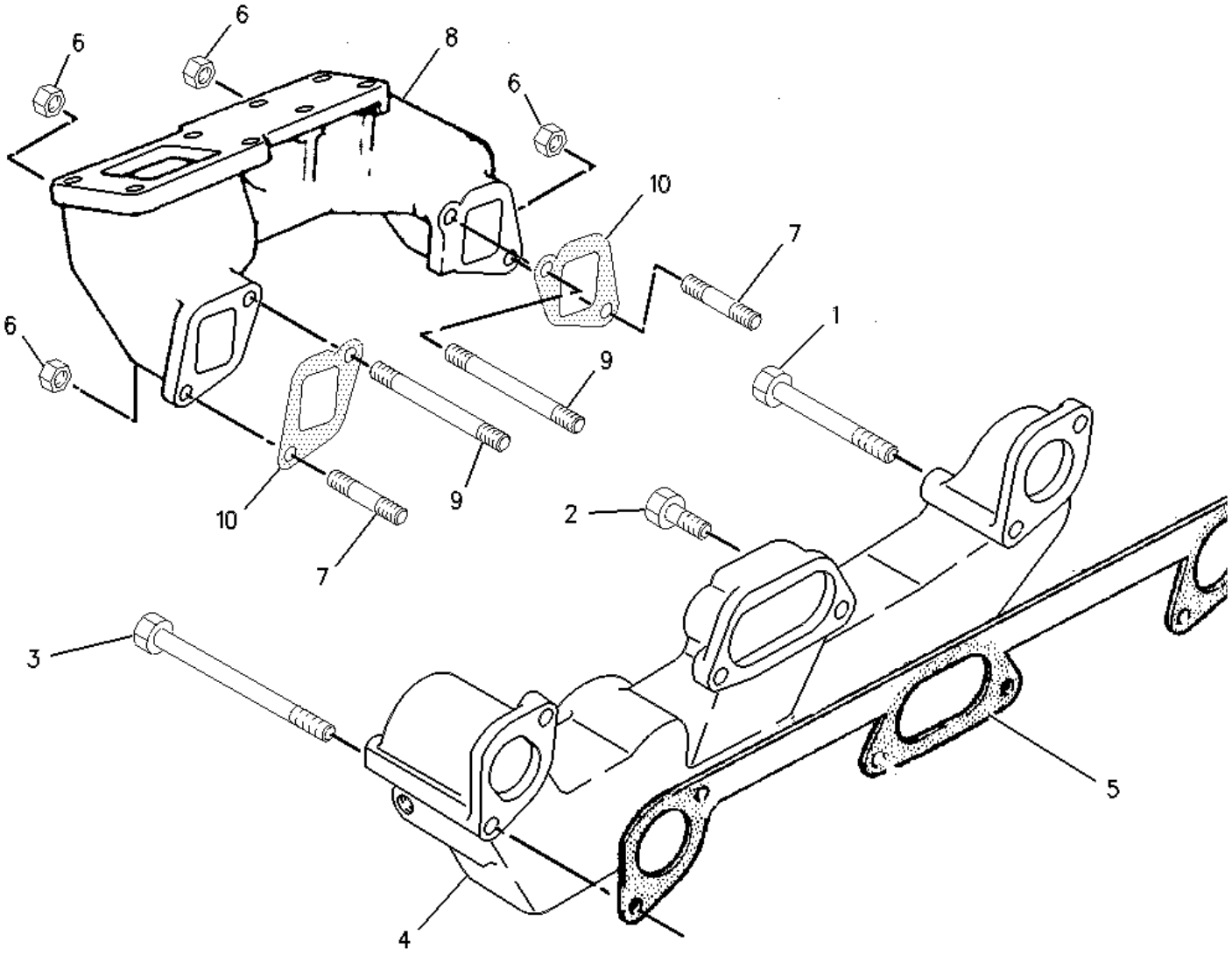

1	NPR	6I-0302	4	BOLT (M10X1.5X25-MM)
2	NPR	6I-1109	1	BOLT
3	NPR	6I-1110	1	BOLT
4	NPR	105-2498	1	MANIFOLD-INLET
5	NPR	142-2414	1	GASKET
6	NPR	6I-0563	6	NUT
7	NPR	6I-0364	2	STUD (M10X1.5X30-MM)
8	NPR	130-1425	1	MANIFOLD-EXHAUST
9	NPR	130-1426	2	STUD
10	NPR	035-8218	2	GASKET

112-5091 MUFFLER AS --S/N 4ZN16044-50156
FOR USE WITH NATURALLY ASPIRATED ENGINES

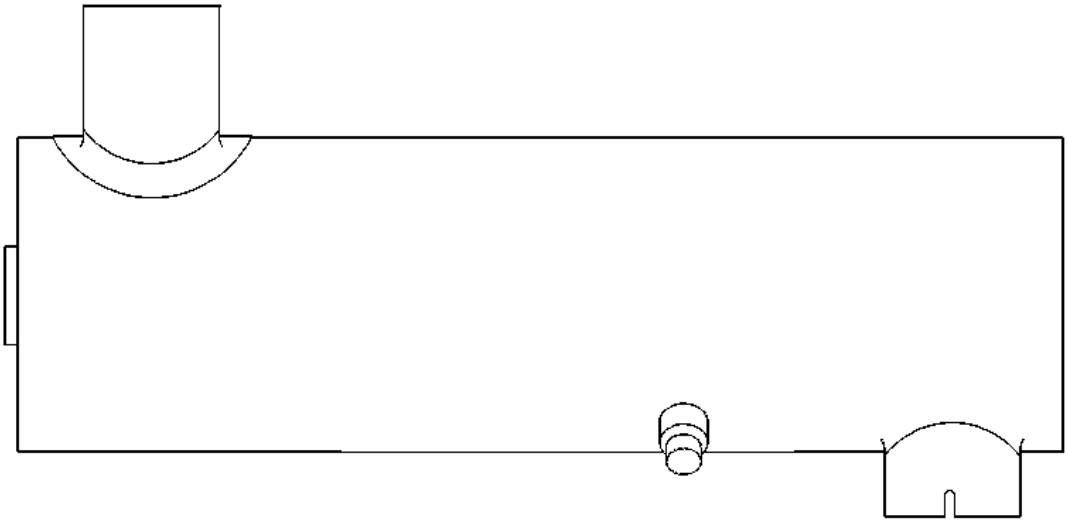

NO SERVICED PARTS

7E-4642 MUFFLER GP --S/N 4ZN16044-50156
FOR NATURALLY ASPIRATED ENGINE --PART OF 158-6062 ENGINE AR

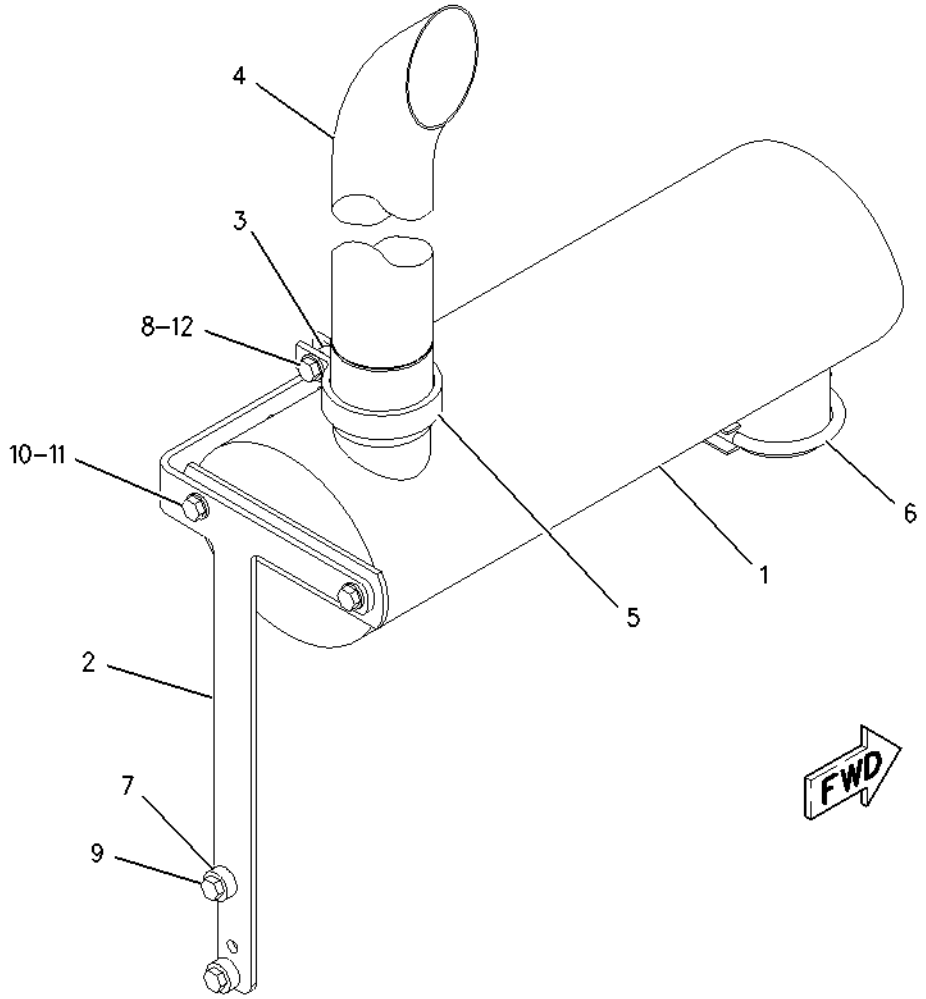

1	NPR	112-5089	1	MUFFLER AS
2	NPR	112-9514	1	BRACKET AS
	NPR M	6V-9632	2	NUT-WELD (M6X1-THD)
3	NPR	133-3260	1	SPACER (11X19X10-MM THK)
4	NPR	135-8167	1	PIPE-EXTENSION
5	NPR	135-8168	1	CLAMP
	NPR M	2Y-5829		NUT (M10X1.5 THD)
6	NPR	9Y-0176	1	CLAMP AS
7	NPR	198-4777	2	WASHER-HARD (11X25X10-MM THK)
8	NPR	6V-5839	1	WASHER (11X21X2.5-MM THK)
9	NPR M	8T-0722	2	BOLT-LOCKING (M10X1.5X30-MM)
10	NPR	8T-4121	2	WASHER-HARD (11X21X2.5-MM THK)
11	NPR M	8T-4136	2	BOLT (M10X1.5X25-MM)
12	NPR M	8T-4185	1	BOLT (M10X1.5X50-MM)

Key: M - METRIC PART

7E-4643 MUFFLER GP --S/N 4ZN16044-50156--FOR TURBO ENGINE
PART OF 158-6063, 158-6064, 158-6065 ENGINE AR

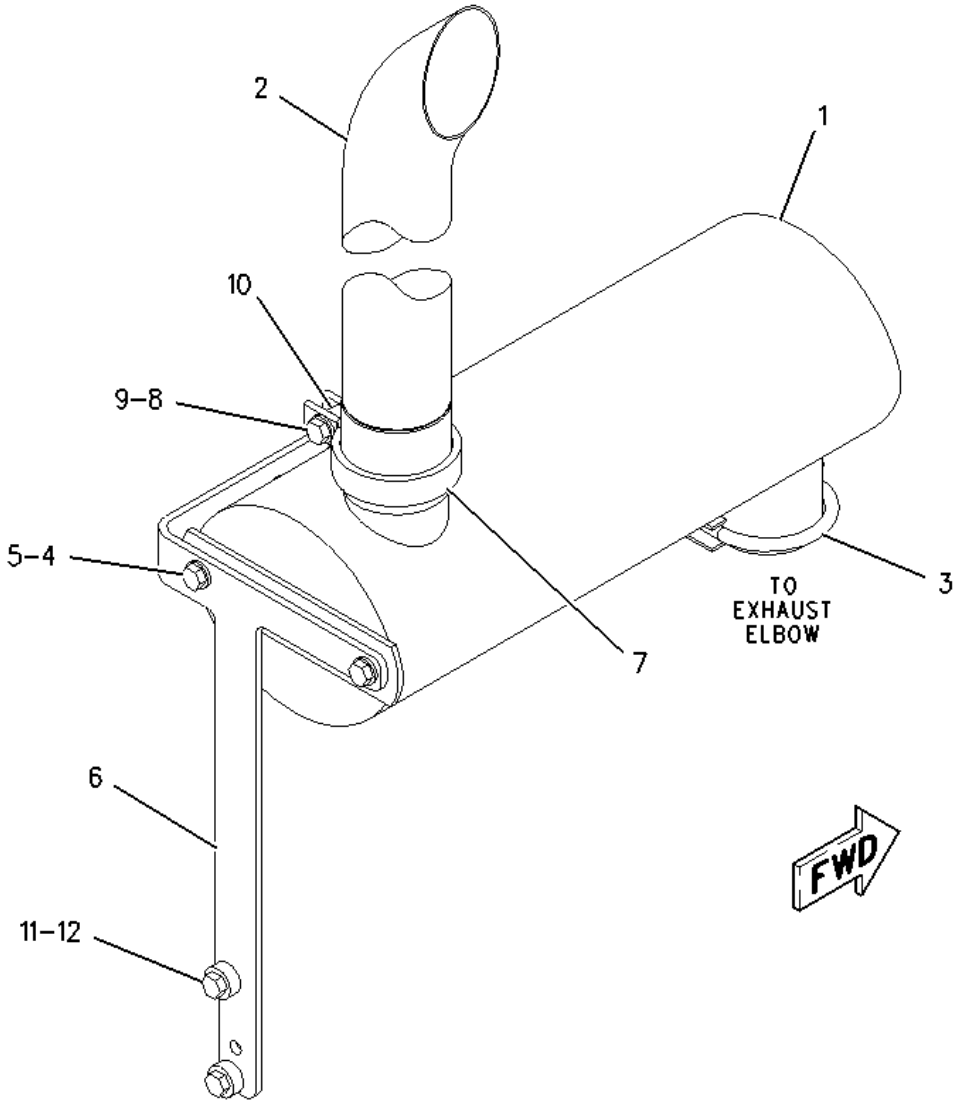

1 NPR 112-5090 1 MUFFLER AS

2 NPR 135-8167 1 PIPE-EXTENSION

3 NPR 9Y-0176 1 CLAMP AS

4 NPR M 8T-4136 2 BOLT (M10X1.5X25-MM)

5 NPR 8T-4121 2 WASHER-HARD (11X21X2.5-MM THK)

6 NPR 112-9514 1 BRACKET AS

NPR M 6V-9632 2 NUT-WELD (M6X1-THD)

7 NPR 135-8168 1 CLAMP

NPR M 2Y-5829 1 NUT (M10X1.5 THD)

8 NPR M 8T-4185 1 BOLT (M10X1.5X50-MM)

9 NPR 6V-5839 1 WASHER (11X21X2.5-MM THK)

10 NPR 133-3260 1 SPACER (11X19X10-MM THK)

11 NPR 198-4777 2 WASHER-HARD (11X25X10-MM THK)

12 NPR M 8T-0722 2 BOLT-LOCKING (M10X1.5X30-MM)

Key:

M - METRIC PART

158-6069 MUFFLER GP --S/N 4ZN16044-50156--PART OF 158-6062 ENGINE AR

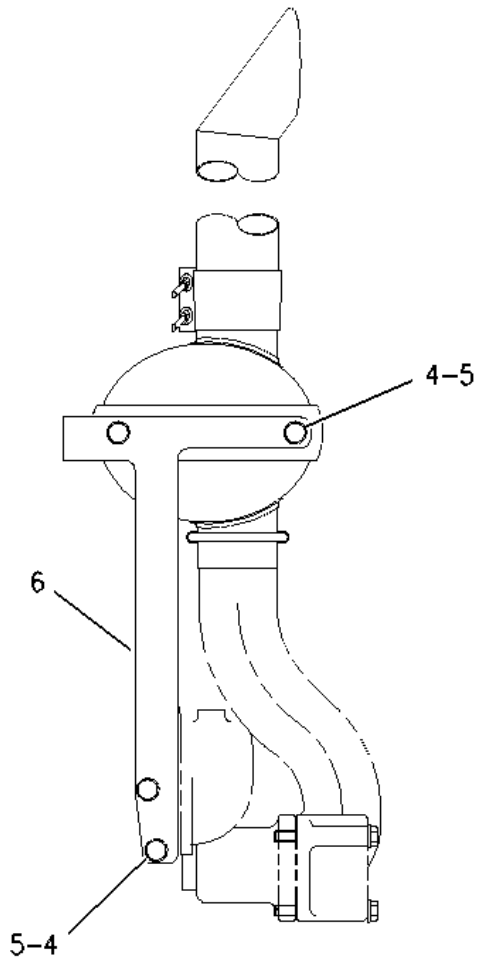

REAR VIEW

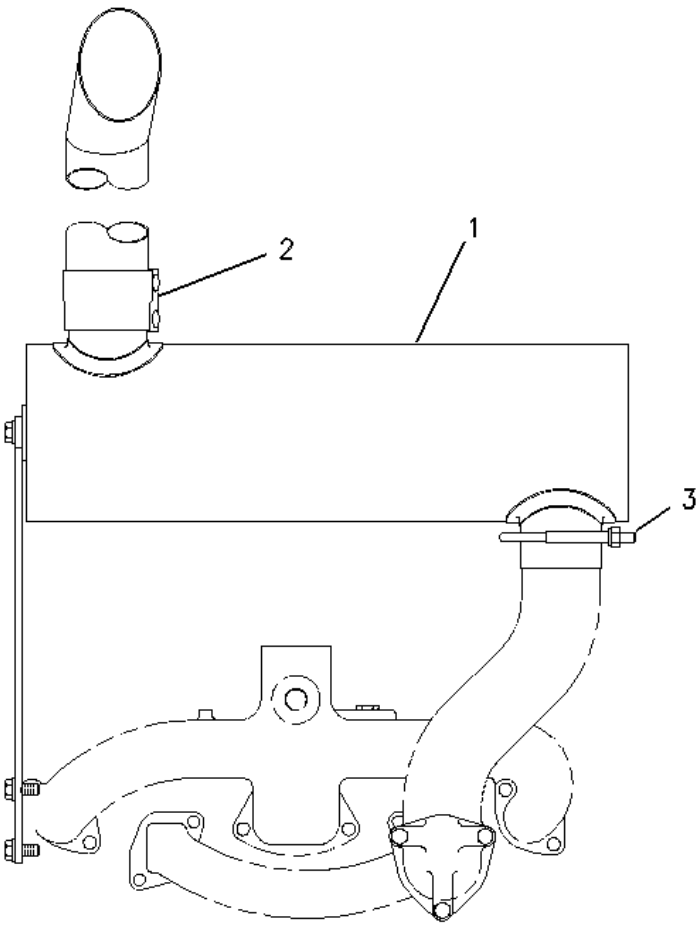

RIGHT SIDE VIEW

1 158-2885 1 MUFFLER AS

2 NPR 7C-4500 1 CLAMP

3 NPR 137-4499 1 CLAMP AS

4 NPR M 8T-4136 4 BOLT (M10X1.5X25-MM)

5 NPR 8T-4121 4 WASHER-HARD (11X21X2.5-MM THK)

6 NPR 112-9514 1 BRACKET AS

NPR M 6V-9632 2 NUT-WELD (M6X1-THD)

Key: M - METRIC PART

6I-1125 TURBOCHARGER GP --S/N 9RM1-UP--PART OF 106-5002 ENGINE AR-PRIMARY

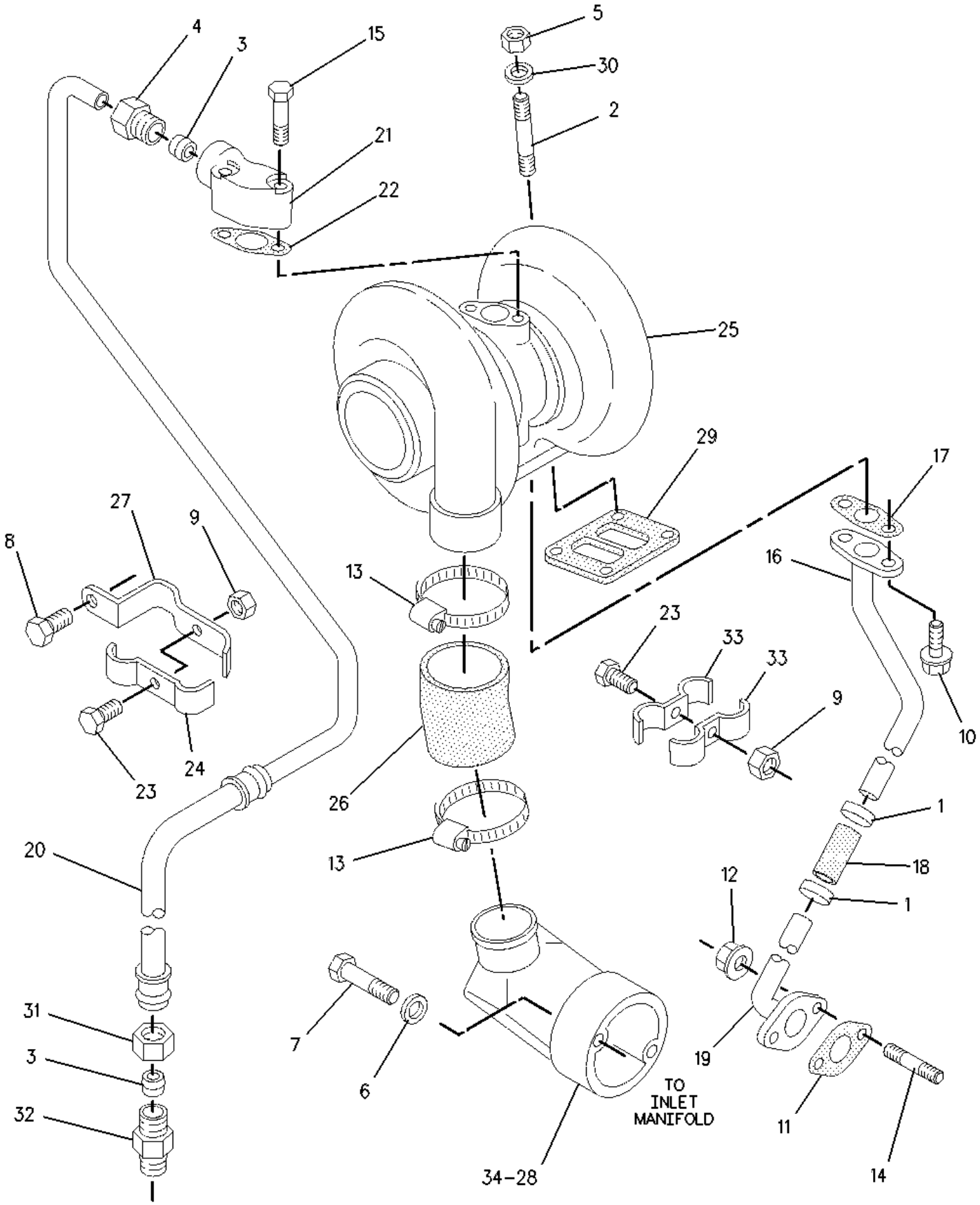

1	NPR	5D-1026	2	CLAMP-HOSE
2	NPR	6I-4012	4	STUD
3	NPR	032-8048	2	FERRULE
4	NPR	032-8051	1	NUT
5	NPR	6I-0563	4	NUT (M10X1.15-THD)
6	NPR	4B-4278	2	WASHER (10.2X20.5X1.6-MM THK)
7	NPR	6I-0789	1	BOLT (M10X1.5X60-MM)
8	NPR M	6I-0650	1	BOLT (M10X1.5X65-MM)
9	NPR	101-3909	2	NUT (M5 LOCK)
10	NPR M	6I-0217	2	BOLT (M8X1.25X20-MM)
11	NPR	6I-0220	1	GASKET
12	NPR	6I-0291	2	NUT (M8X1.25-THD)
13	NPR	064-3058	2	CLAMP-HOSE
14	NPR	6I-1059	2	STUD
15	NPR	6I-1090	2	BOLT (M8X1.25X40-MM)
16	NPR	216-6376	1	TUBE AS
17	NPR	100-4466	1	GASKET
18	NPR	140-7560	1	HOSE
19	NPR	105-2177	1	TUBE
20	NPR	6I-1130	1	TUBE
21	NPR	6I-1131	1	CONNECTOR
22	NPR	6I-1132	1	GASKET
23	NPR	101-3908	2	BOLT
24	NPR	7C-6988	1	CLIP
25	NPR RY	7C-3446	1	TURBOCHARGER GP

R	NPR	0R-4543	1	TURBO GP-BASIC
26	NPR	7C-3447	1	HOSE-TURBOCHARGER
27	NPR	7C-3452	1	CLIP
28	NPR	7C-3455	1	ELBOW
29	NPR	7W-2581	1	GASKET
30	NPR	7W-2601	4	SPACER
31	NPR	7W-2628	1	NUT
32	NPR	7W-2634	1	UNION
33	NPR	111-6796	2	CLIP
34	NPR	8T-9022	1	GASKET-SILICONE

Key:

M - METRIC PART
R - REMFG PART MAY BE AVAILABLE
Y - SEPARATE ILLUSTRATION

7C-3446 TURBOCHARGER GP --S/N 9RM1-UP--PART OF 6I-1125 TURBOCHARGER GP

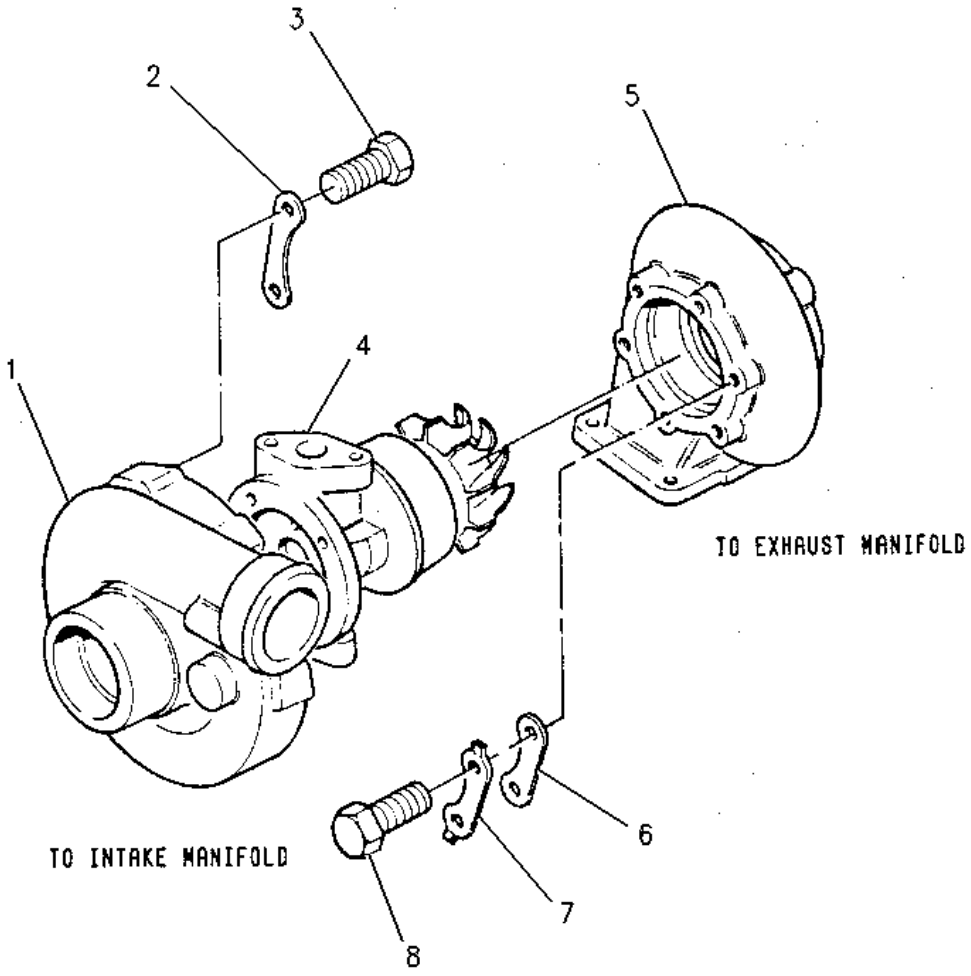

1	**NPR**	**7C-4929**	**1**	**HOUSING AS**
2	**NPR**	**7W-2576**	**3**	**CLAMP**
3	**NPR**	**7W-2575**	**6**	**BOLT**
4	**NPR**	**7C-4930**	**1**	**HOUSING AS**
5	**NPR**	**7W-2577**	**1**	**HOUSING-TURBOCHARGER**
6	**NPR**	**7W-2580**	**3**	**CLAMP**
7	**NPR**	**7W-2579**	**3**	**PLATE**
8	**NPR**	**7W-2578**	**6**	**BOLT**

AVAILABLE REPAIR KIT(S):

NPR 7W-2582 1 KIT-TURBOCHARGER

(INCLUDES CLAMPS, BOLTS, NUTS, BEARINGS, SEALS, PLATES AND RINGS)

148-7183 TURBOCHARGER GP
S/N 7BJ1-UP
PART OF 148-7184, 195-3866 TURBOCHARGER GP

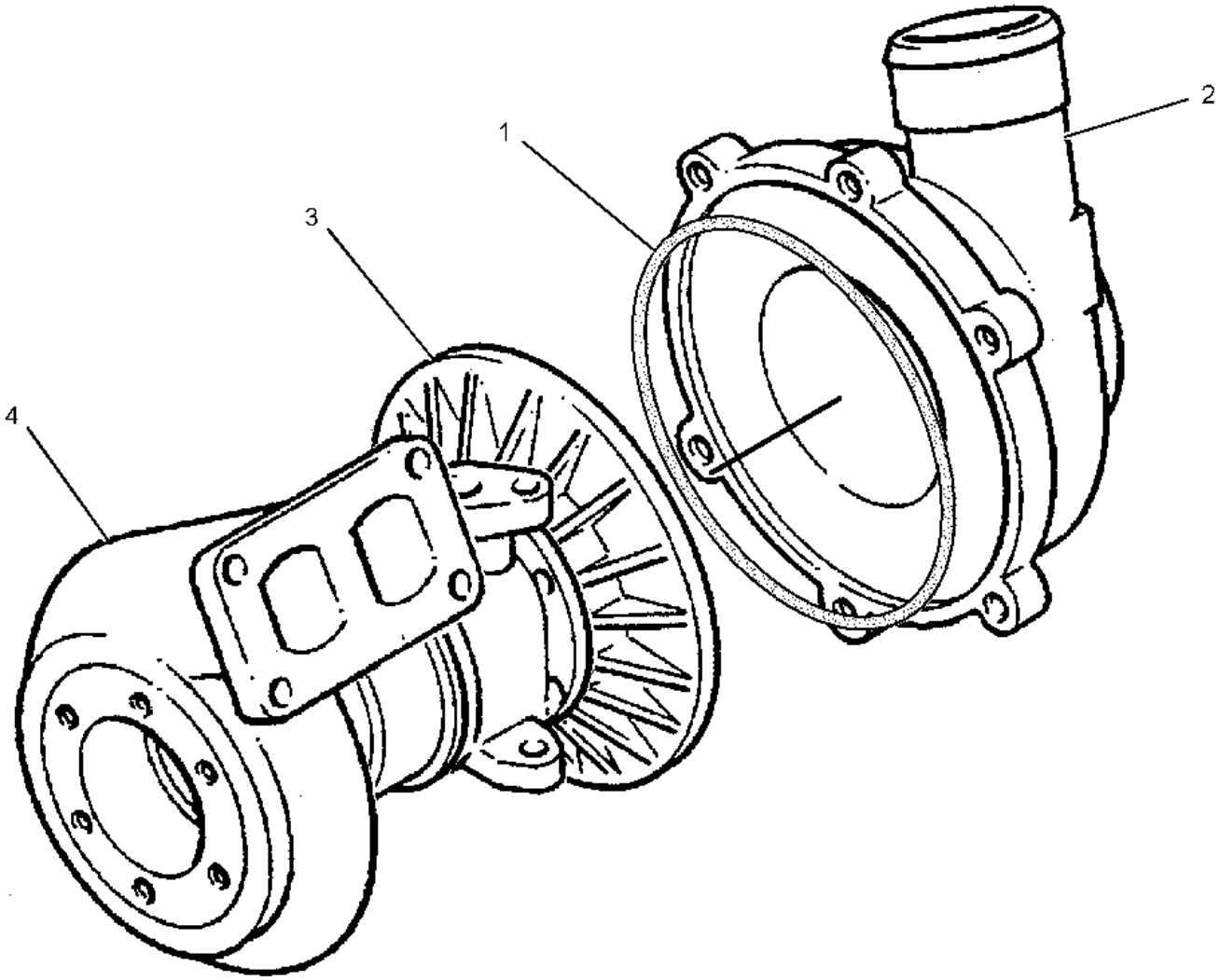

1	**NPR**	**135-9274**	**1**	**SEAL-O-RING**
2	**NPR**	**166-2786**	**1**	**HOUSING AS**
3	**NPR**	**166-2787**	**1**	**CARTRIDGE**
4	**NPR**	**166-2864**	**1**	**HOUSING**

148-7184 TURBOCHARGER GP --S/N 7BJ1-42846; 5HK81000-99999
PART OF 122-8803, 122-8804 ENGINE AR-PRIMARY

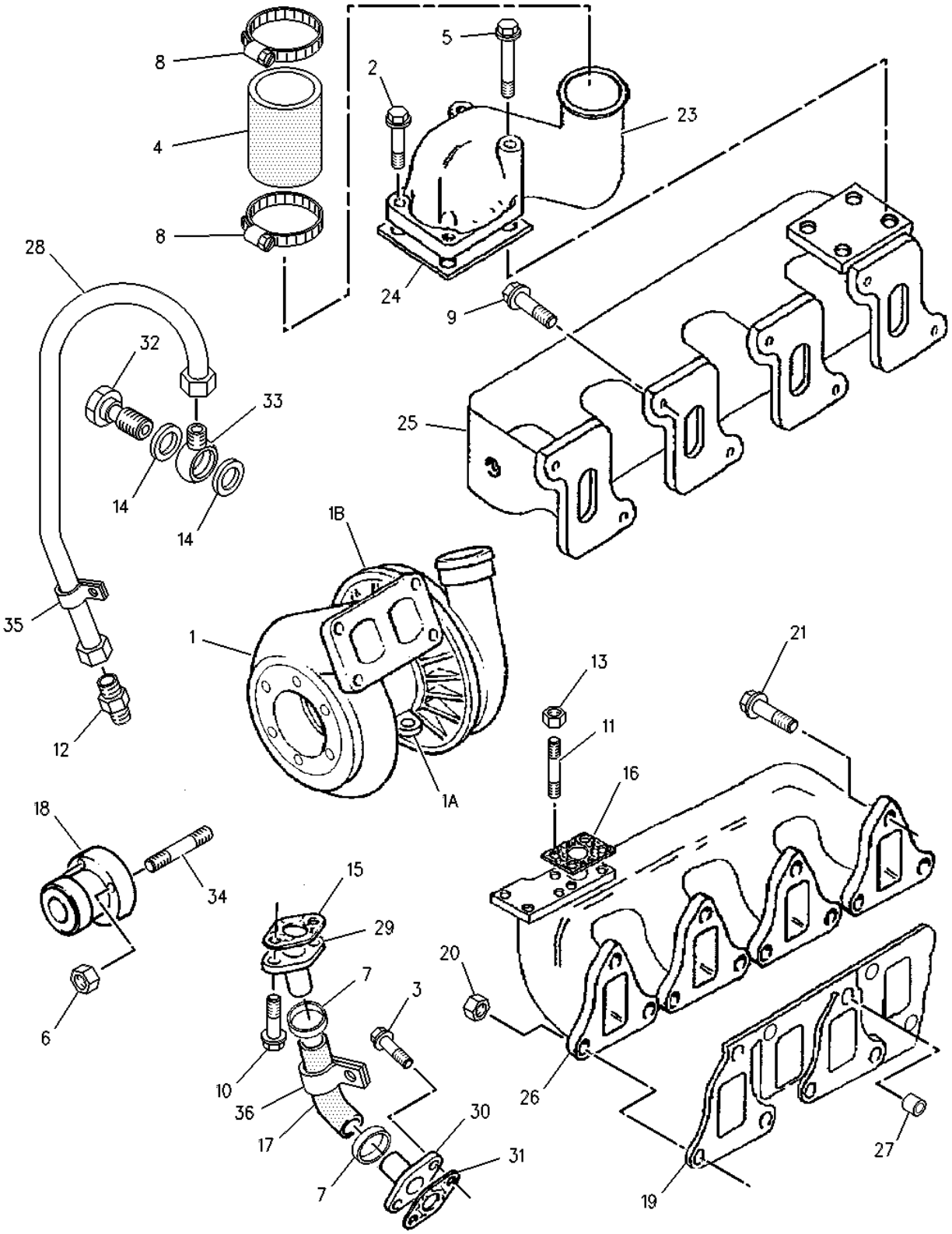

1	**NPR**	**Y**	**148-7183**	**1**	**TURBOCHARGER GP**
	NPR		**166-2786**	**1**	**HOUSING AS**
1A	**NPR**		**166-2787**	**1**	**CARTRIDGE**
1B	**NPR**		**166-2864**	**1**	**HOUSING**

2	NPR M	6I-0260	2	BOLT (M8X1.25X25-MM)
3	NPR	6I-0572	2	BOLT (M8X1.25X20-MM)
4	NPR	146-0029	1	HOSE
5	NPR M	100-3751	2	BOLT (M8X1.25X65-MM)
6	NPR	100-4454	3	NUT
7	NPR	5D-1026	2	CLAMP-HOSE
8	NPR	064-3058	2	CLAMP-HOSE
9	NPR	105-2740	8	BOLT
10	NPR	106-8916	2	BOLT (M6X16-MM)
11	NPR	149-4236	4	STUD
12	NPR	114-2590	1	CONNECTION
13	NPR	6I-0563	4	NUT (M10X1.15-THD)
14	NPR	138-2043	2	WASHER
15	NPR	138-2065	1	GASKET
16	NPR	144-5380	1	GASKET-MANIFOLD
17	NPR	143-4534	1	HOSE
18	NPR	140-7700	1	ADAPTER
19	NPR	143-9112	2	GASKET
20	NPR	146-1840	8	NUT
21	NPR	146-1841	4	BOLT
23	NPR	148-7127	1	ELBOW
24	NPR	148-7128	1	GASKET
25	NPR	148-7129	1	MANIFOLD-INLET
26	NPR	148-7130	1	MANIFOLD-EXHAUST
27	NPR	148-0287	2	FERRULE
28	NPR	162-1591	1	TUBE AS
29	NPR	148-7135	1	TUBE
30	NPR	148-7136	1	TUBE
31	NPR	6I-0220	1	GASKET
32	NPR	148-7138	1	BOLT
33	NPR	148-7139	1	CONNECTION
34	NPR	148-7140	3	STUD
35	NPR	154-8044	1	CLIP
36	NPR	164-4019	1	CLIP

AVAILABLE REPAIR KIT(S):

NPR	167-6921	1	KIT-TURBOCHARGER

Key: M - METRIC PART Y - Separate Illustration

148-7184 TURBOCHARGER GP --S/N 7BJ42847-UP--PART OF 122-8803 ENGINE AR-PRIMARY

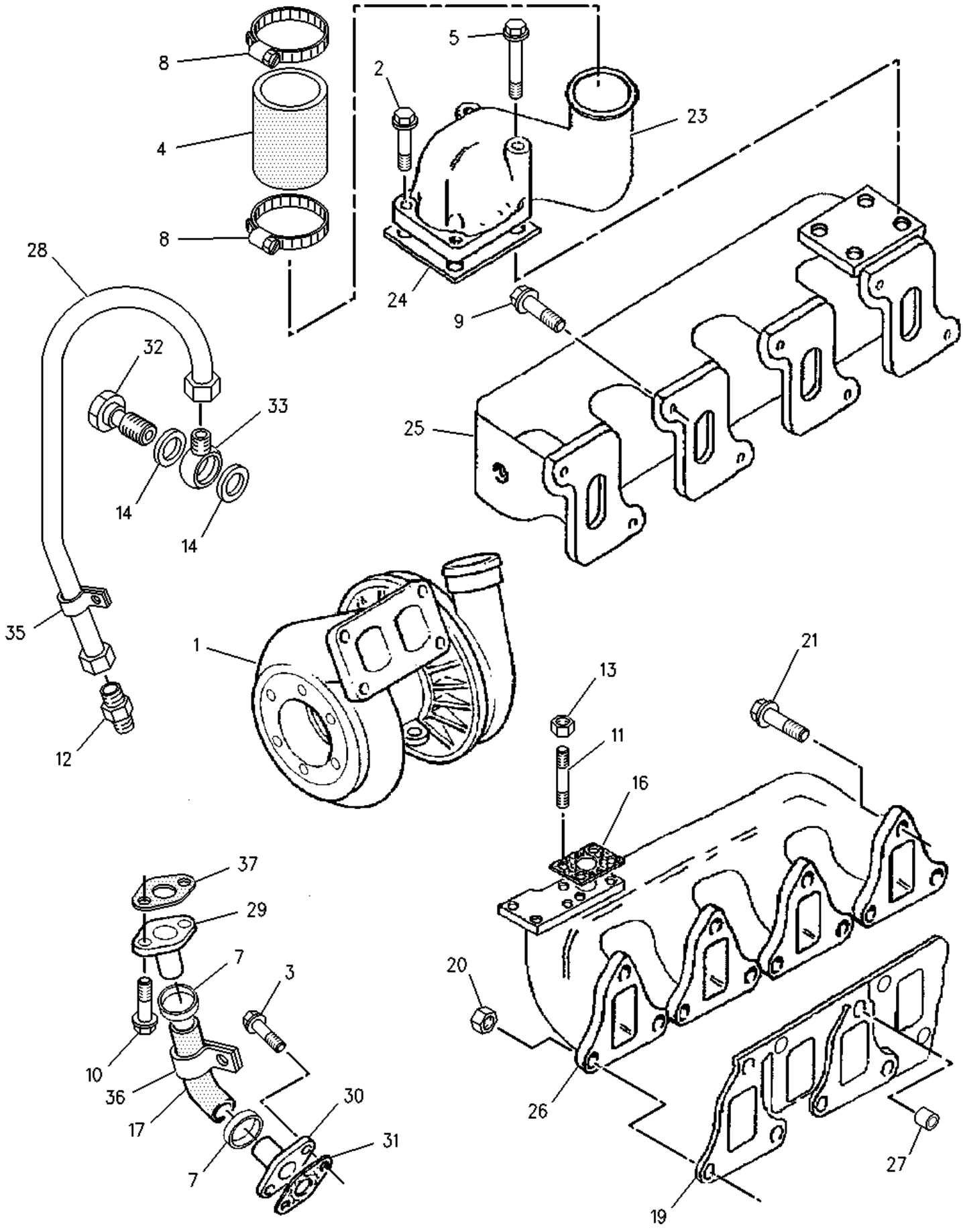
8
4
8
5
2
23
24
9
25
28
32
33
14
14
35
12
1
13
21
11
16
37
29
7
3
10
36
17
7
30
31
20
26
19
27

1	NPR Y	148-7183	1	TURBOCHARGER GP
2	NPR M	6I-0260	2	BOLT (M8X1.25X25-MM)
3	NPR	6I-0572	2	BOLT (M8X1.25X20-MM)
4	NPR	146-0029	1	HOSE
5	NPR M	100-3751	2	BOLT (M8X1.25X65-MM)
7	NPR	5D-1026	2	CLAMP-HOSE
8	NPR	064-3058	2	CLAMP-HOSE
9	NPR	105-2740	8	BOLT
10	NPR	106-8916	2	BOLT (M6X16-MM)
11	NPR	149-4236	4	STUD
12	NPR	114-2590	1	CONNECTION
13	NPR	6I-0563	4	NUT (M10X1.15-THD)
14	NPR	138-2043	2	WASHER
16	NPR	144-5380	1	GASKET-MANIFOLD
17	NPR	143-4534	1	HOSE
19	NPR	143-9112	2	GASKET
20	NPR	146-1840	8	NUT
21	NPR	146-1841	4	BOLT
23	NPR	148-7127	1	ELBOW
24	NPR	148-7128	1	GASKET
25	NPR	148-7129	1	MANIFOLD-INLET
26	NPR	148-7130	1	MANIFOLD-EXHAUST
27	NPR	148-0287	2	FERRULE
28	NPR	162-1591	1	TUBE AS
29	NPR	148-7135	1	TUBE
30	NPR	148-7136	1	TUBE
31	NPR	6I-0220	1	GASKET
32	NPR	148-7138	1	BOLT
33	NPR	148-7139	1	CONNECTION
35	NPR	154-8044	1	CLIP
36	NPR	164-4019	1	CLIP
37	NPR	138-2065	1	GASKET

Key: M - METRIC PART Y - SEPARATE ILLUSTRATION

195-3866 TURBOCHARGER GP --S/N 7BJ41219-67000--PART OF 122-8803, 122-8804 ENGINE AR-PRIMARY

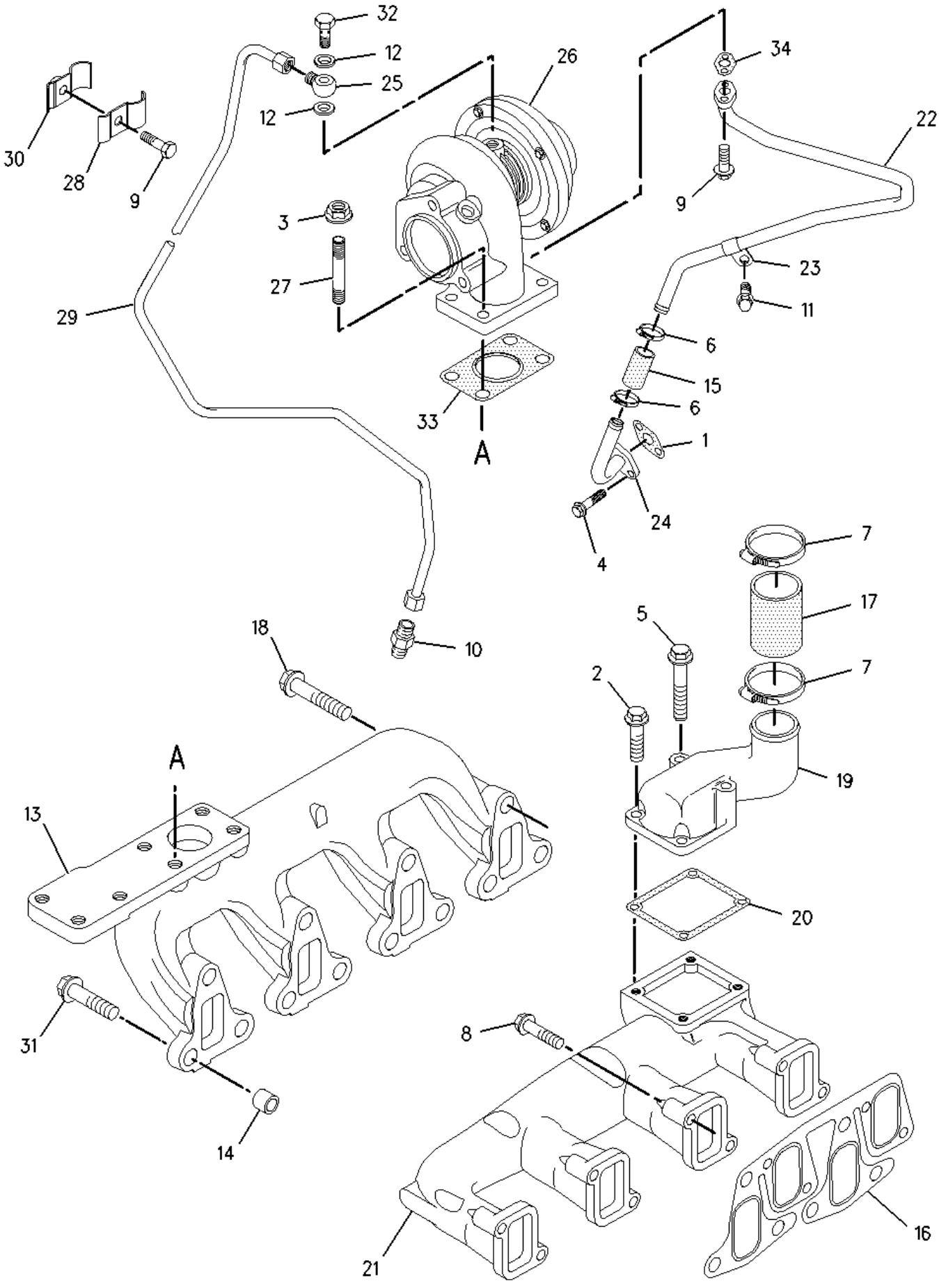
32
12
25
12
26
34
22
30
28
9
3
27
29
9
23
11
6
15
6
1
24
4
33
A
7
17
5
7
18
2
10
19
A
13
20
31
8
14
21
16

1	NPR	6I-0220	1	GASKET
2	NPR M	6I-0260	2	BOLT (M8X1.25X25-MM)
3	NPR	6I-0563	4	NUT (M10X1.15-THD)
4	NPR	6I-0572	2	BOLT (M8X1.25X20-MM)
5	NPR M	100-3751	2	BOLT (M8X1.25X65-MM)
6	NPR	5D-1026	2	CLAMP-HOSE
7	NPR	064-3058	2	CLAMP-HOSE
8	NPR	105-2740	8	BOLT
9	NPR	6I-0631	2	BOLT (M6X1X12-MM)
10	NPR	114-2590	1	CONNECTION
11	NPR M	124-3815	1	BOLT (M8X16X1.25-MM)
12	NPR	138-2043	2	WASHER
13	NPR	139-7009	1	MANIFOLD AS-EXHAUST
14	NPR	148-7132	2	FERRULE
15	NPR	143-4534	1	HOSE
16	NPR	143-9112	2	GASKET
17	NPR	146-0029	1	HOSE
18	NPR	146-1841	4	BOLT
19	NPR	148-7127	1	ELBOW
20	NPR	148-7128	1	GASKET
21	NPR	148-7129	1	MANIFOLD-INLET
22	NPR	148-7135	1	TUBE
23	NPR	101-3921	1	CLIP
24	NPR	148-7136	1	TUBE
25	NPR	148-7139	1	CONNECTION

26	NPR Y	148-7183	1	TURBOCHARGER GP
27	NPR	149-4236	4	STUD
28	NPR	154-8044	1	CLIP
29	NPR	162-1591	1	TUBE AS
30	NPR	164-4019	1	CLIP
31	NPR	174-9638	8	BOLT
32	NPR	148-7138	1	BOLT
33	NPR	194-5390	1	GASKET-MANIFOLD
34	NPR	138-2065	1	GASKET

AVAILABLE REPLACEMENT PART(S):

NPR	167-6921	1	KIT-TURBOCHARGER

Key:

M - METRIC PART
Y - SEPARATE ILLUSTRATION

195-3866 TURBOCHARGER GP --S/N 7BJ67001-74537--PART OF 122-8803, 122-8804 ENGINE AR-PRIMARY

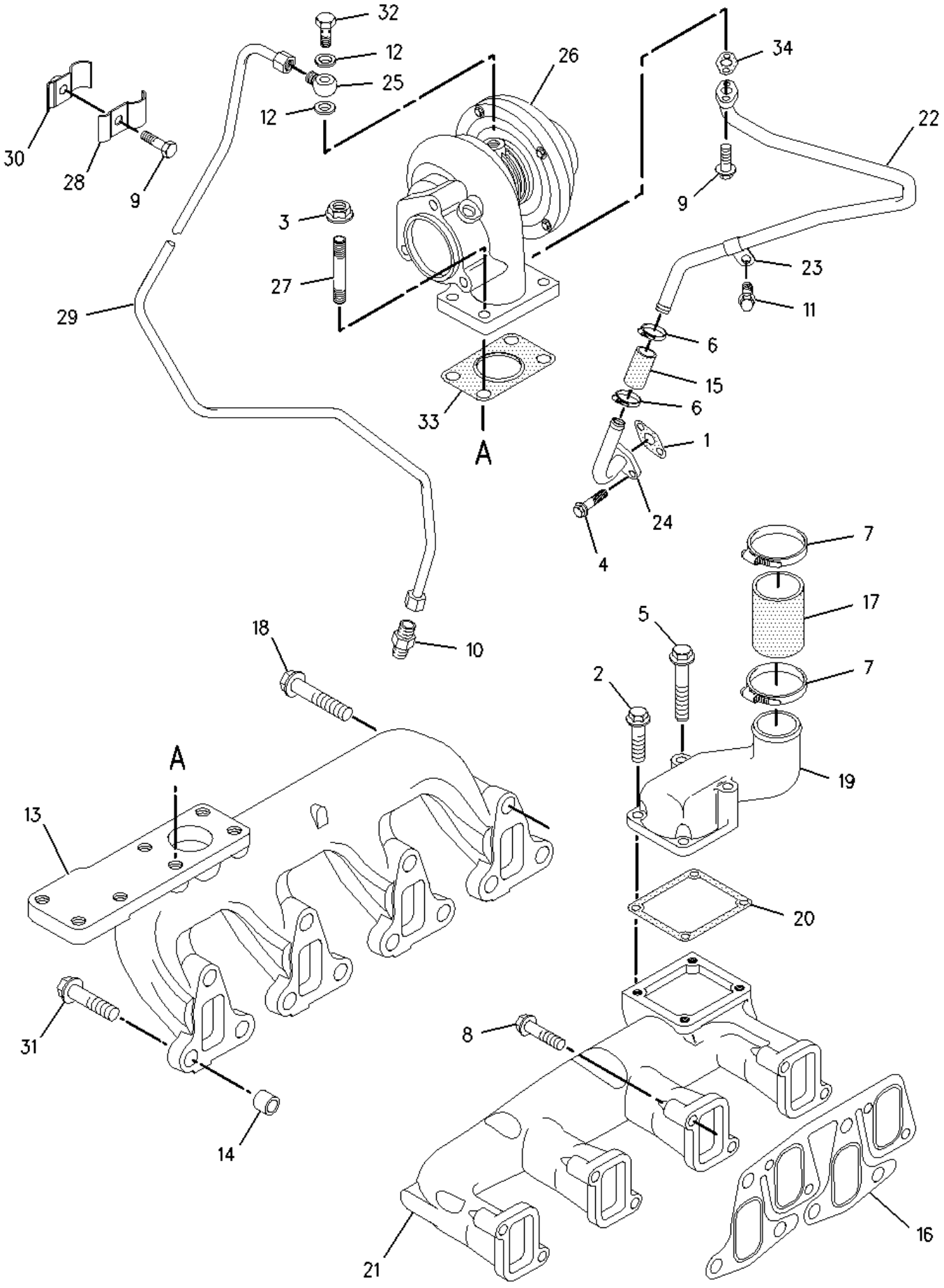

1 NPR 6I-0220 1 GASKET

2 NPR M 6I-0260 2 BOLT (M8X1.25X25-MM)

3 NPR 6I-0563 4 NUT (M10X1.15-THD)

4 NPR 6I-0572 2 BOLT (M8X1.25X20-MM)

5 NPR M 100-3751 2 BOLT (M8X1.25X65-MM)

6 NPR 5D-1026 2 CLAMP-HOSE

7 NPR C 8T-6703 2 CLAMP-HOSE

8 NPR 105-2740 8 BOLT

9 NPR 6I-0631 2 BOLT (M6X1X12-MM)

10 NPR 114-2590 1 CONNECTION

11 NPR M 124-3815 1 BOLT (M8X16X1.25-MM)

12 NPR 138-2043 2 WASHER

13 NPR 139-7009 1 MANIFOLD AS-EXHAUST

14 NPR 148-7132 2 FERRULE

15 NPR 143-4534 1 HOSE

16 NPR C 162-2088 2 GASKET

17 NPR C 218-8568 1 HOSE

18 NPR 146-1841 4 BOLT

19 NPR 148-7127 1 ELBOW

20 NPR 148-7128 1 GASKET

21 NPR 148-7129 1 MANIFOLD-INLET

22 NPR 148-7135 1 TUBE

23 NPR 101-3921 1 CLIP

24 NPR 148-7136 1 TUBE

25 NPR 148-7139 1 CONNECTION

26 NPR CY 219-9773 1 TURBOCHARGER GP

27	NPR	149-4236	4	STUD
28	NPR	154-8044	1	CLIP
29	NPR	162-1591	1	TUBE AS
30	NPR	164-4019	1	CLIP
31	NPR	174-9638	8	BOLT
32	NPR	148-7138	1	BOLT
33	NPR	194-5390	1	GASKET-MANIFOLD
34	NPR	138-2065	1	GASKET

AVAILABLE REPLACEMENT PART(S):

NPR	167-6921	1	KIT-TURBOCHARGER

Key:

C - CHANGE FROM PREVIOUS TYPE
M - METRIC PART
Y - SEPARATE ILLUSTRATION

197-3872 TURBOCHARGER GP ---S/N 7BJ74538-UP-PART OF 122-8803, 122-8804 ENGINE AR-PRIMARY

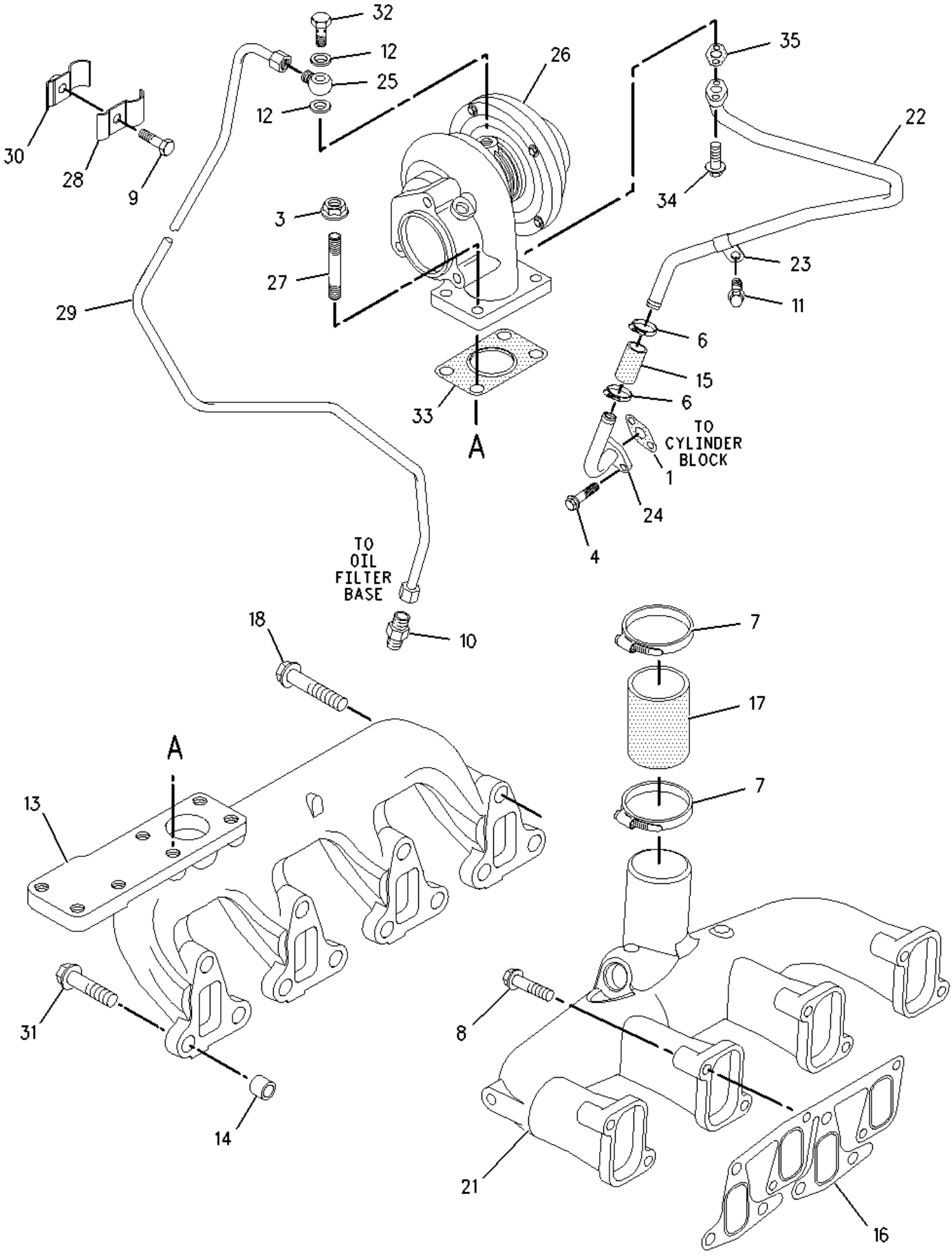

1 NPR 6I-0220 1 GASKET

3	NPR	6I-0563	4	NUT (M10X1.15-THD)
4	NPR	6I-0572	2	BOLT (M8X1.25X20-MM)
6	NPR	5D-1026	2	CLAMP-HOSE
7	NPR	8T-6703	2	CLAMP-HOSE
8	NPR	105-2740	8	BOLT
9	NPR	106-8916	1	BOLT (M6X16-MM)
10	NPR	114-2590	1	CONNECTION
11	NPR M	124-3815	1	BOLT (M8X16X1.25-MM)
12	NPR	138-2043	2	WASHER
13	NPR	139-7009	1	MANIFOLD AS-EXHAUST
14	NPR	148-7132	2	FERRULE
15	NPR	143-4534	1	HOSE
16	NPR	162-2088	2	GASKET
17	NPR	219-2330	1	HOSE
18	NPR	146-1841	4	BOLT
21	NPR	219-2329	1	MANIFOLD-AIR INLET
22	NPR	148-7135	1	TUBE
23	NPR	101-3921	1	CLIP
24	NPR	148-7136	1	TUBE
25	NPR	148-7139	1	CONNECTION
26	NPR CY	219-9773	1	TURBOCHARGER GP
27	NPR	149-4236	4	STUD
28	NPR	154-8044	1	CLIP
29	NPR	162-1591	1	TUBE AS
30	NPR	164-4019	1	CLIP

31	NPR	174-9638	8	BOLT
32	NPR	148-7138	1	BOLT
33	NPR	194-5390	1	GASKET-MANIFOLD
34	NPR	6I-0631	2	BOLT (M6X1X12-MM)
35	NPR	138-2065	1	GASKET

AVAILABLE REPLACEMENT PART(S):

NPR	167-6921	1	KIT-TURBOCHARGER

Key:

C - CHANGE FROM PREVIOUS TYPE
M - METRIC PART
Y - SEPARATE ILLUSTRATION

219-9773 TURBOCHARGER GP --S/N 7BJ67001-UP
PART OF 195-3866, 197-3872 TURBOCHARGER GP

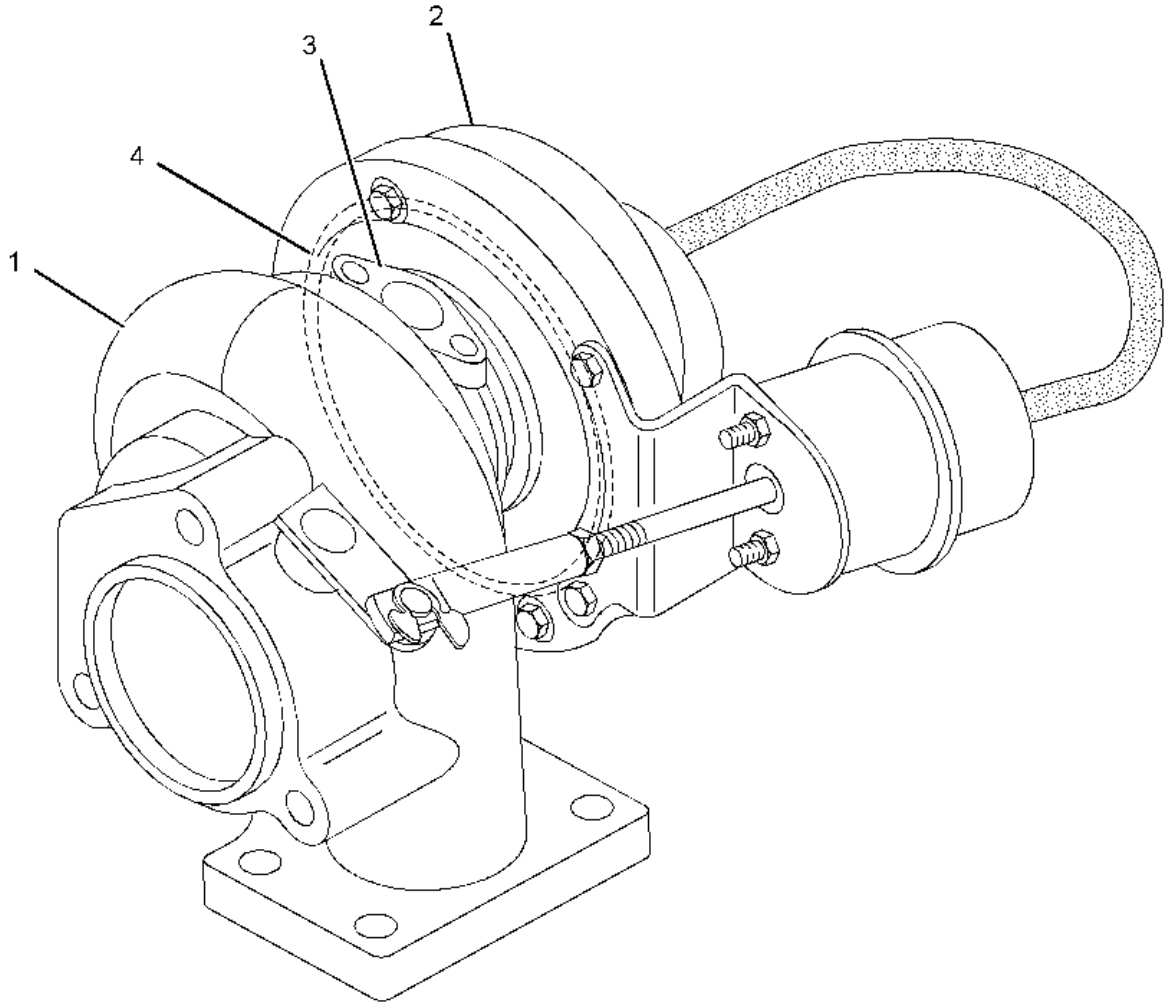

1	**NPR**	**166-2786**	**1**	**HOUSING AS**
2	**NPR**	**166-2864**	**1**	**HOUSING**
3	**NPR**	**166-2787**	**1**	**CARTRIDGE**
4	**NPR**	**135-9274**	**1**	**SEAL-O-RING**

LUBRICATI’ON

SYSTEM

120-8469 GAUGE GP-OIL LEVEL & FILLER --S/N 4ZN16044-50156
PART OF 143-1311, 154-5384 INSTALLATION AR-ENGINE

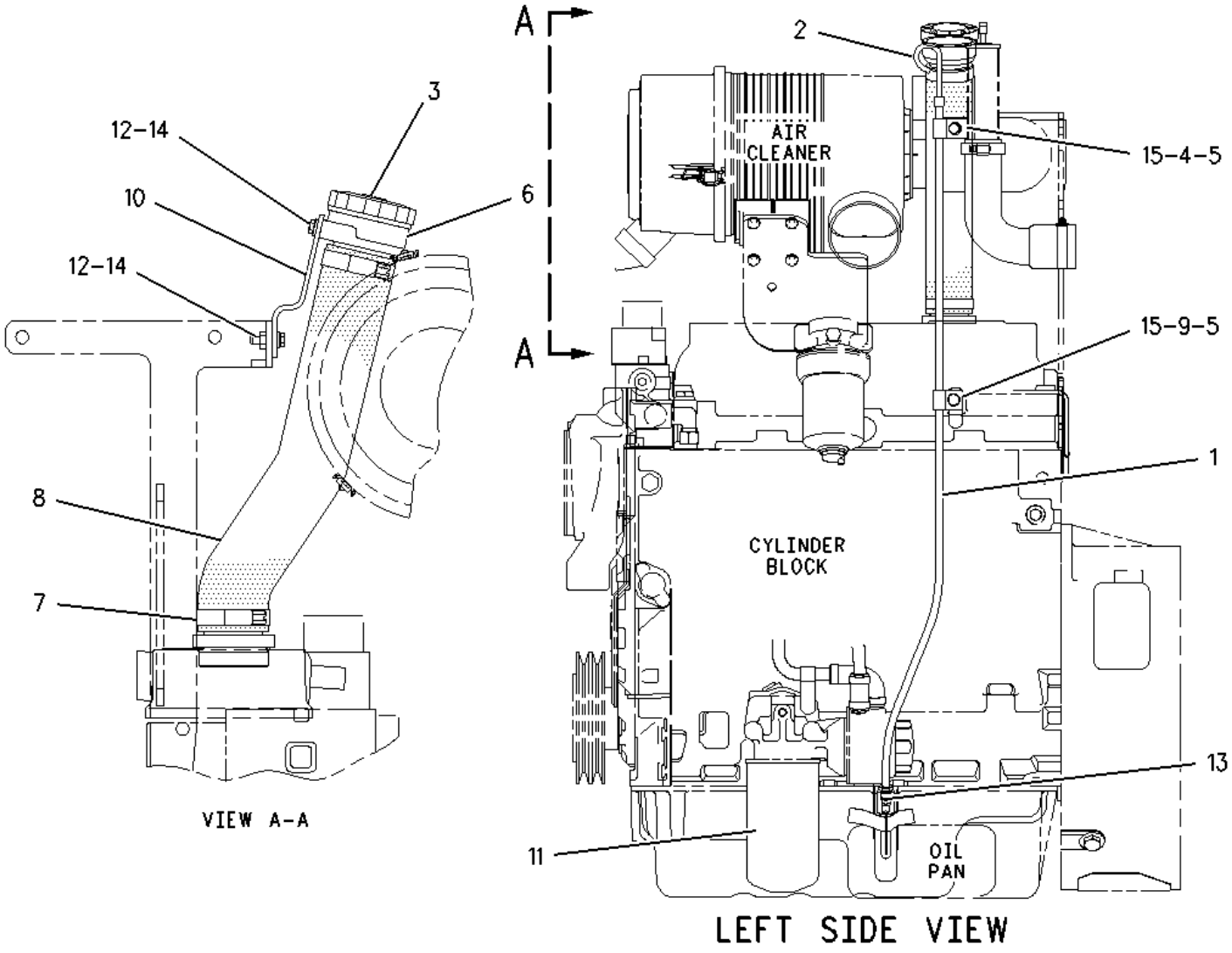

1	NPR	121-1289	1	TUBE AS	
2	NPR	121-1288	1	GAUGE-OIL LEVEL (DIPSTICK)	
3	NPR	136-3608	1	CAP AS (ENGINE OIL FILLER)	
	NPR	124-0506	1	SEAL	
4	NPR M	8T-4189	1	BOLT (M8X1.25X20-MM)	
5	NPR	8T-4224	2	WASHER-HARD (8.8X16X2-MM THK)	
6	NPR	130-6001	1	BODY AS	
	NPR	133-5512	1	NUT	
7	NPR	9M-0164	2	CLAMP-HOSE	
8	NPR	120-8717	1	HOSE	
9	NPR M	8T-4908	1	BOLT (M8X1.25X25-MM)	
10	NPR	120-8718	1	BRACKET	
11	NPR	7W-2326	1	FILTER AS-ENGINE OIL	
12	NPR	8T-4205	4	WASHER-HARD (7.2X14.5X2-MM THK)	
13	NPR	6I-1497	1	SEAL	
14	NPR M	8T-4138	4	BOLT (M6X1X20-MM)	
15	NPR	134-3987	2	CLIP	

Key: **M - METRIC PART**

143-8833 FILTER GP-ENGINE OIL -S/N 5HK81000-99999; 9RM1-UP
PART OF 106-5001 ENGINE AR-PRIMARY

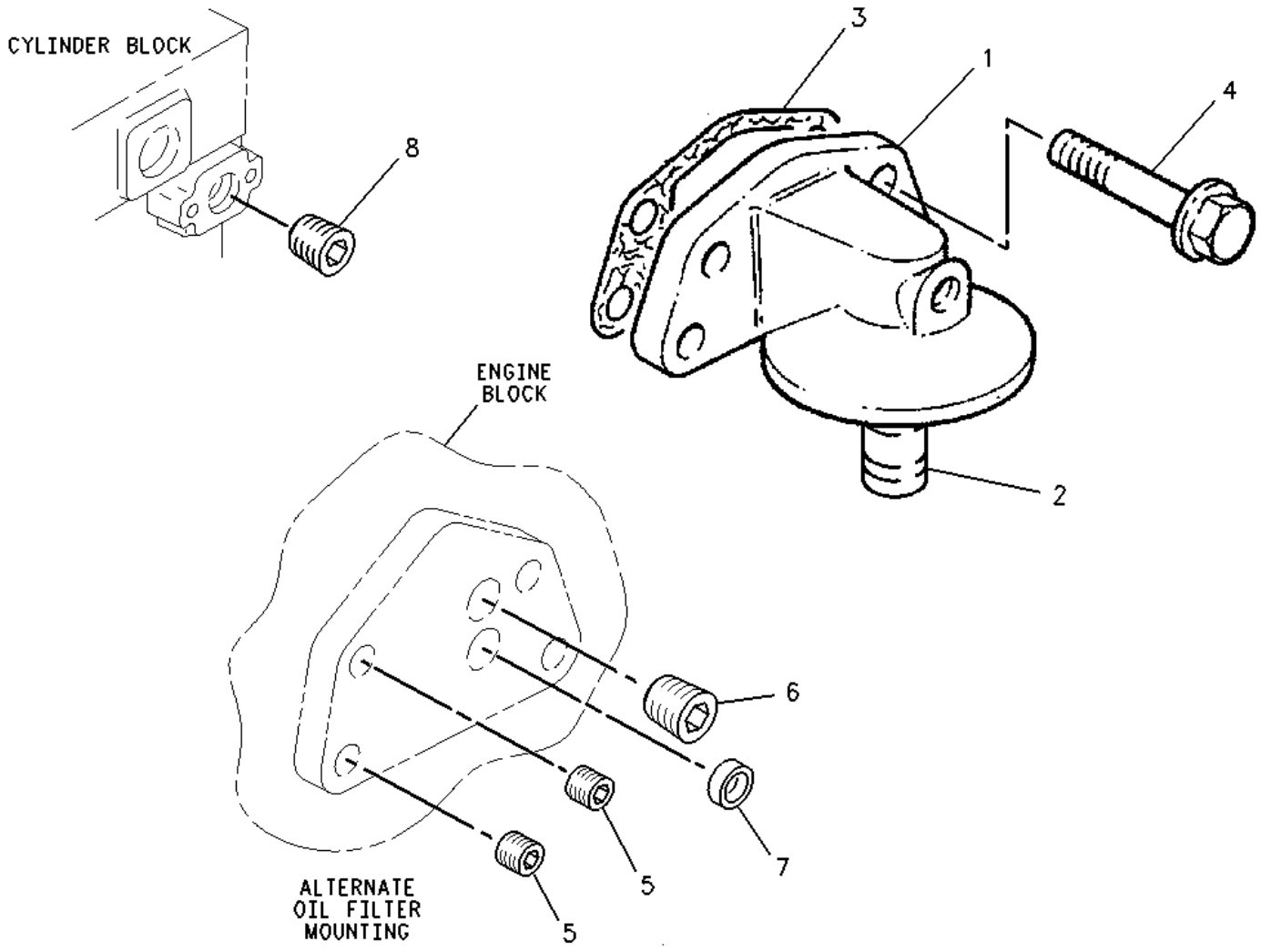

1	**NPR**	**6I-0297**	**1**	**HEAD AS-OIL FILTER**
2	**NPR**	**112-7707**	**1**	**CONNECTOR**
3	**NPR**	**6I-0298**	**1**	**GASKET**
4	**NPR**	**6I-0303**	**4**	**BOLT (M8X1.25X25MM)**
5	**NPR**	**6I-4758**	**2**	**PLUG (M10X1.5X10DIA)**
6	**NPR**	**7C-2851**	**1**	**PLUG**
7	**NPR**	**032-8062**	**1**	**PLUG**
8	**NPR**	**067-6006**	**1**	**PLUG**

137-1361 COOLER GP-FLTR BASE & ENG OIL --S/N 7BJ1-9037; 5HK81000-99999
PART OF 122-8803, 122-8804 ENGINE AR-PRIMARY

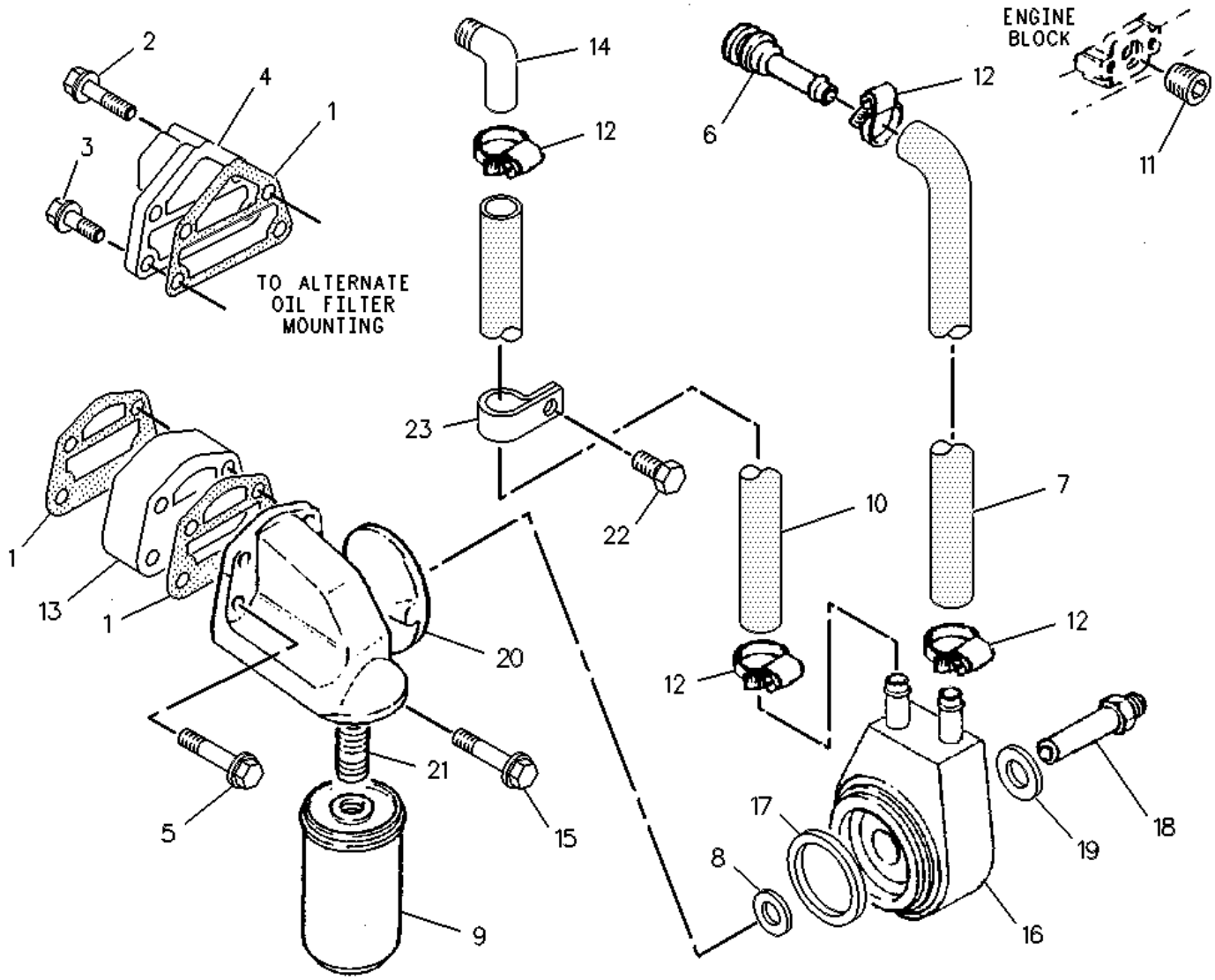

1	NPR	6I-0298	3	GASKET
2	NPR	6I-0301	1	BOLT (M10X45)
3	NPR	6I-0302	3	BOLT (M10X1.5X25-MM)
4	NPR	6I-1052	1	ADAPTER
5	NPR	6I-1110	2	BOLT
6	NPR	7C-2729	1	ADAPTER
7	NPR	134-3854	1	HOSE
8	NPR	7W-0187	1	SEAL
9	NPR	7W-2326	1	FILTER AS-ENGINE OIL
10	NPR	229-8670	1	HOSE
11	NPR	9L-8412	1	PLUG-PIPE
12	NPR	5D-1026	4	CLAMP-HOSE
13	NPR	139-0056	1	ADAPTER
14	NPR	134-3856	1	ELBOW

15	NPR	105-4173	2	BOLT (M10X1.5X60-MM)
16	NPR	118-9143	1	COOLER AS-OIL
17	NPR	6I-2604	1	GASKET
18	NPR	123-4364	1	CONNECTOR
19	NPR	123-4365	1	GASKET
20	NPR	118-9144	1	HEAD AS-OIL FILTER
21	NPR	118-9145	2	CONNECTOR
22	NPR M	124-3815	1	BOLT (M8X16X1.25-MM)
23	NPR	127-8281	1	CLIP
	NPR F	067-6370	1	SPACER
	NPR F	105-2740	1	BOLT

Key: F - NOT SHOWN M - METRIC PART

144-1096 COOLER GP-FLTR BASE & ENG OIL ---S/N 7BJ9039-UP; 9RM1-UP
PART OF 106-5002, 122-8803, 122-8804 ENGINE AR-PRIMARY

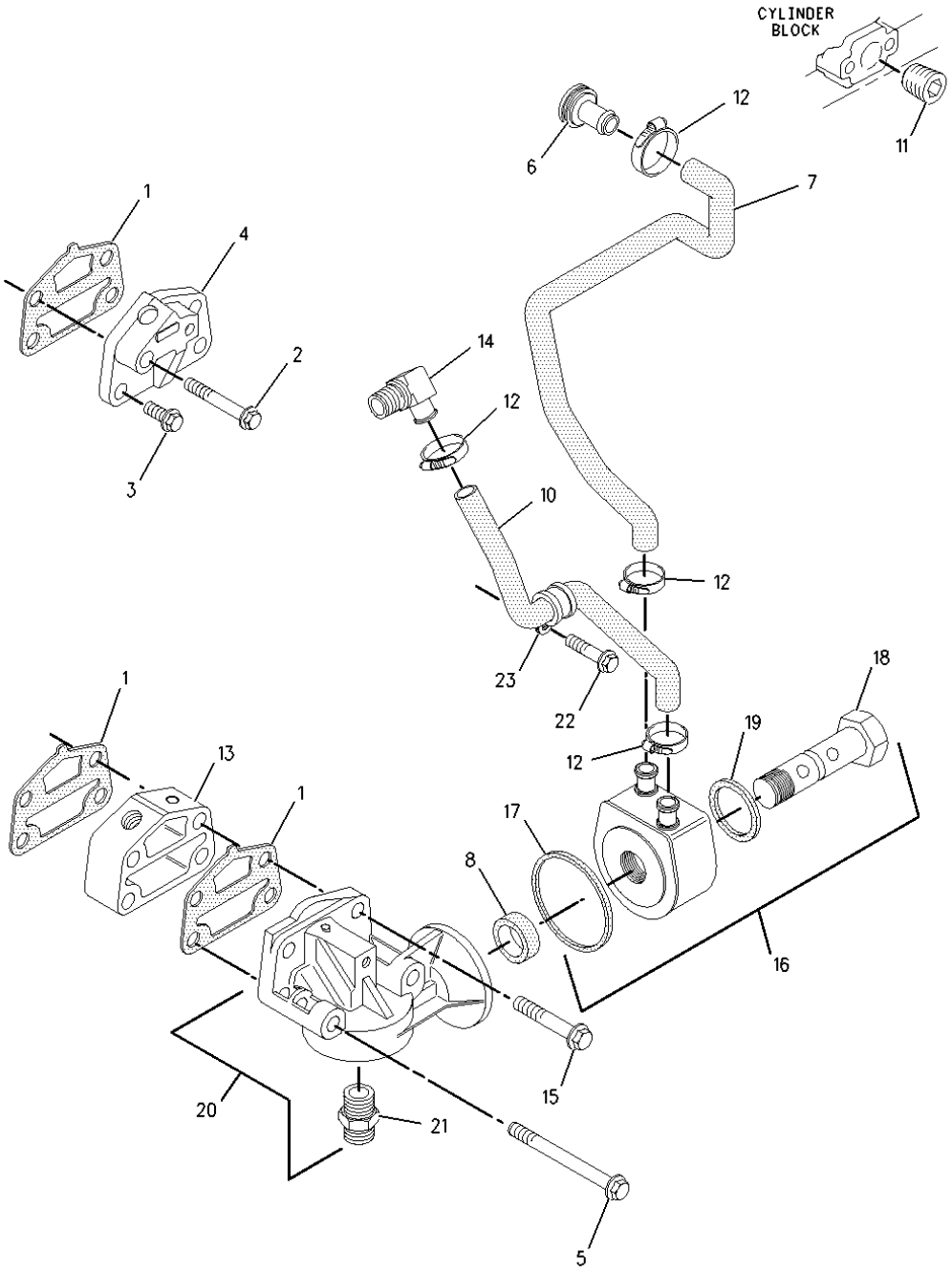

1	**NPR**	**6I-0298**	**3**	**GASKET**
2	**NPR**	**6I-0301**	**1**	**BOLT (M10X45)**
3	**NPR**	**6I-0302**	**3**	**BOLT (M10X1.5X25-MM)**
4	**NPR**	**6I-1052**	**1**	**ADAPTER**
5	**NPR**	**6I-1110**	**2**	**BOLT**
6	**NPR**	**7C-2729**	**1**	**ADAPTER**
7	**NPR**	**134-3854**	**1**	**HOSE**

8	NPR	7W-0187	1	SEAL
10	NPR	204-4127	1	HOSE
11	NPR	9L-8412	1	PLUG-PIPE
12	NPR	5D-1026	4	CLAMP-HOSE
13	NPR	139-0056	1	ADAPTER
14	NPR	134-3856	1	ELBOW
15	NPR	105-4173	2	BOLT (M10X1.5X60-MM)
16	NPR	118-9143	1	COOLER AS-OIL
17	NPR	6I-2604	1	GASKET
18	NPR	123-4364	1	CONNECTOR
19	NPR	123-4365	1	GASKET
20	NPR	118-9144	1	HEAD AS-OIL FILTER
21	NPR	118-9145	2	CONNECTOR
22	NPR M	124-3815	1	BOLT (M8X16X1.25-MM)
23	NPR	127-8281	1	CLIP
	NPR F	067-6370	1	SPACER
	NPR F	105-2740	1	BOLT

Key: F - NOT SHOWN M - METRIC PART

130-3637 PUMP GP-ENGINE OIL ---S/N 9RM1-UP---PART OF 106-5002 ENGINE AR-PRIMARY
Type 1

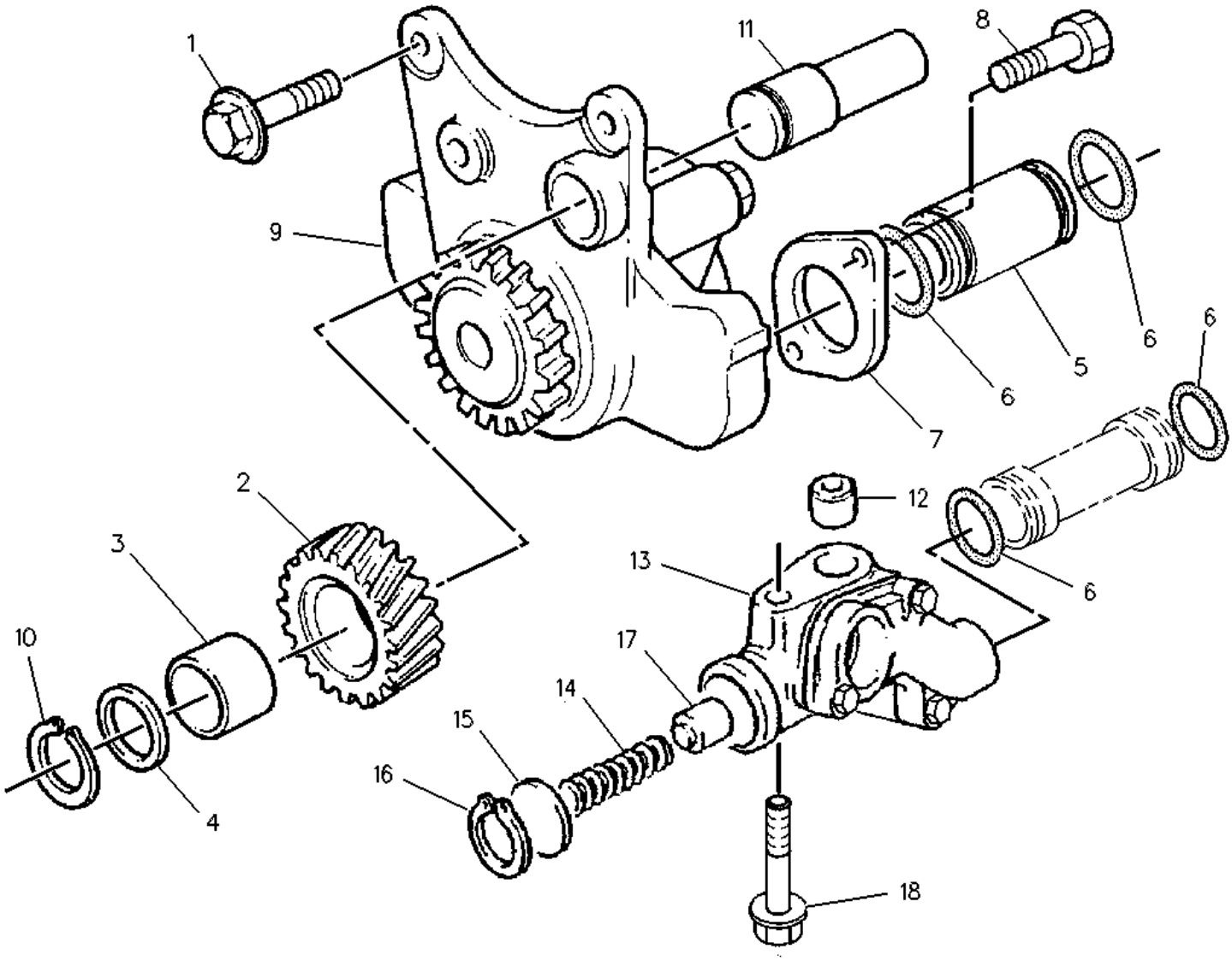

1 NPR M 6I-0254 3 BOLT (M8X1.25X30-MM)

2 NPR 6I-0255 1 GEAR AS (20-TEETH)

3 NPR 067-6927 1 BUSHING-TERMINAL

4 NPR 6I-0256 1 WASHER

5 NPR 6I-0257 1 PIPE

6 NPR 6I-0258 4 SEAL

7 NPR 6I-0259 1 FLANGE

8 NPR M 6I-0260 2 BOLT (M8X1.25X25-MM)

9 NPR 6I-0912 1 PUMP AS-ENGINE OIL

10	NPR	067-6928	1	CLIP
11	NPR	127-3294	1	SHAFT
12	NPR	8N-7998	1	DOWEL
13	NPR	6I-1087	1	HOUSING AS
14	NPR	6I-0786	1	SPRING
15	NPR	7W-4648	1	SEAT-SPRING
16	NPR	6I-0787	1	RING-RETAINING
17	NPR	7W-4782	1	PLUNGER
18	NPR M	6I-0650	1	BOLT (M10X1.5X65-MM)

Key: M - METRIC PART

130-3637 PUMP GP-ENGINE OIL--S/N 9RM1-UP
PART OF 106-5002 ENGINE AR-PRIMARY--Type 2

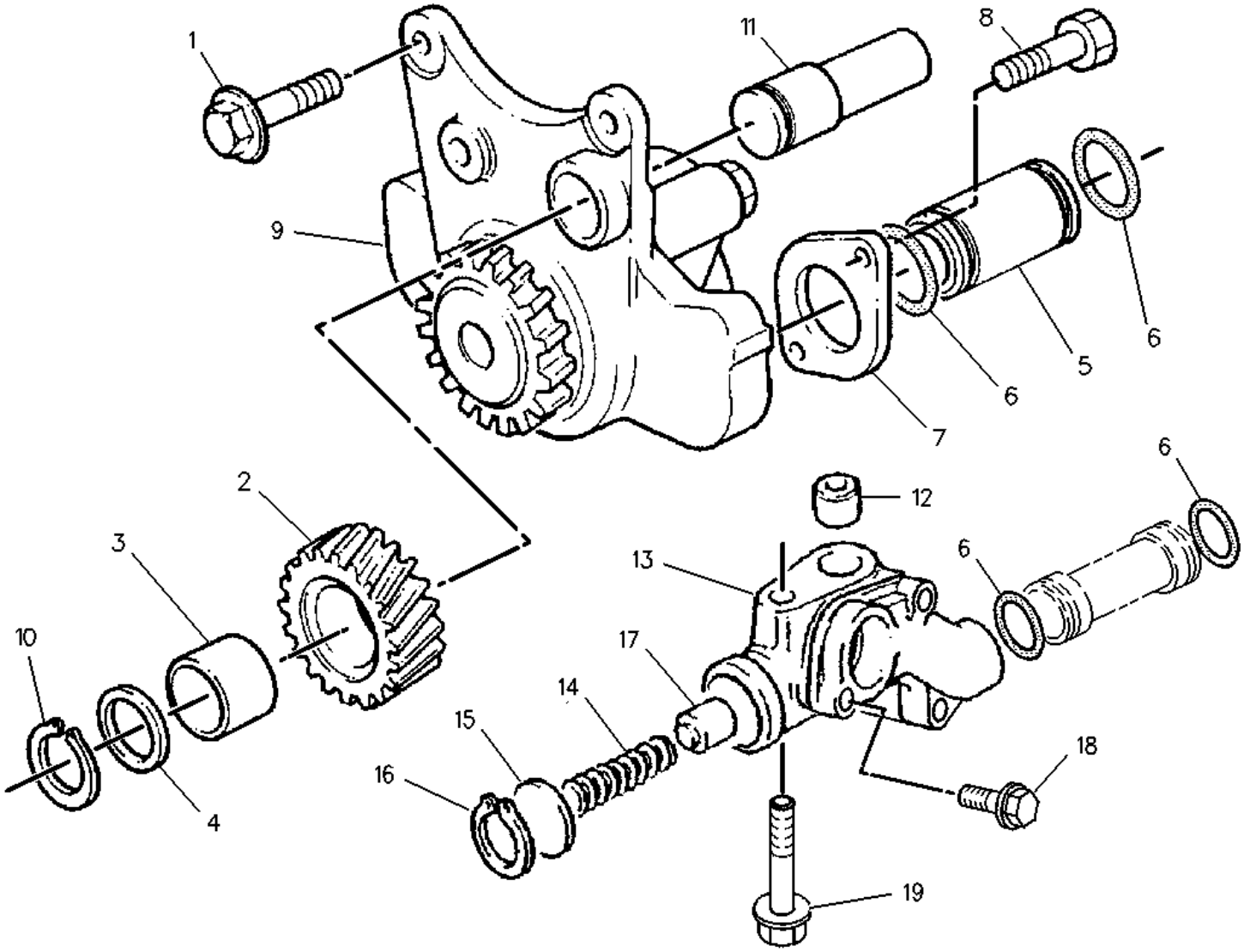

1	NPR M	6I-0254	3	BOLT (M8X1.25X30-MM)
2	NPR	6I-0255	1	GEAR AS (20-TEETH)
3	NPR	067-6927	1	BUSHING-TERMINAL
4	NPR	6I-0256	1	WASHER
5	NPR	6I-0257	1	PIPE
6	NPR	6I-0258	4	SEAL
7	NPR	6I-0259	1	FLANGE
8	NPR M	6I-0260	2	BOLT (M8X1.25X25-MM)
9	NPR	6I-0912	1	PUMP AS-ENGINE OIL

10	NPR	067-6928	1	CLIP
11	NPR	127-3294	1	SHAFT
12	NPR	8N-7998	1	DOWEL
13	NPR	189-6350	1	HOUSING AS
14	NPR	173-0126	1	SPRING
15	NPR	7W-4648	1	SEAT-SPRING
16	NPR	6I-0787	1	RING-RETAINING
17	NPR	7W-4782	1	PLUNGER
18	NPR	101-3415	3	BOLT
19	NPR M	6I-0650	1	BOLT (M10X1.5X65-MM)

Key:

M - METRIC PART

130-6770 PUMP GP-ENGINE OIL ----S/N 5HK81000-99999; 9RM1-UP
PART OF 106-5001 ENGINE AR-PRIMARY

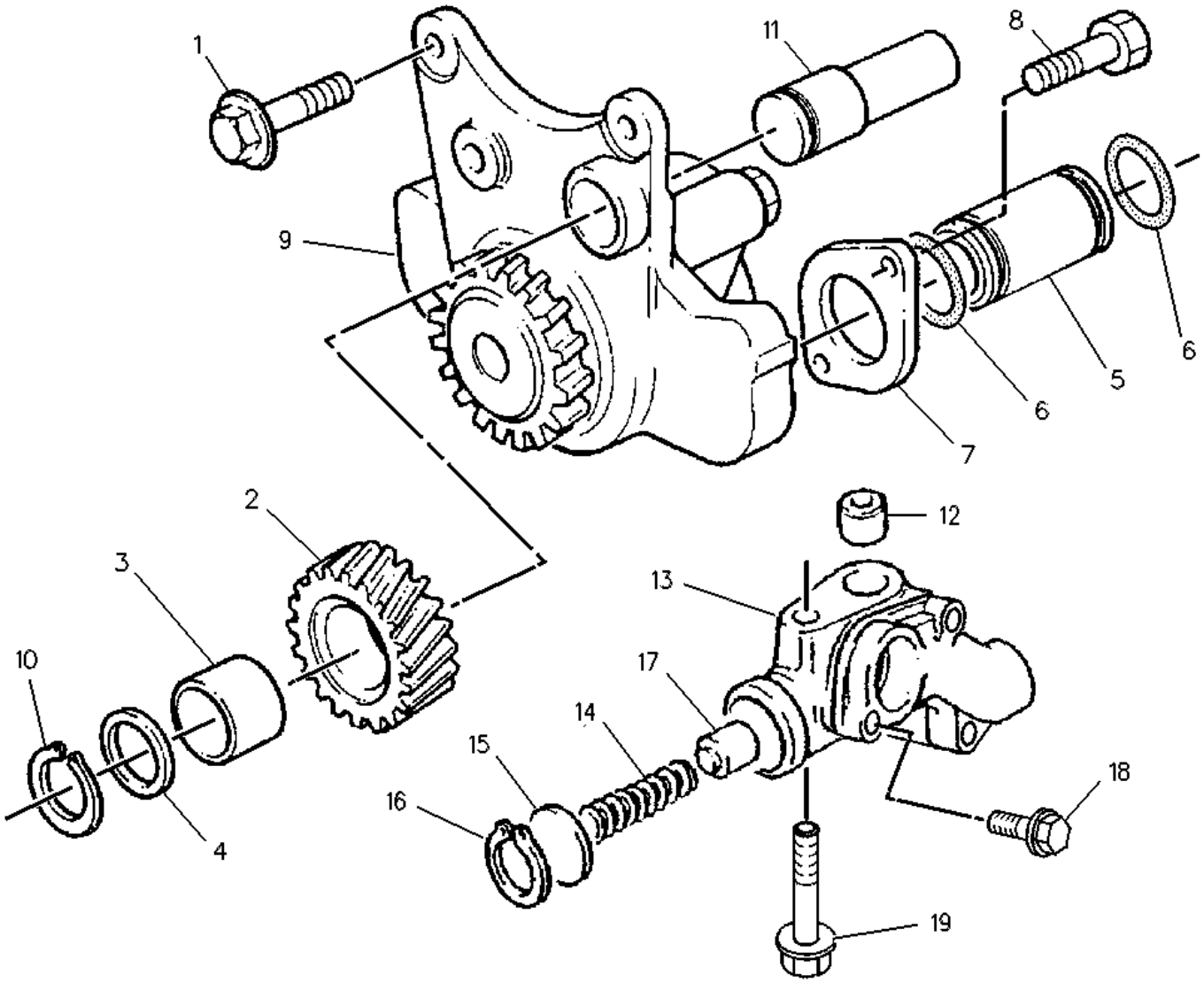

1	NPR	M 6I-0254	3	BOLT (M8X1.25X30-MM)
2	NPR	6I-0255	1	GEAR AS (20-TEETH)
3	NPR	067-6927	1	BUSHING-TERMINAL
4	NPR	6I-0256	1	WASHER
5	NPR	6I-0257	1	PIPE
6	NPR	6I-0258	2	SEAL
7	NPR	6I-0259	1	FLANGE
8	NPR	M 6I-0260	2	BOLT (M8X1.25X25-MM)
9	NPR	6I-0253	1	PUMP AS-ENGINE OIL
10	NPR	067-6928	1	CLIP
11	NPR	127-3294	1	SHAFT
12	NPR	8N-7998	1	DOWEL
13	NPR	6I-0785	1	HOUSING AS
14	NPR	6I-0786	1	SPRING

15	NPR	7W-4648	1	SEAT-SPRING
16	NPR	6I-0787	1	RING-RETAINING
17	NPR	7W-4782	1	PLUNGER
18	NPR	101-3415	3	BOLT
19	NPR M	6I-0650	1	BOLT (M10X1.5X65-MM)

Key: M - METRIC PART

145-8636 PUMP GP-ENGINE OIL ---S/N 7BJ1-UP; 5HK81000-99999
PART OF 122-8803, 122-8804 ENGINE AR-PRIMARY

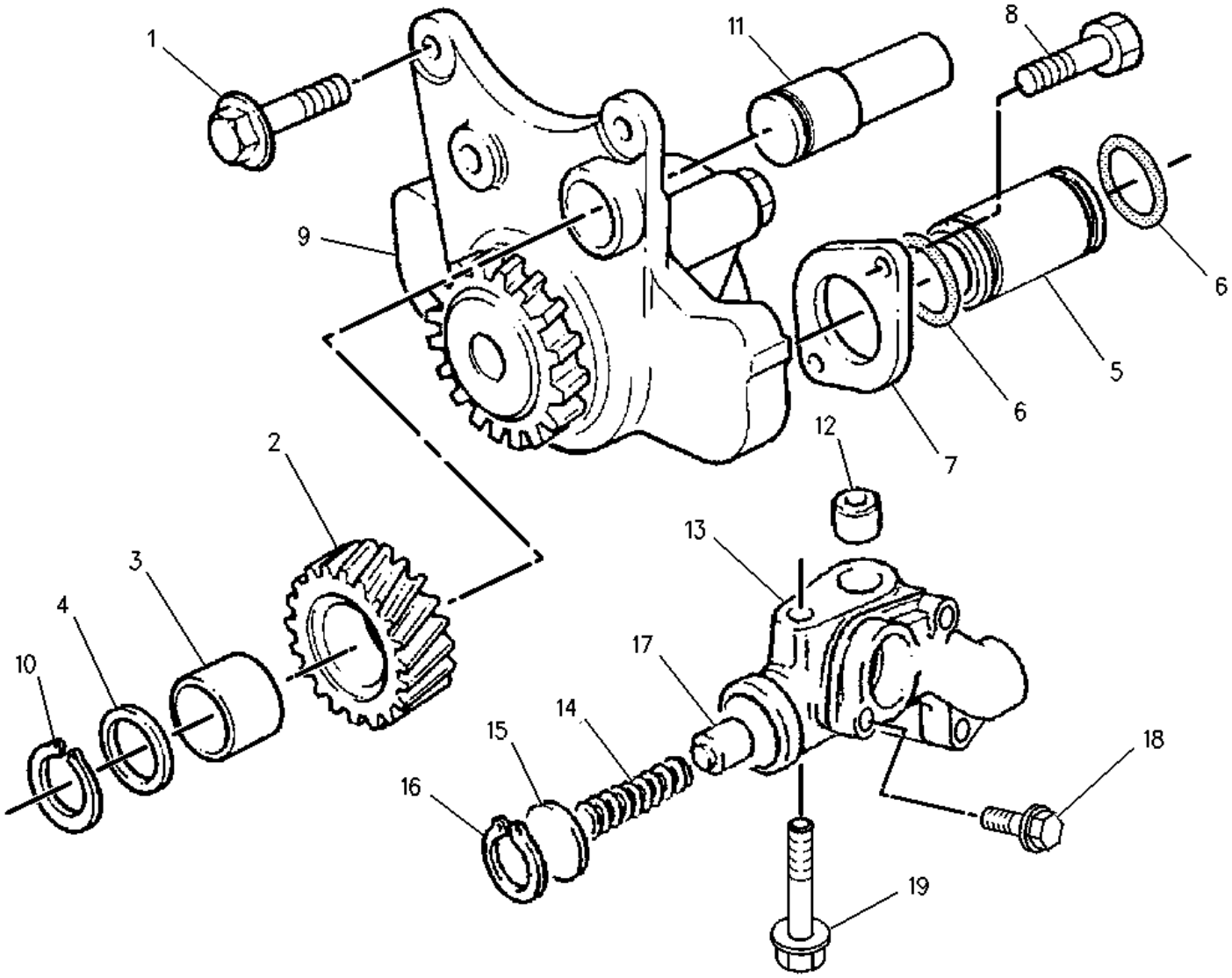

1 NPR M 6I-0254 3 BOLT (M8X1.25X30-MM)

2 NPR 6I-0255 1 GEAR AS (20-TEETH)

3 NPR 067-6927 1 BUSHING-TERMINAL

4 NPR 6I-0256 1 WASHER

5 NPR 6I-0257 1 PIPE

6 NPR 6I-0258 2 SEAL

7 NPR 6I-0259 1 FLANGE

8 NPR M 6I-0260 2 BOLT (M8X1.25X25-MM)

9 NPR 6I-0912 1 PUMP AS-ENGINE OIL

10 NPR 067-6928 1 CLIP

11	NPR	127-3294	1	SHAFT
12	NPR	8N-7998	1	DOWEL
13	NPR	189-6350	1	HOUSING AS
14	NPR	173-0126	1	SPRING
15	NPR	7W-4648	1	SEAT-SPRING
16	NPR	6I-0787	1	RING-RETAINING
17	NPR	7W-4782	1	PLUNGER
18	NPR	101-3415	3	BOLT
19	NPR M	6I-0650	1	BOLT (M10X1.5X65-MM)

Key:

M - METRIC PART

FUEL

SYSTEM

145-6847 CONTROL GP-GOVERNOR --S/N 4ZN19810-50156
PART OF 154-5479, 193-2143 SUPPRESSION AR-SOUND

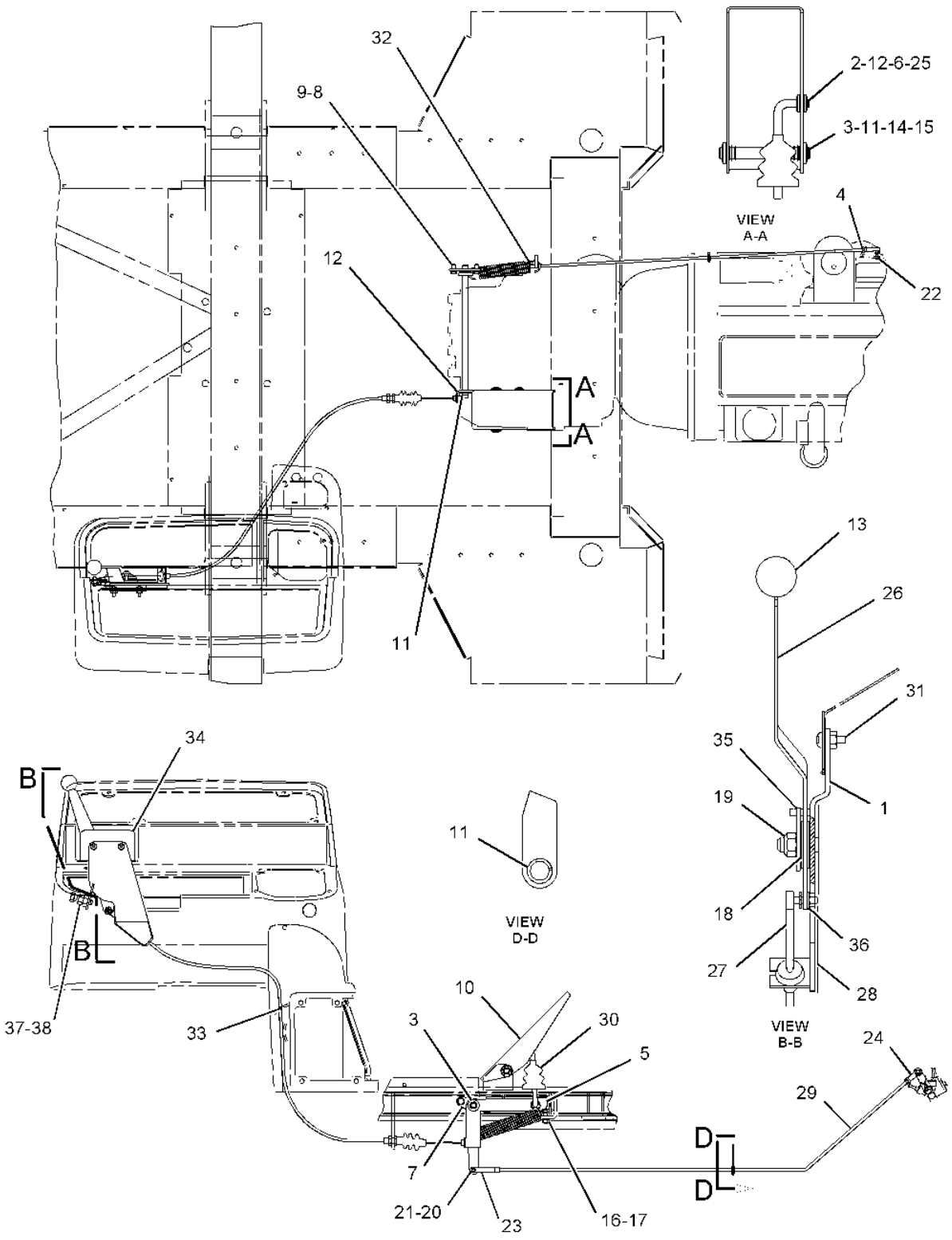

1 NPR 145-9102 1 BRACKET AS

NPR M 8T-3597 1 NUT-WELD (M12X1.75-THD)

2 NPR 9R-8081 1 ROD

3 NPR 8T-4223 4 WASHER-HARD (13.5X25.5X3-MM THK)

4	NPR M	8T-4134	1	NUT (M6X1-THD)
5	NPR	106-5159	1	SHAFT AS
6	NPR	8T-4121	4	WASHER-HARD (11X21X2.5-MM THK)
7	NPR	9R-8099	1	PLATE
8	NPR	8T-4224	2	WASHER-HARD (8.8X16X2-MM THK)
9	NPR M	8T-4200	2	BOLT (M8X1.25X16-MM)
10	NPR	9R-4940	1	PEDAL
11	NPR	9R-1586	7	BEARING
12	NPR	8S-7803	5	RING-RETAINING
13	NPR	8T-3984	1	KNOB
14	NPR	9R-8094	1	PIN
15	NPR	7S-5757	2	RING-RETAINING
16	NPR M	8T-4908	1	BOLT (M8X1.25X25-MM)
17	NPR M	5C-7261	1	NUT (M8X1.25-THD)
18	NPR	5D-0998	4	SPRING-DISC
19	NPR M	6V-7687	1	LOCKNUT (M12X1.75-THD)
20	NPR	8T-6902	1	CLIP
21	NPR	8T-6904	1	PIN-CLEVIS
22	NPR M	6V-7743	1	LOCKNUT (M6X1-THD)
23	NPR	8C-3437	1	END-YOKE ROD
24	NPR	8T-4765	1	ROD END
25	NPR	9R-8084	2	BEARING
26	NPR	164-2255	1	LEVER AS
27	NPR	104-2128	1	CABLE AS
	NPR	6V-8187	1	NUT (1/4-28-THD)

	NPR	8T-4205	1	WASHER-HARD (7.2X14.5X2-MM THK)
	NPR	118-1177	1	BALL JOINT
28	NPR	127-0340	1	PAD
29	NPR	106-5155	1	ROD
30	NPR	9R-1581	1	BOOT
31	NPR M	9X-2045	2	SCREW-TRUSS HEAD (M6X1X20-MM)
32	NPR	141-6343	1	SPRING
33	NPR	3S-2093	1	STRAP-CABLE
34	NPR	106-5621	1	PLATE
35	NPR	104-2129	1	PLATE
36	NPR	8T-4205	1	WASHER-HARD (7.2X14.5X2-MM THK)
37	NPR M	8T-4244	1	NUT (M12X1.75-THD)
38	NPR M	8T-4183	1	BOLT (M12X1.75X40-MM)

Key:

M - METRIC PART

160-0148 FILTER & LINES GP-FUEL -S/N 7BJ1-UP; 5HK81000-99999
PART OF 122-8803, 122-8804 ENGINE AR-PRIMARY

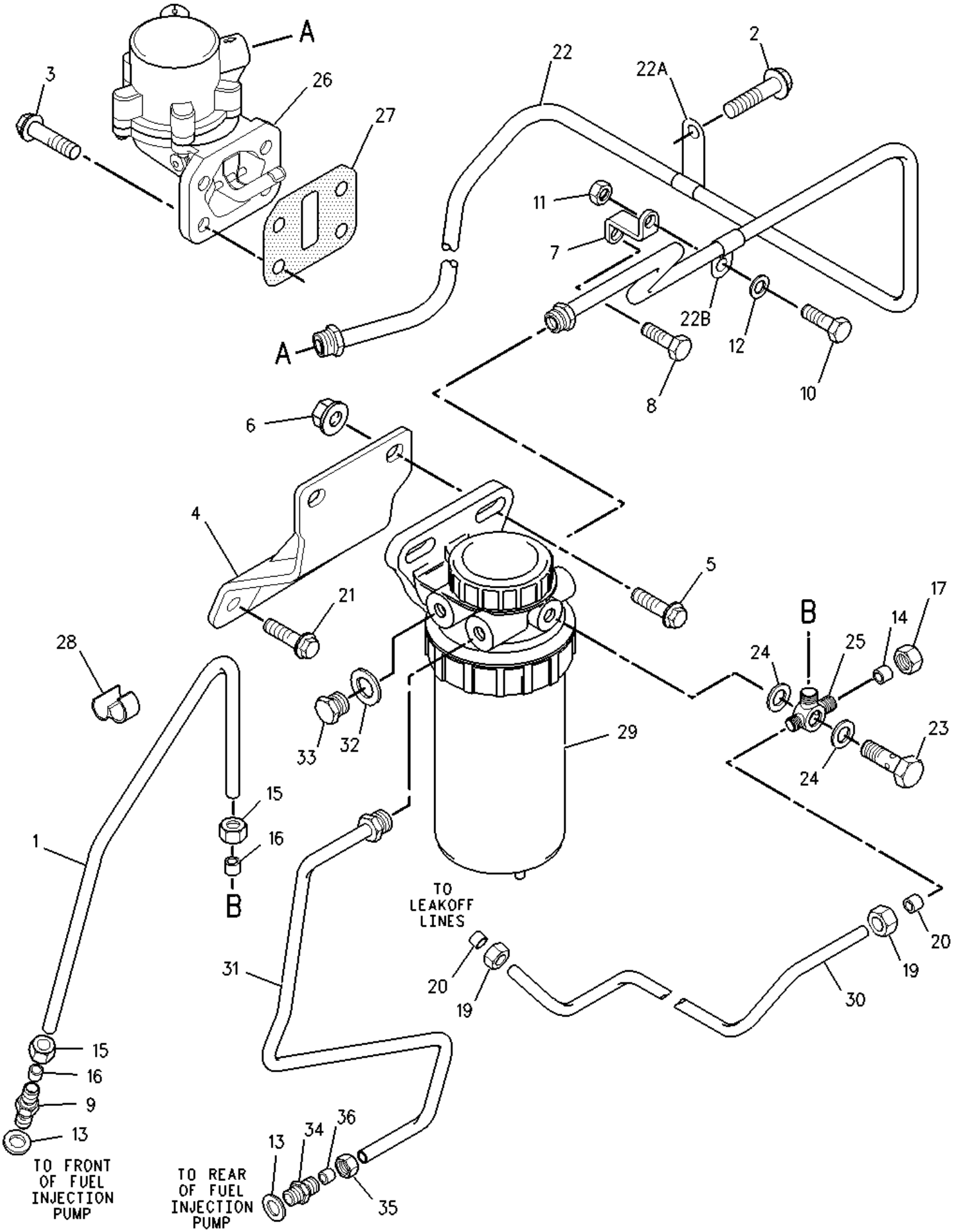

1		160-0152	1	LINE AS-FUEL
2	NPR M	6I-0217	2	BOLT (M8X1.25X20-MM)
3	NPR	6I-0572	4	BOLT (M8X1.25X20-MM)
4	NPR	6I-0592	1	BRACKET
5	NPR M	6I-0593	2	BOLT (M10X1.5X30-MM)
6	NPR	6I-0594	2	NUT (M10X1.15-THD)
7	NPR	6I-0630	1	BRACKET
8	NPR	6I-0631	1	BOLT (M6X1X12-MM)
9	NPR	6I-0817	1	ADAPTER
10	NPR	6I-0917	1	BOLT (M6X1X25-MM)
11	NPR	6I-0918	1	NUT (M6-THD)
12	NPR	6I-2608	1	SPACER
13	NPR	9Y-9381	2	WASHER-HARD (M12)
14	NPR	032-8047	1	FERRULE
15	NPR	032-8181	3	NUT (7/16-24-THD)
16	NPR	032-8193	3	FERRULE
17	NPR	035-8014	1	NUT (7/16-IN)
19	NPR	067-6998	2	NUT (3/8-24-THD)
20	NPR	067-6999	2	FERRULE
21	NPR M	100-4830	2	BOLT (M10X1.5X20-MM)
22	NPR	101-3901	1	LINES GP-FUEL FILTER
22A	NPR	6I-0628	1	CLIP
22B	NPR	6I-0629	1	CLIP
23	NPR	101-3906	1	BOLT
24	NPR	101-3907	2	WASHER

25	NPR	105-2423	1	CONNECTOR
26	NPR J	121-3220	1	PUMP GP-FUEL TRANSFER
	NPR	121-7034	1	KIT-FUEL PUMP
27	NPR	121-3221	1	GASKET
28	NPR	127-8167	2	CLIP
29	NPR Y	138-3096	1	FILTER GP-FUEL
30	NPR	142-1821	1	TUBE
31	NPR	192-5641	1	TUBE AS
32	NPR	032-8100	1	WASHER (0.531X0.718X0.064-IN THK)
33	NPR	033-7849	1	PLUG
34	NPR	102-9990	1	UNION
35	NPR	5C-1777	1	NUT
36	NPR	067-6269	1	FERRULE

AVAILABLE REPAIR KIT(S):

NPR	121-7034	1	KIT-FUEL PUMP

Key:

J - AVAILABLE
M - METRIC PART
Y - SEPARATE ILLUSTRATION

160-0148 FILTER & LINES GP-FUEL --S/N 7BJ1-UP
PART OF 122-8803, 122-8804 ENGINE AR-PRIMARY

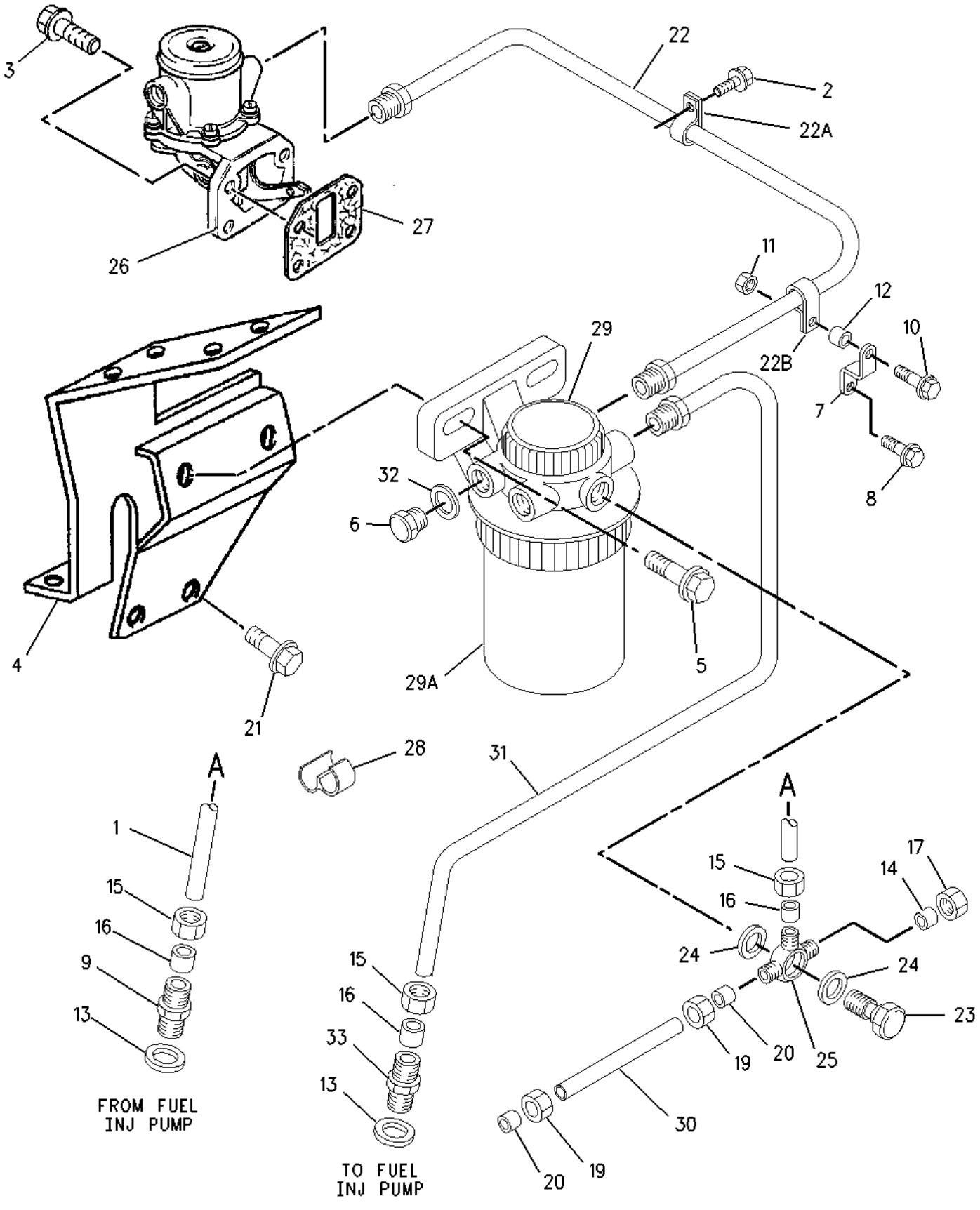

1		160-0152	1	LINE AS-FUEL
2	NPR M	6I-0217	2	BOLT (M8X1.25X20-MM)
3	NPR	6I-0572	4	BOLT (M8X1.25X20-MM)
4		160-9801	1	BRACKET
5	NPR M	6I-0593	2	BOLT (M10X1.5X30-MM)
6	NPR	033-7849	1	PLUG
7	NPR	6I-0630	1	BRACKET
8	NPR	6I-0631	1	BOLT (M6X1X12-MM)
9	NPR	6I-0817	1	ADAPTER
10	NPR	6I-0917	1	BOLT (M6X1X25-MM)
11	NPR	6I-0918	1	NUT (M6-THD)
12	NPR	6I-2608	1	SPACER
13	NPR	9Y-9381	2	WASHER-HARD (M12)
14	NPR	032-8047	1	FERRULE
15	NPR	032-8181	3	NUT (7/16-24-THD)
16	NPR	032-8193	3	FERRULE
17	NPR	035-8014	1	NUT (7/16-IN)
19	NPR	067-6998	2	NUT (3/8-24-THD)
20	NPR	067-6999	2	FERRULE
21	NPR M	6I-0654	3	BOLT (M10X1.5X25-MM)
22	NPR	101-3901	1	LINES GP-FUEL FILTER
22A	NPR	6I-0628	1	CLIP
22B	NPR	6I-0629	1	CLIP
23	NPR	101-3906	1	BOLT
24	NPR	101-3907	2	WASHER

25	NPR	105-2423	1	CONNECTOR
26	NPR J	121-3220	1	PUMP GP-FUEL TRANSFER
27	NPR	121-3221	1	GASKET
28	NPR	127-8167	2	CLIP
29	NPR Y	138-3096	1	FILTER GP-FUEL
30	NPR	165-4496	1	LINE AS-FUEL
31	NPR	192-5641	1	TUBE AS
32	NPR	032-8100	1	WASHER (0.531X0.718X0.064-IN THK)
33	NPR	102-9990	1	UNION
	NPR F	5C-1777	1	NUT
	NPR F	067-6269	1	FERRULE

AVAILABLE REPAIR KIT(S):

NPR	121-7034	1	KIT-FUEL PUMP

Key:

F - NOT SHOWN
J - AVAILABLE
M - METRIC PART
Y - SEPARATE ILLUSTRATION

130-1419 FILTER GP-FUEL --S/N 5HK81000-99999
PART OF 106-5001 ENGINE AR-PRIMARY

1	NPR M	6I-0217	1	BOLT (M8X1.25X20-MM)
2	NPR	6I-0572	4	BOLT (M8X1.25X20-MM)
3	NPR	6I-0592	1	BRACKET
4	NPR M	6I-0593	2	BOLT (M10X1.5X30-MM)
5	NPR	6I-0594	2	NUT (M10X1.15-THD)
6	NPR	6I-0630	1	BRACKET
7	NPR	6I-0631	1	BOLT (M6X1X12-MM)
8	NPR	6I-0817	2	ADAPTER
9	NPR	032-8100	2	WASHER (0.531X0.718X0.064-IN THK)
10	NPR	6I-0918	1	NUT (M6-THD)
11	NPR	6I-2608	1	SPACER
12	NPR	033-7849	2	PLUG
13	NPR	9Y-9381	2	WASHER-HARD (M12)
14	NPR	032-8047	1	FERRULE
15	NPR	032-8181	3	NUT (7/16-24-THD)
16	NPR	032-8193	3	FERRULE
17	NPR	035-8014	1	NUT (7/16-IN)
18	NPR	067-6998	2	NUT (3/8-24-THD)
19	NPR	067-6999	2	FERRULE
20	NPR M	100-4830	2	BOLT (M10X1.5X20-MM)
21	NPR Y	138-3096	1	FILTER GP-FUEL
22	NPR	112-7704	1	BOLT
23	NPR	121-3221	1	GASKET

24	NPR J	121-3220	1	PUMP GP-FUEL TRANSFER
25	NPR	101-3907	2	WASHER
26	NPR	101-3906	1	BOLT
27	NPR	137-6267	1	TUBE
28	NPR	101-3904	1	TUBE
29	NPR	101-3901	1	LINES GP-FUEL FILTER
29A	NPR	6I-0628	1	CLIP
29B	NPR	6I-0629	1	CLIP
30	NPR	105-2423	1	CONNECTOR
31	NPR	101-3903	1	TUBE AS

AVAILABLE REPAIR KIT(S):

NPR J	121-7034	1	KIT-FUEL PUMP

Key:

J - KIT MARKED J SERVICES PART(S) MARKED J
M - METRIC PART
Y - SEPARATE ILLUSTRATION

130-1419 FILTER GP-FUEL ---S/N 5HK81000-99999; 9RM1-UP
PART OF 106-5001, 106-5002 ENGINE AR-PRIMARY

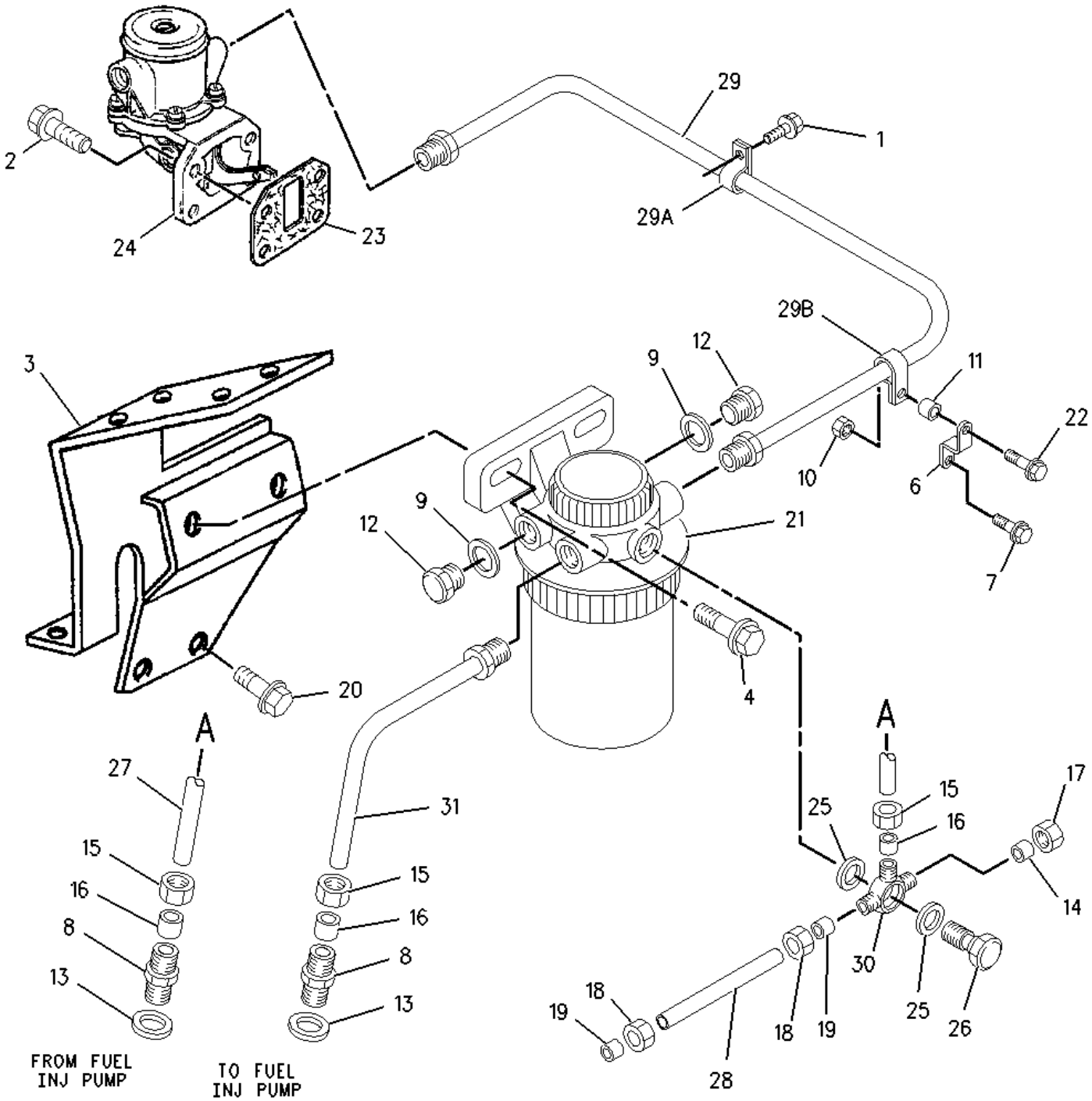

1 NPR M 6I-0217 1 BOLT (M8X1.25X20-MM)

2	NPR	6I-0572	4	BOLT (M8X1.25X20-MM)
3		160-9801	1	BRACKET
4	NPR M	6I-0593	2	BOLT (M10X1.5X30-MM)
6	NPR	6I-0630	1	BRACKET
7	NPR	6I-0631	1	BOLT (M6X1X12-MM)
8	NPR	6I-0817	2	ADAPTER
9	NPR	032-8100	2	WASHER (0.531X0.718X0.064-IN THK)
10	NPR	6I-0918	1	NUT (M6-THD)
11	NPR	6I-2608	1	SPACER
12	NPR	033-7849	2	PLUG
13	NPR	9Y-9381	2	WASHER-HARD (M12)
14	NPR	032-8047	1	FERRULE
15	NPR	032-8181	3	NUT (7/16-24-THD)
16	NPR	032-8193	3	FERRULE
17	NPR	035-8014	1	NUT (7/16-IN)
18	NPR	067-6998	2	NUT (3/8-24-THD)
19	NPR	067-6999	2	FERRULE
20	NPR M	6I-0654	3	BOLT (M10X1.5X25-MM)
21	NPR Y	138-3096	1	FILTER GP-FUEL
22	NPR	112-7704	1	BOLT
23	NPR	121-3221	1	GASKET
24	NPR J	121-3220	1	PUMP GP-FUEL TRANSFER
25	NPR	101-3907	2	WASHER
26	NPR	101-3906	1	BOLT
27	NPR	137-6267	1	TUBE

28	NPR	166-7335	1	TUBE AS
29	NPR	101-3901	1	LINES GP-FUEL FILTER
29A	NPR	6I-0628	1	CLIP
29B	NPR	6I-0629	1	CLIP
30	NPR	105-2423	1	CONNECTOR
31	NPR	101-3903	1	TUBE AS

AVAILABLE REPAIR KIT(S):

NPR J	121-7034	1	KIT-FUEL PUMP

Key:

J - KIT MARKED J SERVICES PART(S) MARKED J
M - METRIC PART
Y - SEPARATE ILLUSTRATION

138-3096 FILTER GP-FUEL --S/N 7BJ1-UP; 5HK81000-99999; 9RM1-UP
PART OF 160-0148 FILTER & LINES GP-FUEL, 130-1419 FILTER GP-FUEL

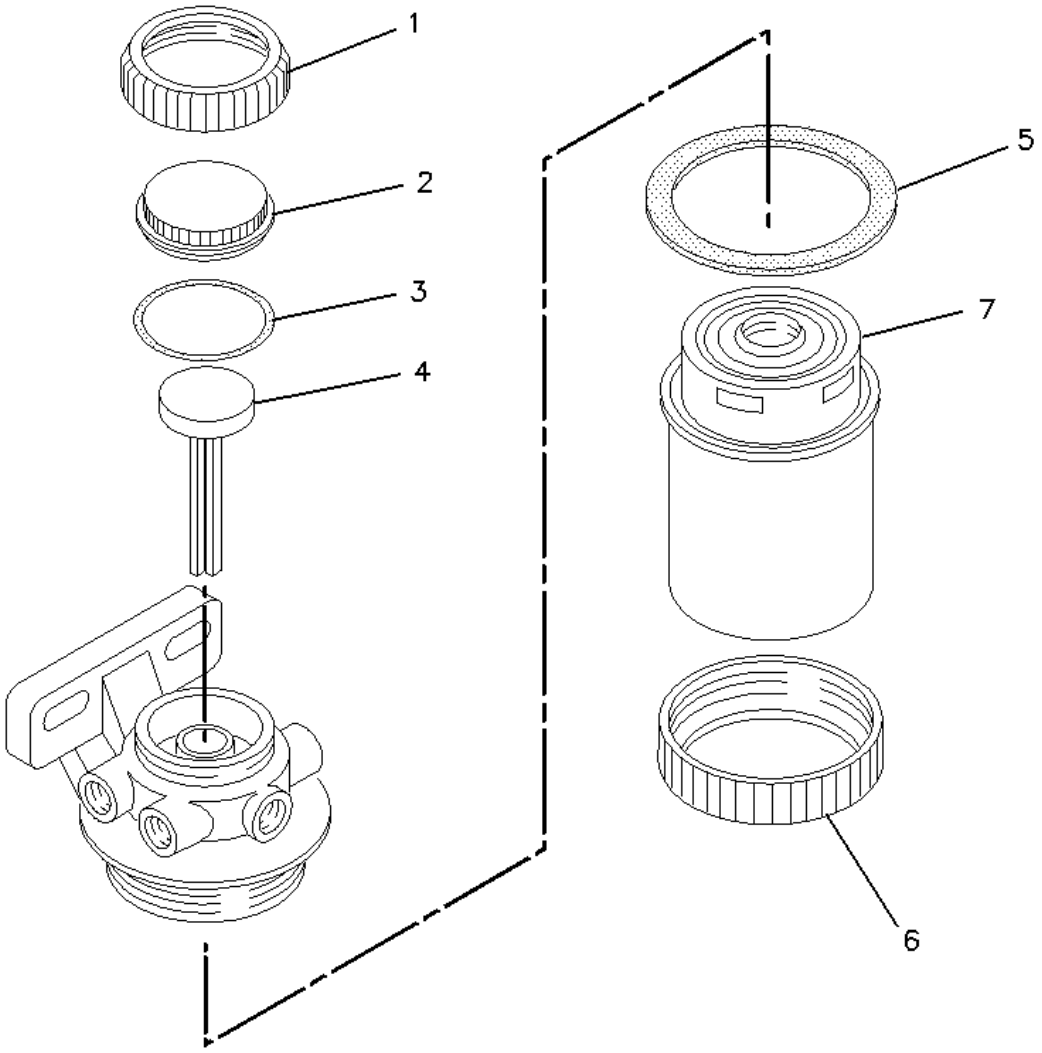

1	**NPR**	**101-3739**	**1**	**NUT**
2	**NPR**	**101-3740**	**1**	**CAP**
3	**NPR**	**101-3741**	**1**	**SEAL**
4	**NPR**	**101-3742**	**1**	**PLUG**
5	**NPR**	**101-3743**	**1**	**SEAL (FUEL FILTER)**
6	**NPR**	**118-8118**	**1**	**RING-RETAINING**
7	**NPR**		**1**	**FILTER ELEMENT AS-FUEL (PRIMARY)**

130-7092 FILTER GP-WATER SEP & FUEL --S/N 4ZN16044-50156
PART OF 7E-4636 SEPARATOR GP-WATER

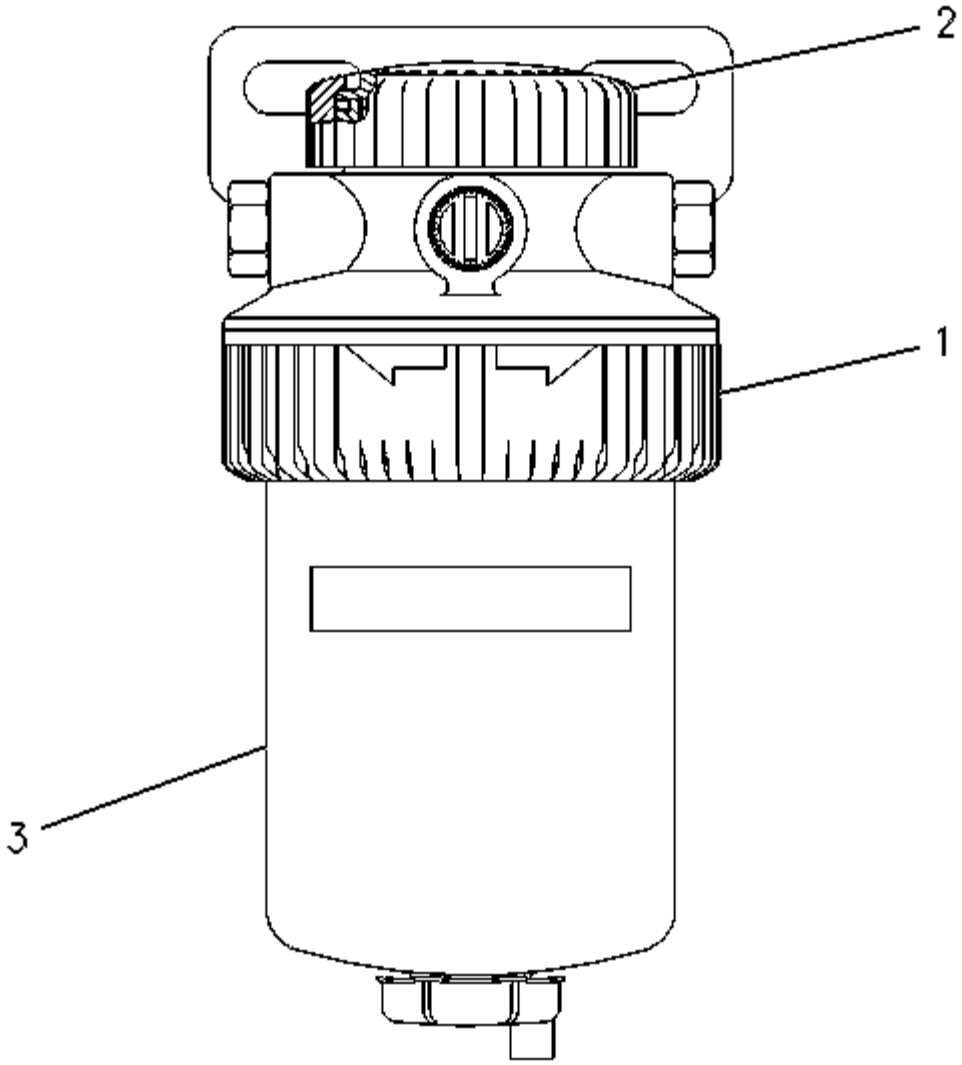

1 NPR 118-8118 1 RING-RETAINING

2 NPR 118-8119 1 NUT

3 NPR 131-1812 1 FILTER ELEMENT AS-FUEL (WATER SEPARATOR)

AVAILABLE REPAIR KIT(S):

NPR 121-4480 1 KIT-WATER BASE (WATER SEPARATOR)

(INCLUDES NUT, CAP, SEALS, & PLUGS)

130-4646 FITTING GP-FUEL LINES --S/N 7BJ1-UP; 5HK81000-99999; 9RM1-UP
PART OF 106-5001, 106-5002, 122-8803, 122-8804 ENGINE AR-PRIMARY

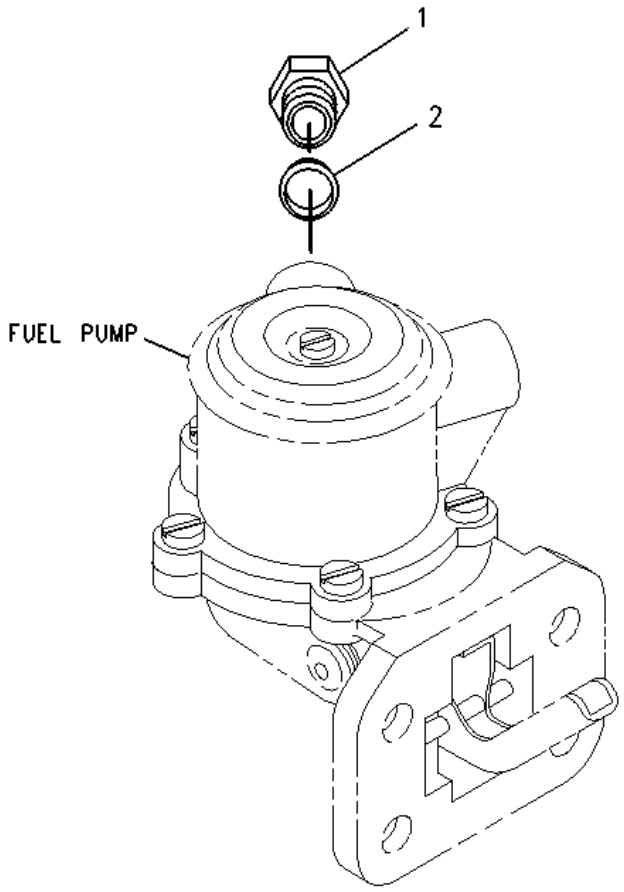

1	**NPR**	**067-6268**	**1**	**NUT-FUEL LINE (1/2-IN)**
2	**NPR**	**067-6269**	**1**	**FERRULE**

166-0501 KIT-INJECTOR ---S/N 9RM1-UP
PART OF 106-5002 ENGINE AR-PRIMARY--FOR USE WITH 106-5002

INCLUDES:OIL PUMP,WATER PUMP REPAIR KIT,THERMOSTAT,FUEL INJECTORS,AND FERRULES

160-0148 FILTER & LINES GP-FUEL --S/N 7BJ1-UP; 5HK81000-99999
PART OF 122-8803, 122-8804 ENGINE AR-PRIMARY

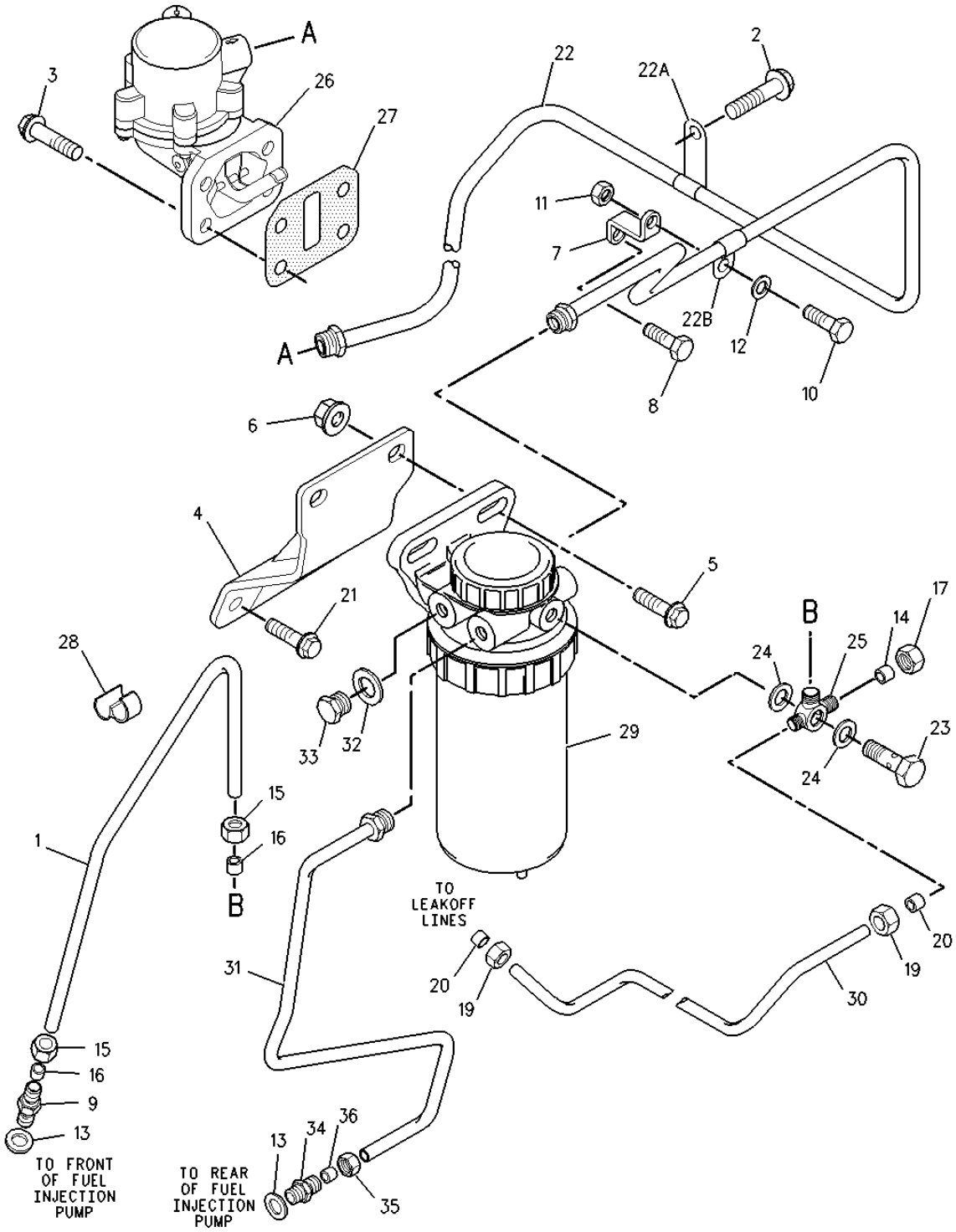

1		160-0152	1	LINE AS-FUEL
2	NPR M	6I-0217	2	BOLT (M8X1.25X20-MM)
3	NPR	6I-0572	4	BOLT (M8X1.25X20-MM)
4	NPR	6I-0592	1	BRACKET

5	NPR M	6I-0593	2	BOLT (M10X1.5X30-MM)
6	NPR	6I-0594	2	NUT (M10X1.15-THD)
7	NPR	6I-0630	1	BRACKET
8	NPR	6I-0631	1	BOLT (M6X1X12-MM)
9	NPR	6I-0817	1	ADAPTER
10	NPR	6I-0917	1	BOLT (M6X1X25-MM)
11	NPR	6I-0918	1	NUT (M6-THD)
12	NPR	6I-2608	1	SPACER
13	NPR	9Y-9381	2	WASHER-HARD (M12)
14	NPR	032-8047	1	FERRULE
15	NPR	032-8181	3	NUT (7/16-24-THD)
16	NPR	032-8193	3	FERRULE
17	NPR	035-8014	1	NUT (7/16-IN)
19	NPR	067-6998	2	NUT (3/8-24-THD)
20	NPR	067-6999	2	FERRULE
21	NPR M	100-4830	2	BOLT (M10X1.5X20-MM)
22	NPR	101-3901	1	LINES GP-FUEL FILTER
22A	NPR	6I-0628	1	CLIP
22B	NPR	6I-0629	1	CLIP
23	NPR	101-3906	1	BOLT
24	NPR	101-3907	2	WASHER
25	NPR	105-2423	1	CONNECTOR
26	NPR J	121-3220	1	PUMP GP-FUEL TRANSFER
	NPR	121-7034	1	KIT-FUEL PUMP
27	NPR	121-3221	1	GASKET

28	NPR	127-8167	2	CLIP
29	NPR Y	138-3096	1	FILTER GP-FUEL
30	NPR	142-1821	1	TUBE
31	NPR	192-5641	1	TUBE AS
32	NPR	032-8100	1	WASHER (0.531X0.718X0.064-IN THK)
33	NPR	033-7849	1	PLUG
34	NPR	102-9990	1	UNION
35	NPR	5C-1777	1	NUT
36	NPR	067-6269	1	FERRULE

AVAILABLE REPAIR KIT(S):

NPR	121-7034	1	KIT-FUEL PUMP

Key: J - AVAILABLE M - METRIC PART Y - SEPARATE ILLUSTRATION

160-0148 FILTER & LINES GP-FUEL ---S/N 7BJ1-UP
PART OF 122-8803, 122-8804 ENGINE AR-PRIMARY

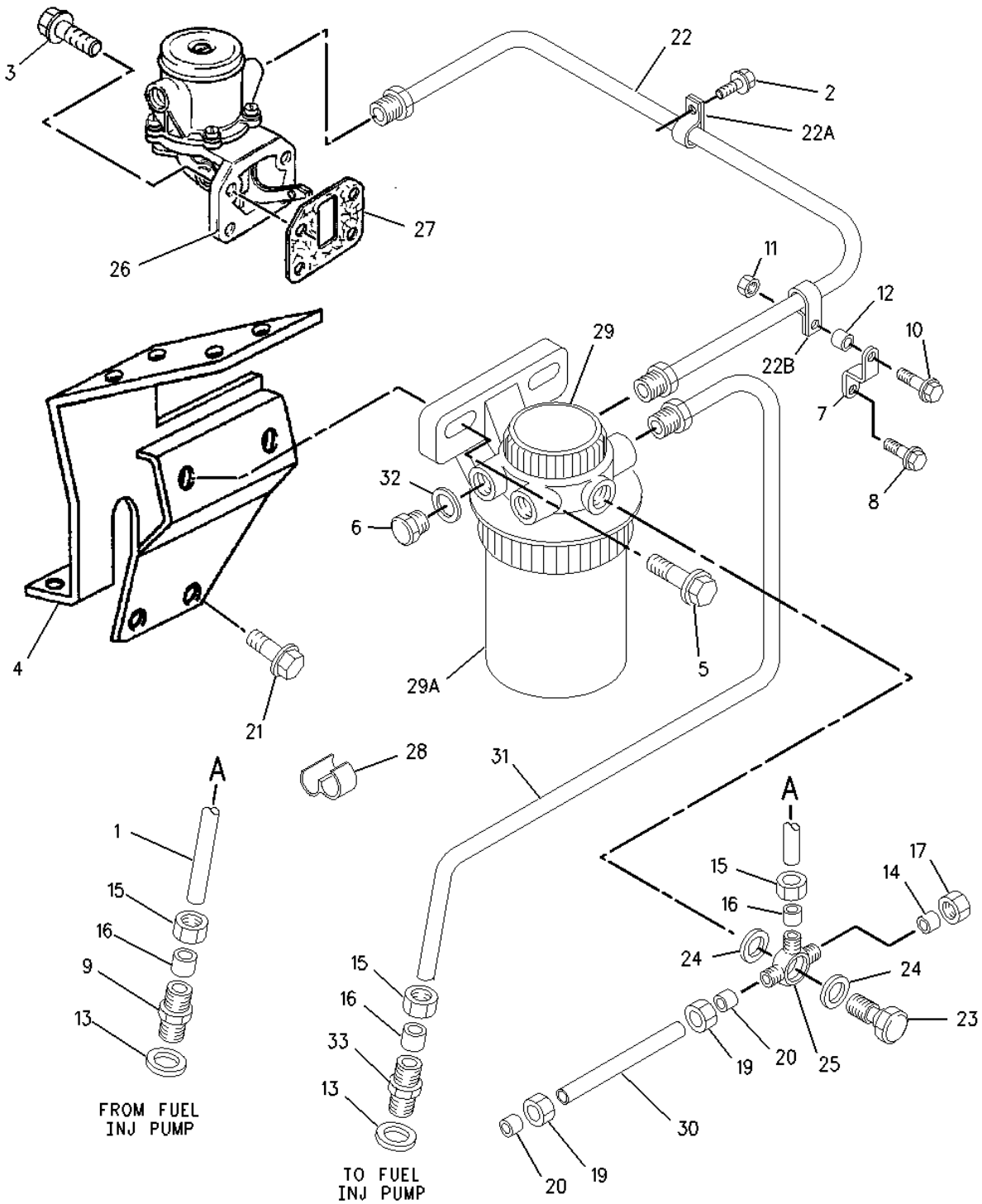

1 160-0152 1 LINE AS-FUEL

2 NPR M 6I-0217 2 BOLT (M8X1.25X20-MM)

3 NPR 6I-0572 4 BOLT (M8X1.25X20-MM)

4 160-9801 1 BRACKET

5 NPR M 6I-0593 2 BOLT (M10X1.5X30-MM)

6	NPR	033-7849	1	PLUG
7	NPR	6I-0630	1	BRACKET
8	NPR	6I-0631	1	BOLT (M6X1X12-MM)
9	NPR	6I-0817	1	ADAPTER
10	NPR	6I-0917	1	BOLT (M6X1X25-MM)
11	NPR	6I-0918	1	NUT (M6-THD)
12	NPR	6I-2608	1	SPACER
13	NPR	9Y-9381	2	WASHER-HARD (M12)
14	NPR	032-8047	1	FERRULE
15	NPR	032-8181	3	NUT (7/16-24-THD)
16	NPR	032-8193	3	FERRULE
17	NPR	035-8014	1	NUT (7/16-IN)
19	NPR	067-6998	2	NUT (3/8-24-THD)
20	NPR	067-6999	2	FERRULE
21	NPR M	6I-0654	3	BOLT (M10X1.5X25-MM)
22	NPR	101-3901	1	LINES GP-FUEL FILTER
22A	NPR	6I-0628	1	CLIP
22B	NPR	6I-0629	1	CLIP
23	NPR	101-3906	1	BOLT
24	NPR	101-3907	2	WASHER
25	NPR	105-2423	1	CONNECTOR
26	NPR J	121-3220	1	PUMP GP-FUEL TRANSFER
27	NPR	121-3221	1	GASKET
28	NPR	127-8167	2	CLIP
29	NPR Y	138-3096	1	FILTER GP-FUEL

30	NPR	165-4496	1	LINE AS-FUEL
31	NPR	192-5641	1	TUBE AS
32	NPR	032-8100	1	WASHER (0.531X0.718X0.064-IN THK)
33	NPR	102-9990	1	UNION
	NPR F	5C-1777	1	NUT
	NPR F	067-6269	1	FERRULE

AVAILABLE REPAIR KIT(S):

NPR	121-7034	1	KIT-FUEL PUMP

Key:

F - NOT SHOWN
J - AVAILABLE
M - METRIC PART
Y - SEPARATE ILLUSTRATION

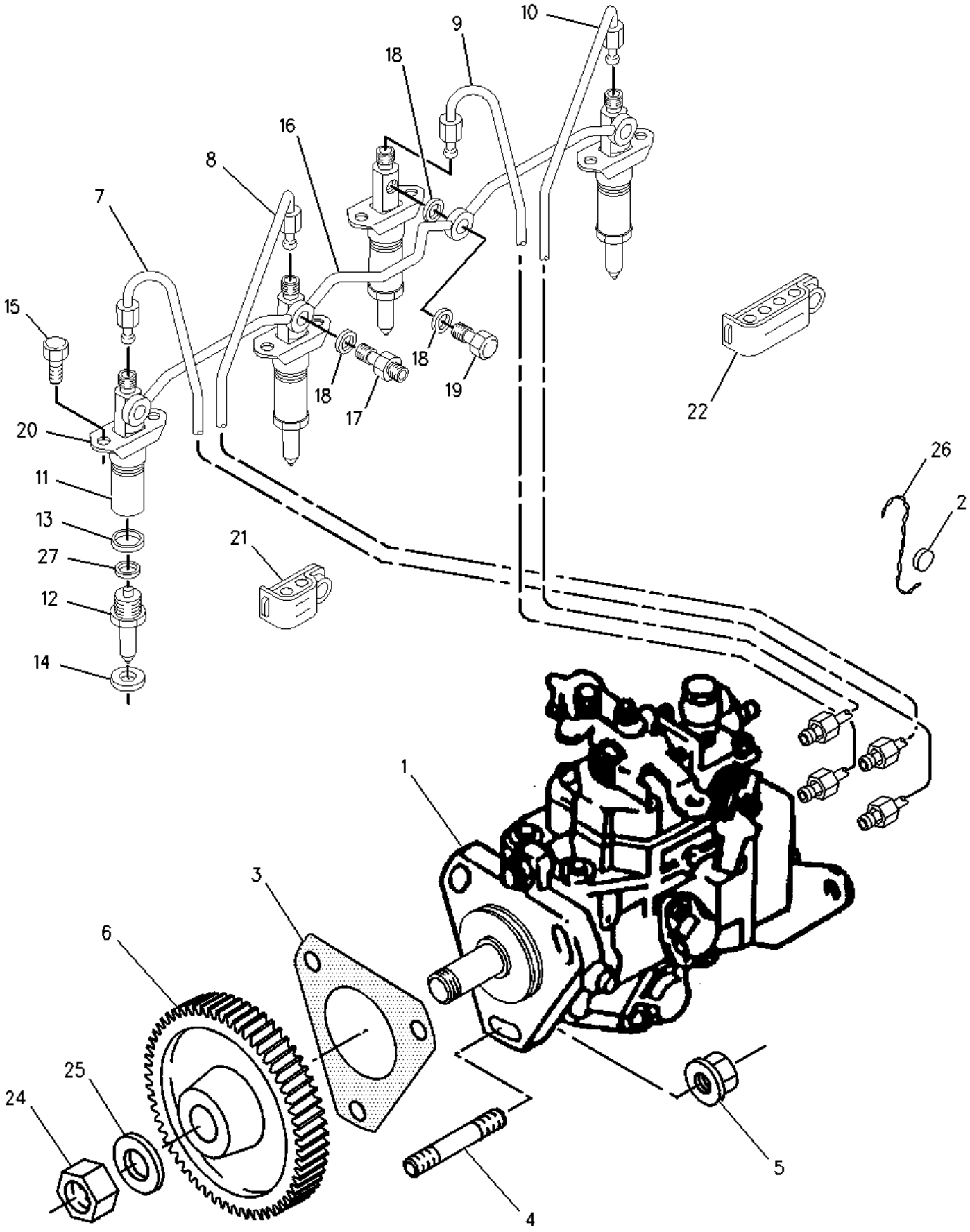
10
9
18
16
8
7
15
18
18
17
19
22
20
11
13
27
12
14
21
26
2
1
3
6
25
24
4
5

R	NPR	0R-9913	1	PUMP GP-F INJ
2	NPR	067-7006	1	SEAL
3	NPR	198-5804	1	GASKET (FUEL PUMP)
4	NPR	101-3877	3	STUD
5	NPR	6I-0291	3	NUT (M8X1.25-THD)
6	NPR	118-9114	1	GEAR
7	NPR	172-0051	1	LINE AS-FUEL (CYLINDER ONE)
8	NPR	166-8797	1	LINE AS-FUEL (CYLINDER TWO)
9	NPR	101-3890	1	LINE AS-FUEL (CYLINDER THREE)
10	NPR	101-3891	1	LINE AS-FUEL (CYLINDER FOUR)
11	NPR	6I-1214	4	ATOMIZER AS-FUEL
	(EACH INCLUDES)			
	NPR	105-2003	1	HOLDER
12	NPR	105-2002	1	NOZZLE
13	NPR	7W-0187	4	SEAL
14	NPR	033-7873	4	WASHER (10.01X20.85X2.03-MM THK)
15	NPR M	101-3895	8	BOLT (M8X1.25X35-MM)
16	NPR	101-3896	1	LINE-DRAIN
17	NPR	067-6980	1	BOLT (M8)
18	NPR	067-7011	8	WASHER (0.323X0.439X0.031-IN THK)
19	NPR	067-6312	3	BOLT
20	NPR	7C-9255	4	CLAMP
21	NPR	101-3892	2	CLIP
22	NPR	101-3893	1	CLIP
24	NPR	111-3422	1	NUT
25	NPR	111-3423	1	WASHER
26	NPR BD	5P-6627		LOCKWIRE (.1M)
27	NPR	7W-0186	4	SPACER (21.6X26.8X3.2-MM THK)

Key: B - USE AS REQUIRED D - ORDER BY THE METER M - METRIC PART
R - REMFG PART MAY BE AVAILABLE Y - SEPARATE ILLUSTRATION

PART OF 130-1414 PUMP GP-FUEL INJECTION

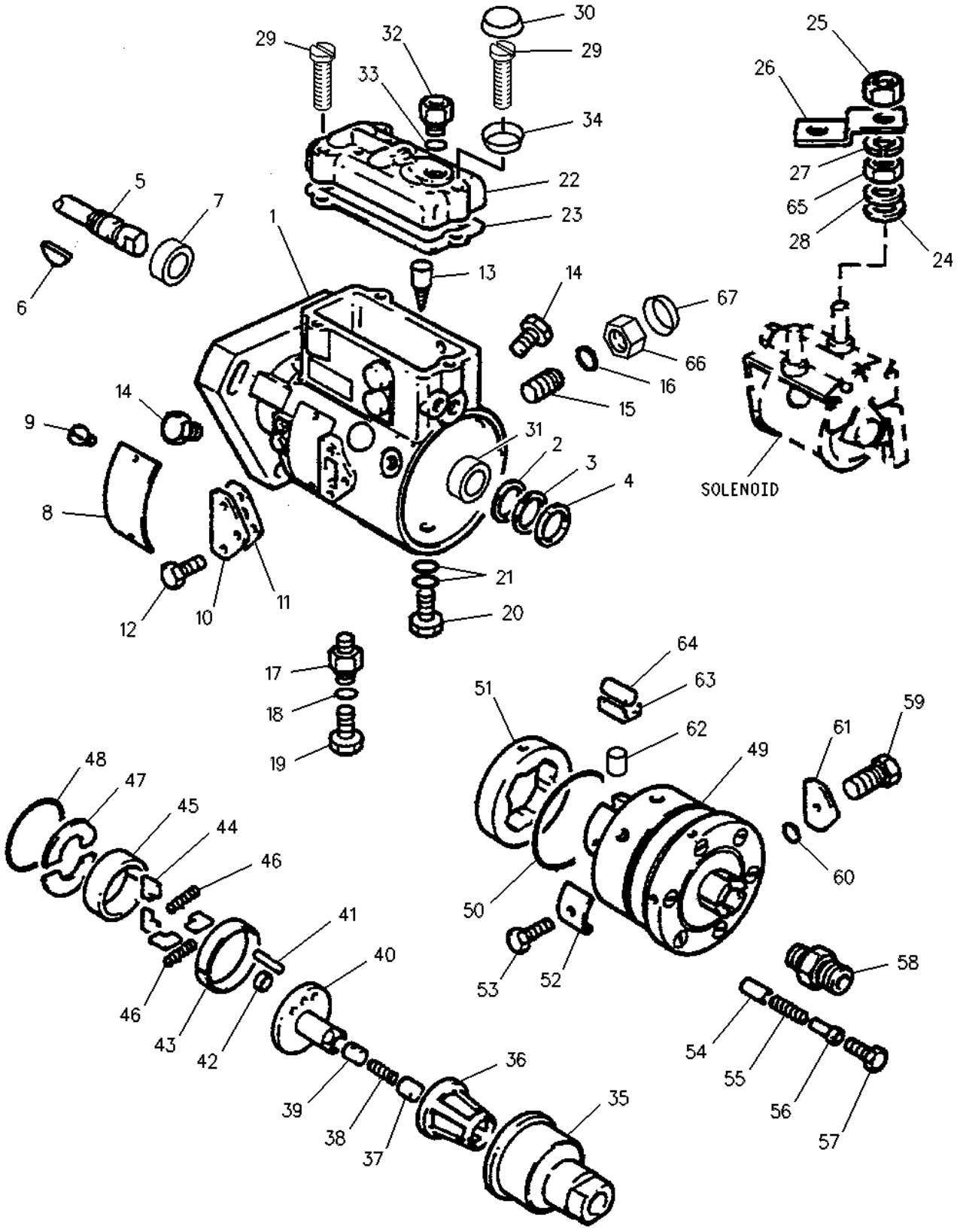

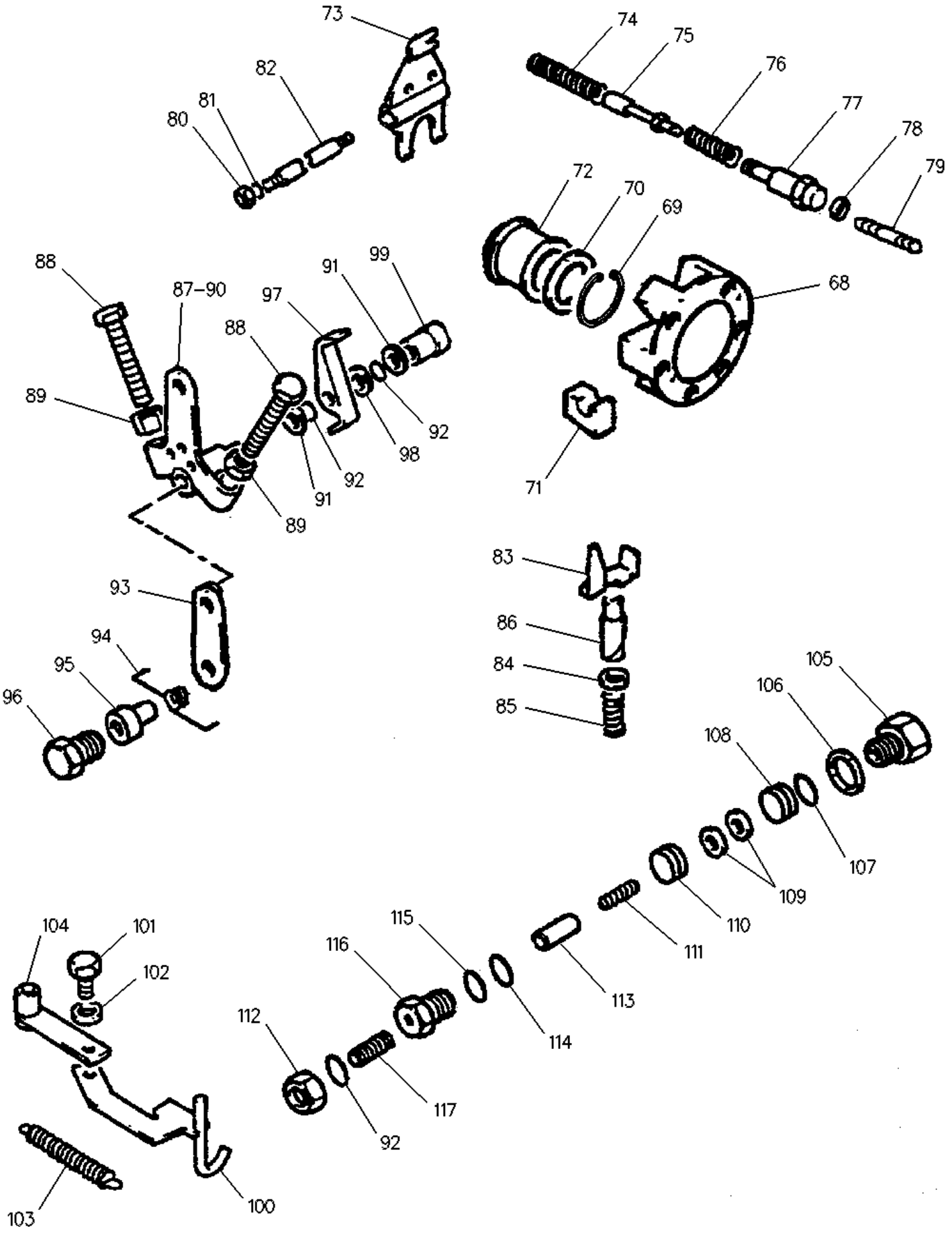
73
74
75
76
77
78
79
82
81
80
72
70
69
68
88
87–90
91
99
97
88
89
92
98
92
91
89
71
83
86
84
85
93
94
95
96
105
106
108
107
109
110
111
113
115
116
114
112
117
92
104
101
102
103
100

1 NPR 1 149-2536 1 HOUSING

2 NPR 1 110-5365 1 WASHER

3 NPR 1 110-5366 1 WASHER

4 NPR 1 110-5367 1 RING

5 NPR 1 118-8386 1 SHAFT

6 NPR 1 116-8564 1 KEY

7 NPR 1 116-7061 2 SEAL

8 NPR 1 116-7062 1 PLATE

9 NPR 1 116-7063 2 BOLT

10 NPR 1 110-5375 1 COVER

11 NPR 1 110-5374 1 GASKET

12 NPR 1 116-8571 2 BOLT

13 NPR 1 116-8569 1 BOLT

-OR-

NPR 1 149-2537 1 BOLT

-OR-

NPR 1 149-2538 1 BOLT

-OR-

NPR 1 149-2540 1 BOLT

-OR-

NPR 1 149-2542 1 BOLT

-OR-

NPR 1 149-2544 1 BOLT

14 NPR 1 110-5370 2 BOLT

15 NPR 1 149-2545 1 BOLT

16	NPR	1	116-7947	4	SEAL
17	NPR	1	110-5378	1	BOLT
18	NPR	1	116-7065	1	SEAL
19	NPR	1	116-7066	1	PLUG
20	NPR	1	110-5377	1	BOLT
21	NPR	1	116-7067	2	SEAL
22	NPR	1	117-1280	1	COVER
23	NPR	1	116-7068	1	GASKET
24	NPR	1	116-7086	2	WASHER
25	NPR	1	116-7069	2	LOCKNUT
26	NPR	1	116-7070	2	TERMINAL
27	NPR	1	116-7071	2	WASHER
28	NPR	1	116-7072	2	WASHER
29	NPR	1	110-5380	3	BOLT
30	NPR	1	135-5016	1	CAP
31	NPR	1	149-2554	1	BEARING
32	NPR	1	132-7925	1	CONNECTOR
33	NPR	1	116-7073	1	SEAL
34	NPR	1	135-5017	1	CAP
35	NPR	1	149-2548	1	CAP
36	NPR	1	110-5400	1	SCREEN (INJECTION PUMP)
37	NPR	1	110-5401	1	PLUG
38	NPR	1	110-5402	1	SPRING
39	NPR	1	110-5403	1	PISTON
40	NPR	1	116-8575	1	REGULATOR (FUEL FLOW)

41	NPR	1	110-5410	1	PIN
42	NPR	1	116-7075	1	SEAL
43	NPR	1	116-7076	1	RING
44	NPR	1	110-5405	1	BLADE
45	NPR	1	110-5406	1	LINER
46	NPR	1	110-5409	2	SPRING
47	NPR	1	110-5407	1	RETAINER
48	NPR	1	116-7078	1	SEAL
49	NPR	1	149-2549	1	ROTOR
50	NPR	1	116-7079	1	RING
51	NPR	1	116-8593	1	RING
52	NPR	1	149-2550	1	SPRING
53	NPR	1	110-5396	1	BOLT
54	NPR	1	117-1076	1	VALVE
55	NPR	1	135-5033	1	SPRING
56	NPR	1	116-7082	1	STOP
57	NPR	1	116-7081	1	BOLT
58	NPR	1	116-8594	4	CONNECTOR
59	NPR	1	116-8596	1	BOLT
60	NPR	1	116-7083	1	SEAL
61	NPR	1	116-8595	1	PLATE
62	NPR	1	116-7084	2	PLUNGER
63	NPR	1	110-5398	2	RETAINER
64	NPR	1	110-5397	2	ROLLER
65	NPR	1	116-7085	2	NUT

66	NPR	1	149-2546	1	NUT
67	NPR	1	149-2547	1	CAP
68	NPR	2	116-7088	1	RETAINER AS
69	NPR	2	116-7090	1	RING
70	NPR	2	135-5073	1	WASHER
71	NPR	2	116-7092	6	WEIGHT
72	NPR	2	116-7093	1	SLEEVE
73	NPR	2	116-7094	1	ARM
74	NPR	2	149-2555	1	SPRING
75	NPR	2	116-8607	1	RETAINER
76	NPR	2	116-7097	1	SPRING
77	NPR	2	116-7098	1	GUIDE
78	NPR	2	116-7099	1	WASHER
79	NPR	2	116-7100	1	STUD
80	NPR	2	116-7101	1	NUT
81	NPR	2	132-7926	1	SEAL
82	NPR	2	116-7103	1	SHAFT
83	NPR	2	117-1278	1	ARM
84	NPR	2	116-8584	1	SHIM
85	NPR	2	116-8585	1	SPRING
86	NPR	2	116-7107	1	VALVE
87	NPR	2	135-5018	1	SHAFT
88	NPR	2	117-1286	2	BOLT
89	NPR	2	116-8618	2	NUT
90	NPR	2	149-2561	1	TUBE

91 NPR 2 116-7112 2 SPACER

92 NPR 2 116-7947 3 SEAL

93 NPR 2 116-7114 1 LEVER

94 NPR 2 116-7115 1 SPRING

95 NPR 2 116-7116 1 RETAINER

96 NPR 2 149-2557 1 BOLT

97 NPR 2 116-7118 1 LEVER

98 NPR 2 117-1287 1 CLIP

99 NPR 2 116-8620 1 SHAFT

100 NPR 2 117-1091 1 HOOK AS

NPR 2 116-7121 1 HOOK

101 NPR 2 116-7122 1 BOLT

102 NPR 2 116-7123 1 WASHER

103 NPR 2 116-7124 1 SPRING

104 NPR 2 116-7125 1 LINK

105 NPR 2 116-7126 1 PLUG

106 NPR 2 110-5412 1 RING

107 NPR 2 116-7127 1 SEAL

108 NPR 2 149-2558 1 PISTON

109 NPR 2 110-5413 2 WASHER

110 NPR 2 149-2559 1 PISTON

111 NPR 2 149-2560 1 SPRING

112 NPR 2 116-7135 1 NUT

113 NPR 2 110-5416 1 GUIDE

114 NPR 2 116-7130 2 SEAL-O-RING

115 NPR 2 116-8630 2 SEAL-O-RING

116 NPR 2 116-7132 1 PLUG

117 NPR 2 116-7133 1 BOLT

AVAILABLE REPAIR KIT(S):

NPR 101-2986 2 KIT-PUMP GASKET (FUEL INJECTION PUMP)

NPR 101-3897 2 KIT-SOLENOID (SHUTOFF)

NPR 133-3760 2 KIT-BUSHING (FUEL INJECTION PUMP)

130-6772 PUMP GP-FUEL INJECTION --S/N 5HK81000-99999; 9RM1-UP
PART OF 106-5001 ENGINE AR-PRIMARY

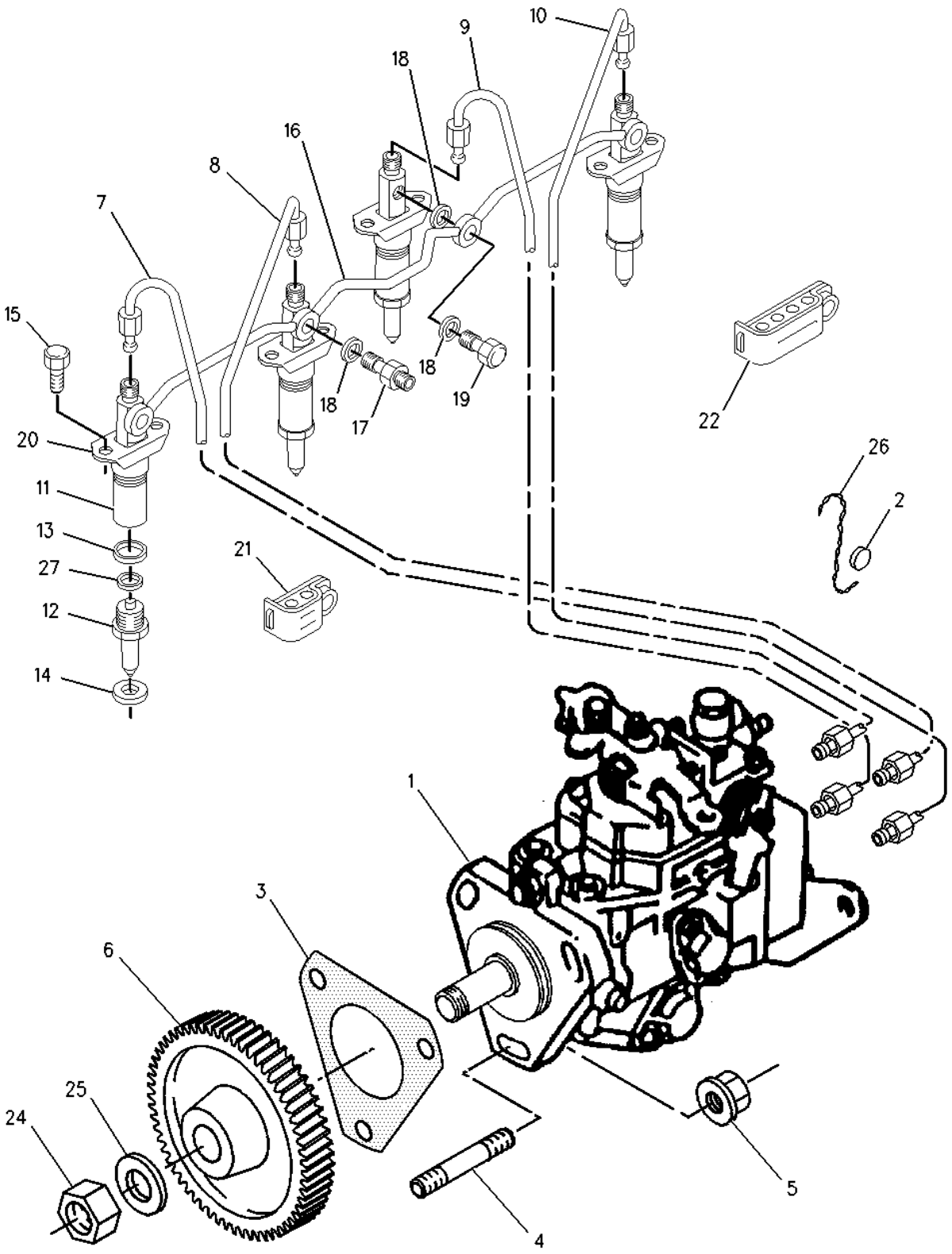

1 NPR RY 130-6774 1 PUMP GP-FUEL INJECTION

R NPR 0R-9911 1 PUMP GP-F INJ

2 NPR 067-7006 1 SEAL

3	NPR	7W-4560	1	GASKET-FUEL PUMP
4	NPR	101-3877	3	STUD
5	NPR	6I-0291	3	NUT (M8X1.25-THD)
6	NPR	101-3878	1	GEAR (56-TEETH)
7	NPR	172-0051	1	LINE AS-FUEL (CYLINDER ONE)
8	NPR	166-8797	1	LINE AS-FUEL (CYLINDER TWO)
9	NPR	101-3890	1	LINE AS-FUEL (CYLINDER THREE)
10	NPR	101-3891	1	LINE AS-FUEL (CYLINDER FOUR)
11	NPR	6I-1174	4	ATOMIZER AS-FUEL
	(EACH INCLUDES)			
	NPR	105-2003	1	HOLDER
12	NPR	105-3433	1	NOZZLE
13	NPR	7W-0187	4	SEAL
14	NPR	033-7873	4	WASHER (10.01X20.85X2.03-MM THK)
15	NPR M	101-3895	8	BOLT (M8X1.25X35-MM)
16	NPR	101-3896	1	LINE-DRAIN
17	NPR	067-6980	1	BOLT (M8)
18	NPR	067-7011	8	WASHER (0.323X0.439X0.031-IN THK)
19	NPR	067-6312	3	BOLT
20	NPR	7C-9255	4	CLAMP
21	NPR	101-3892	2	CLIP
22	NPR	101-3893	1	CLIP
24	NPR	111-3422	1	NUT
25	NPR	111-3423	1	WASHER
26	NPR BD	5P-6627		LOCKWIRE (.1M)
27	NPR	7W-0186	4	SPACER (21.6X26.8X3.2-MM THK)

Key: B - USE AS REQUIRED D - ORDER BY THE METER M - METRIC PART R - REMFG PART MAY BE AVAILABLE Y - SEPARATE ILLUSTRATION

130-6774 PUMP GP-FUEL INJECTION ---S/N 5HK81000-99999; 9RM1-UP
PART OF 130-6772 PUMP GP-FUEL INJECTION

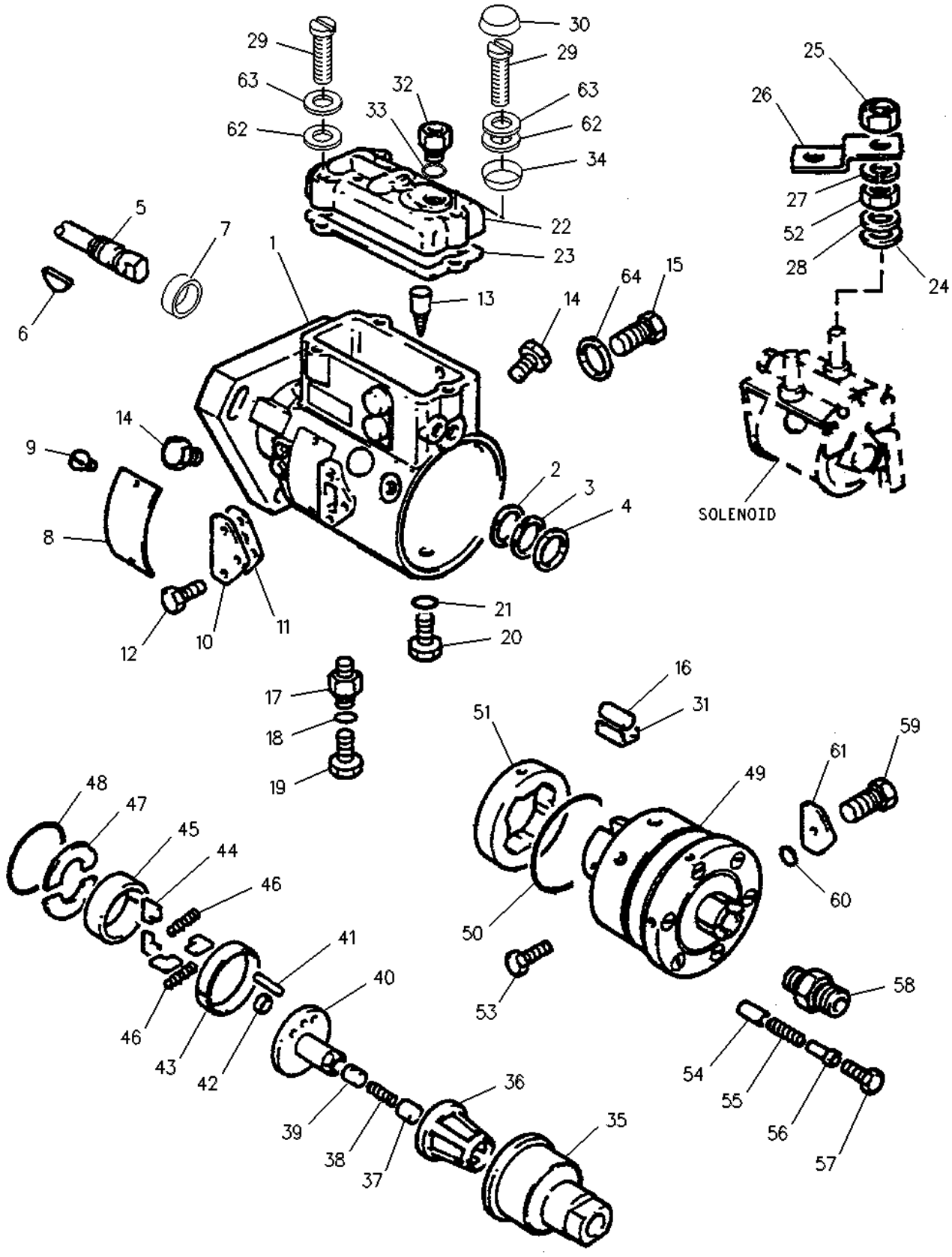

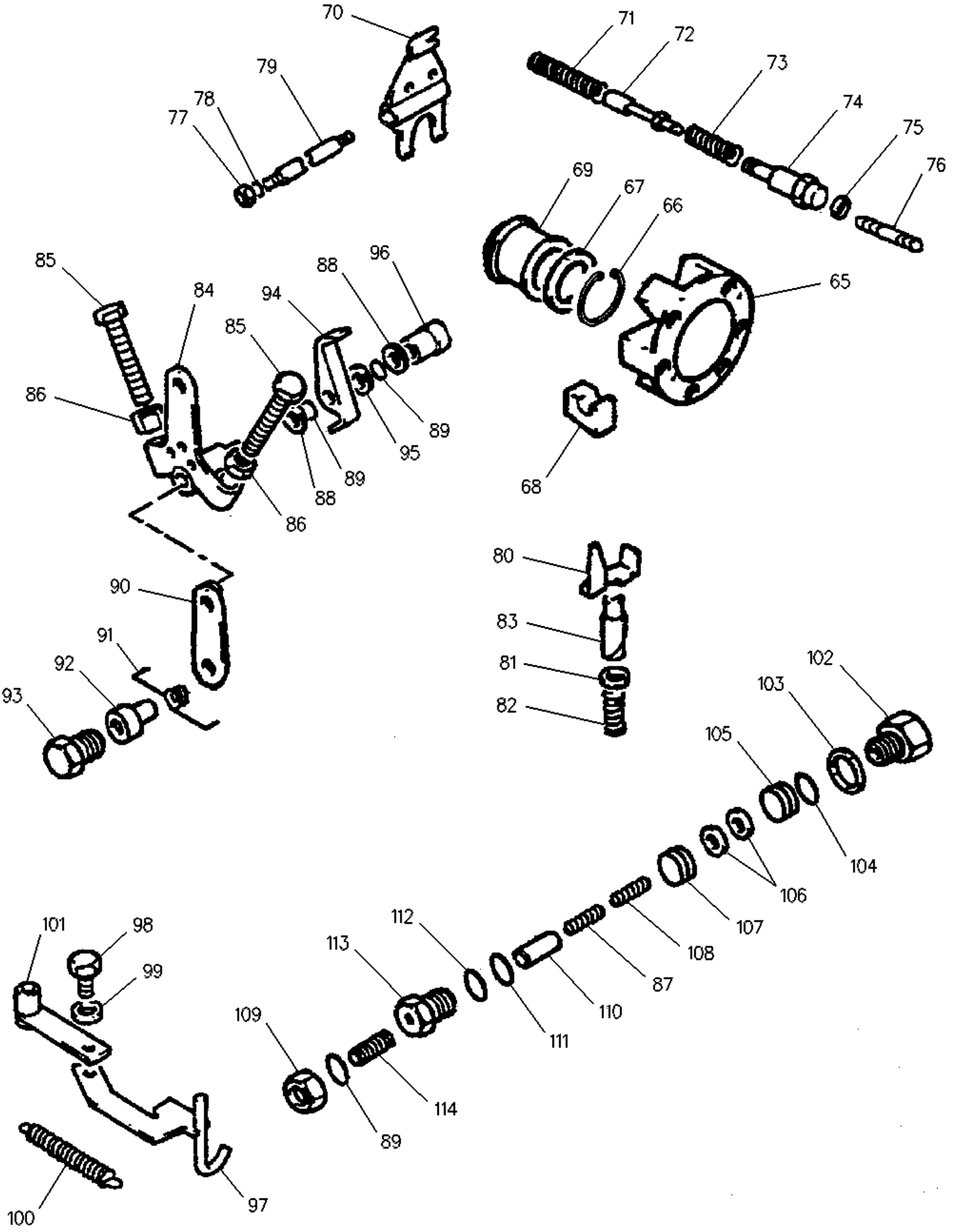
70
71
72
73
74
75
76
77
78
79
69
67
66
65
68
85
84
86
94
88
96
85
89
95
89
88
86
80
83
81
82
90
91
92
93
102
103
105
104
106
107
108
87
110
111
112
113
114
89
109
101
98
99
100
97

1	NPR	1	116-8558	1	HOUSING
2	NPR	1	110-5365	1	WASHER
3	NPR	1	110-5366	1	WASHER
4	NPR	1	110-5367	1	RING
5	NPR	1	118-8386	1	SHAFT
6	NPR	1	116-8564	1	KEY
7	NPR	1	116-7061	2	SEAL
8	NPR	1	116-7062	1	PLATE
9	NPR	1	116-7063	2	BOLT
10	NPR	1	110-5375	1	COVER
11	NPR	1	110-5374	1	GASKET
12	NPR	1	116-8571	2	BOLT
13	NPR	1	116-8569	1	BOLT
-OR-					
	NPR	1	149-2537	1	BOLT
-OR-					
	NPR	1	149-2538	1	BOLT
-OR-					
	NPR	1	149-2540	1	BOLT
-OR-					
	NPR	1	149-2542	1	BOLT
-OR-					
	NPR	1	149-2544	1	BOLT
14	NPR	1	110-5370	2	BOLT
15	NPR	1	116-8570	1	BOLT

16	NPR	1	110-5397	2	ROLLER
17	NPR	1	110-5378	2	BOLT
18	NPR	1	116-7065	1	SEAL
19	NPR	1	116-7066	1	PLUG
20	NPR	1	110-5377	1	BOLT
21	NPR	1	116-7067	2	SEAL
22	NPR	1	117-1280	1	COVER
23	NPR	1	116-7068	1	GASKET
24	NPR	1	116-7086	2	WASHER
25	NPR	1	116-7069	2	LOCKNUT
26	NPR	1	116-7070	2	TERMINAL
27	NPR	1	116-7071	2	WASHER
28	NPR	1	116-7072	2	WASHER
29	NPR	1	110-5380	3	BOLT
30	NPR	1	135-5016	1	CAP
31	NPR	1	110-5398	2	RETAINER
32	NPR	1	132-7925	1	CONNECTOR
33	NPR	1	116-7073	1	SEAL
34	NPR	1	135-5017	1	CAP
35	NPR	1	116-7074	1	CAP
36	NPR	1	110-5400	1	SCREEN (INJECTION PUMP)
37	NPR	1	110-5401	1	PLUG
38	NPR	1	110-5402	1	SPRING
39	NPR	1	110-5403	1	PISTON
40	NPR	1	116-8575	1	REGULATOR (FUEL FLOW)

41	NPR	1	110-5410	1	PIN
42	NPR	1	116-7075	1	SEAL
43	NPR	1	116-7076	1	RING
44	NPR	1	110-5405	1	BLADE
45	NPR	1	110-5406	1	LINER
46	NPR	1	110-5409	2	SPRING
47	NPR	1	110-5407	1	RETAINER
48	NPR	1	116-7078	1	SEAL
49	NPR	1	110-5386	1	ROTOR
50	NPR	1	116-7079	1	RING
51	NPR	1	116-8593	1	RING
52	NPR	1	116-7085	2	NUT
53	NPR	1	110-5396	1	BOLT
54	NPR	1	117-1076	1	VALVE
55	NPR	1	135-5033	1	SPRING
56	NPR	1	116-7082	1	STOP
57	NPR	1	116-7081	1	BOLT
58	NPR	1	116-8594	4	CONNECTOR
59	NPR	1	116-8596	1	BOLT
60	NPR	1	116-7083	1	SEAL
61	NPR	1	116-8595	1	PLATE
62	NPR	1	116-8574	2	WASHER
63	NPR	1	116-8625	2	WASHER
64	NPR	1	110-5411	1	WASHER
65	NPR	2	116-7088	1	RETAINER AS

66	NPR	2	116-7090	1	RING
67	NPR	2	135-5073	1	WASHER
68	NPR	2	116-7092	6	WEIGHT
69	NPR	2	116-7093	1	SLEEVE
70	NPR	2	116-7094	1	ARM
71	NPR	2	124-5590	1	SPRING
72	NPR	2	116-8607	1	RETAINER
73	NPR	2	116-7097	1	SPRING
74	NPR	2	116-7098	1	GUIDE
75	NPR	2	116-7099	1	WASHER
76	NPR	2	116-7100	1	STUD
77	NPR	2	116-7101	1	NUT
78	NPR	2	132-7926	1	SEAL
79	NPR	2	116-7103	1	SHAFT
80	NPR	2	117-1278	1	ARM
81	NPR	2	116-8584	1	SHIM
82	NPR	2	116-8585	1	SPRING
83	NPR	2	116-7107	1	VALVE
84	NPR	2	135-5018	1	SHAFT
85	NPR	2	117-1286	2	BOLT
86	NPR	2	116-8618	2	NUT
87	NPR	2	110-5415	1	SPRING
88	NPR	2	116-7112	2	SPACER
89	NPR	2	116-7947	3	SEAL
90	NPR	2	116-7114	1	LEVER

91 NPR 2 116-7115 1 SPRING

92 NPR 2 116-7116 1 RETAINER

93 NPR 2 116-7117 1 BOLT

94 NPR 2 116-7118 1 LEVER

95 NPR 2 117-1287 1 CLIP

96 NPR 2 116-8620 1 SHAFT

97 NPR 2 117-1091 1 HOOK AS

NPR 2 116-7121 1 HOOK

98 NPR 2 116-7122 1 BOLT

99 NPR 2 116-7123 1 WASHER

100 NPR 2 116-7124 1 SPRING

101 NPR 2 116-7125 1 LINK

102 NPR 2 116-7126 1 PLUG

103 NPR 2 110-5412 1 RING

104 NPR 2 116-7127 1 SEAL

105 NPR 2 135-5034 1 PISTON

106 NPR 2 110-5413 2 WASHER

107 NPR 2 116-7129 1 PISTON

108 NPR 2 110-5414 1 SPRING

109 NPR 2 116-7135 1 NUT

110 NPR 2 110-5416 1 GUIDE

111 NPR 2 116-7130 2 SEAL-O-RING

112 NPR 2 116-8630 2 SEAL-O-RING

113 NPR 2 116-7132 1 PLUG

114 NPR 2 116-7133 1 BOLT

AVAILABLE REPAIR KIT(S):

NPR	**101-2986**	**1**	**KIT-PUMP GASKET (FUEL INJECTION PUMP)**
NPR	**101-3897**	**1**	**KIT-SOLENOID (SHUTOFF)**
NPR	**133-3760**	**1**	**KIT-BUSHING (FUEL INJECTION PUMP)**
NPR	**133-3759**	**1**	**KIT-BUSHING (FUEL INJECTION PUMP)**

148-7178 PUMP GP-FUEL INJECTION ---S/N 7BJ1-UP; 5HK81000-99999
PART OF 122-8804 ENGINE AR-PRIMARY

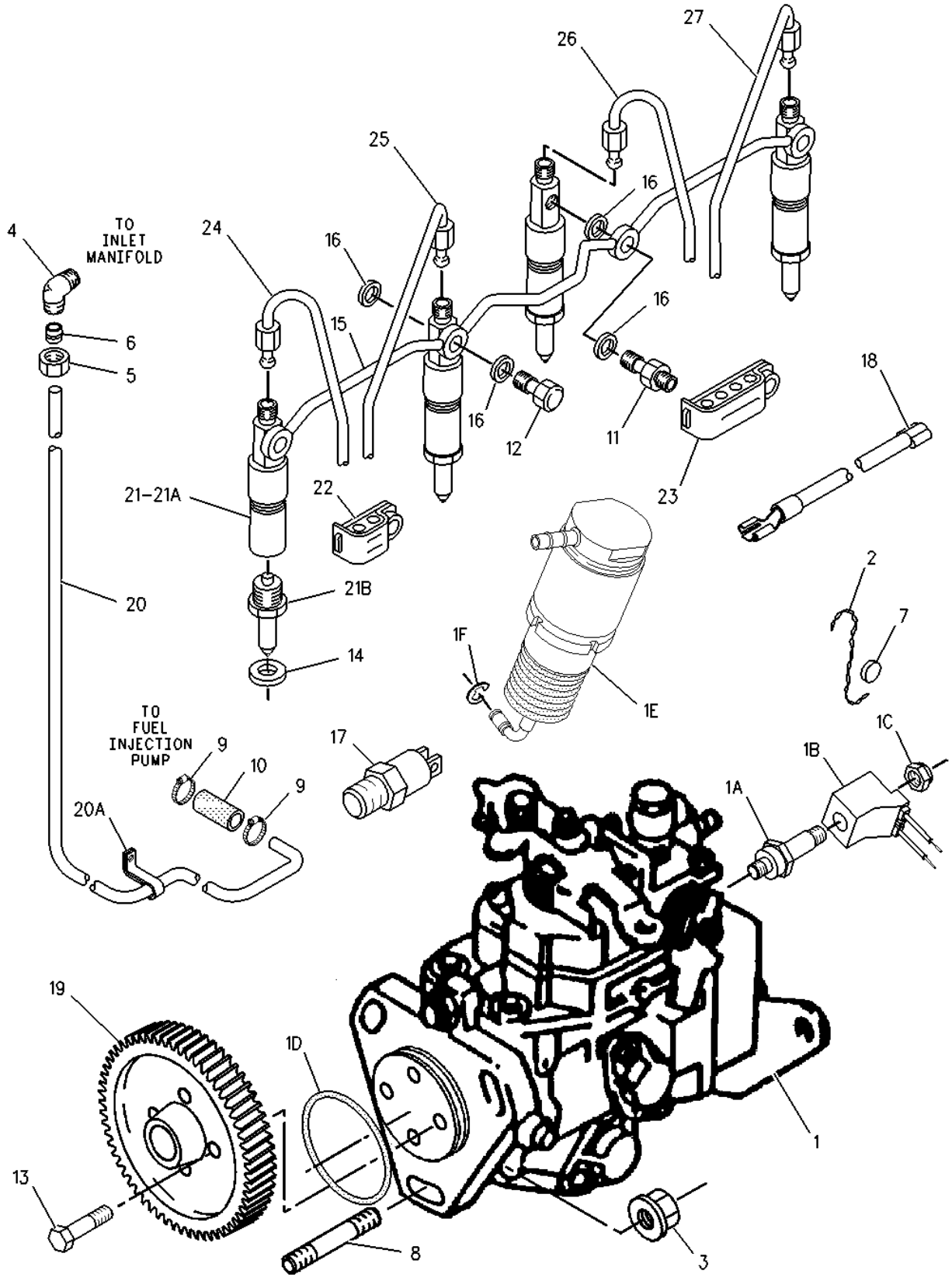

1 NPR R 162-7500 1 PUMP GP-FUEL INJECTION

R NPR 0R-9919 1 PUMP GP-F INJ

1A NPR 174-8831 1 SOLENOID (TIMING ADVANCE)

1B	NPR	137-6395	1	COIL AS
1C	NPR	137-6396	1	LOCKNUT
1D		161-2161	1	SEAL-O-RING
1E	NPR	192-9155	1	CONTROL AS-FUEL RATIO
1F	NPR	116-8648	2	RING
2	NPR D	5P-6627		LOCKWIRE (.1M)
3	NPR	6I-0291	3	NUT (M8X1.25-THD)
4	NPR	033-7625	1	ELBOW
5	NPR	067-6264	1	FITTING-FLARED
6	NPR	067-6265	1	FITTING-BRASS
7	NPR	067-7006	1	SEAL
8	NPR	101-3877	3	STUD
9	NPR	107-2348	2	CLIP
10	NPR	107-2349	1	HOSE
11	NPR	124-3713	1	CONNECTION
12	NPR	124-3714	3	BOLT
13	NPR M	124-3815	1	BOLT (M8X16X1.25-MM)
14	NPR	140-8718	4	WASHER
15	NPR	140-8719	1	LINE-LEAKOFF
16	NPR	204-7853	8	WASHER
17	NPR	149-4910	1	SWITCH (TIMING ADVANCE)
18	NPR	162-0807	1	LEAD
19	NPR	154-6016	1	GEAR-PUMP (50-TEETH)
20	NPR	148-7106	1	TUBE AS
20A	NPR	101-3986	1	CLIP

21 NPR 156-1719 4 INJECTOR AS-FUEL

(EACH INCLUDES)

21A NPR 148-7110 1 HOLDER

21B NPR 148-7111 1 NOZZLE

22 NPR 140-8713 2 CLIP

23 NPR 140-8714 1 CLIP

24 NPR 163-8673 1 TUBE AS-FUEL INJECTION (CYLINDER ONE)

25 NPR 163-8674 1 TUBE AS-FUEL INJECTION (CYLINDER TWO)

26 NPR 160-2336 1 TUBE AS-FUEL INJECTION (CYLINDER THREE)

27 160-2337 1 TUBE AS-FUEL INJECTION (CYLINDER FOUR)

Key:

D - ORDER BY THE METER
M - METRIC PART
R - REMFG PART MAY BE AVAILABLE

148-7179 PUMP GP-FUEL INJECTION --S/N 7BJ1-UP; 5HK81000-99999
PART OF 122-8803 ENGINE AR-PRIMARY

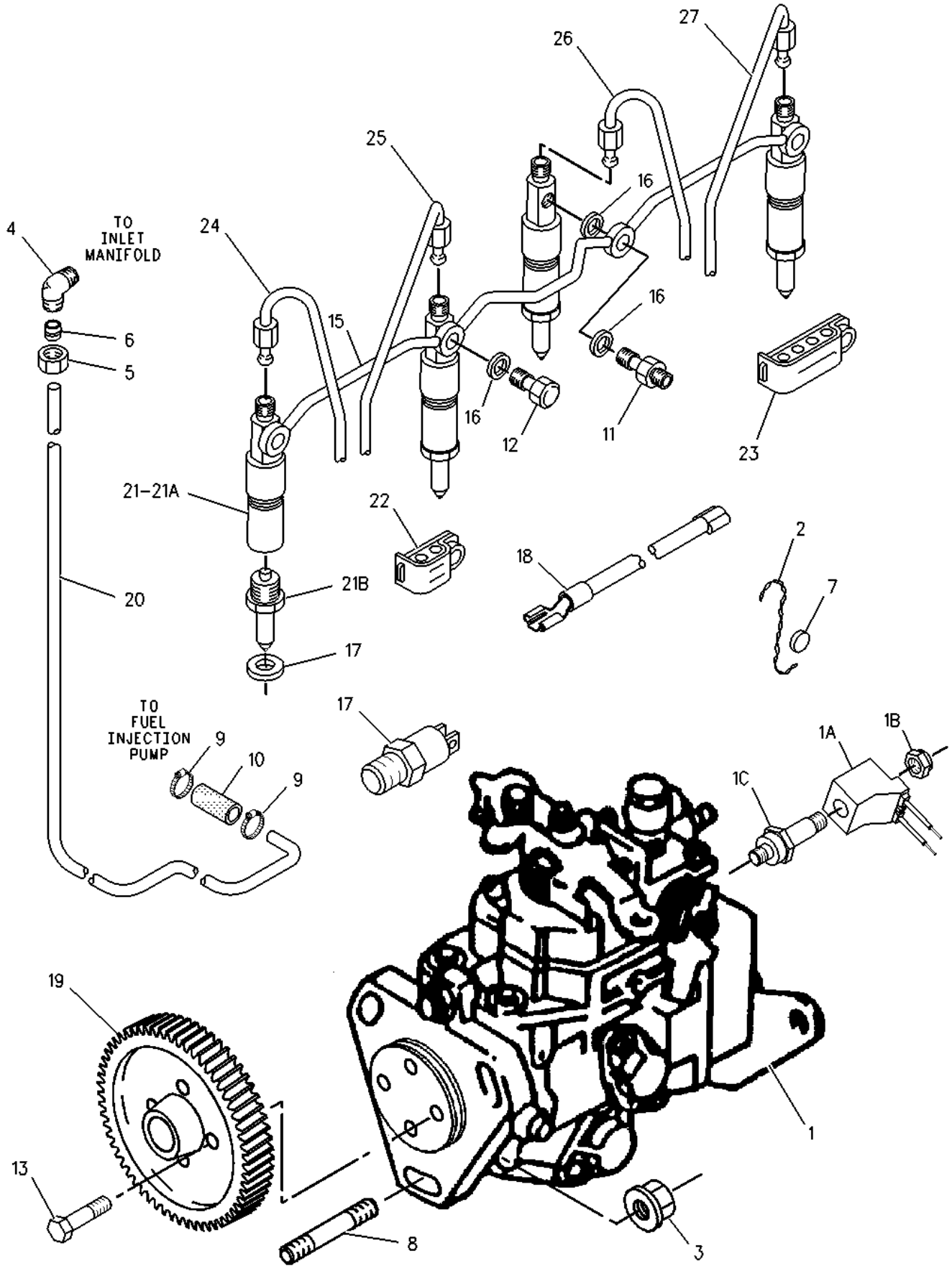

1	**NPR**	**R**	**162-7499**	**1**	**PUMP GP-FUEL INJECTION**
R	**NPR**	**0R-9925**	**1**	**PUMP GP-F INJ**	

1A	NPR	137-6395	1	COIL AS
1B	NPR	137-6396	1	LOCKNUT
1C	NPR	174-8831	1	SOLENOID (TIMING ADVANCE)
2	NPR D	5P-6627		LOCKWIRE (.1M)
3	NPR	6I-0291	3	NUT (M8X1.25-THD)
4	NPR	033-7625	1	ELBOW
5	NPR	067-6264	1	FITTING-FLARED
6	NPR	067-6265	1	FITTING-BRASS
7	NPR	067-7006	1	SEAL
8	NPR	101-3877	3	STUD
9	NPR	107-2348	2	CLIP
10	NPR	107-2349	1	HOSE
11	NPR	124-3713	1	CONNECTION
12	NPR	124-3714	3	BOLT
13	NPR M	124-3815	4	BOLT (M8X16X1.25-MM)
14	NPR	140-8718	4	WASHER
15	NPR	140-8719	1	LINE-LEAKOFF
16	NPR	140-8720	8	WASHER
17	NPR	149-4910	1	SWITCH (TIMING ADVANCE)(FUEL CUT-OFF)
18	NPR	162-0807	1	LEAD
19	NPR	154-6016	1	GEAR-PUMP (50-TEETH)
20	NPR	173-6634	1	TUBE AS
21	NPR	148-7108	4	INJECTOR AS-FUEL
	(EACH INCLUDES)			
21A	NPR	148-7110	1	HOLDER

21B NPR 148-7111 1 NOZZLE

22 NPR 140-8713 2 CLIP

23 NPR 140-8714 1 CLIP

24 NPR 163-8673 1 TUBE AS-FUEL INJECTION (CYLINDER ONE)

25 NPR 163-8674 1 TUBE AS-FUEL INJECTION (CYLINDER TWO)

26 NPR 160-2336 1 TUBE AS-FUEL INJECTION (CYLINDER THREE)

27 160-2337 1 TUBE AS-FUEL INJECTION (CYLINDER FOUR)

NPR F 121-4592 2 CLIP

NPR F 121-4593 1 CLIP

Key: D - ORDER BY THE METER F - NOT SHOWN M - METRIC PART R - REMFG PART MAY BE AVAILABLE

148-7179 PUMP GP-FUEL INJECTION --S/N 7BJ1-UP
PART OF 122-8803 ENGINE AR-PRIMARY

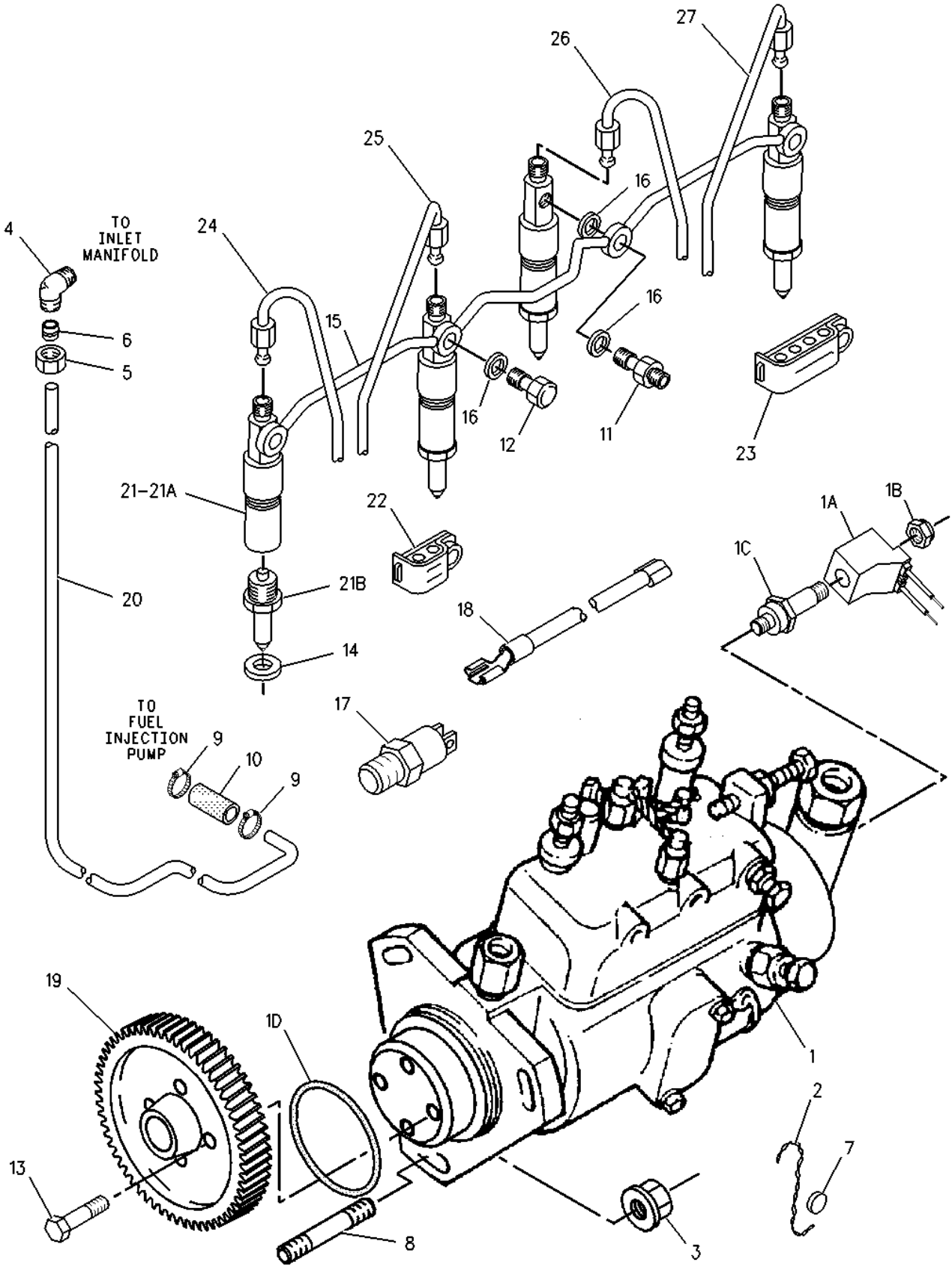

1 NPR R 147-1735 1 PUMP GP-FUEL INJECTION

R NPR 0R-9920 1 PUMP GP-F INJ

1A NPR 137-6395 1 COIL AS

1B	NPR	137-6396	1	LOCKNUT
1C	NPR	174-8831	1	SOLENOID (TIMING ADVANCE)
1D		161-2161	1	SEAL-O-RING
2	NPR D	5P-6627		LOCKWIRE (.1M)
3	NPR	6I-0291	3	NUT (M8X1.25-THD)
4	NPR	033-7625	1	ELBOW
5	NPR	067-6264	1	FITTING-FLARED
6	NPR	067-6265	1	FITTING-BRASS
7	NPR	067-7006	1	SEAL
8	NPR	101-3877	3	STUD
9	NPR	107-2348	2	CLIP
10	NPR	107-2349	1	HOSE
11	NPR	124-3713	1	CONNECTION
12	NPR	124-3714	3	BOLT
13	NPR M	124-3815	4	BOLT (M8X16X1.25-MM)
14	NPR	140-8718	4	WASHER
15	NPR	140-8719	1	LINE-LEAKOFF
16	NPR	204-7853	8	WASHER
17	NPR	149-4910	1	SWITCH (TIMING ADVANCE)(FUEL CUT-OFF)
18	NPR	162-0807	1	LEAD
19	NPR	154-6016	1	GEAR-PUMP (50-TEETH)
20	NPR	173-6634	1	TUBE AS
21	NPR	156-1719	4	INJECTOR AS-FUEL
	(EACH INCLUDES)			
21A	NPR	148-7110	1	HOLDER

21B NPR 148-7111 1 NOZZLE

22 NPR 140-8713 2 CLIP

23 NPR 140-8714 1 CLIP

24 NPR 163-8673 1 TUBE AS-FUEL INJECTION (CYLINDER ONE)

25 NPR 163-8674 1 TUBE AS-FUEL INJECTION (CYLINDER TWO)

26 NPR 160-2336 1 TUBE AS-FUEL INJECTION (CYLINDER THREE)

27 160-2337 1 TUBE AS-FUEL INJECTION (CYLINDER FOUR)

NPR F 121-4592 2 CLIP

NPR F 121-4593 1 CLIP

Key:

D - ORDER BY THE METER
F - NOT SHOWN
M - METRIC PART
R - REMFG PART MAY BE AVAILABLE

130-7092 FILTER GP-WATER SEP & FUEL --S/N 4ZN16044-50156
PART OF 7E-4636 SEPARATOR GP-WATER

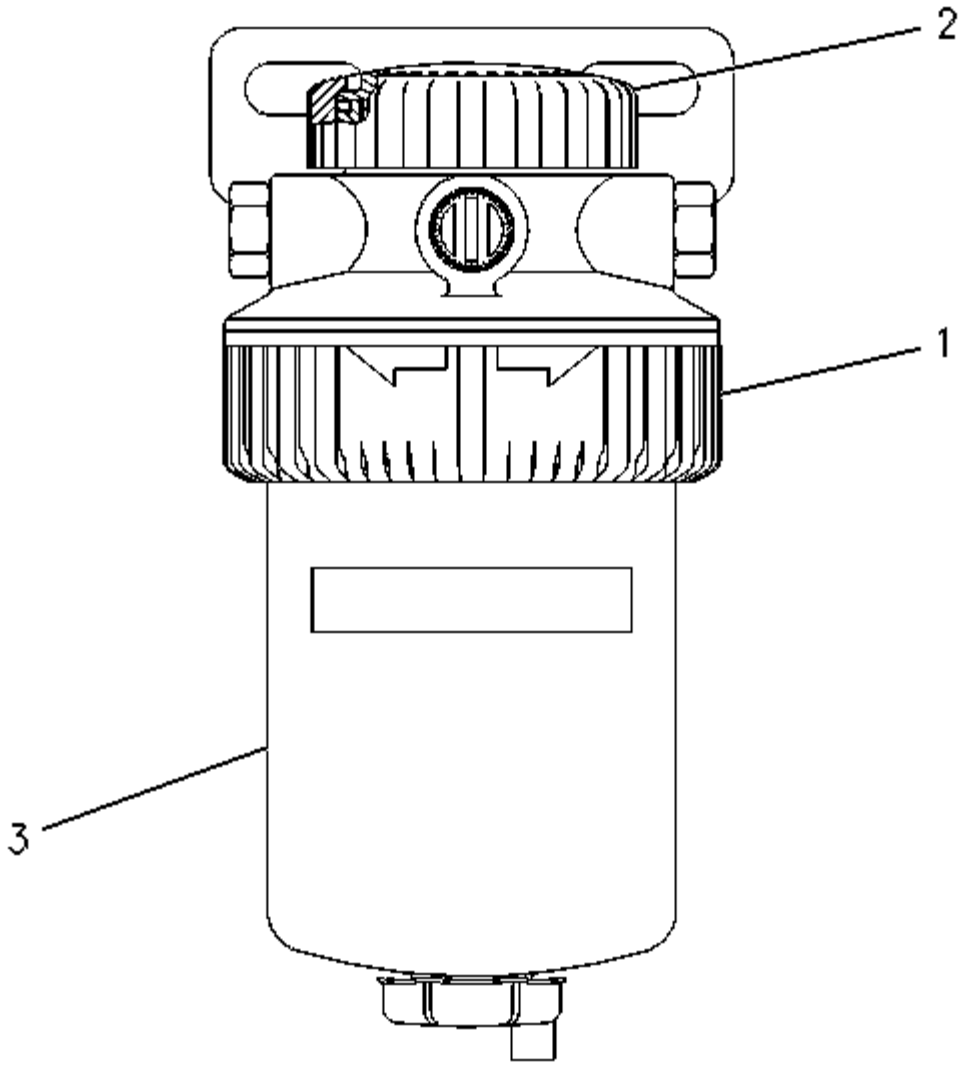

1 NPR 118-8118 1 RING-RETAINING

2 NPR 118-8119 1 NUT

3 NPR 131-1812 1 FILTER ELEMENT AS-FUEL (WATER SEPARATOR)

AVAILABLE REPAIR KIT(S):

NPR 121-4480 1 KIT-WATER BASE (WATER SEPARATOR)

(INCLUDES NUT, CAP, SEALS, & PLUGS)

7E-4636 SEPARATOR GP-WATER ---S/N 4ZN16044-50156
PART OF 143-1311, 154-5384 INSTALLATION AR-ENGINE

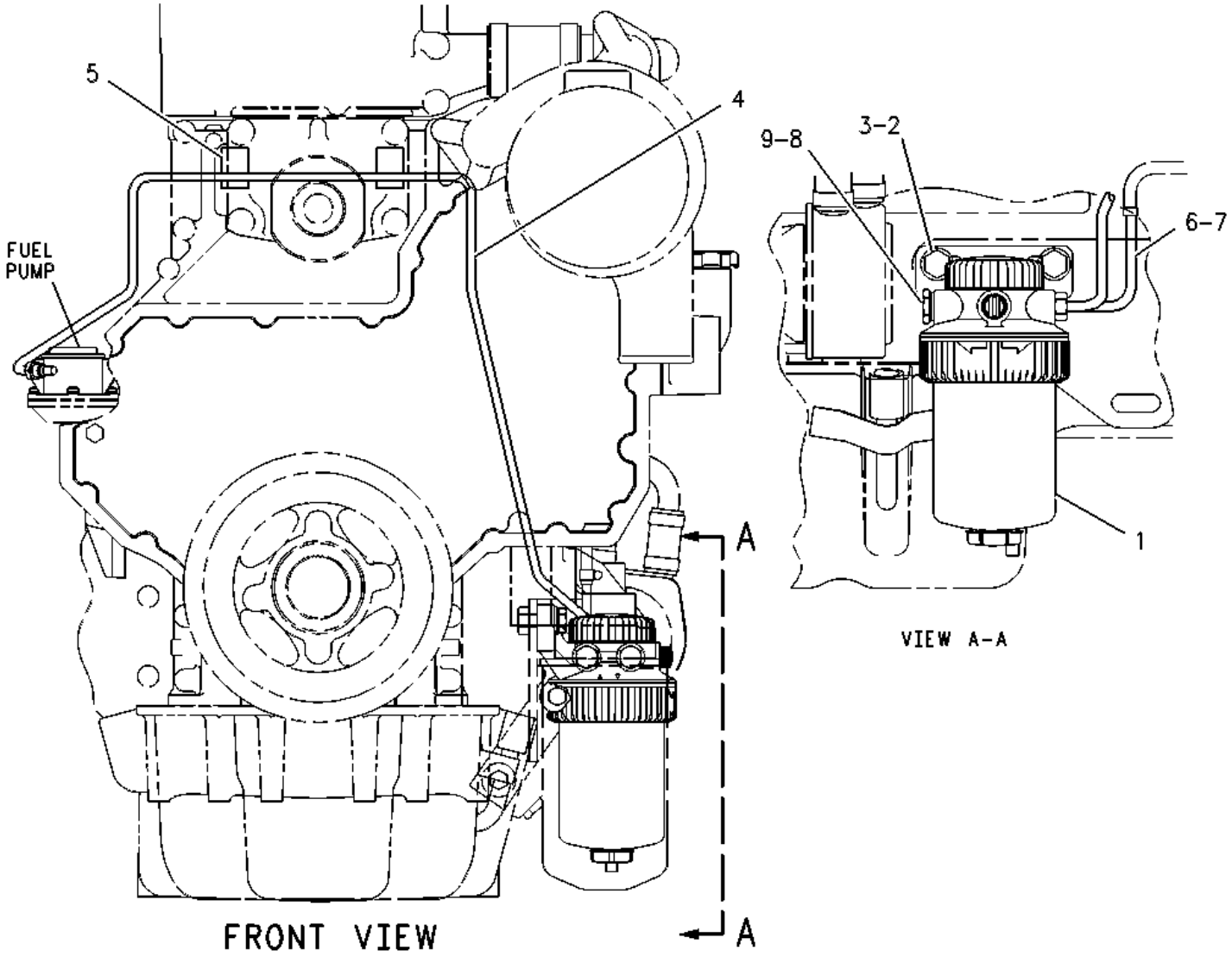

1 NPR Y 130-7092 1 FILTER GP-WATER SEP & FUEL

2 NPR M 8T-4196 2 BOLT (M10X1.5X35-MM)

3 NPR 8T-4121 2 WASHER-HARD (11X21X2.5-MM THK)

4 NPR 130-7964 1 TUBE AS

5 NPR 127-8167 2 CLIP

6 NPR 9R-2603 1 TUBE AS

7 NPR 4H-2494 3 SLEEVE-FITTING

8 NPR 033-7849 2 PLUG

9 NPR 032-8100 2 WASHER (0.53X0.72X0.06-IN THK)

Key: M - METRIC PART Y - SEPARATE ILLUSTRATION

106-1379 TANK GP-FUEL ---S/N 4ZN16044-50156---PART OF 154-5483 CHASSIS AR

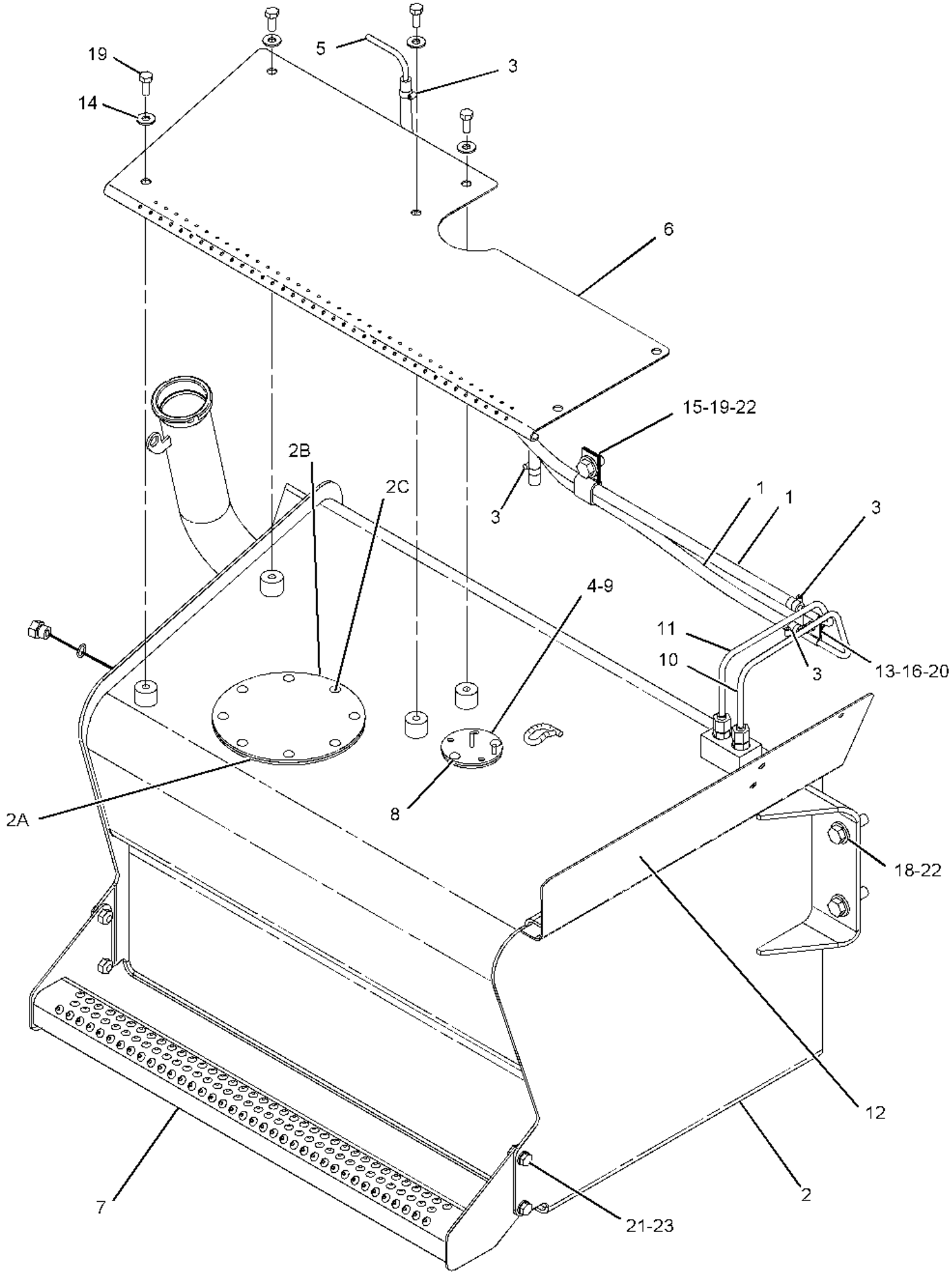

1	NPR BE	5P-6442		HOSE (157CM)
2	NPR	159-1878	1	TANK AS
	NPR F	7X-2644	1	CAP
2A	NPR	106-8020	1	GASKET
2B	NPR	118-6848	1	PLATE
2C	NPR M	123-4950	8	SCREW-PAN HEAD (M6X1X16-MM)
3	NPR	1P-4278	4	CLAMP-HOSE
4	NPR	9R-7240	1	GASKET
5	NPR	116-4808	1	TUBE
6	NPR	118-6846	1	TREAD
7	NPR	118-6847	1	STEP AS
	NPR M	8T-3612	4	NUT-WELD (M8X1.25-THD)
8	NPR M	123-4950	2	SCREW-PAN HEAD (M6X1X16-MM)
9	NPR	128-2875	1	SENDER AS-FUEL LEVEL
	NPR	9X-8491	2	NUT (10-32-THD)
	NPR	9X-8862	2	LOCKWASHER
	NPR	155-2270	1	KIT-CONNECTING PLUG (2-PIN)
	NPR	186-3736	2	SOCKET-CONNECTOR (16-GA TO 18-GA)
	NPR	187-8936	1	SENDER AS-FUEL LEVEL
10	NPR	149-7678	1	TUBE AS
11	NPR	149-7679	1	TUBE AS
12	NPR	149-7681	1	PLATE AS
	NPR M	8T-3612	3	NUT-WELD (M8X1.25-THD)
13	NPR	2B-2404	2	CLIP
14	NPR	5P-4116	7	WASHER-HARD (8.8X20.5X2-MM THK)

15	NPR	6K-5967	1	CLIP
16	NPR	8T-4121	1	WASHER-HARD (11X21X2.5-MM THK)
17	NPR M	8T-4179	1	BOLT (M12X1.75X20-MM)
18	NPR M	8T-4183	4	BOLT (M12X1.75X40-MM)
19	NPR M	8T-4189	7	BOLT (M8X1.25X20-MM)
20	NPR M	8T-4191	1	BOLT (M10X1.5X16-MM)
21	NPR M	8T-4200	4	BOLT (M8X1.25X16-MM)
22	NPR	8T-4223	5	WASHER-HARD (13.5X25.5X3-MM THK)
23	NPR	8T-4224	4	WASHER-HARD (8.8X16X2-MM THK)

Key:

B - USE AS REQUIRED
E - ORDER BY THE CENTIMETER
F - NOT SHOWN
M - METRIC PART

106-1379 TANK GP-FUEL --S/N 4ZN20803-50156--PART OF 154-5483 CHASSIS AR

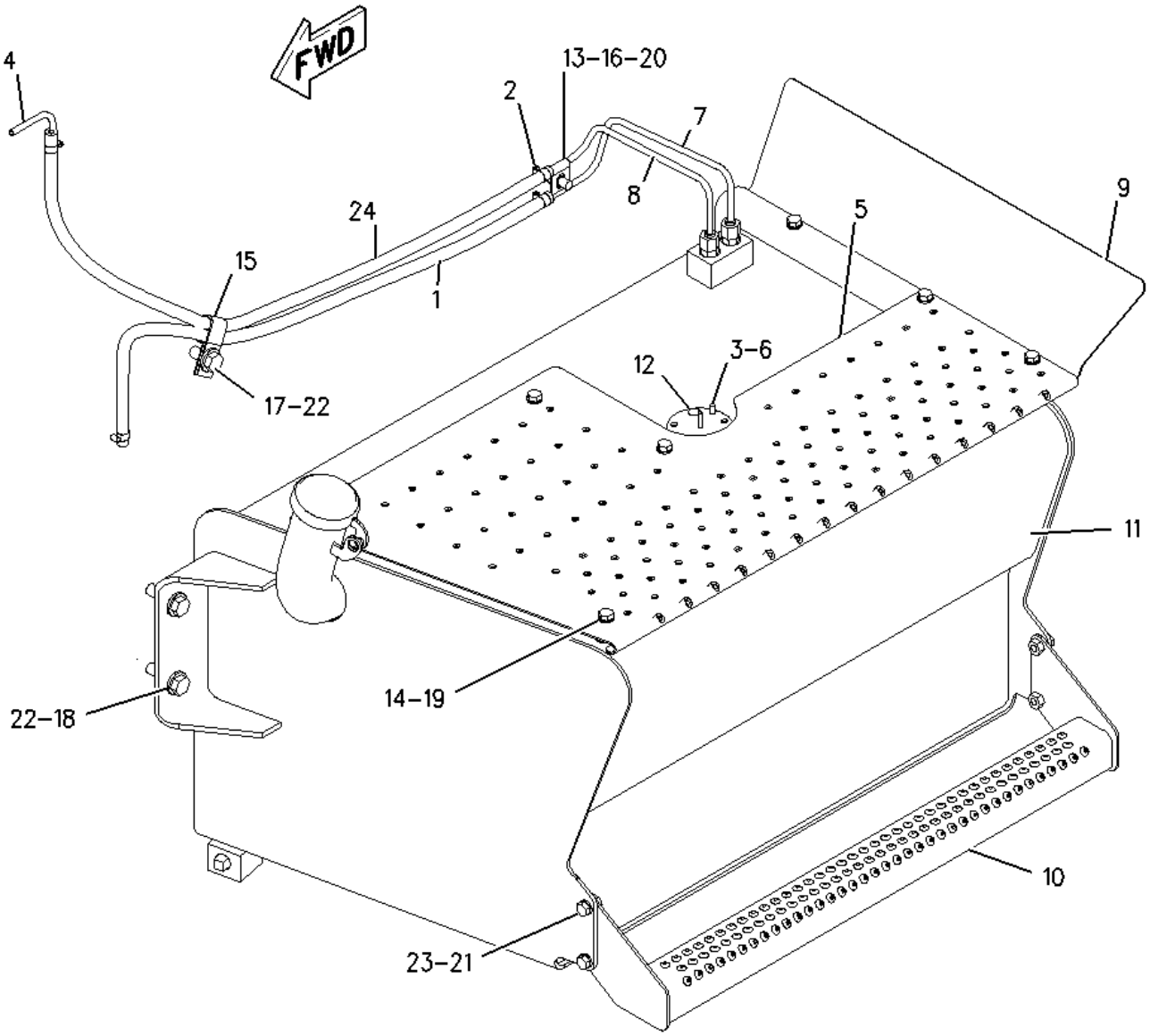

1	NPR	E	5P-6442		HOSE (59-CM)
2	NPR		1P-4278	4	CLAMP-HOSE
3	NPR		9R-7240	1	GASKET
4	NPR		116-4808	1	TUBE
5	NPR		118-6846	1	TREAD
6	NPR		128-2875	1	SENDER AS-FUEL LEVEL
	NPR		155-2270	1	KIT-CONNECTING PLUG (2-PIN)
	NPR		186-3736	2	SOCKET-CONNECTOR (16-GA TO 18-GA)
	NPR		187-8936	1	SENDER AS-FUEL LEVEL
	NPR		9X-8491	2	NUT (10-32-THD)
	NPR		9X-8862	2	LOCKWASHER
7	NPR		149-7678	1	TUBE AS
8	NPR		149-7679	1	TUBE AS
9	NPR		149-7681	1	PLATE AS
	NPR	M	8T-3612	3	NUT-WELD (M8X1.25-THD)
10	NPR	C	164-3876	1	STEP AS
	NPR	M	8T-3612	4	NUT-WELD (M8X1.25-THD)
11	NPR	Y	195-5642	1	TANK GP-FUEL
12	NPR	M	123-4950	2	SCREW-PAN HEAD (M6X1X16-MM)
13	NPR		2B-2404	2	CLIP
14	NPR		5P-4116	7	WASHER-HARD (8.8X20.5X2-MM THK)
15	NPR		6K-5967	1	CLIP
16	NPR		8T-4121	1	WASHER-HARD (11X21X2.5-MM THK)
17	NPR	M	8T-4179	1	BOLT (M12X1.75X20-MM)
18	NPR	M	8T-4183	4	BOLT (M12X1.75X40-MM)

19	NPR M	8T-4189	7	BOLT (M8X1.25X20-MM)
20	NPR M	8T-4191	1	BOLT (M10X1.5X16-MM)
21	NPR M	8T-4200	4	BOLT (M8X1.25X16-MM)
22	NPR	8T-4223	5	WASHER-HARD (13.5X25.5X3-MM THK)
23	NPR	8T-4224	4	WASHER-HARD (8.8X16X2-MM THK)
24	NPR E	5P-6442		HOSE (98-CM)

Key:

C - CHANGE FROM PREVIOUS TYPE
E - ORDER BY THE CENTIMETER
M - METRIC PART
Y - SEPARATE ILLUSTRATION

195-5642 TANK GP-FUEL ---S/N 4ZN16044-50156--PART OF 106-1379 TANK GP-FUEL

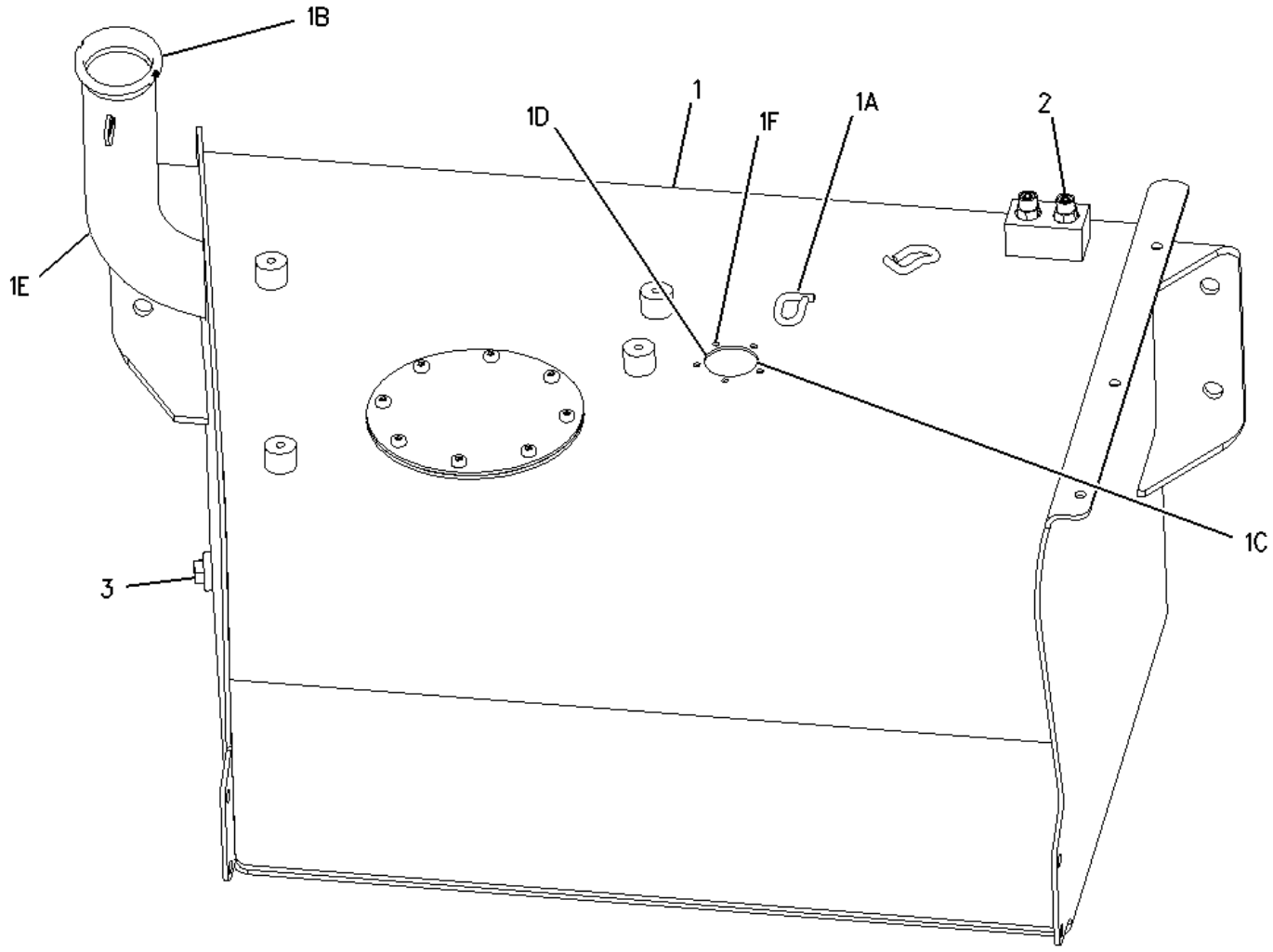

1 NPR 159-1878 1 TANK AS

1A NPR 7T-1099 2 LINK

1B NPR 7X-2644 1 CAP

1C NPR 106-8020 1 GASKET

1D NPR 118-6848 1 PLATE

1E NPR 118-6855 1 PIPE AS-FUEL

1F NPR M 123-4950 8 SCREW-PAN HEAD (M6X1X16-MM)

2 NPR 148-8316 2 CONNECTOR AS

(EACH INCLUDES)

NPR 3J-7354 1 SEAL-O-RING

	NPR	4J-5477	1	SEAL-O-RING
	NPR	6V-8647	1	CONNECTOR
3	NPR	148-8407	1	PLUG AS
	NPR	3J-1907	1	SEAL-O-RING
	NPR	9S-4191	1	PLUG-O RING

Key:

M - METRIC PART

COOLING

SYSTEM

145-6710 COOLING AR -S/N 4ZN16044-50156

NPR	Y	145-6713	1	FAN GP-SUCTION
NPR	Y	147-1557	1	RADIATOR & HYD OIL COOLER GP
NPR		113-5317	1	TACHOMETER AS
NPR		4B-2043	6	NUT (8-32-THD)
NPR		9B-7233	6	LOCKWASHER
NPR		122-7137	1	LAMP (12-VOLT)

Key: Y - SEPARATE ILLUSTRATION

147-1555 COOLING AR-HIGH AMBIENT TEMP -S/N 4ZN16044-50156

NPR	Y	147-1559	1	FAN GP-SUCTION (HIGH AMBIENT)
NPR	Y	147-1557	1	RADIATOR & HYD OIL COOLER GP
NPR		113-5317	1	TACHOMETER AS
NPR		4B-2043	6	NUT (8-32-THD)
NPR		9B-7233	6	LOCKWASHER
NPR		122-7137	1	LAMP (12-VOLT)

Key: Y - SEPARATE ILLUSTRATION

147-1556 COOLING AR-HIGH AMBIENT TEMP S/N 4ZN16044-50156

NPR	Y	147-1560	1	FAN GP-SUCTION (HIGH AMBIENT)
NPR	Y	147-1557	1	RADIATOR & HYD OIL COOLER GP
NPR		172-3576	1	TACHOMETER GP
NPR		4B-2043	6	NUT (8-32-THD)
NPR		9B-7233	6	LOCKWASHER
NPR		122-7137	1	LAMP (12-VOLT)

Key: Y - SEPARATE ILLUSTRATION

145-6713 FAN GP-SUCTION --S/N 4ZN16044-50156--PART OF 145-6710 COOLING AR

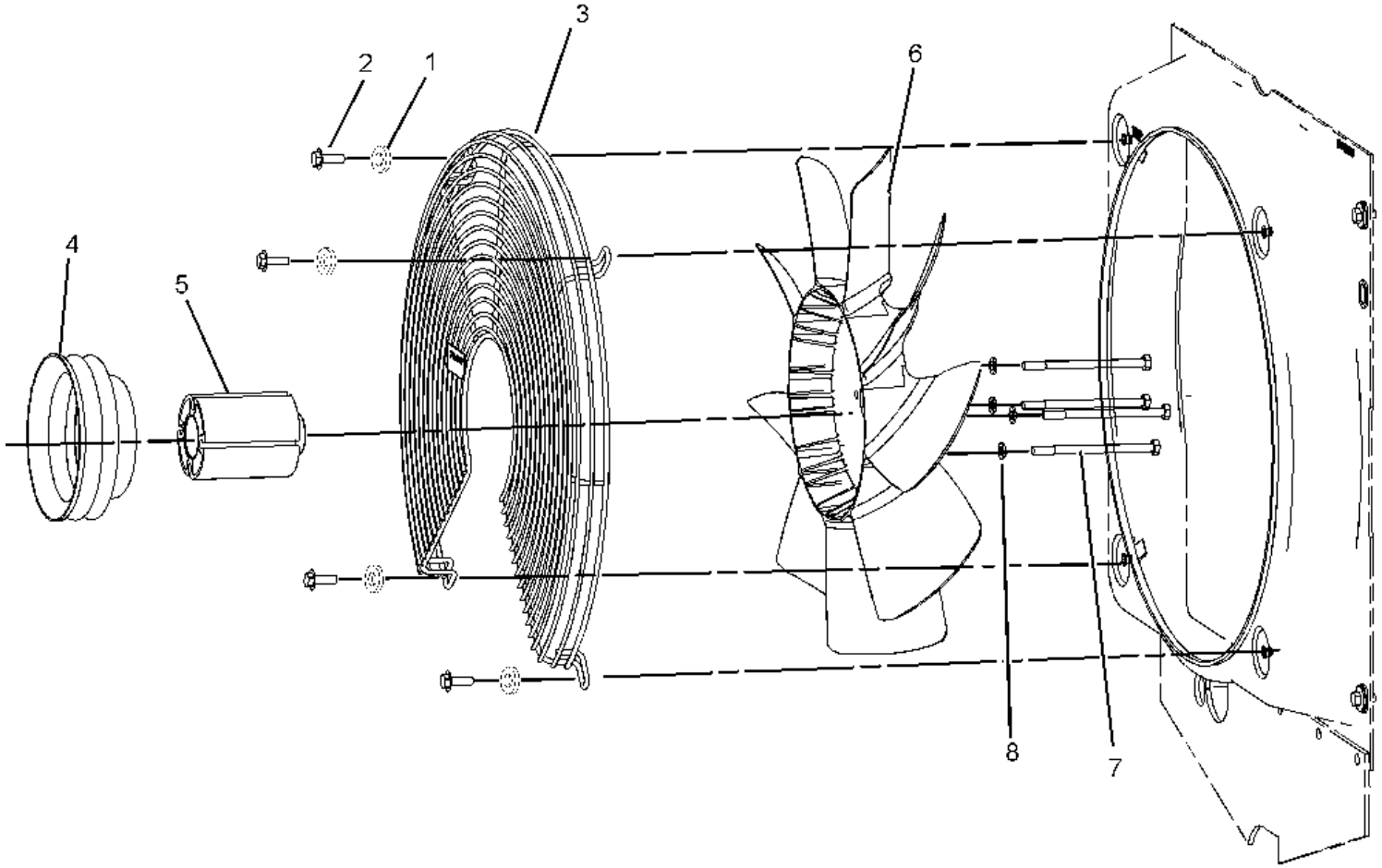

1	NPR	5P-4116	4	WASHER-HARD (8.8X20.5X2-MM THK)
2	NPR M	8T-4908	4	BOLT (M8X1.25X25-MM)
3	NPR	242-9751	1	GUARD AS
4	NPR	130-3880	1	PULLEY-FAN DRIVE
5	NPR	142-3388	1	SPACER-FAN
6	NPR	142-3391	1	SPIDER AS (9-BLADE)
7	NPR M	153-3061	4	BOLT (M8X1.25X130-MM)
8	NPR	8T-4224	4	WASHER-HARD (8.8X16X2-MM THK)

Key: M - METRIC PART

147-1559 FAN GP-SUCTION -HIGH AMBIENT -S/N 4ZN16044-50156
PART OF 147-1555 COOLING AR-HIGH AMBIENT TEMP

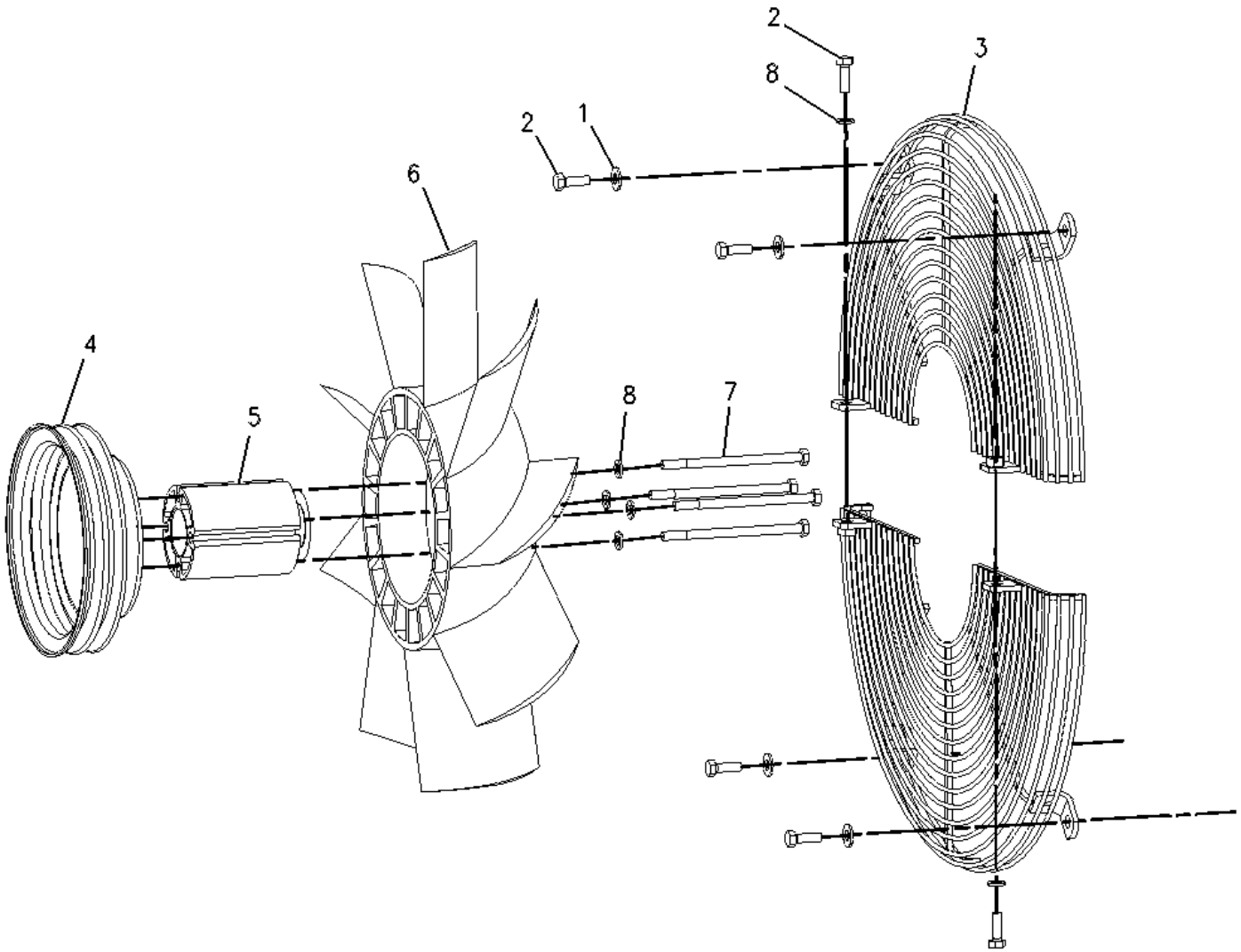

1	NPR	5P-4116	4	WASHER-HARD (8.8X20.5X2-MM THK)
2	NPR M	8T-4908	6	BOLT (M8X1.25X25-MM)
3	NPR	127-6980	2	GUARD AS-FAN
4	NPR	130-3879	1	PULLEY-FAN DRIVE
5	NPR	142-3388	1	SPACER-FAN
6	NPR	142-3391	1	SPIDER AS (9-BLADE)
7	NPR M	153-3061	4	BOLT (M8X1.25X130-MM)
8	NPR	8T-4224	6	WASHER-HARD (8.8X16X2-MM THK)

Key: M - METRIC PART

147-1560 FAN GP-SUCTION -HIGH AMBIENT --S/N 4ZN16044-50156
PART OF 147-1556 COOLING AR-HIGH AMBIENT TEMP

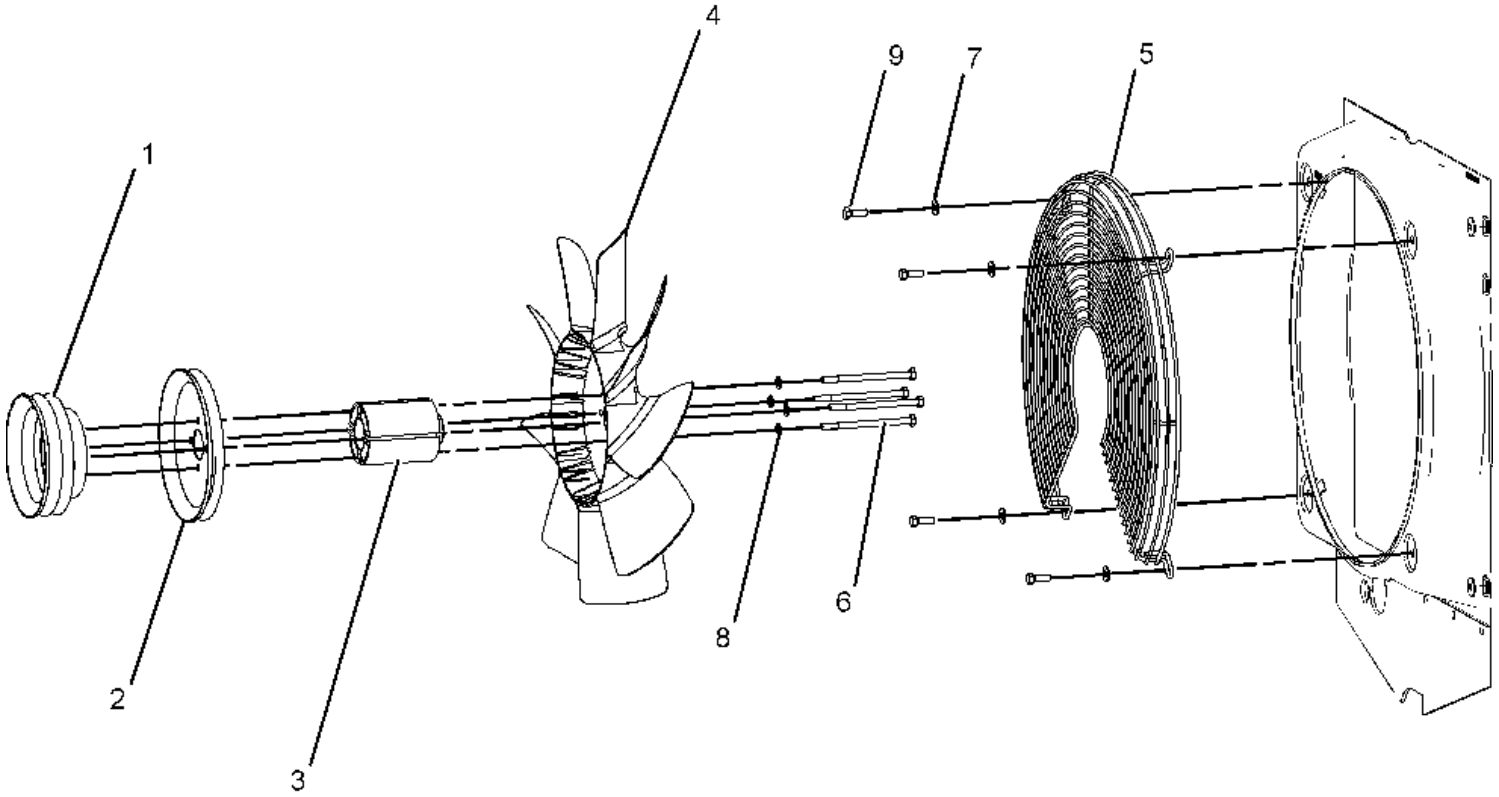

1	**NPR**	**130-3879**	**1**	**PULLEY-FAN DRIVE**
2	**NPR**	**130-3881**	**1**	**PULLEY-FAN**
3	**NPR**	**142-3388**	**1**	**SPACER-FAN**
4	**NPR**	**142-3391**	**1**	**SPIDER AS (9-BLADE)**
5	**NPR**	**242-9751**	**1**	**GUARD AS**
6	**NPR M**	**153-3061**	**4**	**BOLT (M8X1.25X130-MM)**
7	**NPR**	**5P-4116**	**4**	**WASHER-HARD (8.8X20.5X2-MM THK)**
8	**NPR**	**8T-4224**	**4**	**WASHER-HARD (8.8X16X2-MM THK)**
9	**NPR M**	**8T-4908**	**4**	**BOLT (M8X1.25X25-MM)**

Key: M - METRIC PART

130-4645 CONNECTION GP-WATER --S/N 5HK81000-99999; 9RM1-UP
PART OF 106-5001, 106-5002 ENGINE AR-PRIMARY

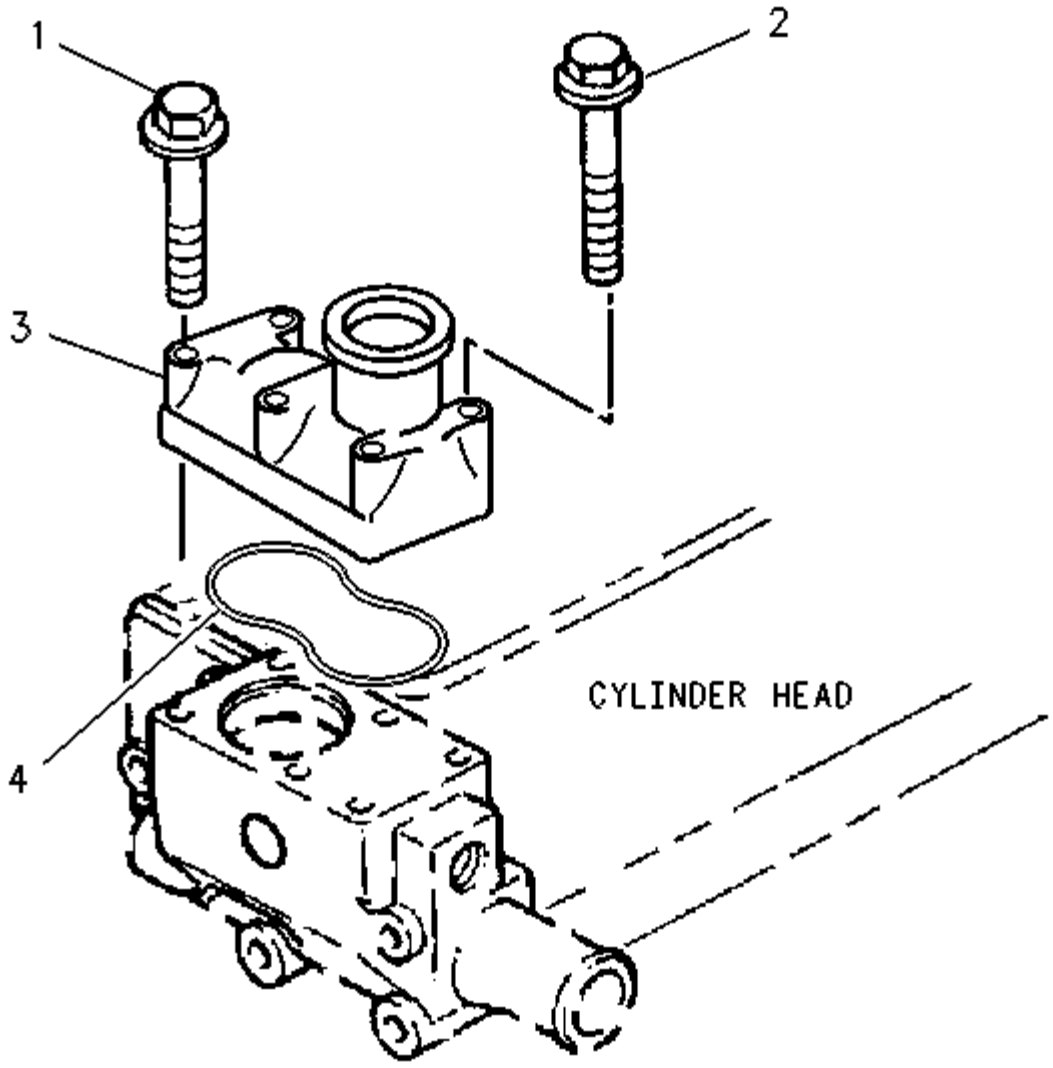

1	NPR	6I-0455	4	BOLT (M8X1.25X55-MM)
2	NPR	6I-0456	2	BOLT (M8X1.25X45-MM)
3	NPR	131-0454	1	CONNECTOR AS
4	NPR	131-0456	1	SEAL-O-RING (WATER TEMPERATURE REGULATOR)

146-0001 CONNECTION GP-WATER --S/N 5HK81000-99999
PART OF 122-8803, 122-8804 ENGINE AR-PRIMARY

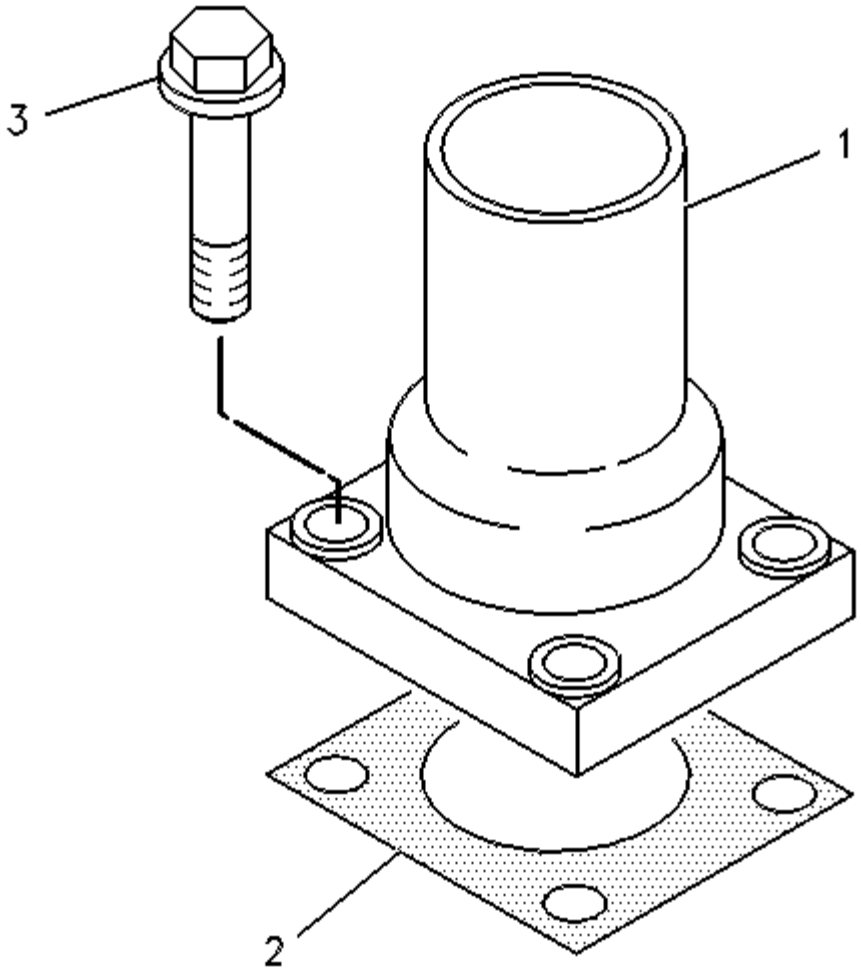

1	**NPR**	**146-0002**	**1**	**CONNECTION**
2	**NPR**	**141-2618**	**1**	**GASKET (HOUSING, REGULATOR)**
3	**NPR M**	**6I-0217**	**4**	**BOLT (M8X1.25X20-MM)**

Key:

M - METRIC PART

146-0001 CONNECTION GP-WATER --S/N 7BJ1-UP; 5HK81000-99999
PART OF 122-8803, 122-8804 ENGINE AR-PRIMARY

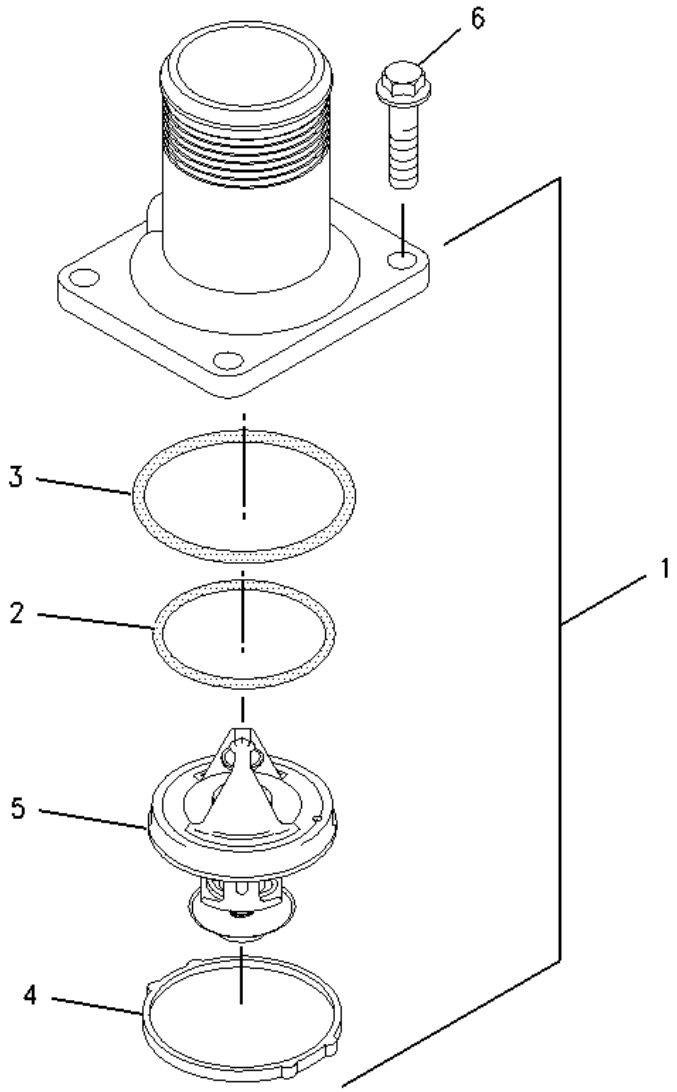

1	NPR C	228-9897	1	CONNECTION AS
2	NPR	140-7515	1	SEAL-O-RING (WATER TEMPERATURE)
3	NPR	141-6188	1	SEAL (HOUSING, REGULATOR)
4	NPR	162-0236	1	RING (WATER TEMPERATURE REGULATOR)
5	NPR	220-2748	1	REGULATOR-WATER TEMPERATURE
6	NPR CM	6I-0260	4	BOLT (M8X1.25X25-MM)

Key: C - CHANGE FROM PREVIOUS TYPE M - METRIC PART

6I-0442 PUMP GP-WATER --S/N 5HK81000-99999
PART OF 130-3644 PUMP GP-WATER

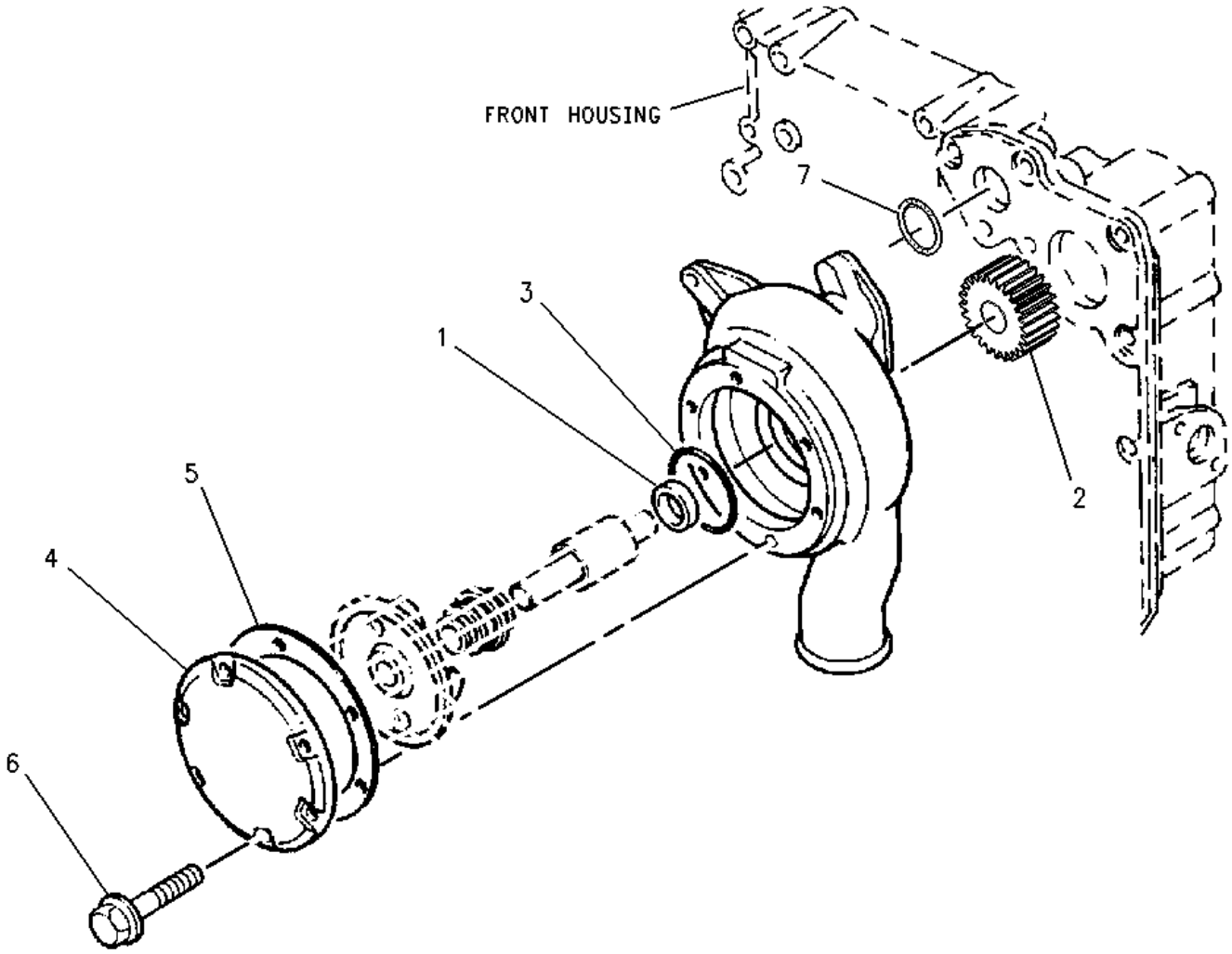

1	**NPR**	**6I-0300**	**1**	**SEAL**
2	**NPR**	**6I-0443**	**1**	**GEAR (18-TEETH)**
3	**NPR**	**6I-0444**	**1**	**SEAL**
4	**NPR**	**6I-0445**	**1**	**COVER**
5	**NPR**	**6I-0446**	**1**	**GASKET**
6	**NPR**	**101-3325**	**6**	**BOLT**
7	**NPR**	**6I-0450**	**1**	**SEAL-O-RING**

AVAILABLE REPAIR KIT(S):

NPR	**151-4840**	**1**	**KIT-WATER PUMP**

130-3644 PUMP GP-WATER ---S/N 5HK81000-93466
PART OF 106-5001 ENGINE AR-PRIMARY

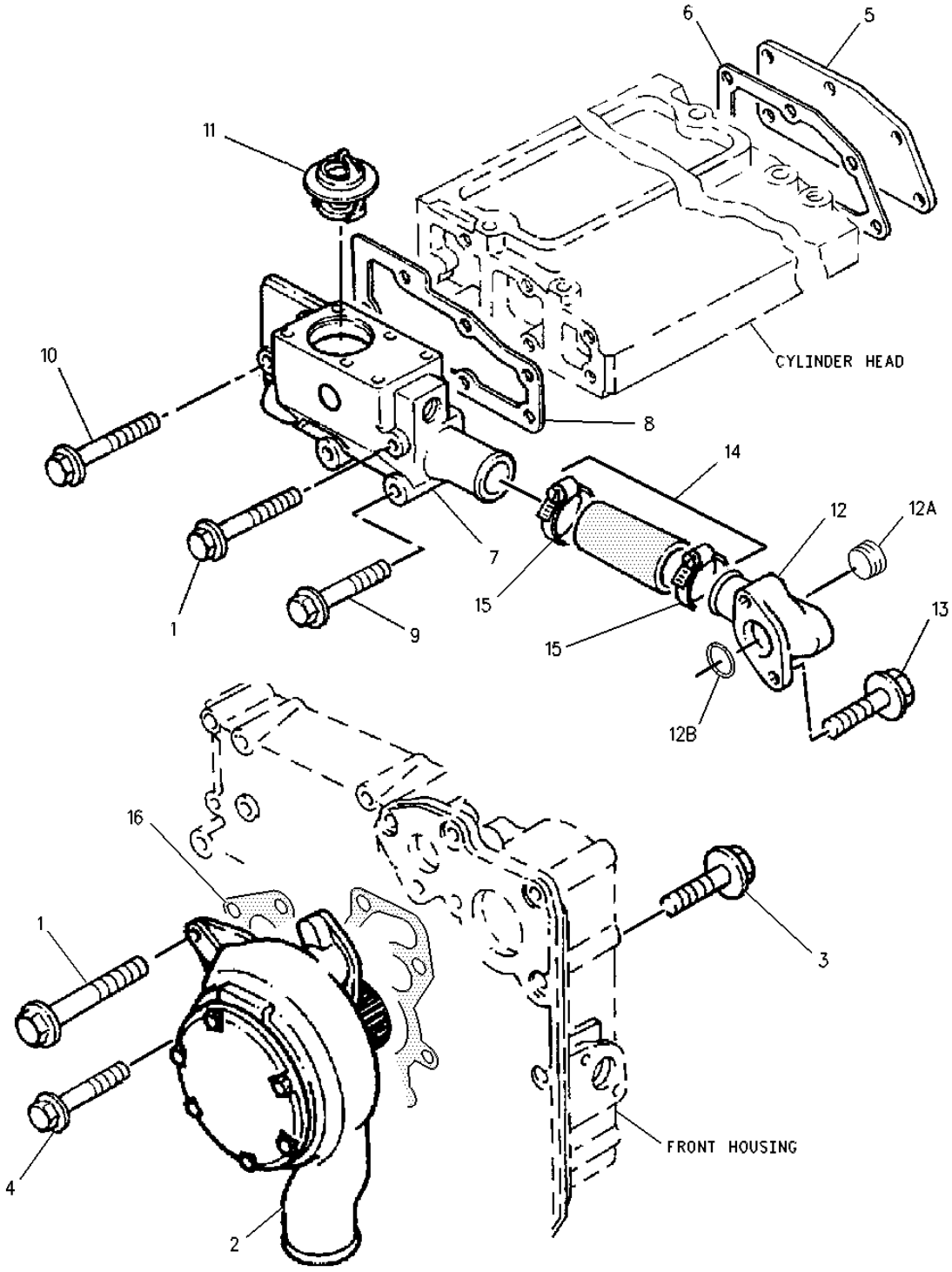

1 NPR 6I-0293 2 BOLT (M8X1.25X80-MM)

2 NPR Y 6I-0442 1 PUMP GP-WATER

3 NPR 6I-0448 3 BOLT

4 NPR M 101-3895 2 BOLT (M8X1.25X35-MM)

5 NPR 7C-3192 1 COVER

6	NPR	100-7611	1	GASKET
7	NPR	6I-4041	1	HOUSING
8	NPR	6I-0453	1	GASKET
9	NPR	6I-4045	2	BOLT (M10X1.5X75-MM)
10	NPR	6I-0456	2	BOLT (M8X1.25X45-MM)
11	NPR	4W-8063	1	REGULATOR-WATER TEMPERATURE
12	NPR	141-0838	1	CONNECTOR AS
12A	NPR	2B-0858	2	PLUG-PIPE
12B	NPR	141-0837	1	SEAL-O-RING
13	NPR M	6I-0260	2	BOLT (M8X1.25X25-MM)
14	NPR	6I-0488	1	KIT-HOSE (HOUSING, REGULATOR)
15	NPR	064-3058	2	CLAMP-HOSE
16	NPR	140-7504	1	GASKET (WATER PUMP)

Key:

M - METRIC PART
R - REMFG PART MAY BE AVAILABLE
Y - SEPARATE ILLUSTRATION

130-3644 PUMP GP-WATER ---S/N 5HK93467-99999; 9RM1-UP
PART OF 106-5001, 106-5002 ENGINE AR-PRIMARY

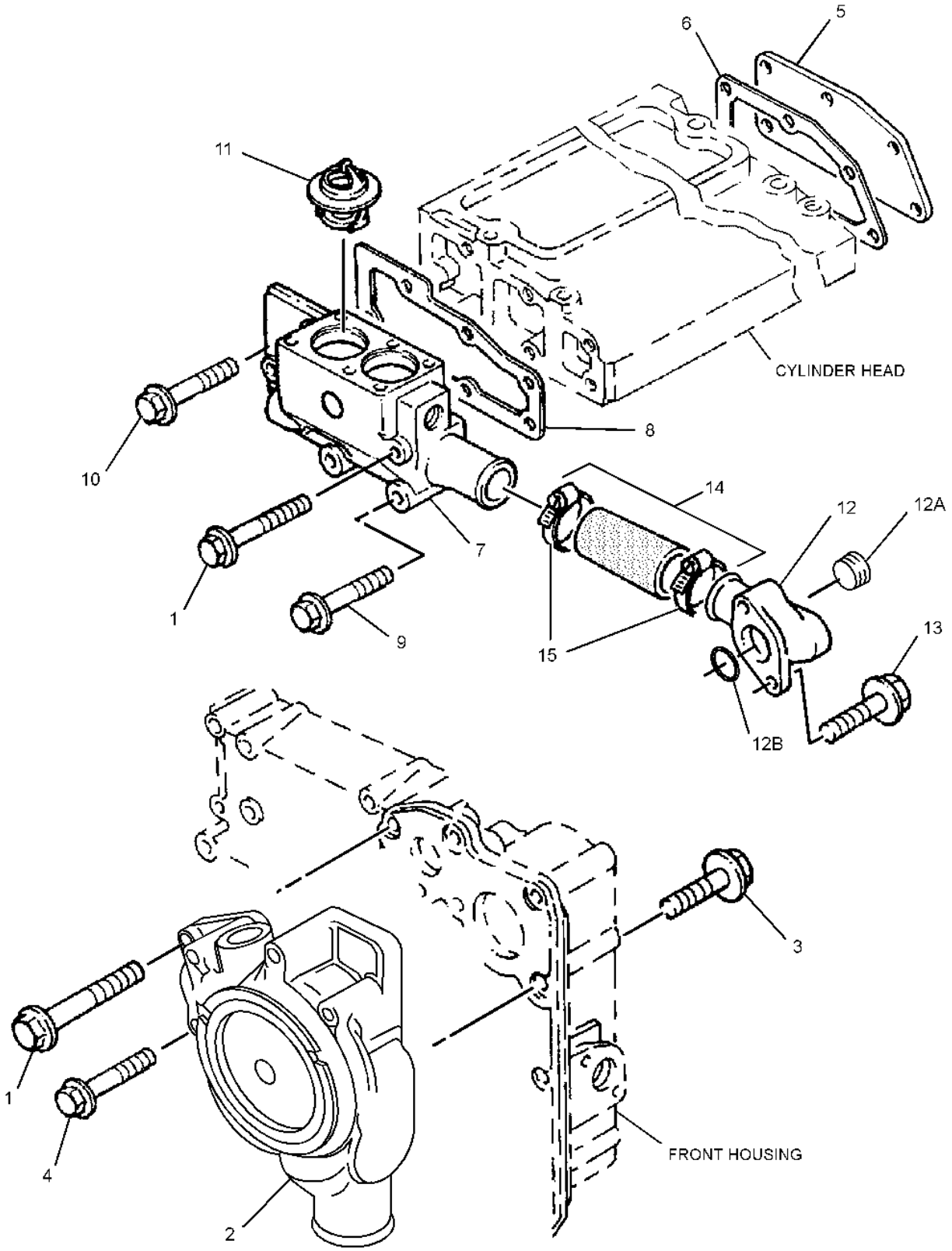

1 NPR 6I-0293 2 BOLT (M8X1.25X80-MM)

2 NPR RY 151-4825 1 PUMP GP-WATER

R NPR 0R-4513 1 PUMP GP-WATER-B

3 NPR 6I-0448 3 BOLT

4	NPR M	101-3895	2	BOLT (M8X1.25X35-MM)
5	NPR	7C-3192	1	COVER
6	NPR	100-7611	1	GASKET
7	NPR	6I-4041	1	HOUSING
8	NPR	6I-0453	1	GASKET
9	NPR	6I-4045	2	BOLT (M10X1.5X75-MM)
10	NPR	6I-0456	2	BOLT (M8X1.25X45-MM)
11	NPR	4W-8063	1	REGULATOR-WATER TEMPERATURE
12	NPR	141-0838	1	CONNECTOR AS
12A	NPR	2B-0858	2	PLUG-PIPE
12B	NPR	141-0837	1	SEAL-O-RING
13	NPR M	6I-0260	2	BOLT (M8X1.25X25-MM)
14	NPR	6I-0488	1	KIT-HOSE (HOUSING, REGULATOR)
15	NPR	064-3058	2	CLAMP-HOSE

Key:

M - METRIC PART
R - REMFG PART MAY BE AVAILABLE
Y - SEPARATE ILLUSTRATION

130-3644 PUMP GP-WATER ---S/N 9RM1-UP
PART OF 106-5001, 106-5002 ENGINE AR-PRIMARY

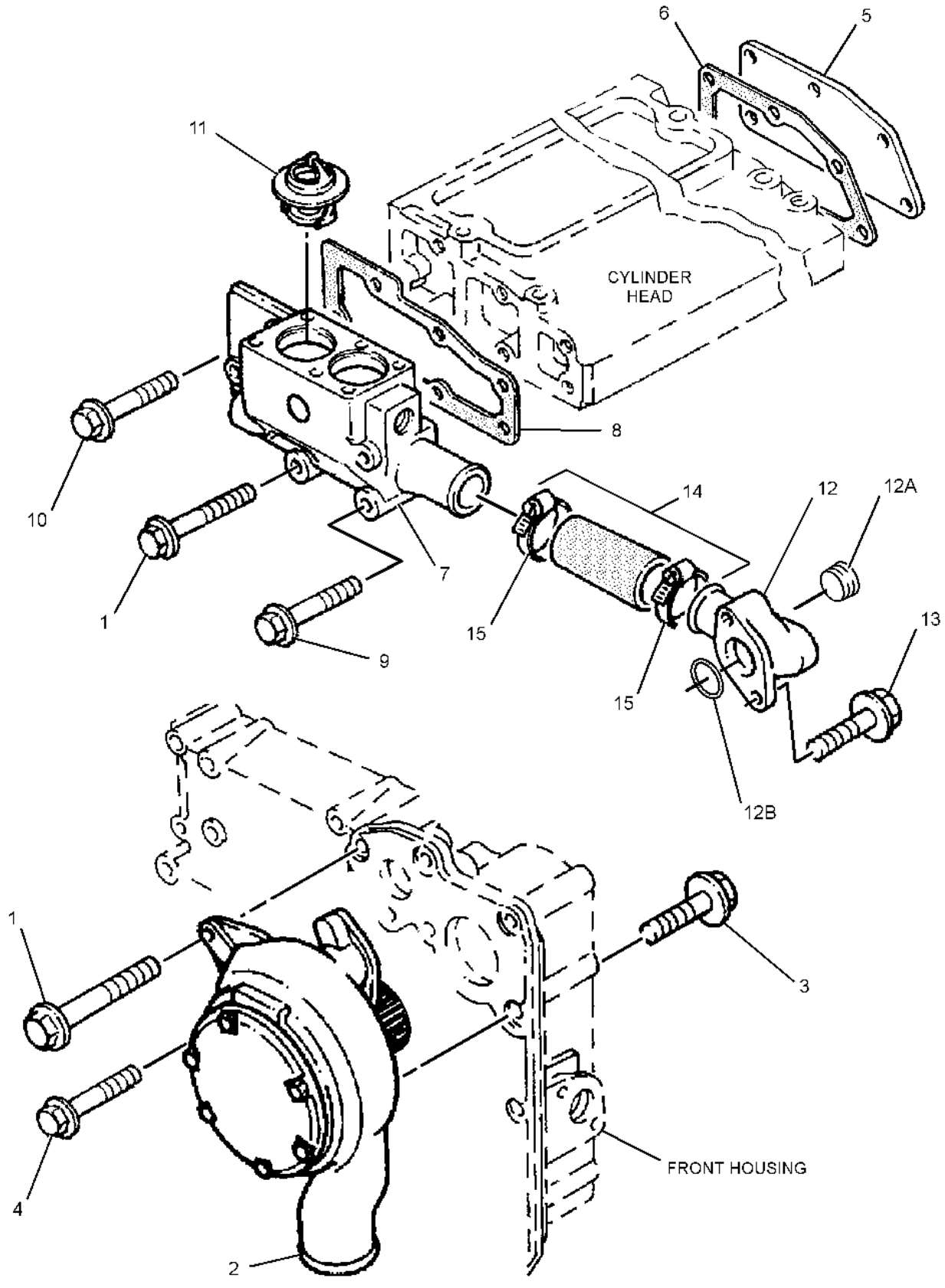

1 NPR 6I-0293 2 BOLT (M8X1.25X80-MM)

2 NPR CY 291-5304 1 PUMP GP-WATER

3 NPR 6I-0448 3 BOLT

4	NPR M	101-3895	2	BOLT (M8X1.25X35-MM)
5	NPR	7C-3192	1	COVER
6	NPR	100-7611	1	GASKET
7	NPR	6I-4041	1	HOUSING
8	NPR	6I-0453	1	GASKET
9	NPR	6I-4045	2	BOLT (M10X1.5X75-MM)
10	NPR	6I-0456	2	BOLT (M8X1.25X45-MM)
11	NPR	4W-8063	1	REGULATOR-WATER TEMPERATURE (COOLANT)
12	NPR	141-0838	1	CONNECTOR AS
12A	NPR	2B-0858	2	PLUG-PIPE
12B	NPR	141-0837	1	SEAL-O-RING
13	NPR M	6I-0260	2	BOLT (M8X1.25X25-MM)
14	NPR	6I-0488	1	KIT-HOSE (HOUSING, REGULATOR)
15	NPR	064-3058	2	CLAMP-HOSE

Key:

C - CHANGE FROM PREVIOUS TYPE
M - METRIC PART
Y - SEPARATE ILLUSTRATION

139-2614 PUMP GP-WATER --S/N 5HK81000-99999
PART OF 122-8803, 122-8804 ENGINE AR-PRIMARY

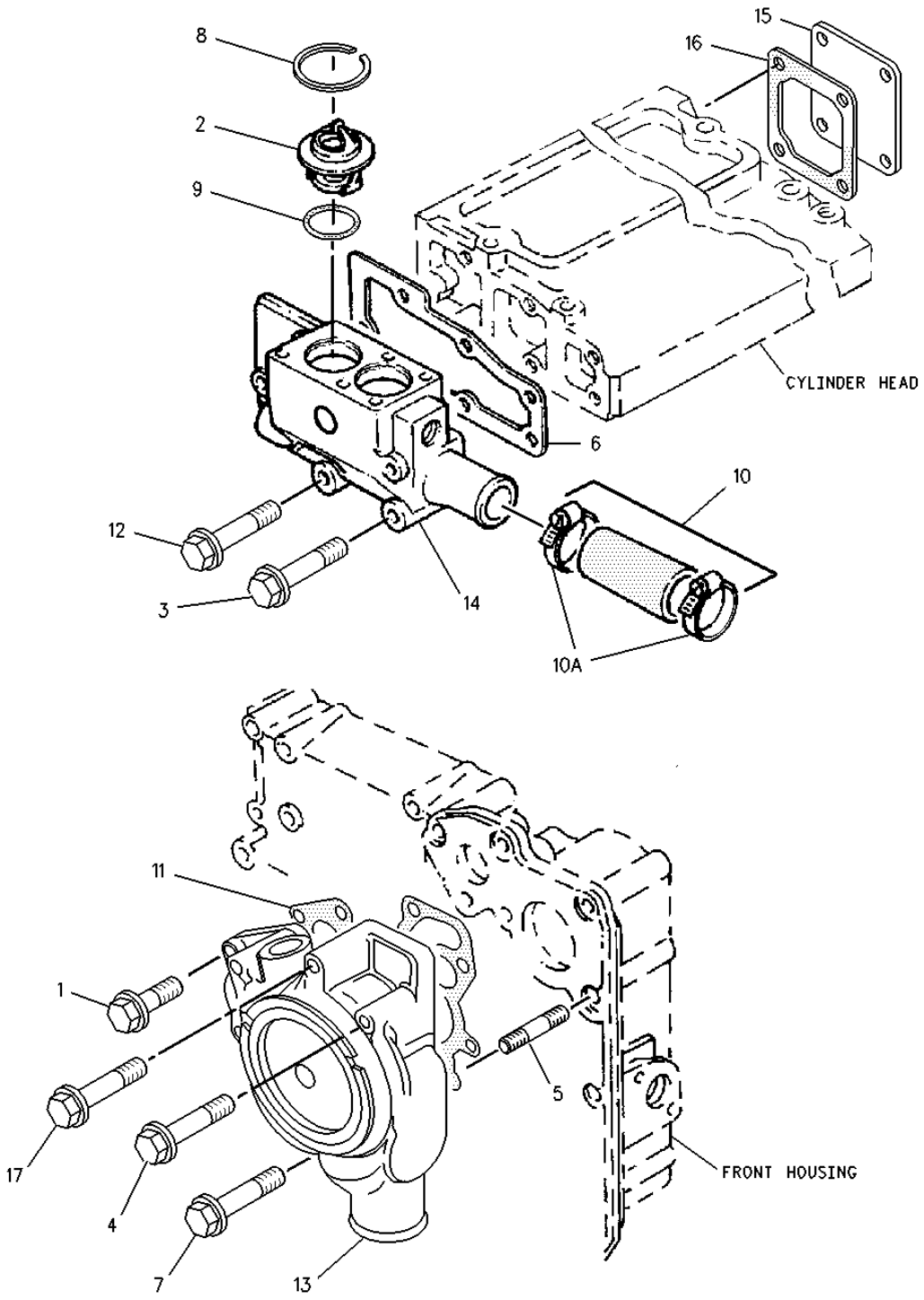

1 NPR 6I-4793 1 BOLT

2 NPR 152-8002 1 REGULATOR-WATER TEMPERATURE

3 NPR M 6I-0260 5 BOLT (M8X1.25X25-MM)

4 NPR M 100-3751 2 BOLT (M8X1.25X65-MM)

5 NPR 140-7513 2 STUD

6	NPR	140-7518	1	GASKET-HOUSING
7	NPR M	6I-0217	3	BOLT (M8X1.25X20-MM)
8	NPR	140-7514	1	RING (WATER TEMPERATURE REGULATOR)
9	NPR	140-7515	1	SEAL-O-RING (WATER TEMPERATURE)
10	NPR	140-7512	1	KIT-HOSE (WATER)
10A	NPR	127-8286	2	CLAMP-HOSE
11	NPR	140-7504	1	GASKET (WATER PUMP)
12	NPR	6I-4374	3	BOLT
13	NPR	143-5271	1	PUMP GP-WATER
14	NPR	147-3473	1	HOUSING
15	NPR	140-7505	1	COVER
16	NPR	140-7506	1	GASKET-COVER
17	NPR	101-3805	4	BOLT (M8X1.25X90-MM)

Key:

M - METRIC PART

139-2614 PUMP GP-WATER --S/N 7BJ1-9038; 5HK81000-99999
PART OF 122-8803, 122-8804 ENGINE AR-PRIMARY

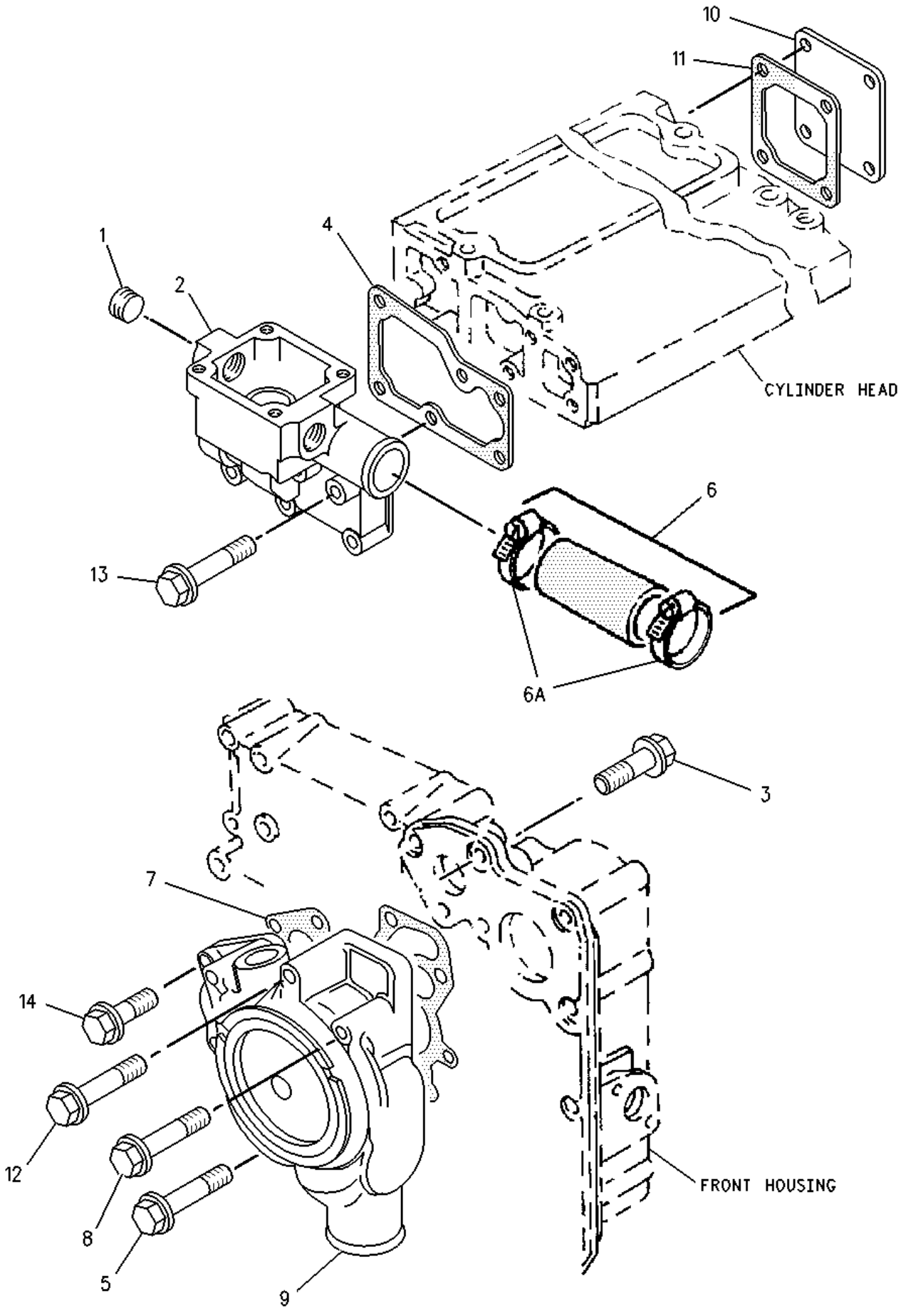

1	NPR C	2B-0858	1	PLUG-PIPE
2	NPR C	163-5591	1	HOUSING AS
3	NPR M	100-3751	2	BOLT (M8X1.25X65-MM)
4	NPR	140-7518	1	GASKET-HOUSING
5	NPR CM	6I-0645	3	BOLT (M8X1.25X25-MM)
6	NPR	140-7512	1	KIT-HOSE (WATER)
6A	NPR	2S-3440	2	CLAMP-HOSE
7	NPR	201-8745	1	GASKET (WATER PUMP)
8	NPR	101-3771	1	BOLT
9	NPR C	156-6010	1	PUMP GP-WATER
10	NPR	140-7505	1	COVER
11	NPR	140-7506	1	GASKET-COVER
12	NPR	101-3805	3	BOLT (M8X1.25X90-MM)
13	NPR	6I-4374	3	BOLT
14	NPR	6I-4793	1	BOLT

Key: C - CHANGE FROM PREVIOUS TYPE M - METRIC PART

139-2614 PUMP GP-WATER ---S/N 7BJ1-9038
PART OF 122-8803, 122-8804 ENGINE AR-PRIMARY

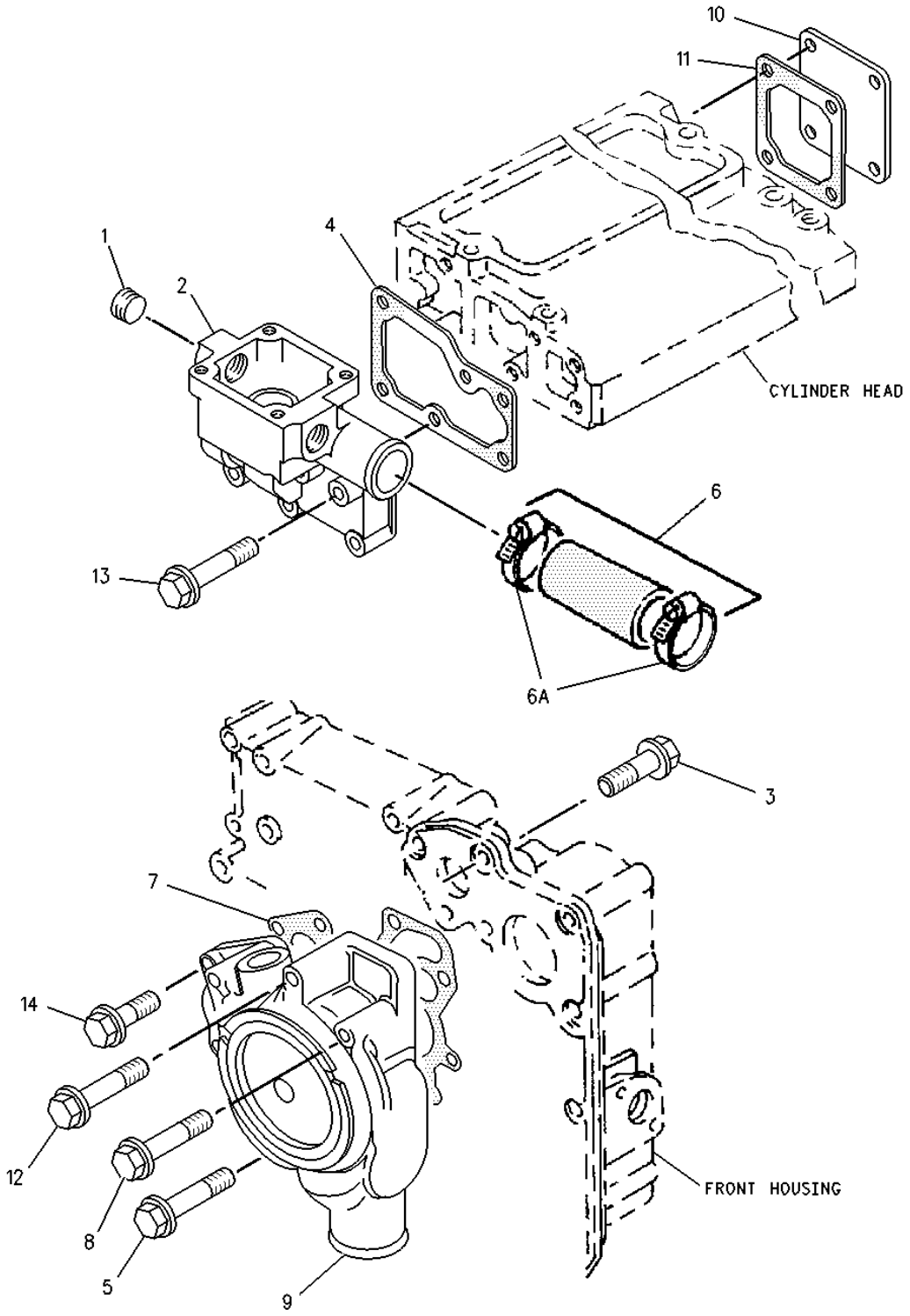

1 NPR 2B-0858 1 PLUG-PIPE

2 NPR C 234-6862 1 HOUSING AS

NPR 234-6854 1 PLUG

NPR 234-6861 1 GASKET

3 NPR M 100-3751 2 BOLT (M8X1.25X65-MM)

4 NPR 140-7518 1 GASKET-HOUSING

5 NPR M 6I-0645 3 BOLT (M8X1.25X25-MM)

6 NPR 140-7512 1 KIT-HOSE (WATER)

6A NPR 2S-3440 2 CLAMP-HOSE

7 NPR C 201-8745 1 GASKET (WATER PUMP)

8 NPR 101-3771 1 BOLT

9 NPR CJ 239-6141 1 PUMP GP-WATER

NPR 201-8745 1 GASKET (WATER PUMP)

10 NPR 140-7505 1 COVER

11 NPR 140-7506 1 GASKET-COVER

12 NPR 101-3805 3 BOLT (M8X1.25X90-MM)

13 NPR 6I-4374 3 BOLT

14 NPR 6I-4793 1 BOLT

AVAILABLE REPAIR KIT(S):

NPR 234-0636 1 KIT-WATER PUMP

Key: C - CHANGE FROM PREVIOUS TYPE J - AVAILABLE M - METRIC PART

151-4825 PUMP GP-WATER ----S/N 5HK81000-99999; 9RM1-UP
PART OF 130-3644 PUMP GP-WATER

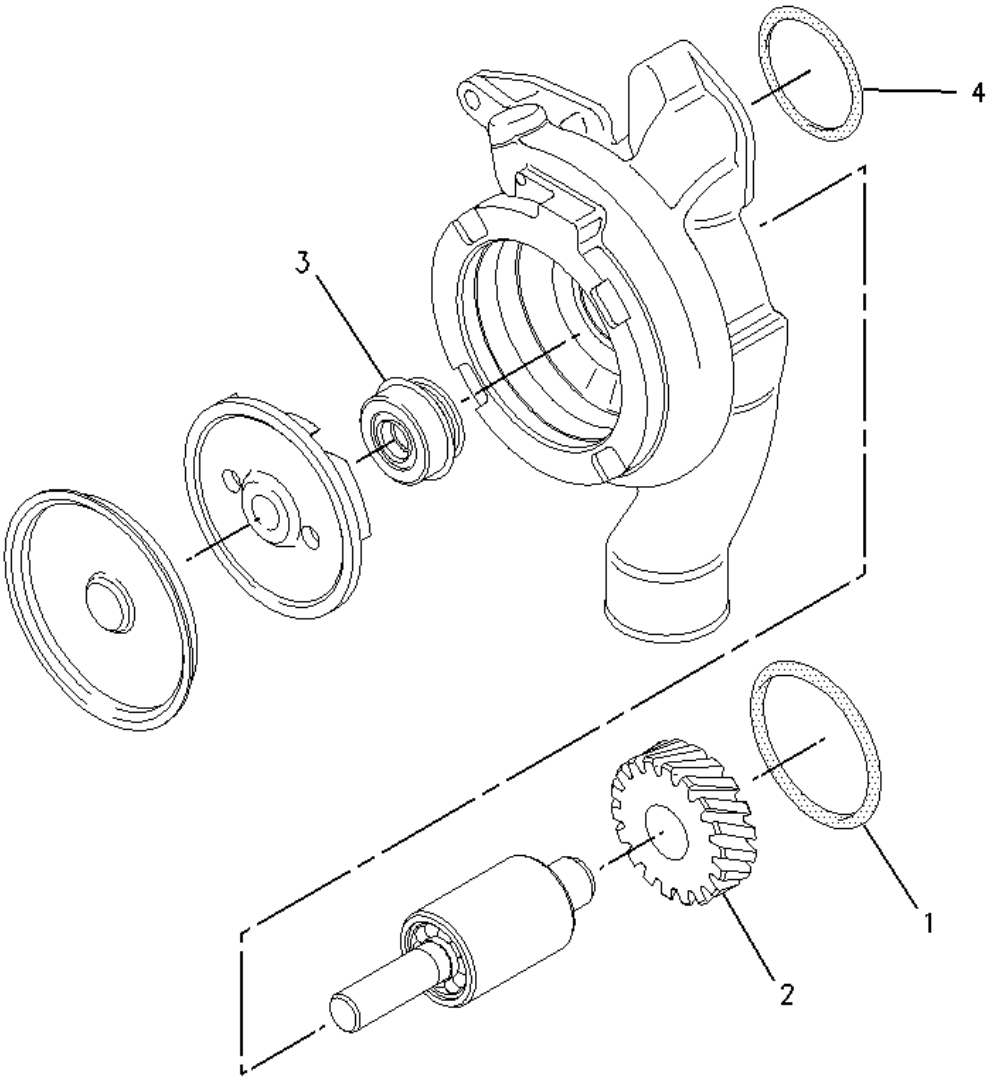

1	**NPR**	**6I-0444**	**1**	**SEAL**
2	**NPR**	**6I-0443**	**1**	**GEAR (18-TEETH)**
3	**NPR**	**151-4838**	**1**	**SEAL**
4	**NPR**	**200-8129**	**1**	**SEAL-O-RING**

179-6896 PUMP GP-WATER ---S/N 7BJ9039-UP
PART OF 122-8803, 122-8804 ENGINE AR-PRIMARY

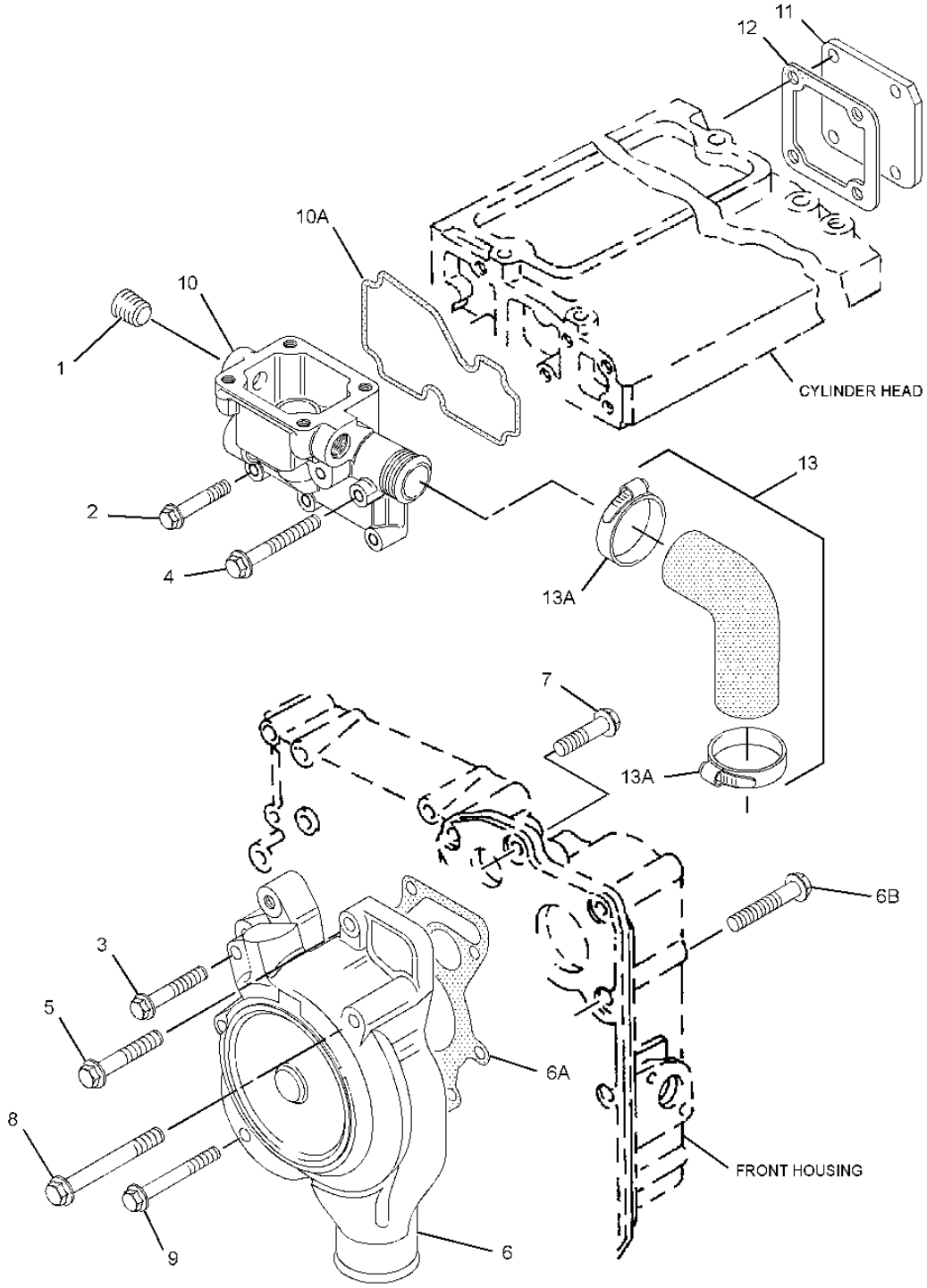

1 NPR 2B-0858 1 PLUG-PIPE

2 NPR 6I-0456 3 BOLT (M8X1.25X45-MM)

3 NPR M 6I-0645 3 BOLT (M8X1.25X25-MM)

4 NPR 6I-4374 3 BOLT

5 NPR 6I-4793 1 BOLT

6 NPR 239-6142 1 PUMP GP-WATER

6A	NPR	201-8745	1	GASKET (WATER PUMP)
6B	NPR	6I-0839	2	BOLT (M8X1.25X70-MM)
7	NPR M	100-3751	2	BOLT (M8X1.25X65-MM)
8	NPR	101-3771	1	BOLT
9	NPR	101-3805	3	BOLT (M8X1.25X90-MM)
10	NPR	171-1076	1	HOUSING AS (REGULATOR)
10A	NPR	172-4844	1	SEAL-O-RING
11	NPR	140-7505	1	COVER
12	NPR	140-7506	1	GASKET-COVER
13	NPR	140-7512	1	KIT-HOSE (WATER)
13A	NPR	2S-3440	2	CLAMP-HOSE

AVAILABLE REPAIR KIT(S):

NPR	234-0636	1	KIT-WATER PUMP

Key: M - METRIC PART

291-5304 PUMP GP-WATER ---S/N 9RM1-UP
PART OF 130-3644 PUMP GP-WATER

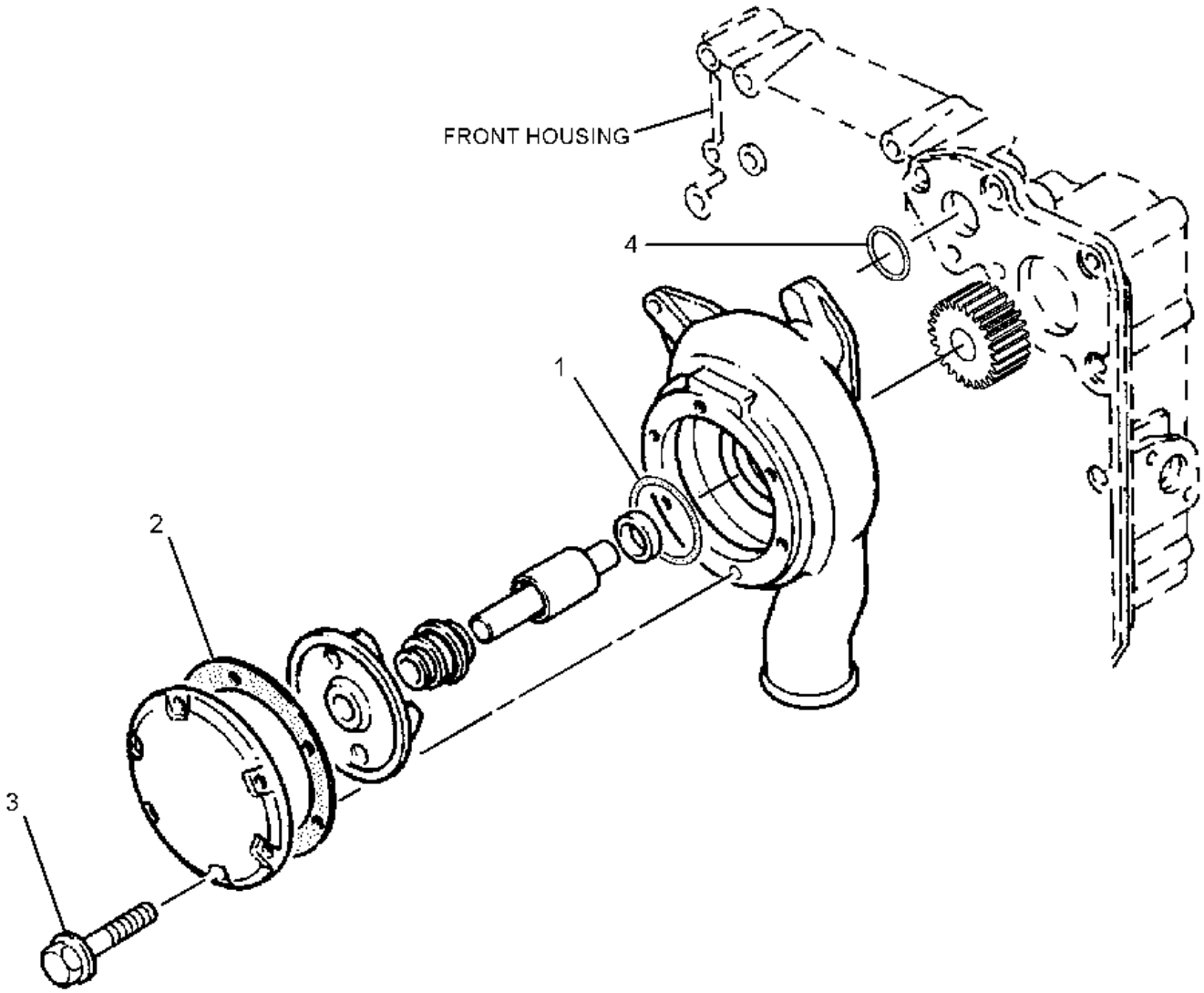

1	**NPR**	**6I-0444**	**1**	**SEAL**
2	**NPR**	**6I-0446**	**1**	**GASKET**
3	**NPR**	**101-3325**	**6**	**BOLT**
4	**NPR**	**200-8129**	**1**	**SEAL-O-RING**

147-1557 RADIATOR & HYD OIL COOLER GP --S/N 4ZN16044-50156
PART OF 145-6710 COOLING AR, 147-1555, 147-1556 COOLING AR-HIGH AMBIENT TEMP

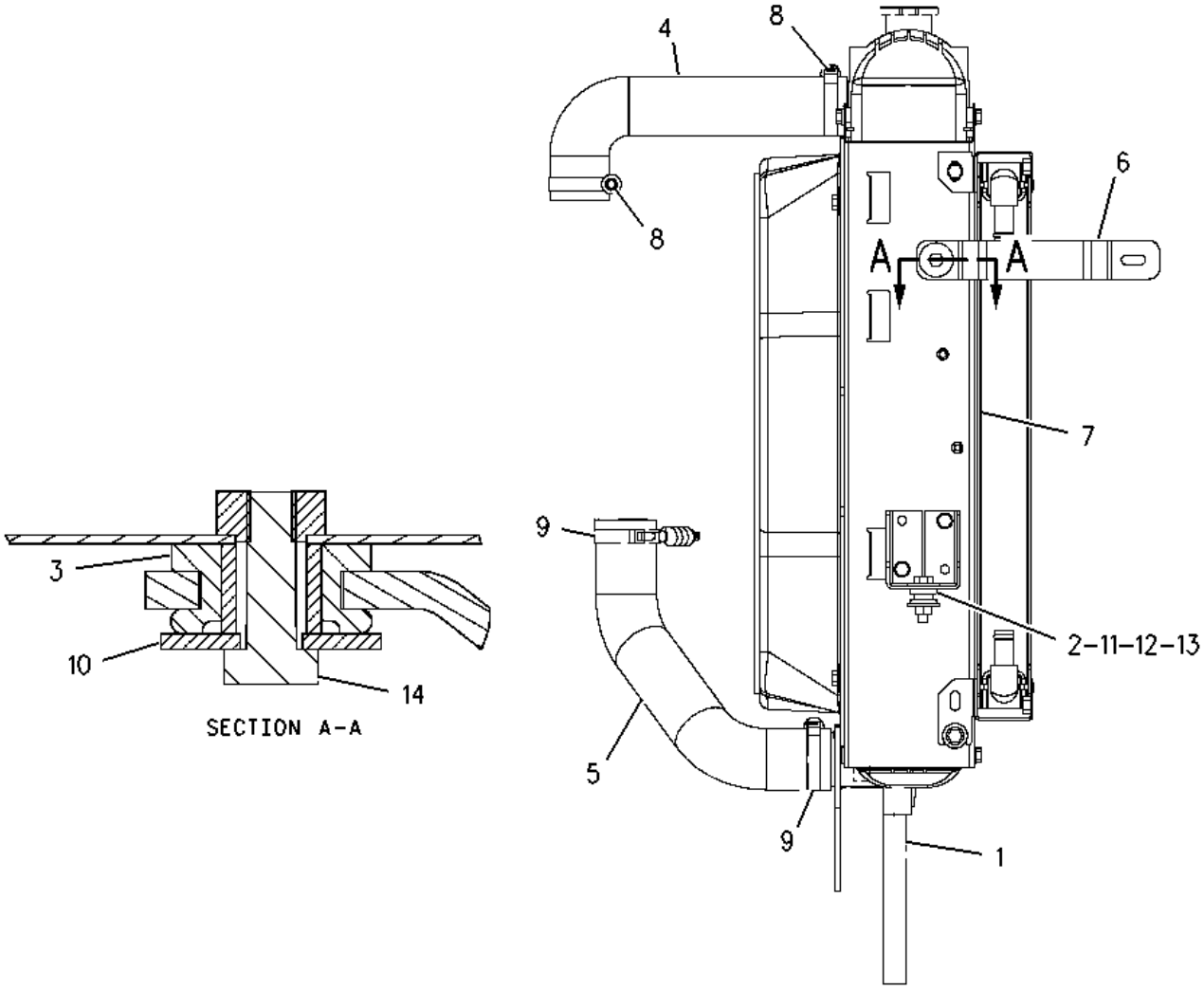

1	**NPR**	**BD 5P-6129**		**TUBE**
2	**NPR**	**2W-9710**	**2**	**MOUNT AS**
3	**NPR**	**6N-6984**	**2**	**MOUNT-RUBBER**
4	**NPR**	**140-3637**	**1**	**HOSE-RADIATOR (UPPER)**
5	**NPR**	**140-3638**	**1**	**HOSE-RADIATOR (LOWER)**
6	**NPR**	**140-3640**	**2**	**PLATE**
7	**NPR Y**	**154-3799**	**1**	**RADIATOR & HYD OIL COOLER GP**
8	**NPR**	**214-7457**	**2**	**CLAMP**
9	**NPR**	**214-7458**	**2**	**CLAMP-HOSE**

10	NPR	7X-0603	2	WASHER-HARD (9.9X35X2.5-MM THK)
11	NPR M	8T-4133	2	NUT (M10X1.5-THD)
12	NPR M	8T-4186	2	BOLT (M10X1.5X40-MM)
13	NPR	8T-4222	4	WASHER-PLATED (11X32X2.5-MM THK)
14	NPR M	8T-4908	2	BOLT (M8X1.25X25-MM)

Key:

B - USE AS REQUIRED
D - ORDER BY THE METER
M - METRIC PART
Y - SEPARATE ILLUSTRATION

147-1558 RADIATOR & HYD OIL COOLER GP -S/N 4ZN16044-50156
PART OF 154-3799 RADIATOR & HYD OIL COOLER GP

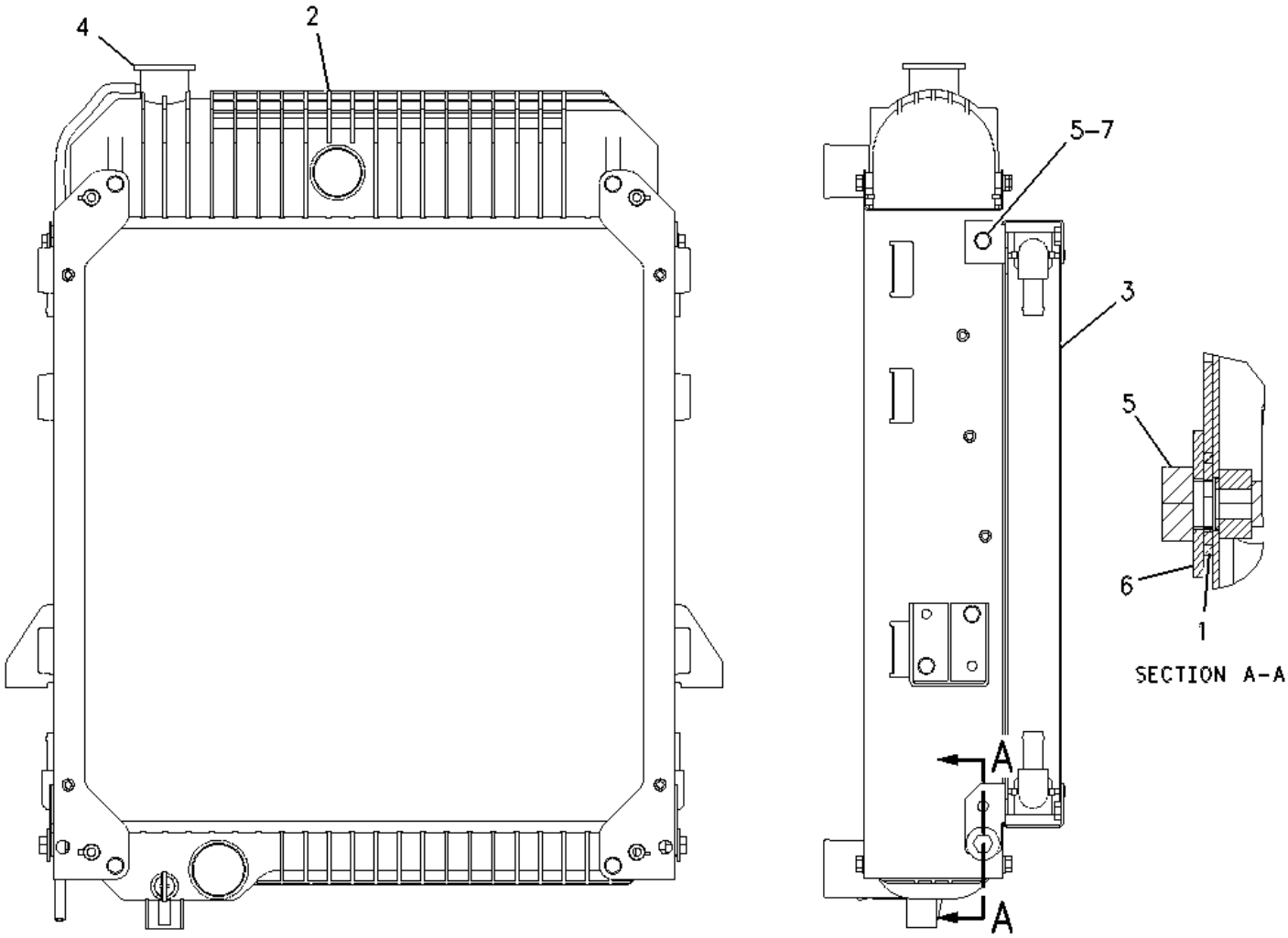

1	**NPR**	**151-8752**	**2**	**BUSHING**
2	**NPR**	**140-3634**	**1**	**RADIATOR AS**
	NPR	**140-2358**	**1**	**PLUG AS**
	NPR	**2D-6392**	**1**	**SEAL-O-RING**
	NPR	**5F-9144**	**1**	**SEAL-O-RING**
	NPR	**145-6005**	**2**	**GASKET**
3	**NPR**	**142-0724**	**1**	**COOLER AS-OIL**
	NPR	**123-4065**	**16**	**RIVET-POP**
	NPR	**140-3635**	**1**	**CORE AS (13 PLATE)**
	NPR	**140-3639**	**1**	**CORE AS (15 PLATE)**

4 NPR 006-8865 1 CAP-RADIATOR

5 NPR M 8T-4200 4 BOLT (M8X1.25X16-MM)

6 NPR 8C-0572 1 WASHER (8.8X25.5X2-MM THK)

7 NPR 8T-4224 2 WASHER-HARD (8.8X16X2-MM THK)

Key:

M - METRIC PART

154-3799 RADIATOR & HYD OIL COOLER GP --S/N 4ZN16044-50156
PART OF 147-1557 RADIATOR & HYD OIL COOLER GP

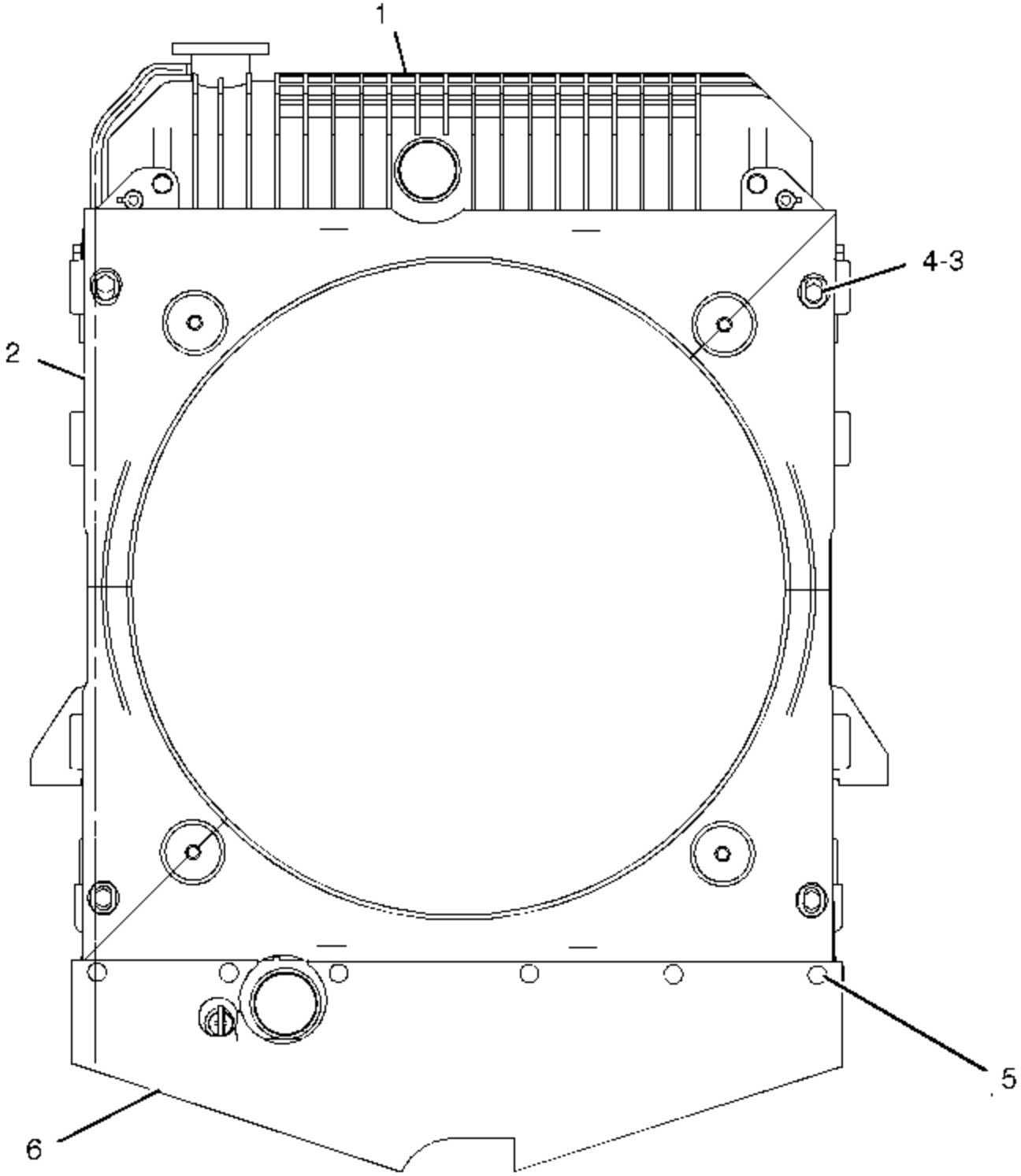

1 NPR Y 147-1558 1 RADIATOR & HYD OIL COOLER GP

2 NPR 180-2441 1 SHROUD AS

3 NPR 7X-0579 4 WASHER-HARD (8.8X25.5X2-MM THK)

4 NPR M 8T-4200 4 BOLT (M8X1.25X16-MM)

5 NPR 123-4065 6 RIVET-POP

6 NPR 141-7512 1 BAFFLE

Key: M - METRIC PART Y - SEPARATE ILLUSTRATION

BASIC

ENGINE

130-3635 CAMSHAFT GP --S/N 9RM1-UP
PART OF 106-5002 ENGINE AR-PRIMARY

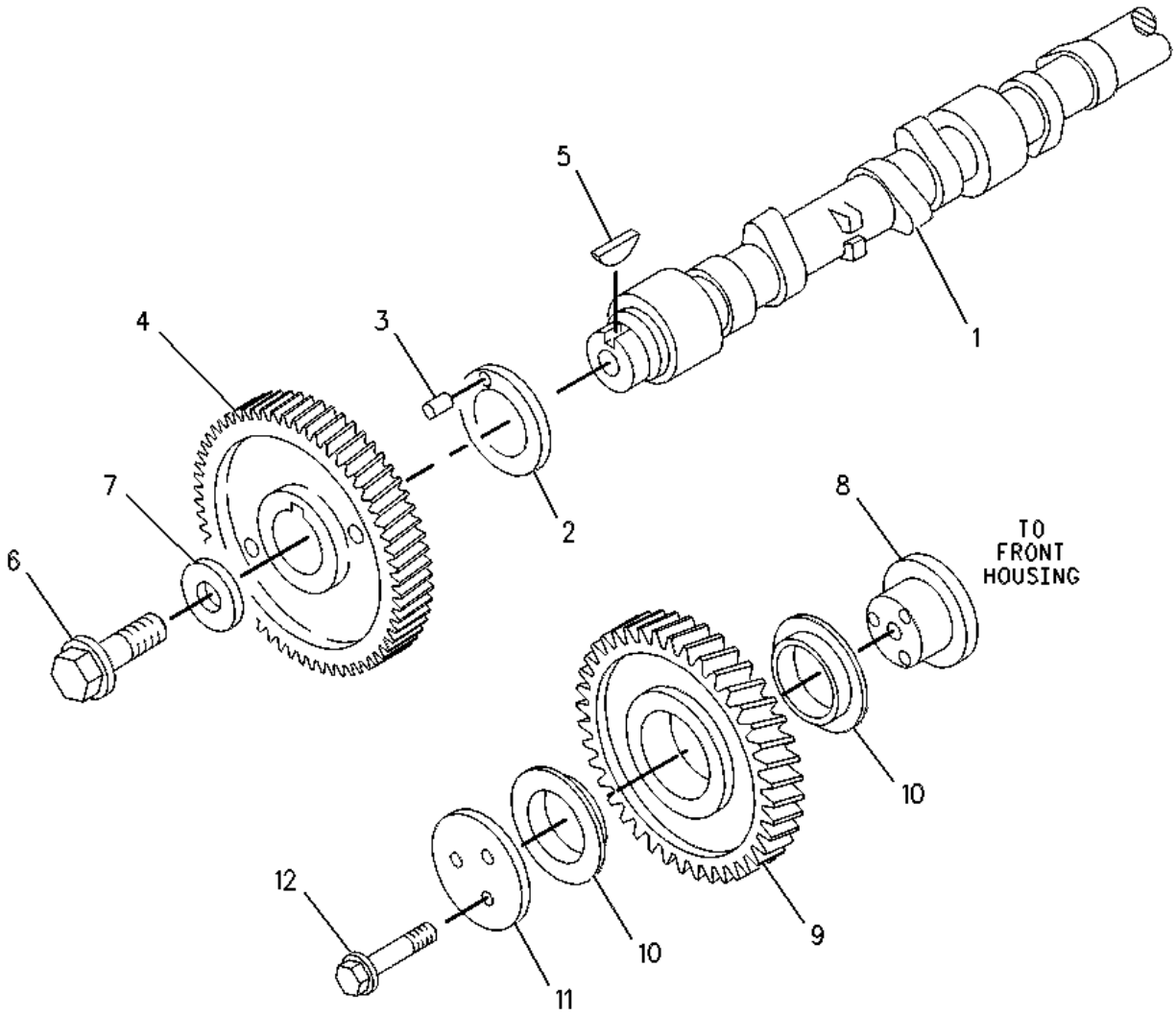

1	NPR	132-3930	1	CAMSHAFT
2	NPR	7W-4842	1	PLATE-THRUST
3	NPR	067-6179	1	DOWEL
4	NPR	9Y-2633	1	GEAR-CAMSHAFT
5	NPR	1B-8736	1	KEY-WOODRUFF
6	NPR	7C-4616	1	BOLT
7	NPR	092-5499	1	WASHER
8	NPR	067-6897	1	HUB-IDLER GEAR
9	NPR	2W-1529	1	GEAR AS-IDLER
10	NPR	067-6899	2	BUSHING-IDLER GEAR

11 NPR 067-6900 1 PLATE-RETAINING

12 NPR 6I-0789 3 BOLT

130-6769 CAMSHAFT GP ---S/N 5HK81000-99999; 9RM1-UP
PART OF 106-5001 ENGINE AR-PRIMARY

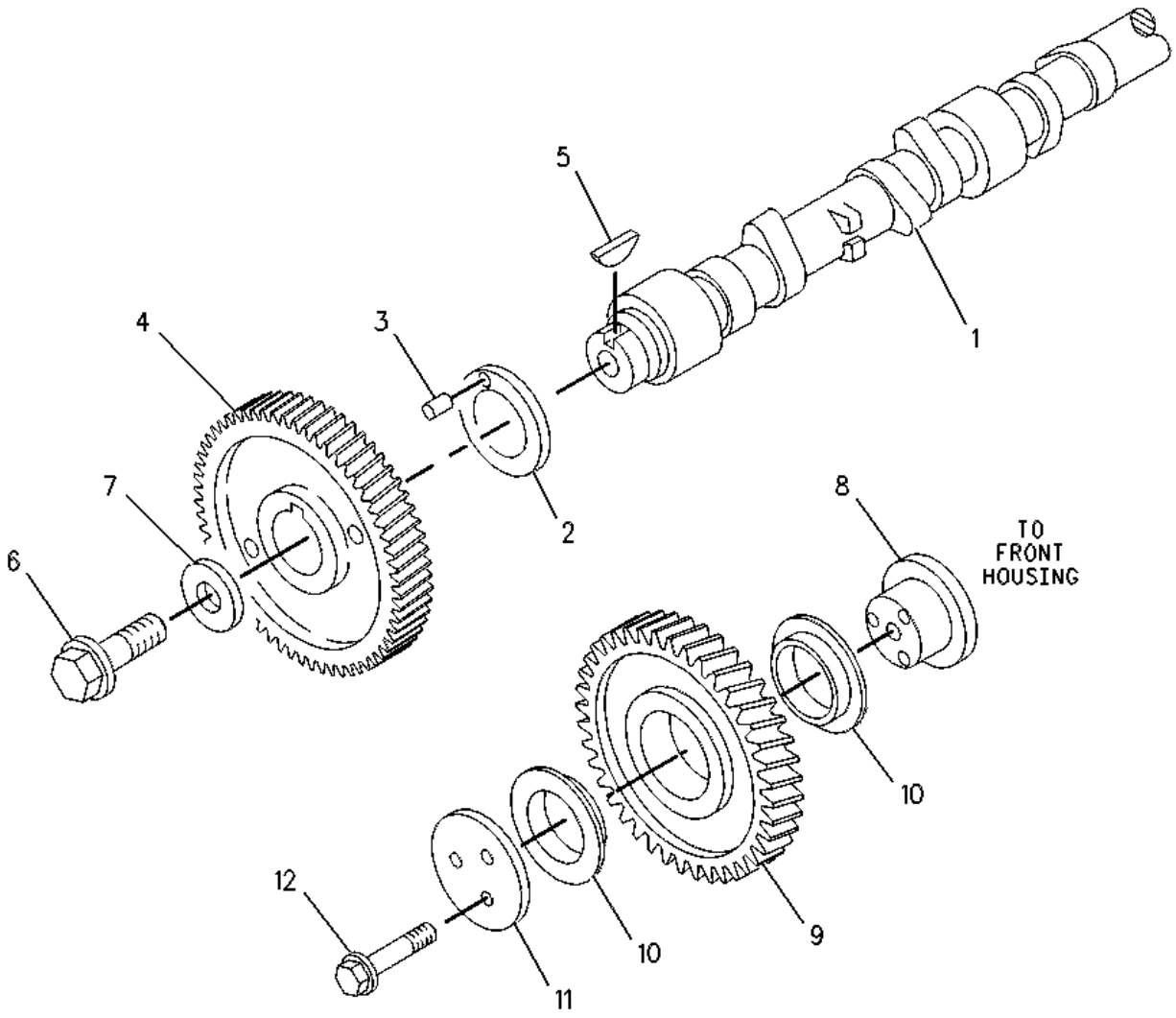

1	NPR	132-3930	1	CAMSHAFT
2	NPR	067-6178	1	WASHER
3	NPR	067-6179	1	DOWEL
4	NPR	7C-3187	1	GEAR
5	NPR	1B-8736	1	KEY-WOODRUFF
6	NPR	7C-4616	1	BOLT
7	NPR	092-5499	1	WASHER
8	NPR	067-6897	1	HUB-IDLER GEAR
9	NPR	067-6898	1	GEAR AS-IDLER
10	NPR	067-6899	2	BUSHING-IDLER GEAR
11	NPR	067-6900	1	PLATE-RETAINING
12	NPR	6I-0789	3	BOLT

145-8504 CAMSHAFT GP --S/N 7BJ1-UP; 5HK81000-99999
PART OF 122-8803, 122-8804 ENGINE AR-PRIMARY

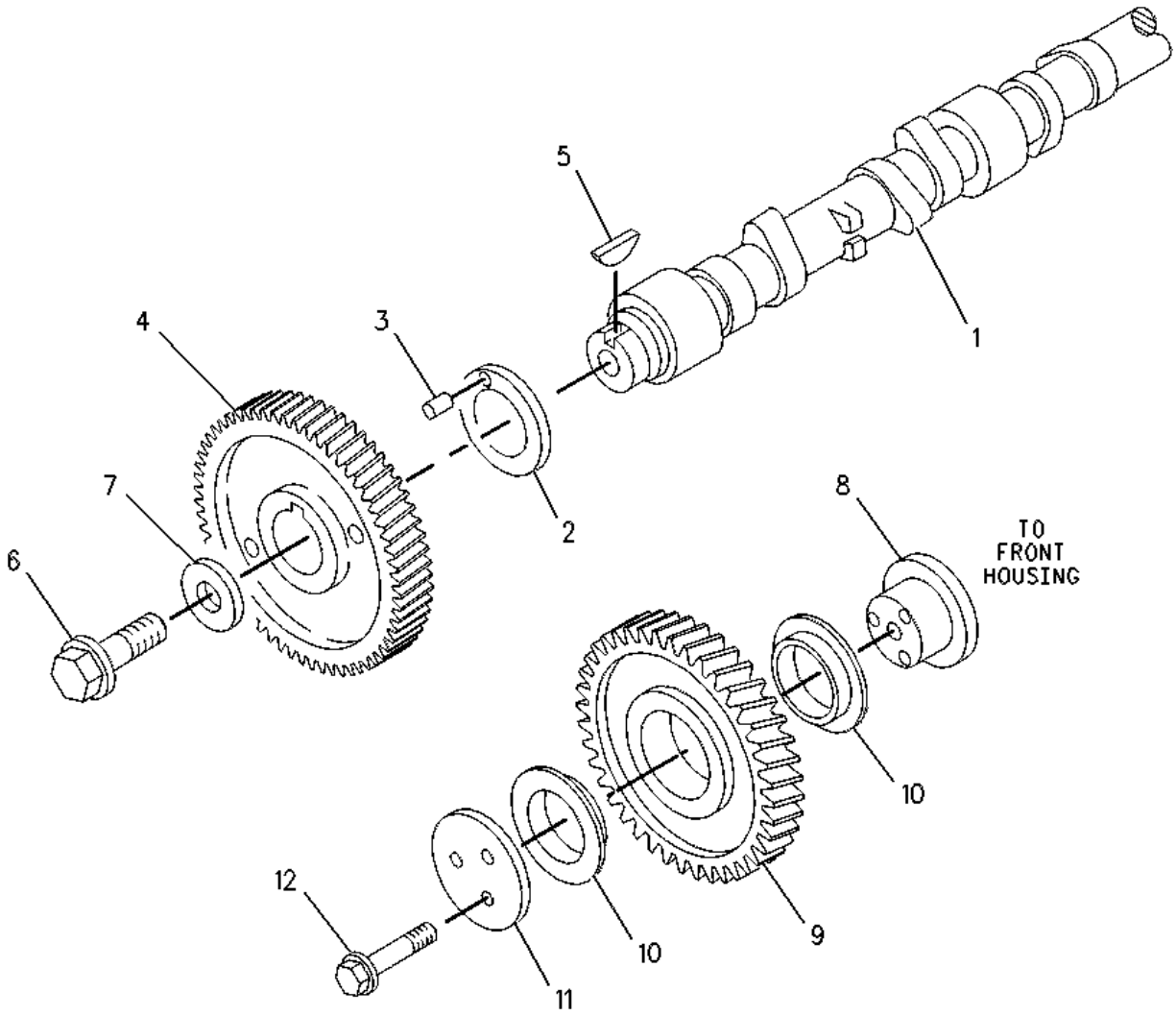

1	NPR	142-3018	1	CAMSHAFT
2	NPR	067-6178	1	WASHER
3	NPR	067-6179	1	DOWEL
4	NPR	9Y-2633	1	GEAR-CAMSHAFT (56-TEETH)
5	NPR	1B-8736	1	KEY-WOODRUFF
6	NPR	7C-4616	1	BOLT (M12X1.75X45-MM)
7	NPR	133-1011	1	WASHER
8	NPR	067-6897	1	HUB-IDLER GEAR
9	NPR	2W-1529	1	GEAR AS-IDLER (63-TEETH)
10	NPR	067-6899	2	BUSHING-IDLER GEAR
11	NPR	067-6900	1	PLATE-RETAINING
12	NPR	6I-0789	3	BOLT (M10X1.5X60-MM)

6I-0222 CRANKSHAFT GP ---S/N 9RM1-UP--PART OF 106-5002 ENGINE AR-PRIMARY

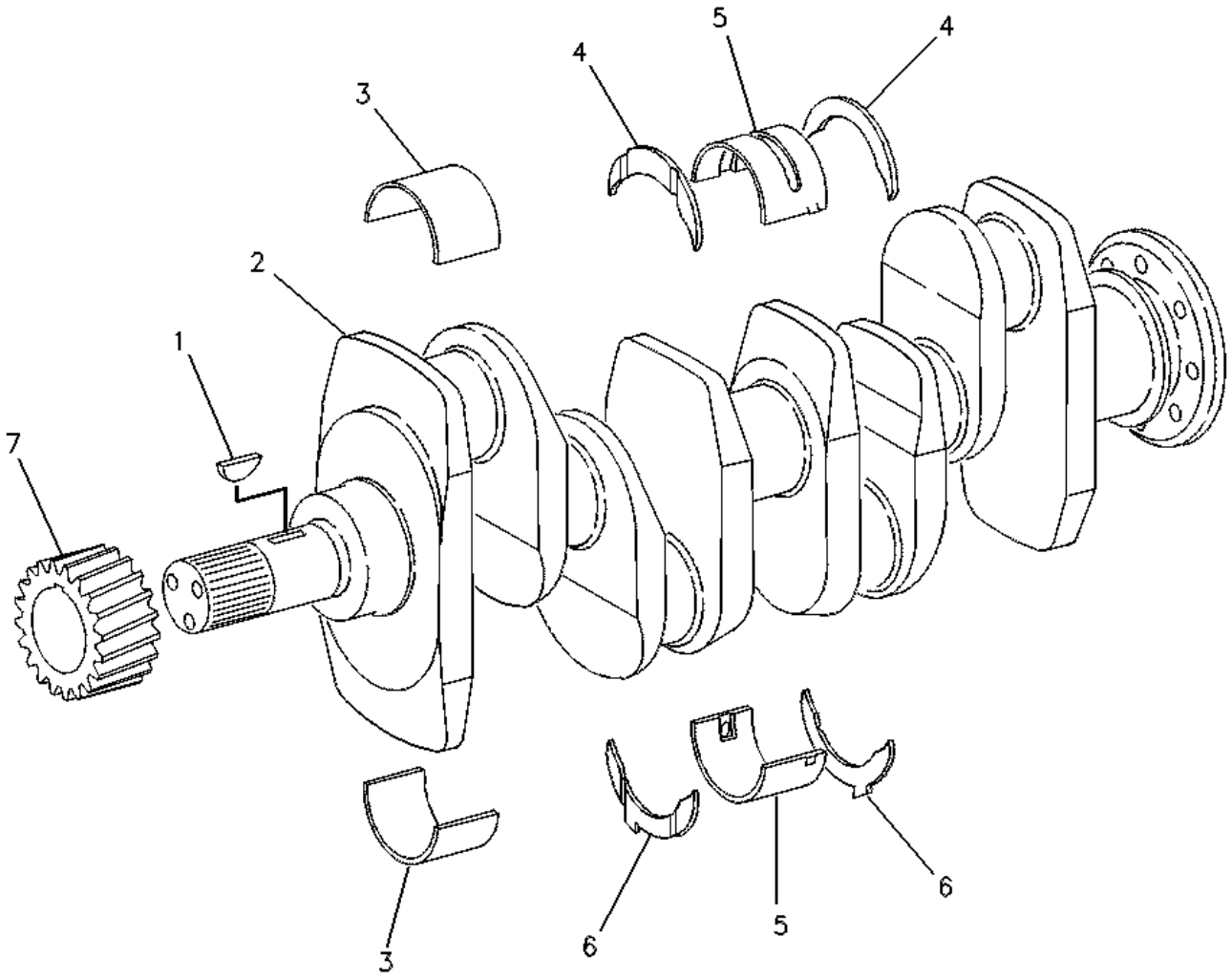

1	NPR	1B-8736	1	KEY-WOODRUFF
2	NPR RC	4P-9948	1	CRANKSHAFT GP
R	NPR	0R-4508	1	CRANKSHUTN
3	NPR B	4P-9944	1	BEARING SET-ROD
	NPR AB	4P-9945	1	KIT-ROD BEARING (0.25-MM US)
	NPR AB	4P-9946	1	KIT-ROD BEARING (0.51-MM US)
	NPR AB	4P-9947	1	KIT-ROD BEARING (0.76-MM US)
4	NPR B	032-9090	2	WASHER-THRUST (STANDARD-UPPER)
	NPR AB	067-6873	2	WASHER-THRUST (0.18-MM OS)
5	NPR B	067-6869	1	BEARING SET-MAIN

	NPR AB	033-2379	1	KIT-CRANKSHAFT BEARING (0.25-MM US)
	NPR AB	033-2380	1	KIT-CRANKSHAFT BEARING (0.51-MM US)
	NPR AB	033-2381	1	KIT-CRANKSHAFT BEARING (0.76-MM US)
6	NPR B	032-9091	2	WASHER-THRUST (STANDARD-LOWER)
	NPR AB	067-6874	2	WASHER-THRUST (0.18-MM OS)
7	NPR	6I-0223	1	GEAR-CRANKSHAFT (28-TEETH)

(BEARING SETS AND KITS INCLUDE A COMPLETE SET OF BEARINGS FOR A CRANKSHAFT.)

Key:

A - NOT PART OF THIS GROUP
B - USE AS REQUIRED
C - CHANGE FROM PREVIOUS TYPE
R - REMFG PART MAY BE AVAILABLE

125-0377 CRANKSHAFT GP ---S/N 5HK81000-99999; 9RM1-UP
PART OF 106-5001 ENGINE AR-PRIMARY

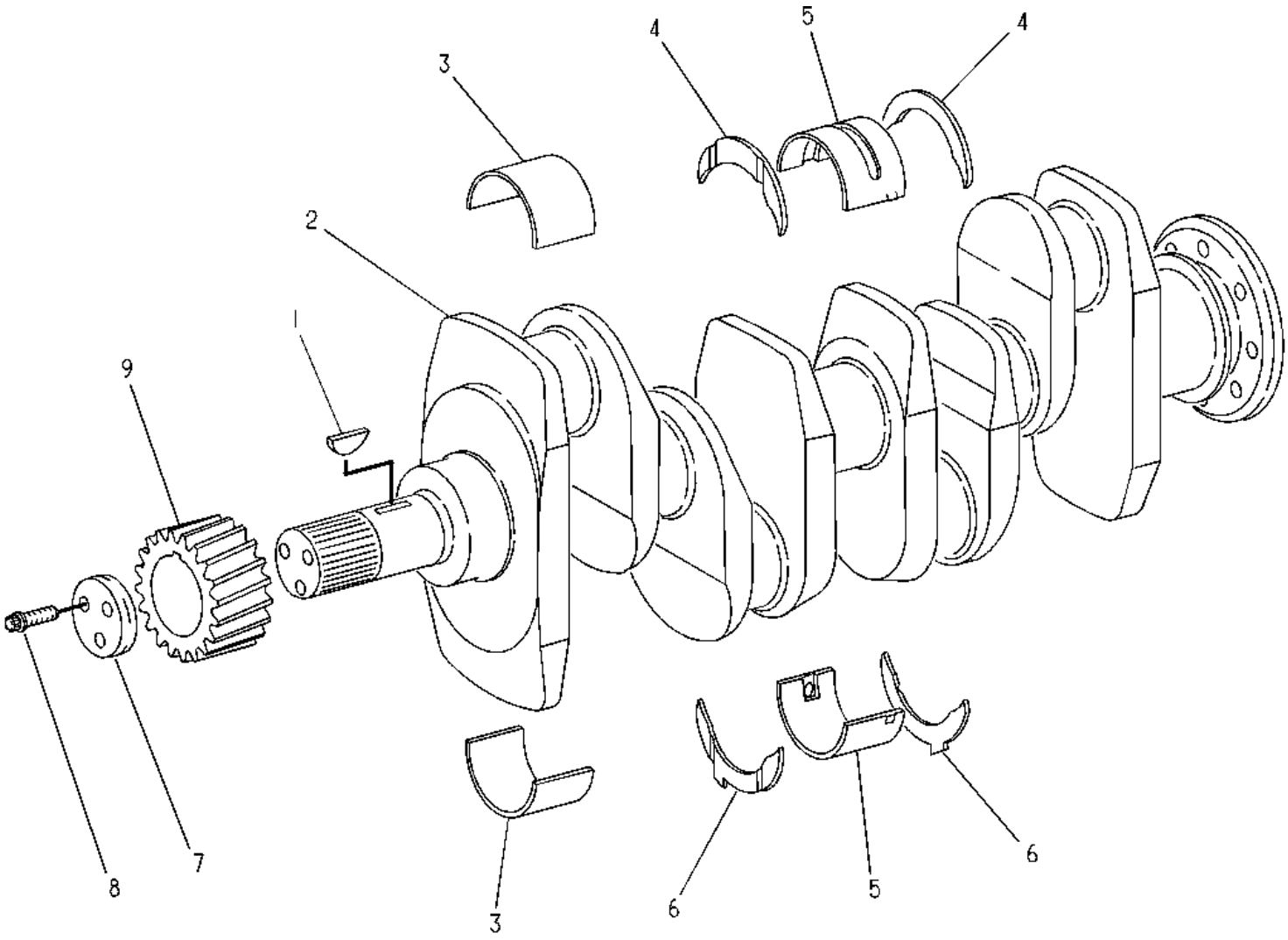

1	NPR	1B-8736	1	KEY-WOODRUFF
2	NPR	7C-6944	1	CRANKSHAFT GP
3	NPR	067-6886	1	SET-BEARING (STANDARD ROD)(COMPLETE)
	NPR A	033-2382	1	KIT-ROD BEARING (0.25-MM US)
	NPR A	033-2383	1	KIT-ROD BEARING (0.51-MM US)
	NPR A	033-2384	1	KIT-ROD BEARING (0.76-MM US)
4	NPR	032-9090	2	WASHER-THRUST (STANDARD-UPPER)
	NPR A	067-6873	2	WASHER-THRUST (0.18-MM OS)
5	NPR	067-6869	1	BEARING SET-MAIN
	NPR A	033-2379	1	KIT-CRANKSHAFT BEARING (0.25-MM US)

	NPR A	033-2380	1	KIT-CRANKSHAFT BEARING (0.51-MM US)
	NPR A	033-2381	1	KIT-CRANKSHAFT BEARING (0.76-MM US)
6	NPR	032-9091	2	WASHER-THRUST (STANDARD-LOWER)
	NPR A	067-6874	2	WASHER-THRUST (0.18-MM OS)
7	NPR	7C-3195	1	BLOCK-THRUST
8	NPR	7C-3196	3	BOLT
9	NPR	6I-0223	1	GEAR-CRANKSHAFT (28-TEETH)
	-OR-			
	NPR R	4P-9948	1	CRANKSHAFT GP
R	NPR	0R-4508	1	CRANKSHUTN
	NPR	4P-9944	1	BEARING SET-ROD
	NPR A	4P-9945	1	KIT-ROD BEARING (0.25-MM US)
	NPR A	4P-9946	1	KIT-ROD BEARING (0.51-MM US)
	NPR A	7W-2509	1	KIT-ROD BEARING
	NPR	032-9090	2	WASHER-THRUST (STANDARD-UPPER)
	NPR A	067-6873	2	WASHER-THRUST (0.18-MM OS)
	NPR	067-6869	1	BEARING SET-MAIN
	NPR A	033-2379	1	KIT-CRANKSHAFT BEARING (0.25-MM US)
	NPR A	033-2380	1	KIT-CRANKSHAFT BEARING (0.51-MM US)
	NPR A	033-2381	1	KIT-CRANKSHAFT BEARING (0.76-MM US)
	NPR	032-9091	2	WASHER-THRUST (STANDARD-LOWER)
	NPR A	067-6874	2	WASHER-THRUST (0.18-MM OS)
	NPR B	7C-3195	1	BLOCK-THRUST
	NPR B	7C-3196	3	BOLT

Key: A - NOT PART OF THIS GROUP B - USE AS REQUIRED R - REMFG PART MAY BE AVAILABLE

145-6688 CRANKSHAFT GP --S/N 7BJ1-UP; 5HK81000-99999
PART OF 122-8803, 122-8804 ENGINE AR-PRIMARY

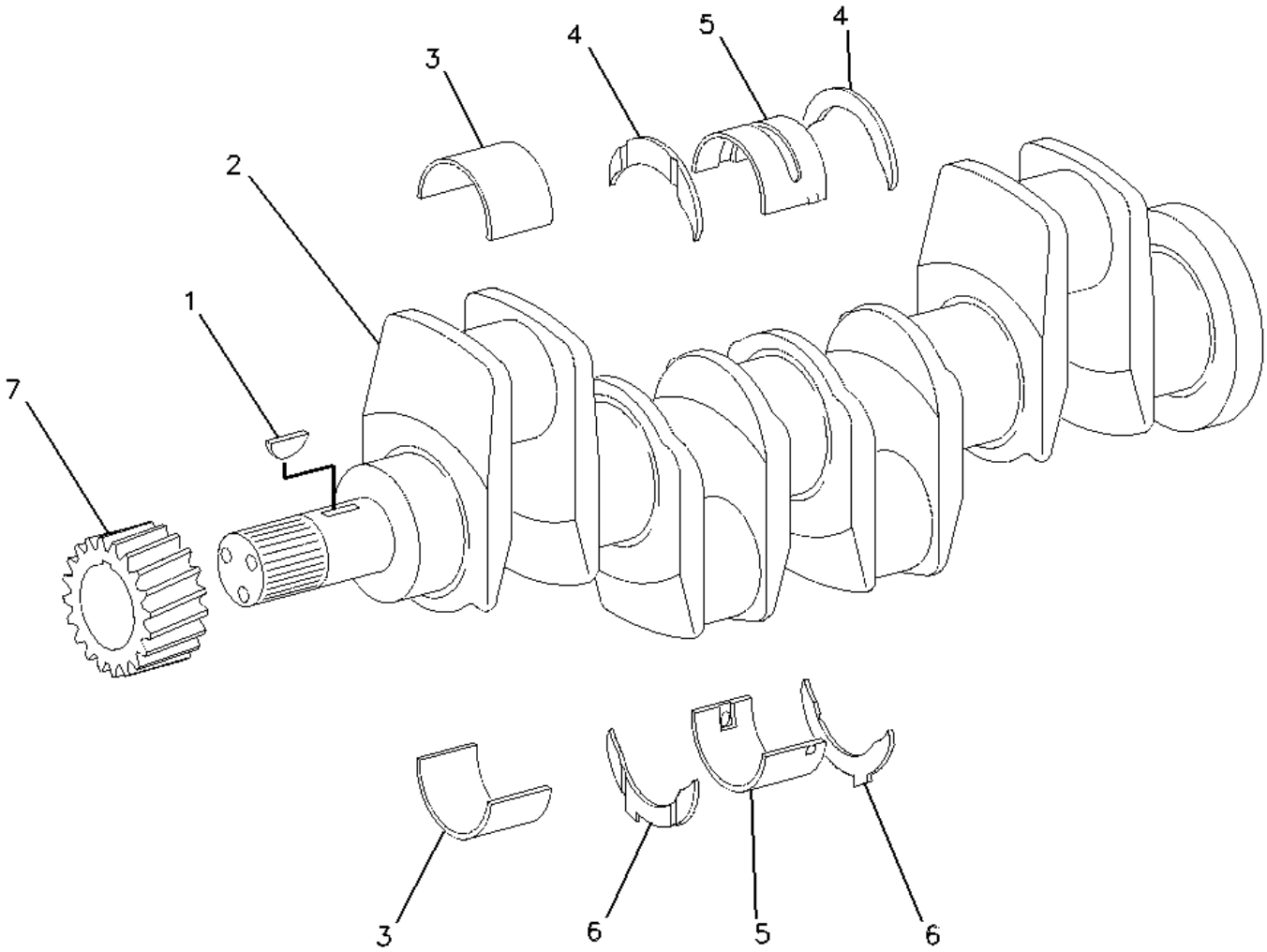

1	NPR	1B-8736	1	KEY-WOODRUFF
2	NPR R	4P-9948	1	CRANKSHAFT GP
R	NPR	0R-4508	1	CRANKSHUTN
3	NPR	4P-9944	1	BEARING SET-ROD
	NPR AB	4P-9945	1	KIT-ROD BEARING (0.25-MM US)
	NPR AB	4P-9946	1	KIT-ROD BEARING (0.51-MM US)
	NPR AB	4P-9947	1	KIT-ROD BEARING (0.76-MM US)
4	NPR	032-9090	2	WASHER-THRUST (STANDARD-UPPER)
	NPR AB	067-6873	2	WASHER-THRUST (0.18-MM OS)(UPPER)

5	NPR	067-6869	1	BEARING SET-MAIN (COMPLETE)
	NPR AB	033-2379	1	KIT-CRANKSHAFT BEARING (0.25-MM US)
	NPR AB	033-2380	1	KIT-CRANKSHAFT BEARING (0.51-MM US)
	NPR AB	033-2381	1	KIT-CRANKSHAFT BEARING (0.76-MM US)
6	NPR	032-9091	2	WASHER-THRUST (STANDARD-LOWER)
	NPR AB	067-6874	2	WASHER-THRUST (0.18-MM OS)(LOWER)
7	NPR	6I-0223	1	GEAR-CRANKSHAFT (28-TEETH)

Key: A - NOT PART OF THIS GROUP B - USE AS REQUIRED R - REMFG PART MAY BE AVAILABLE

6I-3874 CYLINDER BLOCK GP --S/N 5HK81000-99999; 9RM1-UP
PART OF 130-3449, 130-6761 CYLINDER BLOCK GP--FIELD REPLACEMENT ORDER 209-5557

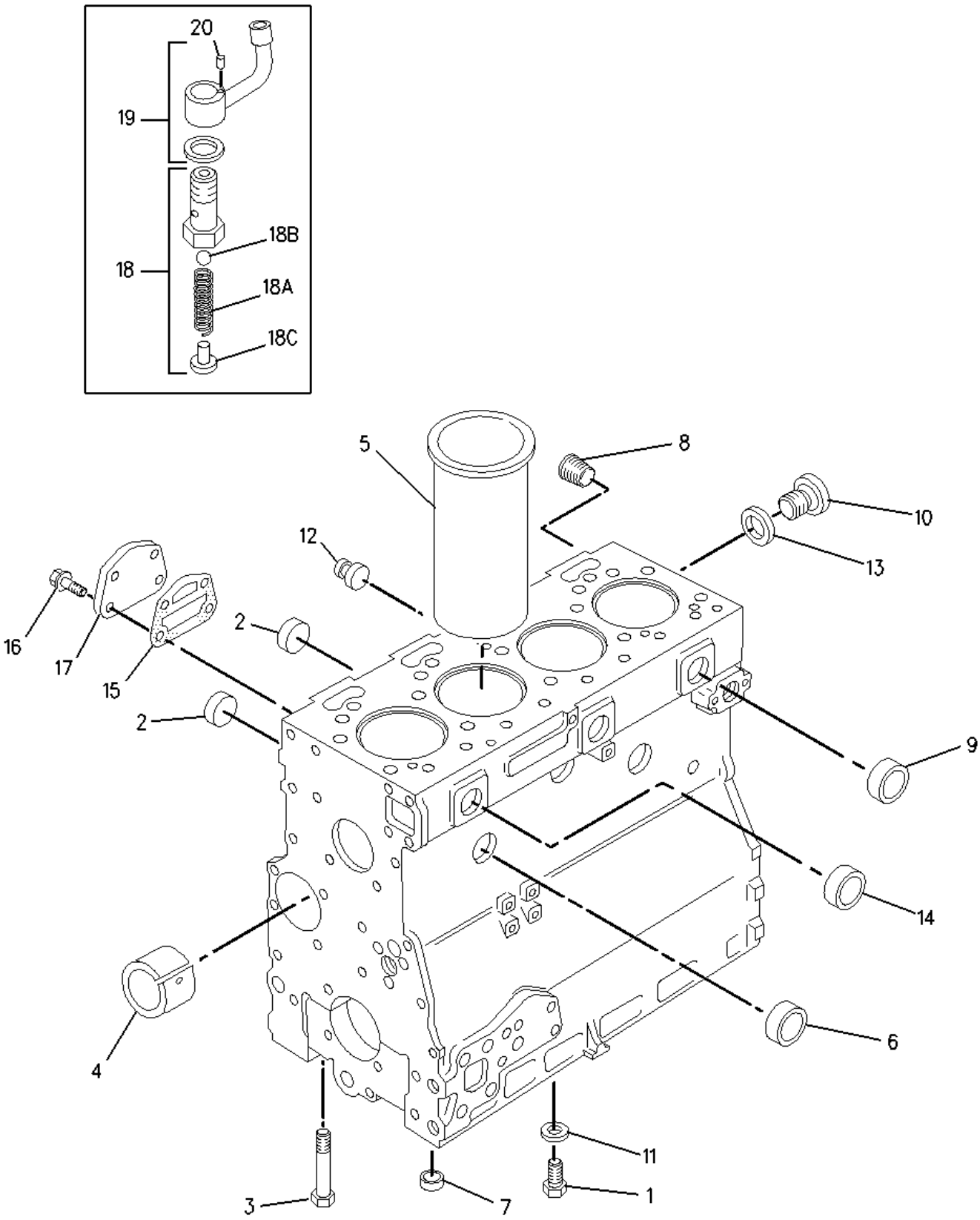

1	NPR	0L-1138	4	BOLT (3/8-24X.5IN)
2	NPR	1N-3762	7	PLUG-CUP
3	NPR	035-8068	10	BOLT
4	NPR	036-5802	1	BEARING
5	NPR	6I-0164	4	LINER
6	NPR	6I-0195	1	PLUG
7	NPR	067-6002	10	DOWEL
8	NPR	067-6006	1	PLUG
9	NPR	067-6043	6	PLUG-SIDE
10	NPR	067-6805	1	PLUG
11	NPR	067-9520	4	SPACER-BOLT
12	NPR	7W-2501	1	PLUG
13	NPR	8F-2534	1	GASKET
14	NPR	127-9768	1	PLUG
15	NPR	6I-0298	1	GASKET
16	NPR	6I-0302	4	BOLT (M10X1.5X25MM)
17	NPR	101-3923	1	PLATE
18	NPR	6I-1074	4	VALVE AS (OIL JET)
	(EACH INCLUDES)			
18A	NPR	6I-0686	1	SPRING
18B	NPR	6I-1075	1	BALL
18C	NPR	6I-1076	1	RETAINER
19	NPR	148-3026	4	JET AS-PISTON COOLING
20	NPR	148-7549	4	DOWEL

130-3449 CYLINDER BLOCK GP --S/N 9RM1-50164-PART OF 106-5002 ENGINE AR-PRIMARY

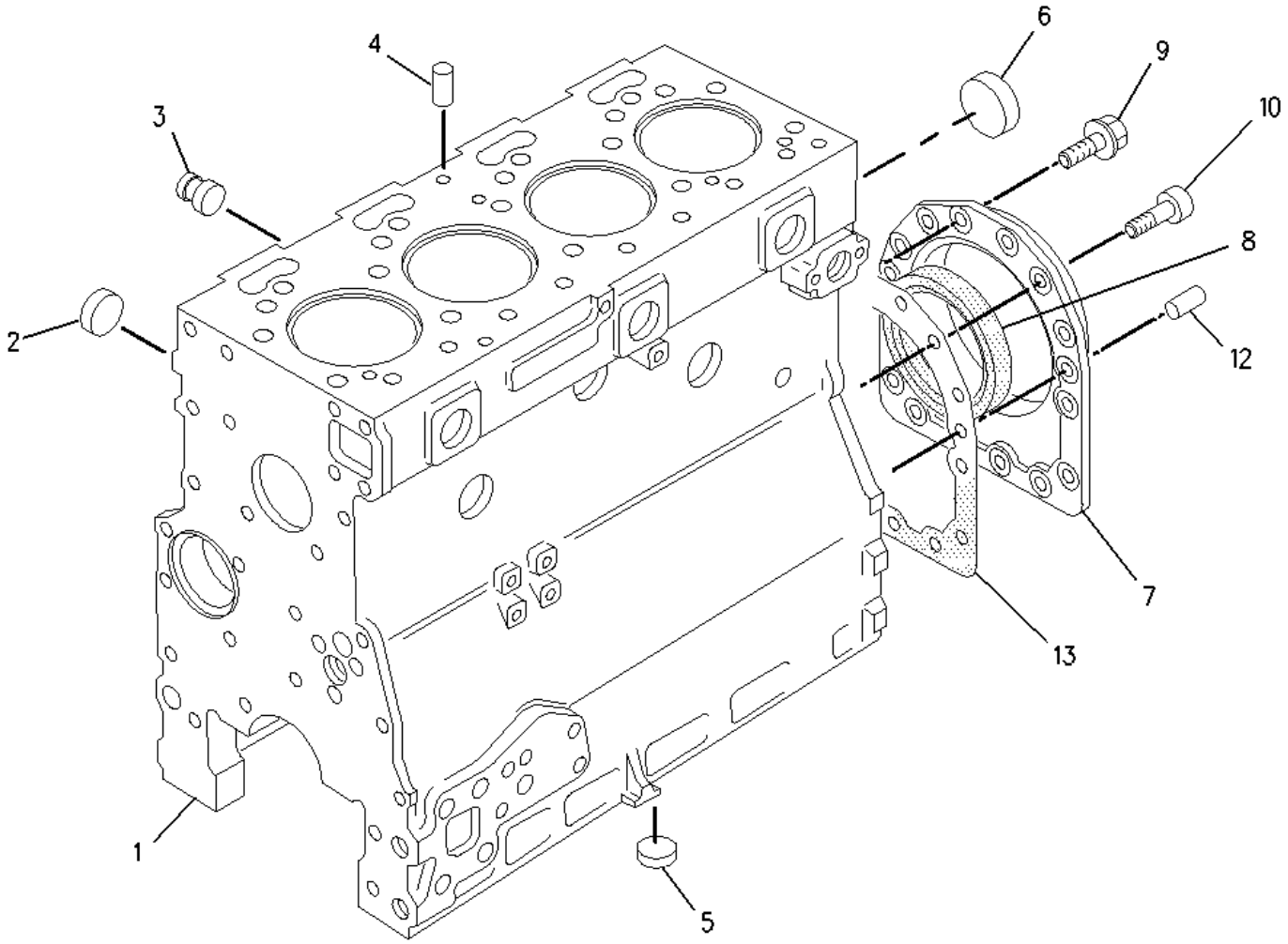

1 NPR CY 6I-3874 1 CYLINDER BLOCK GP

2 NPR 1N-3762 2 PLUG-CUP

3 NPR 7W-2501 1 PLUG

4 NPR 067-6808 1 PLUG

5 NPR 067-9509 1 PLUG

6 NPR 9Y-5015 1 PLUG-FREEZE

7 NPR 112-5540 1 HOUSING AS

8 NPR 4W-5360 1 SEAL-CRANKSHAFT

9 NPR M 6I-0217 12 BOLT (M8X1.25X20-MM)

10 NPR 126-2231 2 BOLT

12 NPR 6D-0044 2 DOWEL

13 NPR 112-5541 1 GASKET

Key:

C - CHANGE FROM PREVIOUS TYPE
M - METRIC PART
Y - SEPARATE ILLUSTRATION

130-3449 CYLINDER BLOCK GP ---S/N 9RM50165-UP
PART OF 106-5002 ENGINE AR-PRIMARY

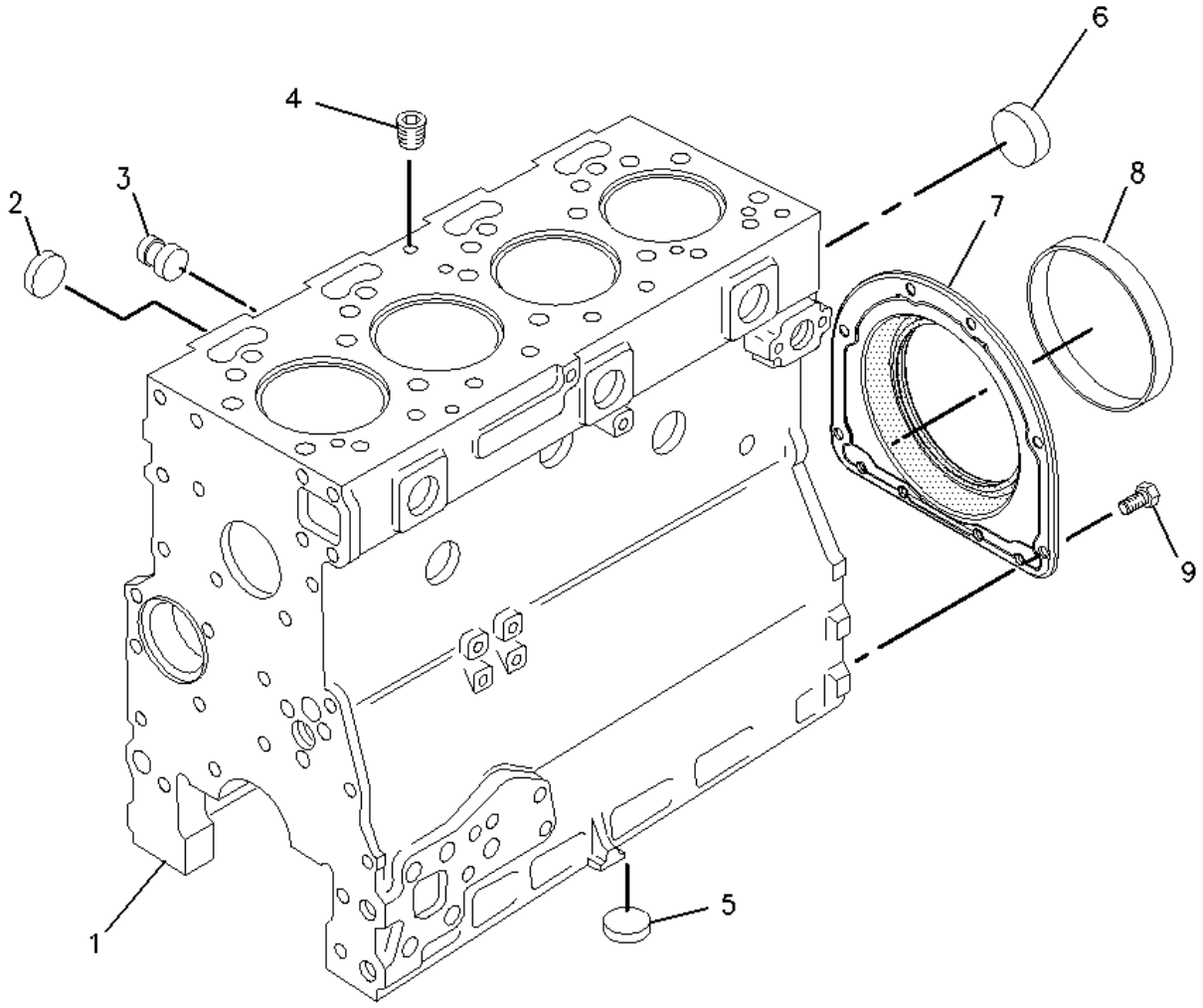

1 NPR CY 209-5557 1 CYLINDER BLOCK GP

2 NPR 1N-3762 2 PLUG-CUP

3 NPR 7W-2501 1 PLUG

4 NPR 067-6808 1 PLUG

5 NPR 067-9509 1 PLUG

6 NPR 9Y-5015 1 PLUG-FREEZE

7 NPR 209-9218 1 HOUSING AS

8 NPR 219-2512 1 SLEEVE

9 NPR M 209-9219 10 BOLT (M8X1.25X16-MM)

NPR F 5G-2985 2 SPACER

Key:

C - CHANGE FROM PREVIOUS TYPE
F - NOT SHOWN
M - METRIC PART
Y - SEPARATE ILLUSTRATION

130-6761 CYLINDER BLOCK GP --S/N 5HK81000-99999; 9RM1-50164
PART OF 106-5001 ENGINE AR-PRIMARY

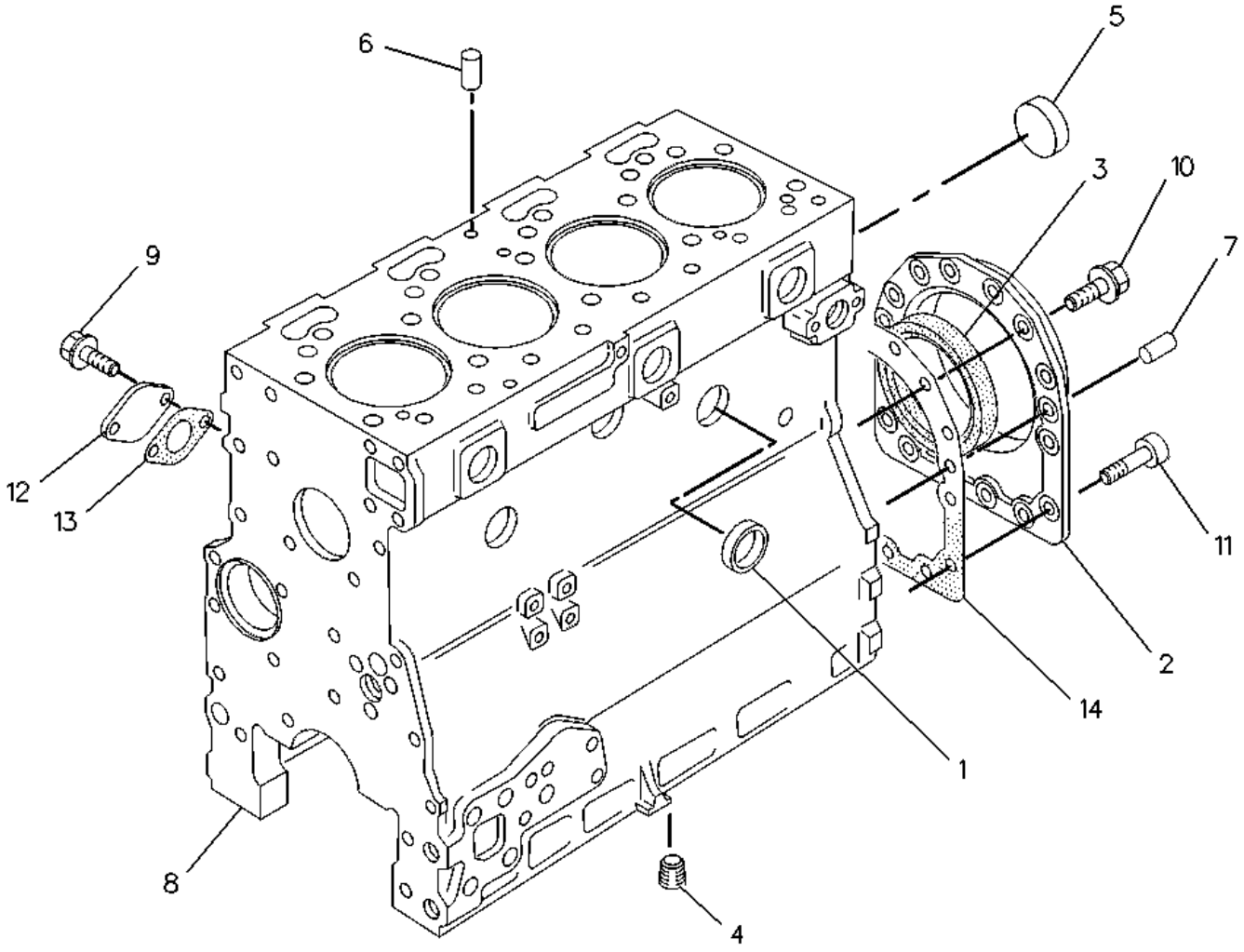

1	**NPR**	**1N-3762**	**4**	**PLUG-CUP**
2	**NPR**	**112-5540**	**1**	**HOUSING AS**
3	**NPR**	**4W-5360**	**1**	**SEAL-CRANKSHAFT**
4	**NPR**	**067-9509**	**1**	**PLUG**
5	**NPR**	**9Y-5015**	**1**	**PLUG-FREEZE**
6	**NPR**	**067-6808**	**1**	**PLUG**
7	**NPR**	**6D-0044**	**2**	**DOWEL**
8	**NPR Y**	**6I-3874**	**1**	**CYLINDER BLOCK GP**
9	**NPR**	**6I-0572**	**2**	**BOLT (M8X1.25X20-MM)**

10	**NPR M**	**6I-0217**	**12**	**BOLT (M8X1.25X20-MM)**
11	**NPR**	**126-2231**	**2**	**BOLT**
12	**NPR**	**6I-0219**	**1**	**PLATE**
13	**NPR**	**6I-0220**	**1**	**GASKET**
14	**NPR**	**112-5541**	**1**	**GASKET**

Key:

M - METRIC PART
Y - SEPARATE ILLUSTRATION

130-6761 CYLINDER BLOCK GP ---S/N 9RM50165-UP
PART OF 106-5001 ENGINE AR-PRIMARY

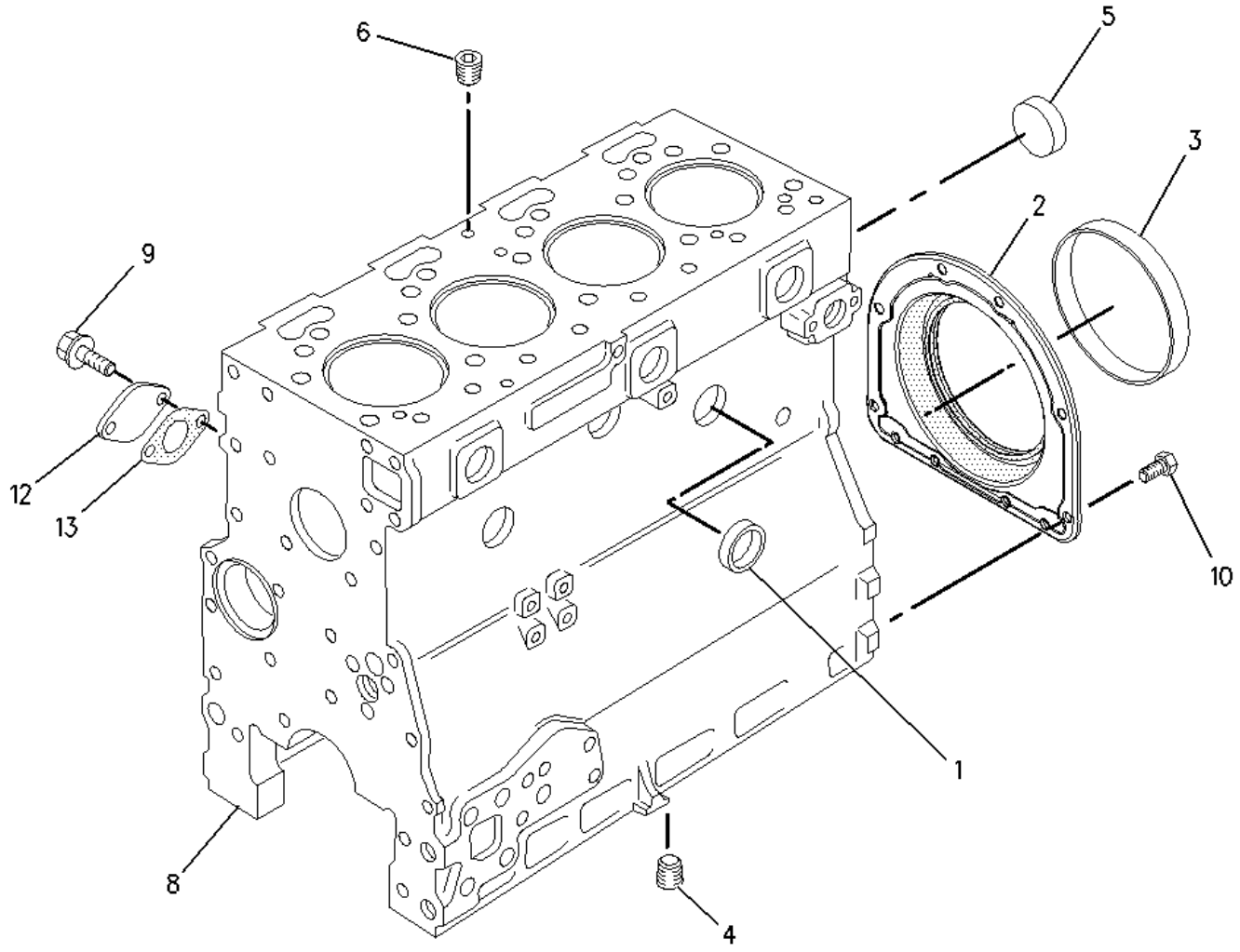

1 NPR 1N-3762 4 PLUG-CUP

2 NPR 209-9218 1 HOUSING AS

3 NPR 209-8228 1 SLEEVE

4 NPR 067-9509 1 PLUG

5 NPR 9Y-5015 1 PLUG-FREEZE

6 NPR 067-6808 1 PLUG

8 NPR Y 209-5557 1 CYLINDER BLOCK GP

9 NPR 6I-0572 2 BOLT (M8X1.25X20-MM)

10 NPR M 209-9219 10 BOLT (M8X1.25X16-MM)

12	**NPR**	**6I-0219**	**1**	**PLATE**
13	**NPR**	**6I-0220**	**1**	**GASKET**

Key:

M - METRIC PART
Y - SEPARATE ILLUSTRATION

145-6685 CYLINDER BLOCK GP --S/N 7BJ1-54855; 5HK81000-99999
PART OF 122-8803, 122-8804 ENGINE AR-PRIMARY

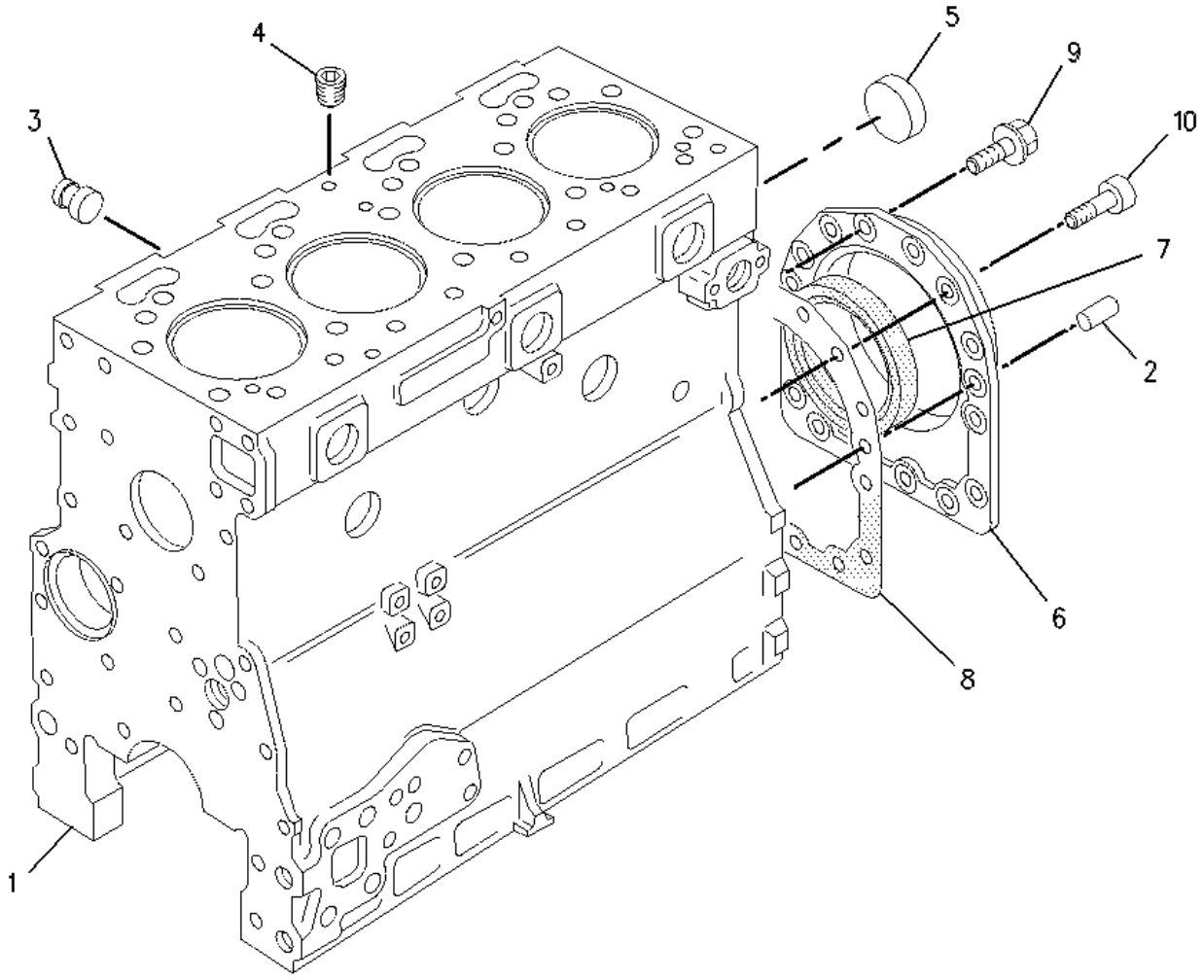

1	NPR Y	152-2884	1	CYLINDER BLOCK GP
2	NPR	6D-0044	2	DOWEL
3	NPR	7W-2501	1	PLUG
4	NPR	067-6808	1	PLUG
5	NPR	9Y-5015	1	PLUG-FREEZE
6	NPR	112-5540	1	HOUSING AS
7	NPR	4W-5360	1	SEAL-CRANKSHAFT
8	NPR	112-5541	1	GASKET
9	NPR M	6I-0217	12	BOLT (M8X1.25X20-MM)
10	NPR	126-2231	2	BOLT

Key: M - METRIC PART Y - SEPARATE ILLUSTRATION

145-6685 CYLINDER BLOCK GP --S/N 7BJ54856-UP
PART OF 122-8803, 122-8804 ENGINE AR-PRIMARY

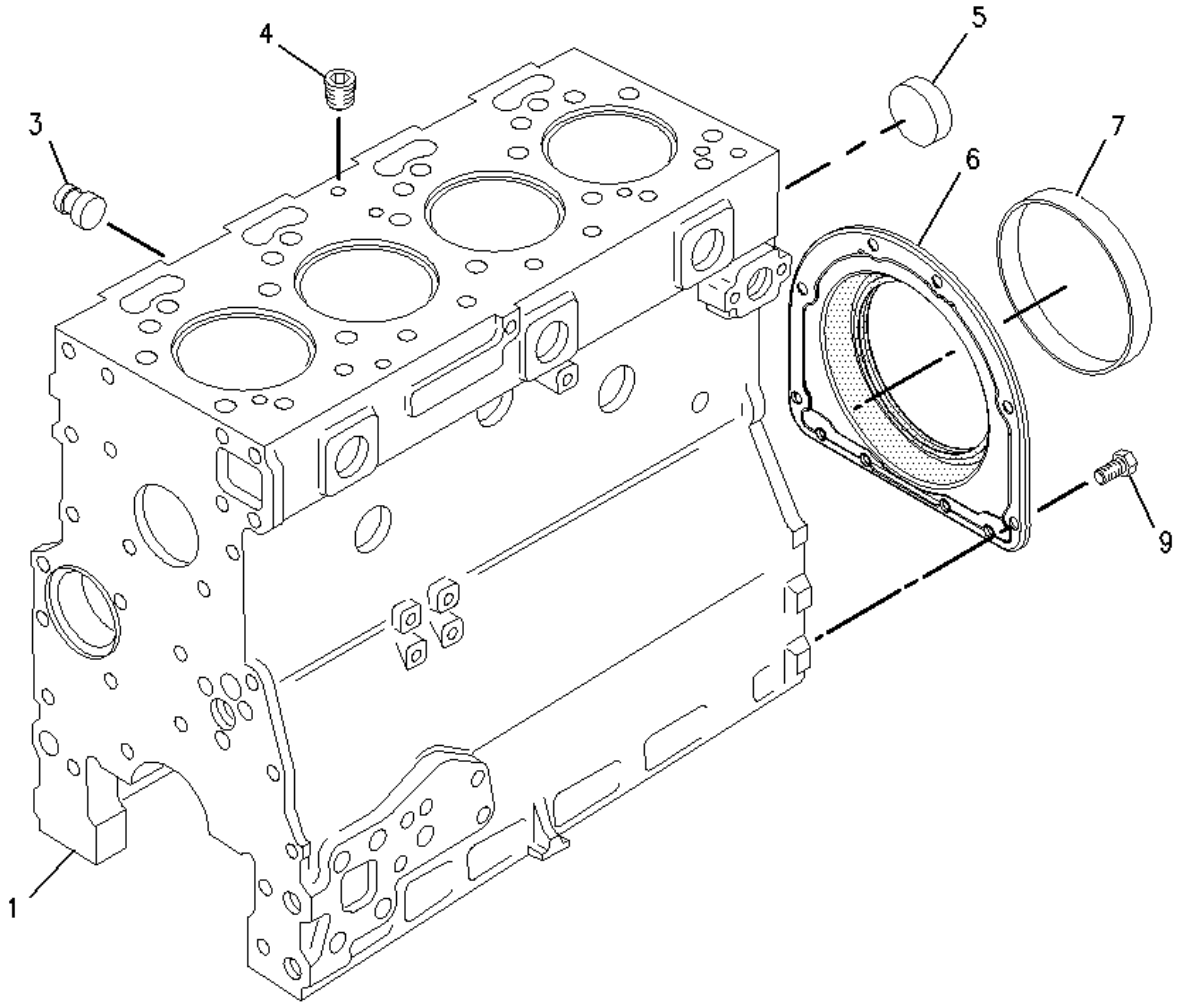

1 NPR Y 209-5562 1 CYLINDER BLOCK GP

3 NPR 7W-2501 1 PLUG

4 NPR 067-6808 1 PLUG

5 NPR 9Y-5015 1 PLUG-FREEZE

6 NPR 209-9218 1 HOUSING AS

7 NPR 209-8228 1 SLEEVE

9 NPR M 209-9219 10 BOLT (M8X1.25X16-MM)

Key: M - METRIC PART Y - SEPARATE ILLUSTRATION

152-2884 CYLINDER BLOCK GP --S/N 7BJ1-54855; 5HK81000-99999
PART OF 145-6685 CYLINDER BLOCK GP-FIELD REPLACEMENT ORDER 209-5562

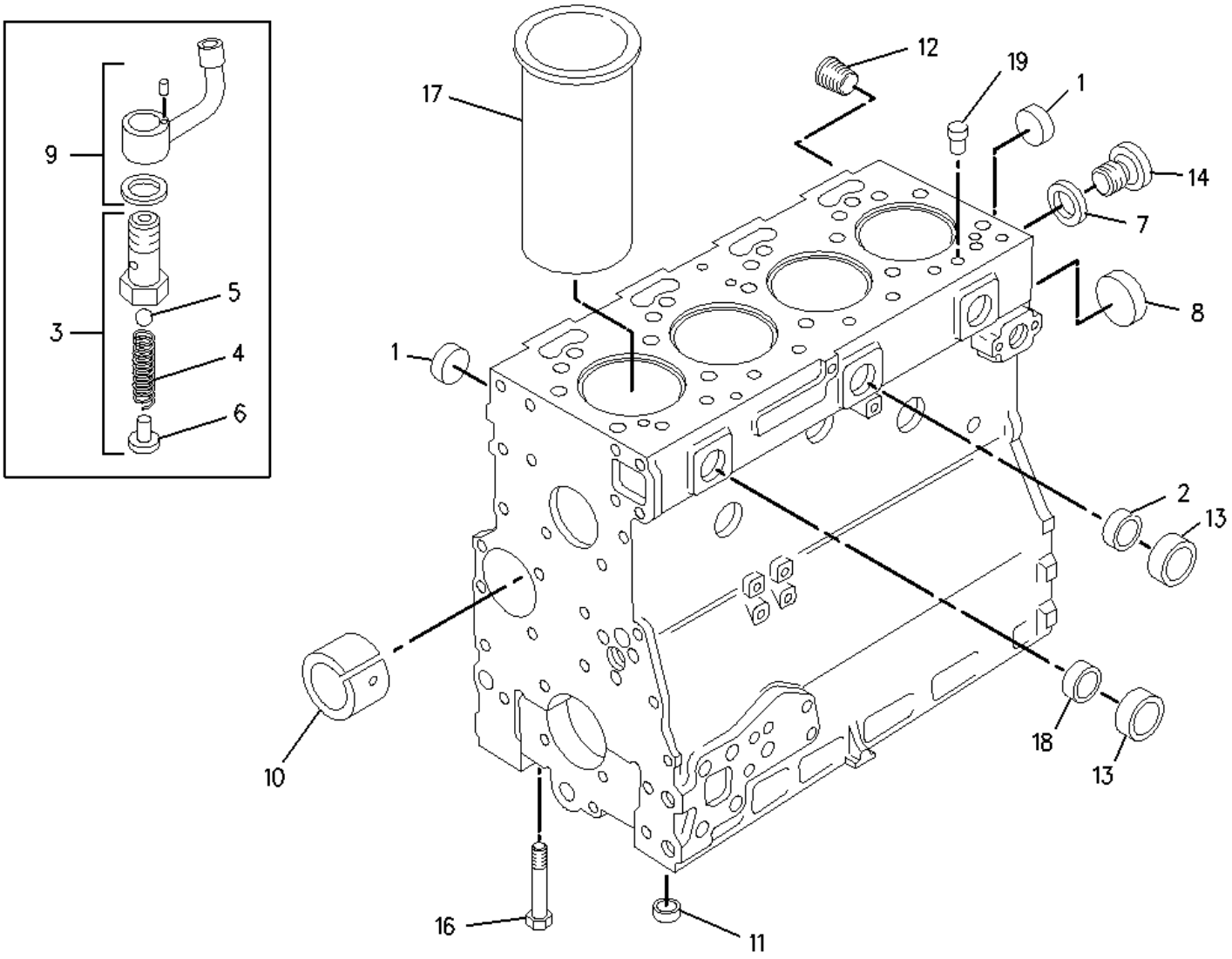

1	**NPR**	**1N-3762**	**9**	**PLUG-CUP**
2	**NPR**	**6I-0195**	**1**	**PLUG**
3	**NPR**	**6I-1074**	**4**	**VALVE AS (OIL JET)**
	(EACH INCLUDES)			
4	**NPR**	**6I-0686**	**1**	**SPRING**
5	**NPR**	**6I-1075**	**1**	**BALL**
6	**NPR**	**6I-1076**	**1**	**RETAINER**
7	**NPR**	**8F-2534**	**1**	**GASKET**
8	**NPR**	**9Y-5015**	**1**	**PLUG-FREEZE**
9	**NPR**	**148-3026**	**4**	**JET AS-PISTON COOLING**

10	**NPR**	**036-5802**	**1**	**BEARING**
11	**NPR**	**067-6002**	**10**	**DOWEL**
12	**NPR**	**067-6006**	**1**	**PLUG**
13	**NPR**	**067-6043**	**6**	**PLUG-SIDE**
14	**NPR**	**067-6805**	**1**	**PLUG**
16	**NPR**	**035-8068**	**10**	**BOLT (5/8-18X3.75-IN)**
17	**NPR**	**111-1815**	**4**	**LINER**
18	**NPR**	**127-9768**	**1**	**PLUG**
19	**NPR**	**147-1978**	**2**	**DOWEL**

209-5557 CYLINDER BLOCK GP --S/N 5HK81000-99999; 9RM1-50164
PART OF 130-3449, 130-6761 CYLINDER BLOCK GP
FIELD REPLACEMENT FOR 6I-3874

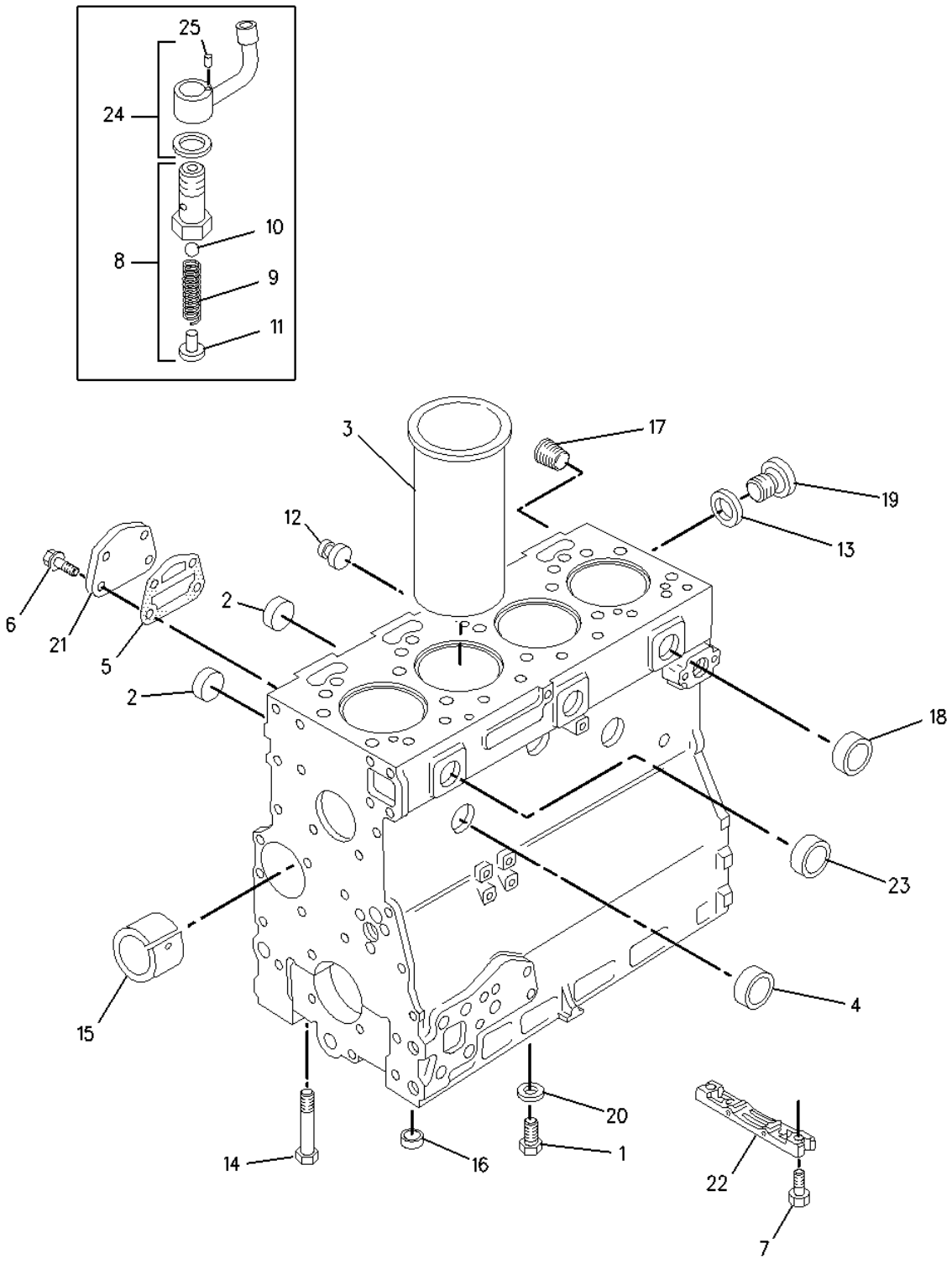

1 NPR 0L-1138 4 BOLT (3/8-24X0.5-IN)

2 NPR 1N-3762 7 PLUG-CUP

3 NPR 6I-0164 4 LINER

4	NPR	6I-0195	1	PLUG
5	NPR	6I-0298	1	GASKET
6	NPR	6I-0302	4	BOLT (M10X1.5X25-MM)
7	NPR M	6I-0363	2	BOLT (M6X1X20-MM)
8	NPR	6I-1074	4	VALVE AS (OIL JET)
	(EACH INCLUDES)			
9	NPR	6I-0686	1	SPRING
10	NPR	6I-1075	1	BALL
11	NPR	6I-1076	1	RETAINER
12	NPR	7W-2501	1	PLUG
13	NPR	8F-2534	1	GASKET
14	NPR	035-8068	10	BOLT (5/8-18X3.75-IN)
15	NPR	036-5802	1	BEARING
16	NPR	067-6002	10	DOWEL
17	NPR	067-6006	1	PLUG
18	NPR	067-6043	6	PLUG-SIDE
19	NPR	067-6805	1	PLUG
20	NPR	067-9520	4	SPACER
21	NPR	101-3923	1	PLATE
22	NPR	113-0309	1	BRIDGE
23	NPR	127-9768	1	PLUG
24	NPR	148-3026	4	JET AS-PISTON COOLING
25	NPR	148-7549	4	DOWEL

Key:

M - METRIC PART

209-5557 CYLINDER BLOCK GP --S/N 9RM50165-UP--PART OF 130-3449 CYLINDER BLOCK GP
Type 1

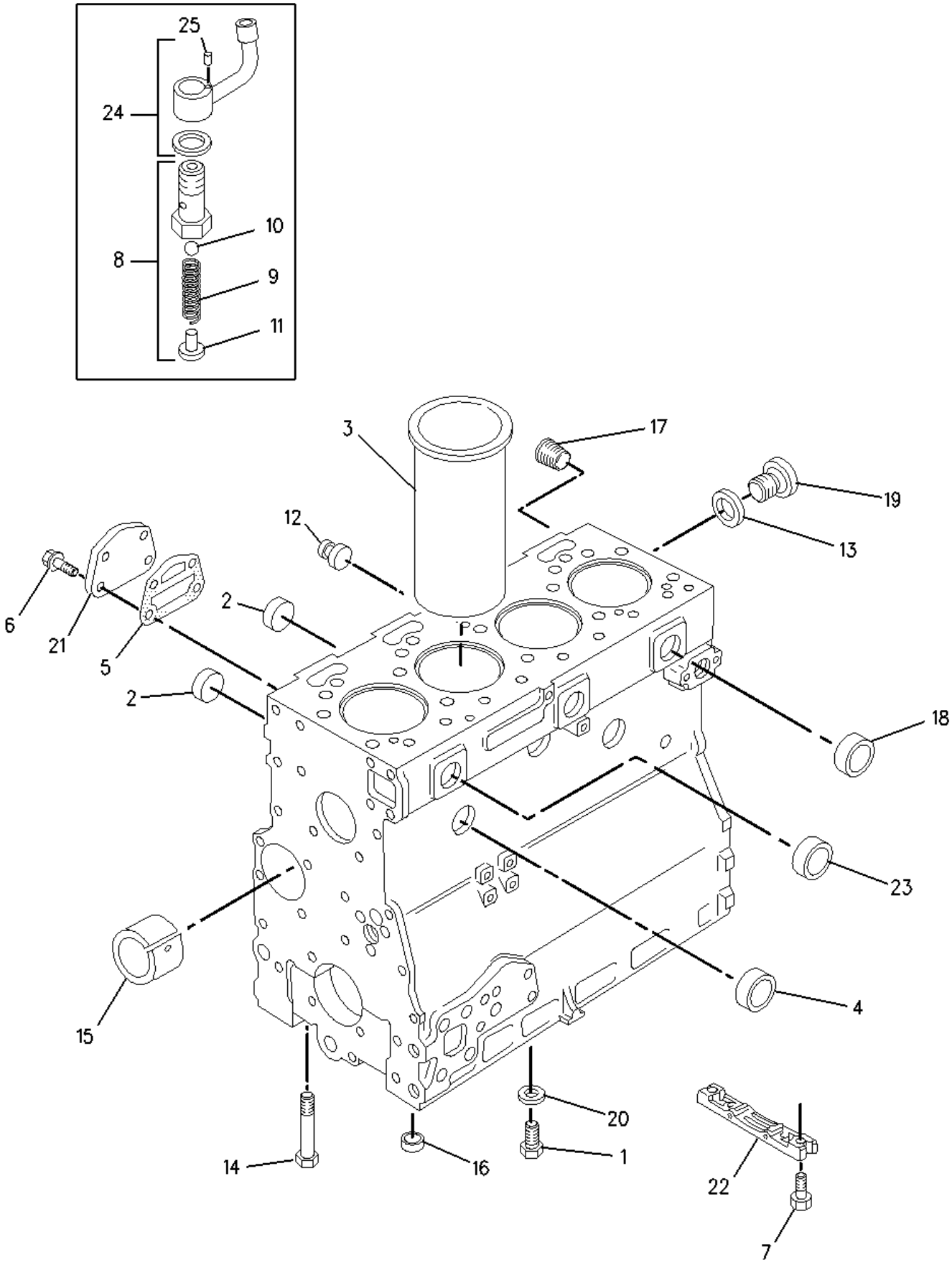

1 NPR 0L-1138 4 BOLT (3/8-24X0.5-IN)

2	NPR	1N-3762	7	PLUG-CUP
3	NPR	6I-0164	4	LINER
4	NPR	6I-0195	1	PLUG
5	NPR	6I-0298	1	GASKET
6	NPR	6I-0302	4	BOLT (M10X1.5X25-MM)
7	NPR M	6I-0363	2	BOLT (M6X1X20-MM)
8	NPR	6I-1074	4	VALVE AS (OIL JET)
	(EACH INCLUDES)			
9	NPR	6I-0686	1	SPRING
10	NPR	6I-1075	1	BALL
11	NPR	6I-1076	1	RETAINER
12	NPR	7W-2501	1	PLUG
13	NPR	8F-2534	1	GASKET
14	NPR	035-8068	10	BOLT (5/8-18X3.75-IN)
15	NPR	036-5802	1	BEARING
16	NPR	067-6002	10	DOWEL
17	NPR	067-6006	1	PLUG
18	NPR	067-6043	6	PLUG-SIDE
19	NPR	067-6805	1	PLUG
20	NPR	067-9520	4	SPACER
21	NPR	101-3923	1	PLATE
22	NPR C	211-0067	1	BRIDGE
23	NPR	127-9768	1	PLUG
24	NPR	148-3026	4	JET AS-PISTON COOLING
25	NPR	148-7549	4	DOWEL

Key: C - CHANGE FROM PREVIOUS TYPE M - METRIC PART

209-5557 CYLINDER BLOCK GP --S/N 9RM50165-UP
PART OF 130-3449, 130-6761 CYLINDER BLOCK GP--Type 2

FIELD REPLACEMENT FOR 6I-3874

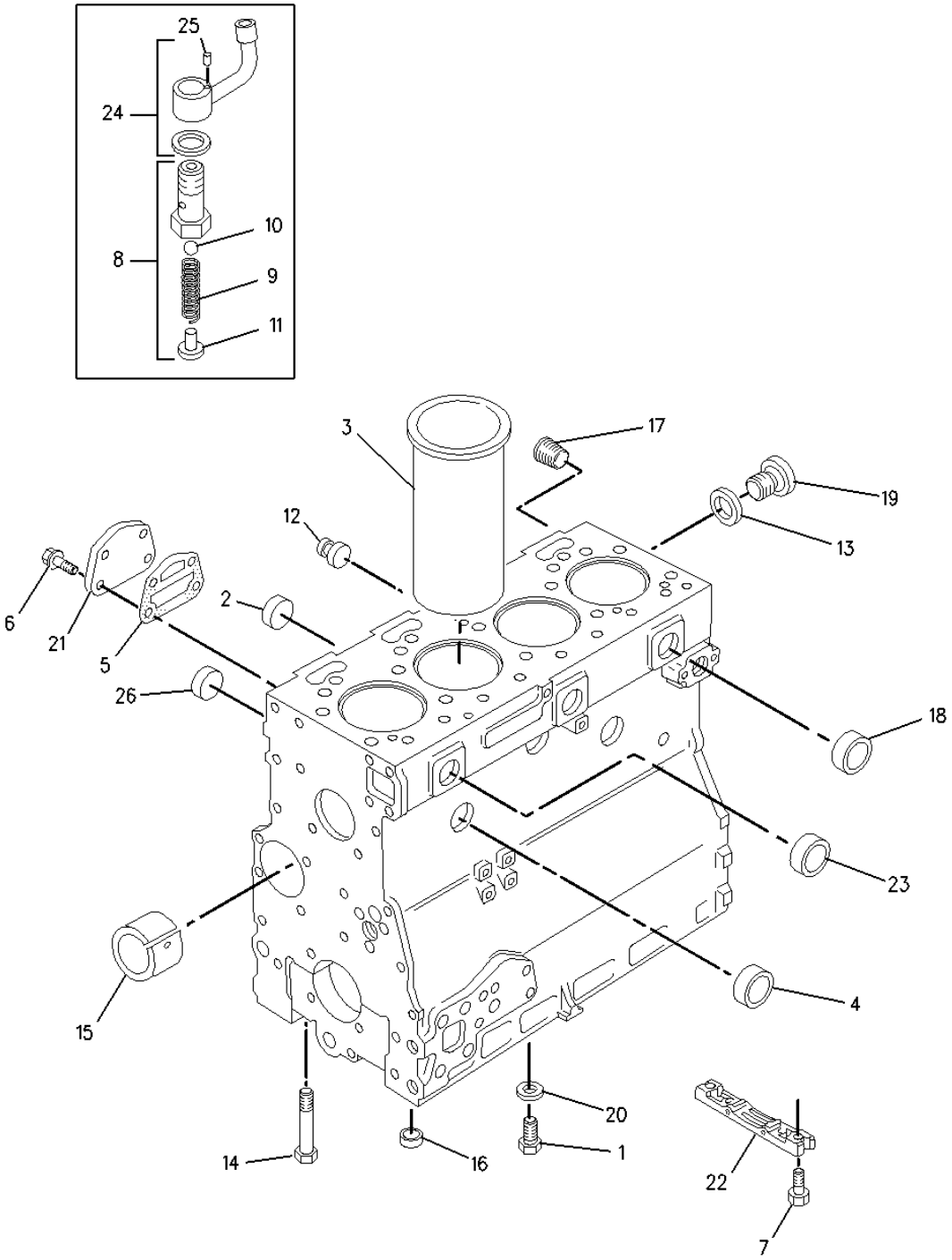

1	**NPR**	**0L-1138**	**4**	**BOLT (3/8-24X0.5-IN)**
2	**NPR**	**1N-3762**	**3**	**PLUG-CUP**
3	**NPR**	**6I-0164**	**4**	**LINER**
4	**NPR**	**6I-0195**	**1**	**PLUG**
5	**NPR**	**6I-0298**	**1**	**GASKET**

6	NPR	6I-0302	4	BOLT (M10X1.5X25-MM)
7	NPR M	6I-0363	2	BOLT (M6X1X20-MM)
8	NPR	6I-1074	4	VALVE AS (OIL JET)
	(EACH INCLUDES)			
9	NPR	6I-0686	1	SPRING
10	NPR	6I-1075	1	BALL
11	NPR	6I-1076	1	RETAINER
12	NPR	7W-2501	1	PLUG
13	NPR	214-1668	1	WASHER-SPECIAL
14	NPR	035-8068	10	BOLT (5/8-18X3.75-IN)
15	NPR	036-5802	1	BEARING
16	NPR	067-6002	10	DOWEL
17	NPR	067-6006	1	PLUG
18	NPR	067-6043	6	PLUG-SIDE
19	NPR	067-6805	1	PLUG
20	NPR	067-9520	4	SPACER
21	NPR	101-3923	1	PLATE
22	NPR	211-0067	1	BRIDGE
23	NPR	127-9768	1	PLUG
24	NPR	148-3026	4	JET AS-PISTON COOLING
25	NPR	148-7549	4	DOWEL
26	NPR C	215-2103	4	PLUG

Key:

C - CHANGE FROM PREVIOUS TYPE
M - METRIC PART

209-5562 CYLINDER BLOCK GP -S/N 7BJ1-54855; 5HK81000-99999
PART OF 145-6685 CYLINDER BLOCK GP-FIELD REPLACEMENT ORDER 209-6725

FIELD REPLACEMENT FOR 152-2884

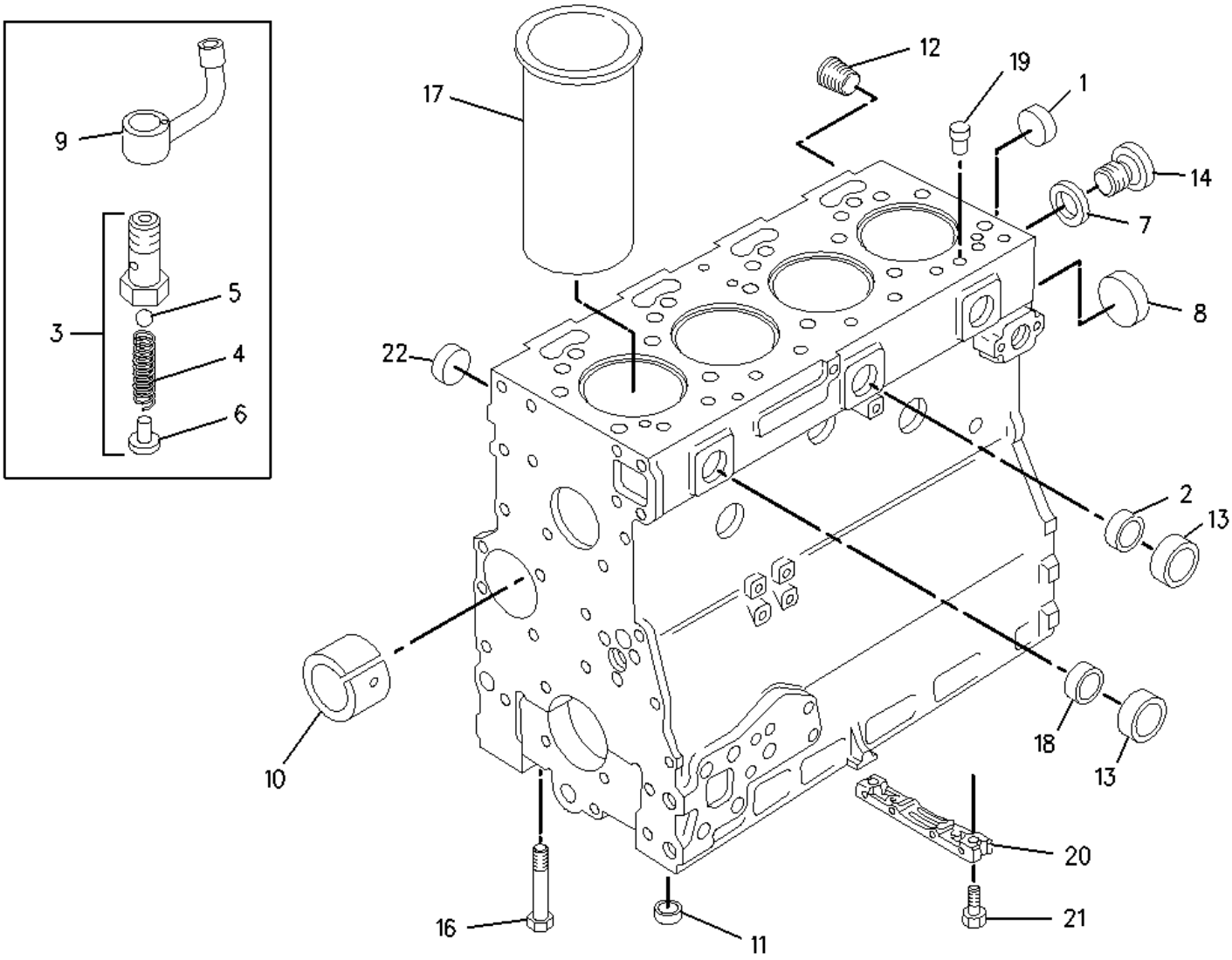

1 NPR 1N-3762 9 PLUG-CUP

2 NPR 6I-0195 1 PLUG

3 NPR 6I-1074 4 VALVE AS (OIL JET)

(EACH INCLUDES)

4 NPR 6I-0686 1 SPRING

5 NPR 6I-1075 1 BALL

6 NPR 6I-1076 1 RETAINER

7 NPR 8F-2534 1 GASKET

8 NPR 9Y-5015 1 PLUG-FREEZE

9 NPR 148-3026 4 JET AS-PISTON COOLING

10	NPR	036-5802	1	BEARING
11	NPR	067-6002	10	DOWEL
12	NPR	067-6006	1	PLUG
13	NPR	067-6043	6	PLUG-SIDE
14	NPR	067-6805	1	PLUG
16	NPR	035-8068	10	BOLT (5/8-18X3.75-IN)
17	NPR	111-1815	4	LINER
18	NPR	127-9768	1	PLUG
19	NPR	147-1978	2	DOWEL
20	NPR	113-0309	1	BRIDGE
21	NPR M	6I-0363	2	BOLT (M6X1X20-MM)

Key:

M - METRIC PART

209-5562 CYLINDER BLOCK GP ---S/N 7BJ54856-61080--PART OF 145-6685 CYLINDER BLOCK GP
FIELD REPLACEMENT ORDER 209-6725--FIELD REPLACEMENT FOR 152-2884

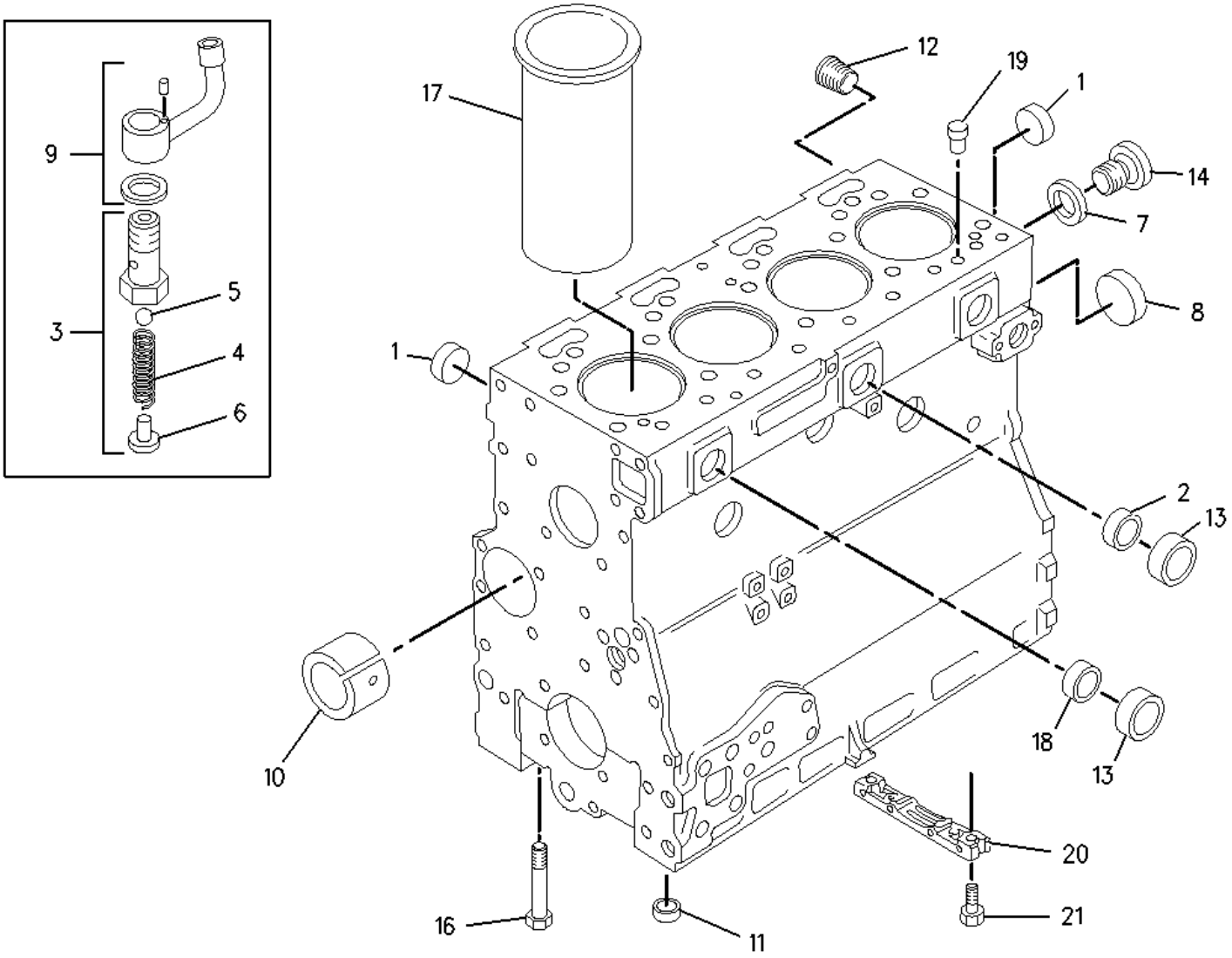

1 NPR 1N-3762 9 PLUG-CUP

2 NPR 6I-0195 1 PLUG

3 NPR 6I-1074 4 VALVE AS (OIL JET)

(EACH INCLUDES)

4 NPR 6I-0686 1 SPRING

5 NPR 6I-1075 1 BALL

6 NPR 6I-1076 1 RETAINER

7 NPR 8F-2534 1 GASKET

8 NPR 9Y-5015 1 PLUG-FREEZE

9 NPR 148-3026 4 JET AS-PISTON COOLING

10	NPR	036-5802	1	BEARING
11	NPR	067-6002	10	DOWEL
12	NPR	067-6006	1	PLUG
13	NPR	067-6043	6	PLUG-SIDE
14	NPR	067-6805	1	PLUG
16	NPR	035-8068	10	BOLT (5/8-18X3.75-IN)
17	NPR	111-1815	4	LINER
18	NPR	127-9768	1	PLUG
19	NPR	147-1978	2	DOWEL
20	NPR C	211-0067	1	BRIDGE
21	NPR M	6I-0363	2	BOLT (M6X1X20-MM)

Key:

C - CHANGE FROM PREVIOUS TYPE
M - METRIC PART

209-5562 CYLINDER BLOCK GP --S/N 7BJ61081-UP--PART OF 145-6685 CYLINDER BLOCK GP
FIELD REPLACEMENT ORDER 209-6725---FIELD REPLACEMENT FOR 152-2884

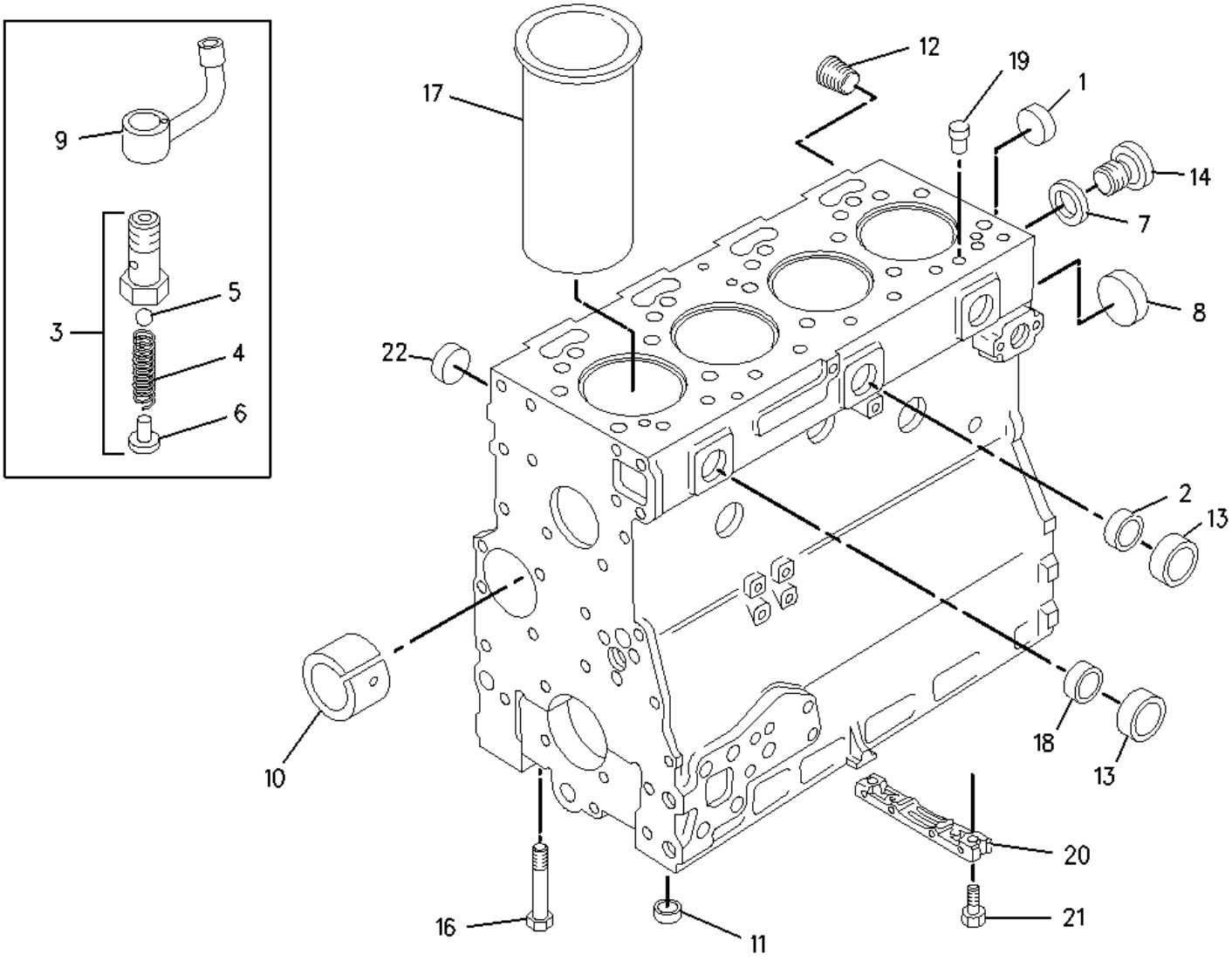

1 NPR 1N-3762 5 PLUG-CUP

2 NPR 6I-0195 1 PLUG

3 NPR 6I-1074 4 VALVE AS (OIL JET)

(EACH INCLUDES)

4 NPR 6I-0686 1 SPRING

5 NPR 6I-1075 1 BALL

6 NPR 6I-1076 1 RETAINER

7 NPR 214-1668 1 WASHER-SPECIAL

8 NPR 9Y-5015 1 PLUG-FREEZE

9 NPR 148-3026 4 JET AS-PISTON COOLING

10	NPR	036-5802	1	BEARING
11	NPR	067-6002	10	DOWEL
12	NPR	067-6006	1	PLUG
13	NPR	067-6043	6	PLUG-SIDE
14	NPR	067-6805	1	PLUG
16	NPR	035-8068	10	BOLT (5/8-18X3.75-IN)
17	NPR	111-1815	4	LINER
18	NPR	127-9768	1	PLUG
19	NPR	147-1978	2	DOWEL
20	NPR	211-0067	1	BRIDGE
21	NPR M	6I-0363	2	BOLT (M6X1X20-MM)
22	NPR C	215-2103	4	PLUG

Key:

C - CHANGE FROM PREVIOUS TYPE
M - METRIC PART

209-6725 CYLINDER BLOCK GP --S/N 7BJ61081-UP
PART OF 145-6685 CYLINDER BLOCK GP--FIELD REPLACEMENT FOR 209-5562

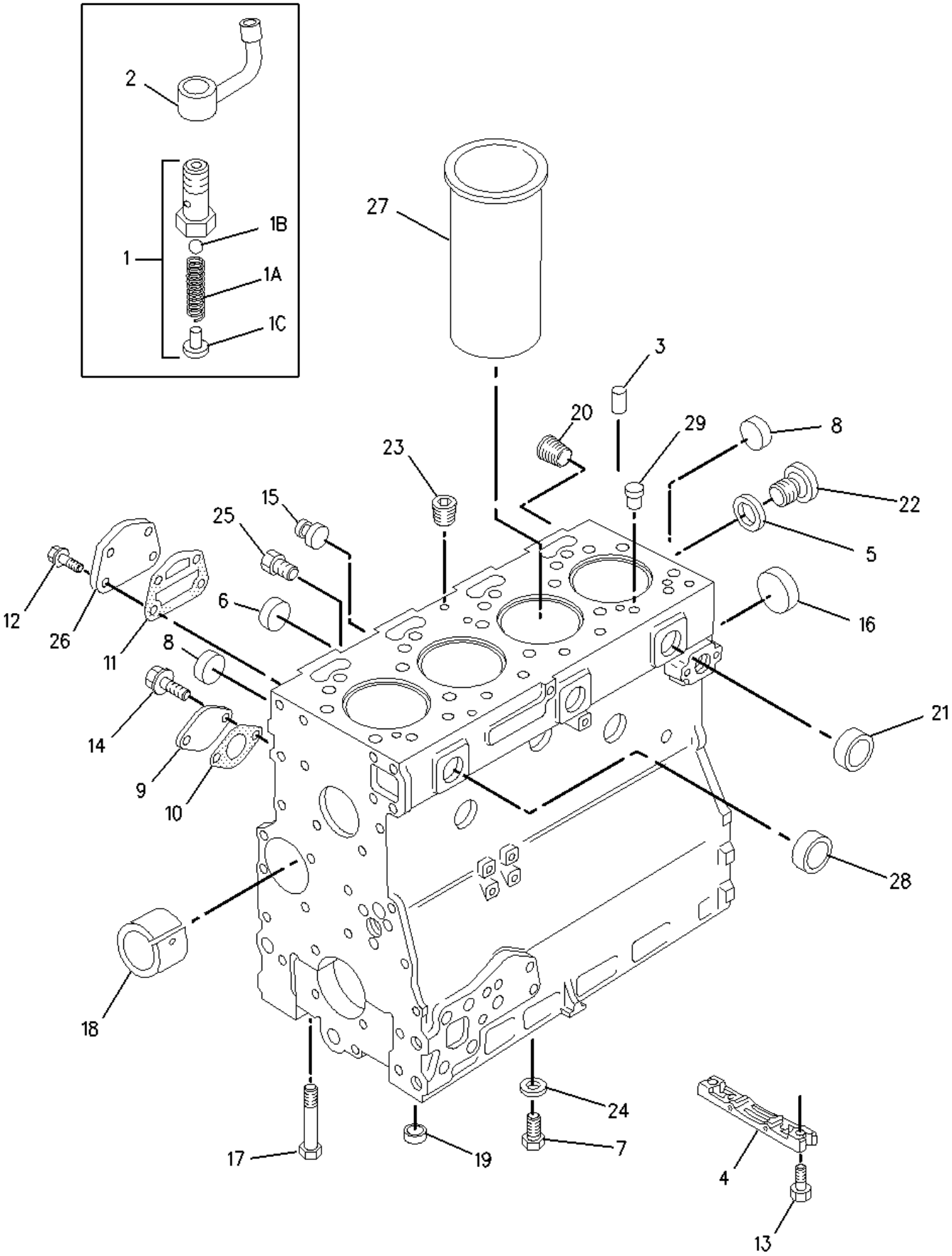

1 NPR 6I-1074 4 VALVE AS (OIL JET)

(EACH INCLUDES)

1A	NPR	6I-0686	1	SPRING
1B	NPR	6I-1075	1	BALL
1C	NPR	6I-1076	1	RETAINER
2	NPR	148-3026	4	JET AS-PISTON COOLING
3	NPR	161-9820	2	PIN
4	NPR	211-0067	1	BRIDGE
5	NPR	214-1668	1	WASHER-SPECIAL
6	NPR	215-2103	4	PLUG
7	NPR	0L-1138	4	BOLT (3/8-24X0.5-IN)
8	NPR	1N-3762	6	PLUG-CUP
9	NPR	6I-0219	1	PLATE
10	NPR	6I-0220	1	GASKET
11	NPR	6I-0298	1	GASKET
12	NPR	6I-0302	4	BOLT (M10X1.5X25-MM)
13	NPR M	6I-0363	2	BOLT (M6X1X20-MM)
14	NPR	6I-0572	2	BOLT (M8X1.25X20-MM)
15	NPR	7W-2501	1	PLUG
16	NPR	9Y-5015	1	PLUG-FREEZE
17	NPR	035-8068	10	BOLT (5/8-18X3.75-IN)
18	NPR	036-5802	1	BEARING
19	NPR	067-6002	10	DOWEL
20	NPR	067-6006	2	PLUG
21	NPR	067-6043	6	PLUG-SIDE
22	NPR	067-6805	1	PLUG
23	NPR	067-6808	1	PLUG
24	NPR	067-9520	4	SPACER
25	NPR	069-1124	1	PLUG
26	NPR	101-3923	1	PLATE
27	NPR	111-1815	4	LINER
28	NPR	127-9768	1	PLUG
29	NPR	147-1978	2	DOWEL

Key: M - METRIC PART

130-4648 PLUG GP-CYLINDER BLOCK
S/N 7BJ1-UP; 5HK81000-99999; 9RM1-UP

PART OF 106-5001, 122-8803, 122-8804 ENGINE AR-PRIMARY

-

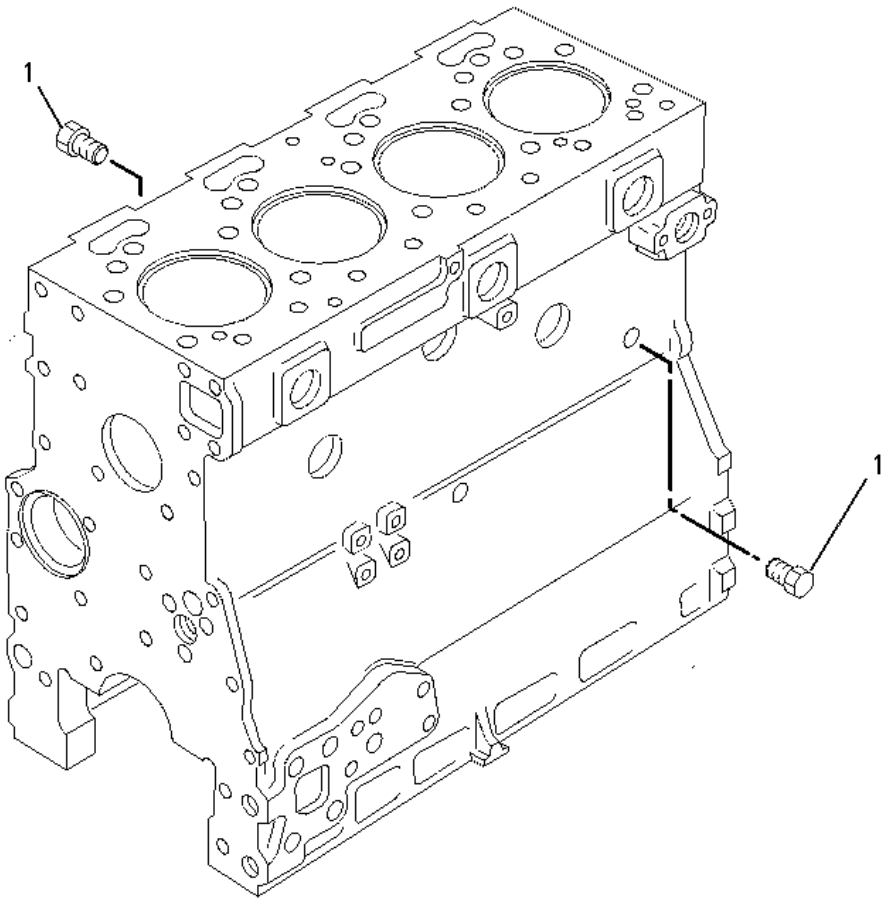

1 NPR 069-1124 2 PLUG

130-4655 PLUG GP-ENGINE -S/N 5HK81000-99999; 9RM1-UP
PART OF 106-5001, 106-5002 ENGINE AR-PRIMARY

NPR 7M-7410 1 PLUG-PIPE

(LOCATED IN COMPRESSOR/EXHAUSTER OIL FEED HOLE)

NPR 2B-0858 1 PLUG-PIPE

(LOCATED IN THERMOSTAT HOUSING)

141-0728 PLUG GP-ENGINE --S/N 7BJ1-UP; 5HK81000-99999
PART OF 122-8803, 122-8804 ENGINE AR-PRIMARY

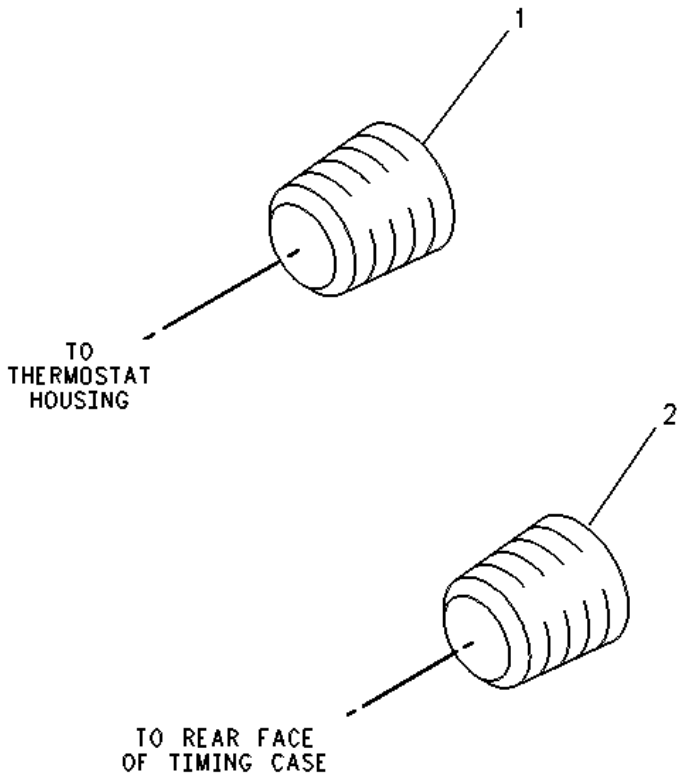

1 NPR 2B-0858 1 PLUG-PIPE

(LOCATES IN THERMOSTAT HOUSING)

2 NPR 2B-0858 1 PLUG-PIPE

(LOCATES IN REAR FACE OF TIMING CASE)

148-9686 PLUG GP-ENGINE --S/N 7BJ1-41218; 5HK81000-99999; 9RM1-UP
PART OF 106-5001, 106-5002, 122-8803, 122-8804 ENGINE AR-PRIMARY

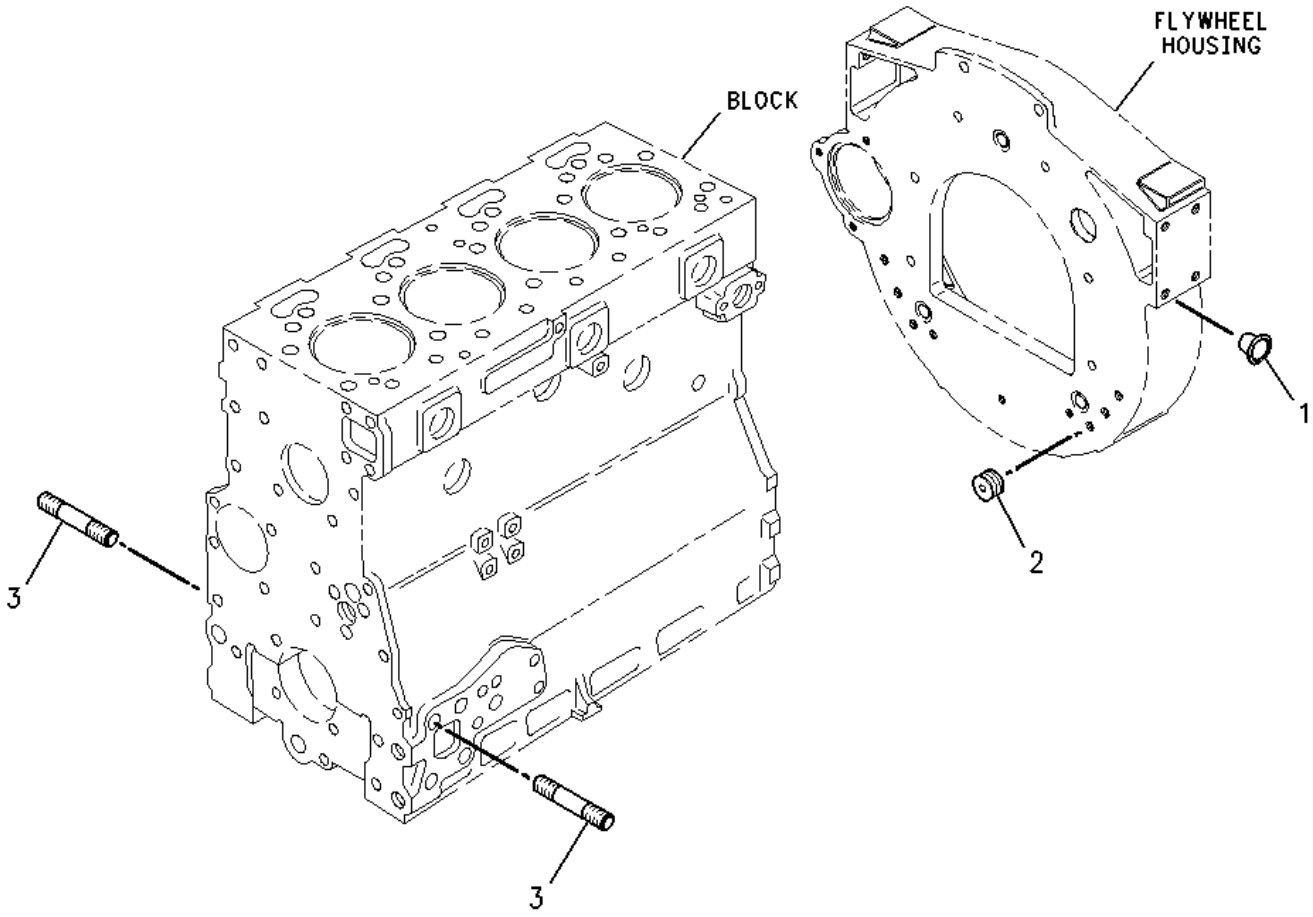

1	**NPR**	**133-8470**	**4**	**PLUG**
2	**NPR**	**101-2987**	**6**	**PLUG**
3	**NPR**	**126-8191**	**8**	**STUD**

166-0498 KIT-CYLINDER BLOCK -S/N 9RM1-UP
PART OF 106-5001 ENGINE AR-PRIMARY--FOR USE WITH 106-5001

INCLUDES: PISTONS,WRIST PINS,RETAINERS,PISTON RINGS,LINERS,CONNECTING ROD NUTS AND BUSHINGS,FRONT AND REAR OIL SEALS,

AND TOP AND BOTTOM GASKET KITS.

166-0499 KIT-CYLINDER BLOCK --S/N 9RM1-UP
PART OF 106-5002 ENGINE AR-PRIMARY--FOR USE WITH 106-5002

INCLUDES: PISTONS,WRIST PINS,RETAINERS,PISTON RINGS,LINERS,CONNECTING ROD NUTS AND BUSHINGS,FRONT AND REAR OIL SEALS,

AND TOP AND BOTTOM GASKET KITS.

130-3494 CYLINDER HEAD GP ---S/N 9RM1-UP
PART OF 106-5002 ENGINE AR-PRIMARY

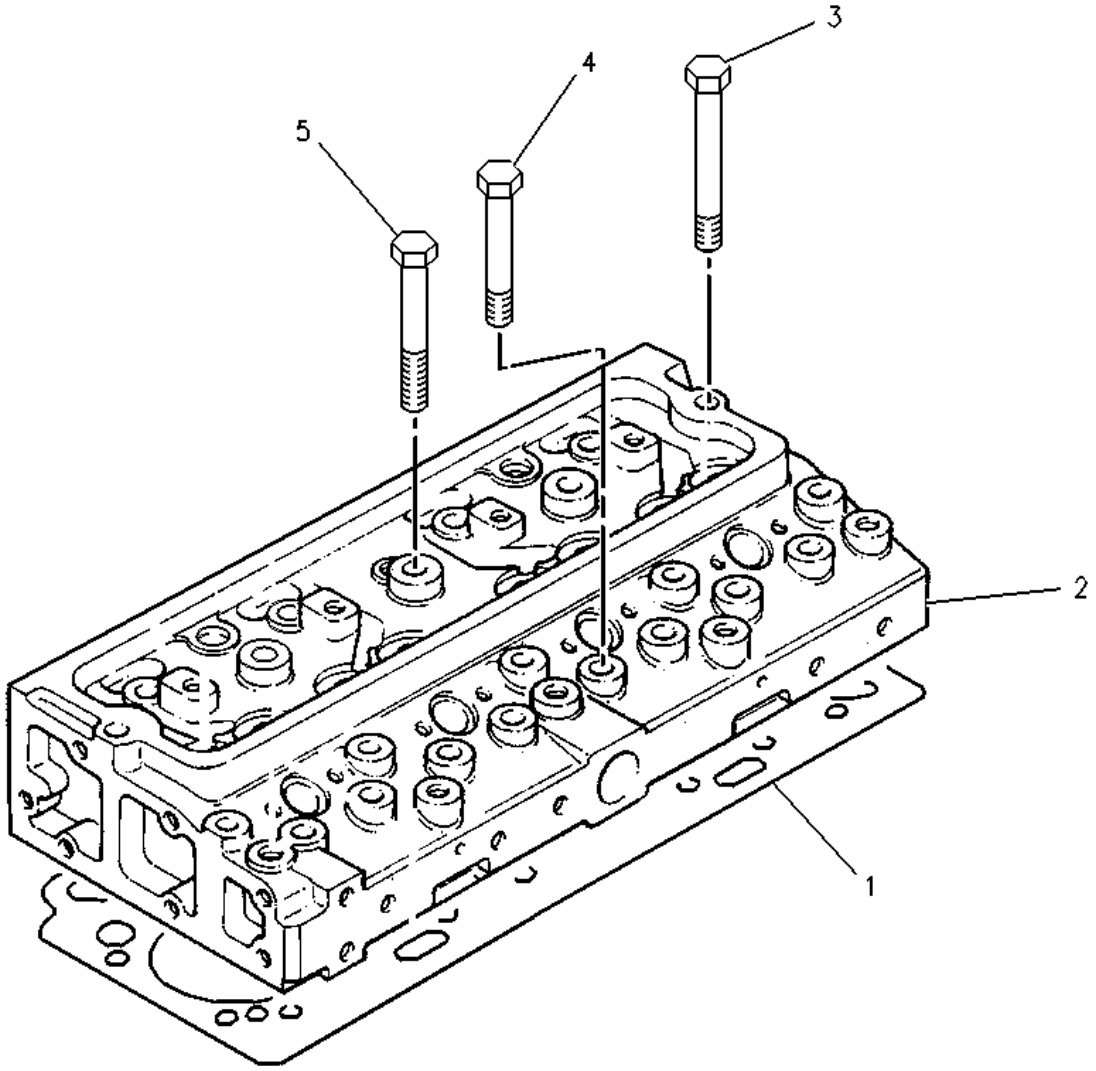

1	**NPR**	**152-2927**	**1**	**GASKET-CYLINDER HEAD**
2	**NPR RY**	**155-6650**	**1**	**CYLINDER HEAD GP**
R	**NPR**	**0R-8280**	**1**	**HEAD GP-CYL BSC**
R	**NPR**	**10R-2935**	**1**	**HEAD AS-CYL**
3	**NPR**	**7W-2520**	**2**	**BOLT**
4	**NPR**	**7W-2518**	**8**	**BOLT**
5	**NPR**	**7W-2519**	**12**	**BOLT**

Key: Y - SEPARATE ILLUSTRATION

130-6764 CYLINDER HEAD GP --S/N 5HK81000-99999; 9RM1-UP
PART OF 106-5001 ENGINE AR-PRIMARY

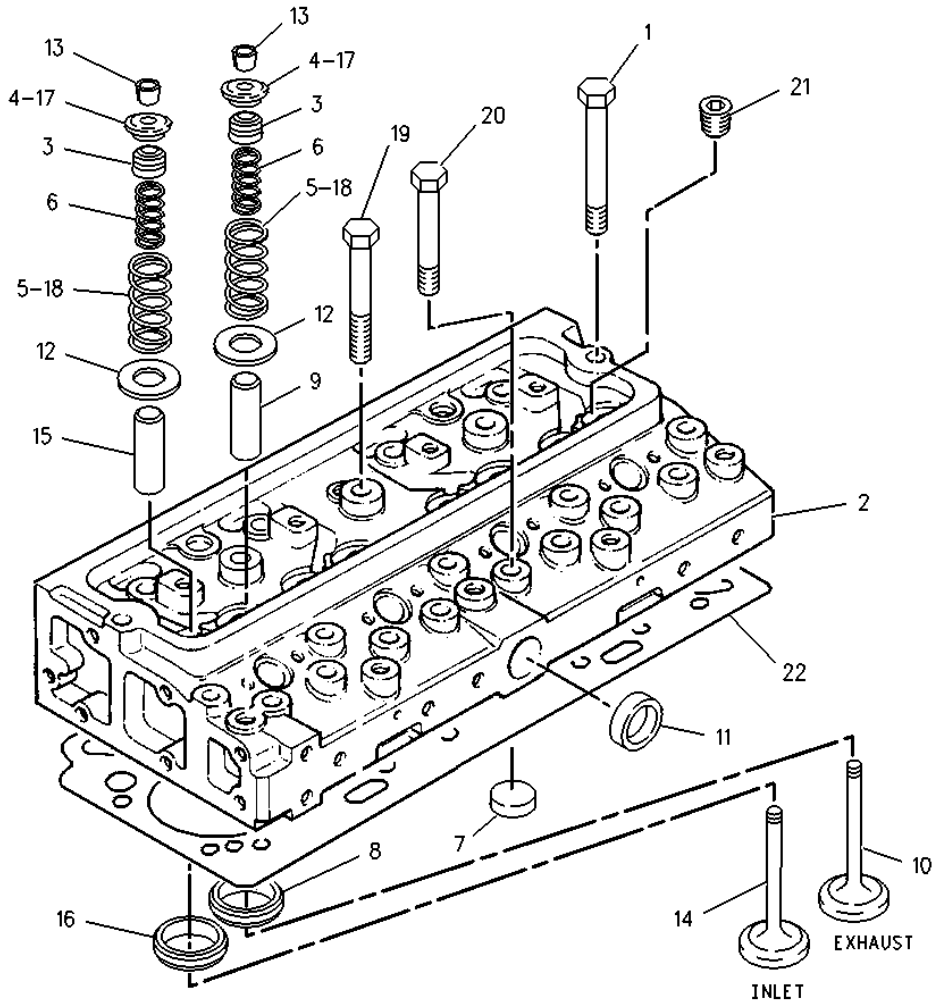

1 NPR 7W-2520 2 BOLT

2 NPR YR 155-6650 1 CYLINDER HEAD GP

R NPR 0R-8280 1 HEAD GP-CYL BSC

R NPR 10R-2935 1 HEAD AS-CYL

3 NPR 1W-5849 8 SEAL-VALVE

4	NPR B	6I-0281	8	CAP-VALVE SPRING (REPLACEMENT HEAD ONLY)
5	NPR B	6I-0283	8	SPRING (REPLACEMENT HEAD ONLY)
6	NPR B	6I-0284	8	SPRING (REPLACEMENT HEAD ONLY)
7	NPR	6I-0285	4	PLUG
8	NPR	109-3428	4	INSERT-EXHAUST VALVE
9	NPR	160-5438	4	GUIDE-VALVE
10	NPR	7W-4602	4	VALVE-EXHAUST
11	NPR	067-6043	1	PLUG-SIDE
12	NPR	067-6054	8	WASHER
13	NPR	067-6834	16	COTTER-CAP
14	NPR	6I-0282	4	VALVE-INLET
15	NPR	160-5436	4	GUIDE-VALVE
16	NPR	109-3427	4	INSERT-VALVE SEAT
17	NPR B	6I-0270	8	CAP-VALVE SPRING (ORIGINAL HEAD ONLY)
18	NPR B	6I-0271	8	SPRING (ORIGINAL HEAD ONLY)
19	NPR	7W-2519	12	BOLT
20	NPR	7W-2518	8	BOLT
21	NPR	7C-2851	4	PLUG
22	NPR	152-2927	1	GASKET-CYLINDER HEAD

Key:

B - USE AS REQUIRED
R - REMFG PART MAY BE AVAILABLE
Y - Separate Illustration

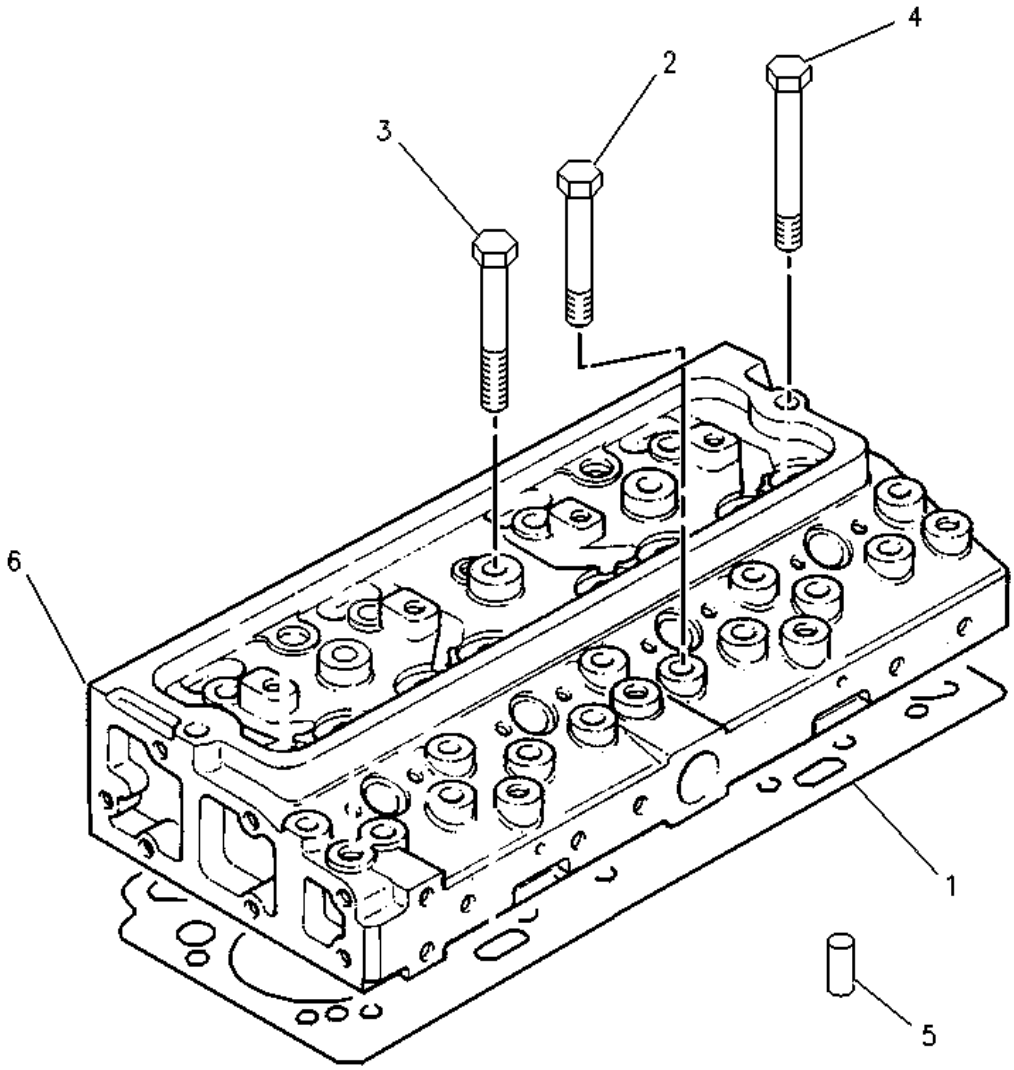

1	NPR	152-2927	1	GASKET-CYLINDER HEAD
2	NPR	7W-2518	8	BOLT
3	NPR	7W-2519	12	BOLT
4	NPR	7W-2520	2	BOLT
5	NPR	161-9820	2	PIN
6	NPR Y	147-2021	1	CYLINDER HEAD GP

Key: Y - SEPARATE ILLUSTRATION

145-6852 CYLINDER HEAD GP --S/N 7BJ1-UP; 5HK81000-99999
PART OF 122-8803, 122-8804 ENGINE AR-PRIMARY

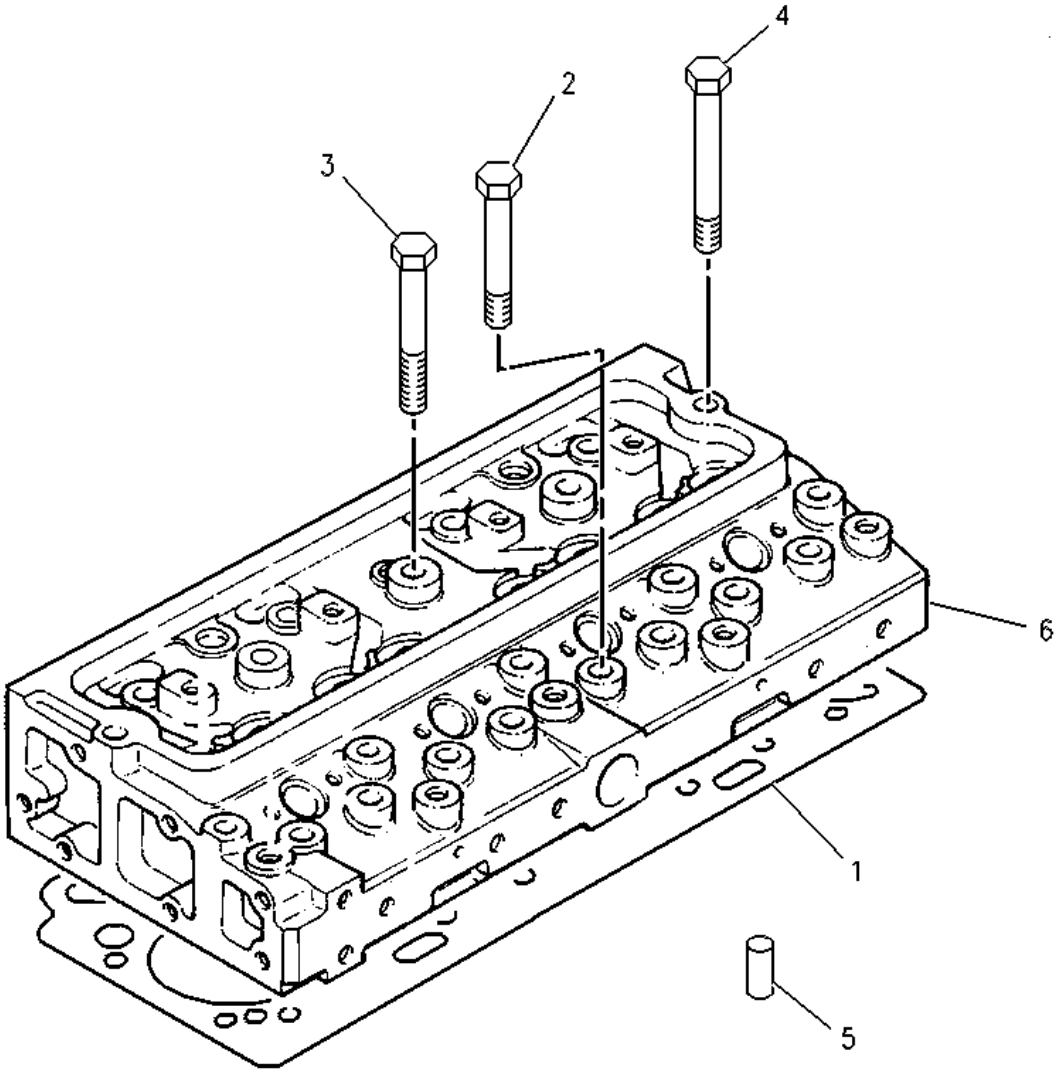

1	**NPR**	**152-2927**	**1**	**GASKET-CYLINDER HEAD**
2	**NPR**	**7W-2518**	**8**	**BOLT (1/2-20X3.63-IN)**
3	**NPR**	**7W-2519**	**12**	**BOLT (1/2-20X4.25-IN)**
4	**NPR**	**7W-2520**	**2**	**BOLT (1/2-20X5.09-IN)**
5	**NPR**	**161-9820**	**2**	**PIN**
6	**NPR Y**	**163-9254**	**1**	**CYLINDER HEAD GP**

Key: Y - SEPARATE ILLUSTRATION

147-2021 CYLINDER HEAD GP --S/N 5HK81000-99999
PART OF 145-6852 CYLINDER HEAD GP

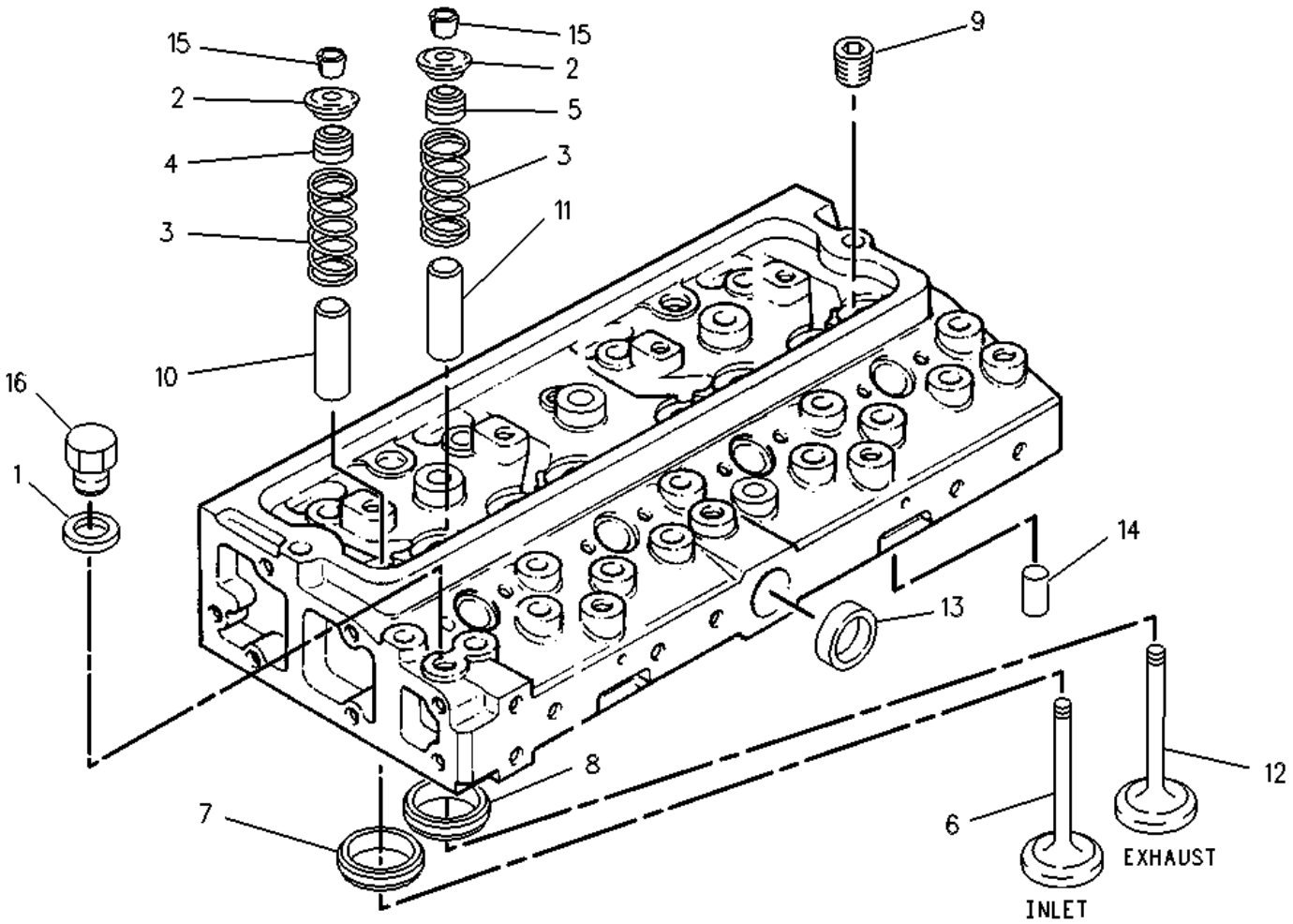

1 NPR 067-6045 1 WASHER (5/8-IN)

2 NPR 138-2060 8 CAP

3 NPR 145-6864 8 SPRING

4 NPR 145-6856 4 SEAL (INLET)

5 NPR 145-6858 4 SEAL (EXHAUST)

6 NPR 145-6855 4 VALVE-INLET

7 NPR 145-6853 4 INSERT-INLET VALVE

8 NPR 145-6854 4 INSERT-EXHAUST VALVE

9 NPR 7C-2851 4 PLUG

10 NPR 138-2059 4 GUIDE-INLET VALVE

11	NPR	138-2058	4	GUIDE-EXHAUST VALVE
12	NPR	145-6857	4	VALVE-EXHAUST
13	NPR	1N-3762	1	PLUG-CUP
14	NPR	147-1978	2	DOWEL
15	NPR	147-1979	16	RETAINER-VALVE SPRING
16	NPR	067-6044	1	PLUG

PART OF 130-3494 CYLINDER HEAD GP

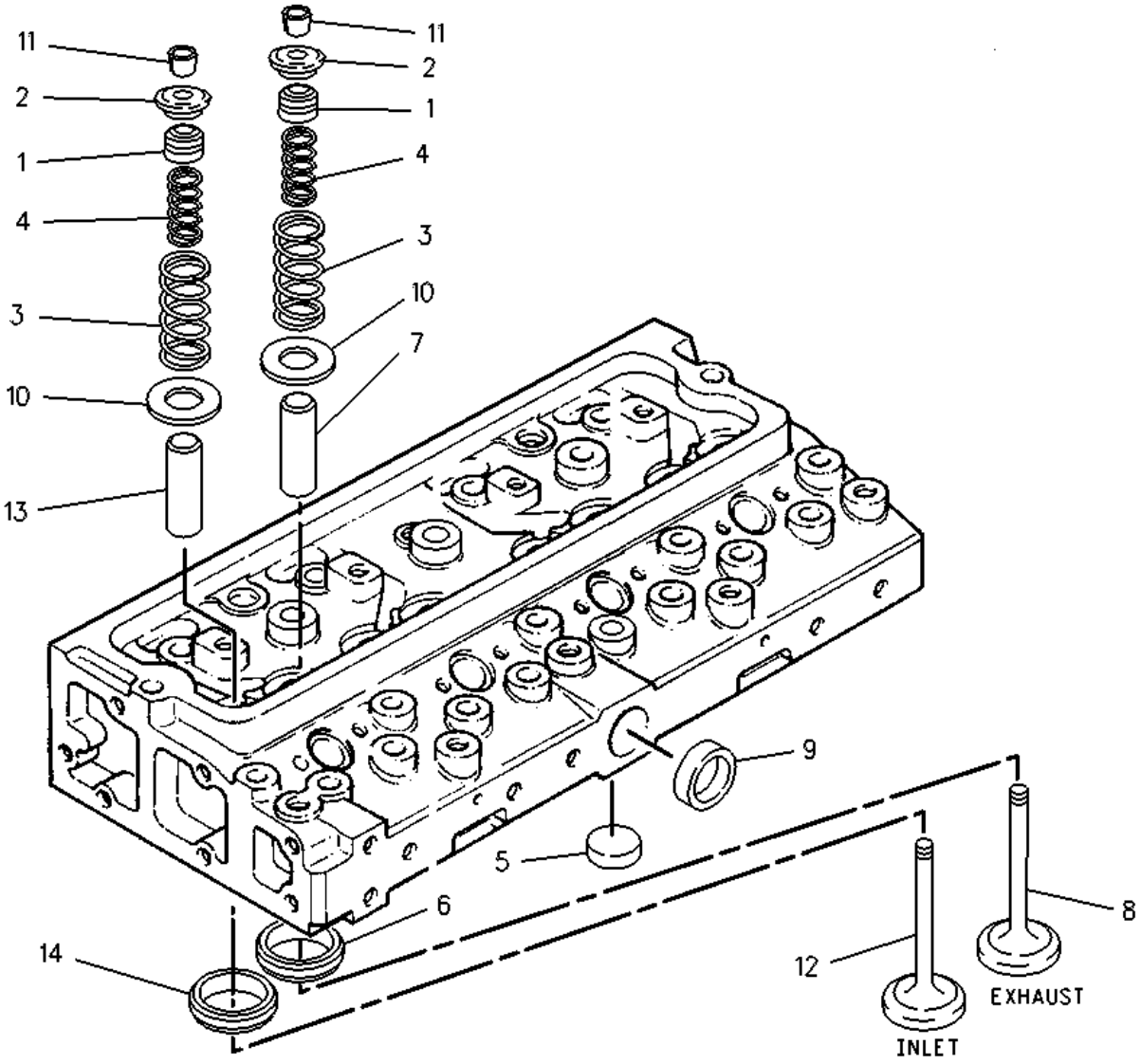

1	NPR	1W-5849	8	SEAL-VALVE
2	NPR	6I-0281	8	CAP-VALVE SPRING
3	NPR	6I-0283	8	SPRING
4	NPR	6I-0284	8	SPRING
5	NPR	6I-0285	4	PLUG
6	NPR	109-3428	4	INSERT-EXHAUST VALVE
7	NPR	160-5438	4	GUIDE-VALVE (EXHAUST)
8	NPR	7W-4602	4	VALVE-EXHAUST
9	NPR	067-6043	1	PLUG-SIDE
10	NPR	067-6054	8	WASHER
11	NPR	067-6834	16	COTTER-CAP
12	NPR	6I-0282	4	VALVE-INLET
13	NPR	160-5436	4	GUIDE-VALVE (INLET)
14	NPR	109-3427	4	INSERT-VALVE SEAT (INLET)

163-9254 CYLINDER HEAD GP --S/N 7BJ1-UP; 5HK81000-99999

PART OF 145-6852 CYLINDER HEAD GP

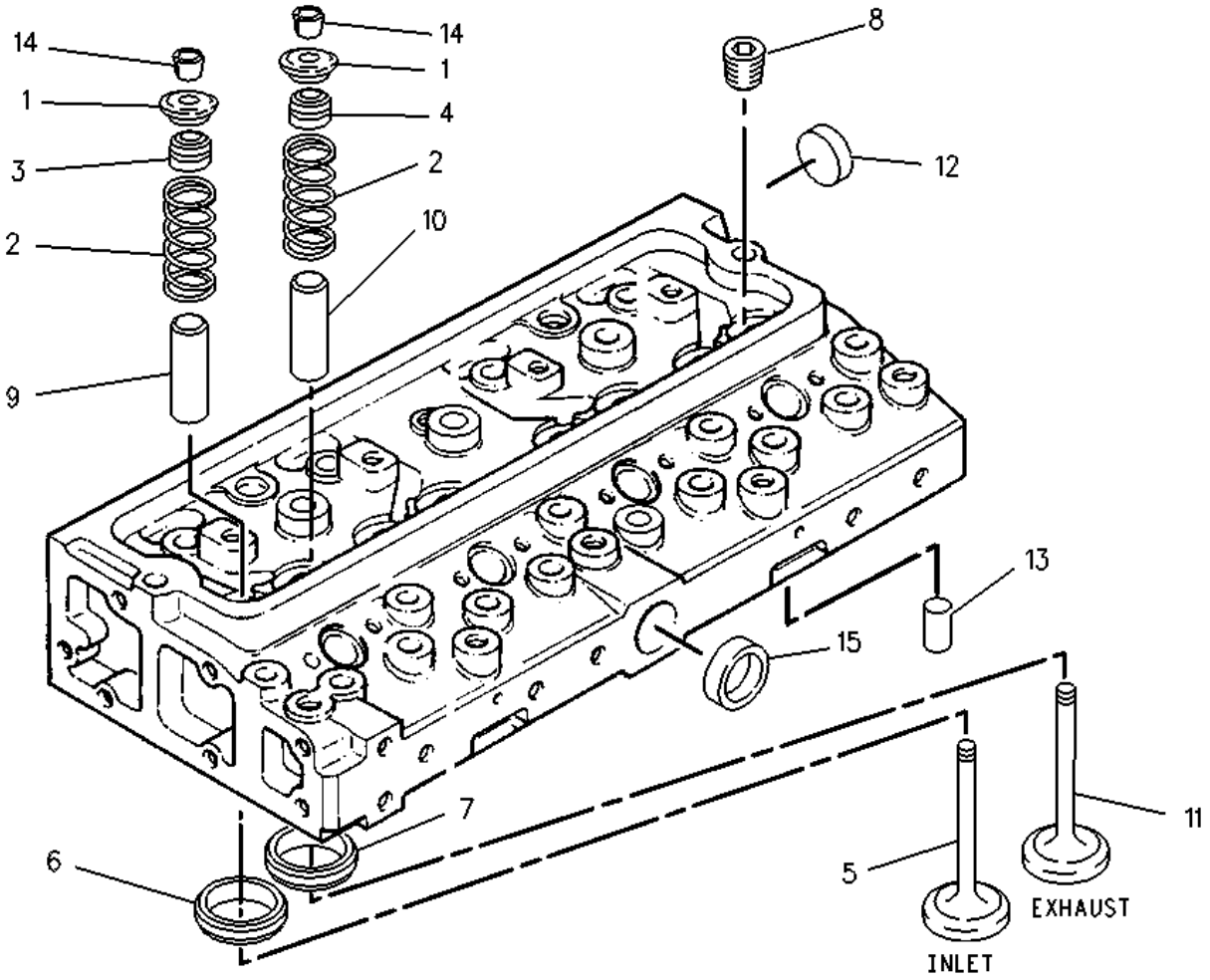

1	NPR	138-2060	8	CAP
2	NPR	206-4127	8	SPRING-VALVE
3	NPR	145-6856	4	SEAL (INLET)
4	NPR	145-6858	4	SEAL (EXHAUST)
5	NPR	145-6855	4	VALVE-INLET
6	NPR	145-6853	4	INSERT-INLET VALVE
7	NPR	145-6854	4	INSERT-EXHAUST VALVE
8	NPR	7C-2851	4	PLUG
9	NPR	185-0882	4	GUIDE-INLET VALVE
10	NPR	163-9256	4	GUIDE-VALVE (EXHAUST)
11	NPR	145-6857	4	VALVE-EXHAUST
12	NPR	1N-3762	2	PLUG-CUP
13	NPR	147-1978	2	DOWEL
14	NPR	147-1979	16	COTTER
15	NPR	067-6043	1	PLUG-SIDE

146-0180 FASTENER GP-CYLINDER HEAD -S/N 7BJ1-UP; 5HK81000-99999

PART OF 122-8803, 122-8804 ENGINE AR-PRIMARY

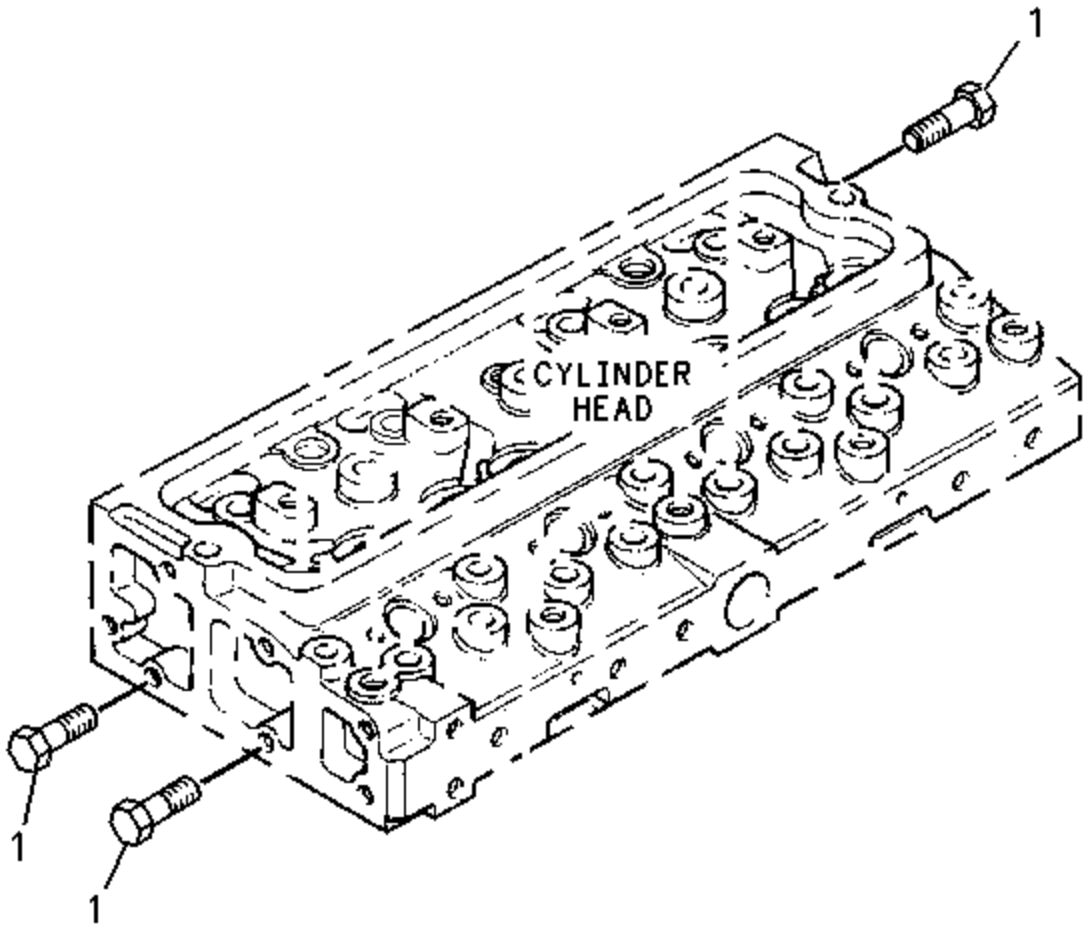

1 NPR M 124-3815 3 BOLT (M8X16X1.25-MM)

Key: M - METRIC PART

130-4648 PLUG GP-CYLINDER BLOCK --S/N 7BJ1-UP; 5HK81000-99999; 9RM1-UP

PART OF 106-5001, 122-8803, 122-8804 ENGINE AR-PRIMARY

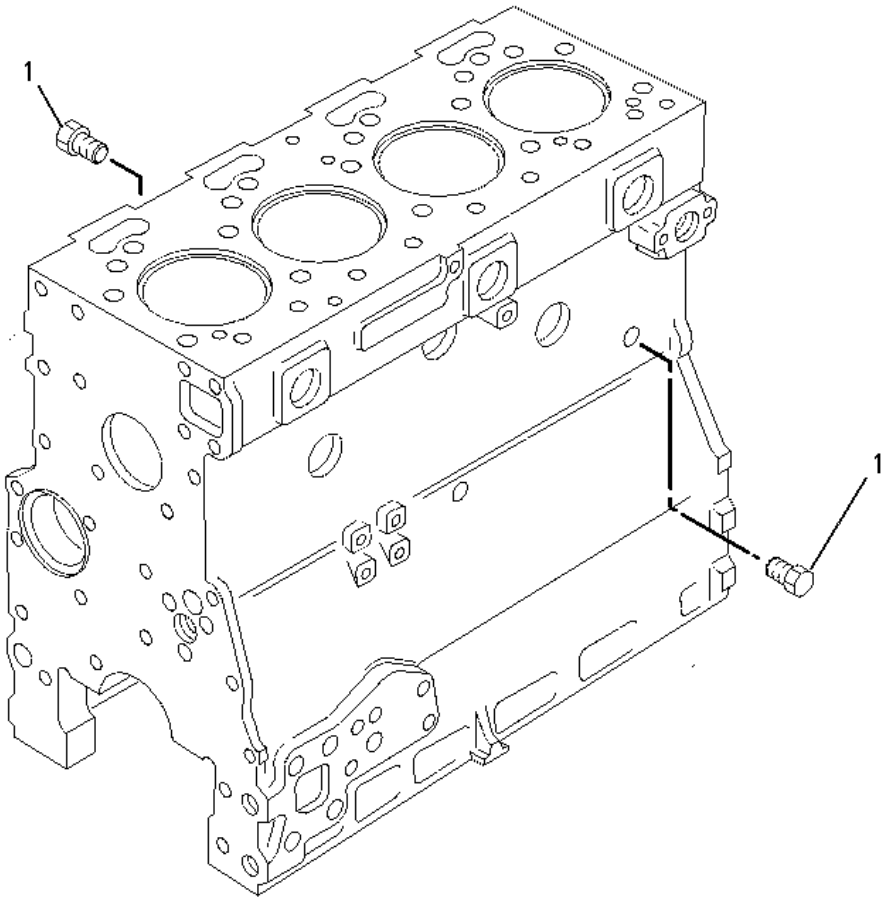

1 NPR 069-1124 2 PLUG

130-4647 PLUG GP-CYLINDER HEAD -S/N 7BJ1-25912; 5HK81000-99999; 9RM1-UP

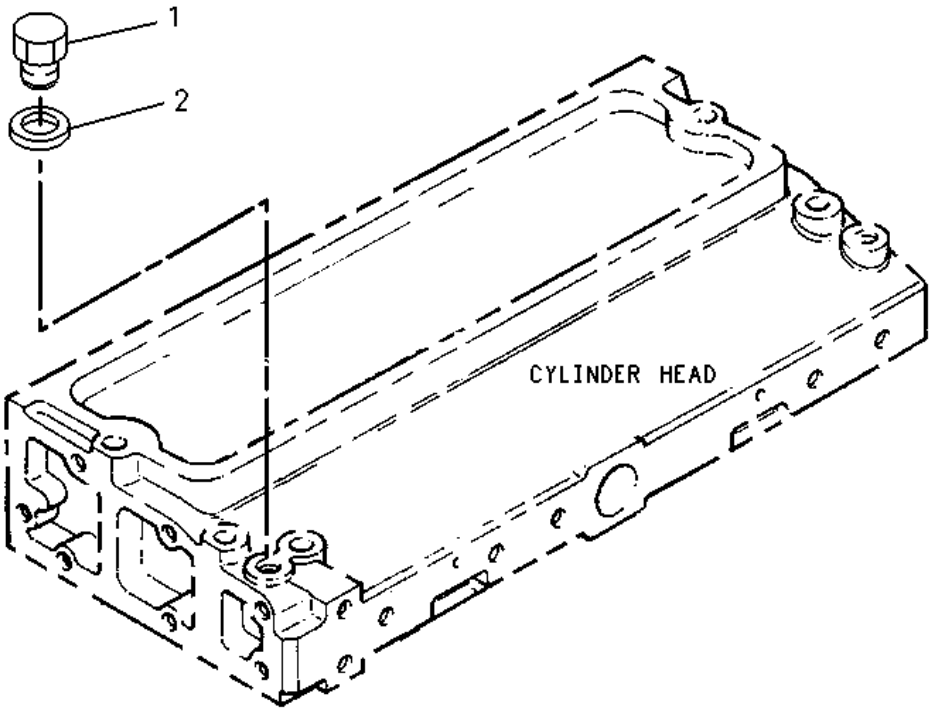

1 NPR 067-6044 1 PLUG

2 NPR 067-6045 1 WASHER (5/8-IN)

PART OF 122-8803, 122-8804 ENGINE AR-PRIMARY

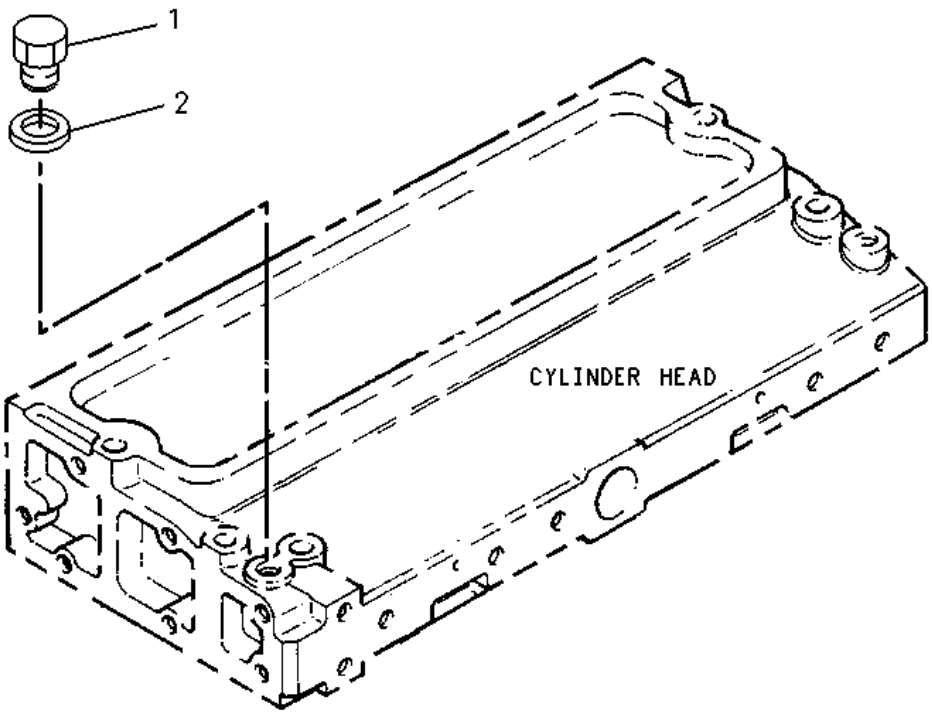

1 NPR 067-6044 1 PLUG

2 NPR C 247-4928 1 WASHER (16.5X20.5X1.6-MM THK)

Key: C - CHANGE FROM PREVIOUS TYPE

PART OF 106-5001, 106-5002 ENGINE AR-PRIMARY

NPR 7M-7410 1 PLUG-PIPE

(LOCATED IN COMPRESSOR/EXHAUSTER OIL FEED HOLE)

NPR 2B-0858 1 PLUG-PIPE

(LOCATED IN THERMOSTAT HOUSING)

141-0728 PLUG GP-ENGINE --S/N 7BJ1-UP; 5HK81000-99999
PART OF 122-8803, 122-8804 ENGINE AR-PRIMARY

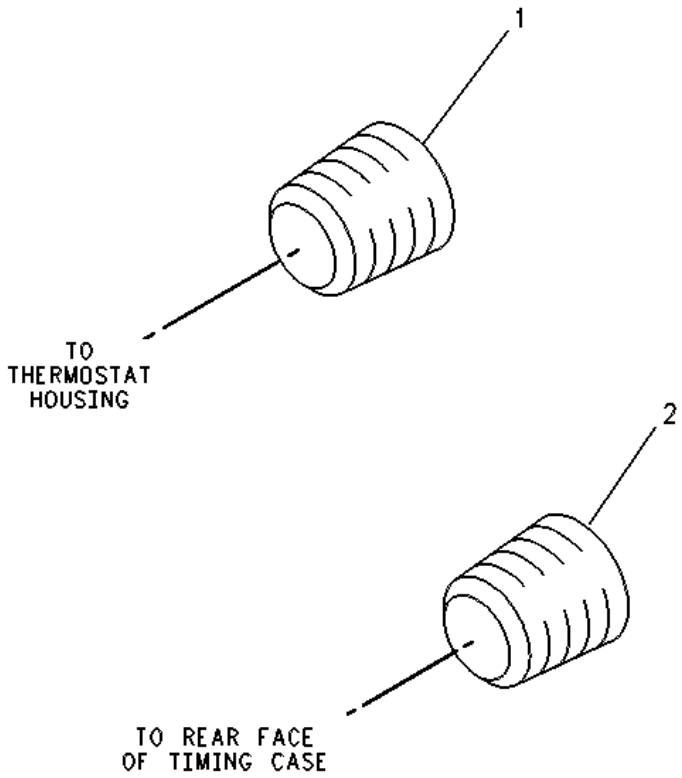

1 NPR 2B-0858 1 PLUG-PIPE

(LOCATES IN THERMOSTAT HOUSING)

2 NPR 2B-0858 1 PLUG-PIPE

(LOCATES IN REAR FACE OF TIMING CASE)

148-9686 PLUG GP-ENGINE

S/N 7BJ1-41218; 5HK81000-99999; 9RM1-UP
PART OF 106-5001, 106-5002, 122-8803, 122-8804 ENGINE AR-PRIMARY

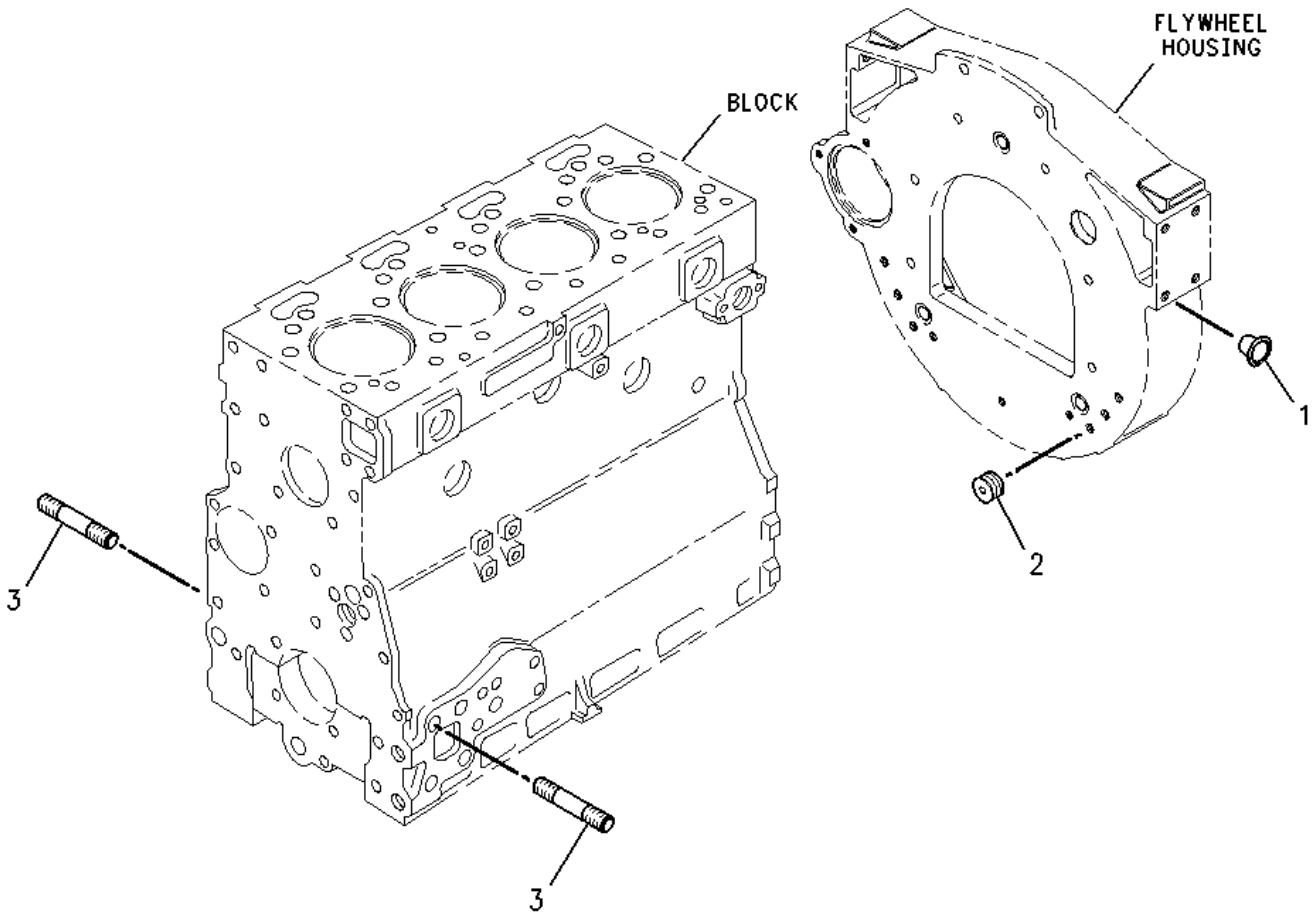

1	**NPR**	**133-8470**	**4**	**PLUG**
2	**NPR**	**101-2987**	**6**	**PLUG**
3	**NPR**	**126-8191**	**8**	**STUD**

166-0497 KIT-CYLINDER HEAD ---S/N 9RM1-UP

PART OF 106-5001, 106-5002 ENGINE AR-PRIMARY
FOR USE WITH 106-5002, 106-5001

INCLUDES: INLET AND EXHAUST VALVES, VALVE GUIDES, VALVE SEALS AND KEEPERS, AND INJECTOR WASHERS AND FUEL LINE WASHERS

130-8616 COVER GP-VALVE MECHANISM -S/N 5HK81000-99999; 9RM1-UP

PART OF 106-5001 ENGINE AR-PRIMARY

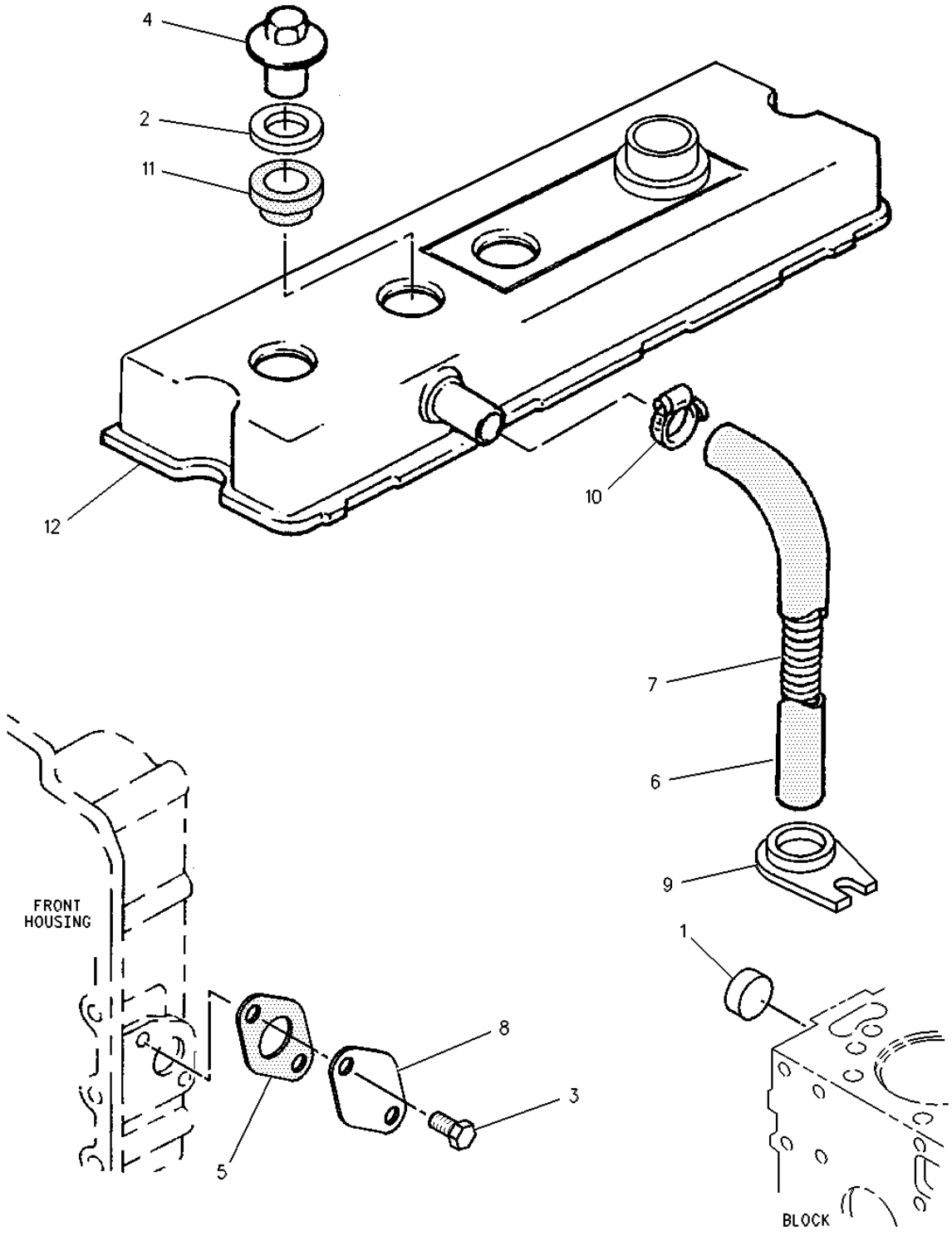

1 NPR 1N-3762 1 PLUG-CUP

2 NPR 5P-8247 3 WASHER-HARD (17X32X3.5-MM THK)

3 NPR M 6I-0217 2 BOLT (M8X1.25X20-MM)

4 NPR 6I-0507 3 NUT

5 NPR 6I-0512 1 GASKET

6	NPR	6I-0516	1	HOSE (FUMES DISPOSAL)
7	NPR	6I-0517	1	SPRING (CRANKCASE BREATHER HOSE)
8	NPR	6I-4037	1	PLATE
9	NPR	7C-1281	1	BRACKET
10	NPR	101-3450	1	CLAMP-HOSE
11	NPR	101-3675	3	SEAL
12	NPR	154-8705	1	COVER AS-VALVE

Key:

M - METRIC PART

PART OF 106-5002 ENGINE AR-PRIMARY

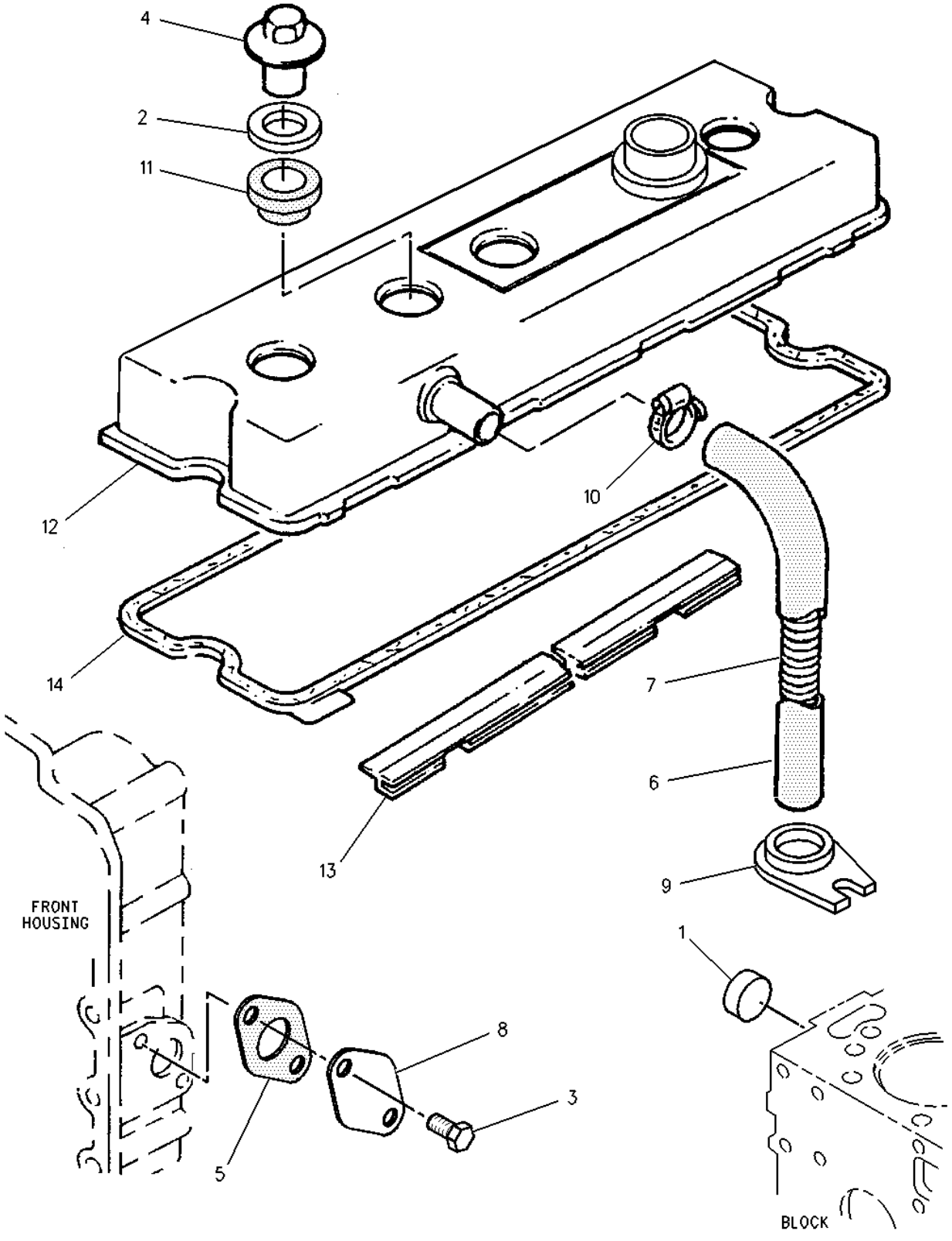

1 NPR 1N-3762 1 PLUG-CUP

2 NPR 5P-8247 3 WASHER-HARD (17X32X3.5-MM THK)

3 NPR M 6I-0217 2 BOLT (M8X1.25X20-MM)

4 NPR 6I-0507 3 NUT

5	NPR	6I-0512	1	GASKET
6	NPR	6I-0516	1	HOSE (FUMES DISPOSAL)
7	NPR	6I-0517	1	SPRING (CRANKCASE BREATHER HOSE)
8	NPR	6I-4037	1	PLATE
9	NPR	7C-1281	1	BRACKET
10	NPR	101-3450	1	CLAMP-HOSE
11	NPR	101-3675	3	SEAL
12	NPR	154-8835	1	COVER AS-VALVE
13	NPR	130-1480	1	SHIELD-HEAT
14	NPR	126-6671	1	GASKET (VALVE COVER)

Key:

M - METRIC PART

PART OF 122-8803, 122-8804 ENGINE AR-PRIMARY

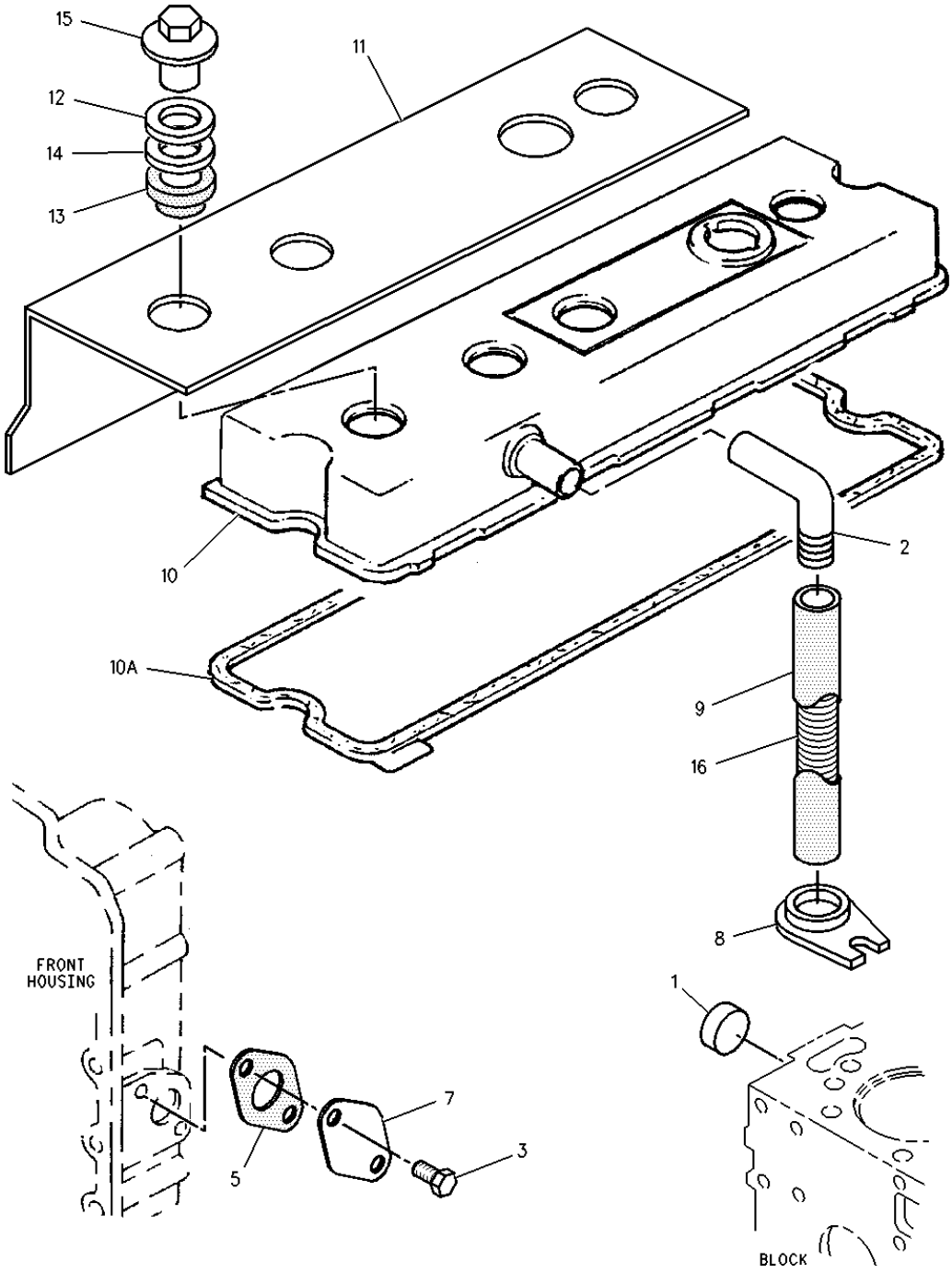

1 NPR 1N-3762 1 PLUG-CUP

2 NPR 175-0083 1 ELBOW-BREATHER

3 NPR M 6I-0217 2 BOLT (M8X1.25X20-MM)

5 NPR 6I-0512 1 GASKET

7 NPR 6I-4037 1 PLATE

8 NPR 7C-1281 1 BRACKET

9 NPR 175-0084 1 HOSE-BREATHER

10	NPR	214-6283	1	COVER AS-CYLINDER
10A	NPR	200-6374	1	SEAL-COVER (VALVE)
11	NPR	167-0087	1	SHIELD AS-HEAT
12	NPR	4B-4281	3	WASHER (16.8X33X2.5-MM THK)
13	NPR	101-3675	3	SEAL
14	NPR	167-0092	3	SPACER
15	NPR	167-0095	3	NUT
16	NPR	162-1565	1	SPRING (CRANKCASE BREATHER HOSE)

Key:

M - METRIC PART

PART OF 106-5002 ENGINE AR-PRIMARY

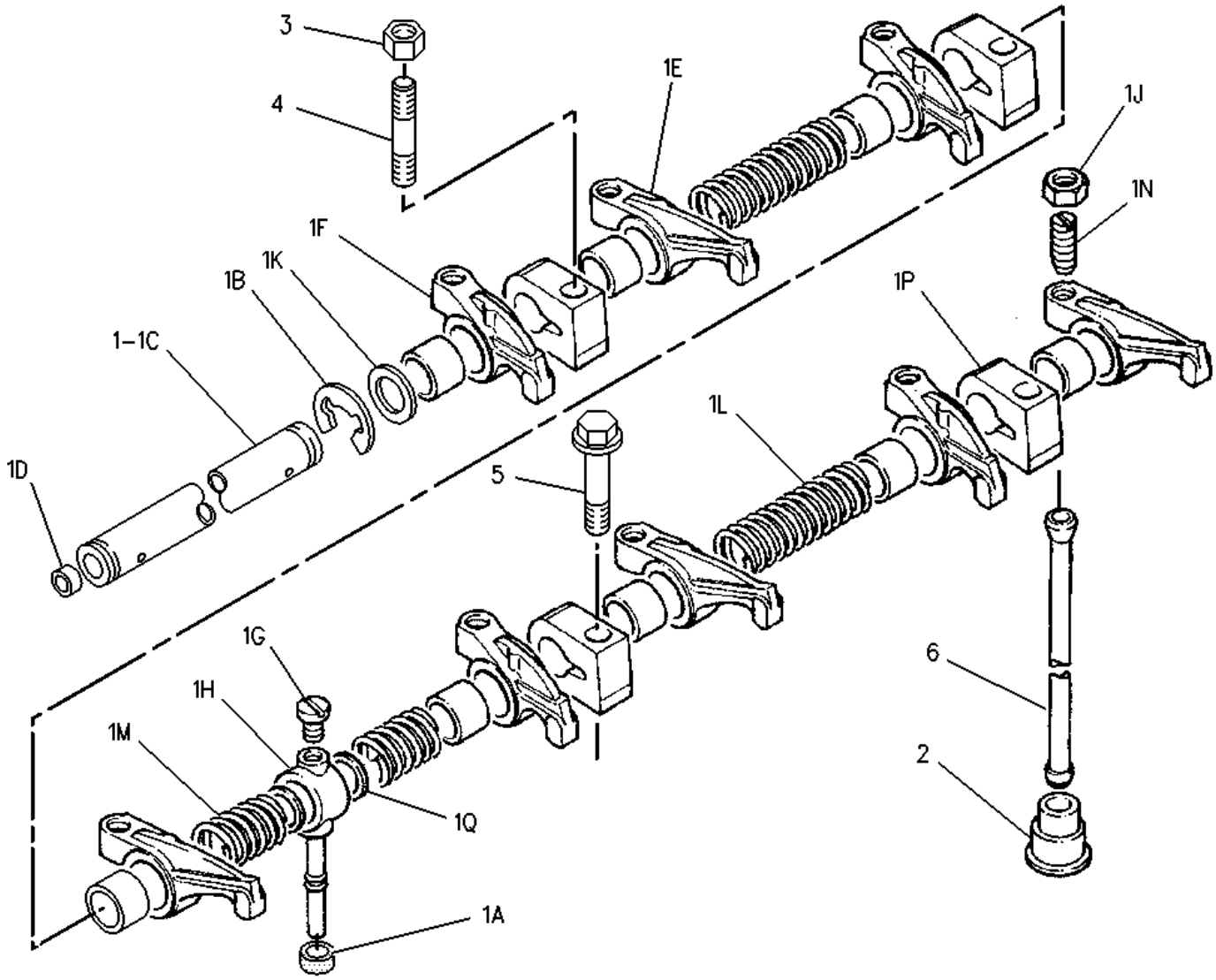

1	**NPR**	**7W-2532**	**1**	**ARM AS**
1A	**NPR**	**129-3493**	**1**	**FERRULE**
1B	**NPR**	**006-8606**	**2**	**RING-RETAINING**
1C	**NPR**	**032-9007**	**1**	**SHAFT AS**
1D	**NPR**	**067-6083**	**2**	**PLUG-SHAFT END**
1E	**NPR**	**119-8382**	**4**	**LEVER AS-LH**
1F	**NPR**	**119-8383**	**4**	**LEVER AS-RH**
1G	**NPR**	**6I-3717**	**1**	**BOLT (NO.10X12.7MM)**
1H	**NPR**	**6I-3718**	**1**	**CONNECTION-FEED**
1J	**NPR**	**5B-9079**	**8**	**NUT-JAM (3/8-24 THD)**

1K	NPR	067-6085	2	WASHER-SHAFT END
1L	NPR	067-6087	2	SPRING-SHAFT
1M	NPR	067-6088	2	SPRING-SHAFT
1N	NPR	067-6090	8	SCREW-TAPPET ADJUSTMENT
1P	NPR	6I-1206	4	BRACKET-SHAFT
1Q	NPR	7C-1271	2	SHIM (.51MM THK)
2	NPR	138-2053	8	TAPPET
3	NPR	6I-0233	3	NUT
4	NPR	6I-0234	3	STUD
5	NPR	6I-0235	1	BOLT (M12X1.75X50MM)
6	NPR	067-6095	8	ROD

PART OF 106-5001 ENGINE AR-PRIMARY

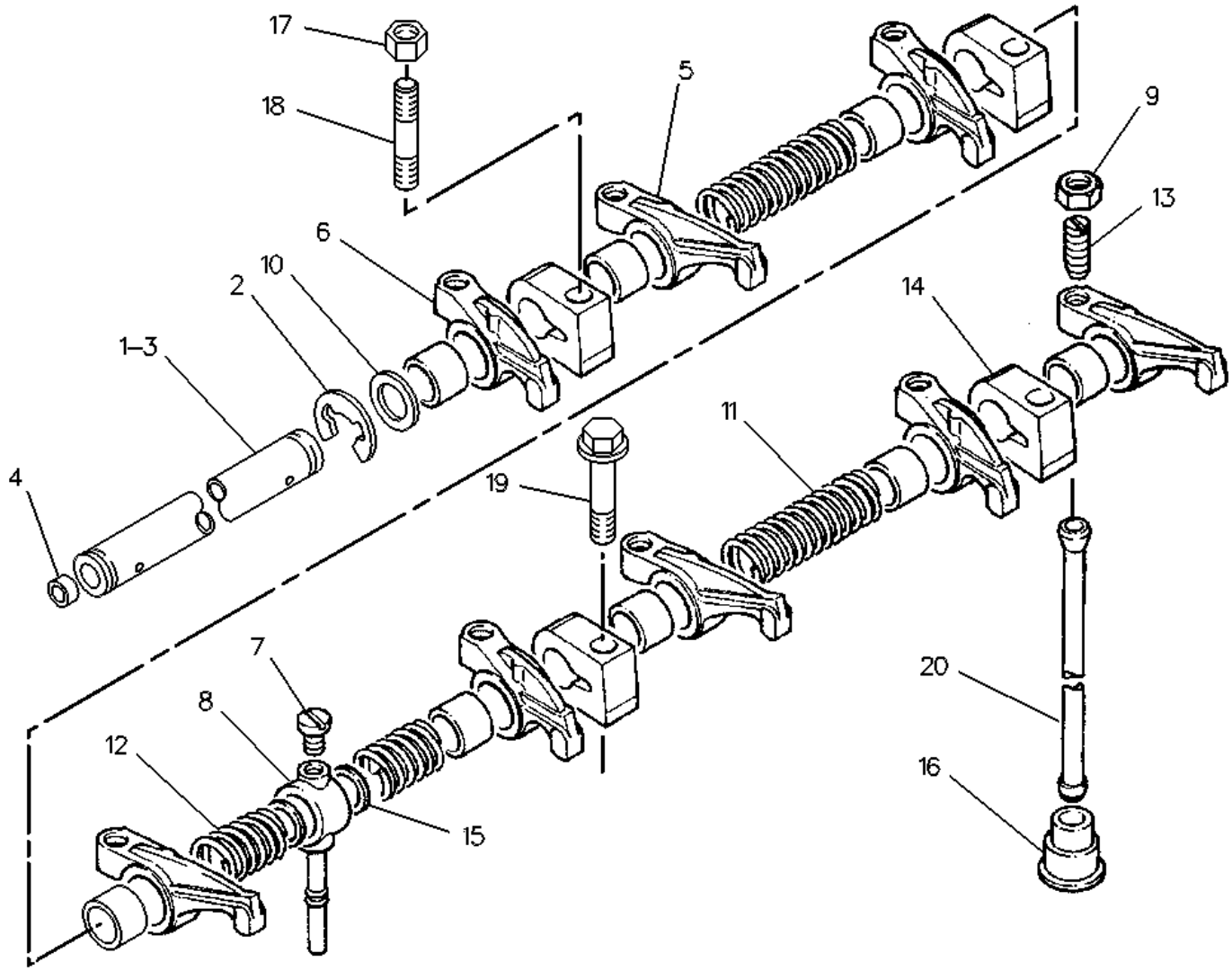

1	NPR	7W-2532	1	ARM AS
2	NPR	006-8606	2	RING-RETAINING
3	NPR	032-9007	1	SHAFT AS
4	NPR	067-6083	2	PLUG-SHAFT END
5	NPR	119-8382	4	LEVER AS-LH
6	NPR	119-8383	4	LEVER AS-RH
7	NPR	6I-3717	1	BOLT
8	NPR	6I-3718	1	CONNECTION-FEED
9	NPR	5B-9079	8	NUT-JAM (3/8-24 THD)
10	NPR	067-6085	2	WASHER-SHAFT END
11	NPR	067-6087	2	SPRING-SHAFT
12	NPR	067-6088	2	SPRING-SHAFT
13	NPR	067-6090	8	SCREW-TAPPET ADJUSTMENT
14	NPR	6I-1206	4	BRACKET-SHAFT

15	NPR	7C-1271	2	SHIM
16	NPR	138-2053	8	TAPPET
17	NPR	6I-0233	3	NUT
18	NPR	6I-0234	3	STUD
19	NPR	6I-0235	1	BOLT
20	NPR	067-6095	8	ROD

PART OF 122-8803, 122-8804 ENGINE AR-PRIMARY

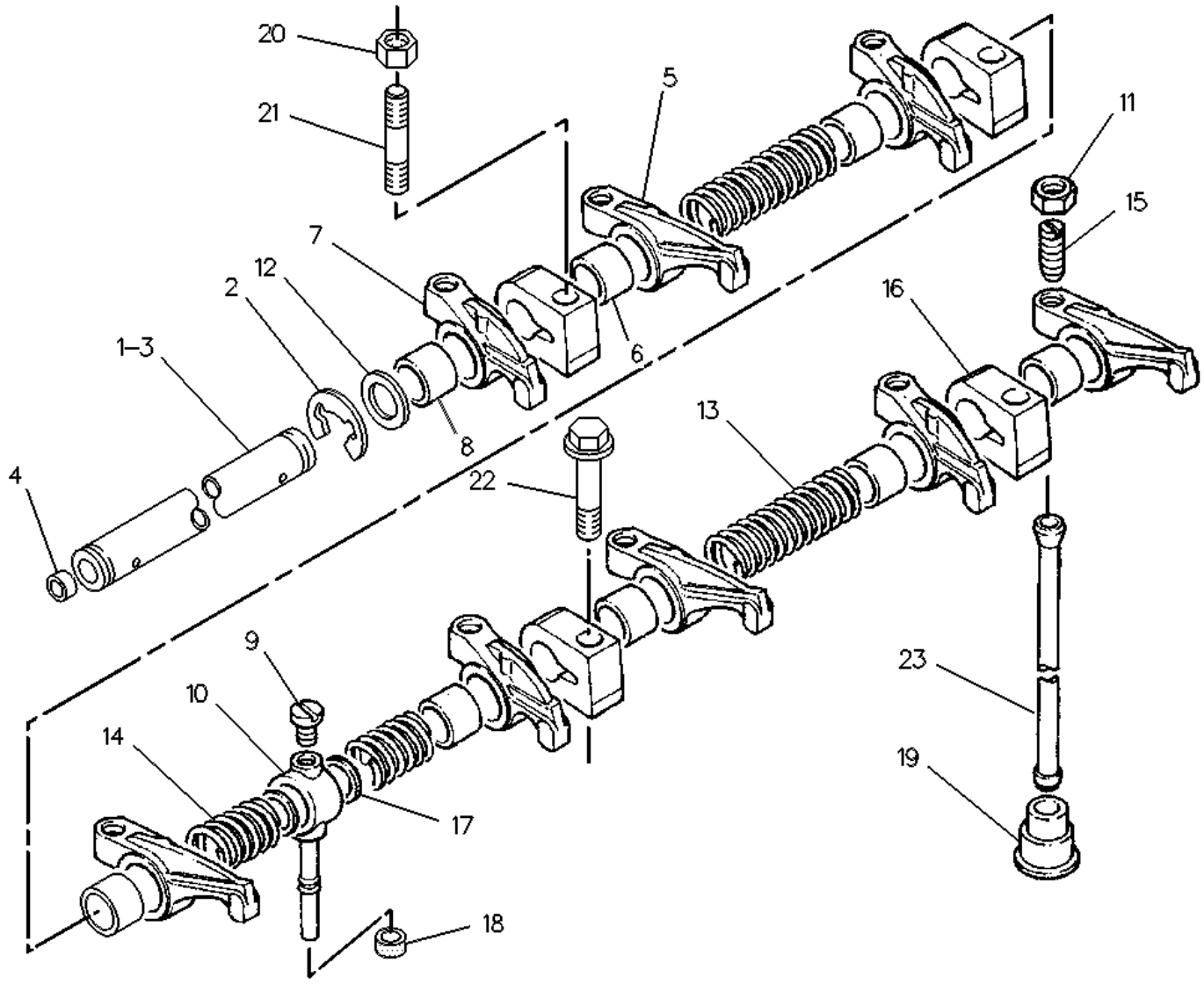

1	NPR	140-7392	1	ROCKER ARM AS
2	NPR	006-8606	2	RING-RETAINING
3	NPR	140-7391	1	SHAFT AS-ROCKER ARM
4	NPR	067-6083	2	PLUG-SHAFT END
5	NPR	209-0091	4	LEVER AS (LH)
		(EACH INCLUDES)		
6	NPR	139-5514	1	BUSHING-LEVER
7	NPR	209-0092	4	LEVER AS (RH)
		(EACH INCLUDES)		
8	NPR	139-5514	1	BUSHING-LEVER
9	NPR	6I-3717	1	BOLT (NO 10X12.7-MM)
10	NPR	6I-3718	1	CONNECTION-FEED
11	NPR	6V-8183	8	NUT-FULL (3/8-24-THD)
12	NPR	138-2054	2	WASHER
13	NPR	067-6087	2	SPRING-SHAFT

14	NPR	067-6088	2	SPRING-SHAFT
15	NPR	185-1546	8	SCREW
16	NPR	6I-1206	4	BRACKET-SHAFT
17	NPR B	195-7004	2	SHIM
18	NPR	129-3493	1	OLIVE
19	NPR	138-2053	8	TAPPET
20	NPR	6I-0233	3	NUT (M12)
21	NPR	6I-0234	3	STUD
22	NPR	6I-0235	1	BOLT (M12X1.75X50-MM)
23	NPR	067-6095	8	ROD

Key: B - USE AS REQUIRED

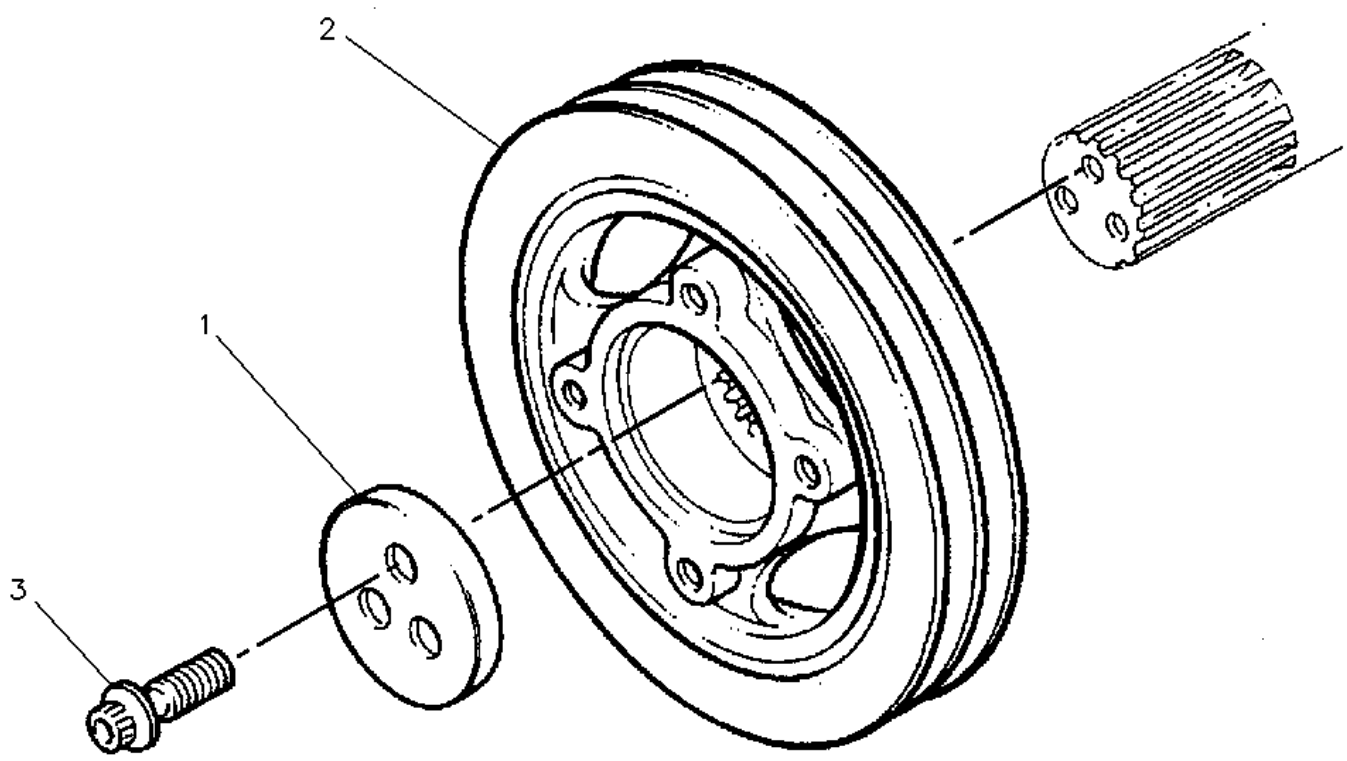

1	**NPR**	**6I-0501**	**1**	**BLOCK**
2	**NPR**	**6I-0502**	**1**	**PULLEY**
3	**NPR**	**7W-4634**	**3**	**BOLT (7/16-20X1.5-IN)**

17.25:1 RATIO --PART OF 106-5002 ENGINE AR-PRIMARY

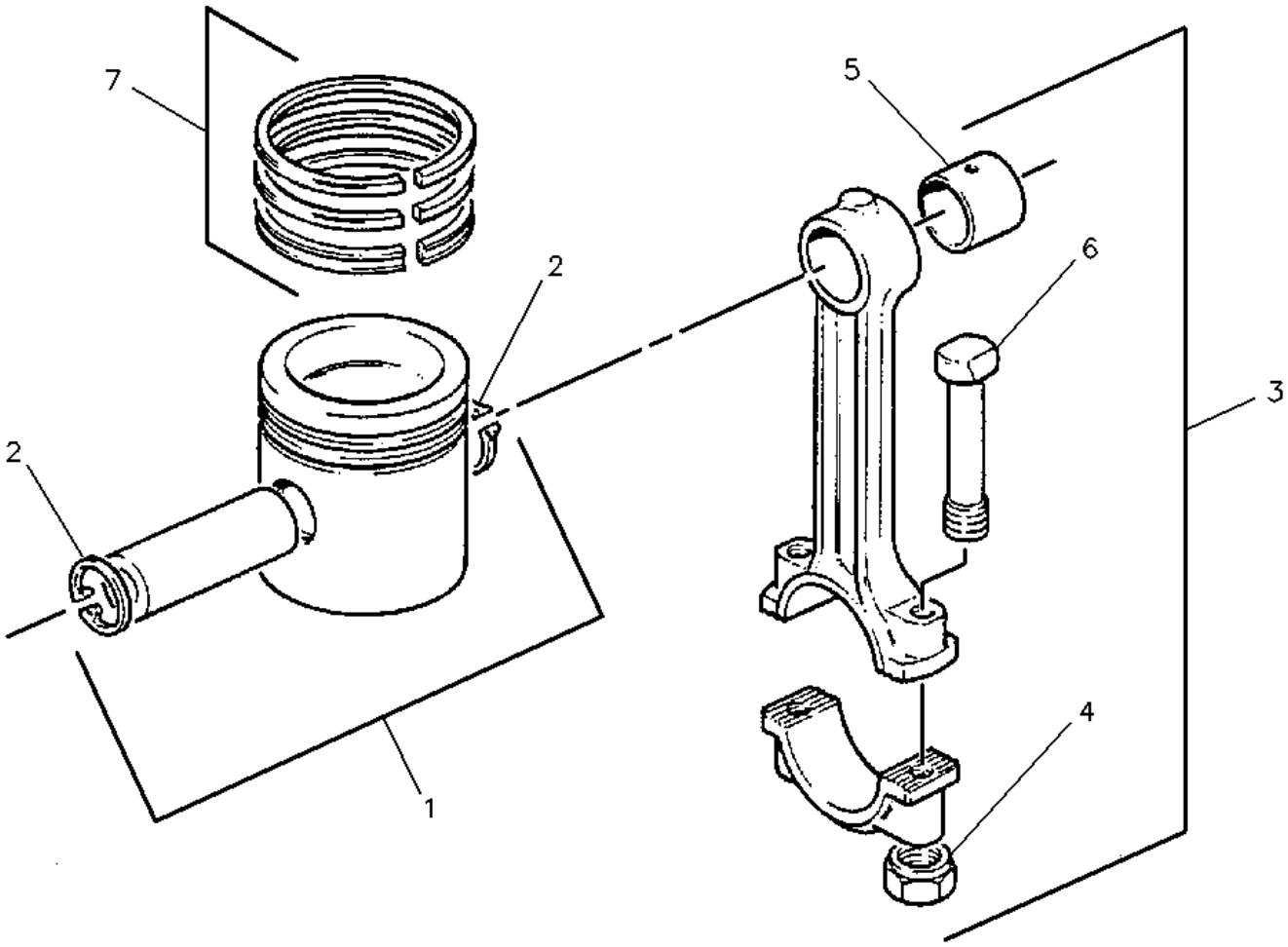

1	NPR	107-2553	4	PISTON AS
	(EACH INCLUDES)			
2	NPR	7W-2530	2	RING-SNAP
3	NPR	7W-2514	4	ROD AS-CONNECTING
	(EACH INCLUDES)			
4	NPR	7W-2505	2	NUT-CONNECTING ROD
5	NPR	7W-2510	1	BUSHING-CONNECTING ROD
6	NPR	067-6883	2	BOLT-ROD CAP
7	NPR	112-7020	4	KIT-PISTON RING

108-9620 PISTON & ROD GP --S/N 9RM2897-2897

17.25:1 RATIO --PART OF 106-5002 ENGINE AR-PRIMARY

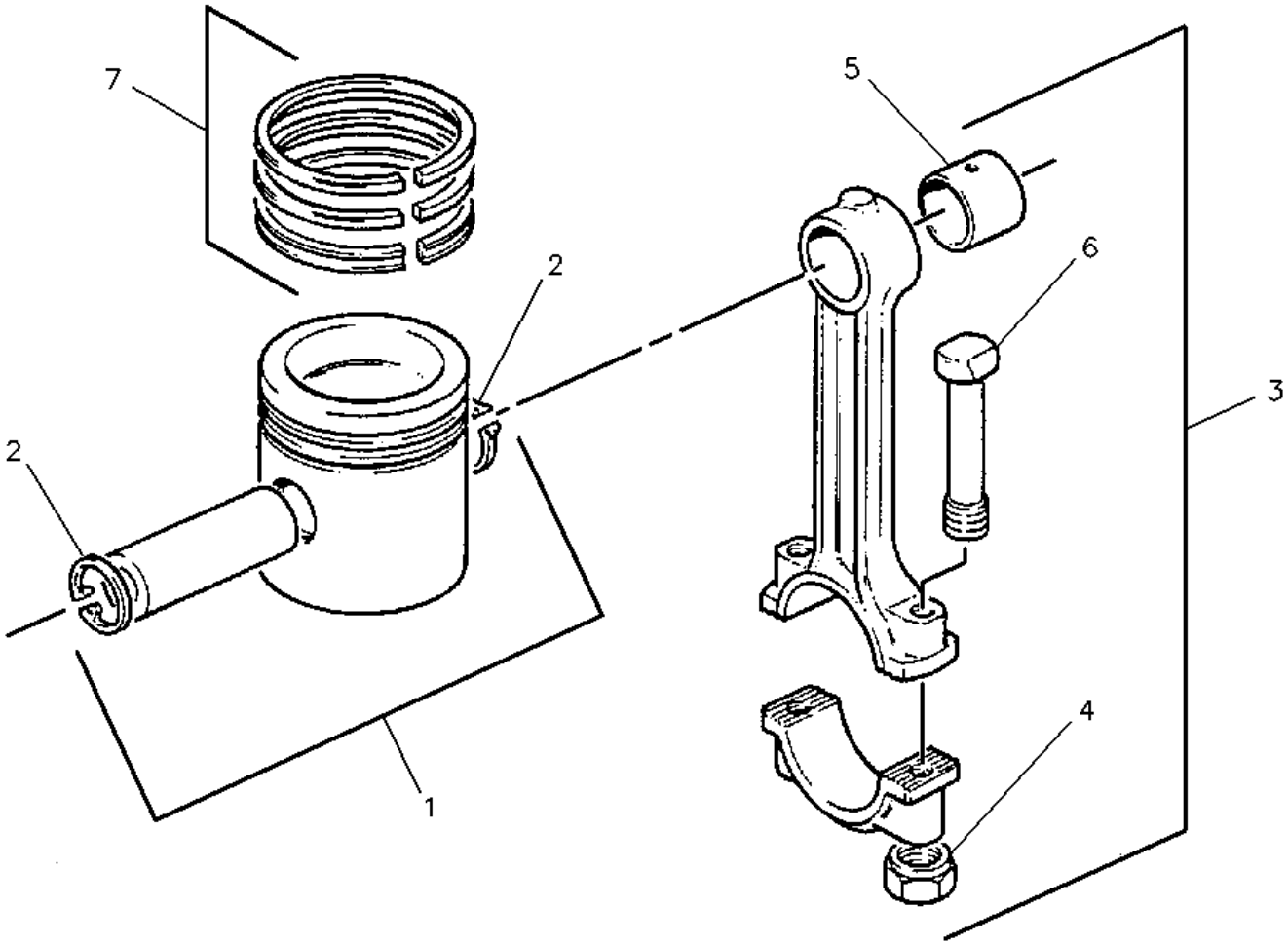

1	NPR	176-0824	4	PISTON AS
	(EACH INCLUDES)			
2	NPR	7W-2530	2	RING-SNAP
3	NPR	7W-2514	4	ROD AS-CONNECTING
	(EACH INCLUDES)			
4	NPR	7W-2505	2	NUT-CONNECTING ROD
5	NPR	7W-2510	1	BUSHING-CONNECTING ROD
6	NPR	067-6883	2	BOLT-ROD CAP
7	NPR	112-7020	4	KIT-PISTON RING

108-9620 PISTON & ROD GP -S/N 9RM2898-2929

17.25:1 RATIO -PART OF 106-5002 ENGINE AR-PRIMARY

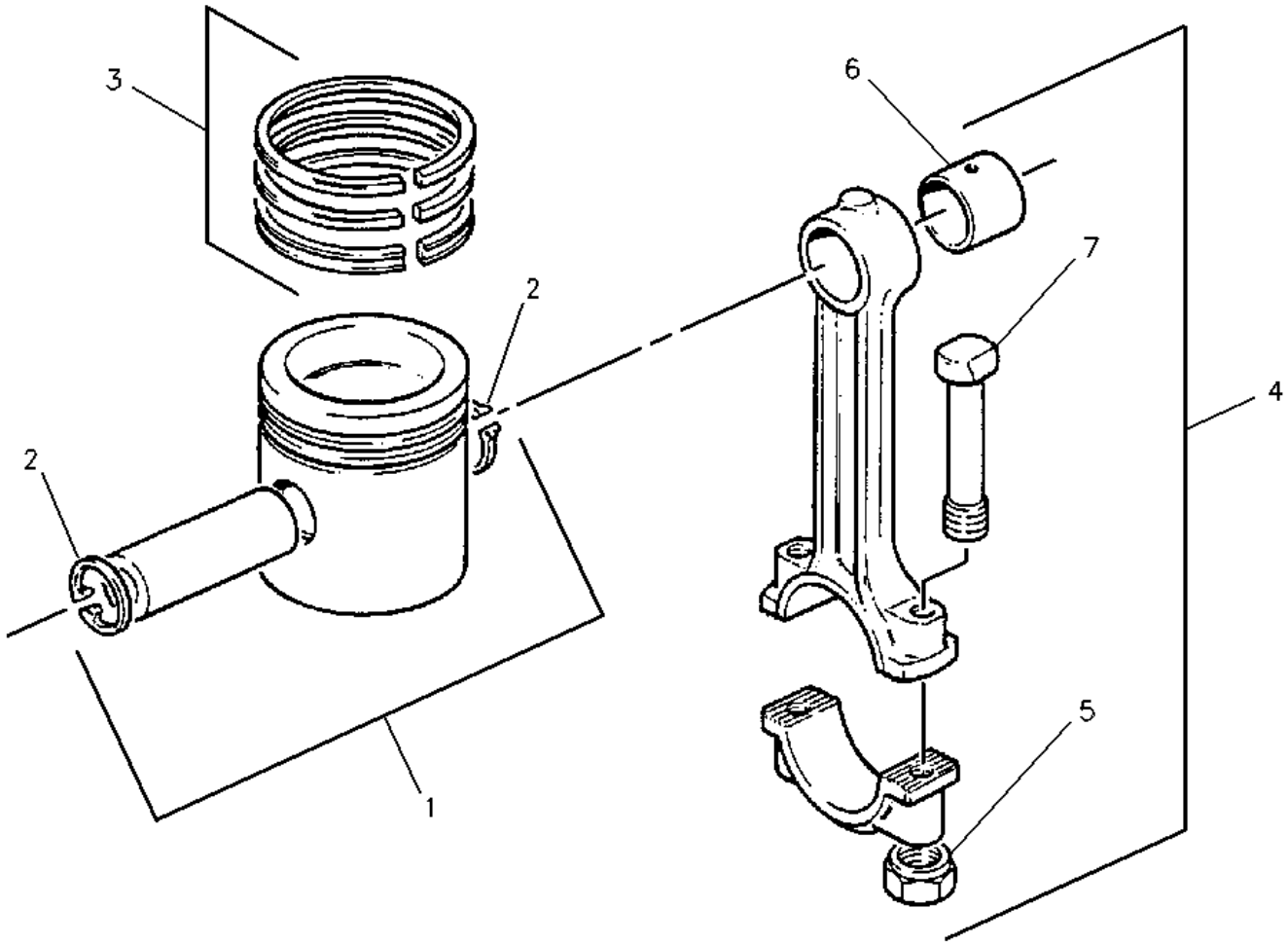

1	NPR	107-2553	4	PISTON AS
	(EACH INCLUDES)			
2	NPR	7W-2530	2	RING-SNAP
3	NPR	112-7020	4	KIT-PISTON RING
4	NPR	7W-2514	4	ROD AS-CONNECTING
	(EACH INCLUDES)			
5	NPR	7W-2505	2	NUT-CONNECTING ROD
6	NPR	7W-2510	1	BUSHING-CONNECTING ROD
7	NPR	067-6883	2	BOLT-ROD CAP

108-9620 PISTON & ROD GP --S/N 9RM2930-UP

17.25:1 RATIO --PART OF 106-5002 ENGINE AR-PRIMARY

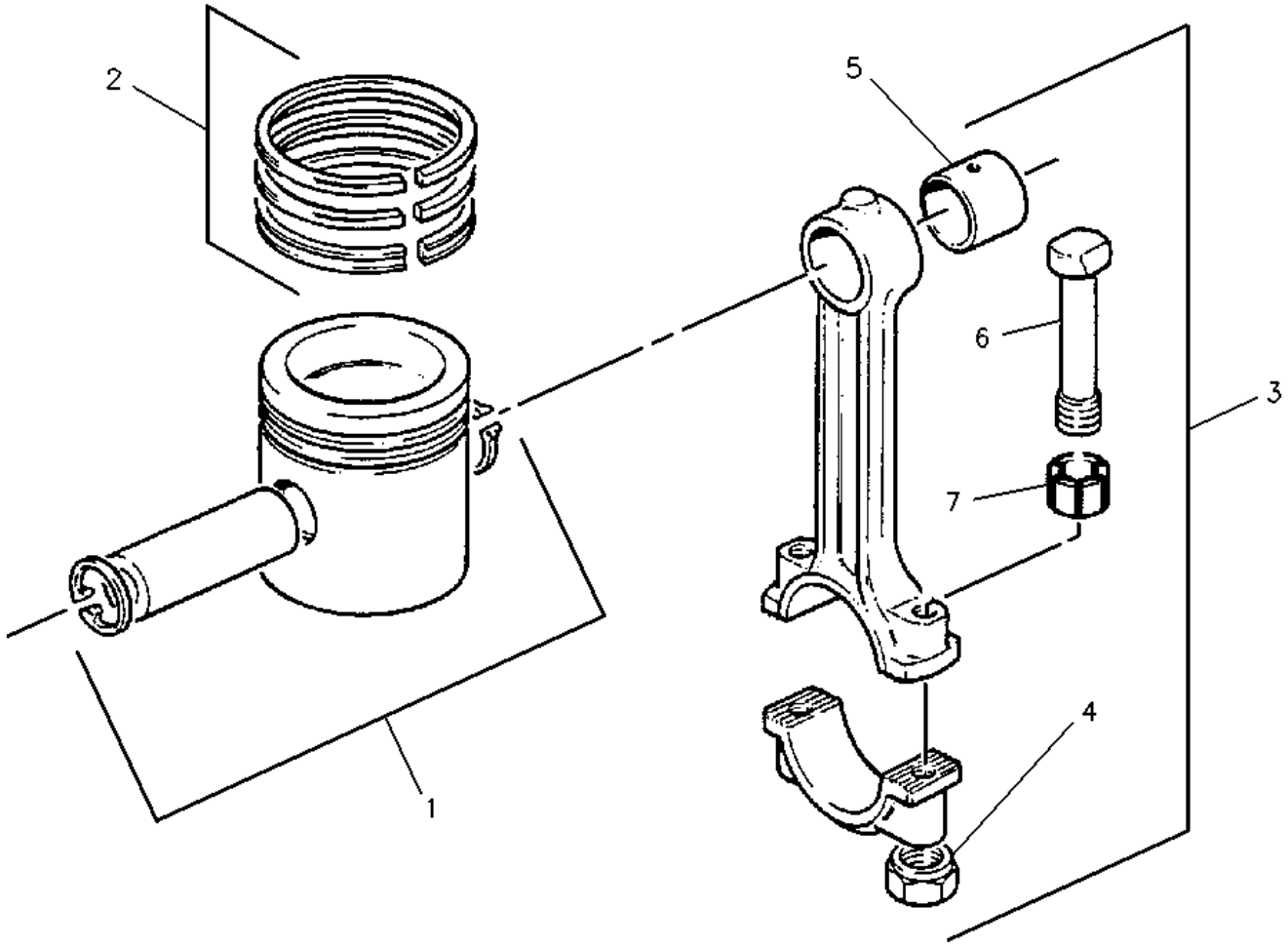

1	NPR	176-0824	4	PISTON AS
2	NPR	112-7020	4	KIT-PISTON RING
3	NPR	7W-2514	4	ROD AS-CONNECTING
	(EACH INCLUDES)			
4	NPR	7W-2505	2	NUT-CONNECTING ROD
5	NPR	7W-2510	1	BUSHING-CONNECTING ROD
6	NPR	067-6883	2	BOLT-ROD CAP
7	NPR	194-2466	2	DOWEL

130-6762 PISTON & ROD GP --S/N 5HK81000-99999; 9RM1-UP

PART OF 106-5001 ENGINE AR-PRIMARY

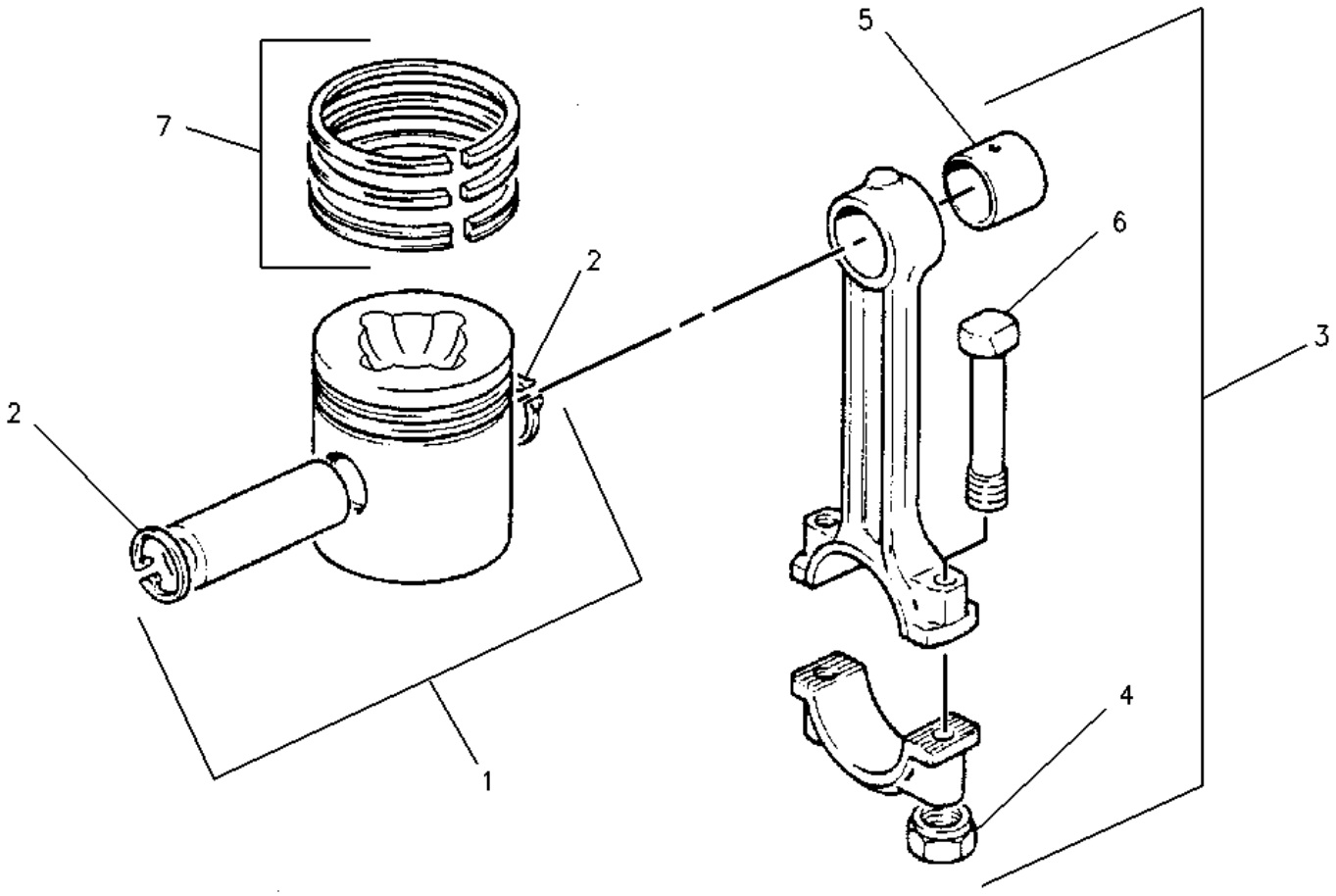

1	NPR	135-0264	4	PISTON AS
	(EACH INCLUDES)			
2	NPR	067-6167	2	RING-RETAINING
3	NPR	067-6879	4	ROD AS
	(EACH INCLUDES)			
4	NPR	7W-2505	2	NUT-CONNECTING ROD
5	NPR	067-6158	1	BUSHING-END
6	NPR	067-6883	2	BOLT-ROD CAP
7	NPR	146-1780	4	KIT-PISTON RING

145-6690 PISTON & ROD GP --S/N 5HK81000-99999

17.25:1 RATIO --PART OF 122-8803, 122-8804 ENGINE AR-PRIMARY

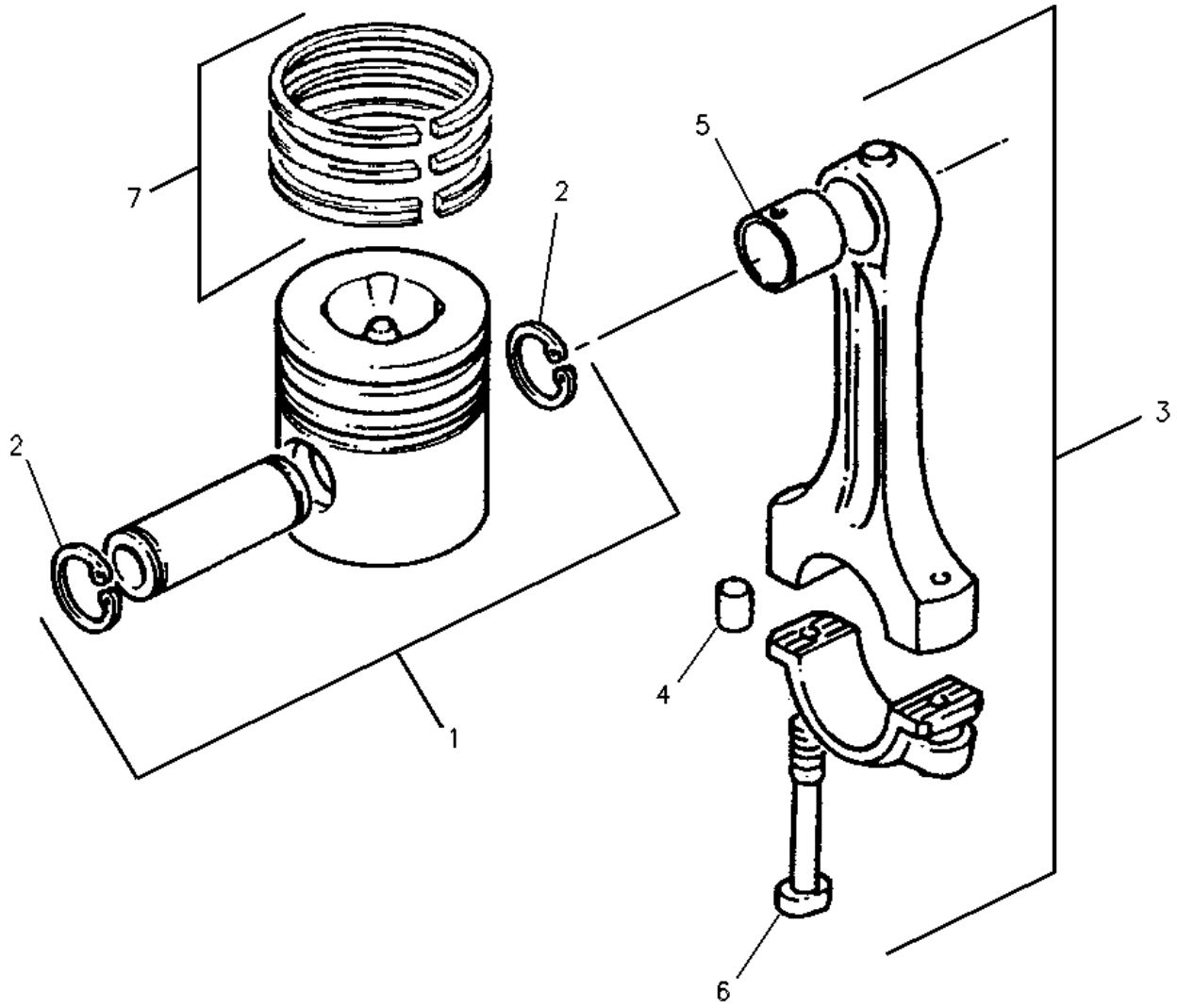

1	NPR	138-2047	4	PISTON AS
		(EACH INCLUDES)		
2	NPR	124-3536	2	RING-RETAINING
3	NPR	139-5182	4	ROD AS-CONNECTING
		(EACH INCLUDES)		
4	NPR	124-3533	2	DOWEL
5	NPR	138-2048	1	BUSHING
6	NPR	124-3532	2	BOLT-CONNECTING ROD
7	NPR	138-2073	4	KIT-PISTON RING

145-6690 PISTON & ROD GP --S/N 7BJ1-22428; 7BJ40000-75556; 5HK81000-99999

17.25:1 RATIO --PART OF 122-8803, 122-8804 ENGINE AR-PRIMARY

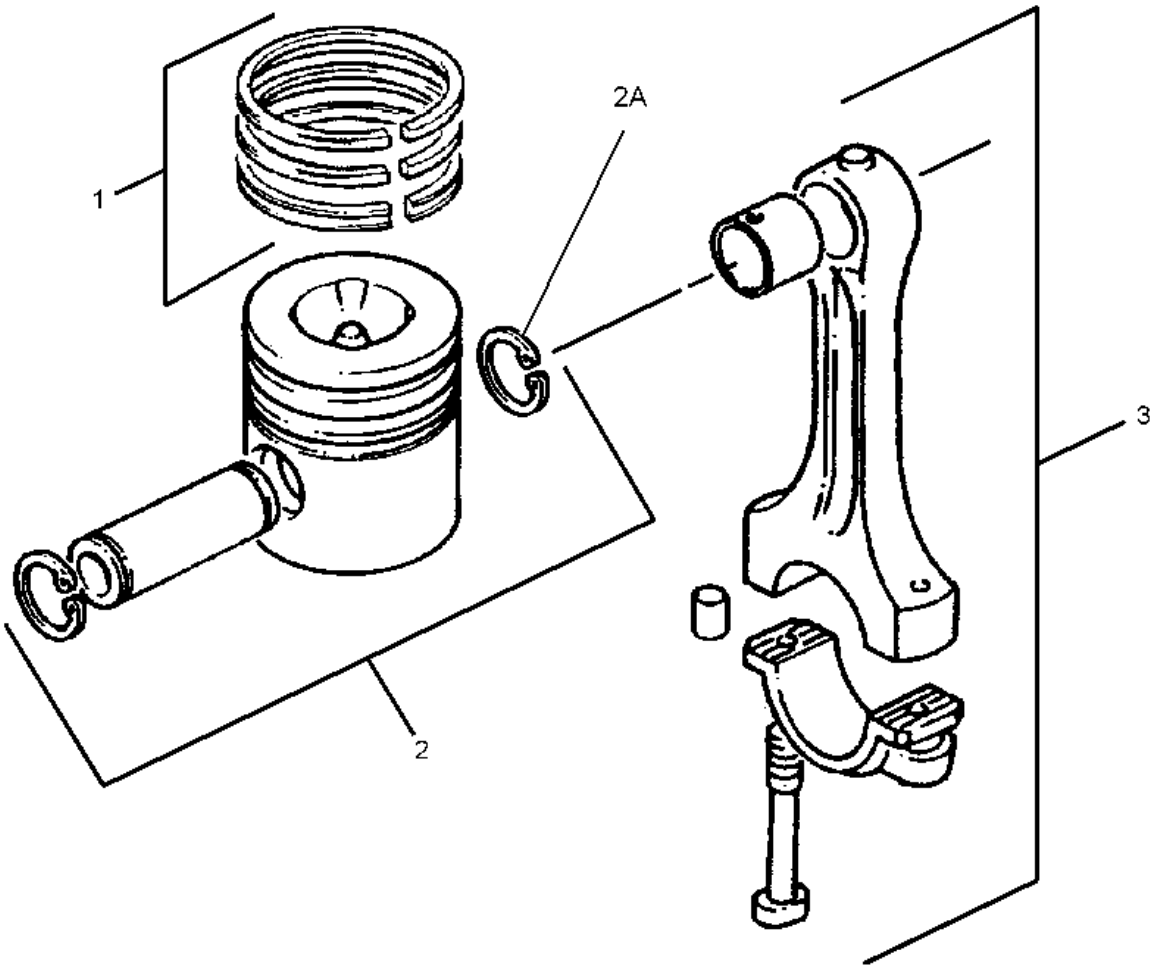

1 NPR 138-2073 4 KIT-PISTON RING

2 NPR 152-1390 4 PISTON AS

(EACH INCLUDES)

2A NPR 124-3536 2 RING-RETAINING

3 160-6493 4 ROD AS

NPR 160-6494 4 ROD AS

NPR 160-6495 4 ROD AS

NPR 160-6496 4 ROD AS

140-8175 PAN GP-OIL --S/N 7BJ1-54855; 5HK81000-99999; 9RM1-50164

PART OF 106-5001, 106-5002, 122-8803, 122-8804 ENGINE AR-PRIMARY

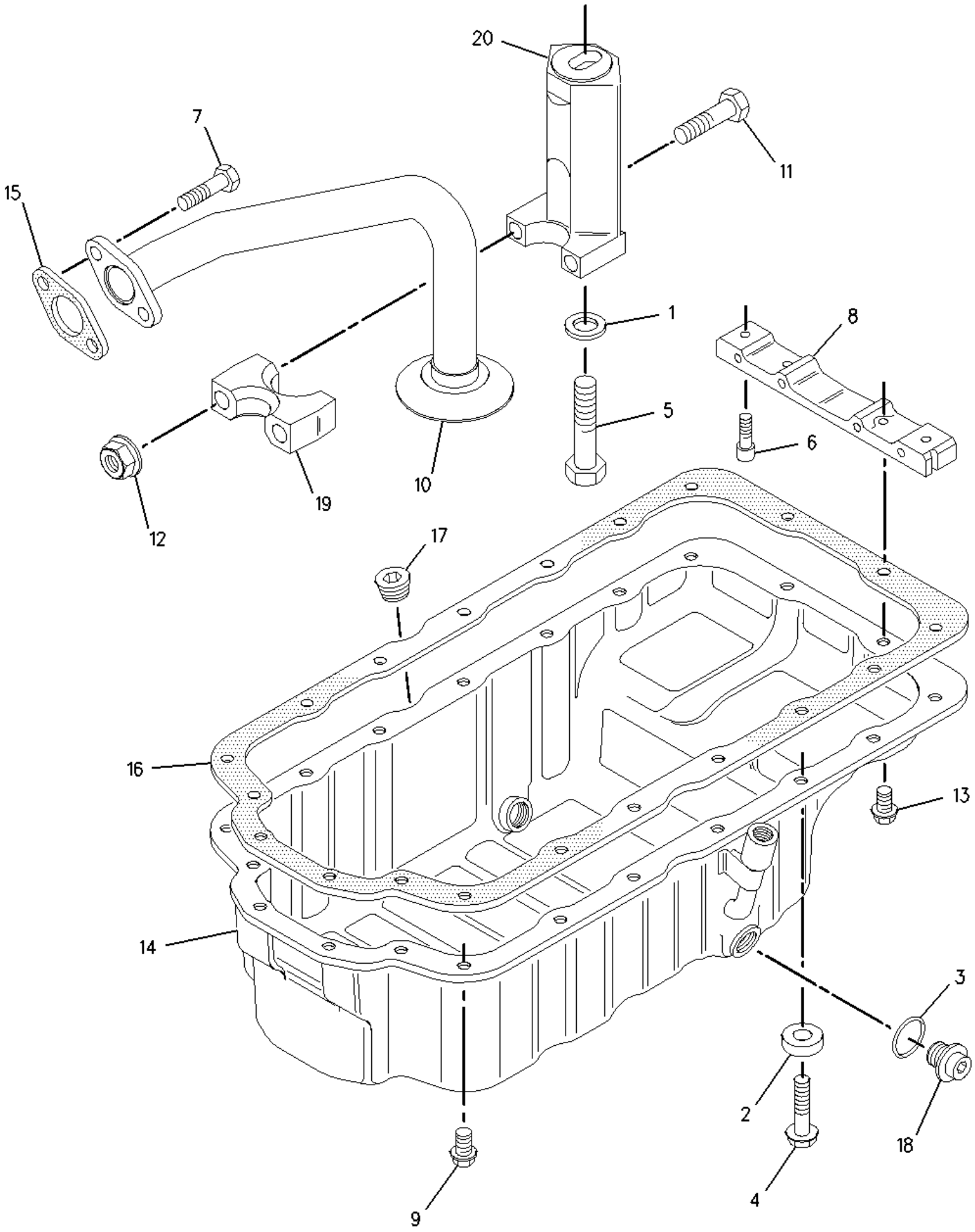

1	NPR	4H-2804	1	SPACER (0.344X0.5X0.219-IN THK)
2	NPR	5C-1798	1	SPACER (8X19X6.5-MM)
3	NPR	5P-6718	2	SEAL-O-RING
4	NPR M	6I-0217	1	BOLT (M8X1.25X20-MM)
5	NPR M	6I-0260	1	BOLT (M8X1.25X25-MM)
6	NPR M	6I-0363	2	BOLT (M6X1X20-MM)
7	NPR	6I-1090	2	BOLT (M8X1.25X40-MM)
8	NPR	113-0309	1	BRIDGE
9	NPR M	124-3815	13	BOLT (M8X16X1.25-MM)
10	NPR	6I-4067	1	TUBE
11	NPR	6I-4068	2	BOLT (M6X1X75-MM)
12	NPR	6I-4069	2	NUT
13	NPR M	6I-4072	2	BOLT (M8X1.25X14-MM)
14	NPR	6I-4076	1	PAN-OIL
15	NPR	067-6213	1	GASKET
16	NPR	032-9946	1	GASKET
17	NPR	6I-0289	1	PLUG
18	NPR	7C-0351	2	PLUG-DRAIN (ENGINE OIL)
19	NPR	9Y-5124	1	CLAMP
20	NPR	9Y-5132	1	BRACKET

Key:

M - METRIC PART

140-8175 PAN GP-OIL --S/N 7BJ54856-59337; 9RM50165-UP

PART OF 106-5001, 106-5002, 122-8803, 122-8804 ENGINE AR-PRIMARY

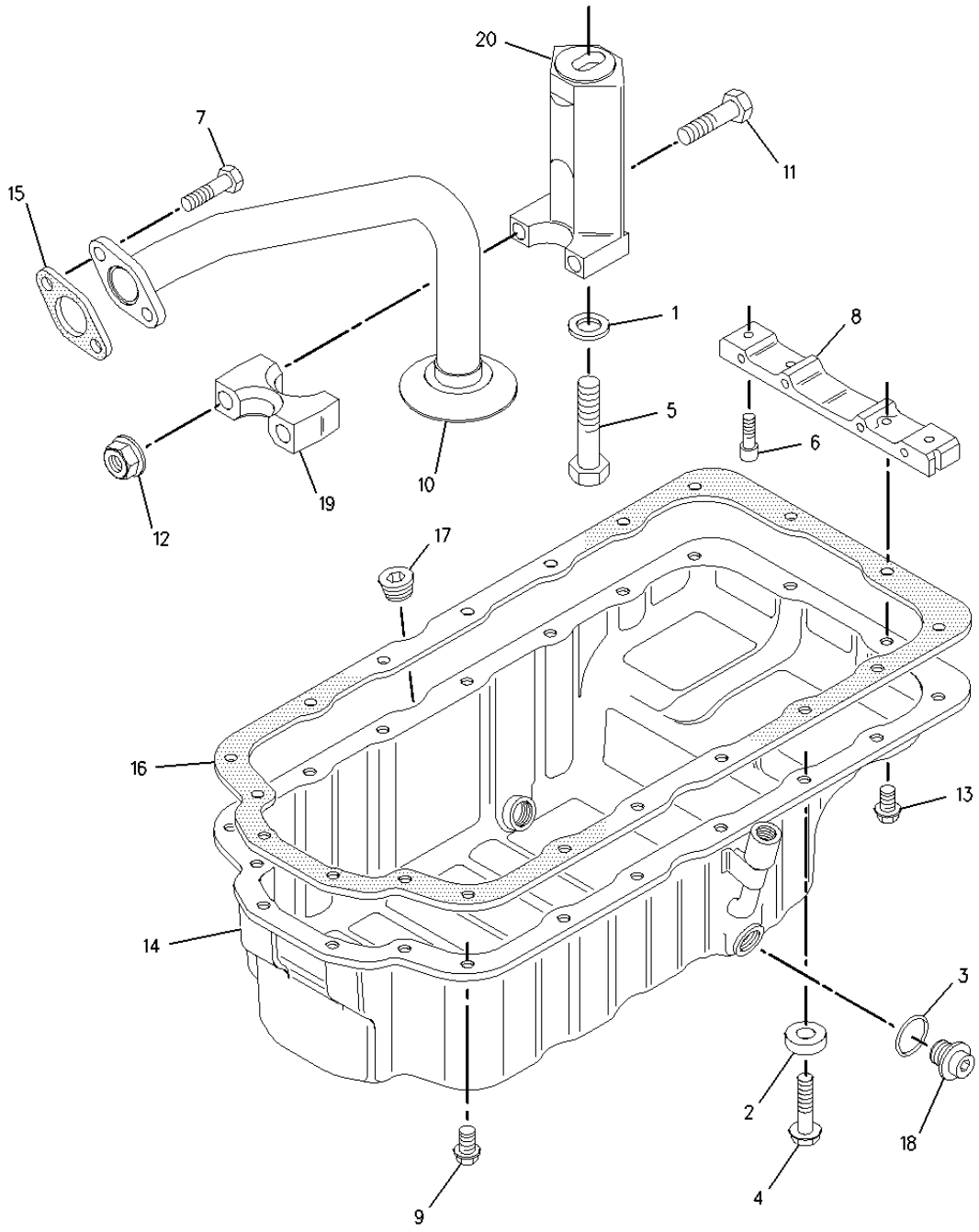

1 NPR 4H-2804 1 SPACER (0.344X0.5X0.219-IN THK)

2 NPR 5C-1798 1 SPACER (8X19X6.5-MM)

3 NPR 5P-6718 2 SEAL-O-RING

4 NPR M 6I-0217 1 BOLT (M8X1.25X20-MM)

5 NPR M 6I-0260 1 BOLT (M8X1.25X25-MM)

6 NPR M 6I-0363 2 BOLT (M6X1X20-MM)

7 NPR 6I-1090 2 BOLT (M8X1.25X40-MM)

8	NPR	211-0067	1	BRIDGE
9	NPR M	124-3815	13	BOLT (M8X16X1.25-MM)
10	NPR	6I-4067	1	TUBE
11	NPR	6I-4068	2	BOLT (M6X1X75-MM)
12	NPR	6I-4069	2	NUT
13	NPR M	6I-4072	2	BOLT (M8X1.25X14-MM)
14	NPR	6I-4076	1	PAN-OIL
15	NPR	067-6213	1	GASKET
16	NPR	032-9946	1	GASKET
17	NPR	6I-0289	1	PLUG
18	NPR	7C-0351	2	PLUG-DRAIN (ENGINE OIL)
19	NPR	9Y-5124	1	CLAMP
20	NPR	9Y-5132	1	BRACKET

Key: M - METRIC PART

PART OF 106-5001, 106-5002, 122-8803, 122-8804 ENGINE AR-PRIMARY

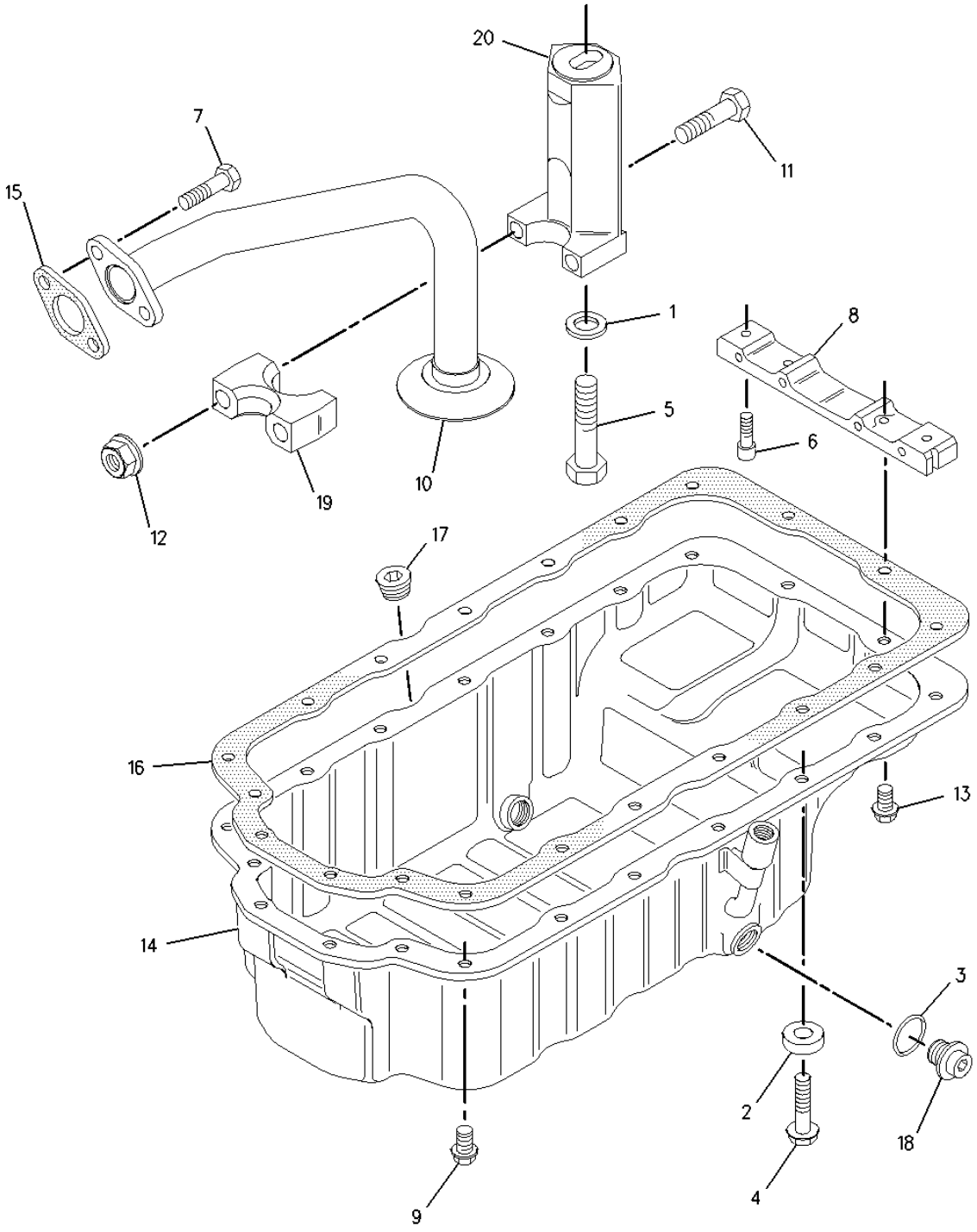

1	**NPR**	**4H-2804**	**1**	**SPACER (0.344X0.5X0.219-IN THK)**
2	**NPR**	**5C-1798**	**1**	**SPACER (8X19X6.5-MM)**
3	**NPR**	**5P-6718**	**2**	**SEAL-O-RING**
4	**NPR M**	**6I-0217**	**1**	**BOLT (M8X1.25X20-MM)**
5	**NPR M**	**6I-0260**	**1**	**BOLT (M8X1.25X25-MM)**

6	NPR M	6I-0363	2	BOLT (M6X1X20-MM)
7	NPR	6I-1090	2	BOLT (M8X1.25X40-MM)
8	NPR	211-0067	1	BRIDGE
9	NPR M	124-3815	13	BOLT (M8X16X1.25-MM)
10	NPR	6I-4067	1	TUBE
11	NPR	6I-4068	2	BOLT (M6X1X75-MM)
12	NPR	6I-4069	2	NUT
13	NPR M	6I-4072	2	BOLT (M8X1.25X14-MM)
14	NPR	211-1871	1	PAN-OIL
15	NPR	067-6213	1	GASKET
16	NPR	032-9946	1	GASKET
17	NPR	6I-0289	2	PLUG
18	NPR	7C-0351	2	PLUG-DRAIN (ENGINE OIL)
19	NPR	9Y-5124	1	CLAMP
20	NPR	9Y-5132	1	BRACKET

Key: M - METRIC PART

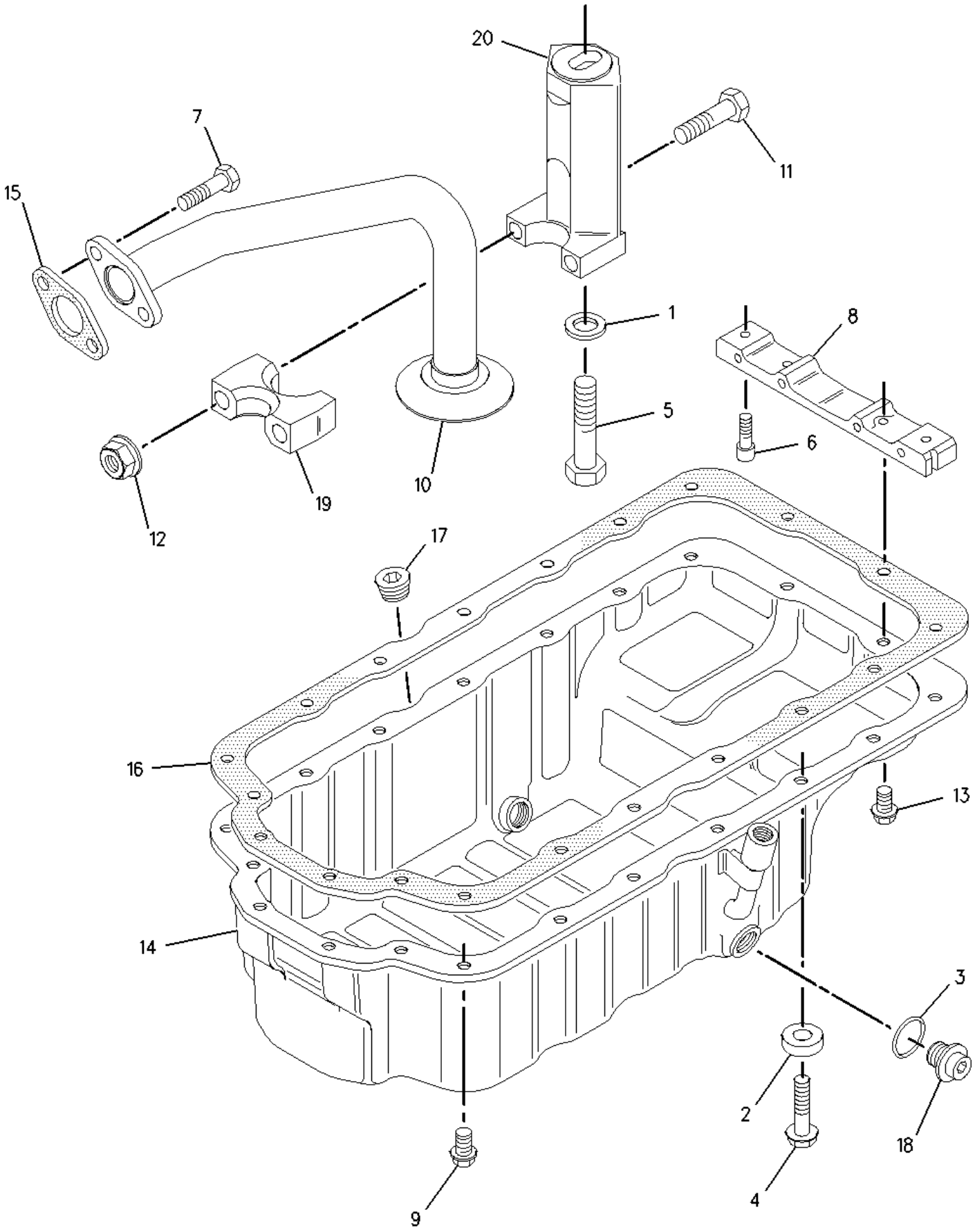

1 NPR 4H-2804 1 SPACER (0.344X0.5X0.219-IN THK)

2	NPR	5C-1809	1	SPACER (8X19X6.5-MM)
3	NPR	5P-6718	2	SEAL-O-RING
4	NPR M	6I-0217	1	BOLT (M8X1.25X20-MM)
5	NPR M	6I-0260	1	BOLT (M8X1.25X25-MM)
6	NPR M	6I-0363	2	BOLT (M6X1X20-MM)
7	NPR	6I-1090	2	BOLT (M8X1.25X40-MM)
8	NPR	211-0067	1	BRIDGE
9	NPR M	124-3815	13	BOLT (M8X16X1.25-MM)
10	NPR	6I-4067	1	TUBE
11	NPR	6I-4068	2	BOLT (M6X1X75-MM)
12	NPR	6I-4069	2	NUT
13	NPR M	6I-4072	2	BOLT (M8X1.25X14-MM)
14	NPR	214-3281	1	PAN-OIL
15	NPR	067-6213	1	GASKET
16	NPR	032-9946	1	GASKET
17	NPR	6I-0289	1	PLUG
18	NPR	7C-0351	2	PLUG-DRAIN (ENGINE OIL)
19	NPR	9Y-5124	1	CLAMP
20	NPR	9Y-5132	1	BRACKET

Key: M - METRIC PART

PART OF 106-5001, 106-5002, 122-8803, 122-8804 ENGINE AR-PRIMARY

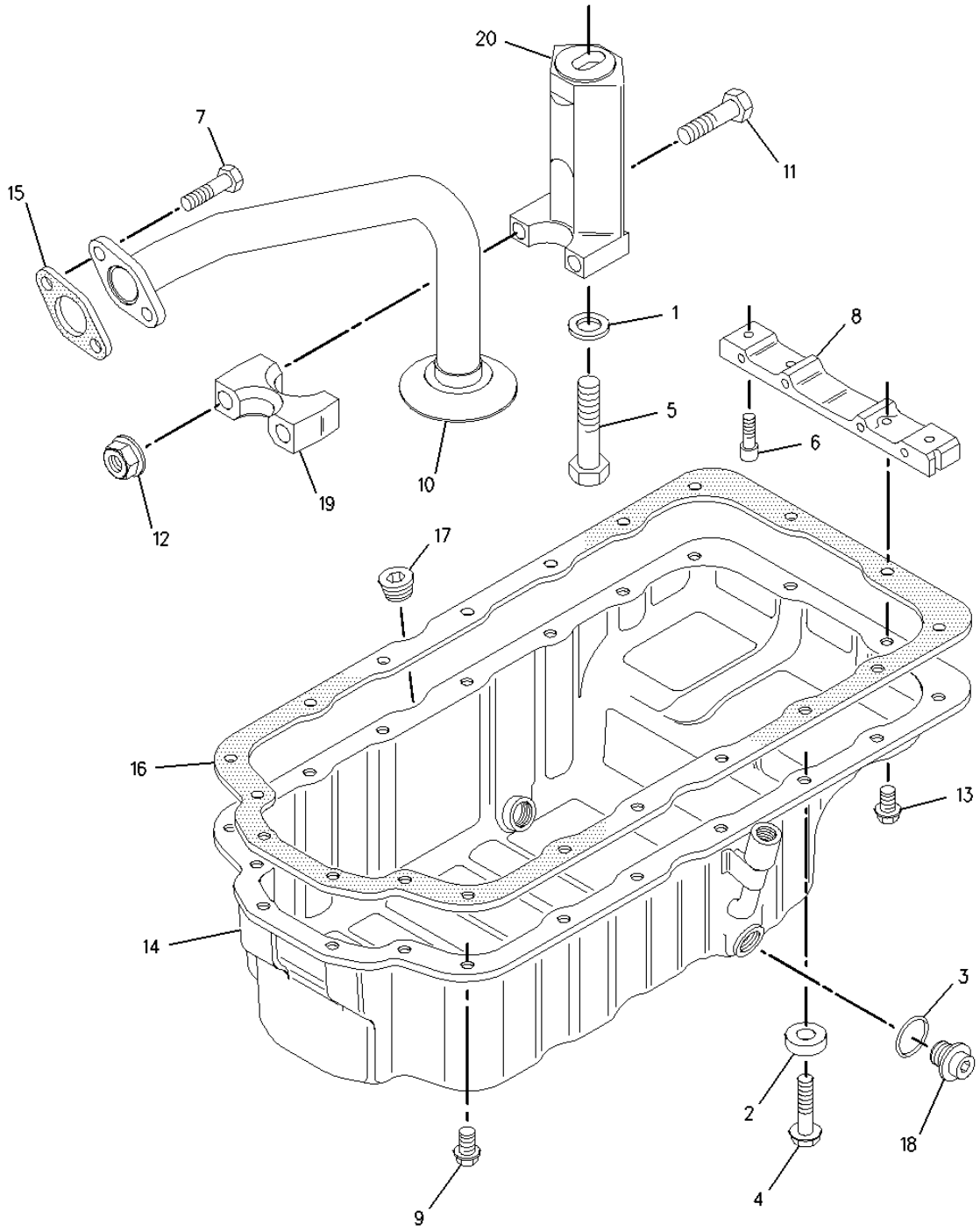

1	**NPR**	**4H-2804**	**1**	**SPACER (0.344X0.5X0.219-IN THK)**
2	**NPR**	**5C-1809**	**1**	**SPACER (8X19X6.5-MM)**
3	**NPR**	**5P-6718**	**2**	**SEAL-O-RING**
4	**NPR M**	**6I-0217**	**1**	**BOLT (M8X1.25X20-MM)**
5	**NPR M**	**6I-0260**	**1**	**BOLT (M8X1.25X25-MM)**

6	NPR M	6I-0363	2	BOLT (M6X1X20-MM)
7	NPR	6I-1090	2	BOLT (M8X1.25X40-MM)
8	NPR	211-0067	1	BRIDGE
9	NPR M	124-3815	13	BOLT (M8X16X1.25-MM)
10	NPR	6I-4067	1	TUBE
11	NPR	6I-4068	2	BOLT (M6X1X75-MM)
12	NPR	6I-4069	2	NUT
13	NPR M	6I-4072	2	BOLT (M8X1.25X14-MM)
14	NPR	211-1871	1	PAN-OIL
15	NPR	067-6213	1	GASKET
16	NPR	032-9946	1	GASKET
17	NPR	6I-0289	3	PLUG
18	NPR	7C-0351	2	PLUG-DRAIN (ENGINE OIL)
19	NPR	9Y-5124	1	CLAMP
20	NPR	9Y-5132	1	BRACKET

Key: M - METRIC PART

PART OF 106-5001, 106-5002, 122-8803, 122-8804 ENGINE AR-PRIMARY

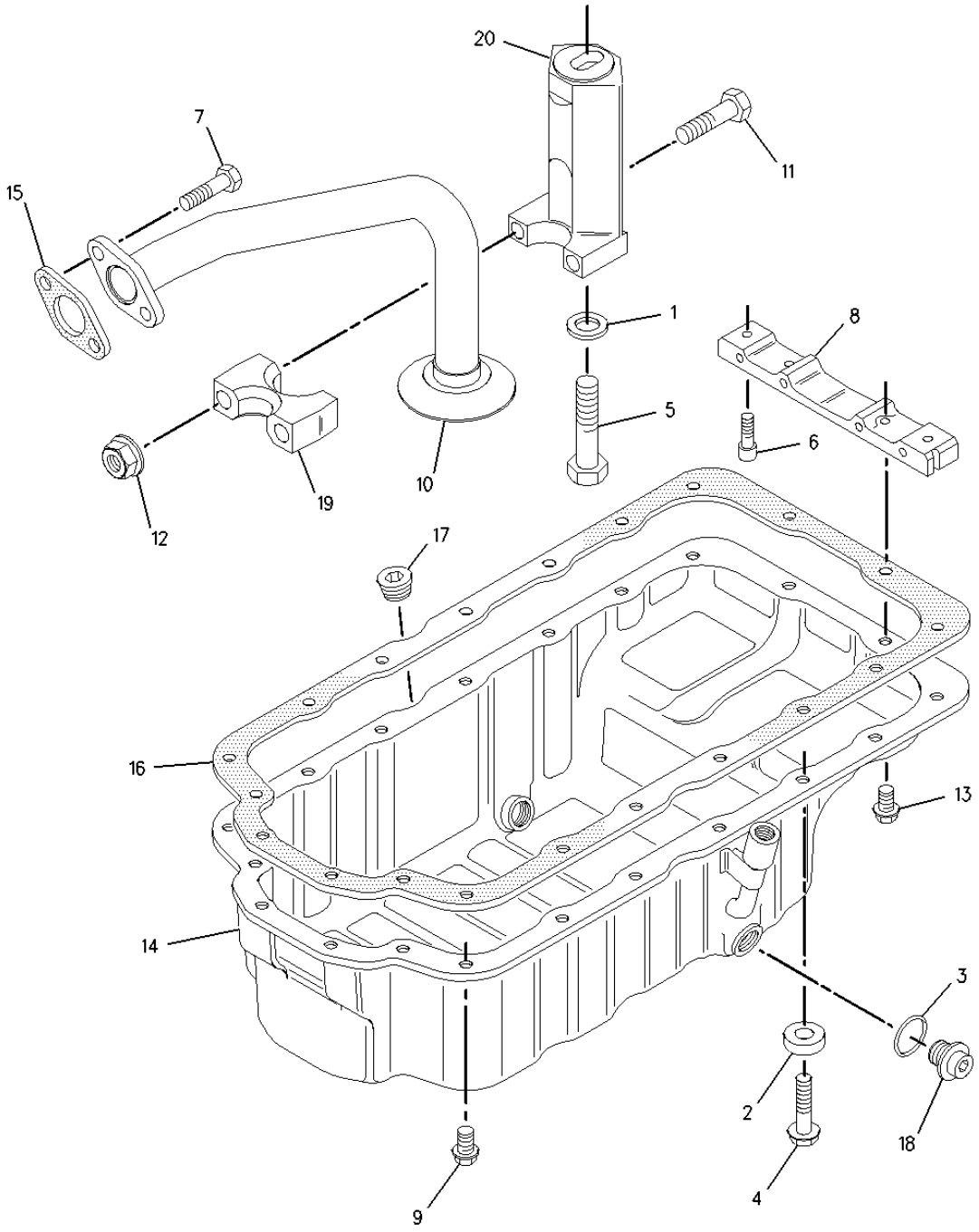

1 NPR 4H-2804 1 SPACER (0.344X0.5X0.219-IN THK)

2 NPR 5C-1809 1 SPACER (8X19X6.5-MM)

3 NPR 5P-6718 2 SEAL-O-RING

4 NPR M 6I-0217 1 BOLT (M8X1.25X20-MM)

5 NPR M 6I-0260 1 BOLT (M8X1.25X25-MM)

6 NPR M 6I-0363 2 BOLT (M6X1X20-MM)

7	NPR	6I-1090	2	BOLT (M8X1.25X40-MM)
8	NPR	211-0067	1	BRIDGE
9	NPR M	124-3815	13	BOLT (M8X16X1.25-MM)
10	NPR	6I-4067	1	TUBE
11	NPR	6I-4068	2	BOLT (M6X1X75-MM)
12	NPR	6I-4069	2	NUT
13	NPR M	6I-4072	2	BOLT (M8X1.25X14-MM)
14	NPR	214-3281	1	PAN-OIL
15	NPR	067-6213	1	GASKET
16	NPR	032-9946	1	GASKET
17	NPR	6I-0289	1	PLUG
18	NPR	7C-0351	2	PLUG-DRAIN (ENGINE OIL)
19	NPR	9Y-5124	1	CLAMP
20	NPR	9Y-5132	1	BRACKET

Key:

M - METRIC PART

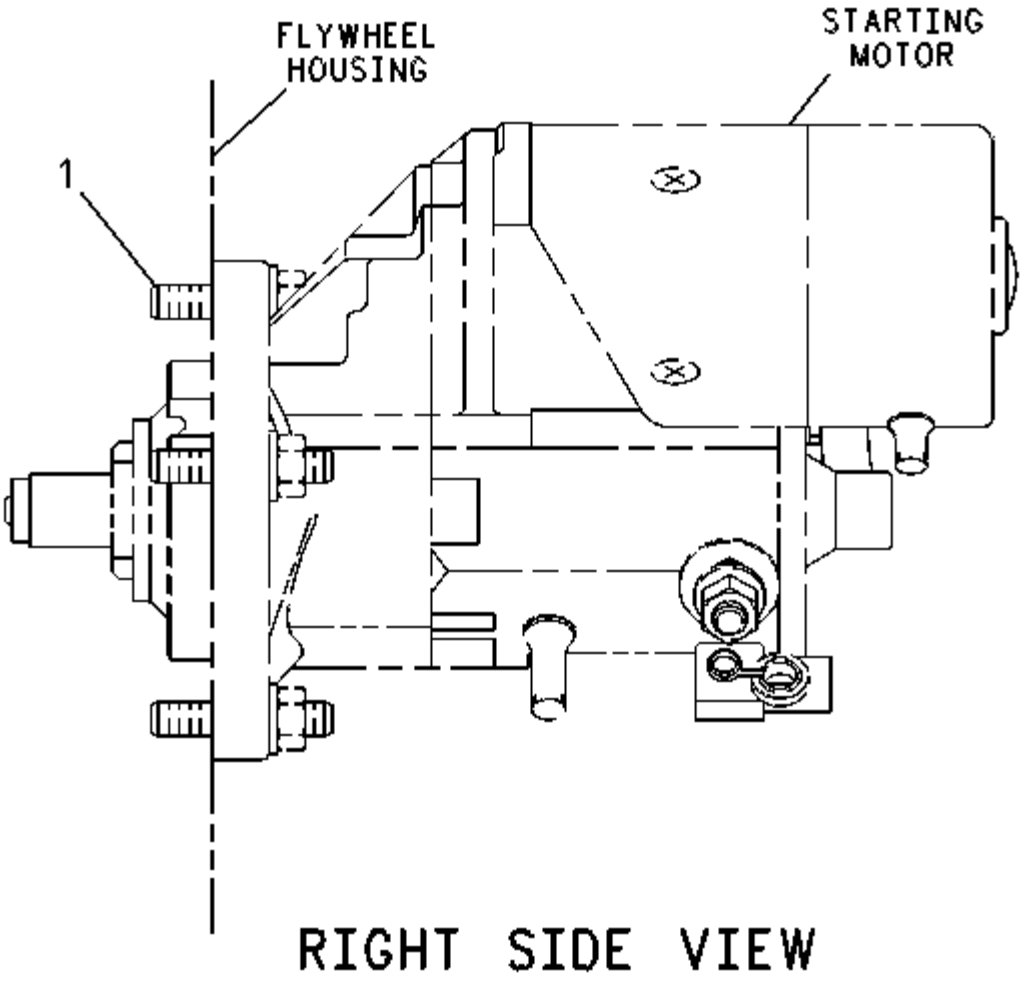

1	NPR	6I-0364	3	STUD (M10X1.5X30-MM)

PART OF 106-5001 ENGINE AR-PRIMARY

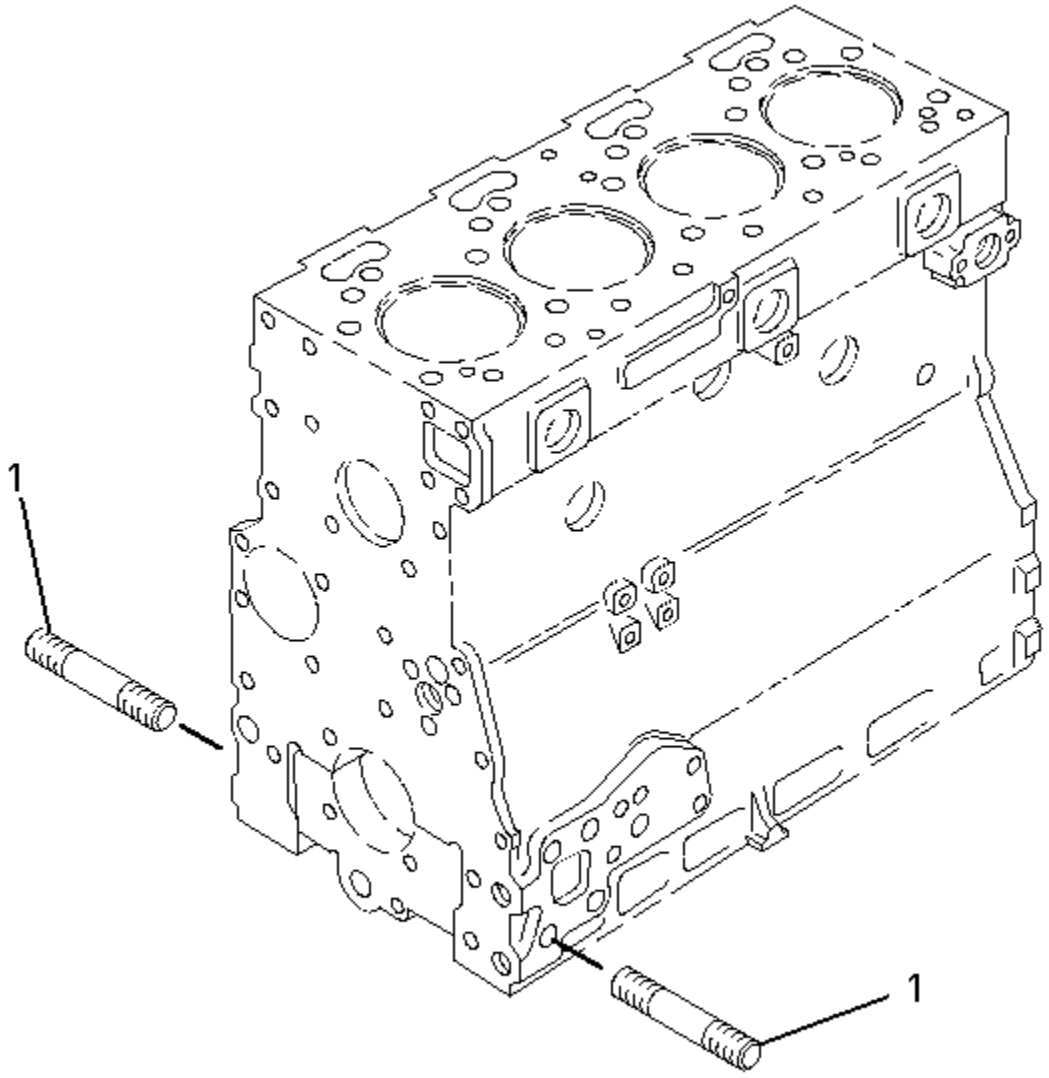

1	NPR	126-8191	8	STUD

195-2130 MOUNTING GP-ENGINE -S/N 7BJ41219-UP; 9RM1-UP

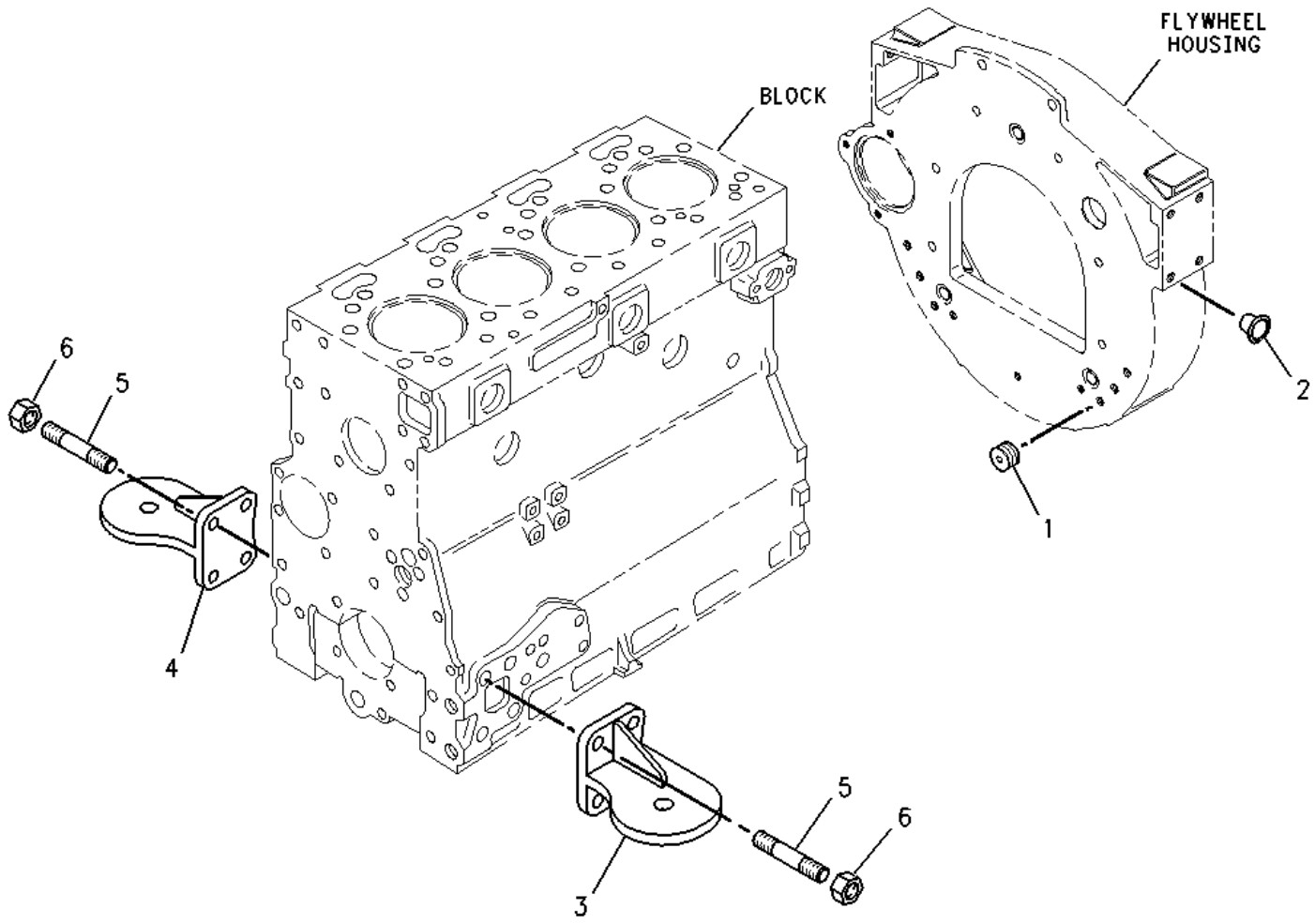

1	**NPR**	**101-2987**	**6**	**PLUG**
2	**NPR**	**133-8470**	**4**	**PLUG**
3	**NPR**	**195-2132**	**1**	**SUPPORT-FRONT**
4	**NPR**	**195-2134**	**1**	**SUPPORT-FRONT**
5	**NPR**	**195-2136**	**8**	**STUD**
6	**NPR**	**195-2221**	**8**	**NUT**

PART OF 140-6156, 140-6157 POWER TRAIN AR

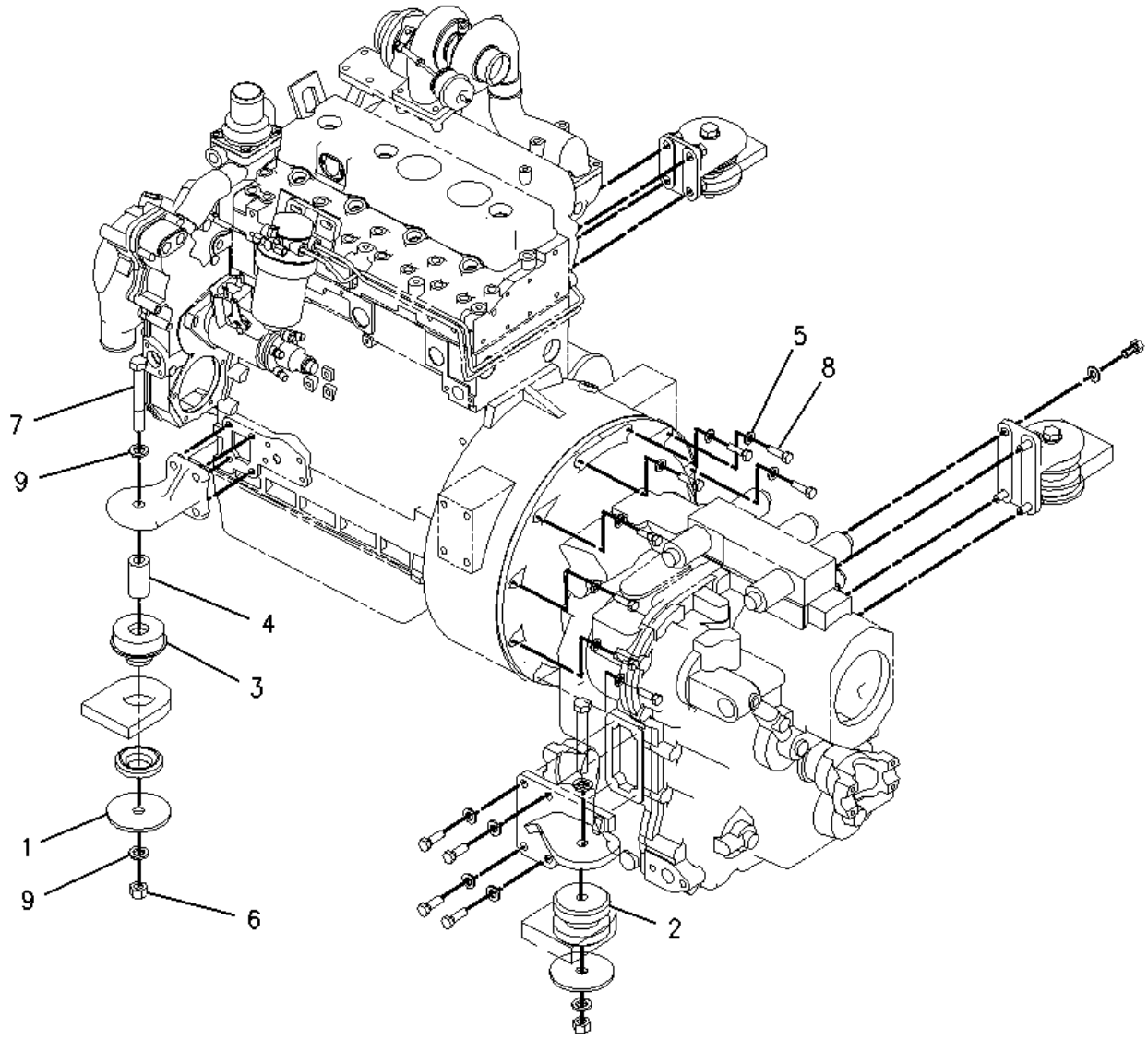

1	NPR	3E-4892	4	WASHER (16.75X100X6-MM THK)
2	NPR	3E-4924	2	MOUNTING AS
3	NPR	6Y-9915	2	MOUNT AS
4	NPR	9W-9953	2	SLEEVE
5	NPR	8T-4121	12	WASHER-HARD (11X21X2.5-MM THK)
6	NPR M	8T-4132	4	NUT (M16X2-THD)
7	NPR M	8T-4174	4	BOLT (M16X2X120-MM)
8	NPR M	8T-4196	12	BOLT (M10X1.5X35-MM)
9	NPR	9X-8257	8	WASHER (17.5X30X3.5-MM THK)

Key: M - METRIC PART

143-0788 MOUNTING GP-ENGINE & TMSN -S/N 4ZN16044-50156

POWER SHIFT -PART OF 159-4962, 159-4963, 159-4964, 159-4965 CONTROL AR-POWER SHIFT TMSN

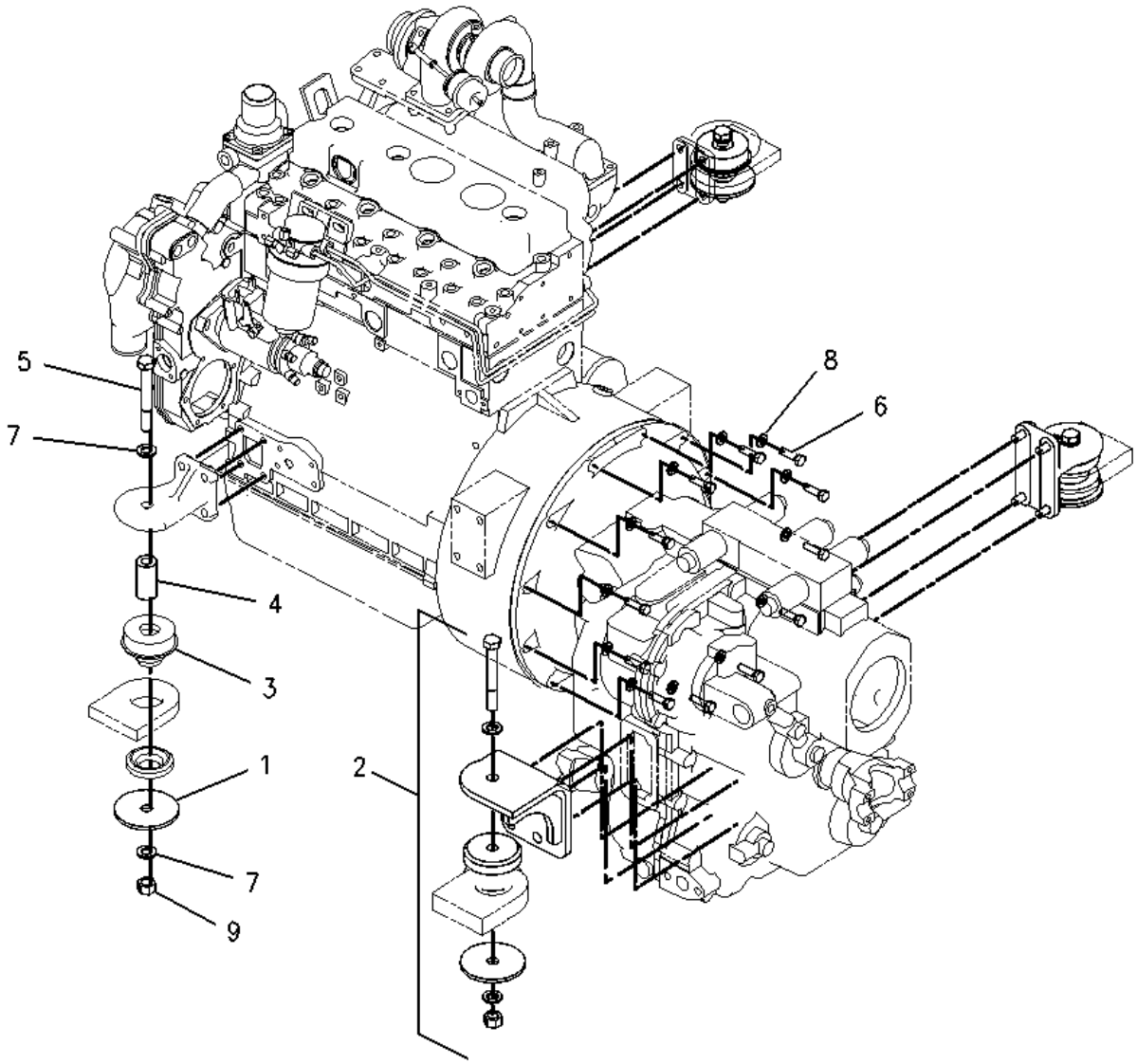

1	NPR	3E-4892	4	WASHER (16.75X100X6-MM THK)
2	NPR	3E-4924	2	MOUNTING AS
3	NPR	6Y-9915	2	MOUNT AS
4	NPR	9W-9953	2	SLEEVE
5	NPR M	8T-4174	4	BOLT (M16X2X120-MM)
6	NPR M	8T-4196	12	BOLT (M10X1.5X35-MM)
7	NPR	9X-8257	8	WASHER (17.5X30X3.5-MM THK)
8	NPR	8T-4121	12	WASHER-HARD (11X21X2.5-MM THK)
9	NPR M	8T-4132	4	NUT (M16X2-THD)

Key: M - METRIC PART

148-9679 DRIVE GP-FAN --S/N 7BJ1-UP; 5HK81000-99999; 9RM1-UP

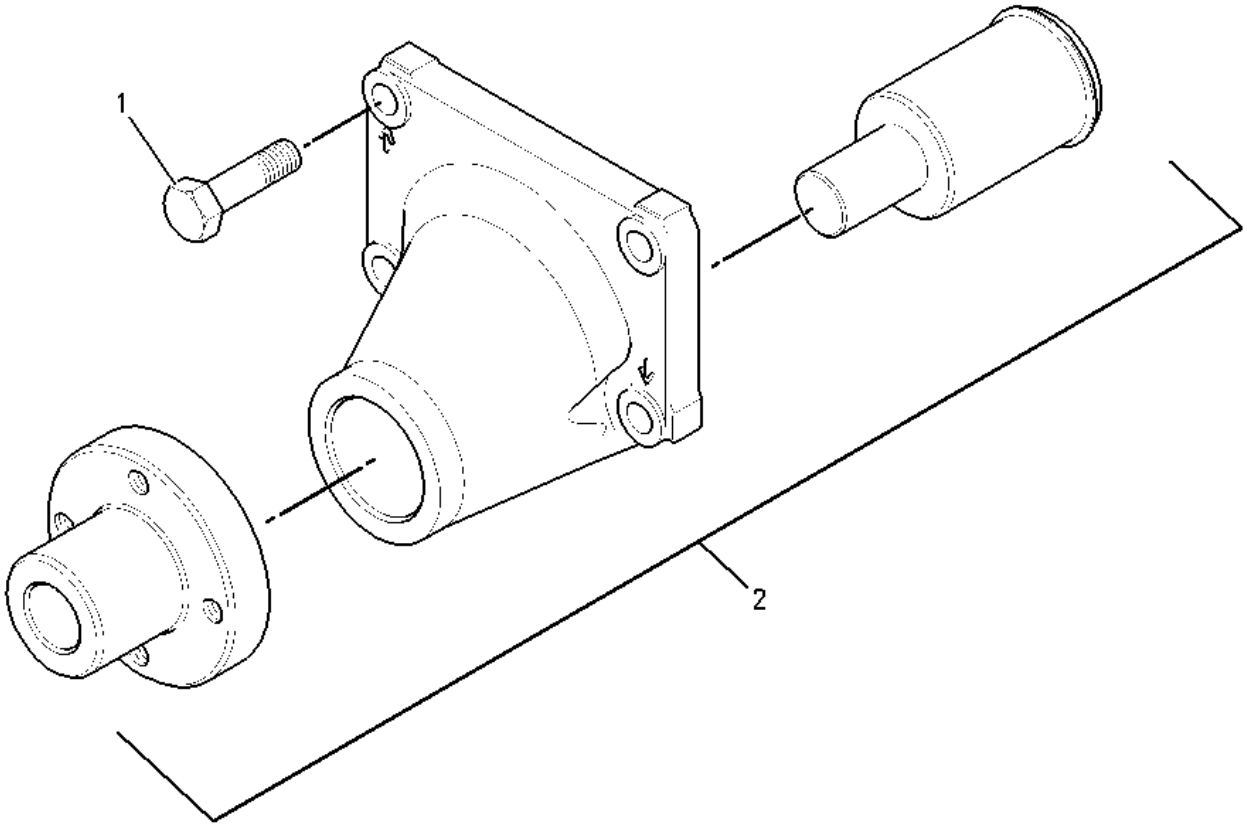

1	**NPR M**	**103-5687**	**4**	**BOLT (M10X1.5X85-MM)**
2	**NPR**	**132-8238**	**1**	**HOUSING AS**

Key: M - METRIC PART

PART OF 106-5001, 106-5002, 122-8803, 122-8804 ENGINE AR-PRIMARY

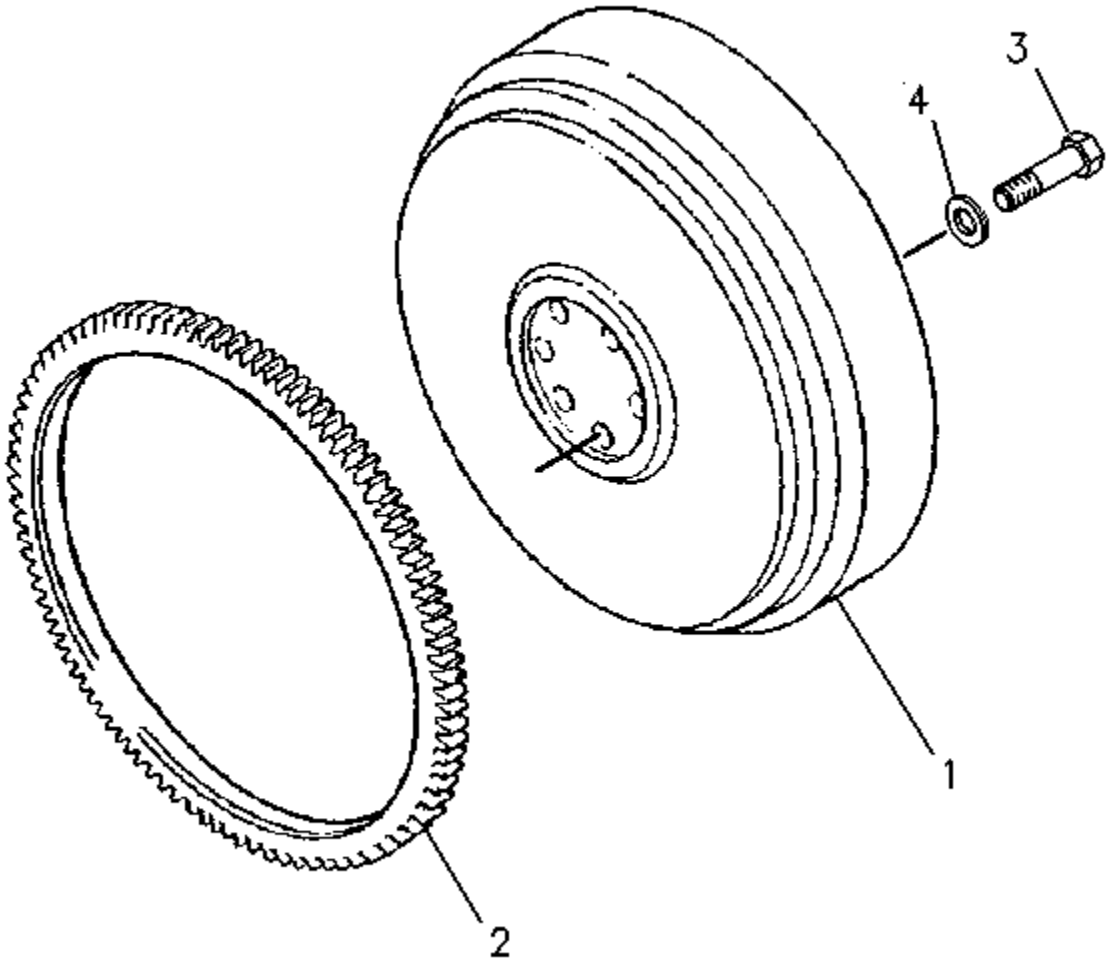

1	NPR	130-1423	1	FLYWHEEL AS
2	NPR	033-7687	1	RING-STARTING MOTOR (126-TEETH)
3	NPR	0S-1603	6	BOLT (1/2-20X1.5-IN)
4	NPR	5P-8245	6	WASHER-HARD (13.5X25.5X3-MM THK

130-3636 HOUSING GP-FRONT ---S/N 9RM1-UP

PART OF 106-5002 ENGINE AR-PRIMARY

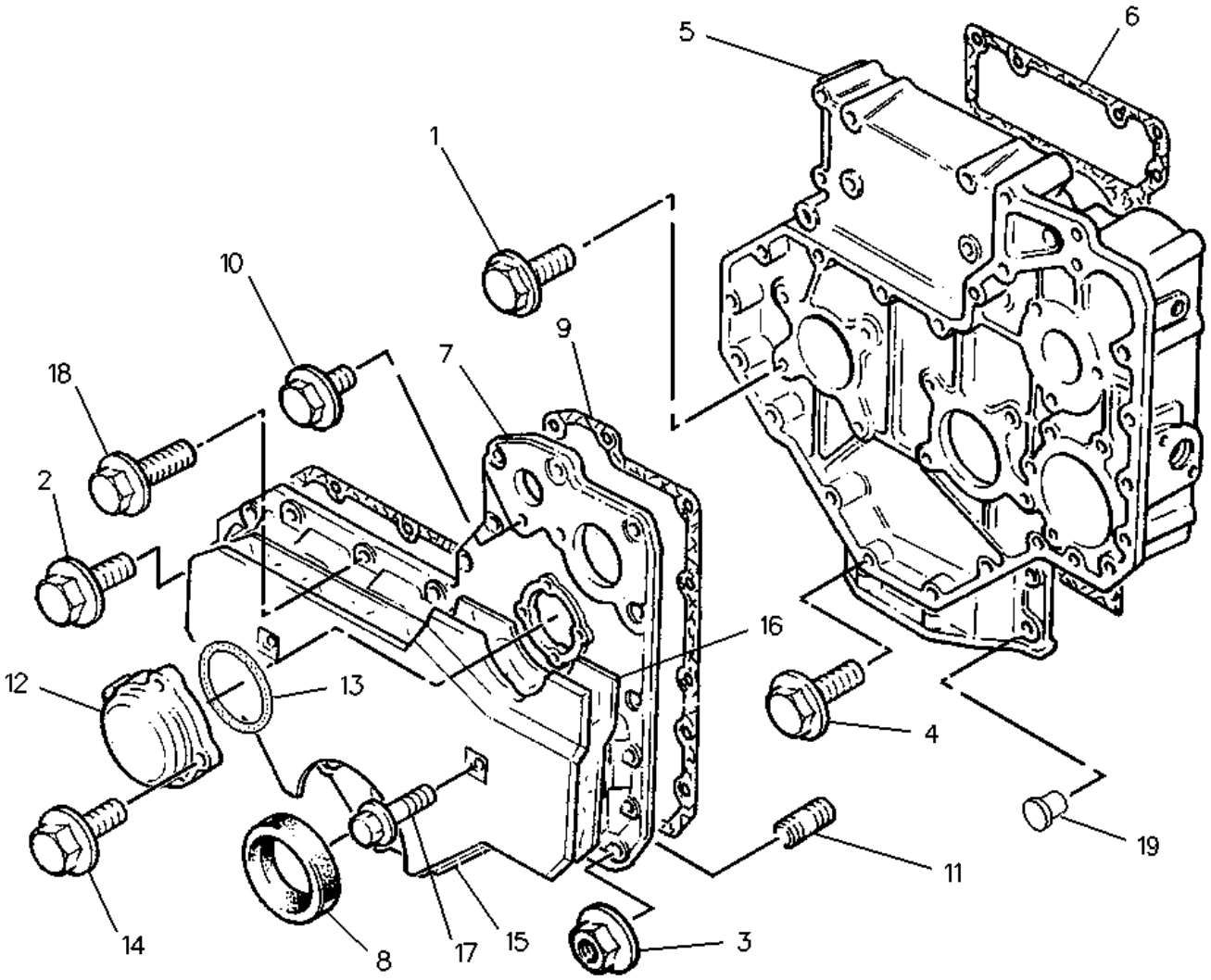

1	**NPR M**	**6I-0217**	**8**	**BOLT (M8X1.25X20-MM)**
2	**NPR M**	**6I-0260**	**1**	**BOLT (M8X1.25X25-MM)**
3	**NPR**	**6I-0291**	**2**	**NUT (M8X1.25-THD)**
4	**NPR M**	**6I-0645**	**4**	**BOLT (M8X1.25X25-MM)**
5	**NPR**	**283-6613**	**1**	**HOUSING**
6	**NPR**	**6I-0836**	**1**	**GASKET**
7	**NPR**	**160-6292**	**1**	**COVER AS-HOUSING**
8	**NPR**	**4W-5359**	**1**	**SEAL-CRANKSHAFT**
9	**NPR**	**179-7069**	**1**	**GASKET**
10	**NPR**	**6I-0839**	**6**	**BOLT (M8X1.25X70-MM)**

11	NPR	101-3877	1	STUD
12	NPR	174-6575	1	COVER AS
13	NPR	174-6577	1	SEAL-O-RING
14	NPR	6I-0843	4	BOLT (M6X1X25-MM)
15	NPR	140-7444	1	SHIELD
16	NPR	140-7445	1	DAMPER
17	NPR	6I-0846	2	BOLT (M6X1X14-MM)
18	NPR M	6I-0254	6	BOLT (M8X1.25X30-MM)
19		160-6291	2	PLUG

Key: M - METRIC PART

PART OF 106-5001 ENGINE AR-PRIMARY

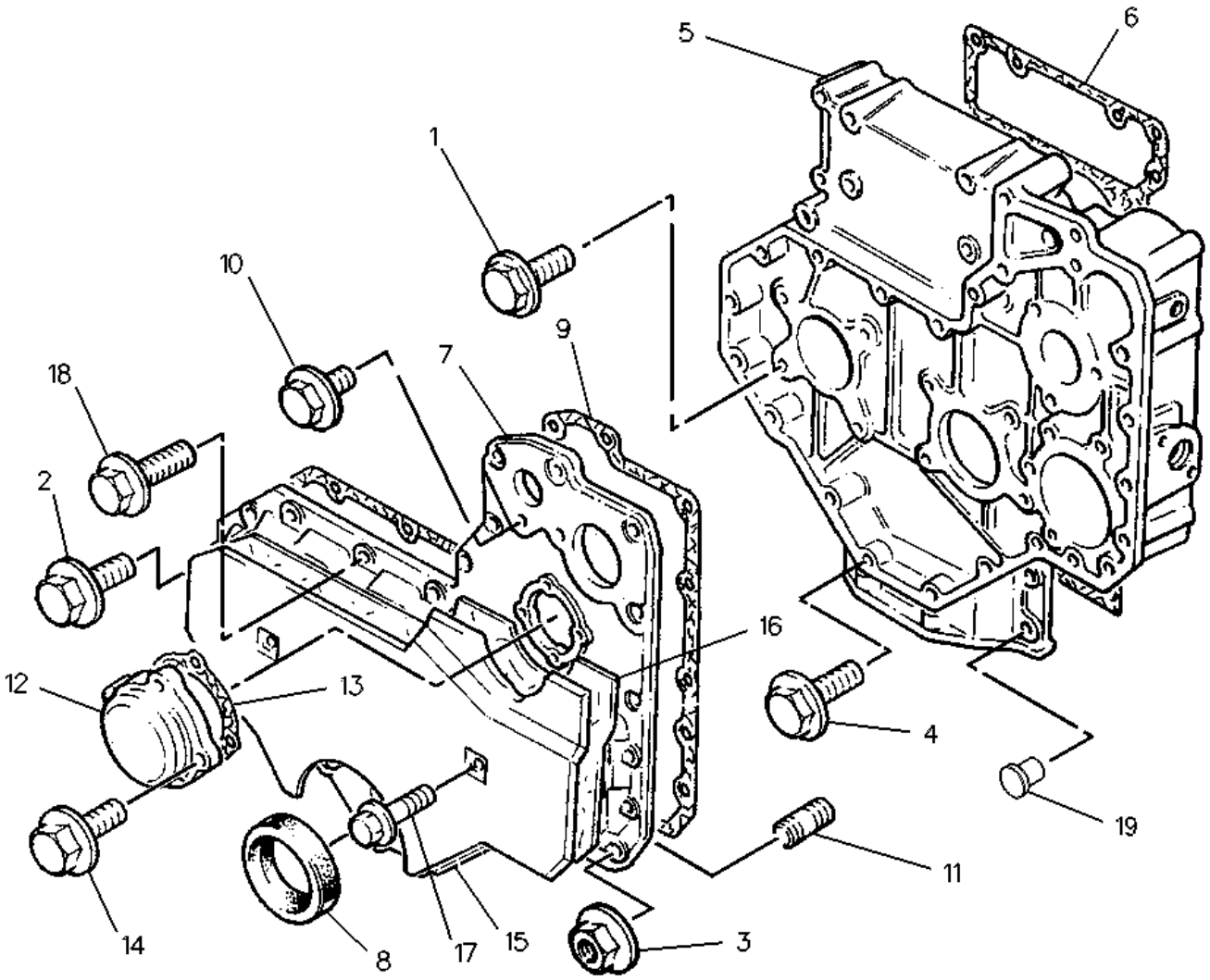

1	**NPR M**	**6I-0217**	**8**	**BOLT (M8X1.25X20-MM)**
2	**NPR M**	**6I-0260**	**1**	**BOLT (M8X1.25X25-MM)**
3	**NPR**	**6I-0291**	**2**	**NUT (M8X1.25-THD)**
4	**NPR M**	**6I-0645**	**4**	**BOLT (M8X1.25X25-MM)**
5	**NPR**	**149-6932**	**1**	**HOUSING**
6	**NPR**	**6I-0836**	**1**	**GASKET**
7	**NPR**	**160-6292**	**1**	**COVER AS-HOUSING**
8	**NPR**	**4W-5359**	**1**	**SEAL-CRANKSHAFT**
9	**NPR**	**6I-0838**	**1**	**GASKET**
10	**NPR**	**6I-0839**	**6**	**BOLT (M8X1.25X70-MM)**

11	NPR	101-3877	1	STUD
12	NPR	6I-0841	1	COVER
13	NPR	6I-0842	1	GASKET
14	NPR	6I-0843	4	BOLT (M6X1X25-MM)
15	NPR	140-7444	1	SHIELD
16	NPR	140-7445	1	DAMPER
17	NPR	6I-0846	2	BOLT (M6X1X14-MM)
18	NPR M	6I-0254	6	BOLT (M8X1.25X30-MM)
19		160-6291	2	PLUG

Key: M - METRIC PART

PART OF 106-5001 ENGINE AR-PRIMARY

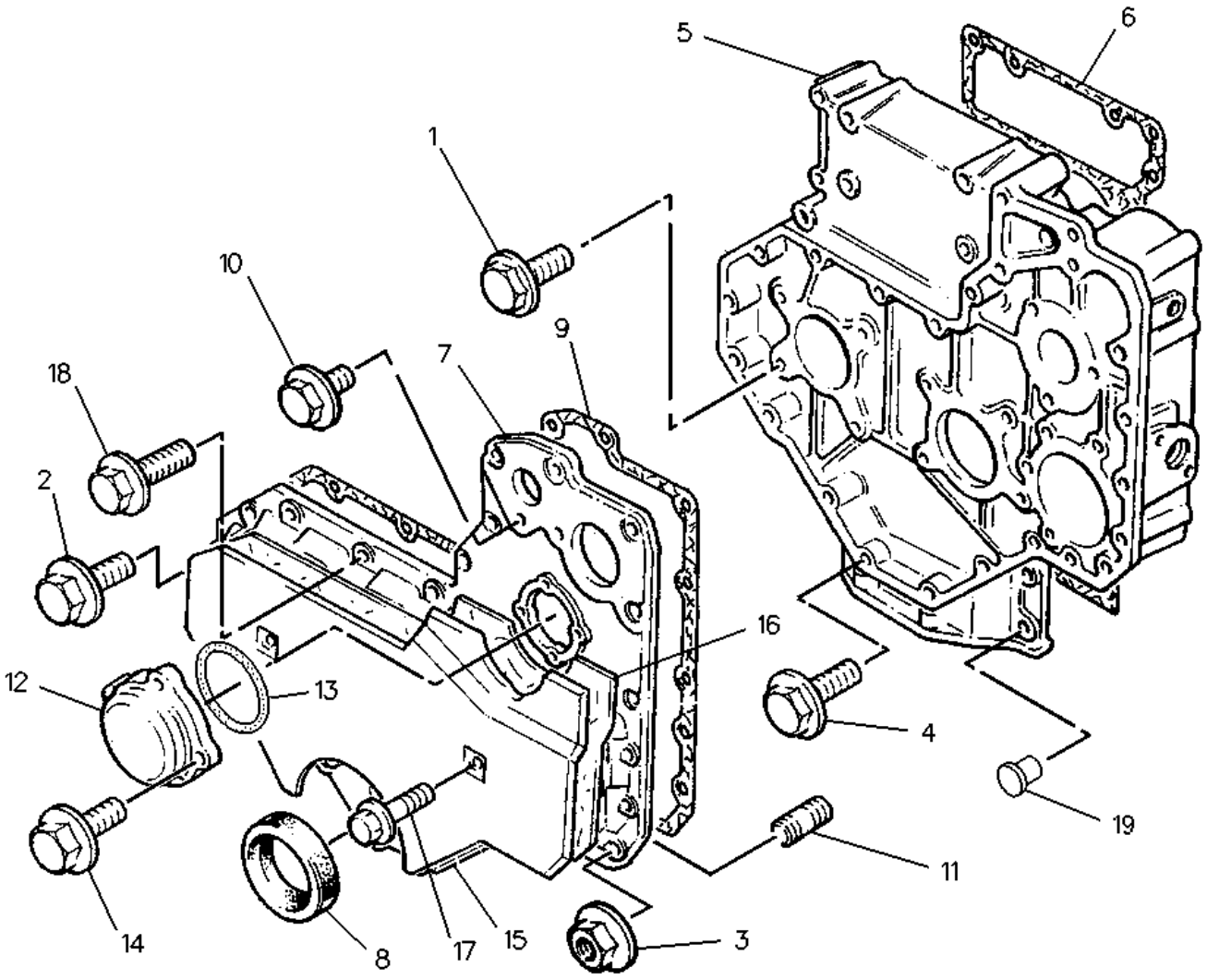

1	**NPR M**	**6I-0217**	**8**	**BOLT (M8X1.25X20-MM)**
2	**NPR M**	**6I-0260**	**1**	**BOLT (M8X1.25X25-MM)**
3	**NPR**	**6I-0291**	**2**	**NUT (M8X1.25-THD)**
4	**NPR M**	**6I-0645**	**4**	**BOLT (M8X1.25X25-MM)**
5	**NPR**	**283-6613**	**1**	**HOUSING**
6	**NPR**	**6I-0836**	**1**	**GASKET**
7	**NPR**	**160-6292**	**1**	**COVER AS-HOUSING**
8	**NPR**	**4W-5359**	**1**	**SEAL-CRANKSHAFT**
9	**NPR**	**179-7069**	**1**	**GASKET**
10	**NPR**	**6I-0839**	**6**	**BOLT (M8X1.25X70-MM)**

11	NPR	101-3877	1	STUD
12	NPR	174-6575	1	COVER AS
13	NPR	174-6577	1	SEAL-O-RING
14	NPR	6I-0843	4	BOLT (M6X1X25-MM)
15	NPR	140-7444	1	SHIELD
16	NPR	140-7445	1	DAMPER
17	NPR	6I-0846	2	BOLT (M6X1X14-MM)
18	NPR M	6I-0254	6	BOLT (M8X1.25X30-MM)
19		160-6291	2	PLUG

Key: M - METRIC PART

PART OF 122-8803, 122-8804 ENGINE AR-PRIMARY

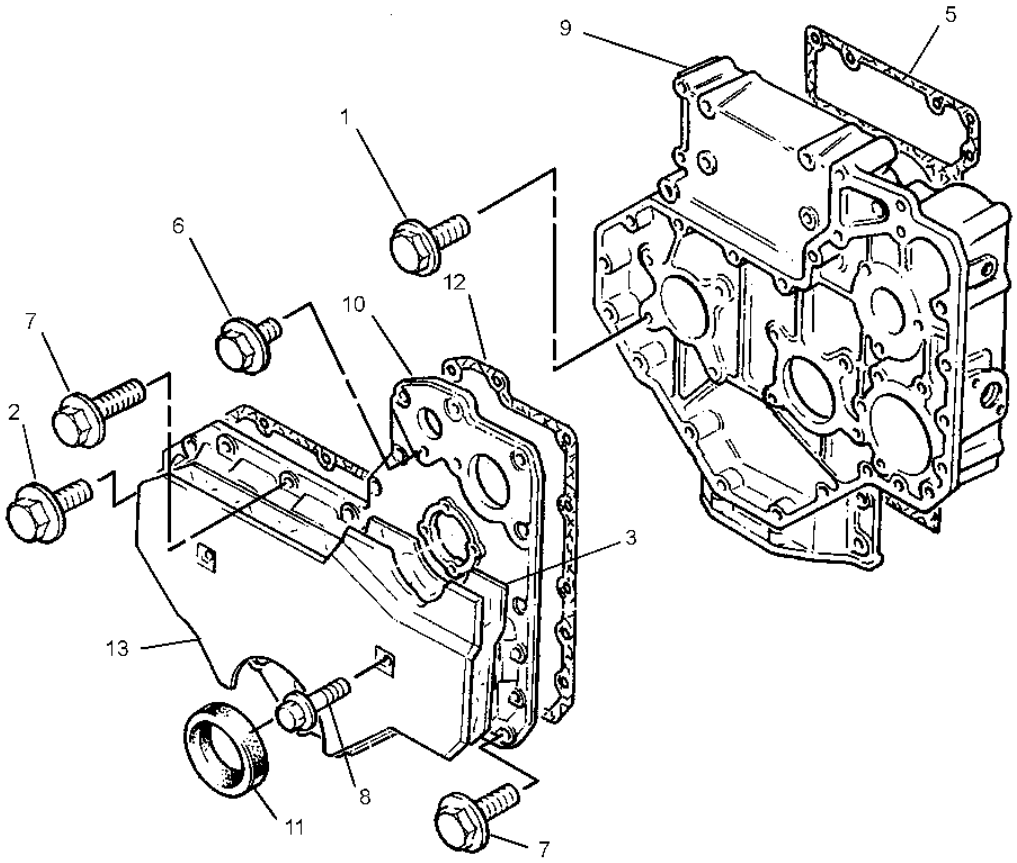

1 NPR M 6I-0217 8 BOLT (M8X1.25X20-MM)

2 NPR M 6I-0254 7 BOLT (M8X1.25X30-MM)

3 NPR 140-7445 1 DAMPER

5 NPR 231-3486 1 GASKET

6 NPR 6I-0839 6 BOLT (M8X1.25X70-MM)

7 NPR M 6I-0645 10 BOLT (M8X1.25X25-MM)

8	NPR	6I-0846	2	BOLT (M6X1X14-MM)
9	NPR	233-4268	1	HOUSING-FRONT
10	NPR	291-8102	1	PLATE-COVER
11	NPR	288-0422	1	SEAL-OIL (FRONT)
12	NPR	177-2391	1	GASKET-COVER
13	NPR	140-7444	1	SHIELD

Key:

M - METRIC PART

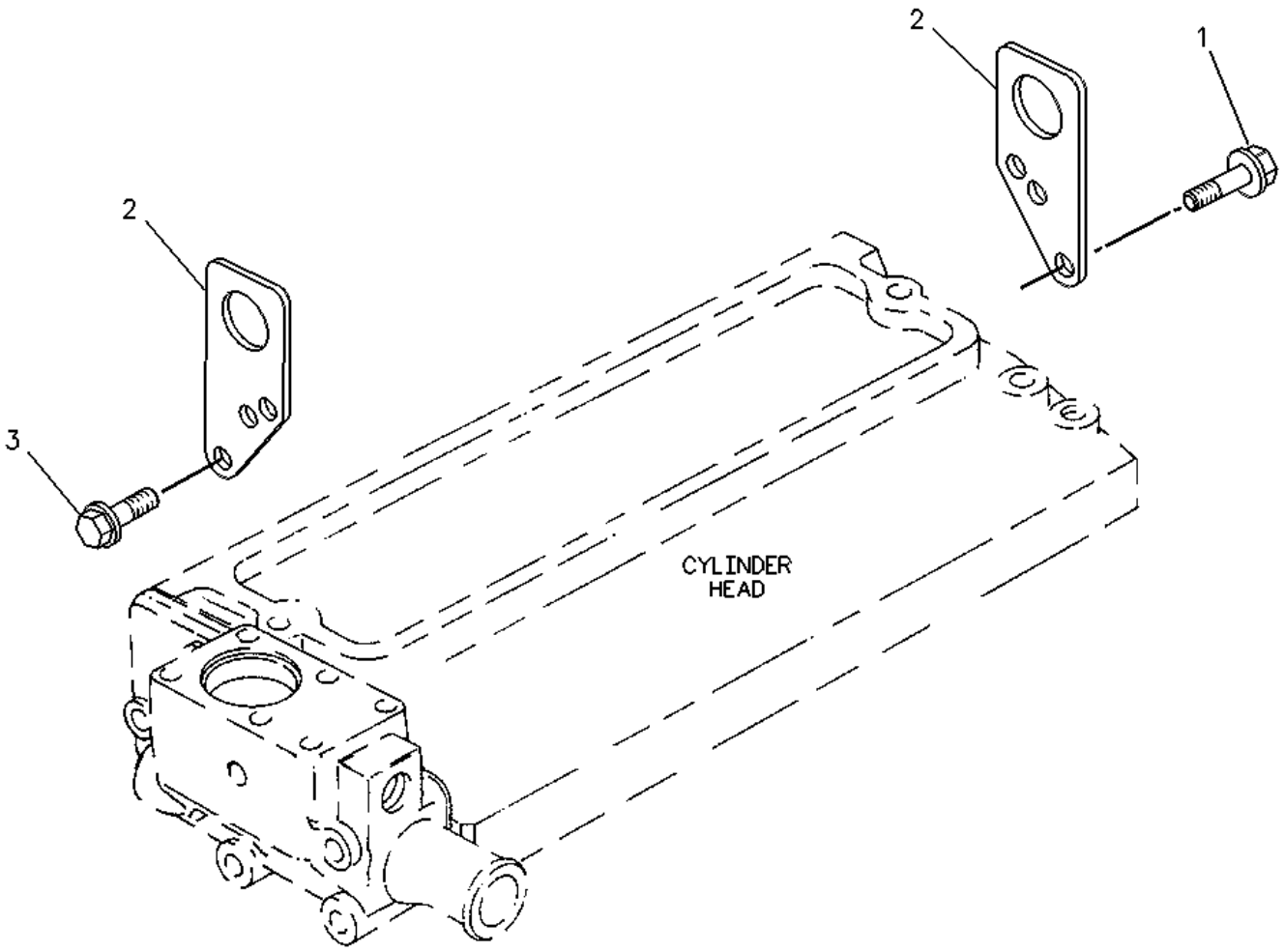

1	**NPR M**	**6I-0593**	**2**	**BOLT (M10X1.5X30-MM)**
2	**NPR**	**123-2898**	**2**	**PLATE**
3	**NPR**	**123-2899**	**2**	**BOLT (M10X1.5X40-MM)**

Key: M - METRIC PART

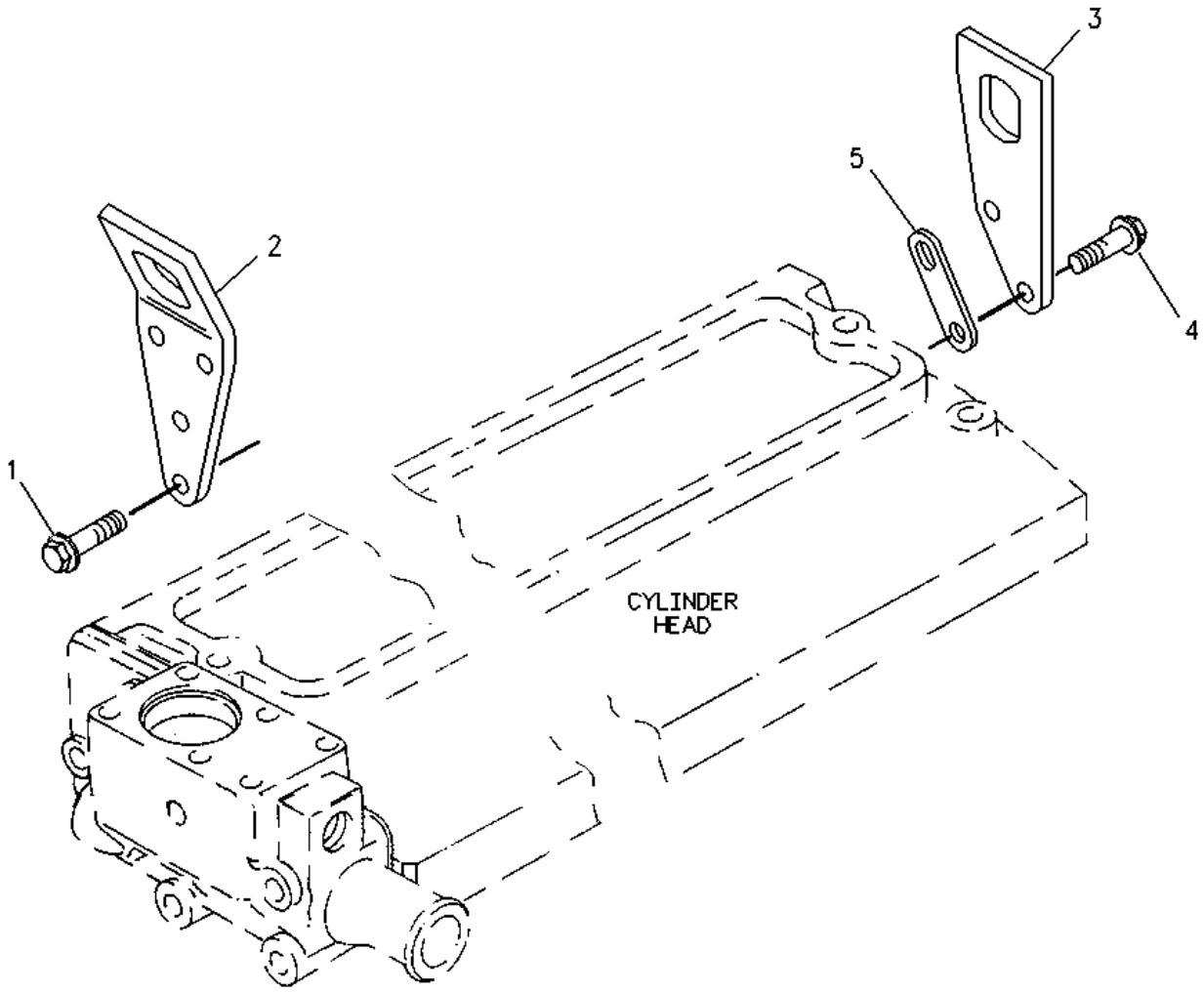

1	**NPR M**	**6I-0654**	**2**	**BOLT (M10X1.5X25-MM)**
2	**NPR**	**142-0349**	**1**	**PLATE-LIFTING**
3	**NPR**	**147-8590**	**1**	**PLATE**
4	**NPR M**	**6I-0593**	**2**	**BOLT (M10X1.5X30-MM)**
5	**NPR**	**123-2900**	**2**	**SPACER**

Key: M - METRIC PART

PART OF 143-1311, 154-5384 INSTALLATION AR-ENGINE

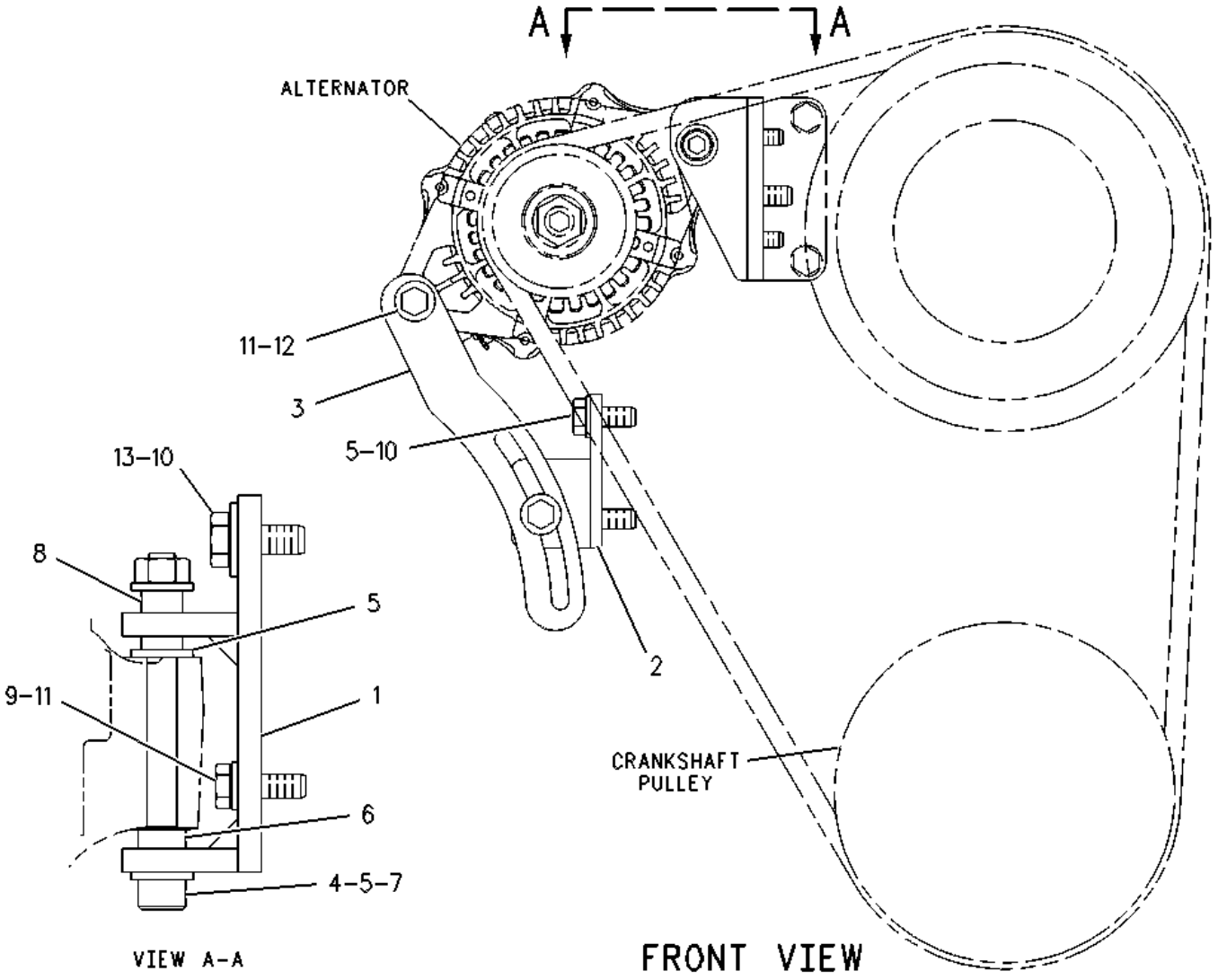

1 NPR 116-3864 1 BRACKET AS

2 NPR 116-3865 1 BRACKET AS

NPR M 8T-3612 1 NUT-WELD (M8X1.25-THD)

3 NPR 116-3866 1 STRAP

4 NPR M 8T-0272 1 BOLT-SOCKET HEAD (M10X1.5X110-MM)

5 NPR 8T-4121 5 WASHER-HARD (11X21X2.5-MM THK)

6 NPR 5B-0486 1 SPACER

7 NPR M 8T-4133 1 NUT (M10X1.5-THD)

8 NPR 7C-9465 1 SPACER (11.1X14.3X20-MM THK)

9 NPR 8T-4224 2 WASHER-HARD (8.8X16X2-MM THK)

10	NPR M	8T-4136	3	BOLT (M10X1.5X25-MM)
11	NPR M	8T-4908	4	BOLT (M8X1.25X25-MM)
12	NPR	5P-4116	2	WASHER-HARD (8.8X20.5X2-MM THK)
13	NPR	7X-7729	1	WASHER (11X25X3-MM THK)

Key:

M - METRIC PART

PART OF 106-5001, 106-5002, 122-8803, 122-8804 ENGINE AR-PRIMARY

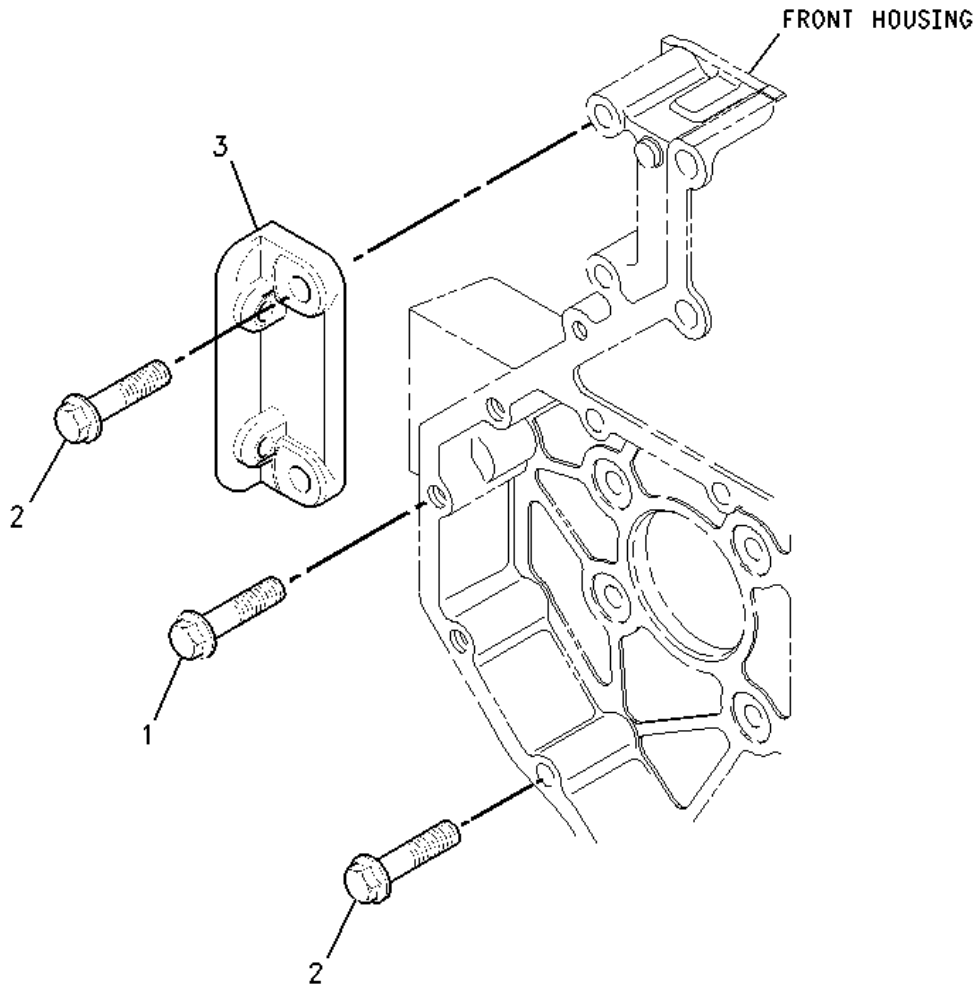

1 NPR M 6I-0254 2 BOLT (M8X1.25X30-MM)

2 NPR 6I-0839 3 BOLT (M8X1.25X70-MM)

3 NPR 101-3802 1 BRACKET

Key: M - METRIC PART

HYDRAULIC SYSTEM

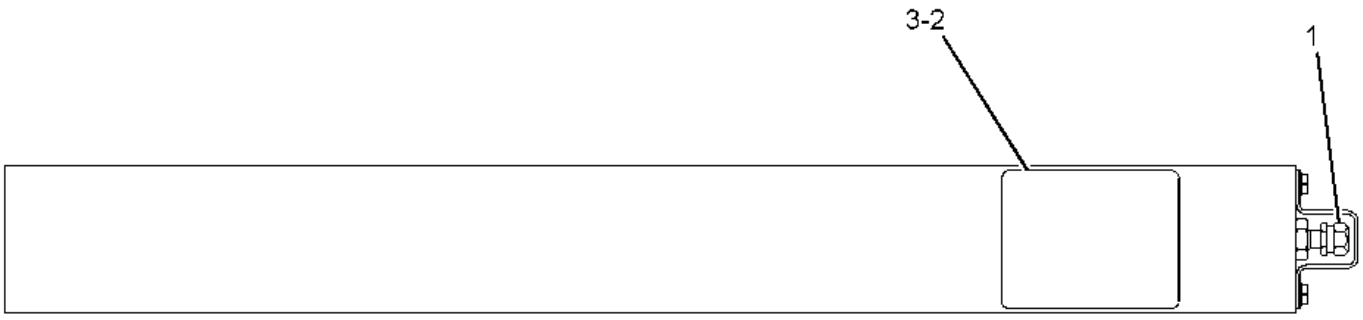

1	NPR	158-2306	1	VALVE-GAS
2	NPR	241-0037	1	FILM-WARNING (HIGH PRESSURE, READ OMM)
3	NPR	170-0503	1	FILM-WARNING (ACCUM, HIGH PRESS, READ OMM)

AVAILABLE REPAIR KIT(S):

NPR	160-0496	1	KIT-SEAL (ACCUMULATOR)

(INCLUDES SEALS)

PART OF 145-6710 COOLING AR, 147-1555, 147-1556 COOLING AR-HIGH AMBIENT TEMP

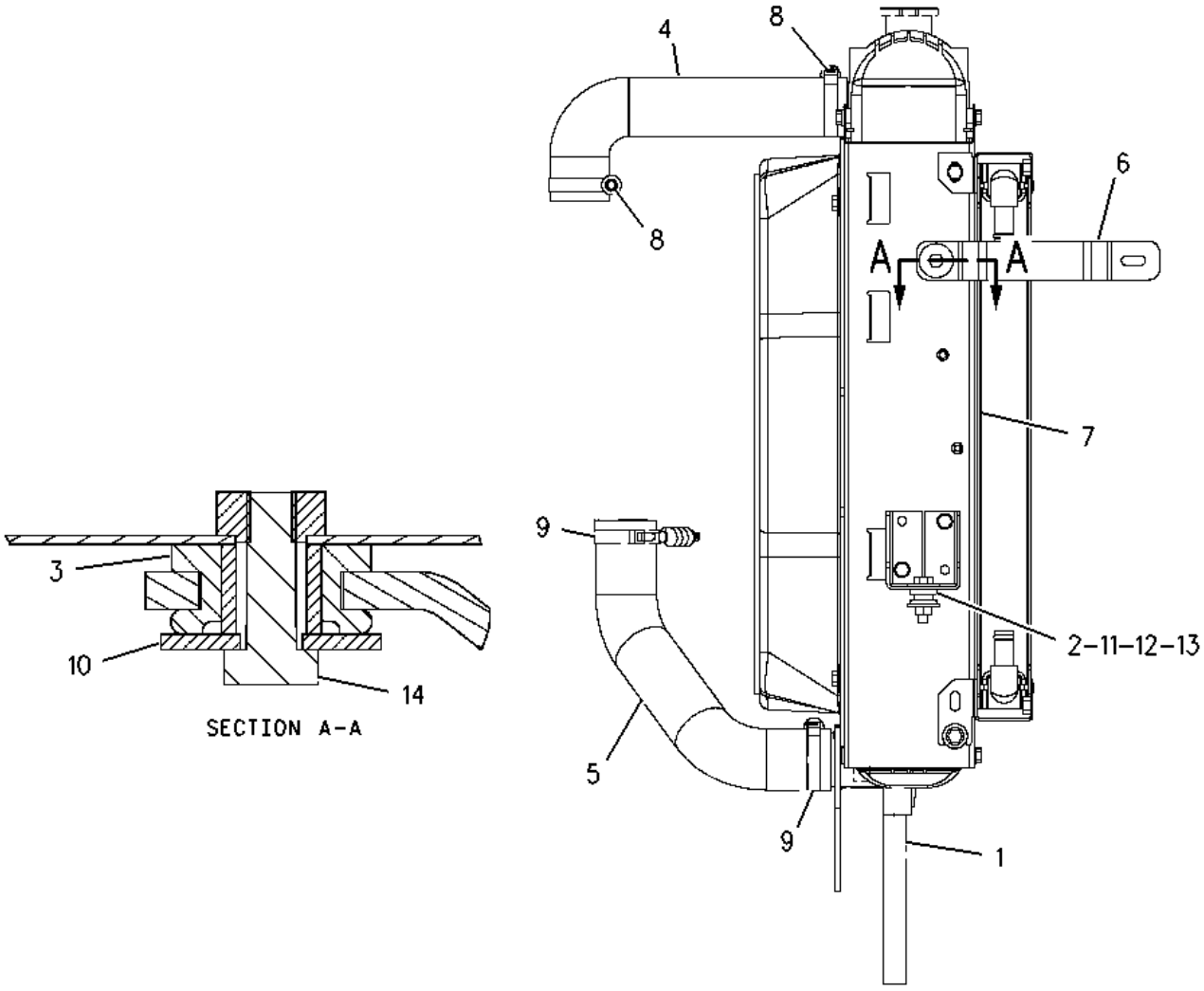

1	**NPR**	**BD 5P-6129**		**TUBE**
2	**NPR**	**2W-9710**	**2**	**MOUNT AS**
3	**NPR**	**6N-6984**	**2**	**MOUNT-RUBBER**
4	**NPR**	**140-3637**	**1**	**HOSE-RADIATOR (UPPER)**
5	**NPR**	**140-3638**	**1**	**HOSE-RADIATOR (LOWER)**
6	**NPR**	**140-3640**	**2**	**PLATE**
7	**NPR Y**	**154-3799**	**1**	**RADIATOR & HYD OIL COOLER GP**
8	**NPR**	**214-7457**	**2**	**CLAMP**
9	**NPR**	**214-7458**	**2**	**CLAMP-HOSE**
10	**NPR**	**7X-0603**	**2**	**WASHER-HARD (9.9X35X2.5-MM THK)**

11	NPR M	8T-4133	2	NUT (M10X1.5-THD)
12	NPR M	8T-4186	2	BOLT (M10X1.5X40-MM)
13	NPR	8T-4222	4	WASHER-PLATED (11X32X2.5-MM THK)
14	NPR M	8T-4908	2	BOLT (M8X1.25X25-MM)

Key:

B - USE AS REQUIRED
D - ORDER BY THE METER
M - METRIC PART
Y - SEPARATE ILLUSTRATION

PART OF 154-3799 RADIATOR & HYD OIL COOLER GP

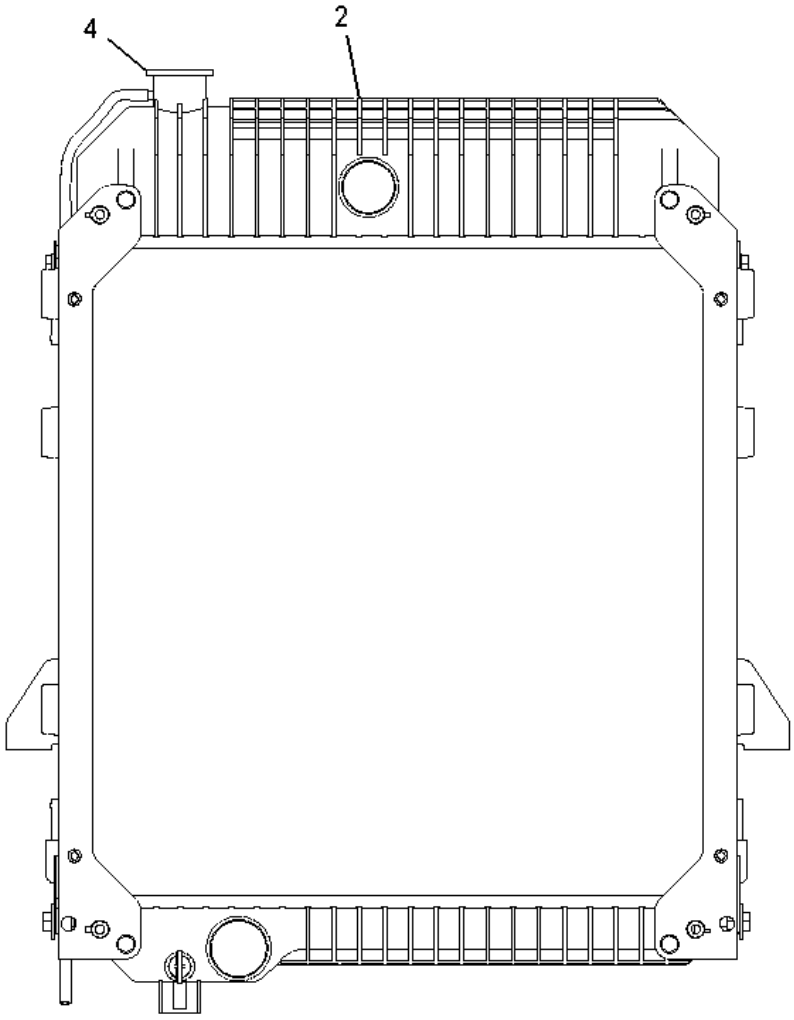

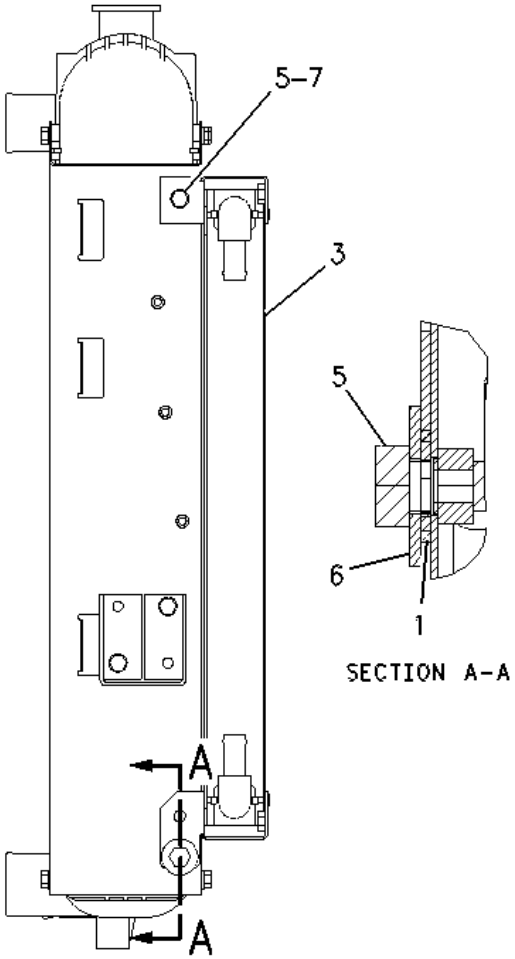

1	NPR	151-8752	2	BUSHING
2	NPR	140-3634	1	RADIATOR AS
	NPR	140-2358	1	PLUG AS
	NPR	2D-6392	1	SEAL-O-RING
	NPR	5F-9144	1	SEAL-O-RING
	NPR	145-6005	2	GASKET
3	NPR	142-0724	1	COOLER AS-OIL
	NPR	123-4065	16	RIVET-POP
	NPR	140-3635	1	CORE AS (13 PLATE)
	NPR	140-3639	1	CORE AS (15 PLATE)

4	NPR	006-8865	1	CAP-RADIATOR
5	NPR M	8T-4200	4	BOLT (M8X1.25X16-MM)
6	NPR	8C-0572	1	WASHER (8.8X25.5X2-MM THK)
7	NPR	8T-4224	2	WASHER-HARD (8.8X16X2-MM THK)

Key:

M - METRIC PART

PART OF 147-1557 RADIATOR & HYD OIL COOLER GP

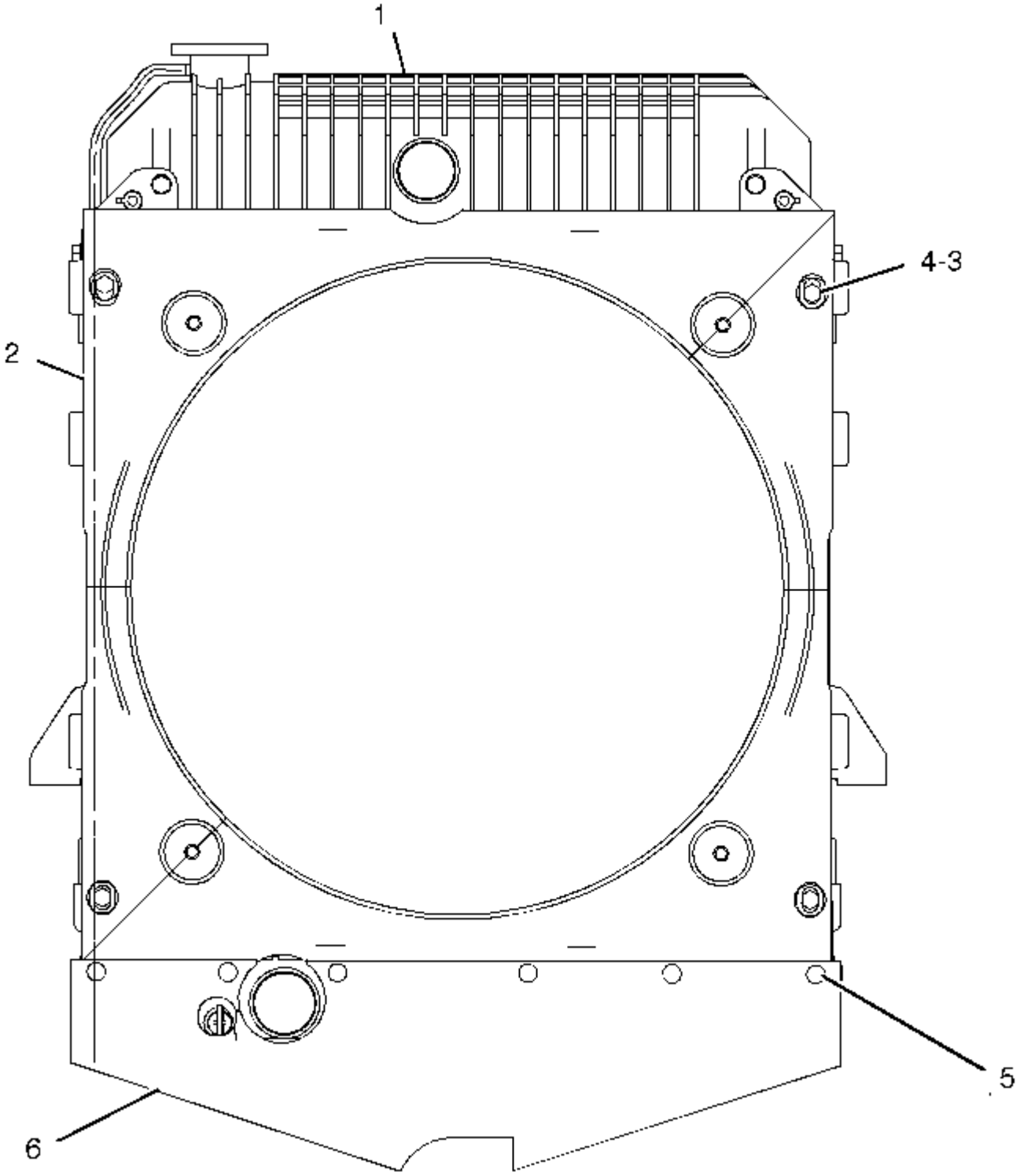

1	NPR Y	147-1558	1	RADIATOR & HYD OIL COOLER GP
2	NPR	180-2441	1	SHROUD AS
3	NPR	7X-0579	4	WASHER-HARD (8.8X25.5X2-MM THK)
4	NPR M	8T-4200	4	BOLT (M8X1.25X16-MM)
5	NPR	123-4065	6	RIVET-POP
6	NPR	141-7512	1	BAFFLE

Key: M - METRIC PART Y - SEPARATE ILLUSTRATION

6E-1964 CYLINDER GP-BACKHOE BUCKET ---S/N 4ZN16044-50156

89 MM (3.5 IN) BORE X 786 MM (31 IN) STROKE. EXTENDABLE STICK
PART OF 154-5309, 154-5311, 154-5312, 154-5314 BACKHOE AR-EXTENDABLE STICK

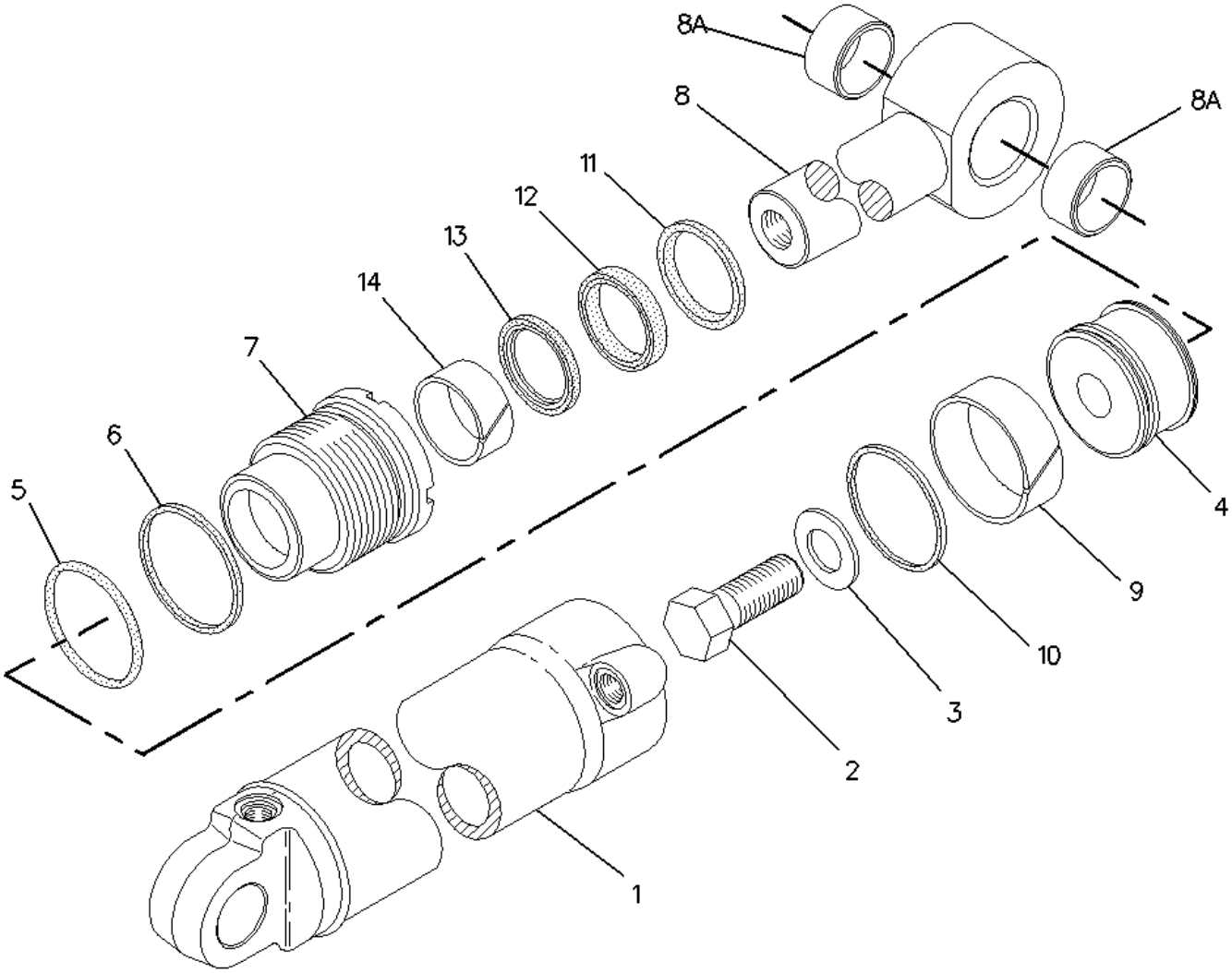

1	NPR	R	105-4402	1 CYLINDER AS
R	NPR		0R-8989	1 CYL AS-HYD
2	NPR	M	173-9682	1 BOLT (M36X4X100-MM)
3	NPR		106-1017	1 WASHER (36.7X77X6-MM THK)
4	NPR		6E-1500	1 PISTON
5	NPR		175-7898	1 SEAL-O-RING
6	NPR		4J-9224	1 RING-BACKUP
7	NPR		107-3950	1 HEAD
8	NPR	R	6E-2109	1 ROD AS
R	NPR		0R-8990	1 ROD AS-HYD

8A	NPR	9R-0147	2	BEARING-SLEEVE
9	NPR	7J-9885	1	RING-WEAR
10	NPR	4T-8054	1	SEAL AS
11	NPR	5J-8156	1	WIPER-ROD
12	NPR	167-2312	1	SEAL-U-CUP
13	NPR	167-2201	1	SEAL AS-BUFFER
14	NPR	8T-5668	1	RING-WEAR

Key:

M - METRIC PART
R - REMFG PART MAY BE AVAILABLE

88.9MM(3.5IN) BORE X 788MM(31.2IN) STROKE
PART OF 154-5300, 154-5302, 154-5303, 154-5305, 154-5306, 154-5308 BACKHOE AR-STANDARD STICK

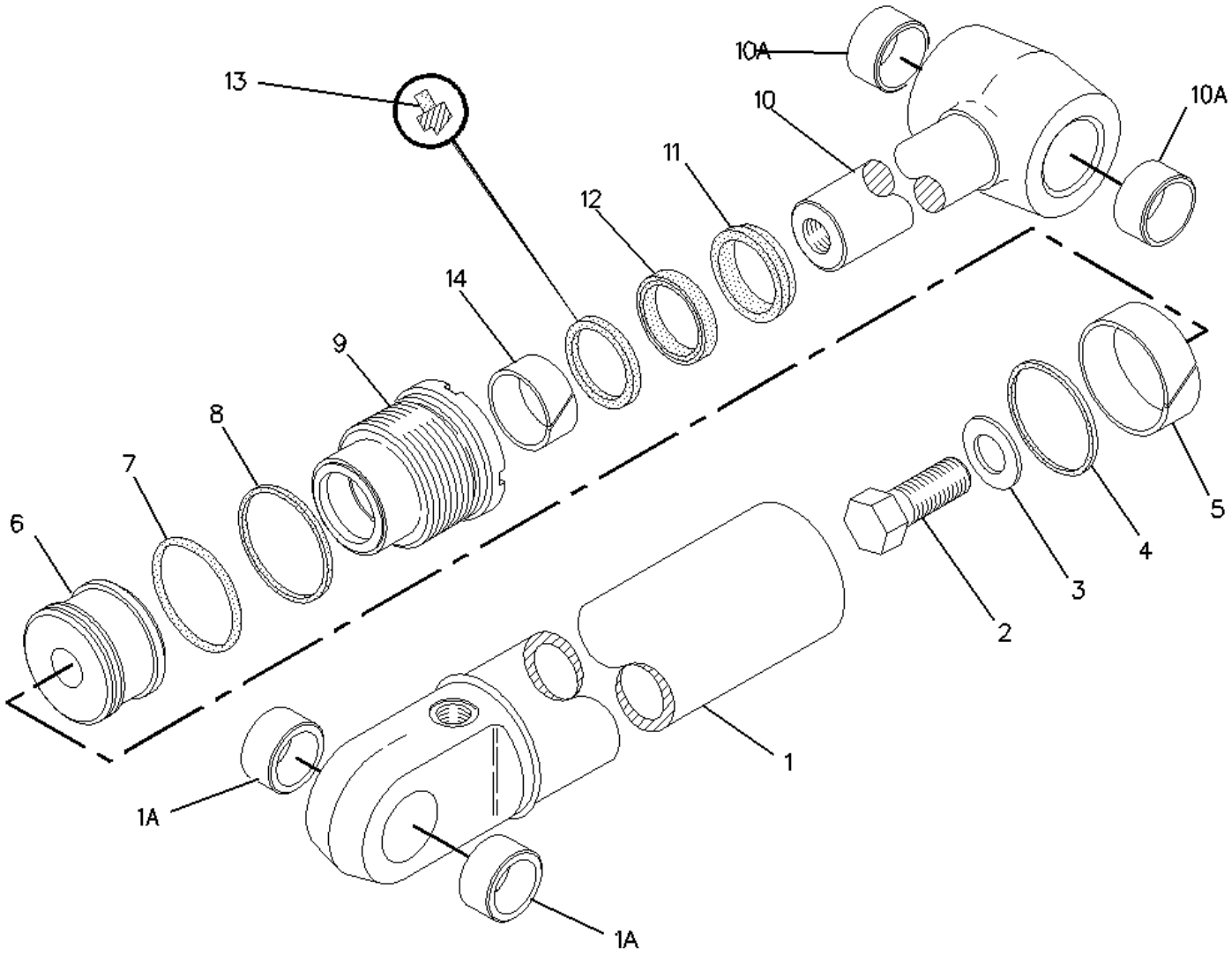

1	**NPR**	**R**	**126-8309**	**1**	**CYLINDER AS**
R	**NPR**		**0R-8981**	**1**	**CYL AS-HYD**
1A	**NPR**		**9R-7960**	**2**	**BEARING-SLEEVE**
2	**NPR**	**M**	**173-9682**	**1**	**BOLT (M36X4X100-MM)**
3	**NPR**		**106-1017**	**1**	**WASHER (36.7X77X6-MM THK)**
4	**NPR**		**4T-8054**	**1**	**SEAL AS**
5	**NPR**		**7J-9885**	**1**	**RING-WEAR**
6	**NPR**		**6E-1500**	**1**	**PISTON**
7	**NPR**		**2H-4145**	**1**	**SEAL-O-RING**
8	**NPR**		**4J-9224**	**1**	**RING-BACKUP**

9	NPR	107-3950	1	HEAD
10	NPR R	6E-1502	1	ROD AS
R	NPR	0R-8982	1	ROD AS-HYD
10A	NPR	9R-0147	2	BEARING-SLEEVE
11	NPR	5J-8156	1	WIPER-ROD
12	NPR	167-2312	1	SEAL-U-CUP
13	NPR	167-2201	1	SEAL AS-BUFFER
14	NPR	8T-5668	1	RING-WEAR

Key:

M - METRIC PART
R - REMFG PART MAY BE AVAILABLE

120.7 BORE X 60.32 STROKE -PART OF 154-5437 HYDRAULIC AR

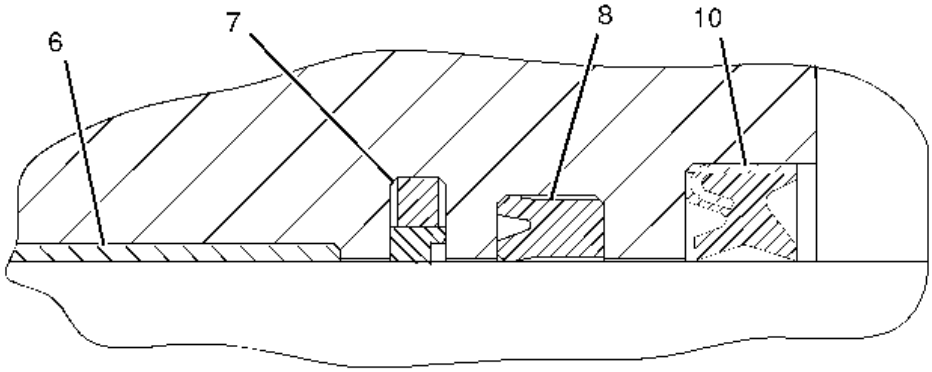

VIEW OF AREA A

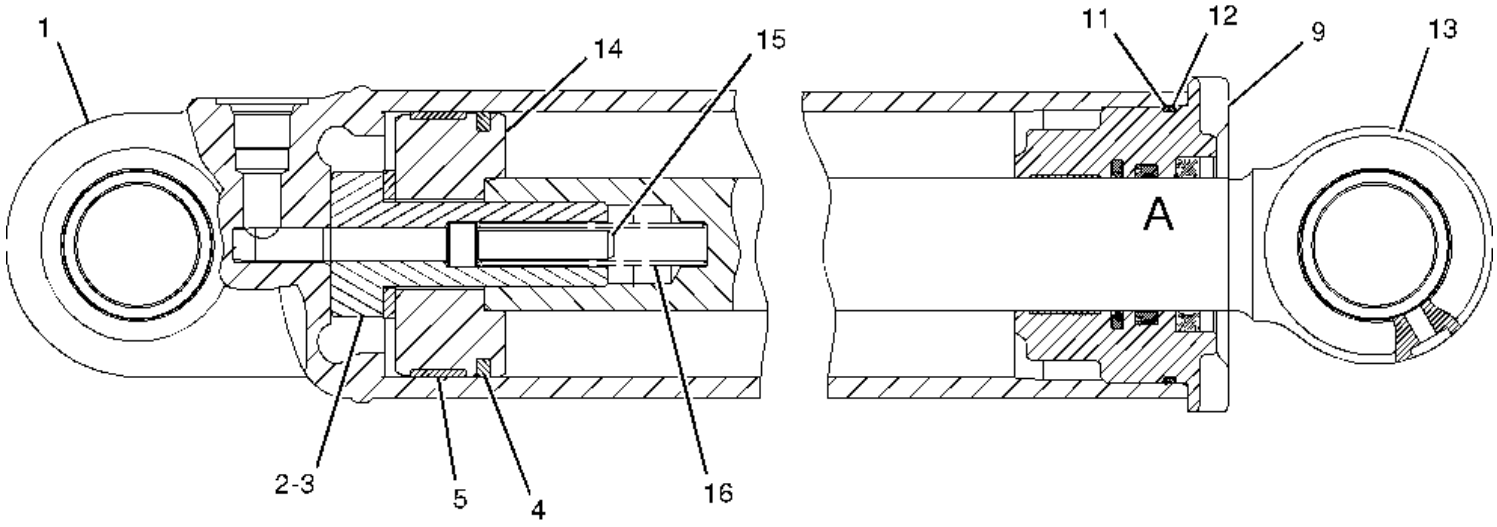

1 NPR R 154-6881 1 CYLINDER AS

R NPR 10R-0634 1 CYLINDER AS-HYD

NPR 6E-1497 1 BOSS

NPR 9R-0139 2 BEARING-SLEEVE

2 NPR 170-9066 1 BOLT (1 1/2-12X101.6-MM)

3 NPR 3S-6162 1 WASHER-HARD (40.5X67X6-MM THK)

4 NPR 8T-8390 1 RING-WEAR

5 NPR 4T-8588 1 SEAL AS

6 NPR 9X-7260 1 RING-WEAR

7 NPR 167-2202 1 SEAL AS-BUFFER

8 NPR 167-2310 1 SEAL-U-CUP

9 NPR 154-8050 1 HEAD

10	NPR	231-3540	1	SEAL-WIPER
11	NPR	175-7903	1	SEAL-O-RING
12	NPR	2J-3961	1	RING-BACKUP
13	NPR R	159-5848	1	ROD AS
R	NPR	10R-0635	1	ROD AS-HYD
	NPR	9R-0139	2	BEARING-SLEEVE
14	NPR	154-8051	1	PISTON
15	NPR	9T-5444	1	PLUNGER
16	NPR	6L-6208	1	SPRING

Key:

R - REMFG PART MAY BE AVAILABLE

76.2MM BORE X 1067MM STROKE --PART OF 155-6586 CYLINDER GP-EXTENDABLE STICK

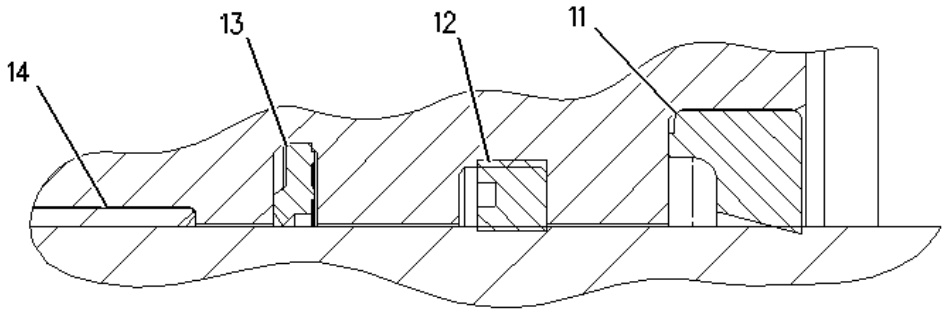

VIEW OF AREA A

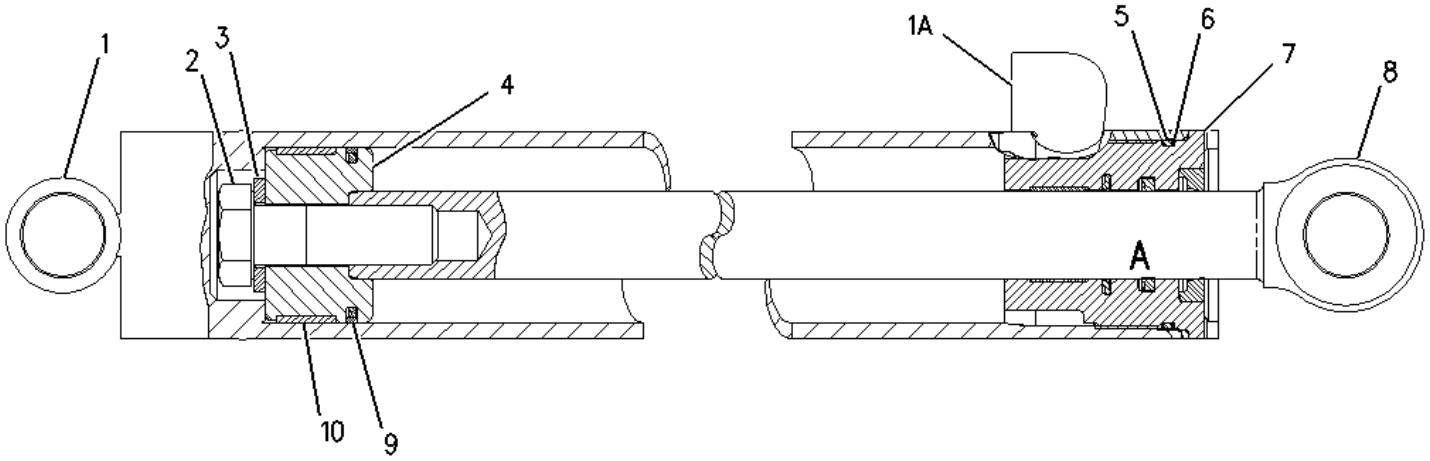

1 NPR 164-7175 1 CYLINDER AS

1A NPR 9T-2969 1 BOSS

2 NPR M 173-9779 1 BOLT (M24X3X80-MM)

3 NPR 6V-8237 1 WASHER (26X44X4-MM THK)

4 NPR 9T-2212 1 PISTON

5 NPR 175-7896 1 SEAL-O-RING

6 NPR 6J-5731 1 RING-BACKUP

7 NPR 6E-0122 1 HEAD

8 NPR 164-7176 1 ROD AS

9 NPR 9X-7337 1 SEAL AS

10	NPR	6J-5733	1	RING-WEAR
11	NPR	167-2450	1	SEAL-WIPER
12	NPR	167-2294	1	SEAL-U-CUP
13	NPR	167-2186	1	SEAL AS-BUFFER
14	NPR	4T-6780	1	RING-WEAR

Key:

M - METRIC PART

82.6MM BORE X 705.3MM STROKE ---PART OF 154-5437 HYDRAULIC AR

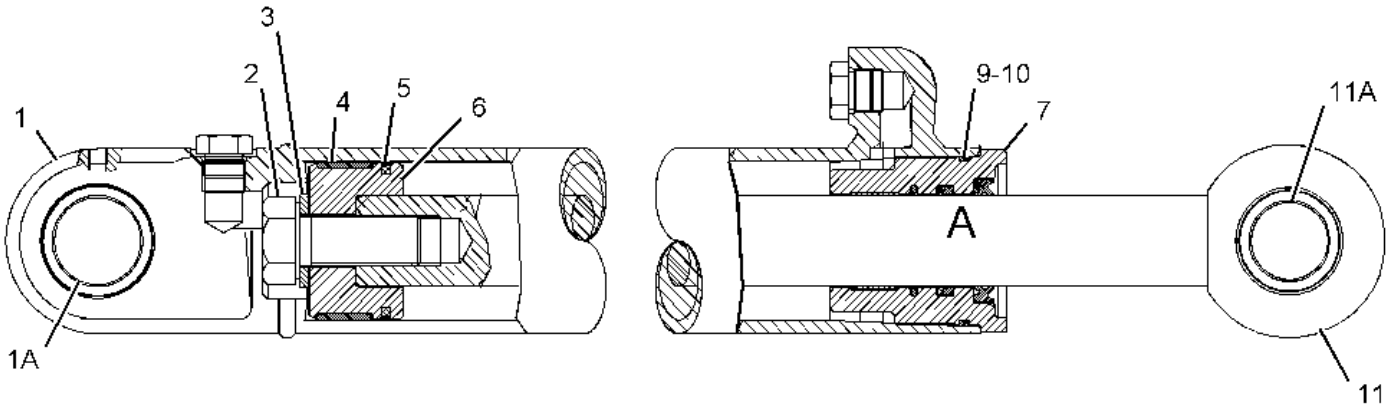

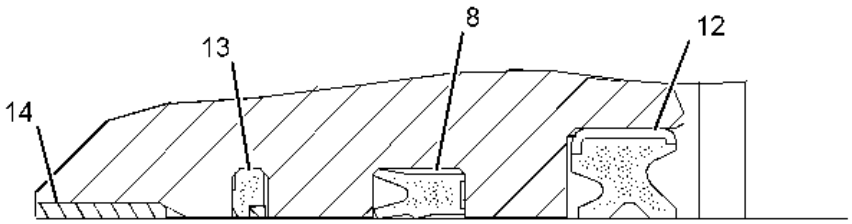

VIEW OF AREA A

1 NPR RC 9T-0665 1 CYLINDER AS

R NPR 0R-2445 1 CYLINDER AS

NPR 7J-9903 1 BOSS

1A NPR 9R-0153 2 BEARING-SLEEVE

2 NPR C 7J-5639 1 BOLT-LOCKING (1-14X2.5-IN)

3 NPR C 5P-8250 1 WASHER (28X49X5-MM THK)

4 NPR C 8J-6371 1 RING-WEAR

5 NPR C 6J-0793 1 SEAL AS

NPR 6J-0789 1 RING-EXPANDER

6 NPR C 4T-7010 1 PISTON

7	NPR C	6E-0123	1	HEAD
8	NPR C	167-2302	1	SEAL-U-CUP
9	NPR C	175-7897	1	SEAL-O-RING
10	NPR C	6J-1381	1	RING-BACKUP
11	NPR RC	9T-0661	1	ROD AS
R	NPR	0R-2707	1	ROD AS
11A	NPR	9R-0321	2	BEARING-SLEEVE
12	NPR	227-1143	1	SEAL-WIPER
13	NPR C	167-2192	1	SEAL AS-BUFFER
14	NPR C	4T-6779	1	RING

Key:

C - CHANGE FROM PREVIOUS TYPE
R - REMFG PART MAY BE AVAILABLE

76.2-MM (3-IN) BORE X 260-MM (10.24-IN) STROKE
PART OF 111-8634, 111-8635, 112-0938, 112-0939 BUCKET AR-MULTIPURPOSE

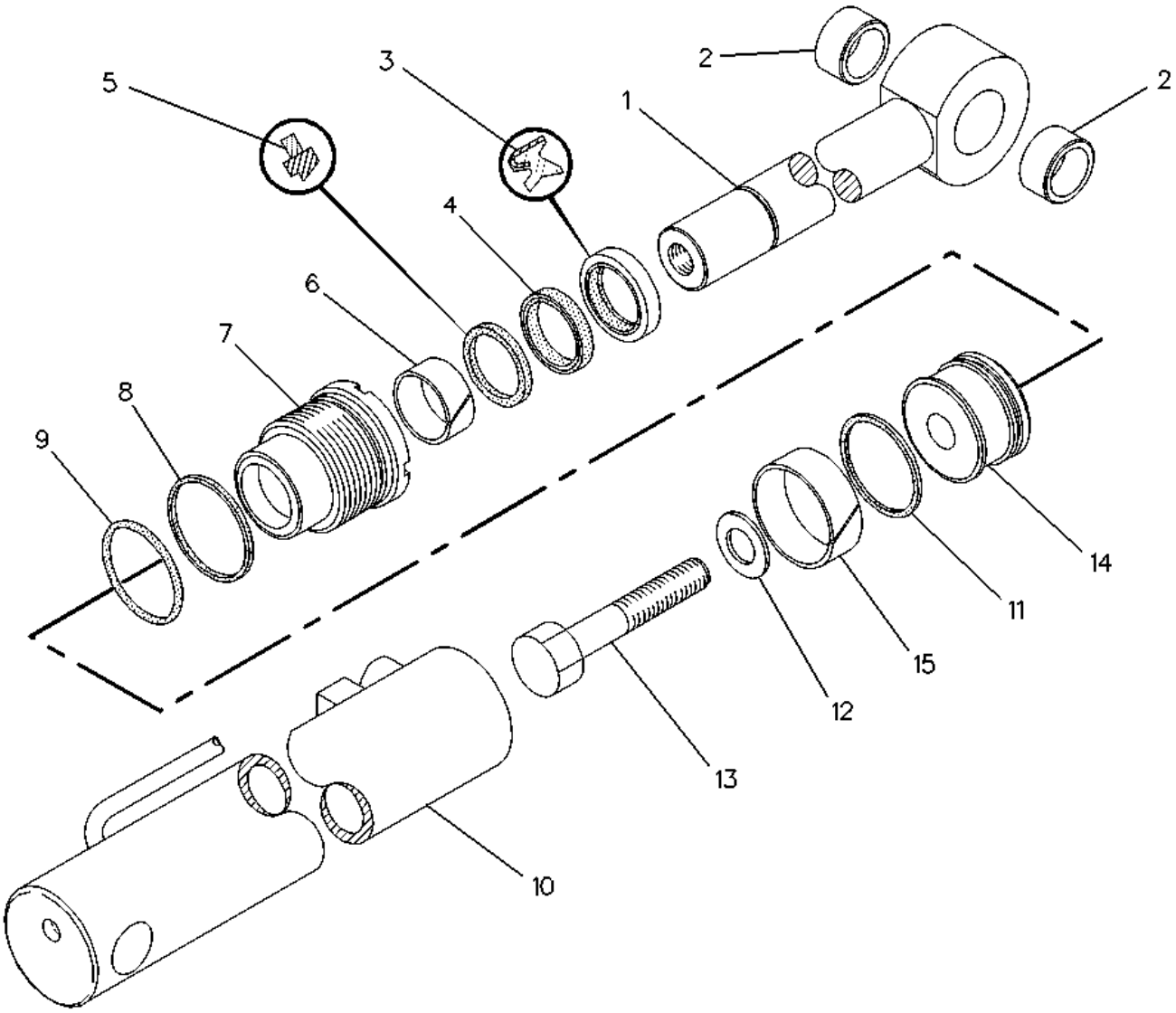

1	NPR	R	9T-4008	1	ROD AS
R	NPR		0R-8965	1	ROD AS-HYD
2	NPR		9T-4007	2	BEARING
3	NPR	J	167-2450	1	SEAL-WIPER
4	NPR	J	167-2294	1	SEAL-U-CUP
5	NPR	J	167-2186	1	SEAL AS-BUFFER
6	NPR	J	4T-6780	1	RING-WEAR
7	NPR		9T-2074	1	HEAD
8	NPR	J	8J-2574	1	RING-BACKUP
9	NPR		1H-7339	1	SEAL-O-RING

10 NPR R 9T-4009 1 CYLINDER AS

R NPR 0R-8966 1 CYL AS-HYD

11 NPR J 6J-1972 1 SEAL AS

12 NPR 5P-8250 1 WASHER (28X49X5MM THK)

13 NPR 6F-7037 1 BOLT (1-14X3.25IN)

14 NPR 9T-2212 1 PISTON

15 NPR J 6J-5733 1 RING-WEAR

AVAILABLE REPAIR KIT(S):

NPR J 185-6583 1 KIT-SEAL

Key: J - KIT MARKED J INCLUDES PART(S) MARKED J
R - REMFG PART MAY BE AVAILABLE

76.2-MM (3-IN) BORE X 260-MM (10.24-IN) STROKE
PART OF 111-8634, 111-8635, 112-0938, 112-0939 BUCKET AR-MULTIPURPOSE

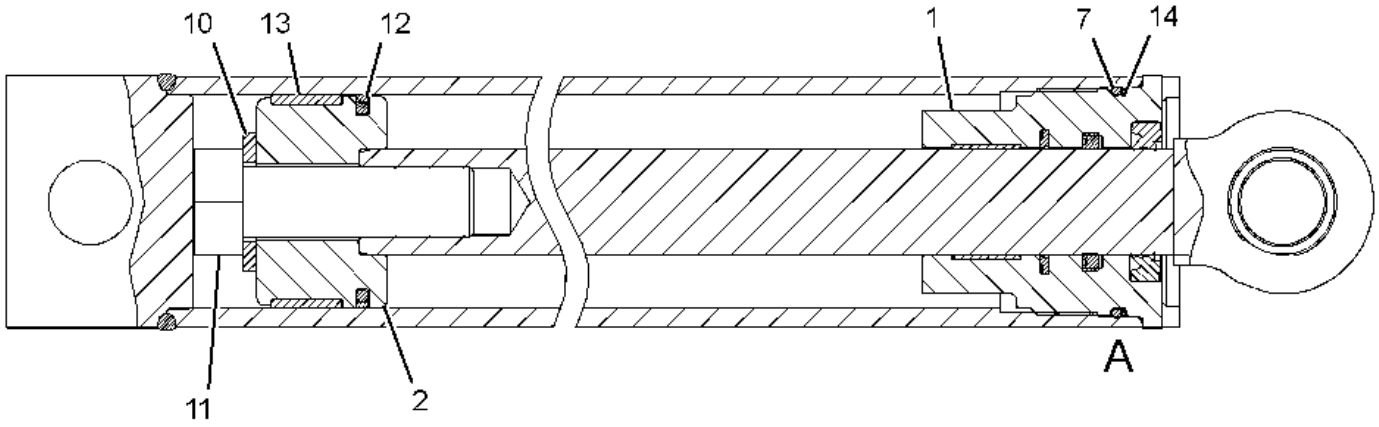

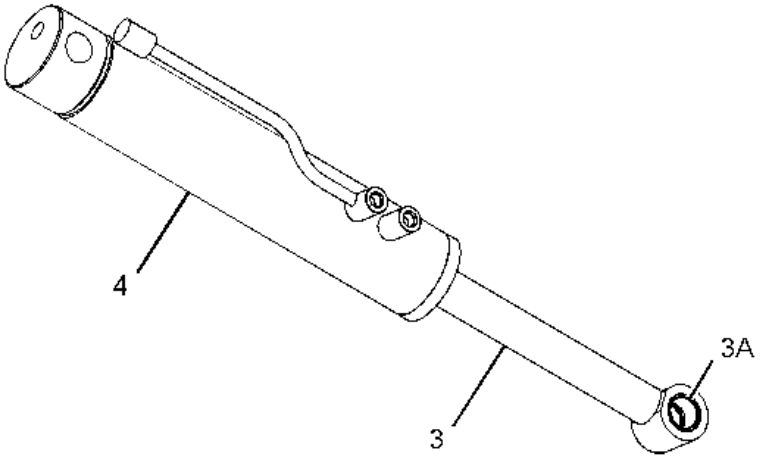

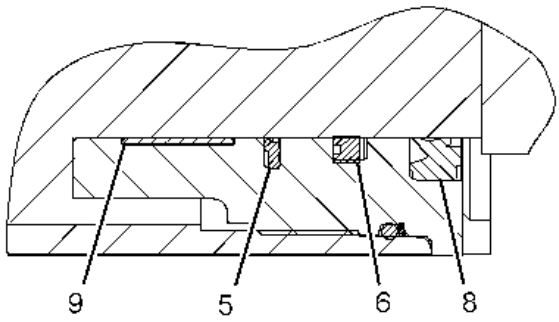

VIEW OF AREA A

1 NPR 6E-0122 1 HEAD

2 NPR 9T-2212 1 PISTON

3 NPR R 9T-4008 1 ROD AS

R NPR 0R-8965 1 ROD AS-HYD

3A NPR 9T-4007 2 BEARING

4 NPR R 9T-4009 1 CYLINDER AS

R NPR 0R-8966 1 CYL AS-HYD

5 NPR 167-2186 1 SEAL AS-BUFFER

6 NPR 167-2294 1 SEAL-U-CUP

7	NPR	1H-7339	1	SEAL-O-RING
8	NPR	226-8202	1	SEAL-WIPER
9	NPR	4T-6780	1	RING-WEAR
10	NPR	5P-8250	1	WASHER (28X49X5-MM THK)
11	NPR	6F-7037	1	BOLT (1-14X3.25-IN)
12	NPR	6J-1972	1	SEAL AS
13	NPR	6J-5733	1	RING-WEAR
14	NPR	8J-2574	1	RING-BACKUP

Key:

R - REMFG PART MAY BE AVAILABLE

101.6-MM (4-IN) BORE X 541-MM (21.3-IN) STROKE
PART OF 154-5437 HYDRAULIC AR

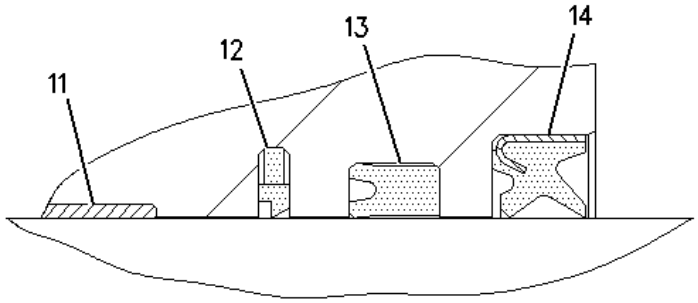

VIEW OF AREA A

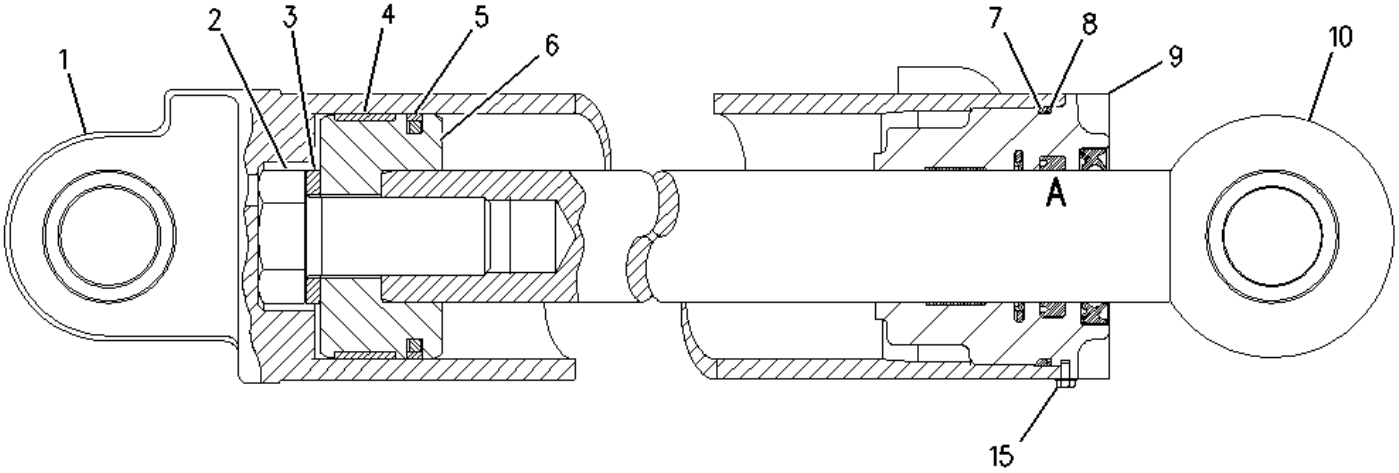

1	**NPR**	**131-1851**	**1**	**CYLINDER AS**
2	**NPR**	**7F-6112**	**1**	**BOLT (1-1/4-12X3-IN)**
3	**NPR**	**4K-0684**	**1**	**WASHER-HARD (34X55X6-MM THK)**
4	**NPR**	**6J-2797**	**1**	**RING-WEAR**
5	**NPR**	**5J-5402**	**1**	**SEAL AS**
6	**NPR**	**4T-7354**	**1**	**PISTON**
7	**NPR**	**9X-4611**	**1**	**SEAL-O-RING**
8	**NPR**	**168-2271**	**1**	**RING-BACKUP**
9	**NPR**	**152-1863**	**1**	**HEAD**

10	NPR	R 131-1856	1	ROD AS
R	NPR	10R-0194	1	ROD AS-HYD
	NPR	9R-0321	2	BEARING-SLEEVE
11	NPR	4T-6128	1	RING
12	NPR	150-6744	1	SEAL-BUFFER (26-PIN)
13	NPR	4T-6126	1	SEAL-U-CUP
14	NPR	150-6745	1	SEAL-LIP TYPE
15	NPR	6V-6718	1	SCREW-SELF-TAPPING (M8X32X6.35-MM)

Key:

R - REMFG PART MAY BE AVAILABLE

101.6-MM (4-IN) BORE X 541-MM (21.3-IN) STROKE --PART OF 154-5437 HYDRAULIC AR

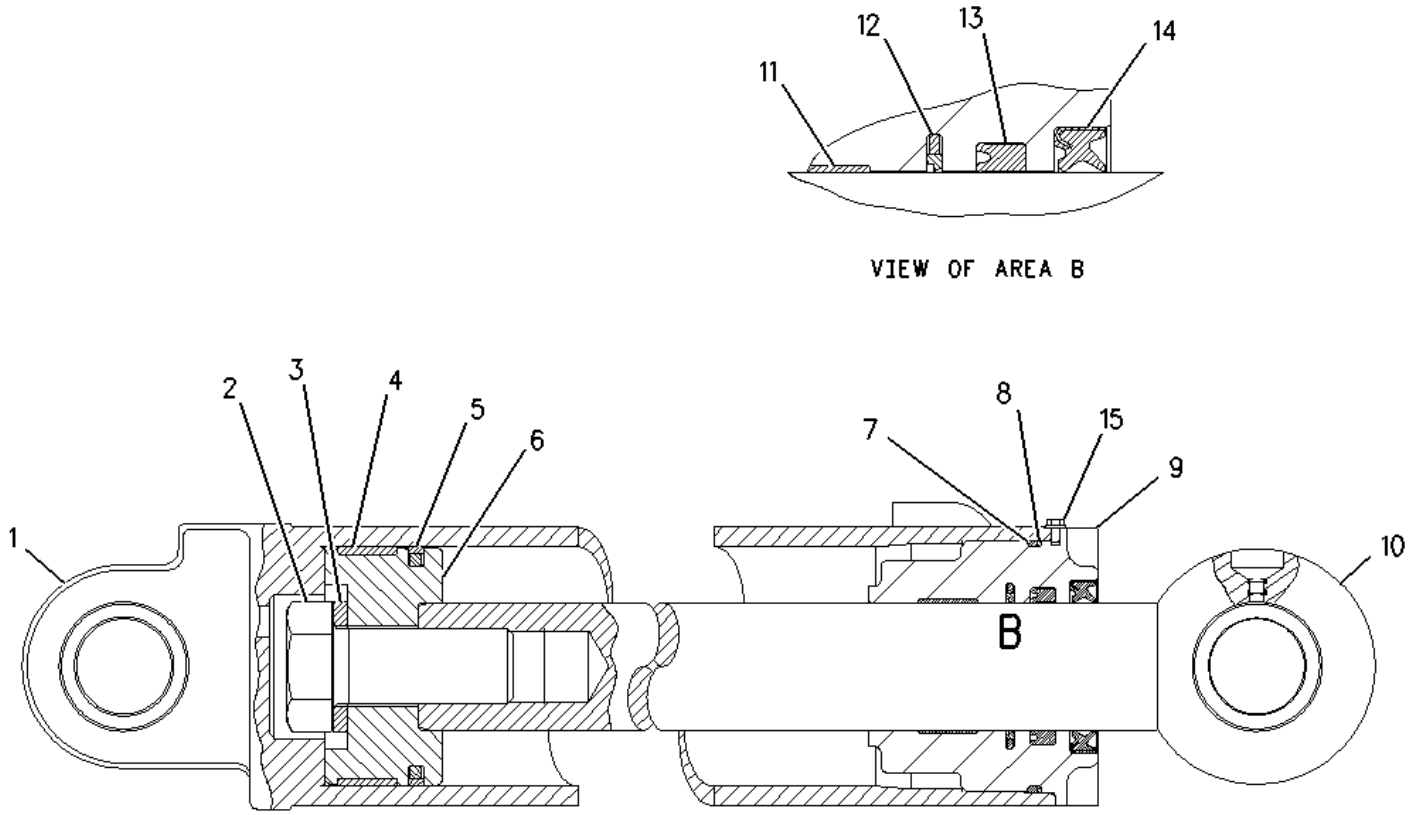

1	**NPR**	**172-2347**	**1**	**CYLINDER AS**
	NPR	**9R-0321**	**2**	**BEARING-SLEEVE**
	NPR	**7J-9903**	**1**	**BOSS**
2	**NPR**	**7F-6112**	**1**	**BOLT (1-1/4-12X3-IN)**
3	**NPR**	**4K-0684**	**1**	**WASHER-HARD (34X55X6-MM THK)**
4	**NPR**	**6J-2797**	**1**	**RING-WEAR**
5	**NPR**	**5J-5402**	**1**	**SEAL AS**
6	**NPR**	**172-2353**	**1**	**PISTON**
7	**NPR**	**175-7900**	**1**	**SEAL-O-RING**
8	**NPR**	**168-2271**	**1**	**RING-BACKUP**

9	NPR	152-1863	1	HEAD
10	NPR	172-2354	1	ROD AS
	NPR	9R-0321	2	BEARING-SLEEVE
11	NPR	4T-6128	1	RING
12	NPR	167-2197	1	SEAL AS-BUFFER
13	NPR	167-2305	1	SEAL-U-CUP
14	NPR	167-2458	1	SEAL-WIPER
15	NPR	6V-6718	1	SCREW-SELF-TAPPING (M8X32X6.35-MM)

101.6-MM (4-IN) BORE X 541-MM (21.3-IN) STROKE --PART OF 154-5437 HYDRAULIC AR

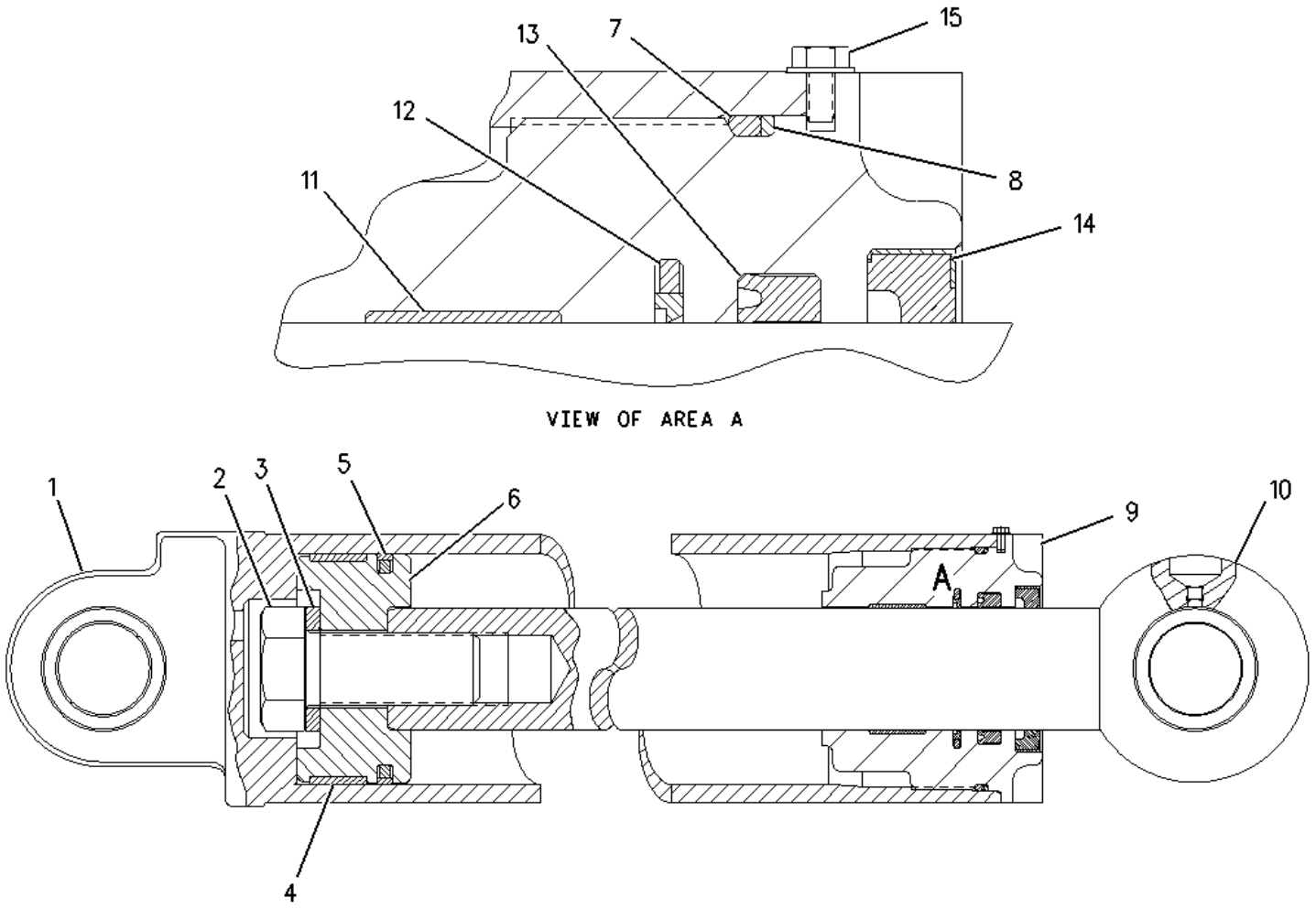

1	NPR	172-2349	1	CYLINDER AS (LH)
	NPR	7J-9903	1	BOSS
	NPR	9R-0321	2	BEARING-SLEEVE
2	NPR	7F-6112	1	BOLT (1-1/4-12X3-IN)
3	NPR	4K-0684	1	WASHER-HARD (34X55X6-MM THK)
4	NPR	6J-2797	1	RING-WEAR
5	NPR	5J-5402	1	SEAL AS
6	NPR	172-2353	1	PISTON
7	NPR	175-7900	1	SEAL-O-RING
8	NPR	168-2271	1	RING-BACKUP

9	NPR	152-1863	1	HEAD
10	NPR	172-2354	1	ROD AS
	NPR	9R-0321	2	BEARING-SLEEVE
11	NPR	4T-6128	1	RING
12	NPR	167-2197	1	SEAL AS-BUFFER
13	NPR	167-2305	1	SEAL-U-CUP
14	NPR	167-2458	1	SEAL-WIPER
15	NPR	6V-6718	1	SCREW-SELF-TAPPING (M8X32X6.35-MM)

114.3MM (4.5IN) BORE X 695MM (27.28IN) STROKE--PART OF 154-5437 HYDRAULIC AR

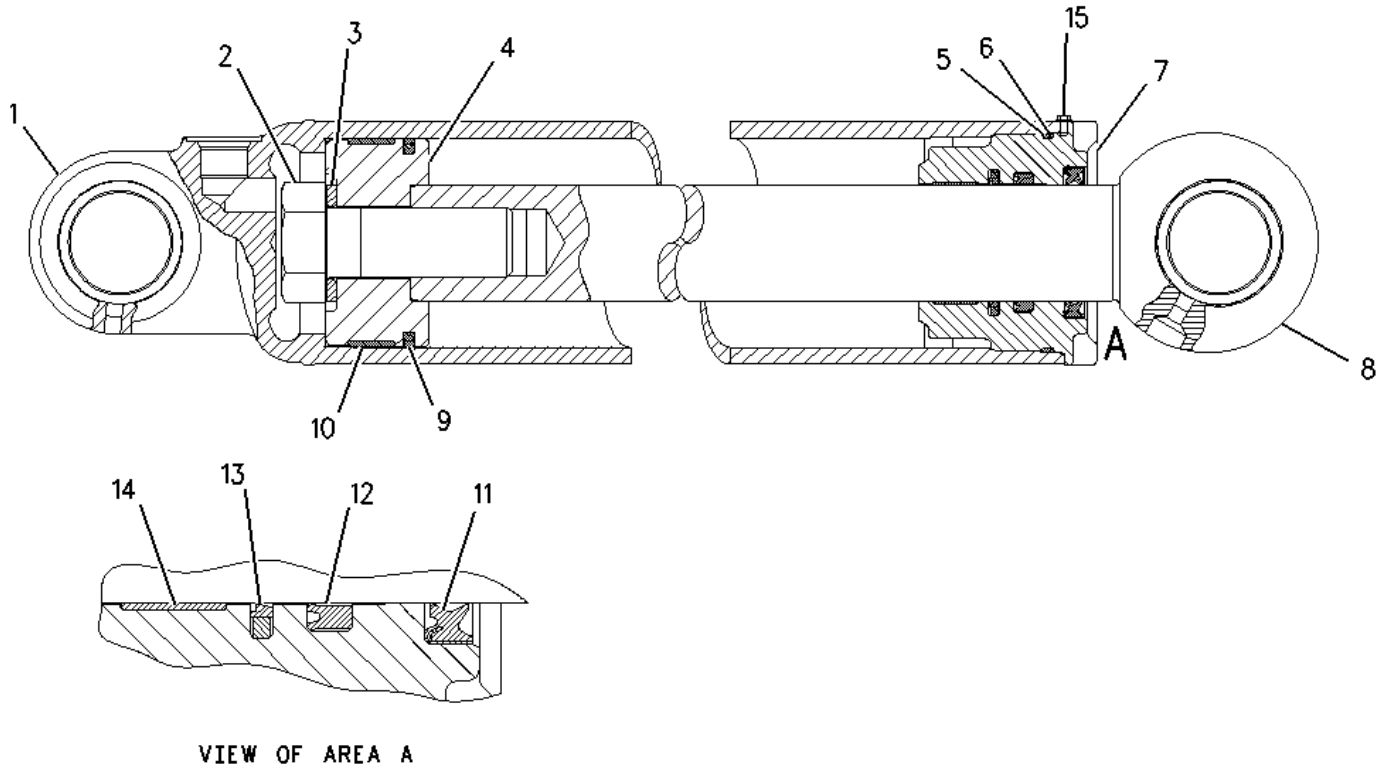

1	NPR	169-2968	1	CYLINDER AS
	NPR	9R-0139	2	BEARING-SLEEVE
	NPR	6E-1497	1	BOSS
2	NPR	8F-5535	1	BOLT (1-1/2-12X4-IN)
3	NPR	3S-6162	1	WASHER-HARD (40.5X67X6-MM THK)
4	NPR	169-2969	1	PISTON
5	NPR	175-7902	1	SEAL-O-RING
6	NPR	1K-7095	1	RING-BACKUP
7	NPR	174-7432	1	HEAD
8	NPR R	134-2659	1	ROD AS

R	NPR	0R-8975	1	ROD AS-HYD
	NPR	9R-0139	2	BEARING-SLEEVE
9	NPR	9X-7269	1	SEAL AS
10	NPR	4J-3745	1	RING-WEAR
11	NPR	225-3281	1	SEAL-WIPER
12	NPR	167-2312	1	SEAL-U-CUP
13	NPR	167-2201	1	SEAL AS-BUFFER
14	NPR	8T-0785	1	RING-WEAR
15	NPR	6V-6718	1	SCREW-SELF-TAPPING (M8X32X6.35-MM)

Key:

R - REMFG PART MAY BE AVAILABLE

114.3MM BORE X 695MM STROKE ---PART OF 154-5437 HYDRAULIC AR

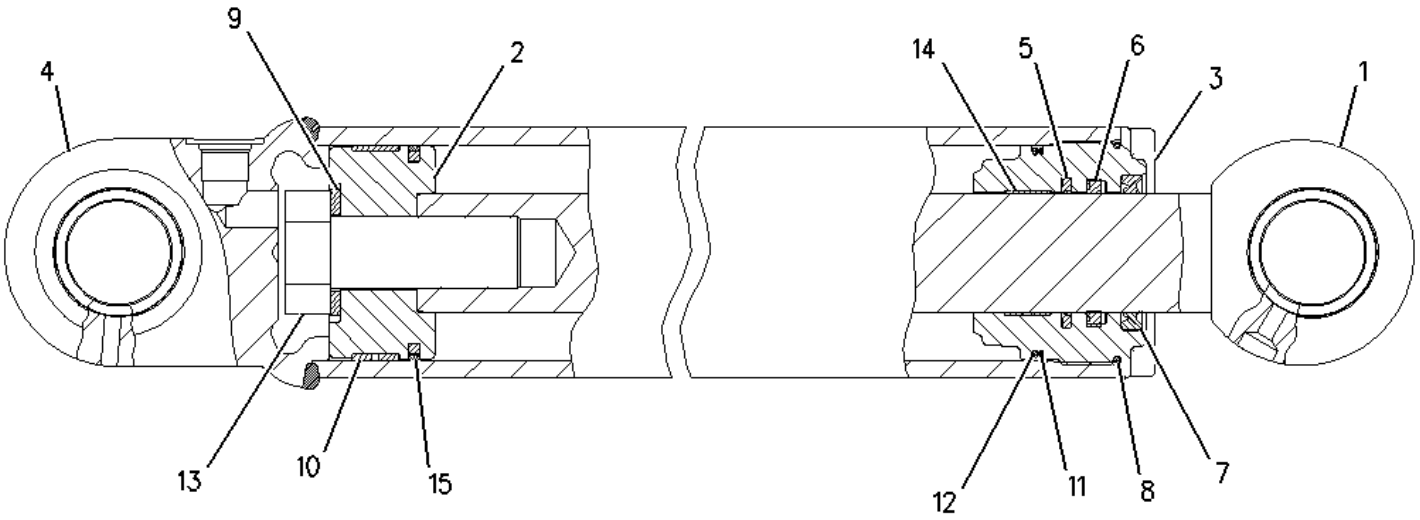

1	NPR R	134-2659	1	ROD AS
R	NPR	0R-8975	1	ROD AS-HYD
	NPR	9R-0139	2	BEARING-SLEEVE
2	NPR	169-2969	1	PISTON
3	NPR	235-9832	1	HEAD
4	NPR R	184-6808	1	CYLINDER AS
R	NPR	10R-4438	1	CYLINDER AS-HYD
	NPR	9R-0139	2	BEARING-SLEEVE
	NPR	6E-1497	1	BOSS
5	NPR	167-2201	1	SEAL AS-BUFFER

6	NPR	167-2312	1	SEAL-U-CUP
7	NPR	225-3281	1	SEAL-WIPER
8	NPR	175-7902	1	SEAL-O-RING
9	NPR	3S-6162	1	WASHER-HARD (40.5X67X6-MM THK)
10	NPR	4J-3745	1	RING-WEAR
11	NPR	4J-9220	1	RING-BACKUP
12	NPR	4M-0189	1	SEAL-O-RING
13	NPR	8F-5535	1	BOLT (1-1/2-12X4-IN)
14	NPR	8T-0785	1	RING-WEAR
15	NPR	9X-7269	1	SEAL AS

Key:

R - REMFG PART MAY BE AVAILABLE

101.6-MM (4-IN) BORE X 249-MM (9.8-IN) STROKE ---PART OF 154-5437 HYDRAULIC AR

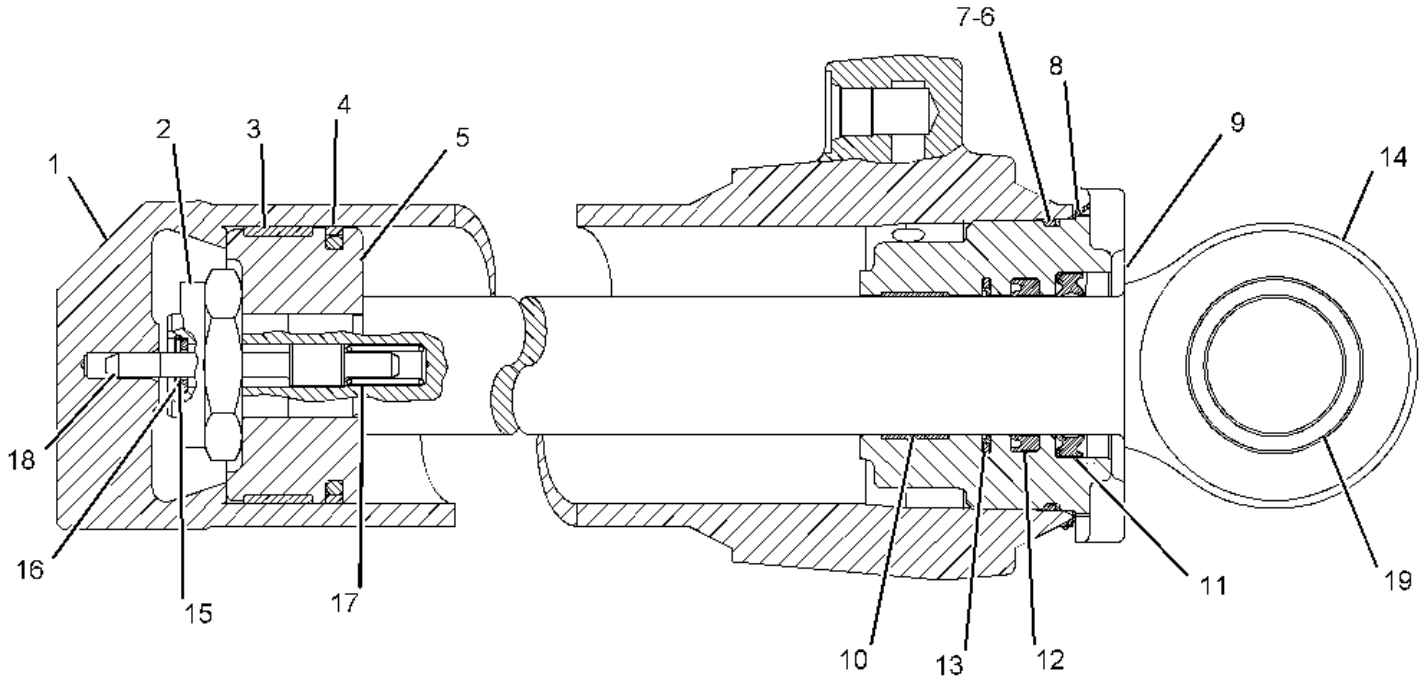

1 NPR R 116-6857 1 CYLINDER AS

R NPR 0R-8977 1 CYLINDER AS-HYD

NPR 9T-2883 2 BEARING

2 NPR 169-6947 1 NUT (1-1/2-12-THD)

3 NPR 6J-2797 1 RING-WEAR

4 NPR 8C-9160 1 SEAL AS

5 NPR 112-1773 1 PISTON

6 NPR 175-7900 1 SEAL-O-RING

7 NPR 168-2271 1 RING-BACKUP

8 NPR 6E-5649 1 WASHER (1.25-MM THK)

9	NPR	6E-5651	1	HEAD
10	NPR	4T-5613	1	RING-WEAR
11	NPR	229-9382	1	SEAL-WIPER
12	NPR	167-2304	1	SEAL-U-CUP
13	NPR	167-2195	1	SEAL AS-BUFFER
14	NPR R	125-7894	1	ROD AS
R	NPR	0R-8979	1	ROD AS-HYD
15	NPR	102-3582	1	WASHER (11X19.5X2.5-MM THK)
16	NPR	2Y-5821	1	RING
17	NPR	3N-5739	1	SPRING
18	NPR	6E-1478	1	PLUNGER
19	NPR	9R-9505	2	BEARING-SLEEVE

Key:

R - REMFG PART MAY BE AVAILABLE

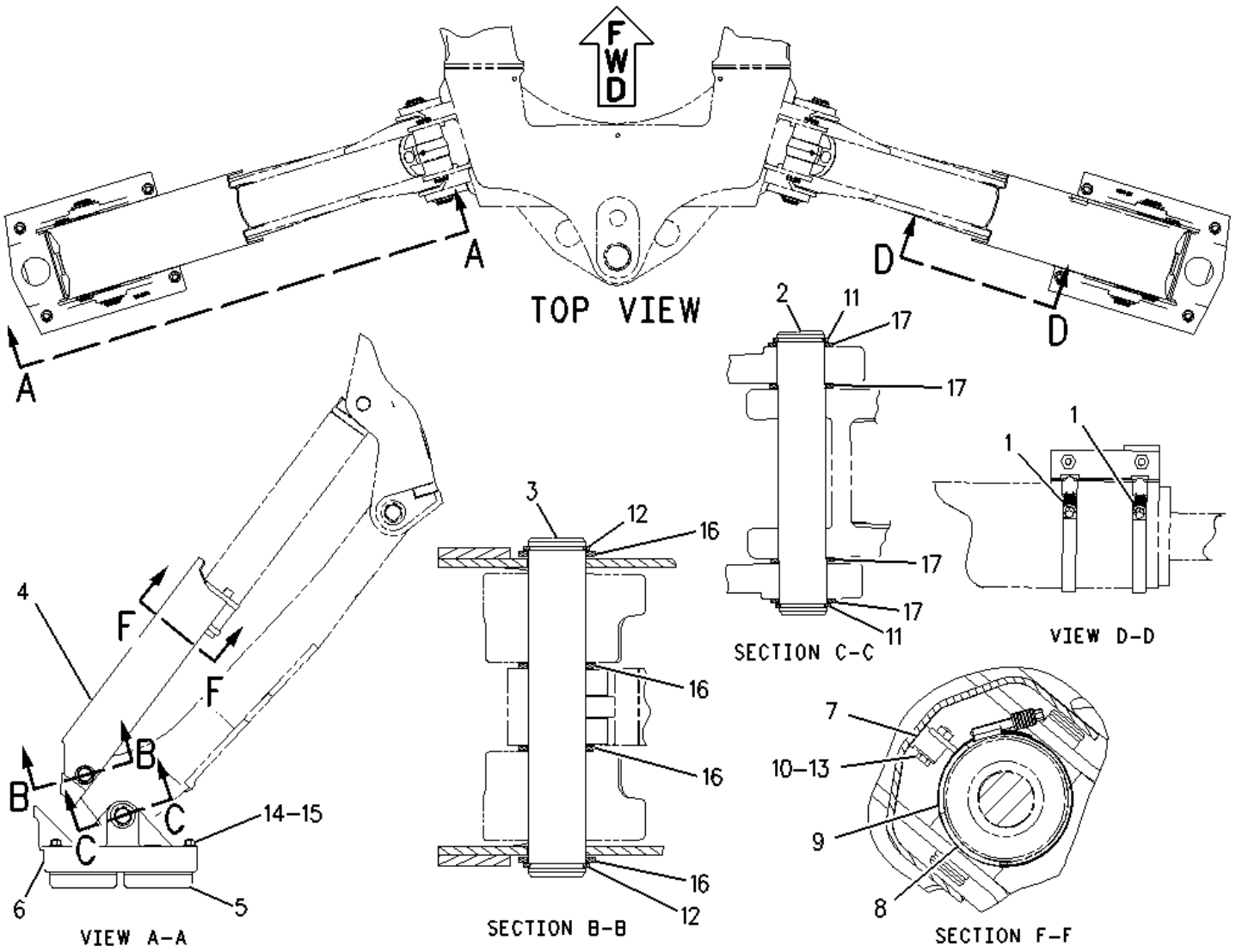

1 NPR 8T-4986 4 CLAMP-HOSE

2 NPR 9R-0424 2 PIN

3 NPR 130-1638 2 PIN

4 NPR 130-1640 2 GUARD AS

5 NPR 141-5150 4 PAD AS-STABILIZER (STREET)

6 NPR 141-6208 2 PAD-STABILIZER

7 NPR 188-3953 2 PAD

8 NPR 201-5810 2 PLATE

9 NPR 201-5812 2 PLATE AS

10 NPR 5P-4116 2 WASHER-HARD (8.8X20.5X2-MM THK)

11	NPR	6V-3213	4	RING-RETAINING
12	NPR	6V-8144	4	RING-RETAINING
13	NPR M	7X-2537	2	BOLT (M8X1.25X35-MM)
14	NPR	8T-4122	12	WASHER-HARD (17X32X3.5-MM THK)
15	NPR M	8T-4132	12	NUT (M16X2-THD)
16	NPR B	9R-0109	12	WASHER (41X64X3-MM THK)
17	NPR B	9R-0158	8	WASHER (46X69X3-MM THK)

Key:

B - USE AS REQUIRED
M - METRIC PART

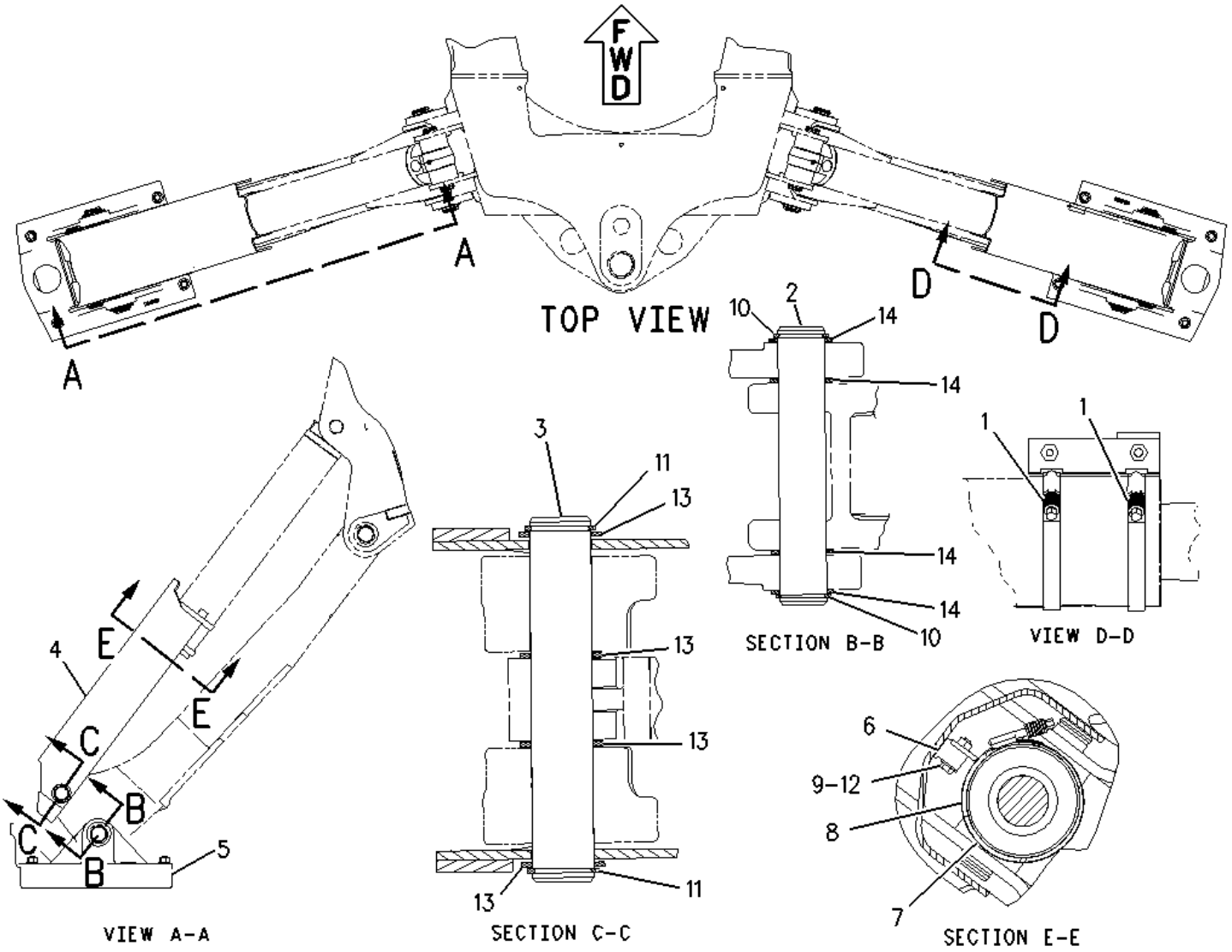

1	**NPR**	**8T-4986**	**4**	**CLAMP-HOSE**
2	**NPR**	**9R-0424**	**2**	**PIN**
3	**NPR**	**130-1638**	**2**	**PIN**
4	**NPR**	**130-1640**	**2**	**GUARD AS**
5	**NPR**	**141-6208**	**2**	**PAD-STABILIZER**
6	**NPR**	**188-3953**	**2**	**PAD**
7	**NPR**	**201-5810**	**2**	**PLATE**
8	**NPR**	**201-5812**	**2**	**PLATE AS**
9	**NPR**	**5P-4116**	**2**	**WASHER-HARD (8.8X20.5X2-MM THK)**
10	**NPR**	**6V-3213**	**4**	**RING-RETAINING**
11	**NPR**	**6V-8144**	**4**	**RING-RETAINING**

12	NPR M	7X-2537	2	BOLT (M8X1.25X35-MM)
13	NPR	9R-0109	12	WASHER (41X64X3-MM THK)
14	NPR	9R-0158	8	WASHER (46X69X3-MM THK)

Key:

M - METRIC PART

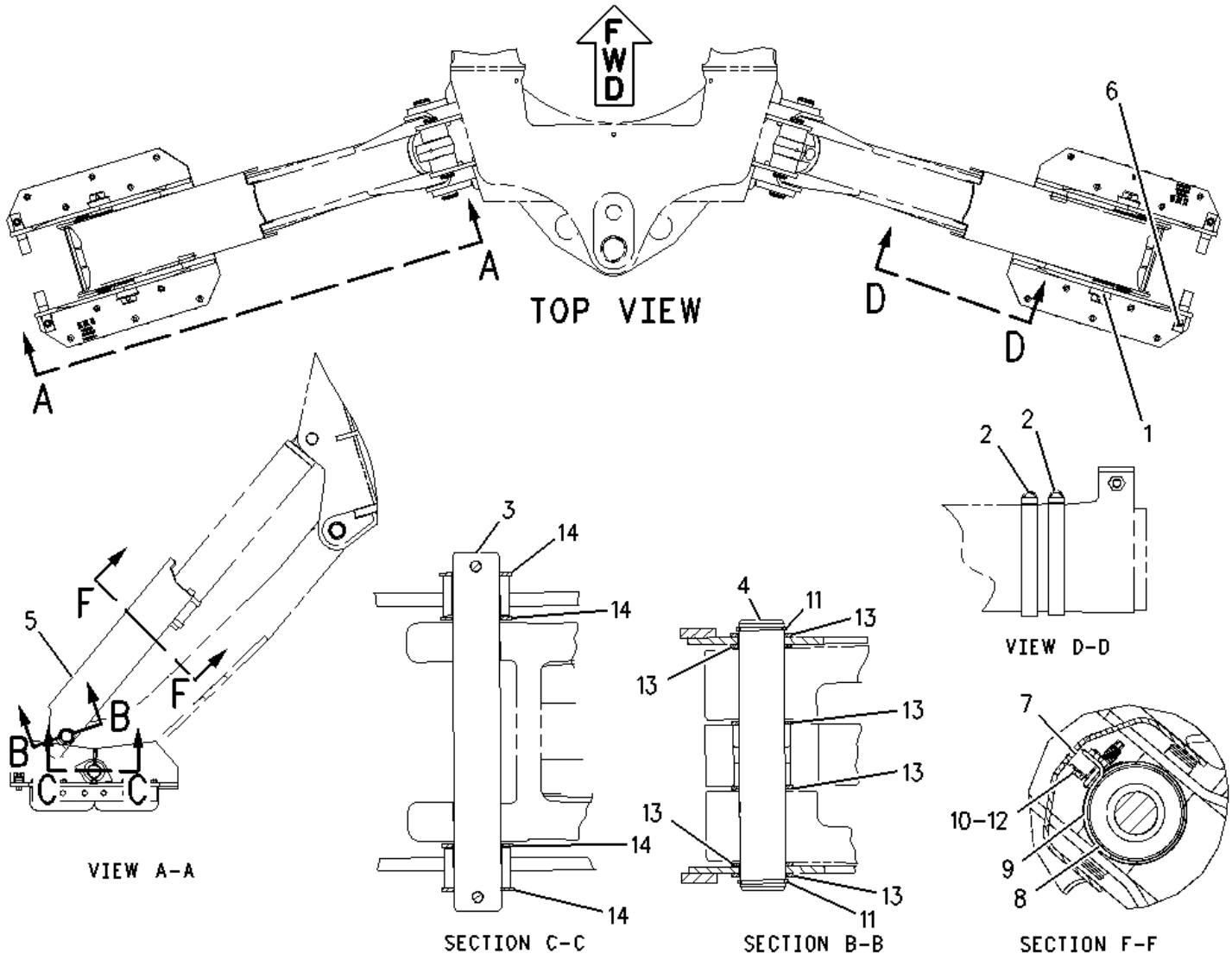

1	**NPR**	**3B-5322**	**4**	**PIN-COTTER**
2	**NPR**	**8T-4986**	**4**	**CLAMP-HOSE**
3	**NPR**	**130-1637**	**2**	**SHAFT**
4	**NPR**	**130-1638**	**2**	**PIN**
5	**NPR**	**130-1640**	**2**	**GUARD AS**
6	**NPR Y**	**135-2876**	**2**	**PAD GP-STABILIZER (STREET)**
7	**NPR**	**188-3953**	**2**	**PAD**
8	**NPR**	**201-5810**	**2**	**PLATE**
9	**NPR**	**201-5812**	**2**	**PLATE AS**
10	**NPR**	**5P-4116**	**2**	**WASHER-HARD (8.8X20.5X2-MM THK)**
11	**NPR**	**6V-8144**	**4**	**RING-RETAINING**

12	NPR M	7X-2537	2	BOLT (M8X1.25X35-MM)
13	NPR B	9R-0109	12	WASHER (41X64X3-MM THK)
14	NPR B	9R-0158	8	WASHER (46X69X3-MM THK)

Key:

B - USE AS REQUIRED
M - METRIC PART
Y - SEPARATE ILLUSTRATION

PART OF 107-3313 LOADER AR

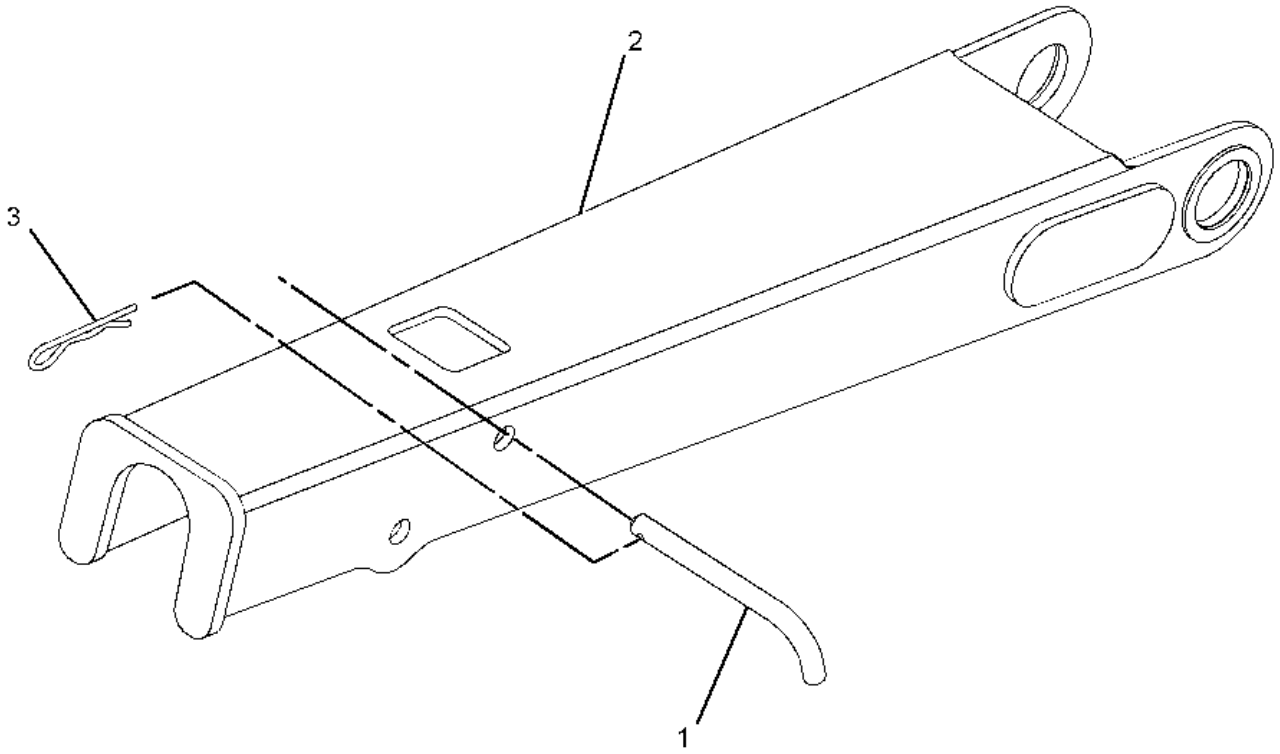

1	**NPR**	**9R-0189**	**1**	**PIN**
2	**NPR**	**132-6497**	**1**	**BRACE AS**
3	**NPR C**	**9R-5301**	**1**	**PIN-COTTER**

Key: C - CHANGE FROM PREVIOUS TYPE

PART OF 154-5312, 154-5314 BACKHOE AR-EXTENDABLE STICK, 154-5303, 154-5305 BACKHOE AR-STANDARD STICK

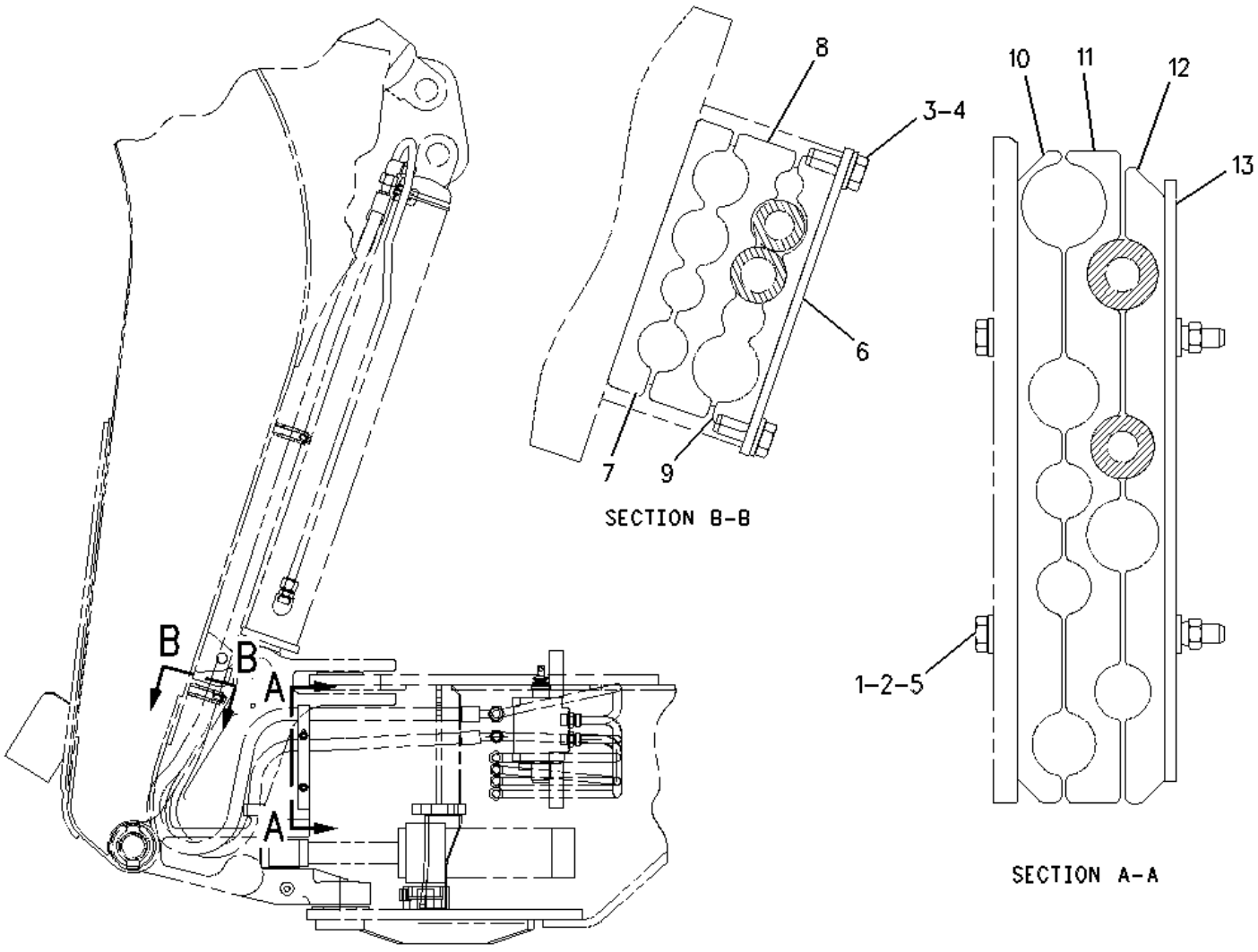

1 NPR M 6V-9189 2 LOCKNUT (M8X1.25-THD)

2 NPR M 7X-2538 2 BOLT (M8X1.25X100-MM)

3 NPR 8T-4121 4 WASHER-HARD (11X21X2.5-MM THK)

4 NPR M 8T-4136 4 BOLT (M10X1.5X25-MM)

5 NPR 8T-4224 4 WASHER-HARD (8.8X16X2-MM THK)

6 NPR 9R-8874 2 PLATE

7 NPR 106-0411 2 BLOCK

8 NPR 106-0412 2 BLOCK

9 NPR 106-0413 2 BLOCK

10 NPR 106-0414 1 BLOCK

11	**NPR**	**106-0415**	**1**	**BLOCK**
12	**NPR**	**106-0416**	**1**	**BLOCK**
13	**NPR**	**120-4397**	**1**	**PLATE**

Key:

M - METRIC PART

PART OF 154-5309, 154-5311 BACKHOE AR-EXTENDABLE STICK, 154-5300, 154-5302, 154-5306, 154-5308 BACKHOE AR-STANDARD STICK

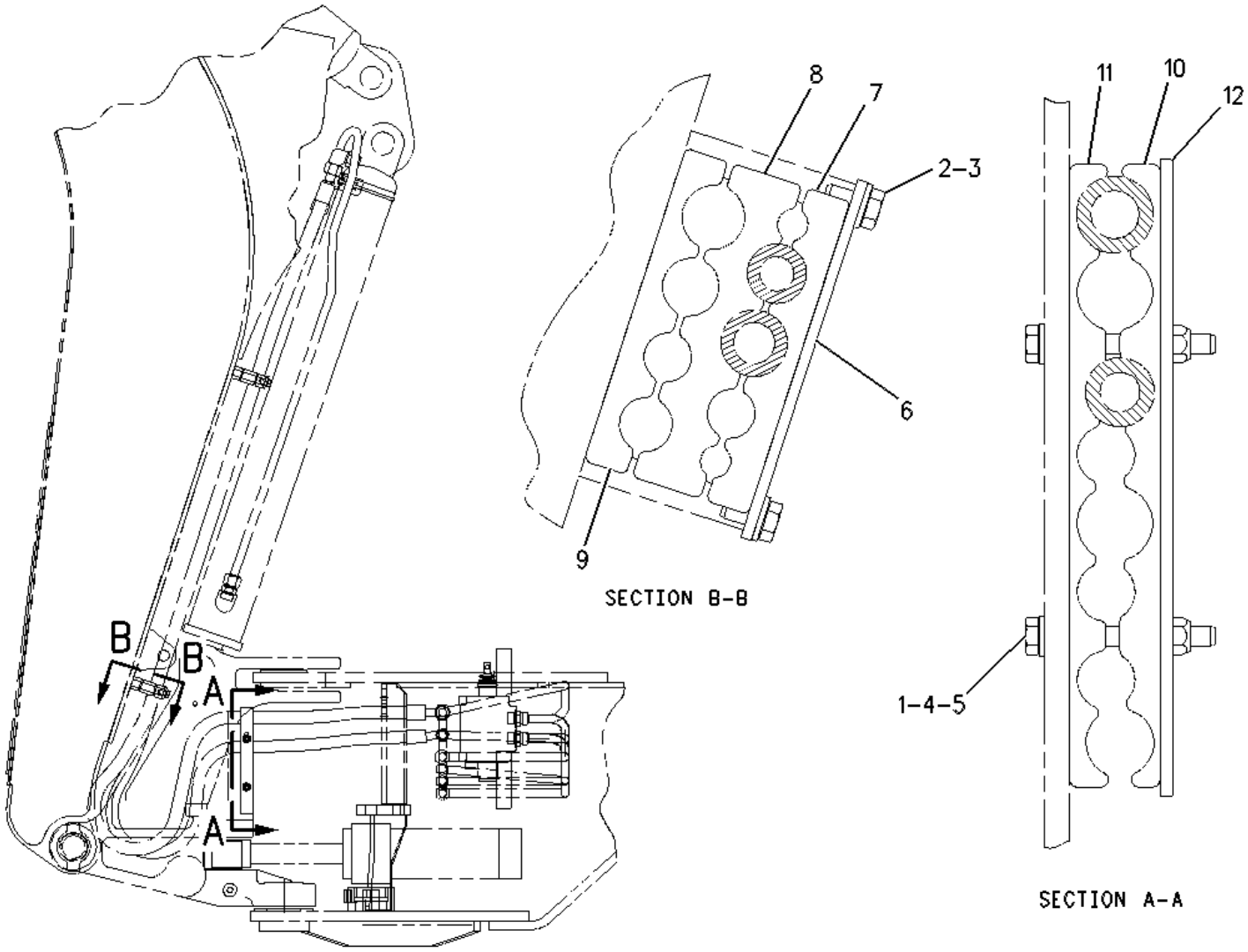

1	**NPR M**	**6V-9189**	**2**	**LOCKNUT (M8X1.25-THD)**
2	**NPR**	**8T-4121**	**4**	**WASHER-HARD (11X21X2.5-MM THK)**
3	**NPR M**	**8T-4136**	**4**	**BOLT (M10X1.5X25-MM)**
4	**NPR**	**8T-4224**	**4**	**WASHER-HARD (8.8X16X2-MM THK)**
5	**NPR M**	**8T-6870**	**2**	**BOLT (M8X1.25X70-MM)**
6	**NPR**	**9R-8874**	**2**	**PLATE**
7	**NPR**	**9R-8875**	**2**	**BLOCK**
8	**NPR**	**109-1258**	**2**	**BLOCK**
9	**NPR**	**109-1259**	**2**	**BLOCK**

10	**NPR**	**119-9398**	**1**	**BLOCK**
11	**NPR**	**119-9399**	**1**	**BLOCK**
12	**NPR**	**120-4397**	**1**	**PLATE**

Key:

M - METRIC PART

FOR USE WITH 9R-6007

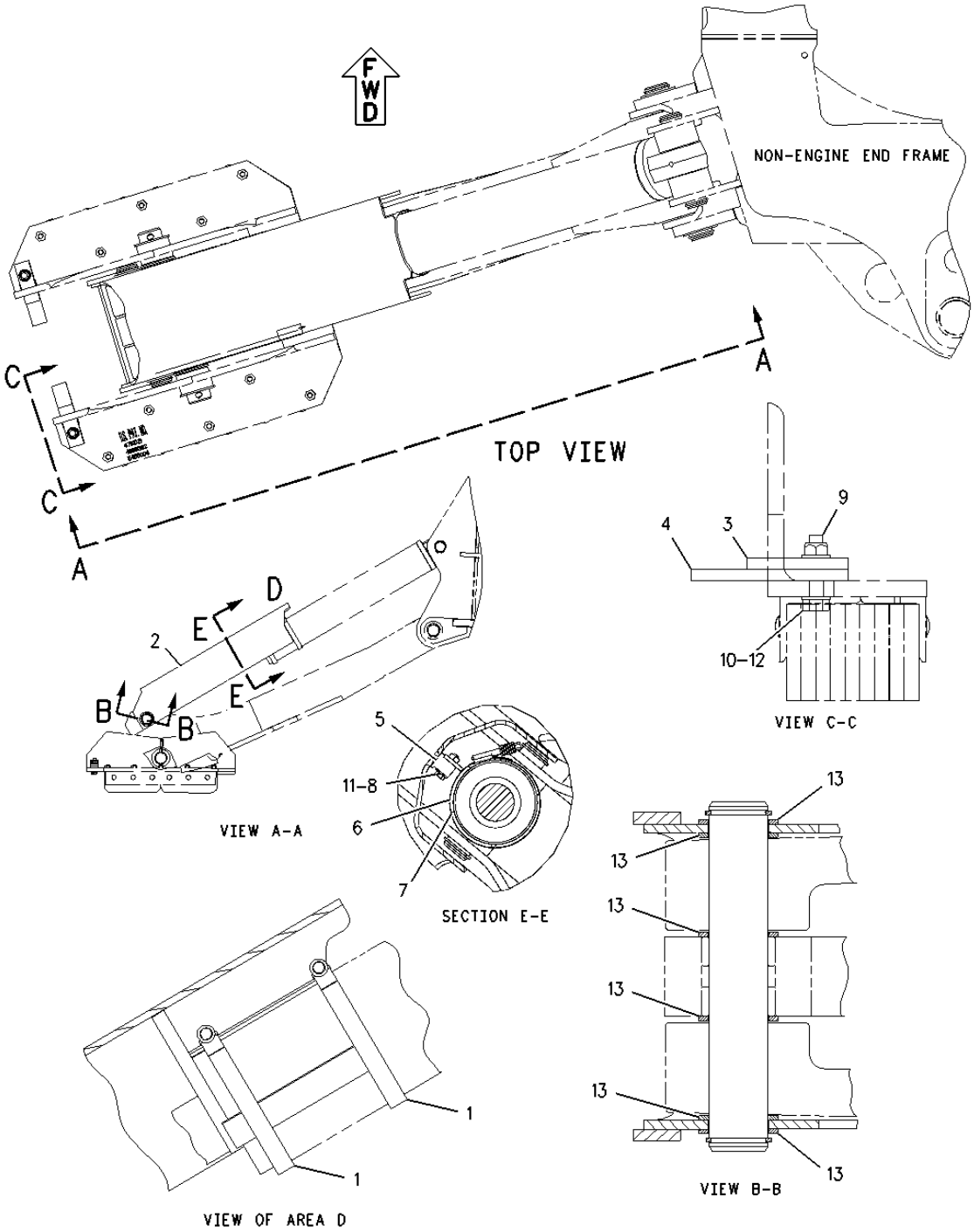

1	**NPR**	**8T-4986**	**4**	**CLAMP-HOSE**
2	**NPR**	**130-1640**	**2**	**GUARD AS**
3	**NPR**	**146-1589**	**4**	**LATCH**
4	**NPR**	**146-1590**	**4**	**LATCH**
5	**NPR**	**188-3953**	**2**	**PAD**
6	**NPR**	**201-5810**	**2**	**PLATE**

7	NPR	201-5812	2	PLATE AS
	NPR M	8T-3612	2	NUT-WELD (M8X1.25-THD)
	NPR	201-5810	1	PLATE
8	NPR	5P-4116	2	WASHER-HARD (8.8X20.5X2-MM THK)
9	NPR	6V-5729	4	LOCKNUT (7/16-14 THD)
10	NPR	7X-0310	4	BOLT (7/16-14X2-IN)
11	NPR M	7X-2537	2	BOLT (M8X1.25X35-MM)
12	NPR	8T-5360	8	WASHER (12X22.5X2.5-MM THK)
13	NPR B	9R-0109	12	WASHER (41X64X3-MM THK)

Key:

B - USE AS REQUIRED
M - METRIC PART

FOR USE WITH 9R-6007, 9R-1085, 116-4942

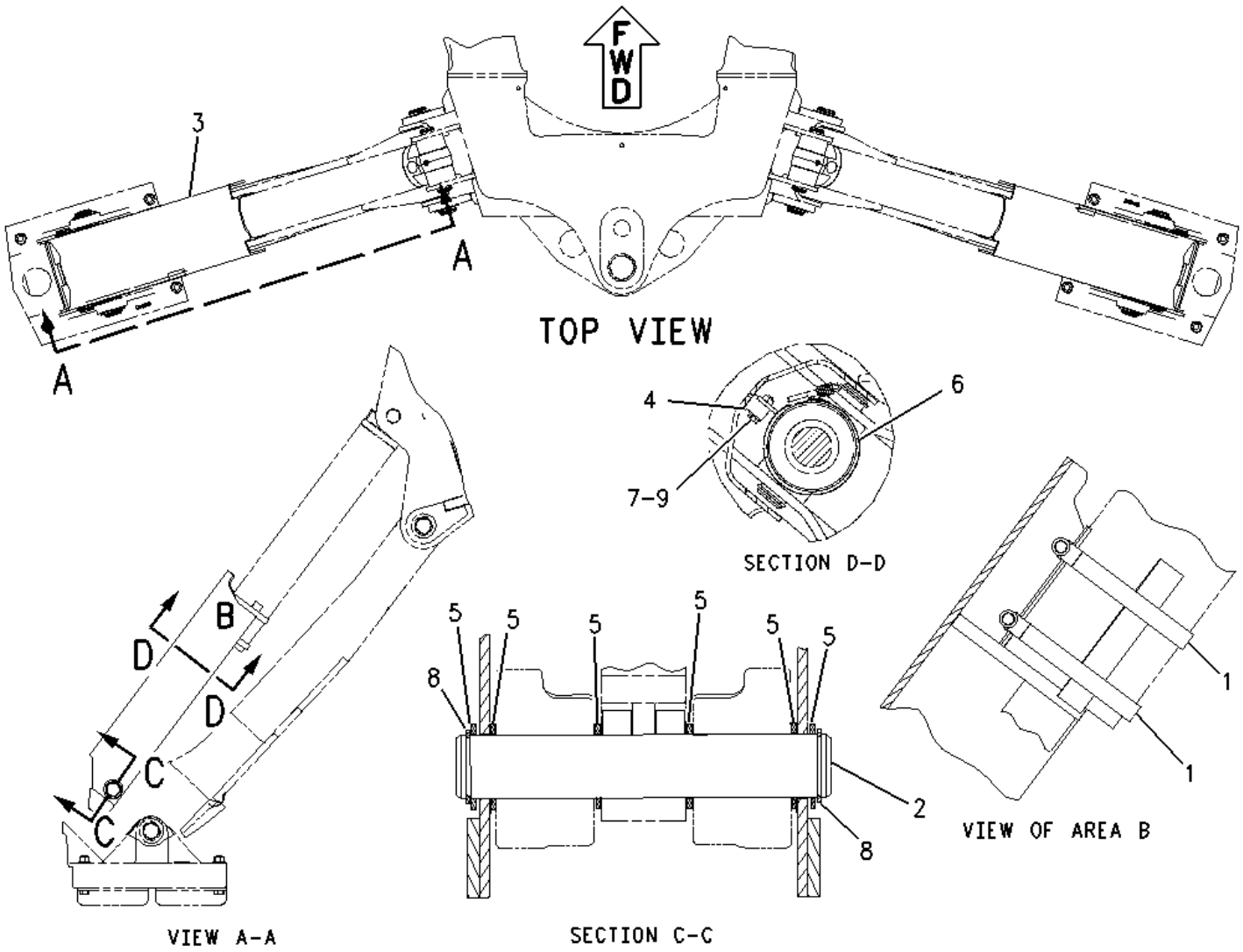

1 NPR 8T-4986 4 CLAMP-HOSE

2 NPR 130-1638 2 PIN

3 NPR 130-1640 2 GUARD AS

4 NPR 188-3953 2 PAD

5 NPR B 9R-0109 12 WASHER (41X64X3-MM THK)

6 NPR 201-5812 2 PLATE AS

(EACH INCLUDES)

NPR M 8T-3612 2 NUT-WELD (M8X1.25-THD)

NPR 201-5810 1 PLATE

7 NPR 5P-4116 2 WASHER-HARD (8.8X20.5X2-MM THK)

8 NPR 6V-8144 4 RING-RETAINING

9 NPR M 7X-2537 2 BOLT (M8X1.25X35-MM)

Key:

B - USE AS REQUIRED
M - METRIC PART

82.55MM (3.25 IN) BORE X 642.1MM (25.28 IN) STROKE
PART OF 154-5437 HYDRAULIC AR

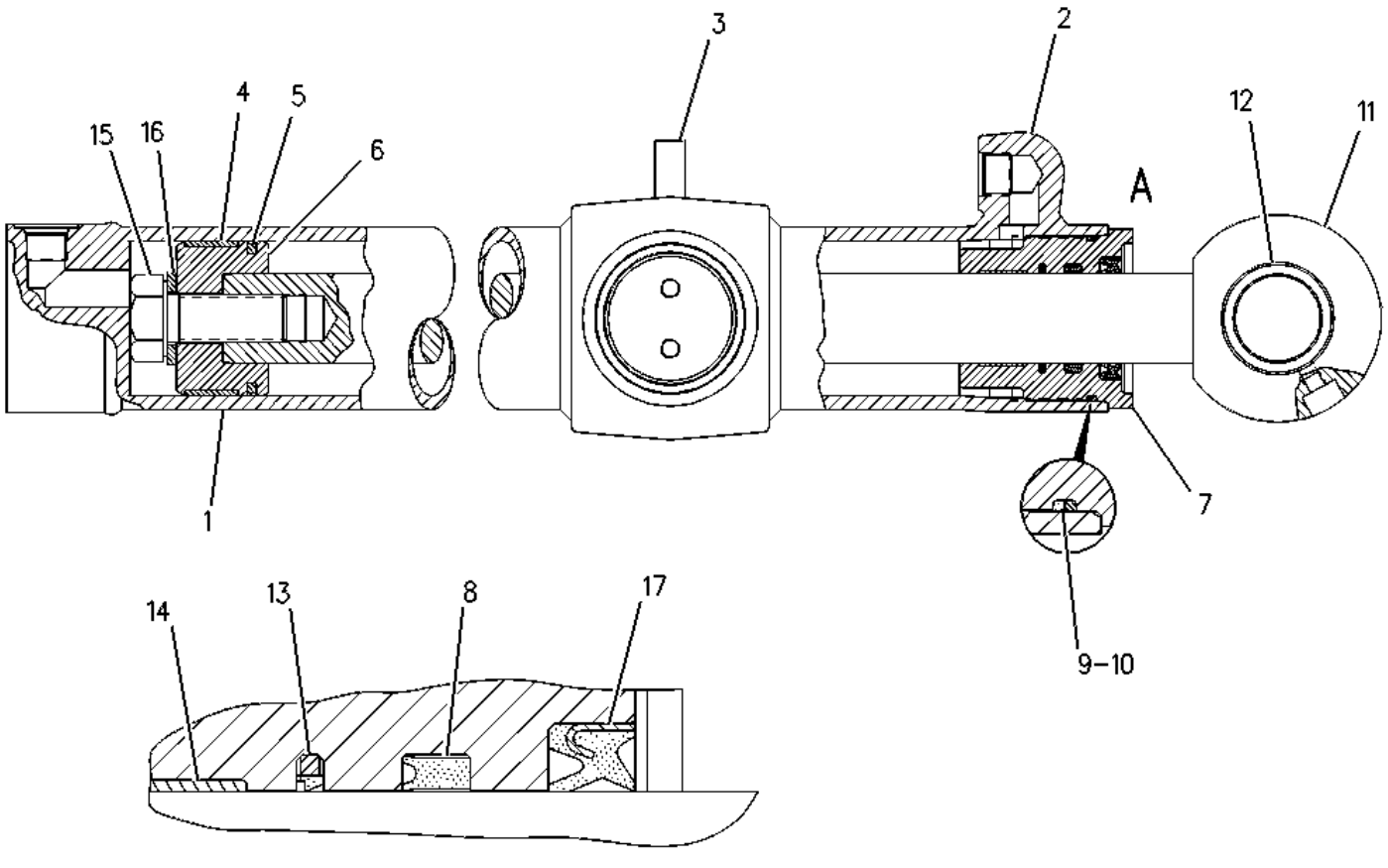

VIEW OF AREA A

1	NPR	R	9T-5490	1 CYLINDER AS
R	NPR		0R-2437	1 CYLINDER AS
2	NPR		7J-9903	1 BOSS
3	NPR	M	8T-3851	1 BOSS-WELD (M10X1.5X17.5-MM)
4	NPR		8J-6371	1 RING-WEAR
5	NPR		6J-0793	1 SEAL AS
	NPR		6J-0789	1 RING-EXPANDER
	NPR		6J-0790	1 SEAL
6	NPR		4T-7010	1 PISTON
7	NPR		4T-7014	1 HEAD

8	NPR	167-2302	1	SEAL-U-CUP
9	NPR	175-7897	1	SEAL-O-RING
10	NPR	6J-1381	1	RING-BACKUP
11	NPR R	9T-3948	1	ROD AS
R	NPR	0R-2798	1	ROD AS
12	NPR	9R-0320	2	BEARING-SLEEVE
13	NPR	167-2192	1	SEAL AS-BUFFER
14	NPR	4T-6779	1	RING
15	NPR	7J-5639	1	BOLT-LOCKING (1-14X2.5-IN)
16	NPR	5P-8250	1	WASHER (28X49X5-MM THK)
17	NPR	167-2455	1	SEAL-WIPER

Key:

M - METRIC PART
R - REMFG PART MAY BE AVAILABLE

101.6-MM (4-IN) BORE X 249-MM (9.8-IN) STROKE -PART OF 154-5437 HYDRAULIC AR

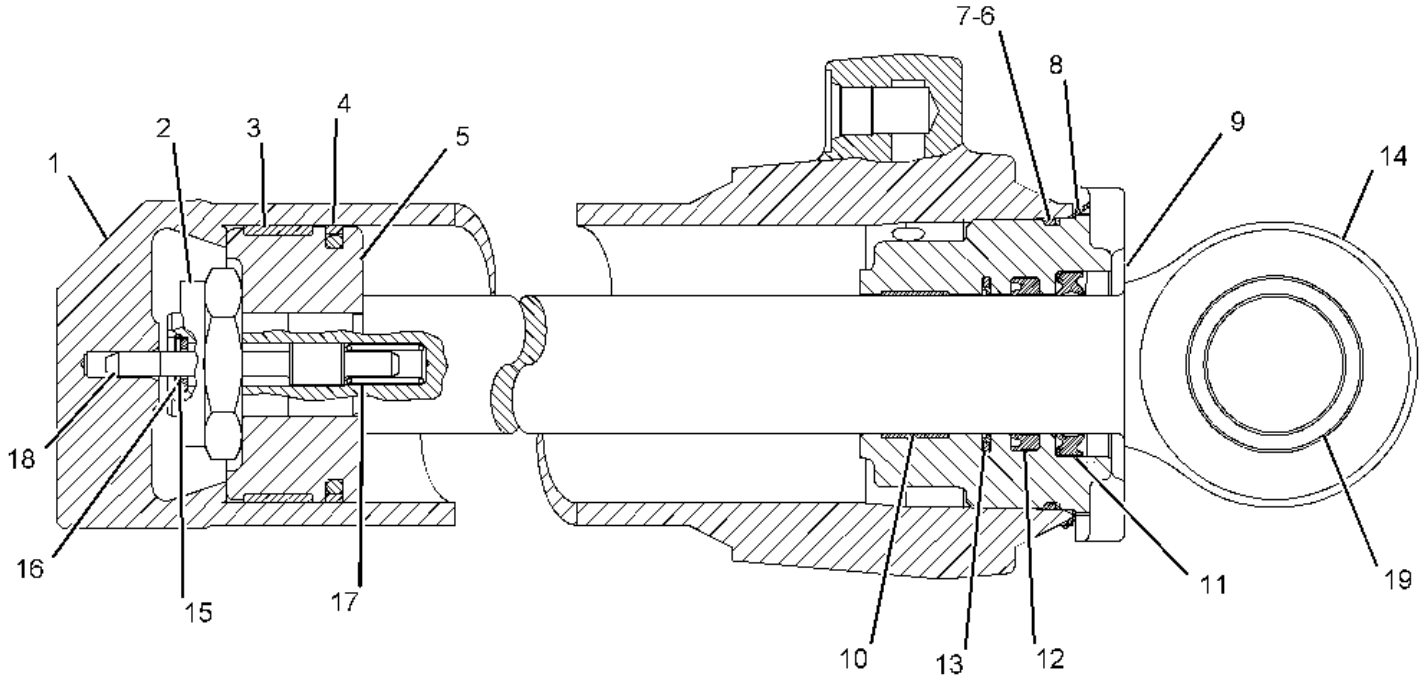

1 NPR R 116-6857 1 CYLINDER AS

R NPR 0R-8977 1 CYLINDER AS-HYD

NPR 9T-2883 2 BEARING

2 NPR 169-6947 1 NUT (1-1/2-12-THD)

3 NPR 6J-2797 1 RING-WEAR

4 NPR 8C-9160 1 SEAL AS

5 NPR 112-1773 1 PISTON

6 NPR 175-7900 1 SEAL-O-RING

7 NPR 168-2271 1 RING-BACKUP

8 NPR 6E-5649 1 WASHER (1.25-MM THK)

9	NPR	6E-5651	1	HEAD
10	NPR	4T-5613	1	RING-WEAR
11	NPR	229-9382	1	SEAL-WIPER
12	NPR	167-2304	1	SEAL-U-CUP
13	NPR	167-2195	1	SEAL AS-BUFFER
14	NPR R	125-7894	1	ROD AS
R	NPR	0R-8979	1	ROD AS-HYD
15	NPR	102-3582	1	WASHER (11X19.5X2.5-MM THK)
16	NPR	2Y-5821	1	RING
17	NPR	3N-5739	1	SPRING
18	NPR	6E-1478	1	PLUNGER
19	NPR	9R-9505	2	BEARING-SLEEVE

Key:

R - REMFG PART MAY BE AVAILABLE

PART OF 154-5437 HYDRAULIC AR

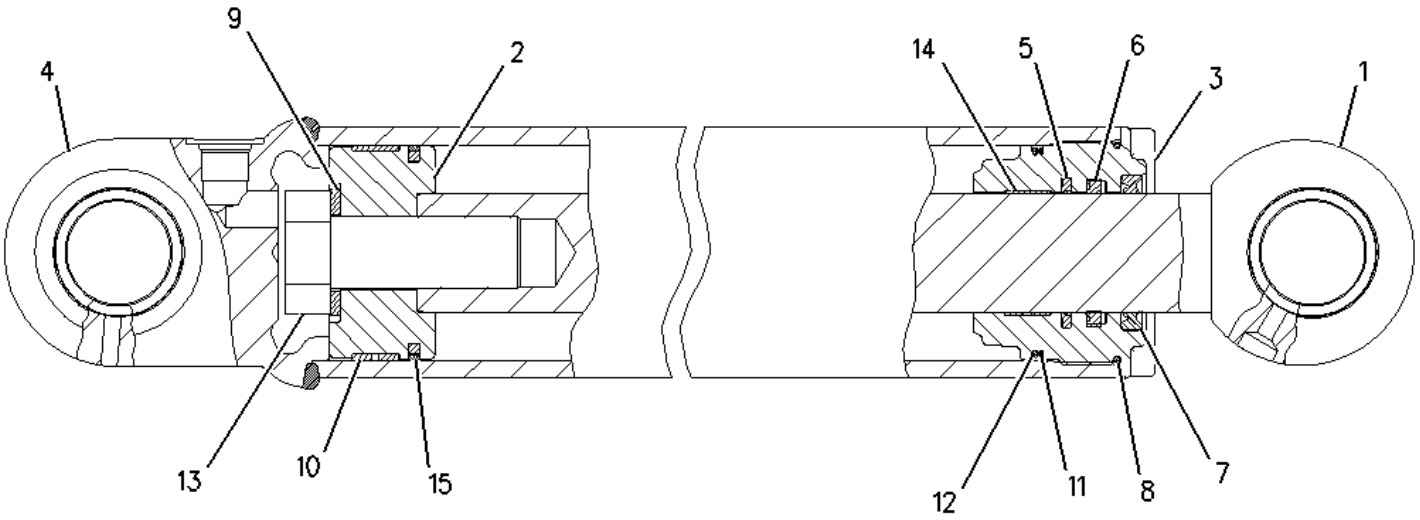

1 NPR R 134-2659 1 ROD AS

R NPR 0R-8975 1 ROD AS-HYD

NPR 9R-0139 2 BEARING-SLEEVE

2 NPR 169-2969 1 PISTON

3 NPR 235-9832 1 HEAD

4 NPR R 184-6808 1 CYLINDER AS

R NPR 10R-4438 1 CYLINDER AS-HYD

NPR 9R-0139 2 BEARING-SLEEVE

NPR 6E-1497 1 BOSS

5 NPR 167-2201 1 SEAL AS-BUFFER

6	NPR	167-2312	1	SEAL-U-CUP
7	NPR	225-3281	1	SEAL-WIPER
8	NPR	175-7902	1	SEAL-O-RING
9	NPR	3S-6162	1	WASHER-HARD (40.5X67X6-MM THK)
10	NPR	4J-3745	1	RING-WEAR
11	NPR	4J-9220	1	RING-BACKUP
12	NPR	4M-0189	1	SEAL-O-RING
13	NPR	8F-5535	1	BOLT (1-1/2-12X4-IN)
14	NPR	8T-0785	1	RING-WEAR
15	NPR	9X-7269	1	SEAL AS

Key: R - REMFG PART MAY BE AVAILABLE

114.3MM (4.5IN) BORE X 695MM (27.28IN) STROKE --PART OF 154-5437 HYDRAULIC AR

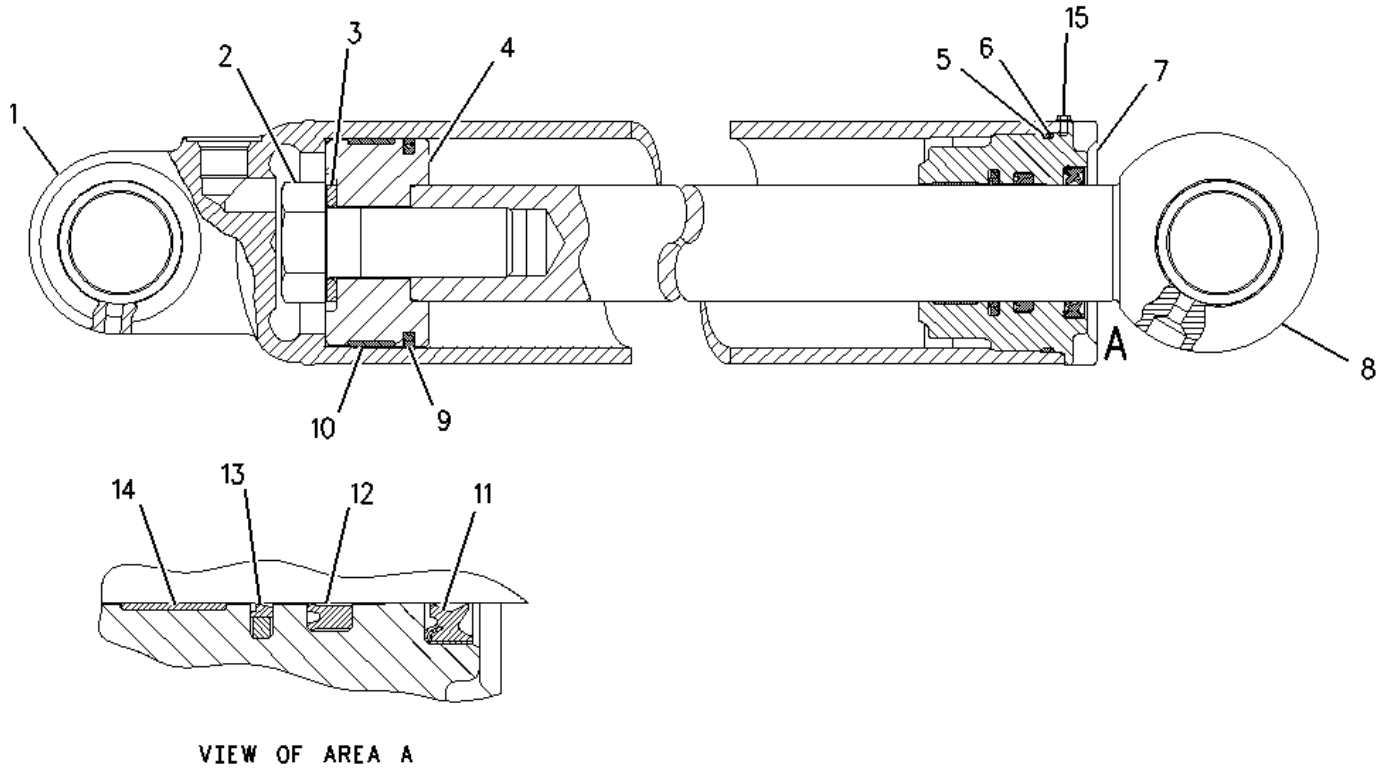

1	NPR	169-2968	1	CYLINDER AS
	NPR	9R-0139	2	BEARING-SLEEVE
	NPR	6E-1497	1	BOSS
2	NPR	8F-5535	1	BOLT (1-1/2-12X4-IN)
3	NPR	3S-6162	1	WASHER-HARD (40.5X67X6-MM THK)
4	NPR	169-2969	1	PISTON
5	NPR	175-7902	1	SEAL-O-RING
6	NPR	1K-7095	1	RING-BACKUP
7	NPR	174-7432	1	HEAD
8	NPR R	134-2659	1	ROD AS

R	NPR	0R-8975	1	ROD AS-HYD
	NPR	9R-0139	2	BEARING-SLEEVE
9	NPR	9X-7269	1	SEAL AS
10	NPR	4J-3745	1	RING-WEAR
11	NPR	225-3281	1	SEAL-WIPER
12	NPR	167-2312	1	SEAL-U-CUP
13	NPR	167-2201	1	SEAL AS-BUFFER
14	NPR	8T-0785	1	RING-WEAR
15	NPR	6V-6718	1	SCREW-SELF-TAPPING (M8X32X6.35-MM)

Key: R - REMFG PART MAY BE AVAILABLE

101.6-MM (4-IN) BORE X 541-MM (21.3-IN) STROKE --PART OF 154-5437 HYDRAULIC AR

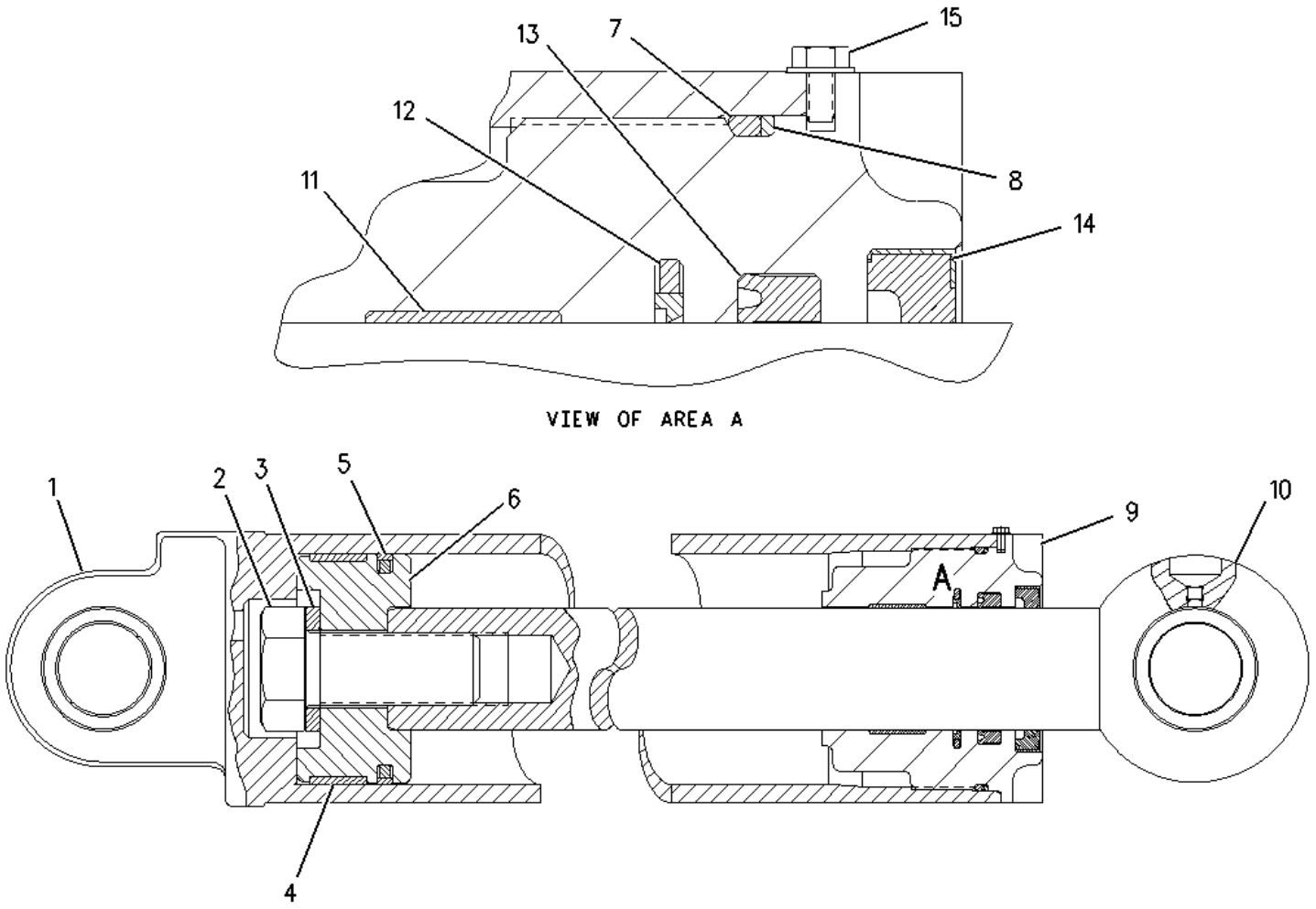

1	NPR	172-2349	1	CYLINDER AS (LH)
	NPR	7J-9903	1	BOSS
	NPR	9R-0321	2	BEARING-SLEEVE
2	NPR	7F-6112	1	BOLT (1-1/4-12X3-IN)
3	NPR	4K-0684	1	WASHER-HARD (34X55X6-MM THK)
4	NPR	6J-2797	1	RING-WEAR
5	NPR	5J-5402	1	SEAL AS
6	NPR	172-2353	1	PISTON
7	NPR	175-7900	1	SEAL-O-RING
8	NPR	168-2271	1	RING-BACKUP

9	NPR	152-1863	1	HEAD
10	NPR	172-2354	1	ROD AS
	NPR	9R-0321	2	BEARING-SLEEVE
11	NPR	4T-6128	1	RING
12	NPR	167-2197	1	SEAL AS-BUFFER
13	NPR	167-2305	1	SEAL-U-CUP
14	NPR	167-2458	1	SEAL-WIPER
15	NPR	6V-6718	1	SCREW-SELF-TAPPING (M8X32X6.35-MM)

101.6-MM (4-IN) BORE X 541-MM (21.3-IN) STROKE --PART OF 154-5437 HYDRAULIC AR

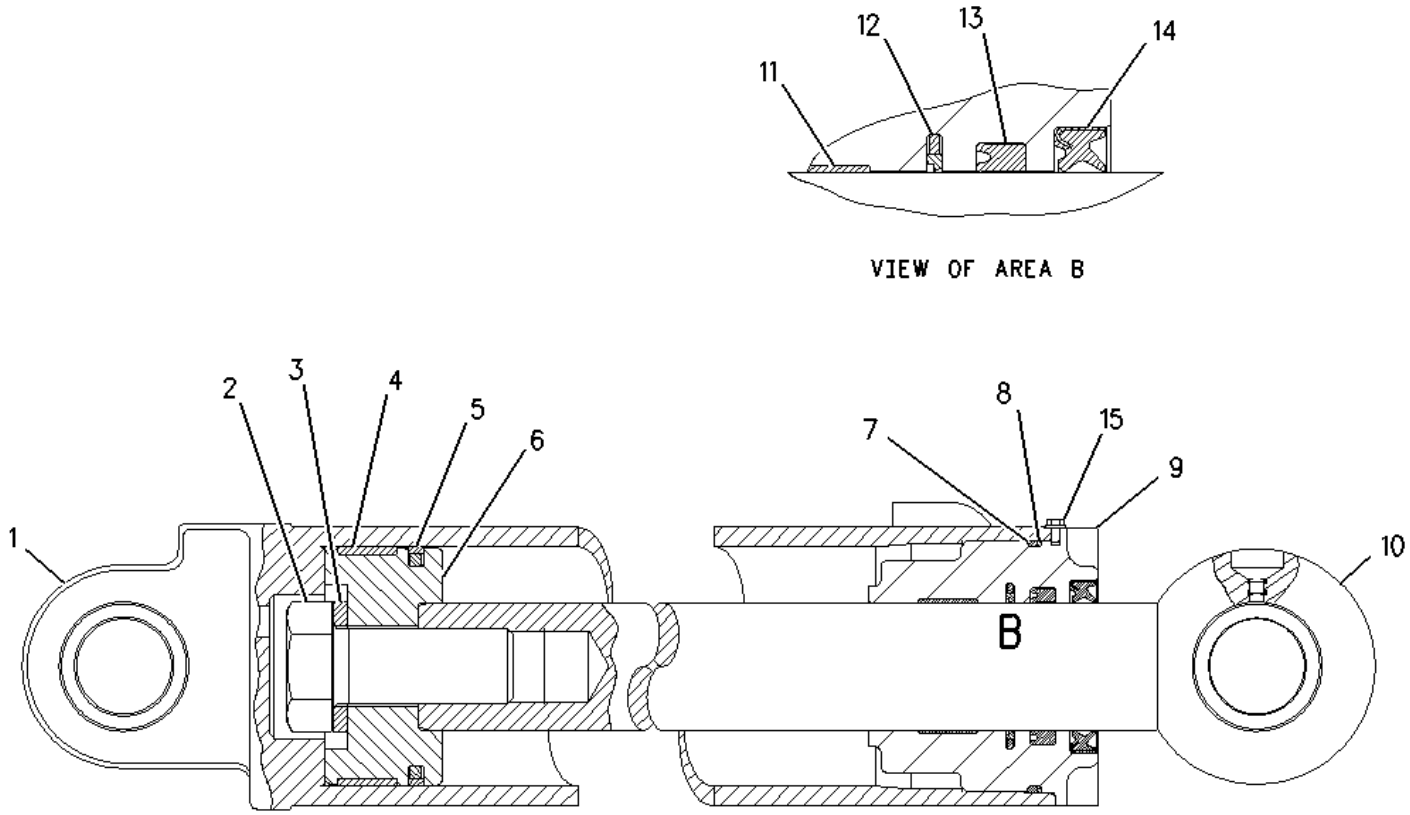

1	**NPR**	**172-2347**	**1**	**CYLINDER AS**
	NPR	**9R-0321**	**2**	**BEARING-SLEEVE**
	NPR	**7J-9903**	**1**	**BOSS**
2	**NPR**	**7F-6112**	**1**	**BOLT (1-1/4-12X3-IN)**
3	**NPR**	**4K-0684**	**1**	**WASHER-HARD (34X55X6-MM THK)**
4	**NPR**	**6J-2797**	**1**	**RING-WEAR**
5	**NPR**	**5J-5402**	**1**	**SEAL AS**
6	**NPR**	**172-2353**	**1**	**PISTON**
7	**NPR**	**175-7900**	**1**	**SEAL-O-RING**
8	**NPR**	**168-2271**	**1**	**RING-BACKUP**

9	NPR	152-1863	1	HEAD
10	NPR	172-2354	1	ROD AS
	NPR	9R-0321	2	BEARING-SLEEVE
11	NPR	4T-6128	1	RING
12	NPR	167-2197	1	SEAL AS-BUFFER
13	NPR	167-2305	1	SEAL-U-CUP
14	NPR	167-2458	1	SEAL-WIPER
15	NPR	6V-6718	1	SCREW-SELF-TAPPING (M8X32X6.35-MM)

101.6-MM (4-IN) BORE X 541-MM (21.3-IN) STROKE --PART OF 154-5437 HYDRAULIC AR

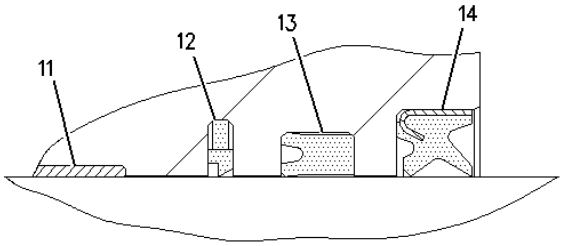

VIEW OF AREA A

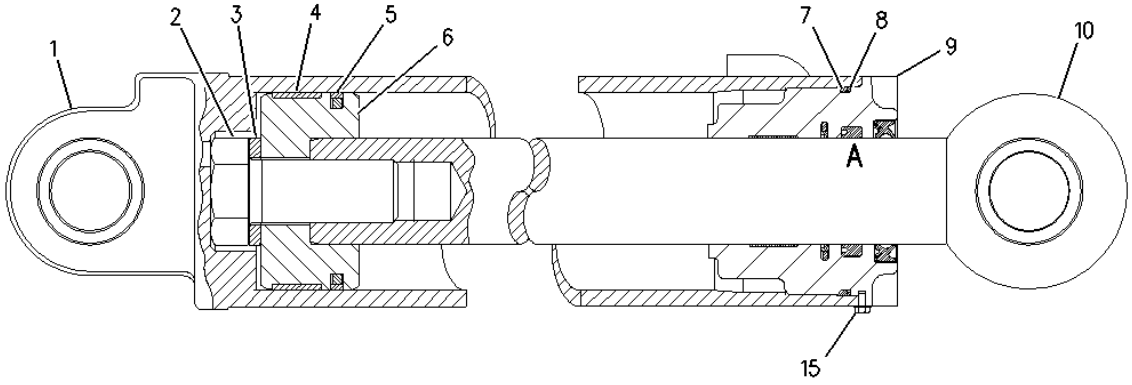

1	NPR	131-1851	1	CYLINDER AS	
2	NPR	7F-6112	1	BOLT (1-1/4-12X3-IN)	
3	NPR	4K-0684	1	WASHER-HARD (34X55X6-MM THK)	
4	NPR	6J-2797	1	RING-WEAR	
5	NPR	5J-5402	1	SEAL AS	
6	NPR	4T-7354	1	PISTON	
7	NPR	9X-4611	1	SEAL-O-RING	
8	NPR	168-2271	1	RING-BACKUP	
9	NPR	152-1863	1	HEAD	
10	NPR R	131-1856	1	ROD AS	
R	NPR	10R-0194	1	ROD AS-HYD	
	NPR	9R-0321	2	BEARING-SLEEVE	
11	NPR	4T-6128	1	RING	
12	NPR	150-6744	1	SEAL-BUFFER (26-PIN)	
13	NPR	4T-6126	1	SEAL-U-CUP	
14	NPR	150-6745	1	SEAL-LIP TYPE	
15	NPR	6V-6718	1	SCREW-SELF-TAPPING (M8X32X6.35-MM)	

Key: R - REMFG PART MAY BE AVAILABLE

112-1826 DRIVE & MTG GP-PUMP --S/N 4ZN16044-50156-PART OF 154-5437 HYDRAULIC AR

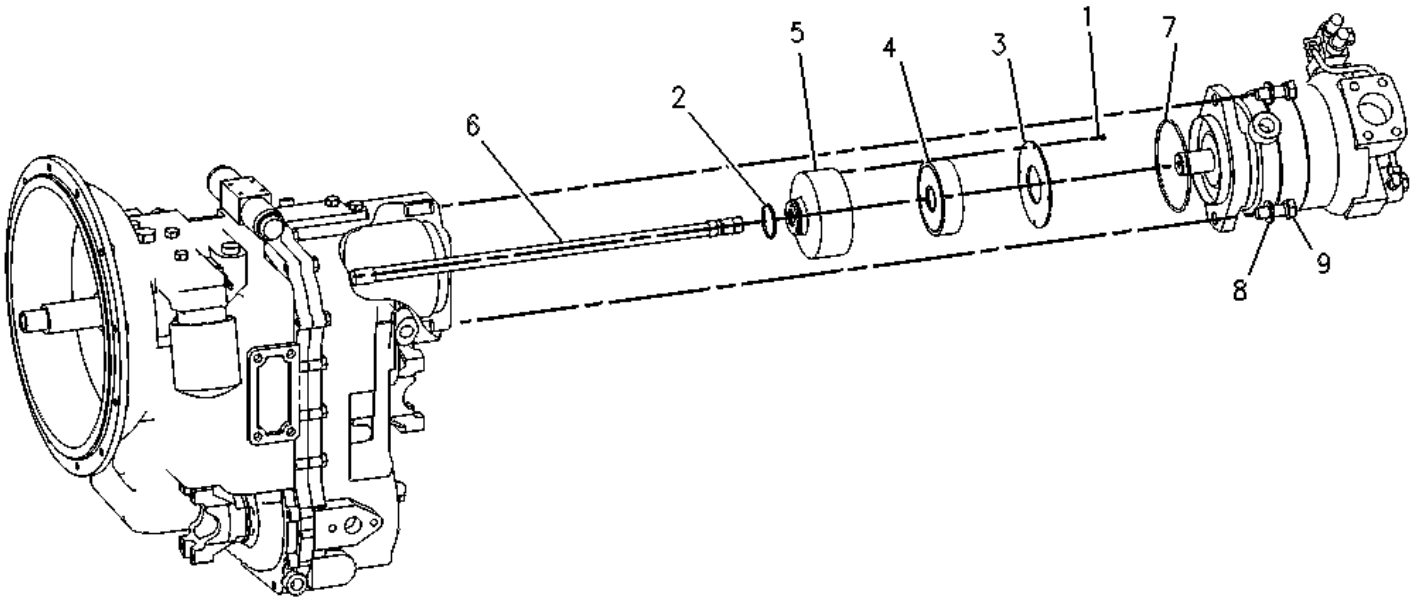

1	NPR M	8T-9405	4	BOLT-SOCKET HEAD (M4X0.7X16-MM)
2	NPR	9U-8886	1	RING-SEAL
3	NPR	115-1918	1	PLATE
4	NPR	117-3534	1	ADAPTER
5	NPR	274-4555	1	HUB
6	NPR Y	128-5596	1	SHAFT GP-PUMP DRIVE
7	NPR	5F-3106	1	SEAL-O-RING
8	NPR	8T-4122	2	WASHER-HARD (17X32X3.5-MM THK)
9	NPR M	8T-7338	2	BOLT (M16X2X45-MM)

Key: M - METRIC PART Y - SEPARATE ILLUSTRATION

152-8308 FILTER GP-OIL ---S/N 4ZN16044-50156--PART OF 154-5437 HYDRAULIC AR

OPTIONAL FIELD REPLACEMENT ORDER 1-134-3014 FILTER AS-OIL

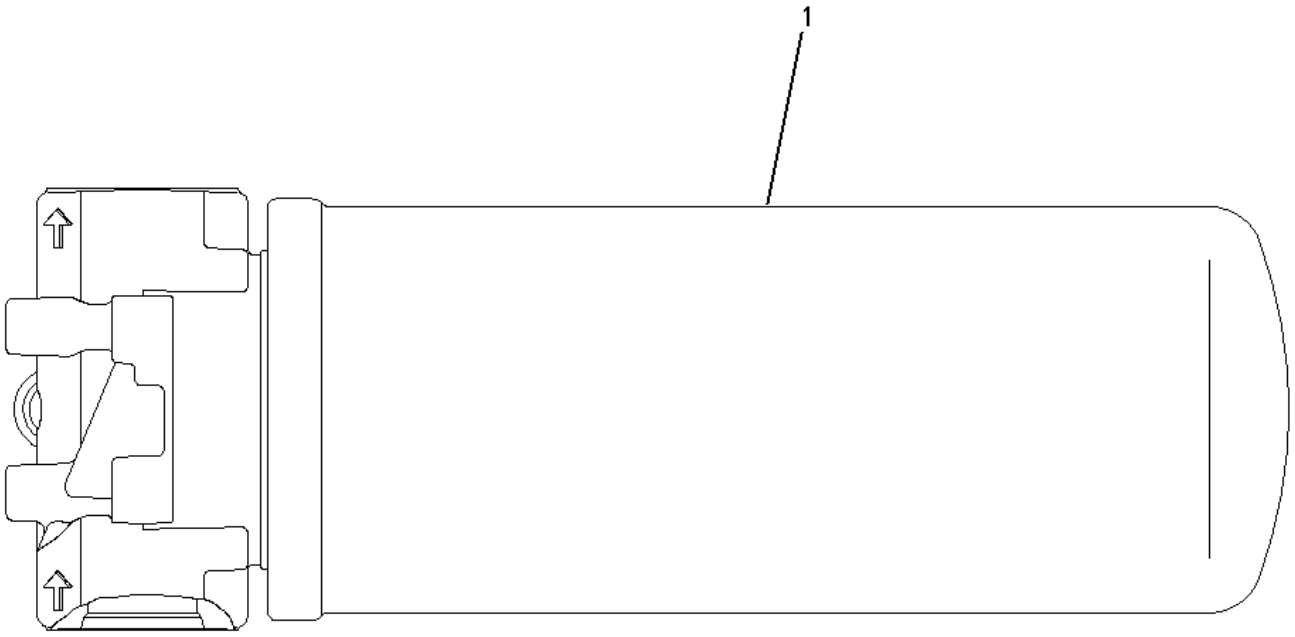

1	NPR	126-1817	1	FILTER AS-OIL (ULTRA HIGH EFFICIENCY)

132-8769 FITTING GP-HYDRAULIC --S/N 4ZN16044-50156

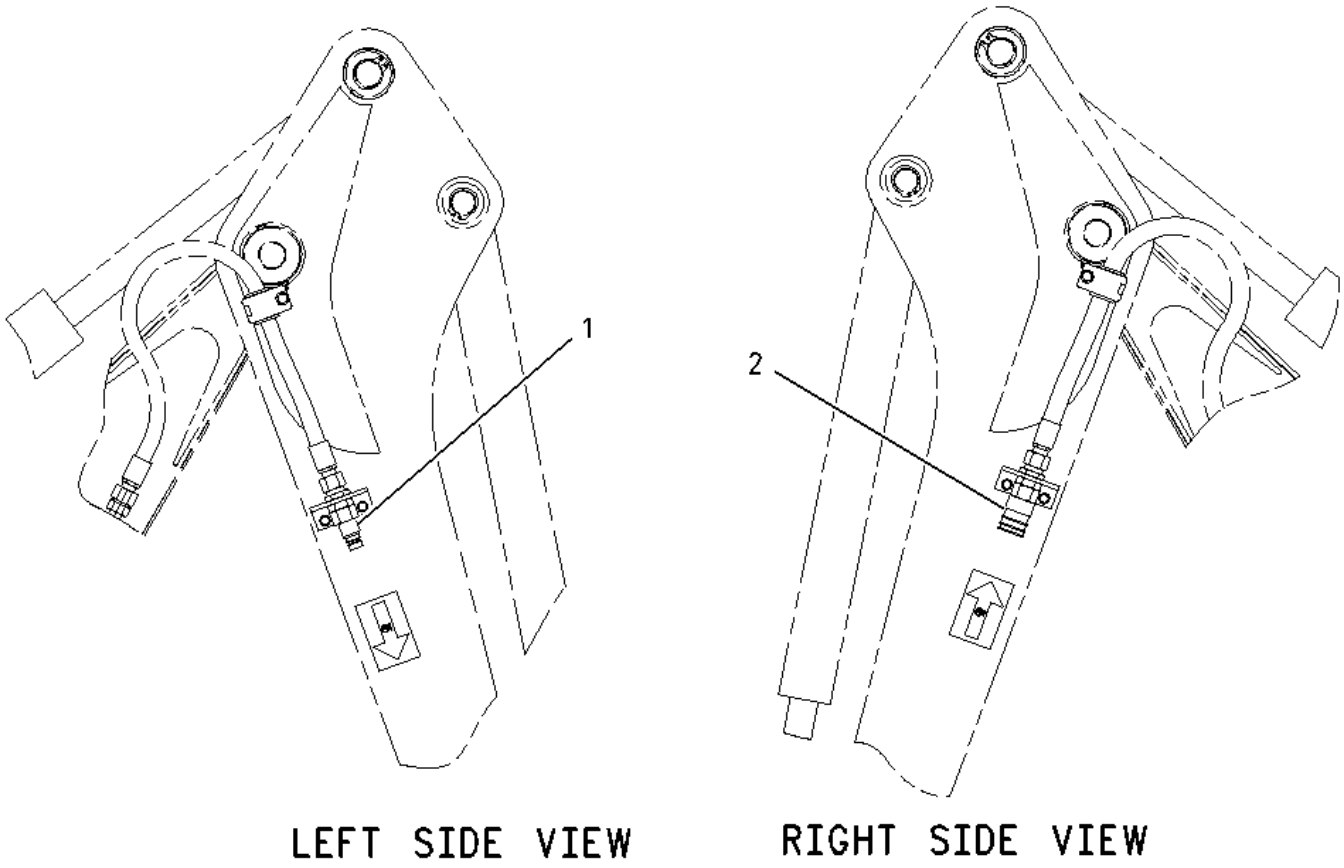

1	**NPR**	**106-0406**	**1**	**FITTING (QUICK DISCONNECT, MALE)**
2	**NPR**	**106-0401**	**1**	**FITTING (QUICK DISCONNECT, FEMALE**

Y 161-6736 1 VALVE GP-BANK 6

NPR 148-8335 1 CONNECTOR AS

NPR 5K-9090 1 SEAL-O-RING

NPR 6V-8635 1 CONNECTOR

NPR 7M-8485 1 SEAL-O-RING

NPR 139-9414 1 PLATE

NPR 148-8429 1 TEE AS

NPR 5K-9090 2 SEAL-O-RING

NPR 6V-9840 1 TEE-SWIVEL

Key: Y - SEPARATE ILLUSTRATION

154-5430 HYDRAULIC AR -S/N 4ZN16044-50156-7 BANK

Y 161-6737 1 VALVE GP-BANK 7

NPR 148-8335 1 CONNECTOR AS

NPR 5K-9090 1 SEAL-O-RING

NPR 6V-8635 1 CONNECTOR

NPR 7M-8485 1 SEAL-O-RING

NPR 148-8408 2 PLUG AS

(EACH INCLUDES)

NPR 3D-2824 1 SEAL-O-RING

NPR 9S-4183 1 PLUG-O RING

NPR 148-8429 1 TEE AS

NPR 5K-9090 2 SEAL-O-RING

NPR 6V-9840 1 TEE-SWIVEL

Key: Y - SEPARATE ILLUSTRATION

154-5431 HYDRAULIC AR --S/N 4ZN16044-50156--7 BANK, RIGHT FT

NPR Y 106-6373 1 CONTROL GP-HYDRAULIC PEDAL

Y 161-6737 1 VALVE GP-BANK 7

NPR 148-8335 1 CONNECTOR AS

NPR 5K-9090 1 SEAL-O-RING

NPR 6V-8635 1 CONNECTOR

NPR 7M-8485 1 SEAL-O-RING

NPR JL 148-8408 2 PLUG AS

(EACH INCLUDES)

NPR 9S-4183 1 PLUG-O RING

NPR 3D-2824 1 SEAL-O-RING

NPR 148-8429 1 TEE AS

NPR 5K-9090 2 SEAL-O-RING

NPR 6V-9840 1 TEE-SWIVEL

Key: J - NO PLUGS REQUIRED WITH AN EXTENDABLE STICK OR LOW FLOW LINES.
L - ONE PLUG REQUIRED WHEN STANDARD STICK IS EQUIPPED WITH UNIVERSAL LINES.
Y - SEPARATE ILLUSTRATION

154-5432 HYDRAULIC AR -S/N 4ZN16044-50156--4 LVR, FT SWING, 7 BANK

NPR Y 112-1842 1 CONTROL GP-HYDRAULIC HAND

Y 161-6737 1 VALVE GP-BANK 7

NPR 148-8335 1 CONNECTOR AS

NPR 5K-9090 1 SEAL-O-RING

NPR 6V-8635 1 CONNECTOR

NPR 7M-8485 1 SEAL-O-RING

NPR JL 148-8408 2 PLUG AS

(EACH INCLUDES)

NPR 9S-4183 1 PLUG-O RING

NPR 3D-2824 1 SEAL-O-RING

NPR 148-8429 1 TEE AS

NPR 5K-9090 2 SEAL-O-RING

NPR 6V-9840 1 TEE-SWIVEL

Key: J - NO PLUGS REQUIRED WITH AN EXTENDABLE STICK OR LOW FLOW LINES.
L - ONE PLUG REQUIRED WHEN STANDARD STICK IS EQUIPPED WITH UNIVERSAL LINES.
Y - SEPARATE ILLUSTRATION

192-5142 HYDRAULIC AR --S/N 4ZN22786-50156

Y	161-6736	1	VALVE GP-BANK 6
NPR	148-8335	1	CONNECTOR AS
NPR	5K-9090	1	SEAL-O-RING
NPR	6V-8635	1	CONNECTOR
NPR	7M-8485	1	SEAL-O-RING
NPR	148-8429	1	TEE AS
NPR	5K-9090	2	SEAL-O-RING
NPR	6V-9840	1	TEE-SWIVEL

Key: Y - SEPARATE ILLUSTRATION

PART OF 107-3313 LOADER AR

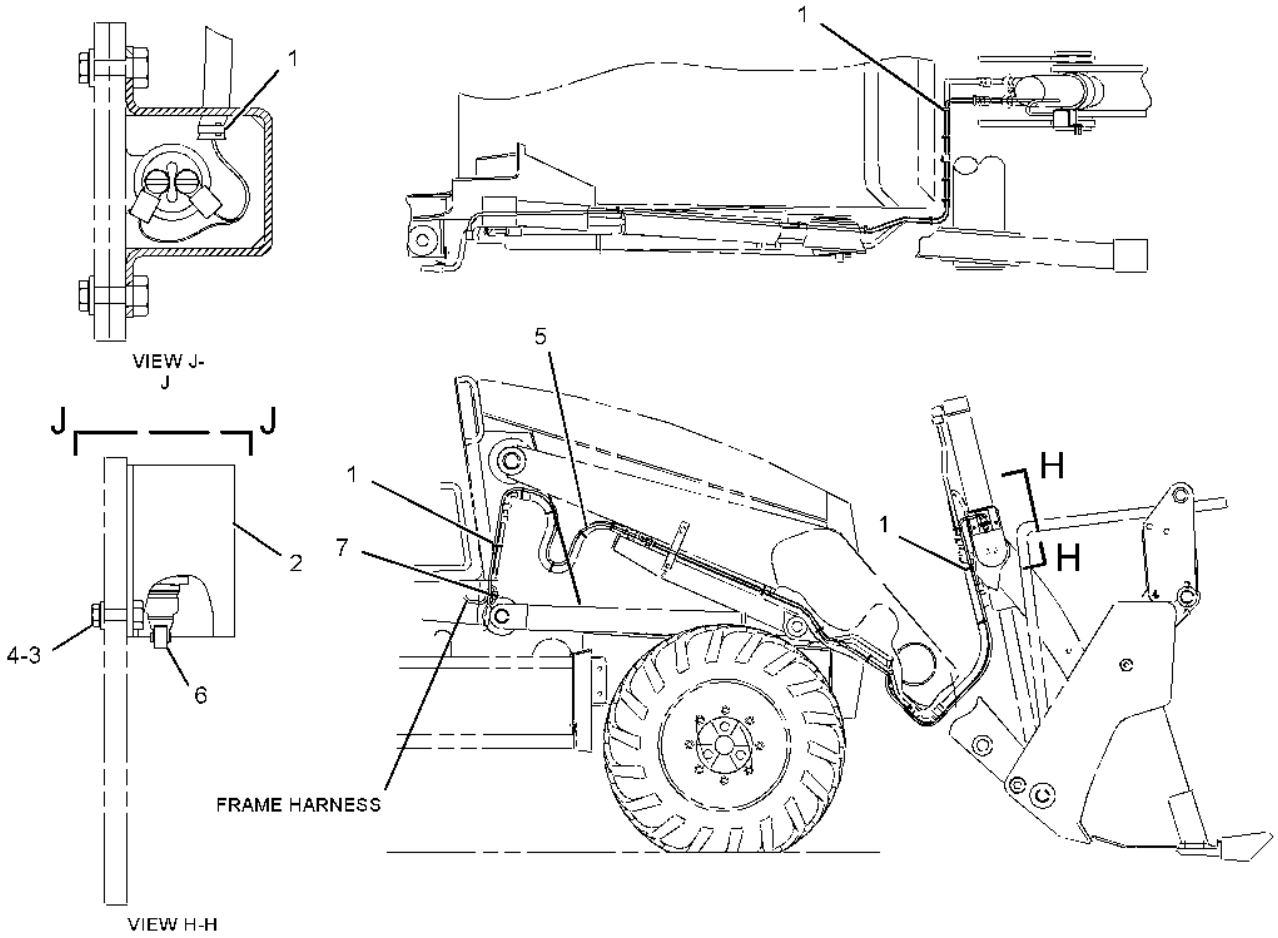

1 NPR 3S-2093 37 STRAP-CABLE

2 NPR 118-7790 1 BRACKET AS

NPR M 6V-9632 2 NUT-WELD (M6X1-THD)

3 NPR M 8T-4138 2 BOLT (M6X1X20-MM)

4 NPR 8T-4205 2 WASHER-HARD (7.2X14.5X2-MM THK)

5 NPR 107-5605 1 HARNESS AS-WIRING (KICKOUT, POSITIONER)

NPR 102-8803 1 KIT-RECEPTACLE (3-PIN)

(INCLUDES RECEPTACLE & WEDGE)

6 NPR 206-1486 1 SWITCH AS-ROLLER (KICKOUT, POSITIONER)

NPR 2H-3922 1 LOCKWASHER

NPR 6V-8363 2 SCREW (10-32X0.312-IN)

NPR 6V-8370 1 NUT-HEX (3/4-32-THD)

NPR 8F-1434 2 LOCKWASHER

NPR 9X-0199 1 BOOT-SWITCH

7 NPR 7K-1181 1 STRAP-CABLE

Key: M - METRIC PART

106-9046 KICKOUT & POSITIONER GP -S/N 4ZN16044-50156

PART OF 107-3313 LOADER AR--Type 1

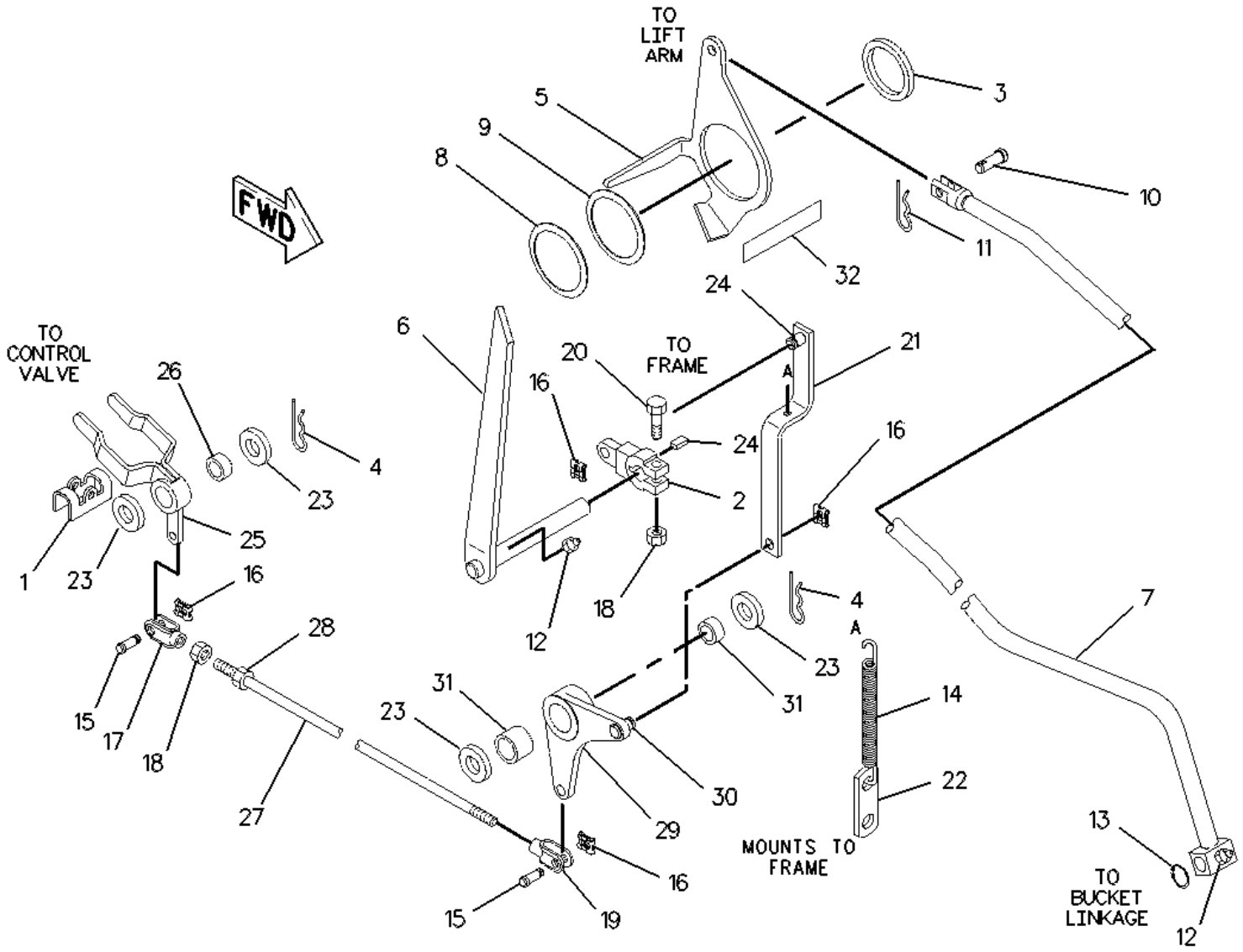

1 NPR 9R-7797 1 PLATE

2 NPR 9R-3255 1 LEVER

3 NPR 128-7902 1 SPACER (60.25X75X6-MM THK)

4 NPR 9R-5301 2 PIN-COTTER

5 NPR 135-9420 1 PIVOT

6 NPR 140-6009 1 LEVER AS

7 NPR 9R-9146 1 PIPE AS

8 NPR 128-7905 3 SPACER (61X114.3X1-MM THK)

9 NPR 128-7903 3 SPACER (61X114.3X3-MM THK)

10 NPR 1B-0676 1 PIN

11	NPR	5P-0372	1	LOCK PIN
12	NPR	3B-8489	2	FITTING-GREASE
13	NPR	8T-0706	1	RING-RETAINING
14	NPR	3C-8727	1	SPRING
15	NPR	9R-2806	2	PIN
16	NPR	9R-2807	4	CLIP
17	NPR	8T-5063	1	ROD END
18	NPR M	8T-4133	2	NUT (M10X1.5-THD)
19	NPR	8C-6955	1	END-YOKE ROD
20	NPR M	8T-4182	1	BOLT (M10X1.5X45-MM)
21	NPR	130-5774	1	LINK AS
22	NPR	130-7952	1	PLATE
23	NPR	8T-4123	4	WASHER-PLATED (22X35X3.5-MM THK)
24	NPR	1B-8736	1	KEY-WOODRUFF
25	NPR	112-5494	1	LEVER AS
	NPR	7Y-0336	1	SPACER (24.5X44X24-MM THK)
26	NPR	9R-2614	1	BEARING
27	NPR	106-7301	1	ROD AS
28	NPR M	2Y-5829	1	NUT (M10X1.15-THD)
29	NPR	130-5891	1	LEVER AS
	NPR	7Y-0336	1	SPACER (24.5X44X24-MM THK)
30	NPR	9R-3135	1	PIN
31	NPR	9R-2614	1	BEARING
32	NPR	8C-3274	1	FILM-INDICATOR (BUCKET)

Key: M - METRIC PART

106-9046 KICKOUT & POSITIONER GP ---S/N 4ZN16044-50156

PART OF 107-3313 LOADER AR--Type 2

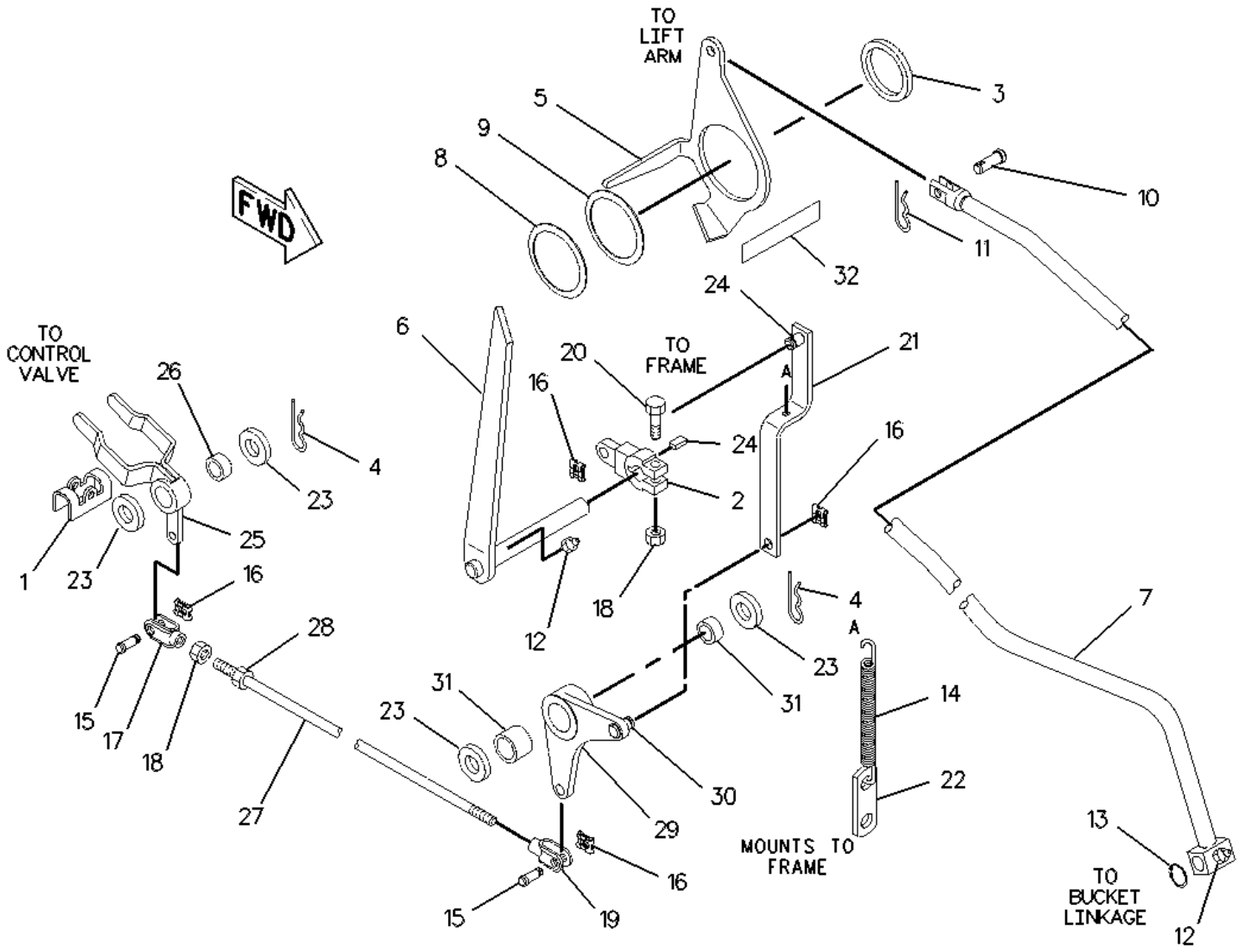

1 NPR 9R-7797 1 PLATE

2 NPR 9R-3255 1 LEVER

3 NPR 128-7902 1 SPACER (60.25X75X6-MM THK)

4 NPR 9R-5301 2 PIN-COTTER

5 NPR 135-9420 1 PIVOT

6 NPR 140-6009 1 LEVER AS

7 NPR 9R-9146 1 PIPE AS

8 NPR 128-7905 3 SPACER (61X114.3X1-MM THK)

9 NPR 128-7903 3 SPACER (61X114.3X3-MM THK)

10 NPR 1B-0676 1 PIN

11	NPR	5P-0372	1	LOCK PIN
12	NPR	3B-8489	2	FITTING-GREASE
13	NPR	8T-0706	1	RING-RETAINING
14	NPR C	141-6343	1	SPRING
15	NPR	9R-2806	2	PIN
16	NPR	9R-2807	4	CLIP
17	NPR	8T-5063	1	ROD END
18	NPR M	8T-4133	2	NUT (M10X1.5-THD)
19	NPR	8C-6955	1	END-YOKE ROD
20	NPR M	8T-4182	1	BOLT (M10X1.5X45-MM)
21	NPR	130-5774	1	LINK AS
22	NPR	130-7952	1	PLATE
23	NPR	8T-4123	4	WASHER-PLATED (22X35X3.5-MM THK)
24	NPR	1B-8736	1	KEY-WOODRUFF
25	NPR	112-5494	1	LEVER AS
	NPR	7Y-0336	1	SPACER (24.5X44X24-MM THK)
26	NPR	9R-2614	1	BEARING
27	NPR	106-7301	1	ROD AS
28	NPR M	2Y-5829	1	NUT (M10X1.15-THD)
29	NPR	130-5891	1	LEVER AS
	NPR	7Y-0336	1	SPACER (24.5X44X24-MM THK)
30	NPR	9R-3135	1	PIN
31	NPR	9R-2614	1	BEARING
32	NPR	9X-2334	1	FILM (BULK)

Key: C - CHANGE FROM PREVIOUS TYPE M - METRIC PART

135-7195 KIT-AUXILIARY LINES --S/N 4ZN16044-50156--FIELD INSTALLATION

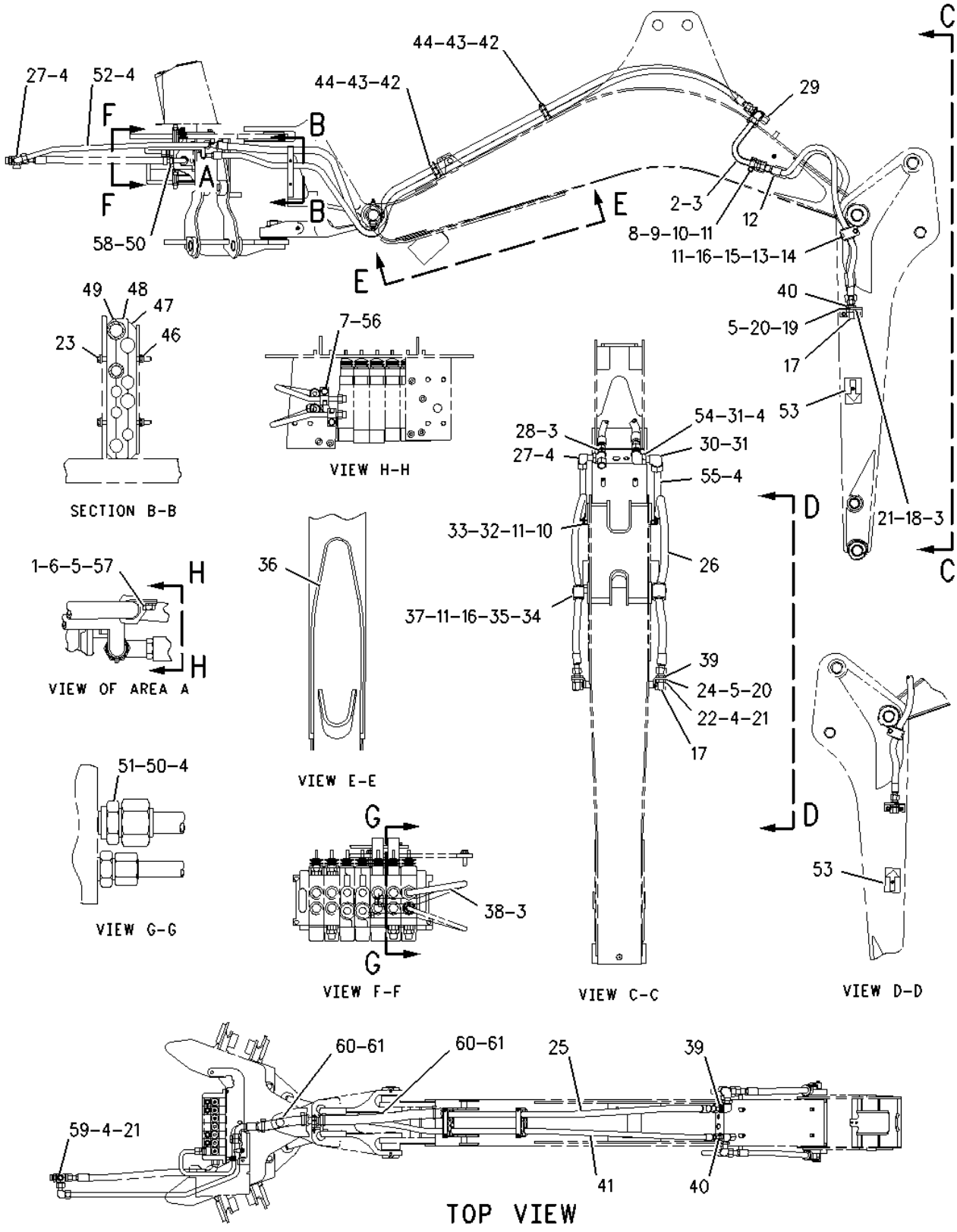

1 NPR 8T-1889 1 CLIP (SLOT)

2 NPR 110-7709 1 TUBE AS

3 NPR 6V-9746 5 SEAL-O-RING

4 NPR 5K-9090 11 SEAL-O-RING

5	NPR	8T-4121	5	WASHER-HARD (11X21X2.5-MM THK)
6	NPR	8T-1890	1	CLIP (TAB)
7	NPR	8T-1891	1	CLIP (SLOT)
8	NPR	7S-3916	1	CLIP (TAB)
9	NPR	7S-3919	1	CLIP (SLOT)
10	NPR M	8T-4192	2	BOLT (M12X1.75X25-MM)
11	NPR	8T-4223	4	WASHER-HARD (13.5X25.5X3-MM THK)
12	NPR I	8W-5149	1	HOSE AS
13	NPR	5P-7467	1	CLIP (TAB)
14	NPR	5P-7466	1	CLIP (SLOT)
15	NPR	5P-8112	1	GROMMET
16	NPR M	8T-4139	2	BOLT (M12X1.75X30-MM)
17	NPR	123-7637	2	CAP
18	NPR	108-3872	1	CONNECTOR
19	NPR	109-1260	1	BRACKET
20	NPR M	8T-4136	4	BOLT (M10X1.5X25-MM)
21	NPR	7M-8485	3	SEAL-O-RING
22	NPR	107-6709	1	CONNECTOR
23	NPR M	7X-2538	2	BOLT (M8X1.25X100-MM)
24	NPR	107-6708	1	BRACKET
25	NPR I	159-1551	1	HOSE AS
26	NPR I	106-0409	1	HOSE AS
27	NPR	6V-9854	2	ELBOW (SWIVEL)
28	NPR	3E-7443	1	TEE-UNION
29	NPR	6V-9832	1	CAP AS

30	NPR	6V-9855	1	ELBOW
31	NPR	6V-8400	2	SEAL-O-RING
32	NPR	8S-0023	1	CLIP (SLOT)
33	NPR	8S-0024	1	CLIP (TAB)
34	NPR	5P-7468	1	CLIP (SLOT)
35	NPR	5P-7469	1	CLIP (TAB)
36	NPR	106-0425	1	PLATE AS (WORK TOOL REST)
37	NPR	5P-8444	1	GROMMET
38	NPR	123-3201	1	TUBE AS
39	NPR	6V-9172	2	NUT (1-7/16-12-THD)
40	NPR	2P-1293	2	LOCKNUT (1-3/16-12-THD)
41	NPR I	106-0405	1	HOSE AS
42	NPR	106-0411	2	BLOCK
43	NPR	106-0412	2	BLOCK
44	NPR	106-0413	2	BLOCK
46	NPR M	6V-9189	2	LOCKNUT (M8X1.25-THD)
47	NPR	106-0414	1	BLOCK
48	NPR	106-0415	1	BLOCK
49	NPR	106-0416	1	BLOCK
50	NPR	3D-2824	2	SEAL-O-RING
51	NPR	6V-8714	1	CONNECTOR
52	NPR	124-7633	1	TUBE AS
53	NPR	101-0863	2	FILM-INSTRUCTION (RETURN FLOW)
54	NPR	3E-7426	1	ELBOW
55	NPR	110-7710	1	TUBE AS

56	NPR	8T-1892	1	CLIP (TAB)
57	NPR M	8T-4137	1	BOLT (M10X1.5X20-MM)
58	NPR	9S-4183	1	PLUG-O RING
59	NPR	109-2953	1	CONNECTOR
60	NPR	096-0061	4	STRAP-CABLE
61	NPR G	160-2247		SLEEVE-ABRASION (40.95 INCHES)

Key:

G - ORDER BY THE INCH
I - REFER TO HYDRAULIC INFORMATION SYSTEM
M - METRIC PART

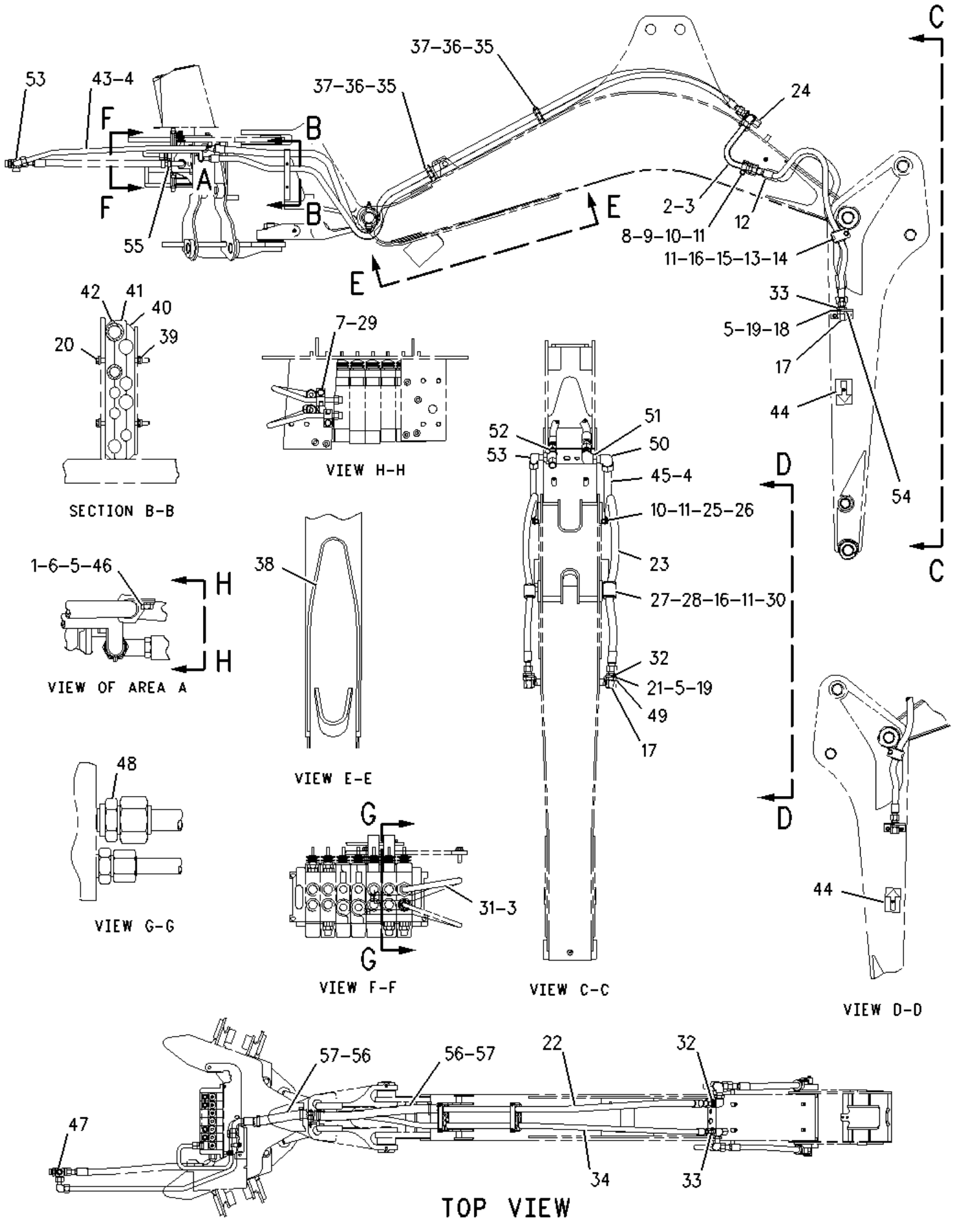

1 NPR 8T-1889 1 CLIP (SLOT)

2	NPR	110-7709	1	TUBE AS
3	NPR	6V-9746	2	SEAL-O-RING
4	NPR	5K-9090	2	SEAL-O-RING
5	NPR	8T-4121	5	WASHER-HARD (11X21X2.5-MM THK)
6	NPR	8T-1890	1	CLIP (TAB)
7	NPR	8T-1891	1	CLIP (SLOT)
8	NPR	7S-3916	1	CLIP (TAB)
9	NPR	7S-3919	1	CLIP (SLOT)
10	NPR M	8T-4192	2	BOLT (M12X1.75X25-MM)
11	NPR	8T-4223	4	WASHER-HARD (13.5X25.5X3-MM THK)
12	NPR I	8W-5149	1	HOSE AS
13	NPR	5P-7467	1	CLIP (TAB)
14	NPR	5P-7466	1	CLIP (SLOT)
15	NPR	5P-8112	1	GROMMET
16	NPR M	8T-4139	2	BOLT (M12X1.75X30-MM)
17	NPR	123-7637	2	CAP
18	NPR	109-1260	1	BRACKET
19	NPR M	8T-4136	4	BOLT (M10X1.5X25-MM)
20	NPR M	7X-2538	2	BOLT (M8X1.25X100-MM)
21	NPR	107-6708	1	BRACKET
22	NPR I	159-1551	1	HOSE AS
23	NPR I	106-0409	1	HOSE AS
24	NPR	6V-9832	1	CAP AS
25	NPR	8S-0023	1	CLIP (SLOT)
26	NPR	8S-0024	1	CLIP (TAB)

27	NPR	5P-7468	1	CLIP (SLOT)
28	NPR	5P-7469	1	CLIP (TAB)
29	NPR	8T-1892	1	CLIP (TAB)
30	NPR	5P-8444	1	GROMMET
31	NPR	123-3201	1	TUBE AS
32	NPR	6V-9172	2	NUT (1-7/16-12-THD)
33	NPR	2P-1293	2	LOCKNUT (1-3/16-12-THD)
34	NPR I	106-0405	1	HOSE AS
35	NPR	106-0411	2	BLOCK
36	NPR	106-0412	2	BLOCK
37	NPR	106-0413	2	BLOCK
38	NPR	106-0425	1	PLATE AS (WORK TOOL REST)
39	NPR M	6V-9189	2	LOCKNUT (M8X1.25-THD)
40	NPR	106-0414	1	BLOCK
41	NPR	106-0415	1	BLOCK
42	NPR	106-0416	1	BLOCK
43	NPR	124-7633	1	TUBE AS
44	NPR	101-0863	2	FILM-INSTRUCTION (RETURN FLOW)
45	NPR	110-7710	1	TUBE AS
46	NPR M	8T-4137	1	BOLT (M10X1.5X20-MM)
47	NPR	150-3054	1	CONNECTOR AS
	NPR	5K-9090	3	SEAL-O-RING
	NPR	7M-8485	1	SEAL-O-RING
	NPR	109-2953	1	CONNECTOR
48	NPR	148-8317	1	CONNECTOR AS

	NPR	3D-2824	1	SEAL-O-RING
	NPR	5K-9090	1	SEAL-O-RING
	NPR	6V-8714	1	CONNECTOR
49	NPR	150-3052	1	CONNECTOR AS
	NPR	5K-9090	1	SEAL-O-RING
	NPR	7M-8485	1	SEAL-O-RING
	NPR	107-6709	1	CONNECTOR
50	NPR	148-8387	1	ELBOW AS
	NPR	6V-8400	1	SEAL-O-RING
	NPR	6V-9855	1	ELBOW
51	NPR	148-8386	1	ELBOW AS
	NPR	3E-7426	1	ELBOW
	NPR	5K-9090	1	SEAL-O-RING
	NPR	6V-8400	1	SEAL-O-RING
52	NPR	148-8450	1	TEE AS
	NPR	3E-7443	1	TEE-UNION
	NPR	5K-9090	1	SEAL-O-RING
	NPR	6V-9746	1	SEAL-O-RING
53	NPR	148-8352	2	ELBOW AS
	(EACH INCLUDES)			
	NPR	5K-9090	1	SEAL-O-RING
	NPR	6V-9854	1	ELBOW (SWIVEL)
54	NPR	150-3053	1	CONNECTOR AS
	NPR	6V-9746	1	SEAL-O-RING
	NPR	7M-8485	1	SEAL-O-RING

	NPR	108-3872	1	CONNECTOR
55	NPR	148-8408	1	PLUG AS
	NPR	3D-2824	1	SEAL-O-RING
	NPR	9S-4183	1	PLUG-O RING
56	NPR G	160-2247		SLEEVE-ABRASION (40.95 INCHES)
57	NPR	096-0061	4	STRAP-CABLE

Key:

G - ORDER BY THE INCH
I - REFER TO HYDRAULIC INFORMATION SYSTEM

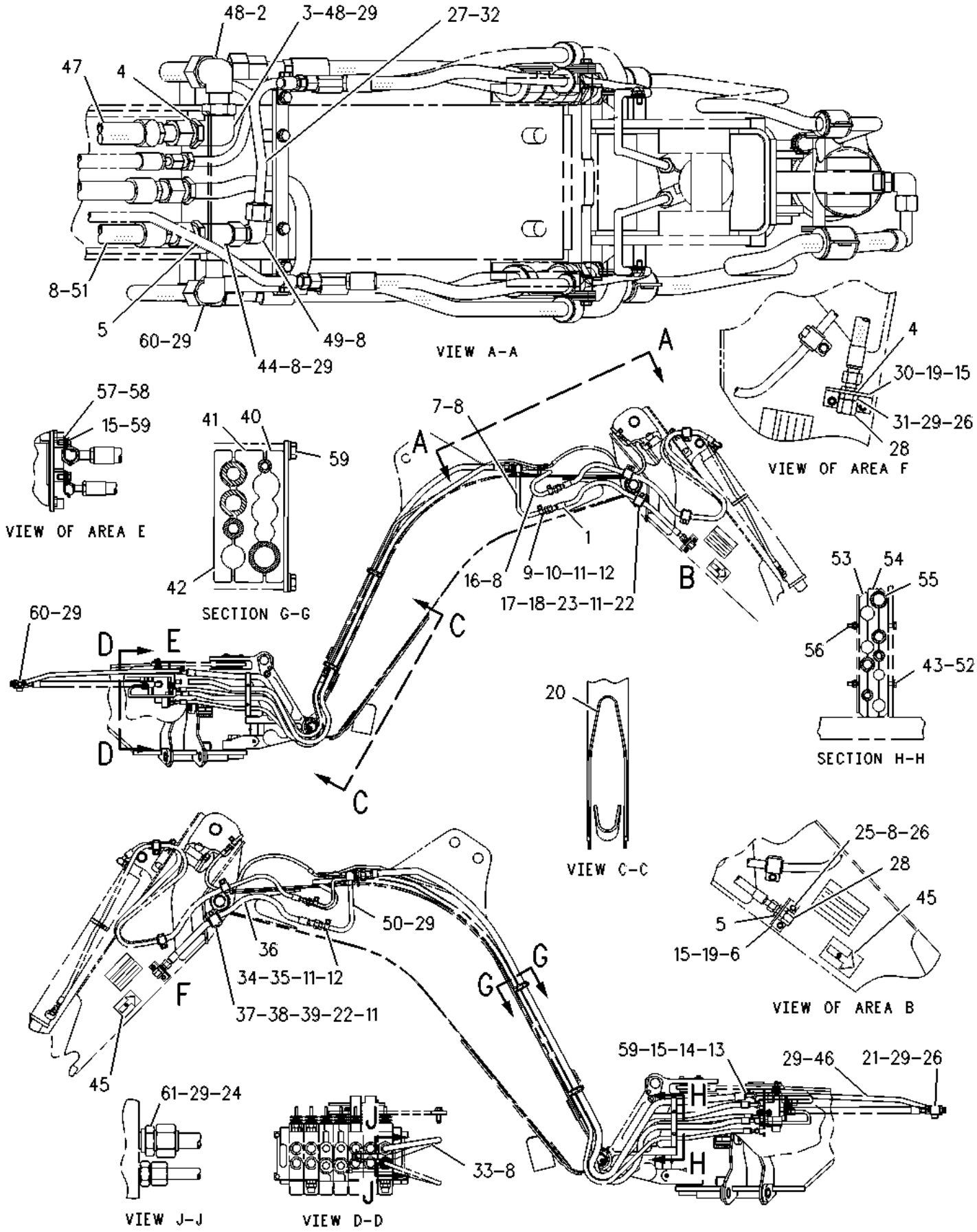

1 NPR I 8W-5149 1 HOSE AS

2	NPR	6V-9855	1	ELBOW
3	NPR	3E-7426	1	ELBOW
4	NPR	6V-9172	2	NUT (1-7/16-12-THD)
5	NPR	2P-1293	2	LOCKNUT (1-3/16-12-THD)
6	NPR	109-1260	1	BRACKET
7	NPR	110-7709	1	TUBE AS
8	NPR	6V-9746	7	SEAL-O-RING
9	NPR	7S-3916	1	CLIP (TAB)
10	NPR	7S-3919	1	CLIP (SLOT)
11	NPR	8T-4223	4	WASHER-HARD (13.5X25.5X3-MM THK)
12	NPR M	8T-4192	2	BOLT (M12X1.75X25-MM)
13	NPR	8T-1889	1	CLIP (SLOT)
14	NPR	8T-1890	1	CLIP (TAB)
15	NPR	8T-4121	7	WASHER-HARD (11X21X2.5-MM THK)
16	NPR	106-0843	1	TUBE AS
17	NPR	5P-8112	1	GROMMET
18	NPR	5P-7466	1	CLIP (SLOT)
19	NPR M	8T-4136	4	BOLT (M10X1.5X25-MM)
20	NPR	106-0425	1	PLATE AS (WORK TOOL REST)
21	NPR	109-2953	1	CONNECTOR
22	NPR M	8T-4139	2	BOLT (M12X1.75X30-MM)
23	NPR	5P-7467	1	CLIP (TAB)
24	NPR	3D-2824	1	SEAL-O-RING
25	NPR	108-3872	1	CONNECTOR
26	NPR	7M-8485	3	SEAL-O-RING

27	NPR	110-7713	1	TUBE AS
28	NPR	123-7637	2	CAP
29	NPR	5K-9090	9	SEAL-O-RING
30	NPR	107-6708	1	BRACKET
31	NPR	107-6709	1	CONNECTOR
32	NPR	6V-8398	1	SEAL-O-RING
33	NPR	123-3201	1	TUBE AS
34	NPR	8S-0023	1	CLIP (SLOT)
35	NPR	8S-0024	1	CLIP (TAB)
36	NPR I	106-0409	1	HOSE AS
37	NPR	5P-8444	1	GROMMET
38	NPR	5P-7468	1	CLIP (SLOT)
39	NPR	5P-7469	1	CLIP (TAB)
40	NPR	106-0411	2	BLOCK
41	NPR	106-0412	2	BLOCK
42	NPR	106-0413	2	BLOCK
43	NPR M	7X-2538	2	BOLT (M8X1.25X100-MM)
44	NPR	3E-7443	1	TEE-UNION
45	NPR	101-0863	2	FILM-INSTRUCTION (RETURN FLOW)
46	NPR	124-7633	1	TUBE AS
47	NPR I	124-7728	1	HOSE AS
48	NPR	6V-8400	2	SEAL-O-RING
49	NPR	6V-9853	1	ELBOW
50	NPR	110-7710	1	TUBE AS
51	NPR I	106-0405	1	HOSE AS

52	NPR	8T-4224	4	WASHER-HARD (8.8X16X2-MM THK)
53	NPR	106-0414	1	BLOCK
54	NPR	106-0415	1	BLOCK
55	NPR	106-0416	1	BLOCK
56	NPR M	6V-9189	2	LOCKNUT (M8X1.25-THD)
57	NPR	8T-1891	1	CLIP (SLOT)
58	NPR	8T-1892	1	CLIP (TAB)
59	NPR M	8T-4137	7	BOLT (M10X1.5X20-MM)
60	NPR	6V-9854	2	ELBOW (SWIVEL)
61	NPR	6V-8714	1	CONNECTOR

Key:

I - REFER TO HYDRAULIC INFORMATION SYSTEM
M - METRIC PART

169-0004 KIT-AUXILIARY LINES --S/N 4ZN16044-50156--FIELD INSTALLED

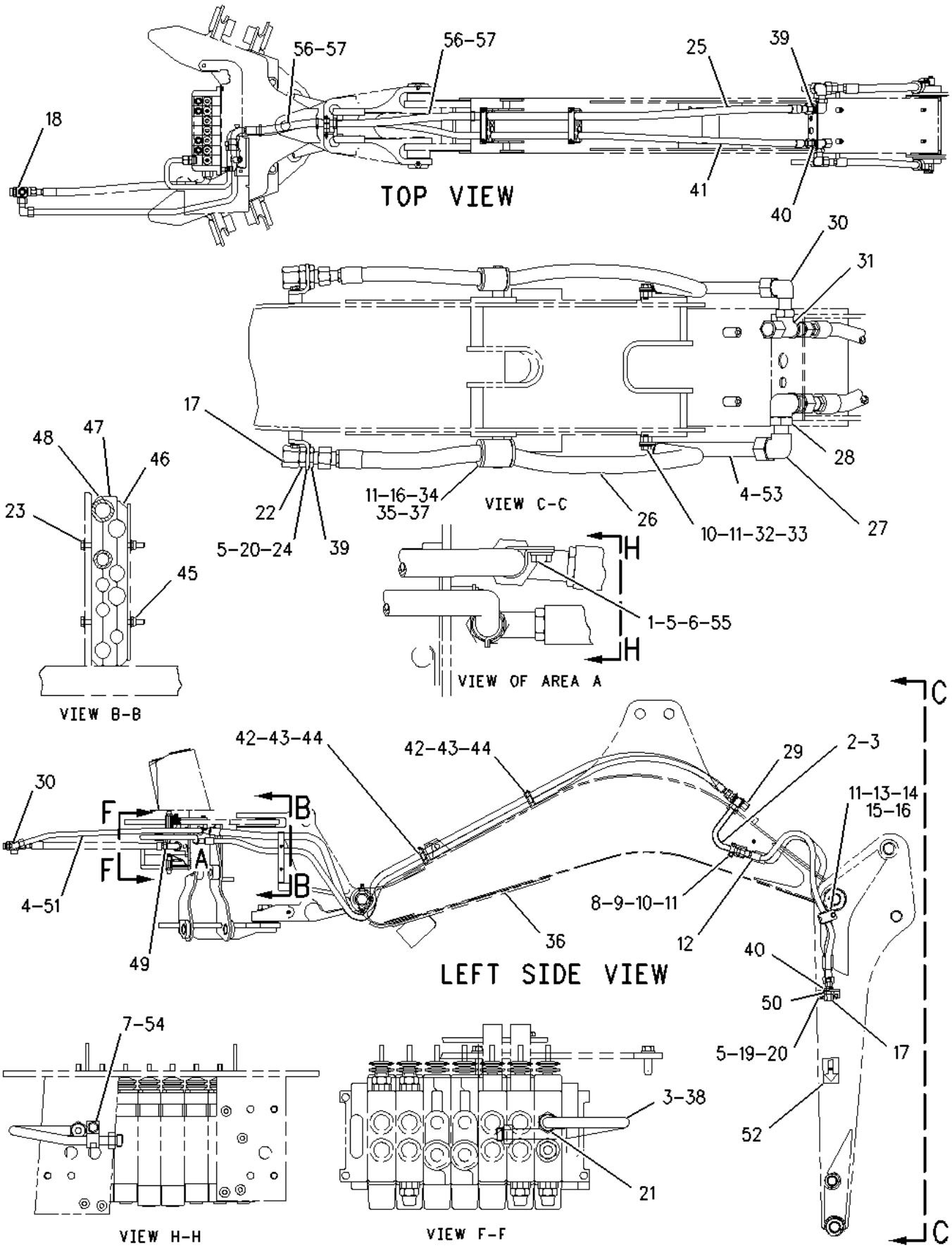

1 NPR 8T-1889 1 CLIP (SLOT)

2 NPR 110-7709 1 TUBE AS

3	NPR	6V-9746	2	SEAL-O-RING
4	NPR	5K-9090	2	SEAL-O-RING
5	NPR	8T-4121	5	WASHER-HARD (11X21X2.5-MM THK)
6	NPR	8T-1890	1	CLIP (TAB)
7	NPR	8T-1891	1	CLIP (SLOT)
8	NPR	7S-3916	1	CLIP (TAB)
9	NPR	7S-3919	1	CLIP (SLOT)
10	NPR M	8T-4192	2	BOLT (M12X1.75X25-MM)
11	NPR	8T-4223	4	WASHER-HARD (13.5X25.5X3-MM THK)
12	NPR I	168-8493	1	HOSE AS
13	NPR	5P-7467	1	CLIP (TAB)
14	NPR	5P-7466	1	CLIP (SLOT)
15	NPR	5P-8112	1	GROMMET
16	NPR M	8T-4139	2	BOLT (M12X1.75X30-MM)
17	NPR	123-7637	2	CAP
18	NPR	150-3054	1	CONNECTOR AS
	NPR	5K-9090	3	SEAL-O-RING
	NPR	7M-8485	1	SEAL-O-RING
	NPR	109-2953	1	CONNECTOR
19	NPR	109-1260	1	BRACKET
20	NPR M	8T-4136	4	BOLT (M10X1.5X25-MM)
21	NPR	148-8317	1	CONNECTOR AS
	NPR	3D-2824	1	SEAL-O-RING
	NPR	5K-9090	1	SEAL-O-RING
	NPR	6V-8714	1	CONNECTOR

22 NPR 150-3052 1 CONNECTOR AS

NPR 5K-9090 1 SEAL-O-RING

NPR 7M-8485 1 SEAL-O-RING

NPR 107-6709 1 CONNECTOR

23 NPR M 7X-2538 2 BOLT (M8X1.25X100-MM)

24 NPR 107-6708 1 BRACKET

25 NPR I 159-1551 1 HOSE AS

26 NPR I 106-0409 1 HOSE AS

27 NPR 148-8387 1 ELBOW AS

NPR 6V-8400 1 SEAL-O-RING

NPR 6V-9855 1 ELBOW

28 NPR 148-8386 1 ELBOW AS

NPR 3E-7426 1 ELBOW

NPR 5K-9090 1 SEAL-O-RING

NPR 6V-8400 1 SEAL-O-RING

29 NPR 6V-9832 1 CAP AS

30 NPR 148-8352 2 ELBOW AS

(EACH INCLUDES)

NPR 5K-9090 1 SEAL-O-RING

NPR 6V-9854 1 ELBOW (SWIVEL)

31 NPR 148-8450 1 TEE AS

NPR 3E-7443 1 TEE-UNION

NPR 5K-9090 1 SEAL-O-RING

NPR 6V-9746 2 SEAL-O-RING

32 NPR 8S-0023 1 CLIP (SLOT)

33 NPR 8S-0024 1 CLIP (TAB)

34 NPR 5P-7468 1 CLIP (SLOT)

35 NPR 5P-7469 1 CLIP (TAB)

36 NPR 106-0425 1 PLATE AS (WORK TOOL REST)

37 NPR 5P-8444 1 GROMMET

38 160-0248 1 TUBE AS

39 NPR 6V-9172 2 NUT (1-7/16-12-THD)

40 NPR 2P-1293 2 LOCKNUT (1-3/16-12-THD)

41 NPR I 106-0405 1 HOSE AS

42 NPR 106-0411 2 BLOCK

43 NPR 106-0412 2 BLOCK

44 NPR 106-0413 2 BLOCK

45 NPR M 6V-9189 2 LOCKNUT (M8X1.25-THD)

46 NPR 106-0414 1 BLOCK

47 NPR 106-0415 1 BLOCK

48 NPR 106-0416 1 BLOCK

49 NPR 148-8408 1 PLUG AS

NPR 3D-2824 1 SEAL-O-RING

NPR 9S-4183 1 PLUG-O RING

50 NPR 150-3053 1 CONNECTOR AS

NPR 6V-9746 1 SEAL-O-RING

NPR 7M-8485 1 SEAL-O-RING

NPR 108-3872 1 CONNECTOR

51 NPR 124-7633 1 TUBE AS

52 NPR 101-0863 2 FILM-INSTRUCTION (RETURN FLOW)

53	NPR	110-7710	1	TUBE AS
54	NPR	8T-1892	1	CLIP (TAB)
55	NPR M	8T-4137	1	BOLT (M10X1.5X20-MM)
56	NPR EG	160-2247		SLEEVE-ABRASION (40.95IN)
57	NPR	096-0061	4	STRAP-CABLE

Key:

E - ORDER BY THE CENTIMETER
G - ORDER BY THE INCH
I - REFER TO HYDRAULIC INFORMATION SYSTEM
M - METRIC PART

169-0007 KIT-AUXILIARY LINES --S/N 4ZN16044-50156--FIELD INSTALLED

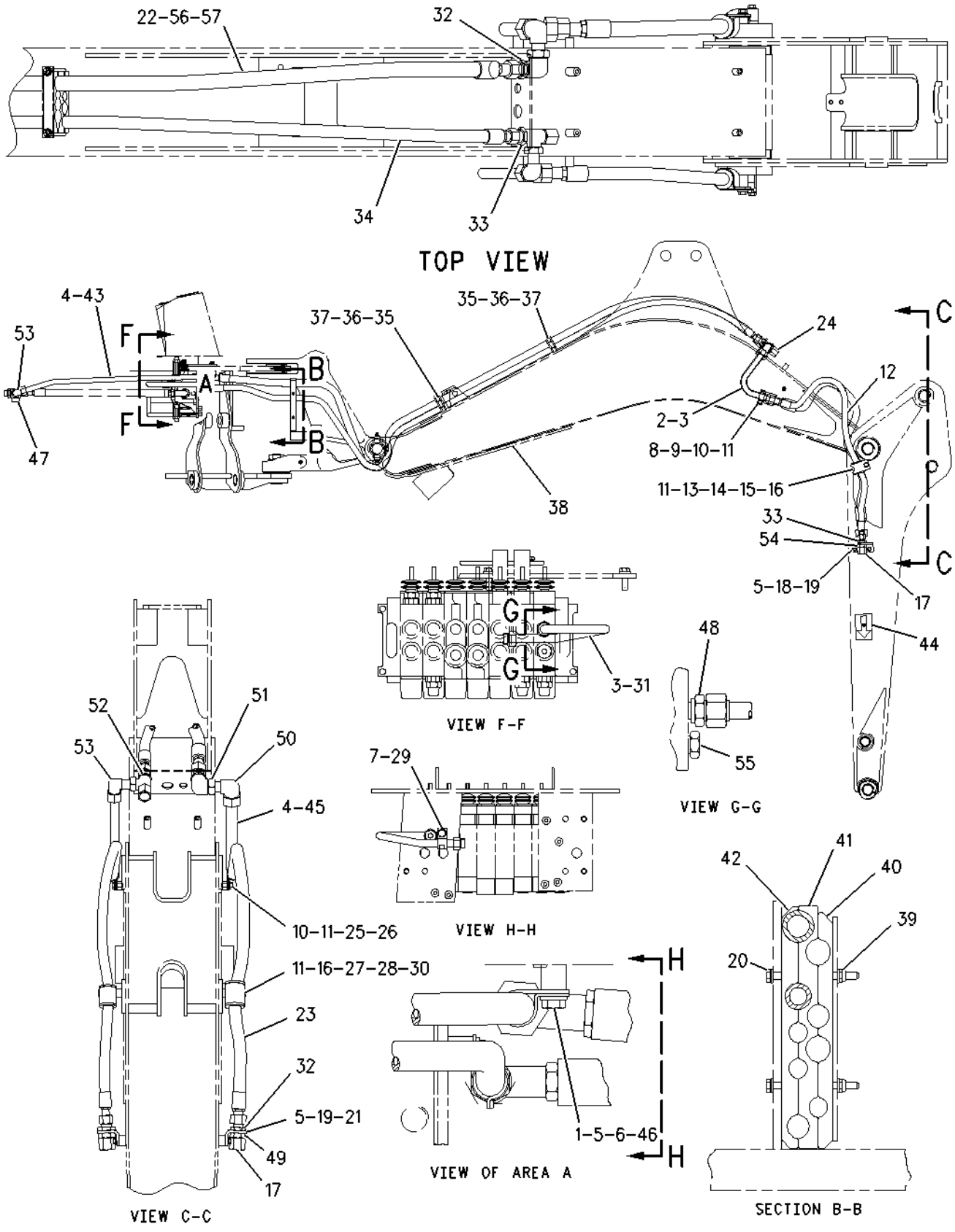

1 NPR 8T-1889 1 CLIP (SLOT)

2 NPR 110-7709 1 TUBE AS

3 NPR 6V-9746 2 SEAL-O-RING

4	NPR	5K-9090	2	SEAL-O-RING
5	NPR	8T-4121	5	WASHER-HARD (11X21X2.5-MM THK)
6	NPR	8T-1890	1	CLIP (TAB)
7	NPR	8T-1891	1	CLIP (SLOT)
8	NPR	7S-3916	1	CLIP (TAB)
9	NPR	7S-3919	1	CLIP (SLOT)
10	NPR M	8T-4192	2	BOLT (M12X1.75X25-MM)
11	NPR	8T-4223	4	WASHER-HARD (13.5X25.5X3-MM THK)
12	NPR I	168-8493	1	HOSE AS
13	NPR	5P-7467	1	CLIP (TAB)
14	NPR	5P-7466	1	CLIP (SLOT)
15	NPR	5P-8112	1	GROMMET
16	NPR M	8T-4139	2	BOLT (M12X1.75X30-MM)
17	NPR	123-7637	2	CAP
18	NPR	109-1260	1	BRACKET
19	NPR M	8T-4136	4	BOLT (M10X1.5X25-MM)
20	NPR M	7X-2538	2	BOLT (M8X1.25X100-MM)
21	NPR	107-6708	1	BRACKET
22	NPR I	159-1551	1	HOSE AS
23	NPR I	106-0409	1	HOSE AS
24	NPR	6V-9832	1	CAP AS
25	NPR	8S-0023	1	CLIP (SLOT)
26	NPR	8S-0024	1	CLIP (TAB)
27	NPR	5P-7468	1	CLIP (SLOT)
28	NPR	5P-7469	1	CLIP (TAB)

29	NPR	8T-1892	1	CLIP (TAB)
30	NPR	5P-8444	1	GROMMET
31		160-0248	1	TUBE AS
32	NPR	6V-9172	2	NUT (1-7/16-12-THD)
33	NPR	2P-1293	2	LOCKNUT (1-3/16-12-THD)
34	NPR I	106-0405	1	HOSE AS
35	NPR	106-0411	2	BLOCK
36	NPR	106-0412	2	BLOCK
37	NPR	106-0413	2	BLOCK
38	NPR	106-0425	1	PLATE AS (WORK TOOL REST)
39	NPR M	6V-9189	2	LOCKNUT (M8X1.25-THD)
40	NPR	106-0414	1	BLOCK
41	NPR	106-0415	1	BLOCK
42	NPR	106-0416	1	BLOCK
43	NPR	124-7633	1	TUBE AS
44	NPR	101-0863	2	FILM-INSTRUCTION (RETURN FLOW)
45	NPR	110-7710	1	TUBE AS
46	NPR M	8T-4137	1	BOLT (M10X1.5X20-MM)
47	NPR	150-3054	1	CONNECTOR AS
	NPR	5K-9090	3	SEAL-O-RING
	NPR	7M-8485	1	SEAL-O-RING
	NPR	109-2953	1	CONNECTOR
48	NPR	148-8317	1	CONNECTOR AS
	NPR	3D-2824	1	SEAL-O-RING
	NPR	5K-9090	1	SEAL-O-RING

	NPR	6V-8714	1	CONNECTOR
49	NPR	150-3052	1	CONNECTOR AS
	NPR	5K-9090	1	SEAL-O-RING
	NPR	7M-8485	1	SEAL-O-RING
	NPR	107-6709	1	CONNECTOR
50	NPR	148-8387	1	ELBOW AS
	NPR	6V-8400	1	SEAL-O-RING
	NPR	6V-9855	1	ELBOW
51	NPR	148-8386	1	ELBOW AS
	NPR	3E-7426	1	ELBOW
	NPR	5K-9090	1	SEAL-O-RING
	NPR	6V-8400	1	SEAL-O-RING
52	NPR	148-8450	1	TEE AS
	NPR	3E-7443	1	TEE-UNION
	NPR	5K-9090	1	SEAL-O-RING
	NPR	6V-9746	2	SEAL-O-RING
53	NPR	148-8352	2	ELBOW AS
	(EACH INCLUDES)			
	NPR	5K-9090	1	SEAL-O-RING
	NPR	6V-9854	1	ELBOW (SWIVEL)
54	NPR	150-3053	1	CONNECTOR AS
	NPR	6V-9746	1	SEAL-O-RING
	NPR	7M-8485	1	SEAL-O-RING
	NPR	108-3872	1	CONNECTOR
55	NPR	148-8408	1	PLUG AS

	NPR	3D-2824	1	SEAL-O-RING
	NPR	9S-4183	1	PLUG-O RING
56	NPR BG	160-2247		SLEEVE-ABRASION (40.95IN)
57	NPR	096-0061	4	STRAP-CABLE

Key:

B - USE AS REQUIRED
G - ORDER BY THE INCH
I - REFER TO HYDRAULIC INFORMATION SYSTEM
M - METRIC PART

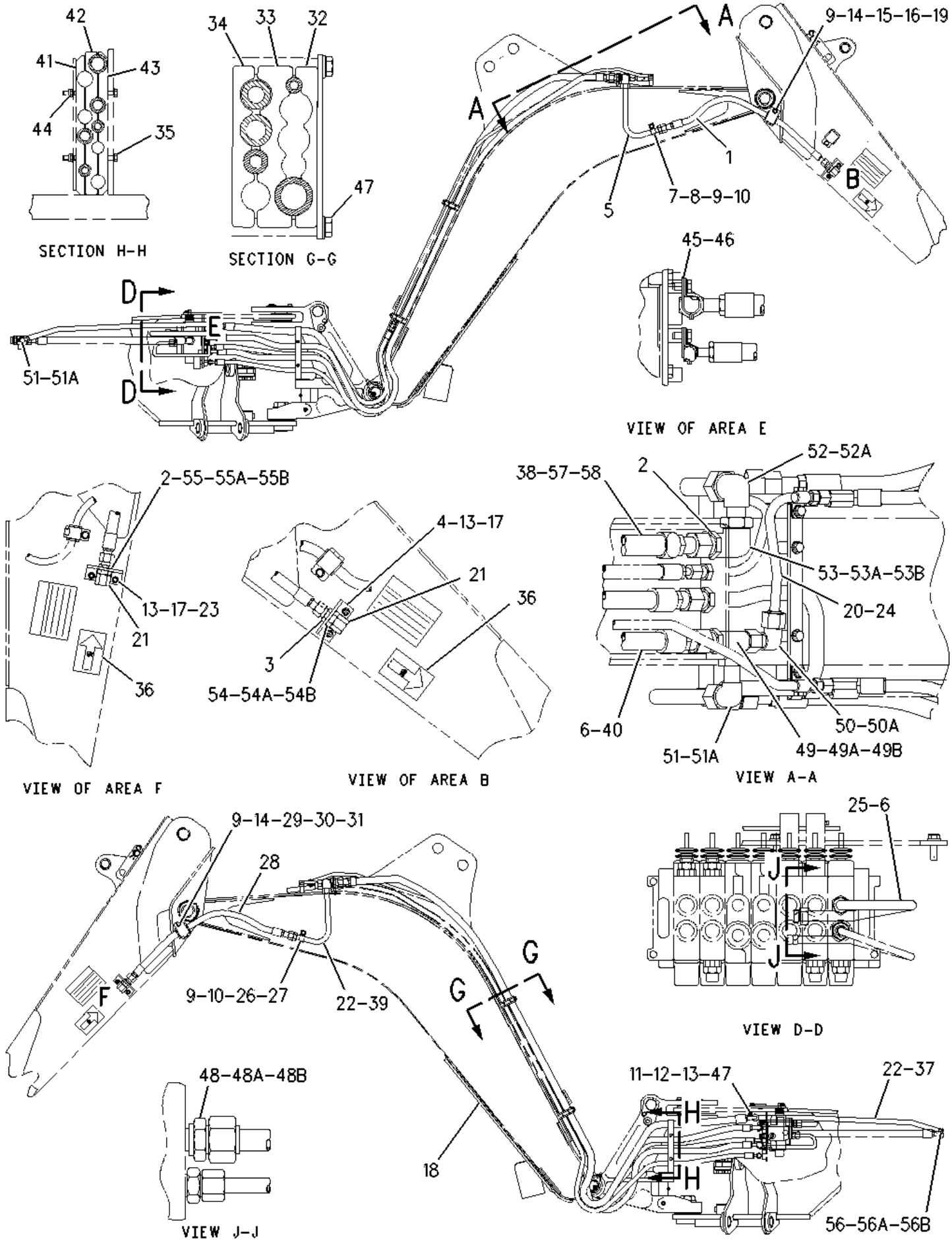
42
41
43
44
35
SECTION H-H
34
33
32
47
SECTION G-G
A
A
9-14-15-16-19
1
5
7-8-9-10
B
45-46
D
E
D
51-51A
VIEW OF AREA E
2-55-55A-55B
13-17-23
21
36
VIEW OF AREA F
4-13-17
21
36
3
54-54A-54B
VIEW OF AREA B
38-57-58
2
52-52A
53-53A-53B
20-24
6-40
50-50A
51-51A
49-49A-49B
VIEW A-A
9-14-29-30-31
28
F
9-10-26-27
22-39
G
G
25-6
J
J
VIEW D-D
48-48A-48B
VIEW J-J
18
11-12-13-47
H
H
22-37
56-56A-56B

2	NPR	6V-9172	2	NUT (1-7/16-12-THD)
3	NPR	2P-1293	2	LOCKNUT (1-3/16-12-THD)
4	NPR	109-1260	1	BRACKET
5	NPR	110-7709	1	TUBE AS
6	NPR	6V-9746	2	SEAL-O-RING
7	NPR	7S-3916	1	CLIP (TAB)
8	NPR	7S-3919	1	CLIP (SLOT)
9	NPR	8T-4223	4	WASHER-HARD (13.5X25.5X3-MM THK)
10	NPR M	8T-4192	2	BOLT (M12X1.75X25-MM)
11	NPR	8T-1889	1	CLIP (SLOT)
12	NPR	8T-1890	1	CLIP (TAB)
13	NPR	8T-4121	5	WASHER-HARD (11X21X2.5-MM THK)
14	NPR M	8T-4184	2	BOLT (M12X1.75X45-MM)
15	NPR	5P-8112	1	GROMMET
16	NPR	5P-7466	1	CLIP (SLOT)
17	NPR M	8T-4136	4	BOLT (M10X1.5X25-MM)
18	NPR	106-0425	1	PLATE AS (WORK TOOL REST)
19	NPR	5P-7467	1	CLIP (TAB)
20	NPR	110-7713	1	TUBE AS
21	NPR	123-7637	2	CAP
22	NPR	5K-9090	2	SEAL-O-RING
23	NPR	107-6708	1	BRACKET
24	NPR	6V-8398	1	SEAL-O-RING
25		160-0248	1	TUBE AS
26	NPR	8S-0023	1	CLIP (SLOT)

27	NPR	8S-0024	1	CLIP (TAB)
28	NPR I	106-0409	1	HOSE AS
29	NPR	5P-8444	1	GROMMET
30	NPR	5P-7468	1	CLIP (SLOT)
31	NPR	5P-7469	1	CLIP (TAB)
32	NPR	106-0411	2	BLOCK
33	NPR	106-0412	2	BLOCK
34	NPR	106-0413	2	BLOCK
35	NPR M	7X-2538	2	BOLT (M8X1.25X100-MM)
36	NPR	101-0863	2	FILM-INSTRUCTION (RETURN FLOW)
37	NPR	124-7633	1	TUBE AS
38	NPR I	159-1551	1	HOSE AS
39	NPR	110-7710	1	TUBE AS
40	NPR I	106-0405	1	HOSE AS
41	NPR	106-0414	1	BLOCK
42	NPR	106-0415	1	BLOCK
43	NPR	106-0416	1	BLOCK
44	NPR M	6V-9189	2	LOCKNUT (M8X1.25-THD)
45	NPR	8T-1891	1	CLIP (SLOT)
46	NPR	8T-1892	1	CLIP (TAB)
47	NPR M	8T-4137	5	BOLT (M10X1.5X20-MM)
48	NPR	3D-2824	1	SEAL-O-RING
48A	NPR	5K-9090	1	SEAL-O-RING
48B	NPR	6V-8714	1	CONNECTOR
49	NPR	3E-7443	1	TEE-UNION

49A	NPR	5K-9090	1	SEAL-O-RING
49B	NPR	6V-9746	2	SEAL-O-RING
50	NPR	6V-9746	1	SEAL-O-RING
50A	NPR	6V-9853	1	ELBOW
51	NPR	5K-9090	2	SEAL-O-RING
51A	NPR	6V-9854	2	ELBOW (SWIVEL)
52	NPR	6V-8400	1	SEAL-O-RING
52A	NPR	6V-9855	1	ELBOW
53	NPR	3E-7426	1	ELBOW
53A	NPR	5K-9090	1	SEAL-O-RING
53B	NPR	6V-8400	1	SEAL-O-RING
54	NPR	6V-9746	1	SEAL-O-RING
54A	NPR	7M-8485	1	SEAL-O-RING
54B	NPR	108-3872	1	CONNECTOR
55	NPR	5K-9090	1	SEAL-O-RING
55A	NPR	7M-8485	1	SEAL-O-RING
55B	NPR	107-6709	1	CONNECTOR
56	NPR	5K-9090	3	SEAL-O-RING
56A	NPR	7M-8485	1	SEAL-O-RING
56B	NPR	109-2953	1	CONNECTOR
57	NPR E	160-2247		SLEEVE-ABRASION (68CM)
58	NPR	096-0061	2	STRAP-CABLE

Key:

E - ORDER BY THE CENTIMETER
I - REFER TO HYDRAULIC INFORMATION SYSTEM
M - METRIC PART

8Y-7474 LINES GP-BACKHOE --S/N 4ZN16044-50156--PART OF 154-5437 HYDRAULIC AR

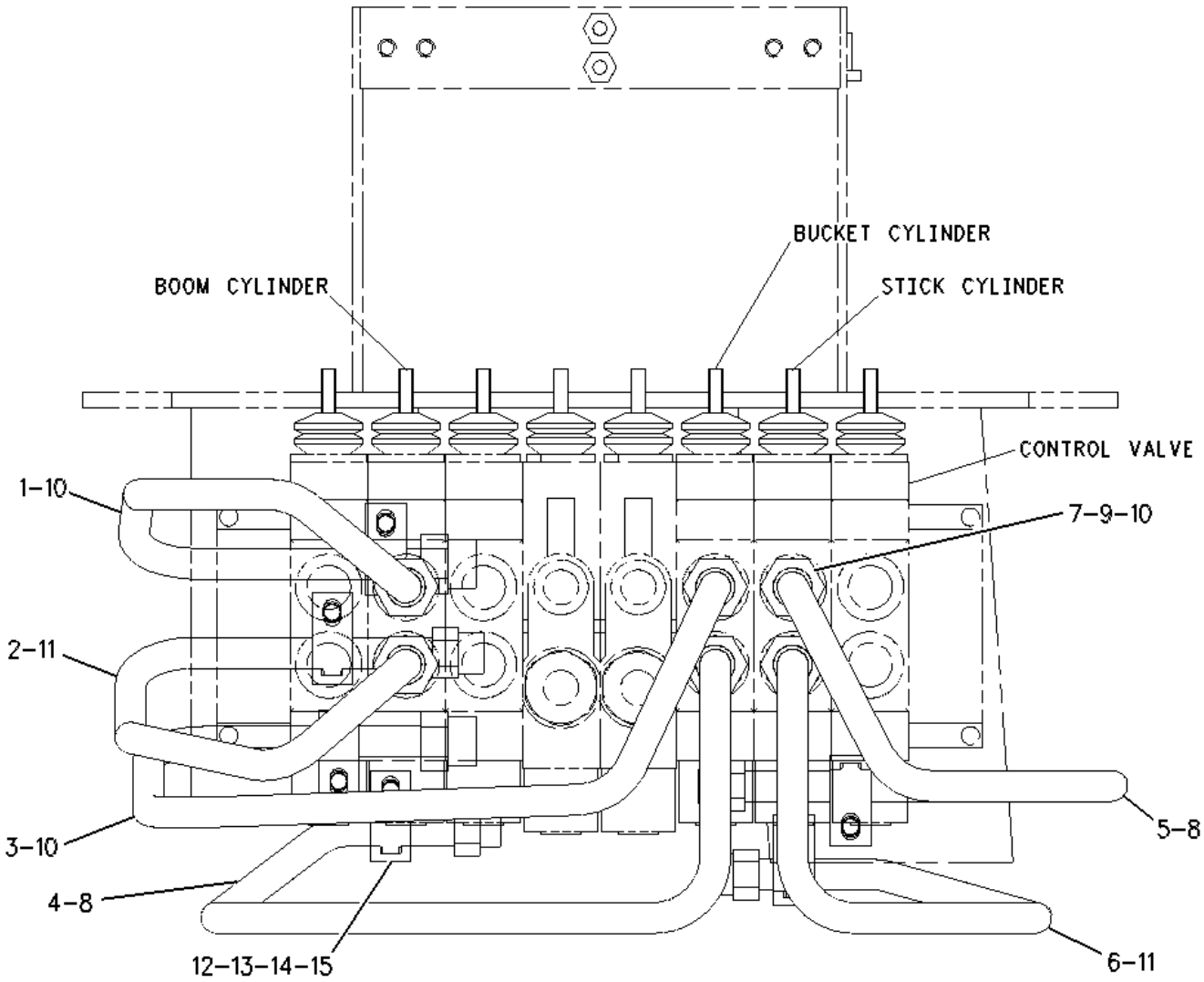

1 NPR 141-7533 1 TUBE AS

2 NPR 113-7874 1 TUBE AS

3 NPR 113-7875 1 TUBE AS

4 NPR 113-7876 1 TUBE AS

5 NPR 116-2299 1 TUBE AS

6 NPR 116-2300 1 TUBE AS

7 NPR 3D-2824 6 SEAL-O-RING

8 NPR 6V-8398 2 SEAL-O-RING

9 NPR 6V-8637 6 CONNECTOR

10 NPR 6V-9746 8 SEAL-O-RING

11	NPR	7J-9108	2	SEAL-O-RING
12	NPR	8T-1887	6	CLIP (SLOT)
13	NPR	8T-1888	6	CLIP (TAB)
14	NPR	8T-4121	6	WASHER-HARD (11X21X2.5-MM THK)
15	NPR M	8T-4137	6	BOLT (M10X1.5X20-MM)

Key:

M - METRIC PART

PART OF 154-5306, 154-5308 BACKHOE AR-STANDARD STICK

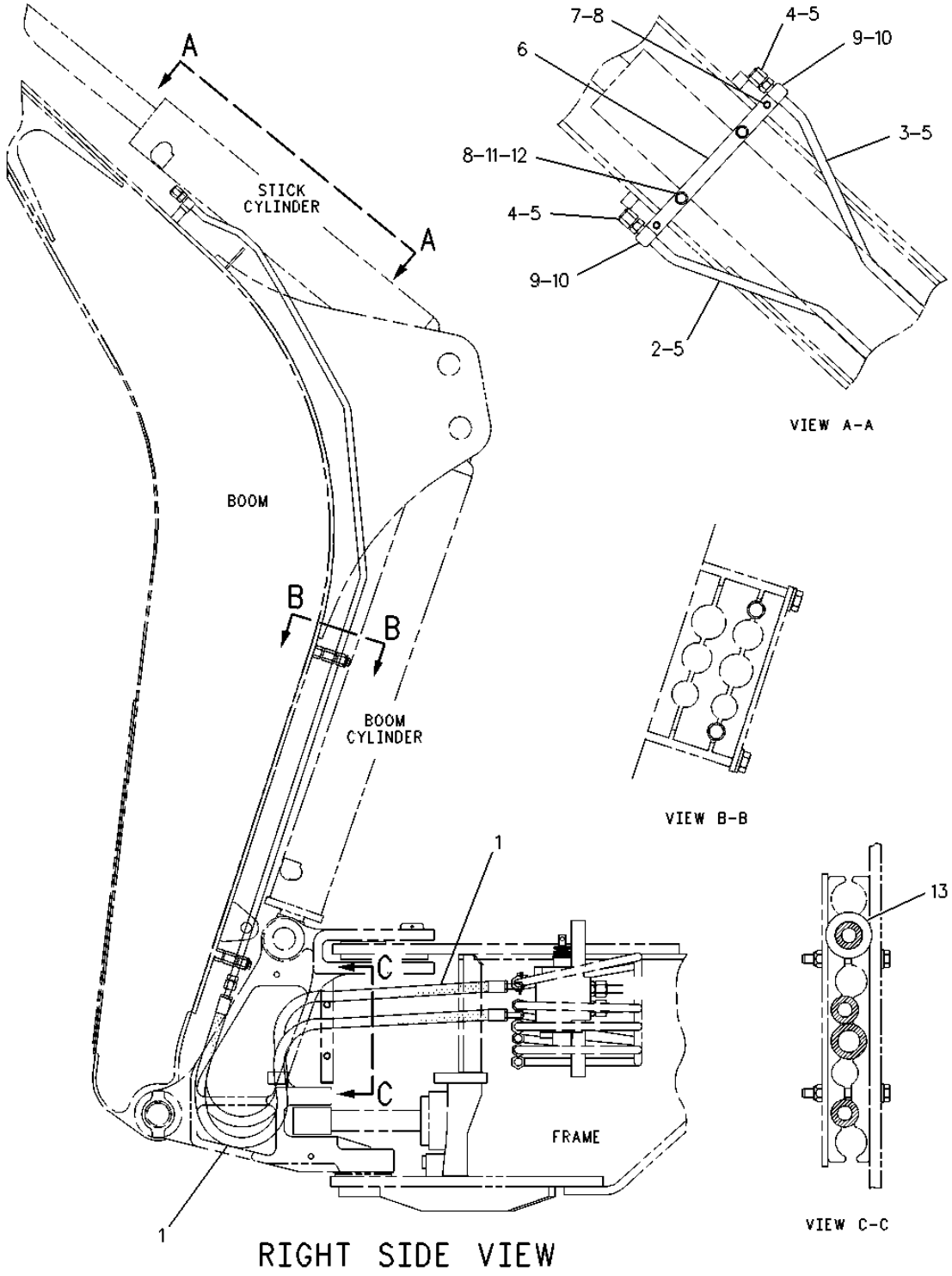

1 NPR I 9R-9926 2 HOSE AS

2 NPR 9R-8968 1 TUBE AS

3 NPR 106-0844 1 TUBE AS

4 NPR 6V-9830 2 CAP AS

5 NPR 6V-8398 4 SEAL-O-RING

6	NPR	9R-9253	1	PLATE
7	NPR M	8T-4136	2	BOLT (M10X1.5X25-MM)
8	NPR	8T-4121	4	WASHER-HARD (11X21X2.5-MM THK)
9	NPR	9R-1004	2	CLIP (TAB)
10	NPR	9R-1005	2	CLIP (SLOT)
11	NPR M	8T-4195	2	BOLT (M10X1.5X30-MM)
12	NPR	2M-6102	2	PIPE
13	NPR	122-0450	2	GROMMET

Key:

I - REFER TO HYDRAULIC INFORMATION SYSTEM
M - METRIC PART

PART OF 154-5303, 154-5305 BACKHOE AR-STANDARD STICK

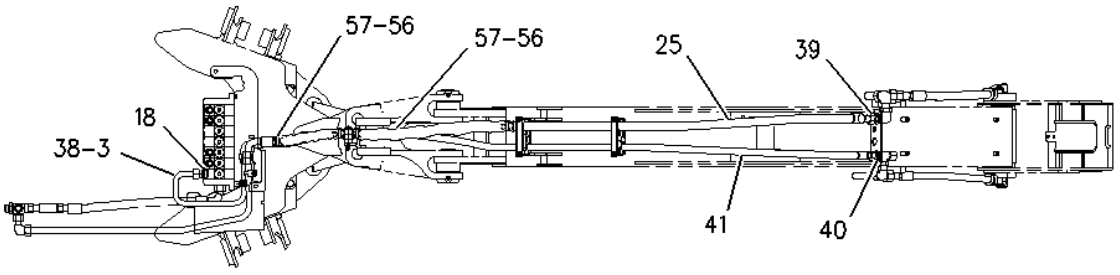

TOP VIEW

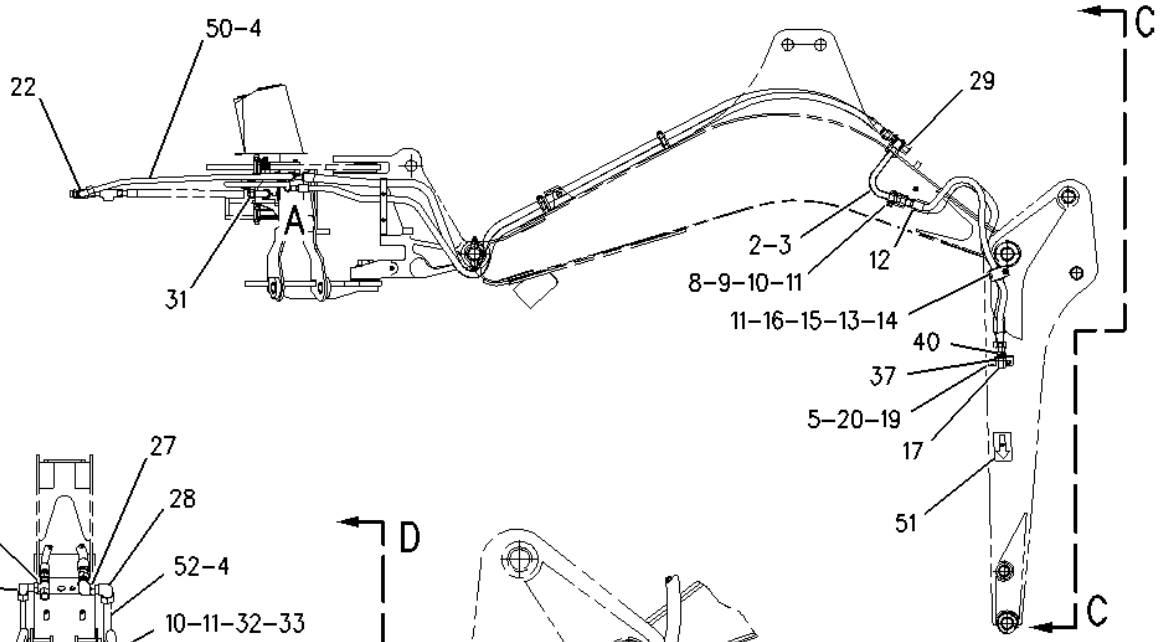

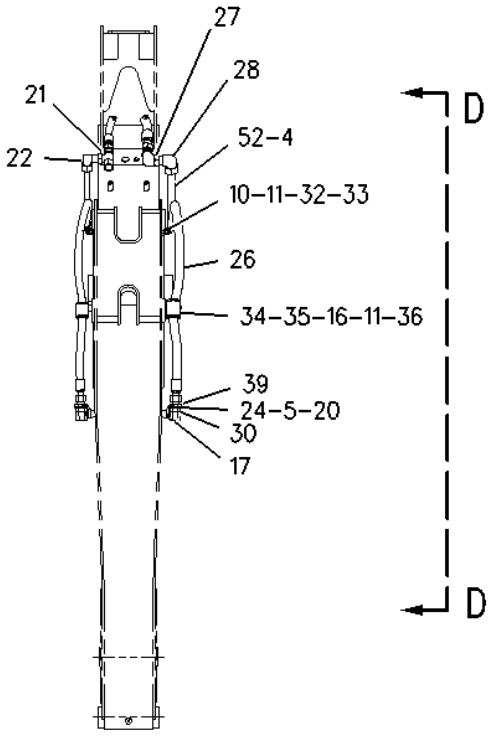

VIEW C-C

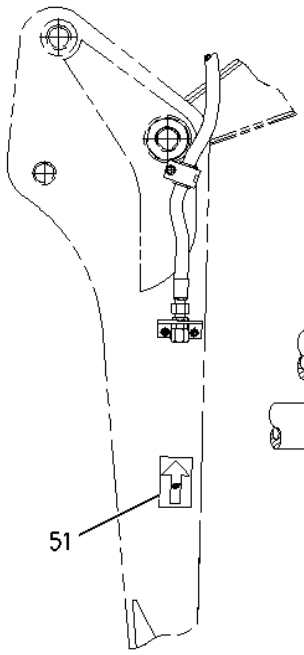

VIEW D-D

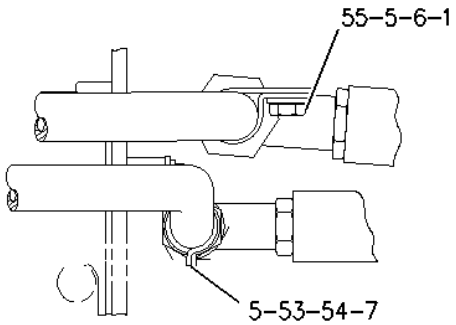

VIEW OF AREA A

1 NPR 8T-1889 1 CLIP (SLOT)

2 NPR 110-7709 1 TUBE AS

3 NPR 6V-9746 2 SEAL-O-RING

4 NPR 5K-9090 2 SEAL-O-RING

5	NPR	8T-4121	6	WASHER-HARD (11X21X2.5-MM THK)
6	NPR	8T-1890	1	CLIP (TAB)
7	NPR	8T-1891	1	CLIP (SLOT)
8	NPR	7S-3916	1	CLIP (TAB)
9	NPR	7S-3919	1	CLIP (SLOT)
10	NPR M	8T-4192	2	BOLT (M12X1.75X25-MM)
11	NPR	8T-4223	4	WASHER-HARD (13.5X25.5X3-MM THK)
12	NPR I	168-8493	1	HOSE AS
13	NPR	5P-7467	1	CLIP (TAB)
14	NPR	5P-7466	1	CLIP (SLOT)
15	NPR	5P-8112	1	GROMMET
16	NPR M	8T-4139	2	BOLT (M12X1.75X30-MM)
17	NPR	123-7637	2	CAP
18	NPR	148-8317	1	CONNECTOR AS
	NPR	3D-2824	1	SEAL-O-RING
	NPR	5K-9090	1	SEAL-O-RING
	NPR	6V-8714	1	CONNECTOR
19	NPR	109-1260	1	BRACKET
20	NPR M	8T-4136	4	BOLT (M10X1.5X25-MM)
21	NPR	148-8450	1	TEE AS
	NPR	3E-7443	1	TEE-UNION
	NPR	5K-9090	1	SEAL-O-RING
	NPR	6V-9746	2	SEAL-O-RING
22	NPR	148-8352	2	ELBOW AS
	(EACH INCLUDES)			

	NPR	5K-9090	1	SEAL-O-RING
	NPR	6V-9854	1	ELBOW (SWIVEL)
24	NPR	107-6708	1	BRACKET
25	NPR I	159-1551	1	HOSE AS
26	NPR I	106-0409	1	HOSE AS
27	NPR	148-8386	1	ELBOW AS
	NPR	3E-7426	1	ELBOW
	NPR	5K-9090	1	SEAL-O-RING
	NPR	6V-8400	1	SEAL-O-RING
28	NPR	148-8387	1	ELBOW AS
	NPR	6V-8400	1	SEAL-O-RING
	NPR	6V-9855	1	ELBOW
29	NPR	6V-9832	1	CAP AS
30	NPR	150-3052	1	CONNECTOR AS
	NPR	5K-9090	1	SEAL-O-RING
	NPR	7M-8485	1	SEAL-O-RING
	NPR	107-6709	1	CONNECTOR
31	NPR	148-8408	1	PLUG AS
	NPR	3D-2824	1	SEAL-O-RING
	NPR	9S-4183	1	PLUG-O RING
32	NPR	8S-0023	1	CLIP (SLOT)
33	NPR	8S-0024	1	CLIP (TAB)
34	NPR	5P-7468	1	CLIP (SLOT)
35	NPR	5P-7469	1	CLIP (TAB)
36	NPR	5P-8444	1	GROMMET

37	NPR	150-3053	1	CONNECTOR AS
	NPR	6V-9746	1	SEAL-O-RING
	NPR	7M-8485	1	SEAL-O-RING
	NPR	108-3872	1	CONNECTOR
38		160-0248	1	TUBE AS
39	NPR	6V-9172	2	NUT (1-7/16-12-THD)
40	NPR	2P-1293	2	LOCKNUT (1-3/16-12-THD)
41	NPR I	106-0405	1	HOSE AS
50	NPR	124-7633	1	TUBE AS
51	NPR	101-0863	2	FILM-INSTRUCTION (RETURN FLOW)
52	NPR	110-7710	1	TUBE AS
53	NPR M	8T-4191	1	BOLT (M10X1.5X16-MM)
54	NPR	8T-1892	1	CLIP (TAB)
55	NPR M	8T-4137	1	BOLT (M10X1.5X20-MM)
56	NPR G	160-2247		SLEEVE-ABRASION (40.95IN)
57	NPR	096-0061	4	STRAP-CABLE

Key:

G - ORDER BY THE INCH
I - REFER TO HYDRAULIC INFORMATION SYSTEM
M - METRIC PART

PART OF 154-5312, 154-5314 BACKHOE AR-EXTENDABLE STICK--Type 1

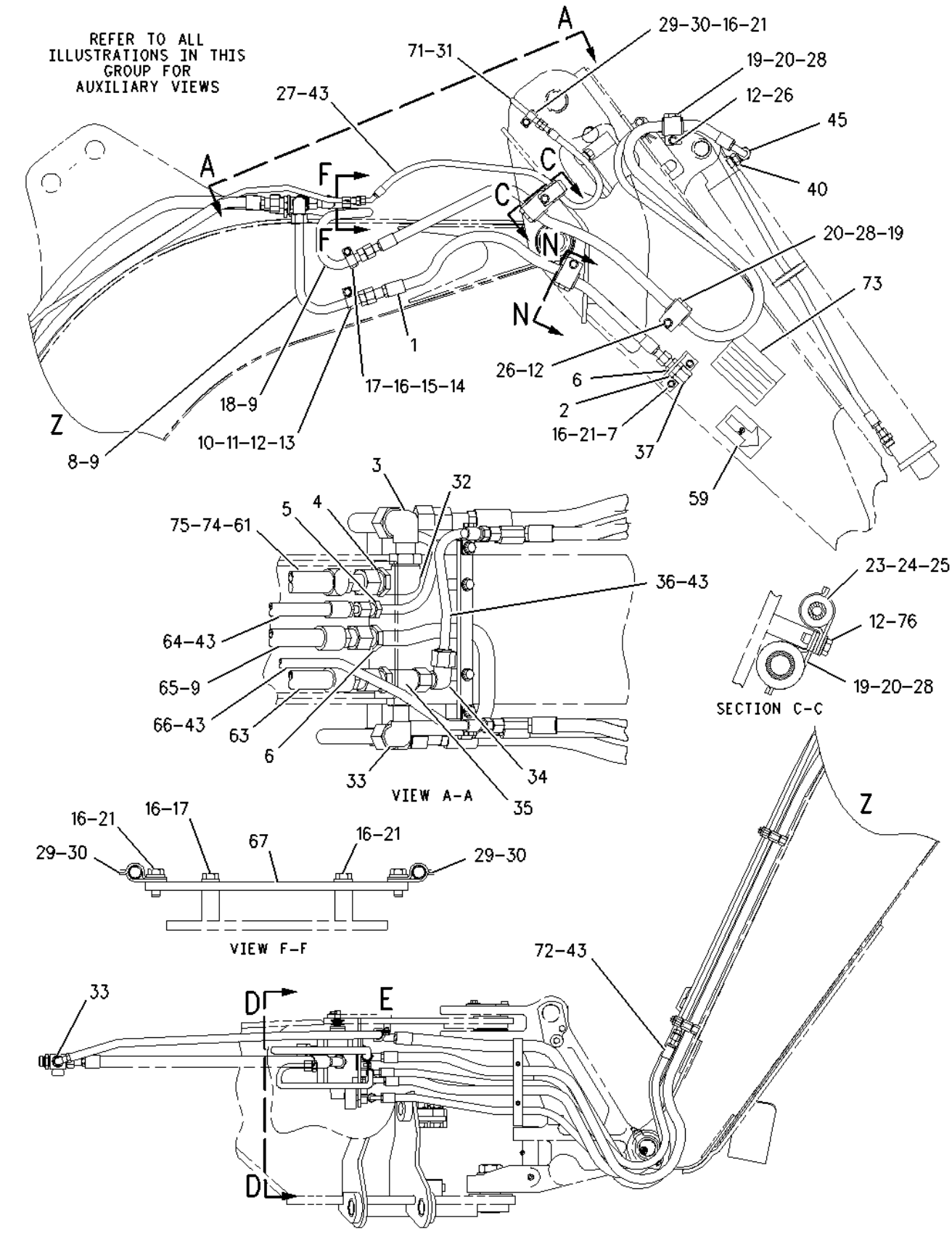

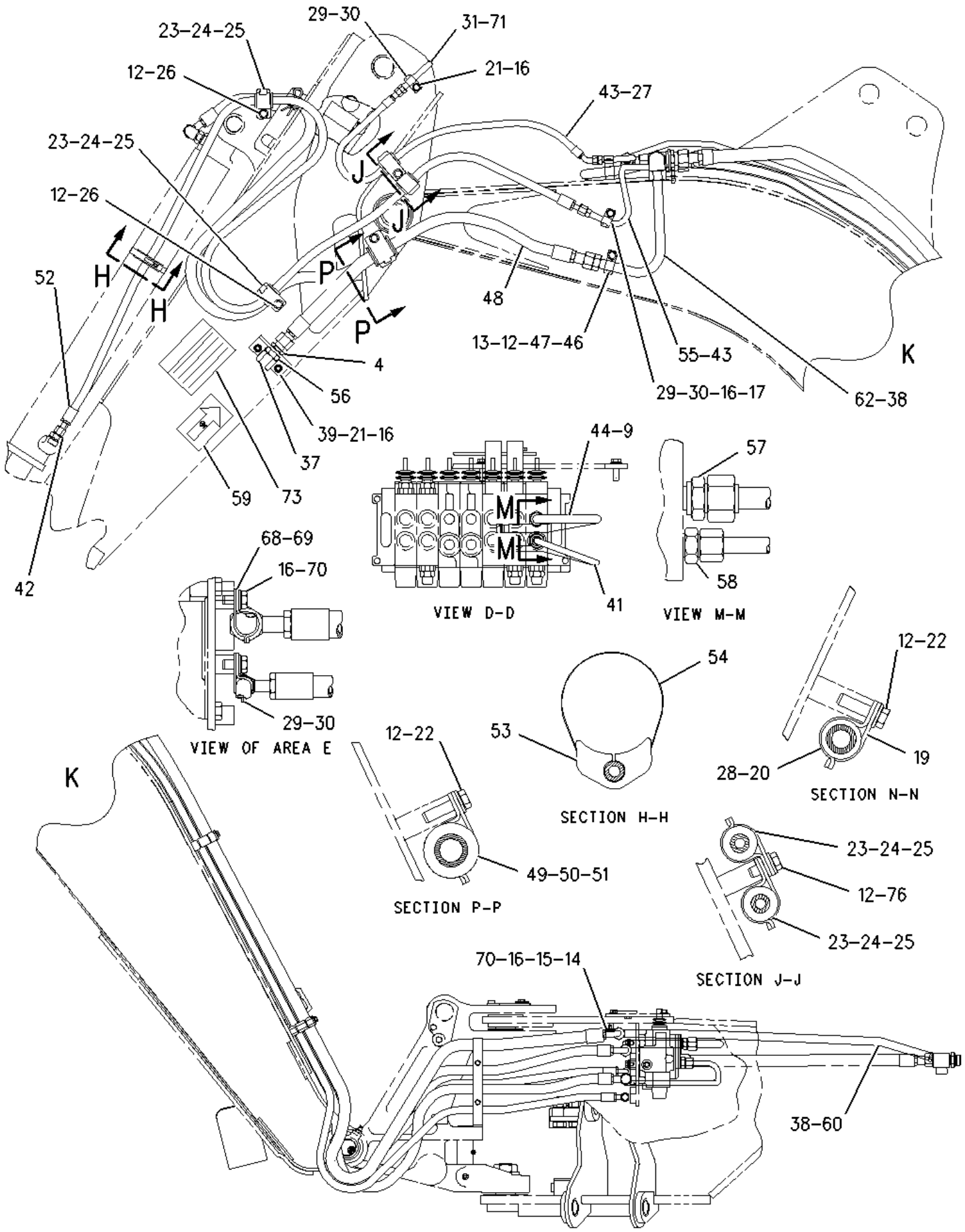
29-30
31-71
23-24-25
21-16
12-26
43-27
23-24-25
J
J
12-26
H
H
P
P
52
48
13-12-47-46
55-43
K
4
56
29-30-16-17
62-38
39-21-16
37
73
59
42
44-9
57
M
M
41
58
VIEW D-D
VIEW M-M
68-69
16-70
29-30
VIEW OF AREA E
54
53
12-22
19
28-20
SECTION N-N
SECTION H-H
12-22
49-50-51
SECTION P-P
K
23-24-25
12-76
23-24-25
SECTION J-J
70-16-15-14
38-60

1	NPR I	1	168-8493	1	HOSE AS
2	NPR	1	150-3053	1	CONNECTOR AS
	NPR	1	6V-9746	1	SEAL-O-RING
	NPR	1	7M-8485	1	SEAL-O-RING
	NPR	1	108-3872	1	CONNECTOR
3	NPR	1	148-8387	1	ELBOW AS
	NPR	1	6V-8400	1	SEAL-O-RING
	NPR	1	6V-9855	1	ELBOW
4	NPR	1,2	6V-9172	2	NUT (1-7/16-12-THD)
5	NPR	1	6V-9169	1	NUT-BULKHEAD (13/16-16-THD)
6	NPR	1	2P-1293	3	LOCKNUT (1-3/16-12-THD)
7	NPR	1	109-1260	1	BRACKET
8	NPR	1	110-7709	1	TUBE AS
9	NPR	1,2	6V-9746	4	SEAL-O-RING
10	NPR	1	7S-3916	1	CLIP (TAB)
11	NPR	1	7S-3919	1	CLIP (SLOT)
12	NPR	1,2	8T-4223	10	WASHER-HARD (13.5X25.5X3-MM THK)
13	NPR M	1,2	8T-4192	2	BOLT (M12X1.75X25-MM)
14	NPR	1,2	8T-1889	2	CLIP (SLOT)
15	NPR	1,2	8T-1890	2	CLIP (TAB)
16	NPR	1,2	8T-4121	15	WASHER-HARD (11X21X2.5-MM THK)
17	NPR M	1,2	8T-4195	4	BOLT (M10X1.5X30-MM)
18	NPR	1	166-9296	1	TUBE AS
19	NPR	1,2	5P-8112	4	GROMMET
20	NPR	1,2	5P-7466	4	CLIP (SLOT)

21 NPR M 1,2 8T-4136 8 BOLT (M10X1.5X25-MM)

22 NPR M 2 8T-4184 2 BOLT (M12X1.75X45-MM)

23 NPR 1,2 6V-1249 5 GROMMET

24 NPR 1,2 5P-7464 5 CLIP (SLOT)

25 NPR 1,2 5P-7465 5 CLIP (TAB)

26 NPR M 1,2 8T-4139 4 BOLT (M12X1.75X30-MM)

27 NPR I 1,2 167-3896 2 HOSE AS

28 NPR 1,2 5P-7467 4 CLIP (TAB)

29 NPR 1,2 9R-1004 6 CLIP (TAB)

30 NPR 1,2 9R-1005 6 CLIP (SLOT)

31 NPR 1,2 162-2356 2 TUBE AS

32 NPR 1 148-8386 1 ELBOW AS

NPR 1 3E-7426 1 ELBOW

NPR 1 5K-9090 1 SEAL-O-RING

NPR 1 6V-8400 1 SEAL-O-RING

33 NPR 1 148-8352 2 ELBOW AS

(EACH INCLUDES)

NPR 1 5K-9090 1 SEAL-O-RING

NPR 1 6V-9854 1 ELBOW (SWIVEL)

34 NPR 1 148-8392 1 ELBOW AS

NPR 1 6V-9746 1 SEAL-O-RING

NPR 1 6V-9853 1 ELBOW

35 NPR 1 148-8450 1 TEE AS

NPR 1 3E-7443 1 TEE-UNION

NPR 1 5K-9090 1 SEAL-O-RING

	NPR	1	6V-9746	2	SEAL-O-RING
36	NPR	1	110-7713	1	TUBE AS
37	NPR	1,2	123-7637	2	CAP
38	NPR	2	5K-9090	2	SEAL-O-RING
39	NPR	2	107-6708	1	BRACKET
40	NPR	1	148-8347	1	ELBOW AS
	NPR	1	3D-2824	1	SEAL-O-RING
	NPR	1	6V-9007	1	ELBOW
	NPR	1	6V-9746	1	SEAL-O-RING
41	NPR	2	116-2302	1	TUBE AS
42	NPR	2	148-8328	1	CONNECTOR AS
	NPR	2	3D-2824	1	SEAL-O-RING
	NPR	2	6V-8398	1	SEAL-O-RING
	NPR	2	6V-8633	1	CONNECTOR
43	NPR	1,2	6V-8398	8	SEAL-O-RING
44		2	160-0248	1	TUBE AS
45	NPR I	1	168-8622	1	HOSE AS
46	NPR	2	8S-0023	1	CLIP (SLOT)
47	NPR	2	8S-0024	1	CLIP (TAB)
48	NPR I	2	106-0409	1	HOSE AS
49	NPR	2	5P-8444	1	GROMMET
50	NPR	2	5P-7468	1	CLIP (SLOT)
51	NPR	2	5P-7469	1	CLIP (TAB)
52	NPR I	2	168-8633	1	HOSE AS
53	NPR	2	9R-5948	1	BLOCK

54 NPR 2 5P-0599 1 CLAMP-BAND

55 NPR 2 167-3783 1 TUBE AS

56 NPR 2 150-3052 1 CONNECTOR AS

NPR 2 5K-9090 1 SEAL-O-RING

NPR 2 7M-8485 1 SEAL-O-RING

NPR 2 107-6709 1 CONNECTOR

57 NPR 2 148-8317 1 CONNECTOR AS

NPR 2 3D-2824 1 SEAL-O-RING

NPR 2 5K-9090 1 SEAL-O-RING

NPR 2 6V-8714 1 CONNECTOR

58 NPR 2 148-8341 1 CONNECTOR AS

NPR 2 3D-2824 1 SEAL-O-RING

NPR 2 6V-8713 1 CONNECTOR

NPR 2 7J-9108 1 SEAL-O-RING

59 NPR 1,2 101-0863 2 FILM-INSTRUCTION (RETURN FLOW)

60 NPR 2 124-7633 1 TUBE AS

61 NPR I 1 159-1551 1 HOSE AS

62 NPR 2 110-7710 1 TUBE AS

63 NPR I 1 106-0405 1 HOSE AS

64 NPR I 1 9R-9221 1 HOSE AS

65 NPR I 1 9R-9218 1 HOSE AS

66 NPR 1 106-0844 1 TUBE AS

67 NPR 1 9R-9253 1 PLATE

68 NPR 2 8T-1891 1 CLIP (SLOT)

69 NPR 2 8T-1892 1 CLIP (TAB)

70 NPR M 2 8T-4137 3 BOLT (M10X1.5X20-MM)

71 NPR 1,2 7J-9108 2 SEAL-O-RING

72 NPR I 1 9R-9926 1 HOSE AS

73 NPR 1,2 101-0862 2 PLATE-WARNING (SECURE EXTENDABLE STICK)

74 NPR G 1 160-2247 SLEEVE-ABRASION (26.79 IN)

75 NPR 1 096-0061 2 STRAP-CABLE

76 NPR M 1,2 8T-4183 2 BOLT (M12X1.75X40-MM)

Key:

G - ORDER BY THE INCH
I - REFER TO HYDRAULIC INFORMATION SYSTEM
M - METRIC PART

168-9991 LINES GP-BACKHOE AUXILIARY --S/N 4ZN16044-50156
PART OF 154-5312, 154-5314 BACKHOE AR-EXTENDABLE STICK--Type 2

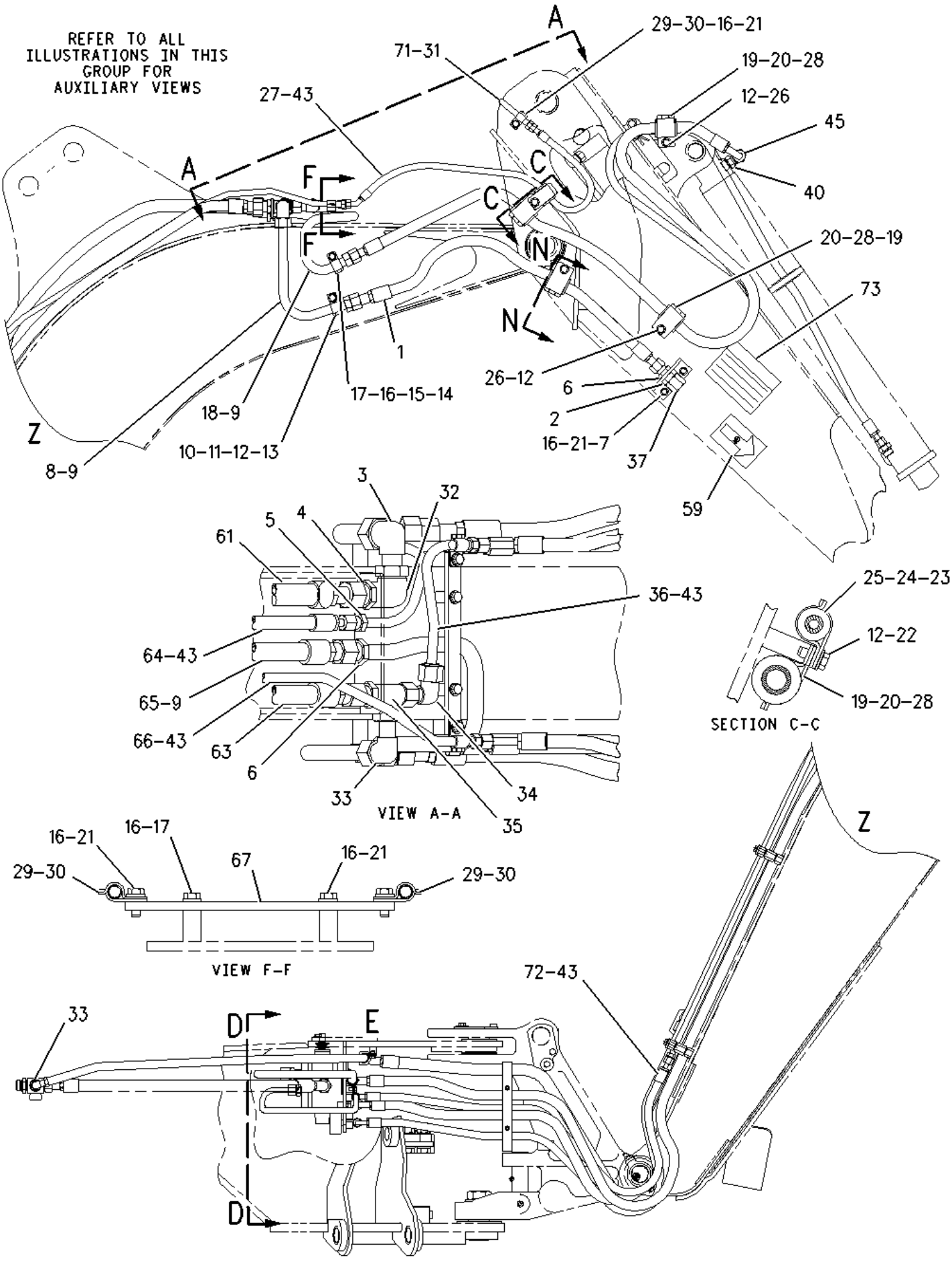

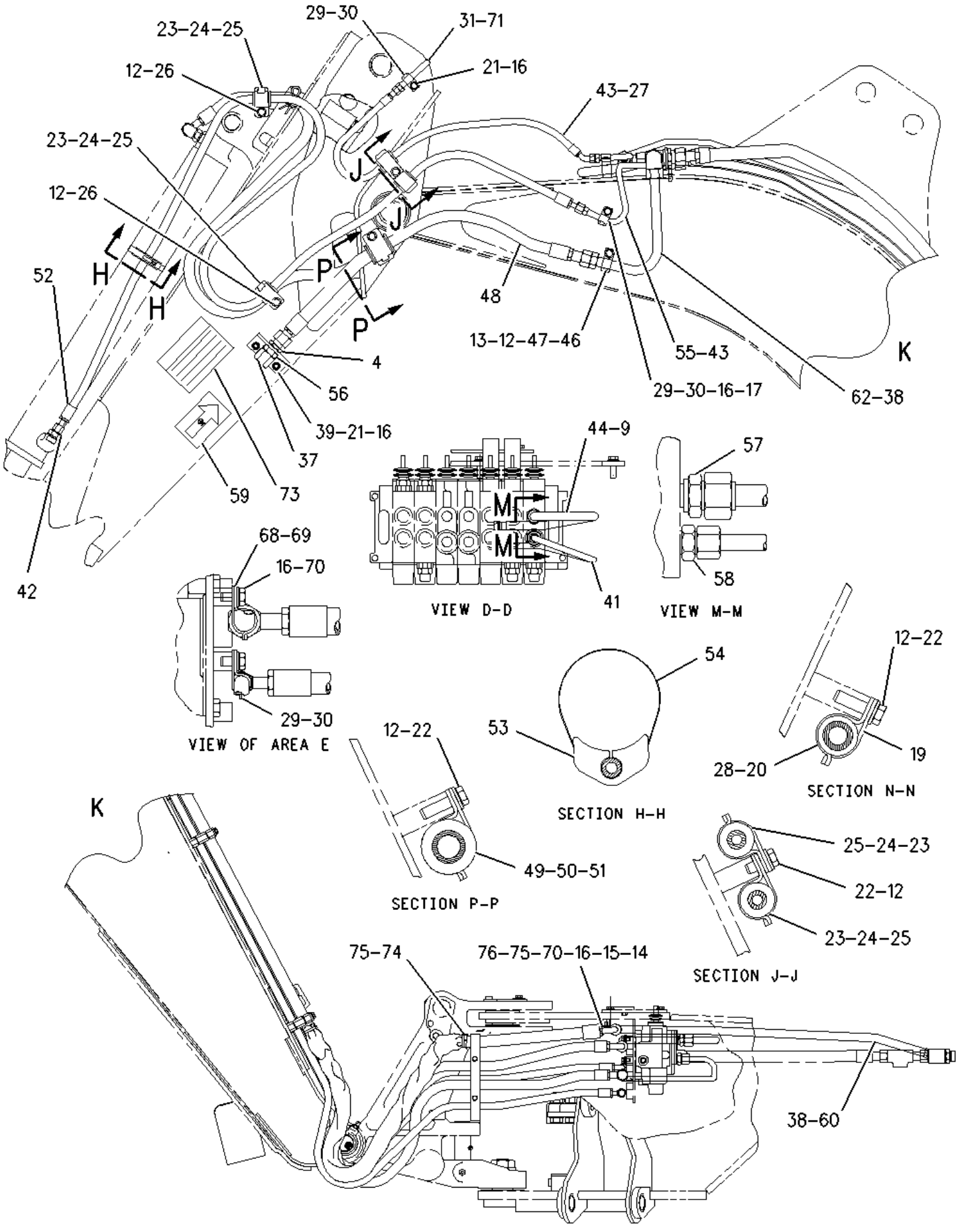
29-30
31-71
23-24-25
21-16
12-26
43-27
23-24-25
J
J
12-26
H
H
P
P
52
48
13-12-47-46
55-43
K
4
56
29-30-16-17
62-38
39-21-16
37
73
59
42
44-9
57
M
M
VIEW D-D
41
VIEW M-M
58
68-69
16-70
29-30
VIEW OF AREA E
54
53
SECTION H-H
12-22
19
28-20
SECTION N-N
12-22
49-50-51
SECTION P-P
K
25-24-23
22-12
23-24-25
SECTION J-J
75-74
76-75-70-16-15-14
38-60

2 NPR 1 150-3053 1 CONNECTOR AS

NPR 1 6V-9746 1 SEAL-O-RING

NPR 1 7M-8485 1 SEAL-O-RING

NPR 1 108-3872 1 CONNECTOR

3 NPR 1 148-8387 1 ELBOW AS

NPR 1 6V-8400 1 SEAL-O-RING

NPR 1 6V-9855 1 ELBOW

4 NPR 1,2 6V-9172 2 NUT (1-7/16-12-THD)

5 NPR 1 6V-9169 1 NUT-BULKHEAD (13/16-16-THD)

6 NPR 1 2P-1293 3 LOCKNUT (1-3/16-12-THD)

7 NPR 1 109-1260 1 BRACKET

8 NPR 1 110-7709 1 TUBE AS

9 NPR 1,2 6V-9746 4 SEAL-O-RING

10 NPR 1 7S-3916 1 CLIP (TAB)

11 NPR 1 7S-3919 1 CLIP (SLOT)

12 NPR 1,2 8T-4223 10 WASHER-HARD (13.5X25.5X3-MM THK)

13 NPR M 1,2 8T-4192 2 BOLT (M12X1.75X25-MM)

14 NPR 1,2 8T-1889 2 CLIP (SLOT)

15 NPR 1,2 8T-1890 2 CLIP (TAB)

16 NPR 1,2 8T-4121 15 WASHER-HARD (11X21X2.5-MM THK)

17 NPR M 1,2 8T-4195 4 BOLT (M10X1.5X30-MM)

18 NPR 1 166-9296 1 TUBE AS

19 NPR 1,2 5P-8112 4 GROMMET

20 NPR 1,2 5P-7466 4 CLIP (SLOT)

21 NPR M 1,2 8T-4136 8 BOLT (M10X1.5X25-MM)

22 NPR M 1,2 8T-4184 4 BOLT (M12X1.75X45-MM)

23 NPR 1,2 6V-1249 5 GROMMET

24 NPR 1,2 5P-7464 5 CLIP (SLOT)

25 NPR 1,2 5P-7465 5 CLIP (TAB)

26 NPR M 1,2 8T-4139 4 BOLT (M12X1.75X30-MM)

27 NPR I 1,2 167-3896 2 HOSE AS

28 NPR 1,2 5P-7467 4 CLIP (TAB)

29 NPR 1,2 9R-1004 6 CLIP (TAB)

30 NPR 1,2 9R-1005 6 CLIP (SLOT)

31 NPR 1,2 162-2356 2 TUBE AS

32 NPR 1 148-8386 1 ELBOW AS

NPR 1 3E-7426 1 ELBOW

NPR 1 5K-9090 1 SEAL-O-RING

NPR 1 6V-8400 1 SEAL-O-RING

33 NPR 1 148-8352 2 ELBOW AS

(EACH INCLUDES)

NPR 1 5K-9090 1 SEAL-O-RING

NPR 1 6V-9854 1 ELBOW (SWIVEL)

34 NPR 1 148-8392 1 ELBOW AS

NPR 1 6V-9746 1 SEAL-O-RING

NPR 1 6V-9853 1 ELBOW

35 NPR 1 148-8450 1 TEE AS

NPR 1 3E-7443 1 TEE-UNION

NPR 1 5K-9090 1 SEAL-O-RING

NPR 1 6V-9746 2 SEAL-O-RING

36 NPR 1 110-7713 1 TUBE AS

37 NPR 1,2 123-7637 2 CAP

38 NPR 2 5K-9090 2 SEAL-O-RING

39 NPR 2 107-6708 1 BRACKET

40 NPR 1 148-8347 1 ELBOW AS

NPR 1 3D-2824 1 SEAL-O-RING

NPR 1 6V-9007 1 ELBOW

NPR 1 6V-9746 1 SEAL-O-RING

41 NPR 2 116-2302 1 TUBE AS

42 NPR 2 148-8328 1 CONNECTOR AS

NPR 2 3D-2824 1 SEAL-O-RING

NPR 2 6V-8398 1 SEAL-O-RING

NPR 2 6V-8633 1 CONNECTOR

43 NPR 1,2 6V-8398 8 SEAL-O-RING

44 2 160-0248 1 TUBE AS

45 NPR CI 1 173-9718 1 HOSE AS

46 NPR 2 8S-0023 1 CLIP (SLOT)

47 NPR 2 8S-0024 1 CLIP (TAB)

48 NPR I 2 106-0409 1 HOSE AS

49 NPR 2 5P-8444 1 GROMMET

50 NPR 2 5P-7468 1 CLIP (SLOT)

51 NPR 2 5P-7469 1 CLIP (TAB)

52 NPR CI 2 173-9719 1 HOSE AS

53 NPR 2 9R-5948 1 BLOCK

54 NPR 2 5P-0599 1 CLAMP-BAND

55 NPR 2 167-3783 1 TUBE AS

56 NPR 2 150-3052 1 CONNECTOR AS

NPR 2 5K-9090 1 SEAL-O-RING

NPR 2 7M-8485 1 SEAL-O-RING

NPR 2 107-6709 1 CONNECTOR

57 NPR 2 148-8317 1 CONNECTOR AS

NPR 2 3D-2824 1 SEAL-O-RING

NPR 2 5K-9090 1 SEAL-O-RING

NPR 2 6V-8714 1 CONNECTOR

58 NPR 2 148-8341 1 CONNECTOR AS

NPR 2 3D-2824 1 SEAL-O-RING

NPR 2 6V-8713 1 CONNECTOR

NPR 2 7J-9108 1 SEAL-O-RING

59 NPR 1,2 101-0863 2 FILM-INSTRUCTION (RETURN FLOW)

60 NPR 2 124-7633 1 TUBE AS

61 NPR I 1 159-1551 1 HOSE AS

62 NPR 2 110-7710 1 TUBE AS

63 NPR I 1 106-0405 1 HOSE AS

64 NPR I 1 9R-9221 1 HOSE AS

65 NPR I 1 9R-9218 1 HOSE AS

66 NPR 1 106-0844 1 TUBE AS

67 NPR 1 9R-9253 1 PLATE

68 NPR 2 8T-1891 1 CLIP (SLOT)

69 NPR 2 8T-1892 1 CLIP (TAB)

70 NPR M 2 8T-4137 3 BOLT (M10X1.5X20-MM)

71 NPR 1,2 7J-9108 2 SEAL-O-RING

72 NPR I 1 9R-9926 1 HOSE AS

73 NPR 1,2 101-0862 2 PLATE-WARNING (SECURE EXTENDABLE STICK)

74 NPR E 2 160-2247 SLEEVE-ABRASION (68CM)

75 NPR 2 096-0061 4 STRAP-CABLE

76 NPR E 2 160-2247 SLEEVE-ABRASION (36CM)

Key:

C - CHANGE FROM PREVIOUS TYPE
E - ORDER BY THE CENTIMETER
I - REFER TO HYDRAULIC INFORMATION SYSTEM
M - METRIC PART

178-8568 LINES GP-BACKHOE AUXILIARY --S/N 4ZN16044-50156--FIELD INSTALLED

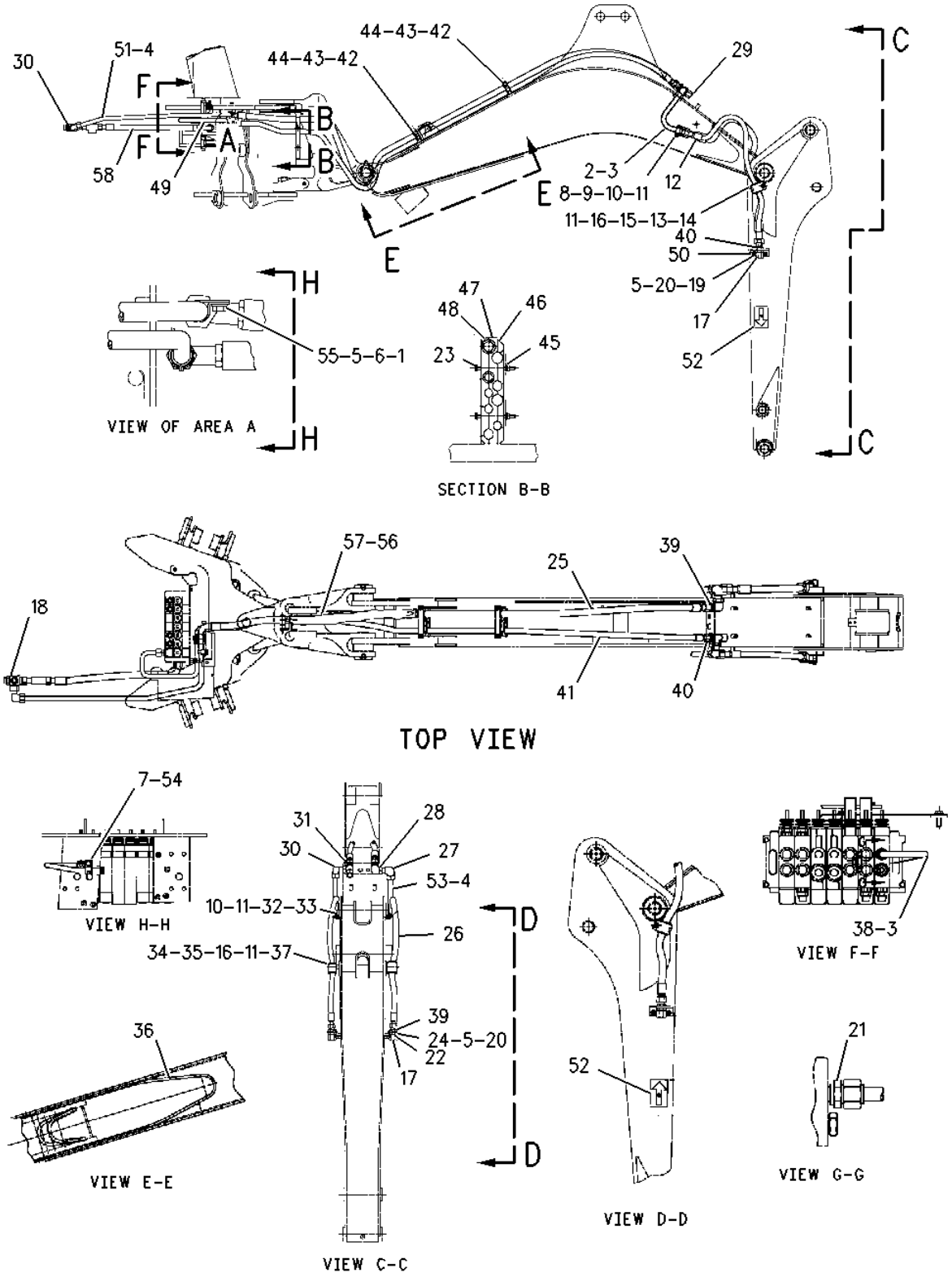

1 NPR 8T-1889 1 CLIP (SLOT)

2 NPR 110-7709 1 TUBE AS

3 NPR 6V-9746 2 SEAL-O-RING

4 NPR 5K-9090 2 SEAL-O-RING

5	NPR	8T-4121	5	WASHER-HARD (11X21X2.5-MM THK)
6	NPR	8T-1890	1	CLIP (TAB)
7	NPR	8T-1891	1	CLIP (SLOT)
8	NPR	7S-3916	1	CLIP (TAB)
9	NPR	7S-3919	1	CLIP (SLOT)
10	NPR M	8T-4192	2	BOLT (M12X1.75X25-MM)
11	NPR	8T-4223	4	WASHER-HARD (13.5X25.5X3-MM THK)
12	NPR I	168-8493	1	HOSE AS
13	NPR	5P-7467	1	CLIP (TAB)
14	NPR	5P-7466	1	CLIP (SLOT)
15	NPR	5P-8112	1	GROMMET
16	NPR M	8T-4139	2	BOLT (M12X1.75X30-MM)
17	NPR	123-7637	2	CAP
18	NPR Y	178-7481	1	VALVE GP-CHECK
19	NPR	109-1260	1	BRACKET
20	NPR M	8T-4136	4	BOLT (M10X1.5X25-MM)
21	NPR	148-8317	1	CONNECTOR AS
	NPR	3D-2824	1	SEAL-O-RING
	NPR	5K-9090	1	SEAL-O-RING
	NPR	6V-8714	1	CONNECTOR
22	NPR	150-3052	1	CONNECTOR AS
	NPR	5K-9090	1	SEAL-O-RING
	NPR	7M-8485	1	SEAL-O-RING
	NPR	107-6709	1	CONNECTOR
23	NPR M	7X-2538	2	BOLT (M8X1.25X100-MM)

24 NPR 107-6708 1 BRACKET

25 NPR I 159-1551 1 HOSE AS

26 NPR I 106-0409 1 HOSE AS

27 NPR 148-8387 1 ELBOW AS

NPR 6V-8400 1 SEAL-O-RING

NPR 6V-9855 1 ELBOW

28 NPR 148-8386 1 ELBOW AS

NPR 3E-7426 1 ELBOW

NPR 5K-9090 1 SEAL-O-RING

NPR 6V-8400 1 SEAL-O-RING

29 NPR 6V-9832 1 CAP AS

30 NPR 148-8352 2 ELBOW AS

(EACH INCLUDES)

NPR 5K-9090 1 SEAL-O-RING

NPR 6V-9854 1 ELBOW (SWIVEL)

31 NPR 148-8450 1 TEE AS

NPR 3E-7443 1 TEE-UNION

NPR 5K-9090 1 SEAL-O-RING

NPR 6V-9746 2 SEAL-O-RING

32 NPR 8S-0023 1 CLIP (SLOT)

33 NPR 8S-0024 1 CLIP (TAB)

34 NPR 5P-7468 1 CLIP (SLOT)

35 NPR 5P-7469 1 CLIP (TAB)

36 NPR 106-0425 1 PLATE AS (WORK TOOL REST)

37 NPR 5P-8444 1 GROMMET

38		160-0248	1	TUBE AS
39	NPR	6V-9172	2	NUT (1-7/16-12-THD)
40	NPR	2P-1293	2	LOCKNUT (1-3/16-12-THD)
41	NPR I	106-0405	1	HOSE AS
42	NPR	106-0411	2	BLOCK
43	NPR	106-0412	2	BLOCK
44	NPR	106-0413	2	BLOCK
45	NPR M	6V-9189	2	LOCKNUT (M8X1.25-THD)
46	NPR	106-0414	1	BLOCK
47	NPR	106-0415	1	BLOCK
48	NPR	106-0416	1	BLOCK
49	NPR	148-8408	1	PLUG AS
	NPR	3D-2824	1	SEAL-O-RING
	NPR	9S-4183	1	PLUG-O RING
50	NPR	150-3053	1	CONNECTOR AS
	NPR	6V-9746	1	SEAL-O-RING
	NPR	7M-8485	1	SEAL-O-RING
	NPR	108-3872	1	CONNECTOR
51	NPR	124-7633	1	TUBE AS
52	NPR	101-0863	2	FILM-INSTRUCTION (RETURN FLOW)
53	NPR	110-7710	1	TUBE AS
54	NPR	8T-1892	1	CLIP (TAB)
55	NPR M	8T-4137	1	BOLT (M10X1.5X20-MM)
56	NPR EG	160-2247		SLEEVE-ABRASION (40.95IN)
57	NPR	096-0061	4	STRAP-CABLE

58 NPR I 183-2909 1 HOSE AS

Key:

E - ORDER BY THE CENTIMETER
G - ORDER BY THE INCH
I - REFER TO HYDRAULIC INFORMATION SYSTEM
M - METRIC PART
Y - SEPARATE ILLUSTRATION

178-8570 LINES GP-BACKHOE AUXILIARY ---S/N 4ZN16044-50156--FIELD INSTALLED

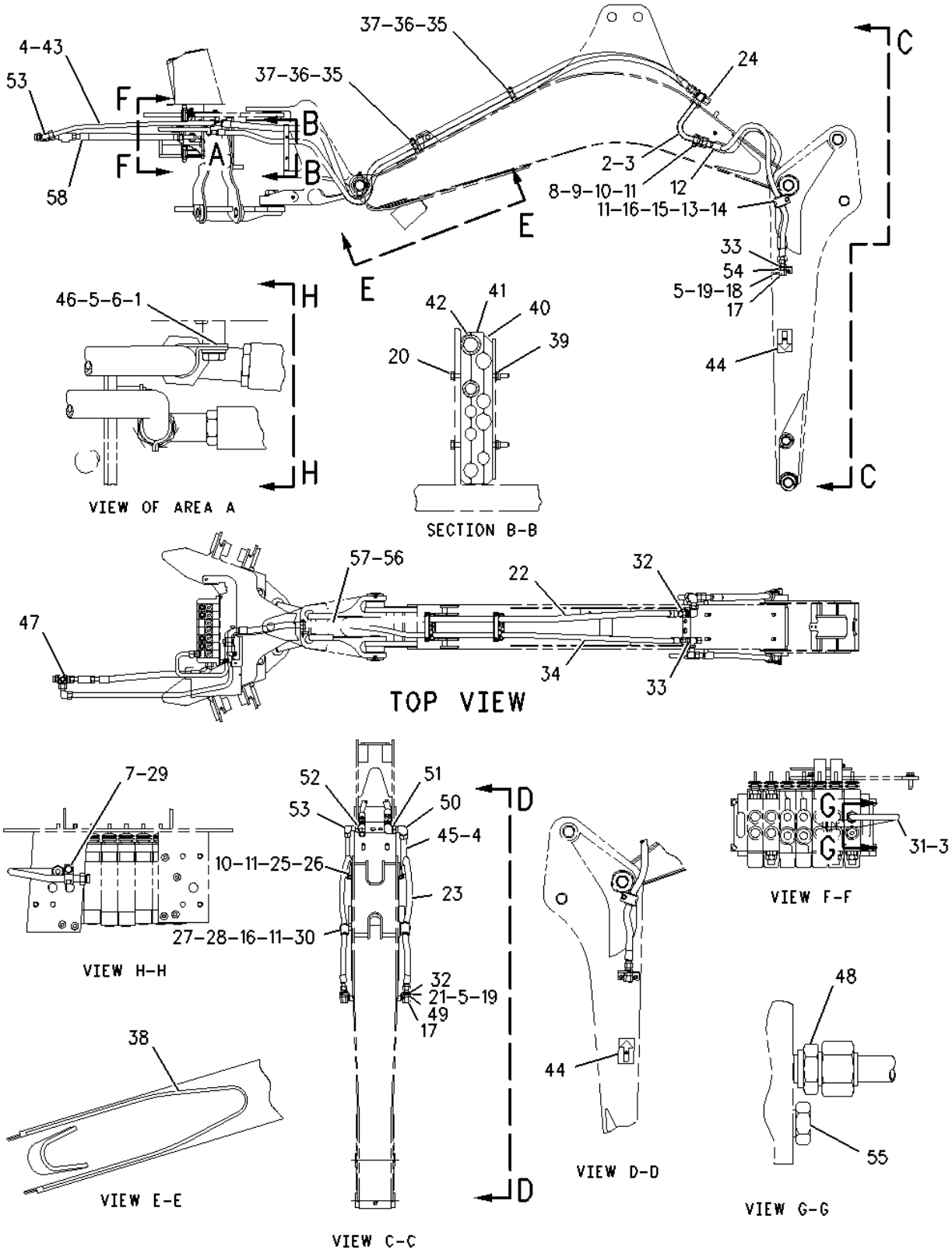

1 NPR 8T-1889 1 CLIP (SLOT)

2 NPR 110-7709 1 TUBE AS

3 NPR 6V-9746 2 SEAL-O-RING

4	NPR	5K-9090	2	SEAL-O-RING
5	NPR	8T-4121	5	WASHER-HARD (11X21X2.5-MM THK)
6	NPR	8T-1890	1	CLIP (TAB)
7	NPR	8T-1891	1	CLIP (SLOT)
8	NPR	7S-3916	1	CLIP (TAB)
9	NPR	7S-3919	1	CLIP (SLOT)
10	NPR M	8T-4192	2	BOLT (M12X1.75X25-MM)
11	NPR	8T-4223	4	WASHER-HARD (13.5X25.5X3-MM THK)
12	NPR I	168-8493	1	HOSE AS
13	NPR	5P-7467	1	CLIP (TAB)
14	NPR	5P-7466	1	CLIP (SLOT)
15	NPR	5P-8112	1	GROMMET
16	NPR M	8T-4139	2	BOLT (M12X1.75X30-MM)
17	NPR	123-7637	2	CAP
18	NPR	109-1260	1	BRACKET
19	NPR M	8T-4136	4	BOLT (M10X1.5X25-MM)
20	NPR M	7X-2538	2	BOLT (M8X1.25X100-MM)
21	NPR	107-6708	1	BRACKET
22	NPR I	159-1551	1	HOSE AS
23	NPR I	106-0409	1	HOSE AS
24	NPR	6V-9832	1	CAP AS
25	NPR	8S-0023	1	CLIP (SLOT)
26	NPR	8S-0024	1	CLIP (TAB)
27	NPR	5P-7468	1	CLIP (SLOT)
28	NPR	5P-7469	1	CLIP (TAB)

29	NPR	8T-1892	1	CLIP (TAB)
30	NPR	5P-8444	1	GROMMET
31		160-0248	1	TUBE AS
32	NPR	6V-9172	2	NUT (1-7/16-12-THD)
33	NPR	2P-1293	2	LOCKNUT (1-3/16-12-THD)
34	NPR I	106-0405	1	HOSE AS
35	NPR	106-0411	2	BLOCK
36	NPR	106-0412	2	BLOCK
37	NPR	106-0413	2	BLOCK
38	NPR	106-0425	1	PLATE AS (WORK TOOL REST)
39	NPR M	6V-9189	2	LOCKNUT (M8X1.25-THD)
40	NPR	106-0414	1	BLOCK
41	NPR	106-0415	1	BLOCK
42	NPR	106-0416	1	BLOCK
43	NPR	124-7633	1	TUBE AS
44	NPR	101-0863	2	FILM-INSTRUCTION (RETURN FLOW)
45	NPR	110-7710	1	TUBE AS
46	NPR M	8T-4137	1	BOLT (M10X1.5X20-MM)
47	NPR Y	178-7481	1	VALVE GP-CHECK
48	NPR	148-8317	1	CONNECTOR AS
	NPR	3D-2824	1	SEAL-O-RING
	NPR	5K-9090	1	SEAL-O-RING
	NPR	6V-8714	1	CONNECTOR
49	NPR	150-3052	1	CONNECTOR AS
	NPR	5K-9090	1	SEAL-O-RING

NPR 7M-8485 1 SEAL-O-RING

NPR 107-6709 1 CONNECTOR

50 NPR 148-8387 1 ELBOW AS

NPR 6V-8400 1 SEAL-O-RING

NPR 6V-9855 1 ELBOW

51 NPR 148-8386 1 ELBOW AS

NPR 3E-7426 1 ELBOW

NPR 5K-9090 1 SEAL-O-RING

NPR 6V-8400 1 SEAL-O-RING

52 NPR 148-8450 1 TEE AS

NPR 3E-7443 1 TEE-UNION

NPR 5K-9090 1 SEAL-O-RING

NPR 6V-9746 2 SEAL-O-RING

53 NPR 148-8352 2 ELBOW AS

(EACH INCLUDES)

NPR 5K-9090 1 SEAL-O-RING

NPR 6V-9854 1 ELBOW (SWIVEL)

54 NPR 150-3053 1 CONNECTOR AS

NPR 6V-9746 1 SEAL-O-RING

NPR 7M-8485 1 SEAL-O-RING

NPR 108-3872 1 CONNECTOR

55 NPR 148-8408 1 PLUG AS

NPR 3D-2824 1 SEAL-O-RING

NPR 9S-4183 1 PLUG-O RING

56 NPR G 160-2247 SLEEVE-ABRASION (40.95IN)

57 NPR 096-0061 4 STRAP-CABLE

58 NPR I 183-2909 1 HOSE AS

Key:

G - ORDER BY THE INCH
I - REFER TO HYDRAULIC INFORMATION SYSTEM
M - METRIC PART
Y - SEPARATE ILLUSTRATION

178-8572 LINES GP-BACKHOE AUXILIARY --S/N 4ZN16044-50156

REFER TO ALL ILLUSTRATIONS
IN THIS GROUP FOR
AUXILIARY VIEWS

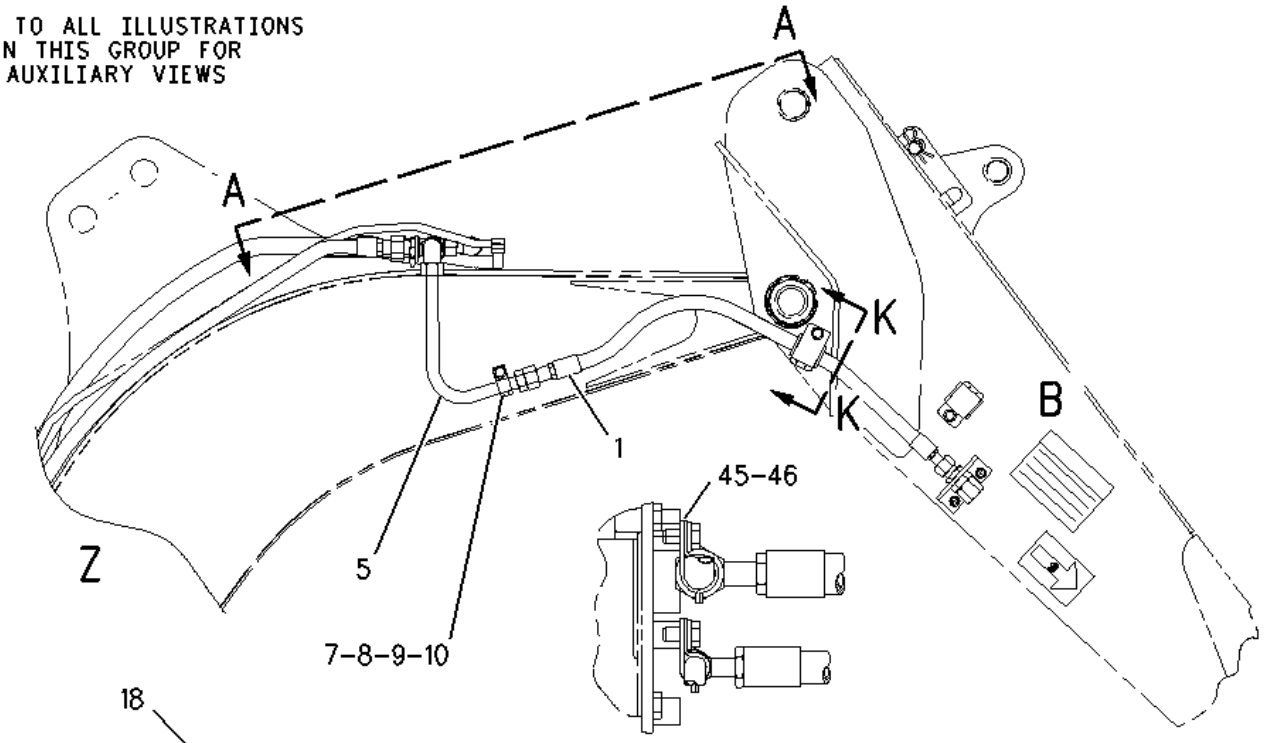

VIEW OF AREA E

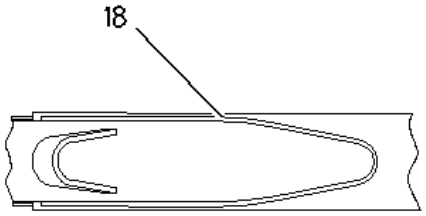

VIEW C-C

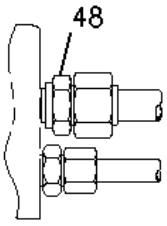

VIEW J-J

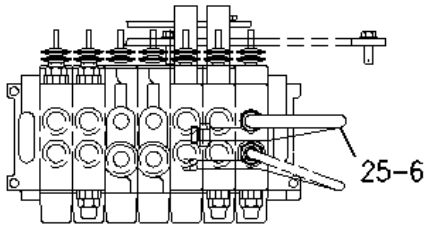

VIEW D-D

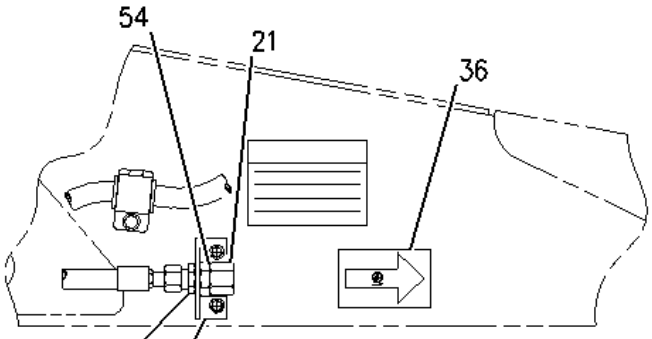

VIEW OF AREA B

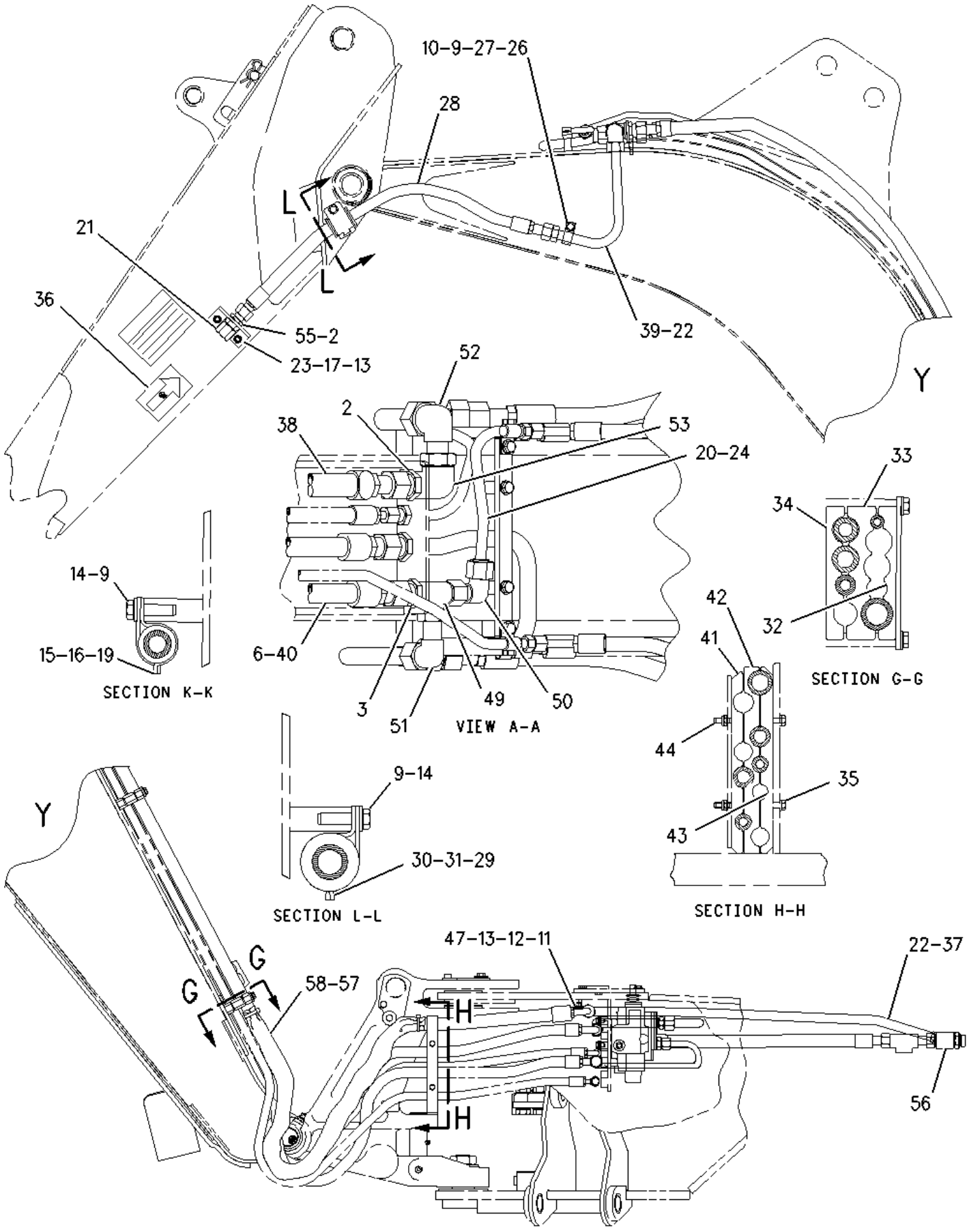
10-9-27-26
28
L
L
21
36
55-2
23-17-13
39-22
Y
52
2
38
53
20-24
33
34
42
41
32
14-9
15-16-19
SECTION K-K
6-40
3
51
49
50
VIEW A-A
SECTION G-G
44
35
43
9-14
30-31-29
SECTION L-L
SECTION H-H
Y
G
G
58-57
47-13-12-11
H
H
22-37
56

1	NPR I	1	168-8493	1	HOSE AS
2	NPR	2	6V-9172	2	NUT (1-7/16-12-THD)
3	NPR	1,2	2P-1293	2	LOCKNUT (1-3/16-12-THD)
4	NPR	1	109-1260	1	BRACKET
5	NPR	1	110-7709	1	TUBE AS
6	NPR	1,2	6V-9746	2	SEAL-O-RING
7	NPR	1	7S-3916	1	CLIP (TAB)
8	NPR	1	7S-3919	1	CLIP (SLOT)
9	NPR	1,2	8T-4223	4	WASHER-HARD (13.5X25.5X3-MM THK)
10	NPR M	1,2	8T-4192	2	BOLT (M12X1.75X25-MM)
11	NPR	2	8T-1889	1	CLIP (SLOT)
12	NPR	2	8T-1890	1	CLIP (TAB)
13	NPR	1,2	8T-4121	5	WASHER-HARD (11X21X2.5-MM THK)
14	NPR M	2	8T-4184	2	BOLT (M12X1.75X45-MM)
15	NPR	2	5P-8112	1	GROMMET
16	NPR	2	5P-7466	1	CLIP (SLOT)
17	NPR M	1,2	8T-4136	4	BOLT (M10X1.5X25-MM)
18	NPR	1	106-0425	1	PLATE AS (WORK TOOL REST)
19	NPR	2	5P-7467	1	CLIP (TAB)
20	NPR	2	110-7713	1	TUBE AS
21	NPR	1,2	123-7637	2	CAP
22	NPR	2	5K-9090	2	SEAL-O-RING
23	NPR	2	107-6708	1	BRACKET
24	NPR	2	6V-8398	1	SEAL-O-RING
25		1	160-0248	1	TUBE AS

26 NPR 2 8S-0023 1 CLIP (SLOT)

27 NPR 2 8S-0024 1 CLIP (TAB)

28 NPR I 2 106-0409 1 HOSE AS

29 NPR 2 5P-8444 1 GROMMET

30 NPR 2 5P-7468 1 CLIP (SLOT)

31 NPR 2 5P-7469 1 CLIP (TAB)

32 NPR 2 106-0411 2 BLOCK

33 NPR 2 106-0412 2 BLOCK

34 NPR 2 106-0413 2 BLOCK

35 NPR M 2 7X-2538 2 BOLT (M8X1.25X100-MM)

36 NPR 1,2 101-0863 2 FILM-INSTRUCTION (RETURN FLOW)

37 NPR 2 124-7633 1 TUBE AS

38 NPR I 2 159-1551 1 HOSE AS

39 NPR 2 110-7710 1 TUBE AS

40 NPR I 2 106-0405 1 HOSE AS

41 NPR 2 106-0414 1 BLOCK

42 NPR 2 106-0415 1 BLOCK

43 NPR 2 106-0416 1 BLOCK

44 NPR M 2 6V-9189 2 LOCKNUT (M8X1.25-THD)

45 NPR 1 8T-1891 1 CLIP (SLOT)

46 NPR 1 8T-1892 1 CLIP (TAB)

47 NPR M 2 8T-4137 1 BOLT (M10X1.5X20-MM)

48 NPR 1 148-8317 1 CONNECTOR AS

NPR 1 3D-2824 1 SEAL-O-RING

NPR 1 5K-9090 1 SEAL-O-RING

	NPR	1	6V-8714	1	CONNECTOR
49	NPR	2	148-8450	1	TEE AS
	NPR	2	3E-7443	1	TEE-UNION
	NPR	2	5K-9090	1	SEAL-O-RING
	NPR	2	6V-9746	2	SEAL-O-RING
50	NPR	2	148-8392	1	ELBOW AS
	NPR	2	6V-9746	1	SEAL-O-RING
	NPR	2	6V-9853	1	ELBOW
51	NPR	1,2	148-8352	2	ELBOW AS
	NPR	1,2	5K-9090	2	SEAL-O-RING
	NPR	1,2	6V-9854	2	ELBOW (SWIVEL)
52	NPR	2	148-8387	1	ELBOW AS
	NPR	2	6V-8400	1	SEAL-O-RING
	NPR	2	6V-9855	1	ELBOW
53	NPR	2	148-8386	1	ELBOW AS
	NPR	2	3E-7426	1	ELBOW
	NPR	2	5K-9090	1	SEAL-O-RING
	NPR	2	6V-8400	1	SEAL-O-RING
54	NPR	1	150-3053	1	CONNECTOR AS
	NPR	1	6V-9746	1	SEAL-O-RING
	NPR	1	7M-8485	1	SEAL-O-RING
	NPR	1	108-3872	1	CONNECTOR
55	NPR	2	150-3052	1	CONNECTOR AS
	NPR	2	5K-9090	1	SEAL-O-RING
	NPR	2	7M-8485	1	SEAL-O-RING

	NPR	2	107-6709	1	CONNECTOR
56	NPR Y	1	178-7481	1	VALVE GP-CHECK
	NPR	1	5K-9090	2	SEAL-O-RING
	NPR	1	7M-8485	1	SEAL-O-RING
	NPR	1	176-5645	1	VALVE GP-CHECK
57	NPR E	2	160-2247		SLEEVE-ABRASION (68CM)
58	NPR	2	096-0061	2	STRAP-CABLE
59	NPR I	1	183-2909	1	HOSE AS

Key:

E - ORDER BY THE CENTIMETER
I - REFER TO HYDRAULIC INFORMATION SYSTEM
M - METRIC PART
Y - Separate Illustration

178-8573 LINES GP-BACKHOE AUXILIARY --S/N 4ZN16044-50156--FIELD INSTALLED

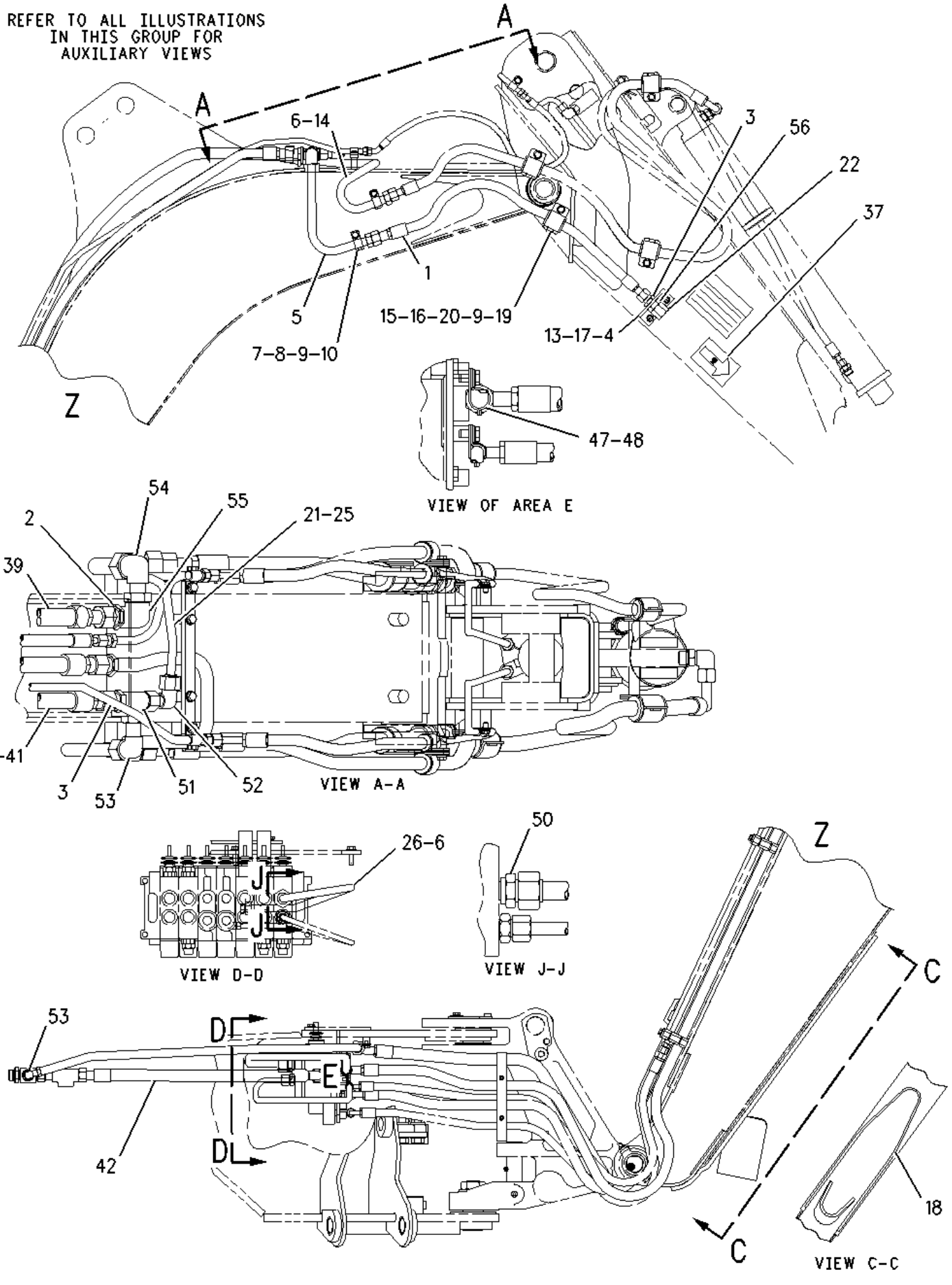

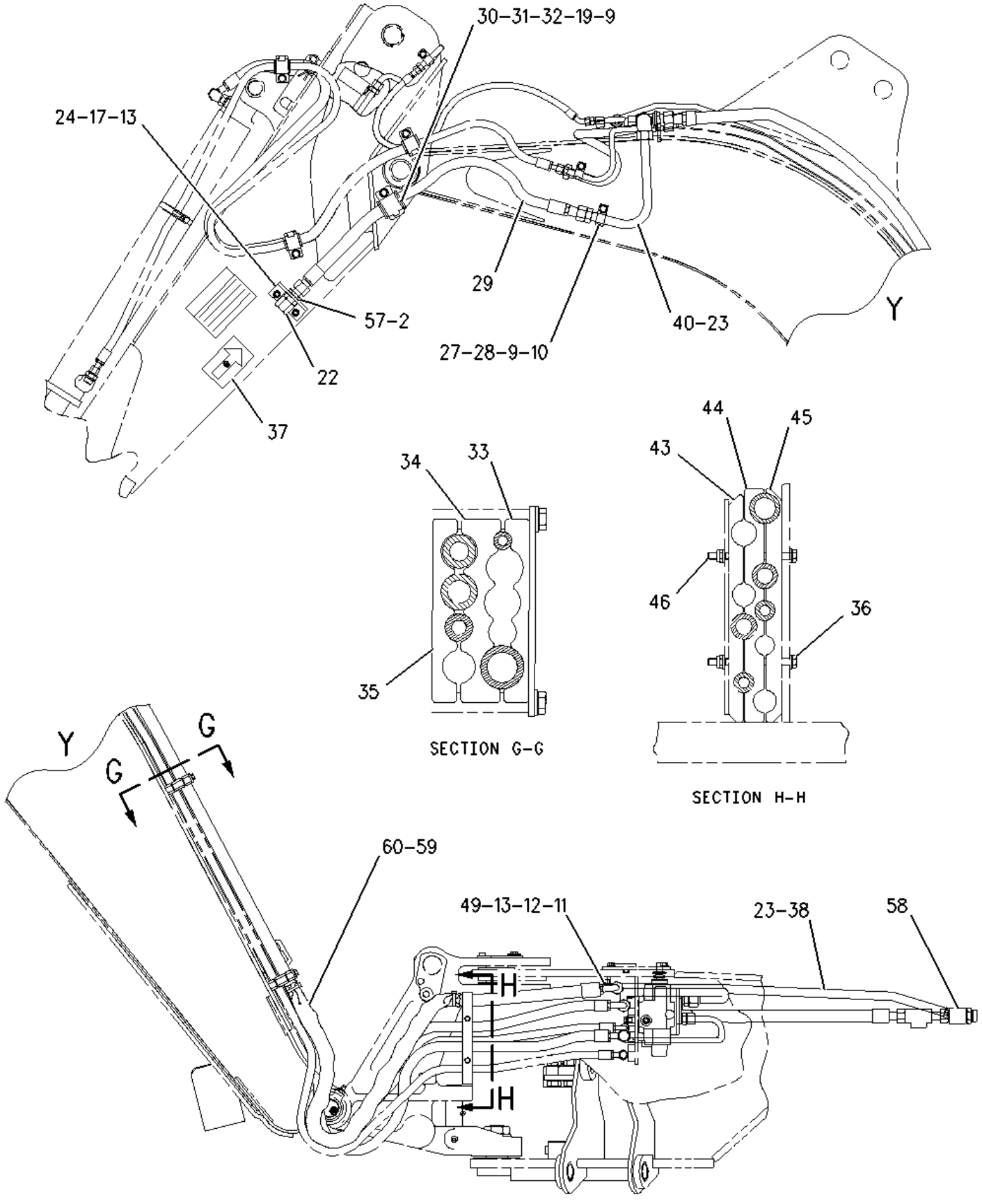
30-31-32-19-9
24-17-13
57-2
22
37
29
27-28-9-10
40-23
Y
34
33
35
SECTION G-G
44
45
43
46
36
SECTION H-H
Y
G
G
60-59
49-13-12-11
23-38
58
H
H

1	NPR I	1	8W-5149	1	HOSE AS
2	NPR	1,2	6V-9172	2	NUT (1-7/16-12-THD)
3	NPR	1	2P-1293	2	LOCKNUT (1-3/16-12-THD)
4	NPR	1	109-1260	1	BRACKET
5	NPR	1	110-7709	1	TUBE AS
6	NPR	1	6V-9746	3	SEAL-O-RING
7	NPR	1	7S-3916	1	CLIP (TAB)
8	NPR	1	7S-3919	1	CLIP (SLOT)
9	NPR	1,2	8T-4223	4	WASHER-HARD (13.5X25.5X3-MM THK)
10	NPR M	1,2	8T-4192	2	BOLT (M12X1.75X25-MM)
11	NPR	2	8T-1889	1	CLIP (SLOT)
12	NPR	2	8T-1890	1	CLIP (TAB)
13	NPR	1,2	8T-4121	5	WASHER-HARD (11X21X2.5-MM THK)
14	NPR	1	106-0843	1	TUBE AS
15	NPR	1	5P-8112	1	GROMMET
16	NPR	1	5P-7466	1	CLIP (SLOT)
17	NPR M	1,2	8T-4136	4	BOLT (M10X1.5X25-MM)
18	NPR	1	106-0425	1	PLATE AS (WORK TOOL REST)
19	NPR M	1,2	8T-4139	2	BOLT (M12X1.75X30-MM)
20	NPR	1	5P-7467	1	CLIP (TAB)
21	NPR	1	110-7713	1	TUBE AS
22	NPR	1,2	123-7637	2	CAP
23	NPR	2	5K-9090	2	SEAL-O-RING
24	NPR	2	107-6708	1	BRACKET
25	NPR	1	6V-8398	1	SEAL-O-RING

26 NPR 1 123-3201 1 TUBE AS

27 NPR 2 8S-0023 1 CLIP (SLOT)

28 NPR 2 8S-0024 1 CLIP (TAB)

29 NPR I 2 106-0409 1 HOSE AS

30 NPR 2 5P-8444 1 GROMMET

31 NPR 2 5P-7468 1 CLIP (SLOT)

32 NPR 2 5P-7469 1 CLIP (TAB)

33 NPR 2 106-0411 2 BLOCK

34 NPR 2 106-0412 2 BLOCK

35 NPR 2 106-0413 2 BLOCK

36 NPR M 2 7X-2538 2 BOLT (M8X1.25X100-MM)

37 NPR 1,2 101-0863 2 FILM-INSTRUCTION (RETURN FLOW)

38 NPR 2 124-7633 1 TUBE AS

39 NPR I 1 159-1551 1 HOSE AS

40 NPR 2 110-7710 1 TUBE AS

41 NPR I 1 106-0405 1 HOSE AS

42 NPR I 1 183-2909 1 HOSE AS

43 NPR 2 106-0414 1 BLOCK

44 NPR 2 106-0415 1 BLOCK

45 NPR 2 106-0416 1 BLOCK

46 NPR M 2 6V-9189 2 LOCKNUT (M8X1.25-THD)

47 NPR 1 8T-1891 1 CLIP (SLOT)

48 NPR 1 8T-1892 1 CLIP (TAB)

49 NPR M 2 8T-4137 1 BOLT (M10X1.5X20-MM)

50 NPR 1 148-8317 1 CONNECTOR AS

NPR 1 3D-2824 1 SEAL-O-RING

NPR 1 5K-9090 1 SEAL-O-RING

NPR 1 6V-8714 1 CONNECTOR

51 NPR 1 148-8450 1 TEE AS

NPR 1 3E-7443 1 TEE-UNION

NPR 1 5K-9090 1 SEAL-O-RING

NPR 1 6V-9746 2 SEAL-O-RING

52 NPR 1 148-8392 1 ELBOW AS

NPR 1 6V-9746 1 SEAL-O-RING

NPR 1 6V-9853 1 ELBOW

53 NPR 1 148-8352 2 ELBOW AS

(EACH INCLUDES)

NPR 1 5K-9090 1 SEAL-O-RING

NPR 1 6V-9854 1 ELBOW (SWIVEL)

54 NPR 1 148-8387 1 ELBOW AS

NPR 1 6V-8400 1 SEAL-O-RING

NPR 1 6V-9855 1 ELBOW

55 NPR 1 148-8386 1 ELBOW AS

NPR 1 3E-7426 1 ELBOW

NPR 1 5K-9090 1 SEAL-O-RING

NPR 1 6V-8400 1 SEAL-O-RING

56 NPR 1 150-3053 1 CONNECTOR AS

NPR 1 6V-9746 1 SEAL-O-RING

NPR 1 7M-8485 1 SEAL-O-RING

NPR 1 108-3872 1 CONNECTOR

57 NPR 2 150-3052 1 CONNECTOR AS

NPR 2 5K-9090 1 SEAL-O-RING

NPR 2 7M-8485 1 SEAL-O-RING

NPR 2 107-6709 1 CONNECTOR

58 NPR Y 1 178-7481 1 VALVE GP-CHECK

NPR 1 5K-9090 2 SEAL-O-RING

NPR 1 7M-8485 1 SEAL-O-RING

NPR 1 176-5645 1 VALVE GP-CHECK

59 NPR E 2 160-2247 SLEEVE-ABRASION (68CM)

60 NPR 2 096-0061 2 STRAP-CABLE

Key:

E - ORDER BY THE CENTIMETER
I - REFER TO HYDRAULIC INFORMATION SYSTEM
M - METRIC PART
Y - Separate Illustration

178-8574 LINES GP-BACKHOE AUXILIARY --S/N 4ZN16044-50156--FIELD INSTALLED

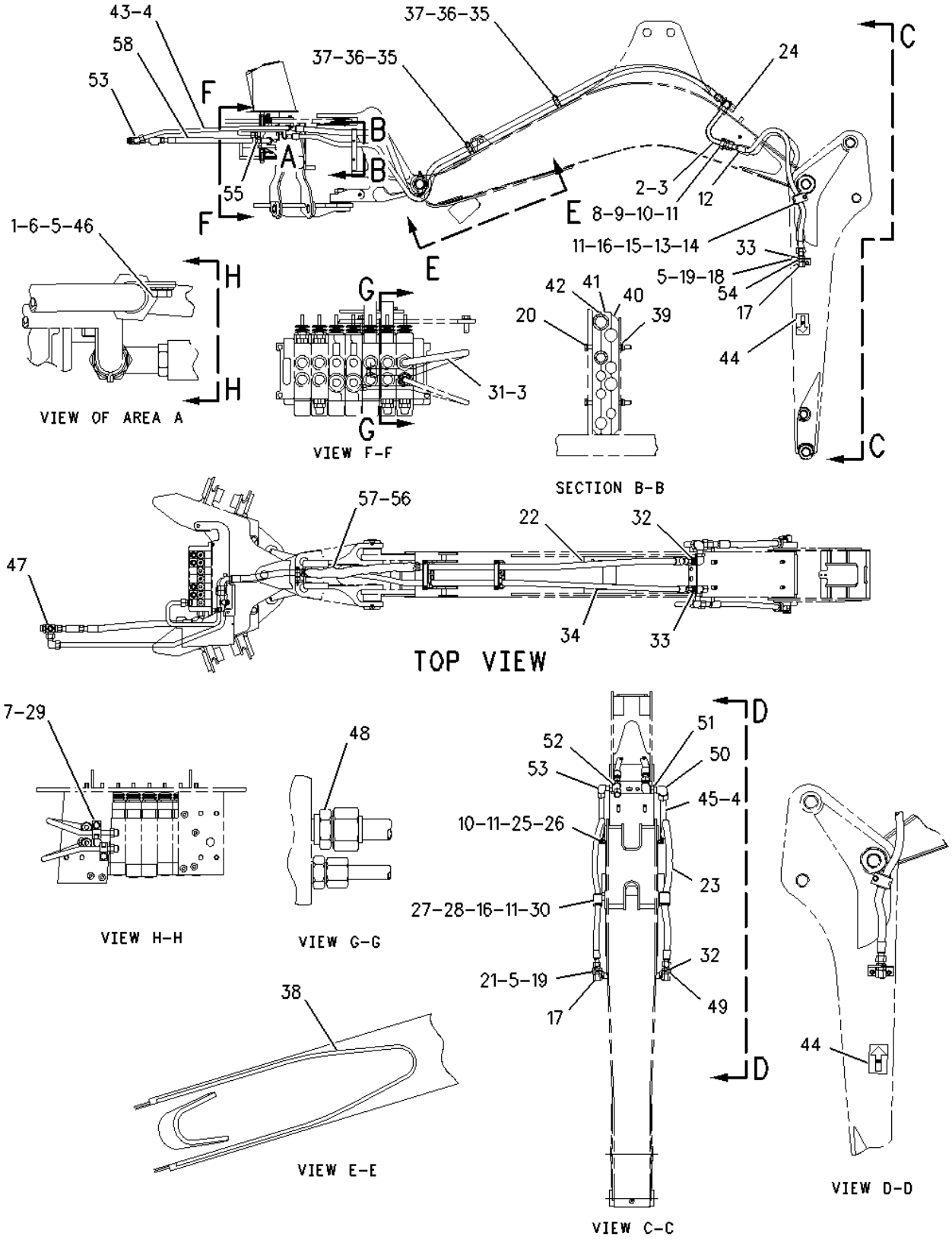

1 NPR 8T-1889 1 CLIP (SLOT)

2 NPR 110-7709 1 TUBE AS

3 NPR 6V-9746 2 SEAL-O-RING

4	NPR	5K-9090	2	SEAL-O-RING
5	NPR	8T-4121	5	WASHER-HARD (11X21X2.5-MM THK)
6	NPR	8T-1890	1	CLIP (TAB)
7	NPR	8T-1891	1	CLIP (SLOT)
8	NPR	7S-3916	1	CLIP (TAB)
9	NPR	7S-3919	1	CLIP (SLOT)
10	NPR M	8T-4192	2	BOLT (M12X1.75X25-MM)
11	NPR	8T-4223	4	WASHER-HARD (13.5X25.5X3-MM THK)
12	NPR I	8W-5149	1	HOSE AS
13	NPR	5P-7467	1	CLIP (TAB)
14	NPR	5P-7466	1	CLIP (SLOT)
15	NPR	5P-8112	1	GROMMET
16	NPR M	8T-4139	2	BOLT (M12X1.75X30-MM)
17	NPR	123-7637	2	CAP
18	NPR	109-1260	1	BRACKET
19	NPR M	8T-4136	4	BOLT (M10X1.5X25-MM)
20	NPR M	7X-2538	2	BOLT (M8X1.25X100-MM)
21	NPR	107-6708	1	BRACKET
22	NPR I	159-1551	1	HOSE AS
23	NPR I	106-0409	1	HOSE AS
24	NPR	6V-9832	1	CAP AS
25	NPR	8S-0023	1	CLIP (SLOT)
26	NPR	8S-0024	1	CLIP (TAB)
27	NPR	5P-7468	1	CLIP (SLOT)
28	NPR	5P-7469	1	CLIP (TAB)

29 NPR 8T-1892 1 CLIP (TAB)

30 NPR 5P-8444 1 GROMMET

31 NPR 123-3201 1 TUBE AS

32 NPR 6V-9172 2 NUT (1-7/16-12-THD)

33 NPR 2P-1293 2 LOCKNUT (1-3/16-12-THD)

34 NPR I 106-0405 1 HOSE AS

35 NPR 106-0411 2 BLOCK

36 NPR 106-0412 2 BLOCK

37 NPR 106-0413 2 BLOCK

38 NPR 106-0425 1 PLATE AS (WORK TOOL REST)

39 NPR M 6V-9189 2 LOCKNUT (M8X1.25-THD)

40 NPR 106-0414 1 BLOCK

41 NPR 106-0415 1 BLOCK

42 NPR 106-0416 1 BLOCK

43 NPR 124-7633 1 TUBE AS

44 NPR 101-0863 2 FILM-INSTRUCTION (RETURN FLOW)

45 NPR 110-7710 1 TUBE AS

46 NPR M 8T-4137 1 BOLT (M10X1.5X20-MM)

47 NPR Y 178-7481 1 VALVE GP-CHECK

48 NPR 148-8317 1 CONNECTOR AS

NPR 3D-2824 1 SEAL-O-RING

NPR 5K-9090 1 SEAL-O-RING

NPR 6V-8714 1 CONNECTOR

49 NPR 150-3052 1 CONNECTOR AS

NPR 5K-9090 1 SEAL-O-RING

NPR 7M-8485 1 SEAL-O-RING

NPR 107-6709 1 CONNECTOR

50 NPR 148-8387 1 ELBOW AS

NPR 6V-8400 1 SEAL-O-RING

NPR 6V-9855 1 ELBOW

51 NPR 148-8386 1 ELBOW AS

NPR 3E-7426 1 ELBOW

NPR 5K-9090 1 SEAL-O-RING

NPR 6V-8400 1 SEAL-O-RING

52 NPR 148-8450 1 TEE AS

NPR 3E-7443 1 TEE-UNION

NPR 5K-9090 1 SEAL-O-RING

NPR 6V-9746 2 SEAL-O-RING

53 NPR 148-8352 2 ELBOW AS

(EACH INCLUDES)

NPR 5K-9090 1 SEAL-O-RING

NPR 6V-9854 1 ELBOW (SWIVEL)

54 NPR 150-3053 1 CONNECTOR AS

NPR 6V-9746 1 SEAL-O-RING

NPR 7M-8485 1 SEAL-O-RING

NPR 108-3872 1 CONNECTOR

55 NPR 148-8408 1 PLUG AS

NPR 3D-2824 1 SEAL-O-RING

NPR 9S-4183 1 PLUG-O RING

56 NPR BG 160-2247 SLEEVE-ABRASION (40.9 IN)

57 NPR 096-0061 4 STRAP-CABLE

58 NPR I 183-2909 1 HOSE AS

Key:

B - USE AS REQUIRED
G - ORDER BY THE INCH
I - REFER TO HYDRAULIC INFORMATION SYSTEM
M - METRIC PART
Y - SEPARATE ILLUSTRATION

178-8577 LINES GP-BACKHOE AUXILIARY --S/N 4ZN16044-50156--FIELD INSTALLED

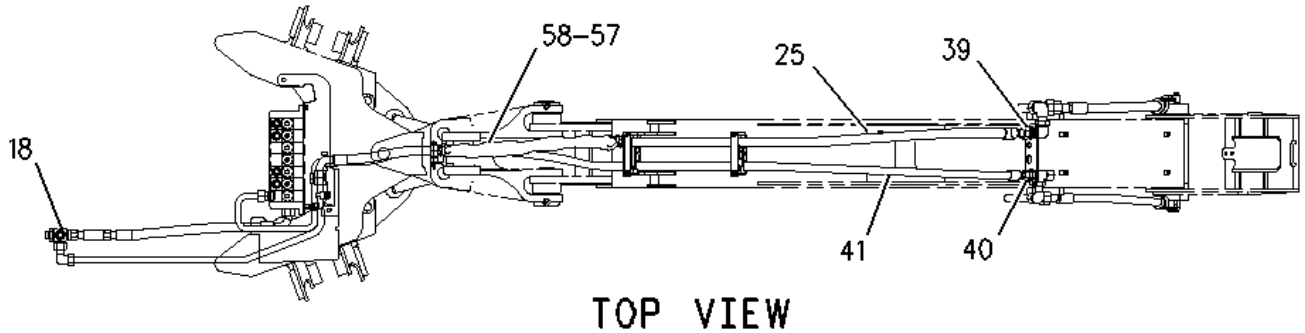

TOP VIEW

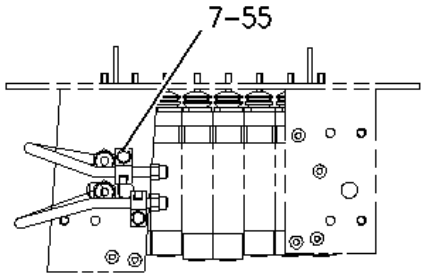

VIEW H-H

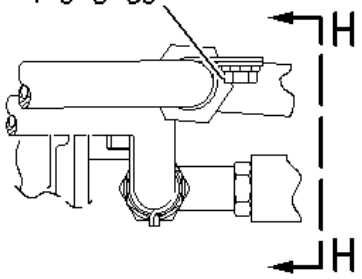

VIEW OF AREA A

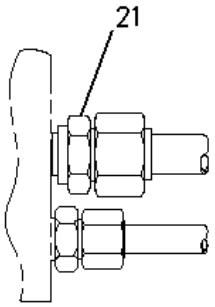

VIEW G-G

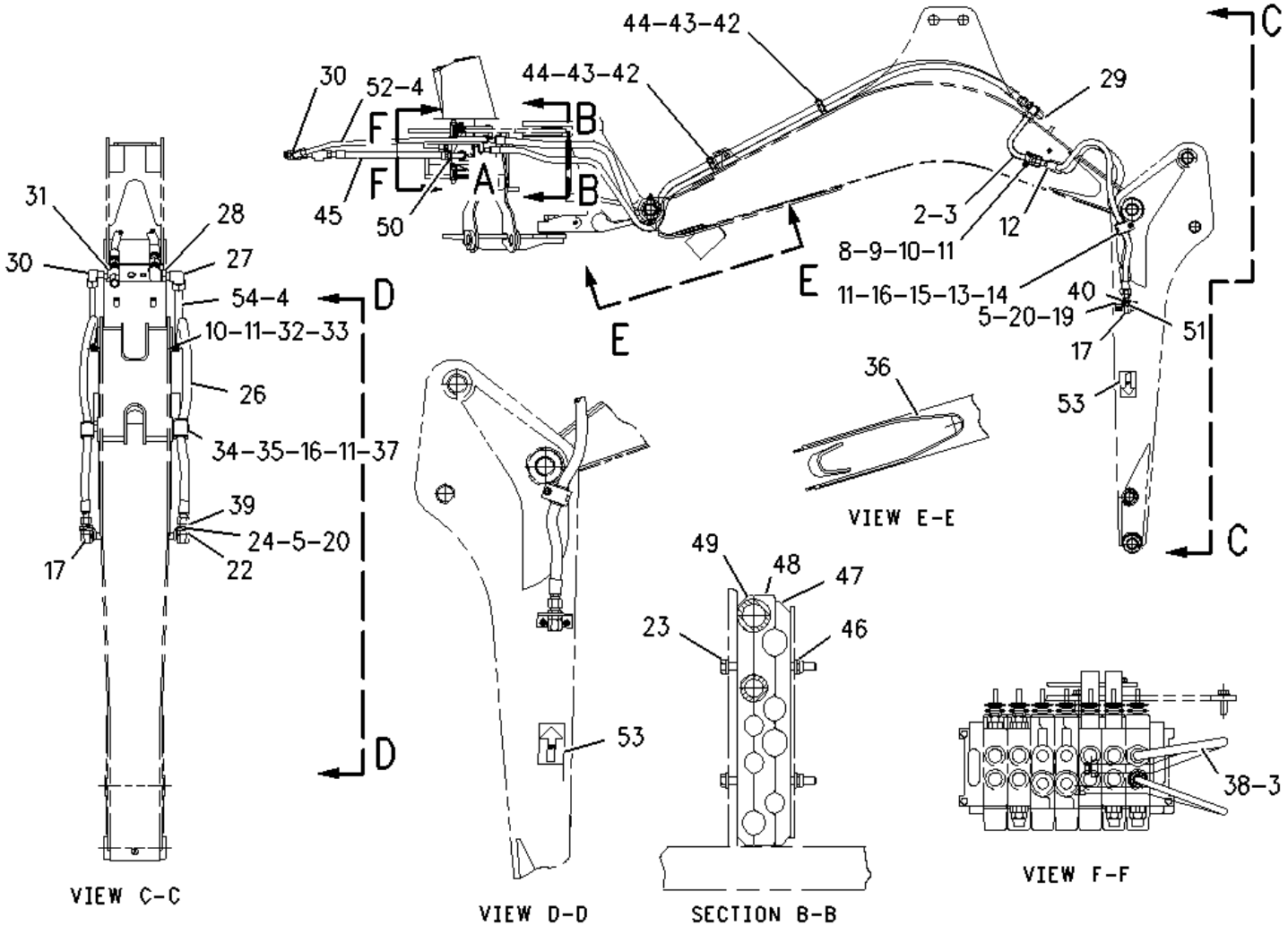

VIEW E-E

VIEW C-C

VIEW D-D

SECTION B-B

VIEW F-F

1	NPR	8T-1889	1	CLIP (SLOT)
2	NPR	110-7709	1	TUBE AS
3	NPR	6V-9746	2	SEAL-O-RING
4	NPR	5K-9090	2	SEAL-O-RING
5	NPR	8T-4121	5	WASHER-HARD (11X21X2.5-MM THK)
6	NPR	8T-1890	1	CLIP (TAB)
7	NPR	8T-1891	1	CLIP (SLOT)
8	NPR	7S-3916	1	CLIP (TAB)
9	NPR	7S-3919	1	CLIP (SLOT)
10	NPR M	8T-4192	2	BOLT (M12X1.75X25-MM)
11	NPR	8T-4223	4	WASHER-HARD (13.5X25.5X3-MM THK)
12	NPR I	8W-5149	1	HOSE AS
13	NPR	5P-7467	1	CLIP (TAB)
14	NPR	5P-7466	1	CLIP (SLOT)
15	NPR	5P-8112	1	GROMMET
16	NPR M	8T-4139	2	BOLT (M12X1.75X30-MM)
17	NPR	123-7637	2	CAP
18	NPR Y	178-7481	1	VALVE GP-CHECK
19	NPR	109-1260	1	BRACKET
20	NPR M	8T-4136	4	BOLT (M10X1.5X25-MM)
21	NPR	148-8317	1	CONNECTOR AS
	NPR	3D-2824	1	SEAL-O-RING
	NPR	5K-9090	1	SEAL-O-RING
	NPR	6V-8714	1	CONNECTOR
22	NPR	150-3052	1	CONNECTOR AS

	NPR	5K-9090	1	SEAL-O-RING
	NPR	7M-8485	1	SEAL-O-RING
	NPR	107-6709	1	CONNECTOR
23	NPR M	7X-2538	2	BOLT (M8X1.25X100-MM)
24	NPR	107-6708	1	BRACKET
25	NPR I	159-1551	1	HOSE AS
26	NPR I	106-0409	1	HOSE AS
27	NPR	148-8387	1	ELBOW AS
	NPR	6V-8400	1	SEAL-O-RING
	NPR	6V-9855	1	ELBOW
28	NPR	148-8386	1	ELBOW AS
	NPR	3E-7426	1	ELBOW
	NPR	5K-9090	1	SEAL-O-RING
	NPR	6V-8400	1	SEAL-O-RING
29	NPR	6V-9832	1	CAP AS
30	NPR	148-8352	2	ELBOW AS
	NPR	5K-9090	1	SEAL-O-RING
	NPR	6V-9854	1	ELBOW (SWIVEL)
31	NPR	148-8450	1	TEE AS
	NPR	3E-7443	1	TEE-UNION
	NPR	5K-9090	1	SEAL-O-RING
	NPR	6V-9746	2	SEAL-O-RING
32	NPR	8S-0023	1	CLIP (SLOT)
33	NPR	8S-0024	1	CLIP (TAB)
34	NPR	5P-7468	1	CLIP (SLOT)

35	NPR	5P-7469	1	CLIP (TAB)
36	NPR	106-0425	1	PLATE AS (WORK TOOL REST)
37	NPR	5P-8444	1	GROMMET
38	NPR	123-3201	1	TUBE AS
39	NPR	6V-9172	2	NUT (1-7/16-12-THD)
40	NPR	2P-1293	2	LOCKNUT (1-3/16-12-THD)
41	NPR I	106-0405	1	HOSE AS
42	NPR	106-0411	2	BLOCK
43	NPR	106-0412	2	BLOCK
44	NPR	106-0413	2	BLOCK
45	NPR I	183-2909	1	HOSE AS
46	NPR M	6V-9189	2	LOCKNUT (M8X1.25-THD)
47	NPR	106-0414	1	BLOCK
48	NPR	106-0415	1	BLOCK
49	NPR	106-0416	1	BLOCK
50	NPR	148-8408	1	PLUG AS
	NPR	3D-2824	1	SEAL-O-RING
	NPR	9S-4183	1	PLUG-O RING
51	NPR	150-3053	1	CONNECTOR AS
	NPR	6V-9746	1	SEAL-O-RING
	NPR	7M-8485	1	SEAL-O-RING
	NPR	108-3872	1	CONNECTOR
52	NPR	124-7633	1	TUBE AS
53	NPR	101-0863	2	FILM-INSTRUCTION (RETURN FLOW)
54	NPR	110-7710	1	TUBE AS

55 NPR 8T-1892 1 CLIP (TAB)

56 NPR M 8T-4137 1 BOLT (M10X1.5X20-MM)

57 NPR BG 160-2247 1 SLEEVE-ABRASION (40.95 IN)

58 NPR 096-0061 4 STRAP-CABLE

Key:

B - USE AS REQUIRED
G - ORDER BY THE INCH
I - REFER TO HYDRAULIC INFORMATION SYSTEM
M - METRIC PART
Y - SEPARATE ILLUSTRATION

106-5876 LINES GP-LOADER AUXILIARY --S/N 4ZN16044-50156
ONE CIRCUIT, SCISSORS --PART OF 106-6261, 159-4872, 163-9200 HYDRAULIC AR

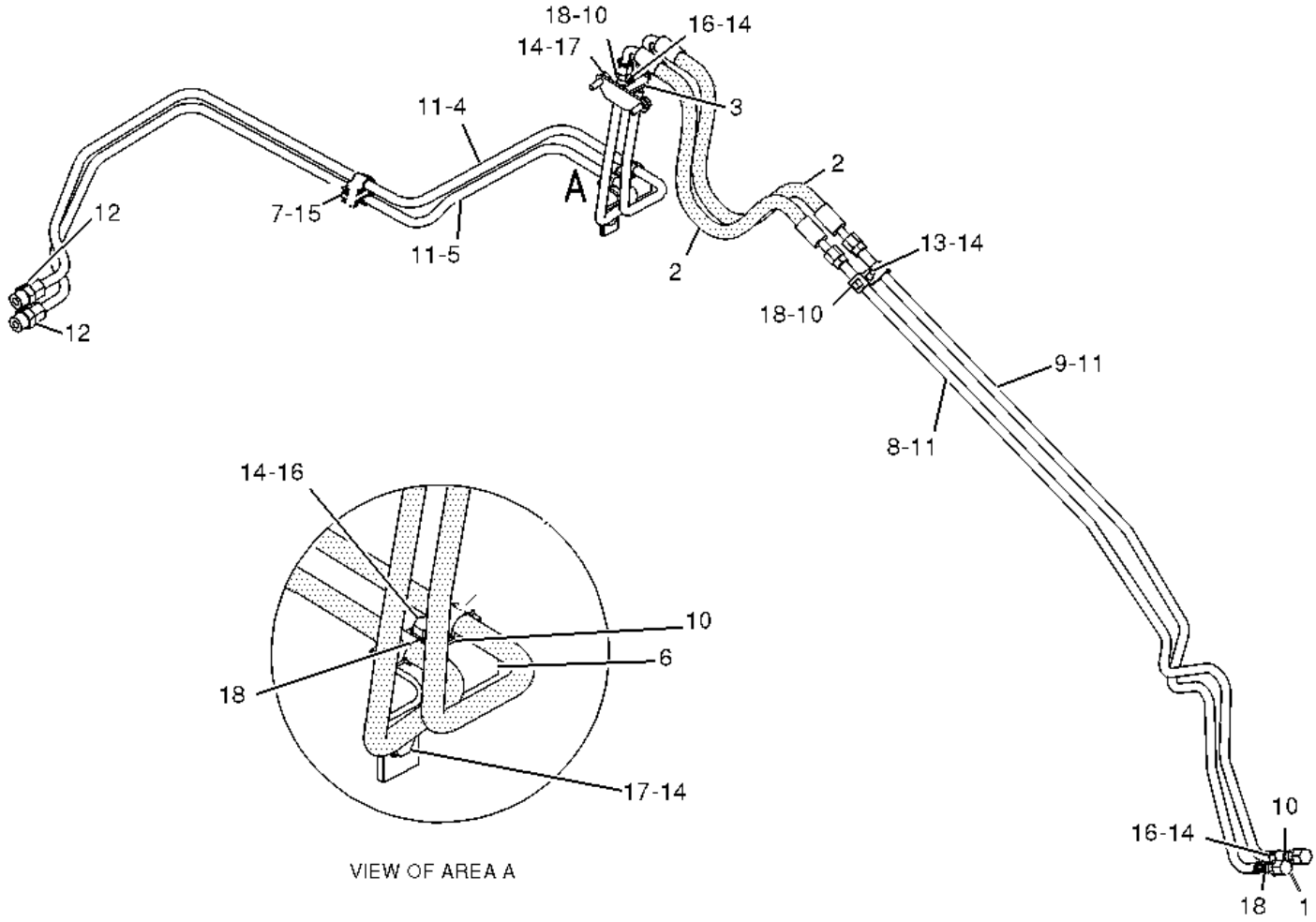

1 NPR 6V-9830 2 CAP AS

2 NPR I 9R-9198 2 HOSE AS

3 NPR 9R-9319 1 BRACKET AS

NPR M 8T-3490 1 NUT-WELD (M10X1.5-THD)

4 NPR 116-4616 1 TUBE AS

5 NPR 116-4617 1 TUBE AS

6 NPR 122-5823 1 BRACKET AS

NPR M 8T-3490 1 NUT-WELD (M10X1.5-THD)

7	NPR	151-4841	1	BLOCK
8	NPR	133-7332	1	TUBE AS
9	NPR	133-7333	1	TUBE AS
10	NPR	9R-7803	4	CLIP (TAB)
11	NPR	6V-8398	6	SEAL-O-RING
12	NPR	148-8341	2	CONNECTOR AS
	(EACH INCLUDES)			
	NPR	3D-2824	1	SEAL-O-RING
	NPR	6V-8713	1	CONNECTOR
	NPR	7J-9108	1	SEAL-O-RING
13	NPR M	8T-4137	1	BOLT (M10X1.5X20-MM)
14	NPR	8T-4121	8	WASHER-HARD (11X21X2.5-MM THK)
15	NPR	7K-1181	1	STRAP-CABLE
16	NPR M	8T-4136	3	BOLT (M10X1.5X25-MM)
17	NPR M	8T-4195	3	BOLT (M10X1.5X30-MM)
18	NPR	158-3412	8	CLIP (SLOT)

Key:

I - REFER TO HYDRAULIC INFORMATION SYSTEM
M - METRIC PART

8Y-7474 LINES GP-BACKHOE --S/N 4ZN16044-50156--PART OF 154-5437 HYDRAULIC AR

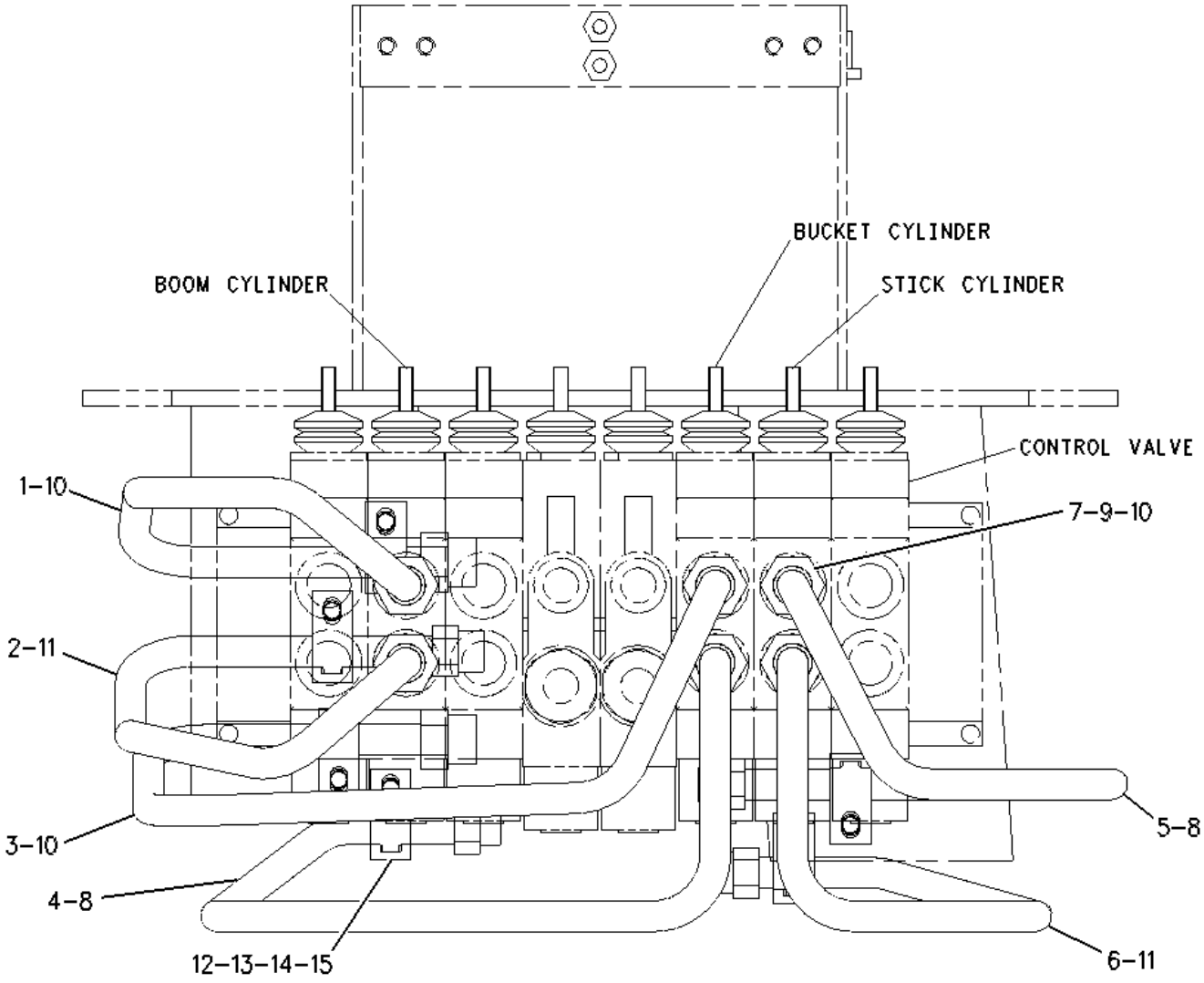

1 NPR 141-7533 1 TUBE AS

2 NPR 113-7874 1 TUBE AS

3 NPR 113-7875 1 TUBE AS

4 NPR 113-7876 1 TUBE AS

5 NPR 116-2299 1 TUBE AS

6 NPR 116-2300 1 TUBE AS

7 NPR 3D-2824 6 SEAL-O-RING

8 NPR 6V-8398 2 SEAL-O-RING

9 NPR 6V-8637 6 CONNECTOR

10	NPR	6V-9746	8	SEAL-O-RING
11	NPR	7J-9108	2	SEAL-O-RING
12	NPR	8T-1887	6	CLIP (SLOT)
13	NPR	8T-1888	6	CLIP (TAB)
14	NPR	8T-4121	6	WASHER-HARD (11X21X2.5-MM THK)
15	NPR M	8T-4137	6	BOLT (M10X1.5X20-MM)

Key:

M - METRIC PART

9R-7601 LINES GP-BOOM --S/N 4ZN16044-50156
PART OF 154-5309, 154-5312 BACKHOE AR-EXTENDABLE STICK, 154-5300, 154-5303, 154-5306 BACKHOE AR-STANDARD STICK

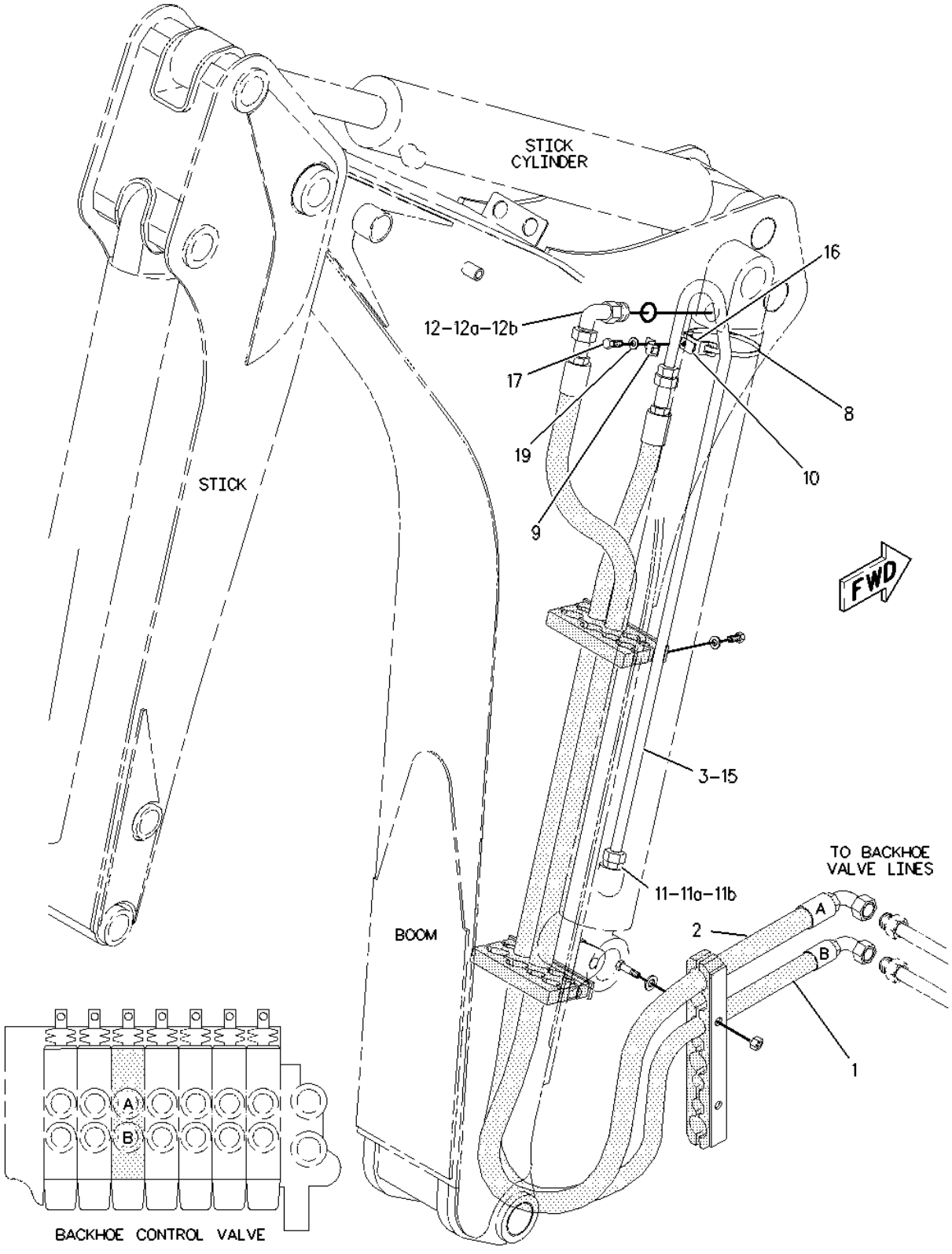

1 NPR I 9R-9165 1 HOSE AS

2 NPR I 9R-9164 1 HOSE AS

3 NPR 168-2472 1 TUBE AS

8	NPR	5P-0599	1	CLAMP-BAND
9	NPR	8T-1887	1	CLIP (SLOT)
10	NPR	8T-1888	1	CLIP (TAB)
11	NPR	3D-2824	1	SEAL-O-RING
11A	NPR	6V-8637	1	CONNECTOR
11B	NPR	6V-9746	1	SEAL-O-RING
12	NPR	3D-2824	1	SEAL-O-RING
12A	NPR	6V-9746	1	SEAL-O-RING
12B	NPR	6V-9007	1	ELBOW
15	NPR	7J-9108	1	SEAL-O-RING
16	NPR	9R-4619	1	SUPPORT AS
	NPR M	6V-8224	1	NUT-WELD (M10X1.15-THD)
17	NPR M	8T-4137	1	BOLT (M10X1.5X20-MM)
19	NPR	8T-4121	1	WASHER-HARD (11X21X2.5-MM THK)

Key:

I - REFER TO HYDRAULIC INFORMATION SYSTEM
M - METRIC PART

136-7835 LINES GP-BOOM --S/N 4ZN16044-50156
PART OF 136-7830 CONTROL AR-BOOM LOAD

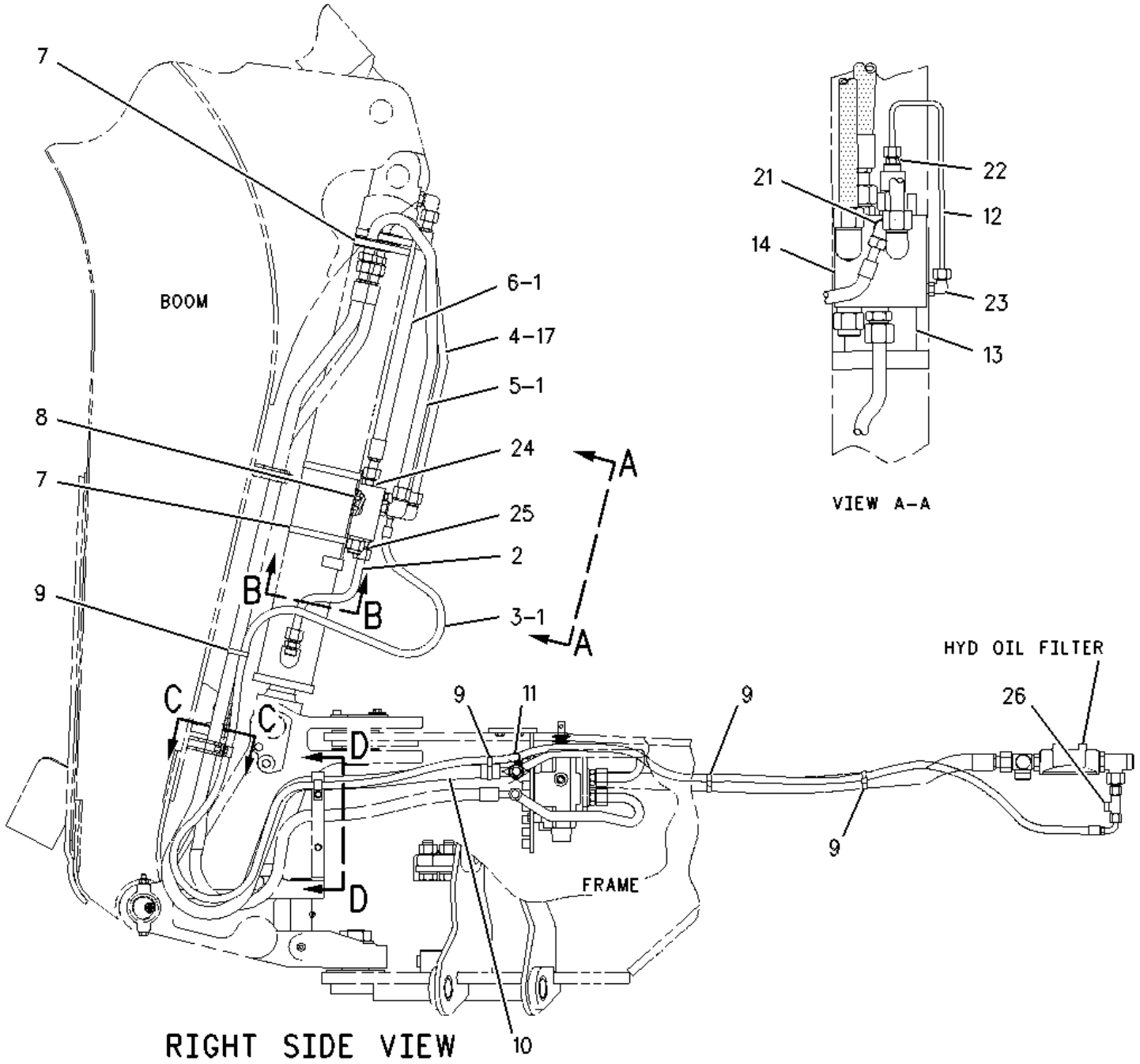

VIEW A-A

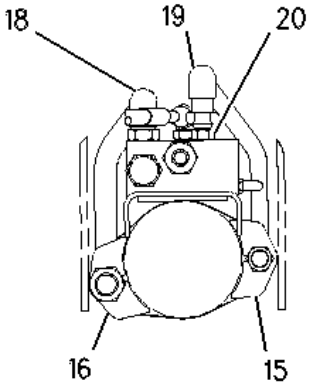

SECTION B-B

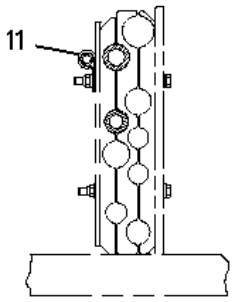

SECTION D-D

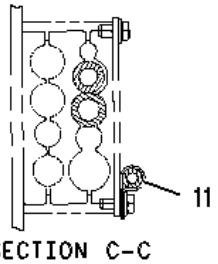

SECTION C-C

1 NPR 6V-9746 3 SEAL-O-RING

2 NPR 8Y-7440 1 TUBE AS (18.94MM ID)

3 NPR I 124-9675 1 HOSE AS

4 NPR 9R-9391 1 TUBE AS

5 NPR 9R-9392 1 TUBE AS

6 NPR I 9C-5246 1 HOSE AS

7 NPR 5P-0599 4 CLAMP-BAND

8 NPR M 6V-8973 2 SCREW-MACHINE (M8X1.25)

9 NPR 7K-1181 4 STRAP-CABLE

10 NPR I 114-6489 1 HOSE AS

11 NPR 8M-2773 3 CLIP

12 NPR 9R-9393 1 TUBE AS

13 NPR 9R-9389 1 PLATE AS

14 NPR Y 6E-3942 1 VALVE GP-LOAD CONTROL (17.46MM ID)

15 NPR 9R-2053 1 BLOCK

16 NPR 9R-5948 1 BLOCK

17 NPR 7J-9108 1 SEAL-O-RING

18 NPR 8T-6684 1 ELBOW

NPR 3D-2824 SEAL-O-RING

NPR 5K-9090 SEAL-O-RING

19 NPR 8C-8762 1 ELBOW

NPR 6V-9746 SEAL-O-RING

20 NPR 6V-8638 1 CONNECTOR

NPR 2M-9780 SEAL-O-RING

NPR 6V-8398 SEAL-O-RING

21 NPR 6V-8723 1 ELBOW

	NPR	3K-0360		SEAL-O-RING
	NPR	6V-8397		SEAL-O-RING
22	NPR	6V-8647	1	CONNECTOR
	NPR	3J-7354		SEAL-O-RING
	NPR	4J-5477		SEAL-O-RING
23	NPR	6V-8628	1	ELBOW
	NPR	3J-7354		SEAL-O-RING
	NPR	4J-5477		SEAL-O-RING
24	NPR	6V-9746	1	SEAL-O-RING
	NPR	3D-2824		SEAL-O-RING
	NPR	6V-9746		SEAL-O-RING
25	NPR	6V-9746	1	SEAL-O-RING
	NPR	2M-9780		SEAL-O-RING
	NPR	6V-9746		SEAL-O-RING
26	NPR	6V-9836	1	TEE-SWIVEL
	NPR	6V-8397		SEAL-O-RING

Key:

I - REFER TO HYDRAULIC INFORMATION SYSTEM
M - METRIC PART
Y - SEPARATE ILLUSTRATION

PART OF 154-5309, 154-5311 BACKHOE AR-EXTENDABLE STICK, 154-5300, 154-5302, 154-5306, 154-5308 BACKHOE AR-STANDARD STICK

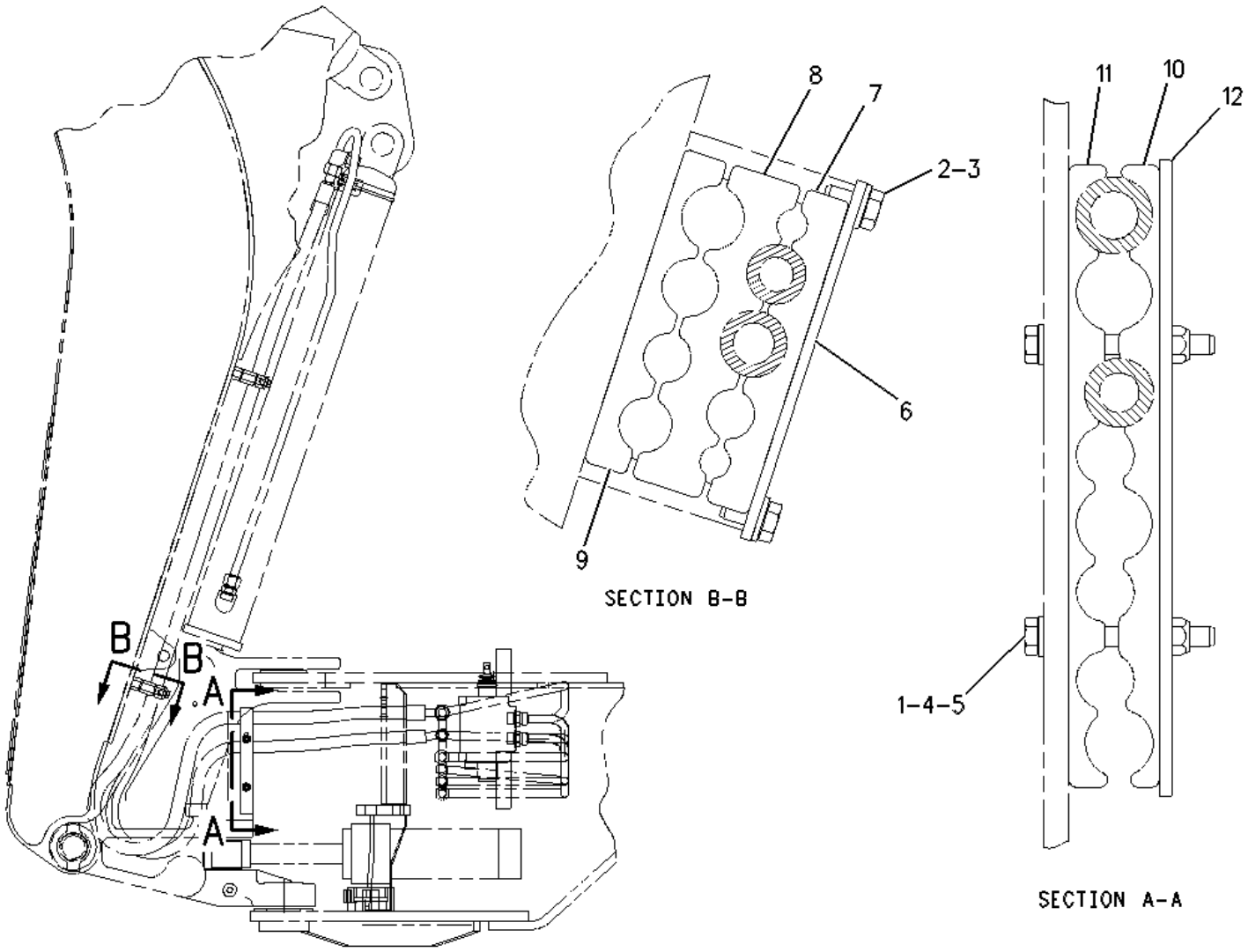

1	NPR M	6V-9189	2	LOCKNUT (M8X1.25-THD)
2	NPR	8T-4121	4	WASHER-HARD (11X21X2.5-MM THK)
3	NPR M	8T-4136	4	BOLT (M10X1.5X25-MM)
4	NPR	8T-4224	4	WASHER-HARD (8.8X16X2-MM THK)
5	NPR M	8T-6870	2	BOLT (M8X1.25X70-MM)
6	NPR	9R-8874	2	PLATE
7	NPR	9R-8875	2	BLOCK
8	NPR	109-1258	2	BLOCK
9	NPR	109-1259	2	BLOCK
10	NPR	119-9398	1	BLOCK
11	NPR	119-9399	1	BLOCK
12	NPR	120-4397	1	PLATE

Key: M - METRIC PART

165-7770 MOUNTING GP-LINES--S/N 4ZN16044-50156

PART OF 154-5312, 154-5314 BACKHOE AR-EXTENDABLE STICK, 154-5303, 154-5305 BACKHOE AR-STANDARD STICK

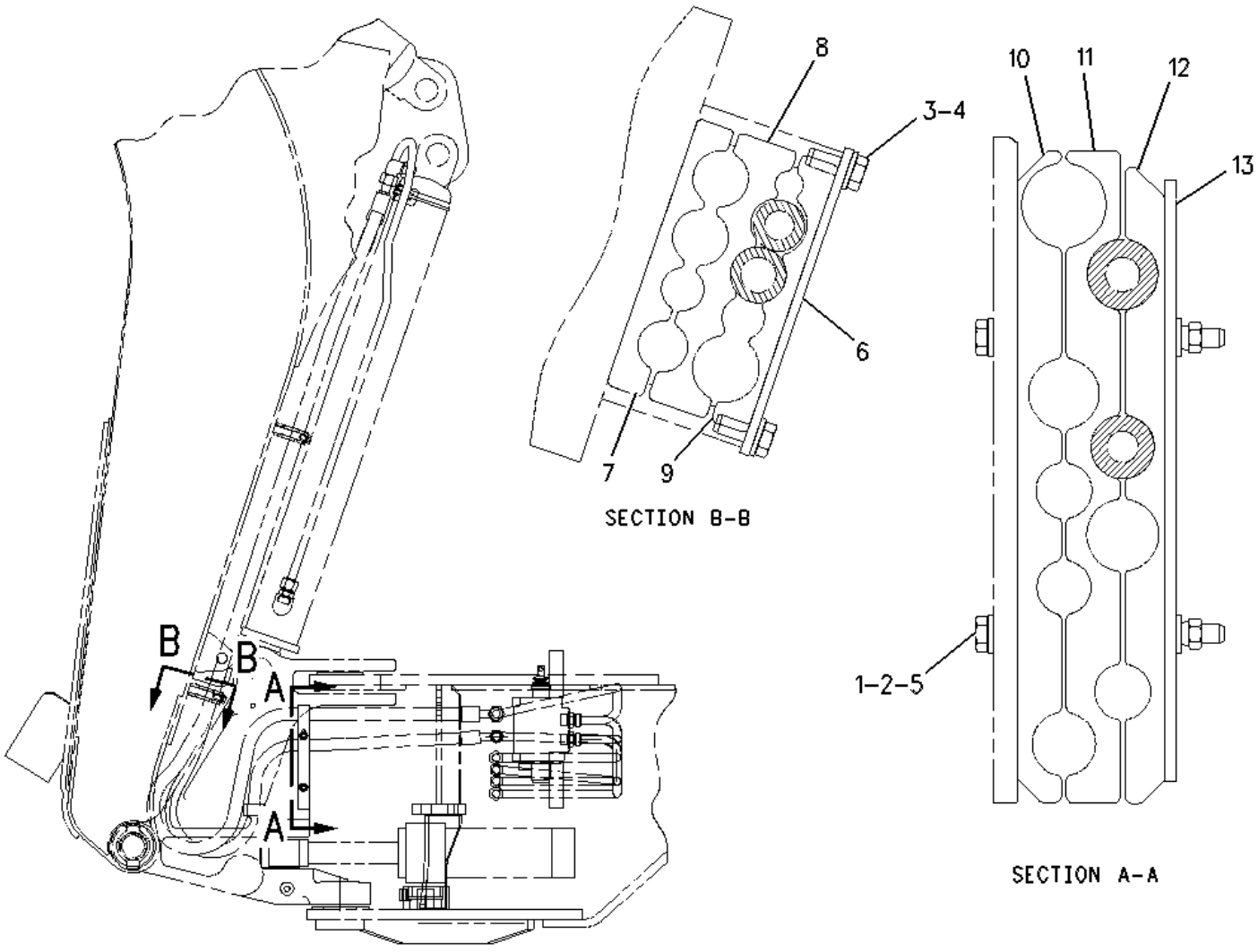

1 NPR M 6V-9189 2 LOCKNUT (M8X1.25-THD)

2 NPR M 7X-2538 2 BOLT (M8X1.25X100-MM)

3 NPR 8T-4121 4 WASHER-HARD (11X21X2.5-MM THK)

4 NPR M 8T-4136 4 BOLT (M10X1.5X25-MM)

5 NPR 8T-4224 4 WASHER-HARD (8.8X16X2-MM THK)

6 NPR 9R-8874 2 PLATE

7 NPR 106-0411 2 BLOCK

8 NPR 106-0412 2 BLOCK

9 NPR 106-0413 2 BLOCK

10 NPR 106-0414 1 BLOCK

11	**NPR**	**106-0415**	**1**	**BLOCK**
12	**NPR**	**106-0416**	**1**	**BLOCK**
13	**NPR**	**120-4397**	**1**	**PLATE**

Key:

M - METRIC PART

PART OF 154-5300, 154-5302, 154-5303, 154-5305, 154-5306, 154-5308 BACKHOE AR-STANDARD STICK
Type 1

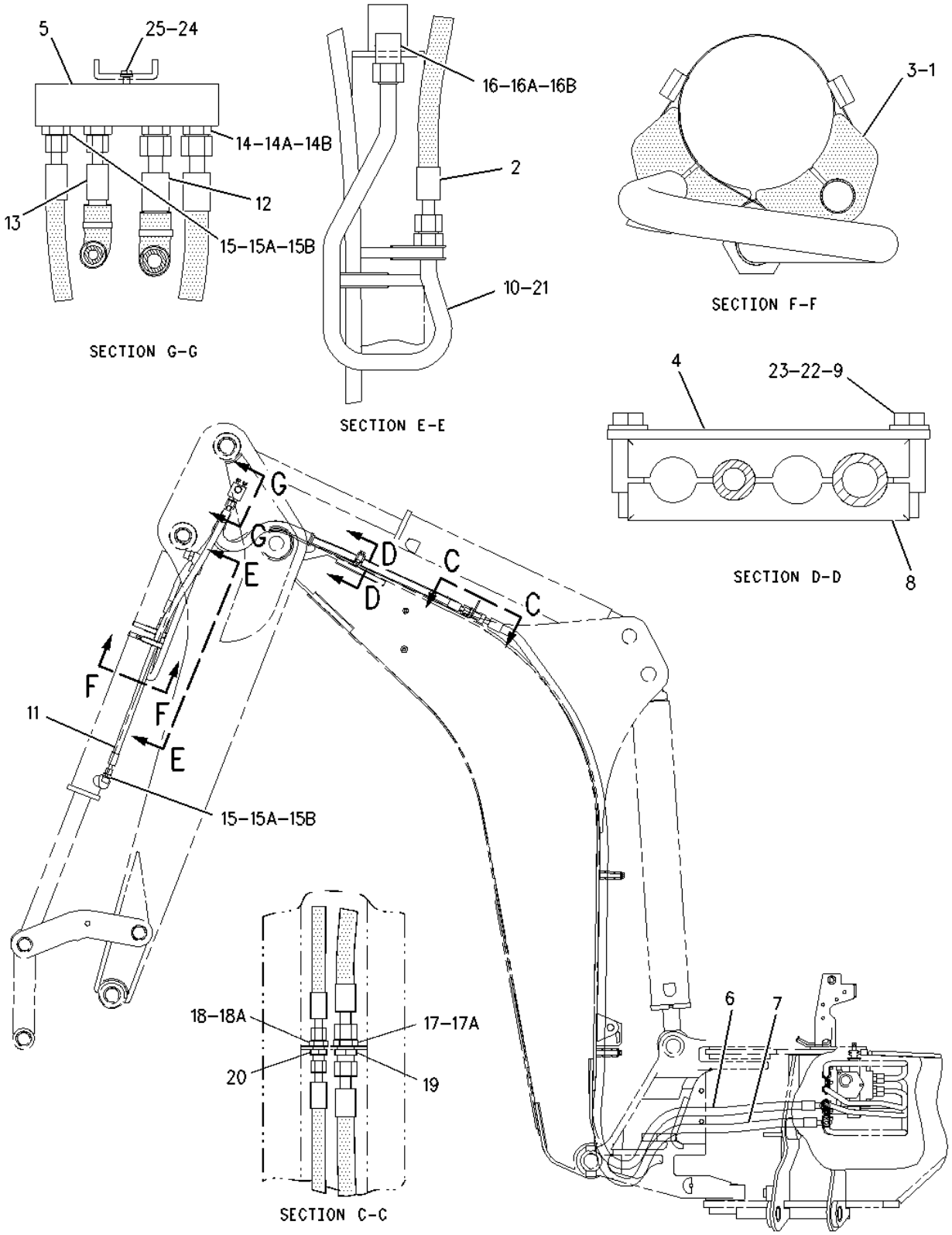

1 NPR 5P-0599 2 CLAMP-BAND

2 NPR I 9C-6729 1 HOSE AS

3 NPR 9R-5948 2 BLOCK

4 NPR 9R-8874 1 PLATE

5	NPR	9R-9205	1	MANIFOLD AS
6	NPR I	9R-9218	1	HOSE AS
7	NPR I	9R-9221	1	HOSE AS
8	NPR	109-1259	2	BLOCK
9	NPR	111-0484	2	SPACER (10.7X17.1X30-MM THK)
10	NPR	126-7423	1	TUBE AS
11	NPR I	174-4754	1	HOSE AS
12	NPR I	180-2529	1	HOSE AS
13	NPR I	180-2530	1	HOSE AS
14	NPR	3D-2824	2	SEAL-O-RING
14A	NPR	6V-8637	2	CONNECTOR
14B	NPR	6V-9746	2	SEAL-O-RING
15	NPR	3D-2824	3	SEAL-O-RING
15A	NPR	6V-8398	3	SEAL-O-RING
15B	NPR	6V-8633	3	CONNECTOR
16	NPR	3D-2824	1	SEAL-O-RING
16A	NPR	5K-9090	1	SEAL-O-RING
16B	NPR	8T-6684	1	ELBOW
17	NPR	6V-8997	1	UNION
17A	NPR	6V-9746	2	SEAL-O-RING
18	NPR	6V-8398	2	SEAL-O-RING
18A	NPR	6V-8995	1	UNION
19	NPR	2P-1293	1	LOCKNUT (1-3/16-12-THD)
20	NPR	6V-9169	1	NUT-BULKHEAD (13/16-16-THD)
21	NPR	6V-9746	1	SEAL-O-RING

22 NPR 8T-4121 2 WASHER-HARD (11X21X2.5-MM THK)

23 NPR M 8T-4185 2 BOLT (M10X1.5X50-MM)

24 NPR 8T-4224 2 WASHER-HARD (8.8X16X2-MM THK)

25 NPR M 8T-4908 2 BOLT (M8X1.25X25-MM)

Key:

I - REFER TO HYDRAULIC INFORMATION SYSTEM
M - METRIC PART

154-5394 LINES GP-BUCKET --S/N 4ZN16044-50156
PART OF 154-5300, 154-5302, 154-5303, 154-5305, 154-5306, 154-5308 BACKHOE AR-STANDARD STICK
Type 2

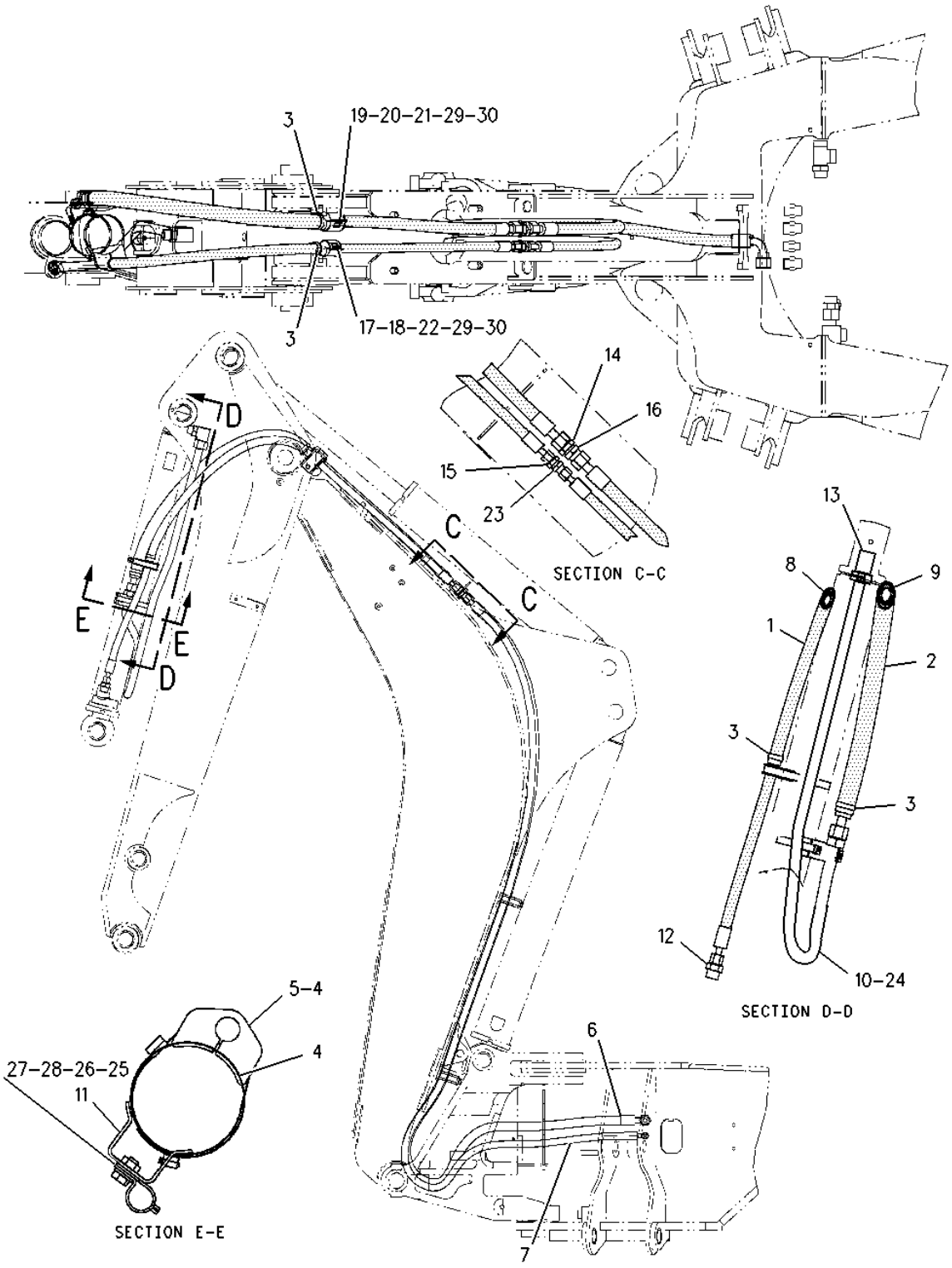

1 NPR G 160-2245 SLEEVE-ABRASION (30.7 INCHES)

2 NPR G 160-2247 SLEEVE-ABRASION (35.0 INCHES)

3 NPR 3S-2093 4 STRAP-CABLE

4 NPR 5P-0599 2 CLAMP-BAND

5	NPR	9R-5948	1	BLOCK
6	NPR I	9R-9218	1	HOSE AS
7	NPR I	9R-9221	1	HOSE AS
8	NPR I	186-3469	1	HOSE AS
9	NPR I	186-3470	1	HOSE AS
10	NPR	187-4343	1	TUBE AS
11	NPR	195-0268	1	BRACKET AS
12	NPR	148-8328	1	CONNECTOR AS
	NPR	3D-2824	1	SEAL-O-RING
	NPR	6V-8398	1	SEAL-O-RING
	NPR	6V-8633	1	CONNECTOR
13	NPR	148-8362	1	ELBOW AS
	NPR	3D-2824	1	SEAL-O-RING
	NPR	5K-9090	1	SEAL-O-RING
	NPR	8T-6684	1	ELBOW
14	NPR	148-8455	1	UNION AS
	NPR	6V-8997	1	UNION
	NPR	6V-9746	2	SEAL-O-RING
15	NPR	148-8457	1	UNION AS
	NPR	6V-8398	2	SEAL-O-RING
	NPR	6V-8995	1	UNION
16	NPR	2P-1293	1	LOCKNUT (1-3/16-12-THD)
17	NPR	5P-7464	1	CLIP (SLOT)
18	NPR	5P-7465	1	CLIP (TAB)
19	NPR	5P-7466	1	CLIP (SLOT)

20	NPR	5P-7467	1	CLIP (TAB)
21	NPR	5P-8112	1	GROMMET (46.0MM OD)
22	NPR	6V-1249	1	GROMMET
23	NPR	6V-9169	1	NUT-BULKHEAD (13/16-16-THD)
24	NPR	6V-9746	1	SEAL-O-RING
25	NPR	8T-1889	1	CLIP (SLOT)
26	NPR	8T-1890	1	CLIP (TAB)
27	NPR	8T-4121	1	WASHER-HARD (11X21X2.5-MM THK)
28	NPR M	8T-4137	1	BOLT (M10X1.5X20-MM)
29	NPR M	8T-4139	2	BOLT (M12X1.75X30-MM)
30	NPR	8T-4223	2	WASHER-HARD (13.5X25.5X3-MM THK)

Key:

G - ORDER BY THE INCH
I - REFER TO HYDRAULIC INFORMATION SYSTEM
M - METRIC PART

9R-3712 LINES GP-MULTIPURPOSE BUCKET --S/N 4ZN16044-50156
BOTTOM DUMP --PART OF 112-0938 BUCKET AR-MULTIPURPOSE--Type 1

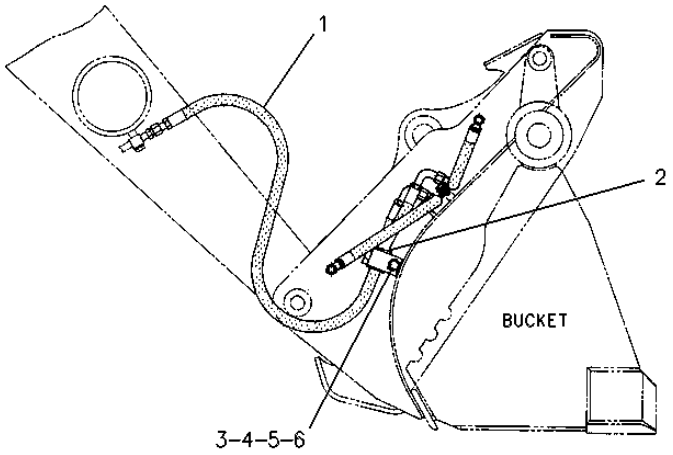

RIGHT SIDE VIEW

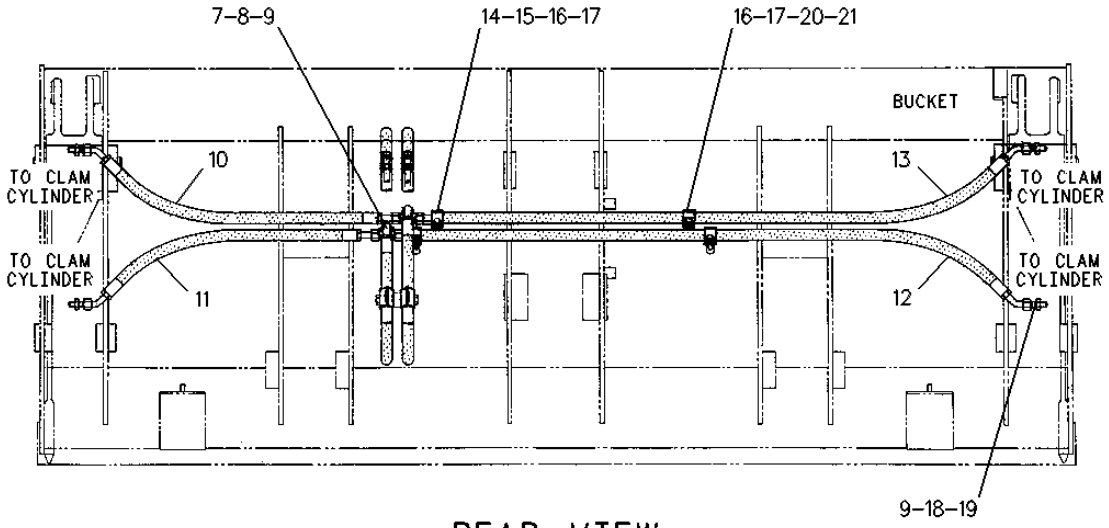

REAR VIEW

1 NPR I 9R-0418 2 HOSE AS

2 NPR 6V-1249 2 GROMMET

3 NPR 5P-7464 2 CLIP (SLOT)

4 NPR 5P-7465 2 CLIP (TAB)

5 NPR M 8T-4192 2 BOLT (M12X1.75X25-MM)

6 NPR 8T-4223 2 WASHER-HARD (13.5X25.5X3-MM THK)

7	NPR	8T-2363	2	TEE-UNION
8	NPR	6V-8398	4	SEAL-O-RING
9	NPR	6V-8397	6	SEAL-O-RING
10	NPR I	9R-4311	2	HOSE AS
11	NPR I	9R-4976	2	HOSE AS
12	NPR I	100-7443	1	HOSE AS
13	NPR I	100-7442	1	HOSE AS
14	NPR	8T-1891	2	CLIP (SLOT)
15	NPR	8T-1892	2	CLIP (TAB)
16	NPR M	8T-4137	4	BOLT (M10X1.5X20-MM)
17	NPR	8T-4121	4	WASHER-HARD (11X21X2.5-MM THK)
18	NPR	6V-8636	4	CONNECTOR
19	NPR	3J-1907	4	SEAL-O-RING
20	NPR	8T-1887	2	CLIP (SLOT)
21	NPR	8T-1888	2	CLIP (TAB)

Key: I - REFER TO HYDRAULIC INFORMATION SYSTEM M - METRIC PART

9R-3712 LINES GP-MULTIPURPOSE BUCKET --S/N 4ZN16044-50156
BOTTOM DUMP --PART OF 112-0938, 112-0939 BUCKET AR-MULTIPURPOSE--Type 2

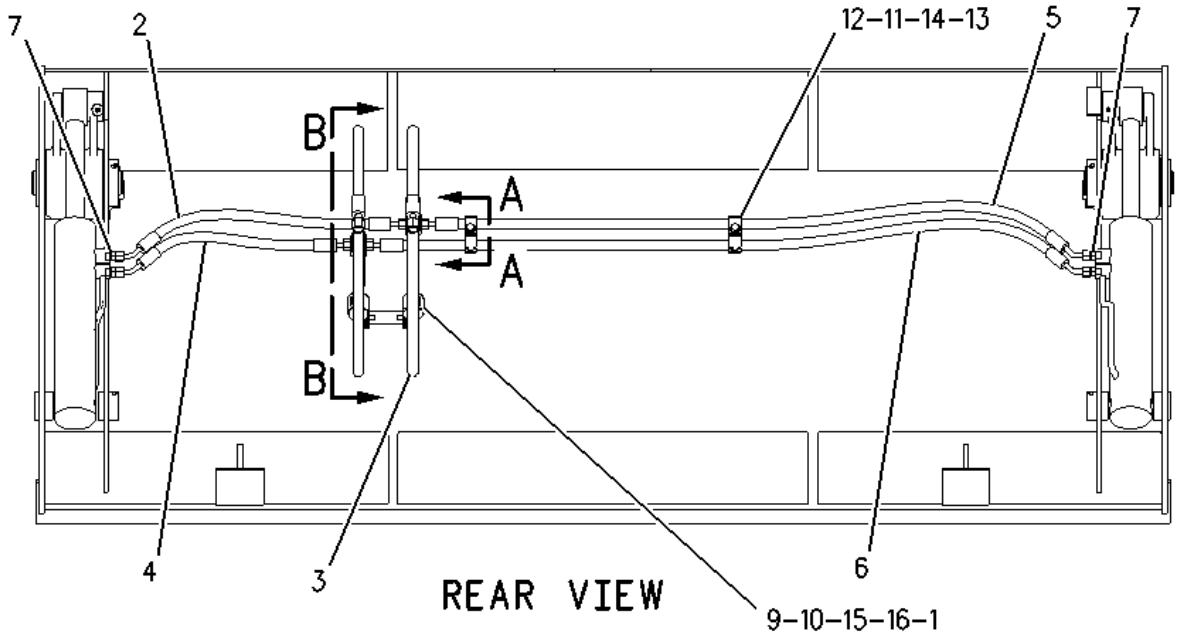

REAR VIEW

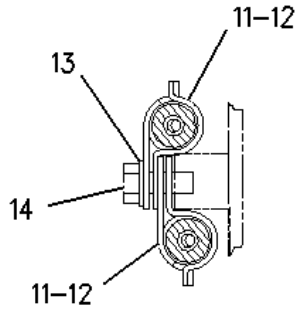

SECTION A–A

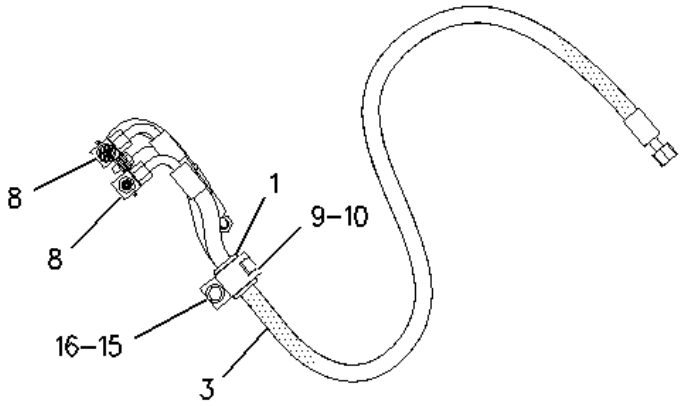

SECTION B–B

1 NPR 6V-1249 2 GROMMET

2 NPR I 8E-3081 1 HOSE AS

3 NPR I 9R-0418 2 HOSE AS

4 NPR I 9R-5971 1 HOSE AS

5 NPR I 100-7442 1 HOSE AS

6 NPR I 117-7520 1 HOSE AS

7 NPR 148-8336 4 CONNECTOR AS

(EACH INCLUDES)

NPR 3J-1907 1 SEAL-O-RING

NPR 6V-8397 1 SEAL-O-RING

	NPR	6V-8636	1	CONNECTOR
8	NPR	150-3060	2	TEE AS
	(EACH INCLUDES)			
	NPR	6V-8397	2	SEAL-O-RING
	NPR	6V-8398	1	SEAL-O-RING
	NPR	8T-3444	1	TEE-UNION
9	NPR	5P-7464	2	CLIP (SLOT)
10	NPR	5P-7465	2	CLIP (TAB)
11	NPR	8T-1891	4	CLIP (SLOT)
12	NPR	8T-1892	4	CLIP (TAB)
13	NPR	8T-4121	2	WASHER-HARD (11X21X2.5-MM THK)
14	NPR M	8T-4136	2	BOLT (M10X1.5X25-MM)
15	NPR M	8T-4192	2	BOLT (M12X1.75X25-MM)
16	NPR	8T-4223	2	WASHER-HARD (13.5X25.5X3-MM THK)

Key:

I - REFER TO HYDRAULIC INFORMATION SYSTEM
M - METRIC PART

9R-5788 LINES GP-MULTIPURPOSE BUCKET -S/N 4ZN16044-50156
BOTTOM DUMP -PART OF 111-8634, 111-8635 BUCKET AR-MULTIPURPOSE

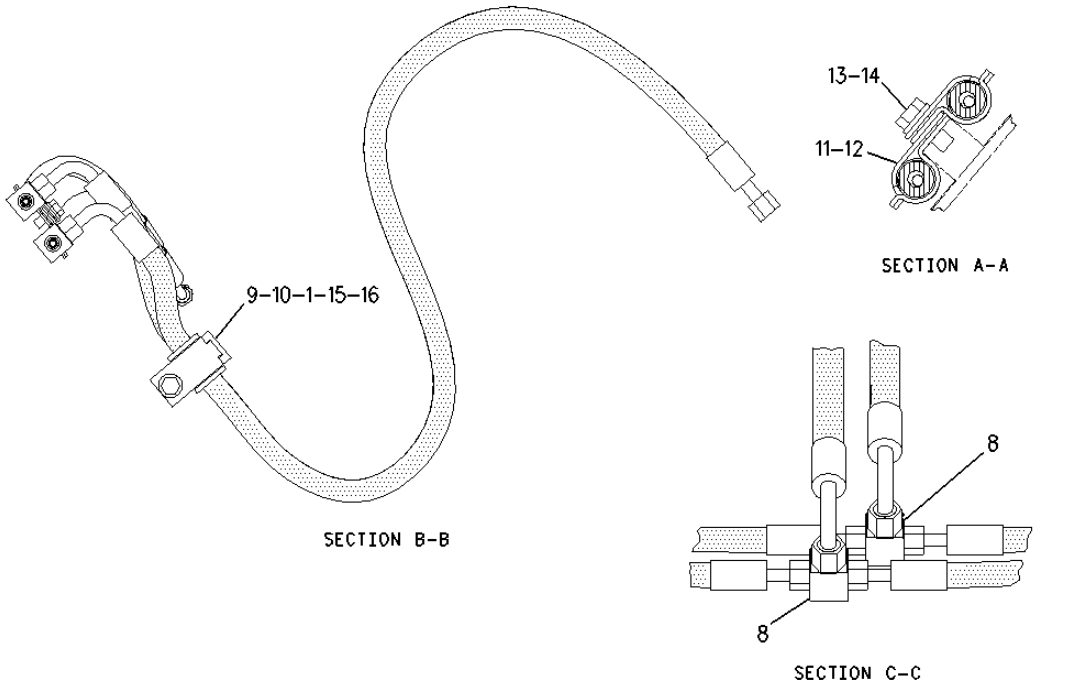

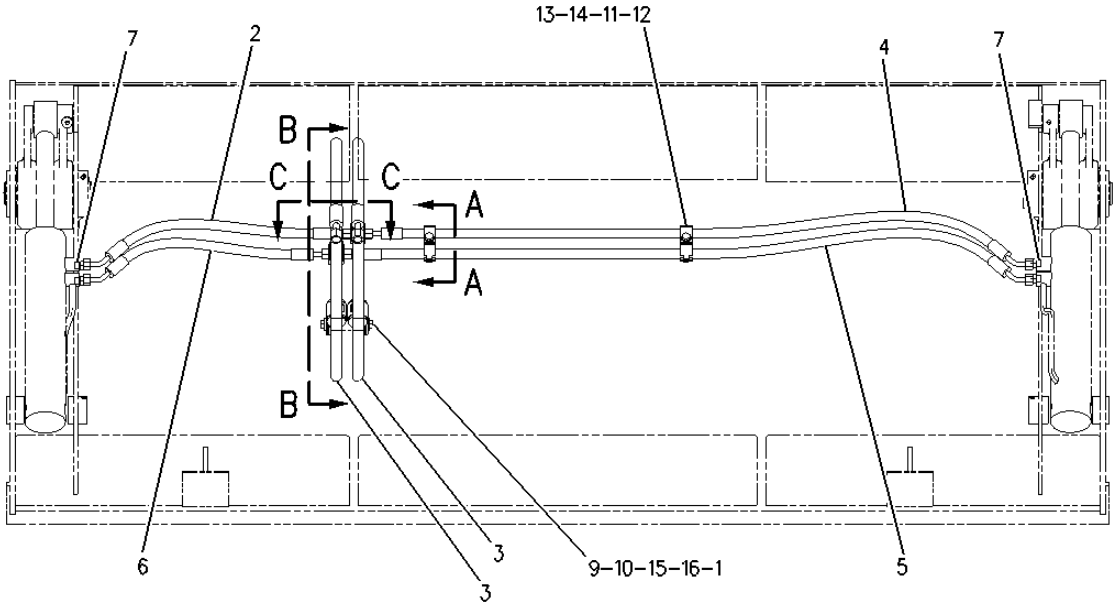

1 NPR 6V-1249 2 GROMMET

2 NPR I 7I-5486 1 HOSE AS

3 NPR I 9R-0418 2 HOSE AS

4 NPR I 100-7443 1 HOSE AS

5 NPR I 100-7444 1 HOSE AS

6	NPR I	131-2127	1	HOSE AS
7	NPR	148-8336	4	CONNECTOR AS
	(EACH INCLUDES)			
	NPR	3J-1907	1	SEAL-O-RING
	NPR	6V-8397	1	SEAL-O-RING
	NPR	6V-8636	1	CONNECTOR
8	NPR	150-3060	2	TEE AS
	(EACH INCLUDES)			
	NPR	6V-8397	2	SEAL-O-RING
	NPR	6V-8398	1	SEAL-O-RING
	NPR	8T-3444	1	TEE-UNION
9	NPR	5P-7464	2	CLIP (SLOT)
10	NPR	5P-7465	2	CLIP (TAB)
11	NPR C	8T-1891	4	CLIP (SLOT)
12	NPR C	8T-1892	4	CLIP (TAB)
13	NPR C	8T-4121	2	WASHER-HARD (11X21X2.5-MM THK)
14	NPR CM	8T-4136	2	BOLT (M10X1.5X25-MM)
15	NPR M	8T-4192	2	BOLT (M12X1.75X25-MM)
16	NPR	8T-4223	2	WASHER-HARD (13.5X25.5X3-MM THK)

Key:

C - CHANGE FROM PREVIOUS TYPE
I - REFER TO HYDRAULIC INFORMATION SYSTEM
M - METRIC PART

144-6253 LINES GP-LIFT CYLINDER --S/N 4ZN16044-50156
PART OF 154-5284 COMMON AR

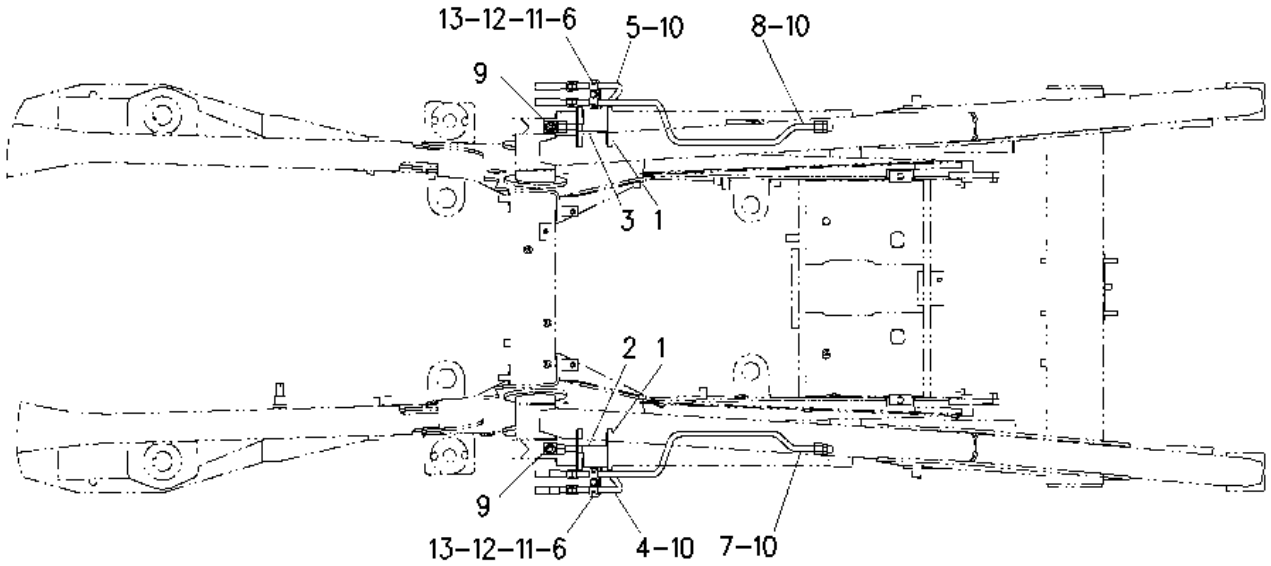

1	**NPR**	**8T-6726**	**4**	**CLAMP-HOSE**
2	**NPR**	**9R-7070**	**1**	**PLATE AS**
3	**NPR**	**9R-7071**	**1**	**PLATE AS**
4	**NPR**	**144-6256**	**1**	**TUBE AS**
5	**NPR**	**144-6258**	**1**	**TUBE AS**
6	**NPR**	**158-3412**	**4**	**CLIP (SLOT)**
7	**NPR**	**207-5479**	**1**	**TUBE AS**
8	**NPR**	**207-5480**	**1**	**TUBE AS**
9	**NPR**	**148-8390**	**2**	**ELBOW AS**

	(EACH INCLUDES)			
	NPR	2M-9780	1	SEAL-O-RING
	NPR	6V-8626	1	ELBOW
	NPR	7J-9108	1	SEAL-O-RING
10	NPR	6V-8398	4	SEAL-O-RING
11	NPR	8T-4121	2	WASHER-HARD (11X21X2.5-MM THK)
12	NPR M	8T-4136	2	BOLT (M10X1.5X25-MM)
13	NPR	9R-7803	2	CLIP (TAB)

Key:

M - METRIC PART

163-9371 LINES GP-LIFT CYLINDER --S/N 4ZN16044-50156
PART OF 159-4870, 159-4872 HYDRAULIC AR

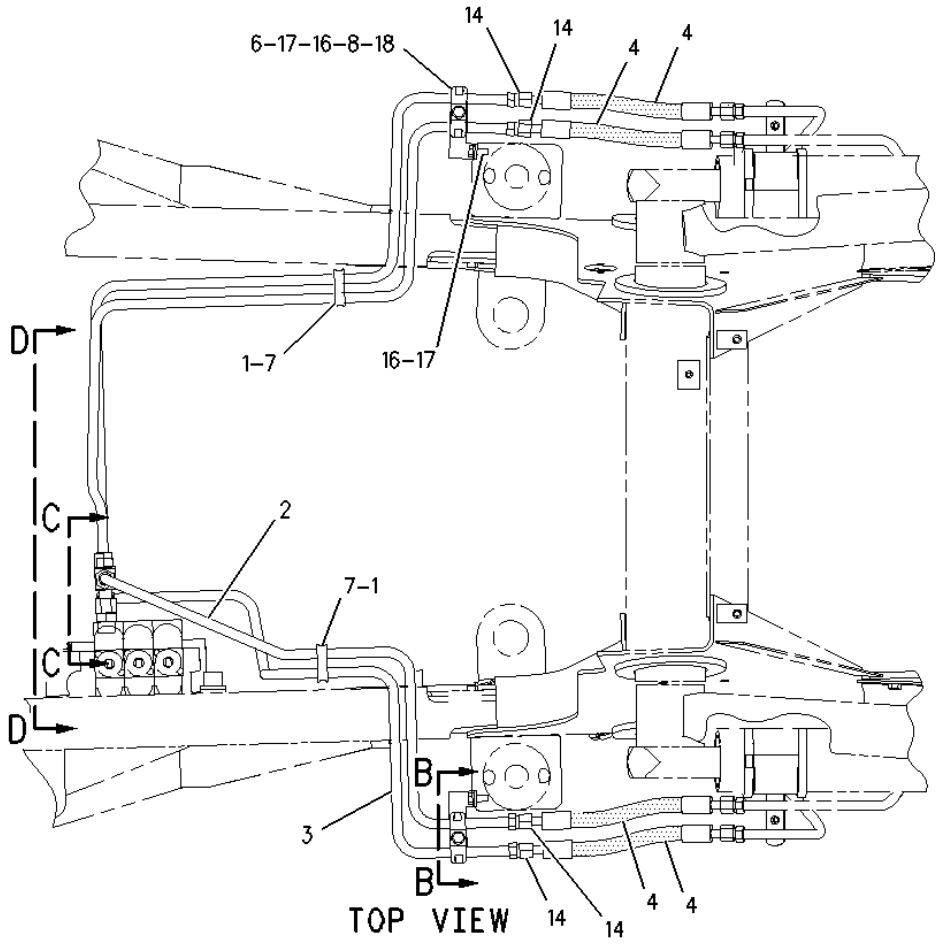

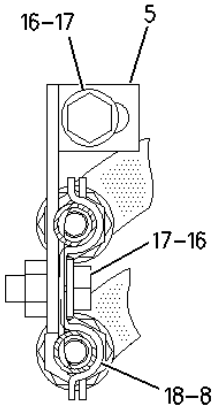

SECTION B-B

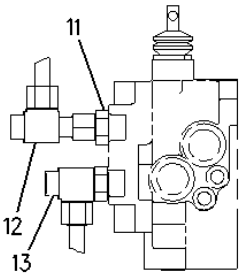

SECTION C-C

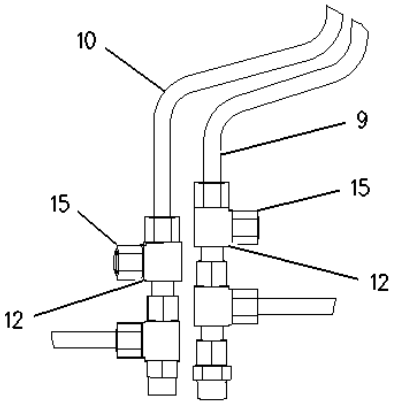

SECTION D-D

1 NPR 7K-1181 2 STRAP-CABLE

2 NPR 112-5825 1 TUBE AS

3 NPR 112-5828 1 TUBE AS

4 NPR I 120-1324 4 HOSE AS

5 NPR 122-4872 1 BRACKET AS

6	NPR	122-4873	1	BRACKET AS
7	NPR	151-4841	2	BLOCK
8	NPR	158-3412	4	CLIP (SLOT)
9	NPR	163-5676	1	TUBE AS
10	NPR	163-5677	1	TUBE AS
11	NPR	148-8341	1	CONNECTOR AS
	NPR	3D-2824	1	SEAL-O-RING
	NPR	6V-8713	1	CONNECTOR
	NPR	7J-9108	1	SEAL-O-RING
12	NPR	148-8446	3	TEE GP-SWIVEL
	(EACH INCLUDES)			
	NPR	6V-9838	1	TEE-SWIVEL
	NPR	7J-9108	2	SEAL-O-RING
13	NPR	150-3063	1	TEE AS
	NPR	3D-2824	1	SEAL-O-RING
	NPR	7J-9108	2	SEAL-O-RING
	NPR	120-9809	1	TEE
14	NPR	6V-8398	4	SEAL-O-RING
15	NPR	6V-9831	2	CAP AS
16	NPR	8T-4121	4	WASHER-HARD (11X21X2.5-MM THK)
17	NPR M	8T-4136	4	BOLT (M10X1.5X25-MM)
18	NPR	9R-7803	2	CLIP (TAB)

Key:

I - REFER TO HYDRAULIC INFORMATION SYSTEM
M - METRIC PART

163-9373 LINES GP-LIFT CYLINDER ---S/N 4ZN16044-50156
PART OF 154-5417 CONTROL AR-RIDE

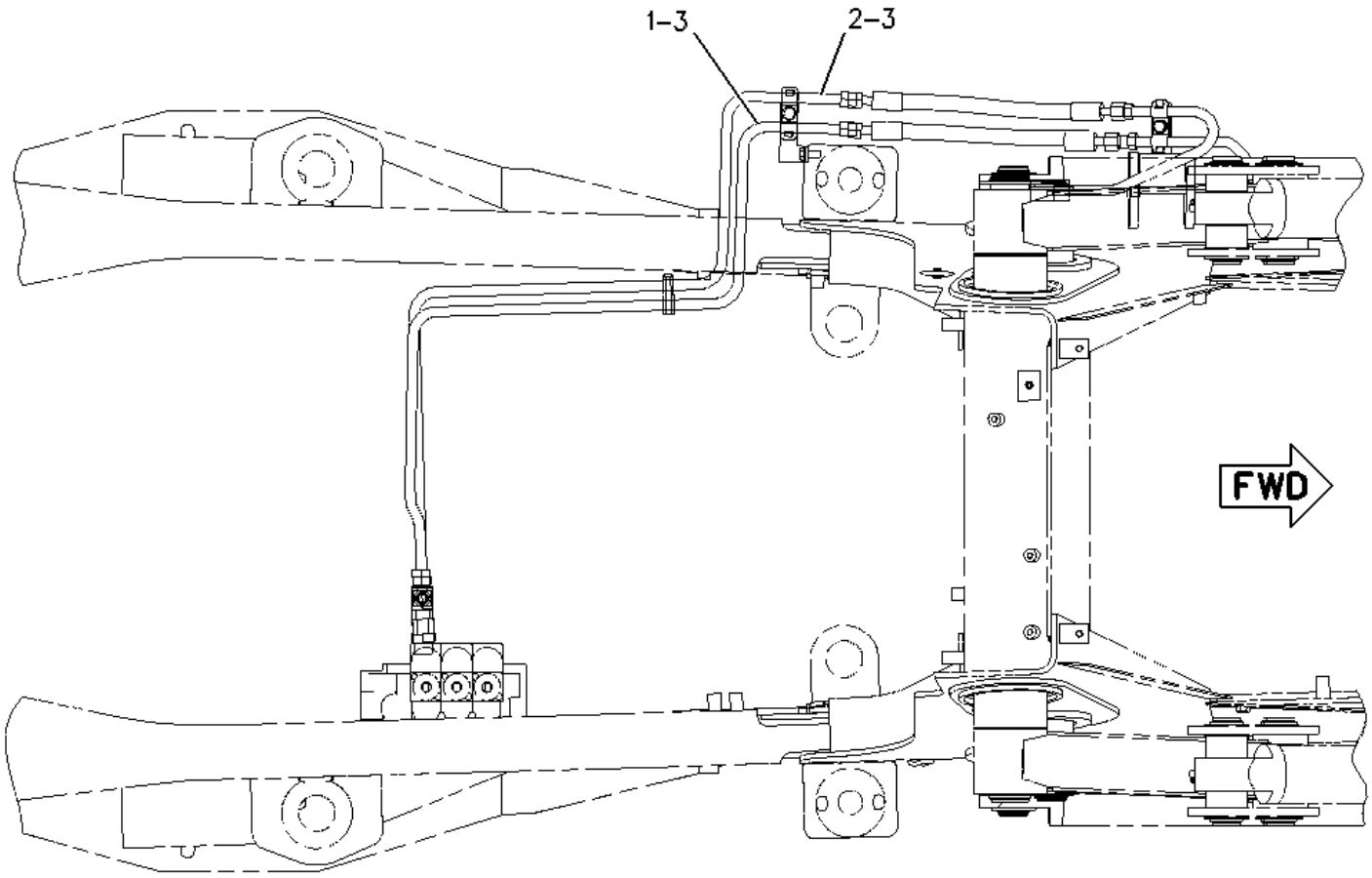

TOP VIEW

1	**NPR**	**112-5823**	**1**	**TUBE AS**
2	**NPR**	**112-5827**	**1**	**TUBE AS**
3	**NPR**	**6V-8398**	**2**	**SEAL-O-RING**

164-2337 LINES GP-LIFT CYLINDER ---S/N 4ZN16044-50156
PART OF 163-9199, 163-9200 HYDRAULIC AR--Type 1

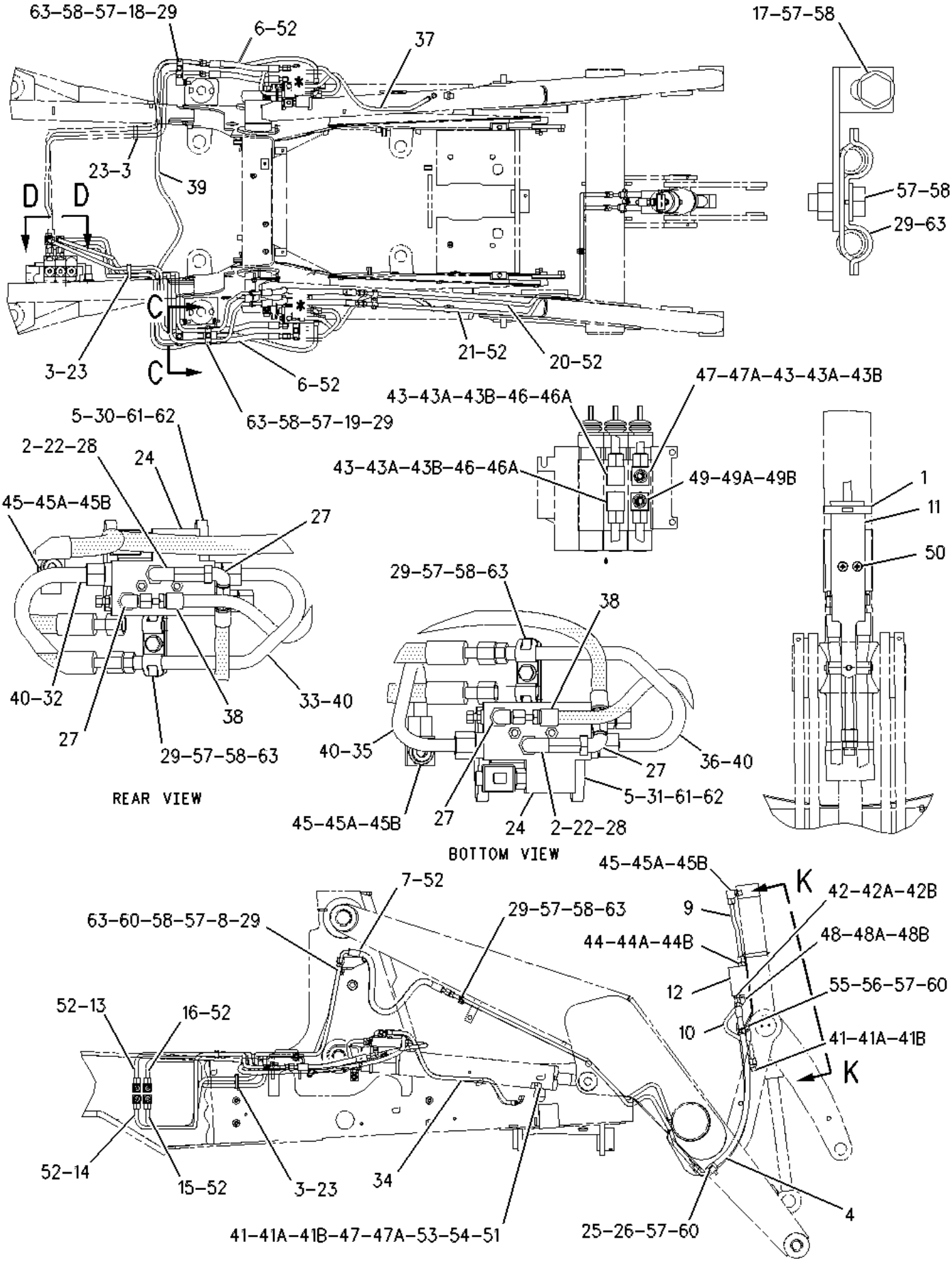

1	NPR	5P-0599	1	CLAMP-BAND
2	NPR	6V-0405	2	SEAL-BONDED
3	NPR	7K-1181	3	STRAP-CABLE
4	NPR I	8W-4002	2	HOSE AS
5	NPR	9M-6738	4	CLAMP-HOSE
6	NPR I	9R-7069	4	HOSE AS
7	NPR I	9R-9198	2	HOSE AS
8	NPR	9R-9316	1	BRACKET AS
9	NPR	9R-9368	1	TUBE AS
10	NPR	9R-9369	1	TUBE AS
11	NPR	9R-9375	1	PLATE
12	NPR Y	9T-5455	1	VALVE GP-LOAD CONTROL
13	NPR	112-5825	1	TUBE AS
14	NPR	112-5828	1	TUBE AS
15	NPR	116-4618	1	TUBE AS
16	NPR	116-4619	1	TUBE AS
17	NPR	122-4872	1	BRACKET AS
18	NPR	122-4873	1	BRACKET AS
19	NPR	122-5822	1	BRACKET AS
20	NPR	123-9173		TUBE AS
21	NPR	123-9174	1	TUBE AS
22	NPR	145-0227	2	FUSE
23	NPR	151-4841	3	BLOCK
24	NPR	154-3763	2	VALVE GP-LOAD CONTROL
25	NPR	156-3837	2	CLIP (SLOT)
26	NPR	156-3838	1	CLIP (TAB)
27		157-0497	4	ELBOW AS
28		158-2765	2	ELBOW AS
29	NPR	158-3412	16	CLIP (SLOT)
30		158-5964	1	BRACKET AS
31		158-5965	1	BRACKET AS
32		158-8625	1	TUBE AS
33		158-8626	1	TUBE AS
34		158-8627	1	TUBE AS
35		158-8628	1	TUBE AS
36		158-8629	1	TUBE AS
37		158-8630	1	TUBE AS
38	I	161-3981	2	HOSE AS

39 NPR I 161-3998 1 HOSE AS

40 NPR 162-8711 4 ADAPTER AS

(EACH INCLUDES)

NPR 7J-9108 1 SEAL-O-RING

NPR 155-9644 1 SEAL

41 NPR 2M-9780 3 SEAL-O-RING

41A NPR 6V-8642 3 CONNECTOR

41B NPR 7J-9108 3 SEAL-O-RING

42 NPR 3K-0360 2 SEAL-O-RING

42A NPR 6V-8398 2 SEAL-O-RING

42B NPR 6V-8639 2 CONNECTOR

43 NPR 3D-2824 3 SEAL-O-RING

43A NPR 6V-8713 3 CONNECTOR

43B NPR 7J-9108 3 SEAL-O-RING

44 NPR 3K-0360 1 SEAL-O-RING

44A NPR 6V-8632 1 CONNECTOR

44B NPR 7J-9108 1 SEAL-O-RING

45 NPR 2M-9780 3 SEAL-O-RING

45A NPR 6V-8626 3 ELBOW

45B NPR 7J-9108 3 SEAL-O-RING

46 NPR 6V-9852 2 ELBOW (SWIVEL)

46A NPR 7J-9108 2 SEAL-O-RING

47 NPR 6V-9838 3 TEE-SWIVEL

47A NPR 7J-9108 6 SEAL-O-RING

48 NPR 3K-0360 1 SEAL-O-RING

48A NPR 7J-9108 1 SEAL-O-RING

48B NPR 8T-2530 1 ELBOW

49 NPR 3D-2824 1 SEAL-O-RING

49A NPR 7J-9108 2 SEAL-O-RING

49B NPR 120-9809 1 TEE

50 NPR M 3T-0850 2 SCREW (M10X1.5-THD)

51 NPR 6V-8397 2 SEAL-O-RING

52 NPR 6V-8398 12 SEAL-O-RING

53 NPR 6V-8555 2 NUT-FACE SEAL (1-14-THD)

54 NPR 6V-8938 2 REDUCER-O-RING

55 NPR 8T-1891 2 CLIP (SLOT)

56 NPR 8T-1892 2 CLIP (TAB)

57	NPR	8T-4121	15	WASHER-HARD (11X21X2.5-MM THK)
58	NPR M	8T-4136	10	BOLT (M10X1.5X25-MM)
59	NPR M	8T-4137	1	BOLT (M10X1.5X20-MM)
60	NPR M	8T-4195	4	BOLT (M10X1.5X30-MM)
61	NPR M	8T-6912	4	BOLT (M8X1.25X50-MM)
62	NPR M	8T-7963	4	LOCKNUT (M8X1.25-THD)
63	NPR	9R-7803	8	CLIP (TAB)
64	NPR B	3S-2093	45	STRAP-CABLE

Key: B - USE AS REQUIRED I - REFER TO HYDRAULIC INFORMATION SYSTEM
M - METRIC PART Y - SEPARATE ILLUSTRATION

185-3160 LINES GP-LIFT CYLINDER --S/N 4ZN16044-50156
PART OF 154-5417 CONTROL AR-RIDE, 154-5437 HYDRAULIC AR

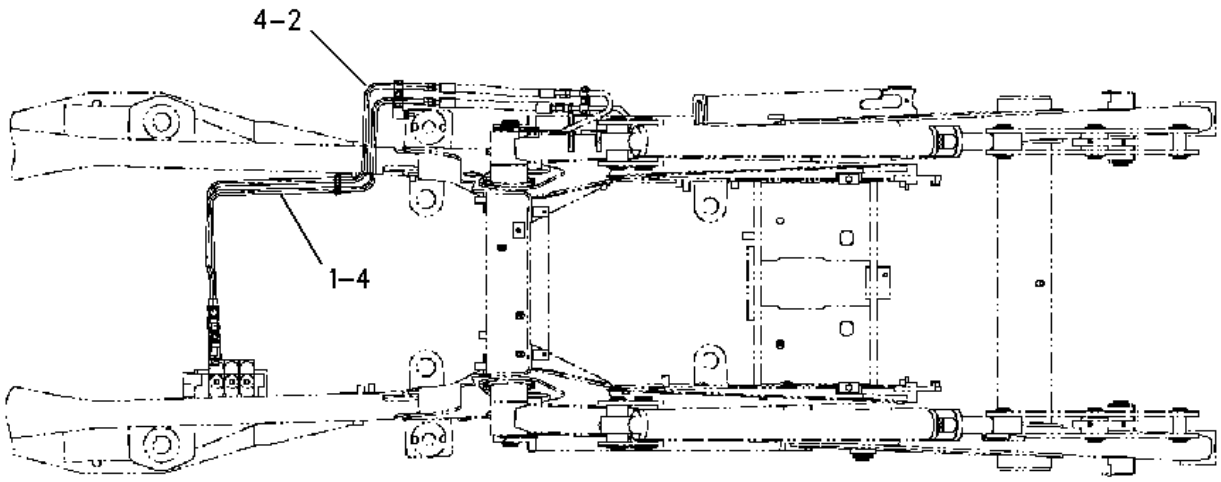

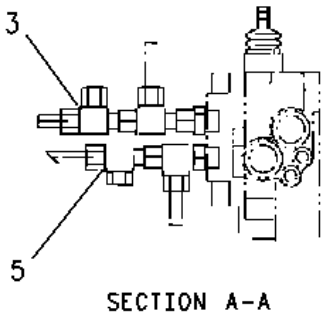

SECTION A-A

1	NPR	163-5676	1	TUBE AS
2	NPR	163-5677	1	TUBE AS
3	NPR	148-8446	2	TEE GP-SWIVEL
	NPR	6V-9838	1	TEE-SWIVEL
	NPR	7J-9108	2	SEAL-O-RING
4	NPR	6V-8398	2	SEAL-O-RING
5	NPR	6V-9831	2	CAP AS

106-5875 LINES GP-TILT CYLINDER
S/N 4ZN16044-50156--PART OF 159-4870, 159-4872 HYDRAULIC AR

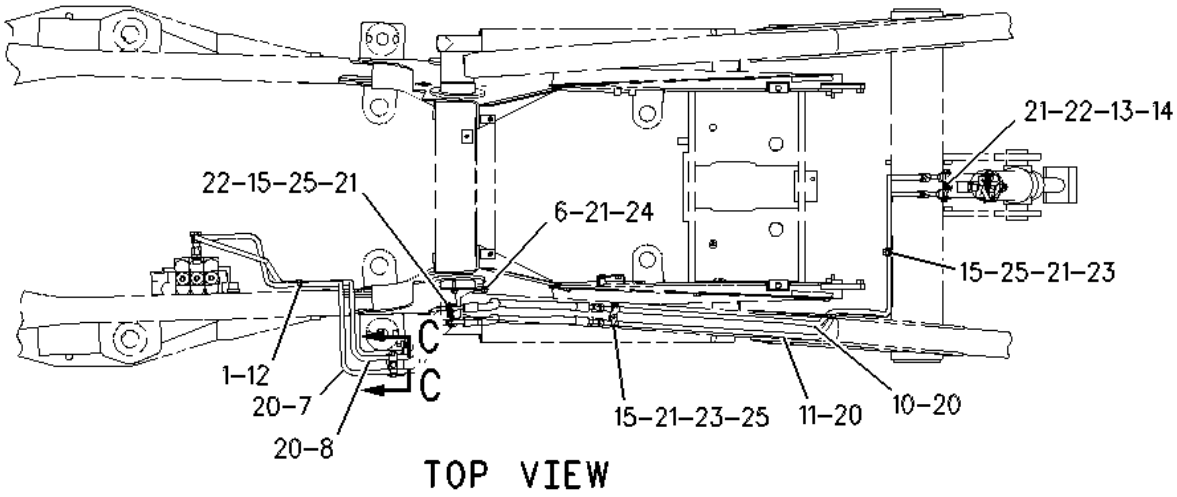

TOP VIEW

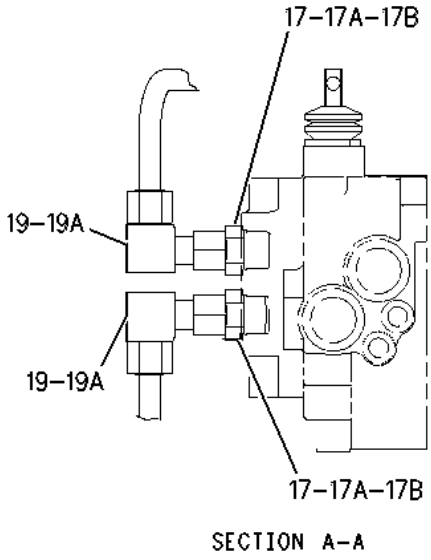

SECTION A-A

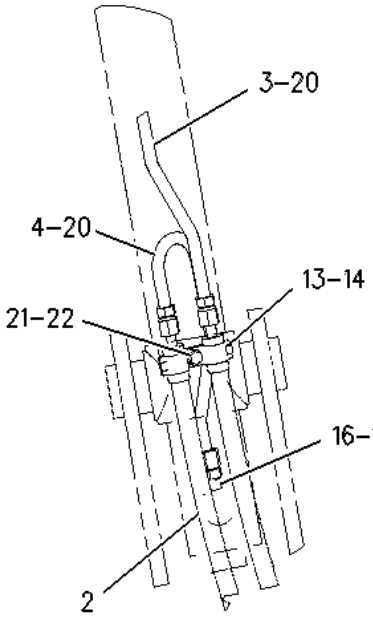

VIEW E-E

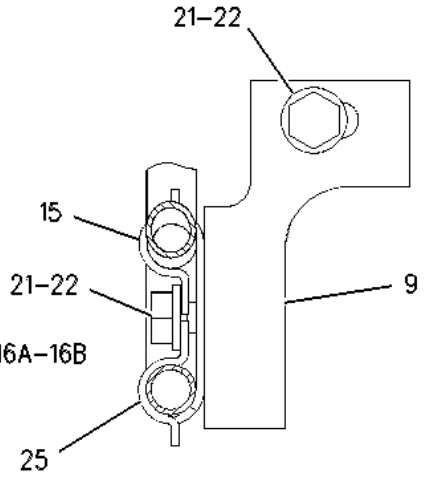

SECTION C-C

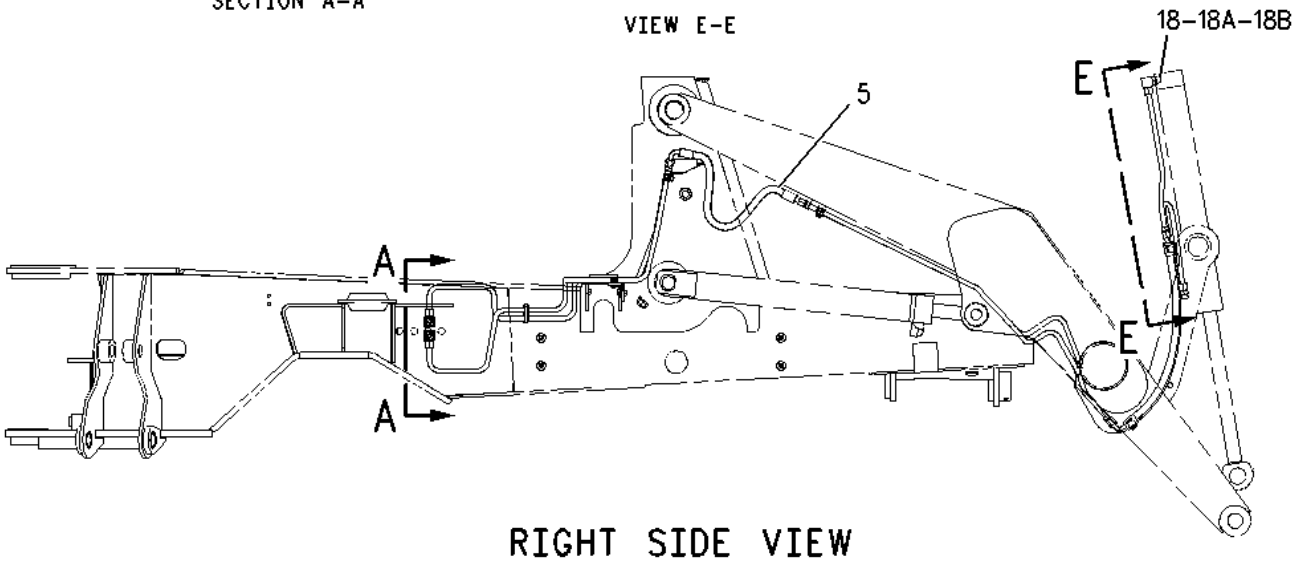

RIGHT SIDE VIEW

1 NPR 7K-1181 1 STRAP-CABLE

2 NPR I 9R-1034 2 HOSE AS

3	NPR	9R-3497	1	TUBE AS
4	NPR	9R-3505	1	TUBE AS
5	NPR I	9R-9198	2	HOSE AS
6	NPR	9R-9316	1	BRACKET AS
7	NPR	116-4618	1	TUBE AS
8	NPR	116-4619	1	TUBE AS
9	NPR	122-5822	1	BRACKET AS
10	NPR	123-9173	1	TUBE AS
11	NPR	123-9174	1	TUBE AS
12	NPR	151-4841	1	BLOCK
13	NPR	156-3837	4	CLIP (SLOT)
14	NPR	156-3838	2	CLIP (TAB)
15	NPR	158-3412	8	CLIP (SLOT)
16	NPR	2M-9780	1	SEAL-O-RING
16A	NPR	6V-8642	1	CONNECTOR
16B	NPR	7J-9108	1	SEAL-O-RING
17	NPR	3D-2824	2	SEAL-O-RING
17A	NPR	6V-8713	2	CONNECTOR
17B	NPR	7J-9108	2	SEAL-O-RING
18	NPR	2M-9780	1	SEAL-O-RING
18A	NPR	6V-8626	1	ELBOW
18B	NPR	7J-9108	1	SEAL-O-RING
19	NPR	6V-9852	2	ELBOW (SWIVEL)
19A	NPR	7J-9108	2	SEAL-O-RING
20	NPR	6V-8398	8	SEAL-O-RING

21	NPR	8T-4121	10	WASHER-HARD (11X21X2.5-MM THK)
22	NPR M	8T-4136	5	BOLT (M10X1.5X25-MM)
23	NPR M	8T-4137	2	BOLT (M10X1.5X20-MM)
24	NPR M	8T-4195	2	BOLT (M10X1.5X30-MM)
25	NPR	9R-7803	4	CLIP (TAB)

Key:

I - REFER TO HYDRAULIC INFORMATION SYSTEM
M - METRIC PART

190-8315 VALVE & MTG GP-SOLENOID
S/N 4ZN16044-50156--PART OF 169-6866, 185-5786 LINES GP-RIDE CONTROL

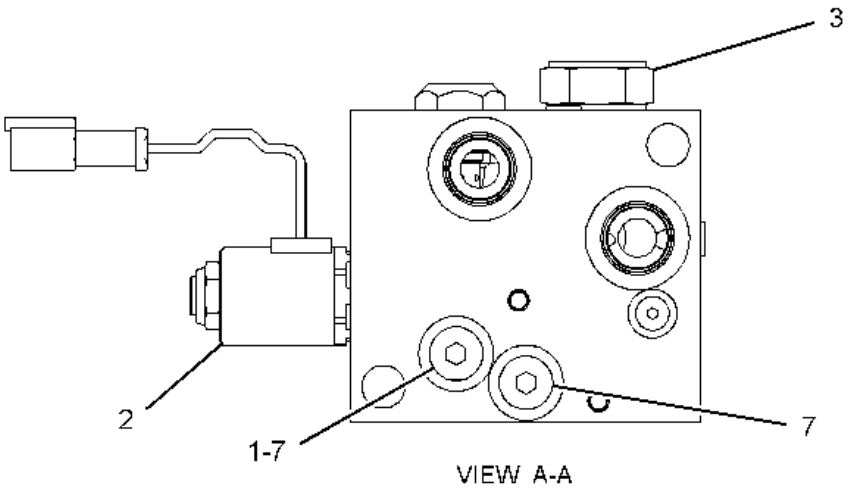

VIEW A-A

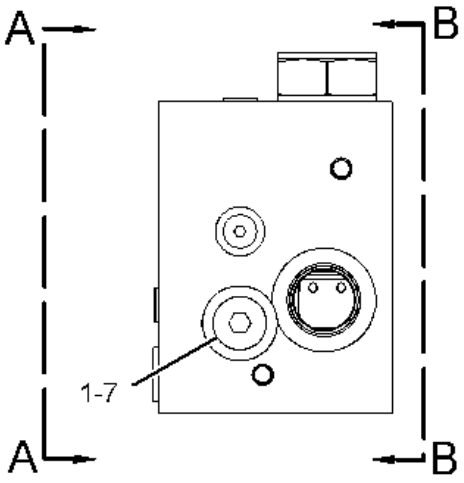

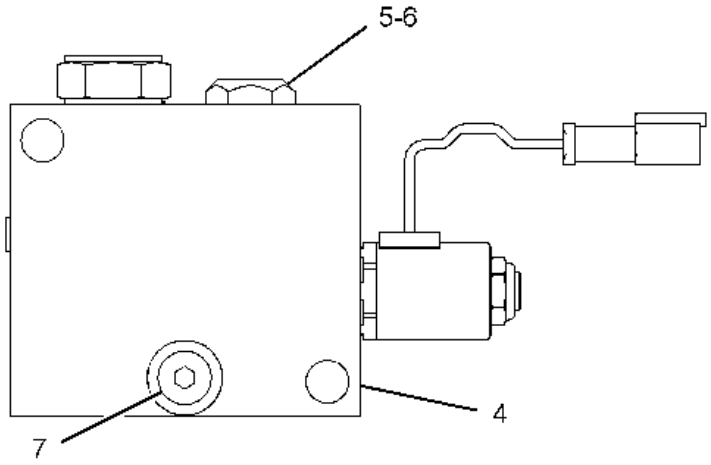

VIEW B-B

1 NPR 160-0269 2 ORIFICE AS

(EACH INCLUDES)

NPR 4J-7533 1 SEAL-O-RING

2 NPR Y 171-8775 1 VALVE GP-SOLENOID

3 NPR J 190-8308 1 CARTRIDGE AS

4 NPR 300-2315 1 MANIFOLD AS-HYDRAULIC

NPR 219-1790 3 PLUG AS

(EACH INCLUDES)

NPR 4J-7533 1 SEAL-O-RING

5 NPR L 190-8312 1 VALVE AS-CHECK

6 NPR 190-8314 1 SPOOL-VALVE

7 NPR 9S-8004 4 PLUG-O RING

AVAILABLE REPAIR KIT(S):

NPR J 193-5958 1 KIT-SEAL (CARTRIDGE)

(INCLUDES SEALS & BACKUP RINGS)

NPR L 143-5446 1 KIT-SEAL (VALVE)

(INCLUDES SEALS & BACKUP RINGS)

Key:

J - KIT MARKED J AVAILABLE FOR PART MARKED J
L - KIT MARKED L AVAILABLE FOR PART MARKED L
Y - SEPARATE ILLUSTRATION

141-7885 VALVE GP-BACKHOE NEUTRALIZER -S/N 4ZN16044-50156

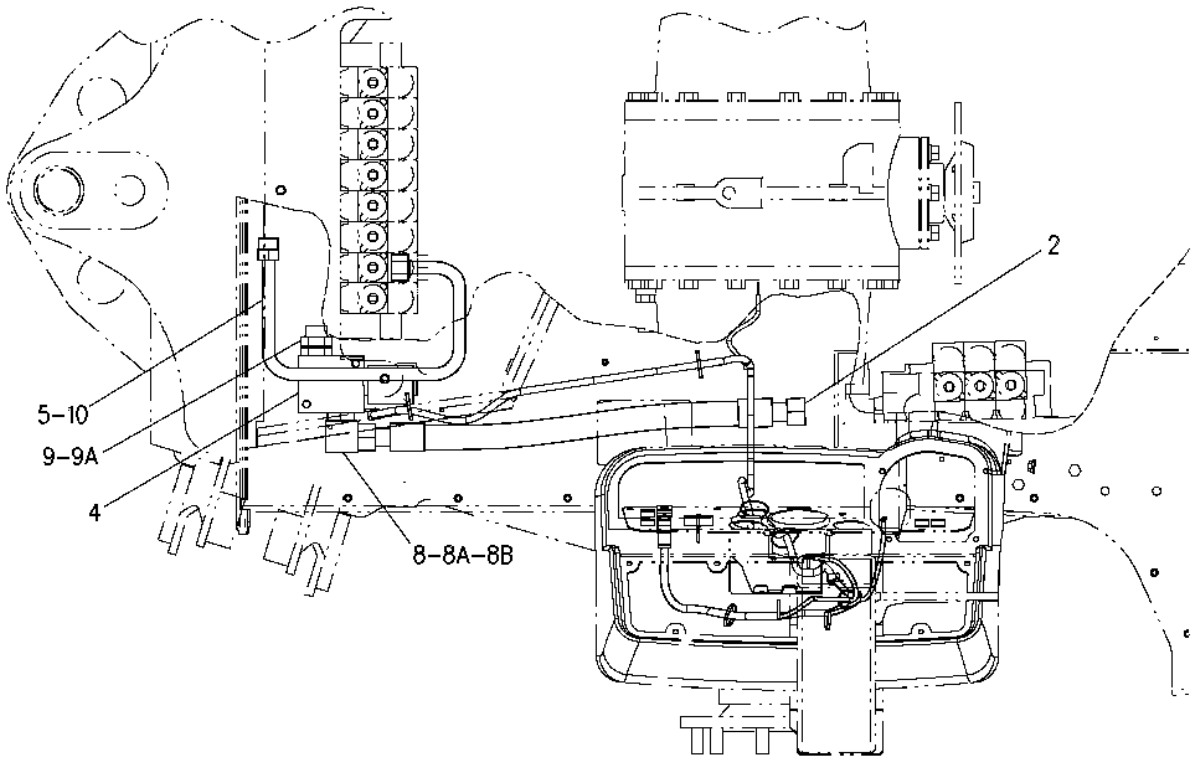

TOP VIEW

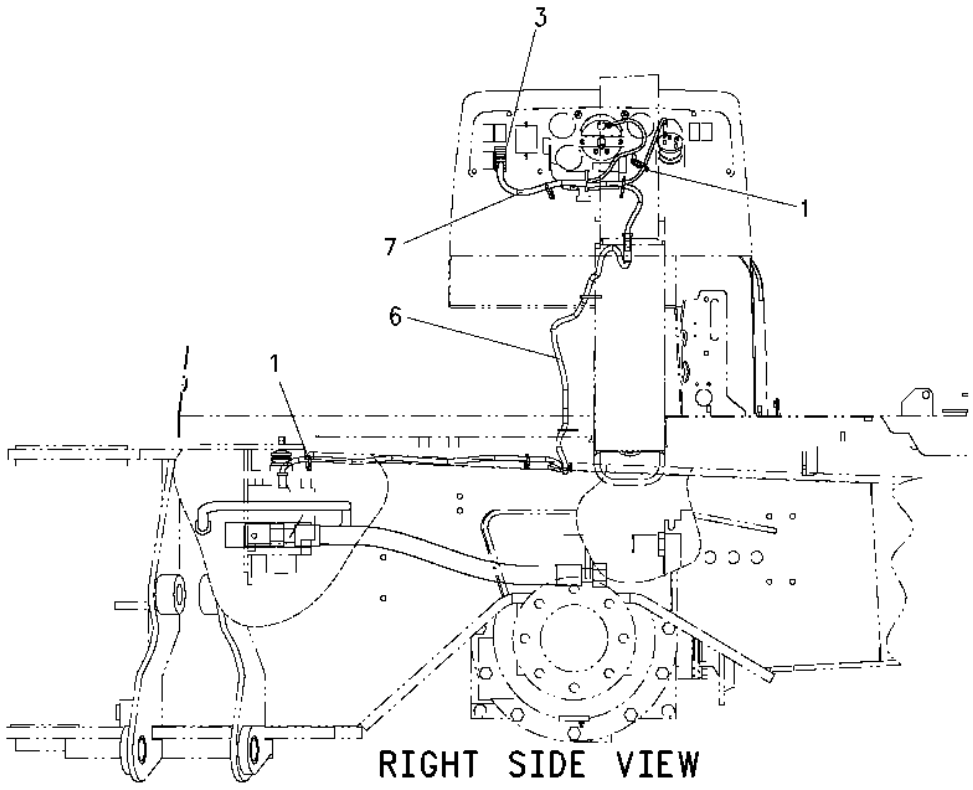

RIGHT SIDE VIEW

1 NPR 3S-2093 8 STRAP-CABLE

2 NPR I 117-3235 1 HOSE AS

3 NPR 130-6584 1 SWITCH AS-ROCKER (HYDRAULIC LOCKOUT)

NPR 111-7899 1 GASKET

4	NPR Y	138-1976	1	VALVE GP-SHUTOFF
5	NPR	141-7533	1	TUBE AS
6	NPR	141-9474	1	HARNESS AS
	NPR	155-2270	1	KIT-CONNECTING PLUG (2-PIN)
	(INCLUDES PLUG AS, WEDGE, & INTERFACE SEAL)			
	NPR	102-8802	1	KIT-RECEPTACLE (2-PIN)
	(INCLUDES RECEPTACLE AS & WEDGE)			
7	NPR	153-2785	1	HARNESS AS
	NPR	155-2270	1	KIT-CONNECTING PLUG (2-PIN)
	(INCLUDES PLUG AS, WEDGE, & INTERFACE SEAL)			
	NPR	8L-8413	2	STRAP-CABLE
	NPR	111-7898	1	CONNECTOR
	NPR	112-9611	4	TERMINAL-BLADE
8	NPR	5K-9090	1	SEAL-O-RING
8A	NPR	6V-9008	1	ELBOW
8B	NPR	7M-8485	1	SEAL-O-RING
9	NPR	7M-8485	2	SEAL-O-RING
9A	NPR	113-4676	2	CONNECTOR
10	NPR	6V-9746	1	SEAL-O-RING

Key:

I - REFER TO HYDRAULIC INFORMATION SYSTEM
Y - SEPARATE ILLUSTRATION

138-1976 VALVE GP-SHUTOFF --S/N 4ZN16044-50156
PART OF 141-7885 VALVE GP-BACKHOE NEUTRALIZER

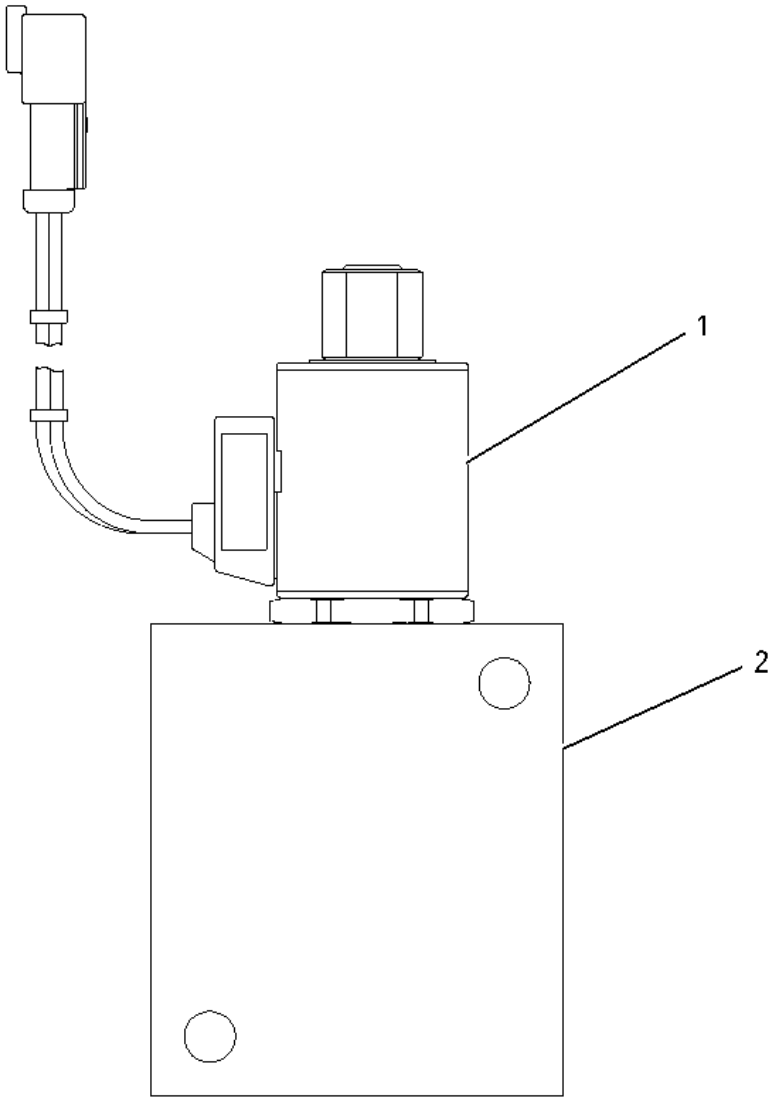

1 NPR 138-1975 1 VALVE GP-SOLENOID

NPR 3G-8175 1 KIT-SEAL

NPR 127-4402 1 COIL AS

NPR 1S-9593 2 STRAP-CABLE

NPR 102-8802 1 KIT-RECEPTACLE (2-PIN)

(INCLUDES WEDGE & RECEPTACLE)

NPR 186-3735 2 PIN-CONNECTOR (16-GA TO 18-GA)

NPR 127-4404 1 NUT (1/2-20-THD)

NPR 138-1974 1 VALVE AS

2 NPR 127-4405 1 MANIFOLD

162-8174 VALVE GP-SOLENOID --S/N 4ZN16044-50156
PART OF 163-5692, 169-6866 LINES GP-RIDE CONTROL

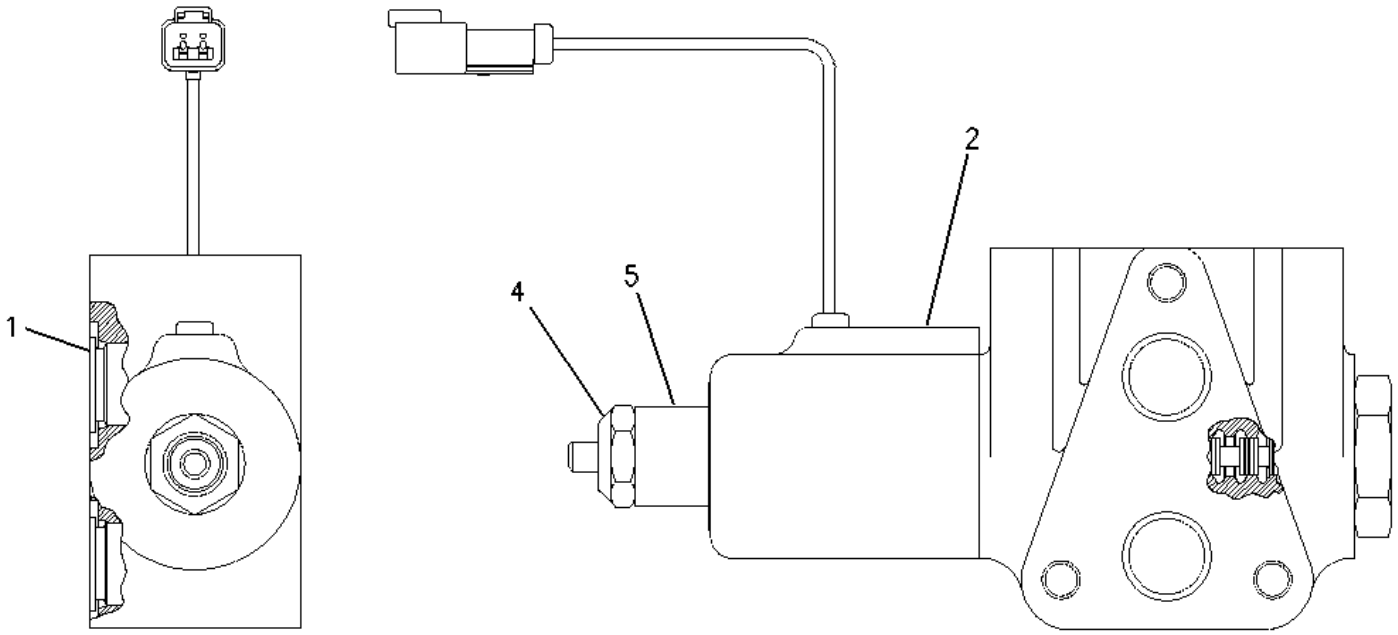

1 NPR 131-5441 2 PLUG

2 NPR 126-3707 1 COIL AS

NPR 1S-9593 2 STRAP-CABLE

NPR 102-8802 1 KIT-RECEPTACLE (2-PIN)

(INCLUDES RECEPTACLE AS & WEDGE.)

NPR 186-3735 2 PIN-CONNECTOR (16-GA TO 18-GA)

4 NPR 157-2284 1 LOCKNUT-SPECIAL (5/8-18-THD)

5 160-4953 1 SPACER (20.8-MM THK)

171-8775 VALVE GP-SOLENOID --S/N 4ZN16044-50156
PART OF 190-8315 VALVE & MTG GP-SOLENOID

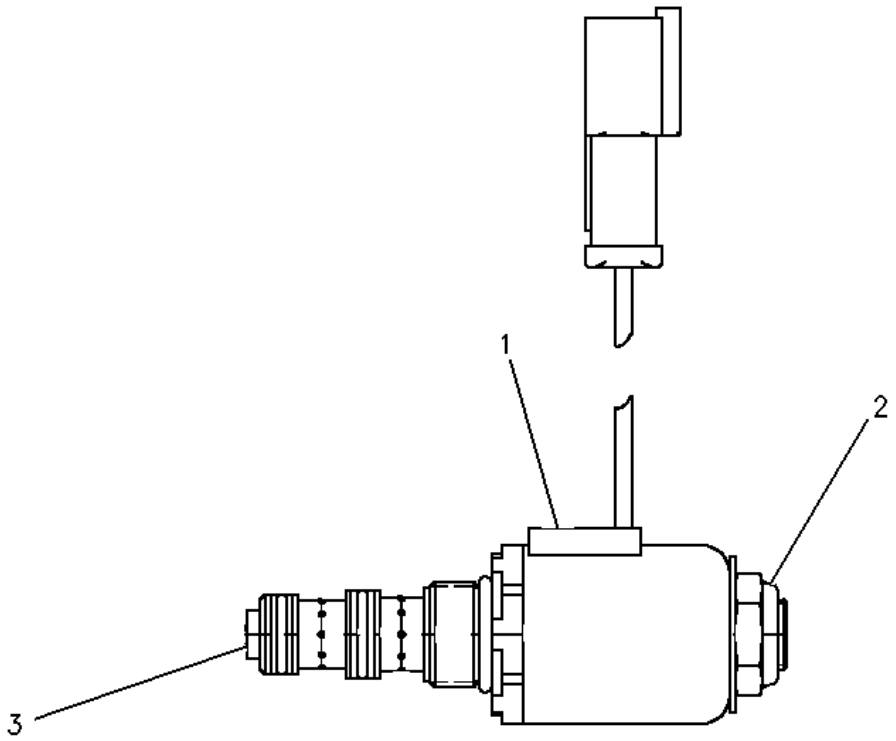

1 NPR 3E-8621 1 COIL AS

NPR 1S-9593 1 STRAP-CABLE

NPR 102-8802 1 KIT-RECEPTACLE (2-PIN)

(INCLUDES RECEPTACLE & WEDGE)

NPR 3E-3365 1 WEDGE-RECEPTACLE LOCK (2-PIN)

NPR 186-3735 2 PIN-CONNECTOR (16-GA TO 18-GA)

2 156-5970 1 NUT (1/2-20-2B-THD)

3 NPR J 171-8772 1 VALVE AS-SOLENOID

156-5970 1 NUT (1/2-20-2B-THD)

AVAILABLE REPAIR KIT(S):

NPR J 195-7430 1 KIT-SEAL

(INCLUDES SEALS & BACKUP RINGS)

Key:

J - KIT MARKED J IS AVAILABLE FOR PART MARKED J

9T-6149 VALVE GP-SHUTTLE -BALL RESOLVER --S/N 4ZN16044-50156
PART OF 8J-6875 VALVE GP-SHUTTLE

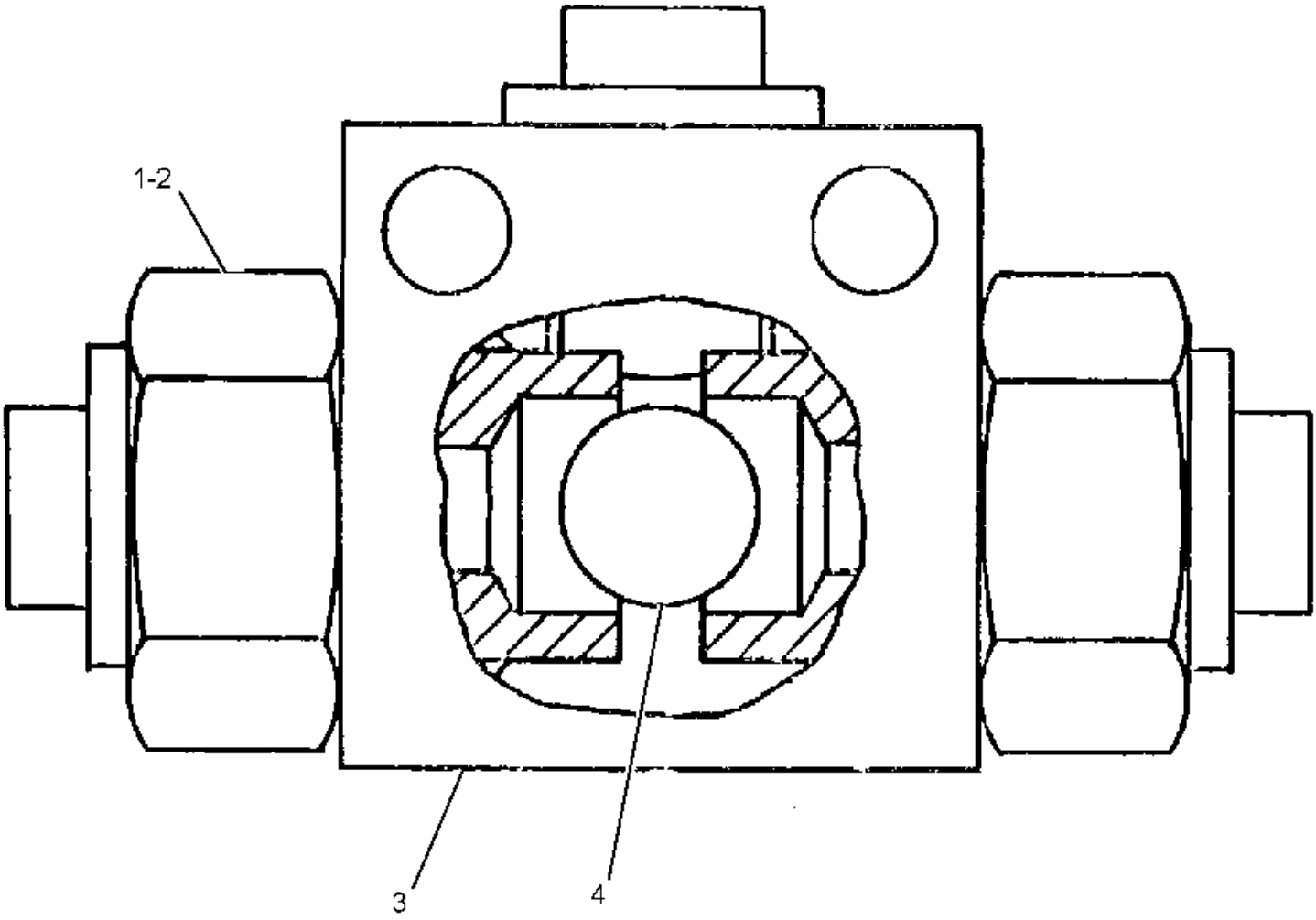

1 NPR 4T-9905 2 ADAPTER

2 NPR 2M-9780 1 SEAL-O-RING

3 Z 3 BLOCK

4 NPR 4B-9784 1 BALL

Key: Z - NOT SERVICED SEPARATELY

9T-6150 VALVE GP-SHUTTLE -BALL RESOLVER --S/N 4ZN16044-50156
PART OF 8J-6875 VALVE GP-SHUTTLE

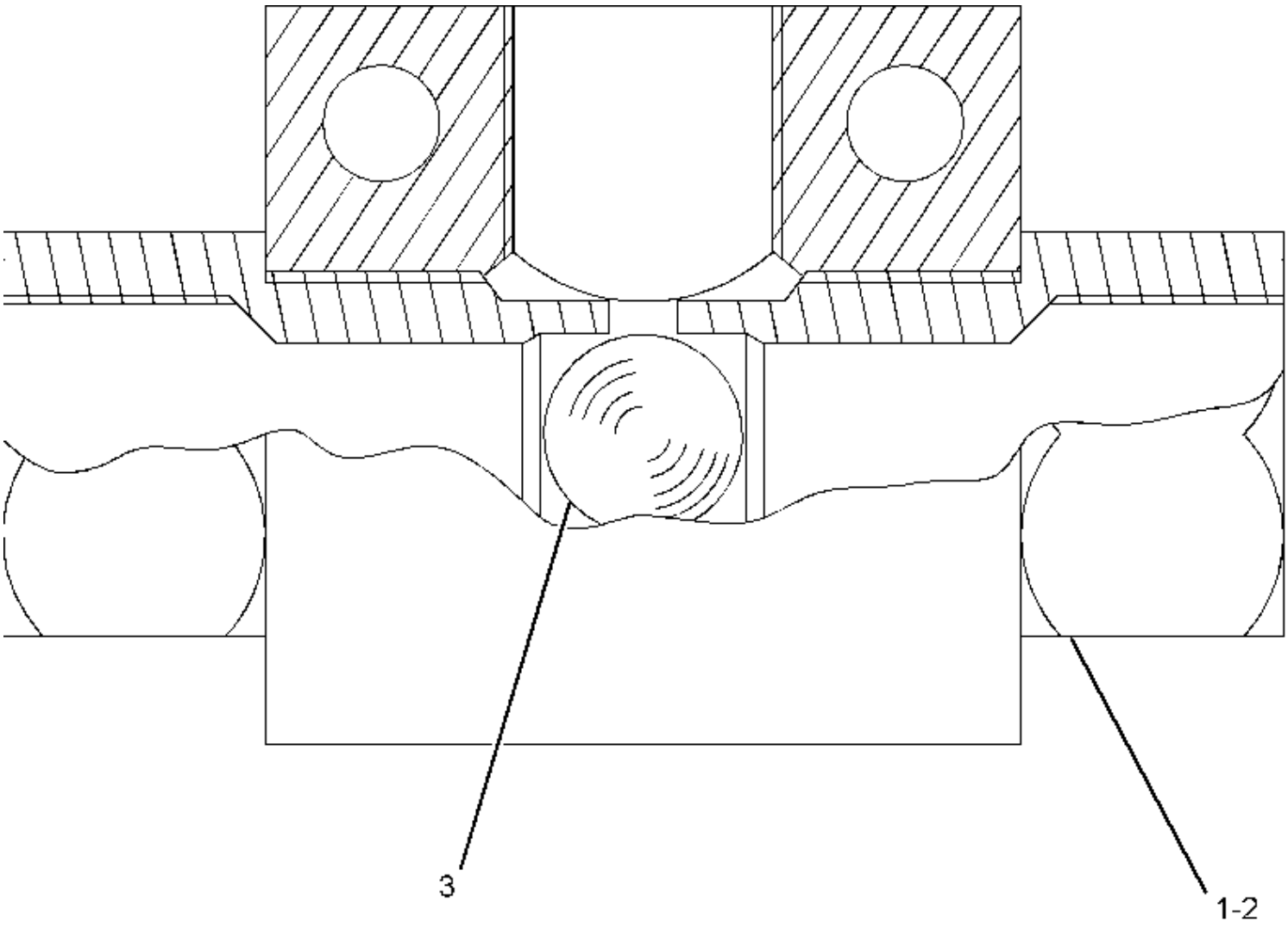

1	**NPR**	**4T-9905**	**2**	**ADAPTER**
2	**NPR**	**2M-9780**	**2**	**SEAL-O-RING**
3	**NPR**	**4B-9784**	**1**	**BALL**

169-7122 VALVE GP-SHUTTLE --S/N 4ZN16044-50156
FIELD INSTALLATION

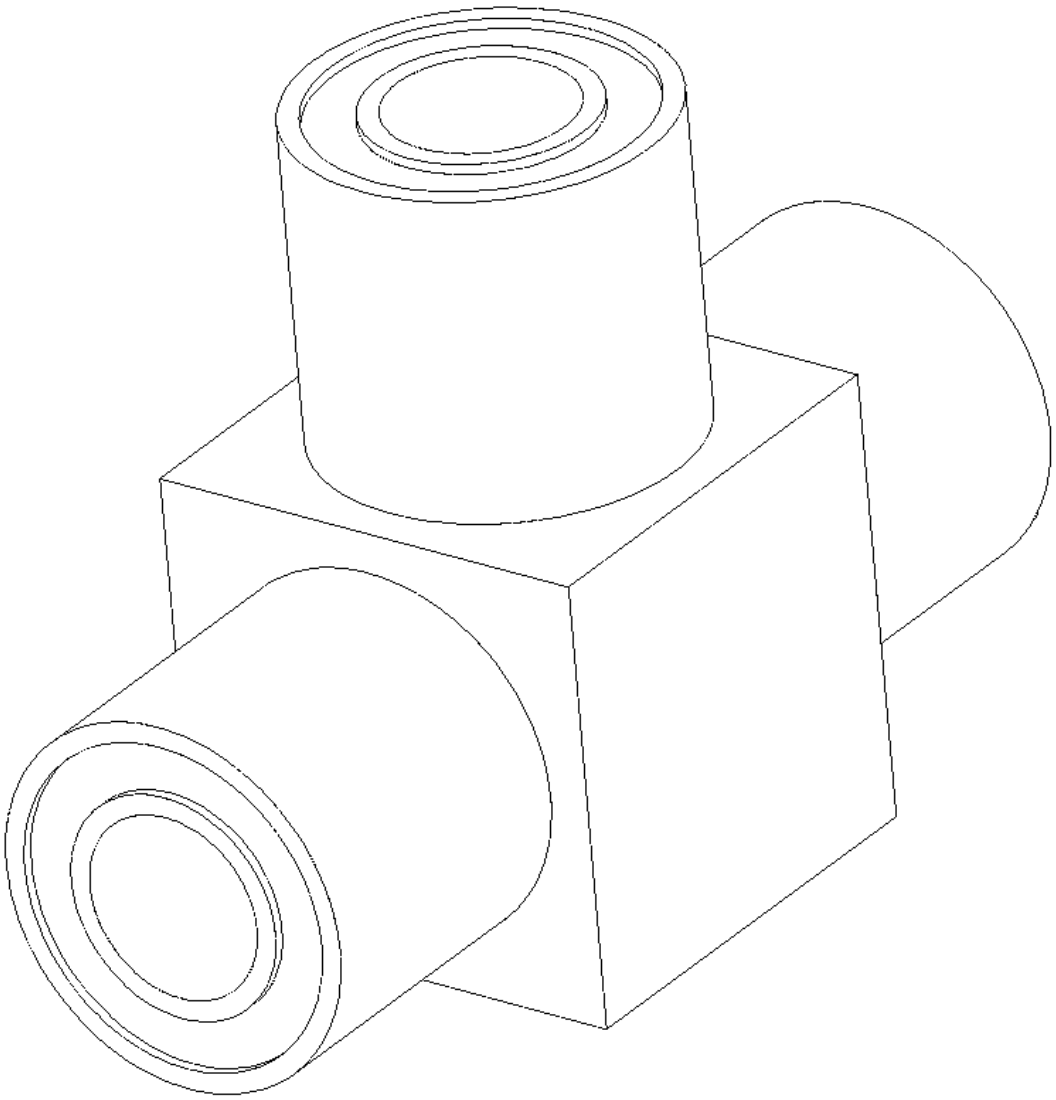

(NO SERVICED PARTS)

138-1976 VALVE GP-SHUTOFF ---S/N 4ZN16044-50156
PART OF 141-7885 VALVE GP-BACKHOE NEUTRALIZER

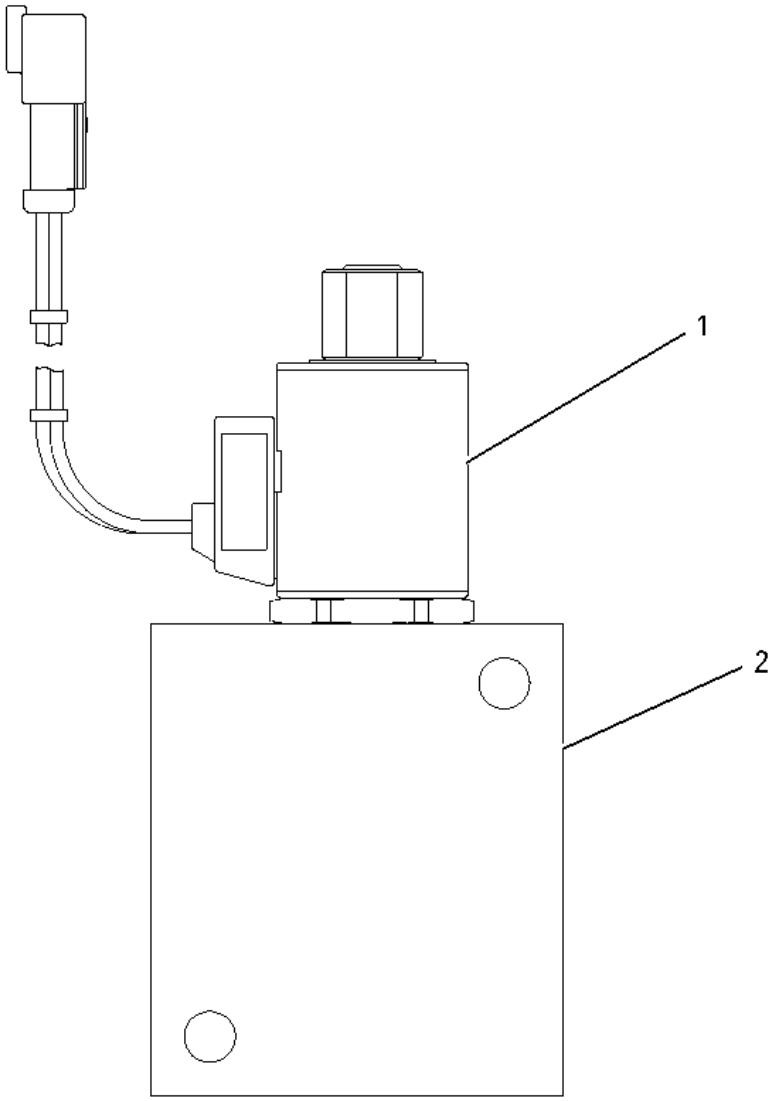

1 NPR 138-1975 1 VALVE GP-SOLENOID

NPR 3G-8175 1 KIT-SEAL

NPR 127-4402 1 COIL AS

NPR 1S-9593 2 STRAP-CABLE

NPR 102-8802 1 KIT-RECEPTACLE (2-PIN)

(INCLUDES WEDGE & RECEPTACLE)

NPR 186-3735 2 PIN-CONNECTOR (16-GA TO 18-GA)

NPR 127-4404 1 NUT (1/2-20-THD)

NPR 138-1974 1 VALVE AS

2 NPR 127-4405 1 MANIFOLD

6E-6283 VALVE GP-RELIEF ---S/N 4ZN16044-50156
PART OF 6E-6289 VALVE GP-CONTROL

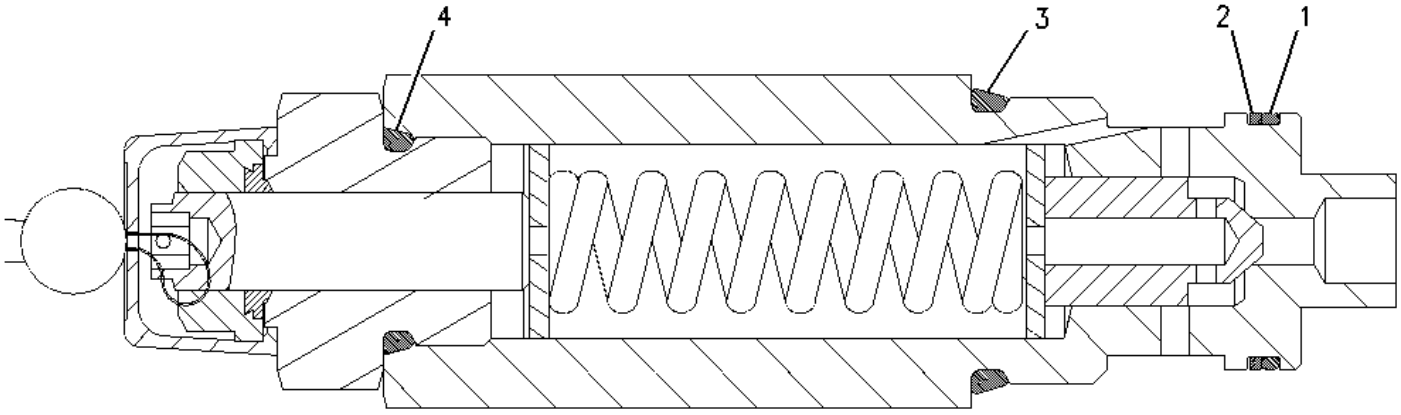

1	**NPR**	**5K-9090**	**1**	**SEAL-O-RING**
2	**NPR**	**6E-0358**	**1**	**RING-BACKUP**
3	**NPR**	**4K-1388**	**1**	**SEAL-O-RING**
4	**NPR**	**3K-0360**	**1**	**SEAL-O-RING**

147-0209 VALVE GP-RELIEF --S/N 4ZN16044-50156
PART OF 147-0200, 147-0204, 192-0849 TRANSMISSION GP-POWER SHIFT

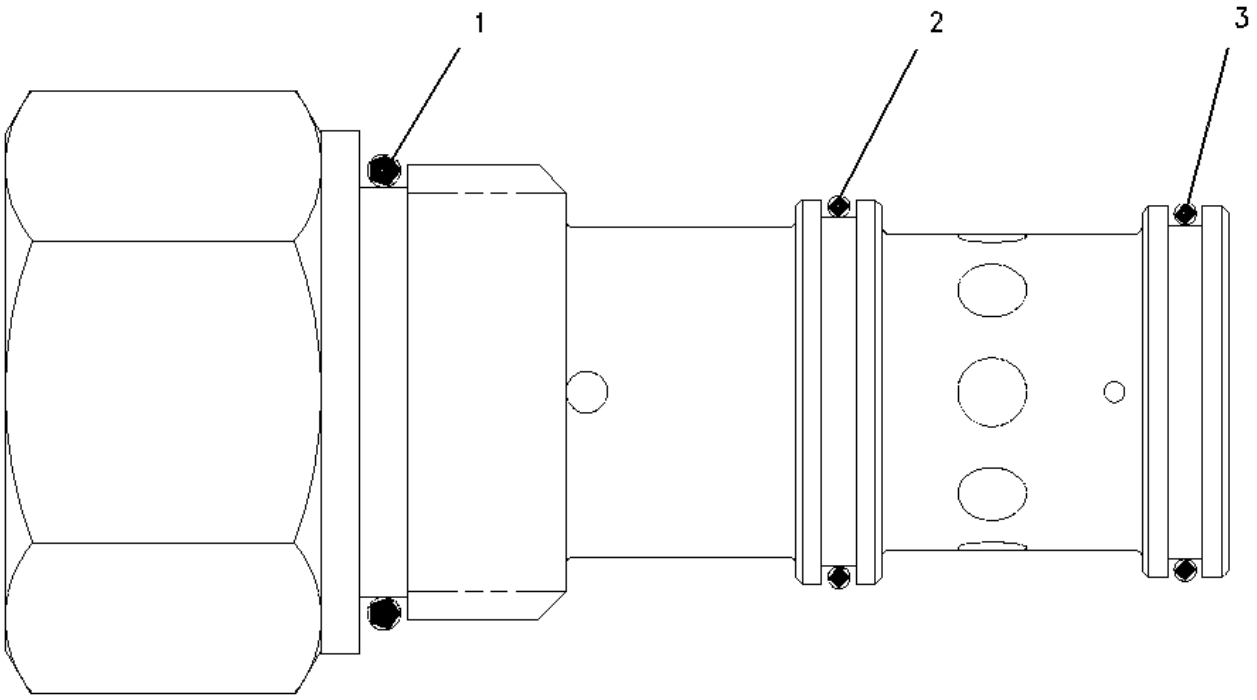

1	**NPR**	**7X-4744**	**1**	**SEAL-O-RING**
2	**NPR**	**6V-9178**	**1**	**SEAL-O-RING**
3	**NPR**	**106-9586**	**1**	**SEAL-O-RING**

157-0491 LINES GP-LOAD CONTROL VALVE -S/N 4ZN16044-50156-BOOM & STICK
PART OF 154-5314 BACKHOE AR-EXTENDABLE STICK, 154-5302, 154-5305, 154-5308 BACKHOE AR-STANDARD STICK
Type 1

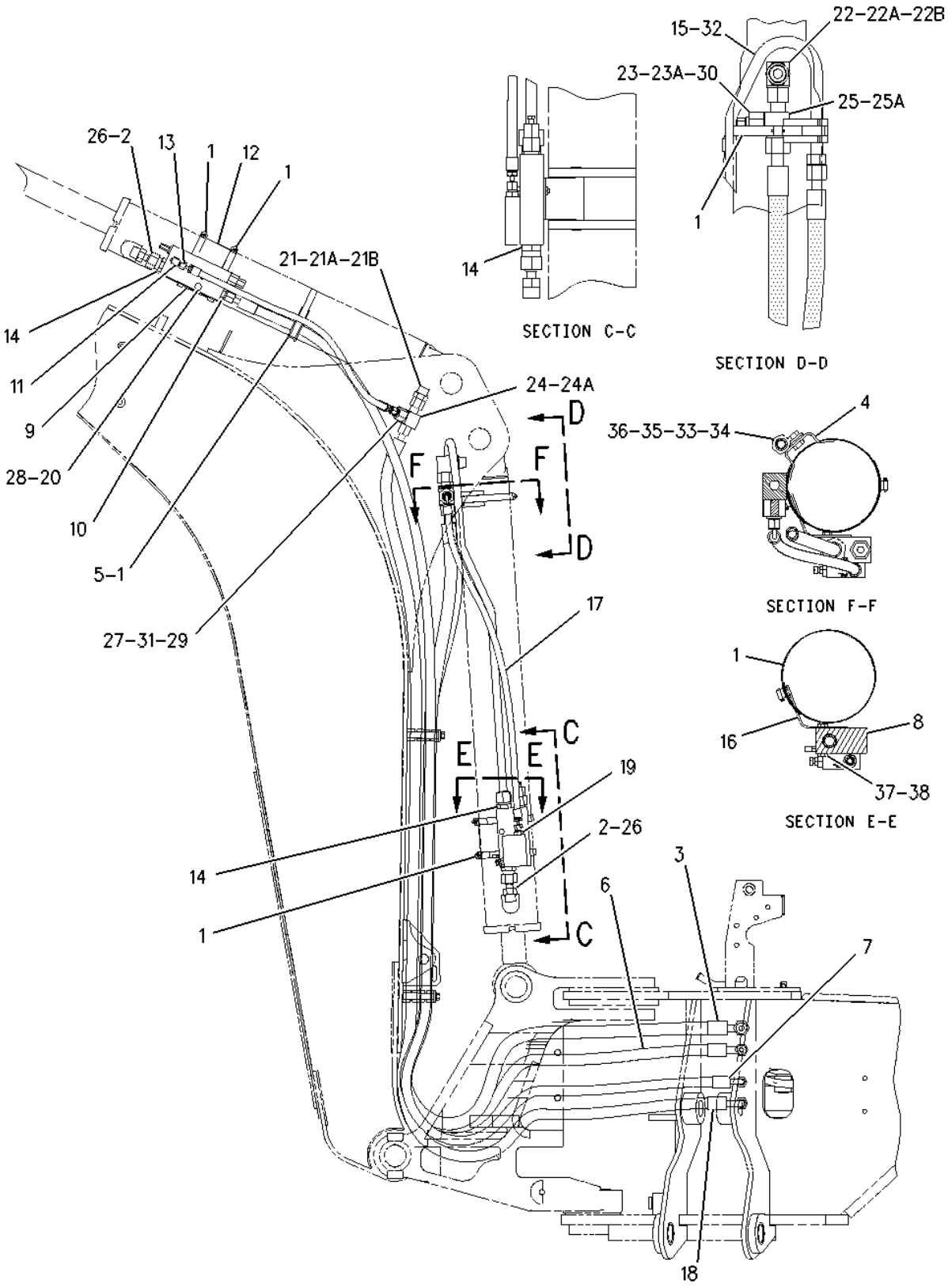

1 NPR 5P-0599 6 CLAMP-BAND

2 NPR 7X-3166 2 ADAPTER-SWIVEL

3 NPR I 8Y-7369 1 HOSE AS

4		NPR	9R-4619	1	SUPPORT AS
		NPR M	6V-8224	1	NUT-WELD (M10X1.15-THD)
5		NPR	173-3995	1	BLOCK
6		NPR I	9R-9165	1	HOSE AS
7		NPR I	9R-9285	1	HOSE AS
8		NPR	154-3765	1	VALVE GP-LOAD CONTROL
9		NPR	154-3766	1	VALVE GP-LOAD CONTROL
10		NPR	155-8994	1	ADAPTER AS
		NPR	6V-8398	1	SEAL-O-RING
		NPR	155-9644	1	SEAL
11			157-0497	1	ELBOW AS
12			160-8282	1	BRACKET
13		I	160-8283	1	HOSE AS
14			160-8284	3	ADAPTER AS
	(EACH INCLUDES)				
		NPR	6V-9746	1	SEAL-O-RING
		NPR	155-9644	1	SEAL
15			160-9776	1	TUBE AS
16			160-9777	1	BRACKET
17		I	161-1024	1	HOSE AS
18		NPR I	165-6982	1	HOSE AS
19		NPR	170-5121	1	ADAPTER AS
		NPR	4J-5477	1	SEAL-O-RING
		NPR	162-6816	1	SEAL
20		NPR M	085-8091	1	BOLT (M10X1.5X55-MM)

21	NPR	3D-2824	1	SEAL-O-RING
21A	NPR	6V-8713	1	CONNECTOR
21B	NPR	7J-9108	1	SEAL-O-RING
22	NPR	3D-2824	1	SEAL-O-RING
22A	NPR	6V-9007	1	ELBOW
22B	NPR	6V-9746	1	SEAL-O-RING
23	NPR	6V-8397	1	SEAL-O-RING
23A	NPR	6V-8941	1	REDUCER
24	NPR	6V-9838	1	TEE-SWIVEL
24A	NPR	7J-9108	2	SEAL-O-RING
25	NPR	6V-9746	2	SEAL-O-RING
25A	NPR	6V-9839	1	TEE-SWIVEL
26	NPR	3D-2824	2	SEAL-O-RING
27	NPR	4J-5477	1	SEAL-O-RING
28	NPR M	6V-7744	1	LOCKNUT (M10X1.15-THD)
29	NPR	6V-8555	1	NUT-FACE SEAL (1-14-THD)
30	NPR	6V-8556	1	NUT (1-3/16-12-THD)
31	NPR	6V-8937	1	REDUCER-O-RING
32	NPR	7J-9108	1	SEAL-O-RING
33	NPR	8T-1887	1	CLIP (SLOT)
34	NPR	8T-1888	1	CLIP (TAB)
35	NPR	8T-4121	1	WASHER-HARD (11X21X2.5-MM THK)
36	NPR M	8T-4137	1	BOLT (M10X1.5X20-MM)
37	NPR M	8T-6912	1	BOLT (M8X1.25X50-MM)
38	NPR M	8T-7963	1	LOCKNUT (M8X1.25-THD)
39	NPR	3S-2093	20	STRAP-CABLE

Key: I - REFER TO HYDRAULIC INFORMATION SYSTEM
M - METRIC PART

157-0491 LINES GP-LOAD CONTROL VALVE -S/N 4ZN16044-50156-BOOM & STICK
PART OF 154-5314 BACKHOE AR-EXTENDABLE STICK, 154-5302, 154-5305, 154-5308 BACKHOE AR-STANDARD STICK
Type 2

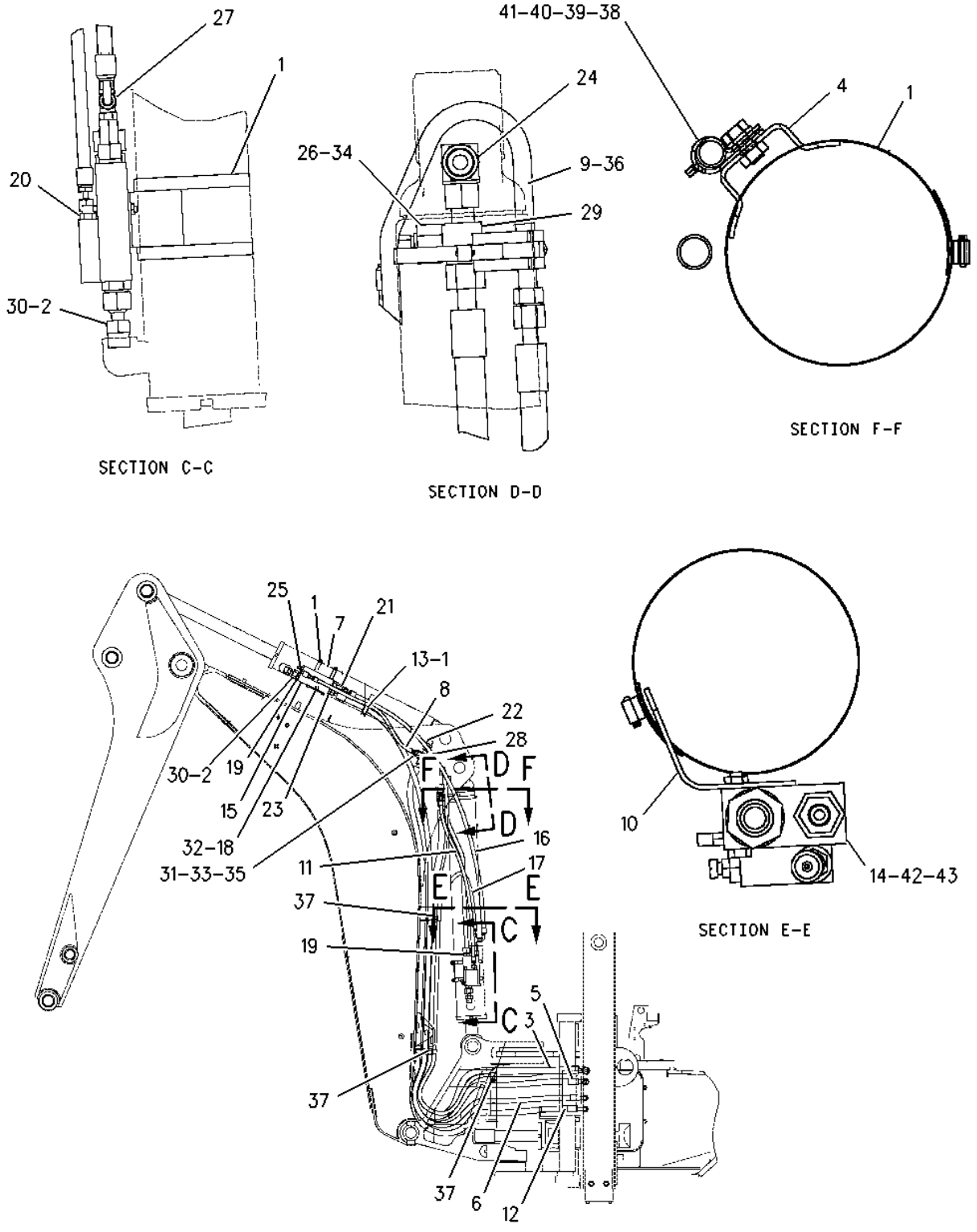

1 NPR 5P-0599 6 CLAMP-BAND

2 NPR 7X-3166 2 ADAPTER-SWIVEL

3 NPR I 8Y-7369 1 HOSE AS

4 NPR 9R-4619 1 SUPPORT AS

NPR M 6V-8224 1 NUT-WELD (M10X1.15-THD)

5 NPR I 9R-9165 1 HOSE AS

6 NPR I 9R-9285 1 HOSE AS

7 160-8282 1 BRACKET

8 I 160-8283 1 HOSE AS

9 160-9776 1 TUBE AS

10 160-9777 1 BRACKET

11 I 161-1024 1 HOSE AS

12 NPR I 165-6982 1 HOSE AS

13 NPR 173-3995 1 BLOCK

14 NPR 175-6918 1 VALVE GP-LOAD CONTROL

15 NPR 175-6919 1 VALVE GP-LOAD CONTROL

16 NPR I 176-8121 1 HOSE AS

17 NPR I 176-8122 1 HOSE AS

18 NPR M 085-8091 1 BOLT (M10X1.5X55-MM)

19 NPR 148-8322 3 CONNECTOR AS

NPR 2M-9780 1 SEAL-O-RING

NPR 6V-8640 1 CONNECTOR

NPR 6V-9746 1 SEAL-O-RING

20 NPR 148-8325 1 CONNECTOR AS

NPR 3J-1907 1 SEAL-O-RING

NPR 4J-5477 1 SEAL-O-RING

NPR 6V-8641 1 CONNECTOR

21 NPR 148-8336 1 CONNECTOR AS

	NPR	3J-1907	1	SEAL-O-RING
	NPR	6V-8397	1	SEAL-O-RING
	NPR	6V-8636	1	CONNECTOR
22	NPR	148-8341	1	CONNECTOR AS
	NPR	3D-2824	1	SEAL-O-RING
	NPR	6V-8713	1	CONNECTOR
	NPR	7J-9108	1	SEAL-O-RING
23	NPR	148-8345	1	CONNECTOR AS
	NPR	2M-9780	1	SEAL-O-RING
	NPR	6V-8398	1	SEAL-O-RING
	NPR	6V-8638	1	CONNECTOR
24	NPR	148-8347	1	ELBOW AS
	NPR	3D-2824	1	SEAL-O-RING
	NPR	6V-9007	1	ELBOW
	NPR	6V-9746	1	SEAL-O-RING
25	NPR	148-8368	1	ELBOW AS
	NPR	3J-1907	1	SEAL-O-RING
	NPR	4J-5477	1	SEAL-O-RING
	NPR	6V-8627	1	ELBOW
26	NPR	148-8417	1	REDUCER AS
	NPR	6V-8397	1	SEAL-O-RING
	NPR	6V-8941	1	REDUCER
27	NPR	148-8435	1	TEE AS
	NPR	3J-1907	1	SEAL-O-RING
	NPR	6V-8397	2	SEAL-O-RING

	NPR	6V-8781	1	TEE-FACE SEAL
28	NPR	148-8446	1	TEE GP-SWIVEL
	NPR	6V-9838	1	TEE-SWIVEL
	NPR	7J-9108	2	SEAL-O-RING
29	NPR	148-8449	1	TEE AS-SWIVEL
	NPR	6V-9746	2	SEAL-O-RING
	NPR	6V-9839	1	TEE-SWIVEL
30	NPR	3D-2824	2	SEAL-O-RING
31	NPR	4J-5477	1	SEAL-O-RING
32	NPR M	6V-7744	1	LOCKNUT (M10X1.15-THD)
33	NPR	6V-8555	1	NUT-FACE SEAL (1-14-THD)
34	NPR	6V-8556	1	NUT (1-3/16-12-THD)
35	NPR	6V-8937	1	REDUCER-O-RING
36	NPR	7J-9108	1	SEAL-O-RING
37	NPR	8M-2773	3	CLIP
38	NPR	8T-1887	1	CLIP (SLOT)
39	NPR	8T-1888	1	CLIP (TAB)
40	NPR	8T-4121	1	WASHER-HARD (11X21X2.5-MM THK)
41	NPR M	8T-4137	1	BOLT (M10X1.5X20-MM)
42	NPR M	8T-6912	1	BOLT (M8X1.25X50-MM)
43	NPR M	8T-7963	1	LOCKNUT (M8X1.25-THD)
44	NPR	3S-2093	25	STRAP-CABLE

Key: I - REFER TO HYDRAULIC INFORMATION SYSTEM
M - METRIC PART

6E-3942 VALVE GP-LOAD CONTROL -BOOM --S/N 4ZN16044-50156
PART OF 136-7835 LINES GP-BOOM

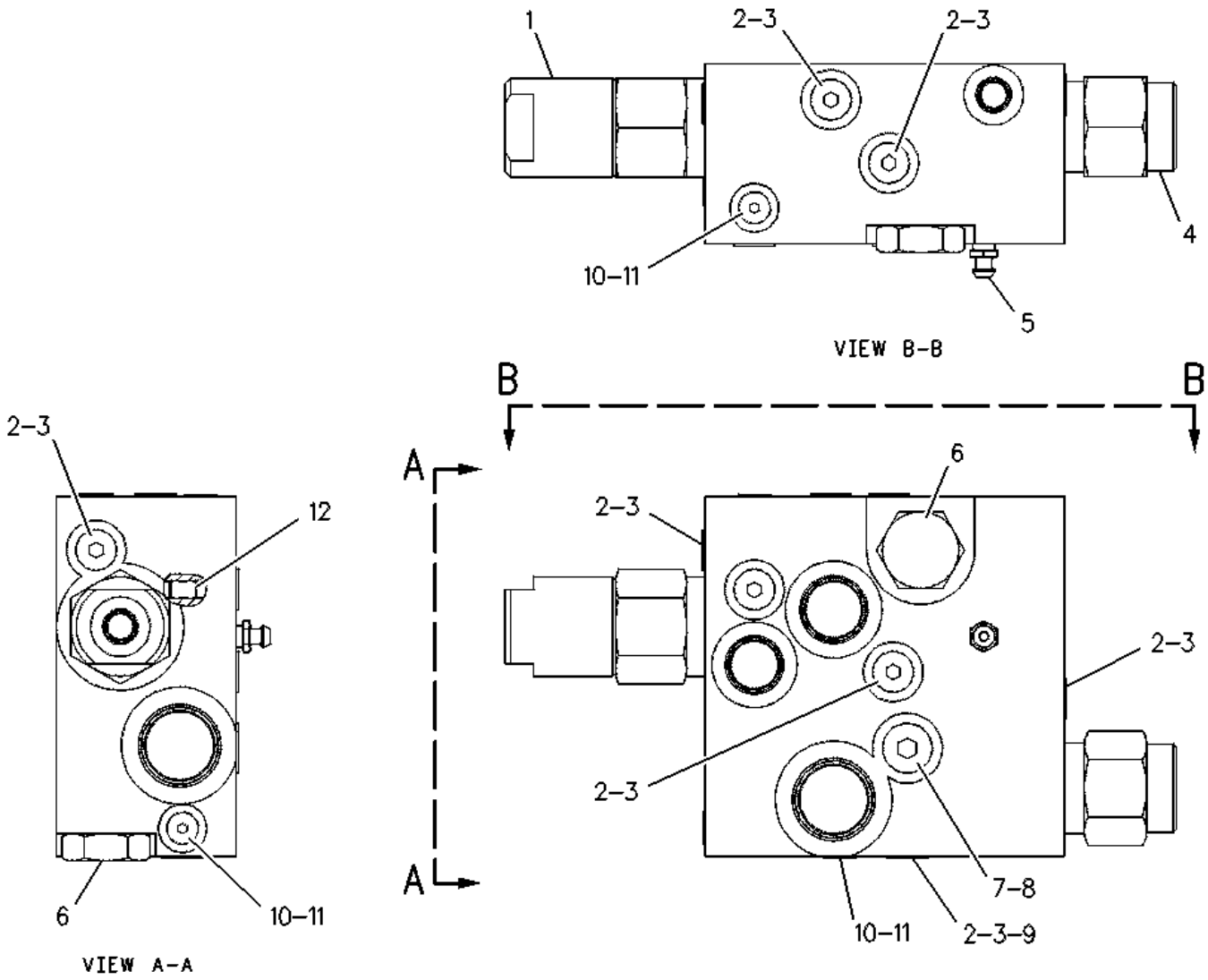

1 NPR J 106-9418 1 VALVE GP-LOAD CONTROL

2 NPR 9S-8002 7 PLUG

3 NPR 3J-7354 7 SEAL-O-RING

4 NPR L 106-9420 1 VALVE GP-SEQUENCE

5 NPR 9F-2167 1 SCREW-PURGE (3/8-24-THD)

6 NPR 9T-6630 2 VALVE GP-CHECK

(EACH INCLUDES)

NPR 2M-9780 1 SEAL-O-RING

NPR 4M-6582 1 SEAL-O-RING

NPR 5P-2199 1 RING-BACKUP

7 NPR 9S-8004 1 PLUG-O RING

8 NPR 3J-1907 1 SEAL-O-RING

9 NPR 106-9485 1 PLUG-ORIFICE

10 NPR 9S-8001 3 PLUG

11 NPR 4J-7533 3 SEAL-O-RING

12 NPR 106-9421 1 PLUG-ORIFICE

AVAILABLE REPAIR KIT(S):

NPR J 6E-5820 KIT-SEAL

(INCLUDES SEALS & RINGS)

NPR L 6E-5759 1 KIT-SEAL

Key:

J - KIT(S) MARKED J AVAILABLE FOR PART(S) MARKED J
L - KIT(S) MARKED L AVAILABLE FOR PART(S) MARKED L

9T-5455 VALVE GP-LOAD CONTROL -S/N 4ZN16044-50156
PART OF 171-4731 LINES GP-CHECK VALVE, 164-2337 LINES GP-LIFT CYLINDER

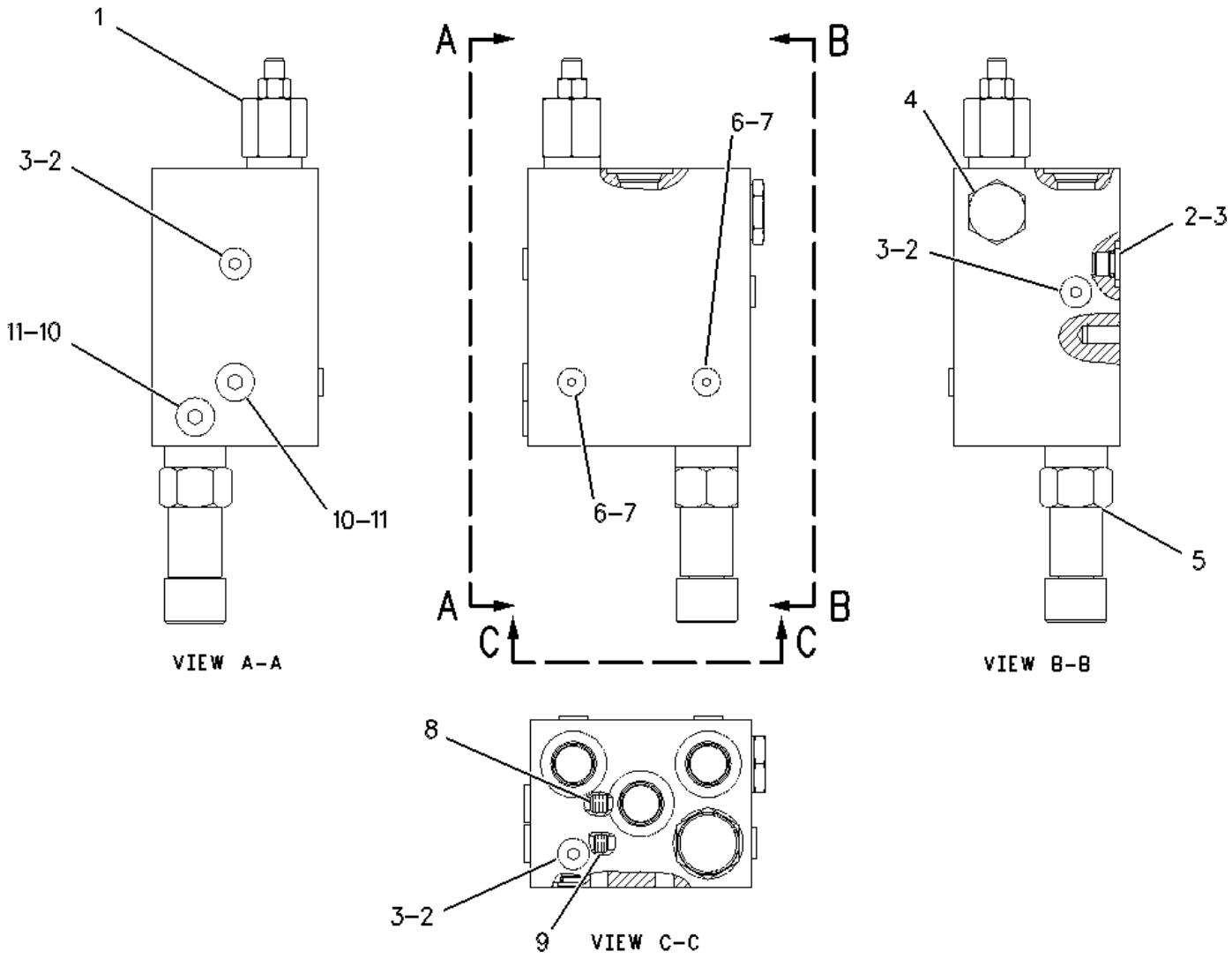

1 NPR J 106-9427 1 VALVE GP-SEQUENCE

2 NPR 9S-8002 4 PLUG

3 NPR 3J-7354 4 SEAL-O-RING

4 NPR L 106-9430 1 VALVE GP-CHECK

NPR 2M-9780 1 SEAL-O-RING

NPR 4M-6582 1 SEAL-O-RING

NPR 5P-2199 1 RING-BACKUP

5 NPR CY 150-5150 1 VALVE GP-LOAD CONTROL

6 NPR 9S-8007 2 PLUG

7	NPR	7J-0204	2	SEAL-O-RING
8	NPR	4J-9780	1	PLUG-ORIFICE
9	NPR	7Y-4224	1	ORIFICE
10	NPR	9S-8004	2	PLUG-O RING
11	NPR	3J-1907	2	SEAL-O-RING

AVAILABLE REPAIR KIT(S):

NPR J	6E-4753	1	KIT-SEAL
NPR L	6E-3583	1	KIT-SEAL

Key:

C - CHANGE FROM PREVIOUS TYPE
J - KIT MARKED J IS AVAILABLE FOR PART MARKED J
L - KIT MARKED L IS AVAILABLE FOR PART MARKED L
Y - SEPARATE ILLUSTRATION

150-5150 VALVE GP-LOAD CONTROL ---S/N 4ZN16044-50156
PART OF 9T-5455 VALVE GP-LOAD CONTROL

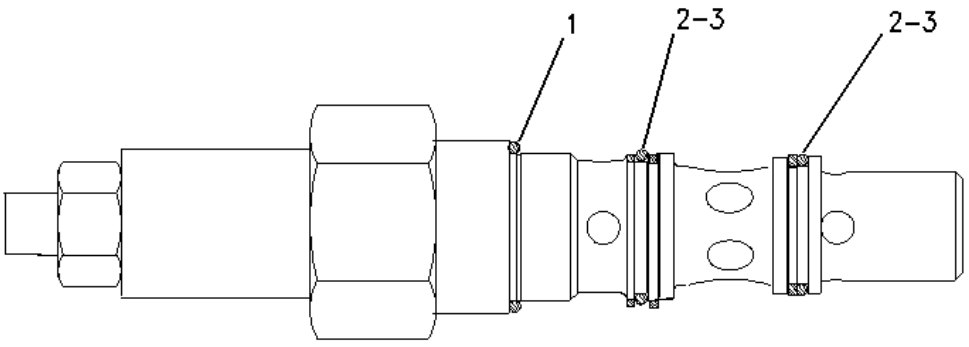

1	**NPR**	**2M-9780**	**1**	**SEAL-O-RING**
2	**NPR**	**6V-8399**	**2**	**SEAL-O-RING**
3	**NPR**	**149-4091**	**3**	**RING-BACKUP**

112-1843 CONVERSION GP-CONTROL VALVE --S/N 4ZN16044-50156
3RD VALVE FOR SINGLE TILT --PART OF 106-6261 HYDRAULIC AR

NPR Y	124-8818	1	VALVE GP-CONTROL
NPR	9S-8752	3	NUT-FULL (3/8-16-THD)
NPR	4J-5267	1	SEAL-O-RING
NPR	4J-5140	1	SEAL-O-RING
NPR	4D-9986	2	SEAL-O-RING
NPR B	4T-2723	3	SHIM (0.076-MM THK)
NPR	4T-4518	3	STUD (3/8-16X8.52-IN)
NPR	5M-2894	3	WASHER-HARD (10.2X18.5X2.5-MM THK)

Key: B - USE AS REQUIRED Y - SEPARATE ILLUSTRATION

150-3034 VALVE GP-CHECK ---S/N 4ZN16044-50156
PRE-INSTALLED O-RINGS ---PART OF 121-8338, 121-8339 LINES GP-RETURN

NPR	5K-9090	1	SEAL-O-RING
NPR	7M-8485	1	SEAL-O-RING
NPR	129-1555	1	VALVE GP-CHECK

119-4003 CONVERSION GP-CONTROL VALVE ---S/N 4ZN16044-50156
6 TO 7 VALVE ---PART OF 106-6253, 119-4005 HYDRAULIC AR

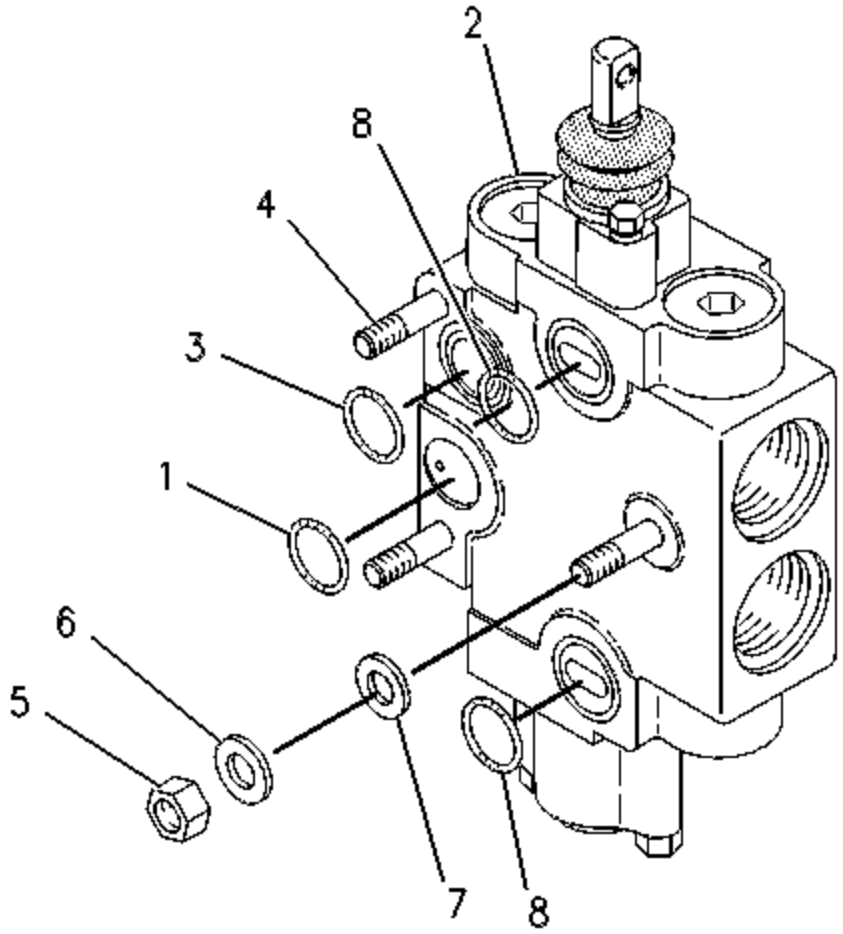

1	NPR	4J-5140	1	SEAL-O-RING
2	NPR Y	6E-6287	1	VALVE GP-CONTROL (EXTENDABLE STICK)
3	NPR	4J-5267	1	SEAL-O-RING
4	NPR	116-1315	3	STUD
5	NPR	9S-8752	6	NUT-FULL (3/8-16-THD)
6	NPR	5M-2894	6	WASHER-HARD (10.2X18.5X2.5-MM THK)
7	NPR	4T-2723	3	SHIM (0.076-MM THK)
8	NPR	4D-9986	2	SEAL-O-RING

Key: Y - SEPARATE ILLUSTRATION

119-4004 CONVERSION GP-CONTROL VALVE --S/N 4ZN16044-50156
PART OF 119-4006 HYDRAULIC AR

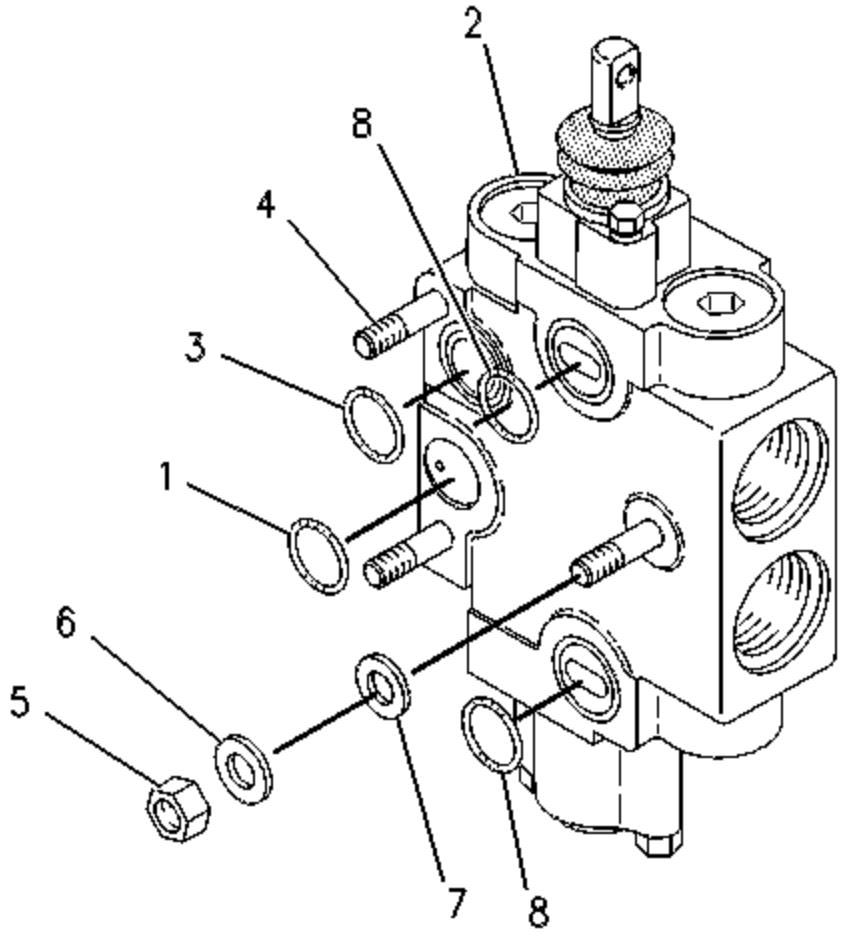

1	NPR	4J-5140	1	SEAL-O-RING
2	NPR Y	6E-6287	1	VALVE GP-CONTROL (EXTENDABLE STICK)
3	NPR	4J-5267	1	SEAL-O-RING
4	NPR	107-6170	3	STUD
5	NPR	9S-8752	6	NUT-FULL (3/8-16-THD)
6	NPR	5M-2894	6	WASHER-HARD (10.2X18.5X2.5-MM THK)
7	NPR	4T-2723	3	SHIM (0.076-MM THK)
8	NPR	4D-9986	2	SEAL-O-RING

Key: Y - SEPARATE ILLUSTRATION

122-9136 MOUNTING GP-BANK VALVE --S/N 4ZN16044-50156
PART OF 154-5437 HYDRAULIC AR

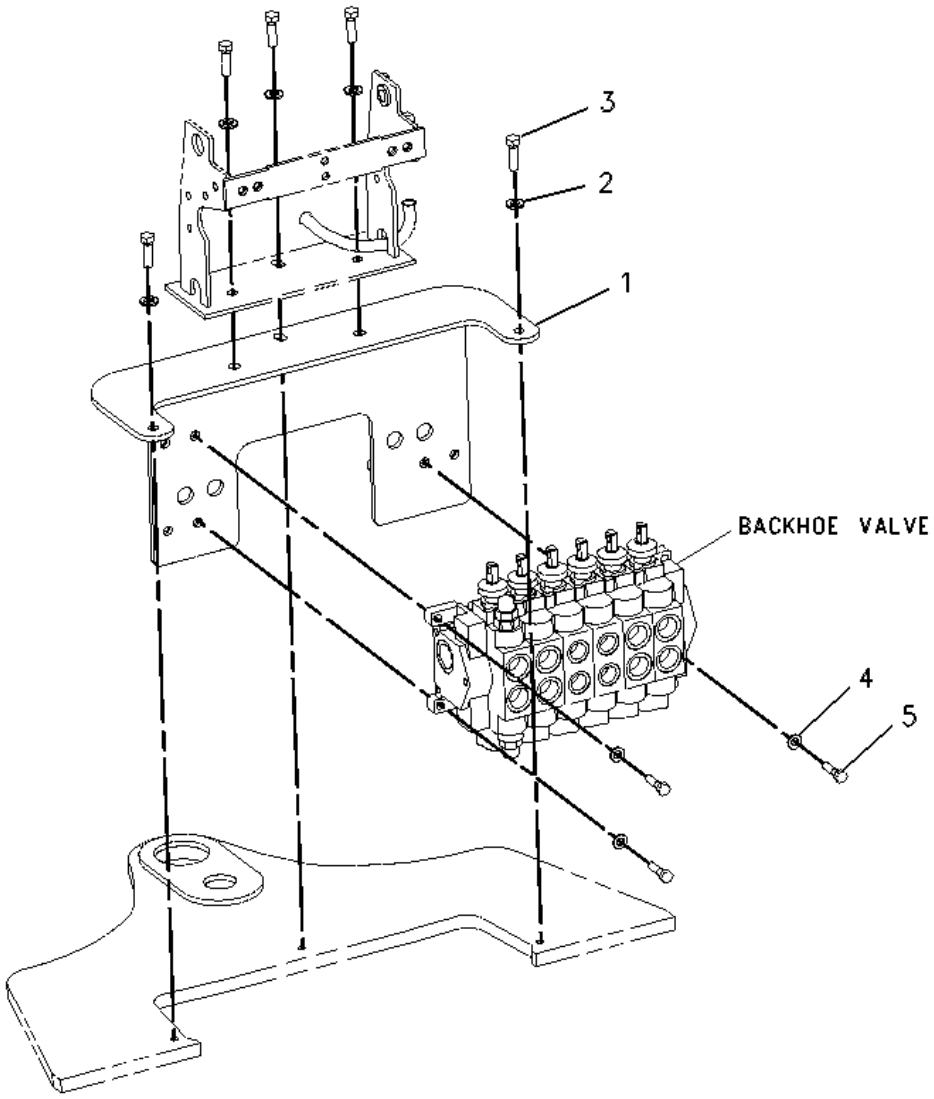

1 NPR 192-2863 1 BRACKET AS

NPR M 8T-3490 6 NUT-WELD (M10X1.5-THD)

NPR M 8T-3597 2 NUT-WELD (M12X1.75-THD)

NPR M 9R-2672 8 BOSS-THREADED (M10X1.5-6HX20-MM)

2 NPR 8T-4223 5 WASHER-HARD (13.5X25.5X3-MM THK)

3 NPR M 8T-4183 5 BOLT (M12X1.75X40-MM)

4 NPR 8T-4121 3 WASHER-HARD (11X21X2.5-MM THK)

5 NPR M 8T-4186 3 BOLT (M10X1.5X40-MM)

Key: M - METRIC PART

6E-6287 VALVE GP-CONTROL -EXTENDABLE STICK --S/N 4ZN16044-50156
PART OF 119-4003, 119-4004 CONVERSION GP-CONTROL VALVE

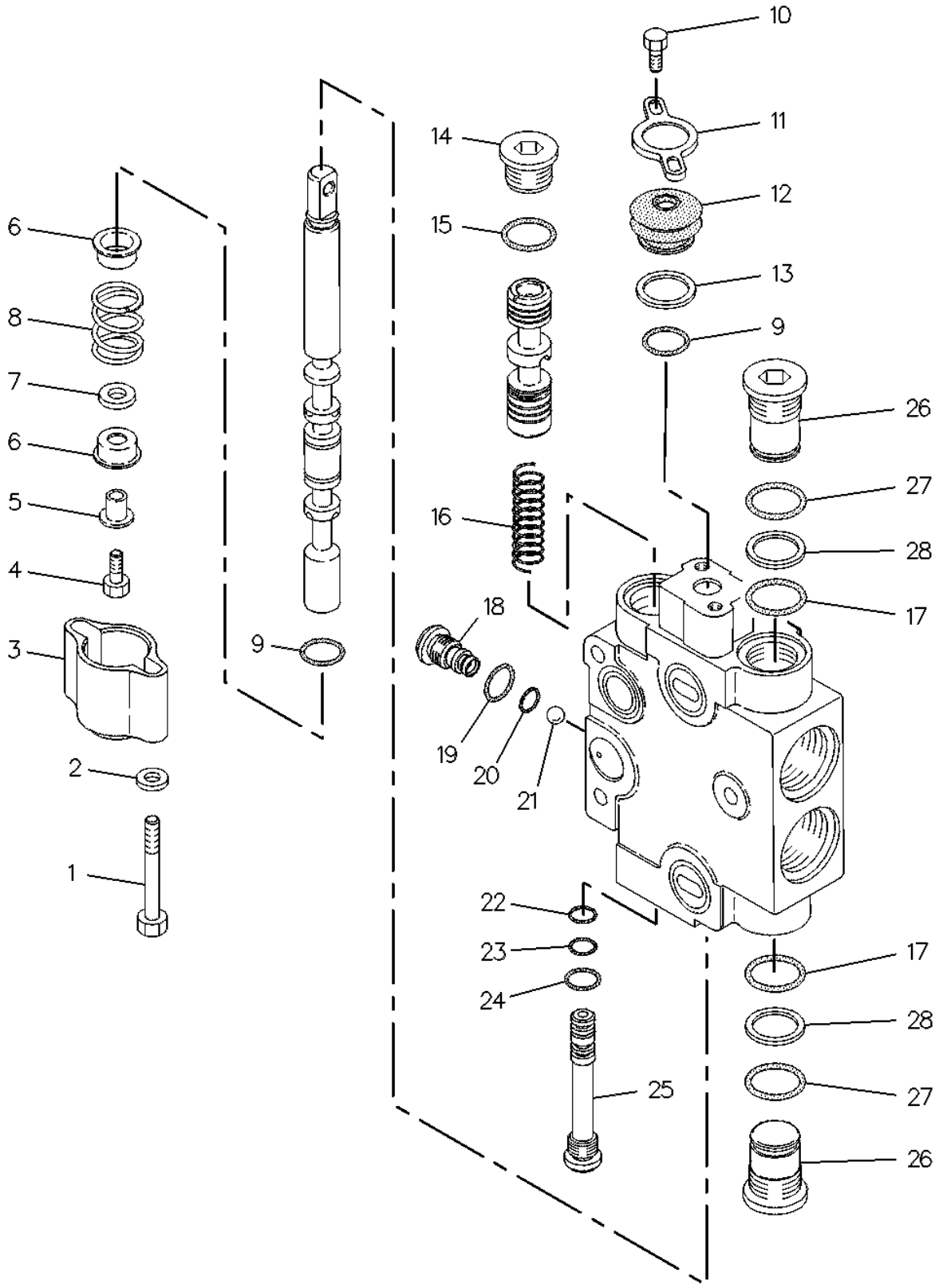

1	NPR	8B-2377	2	BOLT (1/4-20X2-IN)
2	NPR	5P-0537	2	WASHER-HARD (7.2X14.5X2-MM THK)
3	NPR	4T-4532	1	HOUSING

4	NPR	031-5085	1	BOLT-LOCKING (1/4-20X1-IN)
5	NPR	4T-4533	1	SPACER (7.1X17.3X1.5-MM THK)
6	NPR	4T-4521	2	RETAINER
7	NPR	6E-0131	2	WASHER
8	NPR	195-2406	1	SPRING
9	NPR	195-2139	2	SEAL-O-RING
10	NPR	031-0214	2	BOLT-LOCKING (1/4-20X0.5-IN)
11	NPR	4T-4528	1	RETAINER
12	NPR	4T-4524	1	GUARD-DUST
13	NPR	4T-4520	1	FILTER
14	NPR	9S-8006	1	PLUG-O RING
15	NPR	2M-9780	1	SEAL-O-RING
16	NPR	6E-4317	1	SPRING
17	NPR	5K-9090	2	SEAL-O-RING
18	NPR	126-5476	1	SEAT AS-SHUTTLE
	NPR	7J-0204	1	SEAL-O-RING
	NPR	4T-7807	1	RING-BACKUP
	NPR	8T-2360	1	SEAL-O-RING
19	NPR	7J-0204	1	SEAL-O-RING
20	NPR	8T-2360	1	SEAL-O-RING
21	NPR	5B-9318	1	BALL
22	NPR	8T-2361	1	SEAL-O-RING
23	NPR	1P-7363	1	SEAL-O-RING
24	NPR	3J-7354	1	SEAL-O-RING
25	NPR	126-5796	1	VALVE GP-CHECK

	NPR	8T-2361	1	SEAL-O-RING
	NPR	1P-7363	1	SEAL-O-RING
	NPR	3J-7354	1	SEAL-O-RING
	NPR	126-5984	1	RING-BACKUP
	NPR	126-5985	1	RING-BACKUP
26	NPR	4T-4531	2	PLUG
27	NPR	4K-1388	2	SEAL-O-RING
28	NPR	6E-0358	2	RING-BACKUP

6E-6289 VALVE GP-CONTROL ---S/N 4ZN16044-50156
PART OF 105-8906, 161-6736 VALVE GP-BANK 6, 161-6737 VALVE GP-BANK 7, 161-6738 VALVE GP-BANK 8

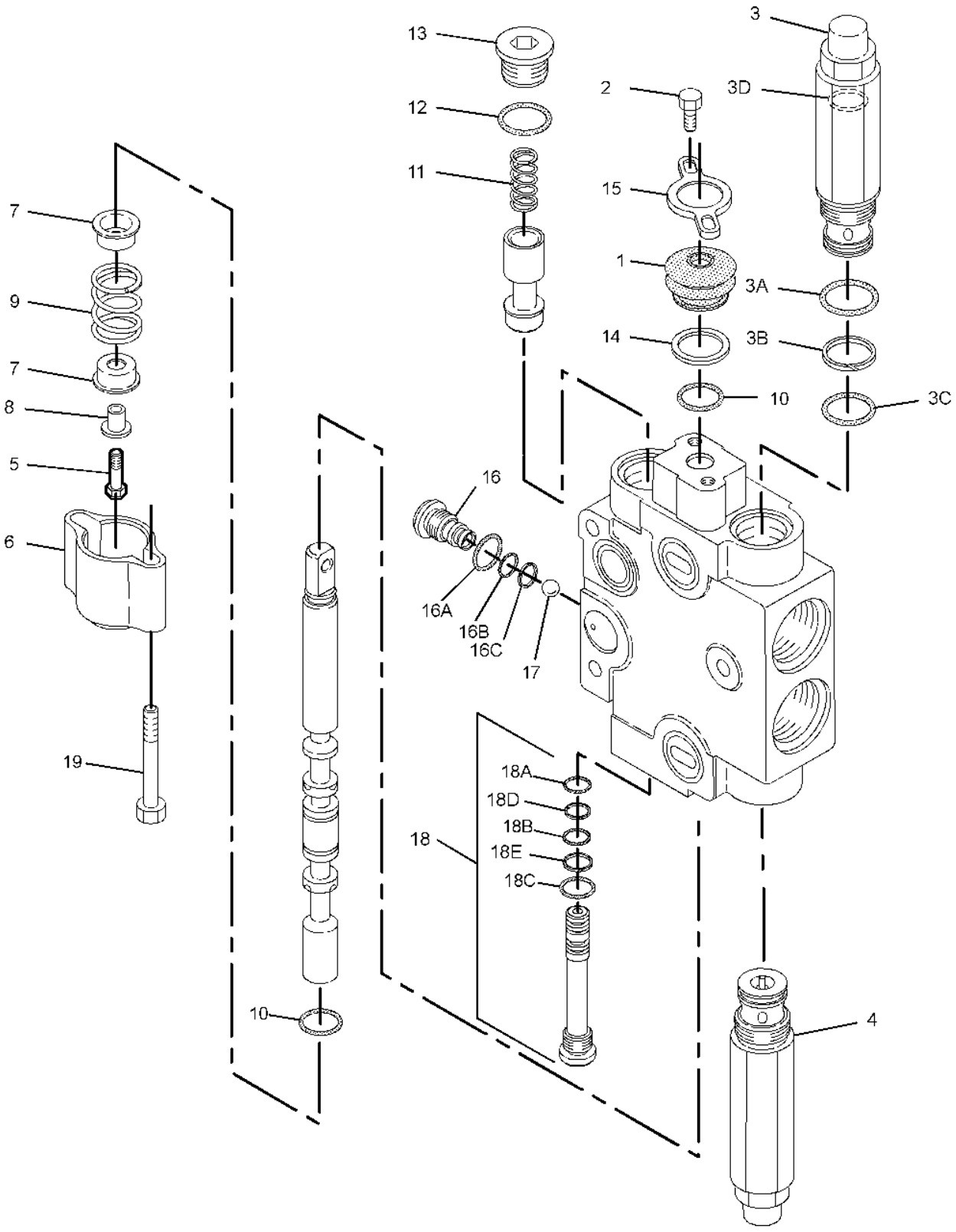

1 NPR 4T-4524 1 GUARD-DUST

2 NPR 031-0214 2 BOLT-LOCKING (1/4-20X0.5-IN)

3 NPR 6E-6282 1 VALVE GP-RELIEF

3A	NPR	4K-1388	1	SEAL-O-RING
3B	NPR	6E-0358	1	RING-BACKUP
3C	NPR	5K-9090	1	SEAL-O-RING
3D	NPR	3K-0360	1	SEAL-O-RING
4	NPR Y	6E-6283	1	VALVE GP-RELIEF
5	NPR	031-5085	1	BOLT-LOCKING (1/4-20X1-IN)
6	NPR	167-6768	1	HOUSING
7	NPR	4T-4521	2	RETAINER
8	NPR	4T-4533	1	SPACER (7.1X17.3X1.5-MM THK)
9	NPR	195-2406	1	SPRING
10	NPR	195-2139	2	SEAL-O-RING
11	NPR	137-9463	1	SPRING
12	NPR	2M-9780	1	SEAL-O-RING
13	NPR	9S-8006	1	PLUG-O RING
14	NPR	4T-4520	1	FILTER
15	NPR	4T-4528	1	RETAINER
16	NPR	126-5476	1	SEAT AS-SHUTTLE
16A	NPR	7J-0204	1	SEAL-O-RING
16B	NPR	8T-2360	1	SEAL-O-RING
16C	NPR	4T-7807	1	RING-BACKUP
17	NPR	5B-9318	1	BALL
18	NPR	126-5796	1	VALVE GP-CHECK
18A	NPR	8T-2361	1	SEAL-O-RING
18B	NPR	1P-7363	1	SEAL-O-RING
18C	NPR	3J-7354	1	SEAL-O-RING
18D	NPR	126-5984	1	RING-BACKUP
18E	NPR	126-5985	1	RING-BACKUP
19	NPR	8H-0707	2	BOLT (1/4-20X1-IN)

Key: Y - SEPARATE ILLUSTRATION

100-4101 VALVE GP-CONTROL -BOOM ---S/N 4ZN16044-50156--PART OF 136-7830 CONTROL AR-BOOM LOAD

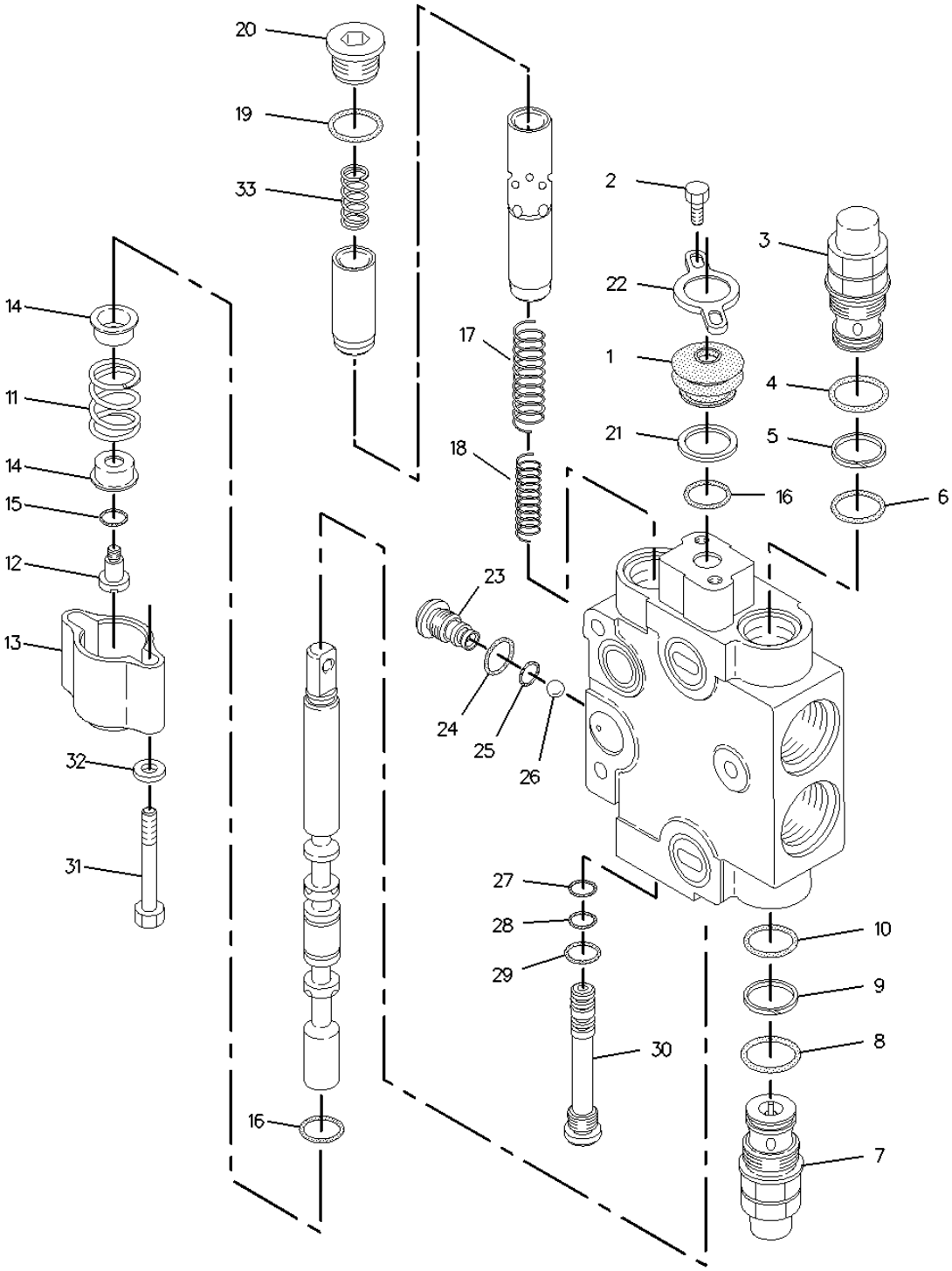

1	**NPR**	**4T-4524**	**1**	**GUARD-DUST**
2	**NPR**	**031-0214**	**2**	**BOLT-LOCKING (1/4-20X0.5-IN)**
3	**NPR**	**6E-6284**	**1**	**VALVE GP-MAKEUP & RELIEF**
4	**NPR**	**4K-1388**	**1**	**SEAL-O-RING**
5	**NPR**	**6E-0358**	**1**	**RING-BACKUP**

6 NPR 5K-9090 1 SEAL-O-RING

7 NPR 6E-6285 1 VALVE GP-RELIEF

8 NPR 4K-1388 1 SEAL-O-RING

9 NPR 6E-0358 1 RING-BACKUP

10 NPR 5K-9090 1 SEAL-O-RING

11 NPR 195-2406 1 SPRING

12 NPR 9T-0650 1 BOLT-SPECIAL

13 NPR 4T-4532 1 HOUSING

14 NPR 4T-4521 2 RETAINER

15 NPR 4J-7533 1 SEAL-O-RING

16 NPR 195-2139 2 SEAL-O-RING

17 NPR 4T-4534 1 SPRING

18 NPR 9T-3729 1 SPRING

19 NPR 2M-9780 1 SEAL-O-RING

20 NPR 9S-8006 1 PLUG-O RING

21 NPR 4T-4520 1 FILTER

22 NPR 4T-4528 1 RETAINER

23 NPR 126-5476 1 SEAT AS-SHUTTLE

NPR 4T-7807 1 RING-BACKUP

NPR 7J-0204 1 SEAL-O-RING

NPR 8T-2360 1 SEAL-O-RING

24 NPR 7J-0204 1 SEAL-O-RING

25 NPR 8T-2360 1 SEAL-O-RING

26 NPR 5B-9318 1 BALL

27 NPR 8T-2361 1 SEAL-O-RING

28	NPR	1P-7363	1	SEAL-O-RING
29	NPR	3J-7354	1	SEAL-O-RING
30	NPR	126-5796	1	VALVE GP-CHECK
	NPR	1P-7363	1	SEAL-O-RING
	NPR	3J-7354	1	SEAL-O-RING
	NPR	8T-2361	1	SEAL-O-RING
	NPR	126-5984	1	RING-BACKUP
	NPR	126-5985	1	RING-BACKUP
31	NPR	8B-2377	2	BOLT (1/4-20X2-IN)
32	NPR	5P-0537	2	WASHER-HARD (7.2X14.5X2-MM THK)
33	NPR	4T-4514	1	SPRING

124-8816 VALVE GP-CONTROL -STICK --S/N 4ZN16044-50156
PART OF 105-8906, 161-6736 VALVE GP-BANK 6, 161-6737 VALVE GP-BANK 7, 161-6738 VALVE GP-BANK 8

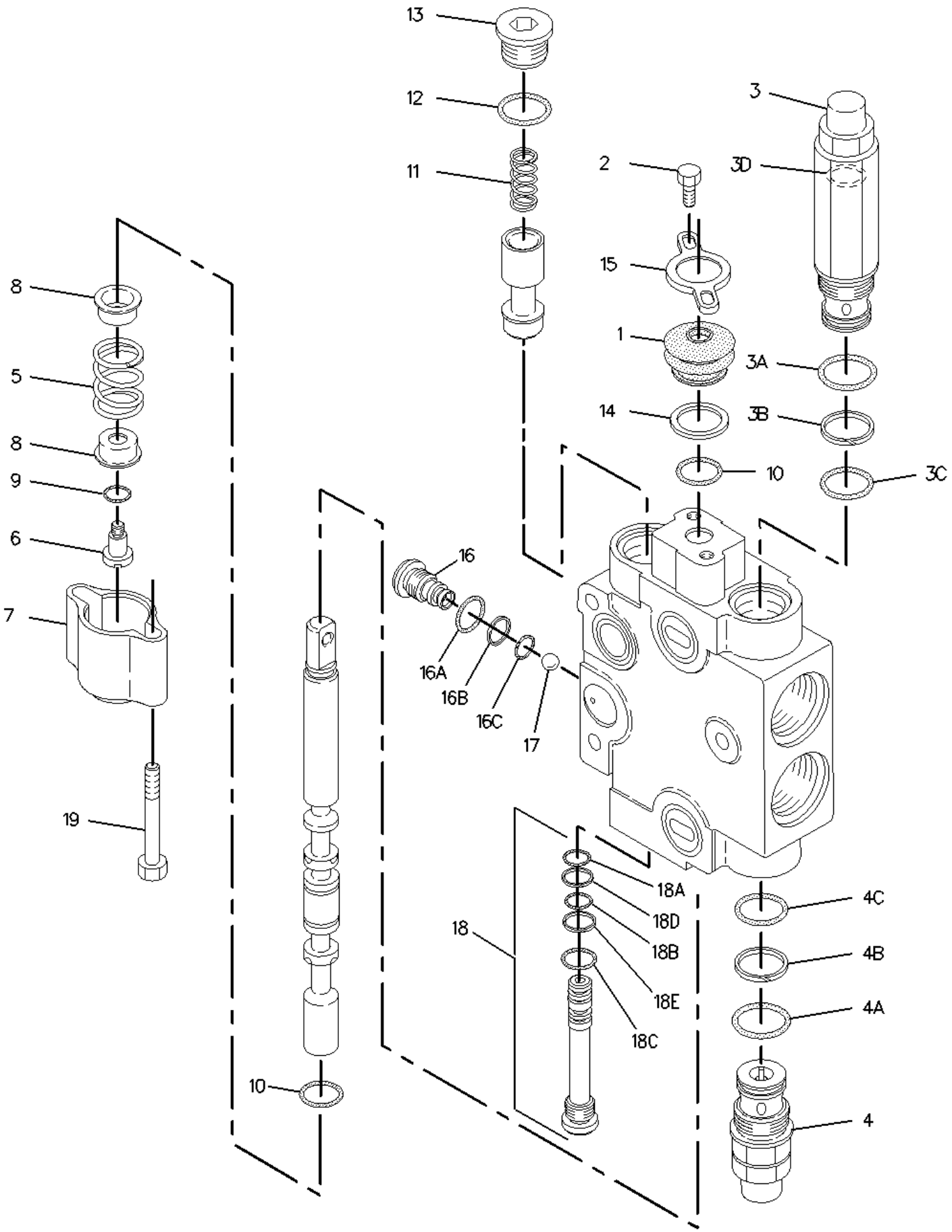

1 NPR 4T-4524 1 GUARD-DUST

2	NPR	031-0214	2	BOLT-LOCKING (1/4-20X0.5-IN)
3	NPR	6E-6281	1	VALVE GP-RELIEF
3A	NPR	4K-1388	1	SEAL-O-RING
3B	NPR	6E-0358	1	RING-BACKUP
3C	NPR	5K-9090	1	SEAL-O-RING
3D	NPR	3K-0360	1	SEAL-O-RING
4	NPR	9T-0704	1	VALVE GP-RELIEF (LINE)
4A	NPR	4K-1388	1	SEAL-O-RING
4B	NPR	6E-0358	1	RING-BACKUP
4C	NPR	5K-9090	1	SEAL-O-RING
5	NPR	195-2406	1	SPRING
6	NPR	9T-0650	1	BOLT-SPECIAL
7	NPR	167-6768	1	HOUSING
8	NPR	4T-4521	2	RETAINER
9	NPR	4J-7533	1	SEAL-O-RING
10	NPR	195-2139	2	SEAL-O-RING
11	NPR	137-9463	1	SPRING
12	NPR	2M-9780	1	SEAL-O-RING
13	NPR	9S-8006	1	PLUG-O RING
14	NPR	4T-4520	1	FILTER
15	NPR	4T-4528	1	RETAINER
16	NPR	126-5476	1	SEAT AS-SHUTTLE
16A	NPR	7J-0204	1	SEAL-O-RING
16B	NPR	4T-7807	1	RING-BACKUP
16C	NPR	8T-2360	1	SEAL-O-RING

17	NPR	5B-9318	1	BALL
18	NPR	126-5796	1	VALVE GP-CHECK
18A	NPR	126-5984	1	RING-BACKUP
18B	NPR	1P-7363	1	SEAL-O-RING
18C	NPR	3J-7354	1	SEAL-O-RING
18D	NPR	8T-2361	1	SEAL-O-RING
18E	NPR	126-5985	1	RING-BACKUP
19	NPR	8H-0707	2	BOLT (1/4-20X1-IN)

124-8818 VALVE GP-CONTROL -CLAM ---S/N 4ZN16044-50156--LOADER
PART OF 112-1843 CONVERSION GP-CONTROL VALVE, 159-7560, 180-9136 VALVE GP-BANK 3

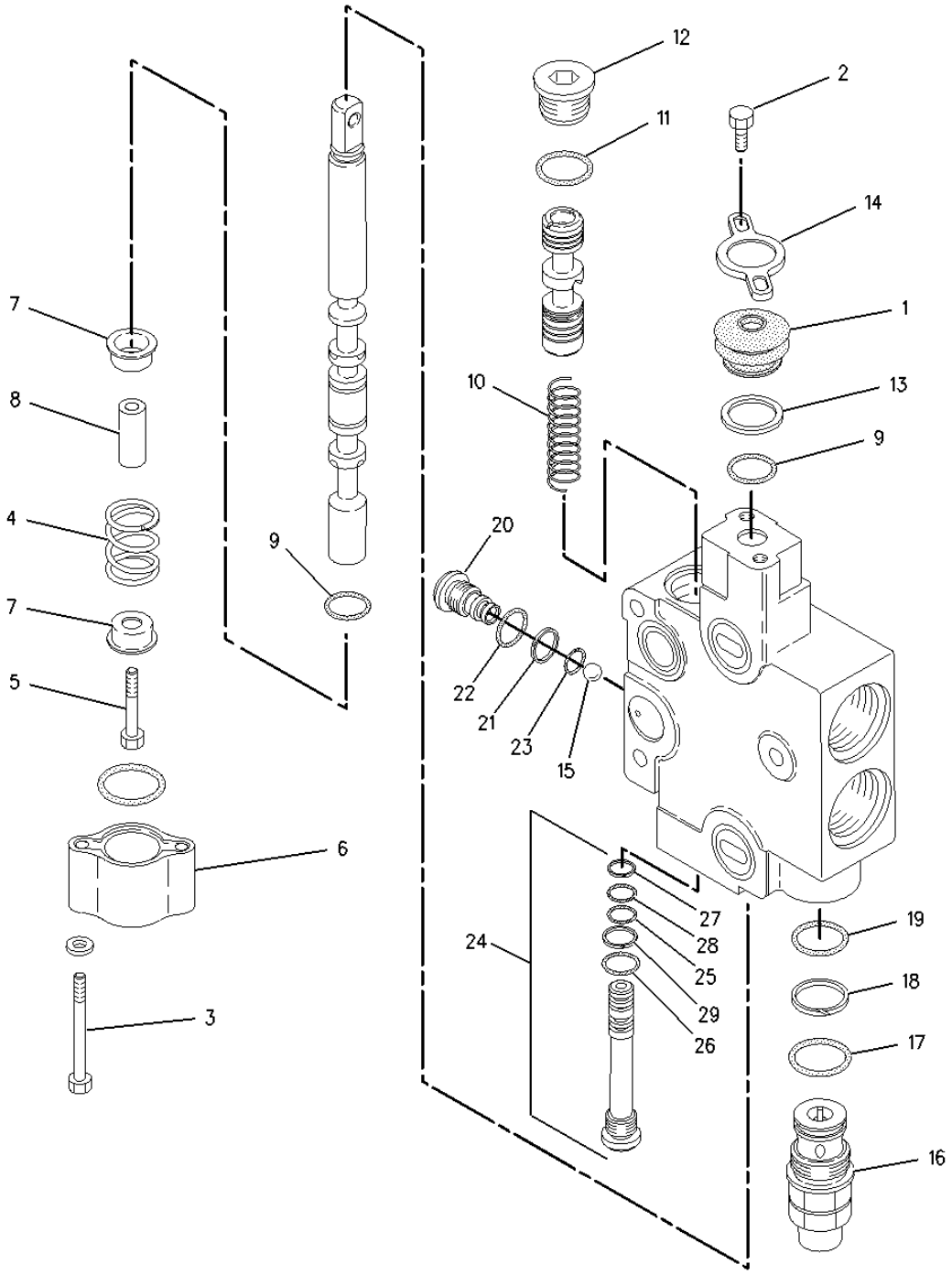

1 NPR 4T-4524 1 GUARD-DUST

2 NPR 031-0214 2 BOLT-LOCKING (1/4-20X0.5-IN)

3 NPR 8H-0707 2 BOLT (1/4-20X1-IN)

4 NPR 4T-4516 1 SPRING

5 NPR 031-5085 1 BOLT-LOCKING (1/4-20X1-IN)

6 NPR 167-6768 1 HOUSING

7	NPR	4T-4521	2	RETAINER
8	NPR	4T-4533	1	SPACER (7.1X17.3X1.5-MM THK)
9	NPR	195-2139	2	SEAL-O-RING
10	NPR	6E-4317	1	SPRING
11	NPR	2M-9780	1	SEAL-O-RING
12	NPR	9S-8006	1	PLUG-O RING
13	NPR	4T-4520	1	FILTER
14	NPR	4T-4528	1	RETAINER
15	NPR	5B-9318	1	BALL
16	NPR	9T-0704	1	VALVE GP-RELIEF (LINE)
17	NPR	4K-1388	1	SEAL-O-RING
18	NPR	6E-0358	1	RING-BACKUP
19	NPR	5K-9090	1	SEAL-O-RING
20	NPR	126-5476	1	SEAT AS-SHUTTLE
21	NPR	4T-7807	1	RING-BACKUP
22	NPR	7J-0204	1	SEAL-O-RING
23	NPR	8T-2360	1	SEAL-O-RING
24	NPR	155-9836	1	VALVE GP-CHECK
25	NPR	1P-7363	1	SEAL-O-RING
26	NPR	3J-7354	1	SEAL-O-RING
27	NPR	8T-2361	1	SEAL-O-RING
28	NPR	126-5984	1	RING-BACKUP
29	NPR	126-5985	1	RING-BACKUP

130-6520 VALVE GP-CONTROL -LIFT ---S/N 4ZN16044-50156
PART OF 159-7559, 180-9135 VALVE GP-BANK 2, 159-7560, 180-9136 VALVE GP-BANK 3

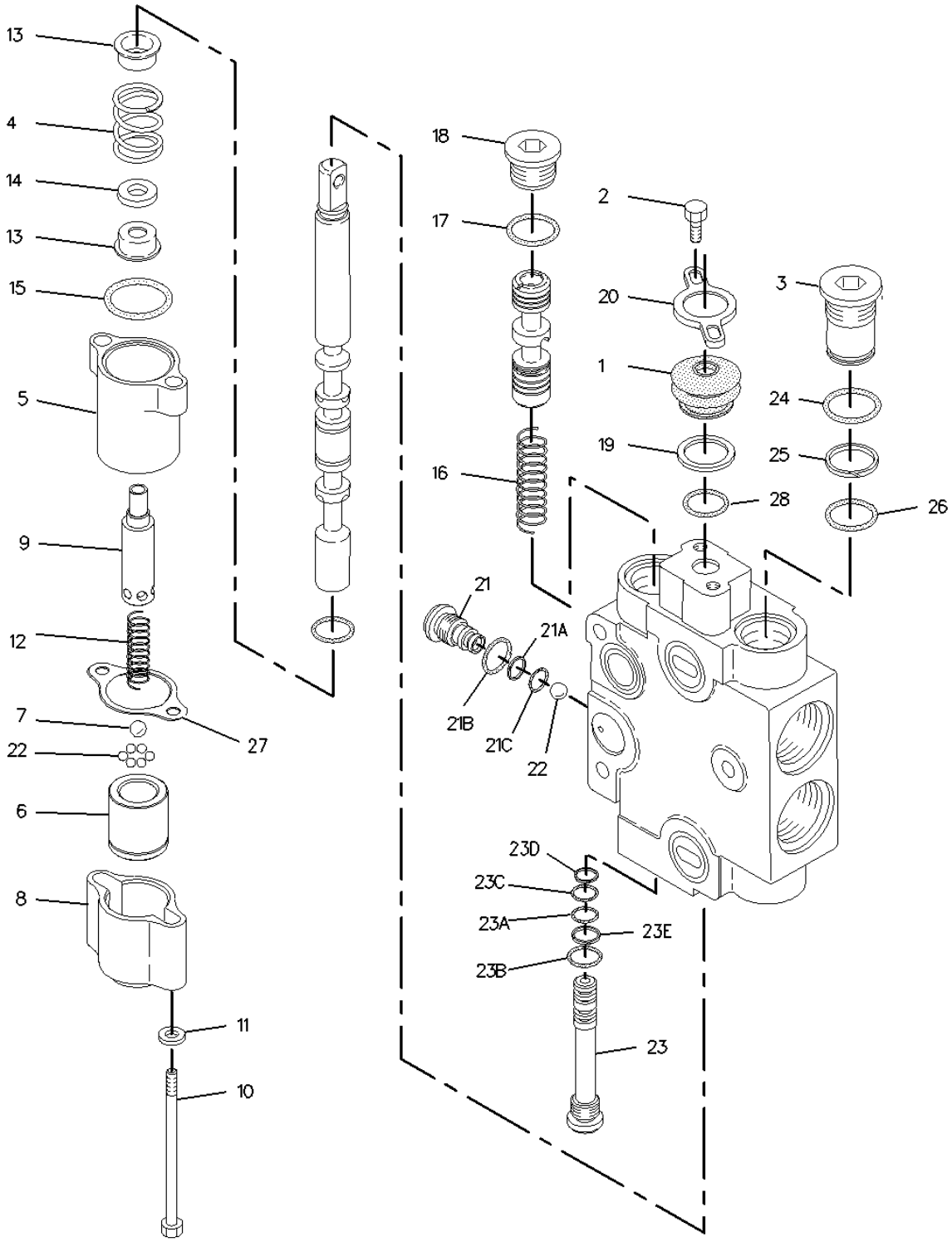

1 NPR 4T-4524 1 GUARD-DUST

2 NPR 031-0214 2 BOLT-LOCKING (1/4-20X0.5-IN)

3 NPR 4T-4531 1 PLUG

4 NPR 4T-4513 1 SPRING

5 NPR 100-3567 1 HOUSING-DETENT

6	NPR	100-3566	1	PISTON-DETENT
7	NPR	4B-9782	1	BALL
8	NPR	4T-4532	1	HOUSING
9	NPR	144-4277	1	SHAFT AS-DETENT
10	NPR	8S-4710	2	BOLT (1/4-20X4-IN)
11	NPR	5P-0537	2	WASHER-HARD (7.2X14.5X2-MM THK)
12	NPR	100-3564	1	SPRING
13	NPR	4T-4521	2	RETAINER
14	NPR	100-3563	1	SPACER
15	NPR	8F-0212	1	SEAL-O-RING
16	NPR	6E-4317	1	SPRING
17	NPR	2M-9780	1	SEAL-O-RING
18	NPR	9S-8006	1	PLUG-O RING
19	NPR	4T-4520	1	FILTER (HYDRAULIC OIL)
20	NPR	4T-4528	1	RETAINER
21	NPR	126-5476	1	SEAT AS-SHUTTLE
21A	NPR	4T-7807	1	RING-BACKUP
21B	NPR	7J-0204	1	SEAL-O-RING
21C	NPR	8T-2360	1	SEAL-O-RING
22	NPR	5B-9318	7	BALL
23	NPR	155-9836	1	VALVE GP-CHECK
23A	NPR	1P-7363	1	SEAL-O-RING
23B	NPR	3J-7354	1	SEAL-O-RING
23C	NPR	8T-2361	1	SEAL-O-RING
23D	NPR	126-5984	1	RING-BACKUP

23E	NPR	126-5985	1	RING-BACKUP
24	NPR	4K-1388	1	SEAL-O-RING
25	NPR	6E-0358	1	RING-BACKUP
26	NPR	5K-9090	1	SEAL-O-RING
27	NPR	128-2776	1	GASKET
28	NPR	195-2139	1	SEAL-O-RING

PART OF 161-6737 VALVE GP-BANK 7, 161-6738 VALVE GP-BANK 8

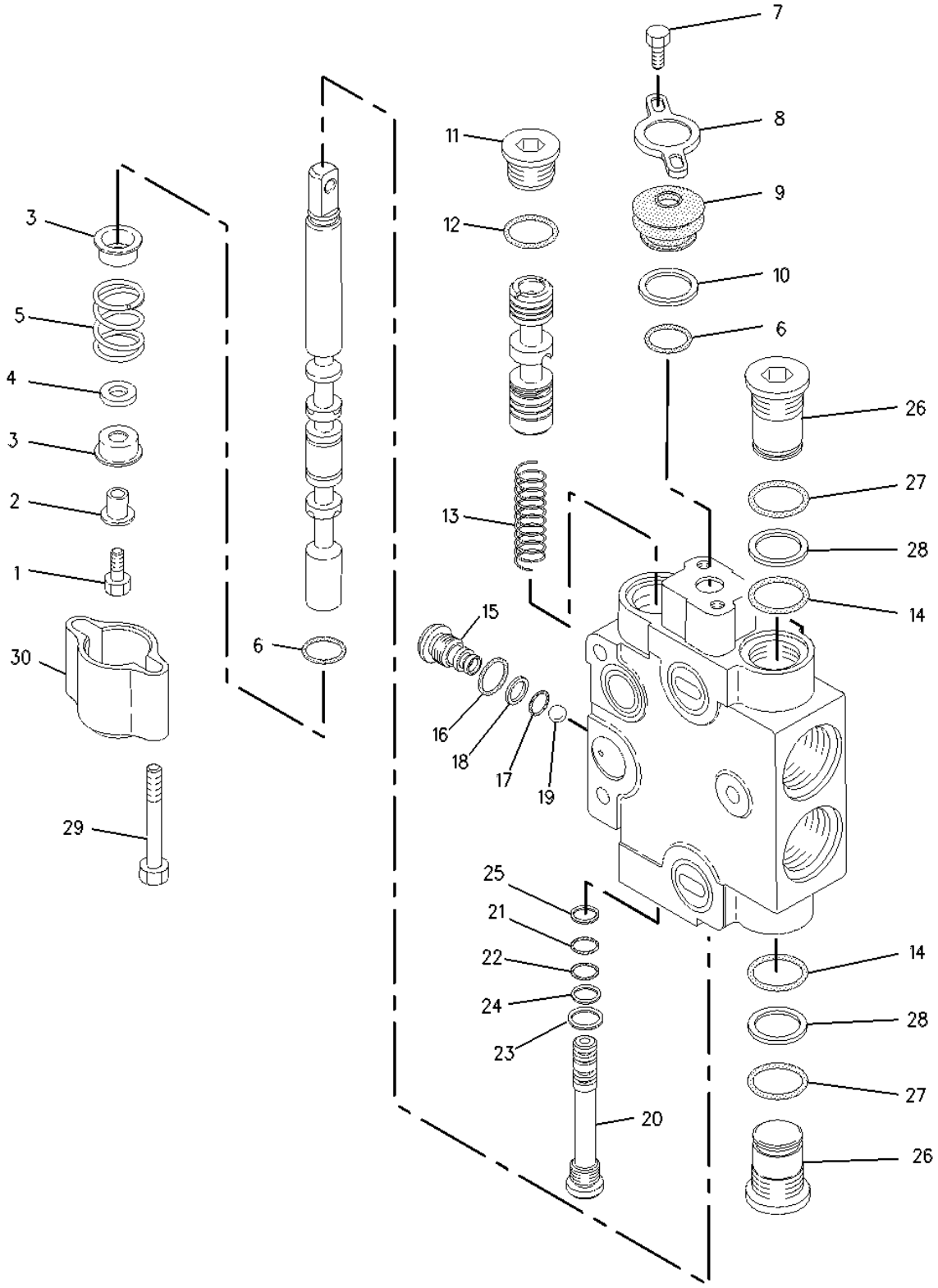

1 NPR 031-5085 1 BOLT-LOCKING (1/4-20X1-IN)

2 NPR 4T-4533 1 SPACER (7.1X17.3X1.5-MM THK)

3 NPR 4T-4521 2 RETAINER

4 NPR 6E-0131 2 WASHER

5	NPR	9T-0653	1	SPRING
6	NPR	7F-8607	2	SEAL-O-RING
7	NPR	031-0214	2	BOLT-LOCKING (1/4-20X0.5-IN)
8	NPR	4T-4528	1	RETAINER
9	NPR	4T-4524	1	GUARD-DUST
10	NPR	4T-4520	1	FILTER
11	NPR	9S-8006	1	PLUG-O RING
12	NPR	2M-9780	1	SEAL-O-RING
13	NPR	6E-4317	1	SPRING
14	NPR	5K-9090	2	SEAL-O-RING
15	NPR	126-5476	1	SEAT AS-SHUTTLE
16	NPR	7J-0204	1	SEAL-O-RING
17	NPR	8T-2360	1	SEAL-O-RING
18	NPR	4T-7807	1	RING-BACKUP
19	NPR	5B-9318	1	BALL
20	NPR	155-9836	1	VALVE GP-CHECK
21	NPR	8T-2361	1	SEAL-O-RING
22	NPR	1P-7363	1	SEAL-O-RING
23	NPR	3J-7354	1	SEAL-O-RING
24	NPR	126-5985	1	RING-BACKUP
25	NPR	126-5984	1	RING-BACKUP
26	NPR	4T-4531	2	PLUG
27	NPR	4K-1388	2	SEAL-O-RING
28	NPR	6E-0358	2	RING-BACKUP
29	NPR	8H-0707	2	BOLT (1/4-20X1-IN)
30	NPR	167-6768	1	HOUSING

137-9467 VALVE GP-CONTROL -STABILIZER --S/N 4ZN16044-50156
PART OF 105-8906, 161-6736 VALVE GP-BANK 6, 161-6737 VALVE GP-BANK 7, 161-6738 VALVE GP-BANK 8

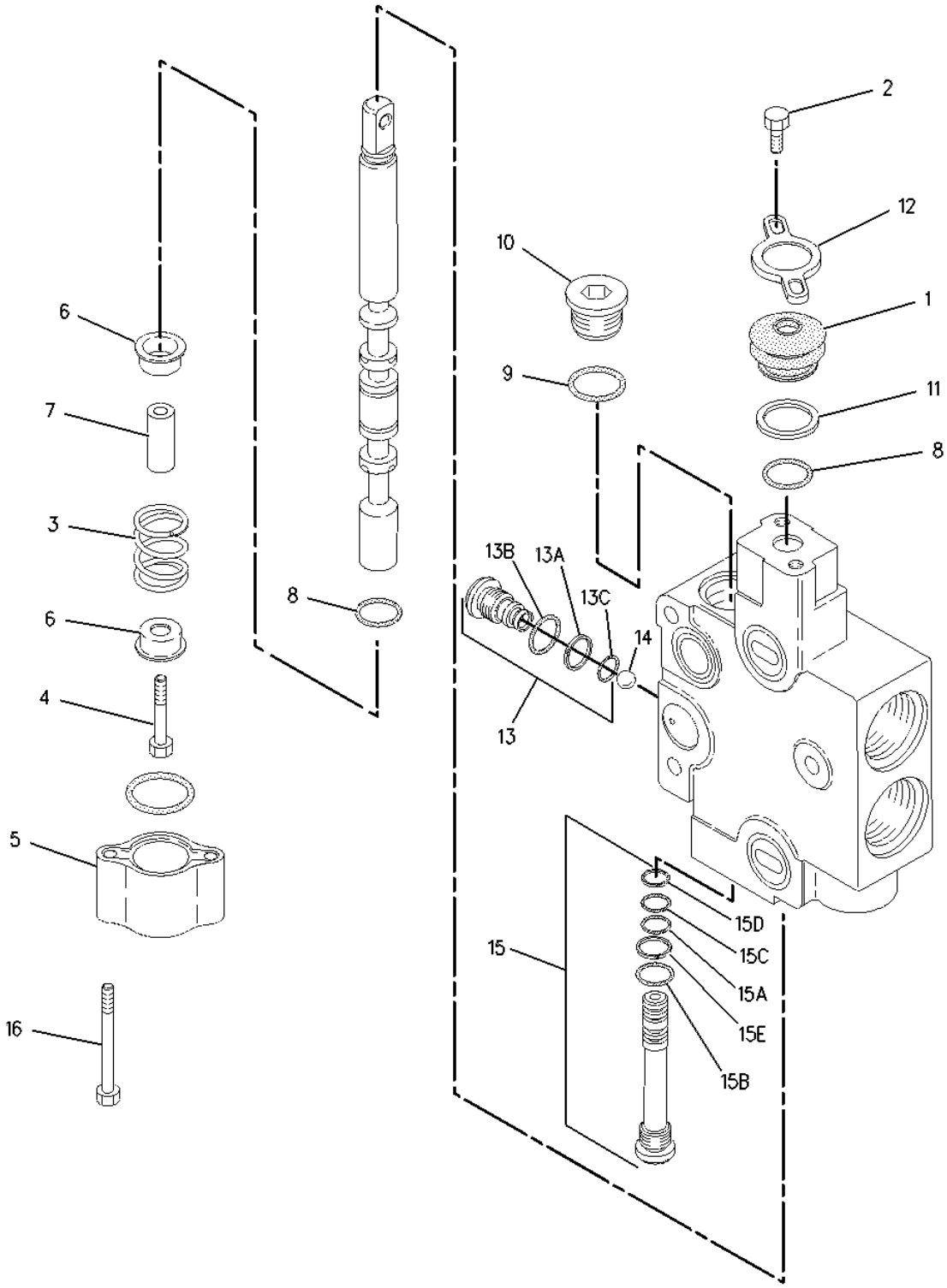

1 NPR 4T-4524 1 GUARD-DUST

2 NPR 031-0214 2 BOLT-LOCKING (1/4-20X0.5-IN)

3 NPR 195-2406 1 SPRING

4 NPR 031-5085 1 BOLT-LOCKING (1/4-20X1-IN)

5	NPR	167-6768	1	HOUSING
6	NPR	4T-4521	2	RETAINER
7	NPR	4T-4533	1	SPACER (7.1X17.3X1.5-MM THK)
8	NPR	195-2139	2	SEAL-O-RING
9	NPR	2M-9780	1	SEAL-O-RING
10	NPR	9S-8006	1	PLUG-O RING
11	NPR	4T-4520	1	FILTER
12	NPR	4T-4528	1	RETAINER
13	NPR	126-5476	1	SEAT AS-SHUTTLE
13A	NPR	4T-7807	1	RING-BACKUP
13B	NPR	7J-0204	1	SEAL-O-RING
13C	NPR	8T-2360	1	SEAL-O-RING
14	NPR	5B-9318	1	BALL
15	NPR	171-6589	1	HOUSING AS
15A	NPR	1P-7363	1	SEAL-O-RING
15B	NPR	3J-7354	1	SEAL-O-RING
15C	NPR	8T-2361	1	SEAL-O-RING
15D	NPR	126-5984	1	RING-BACKUP
15E	NPR	126-5985	1	RING-BACKUP
16	NPR	8H-0707	2	BOLT (1/4-20X1-IN)

PART OF 105-8906 VALVE GP-BANK 6

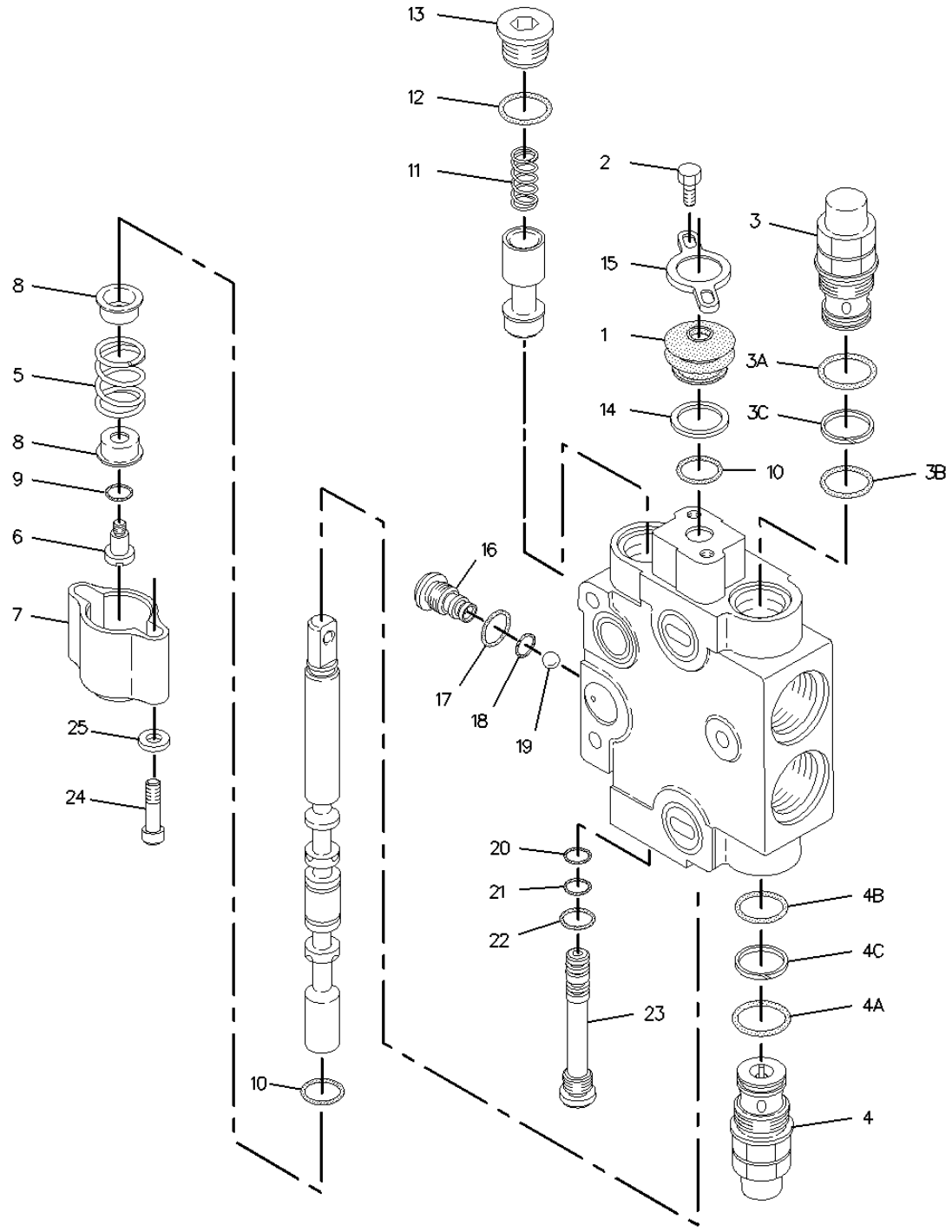

1 NPR 4T-4524 1 GUARD-DUST

2 NPR 031-0214 2 BOLT-LOCKING (1/4-20X0.5-IN)

3 NPR 6E-6284 1 VALVE GP-MAKEUP & RELIEF

3A NPR 4K-1388 1 SEAL-O-RING

3B NPR 5K-9090 1 SEAL-O-RING

3C NPR 6E-0358 1 RING-BACKUP

4	NPR	6E-6285	1	VALVE GP-RELIEF
4A	NPR	4K-1388	1	SEAL-O-RING
4B	NPR	5K-9090	1	SEAL-O-RING
4C	NPR	6E-0358	1	RING-BACKUP
5	NPR	195-2406	1	SPRING
6	NPR	9T-0650	1	BOLT-SPECIAL
7	NPR	167-6768	1	HOUSING
8	NPR	4T-4521	2	RETAINER
9	NPR	4J-7533	1	SEAL-O-RING
10	NPR	195-2139	2	SEAL-O-RING
11	NPR	137-9463	1	SPRING
12	NPR	2M-9780	1	SEAL-O-RING
13	NPR	9S-8006	1	PLUG-O RING
14	NPR	4T-4520	1	FILTER
15	NPR	4T-4528	1	RETAINER
16	NPR	126-5476	1	SEAT AS-SHUTTLE
17	NPR	7J-0204	1	SEAL-O-RING
18	NPR	8T-2360	1	SEAL-O-RING
19	NPR	5B-9318	1	BALL
20	NPR	8T-2361	1	SEAL-O-RING
21	NPR	1P-7363	1	SEAL-O-RING
22	NPR	3J-7354	1	SEAL-O-RING
23	NPR	126-5796	1	VALVE GP-CHECK
	NPR	1P-7363	1	SEAL-O-RING
	NPR	3J-7354	1	SEAL-O-RING

	NPR	8T-2361	1	SEAL-O-RING
	NPR	126-5984	1	RING-BACKUP
	NPR	126-5985	1	RING-BACKUP
24	NPR	8H-0707	2	BOLT (1/4-20X1-IN)
25	NPR	5P-0537	2	WASHER-HARD (7.2X14.5X2-MM THK)

PART OF 105-8906 VALVE GP-BANK 6

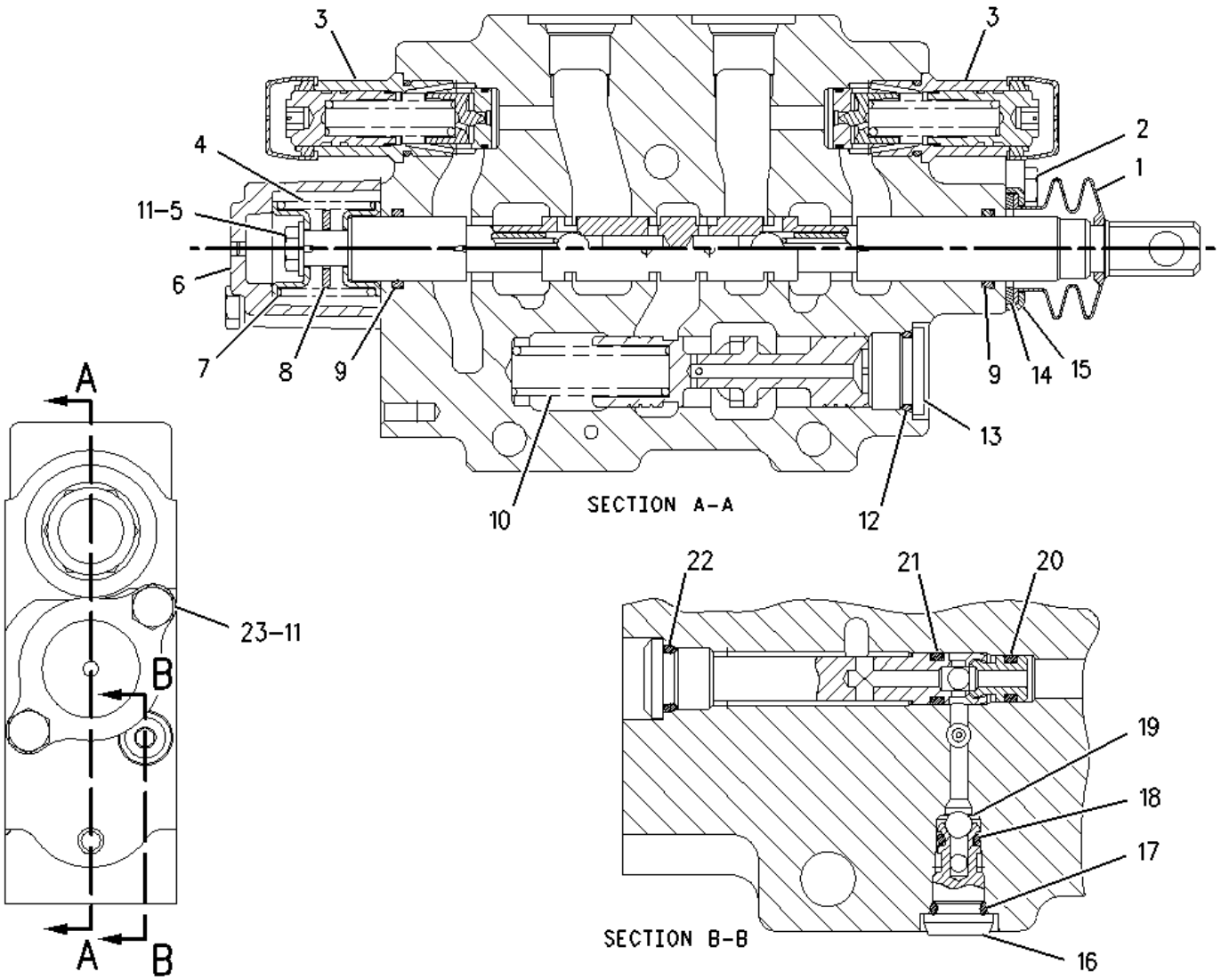

1 NPR 4T-4524 1 GUARD-DUST

2 NPR 031-0214 2 BOLT-LOCKING (1/4-20X0.5-IN)

3 NPR J 137-9466 2 VALVE GP-RELIEF

4 NPR 195-2406 1 SPRING

5 NPR 0S-1614 1 BOLT (1/4-20X0.5-IN)

6 NPR 167-6768 1 HOUSING

7 NPR 4T-4521 2 RETAINER

8 NPR 9X-2027 1 WASHER (11X18X2-MM THK)

9 NPR 195-2139 2 SEAL-O-RING

10 NPR 6E-4317 1 SPRING

11	NPR	5P-0537	3	WASHER-HARD (7.2X14.5X2-MM THK)
12	NPR	2M-9780	1	SEAL-O-RING
13	NPR	9S-8006	1	PLUG-O RING
14	NPR	4T-4520	1	FILTER
15	NPR	4T-4528	1	RETAINER
16	NPR	126-5476	1	SEAT AS-SHUTTLE
	NPR	4T-7807	1	RING-BACKUP
	NPR	7J-0204	1	SEAL-O-RING
	NPR	8T-2360	1	SEAL-O-RING
17	NPR	7J-0204	1	SEAL-O-RING
18	NPR	8T-2360	1	SEAL-O-RING
19	NPR	5B-9318	1	BALL
20	NPR	8T-2361	1	SEAL-O-RING
21	NPR	1P-7363	1	SEAL-O-RING
22	NPR	3J-7354	1	SEAL-O-RING
23	NPR	8H-0707	2	BOLT (1/4-20X1-IN)

AVAILABLE REPAIR KIT(S):

NPR J	147-1659	1	KIT-SEAL

(INCLUDES RINGS)

Key: J - KIT(S) MARKED J AVAILABLE FOR PART(S) MARKED J

PART OF 161-6736 VALVE GP-BANK 6, 161-6737 VALVE GP-BANK 7, 161-6738 VALVE GP-BANK 8

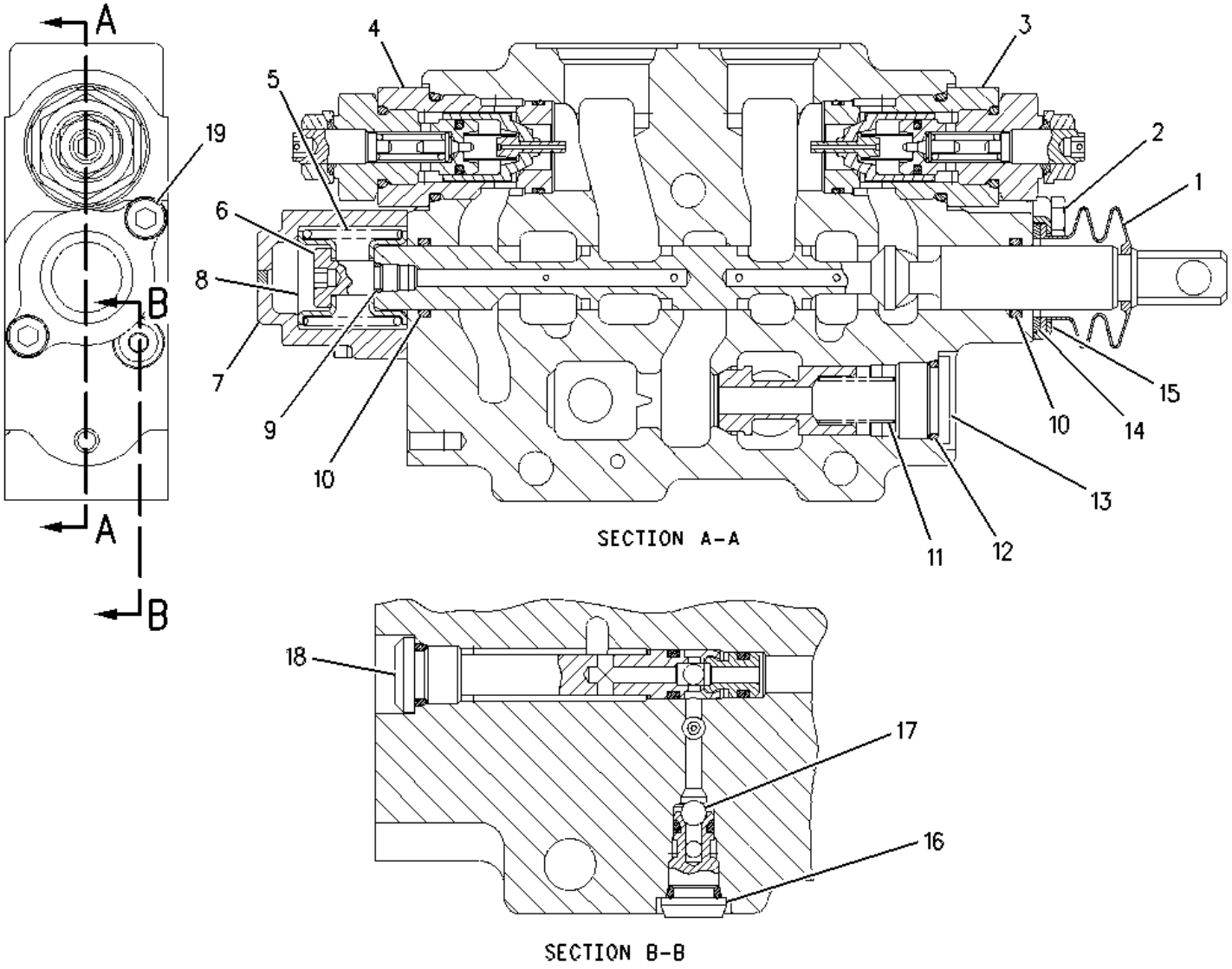

1 NPR 4T-4524 1 GUARD-DUST

2 NPR 031-0214 2 BOLT-LOCKING (1/4-20X0.5-IN)

3 NPR 9T-1465 1 VALVE GP

NPR 4K-1388 1 SEAL-O-RING

NPR 5K-9090 1 SEAL-O-RING

NPR 6E-0358 1 RING-BACKUP

4 NPR 6E-6285 1 VALVE GP-RELIEF

NPR 4K-1388 1 SEAL-O-RING

NPR 5K-9090 1 SEAL-O-RING

NPR 6E-0358 1 RING-BACKUP

5	NPR	195-2406	1	SPRING
6	NPR	9T-0650	1	BOLT-SPECIAL
7	NPR	167-6768	1	HOUSING
8	NPR	4T-4521	2	RETAINER
9	NPR	4J-7533	1	SEAL-O-RING
10	NPR	195-2139	2	SEAL-O-RING
11	NPR	137-9463	1	SPRING
12	NPR	2M-9780	1	SEAL-O-RING
13	NPR	9S-8006	1	PLUG-O RING
14	NPR	4T-4520	1	FILTER
15	NPR	4T-4528	1	RETAINER
16	NPR	126-5476	1	SEAT AS-SHUTTLE
	NPR	4T-7807	1	RING-BACKUP
	NPR	7J-0204	1	SEAL-O-RING
	NPR	8T-2360	1	SEAL-O-RING
17	NPR	5B-9318	1	BALL
18	NPR	126-5796	1	VALVE GP-CHECK
	NPR	1P-7363	1	SEAL-O-RING
	NPR	3J-7354	1	SEAL-O-RING
	NPR	8T-2361	1	SEAL-O-RING
	NPR	126-5984	1	RING-BACKUP
	NPR	126-5985	1	RING-BACKUP
19	NPR	8H-0707	2	BOLT (1/4-20X1-IN)

166-7950 VALVE GP-CONTROL –SWING--S/N 4ZN16044-50156

PART OF 161-6736 VALVE GP-BANK 6, 161-6737 VALVE GP-BANK 7, 161-6738 VALVE GP-BANK 8

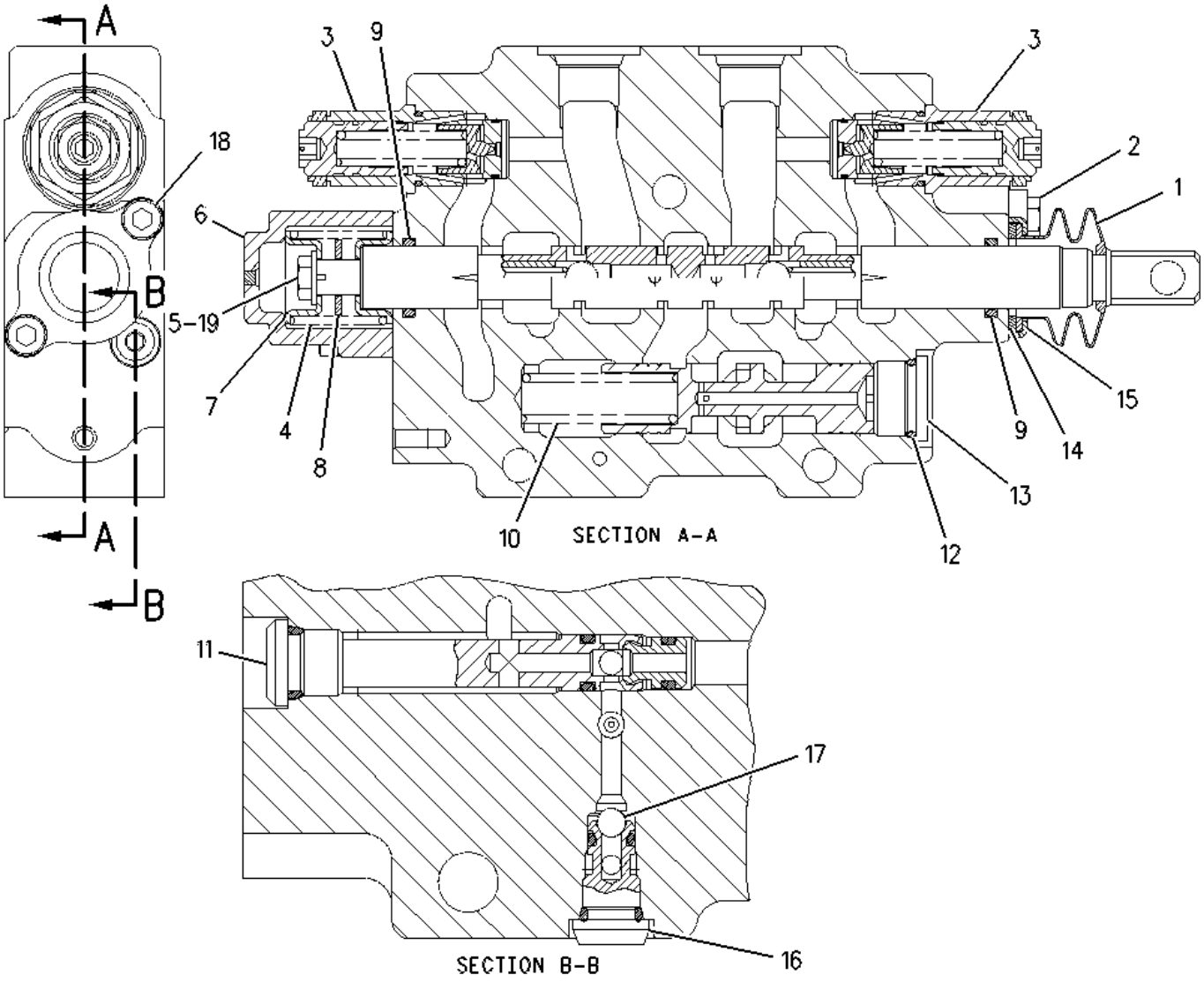

1 NPR 4T-4524 1 GUARD-DUST

2 NPR 031-0214 2 BOLT-LOCKING (1/4-20X0.5-IN)

3 NPR 137-9466 2 VALVE GP-RELIEF

(EACH INCLUDES)

NPR 147-1659 1 KIT-SEAL

(INCLUDES RINGS)

4 NPR 195-2406 1 SPRING

5 NPR 0S-1614 1 BOLT (1/4-20X0.5-IN)

6 NPR 167-6768 1 HOUSING

7 NPR 4T-4521 2 RETAINER

8	NPR	9X-2027	1	WASHER (11X18X2-MM THK)
9	NPR	195-2139	2	SEAL-O-RING
10	NPR	6E-4317	1	SPRING
11	NPR	126-5796	1	VALVE GP-CHECK
	NPR	1P-7363	1	SEAL-O-RING
	NPR	3J-7354	1	SEAL-O-RING
	NPR	8T-2361	1	SEAL-O-RING
	NPR	126-5984	1	RING-BACKUP
	NPR	126-5985	1	RING-BACKUP
12	NPR	2M-9780	1	SEAL-O-RING
13	NPR	9S-8006	1	PLUG-O RING
14	NPR	4T-4520	1	FILTER
15	NPR	4T-4528	1	RETAINER
16	NPR	126-5476	1	SEAT AS-SHUTTLE
	NPR	4T-7807	1	RING-BACKUP
	NPR	7J-0204	1	SEAL-O-RING
	NPR	8T-2360	1	SEAL-O-RING
17	NPR	5B-9318	1	BALL
18	NPR	8H-0707	2	BOLT (1/4-20X1-IN)
19	NPR	5P-0537	1	WASHER-HARD (7.2X14.5X2-MM THK)

PART OF 159-7559, 180-9135 VALVE GP-BANK 2, 159-7560, 180-9136 VALVE GP-BANK 3

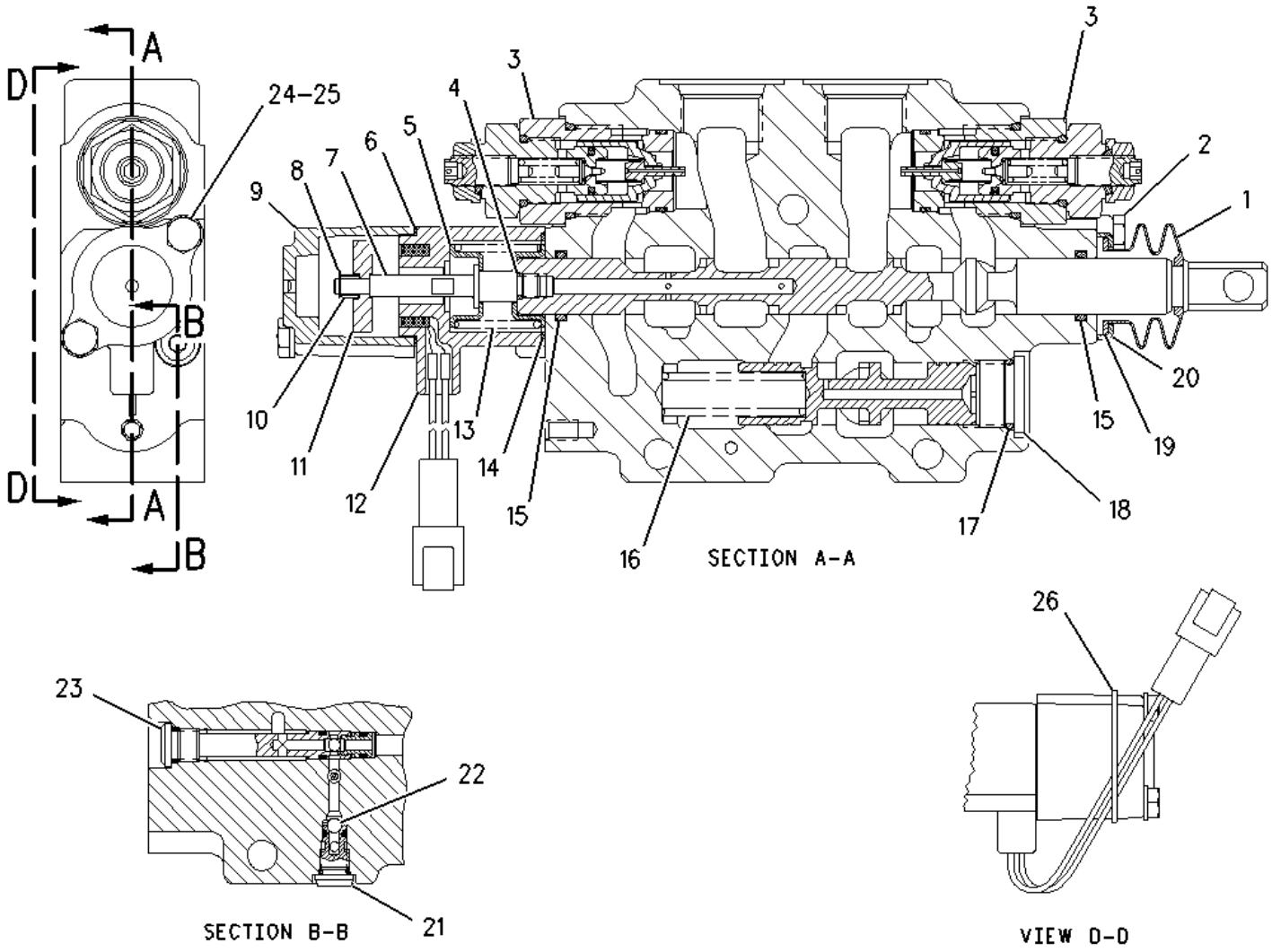

1 NPR 4T-4524 1 GUARD-DUST

2 NPR 031-0214 2 BOLT-LOCKING (1/4-20X0.5-IN)

3 NPR 9T-0704 2 VALVE GP-RELIEF (LINE)

(EACH INCLUDES)

NPR 4K-1388 1 SEAL-O-RING

NPR 6E-0358 1 RING-BACKUP

NPR 5K-9090 1 SEAL-O-RING

4 NPR 4J-7533 1 SEAL-O-RING

5 NPR 4T-4521 2 RETAINER

6 NPR 128-2776 1 GASKET

7 NPR 9T-0642 1 COUPLING

8 NPR 5L-9023 1 RING-RETAINING

9 NPR 4T-4532 1 HOUSING

10 NPR 9T-0644 1 SPRING

11 NPR 9T-7309 1 PLATE

12 NPR 3E-8620 1 COIL AS-SOLENOID

NPR 1S-9593 2 STRAP-CABLE

NPR 102-8802 1 KIT-RECEPTACLE (2-PIN)

(INCLUDES RECEPTACLE AS & WEDGE)

NPR 186-3735 2 PIN-CONNECTOR (16-GA TO 18-GA)

13 NPR 195-2406 1 SPRING

14 NPR 197-3698 1 SEAL-O-RING

15 NPR 195-2139 2 SEAL-O-RING

16 NPR 6E-4317 1 SPRING

17 NPR 2M-9780 1 SEAL-O-RING

18 NPR 9S-8006 1 PLUG-O RING

19 NPR 4T-4520 1 FILTER

20 NPR 4T-4528 1 RETAINER

21 NPR 126-5476 1 SEAT AS-SHUTTLE

NPR 4T-7807 1 RING-BACKUP

NPR 7J-0204 1 SEAL-O-RING

NPR 8T-2360 1 SEAL-O-RING

22 NPR 5B-9318 1 BALL

23 NPR 155-9836 1 VALVE GP-CHECK

NPR 1P-7363 1 SEAL-O-RING

	NPR	3J-7354	1	SEAL-O-RING
	NPR	8T-2361	1	SEAL-O-RING
	NPR	126-5984	1	RING-BACKUP
	NPR	126-5985	1	RING-BACKUP
24	NPR	8F-6302	2	BOLT (1/4-20X3.75-IN)
25	NPR	5P-0537	2	WASHER-HARD (7.2X14.5X2-MM THK)
26	NPR	197-3121	1	RING-GUIDE

PART OF 106-6249, 139-1923 LINES GP-STABILIZER

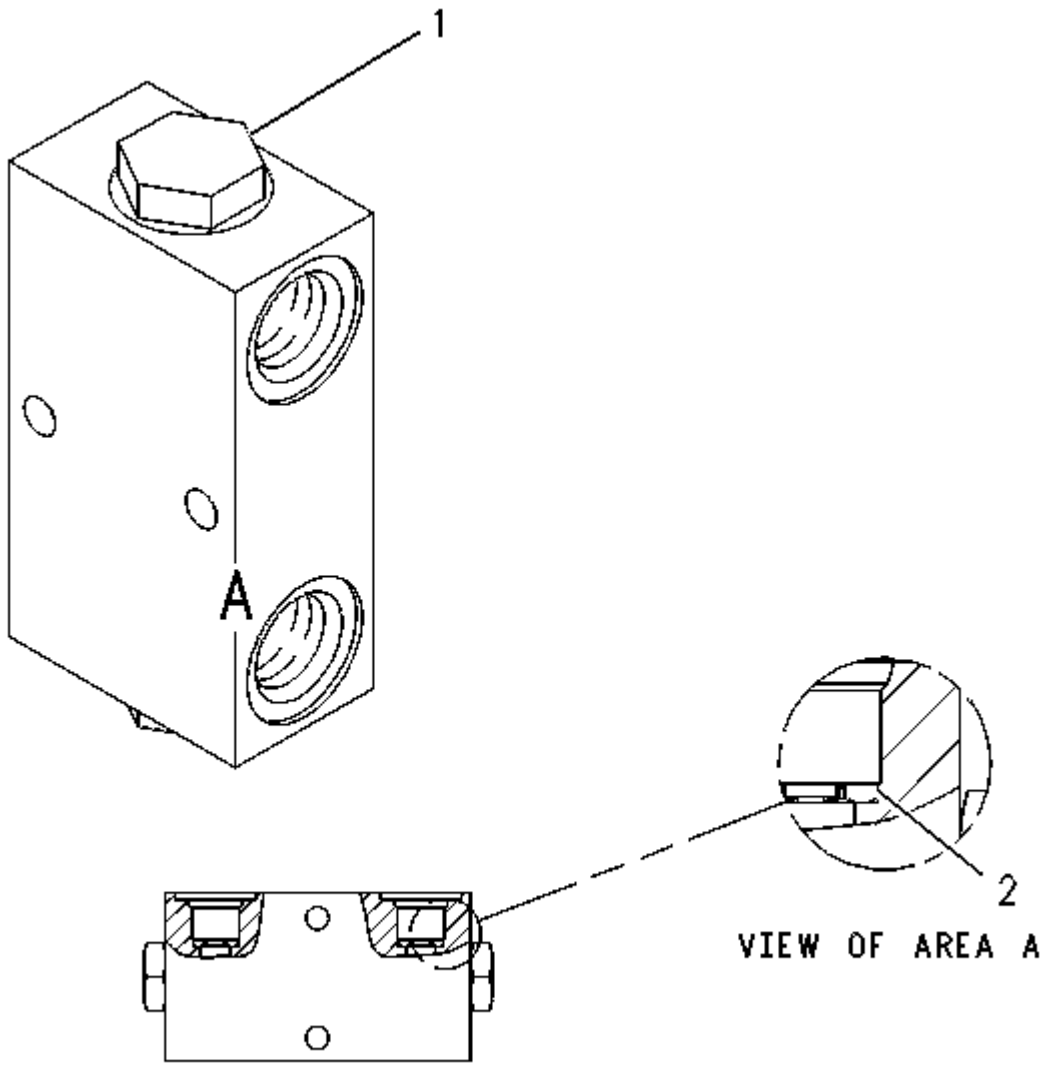

1 NPR 136-9777 2 VALVE GP-CHECK

2 NPR 141-6358 2 DISC-ORIFICE

NPR F 136-9778 1 KIT-SEAL

(INCLUDES SEALS & RINGS)

Key: F - NOT SHOWN

159-7569 VALVE GP-CHECK --S/N 4ZN20460-50156

PART OF 139-1923 LINES GP-STABILIZER

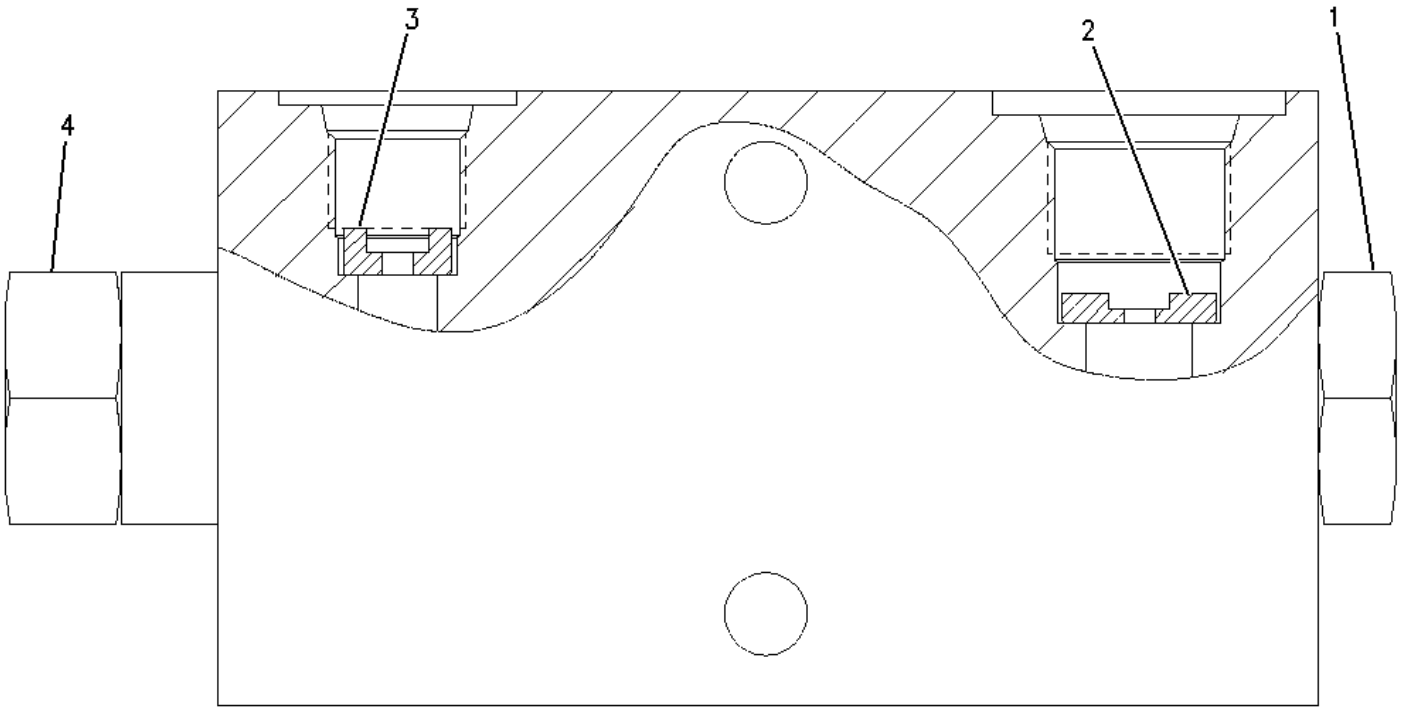

1	NPR	136-9777	1	VALVE GP-CHECK
2	NPR	141-6358	1	DISC-ORIFICE
3	NPR	173-5507	1	DISC
4		159-7570	1	VALVE GP-CHECK

178-7480 VALVE GP-CHECK -RETURN OIL --S/N 4ZN16044-50156

PRE-INSTALLED O-RINGS --PART OF 121-8338, 121-9805 LINES GP-RETURN

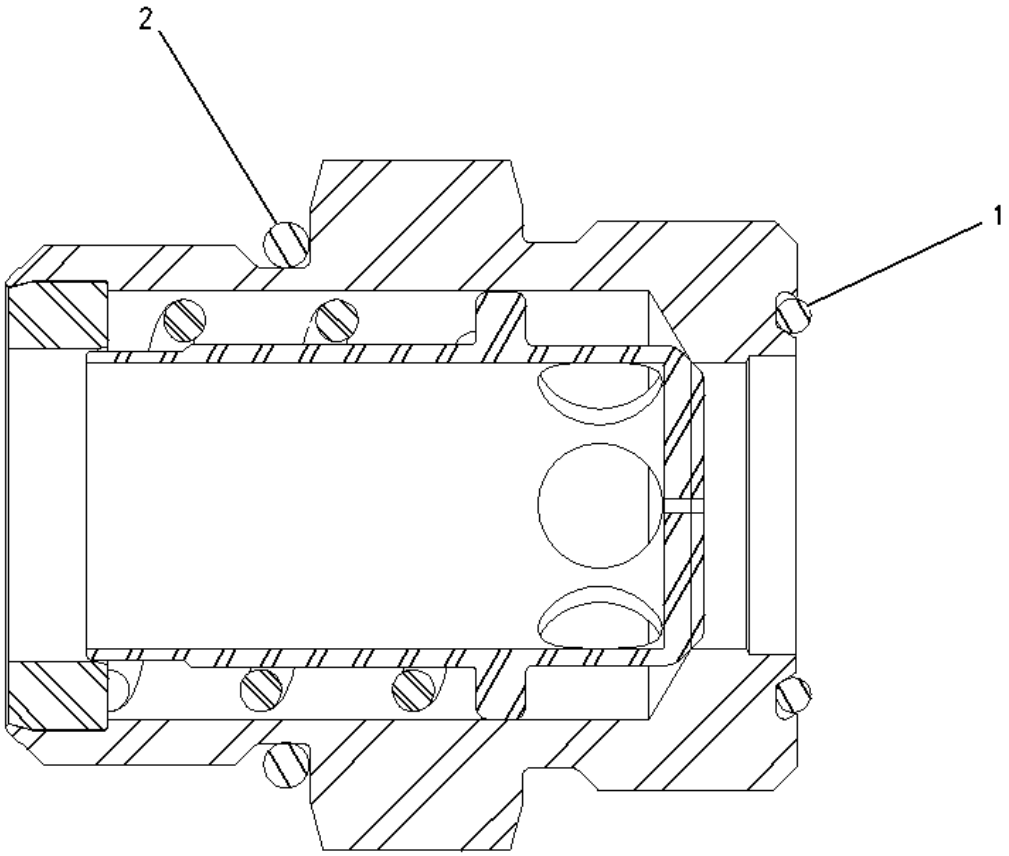

1	**NPR**	**5K-9090**	**1**	**SEAL-O-RING**
2	**NPR**	**7M-8485**	**1**	**SEAL-O-RING**

178-7481 VALVE GP-CHECK -BACK PRESSURE --S/N 4ZN16044-50156

PRE-INSTALLED O-RINGS
PART OF 178-8568, 178-8570, 178-8574, 178-8577 LINES GP-BACKHOE AUXILIARY, 121-8338 LINES GP-RETURN

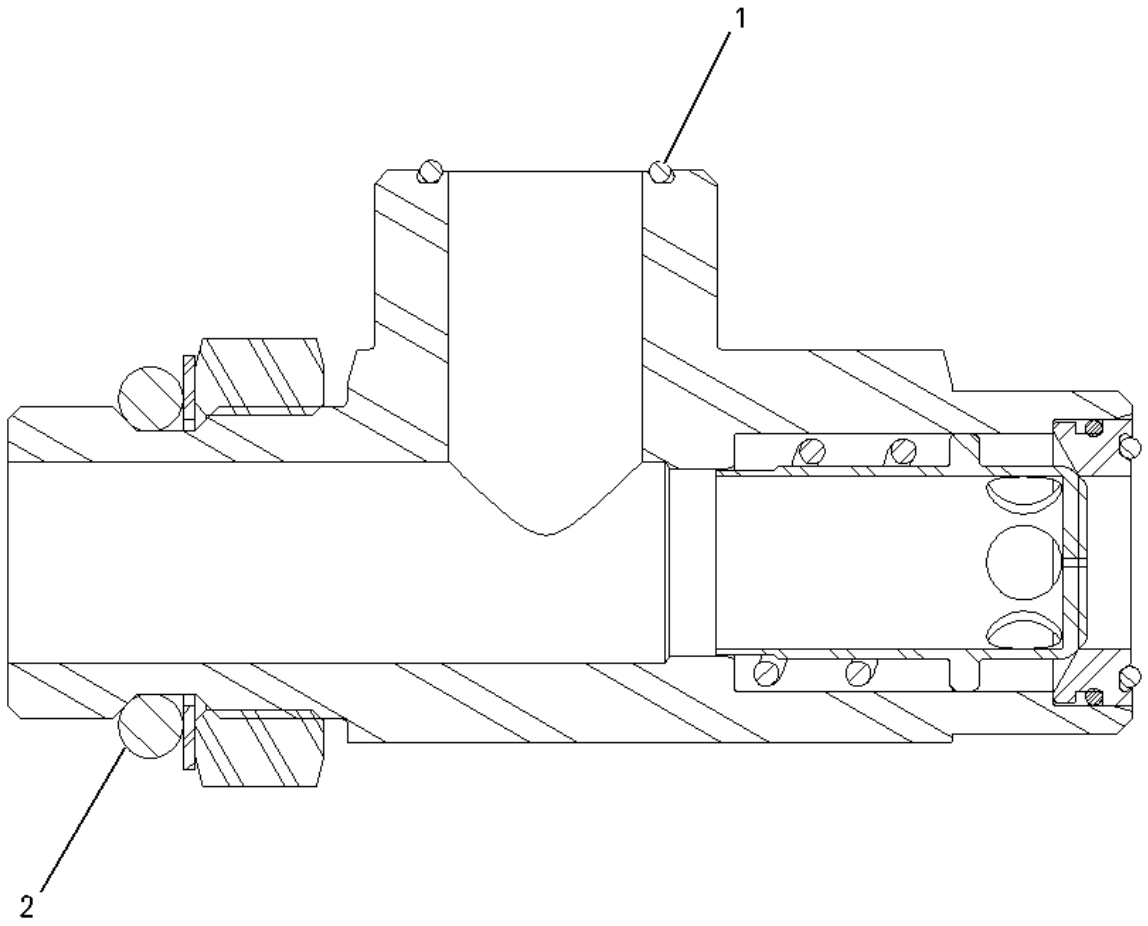

1	**NPR**	**5K-9090**	**2**	**SEAL-O-RING**
2	**NPR**	**7M-8485**	**1**	**SEAL-O-RING**

3RD VALVE FOR SINGLE TILT --PART OF 106-6261 HYDRAULIC AR

NPR Y	124-8818	1	VALVE GP-CONTROL
NPR	9S-8752	3	NUT-FULL (3/8-16-THD)
NPR	4J-5267	1	SEAL-O-RING
NPR	4J-5140	1	SEAL-O-RING
NPR	4D-9986	2	SEAL-O-RING
NPR B	4T-2723	3	SHIM (0.076-MM THK)
NPR	4T-4518	3	STUD (3/8-16X8.52-IN)
NPR	5M-2894	3	WASHER-HARD (10.2X18.5X2.5-MM THK)

Key: **B - USE AS REQUIRED** **Y - SEPARATE ILLUSTRATION**

119-4003 CONVERSION GP-CONTROL VALVE --S/N 4ZN16044-50156

6 TO 7 VALVE --PART OF 106-6253, 119-4005 HYDRAULIC AR

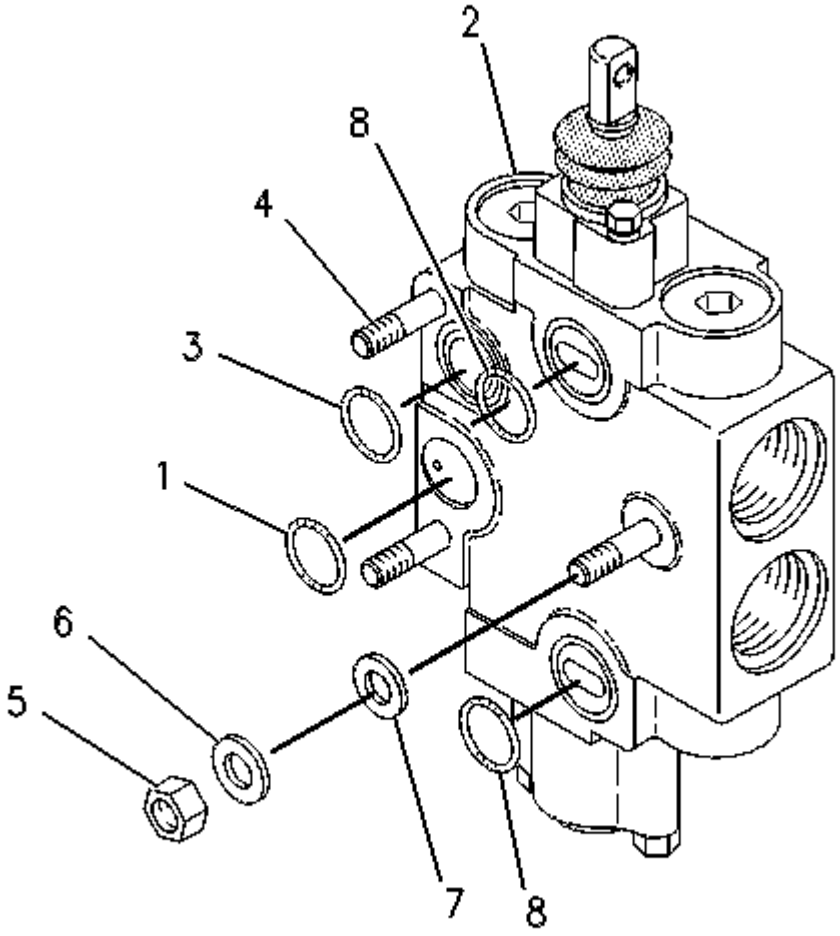

1	NPR	4J-5140	1	SEAL-O-RING
2	NPR Y	6E-6287	1	VALVE GP-CONTROL (EXTENDABLE STICK)
3	NPR	4J-5267	1	SEAL-O-RING
4	NPR	116-1315	3	STUD
5	NPR	9S-8752	6	NUT-FULL (3/8-16-THD)
6	NPR	5M-2894	6	WASHER-HARD (10.2X18.5X2.5-MM THK)
7	NPR	4T-2723	3	SHIM (0.076-MM THK)
8	NPR	4D-9986	2	SEAL-O-RING

Key: Y - SEPARATE ILLUSTRATION

119-4004 CONVERSION GP-CONTROL VALVE --S/N 4ZN16044-50156

PART OF 119-4006 HYDRAULIC AR

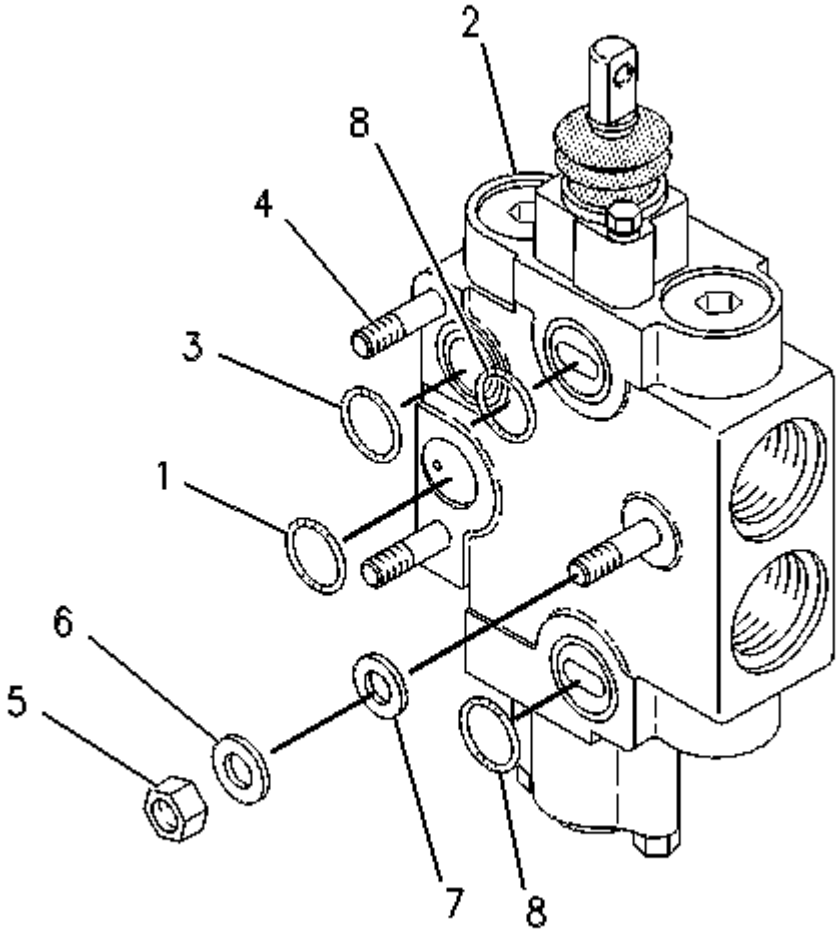

1	NPR	4J-5140	1	SEAL-O-RING
2	NPR Y	6E-6287	1	VALVE GP-CONTROL (EXTENDABLE STICK)
3	NPR	4J-5267	1	SEAL-O-RING
4	NPR	107-6170	3	STUD
5	NPR	9S-8752	6	NUT-FULL (3/8-16-THD)
6	NPR	5M-2894	6	WASHER-HARD (10.2X18.5X2.5-MM THK)
7	NPR	4T-2723	3	SHIM (0.076-MM THK)
8	NPR	4D-9986	2	SEAL-O-RING

Key: Y - SEPARATE ILLUSTRATION

122-9136 MOUNTING GP-BANK VALVE --S/N 4ZN16044-50156

PART OF 154-5437 HYDRAULIC AR

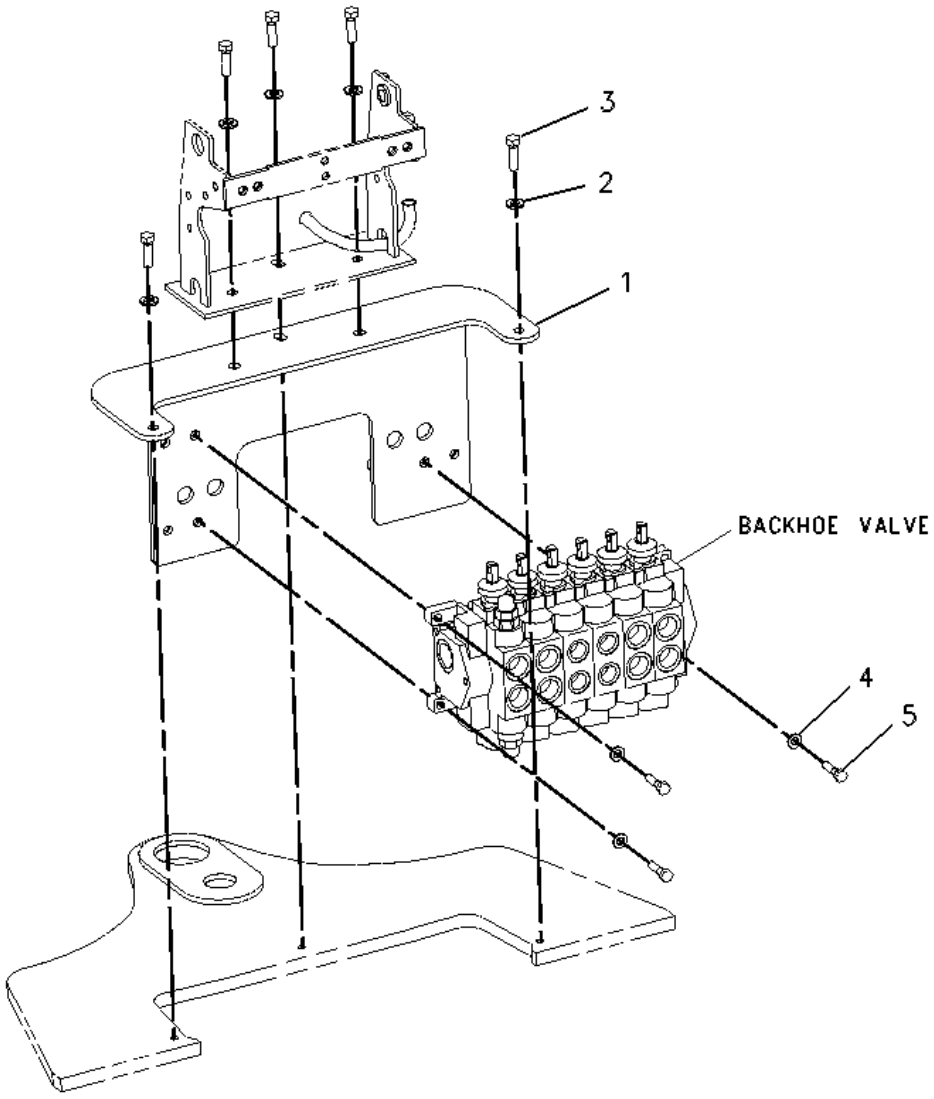

1	NPR	192-2863	1	BRACKET AS
	NPR M	8T-3490	6	NUT-WELD (M10X1.5-THD)
	NPR M	8T-3597	2	NUT-WELD (M12X1.75-THD)
	NPR M	9R-2672	8	BOSS-THREADED (M10X1.5-6HX20-MM)
2	NPR	8T-4223	5	WASHER-HARD (13.5X25.5X3-MM THK)
3	NPR M	8T-4183	5	BOLT (M12X1.75X40-MM)
4	NPR	8T-4121	3	WASHER-HARD (11X21X2.5-MM THK)
5	NPR M	8T-4186	3	BOLT (M10X1.5X40-MM)

Key: M - METRIC PART

159-7559 VALVE GP-BANK 2 --S/N 4ZN16044-50156--PART OF 159-4870, 163-9199 HYDRAULIC AR

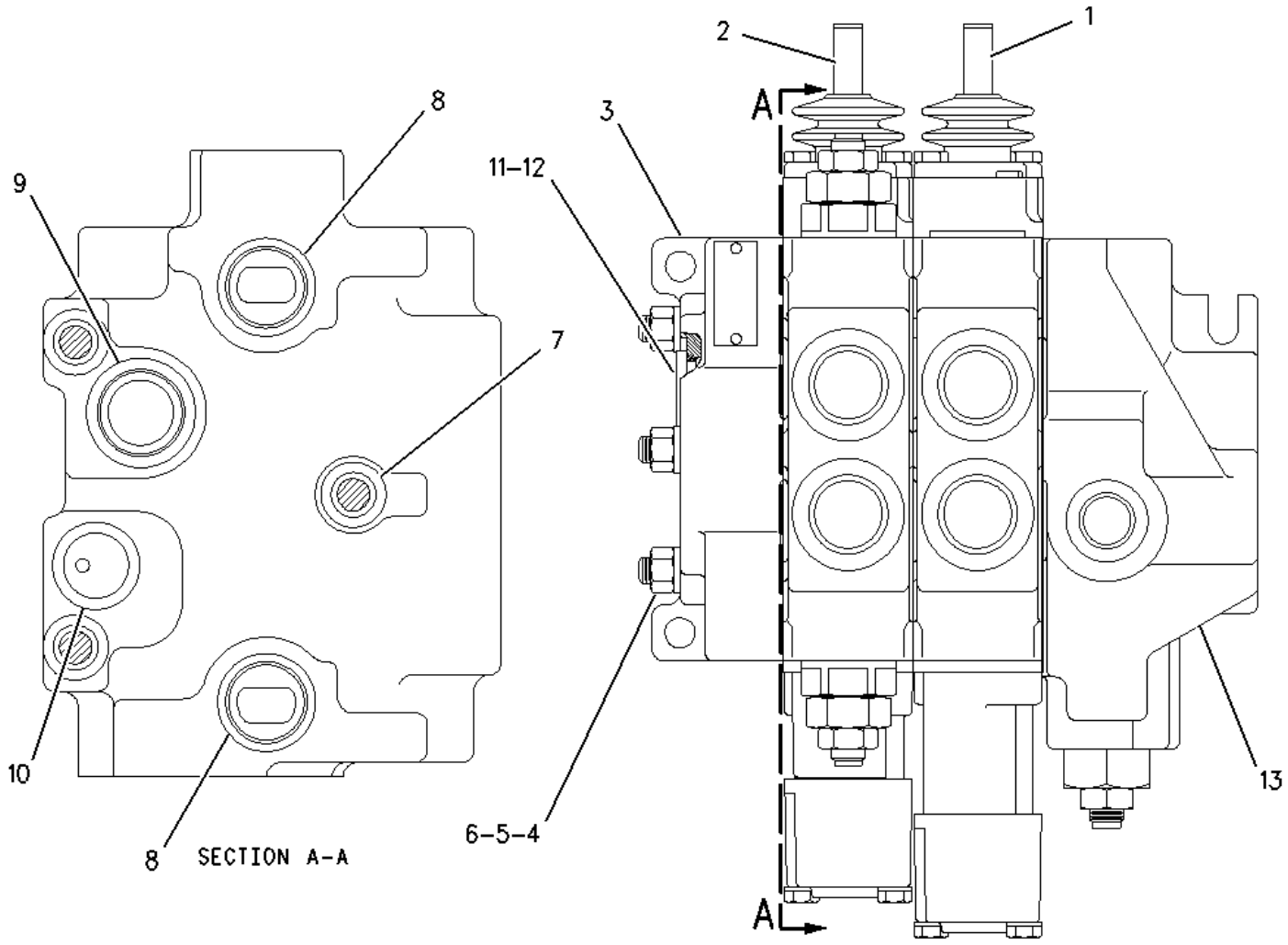

1	NPR	Y	130-6520	1 VALVE GP-CONTROL (LIFT)
2	NPR	CY	168-0361	1 VALVE GP-CONTROL (TILT)
3	NPR		4T-7862	1 COVER
4	NPR		4T-4538	3 STUD (3/8-16-THD)
5	NPR		6V-8801	3 NUT (3/8-16-THD)
6	NPR		8T-4896	3 WASHER-HARD (10.2X18.5X2.5-MM THK)
7	NPR		4T-2723	9 SHIM (0.076-MM THK)
8	NPR		4D-9986	6 SEAL-O-RING
9	NPR		4J-5267	3 SEAL-O-RING
10	NPR		4J-5140	3 SEAL-O-RING
11	NPR		9S-8008	1 PLUG-O RING
12	NPR		3D-2824	1 SEAL-O-RING
13		Y	159-7543	1 VALVE GP-PRIORITY (STEERING)

Key: C - CHANGE FROM PREVIOUS TYPE Y - SEPARATE ILLUSTRATION

180-9135 VALVE GP-BANK 2 ---S/N 4ZN16044-50156

PART OF 159-4870, 163-9199 HYDRAULIC AR

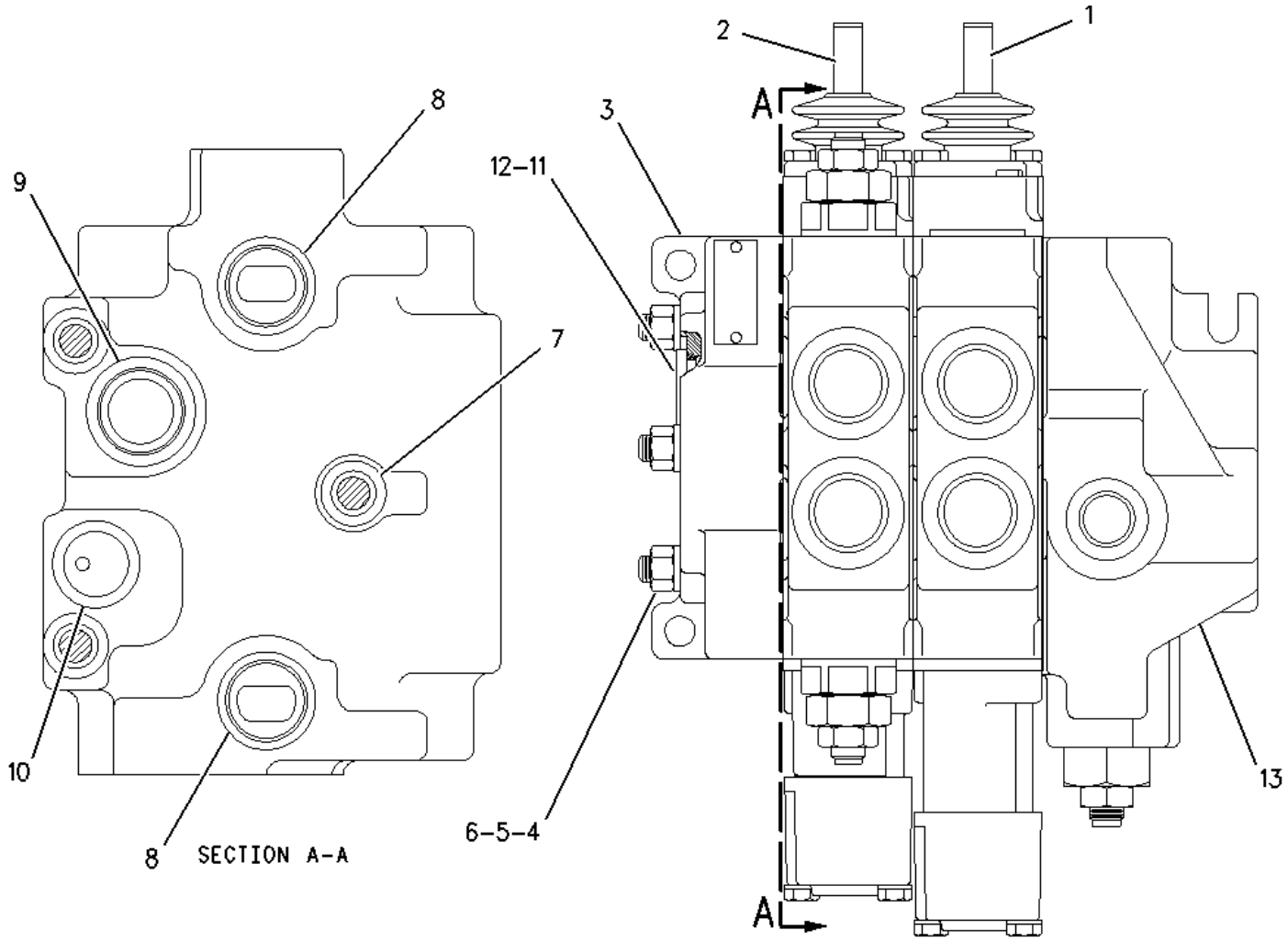

1	NPR	Y	130-6520	1	VALVE GP-CONTROL (LIFT)
2	NPR	Y	168-0361	1	VALVE GP-CONTROL (TILT)
3	NPR		105-4910	1	COVER
4	NPR		4T-4538	3	STUD (3/8-16-THD)
5	NPR		6V-8801	3	NUT (3/8-16-THD)
6	NPR		8T-4896	3	WASHER-HARD (10.2X18.5X2.5-MM THK)
7	NPR		4T-2723	9	SHIM (0.076-MM THK)
8	NPR		4D-9986	6	SEAL-O-RING
9	NPR		4J-5267	3	SEAL-O-RING
10	NPR		4J-5140	3	SEAL-O-RING
11	NPR		9S-8008	1	PLUG-O RING
12	NPR		3D-2824	1	SEAL-O-RING
13	NPR	Y	180-9624	1	VALVE GP-PRIORITY (STEERING)

Key: Y - SEPARATE ILLUSTRATION

180-9136 VALVE GP-BANK 3 ---S/N 4ZN22688-50156

PART OF 159-4872, 163-9200 HYDRAULIC AR

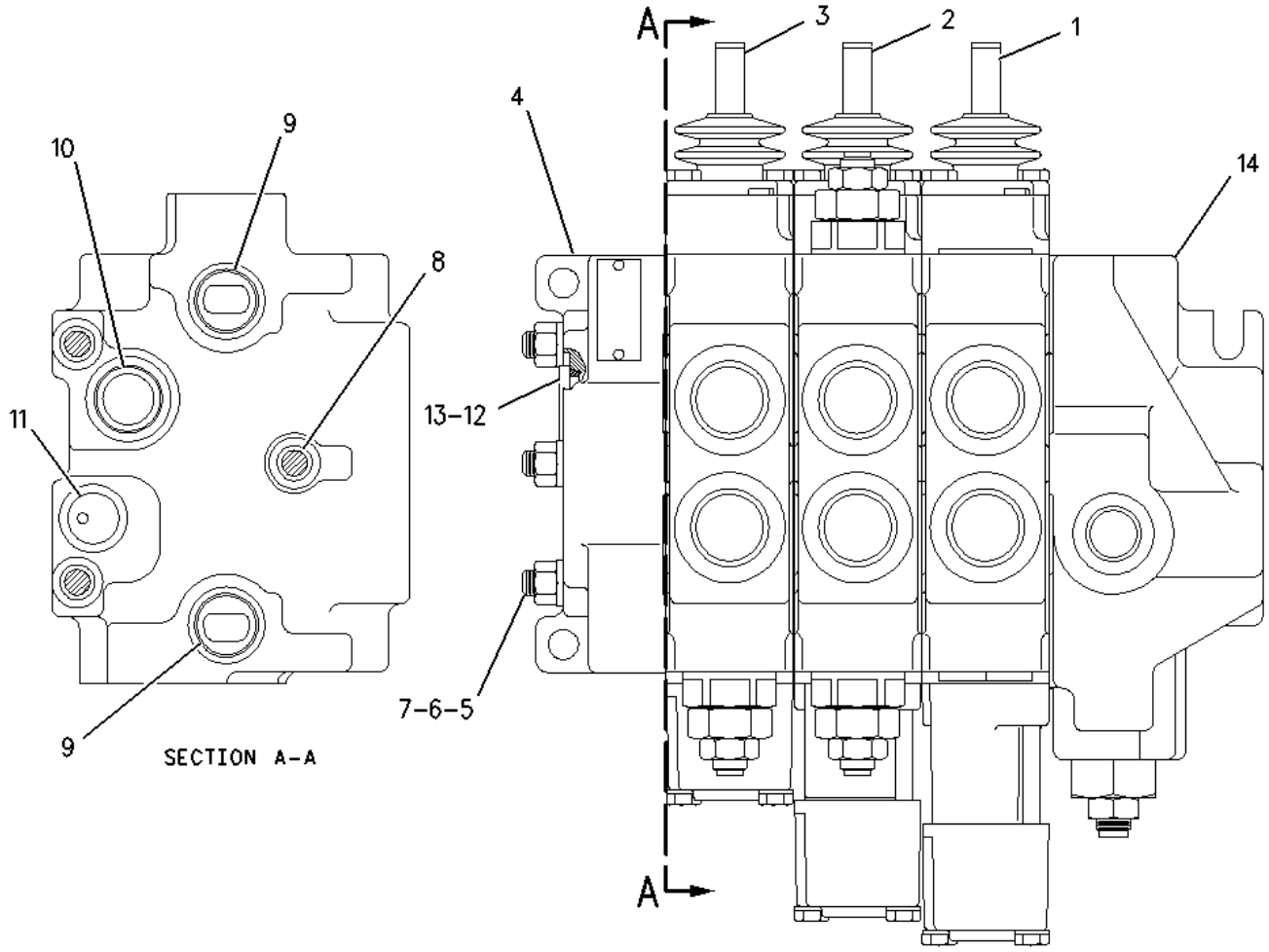

1	NPR Y	130-6520	1	VALVE GP-CONTROL (LIFT)
2	NPR Y	168-0361	1	VALVE GP-CONTROL (TILT)
3	NPR Y	124-8818	1	VALVE GP-CONTROL (AUXILIARY)
4	NPR	105-4910	1	COVER
5	NPR	4T-4518	3	STUD (3/8-16X8.52-IN)
6	NPR	6V-8801	3	NUT (3/8-16-THD)
7	NPR	8T-4896	3	WASHER-HARD (10.2X18.5X2.5-MM THK)
8	NPR	4T-2723	12	SHIM (0.076-MM THK)
9	NPR	4D-9986	8	SEAL-O-RING
10	NPR	4J-5267	4	SEAL-O-RING
11	NPR	4J-5140	4	SEAL-O-RING
12	NPR	9S-8008	1	PLUG-O RING
13	NPR	3D-2824	1	SEAL-O-RING
14	NPR Y	180-9624	1	VALVE GP-PRIORITY (STEERING)

Key: Y - SEPARATE ILLUSTRATION

105-8906 VALVE GP-BANK 6 ---S/N 4ZN16044-50156

FOR USE WITH 8Y-7458 BACKHOE AR, 8Y-7459 BACKHOE AR-STANDARD STICK, 8Y-7460 BACKHOE AR

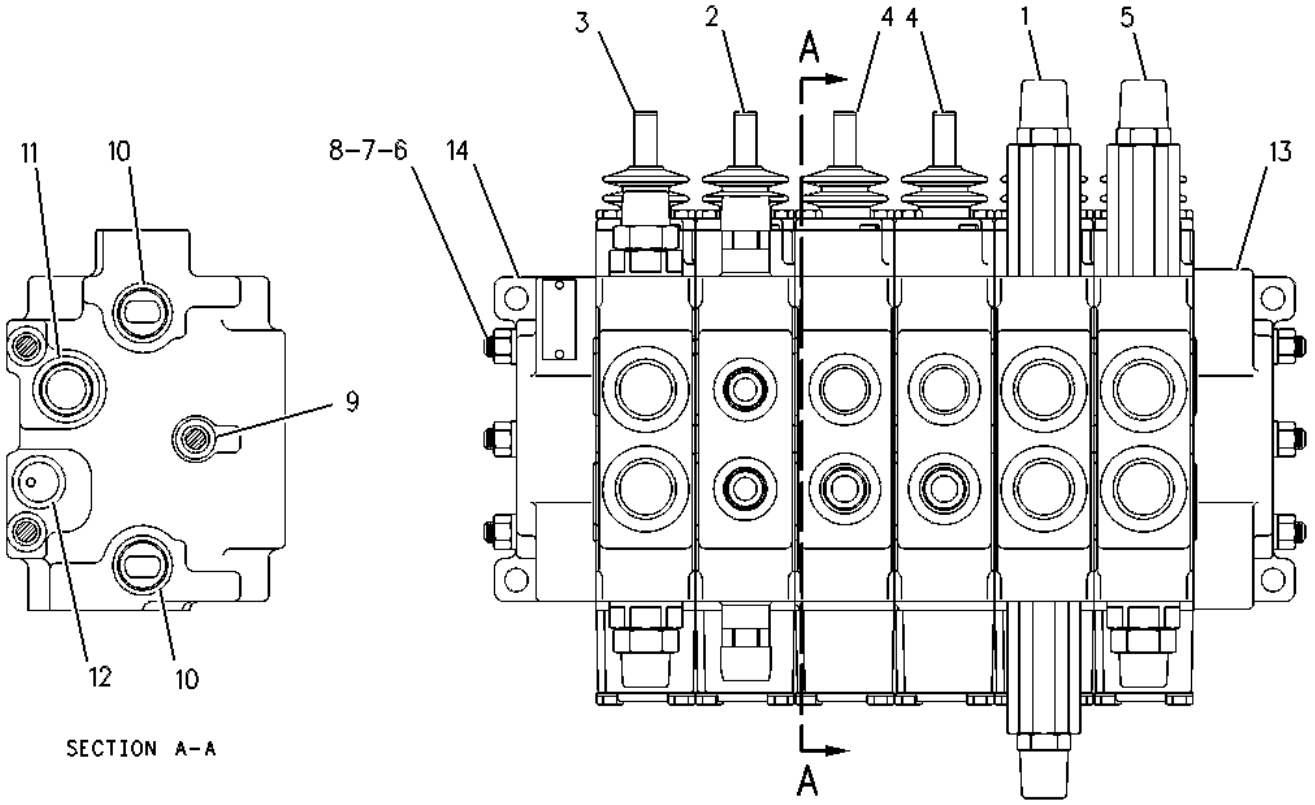

1 NPR Y 6E-6289 1 VALVE GP-CONTROL (BUCKET)

2 NPR YC 148-6516 1 VALVE GP-CONTROL (SWING)

3 NPR Y 137-9468 1 VALVE GP-CONTROL (BOOM)

4 NPR Y 137-9467 2 VALVE GP-CONTROL (STABILIZER)

5 NPR Y 124-8816 1 VALVE GP-CONTROL (STICK)

6 NPR 9T-0637 3 STUD (3/8-16-THD)

7 NPR 9S-8752 6 NUT-FULL (3/8-16-THD)

8 NPR 5M-2894 6 WASHER-HARD (10.2X18.5X2.5-MM THK)

9 NPR B 4T-2723 21 SHIM (0.076-MM THK)

10 NPR 4D-9986 14 SEAL-O-RING

11 NPR 4J-5267 7 SEAL-O-RING

12 NPR 4J-5140 7 SEAL-O-RING

13 NPR 124-8822 1 COVER

14 NPR 124-8823 1 COVER

Key: B - USE AS REQUIRED C - CHANGE FROM PREVIOUS TYPE Y - SEPARATE ILLUSTRATION

161-6736 VALVE GP-BANK 6 ---S/N 4ZN16044-50156

PART OF 154-5420, 192-5142 HYDRAULIC AR

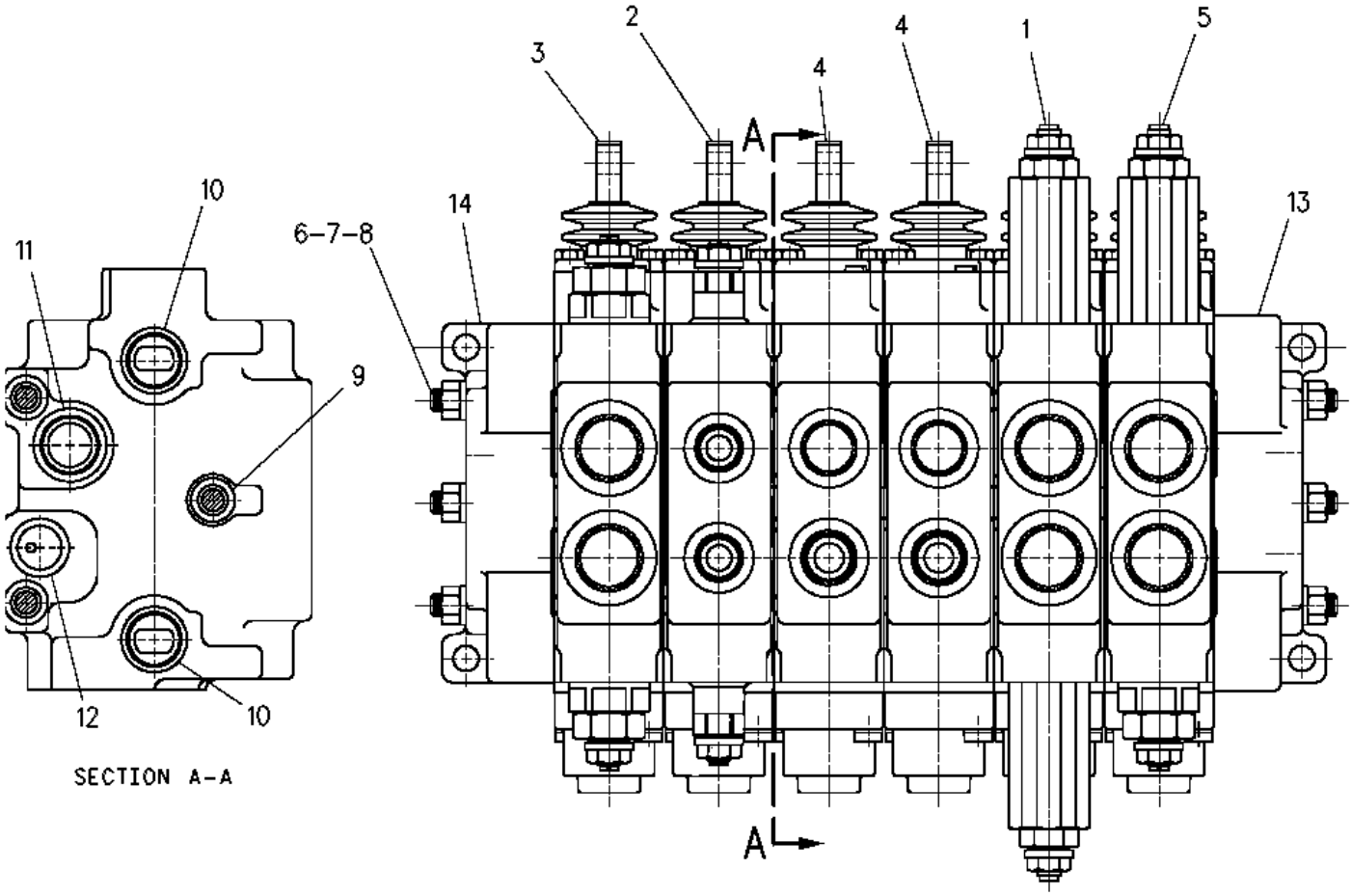

1 NPR Y 6E-6289 1 VALVE GP-CONTROL (BUCKET)

2 NPR Y 166-7950 1 VALVE GP-CONTROL (SWING)

3 Y 159-7568 1 VALVE GP-CONTROL (BOOM)

4 NPR Y 137-9467 2 VALVE GP-CONTROL (STABILIZER)

5 NPR Y 124-8816 1 VALVE GP-CONTROL (STICK)

6 NPR 9T-0637 3 STUD (3/8-16 X 14.38IN)

7 NPR 9S-8752 6 NUT-FULL (3/8-16-THD)

8 NPR 5M-2894 6 WASHER-HARD (10.2X18.5X2.5-MM THK)

9 NPR 4T-2723 21 SHIM (0.076-MM THK)

10 NPR 4D-9986 14 SEAL-O-RING

11	NPR	4J-5267	1	SEAL-O-RING
12	NPR	4J-5140	7	SEAL-O-RING
13	NPR	161-5739	1	COVER
14	NPR	124-8823	1	COVER

Key: Y - SEPARATE ILLUSTRATION

PART OF 154-5430, 154-5431, 154-5432 HYDRAULIC AR

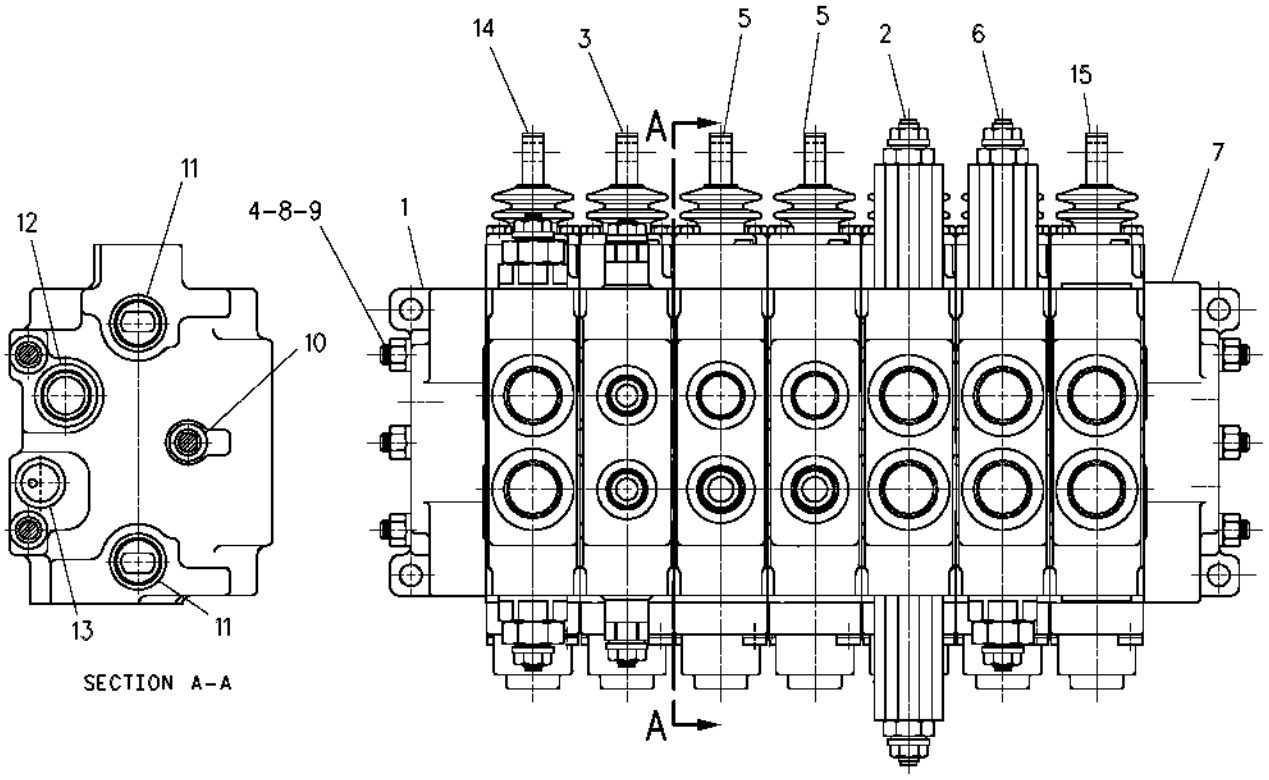

1	NPR	124-8823	1	COVER
2	NPR Y	6E-6289	1	VALVE GP-CONTROL (BUCKET)
3	NPR Y	166-7950	1	VALVE GP-CONTROL (SWING)
4	NPR	116-1315	3	STUD (3/8-16 X 17.38IN)
5	NPR Y	137-9467	2	VALVE GP-CONTROL (STABILIZER)
6	NPR Y	124-8816	1	VALVE GP-CONTROL (STICK)
7	NPR	161-5739	1	COVER
8	NPR	9S-8752	6	NUT-FULL (3/8-16-THD)
9	NPR	5M-2894	6	WASHER-HARD (10.2X18.5X2.5-MM THK)
10	NPR	4T-2723	24	SHIM (0.076-MM THK)
11	NPR	4D-9986	16	SEAL-O-RING
12	NPR	4J-5267	8	SEAL-O-RING
13	NPR	4J-5140	8	SEAL-O-RING
14	Y	159-7568	1	VALVE GP-CONTROL (BOOM)
15	NPR Y	132-5134	1	VALVE GP-CONTROL (EXTENDABLE STICK)

Key: Y - SEPARATE ILLUSTRATION

161-6738 VALVE GP-BANK 8 ---S/N 4ZN16044-50156--PART OF 154-5433 HYDRAULIC AR

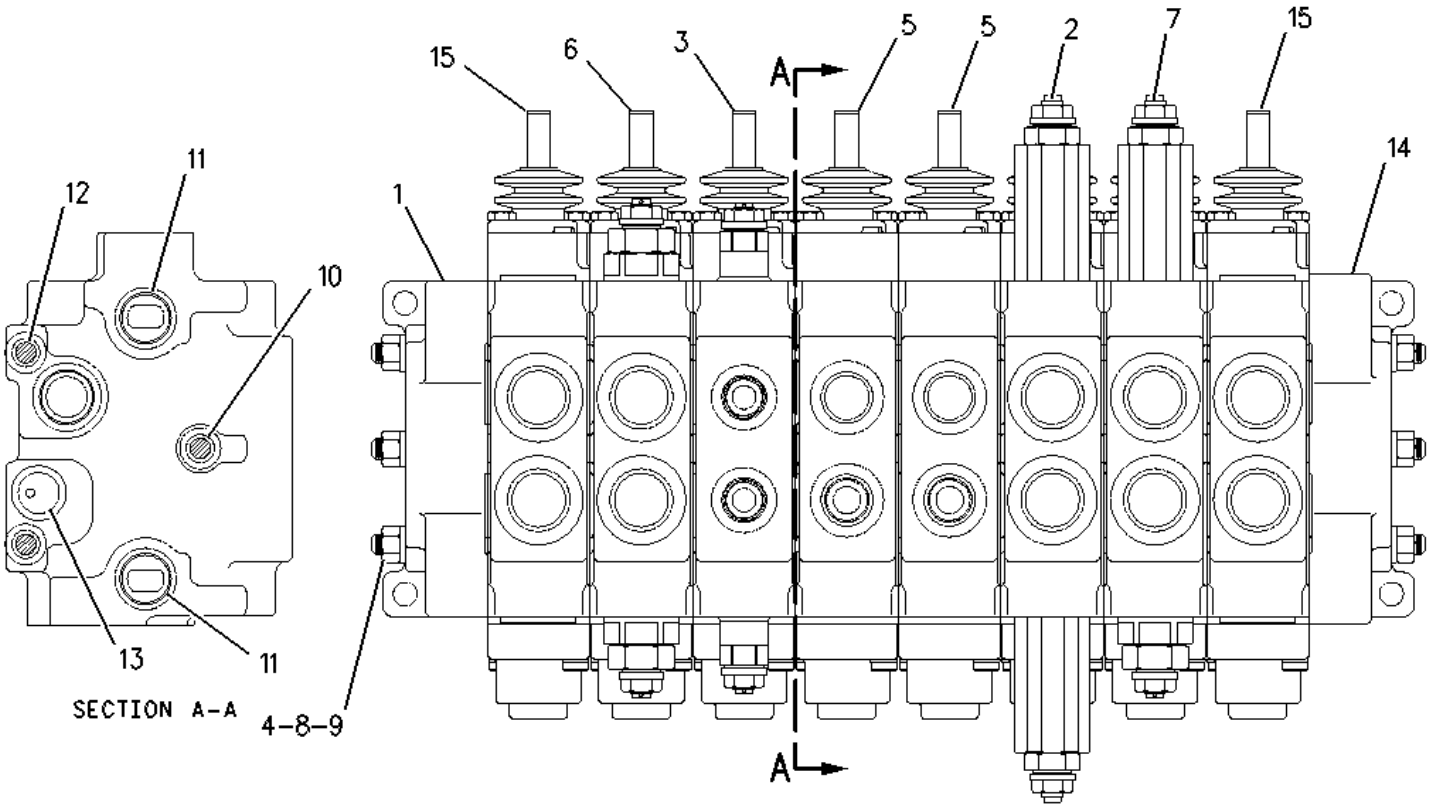

1 NPR 124-8823 1 COVER

2 NPR Y 6E-6289 1 VALVE GP-CONTROL (BUCKET)

3 NPR Y 166-7950 1 VALVE GP-CONTROL (SWING)

4 NPR 107-6170 3 STUD

5 NPR Y 137-9467 2 VALVE GP-CONTROL (STABILIZER)

6 Y 159-7568 1 VALVE GP-CONTROL (BOOM)

7 NPR Y 124-8816 1 VALVE GP-CONTROL (STICK)

8 NPR 9S-8752 6 NUT-FULL (3/8-16-THD)

9 NPR 5M-2894 6 WASHER-HARD (10.2X18.5X2.5-MM THK)

10 NPR 4T-2723 27 SHIM (0.076-MM THK)

11 NPR 4D-9986 18 SEAL-O-RING

12	NPR	4J-5267	9	SEAL-O-RING
13	NPR	4J-5140	9	SEAL-O-RING
14	NPR	161-5739	1	COVER
15	NPR Y	132-5134	2	VALVE GP-CONTROL (EXTENDABLE STICK)

Key: Y - SEPARATE ILLUSTRATION

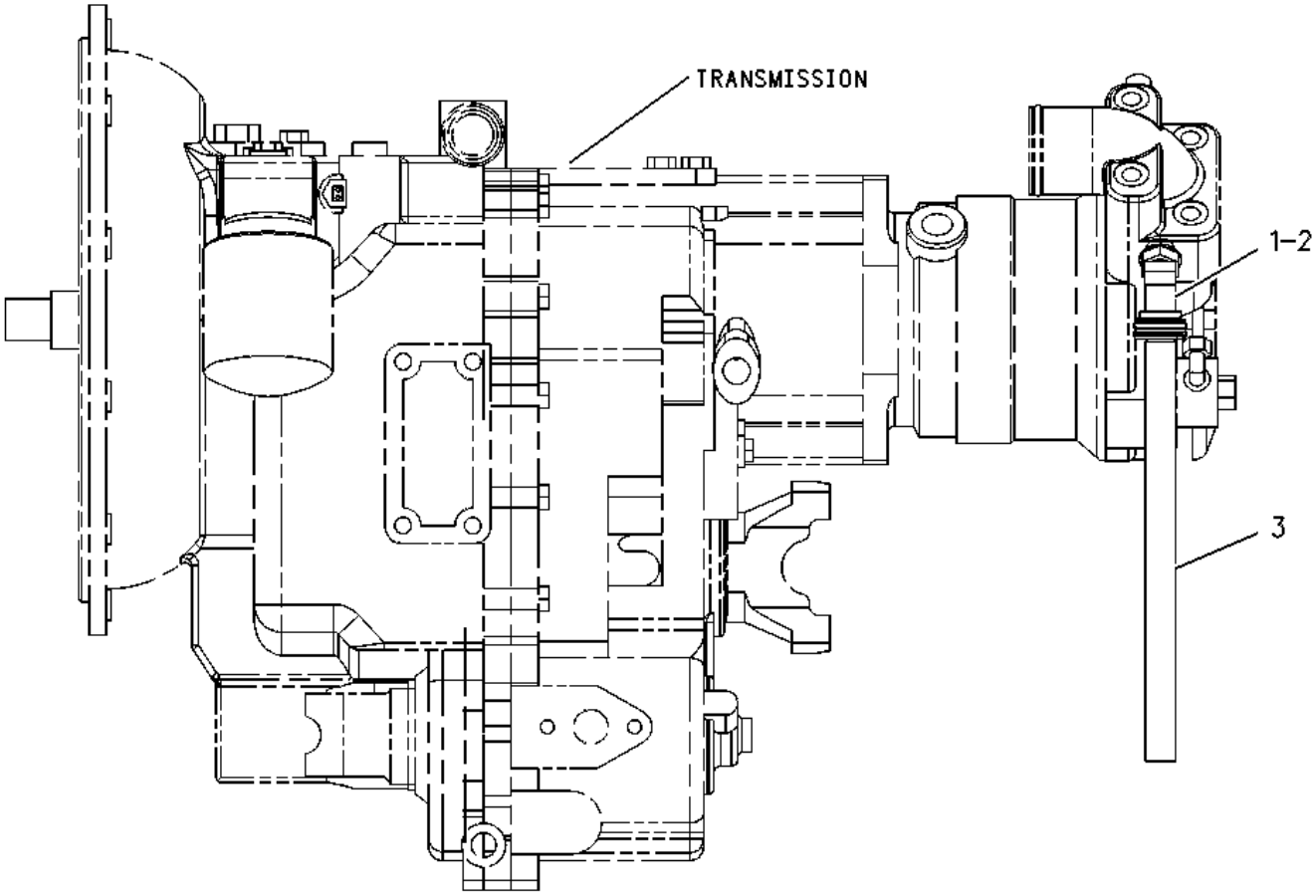

1	**NPR**	**2M-9780**	**1**	**SEAL-O-RING**
2	**NPR**	**133-6337**	**1**	**PLUG-DRAIN**
3	**NPR**	**134-8474**	**1**	**TUBE AS-DRAIN**

PART OF 154-5437 HYDRAULIC AR

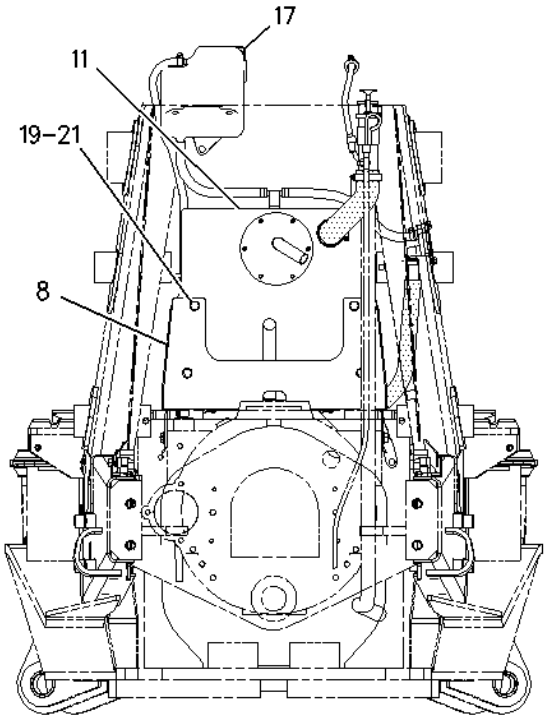

FRONT VIEW

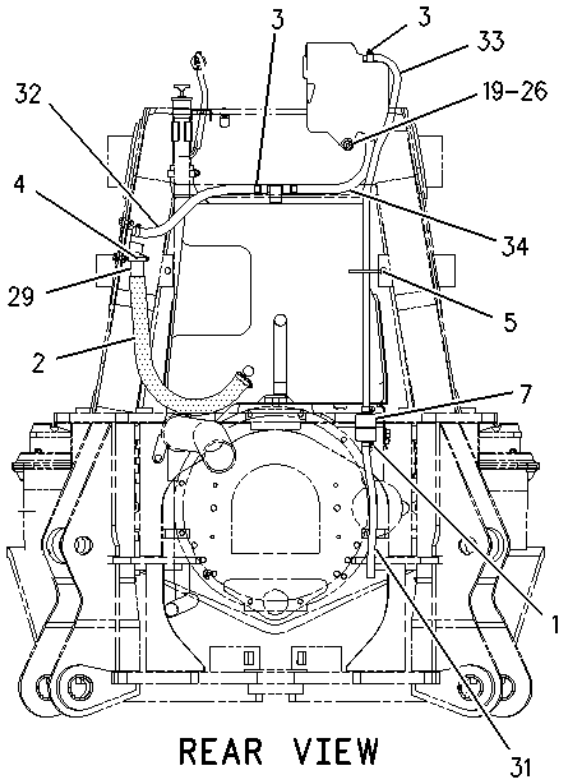

REAR VIEW

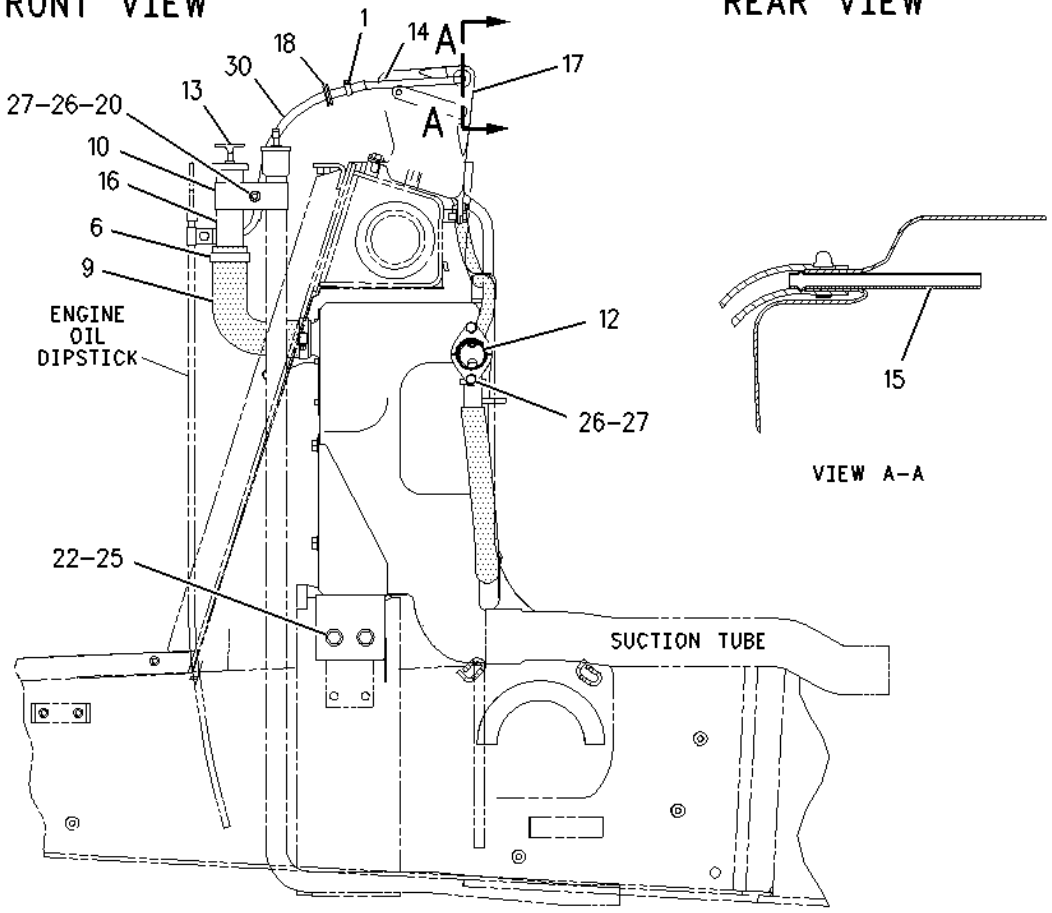

LEFT SIDE VIEW

1 NPR 1P-4278 3 CLAMP-HOSE

2 NPR BG 160-2245 SLEEVE-ABRASION

3 NPR 5D-1026 6 CLAMP-HOSE

4	NPR	5V-9155	2	CLAMP-HOSE
5	NPR	7K-1181	1	STRAP-CABLE
6	NPR	9M-0164	2	CLAMP-HOSE
7	NPR	9R-9925	1	FILTER-BREATHER
8	NPR	112-5369	1	BRACKET AS
	NPR	7T-1099	2	LINK
9	NPR	119-7749	1	HOSE
10	NPR	120-9926	2	CLAMP
11	NPR Y	122-0051	1	TANK GP-HYDRAULIC
12	NPR	122-1160	1	GAUGE AS-LIQUID LEVEL
	NPR	7X-4782	1	SEAL-O-RING
	NPR	136-7876	1	GLASS
	NPR	136-8059	1	RING-RETAINING
13	NPR	123-0867	1	CAP-FILLER
14	NPR	151-8753	1	TUBE
15	NPR	139-4068	1	TUBE
16	NPR	140-9451	1	TUBE AS
17	NPR	163-1491	1	TANK-EXPANSION
18	NPR	061-8844	1	GROMMET
19	NPR	3F-1240	1	GROMMET
20	NPR M	5C-7261	1	NUT (M8X1.25-THD)
21	NPR	8T-4121	12	WASHER-HARD (11X21X2.5-MM THK)
22	NPR M	8T-4179	4	BOLT (M12X1.75X20-MM)
23	NPR M	8T-4191	4	BOLT (M10X1.5X16-MM)
25	NPR	8T-4223	4	WASHER-HARD (13.5X25.5X3-MM THK)

26	NPR	8T-4224	4	WASHER-HARD (8.8X16X2-MM THK)
27	NPR M	8T-4908	3	BOLT (M8X1.25X25-MM)
28	NPR M	9X-2125	3	BOLT-LOCKING (M10X1.5X25-MM)
29	NPR E	5P-1695		HOSE (54-CM)
30	NPR E	5P-1442		HOSE (33-CM)
31	NPR E	5P-1442		HOSE (21-CM)
32	NPR E	5P-1505		HOSE (36-CM)
33	NPR E	5P-1505		HOSE (94-CM)
34	NPR E	5P-1505		HOSE (26-CM)

Key: B - USE AS EQUIRED E - ORDER BY THE CENTIMETER G - ORDER BY THE INCH
M - METRIC PART Y - SEPARATE ILLUSTRATION

PART OF 106-6252 TANK & MTG GP-HYDRAULIC

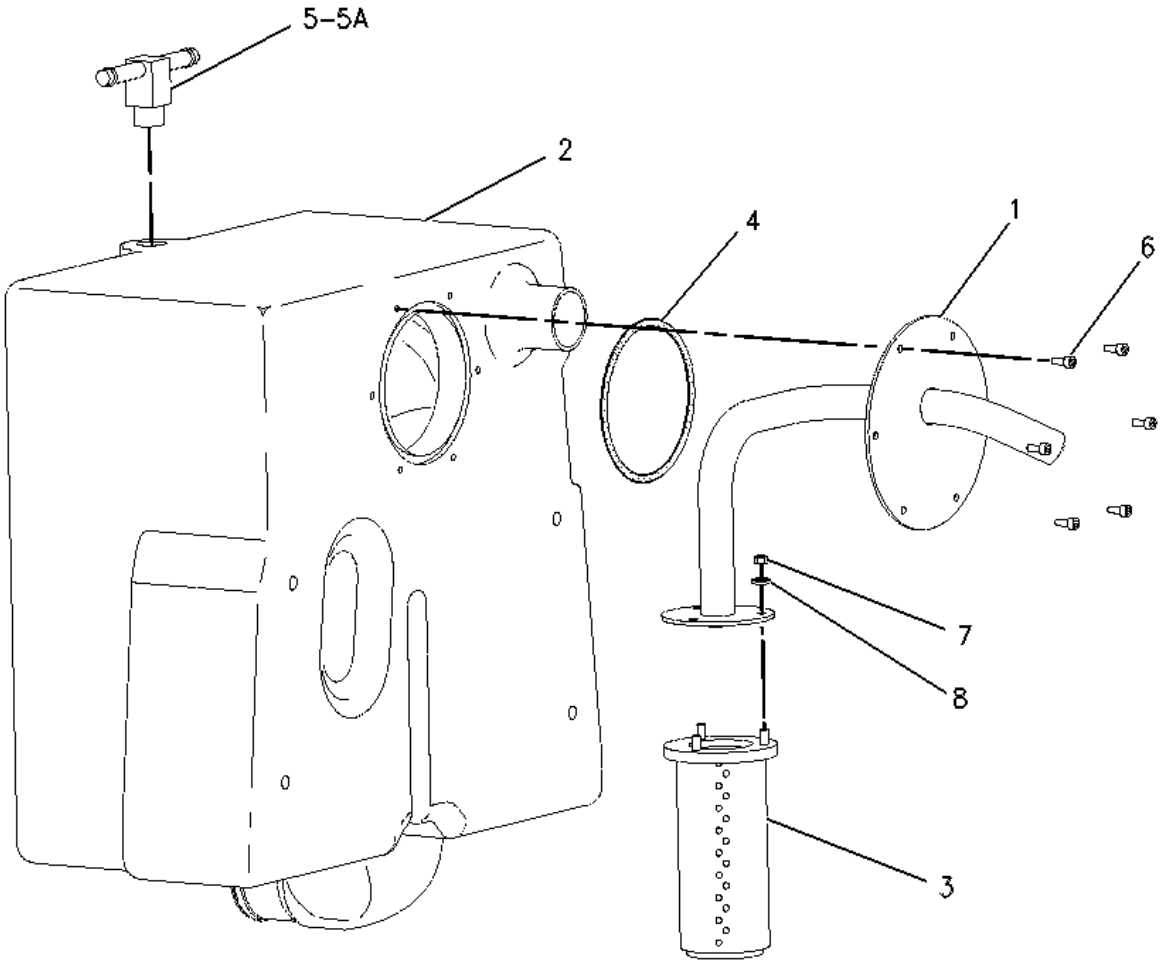

1	NPR	112-5364	1	PLATE AS
2	NPR	112-5371	1	TANK AS-HYDRAULIC
3	NPR	124-0152	1	SCREEN
4	NPR	132-3056	1	SEAL-O-RING
5	NPR	2M-9780	1	SEAL-O-RING
5A	NPR	122-1113	1	TEE-O-RING
6	NPR M	099-2374	6	BOLT-SOCKET HEAD (M5X0.8X12-MM)
7	NPR M	129-3178	3	LOCKNUT (M6X1-THD)
8	NPR	8T-4205	3	WASHER-HARD (7.2X14.5X2-MM THK)

Key: M - METRIC PART

128-5596 SHAFT GP-PUMP DRIVE --S/N 4ZN16044-50156

PART OF 112-1826 DRIVE & MTG GP-PUMP

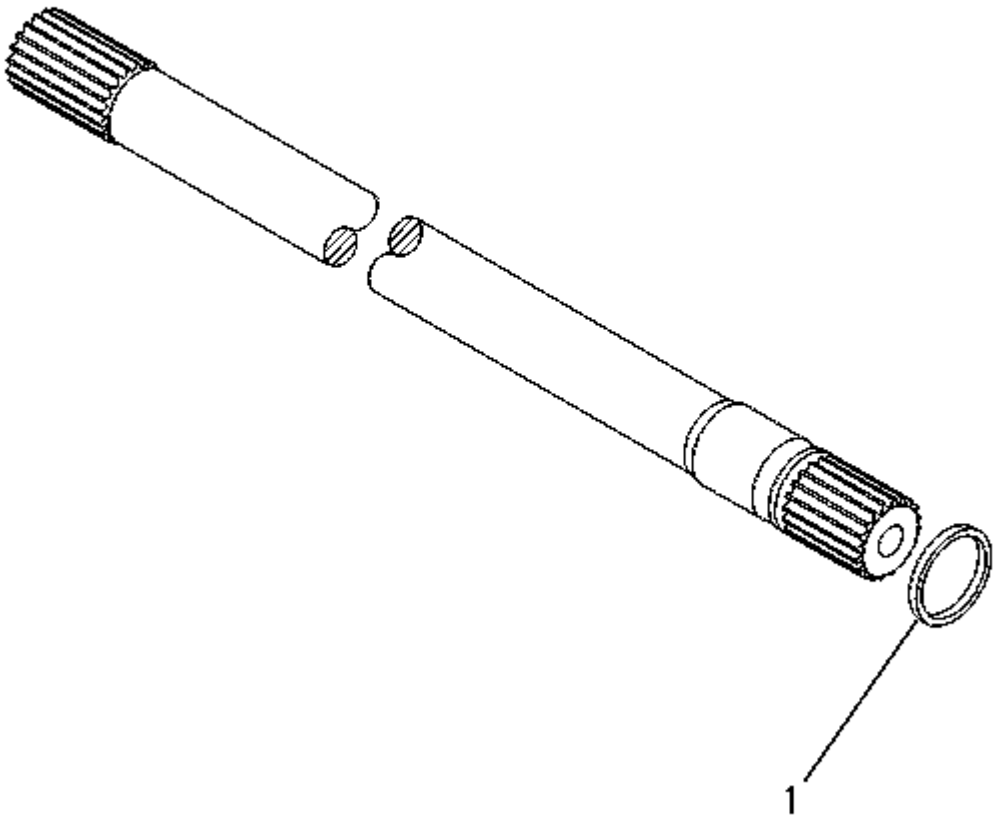

1	**NPR**	**130-8150**	**1**	**RING-RETAINING**

PART OF 154-5437 HYDRAULIC AR

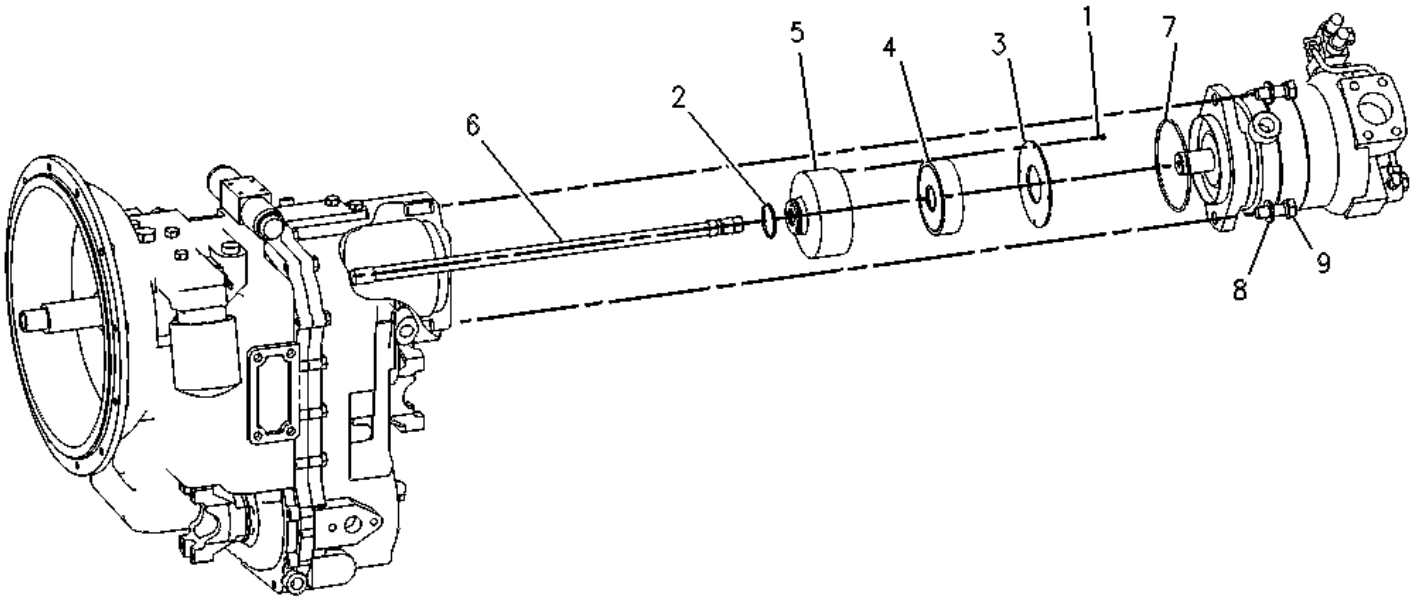

1	NPR M	8T-9405	4	BOLT-SOCKET HEAD (M4X0.7X16-MM)
2	NPR	9U-8886	1	RING-SEAL
3	NPR	115-1918	1	PLATE
4	NPR	117-3534	1	ADAPTER
5	NPR	274-4555	1	HUB
6	NPR Y	128-5596	1	SHAFT GP-PUMP DRIVE
7	NPR	5F-3106	1	SEAL-O-RING
8	NPR	8T-4122	2	WASHER-HARD (17X32X3.5-MM THK)
9	NPR M	8T-7338	2	BOLT (M16X2X45-MM)

Key: M - METRIC PART Y - SEPARATE ILLUSTRATION

161-6634 PUMP GP-PISTON ---S/N 4ZN16044-50156---PART OF 154-5437 HYDRAULIC AR

42-41-9-34-33-32

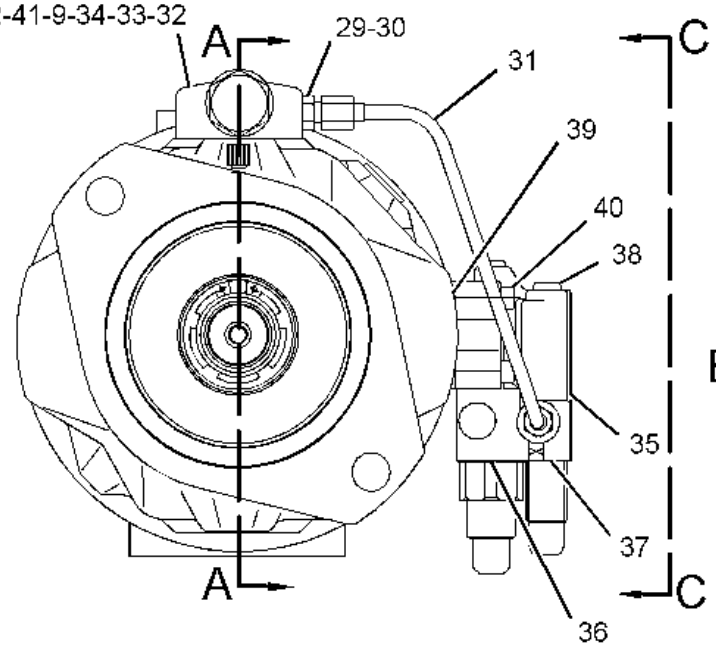

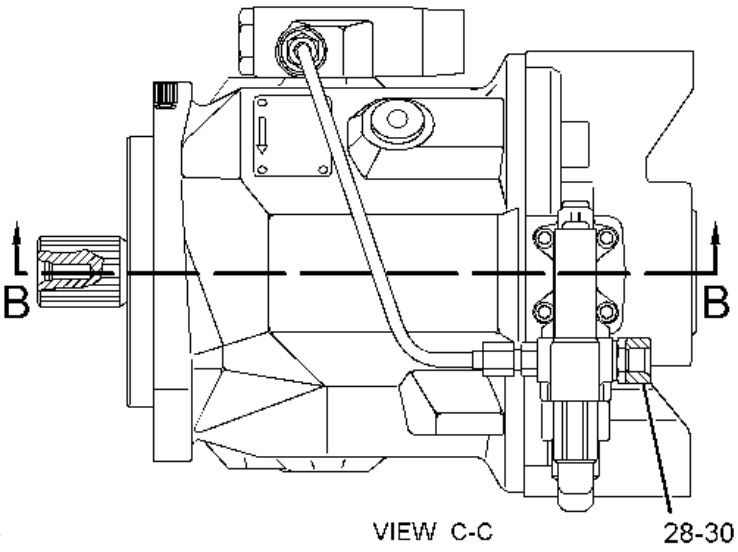

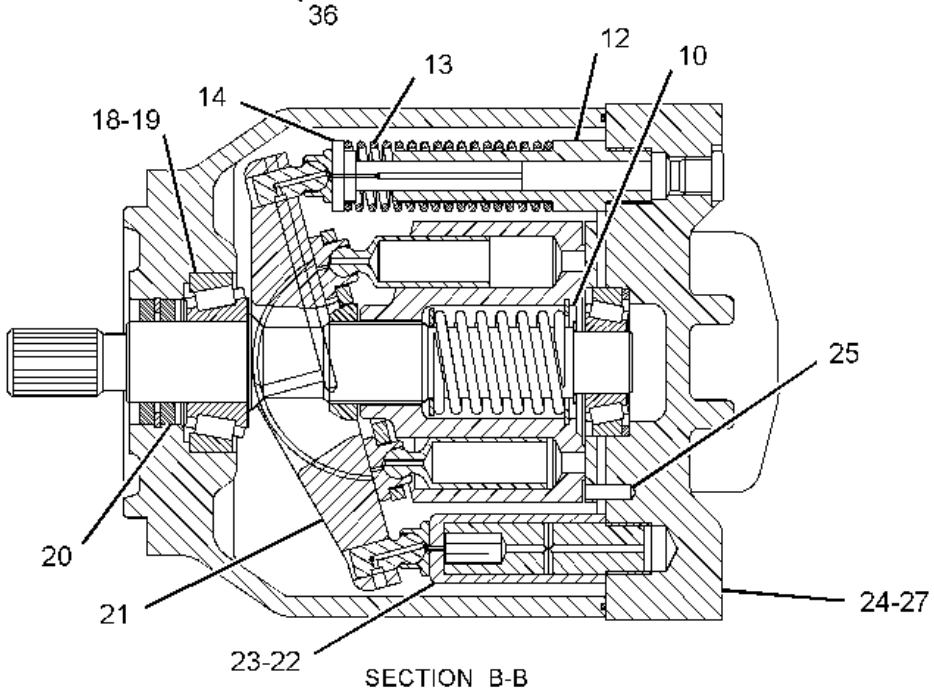

SECTION B-B

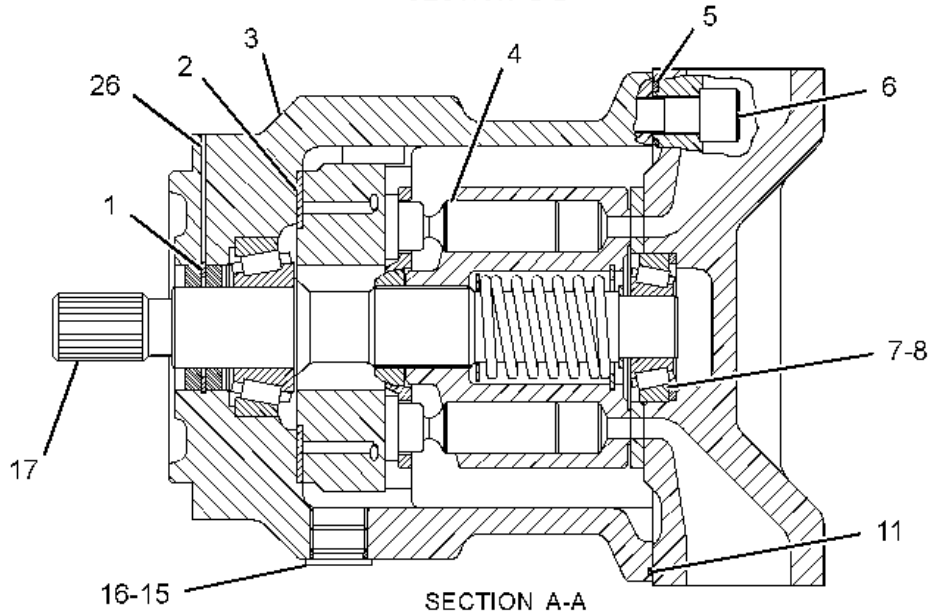

SECTION A-A

1	NPR	180-6213	1	RING-RETAINING
2	NPR	6E-4003	2	BEARING
3	NPR	173-0637	1	HOUSING-PUMP
4	NPR Y	120-5726	1	ROTATING GP-PUMP
5	NPR	3E-6769	4	SEAL-O-RING
6	NPR M	095-9805	4	BOLT-SOCKET HEAD (M14X2X40-MM)
7	NPR	1P-6872	1	CUP-BEARING
8	NPR	8C-7110	1	CONE-BEARING
9	NPR	103-5520	1	CARRIER-PIN
10	NPR B	6E-4000	1	SPACER (25.5X35X3-MM THK)
11	NPR	3E-6770	1	SEAL-O-RING
12	NPR	6E-6175	1	CYLINDER
13	NPR	6E-6176	1	SPRING
14	NPR	6E-6174	1	PLUNGER
15	NPR	9S-8006	1	PLUG-O RING
16	NPR	2M-9780	1	SEAL-O-RING
17	NPR	162-1604	1	SHAFT-DRIVE
18	NPR	6V-2323	1	CONE-BEARING
19	NPR	3B-5790	1	CUP-BEARING
20	NPR	6E-4004	2	SEAL-SHAFT
21	NPR	173-0639	1	SWASHPLATE AS
22	NPR	120-5727	1	PISTON-CONTROL
23	NPR	120-5729	1	GUIDE-PISTON
24	NPR	136-8423	1	PLUG-BREAK OFF
25	NPR	083-4419	1	PIN

26	NPR	173-0641	1	PLUG-FILTER
27	NPR	173-0638	1	HEAD-PUMP
28	NPR	103-5522	1	ADAPTER AS
	NPR	3J-7354	1	SEAL-O-RING
29	NPR	3J-7352	2	CONNECTOR
30	NPR	3J-7354	3	SEAL-O-RING
31	NPR	193-8648	1	TUBE AS
32	NPR Y	103-5519	1	VALVE GP-PUMP CONTROL (POWER COMPENSATOR)
33	NPR M	6V-5683	1	BOLT (M6X1X16-MM)
34	NPR	3C-8388	1	PIN-ROLL
35	NPR Y	173-0640	1	VALVE GP-PUMP CONTROL (PRESSURE, FLOW COMPENSATOR)
36	NPR	6V-8352	1	SEAL-O-RING
37	NPR	033-6043	1	SEAL-O-RING
38	NPR	6E-6528	2	SEAL
39	NPR	9X-7680	3	SEAL-O-RING
40	NPR M	8T-8442	4	BOLT-SOCKET HEAD (M6X1X30-MM)
41	NPR M	3T-0849	2	BOLT-SOCKET HEAD (M6X1X25-MM)
42	NPR	105-1440	1	CAP

Key:

B - USE AS REQUIRED
M - METRIC PART
Y - SEPARATE ILLUSTRATION

PART OF 161-6634 PUMP GP-PISTON

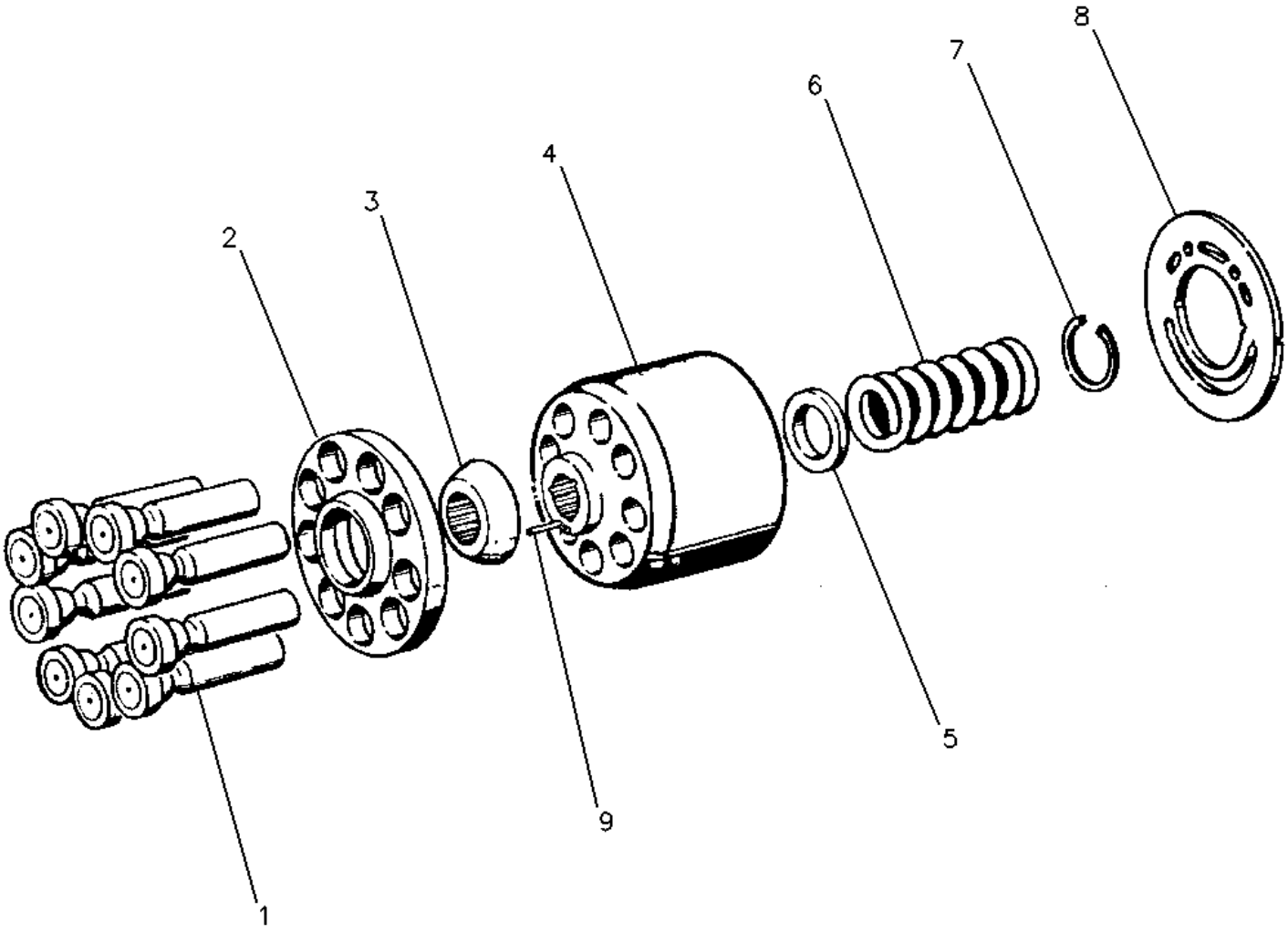

1	NPR	6E-6151	9	PISTON AS
2	NPR	6E-6154	1	PLATE-RETRACTION
3	NPR	6E-6155	1	BEARING
4	NPR	6E-4007	1	BARREL
5	NPR	6E-3341	1	SEAT-SPRING
6	NPR	6E-4009	1	SPRING
7	NPR	6E-6158	1	RING
8	NPR	120-5724	1	PLATE-VALVE
9	NPR	6E-6157	3	PIN

128-5596 SHAFT GP-PUMP DRIVE

S/N 4ZN16044-50156---PART OF 112-1826 DRIVE & MTG GP-PUMP

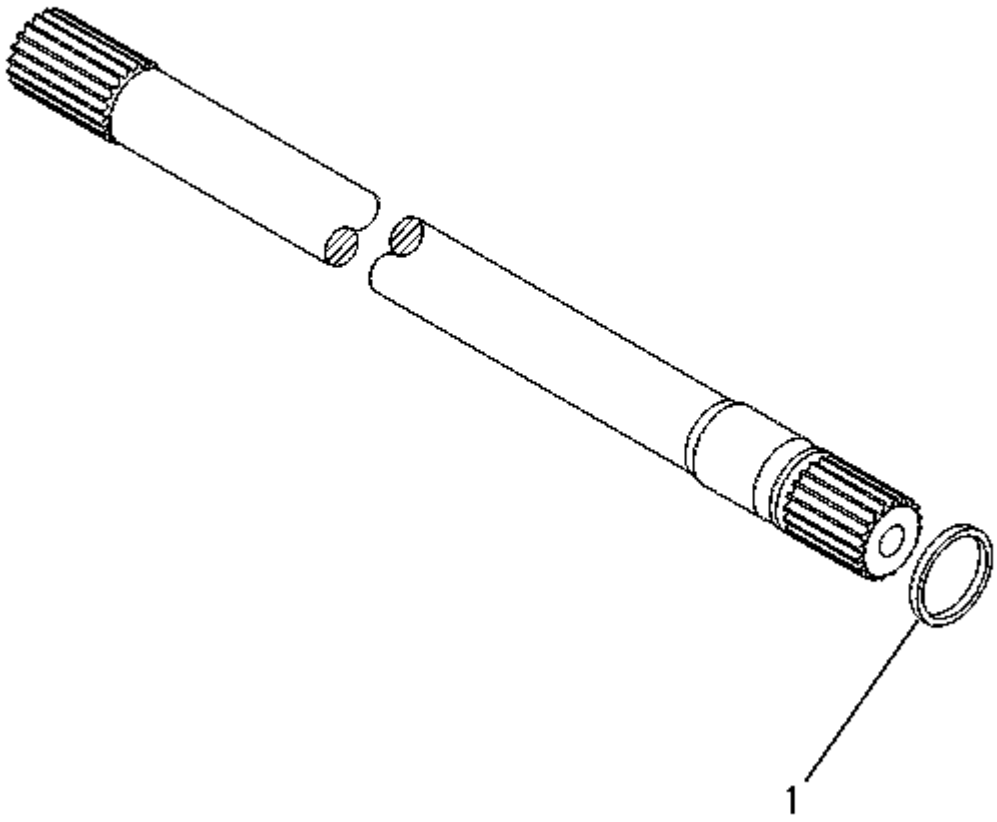

1	NPR	130-8150	1	RING-RETAINING

103-5519 VALVE GP-PUMP CONTROL -POWER COMPENSATOR

S/N 4ZN16044-50156---PART OF 161-6634 PUMP GP-PISTON

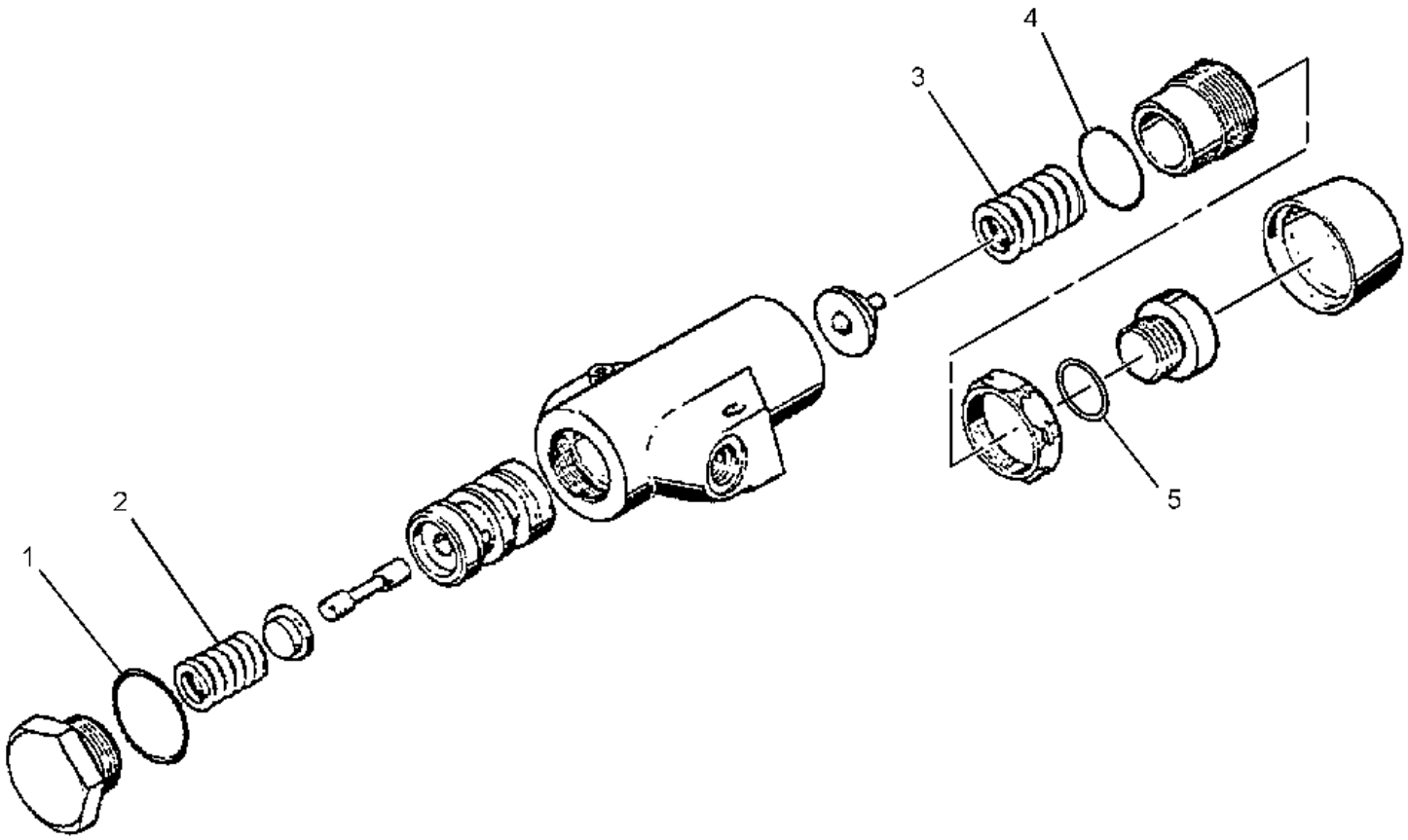

1	NPR	6V-4589	1	SEAL-O-RING
2	NPR	105-1435	1	SPRING
3	NPR	105-1438	1	SPRING
4	NPR	033-6044	1	SEAL-O-RING
5	NPR	6E-6528	1	SEAL

PARTS SHOWN IN GRAPHIC(S) WITHOUT A REFERENCE NUMBER ARE NOT SERVICED SEPARATELY

173-0640 VALVE GP-PUMP CONTROL -PRESSURE,FLOW COMPENSATOR

S/N 4ZN16044-50156----PART OF 161-6634 PUMP GP-PISTON

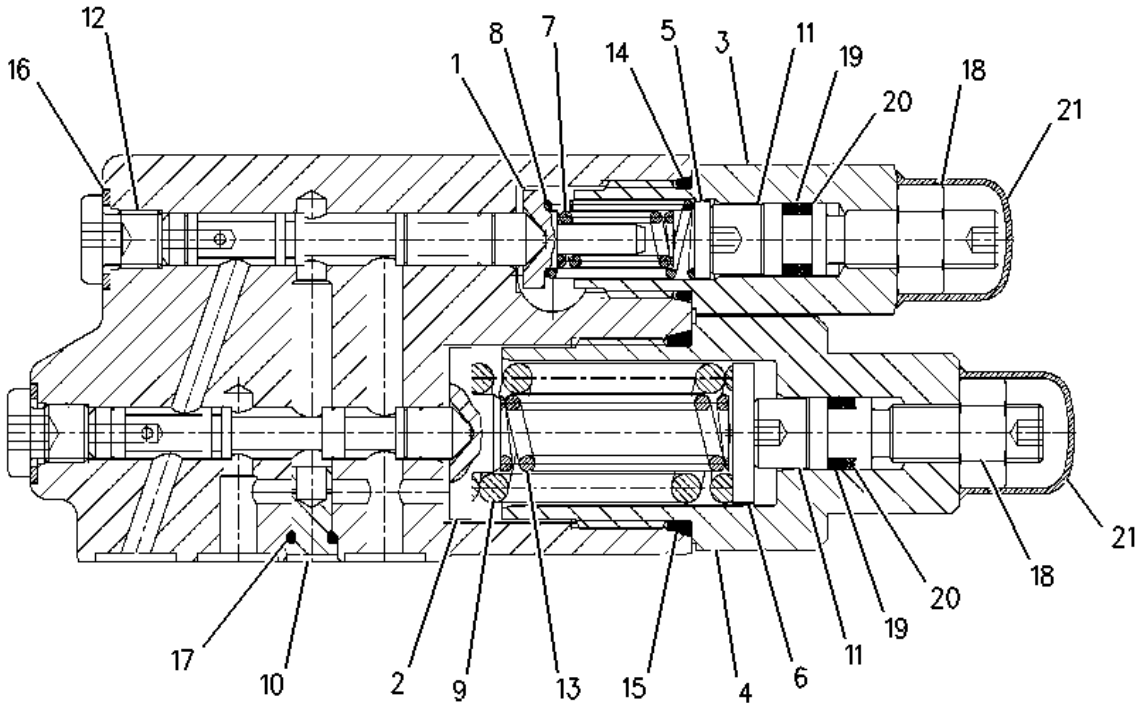

1 NPR 6E-3268 1 RETAINER-SPRING

2 NPR 6E-3269 1 RETAINER-SPRING

3 NPR 200-5359 1 HOUSING

4 NPR 200-5360 1 HOUSING

5 NPR 6E-3272 1 SEAT

6 NPR 6E-3273 1 SEAT

7 NPR 6E-3274 1 SPRING

8 NPR 6E-3275 1 SPRING

9 NPR 6E-3276 1 SPRING

10 NPR 105-2145 1 VALVE-ORIFICE

11	NPR	202-7503	2	RETAINER
12	NPR	6E-6527	2	PLUG
13	NPR	193-1036	1	SPRING
14	NPR	033-6043	1	SEAL-O-RING
15	NPR	6V-8352	1	SEAL-O-RING
16	NPR	6E-6528	2	SEAL
17	NPR	5P-9262	1	SEAL-O-RING
18	NPR M	200-5361	2	NUT (M8X1-THD)
19	NPR	200-5362	2	SEAL-O-RING
20	NPR	200-5363	2	RING-THRUST
21	NPR	200-5364	2	CAP

Key:

M - METRIC PART

PART OF 154-5437 HYDRAULIC AR

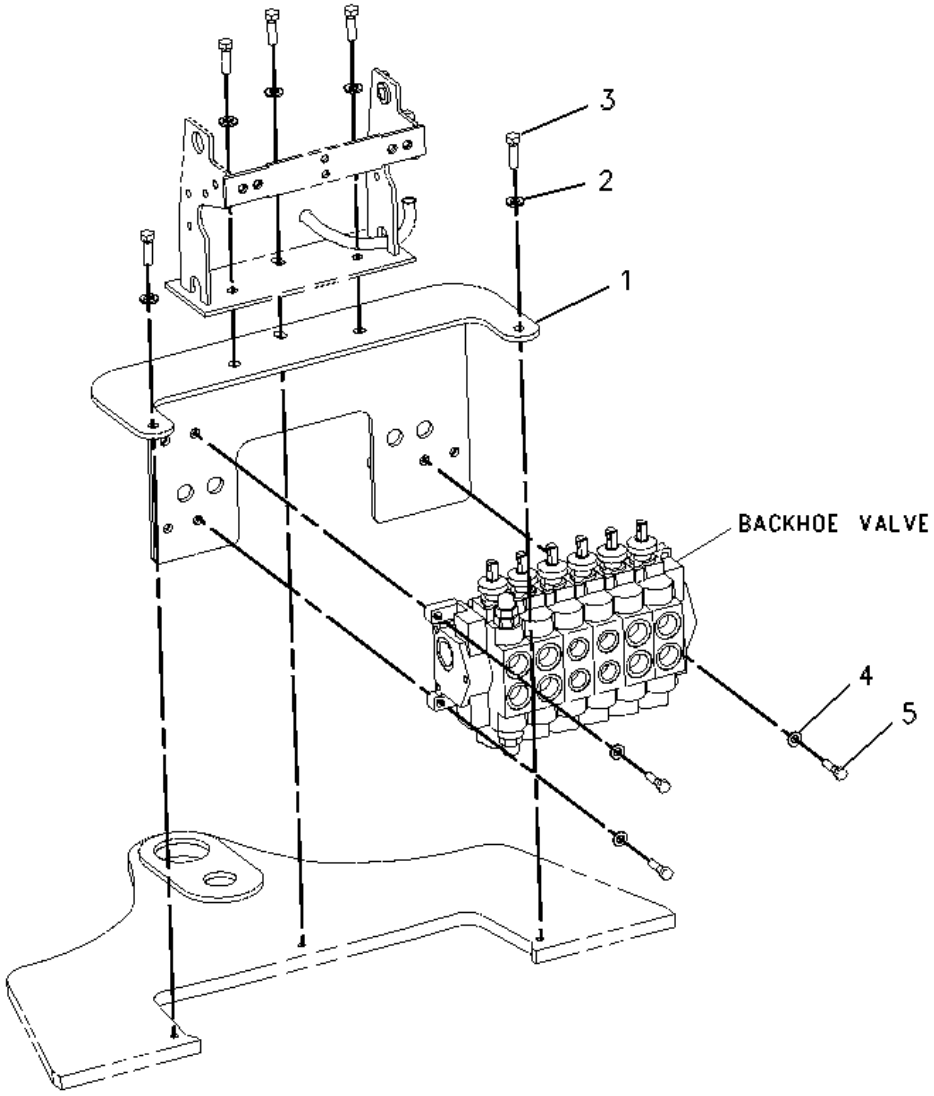

1 NPR 192-2863 1 BRACKET AS

NPR M 8T-3490 6 NUT-WELD (M10X1.5-THD)

NPR M 8T-3597 2 NUT-WELD (M12X1.75-THD)

NPR M 9R-2672 8 BOSS-THREADED (M10X1.5-6HX20-MM)

2 NPR 8T-4223 5 WASHER-HARD (13.5X25.5X3-MM THK)

3 NPR M 8T-4183 5 BOLT (M12X1.75X40-MM)

4 NPR 8T-4121 3 WASHER-HARD (11X21X2.5-MM THK)

5 NPR M 8T-4186 3 BOLT (M10X1.5X40-MM)

Key: M - METRIC PART

9R-4668 MOUNTING GP-CYLINDER ---S/N 4ZN16044-50156

PART OF 111-8634, 111-8635, 112-0938, 112-0939 BUCKET AR-MULTIPURPOSE

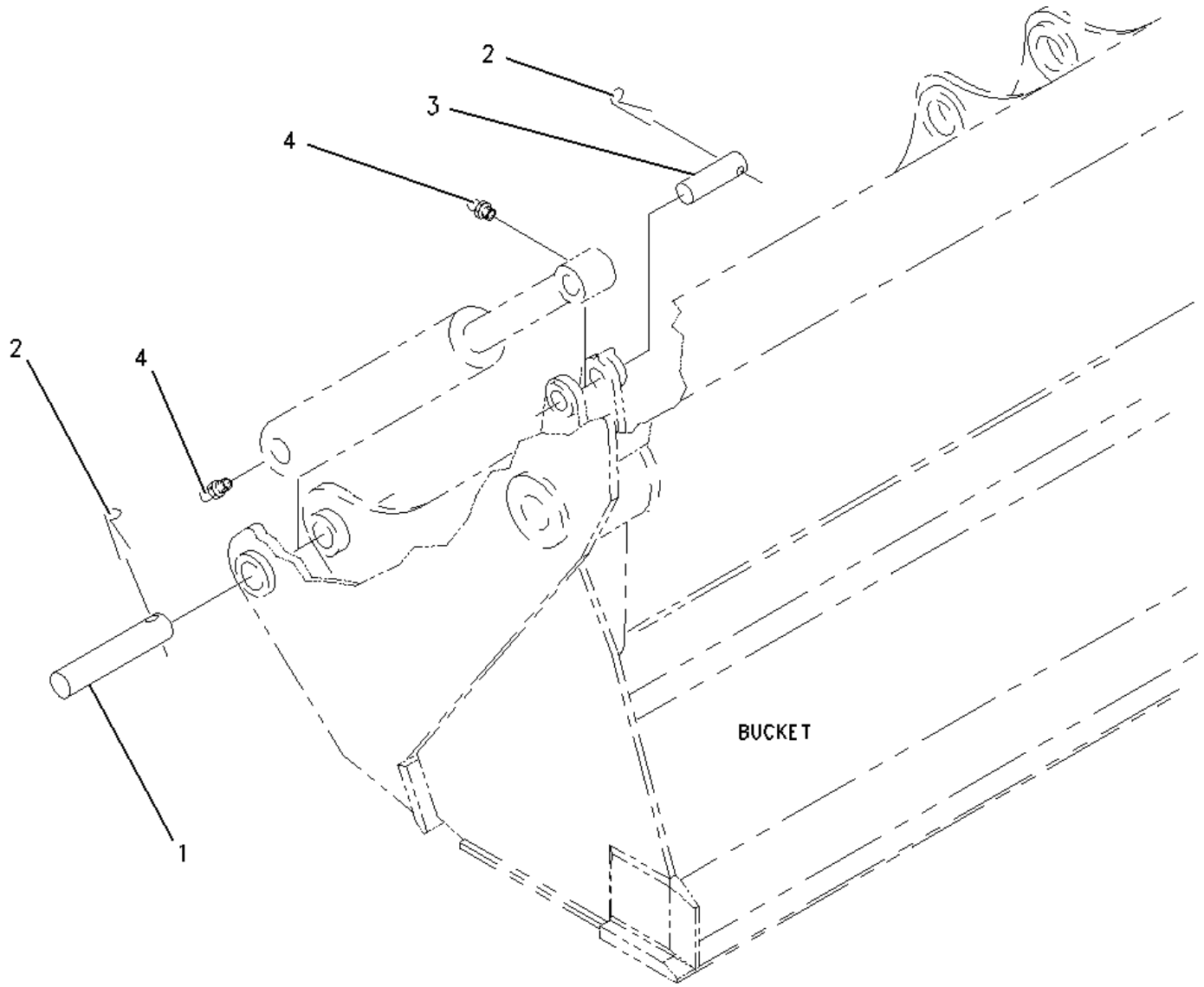

1	**NPR**	**9R-4677**	**2**	**PIN**
2	**NPR**	**3B-5317**	**4**	**PIN-COTTER**
3	**NPR**	**9R-4678**	**2**	**PIN**
4	**NPR**	**3B-8489**	**4**	**FITTING-GREASE**

136-8034 LOCK GP-HYDRAULIC FOOT CONTROL

S/N 4ZN16044-50156---3 LEVER FOOT SWING

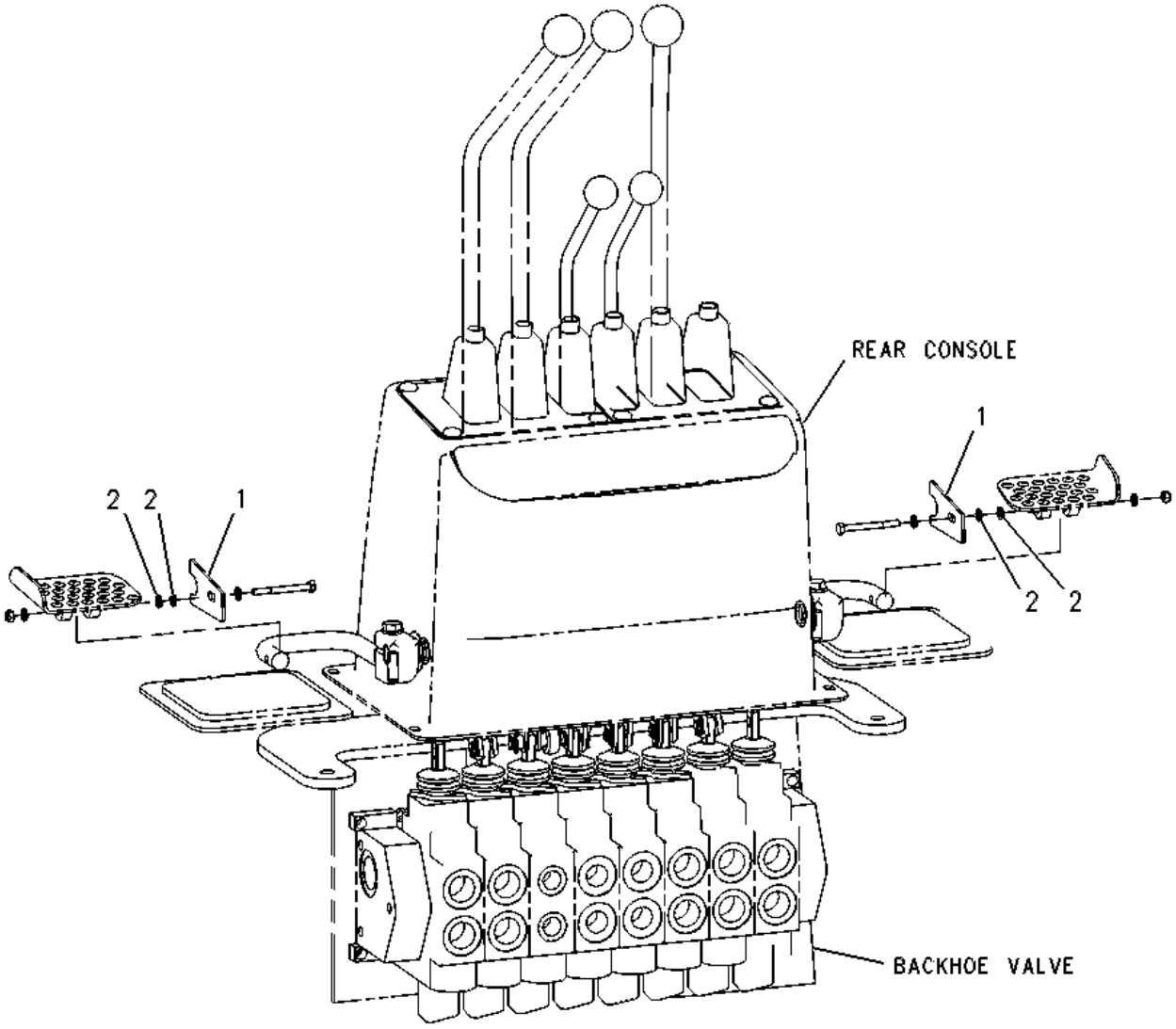

1 NPR 136-1002 2 PLATE

2 NPR 9X-8256 4 WASHER (6.6X12X2-MM THK)

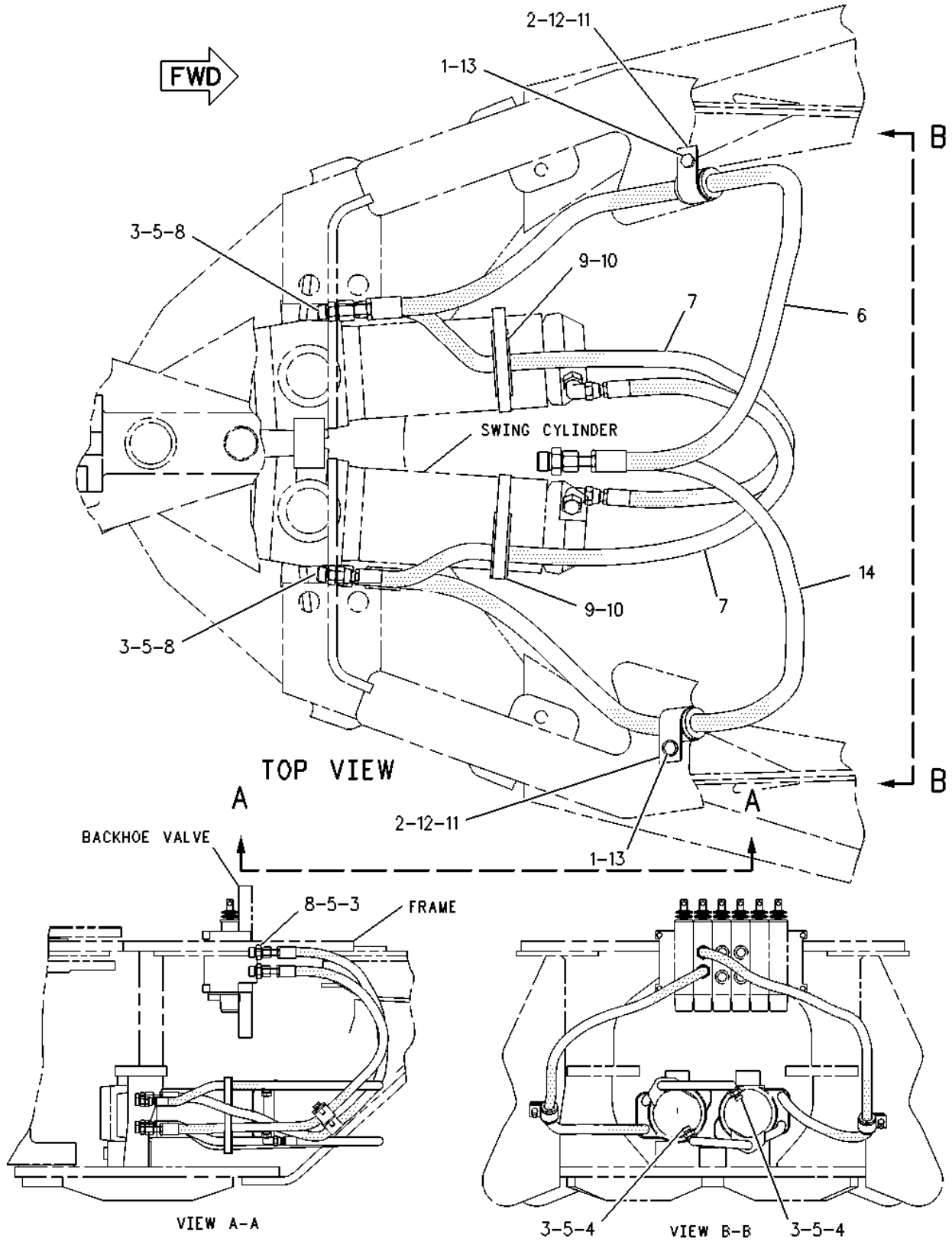

1 NPR 8T-4121 2 WASHER-HARD (11X21X2.5-MM THK)

2 NPR 6V-1249 2 GROMMET

3 NPR 6V-8398 8 SEAL-O-RING

4 NPR 6V-8625 2 ELBOW

5	NPR	3K-0360	8	SEAL-O-RING
6	NPR I	113-7871	1	HOSE AS
7	NPR I	9R-9005	2	HOSE AS
8	NPR	6V-8639	6	CONNECTOR
9	NPR	9R-2053	2	BLOCK
10	NPR	5P-0599	2	CLAMP-BAND
11	NPR	5P-7464	2	CLIP (SLOT)
12	NPR	5P-7465	2	CLIP (TAB)
13	NPR M	8T-4136	2	BOLT (M10X1.5X25-MM)
14	NPR I	113-7872	1	HOSE AS

Key:

I - REFER TO HYDRAULIC INFORMATION SYSTEM
M - METRIC PART

PART OF 154-5309, 154-5312 BACKHOE AR-EXTENDABLE STICK, 154-5300, 154-5303, 154-5306 BACKHOE AR-STANDARD STICK

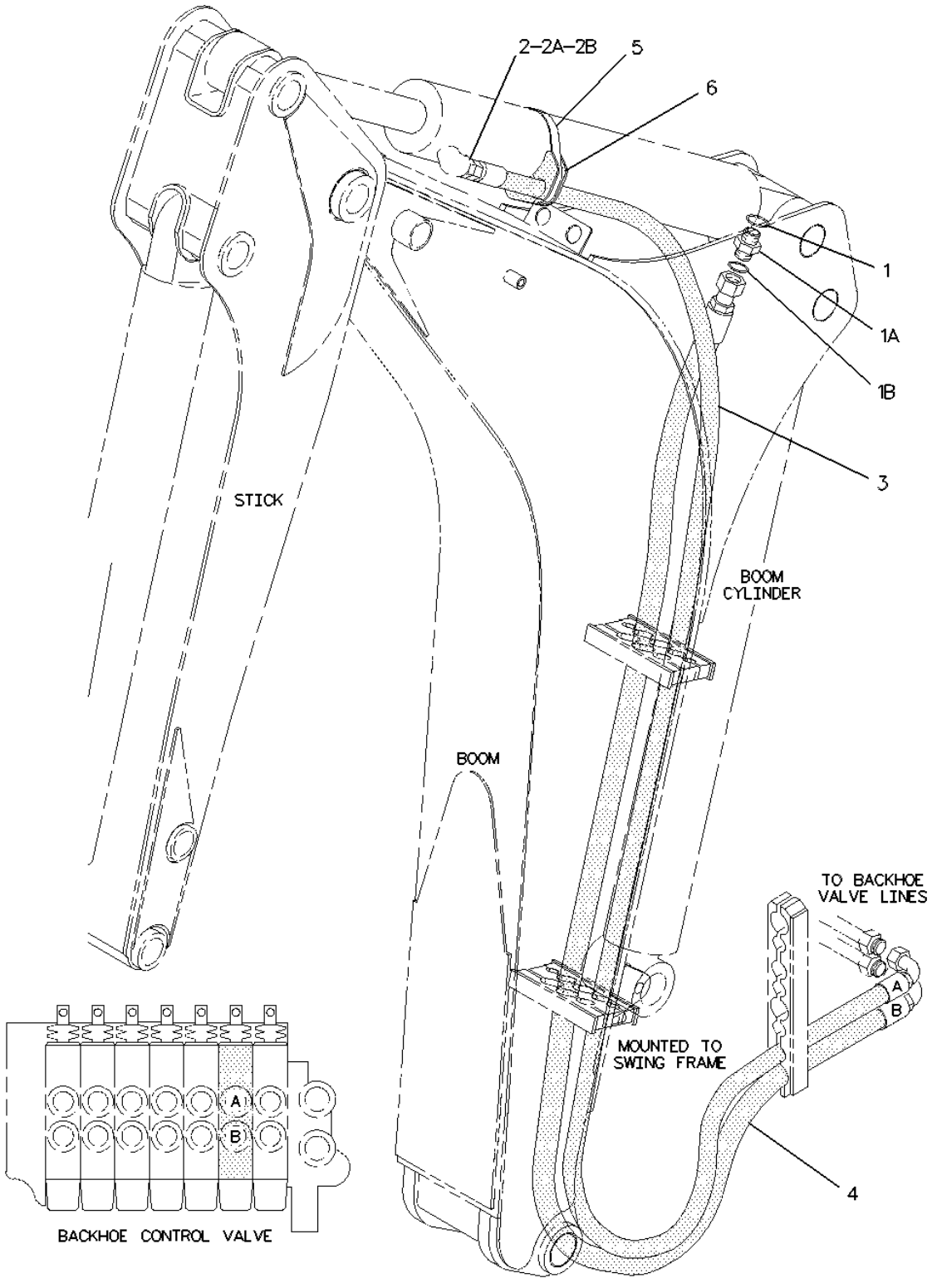

1 NPR 3D-2824 1 SEAL-O-RING

1A NPR 6V-8713 1 CONNECTOR

1B NPR 7J-9108 1 SEAL-O-RING

2 NPR 3D-2824 1 SEAL-O-RING

2A	NPR	6V-8633	1	CONNECTOR
2B	NPR	6V-8398	1	SEAL-O-RING
3	NPR I	9R-9211	1	HOSE AS
4	NPR I	9R-9210	1	HOSE AS
5	NPR	5P-0599	1	CLAMP-BAND
6	NPR	173-3995	1	BLOCK

Key:

I - REFER TO HYDRAULIC INFORMATION SYSTEM

PART OF 154-5309, 154-5311 BACKHOE AR-EXTENDABLE STICK--Type 2

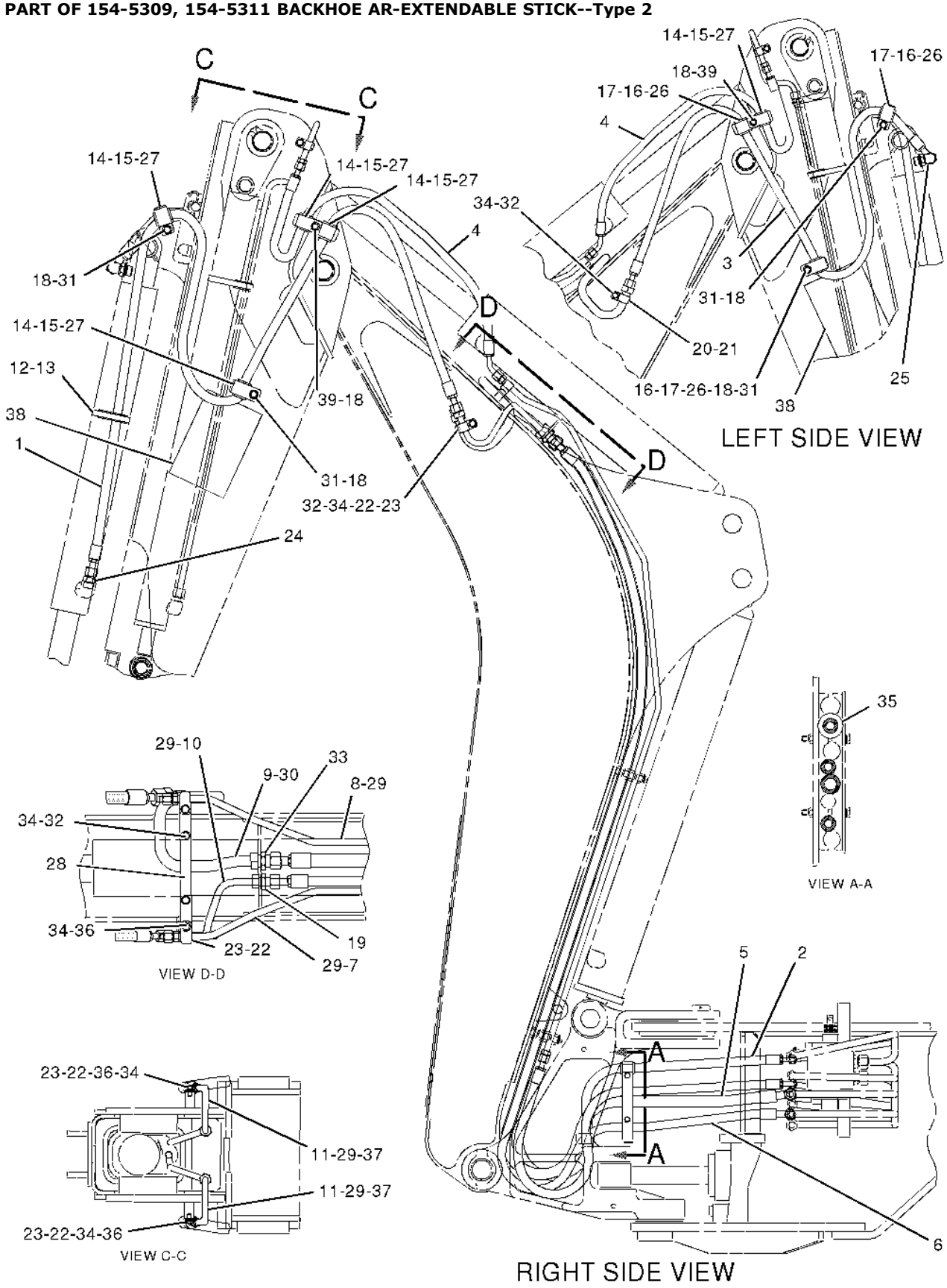

1 NPR CI 168-8644 1 HOSE AS

2 NPR I 9R-9926 2 HOSE AS

3 NPR CI 168-8497 1 HOSE AS

4	NPR I	167-3896	2	HOSE AS
5	NPR I	9R-9218	1	HOSE AS
6	NPR I	9R-9221	1	HOSE AS
7	NPR	9R-8968	1	TUBE AS
8	NPR	106-0844	1	TUBE AS
9	NPR	166-9296	1	TUBE AS
10	NPR	167-3783	1	TUBE AS
11	NPR	162-2356	2	TUBE AS
12	NPR	9R-5948	1	BLOCK
13	NPR	5P-0599	1	CLAMP-BAND
14	NPR	5P-7464	5	CLIP (SLOT)
15	NPR	5P-7465	5	CLIP (TAB)
16	NPR	5P-7466	3	CLIP (SLOT)
17	NPR	5P-7467	3	CLIP (TAB)
18	NPR	8T-4223	6	WASHER-HARD (13.5X25.5X3-MM THK)
19	NPR	6V-9169	1	NUT-BULKHEAD (13/16-16-THD)
20	NPR	8T-1889	1	CLIP (SLOT)
21	NPR	8T-1890	1	CLIP (TAB)
22	NPR	9R-1004	5	CLIP (TAB)
23	NPR	9R-1005	5	CLIP (SLOT)
24	NPR	148-8328	1	CONNECTOR AS
	NPR	3D-2824	1	SEAL-O-RING
	NPR	6V-8398	1	SEAL-O-RING
	NPR	6V-8633	1	CONNECTOR
25	NPR	148-8347	1	ELBOW AS

	NPR	3D-2824	1	SEAL-O-RING
	NPR	6V-9007	1	ELBOW
	NPR	6V-9746	1	SEAL-O-RING
26	NPR	5P-8112	3	GROMMET
27	NPR	6V-1249	5	GROMMET
28	NPR	9R-9253	1	PLATE
29	NPR	6V-8398	8	SEAL-O-RING
30	NPR	6V-9746	2	SEAL-O-RING
31	NPR M	8T-4139	4	BOLT (M12X1.75X30-MM)
32	NPR M	8T-4195	4	BOLT (M10X1.5X30-MM)
33	NPR	2P-1293	1	LOCKNUT (1-3/16-12-THD)
34	NPR	8T-4121	8	WASHER-HARD (11X21X2.5-MM THK)
35	NPR	122-0450	1	GROMMET
36	NPR M	8T-4136	4	BOLT (M10X1.5X25-MM)
37	NPR	7J-9108	2	SEAL-O-RING
38	NPR	239-9427	2	FILM-NOTICE (EXTENDABLE STICK)
39	NPR M	8T-4184	2	BOLT (M12X1.75X45-MM)

Key:

C - CHANGE FROM PREVIOUS TYPE
I - REFER TO HYDRAULIC INFORMATION SYSTEM
M - METRIC PART

PART OF 154-5309, 154-5311 BACKHOE AR-EXTENDABLE STICK--Type 1

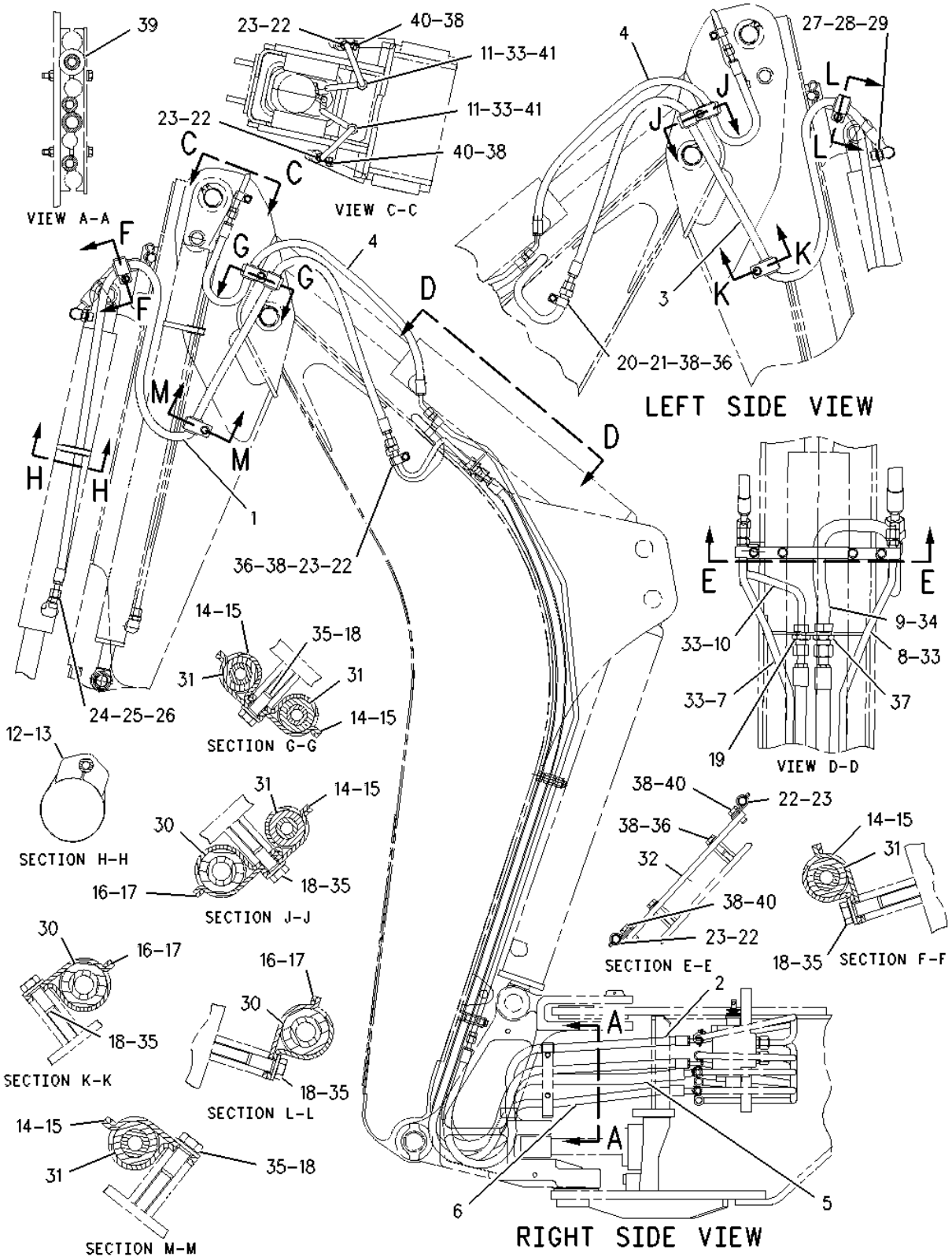

1 NPR I 168-8633 1 HOSE AS

2 NPR I 9R-9926 2 HOSE AS

3 NPR I 168-8622 1 HOSE AS

4 NPR I 167-3896 2 HOSE AS

5	NPR I	9R-9218	1	HOSE AS
6	NPR I	9R-9221	1	HOSE AS
7	NPR	9R-8968	1	TUBE AS
8	NPR	106-0844	1	TUBE AS
9	NPR	166-9296	1	TUBE AS
10	NPR	167-3783	1	TUBE AS
11	NPR	162-2356	2	TUBE AS
12	NPR	9R-5948	1	BLOCK
13	NPR	5P-0599	1	CLAMP-BAND
14	NPR	5P-7464	5	CLIP (SLOT)
15	NPR	5P-7465	5	CLIP (TAB)
16	NPR	5P-7466	3	CLIP (SLOT)
17	NPR	5P-7467	3	CLIP (TAB)
18	NPR	8T-4223	6	WASHER-HARD (13.5X25.5X3-MM THK)
19	NPR	6V-9169	1	NUT-BULKHEAD (13/16-16-THD)
20	NPR	8T-1889	1	CLIP (SLOT)
21	NPR	8T-1890	1	CLIP (TAB)
22	NPR	9R-1004	5	CLIP (TAB)
23	NPR	9R-1005	5	CLIP (SLOT)
24	NPR	3D-2824	1	SEAL-O-RING
25	NPR	6V-8398	1	SEAL-O-RING
26	NPR	6V-8633	1	CONNECTOR
27	NPR	3D-2824	1	SEAL-O-RING
28	NPR	6V-9007	1	ELBOW
29	NPR	6V-9746	1	SEAL-O-RING

30	NPR	5P-8112	3	GROMMET
31	NPR	6V-1249	5	GROMMET
32	NPR	9R-9253	1	PLATE
33	NPR	6V-8398	8	SEAL-O-RING
34	NPR	6V-9746	2	SEAL-O-RING
35	NPR M	8T-4139	6	BOLT (M12X1.75X30-MM)
36	NPR M	8T-4195	4	BOLT (M10X1.5X30-MM)
37	NPR	2P-1293	1	LOCKNUT (1-3/16-12-THD)
38	NPR	8T-4121	8	WASHER-HARD (11X21X2.5-MM THK)
39	NPR	122-0450	1	GROMMET
40	NPR M	8T-4136	4	BOLT (M10X1.5X25-MM)
41	NPR	7J-9108	2	SEAL-O-RING

Key: I - REFER TO HYDRAULIC INFORMATION SYSTEM M - METRIC PART

162-2351 LINES GP-EXTENDABLE STICK ---------S/N 4ZN16044-50156
PART OF 155-6586 CYLINDER GP-EXTENDABLE STICK

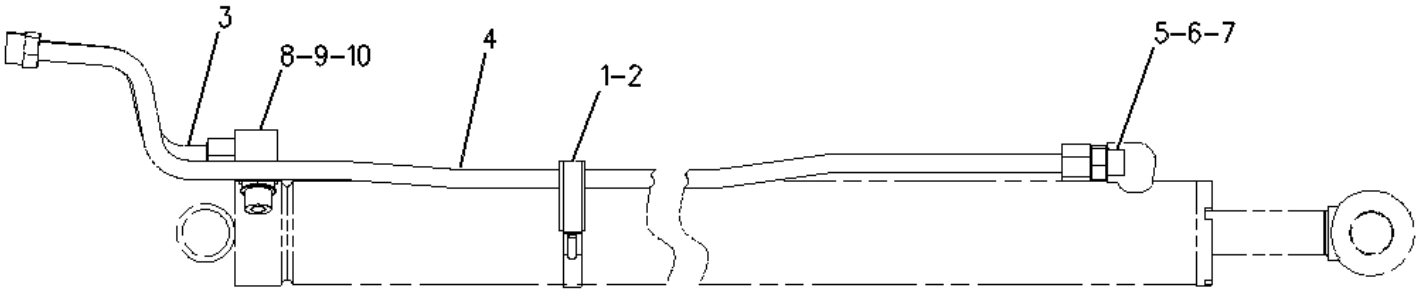

1	NPR	5P-0599	1	CLAMP-BAND
2	NPR	9R-2004	1	BLOCK
3	NPR	162-2353	1	TUBE AS
4	NPR	162-2354	1	TUBE AS
5	NPR	2M-9780	1	SEAL-O-RING
6	NPR	6V-8642	1	CONNECTOR
7	NPR	7J-9108	1	SEAL-O-RING
8	NPR	2M-9780	1	SEAL-O-RING
9	NPR	6V-8626	1	ELBOW
10	NPR	7J-9108	1	SEAL-O-RING

8Y-7474 LINES GP-BACKHOE-----S/N 4ZN16044-50156----PART OF 154-5437 HYDRAULIC AR

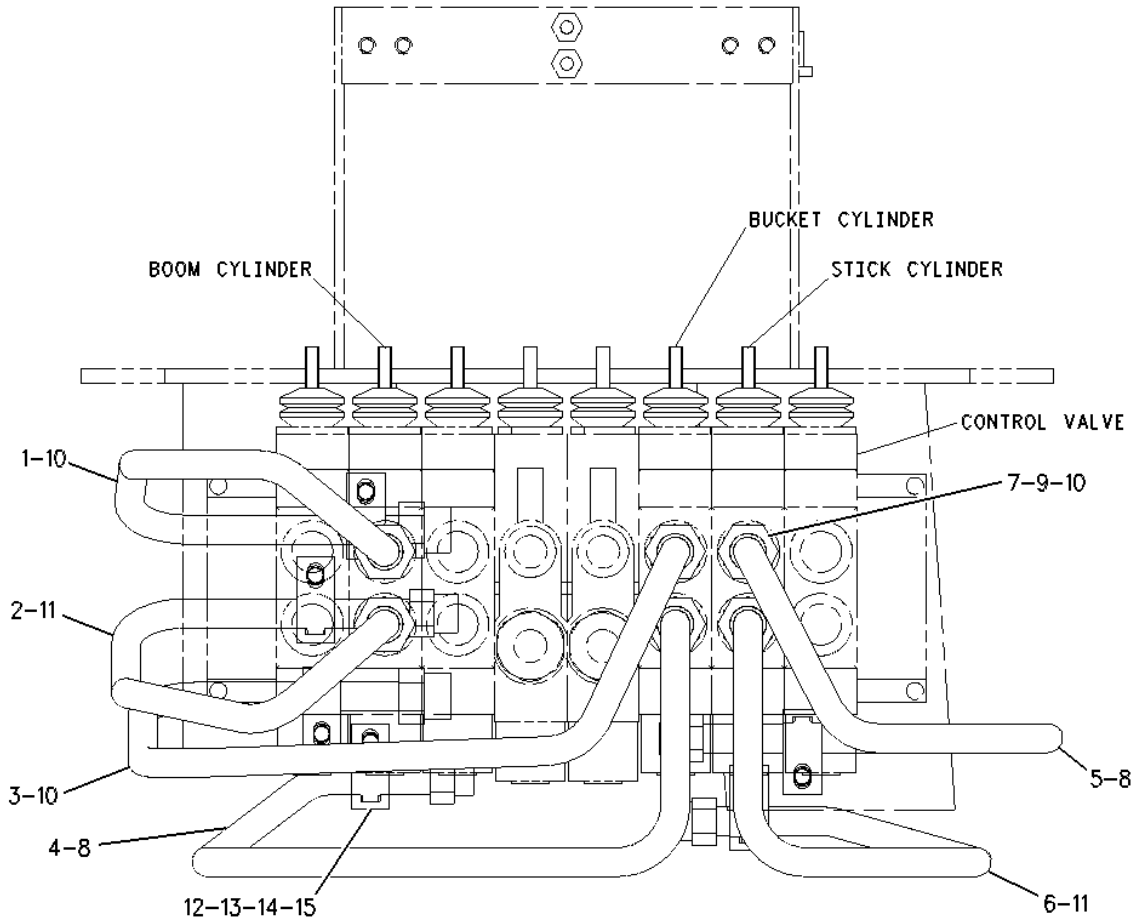

1	NPR	141-7533	1	TUBE AS
2	NPR	113-7874	1	TUBE AS
3	NPR	113-7875	1	TUBE AS
4	NPR	113-7876	1	TUBE AS
5	NPR	116-2299	1	TUBE AS
6	NPR	116-2300	1	TUBE AS
7	NPR	3D-2824	6	SEAL-O-RING
8	NPR	6V-8398	2	SEAL-O-RING
9	NPR	6V-8637	6	CONNECTOR
10	NPR	6V-9746	8	SEAL-O-RING
11	NPR	7J-9108	2	SEAL-O-RING
12	NPR	8T-1887	6	CLIP (SLOT)
13	NPR	8T-1888	6	CLIP (TAB)
14	NPR	8T-4121	6	WASHER-HARD (11X21X2.5-MM THK)
15	NPR M	8T-4137	6	BOLT (M10X1.5X20-MM)

Key: M - METRIC PART

106-6249 LINES GP-STABILIZER ---S/N 4ZN16044-50156
PART OF 154-5447, 154-5449 DRIVE AR-BACKHOE LOADER---Type 1

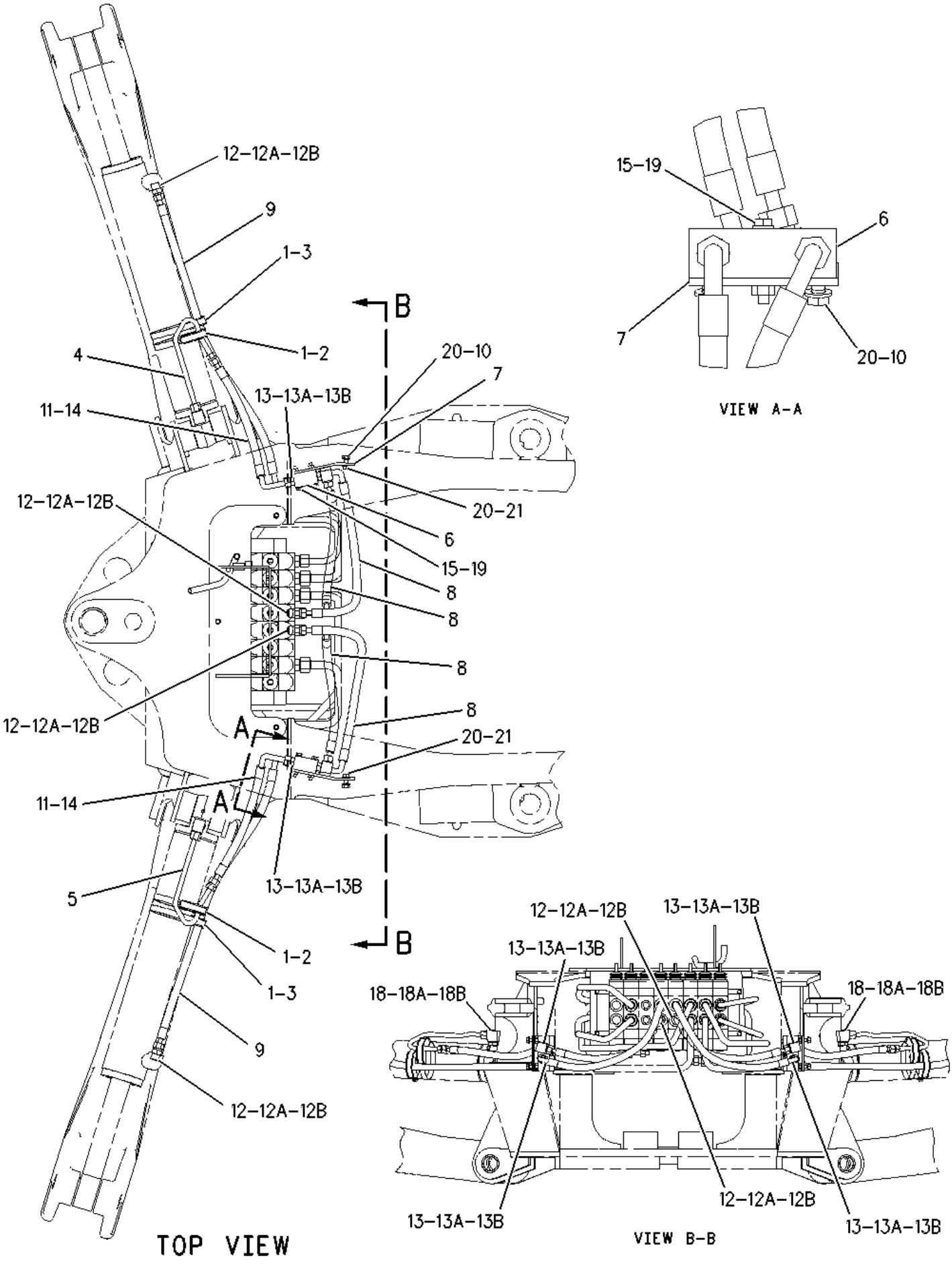

1	NPR	5P-0599	4	CLAMP-BAND
2	NPR	9R-2052	2	BLOCK
3	NPR	9R-2053	2	BLOCK
4	NPR	134-7323	1	TUBE AS
5	NPR	134-7324	1	TUBE AS
6	NPR Y	135-0565	2	VALVE GP-CHECK
7	NPR	135-7209	2	BRACKET AS
8	NPR CI	135-8273	4	HOSE AS
9	NPR I	135-8274	2	HOSE AS
10	NPR CM	8T-4196	4	BOLT (M10X1.5X35-MM)
11	NPR I	135-8276	2	HOSE AS
12	NPR	2M-9780	6	SEAL-O-RING
12A	NPR	6V-8398	6	SEAL-O-RING
12B	NPR	6V-8638	6	CONNECTOR
13	NPR	3K-0360	8	SEAL-O-RING
13A	NPR	6V-8398	8	SEAL-O-RING
13B	NPR	6V-8639	8	CONNECTOR
14	NPR	6V-8398	2	SEAL-O-RING
15	NPR	8T-4224	4	WASHER-HARD (8.8X16X2-MM THK)
18	NPR	6V-8721	2	ELBOW
18A	NPR	2M-9780	2	SEAL-O-RING
18B	NPR	6V-8398	2	SEAL-O-RING
19	NPR M	8T-6869	4	BOLT (M8X1.25X60-MM)
20	NPR	8T-4121	8	WASHER-HARD (11X21X2.5-MM THK)
21	NPR M	8T-4133	4	NUT (M10X1.5-THD)

Key: C - CHANGE FROM PREVIOUS TYPE I - REFER TO HYDRAULIC INFORMATION SYSTEM
M - METRIC PART Y - SEPARATE ILLUSTRATIO

106-6249 LINES GP-STABILIZER -S/N 4ZN16044-50156
PART OF 154-5447, 154-5449 DRIVE AR-BACKHOE LOADER--Type 2

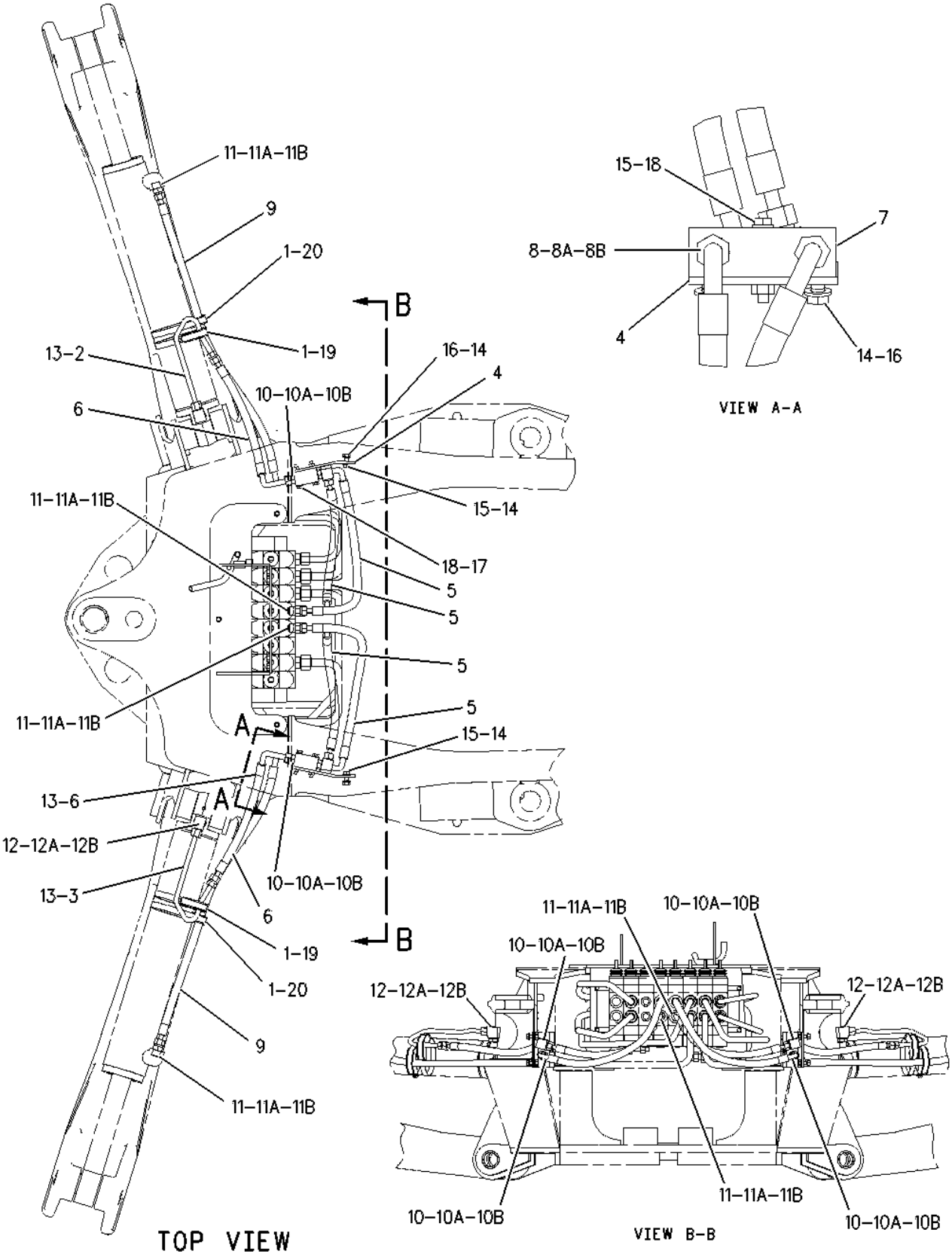

1 NPR 5P-0599 4 CLAMP-BAND

2 NPR 134-7323 1 TUBE AS

3 NPR 134-7324 1 TUBE AS

4	NPR	135-7209	2	BRACKET AS
5	NPR I	135-8273	4	HOSE AS
6	NPR I	135-8276	2	HOSE AS
7	NPR YC	159-7569	2	VALVE GP-CHECK
8	NPR C	3J-1907	2	SEAL-O-RING
8A	NPR C	6V-8397	2	SEAL-O-RING
8B	NPR C	7E-9898	2	CONNECTOR
9	NPR CI	173-2492	2	HOSE AS
10	NPR	3K-0360	6	SEAL-O-RING
10A	NPR	6V-8398	6	SEAL-O-RING
10B	NPR	6V-8639	6	CONNECTOR
11	NPR	2M-9780	6	SEAL-O-RING
11A	NPR	6V-8398	6	SEAL-O-RING
11B	NPR	6V-8638	6	CONNECTOR
12	NPR	6V-8721	2	ELBOW
12A	NPR	2M-9780	2	SEAL-O-RING
12B	NPR	6V-8398	2	SEAL-O-RING
13	NPR	6V-8398	2	SEAL-O-RING
14	NPR	8T-4121	8	WASHER-HARD (11X21X2.5-MM THK)
15	NPR M	8T-4133	4	NUT (M10X1.5-THD)
16	NPR M	8T-4196	4	BOLT (M10X1.5X35-MM)
17	NPR	8T-4224	4	WASHER-HARD (8.8X16X2-MM THK)
18	NPR M	8T-6869	4	BOLT (M8X1.25X60-MM)
19	NPR	9R-2052	2	BLOCK
20	NPR	9R-2053	2	BLOCK

Key: C - CHANGE FROM PREVIOUS TYPE I - REFER TO HYDRAULIC INFORMATION SYSTEM
M - METRIC PART Y - Separate Illustration

139-1923 LINES GP-STABILIZER --S/N 4ZN16044-50156--FIELD INSTALLATION

NPR Y	159-7569	2	VALVE GP-CHECK
NPR M	8T-4195	4	BOLT (M10X1.5X30-MM)
NPR M	8T-4194	2	BOLT (M12X1.75X50-MM)
NPR M	8T-6912	4	BOLT (M8X1.25X50-MM)
NPR	147-0678	2	BRACKET AS
NPR	147-0944	1	BRACKET AS (LH)
NPR	147-0945	1	BRACKET AS (RH)
NPR	5P-0599	4	CLAMP-BAND
NPR	5P-7463	4	CLIP (TAB)
NPR	5P-7462	4	CLIP (SLOT)
NPR	148-8340	6	CONNECTOR AS (EACH INCLUDES)
NPR	3K-0360	6	SEAL-O-RING
NPR	6V-8398	6	SEAL-O-RING
NPR	6V-8639	8	CONNECTOR
NPR	148-8345	6	CONNECTOR AS (EACH INCLUDES)
NPR	2M-9780	6	SEAL-O-RING
NPR	6V-8398	6	SEAL-O-RING
NPR	6V-8638	6	CONNECTOR
NPR	150-4043	2	CONNECTOR AS (EACH INCLUDES)
NPR	3J-1907	2	SEAL-O-RING
NPR	6V-8398	2	SEAL-O-RING
NPR	6V-9873	2	CONNECTOR
NPR	148-8372	2	ELBOW AS (EACH INCLUDES)
NPR	2M-9780	2	SEAL-O-RING
NPR	6V-8398	2	SEAL-O-RING
NPR	6V-8721	2	ELBOW
NPR	6V-0683	4	GROMMET
NPR I	147-0677	4	HOSE AS
NPR	147-0676	2	TUBE AS
NPR	147-0643	1	TUBE AS
NPR	147-0652	1	TUBE AS
NPR	8T-4121	4	WASHER-HARD (11X21X2.5-MM THK)
NPR	8T-4224	4	WASHER-HARD (8.8X16X2-MM THK)
NPR	8T-4223	4	WASHER-HARD (13.5X25.5X3-MM THK)
NPR M	8T-4244	2	NUT (M12X1.75-THD)

Key: I - REFER TO HYDRAULIC INFORMATION SYSTEM M - METRIC PART Y - SEPARATE ILLUSTRATION

163-5692 LINES GP-RIDE CONTROL --S/N 4ZN16044-50156
PART OF 154-5418, 154-5419, 175-6773 CONTROL AR-RIDE

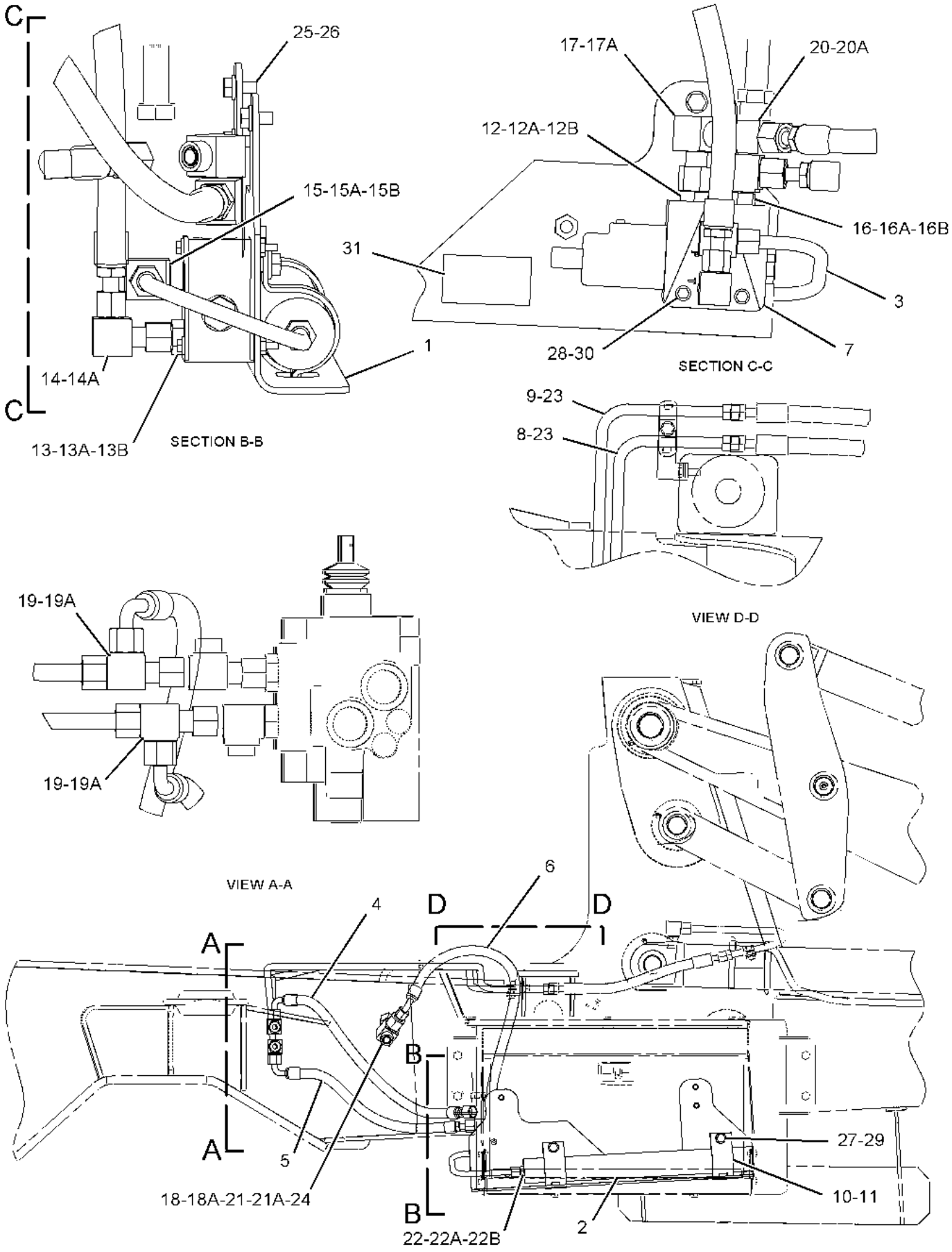

1 161-3935 1 BRACKET AS

	NPR M	6V-9632	3	NUT-WELD (M6X1-THD)
	NPR M	8T-3597	2	NUT-WELD (M12X1.75-THD)
2	NPR Y	162-3960	1	ACCUMULATOR GP-RIDE CONTROL (CHARGED)
3	NPR	162-5377	1	TUBE AS
4	NPR I	162-5378	1	HOSE AS
5	NPR I	162-5379	1	HOSE AS
6	NPR I	162-5380	1	HOSE AS
7	NPR Y	162-8174	1	VALVE GP-SOLENOID
8	NPR	163-5676	1	TUBE AS
9	NPR	163-5677	1	TUBE AS
10	NPR	109-1633	2	CLIP (SLOT)
11	NPR	109-1634	2	CLIP (TAB)
12	NPR	2M-9780	1	SEAL-O-RING
12A	NPR	6V-8642	1	CONNECTOR
12B	NPR	7J-9108	1	SEAL-O-RING
13	NPR	2M-9780	1	SEAL-O-RING
13A	NPR	6V-8398	1	SEAL-O-RING
13B	NPR	6V-8638	1	CONNECTOR
14	NPR	6V-8398	1	SEAL-O-RING
14A	NPR	6V-9851	1	ELBOW
15	NPR	2M-9780	1	SEAL-O-RING
15A	NPR	6V-8398	1	SEAL-O-RING
15B	NPR	6V-8721	1	ELBOW
16	NPR	2M-9780	1	SEAL-O-RING
16A	NPR	6V-8626	1	ELBOW

16B	NPR	7J-9108	1	SEAL-O-RING
17	NPR	6V-9852	1	ELBOW (SWIVEL)
17A	NPR	7J-9108	1	SEAL-O-RING
18	NPR	6V-8398	1	SEAL-O-RING
18A	NPR	6V-8942	1	REDUCER-O-RING
19	NPR	6V-9838	2	TEE-SWIVEL
19A	NPR	7J-9108	4	SEAL-O-RING
20	NPR	7J-9108	1	SEAL-O-RING
20A	NPR	7X-0872	1	TEE-SWIVEL
21	NPR	6V-9746	2	SEAL-O-RING
21A	NPR	6V-9839	1	TEE-SWIVEL
22	NPR	3J-1907	1	SEAL-O-RING
22A	NPR	6V-8398	1	SEAL-O-RING
22B	NPR	6V-9873	1	CONNECTOR
23	NPR	6V-8398	2	SEAL-O-RING
24	NPR	9X-6580	1	NUT (1-3/16-12-THD)
25	NPR	8T-4121	3	WASHER-HARD (11X21X2.5-MM THK)
26	NPR M	8T-4137	3	BOLT (M10X1.5X20-MM)
27	NPR M	8T-4139	2	BOLT (M12X1.75X30-MM)
28	NPR	8T-4205	3	WASHER-HARD (7.2X14.5X2-MM THK)
29	NPR	8T-4223	2	WASHER-HARD (13.5X25.5X3-MM THK)
30	NPR M	8T-6974	3	BOLT (M6X1X80-MM)
31	NPR	105-3330	1	FILM-WARNING (ACCUMULATOR PRESSURE)

Key:

I - REFER TO HYDRAULIC INFORMATION SYSTEM
M - METRIC PART
Y - SEPARATE ILLUSTRATION

169-6866 LINES GP-RIDE CONTROL --S/N 4ZN16044-50156-UPDATED RIDE CONTROL VALVE PART OF 163-9209, 175-6777 KIT-RIDE CONTROL--Type 1

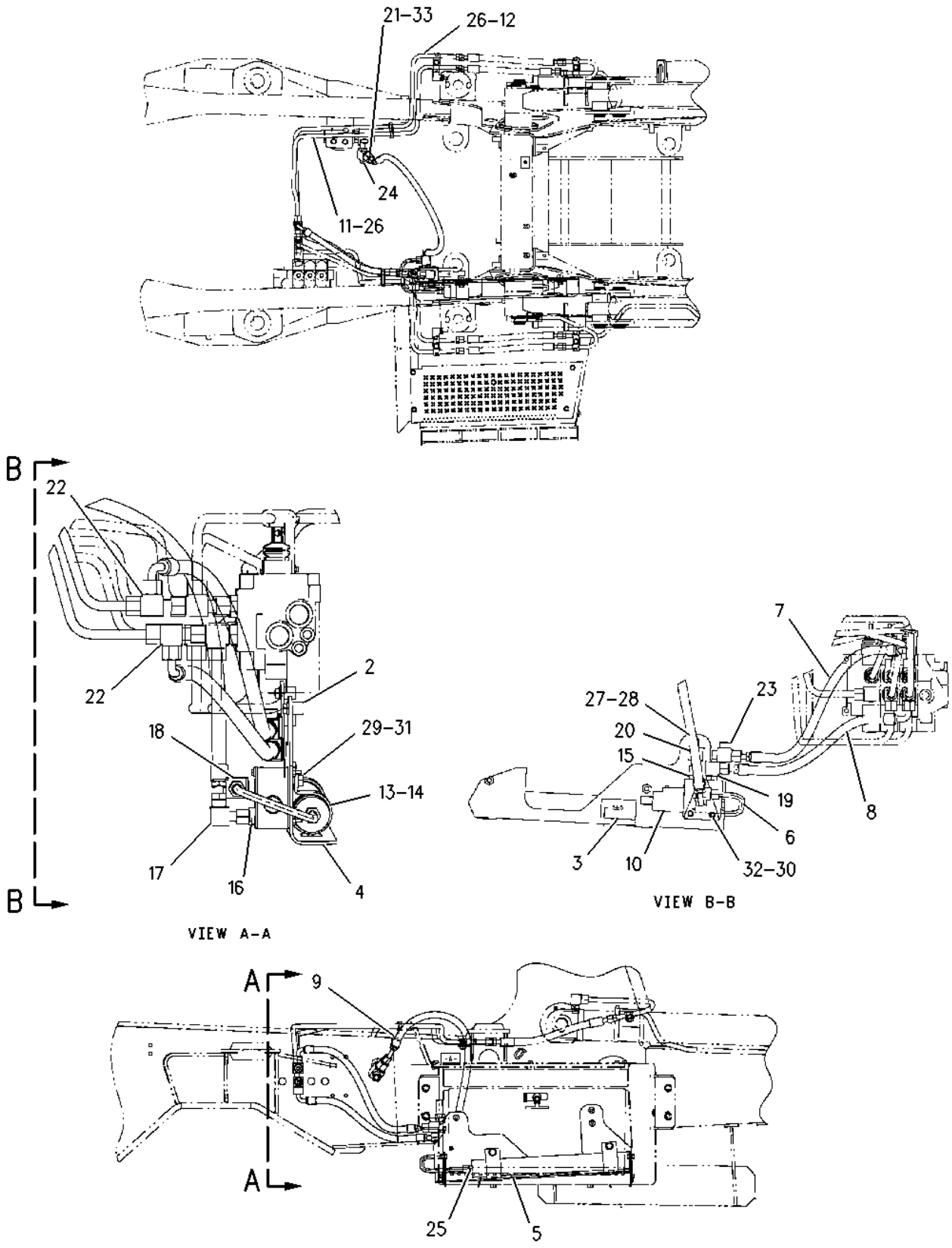

2 NPR M 9R-2672 3 BOSS-THREADED (M10X1.5-6HX20-MM)

3 NPR 105-3330 1 FILM-WARNING (ACCUMULATOR PRESSURE)

4 161-3935 1 BRACKET AS

5 NPR Y 162-3960 1 ACCUMULATOR GP-RIDE CONTROL (CHARGED)

6 NPR 162-5377 1 TUBE AS

7 NPR I 162-5378 1 HOSE AS

8 NPR I 162-5379 1 HOSE AS

9 NPR I 162-5380 1 HOSE AS

10 NPR Y 162-8174 1 VALVE GP-SOLENOID

11 NPR 163-5676 1 TUBE AS

12 NPR 163-5677 1 TUBE AS

13 NPR 109-1633 2 CLIP (SLOT)

14 NPR 109-1634 2 CLIP (TAB)

15 NPR 148-8315 1 CONNECTOR AS

NPR 2M-9780 1 SEAL-O-RING

NPR 6V-8642 1 CONNECTOR

NPR 7J-9108 1 SEAL-O-RING

16 NPR 148-8345 1 CONNECTOR AS

NPR 2M-9780 1 SEAL-O-RING

NPR 6V-8398 1 SEAL-O-RING

NPR 6V-8638 1 CONNECTOR

17 NPR 148-8370 1 ELBOW AS

NPR 6V-8398 1 SEAL-O-RING

NPR 6V-9851 1 ELBOW

18 NPR 148-8372 1 ELBOW AS

NPR 2M-9780 1 SEAL-O-RING

NPR 6V-8398 1 SEAL-O-RING

NPR 6V-8721 1 ELBOW

19	NPR	148-8390	1	ELBOW AS
	NPR	2M-9780	1	SEAL-O-RING
	NPR	6V-8626	1	ELBOW
	NPR	7J-9108	1	SEAL-O-RING
20	NPR	148-8393	1	ELBOW AS
	NPR	6V-9852	1	ELBOW (SWIVEL)
	NPR	7J-9108	1	SEAL-O-RING
21	NPR	148-8418	1	REDUCER AS
	NPR	6V-8398	1	SEAL-O-RING
	NPR	6V-8942	1	REDUCER-O-RING
22	NPR	148-8446	2	TEE GP-SWIVEL
	(EACH INCLUDES)			
	NPR	6V-9838	1	TEE-SWIVEL
	NPR	7J-9108	2	SEAL-O-RING
23	NPR	148-8447	1	TEE AS-SWIVEL
	NPR	7J-9108	1	SEAL-O-RING
	NPR	7X-0872	1	TEE-SWIVEL
24	NPR	148-8449	1	TEE AS-SWIVEL
	NPR	6V-9746	2	SEAL-O-RING
	NPR	6V-9839	1	TEE-SWIVEL
25	NPR	150-4043	1	CONNECTOR AS
	NPR	3J-1907	1	SEAL-O-RING
	NPR	6V-8398	1	SEAL-O-RING
	NPR	6V-9873	1	CONNECTOR
26	NPR	6V-8398	2	SEAL-O-RING

27	NPR	8T-4121	3	WASHER-HARD (11X21X2.5-MM THK)
28	NPR M	8T-4137	3	BOLT (M10X1.5X20-MM)
29	NPR M	8T-4139	2	BOLT (M12X1.75X30-MM)
30	NPR	8T-4205	3	WASHER-HARD (7.2X14.5X2-MM THK)
31	NPR	8T-4223	2	WASHER-HARD (13.5X25.5X3-MM THK)
32	NPR M	8T-6974	3	BOLT (M6X1X80-MM)
33	NPR	9X-6580	1	NUT (1-3/16-12-THD)

Key:

I - REFER TO HYDRAULIC INFORMATION SYSTEM
M - METRIC PART
Y - SEPARATE ILLUSTRATION

169-6866 LINES GP-RIDE CONTROL --S/N 4ZN16044-50156
UPDATED RIDE CONTROL VALVE --PART OF 163-9209, 175-6777 KIT-RIDE CONTROL--Type 2

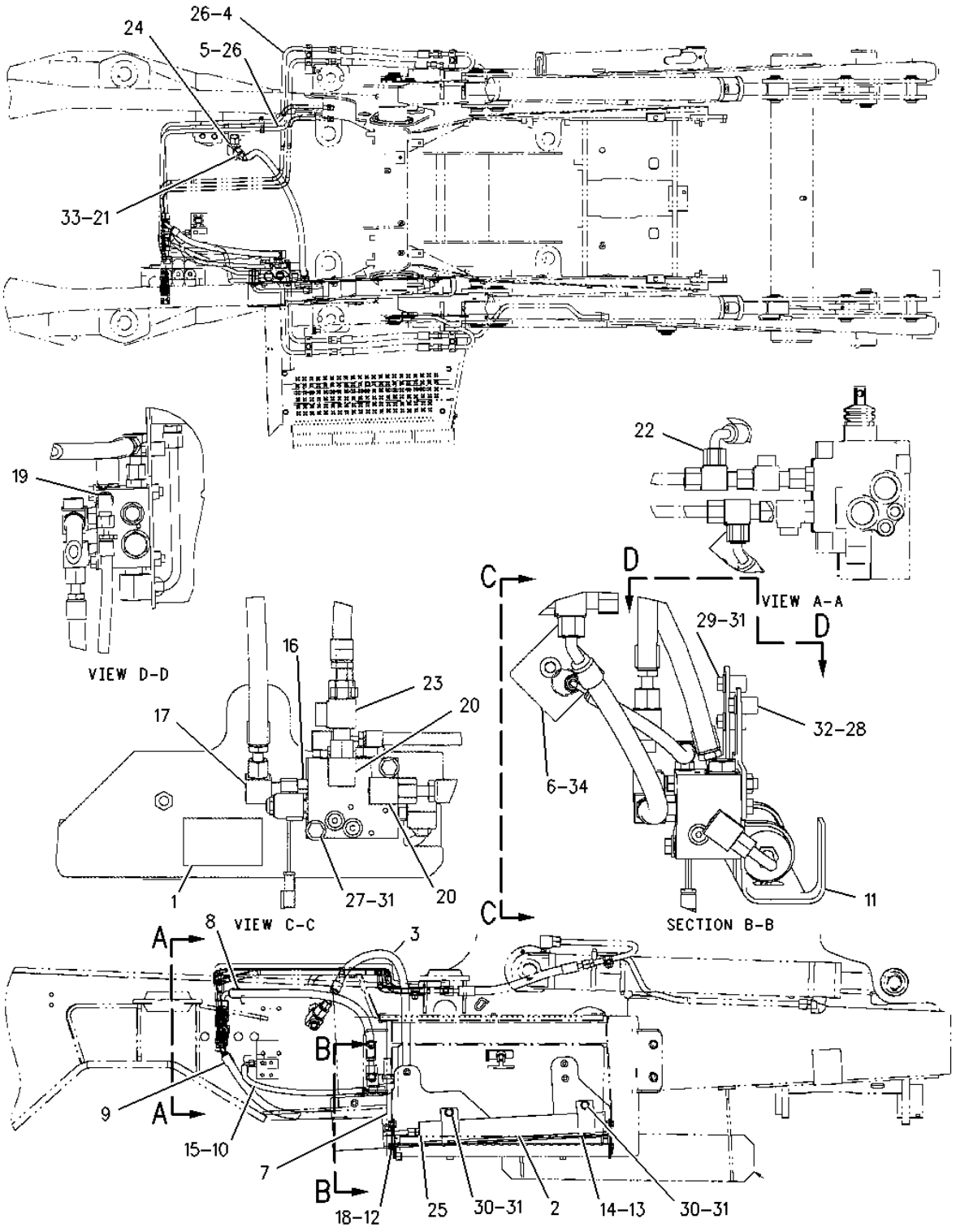

1 NPR 105-3330 1 FILM-WARNING (ACCUMULATOR PRESSURE)

2 NPR Y 162-3960 1 ACCUMULATOR GP-RIDE CONTROL (CHARGED)

3 NPR I 162-5380 1 HOSE AS

4 NPR 163-5676 1 TUBE AS

5 NPR 163-5677 1 TUBE AS

6 NPR C 190-2932 1 FLANGE

7 NPR CJY 190-8315 1 VALVE & MTG GP-SOLENOID (RIDE CONTROL)

8 NPR CI 195-1285 1 HOSE AS

9 NPR CI 195-1286 1 HOSE AS

10 NPR CI 195-1288 1 HOSE AS

11 NPR C 195-1289 1 BRACKET AS

NPR M 8T-3597 4 NUT-WELD (M12X1.75-THD)

12 NPR C 195-1736 1 TUBE AS

13 NPR 109-1633 2 CLIP (SLOT)

14 NPR 109-1634 2 CLIP (TAB)

15 NPR C 148-8316 1 CONNECTOR AS

NPR 4J-5477 1 SEAL-O-RING

NPR 6V-8642 1 CONNECTOR

NPR 3J-7354 1 SEAL-O-RING

16 NPR 148-8345 1 CONNECTOR AS

NPR 2M-9780 1 SEAL-O-RING

NPR 6V-8398 1 SEAL-O-RING

NPR 6V-8638 1 CONNECTOR

17 NPR 148-8370 1 ELBOW AS

NPR 6V-8398 1 SEAL-O-RING

NPR 6V-9851 1 ELBOW

18 NPR 148-8372 1 ELBOW AS

NPR 2M-9780 1 SEAL-O-RING

NPR 6V-8398 1 SEAL-O-RING

	NPR	6V-8721	1	ELBOW	
19	NPR C	148-8378	1	ELBOW AS	
	NPR	3J-1907	1	SEAL-O-RING	
	NPR	6V-8397	1	SEAL-O-RING	
	NPR	6V-8724	1	ELBOW	
20	NPR C	148-8390	2	ELBOW AS	
	(EACH INCLUDES)				
	NPR	2M-9780	1	SEAL-O-RING	
	NPR	6V-8626	1	ELBOW	
	NPR	7J-9108	1	SEAL-O-RING	
21	NPR	148-8418	1	REDUCER AS	
	NPR	6V-8398	1	SEAL-O-RING	
	NPR	6V-8942	1	REDUCER-O-RING	
22	NPR	148-8446	2	TEE GP-SWIVEL	
	(EACH INCLUDES)				
	NPR	6V-9838	1	TEE-SWIVEL	
	NPR	7J-9108	2	SEAL-O-RING	
23	NPR	148-8447	1	TEE AS-SWIVEL	
	NPR	7J-9108	1	SEAL-O-RING	
	NPR	7X-0872	1	TEE-SWIVEL	
24	NPR	148-8449	1	TEE AS-SWIVEL	
	NPR	6V-9746	2	SEAL-O-RING	
	NPR	6V-9839	1	TEE-SWIVEL	
25	NPR	150-4043	1	CONNECTOR AS	
	NPR	3J-1907	1	SEAL-O-RING	

	NPR	6V-8398	1	SEAL-O-RING
	NPR	6V-9873	1	CONNECTOR
26	NPR	6V-8398	2	SEAL-O-RING
27	NPR CM	7X-2549	2	BOLT (M12X1.75X100-MM)
28	NPR	8T-4121	3	WASHER-HARD (11X21X2.5-MM THK)
29	NPR M	8T-4137	3	BOLT (M10X1.5X20-MM)
30	NPR M	8T-4139	2	BOLT (M12X1.75X30-MM)
31	NPR C	8T-4223	4	WASHER-HARD (13.5X25.5X3-MM THK)
32	NPR M	9R-2672	3	BOSS-THREADED (M10X1.5-6HX20-MM)
33	NPR	9X-6580	1	NUT (1-3/16-12-THD)
34	NPR C	114-5536	1	FLANGE

Key:

C - CHANGE FROM PREVIOUS TYPE
I - REFER TO HYDRAULIC INFORMATION SYSTEM
J - UPDATED RIDE CONTROL VALVE
M - METRIC PART
Y - SEPARATE ILLUSTRATION

185-5786 LINES GP-RIDE CONTROL ---S/N 4ZN16044-50156
PART OF 154-5418, 154-5419, 175-6773 CONTROL AR-RIDE

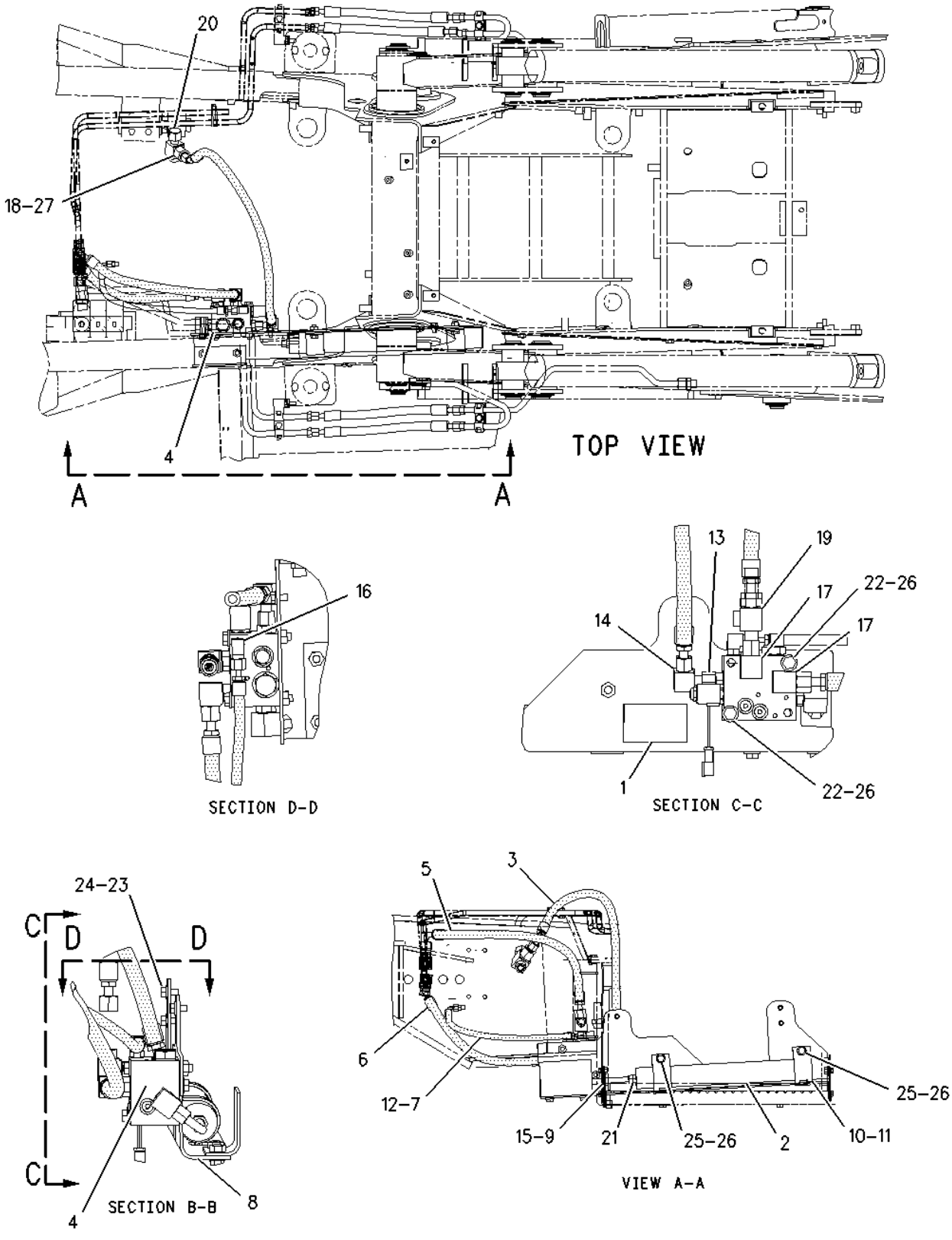

1 NPR 105-3330 1 FILM-WARNING (ACCUMULATOR PRESSURE)

2 NPR JY 162-3960 1 ACCUMULATOR GP-RIDE CONTROL (CHARGED)

3 NPR I 162-5380 1 HOSE AS

4 NPR Y 190-8315 1 VALVE & MTG GP-SOLENOID (RIDE CONTROL)

5 NPR I 195-1285 1 HOSE AS

6 NPR I 195-1286 1 HOSE AS

7 NPR I 195-1288 1 HOSE AS

8 NPR 195-1289 1 BRACKET AS

NPR M 8T-3597 4 NUT-WELD (M12X1.75-THD)

9 NPR 195-1736 1 TUBE AS

10 NPR 109-1633 2 CLIP (SLOT)

11 NPR 109-1634 2 CLIP (TAB)

12 NPR 148-8316 1 CONNECTOR AS

NPR 3J-7354 1 SEAL-O-RING

NPR 4J-5477 1 SEAL-O-RING

NPR 6V-8647 1 CONNECTOR

13 NPR 148-8345 1 CONNECTOR AS

NPR 2M-9780 1 SEAL-O-RING

NPR 6V-8398 1 SEAL-O-RING

NPR 6V-8638 1 CONNECTOR

14 NPR 148-8370 1 ELBOW AS

NPR 6V-8398 1 SEAL-O-RING

NPR 6V-9851 1 ELBOW

15 NPR 148-8372 1 ELBOW AS

NPR 2M-9780 1 SEAL-O-RING

NPR 6V-8398 1 SEAL-O-RING

NPR 6V-8721 1 ELBOW

16 NPR 148-8378 1 ELBOW AS

NPR 3J-1907 1 SEAL-O-RING

NPR 6V-8397 1 SEAL-O-RING

NPR 6V-8724 1 ELBOW

17 NPR 148-8390 2 ELBOW AS

(EACH INCLUDES)

NPR 2M-9780 1 SEAL-O-RING

NPR 6V-8626 1 ELBOW

NPR 7J-9108 1 SEAL-O-RING

18 NPR 148-8418 1 REDUCER AS

NPR 6V-8398 1 SEAL-O-RING

NPR 6V-8942 1 REDUCER-O-RING

19 NPR 148-8447 1 TEE AS-SWIVEL

NPR 7J-9108 1 SEAL-O-RING

NPR 7X-0872 1 TEE-SWIVEL

20 NPR 148-8449 1 TEE AS-SWIVEL

NPR 6V-9746 2 SEAL-O-RING

NPR 6V-9839 1 TEE-SWIVEL

21 NPR 150-4043 1 CONNECTOR AS

NPR 3J-1907 1 SEAL-O-RING

NPR 6V-8398 1 SEAL-O-RING

NPR 6V-9873 1 CONNECTOR

22 NPR M 7X-2549 2 BOLT (M12X1.75X100-MM)

23 NPR 8T-4121 3 WASHER-HARD (11X21X2.5-MM THK)

24 NPR M 8T-4137 3 BOLT (M10X1.5X20-MM)

25 NPR M 8T-4139 2 BOLT (M12X1.75X30-MM)

26 NPR 8T-4223 4 WASHER-HARD (13.5X25.5X3-MM THK)

27 NPR 9X-6580 1 NUT (1-3/16-12-THD)

AVAILABLE REPAIR KIT(S):

NPR J 160-0496 1 KIT-SEAL (ACCUMULATOR)

Key: I - REFER TO HYDRAULIC INFORMATION SYSTEM J - KIT MARKED J AVAILABLE FOR PART MARKED J
M - METRIC PART Y - SEPARATE ILLUSTRATION

121-8338 LINES GP-RETURN --S/N 4ZN23243-50156
PART OF 154-5309 BACKHOE AR-EXTENDABLE STICK, 154-5300, 154-5306 BACKHOE AR-STANDARD STICK

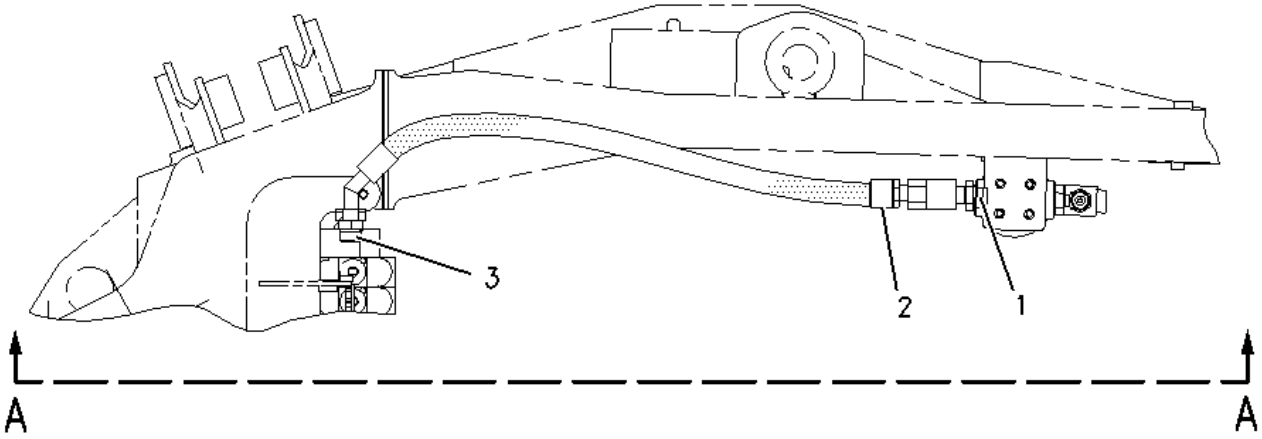

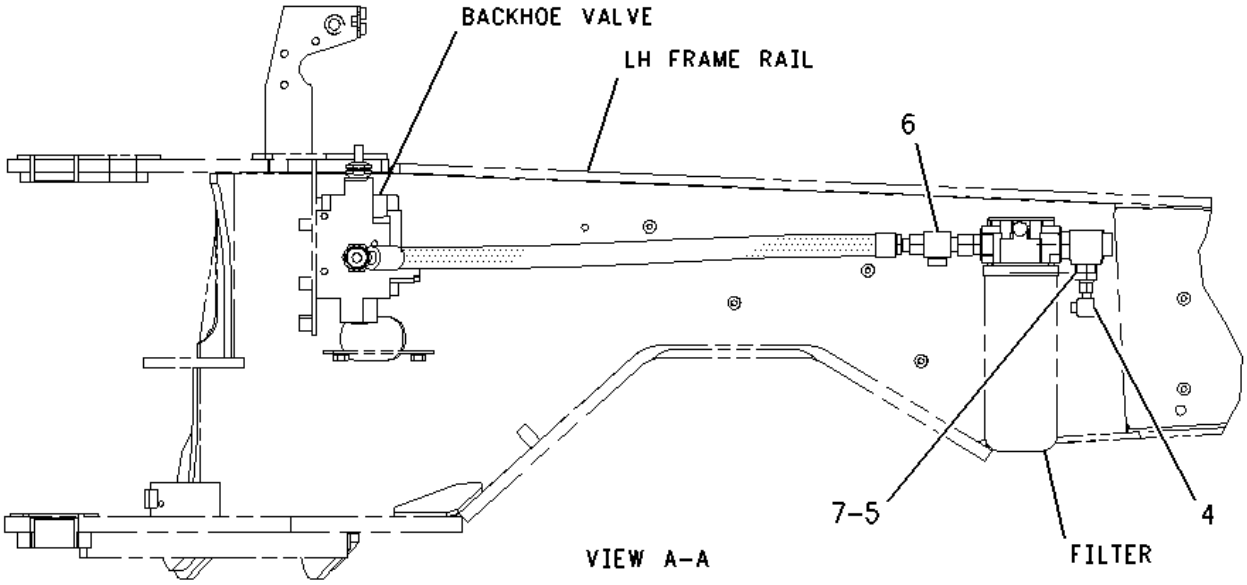

1	NPR	CY	178-7480	1 VALVE GP-CHECK
2	NPR	CI	178-7546	1 HOSE AS
3	NPR		148-8335	1 CONNECTOR AS
	NPR		5K-9090	1 SEAL-O-RING
	NPR		6V-8635	1 CONNECTOR
	NPR		7M-8485	1 SEAL-O-RING
4	NPR		148-8367	1 ELBOW AS
	NPR		6V-8397	1 SEAL-O-RING
	NPR		6V-9850	1 ELBOW
5	NPR		148-8417	1 REDUCER AS
	NPR		6V-8397	1 SEAL-O-RING
	NPR		6V-8941	1 REDUCER
6	NPR		148-8429	1 TEE AS
	NPR		5K-9090	2 SEAL-O-RING
	NPR		6V-9840	1 TEE-SWIVEL
7	NPR		9X-6580	1 NUT (1-3/16-12-THD)

Key: C - CHANGE FROM PREVIOUS TYPE I - REFER TO HYDRAULIC INFORMATION SYSTEM
Y - SEPARATE ILLUSTRATION

121-8339 LINES GP-RETURN --S/N 4ZN22688-50156
PART OF 154-5312 BACKHOE AR-EXTENDABLE STICK, 154-5303 BACKHOE AR-STANDARD STICK

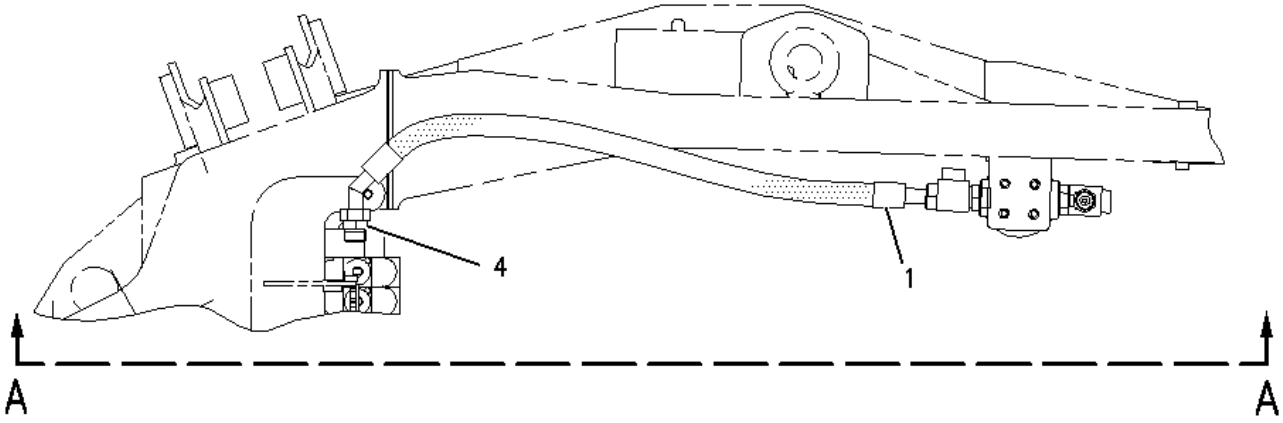

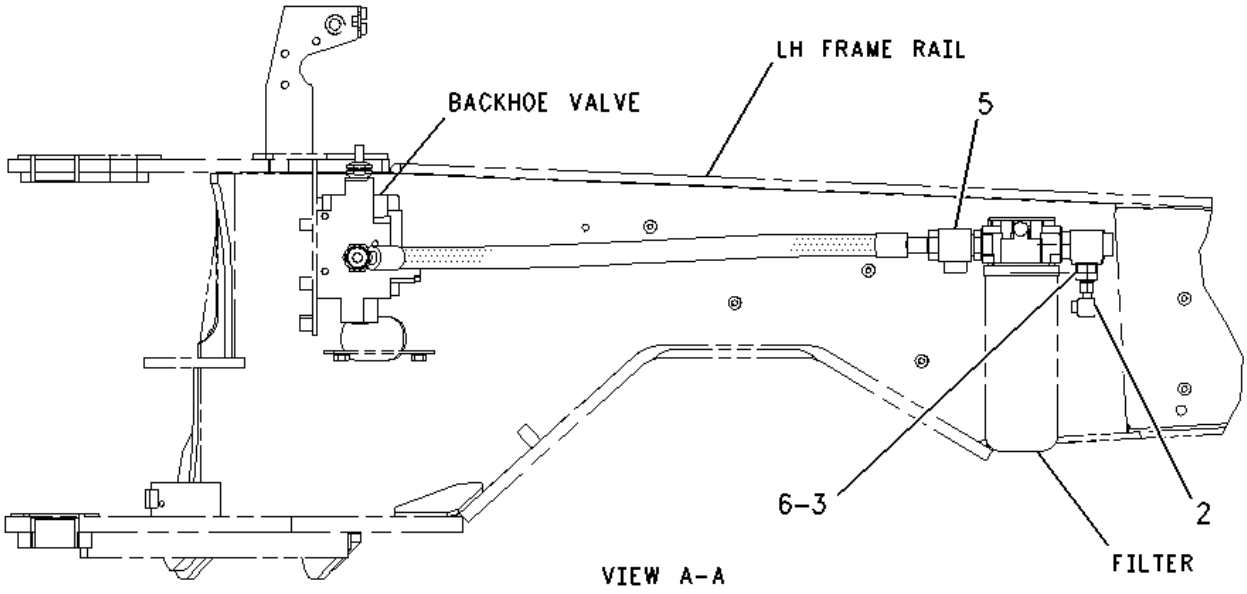

1	NPR CI	191-4910	1	HOSE AS
2	NPR	148-8367	1	ELBOW AS
	NPR	6V-8397	1	SEAL-O-RING
	NPR	6V-9850	1	ELBOW
3	NPR	148-8417	1	REDUCER AS
	NPR	6V-8397	1	SEAL-O-RING
	NPR	6V-8941	1	REDUCER
4	NPR Y	150-3034	1	VALVE GP-CHECK
5	NPR	150-3054	1	CONNECTOR AS
	NPR	7M-8485	1	SEAL-O-RING
	NPR	5K-9090	3	SEAL-O-RING
	NPR	109-2953	1	CONNECTOR
6	NPR	9X-6580	1	NUT (1-3/16-12-THD)

Key: C - CHANGE FROM PREVIOUS TYPE I - REFER TO HYDRAULIC INFORMATION SYSTEM
Y - SEPARATE ILLUSTRATION

121-9805 LINES GP-RETURN ---S/N 4ZN16044-50156
PART OF 154-5311 BACKHOE AR-EXTENDABLE STICK, 154-5302, 154-5308 BACKHOE AR-STANDARD STICK
Type 1

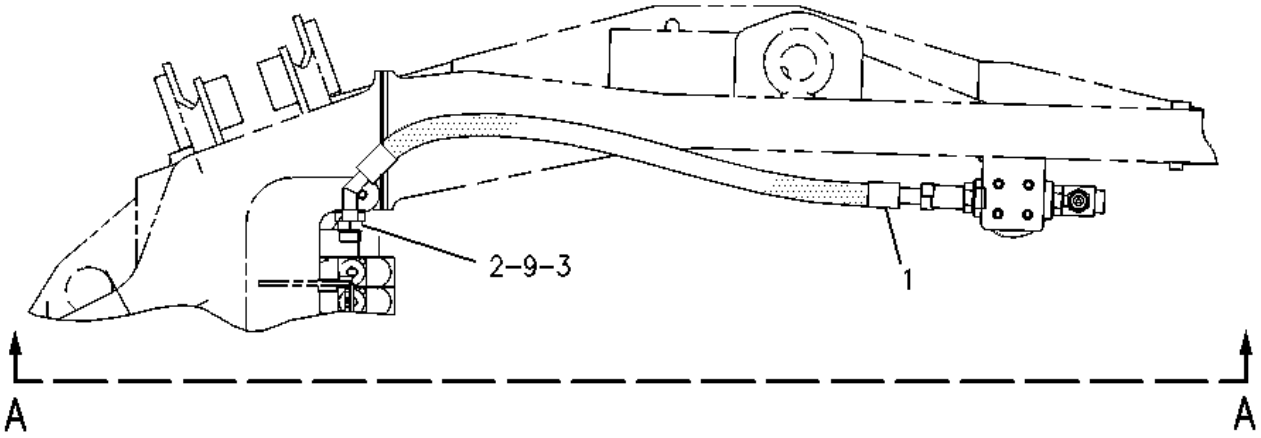

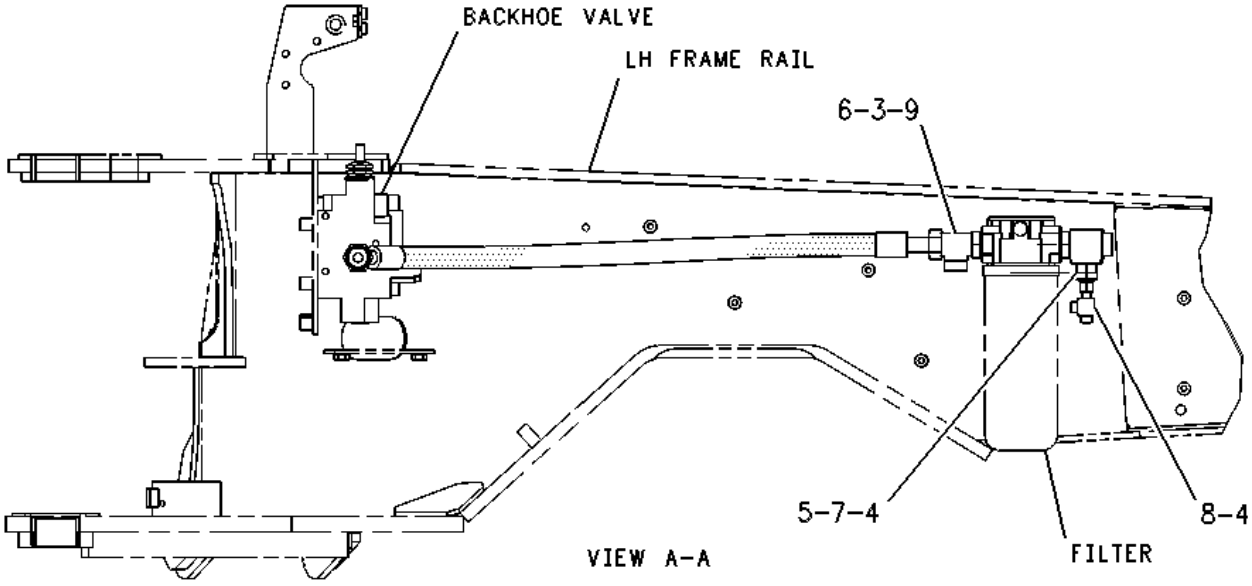

1	**NPR I**	**117-3237**	**1**	**HOSE AS**
2	**NPR**	**129-1555**	**1**	**VALVE GP-CHECK**
3	**NPR**	**5K-9090**	**3**	**SEAL-O-RING**
4	**NPR**	**6V-8397**	**3**	**SEAL-O-RING**
5	**NPR**	**9X-6580**	**1**	**NUT (1-3/16-12-THD)**
6	**NPR**	**6V-8785**	**1**	**TEE**
7	**NPR**	**6V-8941**	**1**	**REDUCER**
8	**NPR**	**6V-9836**	**1**	**TEE-SWIVEL**
9	**NPR**	**7M-8485**	**2**	**SEAL-O-RING**

Key: I - REFER TO HYDRAULIC INFORMATION SYSTEM

121-9805 LINES GP-RETURN --S/N 4ZN16044-50156
PART OF 154-5311 BACKHOE AR-EXTENDABLE STICK, 154-5302, 154-5308 BACKHOE AR-STANDARD STICK
Type 2

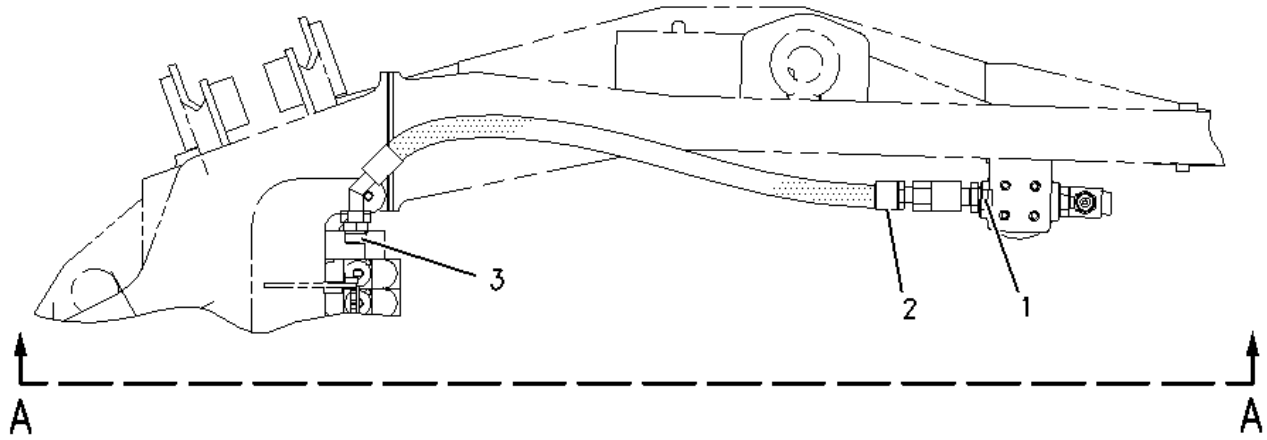

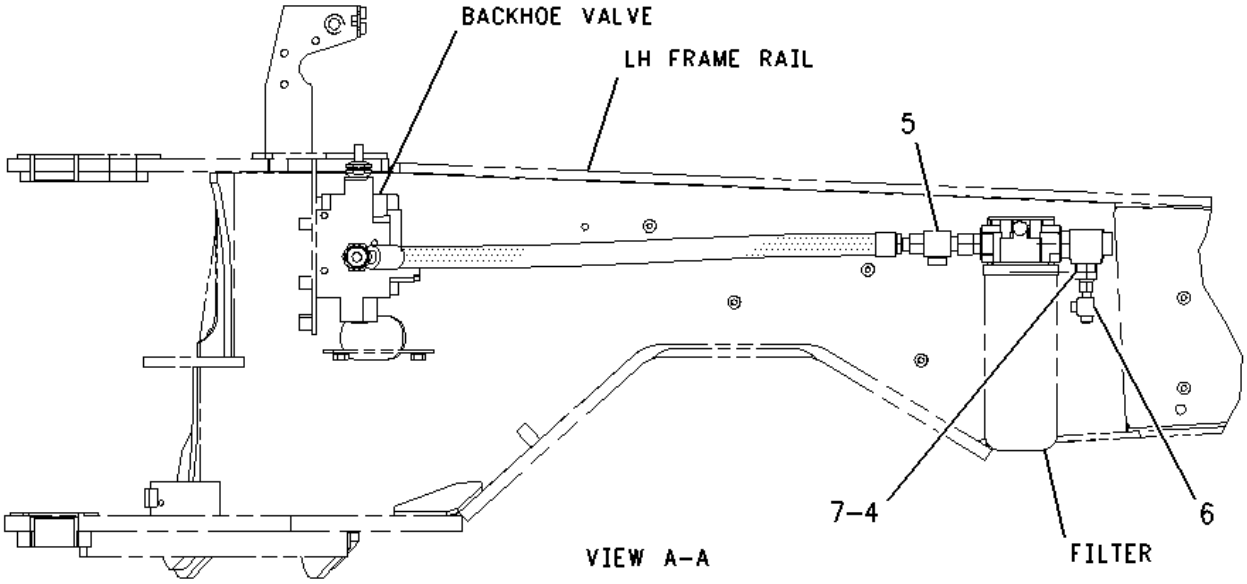

1	NPR Y	178-7480	1	VALVE GP-CHECK
2	NPR I	178-7546	1	HOSE AS
3	NPR	148-8335	1	CONNECTOR AS
	NPR	5K-9090	1	SEAL-O-RING
	NPR	6V-8635	1	CONNECTOR
	NPR	7M-8485	1	SEAL-O-RING
4	NPR	148-8417	1	REDUCER AS
	NPR	6V-8397	1	SEAL-O-RING
	NPR	6V-8941	1	REDUCER
5	NPR	148-8429	1	TEE AS
	NPR	5K-9090	2	SEAL-O-RING
	NPR	6V-9840	1	TEE-SWIVEL
6	NPR	148-8433	1	TEE AS
	NPR	6V-8397	2	SEAL-O-RING
	NPR	6V-9836	1	TEE-SWIVEL
7	NPR	9X-6580	1	NUT (1-3/16-12-THD)

Key: I - REFER TO HYDRAULIC INFORMATION SYSTEM Y - SEPARATE ILLUSTRATION

121-9806 LINES GP-RETURN -S/N 4ZN16044-50156
PART OF 154-5314 BACKHOE AR-EXTENDABLE STICK, 154-5305 BACKHOE AR-STANDARD STICK-Type 1

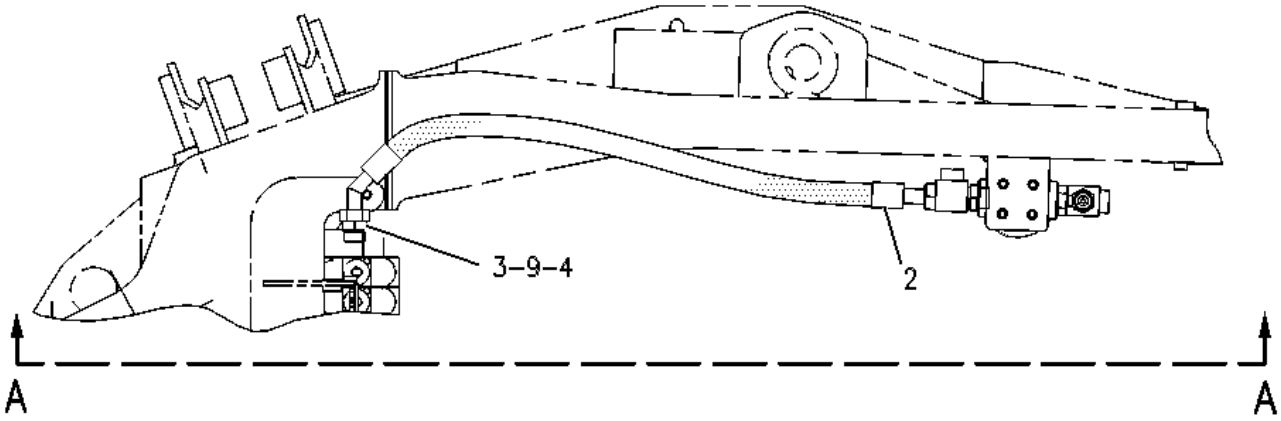

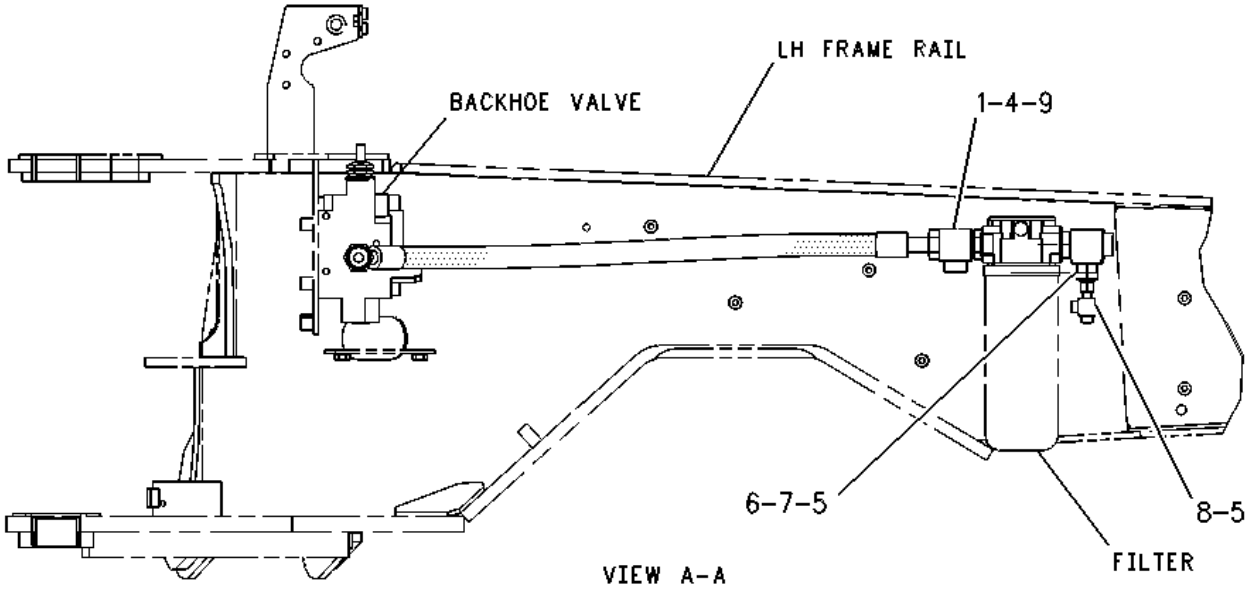

1	NPR	109-2953	1	CONNECTOR
2	NPR I	117-3237	1	HOSE AS
3	NPR	129-1555	1	VALVE GP-CHECK
4	NPR	5K-9090	4	SEAL-O-RING
5	NPR	6V-8397	3	SEAL-O-RING
6	NPR	9X-6580	1	NUT (1-3/16-12-THD)
7	NPR	6V-8941	1	REDUCER
8	NPR	6V-9836	1	TEE-SWIVEL
9	NPR	7M-8485	2	SEAL-O-RING

Key: I - REFER TO HYDRAULIC INFORMATION SYSTEM

121-9806 LINES GP-RETURN --S/N 4ZN16044-50156--
PART OF 154-5314 BACKHOE AR-EXTENDABLE STICK, 154-5305 BACKHOE AR-STANDARD STICK--Type 2

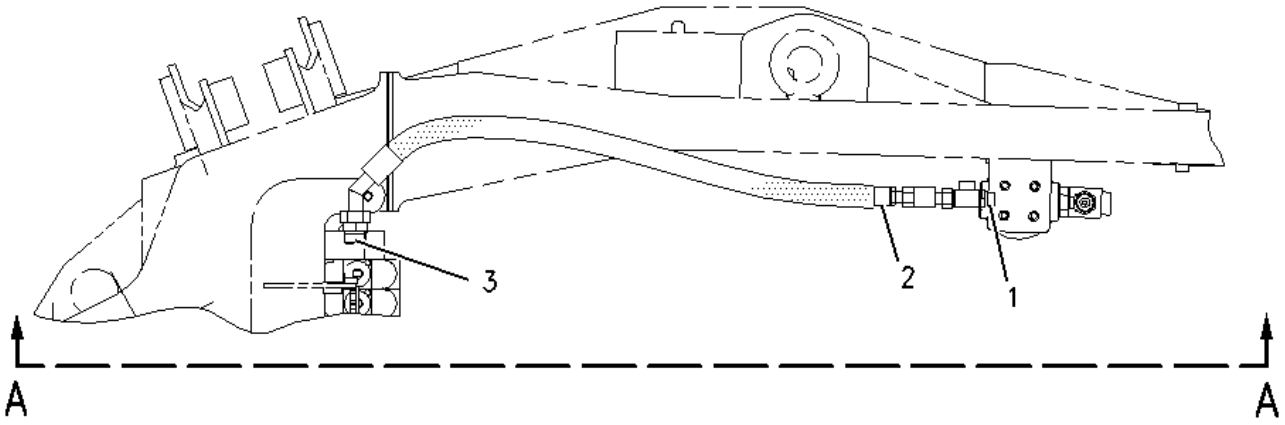

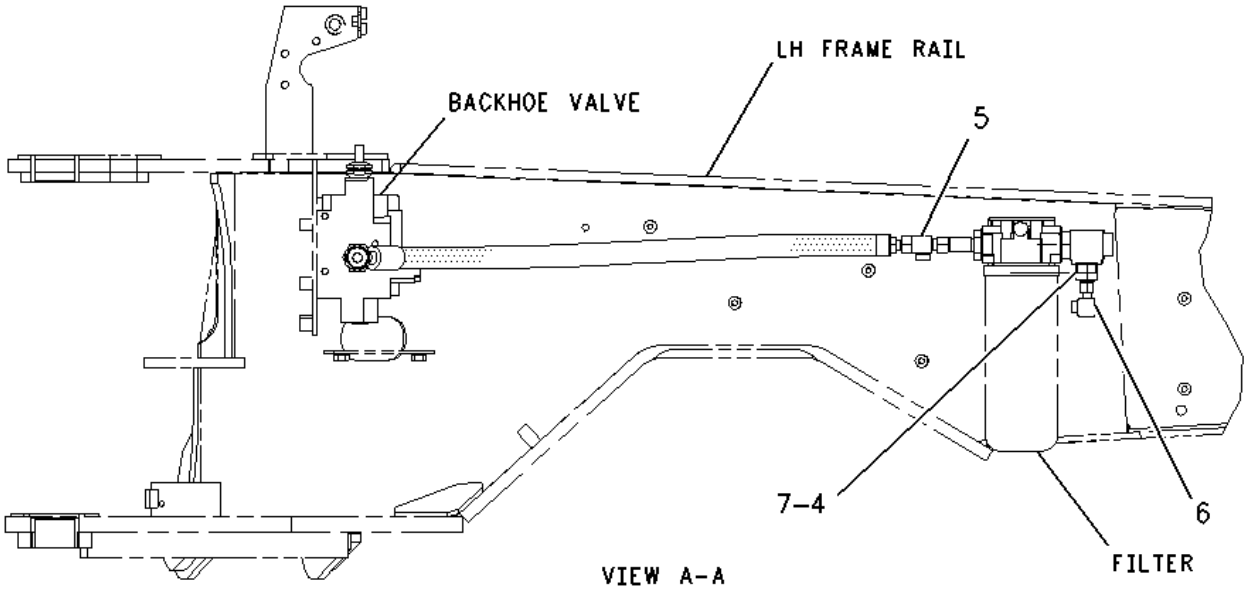

1 NPR YC 178-7481 1 VALVE GP-CHECK

NPR 5K-9090 2 SEAL-O-RING

NPR 7M-8485 1 SEAL-O-RING

NPR 176-5645 1 VALVE GP-CHECK

2 NPR CI 183-2909 1 HOSE AS

3 NPR 148-8335 1 CONNECTOR AS

NPR 5K-9090 1 SEAL-O-RING

NPR 6V-8635 1 CONNECTOR

NPR 7M-8485 1 SEAL-O-RING

4 NPR 148-8417 1 REDUCER AS

	NPR	6V-8397	1	SEAL-O-RING
	NPR	6V-8941	1	REDUCER
5	NPR C	148-8429	1	TEE AS
	NPR	5K-9090	2	SEAL-O-RING
	NPR	6V-9840	1	TEE-SWIVEL
6	NPR C	148-8433	1	TEE AS
	NPR	6V-8397	2	SEAL-O-RING
	NPR	6V-9836	1	TEE-SWIVEL
7	NPR	9X-6580	1	NUT (1-3/16-12-THD)

Key:

C - CHANGE FROM PREVIOUS TYPE
I - REFER TO HYDRAULIC INFORMATION SYSTEM
Y - Separate Illustration

119-8158 LINES GP-PUMP ---S/N 4ZN16044-50156-PART OF 154-5447, 154-5449 DRIVE AR-BACKHOE LOADER

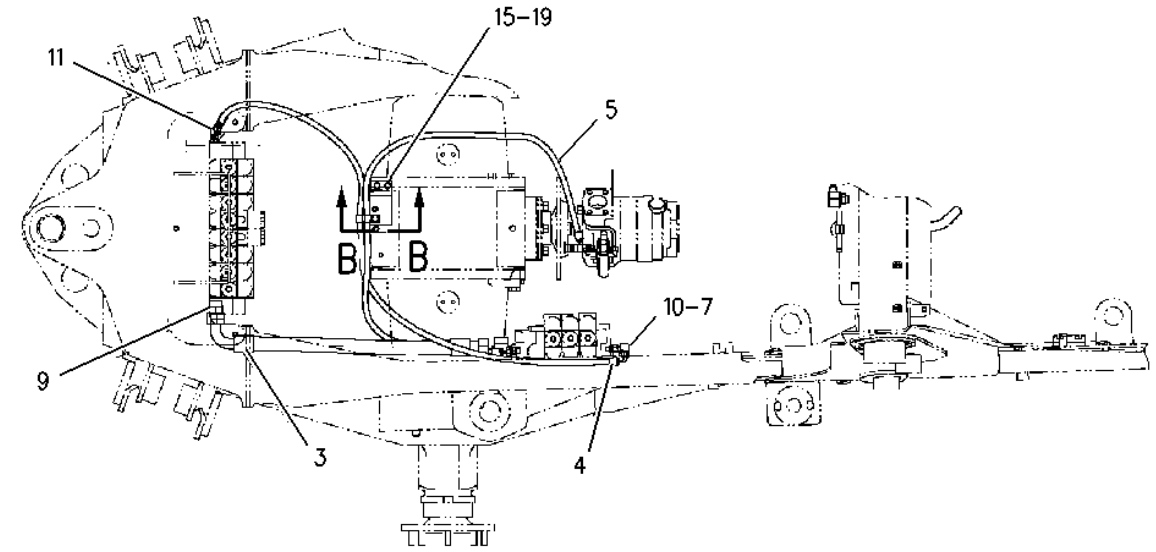

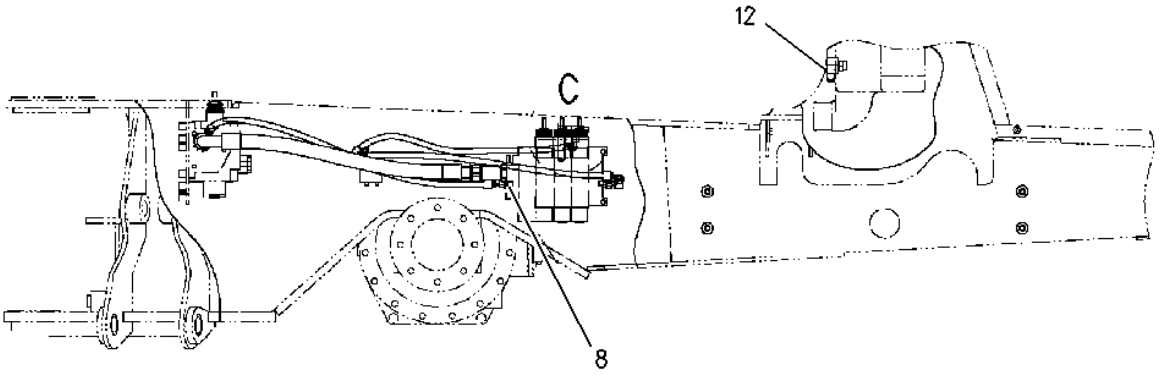

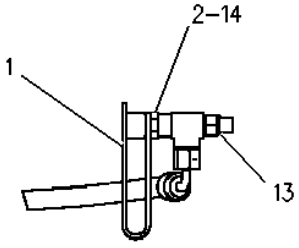

VIEW OF AREA C

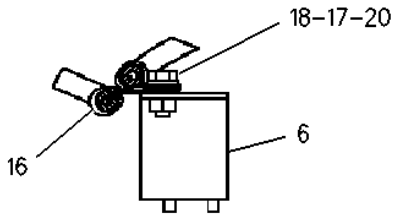

SECTION B-B

1 NPR 6V-0852 1 CAP-DUST

2 NPR 6V-3965 1 FITTING

3 NPR I 117-3238 1 HOSE AS

4 NPR I 117-3242 1 HOSE AS

5	NPR I	117-3244	1	HOSE AS
6	NPR	126-3866	1	PLATE AS
	NPR M	8T-3490	2	NUT-WELD (M10X1.5-THD)
7	NPR	148-8316	1	CONNECTOR AS
	NPR	3J-7354	1	SEAL-O-RING
	NPR	4J-5477	1	SEAL-O-RING
	NPR	6V-8647	1	CONNECTOR
8	NPR	148-8325	1	CONNECTOR AS
	NPR	3J-1907	1	SEAL-O-RING
	NPR	4J-5477	1	SEAL-O-RING
	NPR	6V-8641	1	CONNECTOR
9	NPR	148-8335	1	CONNECTOR AS
	NPR	5K-9090	1	SEAL-O-RING
	NPR	6V-8635	1	CONNECTOR
	NPR	7M-8485	1	SEAL-O-RING
10	NPR	148-8351	1	ELBOW AS
	NPR	4J-5477	1	SEAL-O-RING
	NPR	6V-9849	1	ELBOW (SWIVEL)
11	NPR	148-8385	1	ELBOW AS
	NPR	3J-7354	1	SEAL-O-RING
	NPR	4J-5477	1	SEAL-O-RING
	NPR	6V-9000	1	ELBOW
12	NPR	150-3040	1	ELBOW AS
	NPR	2M-9780	1	SEAL-O-RING
	NPR	137-9438	1	ELBOW

13	NPR	150-3062	1	TEE AS
	NPR	3J-7354	1	SEAL-O-RING
	NPR	4J-5477	1	SEAL-O-RING
	NPR	101-1787	1	TEE AS
14	NPR	3J-1907	1	SEAL-O-RING
15	NPR	5K-0906	2	BOLT (5/16-18X0.625-IN)
16	NPR	6K-8178	1	CLIP
17	NPR	8T-4121	1	WASHER-HARD (11X21X2.5-MM THK)
18	NPR M	8T-4136	1	BOLT (M10X1.5X25-MM)
19	NPR	8T-4224	2	WASHER-HARD (8.8X16X2-MM THK)
20	NPR	9M-8406	1	CLIP

Key:

I - REFER TO HYDRAULIC INFORMATION SYSTEM
M - METRIC PART

192-7478 LINES GP-PUMP --S/N 4ZN22786-24051
COMMON --PART OF 154-5447, 154-5449 DRIVE AR-BACKHOE LOADER

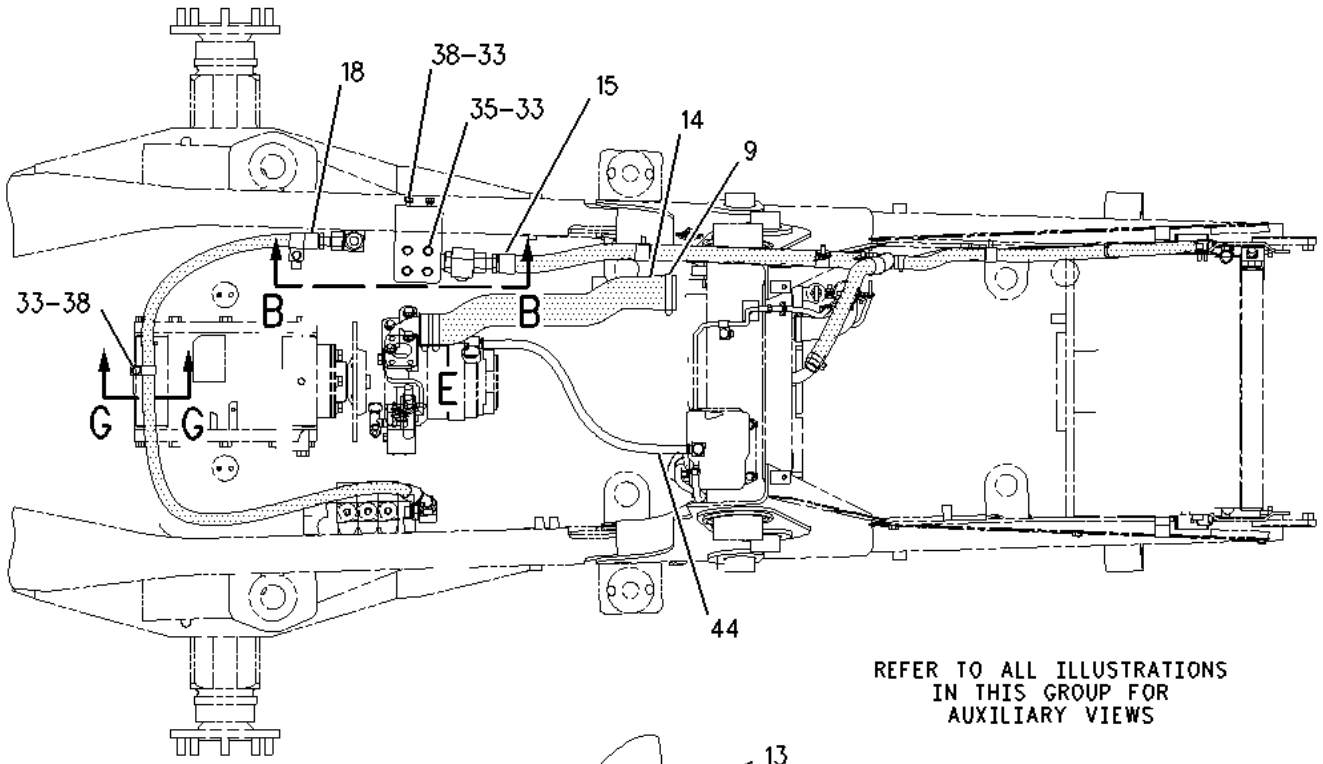

REFER TO ALL ILLUSTRATIONS
IN THIS GROUP FOR
AUXILIARY VIEWS

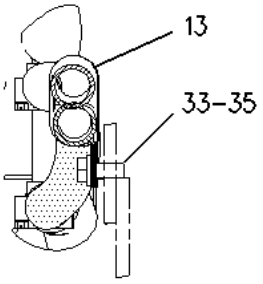

SECTION K-K

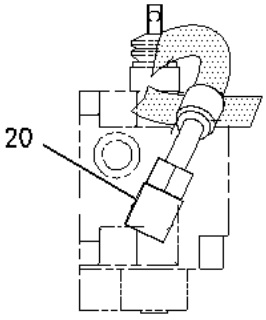

SECTION A-A

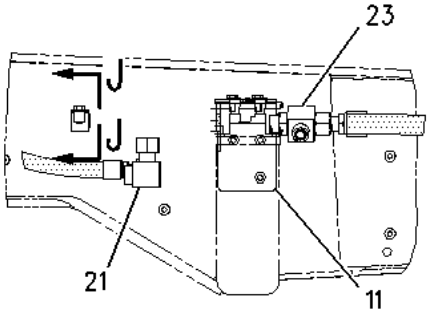

SECTION B-B

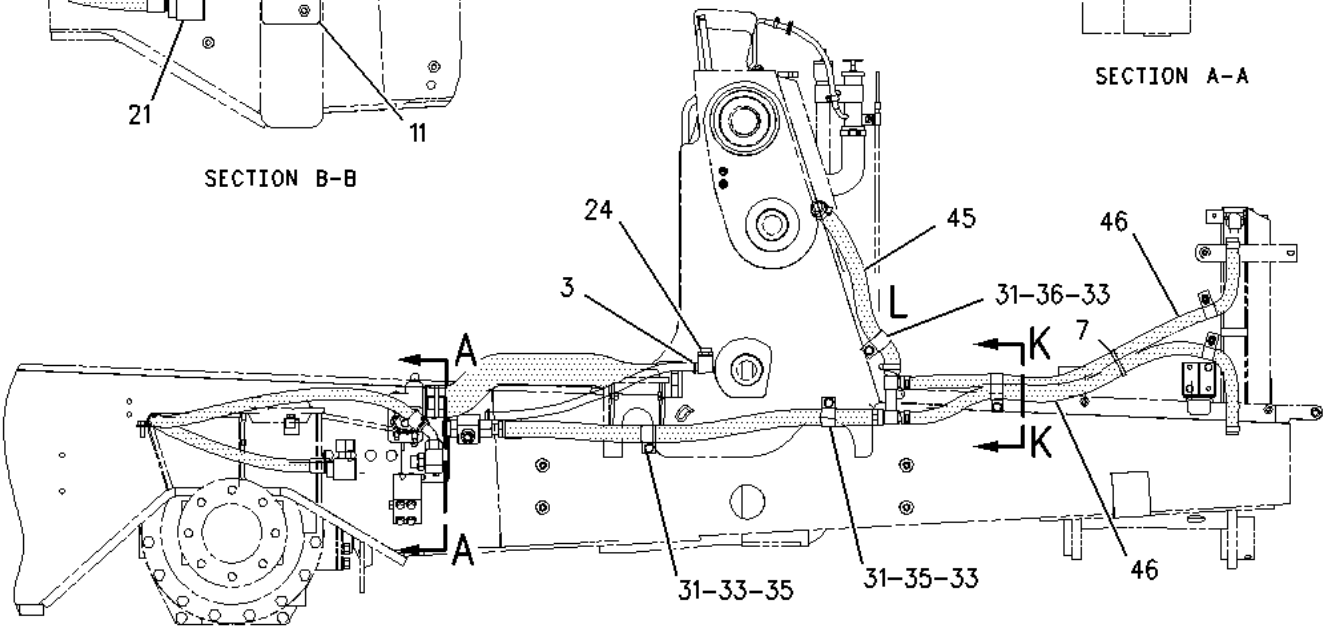

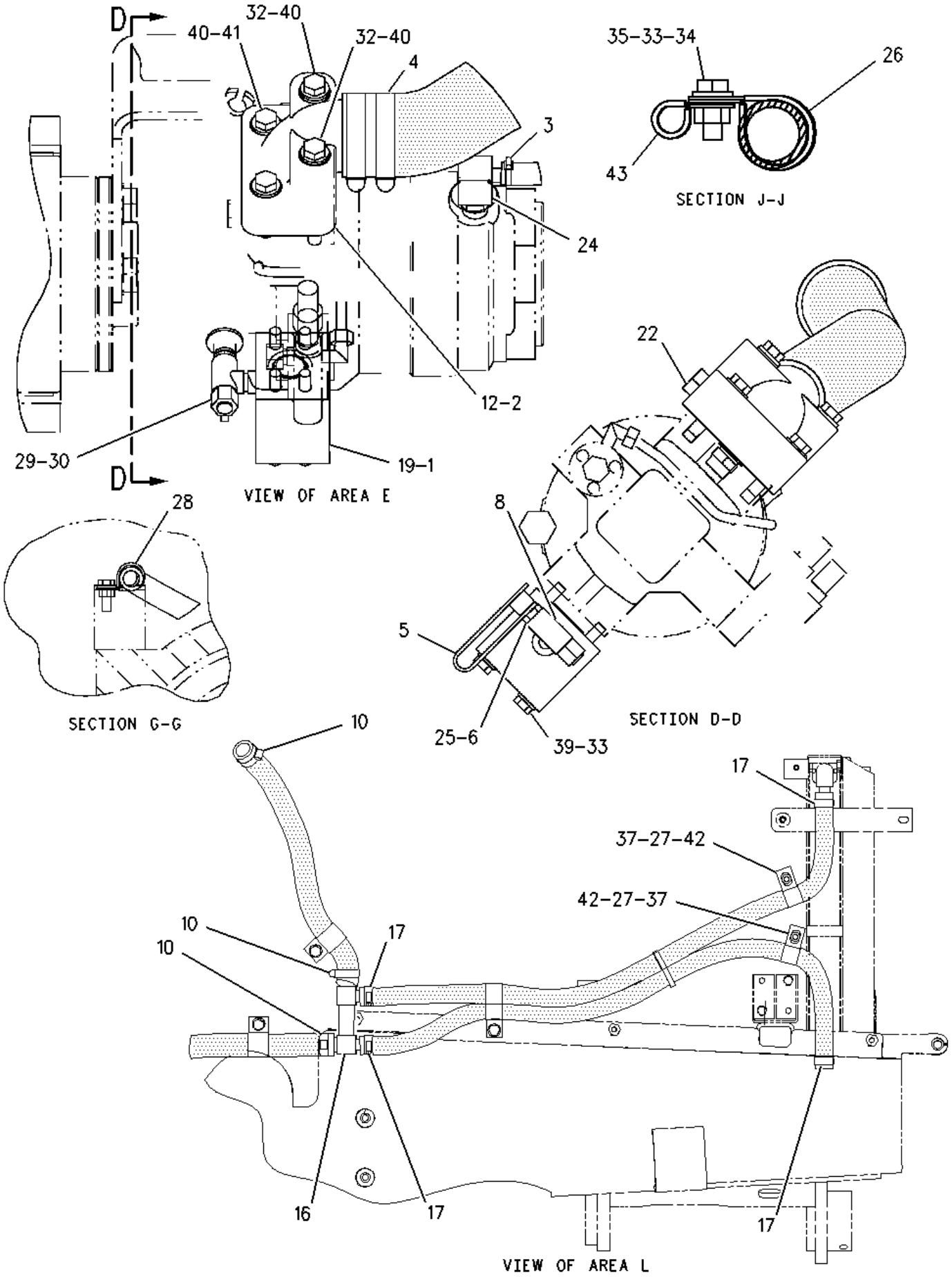
D
D
40-41
32-40
32-40
4
3
24
12-2
29-30
19-1
VIEW OF AREA E
35-33-34
26
43
SECTION J-J
22
8
5
25-6
39-33
SECTION D-D
28
SECTION G-G
10
17
37-27-42
42-27-37
10
10
17
16
17
17
VIEW OF AREA L

1	NPR	2	1P-3703	1	SEAL-RECTANGULAR
2	NPR	2	1P-3709	1	SEAL-RECTANGULAR
3	NPR	1,2	5D-1026	2	CLAMP-HOSE
4	NPR	2	5P-4868	2	CLAMP-HOSE
5	NPR	2	6V-0852	1	CAP-DUST
6	NPR	2	6V-3965	1	FITTING
7	NPR	1	7K-1181	1	STRAP-CABLE
8	NPR	2	7X-2459	1	TEE-O-RING
9	NPR	1	8T-6675	1	CLAMP-HOSE
10	NPR	2	110-2445	3	CLAMP-HOSE
11	NPR	1	114-4777	1	BRACKET AS
12	NPR	2	121-2903	1	FLANGE
13	NPR	1	130-9984	1	CLIP
14	NPR	1	138-9755	1	HOSE
15	NPR I	1	146-7276	1	HOSE AS
16	NPR	2	146-8958	1	FITTING
17		2	159-0186	4	CLAMP
18	NPR I	1	178-8064	1	HOSE AS
19	NPR	2	190-2932	1	FLANGE
20	NPR	1	148-8347	1	ELBOW AS
	NPR	1	3D-2824	1	SEAL-O-RING
	NPR	1	6V-9007	1	ELBOW
	NPR	1	6V-9746	1	SEAL-O-RING
21	NPR	1	148-8352	1	ELBOW AS
	NPR	1	5K-9090	1	SEAL-O-RING

NPR 1 6V-9854 1 ELBOW (SWIVEL)

22 NPR 2 148-8410 1 PLUG AS

NPR 2 2M-9780 1 SEAL-O-RING

NPR 2 9S-4190 1 PLUG

23 NPR 1 148-8422 1 TEE AS

NPR 1 5K-9090 1 SEAL-O-RING

NPR 1 6V-9746 1 SEAL-O-RING

NPR 1 7M-8485 1 SEAL-O-RING

NPR 1 8T-6356 1 TEE-O-RING PORT

24 NPR 1,2 150-3027 2 ELBOW AS

(EACH INCLUDES)

NPR 1,2 2M-9780 1 SEAL-O-RING

NPR 1,2 6V-5653 1 ELBOW

25 NPR 2 3J-1907 1 SEAL-O-RING

26 NPR 2 4D-7388 1 CLIP

27 NPR 2 5P-4116 2 WASHER-HARD (8.8X20.5X2-MM THK)

28 NPR 2 6V-1889 1 CLIP

29 NPR 2 6V-8397 1 SEAL-O-RING

30 NPR 2 6V-9829 1 CAP AS

31 NPR 1 7D-7233 3 CLIP

32 NPR M 2 7X-2550 2 BOLT (M12X1.75X110-MM)

33 NPR 1,2 8T-4121 17 WASHER-HARD (11X21X2.5-MM THK)

34 NPR M 2 8T-4133 1 NUT (M10X1.5-THD)

35 NPR M 1,2 8T-4136 8 BOLT (M10X1.5X25-MM)

36 NPR M 1 8T-4137 1 BOLT (M10X1.5X20-MM)

37	NPR	M	2	8T-4189	2 BOLT (M8X1.25X20-MM)
38	NPR	M	1	8T-4195	4 BOLT (M10X1.5X30-MM)
39	NPR	M	2	8T-4198	4 BOLT (M10X1.5X100-MM)
40	NPR		2	8T-4223	6 WASHER-HARD (13.5X25.5X3-MM THK)
41	NPR	M	2	8T-4910	2 BOLT (M12X1.75X60-MM)
42	NPR		2	8T-7529	2 CLIP
43	NPR		2	9M-8406	1 CLIP
44	NPR	E	1	5P-1505	HOSE (70CM)
45	NPR	E	1	5P-1506	HOSE (55CM)
46	NPR	E	1	136-1955	HOSE (192CM)

Key:

E - ORDER BY THE CENTIMETER
I - REFER TO HYDRAULIC INFORMATION SYSTEM
M - METRIC PART

192-7481 LINES GP-PUMP ---S/N 4ZN16044-50156--CENTER PIVOT, TWO WHEEL STEER
PART OF 154-5447, 154-5449 DRIVE AR-BACKHOE LOADER

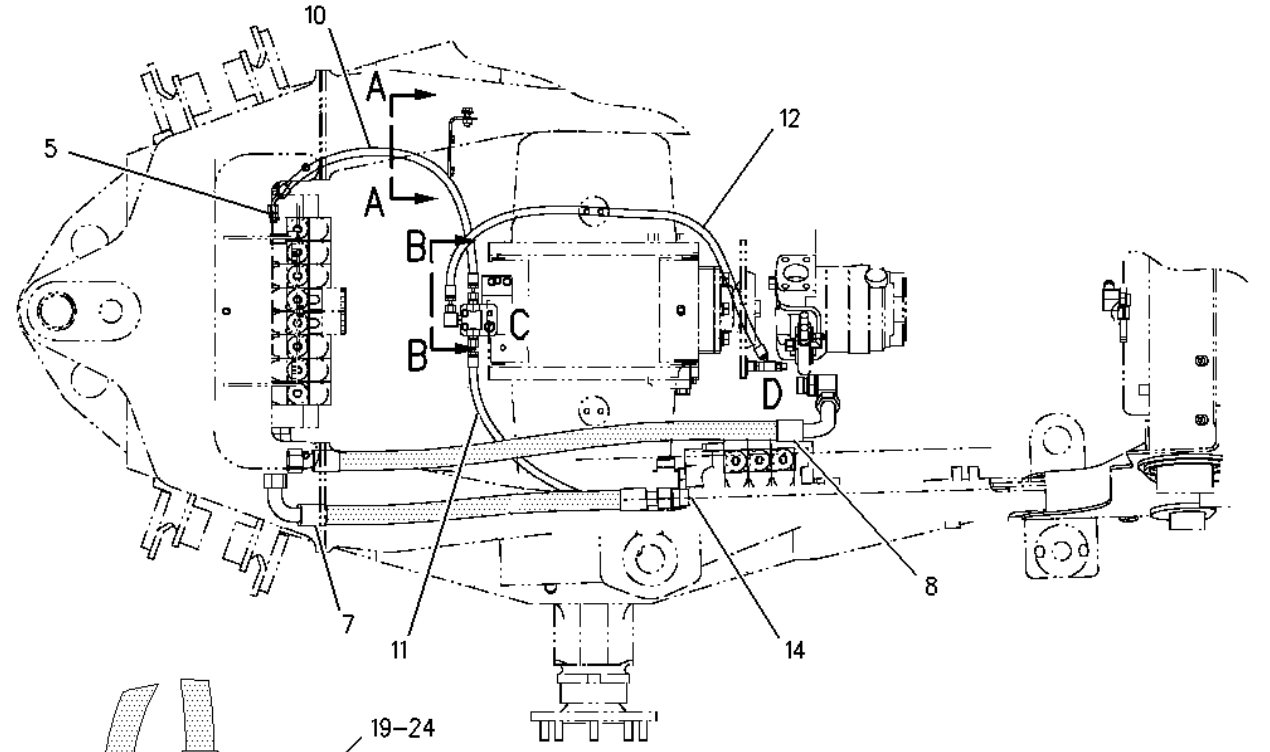

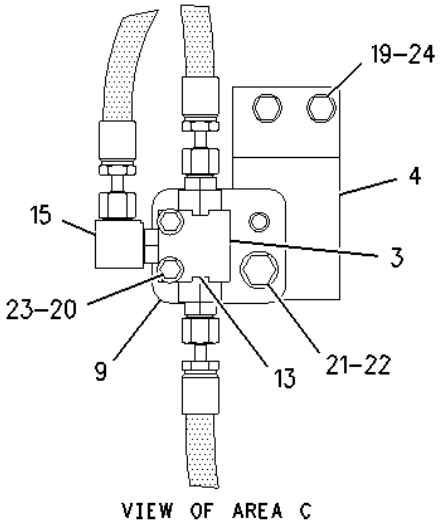

VIEW OF AREA C

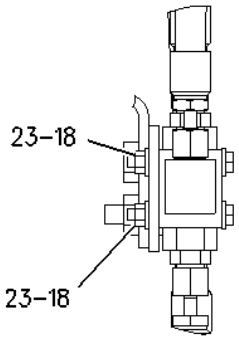

VIEW B-B

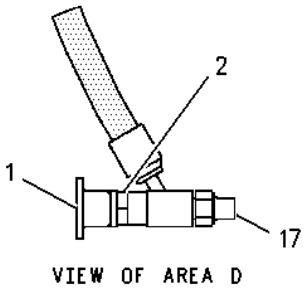

VIEW OF AREA D

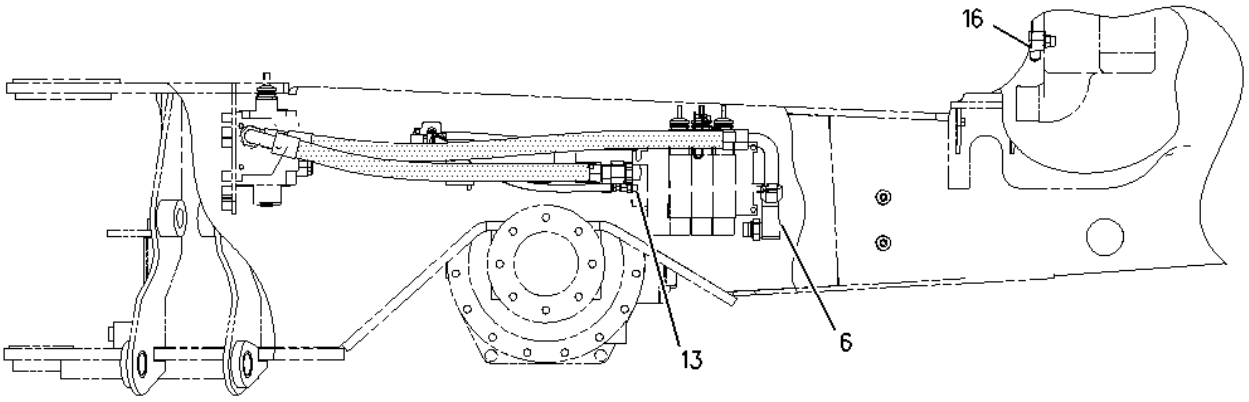

1	NPR	6V-0852	1	CAP-DUST
2	NPR	6V-3965	1	FITTING
3	NPR Y	8J-6875	1	VALVE GP-SHUTTLE
	NPR	2M-9780	2	SEAL-O-RING
	NPR	4B-9784	1	BALL
	NPR	4T-9905	2	ADAPTER
4	NPR	126-3866	1	PLATE AS
	NPR M	8T-3490	2	NUT-WELD (M10X1.5-THD)
5	NPR	187-9684	1	CONNECTOR AS
	NPR	3J-7354	1	SEAL-O-RING
	NPR	4J-5477	1	SEAL-O-RING
	NPR	187-9646	1	CONNECTOR
6	NPR	190-3032	1	ELBOW AS
	NPR	5K-9090	1	SEAL-O-RING
	NPR	7M-8485	1	SEAL-O-RING
	NPR	194-1958	1	ELBOW
7	NPR I	192-0881	1	HOSE AS
8	NPR I	192-0882	1	HOSE AS
9	NPR	192-3328	1	BRACKET
10	NPR I	192-3545	1	HOSE AS
11	NPR I	192-3549	1	HOSE AS
12	NPR I	192-3553	1	HOSE AS
13	NPR	148-8325	3	CONNECTOR AS
	(EACH INCLUDES)			
	NPR	3J-1907	1	SEAL-O-RING

	NPR	4J-5477	1	SEAL-O-RING
	NPR	6V-8641	1	CONNECTOR
14	NPR	148-8335	1	CONNECTOR AS
	NPR	5K-9090	1	SEAL-O-RING
	NPR	6V-8635	1	CONNECTOR
	NPR	7M-8485	1	SEAL-O-RING
15	NPR	148-8368	1	ELBOW AS
	NPR	3J-1907	1	SEAL-O-RING
	NPR	4J-5477	1	SEAL-O-RING
	NPR	6V-8627	1	ELBOW
16	NPR	150-3040	1	ELBOW AS
	NPR	2M-9780	1	SEAL-O-RING
	NPR	137-9438	1	ELBOW
17	NPR	150-3062	1	TEE AS
	NPR	3J-7354	1	SEAL-O-RING
	NPR	4J-5477	1	SEAL-O-RING
	NPR	101-1787	1	TEE AS
18	NPR M	5C-2890	2	NUT (M6X1-THD)
19	NPR	5K-0906	2	BOLT (5/16-18X0.625-IN)
20	NPR M	7X-2534	2	BOLT (M6X1X50-MM)
21	NPR	8T-4121	1	WASHER-HARD (11X21X2.5-MM THK)
22	NPR M	8T-4195	1	BOLT (M10X1.5X30-MM)
23	NPR	8T-4205	4	WASHER-HARD (7.2X14.5X2-MM THK)
24	NPR	8T-4224	2	WASHER-HARD (8.8X16X2-MM THK)

Key: I - REFER TO HYDRAULIC INFORMATION SYSTEM
M - METRIC PART
Y - SEPARATE ILLUSTRATION

145-4915 LINES GP-HYDRAULIC s/N 4ZN16044-50156
COMMON PART OF 154-5437 HYDRAULIC AR

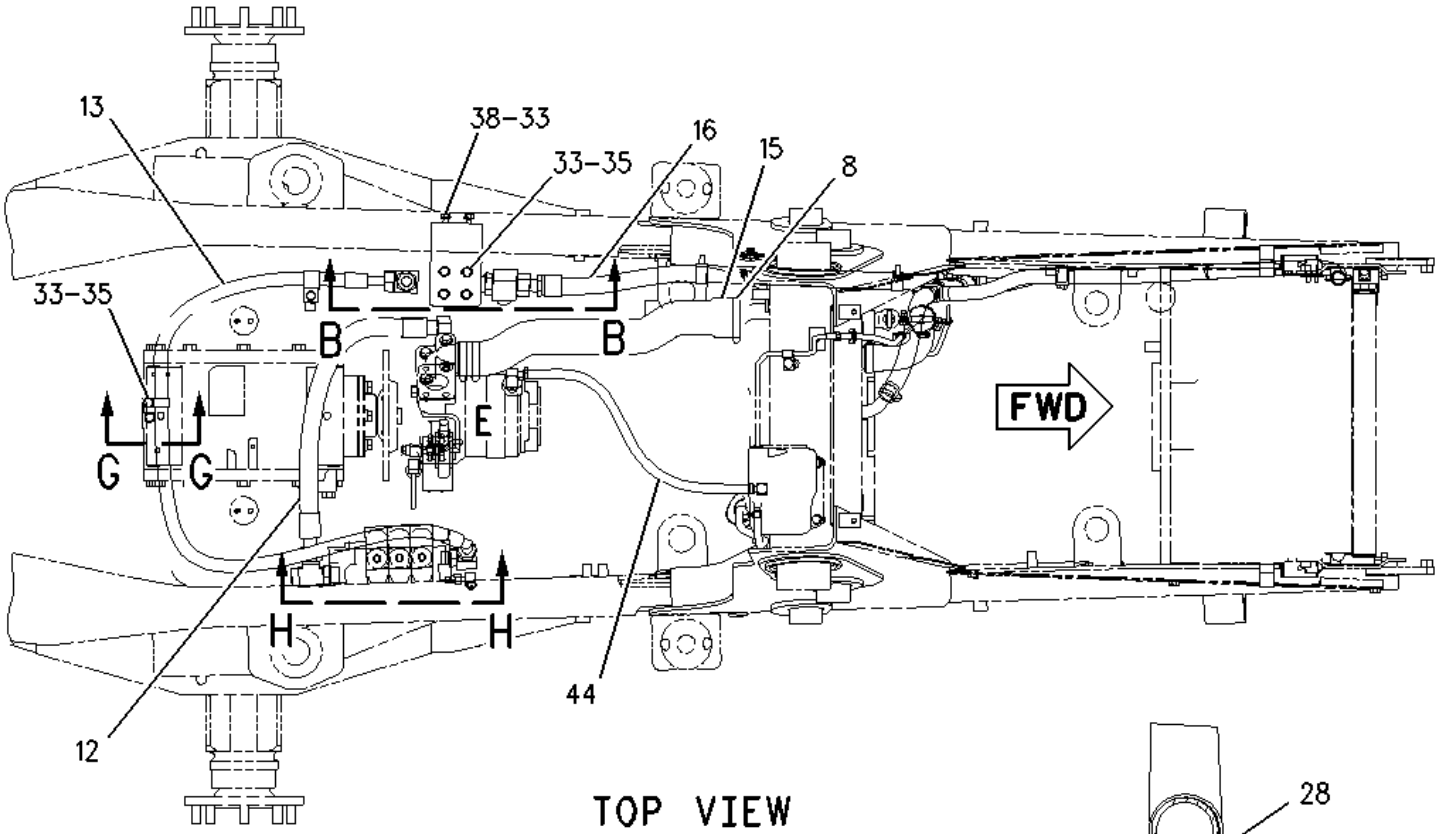

TOP VIEW

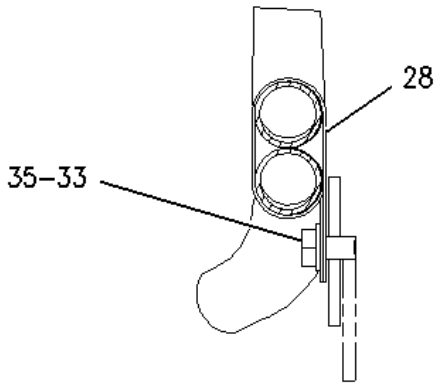

SECTION K-K

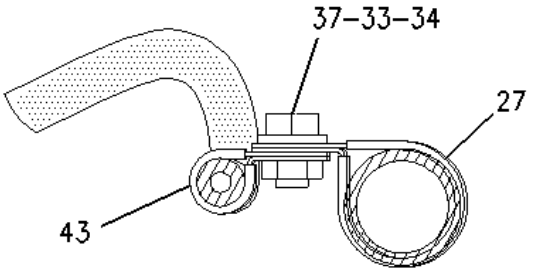

SECTION J-J

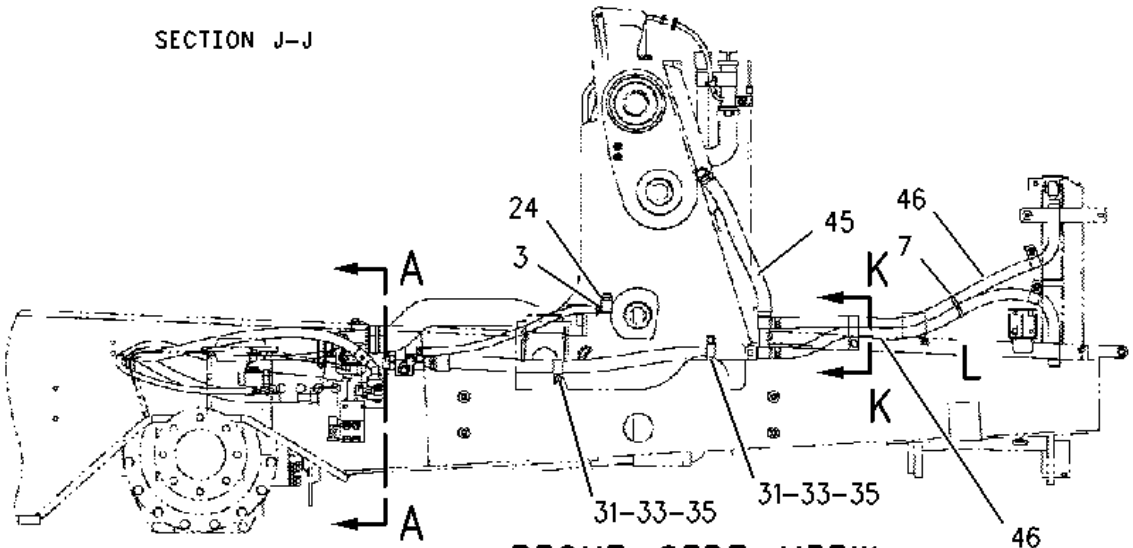

RIGHT SIDE VIEW

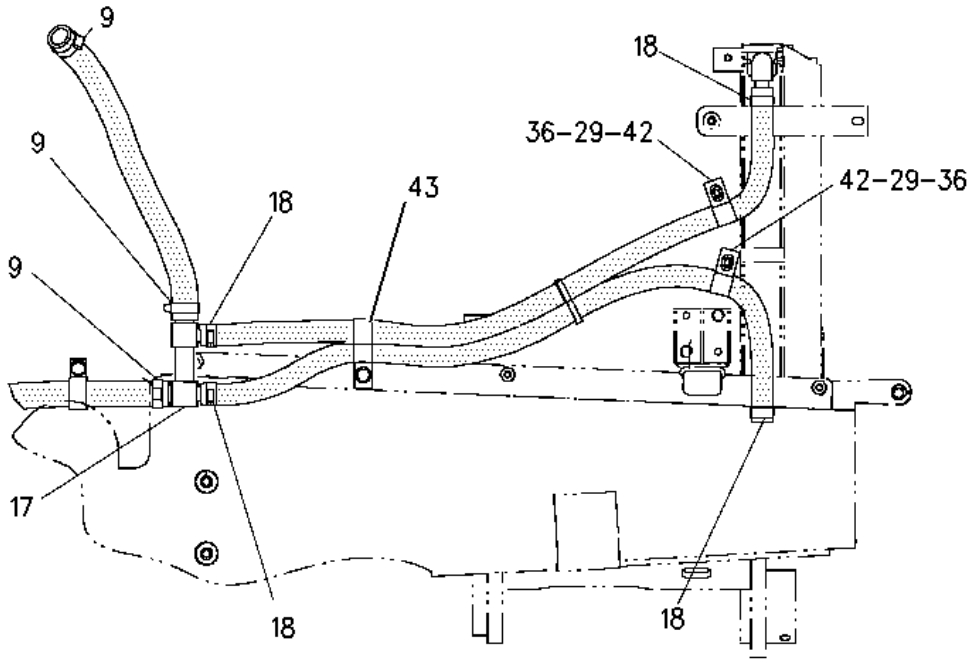

VIEW OF AREA L

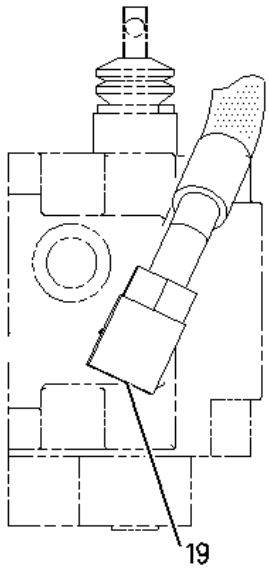

SECTION A-A

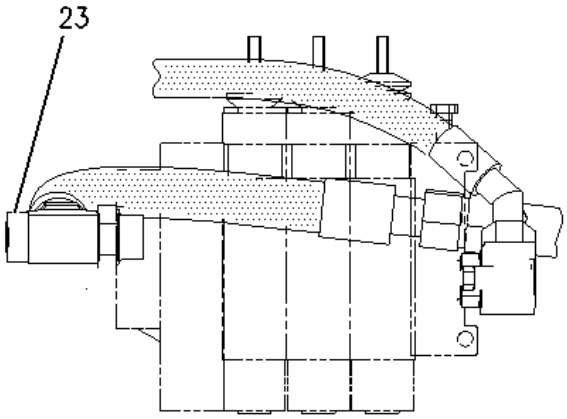

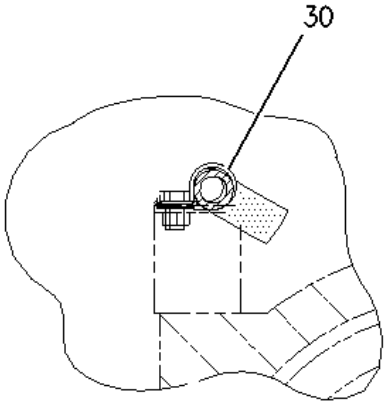

SECTION G-G

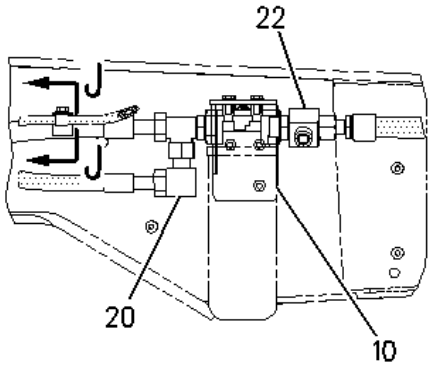

SECTION B-B

SECTION H-H

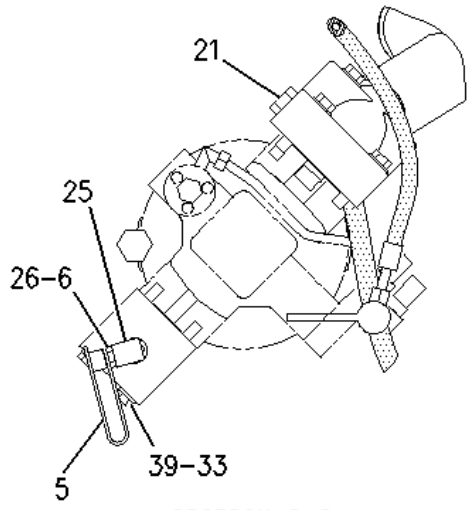

SECTION D-D

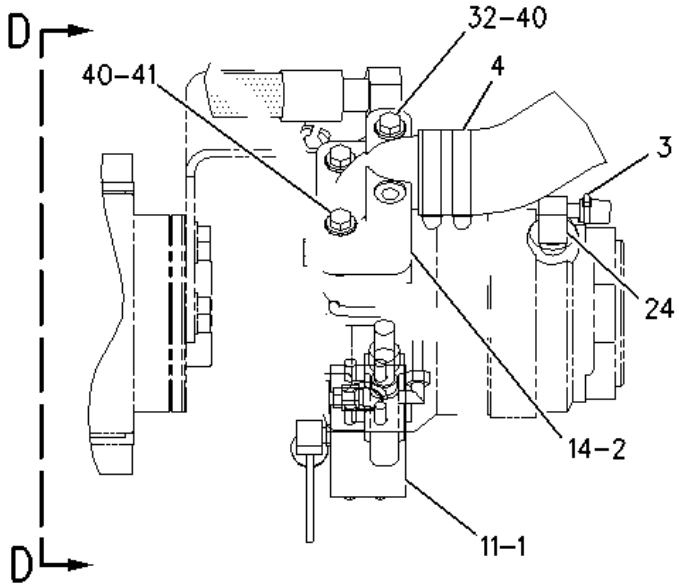

VIEW OF AREA E

1 NPR 2 1P-3703 1 SEAL-RECTANGULAR

2 NPR 2 1P-3709 1 SEAL-RECTANGULAR

3 NPR 1,2 5D-1026 2 CLAMP-HOSE

4 NPR 2 5P-4868 2 CLAMP-HOSE

5 NPR 2 6V-0852 1 CAP-DUST

6 NPR 2 6V-3965 1 FITTING

7 NPR 1 7K-1181 1 STRAP-CABLE

8 NPR 1 8T-6675 1 CLAMP-HOSE

9 NPR 2 110-2445 3 CLAMP-HOSE

10 NPR 2 114-4777 1 BRACKET AS

11 NPR 2 114-5536 1 FLANGE

12 NPR I 1 117-3235 1 HOSE AS

13 NPR I 1 117-3240 1 HOSE AS

14 NPR 2 121-2903 1 FLANGE

15 NPR 1 138-9755 1 HOSE

16 NPR I 1 146-7276 1 HOSE AS

17 NPR 2 146-8958 1 FITTING

18 2 159-0186 4 CLAMP

19 NPR 2 148-8347 1 ELBOW AS

NPR 2 3D-2824 1 SEAL-O-RING

NPR 2 6V-9007 1 ELBOW

NPR 2 6V-9746 1 SEAL-O-RING

20 NPR 2 148-8352 1 ELBOW AS

NPR 2 5K-9090 1 SEAL-O-RING

NPR 2 6V-9854 1 ELBOW (SWIVEL)

21 NPR 2 148-8410 1 PLUG AS

NPR 2 2M-9780 1 SEAL-O-RING

NPR 2 9S-4190 1 PLUG

22 NPR 2 148-8422 1 TEE AS

NPR 2 5K-9090 1 SEAL-O-RING

NPR 2 6V-9746 1 SEAL-O-RING

NPR 2 7M-8485 1 SEAL-O-RING

NPR 2 8T-6356 1 TEE-O-RING PORT

23 NPR 2 148-8431 1 TEE GP

NPR 2 5K-9090 2 SEAL-O-RING

NPR 2 6V-8785 1 TEE

NPR 2 7M-8485 1 SEAL-O-RING

24 NPR 1,2 150-3027 2 ELBOW AS

(EACH INCLUDES)

NPR 1,2 2M-9780 2 SEAL-O-RING

NPR 1,2 6V-5653 2 ELBOW

25 NPR 2 150-3065 1 ADAPTER AS

NPR 2 3J-1907 1 SEAL-O-RING

NPR 2 6V-0484 1 ADAPTER-O-RING

26 NPR 2 3J-1907 2 SEAL-O-RING

27 NPR 1 4D-7388 1 CLIP

28 NPR 1 5D-0718 1 CLIP

29 NPR 2 5P-4116 2 WASHER-HARD (8.8X20.5X2-MM THK)

30 NPR 2 6V-1889 1 CLIP

31 NPR 1 7D-7233 2 CLIP

32 NPR M 2 7X-2550 1 BOLT (M12X1.75X110-MM)

33 NPR 2 8T-4121 16 WASHER-HARD (11X21X2.5-MM THK)

34 NPR M 1 8T-4133 1 NUT (M10X1.5-THD)

35 NPR M 1 8T-4136 8 BOLT (M10X1.5X25-MM)

36 NPR M 2 8T-4189 2 BOLT (M8X1.25X20-MM)

37 NPR M 1 8T-4191 1 BOLT (M10X1.5X16-MM)

38 NPR M 1 8T-4195 3 BOLT (M10X1.5X30-MM)

39 NPR M 2 8T-4198 4 BOLT (M10X1.5X100-MM)

40 NPR 2 8T-4223 4 WASHER-HARD (13.5X25.5X3-MM THK)

41 NPR M 2 8T-4910 2 BOLT (M12X1.75X60-MM)

42 NPR 2 8T-7529 2 CLIP

43 NPR 2 9M-8406 1 CLIP

44 NPR E 1 5P-1505 HOSE (70-CM)

45 NPR E 1 5P-1506 HOSE (55-CM)

46 NPR E 1 136-1955 HOSE (192-CM)

Key:

E - ORDER BY THE CENTIMETER
I - REFER TO HYDRAULIC INFORMATION SYSTEM
M - METRIC PART

160-7729 LINES GP-HYDRAULIC --S/N 4ZN16044-50156
PART OF 154-5309, 154-5311 BACKHOE AR-EXTENDABLE STICK, 154-5306, 154-5308 BACKHOE AR-STANDARD STICK, 106-6253, 119-4005 HYDRAULIC AR

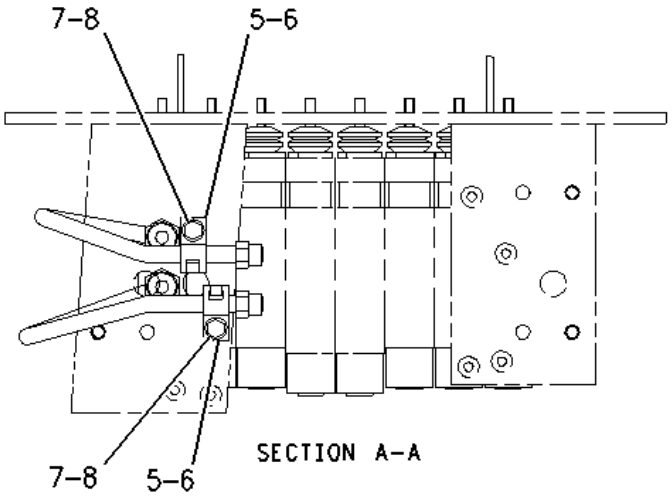

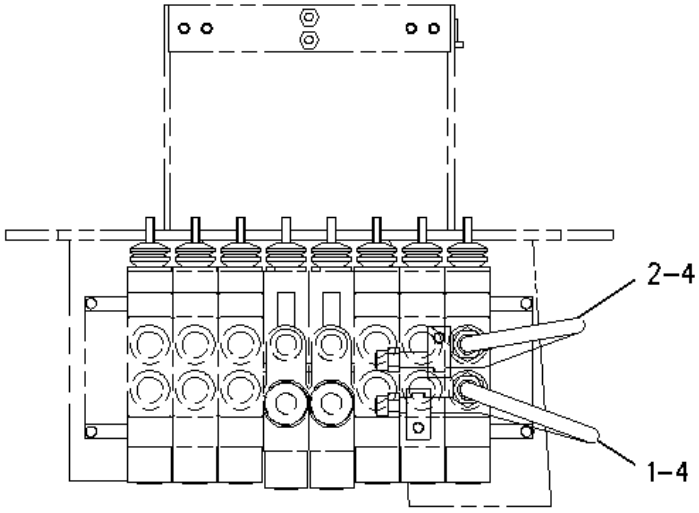

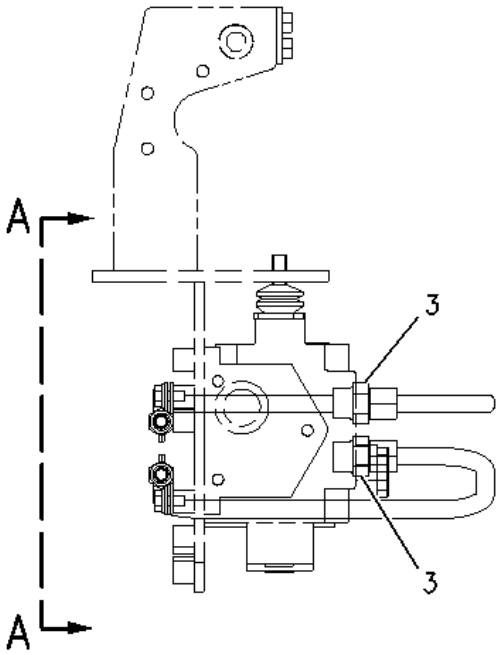

1	NPR	116-2302	1	TUBE AS
2	NPR	185-7861	1	TUBE AS
3	NPR	148-8341	2	CONNECTOR AS
	NPR	6V-8713	1	CONNECTOR
	NPR	3D-2824	1	SEAL-O-RING
	NPR	7J-9108	1	SEAL-O-RING
4	NPR	6V-8398	2	SEAL-O-RING
5	NPR	8T-4121	2	WASHER-HARD (11X21X2.5-MM THK)
6	NPR M	8T-4137	2	BOLT (M10X1.5X20-MM)
7	NPR	9R-1004	2	CLIP (TAB)
8	NPR	9R-1005	2	CLIP (SLOT)

Key: M - METRIC PART

194-0799 LINES GP-HYDRAULIC --S/N 4ZN16044-50156--POWER MODE

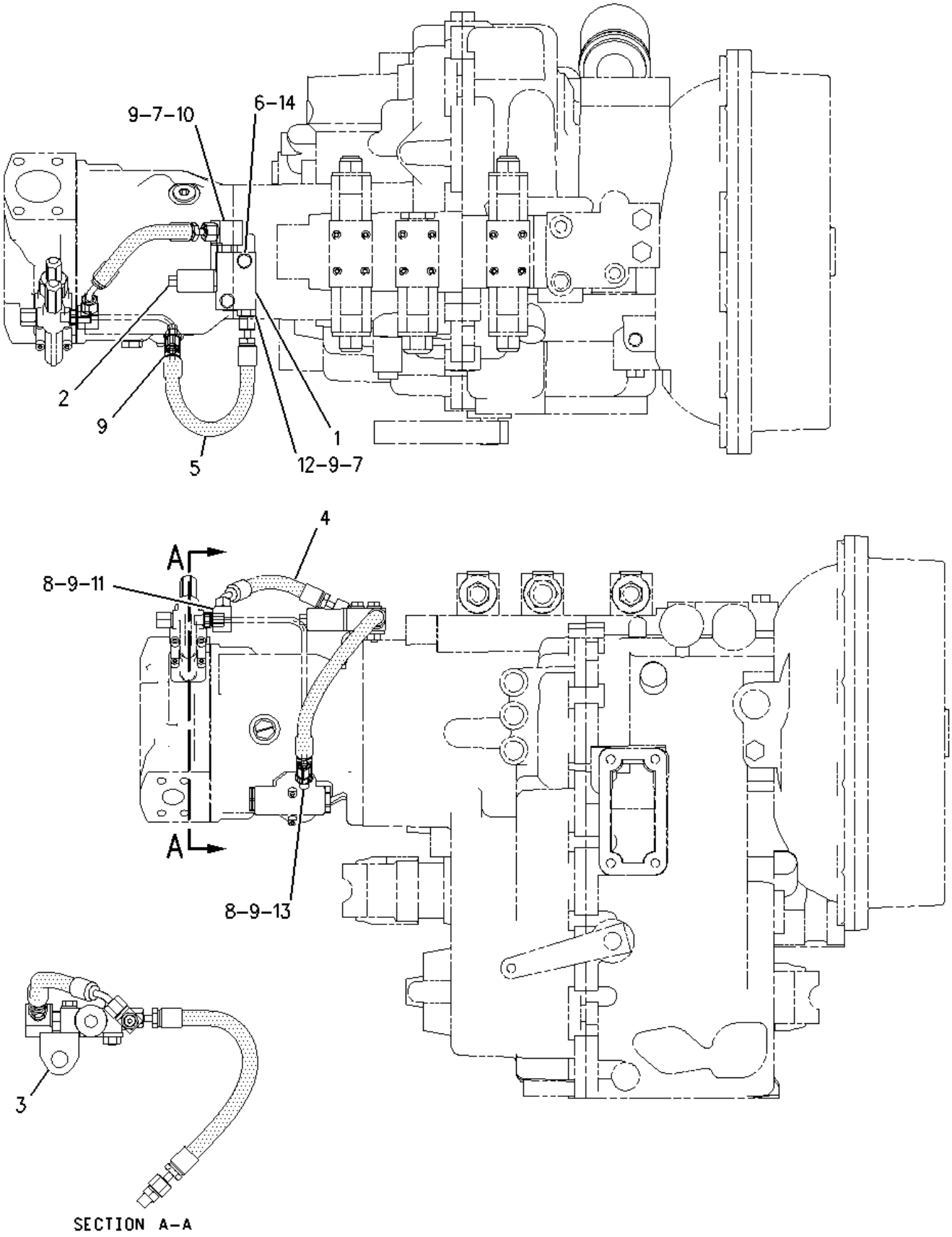

1	NPR	100-3372	1	MANIFOLD
2	NPR J	122-8302	1	VALVE GP-SOLENOID
	NPR	3E-8621	1	COIL AS
	NPR	9X-3418	1	CARTRIDGE AS
3	NPR	192-7612	1	BRACKET AS
	NPR M	8T-3612	2	NUT-WELD (M8X1.25-THD)
4	NPR I	194-0797	1	HOSE AS
5	NPR I	194-0798	1	HOSE AS
6	NPR M	099-3649	2	BOLT (M8X1.25X40-MM)
7	NPR	3J-1907	2	SEAL-O-RING
8	NPR	3J-7354	2	SEAL-O-RING
9	NPR	4J-5477	4	SEAL-O-RING
10	NPR	6V-8627	1	ELBOW
11	NPR	6V-8628	1	ELBOW
12	NPR	6V-8641	1	CONNECTOR
13	NPR	6V-8647	1	CONNECTOR
14	NPR	8T-4224	2	WASHER-HARD (8.8X16X2-MM THK)

AVAILABLE REPAIR KIT(S):

	NPR J	9X-3461	1	KIT-SEAL

Key:

I - REFER TO HYDRAULIC INFORMATION SYSTEM
J - KIT(S) MARKED J AVAILABLE FOR PART(S) MARKED J

157-0491 LINES GP-LOAD CONTROL VALVE --S/N 4ZN16044-50156--BOOM & STICK
PART OF 154-5314 BACKHOE AR-EXTENDABLE STICK, 154-5302, 154-5305, 154-5308 BACKHOE AR-STANDARD STICK
Type 1

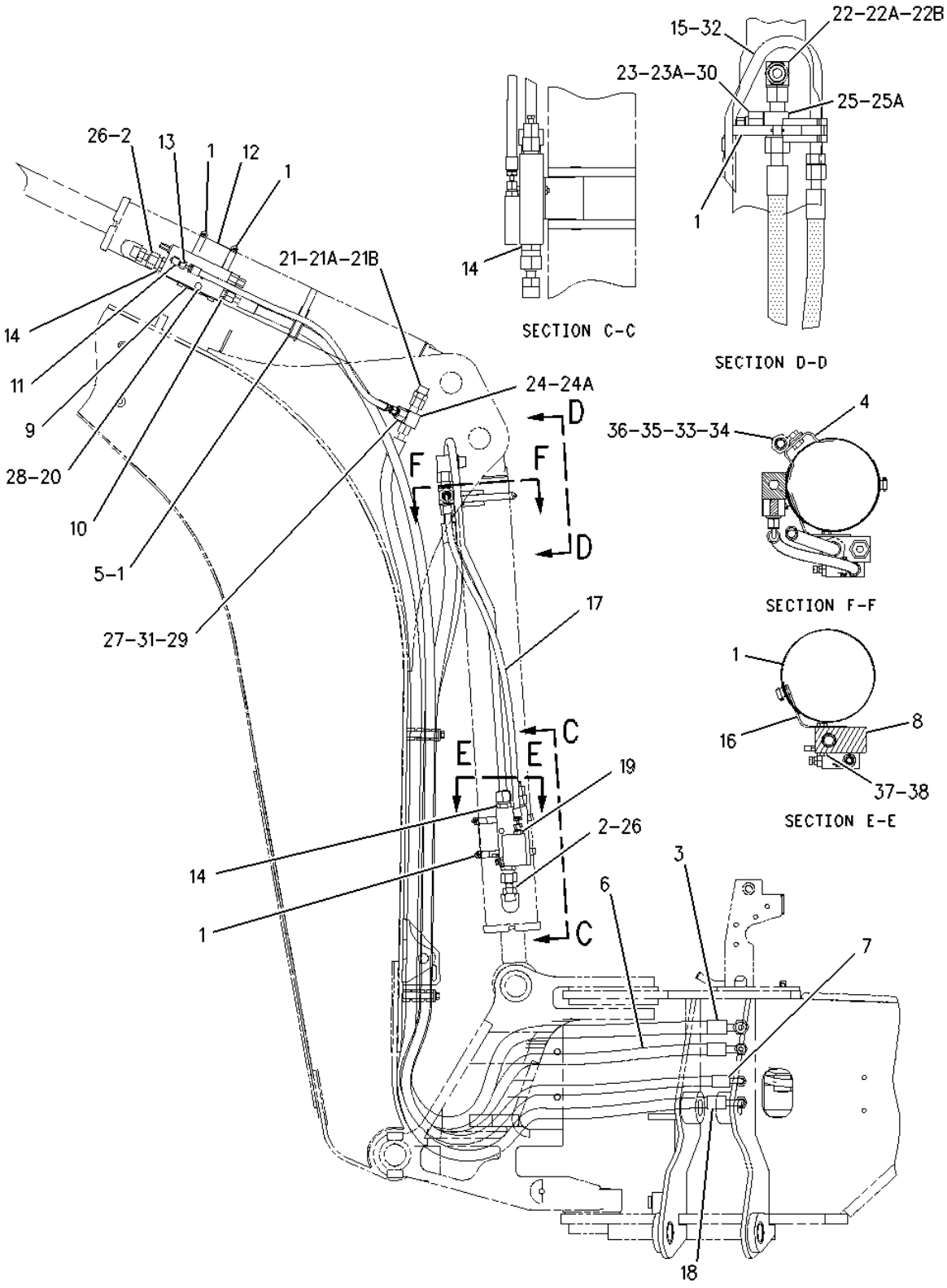

1 NPR 5P-0599 6 CLAMP-BAND

2 NPR 7X-3166 2 ADAPTER-SWIVEL

3 NPR I 8Y-7369 1 HOSE AS

4	NPR	9R-4619	1	SUPPORT AS
	NPR M	6V-8224	1	NUT-WELD (M10X1.15-THD)
5	NPR	173-3995	1	BLOCK
6	NPR I	9R-9165	1	HOSE AS
7	NPR I	9R-9285	1	HOSE AS
8	NPR	154-3765	1	VALVE GP-LOAD CONTROL
9	NPR	154-3766	1	VALVE GP-LOAD CONTROL
10	NPR	155-8994	1	ADAPTER AS
	NPR	6V-8398	1	SEAL-O-RING
	NPR	155-9644	1	SEAL
11		157-0497	1	ELBOW AS
12		160-8282	1	BRACKET
13	I	160-8283	1	HOSE AS
14		160-8284	3	ADAPTER AS
	(EACH INCLUDES)			
	NPR	6V-9746	1	SEAL-O-RING
	NPR	155-9644	1	SEAL
15		160-9776	1	TUBE AS
16		160-9777	1	BRACKET
17	I	161-1024	1	HOSE AS
18	NPR I	165-6982	1	HOSE AS
19	NPR	170-5121	1	ADAPTER AS
	NPR	4J-5477	1	SEAL-O-RING
	NPR	162-6816	1	SEAL
20	NPR M	085-8091	1	BOLT (M10X1.5X55-MM)

21	NPR	3D-2824	1	SEAL-O-RING
21A	NPR	6V-8713	1	CONNECTOR
21B	NPR	7J-9108	1	SEAL-O-RING
22	NPR	3D-2824	1	SEAL-O-RING
22A	NPR	6V-9007	1	ELBOW
22B	NPR	6V-9746	1	SEAL-O-RING
23	NPR	6V-8397	1	SEAL-O-RING
23A	NPR	6V-8941	1	REDUCER
24	NPR	6V-9838	1	TEE-SWIVEL
24A	NPR	7J-9108	2	SEAL-O-RING
25	NPR	6V-9746	2	SEAL-O-RING
25A	NPR	6V-9839	1	TEE-SWIVEL
26	NPR	3D-2824	2	SEAL-O-RING
27	NPR	4J-5477	1	SEAL-O-RING
28	NPR M	6V-7744	1	LOCKNUT (M10X1.15-THD)
29	NPR	6V-8555	1	NUT-FACE SEAL (1-14-THD)
30	NPR	6V-8556	1	NUT (1-3/16-12-THD)
31	NPR	6V-8937	1	REDUCER-O-RING
32	NPR	7J-9108	1	SEAL-O-RING
33	NPR	8T-1887	1	CLIP (SLOT)
34	NPR	8T-1888	1	CLIP (TAB)
35	NPR	8T-4121	1	WASHER-HARD (11X21X2.5-MM THK)
36	NPR M	8T-4137	1	BOLT (M10X1.5X20-MM)
37	NPR M	8T-6912	1	BOLT (M8X1.25X50-MM)
38	NPR M	8T-7963	1	LOCKNUT (M8X1.25-THD)

39 NPR 3S-2093 20 STRAP-CABLE

Key:

I - REFER TO HYDRAULIC INFORMATION SYSTEM
M - METRIC PART

157-0491 LINES GP-LOAD CONTROL VALVE --S/N 4ZN16044-50156--BOOM & STICK
PART OF 154-5314 BACKHOE AR-EXTENDABLE STICK, 154-5302, 154-5305, 154-5308 BACKHOE AR-STANDARD STICK
Type 2

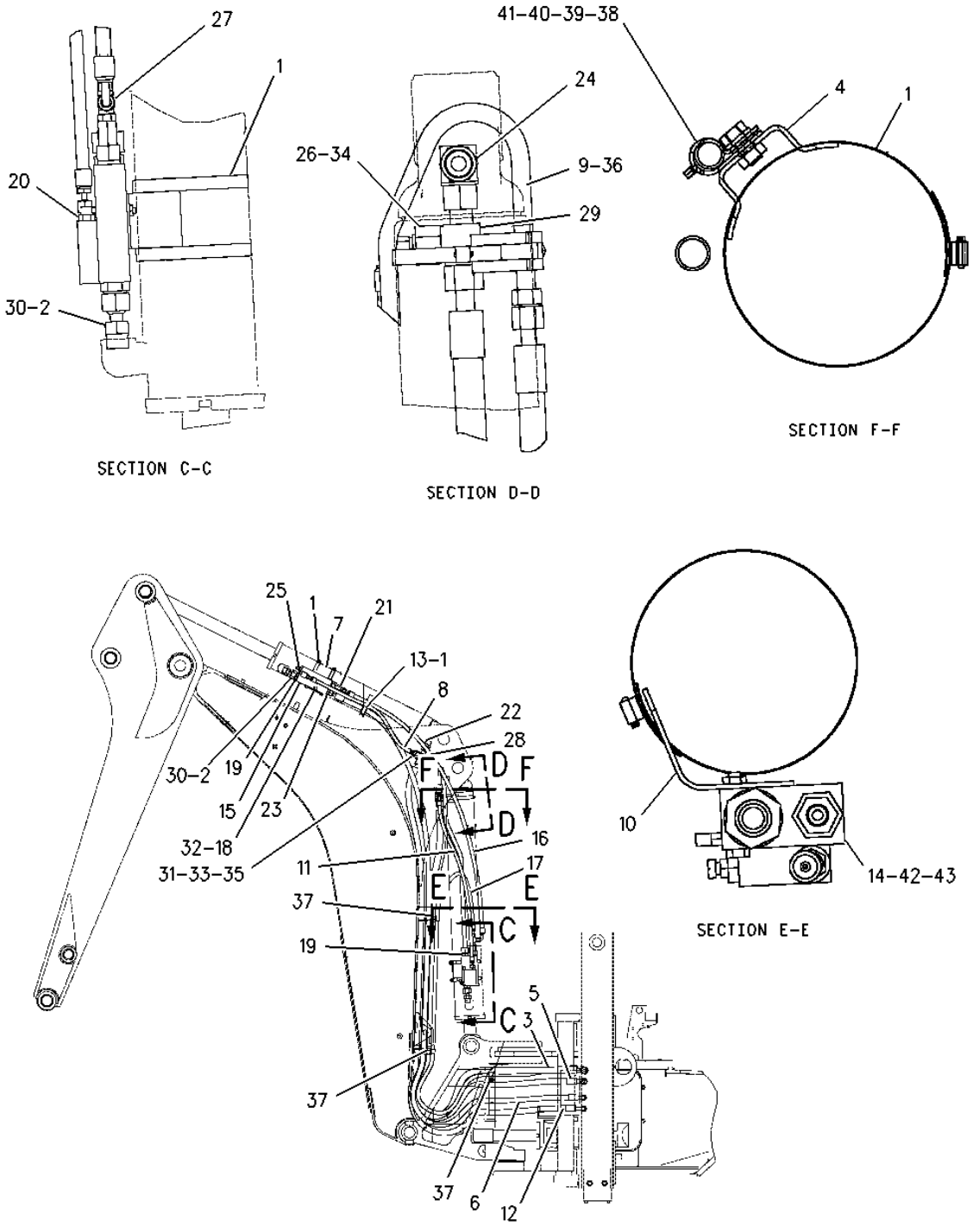

1 NPR 5P-0599 6 CLAMP-BAND

2 NPR 7X-3166 2 ADAPTER-SWIVEL

3 NPR I 8Y-7369 1 HOSE AS

4 NPR 9R-4619 1 SUPPORT AS

	NPR	M	6V-8224	1 NUT-WELD (M10X1.15-THD)
5	NPR	I	9R-9165	1 HOSE AS
6	NPR	I	9R-9285	1 HOSE AS
7			160-8282	1 BRACKET
8		I	160-8283	1 HOSE AS
9			160-9776	1 TUBE AS
10			160-9777	1 BRACKET
11		I	161-1024	1 HOSE AS
12	NPR	I	165-6982	1 HOSE AS
13	NPR		173-3995	1 BLOCK
14	NPR		175-6918	1 VALVE GP-LOAD CONTROL
15	NPR		175-6919	1 VALVE GP-LOAD CONTROL
16	NPR	I	176-8121	1 HOSE AS
17	NPR	I	176-8122	1 HOSE AS
18	NPR	M	085-8091	1 BOLT (M10X1.5X55-MM)
19	NPR		148-8322	3 CONNECTOR AS
	NPR		2M-9780	1 SEAL-O-RING
	NPR		6V-8640	1 CONNECTOR
	NPR		6V-9746	1 SEAL-O-RING
20	NPR		148-8325	1 CONNECTOR AS
	NPR		3J-1907	1 SEAL-O-RING
	NPR		4J-5477	1 SEAL-O-RING
	NPR		6V-8641	1 CONNECTOR
21	NPR		148-8336	1 CONNECTOR AS
	NPR		3J-1907	1 SEAL-O-RING

	NPR	6V-8397	1	SEAL-O-RING
	NPR	6V-8636	1	CONNECTOR
22	NPR	148-8341	1	CONNECTOR AS
	NPR	3D-2824	1	SEAL-O-RING
	NPR	6V-8713	1	CONNECTOR
	NPR	7J-9108	1	SEAL-O-RING
23	NPR	148-8345	1	CONNECTOR AS
	NPR	2M-9780	1	SEAL-O-RING
	NPR	6V-8398	1	SEAL-O-RING
	NPR	6V-8638	1	CONNECTOR
24	NPR	148-8347	1	ELBOW AS
	NPR	3D-2824	1	SEAL-O-RING
	NPR	6V-9007	1	ELBOW
	NPR	6V-9746	1	SEAL-O-RING
25	NPR	148-8368	1	ELBOW AS
	NPR	3J-1907	1	SEAL-O-RING
	NPR	4J-5477	1	SEAL-O-RING
	NPR	6V-8627	1	ELBOW
26	NPR	148-8417	1	REDUCER AS
	NPR	6V-8397	1	SEAL-O-RING
	NPR	6V-8941	1	REDUCER
27	NPR	148-8435	1	TEE AS
	NPR	3J-1907	1	SEAL-O-RING
	NPR	6V-8397	2	SEAL-O-RING
	NPR	6V-8781	1	TEE-FACE SEAL

28	NPR	148-8446	1	TEE GP-SWIVEL
	NPR	6V-9838	1	TEE-SWIVEL
	NPR	7J-9108	2	SEAL-O-RING
29	NPR	148-8449	1	TEE AS-SWIVEL
	NPR	6V-9746	2	SEAL-O-RING
	NPR	6V-9839	1	TEE-SWIVEL
30	NPR	3D-2824	2	SEAL-O-RING
31	NPR	4J-5477	1	SEAL-O-RING
32	NPR M	6V-7744	1	LOCKNUT (M10X1.15-THD)
33	NPR	6V-8555	1	NUT-FACE SEAL (1-14-THD)
34	NPR	6V-8556	1	NUT (1-3/16-12-THD)
35	NPR	6V-8937	1	REDUCER-O-RING
36	NPR	7J-9108	1	SEAL-O-RING
37	NPR	8M-2773	3	CLIP
38	NPR	8T-1887	1	CLIP (SLOT)
39	NPR	8T-1888	1	CLIP (TAB)
40	NPR	8T-4121	1	WASHER-HARD (11X21X2.5-MM THK)
41	NPR M	8T-4137	1	BOLT (M10X1.5X20-MM)
42	NPR M	8T-6912	1	BOLT (M8X1.25X50-MM)
43	NPR M	8T-7963	1	LOCKNUT (M8X1.25-THD)
44	NPR	3S-2093	25	STRAP-CABLE

Key: I - REFER TO HYDRAULIC INFORMATION SYSTEM - M - METRIC PART

121-8338 LINES GP-RETURN --S/N 4ZN23243-50156
PART OF 154-5309 BACKHOE AR-EXTENDABLE STICK, 154-5300, 154-5306 BACKHOE AR-STANDARD STICK

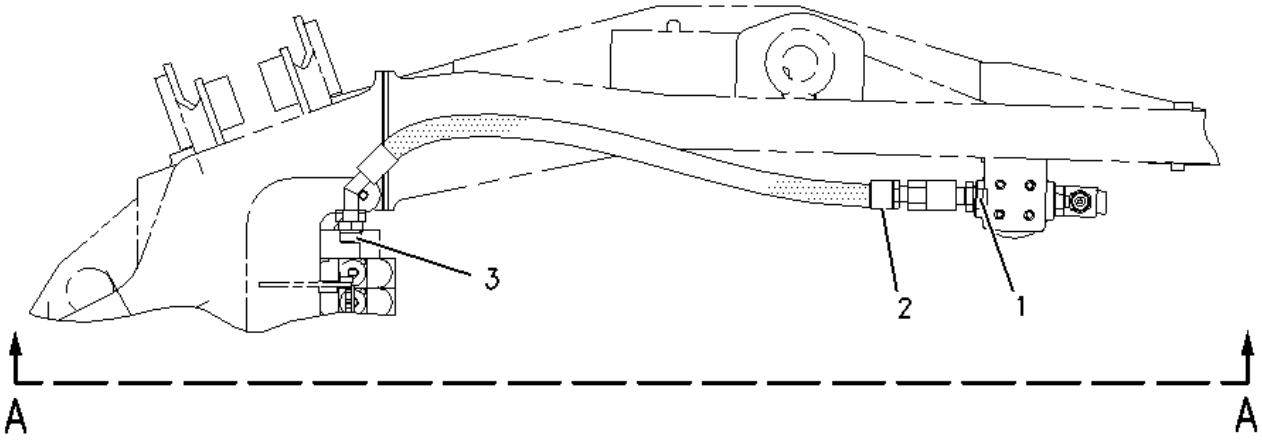

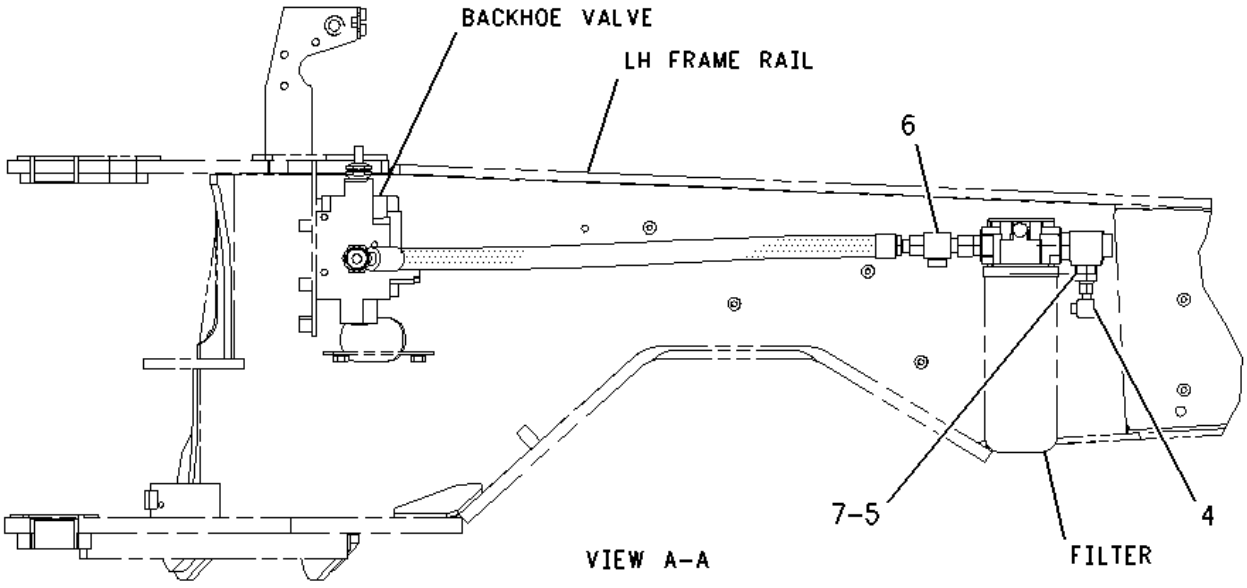

1 NPR CY 178-7480 1 VALVE GP-CHECK

2 NPR CI 178-7546 1 HOSE AS

3 NPR 148-8335 1 CONNECTOR AS

NPR 5K-9090 1 SEAL-O-RING

NPR 6V-8635 1 CONNECTOR

NPR 7M-8485 1 SEAL-O-RING

4 NPR 148-8367 1 ELBOW AS

NPR 6V-8397 1 SEAL-O-RING

NPR 6V-9850 1 ELBOW

5	NPR	148-8417	1	REDUCER AS
	NPR	6V-8397	1	SEAL-O-RING
	NPR	6V-8941	1	REDUCER
6	NPR	148-8429	1	TEE AS
	NPR	5K-9090	2	SEAL-O-RING
	NPR	6V-9840	1	TEE-SWIVEL
7	NPR	9X-6580	1	NUT (1-3/16-12-THD)

Key:

C - CHANGE FROM PREVIOUS TYPE
I - REFER TO HYDRAULIC INFORMATION SYSTEM
Y - SEPARATE ILLUSTRATION

171-4731 LINES GP-CHECK VALVE --S/N 4ZN16044-50156
PART OF 163-9208 CONVERSION GP-LOAD CONTROL

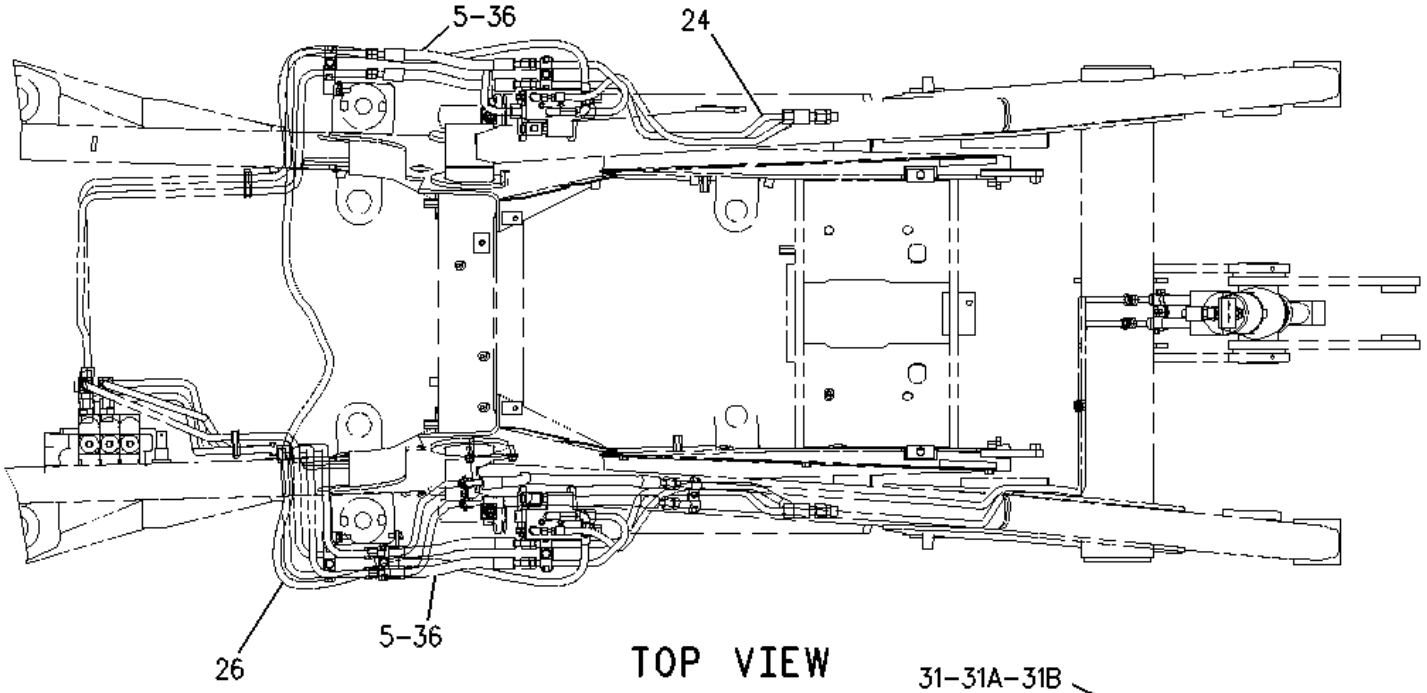

TOP VIEW

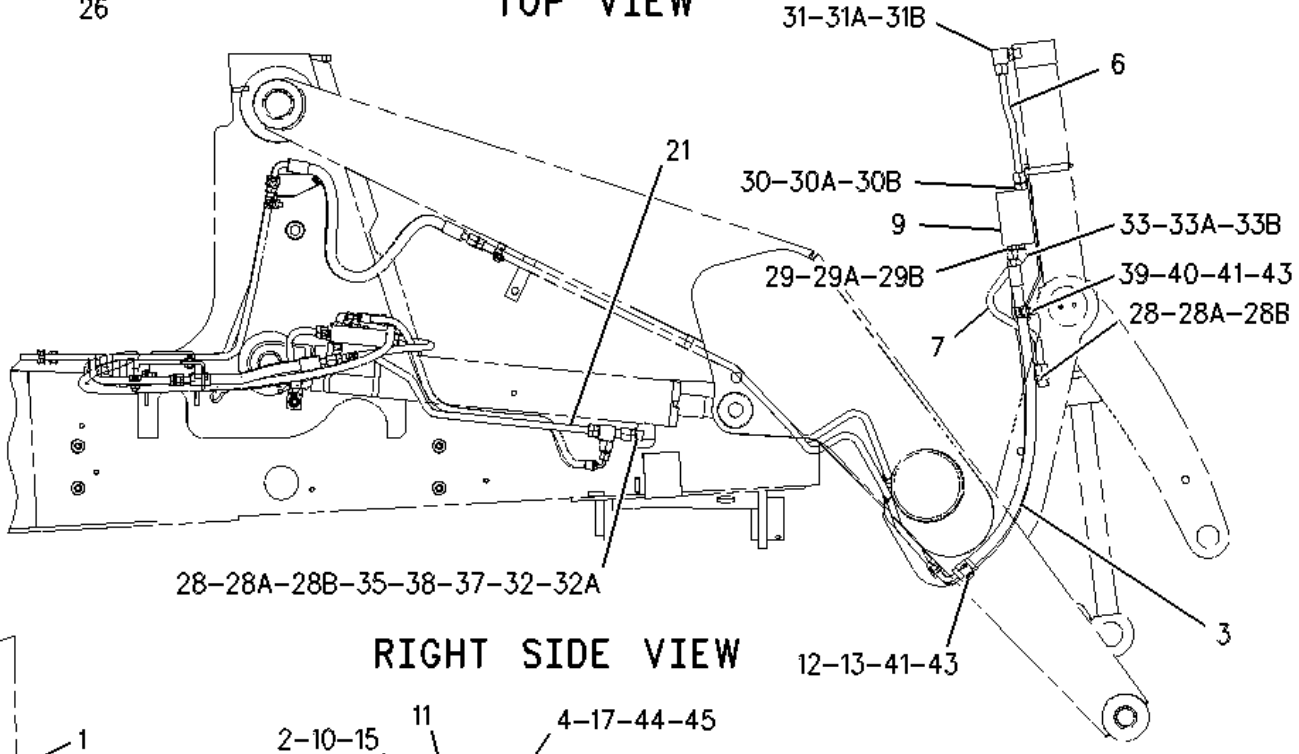

RIGHT SIDE VIEW

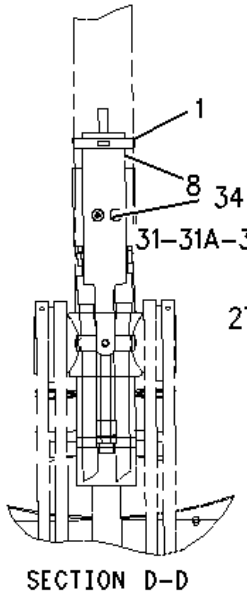

SECTION D-D

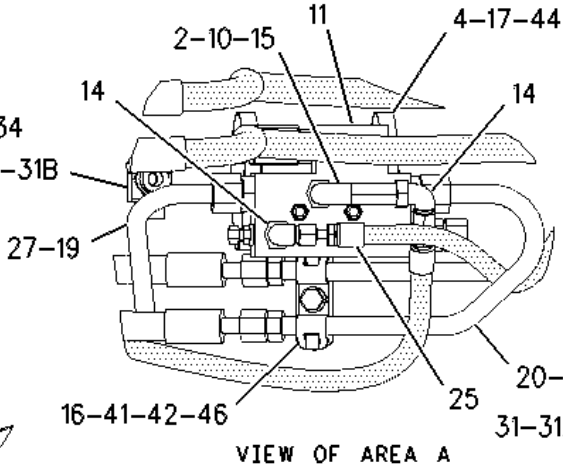

VIEW OF AREA A

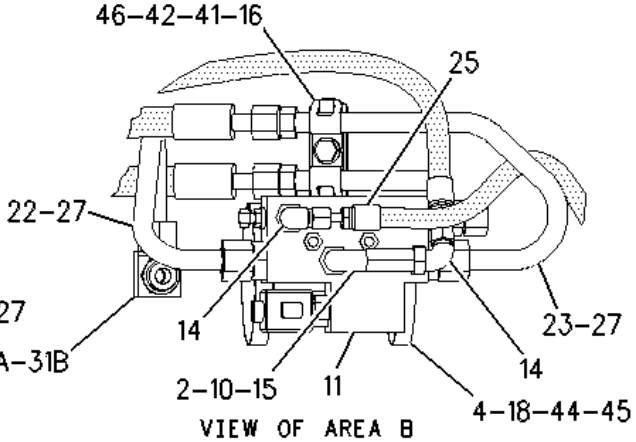

VIEW OF AREA B

1	NPR	5P-0599	1	CLAMP-BAND
2	NPR	6V-0405	2	SEAL-BONDED
3	NPR I	8W-4002	2	HOSE AS
4	NPR	9M-6738	4	CLAMP-HOSE
5	NPR I	9R-7069	4	HOSE AS
6	NPR	9R-9368	1	TUBE AS
7	NPR	9R-9369	1	TUBE AS
8	NPR	9R-9375	1	PLATE
9	NPR Y	9T-5455	1	VALVE GP-LOAD CONTROL
10	NPR	145-0227	2	FUSE
11	NPR	154-3763	2	VALVE GP-LOAD CONTROL
12	NPR	156-3837	2	CLIP (SLOT)
13	NPR	156-3838	1	CLIP (TAB)
14		157-0497	4	ELBOW AS
15		158-2765	2	ELBOW AS
16	NPR	158-3412	4	CLIP (SLOT)
17		158-5964	1	BRACKET AS
	NPR M	8T-3490	1	NUT-WELD (M10X1.5-THD)
18		158-5965	1	BRACKET AS
	NPR M	8T-3490	1	NUT-WELD (M10X1.5-THD)
19		158-8625	1	TUBE AS
20		158-8626	1	TUBE AS
21		158-8627	1	TUBE AS
22		158-8628	1	TUBE AS
23		158-8629	1	TUBE AS

24		158-8630	1	TUBE AS
25	I	161-3981	2	HOSE AS
26	NPR I	161-3998	1	HOSE AS
27	NPR	162-8711	4	ADAPTER AS
	NPR	7J-9108	1	SEAL-O-RING
	NPR	155-9644	1	SEAL
28	NPR	2M-9780	1	SEAL-O-RING
28A	NPR	6V-8642	1	CONNECTOR
28B	NPR	7J-9108	1	SEAL-O-RING
29	NPR	3K-0360	1	SEAL-O-RING
29A	NPR	6V-8398	1	SEAL-O-RING
29B	NPR	6V-8639	1	CONNECTOR
30	NPR	3K-0360	1	SEAL-O-RING
30A	NPR	6V-8632	1	CONNECTOR
30B	NPR	7J-9108	1	SEAL-O-RING
31	NPR	2M-9780	1	SEAL-O-RING
31A	NPR	6V-8626	1	ELBOW
31B	NPR	7J-9108	1	SEAL-O-RING
32	NPR	6V-9838	1	TEE-SWIVEL
32A	NPR	7J-9108	2	SEAL-O-RING
33	NPR	3K-0360	1	SEAL-O-RING
33A	NPR	7J-9108	1	SEAL-O-RING
33B	NPR	8T-2530	1	ELBOW
34	NPR M	3T-0850	2	SCREW (M10X1.5-THD)
35	NPR	6V-8397	2	SEAL-O-RING

36	NPR	6V-8398	4	SEAL-O-RING
37	NPR	6V-8555	2	NUT-FACE SEAL (1-14-THD)
38	NPR	6V-8938	2	REDUCER-O-RING
39	NPR	8T-1891	2	CLIP (SLOT)
40	NPR	8T-1892	2	CLIP (TAB)
41	NPR	8T-4121	4	WASHER-HARD (11X21X2.5-MM THK)
42	NPR M	8T-4136	2	BOLT (M10X1.5X25-MM)
43	NPR M	8T-4195	2	BOLT (M10X1.5X30-MM)
44	NPR M	8T-6912	4	BOLT (M8X1.25X50-MM)
45	NPR M	8T-7963	4	LOCKNUT (M8X1.25-THD)
46	NPR	9R-7803	2	CLIP (TAB)
47	NPR	3S-2093	45	STRAP-CABLE

Key:

I - REFER TO HYDRAULIC INFORMATION SYSTEM
M - METRIC PART
Y - SEPARATE ILLUSTRATION

144-6253 LINES GP-LIFT CYLINDER --S/N 4ZN16044-50156
PART OF 154-5284 COMMON AR

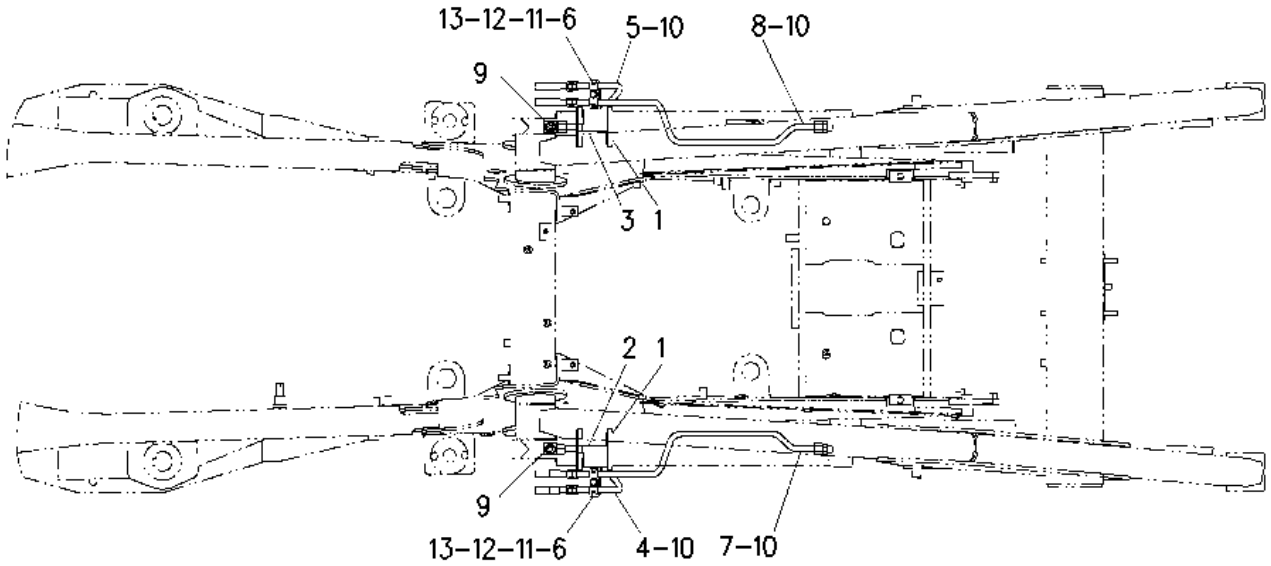

1	**NPR**	**8T-6726**	**4**	**CLAMP-HOSE**
2	**NPR**	**9R-7070**	**1**	**PLATE AS**
3	**NPR**	**9R-7071**	**1**	**PLATE AS**
4	**NPR**	**144-6256**	**1**	**TUBE AS**
5	**NPR**	**144-6258**	**1**	**TUBE AS**
6	**NPR**	**158-3412**	**4**	**CLIP (SLOT)**
7	**NPR**	**207-5479**	**1**	**TUBE AS**
8	**NPR**	**207-5480**	**1**	**TUBE AS**
9	**NPR**	**148-8390**	**2**	**ELBOW AS**

	(EACH INCLUDES)			
	NPR	2M-9780	1	SEAL-O-RING
	NPR	6V-8626	1	ELBOW
	NPR	7J-9108	1	SEAL-O-RING
10	NPR	6V-8398	4	SEAL-O-RING
11	NPR	8T-4121	2	WASHER-HARD (11X21X2.5-MM THK)
12	NPR M	8T-4136	2	BOLT (M10X1.5X25-MM)
13	NPR	9R-7803	2	CLIP (TAB)

Key:

M - METRIC PART

163-9371 LINES GP-LIFT CYLINDER --S/N 4ZN16044-50156
PART OF 159-4870, 159-4872 HYDRAULIC AR

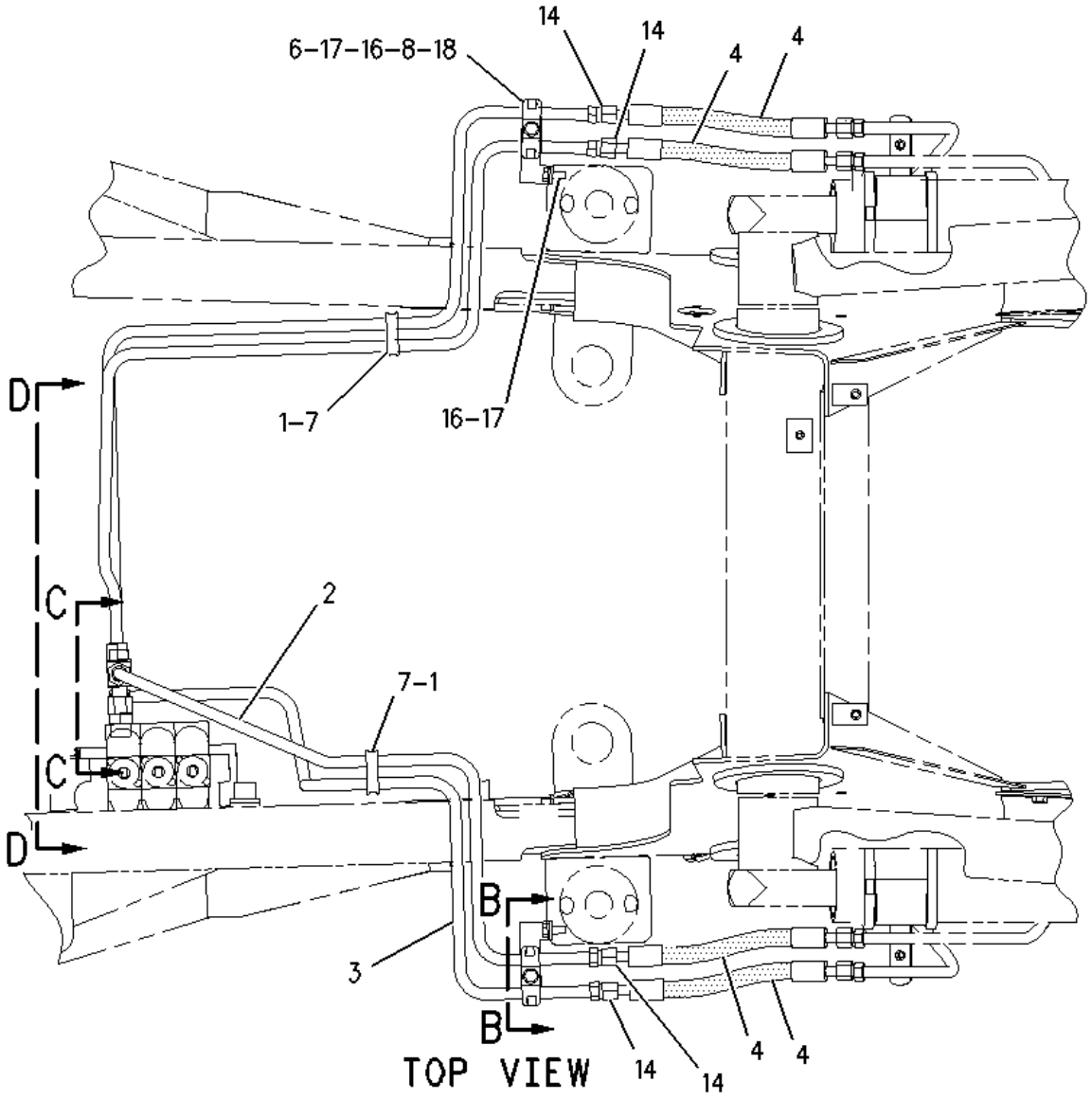

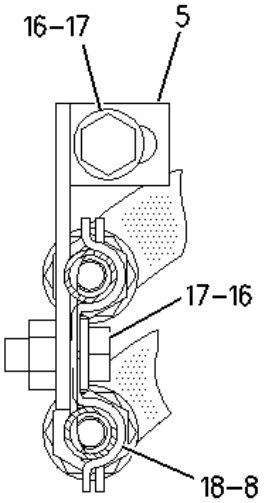

SECTION B-B

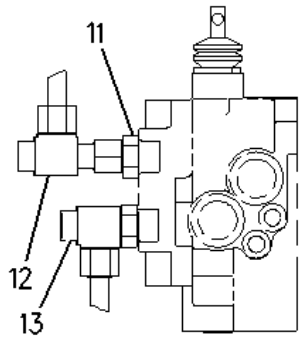

SECTION C-C

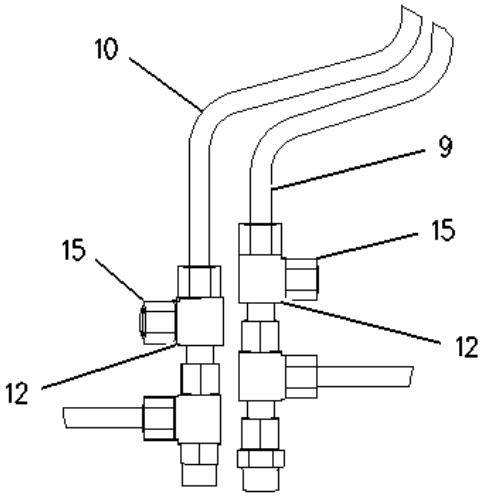

SECTION D-D

1	NPR	7K-1181	2	STRAP-CABLE
2	NPR	112-5825	1	TUBE AS
3	NPR	112-5828	1	TUBE AS
4	NPR I	120-1324	4	HOSE AS
5	NPR	122-4872	1	BRACKET AS
6	NPR	122-4873	1	BRACKET AS
7	NPR	151-4841	2	BLOCK
8	NPR	158-3412	4	CLIP (SLOT)
9	NPR	163-5676	1	TUBE AS
10	NPR	163-5677	1	TUBE AS
11	NPR	148-8341	1	CONNECTOR AS
	NPR	3D-2824	1	SEAL-O-RING
	NPR	6V-8713	1	CONNECTOR
	NPR	7J-9108	1	SEAL-O-RING
12	NPR	148-8446	3	TEE GP-SWIVEL
	(EACH INCLUDES)			
	NPR	6V-9838	1	TEE-SWIVEL
	NPR	7J-9108	2	SEAL-O-RING
13	NPR	150-3063	1	TEE AS
	NPR	3D-2824	1	SEAL-O-RING
	NPR	7J-9108	2	SEAL-O-RING
	NPR	120-9809	1	TEE
14	NPR	6V-8398	4	SEAL-O-RING
15	NPR	6V-9831	2	CAP AS
16	NPR	8T-4121	4	WASHER-HARD (11X21X2.5-MM THK)
17	NPR M	8T-4136	4	BOLT (M10X1.5X25-MM)
18	NPR	9R-7803	2	CLIP (TAB)

Key: I - REFER TO HYDRAULIC INFORMATION SYSTEM M - METRIC PART

163-9373 LINES GP-LIFT CYLINDER --S/N 4ZN16044-50156
PART OF 154-5417 CONTROL AR-RIDE

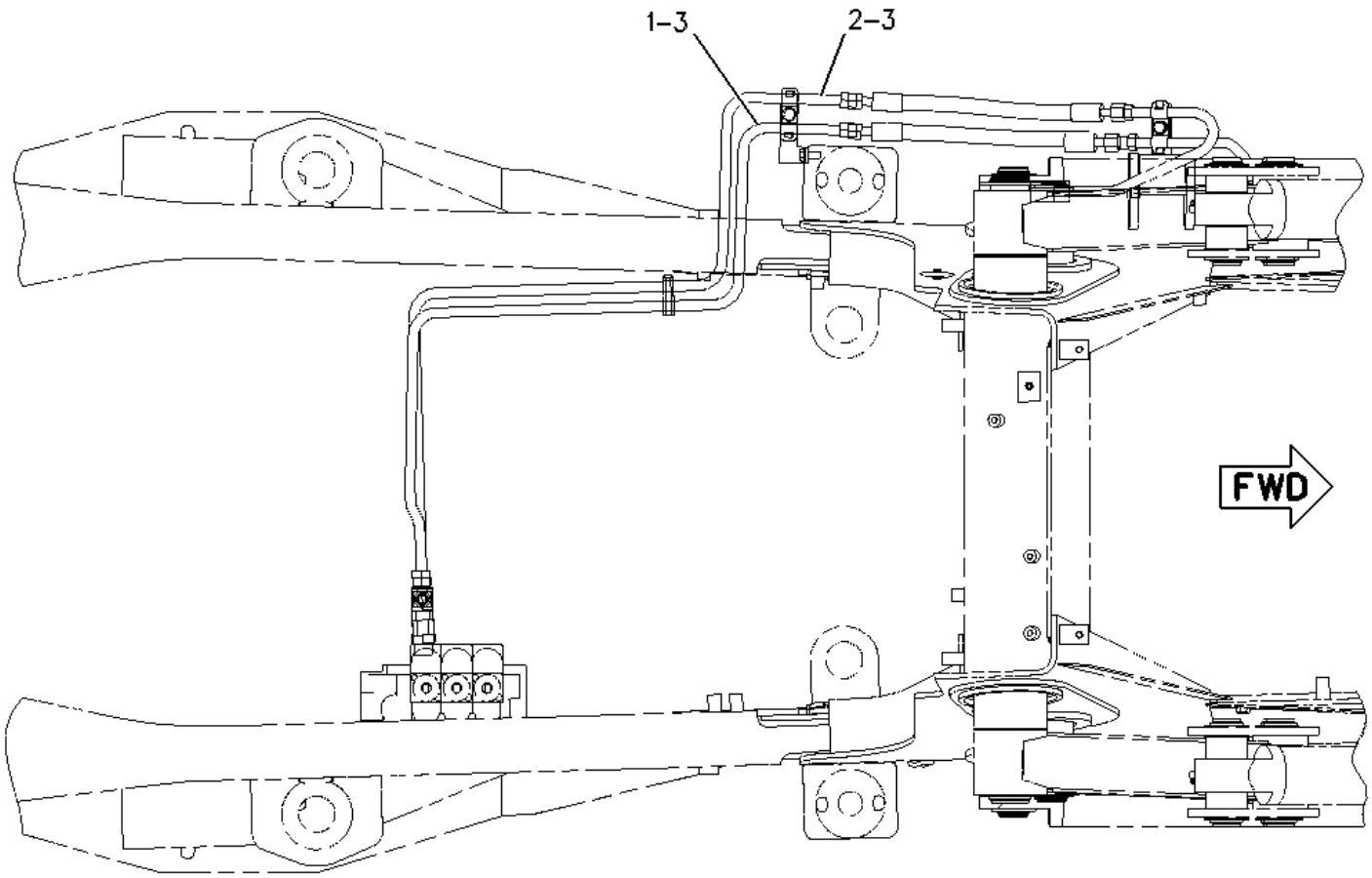

TOP VIEW

1	**NPR**	**112-5823**	**1**	**TUBE AS**
2	**NPR**	**112-5827**	**1**	**TUBE AS**
3	**NPR**	**6V-8398**	**2**	**SEAL-O-RING**

164-2337 LINES GP-LIFT CYLINDER ---S/N 4ZN16044-50156
PART OF 163-9199, 163-9200 HYDRAULIC AR---Type 1

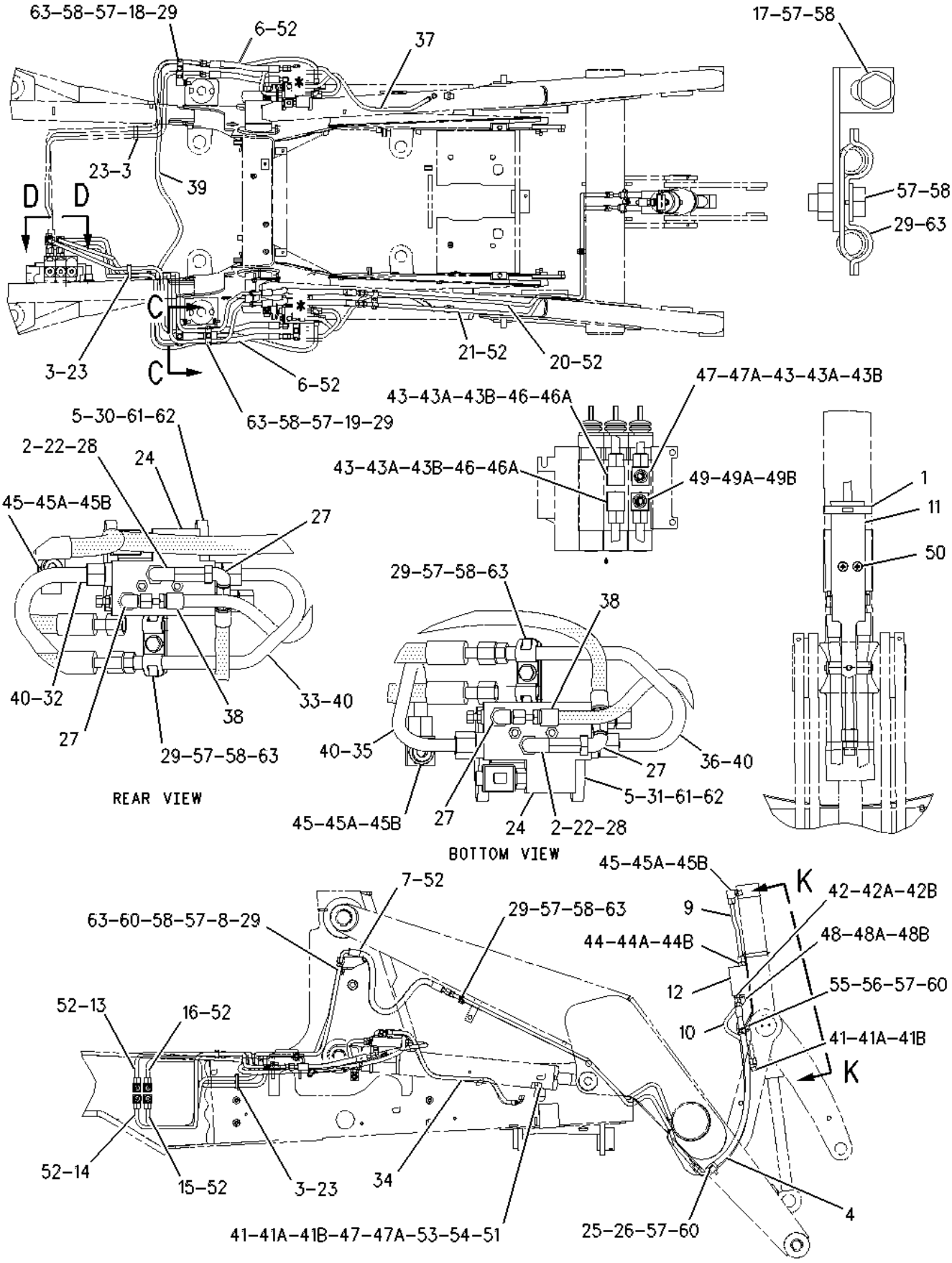

1 NPR 5P-0599 1 CLAMP-BAND

2 NPR 6V-0405 2 SEAL-BONDED

3	NPR	7K-1181	3	STRAP-CABLE
4	NPR I	8W-4002	2	HOSE AS
5	NPR	9M-6738	4	CLAMP-HOSE
6	NPR I	9R-7069	4	HOSE AS
7	NPR I	9R-9198	2	HOSE AS
8	NPR	9R-9316	1	BRACKET AS
9	NPR	9R-9368	1	TUBE AS
10	NPR	9R-9369	1	TUBE AS
11	NPR	9R-9375	1	PLATE
12	NPR Y	9T-5455	1	VALVE GP-LOAD CONTROL
13	NPR	112-5825	1	TUBE AS
14	NPR	112-5828	1	TUBE AS
15	NPR	116-4618	1	TUBE AS
16	NPR	116-4619	1	TUBE AS
17	NPR	122-4872	1	BRACKET AS
18	NPR	122-4873	1	BRACKET AS
19	NPR	122-5822	1	BRACKET AS
20	NPR	123-9173		TUBE AS
21	NPR	123-9174	1	TUBE AS
22	NPR	145-0227	2	FUSE
23	NPR	151-4841	3	BLOCK
24	NPR	154-3763	2	VALVE GP-LOAD CONTROL
25	NPR	156-3837	2	CLIP (SLOT)
26	NPR	156-3838	1	CLIP (TAB)
27		157-0497	4	ELBOW AS

28		158-2765	2	ELBOW AS
29	NPR	158-3412	16	CLIP (SLOT)
30		158-5964	1	BRACKET AS
31		158-5965	1	BRACKET AS
32		158-8625	1	TUBE AS
33		158-8626	1	TUBE AS
34		158-8627	1	TUBE AS
35		158-8628	1	TUBE AS
36		158-8629	1	TUBE AS
37		158-8630	1	TUBE AS
38	I	161-3981	2	HOSE AS
39	NPR I	161-3998	1	HOSE AS
40	NPR	162-8711	4	ADAPTER AS
	(EACH INCLUDES)			
	NPR	7J-9108	1	SEAL-O-RING
	NPR	155-9644	1	SEAL
41	NPR	2M-9780	3	SEAL-O-RING
41A	NPR	6V-8642	3	CONNECTOR
41B	NPR	7J-9108	3	SEAL-O-RING
42	NPR	3K-0360	2	SEAL-O-RING
42A	NPR	6V-8398	2	SEAL-O-RING
42B	NPR	6V-8639	2	CONNECTOR
43	NPR	3D-2824	3	SEAL-O-RING
43A	NPR	6V-8713	3	CONNECTOR
43B	NPR	7J-9108	3	SEAL-O-RING

44	NPR	3K-0360	1	SEAL-O-RING
44A	NPR	6V-8632	1	CONNECTOR
44B	NPR	7J-9108	1	SEAL-O-RING
45	NPR	2M-9780	3	SEAL-O-RING
45A	NPR	6V-8626	3	ELBOW
45B	NPR	7J-9108	3	SEAL-O-RING
46	NPR	6V-9852	2	ELBOW (SWIVEL)
46A	NPR	7J-9108	2	SEAL-O-RING
47	NPR	6V-9838	3	TEE-SWIVEL
47A	NPR	7J-9108	6	SEAL-O-RING
48	NPR	3K-0360	1	SEAL-O-RING
48A	NPR	7J-9108	1	SEAL-O-RING
48B	NPR	8T-2530	1	ELBOW
49	NPR	3D-2824	1	SEAL-O-RING
49A	NPR	7J-9108	2	SEAL-O-RING
49B	NPR	120-9809	1	TEE
50	NPR M	3T-0850	2	SCREW (M10X1.5-THD)
51	NPR	6V-8397	2	SEAL-O-RING
52	NPR	6V-8398	12	SEAL-O-RING
53	NPR	6V-8555	2	NUT-FACE SEAL (1-14-THD)
54	NPR	6V-8938	2	REDUCER-O-RING
55	NPR	8T-1891	2	CLIP (SLOT)
56	NPR	8T-1892	2	CLIP (TAB)
57	NPR	8T-4121	15	WASHER-HARD (11X21X2.5-MM THK)
58	NPR M	8T-4136	10	BOLT (M10X1.5X25-MM)

59	NPR M	8T-4137	1	BOLT (M10X1.5X20-MM)
60	NPR M	8T-4195	4	BOLT (M10X1.5X30-MM)
61	NPR M	8T-6912	4	BOLT (M8X1.25X50-MM)
62	NPR M	8T-7963	4	LOCKNUT (M8X1.25-THD)
63	NPR	9R-7803	8	CLIP (TAB)
64	NPR B	3S-2093	45	STRAP-CABLE

Key:

B - USE AS REQUIRED
I - REFER TO HYDRAULIC INFORMATION SYSTEM
M - METRIC PART
Y - SEPARATE ILLUSTRATION

164-2337 LINES GP-LIFT CYLINDER
S/N 4ZN16044-50156
PART OF 163-9199, 163-9200 HYDRAULIC AR
Type 2
AN ATTACHMENT

ENTIRE GROUP

Ref.	Qty.	NPR	Note	Part No.	Part Name
Grp		NPR		164-2337	LINES GP-LIFT CYLINDER

INDIVIDUAL PARTS

Ref.	Qty.	NPR	Note	Part No.	Req. Qty.	Part Name
		NPR	Y	9T-5455	1	VALVE GP-LOAD CONTROL
				156-3691	2	ADAPTER AS
		NPR		3J-1907	2	SEAL-O-RING
		NPR		4J-5477	2	SEAL-O-RING
		NPR		081-6352	2	ADAPTER
		NPR		162-8711	4	ADAPTER AS
		NPR		7J-9108	4	SEAL-O-RING
		NPR		155-9644	4	SEAL
		NPR		151-4841	3	BLOCK
		NPR	M	8T-4136	10	BOLT (M10X1.5X25-MM)
		NPR	M	8T-4137	2	BOLT (M10X1.5X20-MM)
		NPR	M	8T-4195	3	BOLT (M10X1.5X30-MM)
		NPR	M	8T-6912	4	BOLT (M8X1.25X50-MM)
		NPR		9R-9316	1	BRACKET AS
		NPR		122-4872	1	BRACKET AS
		NPR		122-4873	1	BRACKET AS
		NPR		122-5822	1	BRACKET AS
				158-5964	1	BRACKET AS
				158-5965	1	BRACKET AS

NPR 5P-0599 1 CLAMP-BAND

NPR 9M-6738 4 CLAMP-HOSE

NPR 156-3837 4 CLIP (SLOT)(SLOT)

NPR 156-3838 2 CLIP (TAB)(TAB)

NPR 158-3412 16 CLIP (SLOT)

NPR 9R-7803 8 CLIP (TAB)

NPR 148-8340 2 CONNECTOR AS

NPR 3K-0360 2 SEAL-O-RING

NPR 6V-8398 2 SEAL-O-RING

NPR 6V-8639 2 CONNECTOR

NPR 148-8342 1 CONNECTOR AS

NPR 3K-0360 1 SEAL-O-RING

NPR 6V-8632 1 CONNECTOR

NPR 7J-9108 1 SEAL-O-RING

NPR 148-8315 7 CONNECTOR AS

NPR 2M-9780 7 SEAL-O-RING

NPR 6V-8642 7 CONNECTOR

NPR 7J-9108 7 SEAL-O-RING

NPR 148-8341 3 CONNECTOR AS

NPR 3D-2824 3 SEAL-O-RING

NPR 6V-8713 3 CONNECTOR

NPR 148-8368 2 ELBOW AS

NPR 3J-1907 2 SEAL-O-RING

NPR 4J-5477 2 SEAL-O-RING

NPR 6V-8627 2 ELBOW

NPR 148-8390 3 ELBOW AS

NPR 2M-9780 3 SEAL-O-RING

NPR 6V-8626 3 ELBOW

NPR 7J-9108 3 SEAL-O-RING

NPR 148-8393 2 ELBOW AS

NPR 6V-9852 2 ELBOW (SWIVEL)

NPR 7J-9108 2 SEAL-O-RING

NPR 150-3037 1 ELBOW AS

NPR 3K-0360 1 SEAL-O-RING

NPR 7J-9108 1 SEAL-O-RING

NPR 8T-2530 1 ELBOW

NPR I 8W-4002 2 HOSE AS

NPR I 9R-7069 4 HOSE AS

NPR I 9R-9198 2 HOSE AS

I 161-3981 2 HOSE AS

NPR I 180-4194 1 HOSE AS

NPR M 8T-7963 4 LOCKNUT (M8X1.25-THD)

NPR 6V-8555 2 NUT-FACE SEAL (1-14-THD)

NPR 9R-9375 1 PLATE

NPR 6V-8938 2 REDUCER-O-RING

NPR M 3T-0850 2 SCREW (M10X1.5-THD)(M10 X 18MM)

NPR C 6V-8397 2 SEAL-O-RING

NPR 6V-8398 12 SEAL-O-RING

NPR 7K-1181 3 STRAP-CABLE

NPR 3S-2093 45 STRAP-CABLE

NPR 150-3063 1 TEE AS

NPR 3D-2824 1 SEAL-O-RING

NPR 7J-9108 2 SEAL-O-RING

NPR 120-9809 1 TEE

NPR 148-8446 3 TEE GP-SWIVEL

NPR 6V-9838 3 TEE-SWIVEL

NPR 7J-9108 6 SEAL-O-RING

NPR 9R-9368 1 TUBE AS

NPR 9R-9369 1 TUBE AS

NPR 112-5825 1 TUBE AS

NPR 112-5828 1 TUBE AS

NPR 116-4618 1 TUBE AS

NPR 116-4619 1 TUBE AS

NPR 123-9173 1 TUBE AS

NPR 123-9174 1 TUBE AS

158-8625 1 TUBE AS

158-8626 1 TUBE AS

158-8627 1 TUBE AS

158-8628 1 TUBE AS

158-8629 1 TUBE AS

158-8630 1 TUBE AS

NPR 175-6916 2 VALVE GP-LOAD CONTROL

NPR 8T-4121 15 WASHER-HARD (11X21X2.5-MM THK)

Key: C - CHANGE FROM PREVIOUS TYPE
I - REFER TO HYDRAULIC INFORMATION SYSTEM
M - METRIC PART Y - SEPARATE ILLUSTRATION

185-3160 LINES GP-LIFT CYLINDER
S/N 4ZN16044-50156
PART OF 154-5417 CONTROL AR-RIDE, 154-5437 HYDRAULIC AR
ALSO AN ATTACHMENT

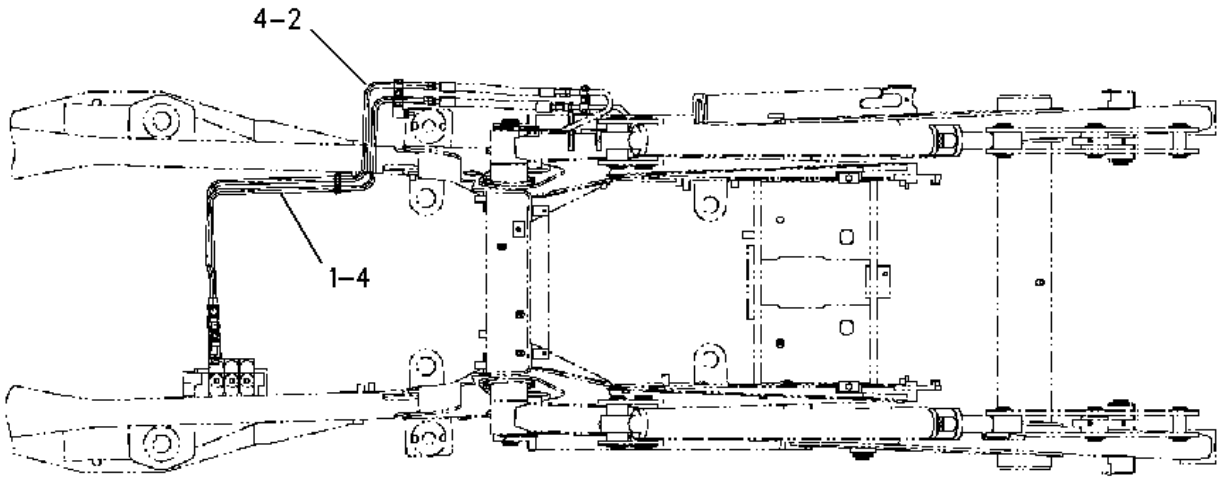

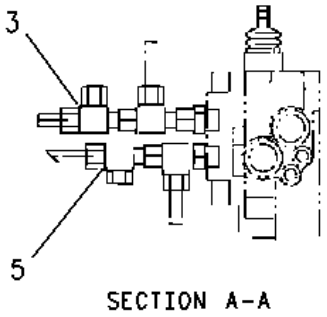

SECTION A–A

1	NPR	163-5676	1	TUBE AS
2	NPR	163-5677	1	TUBE AS
3	NPR	148-8446	2	TEE GP-SWIVEL
	NPR	6V-9838	1	TEE-SWIVEL
	NPR	7J-9108	2	SEAL-O-RING
4	NPR	6V-8398	2	SEAL-O-RING
5	NPR	6V-9831	2	CAP AS

106-5875 LINES GP-TILT CYLINDER --S/N 4ZN16044-50156
PART OF 159-4870, 159-4872 HYDRAULIC AR

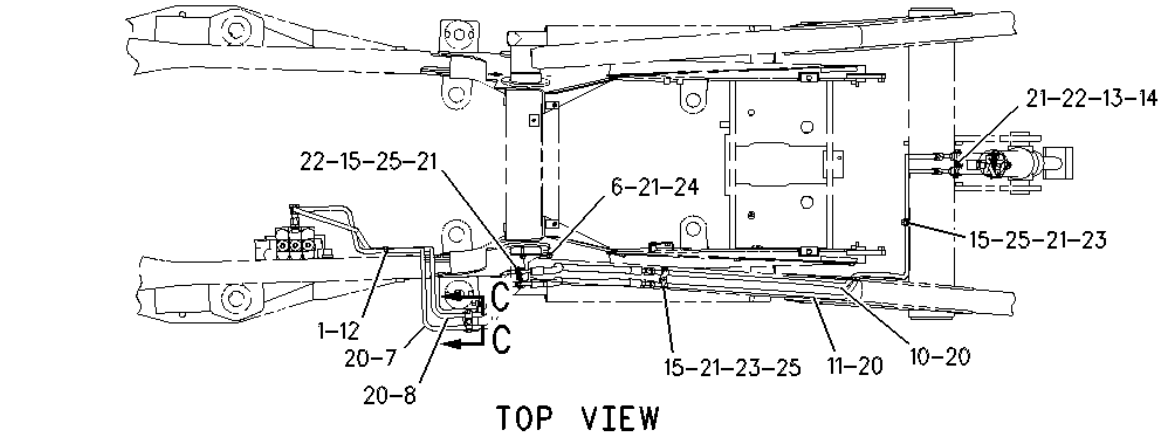

TOP VIEW

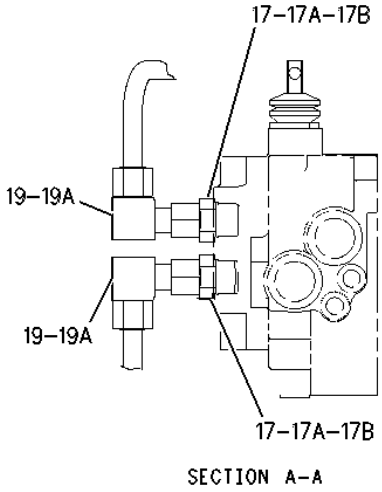

SECTION A–A

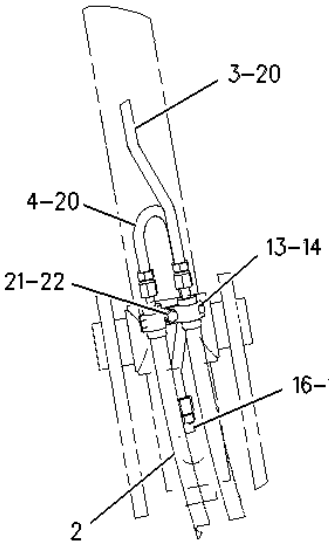

VIEW E–E

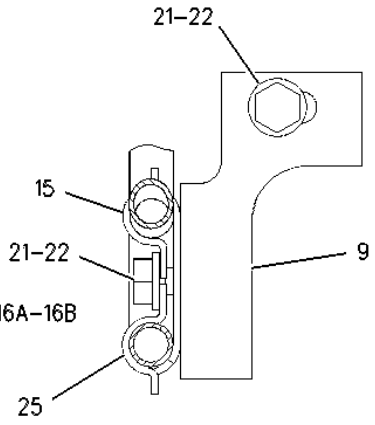

SECTION C–C

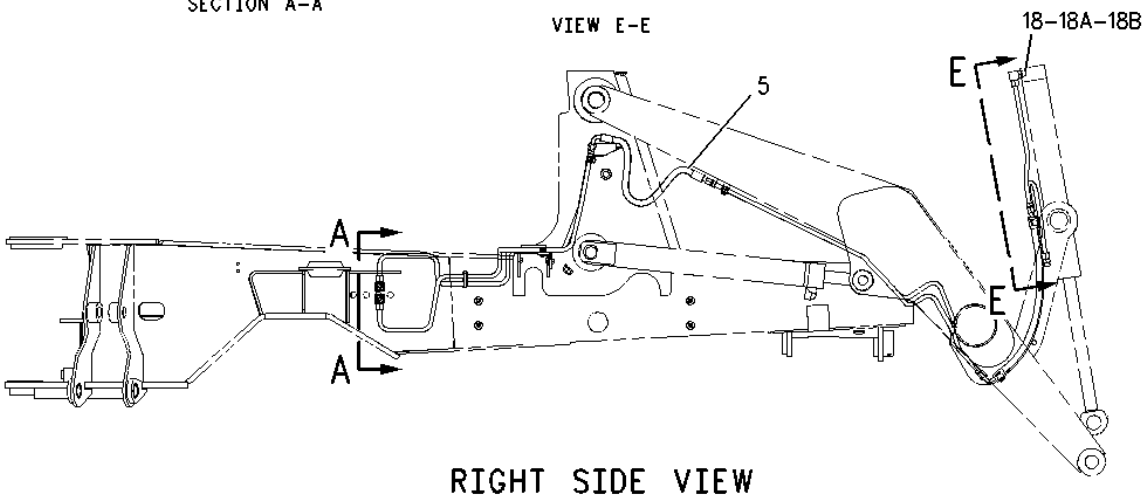

RIGHT SIDE VIEW

1 NPR 7K-1181 1 STRAP-CABLE

2 NPR I 9R-1034 2 HOSE AS

3 NPR 9R-3497 1 TUBE AS

4 NPR 9R-3505 1 TUBE AS

5	NPR I	9R-9198	2	HOSE AS
6	NPR	9R-9316	1	BRACKET AS
7	NPR	116-4618	1	TUBE AS
8	NPR	116-4619	1	TUBE AS
9	NPR	122-5822	1	BRACKET AS
10	NPR	123-9173	1	TUBE AS
11	NPR	123-9174	1	TUBE AS
12	NPR	151-4841	1	BLOCK
13	NPR	156-3837	4	CLIP (SLOT)
14	NPR	156-3838	2	CLIP (TAB)
15	NPR	158-3412	8	CLIP (SLOT)
16	NPR	2M-9780	1	SEAL-O-RING
16A	NPR	6V-8642	1	CONNECTOR
16B	NPR	7J-9108	1	SEAL-O-RING
17	NPR	3D-2824	2	SEAL-O-RING
17A	NPR	6V-8713	2	CONNECTOR
17B	NPR	7J-9108	2	SEAL-O-RING
18	NPR	2M-9780	1	SEAL-O-RING
18A	NPR	6V-8626	1	ELBOW
18B	NPR	7J-9108	1	SEAL-O-RING
19	NPR	6V-9852	2	ELBOW (SWIVEL)
19A	NPR	7J-9108	2	SEAL-O-RING
20	NPR	6V-8398	8	SEAL-O-RING
21	NPR	8T-4121	10	WASHER-HARD (11X21X2.5-MM THK)
22	NPR M	8T-4136	5	BOLT (M10X1.5X25-MM)

23 NPR M 8T-4137 2 BOLT (M10X1.5X20-MM)

24 NPR M 8T-4195 2 BOLT (M10X1.5X30-MM)

25 NPR 9R-7803 4 CLIP (TAB)

Key:

I - REFER TO HYDRAULIC INFORMATION SYSTEM
M - METRIC PART

WORK

TOOL

9R-4668 MOUNTING GP-CYLINDER --S/N 4ZN16044-50156
PART OF 111-8634, 111-8635, 112-0938, 112-0939 BUCKET AR-MULTIPURPOSE

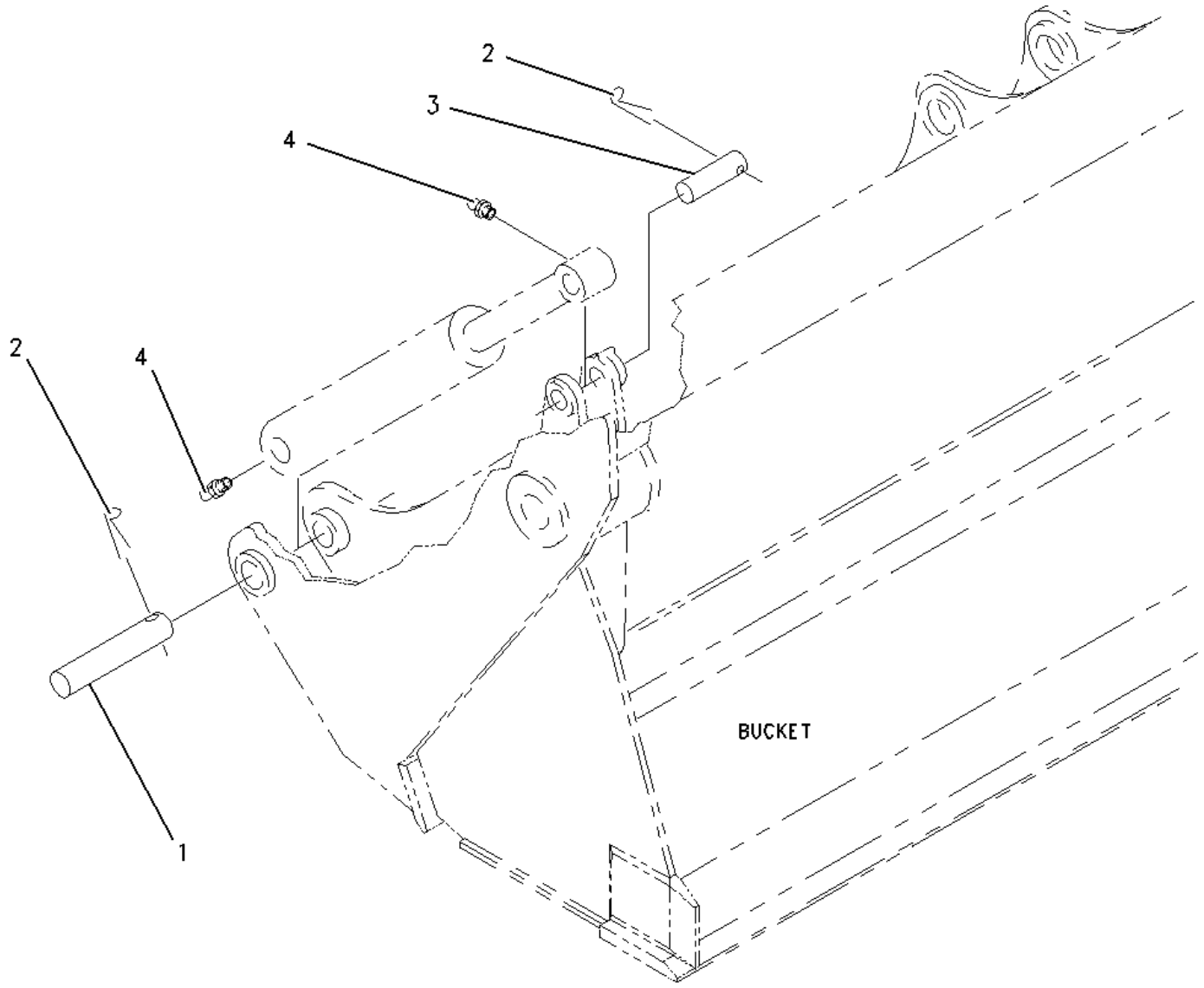

1	**NPR**	**9R-4677**	**2**	**PIN**
2	**NPR**	**3B-5317**	**4**	**PIN-COTTER**
3	**NPR**	**9R-4678**	**2**	**PIN**
4	**NPR**	**3B-8489**	**4**	**FITTING-GREASE**

132-1009 ADAPTER GP-TIP --S/N 4ZN16044-50156

NPR 8E-2184 8 ADAPTER

NPR 4F-3656 16 BOLT-PLOW (5/8-11X2.5-IN)

NPR 4K-0367 16 NUT-FULL (5/8-11-THD)

190-1077 BUCKET AR-GENERAL PURPOSE --S/N 4ZN16044-50156

NPR Y 9R-5321 1 EDGE GP-CUTTING

6Q-3616 1 CONVERSION AR-BUCKET

NPR Y 9R-5989 1 BUCKET GP-GENERAL PURPOSE

Key: Y - SEPARATE ILLUSTRATION

137-3848 MOUNTING GP-BUCKET -BACKHOE --S/N 4ZN16044-50156
CANNOT BE USED WITH HIGH ROTATION LINKAGE BUCKETS

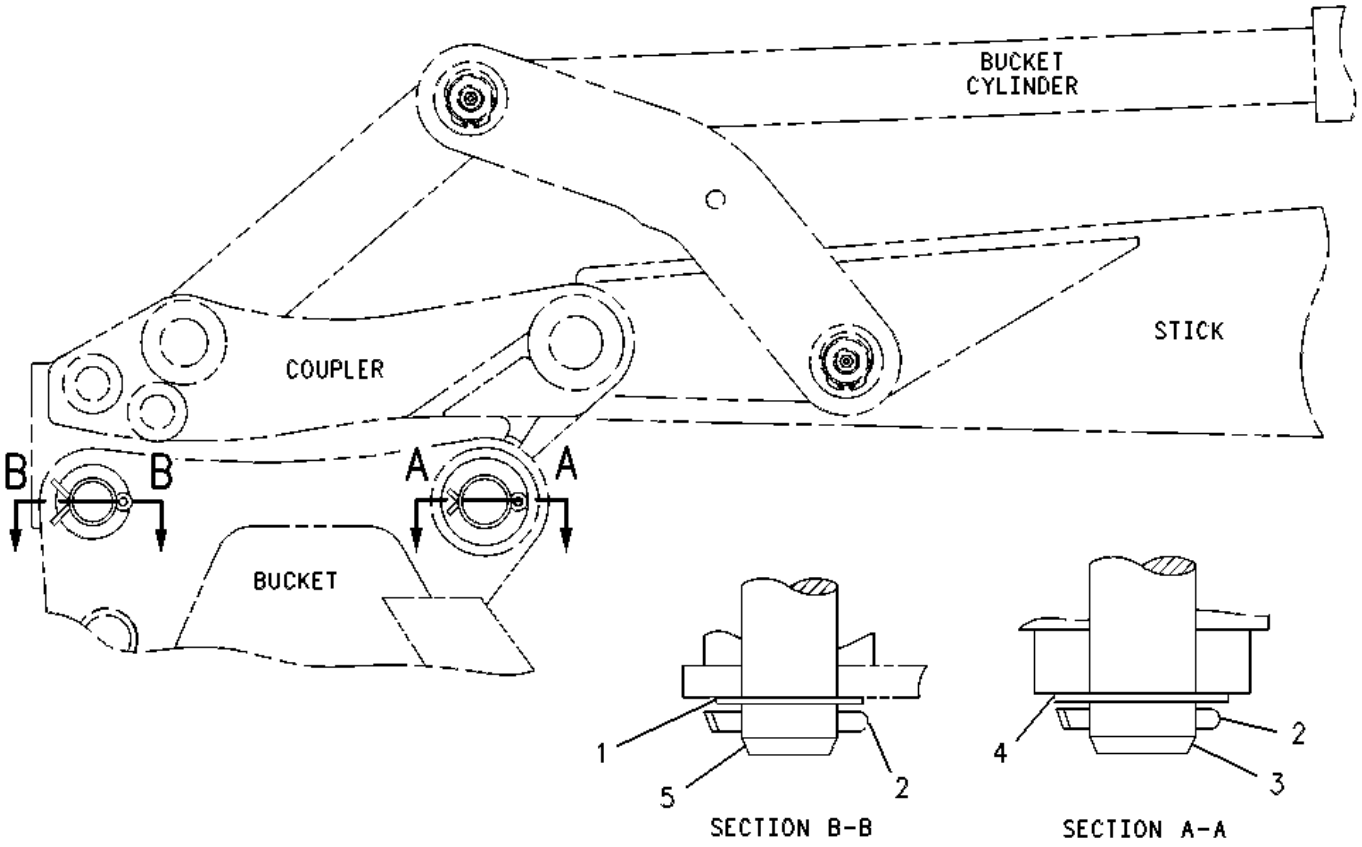

1	**NPR**	**9R-0158**	**5**	**WASHER (46X69X3-MM THK)**
2	**NPR**	**3B-5319**	**4**	**PIN-COTTER**
3	**NPR**	**9R-6162**	**1**	**PIN**
4	**NPR**	**9R-1510**	**2**	**WASHER (51X82X4-MM THK)**
5	**NPR**	**154-5279**	**1**	**PIN**

112-1778 BUCKET GP-MULTIPURPOSE --S/N 4ZN16044-50156
0.95 CU M (1.25 CU YD) -PART OF 112-0939 BUCKET AR-MULTIPURPOSE

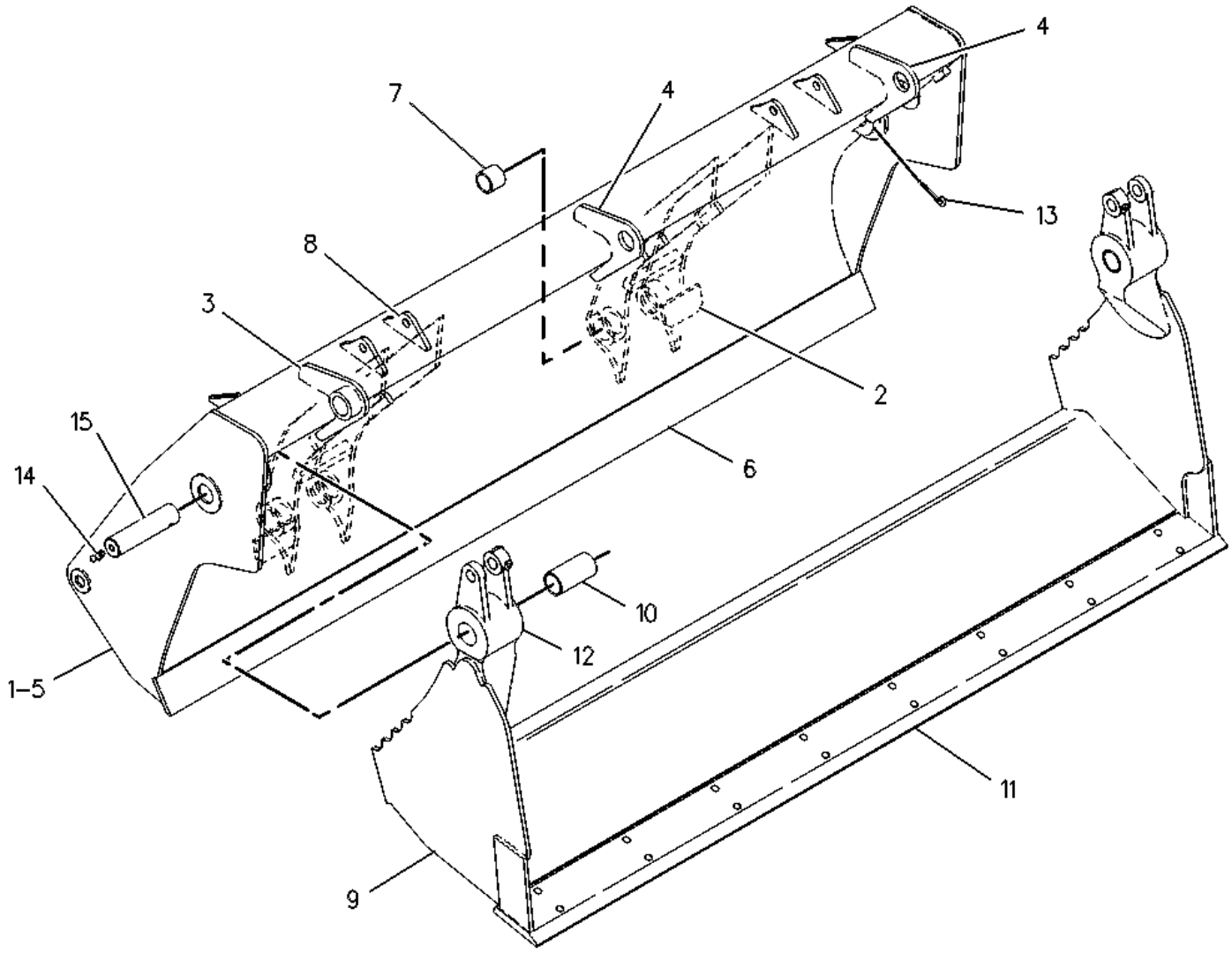

1	**NPR**	**112-1777**	**1**	**BULLDOZER AS**
2	**NPR**	**104-6314**	**2**	**BRACKET**
3	**NPR**	**104-6313**	**1**	**BRACKET AS**
4	**NPR**	**106-9388**	**1**	**BRACKET**
5	**NPR**	**108-3037**	**1**	**BULLDOZER AS**
6	**NPR**	**9R-4670**	**1**	**EDGE**
7	**NPR**	**9R-0111**	**2**	**BEARING-SLEEVE**
8	**NPR**	**110-2861**	**4**	**BRACKET**
9	**NPR**	**126-4224**	**1**	**CLAM AS**

10	**NPR**	**9R-4675**	**2**	**BUSHING-TERMINAL**
11	**NPR**	**9R-4672**	**1**	**EDGE**
12	**NPR**	**9R-5294**	**2**	**HINGE**
13	**NPR**	**4J-1888**	**2**	**PIN-COTTER**
14	**NPR**	**3B-8489**	**2**	**FITTING-GREASE**
15	**NPR**	**9R-4676**	**2**	**PIN**

108-3036 BUCKET GP-MULTIPURPOSE ---S/N 4ZN16044-50156
0.96 CU M (1.25 CU YD) --PART OF 112-0938 BUCKET AR-MULTIPURPOSE

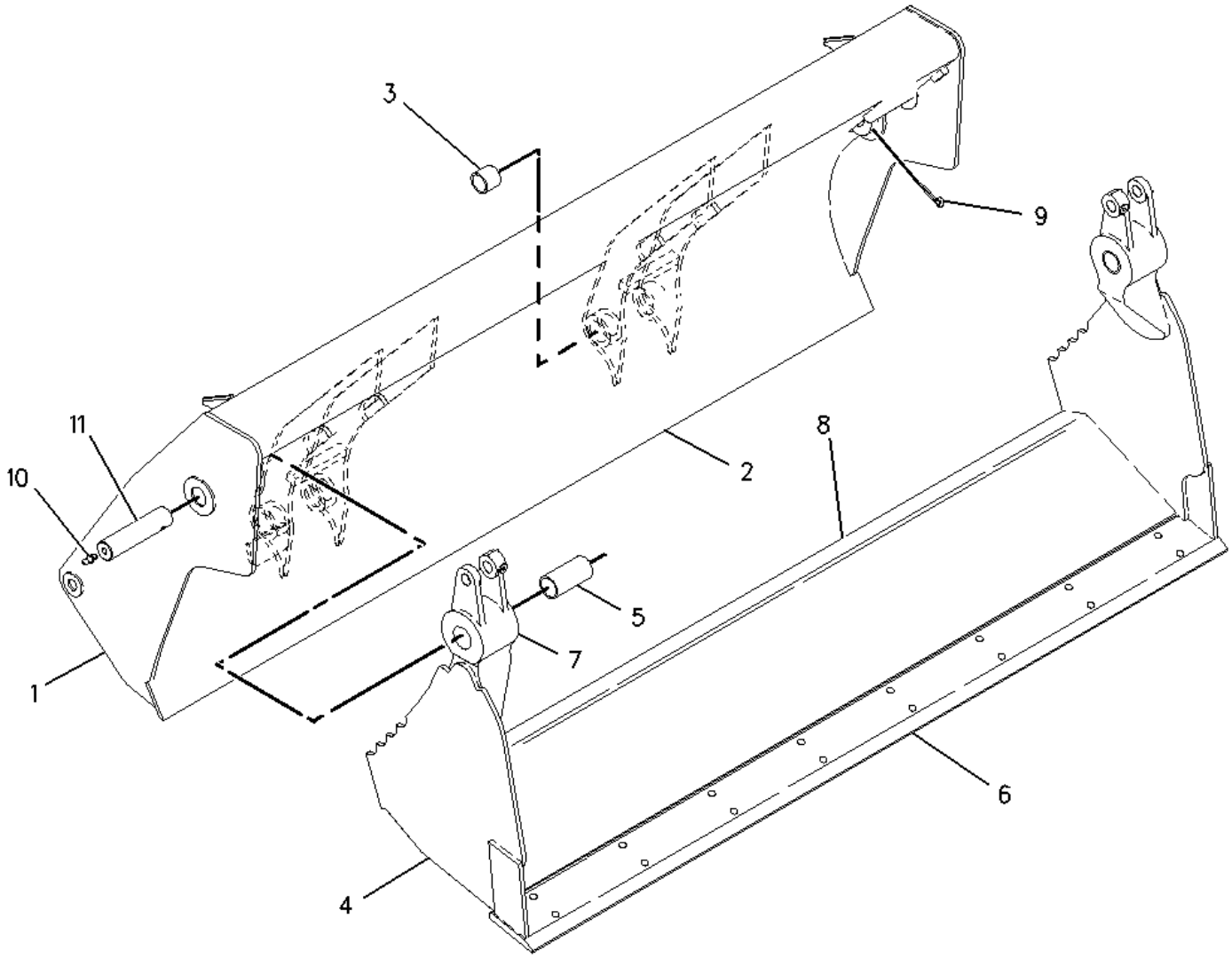

1	NPR	108-3037	1	BULLDOZER AS
2	NPR	9R-4670	1	EDGE
3	NPR	9R-0111	2	BEARING-SLEEVE
4	NPR	126-4224	1	CLAM AS
5	NPR	9R-4675	2	BUSHING-TERMINAL
6	NPR	9R-4672	1	EDGE
7	NPR	9R-5294	2	HINGE
8	NPR	125-7116	1	EDGE
9	NPR	4J-1888	2	PIN-COTTER
10	NPR	3B-8489	2	FITTING-GREASE
11	NPR	9R-4676	2	PIN

104-3965 BUCKET GP-MULTIPURPOSE --S/N 4ZN16044-50156
1.03 CU M (1.35 CU YD) --PART OF 111-8634 BUCKET AR-MULTIPURPOSE

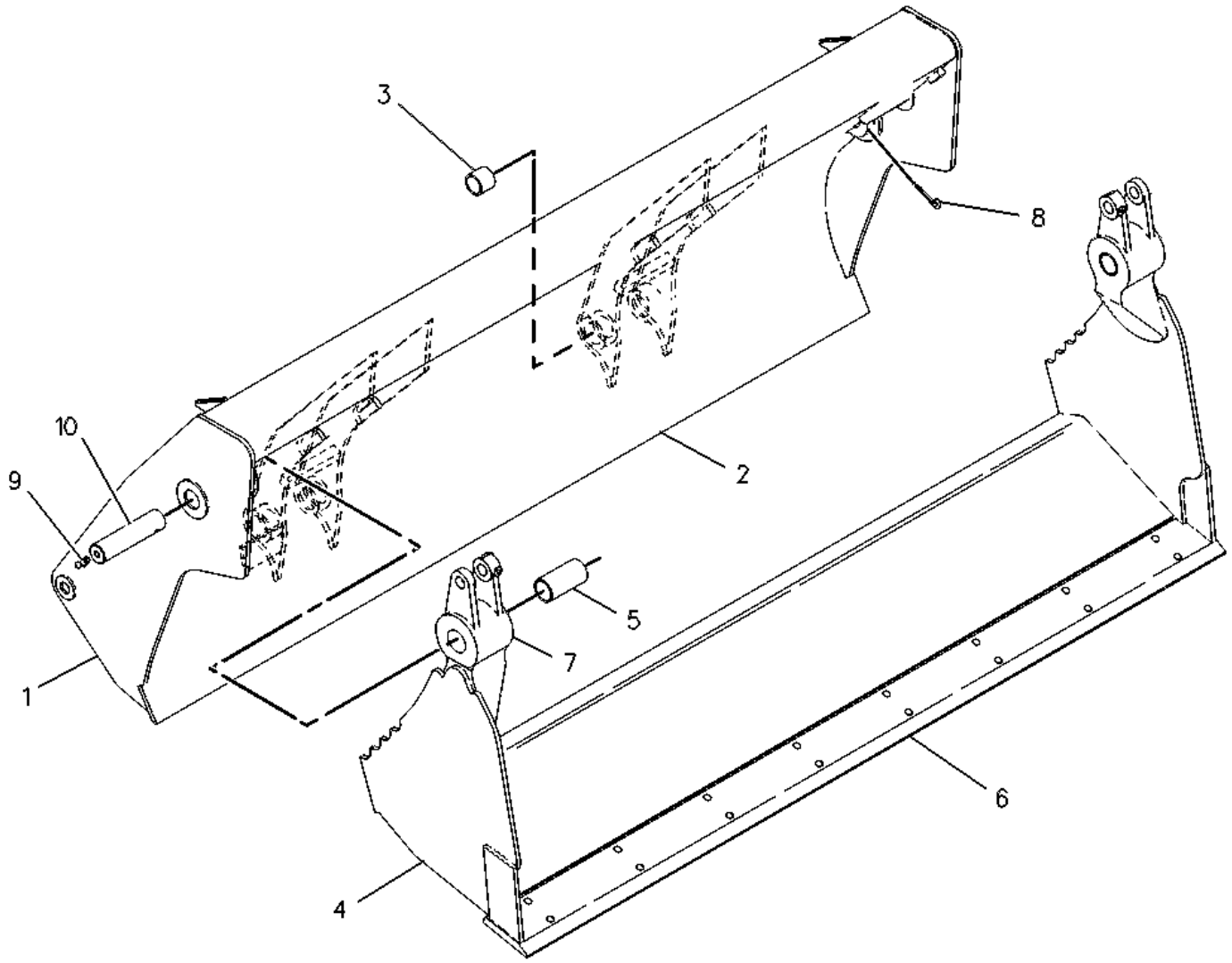

1	NPR	104-3967	1	BULLDOZER AS
2	NPR	9R-5786	1	EDGE
3	NPR	9R-0111	2	BEARING-SLEEVE
4	NPR	126-4225	1	CLAM AS
5	NPR	9R-4675	2	BUSHING-TERMINAL
6	NPR	9R-5313	1	EDGE
7	NPR	9R-5294	2	HINGE
8	NPR	4J-1888	2	PIN-COTTER
9	NPR	3B-8489	2	FITTING-GREASE
10	NPR	9R-4676	2	PIN

104-3964 BUCKET GP-MULTIPURPOSE --S/N 4ZN16044-50156
1.03 CU M (1.35 CU YD) --PART OF 111-8635 BUCKET AR-MULTIPURPOSE

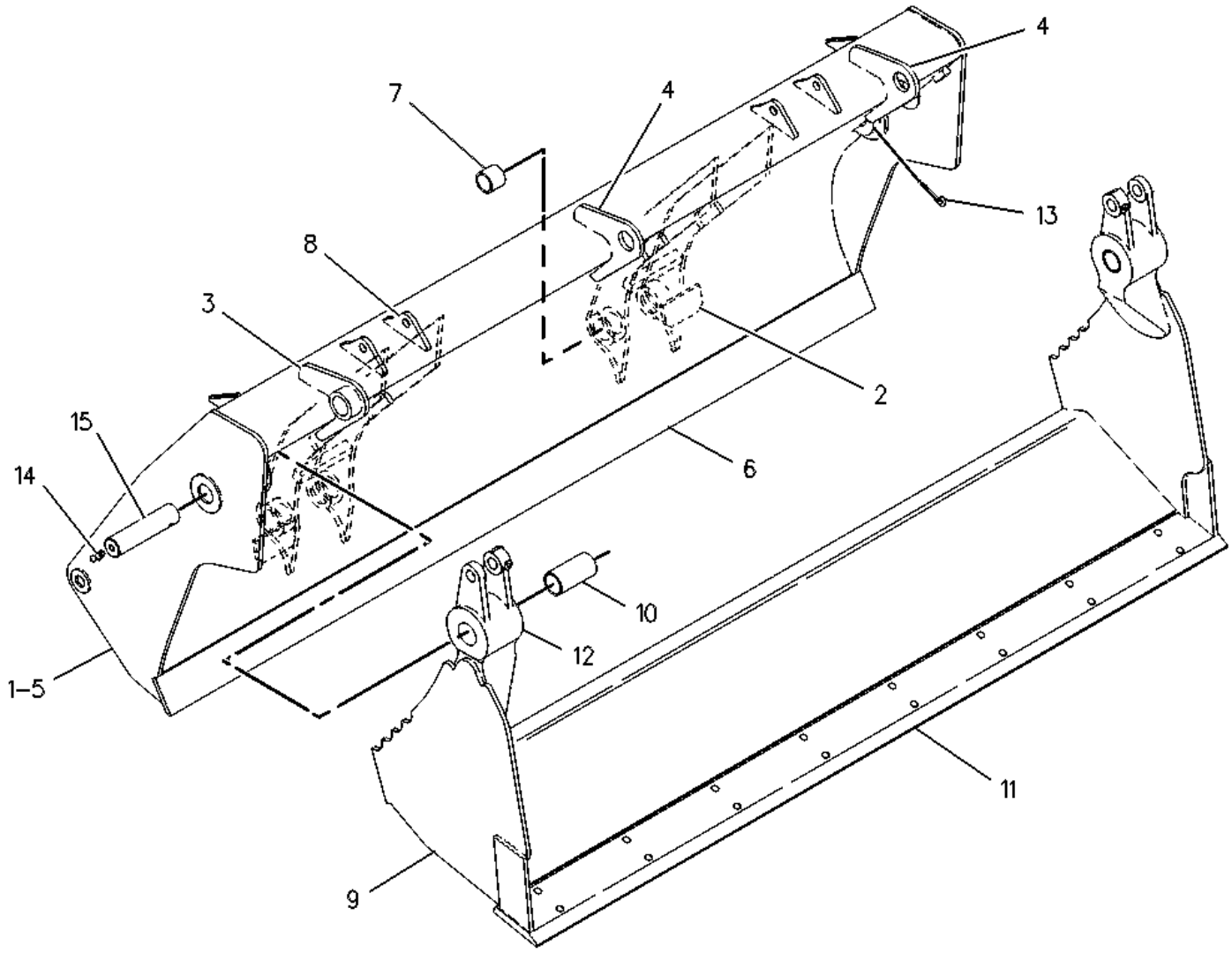

1	**NPR**	**104-3966**	**1**	**BULLDOZER AS**
2	**NPR**	**104-6314**	**2**	**BRACKET**
3	**NPR**	**104-6313**	**1**	**BRACKET AS**
4	**NPR**	**106-9388**	**1**	**BRACKET**
5	**NPR**	**104-3967**	**1**	**BULLDOZER AS**
6	**NPR**	**9R-5786**	**1**	**EDGE**
7	**NPR**	**9R-0111**	**2**	**BEARING-SLEEVE**
8	**NPR**	**110-2861**	**4**	**BRACKET**
9	**NPR**	**126-4225**	**1**	**CLAM AS**

10	**NPR**	**9R-4675**	**2**	**BUSHING-TERMINAL**
11	**NPR**	**9R-5313**	**1**	**EDGE**
12	**NPR**	**9R-5294**	**2**	**HINGE**
13	**NPR**	**4J-1888**	**2**	**PIN-COTTER**
14	**NPR**	**3B-8489**	**2**	**FITTING-GREASE**
15	**NPR**	**9R-4676**	**2**	**PIN**

137-4691 BUCKET GP-HOE ---S/N 4ZN16044-50156
305MM (12 IN). STANDARD --PART OF 136-6896 BUCKET GP-HOE

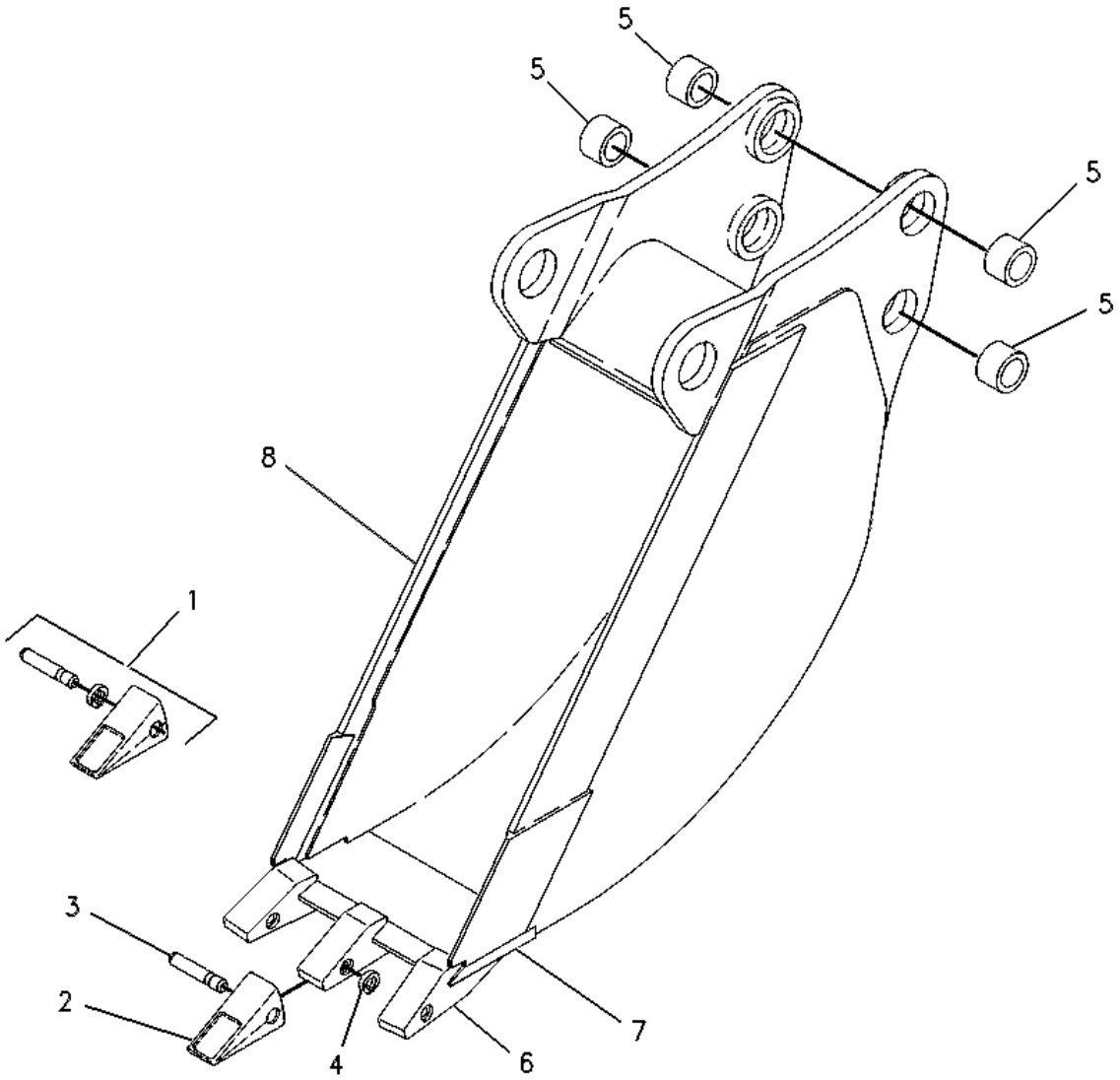

1 NPR 4T-9106 3 TIP GP-LONG

(EACH INCLUDES)

2 NPR 7T-8202 1 TIP-LONG

3 NPR 8E-6208 1 PIN-G.E.T.

4 NPR 8E-6209 1 RETAINER AS-G.E.T.

5 NPR 9R-0430 2 BEARING-SLEEVE

NPR 9R-0431 4 BEARING-SLEEVE

6 NPR Y 119-3205 3 ADAPTER-STRAP

7 NPR 136-6886 2 EDGE

8 NPR 136-7150 2 EDGE

Key: Y - Separate Illustration

136-7045 BUCKET GP-HOE --S/N 4ZN16044-50156--610MM (24 IN). EXTREME

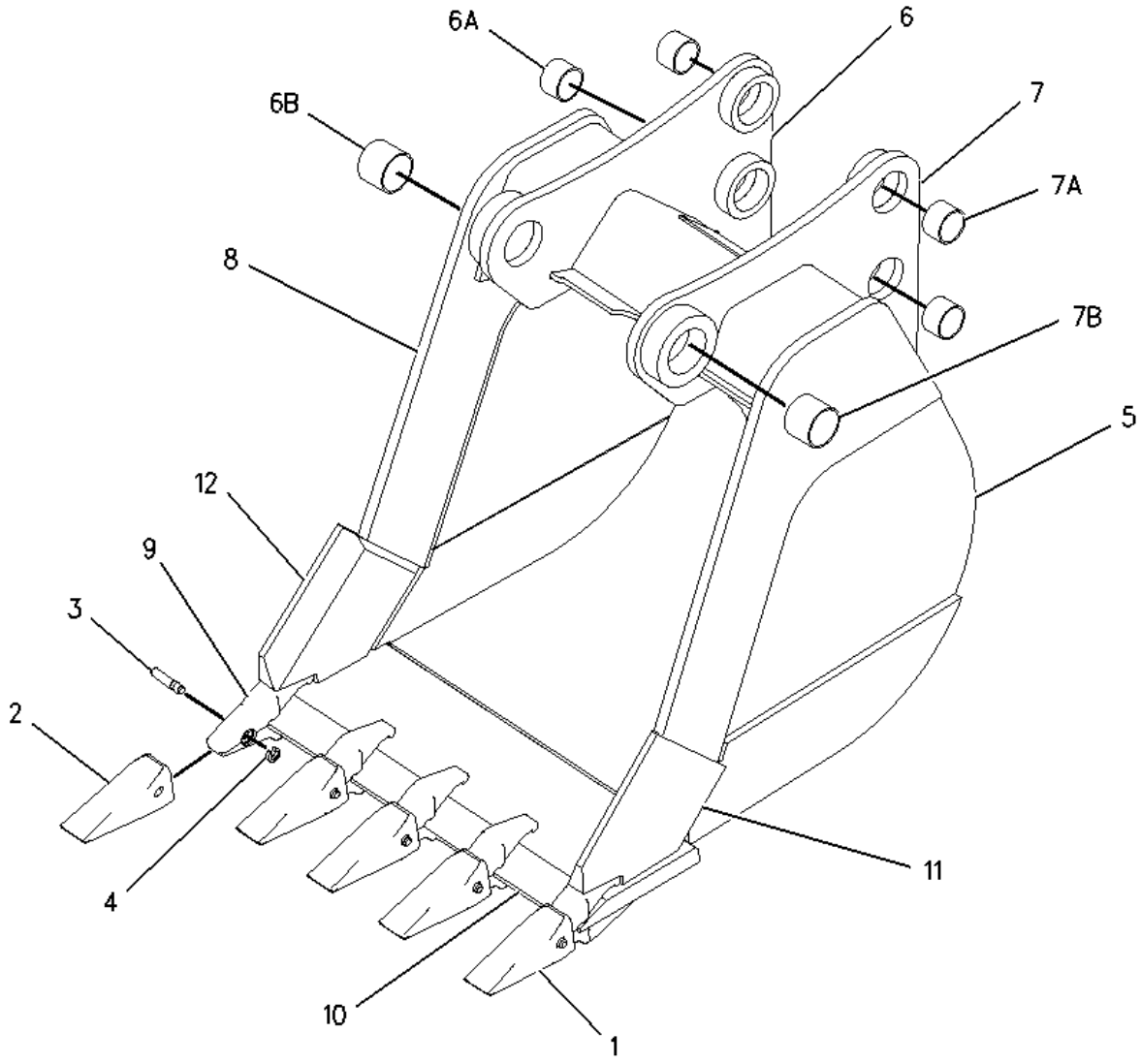

1	**NPR**	**3G-6127**	**5**	**TIP GP-LONG**
2	**NPR**	**1U-3202**	**5**	**TIP-LONG**
3	**NPR**	**8E-6208**	**5**	**PIN-G.E.T.**
4	**NPR**	**8E-6209**	**5**	**RETAINER AS-G.E.T.**
5	**NPR**	**136-7043**	**1**	**BUCKET AS-HOE**
6	**NPR**	**9R-7564**	**1**	**BRACKET AS-RH**
6A	**NPR**	**9R-0411**	**2**	**BEARING-SLEEVE**
6B	**NPR**	**9R-3092**	**1**	**BEARING-SLEEVE**
7	**NPR**	**9R-7565**	**1**	**BRACKET AS-LH**
7A	**NPR**	**9R-0411**	**2**	**BEARING-SLEEVE**

7B	**NPR**	**9R-3092**	**1**	**BEARING-SLEEVE**
8	**NPR**	**9R-9238**	**2**	**EDGE**
9	**NPR Y**	**119-3204**	**5**	**ADAPTER-STRAP**
10	**NPR**	**136-7047**	**1**	**PLATE**
11	**NPR**	**136-7049**	**1**	**ROUTER**
12	**NPR**	**136-7051**	**1**	**ROUTER**

Key: Y - Separate Illustration

136-7044 BUCKET GP-HOE --S/N 4ZN16044-50156-458MM (18IN). EXTREME

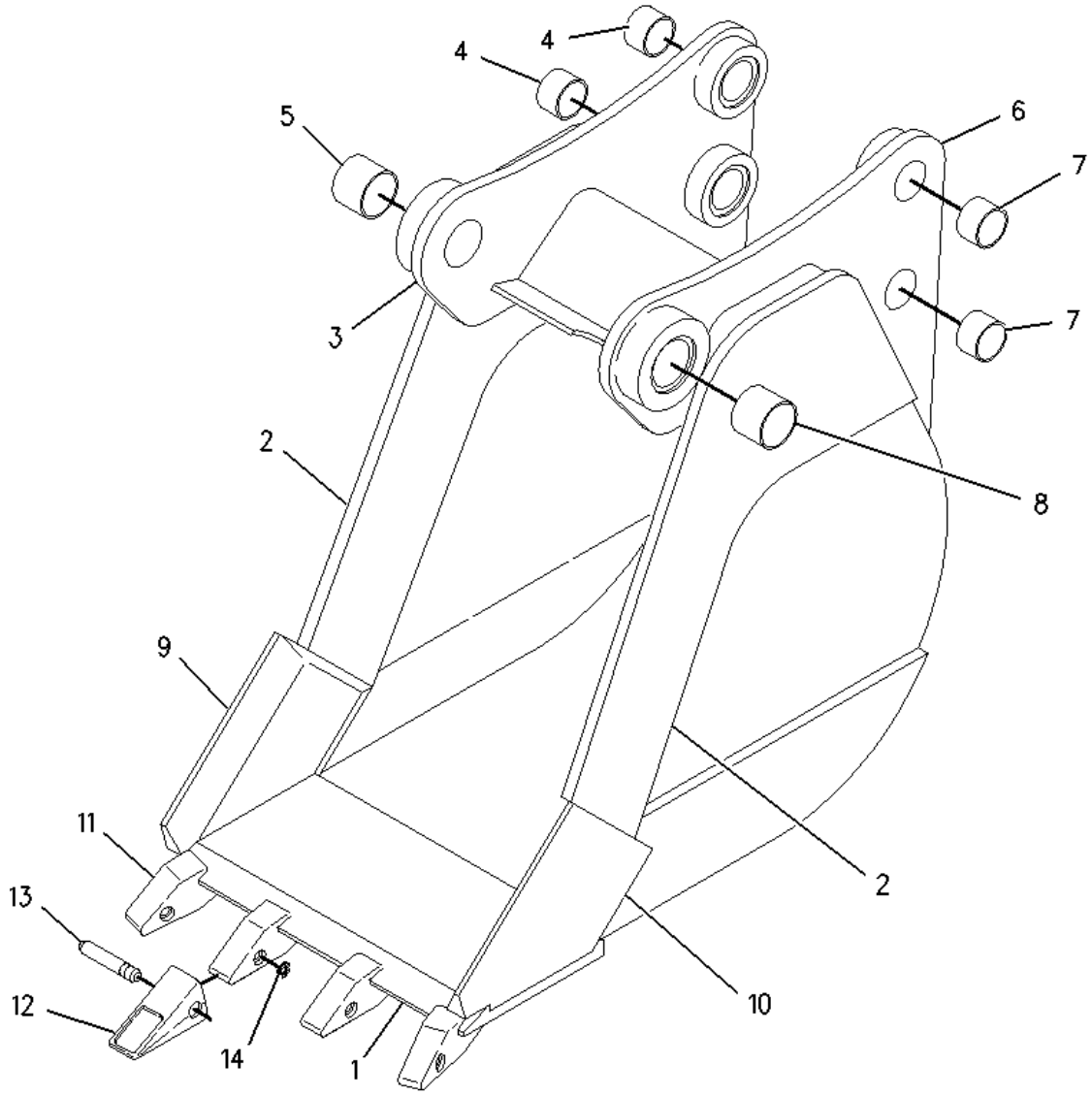

1	**NPR**	**136-7046**	**1**	**EDGE-CUTTING**
2	**NPR**	**9R-9238**	**2**	**EDGE**
3	**NPR**	**9R-7564**	**1**	**BRACKET AS (RH)**
4	**NPR**	**9R-0411**	**2**	**BEARING-SLEEVE**
5	**NPR**	**9R-3092**	**1**	**BEARING-SLEEVE**
6	**NPR**	**9R-7565**	**1**	**BRACKET AS (LH)**
7	**NPR**	**9R-0411**	**2**	**BEARING-SLEEVE**
8	**NPR**	**9R-3092**	**1**	**BEARING-SLEEVE**
9	**NPR**	**136-7049**	**1**	**BIT-ROUTER (RH)**
10	**NPR**	**136-7051**	**1**	**BIT-ROUTER (LH)**

11 NPR Y 119-3204 4 ADAPTER-STRAP

12 NPR 1U-3202 5 TIP-LONG

13 NPR 8E-6208 5 PIN

14 NPR 8E-6209 5 RETAINER AS

Key: Y - Separate Illustration

136-6914 BUCKET GP-HOE ----S/N 4ZN16044-50156--914MM (36 IN). HEAVY

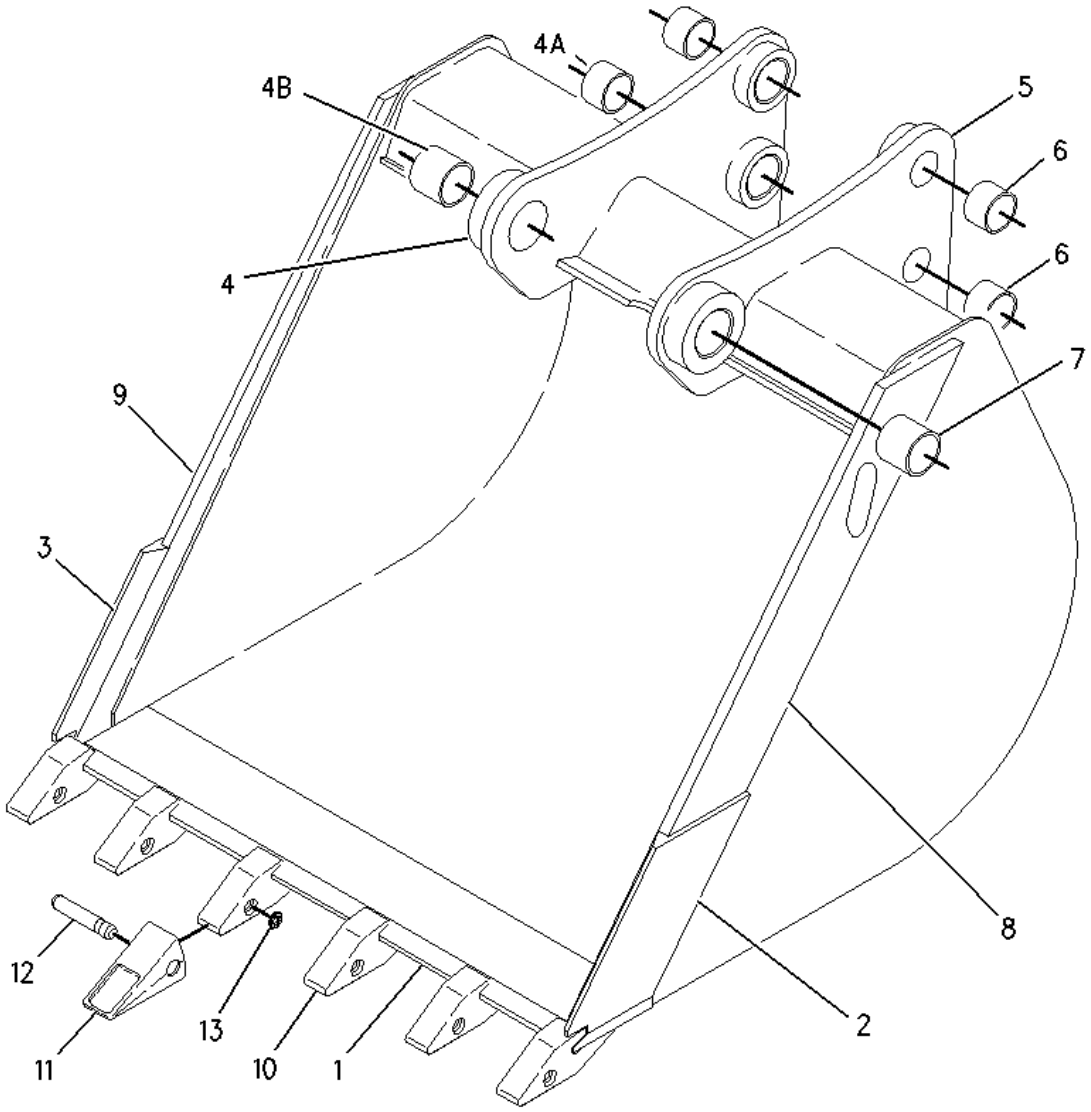

1	**NPR**	**134-5882**	**1**	**EDGE**
2	**NPR**	**134-5884**	**1**	**EDGE (LH)**
3	**NPR**	**134-5885**	**1**	**EDGE (RH)**
4	**NPR**	**9R-7564**	**1**	**BRACKET AS (RH)**
4A	**NPR**	**9R-0411**	**2**	**BEARING-SLEEVE**
4B	**NPR**	**9R-3092**	**1**	**BEARING-SLEEVE**
5	**NPR**	**9R-7565**	**1**	**BRACKET AS (LH)**
6	**NPR**	**9R-0411**	**2**	**BEARING-SLEEVE**
7	**NPR**	**9R-3092**	**1**	**BEARING-SLEEVE**
8	**NPR**	**136-6904**	**1**	**PLATE-LH**

9 NPR 136-6905 1 PLATE-RH

10 NPR Y 119-3204 6 ADAPTER-STRAP

11 NPR 1U-3202 6 TIP-LONG

12 NPR 8E-6208 6 PIN

13 NPR 8E-6209 6 RETAINER AS

Key: Y - Separate Illustration

136-6913 BUCKET GP-HOE --S/N 4ZN16044-50156--762MM (30 IN). HEAVY

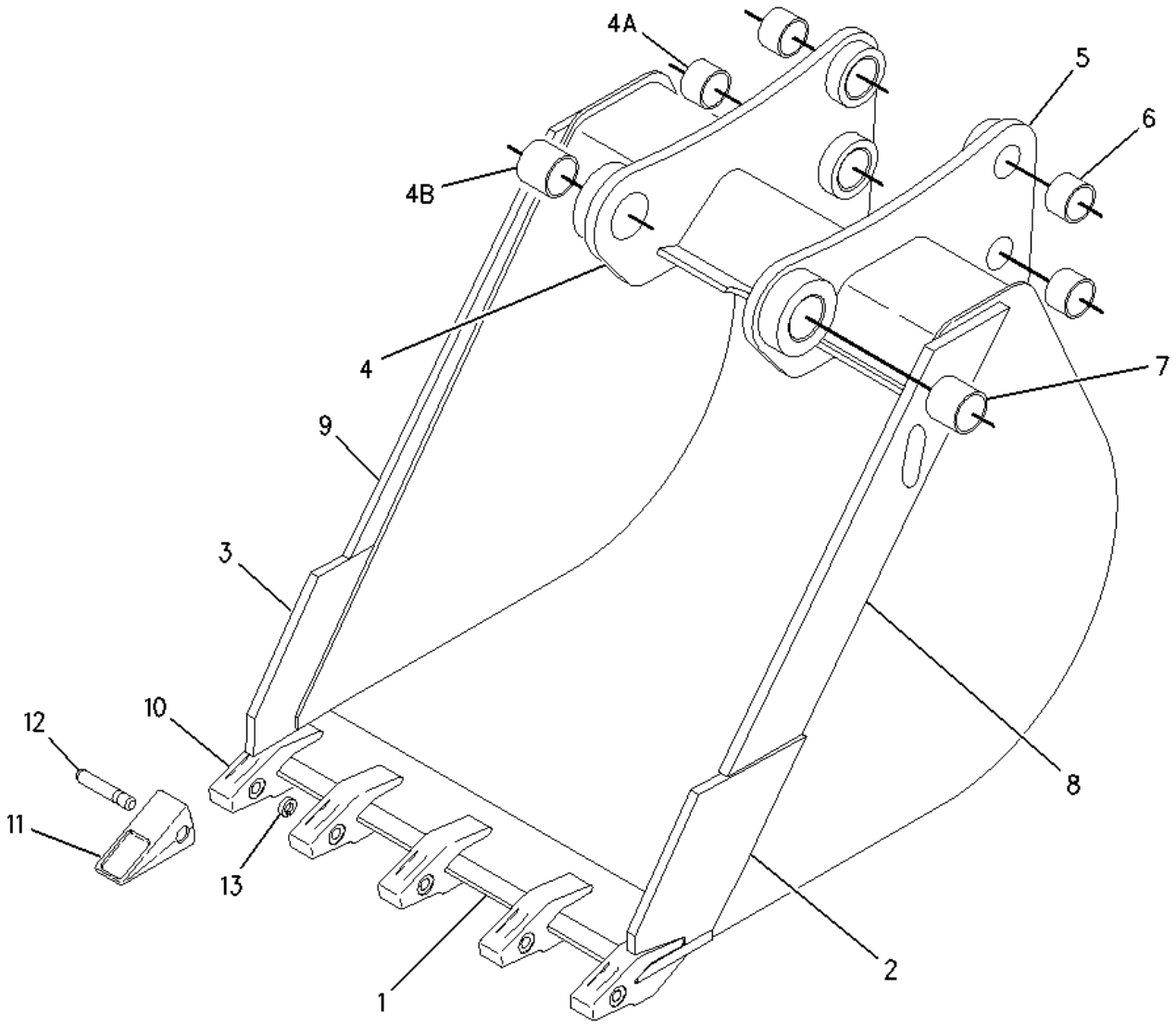

1	**NPR**	**134-5881**	**1**	**EDGE**
2	**NPR**	**134-5884**	**1**	**EDGE (LH)**
3	**NPR**	**134-5885**	**1**	**EDGE (RH)**
4	**NPR**	**9R-7564**	**1**	**BRACKET AS (RH)**
4A	**NPR**	**9R-0411**	**2**	**BEARING-SLEEVE**
4B	**NPR**	**9R-3092**	**1**	**BEARING-SLEEVE**
5	**NPR**	**9R-7565**	**1**	**BRACKET AS (LH)**
6	**NPR**	**9R-0411**	**2**	**BEARING-SLEEVE**
7	**NPR**	**9R-3092**	**1**	**BEARING-SLEEVE**
8	**NPR**	**136-6904**	**1**	**PLATE-LH**

9 NPR 136-6905 1 PLATE-RH

10 NPR Y 119-3204 5 ADAPTER-STRAP

11 NPR 1U-3202 5 TIP-LONG

12 NPR 8E-6208 5 PIN

13 NPR 8E-6209 5 RETAINER AS

Key: Y - Separate Illustration

136-6912 BUCKET GP-HOE --S/N 4ZN16044-50156--610MM (24 IN). HEAVY

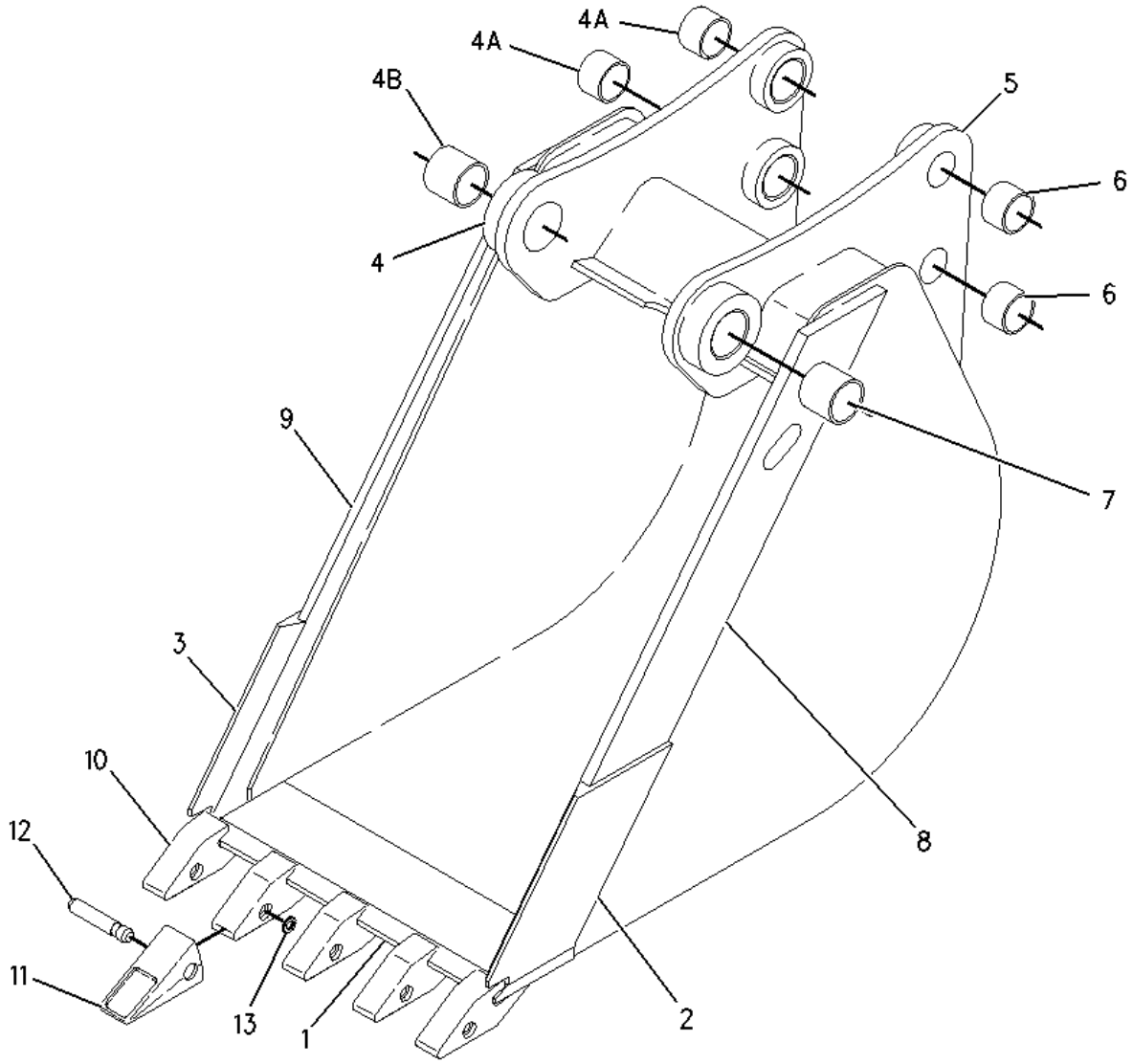

1 NPR 134-5880 1 EDGE

2 NPR 134-5884 1 EDGE (LH)

3 NPR 134-5885 1 EDGE (RH)

4 NPR 9R-7564 1 BRACKET AS (RH)

4A NPR 9R-0411 2 BEARING-SLEEVE

4B NPR 9R-3092 1 BEARING-SLEEVE

5 NPR 9R-7565 1 BRACKET AS (LH)

6 NPR 9R-0411 2 BEARING-SLEEVE

7 NPR 9R-3092 1 BEARING-SLEEVE

8 NPR 136-6904 1 PLATE-LH

9 NPR 136-6905 1 PLATE-RH

10 NPR Y 119-3204 5 ADAPTER-STRAP

11 NPR 1U-3202 5 TIP-LONG

12 NPR 8E-6208 5 PIN

13 NPR 8E-6209 5 RETAINER AS

Key:

Y - Separate Illustration

136-6911 BUCKET GP-HOE --S/N 4ZN16044-50156--458MM (18IN). HEAVY

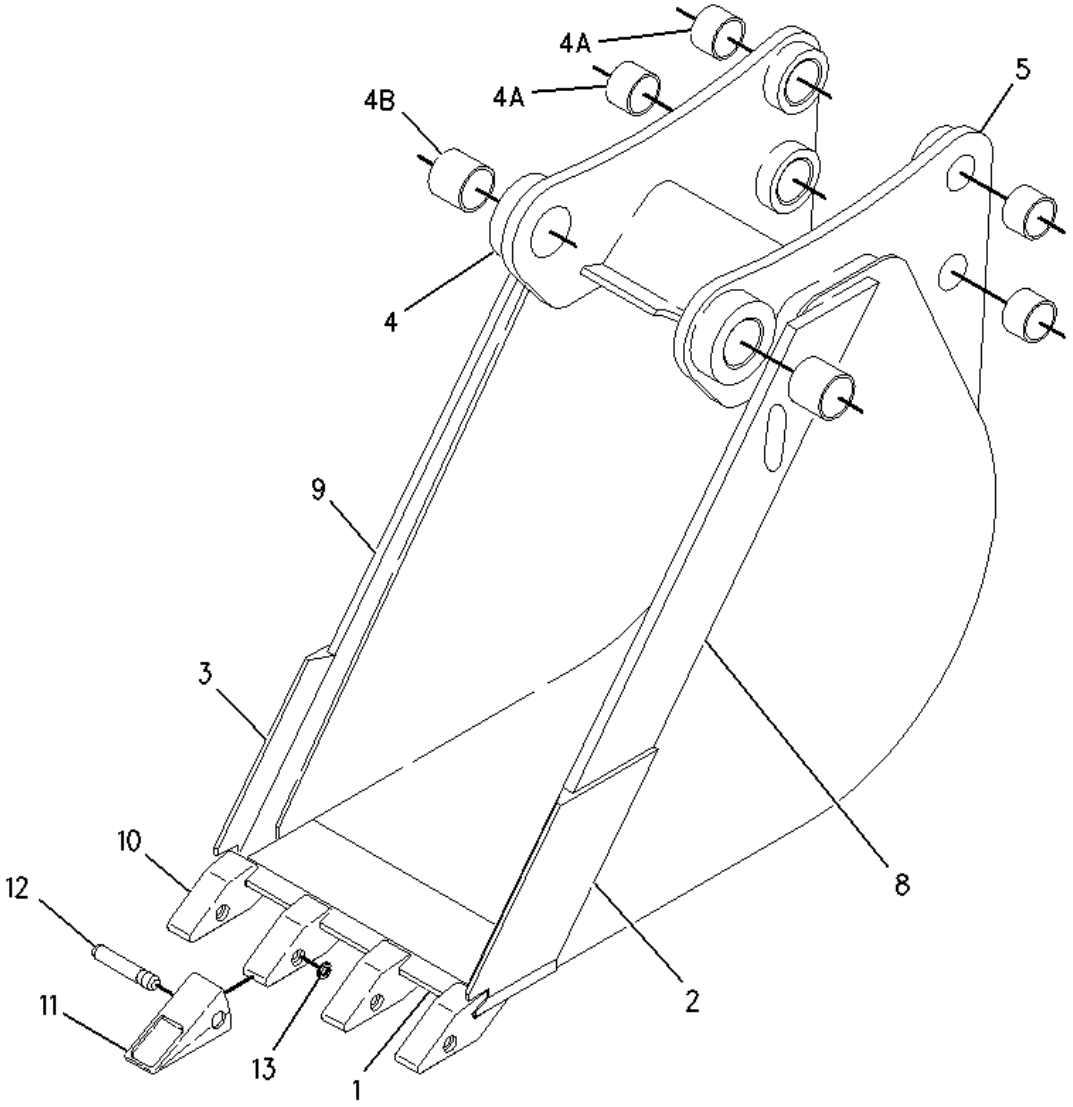

1	NPR	134-5879	1	EDGE
2	NPR	134-5884	1	EDGE (LH)
3	NPR	134-5885	1	EDGE (RH)
4	NPR	9R-7564	1	BRACKET AS (RH)
4A	NPR	9R-0411	2	BEARING-SLEEVE
4B	NPR	9R-3092	1	BEARING-SLEEVE
5	NPR	9R-7565	1	BRACKET AS (LH)
6	NPR	9R-0411	2	BEARING-SLEEVE
7	NPR	9R-3092	1	BEARING-SLEEVE
8	NPR	136-6904	1	PLATE-LH

9 NPR 136-6905 1 PLATE-RH

10 NPR Y 119-3204 4 ADAPTER-STRAP

11 NPR 1U-3202 4 TIP-LONG

12 NPR 8E-6208 4 PIN

13 NPR 8E-6209 4 RETAINER AS

Key:

Y - Separate Illustration

136-6900 BUCKET GP-HOE --S/N 4ZN16044-50156--914MM (36IN). STANDARD

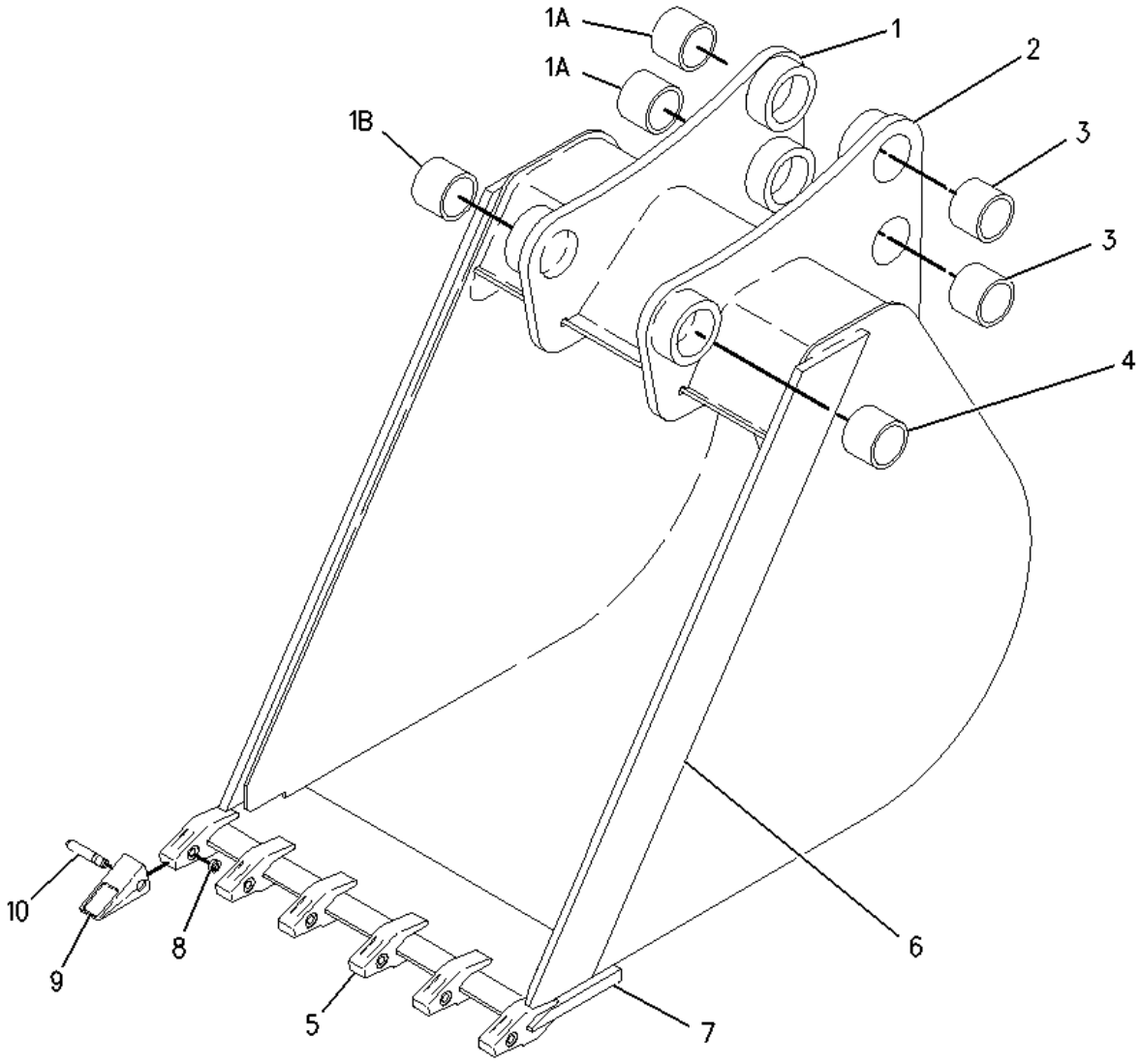

1	NPR	9R-7564	1	BRACKET AS-RH
1A	NPR	9R-0411	2	BEARING-SLEEVE
1B	NPR	9R-3092	1	BEARING-SLEEVE
2	NPR	9R-7565	1	BRACKET AS-LH
3	NPR	9R-0411	2	BEARING-SLEEVE
4	NPR	9R-3092	1	BEARING-SLEEVE
5	NPR Y	119-3205	6	ADAPTER-STRAP
6	NPR	136-6885	2	PLATE
7	NPR	136-6890	1	EDGE
8	NPR	8E-6209	1	RETAINER AS-G.E.T.
9	NPR	7T-8202	1	TIP-LONG
10	NPR	8E-6208	1	PIN-G.E.T.

Key: Y - Separate Illustration

136-6899 BUCKET GP-HOE --S/N 4ZN16044-50156--762MM (30IN). STANDARD

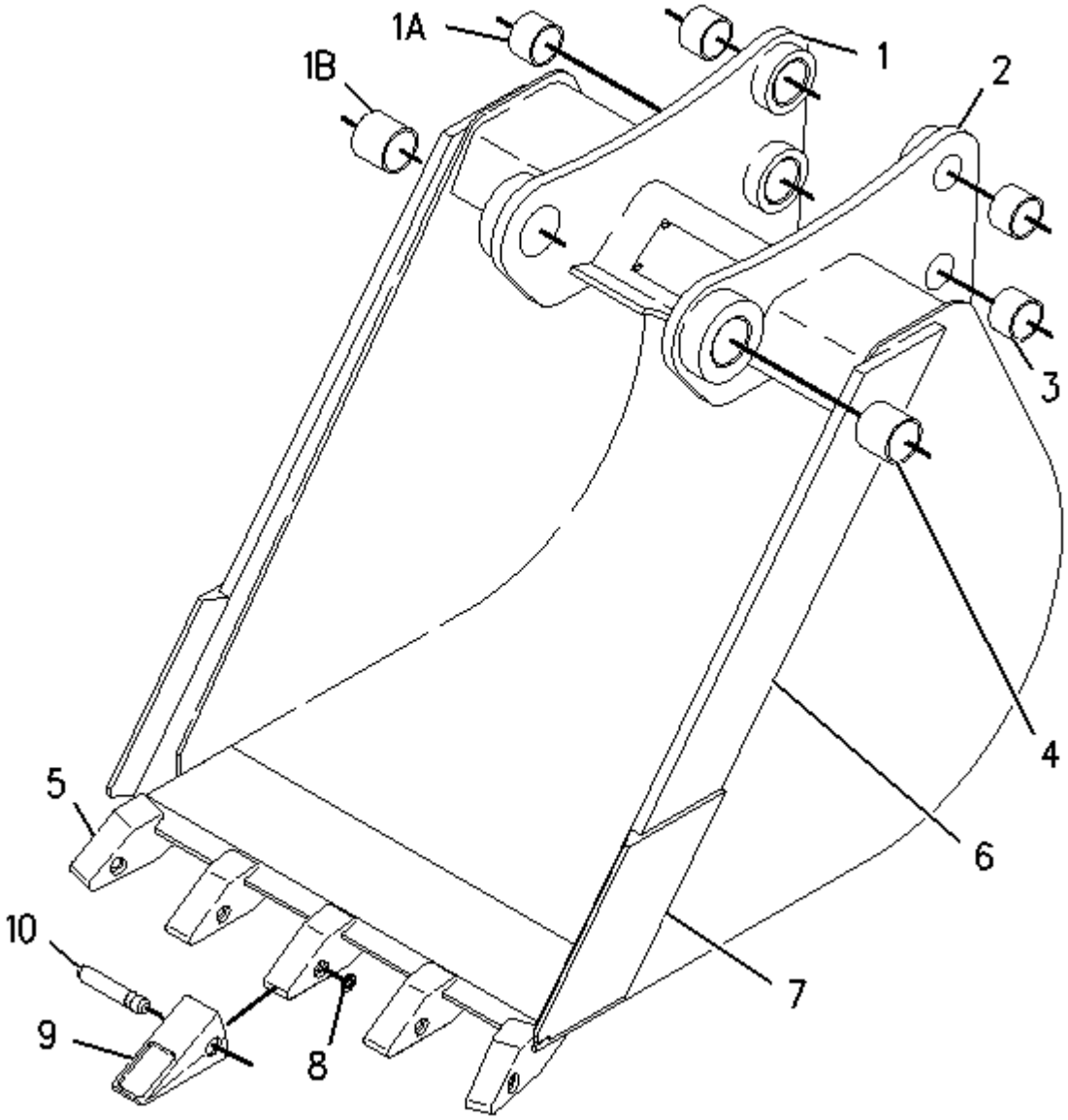

1	NPR	9R-7564	1	BRACKET AS-RH
1A	NPR	9R-0411	2	BEARING-SLEEVE
1B	NPR	9R-3092	1	BEARING-SLEEVE
2	NPR	9R-7565	1	BRACKET AS-LH
3	NPR	9R-0411	2	BEARING-SLEEVE
4	NPR	9R-3092	1	BEARING-SLEEVE
5	NPR Y	119-3205	5	ADAPTER-STRAP
6		134-5883	2	PLATE
7	NPR	136-6889	1	EDGE
8	NPR	8E-6209	1	RETAINER AS-G.E.T.
9	NPR	7T-8202	1	TIP-LONG
10	NPR	8E-6208	1	PIN-G.E.T.

Key: Y - Separate Illustration

136-6898 BUCKET GP-HOE --S/N 4ZN16044-50156--610MM (24IN). STANDARD

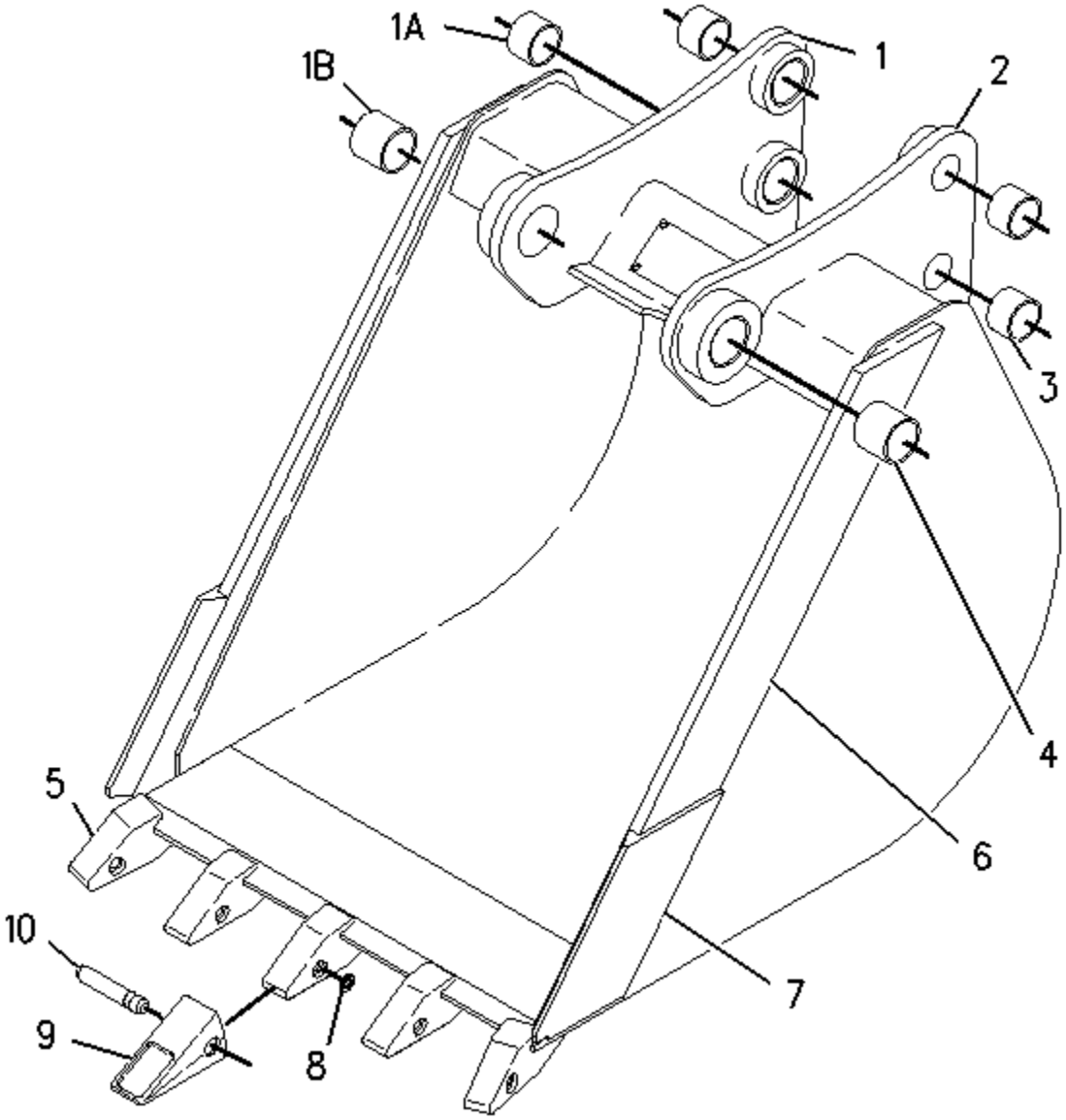

1	NPR	9R-7564	1	BRACKET AS-RH
1A	NPR	9R-0411	2	BEARING-SLEEVE
1B	NPR	9R-3092	1	BEARING-SLEEVE
2	NPR	9R-7565	1	BRACKET AS-LH
3	NPR	9R-0411	2	BEARING-SLEEVE
4	NPR	9R-3092	1	BEARING-SLEEVE
5	NPR Y	119-3205	5	ADAPTER-STRAP
6	NPR	136-6885	2	PLATE
7	NPR	136-6888	1	EDGE
8	NPR	8E-6209	1	RETAINER AS-G.E.T.
9	NPR	7T-8202	1	TIP-LONG
10	NPR	8E-6208	1	PIN-G.E.T.

Key: Y - Separate Illustration

136-6897 BUCKET GP-HOE --S/N 4ZN16044-50156--458MM (18IN). STANDARD

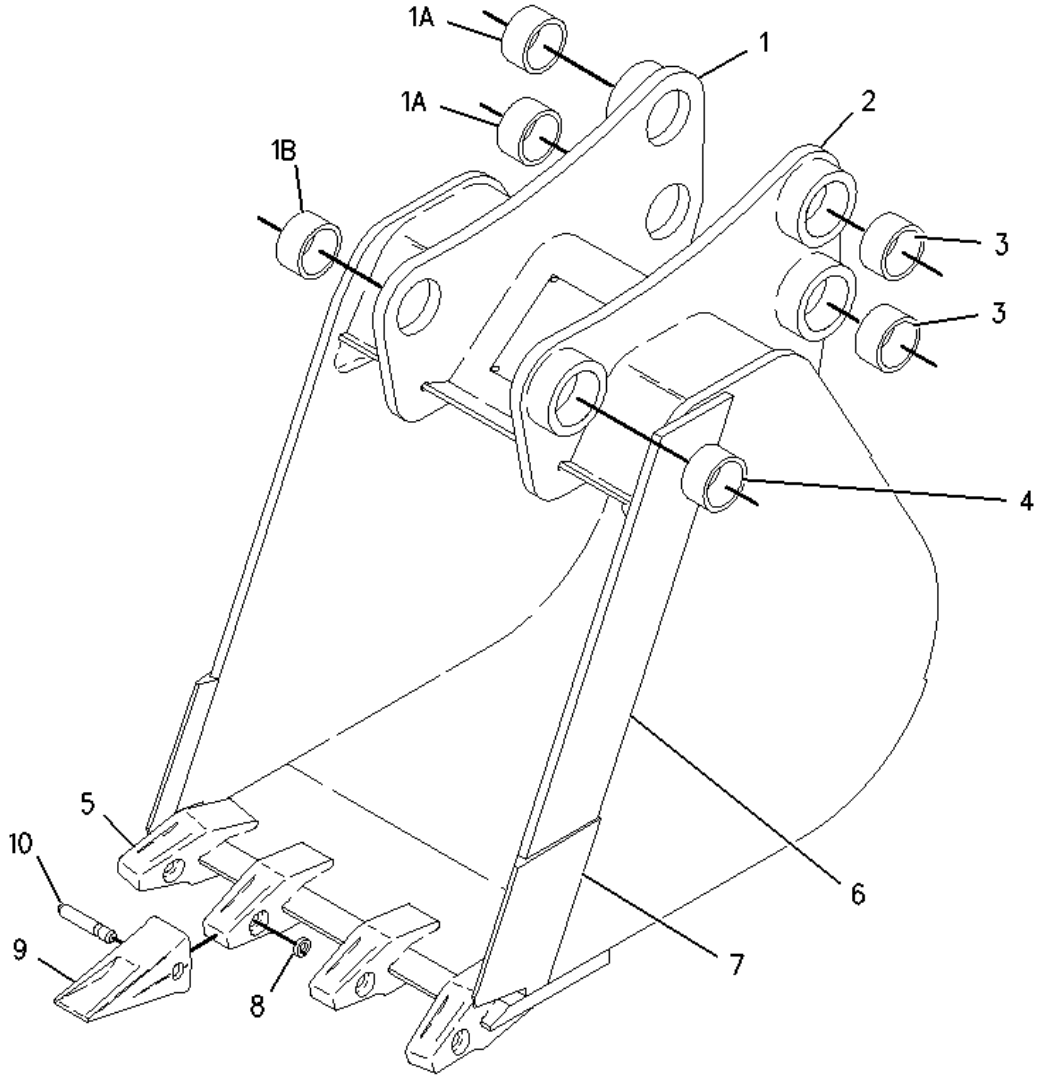

1	NPR	9R-7564	1	BRACKET AS-RH
1A	NPR	9R-0411	2	BEARING-SLEEVE
1B	NPR	9R-3092	1	BEARING-SLEEVE
2	NPR	9R-7565	1	BRACKET AS-LH
3	NPR	9R-0411	2	BEARING-SLEEVE
4	NPR	9R-3092	1	BEARING-SLEEVE
5	NPR Y	119-3205	4	ADAPTER-STRAP
6	NPR	136-6885	2	PLATE
7	NPR	136-6887	1	EDGE
8	NPR	8E-6209	1	RETAINER AS-G.E.T.
9	NPR	7T-8202	1	TIP-LONG
10	NPR	8E-6208	1	PIN-G.E.T.

Key: Y - Separate Illustration

136-6896 BUCKET GP-HOE --S/N 4ZN16044-50156--305MM (12 IN). STANDARD

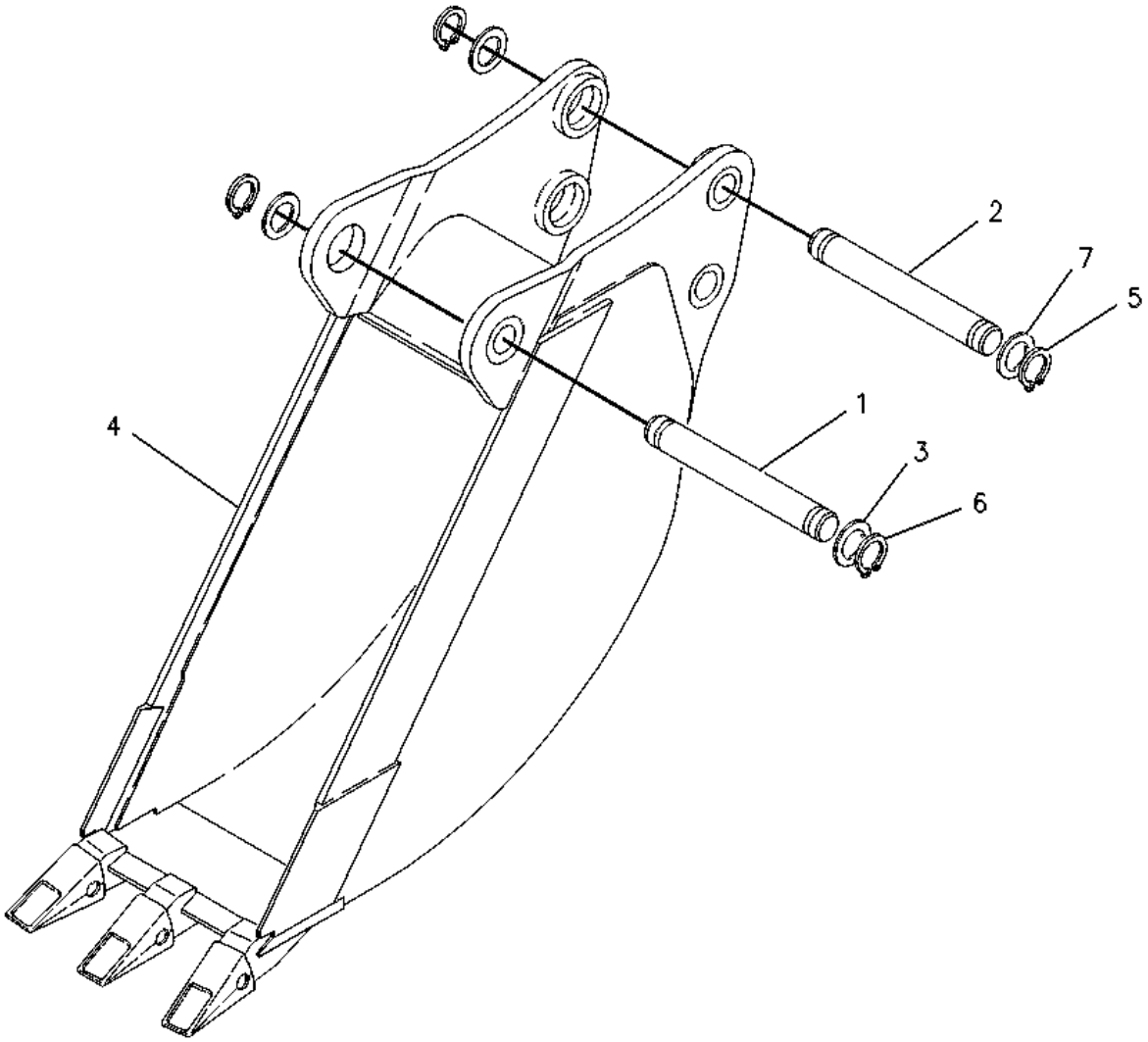

1	**NPR**	**9R-0437**	**1**	**PIN**
2	**NPR**	**9R-0438**	**1**	**PIN**
3	**NPR**	**9R-1510**	**2**	**WASHER (51X82X4-MM THK)**
4	**NPR Y**	**137-4691**	**1**	**BUCKET GP-HOE**
5	**NPR**	**6V-3213**	**2**	**RING-RETAINING**
6	**NPR**	**6V-4364**	**2**	**RING-RETAINING**
7	**NPR**	**9R-0158**	**2**	**WASHER (46X69X3-MM THK)**

Key: Y - SEPARATE ILLUSTRATION

134-5888 BUCKET GP-HOE --S/N 4ZN16044-50156--305MM (12 IN). HEAVY

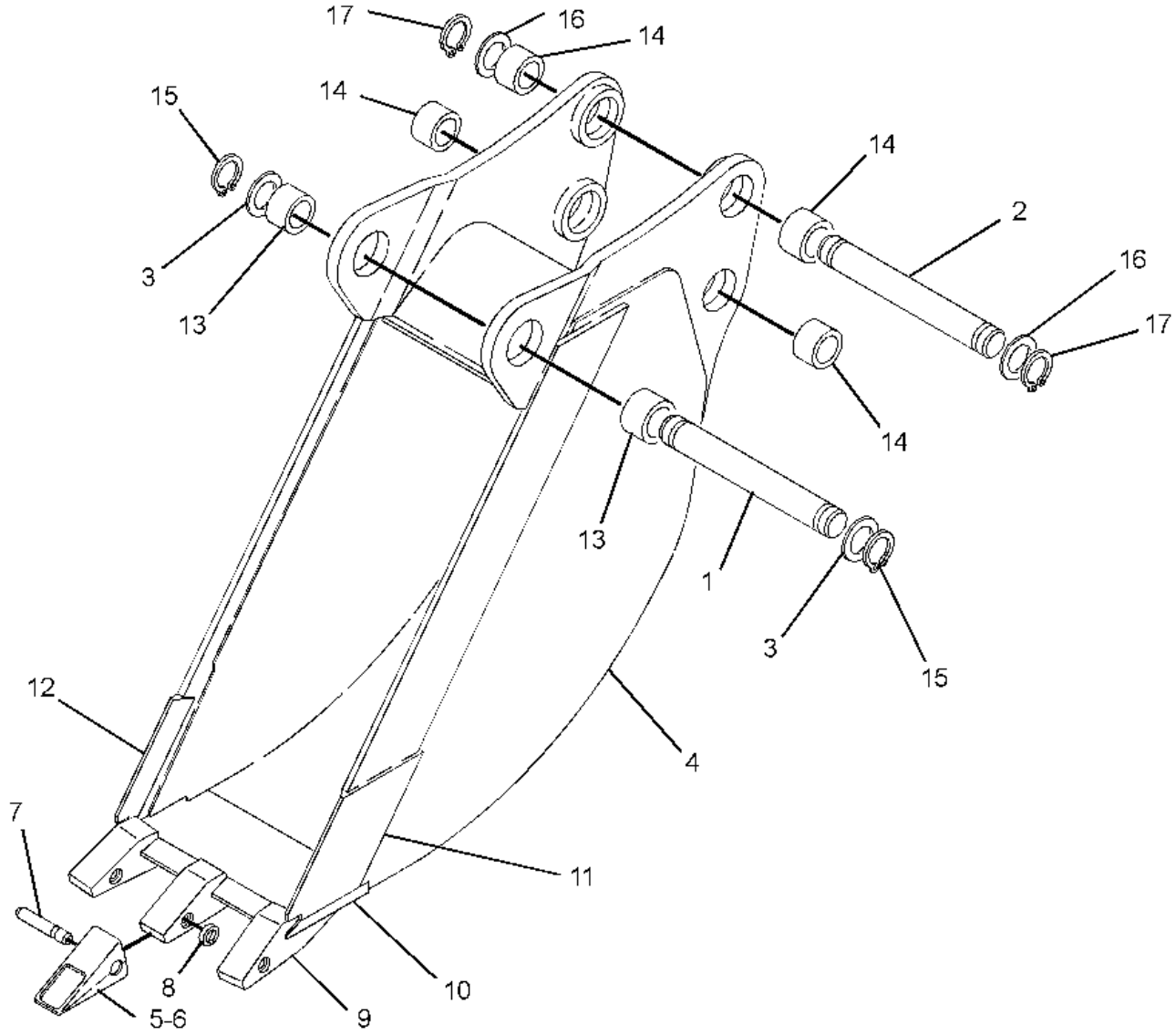

1	**NPR**	**9R-0437**	**1**	**PIN**
2	**NPR**	**9R-0438**	**1**	**PIN**
3	**NPR**	**9R-1510**	**2**	**WASHER (51X82X4-MM THK)**
4	**NPR**	**134-5865**	**1**	**BUCKET GP-HOE**
5	**NPR**	**3G-6127**	**3**	**TIP GP-LONG**
	(EACH INCLUDES)			
6	**NPR**	**1U-3202**	**1**	**TIP-LONG**
7	**NPR**	**8E-6208**	**1**	**PIN**
8	**NPR**	**8E-6209**	**1**	**RETAINER AS**
9	**NPR Y**	**119-3204**	**3**	**ADAPTER-STRAP**

10	NPR	134-5877	1	EDGE
11	NPR	134-5884	1	EDGE (LH)
12	NPR	134-5885	1	EDGE (RH)
13	NPR	9R-0430	2	BEARING-SLEEVE
14	NPR	9R-0431	4	BEARING-SLEEVE
15	NPR	6V-4364	2	RING-RETAINING
16	NPR	9R-0158	2	WASHER (46X69X3-MM THK)
17	NPR	6V-3213	2	RING-RETAINING

Key: Y - Separate Illustration

134-5870 BUCKET GP-HOE ---S/N 4ZN16044-50156-914MM (36 IN). HEAVY

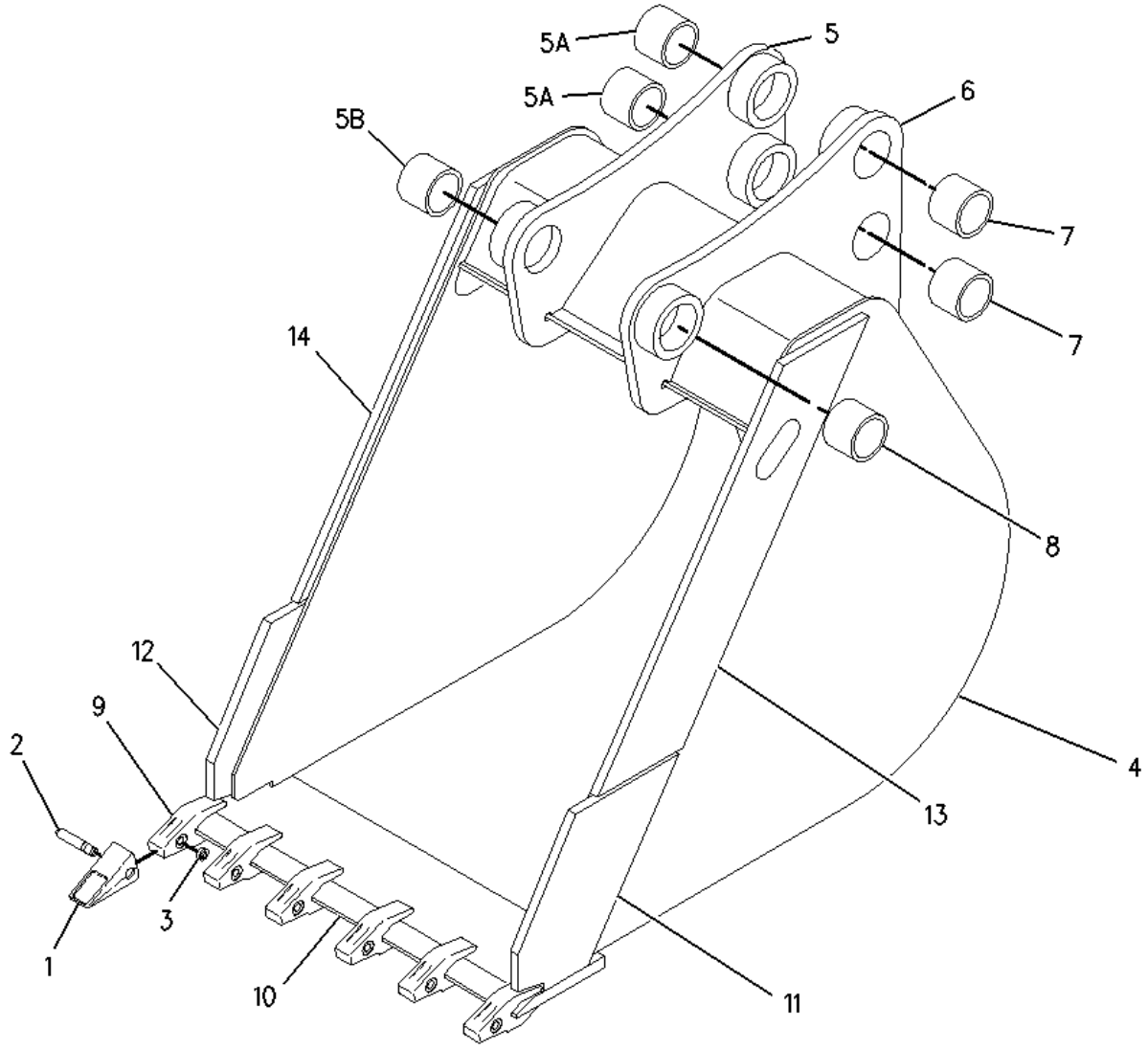

1 NPR 1U-3202 1 TIP-LONG

2 NPR 8E-6208 1 PIN

3 NPR 8E-6209 1 RETAINER AS

4 NPR 134-5876 1 BUCKET AS-HOE

5 NPR 9R-7564 1 BRACKET AS (RH)

5A NPR 9R-0411 2 BEARING-SLEEVE

5B NPR 9R-3092 1 BEARING-SLEEVE

6 NPR 9R-7565 1 BRACKET AS (LH)

7 NPR 9R-0411 2 BEARING-SLEEVE

8 NPR 9R-3092 1 BEARING-SLEEVE

9	NPR Y	119-3204	6	ADAPTER-STRAP
10	NPR	134-5882	1	EDGE
11	NPR	134-5884	1	EDGE (LH)
12	NPR	134-5885	1	EDGE (RH)
13	NPR	134-5886	1	PLATE-LH
14	NPR	134-5887	1	PLATE-RH

Key: Y - Separate Illustration

134-5869 BUCKET GP-HOE --S/N 4ZN16044-50156-762MM (30 IN). HEAVY

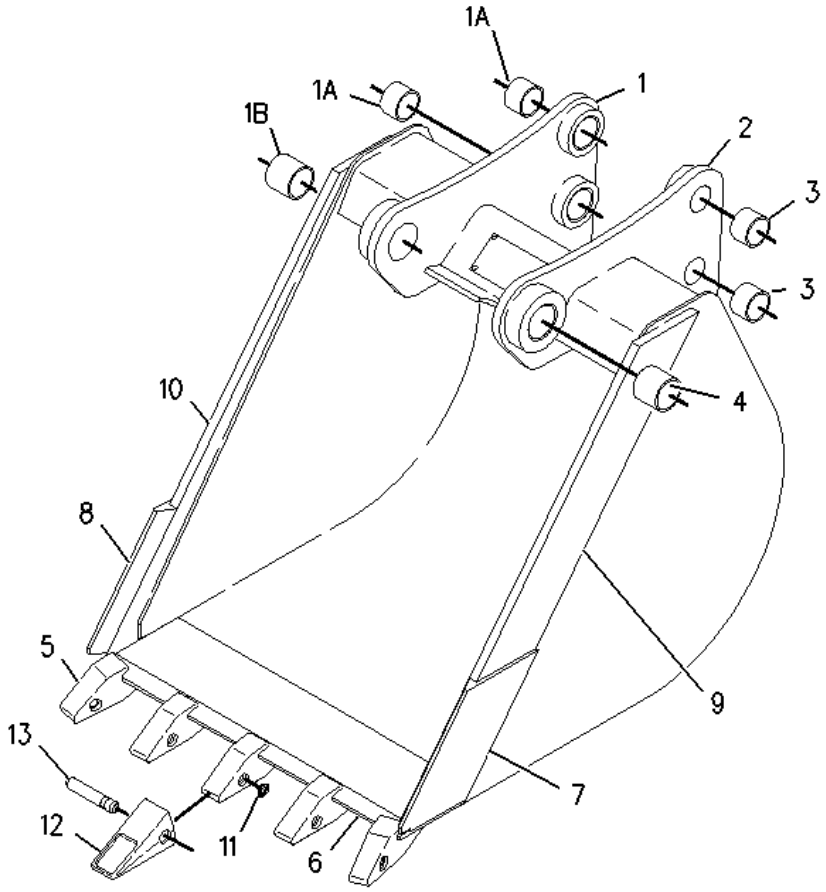

1	NPR	9R-7564	1	BRACKET AS (RH)
1A	NPR	9R-0411	2	BEARING-SLEEVE
1B	NPR	9R-3092	1	BEARING-SLEEVE
2	NPR	9R-7565	1	BRACKET AS (LH)
3	NPR	9R-0411	2	BEARING-SLEEVE
4	NPR	9R-3092	1	BEARING-SLEEVE
5	NPR Y	119-3204	5	ADAPTER-STRAP
6	NPR	134-5881	1	EDGE
7	NPR	134-5884	1	EDGE (LH)
8	NPR	134-5885	1	EDGE (RH)

9	**NPR**	**134-5886**	**1**	**PLATE-LH**
10	**NPR**	**134-5887**	**1**	**PLATE-RH**
11	**NPR**	**8E-6209**	**5**	**RETAINER AS**
12	**NPR**	**1U-3202**	**5**	**TIP-LONG**
13	**NPR**	**8E-6208**	**5**	**PIN**

Key:

Y - Separate Illustration

134-5868 BUCKET GP-HOE --S/N 4ZN16044-50156--610MM (24 IN). HEAVY

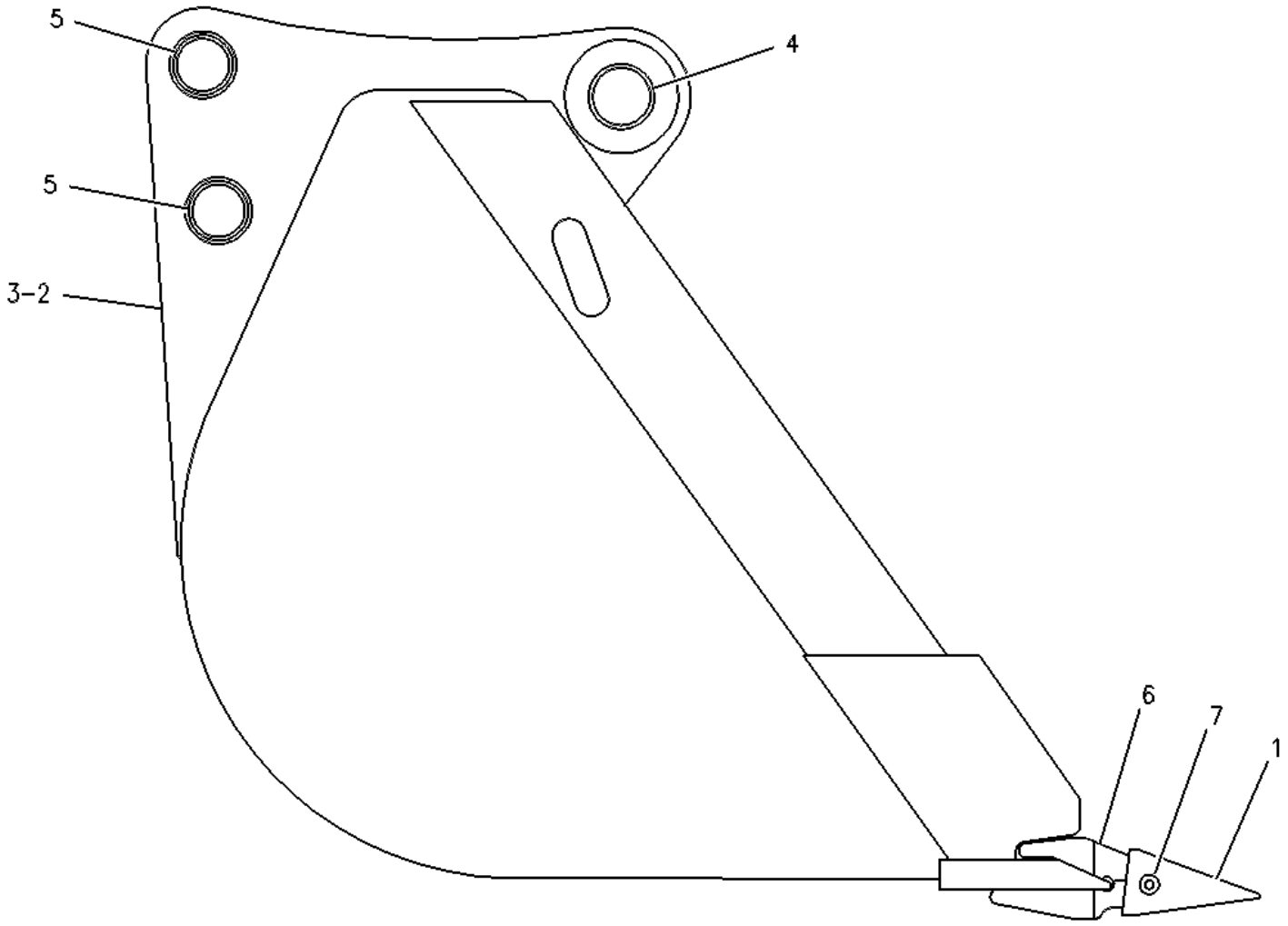

1	**NPR**	**1U-3202**	**5**	**TIP-LONG**
2	**NPR**	**9R-7564**	**1**	**BRACKET AS-RH**
	NPR	**9R-0411**	**2**	**BEARING-SLEEVE**
	NPR	**9R-3092**	**1**	**BEARING-SLEEVE**
3	**NPR**	**9R-7565**	**1**	**BRACKET AS-LH**
4	**NPR**	**9R-3092**	**1**	**BEARING-SLEEVE**
5	**NPR**	**9R-0411**	**2**	**BEARING-SLEEVE**
6	**NPR Y**	**119-3204**	**5**	**ADAPTER-STRAP**
7	**NPR**	**8E-6208**	**5**	**PIN-G.E.T.**
	NPR	**8E-6209**	**5**	**RETAINER AS-G.E.T.**

Key: Y - Separate Illustration

134-5867 BUCKET GP-HOE --S/N 4ZN16044-50156-458MM (18IN). HEAVY

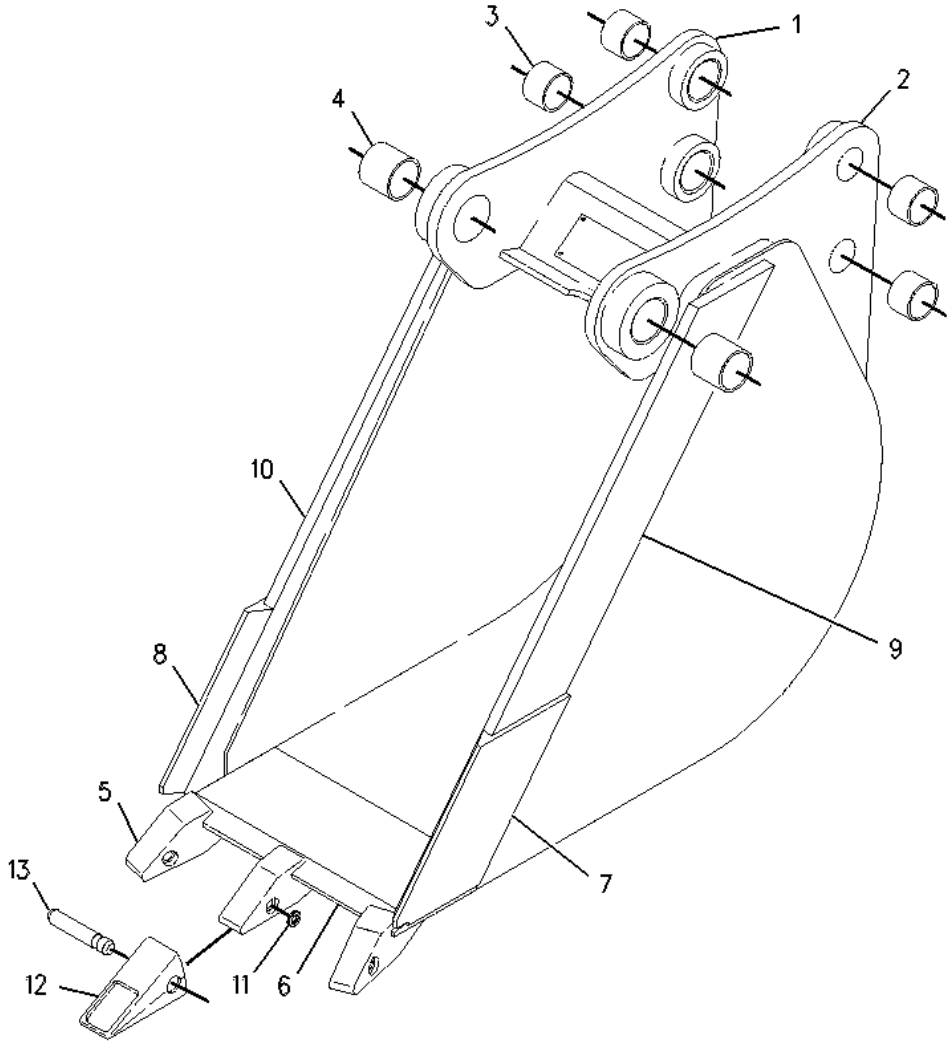

1	NPR	9R-7564	1	BRACKET AS (RH)
	NPR	9R-0411	2	BEARING-SLEEVE
	NPR	9R-3092	1	BEARING-SLEEVE
2	NPR	9R-7565	1	BRACKET AS (LH)
3	NPR	9R-0411	2	BEARING-SLEEVE
4	NPR	9R-3092	1	BEARING-SLEEVE
5	NPR Y	119-3204	4	ADAPTER-STRAP
6	NPR	134-5879	1	EDGE
7	NPR	134-5884	1	EDGE (LH)
8	NPR	134-5885	1	EDGE (RH)
9	NPR	134-5886	1	PLATE-LH
10	NPR	134-5887	1	PLATE-RH
11	NPR	8E-6209	1	RETAINER AS
12	NPR	1U-3202	1	TIP-LONG
13	NPR	8E-6208	1	PIN

Key: Y - Separate Illustration

134-5866 BUCKET GP-HOE --S/N 4ZN16044-50156--407MM (16IN). HEAVY

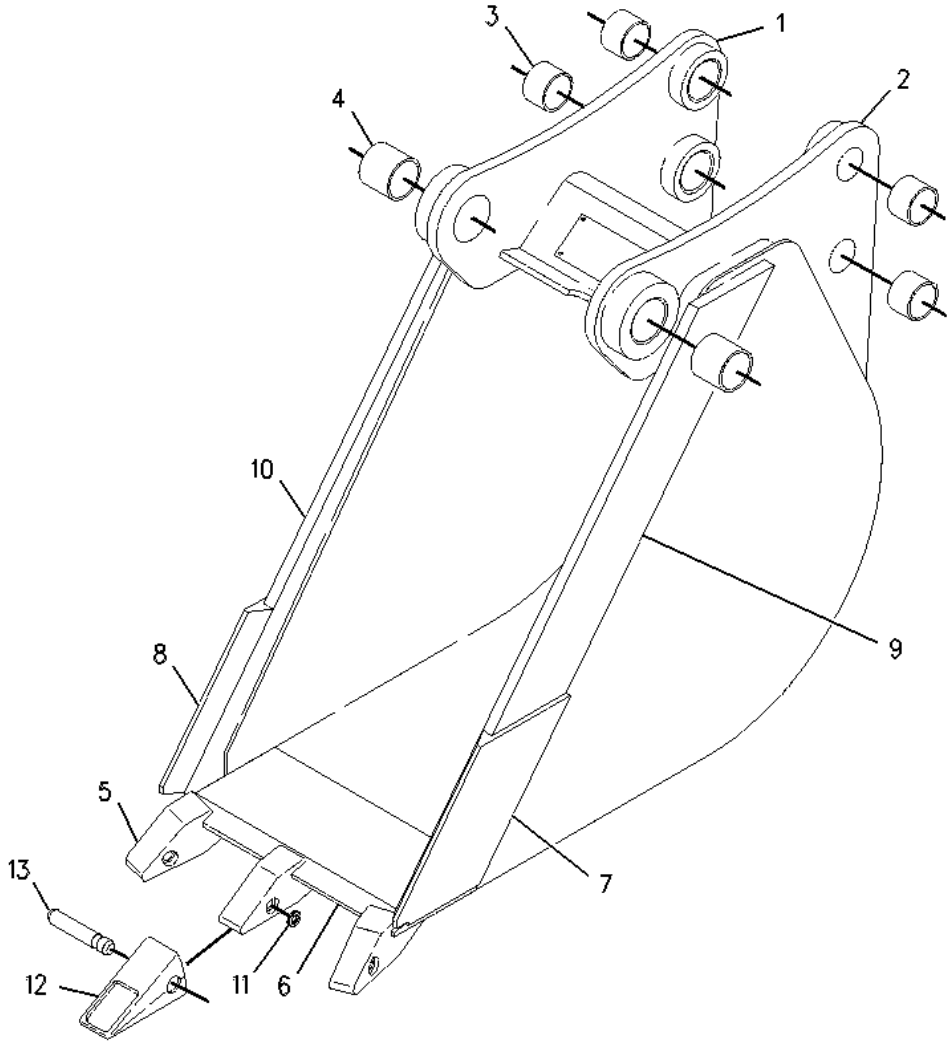

1	NPR	9R-7564	1	BRACKET AS (RH)
	NPR	9R-0411	2	BEARING-SLEEVE
	NPR	9R-3092	1	BEARING-SLEEVE
2	NPR	9R-7565	1	BRACKET AS (LH)
3	NPR	9R-0411	2	BEARING-SLEEVE
4	NPR	9R-3092	1	BEARING-SLEEVE
5	NPR Y	119-3204	3	ADAPTER-STRAP
6	NPR	134-5878	1	EDGE
7	NPR	134-5884	1	EDGE (LH)
8	NPR	134-5885	1	EDGE (RH)
9	NPR	134-5886	1	PLATE-LH
10	NPR	134-5887	1	PLATE-RH
11	NPR	8E-6209	1	RETAINER AS
12	NPR	1U-3202	1	TIP-LONG
13	NPR	8E-6208	1	PIN

Key: Y - Separate Illustration

9R-9136 BUCKET GP-HOE -S/N 4ZN16044-50156-914MM (36 IN). UNITOOTH HEAVY

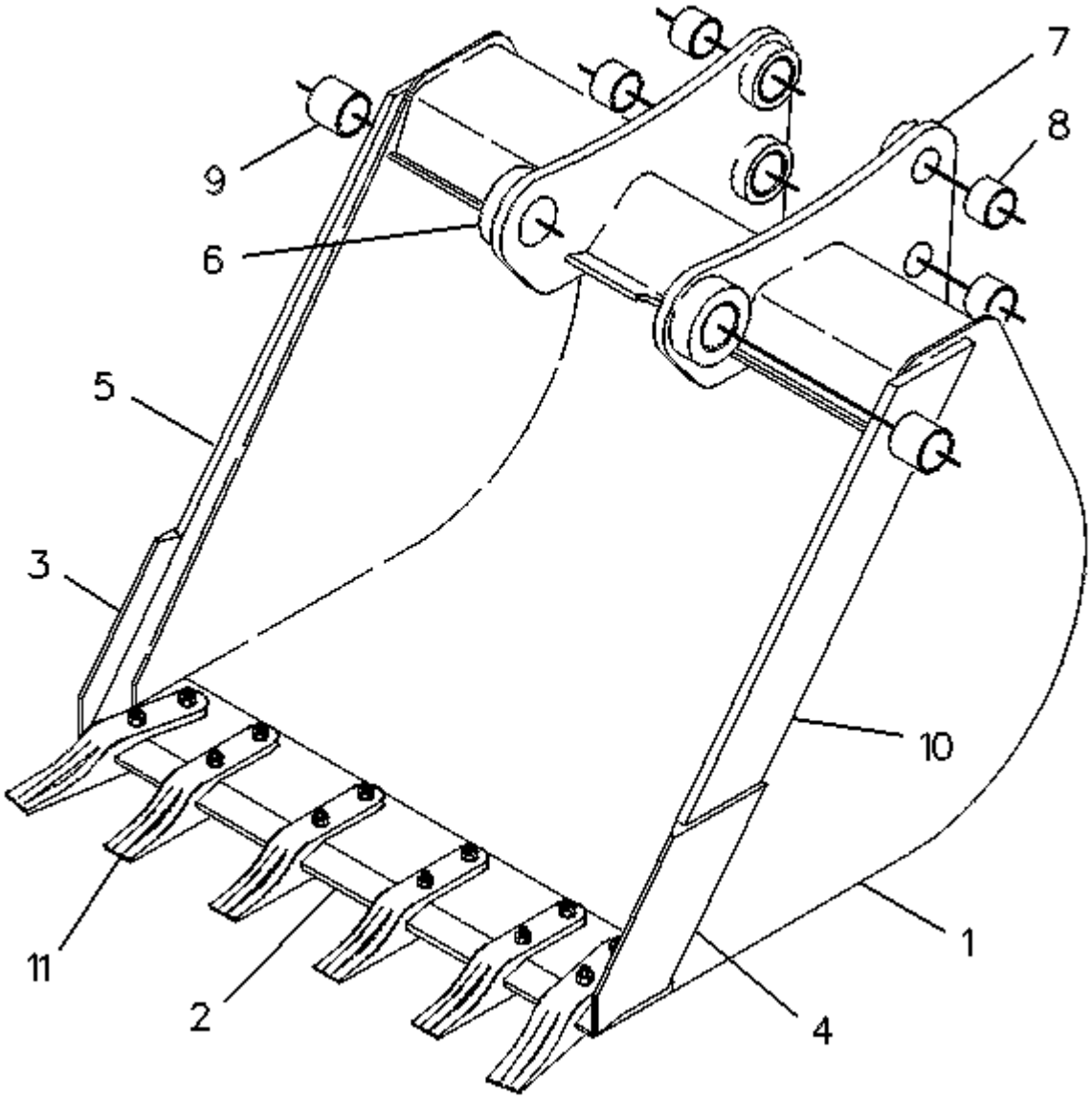

1	NPR	9R-9137	1	BUCKET AS-HOE
2	NPR	9R-8986	1	EDGE
3	NPR	9R-8988	1	EDGE (RH)
4	NPR	9R-8987	1	EDGE (LH)
5	NPR	9R-9167	1	PLATE-RH
6	NPR	9R-7564	1	BRACKET AS (RH)
7	NPR	9R-7565	1	BRACKET AS (LH)
		(EACH BRACKET AS INCLUDES)		
8	NPR	9R-0411	2	BEARING-SLEEVE

9	NPR	9R-3092	1	BEARING-SLEEVE
10	NPR	110-8651	1	PLATE-LH
11	NPR Y	135-8206	6	TOOTH GP-UNI

Key:

Y - SEPARATE ILLUSTRATION

9R-9130 BUCKET GP-HOE --S/N 4ZN16044-50156--762MM (30 IN). UNITOOTH HEAVY

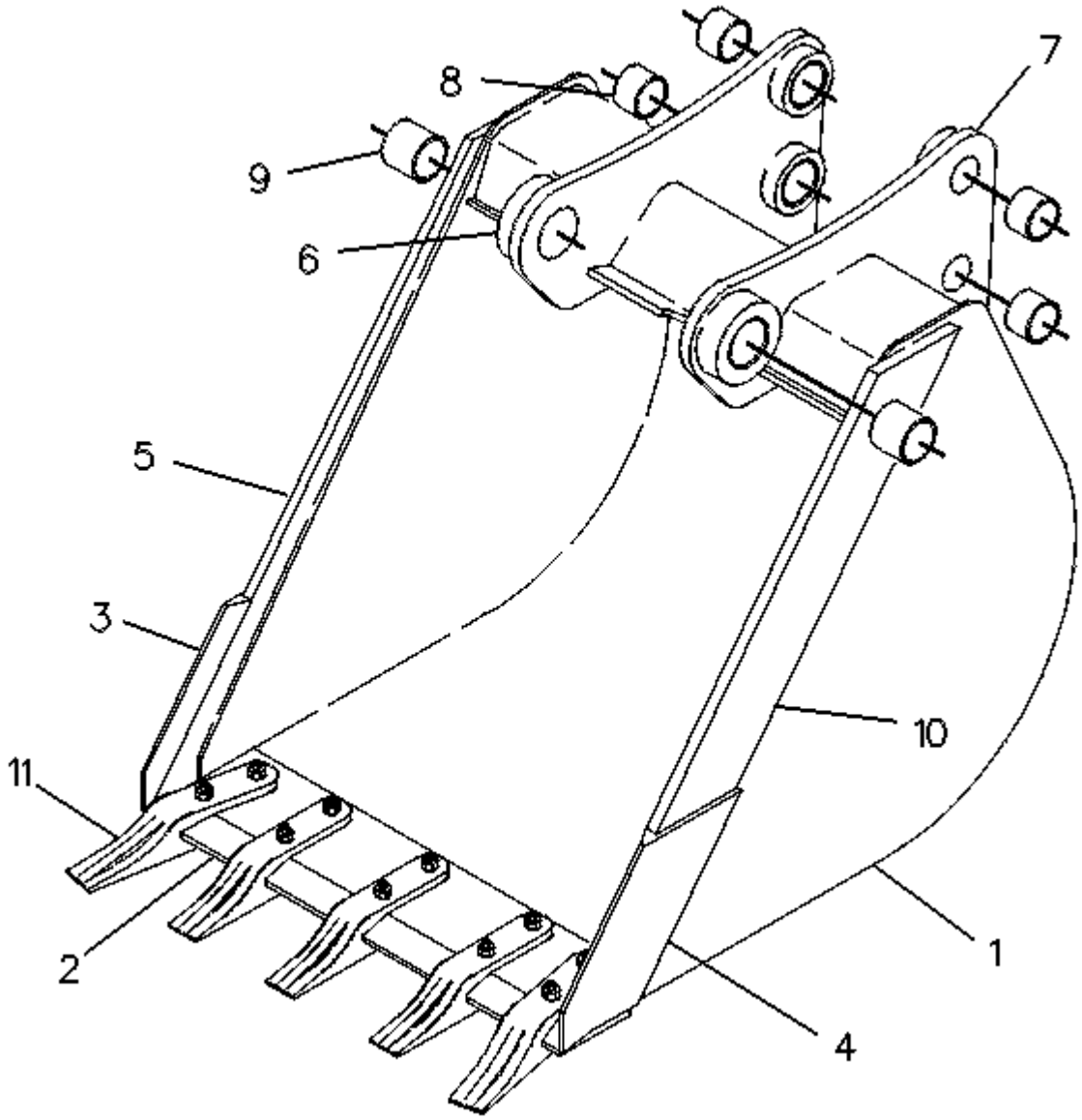

1	NPR	9R-9131	1	BUCKET AS-HOE
2	NPR	9R-8985	1	EDGE
3	NPR	9R-8988	1	EDGE (RH)
4	NPR	9R-8987	1	EDGE (LH)
5	NPR	9R-9167	1	PLATE-RH
6	NPR	9R-7564	1	BRACKET AS (RH)
7	NPR	9R-7565	1	BRACKET AS (LH)
	(EACH BRACKET AS INCLUDES)			
8	NPR	9R-0411	2	BEARING-SLEEVE
9	NPR	9R-3092	1	BEARING-SLEEVE
10	NPR	110-8651	1	PLATE-LH
11	NPR Y	135-8206	5	TOOTH GP-UNI

Key: Y - SEPARATE ILLUSTRATION

9R-9124 BUCKET GP-HOE --S/N 4ZN16044-50156--610MM (24 IN). UNITOOTH HEAVY

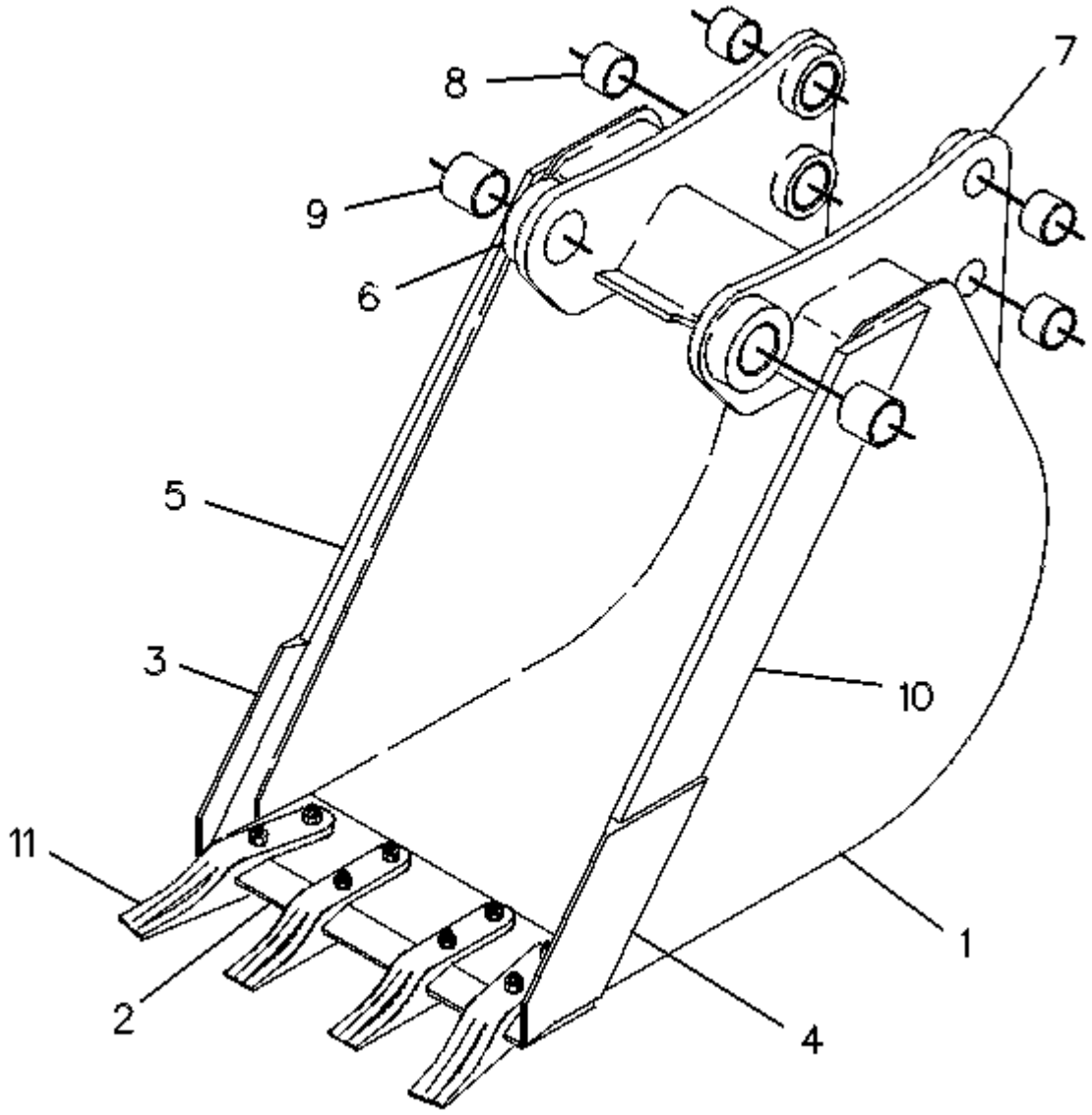

1	NPR	9R-9125	1	BUCKET AS-HOE
2	NPR	9R-8984	1	EDGE
3	NPR	9R-8988	1	EDGE (RH)
4	NPR	9R-8987	1	EDGE (LH)
5	NPR	9R-9167	1	PLATE-RH
6	NPR	9R-7564	1	BRACKET AS (RH)
7	NPR	9R-7565	1	BRACKET AS (LH)
	(EACH BRACKET AS INCLUDES)			
8	NPR	9R-0411	2	BEARING-SLEEVE
9	NPR	9R-3092	1	BEARING-SLEEVE
10	NPR	110-8651	1	PLATE-LH
11	NPR Y	135-8206	4	TOOTH GP-UNI

Key: Y - SEPARATE ILLUSTRATION

9R-9118 BUCKET GP-HOE--S/N 4ZN16044-50156--458MM (18 IN). UNITOOTH HEAVY

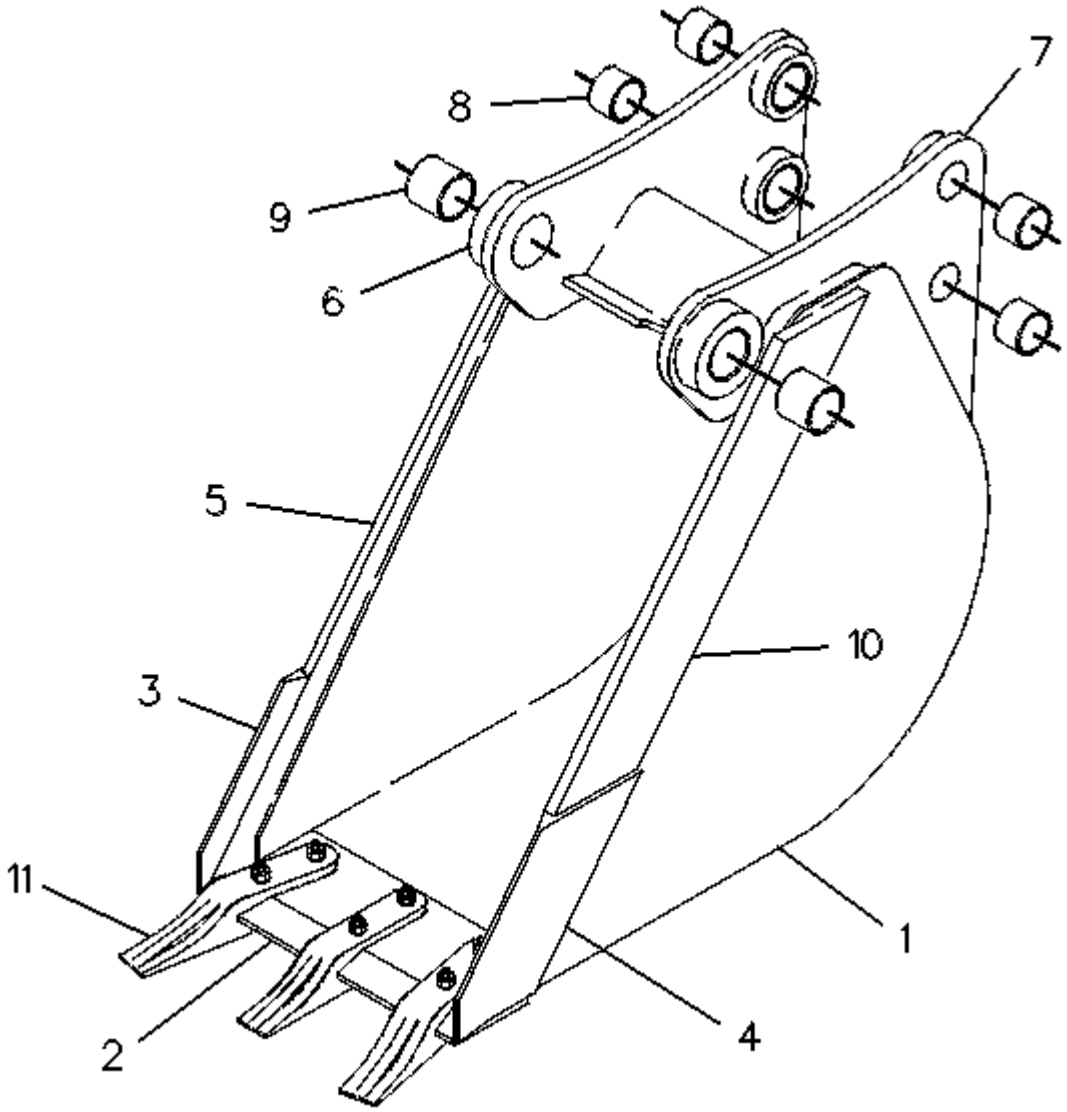

1	NPR	9R-9119	1	BUCKET AS-HOE
2	NPR	9R-8983	1	EDGE
3	NPR	9R-8988	1	EDGE (RH)
4	NPR	9R-8987	1	EDGE (LH)
5	NPR	9R-9167	1	PLATE-RH
6	NPR	9R-7564	1	BRACKET AS (RH)
7	NPR	9R-7565	1	BRACKET AS (LH)
	(EACH BRACKET AS INCLUDES)			
8	NPR	9R-0411	2	BEARING-SLEEVE
9	NPR	9R-3092	1	BEARING-SLEEVE
10	NPR	110-8651	1	PLATE-LH
11	NPR Y	135-8206	3	TOOTH GP-UNI

Key: Y - SEPARATE ILLUSTRATION

9R-9036 BUCKET GP-HOE --S/N 4ZN16044-50156--914MM (36 IN). UNITOOTH HEAVY

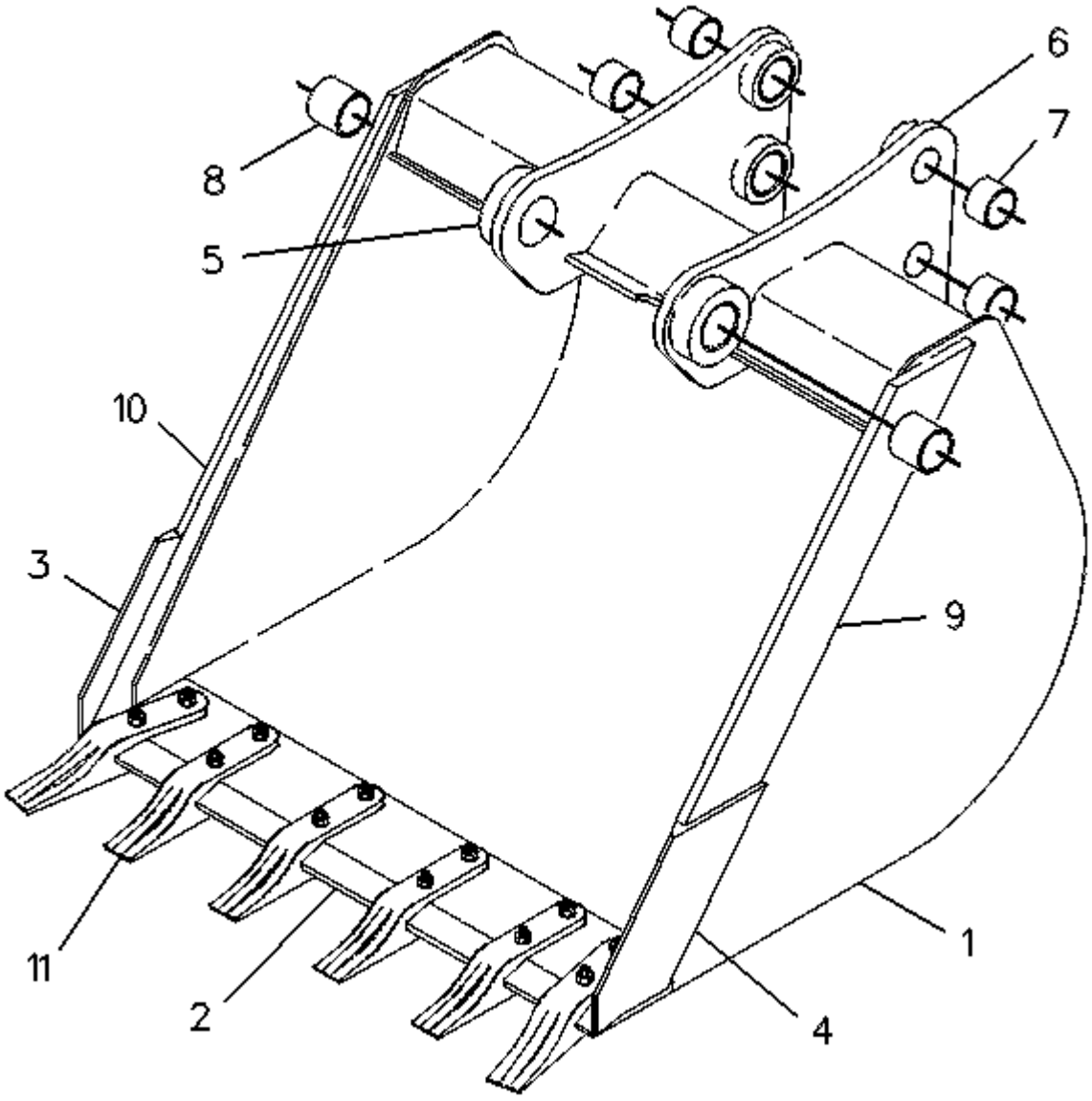

1	NPR	9R-9037	1	BUCKET AS-HOE
2	NPR	9R-8986	1	EDGE
3	NPR	9R-8988	1	EDGE (RH)
4	NPR	9R-8987	1	EDGE (LH)
5	NPR	9R-7564	1	BRACKET AS (RH)
6	NPR	9R-7565	1	BRACKET AS (LH)
	(EACH BRACKET AS. INCLUDES)			
7	NPR	9R-0411	2	BEARING-SLEEVE
8	NPR	9R-3092	1	BEARING-SLEEVE
9	NPR	110-8650	1	PLATE-LH
10	NPR	9R-9102	1	PLATE (RH)
11	NPR Y	135-8206	6	TOOTH GP-UNI

Key: Y - SEPARATE ILLUSTRATION

9R-9030 BUCKET GP-HOE -S/N 4ZN16044-50156-762MM (30 IN). UNITOOTH HEAVY

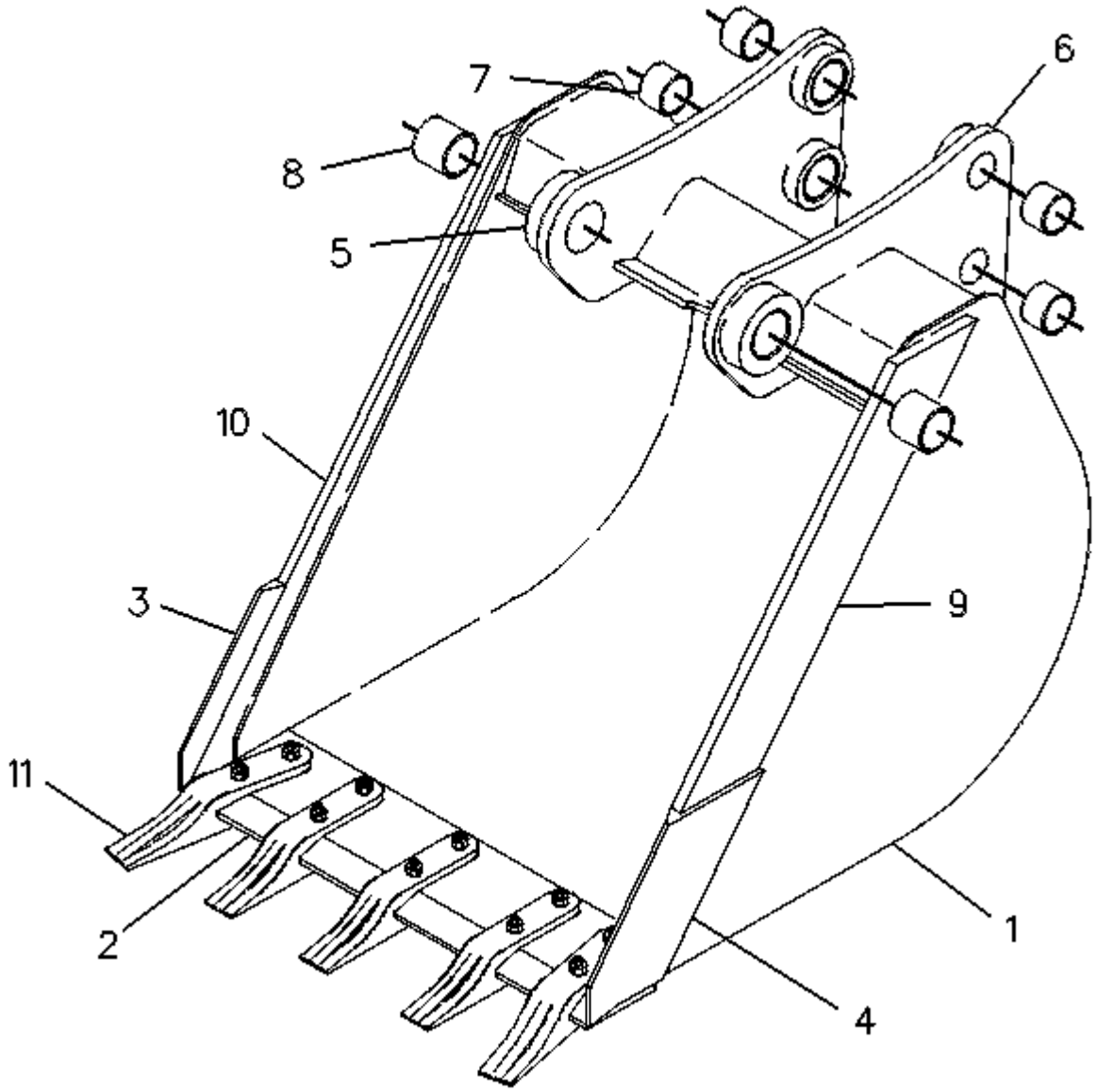

1	NPR	9R-9031	1	BUCKET AS-HOE
2	NPR	9R-8985	1	EDGE
3	NPR	9R-8988	1	EDGE (RH)
4	NPR	9R-8987	1	EDGE (LH)
5	NPR	9R-7564	1	BRACKET AS (RH)
6	NPR	9R-7565	1	BRACKET AS (LH)
	(EACH BRACKET AS INCLUDES)			
7	NPR	9R-0411	2	BEARING-SLEEVE
8	NPR	9R-3092	1	BEARING-SLEEVE
9	NPR	110-8650	1	PLATE-LH
10	NPR	9R-9102	1	PLATE (RH)
11	NPR Y	135-8206	5	TOOTH GP-UNI

Key: Y - SEPARATE ILLUSTRATION

9R-9024 BUCKET GP-HOE --S/N 4ZN16044-50156--610MM (24 IN). UNITOOTH HEAVY

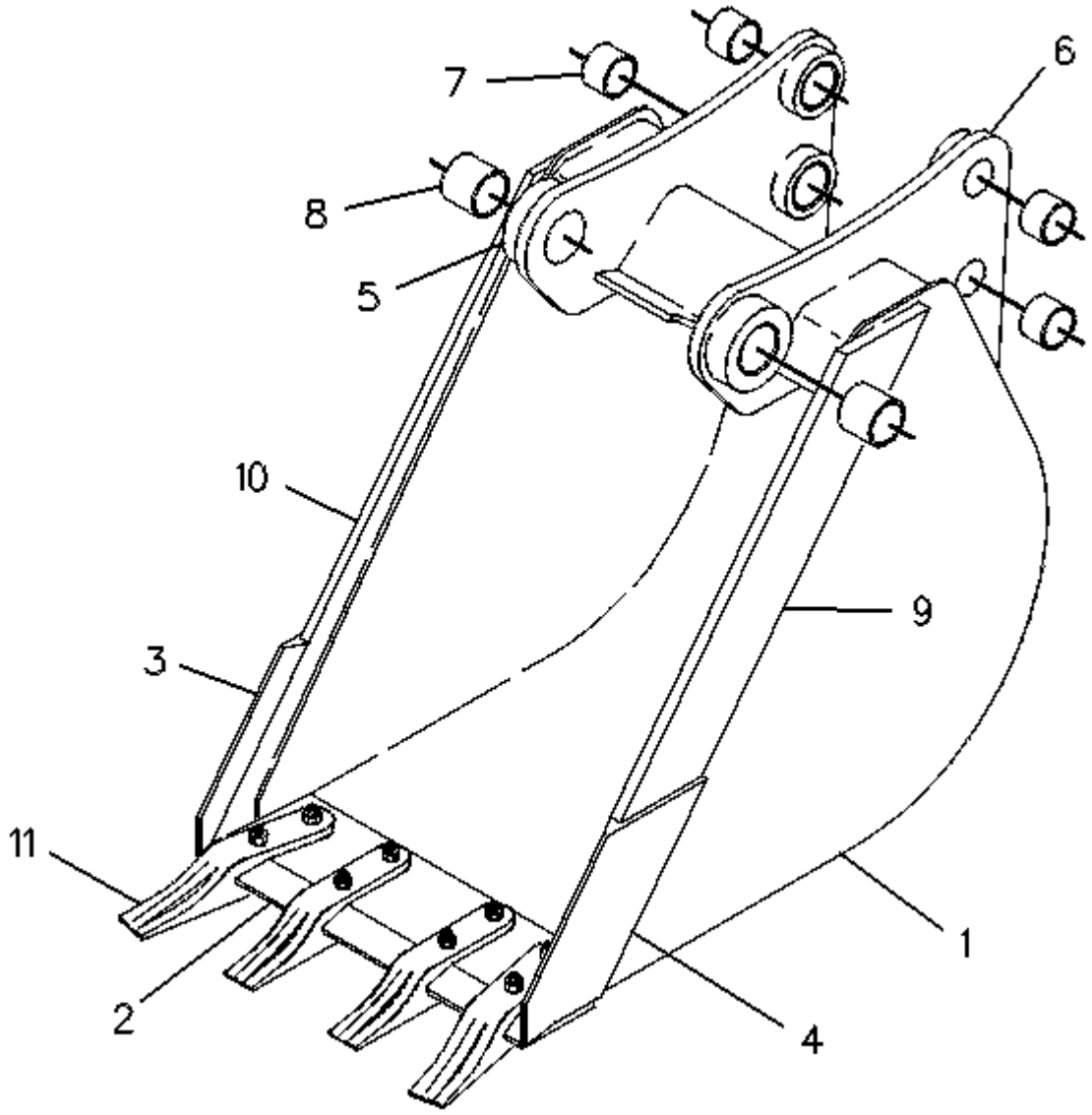

1	NPR	9R-9025	1	BUCKET AS-HOE	
2	NPR	9R-8984	1	EDGE	
3	NPR	9R-8988	1	EDGE (RH)	
4	NPR	9R-8987	1	EDGE (LH)	
5	NPR	9R-7564	1	BRACKET AS (RH)	
6	NPR	9R-7565	1	BRACKET AS (LH)	
	(EACH BRACKET AS INCLUDES)				
7	NPR	9R-0411	2	BEARING-SLEEVE	
8	NPR	9R-3092	1	BEARING-SLEEVE	
9	NPR	110-8650	1	PLATE-LH	
10	NPR	9R-9102	1	PLATE (RH)	
11	NPR Y	135-8206	4	TOOTH GP-UNI	

Key: Y - SEPARATE ILLUSTRATION

9R-9018 BUCKET GP-HOE -S/N 4ZN16044-50156-458MM (18 IN). UNITOOTH HEAVY

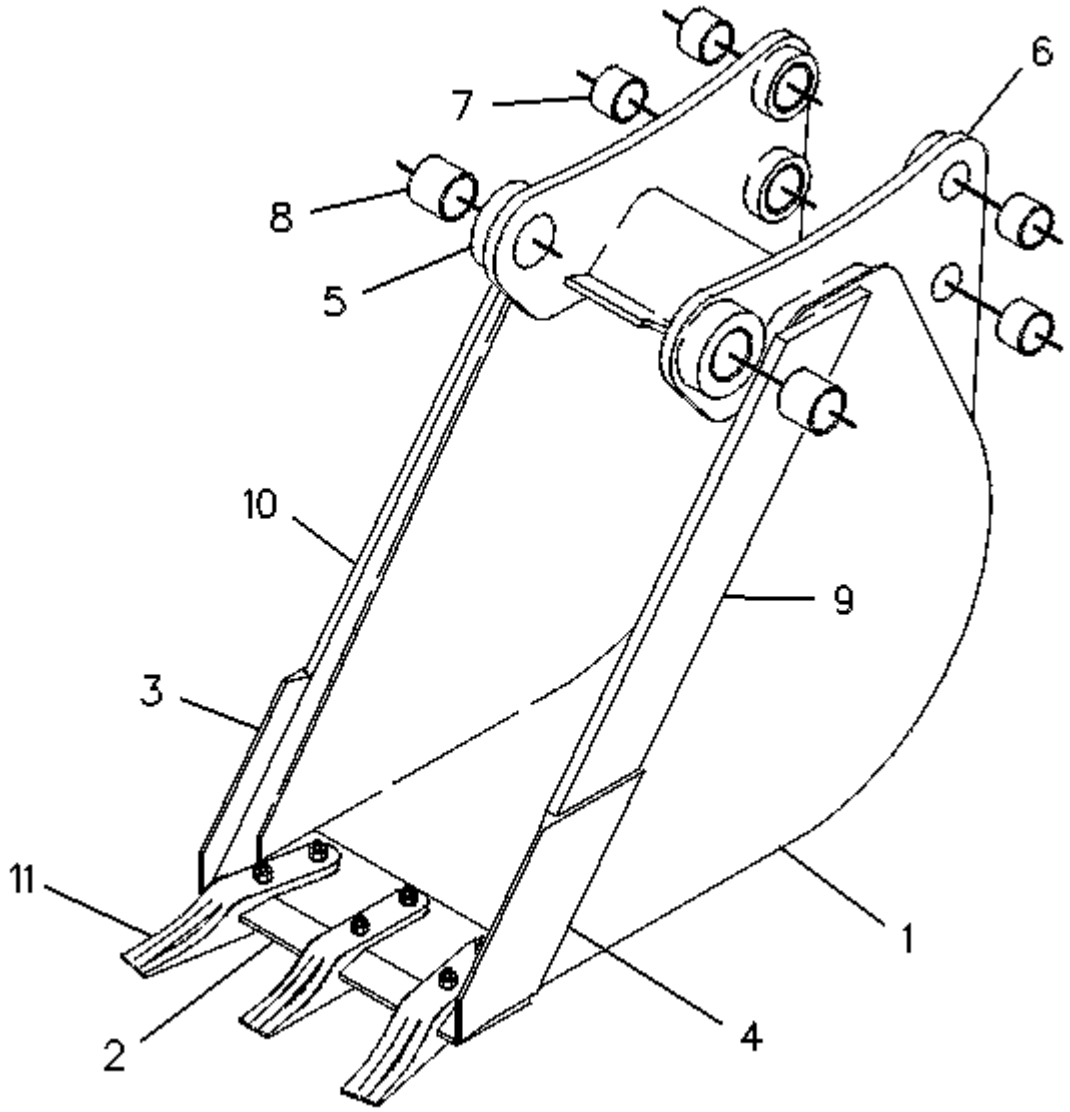

1	NPR	9R-9019	1	BUCKET AS-HOE
2	NPR	9R-8983	1	EDGE
3	NPR	9R-8988	1	EDGE (RH)
4	NPR	9R-8987	1	EDGE (LH)
5	NPR	9R-7564	1	BRACKET AS (RH)
6	NPR	9R-7565	1	BRACKET AS (LH)
	(EACH BRACKET AS INCLUDES)			
7	NPR	9R-0411	2	BEARING-SLEEVE
8	NPR	9R-3092	1	BEARING-SLEEVE
9	NPR	110-8650	1	PLATE-LH
10	NPR	9R-9102	1	PLATE (RH)
11	NPR Y	135-8206	3	TOOTH GP-UNI

Key:
Y - SEPARATE ILLUSTRATION

9R-6512 BUCKET GP-HOE --S/N 4ZN16044-50156--300MM (12 IN). UNIT00TH HEAVY

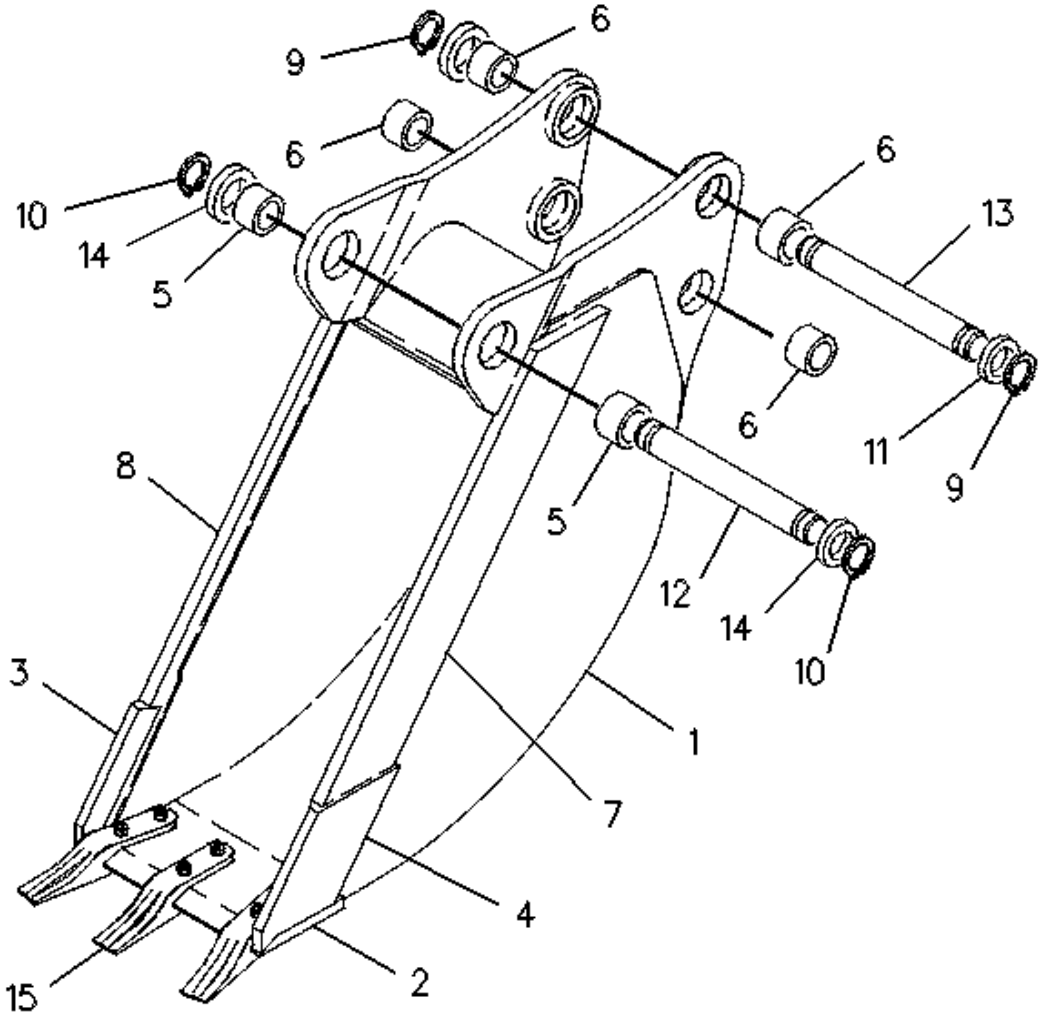

1	NPR C	100-6001	1	BUCKET AS-HOE
2	NPR C	100-6002	1	EDGE
3	NPR C	9R-8988	1	EDGE (RH)
4	NPR C	9R-8987	1	EDGE (LH)
5	NPR	9R-0430	2	BEARING-SLEEVE
6	NPR	9R-0431	4	BEARING-SLEEVE
7		110-8649	1	PLATE-LH
8		101-1838	1	PLATE-RH
9	NPR	6V-3213	2	RING-RETAINING
10	NPR	6V-4364	2	RING-RETAINING
11	NPR	9R-0158	2	WASHER (46X69X3-MM THK)
12	NPR	9R-0437	1	PIN
13	NPR	9R-0438	1	PIN
14	NPR	9R-1510	2	WASHER (51X82X4-MM THK)
15	NPR Y	135-8206	3	TOOTH GP-UNI

Key: C - CHANGE FROM PREVIOUS TYPE Y - SEPARATE ILLUSTRATION

9R-5989 BUCKET GP-GENERAL PURPOSE -S/N 4ZN16044-50156
0.96 CU M (1.25 CU YD) -PART OF 190-1077 BUCKET AR-GENERAL PURPOSE

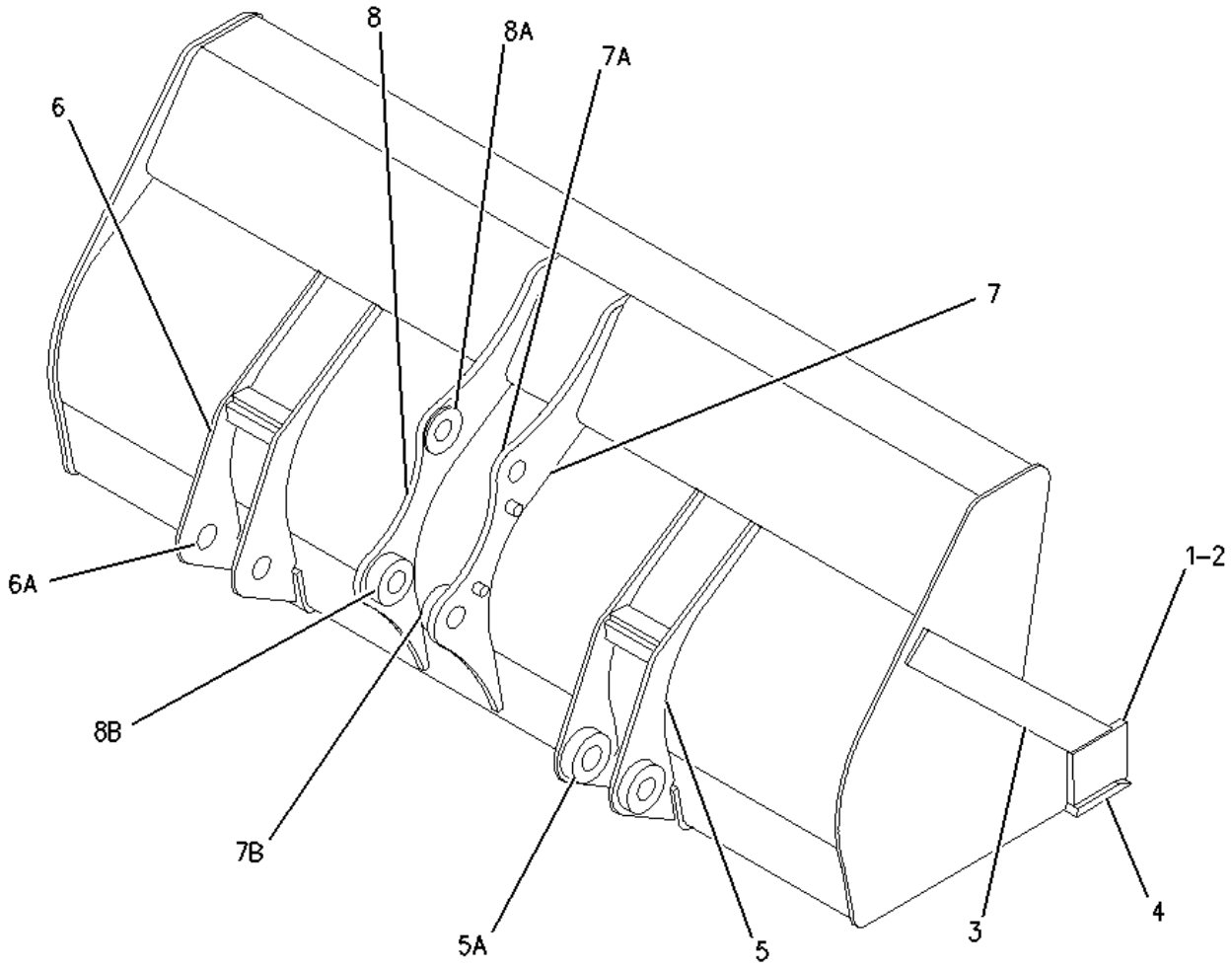

1	NPR	9R-5205	1	EDGE (LH)
2	NPR	9R-5206	1	EDGE (RH)
3	NPR	9R-0376	2	EDGE
4	NPR	9R-4672	1	EDGE
5	NPR	9R-0336	2	BRACKET AS-LIFT (RH)
5A	NPR	9R-0111	2	BEARING-SLEEVE
6	NPR	9R-0343	2	BRACKET AS-LIFT (LH)
6A	NPR	9R-0111	2	BEARING-SLEEVE
7	NPR	9R-0371	1	BRACKET AS-TILT (LH)

7A NPR 9R-4485 1 BOSS

7B NPR 9R-4486 1 BOSS

8 NPR 9R-0372 1 BRACKET AS-TILT (RH)

8A NPR 9R-4485 1 BOSS

8B NPR 9R-4486 1 BOSS

9R-5202 BUCKET AS-GENERAL PURPOSE -S/N 4ZN16044-50156
1.0 CU M (1.31 CU YD) -PART OF 190-1056, 190-1079 BUCKET GP-GENERAL PURPOSE
FOR USE WITH ALL WHEEL STEER

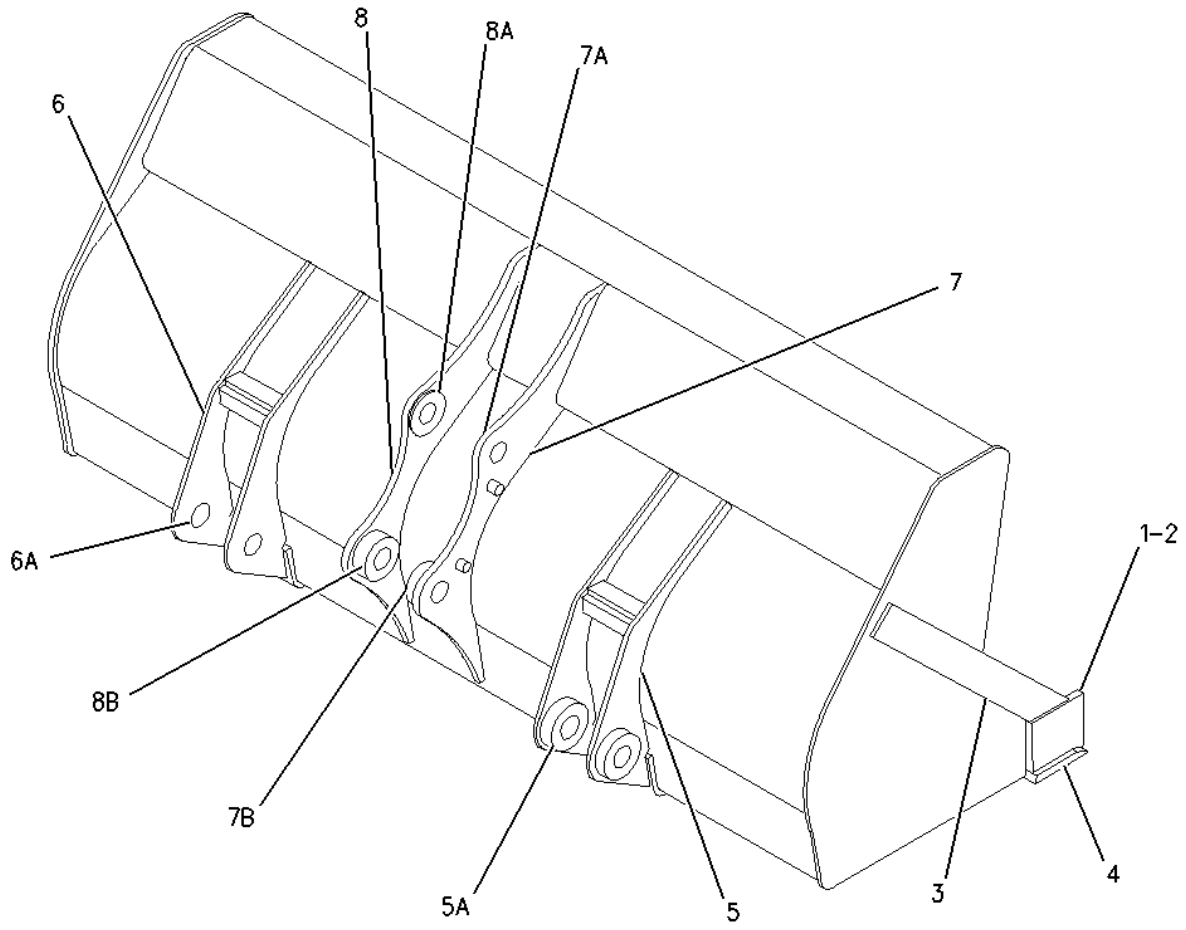

1	NPR	9R-5206	1	EDGE (RH)
2	NPR	9R-5205	1	EDGE (LH)
3	NPR	9R-5832	2	EDGE
4	NPR	9R-5313	1	EDGE
5	NPR	9R-0336	2	BRACKET AS-LIFT (RH)
(EACH INCLUDES)				
5A	NPR	9R-0111	1	BEARING-SLEEVE
6	NPR	9R-0343	2	BRACKET AS-LIFT (LH)
(EACH INCLUDES)				
6A	NPR	9R-0111	1	BEARING-SLEEVE
7	NPR	9R-0371	1	BRACKET AS-TILT (LH)
7A	NPR	9R-4485	1	BOSS
7B	NPR	9R-4486	1	BOSS
8	NPR	9R-0372	1	BRACKET AS-TILT (RH)
8A	NPR	9R-4485	1	BOSS
8B	NPR	9R-4486	1	BOSS

9R-5201 BUCKET AS-GENERAL PURPOSE -S/N 4ZN16044-50156
0.76 CU M (1.00 CU YD) -PART OF 190-1055, 190-1078 BUCKET GP-GENERAL PURPOSE

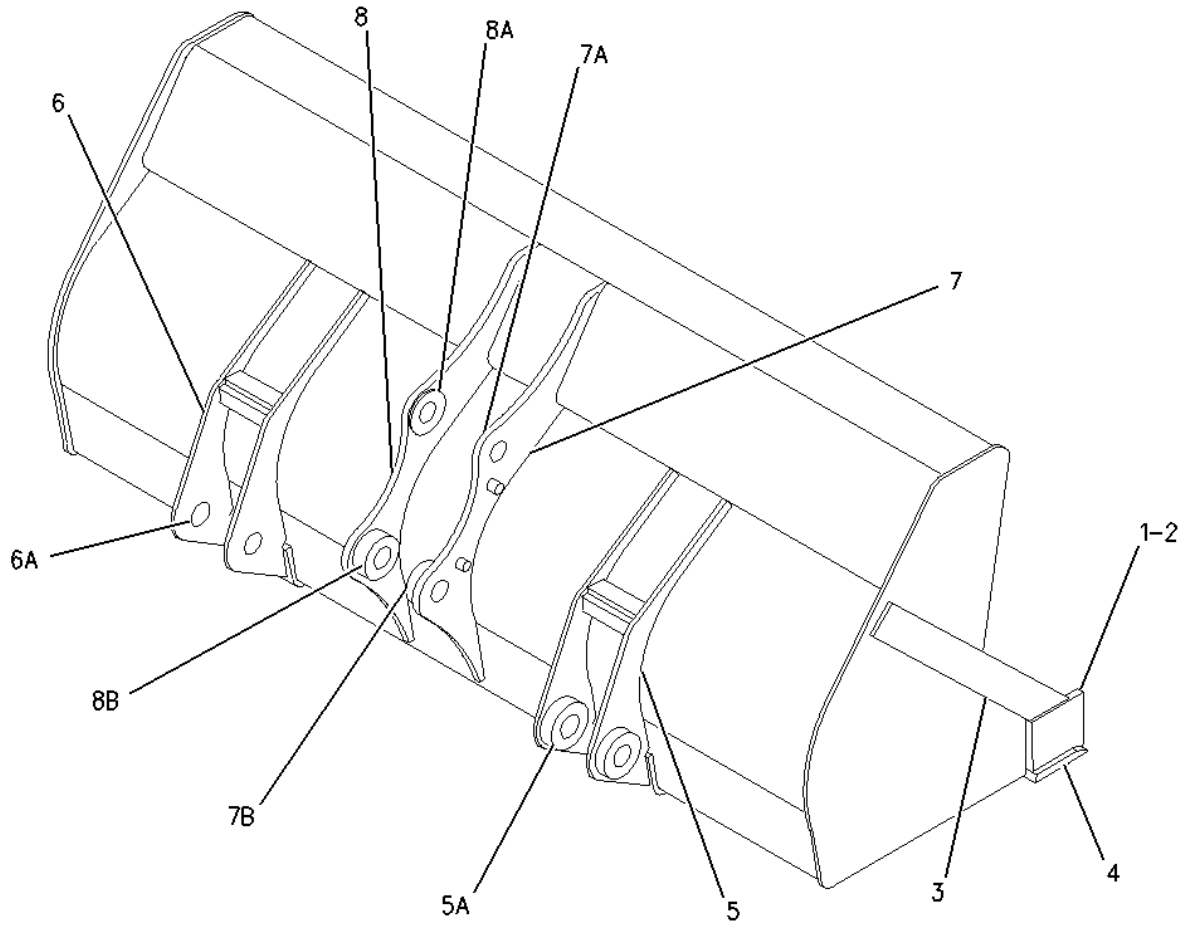

1	NPR	9R-5205	1	EDGE (LH)
2	NPR	9R-5206	1	EDGE (RH)
3	NPR	9R-0347	2	EDGE
4	NPR	9R-4672	1	EDGE
5	NPR	9R-0336	2	BRACKET AS-LIFT (RH)
	(EACH INCLUDES)			
5A	NPR	9R-0111	1	BEARING-SLEEVE
6	NPR	9R-0343	2	BRACKET AS-LIFT (LH)
	(EACH INCLUDES)			
6A	NPR	9R-0111	1	BEARING-SLEEVE
7		9R-4483	1	BRACKET AS-TILT (LH)
7A	NPR	9R-4485	1	BOSS
7B	NPR	9R-4486	1	BOSS
8		9R-4487	1	BRACKET AS-TILT (RH)
8A	NPR	9R-4485	1	BOSS
8B	NPR	9R-4486	1	BOSS

132-3780 COUPLER GP-QUICK --S/N 4ZN16044-50156

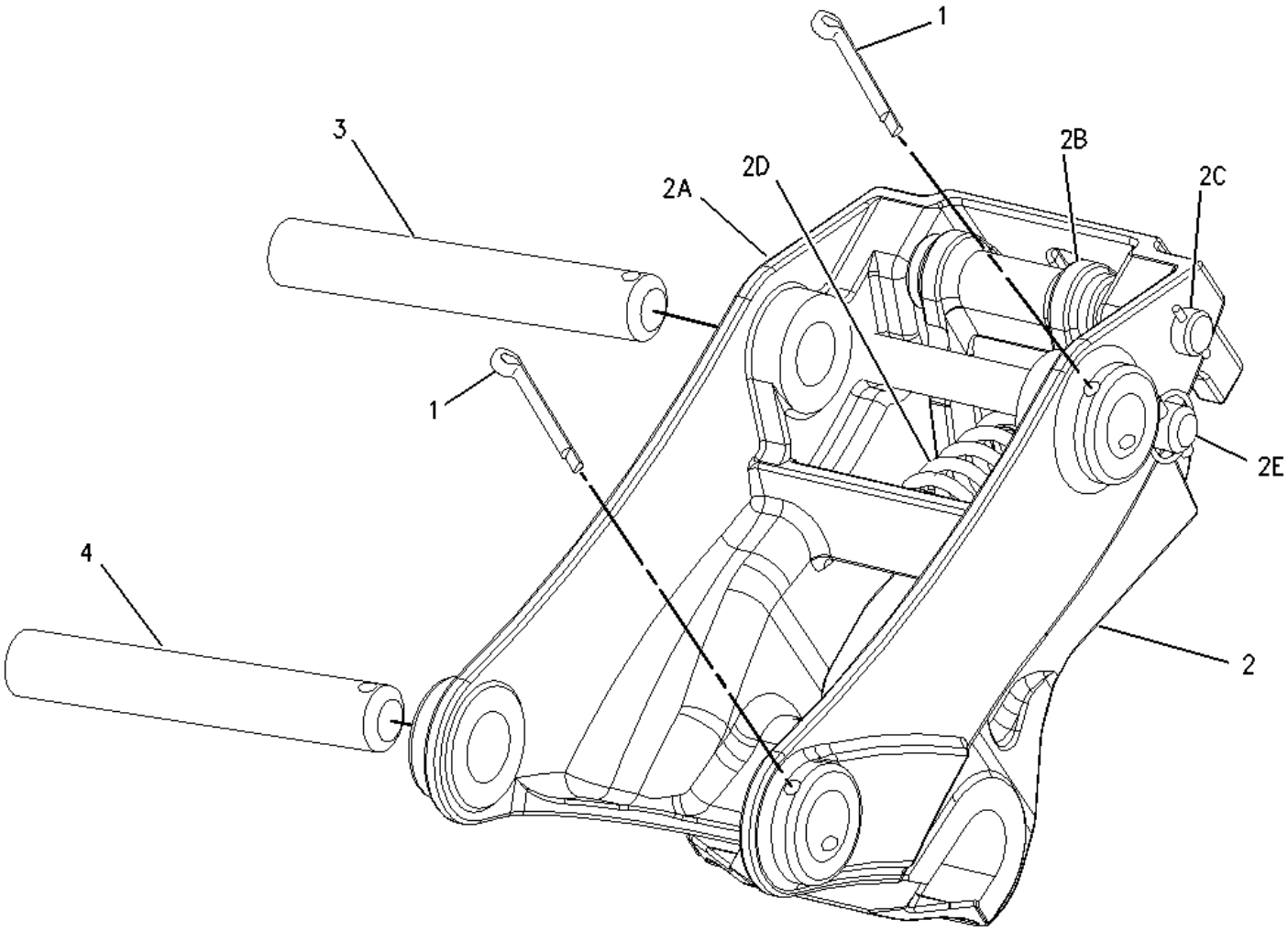

1	**NPR**	**4J-1888**	**2**	**PIN-COTTER**
2	**NPR**	**130-3439**	**1**	**COUPLER AS**
2A	**NPR**	**132-3716**	**1**	**COUPLER**
2B	**NPR**	**132-3718**	**1**	**HOOK**
2C	**NPR**	**132-3721**	**1**	**PIN AS (HOOK)**
2D	**NPR**	**132-3725**	**1**	**SPRING**
2E	**NPR**	**132-3723**	**1**	**LOCK PIN**
	NPR	**132-3812**	**1**	**PIN-LYNCH**
3	**NPR**	**132-3777**	**1**	**PIN**
4	**NPR**	**132-3778**	**1**	**PIN**
	NPR F	**132-3821**	**1**	**LEVER-ACTUATING**

Key: F - NOT SHOWN

161-3240 COUPLER GP-QUICK --S/N 4ZN16044-50156

NPR	4J-1888	2	PIN-COTTER
NPR Y	161-3241	1	COUPLER GP-QUICK
NPR	132-3777	1	PIN
NPR	132-3778	1	PIN

Key: Y - SEPARATE ILLUSTRATION

161-3241 COUPLER GP-QUICK -S/N 4ZN16044-50156
PART OF 161-3240 COUPLER GP-QUICK

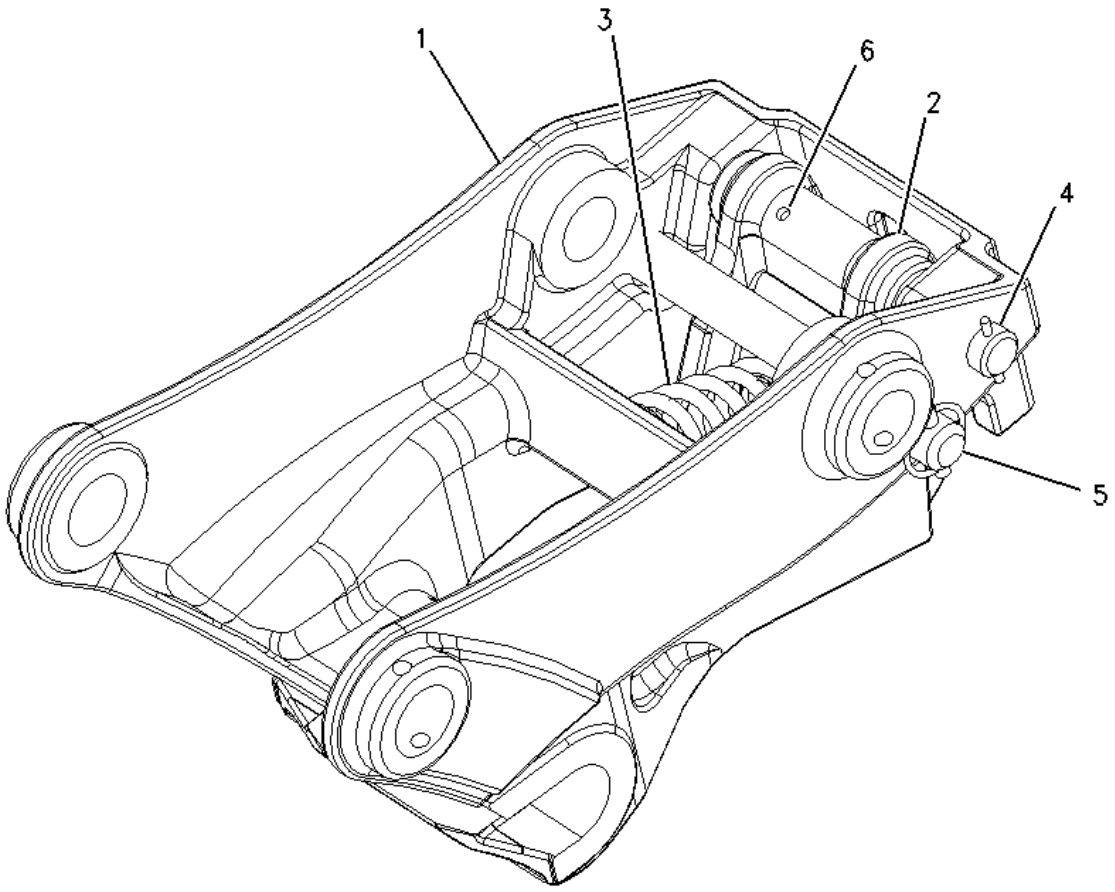

1	**NPR**	**161-3242**	**1**	**COUPLER**
2	**NPR**	**200-5921**	**1**	**HOOK**
3	**NPR**	**132-3725**	**1**	**SPRING**
4	**NPR**	**132-3721**	**1**	**PIN AS (HOOK)**
5	**NPR**	**132-3723**	**1**	**LOCK PIN**
6	**NPR**	**091-5928**	**1**	**FITTING**
	NPR F	**132-3821**	**1**	**LEVER-ACTUATING**

Key: F - NOT SHOWN

104-6310 FORK GP -S/N 4ZN16044-50156
PART OF 111-8635, 112-0939 BUCKET AR-MULTIPURPOSE, 112-0942 FORK GP

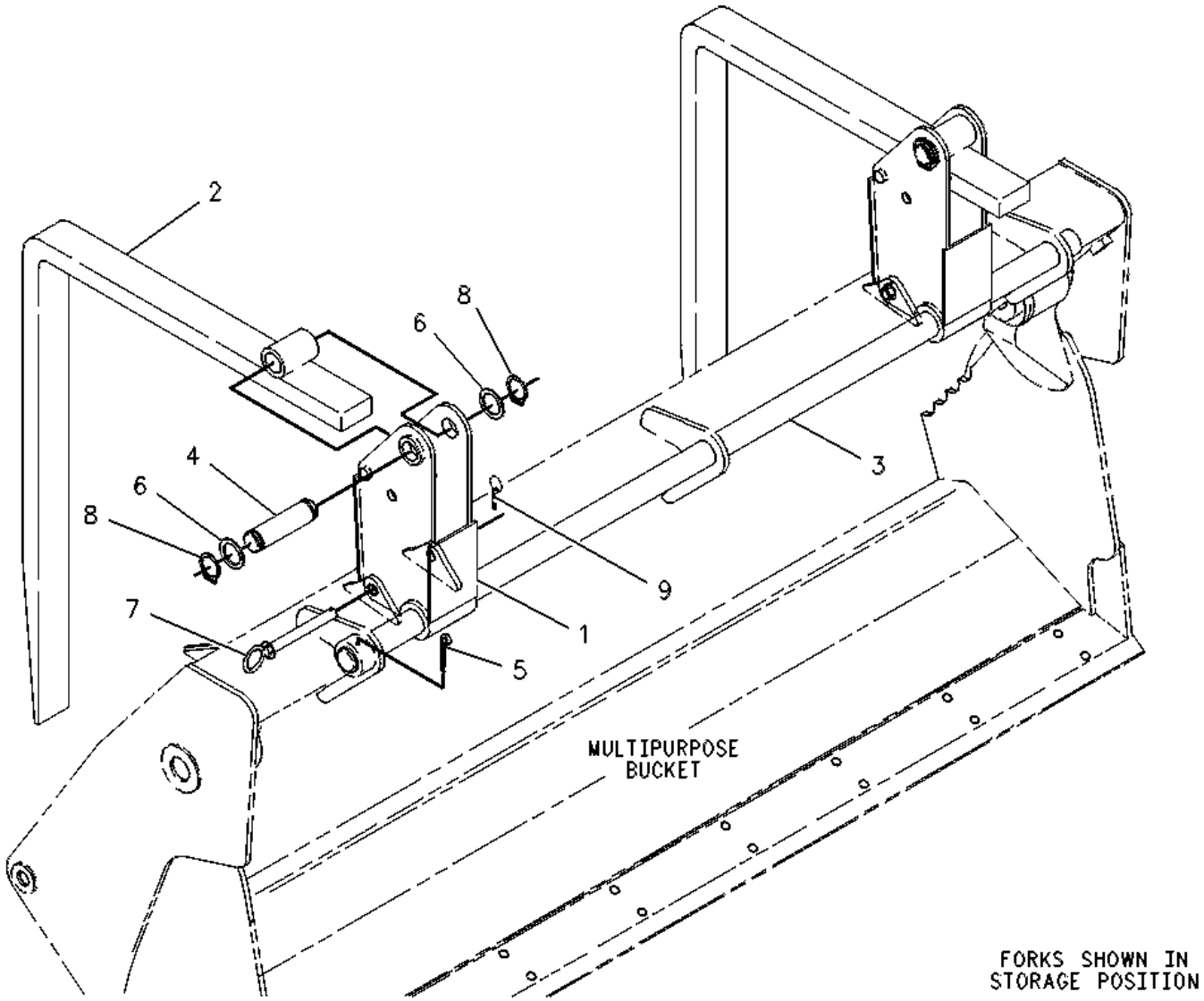

1	**NPR**	**104-6311**	**2**	**BRACKET AS**
2	**NPR**	**104-6312**	**2**	**FORK AS**
3	**NPR**	**104-6316**	**1**	**PIN**
4	**NPR**	**104-6317**	**2**	**PIN**
5	**NPR**	**4J-1888**	**1**	**PIN-COTTER**
6	**NPR**	**9R-0109**	**4**	**WASHER (41X64X3-MM THK)**
7	**NPR**	**112-1776**	**2**	**PIN AS**
8	**NPR**	**6V-8144**	**4**	**RING-RETAINING**
9	**NPR**	**5D-8159**	**2**	**PIN AS**

108-1587 MOUNTING GP-FORK --S/N 4ZN16044-50156-PART OF 112-0942 FORK GP

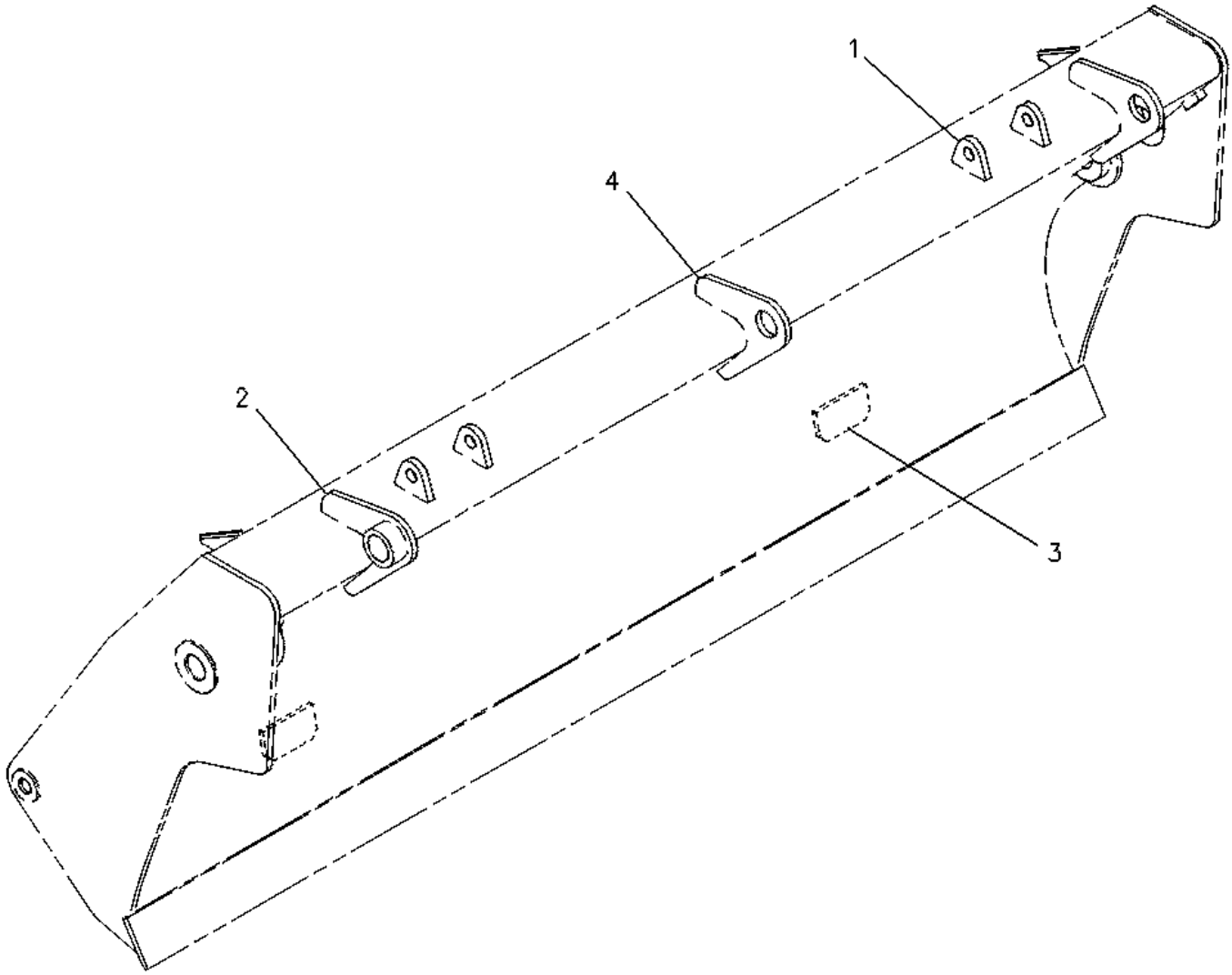

1	**NPR**	**110-2861**	**4**	**BRACKET**
2	**NPR**	**104-6313**	**1**	**BRACKET AS**
3	**NPR**	**104-6314**	**2**	**BRACKET**
4	**NPR**	**106-9388**	**2**	**BRACKET**

132-1009 ADAPTER GP-TIP -S/N 4ZN16044-50156

NPR 8E-2184 8 ADAPTER

NPR 4F-3656 16 BOLT-PLOW (5/8-11X2.5-IN)

NPR 4K-0367 16 NUT-FULL (5/8-11-THD)

4T-2203 TIP-ABRASION -S/N 4ZN16044-50156-FIELD INSTALLATION

NPR 4T-2336 1 TIP-ABRASION

-OR-

NPR 4T-2339 1 TIP-ABRASION

1U-3209 TIP-PENETRATION -S/N 4ZN16044-50156-FIELD INSTALLATION

1U-4431 1 TIP-PENETRATION

-OR-

1U-4432 1 TIP-PENETRATION

9W-8208 TIP-PENETRATION -S/N 4ZN16044-50156-SHARP CORNER FIELD INSTALLATION

NPR 9W-8457 1 TIP-PENETRATION

-OR-

NPR 9W-8458 1 TIP-PENETRATION

9W-8209 TIP-PENETRATION -S/N 4ZN16044-50156--SHARP CENTER FIELD INSTALLATION

NPR 9W-8460 1 TIP-PENETRATION

-OR-

NPR 9W-8461 1 TIP-PENETRATION

119-3204 ADAPTER-STRAP -S/N 4ZN16044-50156
FOR USE WITH BUCKETS THAT HAVE A 25MM THICK BASE EDGE
FIELD INSTALLATION

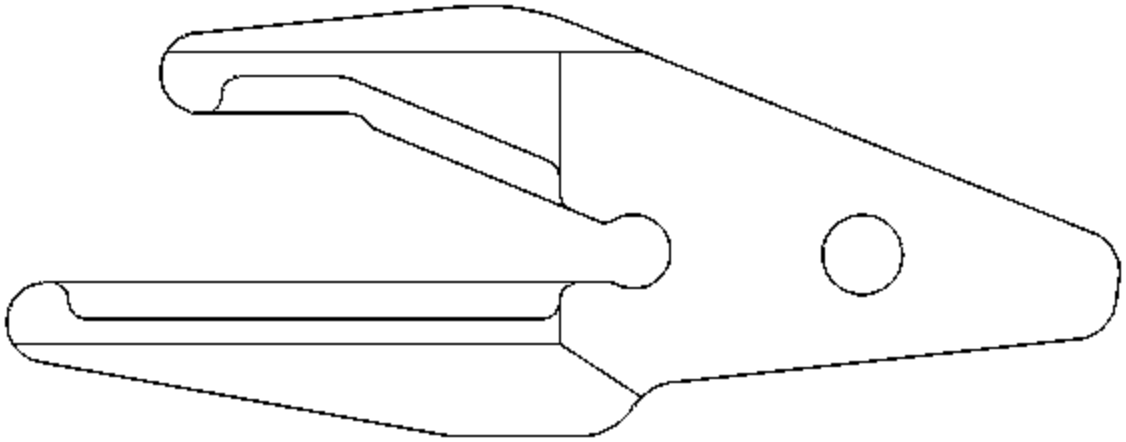

(NO SERVICED PARTS)

119-3205 ADAPTER-STRAP -S/N 4ZN16044-50156
FOR USE WITH BUCKETS THAT HAVE A 20MM THICK BASE EDGE
FIELD INSTALLATION

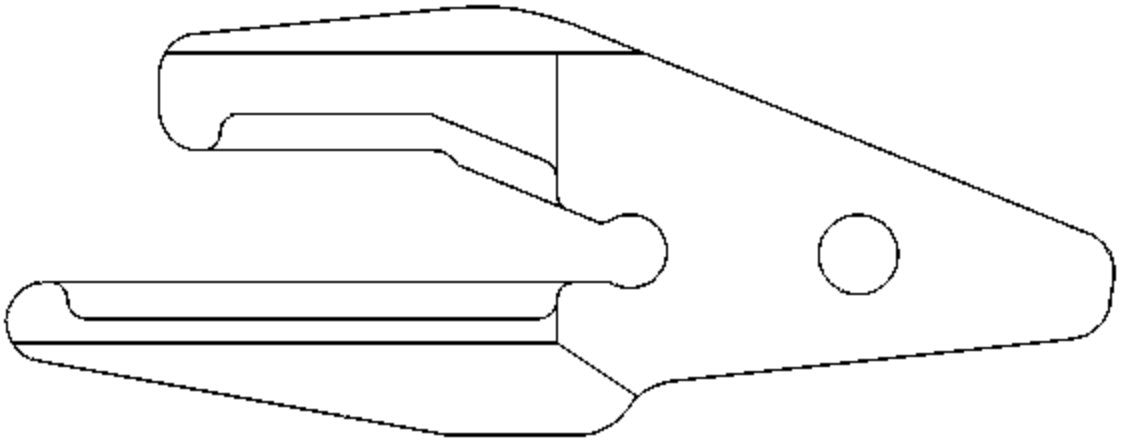

(NO SERVICED PARTS)

9R-5320 EDGE GP-CUTTING -S/N 4ZN16044-50156
PART OF 190-1082, 190-1083 BUCKET AR-MULTIPURPOSE, 190-1079 BUCKET GP-GENERAL PURPOSE

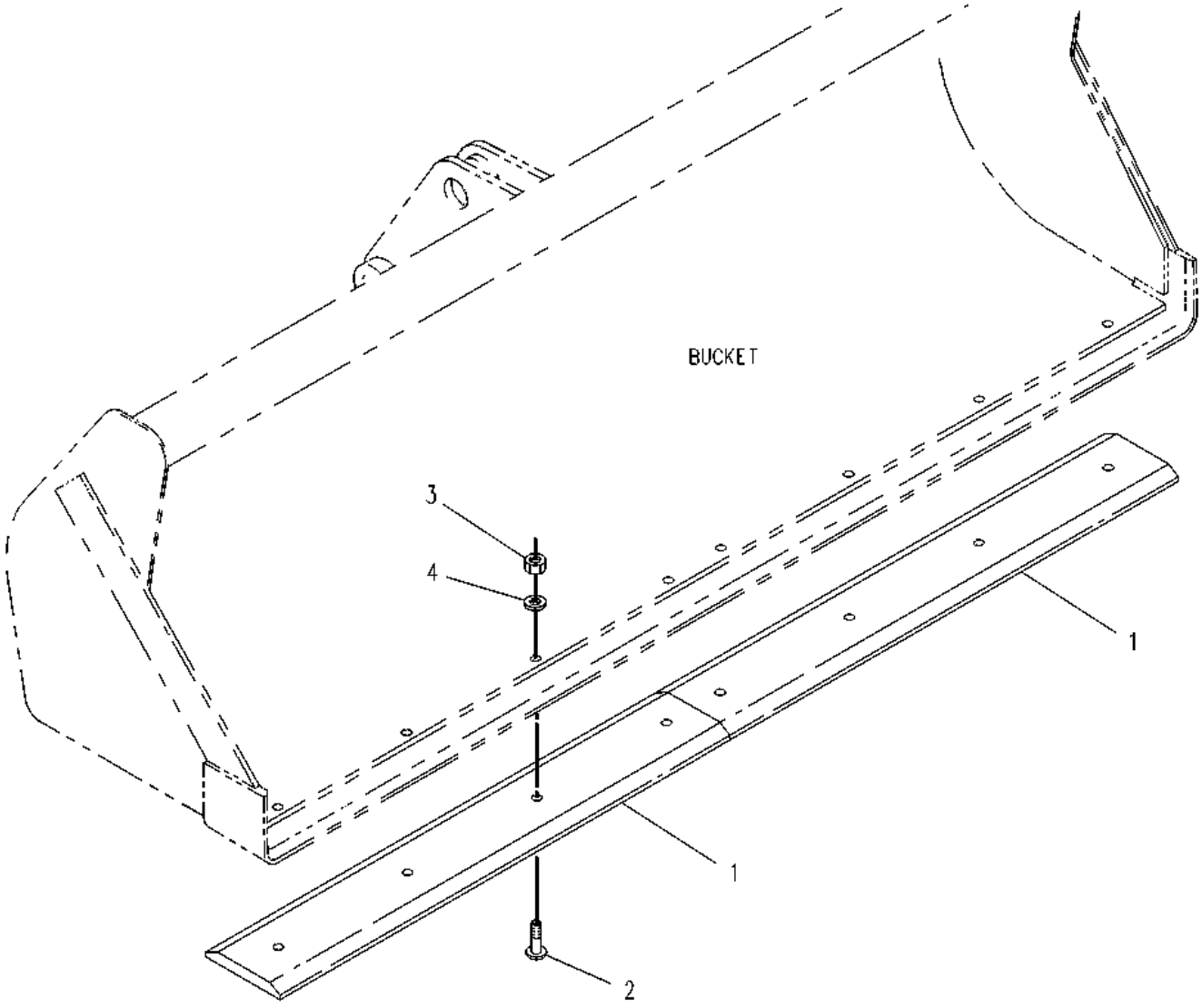

1	**NPR**	**118-7110**	**2**	**EDGE-CUTTING**
2	**NPR**	**4F-3657**	**8**	**BOLT-PLOW (5/8-11X2.75-IN)**
3	**NPR**	**4K-0367**	**8**	**NUT-FULL (5/8-11-THD)**
4	**NPR**	**8T-4122**	**8**	**WASHER-HARD (17X32X3.5-MM THK)**

9R-5321 EDGE GP-CUTTING -S/N 4ZN16044-50156
PART OF 190-1077 BUCKET AR-GENERAL PURPOSE, 190-1084, 190-1085 BUCKET AR-MULTIPURPOSE, 190-1078 BUCKET GP-GENERAL PURPOSE

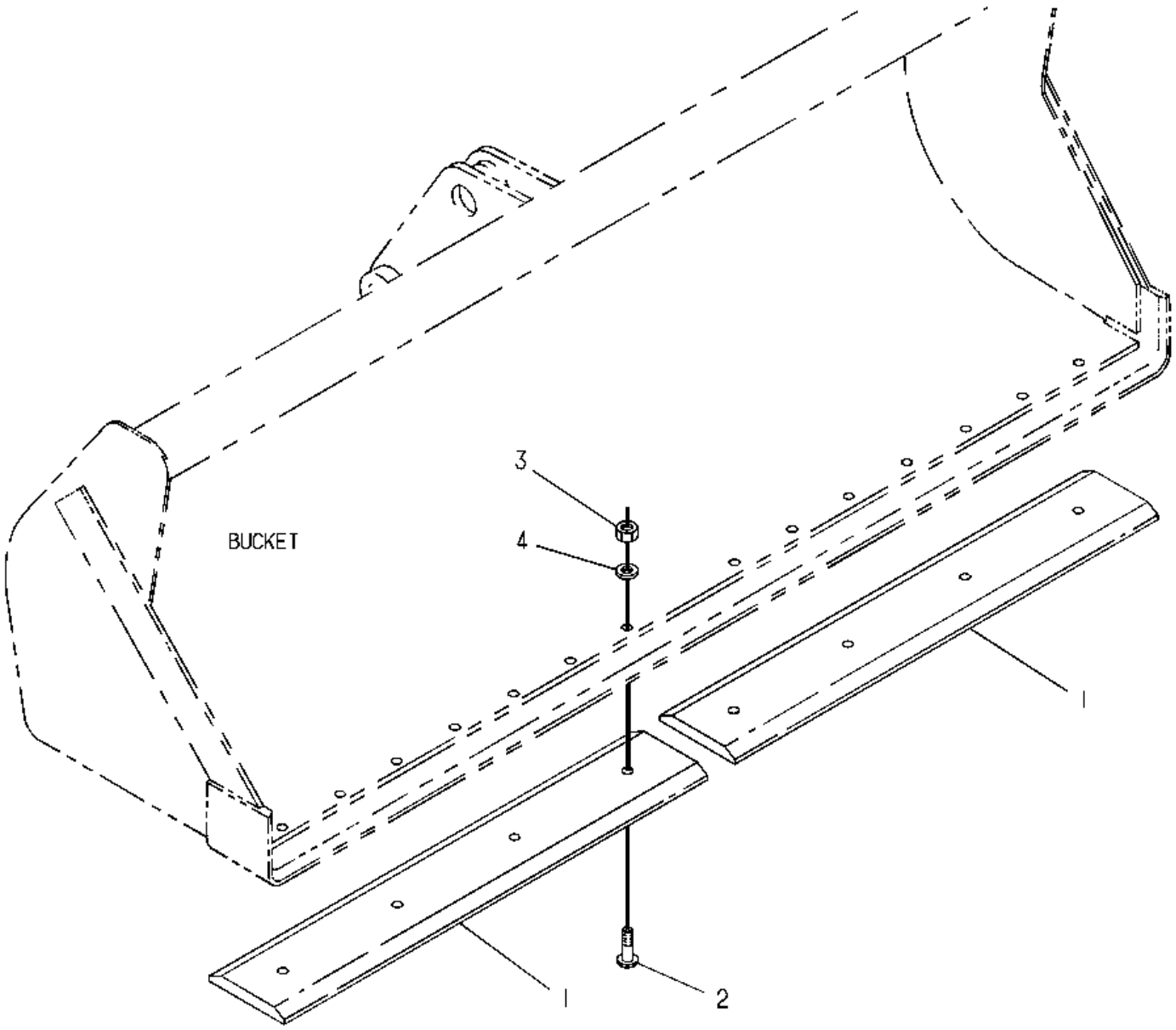

1	**NPR**	**9W-8215**	**2**	**EDGE-CUTTING**
2	**NPR**	**3F-5108**	**8**	**BOLT-PLOW (5/8-11X2.25-IN)**
3	**NPR**	**4K-0367**	**8**	**NUT-FULL (5/8-11-THD)**
4	**NPR**	**8T-4122**	**8**	**WASHER-HARD (17X32X3.5-MM THK)**

9R-5866 TOOTH GP-UNI --S/N 4ZN16044-50156
PART OF 190-1059, 190-1060, 190-1061, 190-1062 BUCKET AR-MULTIPURPOSE, 190-1055, 190-1056 BUCKET GP-GENERAL PURPOSE-FOR USE WITH LOADER BUCKETS

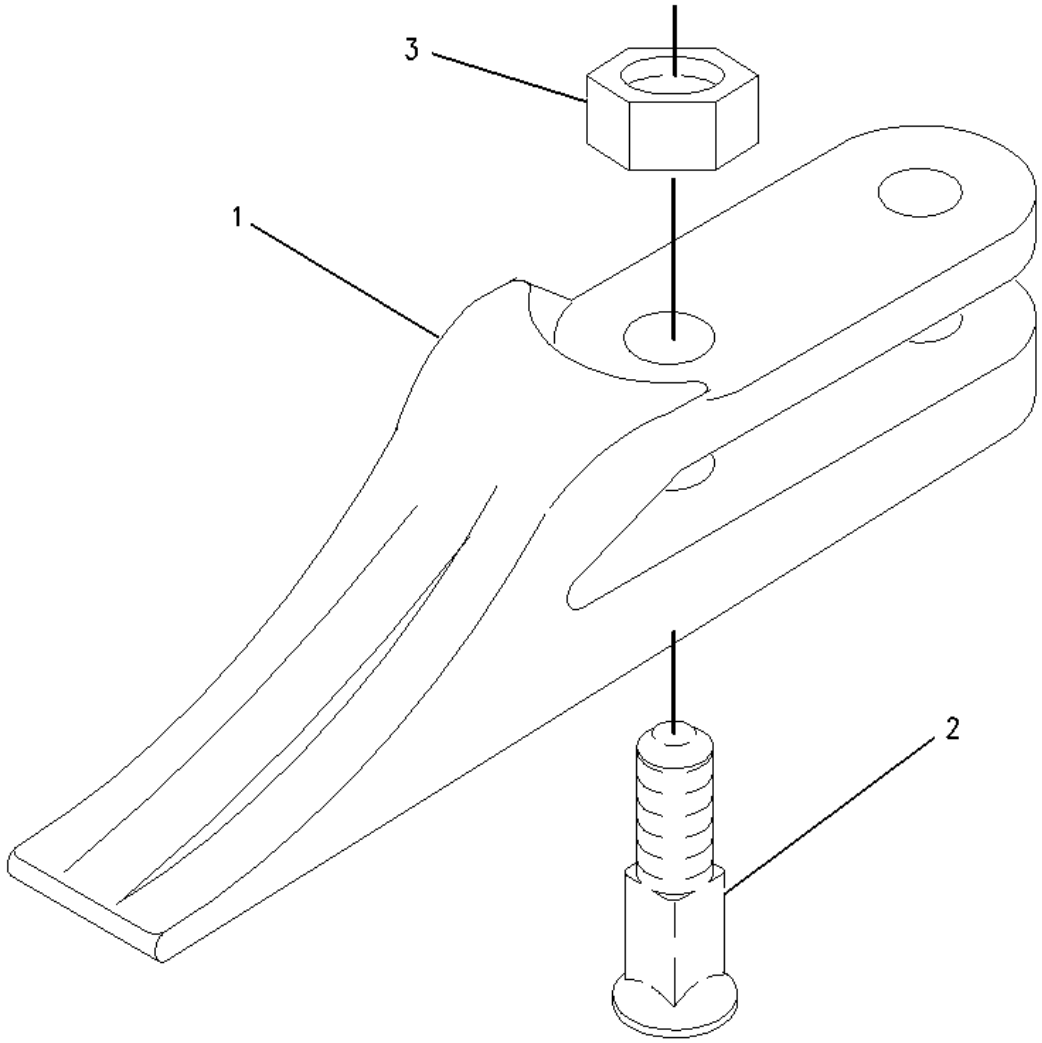

1	**NPR**	**135-8203**	**8**	**TOOTH-UNI**
2	**NPR**	**4F-3657**	**16**	**BOLT-PLOW (5/8-11X2.75-IN)**
3	**NPR**	**4K-0367**	**16**	**NUT-FULL (5/8-11-THD)**

135-8206 TOOTH GP-UNI --S/N 4ZN16044-50156
PART OF 9R-6512, 9R-9018, 9R-9024, 9R-9030, 9R-9036, 9R-9118, 9R-9124, 9R-9130, 9R-9136 BUCKET GP-HOE

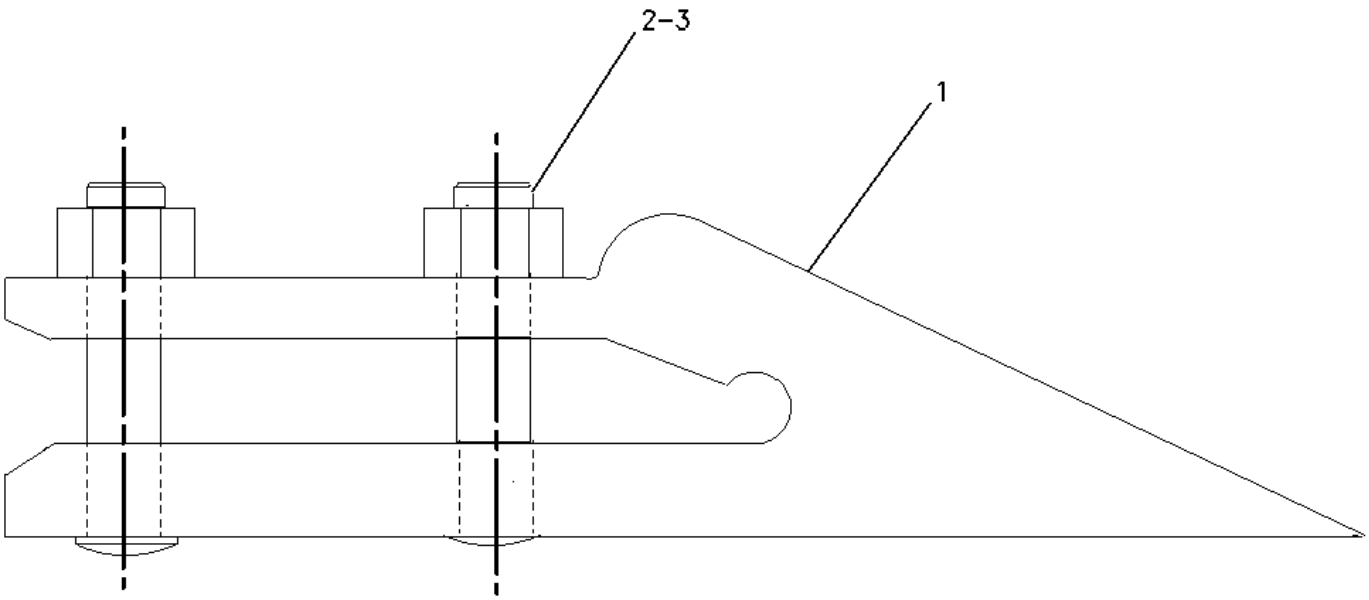

1	**NPR**	**135-8203**	**1**	**TOOTH-UNI**
2	**NPR**	**4F-3657**	**2**	**BOLT-PLOW (5/8-11X2.75 IN)**
3	**NPR**	**4K-0367**	**2**	**NUT-FULL (5/8-11 THD)**

OPERATOR

STATION

186-6190 ACCUMULATOR GP-REFRIGERANT -WITH DESICCANT
S/N 4ZN16044-50156
PART OF 145-7179 LINES GP-AIR CONDITIONER

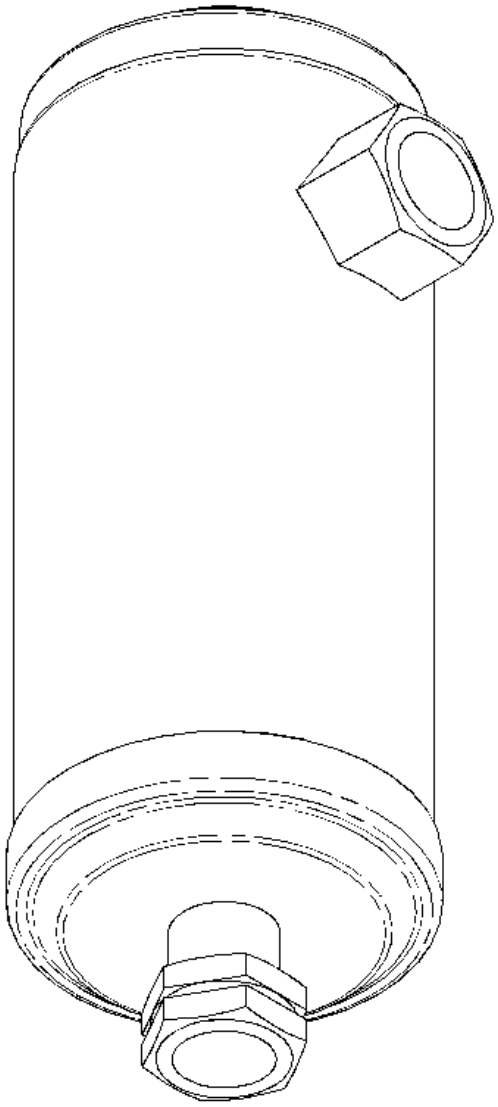

(NO SERVICED

145-7179 LINES GP-AIR CONDITIONER--S/N 4ZN16044-50156
PART OF 144-2221, 145-7168 AIR CONDITIONER AR

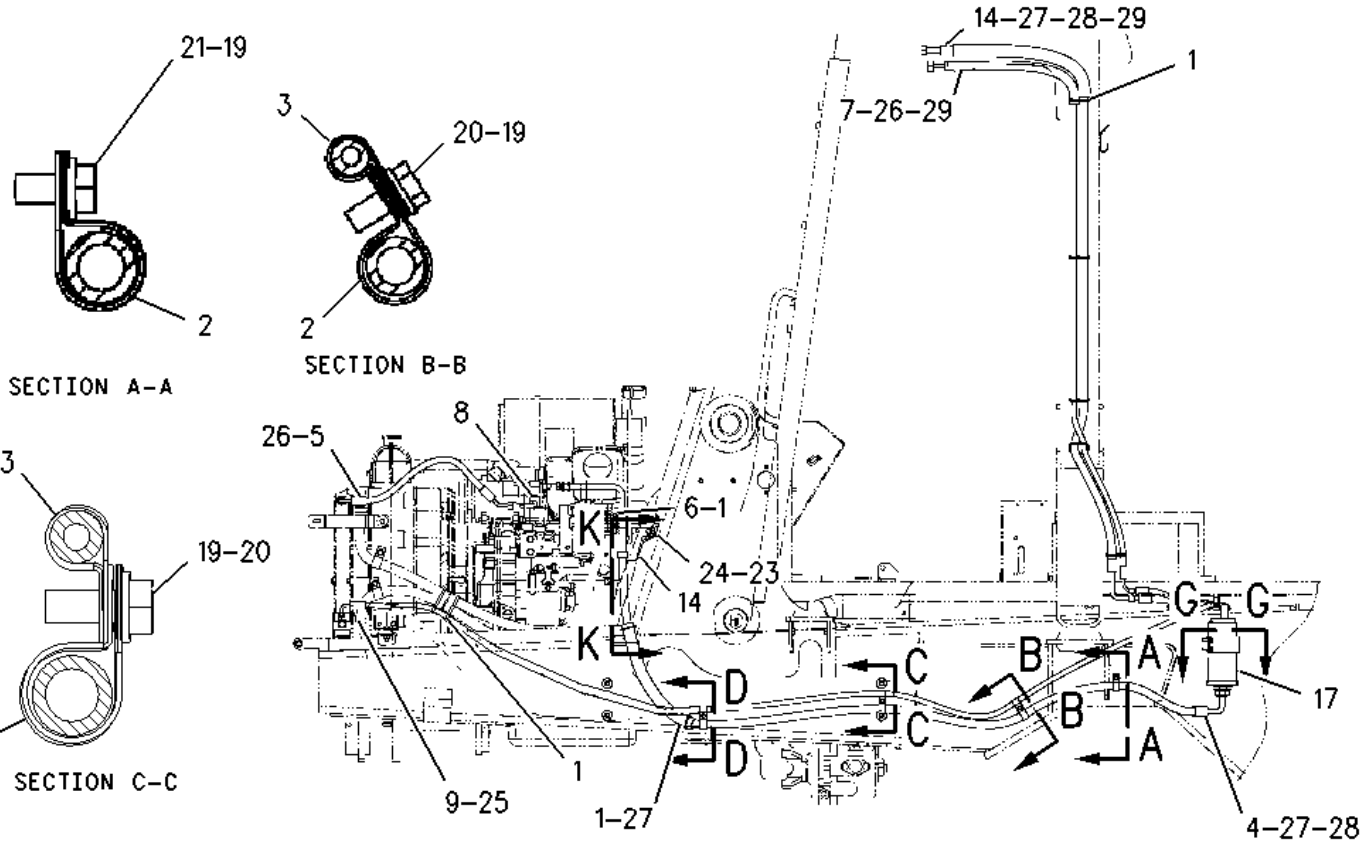
21-19
2
SECTION A-A
3
20-19
2
SECTION B-B
14-27-28-29
1
7-26-29
3
19-20
2
SECTION C-C
26-5
8
6-1
24-23
14
K
K
D
D
C
C
B
B
A
A
G
G
17
1
9-25
1-27
4-27-28

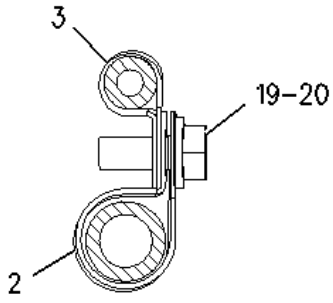
3
19-20
2
SECTION D-D

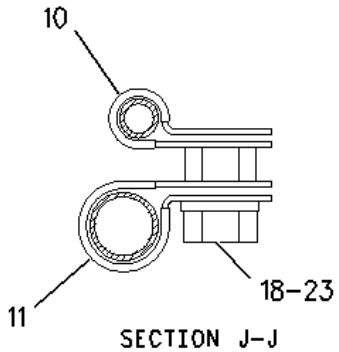
10
11
18-23
SECTION J-J

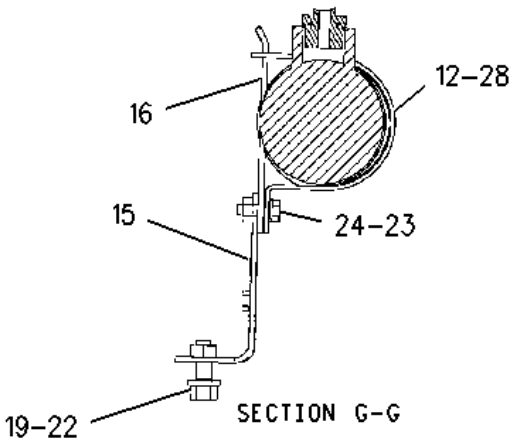
16
12-28
15
24-23
19-22
SECTION G-G

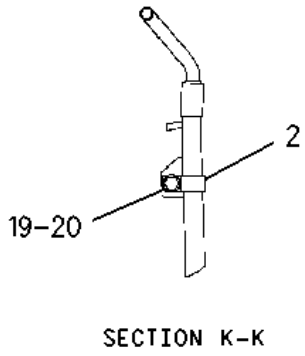
2
19-20
SECTION K-K

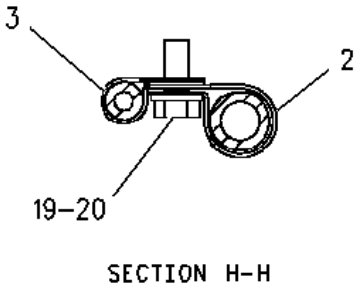
3
2
19-20
SECTION H-H

2 NPR 7C-4354 6 CLIP

3 NPR 9M-8406 4 CLIP

4 NPR I 104-9493 1 HOSE AS

5 NPR I 104-9494 1 HOSE AS

6 NPR 114-0061 1 PLATE-INSTRUCTION

7 NPR I 115-3659 1 HOSE AS

8 NPR 118-9517 1 FITTING AS-AIR CONDITIONER

NPR 3E-4052 1 CAP-SEAL (AIR CONDITIONER)

NPR 3E-4058 1 VALVE AS

9 NPR I 125-3416 1 HOSE AS

10 NPR 134-3987 1 CLIP

11 NPR 134-3988 1 CLIP

12 NPR 152-8417 1 STRAP

13 NPR I 155-7279 1 HOSE AS

14 NPR 171-5284 1 BRACKET AS

NPR M 8T-3490 1 NUT-WELD (M10X1.5-THD)

15 NPR 184-9864 1 BRACKET AS

NPR M 6V-9632 2 NUT-WELD (M6X1-THD)

NPR M 8T-3490 2 NUT-WELD (M10X1.5-THD)

NPR M 8T-3612 2 NUT-WELD (M8X1.25-THD)

16 NPR 184-9865 1 BRACKET

17 NPR Y 186-6190 1 ACCUMULATOR GP-REFRIGERANT (WITH DESICCANT)

18 NPR M 5C-7261 2 NUT (M8X1.25-THD)

19 NPR 8T-4121 8 WASHER-HARD (11X21X2.5-MM THK)

20 NPR M 8T-4136 5 BOLT (M10X1.5X25-MM)

21	NPR M	8T-4137	1	BOLT (M10X1.5X20-MM)
22	NPR M	8T-4195	2	BOLT (M10X1.5X30-MM)
23	NPR	8T-4224	4	WASHER-HARD (8.8X16X2-MM THK)
24	NPR M	8T-4908	3	BOLT (M8X1.25X25-MM)
25	NPR	9X-7380	2	SEAL-O-RING
26	NPR	9X-7381	3	SEAL-O-RING
27	NPR	9X-7382	2	SEAL-O-RING
28	NPR	9X-7383	2	SEAL-O-RING
29	NPR BD	5P-7070		INSULATION-STRIP

NPR FG	160-2245	SLEEVE-ABRASION
NPR DF	5P-5924	SEAL

Key:

B - USE AS REQUIRED
D - ORDER BY THE METER
F - NOT SHOWN
G - ORDER BY THE INCH
I - REFER TO HYDRAULIC INFORMATION SYSTEM
M - METRIC PART
Y - SEPARATE ILLUSTRATION

NPR Y 142-9660 1 AIR CONDITIONER GP

NPR 148-5651 2 BRACKET

NPR 144-9973 2 CLAMP

NPR 101-0003 8 FASTENER

148-9259 1 INSULATION

148-9260 1 INSULATION

NPR BE 5P-7070 INSULATION-STRIP

NPR M 8T-4133 2 NUT (M10X1.5-THD)

148-7508 2 PLATE

NPR 9R-4917 2 ROD-CONTROL

NPR 145-6626 1 SLEEVE

NPR 3S-2093 4 STRAP-CABLE

NPR BE 5P-6129 TUBE

NPR 7T-9793 2 VALVE (CHECK)

Key:

B - USE AS REQUIRED
E - ORDER BY THE CENTIMETER
M - METRIC PART
Y - SEPARATE ILLUSTRATION

144-2222 CONDENSER & MTG GP-REFRIGERANT -S/N 4ZN16044-50156
PART OF 144-2221, 145-7168 AIR CONDITIONER AR

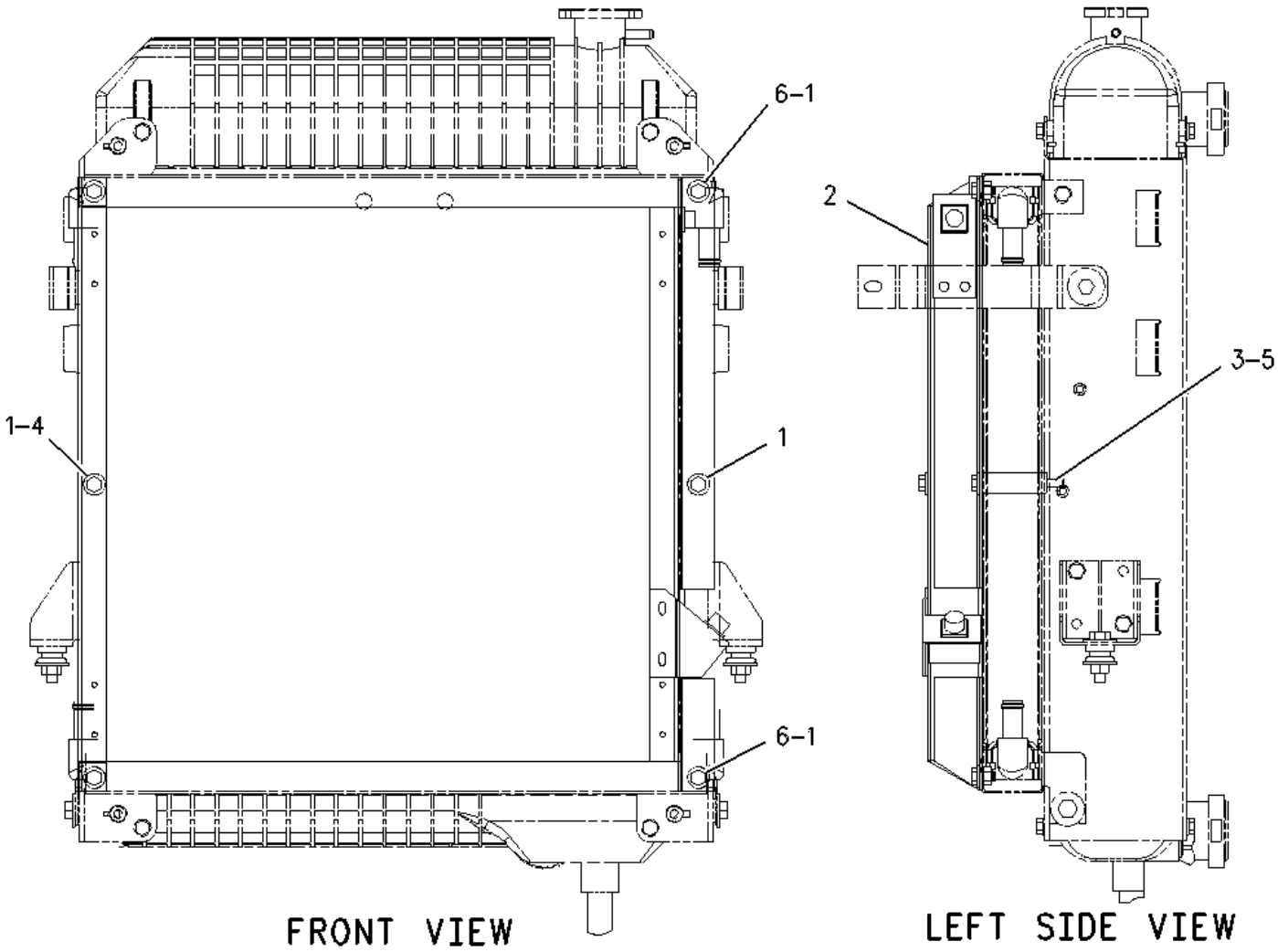

1 NPR 7X-0579 6 WASHER-HARD (8.8X25.5X2-MM THK)

2 NPR 166-2861 1 CORE AS

3 NPR 143-0008 2 SPACER (10X19.5X61-MM THK)

4 NPR M 153-3061 1 BOLT (M8X1.25X130-MM)

5 NPR M 8T-3647 1 BOLT (M8X1.25X80-MM)

6 NPR M 8T-4200 4 BOLT (M8X1.25X16-MM)

Key: M - METRIC PART

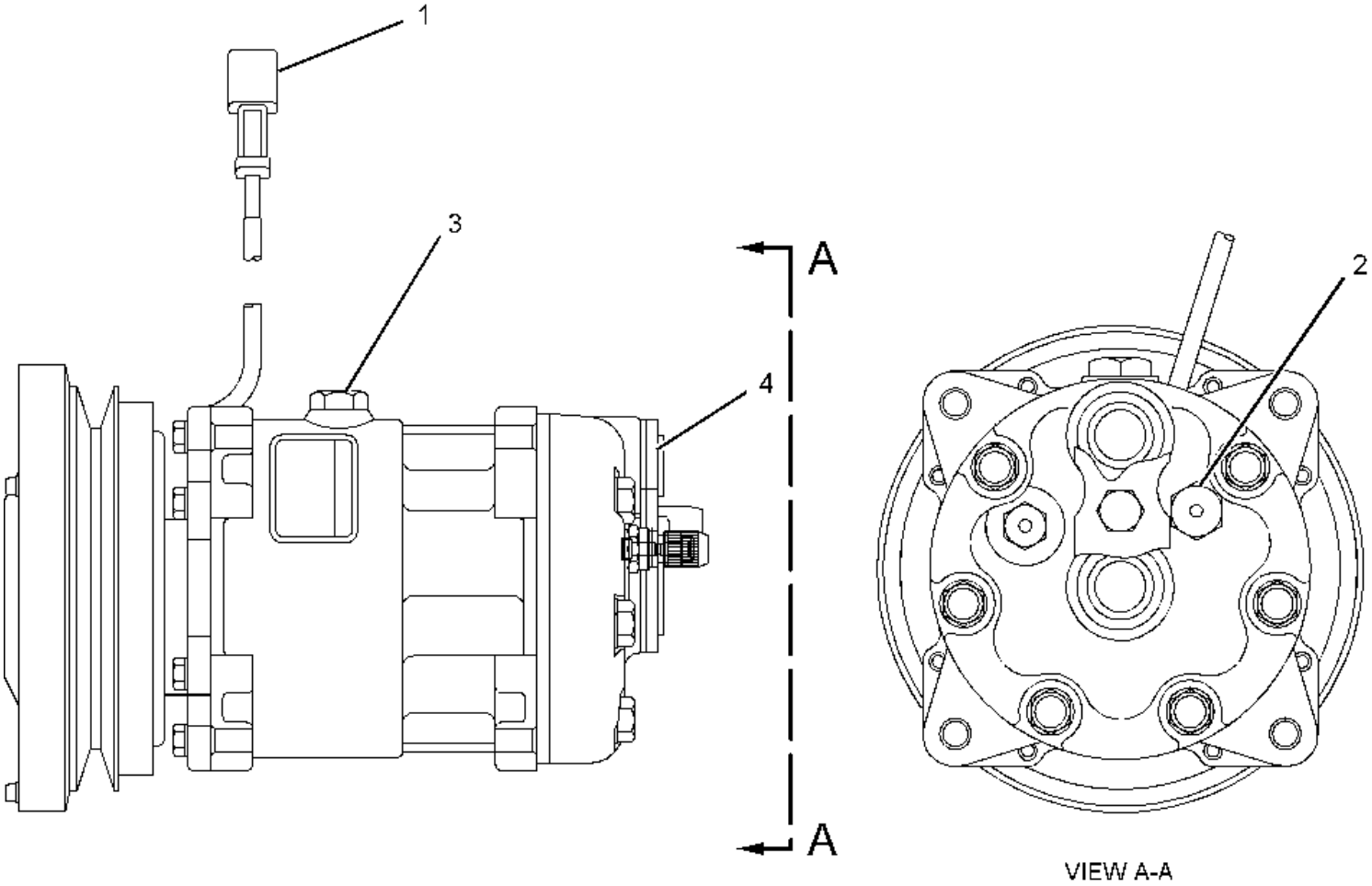

1 NPR 102-8802 1 KIT-RECEPTACLE (2-PIN)

(INCLUDES RECEPTACLE AS & WEDGE)

2 NPR 114-3469 1 VALVE GP-RELIEF (REFRIGERANT COMPRESSOR)

NPR 9X-7378 1 SEAL-O-RING

3 NPR 7T-4532 1 PLUG AS

4 NPR 9X-7385 2 SEAL-O-RING

137-7140 COMPRESSOR & MTG GP-REFRIG -S/N 4ZN16044-50156
PART OF 144-2221 AIR CONDITIONER AR

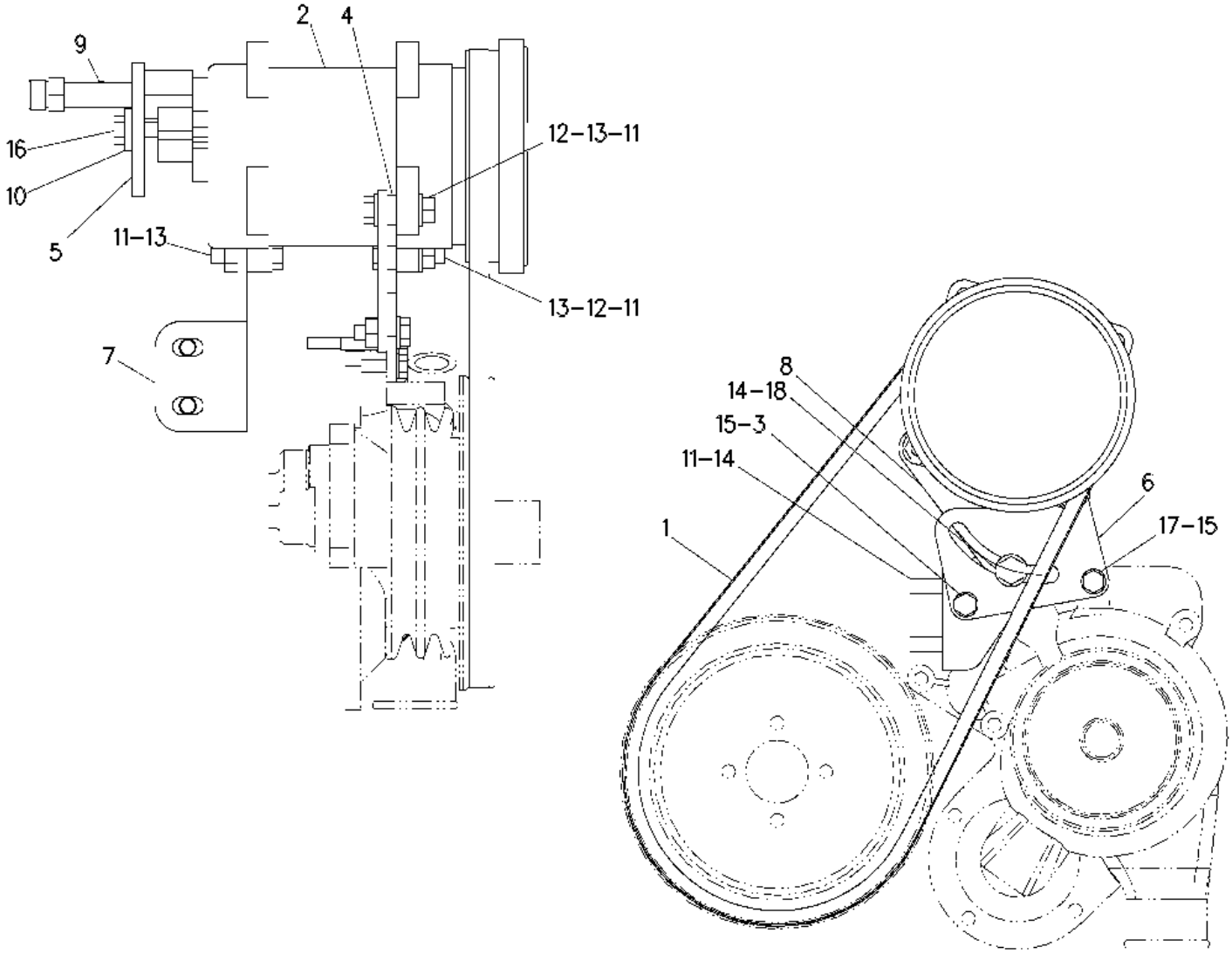

1 NPR 1N-3743 1 V-BELT

2 NPR Y 3E-1908 1 COMPRESSOR GP-REFRIGERANT

3 NPR M 8T-4908 1 BOLT (M8X1.25X25-MM)

4 NPR 2Y-9255 1 SPACER (11X19X5-MM THK)

5 NPR 105-9411 1 SUPPORT

6 NPR 137-7141 1 PLATE

7 NPR 137-7142 1 BRACKET AS

8 NPR 139-0219 1 PLATE AS

9 NPR 146-0797 1 FITTING AS-AIR CONDITIONER

NPR 3E-4051 1 CAP-SEAL (AIR CONDITIONER)

	NPR	3E-4057	1	VALVE AS
10	NPR	8T-2561	1	WASHER-HARD (10.5X28.5X5-MM THK)
11	NPR	8T-4121	7	WASHER-HARD (11X21X2.5-MM THK)
12	NPR M	8T-4133	2	NUT (M10X1.5-THD)
13	NPR M	8T-4186	3	BOLT (M10X1.5X40-MM)
14	NPR M	8T-4195	3	BOLT (M10X1.5X30-MM)
15	NPR	8T-4224	2	WASHER-HARD (8.8X16X2-MM THK)
16	NPR M	8T-6466	1	BOLT (M10X1.5X60-MM)
17	NPR M	8T-6869	1	BOLT (M8X1.25X60-MM)
18	NPR	7X-7729	1	WASHER (11X25X3-MM THK)

Key:

M - METRIC PART
Y - SEPARATE ILLUSTRATION

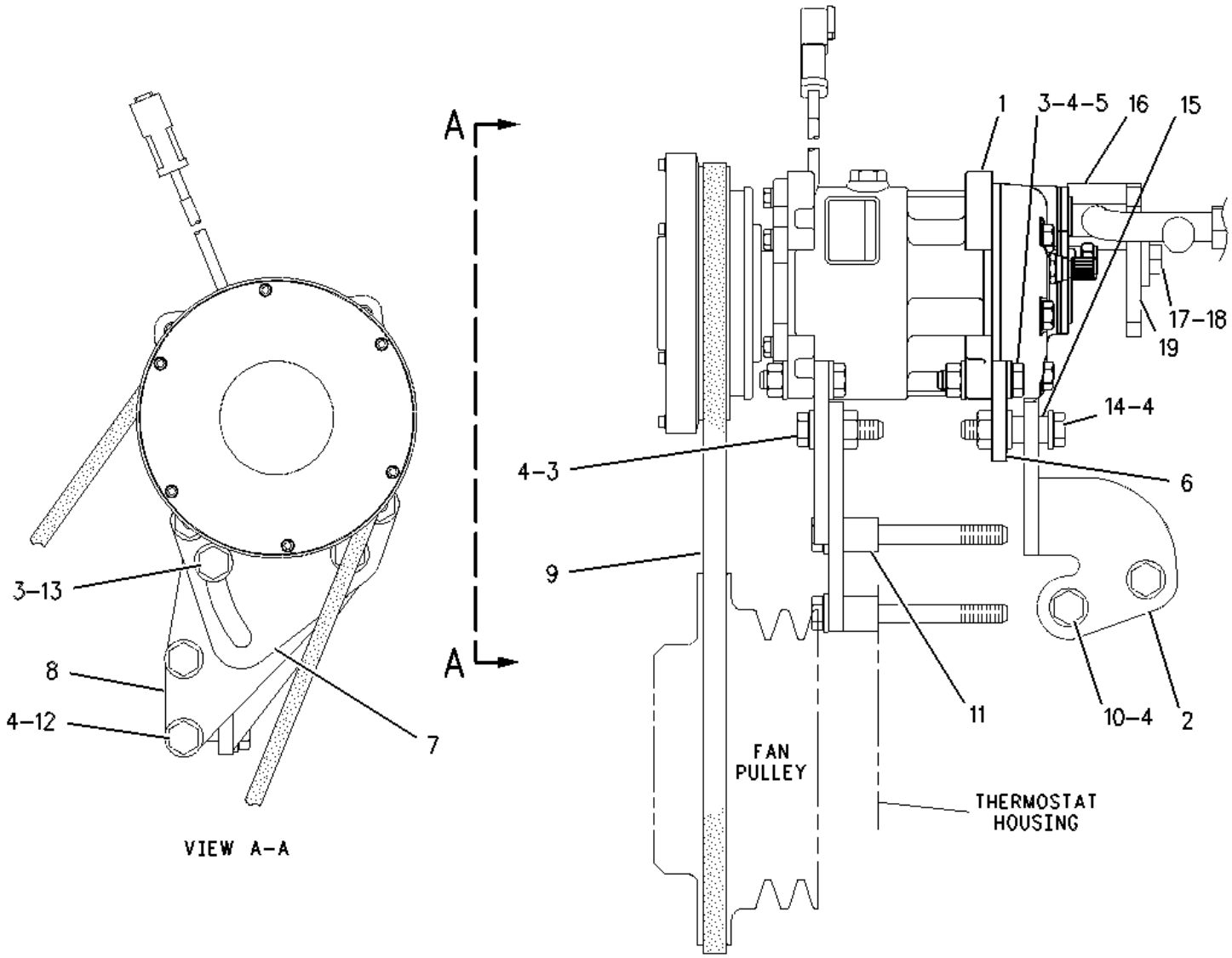

1 NPR CY 3E-1908 1 COMPRESSOR GP-REFRIGERANT

2 NPR 135-6976 1 BRACKET

3 NPR M 8T-4186 6 BOLT (M10X1.5X40-MM)

4 NPR 8T-4121 15 WASHER-HARD (11X21X2.5-MM THK)

5 NPR M 8T-4133 4 NUT (M10X1.5-THD)

6 NPR 129-5449 1 PLATE AS

NPR M 8T-3490 1 NUT-WELD (M10X1.5-THD)

7 NPR 116-5191 1 BRACKET

8 NPR 112-6670 1 BRACKET AS

NPR M 8T-3490 2 NUT-WELD (M10X1.5-THD)

9	NPR	1N-3743	1	V-BELT
10	NPR M	8T-4136	2	BOLT (M10X1.5X25-MM)
11	NPR	2B-0941	2	SPACER (10.5X19X19-MM THK)
12	NPR M	8T-4198	2	BOLT (M10X1.5X100-MM)
13	NPR	7X-7729	1	WASHER (11X25X3-MM THK)
14	NPR M	8T-4185	1	BOLT (M10X1.5X50-MM)
15	NPR	7C-9465	1	SPACER (11.1X14.3X20-MM THK)
16	NPR	125-2796	1	FITTING AS
	NPR	3E-4051	1	CAP-SEAL (AIR CONDITIONER)
	NPR	3E-4057	1	VALVE AS
17	NPR	8T-2561	1	WASHER-HARD (10.5X28.5X5-MM THK)
18	NPR M	8T-6466	1	BOLT (M10X1.5X60-MM)
19	NPR	1P-6356	1	PLATE

Key: C - CHANGE FROM PREVIOUS TYPE
M - METRIC PART
Y - SEPARATE ILLUSTRATION

AN ATTACHMENT AND FIELD INSTALLATION

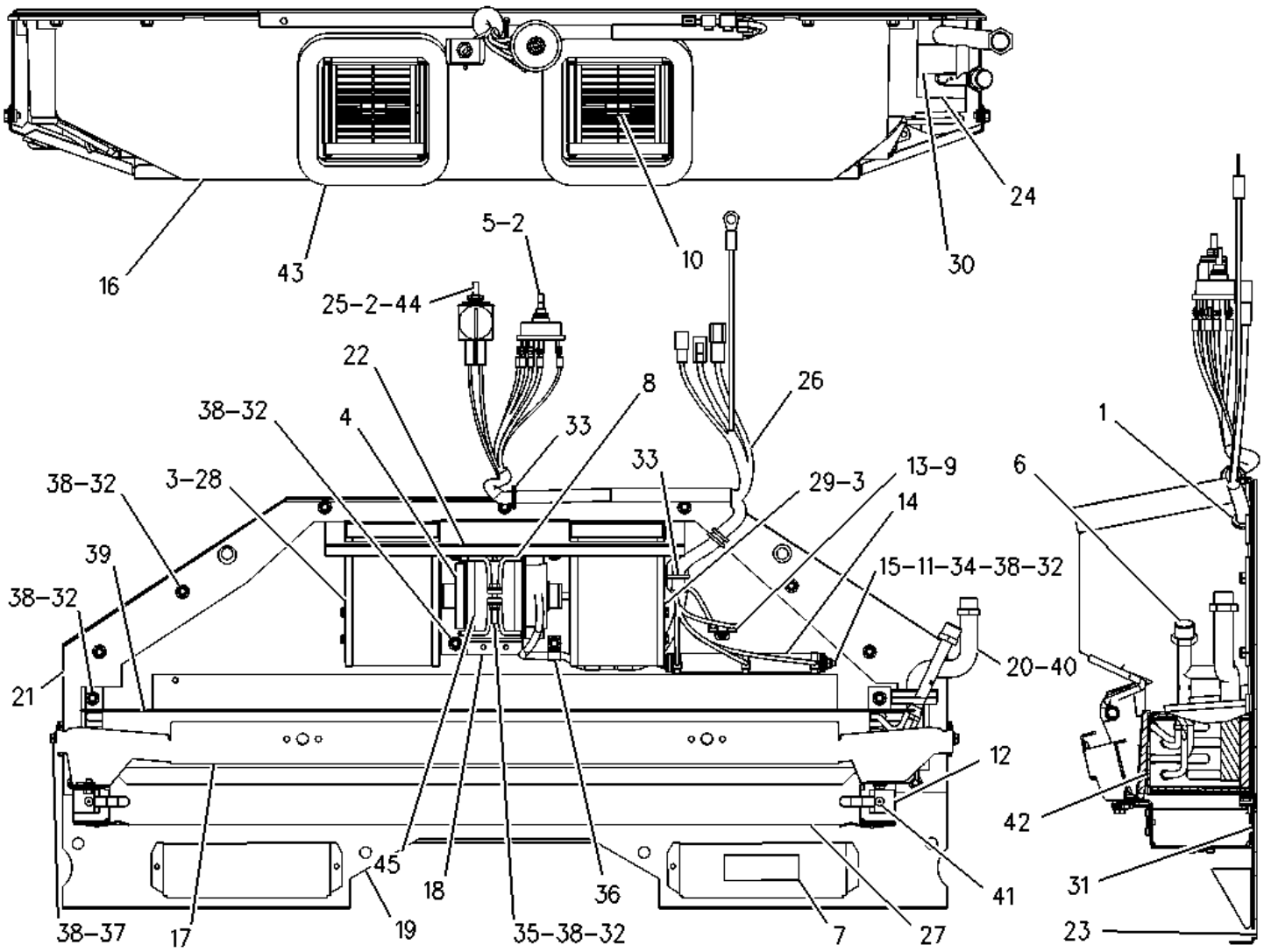

1 NPR 133-8715 1 GROMMET

2 NPR 2P-4339 4 NUT-JAM (7/16-28-THD)

3 NPR 2S-3745 4 SCREW-TAPPING (10-16X0.5-IN)

4 NPR 174-1490 1 MOTOR AS-ELECTRIC

NPR 7T-0093 2 PIN-CONNECTOR

NPR 177-9645 1 KIT-RECEPTACLE (2-PIN)

(KIT INCLUDES RECEPTACLE AS AND WEDGE)

NPR 177-9643 1 LOCK

NPR 177-9644 1 SEAL-RECEPTACLE

5 NPR 6P-3236 1 SWITCH AS-ROTARY

	NPR	6V-8362	5	SCREW-MACHINE (8-32X0.31-IN)
	NPR	9B-7233	5	LOCKWASHER
6	NPR	7X-2049	1	TUBE AS-REFRIGERANT ORIFICE
7	NPR	8C-3756	1	FILM-IDENTIFICATION (GROUP NUMBER)
8	NPR	8C-4586	2	CLAMP
9	NPR M	8C-7581	1	SCREW-MACHINE (M4X0.7X8-MM)
10	NPR	100-3426	2	WHEEL AS-BLOWER
11	NPR	124-7141	2	WASHER (M9X20X3.5-MM THK)
12	NPR	129-1274	4	FASTENER AS-AIR CONDITIONER
13	NPR	133-9012	1	FUSE (15-AMPERE)
14	NPR	134-2885	1	RESISTOR
15	NPR M	141-9784	1	BOLT (M6X1X190-MM)
16	NPR	147-1481	1	COVER
17	NPR	147-1482	1	PLATE AS
18	NPR	147-1483	1	BLOWER AS
19	NPR	147-1484	1	PLATE AS
20	NPR	147-1486	1	COIL AS-EVAPORATOR
21	NPR	147-1487	1	GASKET
22	NPR	148-1319	1	GASKET
23	NPR	148-1903	1	GASKET
24	NPR	148-5557	1	INSULATION
25	NPR	148-6737	1	SWITCH AS-TEMPERATURE
26	NPR	193-5776	1	HARNESS AS
27	NPR	151-8373	1	GASKET
28	NPR	151-8376	1	PLATE-ORIFICE

29	NPR	151-8377	1	PLATE-ORIFICE
30	NPR	154-5630	1	GASKET
31	NPR	154-5631	1	GASKET
32	NPR M	129-3178	19	LOCKNUT (M6X1-THD)
33	NPR	3S-2093	2	STRAP-CABLE
34	NPR	6V-1668	2	WASHER (6.5X29.1X3-MM THK)
35	NPR M	6V-7728	1	BOLT (M6X1X45-MM)
36	NPR	8M-2771	1	CLIP
37	NPR M	8T-4171	4	BOLT (M6X1X12-MM)
38	NPR	8T-4205	25	WASHER-HARD (7.2X14.5X2-MM THK)
39	NPR E	152-6609		SEAL-BULK (86CM)
40	NPR D	5P-6410		SEAL (0.5M)
41	NPR	4K-2089	4	RIVET-POP
42	NPR	5P-5637	2	SEAL
43	NPR	147-1485	2	GASKET-DUCT
44	NPR	6V-2689	1	TUBE-HEAT SHRINK (6.35-MM DIA)
45	NPR D	5P-5908		SEAL (0.2M)

Key:

D - ORDER BY THE METER
E - ORDER BY THE CENTIMETER
M - METRIC PART

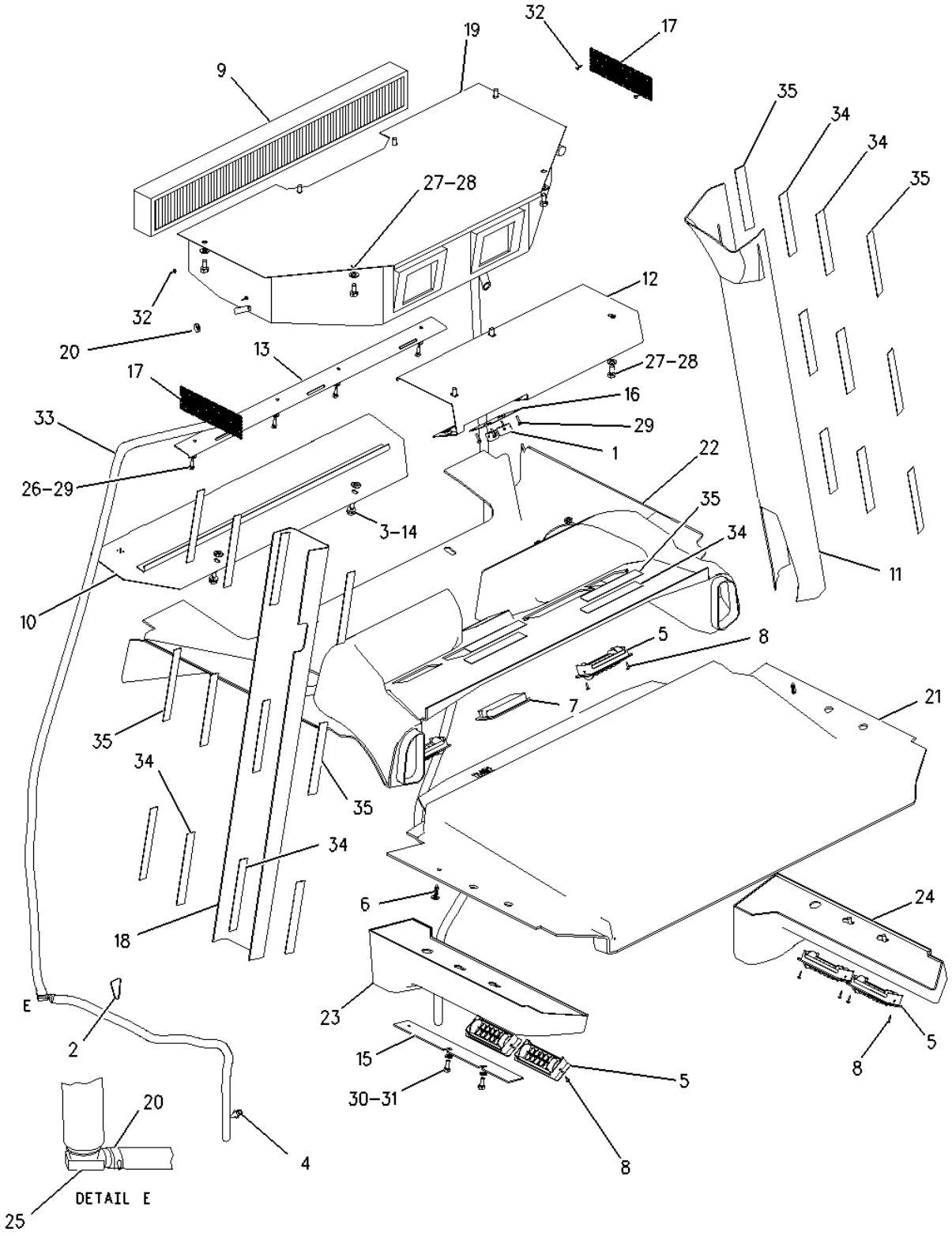

1 NPR 2V-0099 2 KNOB-CONTROL

2 NPR 3S-2093 2 STRAP-CABLE

3 NPR 7K-3262 2 SCREW (THUMB)

4 NPR 7T-9793 2 VALVE (CHECK)

5 NPR 8Y-6388 6 LOUVER AS

6 NPR 9R-9901 2 FASTENER (CLIP)

7 NPR 084-4277 1 LAMP GP-DOME

NPR 6R-7490 1 LAMP (12-VOLT, 10-WATT)

8 NPR 104-2091 12 SCREW-FLAT HEAD (NO 6X0.5-IN)

9 NPR 104-9481 1 FILTER-AIR

10 NPR 104-9485 1 BRACKET AS

11 NPR 104-9486 1 COVER-POST

12 NPR 123-0253 1 BRACKET AS

NPR M 6V-9632 2 NUT-WELD (M6X1-THD)

NPR 7T-1099 1 LINK

13 NPR 124-0256 1 PLATE

14 NPR 131-5492 2 RETAINER-CAPTIVE

15 NPR 131-8158 2 PLATE

16 NPR 133-7655 1 FILM-CONTROL

17 NPR 134-1224 2 GRILL

18 NPR 134-2558 1 COVER

19 NPR CY 142-9660 1 AIR CONDITIONER GP

20 NPR 144-9973 6 CLAMP

21 NPR 146-6919 1 LINER-CAB

22 NPR 149-1507 1 LINER AS-CAB

NPR 154-8079 8 NUT (U-TYPE RETAINER)

23 NPR 158-5064 1 DUCT-LH

24 NPR 158-5065 1 DUCT-RH

25 151-1264 2 ELBOW

26	NPR	5P-4115	3	WASHER-HARD (7.2X19X2-MM THK)
27	NPR	8T-4121	9	WASHER-HARD (11X21X2.5-MM THK)
28	NPR M	8T-4137	9	BOLT (M10X1.5X20-MM)
29	NPR M	8T-4138	3	BOLT (M6X1X20-MM)
30	NPR M	7X-2537	4	BOLT (M8X1.25X35-MM)
31	NPR	8T-4224	4	WASHER-HARD (8.8X16X2-MM THK)
32	NPR	8Y-7446	4	SCREW-PAN HEAD
33	NPR BD	5P-6129		TUBE
34	NPR BE	129-1854		FASTENER-LOOP
35	NPR BE	129-1855		FASTENER-HOOK

Key:

B - USE AS REQUIRED
C - CHANGE FROM PREVIOUS TYPE
D - ORDER BY THE METER
E - ORDER BY THE CENTIMETER
M - METRIC PART
Y - SEPARATE ILLUSTRATION

192-0113 MOTOR GP-WINDOW WIPER --S/N 4ZN16044-50156---12V
PART OF 159-3763 WIPER GP-WINDOW

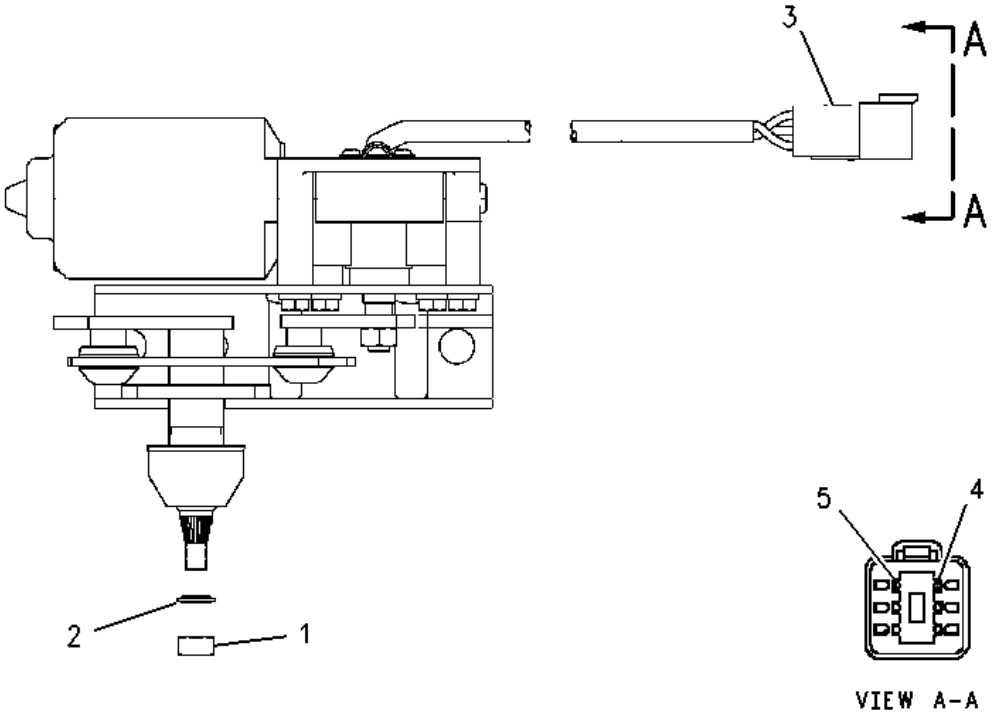

1 NPR M 5C-7261 1 NUT (M8X1.25-THD)

2 NPR 3F-9556 1 LOCKWASHER

3 NPR 102-8805 1 KIT-RECEPTACLE (6-PIN)

(INCLUDES RECEPTACLE AS. & WEDGE)

4 NPR 9G-3695 1 PLUG (GROMMET SEALING)

5 NPR 186-3735 5 PIN-CONNECTOR (16-GA TO 18-GA)

6 NPR M 5C-8917 1 SCREW (M6X8-MM)

Key: M - METRIC PART

3E-7566 WIPER GP-WINDOW ---S/N 4ZN16044-50156-PART OF 159-3763 WIPER GP-WINDOW

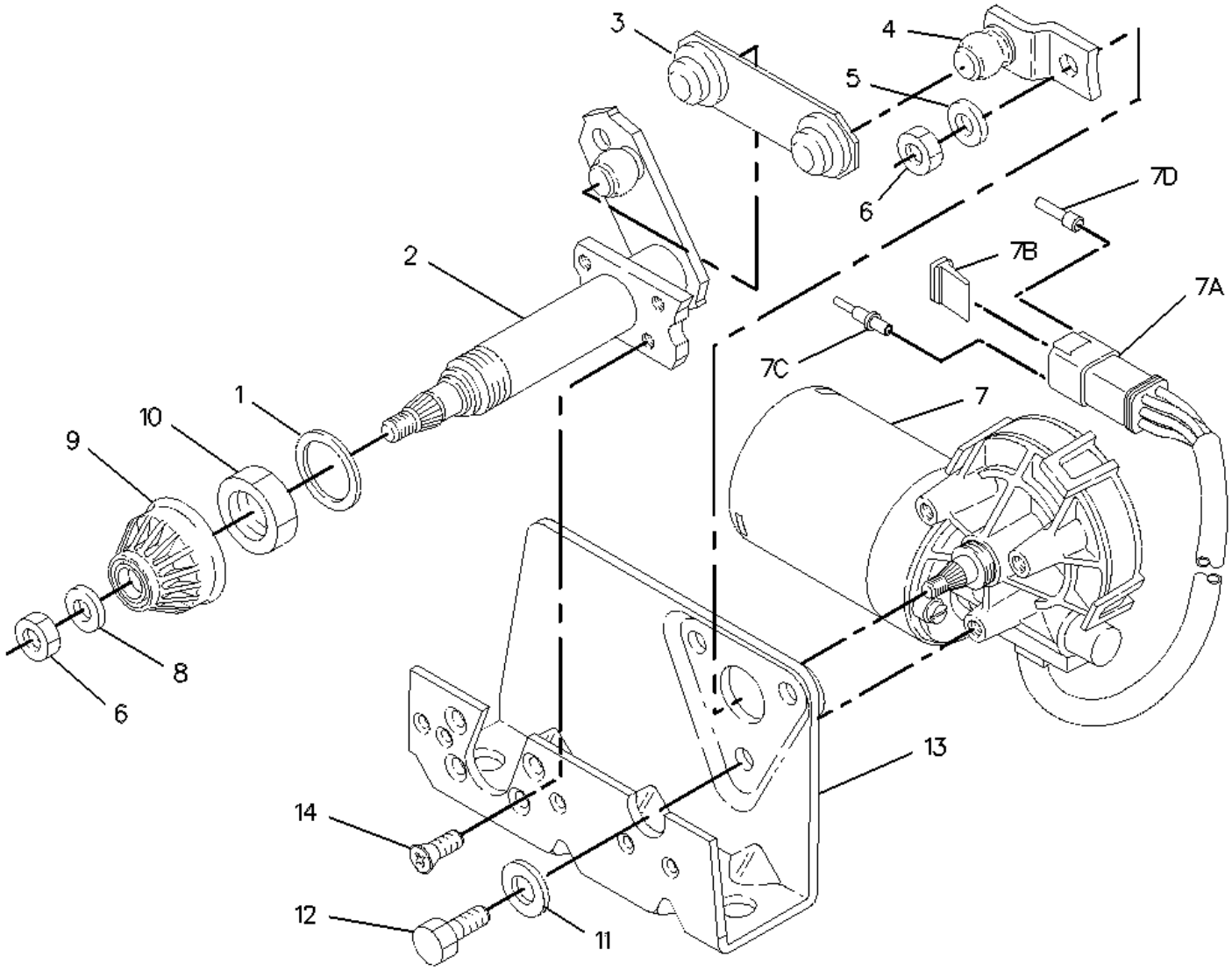

1 NPR 6V-6214 1 WASHER (20.15X29.6X1-MM THK)

2 NPR 6T-2770 1 SHAFT AS-DRIVE

3 NPR 6V-6219 1 LINK-CONNECTING

4 NPR 3T-7086 1 CRANK AS

5 NPR 6V-6888 1 WASHER-SPRING (8.31X15.54X1.07-MM THK)

6 NPR M 6V-6889 2 NUT (M8X1.25-THD)

7 NPR 3E-7304 1 MOTOR AS-WINDOW WIPER

7A NPR 102-8805 1 KIT-RECEPTACLE (6-PIN)

(INCLUDES RECEPTACLE AS & WEDGE)

7B NPR 3E-3383 1 WEDGE-RECEPTACLE LOCK (6-PIN)

7C NPR 8T-8729 5 PIN-CONNECTOR

7D	NPR	8T-8737	1	PLUG-SEAL
8	NPR	6A-9718	1	WASHER (8.1X12.5X1-MM THK)
9	NPR	6V-6209	1	CAP-WIPER
10	NPR M	6V-6213	1	NUT (M20X1-THD)
11	NPR	5P-0537	3	WASHER-HARD (7.2X14.5X2-MM THK)
12	NPR M	5C-9553	3	BOLT (M6X1X16-MM)
13	NPR	3T-7059	1	BRACKET
14	NPR M	3C-1884	4	SCREW-MACHINE (M5X0.8 BG-THD)

Key:

M - METRIC PART

PART OF 154-5473 CAB AR-ENCLOSED ROPS--Type 1

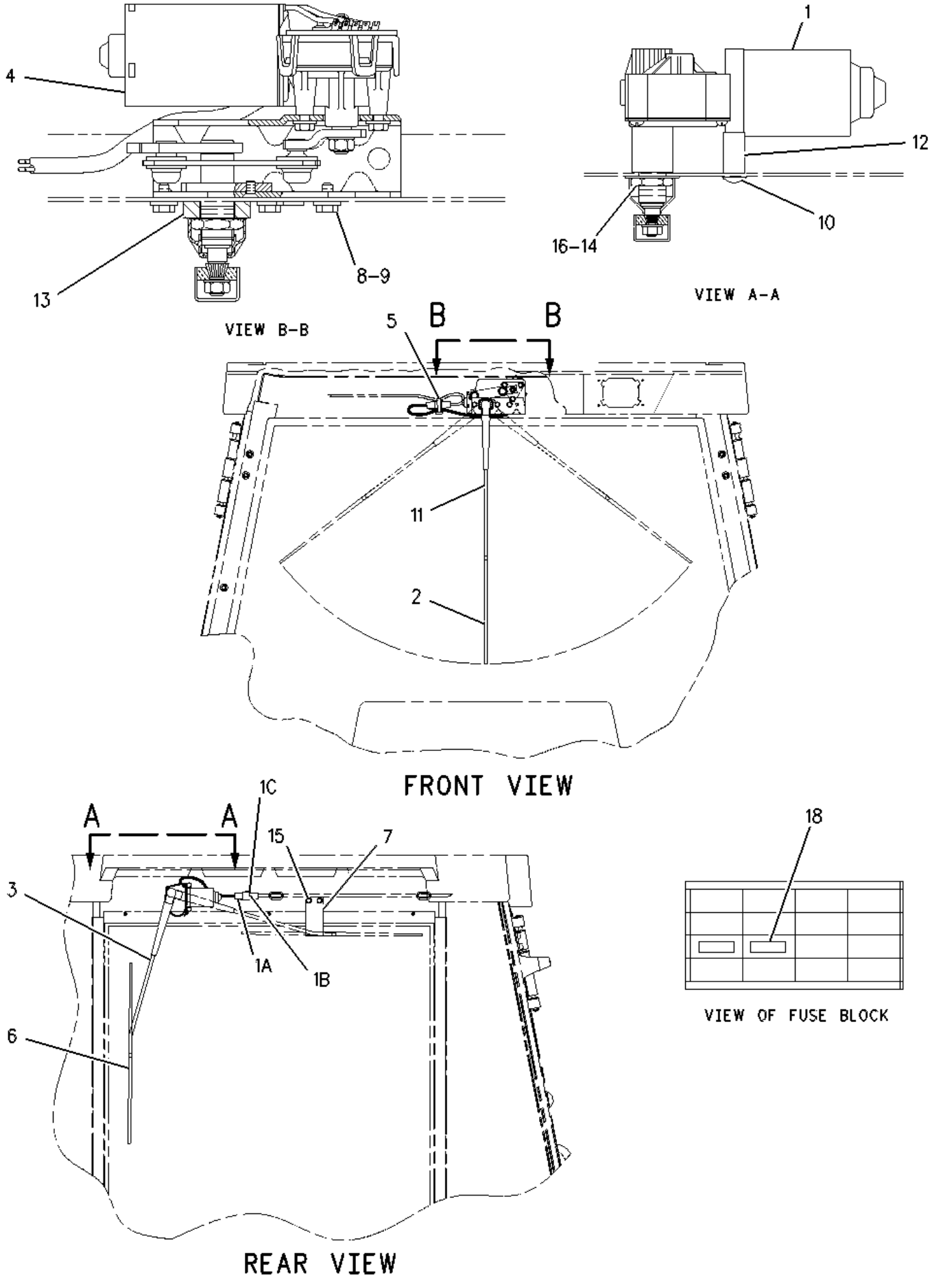

1 NPR 127-0264 1 MOTOR AS-WINDOW WIPER

1A	NPR	102-8805	1	KIT-RECEPTACLE (6-PIN)
		(KIT INCLUDES RECEPTACLE AS AND WEDGE)		
1B	NPR	8T-8737	1	PLUG-SEAL
1C	NPR	8T-8729	5	PIN-CONNECTOR
2	NPR	102-2940	1	BLADE AS-WIPER
3	NPR	154-5412	1	ARM AS-WIPER
4	NPR Y	3E-7566	1	WIPER GP-WINDOW (FRONT)
5	NPR	6K-0806	1	STRAP-CABLE
6	NPR	5C-8811	1	BLADE AS-WIPER (500-MM)
7	NPR	104-6037	1	PLATE
8	NPR	7X-3182	3	BOLT (1/4-28X0.5-IN)
9	NPR	8T-4205	3	WASHER-HARD (7.2X14.5X2-MM THK)
10	NPR M	121-9870	2	SCREW-MACHINE (M6X1X40-MM)
11	NPR	154-5410	1	ARM AS-WIPER
12	NPR	132-2249	2	SPACER (7.4X12.7X24-MM THK)
13	NPR	132-2250	1	SPACER (21X35X10-MM THK)
14	NPR	127-0265	1	KIT-HARDWARE
15	NPR M	9X-2043	2	SCREW-TRUSS HEAD (M6X1X14-MM)
16	NPR	8T-4122	1	WASHER-HARD (17X32X3.5-MM THK)
18	NPR	113-8490	2	FUSE (10-AMPERE)

Key: M - METRIC PART-- Y - SEPARATE ILLUSTRATION

PART OF 154-5473 CAB AR-ENCLOSED ROPS--Type 2

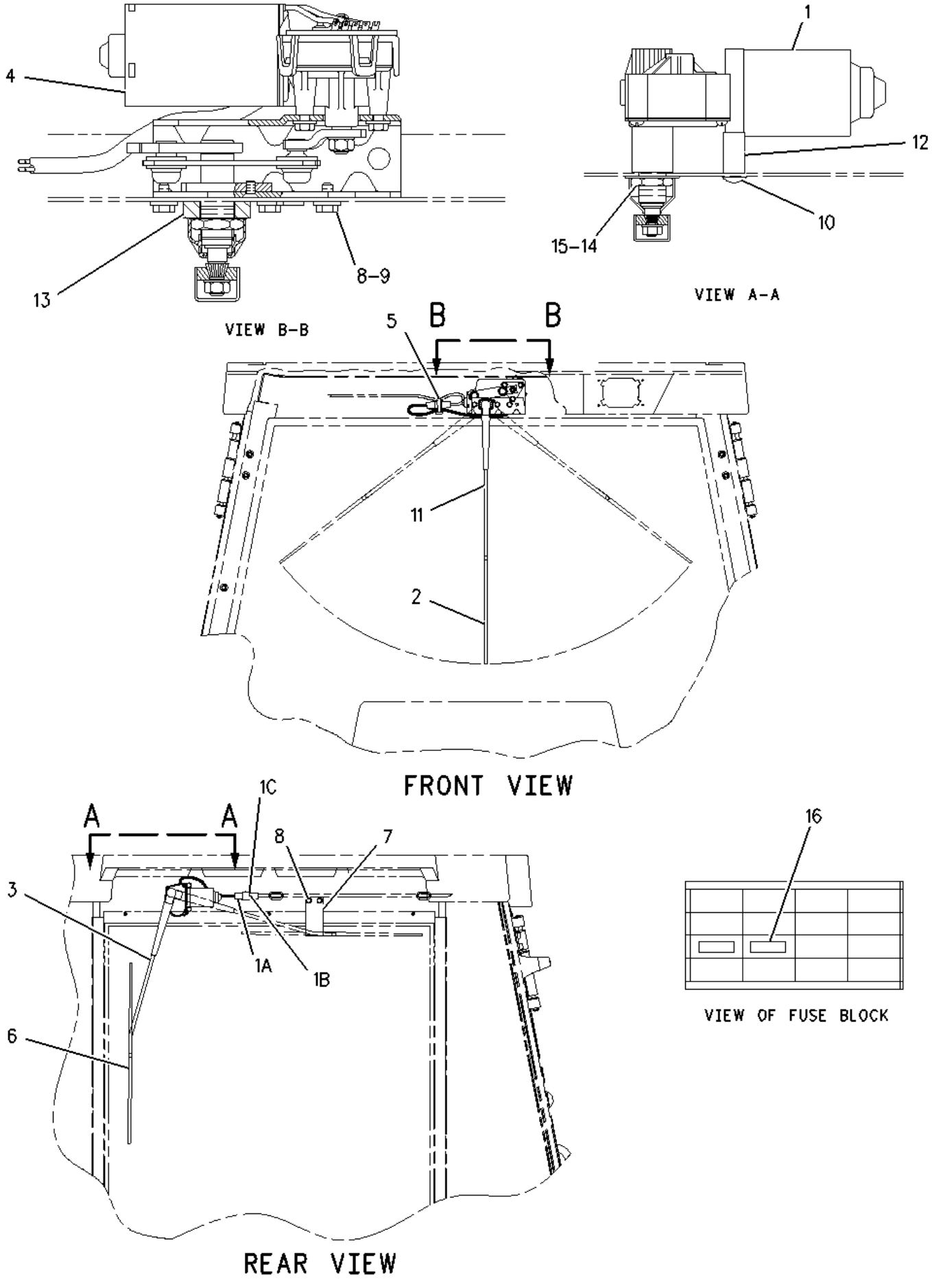

1 NPR 127-0264 1 MOTOR AS-WINDOW WIPER

1A	NPR	102-8805	1	KIT-RECEPTACLE (6-PIN)
		(KIT INCLUDES RECEPTACLE AS AND WEDGE)		
1B	NPR	8T-8737	1	PLUG-SEAL
1C	NPR	8T-8729	5	PIN-CONNECTOR
2	NPR	102-2940	1	BLADE AS-WIPER
3	NPR	154-5412	1	ARM AS-WIPER
4	NPR CY	192-0113	1	MOTOR GP-WINDOW WIPER (FRONT)
5	NPR	6K-0806	1	STRAP-CABLE
6	NPR	5C-8811	1	BLADE AS-WIPER (500-MM)
7	NPR	104-6037	1	PLATE
8	NPR M	8T-4970	5	BOLT (M6X1X14-MM)
9	NPR	8T-4205	3	WASHER-HARD (7.2X14.5X2-MM THK)
10	NPR M	8C-8451	2	BOLT (M6X1X40-MM)
11	NPR	154-5410	1	ARM AS-WIPER
12	NPR	132-2249	2	SPACER (7.4X12.7X24-MM THK)(24MM THK)
13	NPR	132-2250	1	SPACER (21X35X10-MM THK)(10MM THK)
14	NPR	127-0265	1	KIT-HARDWARE
15	NPR	8T-4122	1	WASHER-HARD (17X32X3.5-MM THK)
16	NPR	113-8490	2	FUSE (10-AMPERE)

Key: C - CHANGE FROM PREVIOUS TYPE M - METRIC PART Y - SEPARATE ILLUSTRATION

PART OF 154-5476 CAB GP, 104-3450 CAB GP-ENCLOSED ROPS

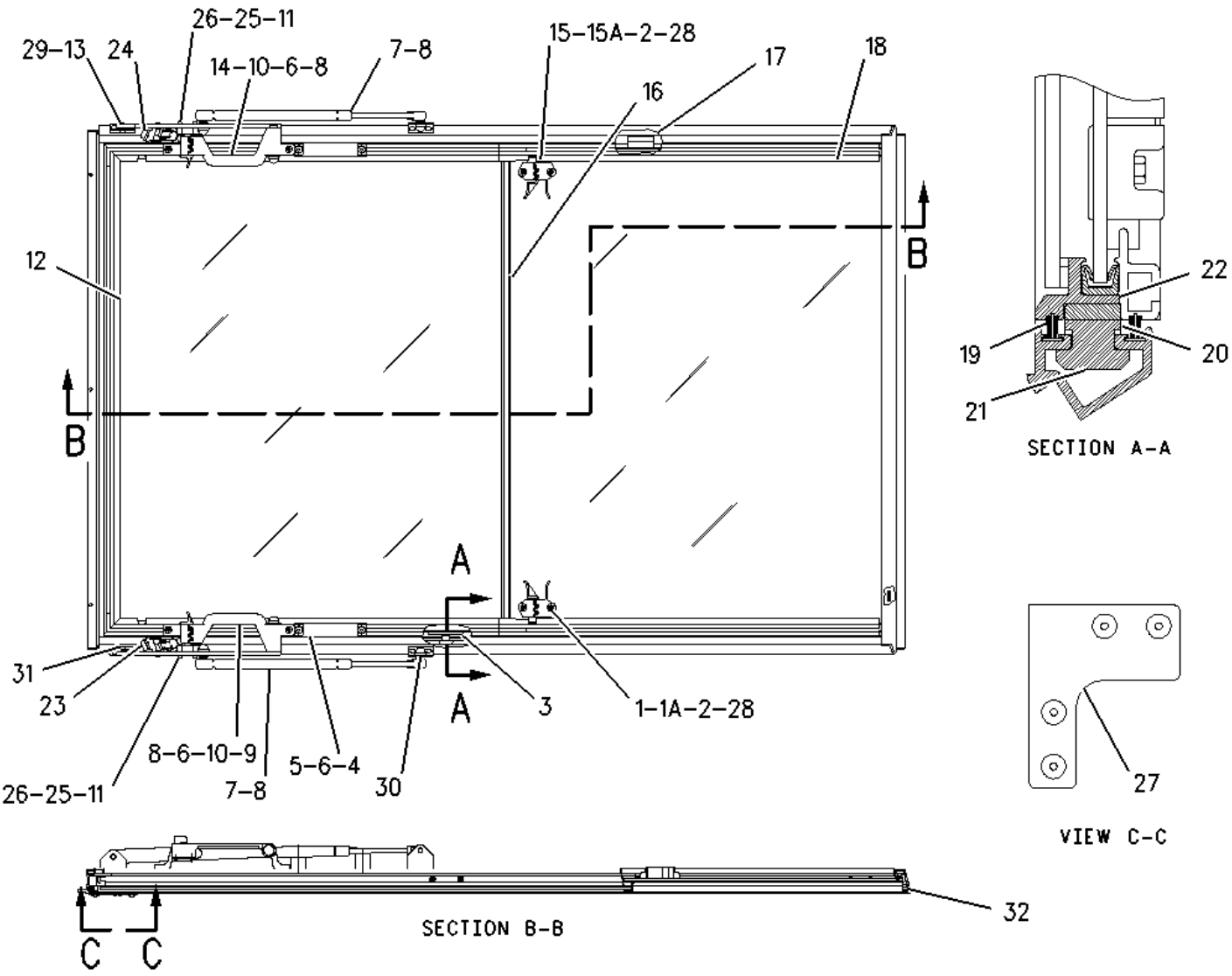

1 NPR 165-0177 1 CATCH AS (LH)

1A NPR 150-8015 1 GASKET

2 NPR M 8T-1573 4 SCREW-FLAT HEAD (M5X0.8X25-MM)

3 NPR M 099-0857 4 SCREW-MACHINE (M5X0.8X5.2-MM)

4 NPR 160-4817 2 HANDLE

5 NPR M 149-4311 4 BOLT-SOCKET HEAD (M6X1X16-MM)

6 NPR M 6V-9632 6 NUT-WELD (M6X1-THD)

7 NPR 121-9748 2 SPRING AS

8 NPR M 5C-7261 6 NUT (M8X1.25-THD)

9 NPR 121-9746 1 HANDLE AS-LH

10 NPR M 127-1960 4 SCREW-FLAT HEAD (M6X1X16-MM)

11 NPR M 8T-5432 4 BOLT (M5X0.8X16-MM)

12 NPR 8Y-7260 1 GLASS (UPPER)

13 NPR 121-9747 2 LINK AS

NPR 222-4860 1 RIVET

14 NPR 121-9745 1 HANDLE AS-RH

15 NPR 165-0178 1 CATCH AS (RH)

15A NPR 150-8015 1 GASKET

16 NPR 121-9743 1 SEAL

17 NPR 9X-8918 8 SCREW-FLAT HEAD (8-32X0.5-IN)

18 NPR 8Y-7259 1 GLASS (LOWER)

19 NPR BE 137-2132 SEAL

20 NPR 123-0006 2 PLATE AS

21 NPR 123-0005 2 ROLLER

22 NPR BE 137-2170 SEAL

23 NPR 157-4301 1 CATCH AS (LH)

24 NPR 157-4302 1 CATCH AS (RH)

25 NPR 168-1892 2 PLATE-CATCH

26 NPR 8T-3016 4 WASHER (5.3X10X1-MM THK)

27 NPR 183-8383 1 KIT-REPAIR (WINDOW FRAME)

(INCLUDES PLATES & RIVETS)

28 NPR 196-7708 4 LOCKNUT

29 NPR 222-4860 2 RIVET

30 NPR 222-4861 2 BRACKET

31 NPR 222-4862 2 BRACKET

32 NPR 144-1569 2 STOP

Key:

B - USE AS REQUIRED
E - ORDER BY THE CENTIMETER
M - METRIC PART

PART OF 154-5476 CAB GP

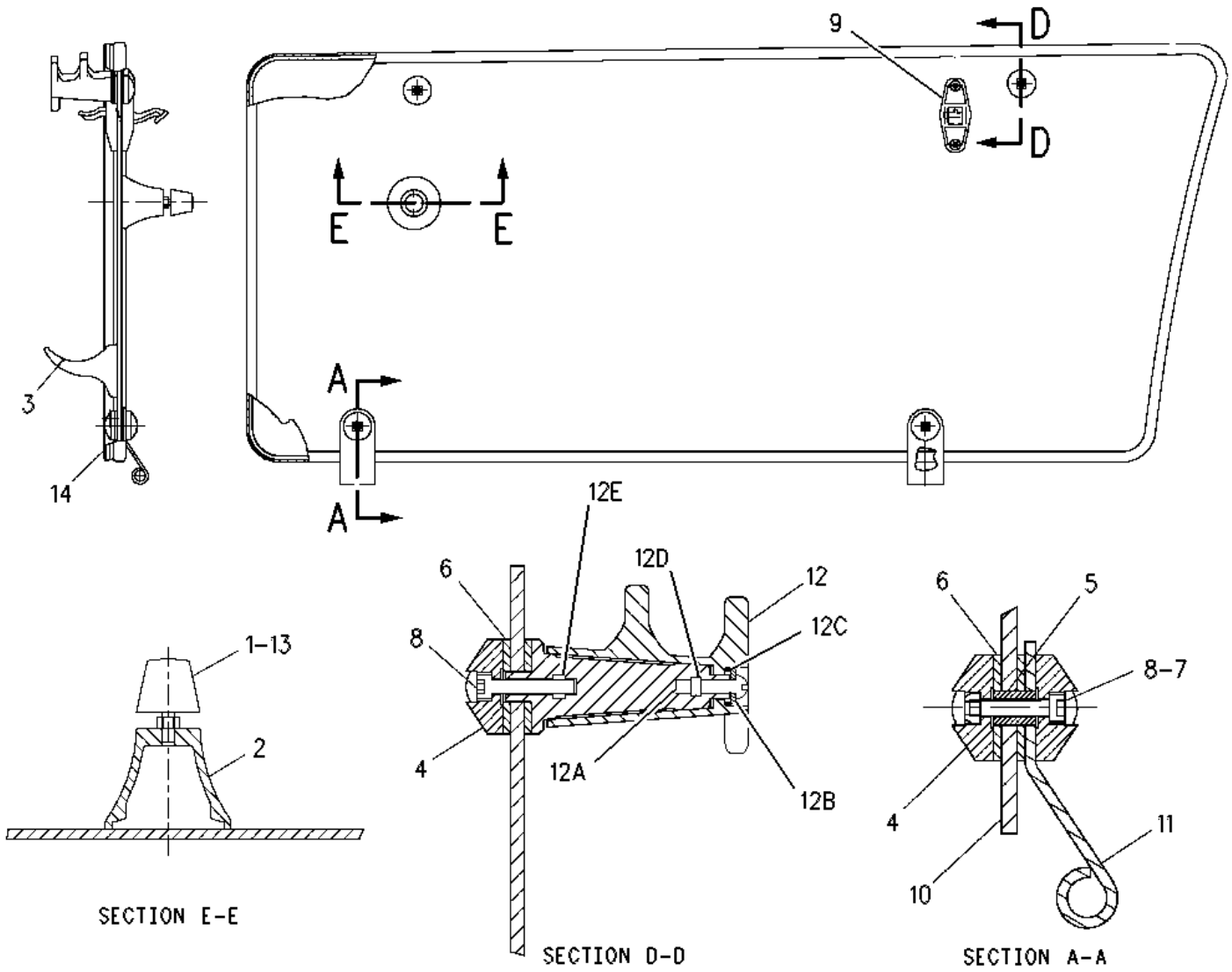

1 NPR 7X-2393 1 BUMPER-CONICAL

2 NPR 8Y-7309 1 RETAINER

3 NPR 100-7608 1 HANDLE

4 NPR 129-8542 6 RETAINER

5 NPR 154-5423 2 SPACER (6.6X12.7X17-MM THK)

6 NPR 129-8545 8 WASHER (13X40X3-MM THK)

7 NPR M 6V-7743 1 LOCKNUT (M6X1-THD)

8 NPR M 136-4192 4 BOLT (M6X1X35-MM)

9 NPR 143-2830 1 LATCH AS

NPR 143-2827 1 SPRING

	NPR M	6V-7743	2	LOCKNUT (M6X1-THD)
	NPR M	9X-2045	2	SCREW-TRUSS HEAD (M6X1X20-MM)
10	NPR	154-5421	1	GLASS-CAB
11	NPR	154-5424	2	HINGE
12	NPR	159-4950	2	LATCH AS
12A	NPR M	161-6984	1	SCREW-TRUSS HEAD (M5X0.8X20-MM)
12B	NPR	161-6987	1	WASHER-HARD (5.2X16X1.5-MM THK)
12C	NPR	161-9294	1	SPRING-FLAT WIRE
12D	NPR M	5C-2874	1	NUT (M5X0.8-THD)
12E	NPR M	162-6556	1	LOCKNUT (M6X1-THD)
13	NPR M	5C-7261	1	NUT (M8X1.25-THD)
14	NPR BE	148-5353		SEAL

Key:

B - USE AS REQUIRED
E - ORDER BY THE CENTIMETER
M - METRIC PART

PART OF 154-5476 CAB GP

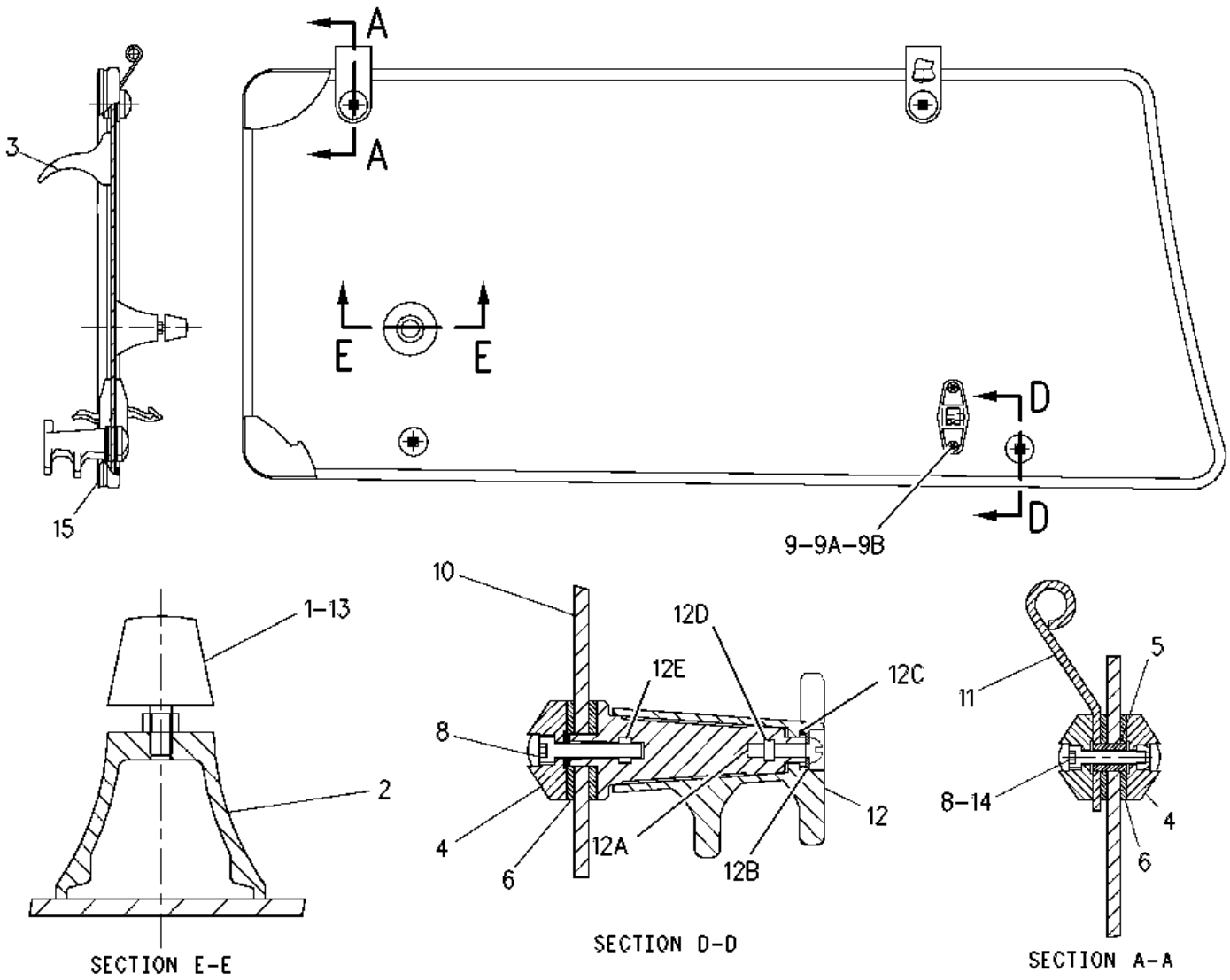

1 NPR 7X-2393 1 BUMPER-CONICAL

2 NPR 8Y-7309 1 RETAINER

3 NPR 100-7608 1 HANDLE

4 NPR 129-8542 6 RETAINER

5 NPR 154-5423 2 SPACER (6.6X12.7X17-MM THK)

6 NPR 129-8545 8 WASHER (13X40X3-MM THK)

8 NPR M 136-4192 4 BOLT (M6X1X35-MM)

9 NPR 143-2830 1 LATCH AS

9A NPR M 6V-7743 2 LOCKNUT (M6X1-THD)

9B NPR M 9X-2045 2 SCREW-TRUSS HEAD (M6X1X20-MM)

10	NPR	154-5422	1	GLASS-CAB
11	NPR	154-5424	2	HINGE
12	NPR	159-4951	2	LATCH AS
12A	NPR M	161-6984	1	SCREW-TRUSS HEAD (M5X0.8X20-MM)
12B	NPR	161-6987	1	WASHER-HARD (5.2X16X1.5-MM THK)
12C	NPR	161-9294	1	SPRING-FLAT WIRE
12D	NPR M	5C-2874	1	NUT (M5X0.8-THD)
12E	NPR M	162-6556	1	LOCKNUT (M6X1-THD)
13	NPR M	5C-7261	1	NUT (M8X1.25-THD)
14	NPR M	6V-7743	2	LOCKNUT (M6X1-THD)
15	NPR BE	148-5353		SEAL

Key:

B - USE AS REQUIRED
E - ORDER BY THE CENTIMETER
M - METRIC PART

PART OF 159-4959 DOOR GP-CAB

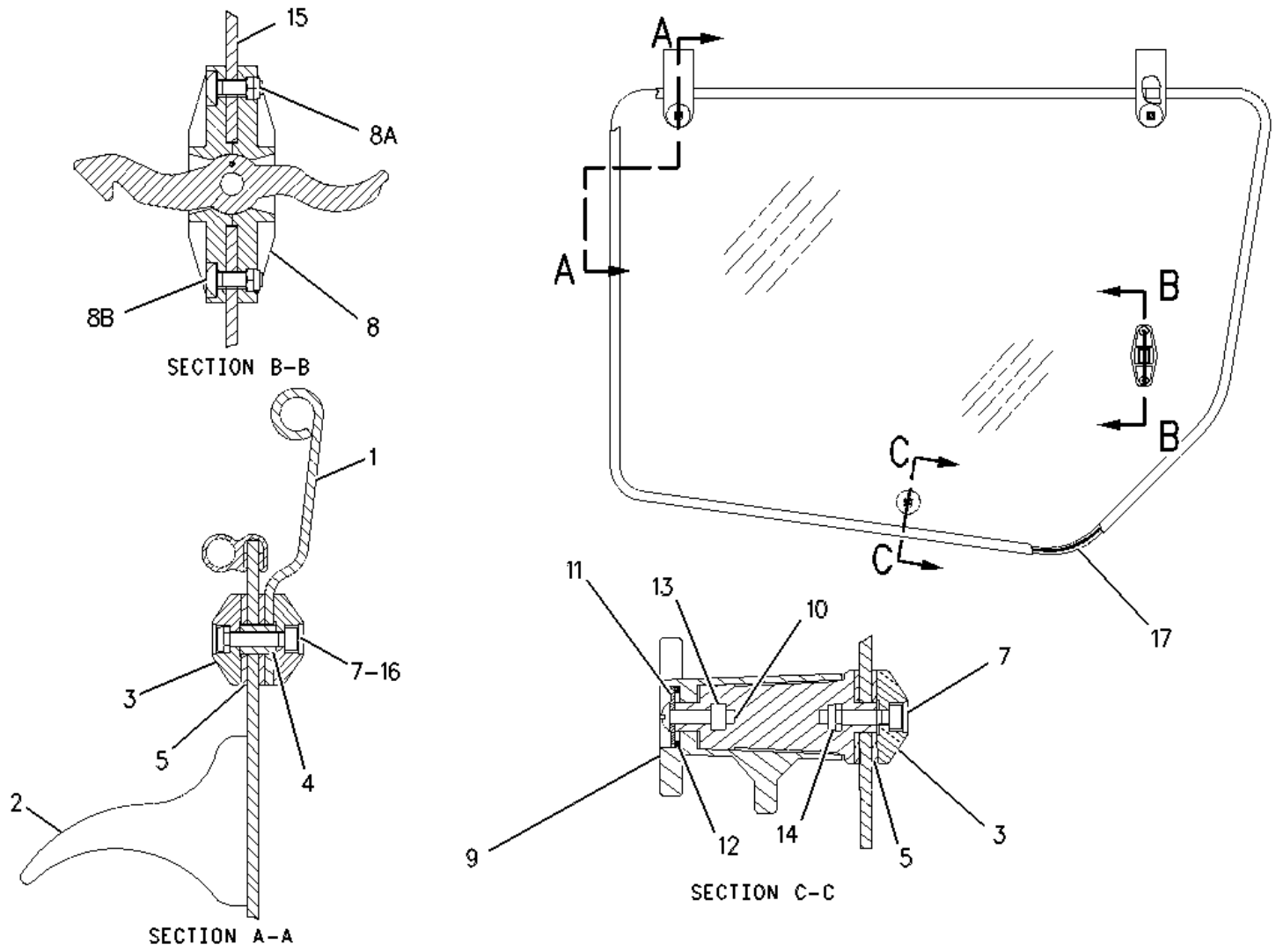

1	NPR	8Y-7287	2	HINGE
2	NPR	100-7608	1	HANDLE
3	NPR	129-8542	5	RETAINER
4	NPR	129-8543	2	SPACER (16-MM THK)
5	NPR	129-8545	6	WASHER (13X40X3-MM THK)
7	NPR M	136-4192	3	BOLT (M6X1X35-MM)
8	NPR	143-2830	1	LATCH AS
8A	NPR M	6V-7743	2	LOCKNUT (M6X1-THD)
8B	NPR M	9X-2045	2	SCREW-TRUSS HEAD (M6X1X20-MM)
9	NPR	159-4951	1	LATCH AS
10	NPR M	161-6984	1	SCREW-TRUSS HEAD (M5X0.8X20-MM)
11	NPR	161-6987	1	WASHER-HARD (5.2X16X1.5-MM THK)
12	NPR	161-9294	1	SPRING-FLAT WIRE
13	NPR M	162-6555	1	LOCKNUT (M5X0.8-THD)

14	NPR M	162-6556	1	LOCKNUT (M6X1-THD)
15		159-4955	1	GLASS-CAB (DOOR)
16	NPR M	6V-7743	2	LOCKNUT (M6X1-THD)
17	NPR BE	148-5353		SEAL

Key: B - USE AS REQUIRED E - ORDER BY THE CENTIMETER M - METRIC PART

PART OF 159-4960 DOOR GP-CAB

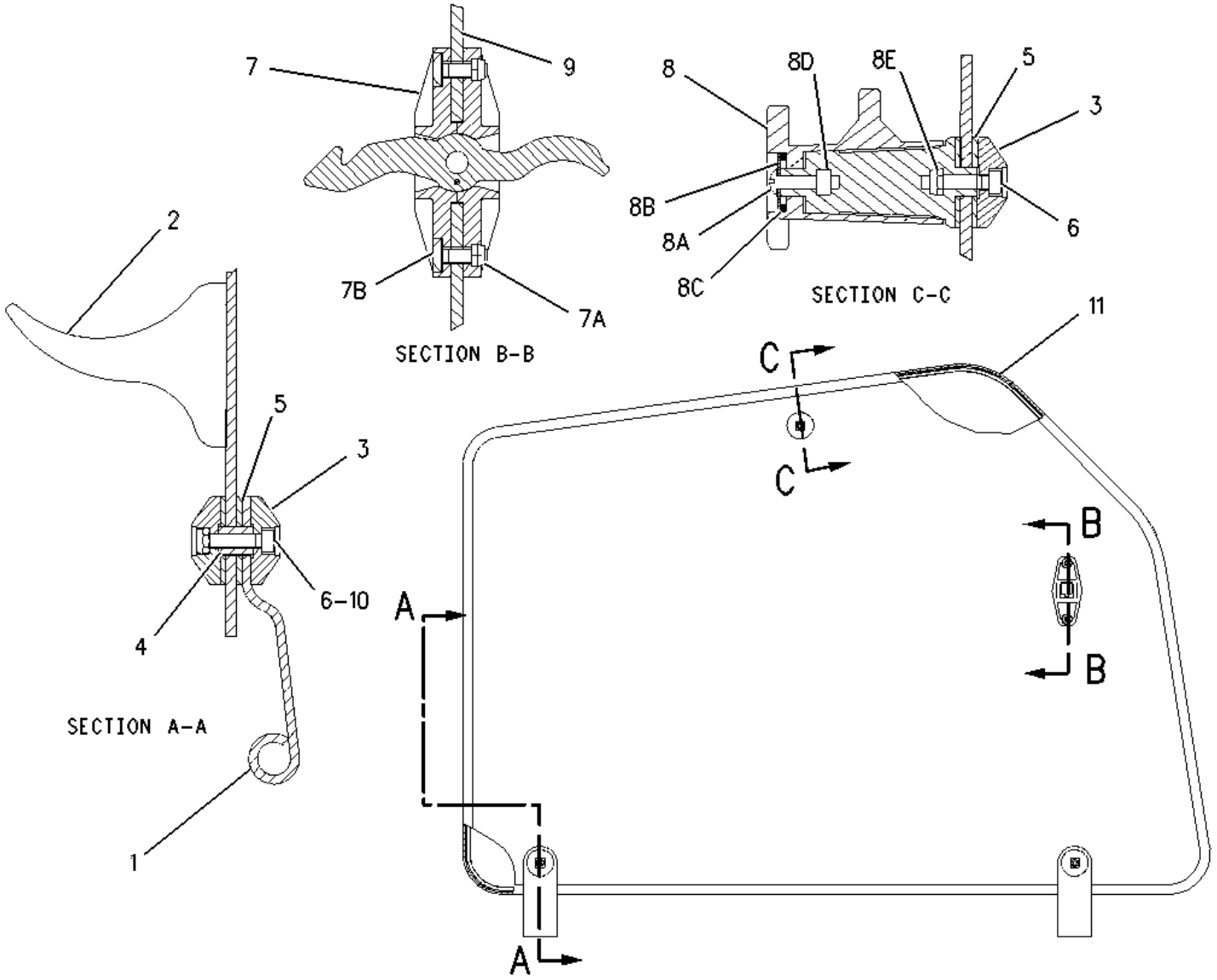

1 NPR 8Y-7287 2 HINGE

2 NPR 100-7608 1 HANDLE

3 NPR 129-8542 5 RETAINER

4 NPR 129-8543 2 SPACER (16-MM THK)

5 NPR 129-8545 6 WASHER (13X40X3-MM THK)

6 NPR M 136-4192 3 BOLT (M6X1X35-MM)

7 NPR 143-2830 1 LATCH AS

7A NPR M 6V-7743 2 LOCKNUT (M6X1 THD)

7B NPR M 9X-2045 2 SCREW-TRUSS HEAD (M6X1X20-MM)

NPR 143-2827 1 SPRING

8	NPR	159-4950	1	LATCH AS
8A	NPR M	161-6984	1	SCREW-TRUSS HEAD (M5X0.8X20-MM)
8B	NPR	161-6987	1	WASHER-HARD (5.2X16X1.5-MM THK)
8C	NPR	161-9294	1	SPRING-FLAT WIRE
8D	NPR M	5C-2874	1	NUT (M5X0.8 THD)
8E	NPR M	162-6556	1	LOCKNUT (M6X1 THD)
9		159-4956	1	GLASS-CAB (DOOR)
10	NPR M	6V-7743	2	LOCKNUT (M6X1 THD)
11	NPR BE	148-5353		SEAL

Key:

B - USE AS REQUIRED
E - ORDER BY THE CENTIMETER
M - METRIC PART

PART OF 154-5473 CAB AR-ENCLOSED ROPS

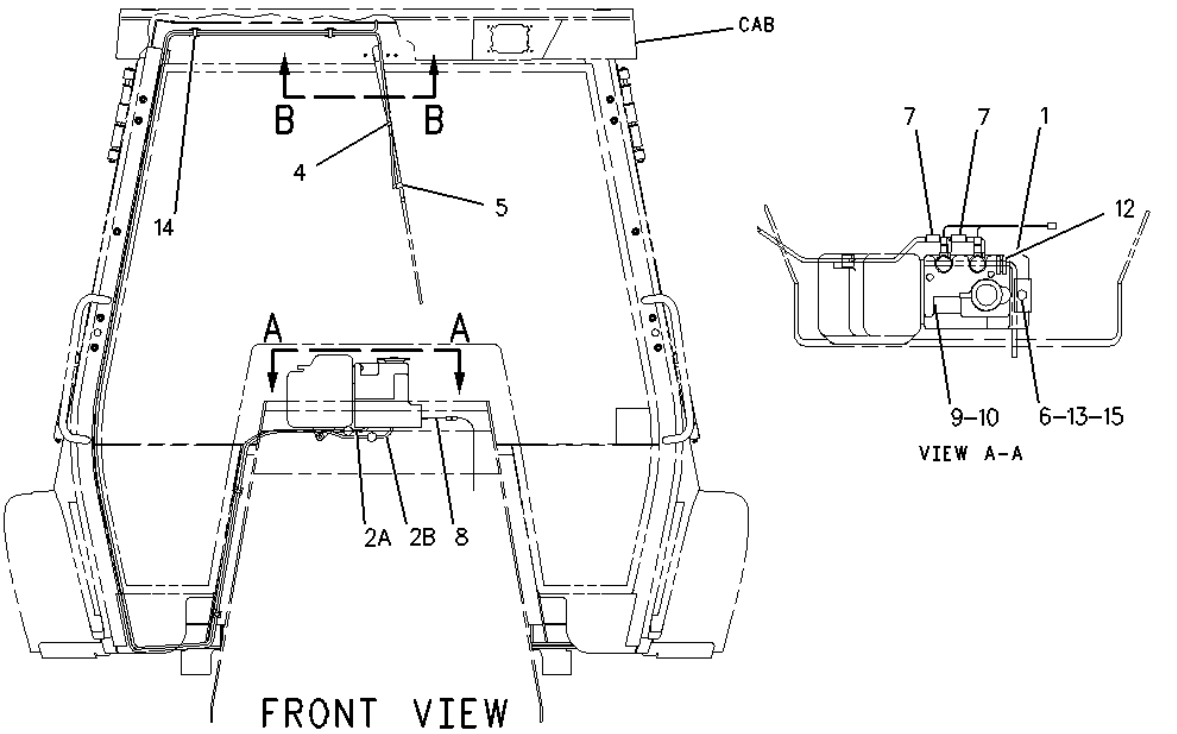

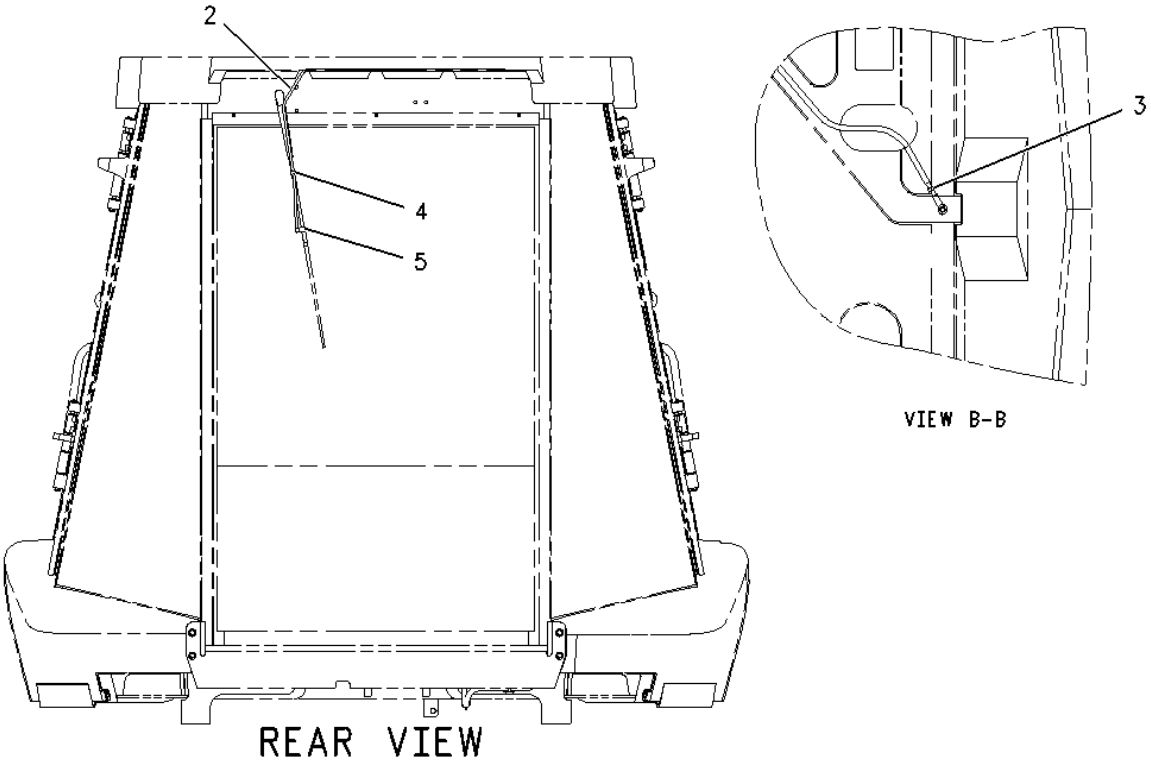

1 NPR 123-8670 1 TANK AS (WINDOW WASHER)

NPR 117-2823 1 CAP

NPR 117-2824 2 GROMMET

NPR 117-2826 2 PUMP AS-WASHER

	NPR	123-8669	1	TANK
2	NPR E	144-0195		HOSE (280-CM)
2A	NPR E	144-0195		HOSE (15-CM)
2B	NPR E	144-0195		HOSE (15-CM)
3	NPR	121-6936	1	CONNECTOR
4	NPR	8T-0789	2	CLIP-HOSE
5	NPR	8T-1118	2	NOZZLE AS
6	NPR	112-9450	1	PLATE
7	NPR	9R-3469	2	DIAPHRAGM
8	NPR	131-1368	1	HARNESS AS-WINDOW WIPER (WINDOW WASHER)
	NPR	102-8803	1	KIT-RECEPTACLE (3-PIN)
	(INCLUDES RECEPTACLE AS & WEDGE)			
	NPR	117-1877	2	RECEPTACLE AS
9	NPR M	6V-7357	1	BOLT (M6X1X25-MM)
10	NPR	8T-4205	1	WASHER-HARD (7.2X14.5X2-MM THK)
12	NPR	3F-1240	1	GROMMET
13	NPR M	8T-4201	1	BOLT-LOCKING (M10X1.5X20-MM)
14	NPR B	3S-2093	2	STRAP-CABLE
15	NPR B	8T-4121	2	WASHER-HARD (11X21X2.5-MM THK)

Key:

B - USE AS REQUIRED
E - ORDER BY THE CENTIMETER
M - METRIC PART

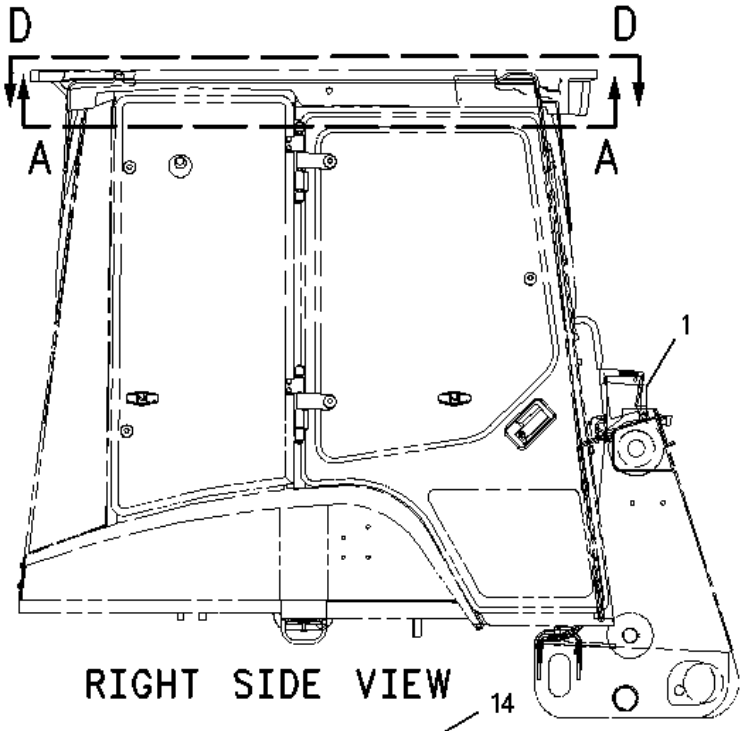

RIGHT SIDE VIEW

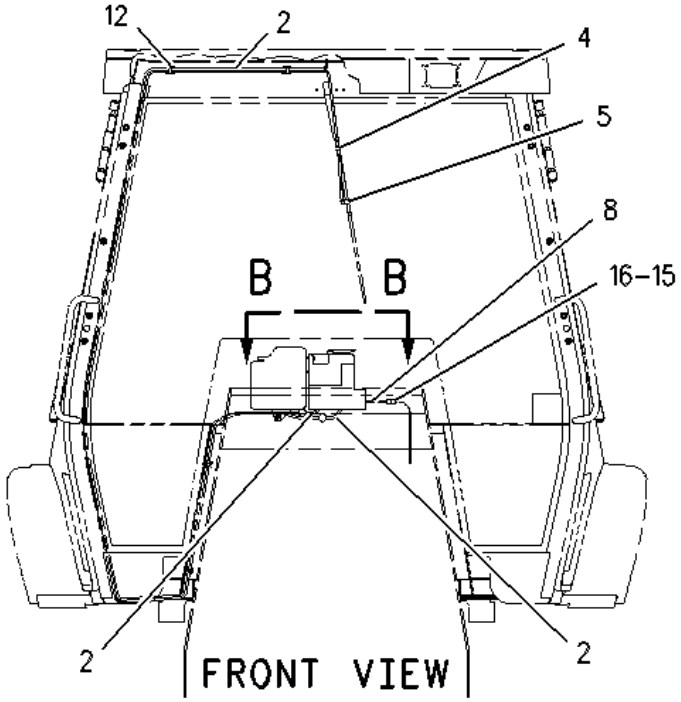

FRONT VIEW

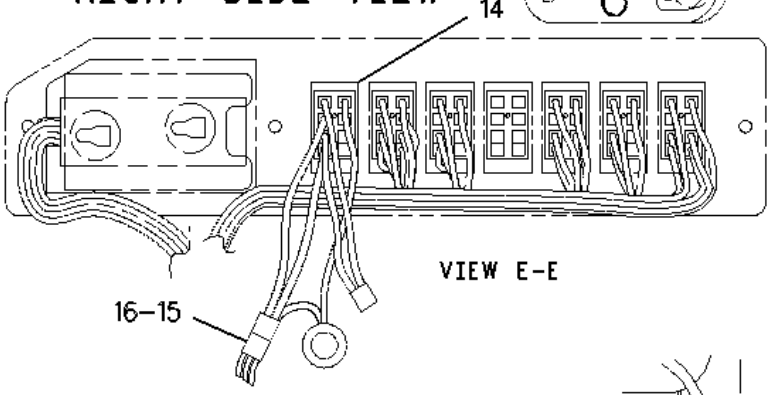

VIEW E-E

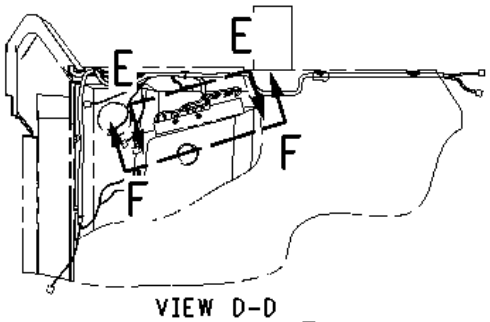

VIEW D-D

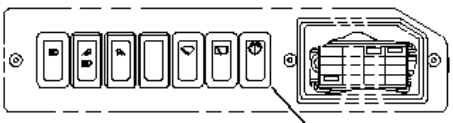

VIEW F-F

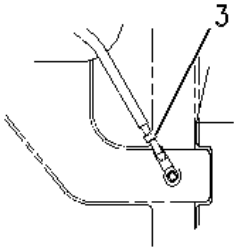

VIEW OF AREA C

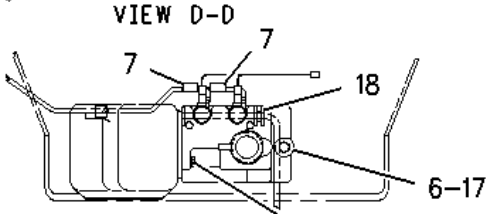

VIEW B-B

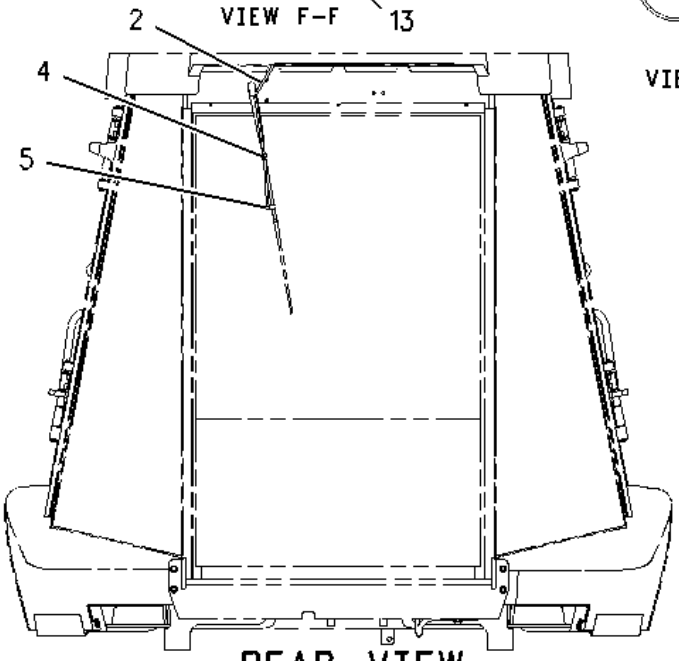

REAR VIEW

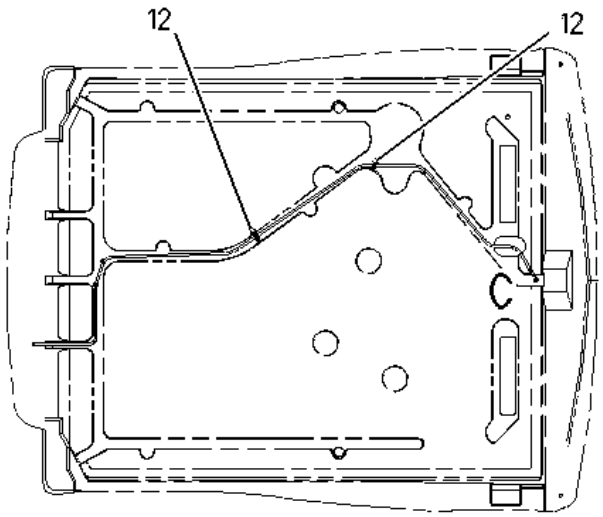

VIEW A-A

1	NPR	123-8670	1	TANK AS (WINDOW WASHER)
	NPR	117-2823	1	CAP
	NPR	117-2824	2	GROMMET
	NPR	117-2826	2	PUMP AS-WASHER
	NPR	123-8669	1	TANK
2	NPR BE	144-0195		HOSE
3	NPR	121-6936	1	CONNECTOR
4	NPR	8T-0789	2	CLIP-HOSE
5	NPR	8T-1118	2	NOZZLE AS
6	NPR	6V-8513	1	WASHER-HARD (11X35X2.5-MM THK)
7	NPR	9R-3469	2	DIAPHRAGM
8	NPR	131-1368	1	HARNESS AS-WINDOW WIPER (WINDOW WASHER)(WASHER)
	NPR	102-8803	1	KIT-RECEPTACLE (3-PIN)
9	NPR M	6V-7357	1	BOLT (M6X1X25-MM)
10	NPR	8T-4205	1	WASHER-HARD (7.2X14.5X2-MM THK)
12	NPR	3S-2093	6	STRAP-CABLE
13	NPR	109-2352	1	SWITCH AS (WASHER)
	NPR	111-7899	1	GASKET
14	NPR	163-4121	1	HARNESS AS (WASHER)
	NPR	102-8804	1	KIT-RECEPTACLE (4-PIN)
	NPR	102-8803	1	KIT-RECEPTACLE (3-PIN)
15	NPR	3E-3368	2	WEDGE-PLUG LOCK (3-PIN)
16	NPR	102-8808	2	KIT-CONNECTING PLUG (3-PIN)
17	NPR M	8T-4201	1	BOLT-LOCKING (M10X1.5X20-MM)
18	NPR	3F-1240	1	GROMMET

Key: B - USE AS REQUIRED E - ORDER BY THE CENTIMETER M - METRIC PART

108-8251 VISOR GP-CAB -S/N 4ZN16044-50156
FOR USE WITH AIR CONDITIONER

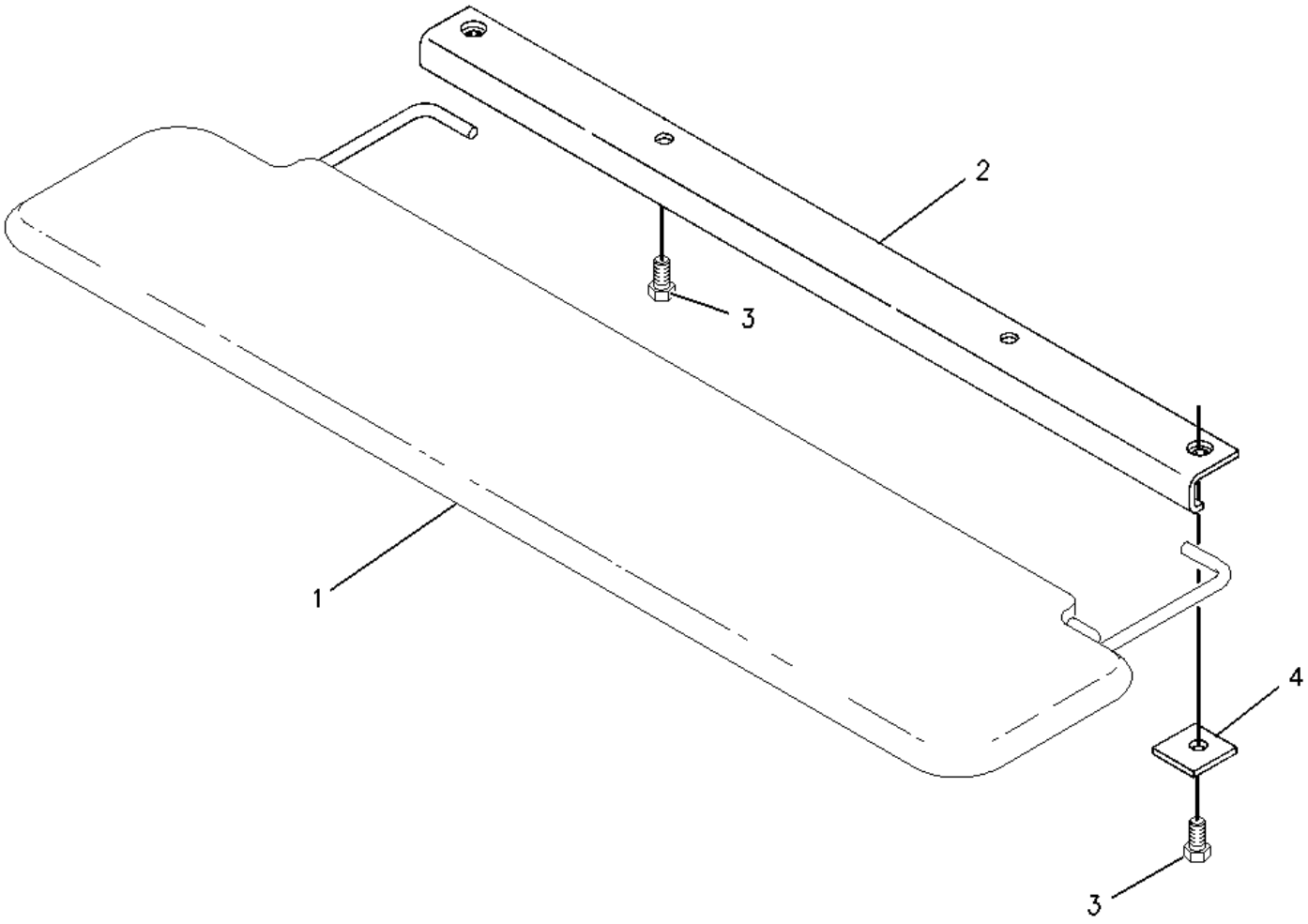

1 NPR 9R-3205 1 VISOR AS

2 NPR 9R-3204 1 PLATE AS

3 NPR M 8T-4171 4 BOLT (M6X1X12MM)

4 NPR 9R-3203 2 PLATE

Key: M - METRIC PART

132-9226 HOUSING GP-SEAT SUSPENSION -S/N 4ZN16044-50156
PART OF 132-9225 SUSPENSION GP-SEAT

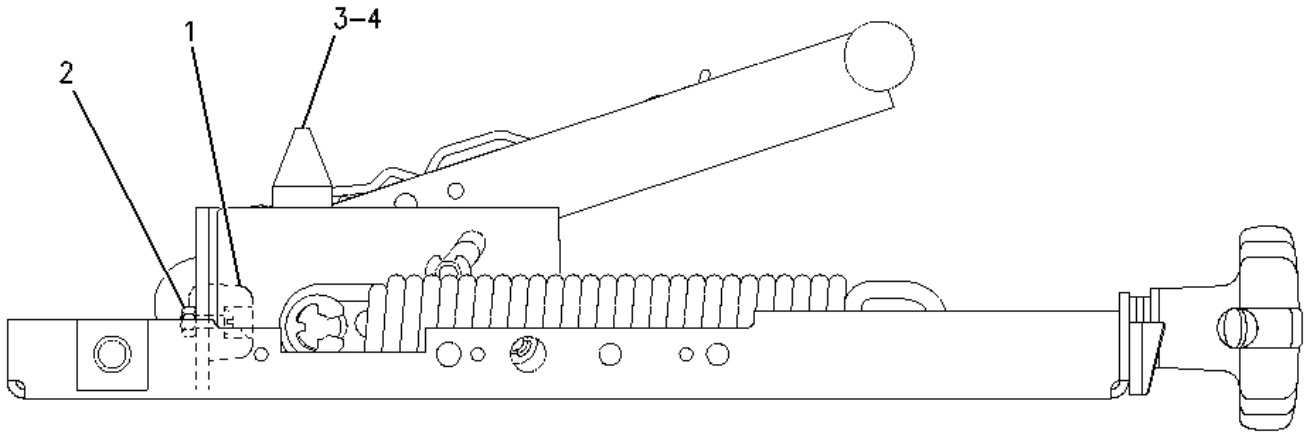

1 NPR 132-9234 2 BUMPER

2 NPR 4B-2047 2 NUT (10-24 THD)

3 NPR 143-1237 2 BUMPER

4 NPR M 2Y-9282 2 NUT

AVAILABLE REPAIR KIT(S):

NPR 101-4195 1 KIT-SUSPENSION ROLLER

(INCLUDES ROLLERS)

NPR 132-9228 2 KIT-SUSPENSION SPRING

(INCLUDES SPRING & BUSHING)

NPR 132-9229 1 KIT-WEIGHT KNOB ADJUSTMENT

(INCLUDES KNOB AS & SPACER)

NPR 132-9230 1 KIT-WEIGHT ADJUSTER

(INCLUDES NUT, SPACER, PIN, RACES, WASHER, & BEARING)

Key:

M - METRIC PART

131-1881 SEAT BELT GP --S/N 4ZN16044-50156

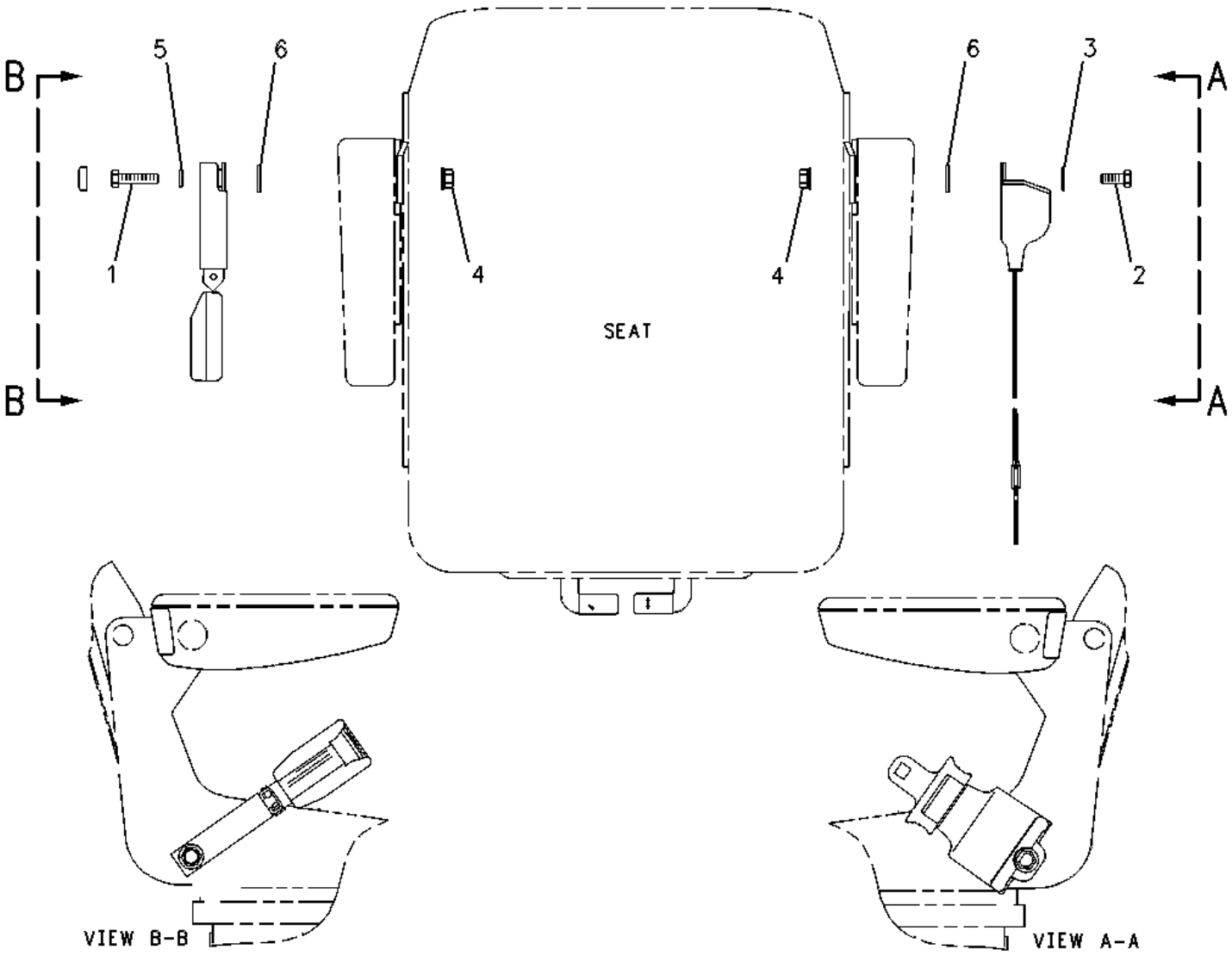

1	**NPR**	**1L-9080**	**1**	**BOLT (7/16-20X1.5-IN)**
2	**NPR**	**8T-9381**	**1**	**BOLT (7/16-20X1-IN)**
3	**NPR**	**7X-7729**	**1**	**WASHER (11X25X3-MM THK)**
4	**NPR**	**8S-0934**	**2**	**LOCKNUT-FLANGE (7/16-20-THD)**
5	**NPR**	**7X-0507**	**1**	**WASHER-HARD (12X22.5X5-MM THK)**
6	**NPR**	**6E-6549**	**2**	**WASHER (11X27X6-MM THK)**

131-2136 SEAT BELT GP -S/N 4ZN16044-50156
RETRACTABLE, BACKHOE -PART OF 132-3728 SEAT BELT GP

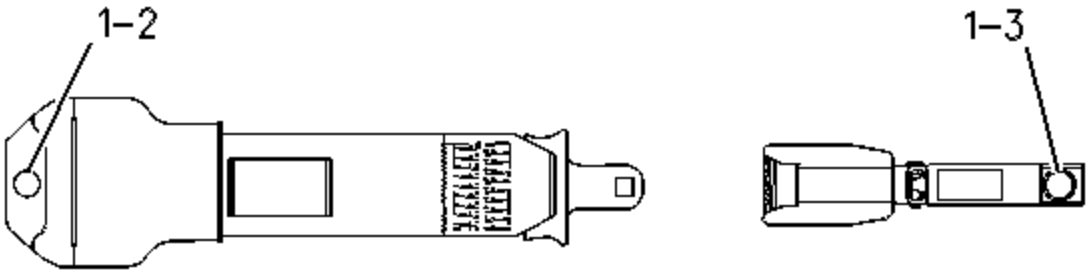

1	**NPR**	**8S-0934**	**2**	**LOCKNUT-FLANGE (7/16-20-THD)**
2	**NPR**	**8T-9381**	**1**	**BOLT (7/16-20X1-IN)**
3	**NPR**	**1L-9080**	**1**	**BOLT (7/16-20X1.5-IN)**

132-3728 SEAT BELT GP --S/N 4ZN16044-50156--3 IN. RETRACTABLE

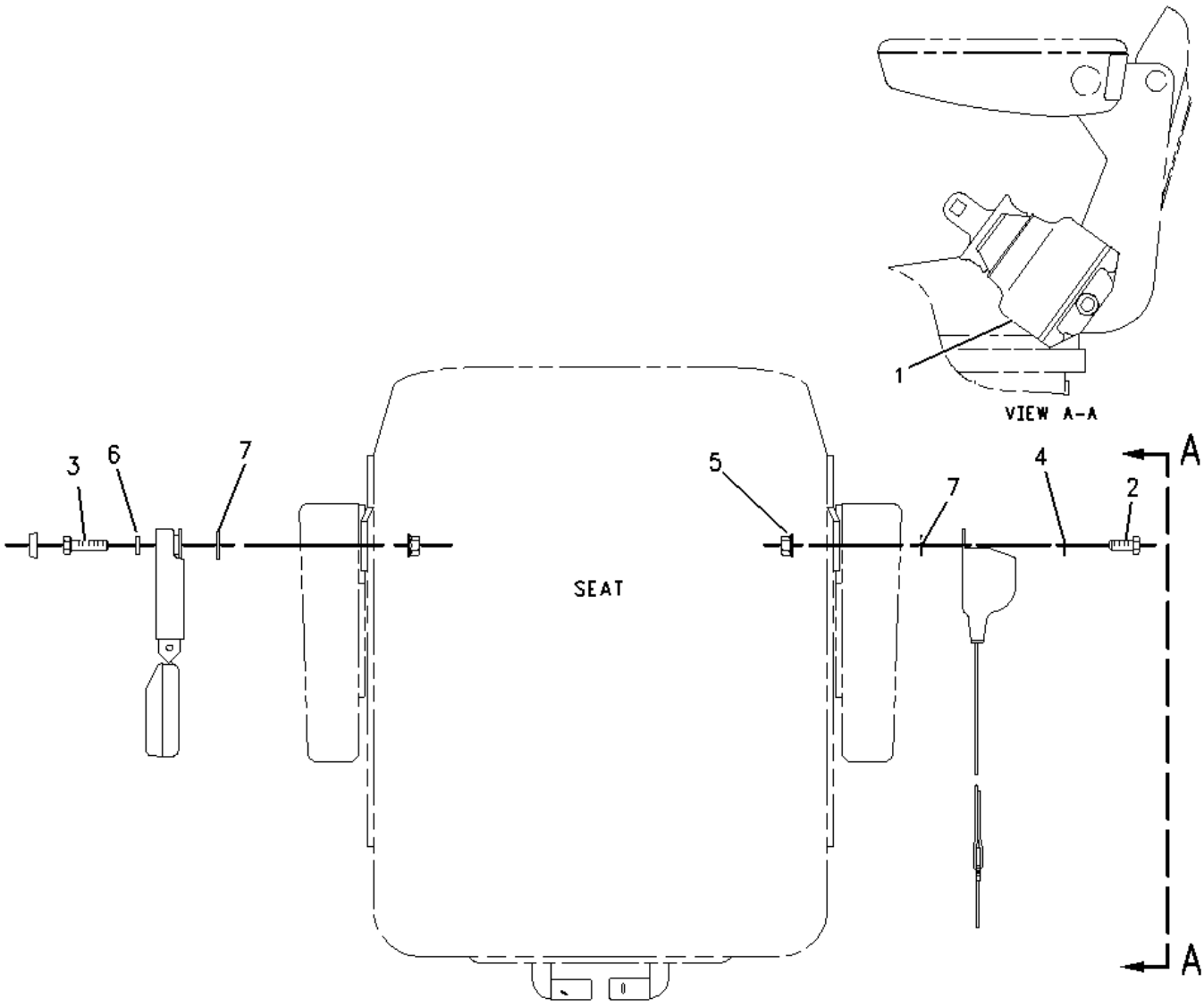

1 NPR Y 131-2136 1 SEAT BELT GP

2 NPR 8T-9381 1 BOLT (7/16-20X1-IN)

3 NPR 1L-9080 1 BOLT (7/16-20X1.5-IN)

4 NPR 7X-7729 1 WASHER (11X25X3-MM THK)

5 NPR 8S-0934 2 LOCKNUT-FLANGE (7/16-20-THD)

6 NPR 7X-0507 1 WASHER-HARD (12X22.5X5-MM THK)

7 NPR 6E-6549 2 WASHER (11X27X6-MM THK)

Key: Y - SEPARATE ILLUSTRATION

130-5564 SEAT GP-SUSPENSION -S/N 4ZN16044-50156-FABRIC

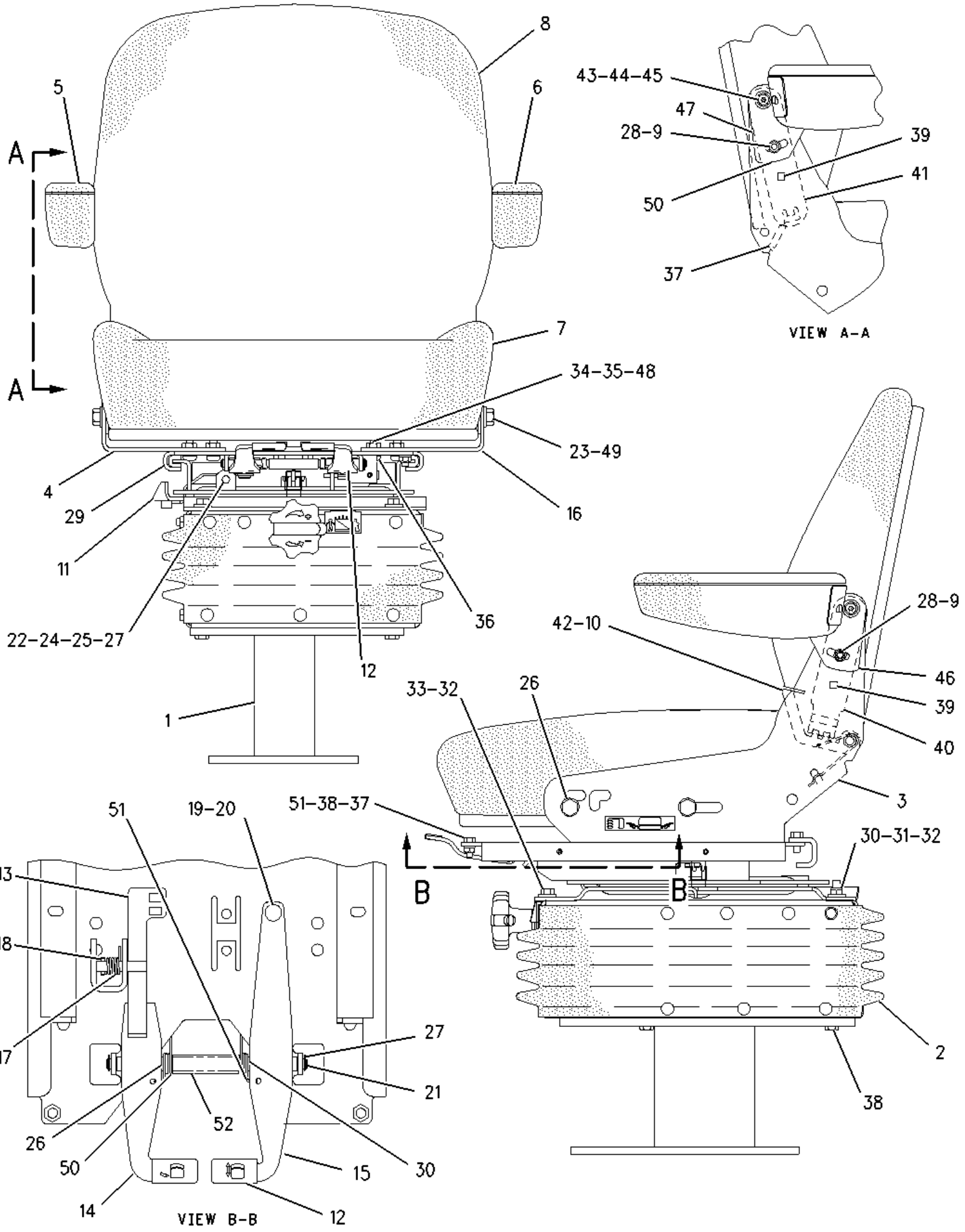
8
5
6
A
A
7
34-35-48
23-49
4
29
11
16
22-24-25-27
36
12
1
43-44-45
47
28-9
39
50
41
37
VIEW A-A
42-10
28-9
46
39
40
3
33-32
26
51-38-37
B
B
30-31-32
2
38
51
19-20
13
18
17
27
21
26
52
50
30
15
14
12
VIEW B-B

1	NPR	132-4563	1	BASE AS
2	NPR Y	132-9225	1	SUSPENSION GP-SEAT
3	NPR	132-9245	1	BRACKET AS (LH)
4	NPR	132-9246	1	BRACKET AS (RH)
5	NPR	132-9250	1	KIT-ARMREST (RH)
6	NPR	132-9305	1	KIT-ARMREST (LH)
7	NPR	132-9241	1	CUSHION AS-SEAT
	NPR	4V-8579	1	CLIP
	NPR	174-8826	5	CLIP
	NPR BE	9X-2092		STRIP-EDGE
8	NPR	132-9243	1	CUSHION AS-BACK
	NPR	4V-8579	1	CLIP
	NPR	174-8826	5	CLIP
	NPR BE	9X-2092		STRIP-EDGE
9	NPR	4B-4278	2	WASHER (10.2X20.5X1.6-MM THK)
10	NPR	132-9249	1	KIT-TILT BACK LEVER
11	NPR	132-9236	1	SWIVEL AS
12	NPR	134-5484	2	CAP
13	NPR	132-9240	1	LATCH AS
14	NPR	155-4707	1	LEVER AS (SLIDE)
15	NPR	155-4753	1	LEVER AS-SWIVEL
16	NPR	161-4518	1	PLATE AS-SLIDE
17	NPR	135-1706	1	SPRING
18	NPR	095-0878	1	PIN-SPRING
19	NPR	8Y-6064	1	ROLLER-SLIDER

20	NPR	009-3681	1	RING-RETAINING
21	NPR	123-6077	1	SHAFT-PIVOT
22	NPR	134-5491	1	SHAFT-PIVOT
23	NPR	8T-8917	4	BOLT (1/2-13X1.25-IN)
24	NPR	131-3214	1	SPRING
25	NPR	134-5492	1	PLATE AS
26	NPR	5P-8245	4	WASHER-HARD (13.5X25.5X3-MM THK)
27	NPR	8S-7803	4	RING-RETAINING
28	NPR	033-4843	2	NUT (5/16-18-THD)
29	NPR	149-4745	1	KIT-SLIDER BLOCK
30	NPR	1D-4677	2	BOLT-ROUND HEAD (3/8-16X1-IN)
31	NPR	2K-4973	2	LOCKNUT (3/8-16-THD)
32	NPR	5P-1075	4	WASHER-HARD (10.2X22.5X3-MM THK)
33	NPR	5M-3062	2	BOLT (3/8-16X0.75-IN)
34	NPR	1C-0569	4	BOLT (5/16-18X0.5-IN)
35	NPR	3B-4505	4	LOCKWASHER
36	NPR	035-2017	4	SCREW-BUTTON HEAD (3/8-16X1-IN)
37	NPR	142-8425	1	SPRING
38	NPR M	8T-4189	4	BOLT (M8X1.25X20-MM)
39	NPR	030-7571	2	BOLT (3/8-16X1-IN)
40	NPR	132-9247	1	PLATE
41	NPR	132-9248	1	PLATE
42	NPR	134-5487	1	CAP
43	NPR	134-5490	2	SPACER (13.9-MM THK)
44	NPR	8C-3375	2	WASHER (2.5-MM THK)

45	NPR	6V-6945	2	SCREW-BUTTON HEAD (3/8-16X1.2-IN)
46	NPR	134-5488	1	PLATE AS
47	NPR	134-5489	1	PLATE AS
48	NPR	031-4155	4	LOCKNUT (5/16-18-THD)
49	NPR	7D-1649	4	WASHER-HARD (13.5X32X5-MM THK)
50	NPR	154-8278	1	SPRING-RETURN (SLIDE)
51	NPR	154-8280	1	SPRING-RETURN (SWIVEL)
52	NPR	154-8284	1	TUBE

Key:

B - USE AS REQUIRED
E - ORDER BY THE CENTIMETER
M - METRIC PART
Y - SEPARATE ILLUSTRATION

130-5565 SEAT GP-SUSPENSION --S/N 4ZN16044-50156
PART OF 161-6646 SEAT AR-SUSPENSION

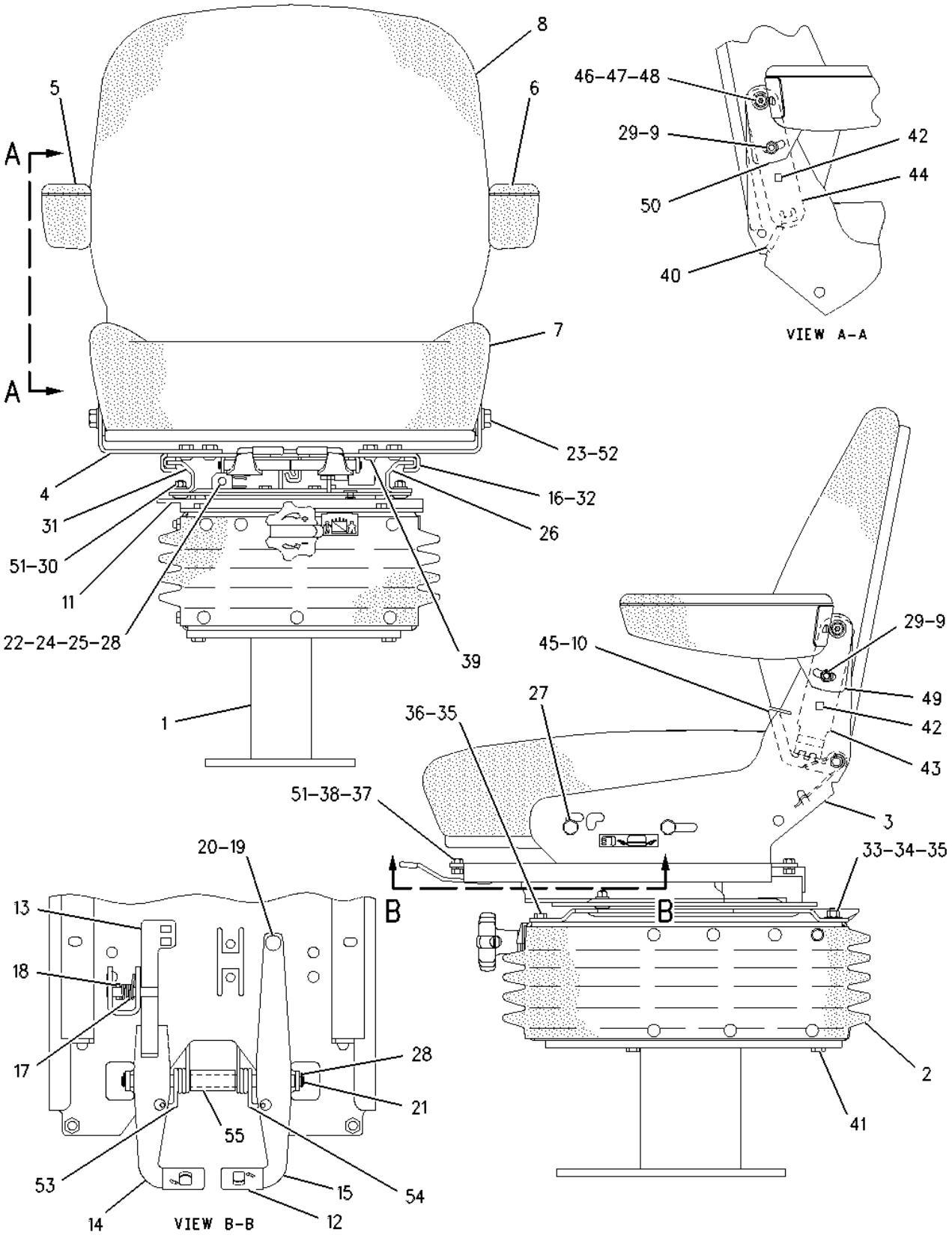

1 NPR 132-4563 1 BASE AS

2 NPR Y 132-9225 1 SUSPENSION GP-SEAT

3 NPR 132-9245 1 BRACKET AS (LH)

4	NPR	132-9246	1	BRACKET AS (RH)
5	NPR	132-9250	1	KIT-ARMREST (RH)
6	NPR	132-9305	1	KIT-ARMREST (LH)
7	NPR	132-9242	1	CUSHION AS-SEAT
	NPR	4V-8579	1	CLIP
	NPR	174-8826	5	CLIP
	NPR BE	9X-2092		STRIP-EDGE
8	NPR	132-9244	1	CUSHION AS-BACK
	NPR	4V-8579	1	CLIP
	NPR	174-8826	5	CLIP
	NPR BE	9X-2092		STRIP-EDGE
9	NPR	1A-6240	2	WASHER (0.328X0.75X0.065-IN THK)
10	NPR	132-9249	1	KIT-TILT BACK LEVER
11	NPR	132-9236	1	SWIVEL AS
12	NPR	134-5484	2	CAP
13	NPR	132-9240	1	LATCH AS
14	NPR	155-4707	1	LEVER AS (SLIDE)
15	NPR	155-4753	1	LEVER AS-SWIVEL
16	NPR	132-9237	1	PLATE AS-SLIDE
17	NPR	135-1706	1	SPRING
18	NPR	095-0878	1	PIN-SPRING
19	NPR	8Y-6064	1	ROLLER-SLIDER
20	NPR	009-3681	1	RING-RETAINING
21	NPR	123-6077	1	SHAFT-PIVOT
22	NPR	134-5491	1	SHAFT-PIVOT

23	NPR	8T-8917	4	BOLT (1/2-13X1.25-IN)
24	NPR	131-3214	1	SPRING
25	NPR	134-5492	1	PLATE AS
26	NPR	134-5485	1	CHANNEL-SLIDE
27	NPR	5P-8245	4	WASHER-HARD (13.5X25.5X3-MM THK)
28	NPR	8S-7803	4	RING-RETAINING
29	NPR	033-4843	2	NUT (5/16-18-THD)
30	NPR	9M-1974	4	WASHER-HARD (8.8X16X2-MM THK)
31	NPR	134-5486	1	CHANNEL-SLIDE
32	NPR	149-4745	1	KIT-SLIDER BLOCK (SUSPENSION SEAT)
	NPR	4F-4879	1	BOLT (3/8-16X0.5-IN)
33	NPR	1D-4677	2	BOLT-ROUND HEAD (3/8-16X1-IN)
34	NPR	2K-4973	2	LOCKNUT (3/8-16-THD)
35	NPR	5P-1075	4	WASHER-HARD (10.2X22.5X3-MM THK)
36	NPR	5M-3062	2	BOLT (3/8-16X0.75-IN)
37	NPR	1C-0569	4	BOLT (5/16-18X0.5-IN)
38	NPR	3B-4505	4	LOCKWASHER
39	NPR	035-2017	4	SCREW-BUTTON HEAD (3/8-16X1-IN)
40	NPR	142-8425	1	SPRING
41	NPR M	8T-4189	4	BOLT (M8X1.25X20-MM)
42	NPR	030-7571	2	BOLT (3/8-16X1-IN)
43	NPR	132-9247	1	PLATE
44	NPR	132-9248	1	PLATE
45	NPR	134-5487	1	CAP
46	NPR	134-5490	2	SPACER (13.9-MM THK)

47	NPR	8C-3375	2	WASHER (2.5-MM THK)
48	NPR	6V-6945	2	SCREW-BUTTON HEAD (3/8-16X1.2-IN)
49	NPR	134-5488	1	PLATE AS
50	NPR	134-5489	1	PLATE AS
51	NPR	031-4155	8	LOCKNUT (5/16-18-THD)
52	NPR	7D-1649	4	WASHER-HARD (13.5X32X5-MM THK)
53	NPR	154-8278	1	SPRING-RETURN (SLIDE)
54	NPR	154-8280	1	SPRING-RETURN (SWIVEL)
55	NPR	154-8284	1	TUBE

Key:

B - USE AS REQUIRED
E - ORDER BY THE CENTIMETER
M - METRIC PART
Y - SEPARATE ILLUSTRATION

155-7275 SEAT GP-SUSPENSION --S/N 4ZN16044-50156
FABRIC

Y	156-1579	1	SEAT GP-SUSPENSION
NPR	113-8493	1	FUSE (25-AMPERE)
NPR	172-7923	1	HARNESS AS-VALVE (SEAT AIR COMPRESSOR)
NPR	102-8802	1	KIT-RECEPTACLE (2-PIN)

(INCLUDES RECEPTACLE AS & WEDGE)

NPR	155-2270	1	KIT-CONNECTING PLUG (2-PIN)

(INCLUDES PLUG AS, WEDGE, & INTERFACE SEAL)

NPR	3S-2093	3	STRAP-CABLE

Key: Y - SEPARATE ILLUSTRATION

155-7276 SEAT GP-SUSPENSION --S/N 4ZN16044-50156-VINYL

Y	156-1580	1	SEAT GP-SUSPENSION
NPR	113-8493	1	FUSE (25-AMPERE)
NPR	172-7923	1	HARNESS AS-VALVE (SEAT AIR COMPRESSOR)
NPR	102-8802	1	KIT-RECEPTACLE (2-PIN)

(INCLUDES RECEPTACLE AS & WEDGE)

NPR	155-2270	1	KIT-CONNECTING PLUG (2-PIN)

(INCLUDES PLUG AS, WEDGE, & INTERFACE SEAL)

NPR	3S-2093	3	STRAP-CABLE

Key: Y - SEPARATE ILLUSTRATION

156-1579 SEAT GP-SUSPENSION --S/N 4ZN16044-50156
PART OF 155-7275 SEAT GP-SUSPENSION

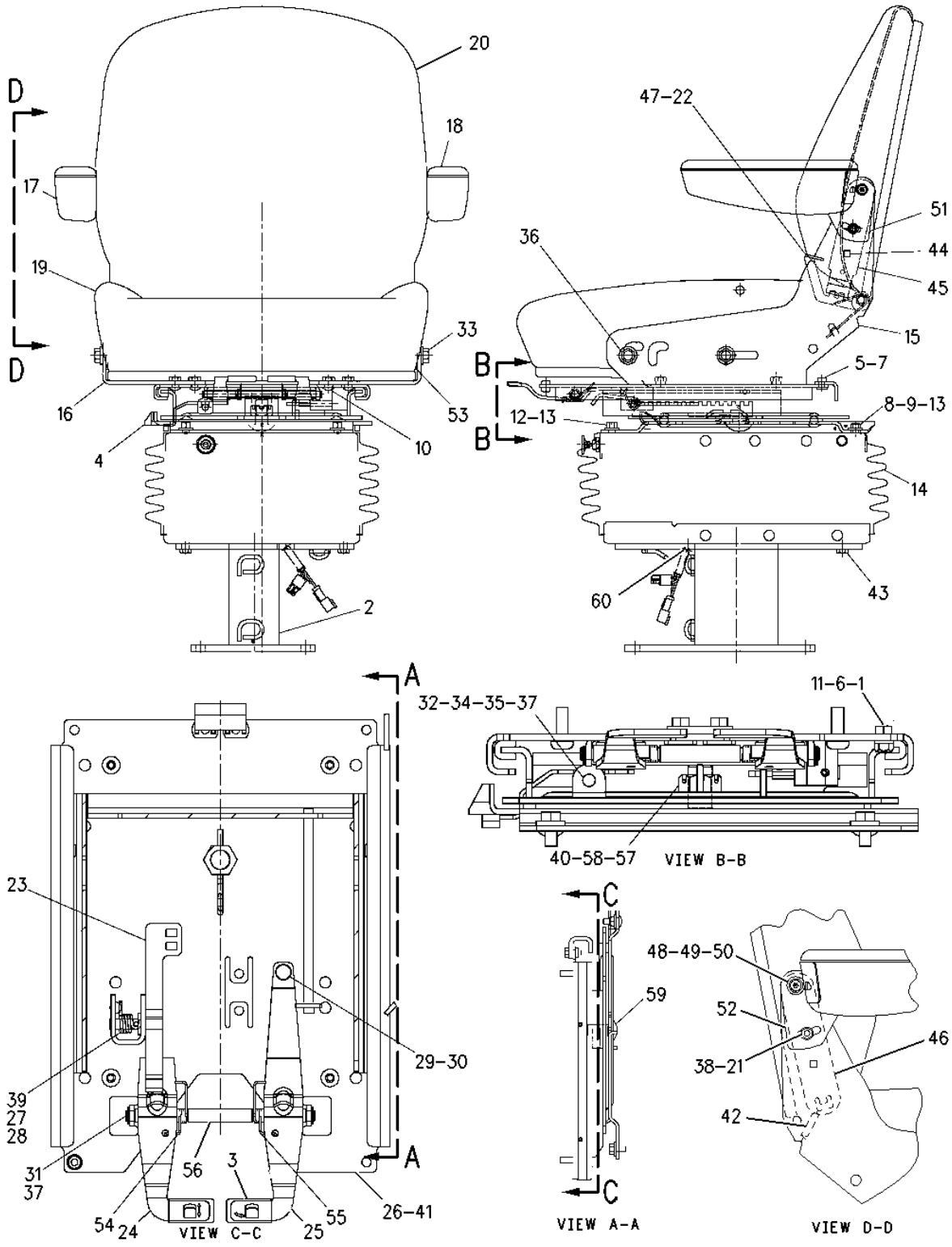

1 NPR 3B-4505 2 LOCKWASHER

2 NPR 132-4563 1 BASE AS

3 NPR 134-5484 2 CAP

4 161-4458 1 SWIVEL AS-SEAT

5	NPR	161-9291	1	BRACKET-STOP
6	NPR	031-4155	2	LOCKNUT (5/16-18-THD)
7	NPR	1C-0569	2	BOLT (5/16-18X0.5-IN)
8	NPR	1D-4677	2	BOLT-ROUND HEAD (3/8-16X1-IN)
9	NPR	2K-4973	2	LOCKNUT (3/8-16-THD)
10	NPR	3E-8043	4	SCREW (3/8-16X0.75-IN)
11	NPR	4M-0061	2	BOLT (5/16-18X0.75-IN)
12	NPR	5M-3062	2	BOLT (3/8-16X0.75-IN)
13	NPR	5P-1075	4	WASHER-HARD (10.2X22.5X3-MM THK)
14	NPR Y	163-1155	1	SUSPENSION GP-SEAT
15	NPR	132-9245	1	BRACKET AS (LH)
16	NPR	132-9246	1	BRACKET AS (RH)
17	NPR	132-9250	1	KIT-ARMREST (RH)
18	NPR	132-9305	1	KIT-ARMREST (LH)
19	NPR	132-9241	1	CUSHION AS-SEAT
	NPR	4V-8579	1	CLIP
	NPR BE	9X-2092		STRIP-EDGE
	NPR	174-8826	5	CLIP
20	NPR	132-9243	1	CUSHION AS-BACK
	NPR	4V-8579	1	CLIP
	NPR BE	9X-2092		STRIP-EDGE
	NPR	174-8826	5	CLIP
21	NPR	1A-6240	2	WASHER (0.328X0.75X0.065-IN THK)(.650IN THK)
22	NPR	132-9249	1	KIT-TILT BACK LEVER
23	NPR	132-9240	1	LATCH AS

24	NPR	155-4707	1	LEVER AS (SLIDE)
25	NPR	155-4753	1	LEVER AS-SWIVEL
26	NPR	161-4518	1	PLATE AS-SLIDE
27	NPR	135-1706	1	SPRING
28	NPR	095-0878	1	PIN-SPRING
29	NPR	8Y-6064	1	ROLLER-SLIDER
30	NPR	009-3681	1	RING-RETAINING
31	NPR	123-6077	1	SHAFT-PIVOT
32	NPR	161-9288	1	SHAFT-PIVOT
33	NPR	8T-8917	4	BOLT (1/2-13X1.25-IN)
34	NPR	161-9286	1	SPRING-LATCH
35	NPR	161-9287	1	PLATE-SWIVEL RELEASE
36	NPR	5P-8245	4	WASHER-HARD (13.5X25.5X3-MM THK)
37	NPR	8S-7803	3	RING-RETAINING
38	NPR	033-4843	2	NUT (5/16-18-THD)
39	NPR	161-9290	1	WASHER (11.9X20.7X2.3-MM THK)
40	NPR	3B-4631	1	PIN-COTTER
41	NPR	161-9744	1	KIT-SLIDER BLOCK
	NPR	173-5787	2	SETSCREW (1/4-20-THD)
	NPR	161-9289	2	BLOCK-SLIDER
42	NPR	142-8425	1	SPRING
43	NPR M	8T-4189	2	BOLT (M8X1.25X20-MM)
44	NPR	030-7571	2	BOLT (3/8-16X1-IN)
45	NPR	132-9247	1	PLATE
46	NPR	132-9248	1	PLATE

47	NPR	134-5487	1	CAP
48	NPR B	134-5490	2	SPACER (13.9-MM THK)
49	NPR	8C-3375	2	WASHER (2.5-MM THK)
50	NPR	6V-6945	2	SCREW-BUTTON HEAD (3/8-16X1.2-IN)
51	NPR	134-5488	1	PLATE AS
52	NPR	134-5489	1	PLATE AS
53	NPR	7D-1649	4	WASHER-HARD (13.5X32X5-MM THK)
54	NPR	154-8278	1	SPRING-RETURN (SLIDE)
55	NPR	154-8280	1	SPRING-RETURN (SWIVEL)
56	NPR	154-8284	1	TUBE
57	NPR	161-9285	1	NUT (3/4-10-THD)
58	NPR	161-9283	1	WASHER (19.8X31.8X1.6-MM THK)
59	NPR	161-9282	1	BOLT (3/4-10X1.5-IN)
60	NPR M	084-4317	2	SCREW-HEX SOCKET (M8X1.25-IN)

Key:

B - USE AS REQUIRED
E - ORDER BY THE CENTIMETER
M - METRIC PART
Y - SEPARATE ILLUSTRATION

156-1580 SEAT GP-SUSPENSION --S/N 4ZN16044-50156-PART OF 155-7276 SEAT GP-SUSPENSION

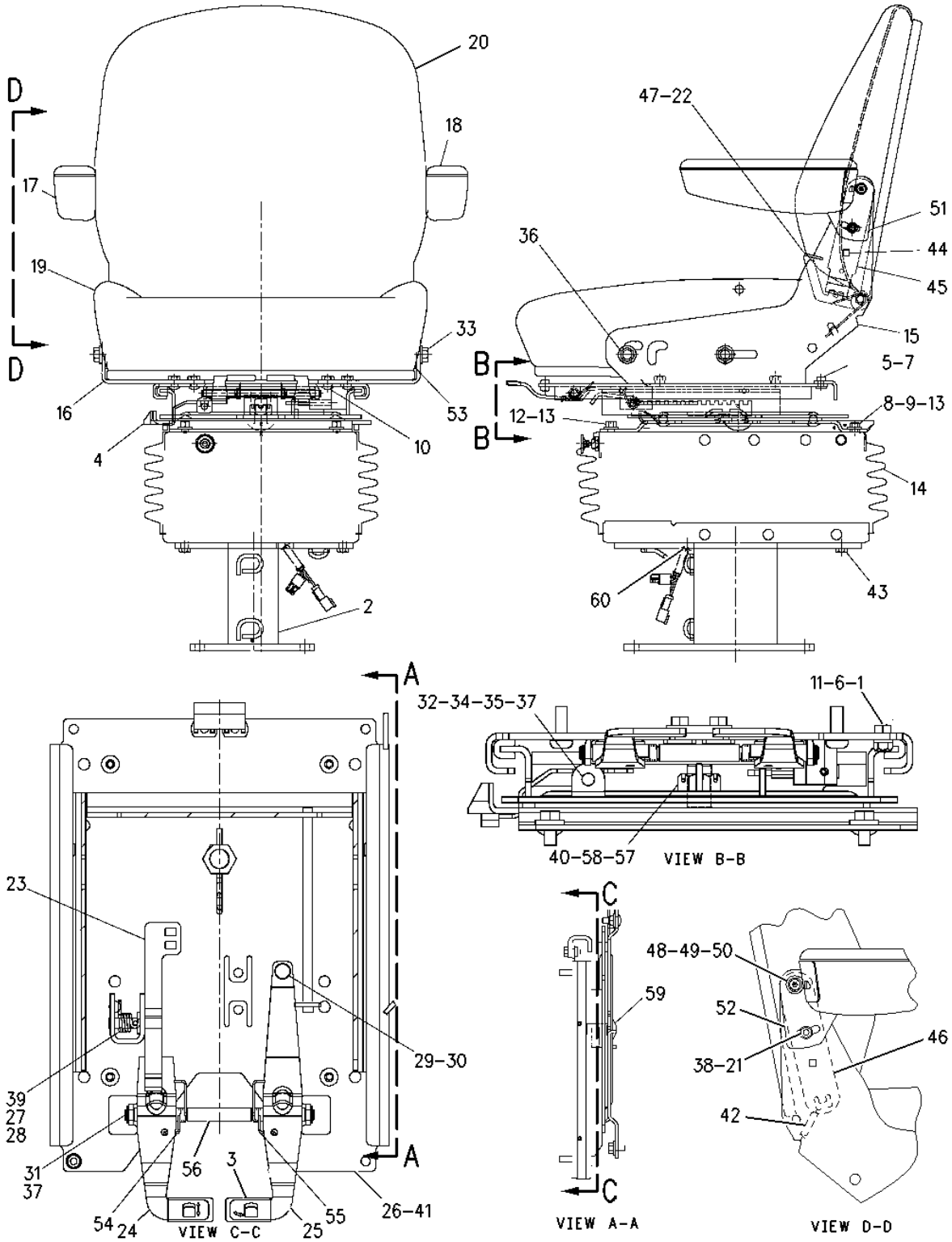

1 NPR 3B-4505 2 LOCKWASHER

2 NPR 132-4563 1 BASE AS

3 NPR 134-5484 2 CAP

4 161-4458 1 SWIVEL AS-SEAT

5 NPR 161-9291 1 BRACKET-STOP

6 NPR 031-4155 2 LOCKNUT (5/16-18-THD)

7 NPR 1C-0569 2 BOLT (5/16-18X0.5-IN)

8 NPR 1D-4677 2 BOLT-ROUND HEAD (3/8-16X1-IN)

9 NPR 2K-4973 2 LOCKNUT (3/8-16-THD)

10 NPR 3E-8043 4 SCREW (3/8-16X0.75-IN)

11 NPR 4M-0061 2 BOLT (5/16-18X0.75-IN)

12 NPR 5M-3062 2 BOLT (3/8-16X0.75-IN)

13 NPR 5P-1075 4 WASHER-HARD (10.2X22.5X3-MM THK)

14 NPR Y 163-1155 1 SUSPENSION GP-SEAT

15 NPR 132-9245 1 BRACKET AS (LH)

16 NPR 132-9246 1 BRACKET AS (RH)

17 NPR 132-9250 1 KIT-ARMREST (RH)

18 NPR 132-9305 1 KIT-ARMREST (LH)

19 NPR 132-9242 1 CUSHION AS-SEAT

NPR 4V-8579 1 CLIP

NPR BE 9X-2092 STRIP-EDGE

NPR 174-8826 5 CLIP

20 NPR 132-9244 1 CUSHION AS-BACK

NPR 4V-8579 1 CLIP

NPR BE 9X-2092 STRIP-EDGE

NPR 174-8826 5 CLIP

21 NPR 1A-6240 2 WASHER (0.328X0.75X0.065-IN THK)(.650IN THK)

22 NPR 132-9249 1 KIT-TILT BACK LEVER

23 NPR 132-9240 1 LATCH AS

24 NPR 155-4707 1 LEVER AS (SLIDE)

25	NPR	155-4753	1	LEVER AS-SWIVEL
26	NPR	161-4518	1	PLATE AS-SLIDE
27	NPR	135-1706	1	SPRING
28	NPR	095-0878	1	PIN-SPRING
29	NPR	8Y-6064	1	ROLLER-SLIDER
30	NPR	009-3681	1	RING-RETAINING
31	NPR	123-6077	1	SHAFT-PIVOT
32	NPR	161-9288	1	SHAFT-PIVOT
33	NPR	8T-8917	4	BOLT (1/2-13X1.25-IN)
34	NPR	161-9286	1	SPRING-LATCH
35	NPR	161-9287	1	PLATE-SWIVEL RELEASE
36	NPR	5P-8245	4	WASHER-HARD (13.5X25.5X3-MM THK)
37	NPR	8S-7803	3	RING-RETAINING
38	NPR	033-4843	2	NUT (5/16-18-THD)
39	NPR	161-9290	1	WASHER (11.9X20.7X2.3-MM THK)
40	NPR	3B-4631	1	PIN-COTTER
41	NPR	161-9744	1	KIT-SLIDER BLOCK
	NPR	161-9289	2	BLOCK-SLIDER
	NPR	173-5787	2	SETSCREW (1/4-20-THD)
42	NPR	142-8425	1	SPRING
43	NPR M	8T-4189	2	BOLT (M8X1.25X20-MM)
44	NPR	030-7571	2	BOLT (3/8-16X1-IN)
45	NPR	132-9247	1	PLATE
46	NPR	132-9248	1	PLATE
47	NPR	134-5487	1	CAP

48	NPR B	134-5490	2	SPACER (13.9-MM THK)
49	NPR	8C-3375	2	WASHER (2.5-MM THK)
50	NPR	6V-6945	2	SCREW-BUTTON HEAD (3/8-16X1.2-IN)
51	NPR	134-5488	1	PLATE AS
52	NPR	134-5489	1	PLATE AS
53	NPR	7D-1649	4	WASHER-HARD (13.5X32X5-MM THK)
54	NPR	154-8278	1	SPRING-RETURN (SLIDE)
55	NPR	154-8280	1	SPRING-RETURN (SWIVEL)
56	NPR	154-8284	1	TUBE
57	NPR	161-9285	1	NUT (3/4-10-THD)
58	NPR	161-9283	1	WASHER (19.8X31.8X1.6-MM THK)
59	NPR	161-9282	1	BOLT (3/4-10X1.5-IN)
60	NPR M	084-4317	2	SCREW-HEX SOCKET (M8X1.25-IN)

Key:

B - USE AS REQUIRED
E - ORDER BY THE CENTIMETER
M - METRIC PART
Y - SEPARATE ILLUSTRATION

163-2181 SEAT GP-SUSPENSION --S/N 4ZN16044-50156--VINYL

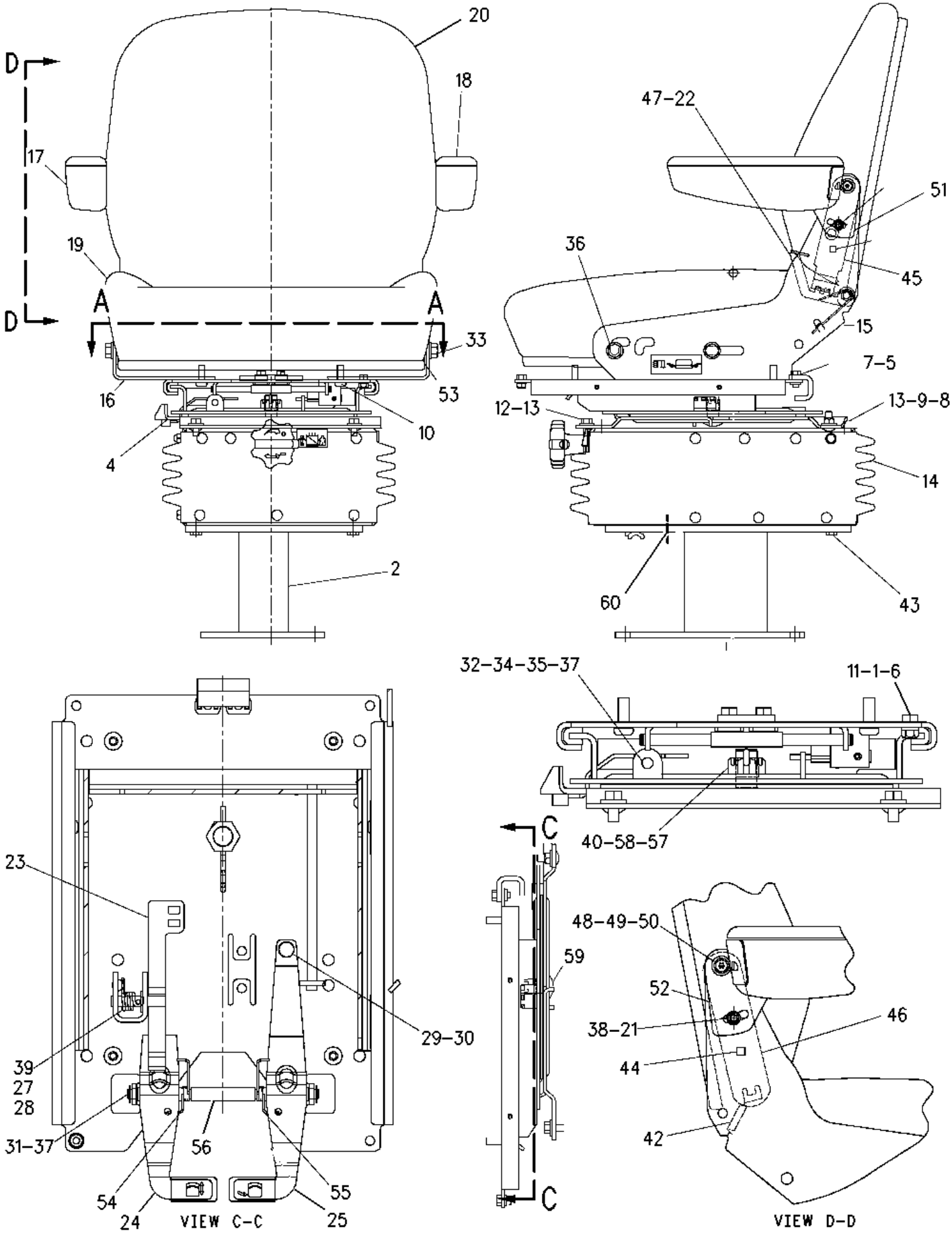
20
18
17
19
D
D
A
A
33
53
16
10
4
2
47-22
51
36
45
15
7-5
12-13
13-9-8
14
60
43
32-34-35-37
11-1-6
40-58-57
C
C
23
29-30
39
27
28
31-37
56
54
24
55
25
VIEW C-C
59
48-49-50
52
38-21
46
44
42
VIEW D-D

1 NPR 1 3B-4505 2 LOCKWASHER

2 NPR 1 132-4563 1 BASE AS

3 NPR 2 134-5484 2 CAP

4 1 161-4458 1 SWIVEL AS-SEAT

5 NPR 1 161-9291 1 BRACKET-STOP

6 NPR 1 031-4155 2 LOCKNUT (5/16-18-THD)

7 NPR 1 1C-0569 2 BOLT (5/16-18X0.5-IN)

8 NPR 1 1D-4677 2 BOLT-ROUND HEAD (3/8-16X1-IN)

9 NPR 1 2K-4973 2 LOCKNUT (3/8-16-THD)

10 NPR 1 3E-8043 4 SCREW (3/8-16X0.75-IN)

11 NPR 1 4M-0061 2 BOLT (5/16-18X0.75-IN)

12 NPR 1 5M-3062 2 BOLT (3/8-16X0.75-IN)

13 NPR 1 5P-1075 4 WASHER-HARD (10.2X22.5X3-MM THK)

14 NPR Y 1 132-9225 1 SUSPENSION GP-SEAT

15 NPR 1 132-9245 1 BRACKET AS (LH)

16 NPR 1 132-9246 1 BRACKET AS (RH)

17 NPR 1 132-9250 1 KIT-ARMREST (RH)

18 NPR 1 132-9305 1 KIT-ARMREST (LH)

19 NPR 1 132-9242 1 CUSHION AS-SEAT

NPR 1 4V-8579 1 CLIP

NPR 1 174-8826 5 CLIP

NPR BE 1 9X-2092 STRIP-EDGE

20 NPR 1 132-9244 1 CUSHION AS-BACK

NPR 1 4V-8579 1 CLIP

NPR 1 174-8826 5 CLIP

	NPR BE	1	9X-2092		STRIP-EDGE
21	NPR	1	1A-6240	2	WASHER (0.328X0.75X0.065-IN THK)
22	NPR	1	132-9249	1	KIT-TILT BACK LEVER
23	NPR	1	132-9240	1	LATCH AS
24	NPR	1	155-4707	1	LEVER AS (SLIDE)
25	NPR	1	155-4753	1	LEVER AS-SWIVEL
26	NPR	2	161-4518	1	PLATE AS-SLIDE
27	NPR	1	135-1706	1	SPRING
28	NPR	1	095-0878	1	PIN-SPRING
29	NPR	1	8Y-6064	1	ROLLER-SLIDER
30	NPR	1	009-3681	1	RING-RETAINING
31	NPR	1	123-6077	1	SHAFT-PIVOT
32	NPR	1	161-9288	1	SHAFT-PIVOT
33	NPR	1	8T-8917	4	BOLT (1/2-13X1.25-IN)
34	NPR	1	161-9286	1	SPRING-LATCH
35	NPR	1	161-9287	1	PLATE-SWIVEL RELEASE
36	NPR	1	5P-8245	4	WASHER-HARD (13.5X25.5X3-MM THK)
37	NPR	1	8S-7803	3	RING-RETAINING
38	NPR	1	033-4843	2	NUT (5/16-18-THD)
39	NPR	1	161-9290	1	WASHER (11.9X20.7X2.3-MM THK)
40	NPR	1	3B-4631	1	PIN-COTTER
41	NPR	2	161-9744	1	KIT-SLIDER BLOCK
42	NPR	1	142-8425	1	SPRING
43	NPR M	1	8T-4189	2	BOLT (M8X1.25X20-MM)
44	NPR	1	030-7571	2	BOLT (3/8-16X1-IN)

45	NPR	1	132-9247	1	PLATE
46	NPR	1	132-9248	1	PLATE
47	NPR	1	134-5487	1	CAP
48	NPR	1	134-5490	2	SPACER (13.9-MM THK)
49	NPR	1	8C-3375	2	WASHER (2.5-MM THK)
50	NPR	1	6V-6945	2	SCREW-BUTTON HEAD (3/8-16X1.2-IN)
51	NPR	1	134-5488	1	PLATE AS
52	NPR	1	134-5489	1	PLATE AS
53	NPR	1	7D-1649	4	WASHER-HARD (13.5X32X5-MM THK)
54	NPR	1	154-8278	1	SPRING-RETURN (SLIDE)
55	NPR	1	154-8280	1	SPRING-RETURN (SWIVEL)
56	NPR	1	154-8284	1	TUBE
57	NPR	1	161-9285	1	NUT (3/4-10-THD)
58	NPR	1	161-9283	1	WASHER (19.8X31.8X1.6-MM THK)
59	NPR	1	161-9282	1	BOLT (3/4-10X1.5-IN)
60	NPR M	1	084-4317	2	SCREW-HEX SOCKET (M8X1.25-IN)

Key:

B - USE AS REQUIRED
E - ORDER BY THE CENTIMETER
M - METRIC PART
Y - SEPARATE ILLUSTRATION

132-9225 SUSPENSION GP-SEAT --S/N 4ZN16044-50156
PART OF 130-5564, 130-5565, 163-2181 SEAT GP-SUSPENSION

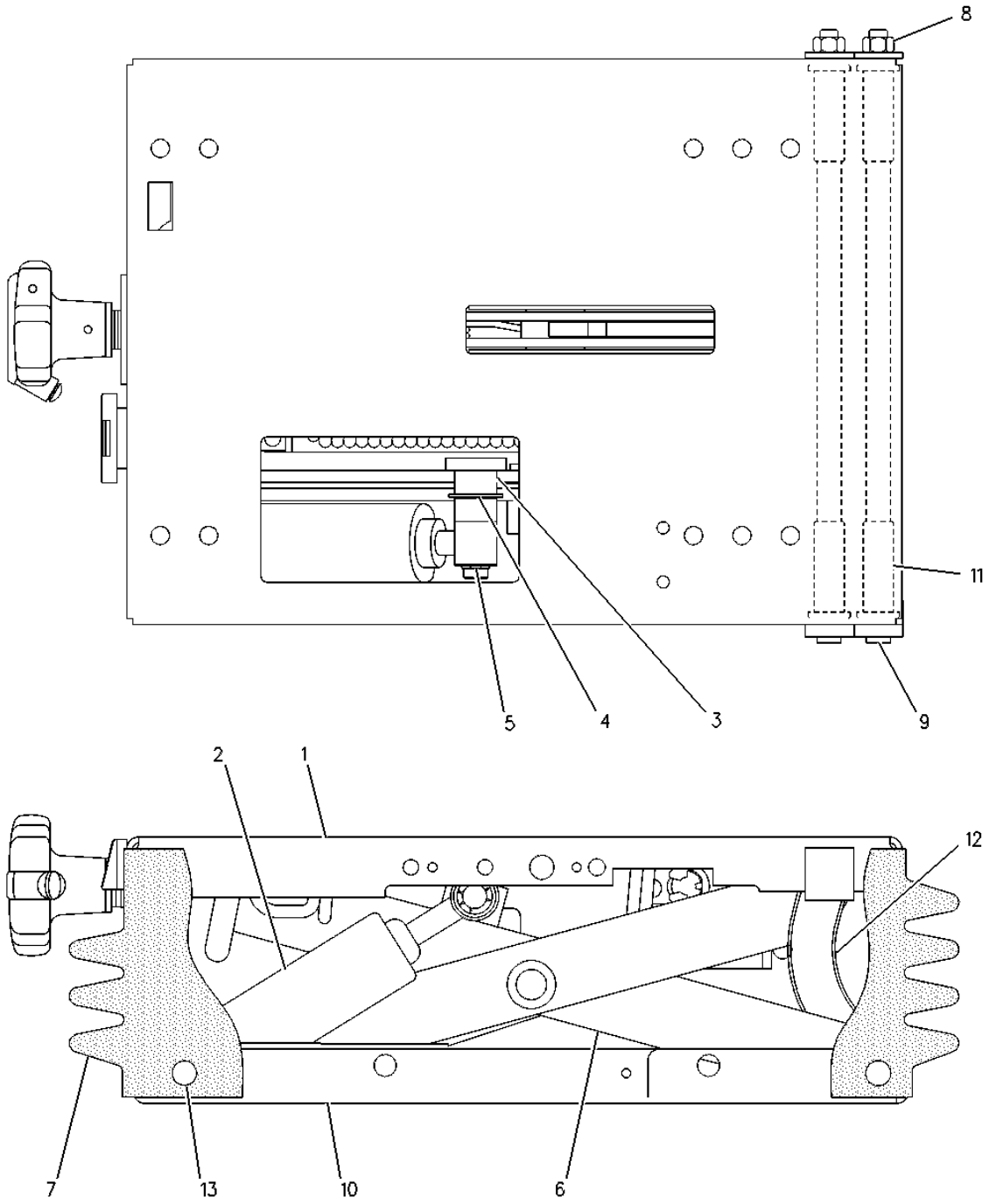

1 NPR Y 132-9226 1 HOUSING GP-SEAT SUSPENSION

2 NPR 150-1550 1 ABSORBER AS-SHOCK

3 NPR 4V-7884 2 BEARING

4 NPR 8Y-3966 1 WASHER (14.7X35X1.57-MM THK)

5 NPR 5V-1497 1 RETAINER

6 NPR 150-1549 1 ARM AS-SUSPENSION

7 NPR 133-0774 1 KIT-SUSPENSION BOOT

(INCLUDES BOOTS, RIVETS, & FASTENERS)

8 NPR 2K-4973 2 LOCKNUT (3/8-16-THD)

9 NPR 132-9233 2 SHAFT AS

10 NPR 132-9235 1 HOUSING AS-LOWER

11 NPR 4V-8577 4 BEARING

12 NPR 134-3522 1 KIT-BELT TETHER

(INCLUDES BELTS)

13 NPR 111-5042 20 FASTENER

AVAILABLE REPAIR KIT(S):

NPR 101-4195 1 KIT-SUSPENSION ROLLER

(INCLUDES ROLLERS)

NPR 133-0993 1 KIT-SPRING HEIGHT ADJUSTMENT

(INCLUDES SPRINGS, RING, BUSHINGS, ROD AS, & WASHER)

Key:

Y - SEPARATE ILLUSTRATION

163-1155 SUSPENSION GP-SEAT --S/N 4ZN16044-50156
PART OF 156-1579, 156-1580 SEAT GP-SUSPENSION

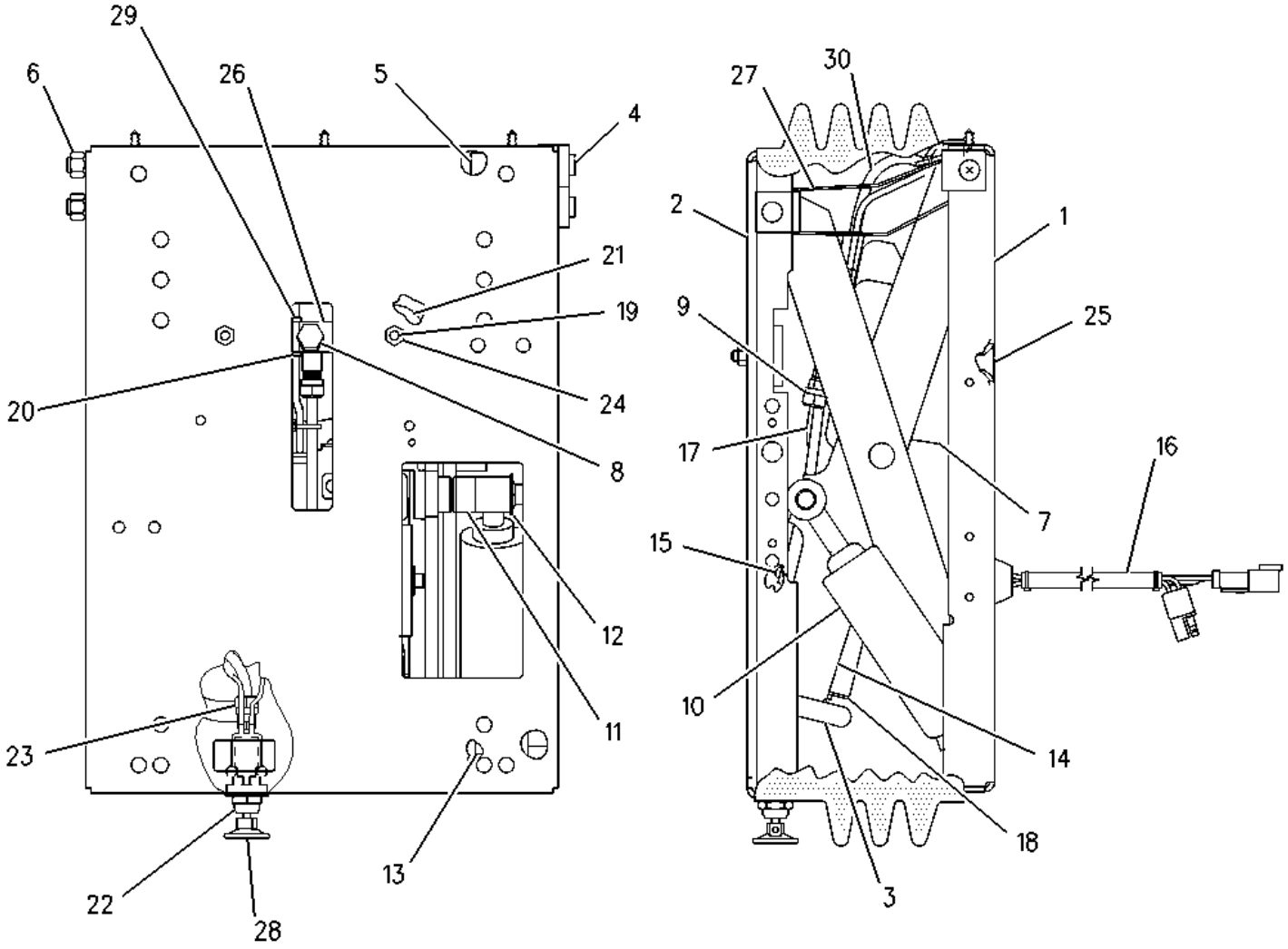

1	**NPR**	**163-1131**	**1**	**HOUSING AS (LOWER)**
2	**NPR**	**163-1132**	**1**	**HOUSING AS (UPPER)**
3	**NPR**	**163-1133**	**1**	**SCISSORS AS**
4	**NPR**	**132-9233**	**2**	**SHAFT AS**
5	**NPR**	**4V-8577**	**4**	**BEARING**
6	**NPR**	**2K-4973**	**2**	**LOCKNUT (3/8-16-THD)**
7	**NPR**	**163-1135**	**1**	**SPRING**
8	**NPR**	**4F-4879**	**1**	**BOLT (3/8-16X0.5-IN)**
9	**NPR**	**5P-4423**	**1**	**ELBOW**

10	NPR	150-1550	1	ABSORBER AS-SHOCK
11	NPR	4V-7884	1	BEARING
12	NPR	5V-1497	1	RETAINER
13	NPR	163-1137	1	BEARING
14	NPR	163-1138	1	COMPRESSOR AS
15	NPR	4B-1220	2	SCREW-MACHINE (8-32X0.375-IN)
16	NPR	163-1134	1	HARNESS AS
17	NPR D	5P-6011		TUBE (0.295M)
18	NPR	163-1139	1	BRACKET
19	NPR	4B-1254	2	SCREW-MACHINE
20	NPR	3S-2093	5	STRAP-CABLE
21	NPR	163-1140	2	BUMPER
22	NPR	163-1142	1	VALVE AS
23	NPR	5P-4400	1	CONNECTOR
24	NPR	2D-6235	2	LOCKNUT (1/4-20-THD)
25	NPR	8M-3267	1	SCREW-HEX SOCKET (3/8-16X0.75-IN)
26	NPR	163-1147	1	CLIP (TAB)
27	NPR	163-1143	1	KIT-TETHER
28	NPR	186-4858	1	KNOB AS
29	NPR	8L-8413	3	STRAP-CABLE
30	NPR D	5P-6011		TUBE (0.673M)

AVAILABLE REPAIR KIT(S):

NPR	163-1144	1	KIT-BOOT

(INCLUDES FASTENERS & BOOT)

NPR 101-4195 1 KIT-SUSPENSION ROLLER (SUSPENSION SEAT)

(INCLUDES ROLLERS)

NPR 166-6782 1 KIT-FASTENER

(INCLUDES FASTENERS)

Key:

D - ORDER BY THE METER

104-3449 CAB GP-ENCLOSED ROPS --S/N 4ZN16044-50156
PART OF 154-5476 CAB GP, 104-3450 CAB GP-ENCLOSED ROPS

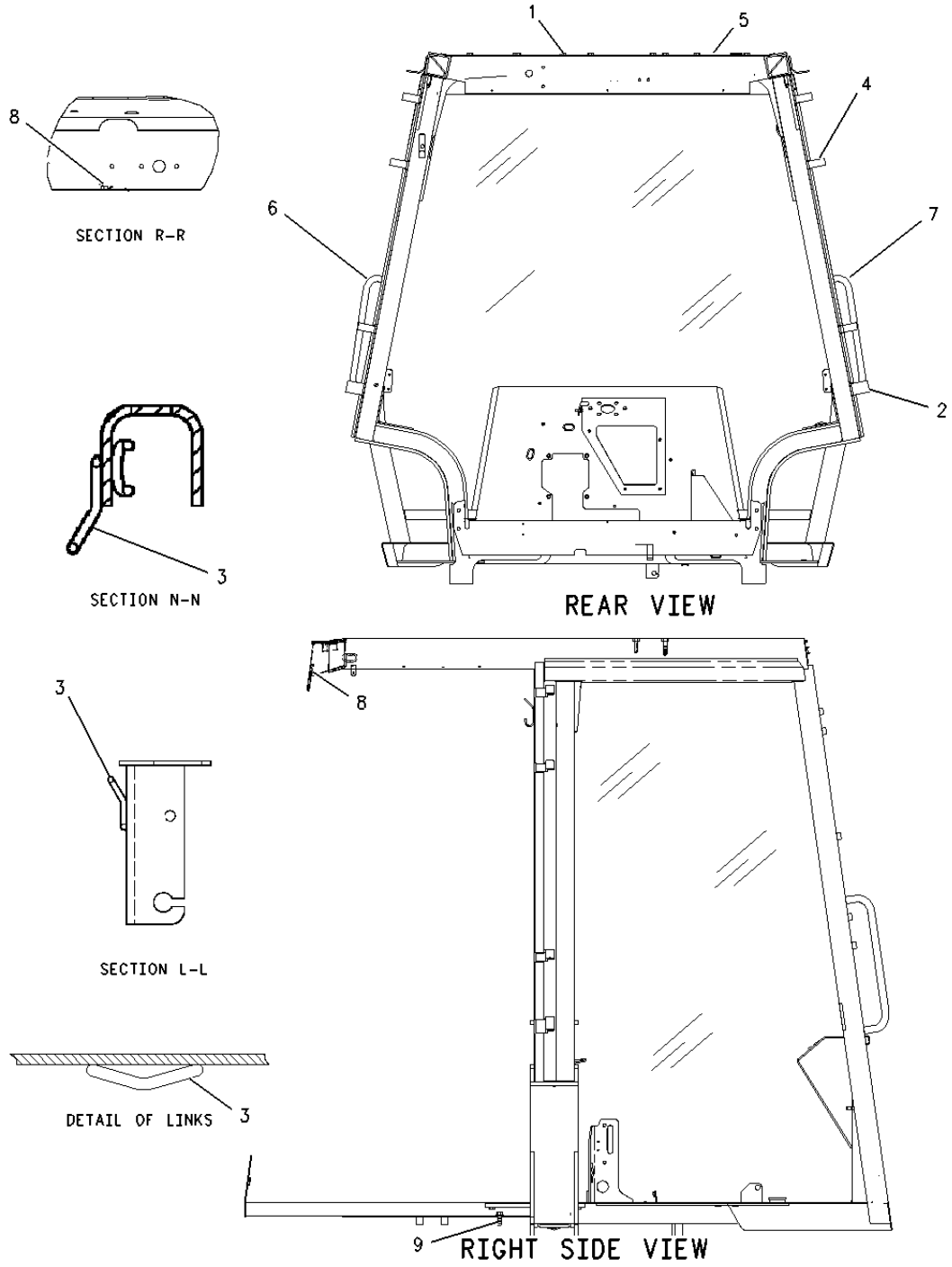

1 NPR M 8T-3490 9 NUT-WELD (M10X1.5-THD)

2 NPR 8Y-7311 2 HINGE

3 NPR 7T-1099 15 LINK

4 NPR 113-5973 6 HINGE

5 8Y-7351 1 CANOPY AS

6 NPR 140-2959 1 HANDHOLD (LH)

7 NPR 8Y-7292 1 HANDHOLD (RH)

8 NPR M 6V-9632 5 NUT-WELD (M6X1-THD)

9 NPR M 8T-4908 1 BOLT (M8X1.25X25-MM)

Key:

M - METRIC PART

104-3445 CANOPY GP-OPEN ROPS --S/N 4ZN16044-50156
PART OF 163-9194 CANOPY AR-OPEN ROPS

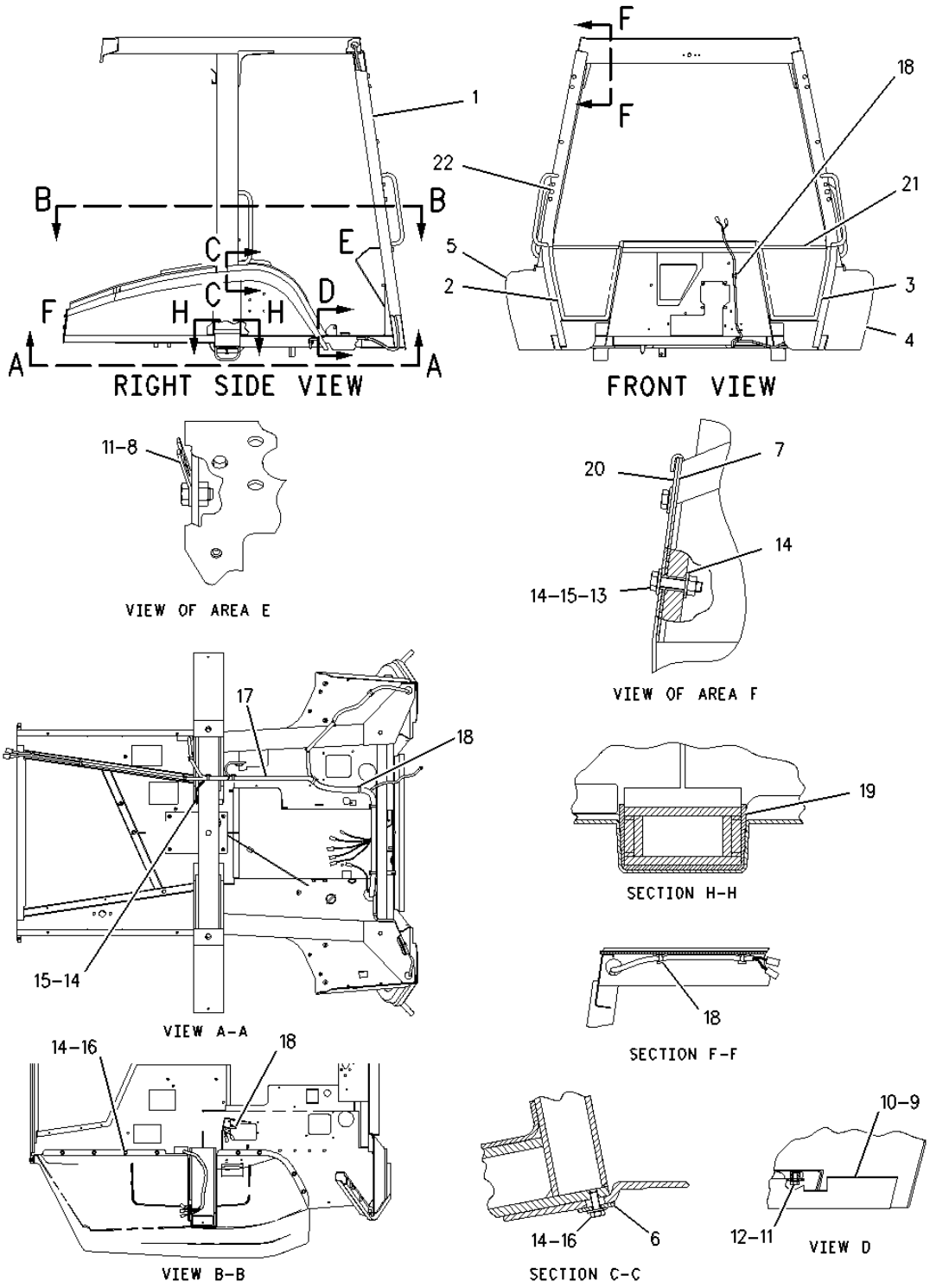

1 NPR 124-5328 1 CANOPY AS

NPR 140-2959 1 HANDHOLD

NPR 8Y-7292 2 HANDHOLD

2 NPR 8Y-7253 1 GLASS-CAB (RH)

3 NPR 8Y-7254 1 GLASS-CAB (LH)

4 NPR 9R-9865 1 FENDER (LH)

5 NPR 9R-9864 1 FENDER (RH)

6 NPR 104-3918 2 PLATE

7 NPR 106-1742 6 PLATE

8 NPR 4P-7581 1 CLIP

9 NPR 128-7773 1 PLATE (RH)

10 NPR 128-7772 1 PLATE (LH)

11 NPR M 8T-4137 5 BOLT (M10X1.5X20-MM)

12 NPR 8T-4121 4 WASHER-HARD (11X21X2.5-MM THK)

13 NPR M 7X-2537 4 BOLT (M8X1.25X35-MM)

14 NPR 5P-4116 27 WASHER-HARD (8.8X20.5X2-MM THK)

15 NPR M 5C-7261 5 NUT (M8X1.25-THD)

16 NPR M 8T-4908 18 BOLT (M8X1.25X25-MM)

17 NPR 9R-9896 1 HARNESS AS

NPR 155-2270 2 KIT-CONNECTING PLUG (2-PIN)

NPR 155-2274 1 KIT-CONNECTING PLUG (6-PIN)

NPR 155-2265 2 KIT-CONNECTING PLUG (8-PIN)

(EACH INCLUDES PLUG AS, WEDGE, & INTERFACE SEAL)

NPR 155-2260 1 KIT-CONNECTING PLUG (3-PIN)

(INCLUDES PLUG AS, WEDGE, & INTERFACE SEAL)

NPR 102-8802 1 KIT-RECEPTACLE (2-PIN)

NPR 102-8804 2 KIT-RECEPTACLE (4-PIN)

NPR 102-8805 1 KIT-RECEPTACLE (6-PIN)

NPR 102-8806 1 KIT-RECEPTACLE (8-PIN)

NPR 102-8801 2 KIT-RECEPTACLE (12-PIN)

(EACH INCLUDES RECEPTACLE AS & WEDGE)

18	**NPR**	**3S-2093**	**21**	**STRAP-CABLE**
19	**NPR BE**	**6V-1392**		**SEAL**
20	**NPR BE**	**3E-6600**		**SEAL**
21	**NPR BE**	**9X-2092**		**STRIP-EDGE**
22	**NPR**	**9R-5616**	**2**	**PLUG**

Key:

B - USE AS REQUIRED
E - ORDER BY THE CENTIMETER
M - METRIC PART

154-5476 CAB GP --S/N 4ZN17195-50156--PART OF 154-5473 CAB AR-ENCLOSED ROPS

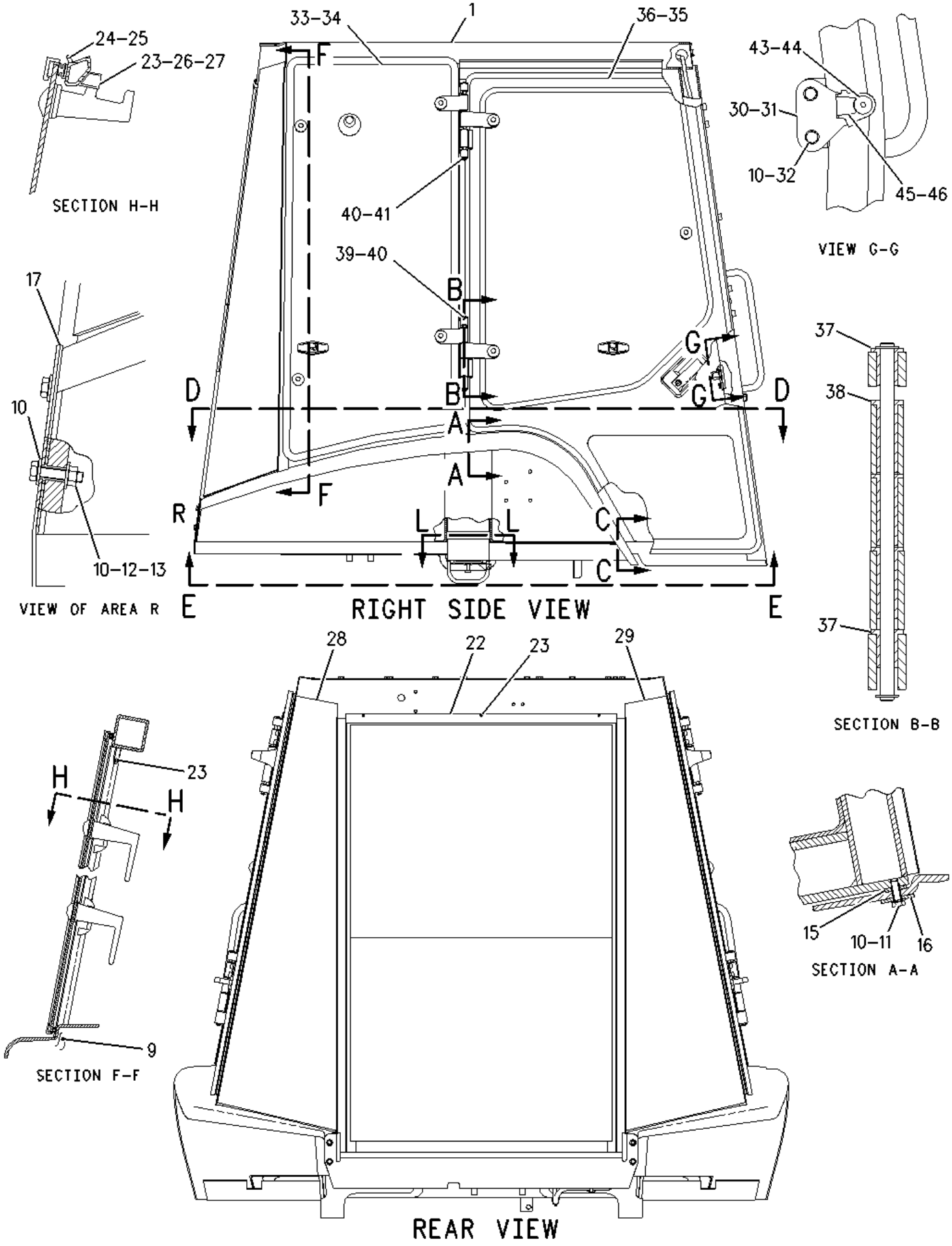

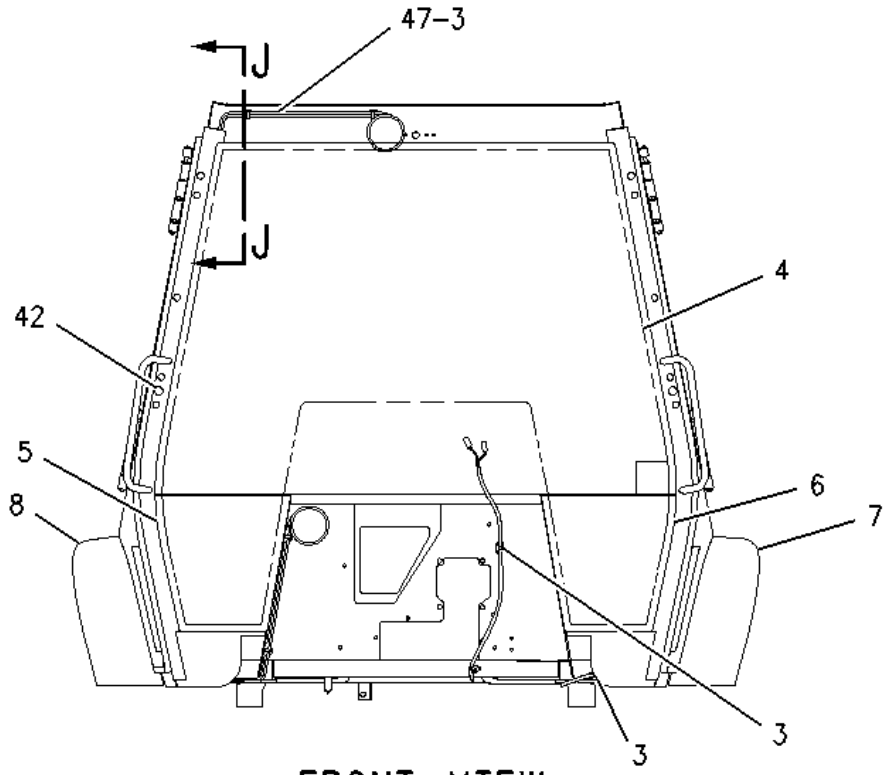

FRONT VIEW

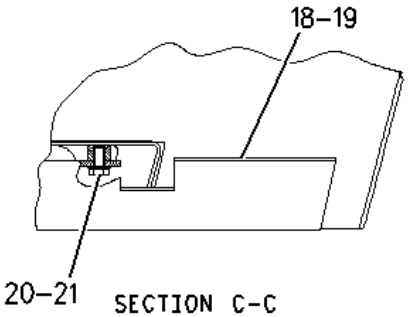

SECTION C-C

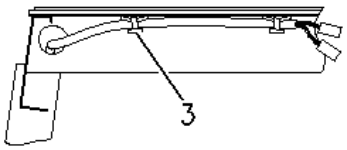

SECTION J-J

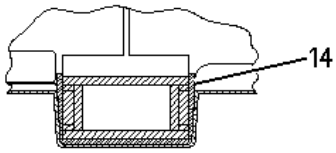

SECTION L-L

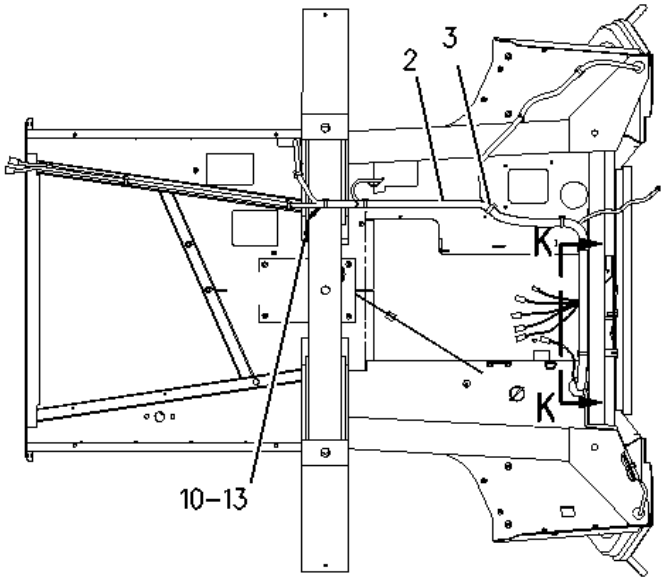

VIEW E-E

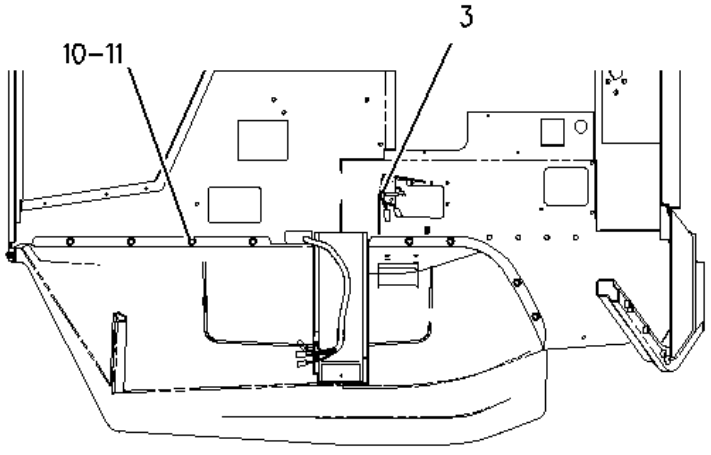

VIEW D-D

1 NPR Y 1 104-3449 1 CAB GP-ENCLOSED ROPS

2 NPR 2 168-9234 1 HARNESS AS (PLATFORM)

NPR 2 155-2270 1 KIT-CONNECTING PLUG (2-PIN)

NPR 2 155-2274 1 KIT-CONNECTING PLUG (6-PIN)

NPR 2 155-2265 3 KIT-CONNECTING PLUG (8-PIN)

(EACH INCLUDES PLUG AS, WEDGE, & INTERFACE SEAL)

NPR 2 102-8802 3 KIT-RECEPTACLE (2-PIN)

NPR 2 102-8804 2 KIT-RECEPTACLE (4-PIN)

NPR 2 102-8805 1 KIT-RECEPTACLE (6-PIN)

NPR 2 102-8806 1 KIT-RECEPTACLE (8-PIN)

NPR 2 102-8801 2 KIT-RECEPTACLE (12-PIN)

(EACH INCLUDES RECEPTACLE AS & WEDGE)

3 NPR 2 3S-2093 25 STRAP-CABLE

4 NPR 2 8Y-7252 1 GLASS (FRONT)

5 NPR 2 8Y-7253 1 GLASS-CAB (RH)

6 NPR 2 8Y-7254 1 GLASS-CAB (LH)

7 NPR 2 9R-9865 1 FENDER (LH)

8 NPR 2 9R-9864 1 FENDER (RH)

9 NPR M 1 131-3986 2 SCREW (M4X0.7X12-MM)

10 NPR 1,2 5P-4116 31 WASHER-HARD (8.8X20.5X2-MM THK)

11 NPR M 1,2 8T-4908 18 BOLT (M8X1.25X25-MM)

12 NPR M 1 7X-2537 4 BOLT (M8X1.25X35-MM)

13 NPR M 1,2 5C-7261 5 NUT (M8X1.25-THD)

14 NPR BD 2 6V-1392 SEAL

15 NPR 1 8T-4222 2 WASHER-PLATED (11X32X2.5-MM THK)

16 NPR 1 104-3918 2 PLATE

17 NPR B 1 106-1742 6 PLATE

18 NPR 2 128-7772 1 PLATE (LH)

19 NPR 2 128-7773 1 PLATE (RH)

20 NPR M 2 8T-4137 4 BOLT (M10X1.5X20-MM)

21 NPR 2 8T-4121 4 WASHER-HARD (11X21X2.5-MM THK)

22 NPR Y 1 8Y-7255 1 WINDOW GP-CAB (REAR)

23 NPR M 1 131-3987 13 SCREW (M4X0.7X12-MM)

24 NPR 1 147-1982 1 CHANNEL (LH)

25 NPR 1 147-1980 1 CHANNEL AS (RH)

NPR 1 140-9921 2 INSERT-THREADED

26 NPR 1 159-4945 2 KEEPER

27 NPR 1 159-4946 2 KEEPER

28 NPR 1 8Y-7274 1 GLASS (LH)

29 NPR 1 8Y-7272 1 GLASS (RH)

30 NPR 1 134-3061 1 PLATE

31 NPR 1 134-3060 1 PLATE

32 NPR M 1 8T-4200 4 BOLT (M8X1.25X16-MM)

33 NPR Y 1 154-5426 1 WINDOW GP-DOOR (RH)

34 NPR Y 1 154-5425 1 WINDOW GP-DOOR (LH)

35 Y 1 159-4960 1 DOOR GP-CAB (RH)

36 Y 1 159-4959 1 DOOR GP-CAB (LH)

37 NPR 1 129-5257 8 BUSHING

38 NPR 1 129-5256 12 BUSHING

39 NPR 1 8Y-7444 2 PIN

40	NPR	1	8S-7803	8	RING-RETAINING
41	NPR	1	117-7414	2	PIN
42	NPR	2	9R-5616	2	PLUG
43	NPR	1	108-4311	2	SCREW-MACHINE (3/8-16X0.75-IN)
44	NPR	1	134-3062	2	STRIKER
45	NPR	1	134-3503	1	GUARD-STRIKER
46	NPR	1	134-3059	1	GUARD
47	NPR E		144-0195	2	HOSE (410-CM EACH)

Key:

B - USE AS REQUIRED
D - ORDER BY THE METER
E - ORDER BY THE CENTIMETER
M - METRIC PART
Y - SEPARATE ILLUSTRATION

104-3449 CAB GP-ENCLOSED ROPS -S/N 4ZN16044-50156
PART OF 154-5476 CAB GP, 104-3450 CAB GP-ENCLOSED ROPS

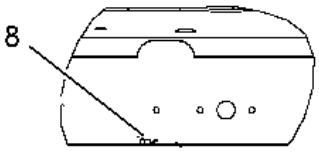

SECTION R-R

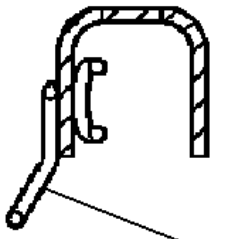

SECTION N-N

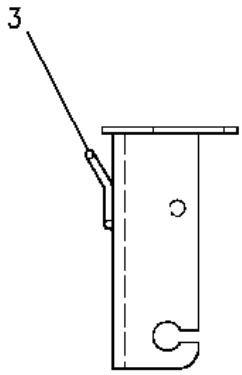

SECTION L-L

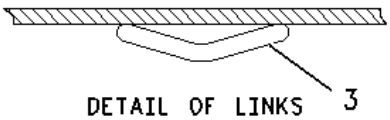

DETAIL OF LINKS

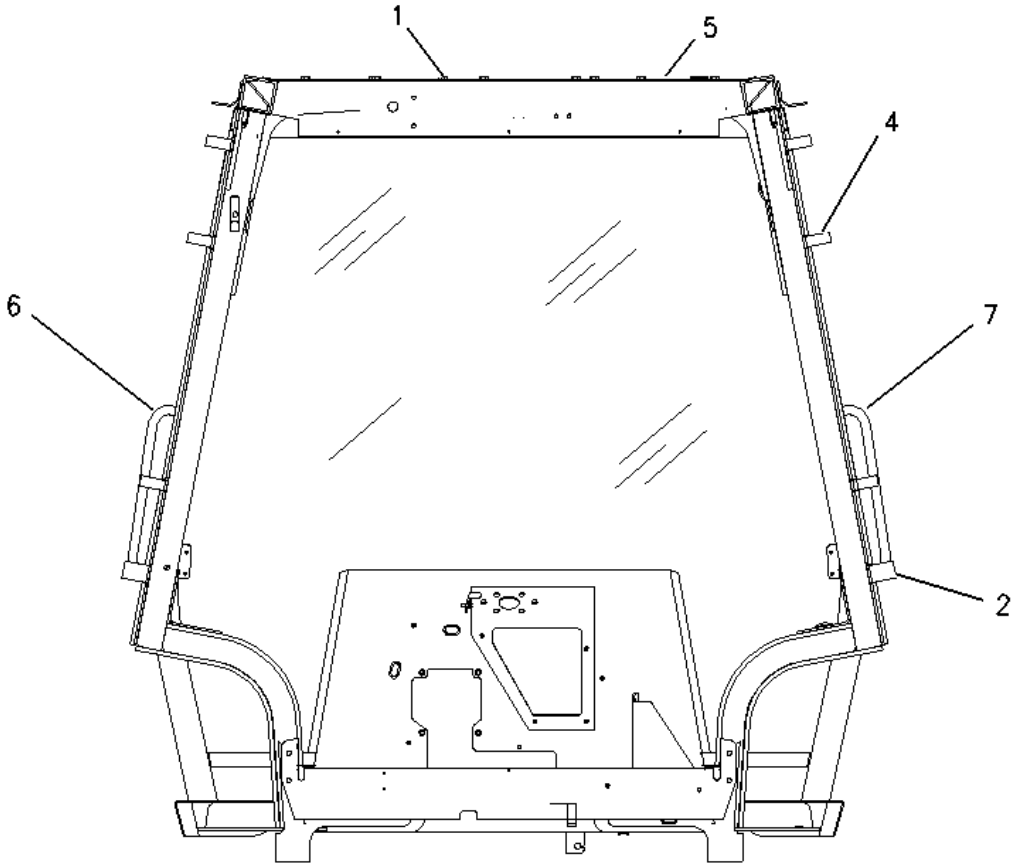

REAR VIEW

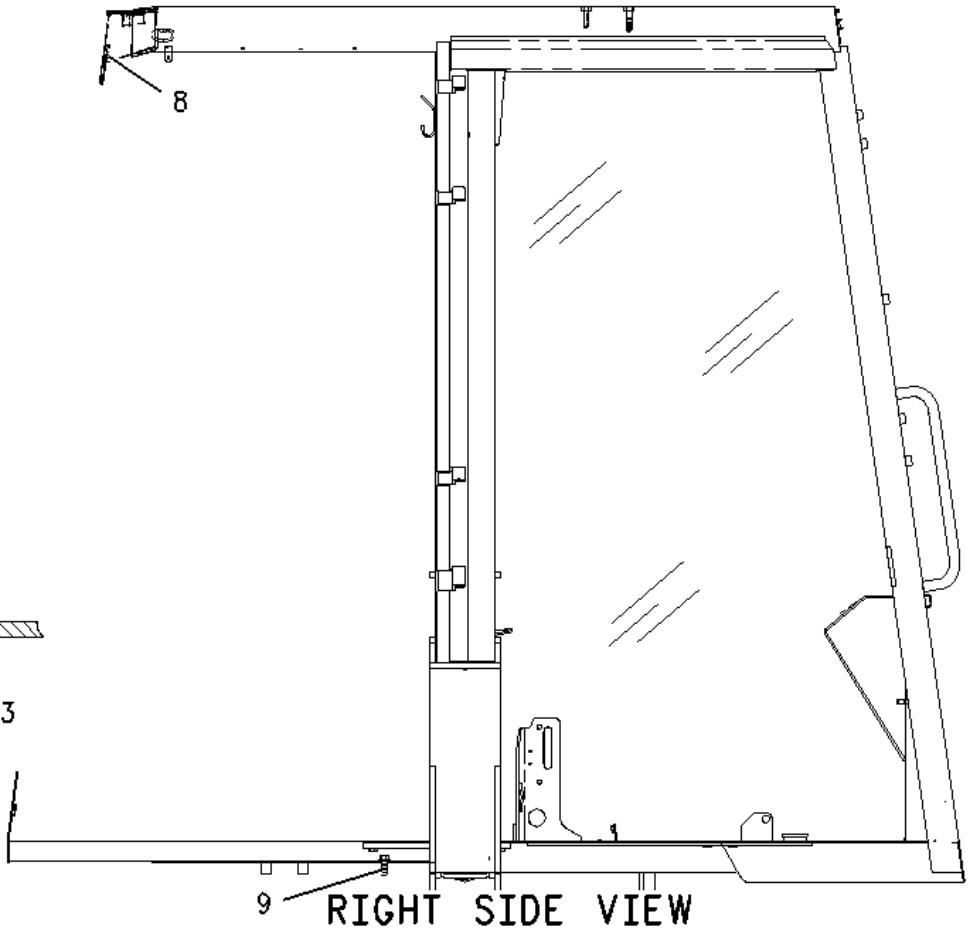

RIGHT SIDE VIEW

1	NPR M	8T-3490	9	NUT-WELD (M10X1.5-THD)
2	NPR	8Y-7311	2	HINGE
3	NPR	7T-1099	15	LINK
4	NPR	113-5973	6	HINGE
5		8Y-7351	1	CANOPY AS
6	NPR	140-2959	1	HANDHOLD (LH)
7	NPR	8Y-7292	1	HANDHOLD (RH)
8	NPR M	6V-9632	5	NUT-WELD (M6X1-THD)
9	NPR M	8T-4908	1	BOLT (M8X1.25X25-MM)

Key:

M - METRIC PART

104-3445 CANOPY GP-OPEN ROPS --S/N 4ZN16044-50156
PART OF 163-9194 CANOPY AR-OPEN ROPS

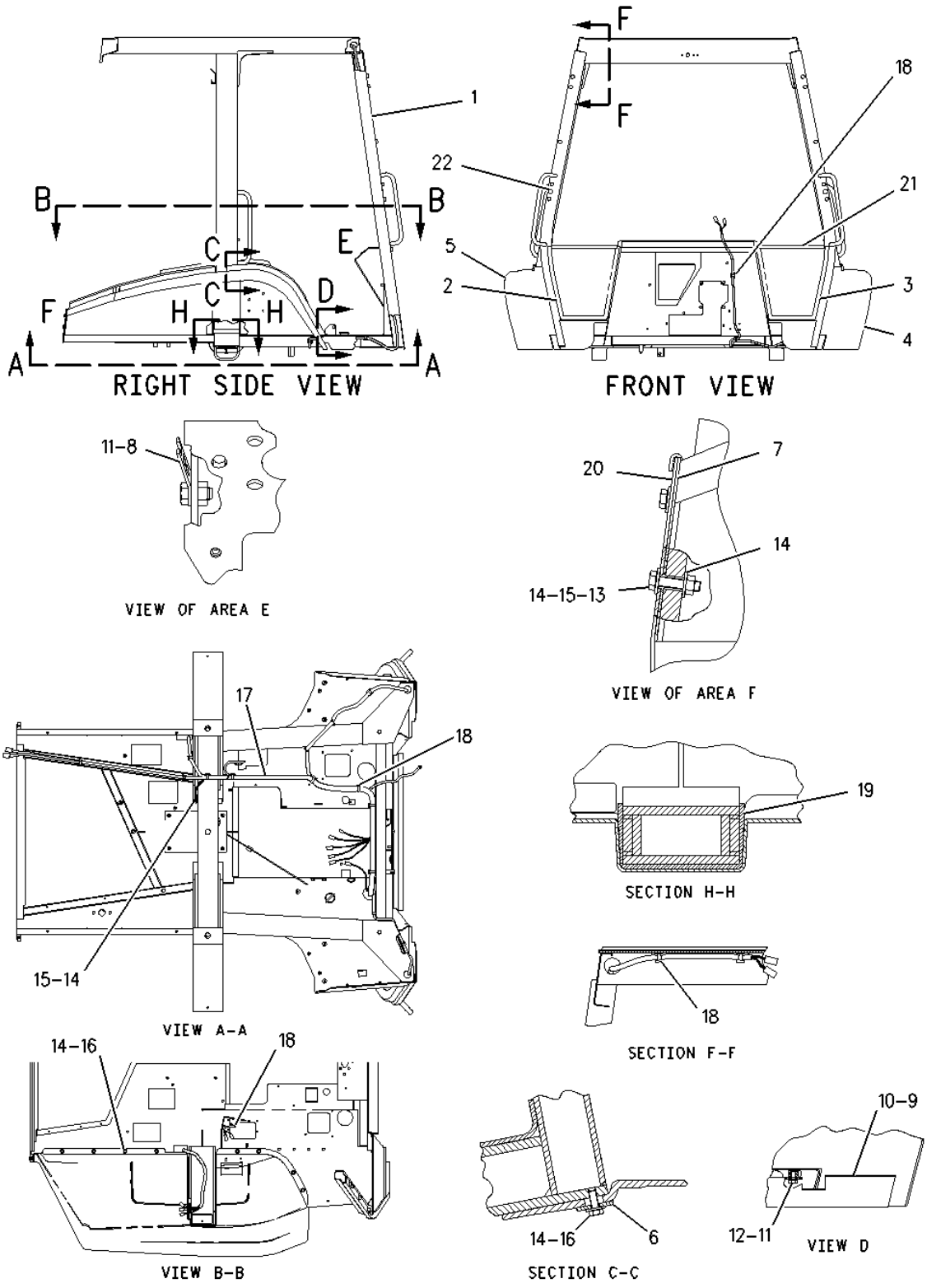

1 NPR 124-5328 1 CANOPY AS

NPR 140-2959 1 HANDHOLD

NPR 8Y-7292 2 HANDHOLD

2 NPR 8Y-7253 1 GLASS-CAB (RH)

3 NPR 8Y-7254 1 GLASS-CAB (LH)

4 NPR 9R-9865 1 FENDER (LH)

5 NPR 9R-9864 1 FENDER (RH)

6 NPR 104-3918 2 PLATE

7 NPR 106-1742 6 PLATE

8 NPR 4P-7581 1 CLIP

9 NPR 128-7773 1 PLATE (RH)

10 NPR 128-7772 1 PLATE (LH)

11 NPR M 8T-4137 5 BOLT (M10X1.5X20-MM)

12 NPR 8T-4121 4 WASHER-HARD (11X21X2.5-MM THK)

13 NPR M 7X-2537 4 BOLT (M8X1.25X35-MM)

14 NPR 5P-4116 27 WASHER-HARD (8.8X20.5X2-MM THK)

15 NPR M 5C-7261 5 NUT (M8X1.25-THD)

16 NPR M 8T-4908 18 BOLT (M8X1.25X25-MM)

17 NPR 9R-9896 1 HARNESS AS

NPR 155-2270 2 KIT-CONNECTING PLUG (2-PIN)

NPR 155-2274 1 KIT-CONNECTING PLUG (6-PIN)

NPR 155-2265 2 KIT-CONNECTING PLUG (8-PIN)

(EACH INCLUDES PLUG AS, WEDGE, & INTERFACE SEAL)

NPR 155-2260 1 KIT-CONNECTING PLUG (3-PIN)

(INCLUDES PLUG AS, WEDGE, & INTERFACE SEAL)

NPR 102-8802 1 KIT-RECEPTACLE (2-PIN)

NPR 102-8804 2 KIT-RECEPTACLE (4-PIN)

NPR 102-8805 1 KIT-RECEPTACLE (6-PIN)

NPR 102-8806 1 KIT-RECEPTACLE (8-PIN)

NPR 102-8801 2 KIT-RECEPTACLE (12-PIN)

(EACH INCLUDES RECEPTACLE AS & WEDGE)

18 NPR 3S-2093 21 STRAP-CABLE

19 NPR BE 6V-1392 SEAL

20 NPR BE 3E-6600 SEAL

21 NPR BE 9X-2092 STRIP-EDGE

22 NPR 9R-5616 2 PLUG

Key:

B - USE AS REQUIRED
E - ORDER BY THE CENTIMETER
M - METRIC PART

104-6381 FLOOR MAT GP -S/N 4ZN16044-50156
PART OF 140-6156, 140-6157 POWER TRAIN AR

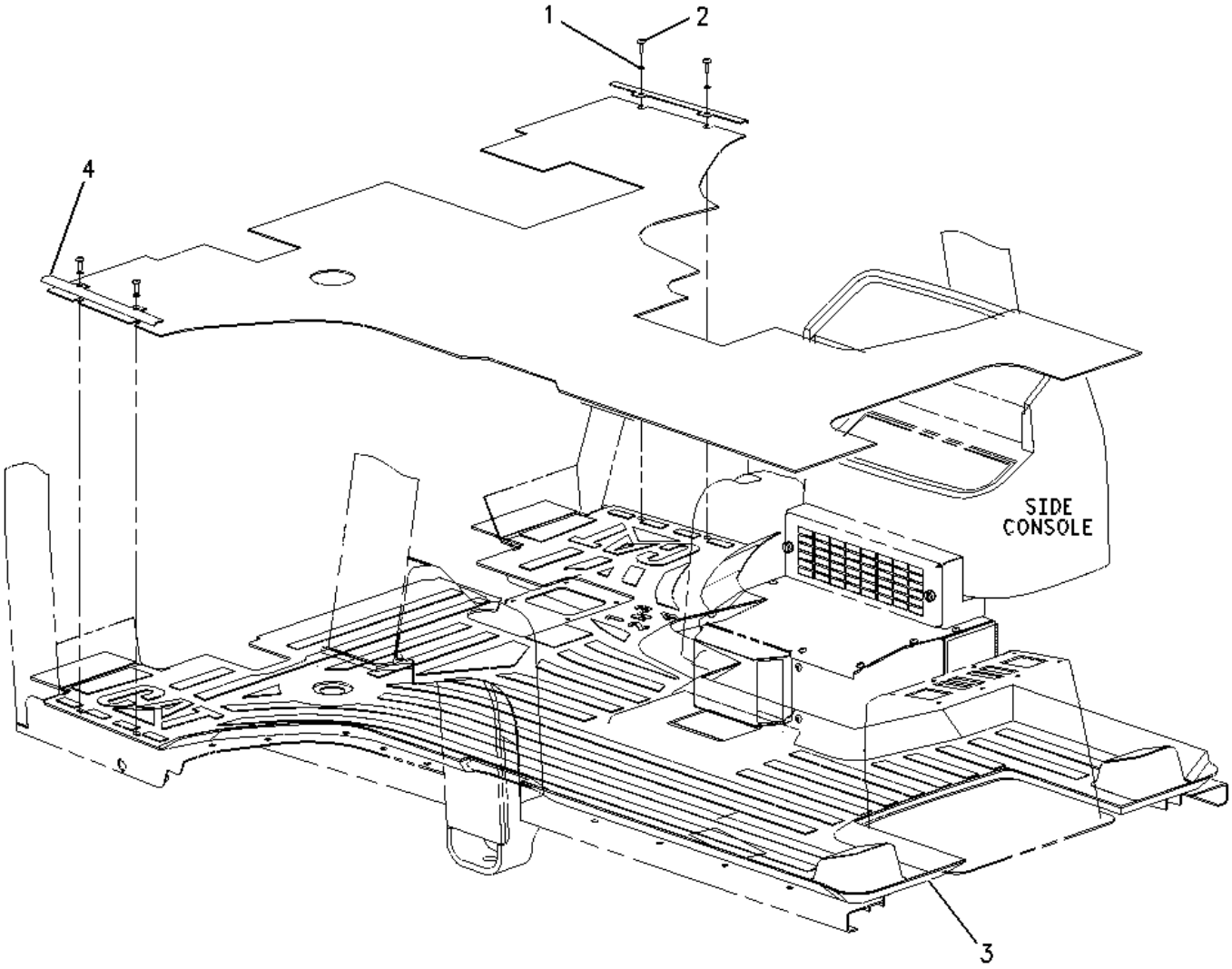

1 NPR 1H-3244 4 LOCKWASHER

2 NPR M 9X-2045 4 SCREW-TRUSS HEAD (M6X1X20-MM)

3 NPR 104-3917 1 MAT

4 NPR 115-7561 2 PLATE

Key:

M - METRIC PART

141-0903 FLOOR MAT GP --S/N 4ZN16044-50156--INSULATION
FIELD INSTALLATION

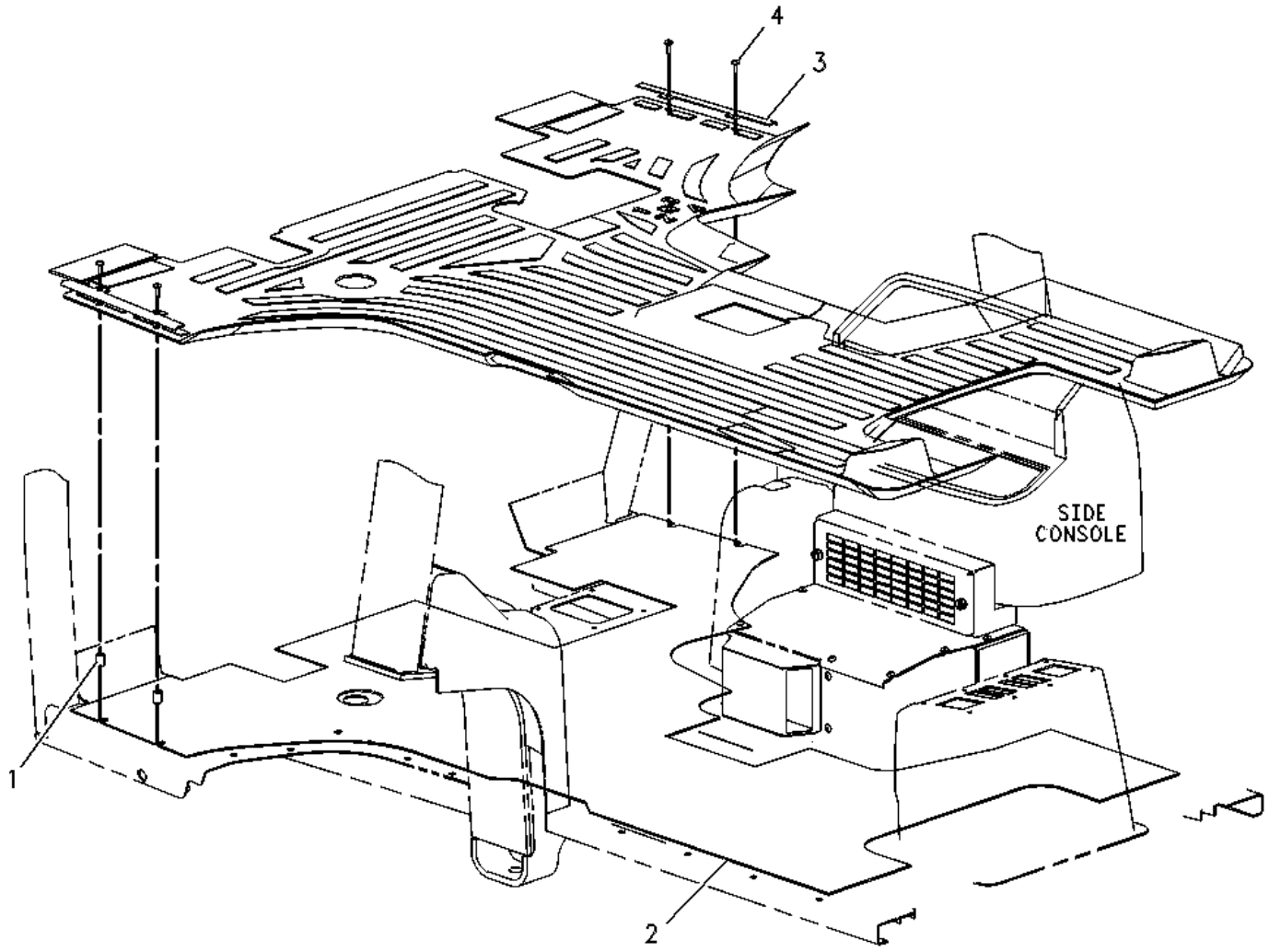

1 NPR 2A-2609 4 BUSHING

2 NPR 137-9465 1 MAT

3 NPR 141-0904 2 PLATE

4 NPR M 9X-2046 4 SCREW-TRUSS HEAD (M6X1X35-MM)

Key:

M - METRIC PART

142-0458 FLOOR MAT GP --S/N 4ZN16044-50156
(POWER SHIFT)
PART OF 159-4962, 159-4963, 159-4964, 159-4965 CONTROL AR-POWER SHIFT TMSN

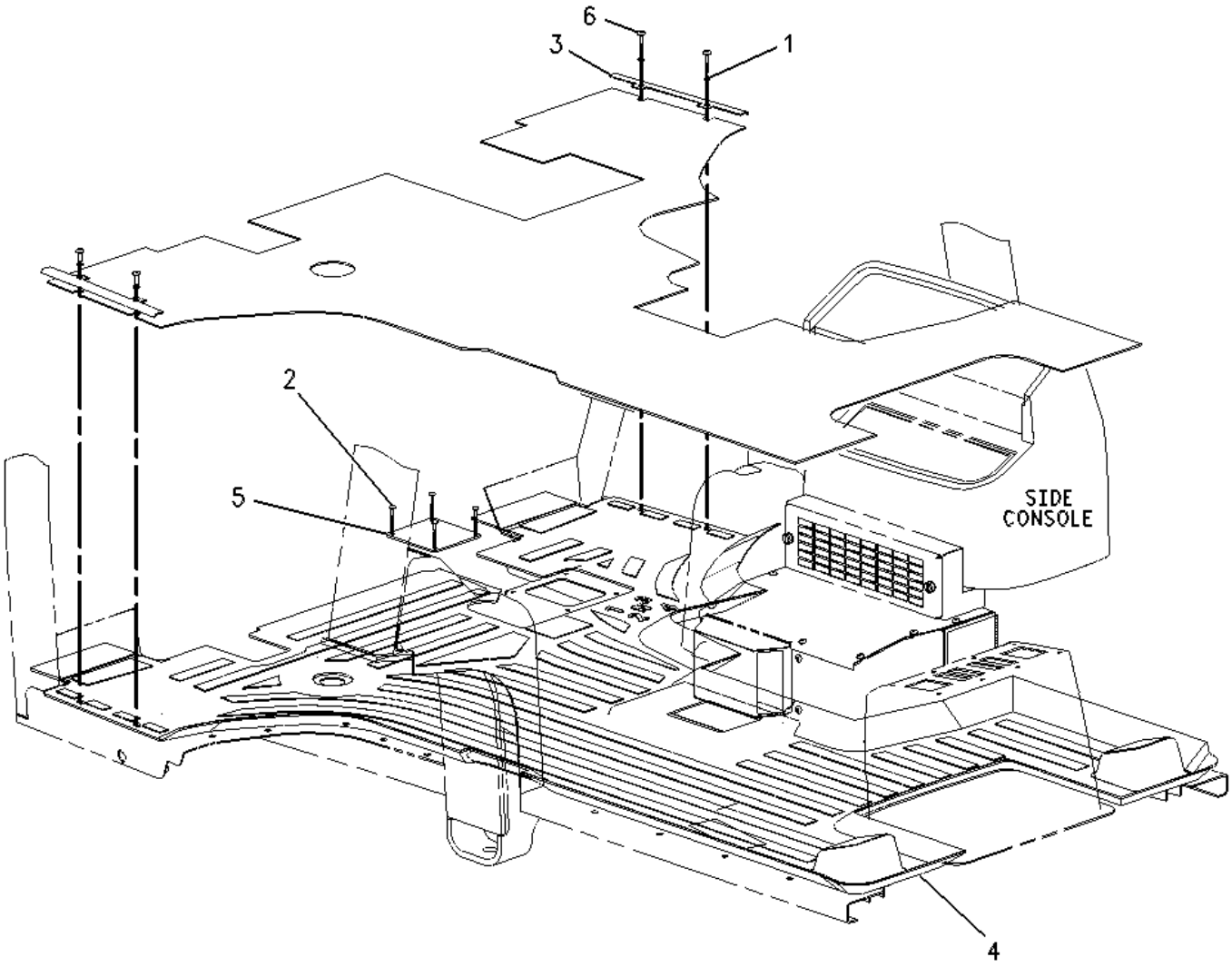

1	**NPR**	**1H-3244**	**4**	**LOCKWASHER**
2	**NPR**	**9R-9901**	**4**	**FASTENER (CLIP)**
3	**NPR**	**115-7561**	**2**	**PLATE**
4	**NPR**	**136-9142**	**1**	**MAT**
5	**NPR**	**137-9462**	**1**	**PLATE**
6	**NPR M**	**9X-2045**	**4**	**SCREW-TRUSS HEAD (M6X1X20-MM)**

Key:

M - METRIC PART

104-6029 LINER GP-CAB --S/N 4ZN16044-50156
FOR USE WITH 120-8233 COOLING AR, 120-8232 COOLING AR
CANNOT BE USED WITH 130-1481 HEADLINER AR, 120-8235 AIR CONDITIONER AR, 120-8236 COOLING AR, 115-1722 CANOPY AR

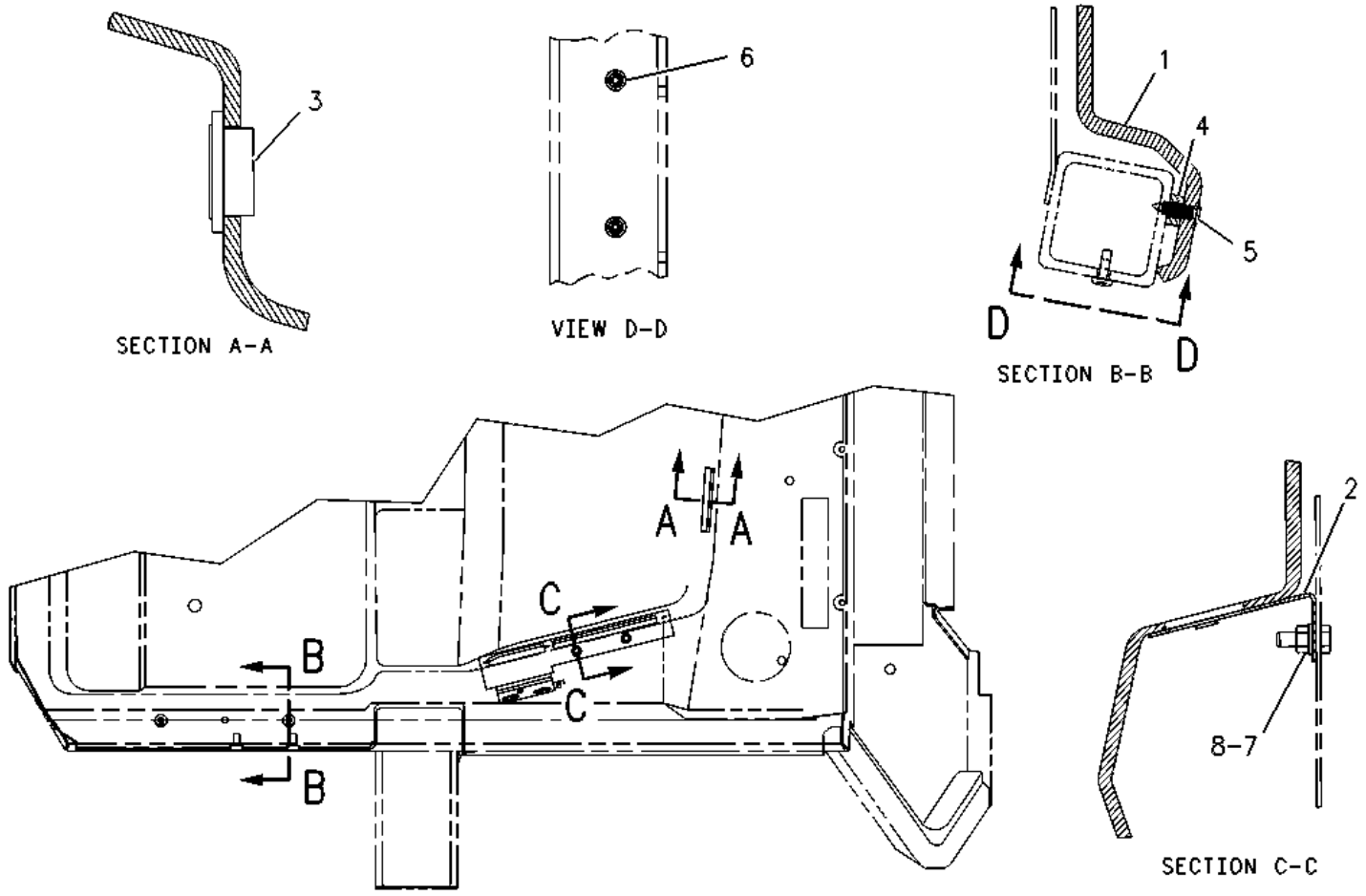

1	NPR	104-6030	1	LINER-CAB
2	NPR	104-3911	1	BRACKET AS
3	NPR	084-4277	1	LAMP GP-DOME
	NPR	210-8754	1	LAMP (12-VOLT)
4	NPR	7H-1698	4	WASHER-FELT
5	NPR	9R-9901	4	FASTENER (CLIP)
6	NPR M	9X-2041	4	SCREW-TRUSS HEAD (M10X1.5X20-MM)
7	NPR	8T-4121	2	WASHER-HARD (11X21X2.5-MM THK)
8	NPR M	8T-4133	2	NUT (M10X1.5-THD)

Key: M - METRIC PART

130-9481 LINER GP-CAB ----S/N 4ZN16044-50156--PART OF 130-1481 LINER AR-CAB

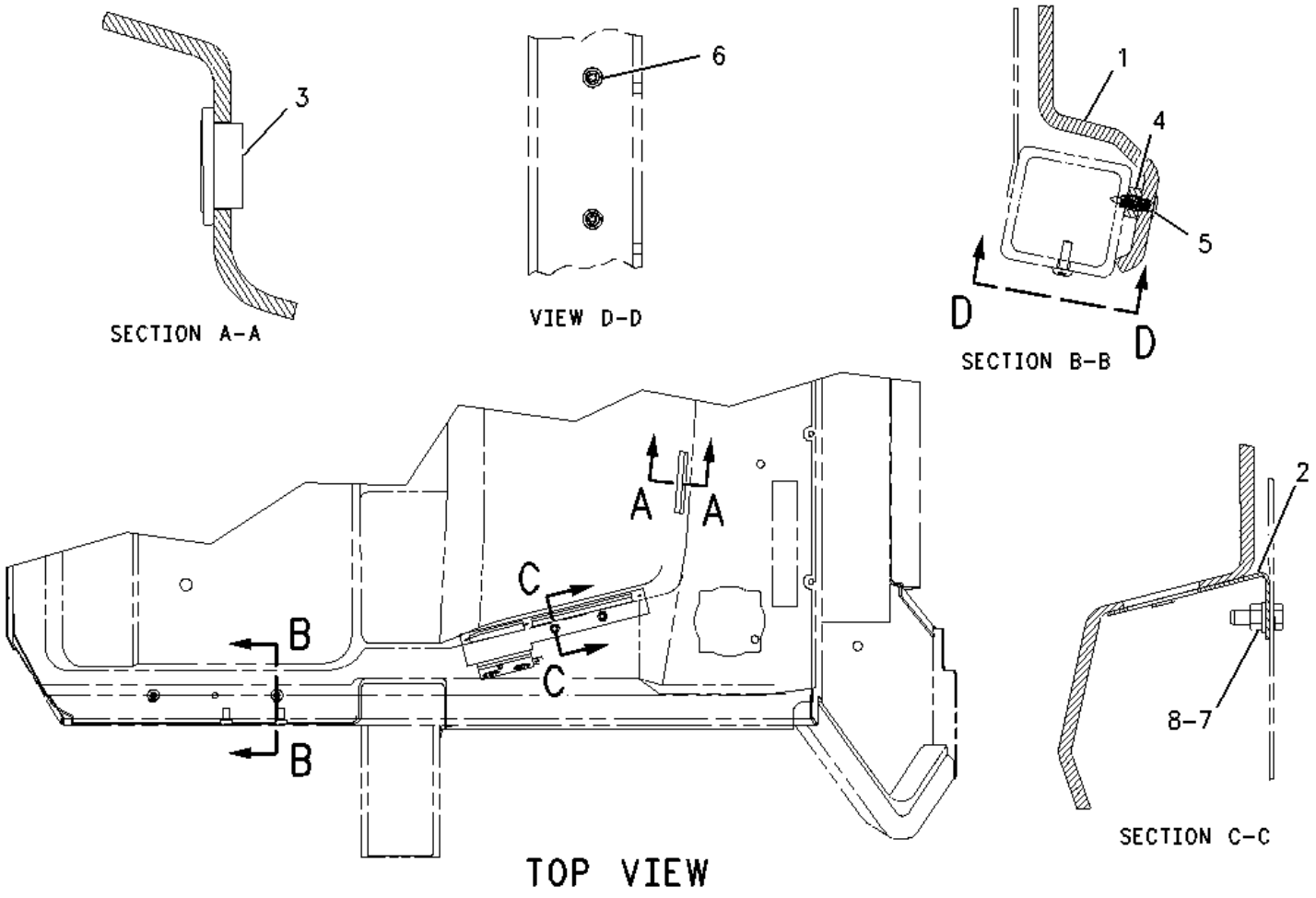

1 NPR 130-9482 1 LINER-CAB

2 NPR 104-3911 1 BRACKET AS

3 NPR 084-4277 1 LAMP GP-DOME

NPR 210-8754 1 LAMP (12-VOLT)

4 NPR 7H-1698 4 WASHER-FELT

5 NPR 9R-9901 4 FASTENER (CLIP)

6 NPR M 9X-2041 4 SCREW-TRUSS HEAD (M10X1.5X20-MM)

7 NPR 8T-4121 2 WASHER-HARD (11X21X2.5-MM THK)

8 NPR M 8T-4133 2 NUT (M10X1.5-THD)

Key: M - METRIC PART

108-8251 VISOR GP-CAB --S/N 4ZN16044-50156
FOR USE WITH AIR CONDITIONER

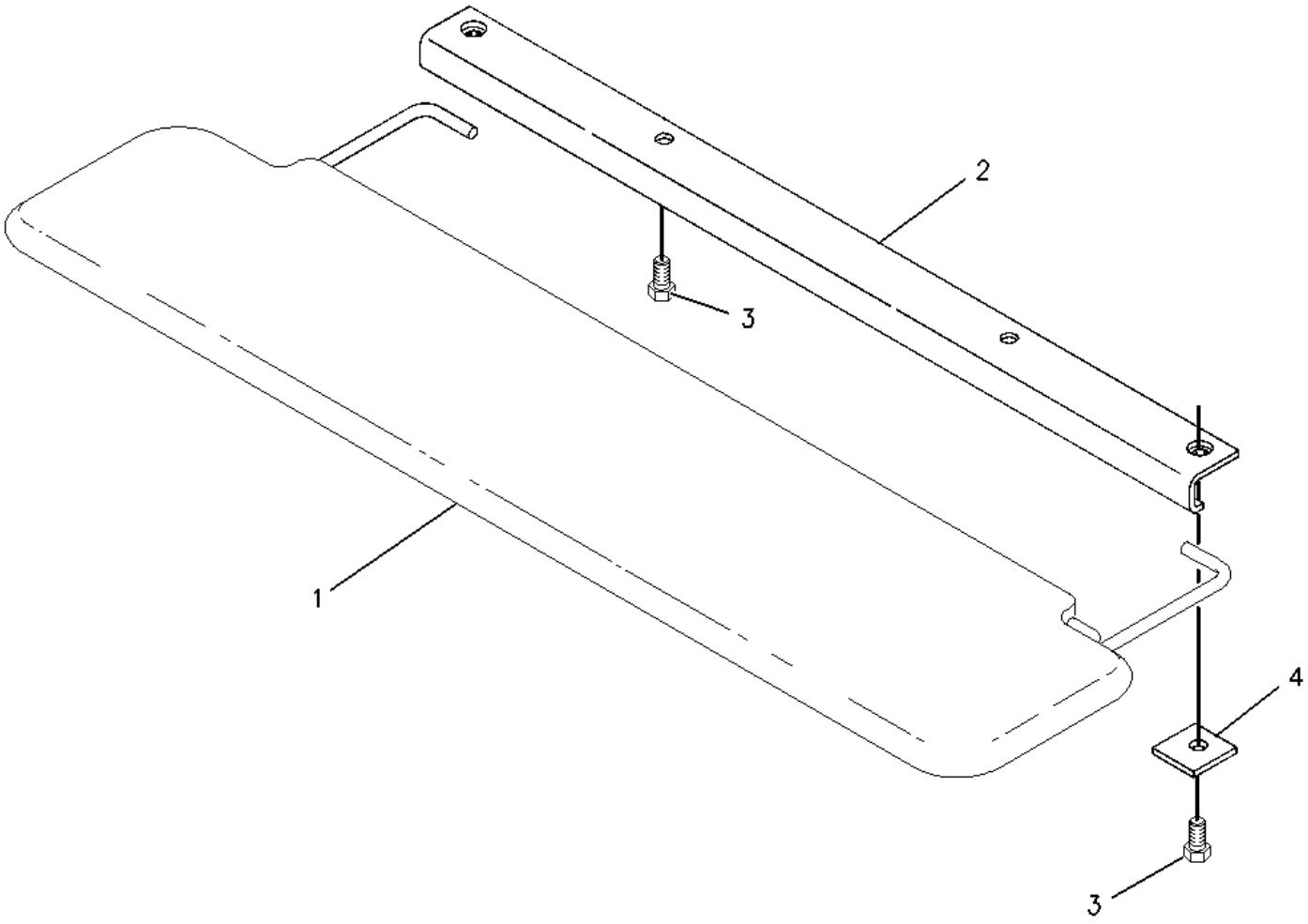

1	**NPR**	**9R-3205**	**1**	**VISOR AS**
2	**NPR**	**9R-3204**	**1**	**PLATE AS**
3	**NPR M**	**8T-4171**	**4**	**BOLT (M6X1X12MM)**
4	**NPR**	**9R-3203**	**2**	**PLATE**

Key: M - METRIC PART

163-9225 MOUNTING GP-INSTRUMENT PANEL
S/N 4ZN16044-50156--PART OF 154-5436 POWER TRAIN AR

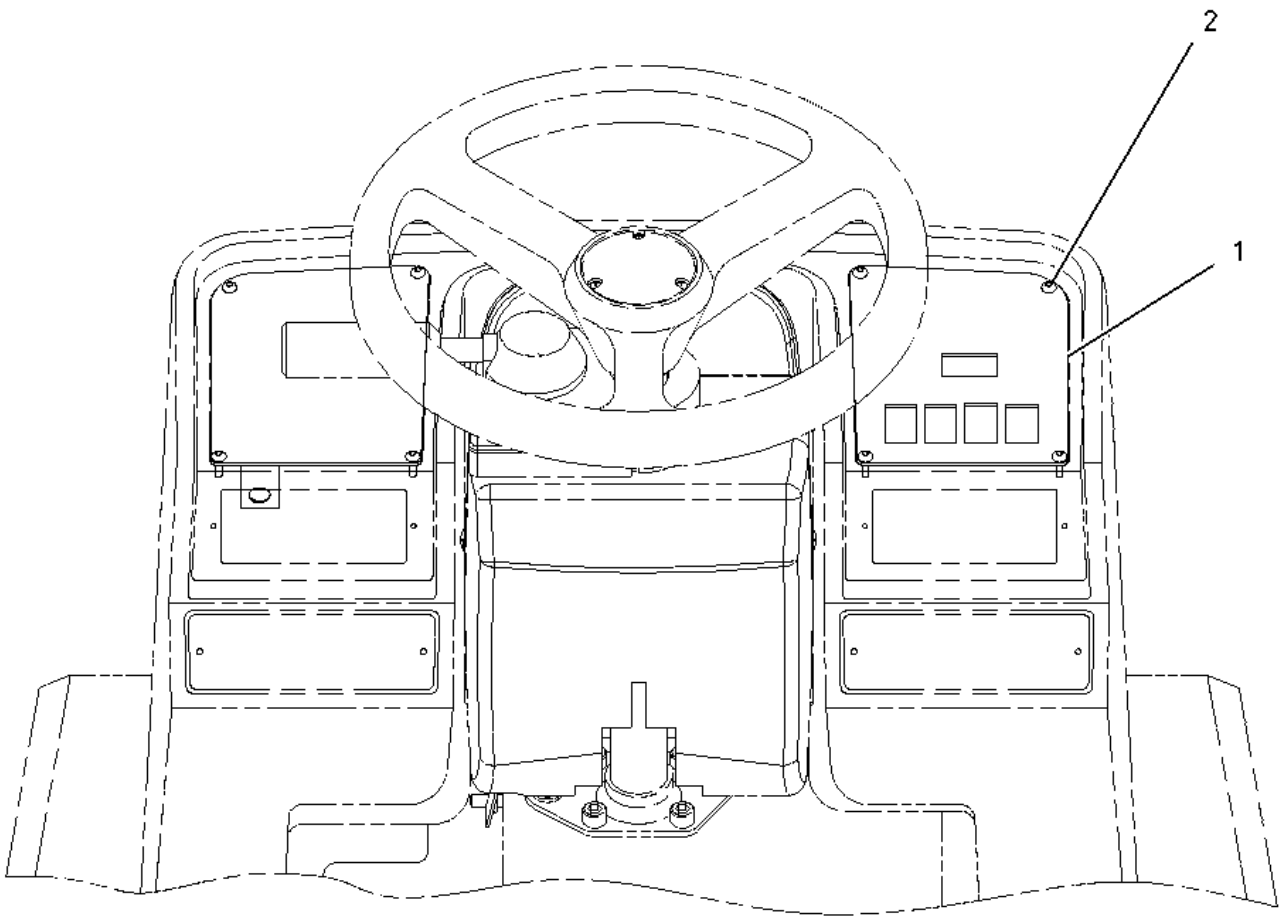

REAR VIEW

1 NPR 163-4533 1 PLATE-RH

2 NPR M 138-8454 4 SCREW-TRUSS HEAD

Key:

M - METRIC PART

163-9224 MOUNTING GP-INSTRUMENT PANEL -S/N 4ZN16044-50156
PART OF 154-5417 CONTROL AR-RIDE

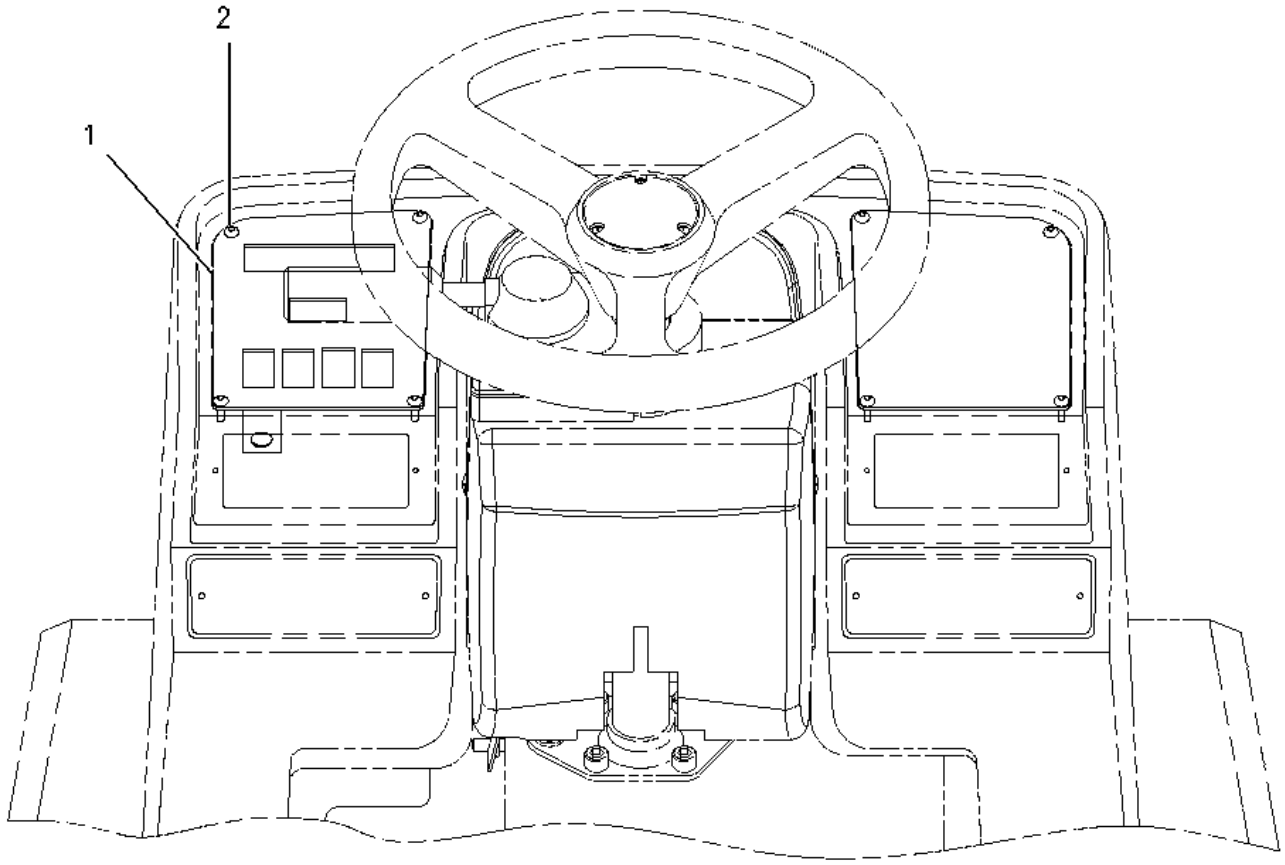

REAR VIEW

1 NPR 163-4531 1 PLATE AS (LH)

2 NPR M 138-8454 4 SCREW-TRUSS HEAD (M4X0.7X10-MM)

Key:

M - METRIC PART

104-5962 COVER GP-CONSOLE --S/N 4ZN16044-50156

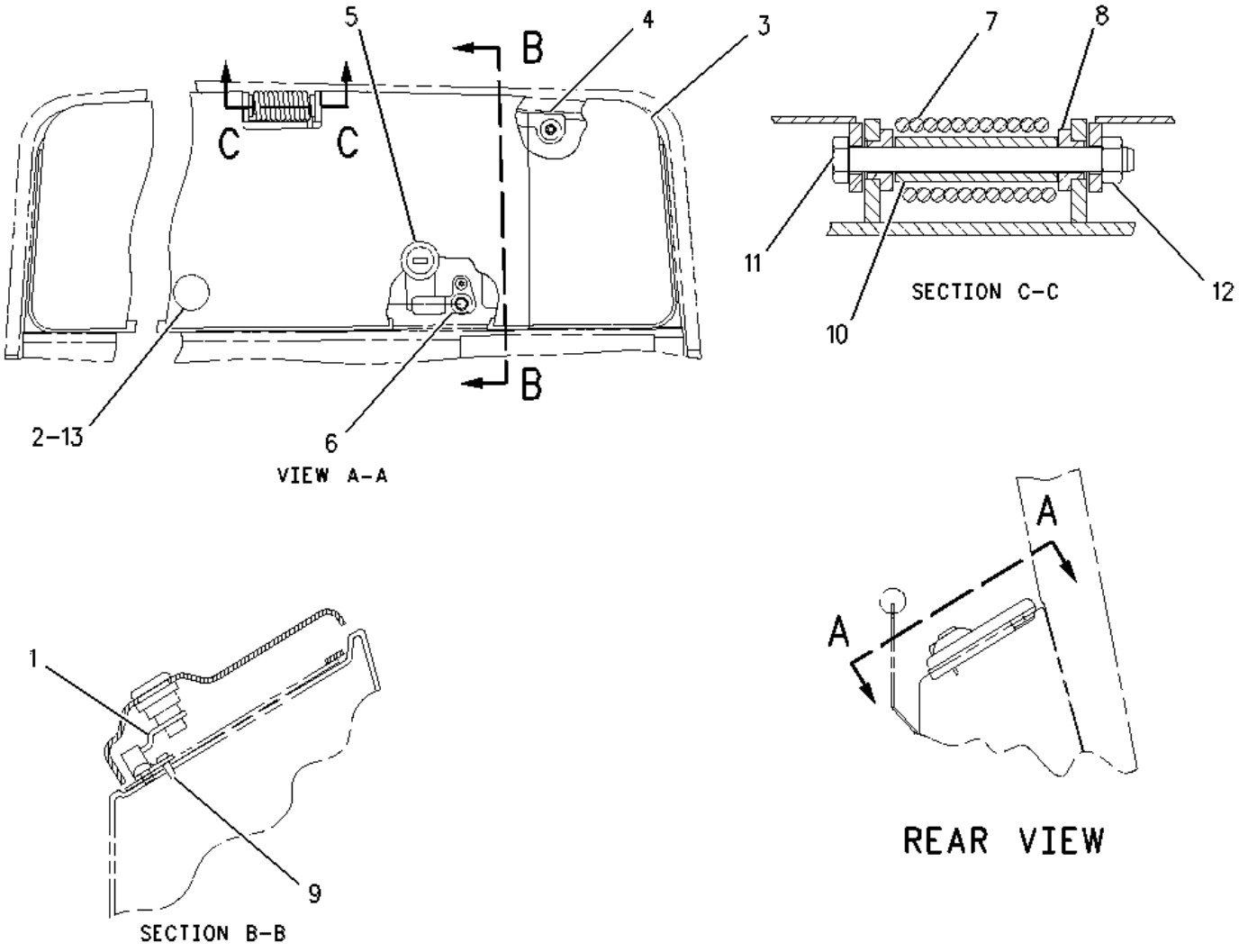

1	**NPR**	**170-0648**	**1**	**PLATE**
2	**NPR**	**9C-9785**	**1**	**BUMPER**
3	**NPR**	**166-8612**	**1**	**COVER AS**
4	**NPR**	**109-8817**	**1**	**SUPPORT AS**
5	**NPR J**	**5P-9000**	**1**	**LOCK AS-CYLINDER**
6	**NPR**	**124-8105**	**1**	**PLATE**
7	**NPR**	**130-7912**	**1**	**SPRING**
8	**NPR**	**130-7913**	**2**	**WASHER-SPECIAL**
9	**NPR**	**113-8277**	**1**	**SCREW-PAN HEAD (8-32X12.7-MM)**
10	**NPR**	**130-7914**	**1**	**SPACER (6.9X11X40-MM THK)**

11	**NPR M**	**8T-3844**	**1**	**BOLT (M6X1X70-MM)**
12	**NPR M**	**6V-7743**	**1**	**LOCKNUT (M6X1-THD)**
13	**NPR M**	**5C-2890**	**1**	**NUT (M6X1-THD)**

Key:

J - PART MARKED J REQUIRES 5P8500 KEY
M - METRIC PART

104-3919 CONSOLE GP-SIDE --S/N 4ZN16044-50156
PART OF 154-5483 CHASSIS AR

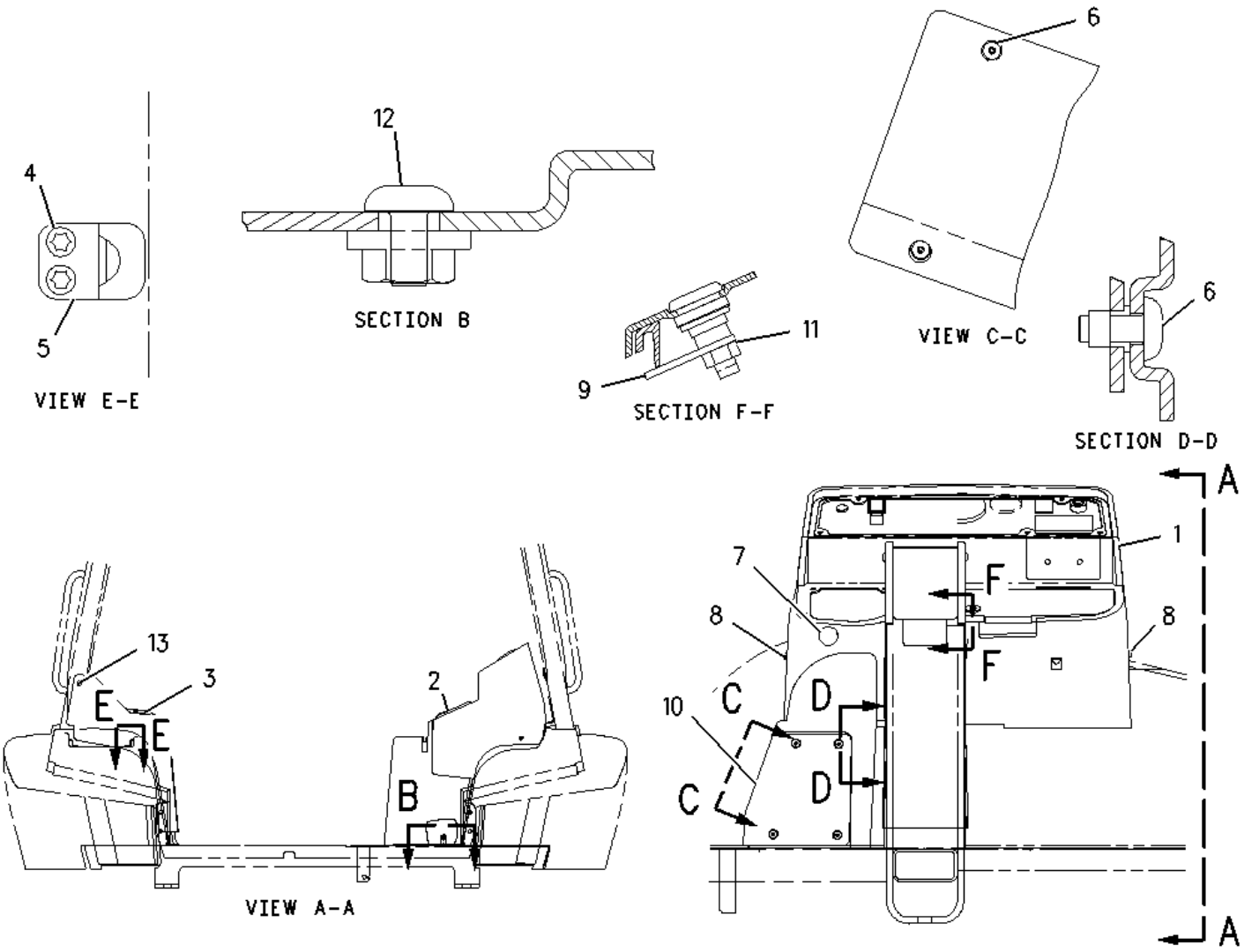

1 NPR 9R-9837 1 CONSOLE-SIDE

2 NPR 9R-9842 1 BOX-STORAGE

3 NPR 9R-9890 1 COVER

4 NPR 113-8277 4 SCREW-PAN HEAD (8-32X12.7-MM)

5 NPR 100-8275 2 PLATE

6 NPR M 9X-2045 4 SCREW-TRUSS HEAD (M6X1X20-MM)

7 NPR 9P-6571 1 PLUG

8 NPR M 131-3985 2 SCREW (M6X1-THD)

9 NPR 136-9143 1 PLATE

10 NPR 130-6004 1 COVER

11 NPR J 5P-9000 1 LOCK AS-CYLINDER

12 NPR M 9X-2043 1 SCREW-TRUSS HEAD (M6X1X14-MM)

13 NPR M 9X-2042 2 SCREW-TRUSS HEAD (M6X1X12-MM)

Key:

J - PART MARKED J REQUIRES 5P8500 KEY
M - METRIC PART

104-3921 CONSOLE GP-REAR --S/N 4ZN16044-50156
PART OF 154-5483 CHASSIS AR

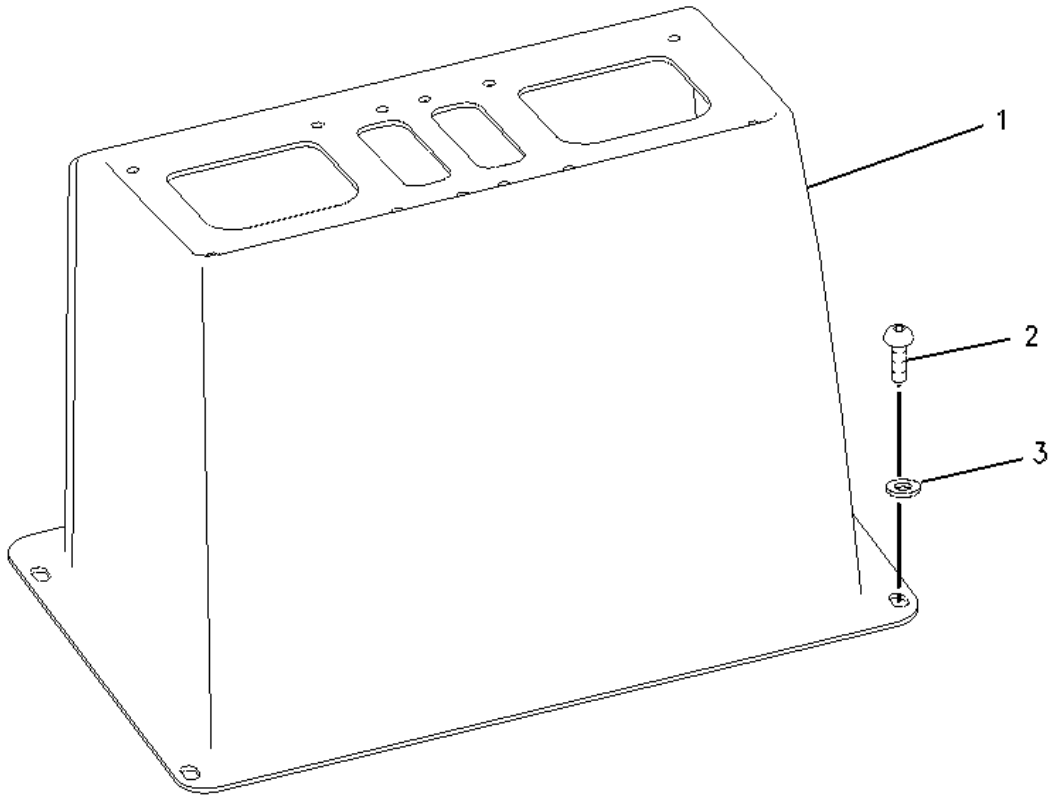

1 NPR 9R-9838 1 CONSOLE-REAR

2 NPR M 9X-2043 4 SCREW-TRUSS HEAD (M6X1X14-MM)

3 NPR 9X-2038 4 WASHER (7X19X2-MM THK)

Key:

M - METRIC PART

104-6044 CONSOLE GP-FRONT --S/N 4ZN16044-50156
PART OF 154-5473 CAB AR-ENCLOSED ROPS

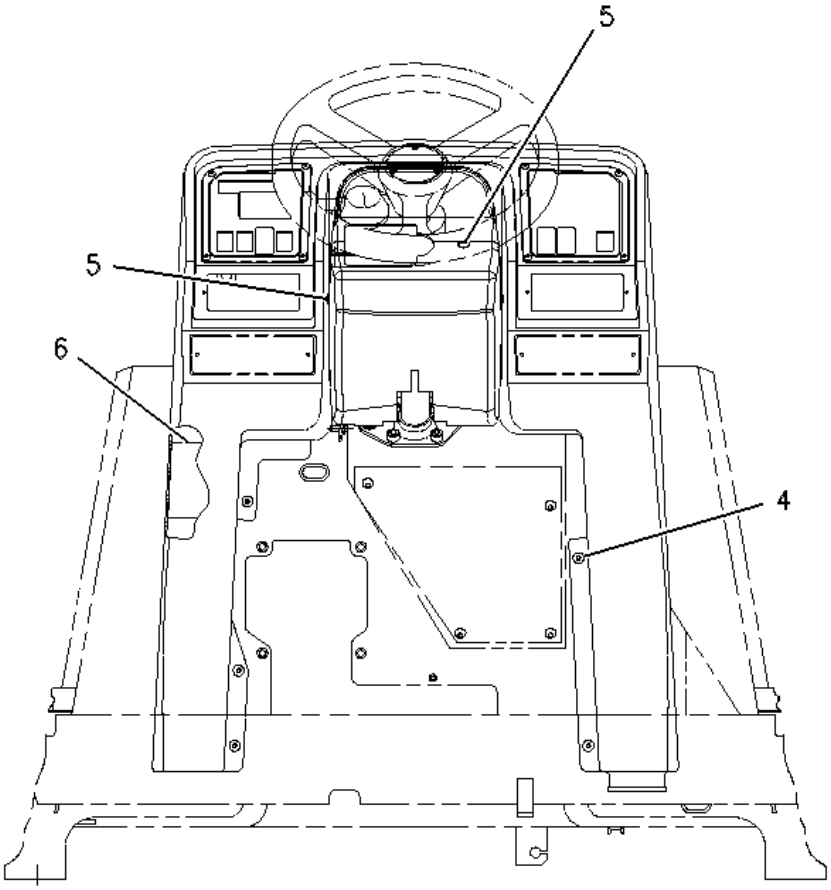

REAR VIEW

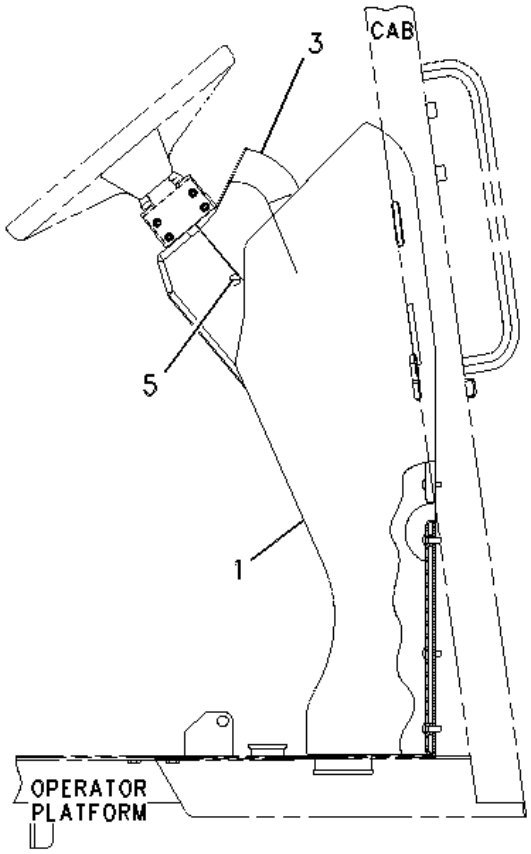

RIGHT SIDE VIEW

1 NPR 9R-9839 1 CONSOLE-FRONT

3 NPR 9R-9912 1 COVER

4 NPR M 9X-2045 5 SCREW-TRUSS HEAD (M6X1X20-MM)

5 NPR M 130-3031 3 SCREW (M6X1X12-MM)

6 NPR 131-7686 1 SEAL

Key: M - METRIC PART

104-3923 CONSOLE GP-FRONT --S/N 4ZN16044-50156
PART OF 163-9194 CANOPY AR-OPEN ROPS

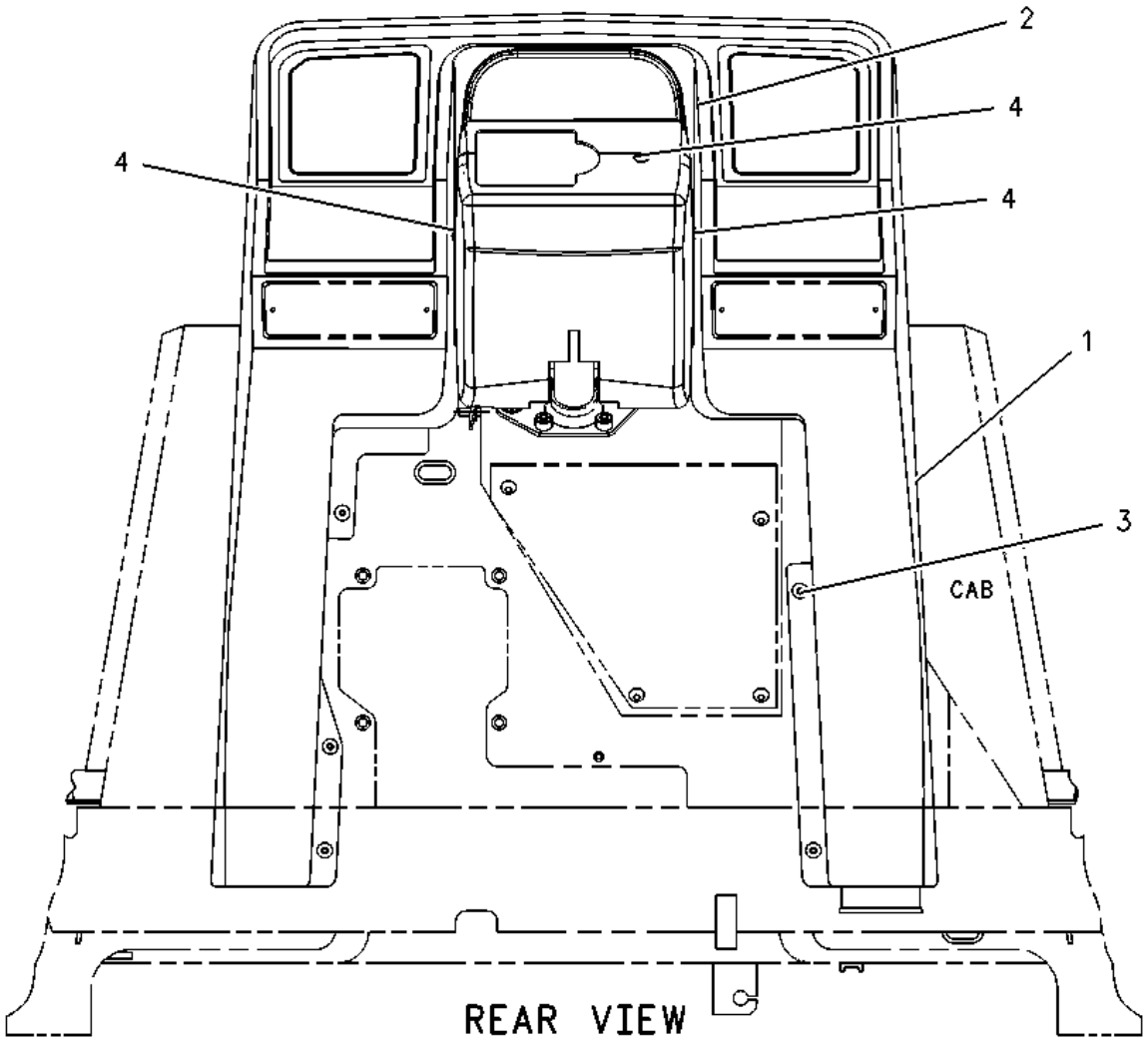

1 NPR 8Y-7371 1 CONSOLE-FRONT

2 NPR 9R-9912 1 COVER

3 NPR M 9X-2045 5 SCREW-TRUSS HEAD (M6X1X20-MM)

4 NPR M 130-3031 3 SCREW (M6X1X12-MM)

Key:

M - METRIC PART

166-6017 KIT-FOOT SWING CONT CONVERSION
S/N 4ZN16044-50156

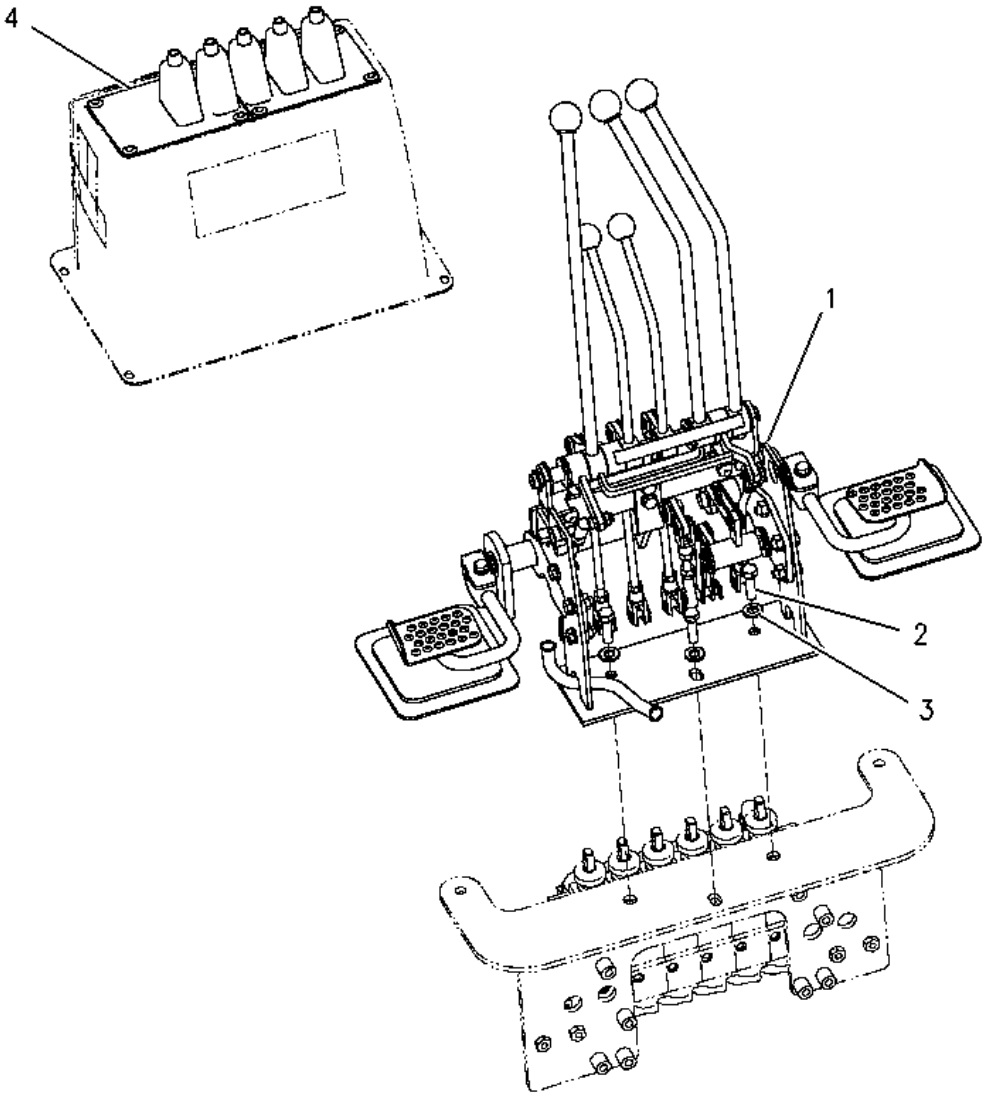

1 NPR Y 112-1834 1 CONTROL GP-HYDRAULIC HAND

2 NPR M 8T-4183 3 BOLT (M12X1.75X40-MM)

3 NPR 8T-4223 3 WASHER-HARD (13.5X25.5X3-MM THK)

4 NPR 139-9414 1 PLATE

Key:

M - METRIC PART
Y - SEPARATE ILLUSTRATION

106-6373 CONTROL GP-HYDRAULIC PEDAL
S/N 4ZN16044-50156
PART OF 106-6253, 154-5431, 154-5433 HYDRAULIC AR

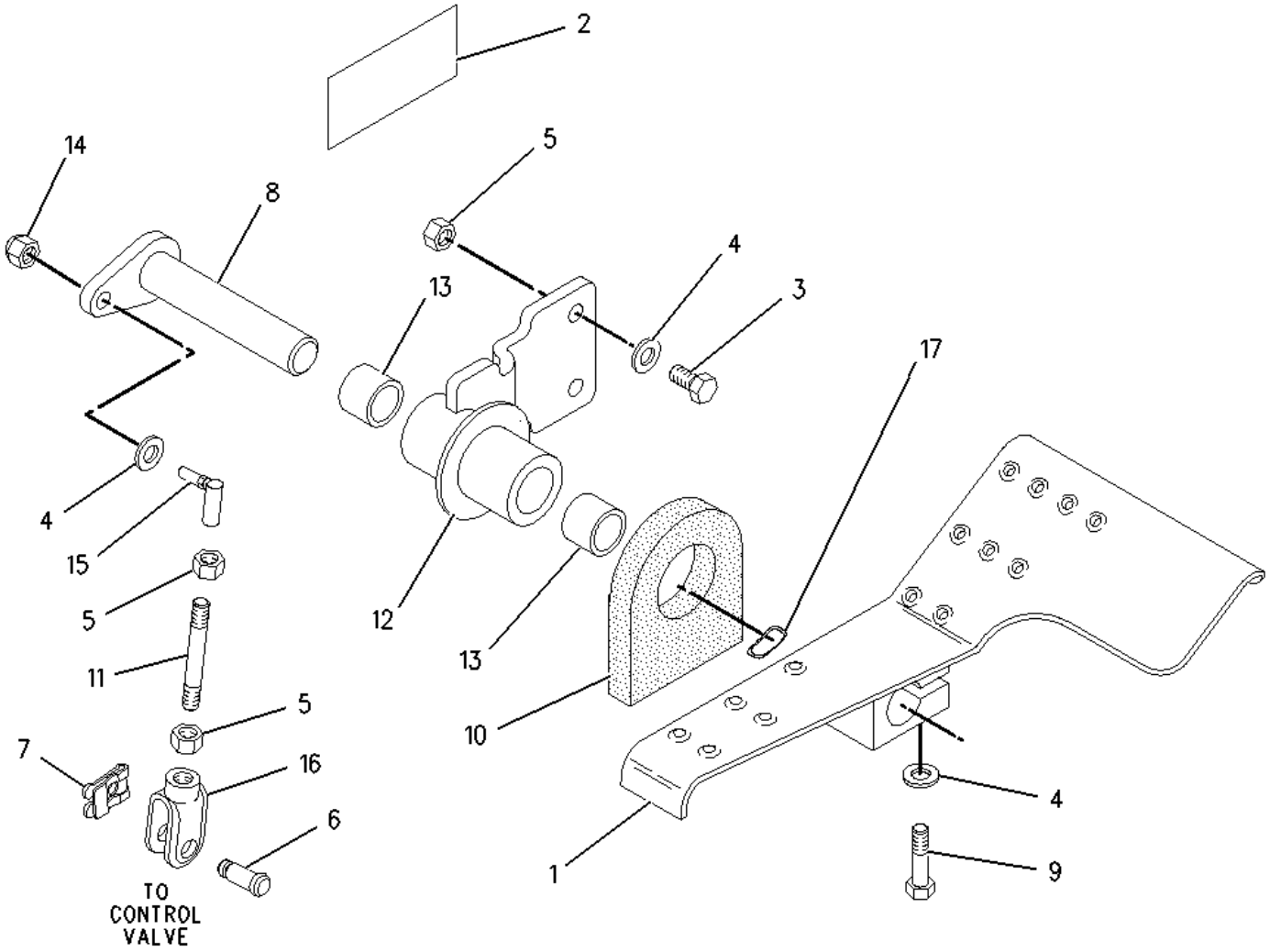

1 NPR 121-0593 1 PEDAL AS-RH

2 NPR 133-8916 1 FILM-INSTRUCTION (EXTENDABLE STICK)

3 NPR M 8T-4195 2 BOLT (M10X1.5X30-MM)

4 NPR 8T-4121 4 WASHER-HARD (11X21X2.5-MM THK)

5 NPR M 8T-4133 4 NUT (M10X1.5-THD)

6 NPR 9R-2806 1 PIN

7 NPR 9R-2807 1 CLIP

8 NPR 128-7341 1 SHAFT AS

9 NPR M 6V-8335 1 BOLT-SELF-LOCKING (M10X1.5X40-MM)

10 NPR 109-0533 1 SEAL

11	NPR	155-6011	1	ROD
12	NPR	106-6374	1	SUPPORT AS
13	NPR	9R-2614	2	BEARING
14	NPR M	6V-7744	1	LOCKNUT (M10X1.15-THD)
15	NPR	8T-4773	1	BALL JOINT
16	NPR	8T-4815	1	ROD END
17	NPR	195-6550	1	WASHER-WAVE

Key:

M - METRIC PART

113-0720 CONTROL GP-HYDRAULIC PEDAL ---S/N 4ZN16044-50156
LEFT FT FACTORY --PART OF 119-4006, 154-5433 HYDRAULIC AR

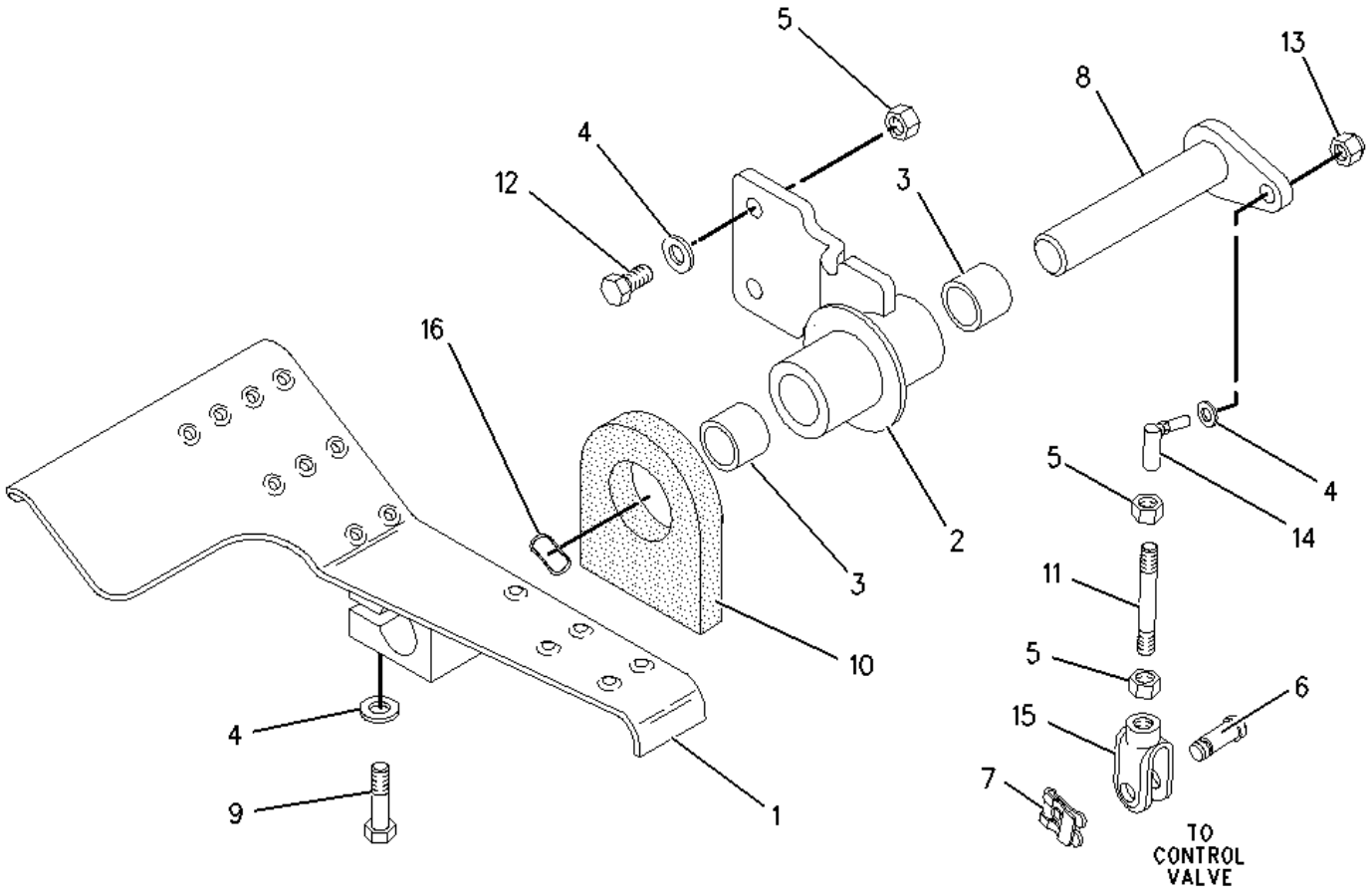

1 NPR 121-0592 1 PEDAL AS-LH

2 NPR 106-6374 1 SUPPORT AS

3 NPR 9R-2614 2 BEARING

4 NPR 8T-4121 4 WASHER-HARD (11X21X2.5-MM THK)

5 NPR M 8T-4133 4 NUT (M10X1.5-THD)

6 NPR 9R-2806 1 PIN

7 NPR 9R-2807 1 CLIP

8 NPR 128-7341 1 SHAFT AS

9 NPR M 6V-8335 1 BOLT-SELF-LOCKING (M10X1.5X40-MM)

10 NPR 109-0533 1 SEAL

11	NPR	155-6011	1	ROD
12	NPR M	8T-4195	2	BOLT (M10X1.5X30-MM)
13	NPR M	6V-7744	1	LOCKNUT (M10X1.15-THD)
14	NPR	8T-4773	1	BALL JOINT
15	NPR	8T-4815	1	ROD END
16	NPR	195-6550	1	WASHER-WAVE

Key:

M - METRIC PART

136-8034 LOCK GP-HYDRAULIC FOOT CONTROL
S/N 4ZN16044-50156--3 LEVER FOOT SWING

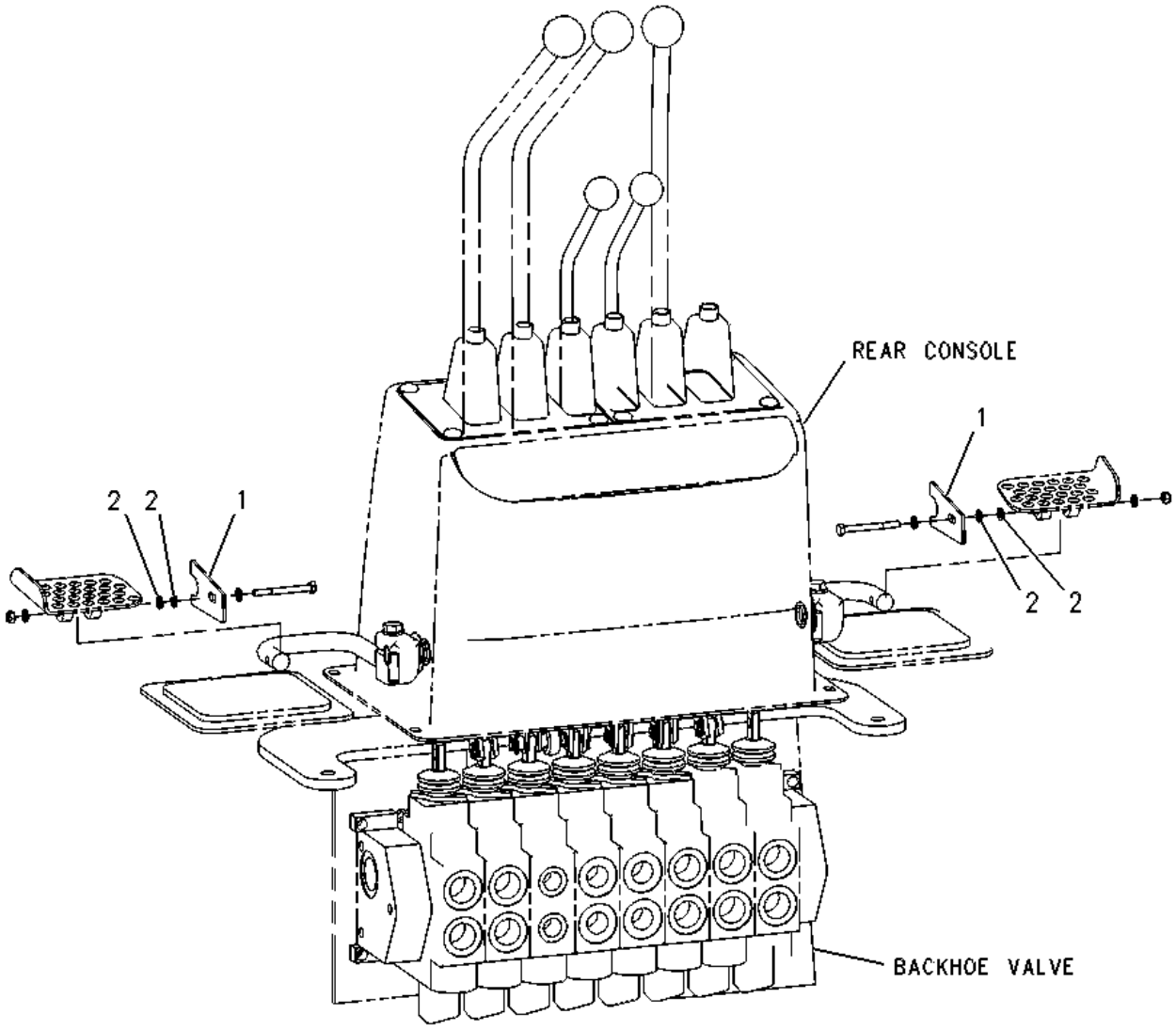

1 NPR 136-1002 2 PLATE

2 NPR 9X-8256 4 WASHER (6.6X12X2-MM THK)

121-9752 MOUNTING GP-RADIO --S/N 4ZN16044-50156
PART OF 144-2221, 145-7168 AIR CONDITIONER AR

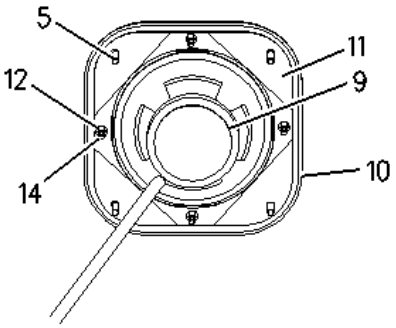

VIEW OF AREA C

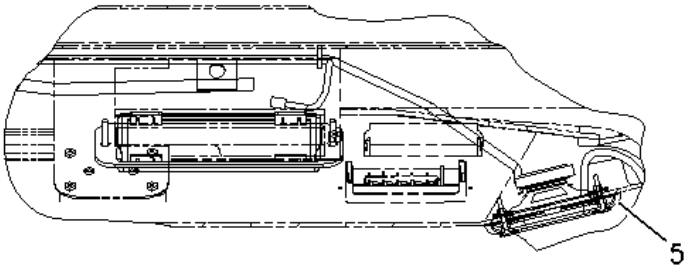

VIEW A-A

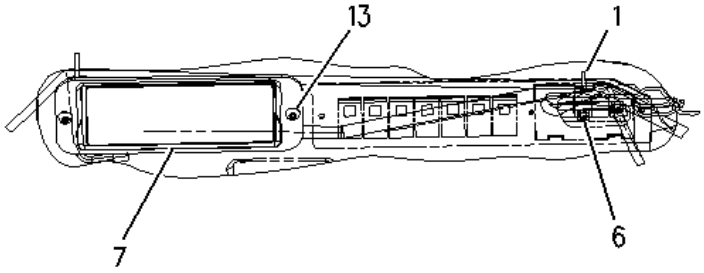

VIEW B-B

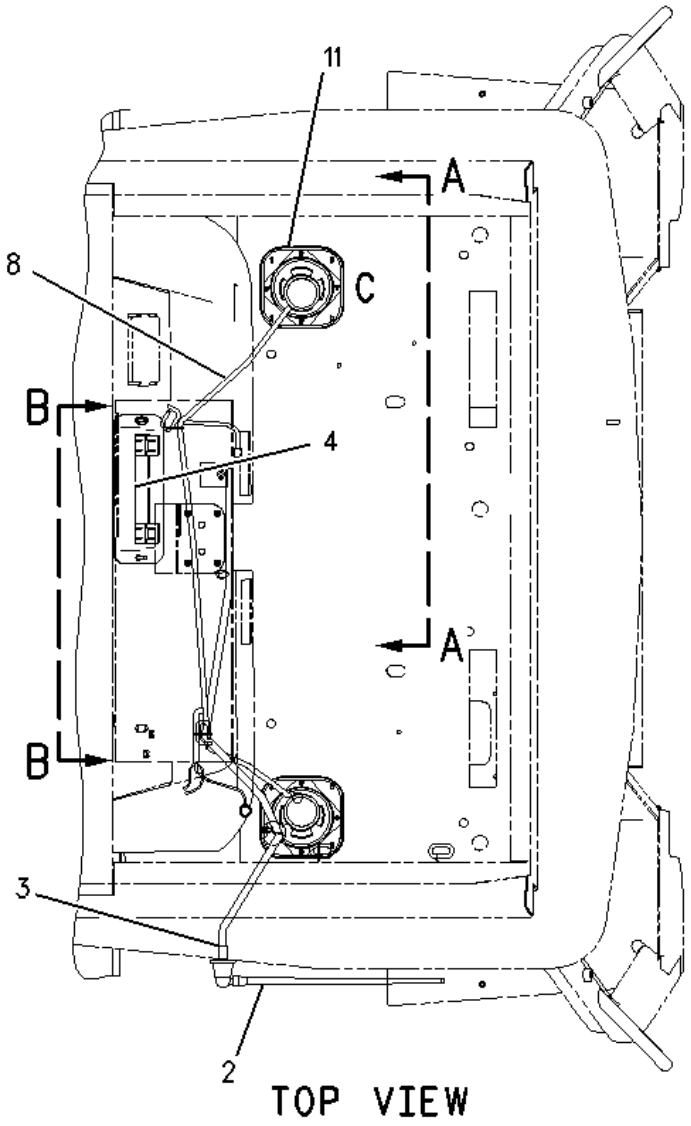

TOP VIEW

1	NPR	3S-2093	3	STRAP-CABLE
2	NPR	8E-1118	1	ANTENNA AS
3	NPR	8R-6111	1	CABLE AS-COAXIAL
4	NPR	9U-8263	1	COVER
5	NPR M	113-0920	8	BOLT-SOCKET HEAD (M4X0.7X35-MM)
6	NPR	113-8490	2	FUSE (10-AMPERE)
7	NPR	121-9751	1	ADAPTER
8	NPR	130-9502	1	HARNESS AS
	NPR	102-8811	1	KIT-CONNECTING PLUG (8-PIN)

(INCLUDES PLUG AS, WEDGE, & INTERFACE SEAL)

9	NPR	169-7290	2	SPEAKER
10	NPR	169-7291	2	COVER-SPEAKER
11	NPR	174-4437	2	BRACKET
12	NPR M	178-9983	8	LOCKNUT (M4X0.7-THD)
13	NPR M	111-4627	2	SCREW-MACHINE (M6X1X30-MM)
14	NPR M	138-8454	8	SCREW-TRUSS HEAD (M4X0.7X10-MM)

Key:

M - METRIC PART

145-6847 CONTROL GP-GOVERNOR --S/N 4ZN19810-50156
PART OF 154-5479, 193-2143 SUPPRESSION AR-SOUND

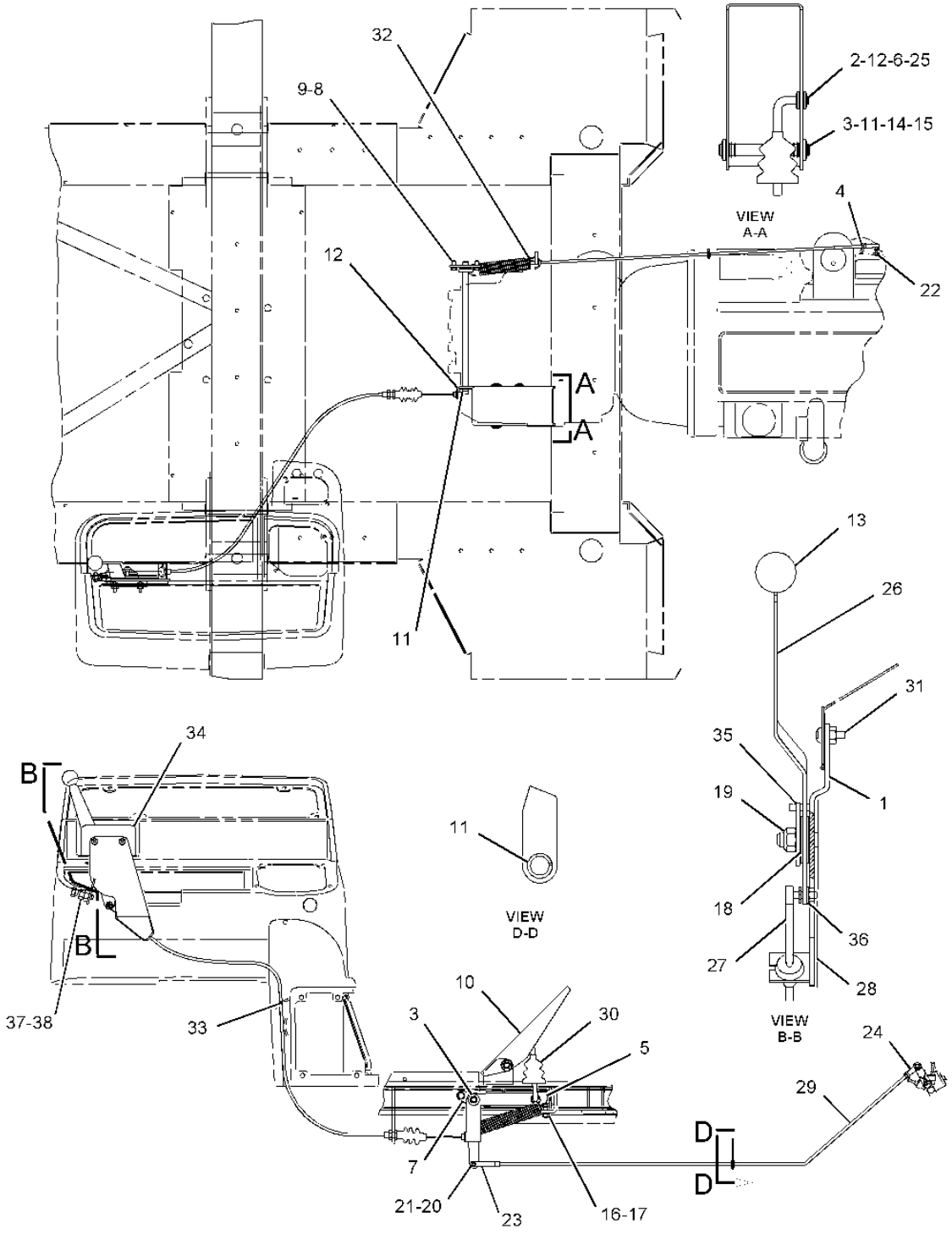

1 NPR 145-9102 1 BRACKET AS

NPR M 8T-3597 1 NUT-WELD (M12X1.75-THD)

2 NPR 9R-8081 1 ROD

3 NPR 8T-4223 4 WASHER-HARD (13.5X25.5X3-MM THK)

4 NPR M 8T-4134 1 NUT (M6X1-THD)

5	NPR	106-5159	1	SHAFT AS
6	NPR	8T-4121	4	WASHER-HARD (11X21X2.5-MM THK)
7	NPR	9R-8099	1	PLATE
8	NPR	8T-4224	2	WASHER-HARD (8.8X16X2-MM THK)
9	NPR M	8T-4200	2	BOLT (M8X1.25X16-MM)
10	NPR	9R-4940	1	PEDAL
11	NPR	9R-1586	7	BEARING
12	NPR	8S-7803	5	RING-RETAINING
13	NPR	8T-3984	1	KNOB
14	NPR	9R-8094	1	PIN
15	NPR	7S-5757	2	RING-RETAINING
16	NPR M	8T-4908	1	BOLT (M8X1.25X25-MM)
17	NPR M	5C-7261	1	NUT (M8X1.25-THD)
18	NPR	5D-0998	4	SPRING-DISC
19	NPR M	6V-7687	1	LOCKNUT (M12X1.75-THD)
20	NPR	8T-6902	1	CLIP
21	NPR	8T-6904	1	PIN-CLEVIS
22	NPR M	6V-7743	1	LOCKNUT (M6X1-THD)
23	NPR	8C-3437	1	END-YOKE ROD
24	NPR	8T-4765	1	ROD END
25	NPR	9R-8084	2	BEARING
26	NPR	164-2255	1	LEVER AS
27	NPR	104-2128	1	CABLE AS
	NPR	6V-8187	1	NUT (1/4-28-THD)
	NPR	8T-4205	1	WASHER-HARD (7.2X14.5X2-MM THK)
	NPR	118-1177	1	BALL JOINT

28 NPR 127-0340 1 PAD

29 NPR 106-5155 1 ROD

30 NPR 9R-1581 1 BOOT

31 NPR M 9X-2045 2 SCREW-TRUSS HEAD (M6X1X20-MM)

32 NPR 141-6343 1 SPRING

33 NPR 3S-2093 1 STRAP-CABLE

34 NPR 106-5621 1 PLATE

35 NPR 104-2129 1 PLATE

36 NPR 8T-4205 1 WASHER-HARD (7.2X14.5X2-MM THK)

37 NPR M 8T-4244 1 NUT (M12X1.75-THD)

38 NPR M 8T-4183 1 BOLT (M12X1.75X40-MM)

Key:

M - METRIC PART

9R-9873 INSTRUMENT GP --S/N 4ZN16044-50156--PART OF 154-5483 CHASSIS AR

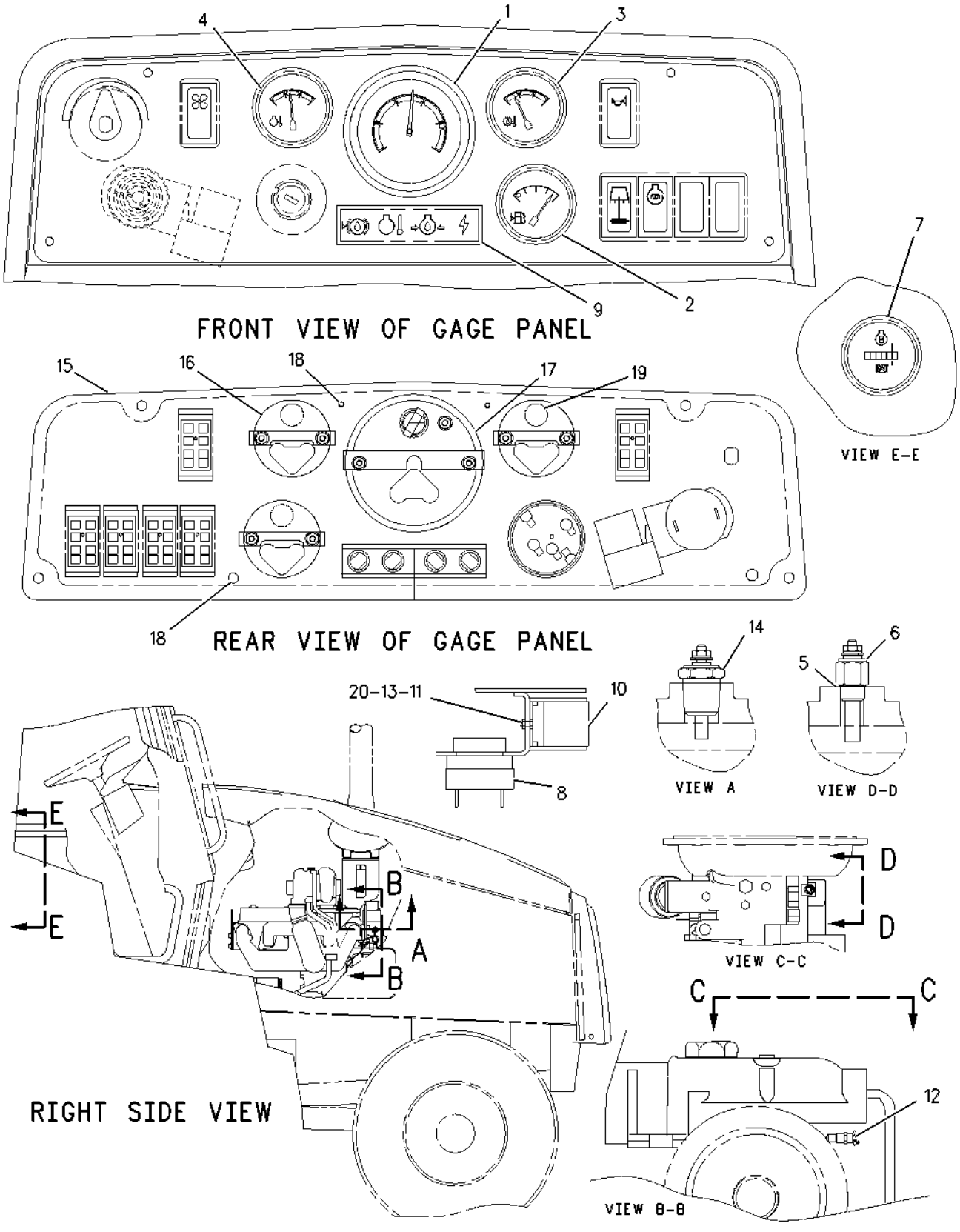

1 NPR 113-5317 1 TACHOMETER AS

NPR 122-7137 1 LAMP (12-VOLT)

NPR 4B-2043 6 NUT (8-32-THD)

NPR 9B-7233 6 LOCKWASHER

2 NPR 113-5314 1 GAUGE GP-FUEL LEVEL

NPR 4B-2043 5 NUT (8-32-THD)

NPR 9B-7233 5 LOCKWASHER

3 NPR 150-1249 1 GAUGE GP-OIL TEMPERATURE (TORQUE CONVERTER)

NPR 4B-2043 5 NUT (8-32-THD)

NPR 9B-7233 5 LOCKWASHER

4 NPR 113-5316 1 GAUGE GP-COOLANT TEMPERATURE

NPR 4B-2043 5 NUT (8-32-THD)

NPR 9B-7233 5 LOCKWASHER

5 NPR 3J-1907 1 SEAL-O-RING

6 NPR 4W-9972 1 SENDER AS-TEMPERATURE (12-VOLT)

NPR 4B-2049 1 NUT (10-32-THD)

NPR 8F-1434 1 LOCKWASHER

NPR 8T-0328 1 WASHER-HARD (5.5X10X1-MM THK)

7 NPR 205-7700 1 KIT-SERVICE METER

8 NPR 110-8046 1 HORN

9 NPR 114-8829 1 PANEL-INDICATOR

NPR 102-8805 1 KIT-RECEPTACLE (6-PIN)

(INCLUDES RECEPTACLE AS & WEDGE)

10 NPR 3E-9362 1 RELAY AS (12-VOLT)

11 NPR M 8C-7581 1 SCREW-MACHINE (M4X0.7X8-MM)

12 NPR 6T-2665 1 SWITCH AS-TEMPERATURE

NPR 6V-8376 2 SCREW-MACHINE (8-32X0.25-IN)

NPR 9B-7233 2 LOCKWASHER

13 NPR 9B-7233 1 LOCKWASHER

14	NPR	7N-8532	1	SENDER AS-TEMPERATURE (12-VOLT)
	NPR	6V-8378	1	NUT (10-32-THD)
	NPR	8F-1434	1	LOCKWASHER
	NPR	8T-0328	1	WASHER-HARD (5.5X10X1-MM THK)
15	NPR	105-2310	1	PANEL AS-INSTRUMENT
16	NPR	134-2305	3	SEAL
17	NPR	131-1424	1	SEAL
18	NPR M	9X-2043	7	SCREW-TRUSS HEAD (M6X1X14-MM)
19	NPR	8M-6176	3	LAMP (12-VOLT)
20	NPR	4B-4863	1	WASHER (4.7X11X1.2-MM THK)

Key:

M - METRIC PART

9R-9873 INSTRUMENT GP --S/N 4ZN17780-50156--PART OF 154-5483 CHASSIS AR

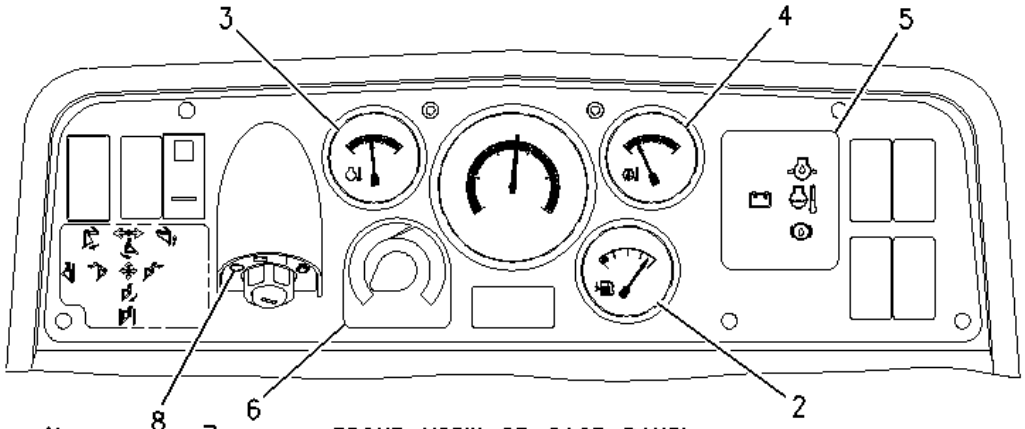

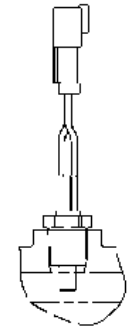

VIEW A-A

FRONT VIEW OF GAGE PANEL

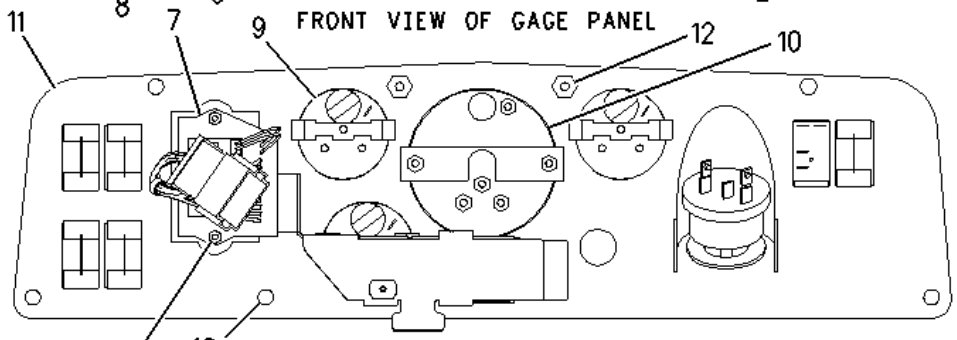

REAR VIEW OF GAGE PANEL

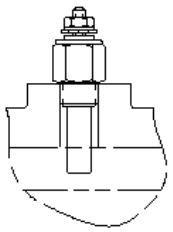

VIEW D-D

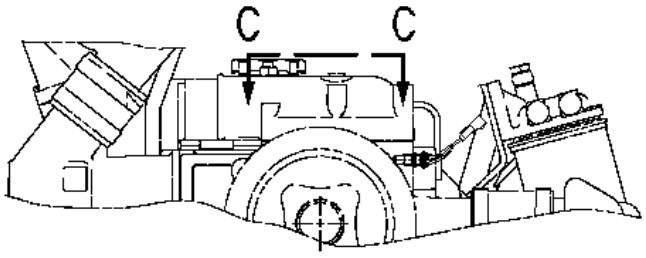

VIEW B-B

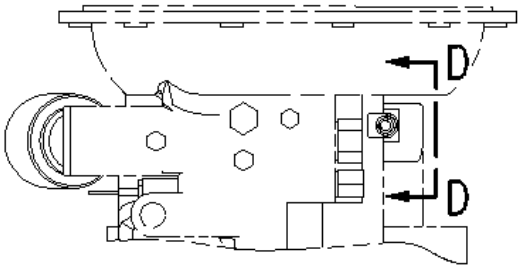

VIEW C-C

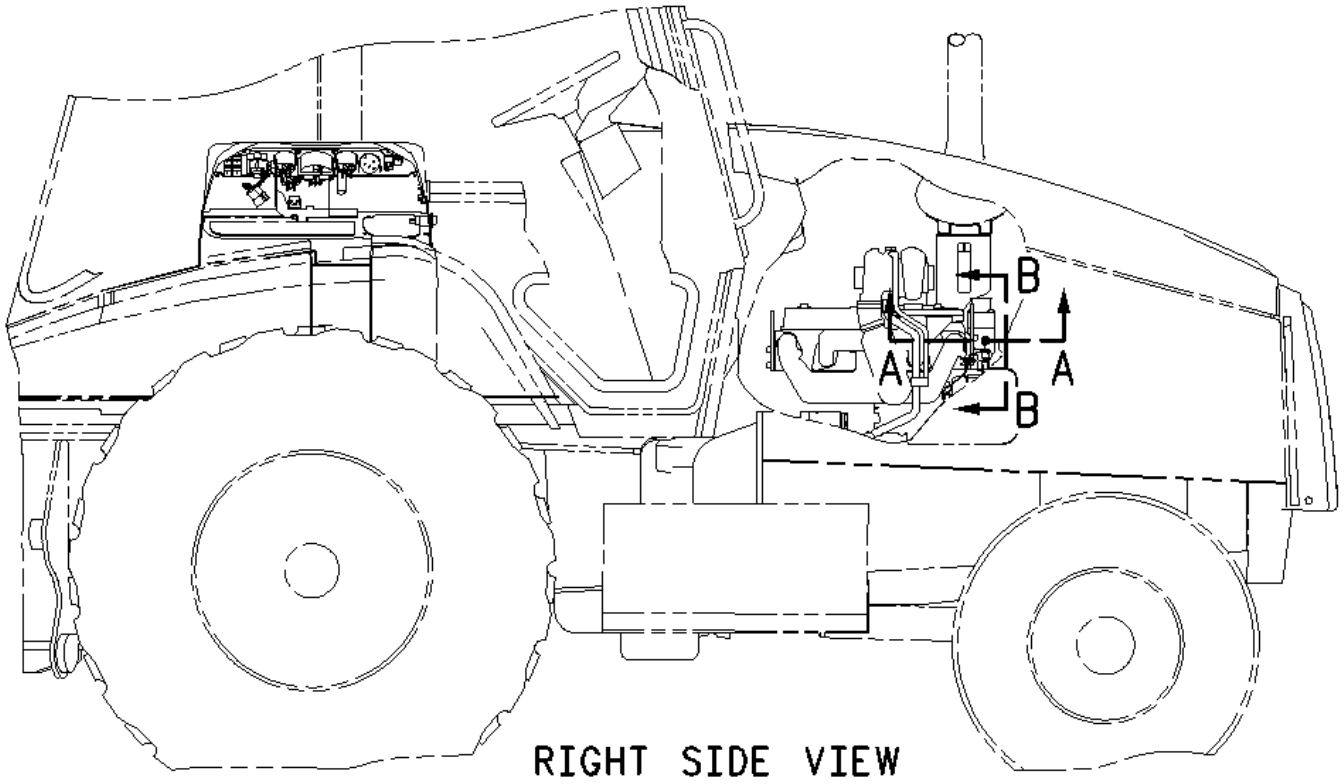

RIGHT SIDE VIEW

1 NPR 157-1997 2 SPACER (4.34X15.88X6.34-MM THK)(15.88MM THK)

2	NPR	153-0455	1	GAUGE GP-FUEL LEVEL
	NPR	4B-2043	3	NUT (8-32-THD)
	NPR	7X-9065	1	LAMP (12-VOLT)
	NPR	9B-7233	3	LOCKWASHER
3	NPR	153-0458	1	INDICATOR AS (TORQUE CONVERTER)
	NPR	4B-2043	3	NUT (8-32-THD)
	NPR	7X-9065	1	LAMP (12-VOLT)
	NPR	9B-7233	3	LOCKWASHER
4	NPR	153-0456	1	INDICATOR AS (COOLANT TEMPERATURE)
	NPR	4B-2043	3	NUT (8-32-THD)
	NPR	7X-9065	1	LAMP (12-VOLT)
	NPR	9B-7233	3	LOCKWASHER
5	NPR	148-3442	1	FILM-IDENTIFICATION
6	NPR	164-6907	1	FILM-INSTRUCTION
7	NPR Y	144-9930	1	MODULE GP-WARNING INDICATOR (WITH ALARM, FUNCTION LIGHTS)
8	NPR	169-5926	1	FILM-INSTRUCTION
9	NPR	134-2305	3	SEAL
10	NPR	131-1424	1	SEAL
11	NPR	146-7464	1	PANEL AS
	NPR M	6V-9632	2	NUT-WELD (M6X1-THD)
12	NPR M	9X-2045	7	SCREW-TRUSS HEAD (M6X1X20-MM)
14	NPR M	8T-2659	2	LOCKNUT (M4X0.7-THD)

Key:

M - METRIC PART
Y - SEPARATE ILLUSTRATION

144-9930 MODULE GP-WARNING INDICATOR -WITH ALARM, FUNCTION LIGHTS

S/N 4ZN16044-50156--12 VOLT ---PART OF 9R-9873 INSTRUMENT GP
FIELD REPLACEMENT ORDER 223-6539

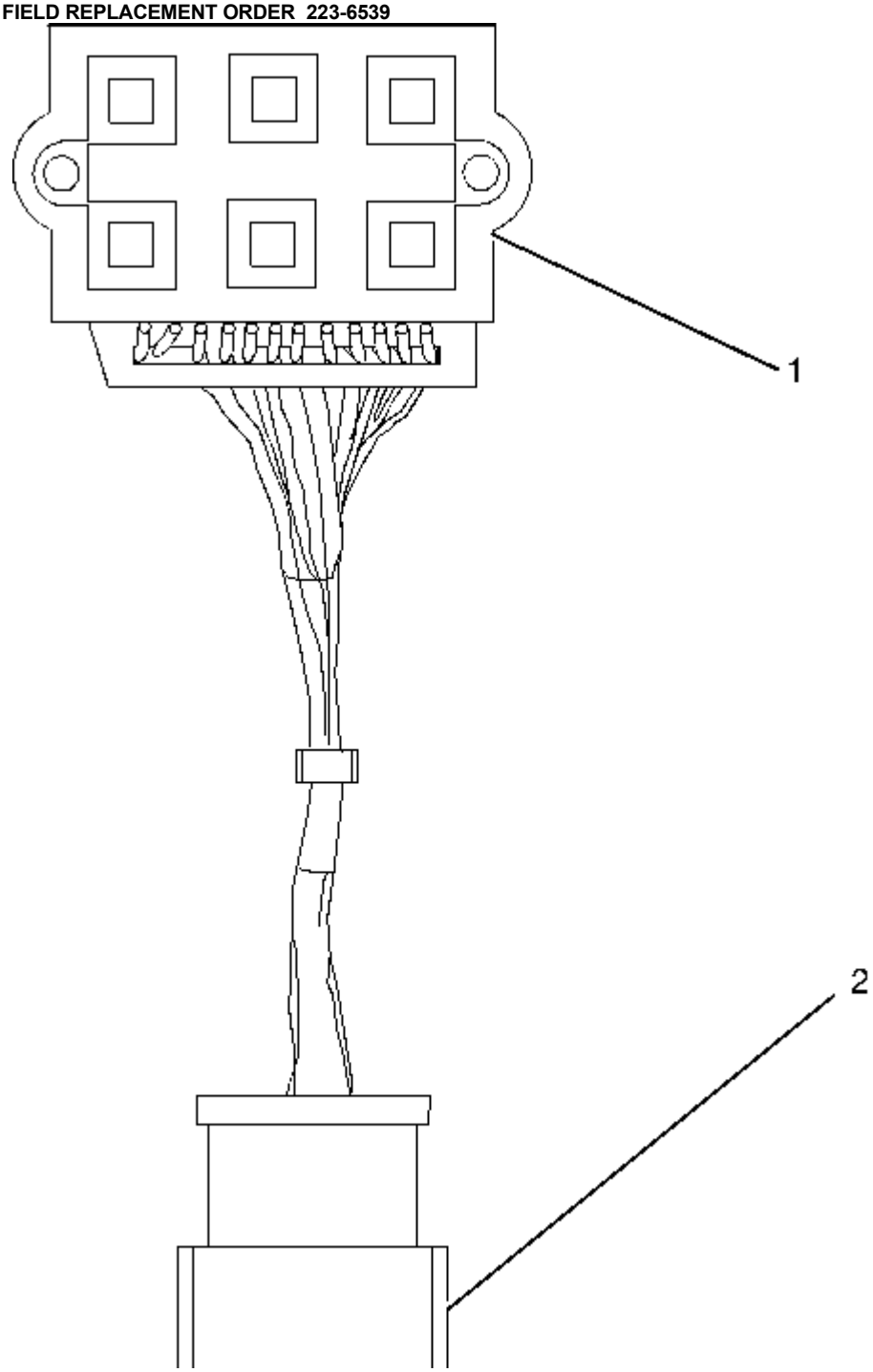

1 NPR 144-9934 1 GASKET

2 NPR 102-8801 1 KIT-RECEPTACLE (12-PIN)

(INCLUDES RECEPTACLE AS & WEDGE)

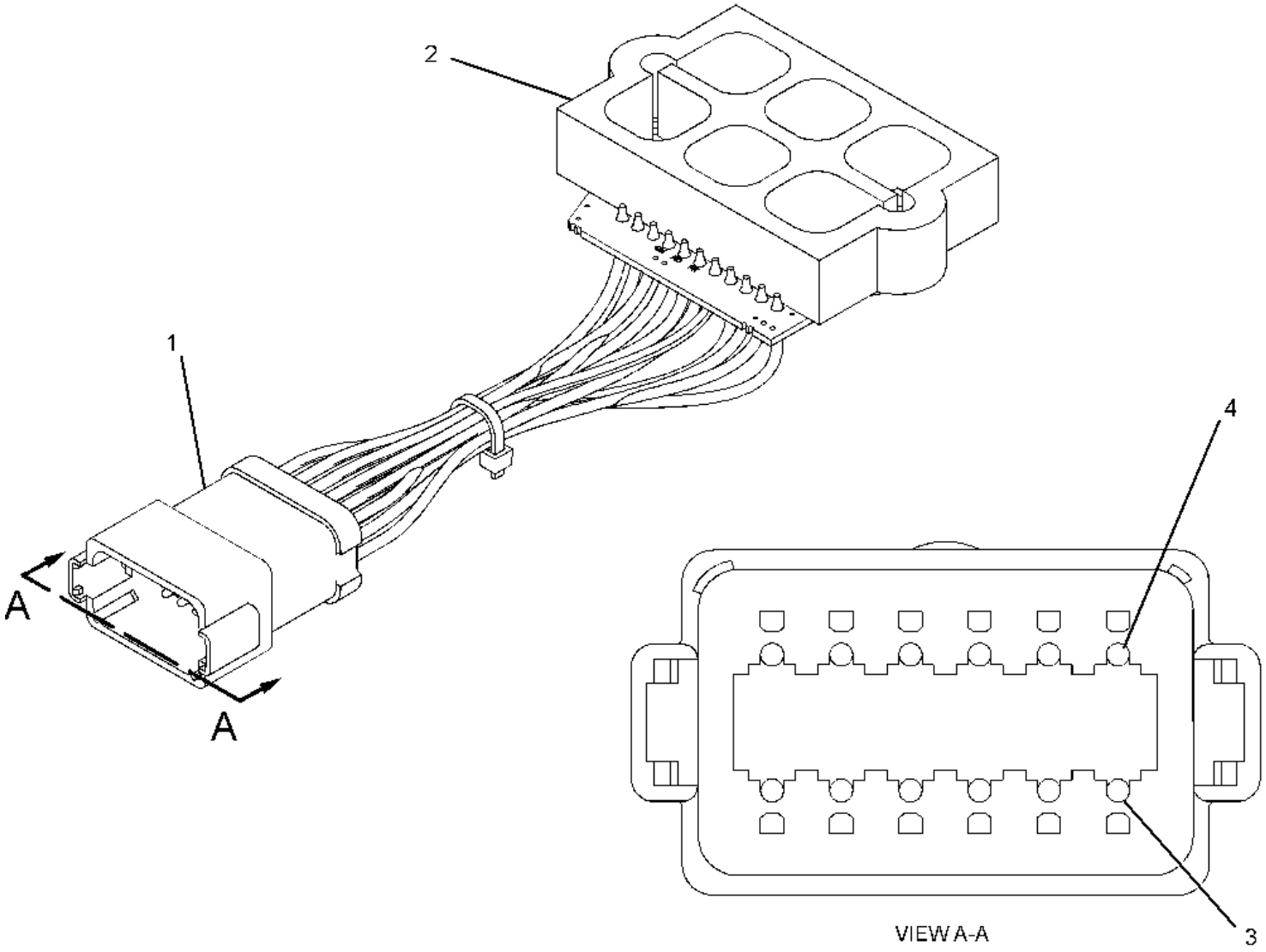

1 NPR 102-8801 1 KIT-RECEPTACLE (12-PIN)

(INCLUDES RECEPTACLE AS & WEDGE)

2 NPR 232-4706 1 GASKET

3 NPR 186-3735 9 PIN-CONNECTOR (16-GA TO 18-GA)

4 NPR 8T-8737 1 PLUG-SEAL

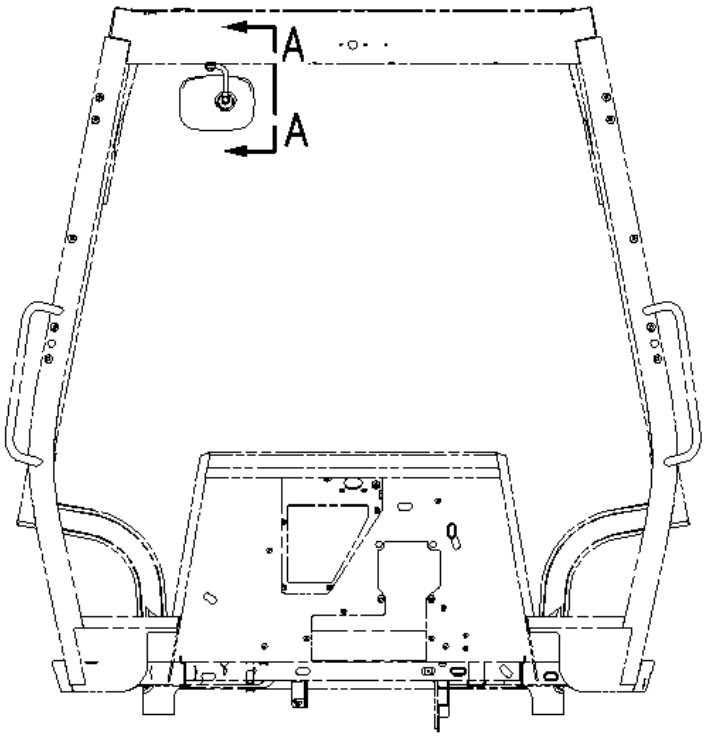

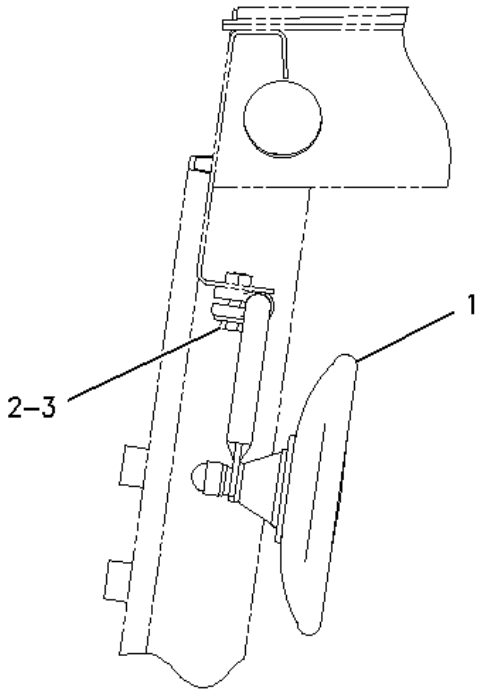

VIEW A-A

1 NPR 201-2638 1 MIRROR AS

2 NPR 5P-4115 1 WASHER-HARD (7.2X19X2-MM THK)

3 NPR M 8T-4971 1 BOLT (M6X1X30-MM)

Key: M - METRIC PART

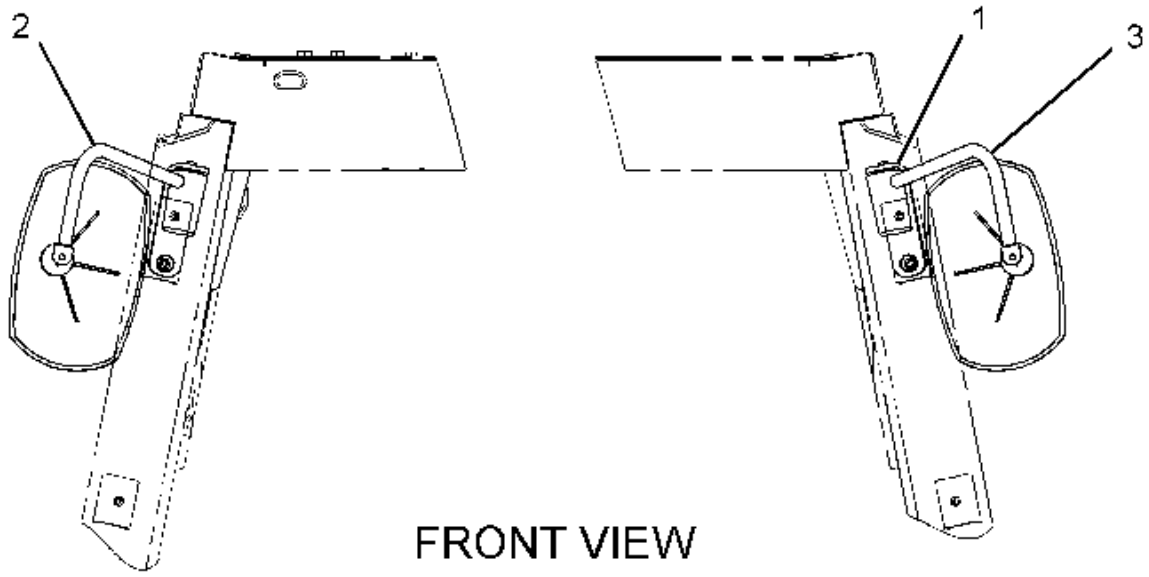

FRONT VIEW

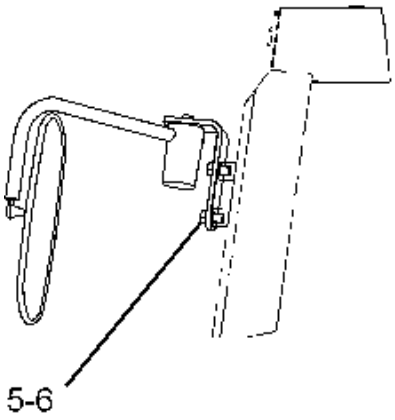

LEFT SIDE VIEW
(WITH CANOPIES)

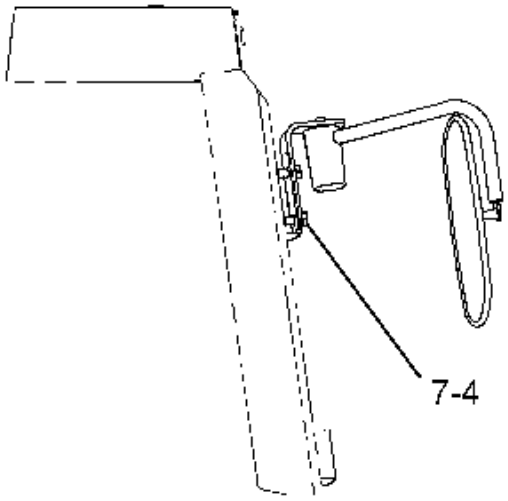

RIGHT SIDE VIEW
(WITH CABS)

1 NPR 122-2051 2 BRACKET

2 NPR 122-2053 1 MIRROR AS (LH)

3 NPR 122-2052 1 MIRROR AS (RH)

4 NPR M 8T-4137 4 BOLT (M10X1.5X20-MM)

5 NPR 8T-4121 4 WASHER-HARD (11X21X2.5-MM THK)

6 NPR 5P-4116 4 WASHER-HARD (8.8X20.5X2-MM THK)

7 NPR M 8T-4189 4 BOLT (M8X1.25X20-MM)

Key: M - METRIC PART

PART OF 154-5479, 193-2143 SUPPRESSION AR-SOUND

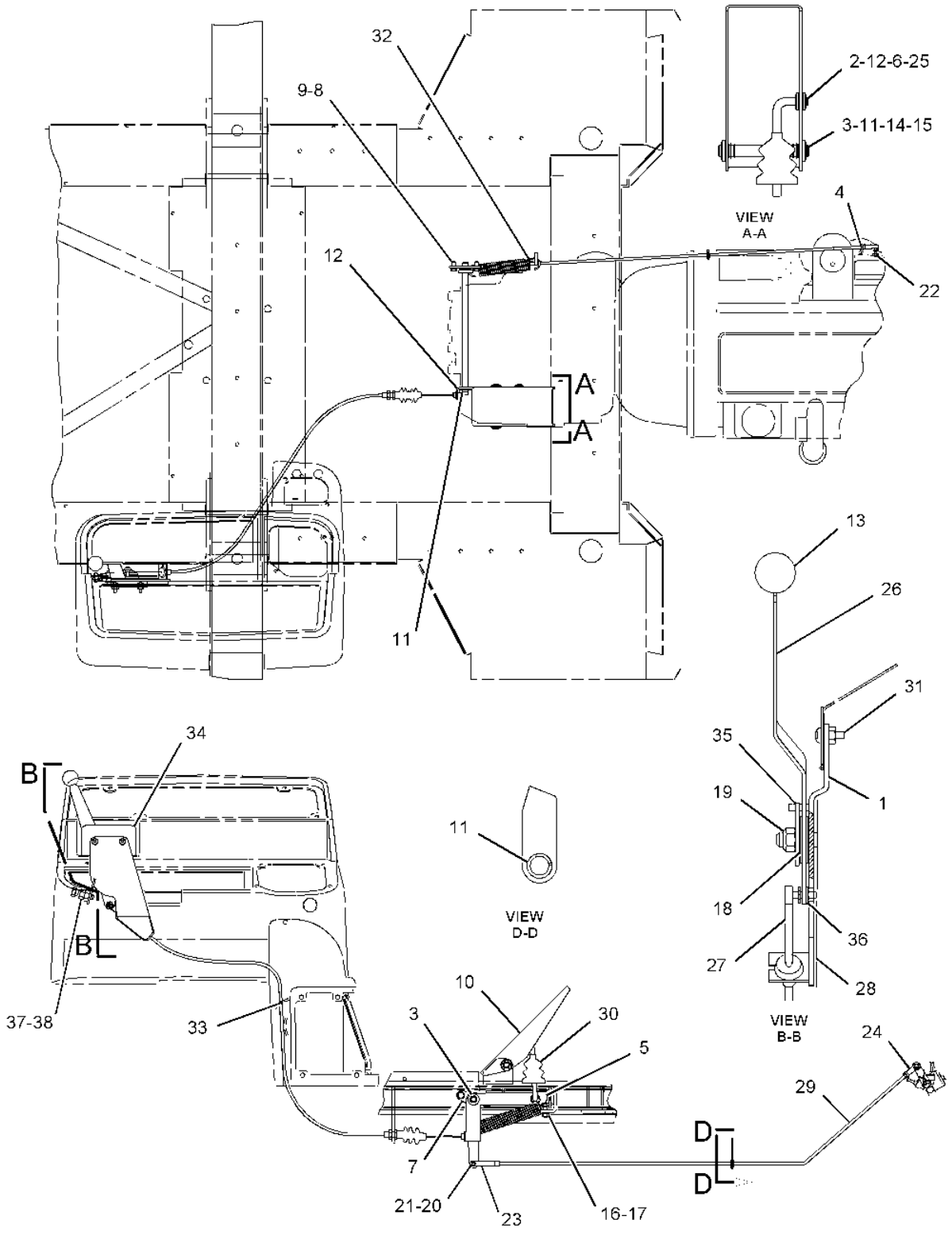

1 NPR 145-9102 1 BRACKET AS

NPR M 8T-3597 1 NUT-WELD (M12X1.75-THD)

2 NPR 9R-8081 1 ROD

3 NPR 8T-4223 4 WASHER-HARD (13.5X25.5X3-MM THK)

4 NPR M 8T-4134 1 NUT (M6X1-THD)

5 NPR 106-5159 1 SHAFT AS

6 NPR 8T-4121 4 WASHER-HARD (11X21X2.5-MM THK)

7 NPR 9R-8099 1 PLATE

8 NPR 8T-4224 2 WASHER-HARD (8.8X16X2-MM THK)

9 NPR M 8T-4200 2 BOLT (M8X1.25X16-MM)

10 NPR 9R-4940 1 PEDAL

11 NPR 9R-1586 7 BEARING

12 NPR 8S-7803 5 RING-RETAINING

13 NPR 8T-3984 1 KNOB

14 NPR 9R-8094 1 PIN

15 NPR 7S-5757 2 RING-RETAINING

16 NPR M 8T-4908 1 BOLT (M8X1.25X25-MM)

17 NPR M 5C-7261 1 NUT (M8X1.25-THD)

18 NPR 5D-0998 4 SPRING-DISC

19 NPR M 6V-7687 1 LOCKNUT (M12X1.75-THD)

20 NPR 8T-6902 1 CLIP

21 NPR 8T-6904 1 PIN-CLEVIS

22 NPR M 6V-7743 1 LOCKNUT (M6X1-THD)

23 NPR 8C-3437 1 END-YOKE ROD

24 NPR 8T-4765 1 ROD END

25 NPR 9R-8084 2 BEARING

26 NPR 164-2255 1 LEVER AS

27 NPR 104-2128 1 CABLE AS

NPR 6V-8187 1 NUT (1/4-28-THD)

NPR 8T-4205 1 WASHER-HARD (7.2X14.5X2-MM THK)

NPR 118-1177 1 BALL JOINT

28 NPR 127-0340 1 PAD

29 NPR 106-5155 1 ROD

30 NPR 9R-1581 1 BOOT

31 NPR M 9X-2045 2 SCREW-TRUSS HEAD (M6X1X20-MM)

32 NPR 141-6343 1 SPRING

33 NPR 3S-2093 1 STRAP-CABLE

34 NPR 106-5621 1 PLATE

35 NPR 104-2129 1 PLATE

36 NPR 8T-4205 1 WASHER-HARD (7.2X14.5X2-MM THK)

37 NPR M 8T-4244 1 NUT (M12X1.75-THD)

38 NPR M 8T-4183 1 BOLT (M12X1.75X40-MM)

Key: M - METRIC PART

141-5759 HORN GP-ELECTRIC -REAR --S/N 4ZN16044-50156--Type 1

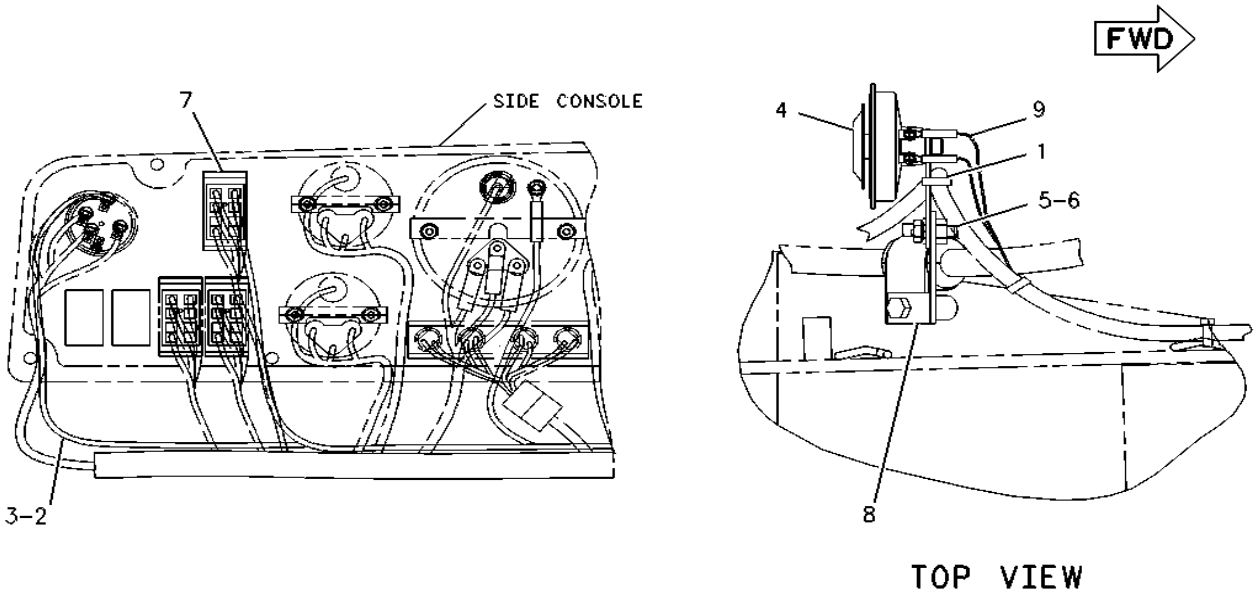

1 NPR 3S-2093 2 STRAP-CABLE

2 NPR 142-4118 1 HARNESS AS (HORN)

NPR 102-8802 1 KIT-RECEPTACLE (2-PIN)

(INCLUDES RECEPTACLE AS & WEDGE)

3 NPR 142-4120 1 HARNESS AS (HORN)

NPR 155-2270 1 KIT-CONNECTING PLUG (2-PIN)

(INCLUDES PLUG AS, WEDGE, & INTERFACE SEAL)

NPR 102-8802 1 KIT-RECEPTACLE (2-PIN)

(INCLUDES RECEPTACLE AS & WEDGE)

4 NPR 7T-0635 1 HORN AS (12-VOLT)

NPR M 8C-7581 2 SCREW-MACHINE (M4X0.7X8-MM)

NPR 9B-7233 2 LOCKWASHER

5 NPR 8T-4121 1 WASHER-HARD (11X21X2.5-MM THK)

6 NPR M 8T-4136 1 BOLT (M10X1.5X25-MM)

7 NPR 106-6570 1 SWITCH AS-ROCKER (HORN)

NPR 111-7899 1 GASKET

8 NPR 141-9962 1 BRACKET AS

NPR M 8T-3490 1 NUT-WELD (M10X1.5-THD)

9 NPR 142-4119 1 HARNESS AS (HORN)

NPR 155-2270 1 KIT-CONNECTING PLUG (2-PIN)

Key: M - METRIC PART

141-5759 HORN GP-ELECTRIC -REAR --S/N 4ZN16044-50156--Type 2

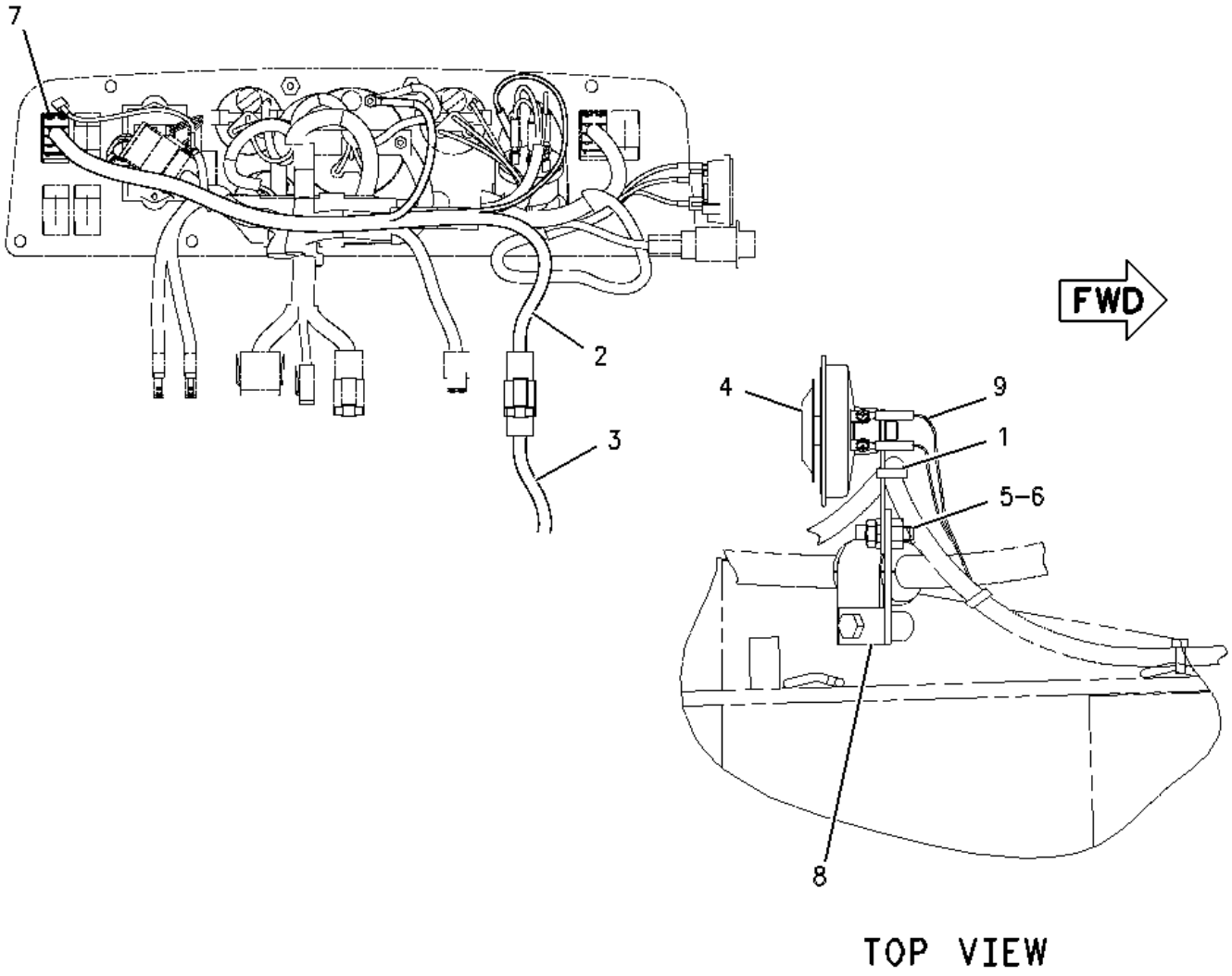

TOP VIEW

1 NPR 3S-2093 2 STRAP-CABLE

2 NPR C 153-2784 1 HARNESS AS (HORN)

NPR 102-8802 1 KIT-RECEPTACLE (2-PIN)

(INCLUDES RECEPTACLE AS & WEDGE)

3 NPR 142-4120 1 HARNESS AS (HORN)

NPR 155-2270 1 KIT-CONNECTING PLUG (2-PIN)

(INCLUDES PLUG AS, WEDGE, & INTERFACE SEAL)

NPR 102-8802 1 KIT-RECEPTACLE (2-PIN)

(INCLUDES RECEPTACLE AS & WEDGE)

4 NPR 7T-0635 1 HORN AS (12-VOLT)

	NPR M	8C-7581	2	SCREW-MACHINE (M4X0.7X8-MM)
	NPR	9B-7233	2	LOCKWASHER
	NPR	096-6166	2	WASHER-HARD (4.5X9X1-MM THK)
	NPR M	8C-7581	2	SCREW-MACHINE (M4X0.7X8-MM)
5	NPR	8T-4121	1	WASHER-HARD (11X21X2.5-MM THK)
6	NPR M	8T-4136	1	BOLT (M10X1.5X25-MM)
7	NPR	106-6570	1	SWITCH AS-ROCKER (HORN)
	NPR	111-7899	1	GASKET
8	NPR	141-9962	1	BRACKET AS
	NPR M	8T-3490	1	NUT-WELD (M10X1.5-THD)
9	NPR	142-4119	1	HARNESS AS (HORN)
	NPR	155-2270	1	KIT-CONNECTING PLUG (2-PIN)

(INCLUDES PLUG AS, WEDGE, & INTERFACE SEAL)

Key: C - CHANGE FROM PREVIOUS TYPE M - METRIC PART

104-6038 HEATER GP-CAB --S/N 4ZN16044-50156--PART OF 154-5473 CAB AR-ENCLOSED ROPS

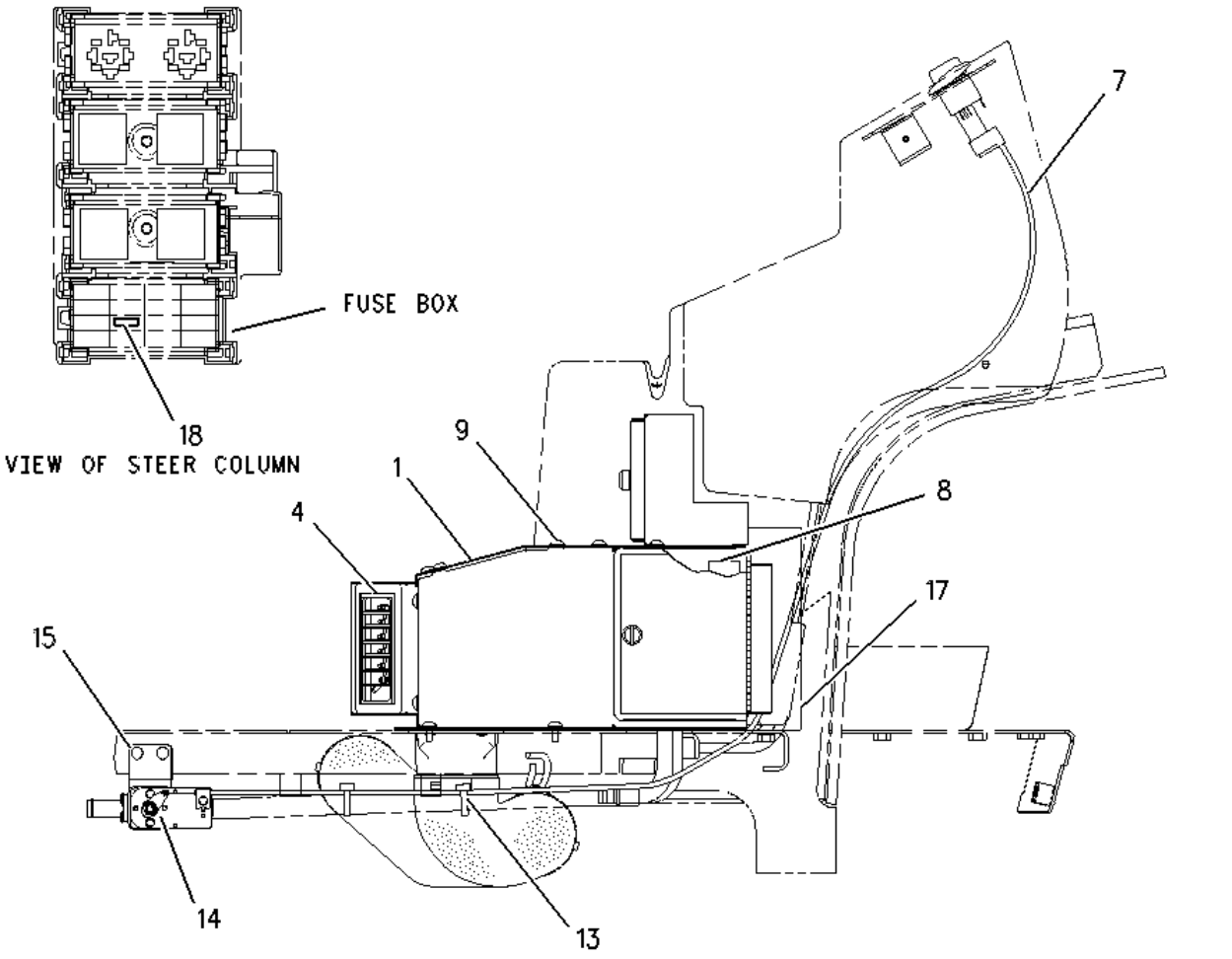

REAR VIEW

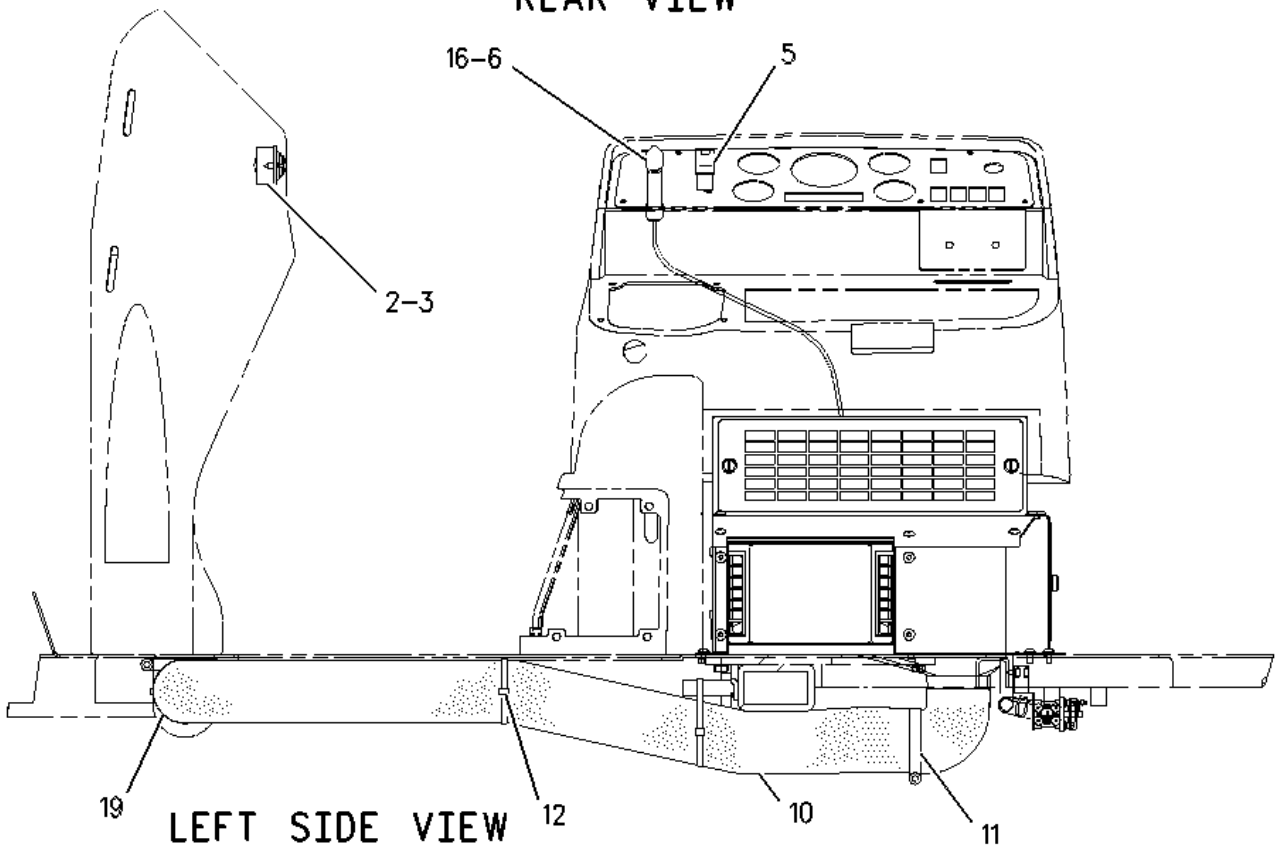

LEFT SIDE VIEW

2 NPR 8Y-6388 2 LOUVER AS

3 NPR 104-2091 4 SCREW-FLAT HEAD (NO 6X0.5-IN)

4 NPR 8Y-6967 2 LOUVER AS

5 NPR 114-4519 1 SWITCH AS-ROCKER (BLOWER FAN SPEED)

NPR 111-7899 1 GASKET

6 NPR 2V-0099 1 KNOB-CONTROL

7 156-4455 1 CABLE AS

NPR 143-8874 1 BOOT

8 NPR 104-6040 1 FILTER

9 NPR M 9X-2043 3 SCREW-TRUSS HEAD (M6X1X14-MM)

10 NPR C 147-0391 1 HOSE

11 NPR 9M-7959 2 CLAMP-HOSE

12 NPR C 7K-1181 2 STRAP-CABLE

13 NPR 3S-2093 2 STRAP-CABLE

14 NPR 134-1009 1 VALVE AS-WATER

NPR 6V-6717 1 SCREW-WASHER HEAD (8-32X9.52-MM)

NPR 3E-1841 1 LEVER

NPR 8Y-5737 1 CLAMP

NPR 037-4426 1 RETAINER

NPR 102-0341 1 CLIP (TAB)

15 NPR M 131-3985 2 SCREW (M6X1-THD)

16 NPR 2H-3920 1 LOCKWASHER

17 NPR 130-6874 1 SEAL-HEATER

18 NPR 113-8492 1 FUSE (20-AMPERE)

19 NPR 034-1432 1 STRAP-CABLE

Key: C - CHANGE FROM PREVIOUS TYPE M - METRIC PART Y - SEPARATE ILLUSTRATION

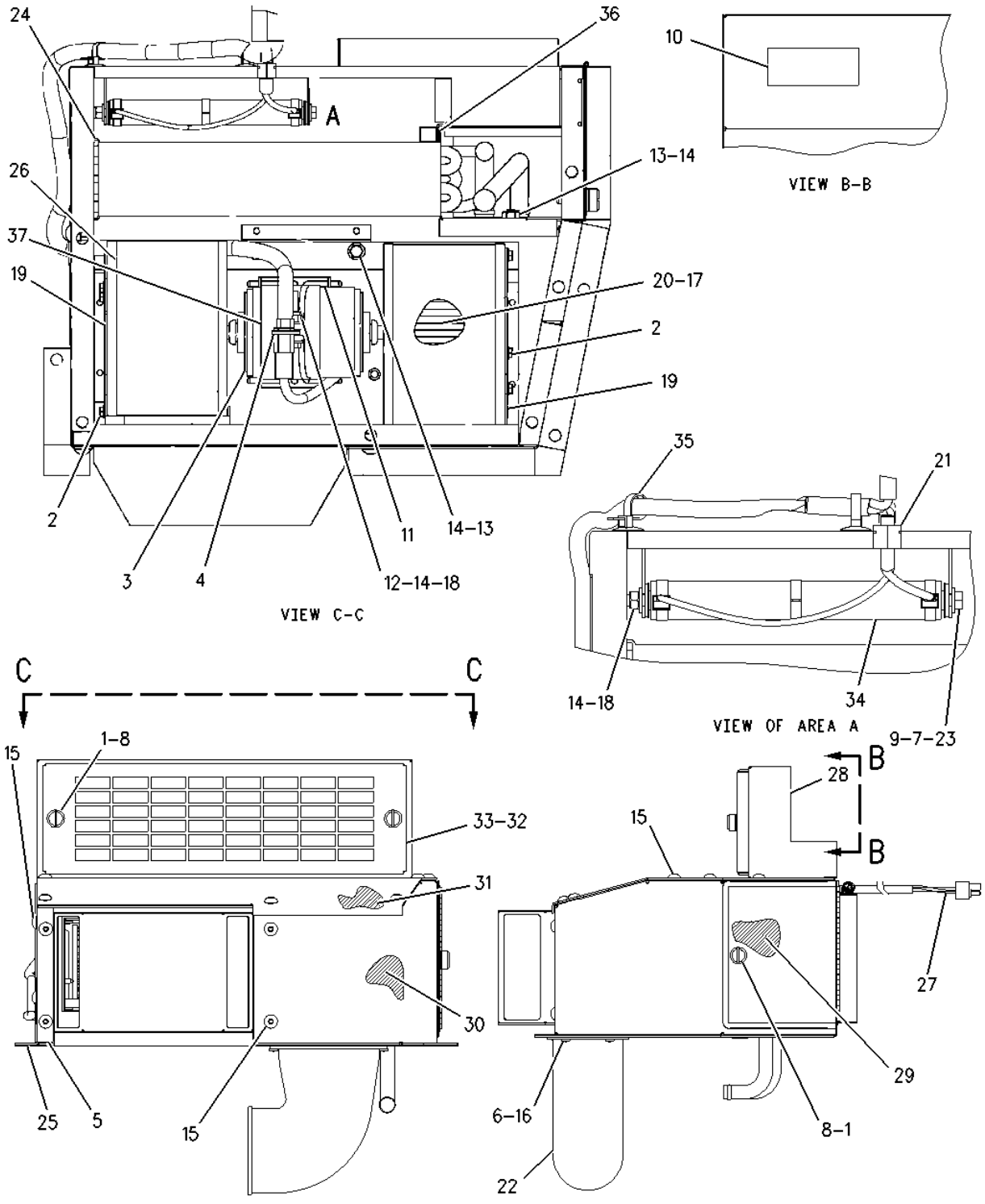

1 NPR 2R-2376 3 WASHER (7X16X0.8-MM THK)

2 NPR 2S-3745 6 SCREW-TAPPING (10-16X0.5-IN)

3 NPR 174-1490 1 MOTOR AS-ELECTRIC

NPR 7T-0093 2 PIN-CONNECTOR

4 NPR 3S-2093 1 STRAP-CABLE

5 NPR 3T-6774 1 GROMMET

6 NPR 6K-3274 4 PLATE-RIVET

7	NPR	6V-1668	2	WASHER (6.5X29.1X3-MM THK)
8	NPR	7K-3262	3	SCREW (THUMB)
9	NPR M	7X-0490	1	BOLT (M6X200-MM)
10	NPR	8C-3756	1	FILM-IDENTIFICATION (GROUP NUMBER)
11	NPR	8C-4586	2	CLAMP
12	NPR M	6V-7728	1	BOLT (M6X1X45-MM)
13	NPR M	8T-4171	4	BOLT (M6X1X12-MM)
14	NPR	8T-4205	8	WASHER-HARD (7.2X14.5X2-MM THK)
15	NPR M	9X-2044	12	SCREW-TRUSS HEAD (M6X1X16-MM)
16	NPR	033-7291	4	RIVET
17	NPR	037-4838	2	CLAMP
18	NPR M	129-3178	2	LOCKNUT (M6X1-THD)
19	NPR	100-3143	2	PLATE-ORIFICE
20	NPR	100-3426	2	WHEEL AS-BLOWER
21	NPR	114-3140	1	GROMMET
22	NPR	141-1642	1	ADAPTER
23	NPR	124-7141	2	WASHER (M9X20X3.5-MM THK)
24	NPR	124-7155	1	COIL AS-HEATER
25	NPR	131-7784	1	CASE AS
26	NPR	133-7469	1	BLOWER AS
27	NPR	193-5777	1	HARNESS AS
	NPR	177-9645	1	KIT-RECEPTACLE (2-PIN)
	(INCLUDES RECEPTACLE AS & WEDGE)			
	NPR	177-9648	1	KIT-CONNECTING PLUG (2-PIN)
	(INCLUDES PLUG AS & WEDGE)			
28	NPR	133-7477	1	COVER AS
29	NPR	133-7480	1	GASKET
30	NPR	133-7485	1	GASKET
31	NPR	133-7487	1	GASKET
32	NPR	133-7488	1	FILTER-RECIRCULATION
33	NPR	134-0168	1	COVER
34	NPR	134-2885	1	RESISTOR
35	NPR	134-3518	2	TIE-PUSH MOUNT
36	NPR BD	5P-5969		SEAL
37	NPR BD	5P-5908		SEAL

Key: B - USE AS REQUIRED D - ORDER BY THE METER M - METRIC PART

104-6043 LINES GP-HEATER --S/N 4ZN16044-50156-PART OF 154-5473 CAB AR-ENCLOSED ROPS

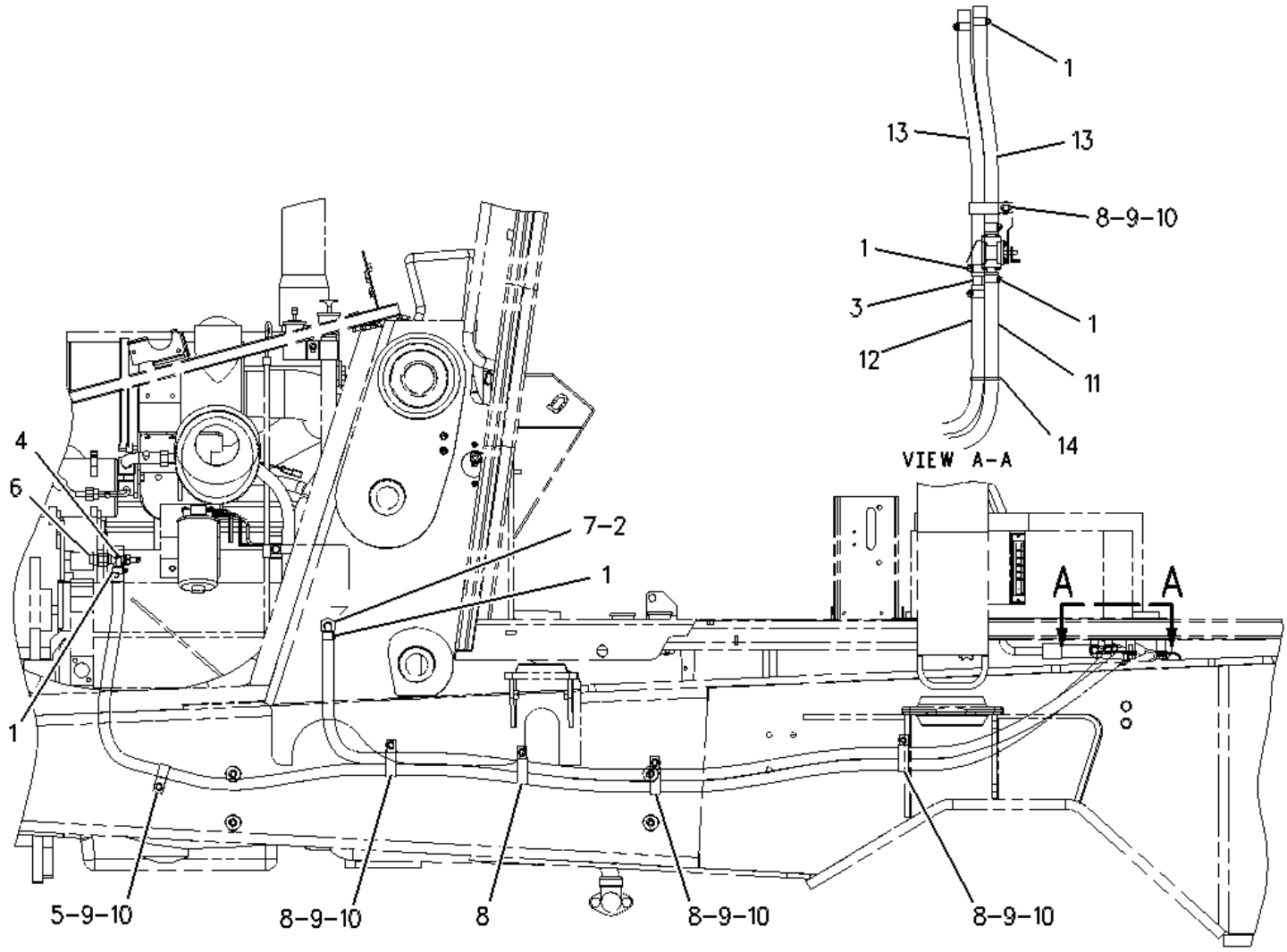

1	NPR	5D-1026	8	CLAMP-HOSE
2	NPR	6B-4661	1	BUSHING-REDUCER
3	NPR	6P-8855	1	SPACER (0.56X0.625X3-IN THK)
4	NPR	8F-8151	1	VALVE AS-SHUTOFF
5	NPR	7C-4354	1	CLIP
6	NPR	004-6557	1	BUSHING-REDUCER
7	NPR	004-6810	1	ELBOW
8	NPR	3E-4321	5	CLIP (SLOT)
9	NPR	8T-4121	5	WASHER-HARD (11X21X2.5-MM THK)
10	NPR M	8T-4137	5	BOLT (M10X1.5X20-MM)
11	NPR E	6V-5651		HOSE (215CM)
12	NPR E	6V-5651		HOSE (255CM)
13	NPR E	6V-5651		HOSE (51CM)
14	NPR	3S-2093	1	STRAP-CABLE

Key: E - ORDER BY THE CENTIMETER M - METRIC PART

104-9476 FAN GP-CIRCULATING -S/N 4ZN16044-50156

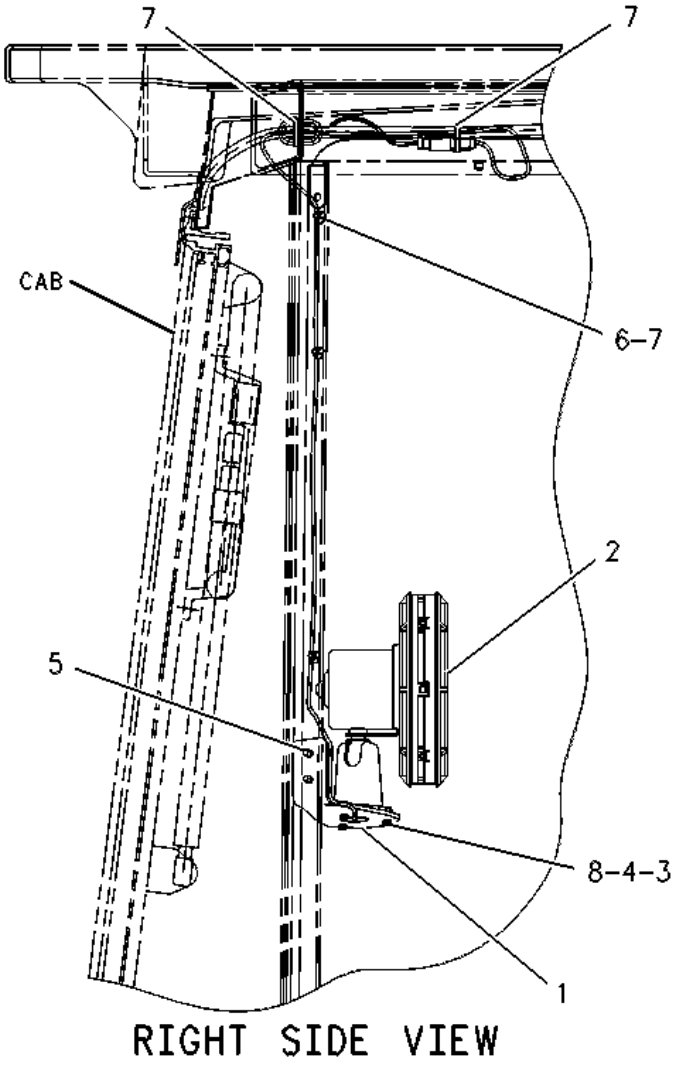

RIGHT SIDE VIEW

1 NPR 104-3444 1 BRACKET AS

2 NPR 106-1744 1 FAN GP-CIRCULATING

NPR 186-3735 2 PIN-CONNECTOR (16-GA TO 18-GA)

NPR 102-8802 1 KIT-RECEPTACLE (2-PIN)

(INCLUDES RECEPTACLE AS & WEDGE)

3 NPR M 9X-1046 3 SCREW (M4X0.7X18-MM)

4 NPR M 5C-8312 3 NUT (M4X0.7-THD)

5 NPR M 9X-2045 2 SCREW-TRUSS HEAD (M6X1X20-MM)

6 NPR 129-4654 3 FASTENER

7 NPR 1S-9593 6 STRAP-CABLE

8 NPR 4B-4863 3 WASHER (4.7X11X1.2-MM THK)

Key: M - METRIC PART

159-4959 DOOR GP-CAB --S/N 4ZN17195-50156--PART OF 154-5476 CAB GP

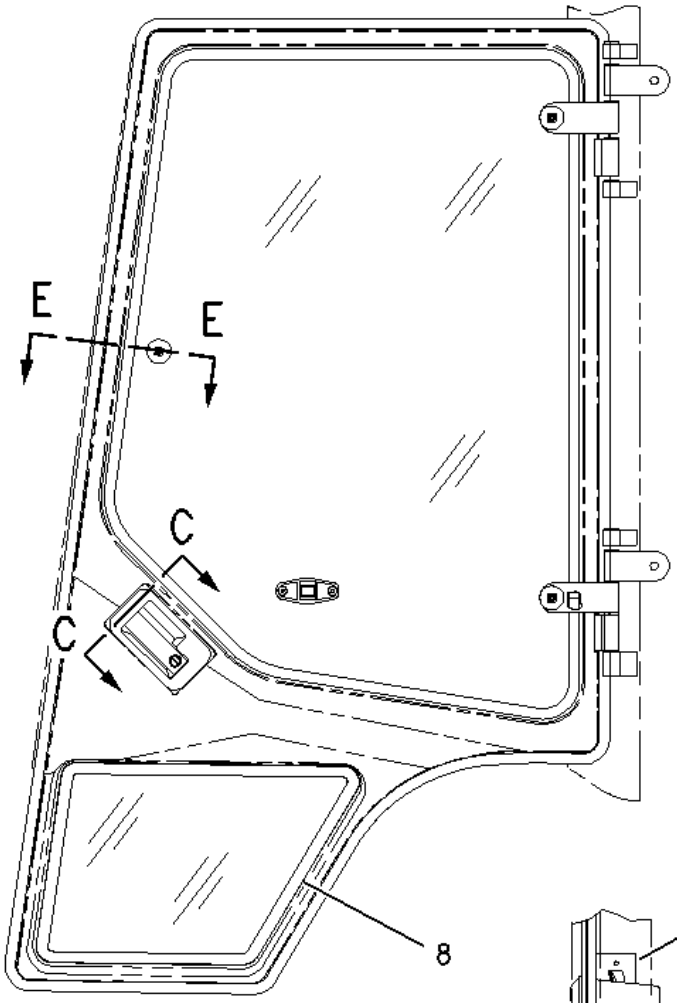

LEFT SIDE VIEW

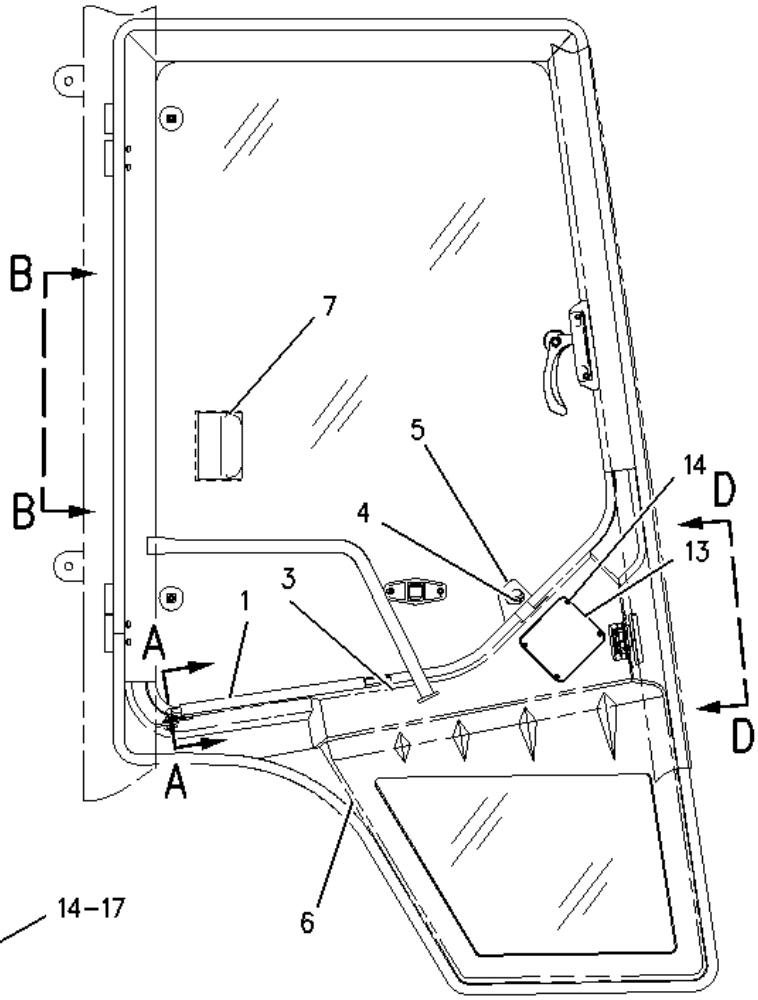

RIGHT SIDE VIEW

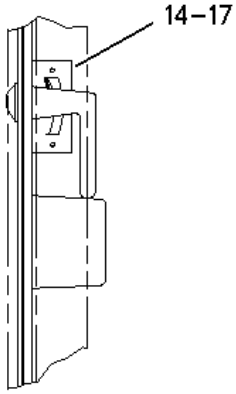

VIEW B-B

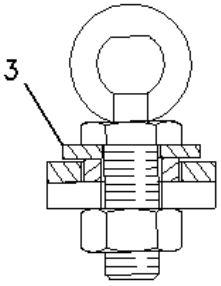

SECTION A-A

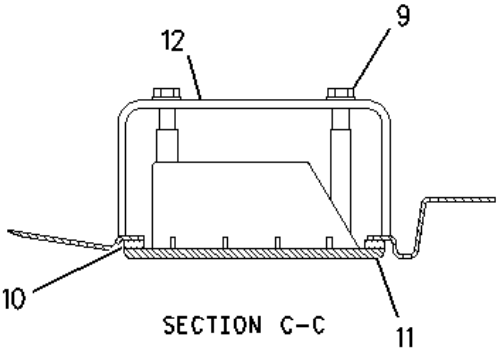

SECTION C-C

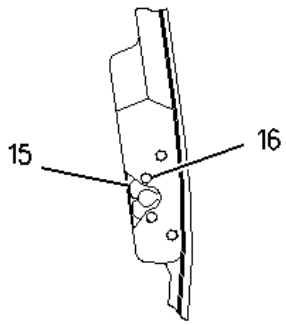

SECTION D-D

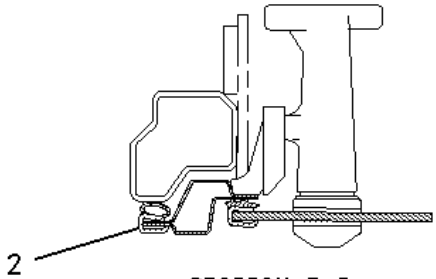

SECTION E-E

1 NPR 159-4269 1 SPRING AS-GAS

NPR 161-9044 1 KIT-FITTING

(KIT INCLUDES NUT AND FITTING AS)

2 NPR BE 148-5355 SEAL

3 NPR 5P-4116 2 WASHER-HARD (8.8X20.5X2-MM THK)

4 NPR M 8T-4171 1 BOLT (M6X1X12-MM)

5 NPR 7X-2497 1 HANDLE-DOOR

6 159-4953 1 DOOR AS

NPR M 8T-3612 1 NUT-WELD (M8X1.25-THD)

NPR 8Y-7310 2 HINGE AS

7 Y 159-4957 1 WINDOW GP-DOOR (LH)

8 NPR 8Y-7264 1 GLASS (LH)(LOWER LH)

9 NPR M 8T-4180 4 SCREW-MACHINE (M5X0.8X20-MM)

10 NPR 8Y-6386 1 SEAL-HANDLE

11 NPR 148-7319 1 HANDLE AS

12 NPR 147-3019 2 BRACKET

13 NPR 8Y-7306 1 COVER

14 NPR M 131-3987 6 SCREW (M4X0.7X12-MM)

15 NPR 148-7311 1 LATCH AS-ROTARY

16 NPR M 8T-4181 4 BOLT (M6X1X20-MM)

17 NPR 159-4946 1 KEEPER

Key: B - USE AS REQUIRED E - ORDER BY THE CENTIMETER M - METRIC PART Y - SEPARATE ILLUSTRATION

159-4960 DOOR GP-CAB ---S/N 4ZN17195-50156---PART OF 154-5476 CAB GP

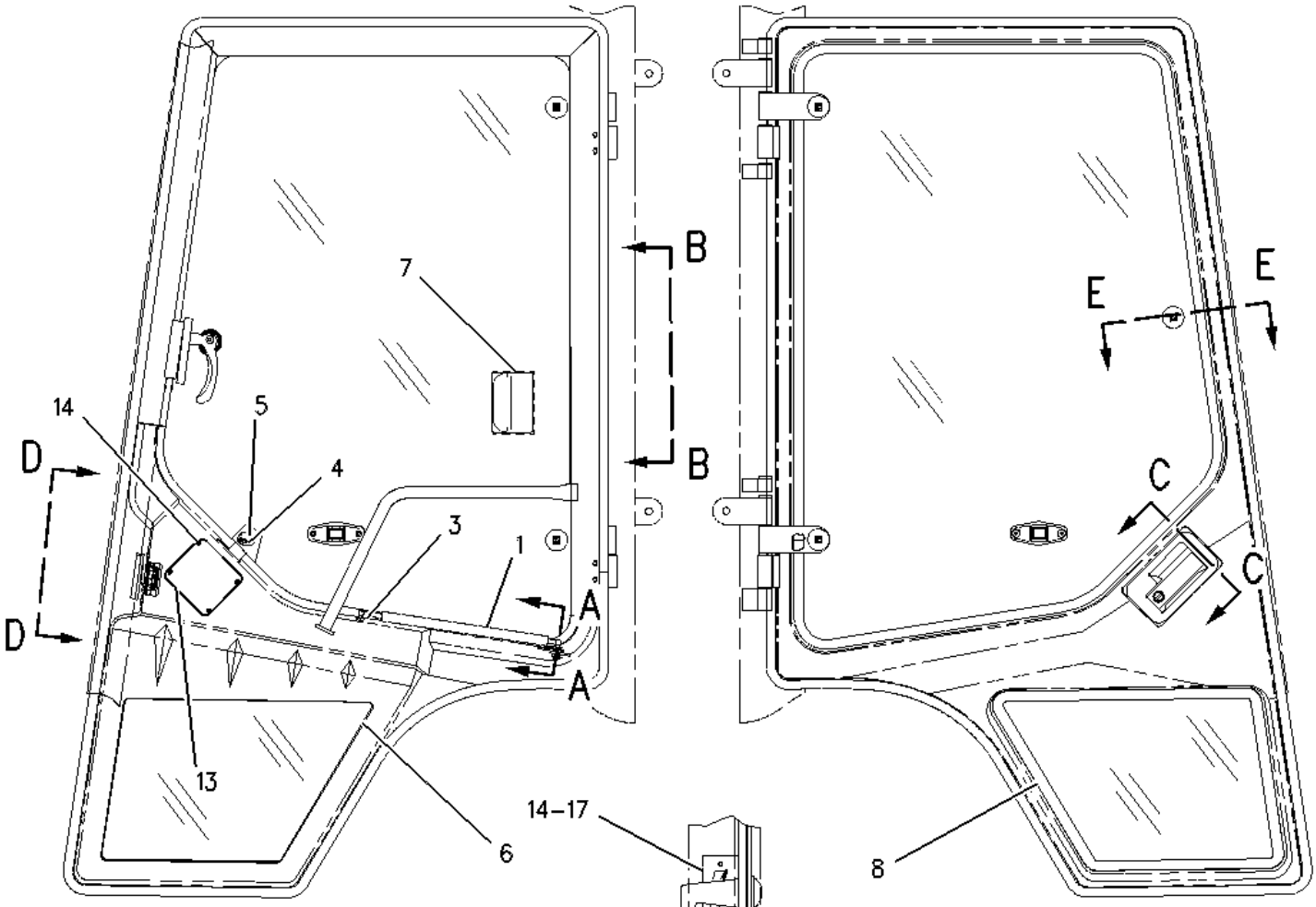

LEFT SIDE VIEW

RIGHT SIDE VIEW

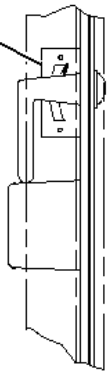

VIEW B-B

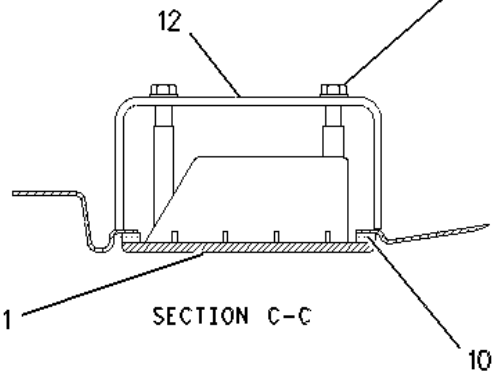

SECTION C-C

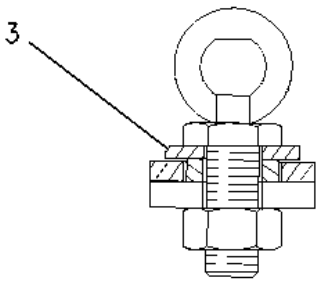

SECTION A-A

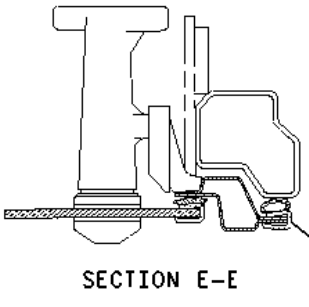

SECTION E-E

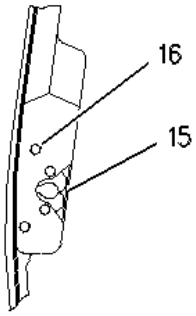

VIEW D-D

1	NPR	159-4269	1	SPRING AS-GAS
	NPR	161-9044	1	KIT-FITTING
2	NPR BE	148-5355		SEAL
3	NPR	5P-4116	2	WASHER-HARD (8.8X20.5X2-MM THK)
4	NPR M	8T-4171	1	BOLT (M6X1X12-MM)
5	NPR	7X-2497	1	HANDLE-DOOR
6		159-4954	1	DOOR AS
	NPR M	8T-3612	1	NUT-WELD (M8X1.25-THD)
	NPR	8Y-7310	2	HINGE AS
7	Y	159-4958	1	WINDOW GP-DOOR (RH)
8	NPR	8Y-7263	1	GLASS (RH)
9	NPR M	8T-4180	4	SCREW-MACHINE (M5X0.8X20-MM)
10	NPR	8Y-6386	1	SEAL-HANDLE
11	NPR	148-7318	1	HANDLE AS
12	NPR	147-3019	2	BRACKET
13	NPR	8Y-7306	1	COVER
14	NPR M	131-3987	6	SCREW (M4X0.7X12-MM)
15	NPR	148-7310	1	LATCH AS-ROTARY
16	NPR M	8T-4181	4	BOLT (M6X1X20-MM)
17	NPR	159-4945	1	KEEPER

Key: B - USE AS REQUIRED E - ORDER BY THE CENTIMETER M - METRIC PART Y - SEPARATE ILLUSTRATION

154-5425 WINDOW GP-DOOR -S/N 4ZN17195-50156-LH --PART OF 154-5476 CAB GP

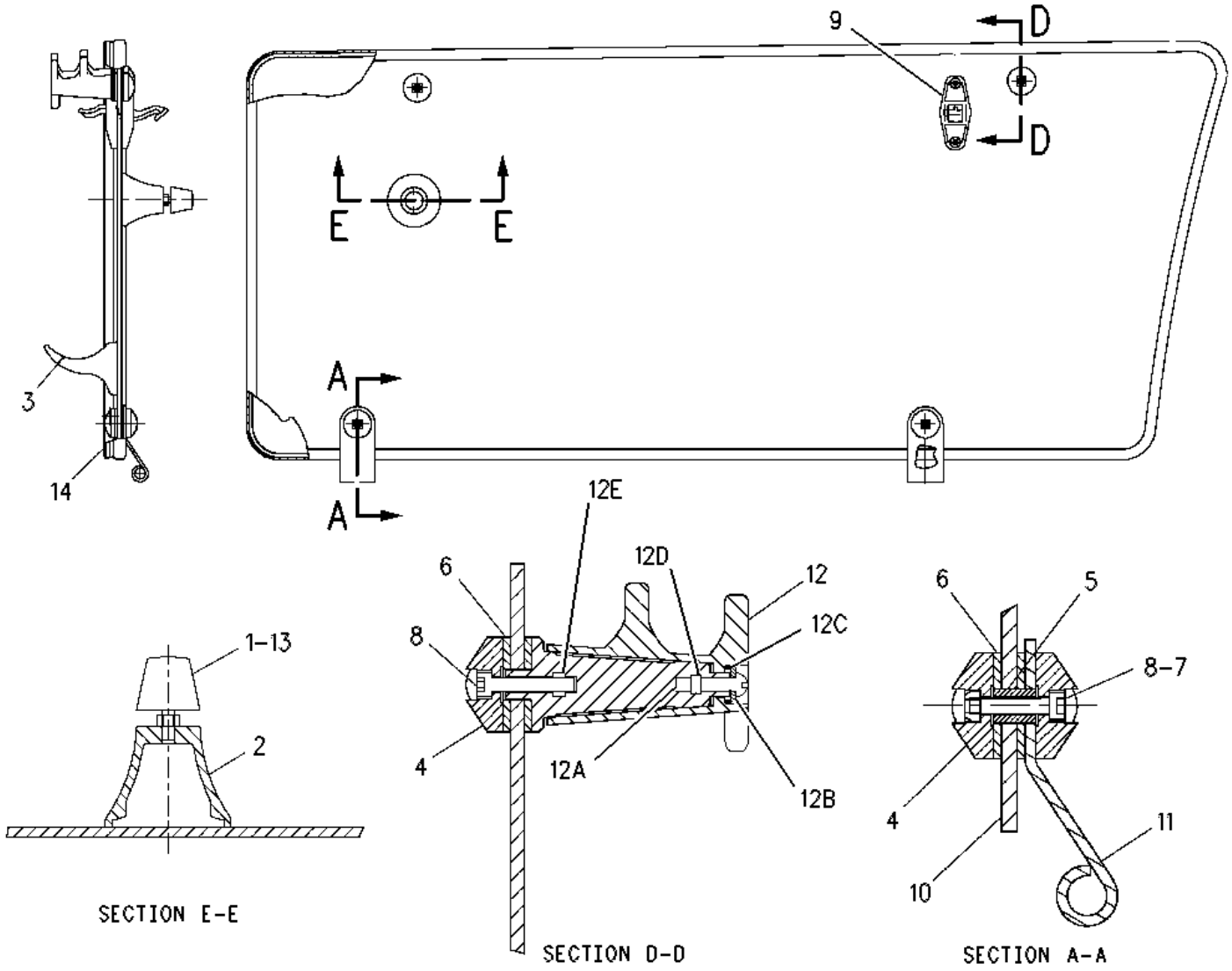

1 NPR 7X-2393 1 BUMPER-CONICAL
2 NPR 8Y-7309 1 RETAINER
3 NPR 100-7608 1 HANDLE
4 NPR 129-8542 6 RETAINER
5 NPR 154-5423 2 SPACER (6.6X12.7X17-MM THK)
6 NPR 129-8545 8 WASHER (13X40X3-MM THK)
7 NPR M 6V-7743 1 LOCKNUT (M6X1-THD)
8 NPR M 136-4192 4 BOLT (M6X1X35-MM)
9 NPR 143-2830 1 LATCH AS
NPR 143-2827 1 SPRING
NPR M 6V-7743 2 LOCKNUT (M6X1-THD)
NPR M 9X-2045 2 SCREW-TRUSS HEAD (M6X1X20-MM)
10 NPR 154-5421 1 GLASS-CAB
11 NPR 154-5424 2 HINGE
12 NPR 159-4950 2 LATCH AS
12A NPR M 161-6984 1 SCREW-TRUSS HEAD (M5X0.8X20-MM)
12B NPR 161-6987 1 WASHER-HARD (5.2X16X1.5-MM THK)
12C NPR 161-9294 1 SPRING-FLAT WIRE
12D NPR M 5C-2874 1 NUT (M5X0.8-THD)
12E NPR M 162-6556 1 LOCKNUT (M6X1-THD)
13 NPR M 5C-7261 1 NUT (M8X1.25-THD)
14 NPR BE 148-5353 SEAL

Key: B - USE AS REQUIRED E - ORDER BY THE CENTIMETER M - METRIC PART

154-5426 WINDOW GP-DOOR --S/N 4ZN17195-50156--RH --PART OF 154-5476 CAB GP

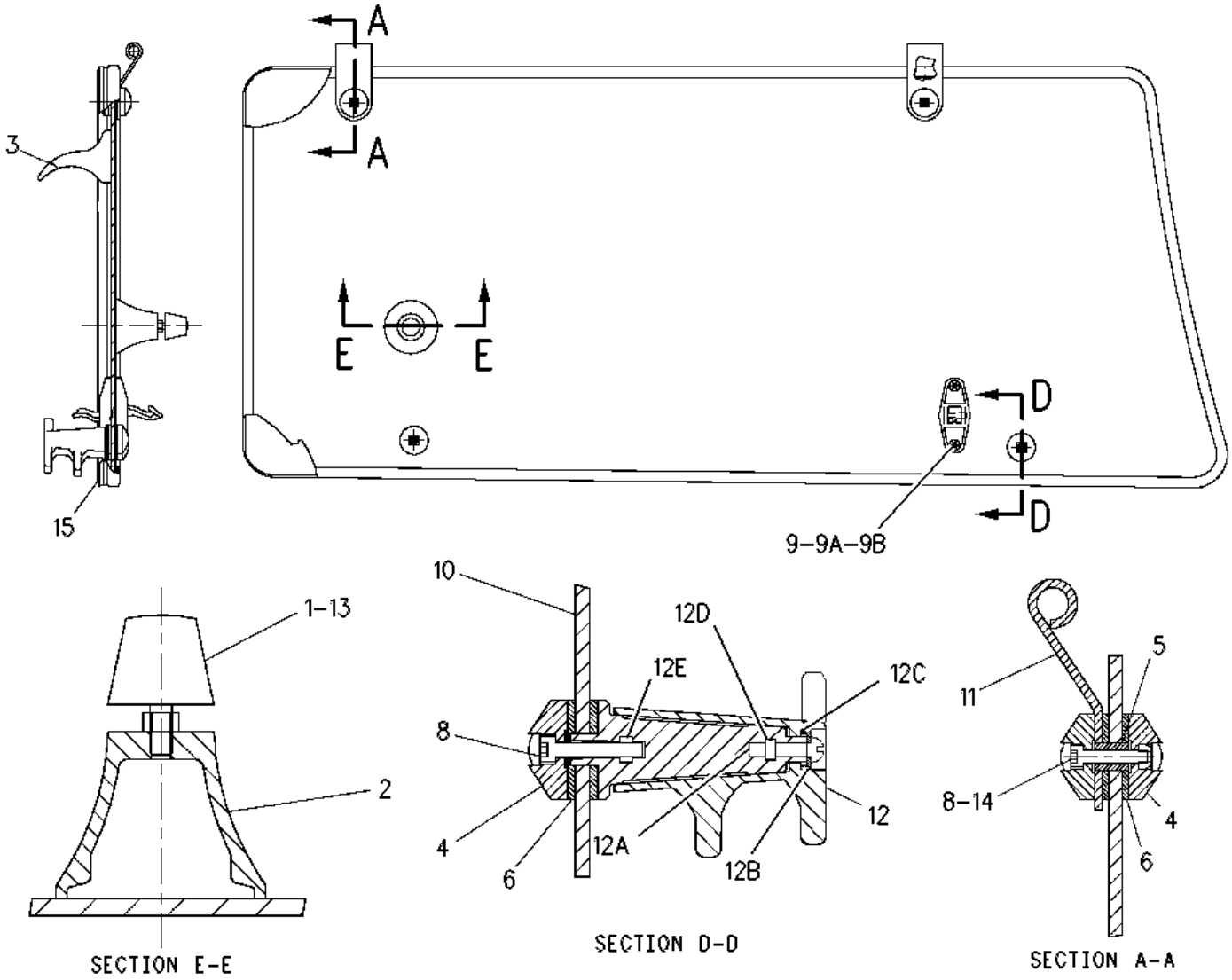

1	NPR	7X-2393	1	BUMPER-CONICAL
2	NPR	8Y-7309	1	RETAINER
3	NPR	100-7608	1	HANDLE
4	NPR	129-8542	6	RETAINER
5	NPR	154-5423	2	SPACER (6.6X12.7X17-MM THK)
6	NPR	129-8545	8	WASHER (13X40X3-MM THK)
8	NPR M	136-4192	4	BOLT (M6X1X35-MM)
9	NPR	143-2830	1	LATCH AS
9A	NPR M	6V-7743	2	LOCKNUT (M6X1-THD)
9B	NPR M	9X-2045	2	SCREW-TRUSS HEAD (M6X1X20-MM)
10	NPR	154-5422	1	GLASS-CAB
11	NPR	154-5424	2	HINGE
12	NPR	159-4951	2	LATCH AS
12A	NPR M	161-6984	1	SCREW-TRUSS HEAD (M5X0.8X20-MM)
12B	NPR	161-6987	1	WASHER-HARD (5.2X16X1.5-MM THK)
12C	NPR	161-9294	1	SPRING-FLAT WIRE
12D	NPR M	5C-2874	1	NUT (M5X0.8-THD)
12E	NPR M	162-6556	1	LOCKNUT (M6X1-THD)
13	NPR M	5C-7261	1	NUT (M8X1.25-THD)
14	NPR M	6V-7743	2	LOCKNUT (M6X1-THD)
15	NPR BE	148-5353		SEAL

Key: B - USE AS REQUIRED E - ORDER BY THE CENTIMETER M - METRIC PART

159-4957 WINDOW GP-DOOR --S/N 4ZN17195-50156--LH --PART OF 159-4959 DOOR GP-CAB

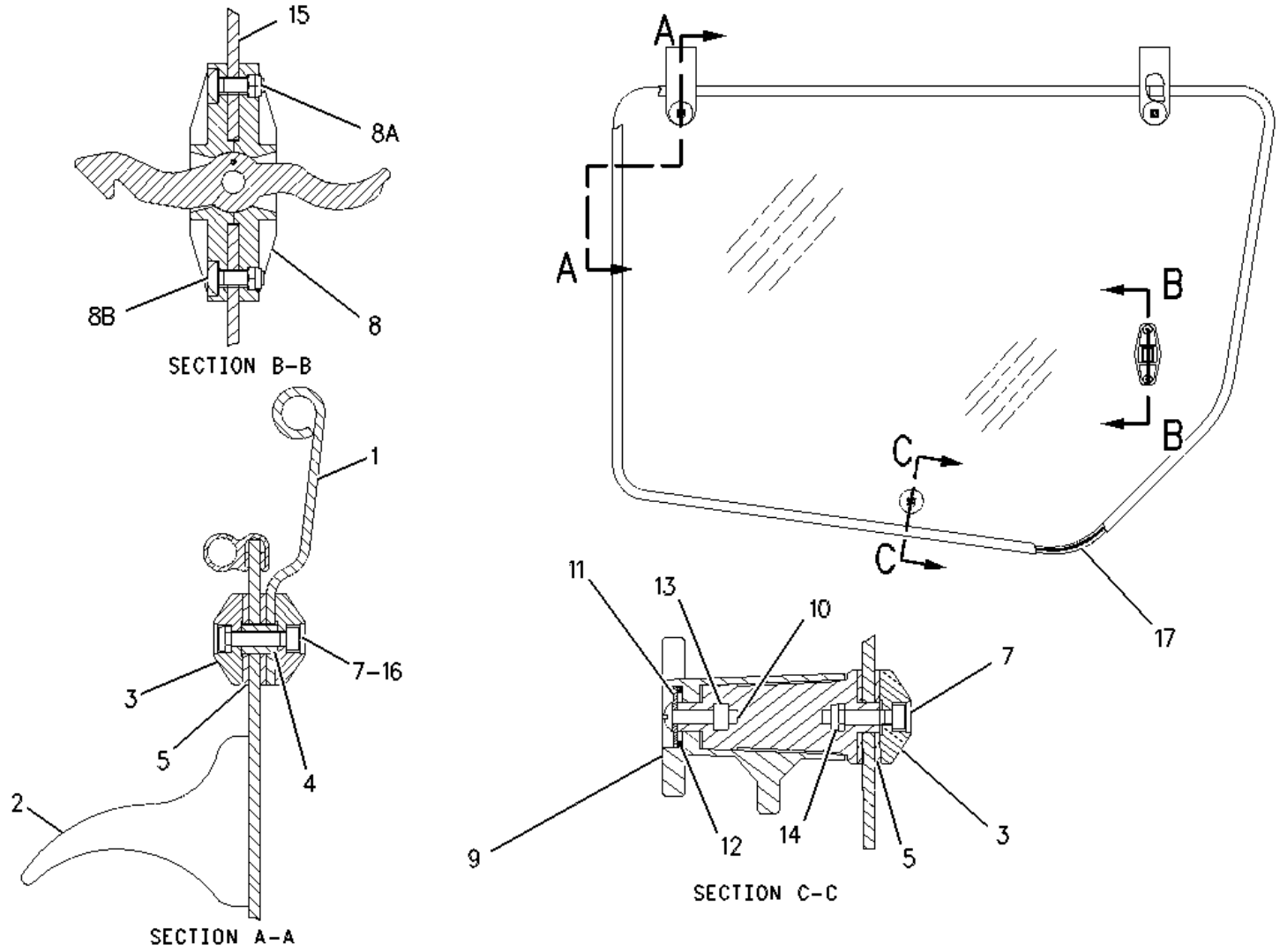

1	NPR	8Y-7287	2	HINGE
2	NPR	100-7608	1	HANDLE
3	NPR	129-8542	5	RETAINER
4	NPR	129-8543	2	SPACER (16-MM THK)
5	NPR	129-8545	6	WASHER (13X40X3-MM THK)
7	NPR M	136-4192	3	BOLT (M6X1X35-MM)
8	NPR	143-2830	1	LATCH AS
8A	NPR M	6V-7743	2	LOCKNUT (M6X1-THD)
8B	NPR M	9X-2045	2	SCREW-TRUSS HEAD (M6X1X20-MM)
9	NPR	159-4951	1	LATCH AS
10	NPR M	161-6984	1	SCREW-TRUSS HEAD (M5X0.8X20-MM)
11	NPR	161-6987	1	WASHER-HARD (5.2X16X1.5-MM THK)
12	NPR	161-9294	1	SPRING-FLAT WIRE
13	NPR M	162-6555	1	LOCKNUT (M5X0.8-THD)
14	NPR M	162-6556	1	LOCKNUT (M6X1-THD)
15		159-4955	1	GLASS-CAB (DOOR)
16	NPR M	6V-7743	2	LOCKNUT (M6X1-THD)
17	NPR BE	148-5353		SEAL

Key:

B - USE AS REQUIRED
E - ORDER BY THE CENTIMETER
M - METRIC PART

159-4958 WINDOW GP-DOOR --S/N 4ZN17195-50156--DOOR RH --PART OF 159-4960 DOOR GP-CAB

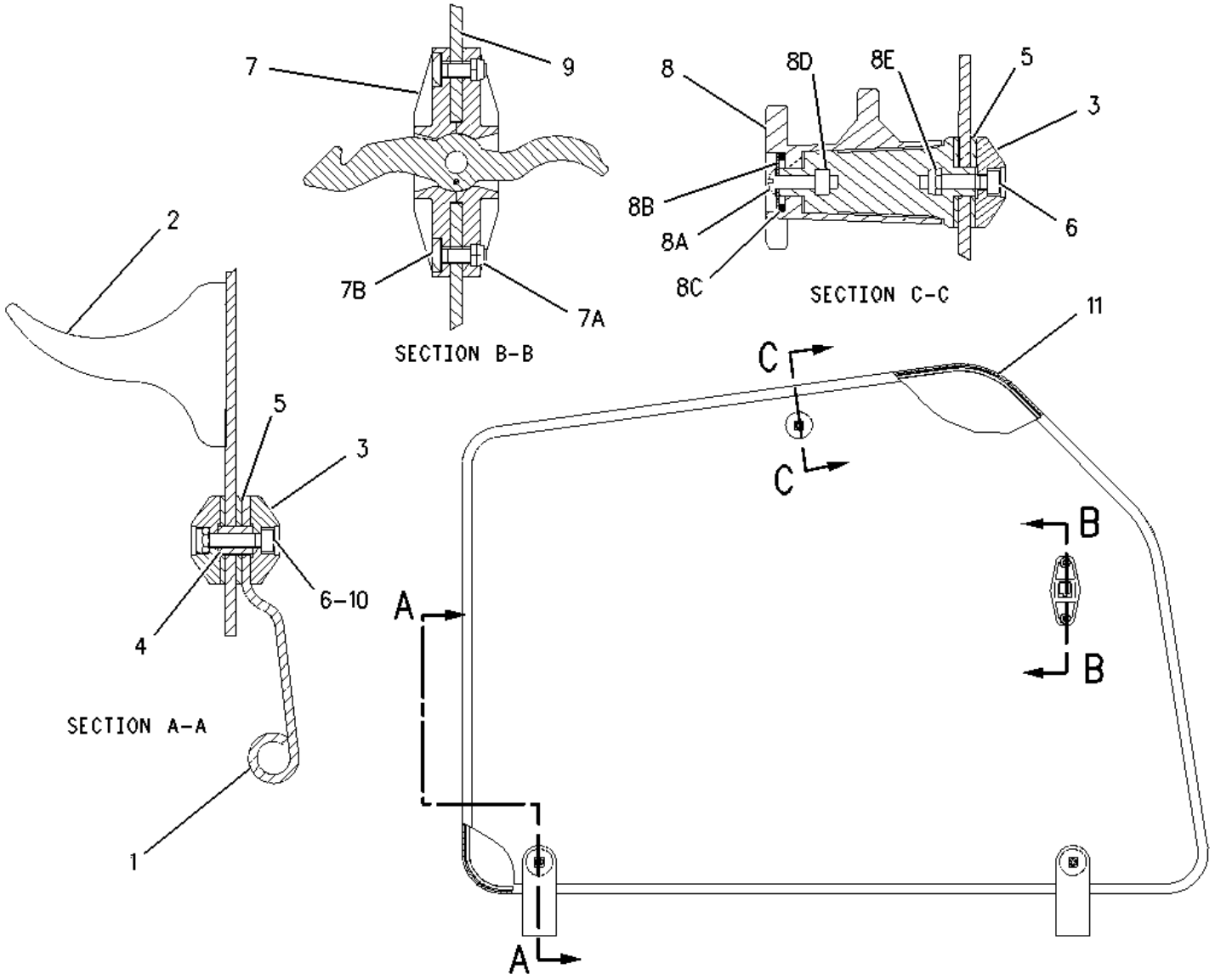

1	NPR	8Y-7287	2	HINGE
2	NPR	100-7608	1	HANDLE
3	NPR	129-8542	5	RETAINER
4	NPR	129-8543	2	SPACER (16-MM THK)
5	NPR	129-8545	6	WASHER (13X40X3-MM THK)
6	NPR M	136-4192	3	BOLT (M6X1X35-MM)
7	NPR	143-2830	1	LATCH AS
7A	NPR M	6V-7743	2	LOCKNUT (M6X1 THD)
7B	NPR M	9X-2045	2	SCREW-TRUSS HEAD (M6X1X20-MM)
	NPR	143-2827	1	SPRING
8	NPR	159-4950	1	LATCH AS
8A	NPR M	161-6984	1	SCREW-TRUSS HEAD (M5X0.8X20-MM)
8B	NPR	161-6987	1	WASHER-HARD (5.2X16X1.5-MM THK)
8C	NPR	161-9294	1	SPRING-FLAT WIRE
8D	NPR M	5C-2874	1	NUT (M5X0.8 THD)
8E	NPR M	162-6556	1	LOCKNUT (M6X1 THD)
9		159-4956	1	GLASS-CAB (DOOR)
10	NPR M	6V-7743	2	LOCKNUT (M6X1 THD)
11	NPR BE	148-5353		SEAL

Key: B - USE AS REQUIRED E - ORDER BY THE CENTIMETER M - METRIC PART

8Y-7482 CONTROL GP-TRANSMISSION --S/N 4ZN16044-50156--PART OF 140-6156, 140-6157 POWER TRAIN AR

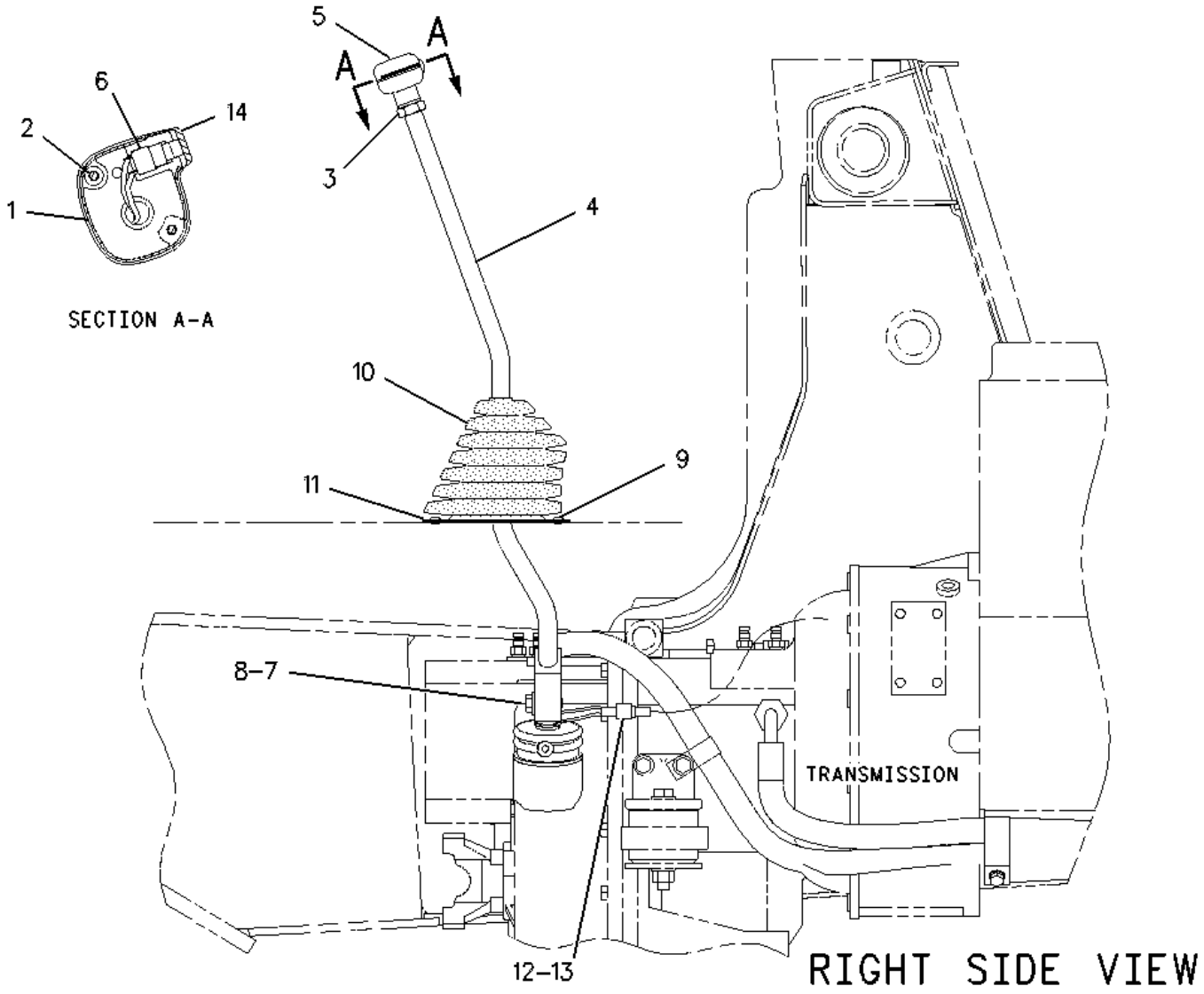

1 NPR 9R-1766 1 KNOB (LOWER)

2 NPR 8T-9501 2 SCREW (10-16X0.75-IN)

3 NPR 107-5591 1 NUT-JAM (3/4-16-THD)

4 NPR 104-7883 1 ROD AS

5 NPR 9R-1765 1 KNOB

6 NPR 8Y-7237 1 SWITCH GP-ROCKER (NEUTRALIZER)

NPR 8T-8729 2 PIN-CONNECTOR

7 NPR M 8T-4956 1 BOLT (M12X1.75X35-MM)

8 NPR 8T-4223 1 WASHER-HARD (13.5X25.5X3-MM THK)

9 NPR 9R-9901 4 FASTENER (CLIP)

10 NPR 8Y-7404 1 BOOT

11 NPR 104-9490 1 PLATE

12 NPR 102-8802 1 KIT-RECEPTACLE (2-PIN)

INCLUDES RECEPTACLE & WEDGE)

13 NPR 3E-3365 1 WEDGE-RECEPTACLE LOCK (2-PIN)

14 NPR 9R-1767 1 BOOT

Key: M - METRIC PART

159-4922 CONTROL GP-STEERING & TMSN --S/N 4ZN16044-50156--SHUTTLE/TILT

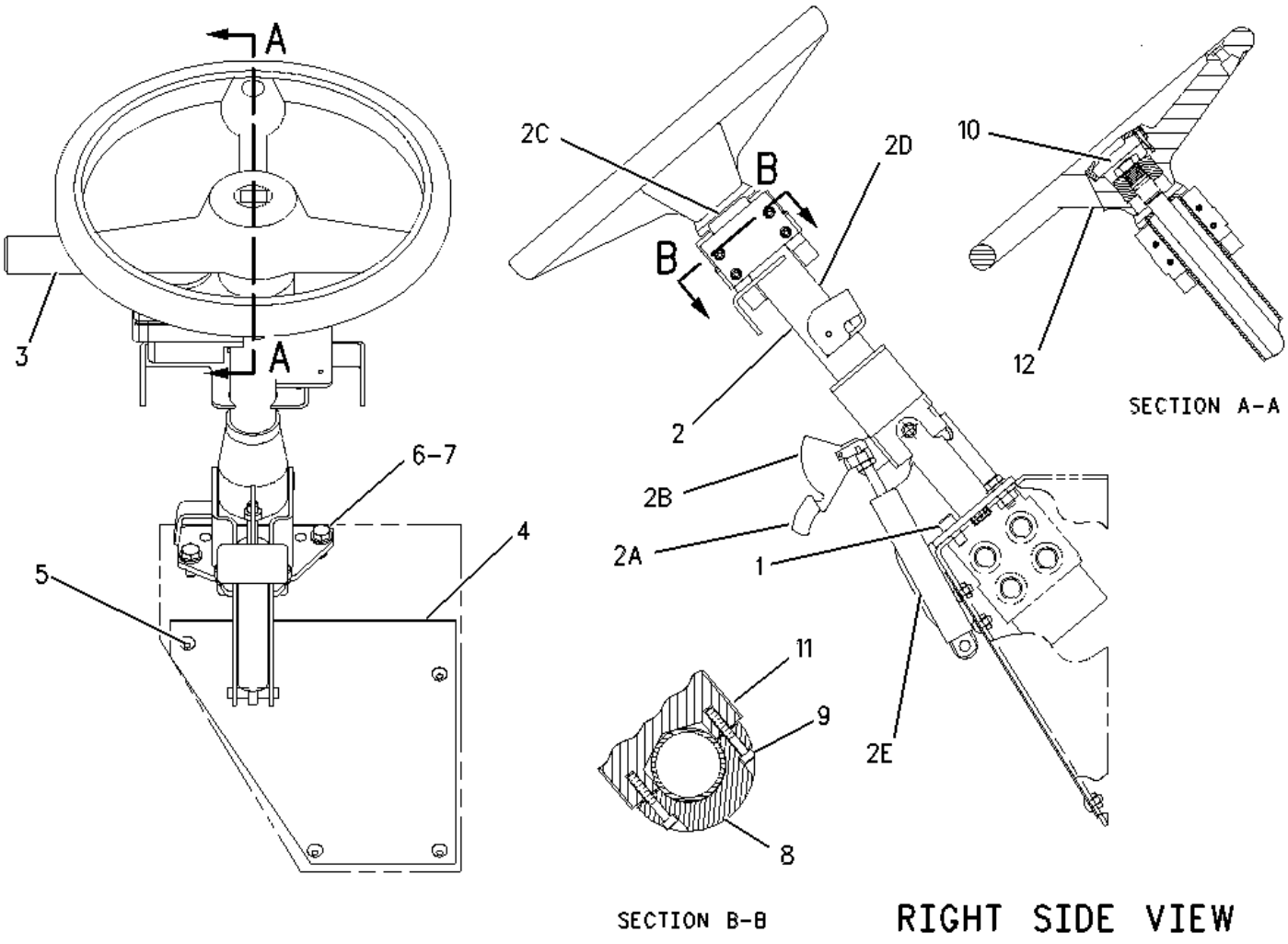

1	NPR M	8T-8894	3	BOLT-SOCKET HEAD (M10X1.5X20-MM)
2	NPR	117-7038	1	STEERING COLUMN
2A	NPR	149-0777	1	KNOB
2B	NPR	149-0782	1	KIT-TILT LEVER
2C	NPR	149-0783	1	KIT-SHAFT
2D	NPR	149-0784	1	KIT-HOUSING
2E	NPR	149-0780	1	KIT-GAS SPRING
3	NPR	166-7501	1	CONTROL GP-TRANSMISSION
4	NPR	8Y-7199	1	PLATE
5	NPR M	9X-2043	4	SCREW-TRUSS HEAD (M6X1X14-MM)
6	NPR	8T-4121	2	WASHER-HARD (11X21X2.5-MM THK)
7	NPR M	8T-4136	2	BOLT (M10X1.5X25-MM)
8	NPR	7X-6324	1	CLAMP-COLUMN
9	NPR M	9X-6615	4	BOLT (M5X0.8X30-MM)
10	NPR M	6V-8227	1	NUT (M18X1.5-6-THD)
11	NPR	135-4566	4	SHIM (0.5-MM THK)
12	NPR Y	153-9580	1	STEERING WHEEL GP

Key: M - METRIC PART Y - SEPARATE ILLUSTRATION

159-4923 CONTROL GP-STEERING & TMSN --S/N 4ZN16044-50156-POWER SHIFT, TILT --Type 1

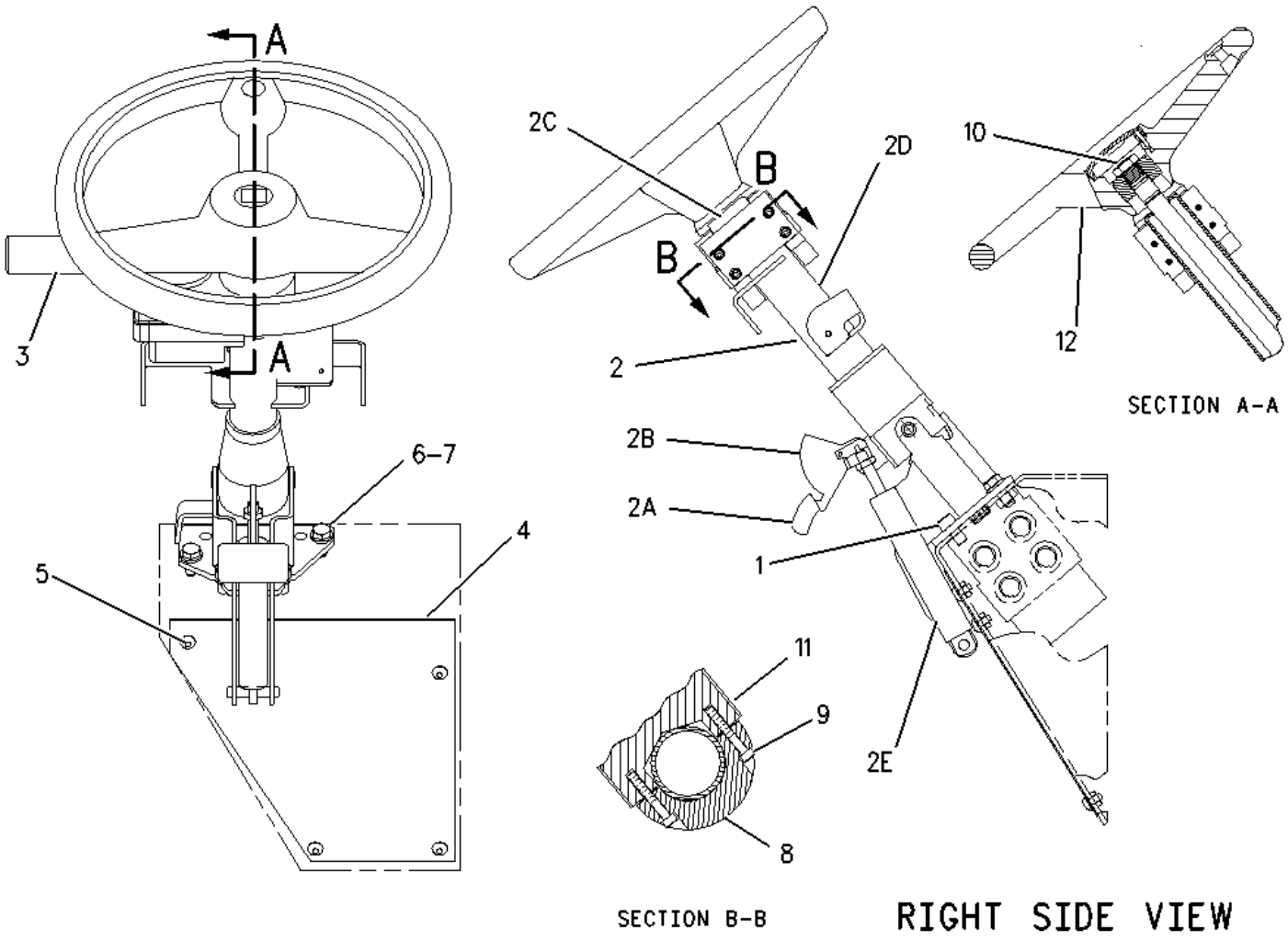

1	NPR M	8T-8894	3	BOLT-SOCKET HEAD (M10X1.5X20-MM)
2	NPR	117-7038	1	STEERING COLUMN
2A	NPR	149-0777	1	KNOB
2B	NPR	149-0782	1	KIT-TILT LEVER
2C	NPR	149-0783	1	KIT-SHAFT
2D	NPR	149-0784	1	KIT-HOUSING
2E	NPR	149-0785	1	KIT-GAS SPRING
3	NPR	158-6209	1	CONTROL GP-TRANSMISSION
4	NPR	8Y-7199	1	PLATE
5	NPR M	9X-2043	4	SCREW-TRUSS HEAD (M6X1X14-MM)
6	NPR	8T-4121	2	WASHER-HARD (11X21X2.5-MM THK)
7	NPR M	8T-4136	2	BOLT (M10X1.5X25-MM)
8	NPR	7X-6324	1	CLAMP-COLUMN
9	NPR M	9X-6615	4	BOLT (M5X0.8X30-MM)
10	NPR M	6V-8227	1	NUT (M18X1.5-6-THD)
11	NPR	135-4566	4	SHIM (0.5-MM THK)
12	NPR CY	153-9580	1	STEERING WHEEL GP

Key: C - CHANGE FROM PREVIOUS TYPE M - METRIC PART Y - SEPARATE ILLUSTRATION

159-4923 CONTROL GP-STEERING & TMSN --S/N 4ZN16044-50156--POWER SHIFT, TILT -Type 2

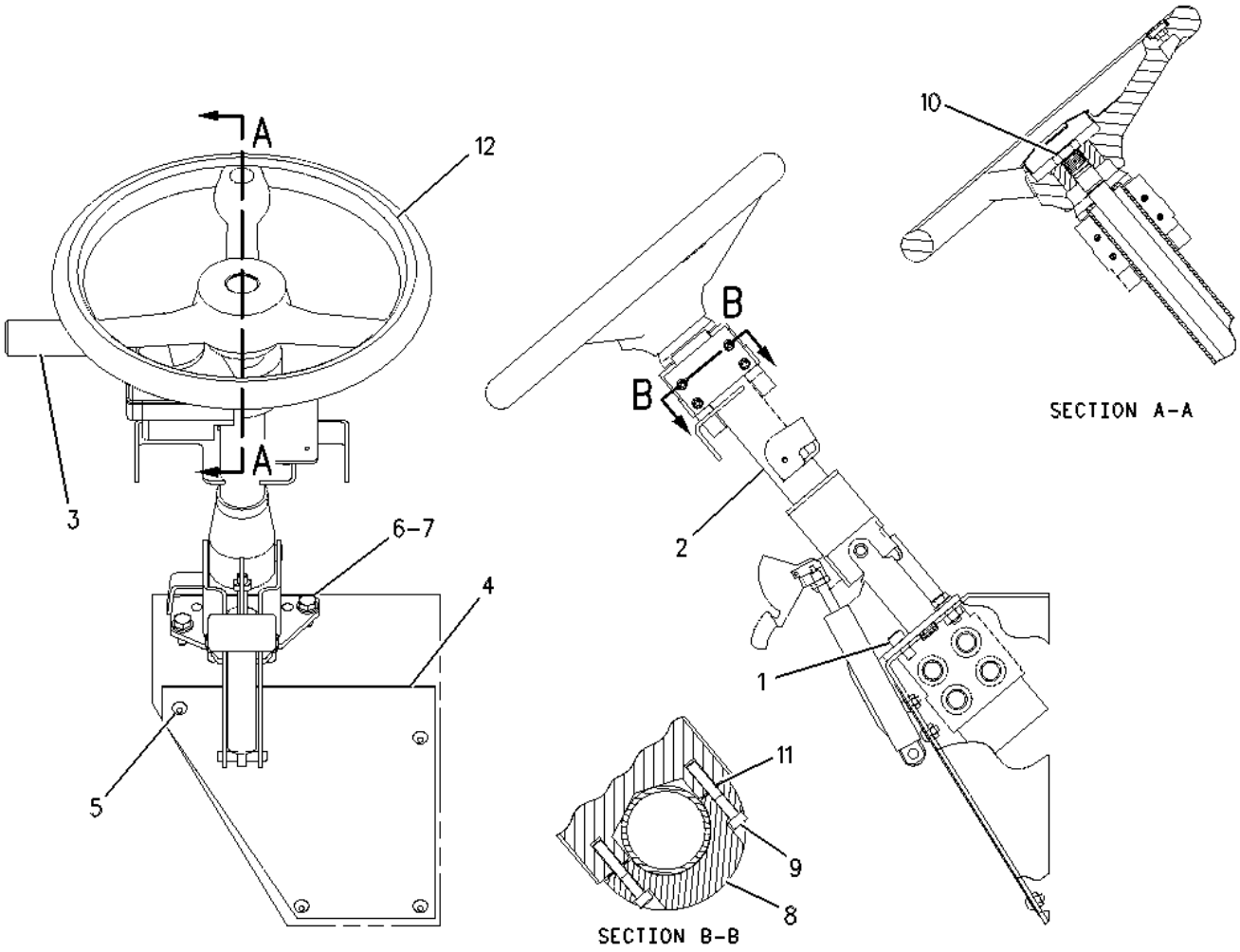

1 NPR M 8T-8894 3 BOLT-SOCKET HEAD (M10X1.5X20-MM)

2 NPR 117-7038 1 STEERING COLUMN

NPR 149-0777 1 KNOB

NPR 149-0782 1 KIT-TILT LEVER

NPR 149-0783 1 KIT-SHAFT

NPR 149-0784 1 KIT-HOUSING

NPR 149-0785 1 KIT-GAS SPRING

3 NPR C 174-6649 1 CONTROL GP-TRANSMISSION

4 NPR 8Y-7199 1 PLATE

5 NPR M 9X-2043 4 SCREW-TRUSS HEAD (M6X1X14-MM)

6 NPR 8T-4121 2 WASHER-HARD (11X21X2.5-MM THK)

7 NPR M 8T-4136 2 BOLT (M10X1.5X25-MM)

8 NPR 7X-6324 1 CLAMP-COLUMN

9 NPR M 9X-6615 4 BOLT (M5X0.8X30-MM)

10 NPR M 6V-8227 1 NUT (M18X1.5-6-THD)

11 NPR B 135-4566 4 SHIM (0.5-MM THK)

12 NPR Y 153-9580 1 STEERING WHEEL GP

Key: B - USE AS REQUIRED C - CHANGE FROM PREVIOUS TYPE M - METRIC PART Y - SEPARATE ILLUSTRATION

159-4924 CONTROL GP-STEERING & TMSN --S/N 4ZN16044-50156--STATIONARY --Type 1

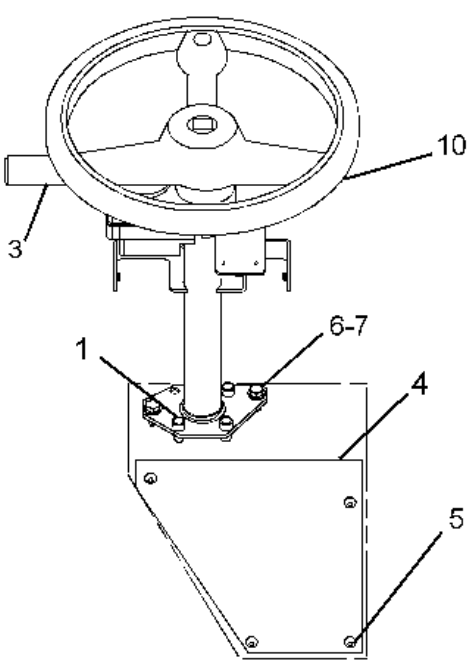

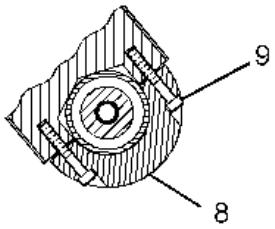

SECTION A-A

RIGHT SIDE VIEW

1	NPR	M	8T-8894	3 BOLT-SOCKET HEAD (M10X1.5X20-MM)
2	NPR		101-2902	1 STEERING COLUMN AS
	NPR	M	6V-8227	1 NUT (M18X1.5-6-THD)
	NPR	M	6V-9632	5 NUT-WELD (M6X1-THD)
	NPR	M	8T-8874	1 NUT-WELD (M5X0.8 THD)
	NPR		9D-6621	2 NUT-WELD (10-24 THD)
3	NPR		137-8899	1 CONTROL GP-TRANSMISSION
4	NPR		8Y-7199	1 PLATE
5	NPR	M	9X-2043	4 SCREW-TRUSS HEAD (M6X1X14-MM)
6	NPR		8T-4121	2 WASHER-HARD (11X21X2.5-MM THK)
7	NPR	M	8T-4136	2 BOLT (M10X1.5X25-MM)
8	NPR		7X-6325	1 CLAMP-COLUMN
9	NPR	M	9X-6615	4 BOLT (M5X0.8X30-MM)
10	NPR	Y	153-9580	1 STEERING WHEEL GP

Key: M - METRIC PART Y - SEPARATE ILLUSTRATION

159-4924 CONTROL GP-STEERING & TMSN --S/N 4ZN16044-50156-STATIONARY -Type 2

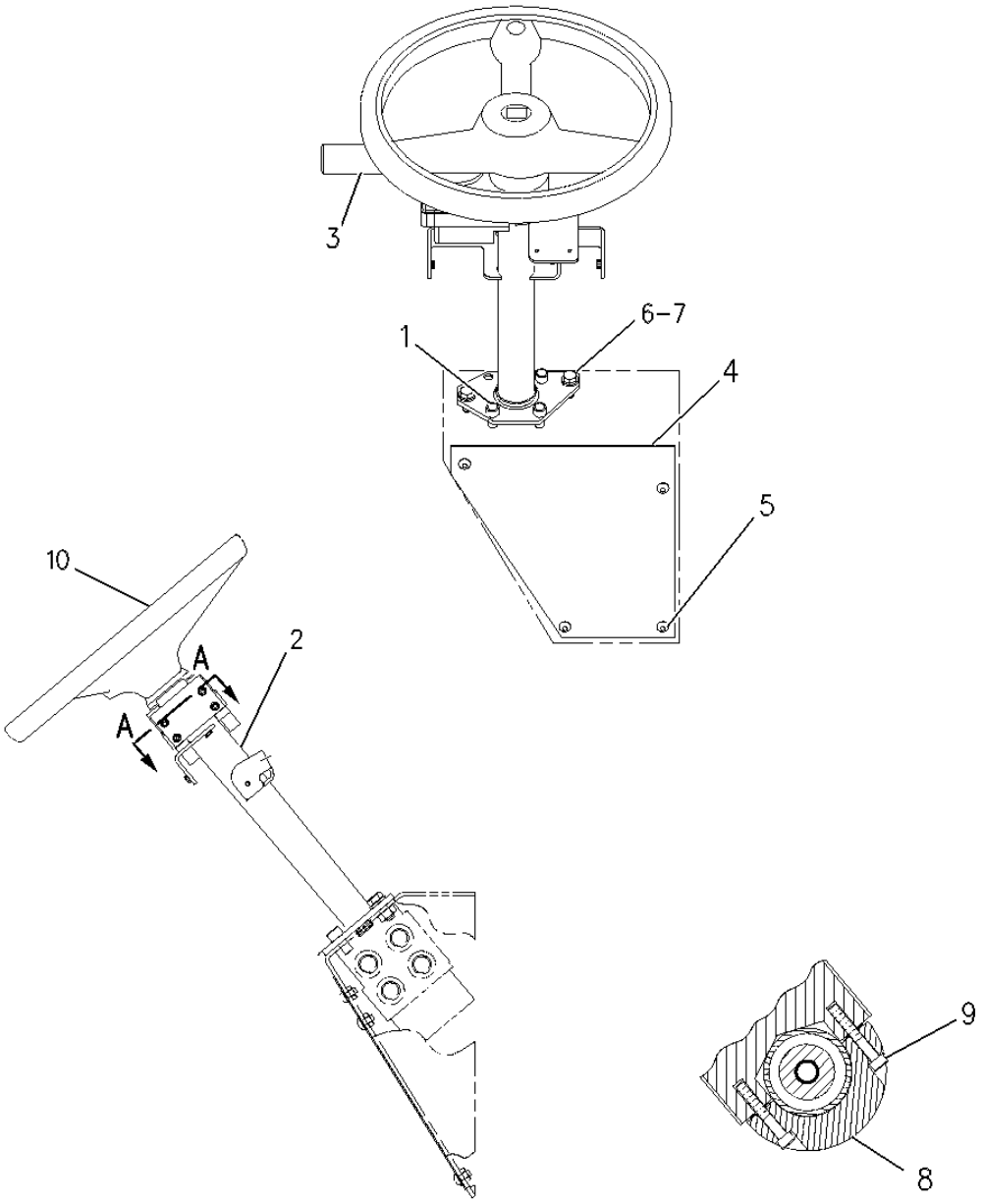

RIGHT SIDE VIEW

SECTION A-A

1 NPR M 8T-8894 3 BOLT-SOCKET HEAD (M10X1.5X20-MM)

2 NPR 101-2902 1 STEERING COLUMN AS

NPR M 6V-8227 1 NUT (M18X1.5-6-THD)

NPR M 6V-9632 5 NUT-WELD (M6X1-THD)

NPR M 8T-8874 1 NUT-WELD (M5X0.8 THD)

NPR 9D-6621 2 NUT-WELD (10-24 THD)

3 NPR C 166-7501 1 CONTROL GP-TRANSMISSION

4 NPR 8Y-7199 1 PLATE

5	NPR M	9X-2043	4	SCREW-TRUSS HEAD (M6X1X14-MM)
6	NPR	8T-4121	2	WASHER-HARD (11X21X2.5-MM THK)
7	NPR M	8T-4136	2	BOLT (M10X1.5X25-MM)
8	NPR	7X-6325	1	CLAMP-COLUMN
9	NPR M	9X-6615	4	BOLT (M5X0.8X30-MM)
10	NPR Y	153-9580	1	STEERING WHEEL GP

Key: C - CHANGE FROM PREVIOUS TYPE M - METRIC PART Y - SEPARATE ILLUSTRATION

159-4925 CONTROL GP-STEERING & TMSN --S/N 4ZN17048-50156--POWER SHIFT, STATIONARY

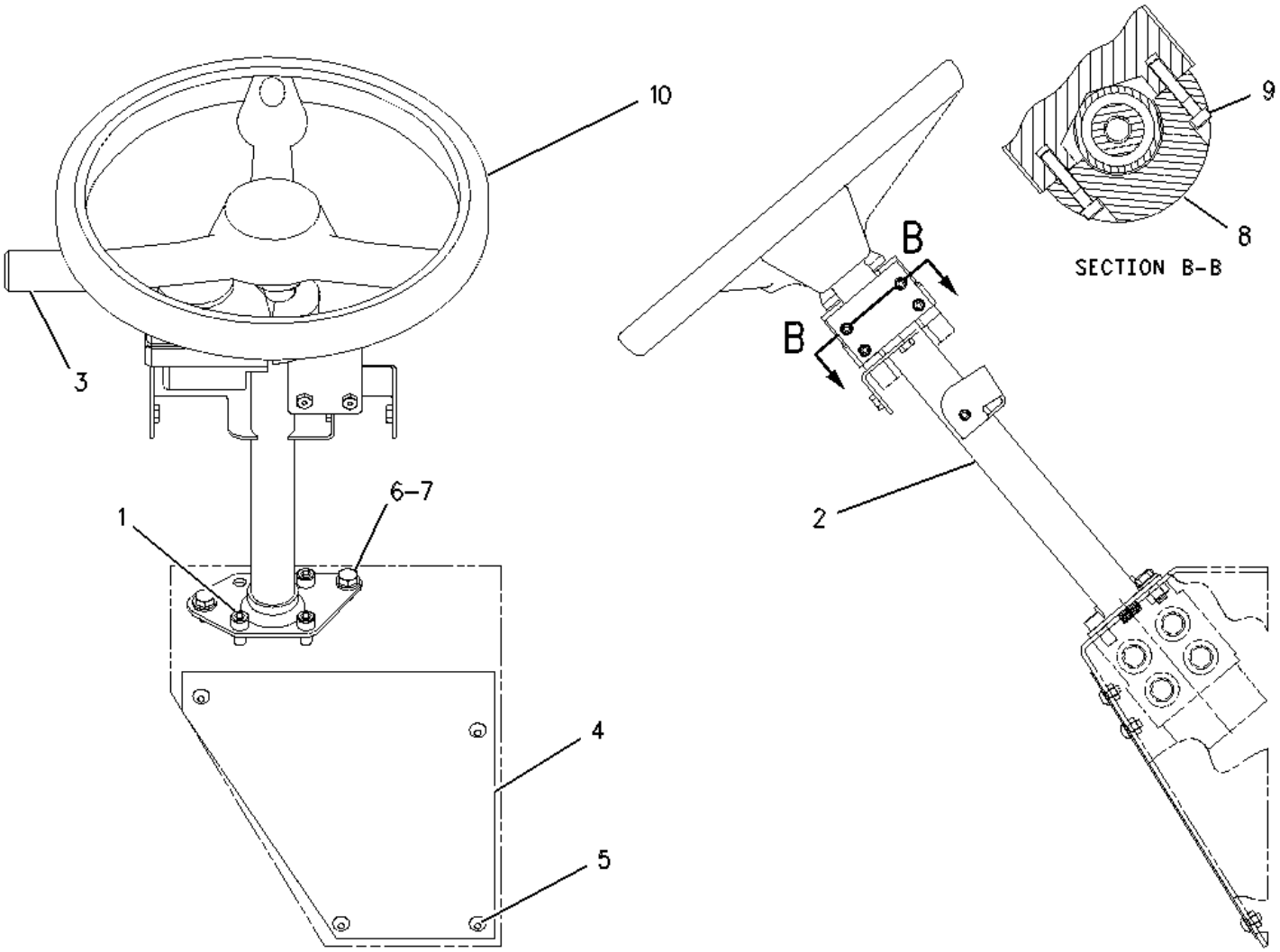

1 NPR M 8T-8894 3 BOLT-SOCKET HEAD (M10X1.5X20-MM)

2 NPR 101-2902 1 STEERING COLUMN AS

NPR M 6V-8227 1 NUT (M18X1.5-6-THD)

NPR M 6V-9632 5 NUT-WELD (M6X1-THD)

NPR M 8T-8874 1 NUT-WELD (M5X0.8 THD)

NPR 9D-6621 2 NUT-WELD (10-24 THD)

3 NPR 174-6649 1 CONTROL GP-TRANSMISSION

4 NPR 8Y-7199 1 PLATE

5 NPR M 9X-2043 4 SCREW-TRUSS HEAD (M6X1X14-MM)

6 NPR 8T-4121 2 WASHER-HARD (11X21X2.5-MM THK)

7 NPR M 8T-4136 2 BOLT (M10X1.5X25-MM)

8 NPR 7X-6325 1 CLAMP-COLUMN

9 NPR M 9X-6615 4 BOLT (M5X0.8X30-MM)

10 NPR Y 153-9580 1 STEERING WHEEL GP

Key: M - METRIC PART Y - SEPARATE ILLUSTRATION

106-2404 CONTROL GP-HYDRAULIC LOCKOUT --S/N 4ZN16044-50156--AN ATTACHMENT

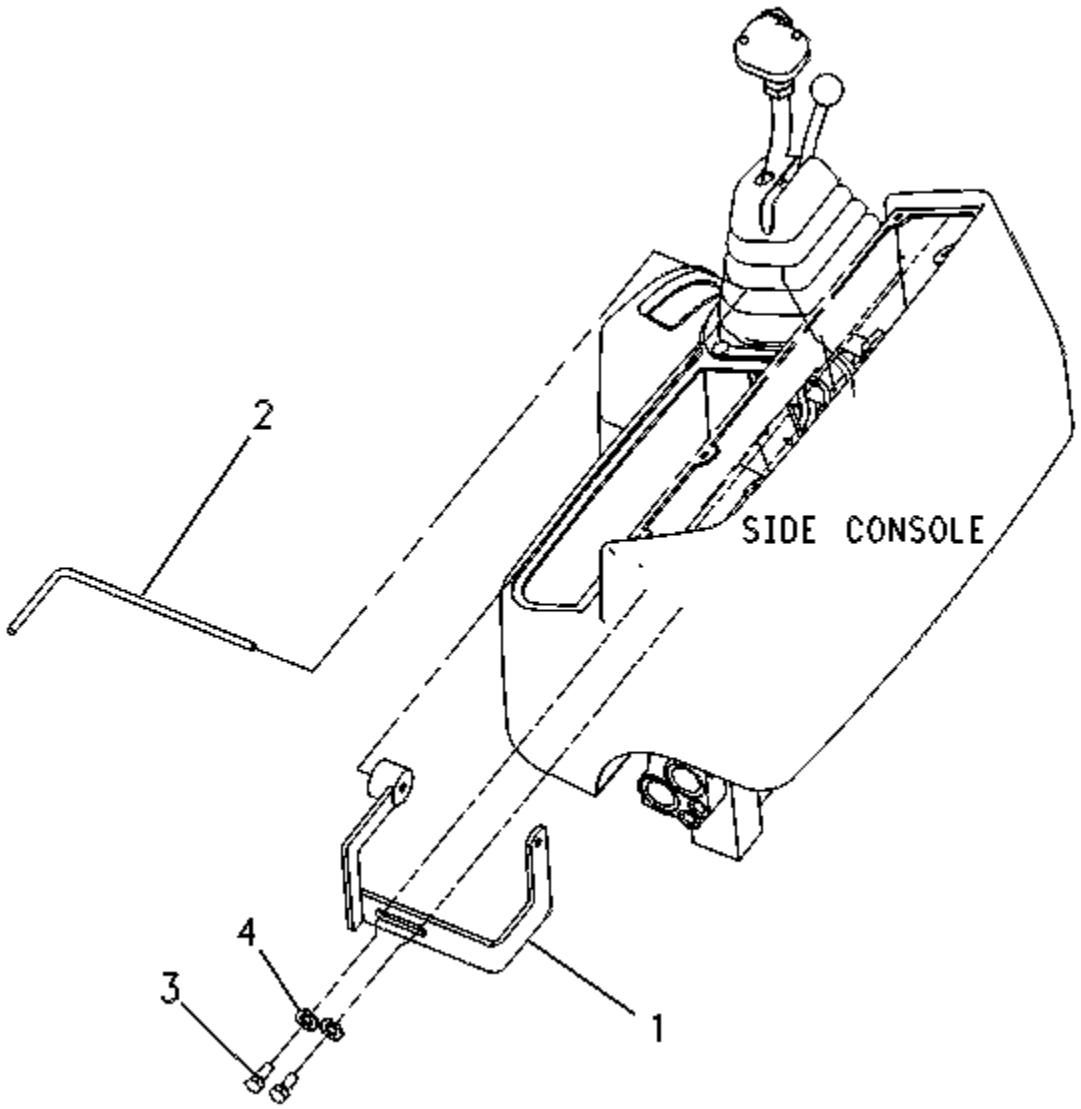

1	NPR	106-2405	1	PLATE AS
2	NPR	106-2409	1	PIN
3	NPR M	8T-4136	2	BOLT (M10X1.5X25-MM)
4	NPR	8T-4223	2	WASHER-HARD (13.5X25.5X3-MM THK)

Key: M - METRIC PART

166-6017 KIT-FOOT SWING CONT CONVERSION --S/N 4ZN16044-50156

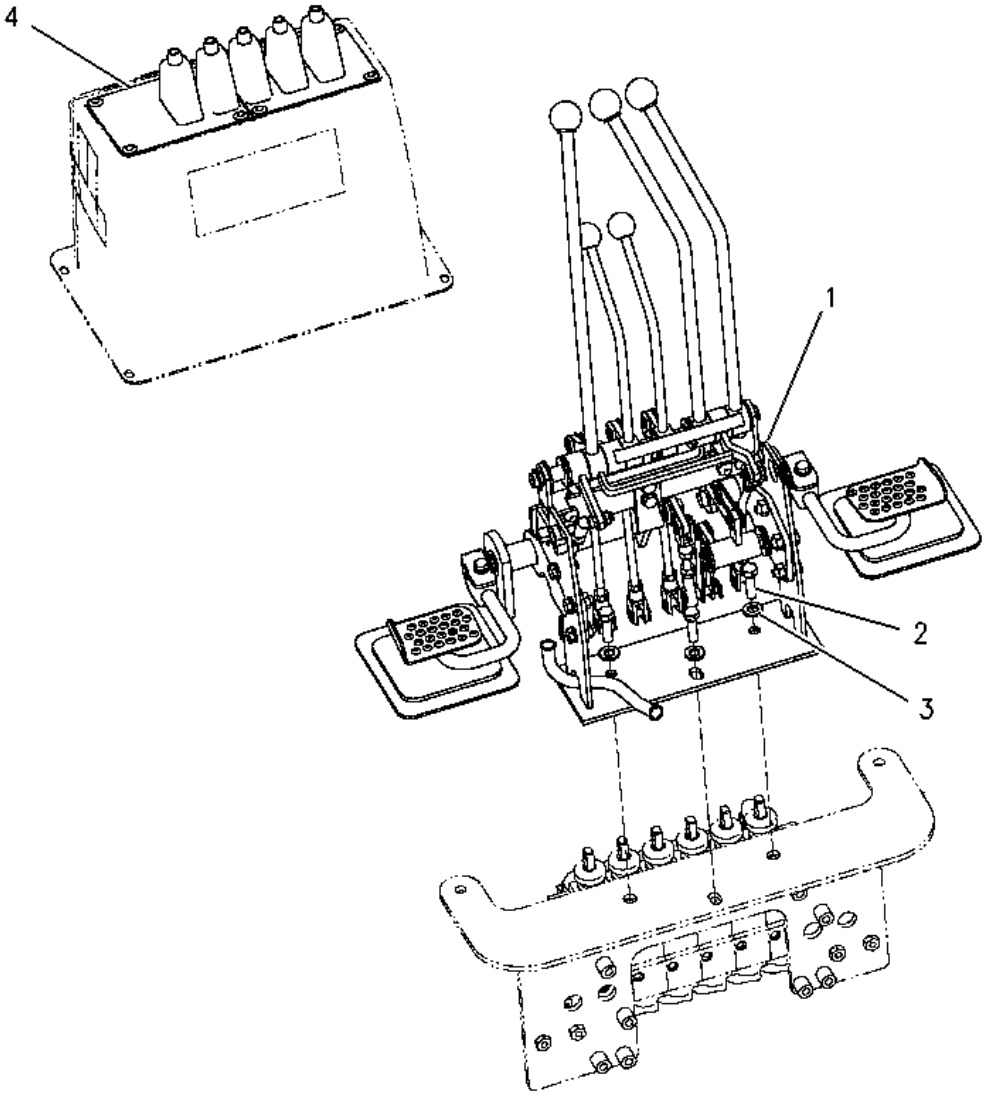

1 NPR Y 112-1834 1 CONTROL GP-HYDRAULIC HAND

2 NPR M 8T-4183 3 BOLT (M12X1.75X40-MM)

3 NPR 8T-4223 3 WASHER-HARD (13.5X25.5X3-MM THK)

4 NPR 139-9414 1 PLATE

Key:

M - METRIC PART
Y - SEPARATE ILLUSTRATION

9R-9705 CONTROL GP-HYDRAULIC HAND --S/N 4ZN16044-50156

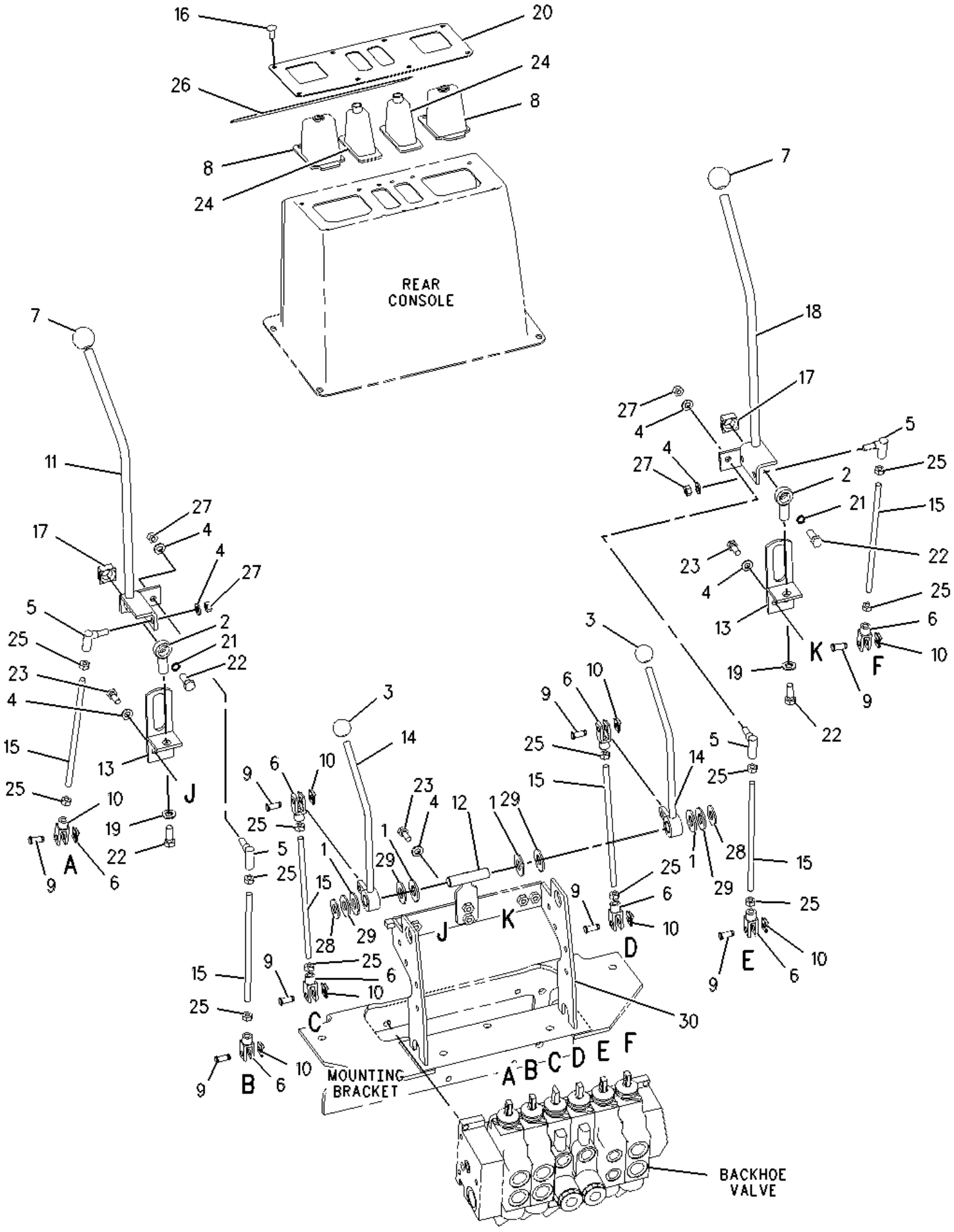

1 NPR B 136-7439 4 SPACER (20X40X3-MM THK)

2 NPR 8C-3392 2 ROD END

3 NPR 8T-3984 2 KNOB

4 NPR 8T-4121 10 WASHER-HARD (11X21X2.5-MM THK)

5 NPR 8T-4773 4 BALL JOINT

6 NPR 8T-4815 8 ROD END

7 NPR 8T-9000 2 KNOB

8 NPR 8Y-7402 2 BOOT

9 NPR 9R-2806 8 PIN

10 NPR 9R-2807 8 CLIP

11 NPR 9R-8087 1 LEVER AS

NPR 9R-9973 1 PLATE AS (LH)

12 NPR 9R-9709 1 BRACKET AS

NPR M 8T-3490 2 NUT-WELD (M10X1.5-THD)

13 NPR 9R-9720 2 BRACKET AS

14 NPR 9R-9721 2 LEVER AS

(EACH INCLUDES)

NPR 5V-4410 1 BEARING-SLEEVE

15 NPR 9R-9722 6 ROD

16 NPR 9R-9901 8 FASTENER (CLIP)

17 NPR 9R-9969 2 BEARING

18 NPR 9R-9972 1 LEVER AS

NPR 9R-9975 1 PLATE AS (RH)

19 NPR 8T-4223 2 WASHER-HARD (13.5X25.5X3-MM THK)

20 NPR 104-9483 1 PLATE

21 NPR 115-8124 2 WASHER (12.2X16X3-MM THK)

22 NPR M 8T-4139 4 BOLT (M12X1.75X30-MM)

23	NPR M	8T-4195	6	BOLT (M10X1.5X30-MM)
24	NPR	117-5672	2	BOOT
25	NPR M	8T-4133	12	NUT (M10X1.5-THD)
26	NPR	110-1463	1	PLATE-INSTRUCTION
27	NPR M	6V-7744	4	LOCKNUT (M10X1.15-THD)
28	NPR	006-8606	2	RING-RETAINING
29	NPR B	136-7440	8	SHIM (1-MM THK)
30	NPR	157-7237	1	BRACKET AS

Key: B - USE AS REQUIRED M - METRIC PART

9R-9939 CONTROL GP-HYDRAULIC HAND --S/N 4ZN16044-50156--PART OF 154-5483 CHASSIS AR

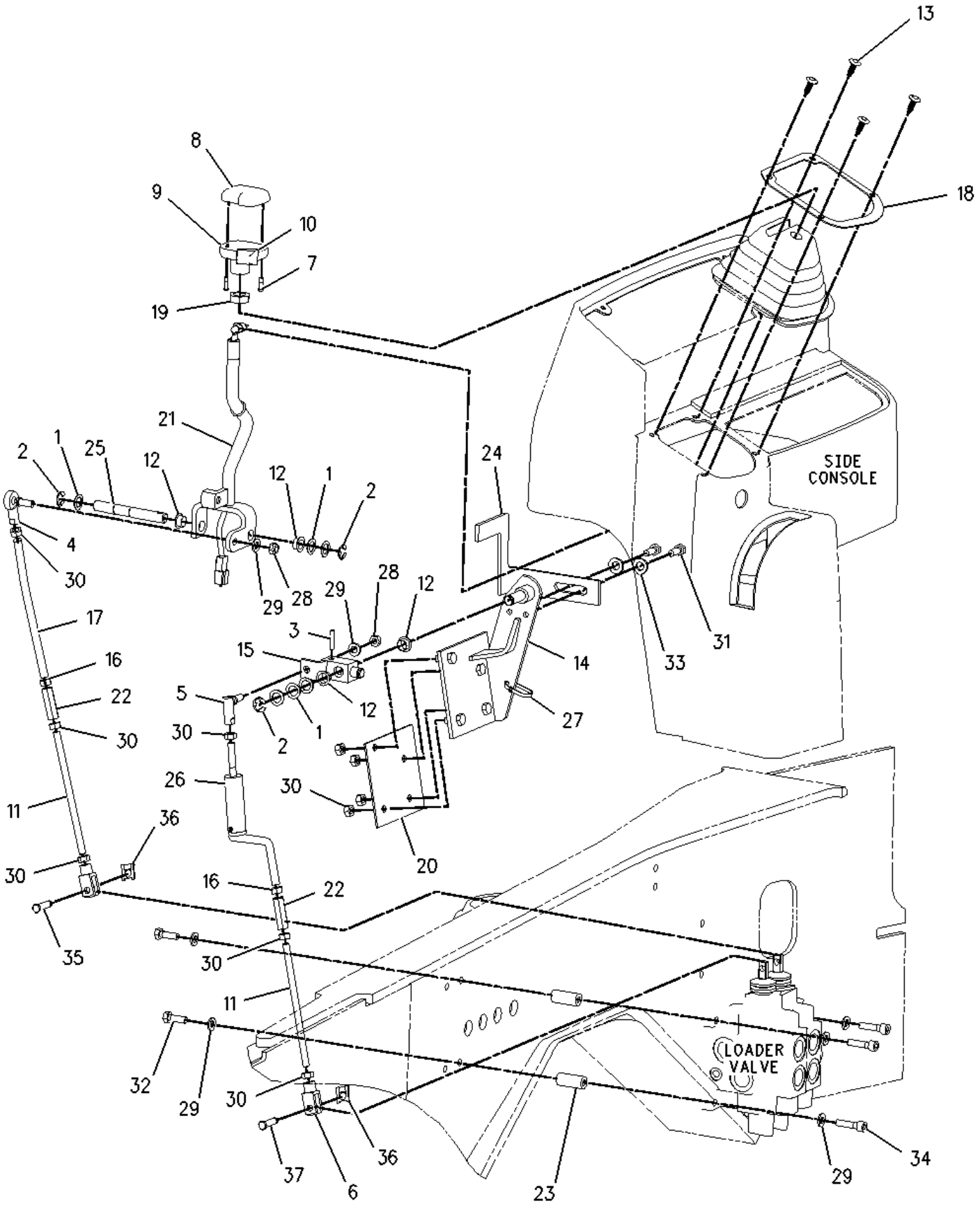

1	NPR BC	1K-0502	6	WASHER (16.3X25.4X1.2-MM THK)
2	NPR	2R-0364	3	RING-RETAINING
3	NPR	5H-3193	1	PIN-SPRING
4	NPR	8T-4766	1	ROD END
5	NPR	8T-4773	1	BALL JOINT
6	NPR	8T-4815	2	ROD END
7	NPR	8T-9501	2	SCREW (10-16X0.75-IN)
8	NPR	9R-1765	1	KNOB (TOP)
9	NPR	9R-1766	1	KNOB (LOWER)(BOTTOM)
10	NPR	9R-1767	1	BOOT
11	NPR	9R-4917	2	ROD-CONTROL
12	NPR	9R-8165	4	BEARING
13	NPR	9R-9901	4	FASTENER (CLIP)
14	NPR	9R-9941	1	BRACKET AS
	NPR M	6V-4248	4	BOLT (M10X1.5X25-MM)
15	NPR	9R-9946	1	JOINT AS
16	NPR M	9X-2065	2	NUT (M10X1.15-THD)
17	NPR	104-1970	1	ROD AS
18	NPR	104-9488	1	PLATE
19	NPR	107-5591	1	NUT-JAM (3/4-16-THD)
20	NPR	110-8884	1	PLATE
21	NPR	115-4343	1	LEVER AS
22	NPR	134-0453	2	TURN BUCKLE
23	NPR	138-6108	2	SPACER (45-MM THK)
24	NPR	140-6021	1	PLATE
25	NPR C	145-4458	1	PIN
26	NPR	200-1790	1	DAMPER AS

	NPR	095-9230	1	PIN-SPRING
27	NPR	3S-2093	1	STRAP-CABLE
28	NPR M	6V-7744	2	LOCKNUT (M10X1.15-THD)
29	NPR	8T-4121	7	WASHER-HARD (11X21X2.5-MM THK)
30	NPR M	8T-4133	10	NUT (M10X1.5-THD)
31	NPR M	8T-4136	2	BOLT (M10X1.5X25-MM)
32	NPR M	8T-4195	2	BOLT (M10X1.5X30-MM)
33	NPR	8T-4223	2	WASHER-HARD (13.5X25.5X3-MM THK)
34	NPR M	8T-9515	3	BOLT-SOCKET HEAD (M10X1.5X40-MM)
35	NPR	9R-2806	1	PIN
36	NPR	9R-2807	2	CLIP
37	NPR	9R-3067	1	PIN

Key:

B - USE AS REQUIRED
C - CHANGE FROM PREVIOUS TYPE
M - METRIC PART

104-1966 CONTROL GP-HYDRAULIC HAND --S/N 4ZN16044-50156--MULTI-PURPOSE
PART OF 106-6261, 159-4872, 163-9200 HYDRAULIC AR

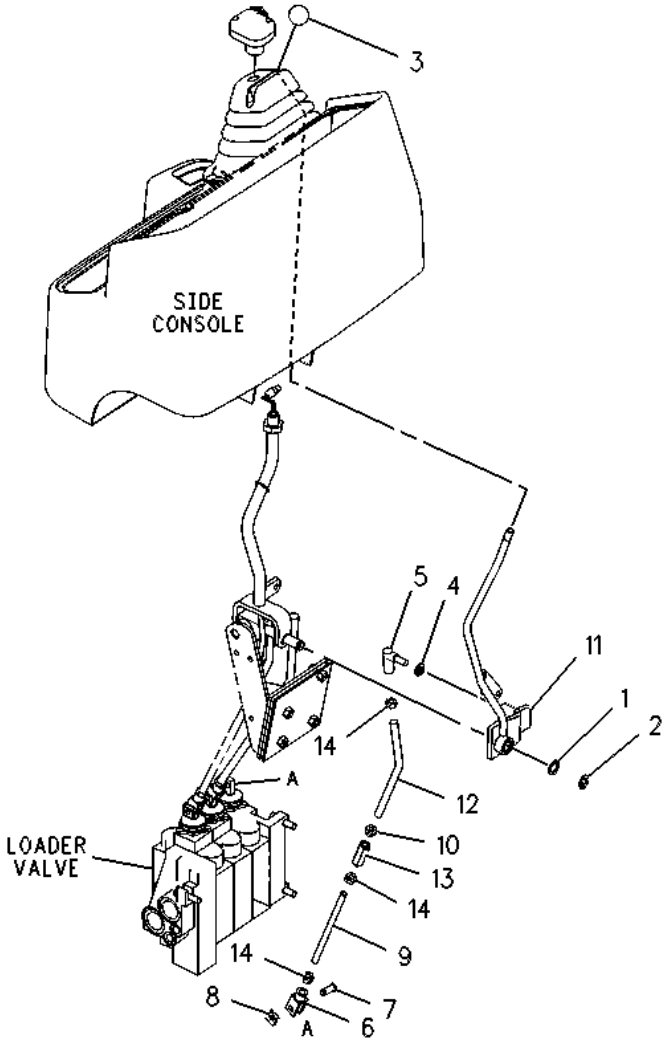

1	NPR B	1K-0502	3	WASHER (16.3X25.4X1.2-MM THK)
2	NPR	2R-0364	1	RING-RETAINING
3	NPR	8T-3984	1	KNOB
4	NPR	8T-4121	1	WASHER-HARD (11X21X2.5-MM THK)
5	NPR	8T-4773	1	BALL JOINT
6	NPR	8T-4815	1	ROD END
7	NPR	9R-2806	1	PIN
8	NPR	9R-2807	1	CLIP
9	NPR	9R-4917	1	ROD-CONTROL
10	NPR M	9X-2065	1	NUT (M10X1.15-THD)
11	NPR	104-1967	1	LEVER AS
	NPR	1K-6649	1	BUSHING-OILLESS
	NPR	8Y-3795	1	BOSS (M10X1.5X39-MM)
12	NPR	104-1970	1	ROD AS
13	NPR	134-0453	1	TURN BUCKLE
14	NPR M	8T-4133	3	NUT (M10X1.5-THD)

Key: **B - USE AS REQUIRED-- M - METRIC PART**

112-1834 CONTROL GP-HYDRAULIC HAND --S/N 4ZN16044-50156
PART OF 166-6017 KIT-FOOT SWING CONT CONVERSION

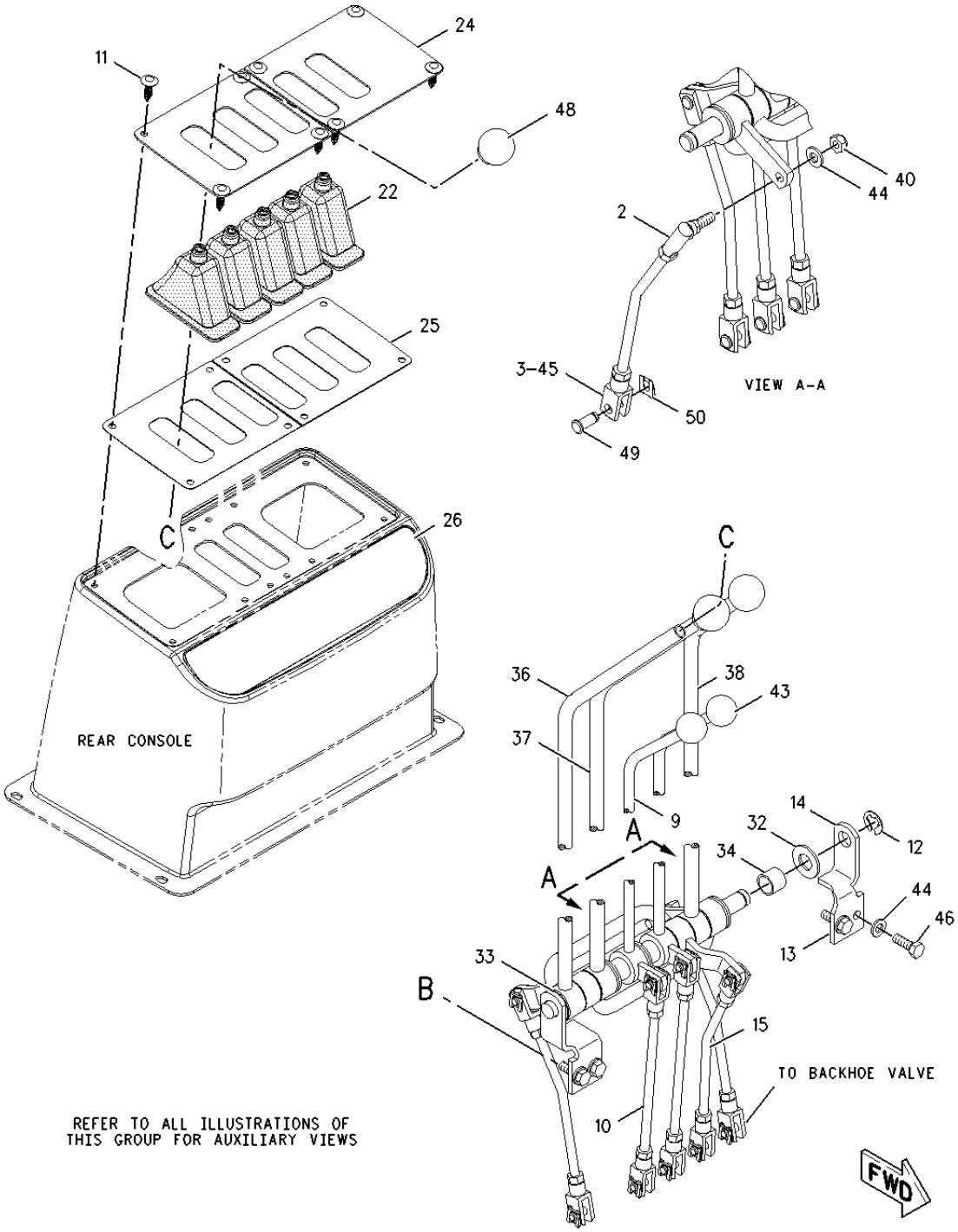

1 NPR 2 8F-7702 4 SEAL-LIP TYPE

2 NPR 1 8T-4773 1 BALL JOINT

3 NPR 1,2 8T-4815 10 ROD END

4 NPR 2 8T-6431 1 ROD END

5 NPR 2 9R-1968 2 SPACER (7-MM THK)

6 NPR 2 9R-3135 3 PIN

7 NPR 2 9R-4764 1 ROD

8 NPR 2 9R-8825 4 PLATE

9 NPR 1 9R-9721 2 LEVER AS

10 NPR 1 9R-9722 2 ROD

11 NPR 1 9R-9901 8 FASTENER (CLIP)

12 NPR 1,2 006-8606 2 RING-RETAINING

13 NPR 1 116-2449 1 SHAFT AS

14 NPR 1 116-2452 1 PLATE

15 NPR 1 116-3019 3 ROD

16 NPR 2 116-4372 1 SHAFT AS

17 NPR 2 116-4373 1 SHAFT AS

18 NPR 2 116-4374 1 SUPPORT AS

NPR 2 5V-4410 2 BEARING-SLEEVE

19 NPR 2 116-4375 1 SUPPORT AS

NPR 2 5V-4410 2 BEARING-SLEEVE

20 NPR 2 116-4381 2 SEAL

21 NPR 2 116-4478 1 BOSS AS

NPR 2 5V-4410 1 BEARING-SLEEVE

22 NPR 1 117-5672 5 BOOT

23 NPR 2 123-2846 1 SUPPORT AS

24 NPR 1 123-3119 1 PLATE

25 NPR 1 126-4358 2 PLATE

26 NPR 1 128-6151 1 FILM-INSTRUCTION

27 NPR 2 130-3291 1 PLATE AS

28 NPR 2 130-3292 1 PLATE AS

29 NPR 2 130-3293 1 ROD AS

30 NPR 2 130-3294 1 ROD AS

31 NPR 2 130-3858 2 MAT

32 NPR B 1,2 136-7439 12 SPACER (20X40X3-MM THK)

33 NPR B 1,2 136-7440 11 SHIM (1-MM THK)

34 NPR 1 141-1762 3 SPACER (21.2X25.4X20-MM THK)

35 NPR 2 157-7237 1 BRACKET AS

36 NPR 1 174-2306 1 LEVER AS

NPR 1 5V-4410 2 BEARING-SLEEVE

37 NPR 1 174-2307 1 LEVER AS

NPR 1 5V-4410 2 BEARING-SLEEVE

38 NPR 1 174-2308 1 LEVER AS

NPR 1 5V-4410 2 BEARING-SLEEVE

39 NPR M 2 6V-7743 2 LOCKNUT (M6X1-THD)

40 NPR M 1 6V-7744 1 LOCKNUT (M10X1.15-THD)

41 NPR M 2 6V-8335 2 BOLT-SELF-LOCKING (M10X1.5X40-MM)

42 NPR M 2 7X-2535 2 BOLT (M6X1X60-MM)

43 NPR 1 8T-3984 2 KNOB

44 NPR 1,2 8T-4121 15 WASHER-HARD (11X21X2.5-MM THK)

45 NPR M 1,2 8T-4133 14 NUT (M10X1.5-THD)

46 NPR M 1,2 8T-4195 12 BOLT (M10X1.5X30-MM)

47 NPR 2 8T-6658 1 PIN

48 NPR 1 8T-9000 3 KNOB

49 NPR 1,2 9R-2806 10 PIN

50 NPR 1,2 9R-2807 14 CLIP

51 NPR 2 9X-8256 4 WASHER (6.6X12X2-MM THK)

Key: B - USE AS REQUIRED
M - METRIC PART

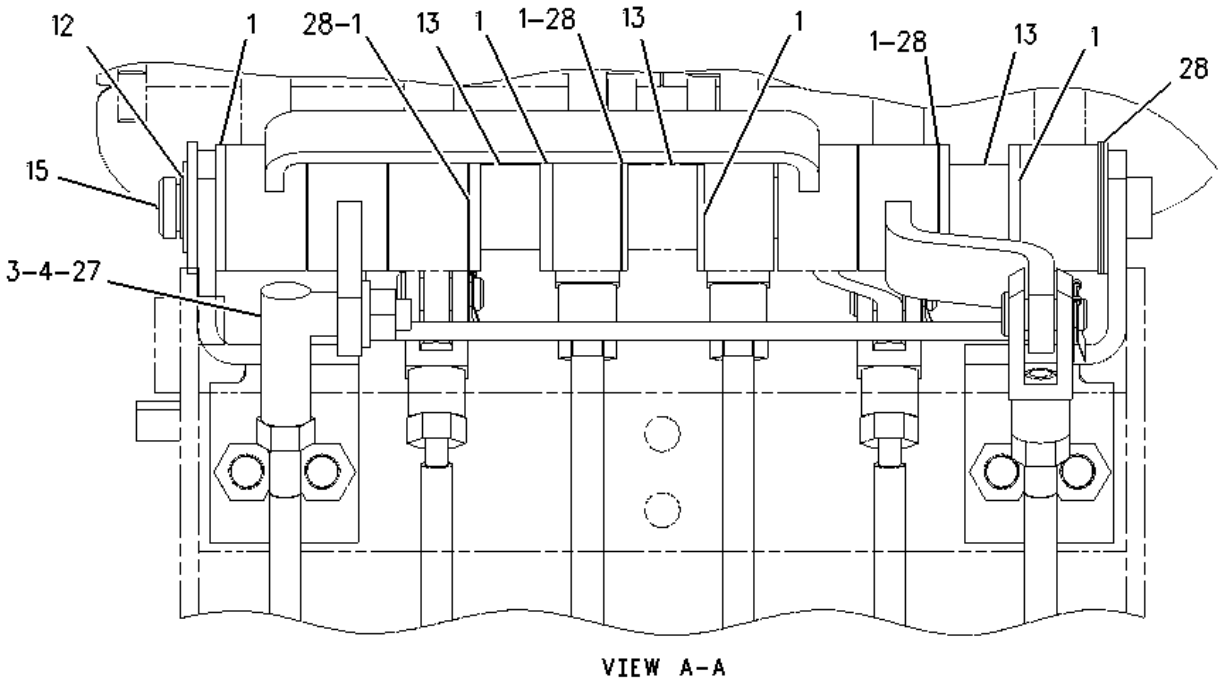

VIEW A-A

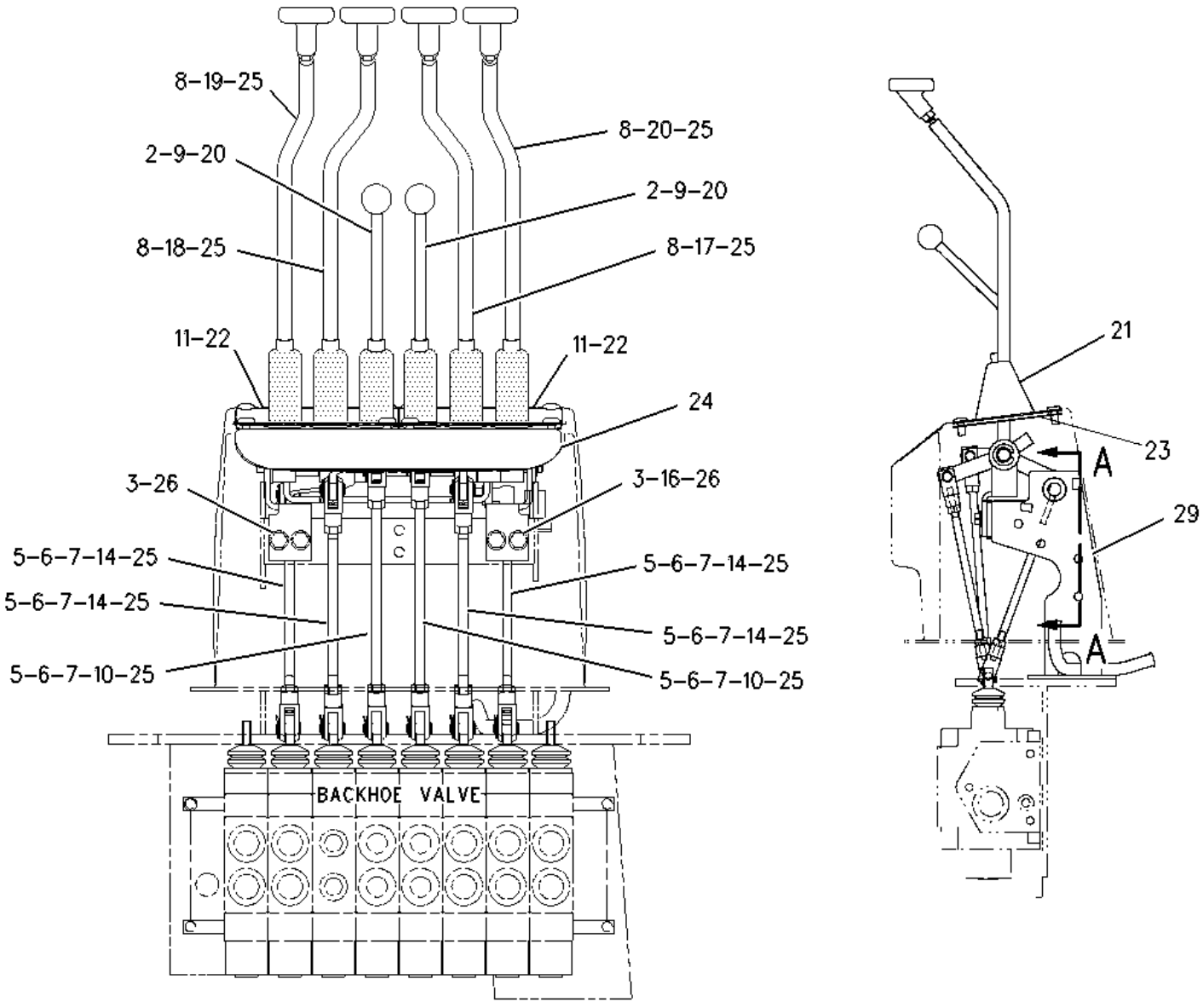

1 NPR B 136-7439 8 SPACER (20X40X3-MM THK)

2 NPR 8T-3984 2 KNOB

3 NPR 8T-4121 5 WASHER-HARD (11X21X2.5-MM THK)

4 NPR 8T-4773 1 BALL JOINT

5 NPR 8T-4815 11 ROD END

6 NPR 9R-2806 11 PIN

7 NPR 9R-2807 11 CLIP

8 NPR 9R-4918 4 KNOB

9 NPR 9R-9721 2 LEVER AS

(EACH INCLUDES)

NPR 5V-4410 1 BEARING-SLEEVE

10 NPR 9R-9722 2 ROD

11 NPR 9R-9901 8 FASTENER (CLIP)

12 NPR 006-8606 1 RING-RETAINING

13 NPR 141-1762 3 SPACER (21.2X25.4X20-MM THK)

14 NPR 115-6452 4 ROD

15 NPR 116-2449 1 SHAFT AS

16 NPR 116-2452 1 PLATE

17 NPR 116-4929 1 LEVER AS

NPR 5V-4410 1 BEARING-SLEEVE

18 NPR 116-5844 1 LEVER AS

NPR 5V-4410 1 BEARING-SLEEVE

19 NPR 116-6198 1 LEVER AS

NPR 5V-4410 2 BEARING-SLEEVE

20 NPR 116-6207 1 LEVER AS

NPR 5V-4410 2 BEARING-SLEEVE

21 NPR 117-5672 6 BOOT

22	NPR	123-3119	2	PLATE
23	NPR	126-4358	2	PLATE
24	NPR	128-6152	1	FILM-INSTRUCTION
25	NPR M	8T-4133	16	NUT (M10X1.5-THD)
26	NPR M	8T-4136	4	BOLT (M10X1.5X25-MM)
27	NPR M	6V-7744	1	LOCKNUT (M10X1.15-THD)
28	NPR B	136-7440	7	SHIM (1-MM THK)
29	NPR	157-7237	1	BRACKET AS

Key:

B - USE AS REQUIRED
M - METRIC PART

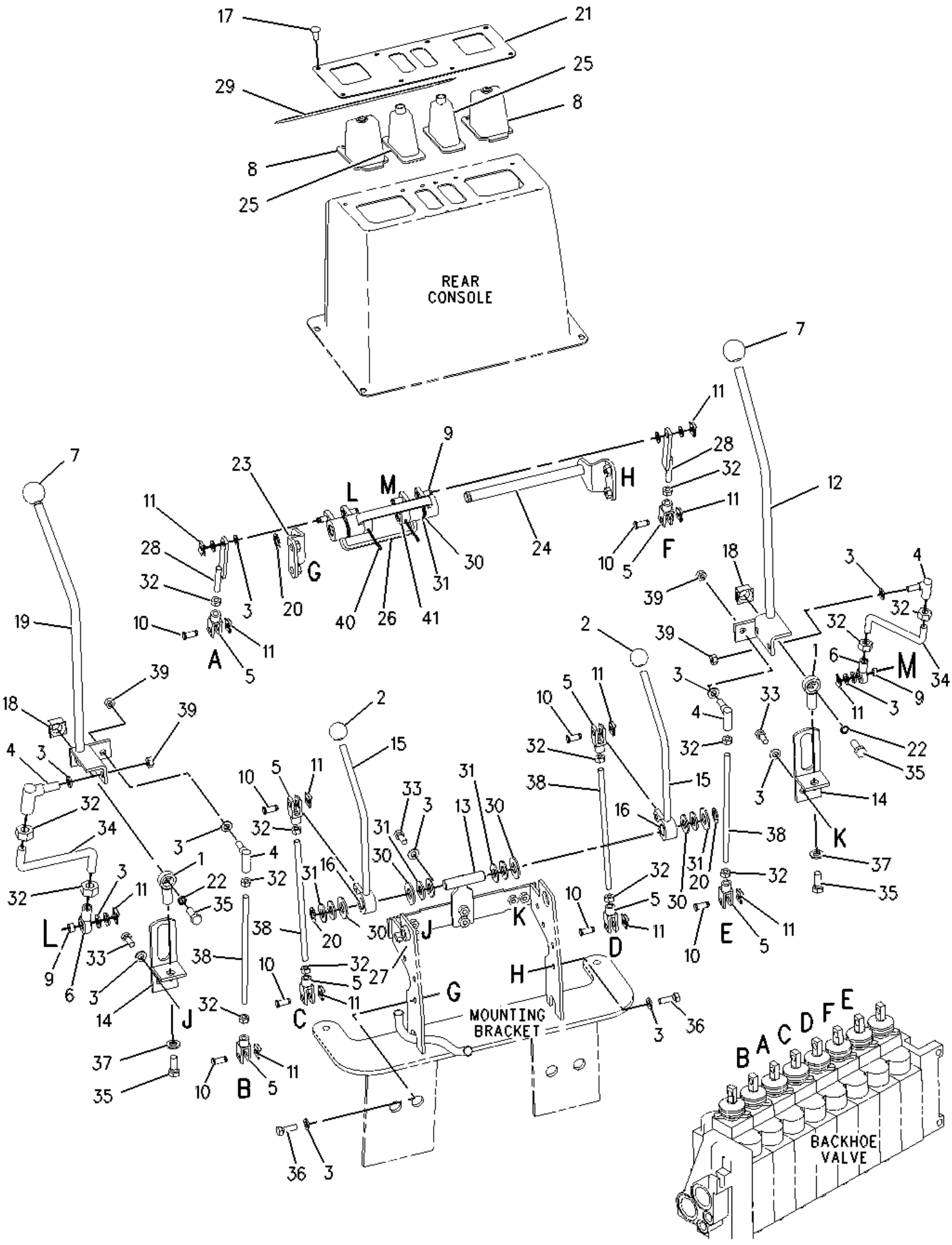
REAR CONSOLE
MOUNTING BRACKET
BACKHOE VALVE
A
B
C
D
E
F
G
H
J
K
L
M

1 NPR 8C-3392 2 ROD END

2 NPR 8T-3984 2 KNOB

3 NPR C 8T-4121 22 WASHER-HARD (11X21X2.5-MM THK)

4 NPR 8T-4773 4 BALL JOINT

5 NPR 8T-4815 8 ROD END

6 NPR 8T-6431 2 ROD END

7 NPR 8T-9000 2 KNOB

8 NPR 8Y-7402 2 BOOT

9 NPR C 9R-1968 6 SPACER (7-MM THK)

10 NPR 9R-2806 8 PIN

11 NPR 9R-2807 12 CLIP

12 NPR 9R-8087 1 LEVER AS

13 NPR 9R-9709 1 BRACKET AS

NPR M 8T-3490 2 NUT-WELD (M10X1.5-THD)

14 NPR 9R-9720 2 BRACKET AS

15 NPR 9R-9721 2 LEVER AS

(EACH INCLUDES)

16 NPR 5V-4410 1 BEARING-SLEEVE

17 NPR 9R-9901 8 FASTENER (CLIP)

18 NPR 9R-9969 2 BEARING

19 NPR 9R-9972 1 LEVER AS

20 NPR 006-8606 3 RING-RETAINING

21 NPR 104-9483 1 PLATE

22 NPR 115-8124 2 WASHER (12.2X16X3-MM THK)

23 NPR 117-1051 1 PLATE AS

24 NPR 117-1052 1 SHAFT AS

25 NPR 117-5672 2 BOOT

26	NPR	118-5262	2	LEVER AS
27	NPR	157-7237	1	BRACKET AS
	NPR M	8T-3490	4	NUT-WELD (M10X1.5-THD)
28	NPR C	144-0898	2	ROD AS
29	NPR	128-6150	1	FILM-INSTRUCTION
30	NPR BC	136-7439	12	SPACER (20X40X3-MM THK)
31	NPR B	136-7440	16	SHIM (1-MM THK)
32	NPR M	8T-4133	14	NUT (M10X1.5-THD)
33	NPR M	8T-4136	6	BOLT (M10X1.5X25-MM)
34	NPR	142-7404	2	ROD
35	NPR M	8T-4139	4	BOLT (M12X1.75X30-MM)
36	NPR M	8T-4196	4	BOLT (M10X1.5X35-MM)
37	NPR	8T-4223	2	WASHER-HARD (13.5X25.5X3-MM THK)
38	NPR	9R-9722	4	ROD
39	NPR M	6V-7744	4	LOCKNUT (M10X1.15-THD)
40	NPR CM	6V-8932	2	SETSCREW-SOCKET (M6X1X10-MM)
41	NPR C	142-7405	2	COLLAR

Key:

B - USE AS REQUIRED
C - CHANGE FROM PREVIOUS TYPE

PART OF 119-4005, 154-5432 HYDRAULIC AR

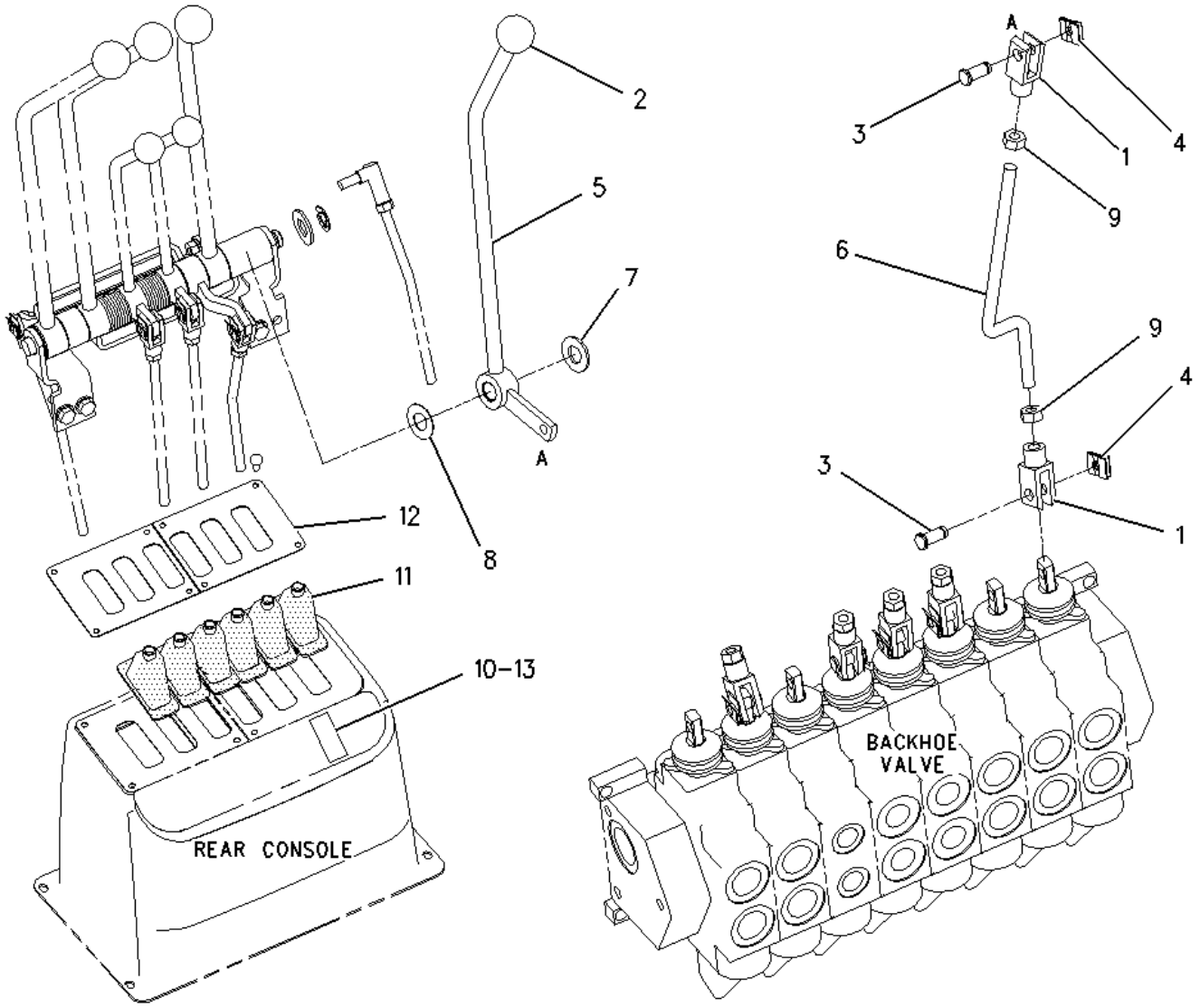

1	NPR	8T-4815	2	ROD END
2	NPR	8T-9000	1	KNOB
3	NPR	9R-2806	2	PIN
4	NPR	9R-2807	2	CLIP
5	NPR	116-3016	1	LEVER AS
	NPR	5V-4410	1	BEARING-SLEEVE
6	NPR	116-3018	1	ROD
7	NPR B	136-7439	1	SPACER (20X40X3-MM THK)
8	NPR B	136-7440	1	SHIM (1-MM THK)
9	NPR M	8T-4133	2	NUT (M10X1.5-THD)
10	NPR J	101-2788	1	FILM-INSTRUCTION (EXTENDABLE STICK)
11	NPR	117-5672	1	BOOT
12	NPR	123-3119	1	PLATE
13	NPR L	186-2854	1	FILM-INSTRUCTION

Key: B - USE AS REQUIRED J - USE AS REQUIRED WHEN MACHINE IS EQUIPPED WITH E-STICK
L - USE AS REQUIRED ON MACHINES WITHOUT E-STICK
M - METRIC PART

106-6373 CONTROL GP-HYDRAULIC PEDAL --S/N 4ZN16044-50156

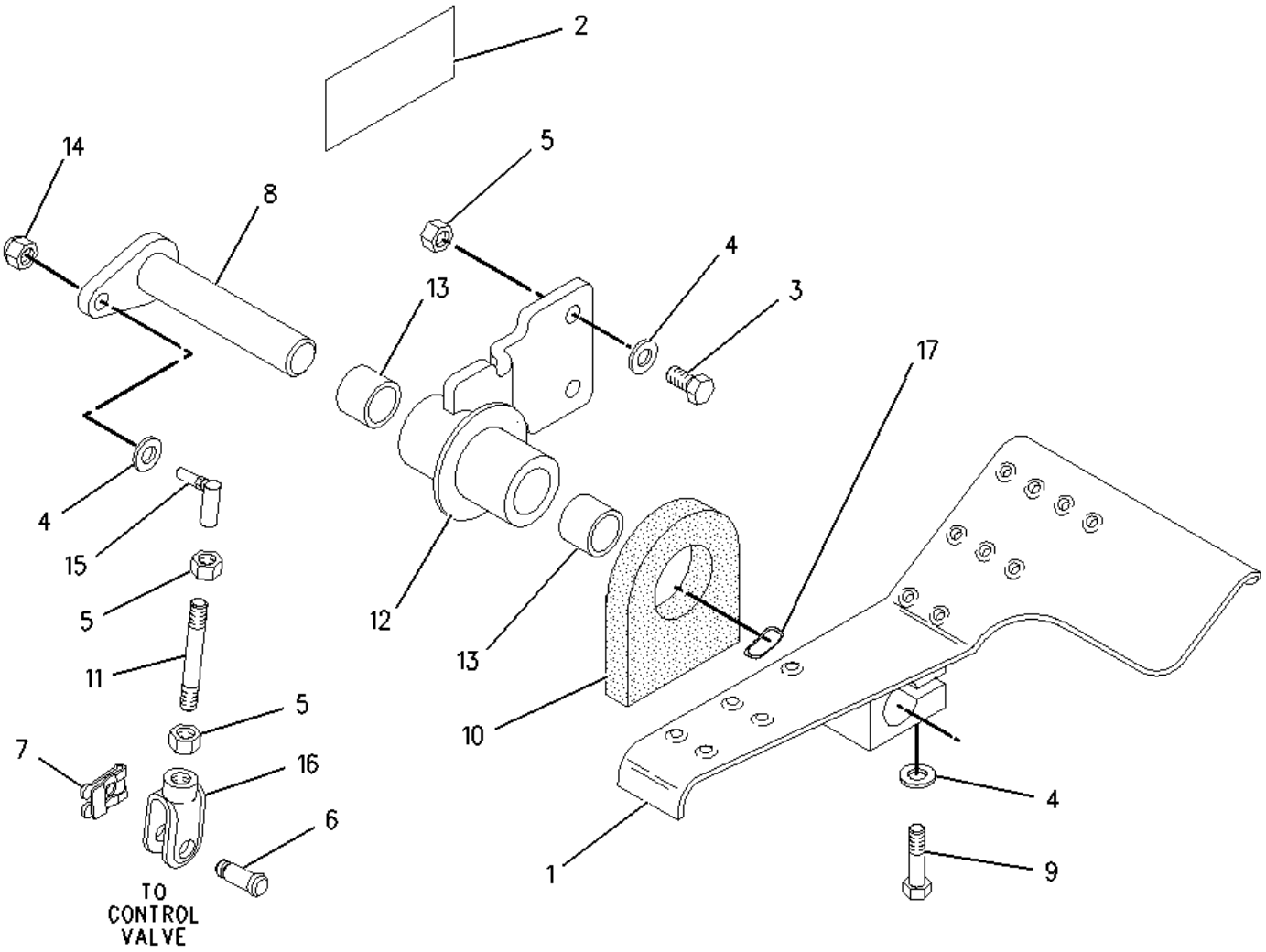

1 NPR 121-0593 1 PEDAL AS-RH
2 NPR 133-8916 1 FILM-INSTRUCTION (EXTENDABLE STICK)

3 NPR M 8T-4195 2 BOLT (M10X1.5X30-MM)
4 NPR 8T-4121 4 WASHER-HARD (11X21X2.5-MM THK)

5 NPR M 8T-4133 4 NUT (M10X1.5-THD)
6 NPR 9R-2806 1 PIN

7 NPR 9R-2807 1 CLIP
8 NPR 128-7341 1 SHAFT AS

9 NPR M 6V-8335 1 BOLT-SELF-LOCKING (M10X1.5X40-MM)

10 NPR 109-0533 1 SEAL

11 NPR 155-6011 1 ROD
12 NPR 106-6374 1 SUPPORT AS

13 NPR 9R-2614 2 BEARING
14 NPR M 6V-7744 1 LOCKNUT (M10X1.15-THD)

15 NPR 8T-4773 1 BALL JOINT

16 NPR 8T-4815 1 ROD END
17 NPR 195-6550 1 WASHER-WAVE

Key: M - METRIC PART

LEFT FT FACTORY --PART OF 119-4006, 154-5433 HYDRAULIC AR

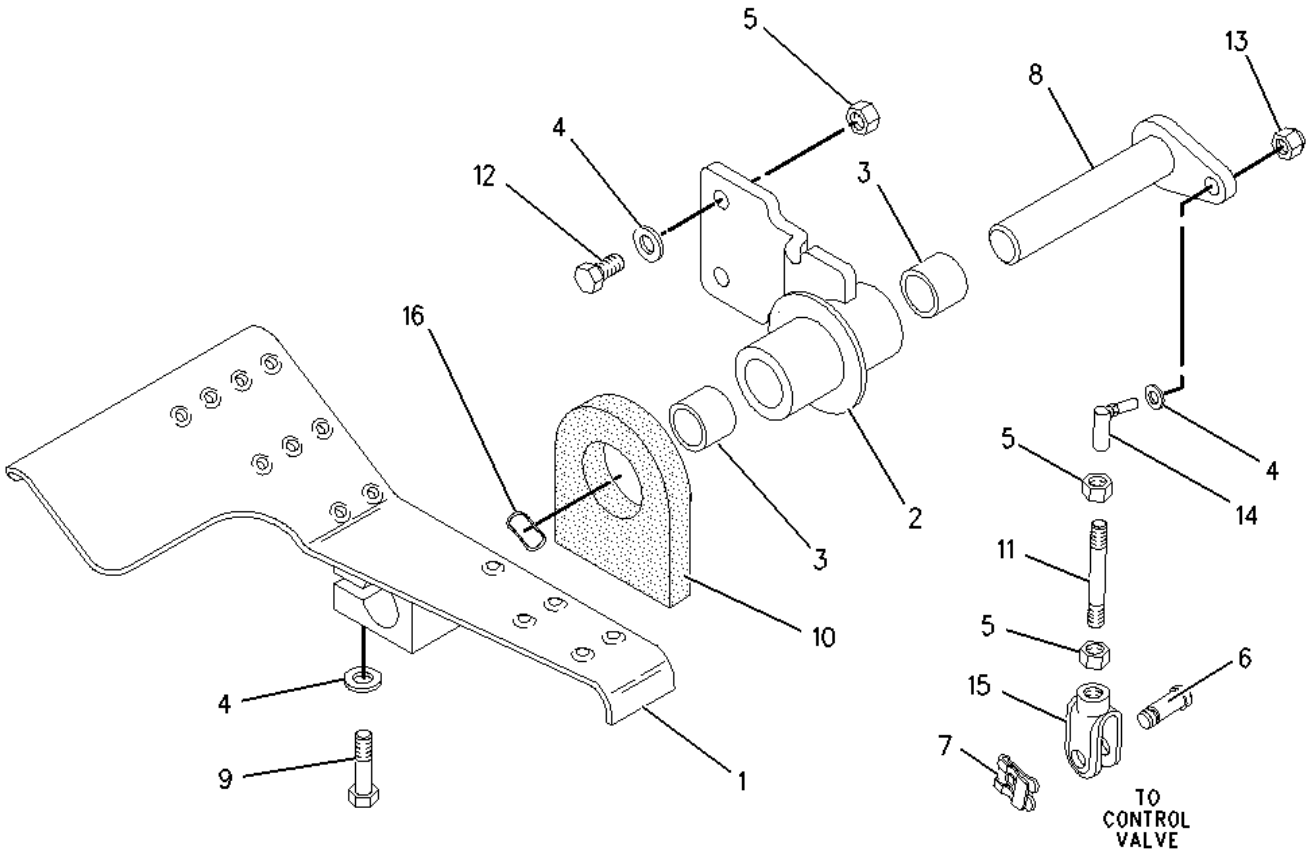

1	NPR	121-0592	1	PEDAL AS-LH
2	NPR	106-6374	1	SUPPORT AS
3	NPR	9R-2614	2	BEARING
4	NPR	8T-4121	4	WASHER-HARD (11X21X2.5-MM THK)
5	NPR M	8T-4133	4	NUT (M10X1.5-THD)
6	NPR	9R-2806	1	PIN
7	NPR	9R-2807	1	CLIP
8	NPR	128-7341	1	SHAFT AS
9	NPR M	6V-8335	1	BOLT-SELF-LOCKING (M10X1.5X40-MM)
10	NPR	109-0533	1	SEAL
11	NPR	155-6011	1	ROD
12	NPR M	8T-4195	2	BOLT (M10X1.5X30-MM)
13	NPR M	6V-7744	1	LOCKNUT (M10X1.15-THD)
14	NPR	8T-4773	1	BALL JOINT
15	NPR	8T-4815	1	ROD END
16	NPR	195-6550	1	WASHER-WAVE

Key: M - METRIC PART

163-0753 LEVER GP-HAND CONTROL -S/N 4ZN16044-50156-PART OF 163-0754 CONTROL GP-PARKING BRAKE

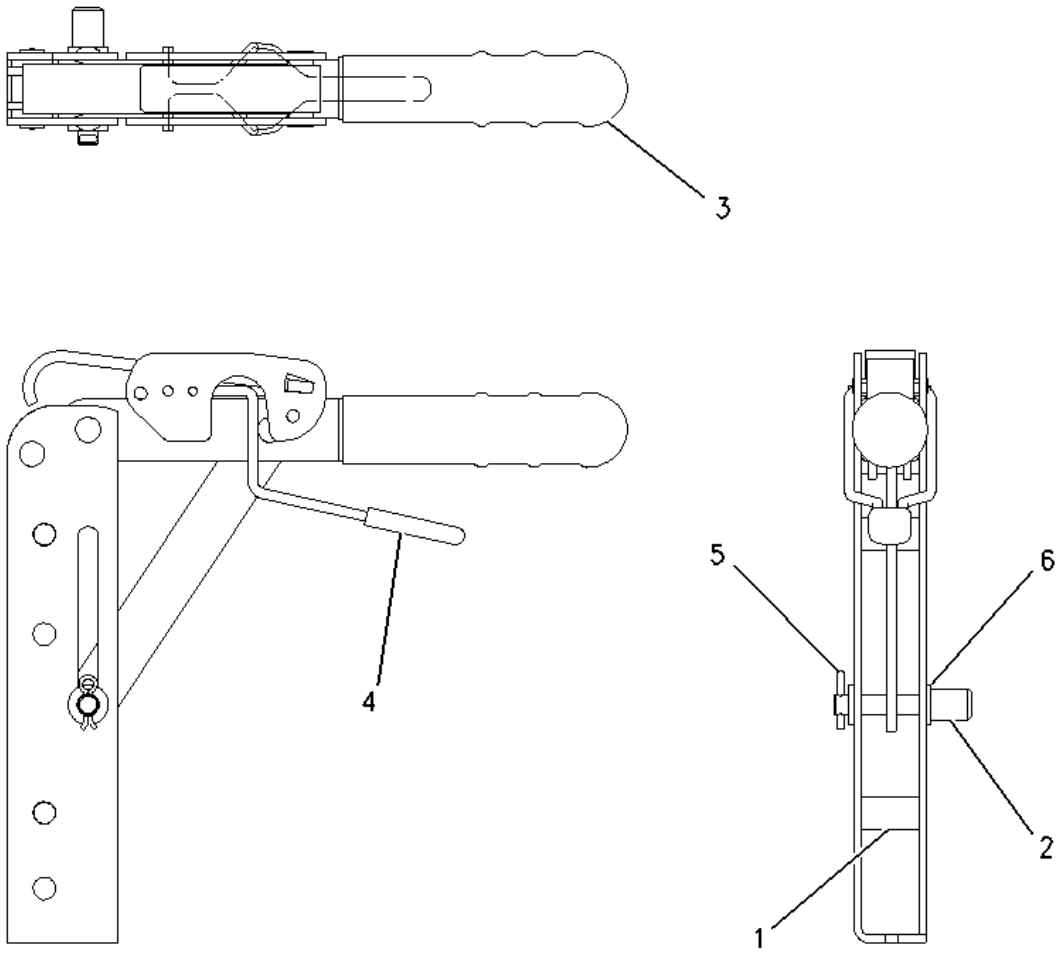

1	**NPR**	**7R-8239**	**2**	**SPACER**
2	**NPR**	**039-9133**	**1**	**PIN**
3	**NPR**	**164-9598**	**1**	**GRIP**
4	**NPR**	**164-9599**	**1**	**COVER**
5	**NPR**	**3B-4610**	**1**	**PIN-COTTER**
6	**NPR**	**8T-4224**	**2**	**WASHER-HARD (8.8X16X2MM THK)**

166-6017 KIT-FOOT SWING CONT CONVERSION --S/N 4ZN16044-50156

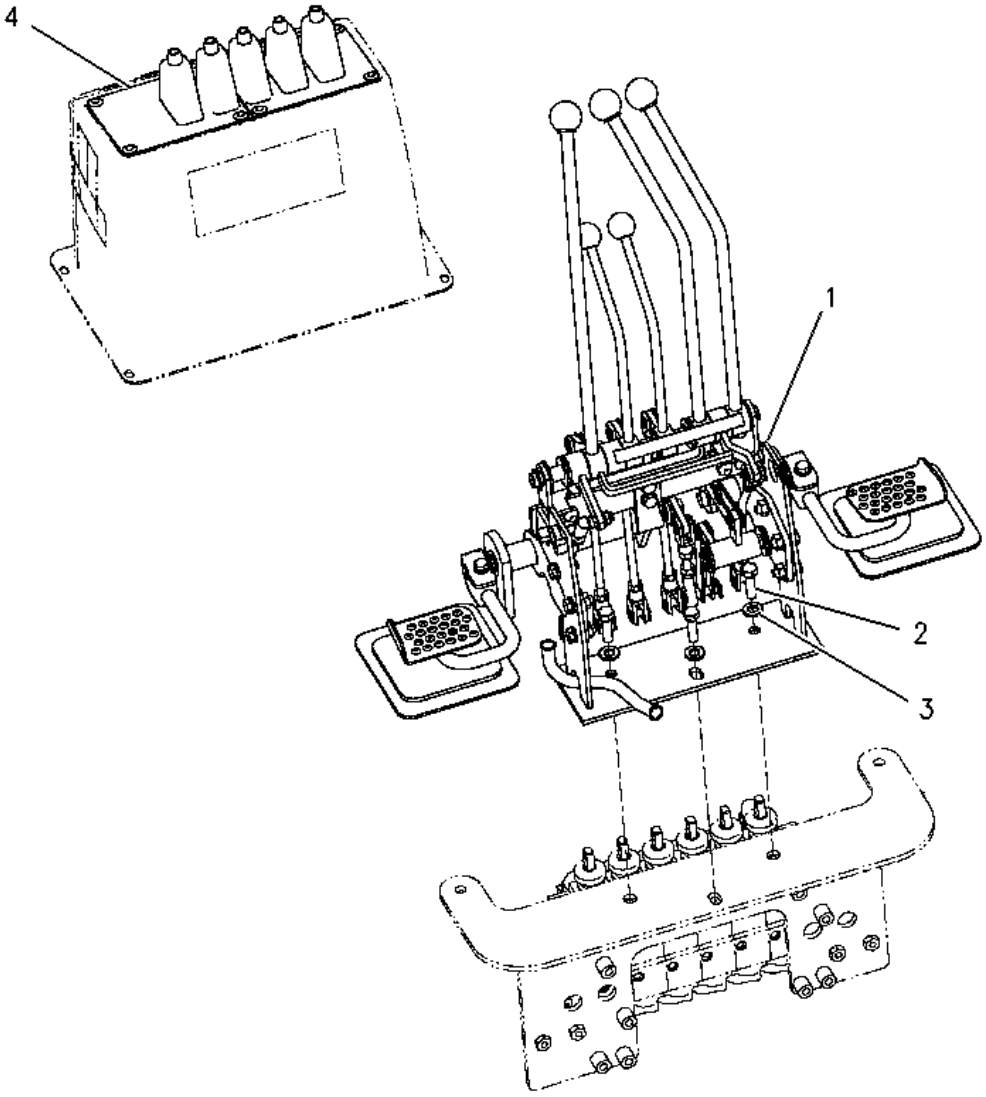

1 NPR Y 112-1834 1 CONTROL GP-HYDRAULIC HAND

2 NPR M 8T-4183 3 BOLT (M12X1.75X40-MM)

3 NPR 8T-4223 3 WASHER-HARD (13.5X25.5X3-MM THK)

4 NPR 139-9414 1 PLATE

Key: M - METRIC PART
Y - SEPARATE ILLUSTRATION

136-8034 LOCK GP-HYDRAULIC FOOT CONTROL -S/N 4ZN16044-50156
3 LEVER FOOT SWING

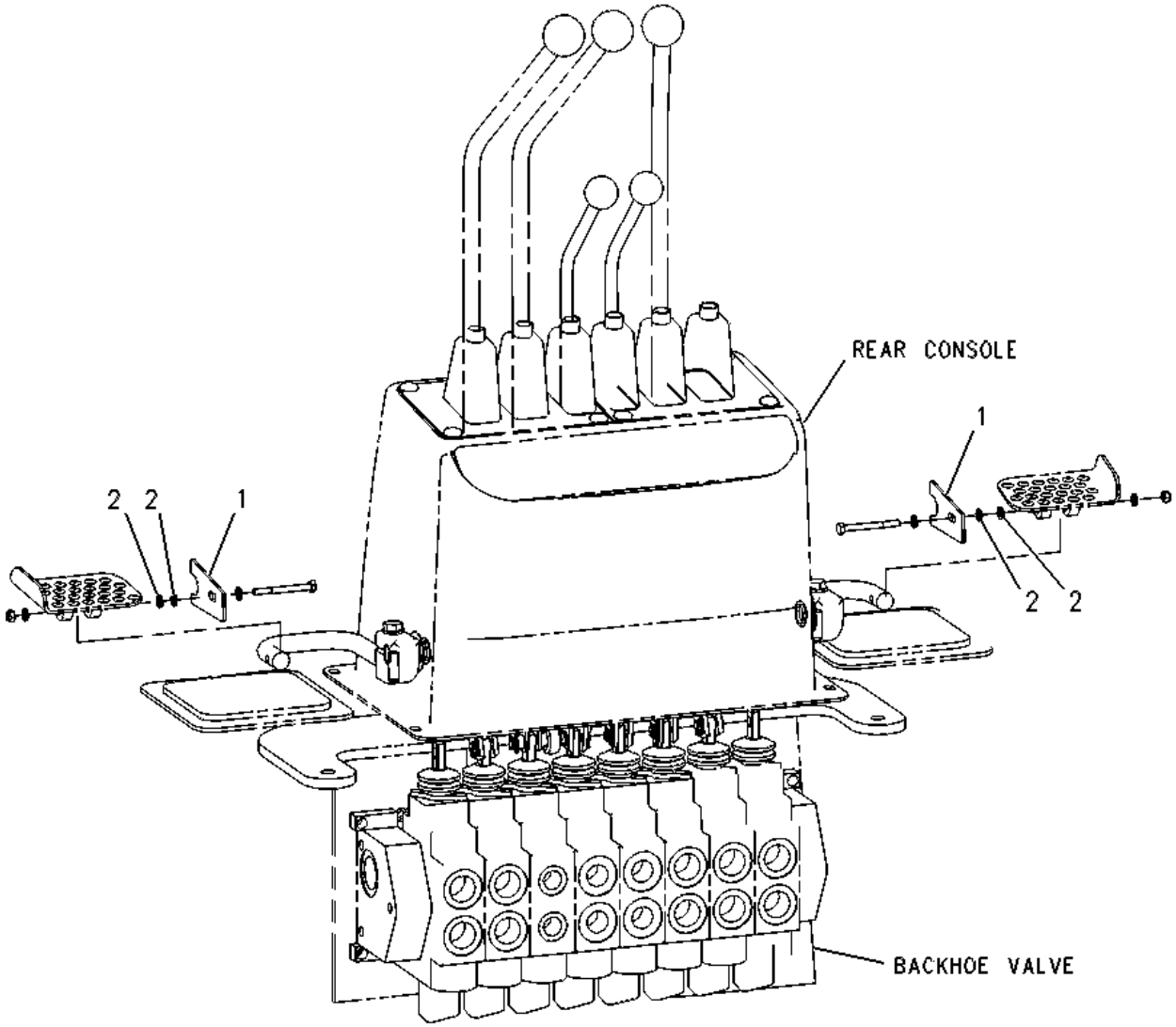

1 NPR 136-1002 2 PLATE

2 NPR 9X-8256 4 WASHER (6.6X12X2-MM THK)

104-3923 CONSOLE GP-FRONT --S/N 4ZN16044-50156-PART OF 163-9194 CANOPY AR-OPEN ROPS

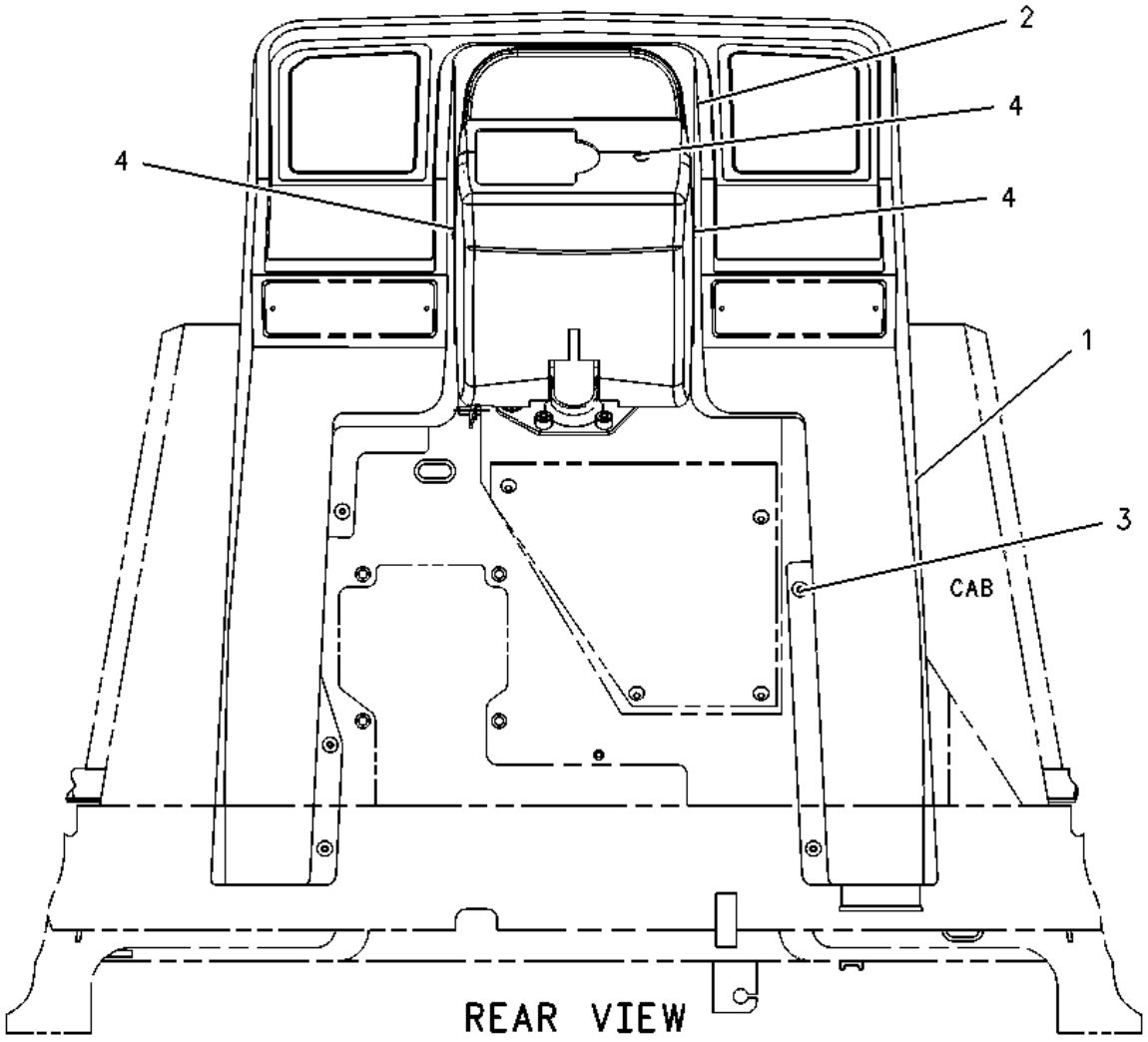

1 NPR 8Y-7371 1 CONSOLE-FRONT

2 NPR 9R-9912 1 COVER

3 NPR M 9X-2045 5 SCREW-TRUSS HEAD (M6X1X20-MM)

4 NPR M 130-3031 3 SCREW (M6X1X12-MM)

Key: M - METRIC PART

104-6044 CONSOLE GP-FRONT --S/N 4ZN16044-50156
PART OF 154-5473 CAB AR-ENCLOSED ROPS

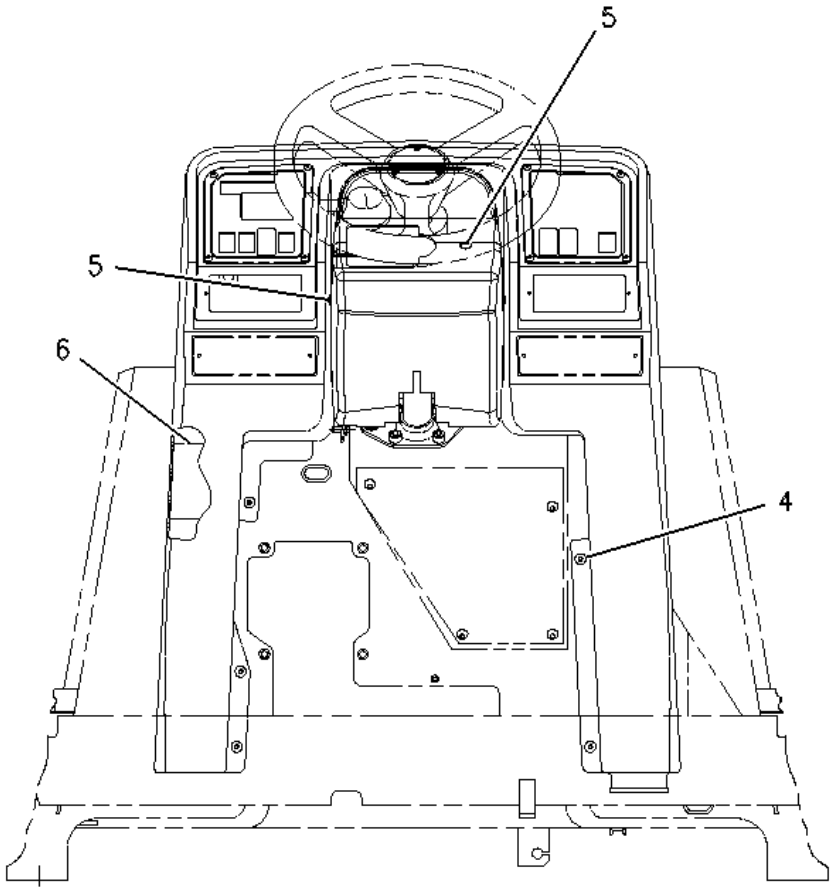

REAR VIEW

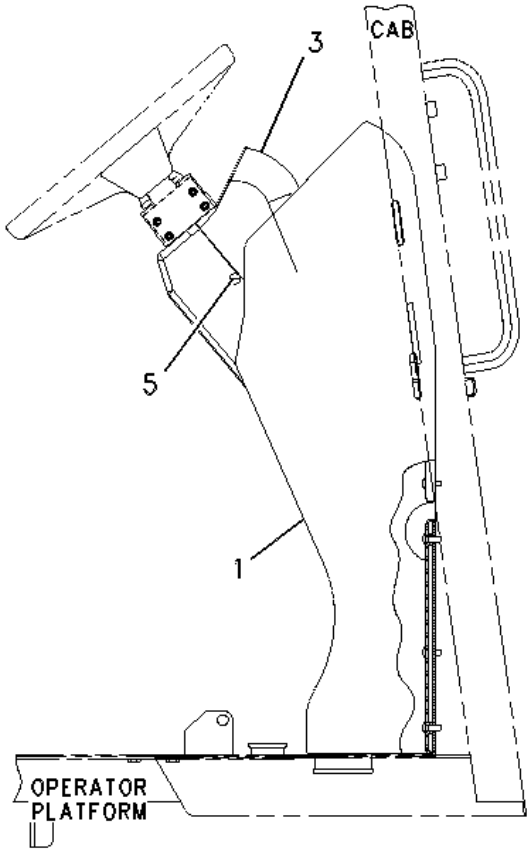

RIGHT SIDE VIEW

1 NPR 9R-9839 1 CONSOLE-FRONT

3 NPR 9R-9912 1 COVER

4 NPR M 9X-2045 5 SCREW-TRUSS HEAD (M6X1X20-MM)

5 NPR M 130-3031 3 SCREW (M6X1X12-MM)

6 NPR 131-7686 1 SEAL

Key:

M - METRIC PART

104-3921 CONSOLE GP-REAR ---S/N 4ZN16044-50156--PART OF 154-5483 CHASSIS AR

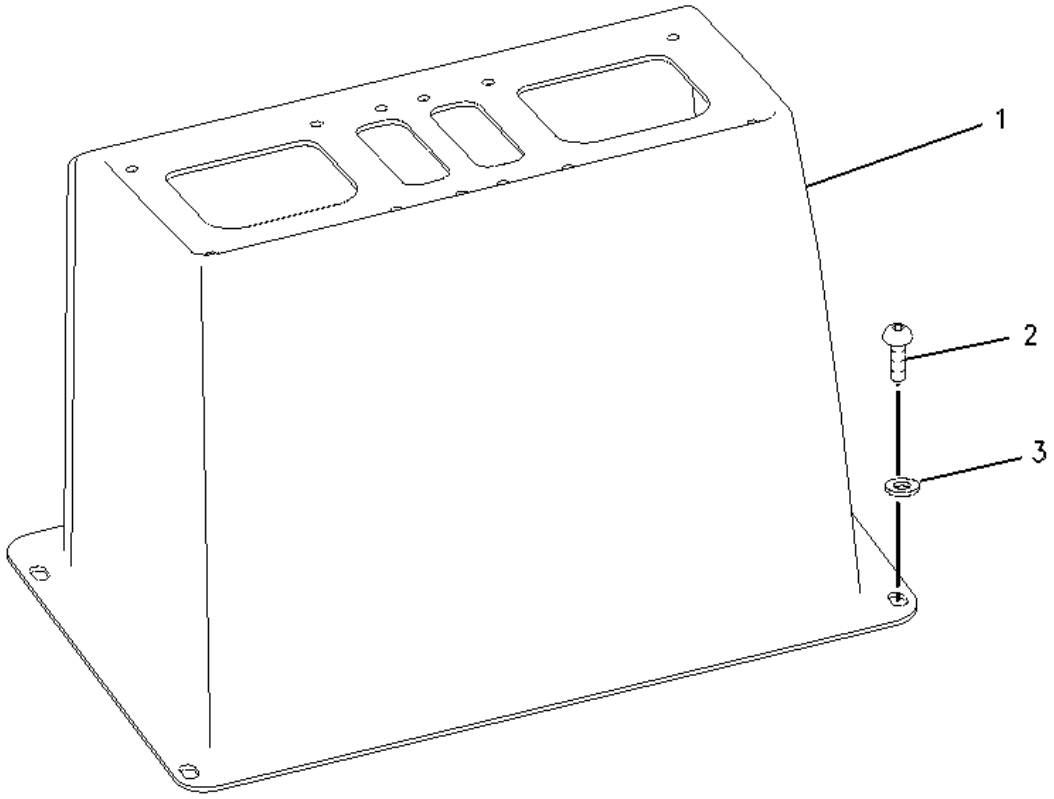

1 NPR 9R-9838 1 CONSOLE-REAR

2 NPR M 9X-2043 4 SCREW-TRUSS HEAD (M6X1X14-MM)

3 NPR 9X-2038 4 WASHER (7X19X2-MM THK)

Key: M - METRIC PART

104-3919 CONSOLE GP-SIDE --S/N 4ZN16044-50156--PART OF 154-5483 CHASSIS AR

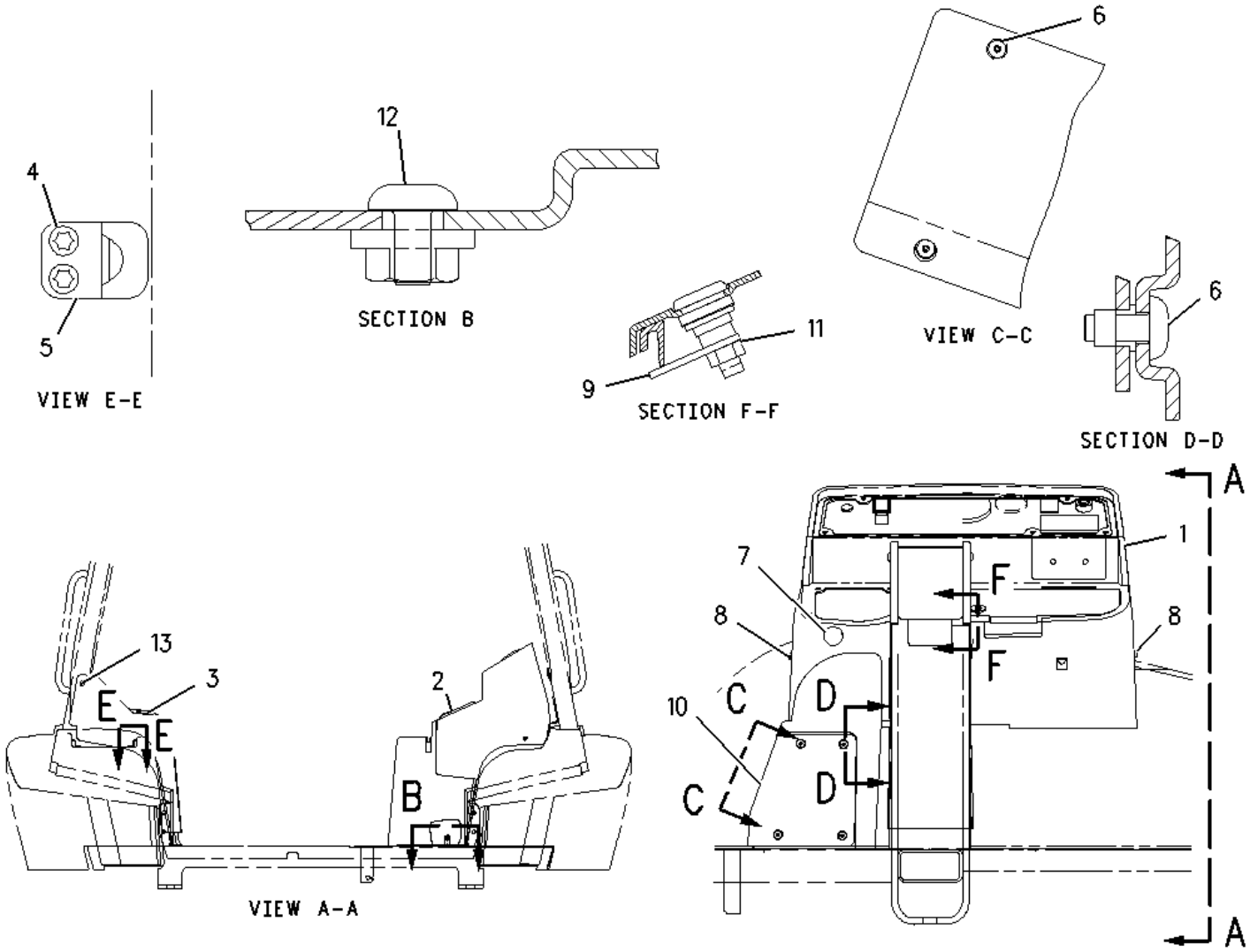

1 NPR 9R-9837 1 CONSOLE-SIDE

2 NPR 9R-9842 1 BOX-STORAGE

3 NPR 9R-9890 1 COVER

4 NPR 113-8277 4 SCREW-PAN HEAD (8-32X12.7-MM)

5 NPR 100-8275 2 PLATE

6 NPR M 9X-2045 4 SCREW-TRUSS HEAD (M6X1X20-MM)

7 NPR 9P-6571 1 PLUG

8 NPR M 131-3985 2 SCREW (M6X1-THD)

9 NPR 136-9143 1 PLATE

10 NPR 130-6004 1 COVER

11 NPR J 5P-9000 1 LOCK AS-CYLINDER

12 NPR M 9X-2043 1 SCREW-TRUSS HEAD (M6X1X14-MM)

13 NPR M 9X-2042 2 SCREW-TRUSS HEAD (M6X1X12-MM)

Key: J - PART MARKED J REQUIRES 5P8500 KEY M - METRIC PART

104-5962 COVER GP-CONSOLE -S/N 4ZN16044-50156-AN ATTACHMENT

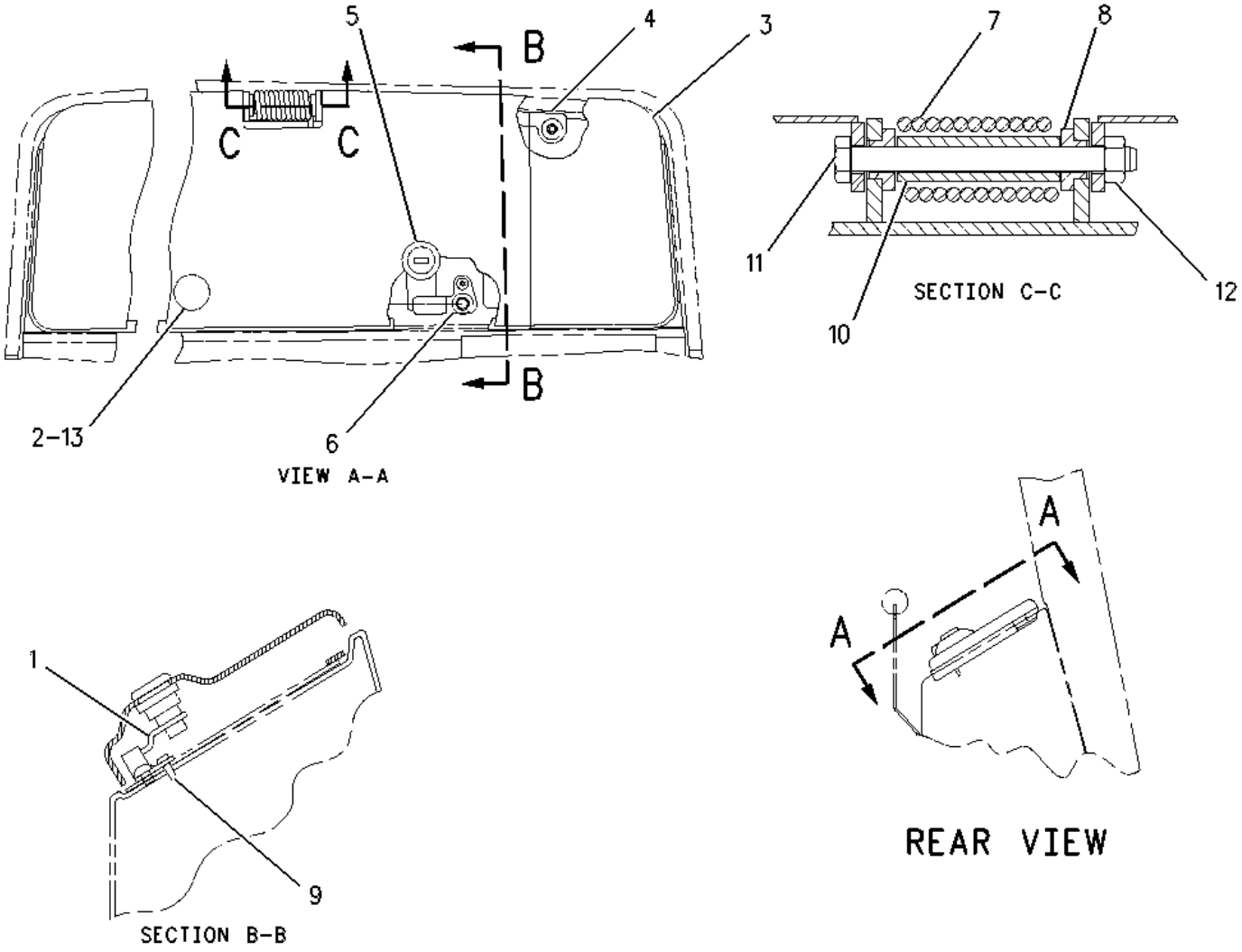

1	NPR	170-0648	1	PLATE
2	NPR	9C-9785	1	BUMPER
3	NPR	166-8612	1	COVER AS
4	NPR	109-8817	1	SUPPORT AS
5	NPR J	5P-9000	1	LOCK AS-CYLINDER
6	NPR	124-8105	1	PLATE
7	NPR	130-7912	1	SPRING
8	NPR	130-7913	2	WASHER-SPECIAL
9	NPR	113-8277	1	SCREW-PAN HEAD (8-32X12.7-MM)
10	NPR	130-7914	1	SPACER (6.9X11X40-MM THK)
11	NPR M	8T-3844	1	BOLT (M6X1X70-MM)
12	NPR M	6V-7743	1	LOCKNUT (M6X1-THD)
13	NPR M	5C-2890	1	NUT (M6X1-THD)

Key: J - PART MARKED J REQUIRES 5P8500 KEY M - METRIC PART

163-9224 MOUNTING GP-INSTRUMENT PANEL --S/N 4ZN16044-50156---PART OF 154-5417 CONTROL AR-RIDE

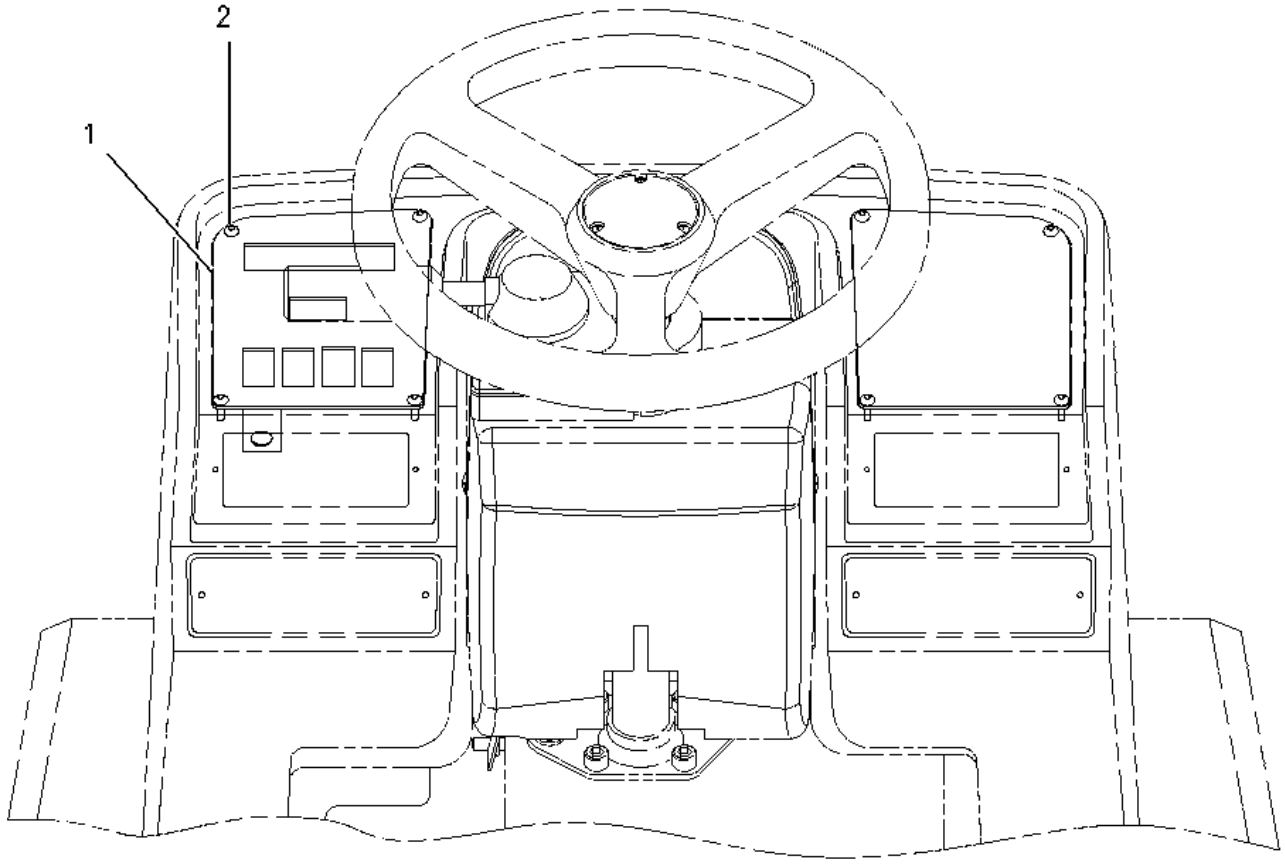

REAR VIEW

1 NPR 163-4531 1 PLATE AS (LH)

2 NPR M 138-8454 4 SCREW-TRUSS HEAD (M4X0.7X10-MM)

Key: M - METRIC PART

163-9225 MOUNTING GP-INSTRUMENT PANEL --S/N 4ZN16044-50156
PART OF 154-5436 POWER TRAIN AR

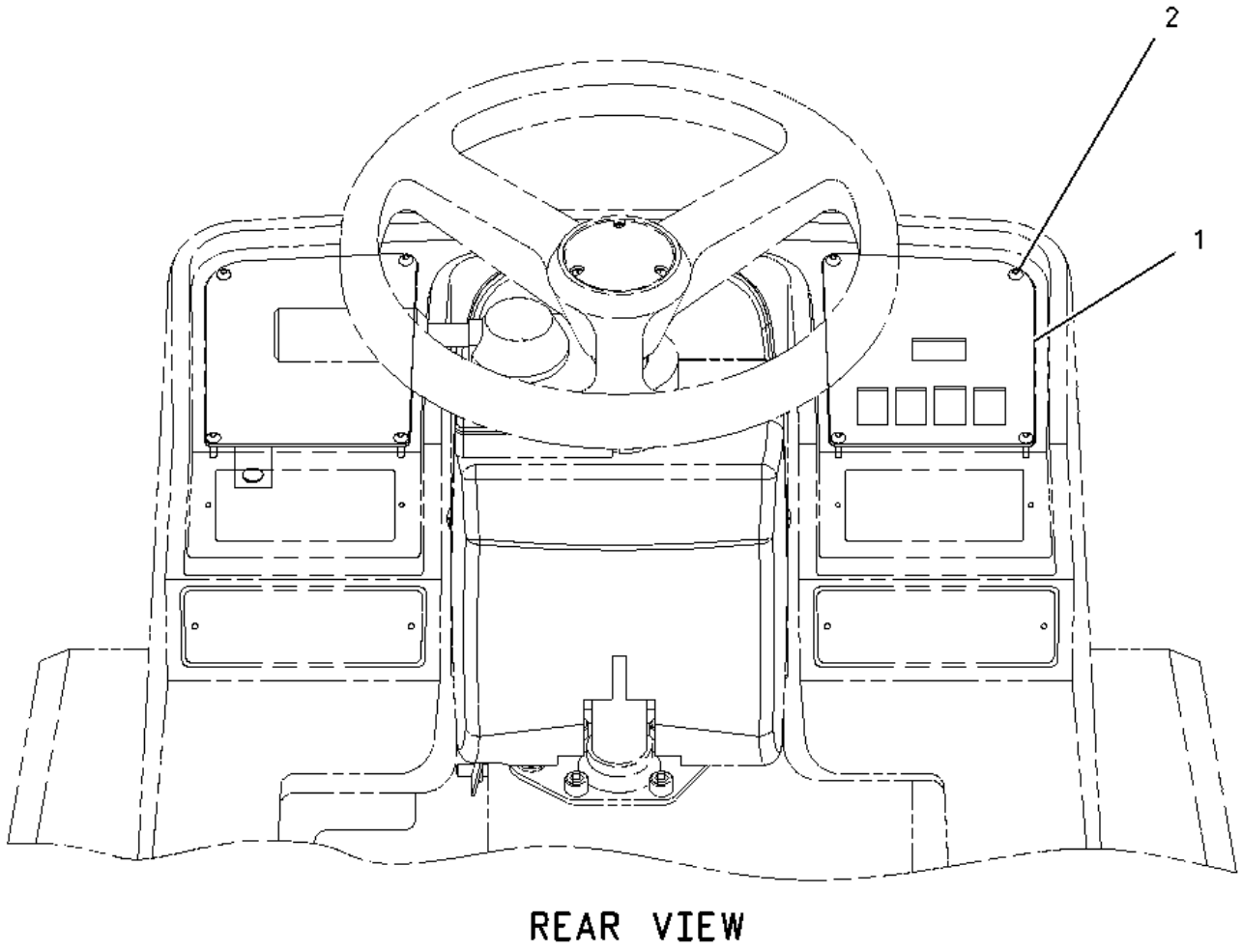

1 NPR 163-4533 1 PLATE-RH

2 NPR M 138-8454 4 SCREW-TRUSS HEAD

Key: M - METRIC PART

147-0204 TRANSMISSION GP-POWER SHIFT --S/N 4ZN5635-16043
PART OF 142-4437 TRANSMISSION AR-POWER SHIFT

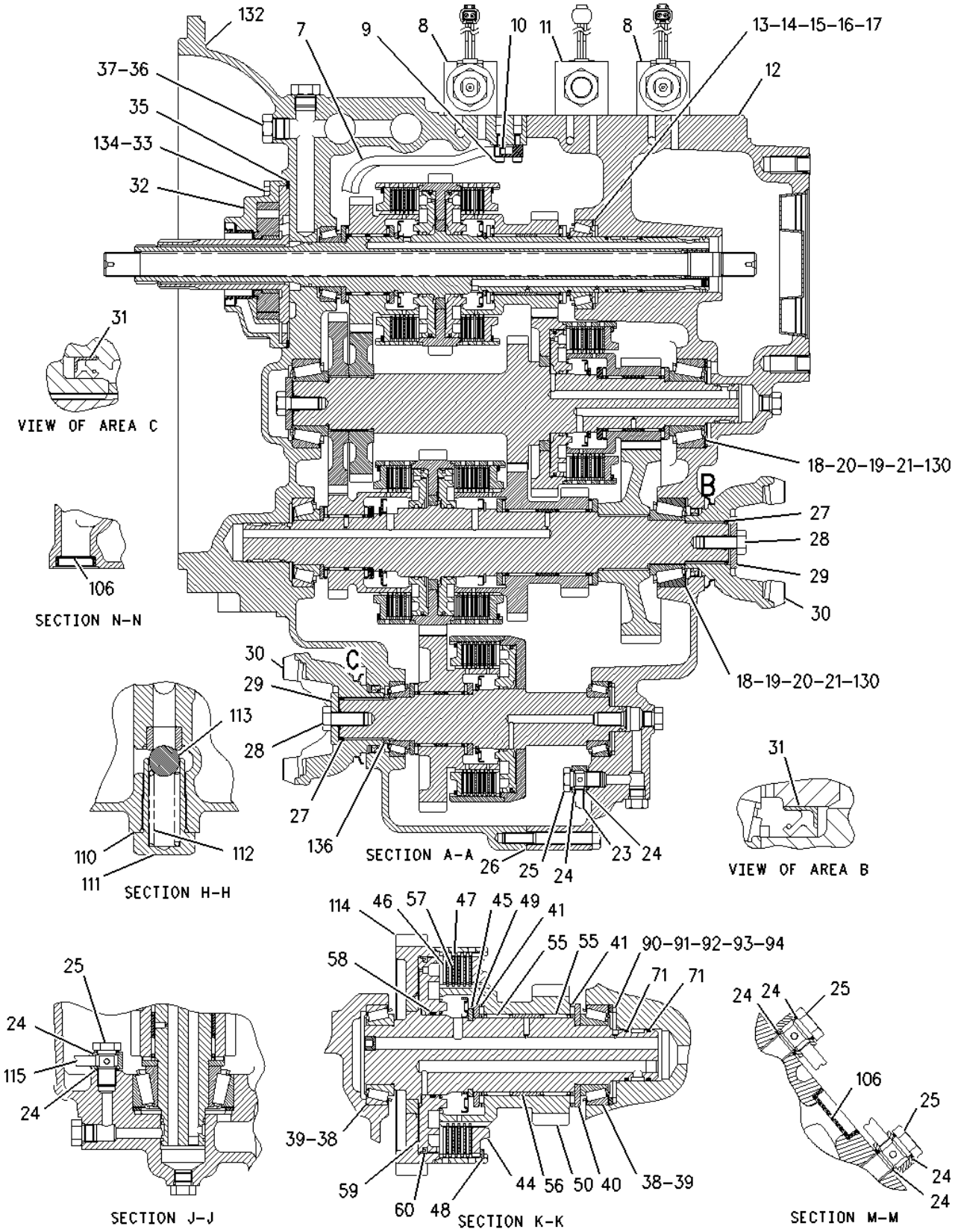

7 NPR 1 147-0218 1 TUBE AS-TRANSFER

8 NPR Y 1 148-8988 2 VALVE GP-SOLENOID (FORWARD HIGH)

9 NPR M 1 8C-8545 2 BOLT-SOCKET HEAD (M5X0.8X20)

10 NPR 1,2 120-9762 5 SEAL-O-RING

11 NPR Y 1 148-8986 1 VALVE GP-SOLENOID (REVERSE)

12 NPR 1 147-0253 1 CASE AS-REAR

NPR 1 9W-0717 11 PLUG

13 NPR 1 121-7398 1 SPACER (70X79.5X2-MM THK)

14 NPR B 1 121-7402 1 SHIM (0.6-MM THK)

15 NPR B 1 121-7401 1 SHIM (0.18-MM THK)

16 NPR B 1 121-7400 1 SHIM (0.08-MM THK)

17 NPR B 1 121-7399 1 SHIM (0.05-MM THK)

18 NPR 1 7T-2646 2 SPACER (66X79.5X2.02-MM THK)

19 NPR B 1 6T-9166 2 SHIM (0.051-MM THK)

20 NPR B 1 6T-9165 2 SHIM (0.076-MM THK)

21 NPR B 1 6T-9164 2 SHIM (0.178-MM THK)

22 NPR 2 122-1878 1 RING-SEAL

23 NPR 1 147-0201 1 TUBE AS

24 NPR 1,3 7W-3556 12 WASHER (14.27X20.57X1.5-MM THK)

25 NPR 1,3 147-0234 6 BOLT (9/16-18X0.83-IN)

26 NPR B 1 1U-8846 1 SEALANT-GASKET

27 NPR 1 5P-8066 2 SEAL-O-RING

28 NPR M 1,2 6V-8097 3 BOLT (M12X1.75X30-MM)

29 NPR 1,2 7T-3195 3 WASHER (12.3X47X6.35-MM THK)

30 NPR 1 122-6787 2 YOKE AS

(EACH AS INCLUDES)

NPR 1 123-1377 1 GUARD

31 NPR 1 8T-2193 2 SEAL-LIP TYPE

32 NPR 1 121-7385 1 PUMP GP-TRANSMISSION

NPR 1 124-6612 1 SEAL-LIP TYPE

33 NPR 1 9P-9150 4 WASHER (8.25X18X0.84-MM THK)

34 NPR 2 173-0332 1 SHAFT AS (COUNTERSHAFT)

NPR 2 163-9091 1 PLUG

35 NPR 1 7X-4741 1 SEAL

36 NPR 1,3 9S-4185 3 PLUG

37 NPR 1,3 3K-0360 3 SEAL-O-RING

38 NPR 1,2 123-8906 5 CUP-TAPERED ROLLER

39 NPR 1,2 123-8905 5 CUP-TAPERED ROLLER

40 NPR 1,2 121-0694 2 WASHER-THRUST (40X70X4-MM THK)

41 NPR 1,2 172-5317 6 BEARING-SPECIAL

42 NPR 2 123-8913 2 BEARING-ROLLER

43 NPR 2 147-0224 1 GEAR (45/32-TEETH)

44 NPR 1,2 8E-5707 7 PLATE-END

45 NPR 1,2 6V-8757 6 RING-RETAINING

46 NPR 1,2 6T-9194 45 PLATE

47 NPR 1,2 6Y-7929 37 DISC-FRICTION

48 NPR 1,2 9U-8875 6 RING-RETAINING

49 NPR 1,2 121-2500 4 WASHER-THRUST (50X70X4-MM THK)

50 NPR 1,2 147-0202 2 GEAR (45/24-TEETH)

51 NPR 2 147-0257 1 SHAFT AS-INPUT

NPR 2 123-2920 3 PLUG

52 NPR 2 9U-8886 4 RING-SEAL

53 NPR 2 123-8910 1 CUP-TAPERED ROLLER

54 NPR 2 123-8909 1 CONE-BEARING

55 NPR 1,2 7T-6655 4 BEARING

56 NPR 1,2 147-0259 2 SPACER (51.1X54.9X18.7-MM THK)

57 NPR 1,2 147-0238 5 SPRING AS

58 NPR 1,2 6V-5100 5 SEAL-O-RING

59 NPR 1,2 147-0228 4 PISTON-CLUTCH

60 NPR 1,2 6T-9196 7 SEAL

61 NPR 2 122-1886 1 RING-SEAL

62 NPR 2 123-8907 3 CONE-BEARING

63 NPR 2 123-8908 3 CUP-TAPERED ROLLER

64 NPR 2 147-0212 1 GEAR (42-TEETH)

65 NPR 2 147-0216 1 GEAR (38/32-TEETH)

66 NPR 2 147-0203 3 WASHER-THRUST (45.3X65X5-MM THK)

67 NPR 2 147-0258 1 SPACER (46X50X16-MM THK)

68 NPR 2 147-0215 1 GEAR (45/19-TEETH)

69 NPR 2 172-6050 6 BEARING-SPECIAL

70 NPR 2 122-1877 3 WASHER-THRUST (40X65X4-MM THK)

71 NPR 1,2 6Y-1192 7 RING-SEAL

72 NPR 2 123-8912 6 BEARING-ROLLER

73 NPR 3 9S-4191 14 PLUG-O RING

74 NPR 2 147-0264 1 GEAR (45/28-TEETH)

75 NPR 2 147-0260 1 RETAINER-SPRING (16.36MM ID)

76 NPR 2 095-0928 1 RING-RETAINING (EXTERNAL)

77 NPR 2 147-0205 2 WASHER (55X78X5-MM THK)

78 NPR 2 147-0248 1 SPACER (56.2X60X15.8-MM THK)

79 NPR 2 157-2090 1 GEAR (38-TEETH)

80 NPR 2 172-6743 2 BEARING-SPECIAL

81 NPR 2 147-0242 1 GEAR (32-TEETH)

82 NPR 2 150-3757 2 BEARING

83 NPR 2 009-2062 2 SEAL-O-RING

84 NPR 2 157-2088 2 PISTON AS

85 NPR 2 147-0261 1 SHAFT AS-OUTPUT (REAR)

NPR 2 9W-0717 2 PLUG

86 NPR 2 095-0927 1 RING-RETAINING

87 NPR 2 122-1884 1 SPACER (45X49X8-MM THK)

88 NPR 2 147-0210 1 GEAR (45/36-TEETH)

89 NPR 2 147-0207 1 SHAFT AS-OUTPUT (FRONT)

90 NPR 1,2 122-1879 2 SPACER (58X67.5X2-MM THK)

91 NPR B 1,2 104-3288 2 SHIM (0.05-MM THK)

92 NPR B 1,2 121-2059 2 SHIM (0.08-MM THK)

93 NPR B 1,2 121-2060 2 SHIM (0.18-MM THK)

94 NPR B 1,2 121-2061 2 SHIM (0.6-MM THK)

95 NPR 3 147-0211 1 ELBOW AS

NPR 3 3G-6927 1 ADAPTER

96 NPR 2 6Y-7957 8 DISC-FRICTION

97 NPR 2 147-0227 1 PISTON-CLUTCH

98 NPR M 3 6V-8335 16 BOLT-SELF-LOCKING (M10X1.5X40-MM)

99 NPR 3 147-0262 4 WASHER (19.1X24.1X1.5-MM THK)

100 NPR 3 147-0266 2 BOLT (3/4-16X1.417-IN)

101 NPR 3 6V-2455 1 SENSOR GP-SPEED

NPR J 1 102-8802 1 KIT-RECEPTACLE (2-PIN)

(INCLUDES RECEPTACLE AS & WEDGE)

NPR J 3 3E-3365 1 WEDGE-RECEPTACLE LOCK (2-PIN)

NPR 3 8T-8729 2 PIN-CONNECTOR

NPR BE 3 9X-1386 SLEEVE

102 NPR 3 1V-6341 1 SEAL

103 NPR 3 3J-1907 14 SEAL-O-RING

104 NPR M 3 8T-0643 1 BOLT (M10X1.5X80-MM)

105 NPR 3 6Y-1896 1 PLUG AS

NPR 3 5P-6718 1 SEAL-O-RING

106 NPR 1,2,3 147-0232 4 PLUG

107 NPR M 3 9X-6615 12 BOLT (M5X0.8X30-MM)

108 NPR 3 7T-3253 2 DOWEL

109 NPR 3 7T-3251 1 BREATHER

110 NPR 1 7X-4744 1 SEAL-O-RING

111 NPR 1 147-0255 1 HOUSING-SPRING

112 NPR 1 147-0206 1 SPRING

113 NPR 1 2H-3698 1 BALL

114 NPR 1 147-0256 1 SHAFT AS-REVERSE

NPR 1 9W-0717 1 PLUG

NPR 1 147-0270 1 ORIFICE

115 NPR 1 147-0226 1 TUBE AS

116 NPR 3 147-0236 1 TUBE AS-TRANSFER

117 NPR M 3 6V-8210 2 BOLT (M8X1.25X16-MM)

118 NPR 3 106-9861 1 PLATE-COVER

119 NPR Y 3 121-4036 2 VALVE GP-SOLENOID (TORQUE CONVERTER INLET)

120 NPR 3 6T-9202 2 PLUG

121 NPR 3 121-7396 1 VALVE GP-RELIEF (CLUTCH 2 SOLENOID)

NPR 3 6V-4589 1 SEAL-O-RING

NPR 3 8L-2746 1 SEAL-O-RING

122 NPR Y 3 147-0209 1 VALVE GP-RELIEF (CLUTCH PRESSURE)

123 NPR 3 9W-5460 1 RING

124 NPR 3 7T-2651 1 STRAINER

125 NPR 3 4F-7952 1 SEAL-O-RING

126 NPR 2 8T-1580 1 CUP

127 NPR M 3 8T-0271 2 BOLT-SOCKET HEAD (M10X1.5X35-MM)

128 NPR 3 150-7732 2 SEAL-O-RING

129 NPR 2 8T-1581 1 CONE

130 NPR B 1 6T-9163 2 SHIM (0.599-MM THK)

131 NPR 3 119-4740 1 FILTER AS-OIL (STANDARD EFFICIENCY)

132 NPR 1 147-0245 1 CASE AS-FRONT

NPR 1 9W-0717 4 PLUG

NPR 1 147-0268 4 PLUG

133 NPR 2 161-3249 1 RING-RETAINING

134 NPR M 1 8C-5748 4 BOLT (M8X1.25X55-MM)

135 NPR 1 178-9566 2 SPRING-PISTON

136 NPR 1 122-1883 1 SPACER (38X45X5-MM THK)

Key: B - USE AS REQUIRED E - ORDER BY THE CENTIMETER J - KIT MARKED J INCLUDES PART MARKED J

M - METRIC PART Y - SEPARATE ILLUSTRATION