CATERPILLAR®

SEBP3993
December 2003

VOLUME I
Pages 1-450

RUTHZIL TRATOR COMERCIAL DE PEÇAS LTDA 11 97083-6812 ROLANDO

Parts Manual

SIS

See "General Information" for New Parts Manual Features.

416D Backhoe Loader

BFP12900-Up (Machine)
CXP940-Up (Machine)
7BJ19000-Up (Engine)
7SG1-Up (Engine)
CRS1-Up (Engine)

Powered By 3054C Engine
This Parts Manual is also Available in .PDF Format on Compact Disc (CD-ROM)-Caterpillar Form No. SERP3993

Product and Dealer Information

Note: For product identification plate locations, see the section “Product Identification Information” in the Operation and Maintenance Manual.

Delivery Date: _____

Product Information

Model: _____

Product Identification Number: _____

Engine Serial Number: _____

Transmission Serial Number: _____

Generator Serial Number: _____

Attachment Serial Numbers: _____

Attachment Information: _____

Customer Equipment Number: _____

Dealer Equipment Number: _____

Dealer Information

Name: _____ Branch: _____

Address: _____

_____

_____

	Dealer Contact	Phone Number	Hours
Sales:	_____	_____	_____
Parts:	_____	_____	_____
Service:	_____	_____	_____

Informations produit et concessionnaire

Nota: Voir l'emplacement de la plaque signalétique du produit au chapitre "Informations produit" du guide d'utilisation et d'entretien.

Date de livraison: _____

Informations produit

Modèle: _____

Numéro d'identification produit: _____

Numéro de série du moteur: _____

Numéro de série de la boîte de vitesses: _____

Numéro de série de l'alternateur: _____

Numéros de série d'équipement: _____

Informations sur l'équipement: _____

Numéro matériel client: _____

Numéro matériel concessionnaire: _____

Informations concessionnaire

Nom: _____ Agence: _____

Adresse: _____

_____

_____

	Contact concessionnaire	Numéro de téléphone	Heures
Ventes:			
Pièces:			
Service:			

Información del Producto/Distribuidor

Nota: Para saber la ubicación de las placas de identificación del producto, ver la sección “Información sobre identificación del producto” en el Manual de Operación y Mantenimiento.

Fecha de entrega: _____

Información del producto

Modelo: _____

Número de identificación del producto: _____

Número de serie del motor: _____

Número de serie de la transmisión: _____

Número de serie del generador: _____

Números de serie de los accesorios: _____

Información sobre los accesorios: _____

Número del equipo del cliente: _____

Número del equipo del distribuidor: _____

Información del distribuidor

Nombre: _____ Sucursal: _____

Dirección: _____

_____

_____

	Comunicación con el distribuidor	Número de teléfono	Horas
Ventas:	_____	_____	_____
Piezas:	_____	_____	_____
Servicio:	_____	_____	_____

Informações Sobre Produto e Revendedor

Nota: Para localizações da placa de identificação do produto, consulte a seção, “Informações Sobre Identificação do Produto” no Manual de Operação e Manutenção.

Data de Entrega: _____

Informações Sobre o Produto

Modelo: _____

Número de Identificação do Produto: _____

Número de Série do Motor: _____

Número de Série da Transmissão: _____

Número de Série do Gerador: _____

Números de Série de Acessórios: _____

Informações Sobre Acessórios: _____

Número do Equipamento do Cliente: _____

Número do Equipamento do Revendedor: _____

Informações Sobre o Revendedor

Nome: _____ Filial: _____

Endereço: _____

_____

_____

	Contato do Revendedor	Telefone	Horas
Vendas:	_____	_____	_____
Peças:	_____	_____	_____
Serviço:	_____	_____	_____

Produkt- und Händlerinformation

Anmerkung: Für die Lage der Produkt-Identnummer und Seriennummern siehe Abschnitt "Produkt-Identinformation" im Betriebs- und Wartungshandbuch.

Lieferdatum: _____

Produkt-Identinformation

Modell: _____

Produkt-Identnummer: _____

Seriennummer des Motors: _____

Seriennummer des Getriebes: _____

Seriennummer des Generators: _____

Seriennummern der Arbeitsgeräte: _____

Arbeitsgeräteinformation: _____

Kundennummer: _____

Händlernummer: _____

Händlerinformation

Name: _____ Niederlassung: _____

Adresse: _____

_____

_____

	Kontaktperson beim Händler	Telefon	Dienststunden
Verkauf:	_____	_____	_____
Ersatzteile:	_____	_____	_____
Service:	_____	_____	_____

MEMORANDA

TABLE OF CONTENTS

Name	Page
GENERAL INFORMATION	A24
REPAIR ALTERNATIVES	A43
SUPPLEMENTAL COOLANT ADDITIVES	A48
MAINTENANCE PARTS	A53
INDEX	A87
MACHINE ARRANGEMENT	1
BACKHOE AR-EXTENDABLE STICK	1
BACKHOE AR	3
BACKHOE AR-STANDARD STICK	4
BACKHOE AR	4
CHASSIS AR	6
COMMON AR	6
ENGINE ARRANGEMENT	8
ENGINE AR	8
ENGINE AR-PRIMARY	14
INSTALLATION AR-ENGINE	20
BASIC ENGINE	21
CAMSHAFT GP	21
COVER GP-FRONT HOUSING	27
COVER GP-VALVE MECHANISM	29
CRANKSHAFT GP	37
CYLINDER BLOCK GP	46
CYLINDER HEAD GP	69
DRIVE GP-FAN	78
FASTENER GP-CYLINDER HEAD	80
FLYWHEEL GP	81
HOUSING GP-FLYWHEEL	83
HOUSING GP-FRONT	85
LIFTING GP-ENGINE	91
MOUNTING GP-ALTERNATOR	93
MOUNTING GP-ENGINE	95
MOUNTING GP-ENGINE & TMSN	97
MOUNTING GP-STARTING MOTOR	98
PAN GP-OIL	99
PISTON & ROD GP	115
PLUG GP-CYLINDER BLOCK	128
PLUG GP-CYLINDER HEAD	129
PLUG GP-ENGINE	130
PULLEY GP-CRANKSHAFT	134
VALVE MECHANISM GP	136
LUBRICATION SYSTEM	146
BREATHER GP	146
FILLER GP-ENGINE OIL	154
PUMP GP-ENGINE OIL	157
COOLING SYSTEM	166
CONNECTION GP-WATER	166
COOLER GP-FLTR BASE & ENG OIL	168
COOLING AR	176
COOLING AR-HIGH AMBIENT TEMP	178
FAN GP-SUCTION	179
FITTING GP-HEATER & AIR COND	182
LINES GP-POWER TRAIN COOLER	183
PUMP GP-WATER	185
RADIATOR & FAN GP	191
RADIATOR & HYD OIL COOLER GP	193
AIR INLET AND EXHAUST SYSTEM	201
AIR CLEANER GP	201
COVER GP-AIR INLET	208
ELBOW GP-AIR INLET	209
EXTENSION GP-EXHAUST	211
INDICATOR GP-AIR FILTER CHANGE	212
LINES GP-AIR	215
MANIFOLD GP-EXHAUST	218
MANIFOLD GP-INLET	220
MUFFLER AS	221
MUFFLER GP	222
TURBOCHARGER GP	226
FUEL SYSTEM	236
CONTROL GP-GOV & ACCELERATOR	236
FILTER & LINES GP-FUEL	240
FILTER GP-FUEL	244
FILTER GP-WATER SEP & FUEL	245
FITTING GP-FUEL LINES	246
LINES GP-FUEL	247
PUMP GP-FUEL INJECTION	251
PUMP GP-FUEL PRIMING	260
SEPARATOR GP-WATER	261
TANK & MTG GP-FUEL	263
TANK GP-FUEL	264
ELECTRICAL AND STARTING SYSTEM	270
ALTERNATOR GP-CHARGING	270
BATTERY GP	275
GLOW PLUG GP	283
HEATER GP-JACKET WATER	284
INSTALLATION GP-SECURITY	287
LAMP GP-FLOOD	291
LAMP GP-SIGNAL	292
LAMP GP-STOP & TAIL	293
LAMP GP-WARNING BEACON	294
LIGHTING GP-FLOOD	296
LIGHTING GP-FLOOD & SIGNAL	305
LIGHTING GP-WARNING BEACON	308
STARTING AID GP	310
HEATER GP-STARTING AID	314
STARTING MOTOR GP-ELECTRIC	315
SWITCH GP-PRESSURE	319

TABLE OF CONTENTS

Name	Page
SWITCH GP-TEMPERATURE	322
WIRING GP-AIR CONDITIONER	323
WIRING GP-CAB	330
WIRING GP-CONSOLE	342
WIRING GP-ENGINE	351
WIRING GP-HEATER	365
WIRING GP-PLATFORM	367
WIRING GP-POWER RECEPTACLE	378
WIRING GP-REAR	379
WIRING GP-RIDE CONTROL	382
WIRING GP-SENSOR	386
WIRING GP-STEERING	387
POWER TRAIN	388
AXLE & MTG GP-REAR	388
AXLE GP-DRIVE & STEERING	390
AXLE GP-REAR	393
CONTROL GP-DIFFERENTIAL LOCK	398
CONTROL GP-TRANSMISSION	399
DIFFERENTIAL & BEVEL GEAR GP	400
DIFFERENTIAL GP	402
DRIVE AR-BACKHOE LOADER	403
DRIVE GP-FLEXIBLE COUPLING	405
FILLER GP-POWER TRAIN OIL	406
FLANGE GP-WHEEL	412
HOUSING & FLANGE GP-AXLE	413
PLANETARY GP-FINAL DRIVE	417
POWER TRAIN AR	418
SHAFT GP-DRIVE	423
TRANSMISSION & MOUNTING GP	425
TRANSMISSION AR-DIRECT DRIVE	427
TRANSMISSION GP-DIRECT DRIVE	428
VALVE GP-SOLENOID	440
VALVE GP-TIRE	442
WHEEL & TIRE AR	443
WHEEL & TIRE GP	445
BRAKING SYSTEM	451
BRAKE GP-PARKING	451
CONTROL GP-PARKING BRAKE	452
CONTROL GP-SERVICE BRAKE	454
LEVER GP-HAND CONTROL	457
RESERVOIR GP-BRAKE	458
STEERING SYSTEM	459
AXLE GP-FRONT	459
CONTROL GP-STEERING	462
LINES GP-STEERING	464
PUMP GP-METERING	469
STEERING WHEEL GP	470
VALVE GP-PRIORITY	471
FRAME AND BODY	472
BOX GP-BATTERY	472
BUMPER GP-FRONT	474
COUNTERWEIGHT GP	475
DOOR GP-BATTERY	480
FENDER GP-FRONT	481
FENDER GP-REAR	482
FLOORPLATE GP	484
FRAME AS-LOADER	489
FRAME GP-LOADER	490
FRAME GP-SWING	491
GUARD GP-DRIVE SHAFT	493
HOOD & GUARD GP	494
HOOD GP-ENGINE	498
SUPPRESSION AR-SOUND	504
HYDRAULIC SYSTEM	505
ACCUMULATOR GP-RIDE CONTROL	505
CONNECTOR GP-VALVE	507
CONTROL AR-RIDE	510
CONTROL GP-HYDRAULIC HAND	511
CONTROL GP-HYDRAULIC PEDAL	527
CONVERSION AR-CUSHION SWING	533
CONVERSION GP-CONTROL VALVE	535
CONVERSION GP-HYD HAND CONTROL	537
COUPLING GP	542
COVER GP-CONTROL VALVE	543
CYLINDER & LINES GP-THUMB	544
CYLINDER GP-BACKHOE BUCKET	545
CYLINDER GP-BOOM	550
CYLINDER GP-EXTENDABLE STICK	552
CYLINDER GP-LIFT	555
CYLINDER GP-MULTIPURPOSE BUKT	557
CYLINDER GP-STABILIZER	558
CYLINDER GP-STICK	560
CYLINDER GP-SWING	561
CYLINDER GP-THUMB	562
CYLINDER GP-TILT	563
FILTER GP-OIL	564
GUARD GP-STABILIZER CYLINDER	565
HYDRAULIC AR	568
KICKOUT & POSITIONER GP	572
KIT-RIDE CONTROL	574
LINES GP-BACKHOE AUXILIARY	575
LINES GP-BOOM	601
LINES GP-BUCKET CYLINDER	603
LINES GP-CHECK VALVE	605
LINES GP-EXTENDABLE STICK	614
LINES GP-LIFT CYLINDER	617
LINES GP-LOAD CONTROL VALVE	620
LINES GP-LOADER AUXILIARY	623
LINES GP-MULTIPURPOSE BUCKET	625
LINES GP-PILOT	629
LINES GP-PUMP	633
LINES GP-RETURN	648
LINES GP-RIDE CONTROL	652

TABLE OF CONTENTS

Name	Page
LINES GP-STABILIZER	656
LINES GP-STICK	658
LINES GP-SWING	659
LINES GP-TILT CYLINDER	660
LOCK GP-HYDRAULIC HAND CONTROL	662
MOUNTING GP-BANK VALVE	663
MOUNTING GP-CYLINDER	665
MOUNTING GP-HYDRAULIC CONTROL	667
MOUNTING GP-HYDRAULIC PUMP	668
MOUNTING GP-LINES	669
PUMP GP-PISTON	671
ROTATING GP-PUMP	675
SHAFT GP-POWER TAKE-OFF	676
STABILIZER AR	677
TANK & MTG GP-HYDRAULIC	678
TANK GP-HYDRAULIC	680
VALVE & MTG GP-BANK	682
VALVE & MTG GP-SOLENOID	683
VALVE AR-BANK 4	684
VALVE AR-BANK 5	684
VALVE AR-BANK 6	685
VALVE GP-BANK 2	686
VALVE GP-BANK 3	689
VALVE GP-BANK 4	690
VALVE GP-BANK 5	691
VALVE GP-BANK 6	692
VALVE GP-CHECK	693
VALVE GP-CONTROL	695
VALVE GP-LOAD CONTROL	715
VALVE GP-PILOT	718
VALVE GP-PUMP CONTROL	722
VALVE GP-SOLENOID	725
IMPLEMENTS	726
ARM GP-LIFT	726
BOOM GP	728
BRACE GP-LIFT CYLINDER	730
BRACKET GP-TRANSPORT	731
LINK GP-SHIPPING	732
LINK GP-THUMB	733
LINKAGE GP-BACKHOE BUCKET	734
LINKAGE GP-LOADER BUCKET	736
LOADER AR	738
LOCK GP-TRANSPORT	739
MOUNTING GP-STICK	742
PAD & GUARD GP-STABILIZER	743
PAD & MTG GP-STABILIZER	745
PAD GP-STABILIZER	748
STABILIZER GP-BACKHOE	750
STICK GP-EXTENDABLE	752
STICK GP-HOE	754
WORK TOOLS	756
BUCKET AR-MULTIPURPOSE	756
BUCKET AS-GENERAL PURPOSE	759
BUCKET AS-HOE	764
BUCKET GP-GENERAL PURPOSE	774
BUCKET GP-HOE	776
BUCKET GP-MULTIPURPOSE	824
COUPLER AR-QUICK	828
COUPLER GP-QUICK	829
EDGE GP-CUTTING	834
FORK AR	836
FORK GP	837
GUARD GP-BUCKET	838
KIT-ADAPTER TIP	840
MOUNTING GP-BUCKET	842
MOUNTING GP-FORK	844
PIN GP-COUPLER	845
SHIPPING AR-BUCKET	847
STOP GP-BUCKET	848
THUMB AR	849
THUMB GP	852
TOOTH GP-UNI	853
OPERATOR STATION	854
ACCUMULATOR GP-REFRIGERANT	854
ADJUSTER GP-SEAT	855
AIR CONDITIONER & MOUNTING GP	857
AIR CONDITIONER AR	861
AIR CONDITIONER GP	862
ARMREST GP	864
BRACKET GP-MOUNTING	865
CAB AR	866
CAB AS	871
CAB GP	875
CANOPY AR	879
CANOPY AS	882
CANOPY GP-OPEN ROPS	886
COMPARTMENT GP-LITERATURE	887
COMPRESSOR GP-REFRIGERANT	888
CONDENSER & MTG GP-REFRIGERANT	892
CONSOLE GP-FRONT	893
CONSOLE GP-OPERATOR	894
CONSOLE GP-SIDE	895
COVER GP-CONSOLE	900
COVER GP-FIREWALL	903
COVER GP-PARKING BRAKE	905
COVER GP-POST	906
DOOR GP-LH	908
DOOR GP-RH	910
DUCT GP-AIR	912
FLOOR MAT GP	915
FOOTREST GP	917
HEATER GP-CAB	918
HORN GP-ELECTRIC	922

TABLE OF CONTENTS

Name	Page	Name	Page
KIT-PEDAL GUARD	923		
LEVER GP-GOVERNOR CONTROL	924		
LINER GP-CAB	925		
LINES GP-HEATER	928		
LINES GP-HEATER & AIR COND	930		
MIRROR GP-REAR VIEW	935		
MODULE GP-WARNING INDICATOR	936		
MOTOR GP-WINDOW WIPER	938		
MOUNTING GP-INSTRUMENT PANEL	939		
PANEL GP-INSTRUMENT	944		
PEDAL GP-GOVERNOR	945		
SEAT BELT GP	946		
SEAT GP	948		
SEAT GP-STATIC	954		
SEAT GP-SUSPENSION	956		
SUPPRESSION GP-SOUND	961		
SUSPENSION GP-SEAT	963		
SWIVEL & SLIDE GP-SEAT	965		
SWIVEL GP-SEAT	967		
TACHOMETER GP-ELECTRIC	968		
TRIM GP-CAB	970		
VISOR GP-CAB	971		
WASHER GP-WINDOW	972		
WINDOW GP-CAB	976		
WINDOW GP-DOOR	982		
WIPER GP-WINDOW	986		
SERVICE EQUIPMENT AND SUPPLIES	989		
FILM GP	989		
INSTALLATION AR-WHEEL CHOCK	990		
LOCK GP-VANDALISM	991		
PLATE & FILM GP	992		
PART NUMBER INDEX	B1		

TABLE DES MATIÈRES

Désignation	Page
GÉNÉRALITÉS	A27
OPTIONS DE RÉPARATION	A44
ADDITIFS POUR LIQUIDE DE REFROIDISSEMENT	A49
PIÈCES DE RECHANGE	A59
INDEX	A100
VERSION DE MACHINE	1
PELLE RÉTRO - BRAS TÉLESCOPIQUE (VERSION)	1
PELLE RÉTRO (VERSION)	3
*BACKHOE AR-STANDARD STICK	4
PELLE RÉTRO (VERSION)	4
VERSION DE CHASSIS	6
VERSION NORMALE	6
VERSION DE MOTEUR	8
MOTEUR (VERSION)	8
MOTEUR (VERSION PRINCIPALE)	14
MONTAGE DE MOTEUR (VERSION)	20
MOTEUR STANDARD	21
ARBRE A CAMES (ASS)	21
COUVERCLE DE CARTER AV (ASS)	27
CACHE-SOUPAPES (ASS)	29
VILEBREQUIN (ASS)	37
BLOC-CYLINDRES (ASS)	46
CULASSE (ASS)	69
ENTRAÎNEMENT DE VENTILATEUR (ASS)	78
BOULONNERIE DE LA CULASSE (ASS)	80
VOLANT MOTEUR (ASS)	81
CARTER DE VOLANT (ASS)	83
CARTER AV (ASS)	85
OEILLETONS DE LEVAGE MOTEUR (ASS)	91
MONTAGE D'ALTERNATEUR (ASS)	93
MONTAGE DE MOTEUR (ASS)	95
MONTAGE DE MOTEUR ET BOÎTE (ASS)	97
DÉMARREUR - MONTAGE (ASS)	98
HUILE MOTEUR - CARTER (ASS)	99
PISTON ET BIELLE (ASS)	115
BOUCHON - BLOC-CYLINDRES	128
BOUCHON - CULASSE (ASS)	129
BOUCHON DE MOTEUR (ASS)	130
VILEBREQUIN - POULIE (ASS)	134
CULBUTERIE (ASS)	136
CIRCUIT DE GRAISSAGE	146
RENIFLARD (ASS)	146
BOUCHON DE REMPLISSAGE D'HUILE MOTEUR (ASS)	154
POMPE A HUILE MOTEUR (ASS)	157
CIRCUIT DE REFROIDISSEMENT	166
RACCORD D'EAU (ASS)	166
SUPPORT DE FILTRE ET REFROIDISSEUR D'HUILE MOTEUR	168
REFROIDISSEMENT (VERSION)	176
REFROIDISSEMENT AUX TEMPÉRATURES ÉLEVÉES (VERSION)	178
VENTILATEUR ASPIRANT (ASS)	179
RACCORD-RÉCHAUFFEUR ET CLIMATISEUR (ASS)	182
CANALISATIONS DE REFROIDIS. DE TRANSMISSION	183
POMPE A EAU (ASS)	185
RADIATEUR ET VENTILATEUR (ASS)	191
RADIATEUR ET REFROIDISSEUR D'HUILE HYDRAULIQUE (ASS)	193
CIRCUIT D'ADMISSION D'AIR ET D'ÉCHAPPEMENT	201
FILTRE A AIR (ASS)	201
COUVERCLE DE COLLECTEUR D'ADMISSION (ASS)	208
COUDE D'ADMISSION D'AIR (ASS)	209
RALLONGE D'ÉCHAPPEMENT (ASS)	211
INDICATEUR DE COLMATAGE DE FILTRE À AIR (ASS)	212
CANALISATIONS D'AIR (ASS)	215
COLLECTEUR D'ÉCHAPPEMENT (ASS)	218
COLLECTEUR D'ADMISSION (ASS)	220
SILENCIEUX (ENS)	221
SILENCIEUX (ASS)	222
TURBOCOMPRESSEUR (ASS)	226
CIRCUIT DE CARBURANT	236
COMMANDE DE RÉGULATEUR ET D'ACCÉLÉRATEUR (ASS)	236
FILTRE ET CANALISATIONS DE CARBURANT (ASS)	240
FILTRE A CARBURANT (ASS)	244
FILTRE DE SÉPARATEUR D'EAU ET DE CARBURANT (ASS)	245
RACCORD - CANALISATIONS DE CARBURANT (ASS)	246
CANALISATIONS DE CARBURANT (ASS)	247

* TRADUCTION NON DISPONIBLE AU MOMENT DE LA PUBLICATION

TABLE DES MATIÈRES

Désignation	Page
POMPE D'INJECTION DE CARBURANT (ASS)	251
POMPE D'AMORÇAGE DE CARBURANT (ASS)	260
SÉPARATEUR D'EAU (ASS)	261
RÉSERVOIR DE CARBURANT ET MONTAGE (ASS)	263
RÉSERVOIR DE CARBURANT (ASS)	264
CIRCUIT ÉLECTRIQUE ET DE DÉMARRAGE	270
ALTERNATEUR DE CHARGE (ASS)	270
BATTERIE (ASS)	275
BOUGIE DE PRÉCHAUFFAGE (ASS)	283
EAU DES CHEMISES - RECHAUFFEUR (ASS)	284
MONTAGE-SÉCURITÉ (ASS)	287
LAMPE - PHARE (ASS)	291
LAMPE - CLIGNOTANT DE DIRECTION (ASS)	292
FEUX ARRIÈRE ET FEUX D'ARRÊT	293
LAMPE - GYROPHARE (ASS)	294
ÉCLAIRAGE - PROJECTEURS (ASS)	296
ÉCLAIRAGE - PROJECTEURS ET CLIGNOTANTS (ASS)	305
ÉCLAIRAGE - GYROPHARE (ASS)	308
*STARTING AID GP	310
*HEATER GP-STARTING AID	314
DÉMARREUR ÉLECTRIQUE (ASS)	315
MANOCONTACT	319
BOUTON DE TEMPÉRATURE	322
CABLAGE - CLIMATISEUR (ASS)	323
CABLAGE DE CABINE (ASS)	330
CABLAGE DE CONSOLE (ASS)	342
CABLAGE DE MOTEUR (ASS)	351
CABLAGE DU CHAUFFAGE DE CABINE (ASS)	365
CABLAGE - PLATE-FORME (ASS)	367
CABLAGE DE PRISE DE FORCE	378
CABLAGE AR (ASS)	379
CÂBLAGE DE COMMANDE DE TRANSLATION (ASS)	382
CABLAGE - CAPTEUR (ASS)	386
CABLAGE DE DIRECTION (ASS)	387
TRANSMISSION	388
ESSIEU ET MONTAGE -ARRIÈRE (ASS)	388
ESSIEU MOTEUR ET DIRECTEUR (ASS)	390
ESSIEU AR (ASS)	393
COMMANDE DE DIFFÉRENTIEL - VERROUILLAGE (ASS)	398
COMMANDE DE BOITE DE VITESSES (ASS)	399
COURONNE ET DIFFERENTIEL (ASS)	400
DIFFERENTIEL (ASS)	402
VERSION D'ENTRAÎNEMENT DE CHARGEUSE-PELLETEUSE	403
ENTRAÎNEMENT D'ACCOUPLEMENT FLEXIBLE (ASS)	405
GOULOTTE DE REMPLISSAGE D'HUILE DE TRANSMISSION	406
BOUDIN DE ROUE (ASS)	412
CARTER ET BRIDE D'ESSIEU (ASS)	413
TRAINS PLANÉTAIRES-RÉDUCTEURS (ASS)	417
TRANSMISSION (VERSION)	418
ARBRE D'ENTRAÎNEMENT (ASS)	423
BOITE DE VITESSES ET MONTAGE (ASS)	425
BOITE MECANIQUE (VERSION)	427
BOÎTE MÉCANIQUE (ASS)	428
SOUPAPE - SOLÉNOÏDE (ASS)	440
PNEU - GROUPE DE VALVE	442
ROUE ET PNEU (VERSION)	443
ROUE ET PNEU (ASS)	445
CIRCUIT DE FREINAGE	451
FREIN DE STATIONNEMENT (ASS)	451
COMMANDE DE FREIN DE STATIONNEMENT (ASS)	452
FREIN DE MANOEUVRE - COMMANDE (ASS)	454
LEVIER DE COMMANDE MANUELLE	457
RÉSERVOIR-FREIN (ASS)	458
CIRCUIT DE DIRECTION	459
ESSIEU AV (ASS)	459
COMMANDE DE DIRECTION (ASS)	462
CANALISATIONS DE DIRECTION (ASS)	464
POMPE DE REGULARISATION DE DEBIT (ASS)	469
VOLANT DE DIRECTION (ASS)	470
SOUPAPE DE PRIORITE (ASS)	471
CHÂSSIS ET BENNE	472
COMPARTIMENT DE BATTERIE (ASS)	472
PARE-CHOCS AV (ASS)	474
CONTREPOIDS (ASS)	475
PORTE DE BATTERIE (ASS)	480
GARDE-BOUE AV (ASS)	481
GARDE-BOUE AR (ASS)	482
TÔLE DE PLANCHER (ASS)	484

* TRADUCTION NON DISPONIBLE AU MOMENT DE LA PUBLICATION

TABLE DES MATIÈRES

Désignation	Page
BÂTI - CHARGEUSE (ENS)	489
BATI - CHARGEUSE (ASS)	490
BÂTI D'ORIENTATION (ASS)	491
BLINDAGE D'ARBRE DE TRANSMISSION (ASS)	493
CAPOT ET PROTECTION (ASS)	494
CAPOT DU MOTEUR (ASS)	498
INSONORISATION (VERSION)	504
CIRCUIT HYDRAULIQUE	505
ACCUMULATEUR - COMMANDE DE TRANSLATION (ASS)	505
RACCORD DE SOUPAPE (ASS)	507
COMMANDE DE TRANSLATION (VERSION)	510
COMMANDE HYDRAULIQUE MANUELLE (ASS)	511
COMMANDE HYDRAULIQUE DE PÉDALE (ASS)	527
VERSION DE TRANSFORMATION D'ORIENTATION D'AMORTISSEUR	533
TRANSFORMATION - DISTRIBUTEUR (ASS)	535
ENSEMBLE DE TRANSFORM.-COMMANDE MANUELLE HYDR.	537
ACCOUPLEMENT (ASS)	542
COUVERCLE DE DISTRIBUTEUR (ASS)	543
VÉRIN ET CANALISATIONS DE SERRE-JOINT (ASS)	544
VÉRIN DE GODET RÉTRO (ASS)	545
VERIN DE FLECHE (ASS)	550
VÉRIN DU BRAS TELESCOPIQUE (ASS)	552
VÉRIN DE LEVAGE (ASS)	555
VÉRIN - GODET TOUS-TRAVAUX (ASS)	557
VERIN DE STABILISATEUR (ASS)	558
VERIN DE BRAS (ASS)	560
VÉRIN D'ORIENTATION (ASS)	561
VÉRIN DE SERRE-JOINT (ASS)	562
VÉRIN D'INCLINAISON (ASS)	563
FILTRE A HUILE (ASS)	564
PROTECTEUR DE VÉRIN DE STABILISATEUR (ASS)	565
*HYDRAULIC AR	568
VERSION HYDRAULIQUE	568
*HYDRAULIC AR	569
VERSION HYDRAULIQUE	569
*HYDRAULIC AR	569
VERSION HYDRAULIQUE	570
LIMITEUR DE LEVAGE ET RETOUR À L'ANGLE DE CAVAGE	572
KIT - COMMANDE DE TRANSLATION	574
CANALISATIONS SECONDAIRES DE PELLE RÉTRO (ASS)	575
FLECHE - CANALISATIONS	601
CANALISATIONS DE VÉRIN DE GODET (ASS)	603
CANALISATIONS DE CLAPET DE RETENUE (ASS)	605
CANALISATIONS DU BRAS TELESCOPIQUE (ASS)	614
CANALISATIONS DE VÉRIN DE LEVAGE (ASS)	617
CANALISATIONS-VALVE DE CONTROLE DE CHARGE	620
CANALISATIONS-CHARGEUSE AUXILIAIRE (ASS)	623
CANALISATIONS - GODET TOUS-TRAVAUX (ASS)	625
CANALISATIONS A COMMANDE PILOTE (ASS)	629
CANALISATIONS DE POMPE (ASS)	633
CANALISATIONS DE RETOUR (ASS)	648
CANALISATIONS DE COMMANDE DE MARCHE	652
CANALISATIONS DE STABILISATEUR (ASS)	656
CANALISATIONS DE BRAS (ASS)	658
CANALISATIONS D'ORIENTATION (ASS)	659
CANALISATIONS DU VÉRIN D'INCLINAISON (ASS)	660
VERROUILLAGE DE COMMANDE MANUELLE HYDRAUL. (ASS)	662
MONTAGE-DISTRIBUTEUR (ASS)	663
MONTAGE DE VÉRIN (ASS)	665
MONTAGE DE COMMANDE HYDRAULIQUE (ASS)	667
MONTAGE - POMPE HYDRAULIQUE (ASS)	668
MONTAGE DE CANALISATIONS (ASS)	669
POMPE A PISTONS (ASS)	671
GROUPE DE ROTATION DE POMPE	675
ARBRE DE PRISE DE FORCE (ASS)	676
STABILISATEUR (VERSION)	677
RÉSERVOIR HYDRAULIQUE ET MONTAGE (ASS)	678
RÉSERVOIR HYDRAULIQUE (ASS)	680
DISTRIBUTEURS ET MONTAGE (ASS)	682
SOUPAPE ET MONTAGE - SOLÉNOÏDE	683
DISTRIBUTEUR 4 ÉLÉMENTS (VERSION)	684

* TRADUCTION NON DISPONIBLE AU MOMENT DE LA PUBLICATION

TABLE DES MATIÈRES

Désignation	Page
DISTRIBUTEUR 5 ÉLÉMENTS (VERSION)	684
DISTRIBUTEUR 6 ÉLÉMENTS (VERSION)	685
DISTRIBUTEUR DOUBLE ÉLÉMENT (ASS)	686
DISTRIBUTEUR TRIPLE ÉLÉMENT (ASS)	689
DISTRIBUTEUR 4 ÉLÉMENTS (ASS)	690
DISTRIBUTEUR 5 ÉLÉMENTS (ASS)	691
DISTRIBUTEUR 6 ÉLÉMENTS (ASS)	692
CLAPET DE RETENUE (ENS)	693
*VALVE GP-CHECK	694
DISTRIBUTEUR (ASS)	695
DISTRIBUTEUR DE CHARGE (ASS)	715
SOUPAPE PILOTE (ASS)	718
*VALVE GP-PUMP CONTROL	722
SOUPAPE - SOLÉNOÏDE (ASS)	725
ÉQUIPEMENTS	726
BRAS DE LEVAGE (ASS)	726
FLECHE (ASS)	728
TIRANT DE VÉRIN DE LEVAGE (ASS)	730
SUPPORT D'EXPÉDITION (ASS)	731
LIAISON-EXPÉDITION (ASS)	732
BIELLETTE DE SERRE-JOINT (ASS)	733
TIMONERIE DE GODET RÉTRO (ASS)	734
TIMONERIE DE GODET DE CHARGEUSE (ASS)	736
CHARGEUSE (VERSION)	738
VERROUILLAGE POUR L'EXPÉDITION (ASS)	739
MONTAGE DE BRAS (ASS)	742
SEMELLE ET PROTECTION DE STABILISATEUR (ASS)	743
SEMELLE ET MONTAGE DE STABILISATEUR	745
SEMELLE DE STABILISATEUR	748
PELLE RÉTRO - STABILISATEUR (ASS)	750
BRAS TÉLESCOPIQUE (ASS)	752
BRAS DE PELLE RETRO (ASS)	754
OUTILS DE TRAVAIL	756
GODET TOUS-TRAVAUX (VERSION)	756
GODET NORMAL (ENS)	759
GODET RETRO (ENS)	764
GODET NORMAL (ASS)	774
GODET RETRO (ASS)	776
GODET TOUS-TRAVAUX (ASS)	824
COUPLEUR EXPRESS (VERSION)	828
COUPLEUR EXPRESS (ASS)	829
LAME DE COUPE (ASS)	834
FOURCHE (VERSION)	836
FOURCHE (ASS)	837
PROTECTION DE GODET (ASS)	838
*KIT-ADAPTER TIP	840
GODET - MONTAGE (ASS)	842
MONTAGE FOURCHE (ASS)	844
AXE DU COUPLER (ASS)	845
GODET - VERSION D'EXPÉDITION	847
ARRÊT-GODET (ASS)	848
VERSION DE SERRE-JOINT	849
SERRE-JOINT (ASS)	852
DENT MONOBLOC (ASS)	853
POSTE DE CONDUITE	854
ACCUMULATEUR - CLIMATISEUR (ASS)	854
REGLAGE DE SIEGE (ASS)	855
CLIMATISEUR ET MONTAGE (ASS)	857
CLIMATISEUR (VERSION)	861
CLIMATISEUR (ASS)	862
ACCOUDOIR (ASS)	864
SUPPORT - MONTAGE (ASS)	865
CABINE (VERSION)	866
CABINE (ENS)	871
CABINE (ASS)	875
TOIT (VERSION)	879
TOIT (ENS)	882
TOIT-ROPS OUVERT (ASS)	886
POCHE A DOCUMENTS (ASS)	887
COMPRESSEUR DE REFRIGERANT (ASS)	888
CONDENSATEUR ET MONTAGE (RÉFRIGÉRANT)	892
CONSOLE AV (ASS)	893
CONSOLE DE CONDUITE (ASS)	894
CONSOLE LATÉRALE (ASS)	895
COUVERCLE DE LA CONSOLE (ASS)	900
COUVERCLE-CLOISON PARE-FEU (ENS)	903
COUVERCLE (ASS)-FREIN DE STATIONNEMENT	905
COUVERCLE (ASS) MONTANT	906
PORTIERE GAUCHE (ASS)	908
PORTIERE DROITE (ASS)	910
GAINE D'AIR (ASS)	912
TAPIS DU PLANCHER (ASS)	915
*FOOTREST GP	917
CHAUFFAGE DE CABINE (ASS)	918
KLAXON ÉLECTRIQUE (ASS)	922
KIT DE PROTECTION DE PÉDALE	923
LEVIER DE COMMANDE DE REGULATEUR (ASS)	924
CABINE - REVÊTEMENT (ASS)	925

* TRADUCTION NON DISPONIBLE AU MOMENT DE LA PUBLICATION

TABLE DES MATIÈRES

Désignation	Page
CANALISATIONS DE CHAUFFAGE (ASS)	928
CANALISATIONS-RÉCHAUFFEUR ET CLIMATISEUR (ASS)	930
RÉTROVISEUR (ASS)	935
MODULE - TÉMOIN (ASS)	936
MOTEUR D'ESSUIE-GLACE (ASS)	938
MONTAGE DU TABLEAU DE BORD (ASS)	939
TABLEAU DE BORD (ASS)	944
RÉGULATEUR - PÉDALE (ASS)	945
CEINTURE DE SECURITE (ASS)	946
SIÈGE (ASS)	948
SIÈGE À ÉQUILIBRAGE STATIQUE (ASS)	954
SIÈGE AVEC SUSPENSION (ASS)	956
INSONORISATION (ASS)	961
SIÈGE AVEC SUSPENSION (ASS)	963
GROUPE D'ORIENTATION ET DE GLISSIÈRE DE SIÈGE	965
ORIENTATION-SIÈGE (ASS)	967
COMPTE-TOURS ÉLECTRIQUE (ASS)	968
GARNITURE POUR CABINE (ASS)	970
RETROVISEUR - CABINE (ASS)	971
LAVE-GLACE - VITRE (ASS)	972
VITRE DE CABINE (ASS)	976
GLACE DE PORTIÈRE (ASS)	982
ESSUIE-GLACE (ASS)	986
MATÉRIEL ET FOURNITURES D'ENTRETIEN	989
PLAQUE SIGNALÉTIQUE (ASS)	989
MONTAGE DE CALE DE ROUE (VERSION)	990
VERROUILLAGE ANTI-VANDALISME (ASS)	991
PLAQUES SIGNALETIQUES ET AUTOCOLLANTS (ASS)	992
INDEX DE NUMÉROS DE PIÈCES	B1

* TRADUCTION NON DISPONIBLE AU MOMENT DE LA PUBLICATION

CONTENIDO

Nombre	Página
INFORMACIÓN GENERAL	A31
ALTERNATIVAS DE REPARACIÓN	A45
ADITIVOS DE REFRIGERANTE SUPLEMENTARIOS	A50
PIEZAS DE MANTENIMIENTO	A66
INDICE	A114
CONFIGURACIÓN DE MÁQUINA	1
BRAZO EXTENDIBLE DE RETROEXCAVADOR (CONFIG)	1
RETROEXCAVADOR (CONFIG)	3
*BACKHOE AR-STANDARD STICK	4
RETROEXCAVADOR (CONFIG)	4
CHASIS (CONFIG)	6
CONFIGURACIÓN COMÚN	6
CONFIGURACIÓN DE MOTOR	8
CONFIGURACIÓN DE MOTORES	8
MOTOR PRIMARIO (CONFIG)	14
CONFIGURACIÓN DE INSTALACIÓN DEL MOTOR	20
MOTOR BÁSICO	21
ÁRBOL DE LEVAS (GR)	21
TAPA DE LA CAJA DELANTERA (GR)	27
TAPA DEL MECANISMO DE VÁLVULAS (GR)	29
CIGÜEÑAL (GR)	37
BLOQUE MOTOR (GR)	46
CULATA DE CILINDROS (GR)	69
IMPULSOR DE VENTILADOR (GR)	78
CULATA DE CILINDROS - TORNILLERÍA DE LA (GR)	80
VOLANTE (GR)	81
VOLANTE - CAJA DE (GR)	83
CAJA DELANTERA (GR)	85
CÁNCAMOS DE LEVANTAMIENTO DEL MOTOR (GR)	91
MONTAJE DEL ALTERNADOR (GR)	93
MONTAJE DEL MOTOR (GR)	95
MONTAJE DEL MOTOR Y LA TRANSMISIÓN (GR)	97
MONTAJE DE MOTOR DE ARRANQUE (GR)	98
CÁRTER - COLECTOR DEL (GR)	99
PISTÓN Y BIELA (GR)	115
TAPÓN DEL BLOQUE MOTOR (GR)	128
TAPÓN DE CULATA (GR)	129
TAPÓN DEL MOTOR (GR)	130
CIGÜEÑAL - POLEA DE (GR)	134
MECANISMO DE VÁLVULAS (GR)	136
SISTEMA DE LUBRICACIÓN	146
RESPIRADERO (GR)	146
TUBO DE LLENADO DE ACEITE (GR)	154
BOMBA DE ACEITE DEL MOTOR (GR)	157
SISTEMA DE ENFRIAMIENTO	166
AGUA - CONEXIÓN DE (GR)	166
ENFRIADOR DE ACEITE DEL MOTOR Y BASE DEL FILTRO	168
CONFIGURACIÓN DE ENFRIAMIENTO	176
ENFRIADOR PARA ALTA TEMPERATURA DE AMBIENTE (CONFIG)	178
SUCCIÓN - VENTILADOR DE (GR)	179
CONEXION DE CALENTADOR Y ACOND. DE AIRE (GR)	182
TUBERÍAS DEL ENFRIADOR DEL TREN DE FUERZA (GR)	183
BOMBA DE AGUA (GR)	185
RADIADOR Y VENTILADOR (GR)	191
RADIADOR Y ENFRIADOR DE ACEITE HIDRÁULICO (GR)	193
SISTEMA DE ADMISIÓN Y ESCAPE	201
FILTRO DE AIRE (GR)	201
TAPA DE ADMISIÓN DE AIRE (GR)	208
CODO DE ADMISIÓN DE AIRE (GR)	209
EXTENSIÓN DEL ESCAPE (GR)	211
INDICADOR DE CAMBIO DE FILTRO DE ACEITE (GR)	212
AIRE - TUBERÍAS DE (GR)	215
MÚLTIPLE DE ESCAPE (GR)	218
MÚLTIPLE DE ADMISIÓN (GR)	220
SILENCIADOR (CONJ)	221
SILENCIADOR (GR)	222
TURBOCOMPRESOR (GR)	226
SISTEMA DE COMBUSTIBLE	236
CONTROL DEL REGULADOR Y ACELERADOR (GR)	236
FILTRO Y TUBERÍAS DE COMBUSTIBLE (GR)	240
FILTRO DE COMBUSTIBLE (GR)	244
FILTRO DE COMBUSTIBLE Y SEPARADOR DE AGUA (GR)	245
CONEXIÓN DE ENGRASE DE LAS TUBERÍAS DE COMBUSTIBLE	246
TUBERÍAS DE COMBUSTIBLE (GR)	247
BOMBA DE INYECCIÓN DE COMBUSTIBLE (GR)	251

* NO HAY TRADUCCION DISPONIBLE EN EL MOMENTO DE LA IMPRESION

CONTENIDO

Nombre	Página
BOMBA DE CEBADO DE COMBUSTIBLE (GR)	260
SEPARADOR DE AGUA (GR)	261
TANQUE DE COMBUSTIBLE Y GRUPO DE MONTAJE	263
COMBUSTIBLE - TANQUE DE (GR)	264
SISTEMA ELÉCTRICO Y DE ARRANQUE	270
CARGA - ALTERNADOR DE (GR)	270
BATERÍA (GR)	275
BUJÍA INCANDESCENTE (GR)	283
AGUA DE LAS CAMISAS - CALENTADOR DEL (GR)	284
INSTALACION DE SEGURIDAD (GR)	287
REFLECTOR (GR)	291
LUZ DE SEÑAL DE GIRO (GR)	292
LUCES DE PARADA Y COLA (GR)	293
LÁMPARA DE BALIZA DE ADVERTENCIA (GR)	294
LUCES DE REFLECTOR (GR)	296
LUCES DE REFLECTOR Y CAMBIO DE DIRECCION (GR)	305
LUZ DE BALIZA (GR)	308
*STARTING AID GP	310
*HEATER GP-STARTING AID	314
MOTOR DE ARRANQUE ELÉCTRICO (GR)	315
INTERRUPTOR DE PRESIÓN (GR)	319
INTERRUPTOR PARA LA TEMPERATURA (GR)	322
CABLES DEL ACONDICIONADOR DE AIRE (GR)	323
CABLES DE LA CABINA (GR)	330
CABLES DE LA CONSOLA (GR)	342
CABLES DEL MOTOR (GR)	351
CABLES DE CALEFACCIÓN (GR)	365
CABLES DE LA PLATAFORMA (GR)	367
CABLES DEL RECEPTÁCULO DE FUERZA (GR)	378
CABLES POSTERIORES (GR)	379
CABLES DE CONTROL DE AMORTIGUACIÓN (GR)	382
CABLES DE SENSOR (GR)	386
CABLES DE LA DIRECCIÓN (GR)	387
TREN DE FUERZA	388
MONTAJE DEL EJE TRASERO (GR)	388
EJE DE IMPULSIÓN Y DE DIRECCIÓN (GR)	390
EJE TRASERO (GR)	393
CONTROL DE TRABA DEL DIFERENCIAL (GR)	398
CONTROL DE LA TRANSMISIÓN (GR)	399
DIFERENCIAL Y CORONA (GR)	400
DIFERENCIAL (GR)	402
CONFIG. DEL MANDO, CARGADOR RETROEXCAVADORA	403
ACOPLAMIENTO FLEXIBLE - MANDO DE (GR)	405
TUBO DE LLENADO DE ACEITE DE LA TRANSMISIÓN (GR)	406
GRUPO DE PESTAÑA, RUEDA	412
GRUPO DE PESTAÑA Y RESINTO, EJE	413
GRUPO PLANETARIO, MANDO FINAL	417
TREN DE FUERZA (CONFIG)	418
EJE DE MANDO (GR)	423
MONTAJE Y TRANSMISIÓN(GR)	425
TRANSMISION DIRECTA (CONFIG)	427
TRANSMISIÓN DIRECTA (GR)	428
VÁLVULA DE SOLENOIDE (GR)	440
VÁLVULA DEL NEUMÁTICO (GR)	442
RUEDA Y LLANTA (CONFIG)	443
RUEDA Y NEUMÁTICO (GR)	445
SISTEMA DE FRENOS	451
FRENO DE ESTACIONAMIENTO (GR)	451
CONTROL DEL FRENO DE ESTACIONAMIENTO	452
FRENO DE SERVICIO - CONTROL (GR)	454
CONTROL MANUAL DE PALANCA (GR)	457
TANQUE DEL SISTEMA DE FRENOS (GR)	458
SISTEMA DE DIRECCIÓN	459
EJE DELANTERO (GR)	459
CONTROL DE DIRECCIÓN (GR)	462
TUBERÍAS DE DIRECCIÓN (GR)	464
DOSIFICACIÓN - BOMBA DE (GR)	469
VOLANTE DE DIRECCIÓN (GR)	470
PRIORIDAD - VÁLVULA DE (GR)	471
BASTIDOR Y CAJA	472
CAJA DE BATERÍA	472
PARAGOLPES DELANTERO	474
CONTRAPESO (GR)	475
TAPA DE LA BATERÍA (GR)	480
GUARDABARROS DELANTERO (GR)	481
GUARDABARROS TRASERO (GR)	482
PLANCHA DEL PISO (GR)	484
BASTIDOR DEL CARGADOR (CONJ)	489
BASTIDOR DEL CARGADOR (GR)	490
BASTIDOR DE ROTACIÓN (GR)	491

* NO HAY TRADUCCION DISPONIBLE EN EL MOMENTO DE LA IMPRESION

CONTENIDO

Nombre	Página
PROTECTOR DEL EJE IMPULSOR (GR)	493
CAPO Y PROTECTOR (GR)	494
CAPÓ DEL MOTOR (GR)	498
INSONORIZADOR (CONFIG)	504
SISTEMA HIDRÁULICO	505
ACUMULADOR DE CONTROL DE AMORTIGUACION (GR)	505
CONECTOR DE VALVULA (GR)	507
CONTROL DE AMORTIGUACIÓN (CONFIG)	510
CONTROL HIDRÁULICO MANUAL (GR)	511
GRUPO DE CONTROL DE PEDAL HIDRÁULICO	527
CONVERSIÓN DE ROTACIÓN AMORTIGUADA (CONFIG)	533
CONVERSIÓN DE LA VÁLVULA DE CONTROL (GR)	535
CONVERSION DE CONTROL DE MANO HIDRAULICO (GR)	537
ACOPLAMIENTO (GR)	542
TAPA DE VÁLVULA DE CONTROL (GR)	543
CILINDRO Y TUBERIAS GR - PULGAR	544
CILINDRO DE CUCHARÓN RETROEXCAVADOR (GR)	545
CILINDRO DE LA PLUMA (GR)	550
CILINDRO DEL BRAZO EXTENSIBLE (GR)	552
CILINDRO DE LEVANTAMIENTO (GR)	555
CILINDRO DE CUCHARÓN DE USO MÚLTIPLE (GR)	557
CILINDRO ESTABILIZADOR (GR)	558
CILINDRO DEL BRAZO (GR)	560
CILINDRO DE ROTACIÓN (GR)	561
CILINDRO GR - PULGAR	562
INCLINACIÓN HORIZONTAL - CILINDRO DE (GR)	563
FILTRO DE ACEITE (GR)	564
PROTECTOR DE CILINDRO ESTABILIZADOR (GR)	565
*HYDRAULIC AR	568
HIDRÁULICA (CONFIG)	568
*HYDRAULIC AR	569
HIDRÁULICA (CONFIG)	569
*HYDRAULIC AR	569
HIDRÁULICA (CONFIG)	570
POSICIONADOR DEL CUCHARÓN Y DESCONEXIÓN (GR)	572
JUEGO DE CONTROL DE OPERACION	574
TUBERIAS AUXILIARES-RETROEXCAVADORA (GR)	575
TUBERÍAS DE LA PLUMA (GR)	601
TUBERÍAS DEL CILINDRO DEL CUCHARÓN (GR)	603
TUBERÍAS DE LA VÁLVULA DE RETENCIÓN (GR)	605
TUBERÍAS DE LA PALANCA EXTENDIBLE (GR)	614
CILINDRO DE LEVANTAMIENTO - TUBERÍAS DEL (GR)	617
TUBERIAS DE VALVULA DE CONTROL DE CARGA (GR)	620
TUBERIAS DE AUXILIAR DE CARGADOR (GR)	623
TUBERÍAS DEL CUCHARÓN DE USO MÚLTIPLE	625
TUBERÍAS CON SERVOMANDO (GR)	629
BOMBA - TUBERÍAS DE (GR)	633
TUBERÍAS DE RETORNO (GR)	648
TUBERIAS DE CONTROL DE LA SUSPENSIÓN (GR)	652
TUBERÍAS DEL ESTABILIZADOR (GR)	656
TUBERÍAS DEL BRAZO (GR)	658
TUBERÍAS DE GIRO (GR)	659
TUBERÍAS DEL CILINDRO DE INCLINACIÓN (GR)	660
TRABA DE CONTROL HIDRÁULICO MANUAL (GR)	662
MONTAJE DE BANCADA DE VALVULA (GR)	663
MONTAJE DE CILINDRO (GR)	665
MONTAJE DEL CONTROL HIDRÁULICO (GR)	667
MONTAJE DE LA BOMBA HIDRÁULICA (GR)	668
MONTAJE DE TUBERIAS (GR)	669
BOMBA DE PISTONES (GR)	671
GRUPO GIRATORIO DE BOMBA	675
EJE DE TOMA DE FUERZA (GR)	676
ESTABILIZADOR (CONFIG)	677
TANQUE HIDRÁULICO Y MONTAJE (GR)	678
TANQUE HIDRÁULICO (GR)	680
MONTAJE Y VALVULA DEL BANCO(GR)	682
VALVULA DE SOLENOIDE Y MONTAJE (GR	683
GRUPO DE CUATRO VALVULAS (CONFIG)	684
GRUPO DE 5 VALVULAS (CONFIG)	684
GRUPO DE 6 VALVULAS (CONFIG)	685

* NO HAY TRADUCCION DISPONIBLE EN EL MOMENTO DE LA IMPRESION

CONTENIDO

Nombre	Página
VÁLVULAS HIDRÁULICAS - GRUPO DE 2	686
GRUPO DE 3 VÁLVULAS HIDRÁULICAS	689
GRUPO DE 4 VÁLVULAS HIDRÁULICAS	690
BANCADA 5 (GR)	691
VÁLVULAS HIDRÁULICAS - GRUPO DE 6	692
VÁLVULA DE RETENCIÓN (GR)	693
*VALVE GP-CHECK	694
VÁLVULA DE CONTROL (GR)	695
VÁLVULA DE CONTROL DE CARGA (GR)	715
VÁLVULA PILOTO (GR)	718
*VALVE GP-PUMP CONTROL	722
VÁLVULA DE SOLENOIDE (GR)	725
IMPLEMENTOS	726
GRUPO DE BRAZO DE LEVANTAMIENTO	726
PLUMA (GR)	728
SOPORTE DEL CILINDRO DE LEVANTAMIENTO (GR)	730
SOPORTE PARA EL TRANSPORTE	731
TIRANTE DE EMBARQUE (GR)	732
VARILLAJE GR-PULGAR	733
VARILLAJE DEL CUCHARÓN RETROEXCAVADOR (GR)	734
VARILLAJE DE CUCHARÓN CARGADOR (GR)	736
CARGADOR (CONFIG)	738
TRABA DE TRANSPORTE DE LA MÁQUINA (GR)	739
MONTAJE DEL BRAZO (GR)	742
ZAPATA Y PROTECTOR DEL ESTABILIZADOR	743
ALMOHADILLA Y MONTAJE DEL ESTABILIZADOR (GR)	745
ZAPATA DE ESTABILIZADOR (GR)	748
RETROEXCAVADOR - ESTABILIZADOR DEL (GR)	750
BRAZO EXTENSIBLE (GR)	752
BRAZO DE RETROEXCAVADOR (GR)	754
HERRAMIENTAS	756
CUCHARÓN DE USO MÚLTIPLE (CONFIG)	756
CUCHARÓN DE USO GENERAL (CONJ)	759
CUCHARÓN EXCAVADOR (CONJ)	764
CUCHARÓN DE USO GENERAL (GR)	774
CUCHARÓN RETROEXCAVADOR (GR)	776
CUCHARÓN DE USO MÚLTIPLE (GR)	824
ACOPLADOR RÁPIDO (CONFIG)	828
ACOPLADOR RÁPIDO (GR)	829
CUCHILLA (GR)	834
HORQUILLA (CONFIG)	836
HORQUILLA (GR)	837
GRUPO DE PROTECTOR DEL CUCHARON	838
*KIT-ADAPTER TIP	840
MONTAJE DEL CUCHARÓN (GR)	842
HORQUILLA - GRUPO DE MONTAJE DE LA	844
PASADOR DE ACOPLADOR (GR)	845
CUCHARÓN DE EMBARQUE (CONFIG)	847
TOPE DE CUCHARON (GR)	848
PULGAR CONFIG.	849
PULGAR GR	852
DIENTE DE UNA PIEZA (UNI-TOOTH) (GR)	853
PUESTO DEL OPERADOR	854
ACUMULADOR DEL ACONDICIONADOR DE AIRE (GR)	854
AJUSTADOR DEL ASIENTO (GR)	855
ACONDICIONADOR DE AIRE Y MONTAJE (GR)	857
ACONDICIONADOR DE AIRE (CONFIG)	861
ACONDICIONADOR DE AIRE (GR)	862
POSABRAZOS (GR)	864
SOPORTE-MONTAJE(GR)	865
CABINA (CONFIG)	866
CABINA (CONJ)	871
CABINA (GR)	875
TECHO (CONFIG)	879
PABELLON (CONJ)	882
TECHO ROPS ABIERTO (GR)	886
COMPARTIMIENTO DE LITERATURA DE SERVICIO (GR)	887
COMPRESOR DE REFRIGERANTE (GR)	888
CONDENSADOR DEL REFRIGERANTE Y MONTAJE (GR)	892
CONSOLA DELANTERA (GR)	893
CONSOLA DEL OPERADOR (GR)	894
CONSOLA LATERAL (GR)	895
TAPA DE LA CONSOLA (GR)	900
TAPA DE MAMPARA PARAFUEGO (GR)	903

* NO HAY TRADUCCION DISPONIBLE EN EL MOMENTO DE LA IMPRESION

CONTENIDO

Nombre	Página
TAPA DE FRENO DE ESTACIONAMIENTO (GR)	905
TAPA DE POSTE (GR)	906
PUERTA IZQUIERDA (GR)	908
PUERTA DERECHA (GR)	910
CONDUCTO DE AIRE (GR)	912
ALFOMBRILLA DEL PISO (GR)	915
*FOOTREST GP	917
CALEFACCIÓN DE LA CABINA (GR)	918
BOCINA ELÉCTRICA (GR)	922
JUEGO-PROTECCIÓN DE PEDAL	923
PALANCA DE CONTROL DEL REGULADOR (GR)	924
REVESTIMIENTO DE LA CABINA (GR)	925
TUBERÍAS DE LA CALEFACCIÓN (GR)	928
TUBERIAS DE CALENTEDOR Y ACONDICIONADOR DE AIRE (GR)	930
RETROVISOR (GR)	935
MÓDULO INDICADOR DE ADVERTENCIA (GR)	936
MOTOR-LIMPIAPARABRISAS (GR)	938
MONTAJE DEL TABLERO DE INSTRUMENTOS (GR)	939
TABLERO DE INSTRUMENTOS (GR)	944
REGULADOR - PEDAL DEL (GR)	945
CINTURÓN DE SEGURIDAD (GR)	946
ASIENTO (GR)	948
ASIENTO FIJO (GR)	954
SUSPENSIÓN - ASIENTO CON (GR)	956
INSONORIZADOR (GR)	961
ASIENTO CON SUSPENSIÓN (GR)	963
GIRAR Y DESLIZAR DEL ASIENTO (GR)	965
ASIENTO GIRATORIO (GR)	967
TACÓMETRO ELÉCTRICO (GR)	968
GUARNICIONES DE LA CABINA (GR)	970
VISERA (GR)	971
LAVAPARABRISAS DE LA VENTANA (GR)	972
VENTANA DE LA CABINA (GR)	976
VENTANA DE LA PUERTA (GR)	982
LIMPIAPARABRISAS DE LA VENTANA (GR)	986
EQUIPOS Y SUMINISTRO DE SERVICIOS	989
ETIQUETA DE ADVERTENCIA (GR)	989
INSTALACIÓN DE LA TRABA DE LA RUEDA	990
TRABA CONTRA EL VANDALISMO (GR)	991
CALCOMANÍAS Y PLACAS DE IDENTIFICACIÓN (GR)	992
INDICE DE NUMEROS DE PIEZA	B1

* NO HAY TRADUCCION DISPONIBLE EN EL MOMENTO DE LA IMPRESION

ÍNDICE

Designação	Página
INFORMAÇÃO GERAL	A35
ALTERNATIVAS DE REPARO	A46
ADITIVOS SUPLEMENTARES DO LÍQUIDO ARREFECEDOR	A51
PEÇAS DE MANUTENÇÃO	A74
ÍNDICE	A128
ARRANJO DA MÁQUINA	1
RETROESCAVADEIRA - BRAÇO ESTENDÍVEL	1
RETROESCAVADORA	3
*BACKHOE AR-STANDARD STICK	4
RETROESCAVADORA	4
CHASSI	6
ARRANJO BÁSICO	6
ARRANJO DO MOTOR	8
MOTOR	8
MOTOR PRIMÁRIO	14
GRUPO DE INSTALAÇÃO - MOTOR	20
MOTOR BÁSICO	21
EIXO-COMANDO DE VÁLVULA	21
TAMPA - CAIXA DIANTEIRA	27
TAMPA - MECANISMO DAS VÁLVULAS	29
VIRABREQUIM	37
BLOCO DO MOTOR	46
CABEÇOTE DO MOTOR	69
COMANDO DO VENTILADOR	78
FIXADORES - CABEÇOTE DO MOTOR	80
VOLANTE DO MOTOR	81
CAIXA DO VOLANTE DO MOTOR	83
CAIXA DIANTEIRA	85
LEVANTAMENTO DO MOTOR	91
MONTAGEM - ALTERNADOR	93
MONTAGEM - MOTOR	95
MONTAGEM - MOTOR E TRANSMISSÃO	97
MONTAGEM - MOTOR DE ARRANQUE	98
CÁRTER DO ÓLEO DO MOTOR	99
PISTÃO E BIELA	115
BUJÃO DO BLOCO DO CILINDRO	128
BUJÃO - CABEÇA DO CILINDRO	129
BUJÃO DO MOTOR	130
POLIA DO VIRABREQUIM	134
MECANISMO DAS VÁLVULAS	136
SISTEMA DE LUBRIFICAÇÃO	146
RESPIRO	146
BOCAL DE ENCHIMENTO DE ÓLEO DO MOTOR	154
BOMBA DE ÓLEO - MOTOR	157
SISTEMA DE ARREFECIMENTO	166
CONEXÃO - TUBO D'ÁGUA	166
ARREFECEDOR DE ÓLEO DO MOTOR E BASE DO FILTRO	168
ARREFECIMENTO	176
ARREFECIMENTO - TEMP. AMBIENTE ALTA	178
VENTILADOR DE SUCÇÃO	179
CONEXÃO-AQUECEDOR & AR CONDICIONADO	182
TUBOS - ARREFECEDOR DO TREM DE FORÇA	183
BOMBA DE ÁGUA	185
RADIADOR E VENTILADOR	191
RADIADOR E ARREFECEDOR DO ÓLEO HIDRÁULICO	193
SISTEMA DE ADMISSÃO E ESCAPE DE AR	201
PURIFICADOR DE AR	201
TAMPA - ADMISSÃO DE AR	208
COTOVELO DE ADMISSÃO DE AR	209
EXTENSÃO DO TUBO DE ESCAPE	211
INDICADOR - TROCA DO FILTRO DE AR	212
TUBOS - AR	215
COLETOR DE ESCAPE	218
COLETOR DE ADMISSÃO	220
SILENCIADOR	221
TURBOALIMENTADOR	226
SISTEMA DO COMBUSTÍVEL	236
CONTROLE DO GOVERNADOR E ACELERADOR	236
FILTRO E TUBOS - COMBUSTÍVEL	240
FILTRO - COMBUSTÍVEL	244
FILTRO DE COMBUSTÍVEL E SEPARADOR DE ÁGUA	245
CONEXÃO - TUBOS DE COMBUSTÍVEL	246
TUBOS - COMBUSTÍVEL	247
BOMBA DE INJEÇÃO DO COMBUSTÍVEL	251
BOMBA DE ESCORVA DO COMBUSTÍVEL	260
SEPARADOR DE ÁGUA	261

* TRADUÇÃO NÃO DISPONÍVEL NO MOMENTO DA IMPRESSÃO

ÍNDICE

Designação	Página
TANQUE DE COMBUSTÍVEL E MONTAGEM	263
TANQUE DE COMBUSTÍVEL	264
SISTEMA ELÉTRICO DE PARTIDA	270
ALTERNADOR DE CORRENTE	270
BATERIA	275
VELA DE AQUECIMENTO; VELA INCANDESCENTE	283
AQUECEDOR DA ÁGUA DO MOTOR	284
INSTALAÇÃO-SEGURANÇA	287
LÂMPADA - FAROL	291
LÂMPADA - SINALIZAÇÃO	292
LUZ TRASEIRA E DE FREIO	293
LUZ GIRATÓRIA DE ALARME	294
SISTEMA DE ILUMINAÇÃO - FARÓIS	296
SISTEMA DE ILUMINAÇÃO - FARÓIS E SINAL	305
SIST. DE ILUMINAÇÃO - PISCA-PISCA GIRATÓRIO DE ADVERTÊNCIA	308
*STARTING AID GP	310
*HEATER GP-STARTING AID	314
MOTOR ELÉTRICO DE PARTIDA	315
INTERRUPTOR - PRESSÃO	319
INTERRUPTOR - TEMPERATURA	322
CABOS/FIOS ELÉTRICOS - AR CONDICIONADO	323
CABOS/FIOS ELÉTRICOS - CABINE	330
CABOS/FIOS ELÉTRICOS DO CONSOLE	342
CABOS/FIOS ELÉTRICOS - MOTOR	351
CABOS/FIOS ELÉTRICOS - AQUECEDOR	365
CABOS/FIOS ELÉTRICOS - PLATAFORMA	367
CABOS/FIOS ELÉTRICOS - TOMADA DE FORÇA	378
CABOS/FIOS ELÉTRICOS - TRASEIROS	379
CABOS/FIOS ELÉTRICOS - ABSORÇÃO DE IMPACTOS	382
CABOS/FIOS ELÉTRICOS - SENSOR	386
CABOS/FIOS ELÉTRICOS - DIREÇÃO	387
TREM DE FORÇA	388
EIXO TRASEIRO E MONTAGEM	388
EIXO DE PROPULSÃO E DIREÇÃO	390
SEMI-EIXO TRASEIRO	393
CONTROLE DA TRAVA DO DIFERENCIAL	398
CONTROLE DA TRANSMISSÃO	399
DIFERENCIAL E COROA	400
DIFERENCIAL	402
COMANDO - RETROESCAVADEIRA	403
COMANDO - ACOPLAMENTO FLEXÍVEL	405
BOCAL DE ENCHIMENTO DE ÓLEO DO TREM DE FORÇA	406
FLANGE - RODA	412
ALOJAMENTO E FLANGE - EIXO	413
GR. PLANETÁRIO - COMANDO FINAL	417
TREM DE FORÇA	418
EIXO DE TRANSMISSÃO	423
TRANSMISSÃO E MONTAGEM	425
TRANSMISSÃO DIRETA	427
VÁLVULA SOLENÓIDE	440
VÁLVULA DE PNEU	442
RODA E PNEU	443
SISTEMA DE FREIOS	451
FREIO DE ESTACIONAMENTO	451
CONTROLE DO FREIO DE ESTACIONAMENTO	452
CONTROLE DO FREIO DE SERVIÇO	454
ALAVANCA DE CONTROLE MANUAL	457
TANQUE DO FREIO	458
SISTEMA DE DIREÇÃO	459
EIXO DIANTEIRO	459
CONTROLE DE DIREÇÃO	462
TUBOS - DIREÇÃO	464
BOMBA REGULADORA	469
VOLANTE	470
VÁLVULA DE PRIORIDADE	471
CHASSI E CARCAÇA	472
CAIXA - BATERIA	472
PÁRA-CHOQUE DIANTEIRO	474
CONTRAPESO	475
TAMPA - ACESSO À BATERIA	480
PÁRA-LAMA DIANTEIRO	481
PÁRA-LAMA TRASEIRO	482
CHAPA DO PISO	484
CHASSI DIANTEIRO	489
ARMAÇÃO OSCILANTE	491
PROTETOR - EIXO DE TRANSMISSÃO	493
CAPÔ E PROTETOR	494
CAPÔ DO MOTOR	498
RUÍDO - ARRANJO PARA SUPRESSÃO	504
SISTEMA HIDRÁULICO	505
ACUMULADOR DO SISTEMA DE ABSORÇÃO DE IMPACTOS	505
VÁLVULA DO CONECTOR	507

* TRADUÇÃO NÃO DISPONÍVEL NO MOMENTO DA IMPRESSÃO

ÍNDICE

Designação	Página
SISTEMA DE ABSORÇÃO DE IMPACTOS	510
CONTROLE HIDRÁULICO MANUAL	511
CONTROLE - PEDAL HIDRÁULICO	527
GRUPO DE CONVERSÃO - ESTOFAMENTO DE GIRO	533
GR. DE CONVERSÃO - VÁLVULA DE CONTROLE	535
CONVERSÃO-CONTROLE MANUAL HIDRÁULICO	537
ACOPLAMENTO	542
TAMPA - VÁLVULA DE CONTROLE	543
CILINDRO E TUBULAÇÕES-POLEGAR	544
CILINDRO DA CAÇAMBA RETROESCAVADEIRA	545
CILINDRO DA LANÇA	550
CILINDRO DO BRAÇO ESTENDÍVEL	552
CILINDRO DE LEVANTAMENTO	555
CILINDRO - CAÇAMBA DE MÚLTIPLAS APLICAÇÕES	557
CILINDRO DO ESTABILIZADOR	558
CILINDRO DO BRAÇO	560
CILINDRO DE GIRO	561
CILINDRO - POLEGAR	562
CILINDRO DE INCLINAÇÃO	563
FILTRO - ÓLEO	564
PROTETOR - CILINDRO DO ESTABILIZADOR	565
*HYDRAULIC AR	568
COMANDO HIDRÁULICO	568
*HYDRAULIC AR	569
COMANDO HIDRÁULICO	569
*HYDRAULIC AR	569
COMANDO HIDRÁULICO	570
DESENGATE E POSICIONADOR DA CAÇAMBA	572
JOGO - SISTEMA DE ABSORÇÃO DE IMPACTOS	574
TUBOS AUXILIARES - RETROESCAVADEIRA	575
TUBOS - LANÇA	601
TUBOS - CILINDRO DA CAÇAMBA	603
TUBOS - VÁLVULA DE RETENÇÃO	605
TUBOS - BRAÇO COM EXTENSÃO	614
TUBOS - CILINDRO DE LEVANTAMENTO	617
TUBOS - VÁLVULA DE CONTROLE DE CARGA	620
TUBOS AUXILIARES	623
TUBOS - CAÇAMBA DE MÚLTIPLAS APLICAÇÕES	625
TUBOS - CIRCUITO PILOTO	629
TUBOS - BOMBA	633
TUBOS - RETORNO	648
TUBOS - ABSORÇÃO DE IMPACTOS	652
TUBOS - ESTABILIZADOR	656
TUBOS - BRAÇO	658
TUBOS - GIRO	659
TUBOS - CILINDRO DE INCLINAÇÃO	660
TRAVA - CONTROLE MANUAL HIDRÁULICO	662
MONTAGEM - BANCO DE VÁLVULAS	663
MONTAGEM - CILINDRO	665
MONTAGEM - CONTROLE HIDRÁULICO	667
MONTAGEM - BOMBA HIDRÁULICA	668
MONTAGEM - TUBOS	669
BOMBA DE PISTÃO	671
GRUPO ROTATIVO DA BOMBA	675
EIXO DA TOMADA DE FORÇA	676
ESTABILIZADOR	677
TANQUE DE ÓLEO HIDRÁULICO E MONTAGEM	678
TANQUE HIDRÁULICO	680
VÁLVULA DE CONTROLE E MONTAGEM	682
VALVULA DO SOLENOIDE E MONTAGEM	683
CONJUNTO DE 4 VÁLVULAS	684
GRUPO DE VÁLVULAS - 5	684
GRUPO DE VÁLVULAS - SEIS	685
GRUPO DE VÁLVULAS DE CONTROLE - DUPLO	686
GRUPO DE VÁLVULAS DE CONTROLE - TRIPLO	689
GRUPO DE VÁLVULAS DE CONTROLE - QUÁDRUPLO	690
GRUPO DE VÁLVULAS DE CONTROLE - CINCO	691
GRUPO DE VÁLVULAS DE CONTROLE - SEIS	692
VÁLVULA DE RETENÇÃO	693
*VALVE GP-CHECK	694
VÁLVULA DE CONTROLE	695
VÁLVULA - CONTROLE DE CARGA	715
VÁLVULA DE CONTROLE PILOTO	718
*VALVE GP-PUMP CONTROL	722
VÁLVULA SOLENÓIDE	725
ACESSÓRIOS	726
BRAÇO DE LEVANTAMENTO	726
LANÇA	728
TIRANTE DO CILINDRO DE LEVANTAMENTO	730
SUPORTE PARA TRANSPORTE	731

* TRADUÇÃO NÃO DISPONÍVEL NO MOMENTO DA IMPRESSÃO

ÍNDICE

Designação	Página
ELO - EMBARQUE	732
ELO - POLEGAR	733
ARTICULAÇÃO DA CAÇAMBA DA RETROESCAVADEIRA	734
ARTICULAÇÃO DAS CAÇAMBAS DAS CARREGADEIRAS	736
CAÇAMBA DIANTEIRA	738
TRAVA - TRANSPORTE	739
MONTAGEM - BRAÇO	742
COXIM E PROTETOR DO ESTABILIZADOR	743
CALÇO DO ESTABILIZADOR E MONTAGEM	745
CALÇO DO ESTABILIZADOR	748
ESTABILIZADOR - RETROESCAVADEIRA	750
BRAÇO ESTENDÍVEL	752
BRAÇO - CAÇAMBA RETRO-ESCAVADORA	754
FERRAMENTAS DE TRABALHO	756
CAÇAMBA DE MÚLTIPLAS APLICAÇÕES	756
CAÇAMBA PARA APLICAÇÃO GERAL	759
CAÇAMBA - RETRO-ESCAVADORA	764
CAÇAMBA PARA APLICAÇÃO GERAL	774
CAÇAMBA RETROESCAVADORA	776
CAÇAMBA DE MÚLTIPLAS APLICAÇÕES	824
ACOPLADOR RÁPIDO	828
BORDA CORTANTE	834
GARFO	836
PROTETOR - CAÇAMBA	838
*KIT-ADAPTER TIP	840
MONTAGEM - CAÇAMBA	842
MONTAGEM - GARFO	844
PINO-ACOPLADOR	845
AR. DE EMBARQUE DA CAÇAMBA	847
BATENTE - CAÇAMBA	848
POLEGAR	849
UNI-DENTE	853
POSTO DO OPERADOR	854
ACUMULADOR - AR CONDICIONADO	854
AJUSTADOR DO ASSENTO	855
CONDICIONADOR DE AR E MONTAGEM	857
CONDICIONADOR DE AR	861
BRAÇO DO ASSENTO	864
SUPORTE - MONTAGEM	865
CABINE	866
TOLDO	879
COBERTA TOLDO	882
TOLDO - ESTRUTURA ROPS ABERTA	886
COMPARTIMENTO PARA LITERATURA	887
COMPRESSOR DE REFRIGERANTE	888
CONDENSADOR DO REFRIGERANTE E MONTAGEM	892
POSTO DE CONTROLE/CONSOLE DIANTEIRO	893
CONSOLE DO OPERADOR	894
CONSOLE LATERAL	895
TAMPA - CONSOLO	900
TAMPA-PAINEL TRASEIRO DO MOTOR	903
TAMPA-FREIO DE ESTACIONAMENTO	905
TAMPA-COLUNA	906
PORTA - LADO ESQUERDO	908
PORTA - LADO DIREITO	910
DUCTO DE AR	912
TAPETE	915
*FOOTREST GP	917
AQUECEDOR DA CABINE	918
BUZINA ELÉTRICA	922
JOGO - PROTETOR DO PEDAL	923
ALAVANCA DE CONTROLE DO GOVERNADOR	924
REVESTIMENTO DA CABINE	925
TUBOS - AQUECEDOR	928
TUBULAÇÕES - AQUECEDOR E AR CONDICIONADO	930
ESPELHO RETROVISOR	935
MÓDULO - INDICADOR DE ALARME	936
MOTOR - LIMPADOR DO VIDRO	938
MONTAGEM - PAINEL DE INSTRUMENTOS	939
PAINEL DE INSTRUMENTOS	944
PEDAL DO GOVERNADOR	945
CINTO DE SEGURANÇA	946
ASSENTO	948
ASSENTO ESTÁTICO	954
ASSENTO COM SUSPENSÃO	956
REDUÇÃO DE RUÍDO	961
SUSPENSÃO - ASSENTO	963
GRUPO DE DESLIZE E ARTICULAÇÃO GIRATÓRIA	965
ASSENTO GIRATÓRIO	967
TACÔMETRO - ELÉTRICO	968
LISTRA DA CABINE	970
PÁRA-SOL DA CABINE	971
LAVADOR DO VIDRO	972
JANELA DA CABINE	976
VIDRO DA PORTA	982
LIMPADOR DO VIDRO	986

* TRADUÇÃO NÃO DISPONÍVEL NO MOMENTO DA IMPRESSÃO

ÍNDICE

Designação	Página	Designação	Página
EQUIPAMENTOS DE SERVIÇO E SUPRIMENTOS	989		
DECALQUE	989		
GR. DE INSTALAÇÃO - CALÇO DA RODA	990		
CADEADO CONTRA VANDALISMO	991		
PLACA E DECALQUE	992		
ÍNDICE DE NÚMERO DE PEÇA	B1		

* TRADUÇÃO NÃO DISPONÍVEL NO MOMENTO DA IMPRESSÃO

INHALTSVERZEICHNIS

Bezeichnung	Seite
ALLGEMEINE HINWEISE	A39
REPARATURALTERNATIVEN	A47
KÜHLMITTELZUSATZ	A52
WARTUNGSTEILE	A81
STICHWORTVERZEICHNIS	A142
MASCHINE	1
HECKBAGGER-TELESKOPSTIEL	1
HECKBAGGER	3
*BACKHOE AR-STANDARD STICK	4
HECKBAGGER	4
FAHRWERK	6
GRUNDAUSFÜHRUNG	6
MOTOR	8
MOTORAUSFÜHRUNG	8
MOTOR-EINBAUSATZ	20
MOTOR (GRUNDAUSFÜHRUNG)	21
NOCKENWELLE	21
STIRNRADGEHÄUSEDECKEL	27
VENTILDECKEL	29
KURBELWELLE	37
MOTORBLOCK	46
ZYLINDERKOPF	69
LÜFTERANTRIEB	78
ZYLINDERKOPF-HALTETEILE	80
SCHWUNGRAD	81
SCHWUNGRADGEHÄUSE	83
STIRNRADGEHÄUSE	85
MOTORHUBÖSE	91
DREHSTROMGENERATOR - BEFESTIGUNG	93
MOTORAUFLAGER	95
MOTOR- UND GETRIEBEAUFLAGER	97
STARTERMOTORAUFHÄNGUNG	98
ÖLWANNE	99
PLEUELSTANGE UND KOLBEN	115
ZYLINDERBLOCKSCHRAUBE	128
ZYLINDERKOPFSTOPFEN	129
MOTORSTOPFEN	130
KURBELWELLEN-RIEMENSCHEIBE	134
VENTILSTEUERUNG	136
SCHMIERSYSTEM	146
ENTLÜFTER	146
MOTORÖLEINFÜLLSTUTZEN	154
SCHMIERPUMPE	157
KÜHLSYSTEM	166
KÜHLWASSERANSCHLUSS	166
MOTORÖLKÜHLER UND FILTER-SOCKEL	168
KÜHLSYSTEM	176
KÜHLSYSTEM - HOHE UMGEBUNGSTEMPERATUREN	178
SAUGLÜFTER	179
ANSCHLUSS - HEIZUNG U. KLIMAANLAGE	182
ÖLKÜHLERLEITUNGEN (KRAFTÜBERTRAGUNG)	183
KÜHLWASSERPUMPE	185
KÜHLER UND LÜFTER	191
KÜHLER UND HYDRAULIKÖLKÜHLER	193
LUFTANSAUG- UND ABGASSYSTEM	201
LUFTREINIGER	201
LUFTEINLASSDECKEL	208
LUFTEINLASSBOGEN	209
AUSPUFFROHRVERLÄNGERUNG	211
LUFTFILTERWARTUNGSANZEIGE	212
DRUCKLUFTLEITUNGEN	215
AUSPUFFKRÜMMER	218
ANSAUGKRÜMMER	220
SCHALLDÄMPFER	221
TURBOLADER	226
KRAFTSTOFFSYSTEM	236
REGLER- UND GASPEDALGESTÄNGE	236
KRAFTSTOFFILTER UND LEITUNGEN	240
KRAFTSTOFFILTER	244
WASSERABSCHEIDER- U. KRAFTSTOFFILTER	245
ANSCHLUSSSTÜCK (KRAFTSTOFFLEITUNGEN)	246
KRAFTSTOFFLEITUNGEN	247
KRAFTSTOFFEINSPRITZPUMPE	251
KRAFTSTOFF-ENTLÜFTUNGSPUMPE	260
WASSERABSCHEIDER	261
KRAFTSTOFFTANK U. BEFESTIGUNG	263
KRAFTSTOFFTANK	264
ELEKTRISCHE ANLAGE UND STARTSYSTEM	270
DREHSTROMGENERATOR	270
BATTERIE	275
GLÜHKERZE	283

* ÜBERSETZUNG ZUM ZEITPUNKT DER DRUCKLEGUNG NICHT VORHANDEN

INHALTSVERZEICHNIS

Bezeichnung	Seite
UMLAUFKÜHLWASSERHEIZUNG	284
SICHERHEITSEINBAUSATZ	287
ARBEITSLEUCHTEN	291
BLINKLEUCHTE	292
BREMS- UND RÜCKLEUCHTE	293
RUNDUM-KENNLEUCHTE	294
ARBEITSLEUCHTEN	296
ARBEITS- U. SIGNALLEUCHTE	305
RUNDUM-KENNLEUCHTE	308
*STARTING AID GP	310
*HEATER GP-STARTING AID	314
STARTERMOTOR	315
DRUCKSCHALTER	319
TEMPERATURSCHALTER	322
KLIMAANLAGENVERDRAHTUNG	323
FAHRERHAUSVERDRAHTUNG	330
KONSOLENVERDRAHTUNG	342
MOTORVERDRAHTUNG	351
HEIZUNGSVERDRAHTUNG	365
FAHRERPLATTFORMVERDRAHTUNG	367
STECKDOSENVERDRAHTUNG	378
VERDRAHTUNG, HINTEN	379
SCHWINGUNGSDÄMPFUNGSVERDRAHTUNG	382
SENSORVERDRAHTUNG	386
LENKVERDRAHTUNG	387
KRAFTÜBERTRAGUNG	388
HINTERACHSE U. BEFESTIGUNG	388
ANTRIEBS- UND LENKACHSE	390
HINTERACHSE	393
DIFFERENTIALSPERRENGESTÄNGE	398
GETRIEBESTEUERUNG	399
DIFFERENTIAL UND TELLERRAD	400
DIFFERENTIAL	402
ANTRIEB - BAGGERLADER	403
KUPPLUNGSANTRIEB, ELAST.	405
GETRIEBEÖLFÜLLSTUTZEN	406
RADFLANSCH	412
ACHSGEHÄUSEFLANSCH	413
SEITENANTRIEB - PLANETENGETRIEBE	417
KRAFTÜBERTRAGUNG	418
ANTRIEBSWELLE	423
GETRIEBE U. BEFESTIGUNG	425
MECHANISCHES GETRIEBE	427
WECHSELGETRIEBE	428
MAGNETVENTIL	440
REIFENVENTIL	442
RAD UND REIFEN	443
BREMSSYSTEM	451
FESTSTELLBREMSE	451
FESTSTELLBREMSGESTÄNGE	452
BREMSGESTÄNGE	454
HANDSTEUERHEBEL	457
BREMSTANK	458
LENKSYSTEM	459
VORDERACHSE	459
LENKBETÄTIGUNG	462
LENKÖLLEITUNGEN	464
ZUMESSPUMPE	469
LENKRAD	470
VORRANGVENTIL	471
RAHMEN UND FAHRGESTELL	472
BATTERIEKASTEN	472
FRONTSTOSSSTANGE	474
GEGENGEWICHT	475
BATTERIEDECKEL	480
SCHUTZBLECHE, VORNE	481
SCHUTZBLECHE, HINTEN	482
BODENBLECH	484
LADERRAHMEN	489
SCHWENKRAHMEN	491
ANTRIEBSWELLENVERKLEIDUNG	493
MOTORHAUBE UND VERKLEIDUNG	494
MOTORHAUBE	498
SCHALLDÄMPFUNG	504
HYDRAULIKSYSTEM	505
DRUCKSPEICHER, HYDRAULISCHE SCHWINGUNGSDÄMPFUNG	505
VERBINDUNGSVENTIL	507
HYDRAULISCHE SCHWINGUNGSDÄMPFUNG	510
HYDRAULIKHANDSTEUERUNG	511
HYDRAULIKPEDALSTEUERUNG	527
UMRÜSTSATZ - GEFEDERETE SCHWENKVORRICHTUNG	533
UMBAUSATZ - STEUERVENTIL	535
UMRÜSTSATZ - HYDRAULIKHEBEL	537
ANSCHLUSS	542
STEUERVENTILDECKEL	543
DAUMEN - ZYLINDER U. LEITUNGEN	544
HECKBAGGERLÖFFELZYLINDER	545
AUSLEGERZYLINDER	550
TELESKOPSTIELZYLINDER	552
HUBZYLINDER	555
KOMBISCHAUFELZYLINDER	557
SEITENSTÜTZENZYLINDER	558
STIELZYLINDER	560
SCHWENKZYLINDER	561

* ÜBERSETZUNG ZUM ZEITPUNKT DER DRUCKLEGUNG NICHT VORHANDEN

INHALTSVERZEICHNIS

Bezeichnung	Seite
DAUMENZYLINDER	562
KIPPZYLINDER	563
ÖLFILTER	564
SEITENSTÜTZENZYLINDERSCHUTZ	565
*HYDRAULIC AR	568
HYDRAULIKSYSTEM	568
*HYDRAULIC AR	569
HYDRAULIKSYSTEM	569
*HYDRAULIC AR	569
HYDRAULIKSYSTEM	570
SCHAUFELAUSSCHALTER UND -EINSTELLER	572
HYDRAULISCHE SCHWINGUNGSDÄMPFUNG - EINBAUSATZ	574
TIEFLÖFFEL-HYDRAULIKNOTLEITUNGEN	575
AUSLEGERLEITUNGEN	601
LÖFFELZYLINDERLEITUNGEN	603
SPERRVENTILLEITUNGEN	605
TELESKOPSTIELLEITUNGEN	614
HUBZYLINDERLEITUNGEN	617
LASTSTEUERVENTILLEITUNGEN	620
LADERZUSATZLEITUNGEN	623
KOMBISCHAUFELLEITUNGEN	625
VORSTEUERLEITUNGEN	629
HYDRAULIKPUMPE UND LEITUNGEN	633
RÜCKLAUFLEITUNG	648
SCHWINGUNGSDÄMPFUNGSLEITUNGEN	652
SEITENSTÜTZENLEITUNGEN	656
STIELZYLINDERLEITUNGEN	658
SCHWENKLEITUNGEN	659
NEIGEZYLINDERLEITUNGEN	660
HYDRAULIKSPERRE (HANDBEDIENUNG)	662
VENTILANORDNUNGS-BEFESTIGUNGSSATZ	663
ZYLINDERAUFHÄNGUNG	665
HYDRAULIKSTEUERUNGSAUFHÄNGUNG	667
HYDRAULIKPUMPENBEFESTIGUNG	668
LEITUNGS-BEFESTIGUNGSTEILE	669
KOLBENPUMPE	671
KOLBENPUMPENUMLAUFSATZ	675
ZAPFWELLE	676
SEITENSTÜTZEN	677
HYDRAULIKTANK UND BEFESTIGUNGSTEILE	678
HYDRAULIKTANK	680
VENTILBLOCK U. BEFESTIGUNG	682
SOLENOIDVENTIL U. BEFESTIGUNGSTEILE	683
4-BLOCK-VENTILSATZ	684
5-VENTIL-BLOCK	684
6-FACH-VENTILBLOCK	685
VENTILSATZ (2-VENTIL)	686
VENTILSATZ (3-VENTIL)	689
VENTILSATZ (4-VENTIL)	690
VENTILSATZ (5-VENTIL)	691
VENTILSATZ (6-VENTIL)	692
SPERRVENTIL	693
*VALVE GP-CHECK	694
STEUERVENTIL	695
LASTSTEUERVENTIL	715
VORSTEUERVENTIL	718
*VALVE GP-PUMP CONTROL	722
MAGNETVENTIL	725
ARBEITSGERÄTE	726
HUBARM	726
AUSLEGER	728
HUBZYLINDER-HALTERUNG	730
TRANSPORTHALTERUNG	731
TRANSPORTSPERRE	732
DAUMENGESTÄNGE	733
HECKBAGGERLÖFFELGESTÄNGE	734
SCHAUFELGESTÄNGE	736
LADESCHAUFEL	738
TRANSPORTSPERRE	739
STIELAUFHÄNGUNG	742
SEITENSTÜTZENPLATTEN UND SCHUTZABDECKUNG	743
STÜTZPLATTEN U. BEFESTIGUNG	745
SEITENSTÜTZENPLATTEN	748
SEITENSTÜTZEN	750
TELESKOPSTIEL	752
LÖFFELSTIEL	754
ARBEITSGERÄTE	756
KOMBISCHAUFEL	756
UNIVERSALSCHAUFEL	759
HECKBAGGERLÖFFEL	764
UNIVERSALSCHAUFEL	774
HECKBAGGERLÖFFEL	776
KOMBISCHAUFEL	824
SCHNELLWECHSELVORRICHTUNG	828
SCHNELLWECHSELEINRICHTUNG	829
SCHNEIDMESSER	834
GABEL	836
PALETTENGABEL	837
SCHAUFELSCHUTZ	838
*KIT-ADAPTER TIP	840
SCHAUFELAUFHÄNGUNG	842
GABELBEFESTIGUNG	844
KUPPLUNGSBOLZEN	845

* ÜBERSETZUNG ZUM ZEITPUNKT DER DRUCKLEGUNG NICHT VORHANDEN

INHALTSVERZEICHNIS

Bezeichnung	Seite
SCHAUFELTRANSPORTAUSFÜHRUNG	847
SCHAUFELANSCHLAG	848
DAUMEN	849
UNIVERSAL-ZAHNSPITZE	853
FAHRERHAUS	854
KLIMAANLAGENDRUCKSPEICHER	854
FAHRERSITZVERSTELLER	855
KLIMAANLAGE UND AUFHÄNGUNG	857
KLIMAANLAGE	861
ARMLEHNE	864
BEFESTIGUNGSHALTERUNG	865
FAHRERHAUS	866
WETTERDACH	879
SCHUTZDACHSATZ	882
FAHRERHAUS M. OFFENEM ÜBERROLLSCHUTZ	886
LITERATURABLAGE	887
KÄLTEMITTELKOMPRESSOR	888
KÄLTEMITTELKONDENSATOR U. BEFESTIGUNGSTEILE	892
FRONTSTEUERPULT	893
STEUERKONSOLE	894
SEITENKONSOLE	895
STEUERKONSOLENABDECKUNG	900
FEUERWANDABDECKUNG	903
FESTSTELLBREMSABDECKUNG	905
PFOSTENABDECKUNG	906
FAHRERHAUSTÜR (LINKS)	908
FAHRERHAUSTÜR (RECHTS)	910
LUFTKANAL	912
FUSSMATTE	915
*FOOTREST GP	917
FAHRERHAUSHEIZUNG	918
WARNHORN, ELEKTR.	922
PEDALSCHUTZ	923
DREHZAHLREGLER - STEUERHEBEL	924
FAHRERHAUSAUSKLEIDUNG	925
HEIZUNGSLEITUNGEN	928
HEIZUNGS- U. KLIMAANLAGENLEITUNGEN	930
RÜCKSPIEGEL	935
WARNANZEIGEMODUL	936
SCHEIBENWISCHERMOTOR	938
INASTRUMENTENTAFEL-EINBAUSATZ	939
INSTRUMENTENTAFEL	944
GASPEDAL	945
SICHERHEITSGURT	946
FAHRERSITZ	948
FAHRERSITZ, FESTSTEHEND	954
SCHWINGSITZ	956
SCHALLDÄMPFUNG	961
FAHRERSITZFEDERUNG	963
SITZDREH- U. -SCHIEBEVORRICHTUNG	965
SITZSCHWENKVORRICHTUNG	967
DREHZAHLMESSER, ELEKTR.	968
FAHRERHAUS - HALTETEILE	970
FAHRERHAUS, SONNENBLENDE	971
SCHEIBENWASCHANLAGE	972
FAHRERHAUSFENSTER	976
TÜRFENSTER	982
SCHEIBENWISCHER	986
WARTUNGSAUSRÜSTUNG UND -ZUBEHÖR	989
AUFKLEBER	989
UNTERLEGKEIL - EINBAUSATZ	990
VORHÄNGESCHLOSS	991
SCHILD UND AUFKLEBER	992
ERSATZTEILNUMMERNINDEX	B1

* ÜBERSETZUNG ZUM ZEITPUNKT DER DRUCKLEGUNG NICHT VORHANDEN

GENERAL INFORMATION

1. MACHINE IDENTIFICATION

Caterpillar machines are identified by Product Identification Numbers (PIN). Some components included in a machine may be identified by Serial Numbers (S/N). Typical components that will be serialized include engines, transmissions, bulldozers, and rippers. The machine and engine are further identified by arrangement numbers and in some cases modification numbers. These numbers are shown on the product identification plate(s) and on the master plate in the operator's compartment.

Caterpillar dealers need all of these numbers to determine accurate parts identification.

SIS ***New Feature***

Effective First Quarter 2001 the Caterpillar Product Identification Number (PIN) changed from 8 to 17 characters. In an effort to provide uniform equipment identification, Caterpillar and other construction equipment manufacturers are moving to comply with the latest version of the product identification numbering standard. Non-road machine PINs are defined by ISO 10261. The new PIN format will apply to all Caterpillar machines and generator sets. The PIN plates and frame marking will display the 17 character PIN. The new format will look like the following:

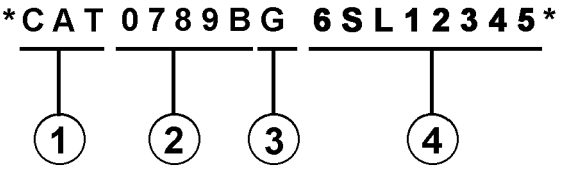

Where:

1. Caterpillar's World Manufacturing Code (characters 1-3)

2. Machine Descriptor (characters 4-8)

3. Check Character (character 9)

4. Machine Indicator Section (MIS) or Product Sequence Number (characters 10-17). These were previously referred to as the Serial Number.

Machines and generator sets produced before First Quarter 2001 will maintain their 8 character PIN format.

Components such as engines, transmissions, axles, etc. and work tools will continue to use an 8 character Serial Number (S/N).

2. ORDERING PARTS

⚠ WARNING

When replacement parts are required for this product Caterpillar recommends using Caterpillar replacement parts or parts with equivalent specifications including, but not limited to, physical dimensions, type, strength and material.

Failure to heed this warning can lead to premature failures, product damage, personal injury or death.

Quality Caterpillar replacement parts are available from Caterpillar dealers throughout the world. Their parts inventories are up to date and include all parts normally required to protect your investment in Caterpillar machines. Dealers may offer repair kits or remanufactured parts to allow selection of the most effective repair alternative for a particular situation. When ordering parts, your order should specify the quantity, part number, part name, and the serial number/product identification number of the machine for which the parts are needed.

3. PARTS MANUAL ORGANIZATION

Product information in this manual is presented as "information elements" that represent all of the components for the specific model. Engine Arrangement and Seat Group are examples of information elements. The information elements are organized alphabetically by part name and secondarily by part number within each major section of the manual.

4. TABLE OF CONTENTS

A table of contents (TOC) is found at the beginning of the manual. The TOC lists each section of the manual with a complete list of all information elements organized as they appear in the manual. Page numbers are provided for quick reference to detailed parts identification illustrations and serviceable consist lists.

5. MAINTENANCE PARTS INDEX

The Maintenance Parts Index, located near the beginning of the manual, references most frequently used maintenance part numbers, providing description, quantity, usage and page number. This information is organized alphabetically by part description.

6. INDEX

The index located near the front of the manual is an alphabetical listing of all information elements included in the manual. Page numbers are provided for quick reference to detailed parts identification illustrations and serviceable consist lists.

7. PART NUMBER INDEX

A numerical index listing all part numbers and the corresponding page number(s) appears at the back of the manual.

8. CAPTIONS

Captions located at the beginning of each information element identify the part number and part name along with additional descriptive information. PIN and S/N information found in each caption should be used to select correct information for a specific machine. Field replacement options, identification of optional attachment components, and where used ("part of") information is also provided.

The first line of a caption is shown in larger type font to indicate the beginning of an information element. Captions for additional pages that may be required to illustrate an information element will be shown in standard type font and will include the term *(contd.)* .

9. NON-SERVICED PARTS

In some instances it is necessary to display non-serviced parts that are a link to a lower level serviceable consist lists. These non-serviced part numbers are shown in *italic* type indicating that they are not available.

10. PARTS LIST REFERENCE NUMBERS

Numbers shown in the Ref No column correspond to numbers used in the associated graphic(s). An alphabetic suffix may be added to a reference number to identify lower level consist items. Numbers shown in the Graphic Ref column refer to the graphic number identifier displayed in the lower left corner of each illustration. The Graphic Ref number may be used in combination with the item Ref No to determine the correct part number. There may be intentional omission of a Ref No in a consist list as information is updated to reflect the latest serviceable part numbers.

11. INDENTED PART NAMES

When a part name is indented in a parts list, it is part of (included in) the group or assembly under which it is indented.

12. ILLUSTRATION REFERENCE LETTERS

When necessary, illustrations contain reference letters (A, B, C etc.) that are intended to track lines and harnesses from one point to another. They are also used to show where to reconnect illustrations that have been separated.

13. ABBREVIATIONS AND SYMBOLS

O.D. – Outside Diameter
I.D. – Inside Diameter
A – Not Part Of This Group
B – Use As Required
C – Change From Previous Type
D – Order By The Meter
E – Order By The Centimeter
F – Not Shown
G – Order By The Inch
I – See Hose Fabrication Guide
M – Metric Part
R – Remfg Part May Be Available
Y – Separate Illustration
Z – Not Serviced Separately

SIS *New Feature*

14.<END>

This symbol indicates the end of an information element.

NOTE:

Continuing improvement and advancement of product design may cause changes to your machine which may not be included in this publication. Whenever a question arises regarding your caterpillar product or this publication, please consult your caterpillar dealer for the latest available information.

FRAME AND BODY

8E-3299 PLATFORM GP-CAB

PIN 38K1-99999

SMCS-7283 — 100090751

NOTE	REF NO	GRAPHIC REF	PART NUMBER	QTY	PART NAME 1 2 3 4 5 6 (PRODUCT LEVEL)	SEE PAGE
	1	1	3T-3953	1	PLATE AS	
	2	1	6B-3062	25	BOLT (3/8-16X.750IN)	
	3	1	6P-1075	41	WASHER-HARD (9MM THK)	
	4	1	9F-1444	2	SUPPORT AS-FOOT	
	5	1	7P-2229	19	BOLT (1/2-13X1IN)	
		1	6P-[illegible]	19	WASHER-HARD (4MM THK)	
	6	1	8E-8134	1	COVER AS-LH	
		1	9F-2979	5	NUT-WELD (3/8-16 THD)	
		1	1P-8188	1	CLIP	
	7	1	7S-2411	4	COVER	
	8		6J-0468	19	SCREW-HEAD (3/8-16X.875IN)	
	9	1	[illegible]-4674	1	COVER	
		1	8E-8972	[illegible]	GASKET	
	10	1	8E-3248	1	[illegible]	
		1	8E-3250	1	GASKET	
	11	1	3T-3939	1	HANDHOLD	
	12	1	8E-8978	1	COVER AS	
		1	9F-2978	8	NUT-WELD (3/8-16 THD)	
		1	8E-8979	1	GASKET	
	13	1	7T-0131	1	FLOORPLATE AS	
		1	1F-0748	4	NUT-WELD (1/2-13 THD)	
	14	1	7Y-8087	1	PLUG-BUTTON	
	15	1	7T-0136	1	PLATE AS	
		1	9F-2979	5	NUT-WELD (3/8-16 THD)	
	16	1	7T-8098	1	COVER	
		1	7T-0779	1	GASKET	
	17	1	3T-3951	1	PLATE AS	
	18	1	6T-8364	4	BOLT (1/4-20X.625IN)	
M		1	6T-4205	4	WASHER-HARD (2MM THK)	
	19	1	6X-8464	1	FLOOR MAT	
	20	1	8E-8946	1	MODULE AS-OPERATOR	
	21	1	3T-3934	1	HANDHOLD	
	22	1	9P-8871	2	PLUG	
	23	2	6T-8364	4	BOLT (1/4-20X.625IN)	
M		2	6T-4205	4	WASHER-HARD (2MM THK)	
	24	2	6B-3062	17	BOLT (3/8-16X.750IN)	
	25	2	6P-1075	21	WASHER-HARD (9MM THK)	
	26	2	7T-0136	1	SEAL	
	27	2	7X-0378	2	BOLT (3/4-10X5IN)	
		2	7X-0682	2	WASHER-HARD (6MM THK)	
	28	2	3T-3482	2	PLATE	
	29	2	3T-8290	1	PLATE AS	
		2	7S-4888	6	SPACER	
	30	2	3T-8291	1	SEAL	
	31	2	7S-8817	1	GASKET	
	32	2	7S-8916	1	COVER AS	
		2	2R-2376	2	WASHER	
		2	6P-8826	2	SCREW-KNURLED	
	33	2	9W-3429	1	COVER	
	34	2	8E-8937	1	COVER	
	35	2	9D-3931	8	SCREW-SOCKET HEAD	
	36	2	9W-3142	8	MOUNTING	
	37	2	9W-9027	2	PLATE	
	38	2	7X-0360	2	BOLT (7/8-9X5IN)	
		2	7X-0672	2	WASHER-HARD	
	39	2	4L-4454	4	BOLT (3/8-16X1.0IN)	
	40	2	3T-4788	1	COVER	

12 FRAME AND BODY — 1 of 4 — SELP4570-01

FRAME AND BODY

8E-3299 PLATFORM GP-CAB (contd.)

100090751

NOTE	REF NO	GRAPHIC REF	PART NUMBER	QTY	PART NAME 1 2 3 4 5 6 (PRODUCT LEVEL)	SEE PAGE
	41	2	8E-2515	1	COVER	
	42	2	7T-0134	1	PLATE	
	43	2	7T-0138	1	GASKET	
	44	2	7S-8724	1	GASKET	
	45	2	7S-8723	1	COVER	
	46	[illegible]	6V-1958	2	PLUG-BUTTON	
M-METRIC PART						

SELP4570-01 — 2 of 4 — FRAME AND BODY 13

FRAME AND BODY

8E-3299 PLATFORM GP-CAB (contd.)

100090751

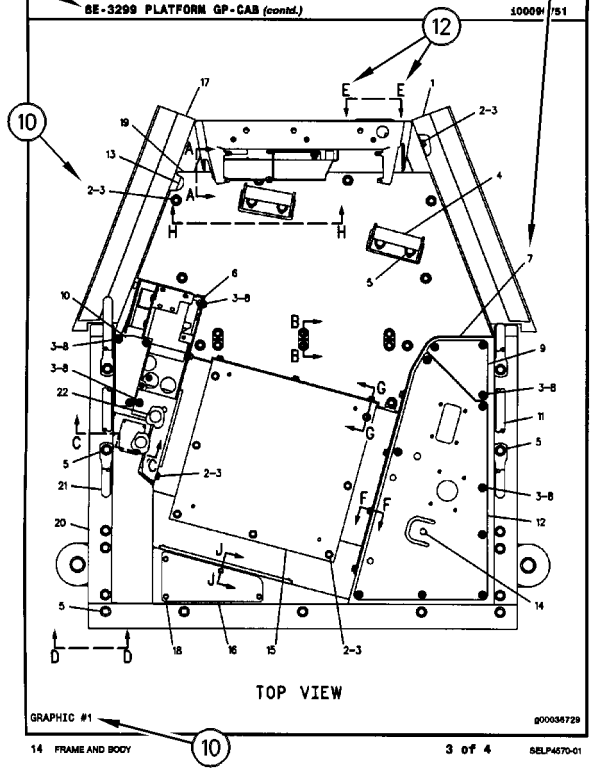

GRAPHIC #1 — g00036729

14 FRAME AND BODY — 3 of 4 — SELP4570-01

FRAME AND BODY

8E-3299 PLATFORM GP-CAB (contd.)

100090751

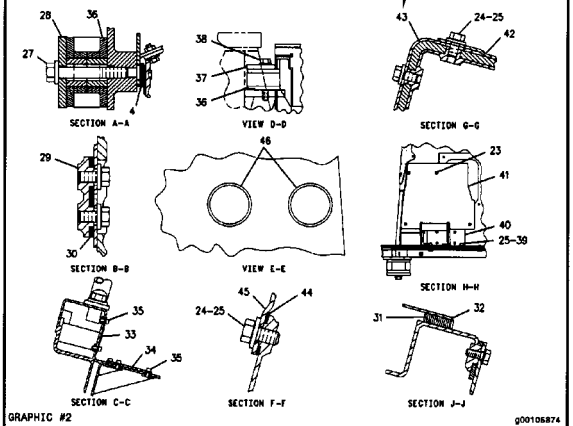

GRAPHIC #2 — g00105874

SELP4570-01 — 4 of 4 — FRAME AND BODY 16

1. IDENTIFICATION DE LA MACHINE

Toutes les machines Caterpillar portent un numéro d'identification (PIN). Certains composants des machines peuvent porter des numéros de série (S/N). En général, parmi les composants qui portent des numéros de série il y a les moteurs, les transmissions, les bulldozers et les rippers. En plus, la machine et le moteur peuvent recevoir des numéros de version, et dans certains cas, de modification. Ces numéros figurent sur les plaques de numéro de série et sur la plaque signalétique principale qui se trouve dans le poste de conduite.

Les concessionnaires Caterpillar doivent connaître tous ces numéros pour identifier correctement les pièces.

SIS *Nouvelle Caractéristique*

À partir du premier trimestre 2001, le numéro d'identification produit (PIN) Caterpillar passe de 8 à 17 caractères. Afin de permettre une identification uniforme des matériels, Caterpillar et d'autres constructeurs de machines de travaux publics s'efforcent de se conformer à la norme la plus récente portant sur les numéros d'identification des produits. Les numéros d'identification (PIN) de machines de chantier sont définis par la norme ISO 10261. Le nouveau format du numéro d'identification est valable pour toutes les machines et tous les groupes électrogènes Caterpillar. Le numéro d'identification produit (PIN) figurant sur la plaque et sur le châssis se composera de 17 caractères. Le nouveau format ressemblera à ceci:

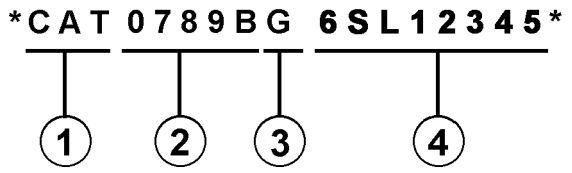

Il se décomposera de la façon suivante:

1. Code international de fabrication de Caterpillar (caractères 1 à 3)

2. Descriptif de la machine (caractères 4 à 8)

3. Contrôle (caractère 9)

4. Indicateur machine (MIS) ou numéro de séquence produit (caractères 10 à 17). Ceux-ci étaient auparavant désignés sous le terme de numéro de série.

Les machines et les groupes électrogènes construits avant le premier trimestre 2001 garderont le format à 8 caractères du numéro d'identification produit (PIN).

Les organes tels que les moteurs, les boîtes de vitesses, les essieux, etc., continueront d'être désignés par un numéro de série (S/N) à 8 caractères.

2. COMMANDE DE PIÈCES

⚠ DANGER

Lorsqu'il faut remplacer des pièces de rechange pour ce produit Caterpillar recommande d'utiliser les pièces de rechange Caterpillar ou les pièces qui ont des spécifications équivalentes dont les dimensions physiques, le type, la force et le matériau. Ces équivalences ne se limitent pas à l'énoncé précédent.

L'inobservation de cette mise en garde peut entraîner des défaillances prématurées, des dommages au produit, des blessures ou même la mort.

Les concessionnaires Caterpillar fournissent dans le monde entier des pièces de rechange de qualité Caterpillar. Leurs stocks de pièces sont constamment réapprovisionnés et comptent toutes les pièces nécessaires pour assurer la bonne marche de vos machines Caterpillar. Certains concessionnaires proposent également des kits de réparation ou des pièces rénovées, ce qui permet de choisir la solution la plus économique dans une situation donnée. Lors des commandes de pièces, mentionner la quantité, le numéro et la désignation des pièces ainsi que le numéro de série ou le numéro d'identification (PIN) de la machine pour laquelle ces pièces sont requises.

3. ORGANISATION DU CATALOGUE DE PIÈCES

Les renseignements sur les produits sont présentés sous forme de "Information element" (élément d'information) représentant tous les composants d'un modèle donné. "Engine Arrangement" (version de moteur) et "Seat Group" (assemblage de siège)" sont des exemples d'éléments d'information. Les éléments d'information sont classés par ordre alphabétique par la désignation standard des pièces et par numéros de pièces dans chaque partie importante du manuel.

4. TABLE DES MATIÈRES

Nouvelle Caractéristique

La table des matières se trouve au début du manuel. La table des matières fournit la liste de tous les chapitres du manuel avec une liste complète de tous les éléments d'information classés par ordre d'apparition dans le manuel. Les numéros de page sont fournis afin que l'utilisateur puisse trouver rapidement les illustrations détaillées concernant l'identification des pièces et les listes des pièces d'entretien.

5. INDEX DES PIÈCES D'ENTRETIEN

La rubrique "Index des pièces d'entretien" qui se trouve au début du manuel renvoie aux pièces d'entretien les plus fréquemment utilisées en précisant la désignation, la quantité, là où la pièce est utilisée et le numéro de page. Ces pièces sont classés par ordre alphabétique.

6. INDEX

L'index qui se trouve vers le début du manuel est une liste alphabétique de tous les éléments d'information du manuel. Les numéros de page sont fournis afin que l'utilisateur puisse trouver rapidement les illustrations détaillées concernant l'identification des pièces et les listes des pièces d'entretien.

7. INDEX DES NUMÉROS DE PIÈCES

Une liste numérique de tous les numéros de pièces et des pages correspondantes se trouve à la fin du manuel.

8. LÉGENDES

Les légendes qui se trouvent en haut de chaque page de chaque élément d'information fournissent le numéro de pièce, la désignation ainsi que des renseignements supplémentaires sur les pièces. Les renseignements concernant les numéros de série (S/N) qui se trouvent dans chaque légende doivent être utilisés pour sélectionner les informations correctes pour un moteur donné. Les informations concernant les options de remplacement sur le chantier, l'identification des composants des équipements offerts en option et les lieux d'application sont aussi fournies.

Nouvelle Caractéristique

Les lettres de la première ligne d'une légende sont présentées en police plus grande afin d'indiquer le début d'une unité d'information. Les légendes qui pourraient être requises pour des pages supplémentaires afin d'illustrer une unité d'information seront présentées en police standard et comprendront le terme (à suivre).

9. PIÈCES NON FOURNIES

Nouvelle Caractéristique

Dans certains cas, il est nécessaire d'indiquer les pièces non fournies qui sont en aval de la liste des pièces d'entretien. Les numéros des pièces non fournies dans la liste des pièces et les légendes seront en italique pour signaler qu'ils ne sont pas disponibles.

10. NUMÉROS DE RÉFÉRENCE DE LA LISTE DES PIÈCES

Nouvelle Caractéristique

Les numéros indiqués dans la colonne des numéros de références correspondent aux numéros utilisés dans les illustrations auxquelles ils sont associés. Un suffixe alphabétique peut être ajouté à un numéro de référence pour identifier la liste des articles en aval. Les numéros indiqués dans la colonne de référence de l'illustration renvoient à l'identification du numéro affiché dans le coin inférieur gauche de chaque illustration. Le numéro de référence de l'illustration pourrait être utilisé avec le numéro de référence de l'article pour déterminer le numéro de pièce correct. Il peut y avoir une omission intentionnelle d'un numéro de référence dans une liste de pièces suite à la mise à jour des informations en vue de refléter les numéros de pièces les plus récentes.

11. DÉSIGNATIONS DE PIÈCES EN RETRAIT

Lorsqu'une désignation de pièce est en retrait, cela veut dire que l'article en regard fait partie de l'ensemble sous lequel il figure.

12. LETTRES DE RÉFÉRENCE DES ILLUSTRATIONS

Quand cela est nécessaire, les illustrations comportent des lettres de référence (A, B, C, etc.) pour montrer le trajet des canalisations et faisceaux de câbles d'un point à l'autre. Elles sont utilisées également pour indiquer où relier les illustrations séparées auparavant.

13. ABRÉVIATIONS ET SYMBOLES

O.D. – Diamètre extérieur
I.D. – Diamètre intérieur
A – Ne fait pas partie de ce groupe
B – Utiliser selon besoin
C – Modification
D – Commander par mètre
E – Commander par centimètre
F – Non représenté
G – Commander par pouce
I – Voir "Hose Fabrication Guide"
M – Pièce métrique
R – Pièce rénovée éventuellement disponible
Y – Illustration séparée
Z – Non fourni séparément

NOTA:

En raison du progrès technique et des améliorations continuelles apportées au matériel, votre machine comporte peut-être des modifications qui n'apparaissent pas dans la présente publication. En cas de doute sur un détail de votre machine Caterpillar ou sur le texte de la présente publication, adressez-vous à votre concessionnaire Caterpillar.

FRAME AND BODY

8E-3299 PLATFORM GP-CAB

PIN 38K1-99999

SMCS-7283 — 100090751

NOTE	REF NO	GRAPHIC REF	PART NUMBER	QTY	PART NAME (1 2 3 4 5 6 PRODUCT LEVEL)	SEE PAGE
	1	1	3T-3953	1	PLATE AS	
	2	1	6B-3062	25	BOLT (3/8-16X.750IN)	
	3	1	6P-1075	41	WASHER-HARD (9MM THK)	
	4	1	9F-1444	2	SUPPORT AS-FOOT	
	5	1	7P-2229	19	BOLT (1/2-13X1IN)	
		1	6P-[illegible]	19	WASHER-HARD (4MM THK)	
	6	1	8E-8134	1	COVER AS-LH	
		1	9F-2979	5	NUT-WELD (3/8-16 THD)	
		1	1P-8188	1	CLIP	
	7	1	7S-2411	4	COVER	
	8		6J-0468	19	SCREW-HEAD (3/8-16X.875IN)	
	9	1	[illegible]-4674	1	COVER	
		1	8E-8972	1	GASKET	
	10	1	8E-3248	1	[illegible]	
		1	8E-3250	1	GASKET	
	11	1	3T-3939	1	HANDHOLD	
	12	1	8E-8978	1	COVER AS	
		1	9F-2978	8	NUT-WELD (3/8-16 THD)	
		1	8E-8978	1	GASKET	
	13	1	7T-0131	1	FLOORPLATE AS	
		1	1F-0748	4	NUT-WELD (1/2-13 THD)	
	14	1	7Y-8087	1	PLUG-BUTTON	
	15	1	7T-0136	1	PLATE AS	
		1	9F-2979	5	NUT-WELD (3/8-16 THD)	
	16	1	7T-8098	1	COVER	
		1	7T-0779	1	GASKET	
	17	1	3T-3951	1	PLATE AS	
	18	1	6T-8364	4	BOLT (1/4-20X.625IN)	
M		1	9T-4205	4	WASHER-HARD (2MM THK)	
	19	1	8S-8464	1	FLOOR MAT	
	20	1	8E-8946	1	MODULE AS-OPERATOR	
	21	1	3T-3934	1	HANDHOLD	
	22	1	9P-8871	2	PLUG	
	23	2	6T-8364	4	BOLT (1/4-20X.625IN)	
M		2	9T-4205	4	WASHER-HARD (2MM THK)	
	24	2	6B-3062	17	BOLT (3/8-16X.750IN)	
	25	2	6P-1075	21	WASHER-HARD (9MM THK)	
	26	2	7T-0136	1	SEAL	
	27	2	7X-0378	2	BOLT (3/4-10X5IN)	
		2	7X-0682	2	WASHER-HARD (6MM THK)	
	28	2	3T-3482	2	PLATE	
	29	2	3T-8290	1	PLATE AS	
		2	7S-4838	6	SPACER	
	30	2	3T-8281	1	SEAL	
	31	2	7S-8817	1	GASKET	
	32	2	7S-8916	1	COVER AS	
		2	2R-2376	2	WASHER	
		2	6P-8826	2	SCREW-KNURLED	
	33	2	9W-3429	1	COVER	
	34	2	8E-8937	1	COVER	
	35	2	9D-3931	8	SCREW-SOCKET HEAD	
	36	2	9W-3142	8	MOUNTING	
	37	2	9W-9027	2	PLATE	
	38	2	7X-0360	2	BOLT (7/8-9X6IN)	
		2	7X-0672	2	WASHER-HARD	
	39	2	4L-4454	4	BOLT (3/8-16X1.0IN)	
	40	2	3T-4788	1	COVER	

12 FRAME AND BODY — 1 of 4 — SELP4570-01

FRAME AND BODY

8E-3299 PLATFORM GP-CAB (contd.)

100090751

NOTE	REF NO	GRAPHIC REF	PART NUMBER	QTY	PART NAME (1 2 3 4 5 6 PRODUCT LEVEL)	SEE PAGE
	41	2	8E-2515	1	COVER	
	42	2	7T-0134	1	PLATE	
	43	2	7T-0138	1	GASKET	
	44	2	7S-8724	1	GASKET	
	45	2	7S-8723	1	COVER	
	46	[illegible]	6V-1958	2	PLUG-BUTTON	
M-METRIC PART						

SELP4570-01 — 2 of 4 — FRAME AND BODY 13

FRAME AND BODY

8E-3299 PLATFORM GP-CAB (contd.)

100090751

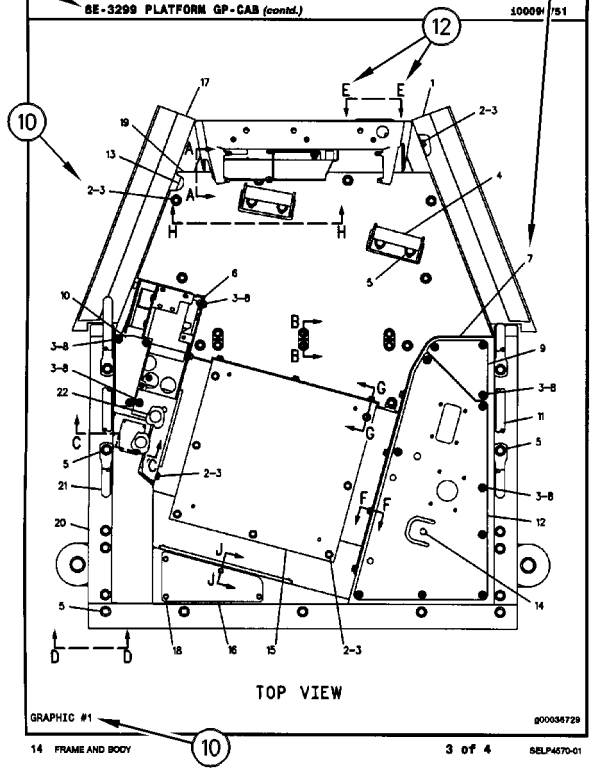

GRAPHIC #1 — g00036729

14 FRAME AND BODY — 3 of 4 — SELP4570-01

FRAME AND BODY

8E-3299 PLATFORM GP-CAB (contd.)

100090751

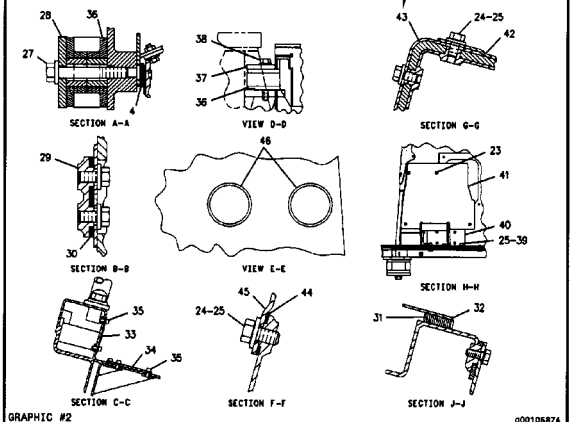

GRAPHIC #2 — g00105874

SELP4570-01 — 4 of 4 — FRAME AND BODY 16

1. MÁQUINAS

Las máquinas Caterpillar se identifican con Números de Identificación del Producto (PIN). Algunos componentes incluídos en la máquina pueden estar identificados con Números de Serie (N/S). Los componentes que tienen típicamente esta identificación incluyen motores, transmisiones, hojas topadoras y desgarradores. La máquina y el motor se identifican además con Números de Configuración y en algunos casos, Números de Modificación. Estos números están en las placas de identificación del producto o en la placa principal en la cabina del operador.

Los distribuidores Caterpillar necesitan estos números para identificar con exactitud los números de piezas de repuesto.

SIS *Nueva Característica*

A partir del primer trimestre del 2001, el Número de Identificación de Producto (PIN) de Caterpillar cambió de 8 a 17 caracteres. Para hacer más uniforme el método de identificación de equipos, Caterpillar y otros fabricantes de equipo de construcción han tomado medidas para cumplir con la versión más reciente de la norma de numeración de identificación de productos. Los Números de Identificación de Producto para máquinas que no se operan en carreteras son definidos por la norma ISO 10261. El nuevo formato PIN corresponderá a todas las máquinas y grupos electrógenos Caterpillar. Las placas y los caracteres PIN estampados en el bastidor mostrarán el PIN de 17 caracteres. El nuevo formato tendrá la apariencia siguiente:

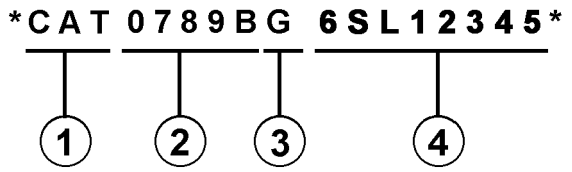

Significado de los caracteres:

1. Código de Fabricación Mundial de Caterpillar (caracteres 1-3)

2. Sección Descriptor de la Máquina (caracteres 4-8)

3. Carácter de Verificación (carácter 9)

4. Sección Indicador de la Máquina (MIS) o Número de Secuencia de Producto (caracteres 10-17). Anteriormente, estos caracteres constituían el Número de Serie.

Las máquinas y grupos electrógenos producidos antes del primer semestre del 2001 mantendrán su formato PIN de 8 caracteres.

Los componentes como motores, transmisiones, ejes, herramientas de trabajo, etc., continuarán usando un Número de Serie (S/N) de 8 caracteres.

2. COMO PEDIR REPUESTOS

⚠ ADVERTENCIA

Cuando se necesiten piezas de repuesto para este producto, Caterpillar recomienda usar piezas de repuesto Caterpillar o piezas que tengan especificaciones equivalentes incluyendo, pero sin estar limitadas a, dimensiones físicas, tipo, fortaleza y material.

El no hacer caso de esta advertencia puede llevar a fallas prematuras, daños al producto y lesiones graves o mortales.

Las piezas de repuesto Caterpillar de calidad están a la disposición de los distribuidores Caterpillar en todo el mundo. Sus existencias actualizadas incluyen todas las piezas normalmente requeridas para proteger su inversión en máquinas Caterpillar. Los distribuidores pueden tener juegos de reparación o piezas remanufacturadas para permitir la selección de la mejor alternativa de reparación en un caso en particular. Al pedir piezas de repuesto, especifique en su pedido la cantidad, el número de pieza, el nombre de la pieza y el número de serie/número de identificación del producto, de la máquina para la cual se necesitan estas piezas.

3. ORGANIZACION DEL MANUAL DE PIEZAS

La información sobre el producto, se presenta en este manual, como "elementos de información" que representan todos los componentes de un modelo específico. Las configuraciones de motores y los grupos de asientos son ejemplos de elementos de información. Los elementos de información están organizados primeramente por nombres de piezas en orden alfabético y en segundo lugar, por el número de pieza dentro de cada sección principal del manual.

4. CONTENIDO

La página de Contenido se encuentra al principio del manual. El Contenido indica cada sección del manual con una lista completa de todos los elementos de información organizados en el orden que aparecen en el manual. Los números de página proporcionan una referencia rápida a las ilustraciones detalladas de identificación de piezas y a las listas de componentes de repuesto de dichas piezas.

5. ÍNDICE DE PIEZAS DE MANTENIMIENTO

Al principio de este catálogo se encuentra un índice de los números de piezas utilizadas más frecuentemente para el mantenimiento, que incluye descripción, cantidad necesaria, lugar de utilización y número de página. Esta información está organizada alfabéticamente, por descripción de la pieza.

6. ÍNDICE

El Índice, ubicado cerca del principio del manual, es una lista en orden alfabético de todos los elementos de información incluídos en el manual. Los números de página proporcionan una referencia rápida a las ilustraciones detalladas de identificación de piezas y a las listas de componentes de repuesto de dichas piezas.

7. INDICE NUMÉRICO DE PIEZAS

Un índice numérico de piezas con el correspondiente número de página aparece al final de este catálogo.

8. TÍTULOS

Los títulos ubicados al principio de cada elemento de información identifican el número y el nombre de la pieza junto con información descriptiva. Se debe usar información sobre los Números de Identificación de Pieza (PIN) y los números de serie (S/N) para seleccionar la información que corresponda a una máquina en particular. También se suministra información sobre las opciones de reparación en el campo, la identificación de componentes de accesorios optativos y el lugar de ubicación de la pieza ("es parte de").

La primera línea del título se muestra con un tipo de letra más grande para indicar el comienzo de un elemento de información. Si se requieren páginas adicionales para ilustrar un elemento de información, los títulos se muestran con un tipo de letra normal y la continuación se indica entre paréntesis.

9. PIEZAS QUE NO SE SUMINISTRAN COMO REPUESTO

En algunos casos es necesario indicar piezas que no se suministran como repuesto pero que pueden estar conectadas a listas de componentes de otras piezas de repuesto. En tal caso, dichas piezas se muestran en cursiva para indicar que no son piezas disponibles.

10. NÚMEROS DE REFERENCIA

Los números en la columna de No. de Referencia corresponden a los números indicados en la ilustración que pertenece a ese número de pieza. Los números que tienen un sufijo alfabético identifican artículos de las listas de componentes de piezas. Los números en la columna de Referencia de la ilustración se identifican en la esquina inferior izquierda de cada ilustración. Para determinar el número de pieza correcto se puede utilizar tanto el No. de Referencia de la ilustración como el No. de Referencia del artículo. A medida que se actualiza la información para indicar los más recientes números de piezas de repuesto, puede omitirse intencionalmente un No. de Referencia en una lista de componentes de piezas.

11. NOMBRES DE PIEZA SANGRADOS

Cuando el nombre de una pieza está sangrado en una lista, significa que esta pieza forma parte del grupo o conjunto del renglón inmediatamente superior.

12. LETRAS DE REFERENCIA DE ILUSTRACIONES

Las ilustraciones contienen algunas veces letras de referencia (A, B, C etc.) cuyo propósito es seguir el trayecto de líneas y mazos de cables de un punto a otro. También se utilizan para mostrar dónde volver a unir ilustraciones que se habían separado.

13. ABREVIATURAS Y SIMBOLOS

O.D. – Diámetro exterior
I.D. – Diámetro interior
A – No es pieza de este grupo
B – Utilizado según la demanda
C – Indica cambio
D – Se pide por metro
E – Se pide por centímetro
F – No se muestra
G – Se pide por pulgada
I – Ver "Hose Fabrication Guide"
M – Pieza métrica
R – Puede estar disponible como pieza remanufacturada
Y – Ilustración separada
Z – No se suministra por separado

SIS *Nueva Característica*

14.<END>

Este símbolo indica el final de un elemento de información.

NOTA:

Las contínuas mejoras y adelantos en diseño podrían originar cambios a su máquina que no se incluyen en esta publicación. Cuando tenga alguna pregunta acerca de su producto Caterpillar o de esta publicación, consulte al distribuidor Caterpillar para obtener la información más reciente.

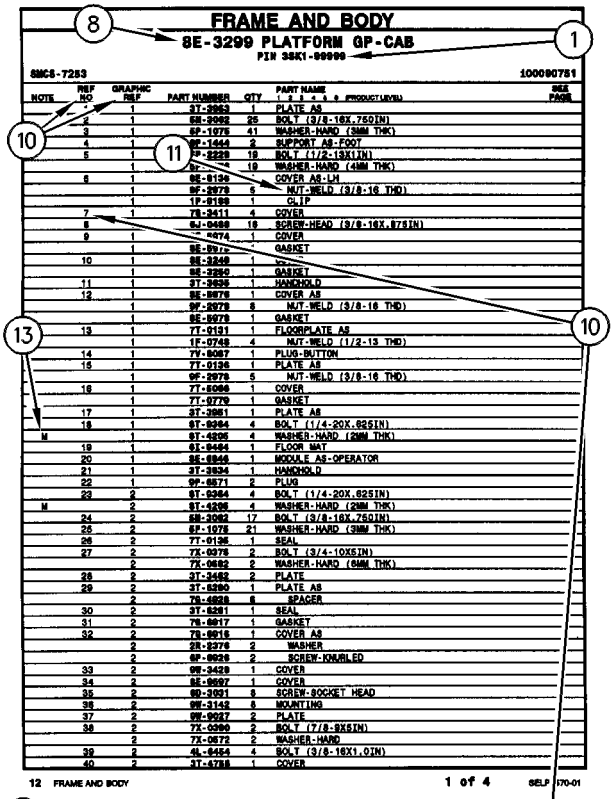

FRAME AND BODY

8E-3299 PLATFORM GP-CAB

PIN 38K1-99999

SMCS-7283 100090751

NOTE	REF NO	GRAPHIC REF	PART NUMBER	QTY	PART NAME 1 2 3 4 5 6 (PRODUCT LEVEL)	SEE PAGE
	1	1	3T-3953	1	PLATE AS	
	2	1	6B-3062	25	BOLT (3/8-16X.750IN)	
	3	1	6P-1075	41	WASHER-HARD (9MM THK)	
	4	1	9F-1444	2	SUPPORT AS-FOOT	
	5	1	7P-2229	19	BOLT (1/2-13X1IN)	
		1	6P-[illegible]	19	WASHER-HARD (4MM THK)	
	6	1	8E-8194	1	COVER AS-LH	
		1	9F-2979	5	NUT-WELD (3/8-16 THD)	
		1	1P-8199	1	CLIP	
	7	1	7S-3411	4	COVER	
	8		6J-0468	19	SCREW-HEAD (3/8-16X.875IN)	
	9	1	[illegible]-4674	1	COVER	
		1	8E-8972	[illegible]	GASKET	
	10	1	8E-3248	1	[illegible]	
		1	8E-3250	1	GASKET	
	11	1	3T-3939	1	HANDHOLD	
	12	1	8E-8978	1	COVER AS	
		1	9F-2978	8	NUT-WELD (3/8-16 THD)	
		1	8E-8978	1	GASKET	
	13	1	7T-0131	1	FLOORPLATE AS	
		1	1F-0748	4	NUT-WELD (1/2-13 THD)	
	14	1	7V-8087	1	PLUG-BUTTON	
	15	1	7T-0136	1	PLATE AS	
		1	9F-2979	5	NUT-WELD (3/8-16 THD)	
	16	1	7T-8098	1	COVER	
		1	7T-0779	1	GASKET	
	17	1	3T-3951	1	PLATE AS	
	18	1	6T-8364	4	BOLT (1/4-20X.625IN)	
M		1	6T-4205	4	WASHER-HARD (2MM THK)	
	19	1	8X-8464	1	FLOOR MAT	
	20	1	8E-8946	1	MODULE AS-OPERATOR	
	21	1	3T-3934	1	HANDHOLD	
	22	1	9P-8871	2	PLUG	
	23	2	6T-8364	4	BOLT (1/4-20X.625IN)	
M		2	6T-4205	4	WASHER-HARD (2MM THK)	
	24	2	6B-3062	17	BOLT (3/8-16X.750IN)	
	25	2	6P-1075	21	WASHER-HARD (9MM THK)	
	26	2	7T-0136	1	SEAL	
	27	2	7X-0378	2	BOLT (3/4-10X5IN)	
		2	7X-0682	2	WASHER-HARD (6MM THK)	
	28	2	3T-3482	2	PLATE	
	29	2	3T-8290	1	PLATE AS	
		2	7S-4888	6	SPACER	
	30	2	3T-8291	1	SEAL	
	31	2	7S-8817	1	GASKET	
	32	2	7S-8916	1	COVER AS	
		2	2R-2376	2	WASHER	
		2	6P-8826	2	SCREW-KNURLED	
	33	2	9W-3429	1	COVER	
	34	2	8E-8897	1	COVER	
	35	2	9D-3991	8	SCREW-SOCKET HEAD	
	36	2	9W-3142	8	MOUNTING	
	37	2	9W-9027	2	PLATE	
	38	2	7X-0390	2	BOLT (7/8-9X6IN)	
		2	7X-0672	2	WASHER-HARD	
	39	2	4L-4454	4	BOLT (3/8-16X1.0IN)	
	40	2	3T-4788	1	COVER	

12 FRAME AND BODY 1 of 4 SELP4570-01

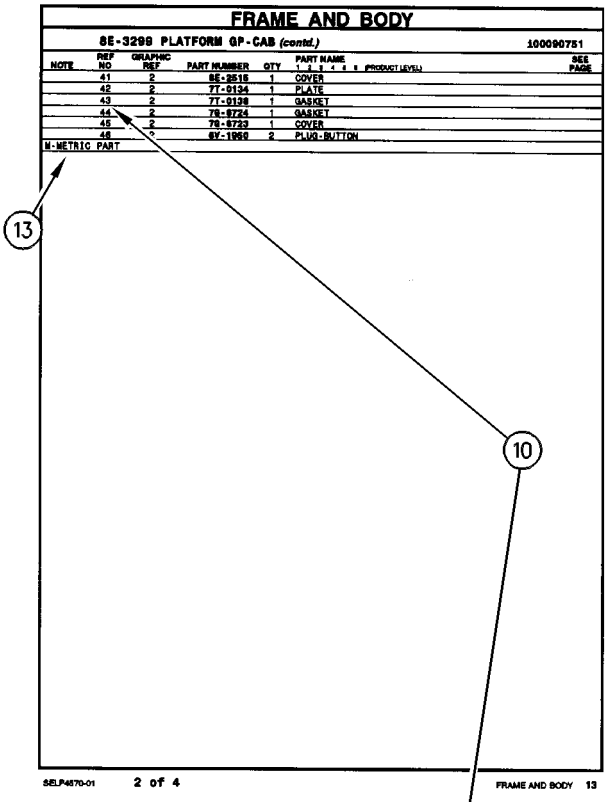

FRAME AND BODY

8E-3299 PLATFORM GP-CAB (contd.) 100090751

NOTE	REF NO	GRAPHIC REF	PART NUMBER	QTY	PART NAME 1 2 3 4 5 6 (PRODUCT LEVEL)	SEE PAGE
	41	2	8E-2515	1	COVER	
	42	2	7T-0134	1	PLATE	
	43	2	7T-0138	1	GASKET	
	44	2	7S-8724	1	GASKET	
	45	2	7S-8723	1	COVER	
	46	[illegible]	6V-1958	2	PLUG-BUTTON	
M-METRIC PART						

SELP4570-01 2 of 4 FRAME AND BODY 13

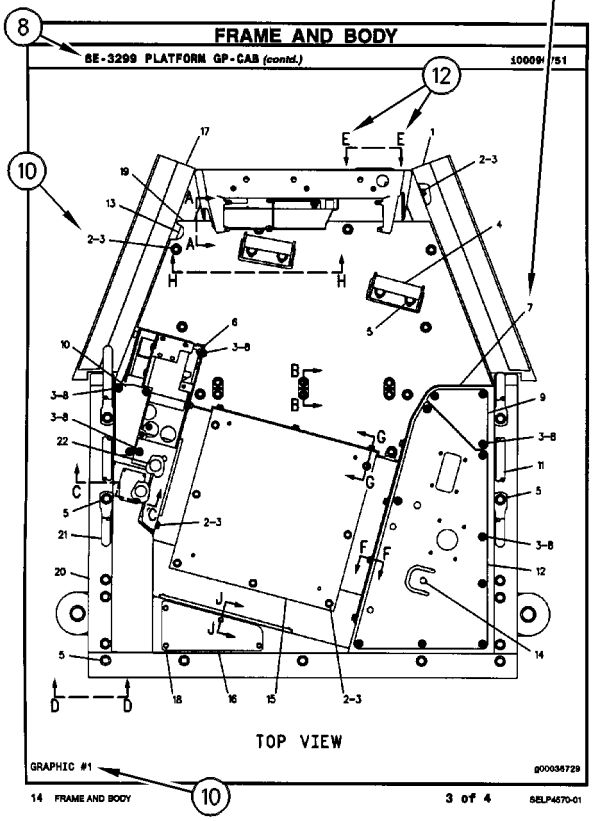

FRAME AND BODY

8E-3299 PLATFORM GP-CAB (contd.) 100090751

GRAPHIC #1 g00036729

14 FRAME AND BODY 3 of 4 SELP4570-01

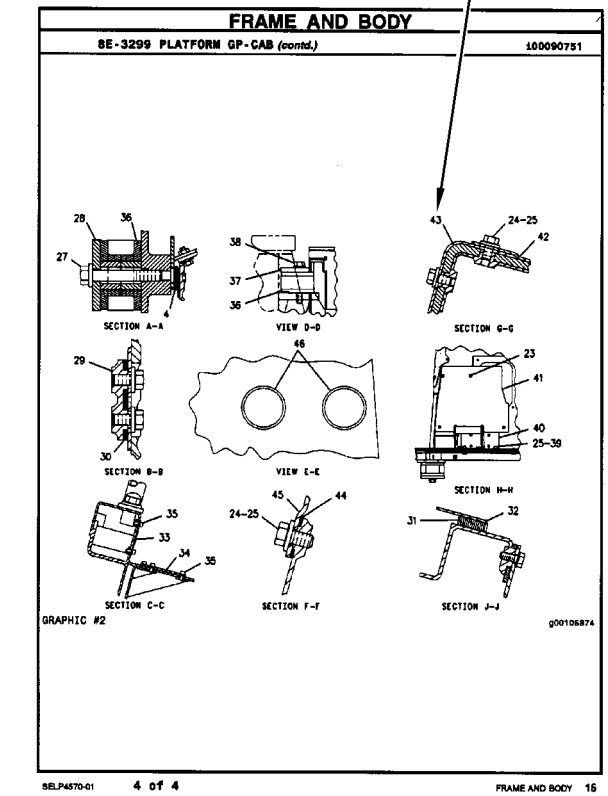

FRAME AND BODY

8E-3299 PLATFORM GP-CAB (contd.) 100090751

SECTION A-A VIEW D-D SECTION G-G

SECTION B-B VIEW E-E SECTION H-H

SECTION C-C SECTION F-F SECTION J-J

GRAPHIC #2 g00105874

SELP4570-01 4 of 4 FRAME AND BODY 16

INFORMAÇÃO GERAL

1. IDENTIFICAÇÃO DA MÁQUINA

As máquinas Caterpillar são identificadas pelos Números de Informação do Produto (PIN). Alguns componentes incluídos numa máquina podem ser identificados por Números de Série (S/N). Componentes típicos que serão enumerados com números de série incluem motores, transmissões, lâminas e ríperes. Além do número de série, a máquina e o motor são ainda identificados por números de arranjo e, em alguns casos, números de modificações. Tais números encontram-se na(s) placa(s) de identificação do produto e na placa mestre no compartimento do operador.

Novidades

A partir do primeiro trimestre de 2001 o Número de Identificação de Produto da Caterpillar (PIN) precisa ser mudado de 8 para 17 caracteres. Esforçando-se para fornecer uma identificação uniforme de equipamentos, a Caterpillar e outros fabricantes de equipamento de construção estão mudando para atender a versão mais atualizada do padrão de identificação de produtos. Os números de PIN para produtos de aplicações não rodoviárias são definidos pela ISO 10261. O novo formato de número PIN será adotado em todas as máquinas e grupos geradores Caterpillar. As placas e as marcações do chassi mostrarão os 17 dígitos de PIN. O novo formato terá a seguinte disposição:

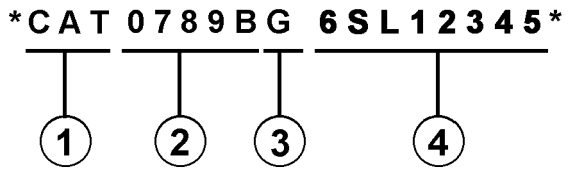

Onde:

1. Código de Fabricação Mundial da Caterpillar (dígitos 1-3)

2. Descrição da Máquina (dígitos 4-8)

3. Dígito de Verificação (dígito 9)

4. Seção de Indicador da Máquina (MIS) ou Número de Seqüência de Produto (dígitos 10-17). Estes eram anteriormente chamados de Número de Série.

Máquinas e grupos geradores produzidos antes do primeiro trimestre de 2001 manterão o formato de 8 caracteres de PIN.

Componentes como motores, transmissões, eixos, ferramentas de trabalho, etc. continuarão a usar Número de Série (S/N) com oito caracteres.

2. COMO OBTER PEÇAS

⚠ CUIDADO

Quando peças de substituição são exigidas para este produto, a Caterpillar recomenda a utilização de peças de substituição Caterpillar ou peças com as especificações equivalentes incluindo, mas não limitadas, à dimensões físicas, tipos, resistência e materiais.

A inobservância desta advertência poderá resultar em falhas prematuras, danos ao produto, ferimentos ou morte.

As Peças de Reposição de Qualidade Caterpillar encontram-se disponíveis nos revendedores Caterpillar no mundo inteiro. Seus estoques de peças são atualizados e incluem todas as peças normalmente necessárias para proteger seu investimento em máquinas Caterpillar. Alguns revendedores podem oferecer jogos de reparo ou peças de troca/remanufaturadas disponíveis como uma opção da alternativa de reparo mais eficaz para uma situação específica. Ao encomendar peças, seu pedido deve especificar a quantidade, o número e o nome da peça e o número de série/número de identificação do produto referentes à máquina para a qual as peças se destinam.

3. ORGANIZAÇÃO DO MANUAL DE PEÇAS

A informação do produto neste manual é apresentada em forma de "elementos de informação" que representam todos os componentes para o modelo específico. Arranjo de Motor e Grupo de Assento são exemplos de elementos de informação. Os elementos de informação são organizados em ordem alfabética por nome de peça ou secundariamente, por número de peça incluído em cada seção principal do manual.

4. LISTA DE CONTEÚDOS

A Lista de Conteúdos (TOC) se encontra no princípio do manual. A Lista de Conteúdos (TOC) relaciona em cada seção do manual uma lista completa com todos os elementos de informação organizados conforme aparecem no manual. Números de página são fornecidos para que se tenha referência rápida de ilustrações de peças detalhadas e listas de conteúdos que podem receber serviço de manutenção.

5. ÍNDICE DE PEÇAS DE MANUTENÇÃO

O Índice de Peças de Manutenção, localizado perto do princípio do manual, faz referência aos números de peça de manutenção usados com maior frequência, fornecendo uma descrição, a quantidade, o uso e o número de página. Esta informação é organizada com a descrição da peça em ordem alfabética.

6. ÍNDICE

O Índice localizado perto do princípio do manual, consiste de uma lista em ordem alfabética de todos os elementos de informação incluídos no manual. Números de página são fornecidos para que se tenha referência rápida de ilustrações de peças detalhadas e listas de conteúdos que podem receber serviço de manutenção.

7. ÍNDICE DE NÚMERO DE PEÇA

Um índice numérico relacionando todos os números de peça e a(s) página(s) correspondentes, aparece no final do manual.

8. LEGENDAS

As legendas localizadas no início de cada elemento de informação identificam o número e o nome de peça, juntamente com informação descritiva adicional. Informações sobre o Número de Informação do Produto (PIN) e o Número de Série (S/N) encontradas em cada legenda devem ser usadas para selecionar a informação correta sobre uma máquina específica. Opções de substituição no campo, identificação de componentes de acessórios opcionais e informações sobre onde são utilizados ("parte de") são também fornecidas.

A primeira linha de uma legenda é indicada em tipo maior para indicar o princípio de um elemento de informação. Legendas para páginas adicionais que podem ser necessárias para ilustrar um elemento de informação serão apresentadas em tipo padrão e incluirão o termo *(continua)* .

9. NÃO DISPONÍVEL SEPARADAMENTE

Em alguns casos, é necessário mostrar peças não disponíveis separadamente que têm uma ligação com listas de conteúdos de nível inferior que podem receber serviço de manutenção. Os números de peça destes componentes não disponíveis aparecerão em *itálico* , a fim de indicar que não estão disponíveis.

10. NÙMEROS DE REFERÊNCIA À LISTA DE PEÇAS

Os números indicados na coluna Ref No (No. de Referência) correspondem-se aos números usados no(s) gráfico(s) correspondente(s). Um sufixo com letras pode ser acrescentado a um número de referência para identificar itens de conteúdo de nível inferior. Os números indicados na coluna Graphic Ref (Referência de Gráfico) referem-se ao identificador de número de gráfico presente no canto esquerdo inferior de cada ilustração. O número de Referência de Gráfico pode ser usado em combinação com o item Ref No para determinar-se o número de peça correto. Poderá haver omissão intencional de um número de referência (Ref No) de uma lista de conteúdos uma vez que as informações são atualizadas para refletir os números de peça mais recentes que podem receber serviço de manutenção.

11. NOMES DE PEÇAS DESALINHADOS

Quando um nome de peça encontra-se desalinhado numa lista de peças, significa que tal item faz parte do (está incluído no) grupo ou conjunto sob o qual está relacionado.

12. LETRAS DE REFERÊNCIA NAS ILUSTRAÇÕES

Quando necessário, as ilustrações contêm letras de referência (A, B, C, etc.) que são utilizadas para seguir tubulações e cabos elétricos de um ponto a outro. Também foram utilizadas para indicar onde se pode reconectar as ilustrações que foram separadas.

13. ABREVIAÇÕES E SÍMBOLOS

O.D. – "Outside Diameter" (Diâmetro Externo)
I.D. – "Inside Diameter" (Diâmetro Interno)
A – Não faz parte deste grupo
B – Use conforme necessário
C – Indica modificação
D – Vendido por metro
E – Vendido por centímetro
F – Não ilustrado
G – Vendido por polegada
I – Consulte o seu revendedor quanto a mangueira
M – Peça métrica
R – Peça remanufaturada pode estar disponível; consulte o seu revendedor Cat
Y – Ilustração separada
Z – Não disponível separadamente

SIS *Novidades*

14. <END>

Este símbolo indica o final de um elemento de informação.

NOTA:

Os contínuos aperfeiçoamentos e avanços no projeto do produto podem ocasionar modificações em sua máquina que talvez ainda não estejam incluídas nesta publicação. Sempre que surgirem dúvidas quanto a um produto Caterpillar ou quanto à presente publicação, consulte o seu revendedor Caterpillar para obter as informações mais recentes disponíveis.

FRAME AND BODY

8E-3299 PLATFORM GP-CAB

PIN 38K1-99999

SMCS-7283 — 100090751

NOTE	REF NO	GRAPHIC REF	PART NUMBER	QTY	PART NAME (1 2 3 4 5 6 PRODUCT LEVEL)	SEE PAGE
	1	1	3T-3953	1	PLATE AS	
	2	1	6B-3062	25	BOLT (3/8-16X.750IN)	
	3	1	6P-1075	41	WASHER-HARD (9MM THK)	
	4	1	9F-1444	2	SUPPORT AS-FOOT	
	5	1	7P-2229	19	BOLT (1/2-13X1IN)	
		1	6P-1	19	WASHER-HARD (4MM THK)	
	6	1	8E-8134	1	COVER AS-LH	
		1	9F-2979	5	NUT-WELD (3/8-16 THD)	
		1	1P-8188	1	CLIP	
	7	1	7S-3411	4	COVER	
	8		6J-0468	19	SCREW-HEAD (3/8-16X.875IN)	
	9	1	[illegible]474	1	COVER	
		1	8E-8972	1	GASKET	
	10	1	8E-3248	1	[illegible]	
		1	8E-3250	1	GASKET	
	11	1	3T-3939	1	HANDHOLD	
	12	1	8E-8978	1	COVER AS	
		1	9F-2978	8	NUT-WELD (3/8-16 THD)	
		1	8E-8978	1	GASKET	
	13	1	7T-0131	1	FLOORPLATE AS	
		1	1F-0748	4	NUT-WELD (1/2-13 THD)	
	14	1	7V-8087	1	PLUG-BUTTON	
	15	1	7T-0136	1	PLATE AS	
		1	9F-2979	5	NUT-WELD (3/8-16 THD)	
	16	1	7T-8098	1	COVER	
		1	7T-0779	1	GASKET	
	17	1	3T-3951	1	PLATE AS	
	18	1	6T-8364	4	BOLT (1/4-20X.625IN)	
M		1	9T-4205	4	WASHER-HARD (2MM THK)	
	19	1	8X-8464	1	FLOOR MAT	
	20	1	8E-8946	1	MODULE AS-OPERATOR	
	21	1	3T-3934	1	HANDHOLD	
	22	1	9P-8871	2	PLUG	
	23	2	6T-8364	4	BOLT (1/4-20X.625IN)	
M		2	9T-4205	4	WASHER-HARD (2MM THK)	
	24	2	6B-3062	17	BOLT (3/8-16X.750IN)	
	25	2	6P-1075	21	WASHER-HARD (9MM THK)	
	26	2	7T-0136	1	SEAL	
	27	2	7X-0378	2	BOLT (3/4-10X5IN)	
		2	7X-0682	2	WASHER-HARD (6MM THK)	
	28	2	3T-3482	2	PLATE	
	29	2	3T-8290	1	PLATE AS	
		2	7S-4838	6	SPACER	
	30	2	3T-8291	1	SEAL	
	31	2	7S-8817	1	GASKET	
	32	2	7S-8916	1	COVER AS	
		2	2R-2376	2	WASHER	
		2	6P-8826	2	SCREW-KNURLED	
	33	2	9W-3429	1	COVER	
	34	2	8E-8937	1	COVER	
	35	2	9D-3931	8	SCREW-SOCKET HEAD	
	36	2	9W-3142	8	MOUNTING	
	37	2	9W-9027	2	PLATE	
	38	2	7X-0360	2	BOLT (7/8-9X5IN)	
		2	7X-0672	2	WASHER-HARD	
	39	2	4L-4454	4	BOLT (3/8-16X1.0IN)	
	40	2	3T-4788	1	COVER	

12 FRAME AND BODY — 1 of 4 — SELP4570-01

FRAME AND BODY

8E-3299 PLATFORM GP-CAB (contd.)

100090751

NOTE	REF NO	GRAPHIC REF	PART NUMBER	QTY	PART NAME (1 2 3 4 5 6 PRODUCT LEVEL)	SEE PAGE
	41	2	8E-2515	1	COVER	
	42	2	7T-0134	1	PLATE	
	43	2	7T-0138	1	GASKET	
	44	2	7S-8724	1	GASKET	
	45	2	7S-8723	1	COVER	
	46		6V-1958	2	PLUG-BUTTON	

M-METRIC PART

SELP4570-01 — 2 of 4 — FRAME AND BODY 13

FRAME AND BODY

8E-3299 PLATFORM GP-CAB (contd.)

100090751

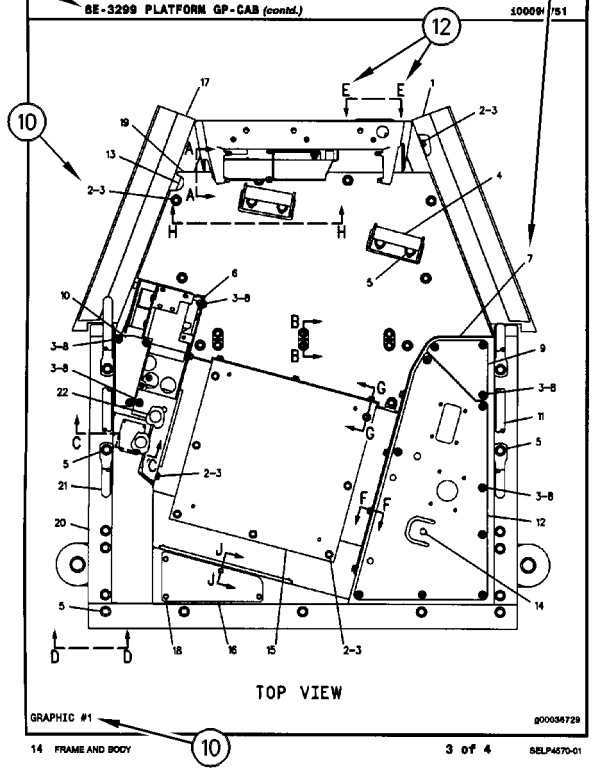

GRAPHIC #1 — g00036729

14 FRAME AND BODY — 3 of 4 — SELP4570-01

FRAME AND BODY

8E-3299 PLATFORM GP-CAB (contd.)

100090751

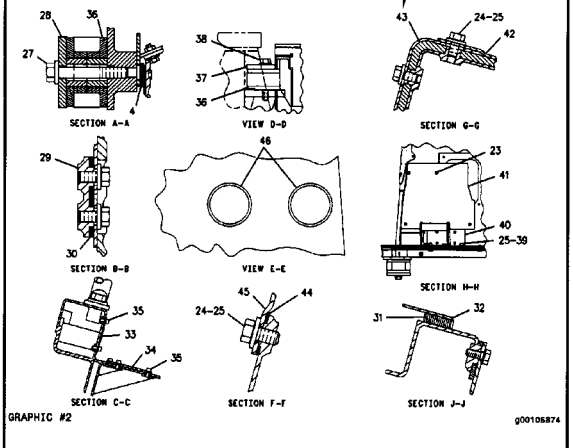

GRAPHIC #2 — g00105874

SELP4570-01 — 4 of 4 — FRAME AND BODY 16

ALLGEMEINE HINWEISE

1. MASCHINENKENNZEICHNUNG

Caterpillar-Maschinen sind mit PRODUCT IDENTIFICATION NUMBERS (PIN) (Produkt-Identnummern) gekennzeichnet. Einige Baugruppen, z.B. Motoren, Getriebe, Planierschilde und Aufreißer, sind mit SERIAL NUMBERS (S/N) (Seriennummern) gekennzeichnet. An der Maschine und am Motor befinden sich außerdem ARRANGEMENT NUMBERS (Ausrüstungsnummern) sowie in einigen Fällen MODIFICATION NUMBERS (Änderungsnummern). Sie befinden sich auf den PIN-Schildern und auf dem Typenschild im Fahrerhaus.

Bei Ersatzteilbestellungen müssen dem Händler alle diese Nummern zur Verfügung gestellt werden.

SIS ***Neu im Parts Manual***

Vom ersten Quartal 2001 ab wurde die Caterpillar Produkt-Identnummer (PIN) von 8 auf 17 Zeichen geändert. Um zur Standardisierung der Produkt-Identnummer beizutragen, sind Caterpillar und andere Baumaschinenhersteller bestrebt, die aktuellste Norm zur Produkt-Identnummerierung einzuführen. Produkt-Identnummern für Baumaschinen sind durch ISO 10261 definiert. Das neue Format der Produkt-Identnummern gilt für alle Caterpillar-Maschinen und -Stromaggregate. Die Produkt-Identschilder und -Identrahmenmarkierung enthalten die aus 17 Zeichen bestehende Identnummer. Das neue Format hat folgende Abschnitte:

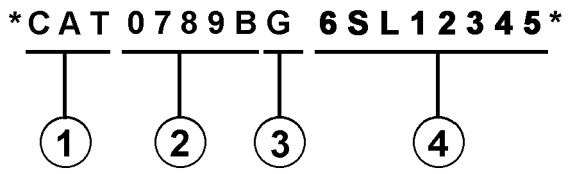

Abschnitte:

1. Caterpillars weltweiter Herstellungscode (Zeichen 1-3)

2. Modell (Zeichen 4-8)

3. Kontrollzeichen (Zeichen 9)

4. Maschinenspezifische Kennung (MIS) oder Produktsequenznummer (Zeichen 10-17). Diese wurde früher als Seriennummer bezeichnet.

Für vor dem ersten Quartal 2001 hergestellte Maschinen und Stromaggregate wird das aus 8 Zeichen bestehende PIN-Format beibehalten.

Bauteile wie z.B. Motoren, Getriebe, Achsen sowie Arbeitsgeräte werden weiterhin eine aus 8 Zeichen bestehende Seriennummer (S/N) aufweisen.

2. BESTELLEN VON ERSATZTEILEN

⚠ WARNUNG

Wenn für diese Maschine Ersatzteile benötigt werden, empfiehlt Caterpillar, ausschließlich Caterpillar-Ersatzteile oder solche zu verwenden, die die gleichen technischen Merkmale hinsichtlich Typ, Festigkeit, Werkzeugeigenschaften und die gleichen Maße aufweisen.

Bei Nichtbeachtung dieser Warnung besteht Verletzungs- oder sogar Lebensgefahr! Ferner kann Nichtbeachtung vorzeitige Ausfälle der Teile und Beschädigung der Maschine zur Folge haben.

Original Caterpillar-Ersatzteile können weltweit bei jedem Caterpillar-Händlern bestellt werden. Die umfangreichen Händlerlager enthalten normalerweise alle Teile, die Sie für Ihre Caterpillar-Maschine benötigen. Einige Händler bieten Reparatursätze, Austausch- oder werküberholte Teile an, so daß Sie eine Auswahl unter verschiedenen Reparaturmöglichkeiten treffen können. Ihre Bestellung muß folgende Angaben enthalten: Anzahl der benötigten Teile, Bestellnummer, Bezeichnung des Teils, Serien-Nr./Produkt-Ident-Nr., Ausrüstungs-Nr. und Änderungs-Nr. der Maschine, für die diese Teile benötigt werden.

3. AUFBAU DES PARTS MANUAL

Die Produktinformationen für alle Komponenten eines bestimmten Modells sind in INFORMATION ELEMENTS (Informationseinheiten) gegliedert. ENGINE ARRANGEMENT (Motorausführung) und SEAT GROUP (Fahrersitz) sind Beispiele für solche Informationseinheiten. Sie sind innerhalb jeder Gruppe alphabetisch, entsprechend der Ersatzteilbezeichnung, und zusätzlich numerisch, entsprechend der Ersatzteilnummer, geordnet.

4. INHALTSVERZEICHNIS

Das Inhaltsverzeichnis befindet sich am Anfang des Buches. Im Inhaltsverzeichnis werden die einzelnen Abschnitte des Buches aufgeführt. Die Abschnitte enthalten eine vollständige Aufstellung aller Informationseinheiten. Diese sind entsprechend ihrem Erscheinen im Buch geordnet. Das Inhaltsverzeichnis enthält Seitenangaben für Schnellverweise auf detaillierte Abbildungen und Teillisten.

ALLGEMEINE HINWEISE

5. INDEX FÜR WARTUNGSTEILE

Der Index für Wartungsteile vorn im Buch enthält die Bestellnummern, Seitenangaben, Mengenangaben und Informationen über den Einsatzbereich für die am häufigsten benötigten Ersatzteile. Die Angaben sind alphabetisch entsprechend der Teilebezeichnung geordnet.

6. INDEX

Der Index vorn im Buch enthält eine alphabetische Liste aller Informationseinheiten. Er enthält Seitenangaben für Schnellverweise auf detaillierte Abbildungen und Teillisten.

7. INDEX FÜR BESTELLNUMMERN

Hinten im Buch befindet sich ein numerischer Index, mit allen Bestellnummern und dem Hinweis auf die Seite, auf der sich die betreffende Abbildung befindet.

8. ÜBERSCHRIFTEN

Die Überschriften, die sich am Anfang jeder der Informationseinheiten befinden, enthalten Bestellnummern, Ersatzteilbezeichnungen und zusätzliche beschreibende Informationen. Produkt-Ident- und Seriennummern in den Überschriften sollten zur Auswahl der richtigen Informationen für die betreffende Maschine verwendet werden. Die Überschriften enthalten außerdem Informationen über möglichen Außendienstersatz, mögliche Baugerätekomponenten und die Baugruppe, zu der das Teil gehört.

Die erste Zeile einer Überschrift erscheint in einer größeren Schriftart, um den Anfang einer Informationseinheit zu kennzeichnen. Überschriften für zusätzliche Seiten, die zur Erläuterung einer Informationseinheit notwendig sind, erscheinen in normaler Schriftart und enthalten den Begriff "(contd.)".

9. NICHT EINZELN LIEFERBARE TEILE

In einigen Fällen ist es notwendig nicht lieferbare Teile, die selbst mit einer eigenen Teilliste im Buch vertreten sind, aufzuführen. Die Bestellnummern dieser nicht einzeln lieferbaren Teile erscheinen kursiv, wodurch angezeigt wird, daß sie nur in Verbindung mit anderen Teilen lieferbar sind.

10. REFERENZNUMMER FÜR ERSATZTEILE

Die Zahlen, die in der Spalte "Ref No" aufgeführt sind, stimmen mit den Zahlen in den beigefügten Abbildungen überein. Ein Buchstaben-Suffix kann zu einer Referenznummer hinzugefügt werden, um zu kennzeichnen, daß das Teil mit einer eigenen Teilliste im Buch aufgeführt ist. Die in der Spalte "Graphic Ref" angeführten Zahlen verweisen auf die Identifikationsnummer der Abbildung, die sich in der linken unteren Ecke der Abbildung befindet. Diese Nummer kann zusammen mit der Referenznummer des Teils angegeben werden, um die richtige Ersatzteilnummer zu ermitteln. Referenznummern können absichtlich weggelassen werden, da die Nummern der lieferbaren Ersatzteile ständig aktualisiert werden.

11. EINGERÜCKTE BEZEICHNUNGEN

Wenn eine Bezeichnung eingerückt ist, wird dadurch angezeigt, daß das Teil zu einer Baugruppe gehört, unter deren Bezeichnung es eingerückt ist.

12. REFERENZBUCHSTABEN

Falls erforderlich sind in den Abbildungen Referenzbuchstaben enthalten (z.B. A, B, C, usw.), die Leitungen und Kabelbäume von einem Punkt zum anderen verfolgen. Außerdem geben sie die Stelle an, an der getrennte Abbildungen fortgesetzt werden.

13. ABKÜRZUNGEN UND SYMBOLE

O.D. – Außendurchmesser
I.D. – Innendurchmesser
A – kein Teil dieser Gruppe
B – nach Bedarf verwenden
C – Hinweis auf eine Änderung
D – in Meter-Länge bestellen
E – in Zentimeter-Länge bestellen
F – nicht gezeigt
G – in Zoll-Länge bestellen
I – siehe "Hose Fabrication Guide"
M – metrisches Teil
R – werküberholtes Teil unter Umständen lieferbar
Y – separate Abbildung
Z – nicht einzeln lieferbar

SIS *Neu im Parts Manual*

14. <END>

Dieses Symbol zeigt das Ende eines Informationselements an.

ANMERKUNG:

Ständig vorgenommene Verbesserungen und Weiterentwicklungen an Ihrer Maschine können Änderungen verursachen, die in der vorliegenden Ausgabe noch nicht berücksichtigt sind. Fragen zu Ihrer Caterpillar-Maschine oder diesem Ersatzteilbuch beantwortet Ihr Caterpillar-Händler.

ALLGEMEINE HINWEISE

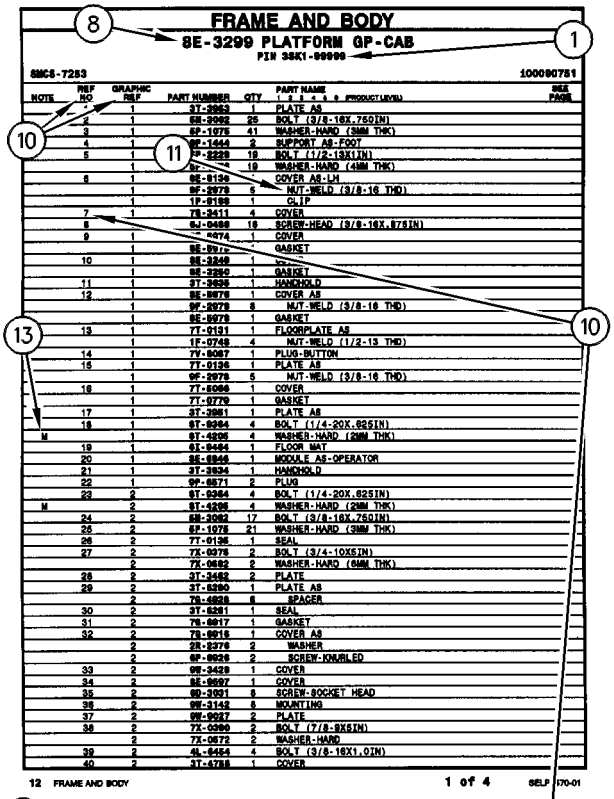

FRAME AND BODY

8E-3299 PLATFORM GP-CAB

PIN 38K1-99999

SMCS-7283 100090751

NOTE	REF NO	GRAPHIC REF	PART NUMBER	QTY	PART NAME 1 2 3 4 5 6 (PRODUCT LEVEL)	SEE PAGE
	1	1	3T-3953	1	PLATE AS	
	2	1	6B-3062	25	BOLT (3/8-16X.750IN)	
	3	1	6P-1075	41	WASHER-HARD (9MM THK)	
	4	1	9F-1444	2	SUPPORT AS-FOOT	
	5	1	7P-2229	19	BOLT (1/2-13X1IN)	
		1	6P-[illegible]	19	WASHER-HARD (4MM THK)	
	6	1	8E-8194	1	COVER AS-LH	
		1	9F-2979	5	NUT-WELD (3/8-16 THD)	
		1	1P-8199	1	CLIP	
	7	1	7S-2411	4	COVER	
	8		6J-0468	19	SCREW-HEAD (3/8-16X.875IN)	
	9	1	[illegible]-4674	1	COVER	
		1	8E-8972	1	GASKET	
	10	1	8E-3248	1	[illegible]	
		1	8E-3250	1	GASKET	
	11	1	3T-3939	1	HANDHOLD	
	12	1	8E-8978	1	COVER AS	
		1	9F-2978	8	NUT-WELD (3/8-16 THD)	
		1	8E-8979	1	GASKET	
	13	1	7T-0131	1	FLOORPLATE AS	
		1	1F-0748	4	NUT-WELD (1/2-13 THD)	
	14	1	7Y-8087	1	PLUG-BUTTON	
	15	1	7T-0136	1	PLATE AS	
		1	9F-2979	5	NUT-WELD (3/8-16 THD)	
	16	1	7T-8098	1	COVER	
		1	7T-0779	1	GASKET	
	17	1	3T-3951	1	PLATE AS	
	18	1	6T-8364	4	BOLT (1/4-20X.625IN)	
M		1	6T-4205	4	WASHER-HARD (2MM THK)	
	19	1	8X-8464	1	FLOOR MAT	
	20	1	8E-8946	1	MODULE AS-OPERATOR	
	21	1	3T-3934	1	HANDHOLD	
	22	1	9P-8871	2	PLUG	
	23	2	6T-8364	4	BOLT (1/4-20X.625IN)	
M		2	6T-4205	4	WASHER-HARD (2MM THK)	
	24	2	6B-3062	17	BOLT (3/8-16X.750IN)	
	25	2	6P-1075	21	WASHER-HARD (9MM THK)	
	26	2	7T-0136	1	SEAL	
	27	2	7X-0378	2	BOLT (3/4-10X5IN)	
		2	7X-0682	2	WASHER-HARD (6MM THK)	
	28	2	3T-3482	2	PLATE	
	29	2	3T-8290	1	PLATE AS	
		2	7S-4838	6	SPACER	
	30	2	3T-8291	1	SEAL	
	31	2	7S-8817	1	GASKET	
	32	2	7S-8916	1	COVER AS	
		2	2R-2376	2	WASHER	
		2	6P-8826	2	SCREW-KNURLED	
	33	2	9W-3429	1	COVER	
	34	2	8E-8697	1	COVER	
	35	2	9D-3931	8	SCREW-SOCKET HEAD	
	36	2	9W-3142	8	MOUNTING	
	37	2	9W-9027	2	PLATE	
	38	2	7X-0360	2	BOLT (7/8-9X6IN)	
		2	7X-0672	2	WASHER-HARD	
	39	2	6L-6454	4	BOLT (3/8-16X1.0IN)	
	40	2	3T-4788	1	COVER	

12 FRAME AND BODY 1 of 4 SELP4570-01

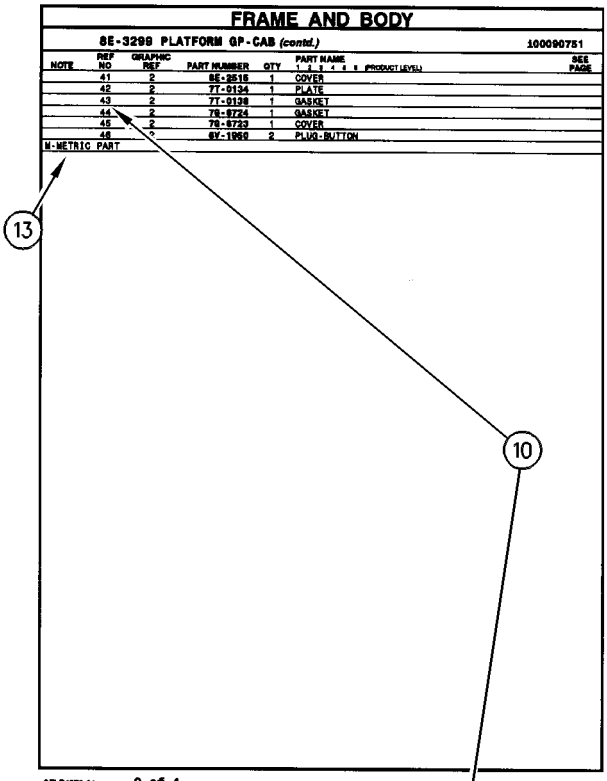

FRAME AND BODY

8E-3299 PLATFORM GP-CAB (contd.) 100090751

NOTE	REF NO	GRAPHIC REF	PART NUMBER	QTY	PART NAME 1 2 3 4 5 6 (PRODUCT LEVEL)	SEE PAGE
	41	2	8E-2515	1	COVER	
	42	2	7T-0134	1	PLATE	
	43	2	7T-0138	1	GASKET	
	44	2	7S-8724	1	GASKET	
	45	2	7S-8723	1	COVER	
	46	[illegible]	6V-1958	2	PLUG-BUTTON	
M-METRIC PART						

SELP4570-01 2 of 4 FRAME AND BODY 13

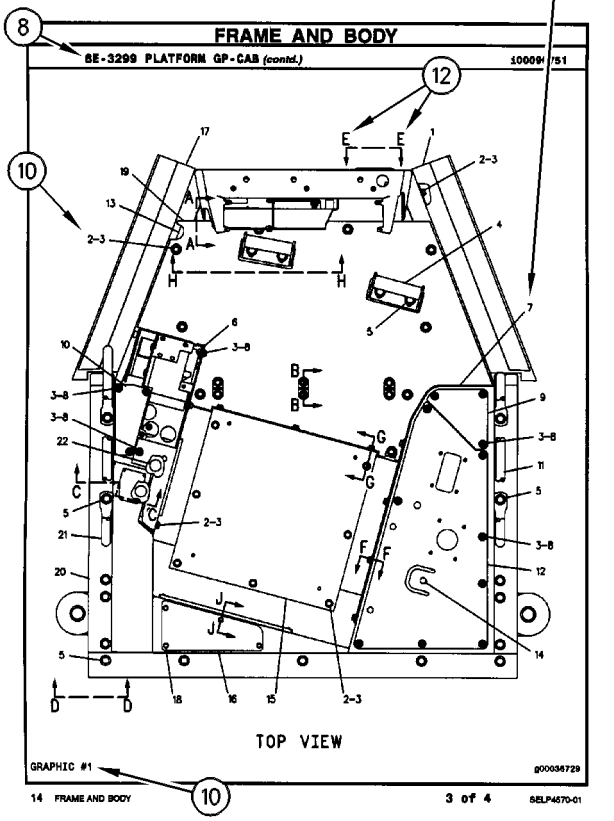

FRAME AND BODY

8E-3299 PLATFORM GP-CAB (contd.) 100090751

14 FRAME AND BODY 3 of 4 SELP4570-01

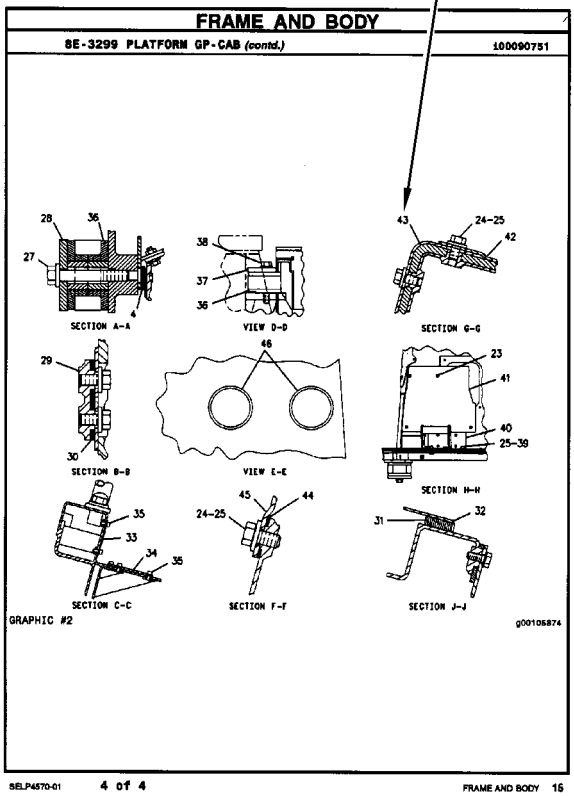

FRAME AND BODY

8E-3299 PLATFORM GP-CAB (contd.) 100090751

SELP4570-01 4 of 4 FRAME AND BODY 16

REMANUFACTURED COMPONENTS

As an option when making repairs consider Caterpillar Remanufactured Components. Components that are available through the Caterpillar Remanufactured Program are identified three ways in the parts book:

- with the letter R in the note field of the parts list
- with an R* at the beginning of the first line of the caption
- with an *R at the end of the first line of the caption

Typical components included in the Remanufacturing Program include:

ALTERNATORS
CONNECTING RODS
CRANKSHAFTS - UNDERSIZE
CRANKSHAFTS - UPGRADE TO NEW
CYLINDER HEADS
ELECTRONIC CONTROL MODULES (ECM)
ELECTRONIC SENSORS
FUEL INJECTORS
FUEL NOZZLES
FUEL PUMPS
GOVERNORS
OIL PUMPS
PISTONS
SHORT BLOCKS
STARTERS
TURBOCHARGERS - COMPLETE
TURBOCHARGER CARTRIDGES
WATER PUMPS

Caterpillar Remanufactured engines for many engine arrangements are also available.

OPTIONS DE RÉPARATION

COMPOSANTS RÉNOVÉS

Comme option de réparation, considérer les composants rénovés Caterpillar. Les composants disponibles dans le cadre du programme Caterpillar de composants rénovés sont identifiés de trois façons dans le catalogue de pièces:

- avec la lettre "R" dans l'espace note de la liste des pièces
- avec R* au début de la première ligne des légendes
- avec *R à la fin de la première ligne des légendes

Les composants suivants figurent parmi les composants typiques du programme de rénovation:

ALTERNATEURS
BIELLES
VILEBREQUINS - SOUS-DIMENSIONNÉS
VILEBREQUINS - REMIS À NEUF
CULASSES
MODULES DE COMMANDE ÉLECTRONIQUE (ECM)
CAPTEURS ÉLECTRONIQUES
INJECTEURS
TÊTES D'INJECTEURS
POMPES À CARBURANT
RÉGULATEURS
POMPES À HUILE
PISTONS
BLOCS EMBIELLÉS
DÉMARREURS
TURBOCOMPRESSEURS - COMPLETS
CARTOUCHES DE TURBOCOMPRESSEUR
POMPES À EAU

Des moteurs rénovés sont aussi disponibles pour plusieurs versions de moteur.

COMPONENTES REMANUFACTURADOS

Al hacer reparaciones, tenga en cuenta la opción de Componentes Remanufacturados Caterpillar. Los componentes que están disponibles por medio del programa de Productos Remanufacturados Caterpillar se identifican de tres maneras en el manual de piezas:

- con la letra R en el espacio de Nota de la lista de piezas
- con una R* al comienzo de la primera línea de la leyenda
- con una *R al final de la primera línea de la leyenda

Los componentes que se incluyen típicamente en el Programa de Productos Remanufacturados son:

ALTERNADORES
BIELAS
CIGÜEÑALES - BAJOMEDIDA
CIGÜEÑALES - REMANUFACTURADOS A NUEVO
CULATAS
MÓDULOS DE CONTROL ELECTRÓNICO (ECM)
SENSORES ELECTRONICOS
INYECTORES
BOQUILLAS
BOMBAS DE COMBUSTIBLE
REGULADORES
BOMBAS DE ACEITE
PISTONES
MONOBLOQUES
MOTORES DE ARRANQUE
TURBOCOMPRESORES - COMPLETOS
NÚCLEOS DE TURBOCOMPRESOR
BOMBAS DE AGUA

También hay disponibles motores Remanufacturados Caterpillar para muchas de las configuraciones de motores.

ALTERNATIVAS DE REPARO

COMPONENTES REMANUFATURADOS

Considere o uso de Componentes Remanufaturados Caterpillar ao efetuar reparos. Os componentes disponíveis através do Programa de Remanufatura Caterpillar são identificados de três formas no manual de peças:

- com um R na área da nota da lista de peças
- com um R* no princípio da primeira linha da legenda
- com um *R no final da primeira linha da legenda

Os componentes típicos que constam no Programa de Remanufatura incluem:

ALTERNADORES
BIELAS
VIRABREQUINS - SUBMEDIDAS
VIRABREQUINS - ATUALIZAÇÃO
CABEÇOTES
MÓDULOS DE CONTROLE ELETRÔNICO (ECM)
SENSORES ELETRÔNICOS
INJETORES DE COMBUSTÍVEL
BICOS DE ABASTECIMENTO DE COMBUSTÍVEL
BOMBAS DE COMBUSTÍVEL
GOVERNADORES
BOMBAS DE ÓLEO
PISTÕES
BLOCOS BÁSICOS DO MOTOR
MOTORES DE PARTIDA
TURBOALIMENTADORES - COMPLETOS
CARTUCHOS DE TURBOALIMENTADORES
BOMBAS D'ÁGUA

Motores Remanufaturados Caterpillar também encontram-se disponíveis para diversos arranjos de motor.

WERKÜBERHOLTE AT-PRODUKTE

Bei Reparaturen sollten werküberholte AT-Produkte von Caterpillar in Betracht gezogen werden. Die durch das AT-Programm von Caterpillar erhältlichen Teile sind im Parts Book auf drei verschiedene Arten gekennzeichnet:

- mit dem Buchstaben R in der Spalte NOTE der Ersatzteilliste
- mit einem R* am Anfang der ersten Zeile der Überschrift
- mit einem *R am Ende der ersten Zeile der Überschrift

Das AT-Programm umfaßt u.a. folgende Produkte:

DREHSTROMGENERATOREN
PLEUELSTANGEN
KURBELWELLEN - MIT UNTERMASS
KURBELWELLEN - MIT ORIGINALMASS
ZYLINDERKÖPFE
ELEKTRONISCHE STEUEREINHEITEN (EMC)
ELEKTRONISCHE SENSOREN
PUMPENDÜSEN
EINSPRITZDÜSEN
KRAFTSTOFFPUMPEN
DREHZAHLREGLER
ÖLPUMPEN
KOLBEN
TEILMOTOREN
ANLASSER
TURBOLADER - KOMPLETT
TURBOLADERLAUFZEUGE
KÜHLWASSERPUMPEN

Viele Motoren können durch werküberholte AT-Motoren von Caterpillar ersetzt werden.

SUPPLEMENTAL COOLANT ADDITIVES

CUSTOMER BENEFITS:

Protects against cavitation, foam, erosion, corrosion, and scale buildup in cooling systems.

- Provides measured coolant conditioner.

DESCRIPTION:

Additives deplete from the coolant with normal operation. For this reason, Supplemental Coolant Additives (SCA) must be added to all heavy duty coolants at regular intervals. In addition, when not using a fully formulated, pre-charged antifreeze, like Caterpillar's DEAC, an initial charge of SCA must be added to the cooling system. The amount of SCA added to the system is dependent on the capacity of the system.

The SCA for initial fill is provided as a liquid. SCA's for maintenance intervals are available in liquid form and as a spin-on element. (No Spin-on available for 3600 Family of Engines)

NOTE:

The amount of SCA added at initial fill is not the same as the amount added at maintenance intervals.

The coolant additive elements can be used with any ethylene or propylene glycol type antifreeze which meets ASTM D4985 or ASTM D5345 Specifications.

NOTE:

For use with standard heavy duty coolant only, not for use with Extended Life Coolant.

PARTS NEEDED:

Cooling System Capacity		Liquid SCA at Initial Fill	Liquid SCA at Maintenance*	Spin-on SCA Maintenance Element*
Liters	Gallons			
22-30	(6-8)	3P-2044 (1)	6V-3542 (1)	111-2370 (1)
30-38	(8-10)	3P-2044 (1) 6V-3542 (1)	111-2372 (1)	111-2369 (1)
38-49	(10-13)	3P-2044 (1) 8T-1589 (1)	111-2372 (1)	111-2369 (1)
49-64	(13-17)	3P-2044 (2)	8T-1589 (1)	9N-3368 (1)
64-83	(17-22)	3P-2044 (2) 8T-1589 (1)	111-2372 (1) 6V-3542 (1)	111-2371 (1)
83-114	(22-30)	3P-2044 (3) 8T-1589 (1)	3P-2044 (1)	9N-3718 (1)
114-163	(30-43)	3P-2044 (5)	3P-2044 (1) 6V-3542 (1)	111-2371 (2)
163-242	(43-64)	3P-2044 (8)	3P-2044 (2)	9N-3718 (2)

** Normal maintenance period is 250 hrs. See your Operation and Maintenance Manual for complete coolant maintenance instructions.*

( ) Indicates quantity required.

ADDITIFS POUR LIQUIDE DE REFROIDISSEMENT

AVANTAGES POUR LE CLIENT

L'additif protège contre la cavitation, la mousse, l'érosion, la corrosion et l'accumulation de dépôts dans le circuit de refroidissement.

- L'additif complémentaire fournit une quantité mesurée d'additif.

DESCRIPTION:

Les additifs s'épuisent pendant l'utilisation du moteur. C'est pourquoi l'on doit ajouter de l'additif au liquide de refroidissement/antigel pour moteurs diesel à intervalles réguliers. En plus, si l'on n'utilise pas de l'antigel entièrement formulé et pré-chargé comme le liquide de refroidissement/antigel Caterpillar pour moteurs diesel, une quantité initiale d'additif doit être ajoutée au circuit de refroidissement. La quantité d'additif à ajouter au circuit dépend de la contenance du circuit.

L'additif pour le remplissage initial est fourni sous forme liquide. L'additif pour l'entretien ultérieur est disponible sous forme liquide et sous forme d'élément à visser. (Il n'y a pas d'élément à visser pour les moteurs de la famille 3600).

NOTA:

La quantité d'additif à ajouter au remplissage initial diffère de la quantité à ajouter aux intervalles d'entretien.

Les éléments d'additif peuvent être utilisés avec tout antigel de type éthylène ou propylène-glycol conforme à la norme ASTM D4985 ou ASTM D5345.

NOTA:

A utiliser uniquement avec du liquide de refroidissement pour moteurs diesel et non avec le liquide de refroidissement longue durée.

PIÈCES NÉCESSAIRES:

Contenance du circuit de refroidissement		Additif liquide au remplissage initial	Additif liquide aux intervalles d'entretien*	Elément d'additif à visser aux intervalles d'entretien*
Litres	Gallons U.S.			
22-30	(6-8)	3P-2044 (1)	6V-3542 (1)	111-2370 (1)
30-38	(8-10)	3P-2044 (1) 6V-3542 (1)	111-2372 (1)	111-2369 (1)
38-49	(10-13)	3P-2044 (1) 8T-1589 (1)	111-2372 (1)	111-2369 (1)
49-64	(13-17)	3P-2044 (2)	8T-1589 (1)	9N-3368 (1)
64-83	(17-22)	3P-2044 (2) 8T-1589 (1)	111-2372 (1) 6V-3542 (1)	111-2371 (1)
83-114	(22-30)	3P-2044 (3) 8T-1589 (1)	3P-2044 (1)	9N-3718 (1)
114-163	(30-43)	3P-2044 (5)	3P-2044 (1) 6V-3542 (1)	111-2371 (2)
163-242	(43-64)	3P-2044 (8)	3P-2044 (2)	9N-3718 (2)

** L'intervalle d'entretien normal est de 250 heures-service. Voir le Guide d'utilisation et d'entretien pour de plus amples renseignements concernant l'entretien du circuit de refroidissement.*

( ) Indique la quantité exigée.

ADITIVOS DE REFRIGERANTE SUPLEMENTARIOS

VENTAJAS PARA EL USUARIO:

Protegen contra la cavitación, la formación de espuma, la corrosión y la acumulación de escamas en los sistemas de enfriamiento.

- Suministra un acondicionador dosificado de refrigerante.

DESCRIPCIÓN:

Los aditivos en el refrigerante se agotan con la operación normal. Por esta razón, se debe agregar Aditivo de refrigerante suplementario (SCA) a todos los refrigerantes para servicio pesado, a intervalos regulares. Además, cuando no se usa un anticongelante de precarga completo, tal como el DEAC de Caterpillar, es necesario agregar una cantidad de aditivo de refrigerante suplementario inicial al sistema de enfriamiento. La cantidad de aditivo que se debe agregar depende de la capacidad del sistema.

El SCA de llenado inicial es líquido. El que se usa para el mantenimiento está disponible tanto en líquido como en un elemento enroscable. (No hay elemento enroscable disponible para la Familia de Motores 3600).

NOTA:

La cantidad de aditivo de llenado inicial no es la misma que se agrega en los intervalos de mantenimiento.

Los elementos de aditivo de refrigerante se pueden usar con cualquier anticongelante de tipo glicol etilénico o propílico que esté de acuerdo con las especificaciones de las normas ASTM D4985 o ASTM D5345.

NOTA:

Se debe utilizar únicamente con refrigerante estándar para servicio pesado; no se debe usar con Refrigerante de Larga Duración.

PIEZAS NECESARIAS:

Capacidad del Sistema de Enfriamiento		SCA líquido de llenado inicial	SCA líquido de mantenimiento*	Elemento de mantenimiento enroscable*
litros	gal EE.UU.			
22-30	6-8	3P-2044 (1)	6V-3542 (1)	111-2370 (1)
30-38	8-10	3P-2044 (1) 6V-3542 (1)	111-2372 (1)	111-2369 (1)
38-49	10-13	3P-2044 (1) 8T-1589 (1)	111-2372 (1)	111-2369 (1)
49-64	13-17	3P-2044 (2)	8T-1589 (1)	9N-3368 (1)
64-83	17-22	3P-2044 (2) 8T-1589 (1)	111-2372 (1) 6V-3542 (1)	111-2371 (1)
83-114	22-30	3P-2044 (3) 8T-1589 (1)	3P-2044 (1)	9N-3718 (1)
114-163	30-43	3P-2044 (5)	3P-2044 (1) 6V-3542 (1)	111-2371 (2)
163-242	43-64	3P-2044 (8)	3P-2044 (2)	9N-3718 (2)

** El período normal de mantenimiento es de 250 horas. Para ver las instrucciones completas sobre el mantenimiento del refrigerante, consulte el Manual de Operación y Mantenimiento.*

( ) Indica la cantidad necesaria.

ADITIVOS SUPLEMENTARES DO LÍQUIDO ARREFECEDOR

BENEFÍCIOS PARA O CLIENTE:

Protege contra cavitação, espuma, erosão, corrosão e acúmulo de crostas nos sistemas de arrefecimento.

- Fornece uma quantidade pré-determinada de condicionador de arrefecimento.

DESCRIÇÃO:

Com a operação normal, os aditivos se esgotam do líquido arrefecedor. Por isso, Aditivos Suplementares do Líquido Arrefecedor (SCA) devem ser acrescentados a todos os líquidos arrefecedores para serviço pesado em intervalos regulares. Além disso, quando um anticongelante pré-carregado, totalmente formulado não for usado, como o DEAC Caterpillar, uma carga inicial de SCA deve ser acrescentada ao sistema de arrefecimento. A quantidade de SCA acrescentada ao sistema depende da capacidade do sistema.

O SCA para abastecimento inicial é fornecido em forma de líquido. Os aditivos suplementares (SCA) para intervalos de manutenção estão à disposição em forma líquida e como um elemento com roscas. (Exceto os Motores da Família 3600)

NOTA:

A quantidade de SCA adicionada no abastecimento inicial não é a mesma que a acrescentada nos intervalos de manutenção.

Os elementos do aditivo do líquido arrefecedor podem ser usados com qualquer tipo de anticongelante etileno ou propileno que satisfaz as Especificações ASTM D4985 ou ASTM D5345.

NOTA:

Para uso apenas com líquido arrefecedor para serviço pesado padrão, não deve ser usado com Líquido Arrefecedor de Vida Longa.

PEÇAS NECESSÁRIAS:

Capacidade do Sistema de Arrefecimento		Líquido SCA Durante Abastecimento Inicial	Líquido SCA Durante Manutenção*	Elemento de Manutenção de SCA com Roscas*
Litros	Galões			
22-30	6-8	3P-2044 (1)	6V-3542 (1)	111-2370 (1)
30-38	8-10	3P-2044 (1) 6V-3542 (1)	111-2372 (1)	111-2369 (1)
38-49	10-13	3P-2044 (1) 8T-1589 (1)	111-2372 (1)	111-2369 (1)
49-64	13-17	3P-2044 (2)	8T-1589 (1)	9N-3368 (1)
64-83	17-22	3P-2044 (2) 8T-1589 (1)	111-2372 (1) 6V-3542 (1)	111-2371 (1)
83-114	22-30	3P-2044 (3) 8T-1589 (1)	3P-2044 (1)	9N-3718 (1)
114-163	30-43	3P-2044 (5)	3P-2044 (1) 6V-3542 (1)	111-2371 (2)
163-242	43-64	3P-2044 (8)	3P-2044 (2)	9N-3718 (2)

** O período normal de manutenção é de 250 horas. Consulte o Manual de Operação e Manutenção para obter instruções completas quanto à manutenção do líquido arrefecedor.*

( ) Indica a quantidade exigida.

KÜHLMITTELZUSATZ

VORTEILE FÜR DEN KUNDEN:

Schutz gegen Kavitation, Schaumbildung, Erosion, Korrosion und Kesselsteinbildung in Kühlsystemen.

- Richtig dosierter Kühlmittelzusatz

BESCHREIBUNG:

Additive erschöpfen sich während des Motorbetriebs. Deshalb muß allen HD-Kühlmitteln regelmäßig Kühlmittelzusatz beigefügt werden. Wenn bei Erstfüllung kein vollwertiges Fertigkühlmittel, wie das Frostschutz- und Kühlmittel für Dieselmotoren von Caterpiller (DEAC), verwendet wird, muß bei Erstfüllung Kühlmittelzusatz beigefügt werden. Wieviel Kühlmittelzusatz beigefügt werden muß, hängt vom Inhalt des Kühlsystems ab.

Für Erstfüllung ist Kühlmittelzusatz nur in flüssiger Form erhältlich. Für Wartungsintervalle ist Kühlmittelzusatz in flüssiger Form und als Zusatzelement erhältlich. (Für die Motorbaureihe 3600 sind keine Zusatzelemente erhältlich.)

ANMERKUNG:

Die Kühlmittelmenge bei Erstfüllung ist nicht die gleiche Menge, die bei Wartungsintervallen beigefügt werden muß.

Die Kühlmittelzusatzelemente können mit allen Frostschutzmitteln auf Ethylen- oder Propylenglykolbasis verwendet werden, die den Standards nach ASTM D4985 oder ASTM D5345 entsprechen.

ANMERKUNG:

Den Kühlmittelzusatz nicht mit Langzeitkühlmittel (ELC) von Caterpillar verwenden. Der Kühlmittelzusatz ist nur für HD-Kühlmittel bestimmt.

TEILEBEZEICHNUNG:

Kühlsysteminhalt		Kühlmittelzusatz bei Erstfüllung	Flüssiger Kühlmittelzusatz bei Wartung*	Kühlmittelzusatzelement bei Wartung*
Liter	US-Gall.			
22-30	(6-8)	3P-2044 (1)	6V-3542 (1)	111-2370 (1)
30-38	(8-10)	3P-2044 (1) 6V-3542 (1)	111-2372 (1)	111-2369 (1)
38-49	(10-13)	3P-2044 (1) 8T-1589 (1)	111-2372 (1)	111-2369 (1)
49-64	(13-17)	3P-2044 (2)	8T-1589 (1)	9N-3368 (1)
64-83	(17-22)	3P-2044 (2) 8T-1589 (1)	111-2372 (1) 6V-3542 (1)	111-2371 (1)
83-114	(22-30)	3P-2044 (3) 8T-1589 (1)	3P-2044 (1)	9N-3718 (1)
114-163	(30-43)	3P-2044 (5)	3P-2044 (1) 6V-3542 (1)	111-2371 (2)
163-242	(43-64)	3P-2044 (8)	3P-2044 (2)	9N-3718 (2)

** Der normale Wartungsintervall beträgt 250 Betriebsstunden. Für vollständige Anweisungen zur Wartung des Kühlsystems, siehe Betriebs- und Wartungshandbuch.*

( ) Erforderliche Anzahl

MAINTENANCE PARTS

DESCRIPTION	PART NUMBER	QTY	WHERE USED	PAGE
AIR INLET AND EXHAUST SYSTEM				
FILTER ELEMENT AS-AIR (PRIMARY)	110-6326	1	AIR CLEANER GP	201
FILTER ELEMENT AS-AIR (SECONDARY)	110-6331	1	AIR CLEANER GP	201
INDICATOR-AIR FILTER CHANGE	7W-7417	1	INDICATOR GP-AIR FILTER CHANGE	213
INDICATOR GP-AIR FILTER CHANGE	8N-2694	1	INDICATOR GP-AIR FILTER CHANGE	214
INDICATOR-SERVICE (AIR FILTER)	7W-7417	1	INDICATOR GP-AIR FILTER CHANGE	212
BASIC ENGINE				
GASKET (VALVE COVER)	196-4886	1	COVER GP-VALVE MECHANISM	29
	225-6451	1	COVER GP-VALVE MECHANISM	35
HOSE (BREATHER)	198-8645	1	COVER GP-VALVE MECHANISM	33
HOSE-BREATHER	175-0084	1	COVER GP-VALVE MECHANISM	31
HOSE-BREATHER (CRANKCASE)	175-0084	1	COVER GP-VALVE MECHANISM	29
PLUG-SUMP DRAIN	7C-0351	2	PAN GP-OIL	99
		2	PAN GP-OIL	101
		2	PAN GP-OIL	103
		2	PAN GP-OIL	105
		2	PAN GP-OIL	107
		2	PAN GP-OIL	109
		2	PAN GP-OIL	111
		2	PAN GP-OIL	113
SEAL-COVER (VALVE)	200-6374	1	COVER GP-VALVE MECHANISM	31
SEAL-O-RING (ENGINE OIL DRAIN)	5P-6718	2	PAN GP-OIL	113
SPRING (BREATHER HOSE)	162-1565	1	COVER GP-VALVE MECHANISM	29
		1	COVER GP-VALVE MECHANISM	31
		1	COVER GP-VALVE MECHANISM	33
COOLING SYSTEM				
CAP AS (RADIATOR)	227-4376	1	RADIATOR & HYD OIL COOLER GP	197
		1	RADIATOR & HYD OIL COOLER GP	200
CAP-RADIATOR	006-8865	1	RADIATOR & HYD OIL COOLER GP	194
HOSE-RADIATOR	140-3637	1	RADIATOR & HYD OIL COOLER GP	193
	140-3638	1	RADIATOR & HYD OIL COOLER GP	193
LAMP	122-7137	1	COOLING AR	176
		1	COOLING AR-HIGH AMBIENT TEMP	178
LAMP (12-VOLT)	122-7137	1	COOLING AR	176
		1	COOLING AR	177
REGULATOR-WATER TEMPERATURE	220-2748	1	CONNECTION GP-WATER	166
	225-6908	1	CONNECTION GP-WATER	167
SEAL-O-RING (REGULATOR)	140-7515	1	CONNECTION GP-WATER	166
SEAL-O-RING (WATER TEMPERATURE REGULATOR)	225-6909	1	CONNECTION GP-WATER	167
SEAL (REGULATOR HOUSING)	141-6188	1	CONNECTION GP-WATER	166
V-BELT (REFRIGERANT COMPRESSOR)	1N-3743	1	COOLING AR	177
V-BELT SET (INCLUDES 2 BELTS)	4N-8597	1	COOLING AR	177
		1	COOLING AR	178
	7W-3896	1	COOLING AR	176
		1	COOLING AR	177
ELECTRICAL AND STARTING SYSTEM				
BATTERY (12 VOLT, HEAVY DUTY)	230-6368	1	BATTERY GP	279
BATTERY (12-VOLT, HEAVY DUTY)	230-6368	1	BATTERY GP	281

MAINTENANCE PARTS

DESCRIPTION	PART NUMBER	QTY	WHERE USED	PAGE
BATTERY (12-VOLT, 750-AMPERE) (750 AMP)	3T-5760	2	BATTERY GP	275
		1	BATTERY GP	277
BELT-DRIVE	9X-8139	1	LAMP GP-WARNING BEACON	294
		1	LAMP GP-WARNING BEACON	295
FUSE (10 AMP)	3K-8782	1	LAMP GP-WARNING BEACON	294
		1	LAMP GP-WARNING BEACON	295
	113-8490	2	LIGHTING GP-FLOOD	300
		1	WIRING GP-AIR CONDITIONER	327
		5	WIRING GP-PLATFORM	367
		1	WIRING GP-PLATFORM	367
		1	WIRING GP-POWER RECEPTACLE	378
FUSE (10-AMPERE)	113-8490	2	LIGHTING GP-FLOOD & SIGNAL	305
		1	WIRING GP-AIR CONDITIONER	323
		1	WIRING GP-RIDE CONTROL	382
		1	WIRING GP-RIDE CONTROL	384
FUSE (15 AMP)	113-8491	2	LIGHTING GP-FLOOD	300
		2	LIGHTING GP-FLOOD	302
		1	WIRING GP-CAB	336
		3	WIRING GP-PLATFORM	367
		1	WIRING GP-PLATFORM	367
FUSE (15-AMPERE)	113-8491	2	LIGHTING GP-FLOOD	296
		2	LIGHTING GP-FLOOD	298
		2	LIGHTING GP-FLOOD & SIGNAL	305
		1	WIRING GP-CAB	339
FUSE (20 AMP)	113-8492	2	WIRING GP-PLATFORM	367
FUSE (20-AMPERE)	113-8492	2	WIRING GP-CAB	330
		2	WIRING GP-CAB	333
FUSE (5 AMP)	141-2759	3	WIRING GP-PLATFORM	367
		1	WIRING GP-STEERING	387
FUSE (5-AMPERE)	141-2759	1	WIRING GP-CAB	330
		1	WIRING GP-CAB	337
GLOW PLUG	232-6662	4	GLOW PLUG GP	283
HOLDER AS-BRUSH	7T-6092	1	STARTING MOTOR GP-ELECTRIC	316
LAMP AS (12-VOLT)	165-5655	1	INSTALLATION GP-SECURITY	287
		1	INSTALLATION GP-SECURITY	290
LAMP (12 VOLT)	7X-9065	1	WIRING GP-CONSOLE	344
	9X-8118	1	LAMP GP-WARNING BEACON	295
		1	LAMP GP-WARNING BEACON	294
LAMP (12-VOLT)	7X-9065	1	WIRING GP-CONSOLE	349
	122-7137	1	WIRING GP-AIR CONDITIONER	326
LAMP (12-VOLT, 24-WATT)	9W-3326	1	LAMP GP-SIGNAL	292
		1	LIGHTING GP-FLOOD	296
		1	LIGHTING GP-FLOOD	298
LAMP (12 VOLT, 55 WATT)	9W-0607	1	LAMP GP-FLOOD	291
LAMP (12-VOLT, 55-WATT)	9W-0607	1	LIGHTING GP-FLOOD	296
		1	LIGHTING GP-FLOOD	298
		1	LIGHTING GP-FLOOD	296
		1	LIGHTING GP-FLOOD	302
		1	LIGHTING GP-FLOOD & SIGNAL	305
LAMP (12 VOLT/21 WATT)	9W-3326	1	LIGHTING GP-FLOOD	300
		1	LAMP GP-STOP & TAIL	293
LAMP (12 VOLT/55 WATT)	9W-0607	1	LIGHTING GP-FLOOD	300
		1	LIGHTING GP-FLOOD	300

MAINTENANCE PARTS

DESCRIPTION	PART NUMBER	QTY	WHERE USED	PAGE
LAMP (12VOLT/21/5WATT)	3C-6516	1	LAMP GP-STOP & TAIL	293
LENS	174-8958	1	LAMP GP-STOP & TAIL	293
LENS (AMBER)	174-8957	1	LAMP GP-SIGNAL	292
		1	LIGHTING GP-FLOOD	296
		1	LIGHTING GP-FLOOD	298
		1	LIGHTING GP-FLOOD	300
LENS-AMBER	9X-8121	1	LAMP GP-WARNING BEACON	294
		1	LAMP GP-WARNING BEACON	295
LENS AS (FLOOD)	202-6614	1	LAMP GP-FLOOD	291
LENS (CLEAR)	176-0346	1	LIGHTING GP-FLOOD	296
		1	LIGHTING GP-FLOOD	298
		1	LIGHTING GP-FLOOD	300
REFLECTOR	9R-1499	2	LIGHTING GP-FLOOD	300
V-BELT	2P-4191	1	ALTERNATOR GP-CHARGING	272
V-BELT SET (INCLUDES 2 BELTS)	4N-8597	1	ALTERNATOR GP-CHARGING	272
ENGINE ARRANGEMENT				
FILTER AS-ENGINE OIL	7W-2326	1	ENGINE AR-PRIMARY	14
FRAME AND BODY				
FITTING-GREASE (1/8-27 THD)	3B-8488	2	FRAME GP-LOADER	490
	3B-8489	2	FRAME GP-LOADER	490
		6	FRAME GP-SWING	491
FUEL SYSTEM				
CAP-FUEL	201-0330	1	TANK GP-FUEL	264
		1	TANK GP-FUEL	268
ELEMENT-FILTER (FUEL)	228-9130	1	PUMP GP-FUEL PRIMING	260
FILTER ELEMENT AS-FUEL	159-6102	1	FILTER GP-FUEL	244
FILTER ELEMENT AS-FUEL (WATER SEPARATOR)	131-1812	1	FILTER GP-WATER SEP & FUEL	245
SEAL (FUEL FILTER)	101-3743	1	FILTER GP-FUEL	244

MAINTENANCE PARTS

DESCRIPTION	PART NUMBER	QTY	WHERE USED	PAGE
HYDRAULIC SYSTEM				
CAP-DUST	6V-0852	1	CONNECTOR GP-VALVE	509
		1	LINES GP-PILOT	629
		1	LINES GP-PUMP	633
CAP-FILL (HYDRAULIC OIL)	237-3797	1	TANK GP-HYDRAULIC	680
CAP-FILLER (HYDRAULIC OIL)	123-0867	1	TANK & MTG GP-HYDRAULIC	678
FILTER	4T-4520	1	VALVE GP-CONTROL	695
		1	VALVE GP-CONTROL	697
		1	VALVE GP-CONTROL	699
		1	VALVE GP-CONTROL	701
		1	VALVE GP-CONTROL	703
		1	VALVE GP-CONTROL	705
		1	VALVE GP-CONTROL	707
		1	VALVE GP-CONTROL	709
		1	VALVE GP-CONTROL	713
FILTER AS-HYDRAULIC	134-3014	1	FILTER GP-OIL	564
FILTER AS-OIL (CLEANOUT/HIGH EFFICIENCY)	126-1817		HYDRAULIC AR	571
FILTER AS-OIL (HYDRAULIC) (FLAME RESISTANT)	134-3014		HYDRAULIC AR	571
FILTER (BREATHER)(HYDRAULIC)	9R-9925	1	TANK & MTG GP-HYDRAULIC	678
FILTER (HYDRAULIC TANK BREATHER)	9R-9925	1	TANK GP-HYDRAULIC	680
FITTING-GREASE	3B-8489	2	CYLINDER GP-THUMB	562
		2	KICKOUT & POSITIONER GP	572
		4	MOUNTING GP-CYLINDER	665
HOSE (72CM)	5P-1505		LINES GP-PUMP	634
HOSE (96CM EACH)	136-1955		LINES GP-PUMP	633
SEAL-O-RING	2M-9780	1	LINES GP-EXTENDABLE STICK	614
IMPLEMENTS				
FITTING-GREASE	3B-8488	3	BOOM GP	728
	3B-8489	2	MOUNTING GP-STICK	742
		2	STICK GP-HOE	754
FITTING-GREASE (1/8-27 THD)	3B-8488	4	ARM GP-LIFT	726
	3B-8489	5	ARM GP-LIFT	726
		7	LINKAGE GP-LOADER BUCKET	736
		4	STABILIZER GP-BACKHOE	750
PAD AS	9R-5555	2	PAD GP-STABILIZER	748
		2	PAD GP-STABILIZER	749

MAINTENANCE PARTS

DESCRIPTION	PART NUMBER	QTY	WHERE USED	PAGE
LUBRICATION SYSTEM				
CANISTER AS-BREATHER	165-4021	1	BREATHER GP	147
		1	BREATHER GP	149
		1	BREATHER GP	151
CAP AS (ENGINE OIL FILLER)	236-6651	1	FILLER GP-ENGINE OIL	155
CAP AS (OIL FILLER) (ENGINE)	136-3608	1	FILLER GP-ENGINE OIL	154
FILTER AS-ENGINE OIL	7W-2326	1	FILLER GP-ENGINE OIL	154
		1	FILLER GP-ENGINE OIL	155
HOSE (CRANKCASE BREATHER VALVE COVER)	218-2685	1	BREATHER GP	149
HOSE (109CM CRANKCASE BREATHER OPEN)	136-1955		BREATHER GP	149
HOSE (90CM CRANKCASE BREATHER SUMP)	5P-1505		BREATHER GP	149
SEAL (BREATHER)	185-6643	1	BREATHER GP	147
		1	BREATHER GP	149
		1	BREATHER GP	151
OPERATOR STATION				
BLADE	101-0745	1	WIPER GP-WINDOW	988
BLADE AS	102-2940	2	WIPER GP-WINDOW	986
CAP AS (AIR CONDITIONER)	3E-4052	1	LINES GP-HEATER & AIR COND	930
FILTER-AIR (AIR CONDITIONER)	170-7272	1	AIR CONDITIONER & MOUNTING GP	857
		1	AIR CONDITIONER GP	862
FILTER-AIR (CAB)	170-7272	1	HEATER GP-CAB	920
FILTER (AIR CONDITIONER)	206-7514	1	AIR CONDITIONER & MOUNTING GP	857
		1	AIR CONDITIONER & MOUNTING GP	859
FILTER (HEATER)	206-7514	1	HEATER GP-CAB	918
LAMP	189-3610	1	MODULE GP-WARNING INDICATOR	937
LAMP (12 VOLT)	122-7137	1	TACHOMETER GP-ELECTRIC	969
LAMP (12-VOLT)	122-7137	1	TACHOMETER GP-ELECTRIC	968
LAMP (12-VOLT, 10-WATT)	6R-7490	1	SUPPRESSION GP-SOUND	961
LAMP (12 VOLT)(10 WATT)	6R-7490	1	LINER GP-CAB	926
V-BELT (AIR CONDITIONER)	1W-2934	1	COMPRESSOR GP-REFRIGERANT	891
V-BELT SET (INCLUDES 2 BELTS)	3N-1491	1	CAB AR	870
	5L-3308	1	CAB AR	868
		1	CAB AR	869
		1	CANOPY AR	880
		1	CANOPY AR	881

MAINTENANCE PARTS

DESCRIPTION	PART NUMBER	QTY	WHERE USED	PAGE
POWER TRAIN				
BREATHER (AXLE)	197-9155	1	AXLE GP-DRIVE & STEERING	390
BREATHER (TRANSMISSION)	7T-3251	1	TRANSMISSION GP-DIRECT DRIVE	430
		1	TRANSMISSION GP-DIRECT DRIVE	435
CAP	2D-2633	1	VALVE GP-TIRE	442
		1	VALVE GP-TIRE	443
CAP-DUST	6V-0852	2	FILLER GP-POWER TRAIN OIL	406
		2	FILLER GP-POWER TRAIN OIL	408
FILTER AS-OIL (TRANSMISSION)	119-4740	1	TRANSMISSION AR-DIRECT DRIVE	427
PLUG-MAGNETIC	9R-6602	2	AXLE GP-REAR	395
	152-6144	3	AXLE GP-DRIVE & STEERING	390
		1	DIFFERENTIAL & BEVEL GEAR GP	400
STRAINER	7T-2651	1	TRANSMISSION GP-DIRECT DRIVE	430
		1	TRANSMISSION GP-DIRECT DRIVE	436
VALVE AS-RELIEF (AIR VENT)	5F-5434	1	AXLE & MTG GP-REAR	388
SERVICE EQUIPMENT AND SUPPLIES				
KEY	5P-8500	1	LOCK GP-VANDALISM	991
PADLOCK GP	5P-8502	2	LOCK GP-VANDALISM	991
STEERING SYSTEM				
HOSE (53CM)	5P-1505		LINES GP-STEERING	464
			LINES GP-STEERING	467
WORK TOOLS				
FITTING-GREASE	3B-8489	2	BUCKET GP-MULTIPURPOSE	826
		2	THUMB GP	852
FITTING-GREASE (1/8-27 THD)	3B-8489	2	BUCKET GP-MULTIPURPOSE	824
		2	BUCKET GP-MULTIPURPOSE	825
		2	BUCKET GP-MULTIPURPOSE	827
REFLECTOR	101-4415	1	GUARD GP-BUCKET	838

PIÈCES DE RECHANGE

DESCRIPTION	NUMÉRO DE PIECÈS	QTÉ	DOMAINE D'APPLICATION	PAGE
CHÂSSIS ET BENNE				
GRAISSEUR (FILET 1/8-27)	3B-8488	2	BATI - CHARGEUSE (ASS)	490
	3B-8489	2	BATI - CHARGEUSE (ASS)	490
		6	BÂTI D'ORIENTATION (ASS)	491
CIRCUIT D'ADMISSION D'AIR ET D'ÉCHAPPEMENT				
ÉLÉMENT DE FILTRE À AIR (ENS) (PRINCIPAL)	110-6326	1	FILTRE A AIR (ASS)	201
ÉLÉMENT DE FILTRE À AIR (ENS) (SECONDAIRE)	110-6331	1	FILTRE A AIR (ASS)	201
INDICATEUR DE COLMATAGE DE FILTRE À AIR (ASS)	8N-2694	1	INDICATEUR DE COLMATAGE DE FILTRE À AIR (ASS)	214
INDICATEUR DE REMPLACEMENT DE FILTRE À AIR	7W-7417	1	INDICATEUR DE COLMATAGE DE FILTRE À AIR (ASS)	213
INDICATEUR D'ENTRETIEN (FILTRE À AIR)	7W-7417	1	INDICATEUR DE COLMATAGE DE FILTRE À AIR (ASS)	212
CIRCUIT DE CARBURANT				
BOUCHON DE CARBURANT	201-0330	1	RÉSERVOIR DE CARBURANT (ASS)	264
		1	RÉSERVOIR DE CARBURANT (ASS)	268
BOURRELET D'ÉTANCHÉITÉ (FILTRE À CARBURANT)	101-3743	1	FILTRE A CARBURANT (ASS)	244
ÉLÉMENT DE FILTRE (CARBURANT)	228-9130	1	POMPE D'AMORÇAGE DE CARBURANT (ASS)	260
ÉLÉMENT DE FILTRE (ENS)-CARBURANT	159-6102	1	FILTRE A CARBURANT (ASS)	244
ÉLÉMENT DE FILTRE (ENS)-CARBURANT (SÉPARATEUR D'EAU)	131-1812	1	FILTRE DE SÉPARATEUR D'EAU ET DE CARBURANT (ASS)	245
CIRCUIT DE DIRECTION				
FLEXIBLE (53CM)	5P-1505		CANALISATIONS DE DIRECTION (ASS)	464
			CANALISATIONS DE DIRECTION (ASS)	467

PIÈCES DE RECHANGE

DESCRIPTION	NUMÉRO DE PIECÈS	QTÉ	DOMAINE D'APPLICATION	PAGE
CIRCUIT DE GRAISSAGE				
BOÎTIER-RENIFLARD	165-4021	1	RENIFLARD (ASS)	147
		1	RENIFLARD (ASS)	149
		1	RENIFLARD (ASS)	151
BOURRELET D'ÉTANCHÉITÉ (RENIFLARD)	185-6643	1	RENIFLARD (ASS)	147
		1	RENIFLARD (ASS)	149
		1	RENIFLARD (ASS)	151
CHAPEAU (ENS) (GOULOTTE DE REMPLISSAGE D'HUILE MOTEUR)	236-6651	1	BOUCHON DE REMPLISSAGE D'HUILE MOTEUR (ASS)	155
CHAPEAU (ENS) (REMPLISSAGE D'HUILE) (MOTEUR)	136-3608	1	BOUCHON DE REMPLISSAGE D'HUILE MOTEUR (ASS)	154
FILTRE A HUILE MOTEUR (ENS)	7W-2326	1	BOUCHON DE REMPLISSAGE D'HUILE MOTEUR (ASS)	154
		1	BOUCHON DE REMPLISSAGE D'HUILE MOTEUR (ASS)	155
FLEXIBLE (CACHE-SOUPAPE DE RENIFLARD DE CARTER)	218-2685	1	RENIFLARD (ASS)	149
FLEXIBLE (RENIFLARD DE CARTER 90 CM OUVERT)	136-1955		RENIFLARD (ASS)	149
FLEXIBLE (RENIFLARD DE CARTER 90CM)	5P-1505		RENIFLARD (ASS)	149
CIRCUIT DE REFROIDISSEMENT				
AMPOULE	122-7137	1	REFROIDISSEMENT AUX TEMPÉRATURES ÉLEVÉES (VERSION)	178
		1	REFROIDISSEMENT (VERSION)	176
AMPOULE (12 VOLTS)	122-7137	1	REFROIDISSEMENT (VERSION)	176
		1	REFROIDISSEMENT (VERSION)	177
BOURRELET D'ÉTANCHÉITÉ (CARTER DE RÉGULATEUR)	141-6188	1	RACCORD D'EAU (ASS)	166
CHAPEAU - RADIATEUR	006-8865	1	RADIATEUR ET REFROIDISSEUR D'HUILE HYDRAULIQUE (ASS)	194
CHAPEAU (ENS) (RADIATEUR)	227-4376	1	RADIATEUR ET REFROIDISSEUR D'HUILE HYDRAULIQUE (ASS)	197
		1	RADIATEUR ET REFROIDISSEUR D'HUILE HYDRAULIQUE (ASS)	200
COURROIE TRAPEZOIDALE (COMPRESSEUR DE RÉFRIGÉRANT)	1N-3743	1	REFROIDISSEMENT (VERSION)	177
FLEXIBLE DE RADIATEUR	140-3637	1	RADIATEUR ET REFROIDISSEUR D'HUILE HYDRAULIQUE (ASS)	193
	140-3638	1	RADIATEUR ET REFROIDISSEUR D'HUILE HYDRAULIQUE (ASS)	193
JEU DE COURROIES TRAPEZOIDALES (COMPREND 2 COURROIES)	4N-8597	1	REFROIDISSEMENT (VERSION)	177
		1	REFROIDISSEMENT (VERSION)	178
	7W-3896	1	REFROIDISSEMENT (VERSION)	176
		1	REFROIDISSEMENT (VERSION)	177
JOINT TORIQUE (RÉGULATEUR)	140-7515	1	RACCORD D'EAU (ASS)	166
JOINT TORIQUE (RÉGULATEUR DE TEMPÉRATURE D'EAU)	225-6909	1	RACCORD D'EAU (ASS)	167
THERMOSTAT-TEMPÉRATURE D'EAU	220-2748	1	RACCORD D'EAU (ASS)	166
	225-6908	1	RACCORD D'EAU (ASS)	167

PIÈCES DE RECHANGE

DESCRIPTION	NUMÉRO DE PIECÈS	QTÉ	DOMAINE D'APPLICATION	PAGE
CIRCUIT ÉLECTRIQUE ET DE DÉMARRAGE				
AMPOULE (12 VOLTS)	7X-9065	1	CABLAGE DE CONSOLE (ASS)	344
		1	CABLAGE DE CONSOLE (ASS)	349
	9X-8118	1	LAMPE - GYROPHARE (ASS)	295
	122-7137	1	CABLAGE - CLIMATISEUR (ASS)	326
	9X-8118	1	LAMPE - GYROPHARE (ASS)	294
AMPOULE (12 VOLTS/ 21 WATTS)	9W-3326	1	ÉCLAIRAGE - PROJECTEURS (ASS)	300
		1	FEUX ARRIÈRE ET FEUX D'ARRÊT	293
AMPOULE (12 VOLTS, 55 WATTS)	9W-0607	1	LAMPE - PHARE (ASS)	291
AMPOULE (12 VOLTS/55 WATTS)	9W-0607	1	ÉCLAIRAGE - PROJECTEURS (ASS)	300
AMPOULE (12V, 24W)	9W-3326	1	ÉCLAIRAGE - PROJECTEURS (ASS)	298
		1	LAMPE - CLIGNOTANT DE DIRECTION (ASS)	292
		1	ÉCLAIRAGE - PROJECTEURS (ASS)	296
AMPOULE (12V, 55W)	9W-0607	1	ÉCLAIRAGE - PROJECTEURS (ASS)	298
		1	ÉCLAIRAGE - PROJECTEURS (ASS)	302
		1	ÉCLAIRAGE - PROJECTEURS ET CLIGNOTANTS (ASS)	305
		1	ÉCLAIRAGE - PROJECTEURS (ASS)	296
AMPOULE (12VOLTS/ 21/ 5WATTS)	3C-6516	1	FEUX ARRIÈRE ET FEUX D'ARRÊT	293
BATTERIE (12V, GRANDE CAPACITÉ)	230-6368	1	BATTERIE (ASS)	281
BATTERIE (12V, INDUSTRIELLE)	230-6368	1	BATTERIE (ASS)	279
BATTERIE (12V, 750A) (750A)	3T-5760	2	BATTERIE (ASS)	275
		1	BATTERIE (ASS)	277
BOUGIE DE PRECHAUFFAGE	232-6662	4	BOUGIE DE PRÉCHAUFFAGE (ASS)	283
COURROIE TRAPEZOIDALE	2P-4191	1	ALTERNATEUR DE CHARGE (ASS)	272
ENTRAÎNEMENT POUR COURROIE	9X-8139	1	LAMPE - GYROPHARE (ASS)	294
		1	LAMPE - GYROPHARE (ASS)	295
FUSIBLE (10A)	3K-8782	1	LAMPE - GYROPHARE (ASS)	294
		1	LAMPE - GYROPHARE (ASS)	295
	113-8490	1	CABLAGE - CLIMATISEUR (ASS)	323
		1	CABLAGE - CLIMATISEUR (ASS)	327
		5	CABLAGE - PLATE-FORME (ASS)	367
		2	ÉCLAIRAGE - PROJECTEURS (ASS)	300
		2	ÉCLAIRAGE - PROJECTEURS ET CLIGNOTANTS (ASS)	305
		1	CABLAGE - PLATE-FORME (ASS)	367
		1	CÂBLAGE DE COMMANDE DE TRANSLATION (ASS)	382
		1	CÂBLAGE DE COMMANDE DE TRANSLATION (ASS)	384
		1	CABLAGE DE PRISE DE FORCE	378
FUSIBLE (15A)	113-8491	3	CABLAGE - PLATE-FORME (ASS)	367
		2	ÉCLAIRAGE - PROJECTEURS (ASS)	296
		2	ÉCLAIRAGE - PROJECTEURS (ASS)	298
		2	ÉCLAIRAGE - PROJECTEURS (ASS)	300
		2	ÉCLAIRAGE - PROJECTEURS (ASS)	302
		2	ÉCLAIRAGE - PROJECTEURS ET CLIGNOTANTS (ASS)	305
		1	CABLAGE - PLATE-FORME (ASS)	367
		1	CABLAGE DE CABINE (ASS)	336
		1	CABLAGE DE CABINE (ASS)	339
FUSIBLE (20 A)	113-8492	2	CABLAGE - PLATE-FORME (ASS)	367
FUSIBLE (20A)	113-8492	2	CABLAGE DE CABINE (ASS)	330

PIÈCES DE RECHANGE

DESCRIPTION	NUMÉRO DE PIECÈS	QTÉ	DOMAINE D'APPLICATION	PAGE
		2	CABLAGE DE CABINE (ASS)	333
FUSIBLE (5A)	141-2759	3	CABLAGE - PLATE-FORME (ASS)	367
		1	CABLAGE DE CABINE (ASS)	330
		1	CABLAGE DE CABINE (ASS)	337
		1	CABLAGE DE DIRECTION (ASS)	387
JEU DE COURROIES TRAPEZOIDALES (COMPREND 2 COURROIES)	4N-8597	1	ALTERNATEUR DE CHARGE (ASS)	272
LAMPE (ENS) (12 VOLTS)	165-5655	1	MONTAGE-SÉCURITÉ (ASS)	287
		1	MONTAGE-SÉCURITÉ (ASS)	290
LENTILLE	174-8958	1	FEUX ARRIÈRE ET FEUX D'ARRÊT	293
LENTILLE (ENS) (PROJECTEUR)	202-6614	1	LAMPE - PHARE (ASS)	291
LENTILLE (JAUNE)	174-8957	1	ÉCLAIRAGE - PROJECTEURS (ASS)	296
		1	ÉCLAIRAGE - PROJECTEURS (ASS)	298
		1	ÉCLAIRAGE - PROJECTEURS (ASS)	300
		1	LAMPE - CLIGNOTANT DE DIRECTION (ASS)	292
LENTILLE ORANGE	9X-8121	1	LAMPE - GYROPHARE (ASS)	294
		1	LAMPE - GYROPHARE (ASS)	295
LENTILLE (TRANSPARENT)	176-0346	1	ÉCLAIRAGE - PROJECTEURS (ASS)	296
		1	ÉCLAIRAGE - PROJECTEURS (ASS)	298
		1	ÉCLAIRAGE - PROJECTEURS (ASS)	300
PORTE-BALAIS (ENS)	7T-6092	1	DÉMARREUR ÉLECTRIQUE (ASS)	316
RÉFLECTEUR	9R-1499	2	ÉCLAIRAGE - PROJECTEURS (ASS)	300

PIÈCES DE RECHANGE

DESCRIPTION	NUMÉRO DE PIECÈS	QTÉ	DOMAINE D'APPLICATION	PAGE
CIRCUIT HYDRAULIQUE				
BOUCHON DE GOULOTTE DE REMPLISSAGE (HUILE HYDRAULIQUE)	123-0867	1	RÉSERVOIR HYDRAULIQUE ET MONTAGE (ASS)	678
BOUCHON DE REMPLISSAGE (HUILE HYDRAULIQUE)	237-3797	1	RÉSERVOIR HYDRAULIQUE (ASS)	680
FILTRE	4T-4520	1	DISTRIBUTEUR (ASS)	695
		1	DISTRIBUTEUR (ASS)	697
		1	DISTRIBUTEUR (ASS)	699
		1	DISTRIBUTEUR (ASS)	701
		1	DISTRIBUTEUR (ASS)	703
		1	DISTRIBUTEUR (ASS)	705
		1	DISTRIBUTEUR (ASS)	707
		1	DISTRIBUTEUR (ASS)	709
		1	DISTRIBUTEUR (ASS)	713
FILTRE À HUILE (ENS) (HYDRAULIQUE) (RÉSISTANT AU FEU)	134-3014		VERSION HYDRAULIQUE	571
FILTRE À HUILE (ENS) (NETTOYAGE/ GRANDE EFFICACITÉ)	126-1817		VERSION HYDRAULIQUE	571
FILTRE HYDRAULIQUE (ENS)	134-3014	1	FILTRE A HUILE (ASS)	564
FILTRE (RENIFLARD DE RÉSERVOIR HYDRAULIQUE)	9R-9925	1	RÉSERVOIR HYDRAULIQUE (ASS)	680
FILTRE (RENIFLARD)(HYDRAULIQUE)	9R-9925	1	RÉSERVOIR HYDRAULIQUE ET MONTAGE (ASS)	678
FLEXIBLE (72CM)	5P-1505		CANALISATIONS DE POMPE (ASS)	634
FLEXIBLE (96CM CHACUN)	136-1955		CANALISATIONS DE POMPE (ASS)	633
GRAISSEUR	3B-8489	2	LIMITEUR DE LEVAGE ET RETOUR À L'ANGLE DE CAVAGE	572
		4	MONTAGE DE VÉRIN (ASS)	665
		2	VÉRIN DE SERRE-JOINT (ASS)	562
JOINT TORIQUE	2M-9780	1	CANALISATIONS DU BRAS TELESCOPIQUE (ASS)	614
PARE-POUSSIERE	6V-0852	1	CANALISATIONS A COMMANDE PILOTE (ASS)	629
		1	CANALISATIONS DE POMPE (ASS)	633
		1	RACCORD DE SOUPAPE (ASS)	509
ÉQUIPEMENTS				
GRAISSEUR	3B-8488	3	FLECHE (ASS)	728
	3B-8489	2	BRAS DE PELLE RETRO (ASS)	754
		2	MONTAGE DE BRAS (ASS)	742
GRAISSEUR (FILET 1/8-27)	3B-8488	4	BRAS DE LEVAGE (ASS)	726
	3B-8489	5	BRAS DE LEVAGE (ASS)	726
		4	PELLE RÉTRO - STABILISATEUR (ASS)	750
		7	TIMONERIE DE GODET DE CHARGEUSE (ASS)	736
PATIN (ENS)	9R-5555	2	SEMELLE DE STABILISATEUR	748
		2	SEMELLE DE STABILISATEUR	749
MATÉRIEL ET FOURNITURES D'ENTRETIEN				
CADENAS (ASS)	5P-8502	2	VERROUILLAGE ANTI-VANDALISME (ASS)	991
CLÉ	5P-8500	1	VERROUILLAGE ANTI-VANDALISME (ASS)	991

PIÈCES DE RECHANGE

DESCRIPTION	NUMÉRO DE PIECÈS	QTÉ	DOMAINE D'APPLICATION	PAGE
MOTEUR STANDARD				
BOUCHON-VIDANGE DU CARTER	7C-0351	2	HUILE MOTEUR - CARTER (ASS)	99
		2	HUILE MOTEUR - CARTER (ASS)	101
		2	HUILE MOTEUR - CARTER (ASS)	103
		2	HUILE MOTEUR - CARTER (ASS)	105
		2	HUILE MOTEUR - CARTER (ASS)	107
		2	HUILE MOTEUR - CARTER (ASS)	109
		2	HUILE MOTEUR - CARTER (ASS)	111
		2	HUILE MOTEUR - CARTER (ASS)	113
COUVRE-JOINT (SOUPAPE)	200-6374	1	CACHE-SOUPAPES (ASS)	31
FLEXIBLE DE RENIFLARD	175-0084	1	CACHE-SOUPAPES (ASS)	31
FLEXIBLE DE RENIFLARD (CARTER)	175-0084	1	CACHE-SOUPAPES (ASS)	29
FLEXIBLE (RENIFLARD)	198-8645	1	CACHE-SOUPAPES (ASS)	33
JOINT PLAT (CACHE-SOUPAPES)	196-4886	1	CACHE-SOUPAPES (ASS)	29
	225-6451	1	CACHE-SOUPAPES (ASS)	35
JOINT TORIQUE (VIDANGE D'HUILE MOTEUR)	5P-6718	2	HUILE MOTEUR - CARTER (ASS)	113
RESSORT (FLEXIBLE DE RENIFLARD)	162-1565	1	CACHE-SOUPAPES (ASS)	29
		1	CACHE-SOUPAPES (ASS)	31
		1	CACHE-SOUPAPES (ASS)	33
OUTILS DE TRAVAIL				
GRAISSEUR	3B-8489	2	GODET TOUS-TRAVAUX (ASS)	826
		2	SERRE-JOINT (ASS)	852
GRAISSEUR (FILET 1/8-27)	3B-8489	2	GODET TOUS-TRAVAUX (ASS)	824
		2	GODET TOUS-TRAVAUX (ASS)	825
		2	GODET TOUS-TRAVAUX (ASS)	827
RÉFLECTEUR	101-4415	1	PROTECTION DE GODET (ASS)	838
POSTE DE CONDUITE				
AMPOULE	189-3610	1	MODULE - TÉMOIN (ASS)	937
AMPOULE (12 VOLTS)	122-7137	1	COMPTE-TOURS ÉLECTRIQUE (ASS)	968
		1	COMPTE-TOURS ÉLECTRIQUE (ASS)	969
AMPOULE (12 VOLTS)(10 WATTS)	6R-7490	1	CABINE - REVÊTEMENT (ASS)	926
AMPOULE (12V, 10W)	6R-7490	1	INSONORISATION (ASS)	961
BALAI D'ESSUIE-GLACE (ENS)	102-2940	2	ESSUIE-GLACE (ASS)	986
CHAPEAU (ENS) (CLIMATISEUR)	3E-4052	1	CANALISATIONS-RÉCHAUFFEUR ET CLIMATISEUR (ASS)	930
COURROIE TRAPEZOIDALE (CLIMATISEUR)	1W-2934	1	COMPRESSEUR DE REFRIGERANT (ASS)	891
FILTRE À AIR (CABINE)	170-7272	1	CHAUFFAGE DE CABINE (ASS)	920
FILTRE À AIR (CLIMATISEUR)	170-7272	1	CLIMATISEUR (ASS)	862
		1	CLIMATISEUR ET MONTAGE (ASS)	857
FILTRE (CLIMATISEUR)	206-7514	1	CLIMATISEUR ET MONTAGE (ASS)	859
		1	CLIMATISEUR ET MONTAGE (ASS)	857
FILTRE (RÉCHAUFFEUR)	206-7514	1	CHAUFFAGE DE CABINE (ASS)	918
JEU DE COURROIES TRAPEZOIDALES (COMPREND 2 COURROIES)	3N-1491	1	CABINE (VERSION)	870
	5L-3308	1	CABINE (VERSION)	868
		1	CABINE (VERSION)	869
		1	TOIT (VERSION)	880
		1	TOIT (VERSION)	881
LAME	101-0745	1	ESSUIE-GLACE (ASS)	988

PIÈCES DE RECHANGE

DESCRIPTION	NUMÉRO DE PIECÈS	QTÉ	DOMAINE D'APPLICATION	PAGE
TRANSMISSION				
BOUCHON AIMANTÉ	9R-6602	2	ESSIEU AR (ASS)	395
	152-6144	1	COURONNE ET DIFFERENTIEL (ASS)	400
		3	ESSIEU MOTEUR ET DIRECTEUR (ASS)	390
CHAPEAU	2D-2633	1	PNEU - GROUPE DE VALVE	442
		1	PNEU - GROUPE DE VALVE	443
CLAPET DE DECHARGE (PURGEUR D'AIR)	5F-5434	1	ESSIEU ET MONTAGE -ARRIÈRE (ASS)	388
CREPINE	7T-2651	1	BOÎTE MÉCANIQUE (ASS)	430
		1	BOÎTE MÉCANIQUE (ASS)	436
FILTRE À HUILE (ENS) (BOîTE DE VITESSES)	119-4740	1	BOITE MECANIQUE (VERSION)	427
PARE-POUSSIERE	6V-0852	2	GOULOTTE DE REMPLISSAGE D'HUILE DE TRANSMISSION	406
		2	GOULOTTE DE REMPLISSAGE D'HUILE DE TRANSMISSION	408
RENIFLARD (BOîTE DE VITESSES)	7T-3251	1	BOÎTE MÉCANIQUE (ASS)	430
		1	BOÎTE MÉCANIQUE (ASS)	435
RENIFLARD (ESSIEU)	197-9155	1	ESSIEU MOTEUR ET DIRECTEUR (ASS)	390
VERSION DE MOTEUR				
FILTRE A HUILE MOTEUR (ENS)	7W-2326	1	MOTEUR (VERSION PRINCIPALE)	14

PIEZAS DE MANTENIMIENTO

DESCRIPCION	NUMERO DE PIEZA	CANT	SE UTILIZA EN	PAGINA
BASTIDOR Y CAJA				
CONEXIÓN DE ENGRASE (ROSCA DE 1/8-27)	3B-8488	2	BASTIDOR DEL CARGADOR (GR)	490
	3B-8489	6	BASTIDOR DE ROTACIÓN (GR)	491
		2	BASTIDOR DEL CARGADOR (GR)	490
CONFIGURACIÓN DE MOTOR				
FILTRO DE ACEITE DEL MOTOR (CONJ)	7W-2326	1	MOTOR PRIMARIO (CONFIG)	14
EQUIPOS Y SUMINISTRO DE SERVICIOS				
CANDADO (GR)	5P-8502	2	TRABA CONTRA EL VANDALISMO (GR)	991
LLAVE	5P-8500	1	TRABA CONTRA EL VANDALISMO (GR)	991
HERRAMIENTAS				
CONEXIÓN DE ENGRASE	3B-8489	2	CUCHARÓN DE USO MÚLTIPLE (GR)	826
		2	PULGAR GR	852
CONEXIÓN DE ENGRASE (ROSCA DE 1/8-27)	3B-8489	2	CUCHARÓN DE USO MÚLTIPLE (GR)	824
		2	CUCHARÓN DE USO MÚLTIPLE (GR)	825
		2	CUCHARÓN DE USO MÚLTIPLE (GR)	827
REFLECTOR	101-4415	1	GRUPO DE PROTECTOR DEL CUCHARON	838
IMPLEMENTOS				
ALMOHADILLA (CONJ)	9R-5555	2	ZAPATA DE ESTABILIZADOR (GR)	748
		2	ZAPATA DE ESTABILIZADOR (GR)	749
CONEXIÓN DE ENGRASE	3B-8488	3	PLUMA (GR)	728
	3B-8489	2	BRAZO DE RETROEXCAVADOR (GR)	754
		2	MONTAJE DEL BRAZO (GR)	742
CONEXIÓN DE ENGRASE (ROSCA DE 1/8-27)	3B-8488	4	GRUPO DE BRAZO DE LEVANTAMIENTO	726
	3B-8489	5	GRUPO DE BRAZO DE LEVANTAMIENTO	726
		7	VARILLAJE DE CUCHARÓN CARGADOR (GR)	736
		4	RETROEXCAVADOR - ESTABILIZADOR DEL (GR)	750

PIEZAS DE MANTENIMIENTO

DESCRIPCION	NUMERO DE PIEZA	CANT	SE UTILIZA EN	PAGINA
MOTOR BÁSICO				
EMPAQUETADURA (TAPA DE VÁLVULA)	196-4886	1	TAPA DEL MECANISMO DE VÁLVULAS (GR)	29
	225-6451	1	TAPA DEL MECANISMO DE VÁLVULAS (GR)	35
MANGUERA DE RESPIRADERO	175-0084	1	TAPA DEL MECANISMO DE VÁLVULAS (GR)	31
MANGUERA DE RESPIRADERO (CÁRTER DEL MOTOR)	175-0084	1	TAPA DEL MECANISMO DE VÁLVULAS (GR)	29
MANGUERA (RESPIRADERO)	198-8645	1	TAPA DEL MECANISMO DE VÁLVULAS (GR)	33
RESORTE (RESPIRADERO DE MANGUERA)	162-1565	1	TAPA DEL MECANISMO DE VÁLVULAS (GR)	29
		1	TAPA DEL MECANISMO DE VÁLVULAS (GR)	31
		1	TAPA DEL MECANISMO DE VÁLVULAS (GR)	33
SELLO ANULAR (DRENAJE DE ACEITE DE MOTOR)	5P-6718	2	CÁRTER - COLECTOR DEL (GR)	113
SELLO DE TAPA (VALVULA)	200-6374	1	TAPA DEL MECANISMO DE VÁLVULAS (GR)	31
TAPON DE DRENAJE DE SUMIDERO	7C-0351	2	CÁRTER - COLECTOR DEL (GR)	99
		2	CÁRTER - COLECTOR DEL (GR)	101
		2	CÁRTER - COLECTOR DEL (GR)	103
		2	CÁRTER - COLECTOR DEL (GR)	105
		2	CÁRTER - COLECTOR DEL (GR)	107
		2	CÁRTER - COLECTOR DEL (GR)	109
		2	CÁRTER - COLECTOR DEL (GR)	111
		2	CÁRTER - COLECTOR DEL (GR)	113

PIEZAS DE MANTENIMIENTO

DESCRIPCION	NUMERO DE PIEZA	CANT	SE UTILIZA EN	PAGINA
PUESTO DEL OPERADOR				
CORREA TRAPEZOIDAL (AIRE ACONDICIONADO)	1W-2934	1	COMPRESOR DE REFRIGERANTE (GR)	891
FILTRO (AIRE ACONDICIONADO)	206-7514	1	ACONDICIONADOR DE AIRE Y MONTAJE (GR)	857
		1	ACONDICIONADOR DE AIRE Y MONTAJE (GR)	859
FILTRO (CALEFACTOR)	206-7514	1	CALEFACCIÓN DE LA CABINA (GR)	918
FILTRO DE AIRE (AIRE ACONDICIONADO)	170-7272	1	ACONDICIONADOR DE AIRE (GR)	862
		1	ACONDICIONADOR DE AIRE Y MONTAJE (GR)	857
FILTRO DE AIRE (CABINA)	170-7272	1	CALEFACCIÓN DE LA CABINA (GR)	920
HOJA	101-0745	1	LIMPIAPARABRISAS DE LA VENTANA (GR)	988
HOJA DE LIMPIAPARABRISAS (CONJ)	102-2940	2	LIMPIAPARABRISAS DE LA VENTANA (GR)	986
JUEGO DE CORREAS TRAPEZOIDALES (INCLUYE 2 CORREAS)	3N-1491	1	CABINA (CONFIG)	870
	5L-3308	1	CABINA (CONFIG)	868
		1	CABINA (CONFIG)	869
		1	TECHO (CONFIG)	880
		1	TECHO (CONFIG)	881
LÁMPARA	189-3610	1	MÓDULO INDICADOR DE ADVERTENCIA (GR)	937
LÁMPARA (12 VOLTIOS)	122-7137	1	TACÓMETRO ELÉCTRICO (GR)	968
		1	TACÓMETRO ELÉCTRICO (GR)	969
LÁMPARA (12 VOLTIOS, 10 VATIOS)	6R-7490	1	INSONORIZADOR (GR)	961
LÁMPARA (12 VOLTIOS)(10 VATIOS)	6R-7490	1	REVESTIMIENTO DE LA CABINA (GR)	926
TAPÓN (CONJ) (ACONDICIONADOR DE AIRE)	3E-4052	1	TUBERIAS DE CALENTEDOR Y ACONDICIONADOR DE AIRE (GR)	930
SISTEMA DE ADMISIÓN Y ESCAPE				
ELEMENTO DEL FILTRO DE AIRE (CONJ) (PRIMARIO)	110-6326	1	FILTRO DE AIRE (GR)	201
ELEMENTO DEL FILTRO DE AIRE (CONJ) (SECUNDARIO)	110-6331	1	FILTRO DE AIRE (GR)	201
INDICADOR- CAMBIO DE FILTRO DE AIRE	7W-7417	1	INDICADOR DE CAMBIO DE FILTRO DE ACEITE (GR)	213
INDICADOR DE CAMBIO DE FILTRO DE ACEITE (GR)	8N-2694	1	INDICADOR DE CAMBIO DE FILTRO DE ACEITE (GR)	214
INDICADOR DE SERVICIO (FILTRO DE AIRE)	7W-7417	1	INDICADOR DE CAMBIO DE FILTRO DE ACEITE (GR)	212

PIEZAS DE MANTENIMIENTO

DESCRIPCION	NUMERO DE PIEZA	CANT	SE UTILIZA EN	PAGINA
SISTEMA DE COMBUSTIBLE				
ELEMENTO DE FILTRO (COMBUSTIBLE)	228-9130	1	BOMBA DE CEBADO DE COMBUSTIBLE (GR)	260
ELEMENTO DE FILTRO DE COMBUSTIBLE (CONJ)	159-6102	1	FILTRO DE COMBUSTIBLE (GR)	244
ELEMENTO DE FILTRO DE COMBUSTIBLE (CONJ) (SEPARADOR DE AGUA)	131-1812	1	FILTRO DE COMBUSTIBLE Y SEPARADOR DE AGUA (GR)	245
SELLO (FILTRO DE COMBUSTIBLE)	101-3743	1	FILTRO DE COMBUSTIBLE (GR)	244
TAPA PARA EL COMBUSTIBLE	201-0330	1	COMBUSTIBLE - TANQUE DE (GR)	264
		1	COMBUSTIBLE - TANQUE DE (GR)	268
SISTEMA DE DIRECCIÓN				
MANGUERA (53 CM)	5P-1505		TUBERÍAS DE DIRECCIÓN (GR)	464
			TUBERÍAS DE DIRECCIÓN (GR)	467
SISTEMA DE ENFRIAMIENTO				
CORREA TRAPEZOIDAL (COMPRESOR DE REFRIGERANTE)	1N-3743	1	CONFIGURACIÓN DE ENFRIAMIENTO	177
JUEGO DE CORREAS TRAPEZOIDALES (INCLUYE 2 CORREAS)	4N-8597	1	CONFIGURACIÓN DE ENFRIAMIENTO	177
		1	CONFIGURACIÓN DE ENFRIAMIENTO	178
	7W-3896	1	CONFIGURACIÓN DE ENFRIAMIENTO	176
		1	CONFIGURACIÓN DE ENFRIAMIENTO	177
LÁMPARA	122-7137	1	CONFIGURACIÓN DE ENFRIAMIENTO	176
		1	ENFRIADOR PARA ALTA TEMPERATURA DE AMBIENTE (CONFIG)	178
LÁMPARA (12 VOLTIOS)	122-7137	1	CONFIGURACIÓN DE ENFRIAMIENTO	176
		1	CONFIGURACIÓN DE ENFRIAMIENTO	177
MANGUERA DE RADIADOR	140-3637	1	RADIADOR Y ENFRIADOR DE ACEITE HIDRÁULICO (GR)	193
	140-3638	1	RADIADOR Y ENFRIADOR DE ACEITE HIDRÁULICO (GR)	193
REGULADOR DE TEMPERATURA DEL AGUA	220-2748	1	AGUA - CONEXIÓN DE (GR)	166
	225-6908	1	AGUA - CONEXIÓN DE (GR)	167
SELLO ANULAR (REGULADOR)	140-7515	1	AGUA - CONEXIÓN DE (GR)	166
SELLO ANULAR (REGULADOR DE TEMPERATURA DEL AGUA)	225-6909	1	AGUA - CONEXIÓN DE (GR)	167
SELLO (CAJA DE REGULADOR)	141-6188	1	AGUA - CONEXIÓN DE (GR)	166
TAPA DEL RADIADOR	006-8865	1	RADIADOR Y ENFRIADOR DE ACEITE HIDRÁULICO (GR)	194
TAPÓN (CONJ) (RADIADOR)	227-4376	1	RADIADOR Y ENFRIADOR DE ACEITE HIDRÁULICO (GR)	197
		1	RADIADOR Y ENFRIADOR DE ACEITE HIDRÁULICO (GR)	200

PIEZAS DE MANTENIMIENTO

DESCRIPCION	NUMERO DE PIEZA	CANT	SE UTILIZA EN	PAGINA
SISTEMA DE LUBRICACIÓN				
FILTRO DE ACEITE DEL MOTOR (CONJ)	7W-2326	1	TUBO DE LLENADO DE ACEITE (GR)	154
		1	TUBO DE LLENADO DE ACEITE (GR)	155
LATA DE RESPIRADERO (CONJ)	165-4021	1	RESPIRADERO (GR)	149
		1	RESPIRADERO (GR)	151
		1	RESPIRADERO (GR)	147
MANGUERA (TAPA DE VÁLVULA DEL RESPIRADERO DEL CARTER)	218-2685	1	RESPIRADERO (GR)	149
MANGUERA (109 CM DEL RESPIRADERO DEL CARTER ABIERTO)	136-1955		RESPIRADERO (GR)	149
MANGUERA (90 CM DE SUMIDERO DE RESPIRADERO DEL CARTER DEL MOTOR)	5P-1505		RESPIRADERO (GR)	149
SELLO (RESPIRADERO)	185-6643	1	RESPIRADERO (GR)	147
		1	RESPIRADERO (GR)	149
		1	RESPIRADERO (GR)	151
TAPÓN (CONJ) (FILTRO DE ACEITE) (MOTOR)	136-3608	1	TUBO DE LLENADO DE ACEITE (GR)	154
TAPÓN (CONJ) (LLENADO DE ACEITE DE MOTOR)	236-6651	1	TUBO DE LLENADO DE ACEITE (GR)	155
SISTEMA ELÉCTRICO Y DE ARRANQUE				
BATERÍA (12 VOLTIOS, SERVICIO PESADO)	230-6368	1	BATERÍA (GR)	279
		1	BATERÍA (GR)	281
BATERÍA (12-VOLTIOS, 750-AMPERIOS) (750AMP)	3T-5760	2	BATERÍA (GR)	275
		1	BATERÍA (GR)	277
BUJÍA INCANDESCENTE	232-6662	4	BUJÍA INCANDESCENTE (GR)	283
CORREA TRAPEZOIDAL	2P-4191	1	CARGA - ALTERNADOR DE (GR)	272
CRISTAL	174-8958	1	LUCES DE PARADA Y COLA (GR)	293
CRISTAL (AMBAR)	174-8957	1	LUCES DE REFLECTOR (GR)	296
		1	LUCES DE REFLECTOR (GR)	298
		1	LUCES DE REFLECTOR (GR)	300
		1	LUZ DE SEÑAL DE GIRO (GR)	292
CRISTAL (TRANSPARENTE)	176-0346	1	LUCES DE REFLECTOR (GR)	296
		1	LUCES DE REFLECTOR (GR)	298
		1	LUCES DE REFLECTOR (GR)	300
FUSIBLE (10 A)	3K-8782	1	LÁMPARA DE BALIZA DE ADVERTENCIA (GR)	294
		1	LÁMPARA DE BALIZA DE ADVERTENCIA (GR)	295
	113-8490	1	CABLES DE LA PLATAFORMA (GR)	367
		1	CABLES DEL ACONDICIONADOR DE AIRE (GR)	327
		1	CABLES DEL RECEPTÁCULO DE FUERZA (GR)	378
		2	LUCES DE REFLECTOR (GR)	300
FUSIBLE (10-AMPERIOS)	113-8490	1	CABLES DEL ACONDICIONADOR DE AIRE (GR)	323
		1	CABLES DE CONTROL DE AMORTIGUACIÓN (GR)	382

PIEZAS DE MANTENIMIENTO

DESCRIPCION	NUMERO DE PIEZA	CANT	SE UTILIZA EN	PAGINA
		1	CABLES DE CONTROL DE AMORTIGUACIÓN (GR)	384
		2	LUCES DE REFLECTOR Y CAMBIO DE DIRECCION (GR)	305
FUSIBLE (15 A)	113-8491	1	CABLES DE LA CABINA (GR)	336
		3	CABLES DE LA PLATAFORMA (GR)	367
		2	LUCES DE REFLECTOR (GR)	300
		2	LUCES DE REFLECTOR (GR)	302
FUSIBLE (15 AMPERIOS)	113-8491	1	CABLES DE LA CABINA (GR)	339
		2	LUCES DE REFLECTOR (GR)	296
		2	LUCES DE REFLECTOR (GR)	298
		2	LUCES DE REFLECTOR Y CAMBIO DE DIRECCION (GR)	305
FUSIBLE (20 A)	113-8492	2	CABLES DE LA PLATAFORMA (GR)	367
FUSIBLE (20-AMPERIOS)	113-8492	2	CABLES DE LA CABINA (GR)	330
		2	CABLES DE LA CABINA (GR)	333
FUSIBLE (5 AMP)	141-2759	1	CABLES DE LA DIRECCIÓN (GR)	387
		3	CABLES DE LA PLATAFORMA (GR)	367
FUSIBLE (5-AMPERIOS)	141-2759	1	CABLES DE LA CABINA (GR)	330
		1	CABLES DE LA CABINA (GR)	337
JUEGO DE CORREAS TRAPEZOIDALES (INCLUYE 2 CORREAS)	4N-8597	1	CARGA - ALTERNADOR DE (GR)	272
LÁMPARA (CONJ) (12 VOLTIOS)	165-5655	1	INSTALACION DE SEGURIDAD (GR)	287
		1	INSTALACION DE SEGURIDAD (GR)	290
LÁMPARA (12 VOLTIOS)	7X-9065	1	CABLES DE LA CONSOLA (GR)	344
		1	CABLES DE LA CONSOLA (GR)	349
	9X-8118	1	LÁMPARA DE BALIZA DE ADVERTENCIA (GR)	294
		1	LÁMPARA DE BALIZA DE ADVERTENCIA (GR)	295
	122-7137	1	CABLES DEL ACONDICIONADOR DE AIRE (GR)	326
LÁMPARA (12 VOLTIOS, 24 VATIOS)	9W-3326	1	LUCES DE REFLECTOR (GR)	296
		1	LUCES DE REFLECTOR (GR)	298
		1	LUZ DE SEÑAL DE GIRO (GR)	292
LÁMPARA (12 VOLTIOS, 55 VATIOS)	9W-0607	1	REFLECTOR (GR)	291
		1	LUCES DE REFLECTOR (GR)	296
		1	LUCES DE REFLECTOR (GR)	298
		1	LUCES DE REFLECTOR (GR)	302
		1	LUCES DE REFLECTOR Y CAMBIO DE DIRECCION (GR)	305
LÁMPARA (12 VOLTIOS/21 VATIOS)	9W-3326	1	LUCES DE REFLECTOR (GR)	300
		1	LUCES DE PARADA Y COLA (GR)	293
LÁMPARA (12 VOLTIOS/21/5 VATIOS)	3C-6516	1	LUCES DE PARADA Y COLA (GR)	293
LÁMPARA (12 VOLTIOS/55 VATIOS)	9W-0607	1	LUCES DE REFLECTOR (GR)	300
LENTE AMBAR	9X-8121	1	LÁMPARA DE BALIZA DE ADVERTENCIA (GR)	294
		1	LÁMPARA DE BALIZA DE ADVERTENCIA (GR)	295
MANDO DE CORREA	9X-8139	1	LÁMPARA DE BALIZA DE ADVERTENCIA (GR)	294
		1	LÁMPARA DE BALIZA DE ADVERTENCIA (GR)	295

PIEZAS DE MANTENIMIENTO

DESCRIPCION	NUMERO DE PIEZA	CANT	SE UTILIZA EN	PAGINA
PORTAESCOBILLAS (CONJ)	7T-6092	1	MOTOR DE ARRANQUE ELÉCTRICO (GR)	316
REFLECTOR	9R-1499	2	LUCES DE REFLECTOR (GR)	300
VIDRIO (CONJ) (REFLECTOR)	202-6614	1	REFLECTOR (GR)	291
SISTEMA HIDRÁULICO				
CONEXIÓN DE ENGRASE	3B-8489	2	CILINDRO GR - PULGAR	562
		4	MONTAJE DE CILINDRO (GR)	665
		2	POSICIONADOR DEL CUCHARÓN Y DESCONEXIÓN (GR)	572
FILTRO	4T-4520	1	VÁLVULA DE CONTROL (GR)	695
		1	VÁLVULA DE CONTROL (GR)	697
		1	VÁLVULA DE CONTROL (GR)	699
		1	VÁLVULA DE CONTROL (GR)	701
		1	VÁLVULA DE CONTROL (GR)	703
		1	VÁLVULA DE CONTROL (GR)	705
		1	VÁLVULA DE CONTROL (GR)	707
		1	VÁLVULA DE CONTROL (GR)	709
		1	VÁLVULA DE CONTROL (GR)	713
FILTRO DE ACEITE (CONJ) (HIDRAULICO) (RESISTENTE AL FUEGO)	134-3014		HIDRÁULICA (CONFIG)	571
FILTRO DE ACEITE (CONJ) (LIMPIEZA/ALTA EFICIENCIA)	126-1817		HIDRÁULICA (CONFIG)	571
FILTRO HIDRÁULICO (CONJ)	134-3014	1	FILTRO DE ACEITE (GR)	564
FILTRO (RESPIRADERO DEL TANQUE)	9R-9925	1	TANQUE HIDRÁULICO (GR)	680
FILTRO (RESPIRADERO)(HIDRAULICO)	9R-9925	1	TANQUE HIDRÁULICO Y MONTAJE (GR)	678
MANGUERA (72 CM)	5P-1505		BOMBA - TUBERÍAS DE (GR)	634
MANGUERA (96 CM CADA UNO)	136-1955		BOMBA - TUBERÍAS DE (GR)	633
SELLO ANULAR	2M-9780	1	TUBERÍAS DE LA PALANCA EXTENDIBLE (GR)	614
TAPA CONTRA EL POLVO	6V-0852	1	BOMBA - TUBERÍAS DE (GR)	633
		1	CONECTOR DE VALVULA (GR)	509
		1	TUBERÍAS CON SERVOMANDO (GR)	629
TAPA DEL TUBO DE LLENADO (ACEITE HIDRÁULICO)	123-0867	1	TANQUE HIDRÁULICO Y MONTAJE (GR)	678
TAPA, LLENADO (ACEITE HIDRÁULICO)	237-3797	1	TANQUE HIDRÁULICO (GR)	680

PIEZAS DE MANTENIMIENTO

DESCRIPCION	NUMERO DE PIEZA	CANT	SE UTILIZA EN	PAGINA
TREN DE FUERZA				
COLADOR	7T-2651	1	TRANSMISIÓN DIRECTA (GR)	436
		1	TRANSMISIÓN DIRECTA (GR)	430
FILTRO DE ACEITE (CONJ) (TRANSMISION)	119-4740	1	TRANSMISION DIRECTA (CONFIG)	427
RESPIRADERO (EJE)	197-9155	1	EJE DE IMPULSIÓN Y DE DIRECCIÓN (GR)	390
RESPIRADERO (TRANSMISION)	7T-3251	1	TRANSMISIÓN DIRECTA (GR)	430
		1	TRANSMISIÓN DIRECTA (GR)	435
TAPA	2D-2633	1	VÁLVULA DEL NEUMÁTICO (GR)	442
		1	VÁLVULA DEL NEUMÁTICO (GR)	443
TAPA CONTRA EL POLVO	6V-0852	2	TUBO DE LLENADO DE ACEITE DE LA TRANSMISIÓN (GR)	406
		2	TUBO DE LLENADO DE ACEITE DE LA TRANSMISIÓN (GR)	408
TAPÓN MAGNÉTICO	9R-6602	2	EJE TRASERO (GR)	395
	152-6144	1	DIFERENCIAL Y CORONA (GR)	400
		3	EJE DE IMPULSIÓN Y DE DIRECCIÓN (GR)	390
VALVULA (RESPIRADERO DE AIRE)	5F-5434	1	MONTAJE DEL EJE TRASERO (GR)	388

PEÇAS DE MANUTENÇÃO

DESCRIÇÃO	NÚMERO DE PEÇA	QUANT	UTILIZADA EM	PÁGINA
ACESSÓRIOS				
CALCO	9R-5555	2	CALÇO DO ESTABILIZADOR	748
		2	CALÇO DO ESTABILIZADOR	749
GRAXEIRA	3B-8488	3	LANÇA	728
	3B-8489	2	BRAÇO - CAÇAMBA RETRO-ESCAVADORA	754
		2	MONTAGEM - BRAÇO	742
GRAXEIRA (ROSCA 1/8-27 POL)	3B-8488	4	BRAÇO DE LEVANTAMENTO	726
	3B-8489	7	ARTICULAÇÃO DAS CAÇAMBAS DAS CARREGADEIRAS	736
		5	BRAÇO DE LEVANTAMENTO	726
		4	ESTABILIZADOR - RETROESCAVADEIRA	750
ARRANJO DO MOTOR				
FILTRO - ÓLEO DO MOTOR	7W-2326	1	MOTOR PRIMÁRIO	14
CHASSI E CARCAÇA				
GRAXEIRA (ROSCA 1/8-27 POL)	3B-8488	2	CHASSI DIANTEIRO	490
	3B-8489	6	ARMAÇÃO OSCILANTE	491
		2	CHASSI DIANTEIRO	490
EQUIPAMENTOS DE SERVIÇO E SUPRIMENTOS				
CADEADO	5P-8502	2	CADEADO CONTRA VANDALISMO	991
CHAVE	5P-8500	1	CADEADO CONTRA VANDALISMO	991
FERRAMENTAS DE TRABALHO				
GRAXEIRA	3B-8489	2	CAÇAMBA DE MÚLTIPLAS APLICAÇÕES	826
		2	POLEGAR	852
GRAXEIRA (ROSCA 1/8-27 POL)	3B-8489	2	CAÇAMBA DE MÚLTIPLAS APLICAÇÕES	824
		2	CAÇAMBA DE MÚLTIPLAS APLICAÇÕES	825
		2	CAÇAMBA DE MÚLTIPLAS APLICAÇÕES	827
REFLETOR	101-4415	1	PROTETOR - CAÇAMBA	838

PEÇAS DE MANUTENÇÃO

DESCRIÇÃO	NÚMERO DE PEÇA	QUANT	UTILIZADA EM	PÁGINA
MOTOR BÁSICO				
BUJÃO - DRENAGEM DO RESERVATÓRIO	7C-0351	2	CÁRTER DO ÓLEO DO MOTOR	99
		2	CÁRTER DO ÓLEO DO MOTOR	101
		2	CÁRTER DO ÓLEO DO MOTOR	103
		2	CÁRTER DO ÓLEO DO MOTOR	105
		2	CÁRTER DO ÓLEO DO MOTOR	107
		2	CÁRTER DO ÓLEO DO MOTOR	109
		2	CÁRTER DO ÓLEO DO MOTOR	111
		2	CÁRTER DO ÓLEO DO MOTOR	113
JUNTA (MECANISMO DAS VÁLVULAS - TAMPA)	196-4886	1	TAMPA - MECANISMO DAS VÁLVULAS	29
JUNTA (TAMPA DA VÁLVULA)	225-6451	1	TAMPA - MECANISMO DAS VÁLVULAS	35
MANGUEIRA (RESPIRO)	198-8645	1	TAMPA - MECANISMO DAS VÁLVULAS	33
MOLA (MANGUEIRA DO RESPIRO)	162-1565	1	TAMPA - MECANISMO DAS VÁLVULAS	29
		1	TAMPA - MECANISMO DAS VÁLVULAS	31
		1	TAMPA - MECANISMO DAS VÁLVULAS	33
RESPIRO DA MANGUEIRA	175-0084	1	TAMPA - MECANISMO DAS VÁLVULAS	31
RESPIRO DA MANGUEIRA (CÁRTER DO MOTOR)	175-0084	1	TAMPA - MECANISMO DAS VÁLVULAS	29
RETENTOR DE ANEL-O (DRENO DO ÓLEO DO MOTOR)	5P-6718	2	CÁRTER DO ÓLEO DO MOTOR	113
VEDADOR - TAMPA (VÁLVULA)	200-6374	1	TAMPA - MECANISMO DAS VÁLVULAS	31
POSTO DO OPERADOR				
CORREIA EM V (AR CONDICIONADO)	1W-2934	1	COMPRESSOR DE REFRIGERANTE	891
FILTRO - AR (AR CONDICIONADO)	170-7272	1	CONDICIONADOR DE AR	862
		1	CONDICIONADOR DE AR E MONTAGEM	857
FILTRO - AR (CABINE)	170-7272	1	AQUECEDOR DA CABINE	920
FILTRO (AQUECEDOR)	206-7514	1	AQUECEDOR DA CABINE	918
FILTRO (AR CONDICIONADO)	206-7514	1	CONDICIONADOR DE AR E MONTAGEM	857
		1	CONDICIONADOR DE AR E MONTAGEM	859
JOGO DE CORREIAS EM V (INCLUI 2 CORREIAS)	3N-1491	1	CABINE	870
	5L-3308	1	CABINE	868
		1	CABINE	869
		1	TOLDO	880
		1	TOLDO	881
LAMINA	101-0745	1	LIMPADOR DO VIDRO	988
LÂMINA	102-2940	2	LIMPADOR DO VIDRO	986
LÂMPADA	189-3610	1	MÓDULO - INDICADOR DE ALARME	937
LÂMPADA (12 V)	122-7137	1	TACÔMETRO - ELÉTRICO	969
LÂMPADA (12-VOLTS)	122-7137	1	TACÔMETRO - ELÉTRICO	968
LÂMPADA (12-VOLTS, 10-WATTS)	6R-7490	1	REDUÇÃO DE RUÍDO	961
LÂMPADA (12 VOLT)(10 WATT)	6R-7490	1	REVESTIMENTO DA CABINE	926
TAMPA (CONDICIONADOR DE AR)	3E-4052	1	TUBULAÇÕES - AQUECEDOR E AR CONDICIONADO	930

PEÇAS DE MANUTENÇÃO

DESCRIÇÃO	NÚMERO DE PEÇA	QUANT	UTILIZADA EM	PÁGINA
SISTEMA DE ADMISSÃO E ESCAPE DE AR				
ELEMENTO DO FILTRO DE AR (PRIMÁRIO)	110-6326	1	PURIFICADOR DE AR	201
ELEMENTO DO FILTRO DE AR (SECUNDÁRIO)	110-6331	1	PURIFICADOR DE AR	201
INDICADOR - MANUTENÇÃO (FILTRO DE AR)	7W-7417	1	INDICADOR - TROCA DO FILTRO DE AR	212
INDICADOR - TROCA DO FILTRO DE AR	8N-2694	1	INDICADOR - TROCA DO FILTRO DE AR	214
INDICADOR-TROCAR FILTRO DE AR	7W-7417	1	INDICADOR - TROCA DO FILTRO DE AR	213
SISTEMA DE ARREFECIMENTO				
CORREIA EM V (COMPRESSOR DO GÁS REFRIGERANTE)	1N-3743	1	ARREFECIMENTO	177
JOGO DE CORREIAS EM V (INCLUI 2 CORREIAS)	4N-8597	1	ARREFECIMENTO	177
		1	ARREFECIMENTO	178
	7W-3896	1	ARREFECIMENTO	176
		1	ARREFECIMENTO	177
LÂMPADA	122-7137	1	ARREFECIMENTO	176
		1	ARREFECIMENTO - TEMP. AMBIENTE ALTA	178
LÂMPADA (12-VOLTS)	122-7137	1	ARREFECIMENTO	176
		1	ARREFECIMENTO	177
MANGUEIRA - RADIADOR	140-3637	1	RADIADOR E ARREFECEDOR DO ÓLEO HIDRÁULICO	193
	140-3638	1	RADIADOR E ARREFECEDOR DO ÓLEO HIDRÁULICO	193
REGULADOR DE TEMPERATURA DA ÁGUA	220-2748	1	CONEXÃO - TUBO D'ÁGUA	166
	225-6908	1	CONEXÃO - TUBO D'ÁGUA	167
RETENTOR (ALOJAMENTO DO REGULADOR)	141-6188	1	CONEXÃO - TUBO D'ÁGUA	166
RETENTOR DE ANEL-O (REGULADOR)	140-7515	1	CONEXÃO - TUBO D'ÁGUA	166
RETENTOR DE ANEL-O (REGULADOR DA TEMPERATURA DA ÁGUA)	225-6909	1	CONEXÃO - TUBO D'ÁGUA	167
TAMPA - RADIADOR	006-8865	1	RADIADOR E ARREFECEDOR DO ÓLEO HIDRÁULICO	194
TAMPA (RADIADOR)	227-4376	1	RADIADOR E ARREFECEDOR DO ÓLEO HIDRÁULICO	197
		1	RADIADOR E ARREFECEDOR DO ÓLEO HIDRÁULICO	200
SISTEMA DE DIREÇÃO				
MANGUEIRA (53CM)	5P-1505		TUBOS - DIREÇÃO	464
			TUBOS - DIREÇÃO	467

PEÇAS DE MANUTENÇÃO

DESCRIÇÃO	NÚMERO DE PEÇA	QUANT	UTILIZADA EM	PÁGINA
SISTEMA DE LUBRIFICAÇÃO				
FILTRO - ÓLEO DO MOTOR	7W-2326	1	BOCAL DE ENCHIMENTO DE ÓLEO DO MOTOR	154
		1	BOCAL DE ENCHIMENTO DE ÓLEO DO MOTOR	155
LATA - RESPIRO	165-4021	1	RESPIRO	147
		1	RESPIRO	149
		1	RESPIRO	151
MANGUEIRA (TAMPA DA VÁLVULA DO RESPIRO DO CÁRTER)	218-2685	1	RESPIRO	149
MANGUEIRA (109CM - ABERTURA DO RESPIRO DO CÁRTER)	136-1955		RESPIRO	149
MANGUEIRA (90 CM - RESERVATÓRIO DO RESPIRO DO CÁRTER)	5P-1505		RESPIRO	149
RETENTOR (RESPIRO)	185-6643	1	RESPIRO	147
		1	RESPIRO	149
		1	RESPIRO	151
TAMPA (BOCAL DE ENCHIMENTO DE ÓLEO) (MOTOR)	136-3608	1	BOCAL DE ENCHIMENTO DE ÓLEO DO MOTOR	154
TAMPA (BOCAL DE ENCHIMENTO DO OLEO DO MOTOR)	236-6651	1	BOCAL DE ENCHIMENTO DE ÓLEO DO MOTOR	155
SISTEMA DO COMBUSTÍVEL				
ELEMENTO - FILTRANTE (COMBUSTÍVEL)	228-9130	1	BOMBA DE ESCORVA DO COMBUSTÍVEL	260
ELEMENTO - FILTRO DE COMBUSTÍVEL	159-6102	1	FILTRO - COMBUSTÍVEL	244
ELEMENTO - FILTRO DE COMBUSTÍVEL (SEPARADOR DE ÁGUA)	131-1812	1	FILTRO DE COMBUSTÍVEL E SEPARADOR DE ÁGUA	245
RETENTOR (FILTRO DE COMBUSTÍVEL)	101-3743	1	FILTRO - COMBUSTÍVEL	244
TAMPA - TANQUE DE COMBUSTÍVEL	201-0330	1	TANQUE DE COMBUSTÍVEL	264
		1	TANQUE DE COMBUSTÍVEL	268
SISTEMA ELÉTRICO DE PARTIDA				
BATERIA (12 VOLTS, SERVIÇO PESADO)	230-6368	1	BATERIA	279
		1	BATERIA	281
BATERIA (12 VOLTS, 750 AMPERES) (750 A)	3T-5760	2	BATERIA	275
		1	BATERIA	277
CORREIA DE COMANDO	9X-8139	1	LUZ GIRATÓRIA DE ALARME	294
		1	LUZ GIRATÓRIA DE ALARME	295
CORREIA EM V	2P-4191	1	ALTERNADOR DE CORRENTE	272
FUSÍVEL (10 A)	3K-8782	1	LUZ GIRATÓRIA DE ALARME	294
		1	LUZ GIRATÓRIA DE ALARME	295
	113-8490	1	CABOS/FIOS ELÉTRICOS - AR CONDICIONADO	327
		5	CABOS/FIOS ELÉTRICOS - PLATAFORMA	367
		1	CABOS/FIOS ELÉTRICOS - TOMADA DE FORÇA	378
		2	SISTEMA DE ILUMINAÇÃO - FARÓIS	300
FUSÍVEL (10 AMPERES)	113-8490	1	CABOS/FIOS ELÉTRICOS - AR CONDICIONADO	323

PEÇAS DE MANUTENÇÃO

DESCRIÇÃO	NÚMERO DE PEÇA	QUANT	UTILIZADA EM	PÁGINA
		2	SISTEMA DE ILUMINAÇÃO - FARÓIS E SINAL	305
		1	CABOS/FIOS ELÉTRICOS - ABSORÇÃO DE IMPACTOS	382
		1	CABOS/FIOS ELÉTRICOS - ABSORÇÃO DE IMPACTOS	384
FUSÍVEL (15 A)	113-8491	1	CABOS/FIOS ELÉTRICOS - CABINE	336
		1	CABOS/FIOS ELÉTRICOS - PLATAFORMA	367
		2	SISTEMA DE ILUMINAÇÃO - FARÓIS	300
		2	SISTEMA DE ILUMINAÇÃO - FARÓIS	302
FUSÍVEL (15 AMPERES)	113-8491	2	SISTEMA DE ILUMINAÇÃO - FARÓIS	296
		2	SISTEMA DE ILUMINAÇÃO - FARÓIS	298
		2	SISTEMA DE ILUMINAÇÃO - FARÓIS E SINAL	305
		1	CABOS/FIOS ELÉTRICOS - CABINE	339
FUSÍVEL (20 A)	113-8492	2	CABOS/FIOS ELÉTRICOS - PLATAFORMA	367
FUSÍVEL (20-AMPERES)	113-8492	2	CABOS/FIOS ELÉTRICOS - CABINE	330
		2	CABOS/FIOS ELÉTRICOS - CABINE	333
FUSÍVEL (5 AMP)	141-2759	1	CABOS/FIOS ELÉTRICOS - DIREÇÃO	387
		2	CABOS/FIOS ELÉTRICOS - PLATAFORMA	367
FUSÍVEL (5 AMPÈRES)	141-2759	1	CABOS/FIOS ELÉTRICOS - CABINE	330
		1	CABOS/FIOS ELÉTRICOS - CABINE	337
JOGO DE CORREIAS EM V (INCLUI 2 CORREIAS)	4N-8597	1	ALTERNADOR DE CORRENTE	272
LÂMPADA (12 V)	7X-9065	1	CABOS/FIOS ELÉTRICOS DO CONSOLE	344
	9X-8118	1	LUZ GIRATÓRIA DE ALARME	294
		1	LUZ GIRATÓRIA DE ALARME	295
LÂMPADA (12-VOLTS)	7X-9065	1	CABOS/FIOS ELÉTRICOS DO CONSOLE	349
	122-7137	1	CABOS/FIOS ELÉTRICOS - AR CONDICIONADO	326
	165-5655	1	INSTALAÇÃO-SEGURANÇA	287
		1	INSTALAÇÃO-SEGURANÇA	290
LÂMPADA (12-VOLTS, 24-WATTS)	9W-3326	1	LÂMPADA - SINALIZAÇÃO	292
		1	SISTEMA DE ILUMINAÇÃO - FARÓIS	296
		1	SISTEMA DE ILUMINAÇÃO - FARÓIS	298
LÂMPADA (12 VOLTS, 55 WATTS)	9W-0607	1	LÂMPADA - FAROL	291
LÂMPADA (12-VOLTS, 55-WATTS)	9W-0607	1	SISTEMA DE ILUMINAÇÃO - FARÓIS	296
		1	SISTEMA DE ILUMINAÇÃO - FARÓIS	298
		1	SISTEMA DE ILUMINAÇÃO - FARÓIS	302
		1	SISTEMA DE ILUMINAÇÃO - FARÓIS E SINAL	305
LÂMPADA (12 VOLTS/21 WATTS)	9W-3326	1	LUZ TRASEIRA E DE FREIO	293
		1	SISTEMA DE ILUMINAÇÃO - FARÓIS	300
LÂMPADA (12 VOLTS/21/5 WATTS)	3C-6516	1	LUZ TRASEIRA E DE FREIO	293
LÂMPADA (12 VOLTS/55 WATTS)	9W-0607	1	SISTEMA DE ILUMINAÇÃO - FARÓIS	300
LENTE	174-8958	1	LUZ TRASEIRA E DE FREIO	293
LENTE ÂMBAR	9X-8121	1	LUZ GIRATÓRIA DE ALARME	294
		1	LUZ GIRATÓRIA DE ALARME	295
LENTE (ÂMBER)	174-8957	1	LÂMPADA - SINALIZAÇÃO	292

PEÇAS DE MANUTENÇÃO

DESCRIÇÃO	NÚMERO DE PEÇA	QUANT	UTILIZADA EM	PÁGINA
		1	SISTEMA DE ILUMINAÇÃO - FARÓIS	296
		1	SISTEMA DE ILUMINAÇÃO - FARÓIS	298
		1	SISTEMA DE ILUMINAÇÃO - FARÓIS	300
LENTE (FAROL)	202-6614	1	LÂMPADA - FAROL	291
LENTE (TRANSPARENTE)	176-0346	1	SISTEMA DE ILUMINAÇÃO - FARÓIS	296
		1	SISTEMA DE ILUMINAÇÃO - FARÓIS	298
		1	SISTEMA DE ILUMINAÇÃO - FARÓIS	300
REFLETOR	9R-1499	2	SISTEMA DE ILUMINAÇÃO - FARÓIS	300
SUPORTE - ESCOVA	7T-6092	1	MOTOR ELÉTRICO DE PARTIDA	316
VELA DE AQUECIMENTO; VELA INCANDESCENTE	232-6662	4	VELA DE AQUECIMENTO; VELA INCANDESCENTE	283
SISTEMA HIDRÁULICO				
FILTRO	4T-4520	1	VÁLVULA DE CONTROLE	695
		1	VÁLVULA DE CONTROLE	697
		1	VÁLVULA DE CONTROLE	699
		1	VÁLVULA DE CONTROLE	701
		1	VÁLVULA DE CONTROLE	703
		1	VÁLVULA DE CONTROLE	705
		1	VÁLVULA DE CONTROLE	707
		1	VÁLVULA DE CONTROLE	709
		1	VÁLVULA DE CONTROLE	713
FILTRO - HIDRÁULICO	134-3014	1	FILTRO - ÓLEO	564
FILTRO - ÓLEO (HIDRÁULICO) (RESISTENTE A FOGO)	134-3014		COMANDO HIDRÁULICO	571
FILTRO - ÓLEO (LIMPEZA / ALTA EFICIÊNCIA)	126-1817		COMANDO HIDRÁULICO	571
FILTRO (RESPIRO DO TANQUE HIDRAULICO)	9R-9925	1	TANQUE HIDRÁULICO	680
FILTRO (RESPIRO)(HIDRÁULICO)	9R-9925	1	TANQUE DE ÓLEO HIDRÁULICO E MONTAGEM	678
GRAXEIRA	3B-8489	2	CILINDRO - POLEGAR	562
		2	DESENGATE E POSICIONADOR DA CAÇAMBA	572
		4	MONTAGEM - CILINDRO	665
MANGUEIRA (72CM)	5P-1505		TUBOS - BOMBA	634
MANGUEIRA (96CM CADA)	136-1955		TUBOS - BOMBA	633
RETENTOR DE ANEL-O	2M-9780	1	TUBOS - BRAÇO COM EXTENSÃO	614
TAMPA - BOCAL DE ENCHIMENTO (ÓLEO HIDRÁULICO)	123-0867	1	TANQUE DE ÓLEO HIDRÁULICO E MONTAGEM	678
TAMPA - ENCHIMENTO (ÓLEO HIDRÁULICO)	237-3797	1	TANQUE HIDRÁULICO	680
TAMPA CONTRA POEIRA	6V-0852	1	TUBOS - BOMBA	633
		1	TUBOS - CIRCUITO PILOTO	629
		1	VÁLVULA DO CONECTOR	509

PEÇAS DE MANUTENÇÃO

DESCRIÇÃO	NÚMERO DE PEÇA	QUANT	UTILIZADA EM	PÁGINA
TREM DE FORÇA				
BUJÃO MAGNÉTICO	9R-6602	2	SEMI-EIXO TRASEIRO	395
	152-6144	1	DIFERENCIAL E COROA	400
		3	EIXO DE PROPULSÃO E DIREÇÃO	390
FILTRO - ÓLEO (TRANSMISSÃO)	119-4740	1	TRANSMISSÃO DIRETA	427
RESPIRO (EIXO)	197-9155	1	EIXO DE PROPULSÃO E DIREÇÃO	390
RESPIRO (TRANSMISSÃO)	7T-3251	1	TRANSMISSÃO DIRETA	430
		1	TRANSMISSÃO DIRETA	435
TAMPA	2D-2633	1	VÁLVULA DE PNEU	442
		1	VÁLVULA DE PNEU	443
TAMPA CONTRA POEIRA	6V-0852	2	BOCAL DE ENCHIMENTO DE ÓLEO DO TREM DE FORÇA	406
		2	BOCAL DE ENCHIMENTO DE ÓLEO DO TREM DE FORÇA	408
TELA FILTRANTE	7T-2651	1	TRANSMISSÃO DIRETA	430
		1	TRANSMISSÃO DIRETA	436
VÁLVULA DE ALÍVIO (RESPIRO DE AR)	5F-5434	1	EIXO TRASEIRO E MONTAGEM	388

WARTUNGSTEILE

BESCHREIBUNG	ERSATZTEIL-NUMMER	MENGE	VERWENDET IN	SEITE
ARBEITSGERÄTE				
POLSTER	9R-5555	2	SEITENSTÜTZENPLATTEN	748
		2	SEITENSTÜTZENPLATTEN	749
REFLEKTOR	101-4415	1	SCHAUFELSCHUTZ	838
SCHMIERNIPPEL	3B-8488	3	AUSLEGER	728
	3B-8489	2	DAUMEN	852
		2	KOMBISCHAUFEL	826
		2	LÖFFELSTIEL	754
		2	STIELAUFHÄNGUNG	742
SCHMIERNIPPEL (1/8-27-GEWINDE)	3B-8488	4	HUBARM	726
	3B-8489	5	HUBARM	726
		2	KOMBISCHAUFEL	824
		2	KOMBISCHAUFEL	825
		2	KOMBISCHAUFEL	827
		7	SCHAUFELGESTÄNGE	736
		4	SEITENSTÜTZEN	750
ELEKTRISCHE ANLAGE UND STARTSYSTEM				
ABDECKGLAS	174-8958	1	BREMS- UND RÜCKLEUCHTE	293
ABDECKGLAS (ARBEITSSCHEIN-WERFER)	202-6614	1	ARBEITSLEUCHTEN	291
ABDECKGLAS (DURCHSICHTIG)	176-0346	1	ARBEITSLEUCHTEN	296
		1	ARBEITSLEUCHTEN	298
		1	ARBEITSLEUCHTEN	300
ABDECKGLAS (GELB)	9X-8121	1	RUNDUM-KENNLEUCHTE	294
		1	RUNDUM-KENNLEUCHTE	295
	174-8957	1	ARBEITSLEUCHTEN	296
		1	ARBEITSLEUCHTEN	298
		1	ARBEITSLEUCHTEN	300
		1	BLINKLEUCHTE	292
BATTERIE (12 V, HD)	230-6368	1	BATTERIE	279
BATTERIE (12V, DH)	230-6368	1	BATTERIE	281
BATTERIE (12V, 750 A) (750 A)	3T-5760	2	BATTERIE	275
		1	BATTERIE	277
BELEUCHTUNGSANLAGE (12 V)	165-5655	1	SICHERHEITSEINBAUSATZ	287
		1	SICHERHEITSEINBAUSATZ	290
BÜRSTENHALTER	7T-6092	1	STARTERMOTOR	316
GLÜHKERZE	232-6662	4	GLÜHKERZE	283
KEILRIEMEN	2P-4191	1	DREHSTROMGENERATOR	272
KEILRIEMENSATZ (EINSCHL. ZWEI RIEMEN)	4N-8597	1	DREHSTROMGENERATOR	272
LAUFBAND UND ANTRIEB	9X-8139	1	RUNDUM-KENNLEUCHTE	294
		1	RUNDUM-KENNLEUCHTE	295
LEUCHTE (12 V)	7X-9065	1	KONSOLENVERDRAHTUNG	344
		1	KONSOLENVERDRAHTUNG	349
	9X-8118	1	RUNDUM-KENNLEUCHTE	294
		1	RUNDUM-KENNLEUCHTE	295
	122-7137	1	KLIMAANLAGENVERDRAHTUNG	326
LEUCHTE (12 V/ 21/5 W)	3C-6516	1	BREMS- UND RÜCKLEUCHTE	293
LEUCHTE (12 V, 24 W)	9W-3326	1	ARBEITSLEUCHTEN	298
		1	BLINKLEUCHTE	292
		1	ARBEITSLEUCHTEN	296
LEUCHTE (12 V, 55 W)	9W-0607	1	ARBEITS- U. SIGNALLEUCHTE	305
		1	ARBEITSLEUCHTEN	291

WARTUNGSTEILE

BESCHREIBUNG	ERSATZTEIL-NUMMER	MENGE	VERWENDET IN	SEITE
		1	ARBEITSLEUCHTEN	298
		1	ARBEITSLEUCHTEN	302
		1	ARBEITSLEUCHTEN	296
LEUCHTE (12 V/21 W)	9W-3326	1	ARBEITSLEUCHTEN	300
		1	BREMS- UND RÜCKLEUCHTE	293
LEUCHTE (12V/55W)	9W-0607	1	ARBEITSLEUCHTEN	300
		1	ARBEITSLEUCHTEN	300
REFLEKTOR	9R-1499	2	ARBEITSLEUCHTEN	300
SICHERUNG (10 A)	3K-8782	1	RUNDUM-KENNLEUCHTE	294
		1	RUNDUM-KENNLEUCHTE	295
	113-8490	2	ARBEITS- U. SIGNALLEUCHTE	305
		2	ARBEITSLEUCHTEN	300
		1	KLIMAANLAGENVERDRAHTUNG	323
		1	KLIMAANLAGENVERDRAHTUNG	327
		5	FAHRERPLATTFORMVERDRAHTUNG	367
		1	SCHWINGUNGSDÄMPFUNGSVER-DRAHTUNG	382
		1	SCHWINGUNGSDÄMPFUNGSVER-DRAHTUNG	384
		1	STECKDOSENVERDRAHTUNG	378
SICHERUNG (15 A)	113-8491	2	ARBEITS- U. SIGNALLEUCHTE	305
		2	ARBEITSLEUCHTEN	296
		2	ARBEITSLEUCHTEN	298
		2	ARBEITSLEUCHTEN	300
		2	ARBEITSLEUCHTEN	302
		1	FAHRERHAUSVERDRAHTUNG	336
		1	FAHRERHAUSVERDRAHTUNG	339
		1	FAHRERPLATTFORMVERDRAHTUNG	367
SICHERUNG (20 A)	113-8492	2	FAHRERHAUSVERDRAHTUNG	330
		2	FAHRERHAUSVERDRAHTUNG	333
		2	FAHRERPLATTFORMVERDRAHTUNG	367
SICHERUNG (5 A)	141-2759	1	FAHRERHAUSVERDRAHTUNG	330
		1	FAHRERHAUSVERDRAHTUNG	337
		3	FAHRERPLATTFORMVERDRAHTUNG	367
		1	LENKVERDRAHTUNG	387

WARTUNGSTEILE

BESCHREIBUNG	ERSATZTEIL-NUMMER	MENGE	VERWENDET IN	SEITE
FAHRERHAUS				
FILTER (HEIZUNG)	206-7514	1	FAHRERHAUSHEIZUNG	918
FILTER (KLIMAANLAGE)	206-7514	1	KLIMAANLAGE UND AUFHÄNGUNG	857
		1	KLIMAANLAGE UND AUFHÄNGUNG	859
KAPPE (KLIMAANLAGE)	3E-4052	1	HEIZUNGS- U. KLIMAANLAGENLEITUNGEN	930
KEILRIEMEN (KLIMAANLAGE)	1W-2934	1	KÄLTEMITTELKOMPRESSOR	891
KEILRIEMENSATZ (EINSCHL. 2 RIEMEN)	3N-1491	1	FAHRERHAUS	870
	5L-3308	1	FAHRERHAUS	868
		1	FAHRERHAUS	869
		1	WETTERDACH	880
		1	WETTERDACH	881
LEUCHTE	189-3610	1	WARNANZEIGEMODUL	937
LEUCHTE (12 V)	122-7137	1	DREHZAHLMESSER, ELEKTR.	968
		1	DREHZAHLMESSER, ELEKTR.	969
LEUCHTE (12 V, 10 W)	6R-7490	1	SCHALLDÄMPFUNG	961
LEUCHTE (12 V)(10 W)	6R-7490	1	FAHRERHAUSAUSKLEIDUNG	926
LUFTFILTER (FAHRERHAUS)	170-7272	1	FAHRERHAUSHEIZUNG	920
LUFTFILTER (KLIMAANLAGE)	170-7272	1	KLIMAANLAGE	862
		1	KLIMAANLAGE UND AUFHÄNGUNG	857
SCHEIBENWISCHERBLATT	102-2940	2	SCHEIBENWISCHER	986
SCHILD	101-0745	1	SCHEIBENWISCHER	988

WARTUNGSTEILE

BESCHREIBUNG	ERSATZTEIL-NUMMER	MENGE	VERWENDET IN	SEITE
HYDRAULIKSYSTEM				
EINFÜLLKAPPE (HYDRAULIKÖL)	237-3797	1	HYDRAULIKTANK	680
EINFÜLLSTUTZENKAPPE (HYDRAULIKÖL)	123-0867	1	HYDRAULIKTANK UND BEFESTIGUNGSTEILE	678
FILTER	4T-4520	1	STEUERVENTIL	695
		1	STEUERVENTIL	697
		1	STEUERVENTIL	699
		1	STEUERVENTIL	701
		1	STEUERVENTIL	703
		1	STEUERVENTIL	705
		1	STEUERVENTIL	707
		1	STEUERVENTIL	709
		1	STEUERVENTIL	713
FILTER (ENTLÜFTER)(HYDRAULIK)	9R-9925	1	HYDRAULIKTANK UND BEFESTIGUNGSTEILE	678
FILTER (HYDRAULIKTANKENTLÜFTER)	9R-9925	1	HYDRAULIKTANK	680
HYDRAULIKFILTER	134-3014	1	ÖLFILTER	564
O-RING-DICHTUNG	2M-9780	1	TELESKOPSTIELLEITUNGEN	614
ÖLFILTER (HYDRAULISCH) (FEUERFEST)	134-3014		HYDRAULIKSYSTEM	571
ÖLFILTER (REINIGUNG/HOCHLEISTUNG)	126-1817		HYDRAULIKSYSTEM	571
SCHLAUCHLEITUNG (JE 96CM)	136-1955		HYDRAULIKPUMPE UND LEITUNGEN	633
SCHLAUCHLEITUNG (72CM)	5P-1505		HYDRAULIKPUMPE UND LEITUNGEN	634
SCHMIERNIPPEL	3B-8489	2	DAUMENZYLINDER	562
		2	SCHAUFELAUSSCHALTER UND -EINSTELLER	572
		4	ZYLINDERAUFHÄNGUNG	665
STAUBKAPPE	6V-0852	1	HYDRAULIKPUMPE UND LEITUNGEN	633
		1	VERBINDUNGSVENTIL	509
		1	VORSTEUERLEITUNGEN	629
KRAFTSTOFFSYSTEM				
DICHTUNG (KRAFTSTOFFILTER)	101-3743	1	KRAFTSTOFFILTER	244
FILTER (KRAFTSTOFF)	228-9130	1	KRAFTSTOFF-ENTLÜFTUNGSPUMPE	260
KRAFTSTOFFFILTEREINSATZ	159-6102	1	KRAFTSTOFFILTER	244
KRAFTSTOFFFILTEREINSATZ (WASSERABSCHEIDER)	131-1812	1	WASSERABSCHEIDER- U. KRAFTSTOFFILTER	245
KRAFTSTOFFTANKKAPPE	201-0330	1	KRAFTSTOFFTANK	264
		1	KRAFTSTOFFTANK	268

WARTUNGSTEILE

BESCHREIBUNG	ERSATZTEIL-NUMMER	MENGE	VERWENDET IN	SEITE
KRAFTÜBERTRAGUNG				
DRUCKBEGRENZUNGSVENTIL (ENTLÜFTUNGSVORRICHTUNG)	5F-5434	1	HINTERACHSE U. BEFESTIGUNG	388
ENTLÜFTER (ACHSE)	197-9155	1	ANTRIEBS- UND LENKACHSE	390
ENTLÜFTER (GETRIEBE)	7T-3251	1	WECHSELGETRIEBE	430
		1	WECHSELGETRIEBE	435
KAPPE	2D-2633	1	REIFENVENTIL	442
		1	REIFENVENTIL	443
MAGNETSTOPFEN	9R-6602	2	HINTERACHSE	395
	152-6144	3	ANTRIEBS- UND LENKACHSE	390
		1	DIFFERENTIAL UND TELLERRAD	400
ÖLFILTER (GETRIEBE)	119-4740	1	MECHANISCHES GETRIEBE	427
SIEB	7T-2651	1	WECHSELGETRIEBE	430
		1	WECHSELGETRIEBE	436
STAUBKAPPE	6V-0852	2	GETRIEBEÖLFÜLLSTUTZEN	406
		2	GETRIEBEÖLFÜLLSTUTZEN	408
KÜHLSYSTEM				
DICHTUNG (REGULATORGEHÄUSE)	141-6188	1	KÜHLWASSERANSCHLUSS	166
KAPPE (KÜHLER)	227-4376	1	KÜHLER UND HYDRAULIKÖLKÜHLER	197
		1	KÜHLER UND HYDRAULIKÖLKÜHLER	200
KEILRIEMEN (KÄLTEMITTELKOM-PRESSOR)	1N-3743	1	KÜHLSYSTEM	177
KEILRIEMENSATZ (EINSCHL. 2 RIEMEN)	4N-8597	1	KÜHLSYSTEM	177
		1	KÜHLSYSTEM	178
	7W-3896	1	KÜHLSYSTEM	177
	4N-8597	1	KÜHLSYSTEM	177
	7W-3896	1	KÜHLSYSTEM	176
KÜHLERKAPPE	006-8865	1	KÜHLER UND HYDRAULIKÖLKÜHLER	194
KÜHLERSCHLAUCH	140-3637	1	KÜHLER UND HYDRAULIKÖLKÜHLER	193
	140-3638	1	KÜHLER UND HYDRAULIKÖLKÜHLER	193
LEUCHTE	122-7137	1	KÜHLSYSTEM	176
		1	KÜHLSYSTEM - HOHE UMGEBUNGSTEMPERATUREN	178
LEUCHTE (12 V)	122-7137	1	KÜHLSYSTEM	176
		1	KÜHLSYSTEM	177
O-RING-DICHTUNG (KÜHLWASSERTHERMOSTAT)	225-6909	1	KÜHLWASSERANSCHLUSS	167
O-RING-DICHTUNG (REGULATOR)	140-7515	1	KÜHLWASSERANSCHLUSS	166
WASSERTEMPERATURREGLER	220-2748	1	KÜHLWASSERANSCHLUSS	166
	225-6908	1	KÜHLWASSERANSCHLUSS	167
LENKSYSTEM				
SCHLAUCHLEITUNG (53CM)	5P-1505		LENKÖLLEITUNGEN	464
			LENKÖLLEITUNGEN	467
LUFTANSAUG- UND ABGASSYSTEM				
LUFTFILTER (HAUPTELEMENT)	110-6326	1	LUFTREINIGER	201
LUFTFILTER (SICHERHEITSELEMENT)	110-6331	1	LUFTREINIGER	201
LUFTFILTERWARTUNGSANZEIGE	8N-2694	1	LUFTFILTERWARTUNGSANZEIGE	214
LUFTFILTERWECHSELANZEIGE	7W-7417	1	LUFTFILTERWARTUNGSANZEIGE	213
WARTUNGSANZEIGE (LUFTFILTER)	7W-7417	1	LUFTFILTERWARTUNGSANZEIGE	212

WARTUNGSTEILE

BESCHREIBUNG	ERSATZTEIL-NUMMER	MENGE	VERWENDET IN	SEITE
MOTOR				
ÖLFILTER	7W-2326	1	MOTORAUSFÜHRUNG	14
MOTOR (GRUNDAUSFÜHRUNG)				
ABDECKUNGSDICHTUNG (VENTIL)	200-6374	1	VENTILDECKEL	31
DICHTUNG (VENTILDECKEL)	196-4886	1	VENTILDECKEL	29
	225-6451	1	VENTILDECKEL	35
ENTLÜFTERSCHLAUCH	175-0084	1	VENTILDECKEL	31
ENTLÜFTERSCHLAUCH (KURBELGEHÄUSE)	175-0084	1	VENTILDECKEL	29
FEDER (ENTLÜFTERSCHLAUCH)	162-1565	1	VENTILDECKEL	29
		1	VENTILDECKEL	31
		1	VENTILDECKEL	33
O-RING-DICHTUNG (MOTORÖLABLASS)	5P-6718	2	ÖLWANNE	113
ÖLWANNEN-ABLASSCHRAUBE	7C-0351	2	ÖLWANNE	99
		2	ÖLWANNE	101
		2	ÖLWANNE	103
		2	ÖLWANNE	105
		2	ÖLWANNE	107
		2	ÖLWANNE	109
		2	ÖLWANNE	111
		2	ÖLWANNE	113
SCHLAUCHLEITUNG (ENTLÜFTER)	198-8645	1	VENTILDECKEL	33
RAHMEN UND FAHRGESTELL				
SCHMIERNIPPEL (1/8-27-GEWINDE)	3B-8488	2	LADERRAHMEN	490
	3B-8489	2	LADERRAHMEN	490
		6	SCHWENKRAHMEN	491
SCHMIERSYSTEM				
DICHTUNG (ENTLÜFTER)	185-6643	1	ENTLÜFTER	147
		1	ENTLÜFTER	149
		1	ENTLÜFTER	151
ENTLÜFTERPATRONE	165-4021	1	ENTLÜFTER	147
		1	ENTLÜFTER	149
		1	ENTLÜFTER	151
KAPPE (MOTORÖLEINFÜLLUNG)	236-6651	1	MOTORÖLEINFÜLLSTUTZEN	155
KAPPE (ÖLEINFÜLLUNG) (MOTOR)	136-3608	1	MOTORÖLEINFÜLLSTUTZEN	154
ÖLFILTER	7W-2326	1	MOTORÖLEINFÜLLSTUTZEN	154
		1	MOTORÖLEINFÜLLSTUTZEN	155
SCHLAUCHLEITUNG (KUREBLGEHÄ-SUEENTLÜFTERVENTILDECKEL)	218-2685	1	ENTLÜFTER	149
SCHLAUCHLEITUNG (109CM KURBELGEHÄUSEENTLÜFTER OFFEN)	136-1955		ENTLÜFTER	149
SCHLAUCHLEITUNG (90CM KURBELWELLENENTLÜFTERSUMPF)	5P-1505		ENTLÜFTER	149
WARTUNGSAUSRÜSTUNG UND -ZUBEHÖR				
SCHLÜSSEL	5P-8500	1	VORHÄNGESCHLOSS	991
VORHÄNGESCHLOSS	5P-8502	2	VORHÄNGESCHLOSS	991

INDEX

Name	Page
A	
ACCUMULATOR GP-AIR CONDITIONER	930
ACCUMULATOR GP-REFRIGERANT–CHARGED	854
ACCUMULATOR GP-RIDE CONTROL–CHARGED	505
ACCUMULATOR GP-RIDE CONTROL–UNCHARGED	506
ADJUSTER GP-SEAT	855
AIR CLEANER GP	201
	202
	203
	204
	206
	207
AIR CONDITIONER & MOUNTING GP	857
	859
AIR CONDITIONER AR	861
AIR CONDITIONER GP	862
ALTERNATOR GP-CHARGING	270
	272
	273
	274
ARM GP-LIFT	726
ARMREST GP	864
	948
	950
AXLE & MTG GP-REAR	388
	389
AXLE GP-DRIVE & STEERING	392
AXLE GP-DRIVE & STEERING–FRONT	390
AXLE GP-FRONT	459
	461
AXLE GP-REAR	393
B	
BACKHOE AR	3
	4
BACKHOE AR–ONE WAY LINES	5
BACKHOE AR–TWO WAY LINES	5
BACKHOE AR-EXTENDABLE STICK	1
	2
BACKHOE AR-STANDARD STICK	4
BATTERY GP	275
	277
	279
BATTERY GP–HEAVY DUTY	281
BATTERY (12 VOLT, HEAVY DUTY)	279
BATTERY (12-VOLT, HEAVY DUTY)	281
BATTERY (12-VOLT, 750-AMPERE) (750 AMP)	275
	277
BELT-DRIVE	294
	295
BLADE	988
BLADE AS	986
BOOM GP	728
	729
BOOT	719
	720
BOX GP-BATTERY	472
	473
BRACE GP-LIFT CYLINDER	730
BRACKET AS	275
	277
BRACKET GP-MOUNTING	865
BRACKET GP-TRANSPORT	731
BRAKE GP-PARKING	451
BREATHER (AXLE)	390
BREATHER GP	146
	147
	149
	151
BREATHER GP–KIT	153
BREATHER (TRANSMISSION)	430
	435
BUCKET AR-MULTIPURPOSE	756
	757
	758
BUCKET AS-GENERAL PURPOSE	759
	760
	762
	763
BUCKET AS-HOE–DITCH CLEANING	764
	765
	766
	767
	768
	769
	770
	771
	772
	773
BUCKET GP-GENERAL PURPOSE	774
	775
BUCKET GP-HOE–CORAL	816
	817
	818
	819
	822
BUCKET GP-HOE–DITCH CLEANING	794
	795
BUCKET GP-HOE–HEAVY DUTY	781
	782
	783
	784
	785
	791

INDEX

Name	Page
	801
	802
	803
	804
	805
	806
	821
BUCKET GP-HOE–HIGH CAPACITY	786
	787
	788
	789
	807
	808
	809
	810
BUCKET GP-HOE–ROCK	811
	812
	813
	814
	815
	823
BUCKET GP-HOE–STANDARD DUTY	776
	777
	778
	779
	780
	790
	796
	797
	798
	799
	800
	820
BUCKET GP-HOE–UTILITY	792
	793
BUCKET GP-MULTIPURPOSE	824
	825
	826
	827
BUMPER GP-FRONT	474

C

CAB AR	866
	867
	868
	869
	870
CAB AS	871
	873
CAB GP	875
	877
CAMSHAFT GP	21
	22
	23
	24
	25
	26
CANISTER AS-BREATHER	147
	149
	151
CANOPY AR	879
	880
	881
CANOPY AS	882
	885
CANOPY GP-OPEN ROPS	886
CAP	442
	443
CAP AS	575
CAP AS (AIR CONDITIONER)	930
CAP AS (ENGINE OIL FILLER)	155
CAP AS (OIL FILLER) (ENGINE)	154
CAP AS (RADIATOR)	197
	200
CAP-DUST	406
	408
	509
	629
	633
CAP-FILL (HYDRAULIC OIL)	680
CAP-FILLER (HYDRAULIC OIL)	678
CAP-FUEL	264
	268
CAP-RADIATOR	194
CHASSIS AR	6
COMMON AR	6
	7
COMPARTMENT GP-LITERATURE	887
COMPRESSOR GP-REFRIGERANT	888
	889
	891
CONDENSER & MTG GP-REFRIGERANT	892
CONNECTION GP-WATER	166
	167
CONNECTOR GP-VALVE	507
	509
CONSOLE GP-FRONT	893
CONSOLE GP-OPERATOR–RH	894
CONSOLE GP-SIDE	895
	896
	897
	898
	899
CONTROL AR-RIDE	510
CONTROL AR-RIDE–KIT	510
CONTROL GP-DIFFERENTIAL LOCK	398
CONTROL GP-GOV & ACCELERATOR	236
	238
CONTROL GP-HYDRAULIC HAND	511

INDEX

Name	Page
	513
	515
	518
	520
	525
CONTROL GP-HYDRAULIC HAND–KIT	517
CONTROL GP-HYDRAULIC HAND–LEVER	524
CONTROL GP-HYDRAULIC HAND–LOADER	522
CONTROL GP-HYDRAULIC PEDAL	527
	529
	531
CONTROL GP-PARKING BRAKE	452
	453
CONTROL GP-SERVICE BRAKE	454
CONTROL GP-STEERING	462
	463
CONTROL GP-TRANSMISSION	399
CONTROL GP-UNPROGRAMMED (SECURITY)	289
CONTROL GP-UNPROGRAMMED (SECURITY)	287
CONVERSION AR-CUSHION SWING–KIT	533
CONVERSION GP-CONTROL VALVE	535
CONVERSION GP-CONTROL VALVE–KIT	535
	536
CONVERSION GP-HYD HAND CONTROL	537
	538
	539
	540
	541
COOLANT HEATER LINES	928
	930
	933
COOLER GP-ENGINE OIL	172
COOLER GP-FLTR BASE & ENG OIL	168
	170
	172
	174
COOLING AR	176
	177
	178
COOLING AR-HIGH AMBIENT TEMP	178
COUNTERWEIGHT GP	475
	476
	477
	478
	479
COUPLER AR-QUICK	828
COUPLER GP-QUICK	829
	830
	831
	832
	833
COUPLING GP	542
COVER GP-AIR INLET	208
COVER GP-CONSOLE	900
	901
COVER GP-CONTROL VALVE	543
COVER GP-FIREWALL	903
	904
COVER GP-FRONT HOUSING	27
	28
COVER GP-PARKING BRAKE	905
COVER GP-POST–RH	906
	907
COVER GP-VALVE MECHANISM	29
	31
	33
	35
CRANKSHAFT GP	37
	38
	39
	40
	42
	44
CYLINDER & LINES GP-THUMB–STANDARD STICK	544
CYLINDER AS	454
CYLINDER BLOCK GP	46
	47
	48
	50
	51
	52
	54
	56
	58
	60
	62
	64
	65
	67
	68
CYLINDER GP-BACKHOE BUCKET	545
	546
CYLINDER GP-BACKHOE BUCKET–EXTENDABLE STICK	548
CYLINDER GP-BOOM	550
CYLINDER GP-EXTENDABLE STICK	552
	553
CYLINDER GP-LIFT	555
	556
CYLINDER GP-MULTIPURPOSE BUKT	557
CYLINDER GP-STABILIZER	558
	559
CYLINDER GP-STICK	560
CYLINDER GP-SWING	561
CYLINDER GP-THUMB	562
CYLINDER GP-TILT	563
CYLINDER HEAD GP	69

INDEX

Name	Page
	70
	71
	72
	73
	74
	75
	76
	77
D	
DIFFERENTIAL & BEVEL GEAR GP	400
DIFFERENTIAL GP	400
	402
DOOR GP-BATTERY	480
DOOR GP-LH	908
DOOR GP-RH	910
DRIVE AR-BACKHOE LOADER	404
DRIVE AR-BACKHOE LOADER– 2 WHEEL STEER, ALL WHEEL DRIVE	403
DRIVE AR-BACKHOE LOADER– 2 WHEEL STEER, 2 WHEEL DRIVE	403
DRIVE GP-FAN	78
	79
DRIVE GP-FLEXIBLE COUPLING	405
DUCT GP-AIR	912
	914
E	
EDGE GP-CUTTING	834
	835
ELBOW GP-AIR INLET	209
	210
ELEMENT-FILTER (FUEL)	260
ENGINE AR	8
	9
	10
	11
	12
	13
ENGINE AR-PRIMARY	14
	16
	18
	19
EXTENSION GP-EXHAUST	211
F	
FAN AS	862
	920
FAN GP-SUCTION	179
	180
	181
FASTENER GP-CYLINDER HEAD	80
FENDER GP-FRONT	481
FENDER GP-REAR	482
	483
FILLER GP-ENGINE OIL	154
	155
FILLER GP-POWER TRAIN OIL	406
	408
	410
	411
FILM (AIR RECIRCULATION)	862
	920
FILM (AUX PEDAL CONTROL)	531
FILM-AWS	1002
FILM (BUCKET)	901
FILM (BUCKET CONTROL)	518
	520
	901
	1002
FILM-BUCKET INDICATOR	1002
FILM (BUCKET MULTIPURPOSE)	901
FILM-CAT	501
FILM (CATERPILLAR)	868
	869
	870
	881
FILM (CATERPILLAR) (ON WINDSHIELD)	866
FILM (CENTER PIVOT, BOOM LOCK)	1002
FILM-CONTROL (AIR CONDITIONER)	857
	859
	918
	1002
FILM (CONTROL PILOT LOADER)	901
FILM GP	989
FILM-IDENTIFICATION (FUSE PANEL)	403
	404
FILM-IDENTIFICATION (FUSE PANEL)	1002
FILM (IGNITION SWITCH)	287
	290
FILM (INDICATOR)	344
FILM-INDICATOR	342
	347
	1002
FILM-INDICATOR (BUCKET)	756
	757
	758
FILM-INSTRUCTION	498
	1002
FILM-INSTRUCTION (AUXILIARY)	901
FILM-INSTRUCTION (BUCKET CONTROL)	568
	569
	1003
FILM-INSTRUCTION (E-STICK)	527
FILM-INSTRUCTION (EXTENDABLE STICK)	520
	1002
	1003

INDEX

Name	Page
FILM-INSTRUCTION (LUBRICANTS)	501
FILM-INSTRUCTION (NO STEP)	1002
FILM-INSTRUCTION (RETURN FLOW)	577
	580
	584
	588
	594
	597
	1002
FILM-LIFT	992
FILM (LIFT EYE LOCATION)	1001
FILM (MULTIPURPOSE BUCKET)	569
	1002
FILM (PEDAL CONTROL AND E-STICK)	531
FILM (PLATE-NAME)	505
FILM (RIDE CONTROL)	510
	574
FILM (SECURITY)	290
FILM (SECURITY) (MACHINE SECURITY SYSTEM)	287
FILM (START) (MACHINE SECURITY SYSTEM)	290
FILM (START SWITCH)	1002
FILM (STD CROSS PATTERN)	515
	1002
FILM-STRIPE (139CM)	498
FILM-STRIPE (399CM)	867
FILM-TIE DOWN	992
FILM (VARIABLE SPEED)	236
	238
	1002
FILM-WARNING (HIGH PRESSURE CYLINDER)	597
FILM (WINDSHIELD SUN VISOR)	867
FILTER	695
	697
	699
	701
	703
	705
	707
	709
	713
FILTER & LINES GP-FUEL	240
	242
FILTER-AIR (AIR CONDITIONER)	857
	862
FILTER-AIR (CAB)	920
FILTER (AIR CONDITIONER)	857
	859
FILTER AS-ENGINE OIL	14
	154
	155
FILTER AS-HYDRAULIC	564
FILTER AS-OIL (CLEANOUT/HIGH EFFICIENCY)	571
FILTER AS-OIL (HYDRAULIC) (FLAME RESISTANT)	571
FILTER AS-OIL (TRANSMISSION)	427
FILTER BASE & ENG OIL COOLER	168
	170
	172
	174
FILTER (BREATHER)(HYDRAULIC)	678
FILTER ELEMENT AS-AIR (PRIMARY)	201
FILTER ELEMENT AS-AIR (SECONDARY)	201
FILTER ELEMENT AS-FUEL	244
FILTER ELEMENT AS-FUEL (WATER SEPARATOR)	245
FILTER GP-FUEL	244
FILTER GP-OIL–HYDRAULIC	564
FILTER GP-WATER SEP & FUEL	245
FILTER (HEATER)	918
FILTER (HYDRAULIC TANK BREATHER)	680
FITTING GP-FUEL LINES	246
FITTING GP-HEATER & AIR COND	182
FITTING-GREASE	562
	572
	665
	728
	742
	754
	826
	852
FITTING-GREASE (1/8-27 THD)	490
	491
	726
	736
	750
	824
	825
	827
FLANGE GP-WHEEL	412
FLASHER AS	374
FLASHER AS-SIGNAL	367
FLOOR MAT GP	915
	916
FLOORPLATE GP	484
	486
	487
FLYWHEEL GP	81
	82
FOOTREST GP	917
FORK AR	836
FORK GP	837
FRAME AS-LOADER	489
FRAME GP-LOADER–SINGLE TILT	490
FRAME GP-SWING	491
FUSE (10 AMP)	294

INDEX

Name	Page
	295
	300
	327
	367
	378
FUSE (10-AMPERE)	305
	323
	382
	384
FUSE (15 AMP)	300
	302
	336
	367
FUSE (15-AMPERE)	296
	298
	305
FUSE (15-AMPERE)	339
FUSE (20 AMP)	367
FUSE (20-AMPERE)	330
	333
FUSE (5 AMP)	367
	387
FUSE (5-AMPERE)	330
	337

G

GASKET (VALVE COVER)	29
	35
GASKET (WATER PUMP)	185
	187
GAUGE-OIL LEVEL (DIPSTICK)	154
GEAR GP-BEVEL & PINION	400
GLOW PLUG	283
GLOW PLUG GP	283
GUARD GP-BUCKET	839
GUARD GP-BUCKET–FRONT BUCKET	838
GUARD GP-DRIVE SHAFT	493
GUARD GP-STABILIZER CYLINDER	565
	566

H

HEATER GP-CAB	918
	920
HEATER GP-JACKET WATER	284
	285
	286
HEATER GP-STARTING AID	314
HOLDER AS-BRUSH	316
HOOD & GUARD GP	494
	496
HOOD GP-ENGINE	498
	501
HORN GP-ELECTRIC	922
HOSE (BREATHER)	33
HOSE-BREATHER	31
HOSE-BREATHER (CRANKCASE)	29
HOSE (CRANKCASE BREATHER VALVE COVER)	149
HOSE-RADIATOR	193
HOSE (109CM CRANKCASE BREATHER OPEN)	149
HOSE (53CM)	464
	467
HOSE (72CM)	634
HOSE (90CM CRANKCASE BREATHER SUMP)	149
HOSE (96CM EACH)	633
HOUSING & FLANGE GP-AXLE–LH	415
HOUSING & FLANGE GP-AXLE–RH	413
HOUSING GP-DIFFERENTIAL	400
HOUSING GP-FLYWHEEL	83
	84
HOUSING GP-FRONT	85
	86
	87
	88
	89
HYDRAULIC AR	568
	569
	570
	571
HYDRAULIC AR–KIT	569
	570

I

INDICATOR-AIR FILTER CHANGE	213
INDICATOR GP-AIR FILTER CHANGE	212
	213
	214
INDICATOR-SERVICE (AIR FILTER)	212
INJECTOR AS-FUEL	251
INSTALLATION AR-ENGINE	20
INSTALLATION AR-WHEEL CHOCK	990
INSTALLATION GP-SECURITY	287
	289
	290

K

KEY	991
KEY AS-ELECTRONIC (GRAY)	287
	289
KEY AS-ELECTRONIC (YELLOW)	287
	289
KICKOUT & POSITIONER GP	572
KIT-ACCUMULATOR SERVICE	505
KIT-ADAPTER TIP	840

INDEX

Name	Page
	841
KIT-ADJUSTER (ARMREST)	864
KIT-ALTERNATOR BEARING	270
KIT-ALTERNATOR HARDWARE	270
KIT-BEARING	393
KIT-BRAKE CALIPER	451
KIT-BRAKE LINING	451
KIT-CAM (COUNTERCLOCKWISE)	451
KIT-CONNECTING PLUG (12 PIN)	344
KIT-CONNECTING PLUG (12 PIN)	367
KIT-CONNECTING PLUG (2 PIN)	300
	344
	351
	355
	367
	440
	862
KIT-CONNECTING PLUG (2 PIN)	453
KIT-CONNECTING PLUG (2-PIN)	327
	374
KIT-CONNECTING PLUG (3 PIN)	351
	355
	367
KIT-CONNECTING PLUG (4 PIN)	300
	344
	367
KIT-CONNECTING PLUG (6 PIN)	344
	367
KIT-CONNECTING PLUG (8 PIN)	367
KIT-CONTACT (STARTING MOTOR)	316
KIT-CRANKSHAFT BEARING (.25MM US)	38
	39
	40
KIT-CRANKSHAFT BEARING (.25MM U.S.) (MAIN)	37
KIT-CRANKSHAFT BEARING (.51MM US)	38
	39
	40
KIT-CRANKSHAFT BEARING (.51MM U.S.) (MAIN)	37
KIT-CRANKSHAFT BEARING (.76MM US)	38
	39
	40
KIT-CRANKSHAFT BEARING (.76MM U.S.) (MAIN)	37
KIT-CUSHION (ARMREST)	864
KIT-FUEL PUMP (INCLUDES FILTER & O-RING)	240
KIT-GEAR (STARTING MOTOR)	316
KIT-HOSE	185
	187
KIT-PEDAL GUARD	923
KIT-PISTON RING	115
	122
	123
KIT-PLANETARY CARRIER	417
KIT-RECEPTACLE (12 PIN)	367
KIT-RECEPTACLE (2 PIN)	351
	355
	367
	372
	387
	441
	522
	701
	725
	888
KIT-RECEPTACLE (2 PIN)	355
KIT-RECEPTACLE (2 PIN)	265
KIT-RECEPTACLE (2 PIN)	300
KIT-RECEPTACLE (2-PIN)	399
KIT-RECEPTACLE (3 PIN)	344
	351
	355
	367
	441
	972
KIT-RECEPTACLE (4 PIN)	367
KIT-RECEPTACLE (4 PIN)	293
	300
KIT-RECEPTACLE (6 PIN)	367
	938
	986
KIT-RECEPTACLE (6 PIN)	300
KIT-RECEPTACLE (8 PIN)	367
	937
KIT-REPAIR	986
KIT-RIDE CONTROL	574
KIT-ROD BEARING (.25MM US)	38
	39
	40
KIT-ROD BEARING (.25MM U.S.) (CONNECTING ROD)	37
KIT-ROD BEARING (.51MM US)	38
	39
	40
KIT-ROD BEARING (51MM U.S.) (CONNECTING ROD)	37
KIT-ROD BEARING (.76MM US)	38
	39
	40
KIT-ROD BEARING (.76MM U.S.) (CONNECTING ROD)	37
KIT-ROLLER BEARING	417
KIT-SEAL	286
	715
KIT-SEAL (STEERING METERING PUMP)	469
KIT-SEAL (STEERING METERING PUMP)	403
KIT-SERVICE	945
KIT-SERVICE METER	342

INDEX

Name	Page
	347
KIT-SLIDER BLOCK	956
	958
KIT-SPIDER	390
KIT-SPIDER & BEARING	423
	424
KIT-WATER BASE	245

L

LAMP	176
	178
	937
LAMP AS (12-VOLT)	287
	290
LAMP GP-DOME	926
	961
LAMP GP-FLOOD	291
LAMP GP-SIGNAL	292
LAMP GP-STOP & TAIL	293
LAMP GP-WARNING BEACON	294
	295
LAMP (12 VOLT)	294
	295
	344
	969
LAMP (12-VOLT)	176
	177
	326
	349
	968
LAMP (12-VOLT, 10-WATT)	961
LAMP (12-VOLT, 24-WATT)	292
LAMP (12-VOLT, 24-WATT)	296
	298
LAMP (12 VOLT, 55 WATT)	291
LAMP (12-VOLT, 55-WATT)	302
	305
LAMP (12-VOLT, 55-WATT)	296
	298
LAMP (12 VOLT)(10 WATT)	926
LAMP (12 VOLT/21 WATT)	300
LAMP (12 VOLT/21 WATT)	293
LAMP (12 VOLT/55 WATT)	300
LAMP (12 VOLT/55 WATT)	300
LAMP (12VOLT/21/5WATT)	293
LANYARD	887
LENS	293
LENS (AMBER)	292
	296
	298
	300
LENS-AMBER	294
	295
LENS AS (FLOOD)	291
LENS (CLEAR)	296
	298
	300
LEVER GP-GOVERNOR CONTROL	924
LEVER GP-HAND CONTROL	457
LIFTING GP-ENGINE	91
	92
LIGHTING GP-FLOOD	296
	298
	300
	302
LIGHTING GP-FLOOD & SIGNAL	305
LIGHTING GP-WARNING BEACON	308
	309
LINER GP-CAB	926
LINER GP-CAB–KIT	925
LINES GP-AIR	215
	217
LINES GP-BACKHOE AUXILIARY	575
	577
	580
	584
	588
	592
	597
LINES GP-BACKHOE AUXILIARY–1 WAY LINES	594
LINES GP-BOOM	601
LINES GP-BUCKET CYLINDER	603
LINES GP-CHECK VALVE	605
	609
LINES GP-EXTENDABLE STICK	614
	615
LINES GP-FUEL	247
	249
LINES GP-HEATER	928
LINES GP-HEATER & AIR COND	930
	933
LINES GP-LIFT CYLINDER	617
	618
LINES GP-LOAD CONTROL VALVE–BACKHOE	620
LINES GP-LOADER AUXILIARY	623
LINES GP-MULTIPURPOSE BUCKET	625
	627
LINES GP-PILOT	629
	630
LINES GP-POWER TRAIN COOLER	183
LINES GP-PUMP	633
	637
	639
	640
	641
	642
	643

INDEX

Name	Page
	646
	647
LINES GP-RETURN	648
	649
	650
	651
LINES GP-RIDE CONTROL	652
	654
LINES GP-STABILIZER	656
LINES GP-STEERING	464
	467
LINES GP-STICK	658
LINES GP-SWING	659
LINES GP-TILT CYLINDER	660
LINK GP-SHIPPING	732
LINK GP-THUMB	733
LINKAGE GP-BACKHOE BUCKET	734
LINKAGE GP-LOADER BUCKET	736
LOADER AR	738
LOCK GP-HYDRAULIC HAND CONTROL	662
LOCK GP-TRANSPORT	739
	740
	741
LOCK GP-VANDALISM	991

M

Name	Page
MANIFOLD GP-EXHAUST	218
	219
MANIFOLD GP-INLET	220
MIRROR GP-REAR VIEW	935
MODULE GP-WARNING INDICATOR	936
	937
MOTOR GP-WINDOW WIPER	938
MOUNTING GP-ALTERNATOR	93
	94
MOUNTING GP-BANK VALVE–BACKHOE	664
MOUNTING GP-BANK VALVE–LOADER	663
MOUNTING GP-BUCKET	842
	843
MOUNTING GP-CYLINDER	665
	666
MOUNTING GP-ENGINE	95
	96
MOUNTING GP-ENGINE & TMSN	97
MOUNTING GP-FORK	844
MOUNTING GP-HYDRAULIC CONTROL–STABILIZER	667
MOUNTING GP-HYDRAULIC PUMP	668
MOUNTING GP-INSTRUMENT PANEL	939
	940
	942
MOUNTING GP-INSTRUMENT PANEL–SIDE CONSOLE	941
MOUNTING GP-LINES	669
	670
MOUNTING GP-STARTING MOTOR	98
MOUNTING GP-STICK	742
MUFFLER AS	221
MUFFLER GP	222
	223
	224
	225

P

Name	Page
PAD & GUARD GP-STABILIZER	743
	744
PAD & MTG GP-STABILIZER–FLIPOVER	746
PAD & MTG GP-STABILIZER–GROUSER	747
PAD & MTG GP-STABILIZER–STREET	745
PAD AS	748
	749
PAD GP-STABILIZER	748
	749
PADLOCK GP	991
PAN GP-OIL	99
	101
	103
	105
	107
	109
	111
	113
PANEL GP-INSTRUMENT–SIDE	944
PEDAL GP-GOVERNOR	945
PIN GP-AXLE	390
PIN GP-COUPLER	845
	846
PISTON & ROD GP	115
	116
	118
	120
	122
	123
	124
	126
PLANETARY GP-FINAL DRIVE	417
PLATE & FILM GP	992
	997
	1001
PLATE & FILM GP–ARABIC	997
PLATE & FILM GP–CZECH	998
PLATE & FILM GP–DANISH	996
PLATE & FILM GP–DUTCH	1000
PLATE & FILM GP–FINNISH	998
PLATE & FILM GP–FRENCH	992
PLATE & FILM GP–GERMAN	994
PLATE & FILM GP–GREEK	1000
PLATE & FILM GP–HEBREW	999

INDEX

Name	Page
PLATE & FILM GP–ITALIAN	995
PLATE & FILM GP–POLISH	999
PLATE & FILM GP–PORTUGUESE	993
PLATE & FILM GP–SPANISH	993
PLUG GP-CYLINDER BLOCK	128
PLUG GP-CYLINDER HEAD	129
PLUG GP-ENGINE	130
	131
	132
	133
PLUG-MAGNETIC	390
	395
	400
PLUG-SUMP DRAIN	99
	101
	103
	105
	107
	109
	111
	113
POWER TRAIN AR	422
POWER TRAIN AR– ALL WHEEL DRIVE, STANDARD SHIFT	418
	419
	421
POWER TRAIN AR–2 WHEEL DRIVE	418
POWER TRAIN AR– 2 WHEEL DRIVE, STANDARD SHIFT	419
	420
	421
PULLEY GP-CRANKSHAFT	134
	135
PUMP GP-ENGINE OIL	157
	159
	161
	163
	165
PUMP GP-FUEL INJECTION	251
	253
	255
	257
PUMP GP-FUEL PRIMING	260
PUMP GP-METERING	469
PUMP GP-PISTON	671
	673
PUMP GP-TRANSMISSION	429
	436
PUMP GP-WATER	185
	187
	189

R

Name	Page
RADIATOR & FAN GP	191
	192
RADIATOR & HYD OIL COOLER GP	193
	194
	195
	196
	197
	198
	200
REDUCER GP	652
REFLECTOR	300
	838
REGULATOR-WATER TEMPERATURE	166
	167
RELAY AS (12 VOLT)	300
	302
	305
	336
	367
	387
RELAY AS (12 VOLT)	327
RELAY AS (12-VOLT)	287
	296
	298
	323
	326
	330
	333
	339
	361
	365
	382
	384
RELAY AS (12-VOLT)	323
	365
RELAY AS (12-VOLT)	290
RELAY AS (12 VOLT) (HIGH SPEED)	327
RESERVOIR GP-BRAKE	458
ROTATING GP-PUMP	675

S

Name	Page
SEAL (BREATHER)	147
	149
	151
SEAL-COVER (VALVE)	31
SEAL (FUEL FILTER)	244
SEAL-O-RING	614
SEAL-O-RING (ENGINE OIL DRAIN)	113
SEAL-O-RING (REGULATOR)	166
SEAL-O-RING (WATER TEMPERATURE REGULATOR)	167
SEAL (REGULATOR HOUSING)	166
SEAT BELT GP	946
	947
SEAT GP	948

INDEX

Name	Page
	950
	952
SEAT GP-STATIC	954
	955
SEAT GP-SUSPENSION	956
	958
	960
SENDER-TEMPERATURE	361
SENDER-TEMPERATURE (TORQUE CONVERTER OIL)	351
SENDER-TEMPERATURE ((TORQUE CONVERTER OIL))	355
SEPARATOR GP-WATER	261
	262
SHAFT GP-DRIVE–FRONT	424
SHAFT GP-DRIVE–REAR	423
SHAFT GP-POWER TAKE-OFF	676
SHIPPING AR-BUCKET	847
SPEAKER	926
	961
SPRING (BREATHER HOSE)	29
	31
	33
STABILIZER AR	677
STABILIZER GP-BACKHOE	750
STARTING AID GP	310
	311
	312
	313
STARTING MOTOR GP-ELECTRIC	315
	316
	318
STEERING WHEEL	463
STEERING WHEEL GP	470
STICK GP-EXTENDABLE	752
STICK GP-HOE	754
STOP GP-BUCKET	848
STRAINER	430
	436
STRAP-CABLE	630
SUN VISOR	971
SUPPRESSION AR-SOUND	504
SUPPRESSION GP-SOUND	961
SUSPENSION GP-SEAT	963
SWITCH AS	568
SWITCH AS (FRONT FLOOD)	300
SWITCH AS (HEATER)	365
SWITCH AS (HORN)	342
	347
SWITCH AS-KEY START	944
SWITCH AS-LIMIT (BRAKE)	454
SWITCH AS (NEUTRA; LOCK)	347
SWITCH AS (NEUTRAL LOCK)	342
SWITCH AS-PRESSURE	323
	382
	384
SWITCH AS-PRESSURE (HIGH - LOW)	327
SWITCH AS-PUSH BUTTON	522
SWITCH AS-PUSH BUTTON (NEUTRALIZER)	399
SWITCH AS (REAR FLOOD)	300
SWITCH AS-ROCKER (FRONT FLOOD)	305
SWITCH AS-ROCKER (HAZARD)	347
SWITCH AS-ROCKER (HAZZARD)	342
SWITCH AS-ROCKER (HEATER FAN SPEED)	323
	327
	365
SWITCH AS-ROCKER (REAR FLOOD)	305
SWITCH AS-ROCKER (RIDE CONTROL)	382
	384
	510
SWITCH AS-ROLLER	386
SWITCH AS-TEMPERATURE (TIMING ADVANCE)	251
	253
SWITCH AS (TURN SIGNAL)	332
SWITCH GP (HYDRAULIC LOCK)	568
SWITCH GP-PRESSURE	319
	320
	321
SWITCH GP-TEMPERATURE	322
SWITCH-PRESSURE (ENGINE OIL)	319
	320
SWITCH-THERMOSTAT (AIR CONDITIONER)	862
SWITCH (40-DEG) (ENGINE COOLANT TEMPERATURE)	255
SWIVEL & SLIDE GP-SEAT	965
SWIVEL GP-SEAT	967
SYNCHRONIZER GP	428
	434

T

TACHOMETER GP-ELECTRIC	868
	869
	870
	880
	881
	968
	969
TANK & MTG GP-FUEL	263
TANK & MTG GP-HYDRAULIC	678
TANK GP-FUEL	264
	265
	267
	268
TANK GP-HYDRAULIC	680
THUMB AR	849
THUMB AR–HEAVY DUTY	849

INDEX

Name	Page
	850
	851
THUMB AR–ROCK	850
	851
THUMB GP	852
TOOTH GP-UNI	853
TRANSMISSION & MOUNTING GP	425
	426
TRANSMISSION AR-DIRECT DRIVE	427
TRANSMISSION GP-DIRECT DRIVE	428
	434
TRIM GP-CAB	970
TURBOCHARGER GP	226
	227
	229
	231
	233
	234

V

V-BELT	272
V-BELT (AIR CONDITIONER)	891
V-BELT (REFRIGERANT COMPRESSOR)	177
V-BELT SET (INCLUDES 2 BELTS)	176
	177
	178
	272
	868
	869
	870
	880
	881
VALVE & MTG GP-BANK–STABILIZER	682
VALVE & MTG GP-SOLENOID	683
VALVE AR-BANK 4	684
VALVE AR-BANK 5	684
VALVE AR-BANK 6	685
VALVE AS-RELIEF (AIR VENT)	388
VALVE AS (WATER)	857
	859
	918
VALVE-GAS	505
VALVE GP-BANK 2	688
VALVE GP-BANK 2–STABILIZER	686
VALVE GP-BANK 3	689
VALVE GP-BANK 4	690
VALVE GP-BANK 5	691
VALVE GP-BANK 6	692
VALVE GP-CHECK–BACK PRESSURE	694
VALVE GP-CHECK–RETURN OIL	693
VALVE GP-CONTROL–BOOM	703
VALVE GP-CONTROL–BUCKET	705
VALVE GP-CONTROL–CLAM	695
VALVE GP-CONTROL–EXTENDABLE STICK	713
VALVE GP-CONTROL–EXTENDABLE STICK;AUXILIARY	709
VALVE GP-CONTROL–LIFT	697
VALVE GP-CONTROL–STABILIZER	711
VALVE GP-CONTROL–STICK	707
VALVE GP-CONTROL–SWING	699
VALVE GP-CONTROL–TILT	701
VALVE GP-LOAD CONTROL	715
	717
VALVE GP-PILOT	721
VALVE GP-PILOT–STABILIZER	718
	719
	720
VALVE GP-PRIORITY–STEERING	471
VALVE GP-PUMP CONTROL–POWER COMPENSATOR	722
VALVE GP-PUMP CONTROL–PRESSURE,FLOW COMPENSATOR	723
VALVE GP-RELIEF	428
	434
	471
	695
	701
	703
VALVE GP-RELIEF (AIR CONDITIONER)	888
VALVE GP-SHUTOFF	633
VALVE GP-SOLENOID	440
	725
VALVE GP-SOLENOID–TRANSMISSION	441
VALVE GP-SOLENOID (12 V)	251
	253
VALVE GP-TIRE	442
	443
VALVE MECHANISM GP	136
	138
	140
	142
	144
	145
VALVE-SHUTOFF	182
	633
	643
VISOR GP-CAB	971

W

WASHER GP-WINDOW	972
	974
WHEEL & TIRE AR–A WHEEL DRIVE	444
WHEEL & TIRE AR–ALL WHEEL DRIVE	443
	445
WHEEL & TIRE AR–2 WHEEL DRIVE	443
	444
WHEEL & TIRE AR–2 WHEEL DRIVE, ALL WHEEL DRIVE	444

INDEX

Name	Page
	445
WHEEL & TIRE GP–FRONT	445
	448
	449
	450
WHEEL & TIRE GP–LH	446
	447
	448
	449
WHEEL & TIRE GP–REAR	445
	447
WHEEL & TIRE GP–RH	446
	447
	449
	450
WINDOW GP-CAB–LH	978
WINDOW GP-CAB–REAR	980
WINDOW GP-CAB–RH	976
WINDOW GP-DOOR–LH	984
WINDOW GP-DOOR–RH	982
WIPER GP-WINDOW	986
	988
WIRING GP-AIR CONDITIONER	323
	326
	327
WIRING GP-CAB	330
	332
	333
	336
	337
	339
WIRING GP-CONSOLE	342
	344
	349
WIRING GP-CONSOLE–FRONT	347
WIRING GP-ENGINE	351
	355
	361
WIRING GP-HEATER	365
WIRING GP-PLATFORM	367
	372
	374
WIRING GP-POWER RECEPTACLE	378
WIRING GP-REAR	379
WIRING GP-RIDE CONTROL	382
	384
WIRING GP-SENSOR	386
WIRING GP-STEERING	387

INDEX

Désignation	Page

A

ACCOUDOIR (ASS)	864
	948
	950
ACCOUPLEMENT (ASS)	542
ACCUMULATEUR - CLIMATISEUR (ASS)	854
ACCUMULATEUR - COMMANDE DE TRANSLATION (ASS)	505
	506
ACCUMULATEUR DE CLIMATISEUR (ASS)	930
ALTERNATEUR DE CHARGE (ASS)	270
	272
	273
	274
AMPOULE	176
	178
	937
AMPOULE (12 VOLTS)	176
	177
	294
	295
	344
	349
	968
	969
AMPOULE (12 VOLTS)	326
AMPOULE (12 VOLTS/ 21 WATTS)	300
AMPOULE (12 VOLTS/ 21 WATTS)	293
AMPOULE (12 VOLTS, 55 WATTS)	291
AMPOULE (12 VOLTS)(10 WATTS)	926
AMPOULE (12 VOLTS/55 WATTS)	300
AMPOULE (12V, 10W)	961
AMPOULE (12V, 24W)	292
	296
	298
AMPOULE (12V, 55W)	296
	298
	302
	305
AMPOULE (12V, 55W)	296
	298
AMPOULE (12VOLTS/ 21/ 5WATTS)	293
ARBRE A CAMES (ASS)	21
	22
	23
	24
	25
	26
ARBRE DE PRISE DE FORCE (ASS)	676
ARBRE D'ENTRAÎNEMENT (ASS)	423
	424
ARRÊT-GODET (ASS)	848
AUTOCOLLANT - DIRECTION INTÉGRALE	1002
AUTOCOLLANT (ALTERNANCE DIAGONALE STANDARD)	515
	1002
AUTOCOLLANT-ARRIMAGE	992
AUTOCOLLANT (ARTICULATION CENTRALE, VERROUILLAGE DE FLÈCHE)	1002
AUTOCOLLANT-CAT	501
AUTOCOLLANT (CATERPILLAR)	869
	870
	881
AUTOCOLLANT (CATERPILLAR)	868
AUTOCOLLANT (CATERPILLAR) (SUR PARE-BRISE)	866
AUTOCOLLANT-COMMANDE (CLIMATISEUR)	1002
AUTOCOLLANT-COMMANDE (CLIMATISEUR)	857
	859
AUTOCOLLANT-COMMANDE (CLIMATISEUR)	918
AUTOCOLLANT (COMMANDE DE GODET)	520
	901
	1002
AUTOCOLLANT (COMMANDE DE GODET)	518
AUTOCOLLANT (COMMANDE DE PÉDALE AUXILIAIRE)	531
AUTOCOLLANT (COMMANDE DE PÉDALE ET BRAS TÉLESCOPIQUE)	531
AUTOCOLLANT (COMMANDE DE TRANSLATION)	510
	574
AUTOCOLLANT (COMMANDE PILOTE DE CHARGEUSE)	901
AUTOCOLLANT (CONTACTEUR D'ALLUMAGE)	287
	290
AUTOCOLLANT (CONTACTEUR DE DÉMARRAGE)	1002
AUTOCOLLANT DE MISE EN GARDE (VÉRIN HAUTE PRESSION)	597
AUTOCOLLANT (DÉMARRAGE) (SYSTÈME DE SÉCURITÉ DE LA MACHINE)	290
AUTOCOLLANT D'IDENTIFICATION (PANNEAU DE FUSIBLES)	403
	404
	1002
AUTOCOLLANT (EMPLACEMENT D'OEILLETON DE LEVAGE)	1001
AUTOCOLLANT (GODET)	901
AUTOCOLLANT (GODET TOUS-TRAVAUX)	1002
AUTOCOLLANT (GODET TOUS-TRAVAUX)	569
AUTOCOLLANT (GODET TOUT USAGE)	901
AUTOCOLLANT-INDICATEUR DE GODET	1002
AUTOCOLLANT-LEVAGE	992

INDEX

Désignation	Page
AUTOCOLLANT (PARE-SOLEIL DE PARE-BRISE)	867
AUTOCOLLANT (PLAQUE-NOM)	505
AUTOCOLLANT (RECIRCULATION D'AIR)	862
	920
AUTOCOLLANT (SÉCURITÉ)	290
AUTOCOLLANT (SÉCURITÉ) (SYSTÈME DE SÉCURITÉ DE LA MACHINE)	287
AUTOCOLLANT (TÉMOIN)	344
AUTOCOLLANT (VITESSE VARIABLE)	236
	238
	1002
AXE D'ESSIEU (ASS)	390
AXE DU COUPLER (ASS)	845
	846

B

*BACKHOE AR-STANDARD STICK	4
BALAI D'ESSUIE-GLACE (ENS)	986
BANDE AUTOCOLLANTE (139CM)	498
BANDE AUTOCOLLANTE (399CM)	867
BATI - CHARGEUSE (ASS)	490
BÂTI - CHARGEUSE (ENS)	489
BÂTI D'ORIENTATION (ASS)	491
BATTERIE (ASS)	275
BATTERIE (ASS)	277
	279
	281
BATTERIE (12V, GRANDE CAPACITÉ)	281
BATTERIE (12V, INDUSTRIELLE)	279
BATTERIE (12V, 750A) (750A)	275
	277
BIELLETTE DE SERRE-JOINT (ASS)	733
BLINDAGE D'ARBRE DE TRANSMISSION (ASS)	493
BLOC-CYLINDRES (ASS)	46
	47
	48
	50
	51
	52
	54
	56
	58
	60
	62
	64
	65
	67
	68
BOITE DE VITESSES ET MONTAGE (ASS)	425
	426
BOÎTE MÉCANIQUE (ASS)	434
BOÎTE MÉCANIQUE (ASS)	428
BOITE MECANIQUE (VERSION)	427
BOITE MECANIQUE (VERSION)	427
BOÎTIER-RENIFLARD	147
	149
	151
BOUCHON - BLOC-CYLINDRES	128
BOUCHON - CULASSE (ASS)	129
BOUCHON AIMANTÉ	390
	395
	400
BOUCHON DE CARBURANT	264
	268
BOUCHON DE GOULOTTE DE REMPLISSAGE (HUILE HYDRAULIQUE)	678
BOUCHON DE MOTEUR (ASS)	130
	131
	132
	133
BOUCHON DE REMPLISSAGE D'HUILE MOTEUR (ASS)	154
BOUCHON DE REMPLISSAGE D'HUILE MOTEUR (ASS)	155
BOUCHON DE REMPLISSAGE (HUILE HYDRAULIQUE)	680
BOUCHON-VIDANGE DU CARTER	99
	101
	103
	105
	107
	109
	111
	113
BOUDIN DE ROUE (ASS)	412
BOUGIE DE PRECHAUFFAGE	283
BOUGIE DE PRÉCHAUFFAGE (ASS)	283
BOULONNERIE DE LA CULASSE (ASS)	80
BOURRELET D'ÉTANCHÉITÉ (CARTER DE RÉGULATEUR)	166
BOURRELET D'ÉTANCHÉITÉ (FILTRE À CARBURANT)	244
BOURRELET D'ÉTANCHÉITÉ (RENIFLARD)	147
	149
	151
BOUTON DE TEMPÉRATURE	322
BRAS DE LEVAGE (ASS)	726
BRAS DE PELLE RETRO (ASS)	754
BRAS TÉLESCOPIQUE (ASS)	752

C

CABINE - REVÊTEMENT (ASS)	925
	926
CABINE (ASS)	875
	877
CABINE (ENS)	871

INDEX

Désignation	Page
	873
CABINE (VERSION)	866
	867
	868
	869
	870
CABLAGE - CAPTEUR (ASS)	386
CABLAGE - CLIMATISEUR (ASS)	326
	327
CABLAGE - CLIMATISEUR (ASS)	323
CABLAGE - PLATE-FORME (ASS)	367
CABLAGE - PLATE-FORME (ASS)	372
	374
CABLAGE AR (ASS)	379
CABLAGE DE CABINE (ASS)	332
	333
	336
	337
	339
CABLAGE DE CABINE (ASS)	330
CÂBLAGE DE COMMANDE DE TRANSLATION (ASS)	382
	384
CABLAGE DE CONSOLE (ASS)	342
	344
	347
CABLAGE DE CONSOLE (ASS)	349
CABLAGE DE DIRECTION (ASS)	387
CABLAGE DE MOTEUR (ASS)	351
	355
	361
CABLAGE DE PRISE DE FORCE	378
CABLAGE DU CHAUFFAGE DE CABINE (ASS)	365
CÂBLE DE COURROIE	630
CACHE-SOUPAPES (ASS)	29
	31
	33
	35
CADENAS (ASS)	991
CANALISATIONS - GODET TOUS-TRAVAUX (ASS)	625
	627
CANALISATIONS A COMMANDE PILOTE (ASS)	629
	630
CANALISATIONS-CHARGEUSE AUXILIAIRE (ASS)	623
CANALISATIONS D'AIR (ASS)	215
	217
CANALISATIONS DE BRAS (ASS)	658
CANALISATIONS DE CARBURANT (ASS)	247
	249
CANALISATIONS DE CHAUFFAGE (ASS)	928

Désignation	Page
CANALISATIONS DE CLAPET DE RETENUE (ASS)	605
	609
CANALISATIONS DE COMMANDE DE MARCHE	652
	654
CANALISATIONS DE DIRECTION (ASS)	464
	467
CANALISATIONS DE POMPE (ASS)	633
CANALISATIONS DE POMPE (ASS)	637
	639
	640
	641
	642
	643
	646
	647
CANALISATIONS DE RÉCHAUFFEUR DE LIQUIDE DE REFROIDISSEMENT	928
	930
	933
CANALISATIONS DE REFROIDIS. DE TRANSMISSION	183
CANALISATIONS DE RETOUR (ASS)	648
	649
	650
	651
CANALISATIONS DE STABILISATEUR (ASS)	656
CANALISATIONS DE VÉRIN DE GODET (ASS)	603
CANALISATIONS DE VÉRIN DE LEVAGE (ASS)	617
	618
CANALISATIONS D'ORIENTATION (ASS)	659
CANALISATIONS DU BRAS TELESCOPIQUE (ASS)	614
	615
CANALISATIONS DU VÉRIN D'INCLINAISON (ASS)	660
CANALISATIONS-RÉCHAUFFEUR ET CLIMATISEUR (ASS)	930
	933
CANALISATIONS SECONDAIRES DE PELLE RÉTRO (ASS)	575
	577
CANALISATIONS SECONDAIRES DE PELLE RÉTRO (ASS)	580
	584
	588
	592
	594
	597
CANALISATIONS-VALVE DE CONTROLE DE CHARGE	620
CAPOT DU MOTEUR (ASS)	501

INDEX

Désignation	Page
CAPOT DU MOTEUR (ASS)	498
CAPOT ET PROTECTION (ASS)	494
	496
CARTER AV (ASS)	85
	86
	87
	88
	89
CARTER DE DIFFÉRENTIEL (ASS)	400
CARTER DE VOLANT (ASS)	83
	84
CARTER ET BRIDE D'ESSIEU (ASS)	413
	415
CEINTURE DE SECURITE (ASS)	946
	947
CHAPEAU	442
	443
CHAPEAU - RADIATEUR	194
CHAPEAU (ENS)	575
CHAPEAU (ENS) (CLIMATISEUR)	930
CHAPEAU (ENS) (GOULOTTE DE REMPLISSAGE D'HUILE MOTEUR)	155
CHAPEAU (ENS) (RADIATEUR)	197
	200
CHAPEAU (ENS) (REMPLISSAGE D'HUILE) (MOTEUR)	154
CHARGEUSE (VERSION)	738
CHAUFFAGE DE CABINE (ASS)	918
	920
CLAPET DE DECHARGE (ASS)	434
	471
CLAPET DE DECHARGE (ASS)	428
CLAPET DE DECHARGE (ASS)	703
CLAPET DE DECHARGE (ASS)	695
	701
CLAPET DE DECHARGE (ASS) (CLIMATISEUR)	888
CLAPET DE DECHARGE (PURGEUR D'AIR)	388
CLAPET DE RETENUE (ENS)	693
CLAPET (ENS) (EAU)	857
	859
	918
CLÉ	991
CLÉ ÉLECTRONIQUE (ENS) (GRIS)	287
	289
CLÉ ÉLECTRONIQUE (ENS) (JAUNE)	287
	289
CLIGNOTANT (ENS)	367
	374
CLIMATISEUR (ASS)	862
CLIMATISEUR ET MONTAGE (ASS)	859
CLIMATISEUR ET MONTAGE (ASS)	857
CLIMATISEUR (VERSION)	861
COLLECTEUR D'ADMISSION (ASS)	220
COLLECTEUR D'ÉCHAPPEMENT (ASS)	218
	219
COMMANDE DE BOITE DE VITESSES (ASS)	399
COMMANDE DE DIFFÉRENTIEL - VERROUILLAGE (ASS)	398
COMMANDE DE DIRECTION (ASS)	462
	463
COMMANDE DE FREIN DE STATIONNEMENT (ASS)	452
	453
COMMANDE DE RÉGULATEUR ET D'ACCÉLÉRATEUR (ASS)	236
	238
COMMANDE DE TRANSLATION (VERSION)	510
COMMANDE HYDRAULIQUE DE PÉDALE (ASS)	529
	531
COMMANDE HYDRAULIQUE DE PÉDALE (ASS)	527
COMMANDE HYDRAULIQUE MANUELLE (ASS)	511
	513
	515
	517
	518
	520
	522
	524
	525
COMMANDE NON PROGRAMMEE (ASS) (SÉCURITÉ)	289
COMMANDE NON PROGRAMMEE (ASS) (SÉCURITÉ)	287
COMPARTIMENT DE BATTERIE (ASS)	472
	473
COMPRESSEUR DE REFRIGERANT (ASS)	889
	891
COMPRESSEUR DE REFRIGERANT (ASS)	888
COMPTE-TOURS ÉLECTRIQUE (ASS)	868
	869
	870
	880
	881
COMPTE-TOURS ÉLECTRIQUE (ASS)	968
	969
CONDENSATEUR ET MONTAGE (RÉFRIGÉRANT)	892
CONSOLE AV (ASS)	893
CONSOLE DE CONDUITE (ASS)	894
CONSOLE LATÉRALE (ASS)	895
	896
	897
	898
	899
CONTACTEUR DE DÉMARRAGE À CLÉ (ENS)	944

INDEX

Désignation	Page
CONTACTEUR (ENS)	568
CONTACTEUR (ENS) (BLOCAGE AU POINT MORT)	342
CONTACTEUR (ENS) (CLIGNOTANT DE DIRECTION)	332
CONTACTEUR (ENS) (KLAXON)	342
CONTACTEUR (ENS) (KLAXON)	347
CONTACTEUR (ENS) (NEUTRE, VERROUILLAGE)	347
CONTACTEUR (ENS) (PROJECTEUR ARRIÈRE)	300
CONTACTEUR (ENS) (PROJECTEUR AV)	300
CONTACTEUR (ENS) (RÉCHAUFFEUR)	365
CONTREPOIDS (ASS)	475
	476
	477
	478
	479
CORDON POUR LITTÉRATURE	887
COUDE D'ADMISSION D'AIR (ASS)	209
	210
COUPLEUR EXPRESS (ASS)	829
	830
	831
	832
	833
COUPLEUR EXPRESS (VERSION)	828
COURONNE CONIQUE ET PIGNON	400
COURONNE ET DIFFERENTIEL (ASS)	400
COURROIE TRAPEZOIDALE	272
COURROIE TRAPEZOIDALE (CLIMATISEUR)	891
COURROIE TRAPEZOIDALE (COMPRESSEUR DE RÉFRIGÉRANT)	177
COUVERCLE (ASS)-FREIN DE STATIONNEMENT	905
COUVERCLE (ASS) MONTANT	906
	907
COUVERCLE-CLOISON PARE-FEU (ENS)	903
	904
COUVERCLE DE CARTER AV (ASS)	27
	28
COUVERCLE DE COLLECTEUR D'ADMISSION (ASS)	208
COUVERCLE DE DISTRIBUTEUR (ASS)	543
COUVERCLE DE LA CONSOLE (ASS)	900
	901
COUVRE-JOINT (SOUPAPE)	31
CREPINE	430
	436
CULASSE (ASS)	69
	70
	71
	72
	73
	74
	75
	76
	77
CULBUTERIE (ASS)	136
	138
	140
	142
	144
	145

D

Désignation	Page
DÉMARREUR - MONTAGE (ASS)	98
DÉMARREUR ÉLECTRIQUE (ASS)	315
	316
	318
DENT MONOBLOC (ASS)	853
DIFFERENTIEL (ASS)	400
	402
DISJONCTEUR DE SECURITE (ENS) (FREIN)	454
DISTRIBUTEUR (ASS)	695
	697
	699
	701
	703
	705
	707
	709
	711
	713
DISTRIBUTEUR DE CHARGE (ASS)	715
	717
DISTRIBUTEUR DOUBLE ÉLÉMENT (ASS)	686
	688
DISTRIBUTEUR TRIPLE ÉLÉMENT (ASS)	689
DISTRIBUTEUR 4 ÉLÉMENTS (ASS)	690
DISTRIBUTEUR 4 ÉLÉMENTS (VERSION)	684
DISTRIBUTEUR 5 ÉLÉMENTS (ASS)	691
DISTRIBUTEUR 5 ÉLÉMENTS (VERSION)	684
DISTRIBUTEUR 6 ÉLÉMENTS (ASS)	692
DISTRIBUTEUR 6 ÉLÉMENTS (VERSION)	685
DISTRIBUTEURS ET MONTAGE (ASS)	682

E

Désignation	Page
EAU DES CHEMISES - RECHAUFFEUR (ASS)	284
	285
	286
ÉCLAIRAGE - GYROPHARE (ASS)	308
	309
ÉCLAIRAGE - PROJECTEURS (ASS)	296
	298

INDEX

Désignation	Page
	300
	302
ÉCLAIRAGE - PROJECTEURS ET CLIGNOTANTS (ASS)	305
ÉLÉMENT DE FILTRE À AIR (ENS) (PRINCIPAL)	201
ÉLÉMENT DE FILTRE À AIR (ENS) (SECONDAIRE)	201
ÉLÉMENT DE FILTRE (CARBURANT)	260
ÉLÉMENT DE FILTRE (ENS)-CARBURANT	244
ÉLÉMENT DE FILTRE (ENS)-CARBURANT (SÉPARATEUR D'EAU)	245
ENSEMBLE DE TRANSFORM.-COMMANDE MANUELLE HYDR.	537
	538
	539
	540
	541
ENTRAÎNEMENT D'ACCOUPLEMENT FLEXIBLE (ASS)	405
ENTRAÎNEMENT DE VENTILATEUR (ASS)	78
	79
ENTRAÎNEMENT POUR COURROIE	294
	295
ESSIEU AR (ASS)	393
ESSIEU AV (ASS)	459
	461
ESSIEU ET MONTAGE -ARRIÈRE (ASS)	389
ESSIEU ET MONTAGE -ARRIÈRE (ASS)	388
ESSIEU MOTEUR ET DIRECTEUR (ASS)	390
	392
ESSUIE-GLACE (ASS)	986
	988

F

Désignation	Page
FEUX ARRIÈRE ET FEUX D'ARRÊT	293
FILTRE	695
	697
	699
	701
	703
	705
	707
	709
	713
FILTRE A AIR (ASS)	201
	202
	203
	204
	206
	207
FILTRE À AIR (CABINE)	920
FILTRE À AIR (CLIMATISEUR)	857
FILTRE À AIR (CLIMATISEUR)	862
FILTRE A CARBURANT (ASS)	244
FILTRE A HUILE (ASS)	564
FILTRE À HUILE (ENS) (BOÎTE DE VITESSES)	427
FILTRE À HUILE (ENS) (HYDRAULIQUE) (RÉSISTANT AU FEU)	571
FILTRE À HUILE (ENS) (NETTOYAGE/ GRANDE EFFICACITÉ)	571
FILTRE A HUILE MOTEUR (ENS)	14
	154
	155
FILTRE (CLIMATISEUR)	857
	859
FILTRE DE SÉPARATEUR D'EAU ET DE CARBURANT (ASS)	245
FILTRE ET CANALISATIONS DE CARBURANT (ASS)	240
	242
FILTRE HYDRAULIQUE (ENS)	564
FILTRE (RÉCHAUFFEUR)	918
FILTRE (RENIFLARD DE RÉSERVOIR HYDRAULIQUE)	680
FILTRE (RENIFLARD)(HYDRAULIQUE)	678
FLECHE - CANALISATIONS	601
FLECHE (ASS)	728
	729
FLEXIBLE (CACHE-SOUPAPE DE RENIFLARD DE CARTER)	149
FLEXIBLE DE RADIATEUR	193
FLEXIBLE DE RENIFLARD	31
FLEXIBLE DE RENIFLARD (CARTER)	29
FLEXIBLE (RENIFLARD)	33
FLEXIBLE (RENIFLARD DE CARTER 90 CM OUVERT)	149
FLEXIBLE (RENIFLARD DE CARTER 90CM)	149
FLEXIBLE (53CM)	464
	467
FLEXIBLE (72CM)	634
FLEXIBLE (96CM CHACUN)	633
*FOOTREST GP	917
FOURCHE (ASS)	837
FOURCHE (VERSION)	836
FREIN DE MANOEUVRE - COMMANDE (ASS)	454
FREIN DE STATIONNEMENT (ASS)	451
FUSIBLE (10A)	294
	295
	300
	305
	367
	378
FUSIBLE (10A)	323
	327
	367
	382

INDEX

Désignation	Page
	384
FUSIBLE (15A)	296
	298
	300
	302
	305
	336
	339
	367
FUSIBLE (15A)	367
FUSIBLE (20 A)	367
FUSIBLE (20A)	330
	333
FUSIBLE (5A)	330
	337
	367
	387
FUSIBLE (5A)	367

G

GAINE	719
	720
GAINE D'AIR (ASS)	912
	914
GARDE-BOUE AR (ASS)	482
	483
GARDE-BOUE AV (ASS)	481
GARNITURE POUR CABINE (ASS)	970
GLACE DE PORTIÈRE (ASS)	982
	984
GODET - MONTAGE (ASS)	842
	843
GODET - VERSION D'EXPÉDITION	847
GODET NORMAL (ASS)	774
	775
GODET NORMAL (ENS)	759
	760
	762
	763
GODET RETRO (ASS)	776
	777
	778
	779
	780
	781
	782
	783
	784
	785
	786
	787
	788
	789
	790
	791
	792
	793
	794
	795
	796
	797
	798
	799
	800
	801
	802
	803
	804
	805
	806
	807
	808
	809
	810
	811
	812
	813
	814
	815
	816
	817
	818
	819
	820
	821
	822
	823
GODET RETRO (ENS)	764
	765
	766
	767
	768
	769
	770
	771
	772
	773
GODET TOUS-TRAVAUX (ASS)	824
	825
	826
	827
GODET TOUS-TRAVAUX (VERSION)	756
GODET TOUS-TRAVAUX (VERSION)	757
	758
GOULOTTE DE REMPLISSAGE D'HUILE DE TRANSMISSION	406
	408
	410
	411

INDEX

Désignation	Page
GRAISSEUR	562, 572, 665, 728, 742, 754, 826, 852
GRAISSEUR (FILET 1/8-27)	726, 736, 750
GRAISSEUR (FILET 1/8-27)	490, 491
GRAISSEUR (FILET 1/8-27)	824, 825, 827
GROUPE DE ROTATION DE POMPE	675
GROUPE D'ORIENTATION ET DE GLISSIÈRE DE SIÈGE	965

H

HAUT-PARLEUR	926, 961
*HEATER GP-STARTING AID	314
HUILE MOTEUR - CARTER (ASS)	99, 101, 103, 105, 107, 109, 111, 113
*HYDRAULIC AR	568, 569, 570

I

INDICATEUR DE COLMATAGE DE FILTRE À AIR (ASS)	212, 213, 214
INDICATEUR DE REMPLACEMENT DE FILTRE À AIR	213
INDICATEUR D'ENTRETIEN (FILTRE À AIR)	212
INJECTEUR DE CARBURANT (ENS)	251
INSONORISATION (ASS)	961
INSONORISATION (VERSION)	504
INTERRUPTEUR - BOUTON-POUSSOIR (ENS)	522
INTERRUPTEUR - BOUTON-POUSSOIR (ENS) (NEUTRALISATION)	399
INTERRUPTEUR - CONTACTEUR (40-DEG) (TEMPÉRATURE DU LIQUIDE DE REFROIDISSEMENT DU MOTEUR)	255
INTERRUPTEUR - THERMOSTAT (CLIMATISEUR)	862
INTERRUPTEUR (ASS) (VERROUILLAGE HYDRAULIQUE)	568
INTERRUPTEUR BALANCIER (ENS) (COMMANDE DE TRANSLATION)	382, 384, 510
INTERRUPTEUR BALANCIER (ENS) (DANGER)	342
INTERRUPTEUR BALANCIER (ENS) (FEUX DE DÉTRESSE)	347
INTERRUPTEUR BALANCIER (ENS) (PROJECTEUR ARRIÈRE)	305
INTERRUPTEUR BALANCIER (ENS) (PROJECTEUR AVANT)	305
INTERRUPTEUR BALANCIER (ENS) (VITESSE DE VENTILATEUR DE RÉCHAUFFEUR)	365
INTERRUPTEUR BALANCIER (ENS) (VITESSE DE VENTILATEUR DE RÉCHAUFFEUR)	323, 327
INTERRUPTEUR ROTATIF	386

J

JAUGE DE NIVEAU D'HUILE (JAUGE BAÏONNETTE)	154
JEU DE COURROIES TRAPEZOIDALES (COMPREND 2 COURROIES)	176, 177, 178, 272, 868, 869, 870, 880, 881
JOINT PLAT (CACHE-SOUPAPES)	29, 35
JOINT PLAT (POMPE À EAU)	185, 187
JOINT TORIQUE	614
JOINT TORIQUE (RÉGULATEUR)	166
JOINT TORIQUE (RÉGULATEUR DE TEMPÉRATURE D'EAU)	167
JOINT TORIQUE (VIDANGE D'HUILE MOTEUR)	113

K

KIT - COMMANDE DE TRANSLATION	574
KIT - COUSSIN (ACCOUDOIR)	864

INDEX

Désignation	Page
*KIT-ADAPTER TIP	840
	841
KIT DE BLOC COULISSANT	956
	958
KIT DE BOUGIE (12 BROCHES)	344
KIT DE BOUGIE (12 BROCHES)	367
KIT DE BOUGIE (2 BROCHES)	300
	327
	344
	351
	355
	367
	374
	440
	453
KIT DE BOUGIE (2 BROCHES)	862
KIT DE BOUGIE (3 BROCHES)	351
	355
	367
KIT DE BOUGIE (4 BROCHES)	300
	344
	367
KIT DE BOUGIE (6 BROCHES)	344
	367
KIT DE BOUGIE (8 BROCHES)	367
KIT DE BOULONNERIE D'ALTERNATEUR	270
KIT DE CAME (SENS INVERSE D'HORLOGE)	451
KIT DE COMPTEUR D'ENTRETIEN	342
KIT DE COMPTEUR D'ENTRETIEN	347
KIT DE CONTACTEUR (DÉMARREUR)	316
KIT DE COUSSINET	393
KIT DE COUSSINET D'ALTERNATEUR	270
KIT DE COUSSINET DE BIELLE (0,25MM SOUS-DIM)	38
	39
	40
KIT DE COUSSINET DE BIELLE (0,25MM SOUS-DIM) (F)	37
KIT DE COUSSINET DE BIELLE (0,51MM SOUS-DIM)	38
	39
	40
KIT DE COUSSINET DE BIELLE (0,76MM SOUS-DIM)	38
	39
	40
KIT DE COUSSINET DE BIELLE (0,76MM SOUS-DIM) (F)	37
KIT DE COUSSINET DE BIELLE (51MM SOUS-DIM) (F)	37
KIT DE COUSSINET DE VILEBREQUIN (O,51MM SOUS-DIM) (PRINCIPAL)	37
KIT DE COUSSINET DE VILEBREQUIN (0,25MM SOUS-DIM)	38
	39
	40
KIT DE COUSSINET DE VILEBREQUIN (0,25MM SOUS-DIM) (PRINCIPAL)	37
KIT DE COUSSINET DE VILEBREQUIN (0,51MM SOUS-DIM)	38
	39
	40
KIT DE COUSSINET DE VILEBREQUIN (0,76MM SOUS-DIM)	38
	39
	40
KIT DE COUSSINET DE VILEBREQUIN (0,76MM SOUS-DIM) (PRINCIPAL)	37
KIT DE CROISILLON	390
KIT DE CROISILLON ET ROULEMENT	423
	424
KIT DE FLEXIBLE	185
	187
KIT DE GARNITURE DE FREIN	451
KIT DE JOINTS	286
	715
KIT DE JOINTS (POMPE DOSEUSE DE DIRECTION)	469
KIT DE JOINTS (POMPE DOSEUSE DE DIRECTION)	403
KIT DE POMPE À CARBURANT (COMPREND FILTRE ET JOINT TORIQUE)	240
KIT DE PORTEUR PLANÉTAIRE	417
KIT DE PRISE FEMELLE (12 BROCHES)	367
KIT DE PRISE FEMELLE (2 BROCHES)	265
	355
	367
	372
	399
	701
KIT DE PRISE FEMELLE (2 BROCHES)	367
	387
	522
	888
KIT DE PRISE FEMELLE (2 BROCHES)	300
KIT DE PRISE FEMELLE (2 BROCHES)	351
KIT DE PRISE FEMELLE (2 BROCHES)	441
	725
KIT DE PRISE FEMELLE (3 BROCHES)	355
	367
	972
KIT DE PRISE FEMELLE (3 BROCHES)	344
	367
KIT DE PRISE FEMELLE (3 BROCHES)	351
KIT DE PRISE FEMELLE (3 BROCHES)	441
KIT DE PRISE FEMELLE (4 BROCHES)	300
	367
KIT DE PRISE FEMELLE (4 BROCHES)	367
KIT DE PRISE FEMELLE (4 BROCHES)	293
KIT DE PRISE FEMELLE (6 BROCHES)	300

INDEX

Désignation	Page
	938
	986
KIT DE PRISE FEMELLE (6 BROCHES)	367
KIT DE PRISE FEMELLE (8 BROCHES)	937
KIT DE PRISE FEMELLE (8 BROCHES)	367
KIT DE PROTECTION DE PÉDALE	923
KIT DE REGLAGE (ACCOUDOIR)	864
KIT DE RÉPARATION	986
KIT DE ROULEMENT À GALETS	417
KIT DE SEGMENT DE PISTON	115
	122
	123
KIT D'ENGRENAGE (DÉMARREUR)	316
KIT D'ENTRETIEN	945
KIT D'ENTRETIEN D'ACCUMULATEUR	505
KIT D'ETRIER DE FREIN	451
KLAXON ÉLECTRIQUE (ASS)	922

L

LAME	988
LAME DE COUPE (ASS)	834
	835
LAMPE - CLIGNOTANT DE DIRECTION (ASS)	292
LAMPE - GYROPHARE (ASS)	294
	295
LAMPE - PHARE (ASS)	291
LAMPE (ENS) (12 VOLTS)	287
LAMPE (ENS) (12 VOLTS)	290
LAVE-GLACE - VITRE (ASS)	972
	974
LENTILLE	293
LENTILLE (ENS) (PROJECTEUR)	291
LENTILLE (JAUNE)	300
LENTILLE (JAUNE)	292
	296
	298
LENTILLE ORANGE	294
	295
LENTILLE (TRANSPARENT)	300
LENTILLE (TRANSPARENT)	296
	298
	300
LEVIER DE COMMANDE DE REGULATEUR (ASS)	924
LEVIER DE COMMANDE MANUELLE	457
LIAISON-EXPÉDITION (ASS)	732
LIMITEUR DE LEVAGE ET RETOUR À L'ANGLE DE CAVAGE	572

M

MANOCONTACT	319
	320
	321
MANOCONTACT (ENS)	323
	382
	384
MANOCONTACT (ENS) (HAUTE - BASSE)	327
MANOCONTACT (HUILE MOTEUR)	319
	320
MODULE - TÉMOIN (ASS)	936
	937
MONTAGE - POMPE HYDRAULIQUE (ASS)	668
MONTAGE D'ALTERNATEUR (ASS)	93
	94
MONTAGE DE BRAS (ASS)	742
MONTAGE DE CALE DE ROUE (VERSION)	990
MONTAGE DE CANALISATIONS (ASS)	669
	670
MONTAGE DE COMMANDE HYDRAULIQUE (ASS)	667
MONTAGE DE MOTEUR (ASS)	95
	96
MONTAGE DE MOTEUR ET BOÎTE (ASS)	97
MONTAGE DE MOTEUR (VERSION)	20
MONTAGE DE VÉRIN (ASS)	665
	666
MONTAGE-DISTRIBUTEUR (ASS)	663
	664
MONTAGE DU TABLEAU DE BORD (ASS)	939
	940
	941
	942
MONTAGE FOURCHE (ASS)	844
MONTAGE-SÉCURITÉ (ASS)	287
	289
	290
MOTEUR D'ESSUIE-GLACE (ASS)	938
MOTEUR (VERSION)	8
	9
	10
	11
	12
	13
MOTEUR (VERSION PRINCIPALE)	14
	16
	18
	19

O

OEILLETONS DE LEVAGE MOTEUR (ASS)	91
	92
ORIENTATION-SIÈGE (ASS)	967

P

PARE-CHOCS AV (ASS)	474

INDEX

Désignation	Page
PARE-POUSSIERE	406
	408
	509
	629
	633
PARE-SOLEIL	971
PATIN (ENS)	748
	749
PELLE RÉTRO - BRAS TÉLESCOPIQUE (VERSION)	1
	2
PELLE RÉTRO - STABILISATEUR (ASS)	750
PELLE RÉTRO (VERSION)	3
	4
	5
PISTON ET BIELLE (ASS)	115
	116
	118
	120
	122
	123
	124
	126
PLAFONNIER (ASS)	926
PLAFONNIER (ASS)	961
PLAQUE SIGNALETIQUE	342
	347
	1002
PLAQUE SIGNALÉTIQUE (ASS)	989
PLAQUE SIGNALETIQUE (GODET)	756
	757
	758
PLAQUES SIGNALETIQUES ET AUTOCOLLANTS (ASS)	992
	993
	994
	995
	996
	997
	998
	999
	1000
	1001
PNEU - GROUPE DE VALVE	442
	443
POCHE A DOCUMENTS (ASS)	887
POMPE A EAU (ASS)	185
	189
POMPE A EAU (ASS)	187
POMPE A HUILE MOTEUR (ASS)	157
	159
	161
	163
	165
POMPE A PISTONS (ASS)	671
	673
POMPE D'AMORÇAGE DE CARBURANT (ASS)	260
POMPE DE BOÎTE DE VITESSES (ASS)	429
	436
POMPE DE REGULARISATION DE DEBIT (ASS)	469
POMPE D'INJECTION DE CARBURANT (ASS)	251
	253
	255
	257
POMPE D'INJECTION DE CARBURANT (ASS)	251
PORTE-BALAIS (ENS)	316
PORTE DE BATTERIE (ASS)	480
PORTIERE DROITE (ASS)	910
PORTIERE GAUCHE (ASS)	908
PROTECTEUR DE VÉRIN DE STABILISATEUR (ASS)	565
	566
PROTECTION DE GODET (ASS)	838
	839

R

Désignation	Page
RACCORD - CANALISATIONS DE CARBURANT (ASS)	246
RACCORD DE SOUPAPE (ASS)	507
	509
RACCORD D'EAU (ASS)	166
	167
RACCORD-RÉCHAUFFEUR ET CLIMATISEUR (ASS)	182
RADIATEUR ET REFROIDISSEUR D'HUILE HYDRAULIQUE (ASS)	193
	194
	195
	196
	197
RADIATEUR ET REFROIDISSEUR D'HUILE HYDRAULIQUE (ASS)	198
	200
RADIATEUR ET VENTILATEUR (ASS)	191
	192
RALLONGE D'ÉCHAPPEMENT (ASS)	211
REDUCTEUR (ASS)	652
RÉFLECTEUR	300
	838
REFROIDISSEMENT AUX TEMPÉRATURES ÉLEVÉES (VERSION)	178
REFROIDISSEMENT (VERSION)	176
	177
	178
REFROIDISSEUR D'HUILE MOTEUR (ASS)	172

INDEX

Désignation	Page
REFROIDISSEUR HUILE MOTEUR ET SUPPORT DE FILTRE	168, 170, 172, 174
REGLAGE DE SIEGE (ASS)	855
RÉGULATEUR - PÉDALE (ASS)	945
RELAIS (ENS) (12 VOLTS)	287, 300, 305, 323, 326, 327, 330, 333, 336, 339, 361, 365, 382, 384, 387
RELAIS (ENS) (12 VOLTS)	296, 298, 302
RELAIS (ENS) (12 VOLTS)	367
RELAIS (ENS) (12 VOLTS)	290
RELAIS (ENS) (12 VOLTS) (VITESSE RAPIDE)	327
RENIFLARD (ASS)	146, 147, 149, 153
RENIFLARD (ASS)	151
RENIFLARD (BOÎTE DE VITESSES)	430, 435
RENIFLARD (ESSIEU)	390
RÉSERVOIR DE CARBURANT (ASS)	264, 265, 267, 268
RÉSERVOIR DE CARBURANT ET MONTAGE (ASS)	263
RÉSERVOIR-FREIN (ASS)	458
RÉSERVOIR HYDRAULIQUE (ASS)	680
RÉSERVOIR HYDRAULIQUE ET MONTAGE (ASS)	678
RESSORT (FLEXIBLE DE RENIFLARD)	29, 31, 33
RETROVISEUR - CABINE (ASS)	971
RÉTROVISEUR (ASS)	935
ROTATION DE LA ROUE DU VENTILATEUR SOUFFLANT	498, 1002
ROTATION DE LA ROUE DU VENTILATEUR SOUFFLANT (AUXILIAIRE)	901
ROTATION DE LA ROUE DU VENTILATEUR SOUFFLANT (BRAS-E)	527
ROTATION DE LA ROUE DU VENTILATEUR SOUFFLANT (BRAS TÉLESCOPIQUE)	520, 1002, 1003
ROTATION DE LA ROUE DU VENTILATEUR SOUFFLANT (COMMANDE DE GODET)	568, 569, 1003
ROTATION DE LA ROUE DU VENTILATEUR SOUFFLANT (DÉBIT DE RETOUR)	577, 580, 584, 588, 594, 597, 1002
ROTATION DE LA ROUE DU VENTILATEUR SOUFFLANT (LUBRIFIANTS)	501
ROTATION DE LA ROUE DU VENTILATEUR SOUFFLANT (N. D'ÉTAPE)	1002
ROUE ET PNEU (ASS)	445, 446, 447, 448, 449, 450
ROUE ET PNEU (VERSION)	443, 444, 445

S

Désignation	Page
SEMELLE DE STABILISATEUR	748, 749
SEMELLE ET MONTAGE DE STABILISATEUR	745, 746, 747
SEMELLE ET PROTECTION DE STABILISATEUR (ASS)	743, 744
SÉPARATEUR D'EAU (ASS)	261, 262
SERRE-JOINT (ASS)	852
SIÈGE À ÉQUILIBRAGE STATIQUE (ASS)	954, 955
SIÈGE (ASS)	948
SIÈGE (ASS)	950, 952
SIÈGE AVEC SUSPENSION (ASS)	956, 958, 960

INDEX

Désignation	Page
	963
SILENCIEUX (ASS)	222
	223
	224
	225
SILENCIEUX (ENS)	221
SONDE THERMIQUE	361
SONDE THERMIQUE ((HUILE DE CONVERTISSEUR DE COUPLE))	355
SONDE THERMIQUE (HUILE DU CONV. DE COUPLE)	351
SOUPAPE - GAZ (CIRCUIT DE FREINAGE)	505
SOUPAPE - SOLÉNOÏDE (ASS)	440
	441
	725
SOUPAPE - SOLÉNOÏDE (ASS) (12 VOLTS)	251
SOUPAPE - SOLÉNOÏDE (ASS) (12 VOLTS)	253
SOUPAPE D'ARRÊT	182
	633
	643
SOUPAPE D'ARRÊT (ASS)	633
SOUPAPE DE PRIORITE (ASS)	471
SOUPAPE ET MONTAGE - SOLÉNOÏDE	683
SOUPAPE PILOTE (ASS)	718
	719
	720
	721
STABILISATEUR (VERSION)	677
*STARTING AID GP	310
	311
	312
	313
SUPPORT - MONTAGE (ASS)	865
SUPPORT DE FILTRE ET REFROIDISSEUR D'HUILE MOTEUR	168
	170
	172
SUPPORT DE FILTRE ET REFROIDISSEUR D'HUILE MOTEUR	174
SUPPORT DE SÉPARATEUR D'EAU	245
SUPPORT D'EXPÉDITION (ASS)	731
SUPPORT (ENS)	275
	277
SYNCHRONISEUR (ASS)	428
	434

T

TABLEAU DE BORD (ASS)	944
TAPIS DU PLANCHER (ASS)	915
	916
THERMOCONTACT (ENS) (AVANCE À L'INJECTION)	251
	253
THERMOSTAT-TEMPÉRATURE D'EAU	166
	167
TIMONERIE DE GODET DE CHARGEUSE (ASS)	736
TIMONERIE DE GODET RÉTRO (ASS)	734
TIRANT DE VÉRIN DE LEVAGE (ASS)	730
TOIT (ENS)	882
	885
TOIT-ROPS OUVERT (ASS)	886
TOIT (VERSION)	879
	880
	881
TÔLE DE PLANCHER (ASS)	484
	486
	487
TRAINS PLANÉTAIRES-RÉDUCTEURS (ASS)	417
TRANSFORMATION - DISTRIBUTEUR (ASS)	535
	536
TRANSMISSION (VERSION)	418
	419
	420
	421
	422
TURBOCOMPRESSEUR (ASS)	226
	227
	229
	231
	233
	234

V

*VALVE GP-CHECK	694
*VALVE GP-PUMP CONTROL	722
	723
VENTILATEUR ASPIRANT (ASS)	179
	180
	181
VENTILATEUR (ENS)	862
	920
VÉRIN - GODET TOUS-TRAVAUX (ASS)	557
VERIN DE BRAS (ASS)	560
VERIN DE FLECHE (ASS)	550
VÉRIN DE GODET RÉTRO (ASS)	545
	546
	548
VÉRIN DE LEVAGE (ASS)	555
	556
VÉRIN DE SERRE-JOINT (ASS)	562
VERIN DE STABILISATEUR (ASS)	558
	559
VÉRIN D'INCLINAISON (ASS)	563
VÉRIN D'ORIENTATION (ASS)	561
VÉRIN DU BRAS TELESCOPIQUE (ASS)	552
	553

INDEX

Désignation	Page	Désignation	Page
VERIN (ENS)	454		
VÉRIN ET CANALISATIONS DE SERRE-JOINT (ASS)	544		
VERROUILLAGE ANTI-VANDALISME (ASS)	991		
VERROUILLAGE DE COMMANDE MANUELLE HYDRAUL. (ASS)	662		
VERROUILLAGE POUR L'EXPÉDITION (ASS)	739 740 741		
VERSION DE CHASSIS	6		
VERSION DE SERRE-JOINT	849 850 851		
VERSION DE TRANSFORMATION D'ORIENTATION D'AMORTISSEUR	533		
VERSION D'ENTRAÎNEMENT DE CHARGEUSE-PELLETEUSE	403 404		
VERSION HYDRAULIQUE	568 569 570 571		
VERSION NORMALE	6 7		
VILEBREQUIN - POULIE (ASS)	134 135		
VILEBREQUIN (ASS)	38 39 40 42 44		
VILEBREQUIN (ASS)	37		
VITRE DE CABINE (ASS)	976 978 980		
VOLANT DE DIRECTION	463		
VOLANT DE DIRECTION (ASS)	470		
VOLANT MOTEUR (ASS)	81 82		

INDICE

Nombre	Página

A

ACONDICIONADOR DE AIRE (CONFIG)	861
ACONDICIONADOR DE AIRE (GR)	862
ACONDICIONADOR DE AIRE Y MONTAJE (GR)	857
	859
ACOPLADOR RÁPIDO (CONFIG)	828
ACOPLADOR RÁPIDO (GR)	829
	830
	831
	832
	833
ACOPLAMIENTO FLEXIBLE - MANDO DE (GR)	405
ACOPLAMIENTO (GR)	542
ACUMULADOR DE CONTROL DE AMORTIGUACION (GR)	505
	506
ACUMULADOR DEL ACONDICIONADOR DE AIRE (GR)	854
AGUA - CONEXIÓN DE (GR)	166
	167
AGUA DE LAS CAMISAS - CALENTADOR DEL (GR)	284
	285
	286
AIRE - TUBERÍAS DE (GR)	215
	217
AJUSTADOR DEL ASIENTO (GR)	855
ALFOMBRILLA DEL PISO (GR)	915
	916
ALMOHADILLA (CONJ)	748
	749
ALMOHADILLA Y MONTAJE DEL ESTABILIZADOR (GR)	745
	746
	747
ALOJAMIENTO GR-DIFERENCIAL	400
ALTAVOZ	926
	961
ÁRBOL DE LEVAS (GR)	21
	22
	23
	24
	25
	26
ASIENTO CON SUSPENSIÓN (GR)	963
ASIENTO FIJO (GR)	954
	955
ASIENTO GIRATORIO (GR)	967
ASIENTO (GR)	948
ASIENTO (GR)	950
	952

B

*BACKHOE AR-STANDARD STICK	4
BANCADA 5 (GR)	691
BASE DEL FILTRO Y ACEITE REFRIGERANTE DE MOTOR	168
	170
	172
	174
BASTIDOR DE ROTACIÓN (GR)	491
BASTIDOR DEL CARGADOR (CONJ)	489
BASTIDOR DEL CARGADOR (GR)	490
BATERÍA (GR)	275
	277
	279
	281
BATERÍA (12 VOLTIOS, SERVICIO PESADO)	279
	281
BATERÍA (12-VOLTIOS, 750-AMPERIOS) (750AMP)	275
	277
BLOQUE DESLIZANTE-JUEGO	956
	958
BLOQUE MOTOR (GR)	46
	47
	48
	50
	51
	52
	54
	56
	58
	60
	62
	64
	65
	67
	68
BOCINA ELÉCTRICA (GR)	922
BOMBA - TUBERÍAS DE (GR)	633
	637
	639
	640
	641
	642
	643
	646
	647
BOMBA DE ACEITE DEL MOTOR (GR)	157
	159
	161
	163
	165
BOMBA DE AGUA (GR)	185

* NO HAY TRADUCCION DISPONIBLE EN EL MOMENTO DE LA IMPRESION

INDICE

Nombre	Página
	187
	189
BOMBA DE CEBADO DE COMBUSTIBLE (GR)	260
BOMBA DE INYECCIÓN DE COMBUSTIBLE (GR)	251
	253
	255
	257
BOMBA DE INYECCIÓN DE COMBUSTIBLE (GR)	251
BOMBA DE LA TRANSMISIÓN (GR)	436
BOMBA DE LA TRANSMISIÓN (GR)	429
BOMBA DE PISTONES (GR)	671
	673
BRAZO DE RETROEXCAVADOR (GR)	754
BRAZO EXTENDIBLE DE RETROEXCAVADOR (CONFIG)	1
	2
BRAZO EXTENSIBLE (GR)	752
BUJÍA INCANDESCENTE	283
BUJÍA INCANDESCENTE (GR)	283

C

CABINA (CONFIG)	866
	867
	868
	869
	870
CABINA (CONJ)	871
	873
CABINA (GR)	875
	877
CABLES DE CALEFACCIÓN (GR)	365
CABLES DE CONTROL DE AMORTIGUACIÓN (GR)	382
	384
CABLES DE LA CABINA (GR)	332
	333
	336
	337
	339
CABLES DE LA CABINA (GR)	330
CABLES DE LA CONSOLA (GR)	342
	344
	347
CABLES DE LA CONSOLA (GR)	349
CABLES DE LA DIRECCIÓN (GR)	387
CABLES DE LA PLATAFORMA (GR)	367
	372
	374
CABLES DE SENSOR (GR)	386
CABLES DEL ACONDICIONADOR DE AIRE (GR)	323
CABLES DEL ACONDICIONADOR DE AIRE (GR)	326
	327
CABLES DEL MOTOR (GR)	355
	361
CABLES DEL MOTOR (GR)	351
CABLES DEL RECEPTÁCULO DE FUERZA (GR)	378
CABLES POSTERIORES (GR)	379
CAJA DE BATERÍA	472
	473
CAJA DELANTERA (GR)	85
	86
	87
	88
	89
CALCOMANIA-AMARRAR	992
CALCOMANÍA (ARRANQUE) (SISTEMA DE SEGURIDAD DE LA MÁQUINA)	290
CALCOMANÍA (CATERPILLAR)	868
	869
	870
	881
CALCOMANÍA (CATERPILLAR) (EN EL PARABRISAS)	866
CALCOMANÍA (CONTROL DE AMORTIGUACION)	510
	574
CALCOMANÍA (CONTROL DE CUCHARÓN)	518
	520
	1002
CALCOMANÍA (CONTROL DE PEDAL Y PALANCA ELECTRONICA)	531
CALCOMANÍA (CONTROL DEL CUCHARON)	901
CALCOMANÍA (CONTROL PILOTO DEL CARGADOR)	901
CALCOMANÍA (CUCHARÓN)	901
CALCOMANÍA (CUCHARÓN DE USO MULTIPLE)	569
	901
	1002
CALCOMANÍA DE ADVERTENCIA	498
	1002
CALCOMANÍA DE ADVERTENCIA (AUXILIAR)	901
CALCOMANÍA DE ADVERTENCIA (BRAZO-E)	527
CALCOMANÍA DE ADVERTENCIA (CILINDRO PARA ALTA PRESION)	597
CALCOMANÍA DE ADVERTENCIA (CONTROL DE CUCHARÓN)	568

* NO HAY TRADUCCION DISPONIBLE EN EL MOMENTO DE LA IMPRESION

INDICE

Nombre	Página
	569
	1003
CALCOMANÍA DE ADVERTENCIA (*EXTENDABLE STICK)	520
	1002
	1003
CALCOMANÍA DE ADVERTENCIA (FLUJO DE RETORNO)	577
	580
	584
	588
	594
	597
	1002
CALCOMANÍA DE ADVERTENCIA (LUBRICANTES)	501
CALCOMANÍA DE ADVERTENCIA (NO PISAR)	1002
CALCOMANÍA DE IDENTIFICACIÓN (TABLERO DE FUSIBLES)	403
	404
	1002
CALCOMANÍA DE RAYAS (139CM)	498
CALCOMANÍA DE RAYAS (399CM)	867
CALCOMANÍA-DIRECCIÓN EN TODAS LAS RUEDAS	1002
CALCOMANÍA (INDICADOR)	344
CALCOMANIA-INDICADOR DE CUCHARON	1002
CALCOMANÍA (INTERRUPTOR DE ARRANQUE)	1002
CALCOMANÍA (INTERRUPTOR DE ENCENDIDO)	287
	290
CALCOMANIA-LEVANTAR	992
CALCOMANÍA (PATRON ESTANDAR/ CRUZADO)	515
	1002
CALCOMANÍA (PEDAL DE CONTROL AUXILIAR)	531
CALCOMANÍA (PIVOTE CENTRAL, TRABA DE LA PLUMA)	1002
CALCOMANÍA (PLACA, NOMBRE)	505
CALCOMANÍA (RECIRCULACIÓN DE AIRE)	862
	920
CALCOMANÍA (SEGURIDAD)	290
CALCOMANÍA (SEGURIDAD) (SISTEMA DE SEGURIDAD DE LA MÁQUINA)	287
CALCOMANÍA (UBICACIÓN DEL CONECTOR DE LEVANTAMIENTO)	1001
CALCOMANÍA (VELOCIDAD VARIABLE)	236
	238
	1002
CALCOMANÍA (VISERA DE PARABRISAS)	867
CALCOMANÍAS Y PLACAS DE IDENTIFICACIÓN (GR)	992
	993
	994
	995
	996
	997
	998
	999
	1000
	1001
CALEFACCIÓN DE LA CABINA (GR)	918
	920
CÁNCAMOS DE LEVANTAMIENTO DEL MOTOR (GR)	91
	92
CANDADO (GR)	991
CAPÓ DEL MOTOR (GR)	498
	501
CAPO Y PROTECTOR (GR)	494
	496
CARGA - ALTERNADOR DE (GR)	270
	272
	273
	274
CARGADOR (CONFIG)	738
CÁRTER - COLECTOR DEL (GR)	99
	101
	103
	105
	107
	109
	111
	113
CHASIS (CONFIG)	6
CIGÜEÑAL - POLEA DE (GR)	134
	135
CIGÜEÑAL (GR)	37
	38
	39
	40
	42
	44
CILINDRO (CONJ)	454
CILINDRO DE CUCHARÓN DE USO MÚLTIPLE (GR)	557
CILINDRO DE CUCHARÓN RETROEXCAVADOR (GR)	545
	546
	548
CILINDRO DE LA PLUMA (GR)	550
CILINDRO DE LEVANTAMIENTO - TUBERÍAS DEL (GR)	617

* NO HAY TRADUCCION DISPONIBLE EN EL MOMENTO DE LA IMPRESION

INDICE

Nombre	Página
	618
CILINDRO DE LEVANTAMIENTO (GR)	555
	556
CILINDRO DE ROTACIÓN (GR)	561
CILINDRO DEL BRAZO EXTENSIBLE (GR)	552
	553
CILINDRO DEL BRAZO (GR)	560
CILINDRO ESTABILIZADOR (GR)	558
	559
CILINDRO GR - PULGAR	562
CILINDRO Y TUBERIAS GR - PULGAR	544
CINTURÓN DE SEGURIDAD (GR)	946
	947
CODO DE ADMISIÓN DE AIRE (GR)	209
	210
COLADOR	430
	436
COMBUSTIBLE - TANQUE DE (GR)	264
	265
	267
	268
COMPARTIMIENTO DE LITERATURA DE SERVICIO (GR)	887
COMPRESOR DE REFRIGERANTE (GR)	888
COMPRESOR DE REFRIGERANTE (GR)	889
	891
CONDENSADOR DEL REFRIGERANTE Y MONTAJE (GR)	892
CONDUCTO DE AIRE (GR)	912
	914
CONECTOR DE VALVULA (GR)	507
	509
CONEXION DE CALENTADOR Y ACOND. DE AIRE (GR)	182
CONEXIÓN DE ENGRASE	562
	572
	665
	728
	742
	754
	826
	852
CONEXIÓN DE ENGRASE DE LAS TUBERÍAS DE COMBUSTIBLE	246
CONEXIÓN DE ENGRASE (ROSCA DE 1/8-27)	490
	491
	726
	750
	824
	825
	827
CONEXIÓN DE ENGRASE (ROSCA DE 1/8-27)	736
CONFIG. DEL MANDO, CARGADOR RETROEXCAVADORA	403
	404
CONFIGURACIÓN COMÚN	6
	7
CONFIGURACIÓN DE ENFRIAMIENTO	176
	177
	178
CONFIGURACIÓN DE INSTALACIÓN DEL MOTOR	20
CONFIGURACIÓN DE MOTORES	8
	9
	10
	11
	12
	13
CONJUNTO DE DESTELLADOR	374
CONJUNTO DE LLAVE, ELECTRONICA (AMARILLO)	287
	289
CONJUNTO DE LLAVE, ELECTRONICA (*GRAY)	287
	289
CONSOLA DEL OPERADOR (GR)	894
CONSOLA DELANTERA (GR)	893
CONSOLA LATERAL (GR)	895
	896
	897
	898
	899
CONTRAPESO (GR)	475
	476
	477
	478
	479
CONTROL DE AMORTIGUACIÓN (CONFIG)	510
CONTROL DE DIRECCIÓN (GR)	462
	463
CONTROL DE LA TRANSMISIÓN (GR)	399
CONTROL DE TRABA DEL DIFERENCIAL (GR)	398
CONTROL DEL FRENO DE ESTACIONAMIENTO	452
	453
CONTROL DEL REGULADOR Y ACELERADOR (GR)	236
	238
CONTROL HIDRÁULICO MANUAL (GR)	511
	513
	515
	517

* NO HAY TRADUCCION DISPONIBLE EN EL MOMENTO DE LA IMPRESION

INDICE

Nombre	Página
	518
	520
	522
	524
	525
CONTROL MANUAL DE PALANCA (GR)	457
CONTROL NO PROGRAMADO (GR) (SEGURIDAD)	287
	289
CONVERSION DE CONTROL DE MANO HIDRAULICO (GR)	537
	538
	539
	540
	541
CONVERSIÓN DE LA VÁLVULA DE CONTROL (GR)	535
	536
CONVERSIÓN DE ROTACIÓN AMORTIGUADA (CONFIG)	533
CORREA PARA CABLES	630
CORREA TRAPEZOIDAL	272
CORREA TRAPEZOIDAL (AIRE ACONDICIONADO)	891
CORREA TRAPEZOIDAL (COMPRESOR DE REFRIGERANTE)	177
CRISTAL	293
CRISTAL (AMBAR)	292
	296
	298
	300
CRISTAL (TRANSPARENTE)	296
	298
	300
CRISTAL (TRANSPARENTE)	300
CUCHARÓN DE EMBARQUE (CONFIG)	847
CUCHARÓN DE USO GENERAL (CONJ)	759
	760
	762
	763
CUCHARÓN DE USO GENERAL (GR)	774
	775
CUCHARÓN DE USO MÚLTIPLE (CONFIG)	757
	758
CUCHARÓN DE USO MÚLTIPLE (CONFIG)	756
CUCHARÓN DE USO MÚLTIPLE (GR)	825
	826
	827
CUCHARÓN DE USO MÚLTIPLE (GR)	824
CUCHARÓN EXCAVADOR (CONJ)	764
	765
	766
	767
	768
	769
	770
	771
	772
	773
CUCHARÓN RETROEXCAVADOR (GR)	776
	777
	778
	779
	780
	781
	782
	783
	784
	785
	786
	787
	788
	789
	790
	791
	792
	793
	794
	795
	796
	797
	798
	799
	800
	801
	802
	803
	804
	805
	806
	807
	808
	809
	810
	811
	812
	813
	814
	815
	816
	817
	818
	819
	820
	821
	822

* NO HAY TRADUCCION DISPONIBLE EN EL MOMENTO DE LA IMPRESION

INDICE

Nombre	Página
	823
CUCHILLA (GR)	834
	835
CULATA DE CILINDROS - TORNILLERÍA DE LA (GR)	80
CULATA DE CILINDROS (GR)	69
	70
	71
	72
	73
	74
	75
	76
	77

D

DETECTOR DE TEMPERATURA	361
DETECTOR DE TEMPERATURA (ACEITE DE CONVERTIDOR DE PAR)	351
DETECTOR DE TEMPERATURA (ACEITE DEL CONVERTIDOR DE PAR)	355
DIENTE DE UNA PIEZA (UNI-TOOTH) (GR)	853
DIFERENCIAL (GR)	400
	402
DIFERENCIAL Y CORONA (GR)	400
DOSIFICACIÓN - BOMBA DE (GR)	469

E

EJE DE IMPULSIÓN Y DE DIRECCIÓN (GR)	390
	392
EJE DE MANDO (GR)	423
	424
EJE DE TOMA DE FUERZA (GR)	676
EJE DELANTERO (GR)	459
	461
EJE TRASERO (GR)	393
ELEMENTO DE FILTRO (COMBUSTIBLE)	260
ELEMENTO DE FILTRO DE COMBUSTIBLE (CONJ)	244
ELEMENTO DE FILTRO DE COMBUSTIBLE (CONJ) (SEPARADOR DE AGUA)	245
ELEMENTO DEL FILTRO DE AIRE (CONJ) (PRIMARIO)	201
ELEMENTO DEL FILTRO DE AIRE (CONJ) (SECUNDARIO)	201
EMPAQUETADURA (BOMBA DE AGUA)	185
	187
EMPAQUETADURA (TAPA DE VÁLVULA)	29
	35
ENFRIADOR DE ACEITE DEL MOTOR (GR)	172
ENFRIADOR DE ACEITE DEL MOTOR Y BASE DEL FILTRO	168
	170
	172
	174
ENFRIADOR PARA ALTA TEMPERATURA DE AMBIENTE (CONFIG)	178
ENGRANAJE DE CORONA Y PIÑÓN (GR)	400
ESTABILIZADOR (CONFIG)	677
ETIQUETA DE ADVERTENCIA (GR)	989
EXTENSIÓN DEL ESCAPE (GR)	211

F

FILTRO	695
	697
	699
	701
	703
	705
	707
	709
	713
FILTRO (AIRE ACONDICIONADO)	857
	859
FILTRO (CALEFACTOR)	918
FILTRO DE ACEITE (CONJ) (HIDRAULICO) (RESISTENTE AL FUEGO)	571
FILTRO DE ACEITE (CONJ) (LIMPIEZA/ALTA EFICIENCIA)	571
FILTRO DE ACEITE (CONJ) (TRANSMISION)	427
FILTRO DE ACEITE DEL MOTOR (CONJ)	14
	154
FILTRO DE ACEITE DEL MOTOR (CONJ)	155
FILTRO DE ACEITE (GR)	564
FILTRO DE AIRE (AIRE ACONDICIONADO)	857
	862
FILTRO DE AIRE (CABINA)	920
FILTRO DE AIRE (GR)	201
	202
	203
	204
	206
	207
FILTRO DE COMBUSTIBLE (GR)	244
FILTRO DE COMBUSTIBLE Y SEPARADOR DE AGUA (GR)	245
FILTRO HIDRÁULICO (CONJ)	564
FILTRO (RESPIRADERO DEL TANQUE)	680
FILTRO (RESPIRADERO)(HIDRAULICO)	678
FILTRO Y TUBERÍAS DE COMBUSTIBLE (GR)	240
	242

* NO HAY TRADUCCION DISPONIBLE EN EL MOMENTO DE LA IMPRESION

INDICE

Nombre	Página
*FOOTREST GP	917
FRENO DE ESTACIONAMIENTO (GR)	451
FRENO DE SERVICIO - CONTROL (GR)	454
FUNDA	719
	720
FUSIBLE (10 A)	294
	295
	300
	327
	367
	378
FUSIBLE (10-AMPERIOS)	323
	382
	384
FUSIBLE (10-AMPERIOS)	305
FUSIBLE (15 A)	300
	302
	336
	367
FUSIBLE (15 AMPERIOS)	339
FUSIBLE (15 AMPERIOS)	296
	298
	305
FUSIBLE (20 A)	367
FUSIBLE (20-AMPERIOS)	330
	333
FUSIBLE (5 AMP)	387
FUSIBLE (5 AMP)	367
FUSIBLE (5-AMPERIOS)	330
	337

G

Nombre	Página
GIRAR Y DESLIZAR DEL ASIENTO (GR)	965
GRUPO DE ACUMULADOR-ACONDICIONADOR DE AIRE	930
GRUPO DE BRAZO DE LEVANTAMIENTO	726
GRUPO DE CLAVIJA, EJE	390
GRUPO DE CONTROL DE PEDAL HIDRÁULICO	527
	529
	531
GRUPO DE CUATRO VALVULAS (CONFIG)	684
GRUPO DE PESTAÑA, RUEDA	412
GRUPO DE PESTAÑA Y RESINTO, EJE	413
	415
GRUPO DE PROTECTOR DEL CUCHARON	838
	839
GRUPO DE 3 VÁLVULAS HIDRÁULICAS	689
GRUPO DE 4 VÁLVULAS HIDRÁULICAS	690
GRUPO DE 5 VALVULAS (CONFIG)	684
GRUPO DE 6 VALVULAS (CONFIG)	685
GRUPO GIRATORIO DE BOMBA	675
GRUPO PLANETARIO, MANDO FINAL	417
GUARDABARROS DELANTERO (GR)	481
GUARDABARROS TRASERO (GR)	482
	483
GUARNICIONES DE LA CABINA (GR)	970

H

Nombre	Página
*HEATER GP-STARTING AID	314
HIDRÁULICA (CONFIG)	568
	569
	570
	571
HOJA	988
HOJA DE LIMPIAPARABRISAS (CONJ)	986
HORQUILLA - GRUPO DE MONTAJE DE LA	844
HORQUILLA (CONFIG)	836
HORQUILLA (GR)	837
*HYDRAULIC AR	568
	569
	570

I

Nombre	Página
IMPULSOR DE VENTILADOR (GR)	78
	79
INCLINACIÓN HORIZONTAL - CILINDRO DE (GR)	563
INDICADOR- CAMBIO DE FILTRO DE AIRE	213
INDICADOR DE CAMBIO DE FILTRO DE ACEITE (GR)	212
	213
	214
INDICADOR DE SERVICIO (FILTRO DE AIRE)	212
INSONORIZADOR (CONFIG)	504
INSONORIZADOR (GR)	961
INSTALACIÓN DE LA TRABA DE LA RUEDA	990
INSTALACION DE SEGURIDAD (GR)	287
	289
	290
INTERRUPTOR (CONJ)	568
INTERRUPTOR (CONJ) (BOCINA)	342
	347
INTERRUPTOR (CONJ) (CALEFACTOR)	365
INTERRUPTOR (CONJ) (REFLECTOR DELANTERO)	300
INTERRUPTOR (CONJ) (REFLECTOR TRASERO)	300
INTERRUPTOR (CONJ) (SEÑAL DE VIRAJE)	332
INTERRUPTOR (CONJ) (TRABA EN NEUTRAL)	342
INTERRUPTOR (CONJ) (TRABA NEUTRAL)	347

* NO HAY TRADUCCION DISPONIBLE EN EL MOMENTO DE LA IMPRESION

INDICE

Nombre	Página
INTERRUPTOR DE ARRANQUE CON LLAVE (CONJ)	944
INTERRUPTOR DE LÍMITE (CONJ) (FRENO)	454
INTERRUPTOR DE PRESIÓN (ACEITE DE MOTOR)	319, 320
INTERRUPTOR DE PRESIÓN (CONJ)	323, 382, 384
INTERRUPTOR DE PRESIÓN (CONJ) (ALTA - BAJA)	327
INTERRUPTOR DE PRESIÓN (GR)	319, 320, 321
INTERRUPTOR DE RODILLO (CONJ)	386
INTERRUPTOR DE TEMPERATURA (CONJ) (AVANCE DE SINCRONIZACION)	251, 253
INTERRUPTOR DE VOLQUETE (CONJ) (CONTROL DE AMORTIGUACION)	510
INTERRUPTOR DE VOLQUETE (CONJ) (LUZ DE TRABAJO DELANTERA)	305
INTERRUPTOR DE VOLQUETE (CONJ) (PELIGRO)	342
INTERRUPTOR DE VOLQUETE (CONJ) (*REAR FLOOD)	305
INTERRUPTOR DE VOLQUETE (CONJ) (*RIDE CONTROL)	382, 384
INTERRUPTOR DE VOLQUETE (CONJ) (RIESGO)	347
INTERRUPTOR DE VOLQUETE (CONJ) (VELOCIDAD DEL VENTILADOR DEL CALENTADOR)	365
INTERRUPTOR DE VOLQUETE (CONJ) (VELOCIDAD DEL VENTILADOR DEL CALENTADOR)	327
INTERRUPTOR DE VOLQUETE (CONJ) (VELOCIDAD DEL VENTILADOR DEL CALENTADOR)	323
INTERRUPTOR DEL TERMOSTATO (AIRE ACONDICIONADO)	862
INTERRUPTOR (GR) (TRABA HIDRÁULICA)	568
INTERRUPTOR PARA LA TEMPERATURA (GR)	322
INTERRUPTOR PULSADOR (CONJ)	522
INTERRUPTOR PULSADOR (CONJ) (NEUTRALIZADOR)	399
INTERRUPTOR (40 GRADOS) (TEMPERATURA DE REFRIGERANTE DE MOTOR)	255
INYECTOR DE COMBUSTIBLE (CONJUNTO)	251

J

Nombre	Página
JUEGO-ACUMULADOR DE SERVICIO	505
JUEGO DE AJUSTE DEL ASIENTO (POSABRAZO)	864
JUEGO DE AMORTIGUADOR (POSABRAZO)	864
JUEGO DE ANILLO DE PISTON	115, 122, 123
JUEGO DE BASE DEL SEPARADOR DE AGUA	245
JUEGO DE BOMBA DE COMBUSTIBLE (INCLUYE FILTROS Y SELLO ANULAR)	240
JUEGO DE COJINETE DE RODILLOS	417
JUEGO DE COJINETE DEL ALTERNADOR	270
JUEGO DE COJINETES	393
JUEGO DE COJINETES DE BANCADA (0,25 MM EUA)	38, 39, 40
JUEGO DE COJINETES DE BANCADA (0,25 MM EUA) (PRINCIPAL)	37
JUEGO DE COJINETES DE BANCADA (0,51 MM EUA)	38, 39, 40
JUEGO DE COJINETES DE BANCADA (0,51 MM EUA) (PRINCIPAL)	37
JUEGO DE COJINETES DE BANCADA (0,76 MM EUA)	38, 39, 40
JUEGO DE COJINETES DE BANCADA (0,76 MM EUA) (PRINCIPAL)	37
JUEGO DE COJINETES DE BIELA (0,25 MM EUA)	38, 39, 40
JUEGO DE COJINETES DE BIELA (0,25 MM EUA) (BIELA)	37
JUEGO DE COJINETES DE BIELA (0,51 MM EUA)	38, 39, 40
JUEGO DE COJINETES DE BIELA (0,76 MM EUA)	38, 39, 40
JUEGO DE COJINETES DE BIELA (0,76 MM EUA) (BIELA)	37
JUEGO DE COJINETES DE BIELA (51 MM EE.UU.) (BIELA)	37
JUEGO DE CONTACTOR (MOTOR DE ARRANQUE)	316

* NO HAY TRADUCCION DISPONIBLE EN EL MOMENTO DE LA IMPRESION

INDICE

Nombre	Página
JUEGO DE CONTROL DE OPERACION	574
JUEGO DE CORREAS TRAPEZOIDALES (INCLUYE 2 CORREAS)	176
	177
	178
	272
	868
	869
	870
	880
	881
JUEGO DE CRUCETA	390
JUEGO DE CRUCETA Y COJINETE	423
	424
JUEGO DE ENCHUFE (12 CLAVIJAS)	344
JUEGO DE ENCHUFE (12 CLAVIJAS)	367
JUEGO DE ENCHUFE (2 CLAVIJAS)	300
	327
	344
	351
	355
	367
	453
	862
JUEGO DE ENCHUFE (2 CLAVIJAS)	374
	440
JUEGO DE ENCHUFE (3 CLAVIJAS)	351
	355
	367
JUEGO DE ENCHUFE (4 CLAVIJAS)	300
	344
	367
JUEGO DE ENCHUFE (6 CLAVIJAS)	344
	367
JUEGO DE ENCHUFE (8 CLAVIJAS)	367
JUEGO DE ENGRANAJES (MOTOR DE ARRANQUE)	316
JUEGO DE FRENO DE HORQUILLA	451
JUEGO DE LEVA (ROTACIÓN HACIA LA IZQUIERDA)	451
JUEGO DE MANGUERA	185
	187
JUEGO DE MEDIDOR DE SERVICIO	342
	347
JUEGO DE RECEPTÁCULO (12 CLAVIJAS)	367
JUEGO DE RECEPTÁCULO (2 CLAVIJAS)	265
	351
	355
	367
	372
	387
	441
	701
	888
JUEGO DE RECEPTÁCULO (2 CLAVIJAS)	399
JUEGO DE RECEPTÁCULO (2 CLAVIJAS)	522
	725
JUEGO DE RECEPTÁCULO (2 CLAVIJAS)	300
JUEGO DE RECEPTÁCULO (3 CLAVIJAS)	344
	351
	355
	367
	441
JUEGO DE RECEPTÁCULO (3 CLAVIJAS)	972
JUEGO DE RECEPTÁCULO (4 CLAVIJAS)	367
JUEGO DE RECEPTÁCULO (4 CLAVIJAS)	293
	300
JUEGO DE RECEPTÁCULO (6 CLAVIJAS)	300
	367
	986
JUEGO DE RECEPTÁCULO (6 CLAVIJAS)	938
JUEGO DE RECEPTÁCULO (8 CLAVIJAS)	367
JUEGO DE RECEPTÁCULO (8 CLAVIJAS)	937
JUEGO DE REPARACIÓN (TUBERÍAS DEL FRENO)	986
JUEGO DE REVESTIMIENTO DE FRENO	451
JUEGO DE SELLOS	286
	715
JUEGO DE SELLOS (*STEERING METERING PUMP)	403
	469
JUEGO DE SERVICIO	945
JUEGO DE TORNILLERÍA DEL ALTERNADOR	270
JUEGO-PORTA PLANETARIO	417
JUEGO-PROTECCIÓN DE PEDAL	923

K

*KIT-ADAPTER TIP	840
	841

L

LÁMPARA	176
	178
	937
LÁMPARA (CONJ) (12 VOLTIOS)	287
	290
LÁMPARA DE BALIZA DE ADVERTENCIA (GR)	294
	295
LÁMPARA DEL TECHO (GR)	926
	961
LÁMPARA (12 VOLTIOS)	176
	177

* NO HAY TRADUCCION DISPONIBLE EN EL MOMENTO DE LA IMPRESION

INDICE

Nombre	Página
	294
	295
	326
	344
	349
	968
	969
LÁMPARA (12 VOLTIOS, 10 VATIOS)	961
LÁMPARA (12 VOLTIOS, 24 VATIOS)	292
	296
	298
LÁMPARA (12 VOLTIOS, 55 VATIOS)	291
	296
	298
	305
LÁMPARA (12 VOLTIOS, 55 VATIOS)	296
	298
	302
LÁMPARA (12 VOLTIOS)(10 VATIOS)	926
LÁMPARA (12 VOLTIOS/21 VATIOS)	293
LÁMPARA (12 VOLTIOS/21 VATIOS)	300
LÁMPARA (12 VOLTIOS/21/5 VATIOS)	293
LÁMPARA (12 VOLTIOS/55 VATIOS)	300
LÁMPARA (12 VOLTIOS/55 VATIOS)	300
LATA DE RESPIRADERO (CONJ)	147
	149
	151
LAVAPARABRISAS DE LA VENTANA (GR)	972
	974
LENTE AMBAR	294
	295
LIMPIAPARABRISAS DE LA VENTANA (GR)	988
LIMPIAPARABRISAS DE LA VENTANA (GR)	986
LLAVE	991
LUCES DE PARADA Y COLA (GR)	293
LUCES DE REFLECTOR (GR)	296
	302
LUCES DE REFLECTOR (GR)	298
	300
LUCES DE REFLECTOR Y CAMBIO DE DIRECCION (GR)	305
LUZ DE BALIZA (GR)	308
	309
LUZ DE SEÑAL DE GIRO (GR)	292
MANGUERA (RESPIRADERO)	33
MANGUERA (TAPA DE VÁLVULA DEL RESPIRADERO DEL CARTER)	149
MANGUERA (109 CM DEL RESPIRADERO DEL CARTER ABIERTO)	149
MANGUERA (53 CM)	464
	467
MANGUERA (72 CM)	634
MANGUERA (90 CM DE SUMIDERO DE RESPIRADERO DEL CARTER DEL MOTOR)	149
MANGUERA (96 CM CADA UNO)	633
MECANISMO DE VÁLVULAS (GR)	136
	138
	140
	142
	144
	145
MEDIDOR DE NIVEL DE ACEITE (VARILLA)	154
MÓDULO INDICADOR DE ADVERTENCIA (GR)	936
	937
MONTAJE DE BANCADA DE VALVULA (GR)	663
	664
MONTAJE DE CILINDRO (GR)	665
	666
MONTAJE DE LA BOMBA HIDRÁULICA (GR)	668
MONTAJE DE MOTOR DE ARRANQUE (GR)	98
MONTAJE DE TUBERIAS (GR)	669
	670
MONTAJE DEL ALTERNADOR (GR)	93
	94
MONTAJE DEL BRAZO (GR)	742
MONTAJE DEL CONTROL HIDRÁULICO (GR)	667
MONTAJE DEL CUCHARÓN (GR)	842
	843
MONTAJE DEL EJE TRASERO (GR)	388
	389
MONTAJE DEL MOTOR (GR)	95
	96
MONTAJE DEL MOTOR Y LA TRANSMISIÓN (GR)	97
MONTAJE DEL TABLERO DE INSTRUMENTOS (GR)	939
	940
	941
	942
MONTAJE Y TRANSMISIÓN(GR)	425
	426
MONTAJE Y VALVULA DEL BANCO(GR)	682
MOTOR DE ARRANQUE ELÉCTRICO (GR)	315
	316

M

MANDO DE CORREA	294
	295
MANGUERA DE RADIADOR	193
MANGUERA DE RESPIRADERO	31
MANGUERA DE RESPIRADERO (CÁRTER DEL MOTOR)	29

* NO HAY TRADUCCION DISPONIBLE EN EL MOMENTO DE LA IMPRESION

INDICE

Nombre	Página
	318
MOTOR-LIMPIAPARABRISAS (GR)	938
MOTOR PRIMARIO (CONFIG)	14
	16
	18
	19
MÚLTIPLE DE ADMISIÓN (GR)	220
MÚLTIPLE DE ESCAPE (GR)	218
	219

P

PABELLON (CONJ)	882
	885
PALANCA DE CONTROL DEL REGULADOR (GR)	924
PARAGOLPES DELANTERO	474
PASADOR DE ACOPLADOR (GR)	845
	846
PISTÓN Y BIELA (GR)	115
	116
	118
	120
	122
	123
	124
	126
PLACA-CAT	501
PLACA DE CONTROL (ACONDICIONADOR DE AIRE)	857
	859
	1002
PLACA DE CONTROL (ACONDICIONADOR DE AIRE)	918
PLACA INDICADORA	342
	347
	1002
PLACA INDICADORA (CUCHARÓN)	756
	757
	758
PLANCHA DEL PISO (GR)	484
	486
	487
PLUMA (GR)	728
	729
PORTAESCOBILLAS (CONJ)	316
POSABRAZOS (GR)	864
	948
	950
POSICIONADOR DEL CUCHARÓN Y DESCONEXIÓN (GR)	572
PRIORIDAD - VÁLVULA DE (GR)	471
PROTECTOR DE CILINDRO ESTABILIZADOR (GR)	565
	566
PROTECTOR DEL EJE IMPULSOR (GR)	493
PUERTA DERECHA (GR)	910
PUERTA IZQUIERDA (GR)	908
PULGAR CONFIG.	849
	850
	851
PULGAR GR	852

R

RADIADOR Y ENFRIADOR DE ACEITE HIDRÁULICO (GR)	193
	194
	195
	196
	197
	198
	200
RADIADOR Y VENTILADOR (GR)	191
	192
REDUCTOR (GR)	652
REFLECTOR	300
	838
REFLECTOR (GR)	291
REGULADOR - PEDAL DEL (GR)	945
REGULADOR DE TEMPERATURA DEL AGUA	166
	167
RELÉ (CONJ) (12 VOLTIOS)	290
	296
	298
	300
	302
	305
	323
	326
	327
	330
	333
	336
	339
	361
	365
	367
	382
	384
	387
RELÉ (CONJ) (12 VOLTIOS)	287
RELÉ (CONJ) (12 VOLTIOS) (ALTA VELOCIDAD)	327

* NO HAY TRADUCCION DISPONIBLE EN EL MOMENTO DE LA IMPRESION

INDICE

Nombre	Página
RESORTE (RESPIRADERO DE MANGUERA)	29, 31, 33
RESPIRADERO (EJE)	390
RESPIRADERO (GR)	146, 147, 149, 151, 153
RESPIRADERO (TRANSMISION)	430
RESPIRADERO (TRANSMISION)	435
RETROEXCAVADOR - ESTABILIZADOR DEL (GR)	750
RETROEXCAVADOR (CONFIG)	3, 4, 5
RETROVISOR (GR)	935
REVESTIMIENTO DE LA CABINA (GR)	925, 926
RUEDA Y LLANTA (CONFIG)	443, 444, 445
RUEDA Y NEUMÁTICO (GR)	445, 446, 447, 448, 449, 450

S

Nombre	Página
SELLO ANULAR	614
SELLO ANULAR (DRENAJE DE ACEITE DE MOTOR)	113
SELLO ANULAR (REGULADOR)	166
SELLO ANULAR (REGULADOR DE TEMPERATURA DEL AGUA)	167
SELLO (CAJA DE REGULADOR)	166
SELLO DE TAPA (VALVULA)	31
SELLO (FILTRO DE COMBUSTIBLE)	244
SELLO (RESPIRADERO)	147, 149, 151
SEÑAL DESTELLADOR (CONJ)	367
SEPARADOR DE AGUA (GR)	261, 262
SILENCIADOR (CONJ)	221
SILENCIADOR (GR)	222, 223, 224, 225
SINCRONIZADOR (GR)	428, 434
SOPORTE (CONJ)	275, 277
SOPORTE DEL CILINDRO DE LEVANTAMIENTO (GR)	730
SOPORTE-MONTAJE(GR)	865
SOPORTE PARA EL TRANSPORTE	731
*STARTING AID GP	310, 311, 312, 313
SUCCIÓN - VENTILADOR DE (GR)	179, 180, 181
SUJETADOR DEL MANUAL DE LA MÁQUINA	887
SUSPENSIÓN - ASIENTO CON (GR)	956, 958, 960

T

Nombre	Página
TABLERO DE INSTRUMENTOS (GR)	944
TACÓMETRO ELÉCTRICO (GR)	868, 869, 870, 880, 881, 968, 969
TANQUE DE COMBUSTIBLE Y GRUPO DE MONTAJE	263
TANQUE DEL SISTEMA DE FRENOS (GR)	458
TANQUE HIDRÁULICO (GR)	680
TANQUE HIDRÁULICO Y MONTAJE (GR)	678
TAPA	442, 443
TAPA CONTRA EL POLVO	406, 408, 509, 629, 633
TAPA DE ADMISIÓN DE AIRE (GR)	208
TAPA DE FRENO DE ESTACIONAMIENTO (GR)	905
TAPA DE LA BATERÍA (GR)	480
TAPA DE LA CAJA DELANTERA (GR)	27, 28
TAPA DE LA CONSOLA (GR)	900, 901
TAPA DE MAMPARA PARAFUEGO (GR)	903, 904
TAPA DE POSTE (GR)	906, 907
TAPA DE VÁLVULA DE CONTROL (GR)	543

* NO HAY TRADUCCION DISPONIBLE EN EL MOMENTO DE LA IMPRESION

INDICE

Nombre	Página
TAPA DEL MECANISMO DE VÁLVULAS (GR)	31
	33
	35
TAPA DEL MECANISMO DE VÁLVULAS (GR)	29
TAPA DEL RADIADOR	194
TAPA DEL TUBO DE LLENADO (ACEITE HIDRÁULICO)	678
TAPA, LLENADO (ACEITE HIDRÁULICO)	680
TAPA PARA EL COMBUSTIBLE	264
	268
TAPÓN (CONJ)	575
TAPÓN (CONJ) (ACONDICIONADOR DE AIRE)	930
TAPÓN (CONJ) (FILTRO DE ACEITE) (MOTOR)	154
TAPÓN (CONJ) (LLENADO DE ACEITE DE MOTOR)	155
TAPÓN (CONJ) (RADIADOR)	197
	200
TAPÓN DE CULATA (GR)	129
TAPON DE DRENAJE DE SUMIDERO	99
	101
	103
	105
	107
	109
	111
	113
TAPÓN DEL BLOQUE MOTOR (GR)	128
TAPÓN DEL MOTOR (GR)	130
	131
	132
	133
TAPÓN MAGNÉTICO	390
	395
	400
TECHO (CONFIG)	881
TECHO (CONFIG)	879
	880
TECHO ROPS ABIERTO (GR)	886
TIRANTE DE EMBARQUE (GR)	732
TOPE DE CUCHARON (GR)	848
TRABA CONTRA EL VANDALISMO (GR)	991
TRABA DE CONTROL HIDRÁULICO MANUAL (GR)	662
TRABA DE TRANSPORTE DE LA MÁQUINA (GR)	739
	740
	741
TRANSMISION DIRECTA (CONFIG)	427
TRANSMISIÓN DIRECTA (GR)	434
TRANSMISIÓN DIRECTA (GR)	428
TREN DE FUERZA (CONFIG)	418
	419
	420
	421
	422
TUBERIAS AUXILIARES-RETROEXCAVADORA (GR)	575
	577
	580
	584
	588
	592
	594
	597
TUBERÍAS CON SERVOMANDO (GR)	629
	630
TUBERIAS DE AUXILIAR DE CARGADOR (GR)	623
TUBERIAS DE CALEFACCION	928
	930
	933
TUBERIAS DE CALENTEDOR Y ACONDICIONADOR DE AIRE (GR)	930
	933
TUBERÍAS DE COMBUSTIBLE (GR)	247
	249
TUBERIAS DE CONTROL DE LA SUSPENSIÓN (GR)	652
	654
TUBERÍAS DE DIRECCIÓN (GR)	464
	467
TUBERÍAS DE GIRO (GR)	659
TUBERÍAS DE LA CALEFACCIÓN (GR)	928
TUBERÍAS DE LA PALANCA EXTENDIBLE (GR)	614
	615
TUBERÍAS DE LA PLUMA (GR)	601
TUBERÍAS DE LA VÁLVULA DE RETENCIÓN (GR)	605
	609
TUBERÍAS DE RETORNO (GR)	648
	649
	650
	651
TUBERIAS DE VALVULA DE CONTROL DE CARGA (GR)	620
TUBERÍAS DEL BRAZO (GR)	658
TUBERÍAS DEL CILINDRO DE INCLINACIÓN (GR)	660
TUBERÍAS DEL CILINDRO DEL CUCHARÓN (GR)	603
TUBERÍAS DEL CUCHARÓN DE USO MÚLTIPLE	625
	627

* NO HAY TRADUCCION DISPONIBLE EN EL MOMENTO DE LA IMPRESION

INDICE

Nombre	Página
TUBERÍAS DEL ENFRIADOR DEL TREN DE FUERZA (GR)	183
TUBERÍAS DEL ESTABILIZADOR (GR)	656
TUBO DE LLENADO DE ACEITE DE LA TRANSMISIÓN (GR)	406
	408
	410
	411
TUBO DE LLENADO DE ACEITE (GR)	154
	155
TURBOCOMPRESOR (GR)	226
	227
	229
	231
	233
	234

V

*VALVE GP-CHECK	694
*VALVE GP-PUMP CONTROL	722
	723
VÁLVULA (CONJ) (AGUA)	857
	859
	918
VÁLVULA DE ALIVIO (GR)	428
	434
	471
	695
	701
	703
VÁLVULA DE ALIVIO (GR) (AIRE ACONDICIONADO)	888
VÁLVULA DE CONTROL DE CARGA (GR)	715
	717
VÁLVULA DE CONTROL (GR)	695
	703
VÁLVULA DE CONTROL (GR)	697
	699
	701
	705
	707
	709
	711
	713
VÁLVULA DE CORTE	182
	633
	643
VÁLVULA DE CORTE (GR)	633
VÁLVULA DE GAS	505
VÁLVULA DE RETENCIÓN (GR)	693
VÁLVULA DE SOLENOIDE (GR)	441
	725
VÁLVULA DE SOLENOIDE (GR)	440
VÁLVULA DE SOLENOIDE (GR) (12 VOLTIOS)	251
VÁLVULA DE SOLENOIDE (GR) (12 VOLTIOS)	253
VALVULA DE SOLENOIDE Y MONTAJE (GR	683
VÁLVULA DEL NEUMÁTICO (GR)	442
	443
VÁLVULA PILOTO (GR)	718
	719
	720
	721
VALVULA (RESPIRADERO DE AIRE)	388
VÁLVULAS HIDRÁULICAS - GRUPO DE 2	686
	688
VÁLVULAS HIDRÁULICAS - GRUPO DE 6	692
VARILLAJE DE CUCHARÓN CARGADOR (GR)	736
VARILLAJE DEL CUCHARÓN RETROEXCAVADOR (GR)	734
VARILLAJE GR-PULGAR	733
VENTANA DE LA CABINA (GR)	976
	978
	980
VENTANA DE LA PUERTA (GR)	982
	984
VENTILADOR (CONJ)	862
	920
VIDRIO (CONJ) (REFLECTOR)	291
VISERA	971
VISERA (GR)	971
VOLANTE - CAJA DE (GR)	83
	84
VOLANTE DE DIRECCIÓN	463
VOLANTE DE DIRECCIÓN (GR)	470
VOLANTE (GR)	81
	82

Z

ZAPATA DE ESTABILIZADOR (GR)	748
	749
ZAPATA Y PROTECTOR DEL ESTABILIZADOR	743
	744

* NO HAY TRADUCCION DISPONIBLE EN EL MOMENTO DE LA IMPRESION

ÍNDICE

Designação	Página
A	
ACOPLADOR RÁPIDO	828, 829, 830, 831, 832, 833
ACOPLAMENTO	542
ACUMULADOR - AR CONDICIONADO	854, 930
ACUMULADOR DO SISTEMA DE ABSORÇÃO DE IMPACTOS	505, 506
AJUSTADOR DO ASSENTO	855
ALAVANCA DE CONTROLE DO GOVERNADOR	924
ALAVANCA DE CONTROLE MANUAL	457
ALCA FIXADOR DE CABO	630
ALOJAMENTO - DIFERENCIAL	400
ALOJAMENTO E FLANGE - EIXO	413, 415
ALTERNADOR DE CORRENTE	270, 272, 273, 274
ALTO-FALANTE	926, 961
AQUECEDOR DA ÁGUA DO MOTOR	284, 285, 286
AQUECEDOR DA CABINE	918, 920
AR. DE EMBARQUE DA CAÇAMBA	847
ARMAÇÃO OSCILANTE	491
ARRANJO BÁSICO	6, 7
ARREFECEDOR - ÓLEO DO MOTOR	172
ARREFECEDOR DE ÓLEO DO MOTOR E BASE DO FILTRO	168, 170, 172, 174
ARREFECIMENTO	176, 177, 178
ARREFECIMENTO - TEMP. AMBIENTE ALTA	178
ARTICULAÇÃO DA CAÇAMBA DA RETROESCAVADEIRA	734
ARTICULAÇÃO DAS CAÇAMBAS DAS CARREGADEIRAS	736
ASSENTO	948, 950, 952
ASSENTO COM SUSPENSÃO	956, 958, 960
ASSENTO ESTÁTICO	954, 955
ASSENTO GIRATÓRIO	967
B	
*BACKHOE AR-STANDARD STICK	4
BATENTE - CAÇAMBA	848
BATERIA	275, 277, 279, 281
BATERIA (12 VOLTS, SERVIÇO PESADO)	279, 281
BATERIA (12 VOLTS, 750 AMPERES) (750 A)	275, 277
BLOCO DO MOTOR	46, 47, 48, 50, 51, 52, 54, 56, 58, 60, 62, 64, 65, 67, 68
BOCAL DE ENCHIMENTO DE ÓLEO DO MOTOR	154, 155
BOCAL DE ENCHIMENTO DE ÓLEO DO TREM DE FORÇA	406, 408, 410, 411
BOMBA DA TRANSMISSÃO	429, 436
BOMBA DE ÁGUA	185, 187, 189
BOMBA DE ESCORVA DO COMBUSTÍVEL	260
BOMBA DE INJEÇÃO DO COMBUSTÍVEL	251, 253, 255, 257
BOMBA DE ÓLEO - MOTOR	157

* TRADUÇÃO NÃO DISPONÍVEL NO MOMENTO DA IMPRESSÃO

ÍNDICE

Designação	Página
	159
	161
	163
	165
BOMBA DE PISTÃO	671
	673
BOMBA REGULADORA	469
BORDA CORTANTE	834
	835
BRAÇO - CAÇAMBA RETRO-ESCAVADORA	754
BRAÇO DE LEVANTAMENTO	726
BRAÇO DO ASSENTO	864
	948
	950
BRAÇO ESTENDÍVEL	752
BUJÃO - CABEÇA DO CILINDRO	129
BUJÃO - DRENAGEM DO RESERVATÓRIO	99
	101
	103
	105
	107
	109
	111
	113
BUJÃO DO BLOCO DO CILINDRO	128
BUJÃO DO MOTOR	130
	131
	132
	133
BUJÃO MAGNÉTICO	390
	395
	400
BUZINA ELÉTRICA	922

C

CABEÇOTE DO MOTOR	69
	70
	71
	72
	73
	74
	75
	76
	77
CABINE	866
	867
	868
	869
	870
	871
	873
	875
	877
CABOS/FIOS ELÉTRICOS - ABSORÇÃO DE IMPACTOS	382
	384
CABOS/FIOS ELÉTRICOS - AQUECEDOR	365
CABOS/FIOS ELÉTRICOS - AR CONDICIONADO	323
	326
	327
CABOS/FIOS ELÉTRICOS - CABINE	330
	332
	333
	336
	337
	339
CABOS/FIOS ELÉTRICOS - DIREÇÃO	387
CABOS/FIOS ELÉTRICOS - MOTOR	351
	355
	361
CABOS/FIOS ELÉTRICOS - PLATAFORMA	367
	372
	374
CABOS/FIOS ELÉTRICOS - SENSOR	386
CABOS/FIOS ELÉTRICOS - TOMADA DE FORÇA	378
CABOS/FIOS ELÉTRICOS - TRASEIROS	379
CABOS/FIOS ELÉTRICOS DO CONSOLE	342
	344
	347
	349
CAÇAMBA - RETRO-ESCAVADORA	764
	765
	766
	767
	768
	769
	770
	771
	772
	773
CAÇAMBA DE MÚLTIPLAS APLICAÇÕES	756
	757
	758
	824
	825
	826
	827
CAÇAMBA DIANTEIRA	738
CAÇAMBA PARA APLICAÇÃO GERAL	759
	760
	762
	763
	774

* TRADUÇÃO NÃO DISPONÍVEL NO MOMENTO DA IMPRESSÃO

ÍNDICE

Designação	Página
	775
CAÇAMBA RETROESCAVADORA	776
	777
	778
	779
	780
	781
	782
	783
	784
	785
	786
	787
	788
	789
	790
	791
	792
	793
	794
	795
	796
	797
	798
	799
	800
	801
	802
	803
	804
	805
	806
	807
	808
	809
	810
	811
	812
	813
	814
	815
	816
	817
	818
	819
	820
	821
	822
	823
CADEADO	991
CADEADO CONTRA VANDALISMO	991
CAIXA - BATERIA	472
	473

Designação	Página
CAIXA DIANTEIRA	85
	86
	87
	88
	89
CAIXA DO VOLANTE DO MOTOR	83
	84
CALCO	748
	749
CALÇO DO ESTABILIZADOR	748
	749
CALÇO DO ESTABILIZADOR E MONTAGEM	745
	746
	747
CAPÔ DO MOTOR	498
	501
CAPÔ E PROTETOR	494
	496
CÁRTER DO ÓLEO DO MOTOR	99
	101
	103
	105
	107
	109
	111
	113
CHAPA DO PISO	484
	486
	487
CHASSI	6
CHASSI DIANTEIRO	489
	490
CHAVE	991
CHAVE - ELETRÔNICO (AMARELO)	287
	289
CHAVE - ELETRÔNICO (CINZA)	287
	289
CHAVE INTERRUPTORA DE PARTIDA	944
CILINDRO	454
CILINDRO - CAÇAMBA DE MÚLTIPLAS	
APLICAÇÕES	557
CILINDRO - POLEGAR	562
CILINDRO DA CAÇAMBA	
RETROESCAVADEIRA	545
	546
	548
CILINDRO DA LANÇA	550
CILINDRO DE GIRO	561
CILINDRO DE INCLINAÇÃO	563
CILINDRO DE LEVANTAMENTO	555
	556
CILINDRO DO BRAÇO	560
CILINDRO DO BRAÇO ESTENDÍVEL	552

* TRADUÇÃO NÃO DISPONÍVEL NO MOMENTO DA IMPRESSÃO

ÍNDICE

Designação	Página
	553
CILINDRO DO ESTABILIZADOR	558
	559
CILINDRO E TUBULAÇÕES-POLEGAR	544
CINTO DE SEGURANÇA	946
	947
COBERTA TOLDO	882
	885
COLETOR DE ADMISSÃO	220
COLETOR DE ESCAPE	218
	219
COMANDO - ACOPLAMENTO FLEXÍVEL	405
COMANDO - RETROESCAVADEIRA	403
	404
COMANDO DO VENTILADOR	78
	79
COMANDO HIDRÁULICO	568
	569
	570
	571
COMPARTIMENTO PARA LITERATURA	887
COMPRESSOR DE REFRIGERANTE	888
	889
	891
CONDENSADOR DO REFRIGERANTE E MONTAGEM	892
CONDICIONADOR DE AR	861
	862
CONDICIONADOR DE AR E MONTAGEM	857
	859
CONEXÃO - TUBO D'ÁGUA	166
	167
CONEXÃO - TUBOS DE COMBUSTÍVEL	246
CONEXÃO-AQUECEDOR & AR CONDICIONADO	182
CONJUNTO DE 4 VÁLVULAS	684
CONSOLE DO OPERADOR	894
CONSOLE LATERAL	895
	896
	897
	898
	899
CONTRAPESO	475
	476
	477
	478
	479
CONTROLE - NÃO PROGRAMADO (SEGURANÇA)	287
	289
CONTROLE - PEDAL HIDRÁULICO	527
	529
	531
CONTROLE DA TRANSMISSÃO	399
CONTROLE DA TRAVA DO DIFERENCIAL	398
CONTROLE DE DIREÇÃO	462
	463
CONTROLE DO FREIO DE ESTACIONAMENTO	452
	453
CONTROLE DO FREIO DE SERVIÇO	454
CONTROLE DO GOVERNADOR E ACELERADOR	236
	238
CONTROLE HIDRÁULICO MANUAL	511
	513
	515
	517
	518
	520
	522
	524
	525
CONVERSÃO-CONTROLE MANUAL HIDRÁULICO	537
	538
	539
	540
	541
CORDÃO PARA LITERATURA	887
CORREIA DE COMANDO	294
	295
CORREIA EM V	272
CORREIA EM V (AR CONDICIONADO)	891
CORREIA EM V (COMPRESSOR DO GÁS REFRIGERANTE)	177
COTOVELO DE ADMISSÃO DE AR	209
	210
COXIM E PROTETOR DO ESTABILIZADOR	743
	744

D

DECALQUE	989
DECALQUE - ADVERTÊNCIA (CILINDRO DE ALTA PRESSÃO)	597
DECALQUE - AMARRAÇÃO	992
DECALQUE - CAT	501
DECALQUE - CONTROLE (CONDICIONADOR DE AR)	857
	859
	918
DECALQUE - CONTROLE (CONDICIONADOR DE AR)	1002
DECALQUE - DIREÇÃO EM TODAS AS RODAS	1002

* TRADUÇÃO NÃO DISPONÍVEL NO MOMENTO DA IMPRESSÃO

ÍNDICE

Designação	Página
DECALQUE - IDENTIFICAÇÃO (PAINEL DE FUSÍVEIS)	403, 404
DECALQUE - IDENTIFICAÇÃO (PAINEL DE FUSÍVEIS)	1002
DECALQUE - INDICADOR	342, 347, 1002
DECALQUE - INDICADOR (CAÇAMBA)	756, 757, 758
DECALQUE - INSTRUÇÃO	498, 1002
DECALQUE - INSTRUÇÃO (AUXILIAR)	901
DECALQUE - INSTRUÇÃO (BRAÇO - E)	527
DECALQUE - INSTRUÇÃO (BRAÇO EXTENSÍVEL)	520, 1002, 1003
DECALQUE - INSTRUÇÃO (CONTROLE DA CAÇAMBA)	568, 569, 1003
DECALQUE - INSTRUÇÃO (FLUXO DE RETORNO)	577, 580, 584, 588, 594, 597, 1002
DECALQUE - INSTRUÇÃO (LUBRIFICANTES)	501
DECALQUE - INSTRUÇÃO (SEM DEGRAUS)	1002
DECALQUE - LEVANTAMENTO	992
DECALQUE - TIRA (139 CM)	498
DECALQUE - TIRA (399 CM)	867
DECALQUE (CAÇAMBA)	901
DECALQUE (CAÇAMBA PARA MÚLTIPLAS APLICAÇÕES)	569
DECALQUE (CAÇAMBA PARA MÚLTIPLAS APLICAÇÕES)	1002
DECALQUE (CAÇAMBA PARA MÚLTIPLOS PROPÓSITOS)	901
DECALQUE (CARREGADOR DO PILOTO DE CONTROLE)	901
DECALQUE (CATERPILLAR)	868, 869, 870, 881
DECALQUE (CATERPILLAR) (NO PÁRA-BRISA)	866
DECALQUE (CHAVE INTERRUPTORA DE PARTIDA)	1002
DECALQUE (CONTROLE DA CAÇAMBA)	518, 520, 901, 1002
DECALQUE (CONTROLE DO PEDAL AUXILIAR)	531
DECALQUE (CONTROLE DO PEDAL E E-BRACO)	531
DECALQUE (IGNIÇÃO)	287, 290
DECALQUE (INDICADOR)	344
DECALQUE-INDICADOR DE CAÇAMBA	1002
DECALQUE (LOCAL DO OLHAL DE LEVANTAMENTO)	1001
DECALQUE (PADRÃO CRUZADO PADRÃO)	515, 1002
DECALQUE (PARTIDA) (SISTEMA DE SEGURANÇA DA MÁQUINA)	290
DECALQUE (PIVÔ CENTRAL, TRAVA DA LANÇA)	1002
DECALQUE (PLACA - NOME)	505
DECALQUE (RECIRCULAÇÃO DE AR)	862, 920
DECALQUE (SEGURANÇA)	290
DECALQUE (SEGURANÇA) (SISTEMA DE SEGURANÇA DA MÁQUINA)	287
DECALQUE (SISTEMA DE ABSORÇÃO DE IMPACTOS)	510, 574
DECALQUE (VELOCIDADE VARIÁVEL)	236, 238, 1002
DECALQUE (VISEIRA DE PÁRA-BRISA)	867
DESENGATE E POSICIONADOR DA CAÇAMBA	572
DIFERENCIAL	400, 402
DIFERENCIAL E COROA	400
DUCTO DE AR	912, 914

E

EIXO-COMANDO DE VÁLVULA	21, 22, 23, 24, 25, 26
EIXO DA TOMADA DE FORÇA	676
EIXO DE PROPULSÃO E DIREÇÃO	390

* TRADUÇÃO NÃO DISPONÍVEL NO MOMENTO DA IMPRESSÃO

ÍNDICE

Designação	Página
	392
EIXO DE TRANSMISSÃO	423
	424
EIXO DIANTEIRO	459
	461
EIXO TRASEIRO E MONTAGEM	388
	389
ELEMENTO - FILTRANTE (COMBUSTÍVEL)	260
ELEMENTO - FILTRO DE COMBUSTÍVEL	244
ELEMENTO - FILTRO DE COMBUSTÍVEL (SEPARADOR DE ÁGUA)	245
ELEMENTO DO FILTRO DE AR (PRIMÁRIO)	201
ELEMENTO DO FILTRO DE AR (SECUNDÁRIO)	201
ELO - EMBARQUE	732
ELO - POLEGAR	733
EMISSOR - TEMPERATURA	361
EMISSOR - TEMPERATURA (ÓLEO DO CONVERSOR DE TORQUE)	351
EMISSOR - TEMPERATURA ((ÓLEO DO CONVERSOR DE TORQUE))	355
ENGRENAGEM-COROA E PINHÃO	400
ESPELHO RETROVISOR	935
ESTABILIZADOR	677
ESTABILIZADOR - RETROESCAVADEIRA	750
EXTENSÃO DO TUBO DE ESCAPE	211
	392
FILTRO (AR CONDICIONADO)	857
	859
FILTRO DE COMBUSTÍVEL E SEPARADOR DE ÁGUA	245
FILTRO E TUBOS - COMBUSTÍVEL	240
	242
FILTRO (RESPIRO DO TANQUE HIDRAULICO)	680
FILTRO (RESPIRO)(HIDRÁULICO)	678
FIXADORES - CABEÇOTE DO MOTOR	80
FLANGE - RODA	412
*FOOTREST GP	917
FREIO DE ESTACIONAMENTO	451
FUSÍVEL (10 A)	294
	295
	300
	327
	367
	378
FUSÍVEL (10 AMPERES)	305
	323
	382
	384
FUSÍVEL (15 A)	300
	302
	336
	367
FUSÍVEL (15 AMPERES)	296
	298
	305
	339
FUSÍVEL (20 A)	367
FUSÍVEL (20-AMPERES)	330
	333
FUSÍVEL (5 AMP)	387
FUSÍVEL (5 AMP)	367
FUSÍVEL (5 AMPÈRES)	330
	337

F

Designação	Página
FILTRO	695
	697
	699
	701
	703
	705
	707
	709
	713
FILTRO - AR (AR CONDICIONADO)	857
	862
FILTRO - AR (CABINE)	920
FILTRO - COMBUSTÍVEL	244
FILTRO - HIDRÁULICO	564
FILTRO - ÓLEO	564
FILTRO - ÓLEO DO MOTOR	14
	154
	155
FILTRO - ÓLEO (HIDRÁULICO) (RESISTENTE A FOGO)	571
FILTRO - ÓLEO (LIMPEZA / ALTA EFICIÊNCIA)	571
FILTRO - ÓLEO (TRANSMISSÃO)	427
FILTRO (AQUECEDOR)	918

G

Designação	Página
GARFO	836
	837
GR. DE CONVERSÃO - VÁLVULA DE CONTROLE	535
	536
GR. DE INSTALAÇÃO - CALÇO DA RODA	990
GR. PLANETÁRIO - COMANDO FINAL	417
GRAXEIRA	562
	572
	665
	728
	742

* TRADUÇÃO NÃO DISPONÍVEL NO MOMENTO DA IMPRESSÃO

ÍNDICE

Designação	Página
	754
	826
	852
GRAXEIRA (ROSCA 1/8-27 POL)	490
	491
	726
	736
	750
	824
	825
	827
GRUPO DE CONVERSÃO - ESTOFAMENTO DE GIRO	533
GRUPO DE DESLIZE E ARTICULAÇÃO GIRATÓRIA	965
GRUPO DE INSTALAÇÃO - MOTOR	20
GRUPO DE VÁLVULAS - SEIS	685
GRUPO DE VÁLVULAS - 5	684
GRUPO DE VÁLVULAS DE CONTROLE - CINCO	691
GRUPO DE VÁLVULAS DE CONTROLE - DUPLO	686
	688
GRUPO DE VÁLVULAS DE CONTROLE - QUÁDRUPLO	690
GRUPO DE VÁLVULAS DE CONTROLE - SEIS	692
GRUPO DE VÁLVULAS DE CONTROLE - TRIPLO	689
GRUPO ROTATIVO DA BOMBA	675

H

*HEATER GP-STARTING AID	314
*HYDRAULIC AR	568
	569
	570

I

INDICADOR - MANUTENÇÃO (FILTRO DE AR)	212
INDICADOR - NÍVEL DE ÓLEO (VARETA DE NÍVEL)	154
INDICADOR - TROCA DO FILTRO DE AR	212
	213
	214
INDICADOR-TROCAR FILTRO DE AR	213
INJETOR DE COMBUSTÍVEL	251
INSTALAÇÃO-SEGURANÇA	287
	289
	290
INTERRUPTOR	568
INTERRUPTOR - BALANCIM (FAROL DIANTEIRO)	305
INTERRUPTOR - BALANCIM (FAROL TRASEIRO)	305
INTERRUPTOR - BALANCIM (PERIGO)	342
	347
INTERRUPTOR - BALANCIM (SISTEMA DE ABSORÇÃO DE IMPACTOS)	382
	384
	510
INTERRUPTOR - BALANCIM (VELOCIDADE DO VENTILADOR DO AQUECEDOR)	323
	327
	365
INTERRUPTOR - BOTÃO	522
INTERRUPTOR - BOTÃO (NEUTRALIZADOR)	399
INTERRUPTOR - LIMITADOR (FREIO)	454
INTERRUPTOR - PRESSÃO	319
	320
	321
	323
	382
	384
INTERRUPTOR - PRESSÃO (ALTA - BAIXA)	327
INTERRUPTOR - PRESSÃO (ÓLEO DO MOTOR)	319
	320
INTERRUPTOR - ROLETAS	386
INTERRUPTOR - TEMPERATURA	322
INTERRUPTOR - TEMPERATURA (AVANÇO DE REGULAGEM)	251
	253
INTERRUPTOR - TERMOSTATO (AR CONDICIONADO)	862
INTERRUPTOR (AQUECEDOR)	365
INTERRUPTOR (BUZINA)	342
	347
INTERRUPTOR (FAROL DIANTEIRO)	300
INTERRUPTOR (FAROL TRASEIRO)	300
INTERRUPTOR (NEUTRO, TRAVA)	347
INTERRUPTOR (SETA DE DIREÇÃO)	332
INTERRUPTOR (TRAVA HIDRÁULICA)	568
INTERRUPTOR (TRAVA NEUTRA)	342
INTERRUPTOR (40 GRAUS) (TEMPERATURA DO LÍQUIDO ARREFECEDOR)	255

J

JANELA DA CABINE	976
	978
	980

* TRADUÇÃO NÃO DISPONÍVEL NO MOMENTO DA IMPRESSÃO

ÍNDICE

Designação	Página
JOGO - BOMBA DE COMBUSTÍVEL (INCLUI FILTRO E RETENTOR)	240
JOGO - EXCÊNTRICO (SENTIDO ANTI-HORÁRIO)	451
JOGO - PORTA SISTEMA PLANETÁRIO	417
JOGO - PROTETOR DO PEDAL	923
JOGO - SERVIÇO DO ACUMULADOR	505
JOGO - SISTEMA DE ABSORÇÃO DE IMPACTOS	574
JOGO DE AJUSTADOR (ENCOSTO DO BRAÇO)	864
JOGO DE ALMOFADA (ENCOSTO DO BRAÇO)	864
JOGO DE ANEL DE PISTÃO	115
	122
	123
JOGO DE BASE DO SEPARADOR DE ÁGUA	245
JOGO DE BLOCO DESLIZADOR	956
	958
JOGO DE CONTATO (MOTOR DE PARTIDA)	316
JOGO DE CORREIAS EM V (INCLUI 2 CORREIAS)	176
	177
	178
	272
JOGO DE CORREIAS EM V (INCLUI 2 CORREIAS)	868
	869
	870
	880
	881
JOGO DE CRUZETA	390
JOGO DE CRUZETA E MANCAL	423
	424
JOGO DE ENGRENAGEM (MOTOR DE PARTIDA)	316
JOGO DE FIXADORES DO ALTERNADOR	270
JOGO DE LONA DO FREIO	451
JOGO DE MANCAL	393
JOGO DE MANCAL DA BIELA (0,25 MM ABAIXO DO TAMANHO) (HASTE DE CONEXÃO)	37
JOGO DE MANCAL DA BIELA (0,25MM ABAIXO DO TAMANHO)	38
	39
	40
JOGO DE MANCAL DA BIELA (0,51MM ABAIXO DO TAMANHO)	38
	39
	40
JOGO DE MANCAL DA BIELA (0,76 MM ABAIXO DO TAMANHO) (HASTE DE CONEXÃO)	37
JOGO DE MANCAL DA BIELA (0,76MM ABAIXO DO TAMANHO)	38
	39
	40
JOGO DE MANCAL DA BIELA (51 MM ABAIXO DO TAMANHO) (HASTE DE CONEXÃO)	37
JOGO DE MANCAL DO ALTERNADOR	270
JOGO DE MANCAL PRINCIPAL DO MOTOR (0,25 MM ABAIXO DO TAMANHO) (PRINCIPAL)	37
JOGO DE MANCAL PRINCIPAL DO MOTOR (0,25MM ABAIXO DO TAMANHO)	38
	39
	40
JOGO DE MANCAL PRINCIPAL DO MOTOR (0,51 MM ABAIXO DO TAMANHO) (PRINCIPAL)	37
JOGO DE MANCAL PRINCIPAL DO MOTOR (0,51MM ABAIXO DO TAMANHO)	38
	39
	40
JOGO DE MANCAL PRINCIPAL DO MOTOR (0,76 MM ABAIXO DO TAMANHO) (PRINCIPAL)	37
JOGO DE MANCAL PRINCIPAL DO MOTOR (0,76MM ABAIXO DO TAMANHO)	38
	39
	40
JOGO DE MANGUEIRA	185
	187
JOGO DE MANUTENÇÃO	945
JOGO DE MARCADOR DE HORAS DE SERVIÇO	342
	347
JOGO DE PINCA DO FREIO	451
JOGO DE RECEPTÁCULO (12 PINOS)	367
JOGO DE RECEPTÁCULO (2 PINOS)	265
	351
	355
	367
	372
	387
	399
	441
	522
	701
	725
	888
JOGO DE RECEPTÁCULO (2 PINOS)	300
JOGO DE RECEPTÁCULO (3 PINOS)	344
	351
	355

* TRADUÇÃO NÃO DISPONÍVEL NO MOMENTO DA IMPRESSÃO

ÍNDICE

Designação	Página
	367
	441
	972
JOGO DE RECEPTÁCULO (4 PINOS)	367
JOGO DE RECEPTÁCULO (4 PINOS)	293
	300
JOGO DE RECEPTÁCULO (6 PINOS)	367
	938
	986
JOGO DE RECEPTÁCULO (6 PINOS)	300
JOGO DE RECEPTÁCULO (8 PINOS)	367
	937
JOGO DE REPARO	986
JOGO DE RETENTOR	286
	715
JOGO DE RETENTOR (BOMBA DE MEDIÇÃO DA DIREÇÃO)	403
JOGO DE RETENTOR (BOMBA DE MEDIÇÃO DA DIREÇÃO)	469
JOGO DE ROLAMENTO DOS ROLETES	417
JOGO DE TOMADA DE CONEXÃO (12 PINOS)	344
	367
JOGO DE TOMADA DE CONEXÃO (2 PINOS)	300
	327
	344
	351
	355
	367
	374
	440
	453
	862
JOGO DE TOMADA DE CONEXÃO (3 PINOS)	351
	355
	367
JOGO DE TOMADA DE CONEXÃO (4 PINOS)	300
	344
	367
JOGO DE TOMADA DE CONEXÃO (6 PINOS)	344
	367
JOGO DE TOMADA DE CONEXÃO (8 PINOS)	367
JUNTA (BOMBA DE ÁGUA)	185
	187
JUNTA (MECANISMO DAS VÁLVULAS - TAMPA)	29
JUNTA (TAMPA DA VÁLVULA)	35

K

*KIT-ADAPTER TIP	840
	841

L

LAMINA	988
LÂMINA	986
LÂMPADA	176
	178
	937
LÂMPADA - FAROL	291
LÂMPADA - SINALIZAÇÃO	292
LÂMPADA - TETO	926
	961
LÂMPADA (12 V)	294
	295
	344
	969
LÂMPADA (12-VOLTS)	176
	177
	287
	290
	326
	349
	968
LÂMPADA (12-VOLTS, 10-WATTS)	961
LÂMPADA (12-VOLTS, 24-WATTS)	292
	296
	298
LÂMPADA (12 VOLTS, 55 WATTS)	291
LÂMPADA (12-VOLTS, 55-WATTS)	296
	298
	302
	305
LÂMPADA (12 VOLTS/21 WATTS)	293
	300
LÂMPADA (12 VOLTS/21/5 WATTS)	293
LÂMPADA (12 VOLTS/55 WATTS)	300
LÂMPADA (12 VOLT)(10 WATT)	926
LANÇA	728
	729
LATA - RESPIRO	147
	149
	151
LAVADOR DO VIDRO	972
	974
LENTE	293
LENTE ÂMBAR	294
	295
LENTE (ÂMBER)	292
	296
	298
	300
LENTE (FAROL)	291
LENTE (TRANSPARENTE)	296
	298
	300

* TRADUÇÃO NÃO DISPONÍVEL NO MOMENTO DA IMPRESSÃO

ÍNDICE

Designação	Página
LEVANTAMENTO DO MOTOR	91
	92
LIMPADOR DO VIDRO	986
	988
LISTRA DA CABINE	970
LUZ GIRATÓRIA DE ALARME	294
	295
LUZ INTERMITENTE	374
LUZ TRASEIRA E DE FREIO	293
M	
MANGUEIRA - RADIADOR	193
MANGUEIRA (RESPIRO)	33
MANGUEIRA (TAMPA DA VÁLVULA DO RESPIRO DO CÁRTER)	149
MANGUEIRA (109CM - ABERTURA DO RESPIRO DO CÁRTER)	149
MANGUEIRA (53CM)	464
	467
MANGUEIRA (72CM)	634
MANGUEIRA (90 CM - RESERVATÓRIO DO RESPIRO DO CÁRTER)	149
MANGUEIRA (96CM CADA)	633
MECANISMO DAS VÁLVULAS	136
	138
	140
	142
	144
	145
MÓDULO - INDICADOR DE ALARME	936
	937
MOLA (MANGUEIRA DO RESPIRO)	29
	31
	33
MONTAGEM - ALTERNADOR	93
	94
MONTAGEM - BANCO DE VÁLVULAS	663
	664
MONTAGEM - BOMBA HIDRÁULICA	668
MONTAGEM - BRAÇO	742
MONTAGEM - CAÇAMBA	842
	843
MONTAGEM - CILINDRO	665
	666
MONTAGEM - CONTROLE HIDRÁULICO	667
MONTAGEM - GARFO	844
MONTAGEM - MOTOR	95
	96
MONTAGEM - MOTOR DE ARRANQUE	98
MONTAGEM - MOTOR E TRANSMISSÃO	97
MONTAGEM - PAINEL DE INSTRUMENTOS	939
	940
	941
	942
MONTAGEM - TUBOS	669
	670
MOTOR	8
	9
	10
	11
	12
	13
MOTOR - LIMPADOR DO VIDRO	938
MOTOR ELÉTRICO DE PARTIDA	315
	316
	318
MOTOR PRIMÁRIO	14
	16
	18
	19
P	
PAINEL DE INSTRUMENTOS	944
PÁRA-CHOQUE DIANTEIRO	474
PÁRA-LAMA DIANTEIRO	481
PÁRA-LAMA TRASEIRO	482
	483
PÁRA-SOL	971
PÁRA-SOL DA CABINE	971
PEDAL DO GOVERNADOR	945
PINO - EIXO	390
PINO-ACOPLADOR	845
	846
PISCA-PISCA-SINALIZAÇÃO	367
PISTÃO E BIELA	115
	116
	118
	120
	122
	123
	124
	126
PLACA E DECALQUE	992
	993
	994
	995
	996
	997
	998
	999
	1000
	1001
POLEGAR	849
	850

* TRADUÇÃO NÃO DISPONÍVEL NO MOMENTO DA IMPRESSÃO

ÍNDICE

Designação	Página
	851
	852
POLIA DO VIRABREQUIM	134
	135
PORTA - LADO DIREITO	910
PORTA - LADO ESQUERDO	908
POSTO DE CONTROLE/CONSOLE DIANTEIRO	893
PROTETOR - CAÇAMBA	838
	839
PROTETOR - CILINDRO DO ESTABILIZADOR	565
	566
PROTETOR - EIXO DE TRANSMISSÃO	493
PROTETOR DE BORRACHA CONTRA POEIRA	719
	720
PURIFICADOR DE AR	201
	202
	203
	204
	206
	207

R

RADIADOR E ARREFECEDOR DO ÓLEO HIDRÁULICO	193
	194
	195
	196
	197
	198
	200
RADIADOR E VENTILADOR	191
	192
REDUÇÃO DE RUÍDO	961
REDUTOR	652
REFLETOR	300
	838
REGULADOR DE TEMPERATURA DA ÁGUA	166
	167
RELÉ (CONJ) (12 V)	302
	305
	327
	336
	367
	387
RELÉ (CONJ) (12 V)	300
RELÉ (CONJ) (12 V) (ALTA VELOCIDADE)	327
RELÉ (CONJ) (12-VOLTS)	287
	290
	323
	326
	330
	333
	339
	361
	365
	382
	384
RELÉ (CONJ) (12-VOLTS)	323
	365
RELÉ (CONJ) (12-VOLTS)	296
	298
RESPIRO	146
	147
	149
	151
	153
RESPIRO DA MANGUEIRA	31
RESPIRO DA MANGUEIRA (CÁRTER DO MOTOR)	29
RESPIRO (EIXO)	390
RESPIRO (TRANSMISSÃO)	430
	435
RETENTOR (ALOJAMENTO DO REGULADOR)	166
RETENTOR DE ANEL-O	614
RETENTOR DE ANEL-O (DRENO DO ÓLEO DO MOTOR)	113
RETENTOR DE ANEL-O (REGULADOR)	166
RETENTOR DE ANEL-O (REGULADOR DA TEMPERATURA DA ÁGUA)	167
RETENTOR (FILTRO DE COMBUSTÍVEL)	244
RETENTOR (RESPIRO)	147
	149
	151
RETROESCAVADEIRA - BRAÇO ESTENDÍVEL	1
	2
RETROESCAVADORA	3
	4
	5
REVESTIMENTO DA CABINE	925
	926
RODA E PNEU	443
	444
	445
	446
	447
	448
	449
	450
RUÍDO - ARRANJO PARA SUPRESSÃO	504

* TRADUÇÃO NÃO DISPONÍVEL NO MOMENTO DA IMPRESSÃO

ÍNDICE

Designação	Página

S

SEMI-EIXO TRASEIRO 393
SEPARADOR DE ÁGUA 261
262
SILENCIADOR 221
222
223
224
225
SINCRONIZADOR 428
434
SIST. DE ILUMINAÇÃO - PISCA-PISCA GIRATÓRIO DE ADVERTÊNCIA 308
309
SISTEMA DE ABSORÇÃO DE IMPACTOS 510
SISTEMA DE ILUMINAÇÃO - FARÓIS 296
298
300
302
SISTEMA DE ILUMINAÇÃO - FARÓIS E SINAL 305
*STARTING AID GP 310
311
312
313
SUPORTE 275
277
SUPORTE - ESCOVA 316
SUPORTE - MONTAGEM 865
SUPORTE PARA TRANSPORTE 731
SUSPENSÃO - ASSENTO 963

T

TACÔMETRO - ELÉTRICO 868
869
870
880
881
968
969
TAMPA 442
443
575
TAMPA - ACESSO À BATERIA 480
TAMPA - ADMISSÃO DE AR 208
TAMPA - BOCAL DE ENCHIMENTO (ÓLEO HIDRÁULICO) 678
TAMPA - CAIXA DIANTEIRA 27
28
TAMPA - CONSOLO 900
901
TAMPA - ENCHIMENTO (ÓLEO HIDRÁULICO) 680
TAMPA - MECANISMO DAS VÁLVULAS 29
31
33
35
TAMPA - RADIADOR 194
TAMPA - TANQUE DE COMBUSTÍVEL 264
268
TAMPA - VÁLVULA DE CONTROLE 543
TAMPA (BOCAL DE ENCHIMENTO DE ÓLEO) (MOTOR) 154
TAMPA (BOCAL DE ENCHIMENTO DO OLEO DO MOTOR) 155
TAMPA-COLUNA 906
907
TAMPA (CONDICIONADOR DE AR) 930
TAMPA CONTRA POEIRA 406
408
509
629
633
TAMPA-FREIO DE ESTACIONAMENTO 905
TAMPA-PAINEL TRASEIRO DO MOTOR 903
904
TAMPA (RADIADOR) 197
200
TANQUE DE COMBUSTÍVEL 264
265
267
268
TANQUE DE COMBUSTÍVEL E MONTAGEM . . . 263
TANQUE DE ÓLEO HIDRÁULICO E MONTAGEM 678
TANQUE DO FREIO 458
TANQUE HIDRÁULICO 680
TAPETE 915
916
TELA FILTRANTE 430
436
TIRANTE DO CILINDRO DE LEVANTAMENTO 730
TOLDO 879
880
881
TOLDO - ESTRUTURA ROPS ABERTA 886
TRANSMISSÃO DIRETA 427
428
434
TRANSMISSÃO E MONTAGEM 425
426
TRAVA - CONTROLE MANUAL HIDRÁULICO . . . 662
TRAVA - TRANSPORTE 739

* TRADUÇÃO NÃO DISPONÍVEL NO MOMENTO DA IMPRESSÃO

ÍNDICE

Designação	Página
	740
	741
TREM DE FORÇA	418
	419
	420
	421
	422
TUBOS - ABSORÇÃO DE IMPACTOS	652
	654
TUBOS - AQUECEDOR	928
TUBOS - AR	215
	217
TUBOS - ARREFECEDOR DO TREM DE FORÇA	183
TUBOS - BOMBA	633
	637
	639
	640
	641
	642
	643
	646
	647
TUBOS - BRAÇO	658
TUBOS - BRAÇO COM EXTENSÃO	614
	615
TUBOS - CAÇAMBA DE MÚLTIPLAS APLICAÇÕES	625
	627
TUBOS - CILINDRO DA CAÇAMBA	603
TUBOS - CILINDRO DE INCLINAÇÃO	660
TUBOS - CILINDRO DE LEVANTAMENTO	617
	618
TUBOS - CIRCUITO PILOTO	629
	630
TUBOS - COMBUSTÍVEL	247
	249
TUBOS - DIREÇÃO	464
	467
TUBOS - ESTABILIZADOR	656
TUBOS - GIRO	659
TUBOS - LANÇA	601
TUBOS - RETORNO	648
	649
	650
	651
TUBOS - VÁLVULA DE CONTROLE DE CARGA	620
TUBOS - VÁLVULA DE RETENÇÃO	605
	609
TUBOS AUXILIARES	623
TUBOS AUXILIARES - RETROESCAVADEIRA	575
	577
	580
	584
	588
	592
	594
	597
TUBOS DO AQUECEDOR	928
	930
	933
TUBULAÇÕES - AQUECEDOR E AR CONDICIONADO	930
	933
TURBOALIMENTADOR	226
	227
	229
	231
	233
	234

U

UNI-DENTE	853

V

*VALVE GP-CHECK	694
*VALVE GP-PUMP CONTROL	722
	723
VÁLVULA - CONTROLE DE CARGA	715
	717
VÁLVULA (ÁGUA)	857
	859
	918
VÁLVULA DE ALÍVIO	428
	434
	471
	695
	701
	703
VÁLVULA DE ALÍVIO (AR CONDICIONADO)	888
VÁLVULA DE ALÍVIO (RESPIRO DE AR)	388
VÁLVULA DE CONTROLE	695
	697
	699
	701
	703
	705
	707
	709
	711
	713
VÁLVULA DE CONTROLE E MONTAGEM	682

* TRADUÇÃO NÃO DISPONÍVEL NO MOMENTO DA IMPRESSÃO

ÍNDICE

Designação	Página
VÁLVULA DE CONTROLE PILOTO	718
	719
	720
	721
VÁLVULA DE GÁS	505
VÁLVULA DE PARADA	182
	633
	643
VÁLVULA DE PNEU	442
	443
VÁLVULA DE PRIORIDADE	471
VÁLVULA DE RETENÇÃO	693
VÁLVULA DO CONECTOR	507
	509
VALVULA DO SOLENOIDE E MONTAGEM	683
VÁLVULA SOLENÓIDE	440
	441
	725
VÁLVULA SOLENÓIDE (12 V)	251
	253
VEDADOR - TAMPA (VÁLVULA)	31
VELA DE AQUECIMENTO; VELA INCANDESCENTE	283
VENTILADOR	862
	920
VENTILADOR DE SUCÇÃO	179
	180
	181
VIDRO DA PORTA	982
	984
VIRABREQUIM	37
	38
	39
	40
	42
	44
VOLANTE	470
VOLANTE DA DIREÇÃO	463
VOLANTE DO MOTOR	81
	82

* TRADUÇÃO NÃO DISPONÍVEL NO MOMENTO DA IMPRESSÃO

STICHWORTVERZEICHNIS

Bezeichnung	Seite
A	
ABDECKGLAS	293
ABDECKGLAS (ARBEITSSCHEINWERFER)	291
ABDECKGLAS (DURCHSICHTIG)	296, 298, 300
ABDECKGLAS (GELB)	292, 294, 295, 296, 298, 300
ABDECKUNGSDICHTUNG (VENTIL)	31
ABSPERRVENTIL	182, 633, 643
ABZUGSLEINE	887
ACHSBOLZEN	390
ACHSGEHÄUSEFLANSCH	413, 415
ANSAUGKRÜMMER	220
ANSCHLUSS	542
ANSCHLUSS - HEIZUNG U. KLIMAANLAGE	182
ANSCHLUSSSTÜCK (KRAFTSTOFFLEITUNGEN)	246
ANTRIEB - BAGGERLADER	403, 404
ANTRIEBS- UND LENKACHSE	390, 392
ANTRIEBSWELLE	423, 424
ANTRIEBSWELLENVERKLEIDUNG	493
ARBEITS- U. SIGNALLEUCHTE	305
ARBEITSLEUCHTEN	291, 296, 298, 300, 302
ARMLEHNE	864, 948, 950
AUFKLEBER	989
AUFKLEBER - ALLRADLENKUNG	1002
AUFKLEBER - ANZEIGE	342, 347, 1002
AUFKLEBER - ANZEIGE (SCHAUFEL)	756, 757, 758
AUFKLEBER - CAT	501
AUFKLEBER - FESTZURREN	992
AUFKLEBER - HEBEN	992
AUFKLEBER - SCHAUFELANZEIGE	1002
AUFKLEBER (ANZEIGE)	344
AUFKLEBER (CATERPILLAR)	868, 869, 870, 881
AUFKLEBER (CATERPILLAR) (AN DER FRONTSCHEIBE)	866
AUFKLEBER (FRONTSCHEIBE - SONNENBLENDE)	867
AUFKLEBER (HUBÖSE)	1001
AUFKLEBER (KOMBISCHAUFEL)	569, 901, 1002
AUFKLEBER (KONTROLLE) (KLIMAANLAGE)	857, 859
AUFKLEBER (KONTROLLE) (KLIMAANLAGE)	1002
AUFKLEBER (KONTROLLE) (KLIMAANLAGE)	918
AUFKLEBER (LADER-VORSTEUERUNG)	901
AUFKLEBER (LUFTUMLAUF)	862, 920
AUFKLEBER (NAMENSSCHILD)	505
AUFKLEBER (PEDALSTEUERUNG U. E-STIEL)	531
AUFKLEBER (SCHAUFEL)	901
AUFKLEBER (SCHAUFELSTEUERUNG)	518, 520, 901, 1002
AUFKLEBER (SCHWINGUNGSDÄMPFUNG)	510, 574
AUFKLEBER (SICHERHEIT)	290
AUFKLEBER (SICHERHEIT) (MASCHINENSICHERHEITSSYSTEM)	287
AUFKLEBER (STANDARD-KREUZMUSTER)	515, 1002
AUFKLEBER (START) (MASCHINENSICHERHEITSSYSTEM)	290
AUFKLEBER (STARTSCHALTER)	1002
AUFKLEBER (STARTSCHLÜSSELSCHALTER)	287, 290
AUFKLEBER (VARIABLE GESCHWINDIGKEIT)	236, 238, 1002
AUFKLEBER (ZENTRALE DREHVORRICHTUNG, AUSLEGERSPERRE)	1002
AUFKLEBER (ZUSATZPEDALSTEUERUNG)	531
AUFKLEBER (139CM)	498
AUFKLEBER (399 CM)	867

* ÜBERSETZUNG ZUM ZEITPUNKT DER DRUCKLEGUNG NICHT VORHANDEN

STICHWORTVERZEICHNIS

Bezeichnung	Seite
AUSLEGER	728, 729
AUSLEGERLEITUNGEN	601
AUSLEGERZYLINDER	550
AUSPUFFKRÜMMER	218, 219
AUSPUFFROHRVERLÄNGERUNG	211
B	
*BACKHOE AR-STANDARD STICK	4
BATTERIE	275, 277, 279, 281
BATTERIE (12 V, HD)	279
BATTERIE (12V, DH)	281
BATTERIE (12V, 750 A) (750 A)	275, 277
BATTERIEDECKEL	480
BATTERIEKASTEN	472, 473
BEFESTIGUNGSHALTERUNG	865
BELEUCHTUNGSANLAGE (12 V)	287, 290
BLINKER	374
BLINKLEUCHTE	292
BODENBLECH	484, 486, 487
BREMS- UND RÜCKLEUCHTE	293
BREMSBELAG-EINBAUSATZ	451
BREMSGESTÄNGE	454
BREMSSATTEL-EINBAUSATZ	451
BREMSTANK	458
BÜRSTENHALTER	316
D	
DAUMEN	849, 850, 851, 852
DAUMEN - ZYLINDER U. LEITUNGEN	544
DAUMENGESTÄNGE	733
DAUMENZYLINDER	562
DICHTUNG (ENTLÜFTER)	147, 149, 151
DICHTUNG (KRAFTSTOFFILTER)	244
DICHTUNG (REGULATORGEHÄUSE)	166
DICHTUNG (VENTILDECKEL)	29, 35
DICHTUNG (WASSERPUMPE)	185, 187
DICHTUNGSSATZ	286, 715
DICHTUNGSSATZ (LENKUNGSZUMESSPUMPE)	403, 469
DIFFERENTIAL	400, 402
DIFFERENTIAL UND TELLERRAD	400
DIFFERENTIALSPERRENGESTÄNGE	398
DIFFERENZIALGEHÄUSE	400
DREHSTROMGENERATOR	270, 272, 273, 274
DREHSTROMGENERATOR - BEFESTIGUNG	93, 94
DREHSTROMGENERATOR-BEFESTIGUNGSELEMENTE	270
DREHSTROMGENERATORLAGER-EINBAUSATZ	270
DREHZAHLMESSER, ELEKTR.	868, 869, 870, 880, 881, 968, 969
DREHZAHLREGLER - STEUERHEBEL	924
DRUCKBEGRENZUNGSVENTIL (ENTLÜFTUNGSVORRICHTUNG)	388
DRUCKKNOPFSCHALTER	522
DRUCKKNOPFSCHALTER (AUSSCHALTER)	399
DRUCKLUFTLEITUNGEN	215, 217
DRUCKSCHALTER	319, 320, 321, 323, 382, 384
DRUCKSCHALTER (HOCH - NIEDRIG)	327
DRUCKSCHALTER (MOTORÖL)	319, 320
DRUCKSPEICHER - KLIMAANLAGE	930
DRUCKSPEICHER, HYDRAULISCHE SCHWINGUNGSDÄMPFUNG	505, 506
DRUCKSPEICHERWARTUNGSSATZ	505

* ÜBERSETZUNG ZUM ZEITPUNKT DER DRUCKLEGUNG NICHT VORHANDEN

STICHWORTVERZEICHNIS

Bezeichnung	Seite
E	
EINFÜLLKAPPE (HYDRAULIKÖL)	680
EINFÜLLSTUTZENKAPPE (HYDRAULIKÖL)	678
EINSTELLER-EINBAUSATZ (ARMLEHNE)	864
ELEKTRONISCHER SCHLÜSSEL (GELB)	287
	289
ELEKTRONISCHER SCHLÜSSEL (GRAU)	287
	289
ENDSCHALTER (BREMSE)	454
ENTLÜFTER	146
	147
	149
	151
	153
ENTLÜFTER (ACHSE)	390
ENTLÜFTER (GETRIEBE)	430
	435
ENTLÜFTERPATRONE	147
	149
	151
ENTLÜFTERSCHLAUCH	31
ENTLÜFTERSCHLAUCH (KURBELGEHÄUSE)	29
F	
FAHRERHAUS	866
	867
	868
	869
	870
	871
	873
	875
	877
FAHRERHAUS - HALTETEILE	970
FAHRERHAUS M. OFFENEM ÜBERROLLSCHUTZ	886
FAHRERHAUS, SONNENBLENDE	971
FAHRERHAUSAUSKLEIDUNG	925
	926
FAHRERHAUSBELEUCHTUNG	926
	961
FAHRERHAUSFENSTER	976
	978
	980
FAHRERHAUSHEIZUNG	918
	920
FAHRERHAUSTÜR (LINKS)	908
FAHRERHAUSTÜR (RECHTS)	910
FAHRERHAUSVERDRAHTUNG	330
	332
	333
	336
	337
	339
FAHRERPLATTFORMVERDRAHTUNG	367
	372
	374
FAHRERSITZ	948
	950
	952
FAHRERSITZ, FESTSTEHEND	954
	955
FAHRERSITZFEDERUNG	963
FAHRERSITZVERSTELLER	855
FAHRWERK	6
FEDER (ENTLÜFTERSCHLAUCH)	29
	31
	33
FESTSTELLBREMSABDECKUNG	905
FESTSTELLBREMSE	451
FESTSTELLBREMSGESTÄNGE	452
	453
FEUERWANDABDECKUNG	903
	904
FILTER	695
	697
	699
	701
	703
	705
	707
	709
	713
FILTER (ENTLÜFTER)(HYDRAULIK)	678
FILTER (HEIZUNG)	918
FILTER (HYDRAULIKTANKENTLÜFTER)	680
FILTER (KLIMAANLAGE)	857
	859
FILTER (KRAFTSTOFF)	260
FILTERSOCKEL U. MOTORÖLKÜHLER	168
	170
	172
	174
*FOOTREST GP	917
FRONTSTEUERPULT	893
FRONTSTOSSSTANGE	474
FUSSMATTE	915
	916
G	
GABEL	836
GABELBEFESTIGUNG	844
GASPEDAL	945

* ÜBERSETZUNG ZUM ZEITPUNKT DER DRUCKLEGUNG NICHT VORHANDEN

STICHWORTVERZEICHNIS

Bezeichnung	Seite
GASVENTIL	505
GEGENGEWICHT	475
	476
	477
	478
	479
GETRIEBE U. BEFESTIGUNG	425
	426
GETRIEBEÖLFÜLLSTUTZEN	406
	408
	410
	411
GETRIEBEPUMPE	429
	436
GETRIEBESTEUERUNG	399
GETRIEBESYNCHRONISIERSATZ	428
	434
GLEITSCHIENENBLOCK-EINBAUSATZ	956
	958
GLÜHKERZE	283
GRUNDAUSFÜHRUNG	6
	7

H

Bezeichnung	Seite
HALTERUNG	275
	277
HANDSTEUERHEBEL	457
*HEATER GP-STARTING AID	314
HECKBAGGER	3
	4
	5
HECKBAGGER-TELESKOPSTIEL	1
	2
HECKBAGGERLÖFFEL	764
	765
	766
	767
	768
	769
	770
	771
	772
	773
	776
	777
	778
	779
	780
	781
	782
	783
	784
	785
	786
	787
	788
	789
	790
	791
	792
	793
	794
	795
	796
	797
	798
	799
	800
	801
	802
	803
	804
	805
	806
	807
	808
	809
	810
	811
	812
	813
	814
	815
	816
	817
	818
	819
	820
	821
	822
	823
HECKBAGGERLÖFFELGESTÄNGE	734
HECKBAGGERLÖFFELZYLINDER	545
	546
	548
HEIZUNGS- U. KLIMAANLAGENLEITUNGEN	930
	933
HEIZUNGSLEITUNGEN	928
	930
	933
HEIZUNGSVERDRAHTUNG	365
HINTERACHSE	393
HINTERACHSE U. BEFESTIGUNG	388
	389
HUBARM	726

* ÜBERSETZUNG ZUM ZEITPUNKT DER DRUCKLEGUNG NICHT VORHANDEN

STICHWORTVERZEICHNIS

Bezeichnung	Seite
HUBZYLINDER	555
	556
HUBZYLINDER-HALTERUNG	730
HUBZYLINDERLEITUNGEN	617
	618
*HYDRAULIC AR	568
	569
	570
HYDRAULIKFILTER	564
HYDRAULIKHANDSTEUERUNG	511
	513
	515
	517
	518
	520
	522
	524
	525
HYDRAULIKPEDALSTEUERUNG	527
	529
	531
HYDRAULIKPUMPE UND LEITUNGEN	633
	637
	639
	640
	641
	642
	643
	646
	647
HYDRAULIKPUMPENBEFESTIGUNG	668
HYDRAULIKSPERRE (HANDBEDIENUNG)	662
HYDRAULIKSTEUERUNGSAUFHÄNGUNG	667
HYDRAULIKSYSTEM	568
	569
	570
	571
HYDRAULIKTANK	680
HYDRAULIKTANK UND BEFESTIGUNGSTEILE	678
HYDRAULISCHE SCHWINGUNGSDÄMPFUNG	510
HYDRAULISCHE SCHWINGUNGSDÄMPFUNG - EINBAUSATZ	574

I

IDENTIFIZIERUNGS-AUFKLEBER (SICHERUNGSTAFEL)	403
	404
	1002
INASTRUMENTENTAFEL-EINBAUSATZ	939
	940
	941
	942
INSTRUKTIONS-AUFKLEBER	498
	1002
INSTRUKTIONS-AUFKLEBER (AUSFAHRBARER STIEL)	520
	1002
	1003
INSTRUKTIONS-AUFKLEBER (E-STIEL)	527
INSTRUKTIONS-AUFKLEBER (NICHT BETRETEN)	1002
INSTRUKTIONS-AUFKLEBER (RÜCKFLUSS)	577
	580
	584
	588
	594
	597
	1002
INSTRUKTIONS-AUFKLEBER (SCHAUFELSTEUERUNG)	568
	569
	1003
INSTRUKTIONS-AUFKLEBER (SCHMIERMITTEL)	501
INSTRUKTIONS-AUFKLEBER (ZUSATZ)	901
INSTRUMENTENTAFEL	944

K

KABELBINDER	630
KÄLTEMITTELKOMPRESSOR	888
	889
	891
KÄLTEMITTELKONDENSATOR U. BEFESTIGUNGSTEILE	892
KAPPE	442
	443
	575
KAPPE (KLIMAANLAGE)	930
KAPPE (KÜHLER)	197
	200
KAPPE (MOTORÖLEINFÜLLUNG)	155
KAPPE (ÖLEINFÜLLUNG) (MOTOR)	154
KEILRIEMEN	272
KEILRIEMEN (KÄLTEMITTELKOMPRESSOR)	177
KEILRIEMEN (KLIMAANLAGE)	891
KEILRIEMENSATZ (EINSCHL. ZWEI RIEMEN)	272
KEILRIEMENSATZ (EINSCHL. 2 RIEMEN)	177
	178
KEILRIEMENSATZ (EINSCHL. 2 RIEMEN)	868
KEILRIEMENSATZ (EINSCHL. 2 RIEMEN)	176

* ÜBERSETZUNG ZUM ZEITPUNKT DER DRUCKLEGUNG NICHT VORHANDEN

STICHWORTVERZEICHNIS

Bezeichnung	Seite
	177
KEILRIEMENSATZ (EINSCHL. 2 RIEMEN)	869
	870
	880
	881
KIPPSCHALTER (GEFAHR)	342
KIPPSCHALTER (HEIZGEBLÄSEGESCHWINGIGKEITSSTUFE)	323
	327
	365
KIPPSCHALTER (HINTERER ARBEITSSCHEINWERFER)	305
KIPPSCHALTER (SCHWINGUNGSDÄMPFUNG)	510
KIPPSCHALTER (SCHWINGUNGSDÄMPFUNG)	382
	384
KIPPSCHALTER (VORDERE ARBEITSSCHEINWERFER)	305
KIPPSCHALTER (WARNSCHALTER)	347
KIPPZYLINDER	563
*KIT-ADAPTER TIP	840
	841
KLIMAANLAGE	861
	862
KLIMAANLAGE UND AUFHÄNGUNG	857
	859
KLIMAANLAGENDRUCKSPEICHER	854
KLIMAANLAGENVERDRAHTUNG	323
	326
	327
KOLBENPUMPE	671
	673
KOLBENPUMPENUMLAUFSATZ	675
KOLBENRINGSATZ	115
	122
	123
KOMBISCHAUFEL	756
	757
	758
	824
	825
	826
	827
KOMBISCHAUFELLEITUNGEN	625
	627
KOMBISCHAUFELZYLINDER	557
KONSOLENVERDRAHTUNG	342
	344
	347
	349
KONTAKT-EINBAUSATZ (STARTERMOTOR)	316
KRAFTSTOFF-ENTLÜFTUNGSPUMPE	260
KRAFTSTOFFEINSPRITZDÜSE	251
KRAFTSTOFFEINSPRITZPUMPE	251
	253
	255
	257
KRAFTSTOFFFILTEREINSATZ	244
KRAFTSTOFFFILTEREINSATZ (WASSERABSCHEIDER)	245
KRAFTSTOFFILTER	244
KRAFTSTOFFILTER UND LEITUNGEN	240
	242
KRAFTSTOFFLEITUNGEN	247
	249
KRAFTSTOFFPUMPEN-EINBAUSATZ (EINSCHL. FILTER U. O-RING)	240
KRAFTSTOFFTANK	264
	265
	267
	268
KRAFTSTOFFTANK U. BEFESTIGUNG	263
KRAFTSTOFFTANKKAPPE	264
	268
KRAFTÜBERTRAGUNG	418
	419
	420
	421
	422
KREUZGELENK-EINBAUSATZ	390
KREUZGELENKLAGER-EINBAUSATZ	423
	424
KÜHLER UND HYDRAULIKÖLKÜHLER	193
	194
	195
	196
	197
	198
	200
KÜHLER UND LÜFTER	191
	192
KÜHLERKAPPE	194
KÜHLERSCHLAUCH	193
KÜHLSYSTEM	176
	177
	178
KÜHLSYSTEM - HOHE UMGEBUNGSTEMPERATUREN	178
KÜHLWASSERANSCHLUSS	166
	167
KÜHLWASSERPUMPE	185
	187
	189
KUPPLUNGSANTRIEB, ELAST.	405
KUPPLUNGSBOLZEN	845

* ÜBERSETZUNG ZUM ZEITPUNKT DER DRUCKLEGUNG NICHT VORHANDEN

STICHWORTVERZEICHNIS

Bezeichnung	Seite
	846
KURBELLAGER-EINBAUSATZ (0,25 MM ÜBERGRÖSSE)	38
	39
	40
KURBELLAGER-EINBAUSATZ (0,25 MM ÜBER-GRÖSSE) (HAUPTUNTERBRECHER)	37
KURBELLAGER-EINBAUSATZ (0,51 MM ÜBERGRÖSSE)	38
	39
	40
KURBELLAGER-EINBAUSATZ (0,51 MM ÜBER-GRÖSSE) (HAUPTUNTERBRECHER)	37
KURBELLAGER-EINBAUSATZ (0,76 MM ÜBERGRÖSSE)	38
	39
	40
KURBELLAGER-EINBAUSATZ (0,76 MM ÜBER-GRÖSSE) (HAUPTUNTERBRECHER)	37
KURBELWELLE	37
	38
	39
	40
	42
	44
KURBELWELLEN-RIEMENSCHEIBE	134
	135

L

LADERRAHMEN	489
	490
LADERZUSATZLEITUNGEN	623
LADESCHAUFEL	738
LAGERSATZ	393
LASTSTEUERVENTIL	715
	717
LASTSTEUERVENTILLEITUNGEN	620
LAUFBAND UND ANTRIEB	294
	295
LAUFROLLENSCHALTER	386
LAUTSPRECHER	926
	961
LEITUNGS-BEFESTIGUNGSTEILE	669
	670
LENKBETÄTIGUNG	462
	463
LENKÖLLEITUNGEN	464
	467
LENKRAD	463
	470
LENKVERDRAHTUNG	387
LEUCHTE	176
	178
	937
LEUCHTE (12 V)	176
	177
	294
	295
	344
	349
	968
	969
LEUCHTE (12 V)	326
LEUCHTE (12 V, 10 W)	961
LEUCHTE (12 V/ 21/5 W)	293
LEUCHTE (12 V, 24 W)	292
	296
	298
LEUCHTE (12 V, 55 W)	291
	296
	298
	305
LEUCHTE (12 V, 55 W)	302
LEUCHTE (12 V, 55 W)	296
	298
LEUCHTE (12 V)(10 W)	926
LEUCHTE (12 V/21 W)	300
LEUCHTE (12 V/21 W)	293
LEUCHTE (12V/55W)	300
LITERATURABLAGE	887
LÖFFELSTIEL	754
LÖFFELZYLINDERLEITUNGEN	603
LUFTEINLASSBOGEN	209
	210
LUFTEINLASSDECKEL	208
LÜFTER	862
	920
LÜFTERANTRIEB	78
	79
LUFTFILTER (FAHRERHAUS)	920
LUFTFILTER (HAUPTELEMENT)	201
LUFTFILTER (KLIMAANLAGE)	857
	862
LUFTFILTER (SICHERHEITSELEMENT)	201
LUFTFILTERWARTUNGSANZEIGE	212
	213
	214
LUFTFILTERWECHSELANZEIGE	213
LUFTKANAL	912
	914
LUFTREINIGER	201
	202
	203
	204
	206

* ÜBERSETZUNG ZUM ZEITPUNKT DER DRUCKLEGUNG NICHT VORHANDEN

STICHWORTVERZEICHNIS

Bezeichnung	Seite
	207
M	
MAGNETSTOPFEN	390, 395, 400
MAGNETVENTIL	440, 441, 725
MAGNETVENTIL (12 V)	251, 253
MANSCHETTE	719, 720
MECHANISCHES GETRIEBE	427
MOTOR- UND GETRIEBEAUFLAGER	97
MOTOR-EINBAUSATZ	20
MOTORAUFLAGER	95, 96
MOTORAUSFÜHRUNG	8, 9, 10, 11, 12, 13, 14, 16, 18, 19
MOTORBLOCK	46, 47, 48, 50, 51, 52, 54, 56, 58, 60, 62, 64, 65, 67, 68
MOTORHAUBE	498, 501
MOTORHAUBE UND VERKLEIDUNG	494, 496
MOTORHUBÖSE	91, 92
MOTORÖLEINFÜLLSTUTZEN	154, 155
MOTORÖLKÜHLER	172
MOTORÖLKÜHLER UND FILTERSOCKEL	168, 170, 172, 174
MOTORSTOPFEN	130, 131, 132, 133
MOTORVERDRAHTUNG	351, 355, 361
N	
NEIGEZYLINDERLEITUNGEN	660
NOCKENSATZ (NACH LINKS)	451
NOCKENWELLE	21, 22, 23, 24, 25, 26
O	
O-RING-DICHTUNG	614
O-RING-DICHTUNG (KÜHLWASSERTHERMOSTAT)	167
O-RING-DICHTUNG (MOTORÖLABLASS)	113
O-RING-DICHTUNG (REGULATOR)	166
ÖLFILTER	14, 154, 155, 564
ÖLFILTER (GETRIEBE)	427
ÖLFILTER (HYDRAULISCH) (FEUERFEST)	571
ÖLFILTER (REINIGUNG/HOCHLEISTUNG)	571
ÖLKÜHLERLEITUNGEN (KRAFTÜBERTRAGUNG)	183
ÖLSTANDANZEIGE (ÖLMESSSTAB)	154
ÖLWANNE	99, 101, 103, 105, 107, 109, 111, 113
ÖLWANNEN-ABLASSSCHRAUBE	99, 101, 103, 105, 107

* ÜBERSETZUNG ZUM ZEITPUNKT DER DRUCKLEGUNG NICHT VORHANDEN

STICHWORTVERZEICHNIS

Bezeichnung	Seite
	109
	111
	113
P	
PALETTENGABEL	837
PANETENTRÄGERSATZ	417
PEDALSCHUTZ	923
PFOSTENABDECKUNG	906
	907
PLEUELLAGER-EINBAUSATZ (0,25 MM ÜBERGRÖSSE)	38
	39
	40
PLEUELLAGER-EINBAUSATZ (0,25 MM ÜBERGRÖSSE) (PLEUELSTANGE)	37
PLEUELLAGER-EINBAUSATZ (0,51 MM ÜBERGRÖSSE)	38
	39
	40
PLEUELLAGER-EINBAUSATZ (0,76 MM ÜBERGRÖSSE)	38
	39
	40
PLEUELLAGER-EINBAUSATZ (0,76 MM ÜBERGRÖSSE) (PLEUELSTANGE)	37
PLEUELLAGER-EINBAUSATZ (51 MM ÜBERGRÖSSE) (PLEUELSTANGE)	37
PLEUELSTANGE UND KOLBEN	115
	116
	118
	120
	122
	123
	124
	126
POLSTER	748
	749
POLSTEREINBAUSATZ (ARMLEHNE)	864
R	
RAD UND REIFEN	443
	444
	445
	446
	447
	448
	449
	450
RADFLANSCH	412
REDUZIERER	652
REFLEKTOR	300
	838
REGLER- UND GASPEDALGESTÄNGE	236
	238
REIFENVENTIL	442
	443
RELAIS (12 V)	287
	290
	296
	298
	300
	302
	305
	323
	326
	327
	330
	333
	336
	339
	361
	365
	367
	382
	384
	387
RELAIS (12 V) (HOHE GESCHWINDIGKEIT)	327
REPARATURSATZ	986
ROLLENLAGER-EINBAUSATZ	417
RÜCKLAUFLEITUNG	648
	649
	650
	651
RÜCKSPIEGEL	935
RUNDUM-KENNLEUCHTE	294
	295
	308
	309
S	
SAUGLÜFTER	179
	180
	181
SCHALLDÄMPFER	221
	222
	223
	224
	225
SCHALLDÄMPFUNG	504
	961
SCHALTER	568
SCHALTER (FAHRTRICHTUNGSANZEIGER)	332

* ÜBERSETZUNG ZUM ZEITPUNKT DER DRUCKLEGUNG NICHT VORHANDEN

STICHWORTVERZEICHNIS

Bezeichnung	Seite
SCHALTER (HEIZUNG)	365
SCHALTER (HINTERE ARBEITSLEUCHTE)	300
SCHALTER (HUPE)	342
	347
SCHALTER (HYDRAULIKSPERRE)	568
SCHALTER (NEUTRALSPERRE)	342
	347
SCHALTER (VORDERE ARBEITSLEUCHTE)	300
SCHALTER (40 GRAD) (MOTORKÜHLMITTEL-TEMPERATUR)	255
SCHAUFELANSCHLAG	848
SCHAUFELAUFHÄNGUNG	842
	843
SCHAUFELAUSSCHALTER UND -EINSTELLER	572
SCHAUFELGESTÄNGE	736
SCHAUFELSCHUTZ	838
	839
SCHAUFELTRANSPORTAUSFÜHRUNG	847
SCHEIBENWASCHANLAGE	972
	974
SCHEIBENWISCHER	986
	988
SCHEIBENWISCHERBLATT	986
SCHEIBENWISCHERMOTOR	938
SCHILD	988
SCHILD UND AUFKLEBER	992
	993
	994
	995
	996
	997
	998
	999
	1000
	1001
SCHLAUCHLEITUNG (ENTLÜFTER)	33
SCHLAUCHLEITUNG (JE 96CM)	633
SCHLAUCHLEITUNG (KUREBLGEHÄSUEENT-LÜFTERVENTILDECKEL)	149
SCHLAUCHLEITUNG (109CM KURBELGEHÄU-SEENTLÜFTER OFFEN)	149
SCHLAUCHLEITUNG (53CM)	464
	467
SCHLAUCHLEITUNG (72CM)	634
SCHLAUCHLEITUNG (90CM KURBELWEL-LENENTLÜFTERSUMPF)	149
SCHLAUCHLEITUNGS-EINBAUSATZ	185
	187
SCHLÜSSEL	991
SCHMIERNIPPEL	562
	572
	665
	728
	742
	754
	826
	852
SCHMIERNIPPEL (1/8-27-GEWINDE)	490
	491
	726
	736
	750
SCHMIERNIPPEL (1/8-27-GEWINDE)	824
	825
	827
SCHMIERPUMPE	157
	159
	161
	163
	165
SCHNEIDMESSER	834
	835
SCHNELLWECHSELEINRICHTUNG	829
	830
	831
	832
	833
SCHNELLWECHSELVORRICHTUNG	828
SCHUTZBLECHE, HINTEN	482
	483
SCHUTZBLECHE, VORNE	481
SCHUTZDACHSATZ	882
	885
SCHWENKLEITUNGEN	659
SCHWENKRAHMEN	491
SCHWENKZYLINDER	561
SCHWINGSITZ	956
	958
	960
SCHWINGUNGSDÄMPFUNGSLEITUNGEN	652
	654
SCHWINGUNGSDÄMPFUNGSVERDRAH-TUNG	382
	384
SCHWUNGRAD	81
	82
SCHWUNGRADGEHÄUSE	83
	84
SEITENANTRIEB - PLANETENGETRIEBE	417
SEITENKONSOLE	895
	896
	897
	898
	899
SEITENSTÜTZEN	677

* ÜBERSETZUNG ZUM ZEITPUNKT DER DRUCKLEGUNG NICHT VORHANDEN

STICHWORTVERZEICHNIS

Bezeichnung	Seite
	750
SEITENSTÜTZENLEITUNGEN	656
SEITENSTÜTZENPLATTEN	748
	749
SEITENSTÜTZENPLATTEN UND SCHUTZABDECKUNG	743
	744
SEITENSTÜTZENZYLINDER	558
	559
SEITENSTÜTZENZYLINDERSCHUTZ	565
	566
SENSORANSCHLUSSSATZ (12POLIG)	344
SENSORANSCHLUSSSATZ (12POLIG)	367
SENSORANSCHLUSSSATZ (2POLIG)	300
	327
	344
	351
	355
	367
	374
	440
	453
	862
SENSORANSCHLUSSSATZ (3POLIG)	351
	355
	367
SENSORANSCHLUSSSATZ (4 POLIG)	300
SENSORANSCHLUSSSATZ (4 POLIG)	344
	367
SENSORANSCHLUSSSATZ (6POLIG)	344
	367
SENSORANSCHLUSSSATZ (8POLIG)	367
SENSORVERDRAHTUNG	386
SICHERHEITSEINBAUSATZ	287
	289
	290
SICHERHEITSGURT	946
	947
SICHERUNG (10 A)	294
	295
	300
	305
	323
	327
	367
	378
	382
	384
SICHERUNG (10 A)	367
SICHERUNG (15 A)	296
	298
	300
	302
	305
	336
	339
	367
SICHERUNG (15 A)	367
SICHERUNG (20 A)	330
	333
	367
SICHERUNG (5 A)	330
	337
	367
	387
SIEB	430
	436
SIGNALBLINKER	367
SITZDREH- U. -SCHIEBEVORRICHTUNG	965
SITZSCHWENKVORRICHTUNG	967
SOLENOIDVENTIL U. BEFESTIGUNGSTEILE	683
SONNENBLENDE	971
SPERRVENTIL	693
SPERRVENTILLEITUNGEN	605
	609
STARTERMOTOR	315
	316
	318
STARTERMOTORAUFHÄNGUNG	98
*STARTING AID GP	310
	311
	312
	313
STARTSCHLÜSSELSCHALTER	944
STAUBKAPPE	406
	408
	509
	629
	633
STECKDOSEN - EINBAUSATZ (12POLIG)	367
STECKDOSEN - EINBAUSATZ (2POLIG)	265
	300
	351
	367
	372
	387
	399
	441
	522
	701
	725
	888
STECKDOSEN - EINBAUSATZ (2POLIG)	355
STECKDOSEN - EINBAUSATZ (3POLIG)	344
	351
	367

* ÜBERSETZUNG ZUM ZEITPUNKT DER DRUCKLEGUNG NICHT VORHANDEN

STICHWORTVERZEICHNIS

Bezeichnung	Seite
	441
	972
STECKDOSEN - EINBAUSATZ (3POLIG)	355
STECKDOSEN - EINBAUSATZ (4 POLIG)	293
	300
	367
STECKDOSEN - EINBAUSATZ (6POLIG)	300
	367
	938
	986
STECKDOSEN - EINBAUSATZ (8POLIG)	367
	937
STECKDOSENVERDRAHTUNG	378
STEUERKONSOLE	894
STEUERKONSOLENABDECKUNG	900
	901
STEUERUNG - NICHT PROGRAMMIERT (SICHERHEIT)	287
	289
STEUERVENTIL	695
	697
	699
	701
	703
	705
	707
	709
	711
	713
STEUERVENTILDECKEL	543
STIELAUFHÄNGUNG	742
STIELZYLINDER	560
STIELZYLINDERLEITUNGEN	658
STIRNRADGEHÄUSE	85
	86
	87
	88
	89
STIRNRADGEHÄUSEDECKEL	27
	28
STÜTZPLATTEN U. BEFESTIGUNG	745
	746
	747

T

TELESKOPSTIEL	752
TELESKOPSTIELLEITUNGEN	614
	615
TELESKOPSTIELZYLINDER	552
	553
TELLER- UND KEGELRAD	400
TEMPERATURGEBER	361
TEMPERATURGEBER (DREHMOMENT-WANDLERÖL)	351
TEMPERATURGEBER ((WANDLERÖL))	355
TEMPERATURSCHALTER	322
TEMPERATURSCHALTER (SPRITZVERSTELLUNG)	251
	253
THERMOSTATSCHALTER (KLIMAANLAGE)	862
TIEFLÖFFEL-HYDRAULIKNOTLEITUNGEN	575
	577
	580
	584
	588
	592
	594
	597
TRANSPORTHALTERUNG	731
TRANSPORTSPERRE	732
	739
	740
	741
TURBOLADER	226
	227
	229
	231
	233
	234
TÜRFENSTER	982
	984

U

ÜBERDRUCKVENTIL	428
	434
	471
	695
	701
	703
ÜBERDRUCKVENTIL (KLIMAANLAGE)	888
UMBAUSATZ - STEUERVENTIL	535
	536
UMLAUFKÜHLWASSERHEIZUNG	284
	285
	286
UMRÜSTSATZ - GEFEDERETE SCHWENKVORRICHTUNG	533
UMRÜSTSATZ - HYDRAULIKHEBEL	537
	538
	539
	540
	541
UNIVERSAL-ZAHNSPITZE	853
UNIVERSALSCHAUFEL	759

* ÜBERSETZUNG ZUM ZEITPUNKT DER DRUCKLEGUNG NICHT VORHANDEN

STICHWORTVERZEICHNIS

Bezeichnung	Seite
	760
	762
	763
	774
	775
UNTERLEGKEIL - EINBAUSATZ	990

V

*VALVE GP-CHECK	694
*VALVE GP-PUMP CONTROL	722
	723
VENTIL (WASSER)	857
	859
	918
VENTILANORDNUNGS-BEFESTIGUNGS-SATZ	663
	664
VENTILBLOCK U. BEFESTIGUNG	682
VENTILDECKEL	29
	31
	33
	35
VENTILSATZ (2-VENTIL)	686
	688
VENTILSATZ (3-VENTIL)	689
VENTILSATZ (4-VENTIL)	690
VENTILSATZ (5-VENTIL)	691
VENTILSATZ (6-VENTIL)	692
VENTILSTEUERUNG	136
	138
	140
	142
	144
	145
VERBINDUNGSVENTIL	507
	509
VERDRAHTUNG, HINTEN	379
VORDERACHSE	459
	461
VORHÄNGESCHLOSS	991
VORRANGVENTIL	471
VORSTEUERLEITUNGEN	629
	630
VORSTEUERVENTIL	718
	719
	720
	721

W

WARNANZEIGEMODUL	936
	937
WARNAUFKLEBER (HOCHDRUCKZYLINDER)	597
WARNHORN, ELEKTR.	922
WARTUNGSANZEIGE (LUFTFILTER)	212
WARTUNGSMESSER	342
	347
WARTUNGSSATZ	945
WASSERABSCHEIDER	261
	262
WASSERABSCHEIDER - EINBAUSATZ	245
WASSERABSCHEIDER- U. KRAFTSTOFFILTER	245
WASSERTEMPERATURREGLER	166
	167
WECHSELGETRIEBE	428
	434
WETTERDACH	879
	880
	881

Z

ZAHNRADSATZ (STARTERMOTOR)	316
ZAPFWELLE	676
ZUMESSPUMPE	469
ZYLINDER	454
ZYLINDERAUFHÄNGUNG	665
	666
ZYLINDERBLOCKSCHRAUBE	128
ZYLINDERKOPF	69
	70
	71
	72
	73
	74
	75
	76
	77
ZYLINDERKOPF-HALTETEILE	80
ZYLINDERKOPFSTOPFEN	129

4

4-BLOCK-VENTILSATZ	684

5

5-VENTIL-BLOCK	684

6

6-FACH-VENTILBLOCK	685

* ÜBERSETZUNG ZUM ZEITPUNKT DER DRUCKLEGUNG NICHT VORHANDEN

MACHINE ARRANGEMENT

184-7909 BACKHOE AR-EXTENDABLE STICK

S/N: BFP12900-UP
BOOM AND STICK LOCKS
AN ATTACHMENT

SMCS-6504, 6533 **i01622453**

NOTE	PART NUMBER	QTY	PART NAME 1 2 3 4 5 6 (PRODUCT LEVEL)	SEE PAGE
Y	*159-2798*	1	BOOM GP	728
Y	**206-0518**	1	CYLINDER GP-BACKHOE BUCKET	548
Y	*185-6159*	1	LINES GP-LOAD CONTROL VALVE	620
Y	*197-6818*	1	LINES GP-RETURN	650
Y	*167-8276*	1	LINES GP-EXTENDABLE STICK	615
Y	*151-7928*	1	LINKAGE GP-BACKHOE BUCKET	734
Y	*171-2101*	1	MOUNTING GP-LINES	669
Y	*152-9736*	1	MOUNTING GP-STICK	742
Y	*197-2733*	1	STICK GP-EXTENDABLE	752
Y-SEPARATE ILLUSTRATION				

<END>

184-7911 BACKHOE AR-EXTENDABLE STICK

S/N: BFP12900-UP
AUXILIARY LINES, BOOM AND STICK LOCKS
AN ATTACHMENT

SMCS-6504, 6533 **i01622586**

NOTE	PART NUMBER	QTY	PART NAME 1 2 3 4 5 6 (PRODUCT LEVEL)	SEE PAGE
Y	*159-2799*	1	BOOM GP	729
Y	**206-0518**	1	CYLINDER GP-BACKHOE BUCKET	548
Y	*171-2429*	1	LINES GP-BACKHOE AUXILIARY	580
Y	*185-6159*	1	LINES GP-LOAD CONTROL VALVE	620
Y	*176-9208*	1	LINES GP-RETURN	648
Y	*151-7928*	1	LINKAGE GP-BACKHOE BUCKET	734
Y	*172-3190*	1	MOUNTING GP-LINES	670
Y	*152-9736*	1	MOUNTING GP-STICK	742
Y	*197-2733*	1	STICK GP-EXTENDABLE	752
Y-SEPARATE ILLUSTRATION				

<END>

MACHINE ARRANGEMENT

238-4783 BACKHOE AR-EXTENDABLE STICK

S/N: BFP12900-UP

AN ATTACHMENT

SMCS-6504, 6533 **i01969148**

NOTE	PART NUMBER	QTY	PART NAME 1 2 3 4 5 6 (PRODUCT LEVEL)	SEE PAGE
Y	*159-2798*	1	BOOM GP	728
Y	**206-0518**	1	CYLINDER GP-BACKHOE BUCKET	548
Y	*167-8270*	1	LINES GP-BOOM	601
Y	*167-8276*	1	LINES GP-EXTENDABLE STICK	615
Y	*167-8273*	1	LINES GP-STICK	658
Y	*151-7928*	1	LINKAGE GP-BACKHOE BUCKET	734
Y	*171-2101*	1	MOUNTING GP-LINES	669
Y	*152-9736*	1	MOUNTING GP-STICK	742
Y	*197-2733*	1	STICK GP-EXTENDABLE	752
Y-SEPARATE ILLUSTRATION				

<END>

238-4784 BACKHOE AR-EXTENDABLE STICK

S/N: BFP12900-UP

AN ATTACHMENT

SMCS-6504, 6533 **i01969174**

NOTE	PART NUMBER	QTY	PART NAME 1 2 3 4 5 6 (PRODUCT LEVEL)	SEE PAGE
Y	*159-2799*	1	BOOM GP	729
Y	**206-0518**	1	CYLINDER GP-BACKHOE BUCKET	548
Y	*235-5849*	1	LINES GP-AUXILIARY HYDRAULIC	597
Y	*167-8270*	1	LINES GP-BOOM	601
Y	*167-8273*	1	LINES GP-STICK	658
Y	*151-7928*	1	LINKAGE GP-BACKHOE BUCKET	734
Y	*172-3190*	1	MOUNTING GP-LINES	670
Y	*152-9736*	1	MOUNTING GP-STICK	742
Y	*197-2733*	1	STICK GP-EXTENDABLE	752
Y-SEPARATE ILLUSTRATION				

<END>

MACHINE ARRANGEMENT

184-7903 BACKHOE AR

S/N: BFP12900-UP
BOOM AND STICK LOCKS, STANDARD STICK
AN ATTACHMENT

SMCS-6502, 6504 **i01944120**

NOTE	PART NUMBER	QTY	PART NAME 1 2 3 4 5 6 (PRODUCT LEVEL)	SEE PAGE
Y	*159-2798*	1	BOOM GP	728
Y	**206-0514**	1	CYLINDER GP-BACKHOE BUCKET	546
Y	*167-8275*	1	LINES GP-BUCKET CYLINDER	603
Y	*185-6159*	1	LINES GP-LOAD CONTROL VALVE	620
Y	*176-9209*	1	LINES GP-RETURN	649
Y	*151-7928*	1	LINKAGE GP-BACKHOE BUCKET	734
Y	*171-2101*	1	MOUNTING GP-LINES	669
Y	*151-7316*	1	STICK GP-HOE	754

Y-SEPARATE ILLUSTRATION

<END>

184-7905 BACKHOE AR

S/N: BFP12900-UP
AUXILIARY LINES, BOOM AND STICK LOCKS
AN ATTACHMENT

SMCS-6502, 6504 **i01397713**

NOTE	PART NUMBER	QTY	PART NAME 1 2 3 4 5 6 (PRODUCT LEVEL)	SEE PAGE
Y	*159-2799*	1	BOOM GP	729
Y	**180-4239**	1	CYLINDER GP-BACKHOE BUCKET	545
Y	*171-2428*	1	LINES GP-BACKHOE AUXILIARY	577
Y	*167-8275*	1	LINES GP-BUCKET CYLINDER	603
Y	*185-6159*	1	LINES GP-LOAD CONTROL VALVE	620
Y	*176-9208*	1	LINES GP-RETURN	648
Y	*151-7928*	1	LINKAGE GP-BACKHOE BUCKET	734
Y	*172-3190*	1	MOUNTING GP-LINES	670
Y	*151-7316*	1	STICK GP-HOE	754

Y-SEPARATE ILLUSTRATION

<END>

MACHINE ARRANGEMENT

184-7907 BACKHOE AR-STANDARD STICK

S/N: BFP12900-UP
AUXILIARY LINES SHORT, BOOM AND STICK LOCKS
AN ATTACHMENT

SMCS-6502, 6504 **i01622214**

NOTE	PART NUMBER	QTY	PART NAME 1 2 3 4 5 6 (PRODUCT LEVEL)	SEE PAGE
Y	*159-2798*	1	BOOM GP	728
Y	**206-0514**	1	CYLINDER GP-BACKHOE BUCKET	546
Y	*171-2427*	1	LINES GP-BACKHOE AUXILIARY	575
Y	*167-8275*	1	LINES GP-BUCKET CYLINDER	603
Y	*185-6159*	1	LINES GP-LOAD CONTROL VALVE	620
Y	*176-9209*	1	LINES GP-RETURN	649
Y	*151-7928*	1	LINKAGE GP-BACKHOE BUCKET	734
Y	*171-2101*	1	MOUNTING GP-LINES	669
Y	*151-7316*	1	STICK GP-HOE	754

Y-SEPARATE ILLUSTRATION

<END>

238-4780 BACKHOE AR

S/N: BFP12900-UP
AN ATTACHMENT

SMCS-6502, 6504 **i01969114**

NOTE	PART NUMBER	QTY	PART NAME 1 2 3 4 5 6 (PRODUCT LEVEL)	SEE PAGE
Y	*159-2798*	1	BOOM GP	728
Y	**206-0514**	1	CYLINDER GP-BACKHOE BUCKET	546
Y	*167-8270*	1	LINES GP-BOOM	601
Y	*167-8275*	1	LINES GP-BUCKET CYLINDER	603
Y	*167-8273*	1	LINES GP-STICK	658
Y	*151-7928*	1	LINKAGE GP-BACKHOE BUCKET	734
Y	*171-2101*	1	MOUNTING GP-LINES	669
Y	*151-7316*	1	STICK GP-HOE	754

Y-SEPARATE ILLUSTRATION

<END>

MACHINE ARRANGEMENT

238-4781 BACKHOE AR–ONE WAY LINES

S/N: BFP12900-UP

AN ATTACHMENT

SMCS-6502, 6504 **i01969142**

NOTE	PART NUMBER	QTY	PART NAME 1 2 3 4 5 6 (PRODUCT LEVEL)	SEE PAGE
Y	*159-2799*	1	BOOM GP	729
Y	**206-0514**	1	CYLINDER GP-BACKHOE BUCKET	546
Y	*235-5848*	1	LINES GP-AUXILIARY HYDRAULIC	594
Y	*167-8270*	1	LINES GP-BOOM	601
Y	*167-8275*	1	LINES GP-BUCKET CYLINDER	603
Y	*167-8273*	1	LINES GP-STICK	658
Y	*151-7928*	1	LINKAGE GP-BACKHOE BUCKET	734
Y	*172-3190*	1	MOUNTING GP-LINES	670
Y	*151-7316*	1	STICK GP-HOE	754

Y-SEPARATE ILLUSTRATION

<END>

238-4782 BACKHOE AR–TWO WAY LINES

S/N: BFP12900-UP

AN ATTACHMENT

SMCS-6502, 6504 **i01969146**

NOTE	PART NUMBER	QTY	PART NAME 1 2 3 4 5 6 (PRODUCT LEVEL)	SEE PAGE
Y	*159-2798*	1	BOOM GP	728
Y	**206-0514**	1	CYLINDER GP-BACKHOE BUCKET	546
Y	*171-2427*	1	LINES GP-BACKHOE AUXILIARY	575
Y	*167-8270*	1	LINES GP-BOOM	601
Y	*167-8275*	1	LINES GP-BUCKET CYLINDER	603
Y	*167-8273*	1	LINES GP-STICK	658
Y	*151-7928*	1	LINKAGE GP-BACKHOE BUCKET	734
Y	*171-2101*	1	MOUNTING GP-LINES	669
Y	*151-7316*	1	STICK GP-HOE	754

Y-SEPARATE ILLUSTRATION

<END>

MACHINE ARRANGEMENT

214-6950 CHASSIS AR

S/N: BFP12900-UP

PART OF 214-6885 COMMON AR

SMCS-7000 **i01966993**

NOTE	PART NUMBER	QTY	PART NAME 1 2 3 4 5 6 (PRODUCT LEVEL)	SEE PAGE
Y	*235-2853*	1	BATTERY GP	279
Y	*234-8892*	1	CONTROL GP-GOV & ACCELERATOR	238
Y	*183-3120*	1	CONTROL GP-HYDRAULIC HAND	522
Y	*185-0080*	1	FLOORPLATE GP	484
Y	*214-6944*	1	FRAME GP-LOADER	490
Y	*183-6056*	1	FRAME GP-SWING	491
Y	*234-9065*	1	HOOD & GUARD GP	496
Y	*188-9097*	1	LINES GP-PILOT	629
Y	*183-6076*	1	LOCK GP-TRANSPORT	741
Y	*185-7736*	1	PLATE & FILM GP	992
Y	*228-3600*	1	PLATE & FILM GP	1001
Y	*9R-0041*	1	STABILIZER GP-BACKHOE	750
Y	*214-6908*	1	TANK & MTG GP-FUEL	263
Y	*238-1165*	1	WIRING GP-CONSOLE	347
Y	*238-1821*	1	WIRING GP-PLATFORM	374

Y-SEPARATE ILLUSTRATION

<END>

214-6885 COMMON AR

S/N: BFP12900-UP

SMCS-7000 **i01967431**

NOTE	PART NUMBER	QTY	PART NAME 1 2 3 4 5 6 (PRODUCT LEVEL)	SEE PAGE
Y	*214-6950*	1	CHASSIS AR	6
Y	*214-6980*	1	HYDRAULIC AR	571
Y	*107-3313*	1	LOADER AR	738
Y	*184-7970*	1	POWER TRAIN AR	418

Y-SEPARATE ILLUSTRATION

<END>

MACHINE ARRANGEMENT

215-6888 COMMON AR

S/N: CXP940-UP

SMCS-7000 **i01944076**

NOTE	PART NUMBER	QTY	PART NAME 1 2 3 4 5 6 (PRODUCT LEVEL)	SEE PAGE
Y	*164-1076*	1	CONTROL GP-GOV & ACCELERATOR	236
Y	*183-3120*	1	CONTROL GP-HYDRAULIC HAND	522
Y	**206-3549**	1	CYLINDER GP-LIFT	555
Y	**206-3553**	1	CYLINDER GP-TILT	563
Y	**186-6159**	1	FRAME AS-LOADER	489
Y	*185-8842*	1	HOOD & GUARD GP	494
Y	*185-1887*	1	INSTALLATION AR-ENGINE	20
Y	*112-1826*	1	MOUNTING GP-HYDRAULIC PUMP	668
Y	*190-7374*	1	MOUNTING GP-INSTRUMENT PANEL	941
Y	*185-7736*	1	PLATE & FILM GP	992
Y	*215-6894*	1	PLATE & FILM GP	1001
Y	*184-7970*	1	POWER TRAIN AR	418
YR	**180-9588**	1	PUMP GP-PISTON	671
Y	*7E-4636*	1	SEPARATOR GP-WATER	261
Y	*163-7934*	1	TANK & MTG GP-HYDRAULIC	678
Y	**202-6051**	1	TANK GP-FUEL	265
Y	*169-0625*	1	WIRING GP-CONSOLE	342
Y	*185-8800*	1	WIRING GP-PLATFORM	367

R-REMFG PART MAY BE AVAILABLE
Y-SEPARATE ILLUSTRATION

<END>

ENGINE ARRANGEMENT

186-0598 ENGINE AR

S/N: CXP940-UP

AN ATTACHMENT

SMCS-1000 **i01400498**

NOTE	PART NUMBER	QTY	PART NAME 1 2 3 4 5 6 (PRODUCT LEVEL)	SEE PAGE
Y	**187-8016**	1	ENGINE AR-PRIMARY	14
Y	*189-5639*	1	LINES GP-AIR	217
Y	*7E-4642*	1	MUFFLER GP	222
Y	*185-8803*	1	WIRING GP-ENGINE	351

Y-SEPARATE ILLUSTRATION

ENGINE ARRANGEMENT

186-0600 ENGINE AR

S/N: BFP12900-UP
59 BRAKE KW (80 BHP)
AN ATTACHMENT

SMCS-1000 **i01400548**

NOTE	PART NUMBER	QTY	PART NAME 1 2 3 4 5 6 (PRODUCT LEVEL)	SEE PAGE
Y	**188-0883**	1	ENGINE AR-PRIMARY	16
Y	*167-8258*	1	LINES GP-AIR	215
Y	*7E-4643*	1	MUFFLER GP	223
Y	*185-8803*	1	WIRING GP-ENGINE	351

Y-SEPARATE ILLUSTRATION

ENGINE ARRANGEMENT

202-5742 ENGINE AR

S/N: BFP12900-UP
59 BRAKE KW (80 BHP)
AN ATTACHMENT

SMCS-1000 **i01707331**

NOTE	PART NUMBER	QTY	PART NAME 1 2 3 4 5 6 (PRODUCT LEVEL)	SEE PAGE
Y	**188-0883**	1	ENGINE AR-PRIMARY	16
Y	*167-8258*	1	LINES GP-AIR	215
Y	*7E-4643*	1	MUFFLER GP	223
Y	*201-3325*	1	WIRING GP-ENGINE	355

Y-SEPARATE ILLUSTRATION

ENGINE ARRANGEMENT

206-6325 ENGINE AR

S/N: BFP12900-UP

AN ATTACHMENT

SMCS-1000 **i01617522**

NOTE	PART NUMBER	QTY	PART NAME 1 2 3 4 5 6 (PRODUCT LEVEL)	SEE PAGE
Y	**187-8016**	1	ENGINE AR-PRIMARY	14
Y	*189-5639*	1	LINES GP-AIR	217
Y	*7E-4642*	1	MUFFLER GP	222
Y	*201-3325*	1	WIRING GP-ENGINE	355

Y-SEPARATE ILLUSTRATION

ENGINE ARRANGEMENT

214-6890 ENGINE AR

S/N: BFP12900-UP

AN ATTACHMENT

SMCS-1000 **i01991930**

NOTE	PART NUMBER	QTY	PART NAME 1 2 3 4 5 6 (PRODUCT LEVEL)	SEE PAGE
Y	*234-1980*	1	AIR CLEANER GP	206
Y	*234-3058*	1	ENGINE AR-PRIMARY	18
Y	*236-2486*	1	EXTENSION GP-EXHAUST	211
Y	*234-7510*	1	FILLER GP-ENGINE OIL	155
Y	**238-9827**	1	INDICATOR GP-AIR FILTER CHANGE	213
Y	*240-9743*	1	LINES GP-FUEL	249
Y	*236-2485*	1	MUFFLER GP	225
Y	*235-3170*	1	SEPARATOR GP-WATER	262
	246-0568	1	WIRE AS (ENGINE SHUTOFF SOLENOID)	
Y	*234-1991*	1	WIRING GP-ENGINE	361

Y-SEPARATE ILLUSTRATION

ENGINE ARRANGEMENT

214-6891 ENGINE AR

S/N: BFP12900-UP

AN ATTACHMENT

SMCS-1000 **i02003062**

NOTE	PART NUMBER	QTY	PART NAME 1 2 3 4 5 6 (PRODUCT LEVEL)	SEE PAGE
Y	*234-1979*	1	AIR CLEANER GP	204
Y	**234-3059**	1	ENGINE AR-PRIMARY	19
Y	*236-2486*	1	EXTENSION GP-EXHAUST	211
Y	*234-7510*	1	FILLER GP-ENGINE OIL	155
Y	*238-9828*	1	INDICATOR GP-AIR FILTER CHANGE	214
Y	*235-2972*	1	LINES GP-FUEL	247
Y	*235-3420*	1	MUFFLER GP	224
Y	*235-3170*	1	SEPARATOR GP-WATER	262
Y	*234-1991*	1	WIRING GP-ENGINE	361

Y-SEPARATE ILLUSTRATION

ENGINE ARRANGEMENT

187-8016 ENGINE AR-PRIMARY

S/N: 7SG1-UP
56 BRAKE KW (75 BHP) AT 2200 RPM
PART OF 186-0598, 206-6325 ENGINE AR
AN ATTACHMENT

SMCS-1000 **i01745951**

NOTE	PART NUMBER	QTY	PART NAME 1 2 3 4 5 6 (PRODUCT LEVEL)	SEE PAGE
Y	*185-3195*	1	CAMSHAFT GP	22
			S/N: 7SG1-3172	
Y	*185-4617*	1	CAMSHAFT GP	23
			S/N: 7SG3173-UP	
Y	*146-0001*	1	CONNECTION GP-WATER	166
Y	*197-9405*	1	COOLER GP-FLTR BASE & ENG OIL	170
Y	*141-6149*	1	COVER GP-FRONT HOUSING	27
			S/N: 7SG1-3172	
Y	*186-0871*	1	PLUG GP-ENGINE	131
			S/N: 7SG3173-UP	
Y	*207-7954*	1	COVER GP-VALVE MECHANISM	31
Y	*185-3190*	1	CRANKSHAFT GP	38
			S/N: 7SG1-3172	
Y	*185-4599*	1	CRANKSHAFT GP	39
			S/N: 7SG3173-UP	
Y	*185-3189*	1	CYLINDER BLOCK GP	50
			S/N: 7SG1-3172	
Y	*185-4594*	1	CYLINDER BLOCK GP	51
			S/N: 7SG3173-UP	
	176-1358	1	CYLINDER BLOCK GP-SHORT	
Y	*185-3192*	1	CYLINDER HEAD GP	72
			S/N: 7SG1-3172	
Y	*185-4603*	1	CYLINDER HEAD GP	73
			S/N: 7SG3173-UP	
Y	*148-9679*	1	DRIVE GP-FAN	78
Y	*153-4953*	1	ELBOW GP-AIR INLET	209
Y	*197-9440*	1	FILTER & LINES GP-FUEL	242
	7W-2326	1	FILTER AS-ENGINE OIL	
Y	*130-4646*	1	FITTING GP-FUEL LINES	246
Y	*130-1422*	1	FLYWHEEL GP	81
Y	*186-4273*	1	STARTING AID GP	311
Y	*197-9245*	1	STARTING AID GP	312
Y	*130-6352*	1	HOUSING GP-FLYWHEEL	83
Y	*185-3194*	1	HOUSING GP-FRONT	86
			S/N: 7SG1-3172	
Y	*185-4611*	1	HOUSING GP-FRONT	87
			S/N: 7SG3173-UP	
Y	*148-9685*	1	LIFTING GP-ENGINE	91
Y	*185-8005*	1	MANIFOLD GP-EXHAUST	218
Y	*197-9435*	1	MANIFOLD GP-INLET	220
Y	*130-1427*	1	MOUNTING GP-ALTERNATOR	94
Y	*195-2130*	1	MOUNTING GP-ENGINE	95
Y	*130-4654*	1	MOUNTING GP-STARTING MOTOR	98
Y	*140-8175*	1	PAN GP-OIL	99
			S/N: 7SG1-2649	
Y	*168-0289*	1	PAN GP-OIL	111
			S/N: 7SG2650-UP	
Y	*185-3191*	1	PISTON & ROD GP	116
			S/N: 7SG1-3172	
Y	*185-4602*	1	PISTON & ROD GP	118
			S/N: 7SG3173-UP	
Y	*130-4648*	1	PLUG GP-CYLINDER BLOCK	128
Y	*130-4647*	1	PLUG GP-CYLINDER HEAD	129
Y	*141-0728*	1	PLUG GP-ENGINE	130

187-8016 ENGINE AR-PRIMARY *(contd.)* i01745951

NOTE	PART NUMBER	QTY	PART NAME 1 2 3 4 5 6 (PRODUCT LEVEL)	SEE PAGE
Y	*6I-0500*	1	PULLEY GP-CRANKSHAFT	134
Y	*185-3196*	1	PUMP GP-ENGINE OIL	159
			S/N: 7SG1-3172	
Y	*185-4621*	1	PUMP GP-ENGINE OIL	161
			S/N: 7SG3173-UP	
Y	*197-9414*	1	PUMP GP-FUEL INJECTION	253
Y	*139-2614*	1	PUMP GP-WATER	185
Y	*197-9401*	1	SWITCH GP-PRESSURE (ENGINE OIL)	320
Y	*185-3193*	1	VALVE MECHANISM GP	138
			S/N: 7SG1-3172	
Y	*185-4605*	1	VALVE MECHANISM GP	140
			S/N: 7SG3173-UP	
			AVAILABLE GASKET KIT(S):	
	187-1290	1	KIT-GASKET (TOP)	
	166-3786	1	KIT-GASKET (BOTTOM)	

Y-SEPARATE ILLUSTRATION

ENGINE ARRANGEMENT

188-0883 ENGINE AR-PRIMARY

S/N: 7BJ19000-UP
60 BRAKE KW (81 BHP) AT 2200 RPM
PART OF 186-0600, 202-5742 ENGINE AR
AN ATTACHMENT

SMCS-1000 **i01742151**

NOTE	PART NUMBER	QTY	PART NAME 1 2 3 4 5 6 (PRODUCT LEVEL)	SEE PAGE
Y	*145-8504*	1	CAMSHAFT GP	21
			S/N: 7BJ19000-67007	
Y	*220-2673*	1	CAMSHAFT GP	24
			S/N: 7BJ67008-UP	
Y	*146-0001*	1	CONNECTION GP-WATER	166
Y	*197-3880*	1	COOLER GP-FLTR BASE & ENG OIL	168
Y	*141-6149*	1	COVER GP-FRONT HOUSING	27
			S/N: 7BJ19000-67007	
Y	*186-0871*	1	PLUG GP-ENGINE	131
			S/N: 7BJ67008-UP	
Y	*196-4102*	1	COVER GP-VALVE MECHANISM	29
Y	*145-6688*	1	CRANKSHAFT GP	37
			S/N: 7BJ19000-67007	
Y	*220-2669*	1	CRANKSHAFT GP	40
			S/N: 7BJ67008-UP	
Y	*145-6685*	1	CYLINDER BLOCK GP	46
			S/N: 7BJ19000-67007	
Y	*220-2668*	1	CYLINDER BLOCK GP	64
			S/N: 7BJ67008-UP	
	164-3258	1	CYLINDER BLOCK GP-SHORT	
Y	*145-6852*	1	CYLINDER HEAD GP	69
			S/N: 7BJ19000-67007	
Y	*220-2671*	1	CYLINDER HEAD GP	74
			S/N: 7BJ67008-UP	
Y	*148-9679*	1	DRIVE GP-FAN	78
Y	*146-0180*	1	FASTENER GP-CYLINDER HEAD	80
Y	*197-3924*	1	FILTER & LINES GP-FUEL	240
Y	*130-4646*	1	FITTING GP-FUEL LINES	246
Y	*130-1422*	1	FLYWHEEL GP	81
Y	*221-7683*	1	HEATER GP-STARTING AID	314
Y	*148-9687*	1	STARTING AID GP	310
			S/N: 7BJ63566-64615	
Y	*219-2343*	1	STARTING AID GP	313
			S/N: 7BJ64616-UP	
Y	*130-6352*	1	HOUSING GP-FLYWHEEL	83
Y	*145-8479*	1	HOUSING GP-FRONT	85
			S/N: 7BJ19000-67007	
Y	*220-2675*	1	HOUSING GP-FRONT	88
			S/N: 7BJ67008-UP	
Y	*148-9685*	1	LIFTING GP-ENGINE	91
Y	*130-1427*	1	MOUNTING GP-ALTERNATOR	94
Y	*195-2130*	1	MOUNTING GP-ENGINE	95
Y	*130-4654*	1	MOUNTING GP-STARTING MOTOR	98
Y	*140-8175*	1	PAN GP-OIL	99
			S/N: 7BJ19000-63565	
Y	*168-0289*	1	PAN GP-OIL	111
			S/N: 7BJ63566-UP	
Y	*145-6690*	1	PISTON & ROD GP	115
			S/N: 7BJ19000-67007	
Y	*220-2670*	1	PISTON & ROD GP	122
			S/N: 7BJ67008-UP	
Y	*130-4648*	1	PLUG GP-CYLINDER BLOCK	128
Y	*130-4647*	1	PLUG GP-CYLINDER HEAD	129
Y	*141-0728*	1	PLUG GP-ENGINE	130

188-0883 ENGINE AR-PRIMARY *(contd.)* i01742151

NOTE	PART NUMBER	QTY	PART NAME 1 2 3 4 5 6 (PRODUCT LEVEL)	SEE PAGE
Y	*6I-0500*	1	PULLEY GP-CRANKSHAFT	134
Y	*145-8636*	1	PUMP GP-ENGINE OIL	157
			S/N: 7BJ19000-67007	
Y	*220-2674*	1	PUMP GP-ENGINE OIL	163
			S/N: 7BJ67008-UP	
Y	*197-7237*	1	PUMP GP-FUEL INJECTION	251
Y	*179-6896*	1	PUMP GP-WATER	187
Y	*130-4653*	1	SWITCH GP-PRESSURE	319
Y	*207-7920*	1	TURBOCHARGER GP	227
Y	*145-8471*	1	VALVE MECHANISM GP	136
			S/N: 7BJ19000-67007	
Y	*220-2672*	1	VALVE MECHANISM GP	142
			S/N: 7BJ67008-UP	
			AVAILABLE GASKET KIT(S):	
	164-3322	1	KIT-GASKET (TOP)	
	164-2158	1	KIT-GASKET (BOTTOM)	

Y-SEPARATE ILLUSTRATION

ENGINE ARRANGEMENT

234-3058 ENGINE AR-PRIMARY

S/N: CRS1-UP
56 BRAKW KW (75 BHP) AT 2200 RPM
PART OF 214-6890 ENGINE AR
AN ATTACHMENT

SMCS-1000 **i01991969**

NOTE	PART NUMBER	QTY	PART NAME 1 2 3 4 5 6 (PRODUCT LEVEL)	SEE PAGE
Y	*237-0027*	1	ALTERNATOR GP-CHARGING	274
Y	*233-7236*	1	CAMSHAFT GP	26
Y	*231-0033*	1	CONNECTION GP-WATER	167
Y	*233-7229*	1	COOLER GP-FLTR BASE & ENG OIL	174
Y	*246-2583*	1	COVER GP-VALVE MECHANISM	35
Y	*233-7027*	1	CRANKSHAFT GP	44
Y	*233-7007*	1	CYLINDER BLOCK GP	68
Y	*233-7234*	1	CYLINDER HEAD GP	77
Y	*236-8241*	1	DRIVE GP-FAN	79
Y	*235-2489*	1	ELBOW GP-AIR INLET	210
Y	*230-7300*	1	FLYWHEEL GP	82
Y	*232-6661*	1	GLOW PLUG GP	283
Y	*236-8238*	1	HOUSING GP-FLYWHEEL	84
Y	*232-3670*	1	HOUSING GP-FRONT	89
Y	*233-7432*	1	LIFTING GP-ENGINE	92
Y	*237-5408*	1	MANIFOLD GP-EXHAUST	219
Y	*237-3658*	1	MOUNTING GP-ENGINE	96
Y	*237-0025*	1	PAN GP-OIL	113
Y	*233-7233*	1	PISTON & ROD GP	126
Y	*225-4317*	1	PLUG GP-ENGINE	132
Y	*230-7569*	1	PLUG GP-ENGINE	133
Y	*230-7353*	1	PULLEY GP-CRANKSHAFT	135
Y	*230-7578*	1	PUMP GP-ENGINE OIL	165
Y	*237-5394*	1	PUMP GP-FUEL INJECTION	257
Y	*230-7355*	1	PUMP GP-WATER	189
Y	*237-0024*	1	STARTING MOTOR GP-ELECTRIC	318
Y	*237-4896*	1	SWITCH GP-PRESSURE	321
Y	*235-8749*	1	SWITCH GP-TEMPERATURE	322
Y	*233-7235*	1	VALVE MECHANISM GP	145
			AVAILABLE REPLACEMENT PART(S):	
	239-9897	1	KIT-GASKET (TOP)	
	235-3556	1	KIT-GASKET (BOTTOM)	

Y-SEPARATE ILLUSTRATION

ENGINE ARRANGEMENT

234-3059 ENGINE AR-PRIMARY

S/N: CRS1-UP
62 BRAKE KW (84 BHP) AT 2200 RPM
PART OF 214-6891 ENGINE AR
AN ATTACHMENT

SMCS-1000 **i02003197**

NOTE	PART NUMBER	QTY	PART NAME 1 2 3 4 5 6 (PRODUCT LEVEL)	SEE PAGE
Y	*237-0027*	1	ALTERNATOR GP-CHARGING	274
Y	*232-7528*	1	CAMSHAFT GP	25
Y	*231-0033*	1	CONNECTION GP-WATER	167
Y	*232-6177*	1	COOLER GP-FLTR BASE & ENG OIL	172
Y	*231-0149*	1	COVER GP-AIR INLET	208
Y	*246-2582*	1	COVER GP-VALVE MECHANISM	33
Y	*232-7439*	1	CRANKSHAFT GP	42
Y	*232-7606*	1	CYLINDER BLOCK GP	67
Y	*232-7524*	1	CYLINDER HEAD GP	76
Y	*236-8241*	1	DRIVE GP-FAN	79
Y	*230-7300*	1	FLYWHEEL GP	82
Y	*232-6661*	1	GLOW PLUG GP	283
Y	*236-8238*	1	HOUSING GP-FLYWHEEL	84
Y	*232-3670*	1	HOUSING GP-FRONT	89
Y	*233-7432*	1	LIFTING GP-ENGINE	92
Y	*237-3658*	1	MOUNTING GP-ENGINE	96
Y	*237-0025*	1	PAN GP-OIL	113
Y	*232-7442*	1	PISTON & ROD GP	124
Y	*225-4317*	1	PLUG GP-ENGINE	132
Y	*230-7569*	1	PLUG GP-ENGINE	133
Y	*230-7353*	1	PULLEY GP-CRANKSHAFT	135
Y	*230-7578*	1	PUMP GP-ENGINE OIL	165
Y	*237-2528*	1	PUMP GP-FUEL INJECTION	255
Y	*230-7355*	1	PUMP GP-WATER	189
Y	*237-0024*	1	STARTING MOTOR GP-ELECTRIC	318
Y	*237-4896*	1	SWITCH GP-PRESSURE	321
Y	*235-8749*	1	SWITCH GP-TEMPERATURE	322
Y	*237-3924*	1	TURBOCHARGER GP	234
Y	*232-7526*	1	VALVE MECHANISM GP	144
			AVAILABLE GASKET KIT(S):	
	239-9897	1	KIT-GASKET (TOP)	
	235-3556	1	KIT-GASKET (BOTTOM)	

Y-SEPARATE ILLUSTRATION

ENGINE ARRANGEMENT

185-1887 INSTALLATION AR-ENGINE

S/N: CXP940-UP

PART OF 215-6888 COMMON AR

SMCS-1000 **i01354237**

NOTE	PART NUMBER	QTY	PART NAME 1 2 3 4 5 6 (PRODUCT LEVEL)	SEE PAGE
Y	*120-8469*	1	FILLER GP-ENGINE OIL	154
Y	*7E-4644*	1	MOUNTING GP-ALTERNATOR	93
Y	*112-1767*	1	STARTING MOTOR GP-ELECTRIC (INCLUDES MOUNTING)	315

Y-SEPARATE ILLUSTRATION

BASIC ENGINE

145-8504 CAMSHAFT GP

S/N: 7BJ19000-67007
PART OF 188-0883 ENGINE AR-PRIMARY
AN ATTACHMENT

SMCS-1210, 1211, 1212 **i01441611**

NOTE	REF NO	GRAPHIC REF	PART NUMBER	QTY	PART NAME 1 2 3 4 5 6 (PRODUCT LEVEL)	SEE PAGE
	1	1	**142-3018**	1	CAMSHAFT	
	2	1	**067-6178**	1	WASHER	
	3	1	**067-6179**	1	DOWEL	
	4	1	**9Y-2633**	1	GEAR-CAMSHAFT (56 TEETH)	
	5	1	**1B-8736**	1	KEY-WOODRUFF	
	6	1	**7C-4616**	1	BOLT (M12X1.75X45MM)	
	7	1	**133-1011**	1	WASHER	
	8	1	**067-6897**	1	HUB-IDLER GEAR	
	9	1	**2W-1529**	1	GEAR AS-IDLER (63 TEETH)	
	10	1	**067-6899**	2	BUSHING-IDLER GEAR	
	11	1	**067-6900**	1	PLATE-RETAINING	
	12	1	**6I-0789**	3	BOLT (M10X1.5X60MM)	

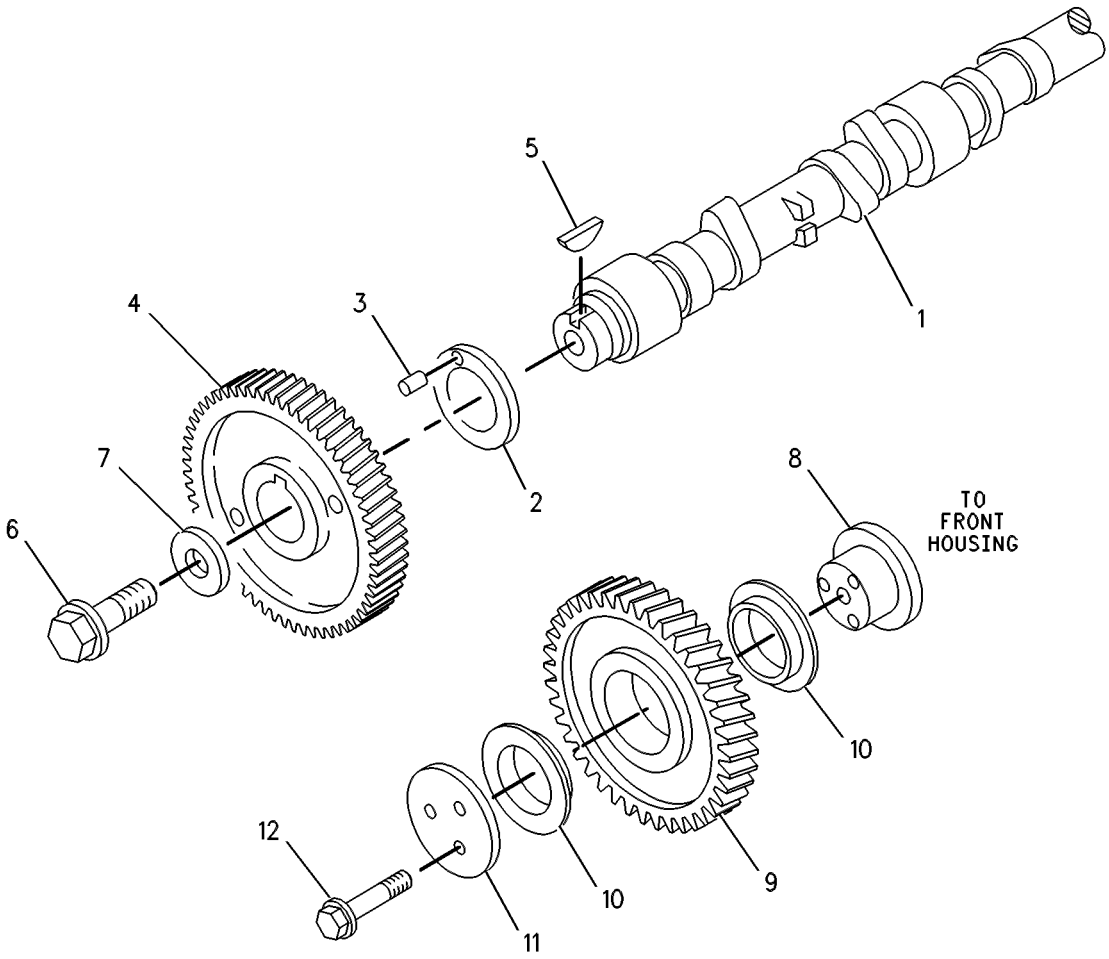

GRAPHIC #1 **<END>** g00131555

BASIC ENGINE

185-3195 CAMSHAFT GP

S/N: 7SG1-3172
PART OF 187-8016 ENGINE AR-PRIMARY
AN ATTACHMENT

SMCS-1210, 1211, 1212 **i01217105**

NOTE	REF NO	GRAPHIC REF	PART NUMBER	QTY	PART NAME 1 2 3 4 5 6 (PRODUCT LEVEL)	SEE PAGE
	1	1	**1B-8736**	1	KEY-WOODRUFF	
	2	1	**2W-1529**	1	GEAR AS-IDLER (63 TEETH)	
	3	1	**067-6899**	2	BUSHING-IDLER GEAR	
	4	1	**6I-0789**	3	BOLT	
	5	1	**7C-4616**	1	BOLT	
	6	1	**7W-4842**	1	PLATE-THRUST	
	7	1	**9Y-2633**	1	GEAR-CAMSHAFT (56 TEETH)	
	8	1	**067-6179**	1	DOWEL	
	9	1	**067-6897**	1	HUB-IDLER GEAR	
	10	1	**067-6900**	1	PLATE-RETAINING	
	11	1	**133-1011**	1	WASHER	
	12	1	**185-1570**	1	CAMSHAFT	

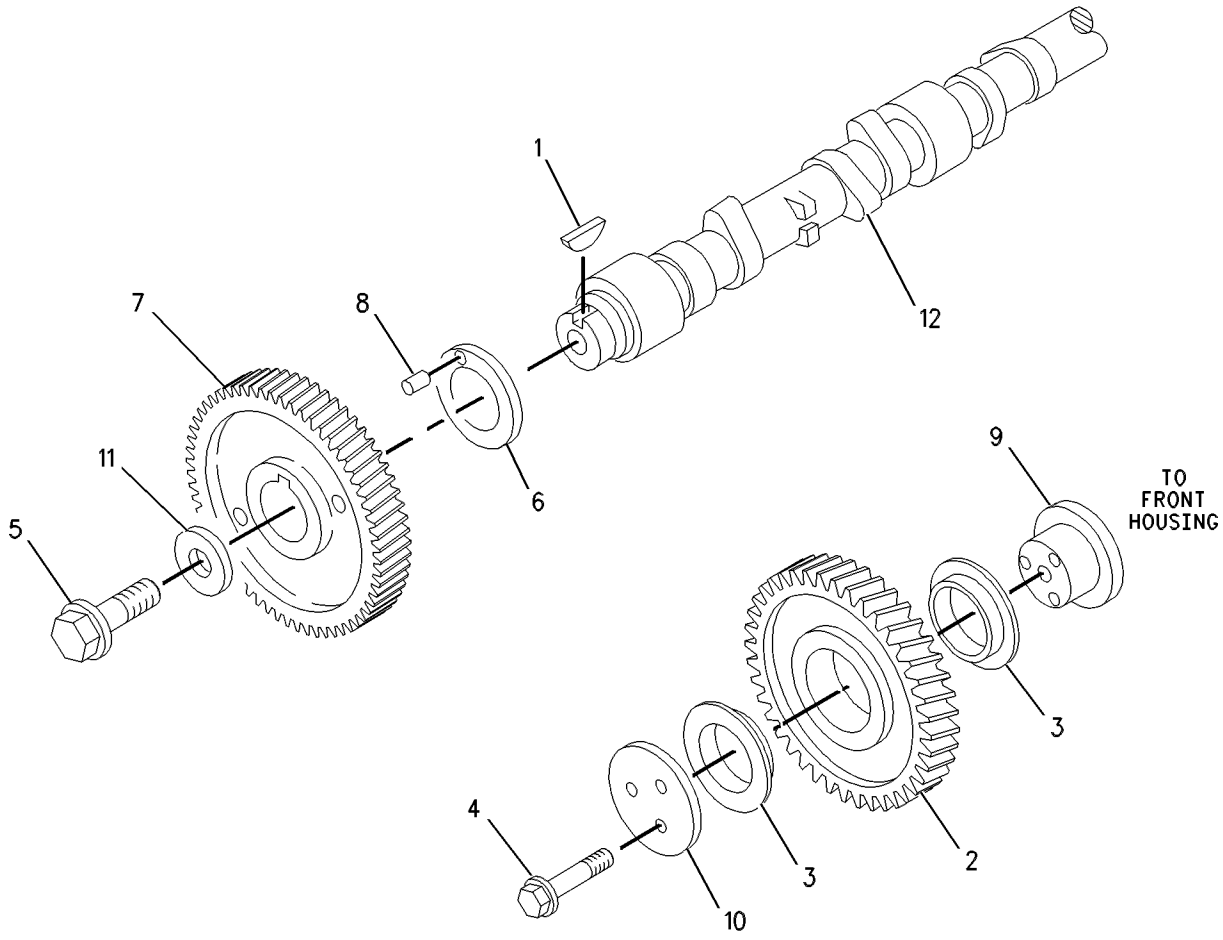

GRAPHIC #1 **<END>** g00653654

BASIC ENGINE

185-4617 CAMSHAFT GP

S/N: 7SG3173-UP
PART OF 187-8016 ENGINE AR-PRIMARY
AN ATTACHMENT

SMCS-1210, 1211, 1212 **i01354907**

NOTE	REF NO	GRAPHIC REF	PART NUMBER	QTY	PART NAME 1 2 3 4 5 6 (PRODUCT LEVEL)	SEE PAGE
	1	1	**1B-8736**	1	KEY-WOODRUFF	
	2	1	**2W-1529**	1	GEAR AS-IDLER (63 TEETH)	
	3	1	**067-6899**	2	BUSHING-IDLER GEAR	
	4	1	**6I-0789**	3	BOLT (M10X1.5X60MM)	
	5	1	**7C-4616**	1	BOLT (M12X1.75X45MM)	
	6	1	**067-6178**	1	WASHER	
	7	1	**9Y-2633**	1	GEAR-CAMSHAFT (56 TEETH)	
	8	1	**067-6179**	1	DOWEL	
	9	1	**067-6897**	1	HUB-IDLER GEAR	
	10	1	**067-6900**	1	PLATE-RETAINING	
	11	1	**133-1011**	1	WASHER	
	12	1	**185-1570**	1	CAMSHAFT	

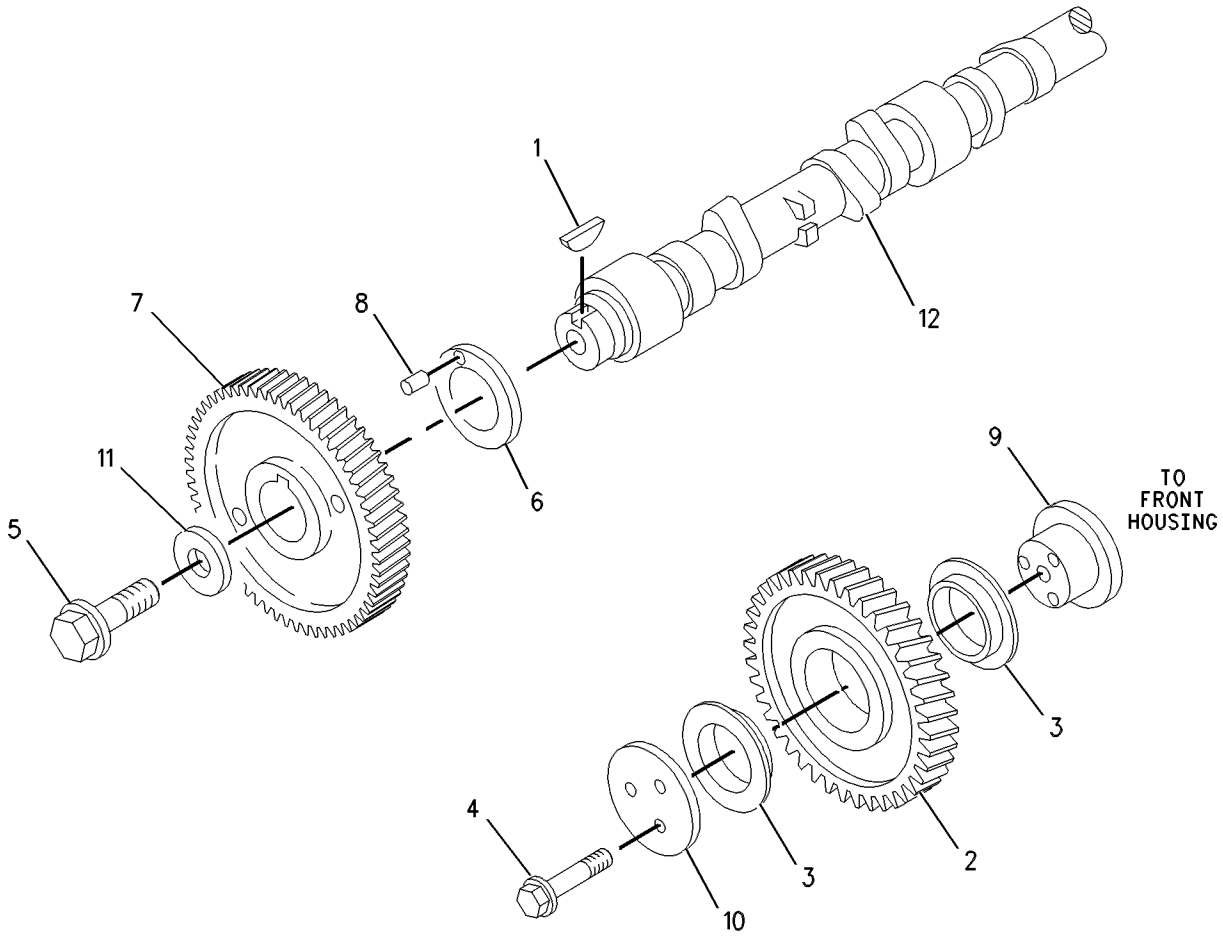

GRAPHIC #1 **<END>** g00653654

220-2673 CAMSHAFT GP

S/N: 7BJ67008-UP
PART OF 188-0883 ENGINE AR-PRIMARY
AN ATTACHMENT

SMCS-1210, 1211, 1212 **i01707588**

NOTE	REF NO	GRAPHIC REF	PART NUMBER	QTY	PART NAME 1 2 3 4 5 6 (PRODUCT LEVEL)	SEE PAGE
	1	1	**1B-8736**	1	KEY-WOODRUFF	
	2	1	**2W-1529**	1	GEAR AS-IDLER (63 TEETH)	
	2A	1	**067-6899**	2	BUSHING-IDLER GEAR	
	3	1	**6I-0789**	3	BOLT (M10X1.5X60MM)	
	4	1	**7C-4616**	1	BOLT (M12X1.75X45MM)	
	5	1	**067-6178**	1	WASHER	
	6	1	**9Y-2633**	1	GEAR-CAMSHAFT (56 TEETH)	
	7	1	**067-6179**	1	DOWEL	
	8	1	**067-6897**	1	HUB-IDLER GEAR	
	9	1	**067-6900**	1	PLATE-RETAINING	
	10	1	**133-1011**	1	WASHER	
	11	1	**142-3018**	1	CAMSHAFT	

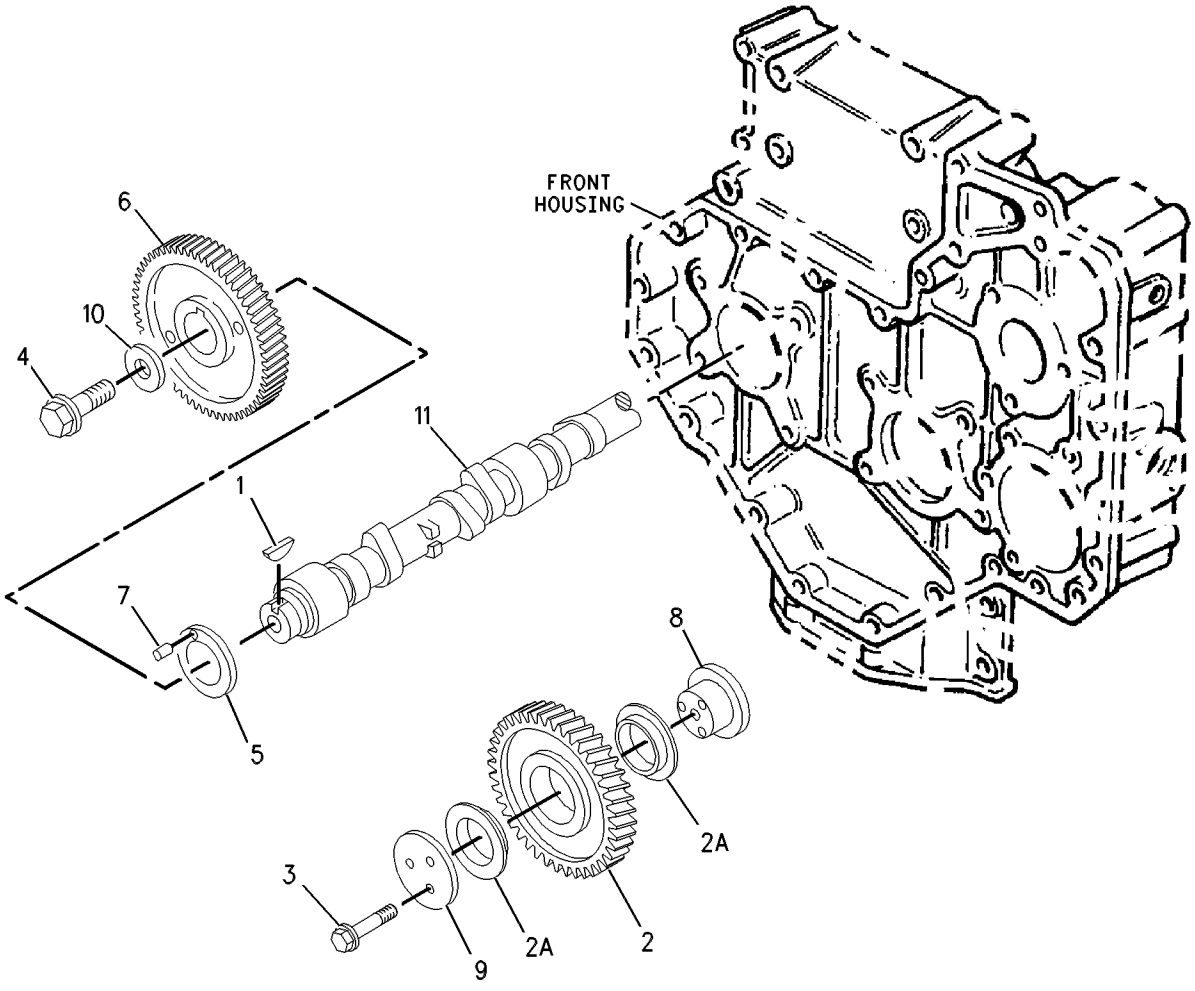

GRAPHIC #1 **<END>** g00568087

BASIC ENGINE

232-7528 CAMSHAFT GP

S/N: CRS1-UP
PART OF 234-3059 ENGINE AR-PRIMARY
AN ATTACHMENT

SMCS-1210, 1211, 1212 **i01863441**

NOTE	REF NO	GRAPHIC REF	PART NUMBER	QTY	PART NAME 1 2 3 4 5 6 (PRODUCT LEVEL)	SEE PAGE
	1	1	**1B-8736**	1	KEY-WOODRUFF	
	2	1	**225-5967**	1	CAMSHAFT	

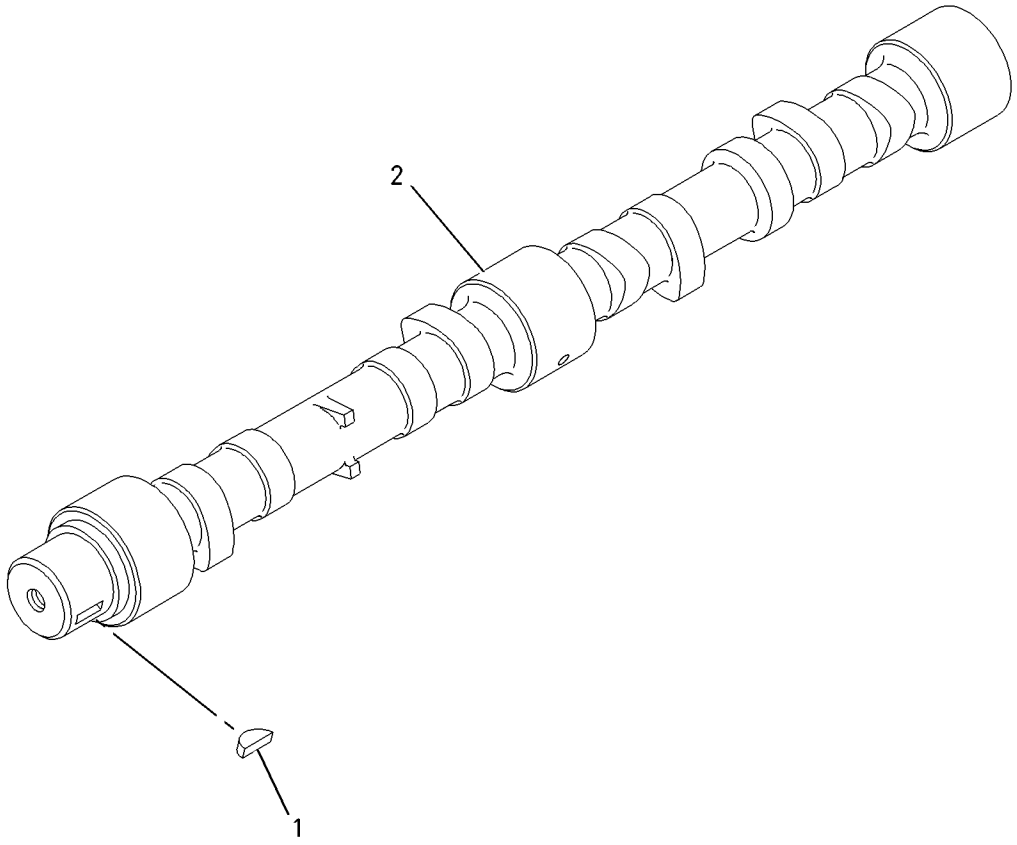

GRAPHIC #1 **<END>** g00911297

BASIC ENGINE

233-7236 CAMSHAFT GP

S/N: CRS1-UP
PART OF 234-3058 ENGINE AR-PRIMARY
AN ATTACHMENT

SMCS-1210, 1211, 1212 **i01872193**

NOTE	REF NO	GRAPHIC REF	PART NUMBER	QTY	PART NAME 1 2 3 4 5 6 (PRODUCT LEVEL)	SEE PAGE
	1	1	**1B-8736**	1	KEY-WOODRUFF	
	2	1	**233-7244**	1	CAMSHAFT	

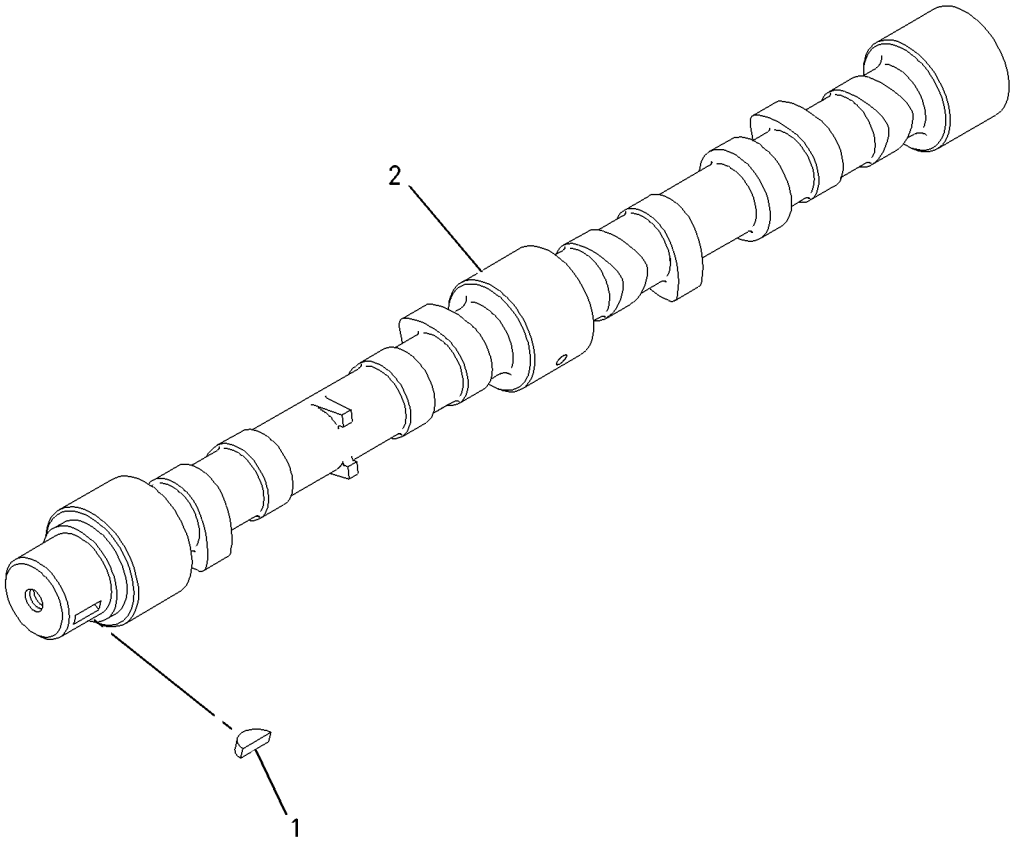

GRAPHIC #1 **<END>** g00911297

BASIC ENGINE

141-6149 COVER GP-FRONT HOUSING

S/N: 7BJ19000-53481
PART OF 188-0883 ENGINE AR-PRIMARY
AN ATTACHMENT

SMCS-1151, 1162, 1166 **i01522254**

NOTE	REF NO	GRAPHIC REF	PART NUMBER	QTY	PART NAME 1 2 3 4 5 6 (PRODUCT LEVEL)	SEE PAGE
	1	1	**100-4830**	1	BOLT (M10X1.5X20MM)	
	2	1	**6I-0593**	1	BOLT (M10X1.5X30MM)	
	3	1	**138-2068**	1	PLATE	
	4	1	**111-8222**	5	BOLT	
	5	1	**6I-0646**	1	BOLT (M10X1.5X14MM)	
	6	1	**067-6810**	1	WASHER	
	7	1	**206-4277**	1	GASKET	

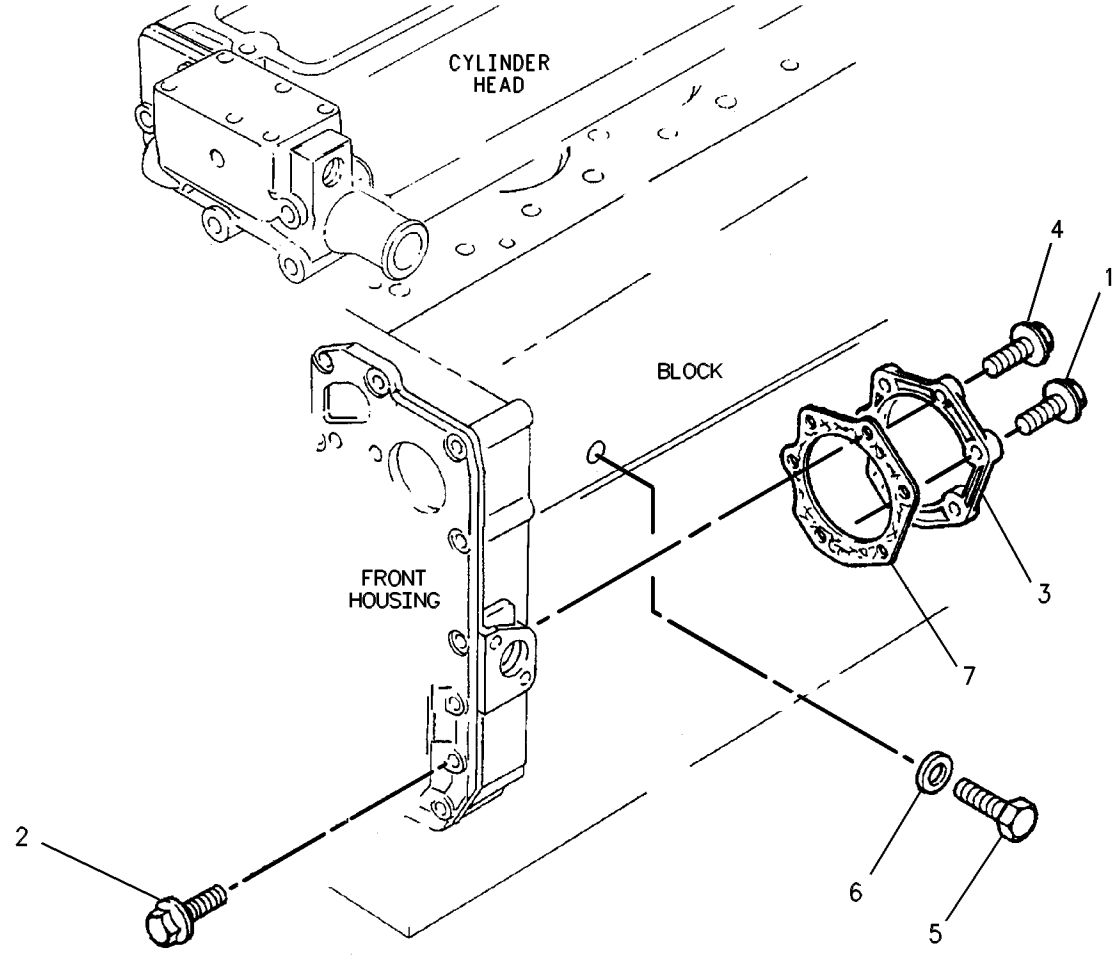

GRAPHIC #1 **<END>** g00575533

141-6149 COVER GP-FRONT HOUSING

S/N: 7SG1-3172; 7BJ53482-67007
PART OF 187-8016, 188-0883 ENGINE AR-PRIMARY
AN ATTACHMENT

SMCS-1151, 1162, 1166 **i01582456**

NOTE	REF NO	GRAPHIC REF	PART NUMBER	QTY	PART NAME 1 2 3 4 5 6 (PRODUCT LEVEL)	SEE PAGE
	1	1	**100-4830**	1	BOLT (M10X1.5X20MM)	
	2	1	**6I-0593**	1	BOLT (M10X1.5X30MM)	
	3	1	**209-5502**	1	COVER AS	
	4	1	**209-5503**	1	SEAL-COVER	
	5	1	**111-8222**	5	BOLT	
	6	1	**6I-0646**	1	BOLT (M10X1.5X14MM)	
	7	1	**067-6810**	1	WASHER	

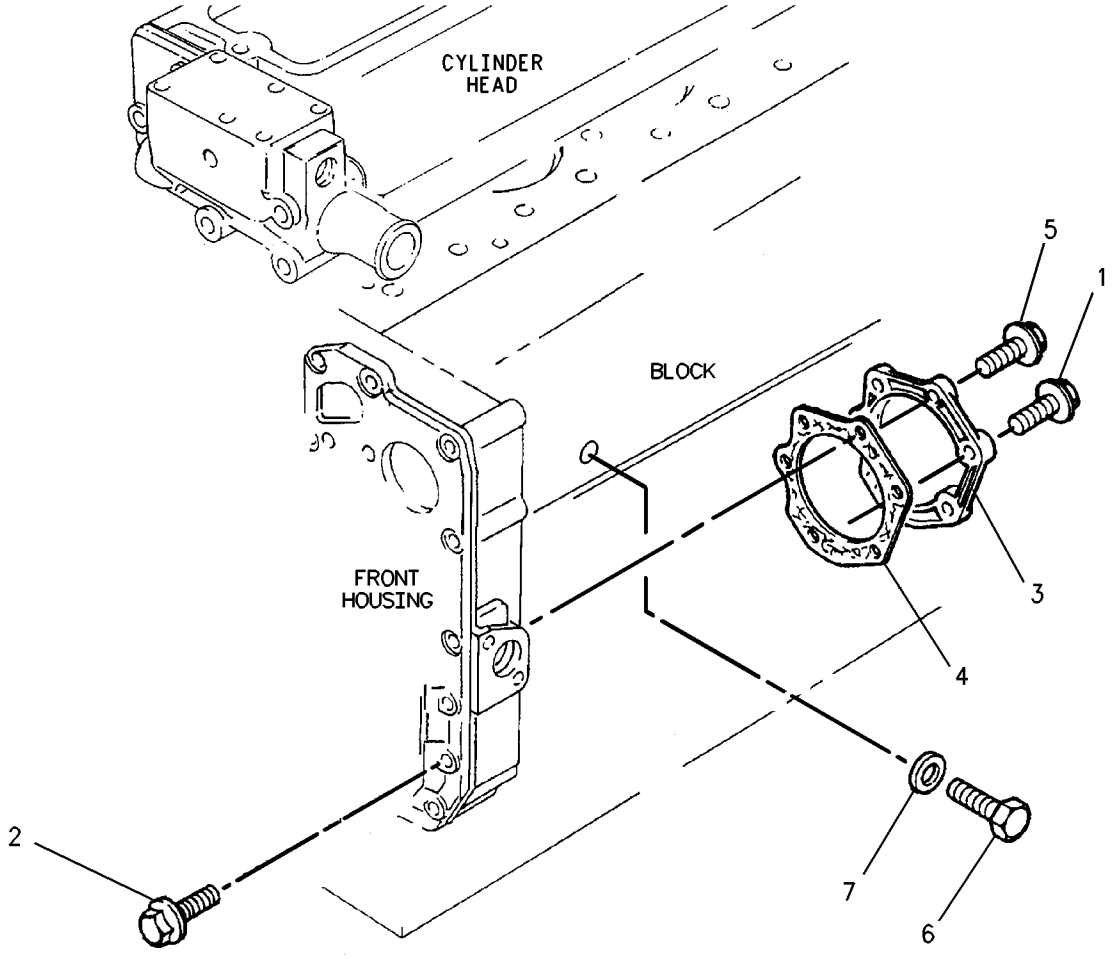

GRAPHIC #1 **<END>** g00821422

196-4102 COVER GP-VALVE MECHANISM

S/N: 7BJ19000-UP

PART OF 188-0883 ENGINE AR-PRIMARY

AN ATTACHMENT

SMCS-1107, 1120 **i01955577**

NOTE	REF NO	GRAPHIC REF	PART NUMBER	QTY	PART NAME 1 2 3 4 5 6 (PRODUCT LEVEL)	SEE PAGE
	1	1	**4B-4281**	3	WASHER (16.8X33X2.5MM THK)	
	2	1	**6I-0217**	2	BOLT (M8X1.25X20MM)	
	3	1	**7C-1281**	1	BRACKET	
	4	1	**101-3675**	3	SEAL	
	5	1	**175-0083**	1	ELBOW-BREATHER	
	6	1	**175-0084**	1	HOSE-BREATHER (CRANKCASE)	
	7	1	**177-2939**	3	NUT-RETAINING	
	8	1	**197-5013**	1	COVER AS-CYLINDER	
	9	1	**196-4886**	1	GASKET (VALVE COVER)	
	10	1	**197-5014**	1	SHIELD-HEAT	
	11	1	**197-5015**	1	PLATE AS	
	12	1	**113-1505**	1	SEAL-O-RING (CRANKCASE)	
	13	1	**162-1565**	1	SPRING (BREATHER HOSE)	

196-4102 **COVER GP-VALVE MECHANISM** *(contd.)* **i01955577**

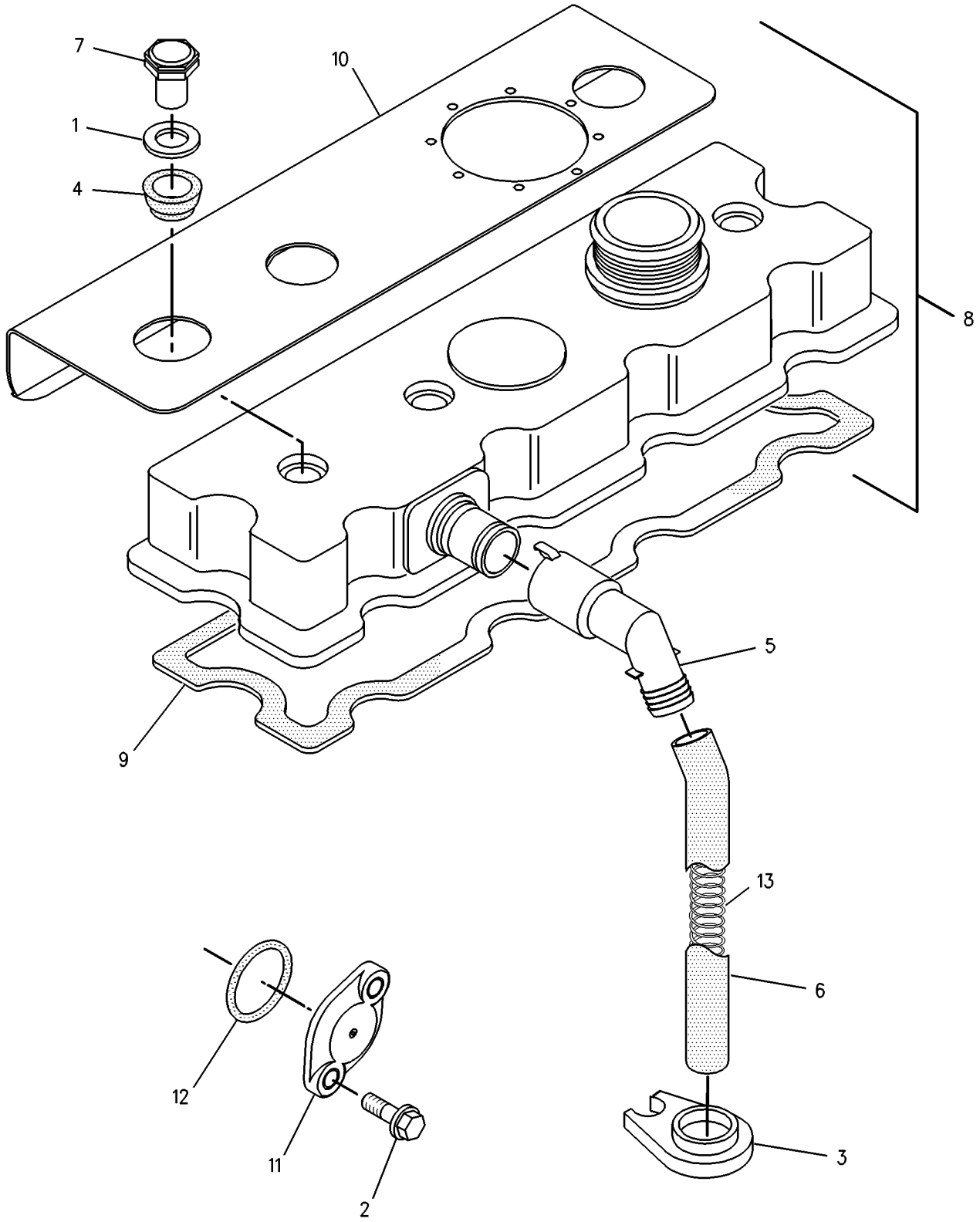

GRAPHIC #1 **<END>** g00897363

207-7954 COVER GP-VALVE MECHANISM

S/N: 7SG1-UP

PART OF 187-8016 ENGINE AR-PRIMARY

AN ATTACHMENT

SMCS-1107, 1120 **i01752612**

NOTE	REF NO	GRAPHIC REF	PART NUMBER	QTY	PART NAME 1 2 3 4 5 6 (PRODUCT LEVEL)	SEE PAGE
	1	1	**4B-4281**	3	WASHER (16.8X33X2.5MM THK)	
	2	1	**6I-0217**	2	BOLT (M8X1.25X20MM)	
	3	1	**7C-1281**	1	BRACKET	
	4	1	**101-3675**	3	SEAL	
	5	1	**214-6282**	1	COVER AS	
	6	1	**200-6374**	1	SEAL-COVER (VALVE)	
	7	1	**175-0083**	1	ELBOW-BREATHER	
	8	1	**175-0084**	1	HOSE-BREATHER	
	9	1	**177-2939**	3	NUT-RETAINING	
	10	1	**197-5015**	1	PLATE AS	
	11	1	**113-1505**	1	SEAL-O-RING	
	12	1	**162-1565**	1	SPRING (BREATHER HOSE)	

207-7954 **COVER GP-VALVE MECHANISM** *(contd.)* **i01752612**

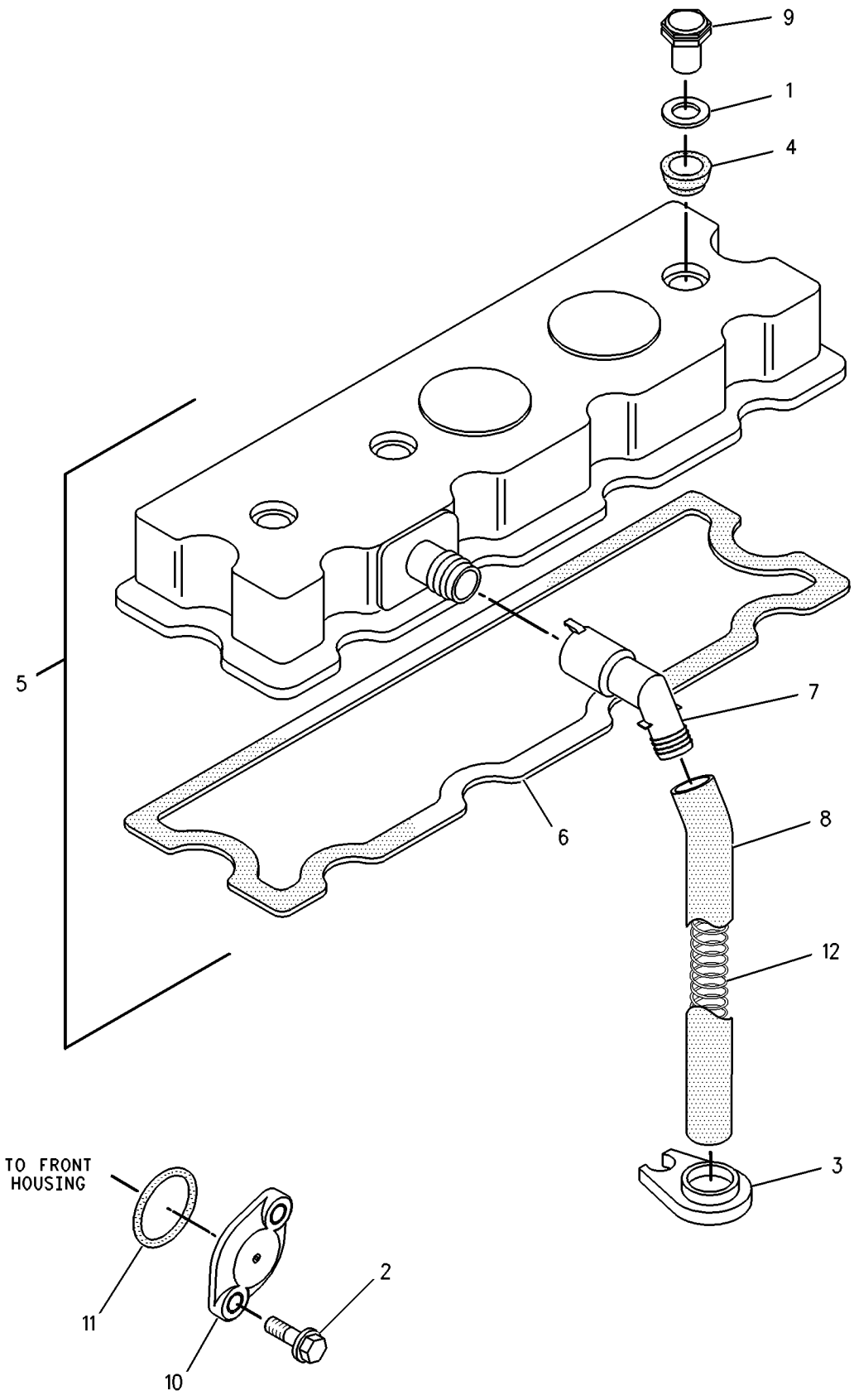

GRAPHIC #1 **<END>** g00904741

246-2582 COVER GP-VALVE MECHANISM

S/N: CRS1-UP
PART OF 234-3059 ENGINE AR-PRIMARY
AN ATTACHMENT

SMCS-1107, 1120 **i02002548**

NOTE	REF NO	GRAPHIC REF	PART NUMBER	QTY	PART NAME 1 2 3 4 5 6 (PRODUCT LEVEL)	SEE PAGE
	1	1	**6I-0260**	2	BOLT (M8X1.25X25MM)	
	2	1	**6I-0846**	3	BOLT (M6X1.0X14MM)	
	3	1	**6I-0917**	1	BOLT (M6X1.0X25MM)	
	4	1	**7C-1281**	1	BRACKET	
	5	1	**100-4841**	2	BOLT (M6X1.0X10MM)	
	6	1	**5D-1026**	1	CLAMP-HOSE	
	7	1	**162-1565**	1	SPRING (BREATHER HOSE)	
	8	1	**198-8645**	1	HOSE (BREATHER)	
	9	1	**225-6522**	1	PLUG-CUP	
	10	1	**230-9127**	1	COVER	
	11	1	**230-9144**	1	CONNECTOR	
	11A	1	**150-7732**	1	SEAL-O-RING	
	11B	1	**225-6455**	2	BOLT	
	11C	1	**225-6517**	1	GASKET	
	12	1	**237-0769**	1	SHIELD-HEAT	
	13	1	**246-1163**	1	FILLER AS-OIL	
	13A	1	**229-4896**	1	SEAL-O-RING	

246-2582 **COVER GP-VALVE MECHANISM** *(contd.)* **i02002548**

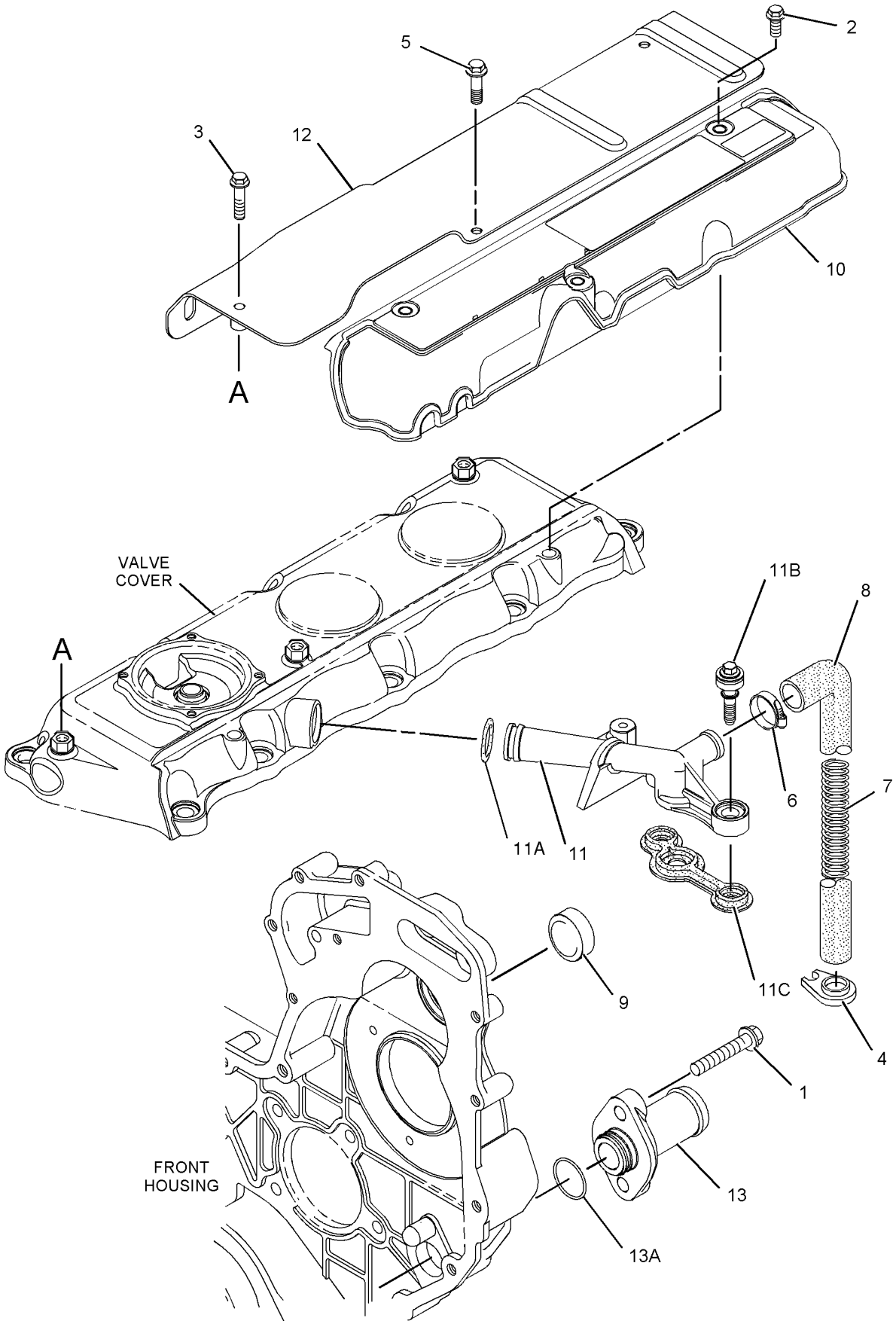

GRAPHIC #1 **<END>** g01039843

246-2583 COVER GP-VALVE MECHANISM

S/N: CRS1-UP
PART OF 234-3058 ENGINE AR-PRIMARY
AN ATTACHMENT

SMCS-1107, 1120 **i02008889**

NOTE	REF NO	GRAPHIC REF	PART NUMBER	QTY	PART NAME 1 2 3 4 5 6 (PRODUCT LEVEL)	SEE PAGE
	1	1	**6I-0260**	2	BOLT (M8X1.25X25MM)	
	2	1	**6I-0846**	3	BOLT (M6X1.0X14MM)	
	3	1	**6I-0917**	1	BOLT (M6X1.0X25MM)	
	4	1	**100-4841**	2	BOLT (M6X1.0X10MM)	
	5	1	**225-6522**	1	PLUG-CUP	
	6	1	**230-9125**	1	CONNECTOR (BREATHER)	
	6A	1	**150-7732**	1	SEAL-O-RING (19.5MM ID)	
	6B	1	**225-6455**	2	BOLT (ISOLATOR)	
	6C	1	**225-6517**	1	GASKET	
	7	1	**230-9127**	1	COVER	
	8	1	**237-0026**	1	COVER AS (VALVE)	
	8A	1	**225-6451**	1	GASKET (VALVE COVER)	
	8B	1	**225-6455**	10	BOLT	
	8C	1	**225-6456**	1	SPRING	
	8D	1	**225-6461**	1	CAP	
	8E	1	**225-6464**	1	DIAPHRAGM	
	8F	1	**225-6477**	1	PLATE	
	8G	1	**225-6478**	4	SCREW-MACHINE	
	8H	1	**225-6479**	1	CAP	
	9	1	**237-0769**	1	SHIELD-HEAT	
	10	1	**246-1163**	1	FILLER AS-OIL	
	11	1	**229-4896**	1	SEAL-O-RING (021.8MM ID)	

246-2583 **COVER GP-VALVE MECHANISM** *(contd.)* **i02008889**

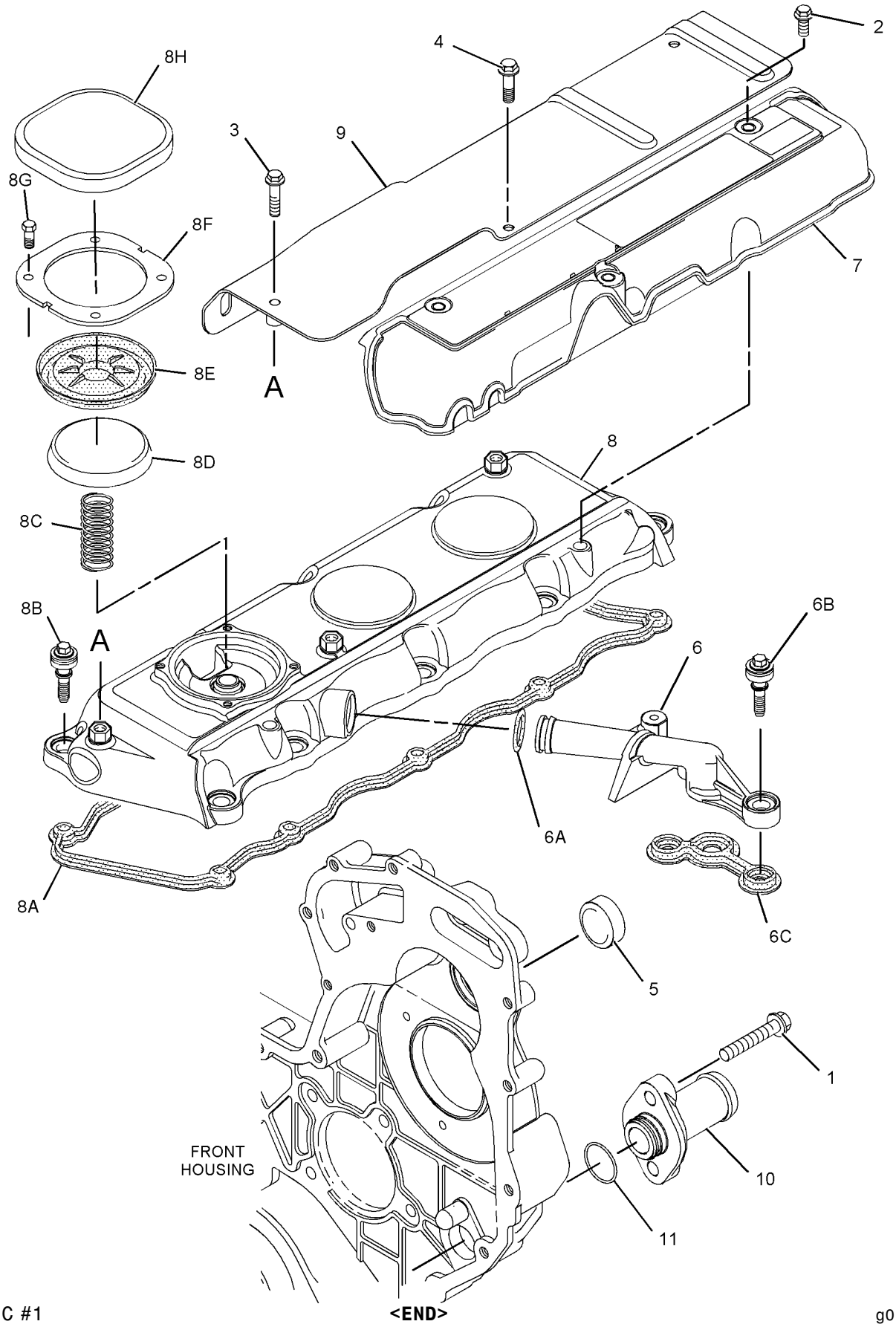

GRAPHIC #1

<END>

g01039759

BASIC ENGINE

145-6688 CRANKSHAFT GP

S/N: 7BJ19000-67007
PART OF 188-0883 ENGINE AR-PRIMARY
AN ATTACHMENT

SMCS-1202, 1203, 1204, 1230, 1231, 1232 **i00828704**

NOTE	REF NO	GRAPHIC REF	PART NUMBER	QTY	PART NAME 1 2 3 4 5 6 (PRODUCT LEVEL)	SEE PAGE
	1	1	**1B-8736**	1	KEY-WOODRUFF	
	2	1	**4P-9948**	1	CRANKSHAFT GP	
	3	1	**4P-9944**	1	BEARING SET-ROD (CONNECTING ROD - COMPLETE)	
		1	**4P-9945**	1	KIT-ROD BEARING (.25MM U.S.) (CONNECTING ROD)	
		1	**4P-9946**	1	KIT-ROD BEARING (51MM U.S.) (CONNECTING ROD)	
		1	**4P-9947**	1	KIT-ROD BEARING (.76MM U.S.) (CONNECTING ROD)	
	4	1	**032-9090**	2	WASHER-THRUST	
		1	**067-6873**	2	WASHER-THRUST (.18MM O.S.) (UPPER)	
	5	1	**067-6869**	1	BEARING SET-MAIN (COMPLETE)	
		1	**033-2379**	1	KIT-CRANKSHAFT BEARING (.25MM U.S.) (MAIN)	
		1	**033-2380**	1	KIT-CRANKSHAFT BEARING (.51MM U.S.) (MAIN)	
		1	**033-2381**	1	KIT-CRANKSHAFT BEARING (.76MM U.S.) (MAIN)	
	6	1	**032-9091**	2	WASHER-THRUST	
		1	**067-6874**	2	WASHER-THRUST (.18MM O.S.) (LOWER)	
	7	1	**6I-0223**	1	GEAR-CRANKSHAFT	

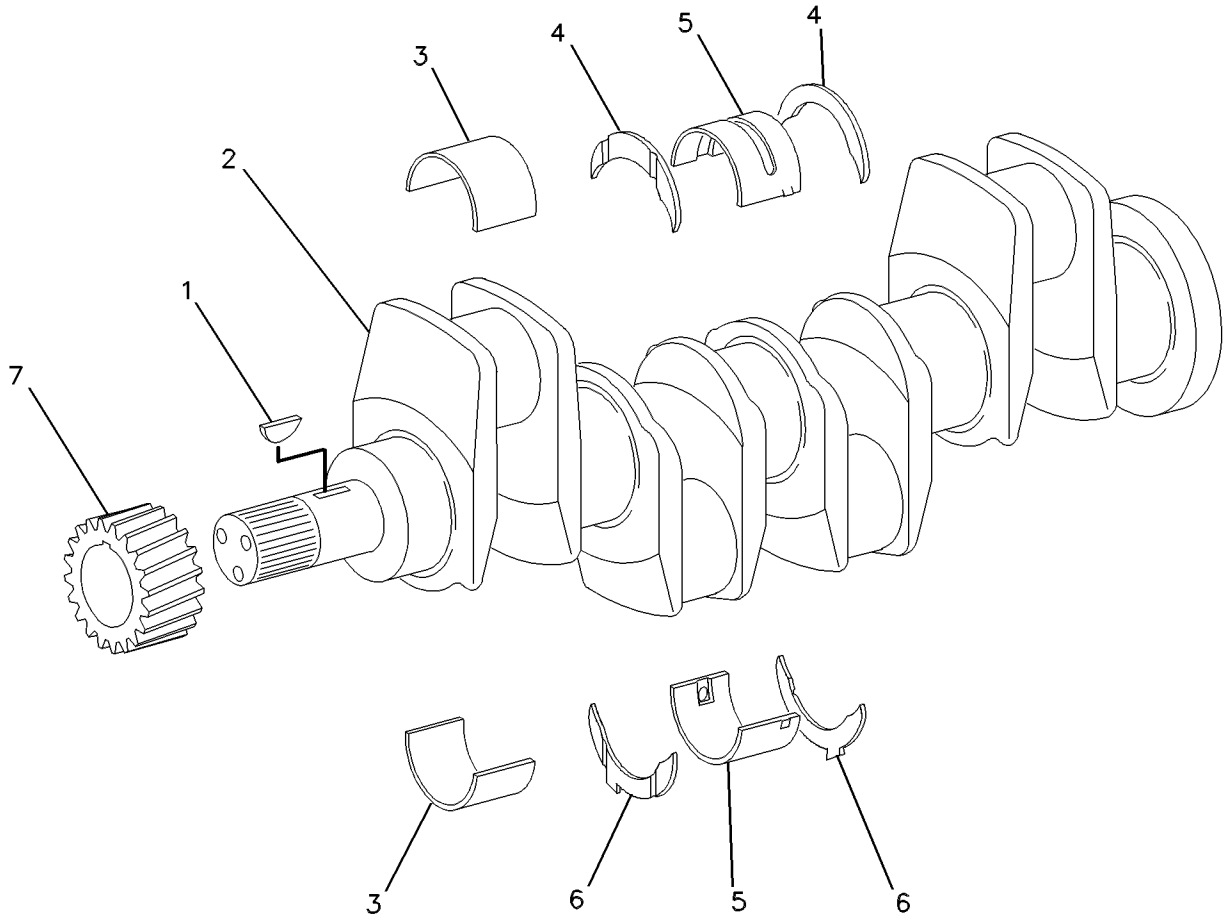

GRAPHIC #1 **<END>** g00400661

185-3190 CRANKSHAFT GP

S/N: 7SG1-3172
PART OF 187-8016 ENGINE AR-PRIMARY
AN ATTACHMENT

SMCS-1202, 1203, 1204, 1230, 1231, 1232 **i01651731**

NOTE	REF NO	GRAPHIC REF	PART NUMBER	QTY	PART NAME 1 2 3 4 5 6 (PRODUCT LEVEL)	SEE PAGE
	1	1	**1B-8736**	1	KEY-WOODRUFF	
BR	2	1	**4P-9948**	1	CRANKSHAFT GP	
B	3	1	**4P-9944**	1	BEARING SET-ROD	
B		1	**4P-9945**	1	KIT-ROD BEARING (.25MM US)	
B		1	**4P-9946**	1	KIT-ROD BEARING (.51MM US)	
B		1	**4P-9947**	1	KIT-ROD BEARING (.76MM US)	
B	4	1	**032-9090**	2	WASHER-THRUST (STANDARD-UPPER)	
B		1	**067-6873**	2	WASHER-THRUST (.18MM OS)	
B	5	1	**067-6869**	1	BEARING SET-MAIN	
B		1	**033-2379**	1	KIT-CRANKSHAFT BEARING (.25MM US)	
B		1	**033-2380**	1	KIT-CRANKSHAFT BEARING (.51MM US)	
B		1	**033-2381**	1	KIT-CRANKSHAFT BEARING (.76MM US)	
B	6	1	**032-9091**	2	WASHER-THRUST (STANDARD-LOWER)	
B		1	**067-6874**	2	WASHER-THRUST (.18MM OS)	
	7	1	**6I-0223**	1	GEAR-CRANKSHAFT (28 TEETH)	

B-USE AS REQUIRED
R-REMFG PART MAY BE AVAILABLE

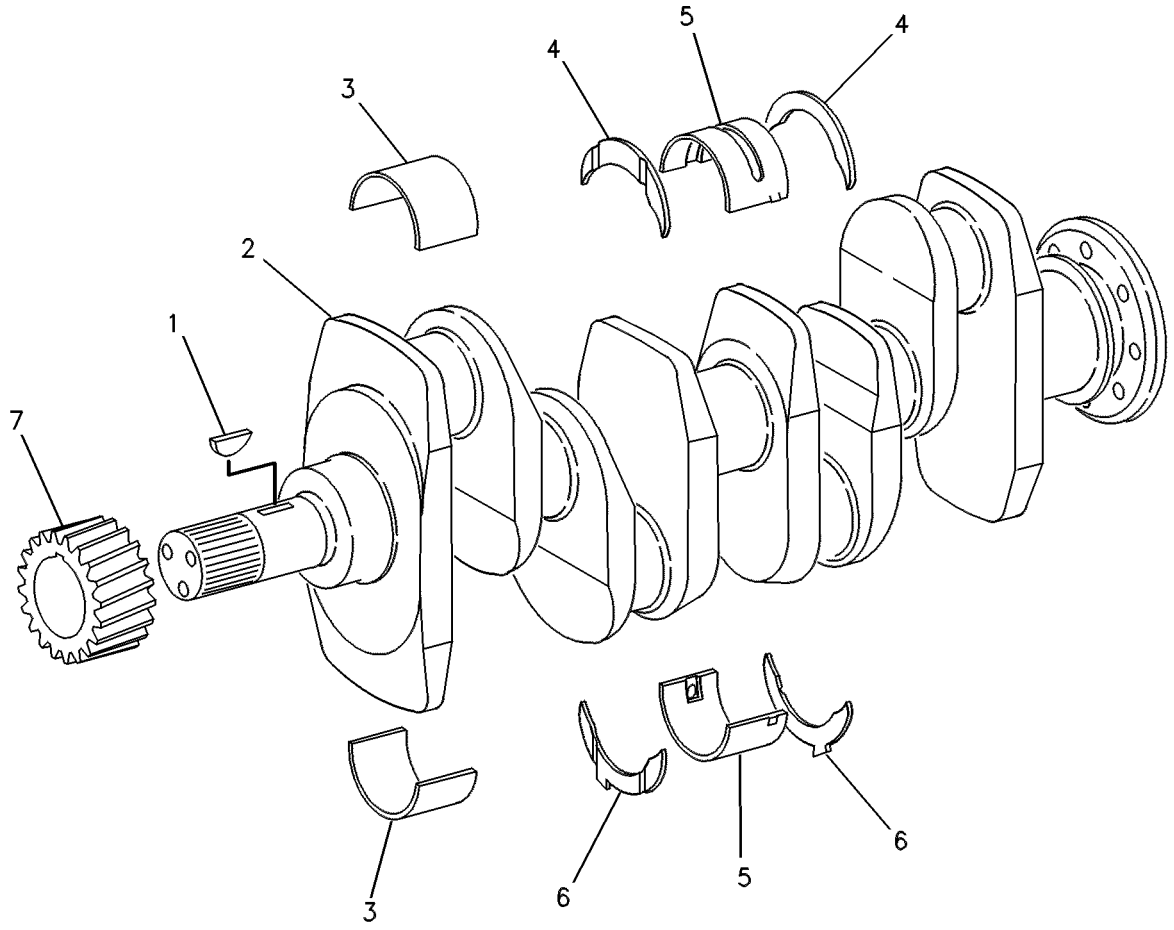

GRAPHIC #1 **<END>** g00131127

BASIC ENGINE

185-4599 CRANKSHAFT GP

S/N: 7SG3173-UP
PART OF 187-8016 ENGINE AR-PRIMARY
AN ATTACHMENT

SMCS-1202, 1203, 1204, 1230, 1231, 1232 **i01613198**

NOTE	REF NO	GRAPHIC REF	PART NUMBER	QTY	PART NAME 1 2 3 4 5 6 (PRODUCT LEVEL)	SEE PAGE
	1	1	**1B-8736**	1	KEY-WOODRUFF	
BR	2	1	**4P-9948**	1	CRANKSHAFT GP	
B	3	1	**4P-9944**	1	BEARING SET-ROD	
B		1	**4P-9945**	1	KIT-ROD BEARING (.25MM US)	
B		1	**4P-9946**	1	KIT-ROD BEARING (.51MM US)	
B		1	**4P-9947**	1	KIT-ROD BEARING (.76MM US)	
B	4	1	**032-9090**	2	WASHER-THRUST (STANDARD-UPPER) (UPPER)	
B		1	**067-6873**	2	WASHER-THRUST (.18MM OS)	
B	5	1	**067-6869**	1	BEARING SET-MAIN	
B		1	**033-2379**	1	KIT-CRANKSHAFT BEARING (.25MM US)	
B		1	**033-2380**	1	KIT-CRANKSHAFT BEARING (.51MM US)	
B		1	**033-2381**	1	KIT-CRANKSHAFT BEARING (.76MM US)	
B	6	1	**032-9091**	2	WASHER-THRUST (STANDARD-LOWER) (LOWER)	
B		1	**067-6874**	2	WASHER-THRUST (.18MM OS)	
	7	1	**6I-0223**	1	GEAR-CRANKSHAFT (28 TEETH)	

B-USE AS REQUIRED
R-REMFG PART MAY BE AVAILABLE

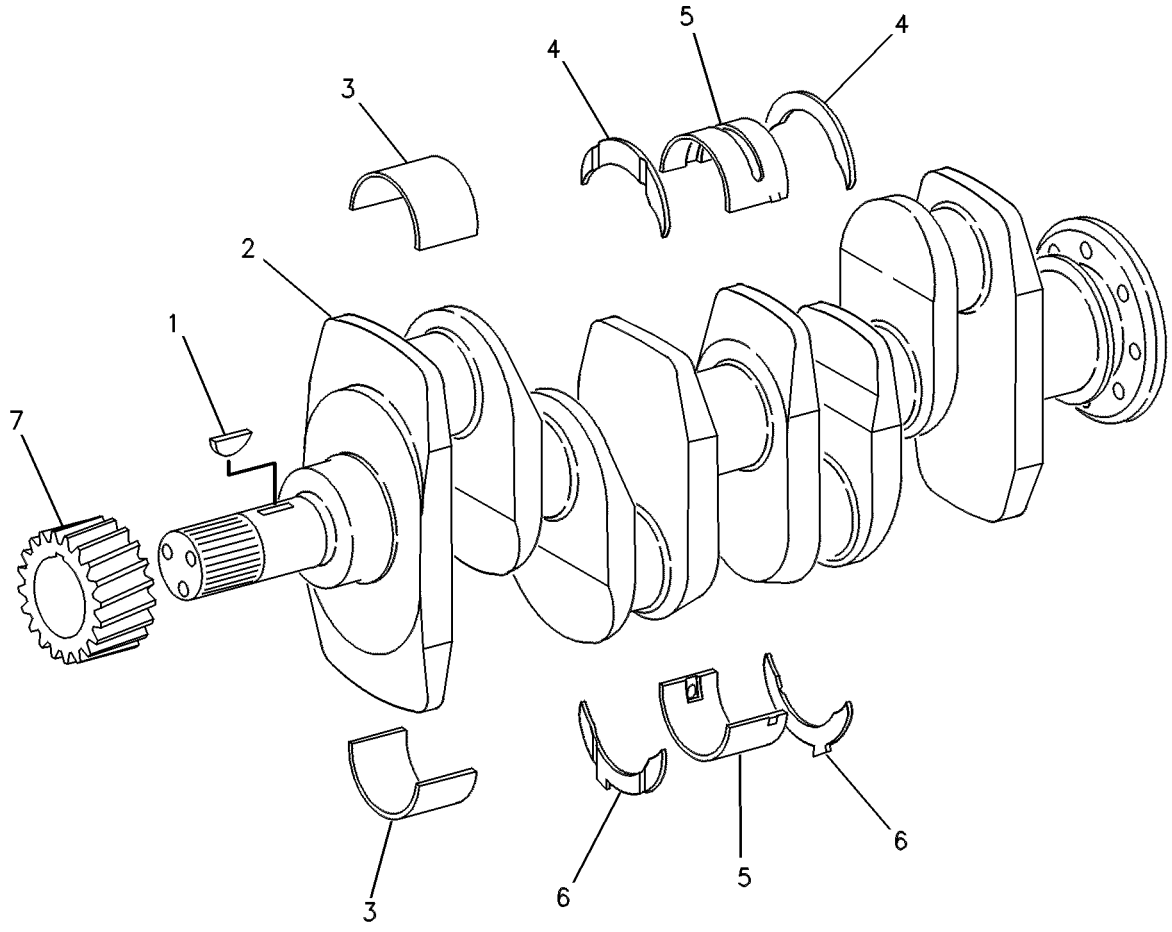

GRAPHIC #1 **<END>** g00131127

220-2669 CRANKSHAFT GP

S/N: 7BJ67008-UP
PART OF 188-0883 ENGINE AR-PRIMARY
AN ATTACHMENT

SMCS-1202, 1203, 1204, 1230, 1231, 1232 **i01707488**

NOTE	REF NO	GRAPHIC REF	PART NUMBER	QTY	PART NAME 1 2 3 4 5 6 (PRODUCT LEVEL)	SEE PAGE
	1	1	**1B-8736**	1	KEY-WOODRUFF	
	2	1	**6I-0223**	1	GEAR-CRANKSHAFT (28 TEETH)	
R	3	1	**139-7018**	1	CRANKSHAFT GP	
B	4	1	**067-6869**	1	BEARING SET-MAIN	
B		1	**033-2379**	1	KIT-CRANKSHAFT BEARING (.25MM US)	
B		1	**033-2381**	1	KIT-CRANKSHAFT BEARING (.76MM US)	
B		1	**033-2380**	1	KIT-CRANKSHAFT BEARING (.51MM US)	
B	5	1	**4P-9944**	1	BEARING SET-ROD (STANDARD)	
B		1	**4P-9945**	1	KIT-ROD BEARING (.25MM US)	
B		1	**4P-9946**	1	KIT-ROD BEARING (.51MM US)	
B		1	**4P-9947**	1	KIT-ROD BEARING (.76MM US)	
B	6	1	**032-9090**	2	WASHER-THRUST (STANDARD-UPPER)	
B		1	**067-6873**	2	WASHER-THRUST (.18MM OS)	
B	7	1	**032-9091**	2	WASHER-THRUST (STANDARD-LOWER)	
B		1	**067-6874**	2	WASHER-THRUST (.18MM OS)	
	8	1	**7C-3196**	3	BOLT	
	9	1	**7C-3195**	1	BLOCK-THRUST	

B-USE AS REQUIRED
R-REMFG PART MAY BE AVAILABLE

220-2669 **CRANKSHAFT GP** *(contd.)* **i01707488**

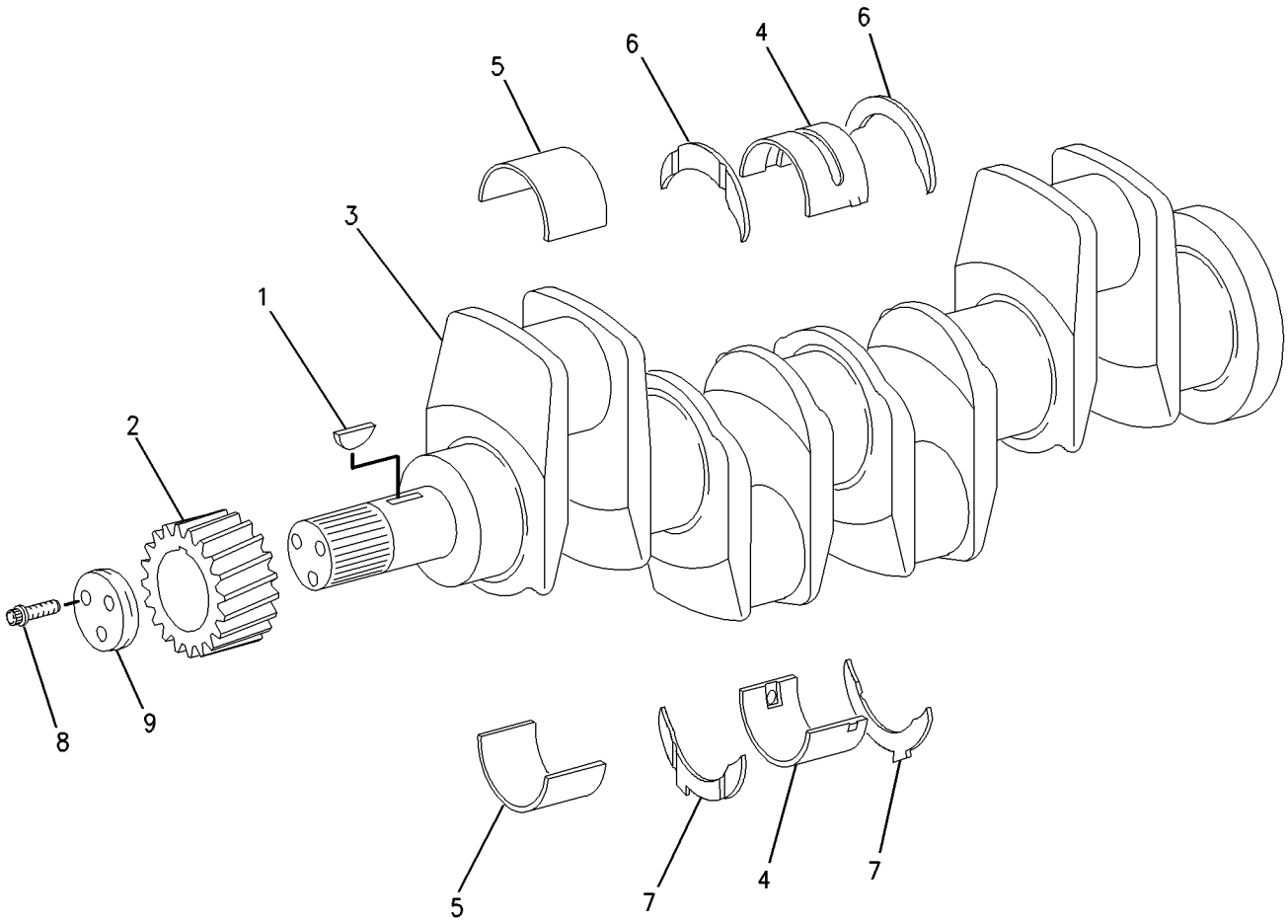

GRAPHIC #1 **<END>** g00881557

BASIC ENGINE

232-7439 CRANKSHAFT GP

S/N: CRS1-UP
PART OF 234-3059 ENGINE AR-PRIMARY
AN ATTACHMENT

SMCS-1202, 1203, 1204, 1230, 1231, 1232 **i01863016**

NOTE	REF NO	GRAPHIC REF	PART NUMBER	QTY	PART NAME 1 2 3 4 5 6 (PRODUCT LEVEL)	SEE PAGE
	1	1	**1B-8736**	1	KEY-WOODRUFF	
	2	1	**216-8314**	1	GEAR-CRANKSHAFT (34 TEETH)	
	3	1	**232-7400**	1	CRANKSHAFT GP	
B	4	1	**225-7772**	1	BEARING SET-MAIN	
B		1	**233-3784**	1	KIT-CRANKSHAFT BEARING (.25MM US)	
B		1	**233-3785**	1	KIT-CRANKSHAFT BEARING (.50MM US)	
B		1	**233-3786**	1	KIT-CRANKSHAFT BEARING (.76MM US)	
B	5	1	**225-7781**	1	BEARING SET-ROD (STANDARD)	
B		1	**233-3788**	1	KIT-ROD BEARING (.25MM US)	
B		1	**233-3789**	1	KIT-ROD BEARING (.50MM US)	
B		1	**233-3790**	1	KIT-ROD BEARING (.76MM US)	
B	6	1	**032-9090**	2	WASHER-THRUST (STANDARD-UPPER)	
B		1	**067-6873**	2	WASHER-THRUST (.18MM OS)	
B	7	1	**032-9091**	2	WASHER-THRUST (STANDARD-LOWER)	
B		1	**067-6874**	2	WASHER-THRUST (.18MM OS)	

B-USE AS REQUIRED

232-7439 **CRANKSHAFT GP** ***(contd.)*** **i01863016**

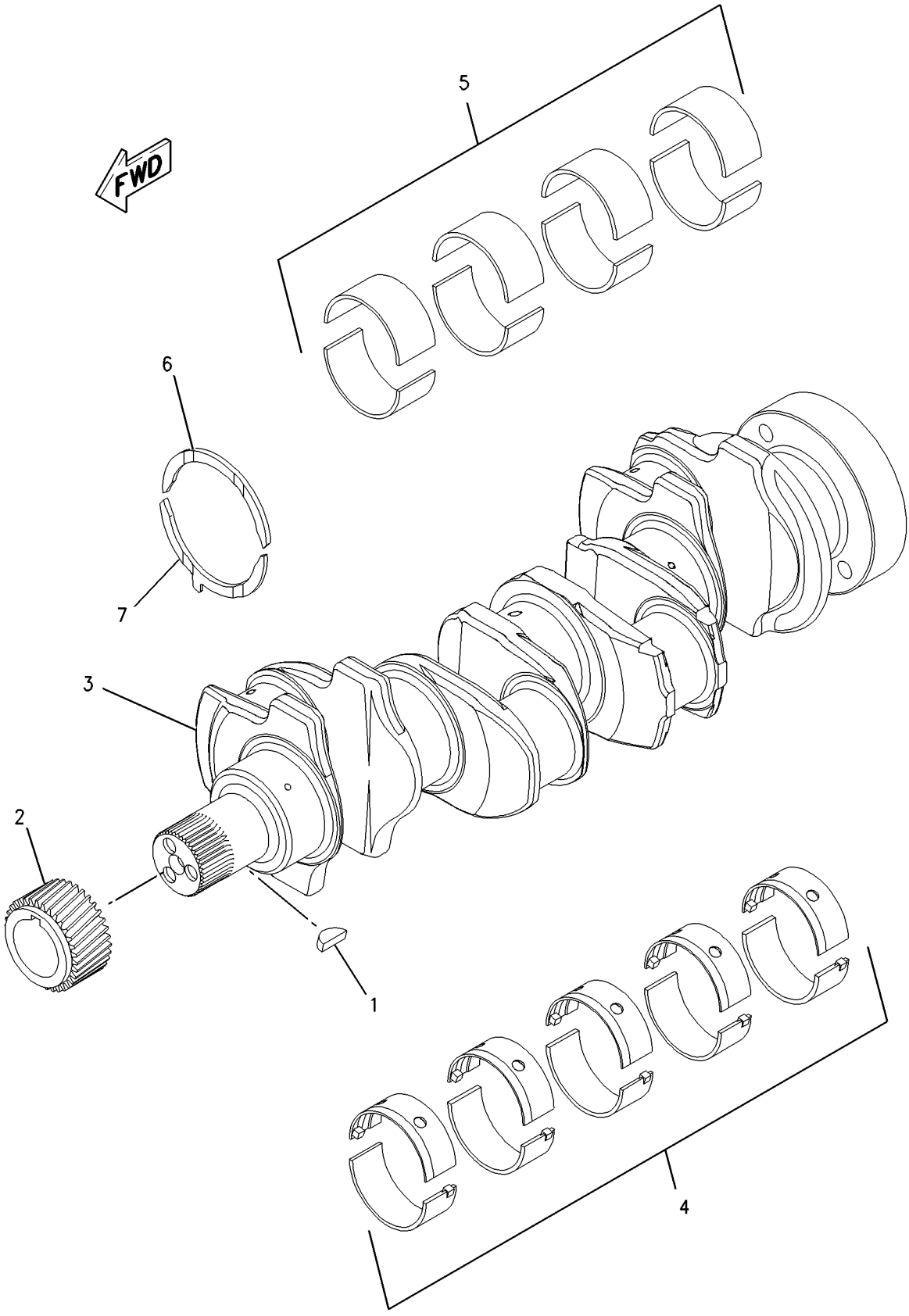

GRAPHIC #1 **<END>** g00950782

BASIC ENGINE

233-7027 CRANKSHAFT GP

S/N: CRS1-UP
PART OF 234-3058 ENGINE AR-PRIMARY
AN ATTACHMENT

SMCS-1202, 1203, 1204, 1230, 1231, 1232 **i01872351**

NOTE	REF NO	GRAPHIC REF	PART NUMBER	QTY	PART NAME 1 2 3 4 5 6 (PRODUCT LEVEL)	SEE PAGE
	1	1	**1B-8736**	1	KEY-WOODRUFF	
	2	1	**216-8314**	1	GEAR-CRANKSHAFT (34 TEETH)	
	3	1	**233-7009**	1	CRANKSHAFT GP	
B	4	1	**225-7772**	1	BEARING SET-MAIN	
B		1	**233-3784**	1	KIT-CRANKSHAFT BEARING (.25MM US)	
B		1	**233-3785**	1	KIT-CRANKSHAFT BEARING (.50MM US)	
B		1	**233-3786**	1	KIT-CRANKSHAFT BEARING (.76MM US)	
B	5	1	**225-7781**	1	BEARING SET-ROD (STANDARD)	
B		1	**233-3788**	1	KIT-ROD BEARING (.25MM US)	
B		1	**233-3789**	1	KIT-ROD BEARING (.50MM US)	
B		1	**233-3790**	1	KIT-ROD BEARING (.76MM US)	
B	6	1	**032-9090**	2	WASHER-THRUST (STANDARD-UPPER)	
B		1	**067-6873**	2	WASHER-THRUST (.18MM OS)	
B	7	1	**032-9091**	2	WASHER-THRUST (STANDARD-LOWER)	
B		1	**067-6874**	2	WASHER-THRUST (.18MM OS)	

B-USE AS REQUIRED

233-7027 **CRANKSHAFT GP** ***(contd.)*** **i01872351**

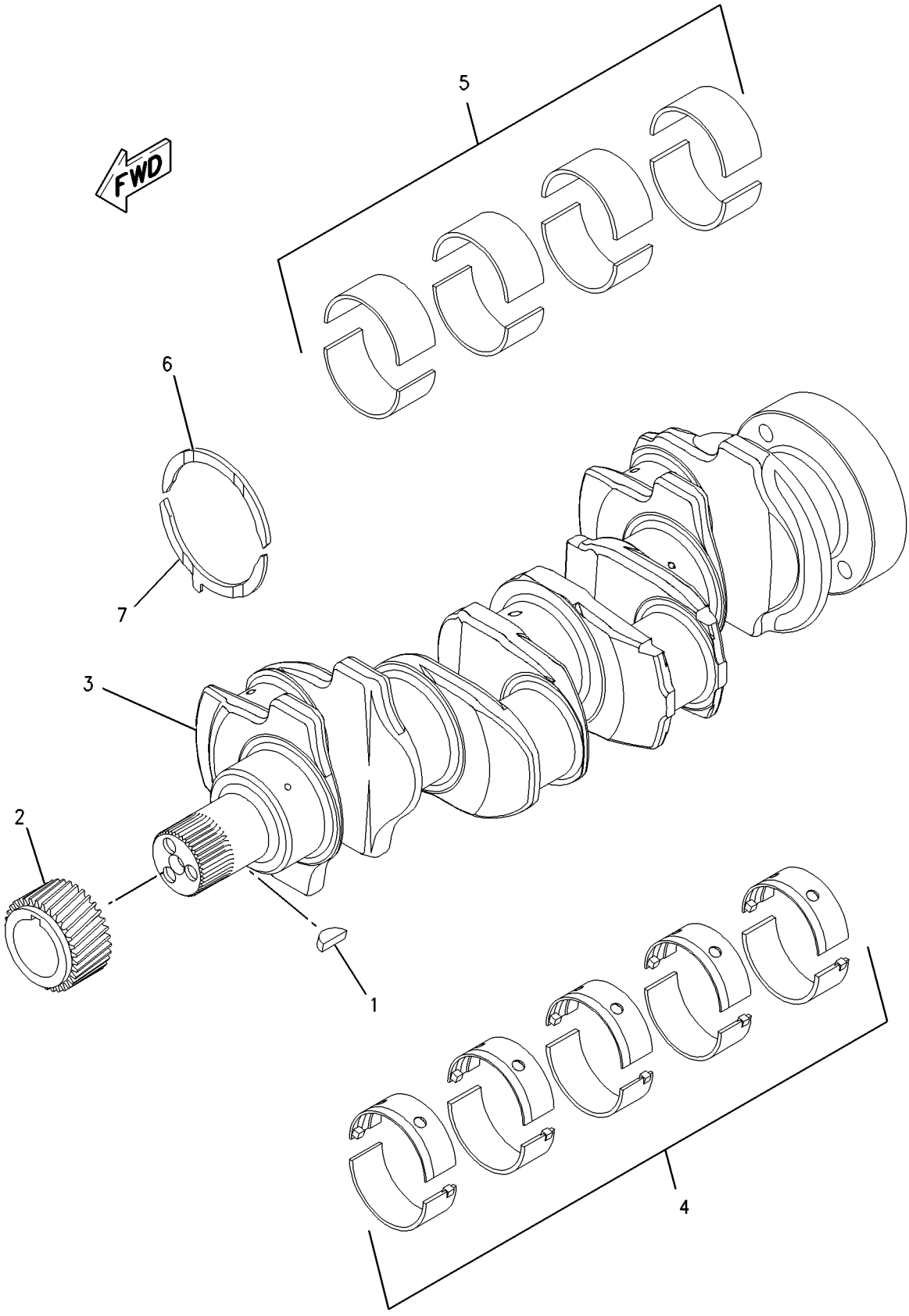

GRAPHIC #1 **<END>** g00950782

145-6685 CYLINDER BLOCK GP

S/N: 7BJ19000-54855
PART OF 188-0883 ENGINE AR-PRIMARY
AN ATTACHMENT

SMCS-1201 **i01025990**

NOTE	REF NO	GRAPHIC REF	PART NUMBER	QTY	PART NAME 1 2 3 4 5 6 (PRODUCT LEVEL)	SEE PAGE
Y	1	1	**152-2884**	1	CYLINDER BLOCK GP	48
	2	1	**6D-0044**	2	DOWEL	
	3	1	**7W-2501**	1	PLUG	
	4	1	**067-6808**	1	PLUG	
	5	1	**9Y-5015**	1	PLUG-FREEZE	
	6	1	**112-5540**	1	HOUSING AS	
	7	1	**4W-5360**	1	SEAL-CRANKSHAFT	
	8	1	**112-5541**	1	GASKET	
	9	1	**6I-0217**	12	BOLT	
	10	1	**126-2231**	2	BOLT	

Y-SEPARATE ILLUSTRATION

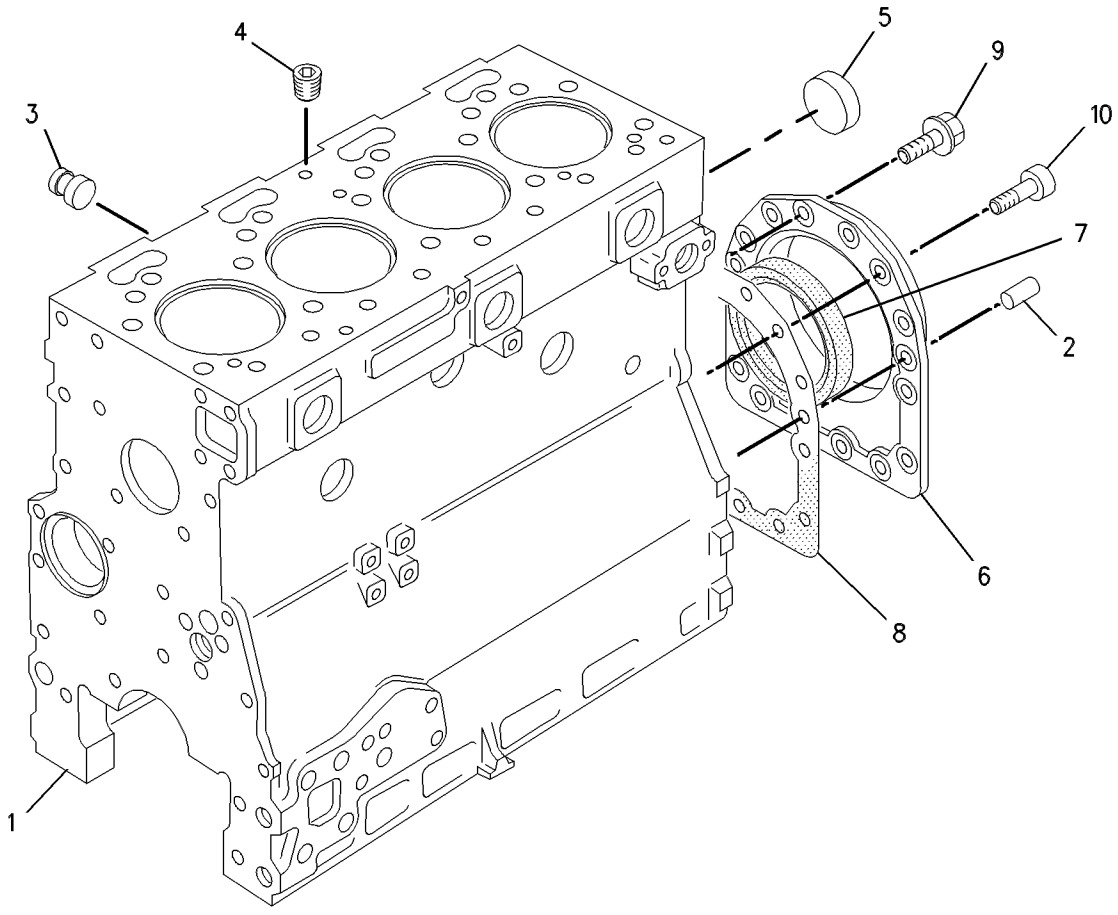

GRAPHIC #1 **<END>** g00497269

BASIC ENGINE

145-6685 CYLINDER BLOCK GP

S/N: 7BJ54856-67007
PART OF 188-0883 ENGINE AR-PRIMARY
AN ATTACHMENT

SMCS-1201 **i01596680**

NOTE	REF NO	GRAPHIC REF	PART NUMBER	QTY	PART NAME 1 2 3 4 5 6 (PRODUCT LEVEL)	SEE PAGE
Y	1	1	**209-5562**	1	CYLINDER BLOCK GP	56
	3	1	**7W-2501**	1	PLUG	
	4	1	**067-6808**	1	PLUG	
	5	1	**9Y-5015**	1	PLUG-FREEZE	
	6	1	**209-9218**	1	HOUSING AS	
	7	1	**209-8228**	1	SLEEVE	
	9	1	**209-9219**	10	BOLT	

Y-SEPARATE ILLUSTRATION

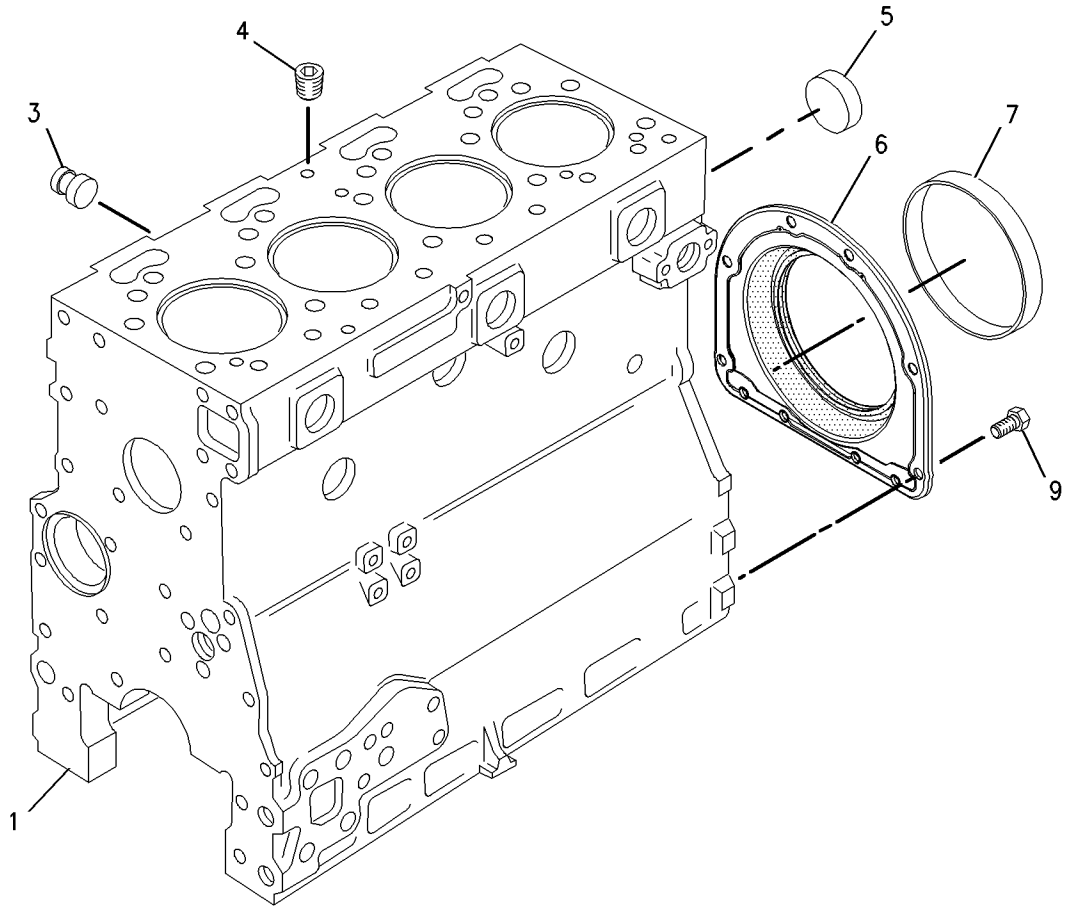

GRAPHIC #1 **<END>** g00831171

152-2884 CYLINDER BLOCK GP

S/N: 7BJ19000-54855
PART OF 145-6685 CYLINDER BLOCK GP
FIELD REPLACEMENT ORDER 209-5562—PAGE 56
AN ATTACHMENT

SMCS-1201 **i01549564**

NOTE	REF NO	GRAPHIC REF	PART NUMBER	QTY	PART NAME 1 2 3 4 5 6 (PRODUCT LEVEL)	SEE PAGE
	1	1	**1N-3762**	9	PLUG-CUP	
	2	1	**6I-0195**	1	PLUG	
	3	1	**6I-1074**	4	VALVE AS (OIL JET)	
					(EACH INCLUDES)	
	4	1	**6I-0686**	1	SPRING	
	5	1	**6I-1075**	1	BALL	
	6	1	**6I-1076**	1	RETAINER	
	7	1	**8F-2534**	1	GASKET	
	8	1	**9Y-5015**	1	PLUG-FREEZE	
	9	1	**148-3026**	4	JET AS-PISTON COOLING	
	10	1	**036-5802**	1	BEARING	
	11	1	**067-6002**	10	DOWEL	
	12	1	**067-6006**	1	PLUG	
	13	1	**067-6043**	6	PLUG-SIDE	
	14	1	**067-6805**	1	PLUG	
	16	1	**035-8068**	10	BOLT	
	17	1	**111-1815**	4	LINER	
	18	1	**127-9768**	1	PLUG	
	19	1	**147-1978**	2	DOWEL	

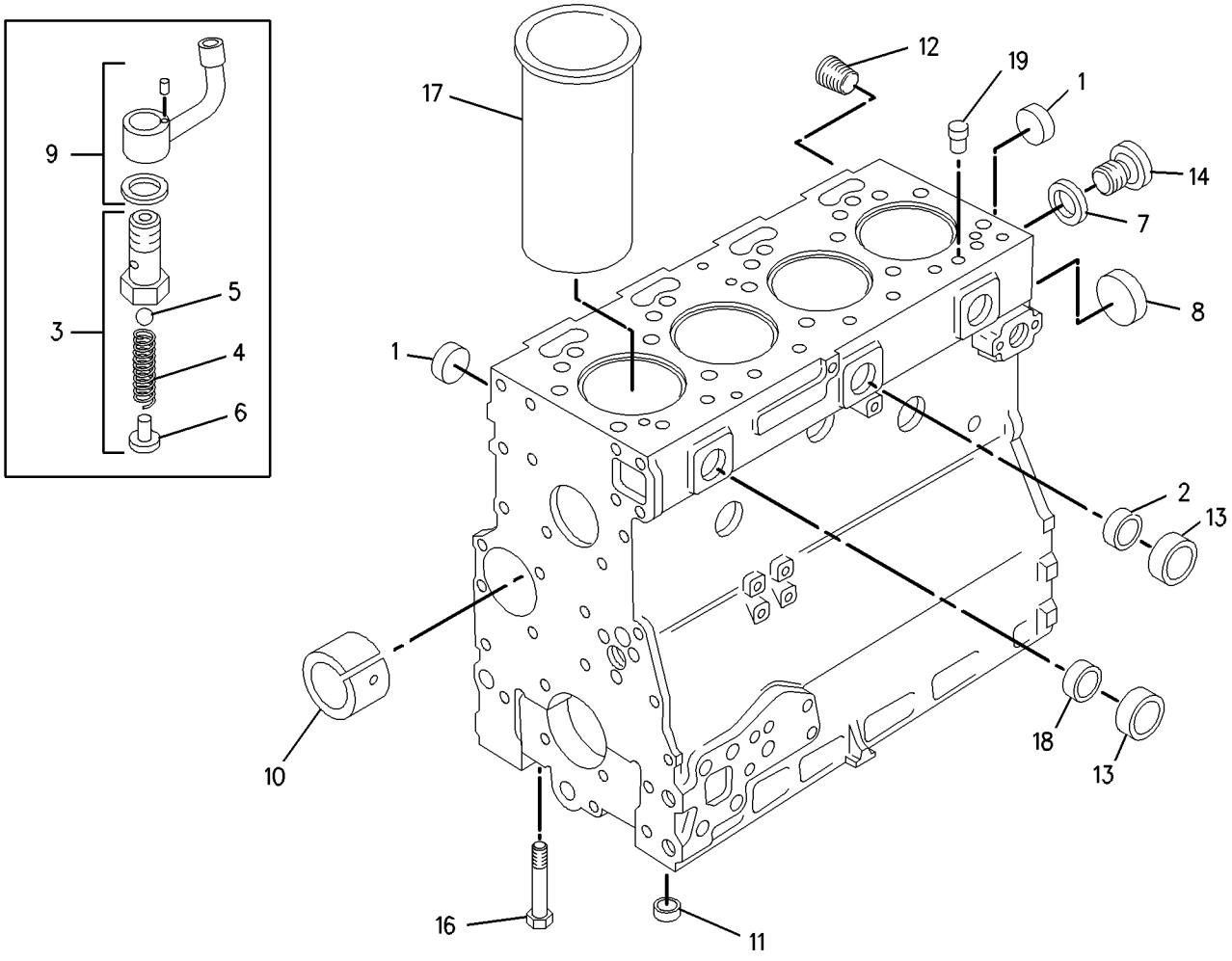

GRAPHIC #1 **<END>** g00805192

185-3189 CYLINDER BLOCK GP

S/N: 7SG1-3172
PART OF 187-8016 ENGINE AR-PRIMARY
AN ATTACHMENT

SMCS-1201 **i01591860**

NOTE	REF NO	GRAPHIC REF	PART NUMBER	QTY	PART NAME 1 2 3 4 5 6 (PRODUCT LEVEL)	SEE PAGE
Y	1	1	**207-1754**	1	CYLINDER BLOCK GP	52
	2	1	**209-9218**	1	HOUSING AS	
	3	1	**209-8228**	1	SLEEVE	
	4	1	**209-9219**	10	BOLT	

Y-SEPARATE ILLUSTRATION

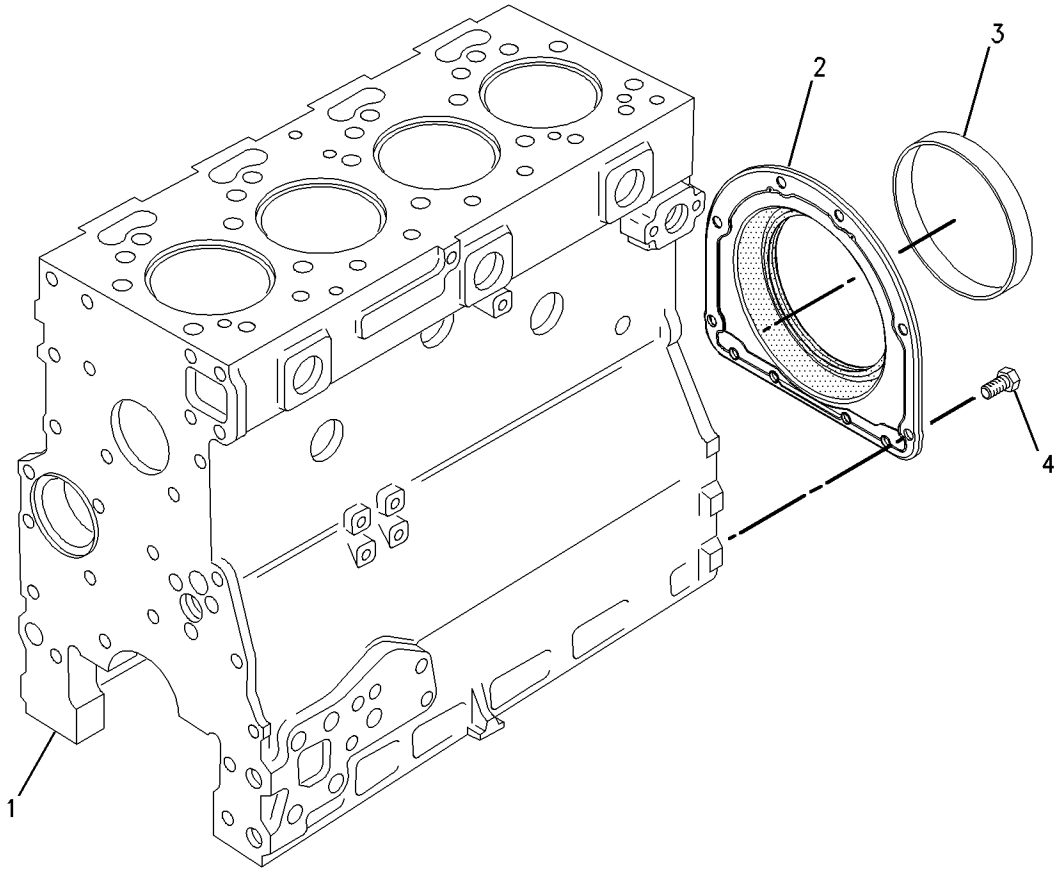

GRAPHIC #1 **<END>** g00831012

BASIC ENGINE

185-4594 CYLINDER BLOCK GP

S/N: 7SG3173-UP
PART OF 187-8016 ENGINE AR-PRIMARY
AN ATTACHMENT

SMCS-1201 **i01591948**

NOTE	REF NO	GRAPHIC REF	PART NUMBER	QTY	PART NAME 1 2 3 4 5 6 (PRODUCT LEVEL)	SEE PAGE
Y	1	1	**207-1754**	1	CYLINDER BLOCK GP	52
	2	1	**209-9218**	1	HOUSING AS	
	3	1	**209-8228**	1	SLEEVE	
	4	1	**209-9219**	10	BOLT	

Y-SEPARATE ILLUSTRATION

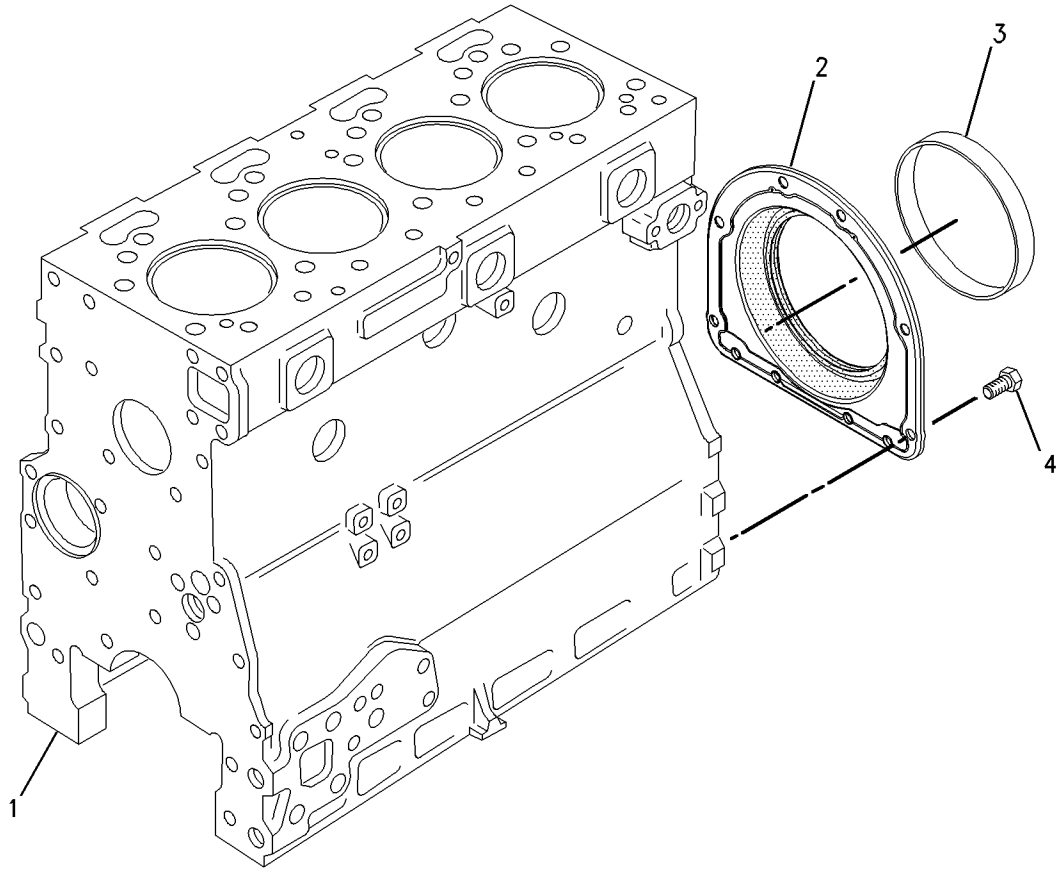

GRAPHIC #1 **<END>** g00831052

207-1754 CYLINDER BLOCK GP

S/N: 7SG1-UP
PART OF 185-3189, 185-4594 CYLINDER BLOCK GP
AN ATTACHMENT

SMCS-1201 **i01549565**

NOTE	REF NO	GRAPHIC REF	PART NUMBER	QTY	PART NAME 1 2 3 4 5 6 (PRODUCT LEVEL)	SEE PAGE
	1	1	**067-6043**	6	PLUG-SIDE	
	2	1	**176-1361**	1	PLUG	
	3	1	**067-6006**	2	PLUG	
	4	1	**067-6002**	10	DOWEL	
	5	1	**035-8068**	10	BOLT	
	6	1	**036-5802**	1	BEARING	
	7	1	**1N-3762**	10	PLUG-CUP	
	8	1	**7W-2501**	1	PLUG	
	9	1	**067-6808**	1	PLUG	
	10	1	**9Y-5015**	1	PLUG-FREEZE	
	11	1	**067-6805**	1	PLUG	
	12	1	**8F-2534**	1	GASKET	
	13	1	**6I-0219**	1	PLATE	
	14	1	**6I-0220**	1	GASKET	
	15	1	**6I-0572**	2	BOLT (M8X1.25.20MM)	
	16	1	**207-1753**	3	PLUG	
	17	1	**148-3026**	1	JET AS-PISTON COOLING	
	18	1	**6I-1074**	1	VALVE AS (OIL JET)	
	19	1	**6I-1075**	1	BALL	
	20	1	**6I-0686**	1	SPRING	
	21	1	**6I-1076**	1	RETAINER	
	22	1	**069-1124**	2	PLUG	
	23	1	**101-3923**	1	PLATE	
	24	1	**6I-0298**	1	GASKET	
	25	1	**6I-0302**	4	BOLT (M10X1.5X25MM)	
	26	1	**113-0309**	1	BRIDGE	
	27	1	**6I-0363**	2	BOLT (M6X1.0X20MM)	

207-1754 **CYLINDER BLOCK GP** *(contd.)* **i01549565**

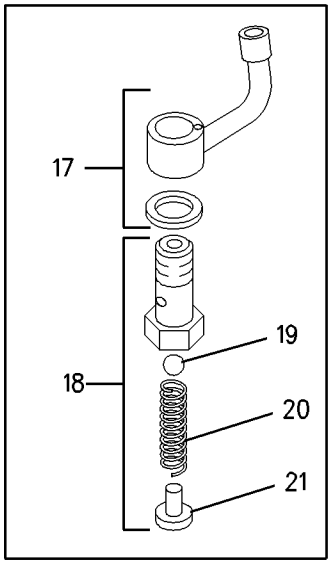

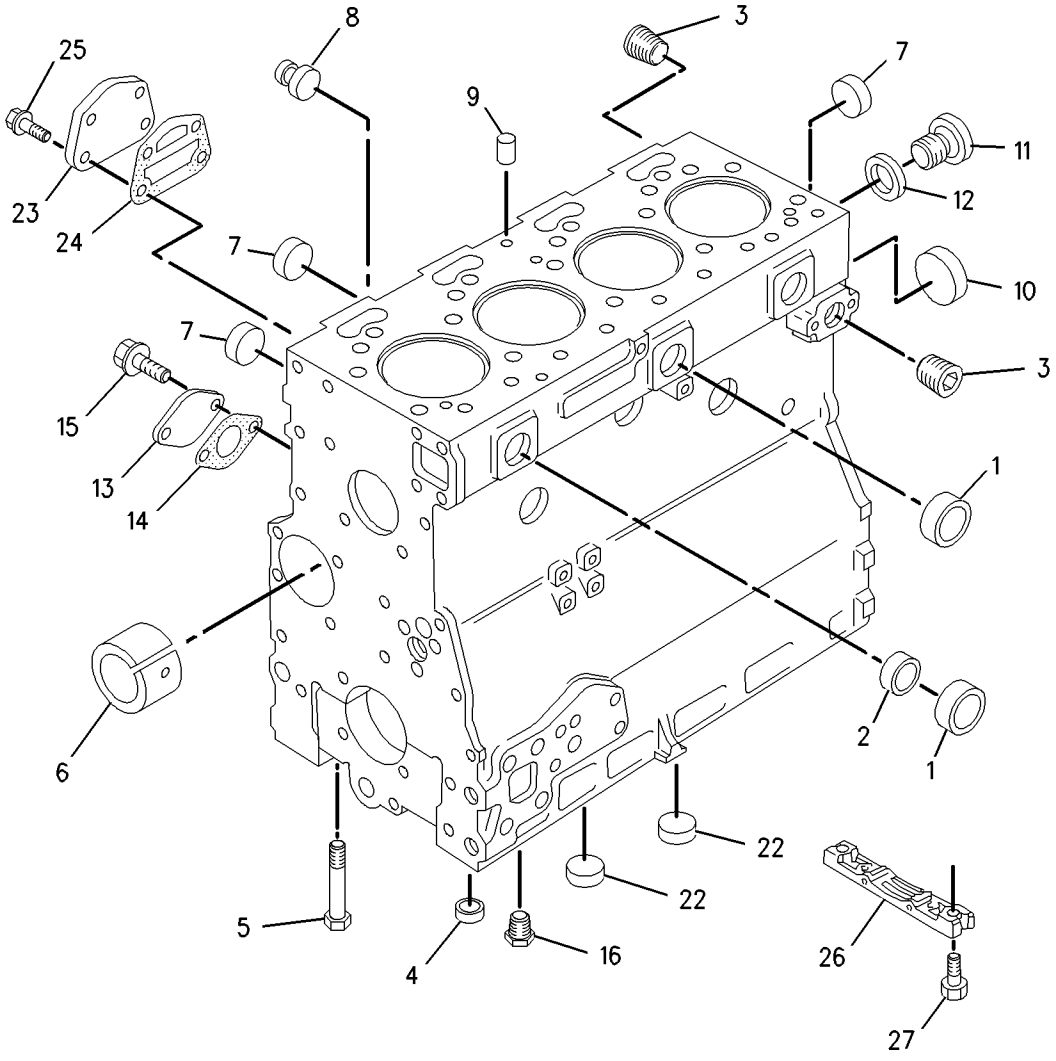

GRAPHIC #1 **<END>** g00799131

BASIC ENGINE

207-1754 CYLINDER BLOCK GP

S/N: 7SG3173-UP
PART OF 185-4594 CYLINDER BLOCK GP
AN ATTACHMENT

SMCS-1201 **i01787429**

NOTE	REF NO	GRAPHIC REF	PART NUMBER	QTY	PART NAME 1 2 3 4 5 6 (PRODUCT LEVEL)	SEE PAGE
	1	1	**067-6043**	6	PLUG-SIDE	
	2	1	**176-1361**	1	PLUG	
	3	1	**067-6006**	2	PLUG	
	4	1	**067-6002**	10	DOWEL	
	5	1	**035-8068**	10	BOLT	
	6	1	**036-5802**	1	BEARING	
	7	1	**1N-3762**	6	PLUG-CUP	
	8	1	**7W-2501**	1	PLUG	
	9	1	**067-6808**	1	PLUG	
	10	1	**9Y-5015**	1	PLUG-FREEZE	
	11	1	**067-6805**	1	PLUG	
	12	1	**214-1668**	1	WASHER-SPECIAL	
	13	1	**6I-0219**	1	PLATE	
	14	1	**6I-0220**	1	GASKET	
	15	1	**6I-0572**	2	BOLT (M8X1.25.20MM)	
	16	1	**207-1753**	3	PLUG	
	17	1	**148-3026**	1	JET AS-PISTON COOLING	
	18	1	**6I-1074**	1	VALVE AS (OIL JET)	
	19	1	**6I-1075**	1	BALL	
	20	1	**6I-0686**	1	SPRING	
	21	1	**6I-1076**	1	RETAINER	
	22	1	**069-1124**	2	PLUG	
	23	1	**101-3923**	1	PLATE	
	24	1	**6I-0298**	1	GASKET	
	25	1	**6I-0302**	4	BOLT (M10X1.5X25MM)	
	26	1	**211-0067**	1	BRIDGE	
	27	1	**6I-0363**	2	BOLT (M6X1.0X20MM)	
C	28	1	**215-2103**	4	PLUG	

C-CHANGE FROM PREVIOUS TYPE

207-1754 **CYLINDER BLOCK GP** *(contd.)* **i01787429**

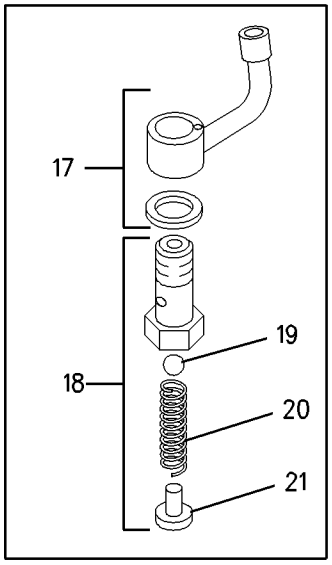

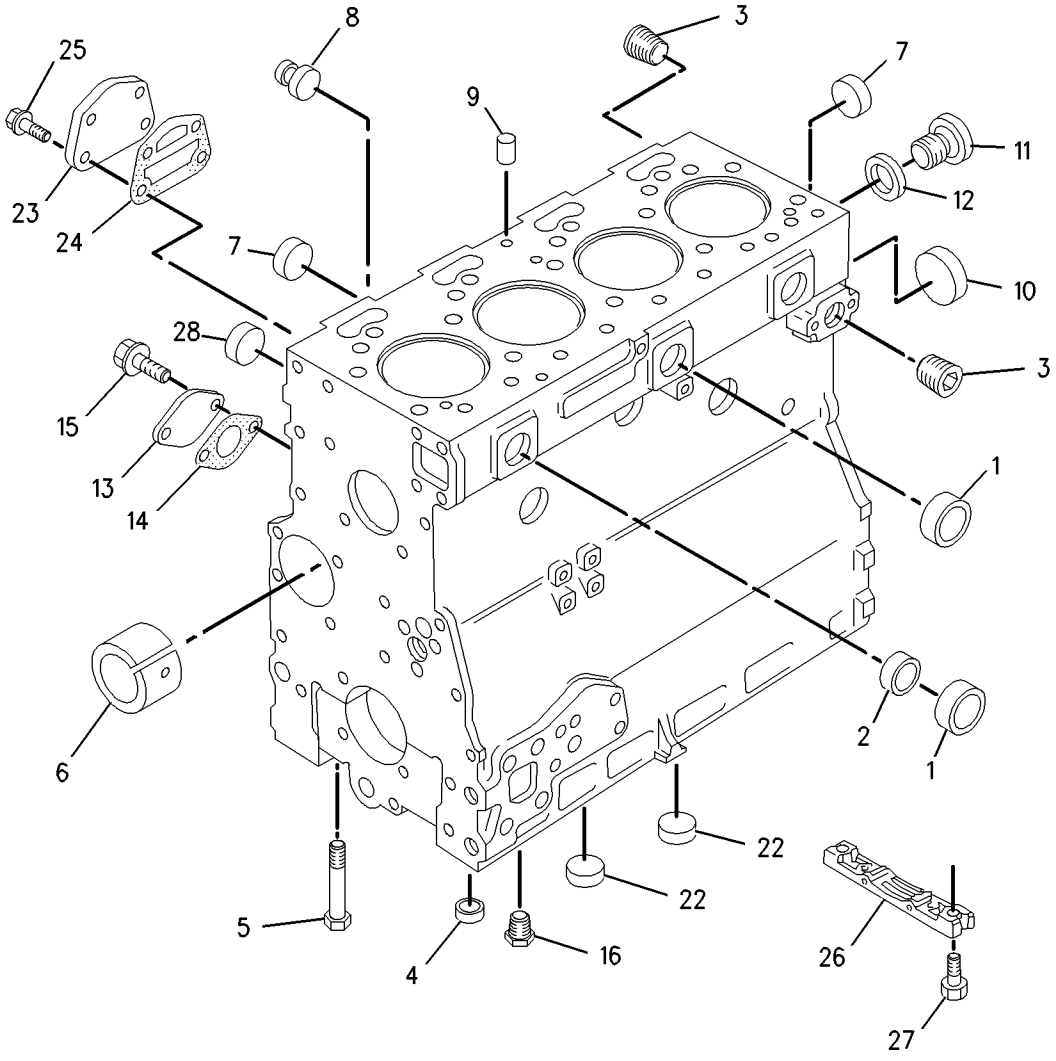

GRAPHIC #1 **<END>** g00890908

209-5562 CYLINDER BLOCK GP

S/N: 7BJ19000-54855

PART OF 145-6685 CYLINDER BLOCK GP

OPTIONAL FIELD REPLACEMENT ORDER 209-6725—PAGE 62. FIELD REPLACEMENT FOR 152-2884—PAGE 48

SMCS-1201 **i01870402**

NOTE	REF NO	GRAPHIC REF	PART NUMBER	QTY	PART NAME 1 2 3 4 5 6 (PRODUCT LEVEL)	SEE PAGE
	1	1	**1N-3762**	9	PLUG-CUP	
	2	1	**6I-0195**	1	PLUG	
	3	1	**6I-1074**	4	VALVE AS (OIL JET)	
					(EACH INCLUDES)	
	4	1	**6I-0686**	1	SPRING	
	5	1	**6I-1075**	1	BALL	
	6	1	**6I-1076**	1	RETAINER	
	7	1	**8F-2534**	1	GASKET	
	8	1	**9Y-5015**	1	PLUG-FREEZE	
	9	1	**148-3026**	4	JET AS-PISTON COOLING	
	10	1	**036-5802**	1	BEARING	
	11	1	**067-6002**	10	DOWEL	
	12	1	**067-6006**	1	PLUG	
	13	1	**067-6043**	6	PLUG-SIDE	
	14	1	**067-6805**	1	PLUG	
	16	1	**035-8068**	10	BOLT	
	17	1	**111-1815**	4	LINER	
	18	1	**127-9768**	1	PLUG	
	19	1	**147-1978**	2	DOWEL	
	20	1	**113-0309**	1	BRIDGE	
	21	1	**6I-0363**	2	BOLT (M6X1.0X20MM)	

209-5562 **CYLINDER BLOCK GP** ***(contd.)*** **i01870402**

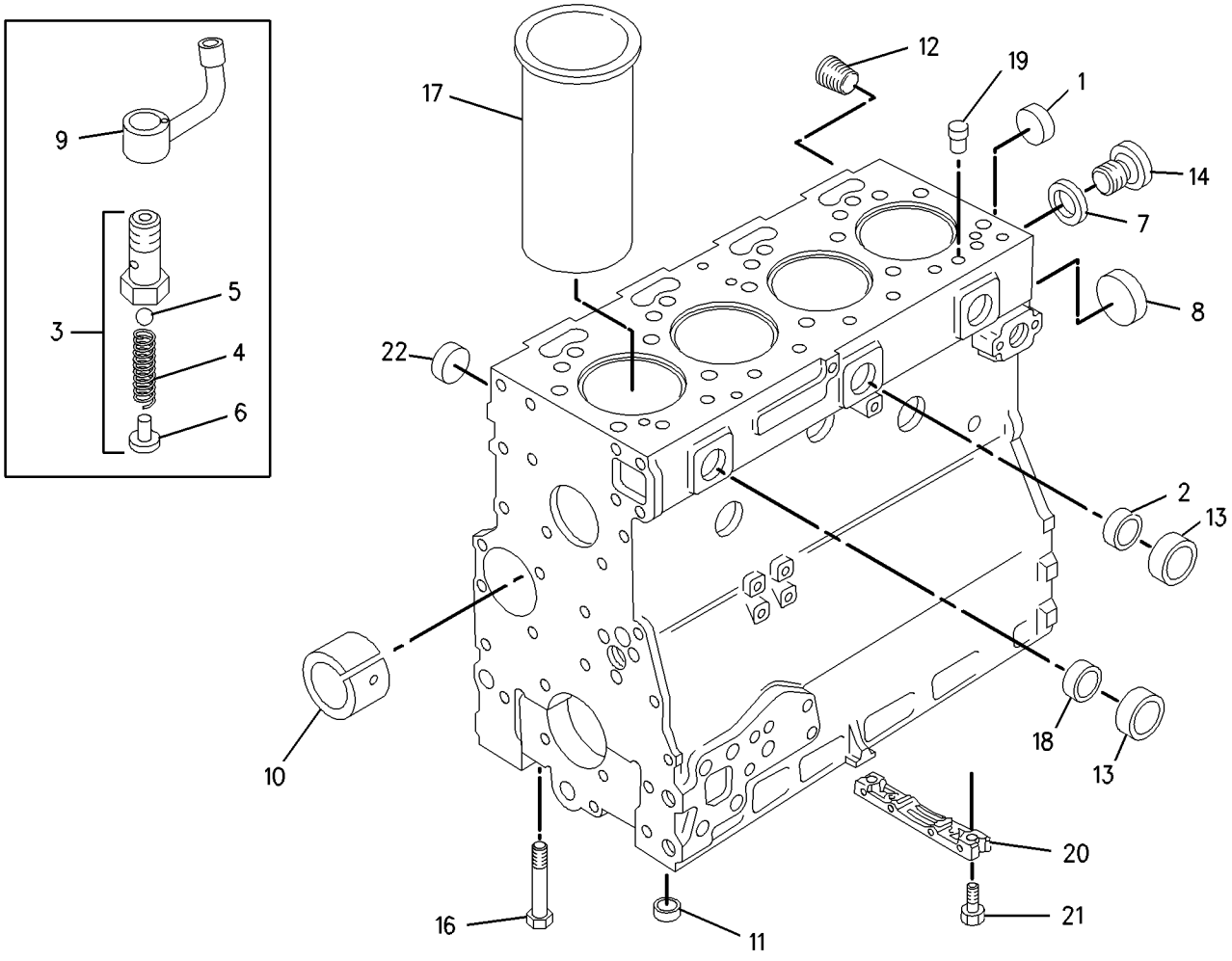

GRAPHIC #1 **<END>** g00952482

209-5562 CYLINDER BLOCK GP

S/N: 7BJ54856-61080
PART OF 145-6685 CYLINDER BLOCK GP
OPTIONAL FIELD REPLACEMENT ORDER 209-6725—PAGE 62. FIELD REPLACEMENT FOR 152-2884—PAGE 48
AN ATTACHMENT

SMCS-1201 **i01617603**

NOTE	REF NO	GRAPHIC REF	PART NUMBER	QTY	PART NAME 1 2 3 4 5 6 (PRODUCT LEVEL)	SEE PAGE
	1	1	**1N-3762**	9	PLUG-CUP	
	2	1	**6I-0195**	1	PLUG	
	3	1	**6I-1074**	4	VALVE AS (OIL JET)	
					(EACH INCLUDES)	
	4	1	**6I-0686**	1	SPRING	
	5	1	**6I-1075**	1	BALL	
	6	1	**6I-1076**	1	RETAINER	
	7	1	**8F-2534**	1	GASKET	
	8	1	**9Y-5015**	1	PLUG-FREEZE	
	9	1	**148-3026**	4	JET AS-PISTON COOLING	
	10	1	**036-5802**	1	BEARING	
	11	1	**067-6002**	10	DOWEL	
	12	1	**067-6006**	1	PLUG	
	13	1	**067-6043**	6	PLUG-SIDE	
	14	1	**067-6805**	1	PLUG	
	16	1	**035-8068**	10	BOLT	
	17	1	**111-1815**	4	LINER	
	18	1	**127-9768**	1	PLUG	
	19	1	**147-1978**	2	DOWEL	
	20	1	**211-0067**	1	BRIDGE	
	21	1	**6I-0363**	2	BOLT (M6X1.0X20MM)	

209-5562 **CYLINDER BLOCK GP** *(contd.)* **i01617603**

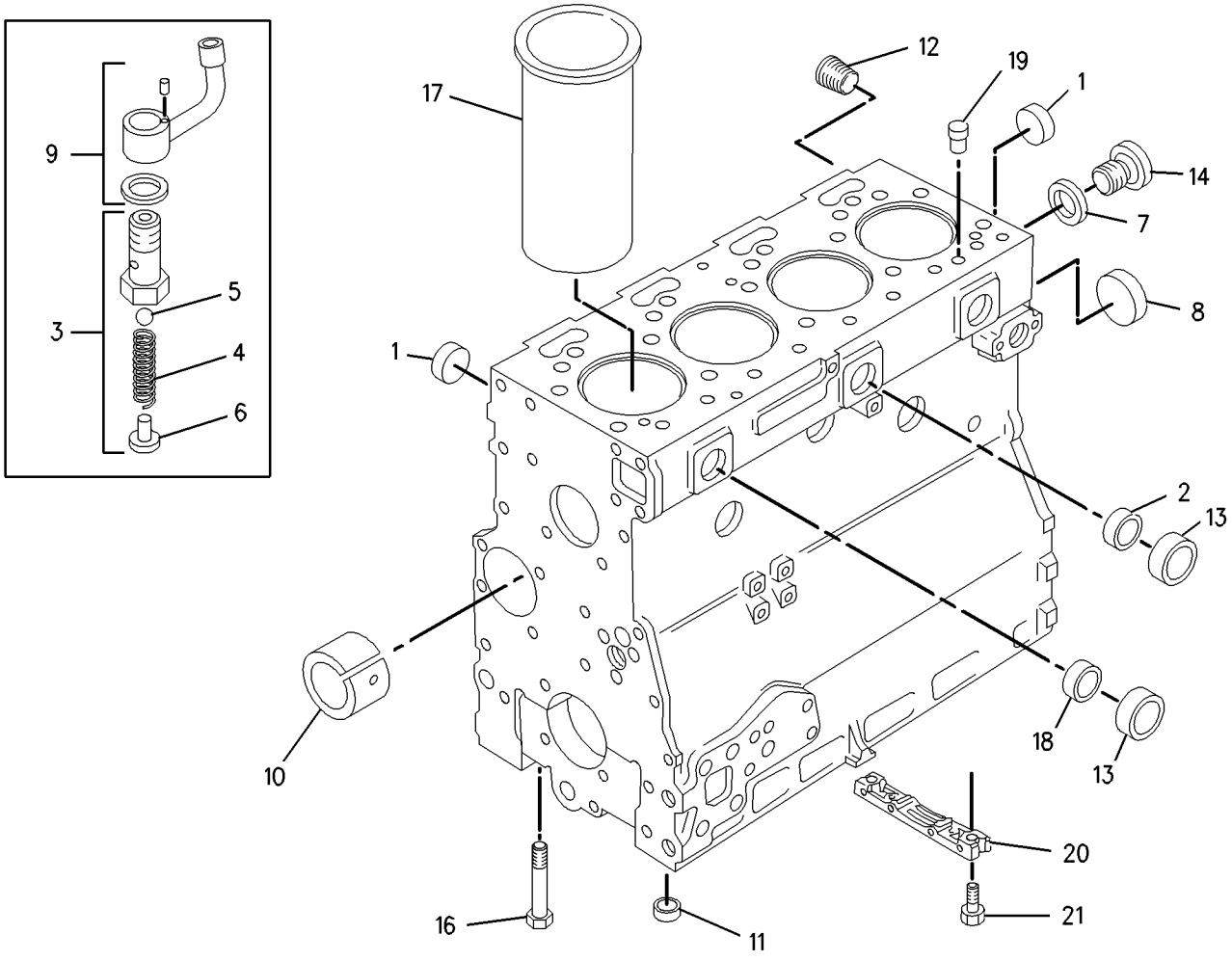

GRAPHIC #1 **<END>** g00805193

209-5562 CYLINDER BLOCK GP

S/N: 7BJ61081-UP

PART OF 145-6685, 220-2668 CYLINDER BLOCK GP

OPTIONAL FIELD REPLACEMENT ORDER 209-6725—PAGE 62. FIELD REPLACEMENT FOR 152-2884—PAGE 48 AN ATTACHMENT

SMCS-1201 **i01870657**

NOTE	REF NO	GRAPHIC REF	PART NUMBER	QTY	PART NAME 1 2 3 4 5 6 (PRODUCT LEVEL)	SEE PAGE
	1	1	**1N-3762**	5	PLUG-CUP	
	2	1	**6I-0195**	1	PLUG	
	3	1	**6I-1074**	4	VALVE AS (OIL JET)	
					(EACH INCLUDES)	
	4	1	**6I-0686**	1	SPRING	
	5	1	**6I-1075**	1	BALL	
	6	1	**6I-1076**	1	RETAINER	
	7	1	**214-1668**	1	WASHER-SPECIAL	
	8	1	**9Y-5015**	1	PLUG-FREEZE	
	9	1	**148-3026**	4	JET AS-PISTON COOLING	
	10	1	**036-5802**	1	BEARING	
	11	1	**067-6002**	10	DOWEL	
	12	1	**067-6006**	1	PLUG	
	13	1	**067-6043**	6	PLUG-SIDE	
	14	1	**067-6805**	1	PLUG	
	16	1	**035-8068**	10	BOLT	
	17	1	**111-1815**	4	LINER	
	18	1	**127-9768**	1	PLUG	
	19	1	**147-1978**	2	DOWEL	
	20	1	**211-0067**	1	BRIDGE	
	21	1	**6I-0363**	2	BOLT (M6X1.0X20MM)	
	22	1	**215-2103**	4	PLUG	

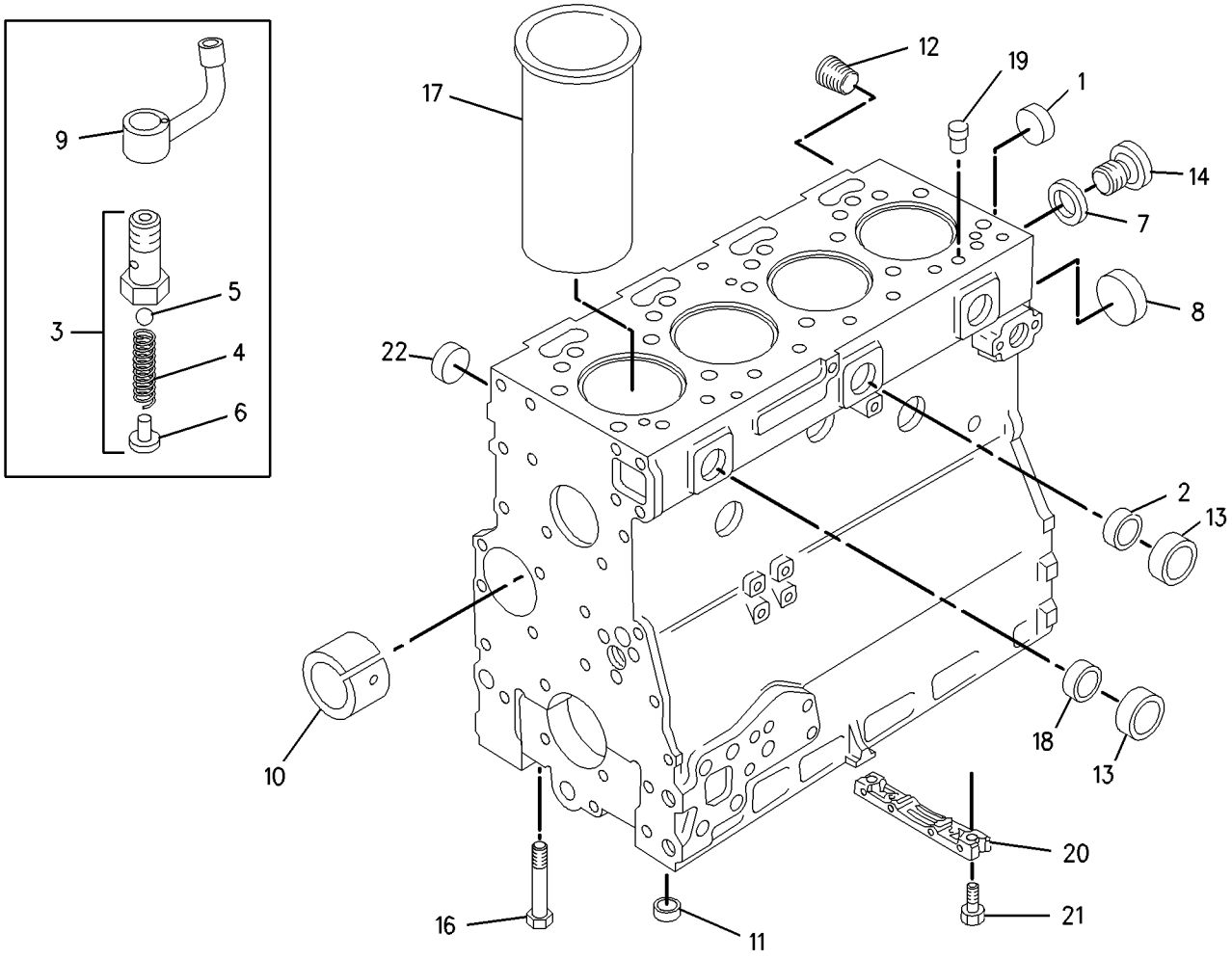

GRAPHIC #1 **<END>** g00952482

209-6725 CYLINDER BLOCK GP

S/N: 7BJ67008-UP

PART OF 220-2668 CYLINDER BLOCK GP

FIELD REPLACEMENT FOR 209-5562—PAGE 56

SMCS-1201 **i01860622**

NOTE	REF NO	GRAPHIC REF	PART NUMBER	QTY	PART NAME 1 2 3 4 5 6 (PRODUCT LEVEL)	SEE PAGE
	1	1	**6I-1074**	4	VALVE AS (OIL JET)	
	1A	1	**6I-0686**	1	SPRING	
	1B	1	**6I-1075**	1	BALL	
	1C	1	**6I-1076**	1	RETAINER	
	2	1	**148-3026**	4	JET AS-PISTON COOLING	
	3	1	**161-9820**	2	PIN	
	4	1	**211-0067**	1	BRIDGE	
	5	1	**214-1668**	1	WASHER-SPECIAL	
	6	1	**215-2103**	4	PLUG	
	7	1	**0L-1138**	4	BOLT (3/8-24X.5IN)	
	8	1	**1N-3762**	6	PLUG-CUP	
	9	1	**6I-0219**	1	PLATE	
	10	1	**6I-0220**	1	GASKET	
	11	1	**6I-0298**	1	GASKET	
	12	1	**6I-0302**	4	BOLT (M10X1.5X25MM)	
	13	1	**6I-0363**	2	BOLT (M6X1.0X20MM)	
	14	1	**6I-0572**	2	BOLT (M8X1.25.20MM)	
	15	1	**7W-2501**	1	PLUG	
	16	1	**9Y-5015**	1	PLUG-FREEZE	
	17	1	**035-8068**	10	BOLT	
	18	1	**036-5802**	1	BEARING	
	19	1	**067-6002**	10	DOWEL	
	20	1	**067-6006**	2	PLUG	
	21	1	**067-6043**	6	PLUG-SIDE	
	22	1	**067-6805**	1	PLUG	
	23	1	**067-6808**	1	PLUG	
	24	1	**067-9520**	4	SPACER	
	25	1	**069-1124**	1	PLUG	
	26	1	**101-3923**	1	PLATE	
	27	1	**111-1815**	4	LINER	
	28	1	**127-9768**	1	PLUG	
	29	1	**147-1978**	2	DOWEL	

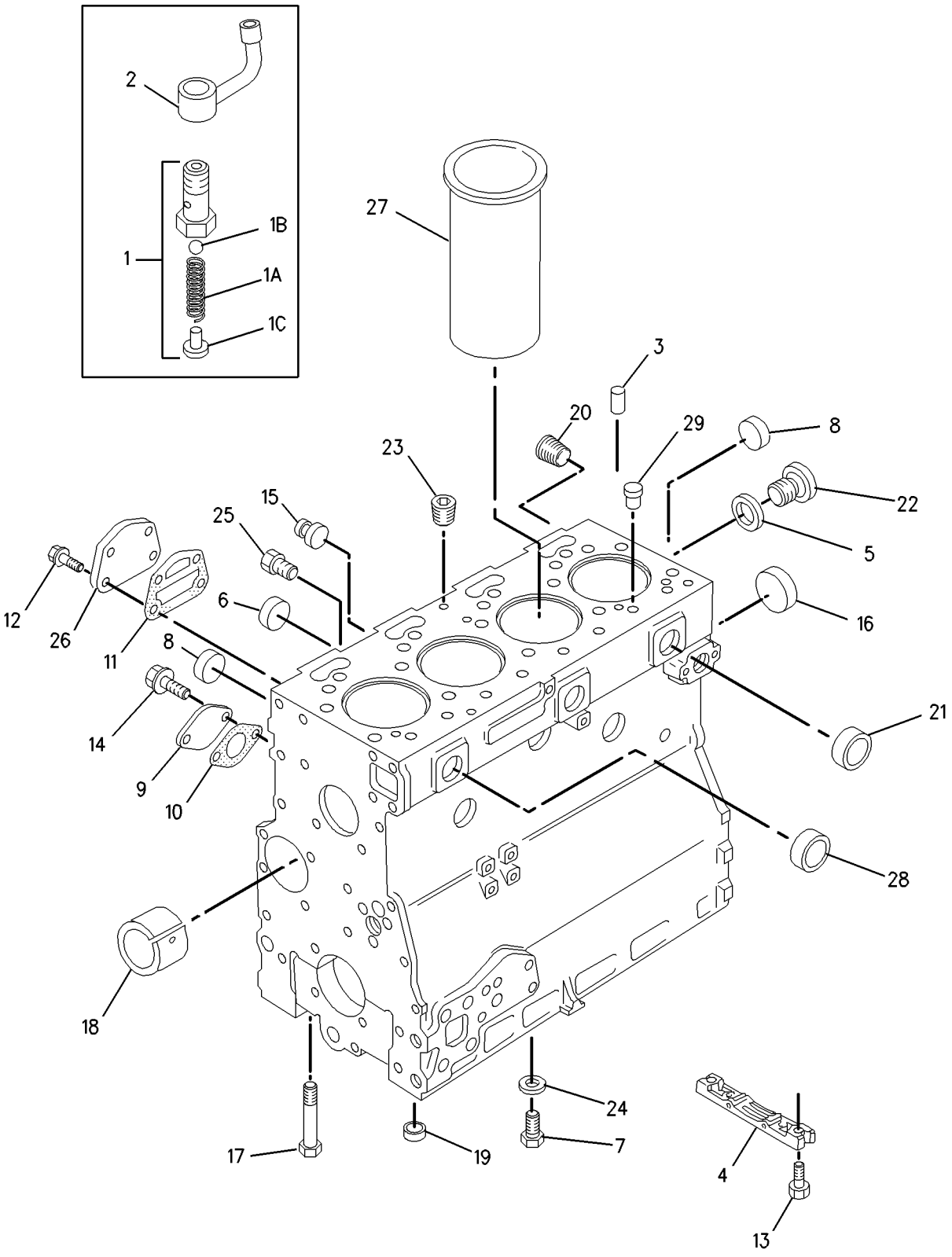

GRAPHIC #1 **<END>** g00952762

220-2668 CYLINDER BLOCK GP

S/N: 7BJ67008-UP
PART OF 188-0883 ENGINE AR-PRIMARY
AN ATTACHMENT

SMCS-1201 **i01707426**

NOTE	REF NO	GRAPHIC REF	PART NUMBER	QTY	PART NAME 1 2 3 4 5 6 (PRODUCT LEVEL)	SEE PAGE
Y	1	1	**209-5562**	1	CYLINDER BLOCK GP	56
	3	1	**7W-2501**	1	PLUG	
	4	1	**067-6808**	1	PLUG	
	5	1	**9Y-5015**	1	PLUG-FREEZE	
	6	1	**209-9218**	1	HOUSING AS	
	7	1	**219-2512**	1	SLEEVE	
	9	1	**209-9219**	10	BOLT (M8X1.25X16MM)	

Y-SEPARATE ILLUSTRATION

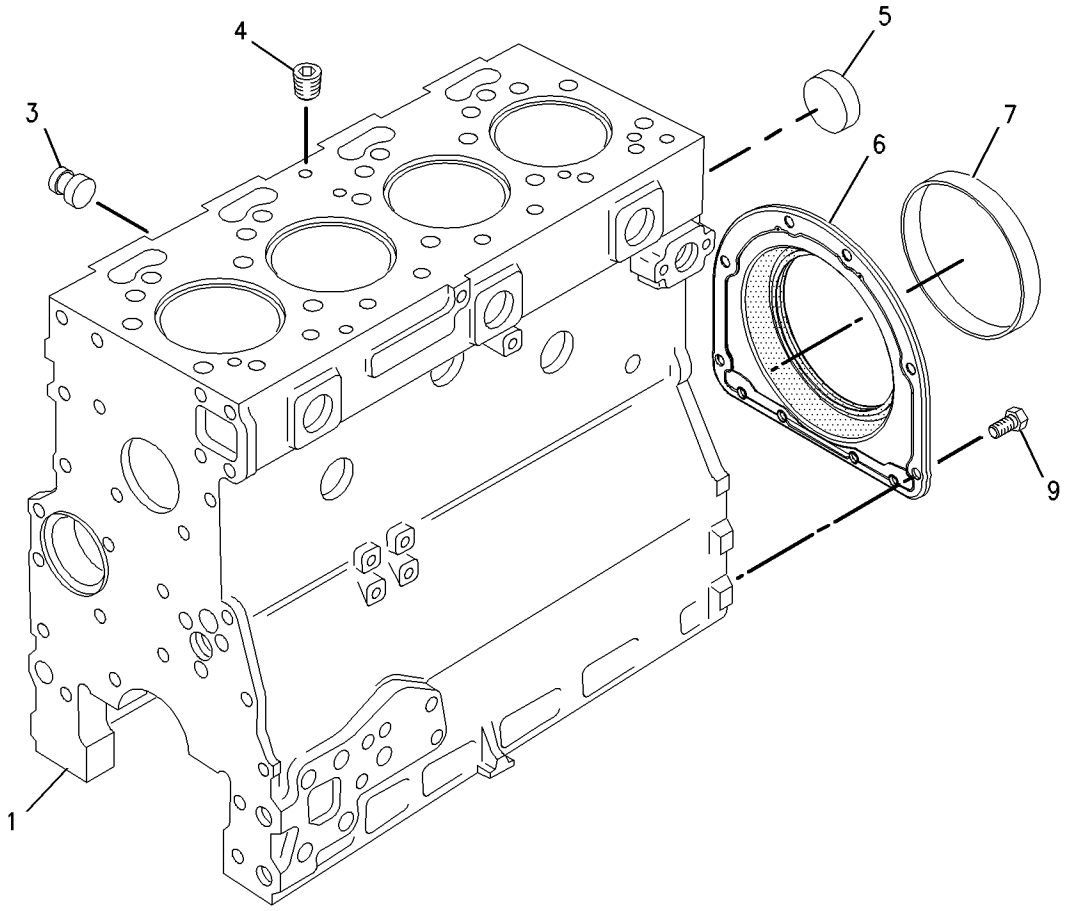

GRAPHIC #1 **<END>** g00831049

232-7604 CYLINDER BLOCK GP

S/N: CRS1-UP

PART OF 232-7606, 233-7007 CYLINDER BLOCK GP

AN ATTACHMENT

SMCS-1201 **i02014648**

NOTE	REF NO	GRAPHIC REF	PART NUMBER	QTY	PART NAME 1 2 3 4 5 6 (PRODUCT LEVEL)	SEE PAGE
	1	1	**6I-0572**	4	BOLT (M8X1.25X20-MM)	
	2	1	**035-8068**	10	BOLT (5/8-18X3.75-IN)	
	3	1	**067-6002**	10	DOWEL	
	4	1	**067-6006**	1	PLUG	
	5	1	**067-6043**	1	PLUG-SIDE	
	6	1	**100-4841**	4	BOLT (M6X1.0X10-MM)	
	7	1	**185-0884**	2	DOWEL	
	8	1	**225-7944**	1	GASKET	
	9	1	**225-8858**	2	PLUG	
	10	1	**232-3751**	1	PLATE	
	11	1	**232-7440**	1	BEARING	
	12	1	**232-7454**	4	JET AS-PISTON COOLING	
	13	1	**232-7596**	1	PLUG	
	14	1	**232-7597**	2	PLUG	
	15	1	**232-7599**	1	PLUG	
	16	1	**232-7600**	1	PLUG-CUP	
	17	1	**232-7603**	1	PLUG	

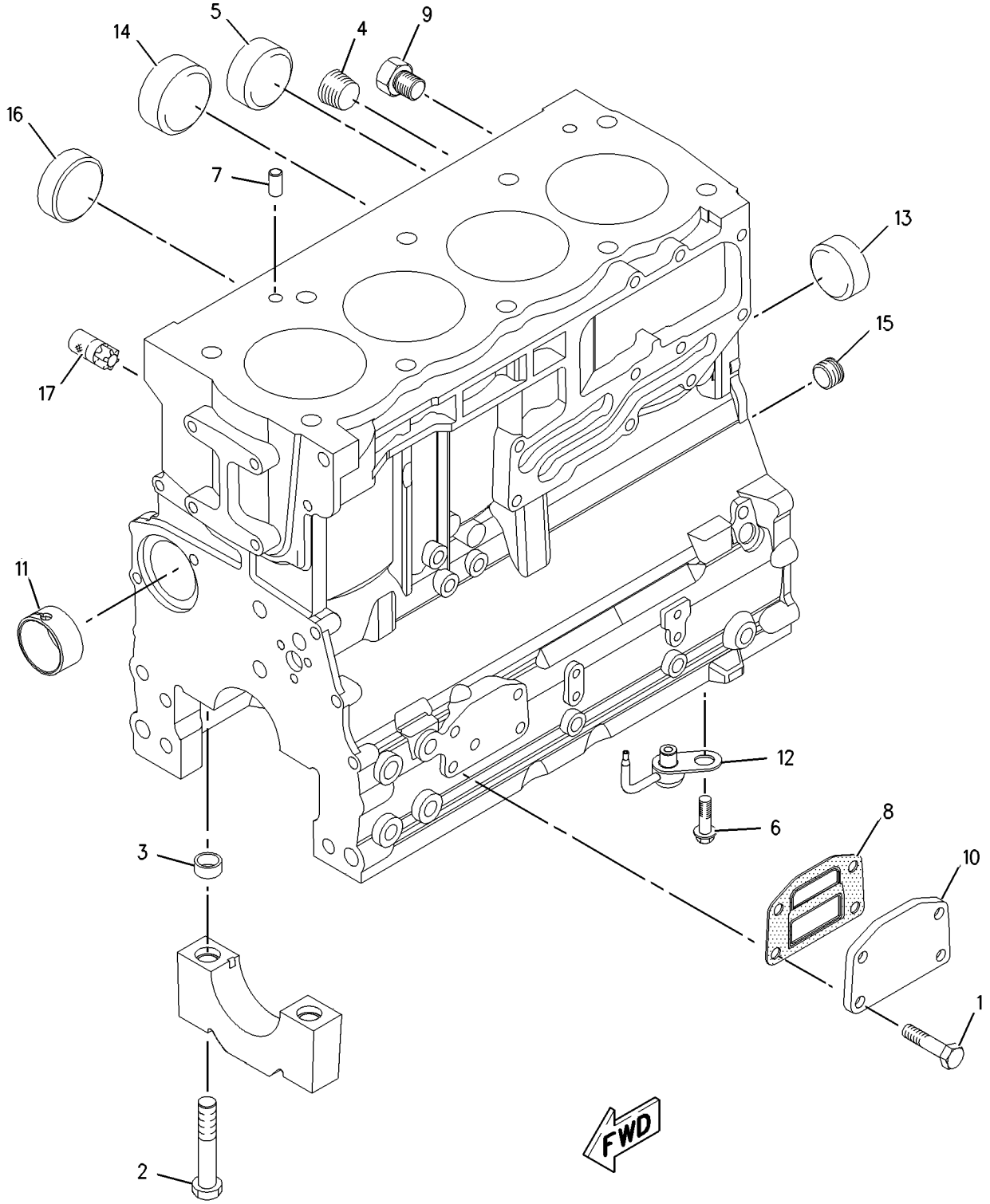

GRAPHIC #1 **<END>** g00951214

BASIC ENGINE

232-7606 CYLINDER BLOCK GP

S/N: CRS1-UP
PART OF 234-3059 ENGINE AR-PRIMARY
AN ATTACHMENT

SMCS-1201 **i01863465**

NOTE	REF NO	GRAPHIC REF	PART NUMBER	QTY	PART NAME 1 2 3 4 5 6 (PRODUCT LEVEL)	SEE PAGE
	1	1	**209-9219**	10	BOLT (M8X1.25X16MM)	
	2	1	**232-7449**	1	HOUSING AS	
Y	3	1	**232-7604**	1	CYLINDER BLOCK GP	65

Y-SEPARATE ILLUSTRATION

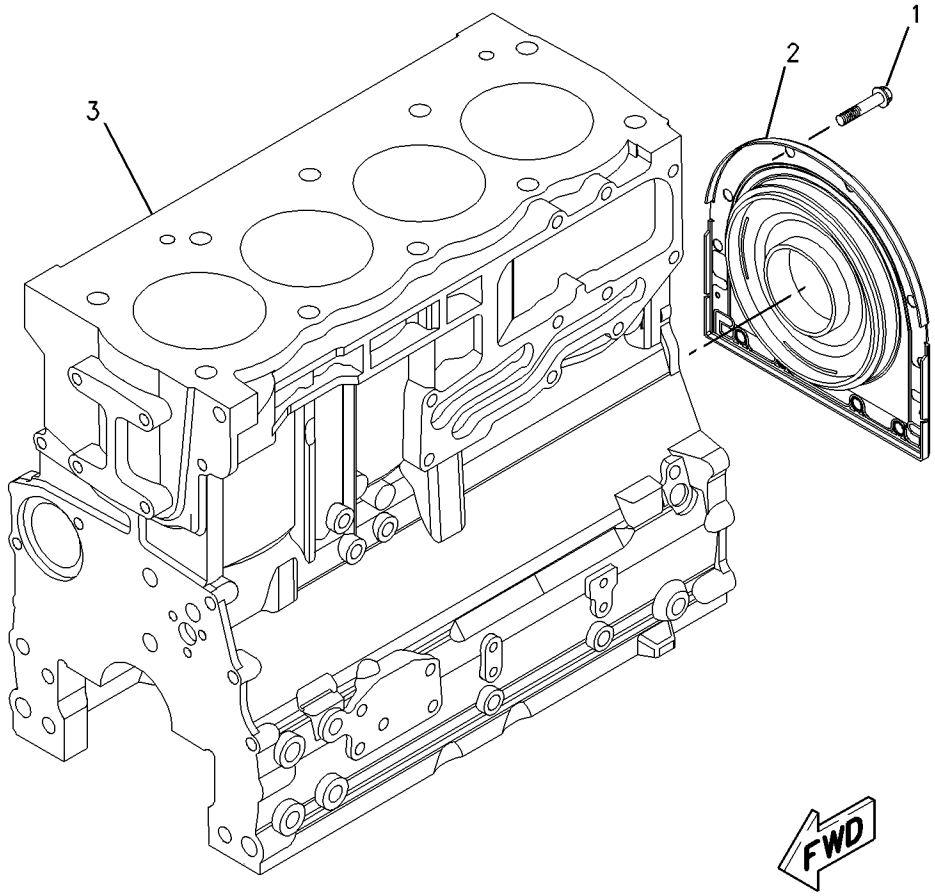

GRAPHIC #1 **<END>** g00952056

233-7007 CYLINDER BLOCK GP

S/N: CRS1-UP
PART OF 234-3058 ENGINE AR-PRIMARY
AN ATTACHMENT

SMCS-1201 **i01872353**

NOTE	REF NO	GRAPHIC REF	PART NUMBER	QTY	PART NAME 1 2 3 4 5 6 (PRODUCT LEVEL)	SEE PAGE
	1	1	**209-9219**	10	BOLT (M8X1.25X16MM)	
	2	1	**232-7449**	1	HOUSING AS	
Y	3	1	**232-7604**	1	CYLINDER BLOCK GP	65

Y-SEPARATE ILLUSTRATION

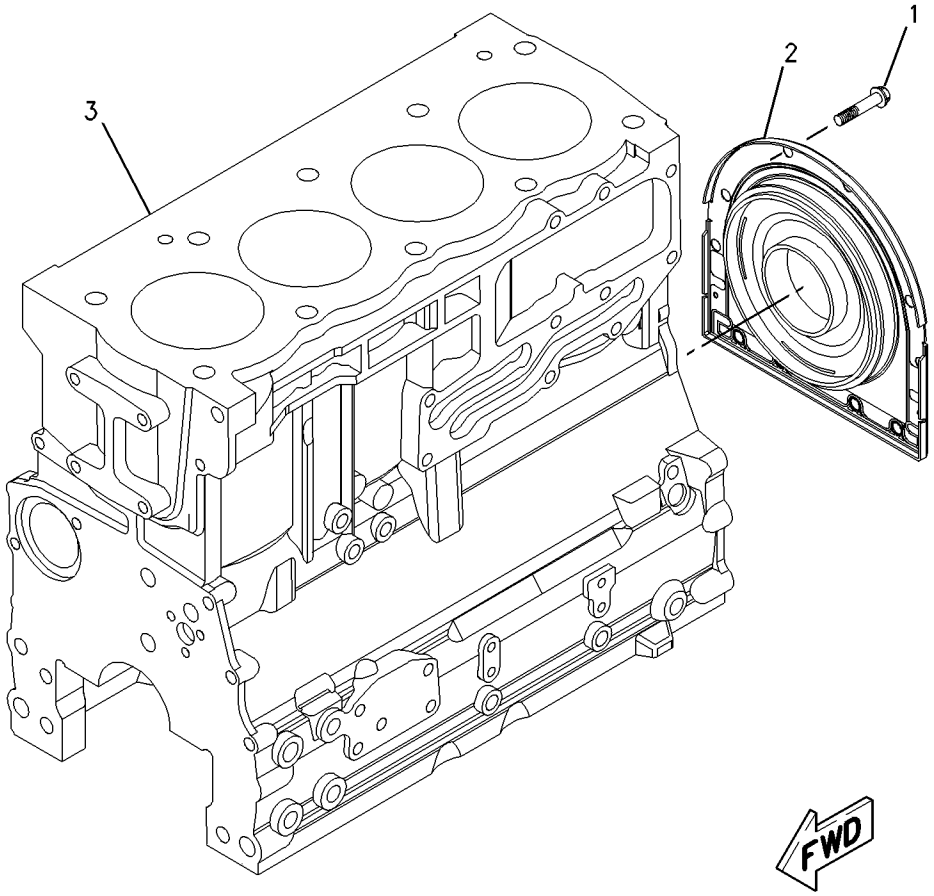

GRAPHIC #1 **<END>** g00952056

145-6852 CYLINDER HEAD GP

S/N: 7BJ19000-67007
PART OF 188-0883 ENGINE AR-PRIMARY
AN ATTACHMENT

SMCS-1100, 1101, 1103, 1104, 1105, 1106, 1108, 1109, 1115, 1117, 1121, 1124, 1125

i01089415

NOTE	REF NO	GRAPHIC REF	PART NUMBER	QTY	PART NAME 1 2 3 4 5 6 (PRODUCT LEVEL)	SEE PAGE
	1	1	**152-2927**	1	GASKET-CYLINDER HEAD	
	2	1	**7W-2518**	8	BOLT	
	3	1	**7W-2519**	12	BOLT	
	4	1	**7W-2520**	2	BOLT	
	5	1	**161-9820**	2	PIN	
Y	6	1	**163-9254**	1	CYLINDER HEAD GP	70

Y-SEPARATE ILLUSTRATION

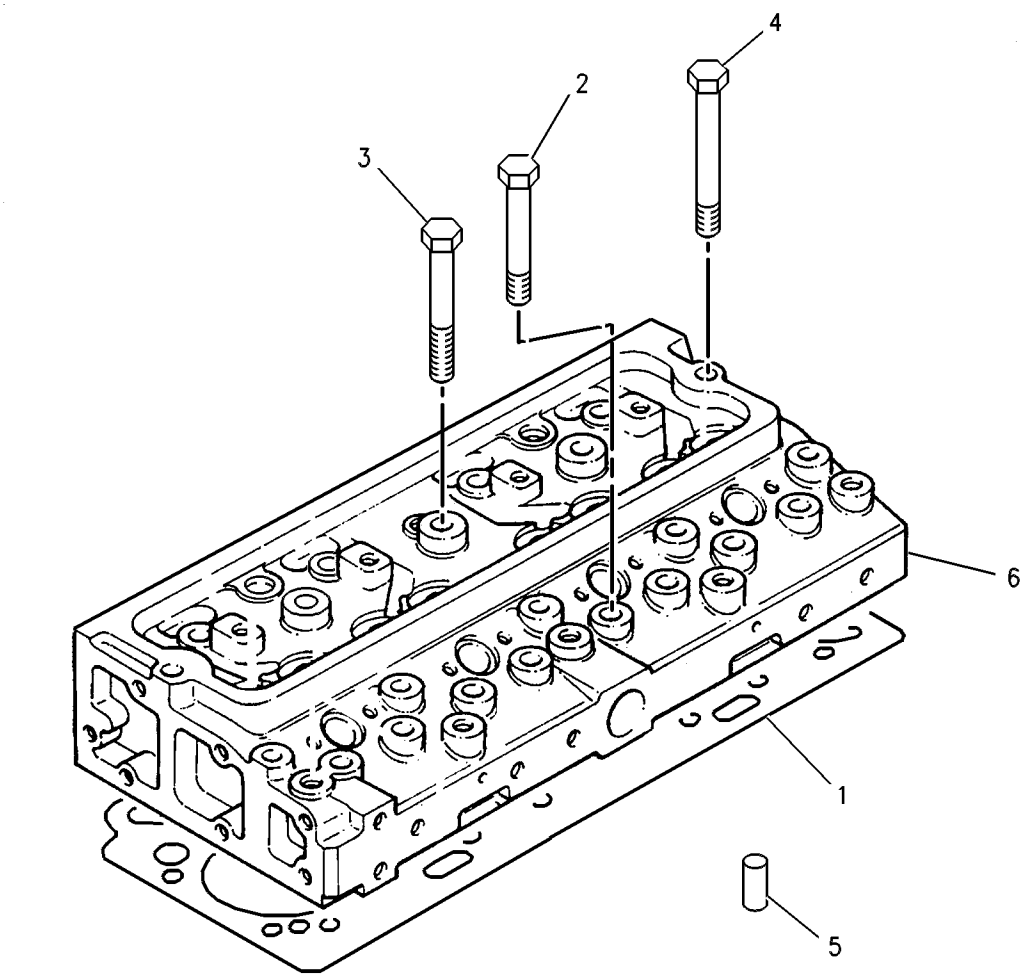

GRAPHIC #1

<END>

g00583180

163-9254 CYLINDER HEAD GP

S/N: 7BJ19000-UP

PART OF 145-6852, 220-2671 CYLINDER HEAD GP

AN ATTACHMENT

SMCS-1100, 1101, 1103, 1104, 1105, 1106, 1108, 1109, 1115, 1117, 1121, 1124, 1125

i01531104

NOTE	REF NO	GRAPHIC REF	PART NUMBER	QTY	PART NAME 1 2 3 4 5 6 (PRODUCT LEVEL)	SEE PAGE
	1	1	**138-2060**	8	CAP	
	2	1	**206-4127**	8	SPRING-VALVE	
	3	1	**145-6856**	4	SEAL (INLET)	
	4	1	**145-6858**	4	SEAL (EXHAUST)	
	5	1	**145-6855**	4	VALVE-INLET	
	6	1	**145-6853**	4	INSERT-INLET VALVE	
	7	1	**145-6854**	4	INSERT-EXHAUST VALVE	
	8	1	**7C-2851**	4	PLUG	
	9	1	**185-0882**	4	GUIDE-INLET VALVE	
	10	1	**163-9256**	4	GUIDE-VALVE (EXHAUST)	
	11	1	**145-6857**	4	VALVE-EXHAUST	
	12	1	**1N-3762**	2	PLUG-CUP	
	13	1	**147-1978**	2	DOWEL	
	14	1	**147-1979**	16	COTTER	
	15	1	**067-6043**	1	PLUG-SIDE	

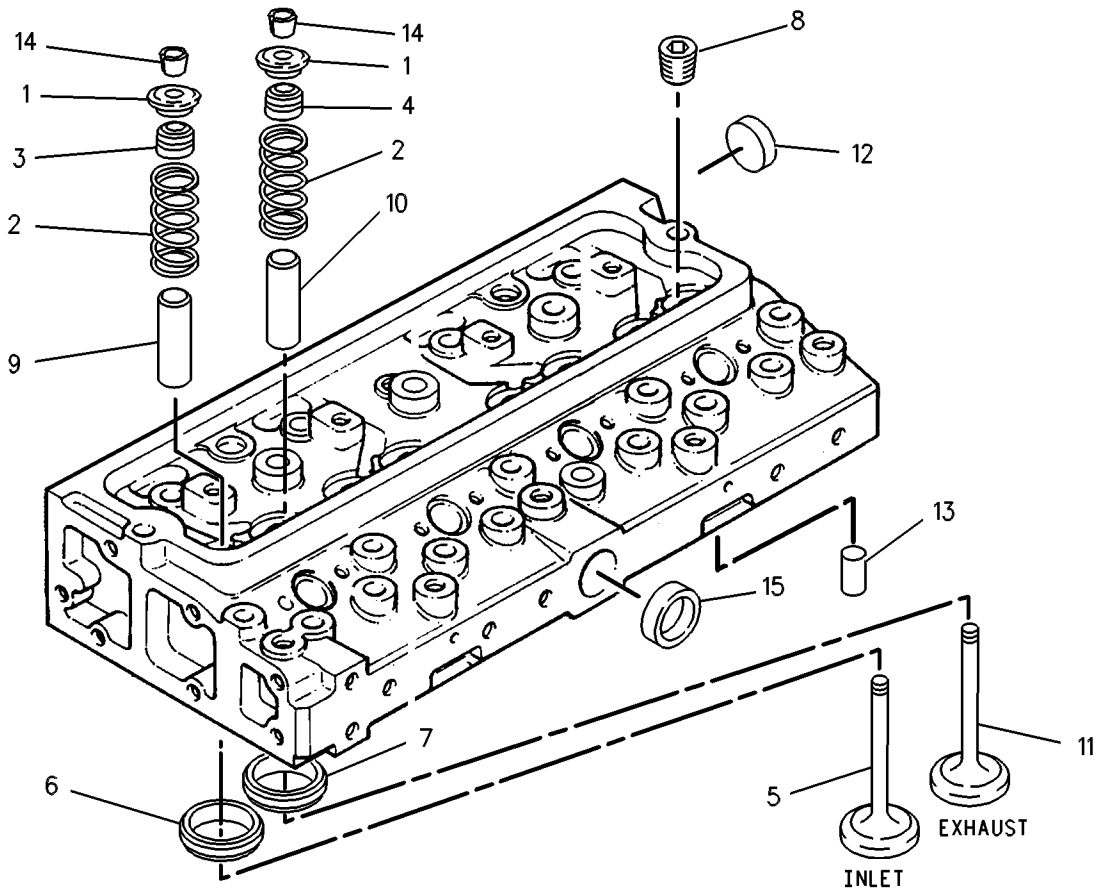

GRAPHIC #1

<END>

g00576250

BASIC ENGINE

176-3133 CYLINDER HEAD GP

S/N: 7SG1-UP

PART OF 185-3192, 185-4603 CYLINDER HEAD GP

AN ATTACHMENT

SMCS-1100, 1101, 1103, 1104, 1105, 1106, 1108, 1109, 1115, 1117, 1121, 1124, 1125

i01548824

NOTE	REF NO	GRAPHIC REF	PART NUMBER	QTY	PART NAME 1 2 3 4 5 6 (PRODUCT LEVEL)	SEE PAGE
	1	1	**1N-3762**	1	PLUG-CUP	
	2	1	**7C-2851**	4	PLUG	
	3	1	**067-6043**	1	PLUG-SIDE	
	4	1	**067-6044**	1	PLUG	
	5	1	**067-6045**	1	WASHER (5/8)	
	6	1	**138-2060**	8	CAP	
	7	1	**145-6858**	4	SEAL (EXHAUST)	
	8	1	**147-1979**	16	COTTER	
	9	1	**163-9256**	4	GUIDE-VALVE (EXHAUST)	
	10	1	**176-3134**	4	VALVE-INLET	
	11	1	**176-3135**	4	INSERT-VALVE SEAT (INLET)	
	12	1	**176-3137**	4	VALVE-EXHAUST	
	13	1	**176-3138**	4	INSERT-VALVE SEAT (EXHAUST)	
	14	1	**176-3139**	8	SPRING	
	15	1	**185-0882**	4	GUIDE-INLET VALVE	
	16	1	**185-0883**	4	SEAL (INLET)	

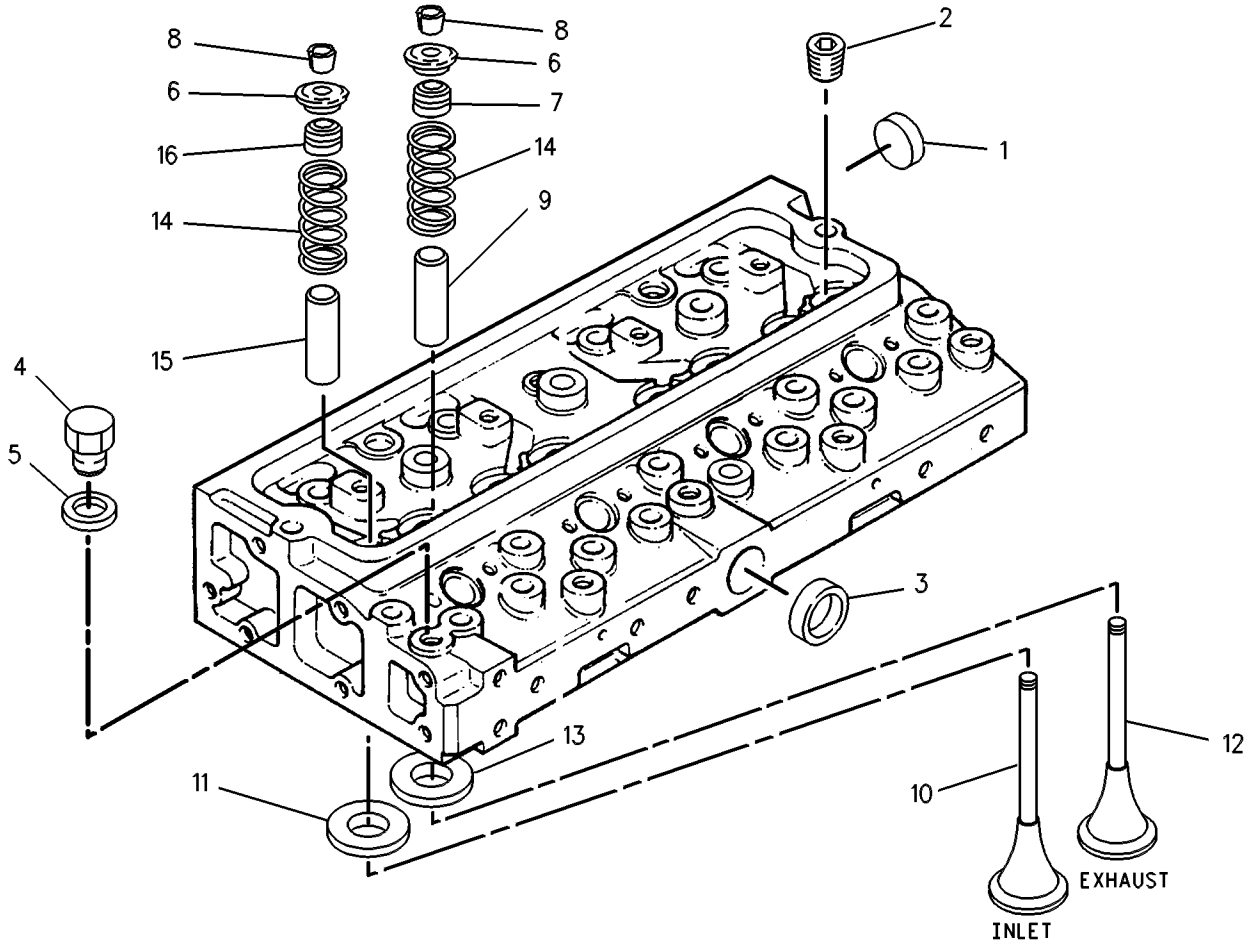

GRAPHIC #1 **<END>** g00657658

185-3192 CYLINDER HEAD GP

S/N: 7SG1-3172
PART OF 187-8016 ENGINE AR-PRIMARY
AN ATTACHMENT

SMCS-1100, 1101, 1103, 1104, 1105, 1106, 1108, 1109, 1115, 1117, 1121, 1124, 1125 **i01217086**

NOTE	REF NO	GRAPHIC REF	PART NUMBER	QTY	PART NAME 1 2 3 4 5 6 (PRODUCT LEVEL)	SEE PAGE
	1	1	**7W-2519**	4	BOLT	
Y	2	1	*176-3133*	1	CYLINDER HEAD GP	71
	3	1	**185-0884**	2	DOWEL	
	4	1	**185-0885**	1	GASKET-HEAD	
	5	1	**185-0886**	8	BOLT	
	6	1	**185-0888**	8	BOLT	
	7	1	**185-0889**	2	BOLT	

Y-SEPARATE ILLUSTRATION

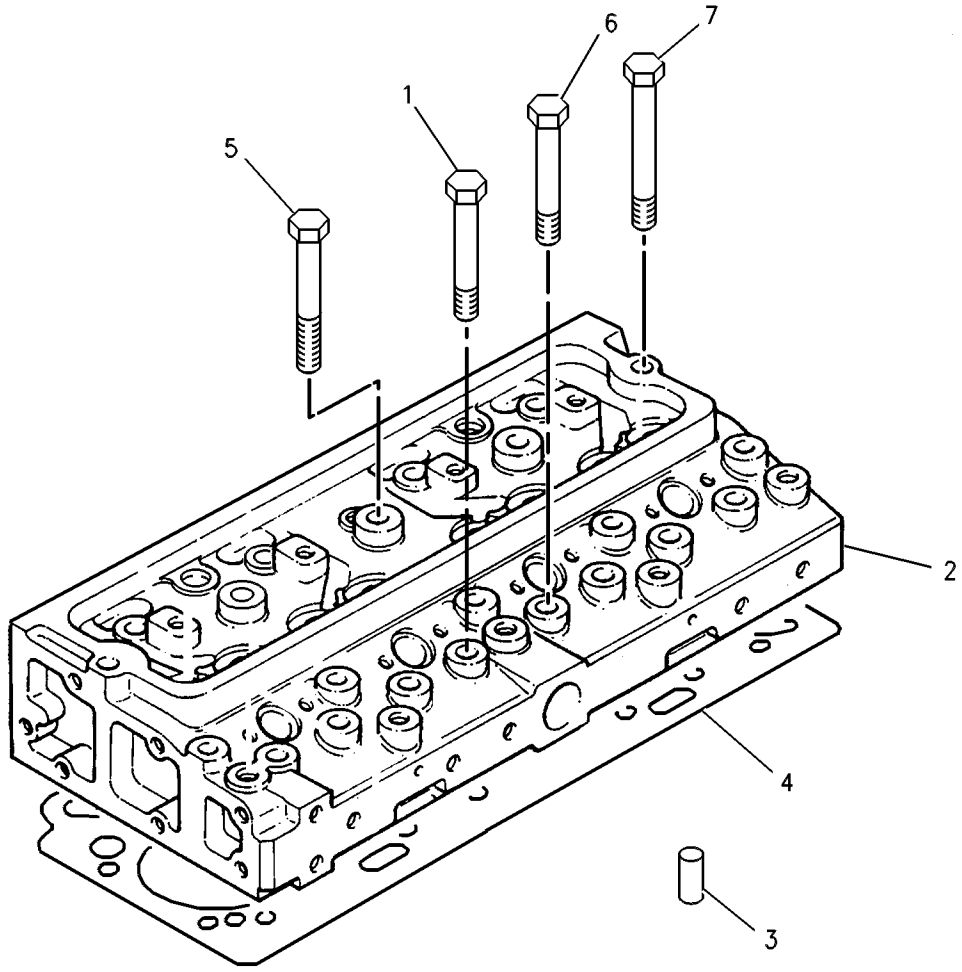

GRAPHIC #1 **<END>** g00653445

185-4603 CYLINDER HEAD GP

S/N: 7SG3173-UP
PART OF 187-8016 ENGINE AR-PRIMARY
AN ATTACHMENT

SMCS-1100, 1101, 1103, 1104, 1105, 1106, 1108, 1109, 1115, 1117, 1121, 1124, 1125

i01354783

NOTE	REF NO	GRAPHIC REF	PART NUMBER	QTY	PART NAME 1 2 3 4 5 6 (PRODUCT LEVEL)	SEE PAGE
	1	1	**7W-2519**	4	BOLT	
Y	2	1	**176-3133**	1	CYLINDER HEAD GP	71
	3	1	**185-0884**	2	DOWEL	
	4	1	**185-0885**	1	GASKET-HEAD	
	5	1	**185-0886**	8	BOLT	
	6	1	**185-0888**	8	BOLT	
	7	1	**185-0889**	2	BOLT	

Y-SEPARATE ILLUSTRATION

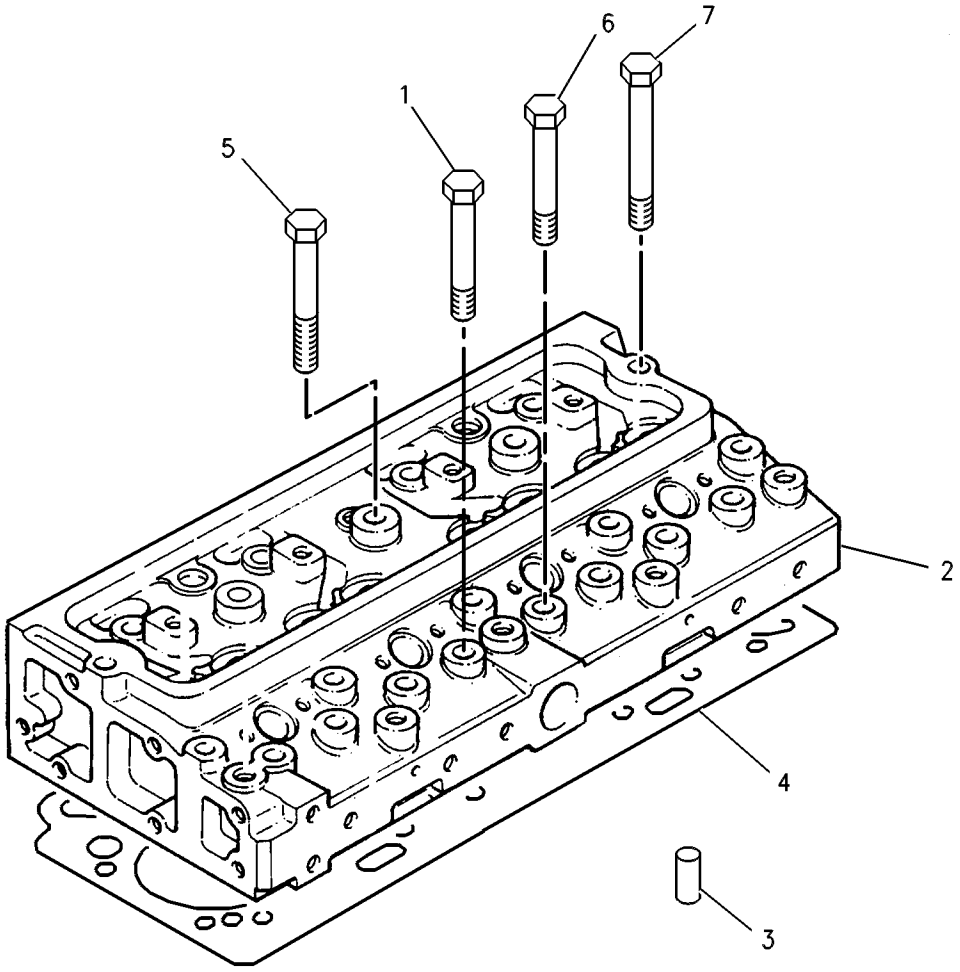

GRAPHIC #1

<END>

g00653445

220-2671 CYLINDER HEAD GP

S/N: 7BJ67008-UP
PART OF 188-0883 ENGINE AR-PRIMARY
AN ATTACHMENT

SMCS-1100, 1101, 1103, 1104, 1105, 1106, 1108, 1109, 1115, 1117, 1121, 1124, 1125 **i01707567**

NOTE	REF NO	GRAPHIC REF	PART NUMBER	QTY	PART NAME 1 2 3 4 5 6 (PRODUCT LEVEL)	SEE PAGE
	1	1	**160-0161**	1	GASKET-CYLINDER HEAD	
	2	1	**7W-2518**	8	BOLT (1/2-20X3.63IN)	
	3	1	**7W-2519**	12	BOLT (1/2-20X4.25IN)	
	4	1	**7W-2520**	2	BOLT (1/2-20X5.09IN)	
	5	1	**161-9820**	2	PIN	
Y	6	1	**163-9254**	1	CYLINDER HEAD GP	70

Y-SEPARATE ILLUSTRATION

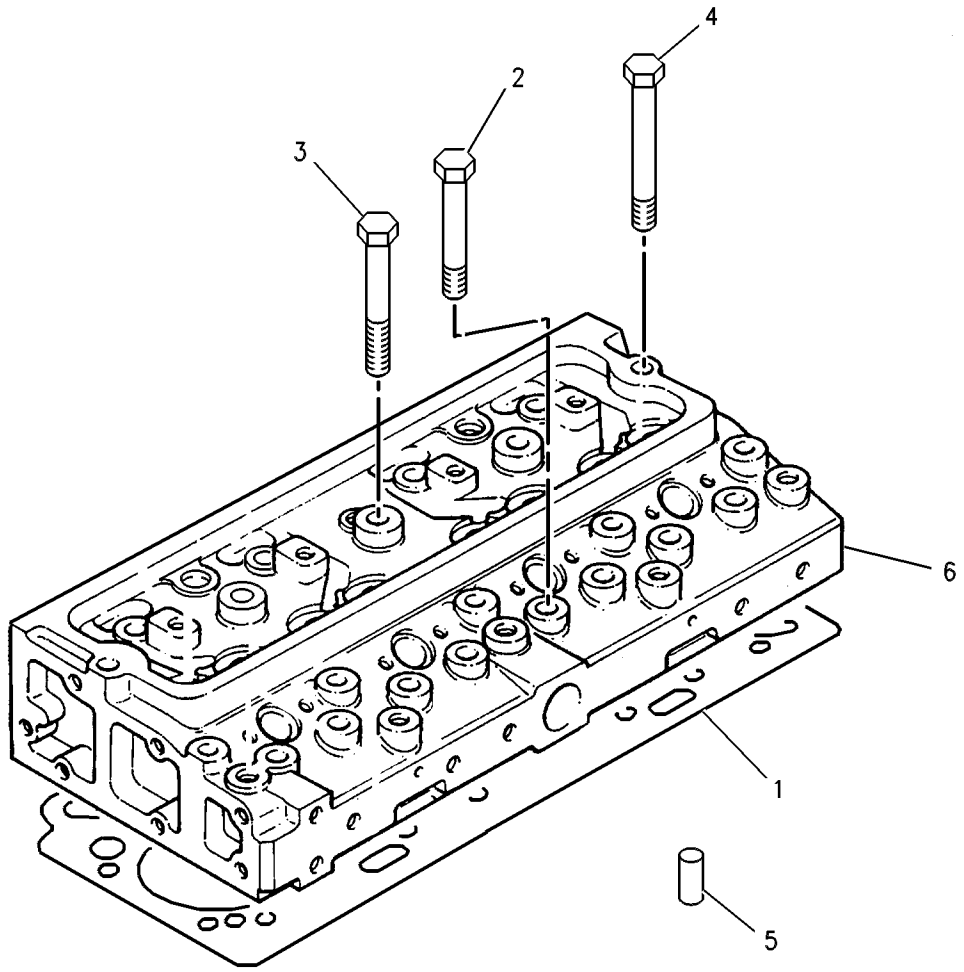

GRAPHIC #1 **<END>** g00583180

232-7519 CYLINDER HEAD GP

S/N: CRS1-UP
PART OF 232-7524, 233-7234 CYLINDER HEAD GP
AN ATTACHMENT

SMCS-1100, 1101, 1103, 1104, 1105, 1106, 1108, 1109, 1115, 1117, 1121, 1124, 1125

i01863425

NOTE	REF NO	GRAPHIC REF	PART NUMBER	QTY	PART NAME 1 2 3 4 5 6 (PRODUCT LEVEL)	SEE PAGE
	1	1	**2B-0858**	1	PLUG-PIPE	
	2	1	**9Y-5015**	2	PLUG-FREEZE	
	3	1	**067-6006**	4	PLUG	
	4	1	**147-1979**	16	RETAINER	
	5	1	**185-0882**	8	GUIDE-VALVE (INTAKE)	
	6	1	**199-9751**	1	SEAL-O-RING	
	7	1	**225-5493**	4	INSERT-VALVE (INLET)	
	8	1	**225-5494**	4	INSERT-VALVE (EXHAUST)	
	9	1	**225-5495**	4	VALVE-INLET	
	10	1	**225-5496**	8	SPRING-VALVE	
	11	1	**225-5497**	8	SEAL-VALVE	
	12	1	**225-5498**	8	CAP	
	13	1	**225-5499**	4	VALVE-EXHAUST	
	14	1	**232-1322**	1	PLUG	

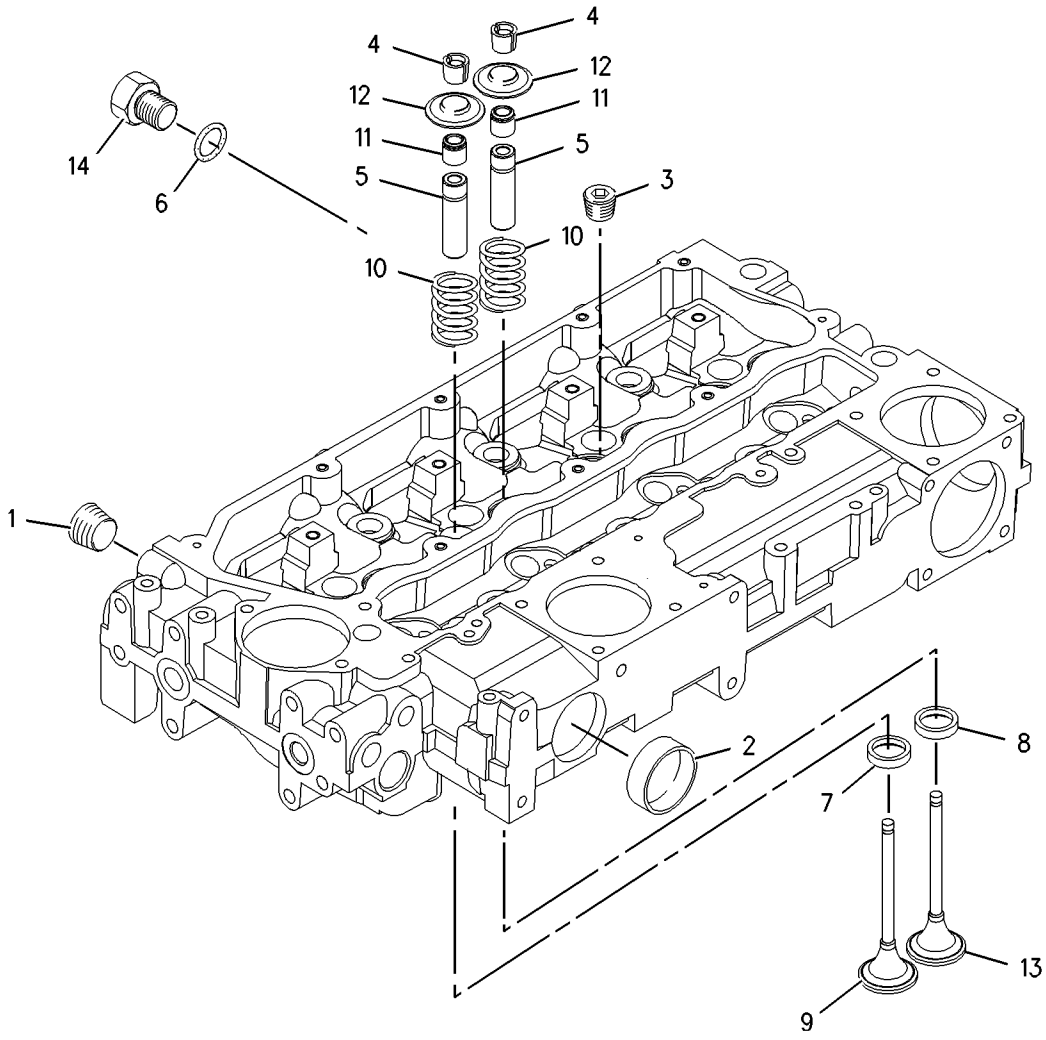

GRAPHIC #1

<END>

g00951196

232-7524 CYLINDER HEAD GP

S/N: CRS1-UP
PART OF 234-3059 ENGINE AR-PRIMARY
AN ATTACHMENT

SMCS-1100, 1101, 1103, 1104, 1105, 1106, 1108, 1109, 1115, 1117, 1121, 1124, 1125 **i02000189**

NOTE	REF NO	GRAPHIC REF	PART NUMBER	QTY	PART NAME 1 2 3 4 5 6 (PRODUCT LEVEL)	SEE PAGE
	1	1	**225-5501**	7	BOLT (M15X1.5X137MM)	
	2	1	**225-5502**	3	BOLT (M15X1.5X162MM)	
	3	1	**240-7194**	1	GASKET-HEAD	
Y	4	1	**232-7519**	1	CYLINDER HEAD GP	75

Y-SEPARATE ILLUSTRATION

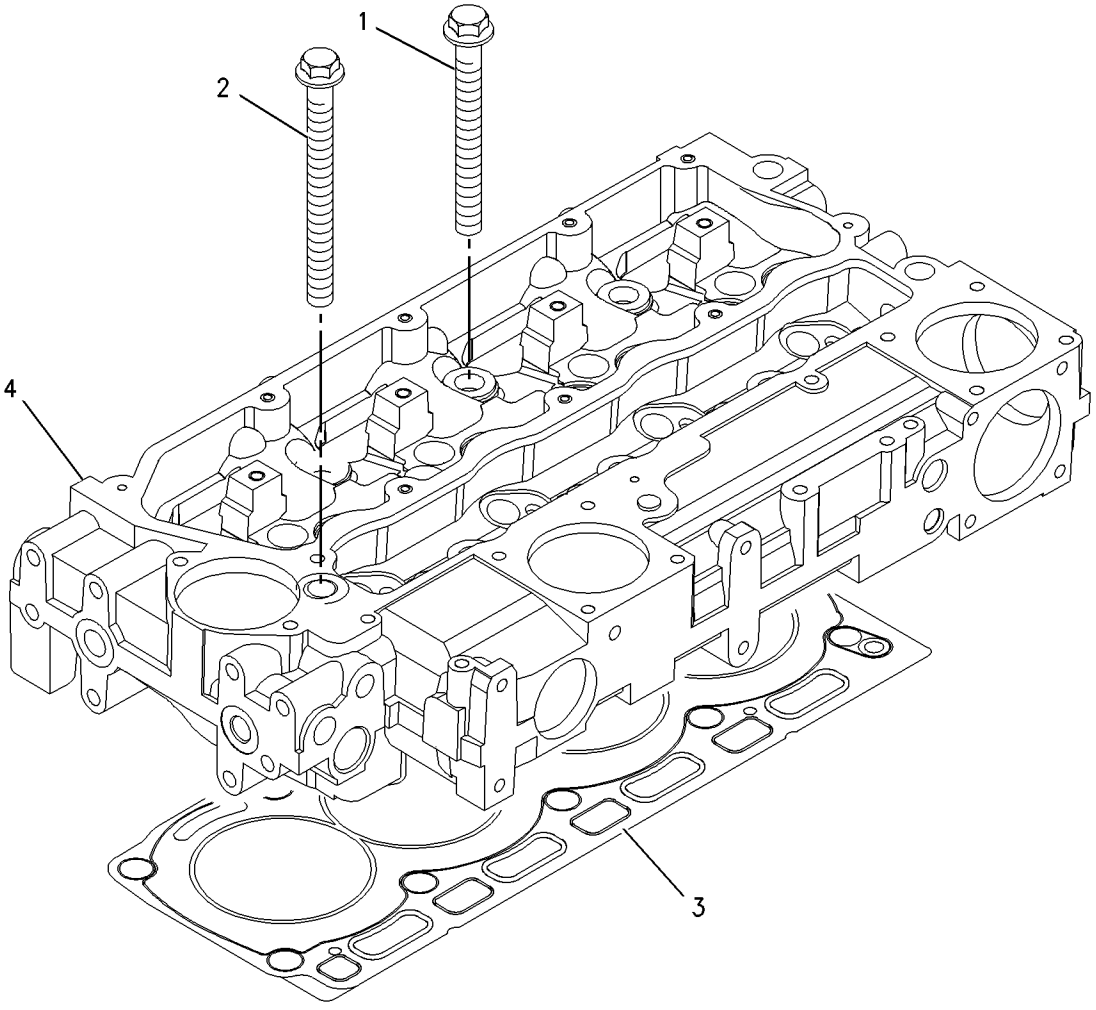

GRAPHIC #1 **<END>** g00909291

233-7234 CYLINDER HEAD GP

S/N: CRS1-UP
PART OF 234-3058 ENGINE AR-PRIMARY
AN ATTACHMENT

SMCS-1100, 1101, 1103, 1104, 1105, 1106, 1108, 1109, 1115, 1117, 1121, 1124, 1125

i02009612

NOTE	REF NO	GRAPHIC REF	PART NUMBER	QTY	PART NAME 1 2 3 4 5 6 (PRODUCT LEVEL)	SEE PAGE
	1	1	**225-5501**	7	BOLT (M15X1.5X137MM)	
	2	1	**225-5502**	3	BOLT (M15X1.5X162MM)	
	3	1	**237-1911**	1	GASKET-CYLINDER HEAD	
Y	4	1	**232-7519**	1	CYLINDER HEAD GP	75

Y-SEPARATE ILLUSTRATION

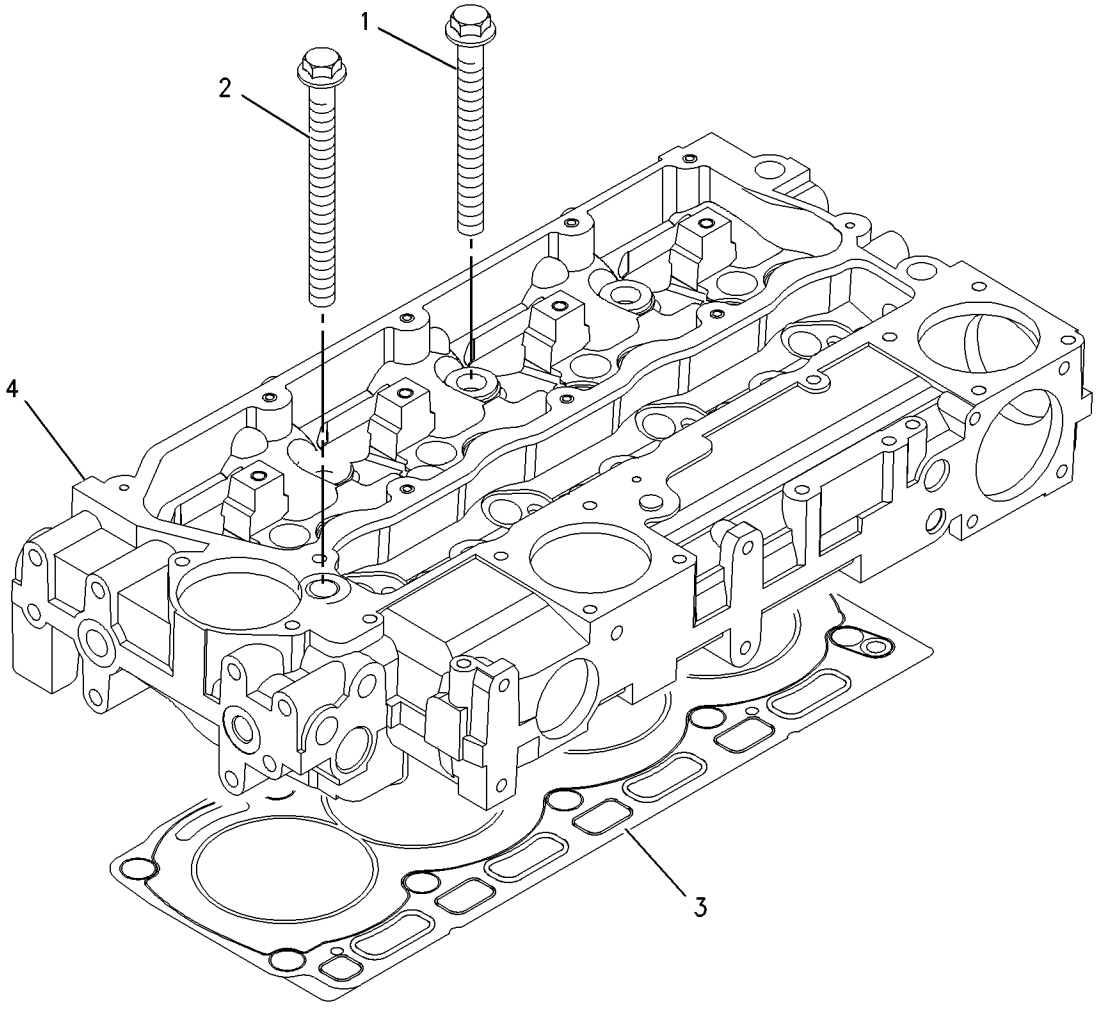

GRAPHIC #1

<END>

g00909291

148-9679 DRIVE GP-FAN

S/N: 7SG1-UP; 7BJ19000-UP
PART OF 187-8016, 188-0883 ENGINE AR-PRIMARY
AN ATTACHMENT

SMCS-1357, 1358, 1359, 1390 **i01400945**

NOTE	REF NO	GRAPHIC REF	PART NUMBER	QTY	PART NAME 1 2 3 4 5 6 (PRODUCT LEVEL)	SEE PAGE
	1	1	**103-5687**	4	BOLT (M10X1.5X85MM)	
	2	1	**132-8238**	1	HOUSING AS	

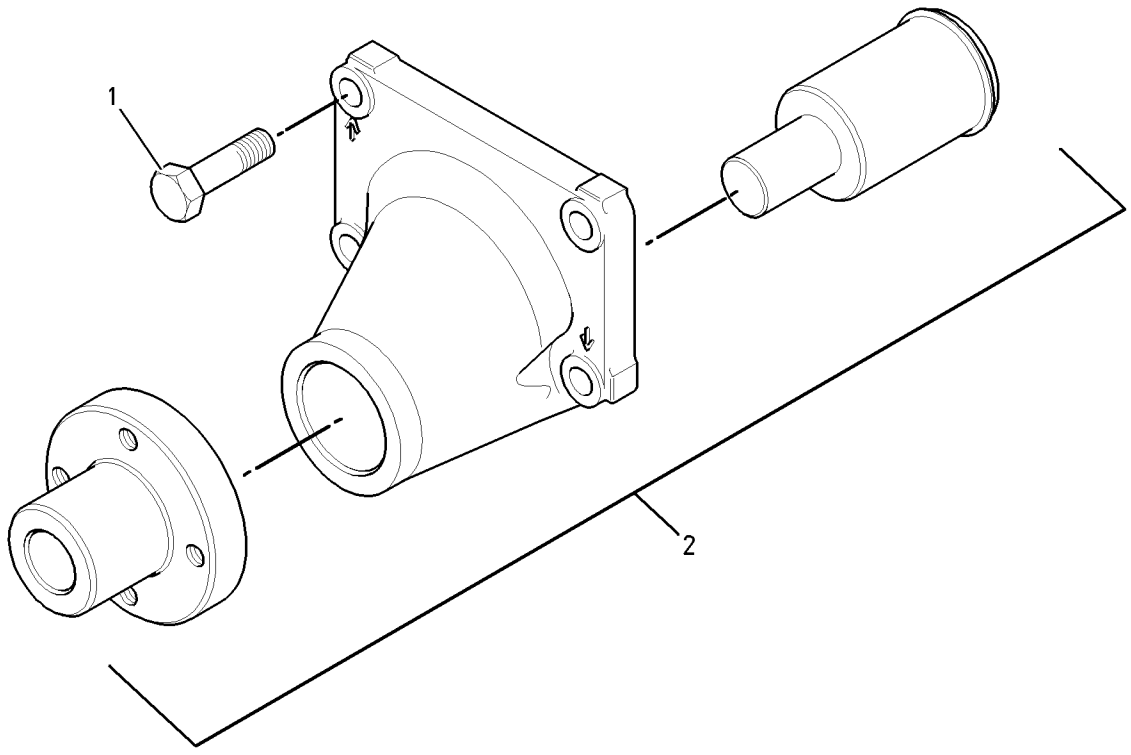

GRAPHIC #1 **<END>** g00738776

236-8241 DRIVE GP-FAN

S/N: CRS1-UP
PART OF 234-3058, 234-3059 ENGINE AR-PRIMARY
AN ATTACHMENT

SMCS-1357, 1358, 1359, 1390 **i01964508**

NOTE	REF NO	GRAPHIC REF	PART NUMBER	QTY	PART NAME 1 2 3 4 5 6 (PRODUCT LEVEL)	SEE PAGE
	1	1	**111-0859**	4	BOLT (M10X1.5X35MM)	
	2	1	**230-8065**	1	HOUSING AS	

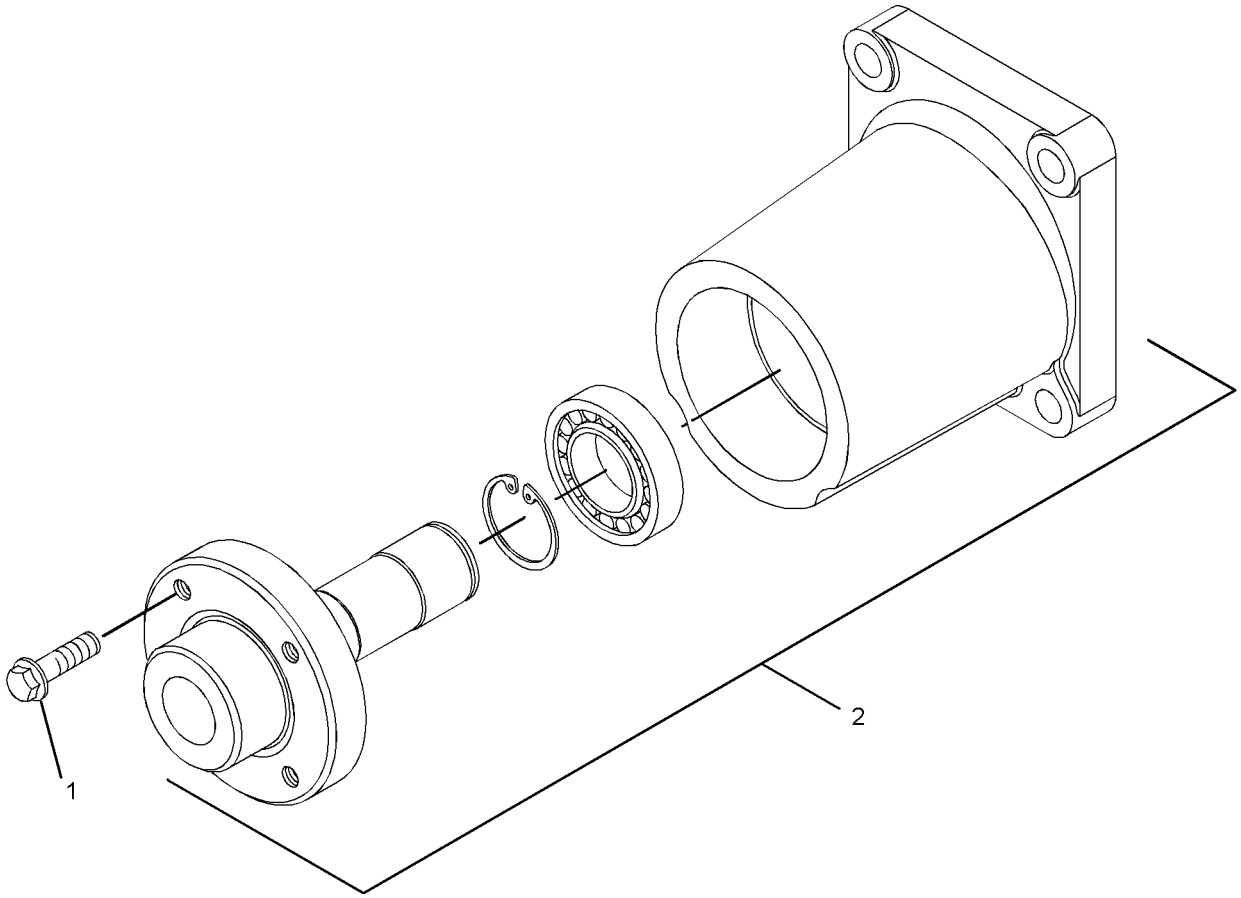

GRAPHIC #1 **<END>** g01022188

146-0180 FASTENER GP-CYLINDER HEAD

S/N: 7BJ19000-UP
PART OF 188-0883 ENGINE AR-PRIMARY
AN ATTACHMENT

SMCS-1100 **i00808612**

NOTE	REF NO	GRAPHIC REF	PART NUMBER	QTY	PART NAME 1 2 3 4 5 6 (PRODUCT LEVEL)	SEE PAGE
	1	1	**124-3815**	3	BOLT	

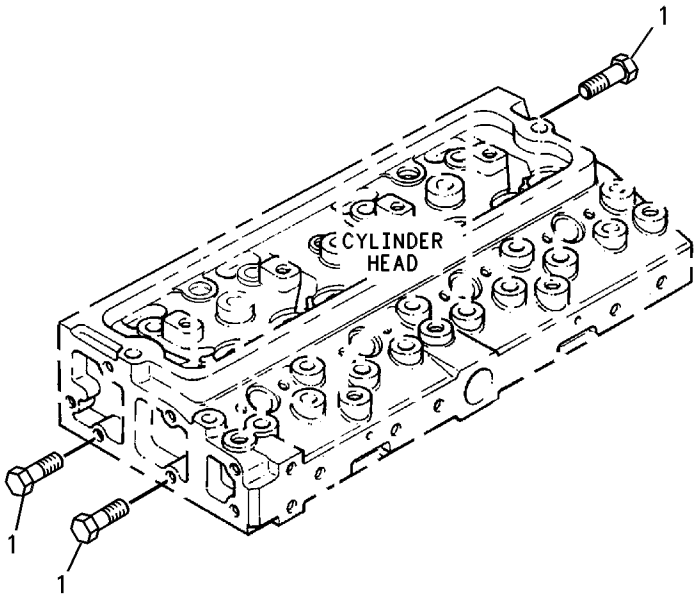

GRAPHIC #1 **<END>** g00275613

BASIC ENGINE

130-1422 FLYWHEEL GP

S/N: 7SG1-UP; 7BJ19000-UP
PART OF 187-8016, 188-0883 ENGINE AR-PRIMARY
AN ATTACHMENT

SMCS-1156, 1158 **i00779081**

NOTE	REF NO	GRAPHIC REF	PART NUMBER	QTY	PART NAME 1 2 3 4 5 6 (PRODUCT LEVEL)	SEE PAGE
	1	1	**130-1423**	1	FLYWHEEL AS	
	2	1	**033-7687**	1	RING-STARTING MOTOR	
	3	1	**0S-1603**	6	BOLT (1/2-20X1.5IN)	
	4	1	**5P-8245**	6	WASHER (3MM THK)	

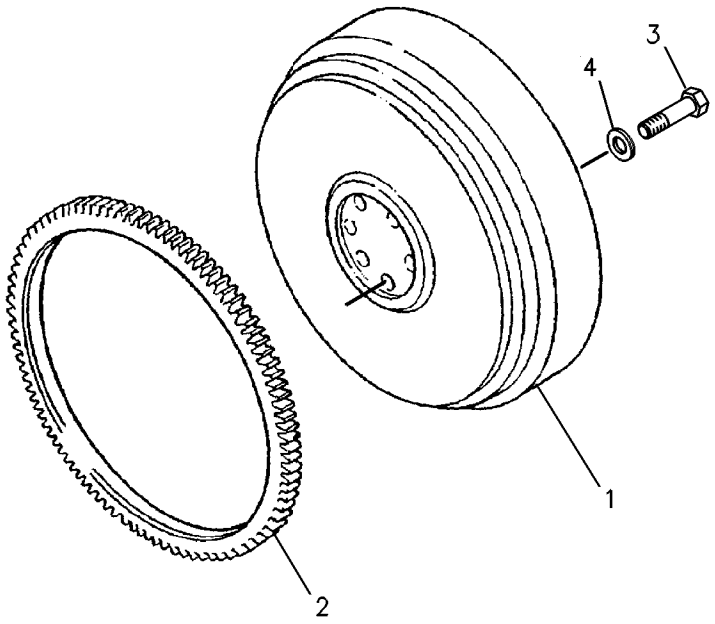

GRAPHIC #1 **<END>** g00131242

230-7300 FLYWHEEL GP

S/N: CRS1-UP
PART OF 234-3058, 234-3059 ENGINE AR-PRIMARY
AN ATTACHMENT

SMCS-1156, 1158 **i02004993**

NOTE	REF NO	GRAPHIC REF	PART NUMBER	QTY	PART NAME 1 2 3 4 5 6 (PRODUCT LEVEL)	SEE PAGE
	1	1	**0S-1603**	6	BOLT (1/2-20X1.5 IN)	
	2	1	**5P-8245**	6	WASHER-HARD (13.5X25.5X3MM THK)	
	3	1	**245-9828**	1	FLYWHEEL AS	
	4	1	**033-7687**	1	RING (126 TEETH)	

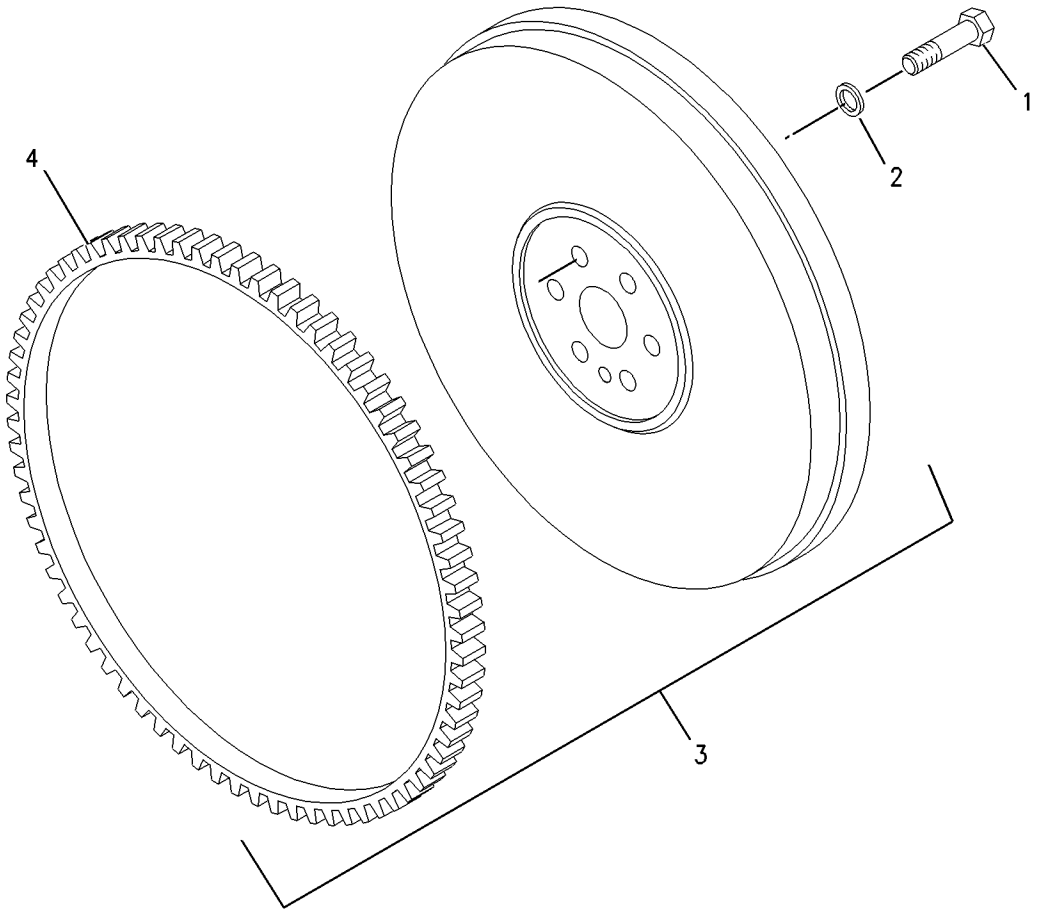

GRAPHIC #1 **<END>** g00955555

130-6352 HOUSING GP-FLYWHEEL

S/N: 7SG1-UP; 7BJ19000-UP
PART OF 187-8016, 188-0883 ENGINE AR-PRIMARY
AN ATTACHMENT

SMCS-1157 **i01763229**

NOTE	REF NO	GRAPHIC REF	PART NUMBER	QTY	PART NAME 1 2 3 4 5 6 (PRODUCT LEVEL)	SEE PAGE
	1	1	**6I-0423**	2	BOLT (M12X1.75X30MM)	
	2	1	**6I-0847**	1	PLUG	
	3	1	**7W-1176**	1	PLATE-COVER	
	4	1	**7W-4642**	1	SHIELD-DUST	
	5	1	**067-6123**	2	DOWEL	
	6	1	**114-4363**	2	BOLT (M8X1.25X12MM)	
	7	1	**101-3617**	3	PLUG	
	8	1	**121-0883**	6	BOLT (M10X1.5X30MM)	
	9	1	**220-8631**	1	HOUSING-FLYWHEEL	

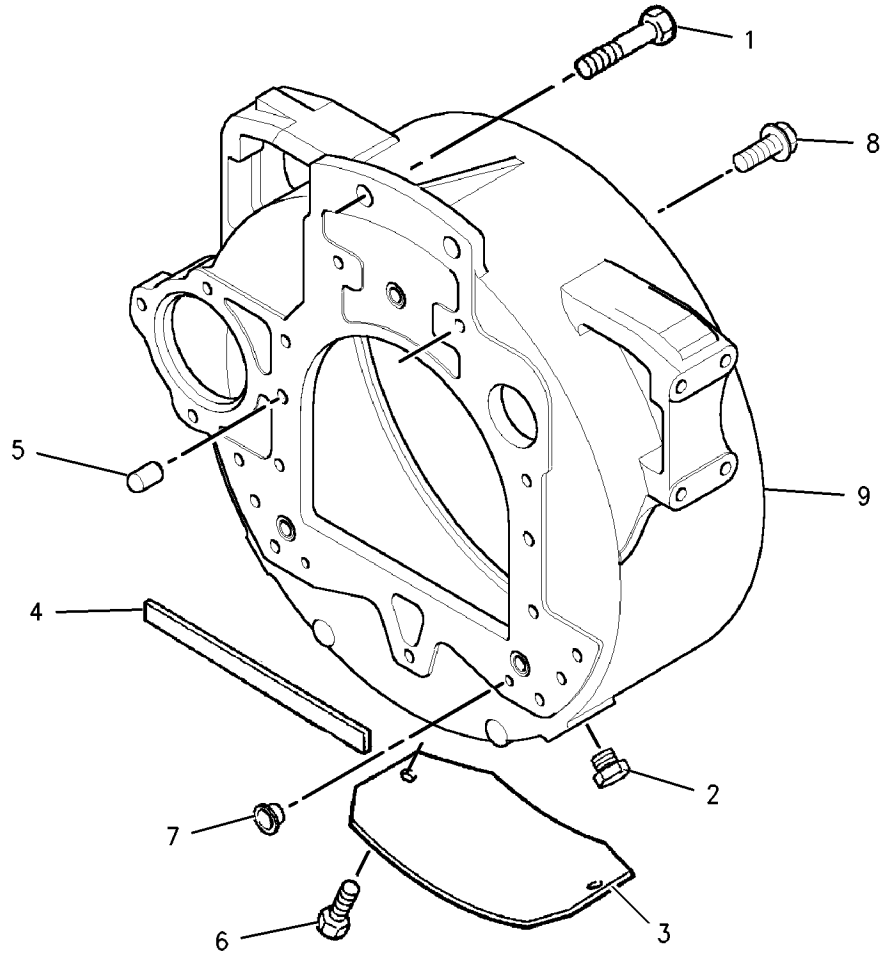

GRAPHIC #1 **<END>** g00902549

236-8238 HOUSING GP-FLYWHEEL

S/N: CRS1-UP
PART OF 234-3058, 234-3059 ENGINE AR-PRIMARY
AN ATTACHMENT

SMCS-1157 **i01925943**

NOTE	REF NO	GRAPHIC REF	PART NUMBER	QTY	PART NAME 1 2 3 4 5 6 (PRODUCT LEVEL)	SEE PAGE
	1	1	**6I-0423**	2	BOLT (M12X1.75X30MM)	
	2	1	**6I-0847**	1	PLUG	
	3	1	**7W-1176**	1	PLATE-COVER	
	4	1	**7W-4642**	1	SHIELD-DUST	
	5	1	**067-6123**	2	DOWEL	
	6	1	**114-4363**	2	BOLT (M8X1.25X12MM)	
	7	1	**101-3617**	3	PLUG	
	8	1	**121-0883**	6	BOLT (M10X1.5X30MM)	
	9	1	**220-8631**	1	HOUSING-FLYWHEEL	

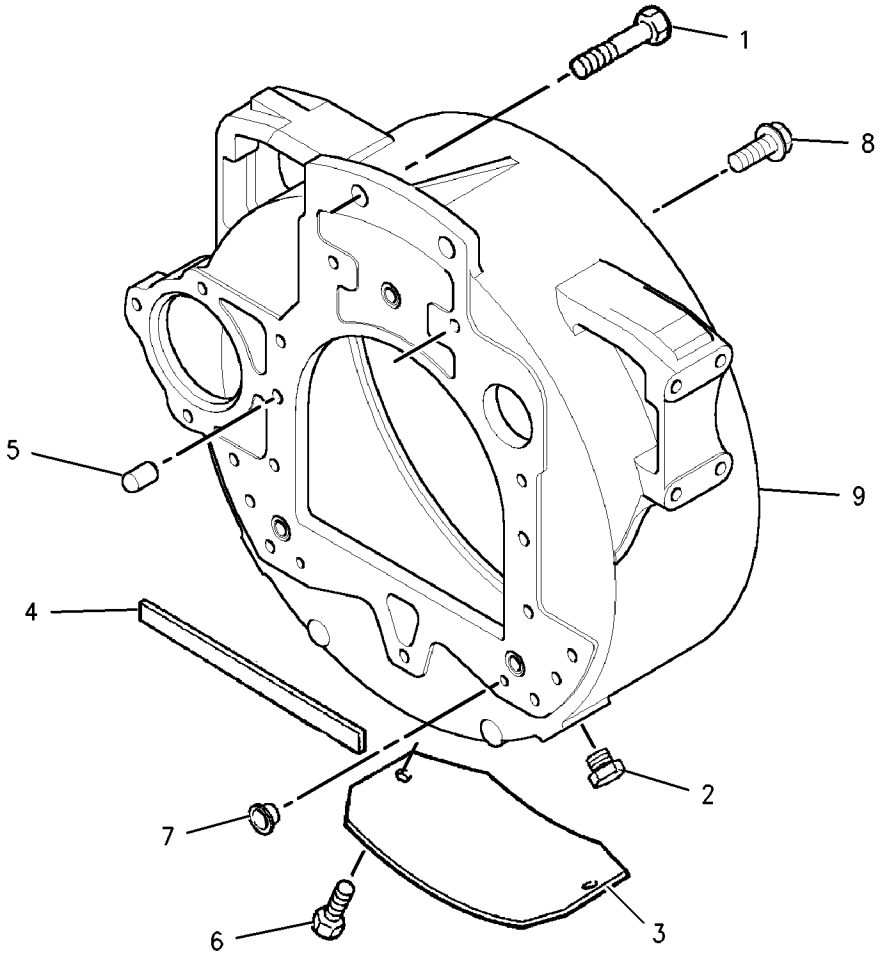

GRAPHIC #1 **<END>** g00902549

BASIC ENGINE

145-8479 HOUSING GP-FRONT

S/N: 7BJ19000-67007
PART OF 188-0883 ENGINE AR-PRIMARY
AN ATTACHMENT

SMCS-1151, 1162, 1166 **i01433417**

NOTE	REF NO	GRAPHIC REF	PART NUMBER	QTY	PART NAME 1 2 3 4 5 6 (PRODUCT LEVEL)	SEE PAGE
	1	1	**6I-0217**	8	BOLT (M8X1.25X20MM)	
	2	1	**6I-0254**	7	BOLT (M8X1.25X30MM)	
	3	1	**6I-0260**	1	BOLT (M8X1.25X25MM)	
	5	1	**6I-0836**	1	GASKET	
	6	1	**6I-0839**	6	BOLT (M8X1.25X70MM)	
	7	1	**6I-0645**	6	BOLT (M8X1.25X25MM)	
	8	1	**6I-0846**	2	BOLT (M6X1.0X14MM)	
	9	1	**164-0792**	1	HOUSING-FRONT	
	10	1	**183-6317**	1	COVER AS-FRONT	
	11	1	**4W-5359**	1	SEAL-CRANKSHAFT	
	12	1	**140-7443**	1	GASKET-COVER	
	13	1	**140-7444**	1	SHIELD	
	14	1	**140-7445**	1	DAMPER	

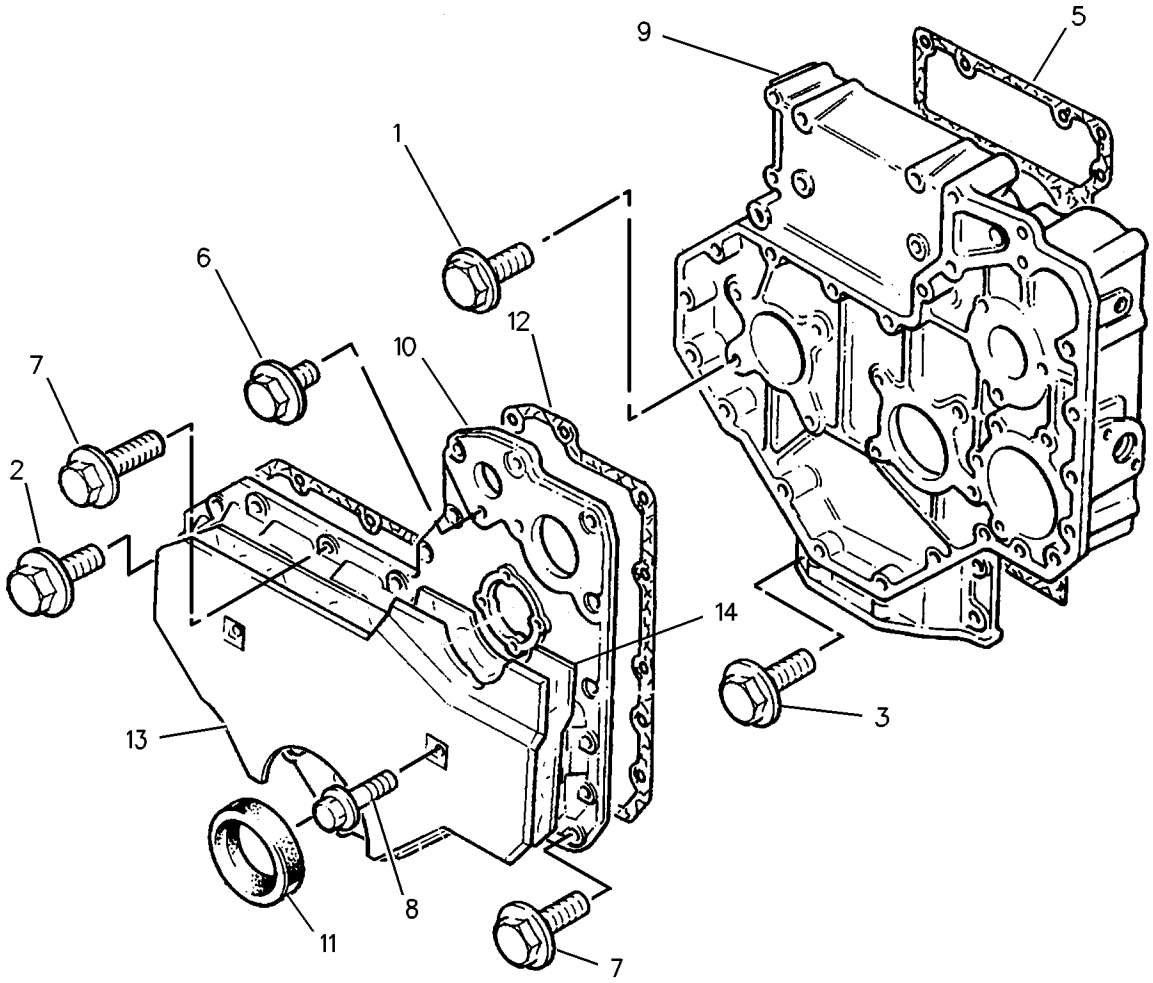

GRAPHIC #1 **<END>** g00751191

185-3194 HOUSING GP-FRONT

S/N: 7SG1-3172
PART OF 187-8016 ENGINE AR-PRIMARY
AN ATTACHMENT

SMCS-1151, 1162, 1166 **i01217100**

NOTE	REF NO	GRAPHIC REF	PART NUMBER	QTY	PART NAME 1 2 3 4 5 6 (PRODUCT LEVEL)	SEE PAGE
	1	1	**6I-0217**	8	BOLT	
	2	1	**6I-0254**	7	BOLT	
	3	1	**6I-0260**	1	BOLT	
	4	1	**6I-0645**	6	BOLT	
	5	1	**6I-0836**	1	GASKET	
	6	1	**6I-0839**	6	BOLT	
	7	1	**6I-0846**	2	BOLT	
	8	1	**140-7443**	1	GASKET-COVER	
	9	1	**140-7444**	1	SHIELD	
	10	1	**140-7445**	1	DAMPER	
	11	1	**164-0792**	1	HOUSING-FRONT	
	12	1	**183-6317**	1	COVER AS-FRONT	
	13	1	**4W-5359**	1	SEAL-CRANKSHAFT	

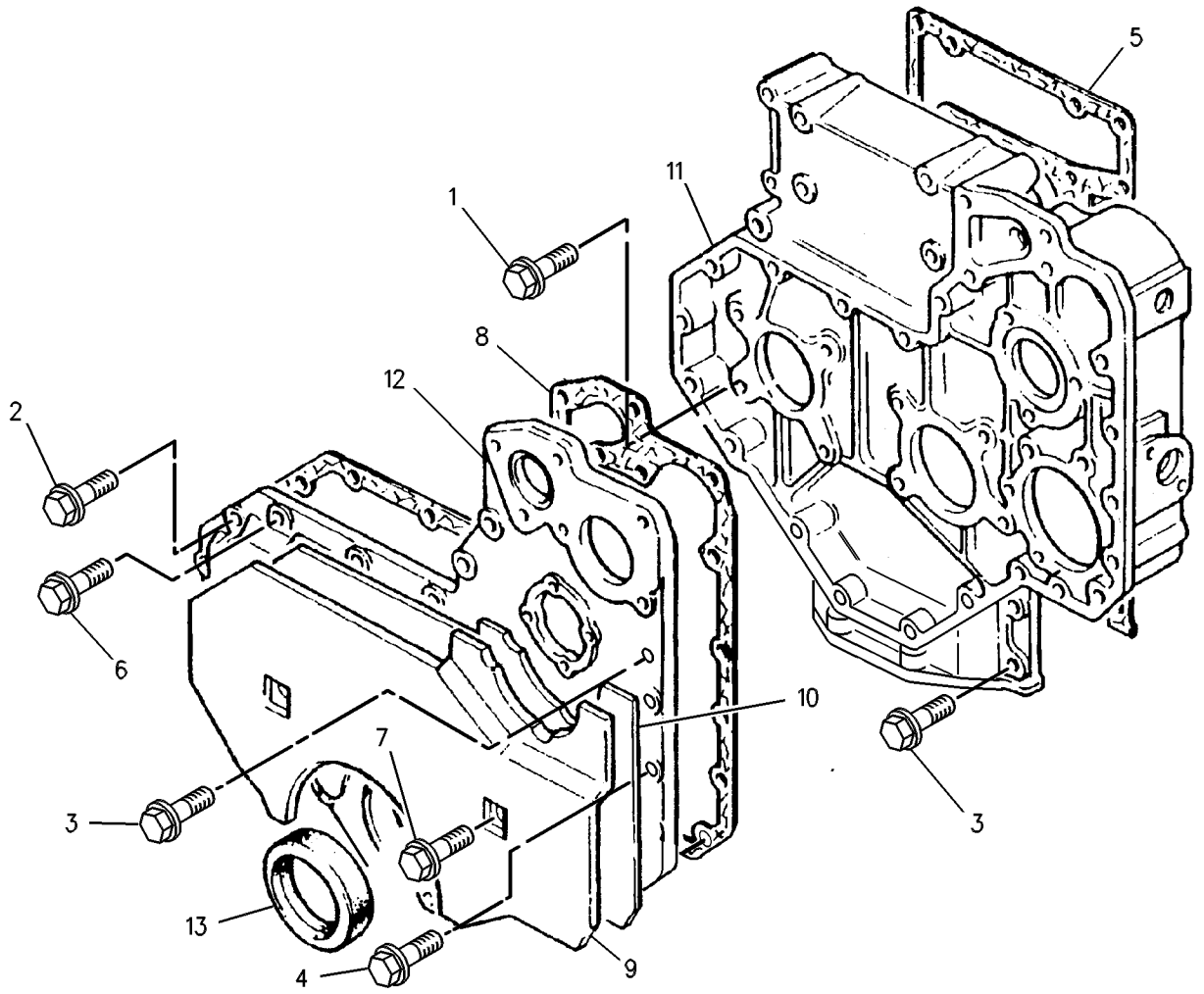

GRAPHIC #1 **<END>** g00652336

BASIC ENGINE

185-4611 HOUSING GP-FRONT

S/N: 7SG3173-UP
PART OF 187-8016 ENGINE AR-PRIMARY
AN ATTACHMENT

SMCS-1151, 1162, 1166 **i01940366**

NOTE	REF NO	GRAPHIC REF	PART NUMBER	QTY	PART NAME 1 2 3 4 5 6 (PRODUCT LEVEL)	SEE PAGE
	1	1	**6I-0217**	8	BOLT (M8X1.25X20MM)	
	2	1	**6I-0254**	6	BOLT (M8X1.25X30MM)	
	3	1	**6I-0260**	1	BOLT (M8X1.25X25MM)	
	4	1	**6I-0645**	6	BOLT (M8X1.25X25MM)	
	5	1	**6I-0836**	1	GASKET	
	6	1	**6I-0839**	6	BOLT (M8X1.25X70MM)	
	7	1	**6I-0846**	2	BOLT (M6X1.0X14MM)	
	8	1	**177-2391**	1	GASKET-COVER	
	9	1	**185-4632**	1	SHIELD	
	10	1	**185-4669**	1	DAMPER	
	11	1	**231-3488**	1	HOUSING-FRONT	
	12	1	**185-4629**	1	COVER AS-HOUSING	
	13	1	**4W-5359**	1	SEAL-CRANKSHAFT	
	14	1	**167-2153**	1	SLEEVE-CRANKSHAFT	

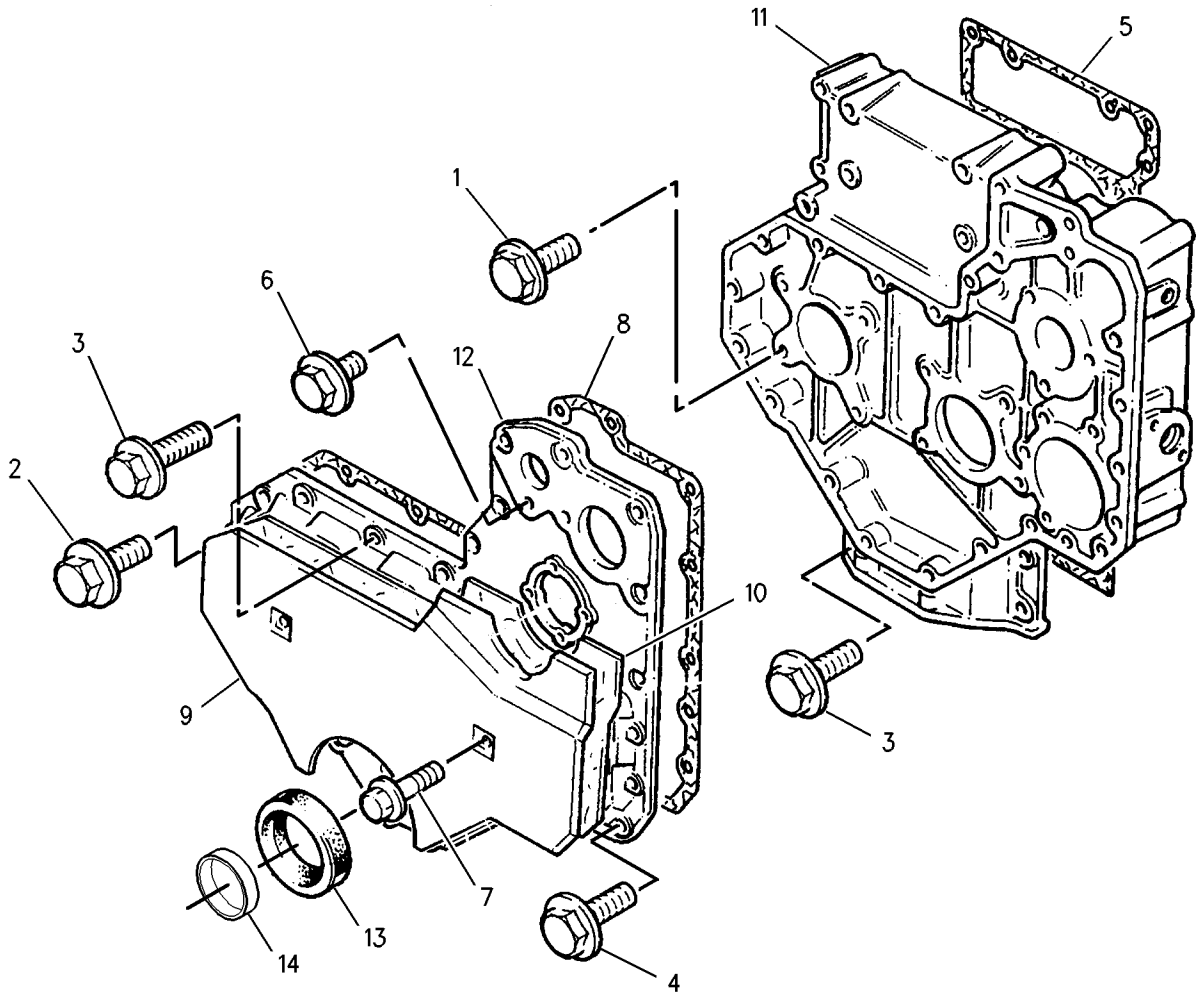

GRAPHIC #1 **<END>** g00731953

BASIC ENGINE

220-2675 HOUSING GP-FRONT

S/N: 7BJ67008-UP
PART OF 188-0883 ENGINE AR-PRIMARY
AN ATTACHMENT

SMCS-1151, 1162, 1166 **i01882552**

NOTE	REF NO	GRAPHIC REF	PART NUMBER	QTY	PART NAME 1 2 3 4 5 6 (PRODUCT LEVEL)	SEE PAGE
	1	1	**6I-0217**	8	BOLT (M8X1.25X20MM)	
	2	1	**6I-0254**	7	BOLT (M8X1.25X30MM)	
	3	1	**6I-0645**	10	BOLT (M8X1.25X25MM)	
	4	1	**160-3510**	1	GASKET	
	5	1	**6I-0839**	6	BOLT (M8X1.25X70MM)	
	6	1	**6I-0846**	2	BOLT (M6X1.0X14MM)	
	7	1	**185-4631**	1	GASKET-COVER	
	8	1	**218-2218**	1	SHIELD	
	9	1	**218-2214**	1	DAMPER	
	10	1	**231-3488**	1	HOUSING-FRONT	
	11	1	**185-4629**	1	COVER AS-HOUSING	
	12	1	**4W-5359**	1	SEAL-CRANKSHAFT	
	13	1	**167-2153**	1	SLEEVE-CRANKSHAFT	

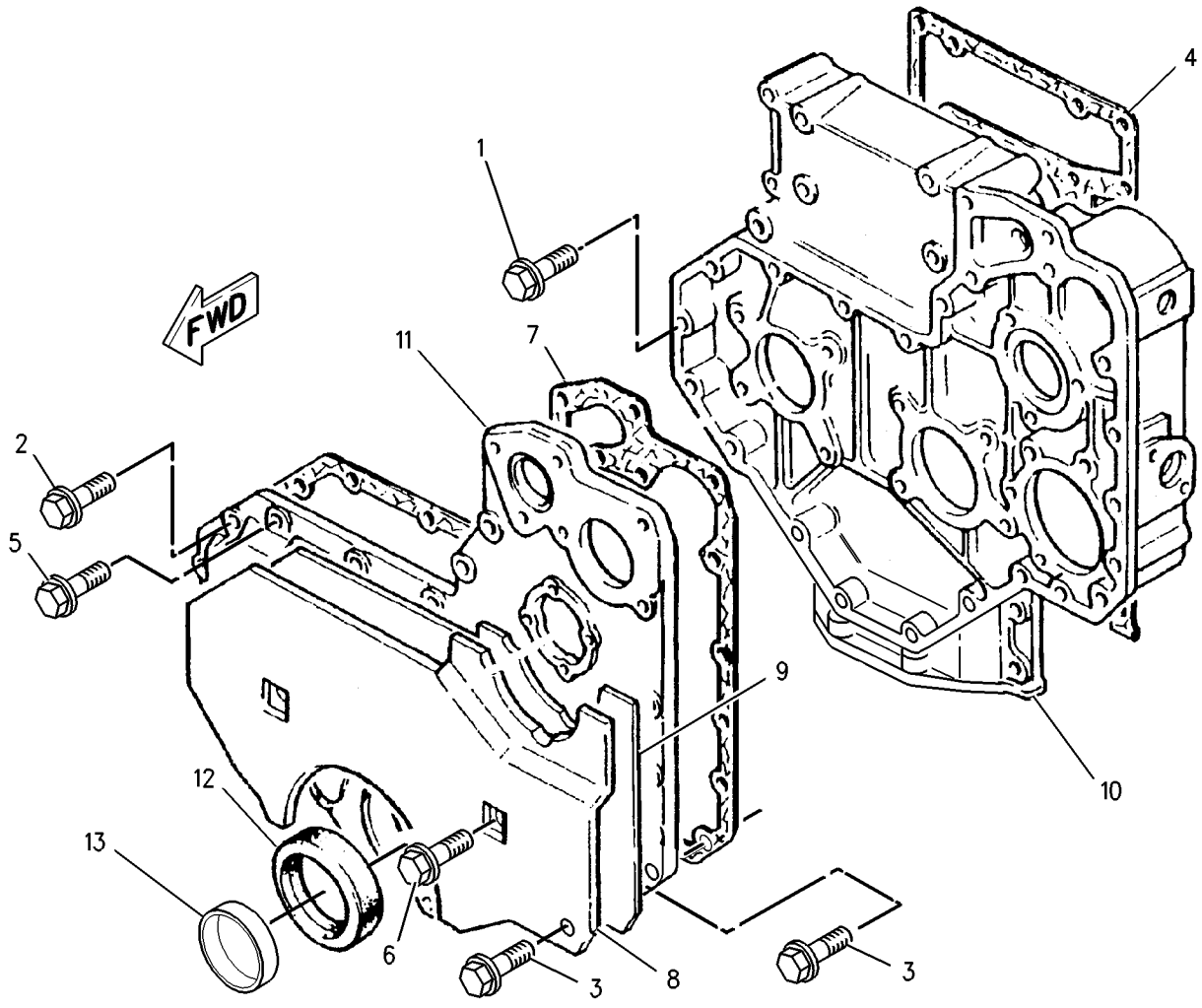

GRAPHIC #1 **<END>** g00893794

BASIC ENGINE

232-3670 HOUSING GP-FRONT

S/N: CRS1-UP

PART OF 234-3058, 234-3059 ENGINE AR-PRIMARY

AN ATTACHMENT

SMCS-1151, 1162, 1166 **i01890768**

NOTE	REF NO	GRAPHIC REF	PART NUMBER	QTY	PART NAME 1 2 3 4 5 6 (PRODUCT LEVEL)	SEE PAGE
	1	1	**1B-8736**	1	KEY-WOODRUFF	
	2	1	**6I-0217**	8	BOLT (M8X1.25X20MM)	
	3	1	**6I-0645**	4	BOLT (M8X1.25X25MM)	
	4	1	**6I-0789**	3	BOLT (M10X1.5X60MM)	
	5	1	**7C-4616**	1	BOLT (M12X1.75X45MM)	
	6	1	**067-6179**	1	DOWEL	
	7	1	**067-6897**	1	HUB-IDLER GEAR	
	8	1	**067-6900**	1	PLATE-RETAINING	
	9	1	**100-3751**	5	BOLT (M8X1.25X65MM)	
	10	1	**124-3815**	10	BOLT (M8X16X1.25MM)	
	11	1	**133-1011**	1	WASHER	
	12	1	**216-8633**	1	GEAR AS-IDLER (73 TEETH)	
	12A	1	**067-6899**	2	BUSHING-IDLER GEAR	
	13	1	**216-8634**	1	GEAR-CAMSHAFT (68 TEETH)	
	14	1	**225-8278**	1	HOUSING-FRONT	
	15	1	**225-8280**	1	SEAL-CRANKSHAFT	
	16	1	**225-8281**	1	GASKET	
	17	1	**225-8282**	1	GASKET	
	18	1	**232-3657**	1	COVER AS-FRONT	
	19	1	**232-3666**	1	WASHER-THRUST	

232-3670 **HOUSING GP-FRONT** *(contd.)* **i01890768**

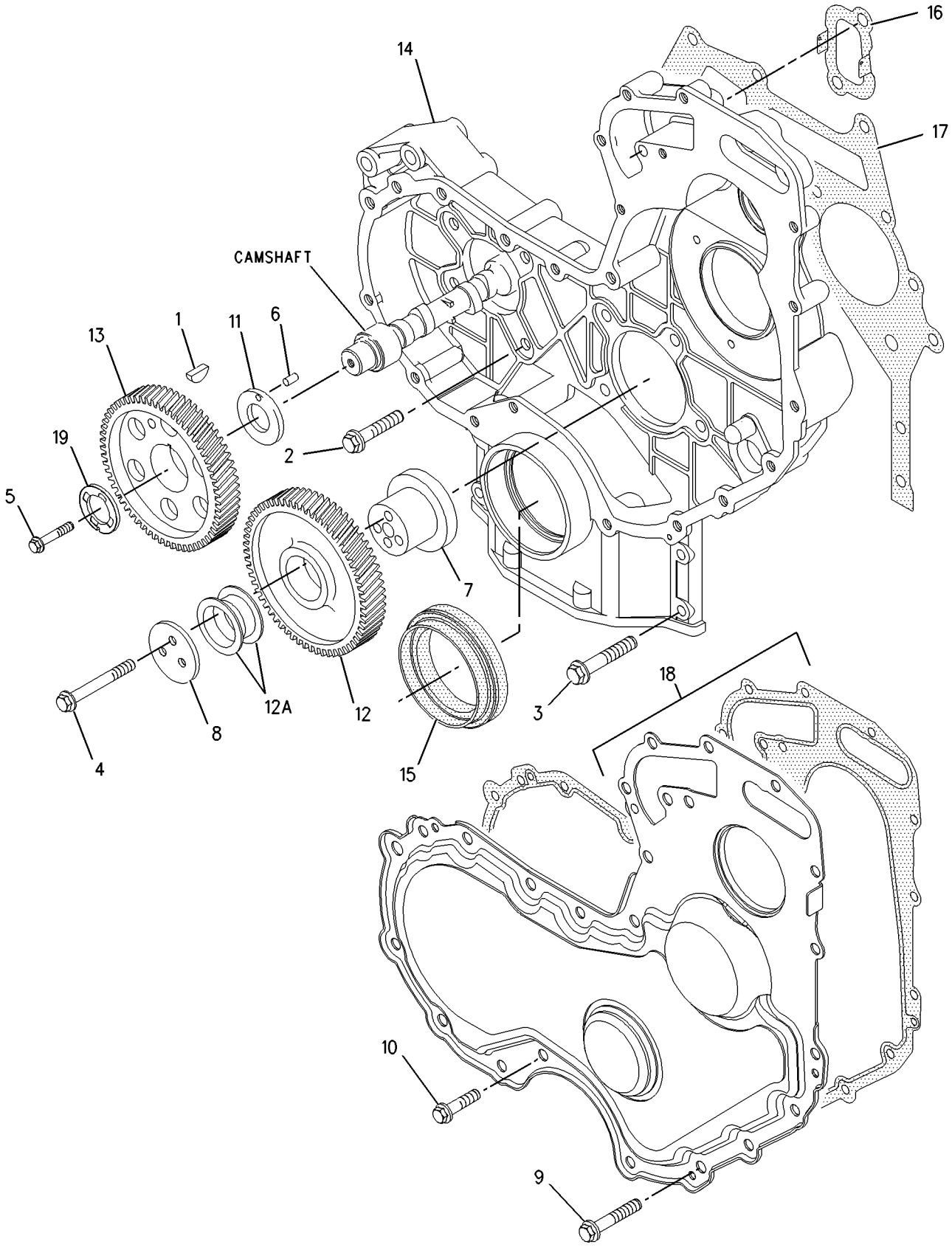

GRAPHIC #1 **<END>** g00985089

BASIC ENGINE

148-9685 LIFTING GP-ENGINE

S/N: 7SG1-UP; 7BJ19000-UP
PART OF 187-8016, 188-0883 ENGINE AR-PRIMARY
AN ATTACHMENT

SMCS-1122 **i01401031**

NOTE	REF NO	GRAPHIC REF	PART NUMBER	QTY	PART NAME 1 2 3 4 5 6 (PRODUCT LEVEL)	SEE PAGE
	1	1	**6I-0654**	2	BOLT (M10X1.5X25MM)	
	2	1	**142-0349**	1	PLATE-LIFTING	
	3	1	**147-8590**	1	PLATE	
	4	1	**6I-0593**	2	BOLT (M10X1.5X30MM)	
	5	1	**123-2900**	2	SPACER	

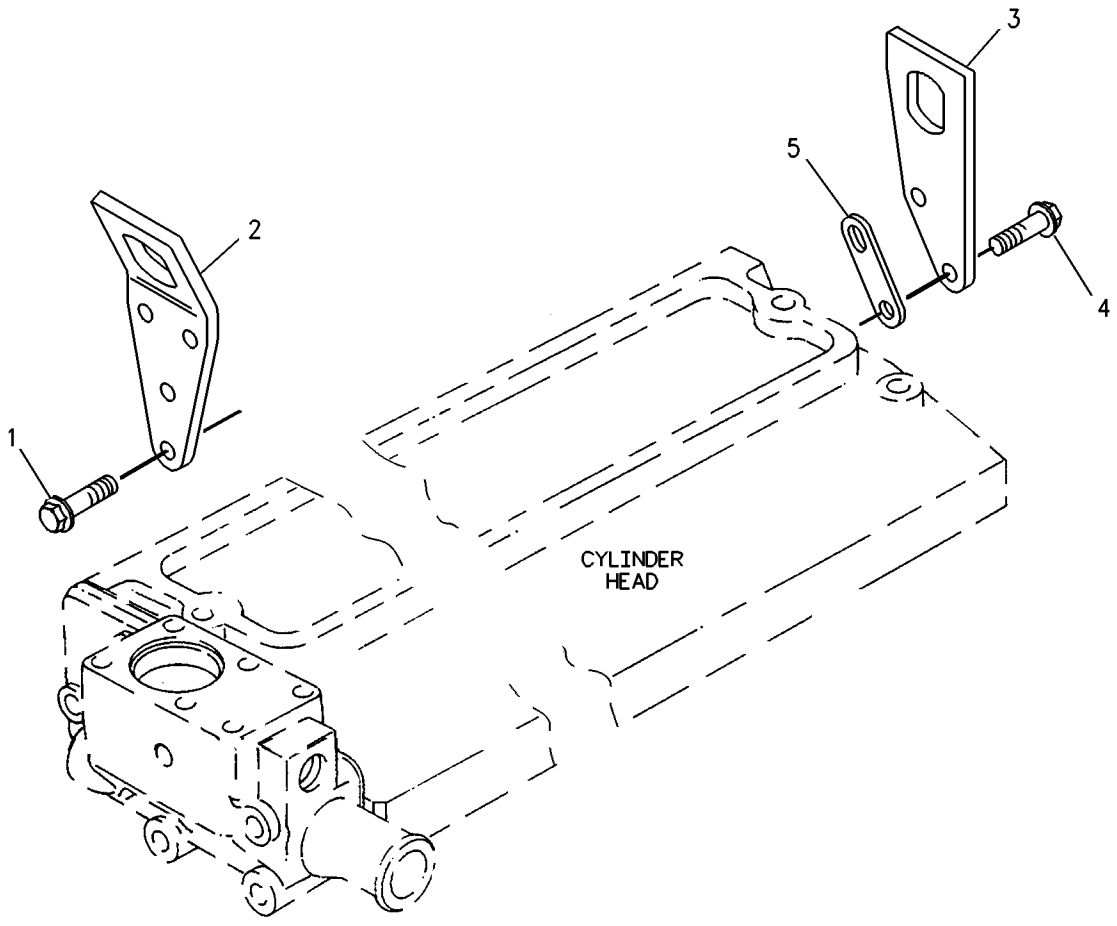

GRAPHIC #1 **<END>** g00738981

233-7432 LIFTING GP-ENGINE

S/N: CRS1-UP
PART OF 234-3058, 234-3059 ENGINE AR-PRIMARY
AN ATTACHMENT

SMCS-1122 **i01876830**

NOTE	REF NO	GRAPHIC REF	PART NUMBER	QTY	PART NAME 1 2 3 4 5 6 (PRODUCT LEVEL)	SEE PAGE
	1	1	**100-4830**	4	BOLT (M10X1.5X20MM)	
	2	1	**225-8848**	2	PLATE	

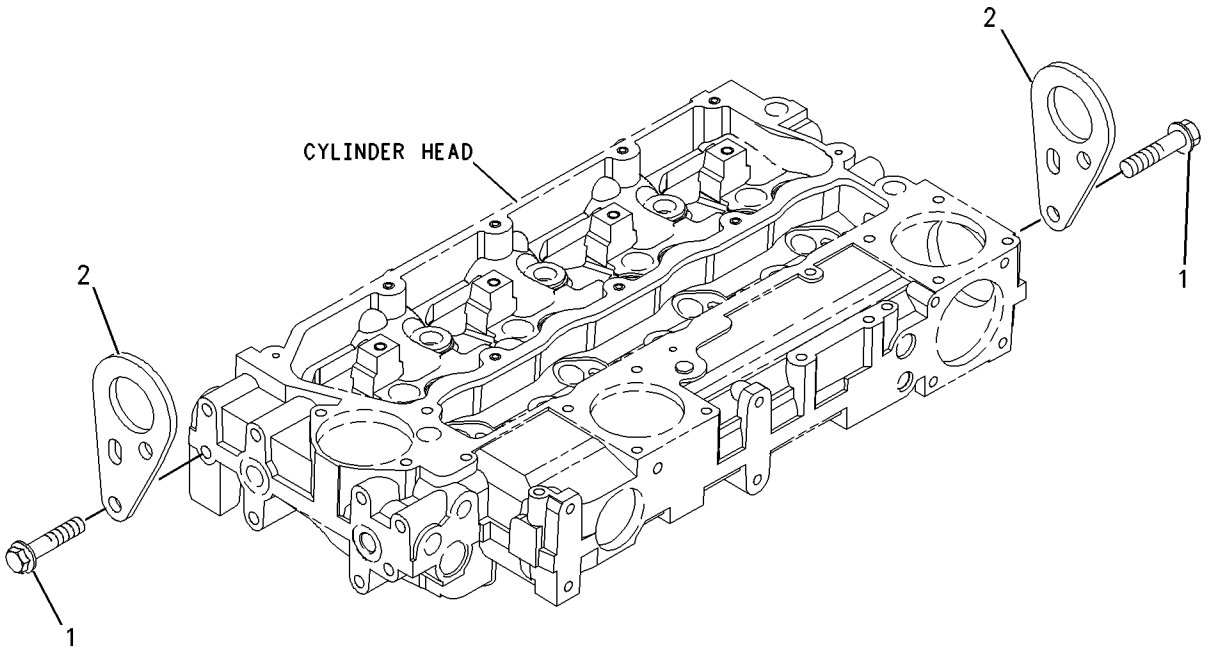

GRAPHIC #1 **<END>** g00955299

BASIC ENGINE

7E-4644 MOUNTING GP-ALTERNATOR

S/N: CXP940-UP

PART OF 185-1887 INSTALLATION AR-ENGINE

SMCS-1405 **i01541133**

NOTE	REF NO	GRAPHIC REF	PART NUMBER	QTY	PART NAME 1 2 3 4 5 6 (PRODUCT LEVEL)	SEE PAGE
	1	1	**116-3864**	1	BRACKET AS	
	2	1	**116-3865**	1	BRACKET AS	
	3	1	**116-3866**	1	STRAP	
M	4	1	**8T-0272**	1	BOLT-SOCKET HEAD (M10X1.5X110MM)	
	5	1	**8T-4121**	5	WASHER-HARD (11X21X2.5MM THK)	
	6	1	**5B-0486**	1	SPACER	
M	7	1	**8T-4133**	1	NUT (M10X1.5 THD)	
	8	1	**7C-9465**	1	SPACER (20MM THK)	
	9	1	**8T-4224**	2	WASHER-HARD (8.8X16X2MM THK)	
M	10	1	**8T-4136**	3	BOLT (M10X1.5X25MM)	
M	11	1	**8T-4908**	4	BOLT (M8X1.25X25MM)	
	12	1	**5P-4116**	2	WASHER-HARD (8.8X20.5X2MM THK)	
	13	1	**7X-7729**	1	WASHER (11X25X3MM THK)	

M-METRIC PART

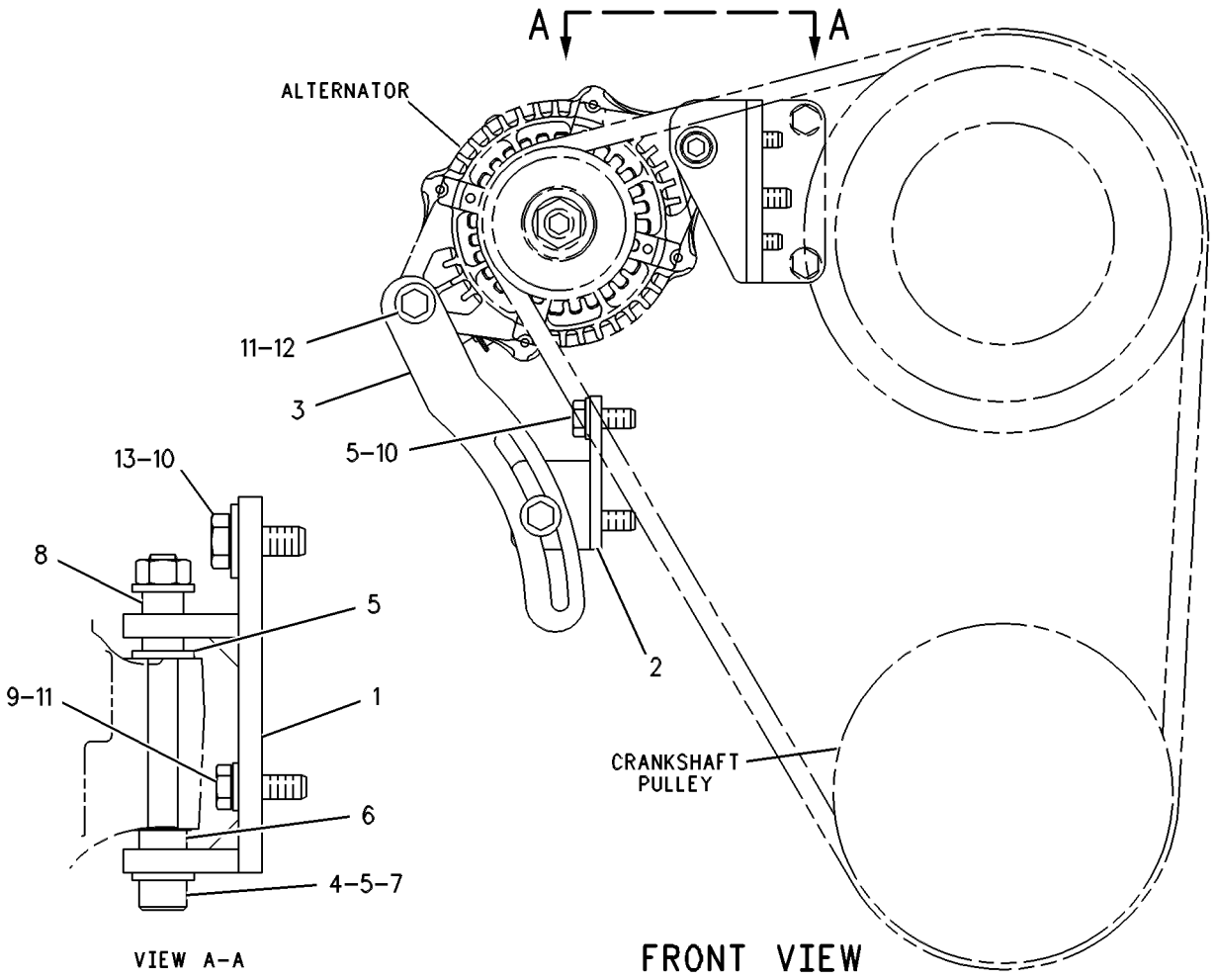

GRAPHIC #1 **<END>** g00259648

BASIC ENGINE

130-1427 MOUNTING GP-ALTERNATOR

S/N: 7SG1-UP; 7BJ19000-UP
PART OF 187-8016, 188-0883 ENGINE AR-PRIMARY
AN ATTACHMENT

SMCS-1405 **i01400643**

NOTE	REF NO	GRAPHIC REF	PART NUMBER	QTY	PART NAME 1 2 3 4 5 6 (PRODUCT LEVEL)	SEE PAGE
	1	1	**6I-0254**	2	BOLT (M8X1.25X30MM)	
	2	1	**6I-0839**	3	BOLT (M8X1.25X70MM)	
	3	1	**101-3802**	1	BRACKET	

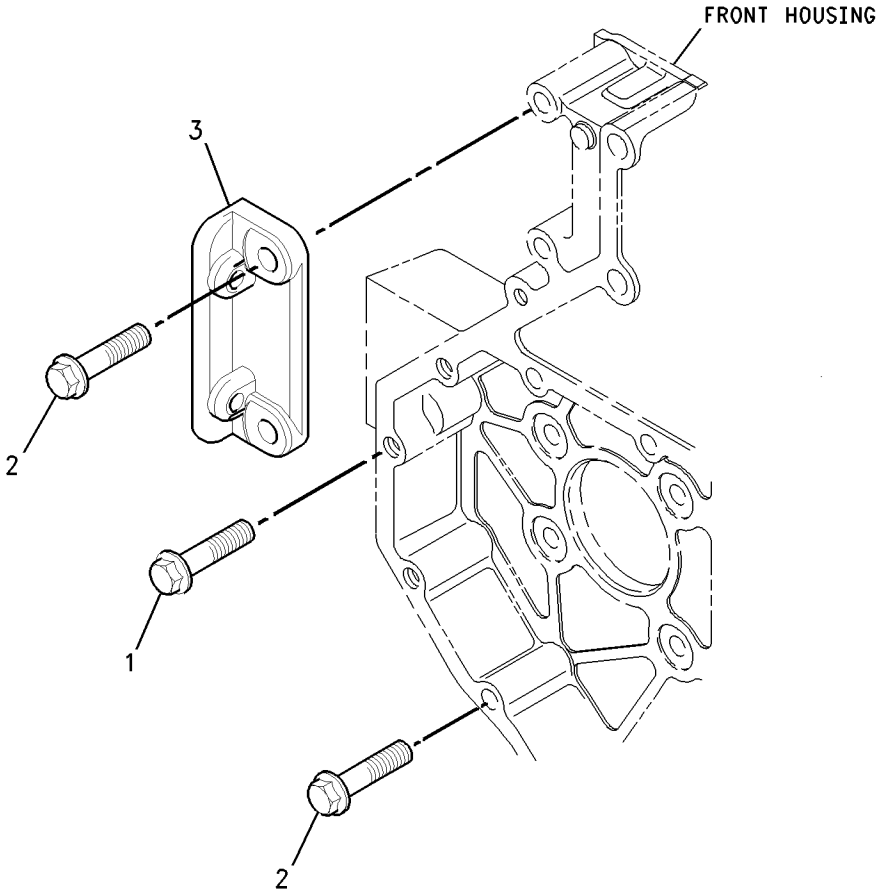

GRAPHIC #1 **<END>** g00738920

BASIC ENGINE

195-2130 MOUNTING GP-ENGINE

S/N: 7SG1-UP; 7BJ19000-UP
PART OF 187-8016, 188-0883 ENGINE AR-PRIMARY
AN ATTACHMENT

SMCS-1152, 1153, 1154 **i01859275**

NOTE	REF NO	GRAPHIC REF	PART NUMBER	QTY	PART NAME 1 2 3 4 5 6 (PRODUCT LEVEL)	SEE PAGE
	1	1	**101-2987**	6	PLUG	
	2	1	**133-8470**	4	PLUG	
	3	1	**195-2132**	1	SUPPORT-FRONT	
	4	1	**195-2134**	1	SUPPORT-FRONT	
	5	1	**195-2136**	8	STUD	
	6	1	**195-2221**	8	NUT	

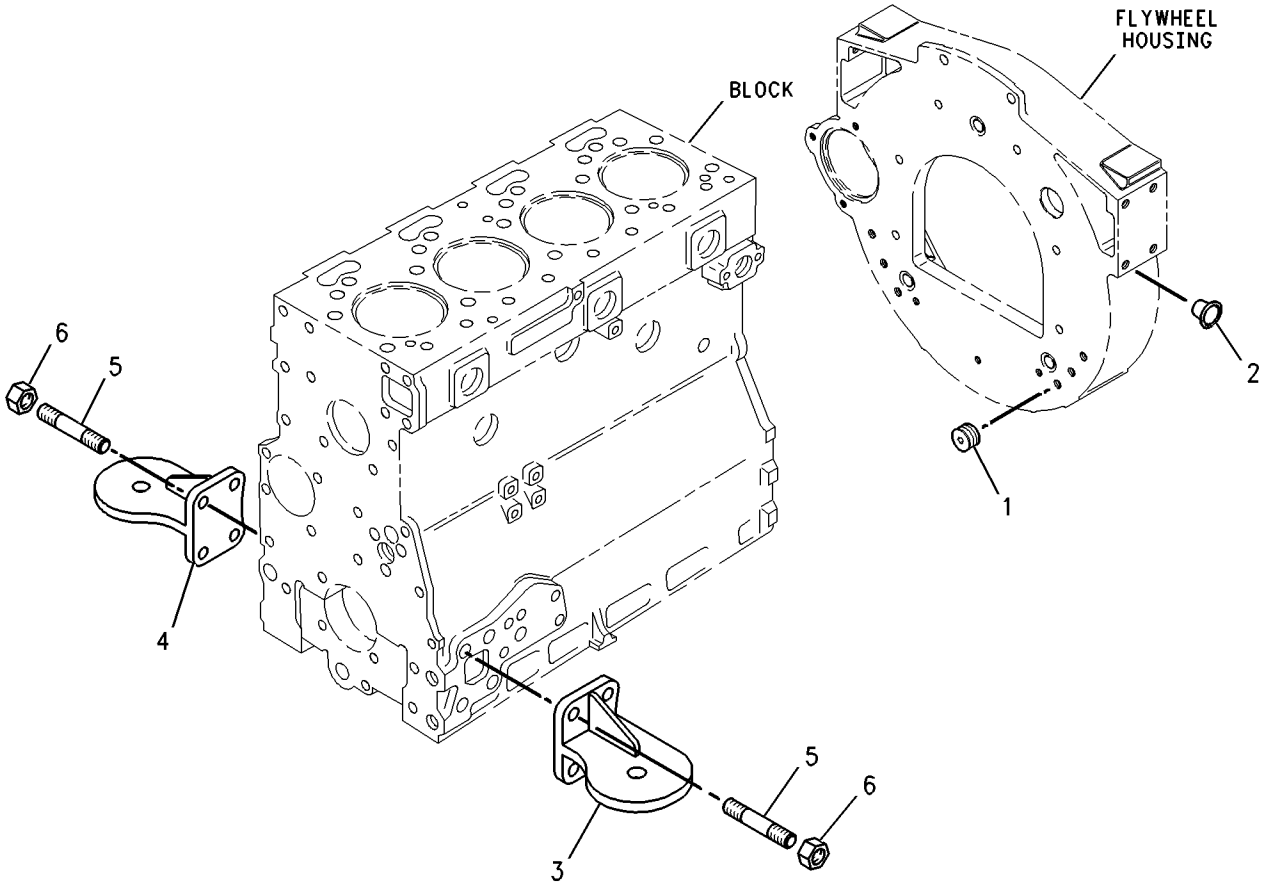

GRAPHIC #1 **<END>** g00738284

237-3658 MOUNTING GP-ENGINE

S/N: CRS1-UP

PART OF 234-3058, 234-3059 ENGINE AR-PRIMARY

AN ATTACHMENT

SMCS-1152, 1153, 1154 **i01925958**

NOTE	REF NO	GRAPHIC REF	PART NUMBER	QTY	PART NAME 1 2 3 4 5 6 (PRODUCT LEVEL)	SEE PAGE
	1	1	**101-2987**	6	PLUG	
	2	1	**6H-3616**	3	PLUG-PROTECTION	
	3	1	**195-2132**	1	SUPPORT-FRONT	
	4	1	**195-2134**	1	SUPPORT-FRONT	
	5	1	**195-2136**	8	STUD	
	6	1	**195-2221**	8	NUT	

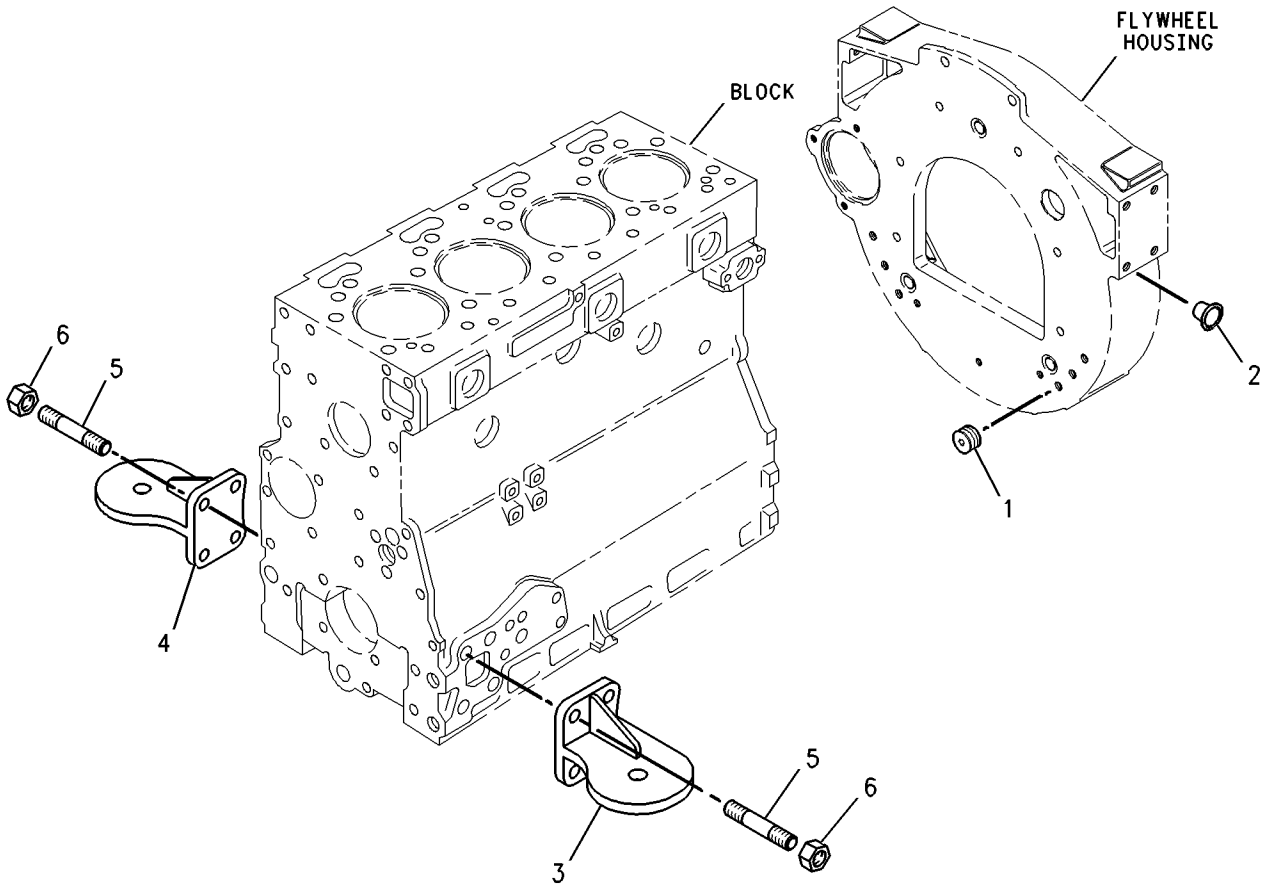

GRAPHIC #1 **<END>** g00738284

BASIC ENGINE

143-0782 MOUNTING GP-ENGINE & TMSN

S/N: BFP12900-UP; CXP940-UP
PART OF 192-4661, 192-4663, 192-4665, 192-4666, 214-6955, 214-6956, 214-6958, 231-9348 POWER TRAIN AR
AN ATTACHMENT

SMCS-1152, 1153, 1154 **i01646227**

NOTE	REF NO	GRAPHIC REF	PART NUMBER	QTY	PART NAME 1 2 3 4 5 6 (PRODUCT LEVEL)	SEE PAGE
	1	1	**3E-4892**	4	WASHER	
	2	1	**3E-4924**	2	MOUNTING AS	
	3	1	**6Y-9915**	2	MOUNT AS	
	4	1	**9W-9953**	2	SLEEVE	
	5	1	**8T-4121**	12	WASHER-HARD (11X21X2.5MM THK)	
M	6	1	**8T-4132**	4	NUT (M16X2 THD)	
M	7	1	**8T-4174**	4	BOLT (M16X2.0X120MM)	
M	8	1	**8T-4196**	12	BOLT (M10X1.5X35MM)	
	9	1	**9X-8257**	8	WASHER (17.5X30X3.5MM THK)	

M-METRIC PART

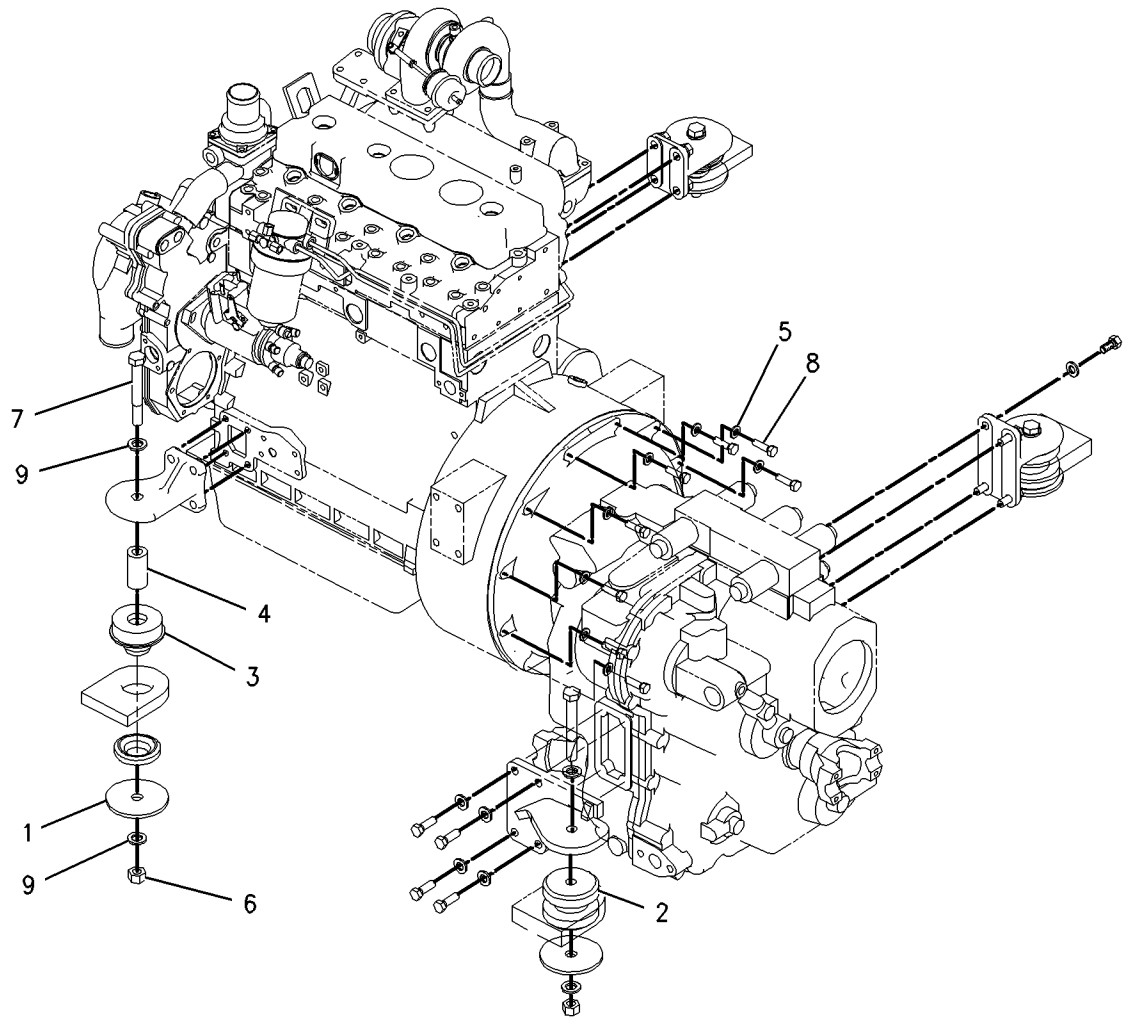

GRAPHIC #1 **<END>** g00850909

130-4654 MOUNTING GP-STARTING MOTOR

S/N: 7SG1-UP; 7BJ19000-UP
PART OF 187-8016, 188-0883 ENGINE AR-PRIMARY
AN ATTACHMENT

SMCS-1453 **i00526936**

NOTE	REF NO	GRAPHIC REF	PART NUMBER	QTY	PART NAME 1 2 3 4 5 6 (PRODUCT LEVEL)	SEE PAGE
	1	1	**6I-0364**	3	STUD	

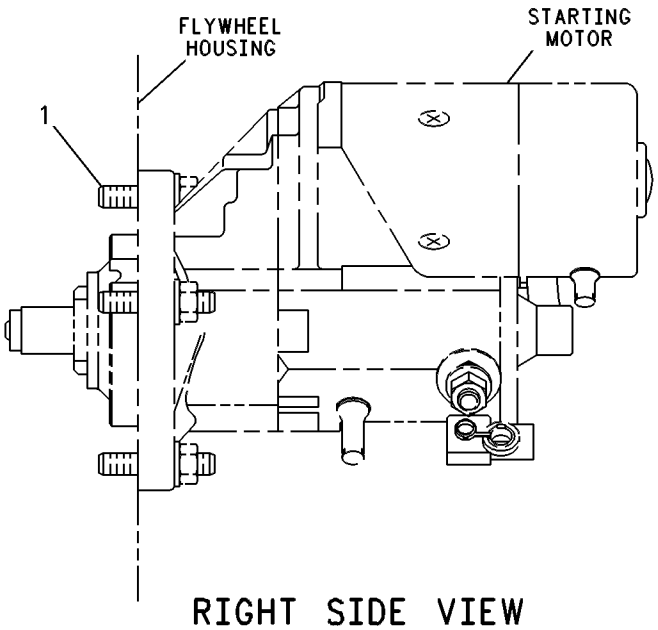

RIGHT SIDE VIEW

GRAPHIC #1 **<END>** g00131663

140-8175 PAN GP-OIL

S/N: 7SG1-772; 7BJ19000-54855
PART OF 187-8016, 188-0883 ENGINE AR-PRIMARY
AN ATTACHMENT

SMCS-1302 **i01400874**

NOTE	REF NO	GRAPHIC REF	PART NUMBER	QTY	PART NAME 1 2 3 4 5 6 (PRODUCT LEVEL)	SEE PAGE
	1	1	**4H-2804**	1	SPACER	
	2	1	**5C-1798**	1	SPACER	
	3	1	**5P-6718**	2	SEAL-O-RING (18.64MM ID)	
	4	1	**6I-0217**	1	BOLT (M8X1.25X20MM)	
	5	1	**6I-0260**	1	BOLT (M8X1.25X25MM)	
	6	1	**6I-0363**	2	BOLT (M6X1.0X20MM)	
	7	1	**6I-1090**	2	BOLT (M8X1.25X40MM)	
	8	1	**113-0309**	1	BRIDGE	
	9	1	**124-3815**	13	BOLT (M6X1.0X12MM)	
	10	1	**6I-4067**	1	TUBE	
	11	1	**6I-4068**	2	BOLT (M6X1.0X75MM)	
	12	1	**6I-4069**	2	NUT	
	13	1	**6I-4072**	2	BOLT (M8X1.25X14MM)	
	14	1	**6I-4076**	1	PAN-OIL	
	15	1	**067-6213**	1	GASKET	
	16	1	**032-9946**	1	GASKET	
	17	1	**6I-0289**	1	PLUG	
	18	1	**7C-0351**	2	PLUG-SUMP DRAIN	
	19	1	**9Y-5124**	1	CLAMP	
	20	1	**9Y-5132**	1	BRACKET	

140-8175 **PAN GP-OIL** *(contd.)* **i01400874**

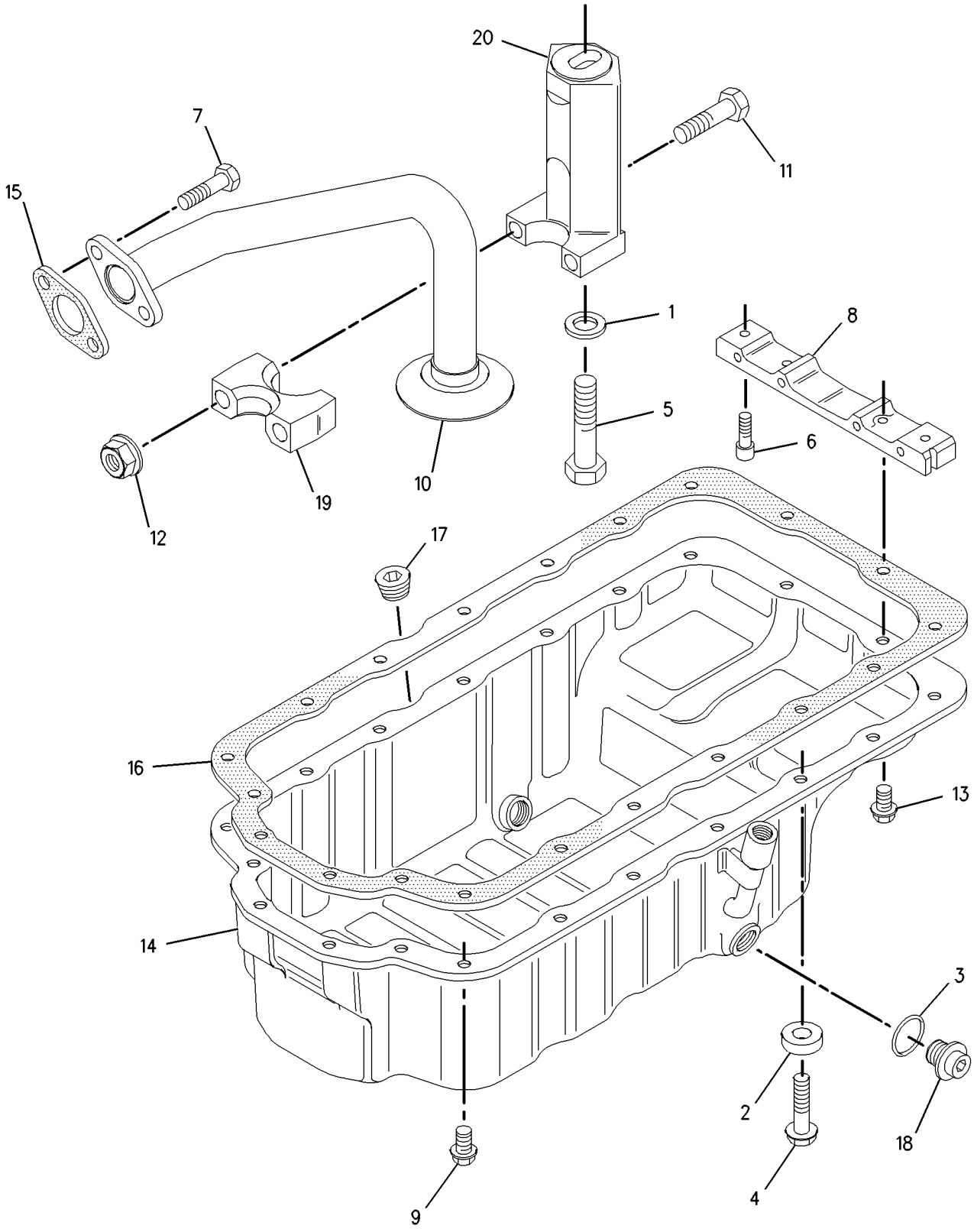

GRAPHIC #1 **<END>** g00739888

BASIC ENGINE

140-8175 PAN GP-OIL

S/N: 7SG773-2072; 7BJ54856-59337
PART OF 187-8016, 188-0883 ENGINE AR-PRIMARY
AN ATTACHMENT

SMCS-1302 **i01596645**

NOTE	REF NO	GRAPHIC REF	PART NUMBER	QTY	PART NAME 1 2 3 4 5 6 (PRODUCT LEVEL)	SEE PAGE
	1	1	**4H-2804**	1	SPACER	
	2	1	**5C-1798**	1	SPACER	
	3	1	**5P-6718**	2	SEAL-O-RING	
	4	1	**6I-0217**	1	BOLT (M8X1.25X20MM)	
	5	1	**6I-0260**	1	BOLT (M8X1.25X25MM)	
	6	1	**6I-0363**	2	BOLT (M6X1.0X20MM)	
	7	1	**6I-1090**	2	BOLT (M8X1.25X40MM)	
	8	1	**211-0067**	1	BRIDGE	
	9	1	**124-3815**	13	BOLT (M8X16X1.25MM)	
	10	1	**6I-4067**	1	TUBE	
	11	1	**6I-4068**	2	BOLT (M6X1.0X75MM)	
	12	1	**6I-4069**	2	NUT	
	13	1	**6I-4072**	2	BOLT (M8X1.25X14MM)	
	14	1	**6I-4076**	1	PAN-OIL	
	15	1	**067-6213**	1	GASKET	
	16	1	**032-9946**	1	GASKET	
	17	1	**6I-0289**	1	PLUG	
	18	1	**7C-0351**	2	PLUG-SUMP DRAIN	
	19	1	**9Y-5124**	1	CLAMP	
	20	1	**9Y-5132**	1	BRACKET	

140-8175 **PAN GP-OIL** *(contd.)* **i01596645**

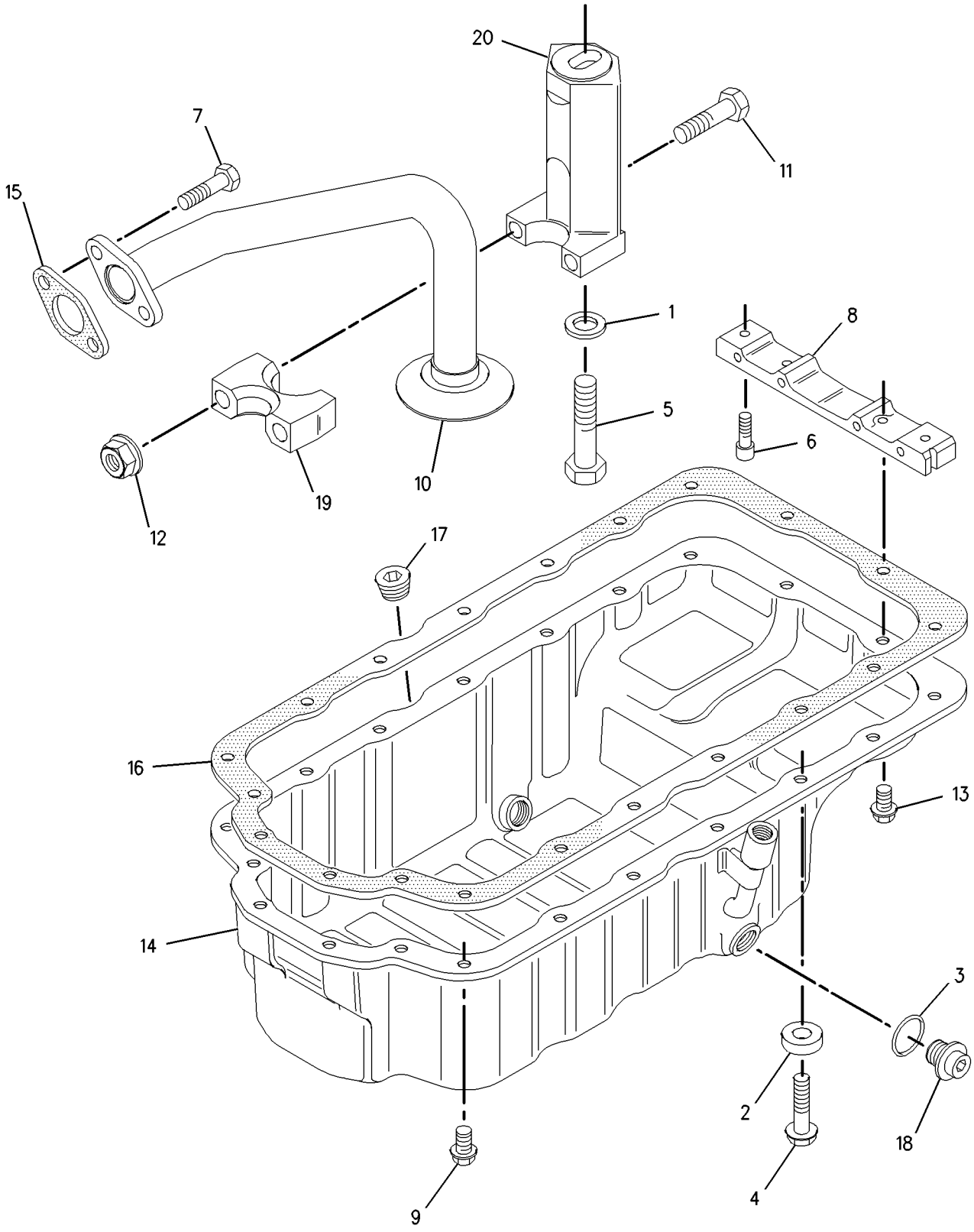

GRAPHIC #1 **<END>** g00739888

140-8175 PAN GP-OIL

S/N: 7SG2073-2076; 7BJ59338-59350
PART OF 187-8016, 188-0883 ENGINE AR-PRIMARY
AN ATTACHMENT

SMCS-1302 **i01614393**

NOTE	REF NO	GRAPHIC REF	PART NUMBER	QTY	PART NAME 1 2 3 4 5 6 (PRODUCT LEVEL)	SEE PAGE
	1	1	**4H-2804**	1	SPACER	
	2	1	**5C-1798**	1	SPACER	
	3	1	**5P-6718**	2	SEAL-O-RING	
	4	1	**6I-0217**	1	BOLT (M8X1.25X20MM)	
	5	1	**6I-0260**	1	BOLT (M8X1.25X25MM)	
	6	1	**6I-0363**	2	BOLT (M6X1.0X20MM)	
	7	1	**6I-1090**	2	BOLT (M8X1.25X40MM)	
	8	1	**211-0067**	1	BRIDGE	
	9	1	**124-3815**	13	BOLT (M8X16X1.25MM)	
	10	1	**6I-4067**	1	TUBE	
	11	1	**6I-4068**	2	BOLT (M6X1.0X75MM)	
	12	1	**6I-4069**	2	NUT	
	13	1	**6I-4072**	2	BOLT (M8X1.25X14MM)	
	14	1	**211-1871**	1	PAN-OIL	
	15	1	**067-6213**	1	GASKET	
	16	1	**032-9946**	1	GASKET	
	17	1	**6I-0289**	2	PLUG	
	18	1	**7C-0351**	2	PLUG-SUMP DRAIN	
	19	1	**9Y-5124**	1	CLAMP	
	20	1	**9Y-5132**	1	BRACKET	

140-8175 **PAN GP-OIL** *(contd.)* **i01614393**

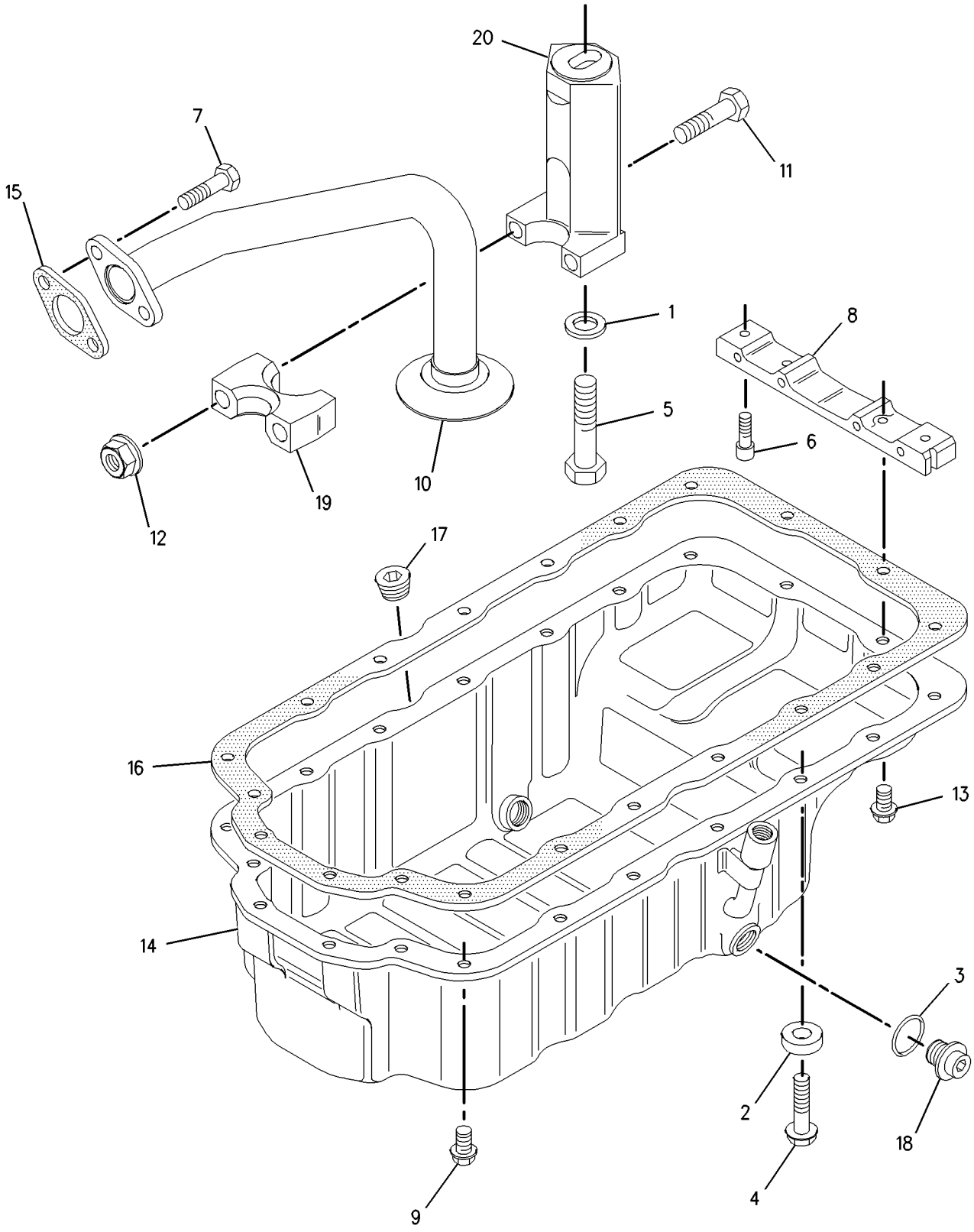

GRAPHIC #1 **<END>** g00739888

140-8175 PAN GP-OIL

S/N: 7SG2077-2528; 7BJ59351-62807
PART OF 187-8016, 188-0883 ENGINE AR-PRIMARY
AN ATTACHMENT

SMCS-1302 **i01709392**

NOTE	REF NO	GRAPHIC REF	PART NUMBER	QTY	PART NAME 1 2 3 4 5 6 (PRODUCT LEVEL)	SEE PAGE
	1	1	**4H-2804**	1	SPACER	
	2	1	**5C-1809**	1	SPACER (8X19X6.5MM)	
	3	1	**5P-6718**	2	SEAL-O-RING	
	4	1	**6I-0217**	1	BOLT (M8X1.25X20MM)	
	5	1	**6I-0260**	1	BOLT (M8X1.25X25MM)	
	6	1	**6I-0363**	2	BOLT (M6X1.0X20MM)	
	7	1	**6I-1090**	2	BOLT (M8X1.25X40MM)	
	8	1	**211-0067**	1	BRIDGE	
	9	1	**124-3815**	13	BOLT (M8X16X1.25MM)	
	10	1	**6I-4067**	1	TUBE	
	11	1	**6I-4068**	2	BOLT (M6X1.0X75MM)	
	12	1	**6I-4069**	2	NUT	
	13	1	**6I-4072**	2	BOLT (M8X1.25X14MM)	
	14	1	**214-3281**	1	PAN-OIL	
	15	1	**067-6213**	1	GASKET	
	16	1	**032-9946**	1	GASKET	
	17	1	**6I-0289**	1	PLUG	
	18	1	**7C-0351**	2	PLUG-SUMP DRAIN	
	19	1	**9Y-5124**	1	CLAMP	
	20	1	**9Y-5132**	1	BRACKET	

140-8175 **PAN GP-OIL** *(contd.)* **i01709392**

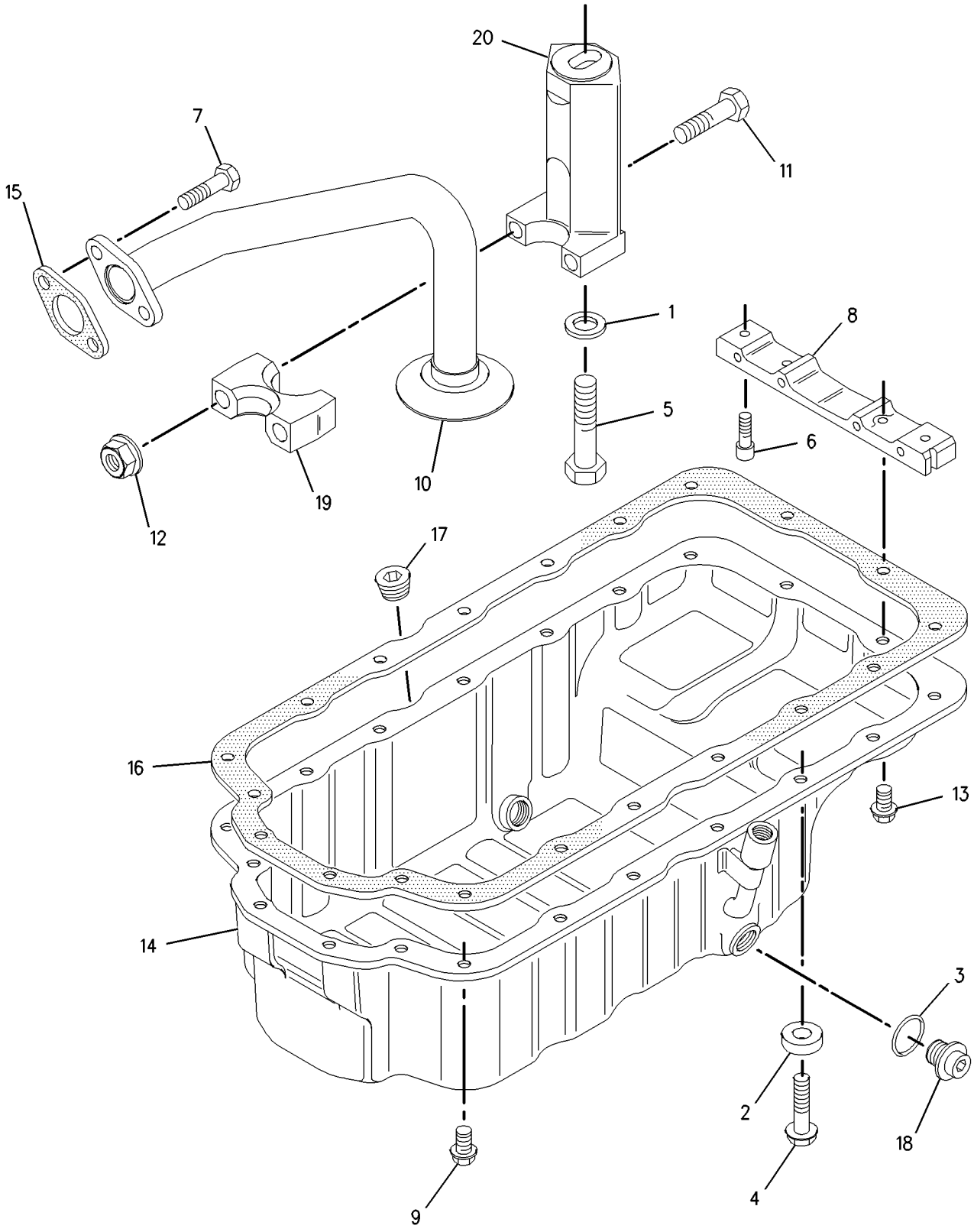

GRAPHIC #1 **<END>** g00739888

BASIC ENGINE

140-8175 PAN GP-OIL

S/N: 7SG2529; 7BJ62808-62809, 62811-62812
PART OF 187-8016, 188-0883 ENGINE AR-PRIMARY
AN ATTACHMENT

SMCS-1302 **i01792743**

NOTE	REF NO	GRAPHIC REF	PART NUMBER	QTY	PART NAME 1 2 3 4 5 6 (PRODUCT LEVEL)	SEE PAGE
	1	1	**4H-2804**	1	SPACER	
	2	1	**5C-1809**	1	SPACER (8X19X6.5MM)	
	3	1	**5P-6718**	2	SEAL-O-RING	
	4	1	**6I-0217**	1	BOLT (M8X1.25X20MM)	
	5	1	**6I-0260**	1	BOLT (M8X1.25X25MM)	
	6	1	**6I-0363**	2	BOLT (M6X1.0X20MM)	
	7	1	**6I-1090**	2	BOLT (M8X1.25X40MM)	
	8	1	**211-0067**	1	BRIDGE	
	9	1	**124-3815**	13	BOLT (M8X16X1.25MM)	
	10	1	**6I-4067**	1	TUBE	
	11	1	**6I-4068**	2	BOLT (M6X1.0X75MM)	
	12	1	**6I-4069**	2	NUT	
	13	1	**6I-4072**	2	BOLT (M8X1.25X14MM)	
	14	1	**211-1871**	1	PAN-OIL	
	15	1	**067-6213**	1	GASKET	
	16	1	**032-9946**	1	GASKET	
	17	1	**6I-0289**	3	PLUG	
	18	1	**7C-0351**	2	PLUG-SUMP DRAIN	
	19	1	**9Y-5124**	1	CLAMP	
	20	1	**9Y-5132**	1	BRACKET	

140-8175 **PAN GP-OIL** *(contd.)* **i01792743**

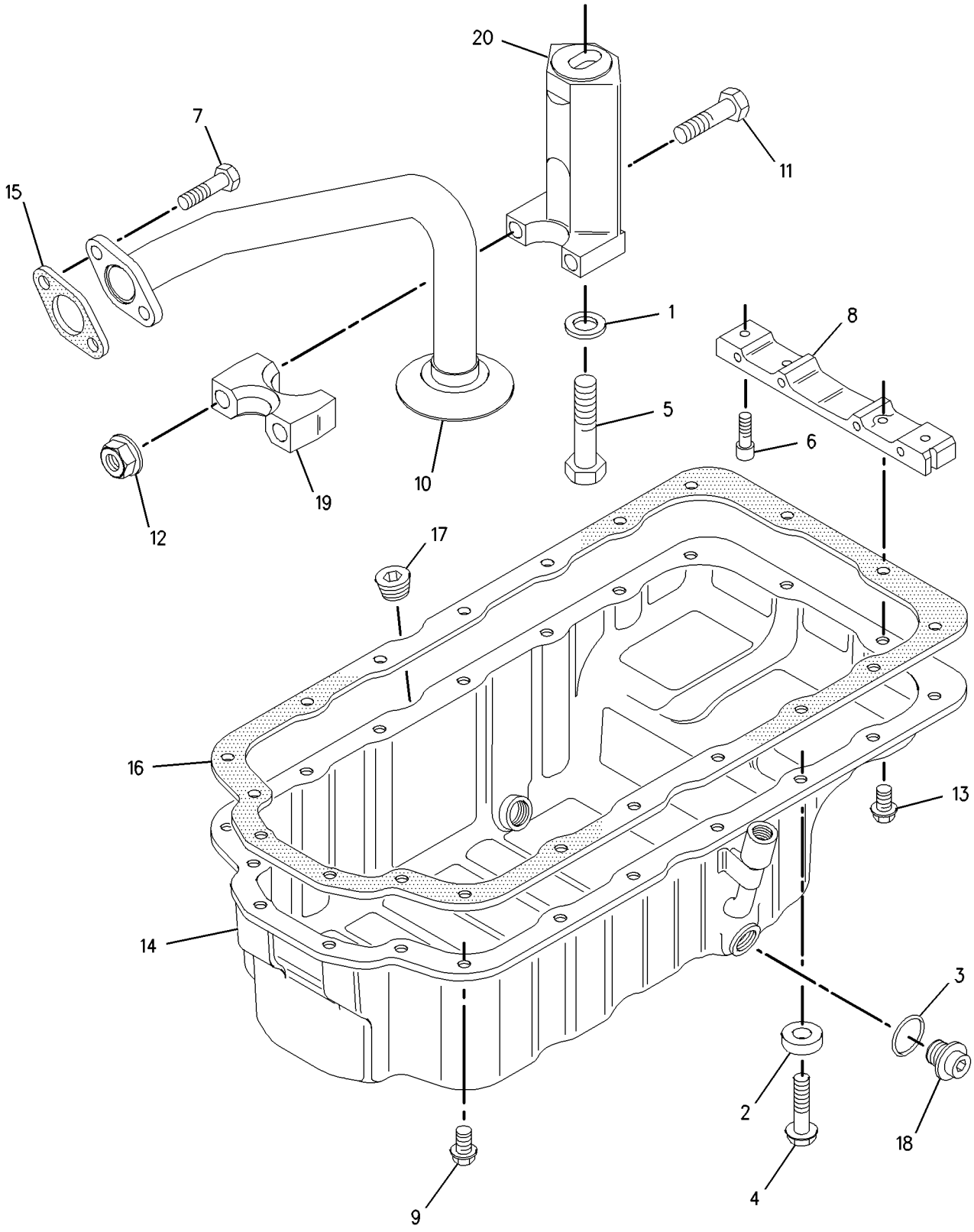

GRAPHIC #1 **<END>** g00739888

140-8175 PAN GP-OIL

S/N: 7SG2530-2649; 7BJ62810, 62813-63565
PART OF 187-8016, 188-0883 ENGINE AR-PRIMARY
AN ATTACHMENT

SMCS-1302 **i01792770**

NOTE	REF NO	GRAPHIC REF	PART NUMBER	QTY	PART NAME 1 2 3 4 5 6 (PRODUCT LEVEL)	SEE PAGE
	1	1	**4H-2804**	1	SPACER	
	2	1	**5C-1809**	1	SPACER (8X19X6.5MM)	
	3	1	**5P-6718**	2	SEAL-O-RING	
	4	1	**6I-0217**	1	BOLT (M8X1.25X20MM)	
	5	1	**6I-0260**	1	BOLT (M8X1.25X25MM)	
	6	1	**6I-0363**	2	BOLT (M6X1.0X20MM)	
	7	1	**6I-1090**	2	BOLT (M8X1.25X40MM)	
	8	1	**211-0067**	1	BRIDGE	
	9	1	**124-3815**	13	BOLT (M8X16X1.25MM)	
	10	1	**6I-4067**	1	TUBE	
	11	1	**6I-4068**	2	BOLT (M6X1.0X75MM)	
	12	1	**6I-4069**	2	NUT	
	13	1	**6I-4072**	2	BOLT (M8X1.25X14MM)	
	14	1	**214-3281**	1	PAN-OIL	
	15	1	**067-6213**	1	GASKET	
	16	1	**032-9946**	1	GASKET	
	17	1	**6I-0289**	1	PLUG	
	18	1	**7C-0351**	2	PLUG-SUMP DRAIN	
	19	1	**9Y-5124**	1	CLAMP	
	20	1	**9Y-5132**	1	BRACKET	

140-8175 **PAN GP-OIL** *(contd.)* **i01792770**

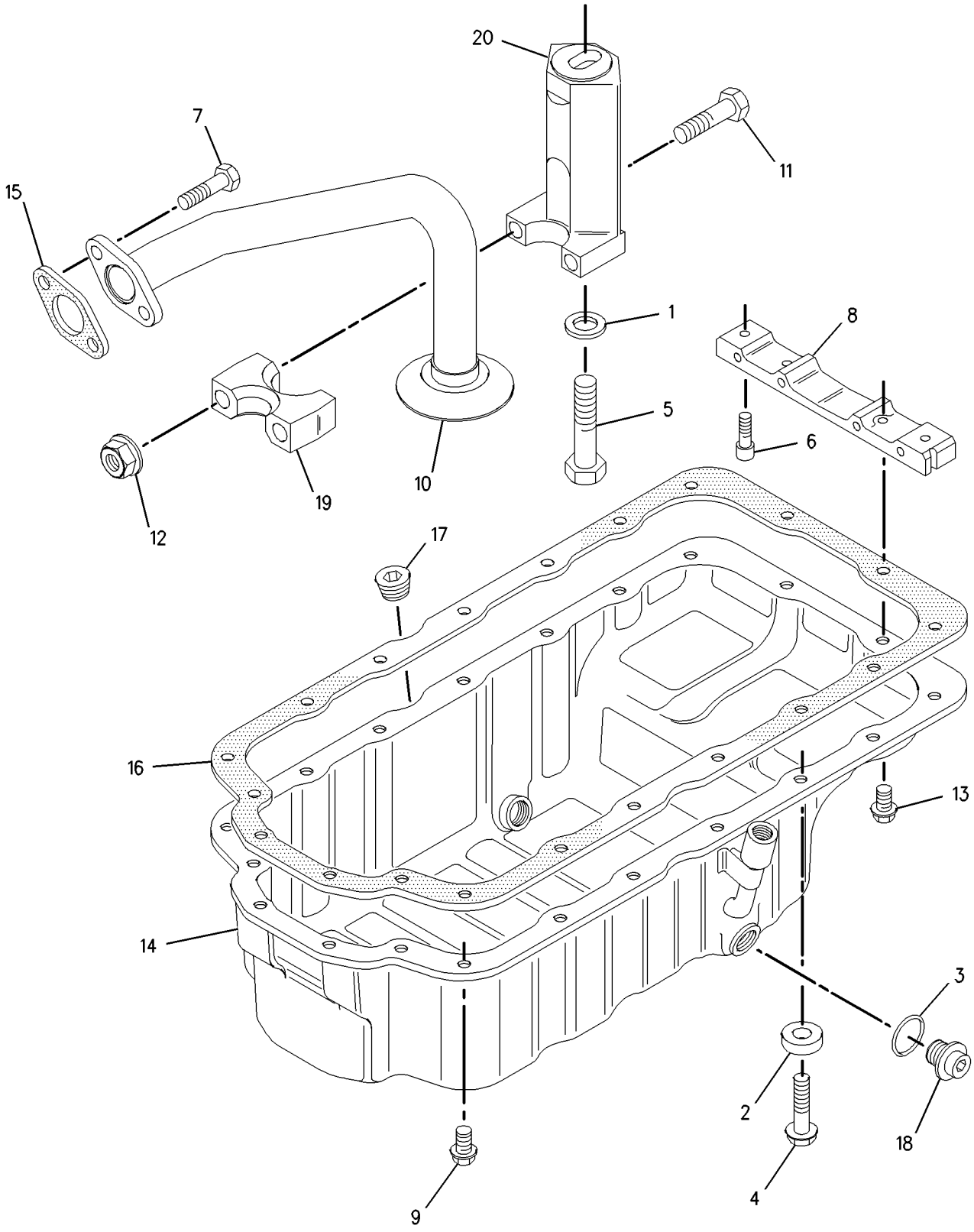

GRAPHIC #1 **<END>** g00739888

168-0289 PAN GP-OIL

S/N: 7SG2650-UP; 7BJ63566-UP
PART OF 187-8016, 188-0883 ENGINE AR-PRIMARY
AN ATTACHMENT

SMCS-1302 **i01694265**

NOTE	REF NO	GRAPHIC REF	PART NUMBER	QTY	PART NAME 1 2 3 4 5 6 (PRODUCT LEVEL)	SEE PAGE
	1	1	**4H-2804**	1	SPACER	
	2	1	**5C-1798**	1	SPACER	
	3	1	**5P-6718**	2	SEAL-O-RING	
	4	1	**6I-0217**	1	BOLT (M8X1.25X20MM)	
	5	1	**6I-0260**	1	BOLT (M8X1.25X25MM)	
	6	1	**6I-0363**	2	BOLT (M6X1.0X20MM)	
	7	1	**6I-1090**	2	BOLT (M8X1.25X40MM)	
	8	1	**211-0067**	1	BRIDGE	
	9	1	**124-3815**	13	BOLT (M8X16X1.25MM)	
	10	1	**6I-4067**	1	TUBE	
	11	1	**6I-4068**	2	BOLT (M6X1.0X75MM)	
	12	1	**6I-4069**	2	NUT	
	13	1	**6I-4072**	2	BOLT (M8X1.25X14MM)	
	14	1	**211-1871**	1	PAN-OIL	
	15	1	**067-6213**	1	GASKET	
	16	1	**032-9946**	1	GASKET	
	17	1	**6I-0289**	2	PLUG	
	18	1	**7C-0351**	2	PLUG-SUMP DRAIN	
	19	1	**9Y-5124**	1	CLAMP	
	20	1	**9Y-5132**	1	BRACKET	

168-0289 **PAN GP-OIL** *(contd.)* **i01694265**

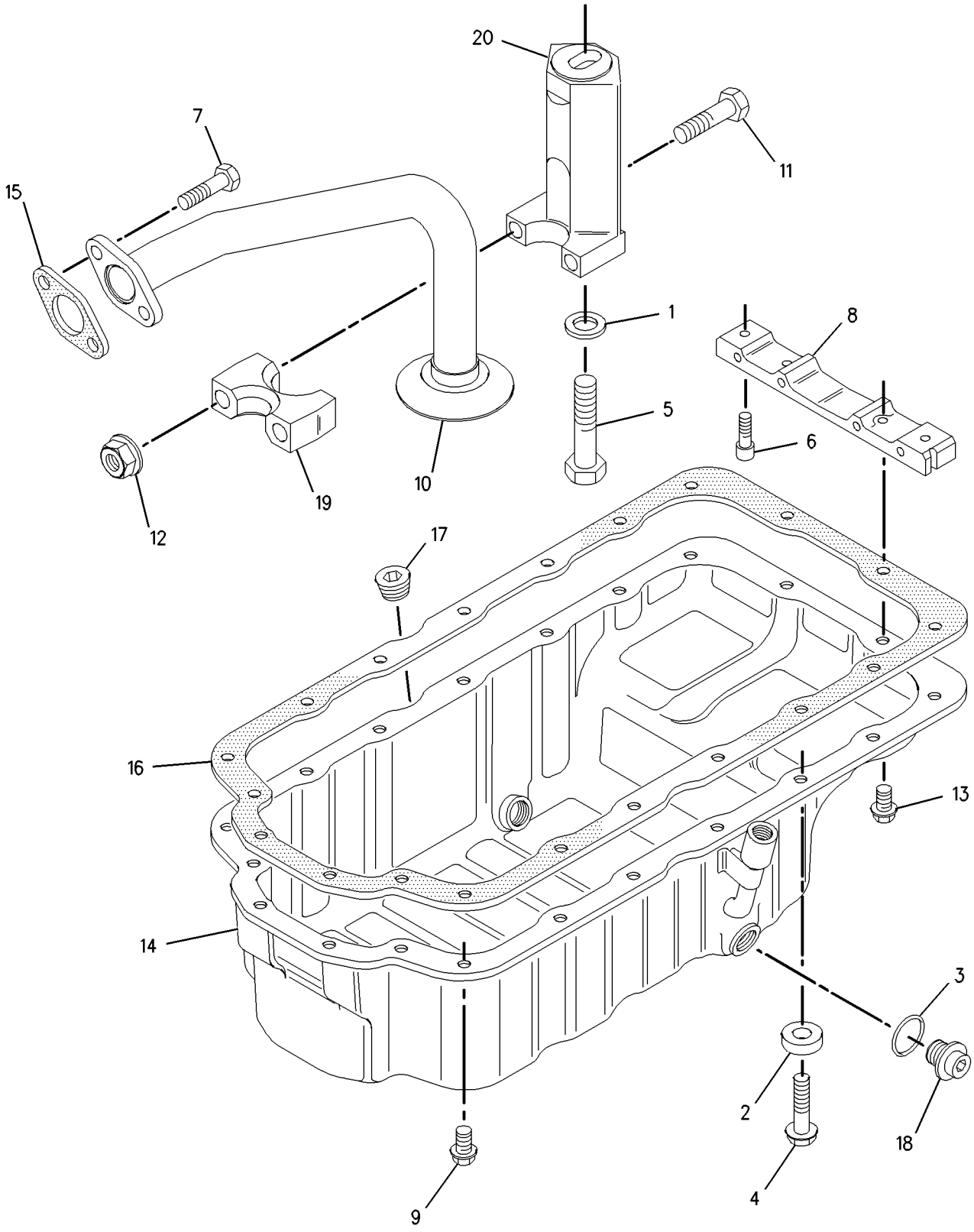

GRAPHIC #1 **<END>** g00739888

237-0025 PAN GP-OIL

S/N: CRS1-UP

PART OF 234-3058, 234-3059 ENGINE AR-PRIMARY

AN ATTACHMENT

SMCS-1302 **i01966323**

NOTE	REF NO	GRAPHIC REF	PART NUMBER	QTY	PART NAME 1 2 3 4 5 6 (PRODUCT LEVEL)	SEE PAGE
	1	1	**5P-6718**	2	SEAL-O-RING (ENGINE OIL DRAIN)	
	2	1	**6I-0217**	12	BOLT (M8X1.25X20-MM)	
	3	1	**6I-0260**	2	BOLT (M8X1.25X25-MM)	
	4	1	**6I-0289**	1	PLUG	
	5	1	**6I-0363**	2	BOLT (M6X1.0X20-MM)	
	6	1	**6I-0572**	2	BOLT (M8X1.25X20-MM)	
	7	1	**7C-0351**	2	PLUG-SUMP DRAIN	
	8	1	**067-6213**	1	GASKET	
	9	1	**101-3771**	6	BOLT	
	10	1	**225-6004**	1	PAN AS-OIL	
	10A	1	**7C-1224**	2	INSERT	
	11	1	**225-6005**	1	GASKET	
	12	1	**225-6041**	1	TUBE	
	13	1	**230-8094**	1	BRIDGE	

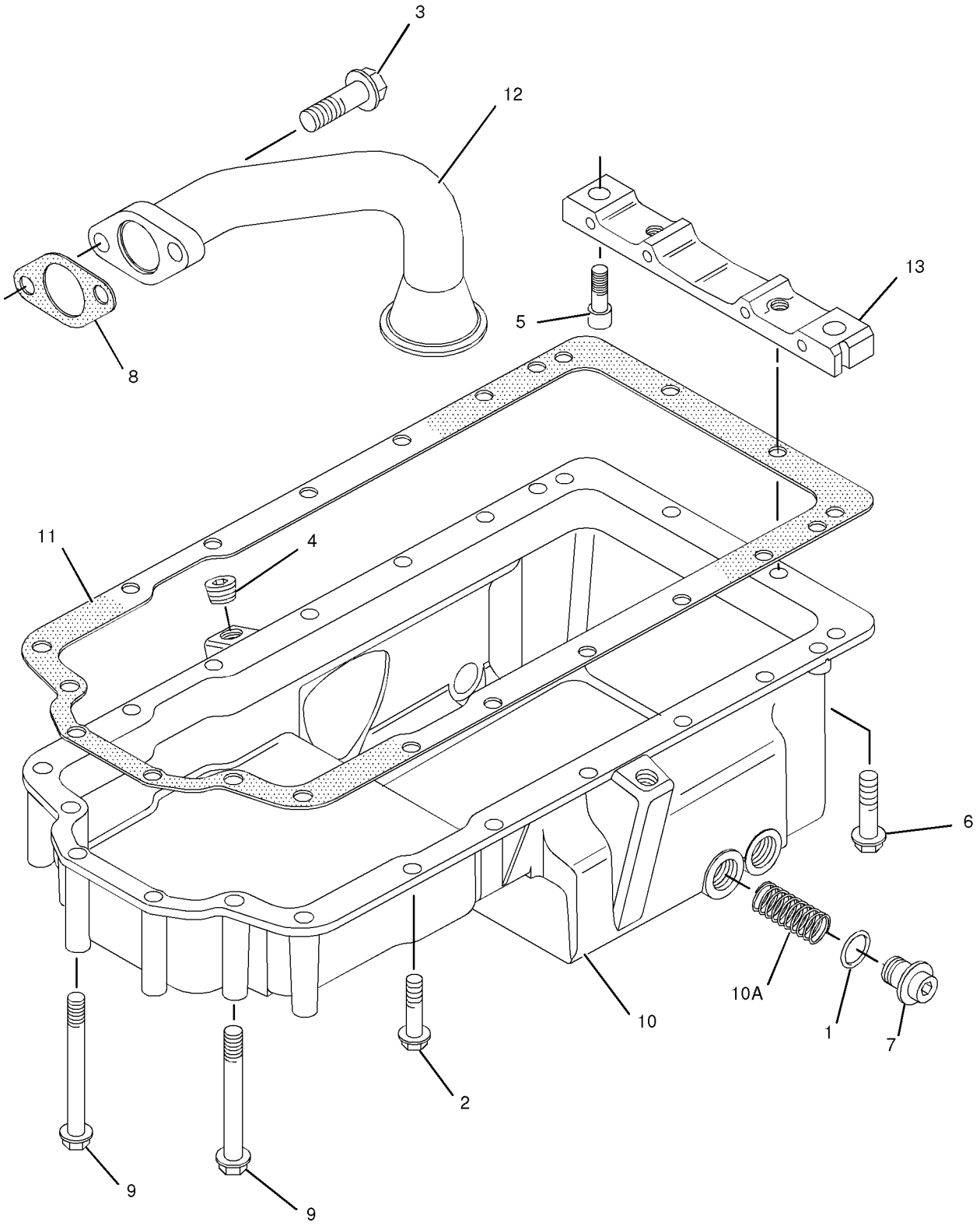

GRAPHIC #1 **<END>** g01036037

145-6690 PISTON & ROD GP

S/N: 7BJ19000-67007
17.25:1 RATIO
PART OF 188-0883 ENGINE AR-PRIMARY
AN ATTACHMENT

SMCS-1213, 1214, 1215, 1218, 1219, 1225, 1239 **i01026304**

NOTE	REF NO	GRAPHIC REF	PART NUMBER	QTY	PART NAME 1 2 3 4 5 6 (PRODUCT LEVEL)	SEE PAGE
	1	1	**138-2073**	4	KIT-PISTON RING	
	2	1	**152-1390**	4	PISTON AS	
	3	1	**160-6493**	4	ROD AS (H)	
		1	**160-6494**	4	ROD AS (J)	
		1	**160-6495**	4	ROD AS (K)	
		1	**160-6496**	4	ROD AS (L)	

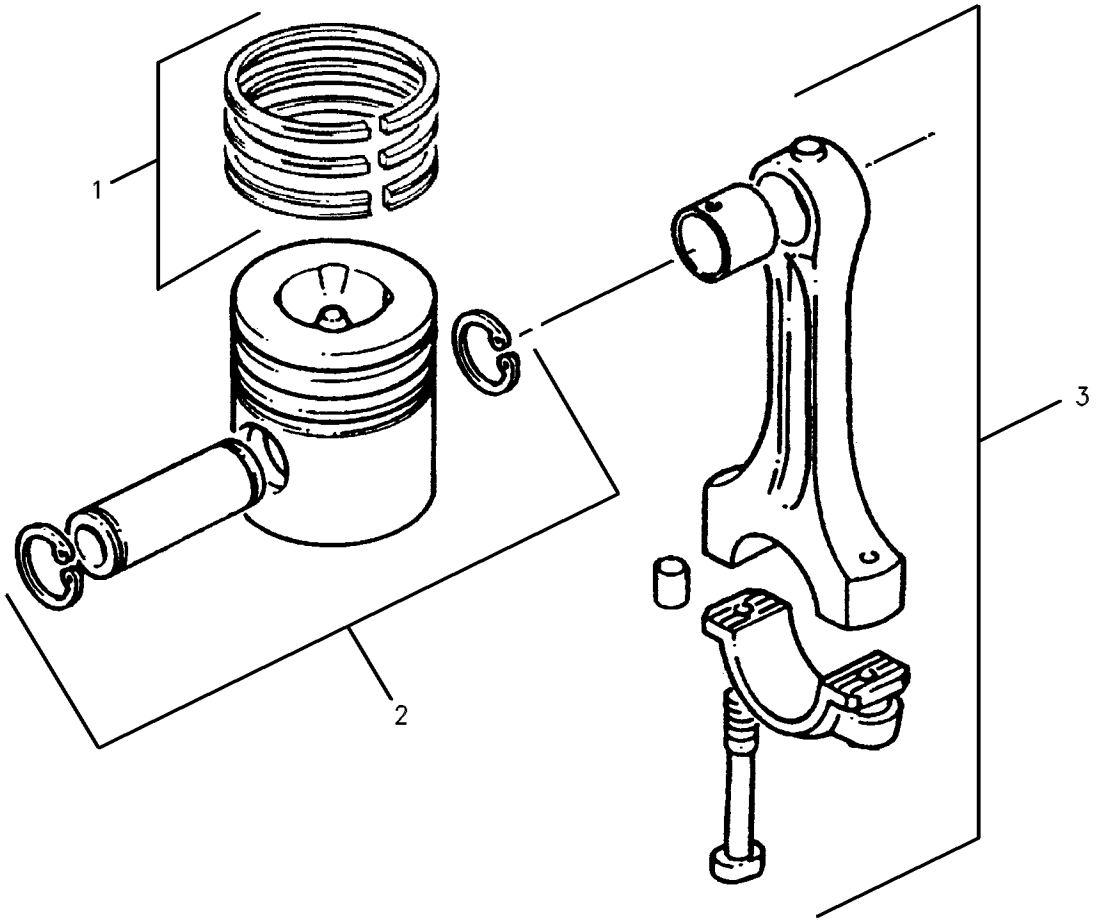

GRAPHIC #1 **<END>** g00527722

BASIC ENGINE

185-3191 PISTON & ROD GP

S/N: 7SG1-3172
17.25:1 RATIO
PART OF 187-8016 ENGINE AR-PRIMARY
AN ATTACHMENT

SMCS-1213, 1214, 1215, 1218, 1219, 1225, 1239 **i01217063**

NOTE	REF NO	GRAPHIC REF	PART NUMBER	QTY	PART NAME 1 2 3 4 5 6 (PRODUCT LEVEL)	SEE PAGE
J	1	1	**160-6493**	4	ROD AS (H)	
					—OR—	
J		1	**160-6494**	4	ROD AS (J)	
					—OR—	
J		1	**160-6495**	4	ROD AS (K)	
					—OR—	
J		1	**160-6496**	4	ROD AS (L)	
					(EACH ROD AS INCLUDES)	
	2	1	**124-3532**	2	BOLT	
	3	1	**124-3533**	2	DOWEL	
	4	1	**138-2048**	1	BUSHING	
	5	1	**185-0104**	4	PISTON AS (STANDARD)	
		1	**185-0106**	4	PISTON AS (OS 0.5MM)	
		1	**185-0107**	4	PISTON AS (OS 1.0MM)	
					(EACH PISTON AS INCLUDES)	
	6	1	**124-3536**	2	RING-RETAINING	
	7	1	**185-0109**	4	KIT-PISTON RING (STANDARD)	
		1	**185-0110**	4	KIT-PISTON RING (OS 0.5MM)	
		1	**185-0111**	4	KIT-PISTON RING (OS 1.0MM)	

J-ENSURE THAT CORRECT ROD LENGTH IS FITTED

185-3191 **PISTON & ROD GP** *(contd.)* **i01217063**

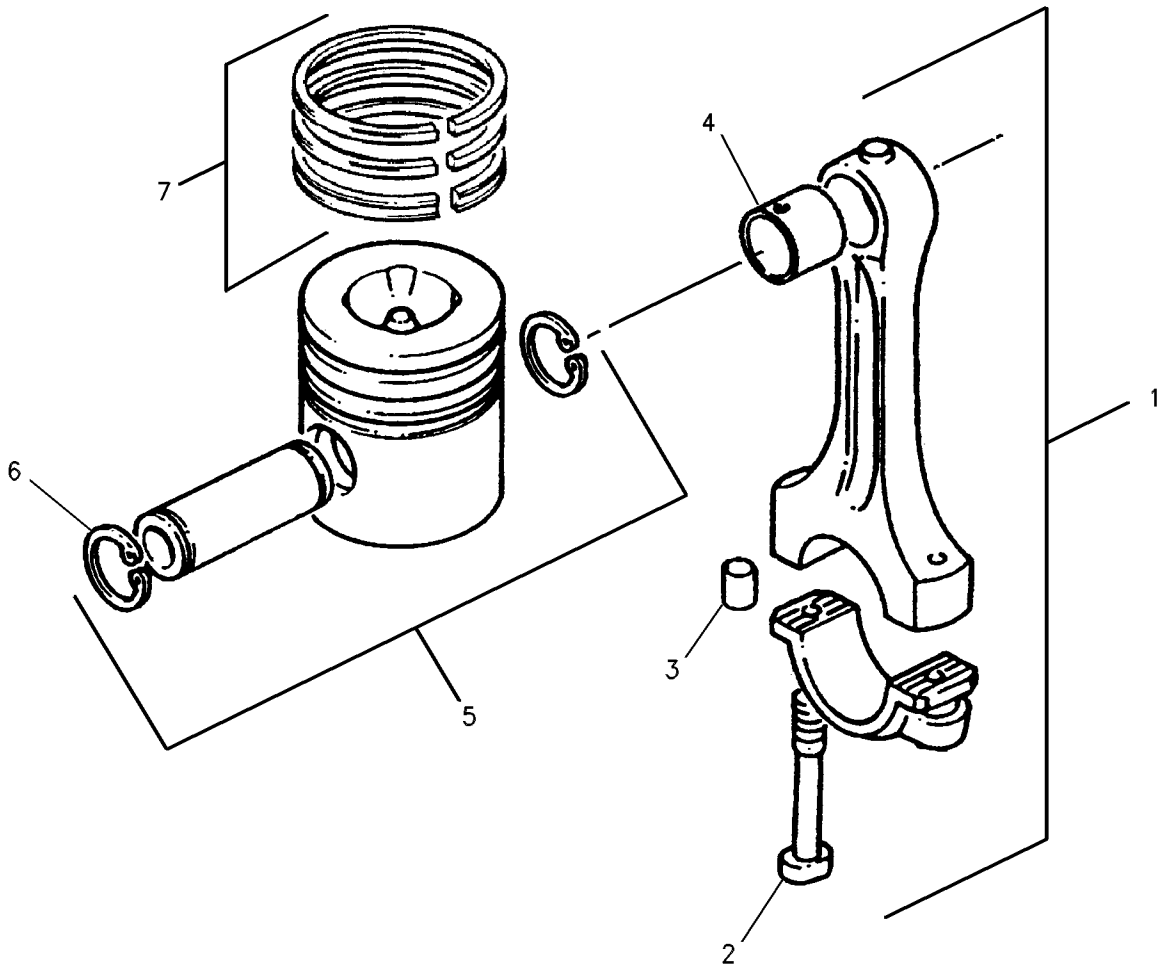

GRAPHIC #1 **<END>** g00651917

185-4602 PISTON & ROD GP

S/N: 7SG3173-6000
17.25:1 RATIO
PART OF 187-8016 ENGINE AR-PRIMARY
AN ATTACHMENT

SMCS-1213, 1214, 1215, 1218, 1219, 1225, 1239 **i01354811**

NOTE	REF NO	GRAPHIC REF	PART NUMBER	QTY	PART NAME 1 2 3 4 5 6 (PRODUCT LEVEL)	SEE PAGE
J	1	1	**160-6493**	4	ROD AS (H)	
					—OR—	
J		1	**160-6494**	4	ROD AS (J)	
					—OR—	
J		1	**160-6495**	4	ROD AS (K)	
					—OR—	
J		1	**160-6496**	4	ROD AS (L)	
					(EACH ROD AS INCLUDES)	
	2	1	**067-6883**	2	BOLT-ROD CAP	
	3	1	**194-2466**	2	DOWEL	
	4	1	**138-2048**	1	BUSHING	
	5	1	**7W-2505**	2	NUT-CONNECTING ROD	
	6	1	**185-0104**	4	PISTON AS (STANDARD)	
		1	**185-0106**	4	PISTON AS (OS 0.5MM)	
		1	**185-0107**	4	PISTON AS (OS 1.0MM)	
					(EACH PISTON AS INCLUDES)	
	7	1	**124-3536**	2	RING-RETAINING	
	8	1	**185-0109**	4	KIT-PISTON RING (STANDARD)	
		1	**185-0110**	4	KIT-PISTON RING (OS 0.5MM)	
		1	**185-0111**	4	KIT-PISTON RING (OS 1.0MM)	

J-ENSURE THAT CORRECT ROD LENGTH IS FITTED

185-4602 **PISTON & ROD GP** *(contd.)* **i01354811**

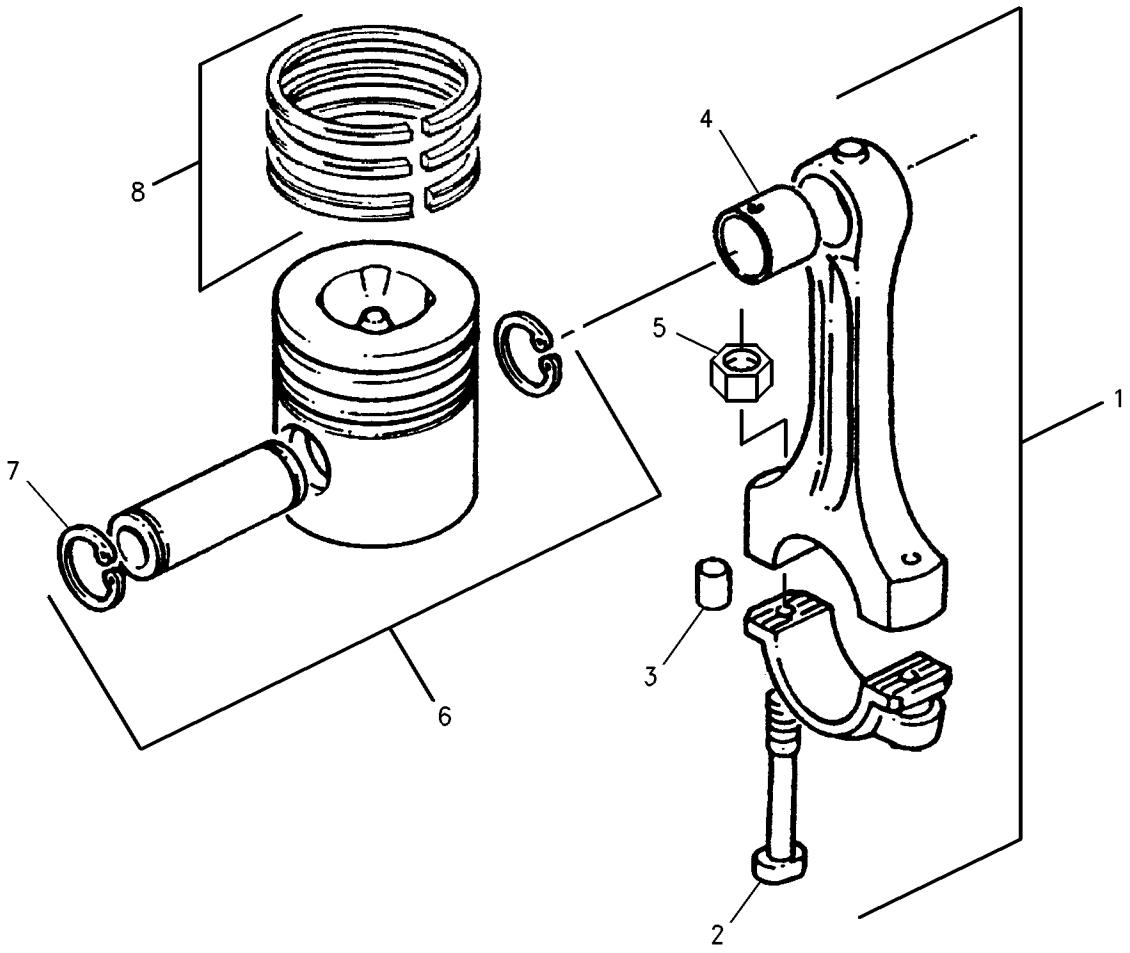

GRAPHIC #1 **<END>** g00732496

185-4602 PISTON & ROD GP

S/N: 7SG6001-UP
17.25:1 RATIO
PART OF 187-8016 ENGINE AR-PRIMARY
AN ATTACHMENT

SMCS-1213, 1214, 1215, 1218, 1219, 1225, 1239 **i01992133**

NOTE	REF NO	GRAPHIC REF	PART NUMBER	QTY	PART NAME 1 2 3 4 5 6 (PRODUCT LEVEL)	SEE PAGE
J	1	1	**225-5454**	4	ROD AS (H)	
					—OR—	
J		1	**225-5453**	4	ROD AS (J)	
					—OR—	
J		1	**225-5451**	4	ROD AS (K)	
					—OR—	
J		1	**225-5441**	4	ROD AS (L)	
					—OR—	
J		1	**225-5458**	4	ROD AS (G)	
					—OR—	
J		1	**225-5459**	4	ROD AS (F)	
					(EACH ROD AS INCLUDES)	
	2	1	**067-6883**	2	BOLT-ROD CAP	
	3	1	**194-2466**	2	DOWEL	
	4	1	**138-2048**	1	BUSHING	
	5	1	**7W-2505**	2	NUT-CONNECTING ROD	
	6	1	**185-0104**	4	PISTON AS (STANDARD)	
		1	**185-0106**	4	PISTON AS (OS 0.5MM)	
		1	**185-0107**	4	PISTON AS (OS 1.0MM)	
					(EACH PISTON AS INCLUDES)	
	7	1	**124-3536**	2	RING-RETAINING	
	8	1	**185-0109**	4	KIT-PISTON RING (STANDARD)	
		1	**185-0110**	4	KIT-PISTON RING (OS 0.5MM)	
		1	**185-0111**	4	KIT-PISTON RING (OS 1.0MM)	

J-ENSURE THAT CORRECT ROD LENGTH IS FITTED

185-4602 **PISTON & ROD GP** *(contd.)* **i01992133**

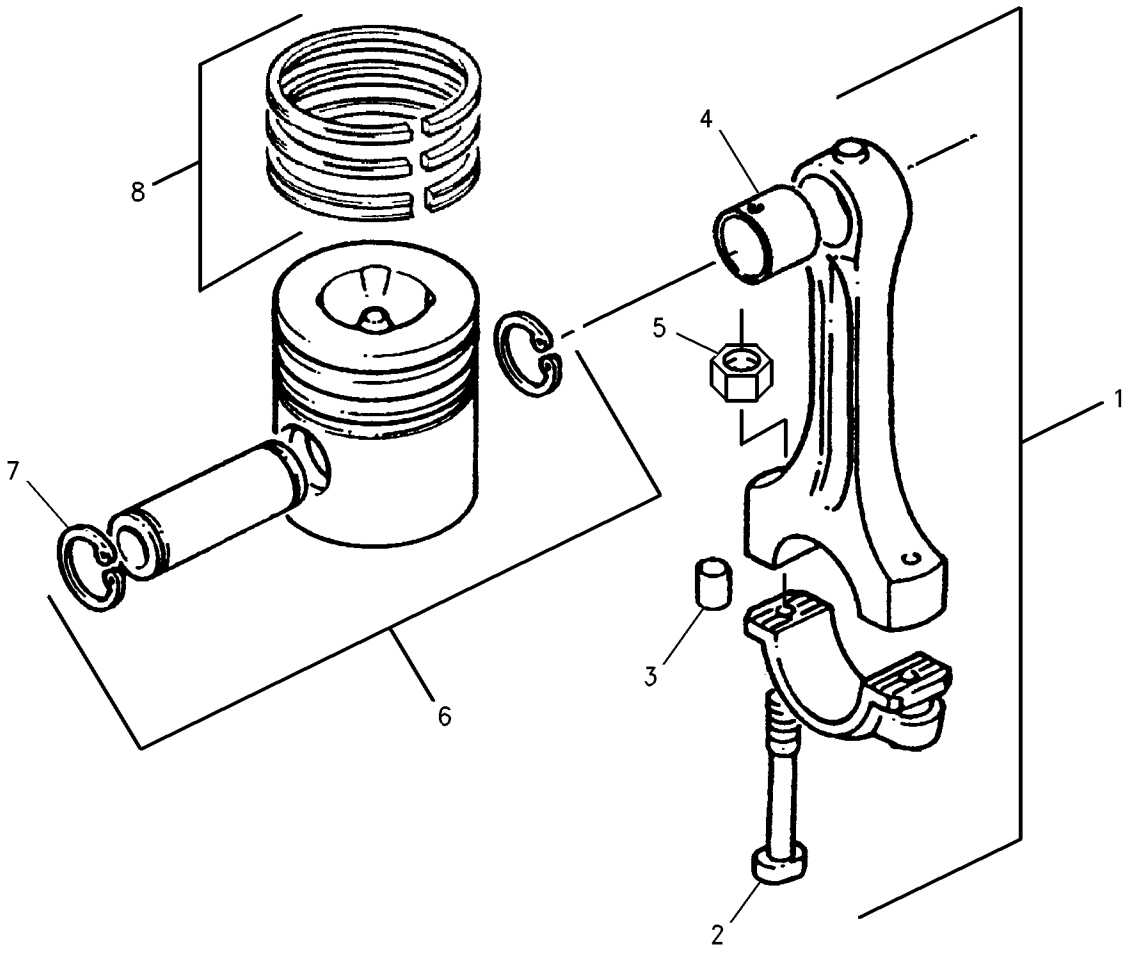

GRAPHIC #1 **<END>** g00732496

220-2670 PISTON & ROD GP

S/N: 7BJ67008-75556
PART OF 188-0883 ENGINE AR-PRIMARY
AN ATTACHMENT

SMCS-1213, 1214, 1215, 1218, 1219, 1225, 1239 **i01707518**

NOTE	REF NO	GRAPHIC REF	PART NUMBER	QTY	PART NAME 1 2 3 4 5 6 (PRODUCT LEVEL)	SEE PAGE
	1	1	**152-1390**	4	PISTON AS	
	2	1	**138-2073**	4	KIT-PISTON RING	
J	3	1	**160-6493**	4	ROD AS (H)	
					—OR—	
J		1	**160-6494**	4	ROD AS (J)	
					—OR—	
J		1	**160-6495**	4	ROD AS (K)	
					—OR—	
J		1	**160-6496**	4	ROD AS (L)	
					(EACH ROD AS INCLUDES)	
	4	1	**7W-2505**	2	NUT-CONNECTING ROD	
	5	1	**067-6883**	2	BOLT-ROD CAP	
	6	1	**138-2048**	1	BUSHING	
	7	1	**194-2466**	2	DOWEL	

J-ENSURE THAT THE CORRECT ROD LENGTH IS FITTED.

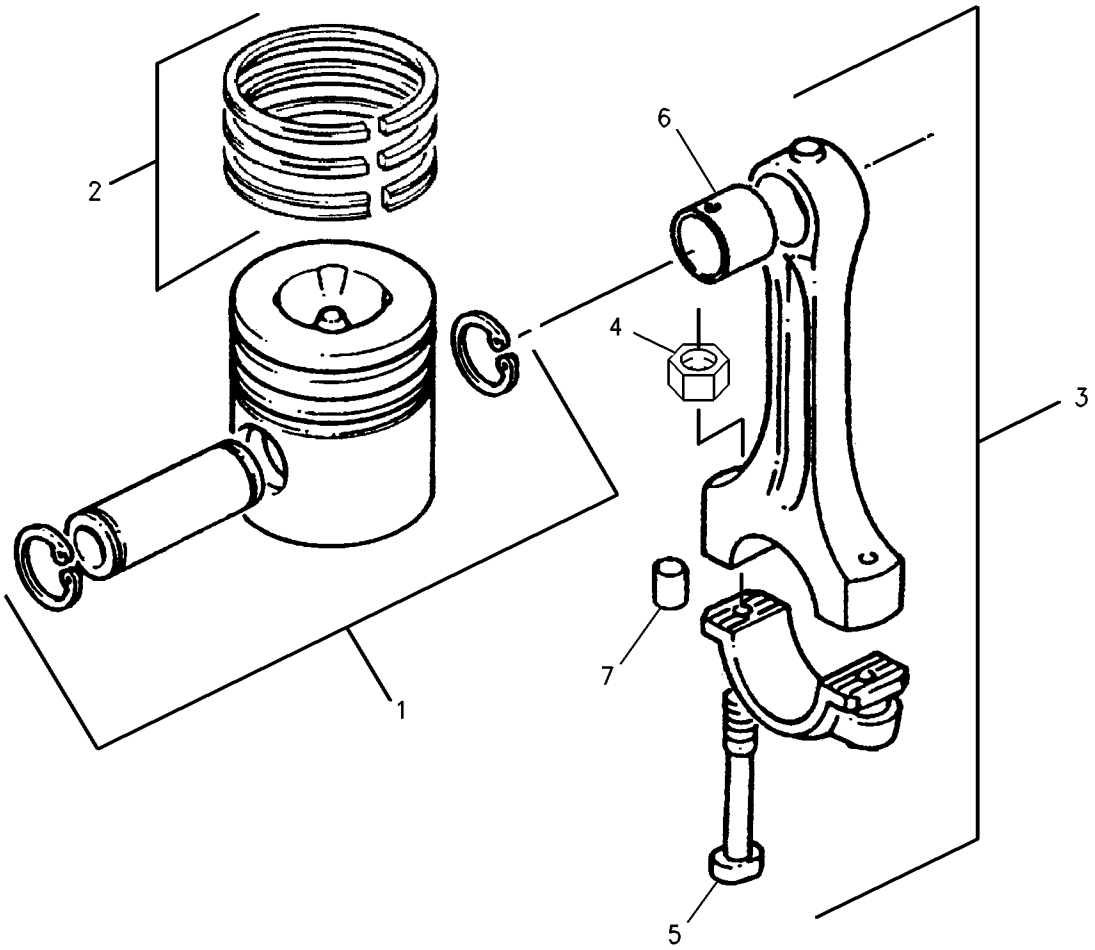

GRAPHIC #1 **<END>** g00716867

BASIC ENGINE

220-2670 PISTON & ROD GP

S/N: 7BJ75557-UP
PART OF 188-0883 ENGINE AR-PRIMARY
AN ATTACHMENT

SMCS-1213, 1214, 1215, 1218, 1219, 1225, 1239 **i01982950**

NOTE	REF NO	GRAPHIC REF	PART NUMBER	QTY	PART NAME 1 2 3 4 5 6 (PRODUCT LEVEL)	SEE PAGE
	1	1	**152-1390**	4	PISTON AS	
	2	1	**138-2073**	4	KIT-PISTON RING	
BJ	3	1	**225-5454**	4	ROD AS (H)	
					—OR—	
BJ		1	**160-6494**	4	ROD AS (J)	
					—OR—	
BJ		1	**225-5441**	4	ROD AS (L)	
					(EACH ROD AS INCLUDES)	
	3A	1	**225-5438**	1	BUSHING	
	3B	1	**225-5439**	2	BOLT (ROD CAP)	

B-USE AS REQUIRED
J-ENSURE THAT THE CORRECT ROD LENGTH IS FITTED.

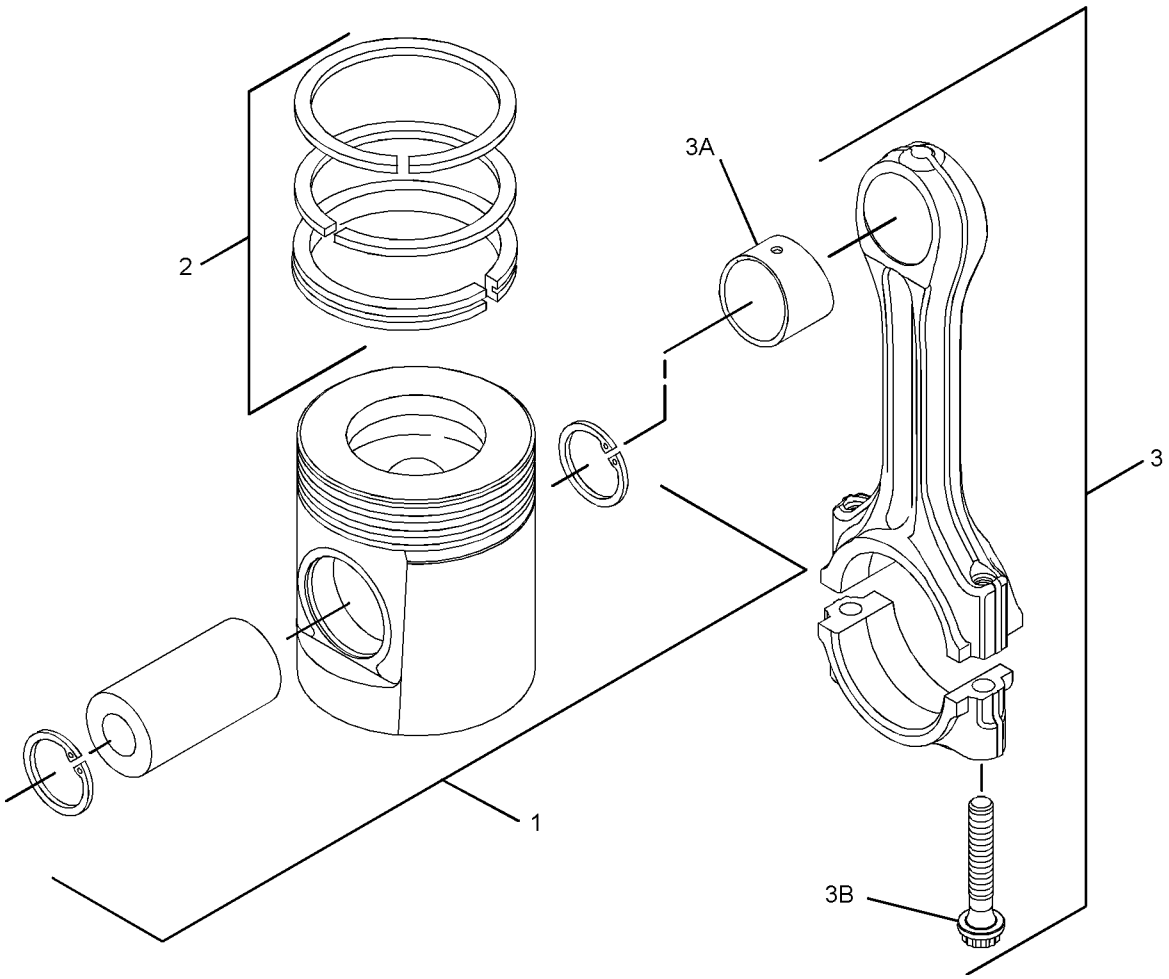

GRAPHIC #1 **<END>** g01042801

BASIC ENGINE

232-7442 PISTON & ROD GP

S/N: CRS1-UP
PART OF 234-3059 ENGINE AR-PRIMARY
AN ATTACHMENT

SMCS-1213, 1214, 1215, 1218, 1219, 1225, 1239 **i01990217**

NOTE	REF NO	GRAPHIC REF	PART NUMBER	QTY	PART NAME 1 2 3 4 5 6 (PRODUCT LEVEL)	SEE PAGE
	1	1	**225-5437**	4	PISTON AS	
					(EACH PISTON AS INCLUDES)	
	2	1	**124-3536**	2	RING-RETAINING	
	3	1	**225-5436**	1	KIT-PISTON RING	
J	4	1	**225-5441**	4	ROD AS (L)	
					—OR—	
J		1	**225-5451**	4	ROD AS (K)	
					—OR—	
J		1	**225-5453**	4	ROD AS (J)	
					—OR—	
J		1	**225-5454**	4	ROD AS (H)	
					—OR—	
J		1	**225-5458**	4	ROD AS (G)	
					—OR—	
J		1	**225-5459**	4	ROD AS (F)	
					(EACH ROD AS INCLUDES)	
	5	1	**225-5438**	1	BUSHING	
	6	1	**225-5439**	2	BOLT	

J-ENSURE THAT CORRECT ROD LENGTH IS FITTED

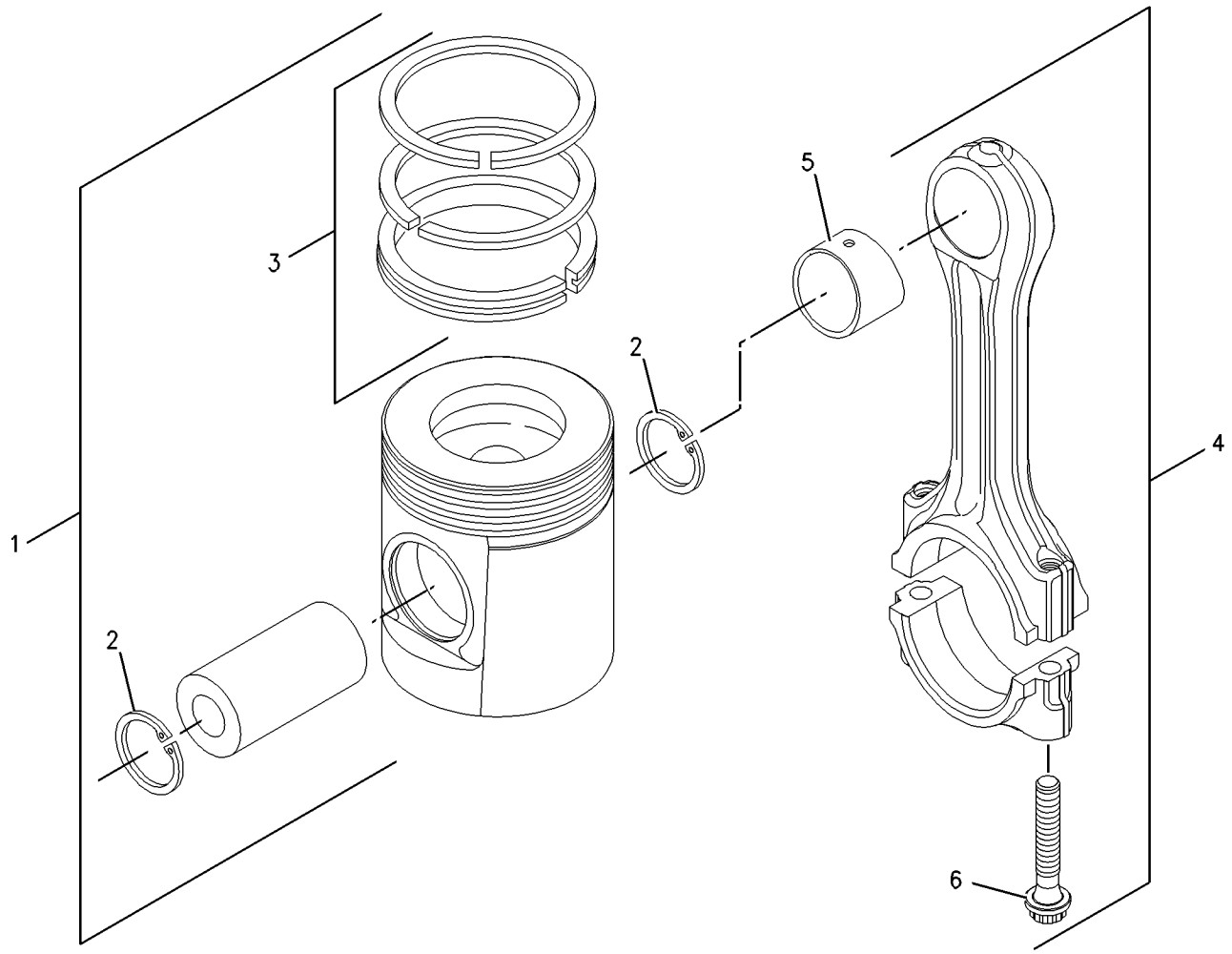

GRAPHIC #1 **<END>** g00909669

BASIC ENGINE

233-7233 PISTON & ROD GP

S/N: CRS1-UP
PART OF 234-3058 ENGINE AR-PRIMARY
AN ATTACHMENT

SMCS-1213, 1214, 1215, 1218, 1219, 1225, 1239 **i01990218**

NOTE	REF NO	GRAPHIC REF	PART NUMBER	QTY	PART NAME 1 2 3 4 5 6 (PRODUCT LEVEL)	SEE PAGE
	1	1	**233-7232**	4	PISTON AS	
					(EACH PISTON AS INCLUDES)	
	2	1	**124-3536**	2	RING-RETAINING	
	3	1	**225-5436**	1	KIT-PISTON RING	
J	4	1	**225-5441**	4	ROD AS (L)	
					—OR—	
J		1	**225-5451**	4	ROD AS (K)	
					—OR—	
J		1	**225-5453**	4	ROD AS (J)	
					—OR—	
J		1	**225-5454**	4	ROD AS (H)	
					—OR—	
J		1	**225-5458**	4	ROD AS (G)	
					—OR—	
J		1	**225-5459**	4	ROD AS (F)	
					(EACH ROD AS INCLUDES)	
	5	1	**225-5438**	1	BUSHING	
	6	1	**225-5439**	2	BOLT	

J-ENSURE THAT CORRECT ROD LENGTH IS FITTED

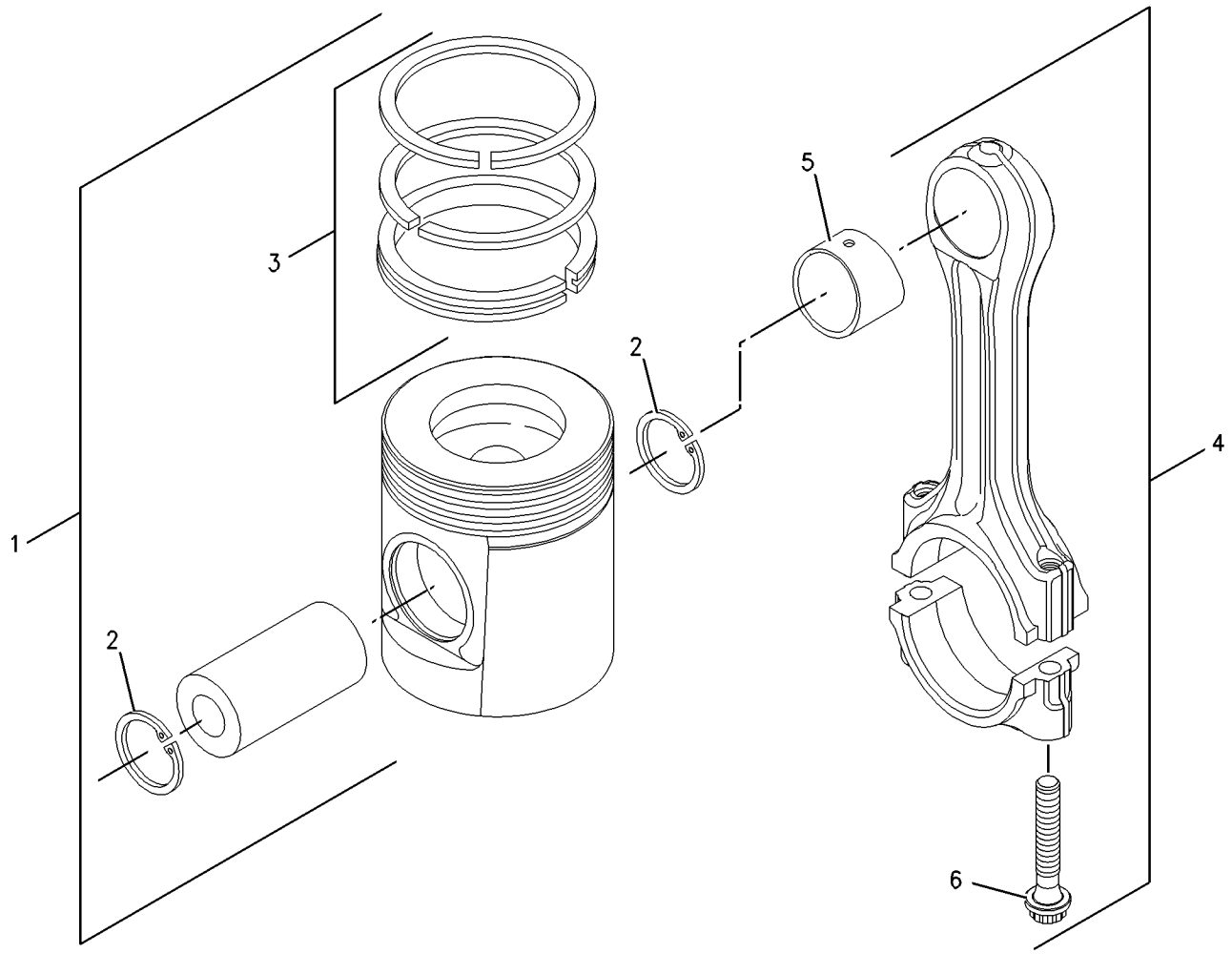

GRAPHIC #1 **<END>** g00909669

BASIC ENGINE

130-4648 PLUG GP-CYLINDER BLOCK

S/N: 7SG1-UP; 7BJ19000-UP
PART OF 187-8016, 188-0883 ENGINE AR-PRIMARY
AN ATTACHMENT

SMCS-1201, 1388 **i01404268**

NOTE	REF NO	GRAPHIC REF	PART NUMBER	QTY	PART NAME 1 2 3 4 5 6 (PRODUCT LEVEL)	SEE PAGE
	1	1	**069-1124**	2	PLUG	

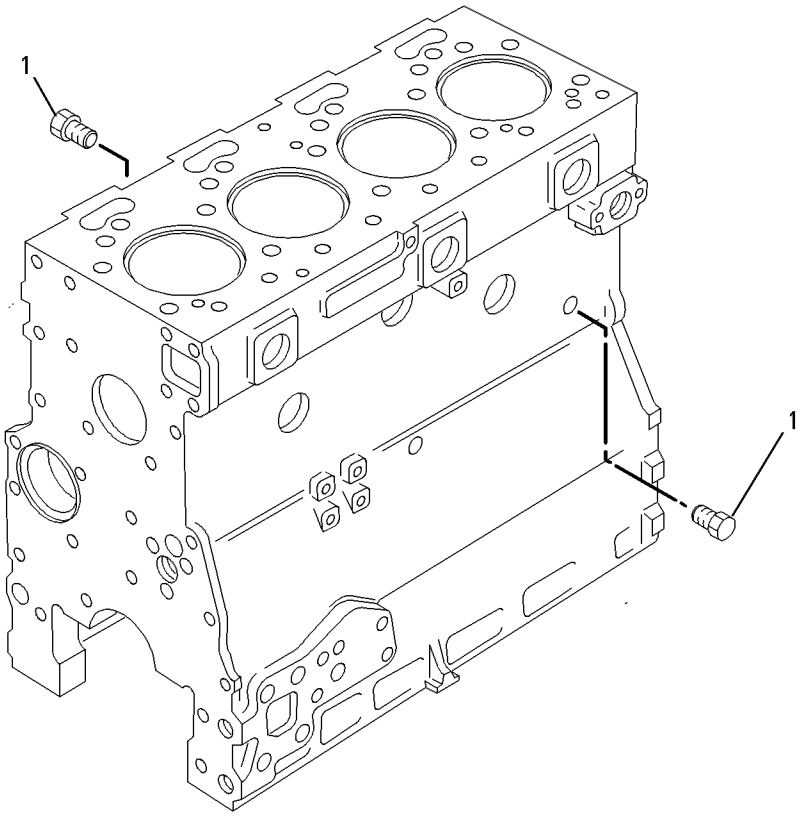

GRAPHIC #1 **<END>** g00517689

130-4647 PLUG GP-CYLINDER HEAD

S/N: 7SG1-UP; 7BJ19000-UP
PART OF 187-8016, 188-0883 ENGINE AR-PRIMARY
AN ATTACHMENT

SMCS-1100 **i00525208**

NOTE	REF NO	GRAPHIC REF	PART NUMBER	QTY	PART NAME 1 2 3 4 5 6 (PRODUCT LEVEL)	SEE PAGE
	1	1	**067-6044**	1	PLUG	
	2	1	**067-6045**	1	WASHER	

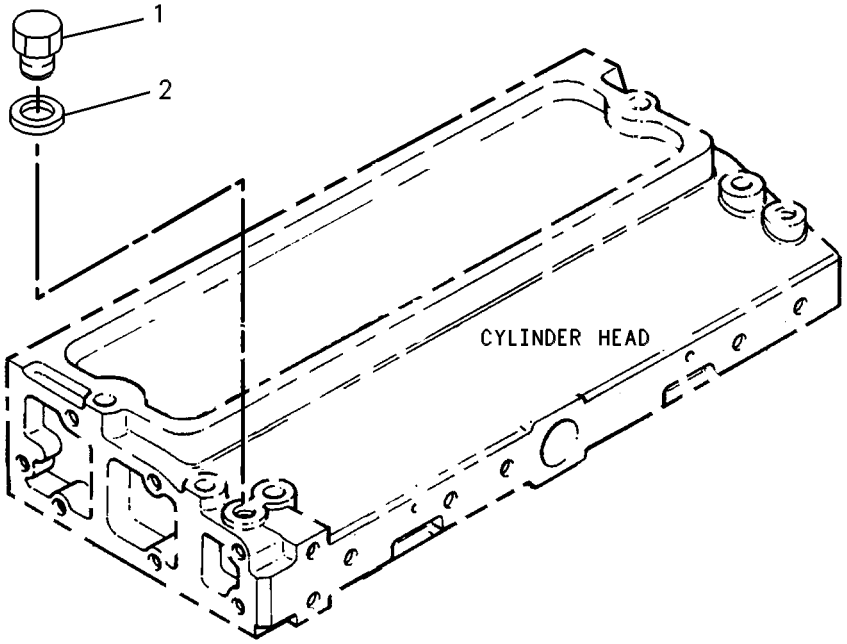

GRAPHIC #1 **<END>** g00131683

141-0728 PLUG GP-ENGINE

S/N: 7SG1-UP; 7BJ19000-UP
PART OF 187-8016, 188-0883 ENGINE AR-PRIMARY
AN ATTACHMENT

SMCS-1000 **i01516985**

NOTE	PART NUMBER	QTY	PART NAME 1 2 3 4 5 6 (PRODUCT LEVEL)	SEE PAGE
	2B-0858	1	PLUG-PIPE	
			(LOCATES IN THERMOSTAT HOUSING)	
	2B-0858	1	PLUG-PIPE	
			(LOCATES IN REAR FACE OF TIMING CASE)	

<END>

BASIC ENGINE

186-0871 PLUG GP-ENGINE

S/N: 7SG3173-UP; 7BJ67008-UP
PART OF 187-8016, 188-0883 ENGINE AR-PRIMARY
AN ATTACHMENT

SMCS-1000 **i01354016**

NOTE	REF NO	GRAPHIC REF	PART NUMBER	QTY	PART NAME 1 2 3 4 5 6 (PRODUCT LEVEL)	SEE PAGE
	1	1	**2B-0858**	1	PLUG-PIPE (1/2-14 NPTF)	
	2	1	**6I-0646**	1	BOLT (M10X1.5X14MM)	
	3	1	**067-6810**	1	WASHER	

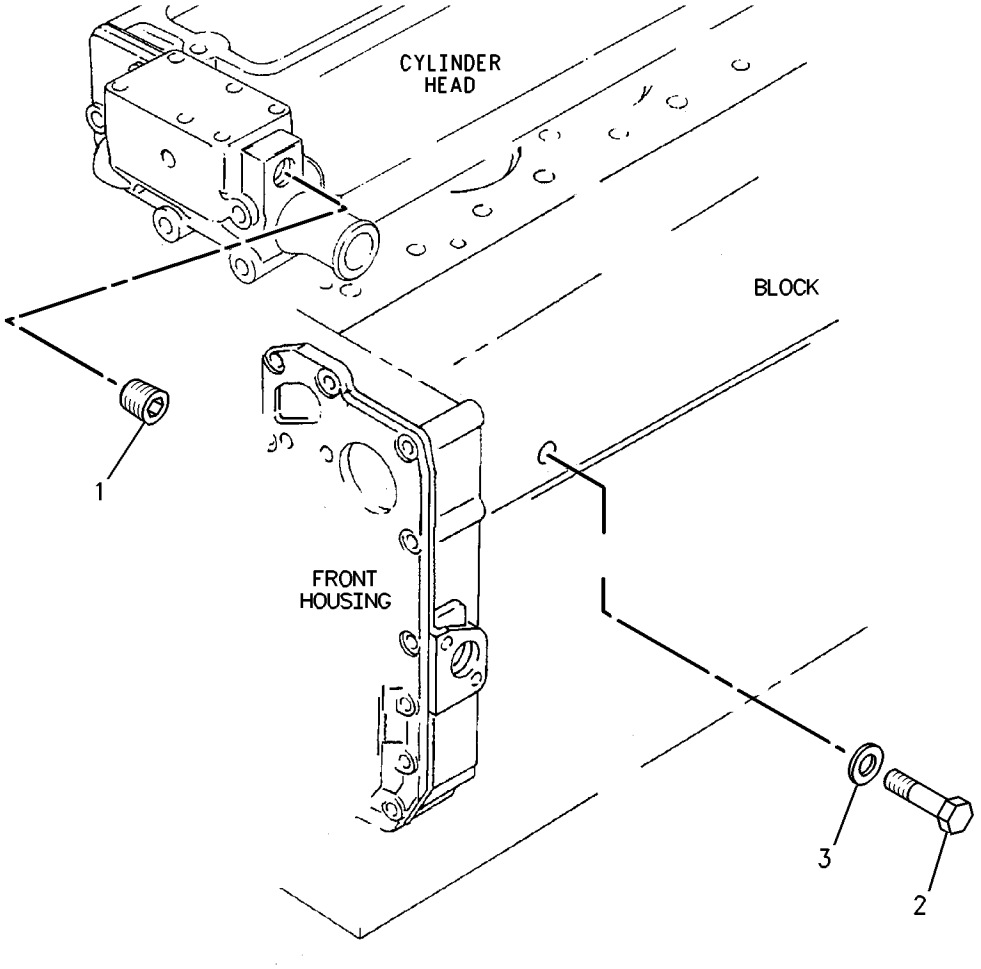

GRAPHIC #1 **<END>** g00732840

225-4317 PLUG GP-ENGINE

S/N: CRS1-UP
PART OF 234-3058, 234-3059 ENGINE AR-PRIMARY
AN ATTACHMENT

SMCS-1000 **i01862406**

NOTE	REF NO	GRAPHIC REF	PART NUMBER	QTY	PART NAME 1 2 3 4 5 6 (PRODUCT LEVEL)	SEE PAGE
	1	1	**2B-0858**	3	PLUG-PIPE	

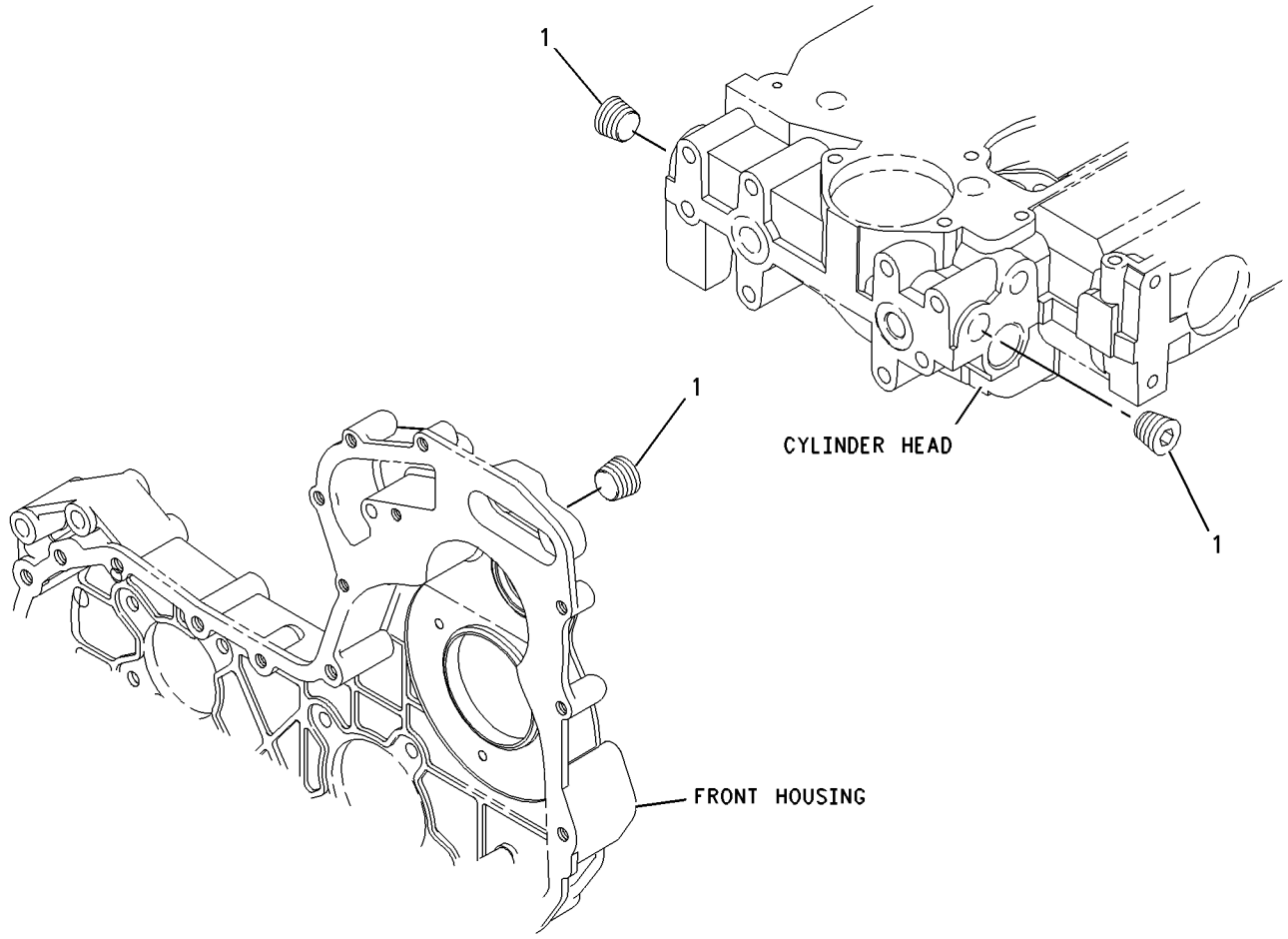

GRAPHIC #1 **<END>** g00911937

230-7569 PLUG GP-ENGINE

S/N: CRS1-UP
PART OF 234-3058, 234-3059 ENGINE AR-PRIMARY
AN ATTACHMENT

SMCS-1000 **i01876806**

NOTE	REF NO	GRAPHIC REF	PART NUMBER	QTY	PART NAME 1 2 3 4 5 6 (PRODUCT LEVEL)	SEE PAGE
	1	1	**231-0046**	1	PLUG	

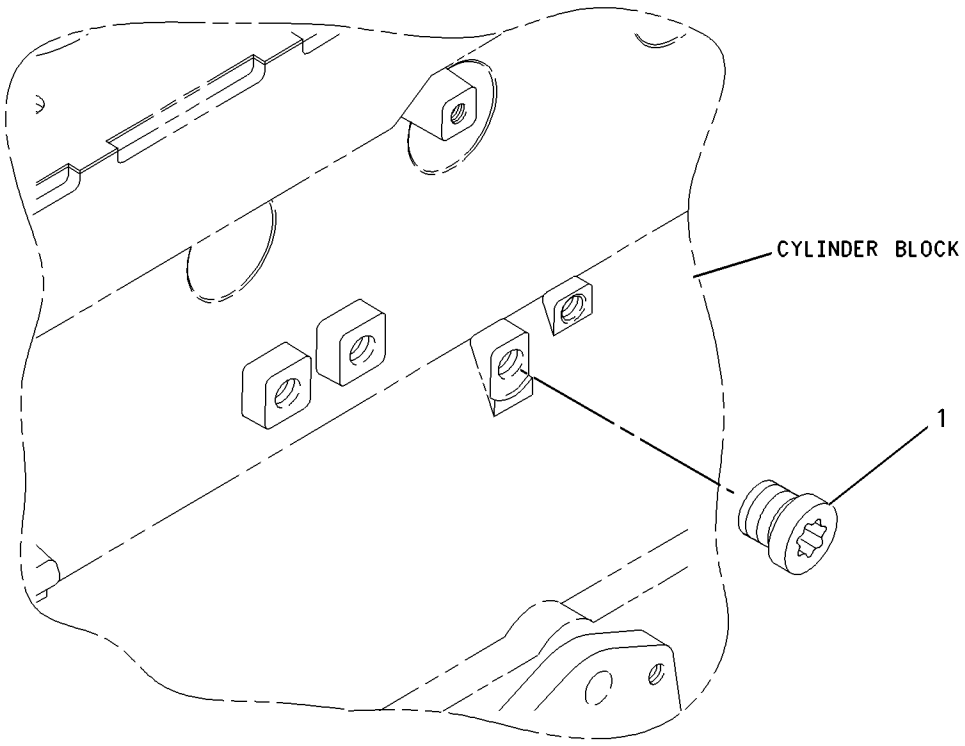

GRAPHIC #1 **<END>** g00911955

6I-0500 PULLEY GP-CRANKSHAFT

S/N: 7SG1-UP; 7BJ19000-UP
PART OF 187-8016, 188-0883 ENGINE AR-PRIMARY
AN ATTACHMENT

SMCS-1205 **i00457493**

NOTE	REF NO	GRAPHIC REF	PART NUMBER	QTY	PART NAME 1 2 3 4 5 6 (PRODUCT LEVEL)	SEE PAGE
	1	1	**6I-0501**	1	BLOCK	
	2	1	**6I-0502**	1	PULLEY	
	3	1	**7W-4634**	3	BOLT	

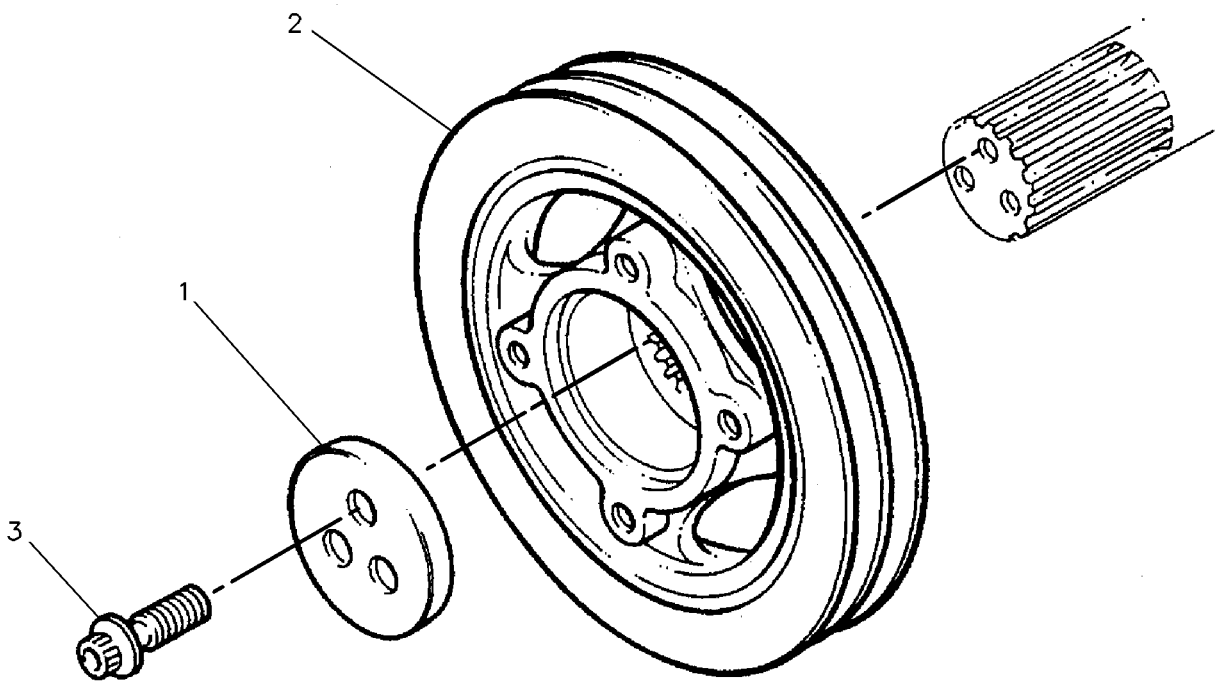

GRAPHIC #1 **<END>** g00130941

230-7353 PULLEY GP-CRANKSHAFT

S/N: CRS1-UP
PART OF 234-3058, 234-3059 ENGINE AR-PRIMARY
AN ATTACHMENT

SMCS-1205 **i02009617**

NOTE	REF NO	GRAPHIC REF	PART NUMBER	QTY	PART NAME 1 2 3 4 5 6 (PRODUCT LEVEL)	SEE PAGE
	1	1	**6I-0501**	1	BLOCK	
	2	1	**6I-0502**	1	PULLEY	
	3	1	**7W-4634**	3	BOLT (7/16-20X1.5 IN)	

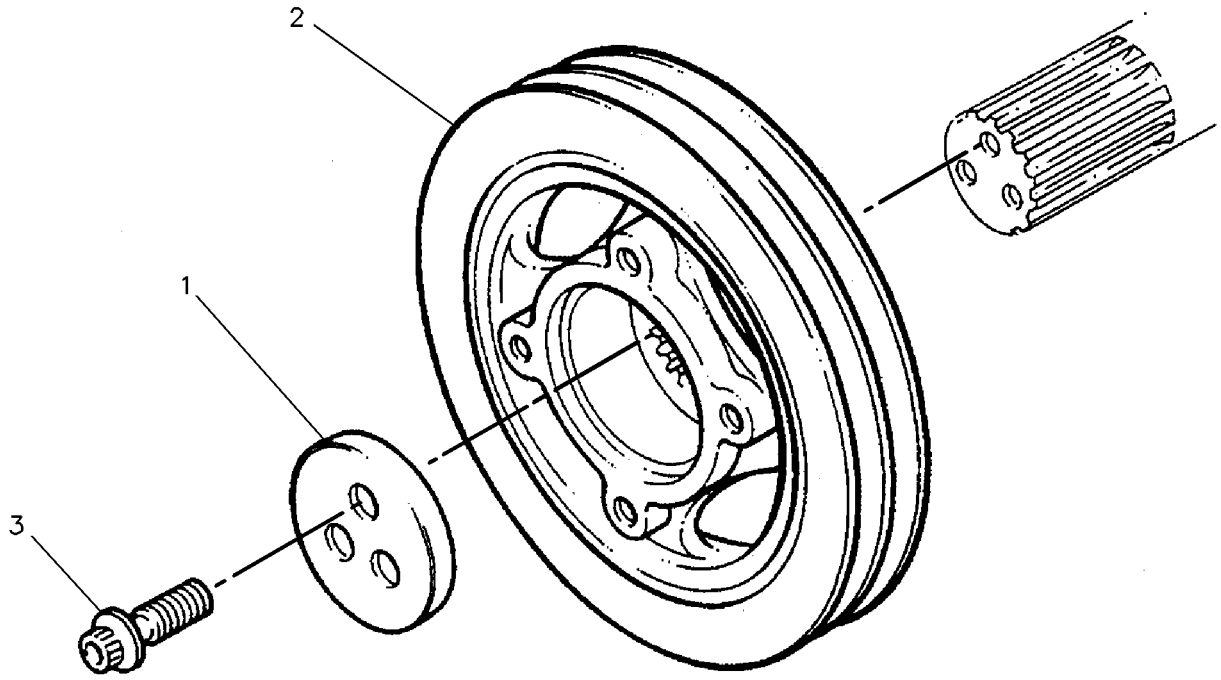

GRAPHIC #1 **<END>** g00130941

BASIC ENGINE

145-8471 VALVE MECHANISM GP

S/N: 7BJ19000-67007
PART OF 188-0883 ENGINE AR-PRIMARY
AN ATTACHMENT

SMCS-1102, 1112, 1121, 1123, 1208, 1209 **i01548159**

NOTE	REF NO	GRAPHIC REF	PART NUMBER	QTY	PART NAME 1 2 3 4 5 6 (PRODUCT LEVEL)	SEE PAGE
	1	1	**140-7392**	1	ROCKER ARM AS	
	2	1	**006-8606**	2	RING-RETAINING	
	3	1	**140-7391**	1	SHAFT AS-ROCKER	
	4	1	**067-6083**	2	PLUG-SHAFT END	
	5	1	**209-0091**	4	LEVER AS (LH)	
					(EACH INCLUDES)	
	6	1	**139-5514**	1	BUSHING-LEVER	
	7	1	**209-0092**	4	LEVER AS (RH)	
					(EACH INCLUDES)	
	8	1	**139-5514**	1	BUSHING-LEVER	
	9	1	**6I-3717**	1	BOLT (NO.10X12.7MM)	
	10	1	**6I-3718**	1	CONNECTION-FEED	
	11	1	**6V-8183**	8	NUT-FULL (3/8-24 THD)	
	12	1	**138-2054**	2	WASHER	
	13	1	**067-6087**	2	SPRING-SHAFT	
	14	1	**067-6088**	2	SPRING-SHAFT	
	15	1	**185-1546**	8	SCREW	
	16	1	**6I-1206**	4	BRACKET-SHAFT	
B	17	1	**195-7004**	2	SHIM	
	18	1	**129-3493**	1	FERRULE	
	19	1	**138-2053**	8	TAPPET	
	20	1	**6I-0233**	3	NUT (M12)	
	21	1	**6I-0234**	3	STUD	
	22	1	**6I-0235**	1	BOLT (M12X1.75X50MM)	
	23	1	**067-6095**	8	ROD	

B-USE AS REQUIRED

145-8471 **VALVE MECHANISM GP** *(contd.)* **i01548159**

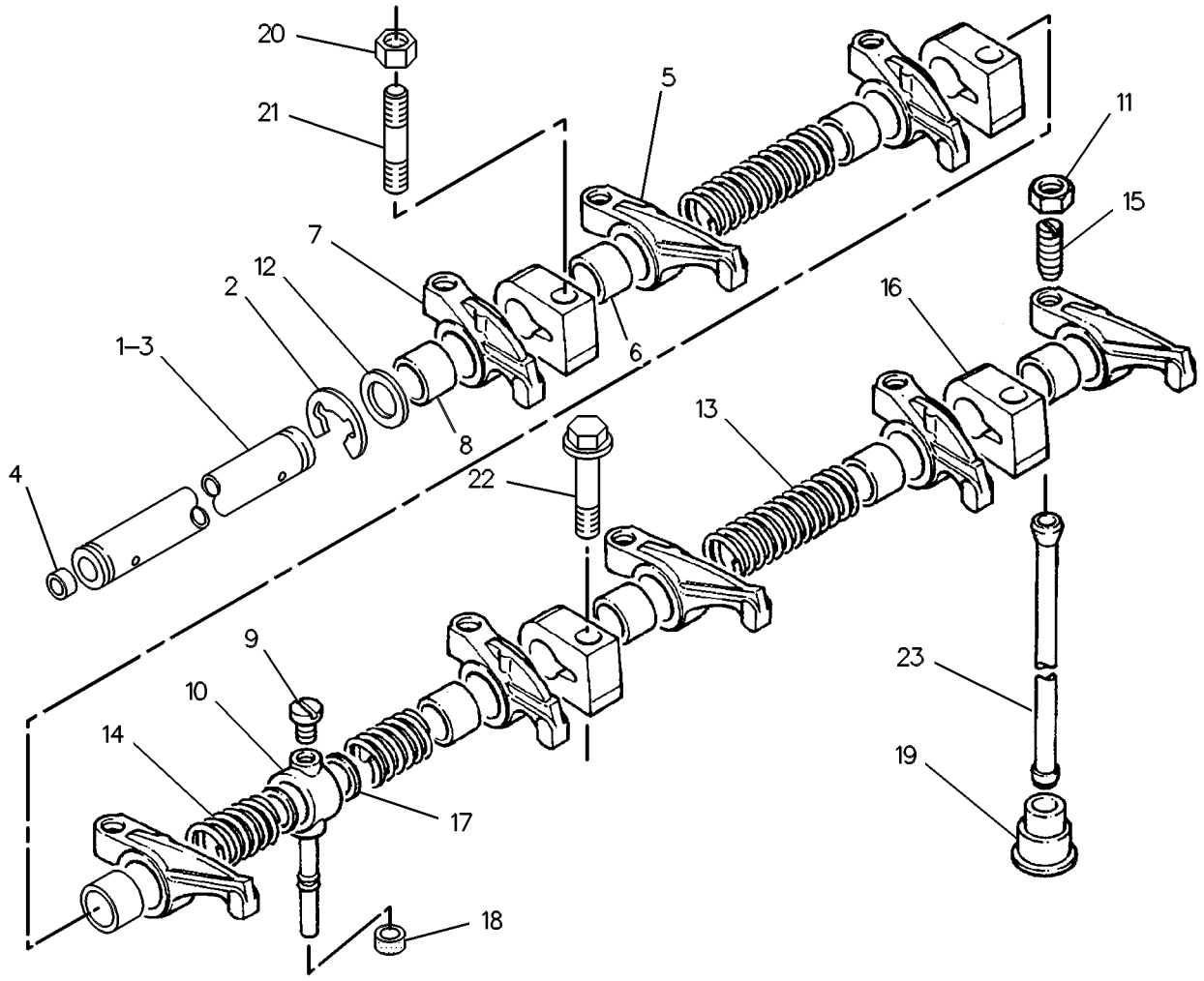

GRAPHIC #1 **<END>** g00267152

BASIC ENGINE

185-3193 VALVE MECHANISM GP

S/N: 7SG1-3172

PART OF 187-8016 ENGINE AR-PRIMARY

AN ATTACHMENT

SMCS-1102, 1112, 1121, 1123, 1208, 1209 **i01548195**

NOTE	REF NO	GRAPHIC REF	PART NUMBER	QTY	PART NAME 1 2 3 4 5 6 (PRODUCT LEVEL)	SEE PAGE
	1	1	**6I-0233**	3	NUT (M12)	
	2	1	**6I-0234**	3	STUD	
	3	1	**6I-0235**	1	BOLT (M12X1.75X50MM)	
	4	1	**067-6095**	8	ROD	
	5	1	**138-2053**	8	TAPPET	
	6	1	**185-0113**	1	ROCKER ARM AS	
	7	1	**6I-1206**	4	BRACKET-SHAFT	
	8	1	**6I-3717**	1	BOLT (NO.10X12.7MM)	
	9	1	**6I-3718**	1	CONNECTION-FEED	
	10	1	**6V-8183**	8	NUT-FULL (3/8-24 THD)	
B	11	1	**7C-1271**	2	SHIM	
	12	1	**006-8606**	2	RING-RETAINING	
	13	1	**067-6087**	2	SPRING-SHAFT	
	14	1	**067-6088**	2	SPRING-SHAFT	
	15	1	**129-3493**	1	FERRULE	
	16	1	**138-2054**	2	WASHER	
	17	1	**209-0091**	4	LEVER AS (LH)	
	18	1	**209-0092**	4	LEVER AS (RH)	
					(EACH LEVER AS INCLUDES)	
	19	1	**139-5514**	1	BUSHING-LEVER	
	20	1	**140-7391**	1	SHAFT AS-ROCKER	
	21	1	**067-6083**	2	PLUG-SHAFT END	
	22	1	**185-1546**	8	SCREW	

B-USE AS REQUIRED

185-3193 **VALVE MECHANISM GP** *(contd.)* **i01548195**

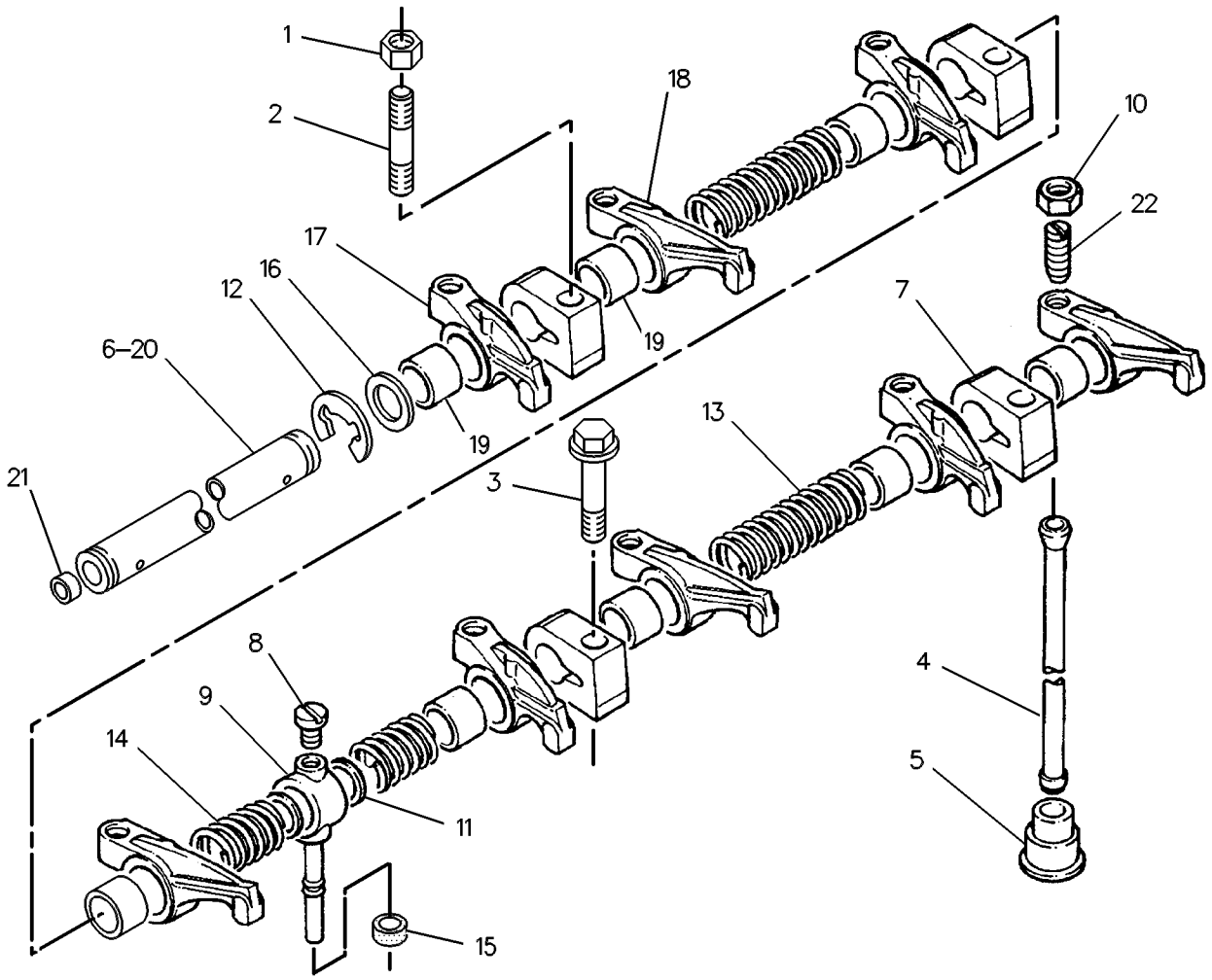

GRAPHIC #1 **<END>** g00654139

185-4605 VALVE MECHANISM GP

S/N: 7SG3173-UP
PART OF 187-8016 ENGINE AR-PRIMARY
AN ATTACHMENT

SMCS-1102, 1112, 1121, 1123, 1208, 1209 **i01548256**

NOTE	REF NO	GRAPHIC REF	PART NUMBER	QTY	PART NAME 1 2 3 4 5 6 (PRODUCT LEVEL)	SEE PAGE
	1	1	**6I-0233**	3	NUT (M12)	
	2	1	**6I-0234**	3	STUD	
	3	1	**6I-0235**	1	BOLT (M12X1.75X50MM)	
	4	1	**067-6095**	8	ROD	
	5	1	**138-2053**	8	TAPPET	
	6	1	**185-0113**	1	ROCKER ARM AS	
	7	1	**6I-1206**	4	BRACKET-SHAFT	
	8	1	**6I-3717**	1	BOLT (NO.10X12.7MM)	
	9	1	**6I-3718**	1	CONNECTION-FEED	
	10	1	**6V-8183**	8	NUT-FULL (3/8-24 THD)	
B	11	1	**7C-1271**	2	SHIM	
	12	1	**006-8606**	2	RING-RETAINING	
	13	1	**067-6087**	2	SPRING-SHAFT	
	14	1	**067-6088**	2	SPRING-SHAFT	
	15	1	**129-3493**	1	FERRULE	
	16	1	**138-2054**	2	WASHER	
	17	1	**209-0091**	4	LEVER AS (LH)	
	18	1	**209-0092**	4	LEVER AS (RH)	
					(EACH LEVER AS INCLUDES)	
	19	1	**139-5514**	1	BUSHING-LEVER	
	20	1	**140-7391**	1	SHAFT AS-ROCKER	
	21	1	**067-6083**	2	PLUG-SHAFT END	
	22	1	**185-1546**	8	SCREW	

B-USE AS REQUIRED

185-4605 **VALVE MECHANISM GP** *(contd.)* **i01548256**

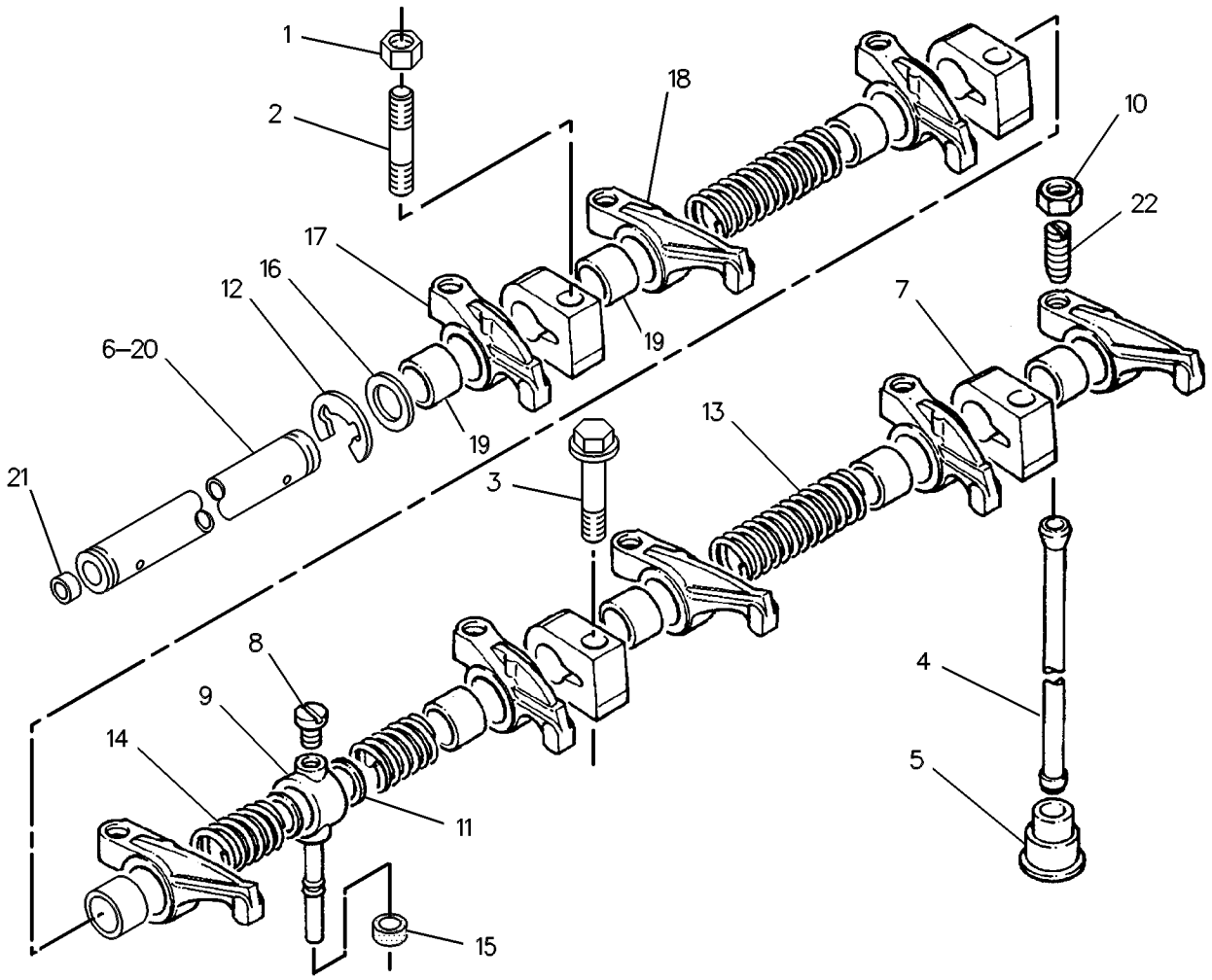

GRAPHIC #1 **<END>** g00654155

BASIC ENGINE

220-2672 VALVE MECHANISM GP

S/N: 7BJ67008-UP
PART OF 188-0883 ENGINE AR-PRIMARY
AN ATTACHMENT

SMCS-1102, 1112, 1121, 1123, 1208, 1209 **i01707577**

NOTE	REF NO	GRAPHIC REF	PART NUMBER	QTY	PART NAME 1 2 3 4 5 6 (PRODUCT LEVEL)	SEE PAGE
	1	1	**140-7392**	1	ROCKER ARM AS	
	2	1	**006-8606**	2	RING-RETAINING	
	3	1	**140-7391**	1	SHAFT AS-ROCKER	
	4	1	**067-6083**	2	PLUG-SHAFT END	
	5	1	**209-0091**	4	LEVER AS (LH)	
					(EACH INCLUDES)	
	6	1	**209-0093**	1	BUSHING	
	7	1	**209-0092**	4	LEVER AS (RH)	
					(EACH INCLUDES)	
	8	1	**209-0093**	1	BUSHING	
	9	1	**6I-3717**	1	BOLT (NO.10X12.7MM)	
	10	1	**6I-3718**	1	CONNECTION-FEED	
	11	1	**6V-8183**	8	NUT-FULL (3/8-24 THD)	
	12	1	**138-2054**	2	WASHER	
	13	1	**067-6087**	2	SPRING-SHAFT	
	14	1	**067-6088**	2	SPRING-SHAFT	
	15	1	**185-1546**	8	SCREW	
	16	1	**6I-1206**	4	BRACKET-SHAFT	
B	17	1	**195-7004**	2	SHIM	
	18	1	**129-3493**	1	FERRULE	
	19	1	**138-2053**	8	TAPPET	
	20	1	**6I-0233**	3	NUT (M12)	
	21	1	**6I-0234**	3	STUD	
	22	1	**6I-0235**	1	BOLT (M12X1.75X50MM)	
	23	1	**067-6095**	8	ROD	

B-USE AS REQUIRED

220-2672 **VALVE MECHANISM GP** *(contd.)* **i01707577**

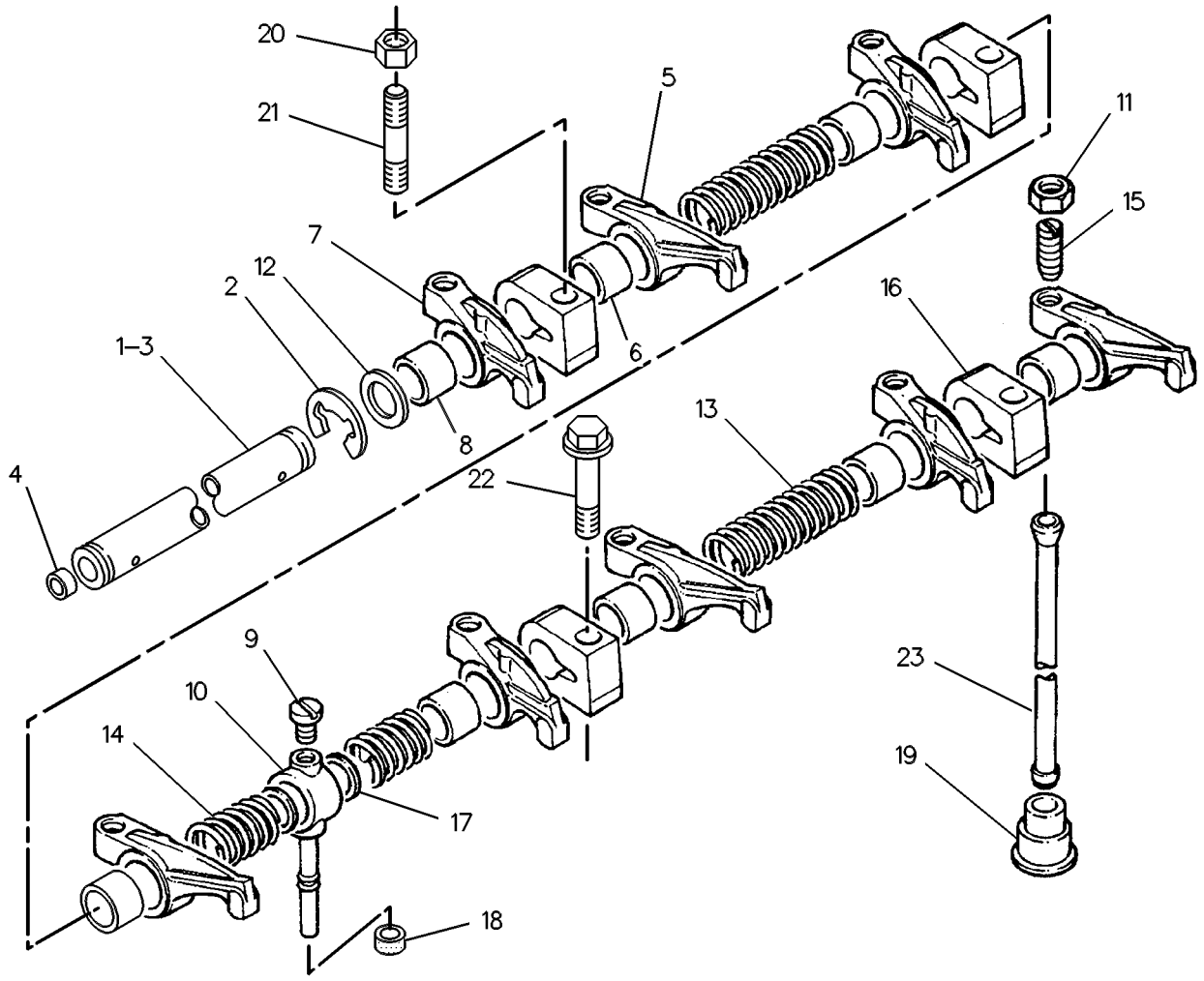

GRAPHIC #1 **<END>** g00267152

232-7526 VALVE MECHANISM GP

S/N: CRS1-UP
PART OF 234-3059 ENGINE AR-PRIMARY
AN ATTACHMENT

SMCS-1102, 1112, 1121, 1123, 1208, 1209 **i01863433**

NOTE	REF NO	GRAPHIC REF	PART NUMBER	QTY	PART NAME 1 2 3 4 5 6 (PRODUCT LEVEL)	SEE PAGE
	1	1	**067-6095**	8	ROD	
	2	1	**138-2053**	8	TAPPET	
	3	1	**225-5963**	1	ROCKER ARM AS	
	4	1	**225-5625**	4	LEVER AS	
					(EACH INCLUDES)	
	5	1	**5B-9079**	1	NUT-JAM (3/8-24 THD)	
	6	1	**185-1546**	1	SCREW	
	7	1	**225-5634**	1	SHAFT AS	
	8	1	**225-5629**	2	PLUG	
	9	1	**225-5638**	3	SPRING	
	10	1	**225-5640**	4	LEVER AS	
					(EACH INCLUDES)	
	11	1	**5B-9079**	1	NUT-JAM (3/8-24 THD)	
	12	1	**185-1546**	1	SCREW	
	13	1	**225-5959**	2	CLIP	
	14	1	**225-5960**	1	BOLT	
	15	1	**225-5961**	2	WASHER	
	16	1	**225-5962**	3	BOLT	

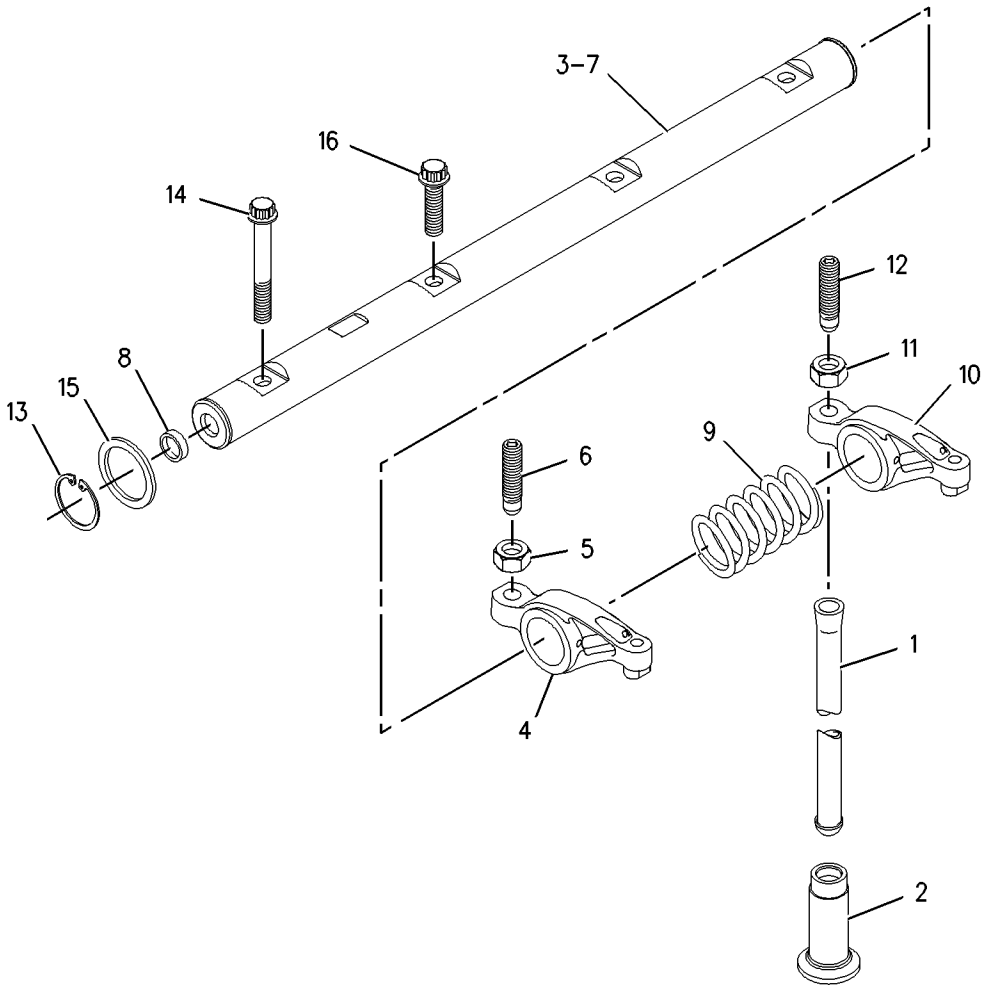

GRAPHIC #1 **<END>** g00910253

BASIC ENGINE

233-7235 VALVE MECHANISM GP

S/N: CRS1-UP
PART OF 234-3058 ENGINE AR-PRIMARY
AN ATTACHMENT

SMCS-1102, 1112, 1121, 1123, 1208, 1209 **i02014678**

NOTE	REF NO	GRAPHIC REF	PART NUMBER	QTY	PART NAME 1 2 3 4 5 6 (PRODUCT LEVEL)	SEE PAGE
	1	1	**067-6095**	8	ROD	
	2	1	**138-2053**	8	TAPPET	
	3	1	**225-5963**	1	ROCKER ARM AS	
	4	1	**225-5625**	4	LEVER AS	
					(EACH INCLUDES)	
	5	1	**5B-9079**	1	NUT-JAM (3/8-24-THD)	
	6	1	**185-1546**	1	SCREW	
	7	1	**225-5634**	1	SHAFT AS	
	8	1	**225-5629**	2	PLUG	
	9	1	**225-5638**	3	SPRING	
	10	1	**225-5640**	4	LEVER AS	
					(EACH INCLUDES)	
	11	1	**5B-9079**	1	NUT-JAM (3/8-24-THD)	
	12	1	**185-1546**	1	SCREW	
	13	1	**225-5959**	2	CLIP	
	14	1	**225-5960**	1	BOLT	
	15	1	**225-5961**	2	WASHER	
	16	1	**225-5962**	3	BOLT (M8X1.25X30-MM)	

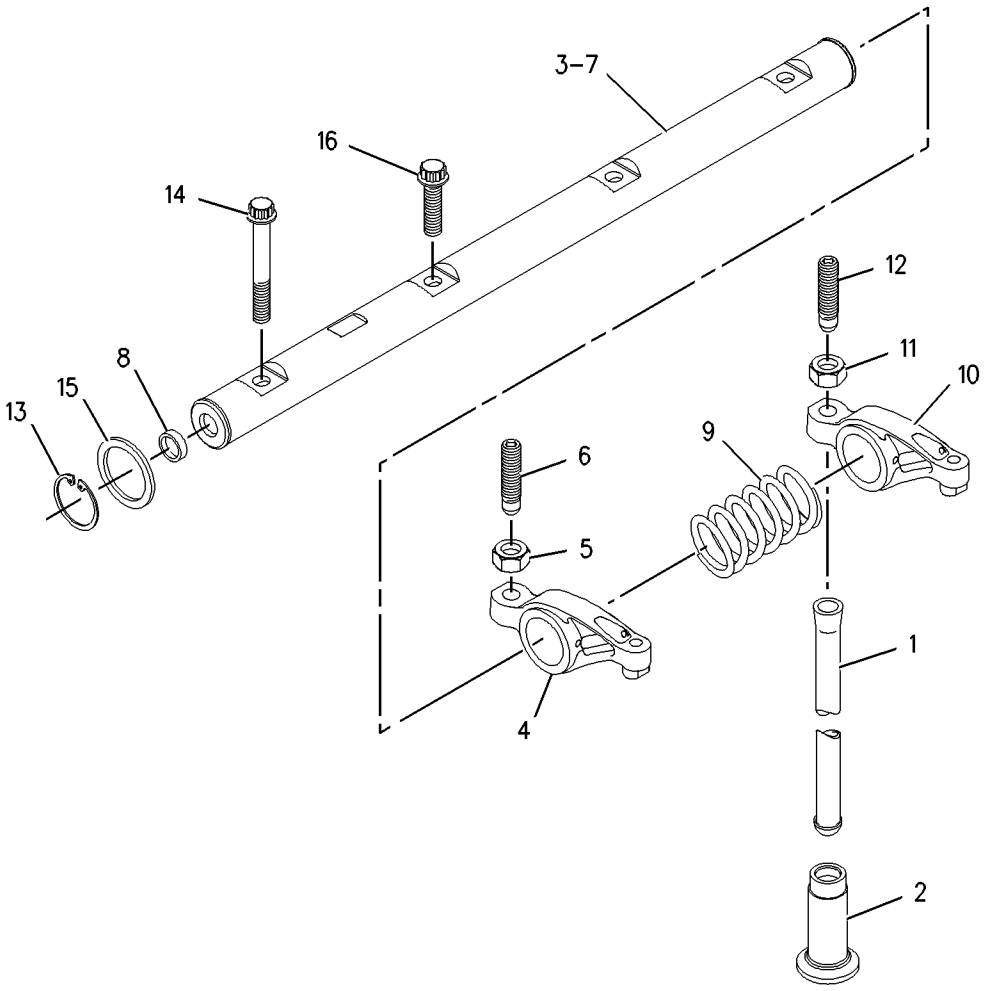

GRAPHIC #1 **<END>** g00910253

LUBRICATION SYSTEM

202-5912 BREATHER GP

S/N: BFP12900-UP

AN ATTACHMENT

SMCS-1317 **i01644390**

NOTE	PART NUMBER	QTY	PART NAME 1 2 3 4 5 6 (PRODUCT LEVEL)	SEE PAGE
Y	*202-5914*	1	BREATHER GP	149

Y-SEPARATE ILLUSTRATION

<END>

LUBRICATION SYSTEM

202-5913 BREATHER GP

S/N: BFP12900-UP

AN ATTACHMENT

SMCS-1317 **i01709472**

NOTE	REF NO	GRAPHIC REF	PART NUMBER	QTY	PART NAME 1 2 3 4 5 6 (PRODUCT LEVEL)	SEE PAGE
E	1	1	**5P-1505**		HOSE (90CM)	
E	2	1	**136-1955**		HOSE (109CM)	
	3	1	**6I-1497**	1	SEAL	
	4	1	**6S-8620**	2	CLAMP-HOSE	
	5	1	**7K-1181**	2	STRAP-CABLE	
	6	1	**8T-9402**	3	CLAMP-HOSE	
	7	1	**032-9946**	1	GASKET	
	8	1	**165-4021**	1	CANISTER AS-BREATHER	
		1	**185-6643**	1	SEAL (BREATHER)	
	9	1	**202-5807**	1	BRACKET AS	
	10	1	**202-5909**	1	TUBE AS-OIL	
	11	1	**211-1871**	1	PAN-OIL	
	12	1	**211-1872**	1	TUBE AS (NO. 2 CYL.)	
	13	1	**218-2685**	1	HOSE	
	14	1	**132-5789**	2	CLIP	
	15	1	**6D-4246**	1	CLIP	
M	16	1	**6V-7743**	2	LOCKNUT (M6X1 THD)	
M	17	1	**8C-3798**	2	BOLT-LOCKING (M6X1X30)	
	18	1	**8T-4121**	1	WASHER-HARD (11X21X2.5MM THK)	
M	19	1	**8T-4137**	1	BOLT (M10X1.5X20MM)	
M	20	1	**8T-4181**	2	BOLT (M6X1X20MM)	
M	21	1	**8T-4189**	2	BOLT (M8X1.25X20MM)	
	22	1	**8T-4205**	6	WASHER-HARD (7.2X14.5X2MM THK)	

E-ORDER BY THE CENTIMETER
M-METRIC PART

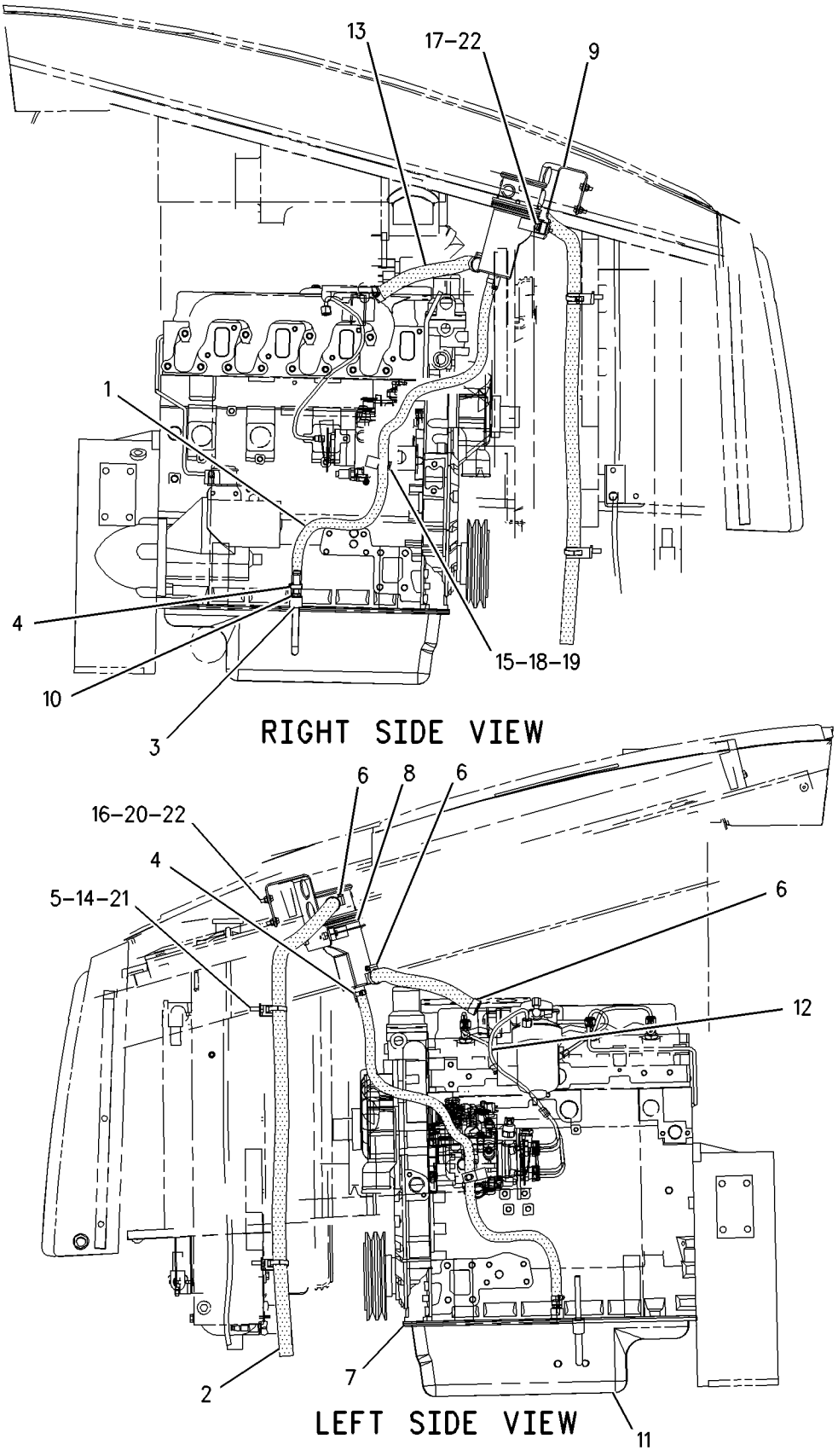

GRAPHIC #1 **<END>** g00879881

LUBRICATION SYSTEM

202-5914 BREATHER GP

S/N: BFP12900-UP
PART OF 202-5912 BREATHER GP
AN ATTACHMENT

SMCS-1317 **i01897828**

NOTE	REF NO	GRAPHIC REF	PART NUMBER	QTY	PART NAME 1 2 3 4 5 6 (PRODUCT LEVEL)	SEE PAGE
E	1	1	**5P-1505**		HOSE (90CM CRANKCASE BREATHER SUMP)	
E	2	1	**136-1955**		HOSE (109CM CRANKCASE BREATHER OPEN)	
	3	1	**5D-1026**	2	CLAMP-HOSE	
	4	1	**6I-1497**	1	SEAL	
	5	1	**6S-8620**	2	CLAMP-HOSE	
	6	1	**7K-1181**	2	STRAP-CABLE	
	7	1	**8T-9402**	3	CLAMP-HOSE	
	8	1	**165-4021**	1	CANISTER AS-BREATHER	
		1	**185-6643**	1	SEAL (BREATHER)	
	9	1	**202-5909**	1	TUBE AS-OIL	
	9A	1	**6I-4079**	1	NUT	
	10	1	**218-2685**	1	HOSE (CRANKCASE BREATHER VALVE COVER)	
	11	1	**221-0750**	1	BRACKET AS	
M		1	**6V-9632**	2	NUT-WELD (M6X1 THD)	
	12	1	**132-5789**	2	CLIP	
	13	1	**6D-4246**	1	CLIP	
	14	1	**7X-0613**	2	WASHER-HARD (8.8X25.5X5MM THK)	
M	15	1	**8C-3798**	2	BOLT-LOCKING (M6X1X30)	
	16	1	**8T-4121**	1	WASHER-HARD (11X21X2.5MM THK)	
M	17	1	**8T-4137**	1	BOLT (M10X1.5X20MM)	
M	18	1	**8T-4189**	2	BOLT (M8X1.25X20MM)	
	19	1	**8T-4205**	2	WASHER-HARD (7.2X14.5X2MM THK)	
M	20	1	**8T-4908**	2	BOLT (M8X1.25X25MM)	

E-ORDER BY THE CENTIMETER
M-METRIC PART

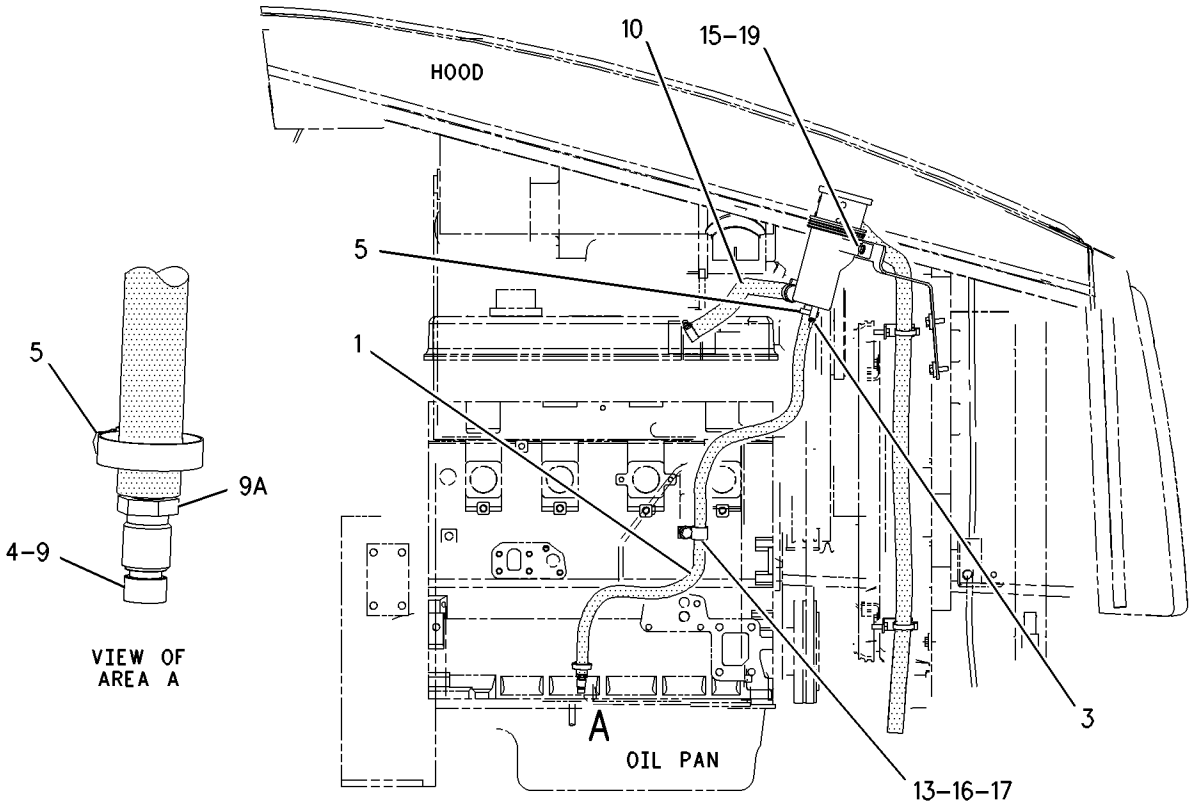

RIGHT SIDE VIEW

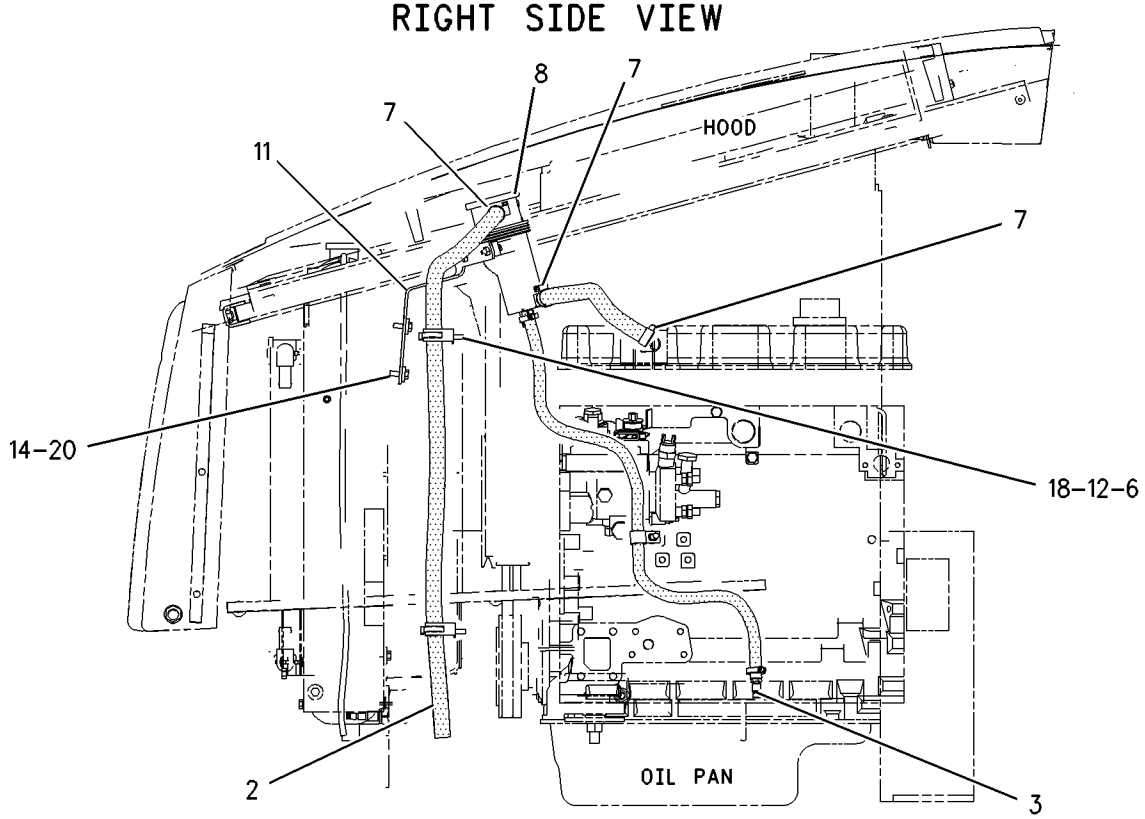

LEFT SIDE VIEW

GRAPHIC #1 **<END>** g00993980

LUBRICATION SYSTEM

239-5760 BREATHER GP

S/N: BFP12900-UP
PART OF 242-9946 BREATHER GP
AN ATTACHMENT

SMCS-1317 **i02001550**

NOTE	REF NO	GRAPHIC REF	PART NUMBER	QTY	PART NAME 1 2 3 4 5 6 (PRODUCT LEVEL)	SEE PAGE
	1	1	**6I-1497**	1	SEAL	
	2	1	**6S-8620**	2	CLAMP-HOSE	
	3	1	**7K-1181**	2	STRAP-CABLE	
	4	1	**8T-9402**	3	CLAMP-HOSE	
	5	1	**165-4021**	1	CANISTER AS-BREATHER	
		1	**185-6643**	1	SEAL (BREATHER)	
	6	1	**202-5909**	1	TUBE AS-OIL	
	7	1	**239-5765**	1	HOSE	
	8	1	**239-7421**	1	PLATE AS	
M		1	**6V-9632**	2	NUT-WELD (M6X1 THD)	
	9	1	**132-5789**	2	CLIP	
	10	1	**6D-4246**	1	CLIP	
	11	1	**7X-0613**	2	WASHER-HARD (8.8X25.5X5MM THK)	
M	12	1	**8C-3798**	2	BOLT-LOCKING (M6X1X30)	
	13	1	**8T-4121**	1	WASHER-HARD (11X21X2.5MM THK)	
M	14	1	**8T-4137**	1	BOLT (M10X1.5X20MM)	
	15	1	**8T-4205**	2	WASHER-HARD (7.2X14.5X2MM THK)	
M	16	1	**8T-4908**	2	BOLT (M8X1.25X25MM)	
E	17	1	**5P-1505**		HOSE (97CM)	
E	18	1	**136-1955**		HOSE (110CM)	

E-ORDER BY THE CENTIMETER
M-METRIC PART

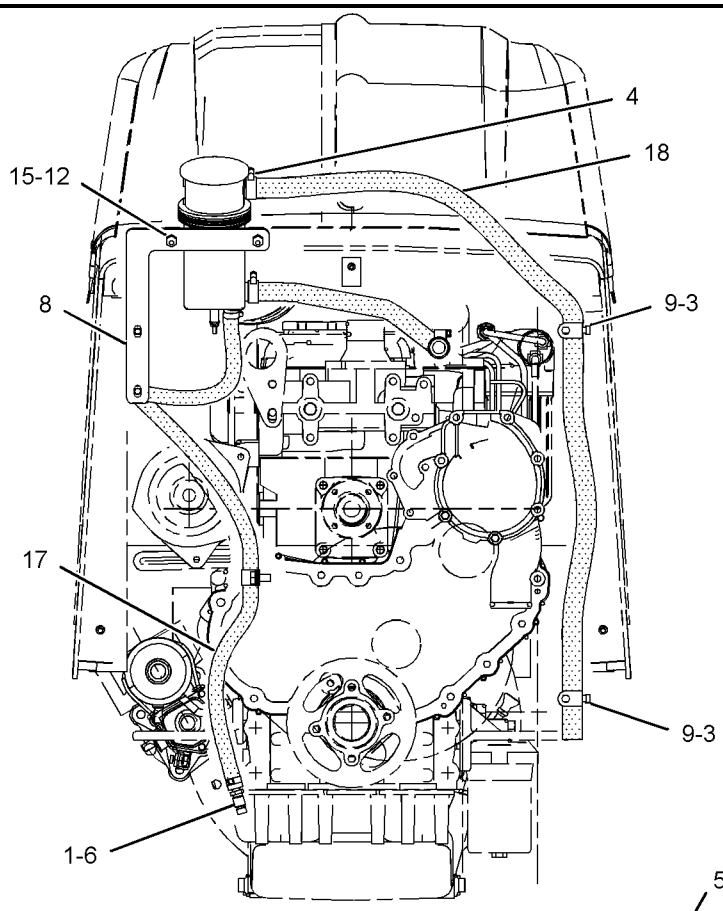

FRONT VIEW

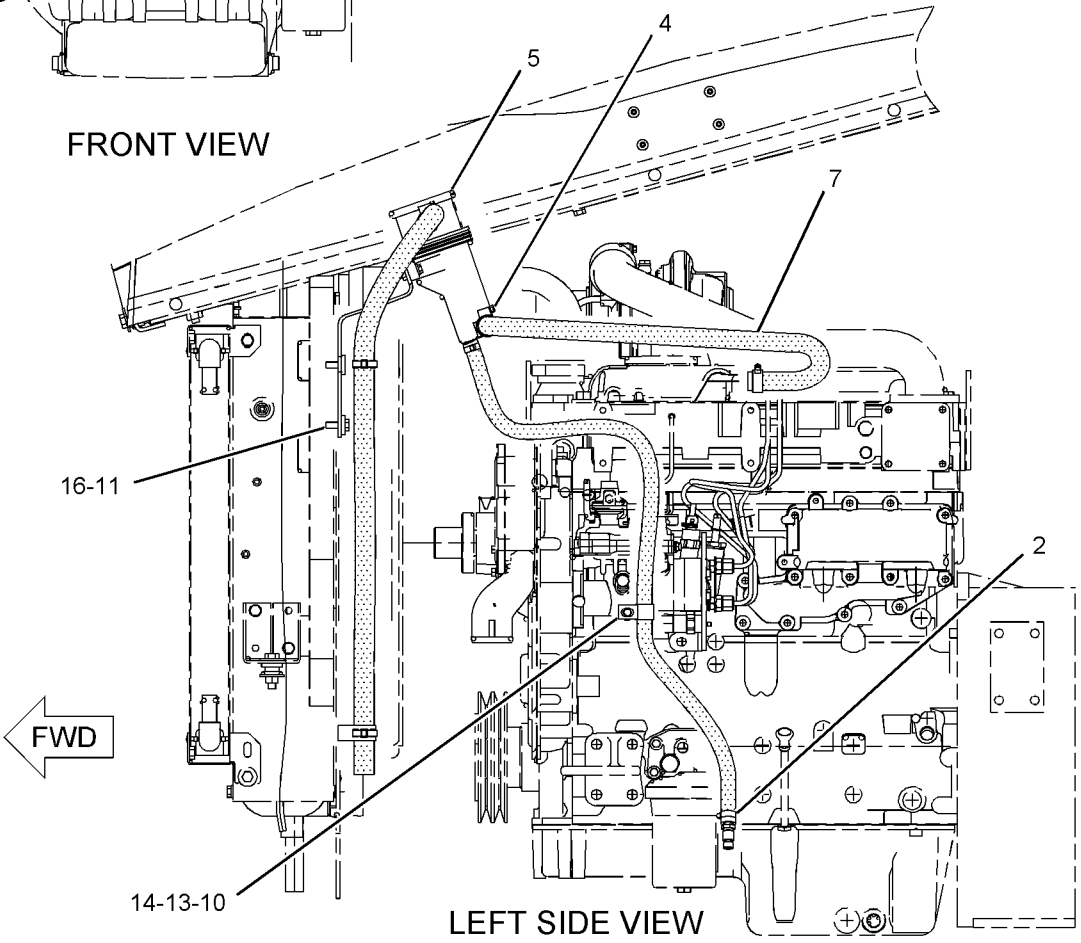

LEFT SIDE VIEW

GRAPHIC #1 **<END>** g01038235

LUBRICATION SYSTEM

242-9946 BREATHER GP–KIT

S/N: BFP12900-UP

FIELD INSTALLATION

SMCS-1317 **i02001562**

NOTE	PART NUMBER	QTY	PART NAME 1 2 3 4 5 6 (PRODUCT LEVEL)	SEE PAGE
Y	*239-5760*	1	BREATHER GP	151

Y-SEPARATE ILLUSTRATION

<END>

LUBRICATION SYSTEM

120-8469 FILLER GP-ENGINE OIL

S/N: CXP940-UP

PART OF 185-1887 INSTALLATION AR-ENGINE

SMCS-1316 **i01955585**

NOTE	REF NO	GRAPHIC REF	PART NUMBER	QTY	PART NAME 1 2 3 4 5 6 (PRODUCT LEVEL)	SEE PAGE
	1	1	**121-1289**	1	TUBE AS	
	2	1	**121-1288**	1	GAUGE-OIL LEVEL (DIPSTICK)	
	3	1	**136-3608**	1	CAP AS (OIL FILLER) (ENGINE)	
		1	**124-0506**	1	SEAL	
M	4	1	**8T-4189**	1	BOLT (M8X1.25X20MM)	
	5	1	**8T-4224**	2	WASHER-HARD (8.8X16X2MM THK)	
	6	1	**130-6001**	1	BODY AS	
		1	**133-5512**	1	NUT	
	7	1	**9M-0164**	2	CLAMP-HOSE	
	8	1	**120-8717**	1	HOSE	
M	9	1	**8T-4908**	1	BOLT (M8X1.25X25MM)	
	10	1	**120-8718**	1	BRACKET	
	11	1	**7W-2326**	1	FILTER AS-ENGINE OIL	
	12	1	**8T-4205**	4	WASHER-HARD (7.2X14.5X2MM THK)	
	13	1	**6I-1497**	1	SEAL	
M	14	1	**8T-4138**	4	BOLT (M6X1X20MM)	
	15	1	**134-3987**	2	CLIP	

M-METRIC PART

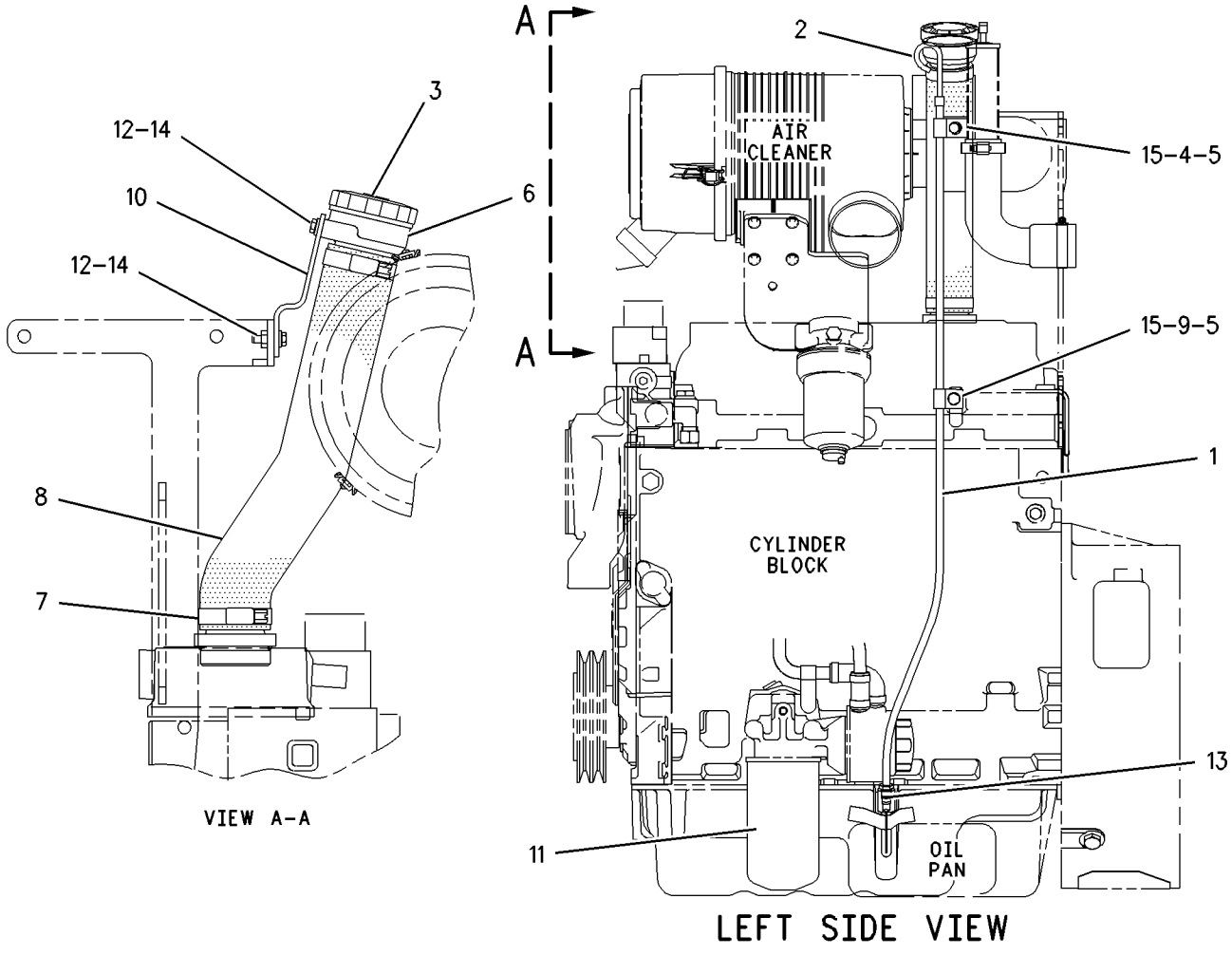

GRAPHIC #1 **<END>** g00813054

234-7510 FILLER GP-ENGINE OIL

S/N: BFP12900-UP
PART OF 214-6890, 214-6891 ENGINE AR
AN ATTACHMENT

SMCS-1316 **i01991952**

NOTE	REF NO	GRAPHIC REF	PART NUMBER	QTY	PART NAME 1 2 3 4 5 6 (PRODUCT LEVEL)	SEE PAGE
	1	1	**6I-1497**	1	SEAL	
	2	1	**7W-2326**	1	FILTER AS-ENGINE OIL	
	3	1	**9M-7958**	1	CLAMP-HOSE	
	4	1	**127-4471**	1	CLAMP-HOSE	
	5	1	**234-7509**	1	TUBE AS	
		1	**6I-4079**	1	NUT	
	6	1	**234-7954**	1	HOSE (OIL FILLER)	
	7	1	**234-8815**	1	TUBE AS	
	8	1	**235-2491**	1	BRACKET AS	
M		1	**8T-3490**	1	NUT-WELD (M10X1.5-THD)	
	9	1	**236-6651**	1	CAP AS (ENGINE OIL FILLER)	
	10	1	**236-6652**	1	GAUGE-OIL LEVEL (DIPSTICK)	
	11	1	**239-3683**	1	SUPPORT	
	12	1	**147-0385**	2	CLIP	
	13	1	**7D-7233**	1	CLIP	
	14	1	**7X-7729**	7	WASHER (11X25X3-MM THK)	
M	15	1	**8T-4133**	1	NUT (M10X1.5-THD)	
M	16	1	**8T-4136**	4	BOLT (M10X1.5X25-MM)	
M	17	1	**8T-4195**	2	BOLT (M10X1.5X30-MM)	

M-METRIC PART

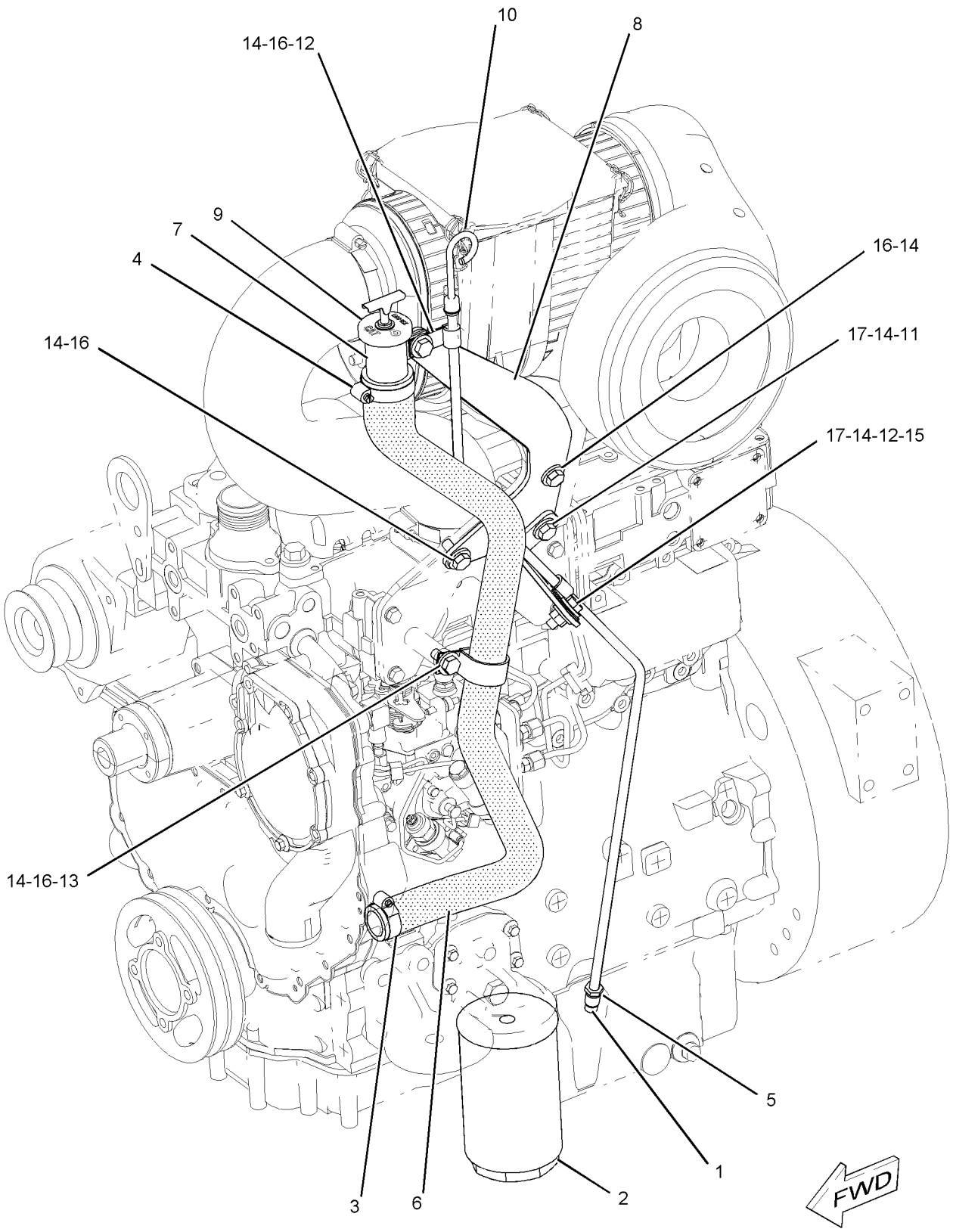

GRAPHIC #1 **<END>** g01042658

LUBRICATION SYSTEM

145-8636 PUMP GP-ENGINE OIL

S/N: 7BJ19000-67007
PART OF 188-0883 ENGINE AR-PRIMARY
AN ATTACHMENT

SMCS-1304, 1315 **i01718325**

NOTE	REF NO	GRAPHIC REF	PART NUMBER	QTY	PART NAME 1 2 3 4 5 6 (PRODUCT LEVEL)	SEE PAGE
	1	1	**6I-0254**	3	BOLT (M8X1.25X30MM)	
	2	1	**6I-0255**	1	GEAR AS (20 TEETH)	
	3	1	**067-6927**	1	BUSHING-TERMINAL	
	4	1	**6I-0256**	1	WASHER	
	5	1	**6I-0257**	1	PIPE	
	6	1	**6I-0258**	2	SEAL	
	7	1	**6I-0259**	1	FLANGE	
	8	1	**6I-0260**	2	BOLT (M8X1.25X25MM)	
	9	1	**6I-0912**	1	PUMP AS-ENGINE OIL	
	10	1	**067-6928**	1	CLIP	
	11	1	**127-3294**	1	SHAFT	
	12	1	**8N-7998**	1	DOWEL	
	13	1	**189-6350**	1	HOUSING AS	
	14	1	**173-0126**	1	SPRING	
	15	1	**7W-4648**	1	SEAT-SPRING	
	16	1	**6I-0787**	1	RING-RETAINING	
	17	1	**7W-4782**	1	PLUNGER	
	18	1	**101-3415**	3	BOLT	
	19	1	**6I-0650**	1	BOLT (M10X1.5X65MM)	

145-8636 **PUMP GP-ENGINE OIL** *(contd.)* **i01718325**

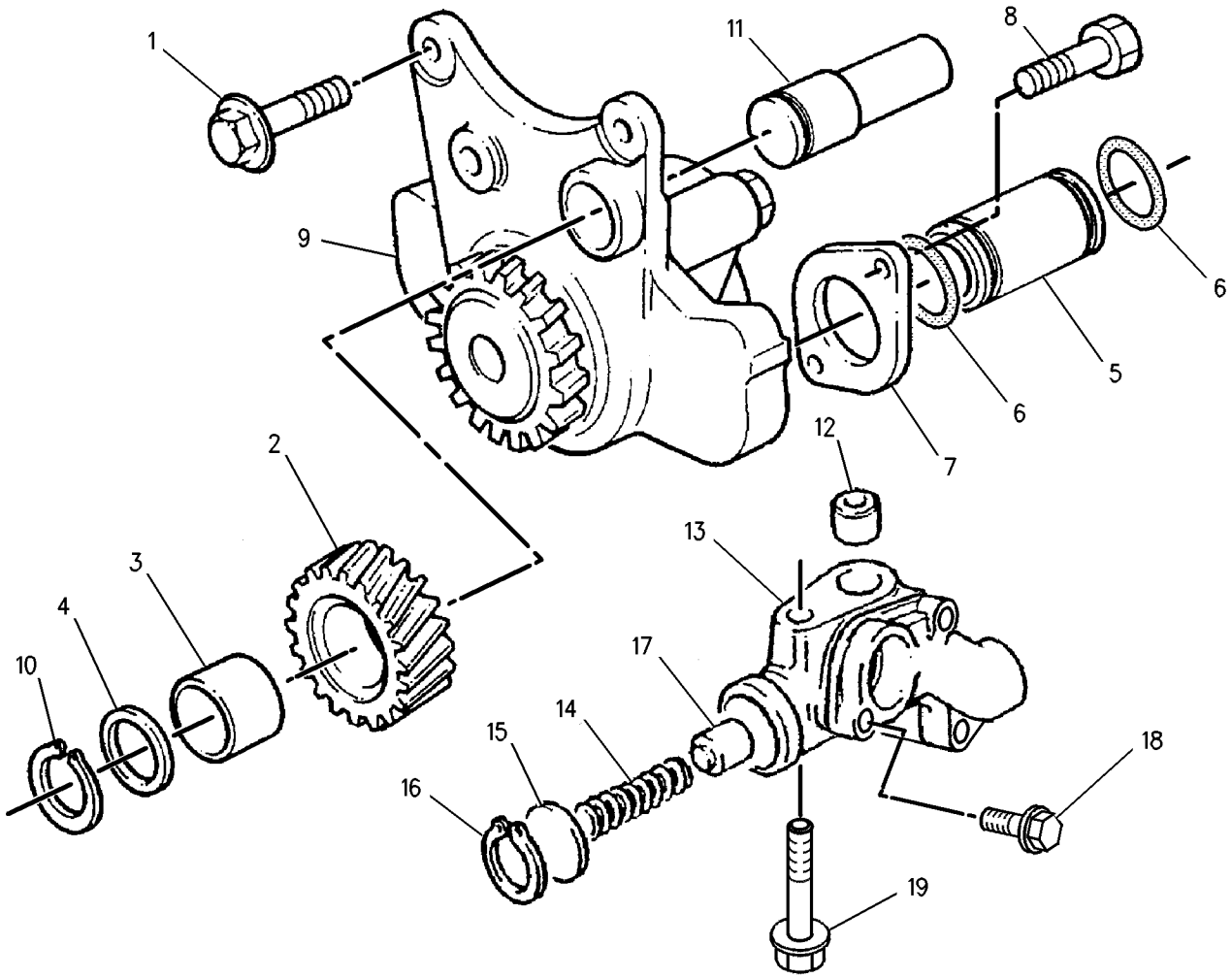

GRAPHIC #1 **<END>** g00738364

LUBRICATION SYSTEM

185-3196 PUMP GP-ENGINE OIL

S/N: 7SG1-3172
PART OF 187-8016 ENGINE AR-PRIMARY
AN ATTACHMENT

SMCS-1304, 1315 **i01397308**

NOTE	REF NO	GRAPHIC REF	PART NUMBER	QTY	PART NAME 1 2 3 4 5 6 (PRODUCT LEVEL)	SEE PAGE
	1	1	**6I-0253**	1	PUMP AS-ENGINE OIL	
	2	1	**6I-0254**	3	BOLT (M8X1.25X30MM)	
	3	1	**6I-0255**	1	GEAR AS (20 TEETH)	
	4	1	**067-6927**	1	BUSHING-TERMINAL	
	5	1	**6I-0256**	1	WASHER	
	6	1	**6I-0257**	1	PIPE	
	7	1	**6I-0258**	2	SEAL	
	8	1	**6I-0259**	1	FLANGE	
	9	1	**6I-0260**	2	BOLT (M8X1.25X25MM)	
	10	1	**6I-0650**	1	BOLT (M10X1.5X65MM)	
	11	1	**189-6353**	1	HOUSING AS	
	11A	1	**101-3415**	3	BOLT	
	12	1	**189-6344**	1	SPRING	
	13	1	**6I-0787**	1	RING-RETAINING	
	14	1	**7W-4648**	1	SEAT-SPRING	
	15	1	**7W-4782**	1	PLUNGER	
	16	1	**8N-7998**	1	DOWEL	
	17	1	**067-6928**	1	CLIP	
	18	1	**127-3294**	1	SHAFT	

185-3196 **PUMP GP-ENGINE OIL** *(contd.)* **i01397308**

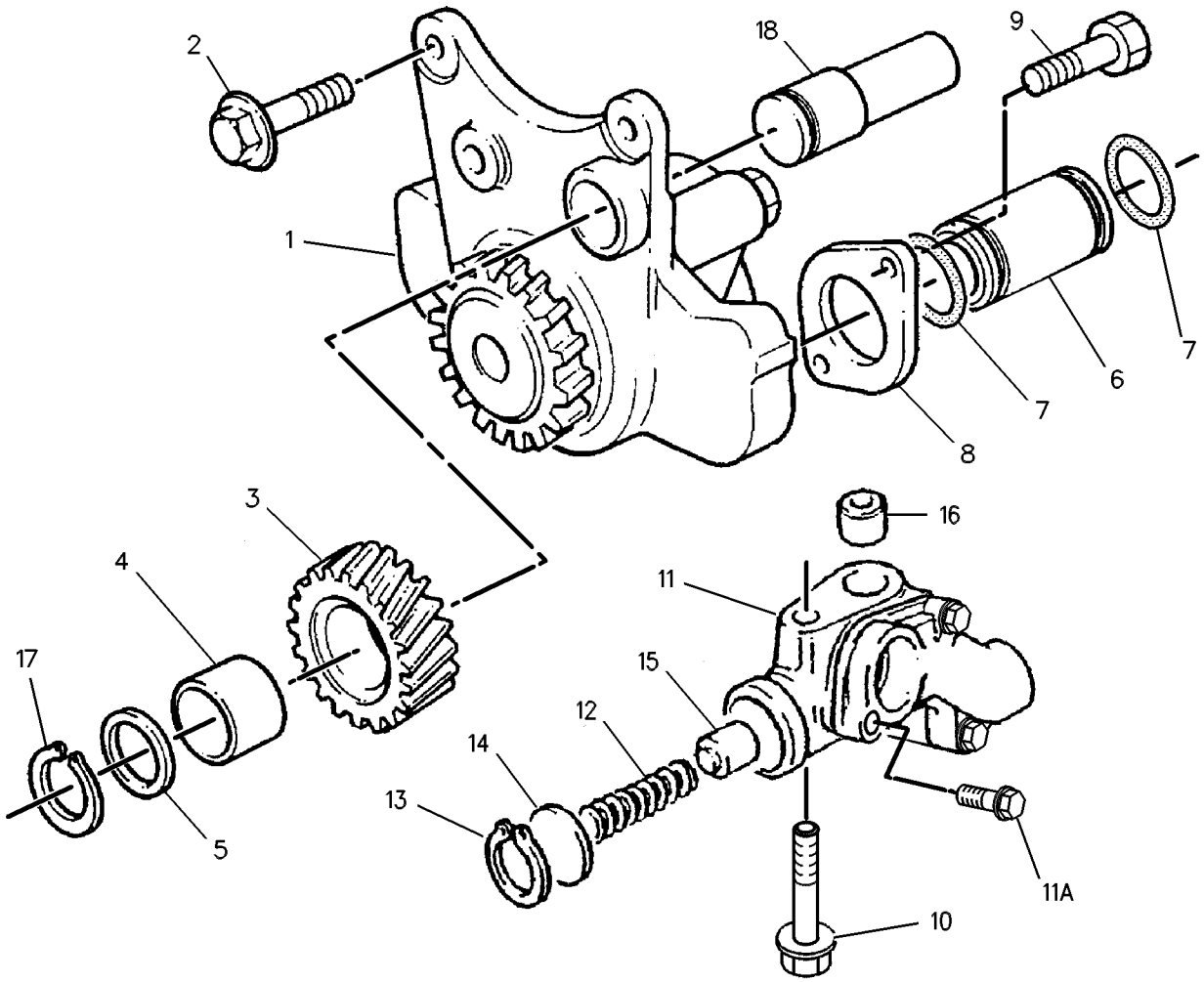

GRAPHIC #1 **<END>** g00652073

LUBRICATION SYSTEM

185-4621 PUMP GP-ENGINE OIL

S/N: 7SG3173-UP
PART OF 187-8016 ENGINE AR-PRIMARY
AN ATTACHMENT

SMCS-1304, 1315 **i01354035**

NOTE	REF NO	GRAPHIC REF	PART NUMBER	QTY	PART NAME 1 2 3 4 5 6 (PRODUCT LEVEL)	SEE PAGE
	1	1	**6I-0254**	3	BOLT (M8X1.25X30MM)	
	2	1	**6I-0255**	1	GEAR AS (20 TEETH)	
	3	1	**067-6927**	1	BUSHING-TERMINAL	
	4	1	**6I-0256**	1	WASHER	
	5	1	**6I-0257**	1	PIPE	
	6	1	**6I-0258**	2	SEAL	
	7	1	**6I-0259**	1	FLANGE	
	8	1	**6I-0260**	2	BOLT (M8X1.25X25MM)	
	9	1	**6I-0253**	1	PUMP AS-ENGINE OIL	
	10	1	**067-6928**	1	CLIP	
	11	1	**127-3294**	1	SHAFT	
	12	1	**8N-7998**	1	DOWEL	
	13	1	**189-6353**	1	HOUSING AS	
	14	1	**189-6344**	1	SPRING	
	15	1	**7W-4648**	1	SEAT-SPRING	
	16	1	**6I-0787**	1	RING-RETAINING	
	17	1	**7W-4782**	1	PLUNGER	
	18	1	**101-3415**	3	BOLT	
	19	1	**6I-0650**	1	BOLT (M10X1.5X65MM)	

185-4621 **PUMP GP-ENGINE OIL** *(contd.)* **i01354035**

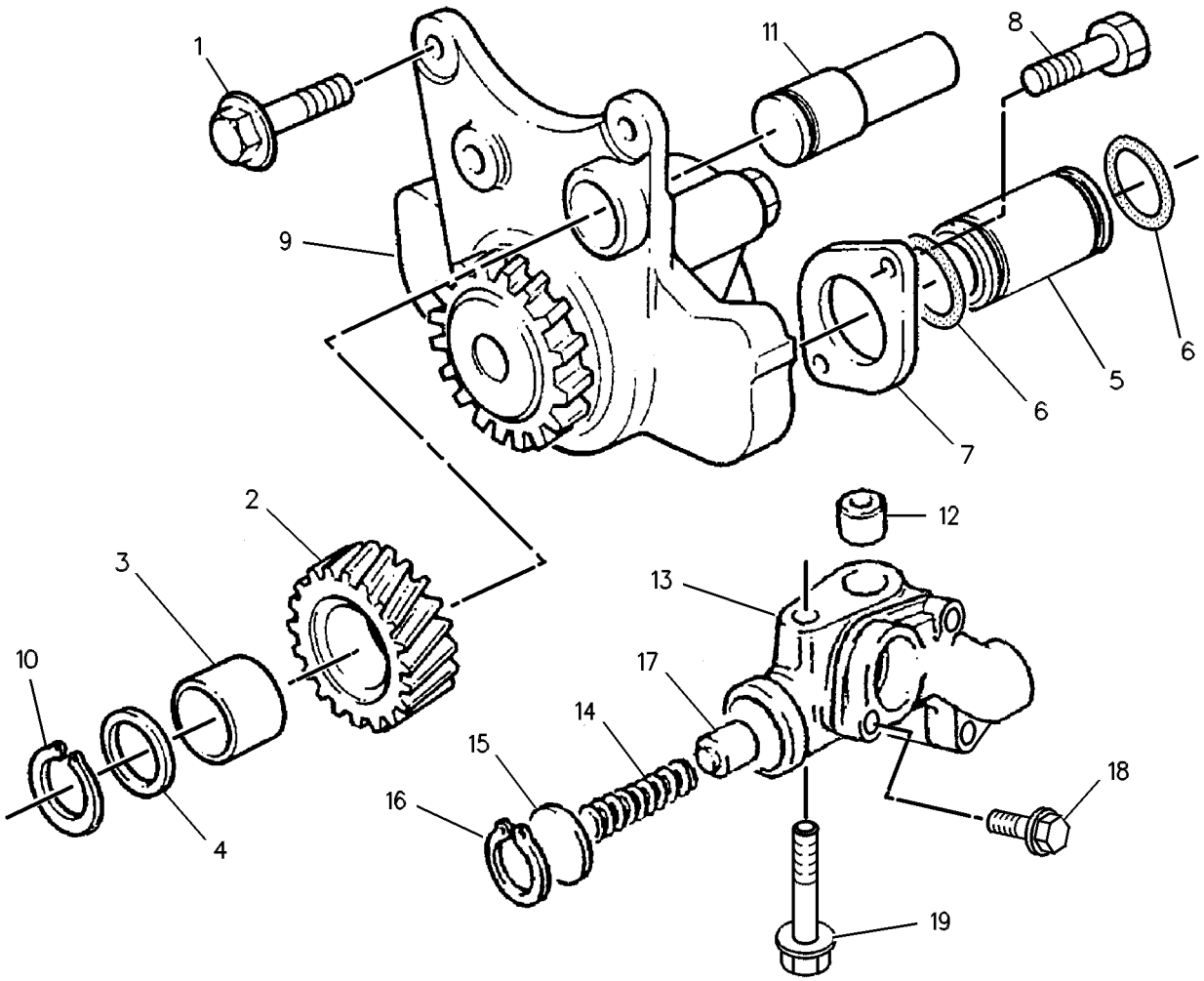

GRAPHIC #1 **<END>** g00131656

LUBRICATION SYSTEM

220-2674 PUMP GP-ENGINE OIL

S/N: 7BJ67008-UP
PART OF 188-0883 ENGINE AR-PRIMARY
AN ATTACHMENT

SMCS-1304, 1315 **i01707598**

NOTE	REF NO	GRAPHIC REF	PART NUMBER	QTY	PART NAME 1 2 3 4 5 6 (PRODUCT LEVEL)	SEE PAGE
	1	1	**6I-0254**	3	BOLT (M8X1.25X30MM)	
	2	1	**6I-0255**	1	GEAR AS (20 TEETH)	
	3	1	**067-6927**	1	BUSHING-TERMINAL	
	4	1	**6I-0256**	1	WASHER	
	5	1	**6I-0257**	1	PIPE	
	6	1	**6I-0258**	2	SEAL	
	7	1	**6I-0259**	1	FLANGE	
	8	1	**6I-0260**	2	BOLT (M8X1.25X25MM)	
	9	1	**6I-0912**	1	PUMP AS-ENGINE OIL	
	10	1	**067-6928**	1	CLIP	
	11	1	**127-3294**	1	SHAFT	
	12	1	**8N-7998**	1	DOWEL	
	13	1	**220-1510**	1	HOUSING AS	
	14	1	**173-0126**	1	SPRING	
	15	1	**7W-4648**	1	SEAT-SPRING	
	16	1	**6I-0787**	1	RING-RETAINING	
	17	1	**7W-4782**	1	PLUNGER	
	18	1	**101-3415**	3	BOLT	
	19	1	**6I-0650**	1	BOLT (M10X1.5X65MM)	

220-2674 **PUMP GP-ENGINE OIL** *(contd.)* **i01707598**

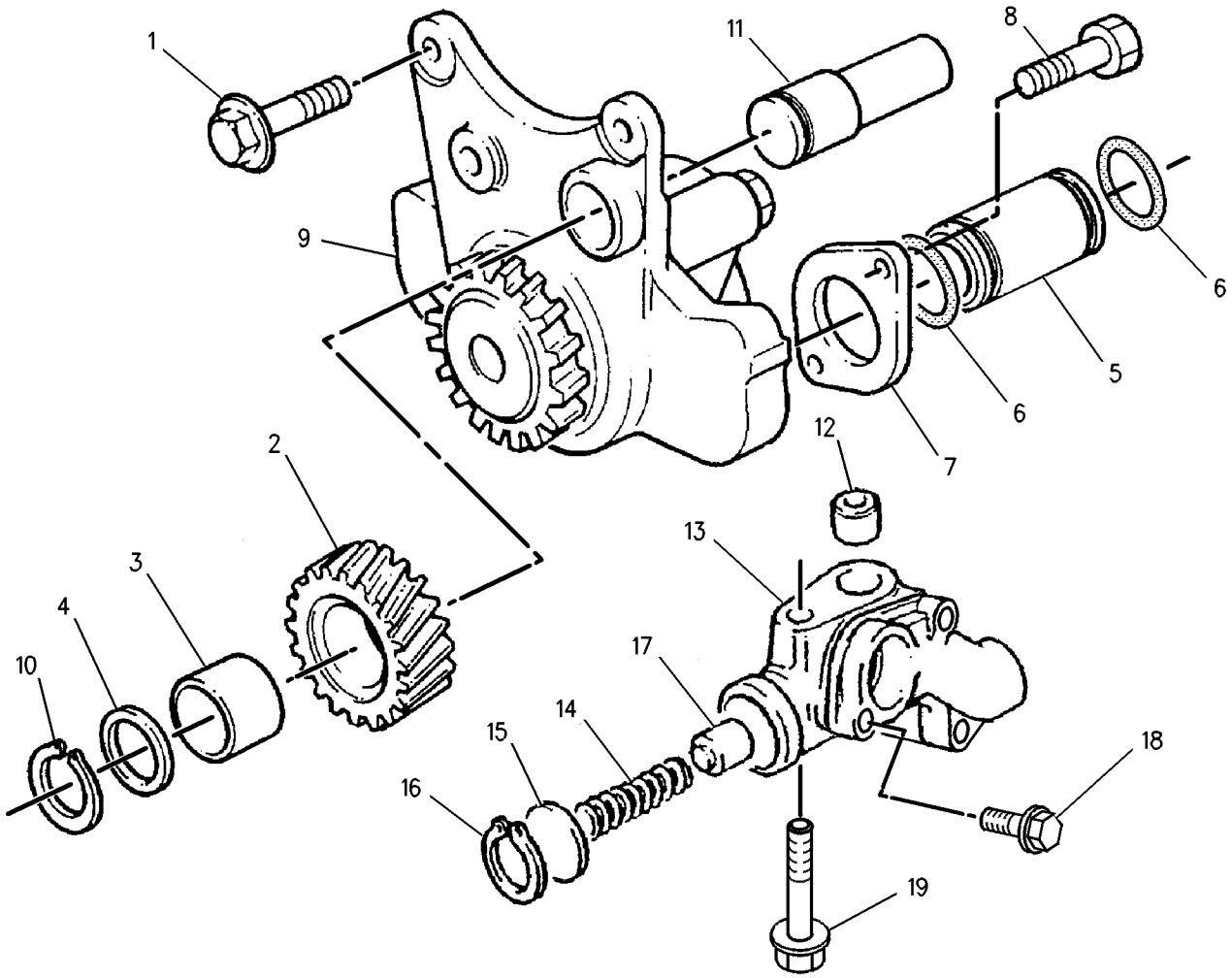

GRAPHIC #1 **<END>** g00738364

230-7578 PUMP GP-ENGINE OIL

S/N: CRS1-UP
PART OF 234-3058, 234-3059 ENGINE AR-PRIMARY
AN ATTACHMENT

SMCS-1304, 1315 **i01862499**

NOTE	REF NO	GRAPHIC REF	PART NUMBER	QTY	PART NAME 1 2 3 4 5 6 (PRODUCT LEVEL)	SEE PAGE
	1	1	**100-4461**	5	BOLT (M10X50MM)	
	2	1	**225-8329**	1	PUMP AS-ENGINE OIL	

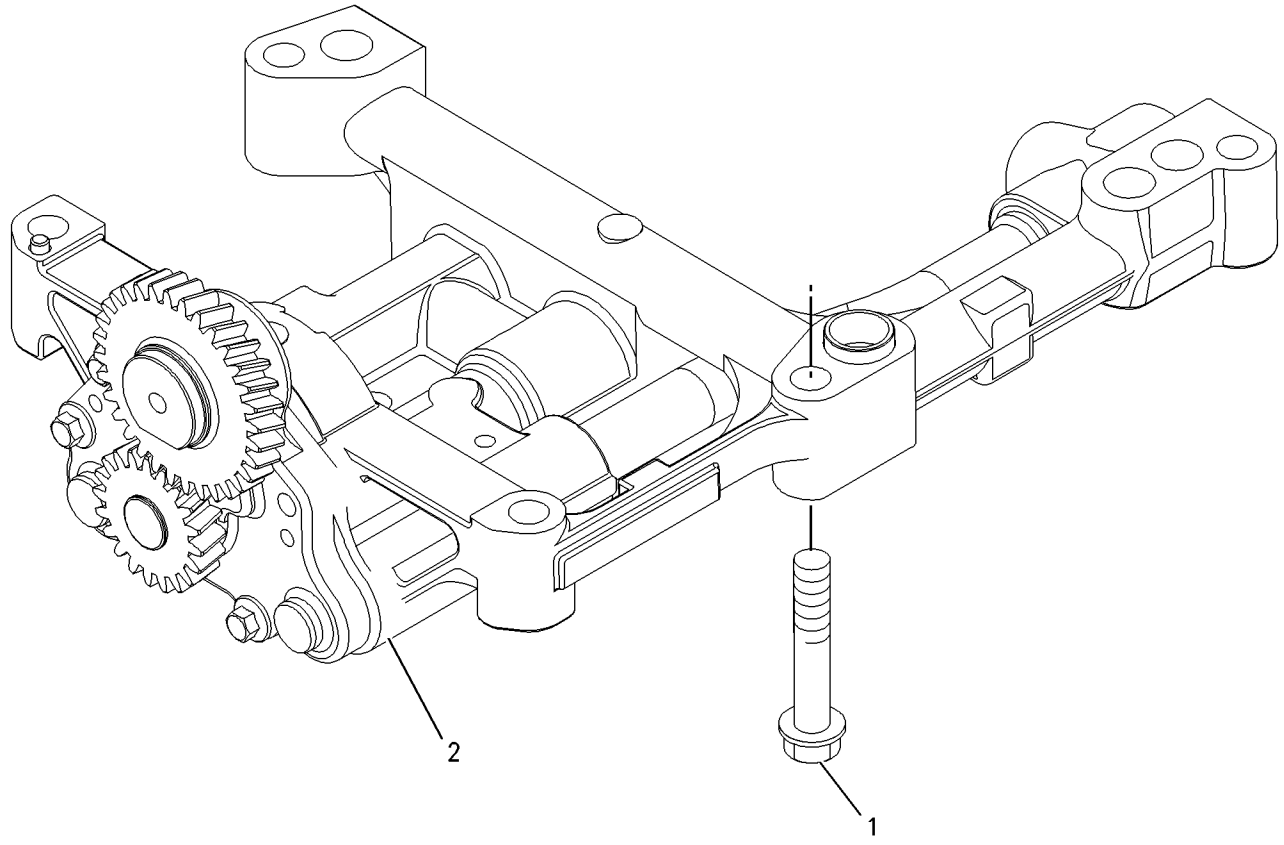

GRAPHIC #1 **<END>** g00911993

146-0001 CONNECTION GP-WATER

S/N: 7SG1-UP; 7BJ19000-UP
PART OF 187-8016, 188-0883 ENGINE AR-PRIMARY
AN ATTACHMENT

SMCS-1380 **i01961286**

NOTE	REF NO	GRAPHIC REF	PART NUMBER	QTY	PART NAME 1 2 3 4 5 6 (PRODUCT LEVEL)	SEE PAGE
	1	1	**228-9897**	1	CONNECTION AS	
	2	1	**140-7515**	1	SEAL-O-RING (REGULATOR)	
	3	1	**141-6188**	1	SEAL (REGULATOR HOUSING)	
	4	1	**162-0236**	1	RING	
	5	1	**220-2748**	1	REGULATOR-WATER TEMPERATURE	
	6	1	**6I-0260**	4	BOLT (M8X1.25X25MM)	

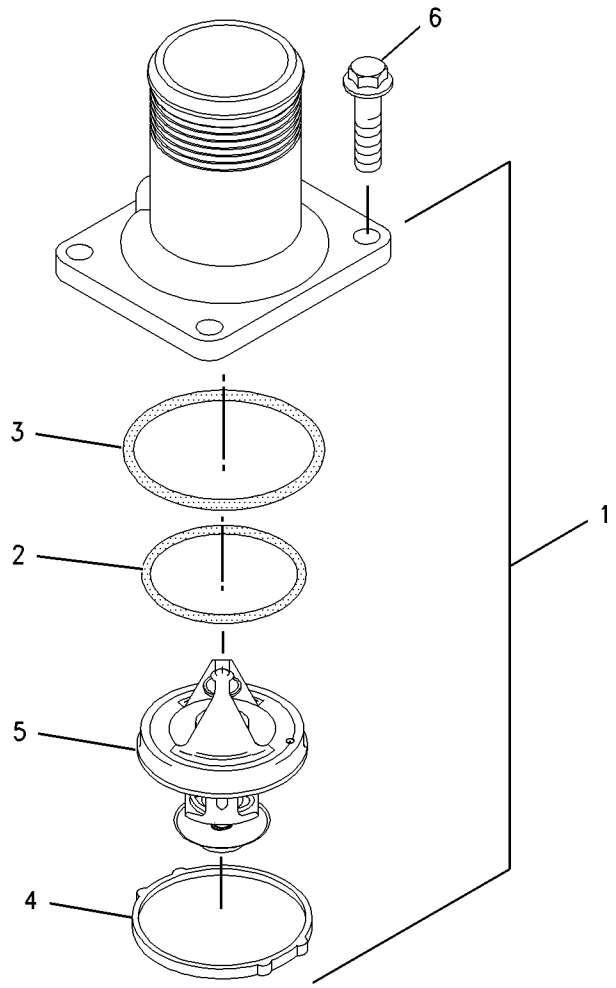

GRAPHIC #1 **<END>** g00987715

231-0033 CONNECTION GP-WATER

S/N: CRS1-UP
PART OF 234-3058, 234-3059 ENGINE AR-PRIMARY
AN ATTACHMENT

SMCS-1380 **i01863003**

NOTE	REF NO	GRAPHIC REF	PART NUMBER	QTY	PART NAME 1 2 3 4 5 6 (PRODUCT LEVEL)	SEE PAGE
	1	1	**6I-0260**	2	BOLT (M8X1.25X25MM)	
	2	1	**231-0030**	1	CONNECTION AS	
	2A	1	**225-6908**	1	REGULATOR-WATER TEMPERATURE	
	2B	1	**225-6909**	1	SEAL-O-RING (WATER TEMPERATURE REGULATOR)	

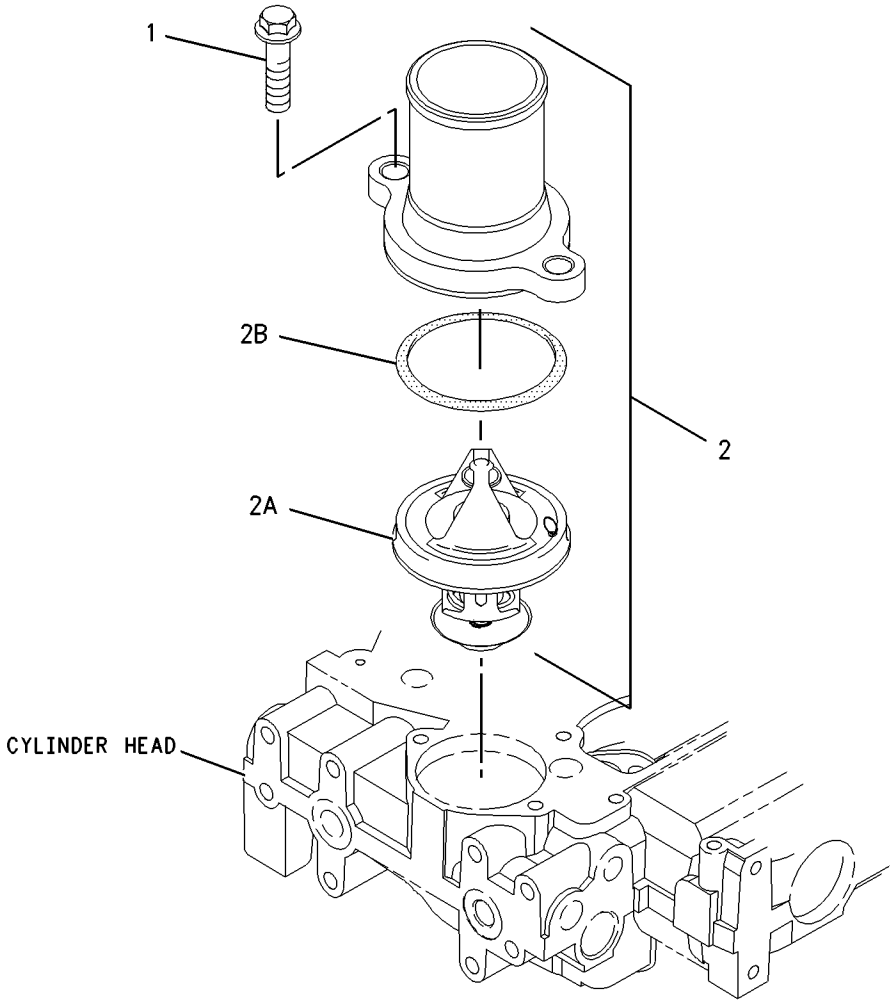

GRAPHIC #1 **<END>** g00950832

197-3880 COOLER GP-FLTR BASE & ENG OIL

S/N: 7BJ19000-UP
PART OF 188-0883 ENGINE AR-PRIMARY
AN ATTACHMENT

SMCS-1306, 1378 **i01564779**

NOTE	REF NO	GRAPHIC REF	PART NUMBER	QTY	PART NAME 1 2 3 4 5 6 (PRODUCT LEVEL)	SEE PAGE
	1	1	**6I-0298**	3	GASKET	
	2	1	**6I-0301**	1	BOLT (M10X45)	
	3	1	**6I-0302**	1	BOLT (M10X1.5X25MM)	
	4	1	**6I-1052**	1	ADAPTER	
	5	1	**6I-1110**	2	BOLT	
	6	1	**7C-2729**	1	ADAPTER	
	7	1	**7W-0187**	1	SEAL	
	8	1	**5D-1026**	4	CLAMP-HOSE	
	9	1	**105-4173**	2	BOLT (M10X1.5X60MM)	
	10	1	**118-9143**	1	COOLER AS-OIL	
	11	1	**6I-2604**	1	GASKET	
	12	1	**123-4364**	1	CONNECTOR	
	13	1	**123-4365**	1	GASKET	
	14	1	**118-9144**	1	HEAD AS-OIL FILTER	
	15	1	**118-9145**	2	CONNECTOR	
	16	1	**124-3815**	1	BOLT (M8X16X1.25MM)	
	17	1	**127-8281**	2	CLIP	
	18	1	**134-3854**	1	HOSE	
	19	1	**204-4127**	1	HOSE	
	20	1	**134-3856**	1	ELBOW	
	21	1	**139-0056**	1	ADAPTER	
					LOOK FOR FILTER ELEMENT IN THE GAUGE GP-OIL LEVEL AND FILLER	

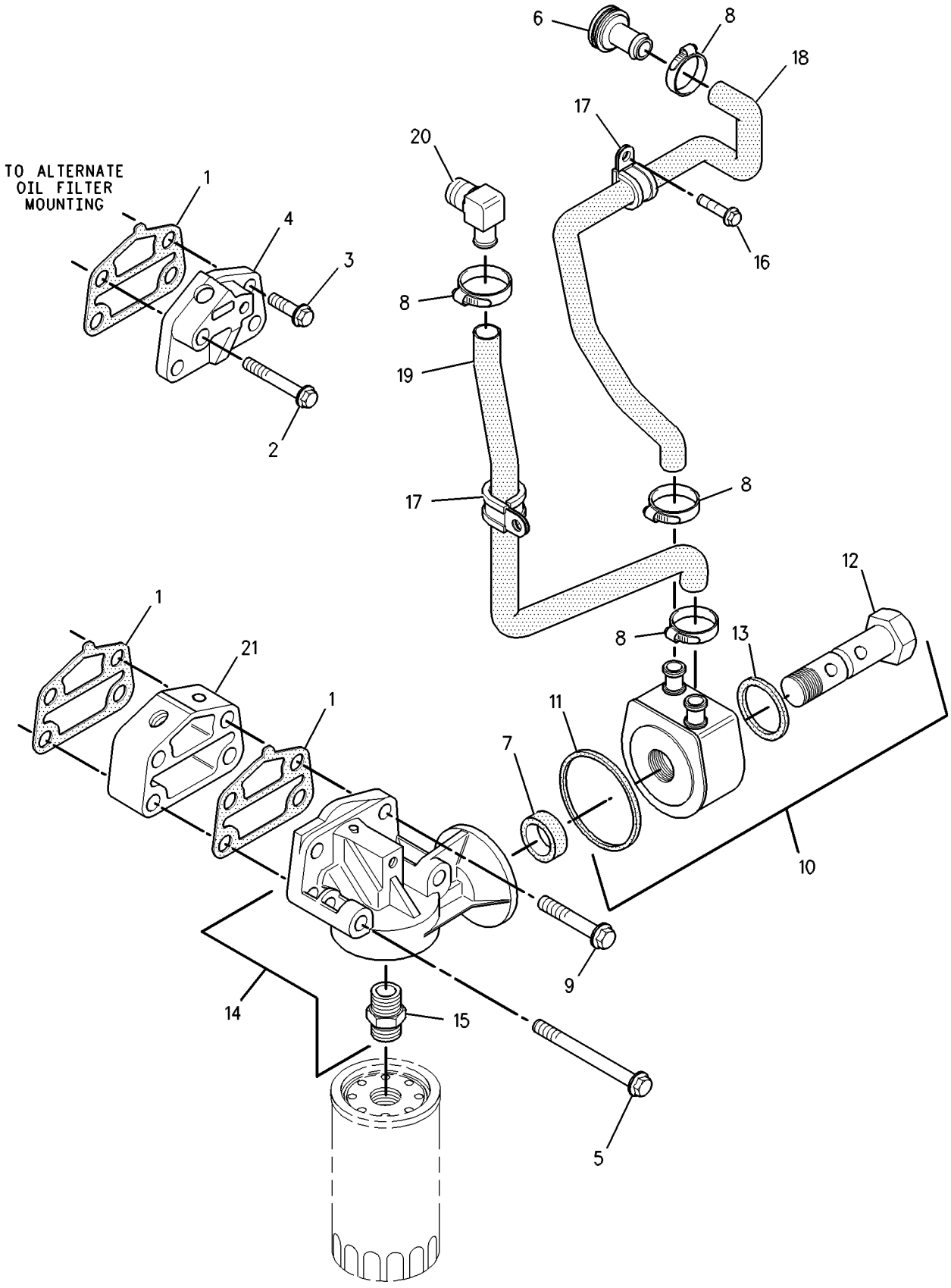

GRAPHIC #1 **<END>** g00813067

197-9405 COOLER GP-FLTR BASE & ENG OIL

S/N: 7SG1-UP

PART OF 187-8016 ENGINE AR-PRIMARY

AN ATTACHMENT

SMCS-1306, 1378 **i01956867**

NOTE	REF NO	GRAPHIC REF	PART NUMBER	QTY	PART NAME 1 2 3 4 5 6 (PRODUCT LEVEL)	SEE PAGE
	1	1	**6I-0298**	2	GASKET	
	2	1	**6I-1110**	2	BOLT	
	3	1	**7C-2729**	1	ADAPTER	
	4	1	**7M-7410**	1	PLUG	
	5	1	**7W-0187**	1	SEAL	
	7	1	**032-8062**	1	PLUG	
	8	1	**5D-1026**	4	CLAMP-HOSE	
	9	1	**139-0056**	1	ADAPTER	
	10	1	**105-4173**	2	BOLT (M10X1.5X60MM)	
	11	1	**118-9143**	1	COOLER AS-OIL	
	12	1	**6I-2604**	1	GASKET	
	13	1	**123-4364**	1	CONNECTOR	
	14	1	**123-4365**	1	GASKET	
	15	1	**118-9144**	1	HEAD AS-OIL FILTER	
	16	1	**118-9145**	2	CONNECTOR	
	17	1	**124-3815**	1	BOLT (M8X16X1.25MM)	
	18	1	**127-5079**	2	PLUG	
	19	1	**127-8281**	2	CLIP	
	20	1	**134-3854**	1	HOSE	
	21	1	**229-8670**	1	HOSE (COOLER)	
	22	1	**134-3856**	1	ELBOW	

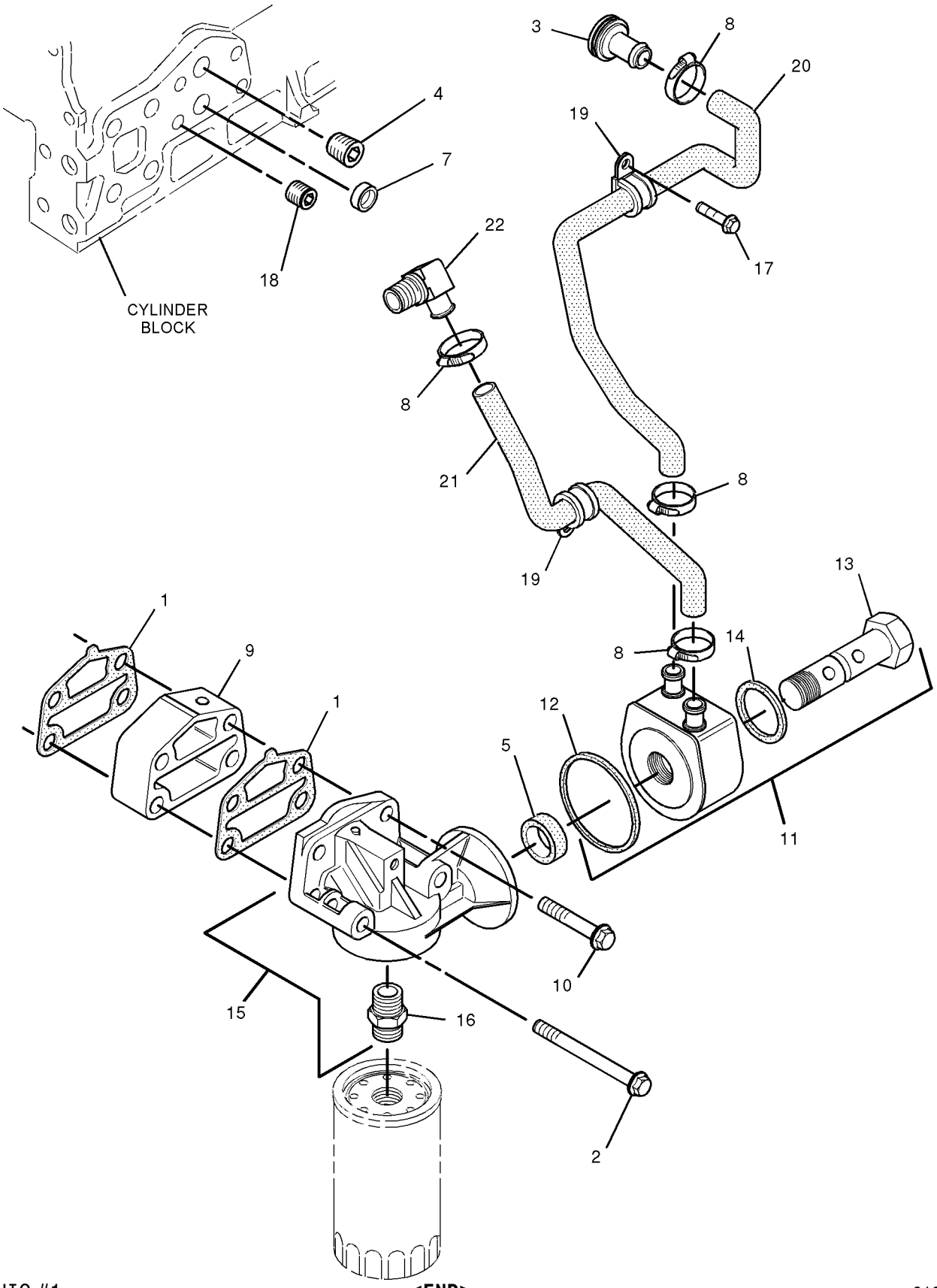

GRAPHIC #1

<END>

g01021759

COOLING SYSTEM

232-6177 COOLER GP-FLTR BASE & ENG OIL

S/N: CRS1-UP
PART OF 234-3059 ENGINE AR-PRIMARY
AN ATTACHMENT

SMCS-1306, 1378 **i02016032**

NOTE	REF NO	GRAPHIC REF	PART NUMBER	QTY	PART NAME 1 2 3 4 5 6 (PRODUCT LEVEL)	SEE PAGE
	1	1	**6I-0572**	4	BOLT (M8X1.25X20-MM)	
	2	1	**6I-0645**	4	BOLT (M8X1.25X25-MM)	
	3	1	**199-9267**	1	SEAL-O-RING	
	4	1	**225-7941**	1	PLUG (ENGINE OIL FILTER LINES)	
	5	1	**225-7944**	2	GASKET	
	6	1	**230-8279**	1	HEAD AS-OIL FILTER	
	6A	1	**118-9145**	1	CONNECTOR	
	7	1	**232-3722**	1	COOLER GP-ENGINE OIL	
	7A	1	**6I-0260**	10	BOLT (M8X1.25X25-MM)	
	7B	1	**6I-4374**	3	BOLT	
M	7C	1	**101-3895**	4	BOLT (M8X1.25X35-MM)	
	7D	1	**225-6817**	1	COOLER-OIL	
	7E	1	**225-6818**	2	SEAL	
	7F	1	**225-6820**	1	GASKET	
	8	1	**232-3751**	1	PLATE	
	9	1	**232-3861**	1	PLUG	
	10	1	**8T-7876**	1	SEAL-O-RING	

M-METRIC PART

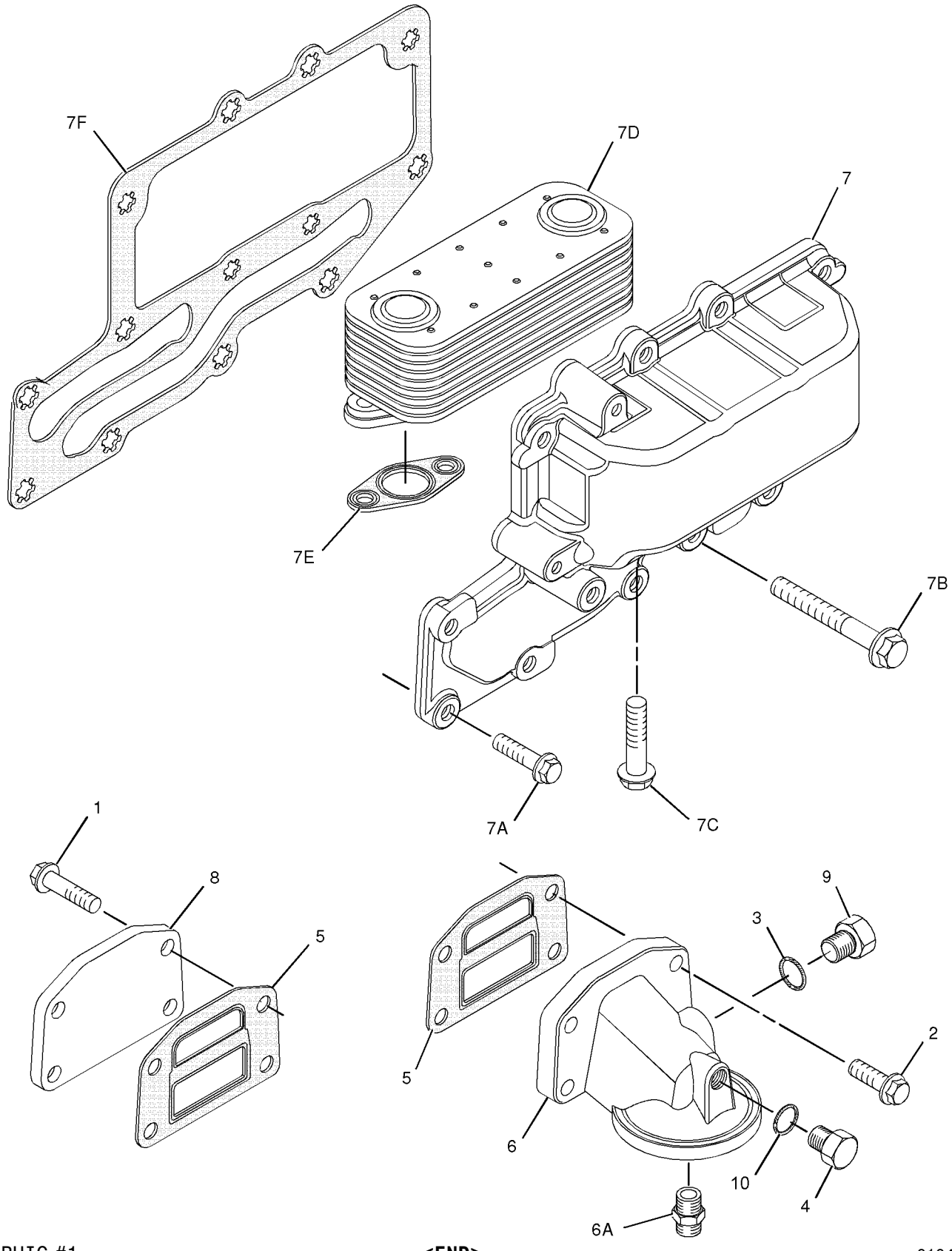

GRAPHIC #1 **<END>** g01042316

COOLING SYSTEM

233-7229 COOLER GP-FLTR BASE & ENG OIL

S/N: CRS1-UP
PART OF 234-3058 ENGINE AR-PRIMARY
AN ATTACHMENT

SMCS-1306, 1378 **i02009614**

NOTE	REF NO	GRAPHIC REF	PART NUMBER	QTY	PART NAME 1 2 3 4 5 6 (PRODUCT LEVEL)	SEE PAGE
	1	1	**6I-0572**	4	BOLT (M8X1.25X20MM)	
	2	1	**6I-0645**	4	BOLT (M8X1.25X25MM)	
	3	1	**199-9267**	1	SEAL-O-RING	
	4	1	**225-7941**	1	PLUG	
	5	1	**225-7944**	2	GASKET	
	6	1	**230-8279**	1	HEAD AS-OIL FILTER	
	6A	1	**118-9145**	1	CONNECTOR	
	7	1	**233-7223**	1	COOLER AS-OIL	
	7A	1	**6I-0260**	10	BOLT (M8X1.25X25MM)	
	7B	1	**6I-4374**	3	BOLT	
M	7C	1	**101-3895**	4	BOLT (M8X1.25X35MM)	
	7D	1	**233-7222**	1	COOLER-OIL	
	7E	1	**225-6818**	2	SEAL	
	7F	1	**225-6820**	1	GASKET	
	8	1	**232-3751**	1	PLATE	
	9	1	**232-3861**	1	PLUG	
	10	1	**8T-7876**	1	SEAL-O-RING	

M-METRIC PART

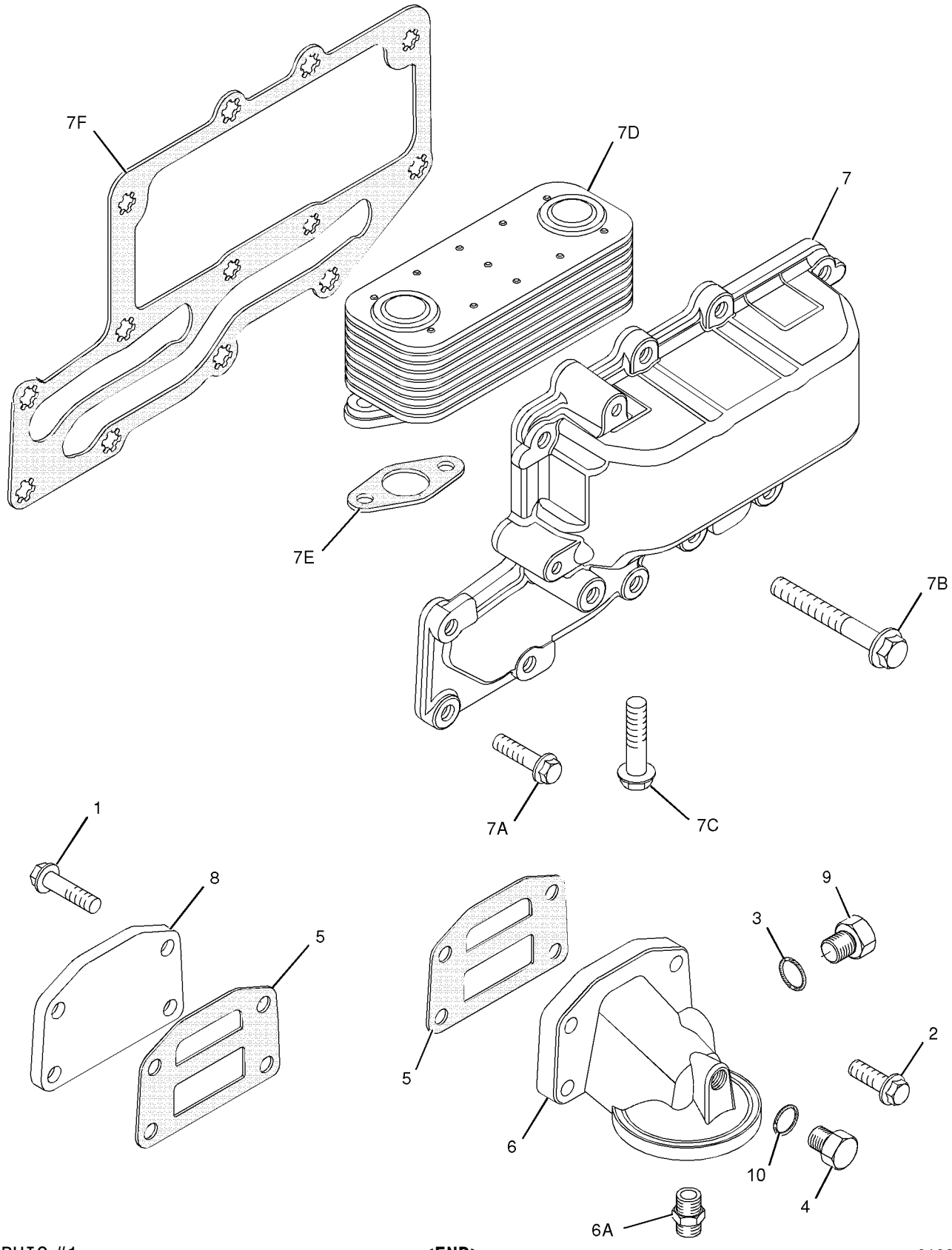

GRAPHIC #1 **<END>** g01039027

COOLING SYSTEM

185-7602 COOLING AR

S/N: CXP940-UP
STANDARD SHIFT, WITHOUT AIR CONDITIONING
AN ATTACHMENT

SMCS-1350 **i01450180**

NOTE	PART NUMBER	QTY	PART NAME 1 2 3 4 5 6 (PRODUCT LEVEL)	SEE PAGE
Y	*145-6713*	1	FAN GP-SUCTION	179
Y	*147-1557*	1	RADIATOR & HYD OIL COOLER GP	193
	131-1424	1	SEAL	
	170-6308	1	TACHOMETER AS	
	4B-2043	6	NUT (8-32 THD)	
	9B-7233	6	LOCKWASHER	
	122-7137	1	LAMP	

Y-SEPARATE ILLUSTRATION

<END>

202-5773 COOLING AR

S/N: BFP12900-UP
STANDARD SHIFT, WITHOUT AIR CONDITIONING
AN ATTACHMENT

SMCS-1350 **i02019170**

NOTE	PART NUMBER	QTY	PART NAME 1 2 3 4 5 6 (PRODUCT LEVEL)	SEE PAGE
Y	*145-6713*	1	FAN GP-SUCTION	179
Y	*147-1557*	1	RADIATOR & HYD OIL COOLER GP	193
	131-1424	1	SEAL	
	170-6308	1	TACHOMETER AS	
	4B-2043	6	NUT (8-32-THD)	
	9B-7233	6	LOCKWASHER	
	122-7137	1	LAMP (12-VOLT)	
	7W-3896	1	V-BELT SET (INCLUDES 2 BELTS)	

Y-SEPARATE ILLUSTRATION

<END>

COOLING SYSTEM

202-5774 COOLING AR

S/N: BFP12900-UP
AUTOSHIFT, WITHOUT AIR CONDITIONING, HIGH AMBIENT
AN ATTACHMENT

SMCS-1350 **i02019176**

NOTE	PART NUMBER	QTY	PART NAME 1 2 3 4 5 6 (PRODUCT LEVEL)	SEE PAGE
Y	*147-1559*	1	FAN GP-SUCTION	180
Y	*147-1557*	1	RADIATOR & HYD OIL COOLER GP	193
	131-1424	1	SEAL	
	170-6308	1	TACHOMETER AS	
	4B-2043	6	NUT (8-32-THD)	
	9B-7233	6	LOCKWASHER	
	122-7137	1	LAMP (12-VOLT)	
	4N-8597	1	V-BELT SET (INCLUDES 2 BELTS)	

Y-SEPARATE ILLUSTRATION

<END>

202-5775 COOLING AR

S/N: BFP12900-UP
AUTOSHIFT, AIR CONDITIONING
AN ATTACHMENT

SMCS-1350 **i02019175**

NOTE	PART NUMBER	QTY	PART NAME 1 2 3 4 5 6 (PRODUCT LEVEL)	SEE PAGE
Y	*147-1560*	1	FAN GP-SUCTION	181
Y	*147-1557*	1	RADIATOR & HYD OIL COOLER GP	193
Y	*202-6107*	1	WIRING GP-AIR CONDITIONER	326
	1N-3743	1	V-BELT (REFRIGERANT COMPRESSOR)	
	4N-8597	1	V-BELT SET (INCLUDES 2 BELTS)	

Y-SEPARATE ILLUSTRATION

<END>

214-6894 COOLING AR

S/N: BFP12900-UP
AN ATTACHMENT

SMCS-1350 **i02019244**

NOTE	PART NUMBER	QTY	PART NAME 1 2 3 4 5 6 (PRODUCT LEVEL)	SEE PAGE
Y	*145-6713*	1	FAN GP-SUCTION	179
Y	*234-7836*	1	RADIATOR & HYD OIL COOLER GP	196
	7W-3896	1	V-BELT SET (INCLUDES 2 BELTS)	

Y-SEPARATE ILLUSTRATION

<END>

COOLING SYSTEM

214-6895 COOLING AR

S/N: BFP12900-UP
AN ATTACHMENT

SMCS-1350 **i02012814**

NOTE	PART NUMBER	QTY	PART NAME 1 2 3 4 5 6 (PRODUCT LEVEL)	SEE PAGE
Y	*147-1559*	1	FAN GP-SUCTION	180
Y	*236-5807*	1	RADIATOR & HYD OIL COOLER GP	198
	4N-8597	1	V-BELT SET (INCLUDES 2 BELTS)	
Y-SEPARATE ILLUSTRATION				

<END>

185-7603 COOLING AR-HIGH AMBIENT TEMP

S/N: CXP940-UP
AUTOSHIFT, WITHOUT AIR CONDITIONING
AN ATTACHMENT

SMCS-1350 **i01450174**

NOTE	PART NUMBER	QTY	PART NAME 1 2 3 4 5 6 (PRODUCT LEVEL)	SEE PAGE
Y	*147-1559*	1	FAN GP-SUCTION	180
Y	*147-1557*	1	RADIATOR & HYD OIL COOLER GP	193
	131-1424	1	SEAL	
	170-6308	1	TACHOMETER AS	
	4B-2043	6	NUT (8-32 THD)	
	9B-7233	6	LOCKWASHER	
	122-7137	1	LAMP	
Y-SEPARATE ILLUSTRATION				

<END>

145-6713 FAN GP-SUCTION

S/N: BFP12900-UP; CXP940-UP
PART OF 239-5560, 239-5561 CAB AR, 239-5558, 239-5559 CANOPY AR, 185-7602, 202-5773, 214-6894 COOLING AR
AN ATTACHMENT

SMCS-1356, 1360 **i01644668**

NOTE	REF NO	GRAPHIC REF	PART NUMBER	QTY	PART NAME 1 2 3 4 5 6 (PRODUCT LEVEL)	SEE PAGE
	1	1	**5P-4116**	4	WASHER-HARD (8.8X20.5X2MM THK)	
M	2	1	**8T-4908**	6	BOLT (M8X1.25X25MM)	
	3	1	**127-6980**	2	GUARD AS-FAN	
	4	1	**130-3880**	1	PULLEY-FAN DRIVE	
	5	1	**142-3388**	1	SPACER-FAN	
	6	1	**142-3391**	1	SPIDER AS	
M	7	1	**153-3061**	4	BOLT-HEX HEAD (M8X1.25X130MM)	
	8	1	**8T-4224**	6	WASHER-HARD (8.8X16X2MM THK)	

M-METRIC PART

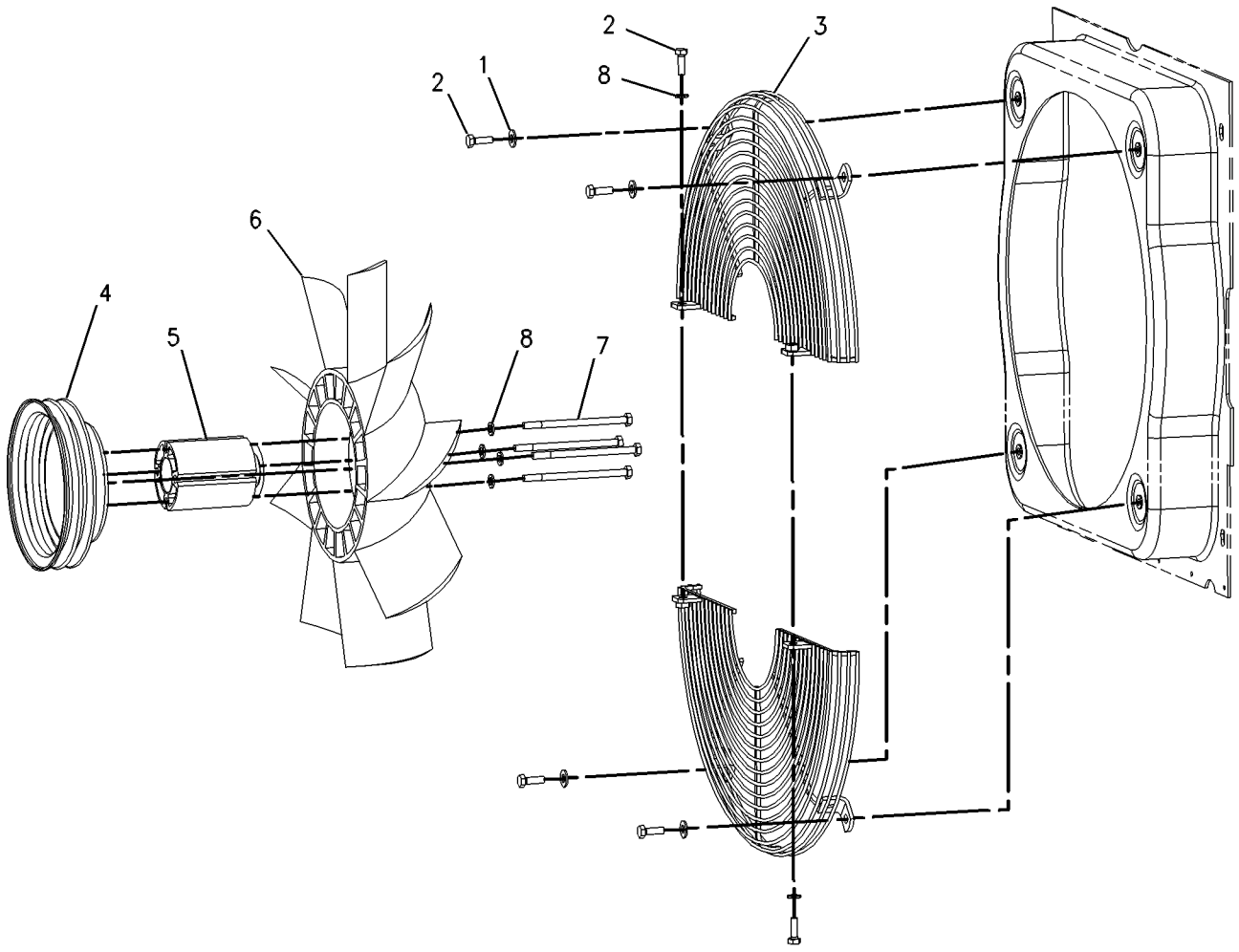

GRAPHIC #1 **<END>** g00367570

147-1559 FAN GP-SUCTION

S/N: BFP12900-UP; CXP940-UP

PART OF 239-5562 CAB AR, 202-5774, 214-6895 COOLING AR, 185-7603 COOLING AR-HIGH AMBIENT TEMP

AN ATTACHMENT

SMCS-1356, 1360 **i01644669**

NOTE	REF NO	GRAPHIC REF	PART NUMBER	QTY	PART NAME 1 2 3 4 5 6 (PRODUCT LEVEL)	SEE PAGE
	1	1	**5P-4116**	4	WASHER-HARD (8.8X20.5X2MM THK)	
M	2	1	**8T-4908**	6	BOLT (M8X1.25X25MM)	
	3	1	**127-6980**	2	GUARD AS-FAN	
	4	1	**130-3879**	1	PULLEY-FAN DRIVE	
	5	1	**142-3388**	1	SPACER-FAN	
	6	1	**142-3391**	1	SPIDER AS	
M	7	1	**153-3061**	4	BOLT-HEX HEAD (M8X1.25X130MM)	
	8	1	**8T-4224**	6	WASHER-HARD (8.8X16X2MM THK)	

M-METRIC PART

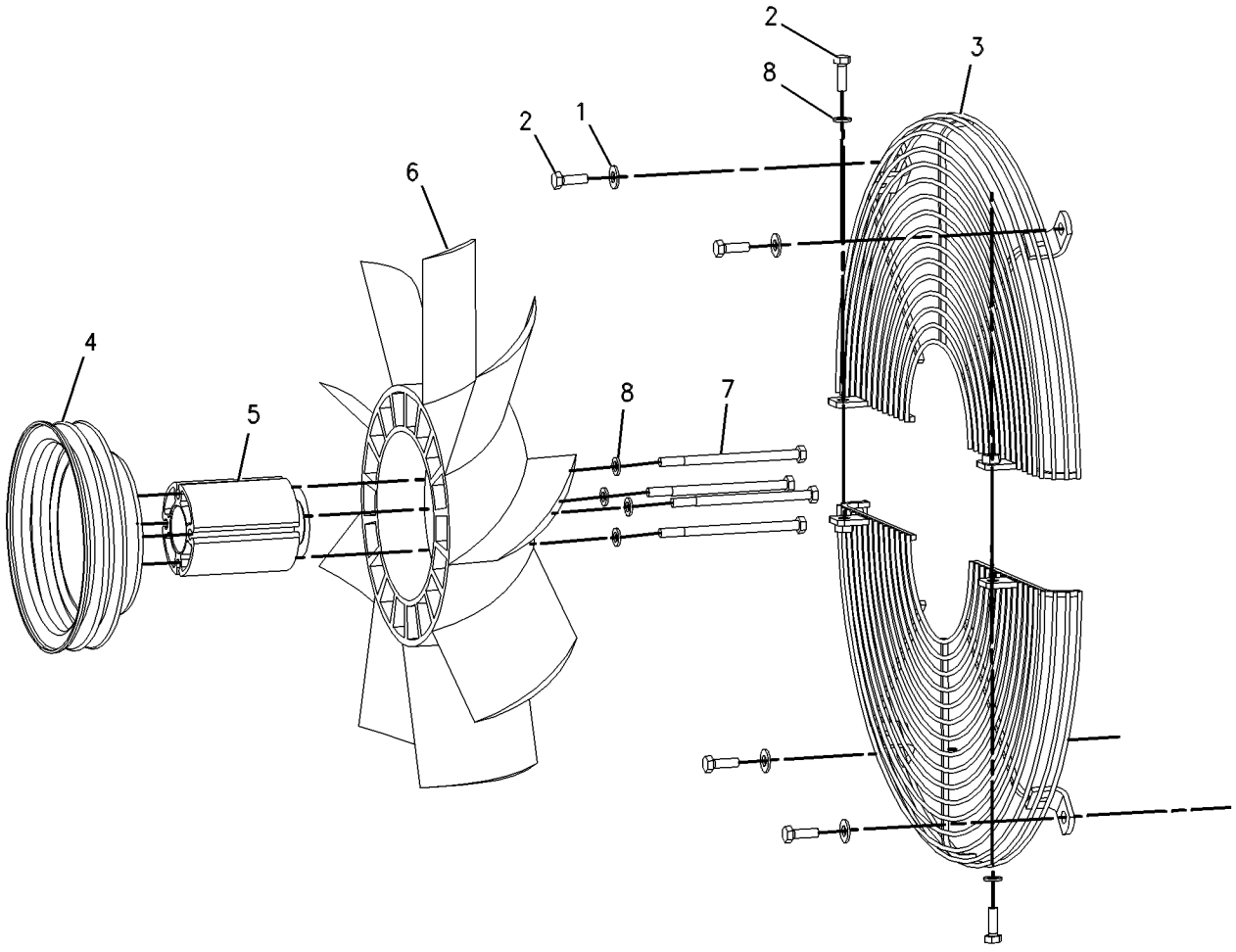

GRAPHIC #1 **<END>** g00448372

COOLING SYSTEM

147-1560 FAN GP-SUCTION

S/N: BFP12900-UP
PART OF 202-5775 COOLING AR
AN ATTACHMENT

SMCS-1356, 1360 **i01644673**

NOTE	REF NO	GRAPHIC REF	PART NUMBER	QTY	PART NAME 1 2 3 4 5 6 (PRODUCT LEVEL)	SEE PAGE
	1	1	**5P-4116**	4	WASHER-HARD (8.8X20.5X2MM THK)	
M	2	1	**8T-4908**	6	BOLT (M8X1.25X25MM)	
	3	1	**127-6980**	2	GUARD AS-FAN	
	4	1	**130-3879**	1	PULLEY-FAN DRIVE	
	5	1	**130-3881**	1	PULLEY-FAN	
	6	1	**142-3388**	1	SPACER-FAN	
	7	1	**142-3391**	1	SPIDER AS	
M	8	1	**153-3061**	4	BOLT-HEX HEAD (M8X1.25X130MM)	
	9	1	**8T-4224**	6	WASHER-HARD (8.8X16X2MM THK)	

M-METRIC PART

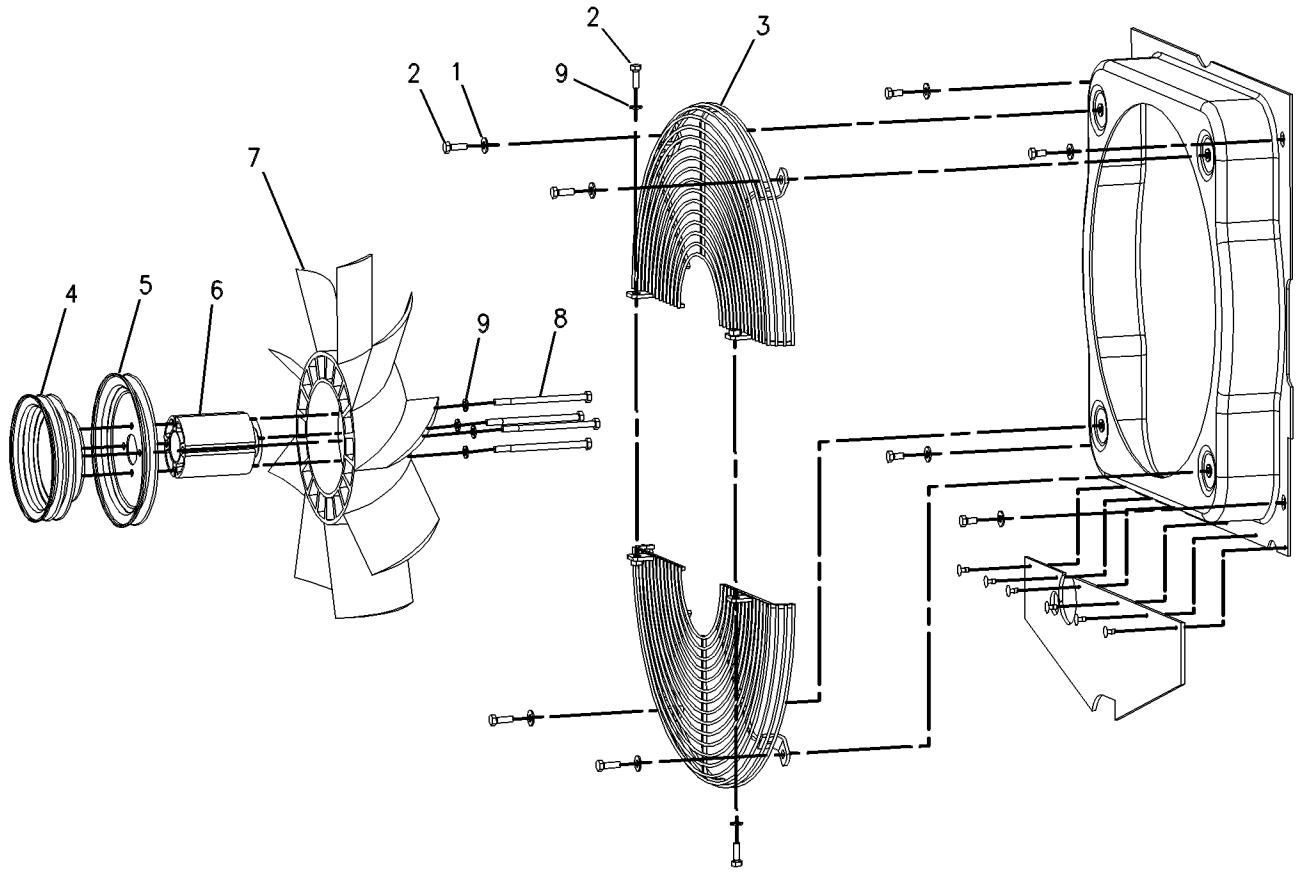

GRAPHIC #1 **<END>** g00367557

198-9723 FITTING GP-HEATER & AIR COND

S/N: BFP12900-UP
PART OF 236-6960 AIR CONDITIONER AR, 239-5560 CAB AR
AN ATTACHMENT

SMCS-7309 **i01519184**

NOTE	REF NO	GRAPHIC REF	PART NUMBER	QTY	PART NAME 1 2 3 4 5 6 (PRODUCT LEVEL)	SEE PAGE
	1	1	**6B-4661**	1	BUSHING-REDUCER	
	2	1	**8F-8151**	1	VALVE-SHUTOFF	
	3	1	**004-6557**	1	BUSHING-REDUCER	
	4	1	**004-6810**	1	ELBOW	

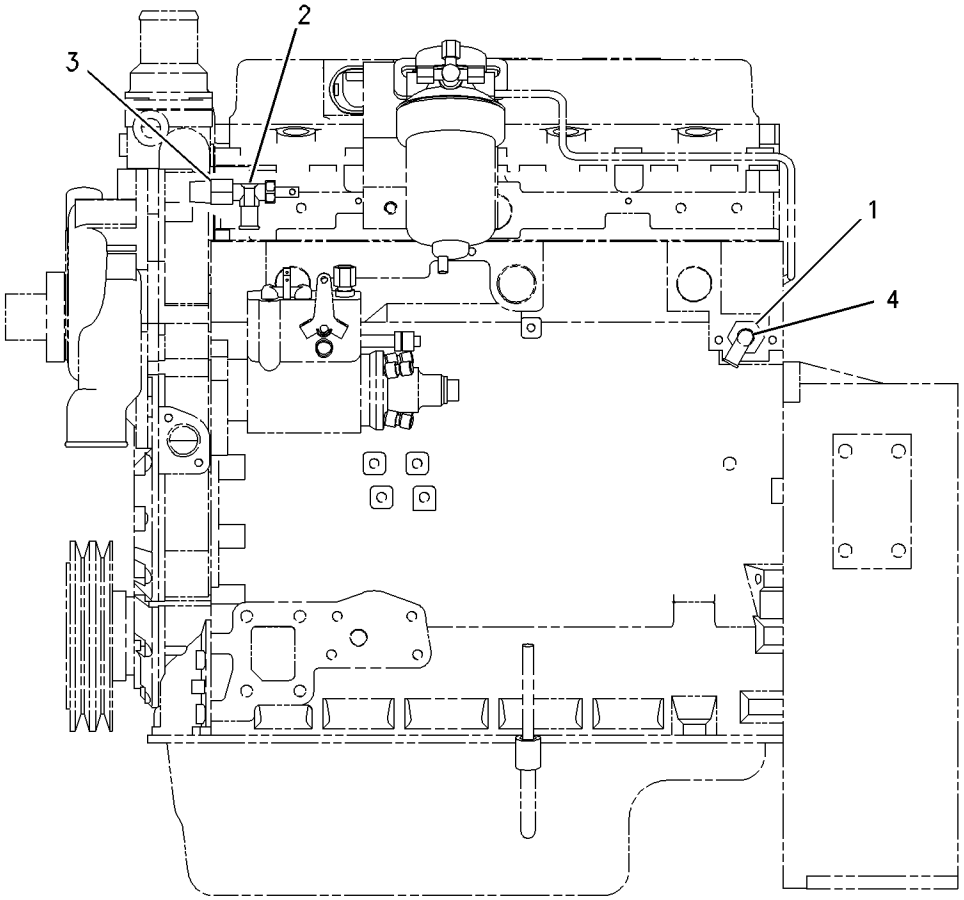

GRAPHIC #1 **<END>** g00772489

COOLING SYSTEM

143-0786 LINES GP-POWER TRAIN COOLER

S/N: BFP12900-UP; CXP940-UP
PART OF 192-4661, 192-4663, 192-4665, 192-4666, 214-6955, 214-6956, 214-6958, 231-9348 POWER TRAIN AR
AN ATTACHMENT

SMCS-1375, 3016 **i01433867**

NOTE	REF NO	GRAPHIC REF	PART NUMBER	QTY	PART NAME 1 2 3 4 5 6 (PRODUCT LEVEL)	SEE PAGE
B	1	1	**7K-1181**	2	STRAP-CABLE	
	2	1	**118-7286**	1	BRACKET AS	
	3	1	**130-9984**	2	CLIP (SLOT)	
	4	1	**138-6904**	1	HOSE AS	
	5	1	**138-6913**	1	HOSE AS	
	6	1	**159-0186**	2	CLAMP	
	7	1	*148-8339*	1	CONNECTOR GP	
		1	**6V-8716**	1	CONNECTOR	
		1	**6V-9746**	1	SEAL-O-RING (18.94MM ID)	
		1	**7M-8485**	1	SEAL-O-RING (29.74MM ID)	
	8	1	*148-8360*	1	ELBOW GP	
		1	**6V-9182**	1	ELBOW	
		1	**6V-9746**	1	SEAL-O-RING (18.94MM ID)	
		1	**7M-8485**	1	SEAL-O-RING (29.74MM ID)	
	9	1	**5P-4116**	2	WASHER-HARD (8.8X20.5X2MM THK)	
	10	1	**8T-4121**	2	WASHER-HARD (11X21X2.5MM THK)	
M	11	1	**8T-4136**	1	BOLT (M10X1.5X25MM)	
M	12	1	**8T-4137**	1	BOLT (M10X1.5X20MM)	
M	13	1	**8T-4189**	2	BOLT (M8X1.25X20MM)	
M	14	1	**8T-4192**	2	BOLT (M12X1.75X25MM)	
	15	1	**8T-4223**	2	WASHER-HARD (13.5X25.5X3MM THK)	
	16	1	**8T-7529**	3	CLIP (SLOT)	

B-USE AS REQUIRED
M-METRIC PART

143-0786 **LINES GP-POWER TRAIN COOLER** *(contd.)* **i01433867**

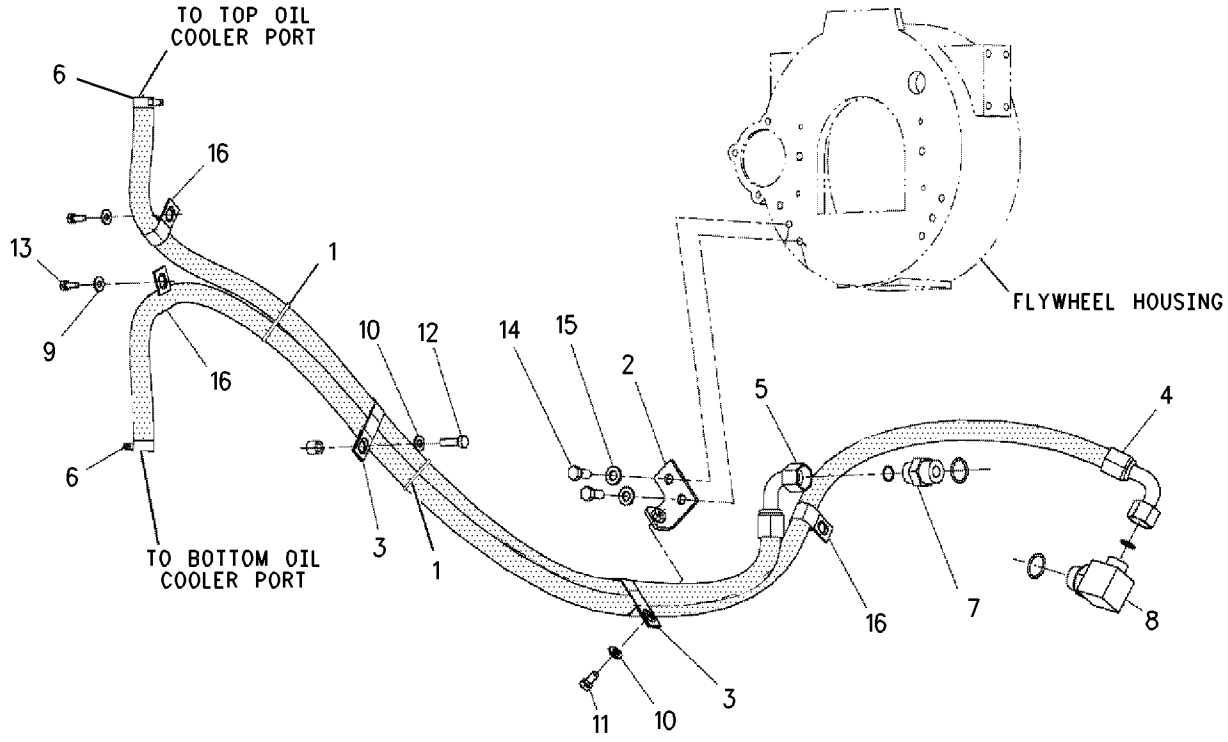

GRAPHIC #1 **<END>** g00751473

COOLING SYSTEM

139-2614 PUMP GP-WATER

S/N: 7SG1-UP
PART OF 187-8016 ENGINE AR-PRIMARY
AN ATTACHMENT

SMCS-1361 **i01610979**

NOTE	REF NO	GRAPHIC REF	PART NUMBER	QTY	PART NAME 1 2 3 4 5 6 (PRODUCT LEVEL)	SEE PAGE
	1	1	**2B-0858**	1	PLUG-PIPE	
	2	1	**171-1076**	1	HOUSING AS	
	2A	1	**172-4844**	1	SEAL-O-RING	
	3	1	**100-3751**	2	BOLT (M8X1.25X65MM)	
	4	1	**6I-0645**	3	BOLT (M8X1.25X25MM)	
	5	1	**140-7512**	1	KIT-HOSE	
	5A	1	**127-8286**	2	CLAMP-HOSE	
	6	1	**140-7504**	1	GASKET (WATER PUMP)	
	7	1	**101-3771**	1	BOLT	
	8	1	**172-7207**	1	PUMP GP-WATER	
		1	**177-8782**	1	KIT-WATER PUMP	
	9	1	**140-7505**	1	COVER	
	10	1	**140-7506**	1	GASKET-COVER	
	11	1	**101-3805**	3	BOLT (M8X1.25X90MM)	
	12	1	**6I-4374**	3	BOLT	
	13	1	**6I-4793**	1	BOLT	

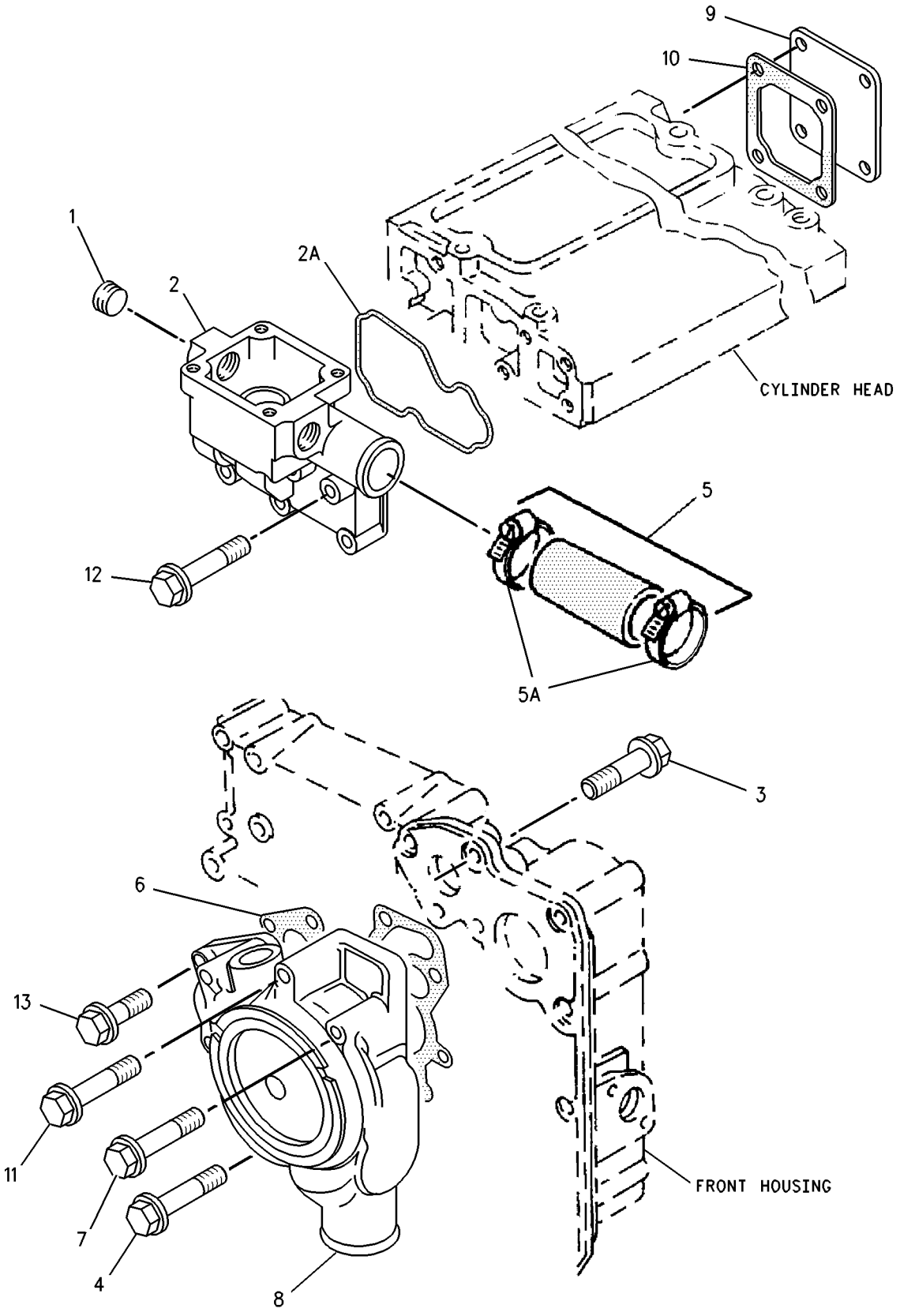

GRAPHIC #1 **<END>** g00695452

COOLING SYSTEM

179-6896 PUMP GP-WATER

S/N: 7BJ19000-UP
PART OF 188-0883 ENGINE AR-PRIMARY
AN ATTACHMENT

SMCS-1361 **i01549355**

NOTE	REF NO	GRAPHIC REF	PART NUMBER	QTY	PART NAME 1 2 3 4 5 6 (PRODUCT LEVEL)	SEE PAGE
	1	1	**2B-0858**	1	PLUG-PIPE	
	2	1	**6I-0456**	3	BOLT (M8X1.25X45MM)	
	3	1	**6I-0645**	3	BOLT (M8X1.25X25MM)	
	4	1	**6I-4374**	3	BOLT	
	5	1	**6I-4793**	1	BOLT	
	6	1	**172-7207**	1	PUMP GP-WATER	
	6A	1	**140-7504**	1	GASKET (WATER PUMP)	
		1	**177-8782**	1	KIT-WATER PUMP	
	7	1	**100-3751**	2	BOLT (M8X1.25X65MM)	
	8	1	**101-3771**	1	BOLT	
	9	1	**101-3805**	3	BOLT (M8X1.25X90MM)	
	10	1	**171-1076**	1	HOUSING AS	
	10A	1	**172-4844**	1	SEAL-O-RING	
	11	1	**140-7505**	1	COVER	
	12	1	**140-7506**	1	GASKET-COVER	
	13	1	**140-7512**	1	KIT-HOSE	
	13A	1	**127-8286**	2	CLAMP-HOSE	

179-6896 **PUMP GP-WATER** *(contd.)* **i01549355**

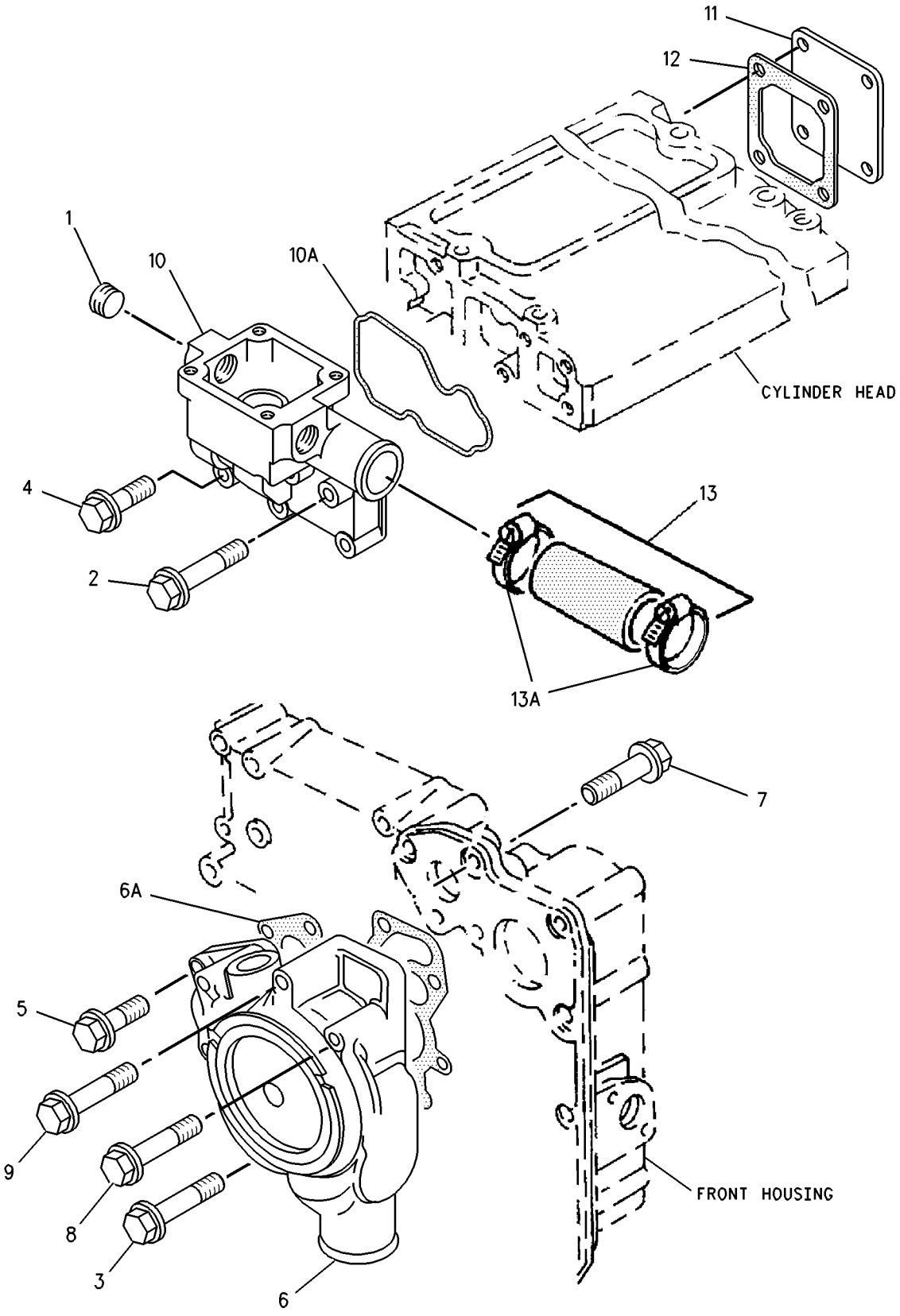

GRAPHIC #1 **<END>** g00756848

230-7355 PUMP GP-WATER

S/N: CRS1-UP

PART OF 234-3058, 234-3059 ENGINE AR-PRIMARY

AN ATTACHMENT

SMCS-1361 **i01862494**

NOTE	REF NO	GRAPHIC REF	PART NUMBER	QTY	PART NAME 1 2 3 4 5 6 (PRODUCT LEVEL)	SEE PAGE
	1	1	**6I-0217**	2	BOLT (M8X1.25X20MM)	
	2	1	**6I-0254**	2	BOLT (M8X1.25X30MM)	
	3	1	**100-3751**	5	BOLT (M8X1.25X65MM)	
	4	1	**113-8129**	2	BOLT (M8X75MM)	
	5	1	**225-7741**	1	CONNECTION AS	
	6	1	**225-7738**	1	SEAL-O-RING	
	7	1	**225-7739**	1	SEAL-O-RING	
	8	1	**225-8016**	1	PUMP GP-WATER	
	9	1	**225-8019**	1	GASKET	

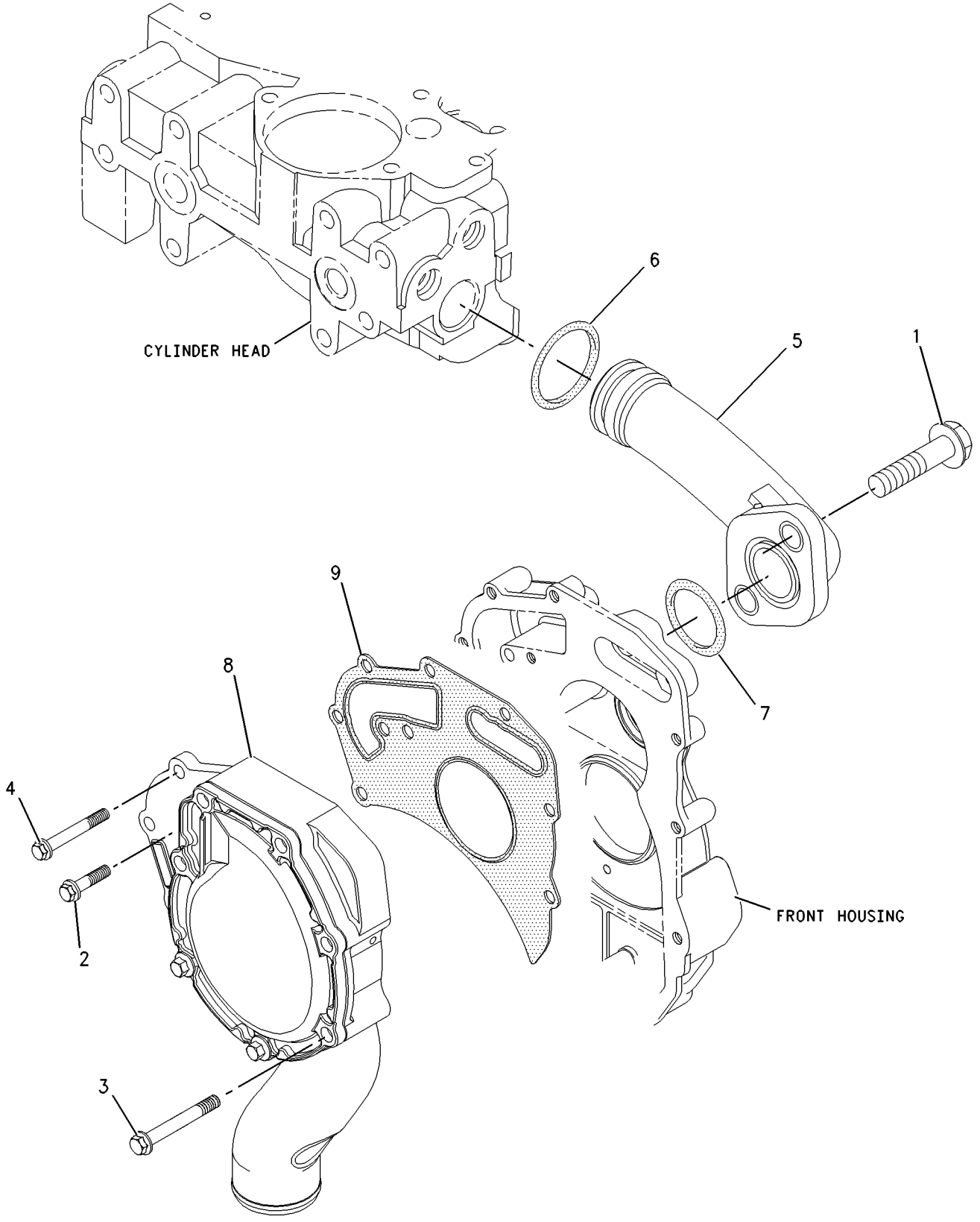

GRAPHIC #1 **<END>** g00912411

234-7834 RADIATOR & FAN GP

S/N: BFP12900-UP
PART OF 234-7836 RADIATOR & HYD OIL COOLER GP
AN ATTACHMENT

SMCS-1353, 1356 **i02015756**

NOTE	REF NO	GRAPHIC REF	PART NUMBER	QTY	PART NAME 1 2 3 4 5 6 (PRODUCT LEVEL)	SEE PAGE
C	1	1	**123-4065**	6	RIVET-POP	
C	2	1	**141-7512**	1	BAFFLE	
	3	1	**180-2441**	1	SHROUD AS	
Y	4	1	**235-1974**	1	RADIATOR & HYD OIL COOLER GP	197
	5	1	**7X-0579**	4	WASHER-HARD (8.8X25.5X2-MM THK)	
M	6	1	**8T-4200**	4	BOLT (M8X1.25X16-MM)	

C-CHANGE FROM PREVIOUS TYPE
M-METRIC PART
Y-SEPARATE ILLUSTRATION

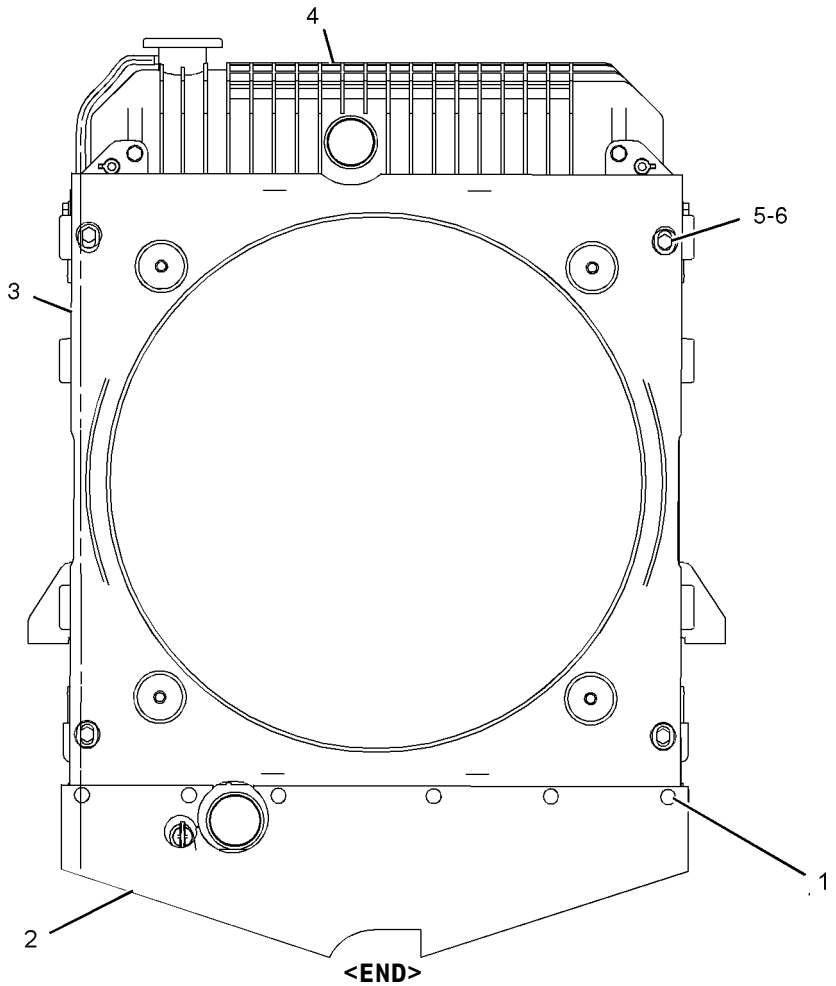

GRAPHIC #1 **<END>** g01030668

236-5808 RADIATOR & FAN GP

S/N: BFP12900-UP
PART OF 236-5807 RADIATOR & HYD OIL COOLER GP
AN ATTACHMENT

SMCS-1353, 1356 **i02001591**

NOTE	REF NO	GRAPHIC REF	PART NUMBER	QTY	PART NAME 1 2 3 4 5 6 (PRODUCT LEVEL)	SEE PAGE
	1	1	**123-4065**	6	RIVET-POP	
	2	1	**141-7512**	1	BAFFLE	
	3	1	**180-2441**	1	SHROUD AS	
		1	**214-3520**	4	NUT-SHOULDER	
Y	4	1	**236-5809**	1	RADIATOR & HYD OIL COOLER GP	200
	5	1	**7X-0579**	4	WASHER-HARD (8.8X25.5X2MM THK)	
M	6	1	**8T-4200**	4	BOLT (M8X1.25X16MM)	

M-METRIC PART
Y-SEPARATE ILLUSTRATION

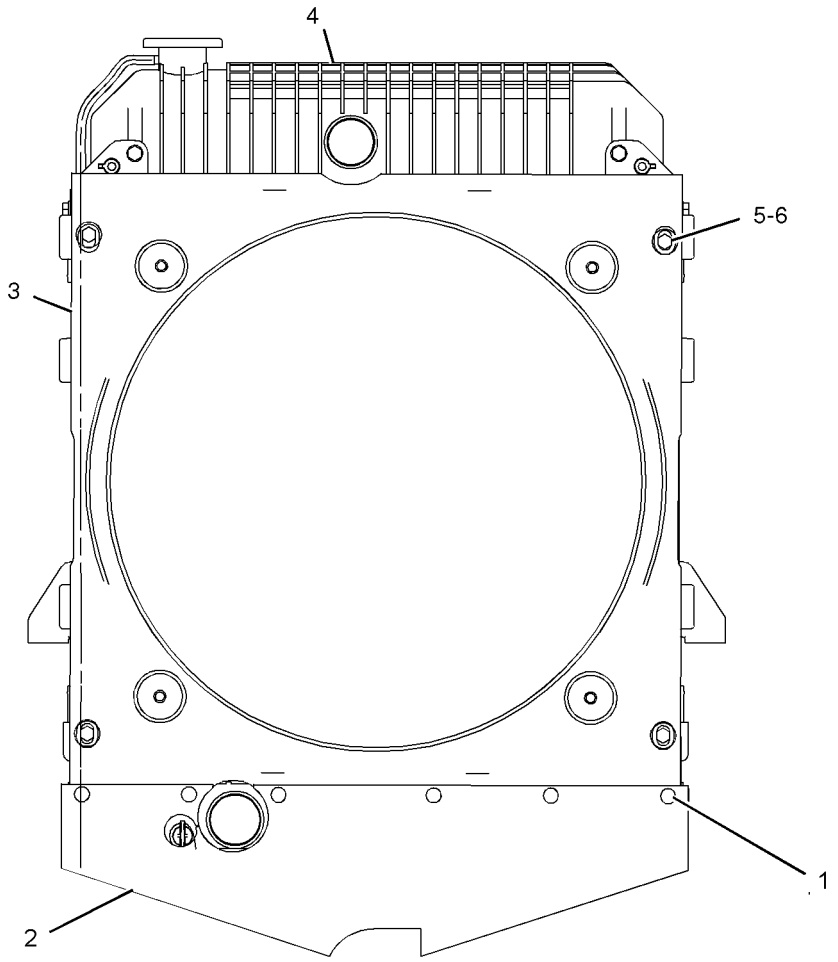

GRAPHIC #1 **<END>** g01030773

147-1557 RADIATOR & HYD OIL COOLER GP

S/N: BFP12900-UP; CXP940-UP
PART OF 185-7602, 202-5773, 202-5774, 202-5775 COOLING AR, 185-7603 COOLING AR-HIGH AMBIENT TEMP AN ATTACHMENT

SMCS-1353, 1374 **i01675978**

NOTE	REF NO	GRAPHIC REF	PART NUMBER	QTY	PART NAME 1 2 3 4 5 6 (PRODUCT LEVEL)	SEE PAGE
D	1	1	**5P-6129**		TUBE (0.1M)	
	2	1	**2W-9710**	2	MOUNT AS	
	3	1	**6N-6984**	2	MOUNT	
	4	1	**140-3637**	1	HOSE-RADIATOR	
	5	1	**140-3638**	1	HOSE-RADIATOR	
	6	1	**140-3640**	2	PLATE	
Y	7	1	*154-3799*	1	RADIATOR & HYD OIL COOLER GP	195
	8	1	**214-7457**	2	CLAMP-T'BOLT	
	9	1	**214-7458**	2	CLAMP-T'BOLT	
	10	1	**7X-0603**	2	WASHER-HARD (9.9X35X2.5MM THK)	
M	11	1	**8T-4133**	2	NUT (M10X1.5 THD)	
M	12	1	**8T-4186**	2	BOLT (M10X1.5X40MM)	
	13	1	**8T-4222**	4	WASHER-PLATED (11X32X2.5MM THK)	
M	14	1	**8T-4908**	2	BOLT (M8X1.25X25MM)	

D-ORDER BY THE METER
M-METRIC PART
Y-SEPARATE ILLUSTRATION

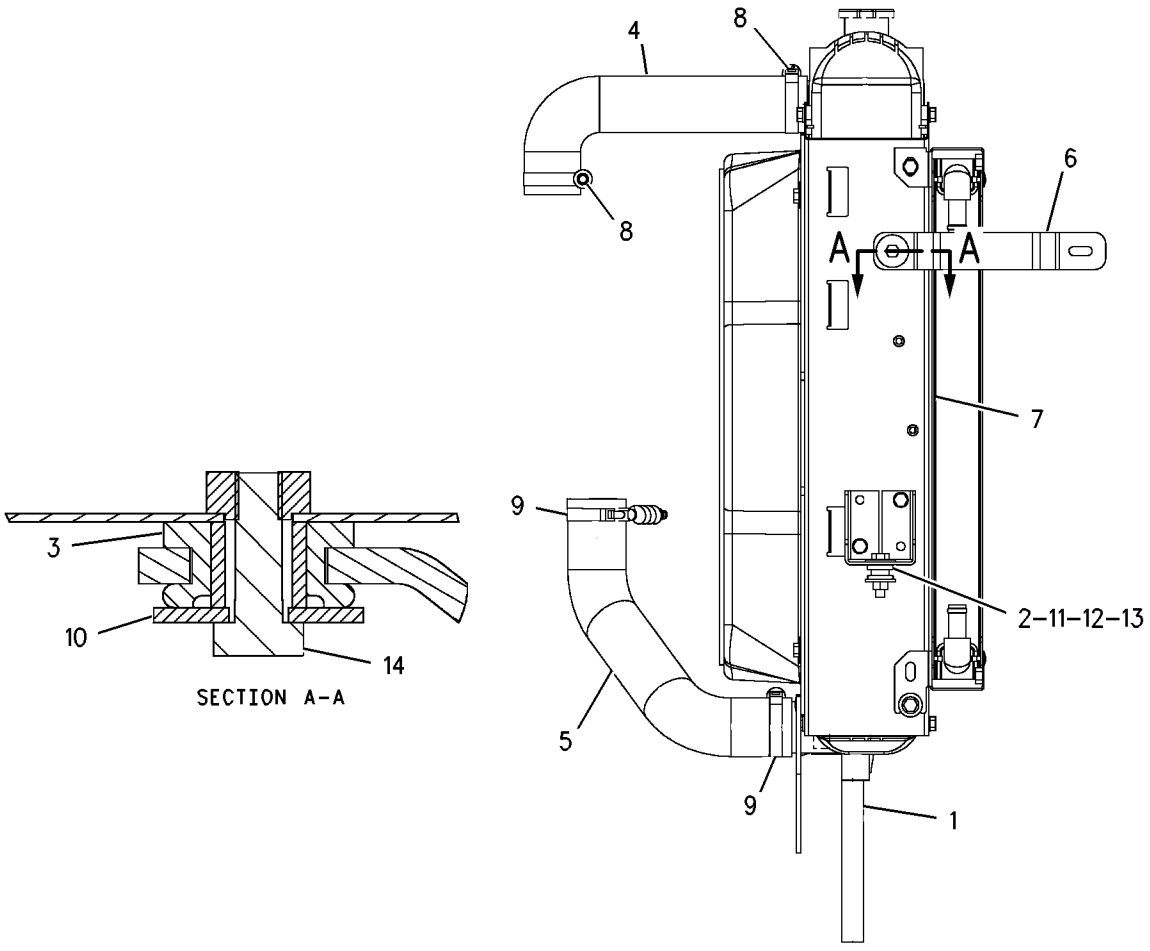

GRAPHIC #1 **<END>** g00856788

COOLING SYSTEM

147-1558 RADIATOR & HYD OIL COOLER GP

S/N: BFP12900-UP; CXP940-UP
PART OF 154-3799 RADIATOR & HYD OIL COOLER GP
AN ATTACHMENT

SMCS-1353, 1374 **i01092185**

NOTE	REF NO	GRAPHIC REF	PART NUMBER	QTY	PART NAME 1 2 3 4 5 6 (PRODUCT LEVEL)	SEE PAGE
	1	1	**151-8752**	2	BUSHING	
	2	1	**140-3634**	1	RADIATOR AS	
		1	**140-2358**	1	PLUG AS	
		1	**2D-6392**	1	SEAL-O-RING (6.07MM ID)	
		1	**5F-9144**	1	SEAL-O-RING (7.65MM ID)	
		1	**145-6005**	2	GASKET	
	3	1	**142-0724**	1	OIL COOLER AS	
		1	**123-4065**	16	RIVET-POP	
		1	**140-3635**	1	CORE AS	
		1	**140-3639**	1	CORE AS-15 PLATE	
	4	1	**006-8865**	1	CAP-RADIATOR	
M	5	1	**8T-4200**	4	BOLT (M8X1.25X16MM)	
	6	1	**8C-0572**	1	WASHER (8.8MM ID)	
	7	1	**8T-4224**	2	WASHER-HARD (2MM THK)	

M-METRIC PART

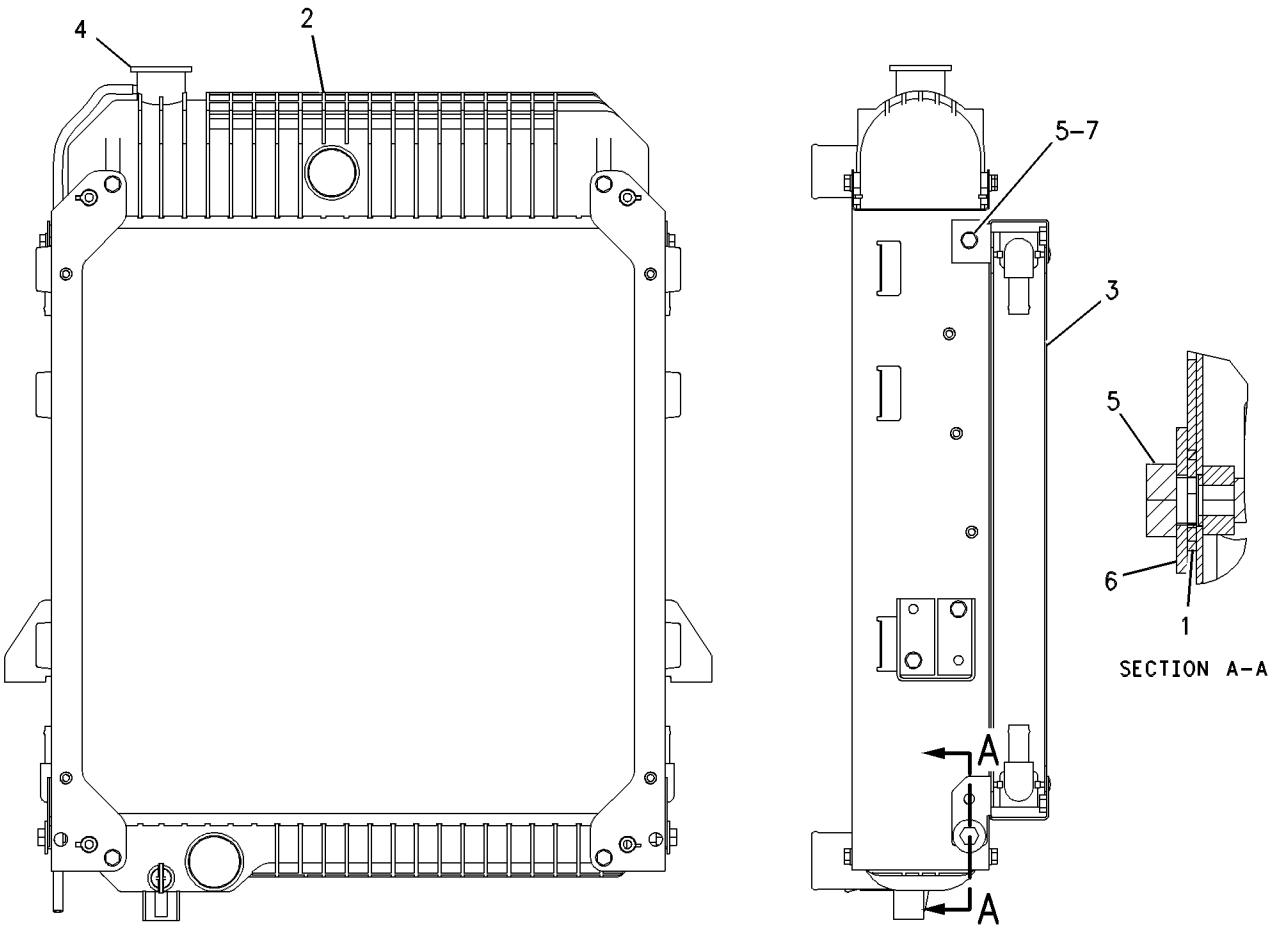

GRAPHIC #1 **<END>** g00365925

154-3799 RADIATOR & HYD OIL COOLER GP

S/N: BFP12900-UP; CXP940-UP
PART OF 147-1557 RADIATOR & HYD OIL COOLER GP
AN ATTACHMENT

SMCS-1353, 1374 **i01939887**

NOTE	REF NO	GRAPHIC REF	PART NUMBER	QTY	PART NAME 1 2 3 4 5 6 (PRODUCT LEVEL)	SEE PAGE
Y	1	1	*147-1558*	1	RADIATOR & HYD OIL COOLER GP	194
	2	1	**180-2441**	1	SHROUD AS	
	3	1	**7X-0579**	4	WASHER-HARD (8.8X25.5X2MM THK)	
M	4	1	**8T-4200**	4	BOLT (M8X1.25X16MM)	
	5	1	**123-4065**	6	RIVET-POP	
	6	1	**141-7512**	1	BAFFLE	

M-METRIC PART
Y-SEPARATE ILLUSTRATION

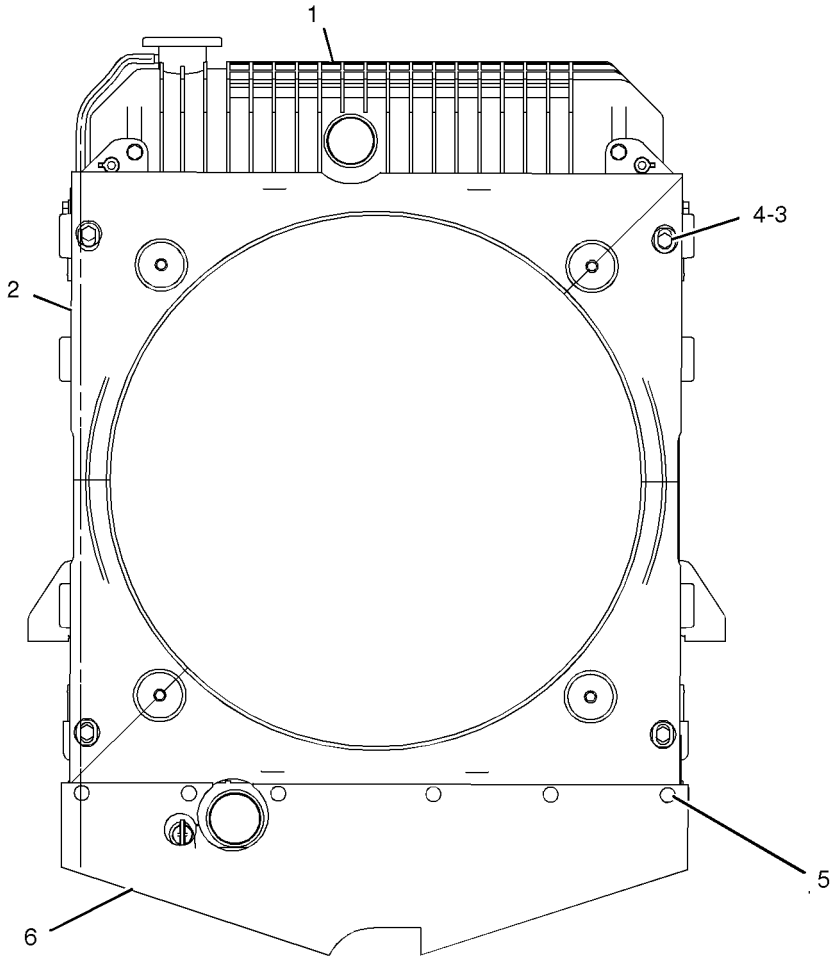

GRAPHIC #1 **<END>** g01009422

234-7836 RADIATOR & HYD OIL COOLER GP

S/N: BFP12900-UP
PART OF 214-6894 COOLING AR
AN ATTACHMENT

SMCS-1353, 1374 **i01968896**

NOTE	REF NO	GRAPHIC REF	PART NUMBER	QTY	PART NAME 1 2 3 4 5 6 (PRODUCT LEVEL)	SEE PAGE
D	1		**5P-6129**		TUBE (.1 METER)	
	2		**2W-9710**	2	MOUNT AS	
	3		**6N-6984**	2	MOUNT	
	4		**140-3640**	2	PLATE	
	5		**214-7457**	2	CLAMP-T'BOLT	
	6		**214-7458**	2	CLAMP-T'BOLT	
Y	7		*234-7834*	1	RADIATOR & FAN GP	191
	8		**235-1966**	1	HOSE	
	9		**235-1967**	1	HOSE	
	10		**7X-0603**	2	WASHER-HARD (9.9X35X2.5MM THK)	
M	11		**8T-4133**	2	NUT (M10X1.5 THD)	
M	12		**8T-4186**	2	BOLT (M10X1.5X40MM)	
	13		**8T-4222**	4	WASHER-PLATED (11X32X2.5MM THK)	
M	14		**8T-4908**	2	BOLT (M8X1.25X25MM)	

D-ORDER BY THE METER
M-METRIC PART
Y-SEPARATE ILLUSTRATION

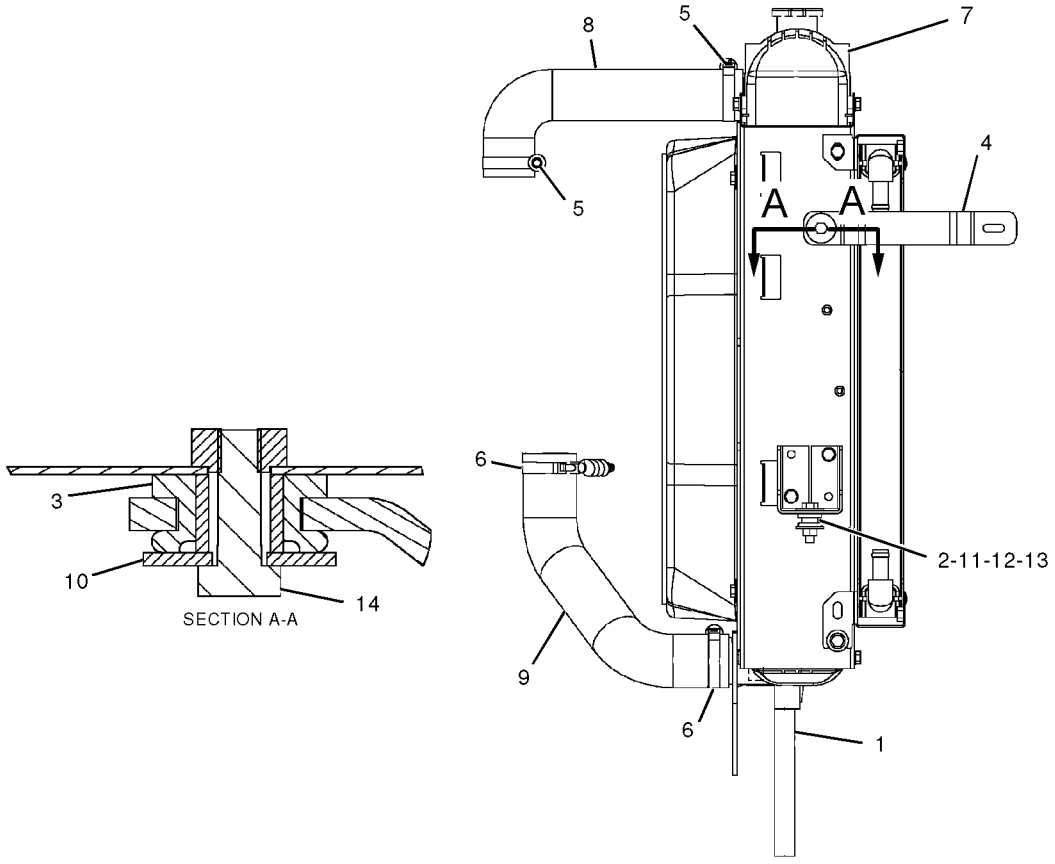

GRAPHIC #1 **<END>** g01022265

COOLING SYSTEM

235-1974 RADIATOR & HYD OIL COOLER GP

S/N: BFP12900-UP
PART OF 234-7834 RADIATOR & FAN GP
AN ATTACHMENT

SMCS-1353, 1374 **i01969842**

NOTE	REF NO	GRAPHIC REF	PART NUMBER	QTY	PART NAME 1 2 3 4 5 6 (PRODUCT LEVEL)	SEE PAGE
	1		**8C-0572**	2	WASHER (8.8X25.5X2MM THK)	
	2		**140-3634**	1	RADIATOR AS	
			140-2358	1	PLUG AS	
			2D-6392	1	SEAL-O-RING	
			5F-9144	1	SEAL-O-RING	
			145-6005	2	GASKET	
	3		**142-0724**	1	COOLER AS-OIL	
			123-4065	16	RIVET-POP	
			140-3635	1	CORE AS (13 PLATE)	
			140-3639	1	CORE AS (15 PLATE)	
	4		**151-8752**	2	BUSHING	
	5		**227-4376**	1	CAP AS (RADIATOR)	
M	6		**8T-4200**	4	BOLT (M8X1.25X16MM)	
	7		**8T-4224**	2	WASHER-HARD (8.8X16X2MM THK)	

M-METRIC PART

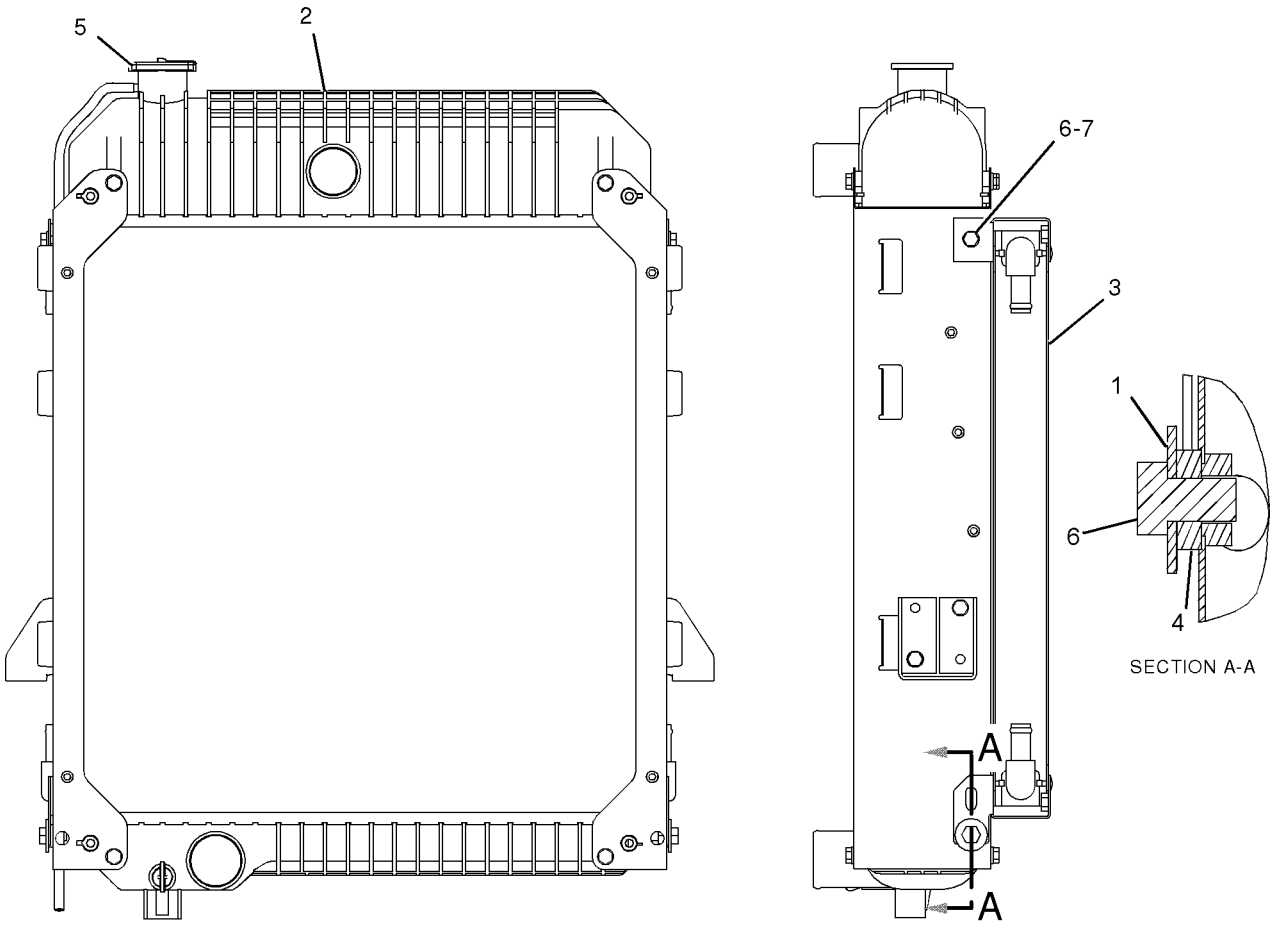

GRAPHIC #1 **<END>** g01028731

236-5807 RADIATOR & HYD OIL COOLER GP

S/N: BFP12900-UP
PART OF 214-6895 COOLING AR
AN ATTACHMENT

SMCS-1353, 1374 **i02001547**

NOTE	REF NO	GRAPHIC REF	PART NUMBER	QTY	PART NAME 1 2 3 4 5 6 (PRODUCT LEVEL)	SEE PAGE
D	1	1	**5P-6129**		TUBE (.1M)	
	2	1	**2W-9710**	2	MOUNT AS	
	3	1	**6N-6984**	2	MOUNT	
	4	1	**140-3640**	2	PLATE	
	5	1	**214-7457**	2	CLAMP-T'BOLT	
	6	1	**214-7458**	2	CLAMP-T'BOLT	
	7	1	**235-1966**	1	HOSE	
	8	1	**235-1967**	1	HOSE	
Y	9	1	*236-5808*	1	RADIATOR & FAN GP	192
	10	1	**7X-0603**	2	WASHER-HARD (9.9X35X2.5MM THK)	
M	11	1	**8T-4133**	2	NUT (M10X1.5 THD)	
M	12	1	**8T-4186**	2	BOLT (M10X1.5X40MM)	
	13	1	**8T-4222**	4	WASHER-PLATED (11X32X2.5MM THK)	
M	14	1	**8T-4908**	2	BOLT (M8X1.25X25MM)	

D-ORDER BY THE METER
M-METRIC PART
Y-SEPARATE ILLUSTRATION

236-5807 **RADIATOR & HYD OIL COOLER GP** *(contd.)* **i02001547**

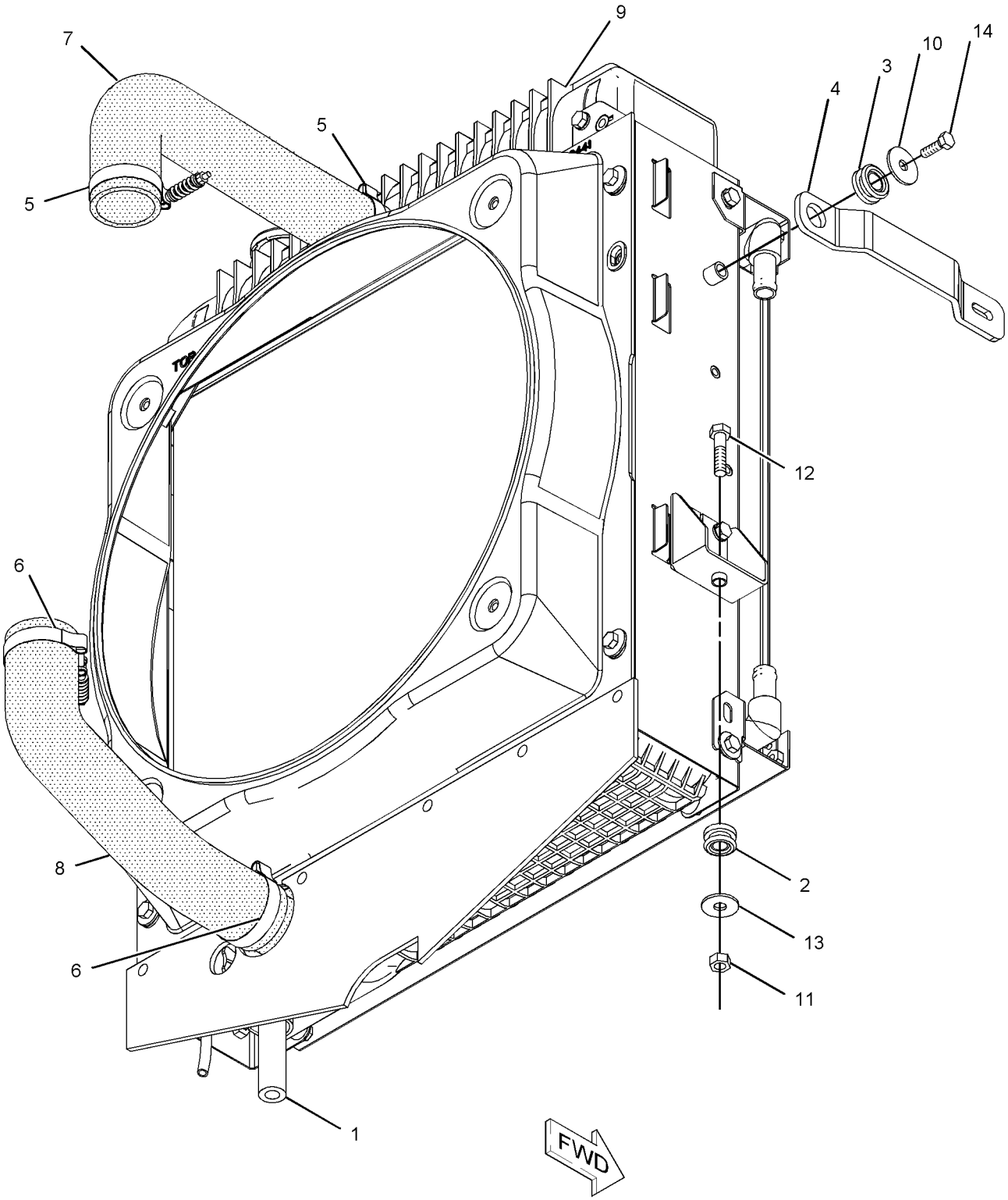

GRAPHIC #1 **<END>** g01023383

COOLING SYSTEM

236-5809 RADIATOR & HYD OIL COOLER GP

S/N: BFP12900-UP
PART OF 236-5808 RADIATOR & FAN GP
AN ATTACHMENT

SMCS-1353, 1374 **i02001595**

NOTE	REF NO	GRAPHIC REF	PART NUMBER	QTY	PART NAME 1 2 3 4 5 6 (PRODUCT LEVEL)	SEE PAGE
	1	1	**8C-0572**	2	WASHER (8.8X25.5X2MM THK)	
	2	1	**140-3634**	1	RADIATOR AS	
		1	**140-2358**	1	PLUG AS	
		1	**2D-6392**	1	SEAL-O-RING	
		1	**5F-9144**	1	SEAL-O-RING	
		1	**145-6005**	2	GASKET	
	3	1	**151-8752**	2	BUSHING	
	4	1	**227-4376**	1	CAP AS (RADIATOR)	
	5	1	**235-1975**	1	COOLER AS-OIL	
		1	**123-4065**	16	RIVET-POP	
M	6	1	**8T-4200**	4	BOLT (M8X1.25X16MM)	
	7	1	**8T-4224**	2	WASHER-HARD (8.8X16X2MM THK)	

M-METRIC PART

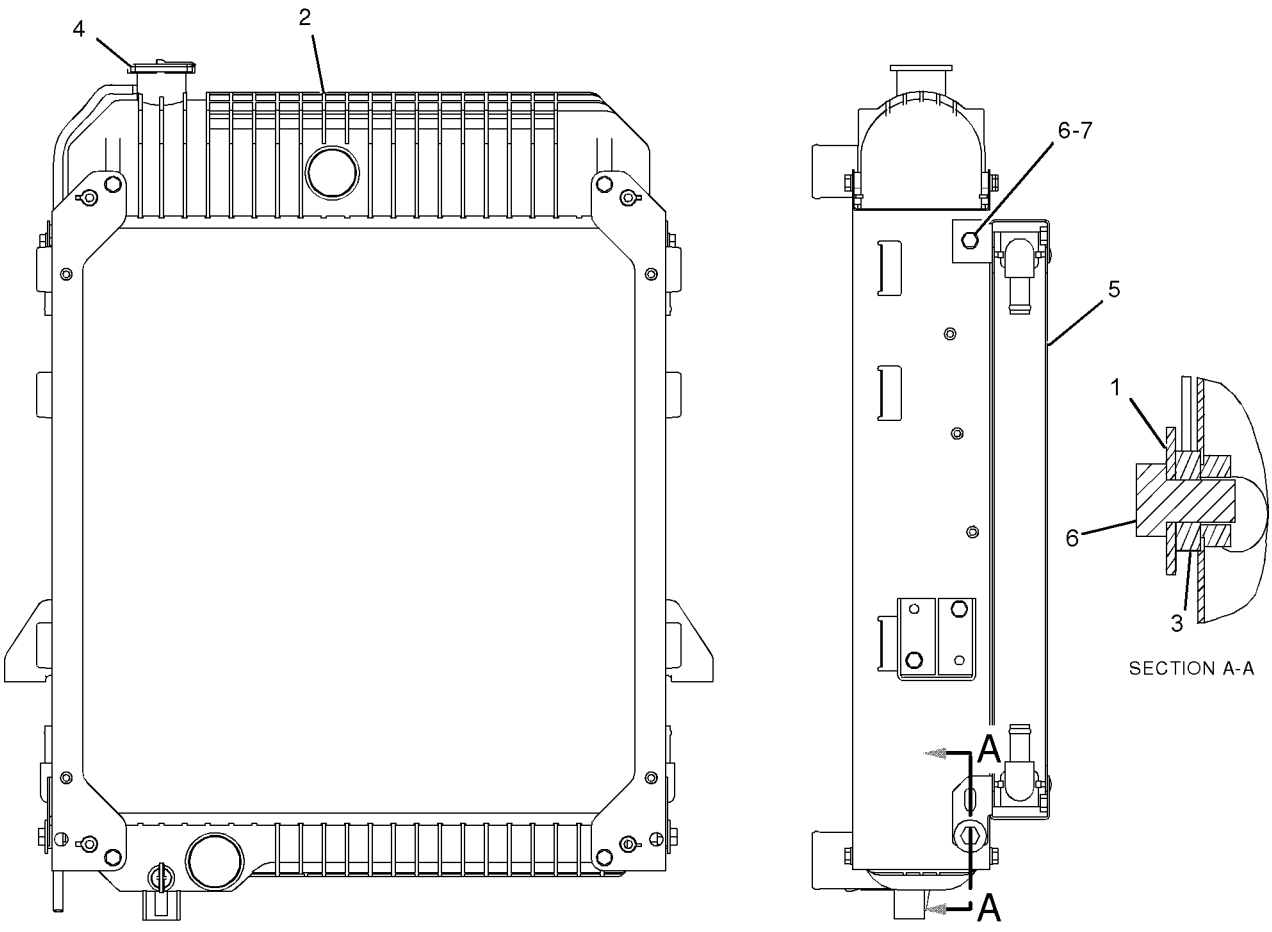

GRAPHIC #1 **<END>** g01032227

AIR INLET AND EXHAUST SYSTEM

112-9689 AIR CLEANER GP

S/N: CXP940-UP
PART OF 130-1470 AIR CLEANER GP
AN ATTACHMENT

SMCS-1051, 1054 **i01450185**

NOTE	REF NO	GRAPHIC REF	PART NUMBER	QTY	PART NAME 1 2 3 4 5 6 (PRODUCT LEVEL)	SEE PAGE
	1	1	**110-6326**	1	FILTER ELEMENT AS-AIR (PRIMARY)	
	2	1	**110-6331**	1	FILTER ELEMENT AS-AIR (SECONDARY)	
	3	1	**112-9717**	1	VALVE-VACUATOR	

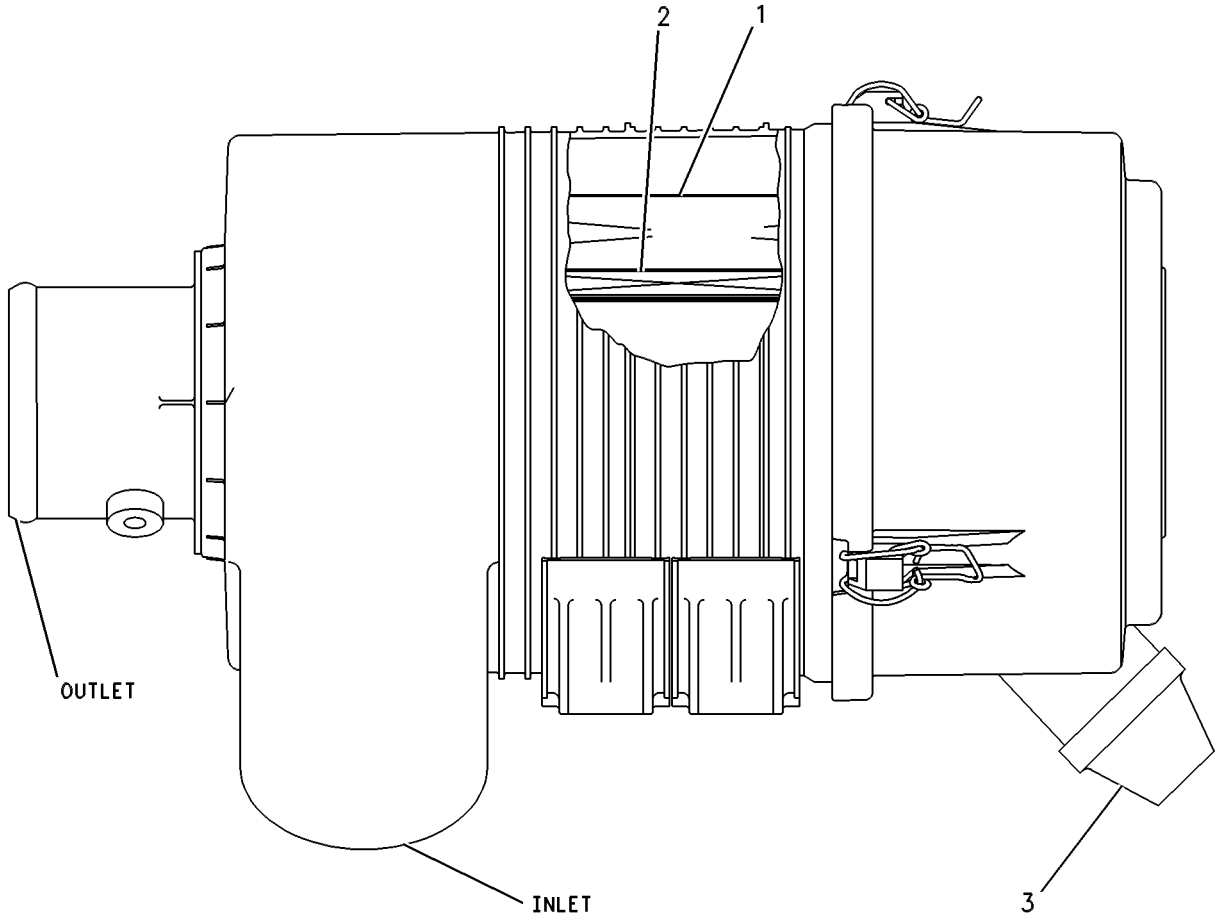

GRAPHIC #1 **<END>** g00131631

AIR INLET AND EXHAUST SYSTEM

130-1470 AIR CLEANER GP

S/N: CXP940-UP
PART OF 197-3263 AIR CLEANER GP
AN ATTACHMENT

SMCS-1051, 1054 **i01421679**

NOTE	REF NO	GRAPHIC REF	PART NUMBER	QTY	PART NAME 1 2 3 4 5 6 (PRODUCT LEVEL)	SEE PAGE
Y	1	1	*112-9689*	1	AIR CLEANER GP	201
	2	1	**7M-1530**	3	RIVET-POP	

Y-SEPARATE ILLUSTRATION

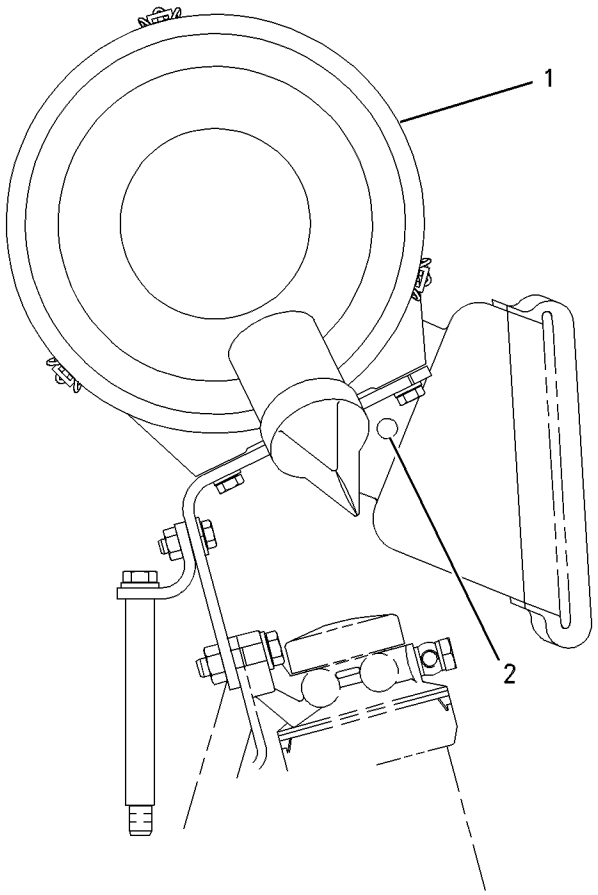

GRAPHIC #1 **<END>** g00535184

197-3263 AIR CLEANER GP

S/N: CXP940-UP
PART OF 185-1129 SUPPRESSION AR-SOUND
AN ATTACHMENT

SMCS-1051, 1054 **i01530218**

NOTE	REF NO	GRAPHIC REF	PART NUMBER	QTY	PART NAME 1 2 3 4 5 6 (PRODUCT LEVEL)	SEE PAGE
Y	1	1	**130-1470**	1	AIR CLEANER GP	202
M	2	1	**8T-4189**	4	BOLT (M8X1.25X20MM)	
	3	1	**8T-4224**	4	WASHER-HARD (8.8X16X2MM THK)	

M-METRIC PART
Y-SEPARATE ILLUSTRATION

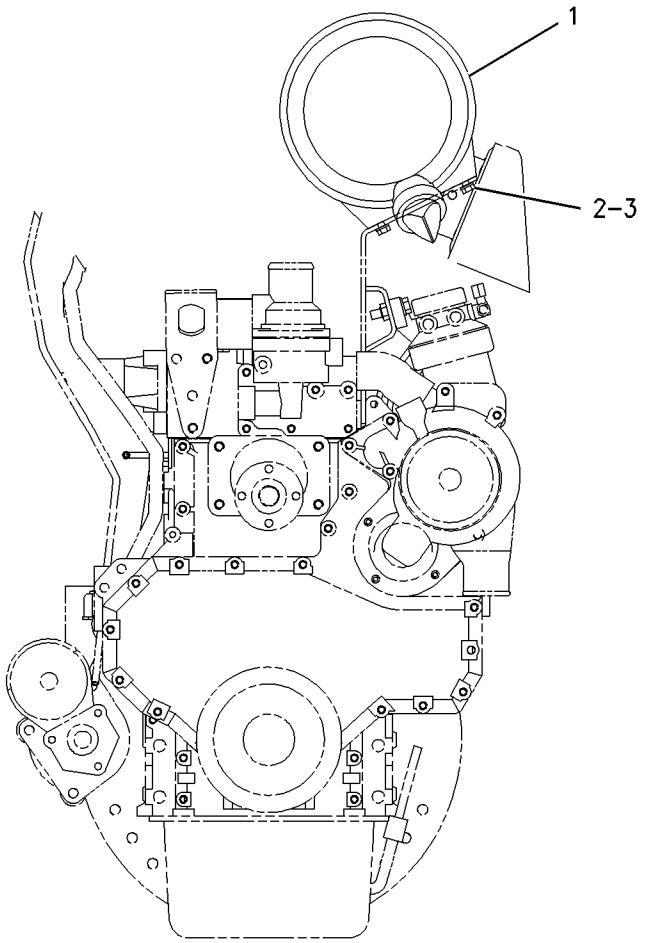

GRAPHIC #1 **<END>** g00767794

AIR INLET AND EXHAUST SYSTEM

234-1979 AIR CLEANER GP

S/N: BFP12900-UP
PART OF 214-6891 ENGINE AR
AN ATTACHMENT

SMCS-1051, 1054 **i01998469**

NOTE	REF NO	GRAPHIC REF	PART NUMBER	QTY	PART NAME 1 2 3 4 5 6 (PRODUCT LEVEL)	SEE PAGE
D	1	1	**8T-2563**		SEAL (0.7M)	
	2	1	**5P-0600**	1	CLAMP-HOSE	
	3	1	**5P-4868**	1	CLAMP-HOSE	
	4	1	**6V-3582**	1	CLAMP-HOSE	
	5	1	**110-2445**	1	CLAMP-HOSE	
	6	1	**127-4471**	1	CLAMP-HOSE	
Y	7	1	**234-1981**	1	AIR CLEANER GP	207
	8	1	**234-2622**	1	HOSE-AIR	
	9	1	**234-5121**	1	HOSE-AIR	
	10	1	**238-9192**	1	PLATE AS	
	11	1	**242-1920**	1	DUCT AS (AIR INTAKE)	
M	12	1	**8T-4189**	2	BOLT (M8X1.25X20-MM)	
M	13	1	**8T-4224**	6	WASHER-HARD (8.8X16X2-MM THK)	
M	14	1	**8T-7547**	4	BOLT (M8X1.25X30-MM)	

D-ORDER BY THE METER
M-METRIC PART
Y-SEPARATE ILLUSTRATION

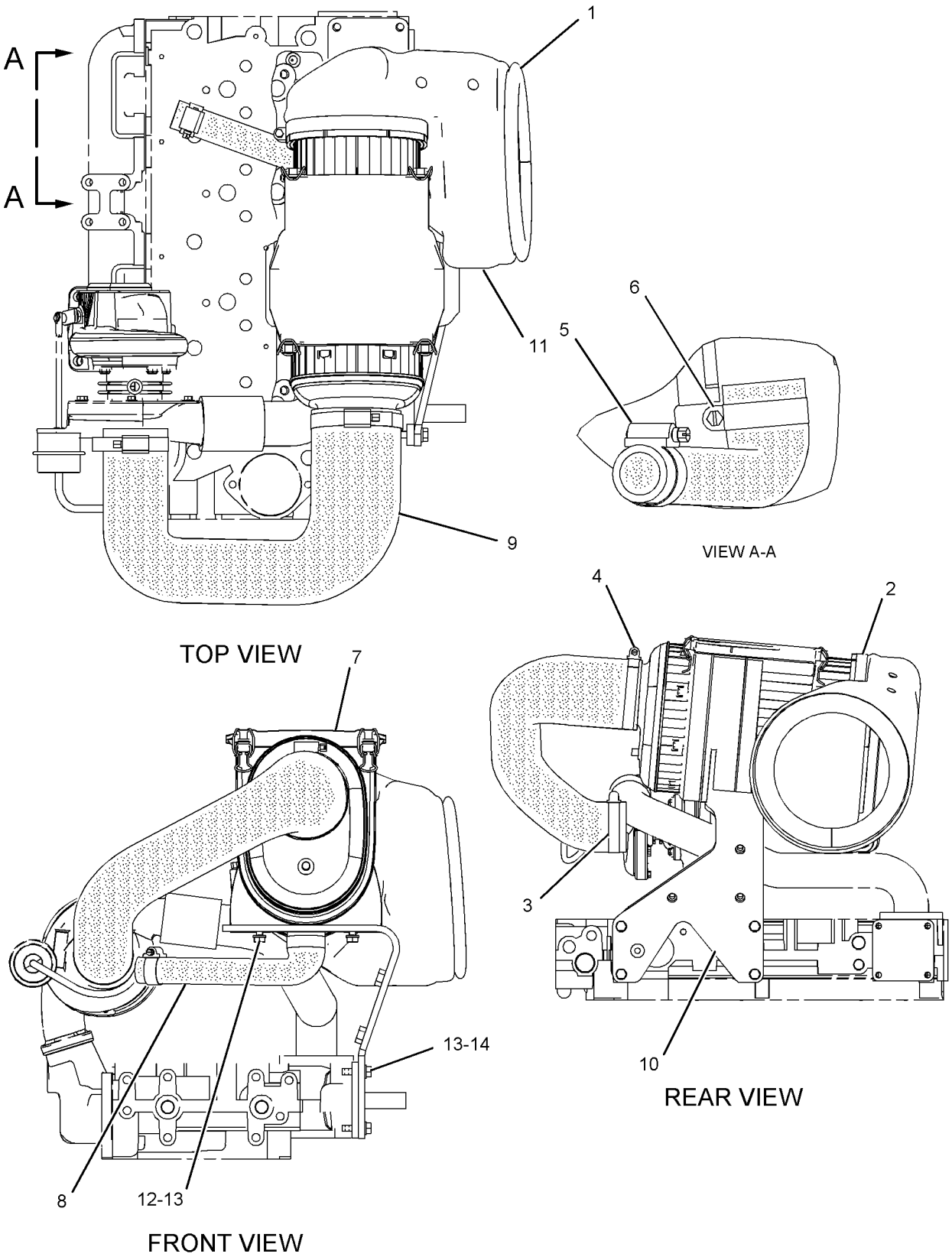

GRAPHIC #1 **<END>** g01035153

AIR INLET AND EXHAUST SYSTEM

234-1980 AIR CLEANER GP

S/N: BFP12900-UP
PART OF 214-6890 ENGINE AR
AN ATTACHMENT

SMCS-1051, 1054 **i01991946**

NOTE	REF NO	GRAPHIC REF	PART NUMBER	QTY	PART NAME 1 2 3 4 5 6 (PRODUCT LEVEL)	SEE PAGE
	1	1	**8T-2563**	7	SEAL	
	2	1	**5P-0600**	1	CLAMP-HOSE	
	3	1	**6V-3582**	1	CLAMP-HOSE	
	4	1	**110-2445**	1	CLAMP-HOSE	
	5	1	**127-4471**	1	CLAMP-HOSE	
Y	6	1	**234-1981**	1	AIR CLEANER GP	207
	7	1	**234-2622**	1	HOSE-AIR	
	8	1	**234-2628**	1	HOSE-AIR	
	9	1	**238-9192**	1	PLATE AS	
	10	1	**240-8459**	1	FOAM (INLET)	
	11	1	**242-1920**	1	DUCT AS (INTAKE)	
M	12	1	**8T-4189**	2	BOLT (M8X1.25X20MM)	
	13	1	**8T-4224**	6	WASHER-HARD (8.8X16X2MM THK)	
M	14	1	**8T-7547**	4	BOLT (M8X1.25X30MM)	

M-METRIC PART
Y-SEPARATE ILLUSTRATION

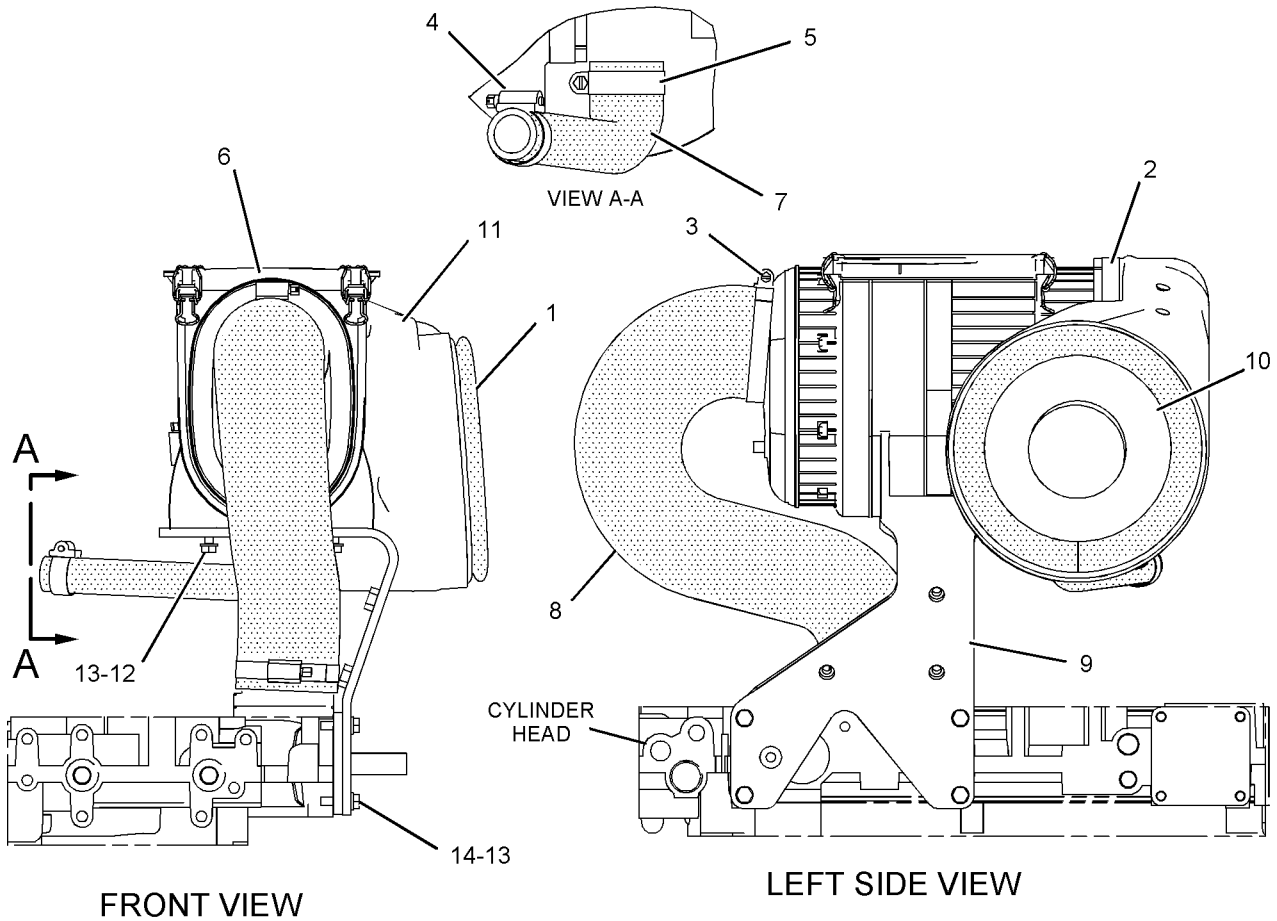

GRAPHIC #1 **<END>** g01039948

AIR INLET AND EXHAUST SYSTEM

234-1981 AIR CLEANER GP

S/N: BFP12900-UP
PART OF 234-1979, 234-1980 AIR CLEANER GP
AN ATTACHMENT

SMCS-1051, 1054 **i01998482**

NOTE	REF NO	GRAPHIC REF	PART NUMBER	QTY	PART NAME 1 2 3 4 5 6 (PRODUCT LEVEL)	SEE PAGE
	1	1	**227-7447**	1	FRAME	
	2	1	**227-7448**	1	ELEMENT-PRIMARY	
	3	1	**227-7449**	1	FILTER ELEMENT AS-AIR (SECONDARY)	
	4	1	**237-4157**	1	COVER	

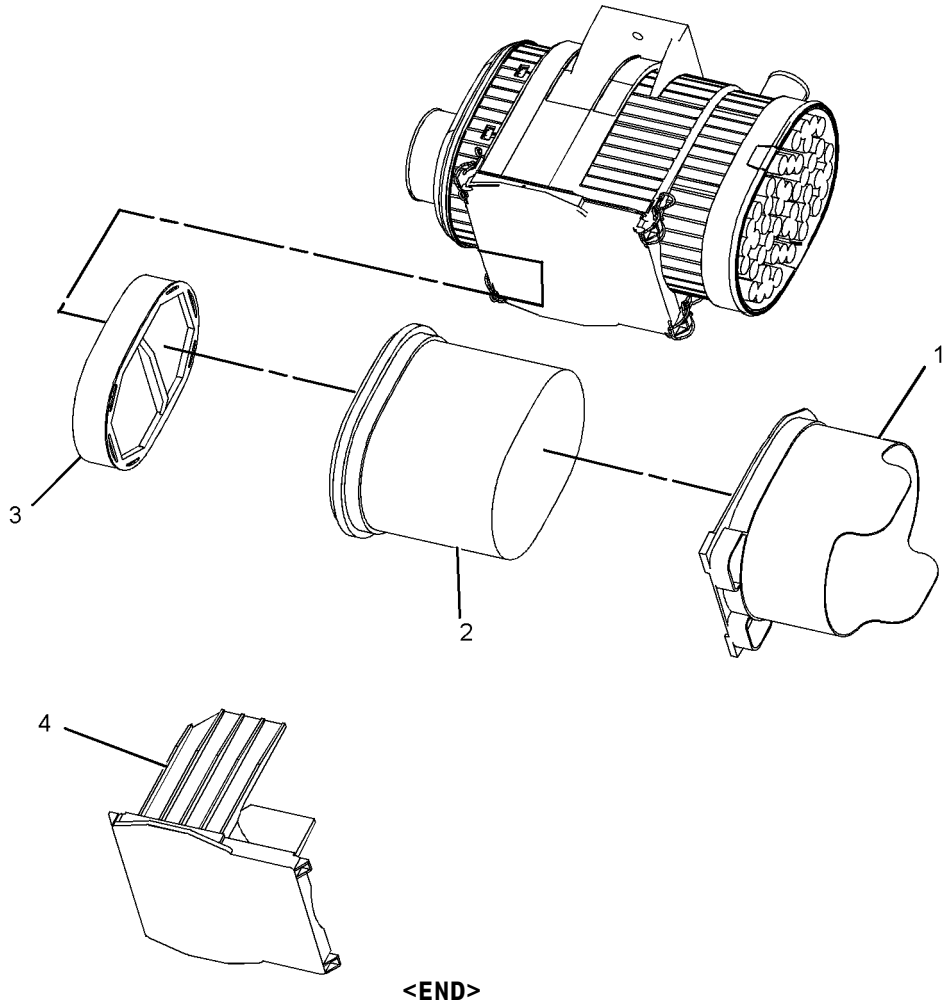

GRAPHIC #1 **<END>** g01035095

AIR INLET AND EXHAUST SYSTEM

231-0149 COVER GP-AIR INLET

S/N: CRS1-UP
PART OF 234-3059 ENGINE AR-PRIMARY
AN ATTACHMENT

SMCS-1087 **i01892314**

NOTE	REF NO	GRAPHIC REF	PART NUMBER	QTY	PART NAME 1 2 3 4 5 6 (PRODUCT LEVEL)	SEE PAGE
	1	1	**6I-0572**	12	BOLT (M8X1.25.20MM)	
	2	1	**114-2579**	3	GASKET	
	3	1	**115-1162**	3	PLATE	

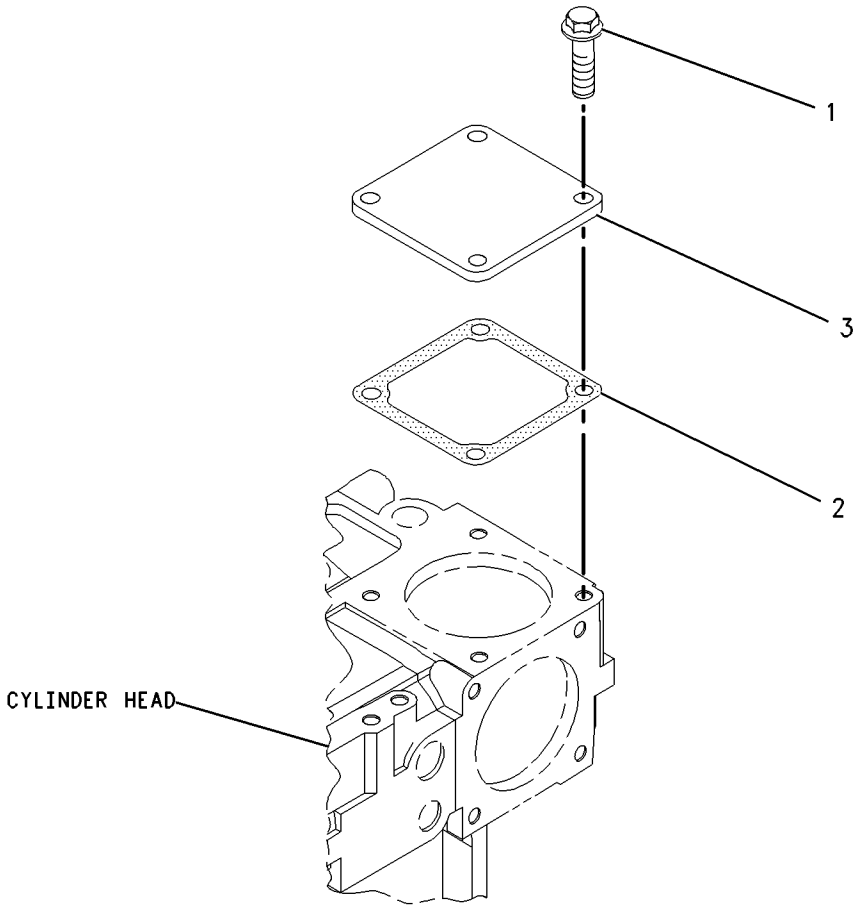

GRAPHIC #1 **<END>** g00986217

AIR INLET AND EXHAUST SYSTEM

153-4953 ELBOW GP-AIR INLET

S/N: 7SG1-UP
PART OF 187-8016 ENGINE AR-PRIMARY
AN ATTACHMENT

SMCS-1058, 1087 **i01313629**

NOTE	REF NO	GRAPHIC REF	PART NUMBER	QTY	PART NAME 1 2 3 4 5 6 (PRODUCT LEVEL)	SEE PAGE
	1	1	**124-3815**	3	BOLT	
F		1	**6I-0260**	1	BOLT	

F-NOT SHOWN

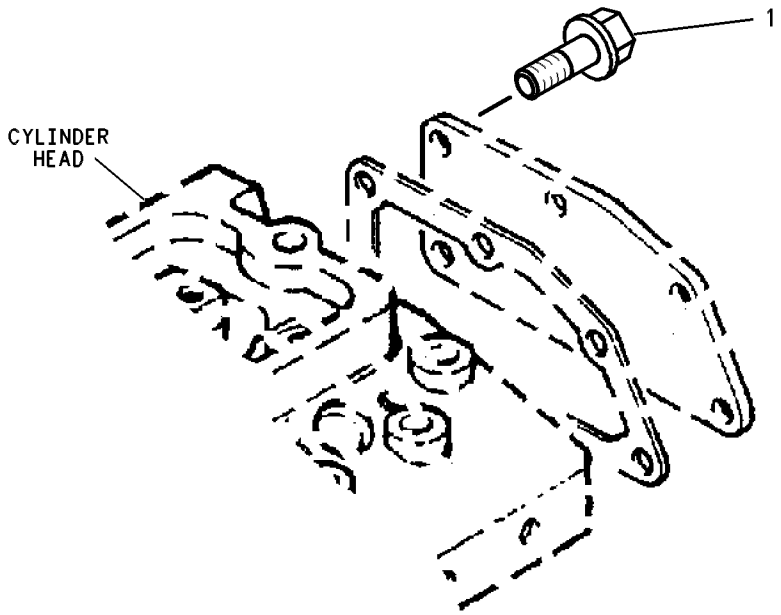

GRAPHIC #1 **<END>** g00538145

AIR INLET AND EXHAUST SYSTEM

235-2489 ELBOW GP-AIR INLET

S/N: CRS1-UP
PART OF 234-3058 ENGINE AR-PRIMARY
AN ATTACHMENT

SMCS-1058, 1087 **i01964463**

NOTE	REF NO	GRAPHIC REF	PART NUMBER	QTY	PART NAME 1 2 3 4 5 6 (PRODUCT LEVEL)	SEE PAGE
	1	1	**6I-0572**	12	BOLT (M8X1.25.20MM)	
	2	1	**100-8451**	2	BOLT	
	3	1	**114-2579**	5	GASKET	
	4	1	**115-1162**	3	PLATE	
	5	1	**233-7490**	1	ELBOW	
	6	1	**235-2451**	2	BOLT	
	7	1	**235-2488**	1	SPACER	

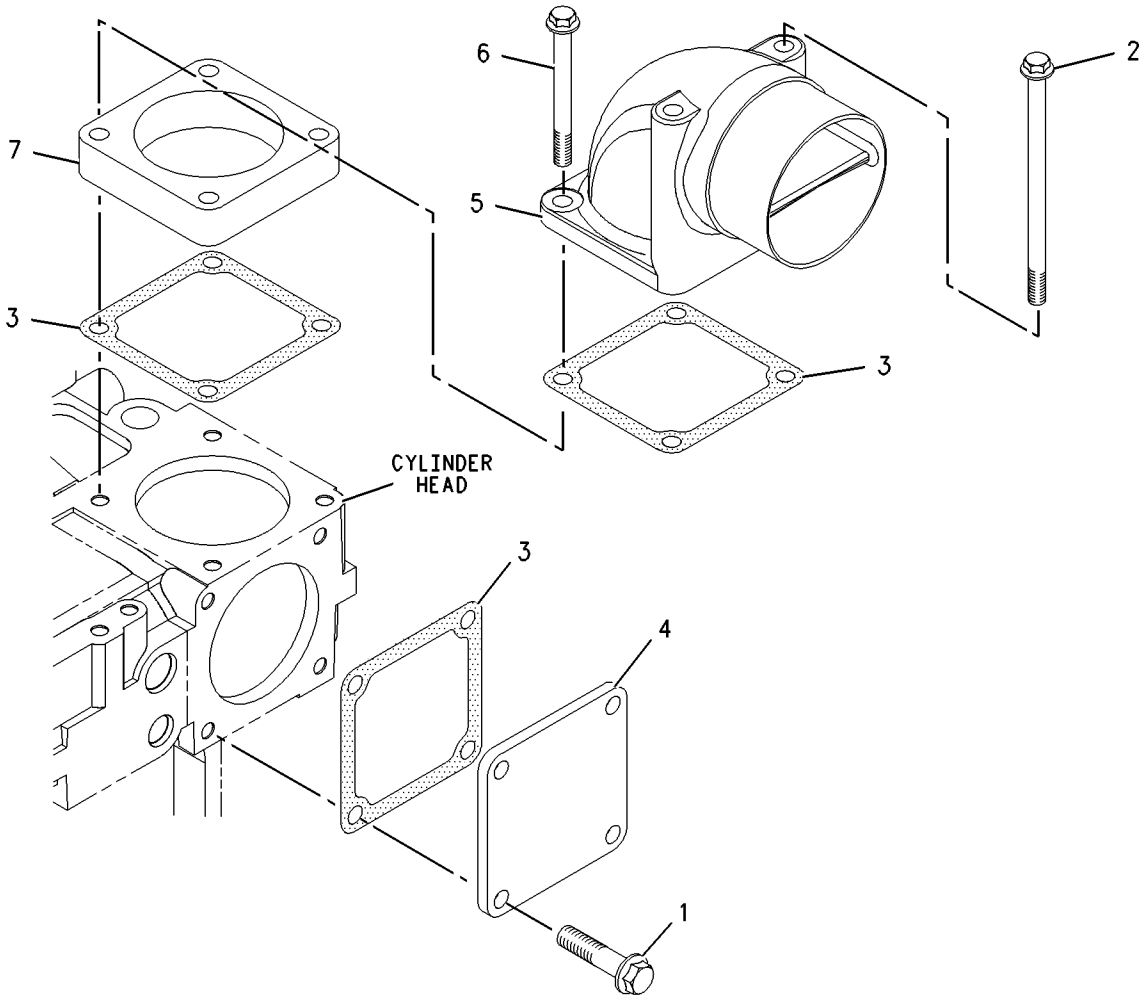

GRAPHIC #1 **<END>** g00975132

AIR INLET AND EXHAUST SYSTEM

236-2486 EXTENSION GP-EXHAUST

S/N: BFP12900-UP
PART OF 214-6890, 214-6891 ENGINE AR
AN ATTACHMENT

SMCS-1061 **i01991958**

NOTE	REF NO	GRAPHIC REF	PART NUMBER	QTY	PART NAME 1 2 3 4 5 6 (PRODUCT LEVEL)	SEE PAGE
	1	1	**7E-3870**	1	CLAMP	
	2	1	**236-5860**	1	PLATE AS	
	3	1	**239-2270**	1	PIPE-EXTENSION	
	4	1	**8T-4121**	3	WASHER-HARD (11X21X2.5MM THK)	
M	5	1	**8T-4136**	3	BOLT (M10X1.5X25MM)	

M-METRIC PART

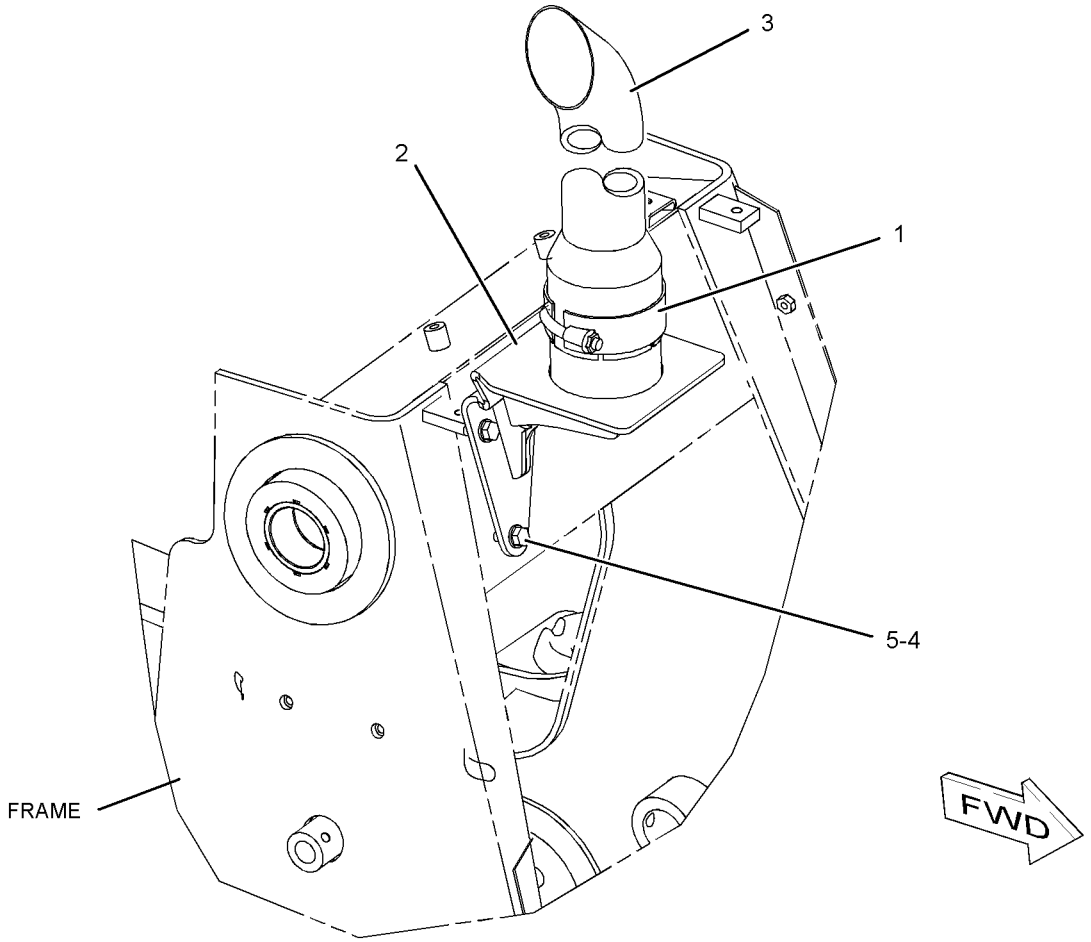

GRAPHIC #1 **<END>** g01040352

184-7900 INDICATOR GP-AIR FILTER CHANGE

S/N: BFP12900-UP; CXP940-UP
STANDARD
PART OF 184-9735, 205-2177 CAB AR, 184-9733 CANOPY AR
AN ATTACHMENT

SMCS-7452 **i01944261**

NOTE	REF NO	GRAPHIC REF	PART NUMBER	QTY	PART NAME 1 2 3 4 5 6 (PRODUCT LEVEL)	SEE PAGE
D	1	1	**6V-1363**		HOSE (0.5M)	
	2	1	**123-0275**	1	FITTING (FILTER)	
	3	1	*228-4525*	1	INDICATOR GP-FILTER CHANGE	
		1	**5W-9411**	1	SEAL-O-RING	
		1	**7W-7417**	1	INDICATOR-SERVICE (AIR FILTER)	
		1	**119-6723**	1	FITTING	
		1	**123-0275**	1	FITTING (FILTER)	
M	4	1	**8T-4138**	2	BOLT (M6X1X20MM)	
	5	1	**8T-4205**	2	WASHER-HARD (7.2X14.5X2MM THK)	

D-ORDER BY THE METER
M-METRIC PART

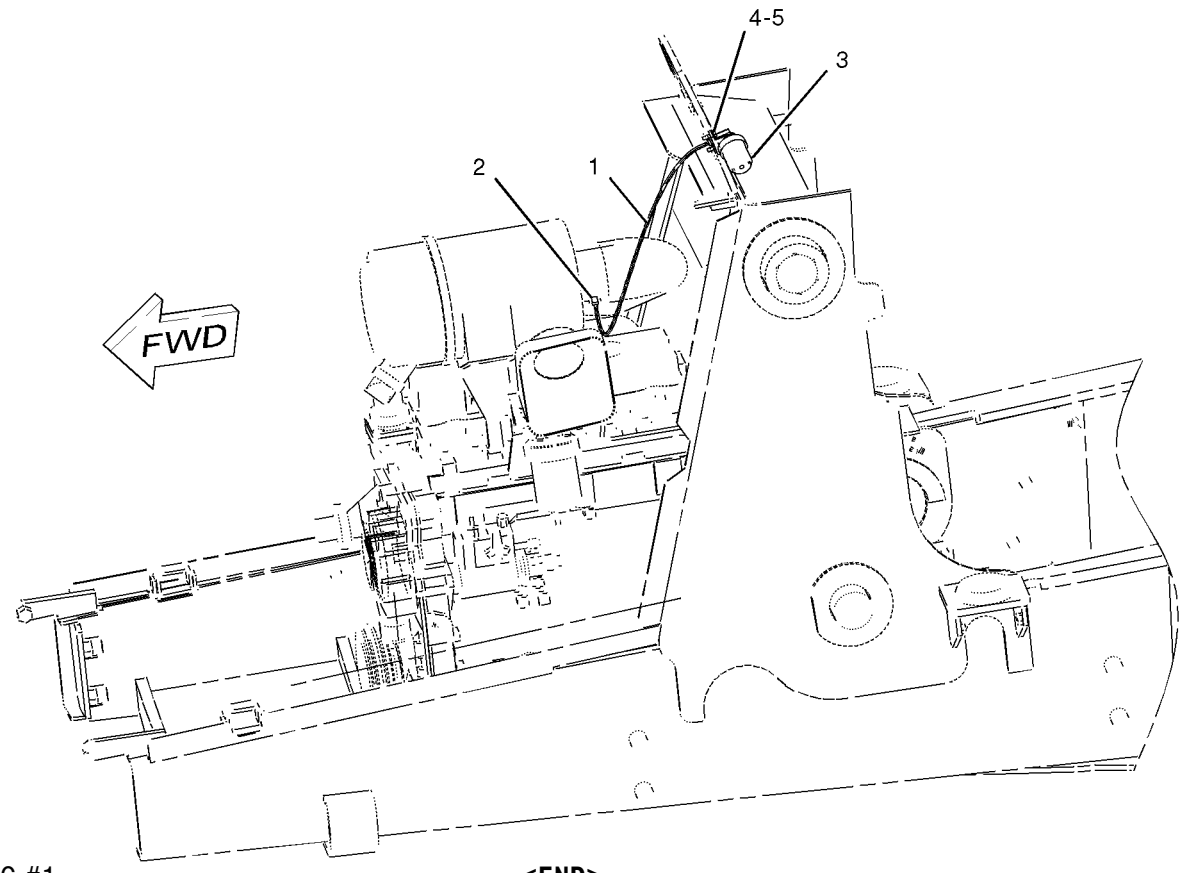

GRAPHIC #1 **<END>** g01012029

AIR INLET AND EXHAUST SYSTEM

238-9827 INDICATOR GP-AIR FILTER CHANGE

S/N: BFP12900-UP
PART OF 214-6890 ENGINE AR
AN ATTACHMENT

SMCS-7452 **i02011521**

NOTE	REF NO	GRAPHIC REF	PART NUMBER	QTY	PART NAME 1 2 3 4 5 6 (PRODUCT LEVEL)	SEE PAGE
	1	1	**5W-9411**	1	SEAL-O-RING	
	2	1	**7W-7417**	1	INDICATOR-AIR FILTER CHANGE	

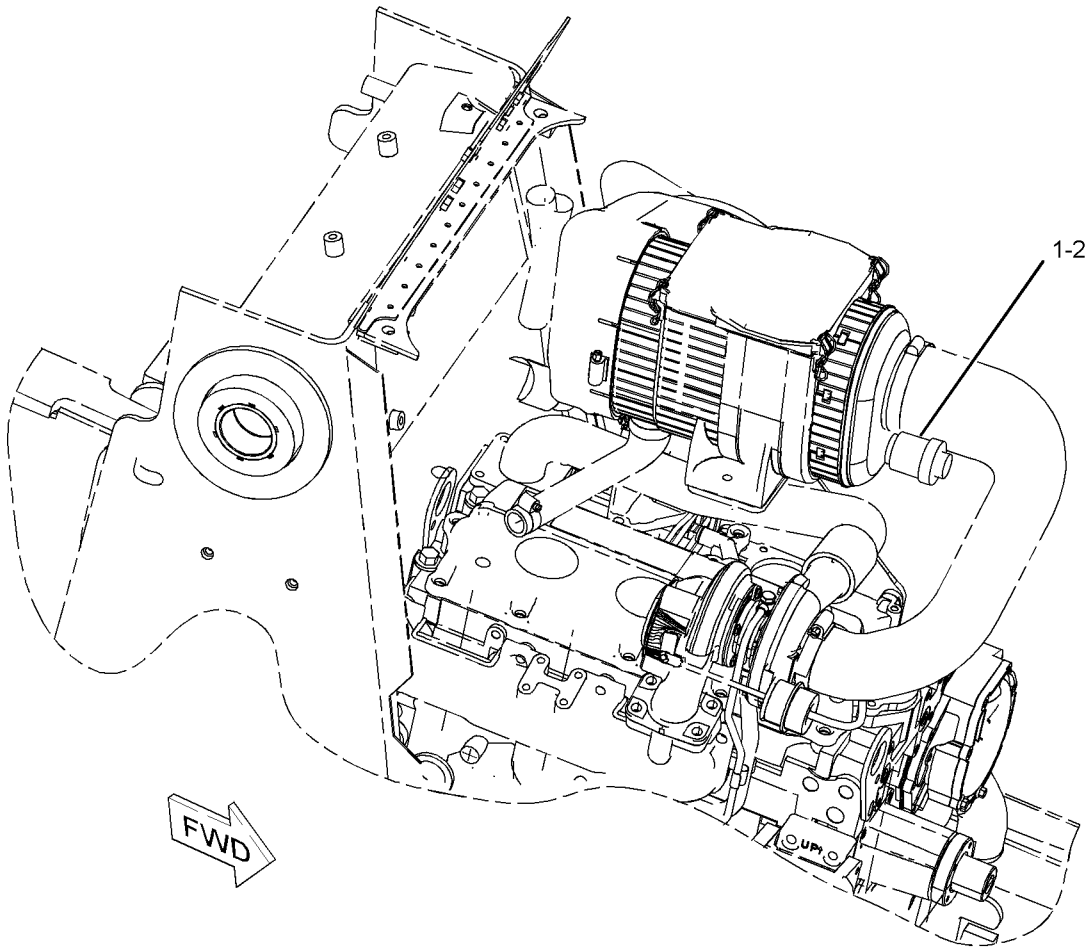

GRAPHIC #1 **<END>** g01040487

AIR INLET AND EXHAUST SYSTEM

238-9828 INDICATOR GP-AIR FILTER CHANGE

S/N: BFP12900-UP
PART OF 214-6891 ENGINE AR
AN ATTACHMENT

SMCS-7452 **i02010323**

NOTE	REF NO	GRAPHIC REF	PART NUMBER	QTY	PART NAME 1 2 3 4 5 6 (PRODUCT LEVEL)	SEE PAGE
	1	1	**5W-9411**	1	SEAL-O-RING	
	2	1	**8N-2694**	1	INDICATOR GP-AIR FILTER CHANGE	

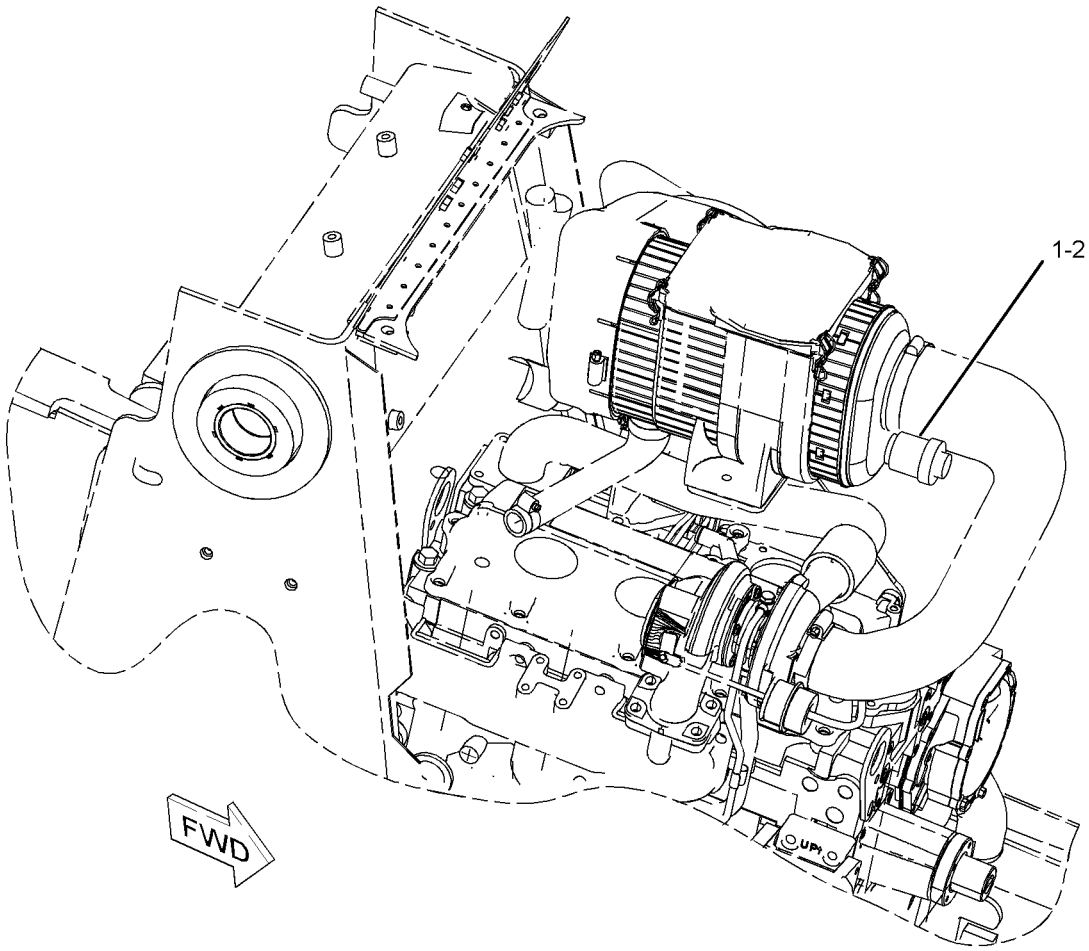

GRAPHIC #1 **<END>** g01040385

AIR INLET AND EXHAUST SYSTEM

167-8258 LINES GP-AIR

S/N: BFP12900-UP
EMISSIONS ENGINE
PART OF 186-0600, 202-5742 ENGINE AR
AN ATTACHMENT

SMCS-1071 **i01366179**

NOTE	REF NO	GRAPHIC REF	PART NUMBER	QTY	PART NAME 1 2 3 4 5 6 (PRODUCT LEVEL)	SEE PAGE
	1	1	**5P-4868**	1	CLAMP (HOSE)	
	2	1	**8T-6726**	1	CLAMP-HOSE	
	3	1	**138-6903**	1	HOSE-MANIFOLD	
	4	1	**167-8259**	1	ADAPTER-EXHAUST	
	5	1	**167-8260**	1	COUPLING-EXHAUST	
	6	1	**167-8261**	1	ELBOW-EXHAUST	
M	7	1	**8T-4136**	3	BOLT (M10X1.5X25MM)	
M	8	1	**8T-4197**	3	BOLT (M8X1.25X40MM)	
	9	1	**8T-4224**	3	WASHER-HARD (8.8X16X2MM THK)	

M-METRIC PART

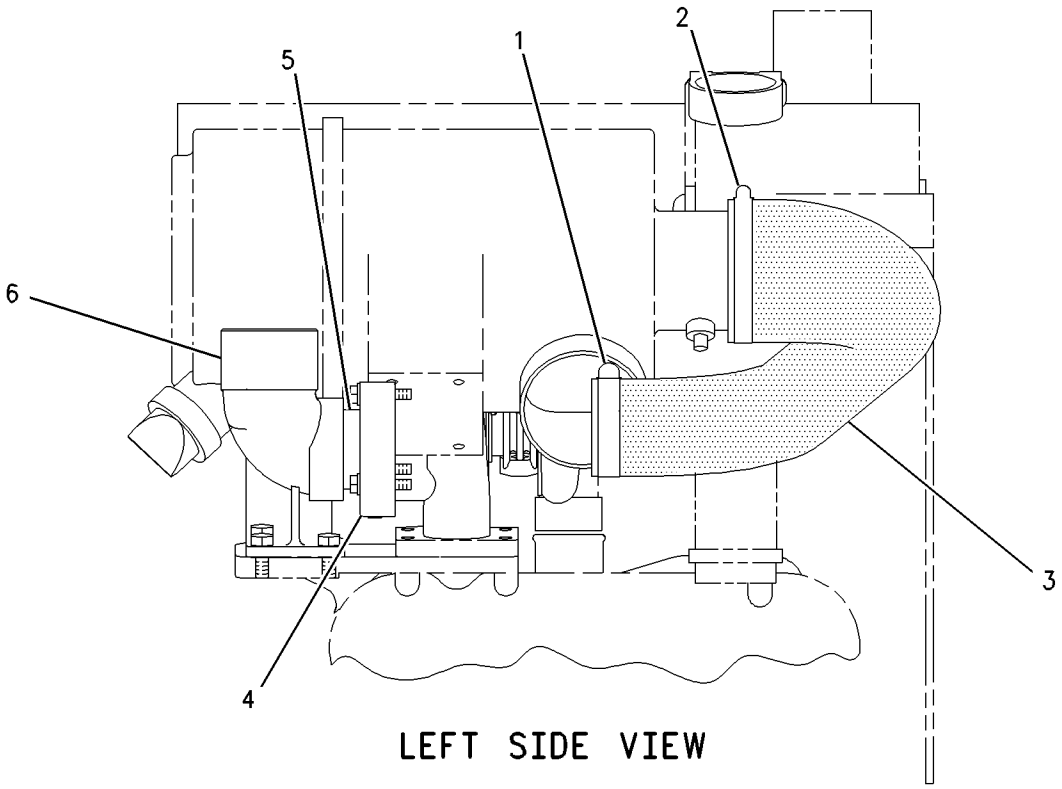

LEFT SIDE VIEW

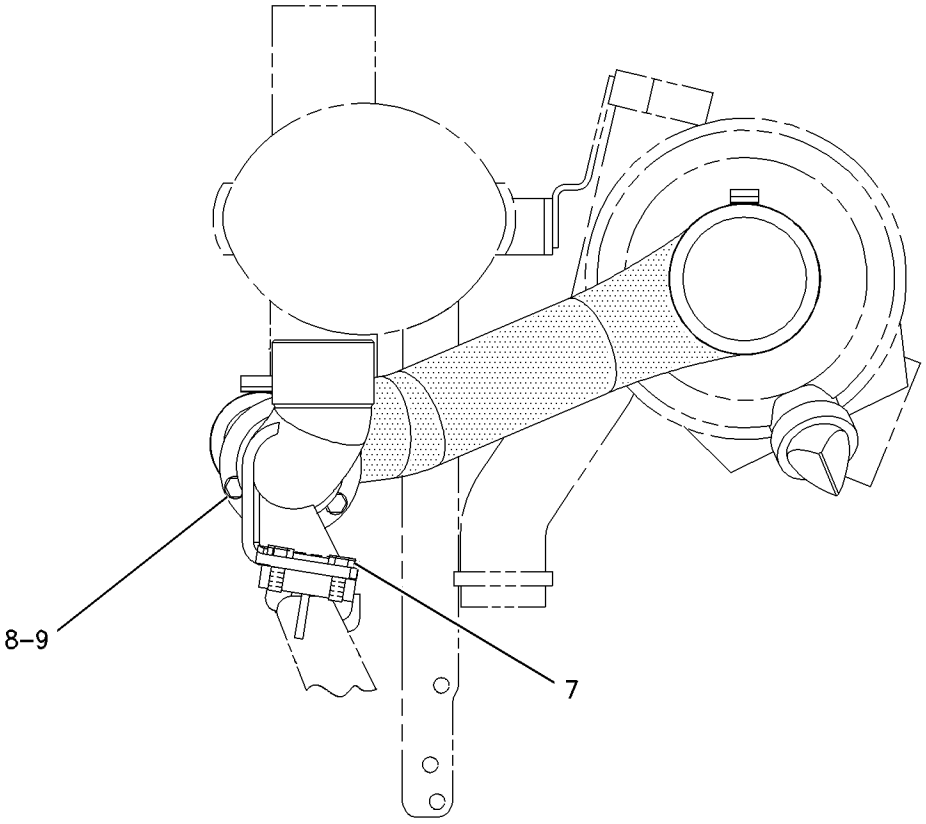

FRONT VIEW

GRAPHIC #1 **<END>** g00735149

AIR INLET AND EXHAUST SYSTEM

189-5639 LINES GP-AIR

S/N: BFP12900-UP; CXP940-UP
PART OF 186-0598, 206-6325 ENGINE AR
AN ATTACHMENT

SMCS-1071 **i01560695**

NOTE	REF NO	GRAPHIC REF	PART NUMBER	QTY	PART NAME 1 2 3 4 5 6 (PRODUCT LEVEL)	SEE PAGE
	2	1	**6I-4039**	1	GASKET	
	3	1	**8T-6726**	2	CLAMP-HOSE	
	4	1	**189-5640**	1	ELBOW-EXHAUST	
	5	1	**189-5641**	1	HOSE	
	6	1	**8T-4121**	3	WASHER-HARD (11X21X2.5MM THK)	
M	7	1	**8T-4198**	3	BOLT (M10X1.5X100MM)	

M-METRIC PART

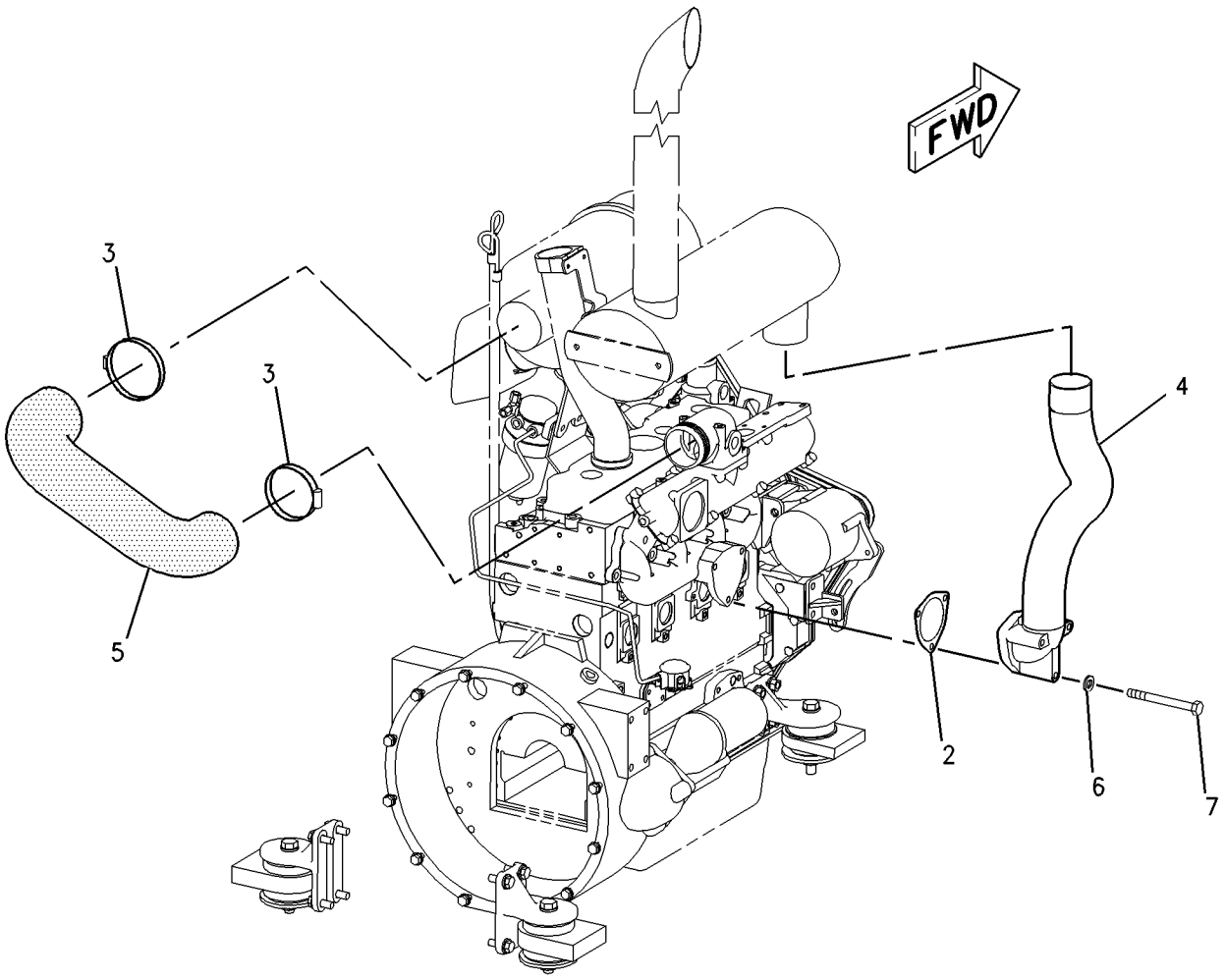

GRAPHIC #1 **<END>** g00810917

AIR INLET AND EXHAUST SYSTEM

185-8005 MANIFOLD GP-EXHAUST

S/N: 7SG1-UP
PART OF 187-8016 ENGINE AR-PRIMARY
AN ATTACHMENT

SMCS-1059 **i01353519**

NOTE	REF NO	GRAPHIC REF	PART NUMBER	QTY	PART NAME 1 2 3 4 5 6 (PRODUCT LEVEL)	SEE PAGE
	1	1	**146-1840**	12	NUT	
	2	1	**147-8096**	12	STUD	
	3	1	**185-8007**	1	MANIFOLD-EXHAUST	

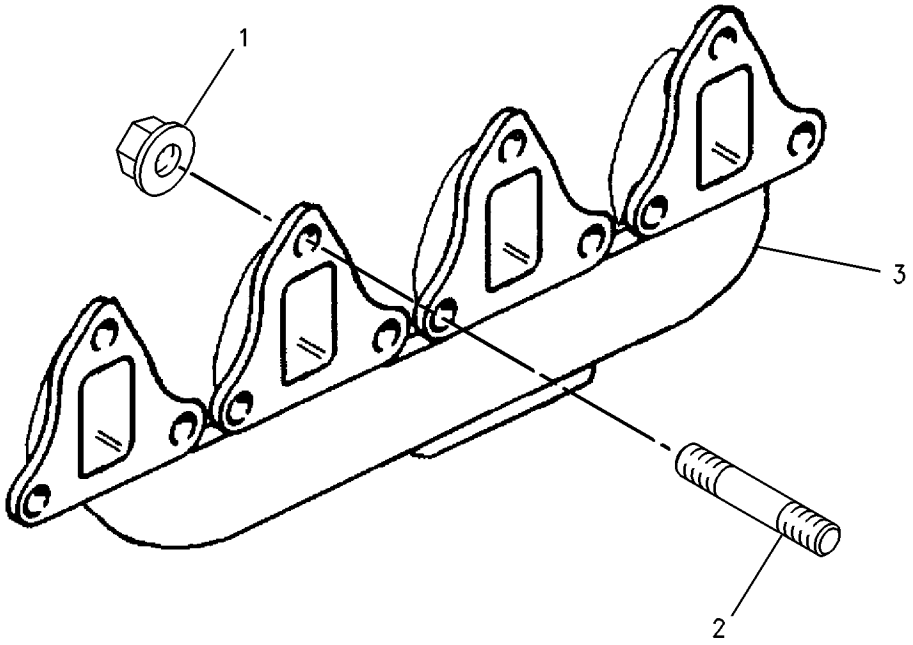

GRAPHIC #1 **<END>** g00729462

237-5408 MANIFOLD GP-EXHAUST

S/N: CRS1-UP
PART OF 234-3058 ENGINE AR-PRIMARY
AN ATTACHMENT

SMCS-1059 **i01979258**

NOTE	REF NO	GRAPHIC REF	PART NUMBER	QTY	PART NAME 1 2 3 4 5 6 (PRODUCT LEVEL)	SEE PAGE
	1	1	**174-9638**	1	BOLT	
	2	1	**225-8536**	1	GASKET	
	3	1	**237-5405**	1	MANIFOLD-EXHAUST	

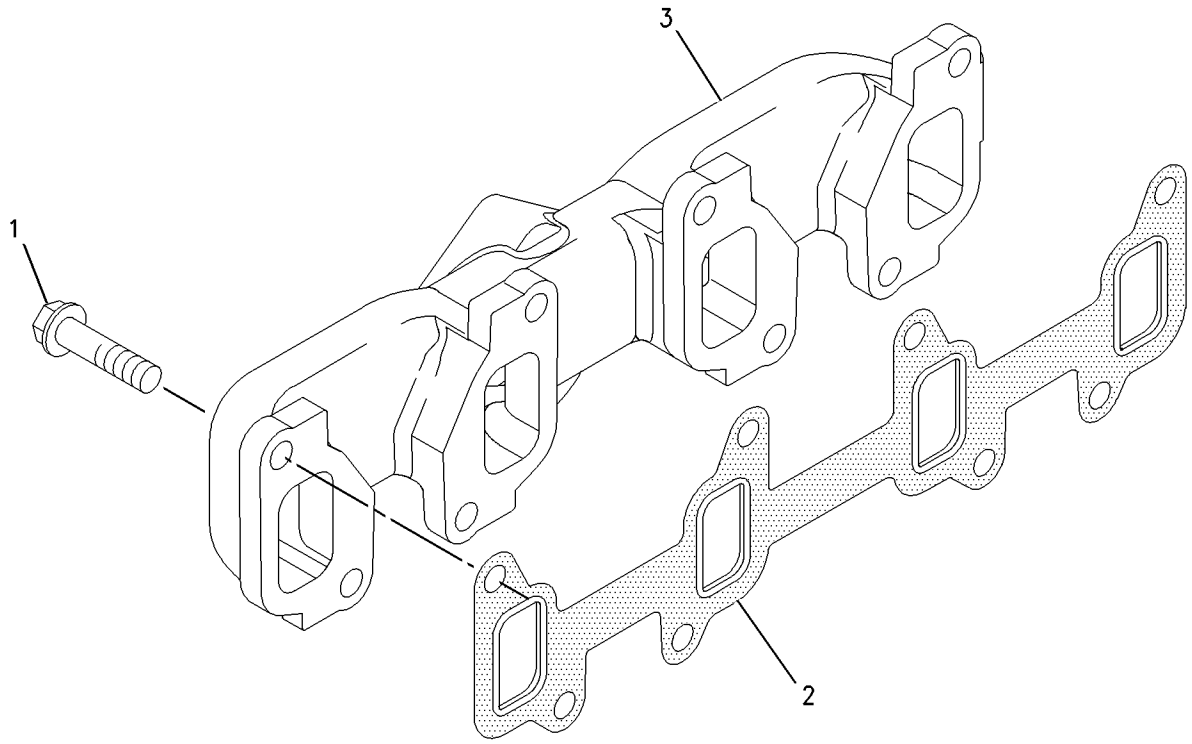

GRAPHIC #1 **<END>** g00955635

AIR INLET AND EXHAUST SYSTEM

197-9435 MANIFOLD GP-INLET

S/N: 7SG1-UP
PART OF 187-8016 ENGINE AR-PRIMARY
AN ATTACHMENT

SMCS-1058 **i01678665**

NOTE	REF NO	GRAPHIC REF	PART NUMBER	QTY	PART NAME 1 2 3 4 5 6 (PRODUCT LEVEL)	SEE PAGE
	1	1	**6I-0217**	9	BOLT (M8X1.25X20MM)	
	2	1	**6I-0260**	2	BOLT (M8X1.25X25MM)	
	3	1	**5D-1026**	1	CLAMP-HOSE	
	4	1	**101-3805**	2	BOLT (M8X1.25X90MM)	
	5	1	**114-2579**	2	GASKET	
	6	1	**207-7014**	1	ELBOW-AIR INLET	
	7	1	**156-6964**	8	BOLT	
	8	1	**185-6621**	1	MANIFOLD-INLET	
	9	1	**185-6622**	1	MANIFOLD-INLET	
	10	1	**185-6623**	1	GASKET-MANIFOLD	
	11	1	**185-6627**	1	PLATE	
	12	1	**207-7353**	4	SCREW	
	13	1	**185-6629**	1	CAP	
	14	1	**197-5918**	1	GASKET-MANIFOLD	

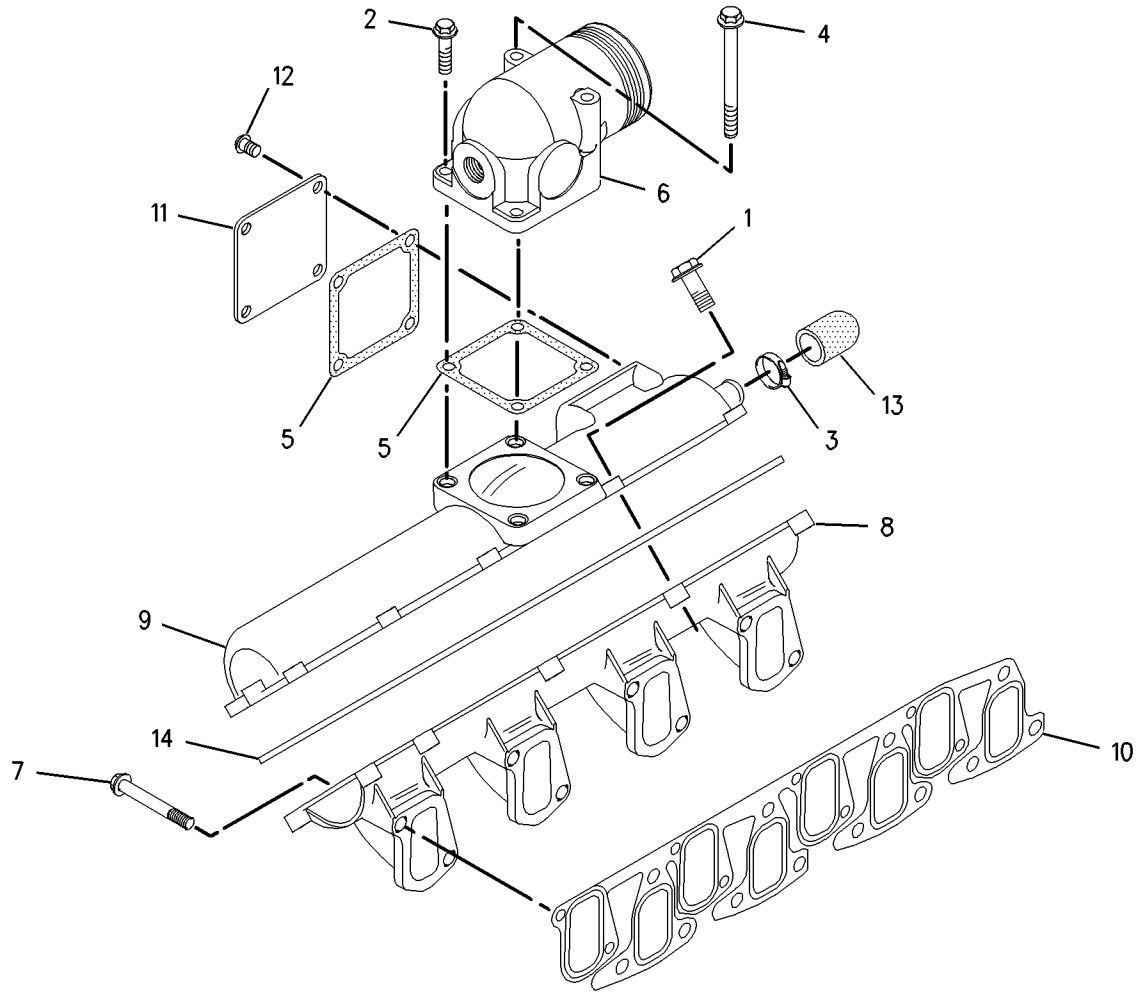

GRAPHIC #1 **<END>** g00742843

AIR INLET AND EXHAUST SYSTEM

112-5091 MUFFLER AS

S/N: BFP12900-UP
FOR USE WITH NATURALLY ASPIRATED ENGINES
AN ATTACHMENT

SMCS-1062 **i00527186**

NOTE	REF NO	GRAPHIC REF	PART NUMBER	QTY	PART NAME 1 2 3 4 5 6 (PRODUCT LEVEL)	SEE PAGE
					INDIVIDUAL PARTS ARE NOT SERVICED SEPARATELY)	

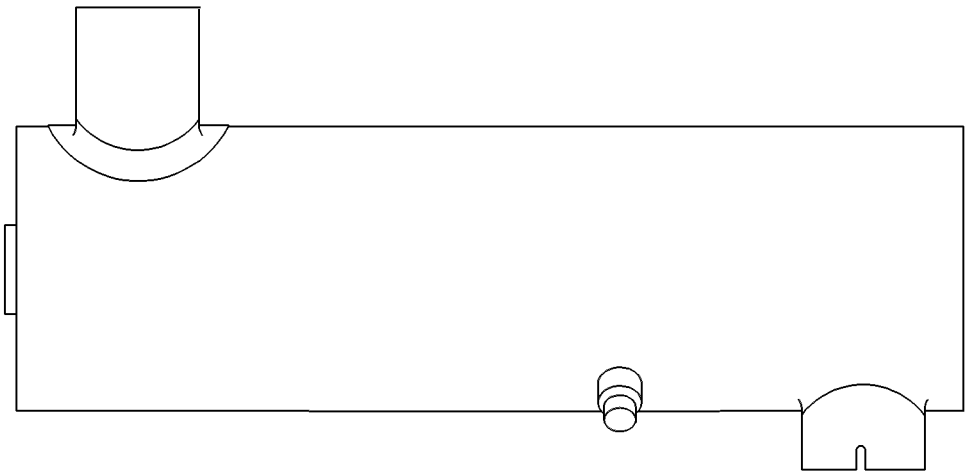

GRAPHIC #1 **<END>** g00263752

AIR INLET AND EXHAUST SYSTEM

7E-4642 MUFFLER GP

S/N: BFP12900-UP; CXP940-UP
FOR NATURALLY ASPIRATED ENGINE
PART OF 186-0598, 206-6325 ENGINE AR
AN ATTACHMENT

SMCS-1062 **i01876121**

NOTE	REF NO	GRAPHIC REF	PART NUMBER	QTY	PART NAME 1 2 3 4 5 6 (PRODUCT LEVEL)	SEE PAGE
	1	1	**112-5089**	1	MUFFLER AS	
	2	1	**112-9514**	1	BRACKET AS	
M		1	**6V-9632**	2	NUT-WELD (M6X1 THD)	
	3	1	**133-3260**	1	SPACER (10.0MM)	
	4	1	**135-8167**	1	PIPE-EXTENSION	
	5	1	**135-8168**	1	CLAMP	
M		1	**2Y-5829**		NUT (M10X1.5 THD)	
	6	1	**9Y-0176**	1	CLAMP AS	
	7	1	**198-4777**	2	WASHER-HARD (11X25X10MM THK)	
	8	1	**6V-5839**	1	WASHER (11X21X2.5MM THK)	
M	9	1	**8T-0722**	2	BOLT-LOCKING (M10X1.5X30MM)	
	10	1	**8T-4121**	2	WASHER-HARD (11X21X2.5MM THK)	
M	11	1	**8T-4136**	2	BOLT (M10X1.5X25MM)	
M	12	1	**8T-4185**	1	BOLT (M10X1.5X50MM)	

M-METRIC PART

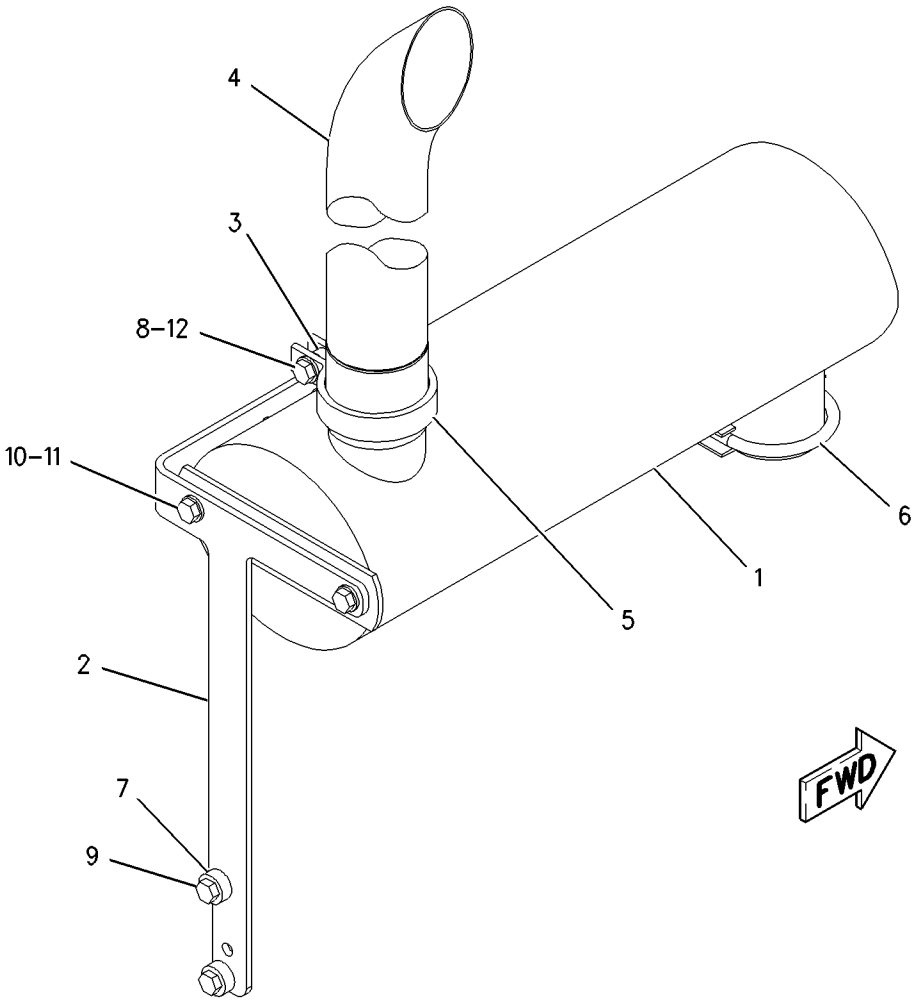

GRAPHIC #1 **<END>** g00921309

AIR INLET AND EXHAUST SYSTEM

7E-4643 MUFFLER GP

S/N: BFP12900-UP
FOR TURBO ENGINE
PART OF 186-0600, 202-5742 ENGINE AR
AN ATTACHMENT

SMCS-1062 **i01876124**

NOTE	REF NO	GRAPHIC REF	PART NUMBER	QTY	PART NAME 1 2 3 4 5 6 (PRODUCT LEVEL)	SEE PAGE
	1	1	**112-5090**	1	MUFFLER AS	
	2	1	**135-8167**	1	PIPE-EXTENSION	
	3	1	**9Y-0176**	1	CLAMP AS	
M	4	1	**8T-4136**	2	BOLT (M10X1.5X25MM)	
	5	1	**8T-4121**	2	WASHER-HARD (11X21X2.5MM THK)	
	6	1	**112-9514**	1	BRACKET AS	
M		1	**6V-9632**	2	NUT-WELD (M6X1 THD)	
	7	1	**135-8168**	1	CLAMP	
M		1	**8T-3490**	1	NUT-WELD (M10X1.5 THD)	
M	8	1	**8T-4185**	1	BOLT (M10X1.5X50MM)	
	9	1	**6V-5839**	1	WASHER (11X21X2.5MM THK)	
	10	1	**133-3260**	1	SPACER (10.0MM)	
	11	1	**198-4777**	2	WASHER-HARD (11X25X10MM THK)	
M	12	1	**8T-0722**	2	BOLT-LOCKING (M10X1.5X30MM)	

M-METRIC PART

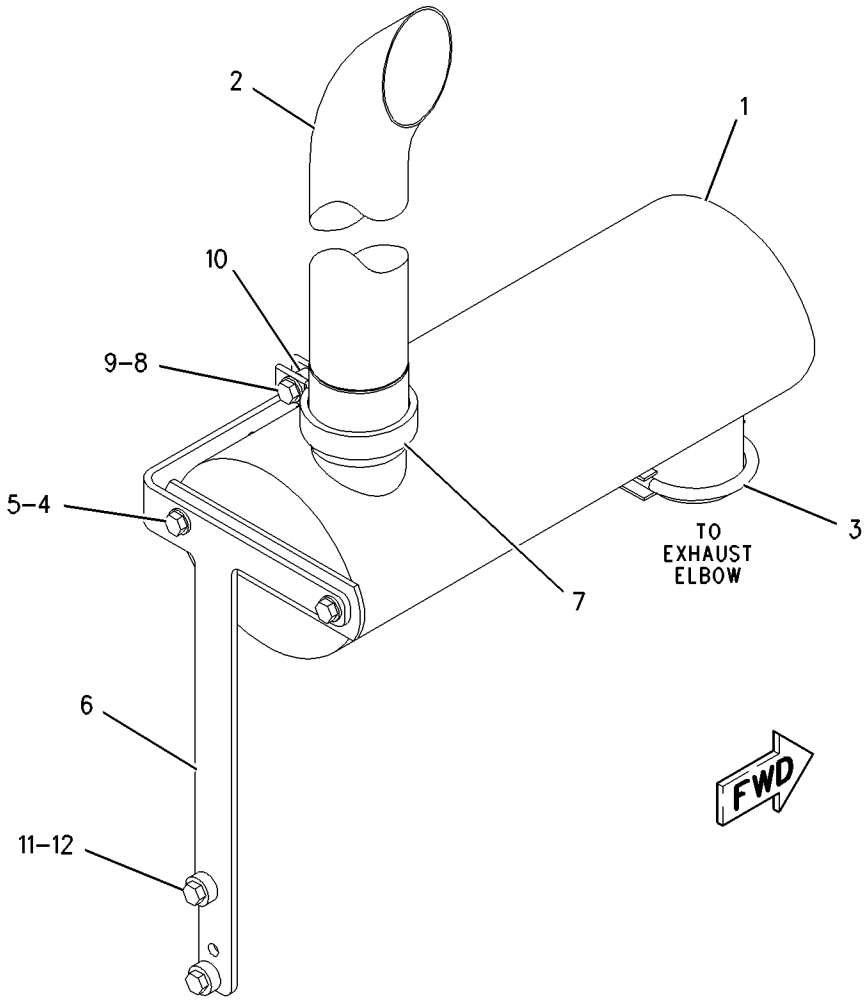

GRAPHIC #1 **<END>** g00909072

235-3420 MUFFLER GP

S/N: BFP12900-UP
PART OF 214-6891 ENGINE AR
AN ATTACHMENT

SMCS-1062 **i01998499**

NOTE	REF NO	GRAPHIC REF	PART NUMBER	QTY	PART NAME 1 2 3 4 5 6 (PRODUCT LEVEL)	SEE PAGE
	1	1	**6I-0563**	3	NUT (M10)	
	2	1	**147-5553**	3	STUD	
	3	1	**235-5363**	1	MUFFLER AS (TURBO)	
	4	1	**236-2507**	2	CLAMP AS (MUFFLER)	
	5	1	**237-0975**	1	PLATE AS	
M	5A	1	**8T-3490**	4	NUT-WELD (M10X1.5 THD)	
	6	1	**237-0976**	1	PLATE AS	
M	6A	1	**8T-3490**	1	NUT-WELD (M10X1.5 THD)	
	7	1	**8T-4121**	19	WASHER-HARD (11X21X2.5MM THK)	
M	8	1	**8T-4133**	4	NUT (M10X1.5 THD)	
M	9	1	**8T-4136**	4	BOLT (M10X1.5X25MM)	
M	10	1	**8T-4195**	8	BOLT (M10X1.5X30MM)	

M-METRIC PART

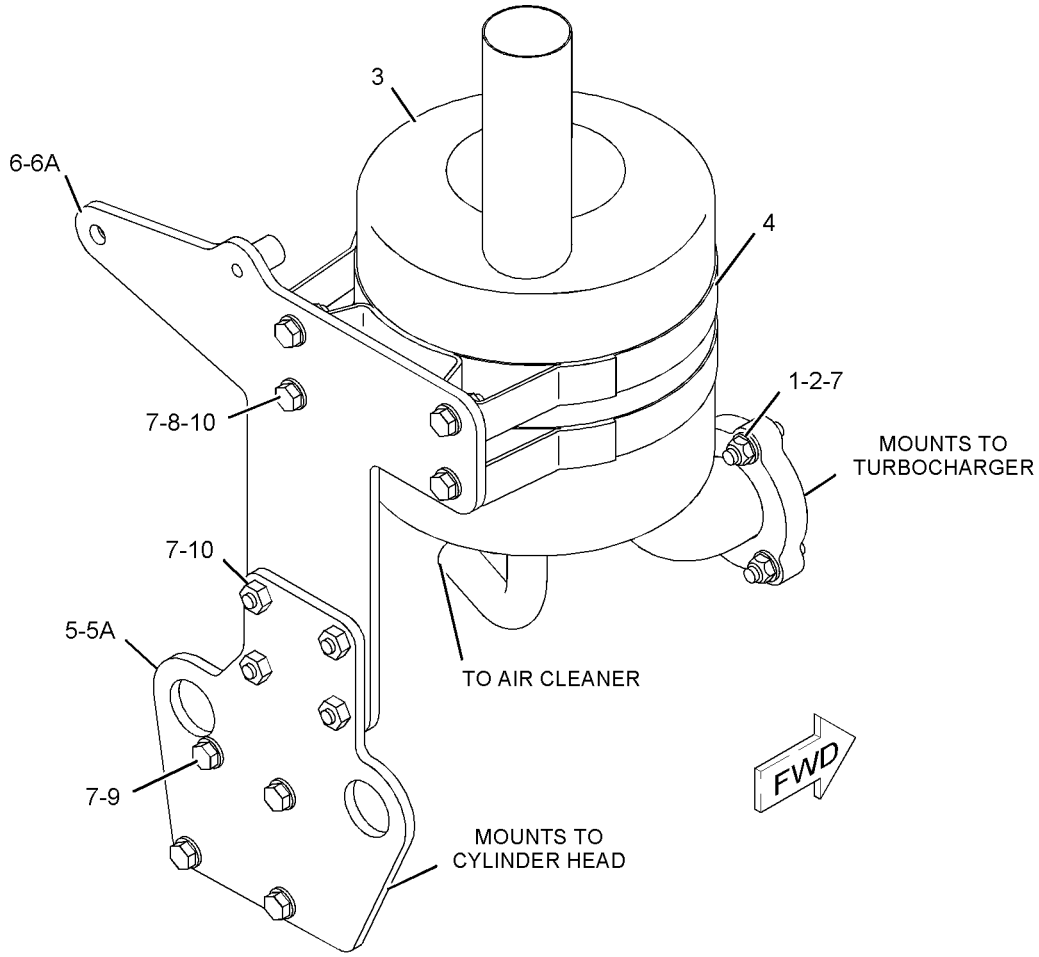

GRAPHIC #1 **<END>** g01036144

AIR INLET AND EXHAUST SYSTEM

236-2485 MUFFLER GP

S/N: BFP12900-UP
PART OF 214-6890 ENGINE AR
AN ATTACHMENT

SMCS-1062 **i01991961**

NOTE	REF NO	GRAPHIC REF	PART NUMBER	QTY	PART NAME 1 2 3 4 5 6 (PRODUCT LEVEL)	SEE PAGE
	1	1	**6I-0563**	3	NUT (M10)	
	2	1	**6I-4039**	1	GASKET	
	3	1	**6I-0364**	3	STUD (M10X1.5X30-MM)	
	4	1	**235-5364**	1	MUFFLER AS	
	5	1	**236-2507**	2	CLAMP AS	
	6	1	**237-0975**	1	PLATE AS	
M	6A	1	**8T-3490**	4	NUT-WELD (M10X1.5-THD)	
	7	1	**237-0976**	1	PLATE AS	
M		1	**8T-3490**	1	NUT-WELD (M10X1.5-THD)	
	8	1	**8T-4121**	16	WASHER-HARD (11X21X2.5-MM THK)	
M	9	1	**8T-4133**	4	NUT (M10X1.5-THD)	
M	10	1	**8T-4136**	4	BOLT (M10X1.5X25-MM)	
M	11	1	**8T-4195**	8	BOLT (M10X1.5X30-MM)	

M-METRIC PART

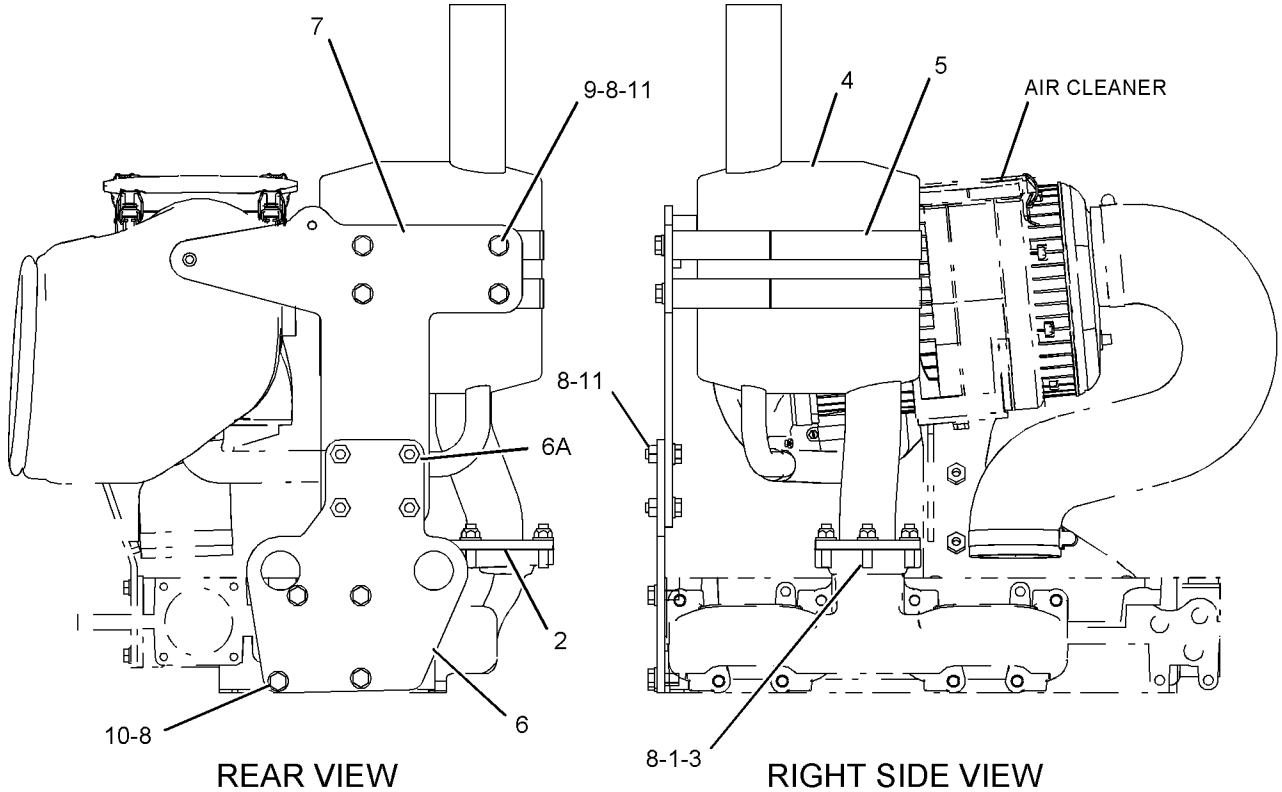

GRAPHIC #1 **<END>** g01042672

AIR INLET AND EXHAUST SYSTEM

148-7183 TURBOCHARGER GP

S/N: 7BJ19000-67000
PART OF 207-7920 TURBOCHARGER GP
AN ATTACHMENT

SMCS-1052, 1053 **i01489496**

NOTE	REF NO	GRAPHIC REF	PART NUMBER	QTY	PART NAME 1 2 3 4 5 6 (PRODUCT LEVEL)	SEE PAGE
	1	1	**166-2786**	1	HOUSING AS	
Z	2	1			SEAL-O-RING	
Z	3	1			CLAMP	
Z	4	1			BOLT	
	5	1	**166-2787**	1	CARTRIDGE	
Z	6	1			BOLT	
Z	7	1			CLAMP	
	8	1	**166-2864**	1	HOUSING	

Z-NOT SERVICED SEPARATELY

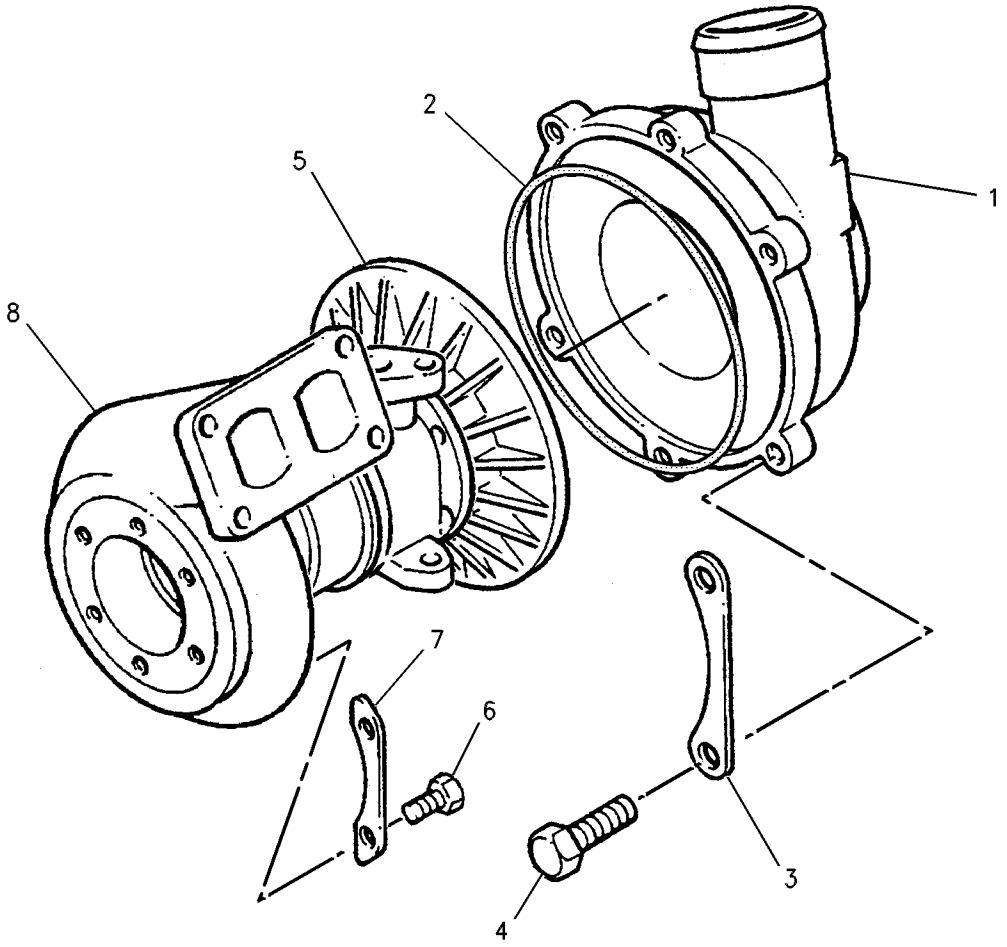

GRAPHIC #1 **<END>** g00619428

AIR INLET AND EXHAUST SYSTEM

207-7920 TURBOCHARGER GP

S/N: 7BJ19000-64615
PART OF 188-0883 ENGINE AR-PRIMARY
AN ATTACHMENT

SMCS-1052, 1053 **i01791166**

NOTE	REF NO	GRAPHIC REF	PART NUMBER	QTY	PART NAME 1 2 3 4 5 6 (PRODUCT LEVEL)	SEE PAGE
	1	1	**6I-0220**	1	GASKET	
	2	1	**6I-0260**	2	BOLT (M8X1.25X25MM)	
	3	1	**6I-0563**	4	NUT (M10)	
	4	1	**6I-0572**	2	BOLT (M8X1.25.20MM)	
	5	1	**100-3751**	2	BOLT (M8X1.25X65MM)	
	6	1	**5D-1026**	2	CLAMP-HOSE	
	7	1	**8T-6703**	2	CLAMP-HOSE	
	8	1	**105-2740**	8	BOLT	
	9	1	**6I-0631**	2	BOLT (M6X1.0X12MM)	
	10	1	**114-2590**	1	CONNECTION	
	11	1	**124-3815**	1	BOLT (M8X16X1.25MM)	
	12	1	**138-2043**	2	WASHER	
	13	1	**139-7009**	1	MANIFOLD AS-EXHAUST	
	14	1	**148-7132**	2	FERRULE	
	15	1	**143-4534**	1	HOSE	
	16	1	**162-2088**	2	GASKET	
	17	1	**218-8568**	1	HOSE	
	18	1	**146-1841**	4	BOLT	
	19	1	**148-7127**	1	ELBOW	
	20	1	**148-7128**	1	GASKET	
	21	1	**207-7925**	1	MANIFOLD-INLET	
	22	1	**148-7135**	1	TUBE	
	23	1	**101-3921**	1	CLIP	
	24	1	**148-7136**	1	TUBE	
	25	1	**148-7139**	1	CONNECTION	
Y	26	1	**148-7183**	1	TURBOCHARGER GP	226
	27	1	**149-4236**	4	STUD	
	28	1	**154-8044**	1	CLIP	
	29	1	**162-1591**	1	TUBE AS	
	30	1	**164-4019**	1	CLIP	
	31	1	**174-9638**	8	BOLT	
	32	1	**148-7138**	1	BOLT	
	33	1	**194-5390**	1	GASKET-MANIFOLD	
	34	1	**138-2065**	1	GASKET	
					AVAILABLE REPLACEMENT PART(S):	
			167-6921	1	KIT-TURBOCHARGER	

Y-SEPARATE ILLUSTRATION

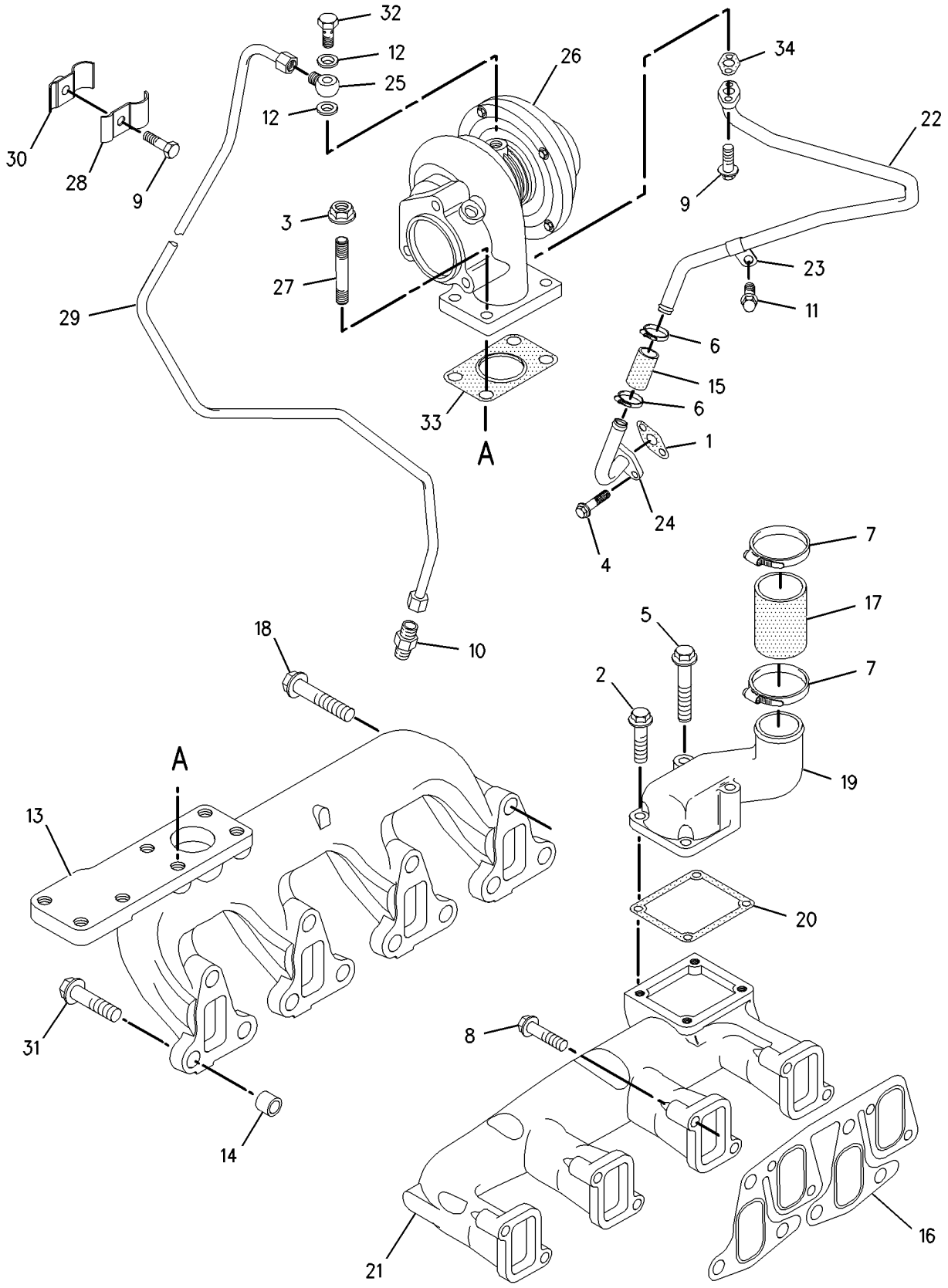

GRAPHIC #1 **<END>** g00794977

AIR INLET AND EXHAUST SYSTEM

207-7920 TURBOCHARGER GP

S/N: 7BJ64616-67000
PART OF 188-0883 ENGINE AR-PRIMARY
AN ATTACHMENT

SMCS-1052, 1053 **i01792896**

NOTE	REF NO	GRAPHIC REF	PART NUMBER	QTY	PART NAME 1 2 3 4 5 6 (PRODUCT LEVEL)	SEE PAGE
	1	1	**6I-0220**	1	GASKET	
	3	1	**6I-0563**	4	NUT (M10)	
	4	1	**6I-0572**	2	BOLT (M8X1.25.20MM)	
	6	1	**5D-1026**	2	CLAMP-HOSE	
	7	1	**8T-6703**	2	CLAMP-HOSE	
	8	1	**105-2740**	8	BOLT	
	9	1	**6I-0631**	3	BOLT (M6X1.0X12MM)	
	10	1	**114-2590**	1	CONNECTION	
	11	1	**124-3815**	1	BOLT (M8X16X1.25MM)	
	12	1	**138-2043**	2	WASHER	
	13	1	**139-7009**	1	MANIFOLD AS-EXHAUST	
	14	1	**148-7132**	2	FERRULE	
	15	1	**143-4534**	1	HOSE	
	16	1	**162-2088**	2	GASKET	
	17	1	**219-2330**	1	HOSE	
	18	1	**146-1841**	4	BOLT	
	21	1	**219-2329**	1	MANIFOLD-AIR INLET	
	22	1	**148-7135**	1	TUBE	
	23	1	**101-3921**	1	CLIP	
	24	1	**148-7136**	1	TUBE	
	25	1	**148-7139**	1	CONNECTION	
CY	26	1	**148-7183**	1	TURBOCHARGER GP	226
	27	1	**149-4236**	4	STUD	
	28	1	**154-8044**	1	CLIP	
	29	1	**162-1591**	1	TUBE AS	
	30	1	**164-4019**	1	CLIP	
	31	1	**174-9638**	8	BOLT	
	32	1	**148-7138**	1	BOLT	
	33	1	**194-5390**	1	GASKET-MANIFOLD	
	34	1	**138-2065**	1	GASKET	
					AVAILABLE REPLACEMENT PART(S):	
			167-6921	1	KIT-TURBOCHARGER	

C-CHANGE FROM PREVIOUS TYPE
Y-SEPARATE ILLUSTRATION

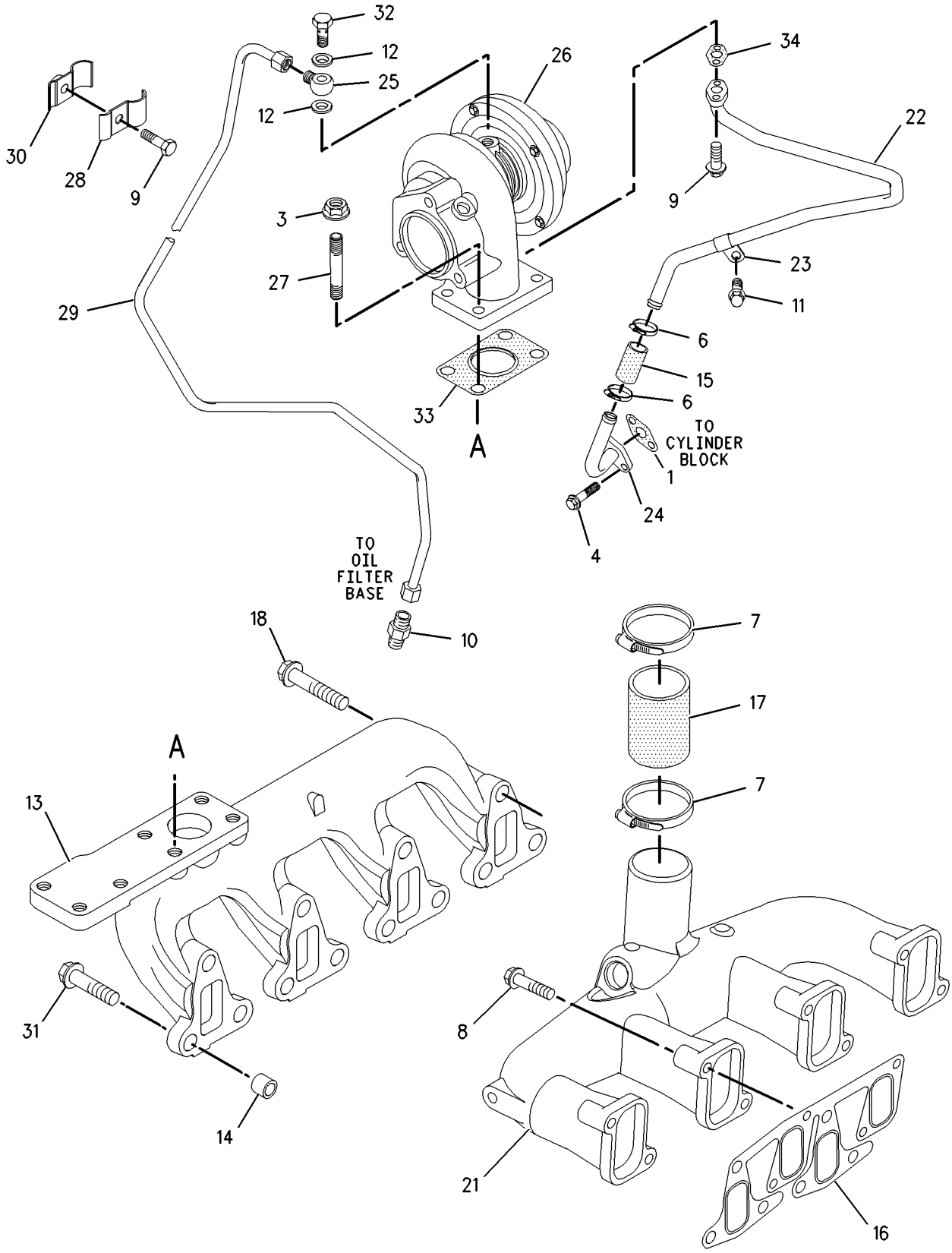

GRAPHIC #1 **<END>** g00917124

AIR INLET AND EXHAUST SYSTEM

207-7920 TURBOCHARGER GP

S/N: 7BJ67001-UP
PART OF 188-0883 ENGINE AR-PRIMARY
AN ATTACHMENT

SMCS-1052, 1053 **i01793012**

NOTE	REF NO	GRAPHIC REF	PART NUMBER	QTY	PART NAME 1 2 3 4 5 6 (PRODUCT LEVEL)	SEE PAGE
	1	1	**6I-0220**	1	GASKET	
	3	1	**6I-0563**	4	NUT (M10)	
	4	1	**6I-0572**	2	BOLT (M8X1.25.20MM)	
	6	1	**5D-1026**	2	CLAMP-HOSE	
	7	1	**8T-6703**	2	CLAMP-HOSE	
	8	1	**105-2740**	8	BOLT	
	9	1	**6I-0631**	3	BOLT (M6X1.0X12MM)	
	10	1	**114-2590**	1	CONNECTION	
	11	1	**124-3815**	1	BOLT (M8X16X1.25MM)	
	12	1	**138-2043**	2	WASHER	
	13	1	**139-7009**	1	MANIFOLD AS-EXHAUST	
	14	1	**148-7132**	2	FERRULE	
	15	1	**143-4534**	1	HOSE	
	16	1	**162-2088**	2	GASKET	
	17	1	**219-2330**	1	HOSE	
	18	1	**146-1841**	4	BOLT	
	21	1	**219-2329**	1	MANIFOLD-AIR INLET	
	22	1	**148-7135**	1	TUBE	
	23	1	**101-3921**	1	CLIP	
	24	1	**148-7136**	1	TUBE	
	25	1	**148-7139**	1	CONNECTION	
Y	26	1	**219-9773**	1	TURBOCHARGER GP	233
	27	1	**149-4236**	4	STUD	
	28	1	**154-8044**	1	CLIP	
	29	1	**162-1591**	1	TUBE AS	
	30	1	**164-4019**	1	CLIP	
	31	1	**174-9638**	8	BOLT	
	32	1	**148-7138**	1	BOLT	
	33	1	**194-5390**	1	GASKET-MANIFOLD	
	34	1	**138-2065**	1	GASKET	

Y-SEPARATE ILLUSTRATION

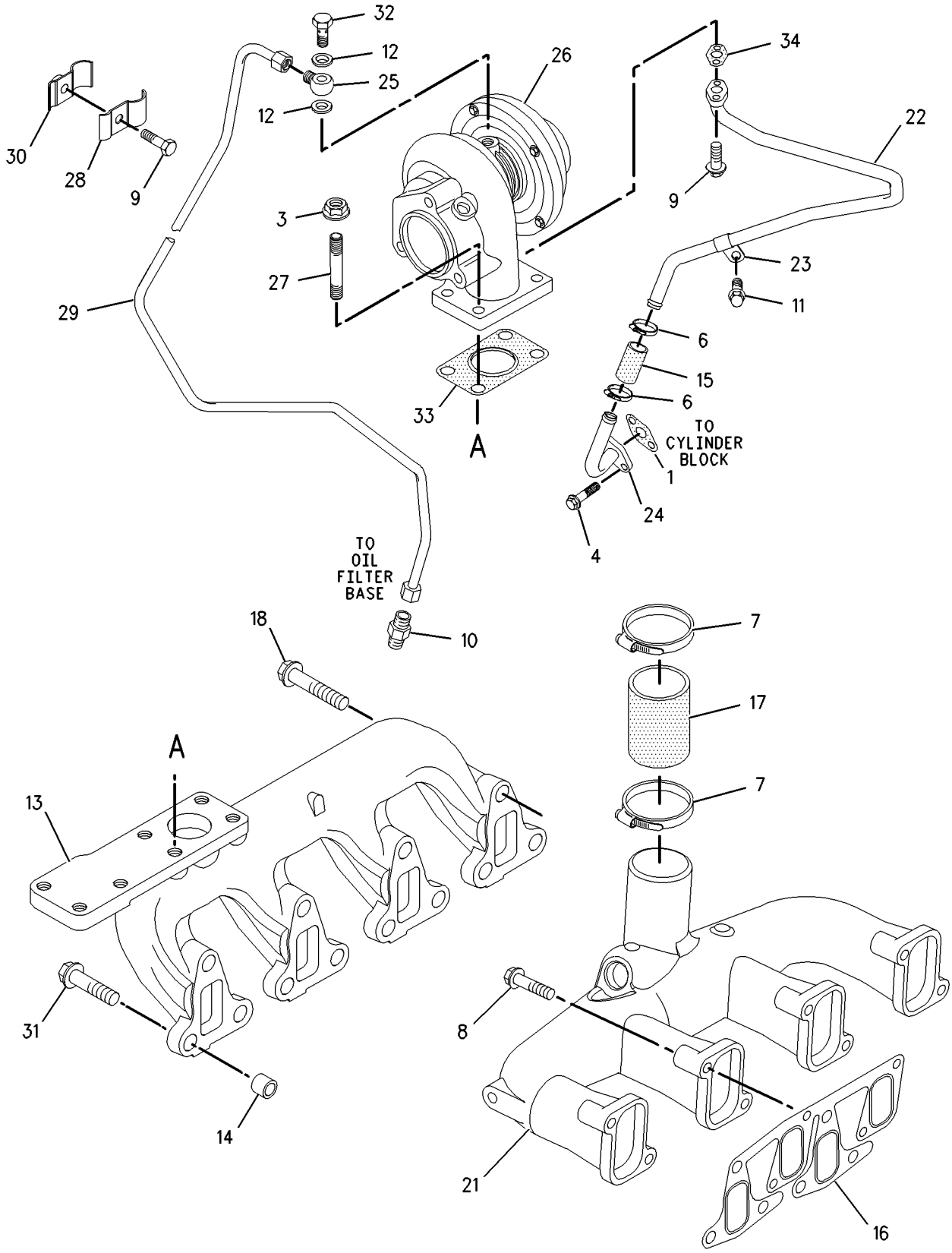

GRAPHIC #1 **<END>** g00917124

AIR INLET AND EXHAUST SYSTEM

219-9773 TURBOCHARGER GP

S/N: 7BJ67001-UP
PART OF 207-7920 TURBOCHARGER GP
AN ATTACHMENT

SMCS-1052, 1053 **i01705323**

NOTE	REF NO	GRAPHIC REF	PART NUMBER	QTY	PART NAME 1 2 3 4 5 6 (PRODUCT LEVEL)	SEE PAGE
	1	1	**166-2786**	1	HOUSING AS	
	2	1	**166-2864**	1	HOUSING	
	3	1	**166-2787**	1	CARTRIDGE	

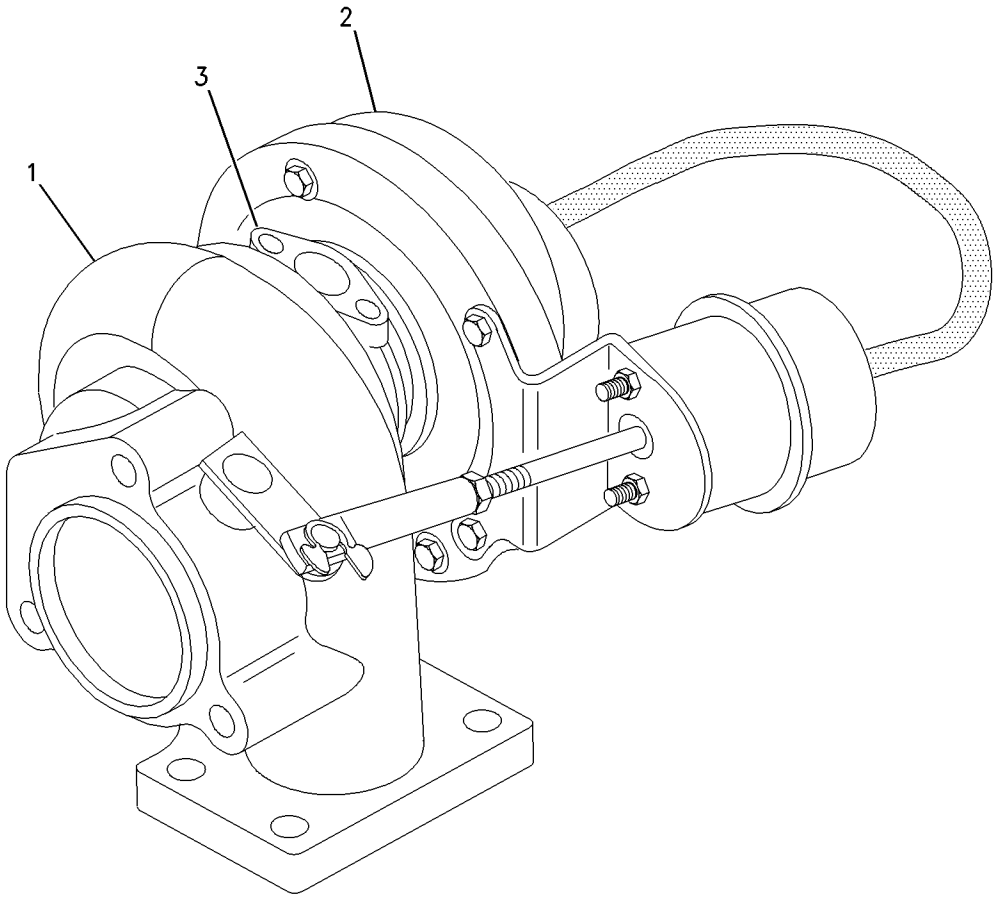

GRAPHIC #1 **<END>** g00885358

AIR INLET AND EXHAUST SYSTEM

237-3924 TURBOCHARGER GP

S/N: CRS1-UP
PART OF 234-3059 ENGINE AR-PRIMARY
AN ATTACHMENT

SMCS-1052, 1053 **i01989916**

NOTE	REF NO	GRAPHIC REF	PART NUMBER	QTY	PART NAME 1 2 3 4 5 6 (PRODUCT LEVEL)	SEE PAGE
	1	1	**6I-0217**	2	BOLT (M8X1.25X20MM)	
	2	1	**6I-0563**	4	NUT (M10)	
	3	1	**6I-0572**	4	BOLT (M8X1.25.20MM)	
	4	1	**106-8916**	2	BOLT (M6X16MM)	
	5	1	**141-1667**	2	CLAMP-HOSE	
	6	1	**149-4236**	4	STUD	
	7	1	**174-9638**	8	BOLT	
	8	1	**194-5390**	1	GASKET-MANIFOLD	
	9	1	**225-8530**	1	GASKET	
	10	1	**225-8533**	1	GASKET	
	11	1	**225-8534**	1	GASKET	
	12	1	**225-8536**	1	GASKET	
	13	1	**234-3029**	1	HOSE	
	14	1	**234-3030**	1	GASKET	
	15	1	**237-2799**	1	TUBE AS	
	15A	1	**225-8524**	3	BOLT	
	15B	1	**225-8526**	7	WASHER	
	16	1	**237-3786**	1	TURBOCHARGER GP	
	17	1	**237-3791**	1	TUBE AS	
	18	1	**237-3794**	1	BOLT	
	19	1	**237-3921**	1	CLIP	
	20	1	**237-3922**	1	PIPE-EXHAUST	
	21	1	**237-3923**	1	MANIFOLD-EXHAUST	

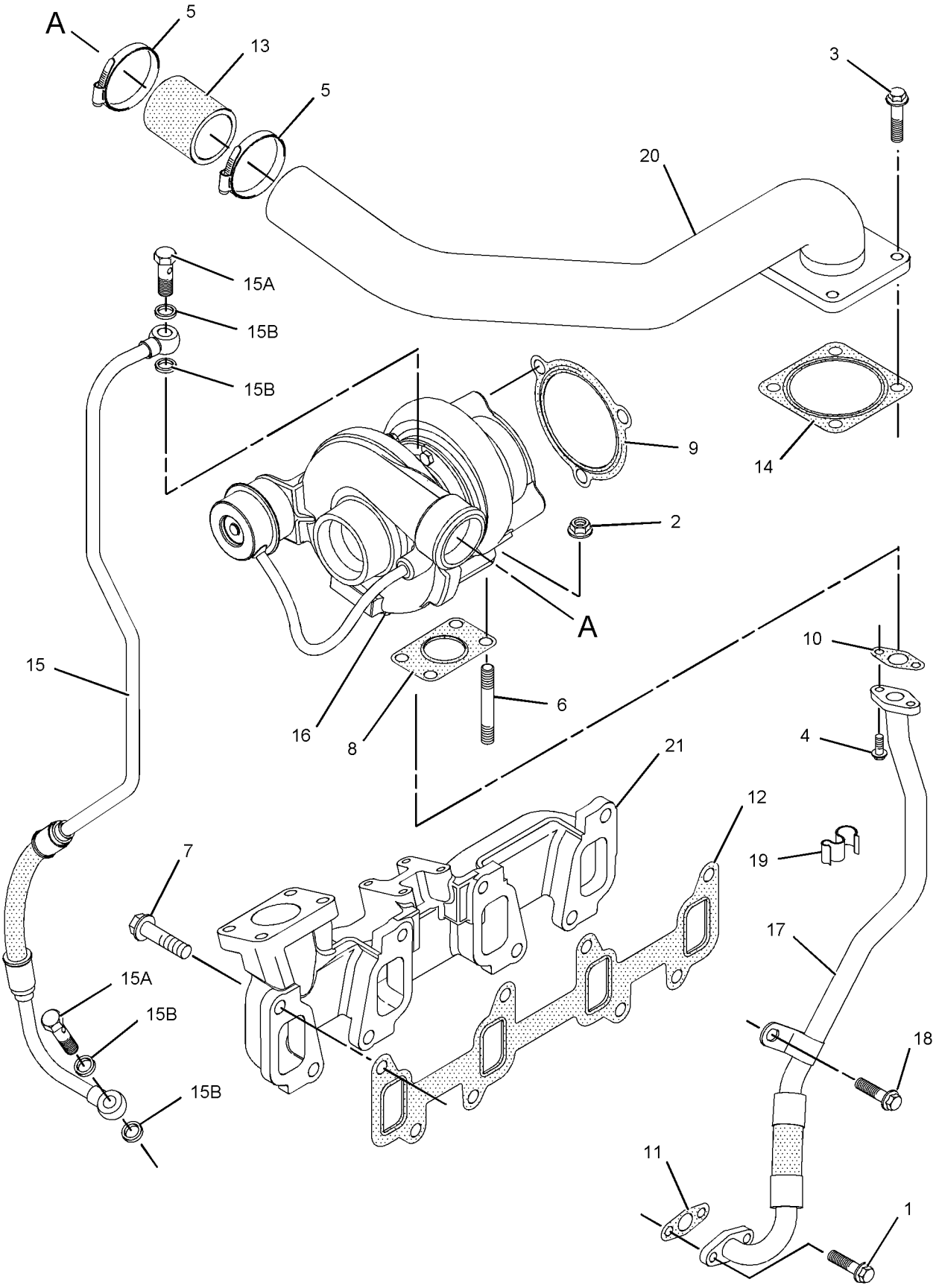

GRAPHIC #1 **<END>** g01031810

FUEL SYSTEM

164-1076 CONTROL GP-GOV & ACCELERATOR

S/N: CXP940-UP

PART OF 215-6888 COMMON AR

SMCS-1265, 1276 **i01944121**

NOTE	REF NO	GRAPHIC REF	PART NUMBER	QTY	PART NAME 1 2 3 4 5 6 (PRODUCT LEVEL)	SEE PAGE
	1	1	**7K-1181**	3	STRAP-CABLE	
	2	1	**164-1077**	1	PANEL AS	
Y	3	1	**164-1078**	1	PEDAL GP-GOVERNOR	945
Y	4	1	**183-3887**	1	LEVER GP-GOVERNOR CONTROL	924
	5	1	**190-5139**	1	FILM (VARIABLE SPEED)	
	6	1	**202-6113**	1	BRACKET AS	
C	7	1	**221-3133**	1	CABLE AS	
M		1	**5C-2890**	1	NUT (M6X1 THD)	
		1	**8T-4742**	2	END-YOKE ROD	
		1	**8T-4744**	2	PIN AS-SPRING	
		1	**222-2690**	1	CLIP	
C	8	1	**221-4137**	1	BRACKET	
M	9	1	**119-5025**	4	SCREW-FLAT HEAD (M6X1X25MM)	
	10	1	**151-4841**	3	BLOCK	
	11	1	**164-1395**	1	KNOB	
	12	1	**3S-2093**	1	STRAP-CABLE	
M	13	1	**8T-4138**	3	BOLT (M6X1X20MM)	
M	14	1	**8T-4189**	1	BOLT (M8X1.25X20MM)	
	15	1	**8T-4205**	3	WASHER-HARD (7.2X14.5X2MM THK)	
	16	1	**8T-4224**	2	WASHER-HARD (8.8X16X2MM THK)	
M	17	1	**8T-4908**	1	BOLT (M8X1.25X25MM)	
M	18	1	**9X-2044**	7	SCREW-TRUSS HEAD (M6X1X16MM)	

C-CHANGE FROM PREVIOUS TYPE
M-METRIC PART
Y-SEPARATE ILLUSTRATION

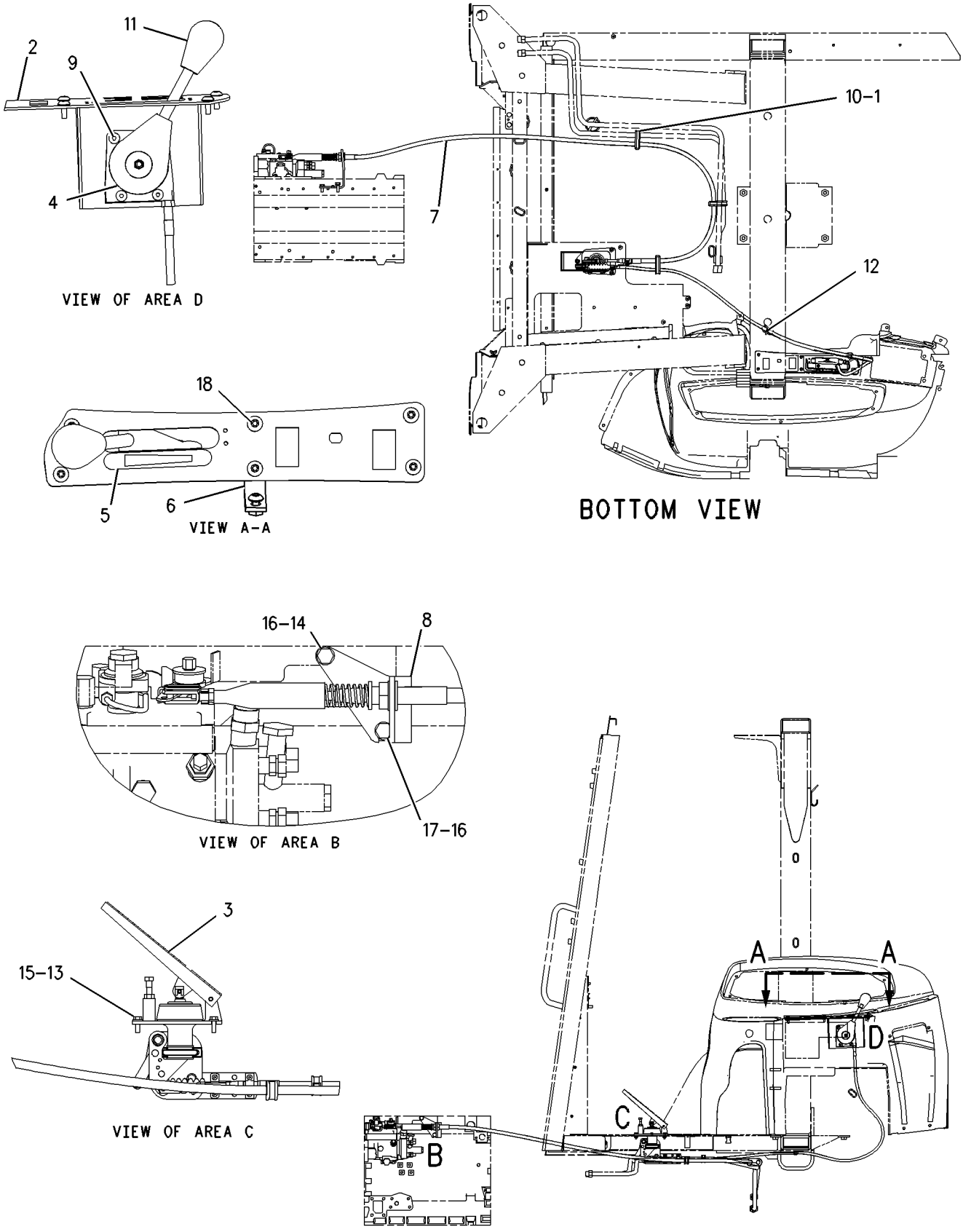

GRAPHIC #1 **<END>** g00949337

FUEL SYSTEM

234-8892 CONTROL GP-GOV & ACCELERATOR

S/N: BFP12900-UP

PART OF 214-6950 CHASSIS AR

SMCS-1265, 1276 **i02012642**

NOTE	REF NO	GRAPHIC REF	PART NUMBER	QTY	PART NAME 1 2 3 4 5 6 (PRODUCT LEVEL)	SEE PAGE
	1	1	**7K-1181**	3	STRAP-CABLE	
	2	1	**8X-5489**	1	SLEEVE	
	3	1	**164-1077**	1	PANEL AS	
M		1	**6V-9632**	4	NUT-WELD (M6X1 THD)	
Y	4	1	**164-1078**	1	PEDAL GP-GOVERNOR	945
Y	5	1	**183-3887**	1	LEVER GP-GOVERNOR CONTROL	924
	6	1	**190-5139**	1	FILM (VARIABLE SPEED)	
	7	1	**202-6113**	1	BRACKET AS	
M		1	**6V-9632**	3	NUT-WELD (M6X1 THD)	
	8	1	**235-0128**	1	CABLE AS	
M		1	**5C-2890**	1	NUT (M6X1 THD)	
		1	**8T-4742**	2	END-YOKE ROD	
		1	**8T-4744**	2	PIN AS-SPRING	
		1	**222-2690**	1	CLIP	
	9	1	**239-1434**	1	PLATE	
	10	1	**239-1435**	1	BRACKET AS	
M		1	**8T-3612**	2	NUT-WELD (M8X1.25 THD)	
M	11	1	**119-5025**	4	SCREW-FLAT HEAD (M6X1X25MM)	
	12	1	**151-4841**	3	BLOCK	
	13	1	**164-1395**	1	KNOB	
	14	1	**3S-2093**	1	STRAP-CABLE	
M	15	1	**8T-4138**	3	BOLT (M6X1X20MM)	
	16	1	**8T-4205**	3	WASHER-HARD (7.2X14.5X2MM THK)	
	17	1	**8T-4224**	4	WASHER-HARD (8.8X16X2MM THK)	
M	18	1	**8T-4908**	4	BOLT (M8X1.25X25MM)	
M	19	1	**9X-2044**	7	SCREW-TRUSS HEAD (M6X1X16MM)	

M-METRIC PART
Y-SEPARATE ILLUSTRATION

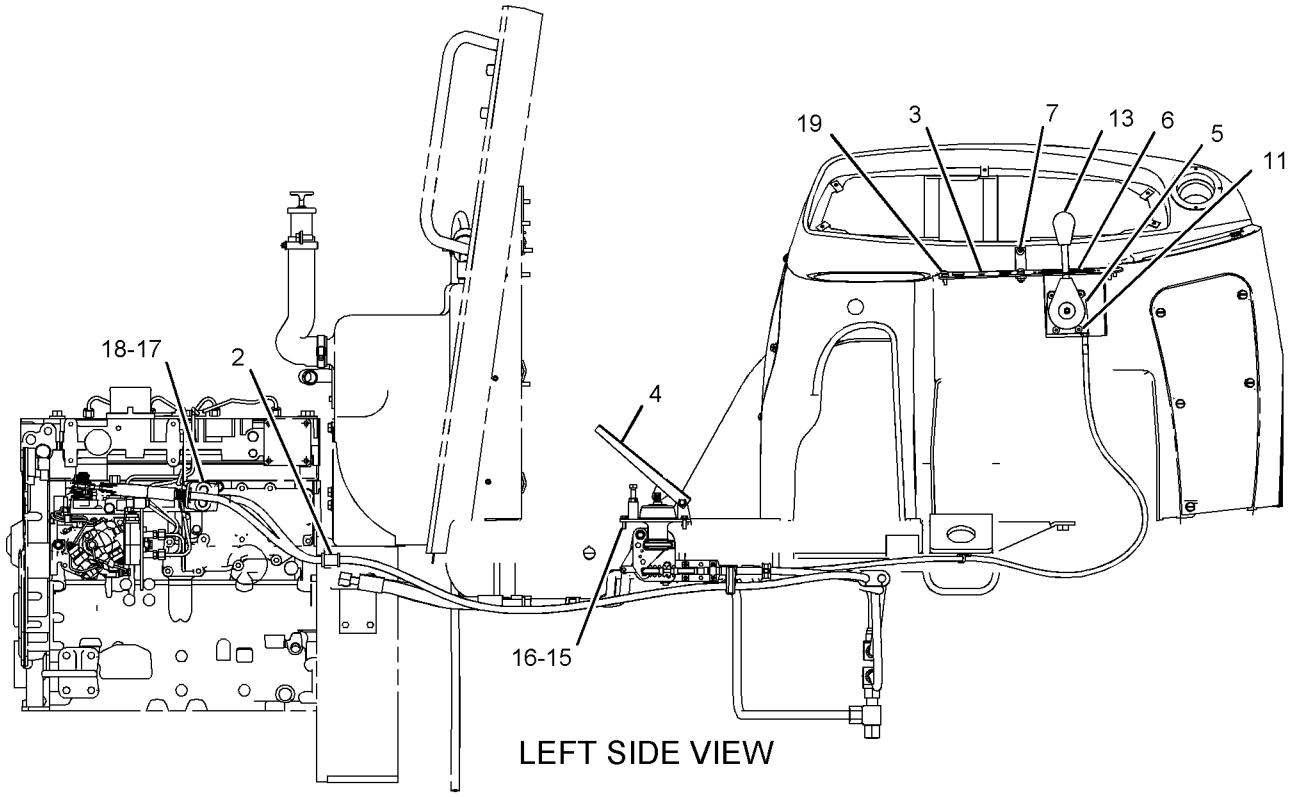

LEFT SIDE VIEW

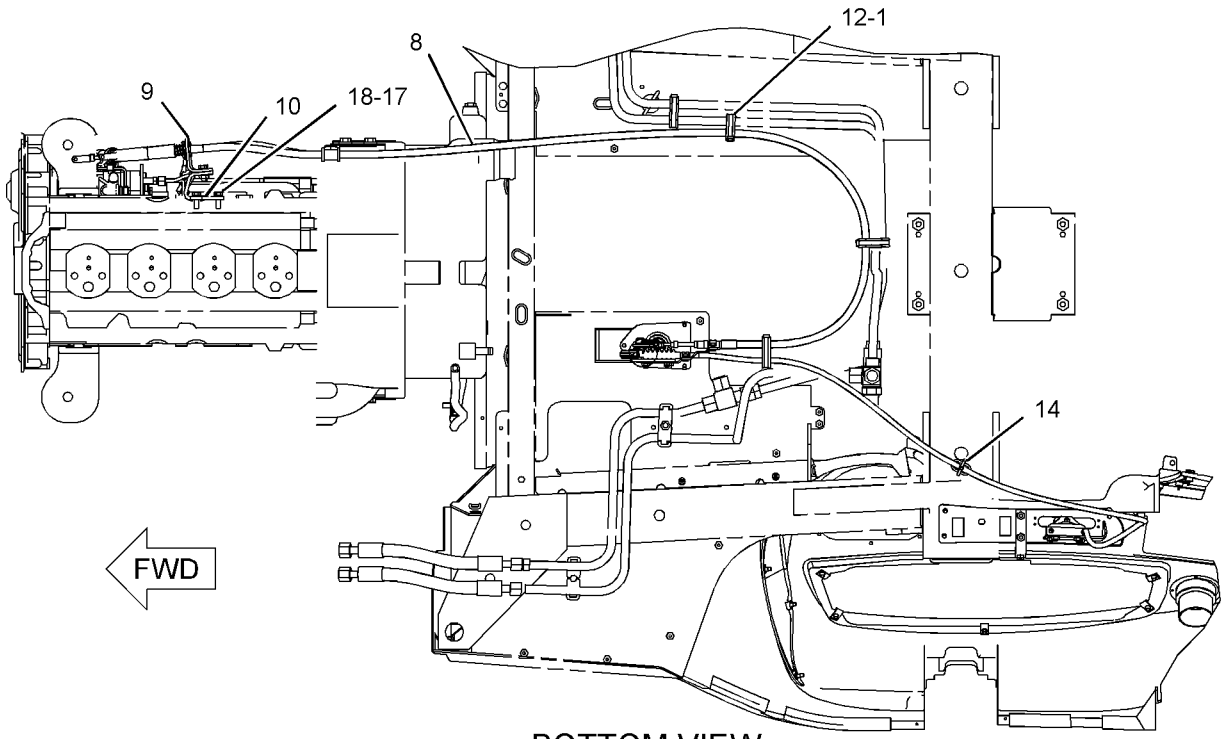

BOTTOM VIEW

GRAPHIC #1

<END>

g01031631

FUEL SYSTEM

197-3924 FILTER & LINES GP-FUEL

S/N: 7BJ19000-UP
PART OF 188-0883 ENGINE AR-PRIMARY
AN ATTACHMENT

SMCS-1261, 1274 **i01952150**

NOTE	REF NO	GRAPHIC REF	PART NUMBER	QTY	PART NAME 1 2 3 4 5 6 (PRODUCT LEVEL)	SEE PAGE
	1	1	**6I-0217**	1	BOLT (M8X1.25X20MM)	
	2	1	**6I-0572**	4	BOLT (M8X1.25.20MM)	
	3	1	**6I-0593**	2	BOLT (M10X1.5X30MM)	
	4	1	**6I-0630**	1	BRACKET	
	5	1	**6I-0631**	1	BOLT (M6X1.0X12MM)	
	6	1	**6I-0654**	3	BOLT (M10X1.5X25MM)	
	7	1	**6I-0917**	1	BOLT (M6X1.0X25MM)	
	8	1	**6I-0918**	1	NUT (M6)	
	9	1	**6I-2608**	1	SPACER	
	10	1	**224-8978**	1	FITTING-COMPRESSION	
	11	1	**067-6998**	2	NUT	
	12	1	**067-6999**	2	OLIVE	
	13	1	**101-3906**	1	BOLT	
	14	1	**101-3907**	2	WASHER	
	15	1	**114-2589**	1	NUT (1/2)	
	16	1	**201-0877**	1	PUMP GP-FUEL TRANSFER	
		1	**121-7034**	1	KIT-FUEL PUMP (INCLUDES FILTER & O-RING)	
	17	1	**231-4457**	1	GASKET	
	19	1	**127-8162**	1	CLIP	
Y	20	1	**138-3096**	1	FILTER GP-FUEL	244
	21	1	**147-0679**	1	LINE AS-FUEL FILTER	
	21A	1	**067-6268**	2	NUT-FUEL LINE (1/2IN)	
	21B	1	**067-6269**	2	OLIVE	
	22	1	**149-6116**	1	CLIP	
	23	1	**149-6117**	1	CLIP	
	24	1	**147-6539**	1	TUBE AS	
	24A	1	**067-6268**	2	NUT-FUEL LINE (1/2IN)	
	24B	1	**067-6269**	2	OLIVE	
	25	1	**160-9801**	1	BRACKET	
	26	1	**164-0302**	1	TUBE AS-FUEL INJECTION	
	26A	1	**067-6268**	2	NUT-FUEL LINE (1/2IN)	
	26B	1	**067-6269**	2	OLIVE	
	27	1	**165-4496**	1	LINE AS-FUEL	
	28	1	**197-3925**	1	FITTING	
	29	1	**220-1492**	1	CLIP	
					BETWEEN THE NO.4 FUEL LINE AND THE THERMOSTAT TUBE AS.	

Y-SEPARATE ILLUSTRATION

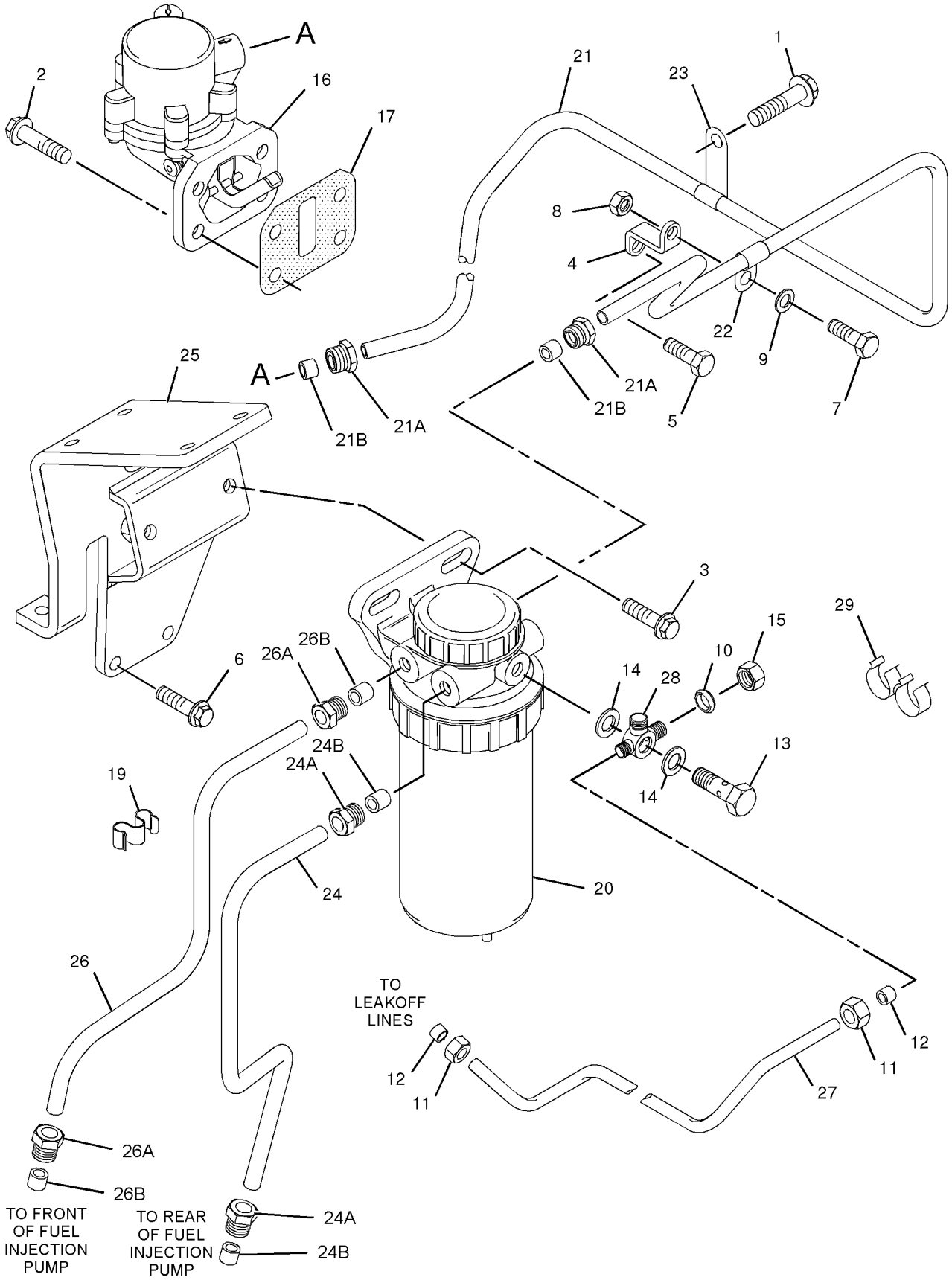

GRAPHIC #1

<END>

g01015656

FUEL SYSTEM

197-9440 FILTER & LINES GP-FUEL

S/N: 7SG1-UP
PART OF 187-8016 ENGINE AR-PRIMARY
AN ATTACHMENT

SMCS-1261, 1274 **i01951949**

NOTE	REF NO	GRAPHIC REF	PART NUMBER	QTY	PART NAME 1 2 3 4 5 6 (PRODUCT LEVEL)	SEE PAGE
	1	1	**5C-1777**	1	NUT	
	2	1	**6I-0572**	4	BOLT (M8X1.25.20MM)	
	3	1	**6I-0593**	2	BOLT (M10X1.5X30MM)	
	4	1	**6I-0630**	1	BRACKET	
	5	1	**6I-0631**	1	BOLT (M6X1.0X12MM)	
	6	1	**6I-0917**	1	BOLT (M6X1.0X25MM)	
	7	1	**032-8100**	1	WASHER (.064MM THK)	
	8	1	**033-7849**	1	PLUG	
	9	1	**067-6269**	2	OLIVE	
	10	1	**067-6998**	2	NUT	
	11	1	**067-6999**	2	OLIVE	
	12	1	**6I-0654**	3	BOLT (M10X1.5X25MM)	
	13	1	**101-3906**	1	BOLT	
	14	1	**101-3907**	2	WASHER	
	15	1	**114-2589**	1	NUT (1/2)	
	16	1	**201-0877**	1	PUMP GP-FUEL TRANSFER	
		1	**201-0878**	1	KIT-FUEL FILTER (INCLUDES FILTER & O-RING)	
	17	1	**7W-4553**	1	GASKET-FUEL PUMP	
Y	19	1	**138-3096**	1	FILTER GP-FUEL	244
	20	1	**147-0679**	1	LINE AS-FUEL FILTER	
	21	1	**149-6116**	1	CLIP	
	22	1	**149-6117**	1	CLIP	
		1	**067-6268**	2	NUT-FUEL LINE (1/2IN)	
		1	**067-6269**	2	OLIVE	
	23	1	**147-6539**	1	TUBE AS	
		1	**067-6268**	2	NUT-FUEL LINE (1/2IN)	
		1	**067-6269**	2	OLIVE	
	24	1	**160-7213**	1	FITTING	
	25	1	**160-9801**	1	BRACKET	
	26	1	**197-9438**	1	LINE AS-FUEL	
		1	**067-6268**	1	NUT-FUEL LINE (1/2IN)	
		1	**067-6269**	1	OLIVE	
	27	1	**197-9439**	1	LINE-FUEL	
	28	1	**6I-2608**	1	SPACER	
	29	1	**220-1492**	1	CLIP	
					BETWEEN THE NO.4 FUEL LINES AND THE THERMOSTAT TUBE AS.	

Y-SEPARATE ILLUSTRATION

197-9440 **FILTER & LINES GP-FUEL** *(contd.)* **i01951949**

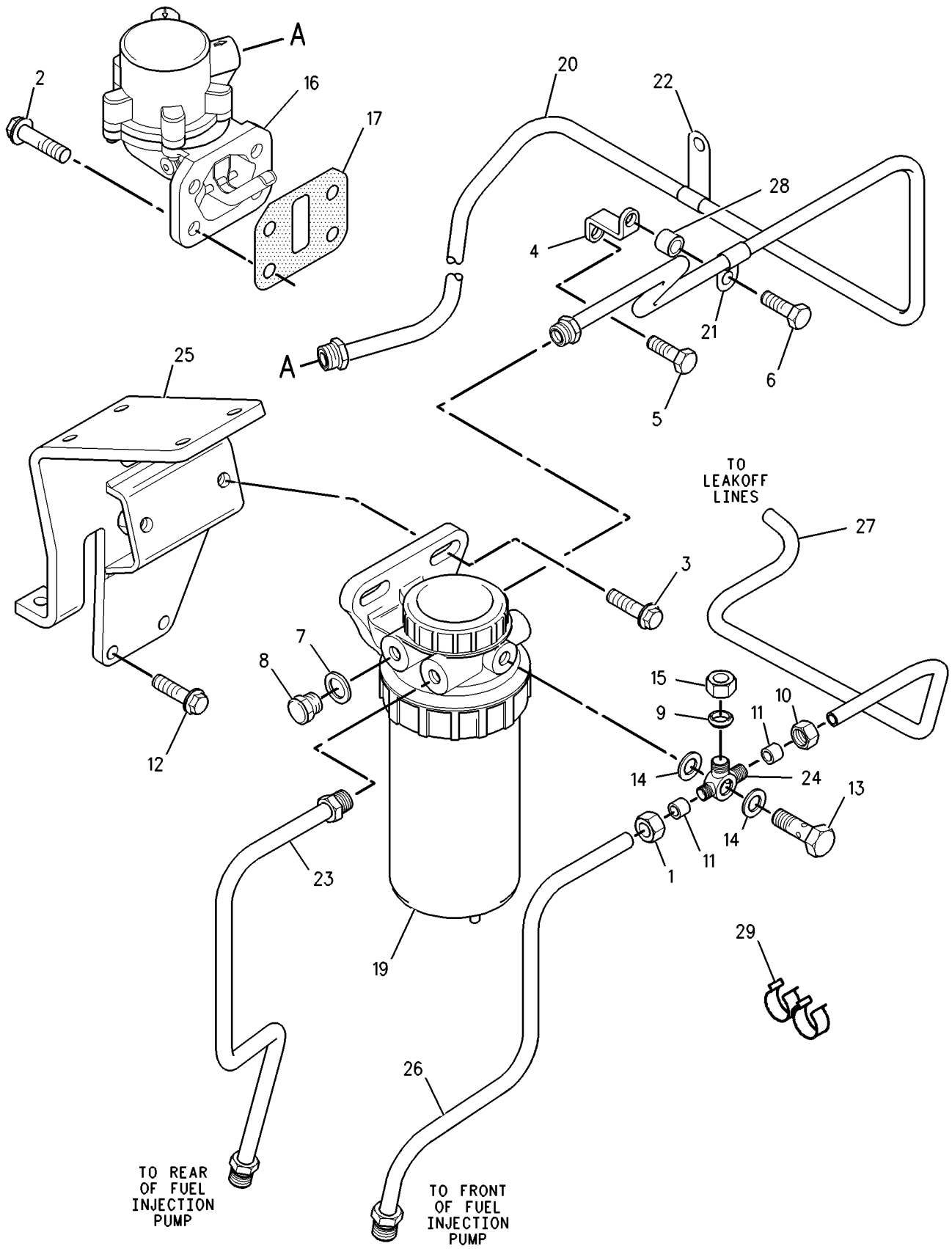

GRAPHIC #1 **<END>** g00906827

138-3096 FILTER GP-FUEL

S/N: 7SG1-UP; 7BJ19000-UP
PART OF 197-3924, 197-9440 FILTER & LINES GP-FUEL
AN ATTACHMENT

SMCS-1261 **i01611160**

NOTE	REF NO	GRAPHIC REF	PART NUMBER	QTY	PART NAME 1 2 3 4 5 6 (PRODUCT LEVEL)	SEE PAGE
	1	1	**101-3739**	1	NUT	
	2	1	**101-3740**	1	CAP	
	3	1	**101-3741**	1	SEAL (PLUNGER)	
	4	1	**101-3742**	1	PLUG	
	5	1	**101-3743**	1	SEAL (FUEL FILTER)	
	6	1	**118-8118**	1	RING-RETAINING	
	7	1	**159-6102**	1	FILTER ELEMENT AS-FUEL	

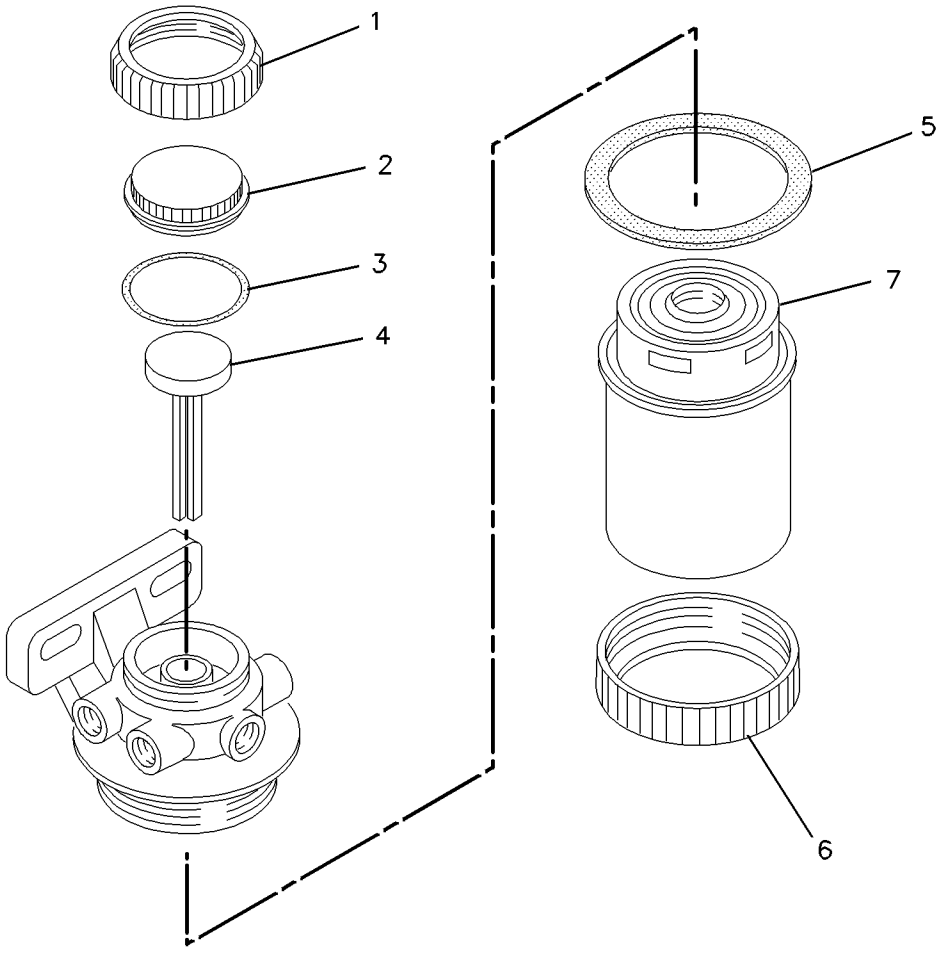

GRAPHIC #1 **<END>** g00693633

130-7092 FILTER GP-WATER SEP & FUEL

S/N: CXP940-UP

PART OF 7E-4636 SEPARATOR GP-WATER

SMCS-1261, 1263 **i01905092**

NOTE	REF NO	GRAPHIC REF	PART NUMBER	QTY	PART NAME 1 2 3 4 5 6 (PRODUCT LEVEL)	SEE PAGE
	1	1	**118-8118**	1	RING-RETAINING	
	2	1	**118-8119**	1	NUT	
	3	1	**131-1812**	1	FILTER ELEMENT AS-FUEL (WATER SEPARATOR)	
					AVAILABLE REPAIR KIT(S):	
			121-4480	1	KIT-WATER BASE	

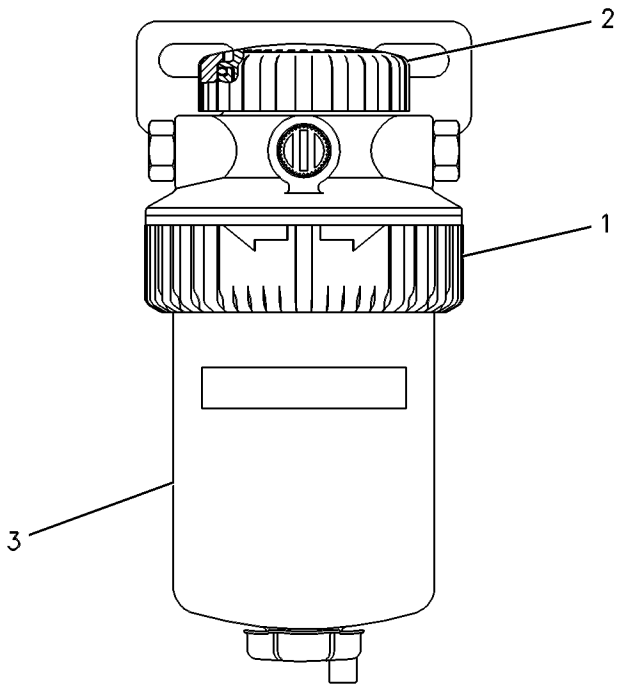

GRAPHIC #1 **<END>** g00259641

130-4646 FITTING GP-FUEL LINES

S/N: 7SG1-UP; 7BJ19000-UP
PART OF 187-8016, 188-0883 ENGINE AR-PRIMARY
AN ATTACHMENT

SMCS-1274 **i01400648**

NOTE	REF NO	GRAPHIC REF	PART NUMBER	QTY	PART NAME 1 2 3 4 5 6 (PRODUCT LEVEL)	SEE PAGE
	1	1	**067-6268**	1	NUT-FUEL LINE	
	2	1	**067-6269**	1	FITTING	

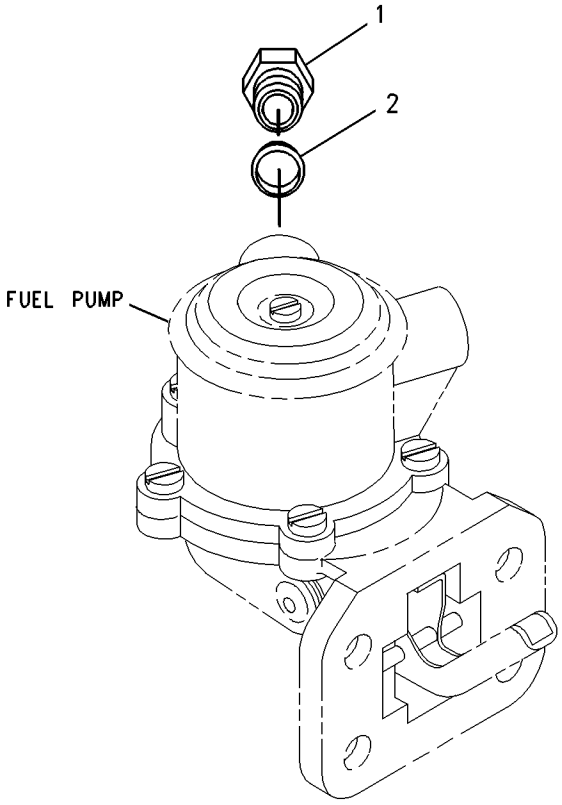

GRAPHIC #1 **<END>** g00739713

FUEL SYSTEM

235-2972 LINES GP-FUEL

S/N: BFP12900-UP
PART OF 214-6891 ENGINE AR
AN ATTACHMENT

SMCS-1274 **i01998506**

NOTE	REF NO	GRAPHIC REF	PART NUMBER	QTY	PART NAME 1 2 3 4 5 6 (PRODUCT LEVEL)	SEE PAGE
	1	1	**1P-4278**	9	CLAMP-HOSE	
	2	1	**8B-6127**	1	CLIP	
	3	1	**190-9838**	1	TUBE AS	
E	3A	1	**5P-0078**		TUBE (34CM)	
	3B	1	**6V-8553**	1	NUT (11/16X16THD)	
	3C	1	**6V-8560**	1	SLEEVE	
	4	1	**215-9513**	1	CONNECTOR	
	5	1	**238-1830**	1	TUBE AS	
	5A	1	**6V-8553**	1	NUT (11/16X16THD)	
	6	1	**241-0022**	1	LINE AS-FUEL	
	6A	1	**1P-4278**	1	CLAMP-HOSE	
E	6B	1	**5P-1420**		HOSE (59CM)	
	7	1	**241-4275**	1	TEE-SPECIAL	
	8	1	**0S-0550**	1	CLIP	
	9	1	**1P-7009**	1	CLIP	
	10	1	**6D-7573**	1	CLIP	
	11	1	**6K-8178**	1	CLIP	
M	12	1	**8T-1159**	1	BOLT-SOCKET HEAD (M10X1.5X25MM)	
	13	1	**8T-4121**	3	WASHER-HARD (11X21X2.5MM THK)	
M	14	1	**8T-4179**	1	BOLT (M12X1.75X20MM)	
	15	1	**8T-4223**	1	WASHER-HARD (13.5X25.5X3MM THK)	
E	16	1	**5P-1442**		HOSE (81CM)	
E	17	1	**5P-1420**		HOSE (122CM)	

E-ORDER BY THE CENTIMETER
M-METRIC PART

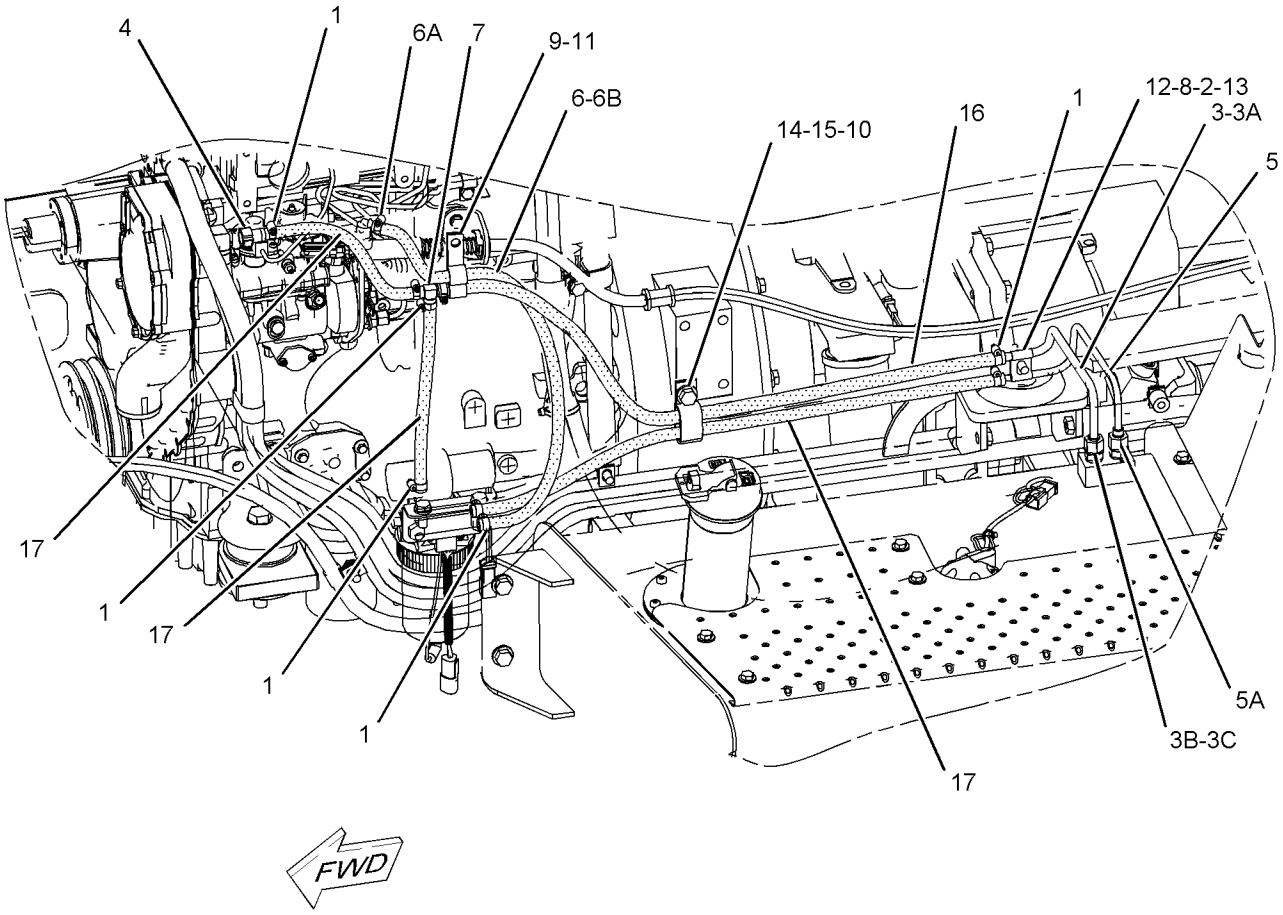

GRAPHIC #1 **<END>** g01035314

240-9743 LINES GP-FUEL

S/N: BFP12900-UP
PART OF 214-6890 ENGINE AR
AN ATTACHMENT

SMCS-1274 **i01991965**

NOTE	REF NO	GRAPHIC REF	PART NUMBER	QTY	PART NAME 1 2 3 4 5 6 (PRODUCT LEVEL)	SEE PAGE
	1	1	**1P-4278**	9	CLAMP-HOSE	
	2	1	**8B-6127**	1	CLIP	
	3	1	**190-9838**	1	TUBE AS	
E		1	**5P-0078**		TUBE (34CM)	
		1	**6V-8553**	1	NUT (11/16X16-THD)	
		1	**6V-8560**	1	SLEEVE	
	4	1	**215-9513**	1	CONNECTOR	
	5	1	**238-1830**	1	TUBE AS	
		1	**6V-8553**	1	NUT (11/16X16-THD)	
	6	1	**241-0023**	1	LINE AS-FUEL	
E		1	**5P-1420**		HOSE (73CM)	
		1	**1P-4278**	1	CLAMP-HOSE	
		1	**215-9515**	1	CONNECTOR	
	7	1	**241-4275**	1	TEE-SPECIAL	
	8	1	**0S-0550**	1	CLIP	
	9	1	**4K-8864**	1	CLIP	
	10	1	**6D-7573**	1	CLIP	
M	11	1	**8T-1159**	1	BOLT-SOCKET HEAD (M10X1.5X25-MM)	
	12	1	**8T-4121**	1	WASHER-HARD (11X21X2.5-MM THK)	
M	13	1	**8T-4179**	1	BOLT (M12X1.75X20-MM)	
M	14	1	**8T-4189**	1	BOLT (M8X1.25X20-MM)	
	15	1	**8T-4223**	1	WASHER-HARD (13.5X25.5X3-MM THK)	
	16	1	**9M-8406**	1	CLIP	
E	17	1	**5P-1442**		HOSE (77CM)	
E	18	1	**5P-1420**		HOSE (67CM)	
	18A	1	**5P-1420**		HOSE (17CM)	
	18B	1	**5P-1420**		HOSE (38CM)	

E-ORDER BY THE CENTIMETER
M-METRIC PART

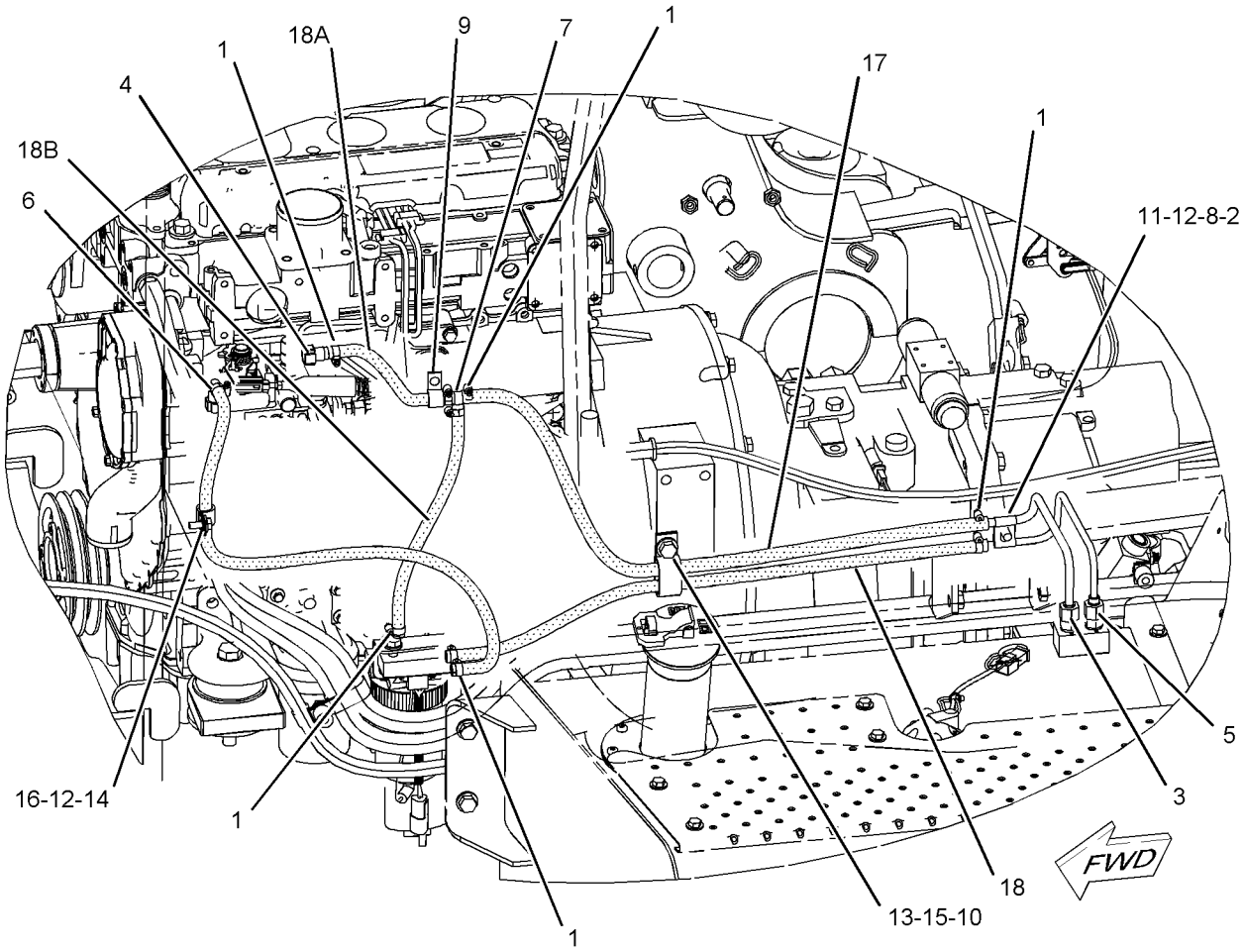

GRAPHIC #1 **<END>** g01040584

FUEL SYSTEM

197-7237 PUMP GP-FUEL INJECTION

S/N: 7BJ19000-UP
PART OF 188-0883 ENGINE AR-PRIMARY
AN ATTACHMENT

SMCS-1251, 1290 **i01882513**

NOTE	REF NO	GRAPHIC REF	PART NUMBER	QTY	PART NAME 1 2 3 4 5 6 (PRODUCT LEVEL)	SEE PAGE
	1	1	**6I-0217**	1	BOLT (M8X1.25X20MM)	
	2	1	**6I-0291**	4	NUT (M8X1.25)	
	3	1	**035-8063**	1	PLUG (1/8)	
	4	1	**067-6998**	1	NUT	
	5	1	**067-6999**	1	FERRULE	
	6	1	**100-4830**	1	BOLT (M10X1.5X20MM)	
	7	1	**124-3713**	1	CONNECTION	
	8	1	**124-3714**	3	BOLT	
	9	1	**124-3815**	4	BOLT (M8X16X1.25MM)	
	10	1	**140-8713**	2	CLIP	
	11	1	**140-8714**	1	CLIP	
	12	1	**140-8718**	4	WASHER	
	13	1	**140-8719**	1	LINE-LEAKOFF	
	14	1	**140-8720**	8	WASHER	
	15	1	**142-4248**	1	BRACKET	
	16	1	**154-6015**	3	STUD	
	17	1	**154-6016**	1	GEAR-PUMP (50 TEETH)	
	18	1	**170-0580**	1	TUBE AS (NO. 1 CYL.)	
	19	1	**211-1872**	1	TUBE AS (NO. 2 CYL.)	
	20	1	**170-0582**	1	TUBE AS (NO. 3 CYL.)	
	21	1	**170-0583**	1	TUBE AS (NO. 4 CYL.)	
	22	1	**170-2377**	1	CAP	
	23	1	**170-2387**	4	INJECTOR AS-FUEL	
					(EACH INCLUDES)	
	24	1	**147-6240**	1	HOLDER	
	25	1	**170-2388**	1	NOZZLE	
	26	1	**173-7527**	1	SWITCH AS-TEMPERATURE (TIMING ADVANCE)	
	28	1	**185-6374**	1	TUBE AS	
	31	1	**213-4881**	1	PUMP GP-FUEL INJECTION	
	31A	1	**152-3968**	1	SEAL-O-RING	
	31B	1	**176-6219**	1	VALVE GP-SOLENOID (12 V)	
	31C	1	**141-8947**	1	THERMOCOUPLE	

197-7237 **PUMP GP-FUEL INJECTION** *(contd.)* **i01882513**

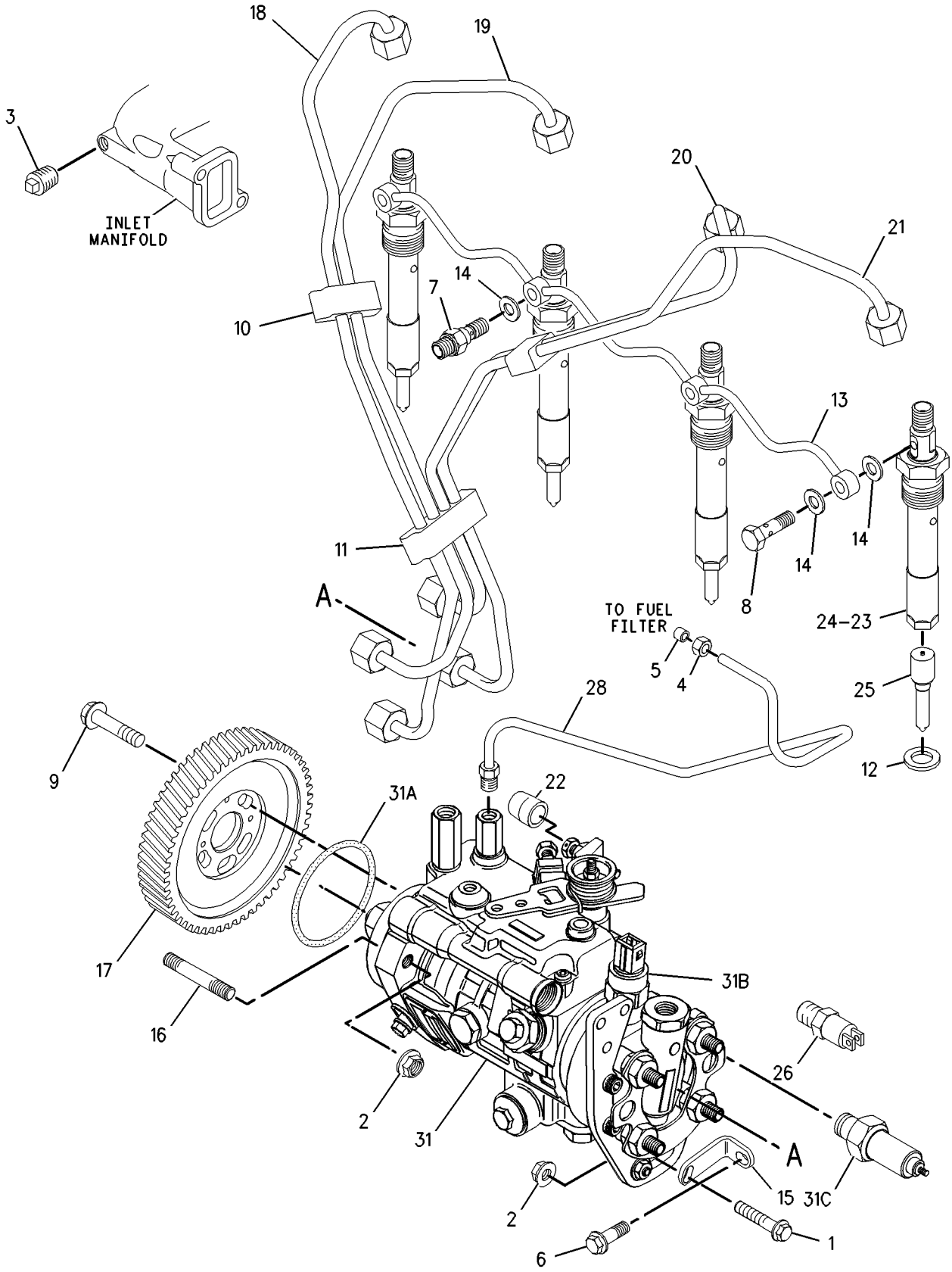

GRAPHIC #1 **<END>** g00975582

FUEL SYSTEM

197-9414 PUMP GP-FUEL INJECTION

S/N: 7SG1-UP
PART OF 187-8016 ENGINE AR-PRIMARY
AN ATTACHMENT

SMCS-1251, 1290 **i01938440**

NOTE	REF NO	GRAPHIC REF	PART NUMBER	QTY	PART NAME 1 2 3 4 5 6 (PRODUCT LEVEL)	SEE PAGE
	1	1	**6I-0217**	1	BOLT (M8X1.25X20MM)	
	2	1	**6I-0291**	4	NUT (M8X1.25)	
	3	1	**100-4830**	1	BOLT (M10X1.5X20MM)	
	4	1	**124-3713**	1	CONNECTION	
	5	1	**124-3714**	3	BOLT	
	6	1	**124-3815**	4	BOLT (M8X16X1.25MM)	
	7	1	**140-8713**	2	CLIP	
	8	1	**140-8714**	1	CLIP	
	9	1	**140-8718**	4	WASHER	
	10	1	**140-8719**	1	LINE-LEAKOFF	
	11	1	**140-8720**	8	WASHER	
	12	1	**142-4248**	1	BRACKET	
	13	1	**154-6015**	3	STUD	
	14	1	**154-6016**	1	GEAR-PUMP (50 TEETH)	
	15	1	**170-0580**	1	TUBE AS (NO. 1 CYL.)	
	16	1	**211-1872**	1	TUBE AS (NO. 2 CYL.)	
	17	1	**170-0582**	1	TUBE AS (NO. 3 CYL.)	
	18	1	**170-0583**	1	TUBE AS (NO. 4 CYL.)	
	19	1	**170-2377**	1	CAP	
	20	1	**173-7527**	1	SWITCH AS-TEMPERATURE (TIMING ADVANCE)	
	21	1	**185-5754**	4	INJECTOR AS-FUEL	
					(EACH INCLUDES)	
		1	**147-6240**	1	HOLDER	
	22	1	**197-9417**	1	NOZZLE	
	24	1	**197-9416**	1	PUMP GP-FUEL INJECTION	
	25	1	**193-0161**	1	KIT-CONNECTOR	
	26	1	**176-6219**	1	VALVE GP-SOLENOID (12 V)	
	27	1	**152-3968**	1	SEAL-O-RING	
	28	1	**141-8947**	1	THERMOCOUPLE	

197-9414 **PUMP GP-FUEL INJECTION** *(contd.)* **i01938440**

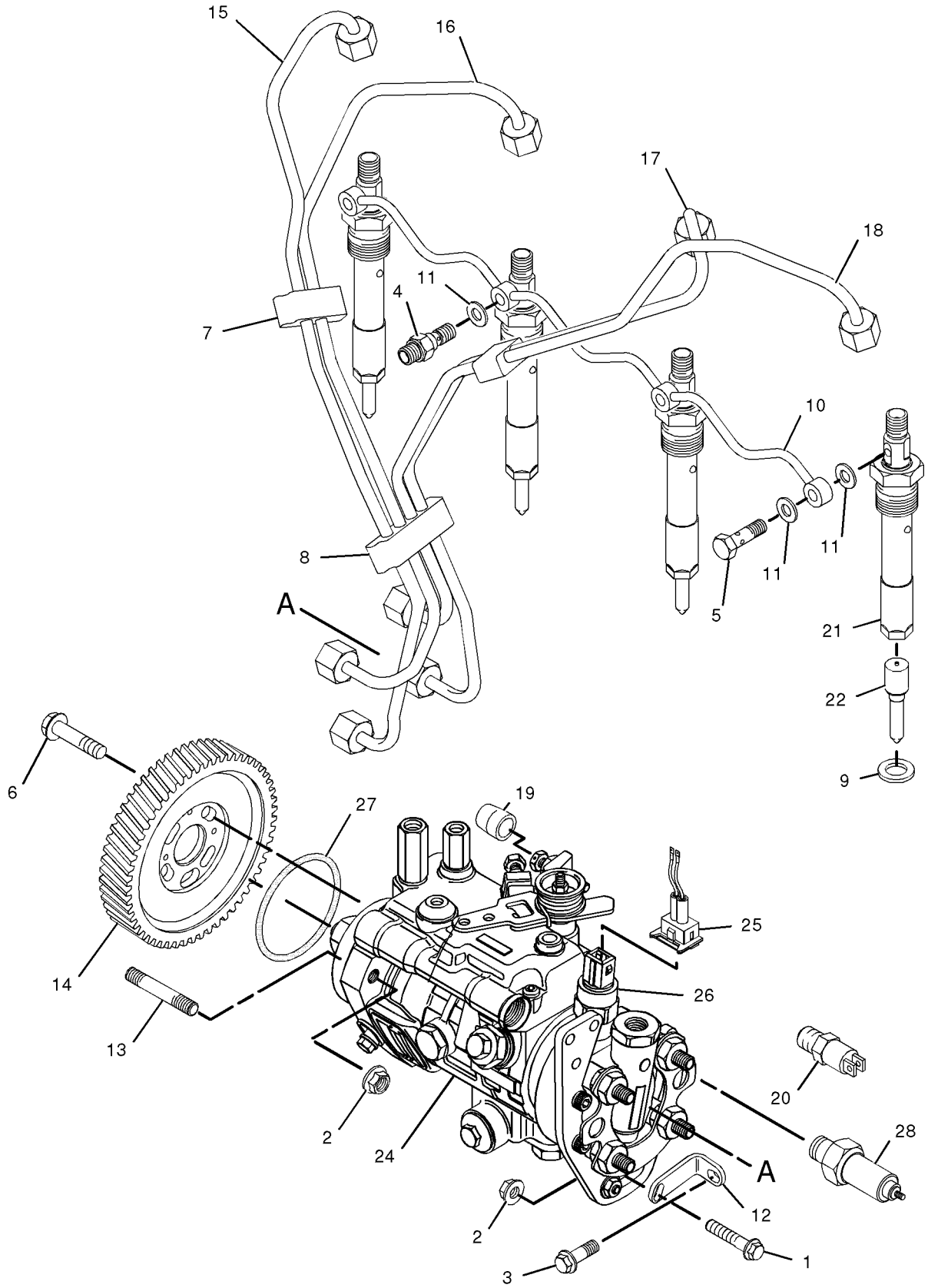

GRAPHIC #1 **<END>** g01009630

237-2528 PUMP GP-FUEL INJECTION

S/N: CRS1-UP
PART OF 234-3059 ENGINE AR-PRIMARY
AN ATTACHMENT

SMCS-1251, 1290 **i02017821**

NOTE	REF NO	GRAPHIC REF	PART NUMBER	QTY	PART NAME 1 2 3 4 5 6 (PRODUCT LEVEL)	SEE PAGE
	1	1	**6I-0217**	1	BOLT (M8X1.25X20-MM)	
	2	1	**6I-0260**	3	BOLT (M8X1.25X25-MM)	
	3	1	**6I-0291**	1	NUT (M8X1.25)	
	4	1	**9F-2247**	1	PLUG-PIPE	
	5	1	**100-4830**	1	BOLT (M10X1.5X20-MM)	
	6	1	**111-3422**	1	NUT	
	7	1	**111-3423**	1	WASHER	
	8	1	**124-3815**	1	BOLT (M8X16X1.25-MM)	
	9	1	**140-8714**	1	CLIP	
	10	1	**230-8989**	1	GEAR-FUEL PUMP	
	11	1	**230-8995**	1	TUBE AS (CYL NO.1)	
	12	1	**230-8996**	1	TUBE AS (CYL NO.2)	
	13	1	**230-8997**	1	TUBE AS (CYL NO.3)	
	14	1	**230-8998**	1	TUBE AS (CYL NO.4)	
	15	1	**240-5571**	1	BRACKET	
	16	1	**232-3126**	1	CLIP	
	17	1	**232-1323**	1	PLUG-CUP	
	18	1	**232-1328**	1	CAP	
	19	1	**232-1793**	1	CABLE	
	20	1	**232-1794**	3	HOSE	
	21	1	**232-2725**	2	CLIP	
	22	1	**232-2726**	1	CLIP	
	23	1	**232-3149**	3	WASHER	
	24	1	**232-3157**	1	BRACKET	
	25	1	**238-8671**	1	CLAMP-INJECTOR	
	26	1	**232-3274**	4	BOLT	
	27	1	**235-1790**	1	SWITCH (40-DEG) (ENGINE COOLANT TEMPERATURE)	
	28	1	**236-1674**	4	INJECTOR AS-FUEL	
	28A	1	**140-8718**	1	WASHER	
	28B	1	**236-1673**	1	NOZZLE	
	29	1	**237-2527**	1	PUMP GP-FUEL INJECTION	

237-2528 **PUMP GP-FUEL INJECTION** *(contd.)* **i02017821**

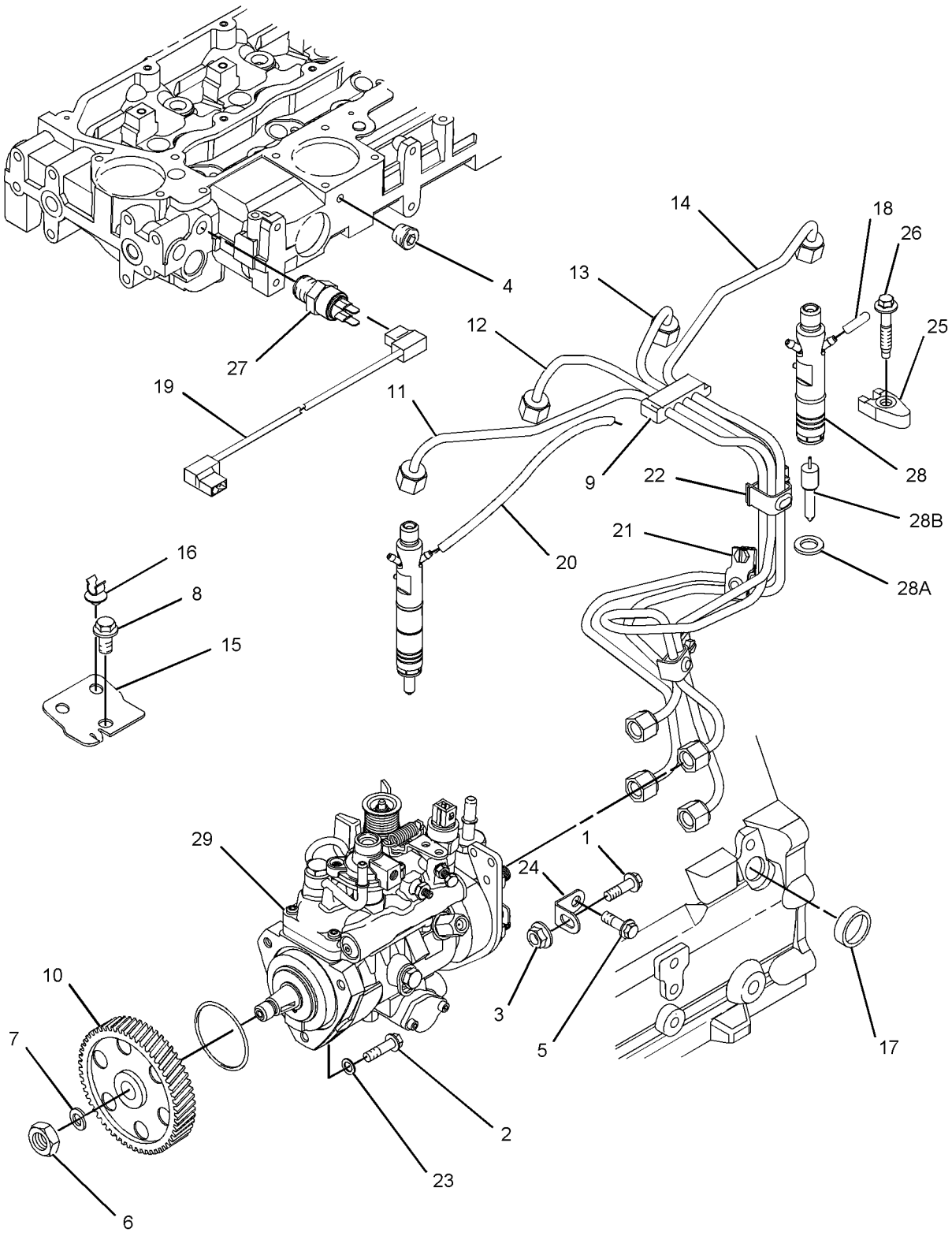

GRAPHIC #1 **<END>** g01021884

237-5394 PUMP GP-FUEL INJECTION

S/N: CRS1-UP
PART OF 234-3058 ENGINE AR-PRIMARY
AN ATTACHMENT

SMCS-1251, 1290 **i02010413**

NOTE	REF NO	GRAPHIC REF	PART NUMBER	QTY	PART NAME 1 2 3 4 5 6 (PRODUCT LEVEL)	SEE PAGE
	1	1	**6I-0217**	1	BOLT (M8X1.25X20MM)	
	2	1	**232-3149**	3	WASHER	
	3	1	**6I-0291**	1	NUT (M8X1.25)	
	4	1	**100-4830**	1	BOLT (M10X1.5X20MM)	
	5	1	**124-3815**	1	BOLT (M8X16X1.25MM)	
	6	1	**140-8714**	1	CLIP	
	7	1	**145-8327**	1	SEAL-O-RING	
	8	1	**155-8804**	1	CAP	
	10	2	**199-9252**	1	SEAL-O-RING	
	11	2	**199-9751**	1	SEAL-O-RING	
	12	1	**230-9527**	1	BRACKET	
	13	1	**232-1117**	1	CLIP-PIPE	
	14	2	**232-1295**	1	PLUG	
	15	2	**232-1322**	1	PLUG	
	16	2	**232-1323**	1	PLUG-CUP	
	17	1	**232-2720**	1	TUBE AS	
	18	1	**232-2721**	1	TUBE AS	
	19	1	**232-2722**	1	TUBE AS	
	20	1	**232-2723**	1	TUBE AS	
	21	1	**232-2725**	2	CLIP	
	22	1	**232-2726**	1	CLIP	
	23	1	**6I-0260**	3	BOLT (M8X1.25X25MM)	
	24	1	**232-3157**	1	BRACKET	
	25	1	**232-3158**	4	CLAMP-INJECTOR	
	27	1	**232-3274**	4	BOLT	
	28	1	**237-5393**	1	PUMP GP-FUEL INJECTION	
	29	1	**233-7104**	1	GEAR-PUMP	
	30	2	**233-7214**	1	CABLE	
	31	1	**233-7972**	4	INJECTOR AS-FUEL	
					(EACH INCLUDES)	
	32	1	**140-8718**	1	WASHER	
	33	1	**234-0387**	1	NOZZLE	
F			**232-3263**	1	CLIP-PIPE	

F-NOT SHOWN

237-5394 **PUMP GP-FUEL INJECTION** *(contd.)* **i02010413**

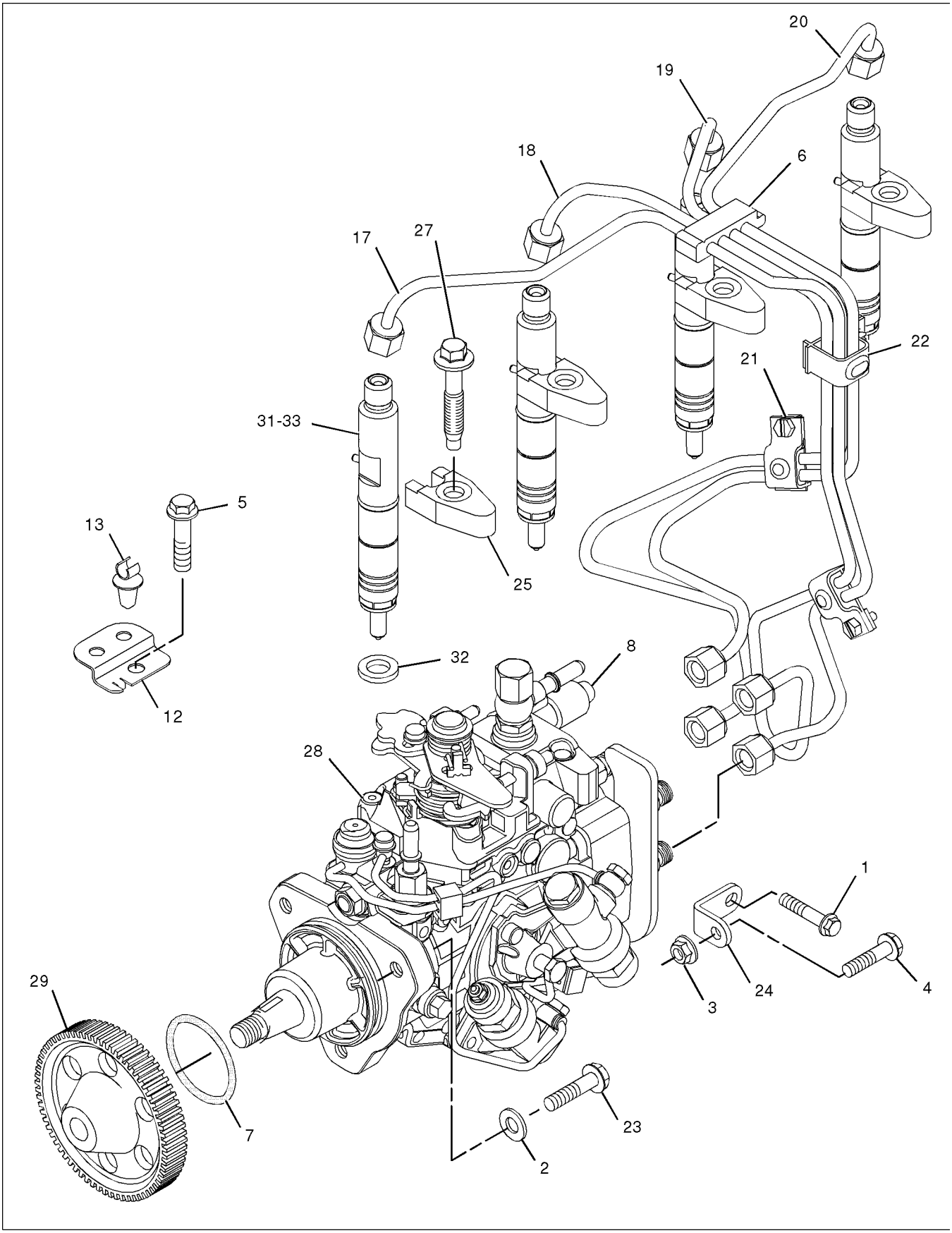

GRAPHIC #1 g01039638

237-5394 **PUMP GP-FUEL INJECTION** *(contd.)* **i02010413**

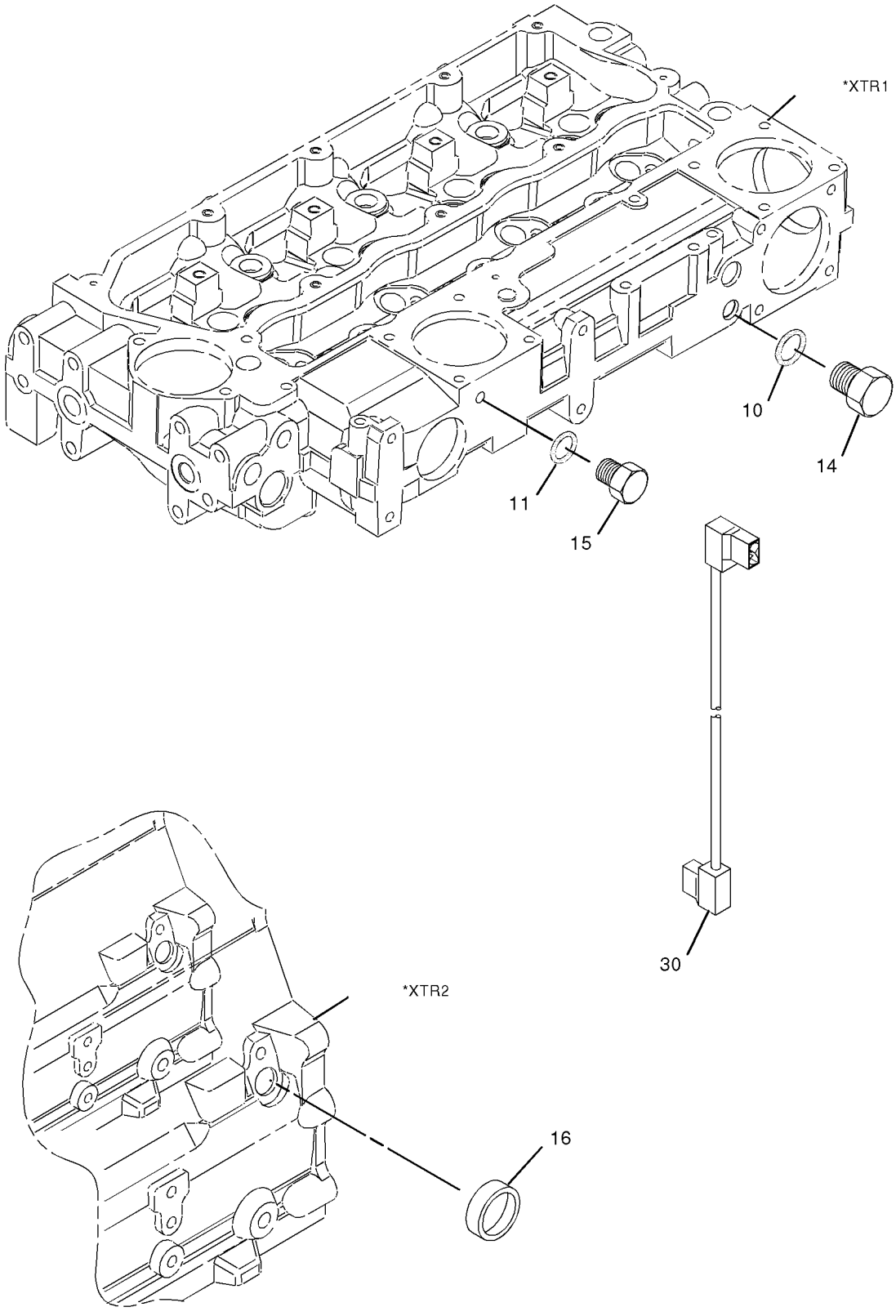

GRAPHIC #2 **<END>** g01039639

228-9129 PUMP GP-FUEL PRIMING

S/N: BFP12900-UP
ELECTRIC
PART OF 235-3170 SEPARATOR GP-WATER
AN ATTACHMENT

SMCS-1258 **i02010443**

NOTE	REF NO	GRAPHIC REF	PART NUMBER	QTY	PART NAME 1 2 3 4 5 6 (PRODUCT LEVEL)	SEE PAGE
	1	1	**118-8118**	1	RING-RETAINING	
	2	1	**228-9130**	1	ELEMENT-FILTER (FUEL)	
	3	1	**228-9132**	1	FITTING (FUEL PUMP)	
F			**149-9954**	1	DRAIN AS (SENSOR)	
	4	1	**193-0618**	1	SENSOR GP-MOISTURE (WATER SEPARATOR)	
		1	**192-7877**	1	RETAINER	

F-NOT SHOWN

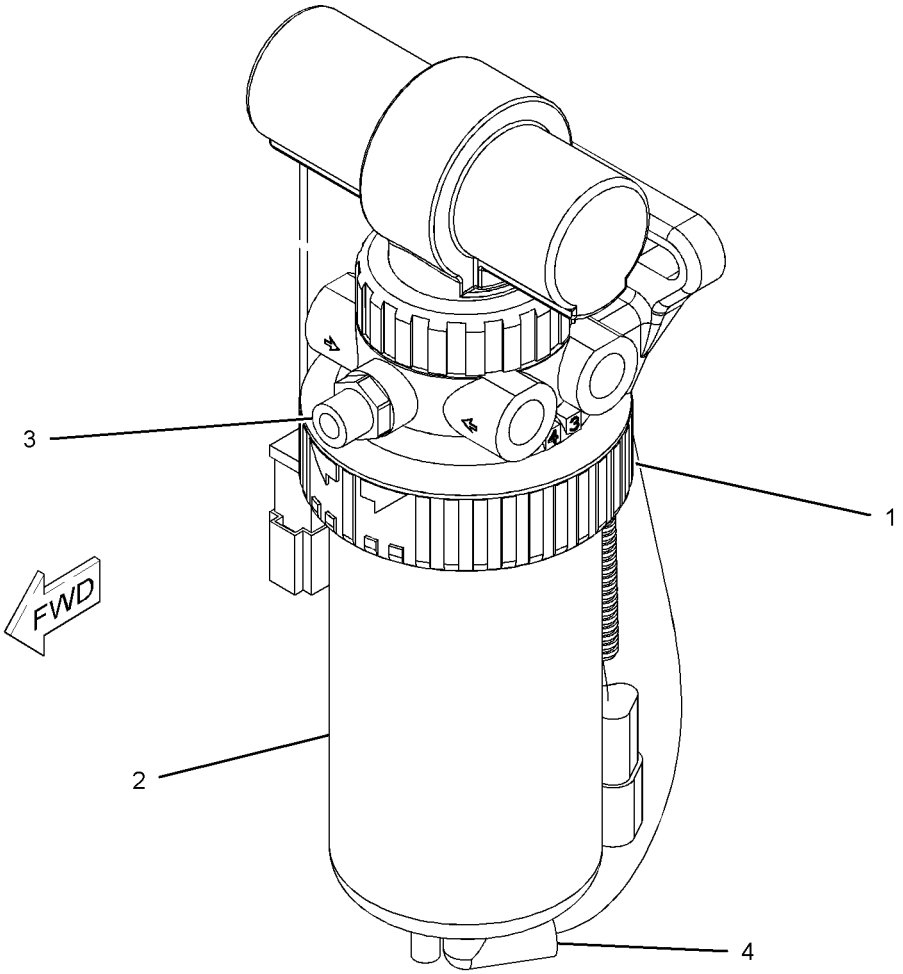

GRAPHIC #1 **<END>** g01039647

7E-4636 SEPARATOR GP-WATER

S/N: CXP940-UP

PART OF 215-6888 COMMON AR

SMCS-1263 **i00730256**

NOTE	REF NO	GRAPHIC REF	PART NUMBER	QTY	PART NAME 1 2 3 4 5 6 (PRODUCT LEVEL)	SEE PAGE
Y	1	1	**130-7092**	1	FILTER GP-WATER SEP & FUEL	245
M	2	1	**8T-4196**	2	BOLT (M10X1.50X35MM)	
	3	1	**8T-4121**	2	WASHER (2.5MM THK)	
	4	1	**130-7964**	1	TUBE AS	
	5	1	**127-8167**	2	CLIP	
	6	1	**9R-2603**	1	TUBE AS	
	7	1	**4H-2494**	3	SLEEVE-FITTING	
	8	1	**033-7849**	2	PLUG	
	9	1	**032-8100**	2	WASHER (.064MM THK)	

M-METRIC PART
Y-SEPARATE ILLUSTRATION

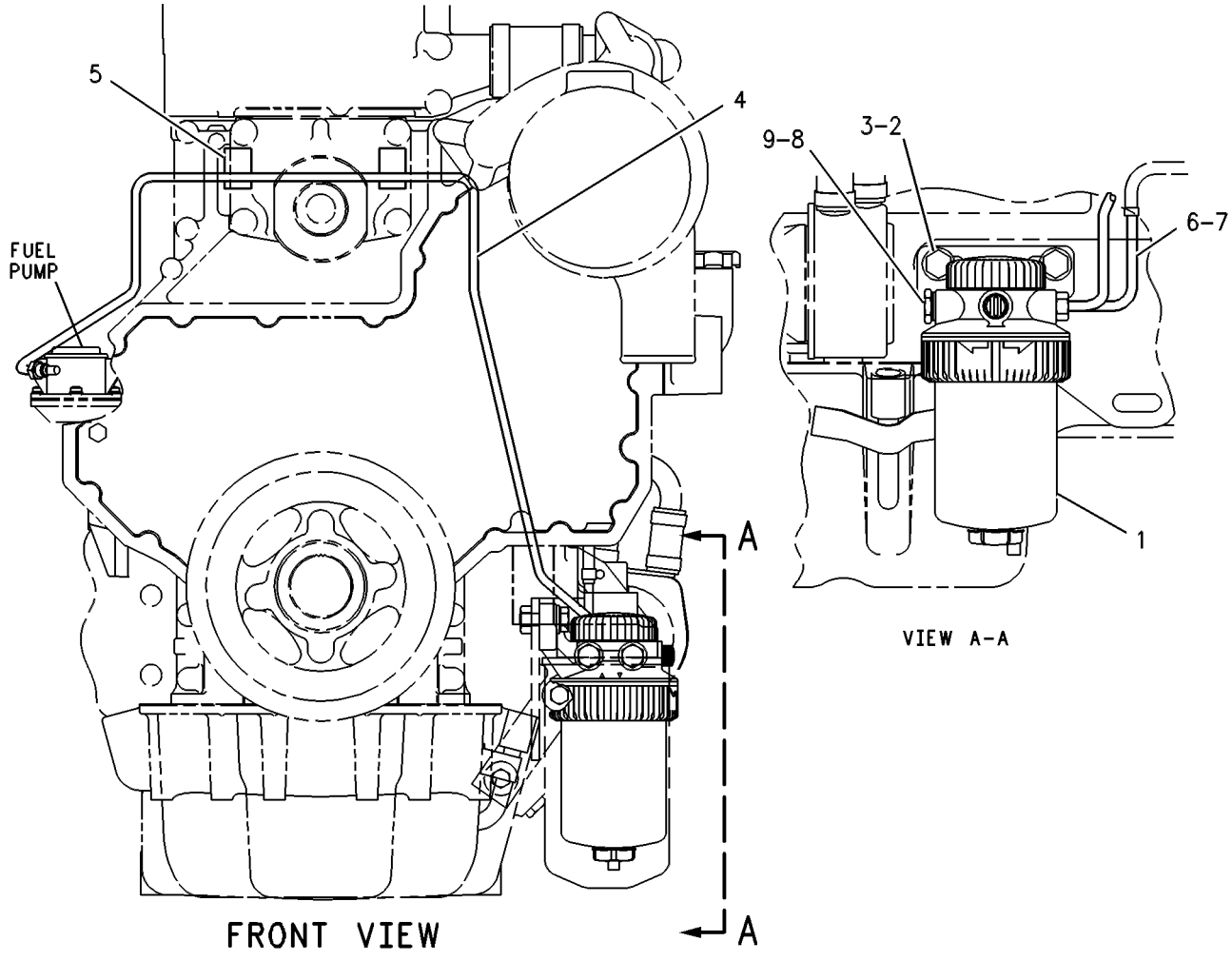

GRAPHIC #1 **<END>** g00259639

235-3170 SEPARATOR GP-WATER

S/N: BFP12900-UP
PART OF 214-6890, 214-6891 ENGINE AR
AN ATTACHMENT

SMCS-1263 **i01991956**

NOTE	REF NO	GRAPHIC REF	PART NUMBER	QTY	PART NAME 1 2 3 4 5 6 (PRODUCT LEVEL)	SEE PAGE
	1	1	**3S-2093**	1	STRAP-CABLE	
	2	1	**069-4080**	1	FITTING-COUPLING	
	3	1	*165-7951*	2	CONNECTOR AS	
		1	**3J-1907**	1	SEAL-O-RING	
		1	**157-1669**	1	CONNECTOR	
Y	4	1	**228-9129**	1	PUMP GP-FUEL PRIMING	260
	5	1	**237-2197**	1	BRACKET AS	
	6	1	**3J-1907**	2	SEAL-O-RING	
	7	1	**8T-4121**	4	WASHER-HARD (11X21X2.5MM THK)	
M	8	1	**8T-4136**	2	BOLT (M10X1.5X25MM)	
M	9	1	**8T-4196**	2	BOLT (M10X1.5X35MM)	
	10	1	**9S-4191**	2	PLUG	

M-METRIC PART
Y-SEPARATE ILLUSTRATION

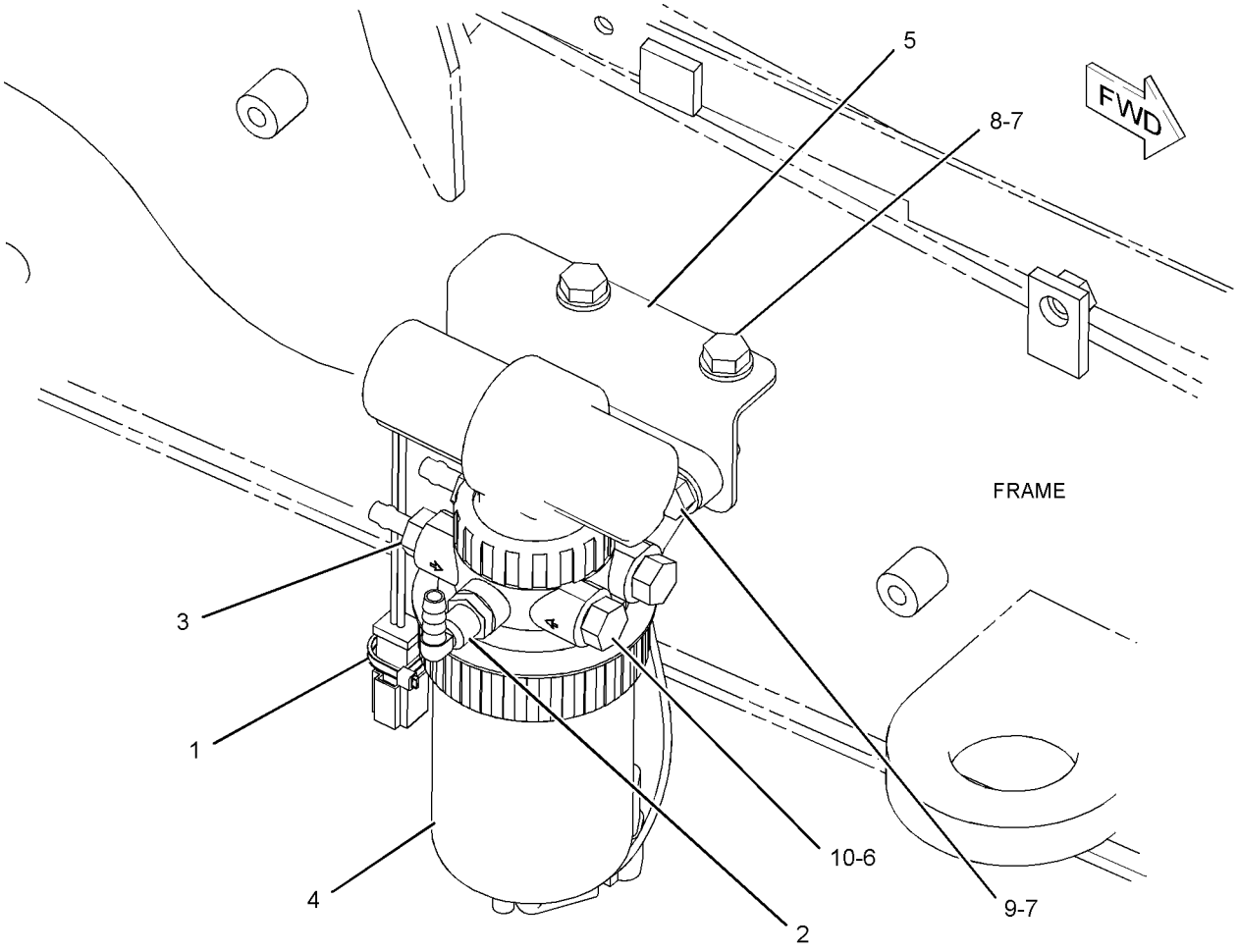

GRAPHIC #1 **<END>** g01040336

FUEL SYSTEM

214-6908 TANK & MTG GP-FUEL

S/N: BFP12900-UP

PART OF 214-6950 CHASSIS AR

SMCS-1273 **i01967038**

NOTE	REF NO	GRAPHIC REF	PART NUMBER	QTY	PART NAME 1 2 3 4 5 6 (PRODUCT LEVEL)	SEE PAGE
	1		**164-3876**	1	STEP AS	
	2		**190-5123**	1	PLATE AS	
	3		**201-1837**	1	TREAD	
Y	4		**214-6949**	1	TANK GP-FUEL	267
	5		**5P-4116**	7	WASHER-HARD (8.8X20.5X2MM THK)	
M	6		**8T-4183**	4	BOLT (M12X1.75X40MM)	
M	7		**8T-4189**	7	BOLT (M8X1.25X20MM)	
M	8		**8T-4200**	4	BOLT (M8X1.25X16MM)	
	9		**8T-4223**	4	WASHER-HARD (13.5X25.5X3MM THK)	
	10		**8T-4224**	4	WASHER-HARD (8.8X16X2MM THK)	

M-METRIC PART
Y-SEPARATE ILLUSTRATION

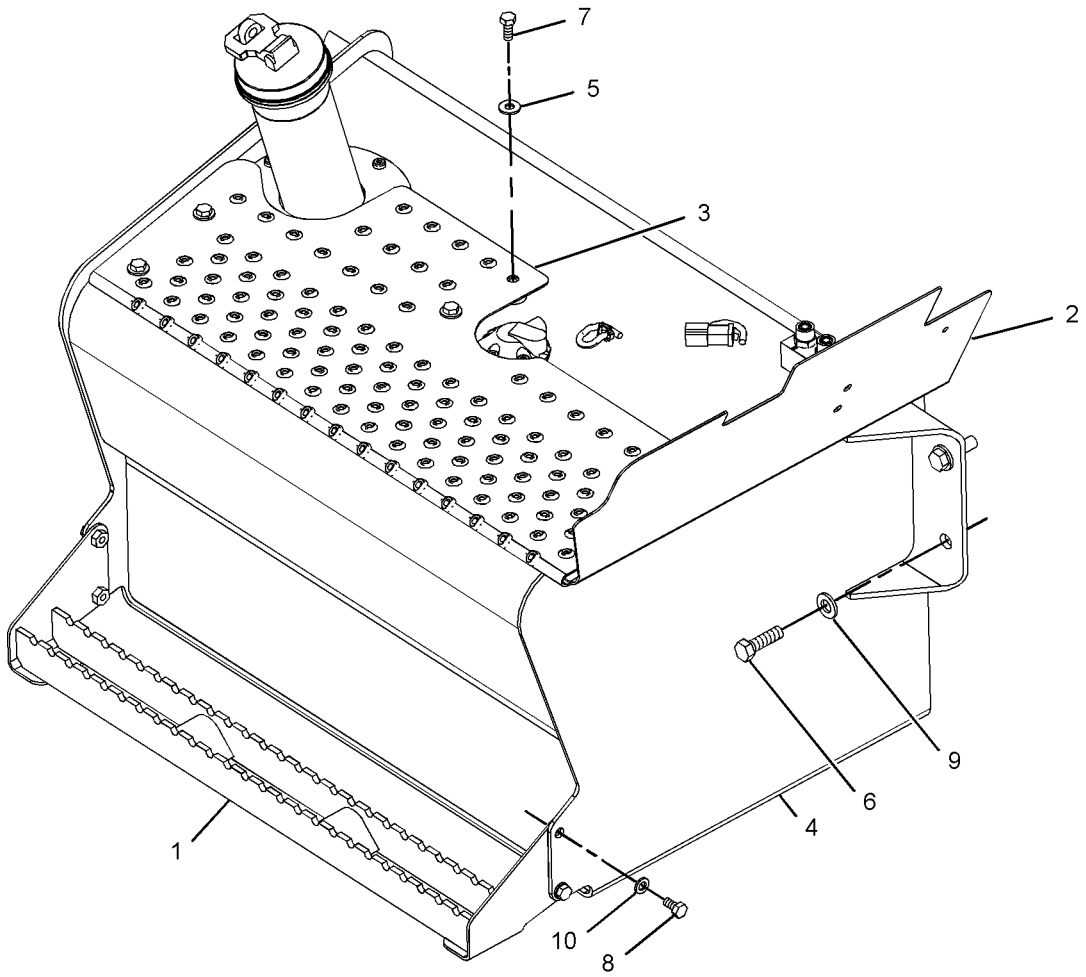

GRAPHIC #1 **<END>** g01022364

FUEL SYSTEM

202-6019 TANK GP-FUEL

S/N: CXP940-UP

PART OF 202-6051 TANK GP-FUEL

SMCS-1273 **i01797308**

NOTE	REF NO	GRAPHIC REF	PART NUMBER	QTY	PART NAME 1 2 3 4 5 6 (PRODUCT LEVEL)	SEE PAGE
	1	1	**201-0330**	1	CAP-FUEL	
J	2	1	**201-1835**	1	TUBE AS	
	3	1	**201-1836**	1	TANK AS-FUEL	
	4	1	**106-8020**	1	GASKET	
M	5	1	**123-4950**	8	SCREW-PAN HEAD (M6X1X16MM)	
	6	1	*148-8316*	1	CONNECTOR GP	
		1	**3J-7354**	1	SEAL-O-RING	
		1	**4J-5477**	1	SEAL-O-RING	
		1	**6V-8647**	1	CONNECTOR	
	7	1	*148-8326*	1	CONNECTOR GP	
		1	**3J-7354**	1	SEAL-O-RING	
		1	**6V-8397**	1	SEAL-O-RING	
		1	**6V-9872**	1	CONNECTOR	
	8	1	*148-8407*	1	PLUG GP	
		1	**3J-1907**	1	SEAL-O-RING	
		1	**9S-4191**	1	PLUG	

J-NOTE: 180-3730 (FILTER SCREEN) OPTIONAL SERVICE PART
M-METRIC PART

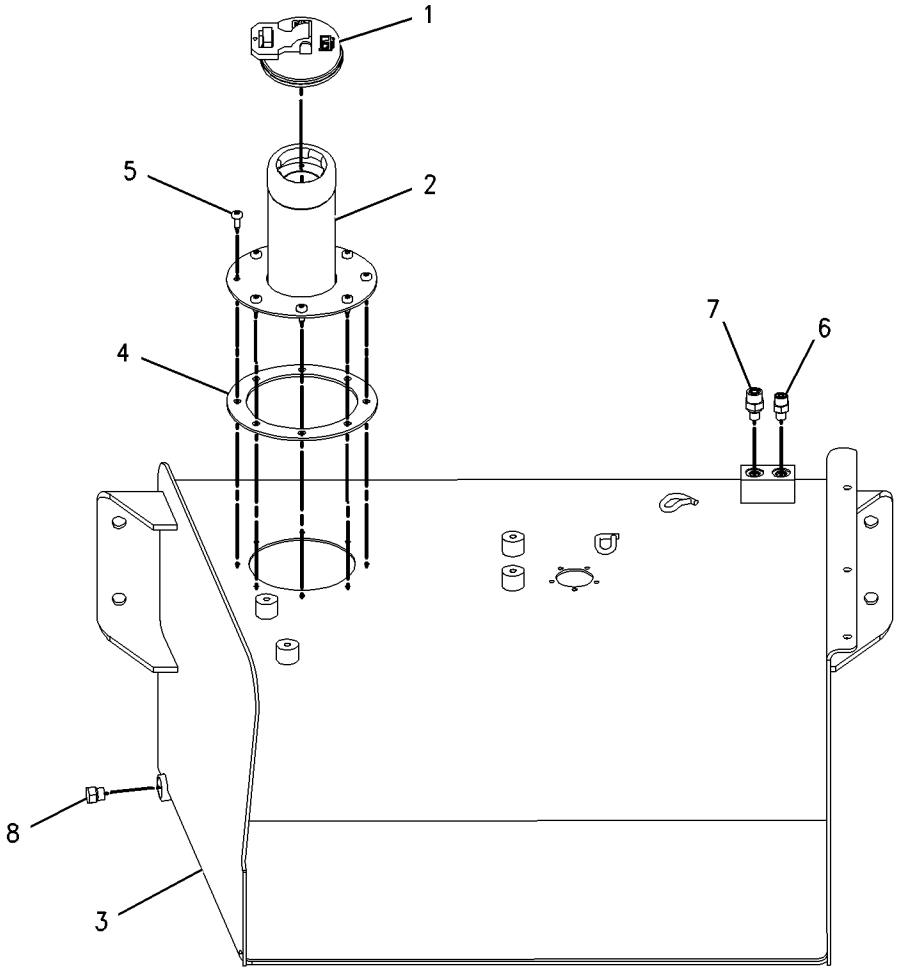

GRAPHIC #1 **<END>** g00843678

FUEL SYSTEM

202-6051 TANK GP-FUEL

S/N: CXP940-UP

PART OF 215-6888 COMMON AR

SMCS-1273 **i01715295**

NOTE	REF NO	GRAPHIC REF	PART NUMBER	QTY	PART NAME 1 2 3 4 5 6 (PRODUCT LEVEL)	SEE PAGE
E	1	1	**5P-1442**		HOSE (108CM)	
E	2	1	**5P-6442**		HOSE (60CM)	
	3	1	**1P-4278**	2	CLAMP-HOSE	
	4	1	**6S-8620**	2	CLAMP-HOSE	
	5	1	**8B-6127**	1	CLIP	
	6	1	**8L-8413**	1	STRAP-CABLE	
	7	1	**9R-7240**	1	GASKET	
	8	1	**131-0232**	1	COVER	
	9	1	**149-7678**	1	TUBE AS	
	10	1	**164-3876**	1	STEP AS	
	11	1	**187-8936**	1	SENDER AS-FUEL LEVEL	
		1	**3E-3365**	1	WEDGE-RECEPTACLE LOCK (2 PIN)	
		1	**102-8802**	1	KIT-RECEPTACLE (2 PIN)	
					(KIT SERVICES RECEPTACLE AS AND WEDGE)	
		1	**186-3735**	2	PIN-CONNECTOR	
	12	1	**190-1118**	1	TUBE AS	
	13	1	**190-5123**	1	PLATE AS	
	14	1	**190-9838**	1	TUBE AS	
	15	1	**201-1837**	1	TREAD	
Y	16	1	*202-6019*	1	TANK GP-FUEL	264
M	17	1	**123-4950**	5	SCREW-PAN HEAD (M6X1X16MM)	
	18	1	**2B-2404**	1	CLIP	
	19	1	**5P-4116**	7	WASHER-HARD (8.8X20.5X2MM THK)	
	20	1	**5P-7854**	1	CLIP	
	21	1	**6D-7573**	1	CLIP	
	22	1	**6K-8178**	1	CLIP	
M	23	1	**8T-1159**	1	BOLT-SOCKET HEAD (M10X1.5X25MM)	
	24	1	**8T-4121**	1	WASHER-HARD (11X21X2.5MM THK)	
M	25	1	**8T-4133**	1	NUT (M10X1.5 THD)	
M	26	1	**8T-4136**	1	BOLT (M10X1.5X25MM)	
M	27	1	**8T-4179**	1	BOLT (M12X1.75X20MM)	
M	28	1	**8T-4183**	4	BOLT (M12X1.75X40MM)	
M	29	1	**8T-4189**	7	BOLT (M8X1.25X20MM)	
M	30	1	**8T-4200**	4	BOLT (M8X1.25X16MM)	
	31	1	**8T-4223**	5	WASHER-HARD (13.5X25.5X3MM THK)	
	32	1	**8T-4224**	4	WASHER-HARD (8.8X16X2MM THK)	

E-ORDER BY THE CENTIMETER
M-METRIC PART
Y-SEPARATE ILLUSTRATION

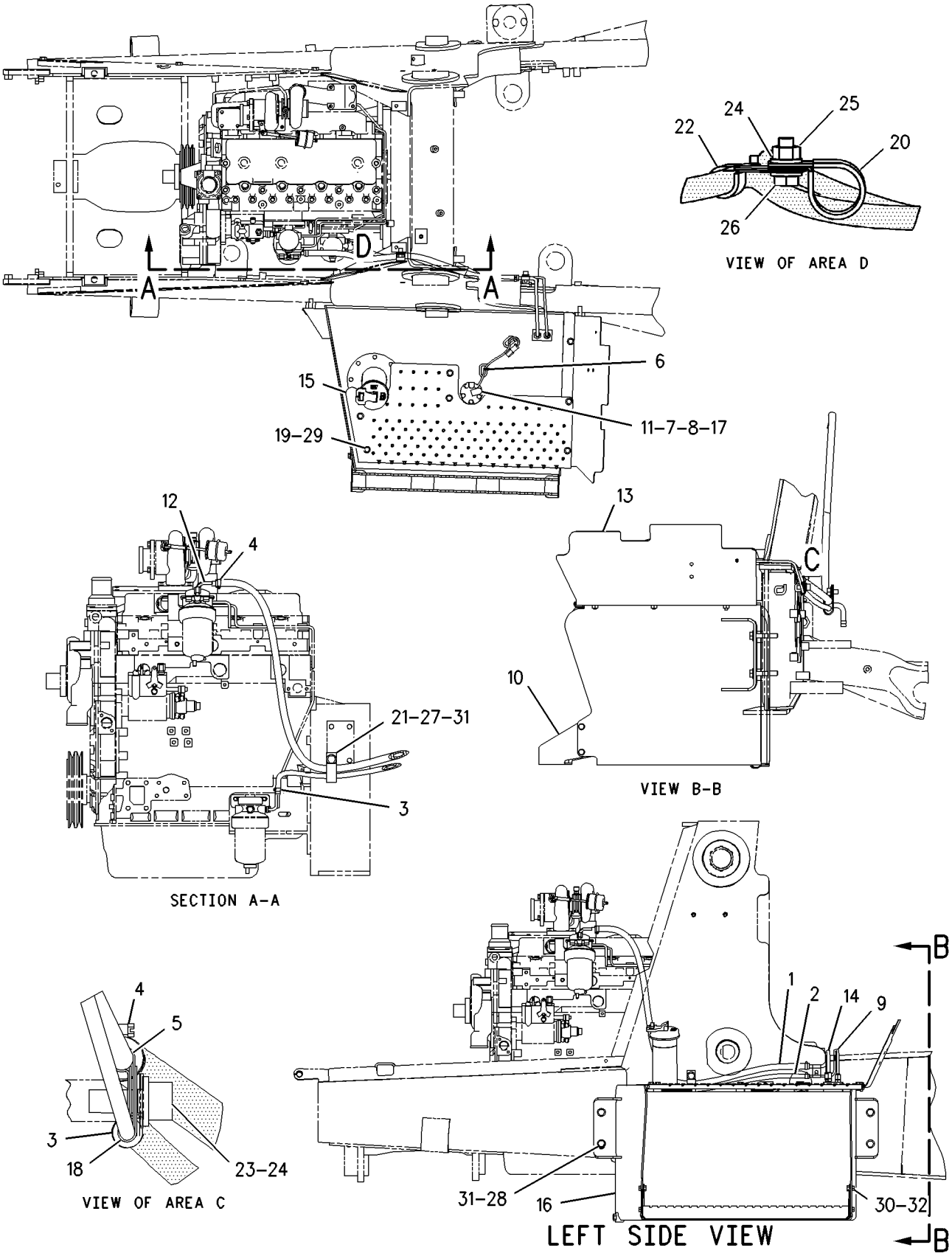

GRAPHIC #1 **<END>** g00882638

FUEL SYSTEM

214-6949 TANK GP-FUEL

S/N: BFP12900-UP

PART OF 214-6908 TANK & MTG GP-FUEL

SMCS-1273 **i02014882**

NOTE	REF NO	GRAPHIC REF	PART NUMBER	QTY	PART NAME 1 2 3 4 5 6 (PRODUCT LEVEL)	SEE PAGE
	1	1	**8L-8413**	1	STRAP-CABLE	
	2	1	**9R-7240**	1	GASKET	
	3	1	**131-0232**	1	COVER	
	4	1	**187-8936**	1	SENDER AS-FUEL LEVEL	
		1	**3E-3365**	1	WEDGE-RECEPTACLE LOCK (2-PIN)	
		1	**102-8802**	1	KIT-RECEPTACLE (2-PIN)	
		1	**186-3735**	2	PIN-CONNECTOR	
Y	5	1	*244-2603*	1	TANK GP-FUEL	268
M	6	1	**123-4950**	1	SCREW-PAN HEAD (M6X1X16-MM)	

M-METRIC PART
Y-SEPARATE ILLUSTRATION

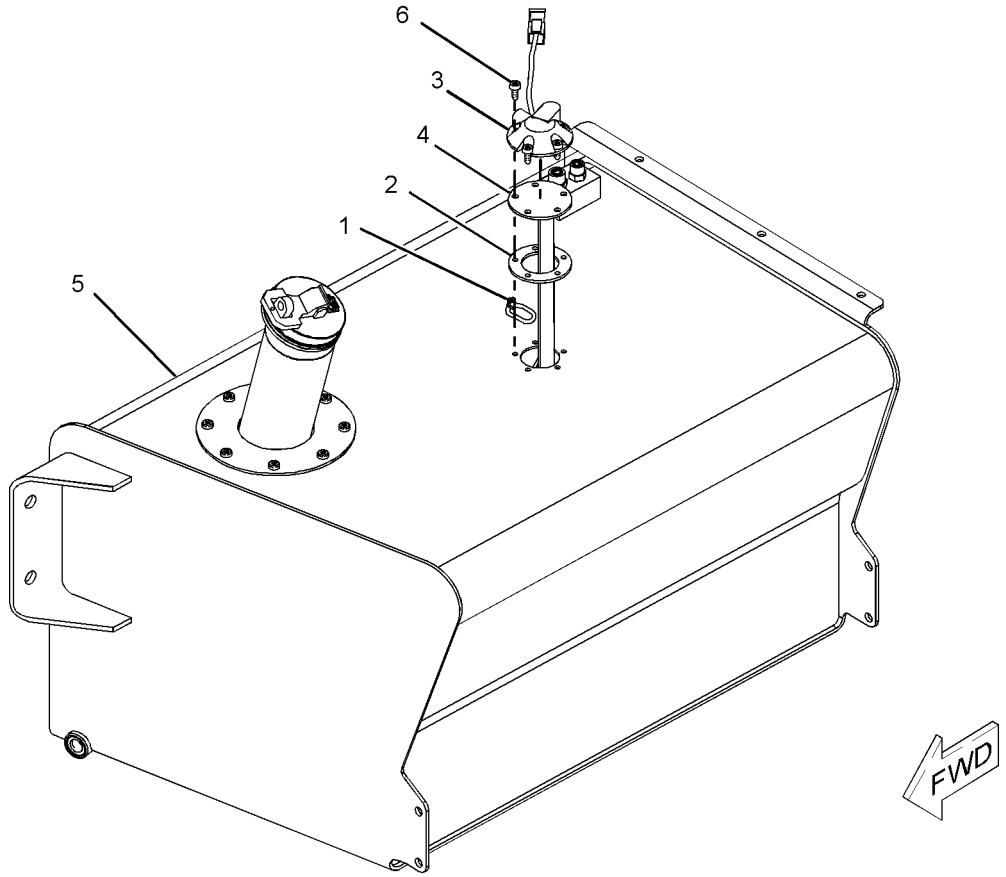

GRAPHIC #1 **<END>** g01042635

FUEL SYSTEM

244-2603 TANK GP-FUEL

S/N: BFP12900-UP

PART OF 214-6949 TANK GP-FUEL

SMCS-1273 **i02014793**

NOTE	REF NO	GRAPHIC REF	PART NUMBER	QTY	PART NAME 1 2 3 4 5 6 (PRODUCT LEVEL)	SEE PAGE
	1	1	**201-0330**	1	CAP-FUEL	
J	2	1	**201-1835**	1	TUBE AS	
	3	1	**214-6948**	1	TANK AS-FUEL	
			7T-1099	2	LINK	
	4	1	**106-8020**	1	GASKET	
M	5	1	**123-4950**	8	SCREW-PAN HEAD (M6X1X16-MM)	
	6	1	*148-8326*	2	CONNECTOR GP	
			3J-7354	1	SEAL-O-RING	
			6V-8397	1	SEAL-O-RING	
			6V-9872	1	CONNECTOR	
	7	1	*148-8407*	1	PLUG GP	
			3J-1907	1	SEAL-O-RING	
			9S-4191	1	PLUG	

J-180-3730 (FILTER SCREEN) OPTIONAL SERVICE PART
M-METRIC PART

244-2603 **TANK GP-FUEL** ***(contd.)*** **i02014793**

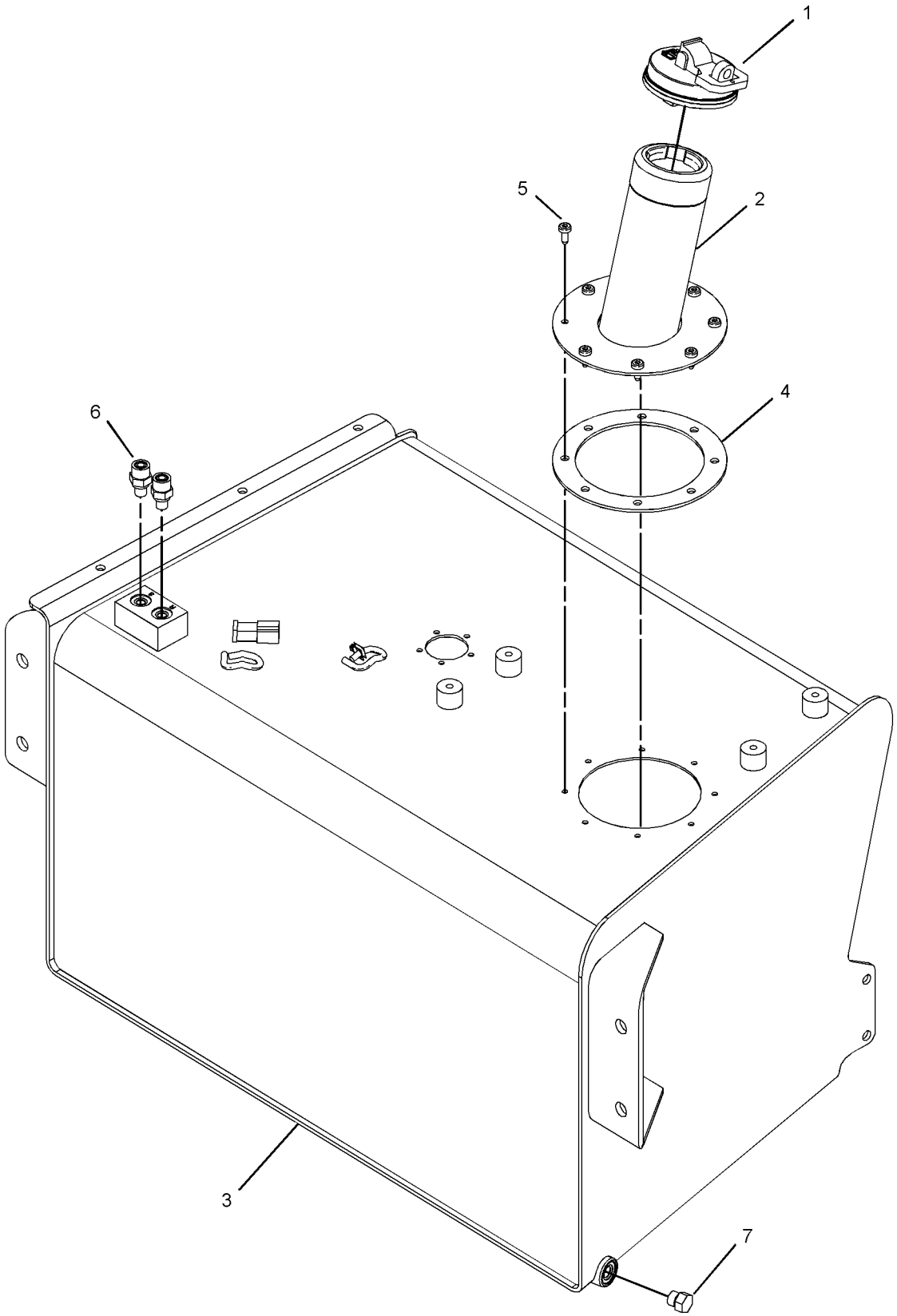

GRAPHIC #1 **<END>** g01042809

105-2812 ALTERNATOR GP-CHARGING*R

S/N: BFP12900-UP; CXP940-UP
12 VOLT, 55 AMP
PART OF 121-5830, 137-3507, 202-5748 ALTERNATOR GP-CHARGING
AN ATTACHMENT

SMCS-1405 **i01541243**

NOTE	REF NO	GRAPHIC REF	PART NUMBER	QTY	PART NAME 1 2 3 4 5 6 (PRODUCT LEVEL)	SEE PAGE
M	1	1	**5C-2890**	1	NUT (M6X1 THD)	
	2	1	**8T-4205**	1	WASHER-HARD (7.2X14.5X2MM THK)	
	3	1	**1H-3244**	1	LOCKWASHER (6.64X11.91X.65MM THK)	
	4	1	**114-2863**	1	PULLEY-ALTERNATOR	
	5	1	**114-2865**	1	FRAME AS-ALTERNATOR	
	6	1	**114-2866**	1	ROTOR AS-ALTERNATOR	
	7	1	**114-2867**	1	FRAME-ALTERNATOR	
	8	1	**114-2868**	1	REGULATOR AS-ALTERNATOR	
	9	1	**114-2869**	1	RECTIFIER AS-ALTERNATOR	
	10	1	**114-2870**	1	HOLDER AS-ALTERNATOR	
	11	1	**114-2871**	1	COVER-ALTERNATOR	
	12	1	**114-2872**	1	BUSHING-ALTERNATOR	
					AVAILABLE REPAIR KIT(S):	
			114-2873	1	KIT-ALTERNATOR BEARING	
					(INCLUDES BEARINGS, COVERS, PLATE, SCREW, AND WASHER)	
			114-2874	1	KIT-ALTERNATOR HARDWARE	
					(INCLUDES NUTS AND BOLTS)	
			114-2875	1	KIT-ALTERNATOR HARDWARE	
					(INCLUDES SCREWS)	

M-METRIC PART

105-2812 ALTERNATOR GP-CHARGING ***(contd.)*** **i01541243**

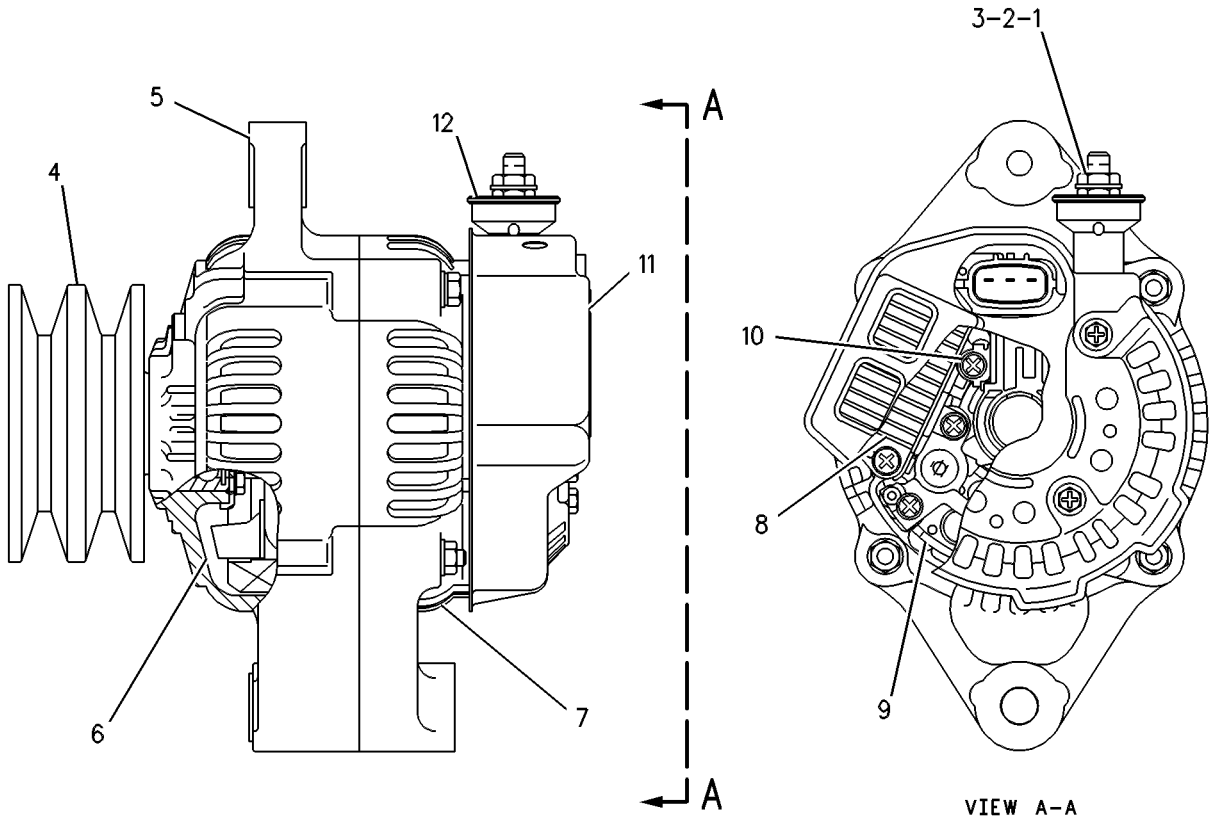

GRAPHIC #1 **<END>** g00131316

121-5830 ALTERNATOR GP-CHARGING

S/N: CXP940-UP
AN ATTACHMENT

SMCS-1405 **i00784875**

NOTE	PART NUMBER	QTY	PART NAME 1 2 3 4 5 6 (PRODUCT LEVEL)	SEE PAGE
Y	**105-2812**	1	ALTERNATOR GP-CHARGING	270
	2P-4191	1	V-BELT	

Y-SEPARATE ILLUSTRATION

<END>

137-3507 ALTERNATOR GP-CHARGING

S/N: CXP940-UP
AN ATTACHMENT

SMCS-1405 **i00778502**

NOTE	PART NUMBER	QTY	PART NAME 1 2 3 4 5 6 (PRODUCT LEVEL)	SEE PAGE
Y	**105-2812**	1	ALTERNATOR GP-CHARGING	270
	4N-8597	1	V-BELT SET (INCLUDES 2 BELTS)	

Y-SEPARATE ILLUSTRATION

<END>

202-5748 ALTERNATOR GP-CHARGING

S/N: BFP12900-UP
AN ATTACHMENT

SMCS-1405 **i01632369**

NOTE	PART NUMBER	QTY	PART NAME 1 2 3 4 5 6 (PRODUCT LEVEL)	SEE PAGE
YR	**105-2812**	1	ALTERNATOR GP-CHARGING	270

R-REMFG PART MAY BE AVAILABLE
Y-SEPARATE ILLUSTRATION

<END>

202-5749 ALTERNATOR GP-CHARGING

S/N: BFP12900-UP
90 AMP
AN ATTACHMENT

SMCS-1405 **i01843773**

NOTE	REF NO	GRAPHIC REF	PART NUMBER	QTY	PART NAME 1 2 3 4 5 6 (PRODUCT LEVEL)	SEE PAGE
	1	1	**217-1589**	1	ALTERNATOR GP-CHARGING	
M	1A	1	**5C-2890**	1	NUT (M6X1 THD)	
	1B	1	**8T-4205**	1	WASHER-HARD (7.2X14.5X2MM THK)	
	1C	1	**1H-3244**	1	LOCKWASHER	
M	2	1	**8T-7547**	1	BOLT (M8X1.25X30MM)	

M-METRIC PART

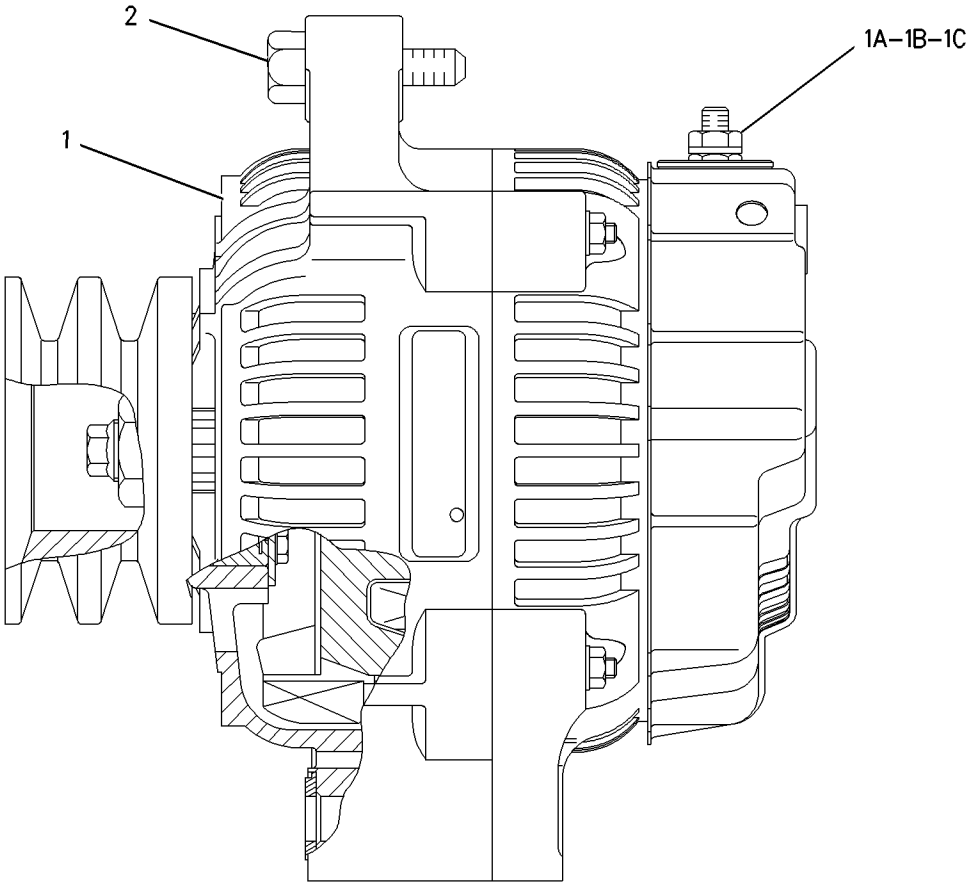

GRAPHIC #1 **<END>** g00993717

237-0027 ALTERNATOR GP-CHARGING

S/N: CRS1-UP
PART OF 234-3058, 234-3059 ENGINE AR-PRIMARY
AN ATTACHMENT

SMCS-1405 **i01991982**

NOTE	REF NO	GRAPHIC REF	PART NUMBER	QTY	PART NAME 1 2 3 4 5 6 (PRODUCT LEVEL)	SEE PAGE
	1	1	**6B-0933**	1	SPACER (10.31X19.05X6.35MM THK)	
	2	1	**6I-0260**	1	BOLT (M8X1.25X25MM)	
	3	1	**6I-0454**	1	BOLT (M10X1.5X70MM)	
	4	1	**6I-0594**	1	NUT (M10X1.5)	
	5	1	**7W-2632**	1	WASHER (8.5X16.8X1.6MM THK)	
	6	1	**067-6366**	1	WASHER (M8)	
	7	1	**100-8451**	1	BOLT	
	8	1	**113-6349**	1	NUT	
	9	1	**140-8783**	2	BOLT (M10X45MM)	
	10	1	**225-3145**	1	ALTERNATOR GP-CHARGING	
	11	1	**233-9530**	1	BRACKET	
	12	1	**233-9531**	1	LEVER-ADJUSTING	
	13	1	**233-9532**	1	PULLEY-ALTERNATOR	

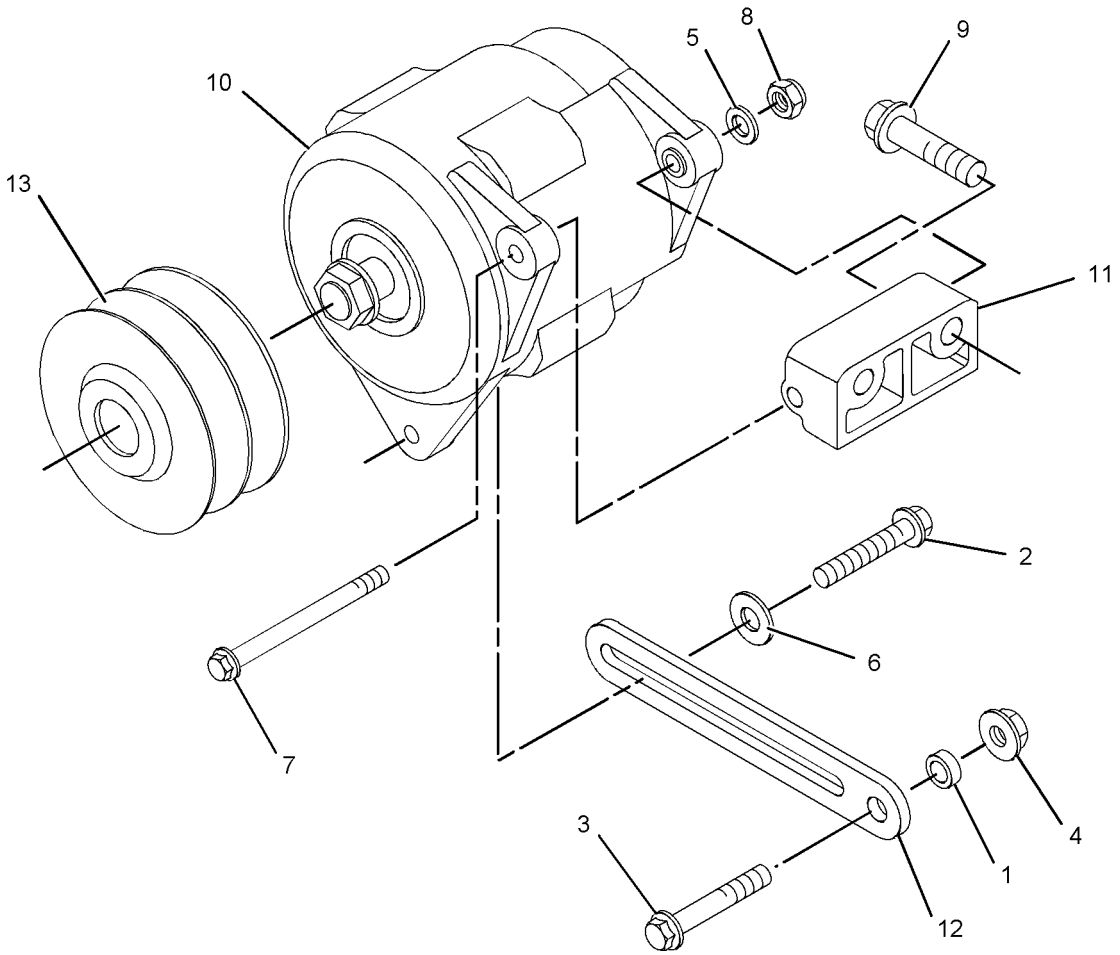

GRAPHIC #1 **<END>** g01039667

119-8016 BATTERY GP

S/N: BFP12900-UP
DUAL BATTERY
AN ATTACHMENT

SMCS-1401 **i02019243**

NOTE	REF NO	GRAPHIC REF	PART NUMBER	QTY	PART NAME 1 2 3 4 5 6 (PRODUCT LEVEL)	SEE PAGE
	1	1	**141-1658**	1	CABLE AS-BATTERY (POSITIVE)	
E		1	**5P-0761**		CABLE (00-GA)(RED) (94CM)	
D		1	**6V-2722**		TUBE-HEAT SHRINK (0.07M)	
		1	**1S-7252**	1	TERMINAL-RING (FOR 3/8-IN BOLT)	
		1	**8Y-8081**		TUBE	
		1	**7T-9987**	1	COVER-TERMINAL	
		1	**8N-0869**	1	COVER-TERMINAL (RED) (RING)	
		1	**3T-3349**	1	STUDBOLT (M18X57.5-MM)	
		1	**1M-6120**	2	NUT (5/16-18-THD)	
	1A	1	**3S-6049**	1	TERMINAL AS-BATTERY (POSITIVE)	
		1	**1M-6119**	1	BOLT (5/16-18X1.375-IN)	
		1	**1M-6120**	1	NUT (5/16-18-THD)	
C	2	1	**178-9242**	2	BRACKET AS	
	3	1	**130-8293**	1	CABLE AS-BATTERY (NEGATIVE)	
E		1	**5P-0747**		CABLE (00-GA)(BLACK) (46CM)	
	3A	1	**1S-7251**	1	TERMINAL-RING (FOR 1/2-IN BOLT)	
	3B	1	**7N-5274**	2	COVER-TERMINAL (BLACK) (BATTERY)	
	3C	1	**3S-6050**	2	TERMINAL AS-BATTERY (NEGATIVE)	
					(EACH INCLUDES)	
		1	**1M-6119**	1	BOLT (5/16-18X1.375-IN)	
		1	**1M-6120**	1	NUT (5/16-18-THD)	
	4	1	**7X-7729**	4	WASHER (11X25X3-MM THK)	
M	5	1	**8T-5005**	2	BOLT (M10X1.50X70-MM)	
	6	1	**3T-5760**	2	BATTERY (12-VOLT, 750-AMPERE) (750 AMP)	
	7	1	**4H-2558**	1	GROMMET	
	8	1	**8T-4223**	1	WASHER-HARD (13.5X25.5X3-MM THK)	
	9	1	**7K-1181**	2	STRAP-CABLE	
	10	1	**4P-8134**	1	CLIP	
	11	1	**3S-2093**	2	STRAP-CABLE	
M	12	1	**8T-4133**	2	NUT (M10X1.5-THD)	
	13	1	**038-9317**	2	TREAD	
M	14	1	**8T-4137**	2	BOLT (M10X1.5X20-MM)	

C-CHANGE FROM PREVIOUS TYPE
D-ORDER BY THE METER
E-ORDER BY THE CENTIMETER
M-METRIC PART

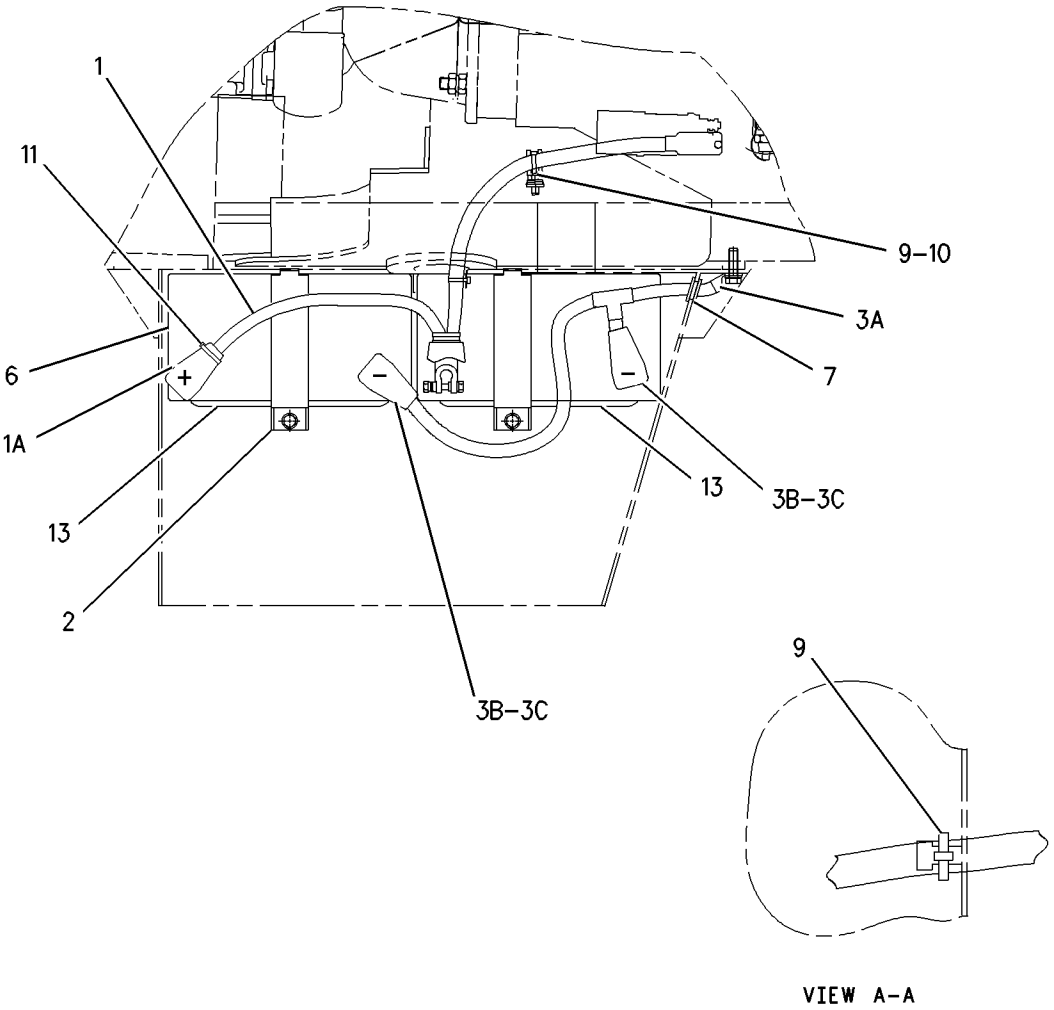

GRAPHIC #1 **<END>** g00802459

122-5865 BATTERY GP

S/N: BFP12900-UP; CXP940-UP
AN ATTACHMENT

SMCS-1401 **i02019248**

NOTE	REF NO	GRAPHIC REF	PART NUMBER	QTY	PART NAME 1 2 3 4 5 6 (PRODUCT LEVEL)	SEE PAGE
	1	1	**3T-5760**	1	BATTERY (12-VOLT, 750-AMPERE) (750 AMP)	
	2	1	**8T-4223**	1	WASHER-HARD (13.5X25.5X3-MM THK)	
	3	1	**7X-7729**	2	WASHER (11X25X3-MM THK)	
C	4	1	**178-9242**	1	BRACKET AS	
	5	1	**130-8292**	1	CABLE AS-BATTERY (NEGATIVE)	
E		1	**5P-0747**		CABLE (00-GA)(BLACK) (13CM)	
	5A	1	**1S-7251**	1	TERMINAL-RING (FOR 1/2-IN BOLT)	
	5B	1	**7N-5274**	1	COVER-TERMINAL (BLACK) (BATTERY)	
	5C	1	**3S-6050**	1	TERMINAL AS-BATTERY (NEGATIVE)	
		1	**1M-6119**	1	BOLT (5/16-18X1.375-IN)	
		1	**1M-6120**	1	NUT (5/16-18-THD)	
	6	1	**141-1656**	1	CABLE AS-BATTERY (POSITIVE)	
		1	**1S-7252**	1	TERMINAL-RING (FOR 3/8-IN BOLT)	
E		1	**5P-0761**		CABLE (00-GA)(RED) (56CM)	
D		1	**6V-2722**		TUBE-HEAT SHRINK (0.07M)	
		1	**8N-0869**	1	COVER-TERMINAL (RED)	
		1	**8Y-8081**		TUBE	
		1	**3S-6049**	1	TERMINAL AS-BATTERY (POSITIVE)	
		1	**1M-6120**	1	NUT (5/16-18-THD)	
		1	**1M-6119**	1	BOLT (5/16-18X1.375-IN)	
	7	1	**4H-2558**	1	GROMMET	
	8	1	**7K-1181**	2	STRAP-CABLE	
M	9	1	**8T-5005**	1	BOLT (M10X1.50X70-MM)	
	10	1	**4P-8134**	1	CLIP	
	11	1	**3S-2093**	1	STRAP-CABLE	
M	12	1	**8T-4133**	1	NUT (M10X1.5-THD)	
	13	1	**038-9317**	1	TREAD	
M	14	1	**8T-4137**	2	BOLT (M10X1.5X20-MM)	
	15	1	**8T-4121**	1	WASHER-HARD (11X21X2.5-MM THK)	

C-CHANGE FROM PREVIOUS TYPE
D-ORDER BY THE METER
E-ORDER BY THE CENTIMETER
M-METRIC PART

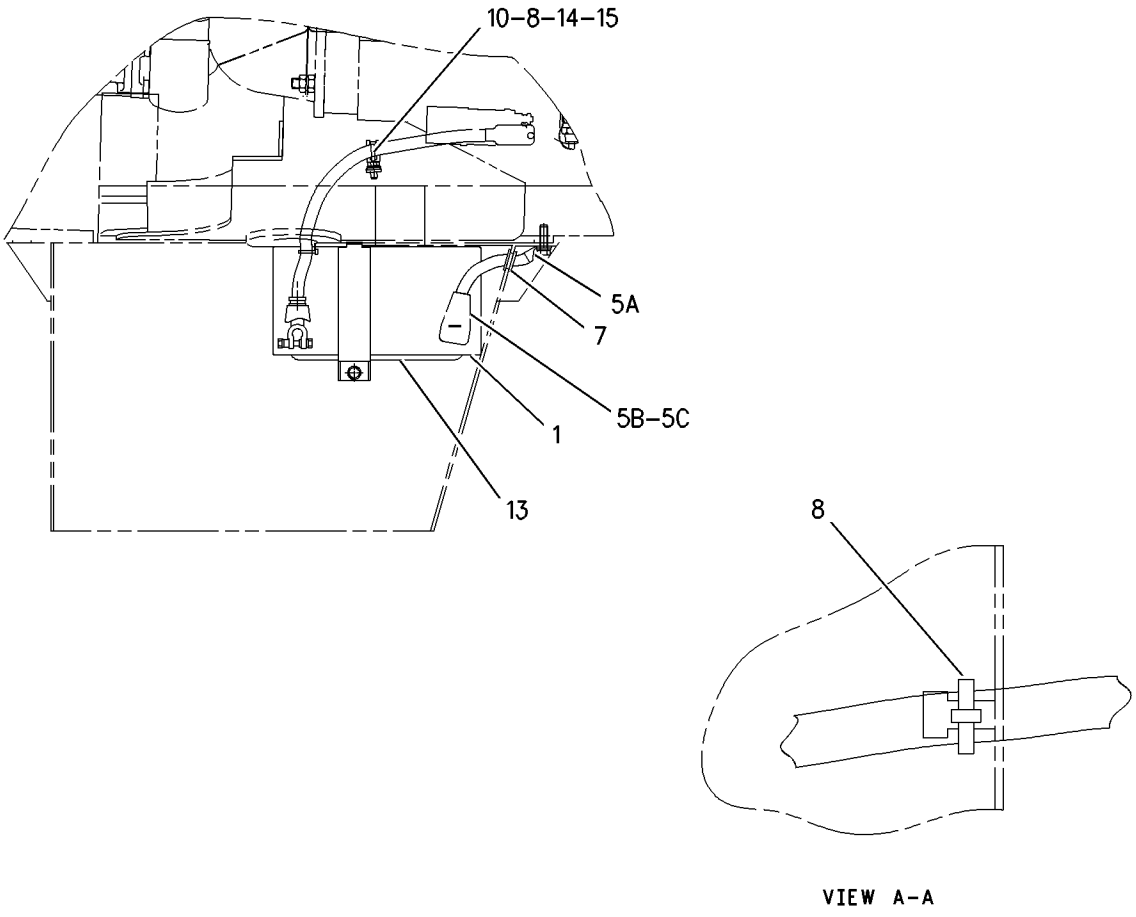

GRAPHIC #1 **<END>** g00852156

235-2853 BATTERY GP

S/N: BFP12900-UP

PART OF 214-6950 CHASSIS AR

SMCS-1401 **i02012891**

NOTE	REF NO	GRAPHIC REF	PART NUMBER	QTY	PART NAME 1 2 3 4 5 6 (PRODUCT LEVEL)	SEE PAGE
	1	1	**7K-1181**	2	STRAP-CABLE	
	2	1	**038-9317**	1	TREAD	
	3	1	**240-4639**	1	BRACKET AS	
	4	1	**213-6088**	1	CABLE AS-BATTERY (NEGATIVE)	
		1	**1S-7251**	1	TERMINAL-RING (FOR 1/2IN BOLT)	
E		1	**5P-0747**		CABLE (00GA)(BLACK) (61CM)	
		1	**1M-6119**	1	BOLT (5/16-18X1.375 IN)	
		1	**1M-6120**	2	NUT (5/16-18 THD)	
	5	1	**230-6368**	1	BATTERY (12 VOLT, HEAVY DUTY)	
	6	1	**235-5776**	1	CABLE AS (POSITIVE)	
		1	**1S-7251**	1	TERMINAL-RING (FOR 1/2IN BOLT)	
		1	**5P-0761**		CABLE (00GA)(RED) (95CM)	
		1	**8L-8413**	1	STRAP-CABLE	
		1	**1M-6119**	1	BOLT (5/16-18X1.375 IN)	
		1	**1M-6120**	1	NUT (5/16-18 THD)	
		1	**6V-8801**	2	NUT (3/8-16 THD)	
	7	1	**4H-2558**	1	GROMMET	
	8	1	**7X-7729**	2	WASHER (11X25X3MM THK)	
M	9	1	**8T-4133**	1	NUT (M10X1.5 THD)	
M	10	1	**8T-4137**	1	BOLT (M10X1.5X20MM)	
M	11	1	**8T-5005**	1	BOLT (M10X1.50X70MM)	

E-ORDER BY THE CENTIMETER
M-METRIC PART

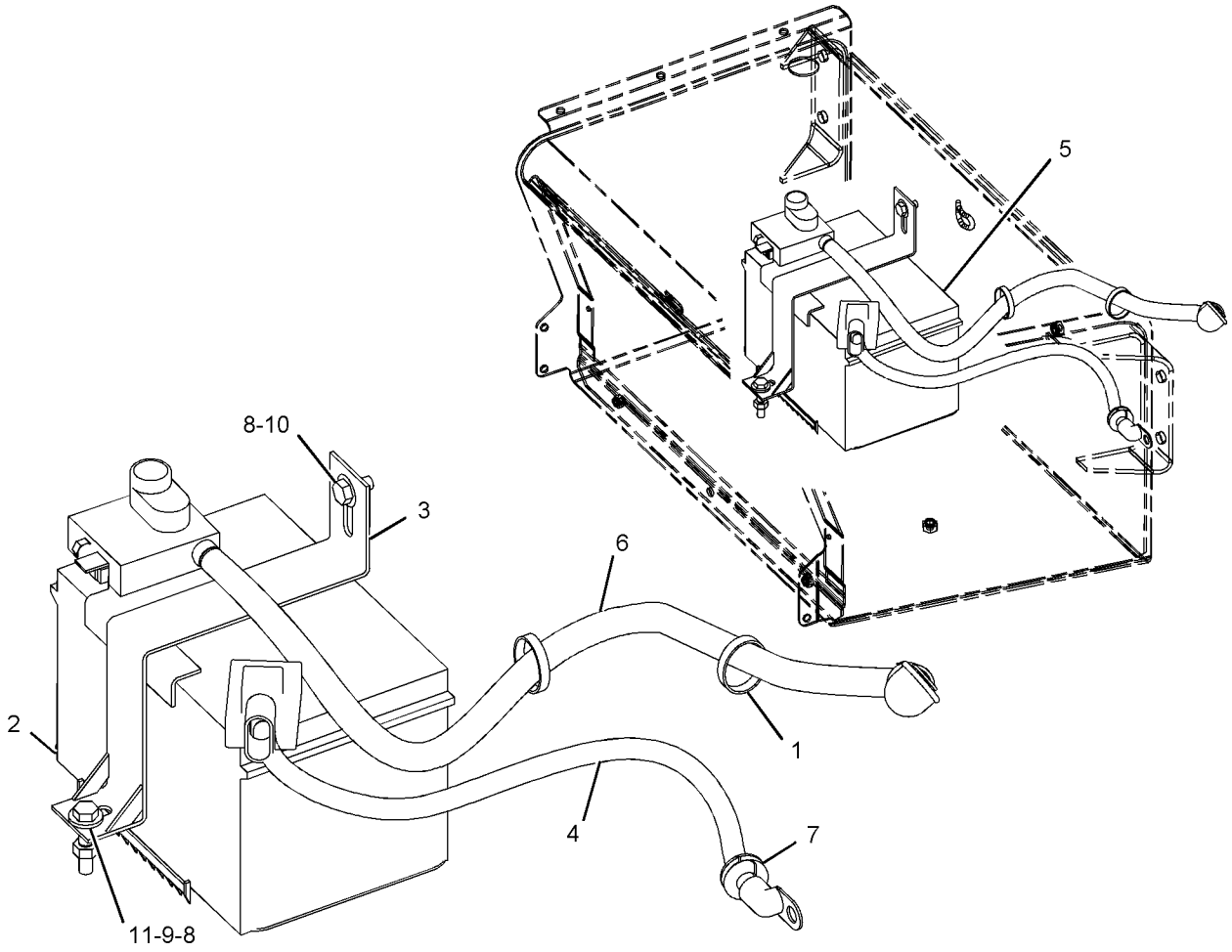

GRAPHIC #1 **<END>** g01034109

235-2854 BATTERY GP–HEAVY DUTY

S/N: BFP12900-UP
AN ATTACHMENT

SMCS-1401 **i02019251**

NOTE	REF NO	GRAPHIC REF	PART NUMBER	QTY	PART NAME 1 2 3 4 5 6 (PRODUCT LEVEL)	SEE PAGE
	1	1	**038-9317**	1	TREAD	
	2	1	**213-6091**	1	CABLE AS-BATTERY (POSITIVE)	
E	2A	1	**5P-0761**		CABLE (00-GA)(RED) (35CM)	
	2B	1	**7T-9987**	1	COVER-TERMINAL	
		1	**8L-8413**	1	STRAP-CABLE	
		1	**8L-8413**	2	STRAP-CABLE	
		1	**8N-0869**	1	COVER-TERMINAL (RED)	
		1	**8S-3020**	1	TERMINAL-CABLE	
E	2C	1	**8Y-8081**		TUBE (35CM)	
	2D	1	**3S-6049**	1	TERMINAL AS-BATTERY (POSITIVE)	
		1	**1M-6119**	1	BOLT (5/16-18X1.375-IN)	
		1	**1M-6120**	1	NUT (5/16-18-THD)	
	3	1	**213-6092**	1	CABLE AS-BATTERY (NEGATIVE)	
	3A	1	**1S-7252**	1	TERMINAL-RING (FOR 3/8-IN BOLT)	
E	3B	1	**5P-0747**		CABLE (00-GA)(BLACK) (47CM)	
	3C	1	**7N-5274**	1	COVER-TERMINAL (BLACK)	
		1	**8L-8413**	1	STRAP-CABLE	
		1	**8L-8413**	2	STRAP-CABLE	
		1	**9G-8909**	1	COVER-TERMINAL (BLACK)	
	3D	1	**3S-6050**	1	TERMINAL AS-BATTERY (NEGATIVE)	
		1	**1M-6119**	1	BOLT (5/16-18X1.375-IN)	
		1	**1M-6120**	1	NUT (5/16-18-THD)	
	4	1	**230-6368**	1	BATTERY (12-VOLT, HEAVY DUTY)	
	5	1	**240-4639**	1	BRACKET AS	
	6	1	**7X-7729**	2	WASHER (11X25X3-MM THK)	
M	7	1	**8T-4133**	1	NUT (M10X1.5-THD)	
M	8	1	**8T-4137**	1	BOLT (M10X1.5X20-MM)	
M	9	1	**8T-5005**	1	BOLT (M10X1.50X70-MM)	

E-ORDER BY THE CENTIMETER
M-METRIC PART

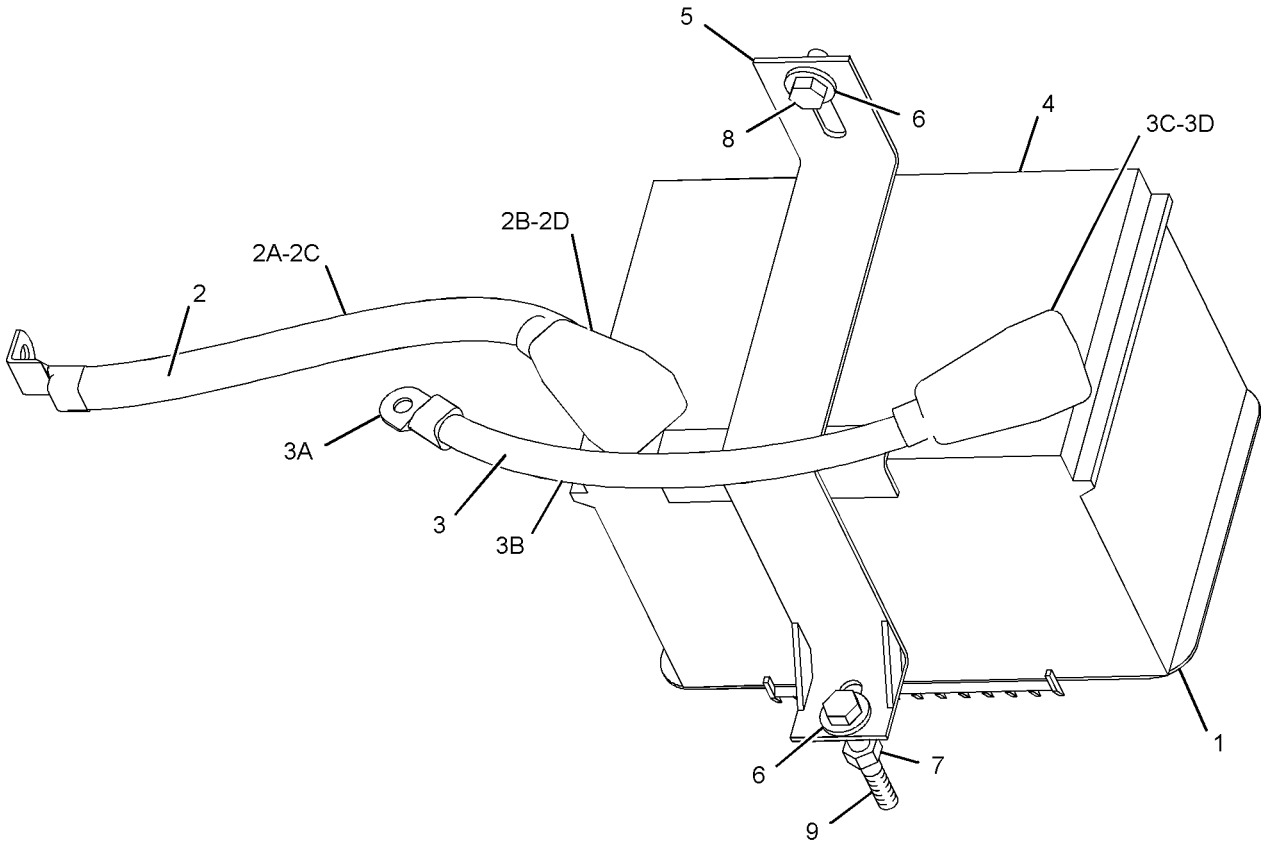

GRAPHIC #1 **<END>** g01023322

232-6661 GLOW PLUG GP

S/N: CRS1-UP
PART OF 234-3058, 234-3059 ENGINE AR-PRIMARY
AN ATTACHMENT

SMCS-1412 **i01988281**

NOTE	REF NO	GRAPHIC REF	PART NUMBER	QTY	PART NAME 1 2 3 4 5 6 (PRODUCT LEVEL)	SEE PAGE
	1	1	**244-3316**	1	SUPPORT	
	2	1	**232-6662**	4	GLOW PLUG	

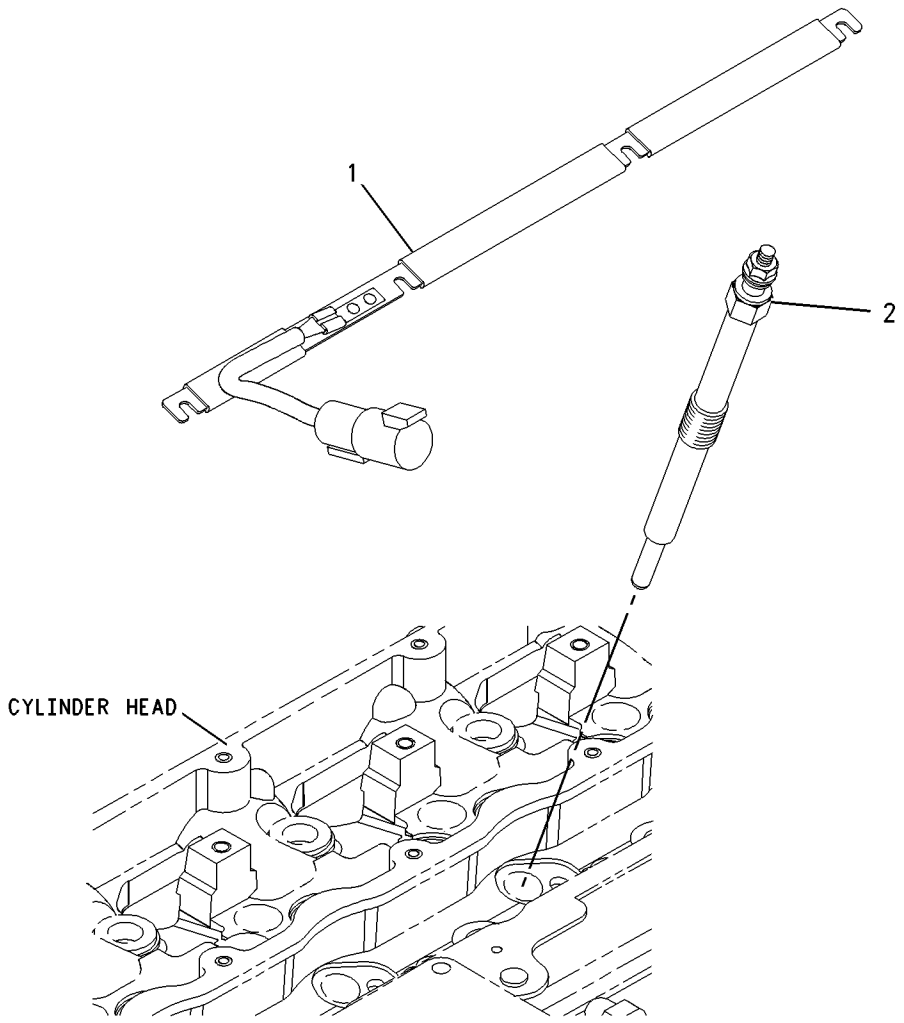

GRAPHIC #1 **<END>** g00950927

166-0658 HEATER GP-JACKET WATER

S/N: BFP12900-UP
120 VOLT
AN ATTACHMENT

SMCS-1383 **i01028780**

NOTE	REF NO	GRAPHIC REF	PART NUMBER	QTY	PART NAME 1 2 3 4 5 6 (PRODUCT LEVEL)	SEE PAGE
	1	1	**165-8357**	1	BRACKET AS	
M	2	1	**8T-4189**	2	BOLT (M8X1.25X20MM)	
	3	1	**8T-4224**	2	WASHER-HARD (2MM THK)	
	4	1	**130-0165**	1	RECEPTACLE-COVERED	
	5	1	**161-4150**	1	CORD AS	
	6	1	**161-8198**	1	ELEMENT AS-JACKET WATER HEATER	
		1	**161-8200**	1	KIT-SEAL	
	7	1	**3S-2093**	7	STRAP-CABLE (1.75IN DIA)	

M-METRIC PART

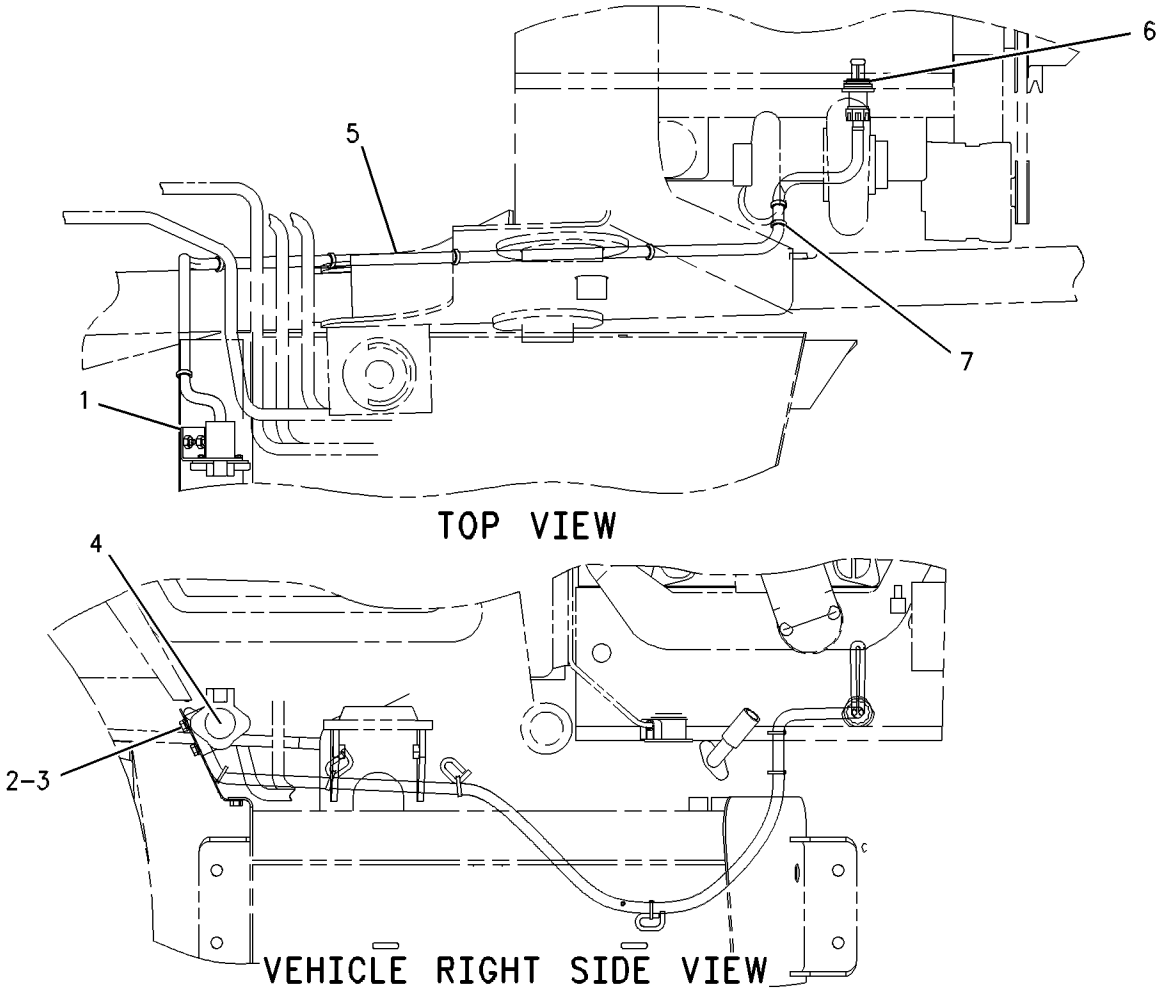

GRAPHIC #1 **<END>** g00533739

166-0659 HEATER GP-JACKET WATER

S/N: BFP12900-UP
240 VOLT
AN ATTACHMENT

SMCS-1383 **i01655307**

NOTE	REF NO	GRAPHIC REF	PART NUMBER	QTY	PART NAME 1 2 3 4 5 6 (PRODUCT LEVEL)	SEE PAGE
	1	1	**161-8199**	1	ELEMENT AS-JACKET WATER HEATER	
		1	**161-8200**	1	KIT-SEAL	
	2	1	**162-3874**	1	CORD AS (JACKET WATER HEATER)	
	3	1	**3S-2093**	7	STRAP-CABLE	

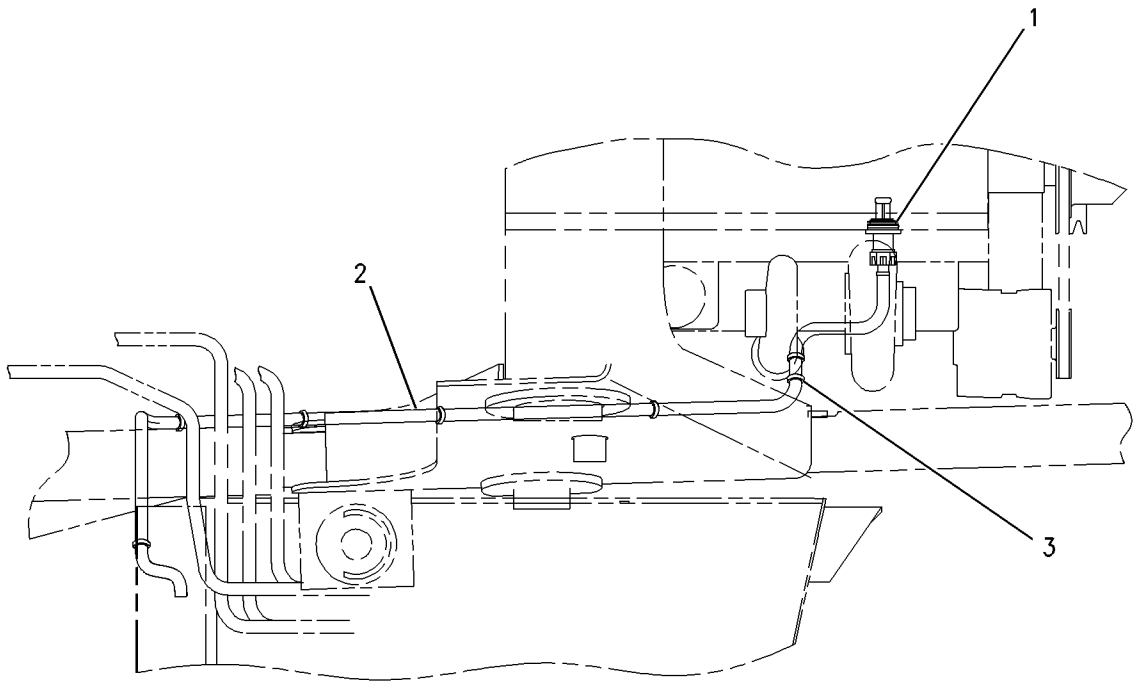

TOP VIEW

GRAPHIC #1 **<END>** g00712660

234-1711 HEATER GP-JACKET WATER

S/N: BFP12900-UP; CXP940-UP
AN ATTACHMENT

SMCS-1383 **i02012717**

NOTE	REF NO	GRAPHIC REF	PART NUMBER	QTY	PART NAME 1 2 3 4 5 6 (PRODUCT LEVEL)	SEE PAGE
	1	1	*231-3054*	1	HEATER GP-JACKET WATER	
		1	**219-3273**	1	ELEMENT AS-JACKET WATER HEATER (120-VOLT, 1000-WATT)	
		1	**133-6517**	1	CAP AS-DUST	
		1	**133-3413**	1	KIT-SEAL	
					(KIT INCLUDES SEAL, SPACER, & RINGS.)	
		1	**231-3052**	1	CORD AS	
	2	1	**130-0165**	1	RECEPTACLE AS	
		1	**1M-1230**	2	NUT & LOCK AS	
		1	**168-4511**	2	SCREW-PAN HEAD (NO 10X25.4-MM)	
	3	1	**165-8357**	1	BRACKET AS	
M		1	**8T-3612**	2	NUT-WELD (M8X1.25-THD)	
	4	1	**3S-2093**	3	STRAP-CABLE	
M	5	1	**8T-4189**	2	BOLT (M8X1.25X20-MM)	
M	6	1	**8T-4224**	2	WASHER-HARD (8.8X16X2-MM THK)	

M-METRIC PART

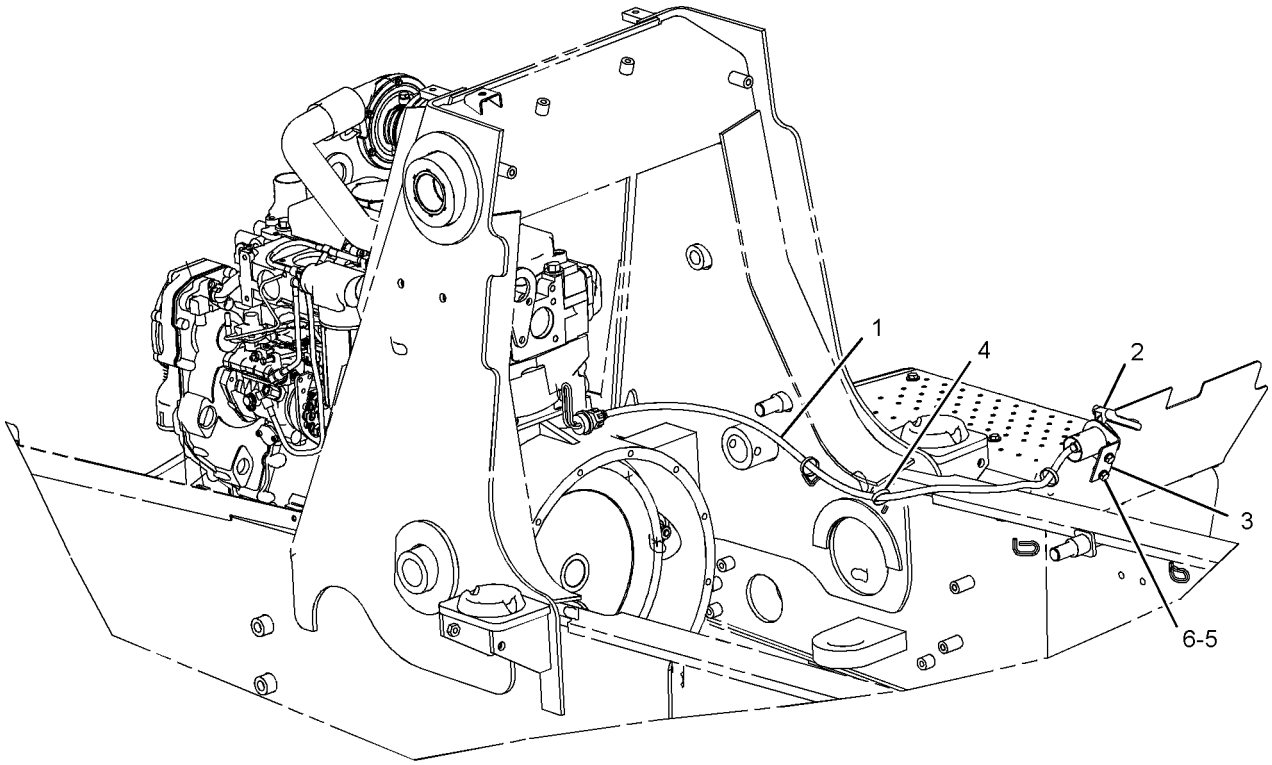

GRAPHIC #1 **<END>** g01042021

ELECTRICAL AND STARTING SYSTEM

186-0310 INSTALLATION GP-SECURITY

S/N: BFP12900-UP
AN ATTACHMENT

SMCS-7631 **i02019328**

NOTE	REF NO	GRAPHIC REF	PART NUMBER	QTY	PART NAME 1 2 3 4 5 6 (PRODUCT LEVEL)	SEE PAGE
	1	1	**6I-1418**	3	SPACER (8.2X12.7X28.7-MM THK)	
B	2	1	**6K-0806**	8	STRAP-CABLE	
	3	1	**8T-9655**	6	MOUNT (ISOLATION)	
	4	1	**9N-0869**	5	WASHER-HARD (8.8X25.5X2.0-MM THK)	
	5	1	**115-1615**	1	RELAY AS (12-VOLT)	
	6	1	**156-6155**	1	CONTROL GP-UNPROGRAMMED (SECURITY)	
		1	**7X-6315**	1	STRAP AS-GROUND	
		1	**134-4126**	1	WASHER (4.52X8.28X.76-MM THK)	
		1	**184-2472**	1	SCREW-PAN HEAD (NO.8-32X9.52-MM)	
	7	1	**205-0826**	1	FILM (SECURITY) (MACHINE SECURITY SYSTEM)	
	8	1	**206-5162**	1	KEY AS-ELECTRONIC (YELLOW)	
	9	1	**206-5165**	1	KEY AS-ELECTRONIC (GRAY)	
	10	1	**206-5203**	1	COIL AS (EXCITER)	
		1	**102-8802**	1	KIT-RECEPTACLE (2-PIN)	
					(KIT SERVICES RECEPTACLE AS AND WEDGE)	
		1	**198-5389**	1	FILM (IGNITION SWITCH)	
		1	**205-8257**	1	COIL AS (EXCITER)	
		1	**207-5271**	1	WASHER	
	11	1	**208-3702**	1	COIL AS	
		1	**102-8804**	1	KIT-RECEPTACLE (4-PIN)	
					(KIT SERVICES RECEPTACLE AS AND WEDGE)	
	12	1	**211-1813**	1	HARNESS AS-CONTROL (SECURITY)	
		1	**102-8802**	1	KIT-RECEPTACLE (2-PIN)	
					(KIT SERVICES RECEPTACLE AS AND WEDGE)	
		1	**102-8803**	1	KIT-RECEPTACLE (3-PIN)	
					(KIT SERVICES RECEPTACLE AS AND WEDGE)	
		1	**102-8804**	1	KIT-RECEPTACLE (4-PIN)	
					(KIT SERVICES RECEPTACLE AS AND WEDGE)	
		1	**8L-8413**	17	STRAP-CABLE	
		1	**8T-8737**	8	PLUG-SEAL	
		1	**9X-1054**	1	PLUG AS-CONNECTOR (4-PIN)	
		1	**150-6766**	1	PLUG AS-CONNECTOR (26-PIN)	
		1	**159-9322**	1	SEAL-O-RING	
		1	**155-2260**	2	KIT-CONNECTING PLUG (3-PIN)	
					(KIT SERVICES PLUG AS AND WEDGE)	
		1	**155-2270**	1	KIT-CONNECTING PLUG (2-PIN)	
					(KIT SERVICES PLUG AS AND WEDGE)	
		1	**155-2271**	1	KIT-CONNECTING PLUG (4-PIN)	
					(KIT SERVICES PLUG AS AND WEDGE)	
M	13	1	**129-3178**	1	LOCKNUT (M6X1-THD)	
M	14	1	**147-4502**	1	BOLT-SOCKET HEAD (M6X1X10.0-MM)	
	15	1	**165-5655**	1	LAMP AS (12-VOLT)	
	16	1	**4P-7581**	1	CLIP	
M	17	1	**5C-7261**	3	NUT (M8X1.25-THD)	
M	18	1	**7X-0818**	3	BOLT (M8X1.25X45-MM)	

B-USE AS REQUIRED
M-METRIC PART

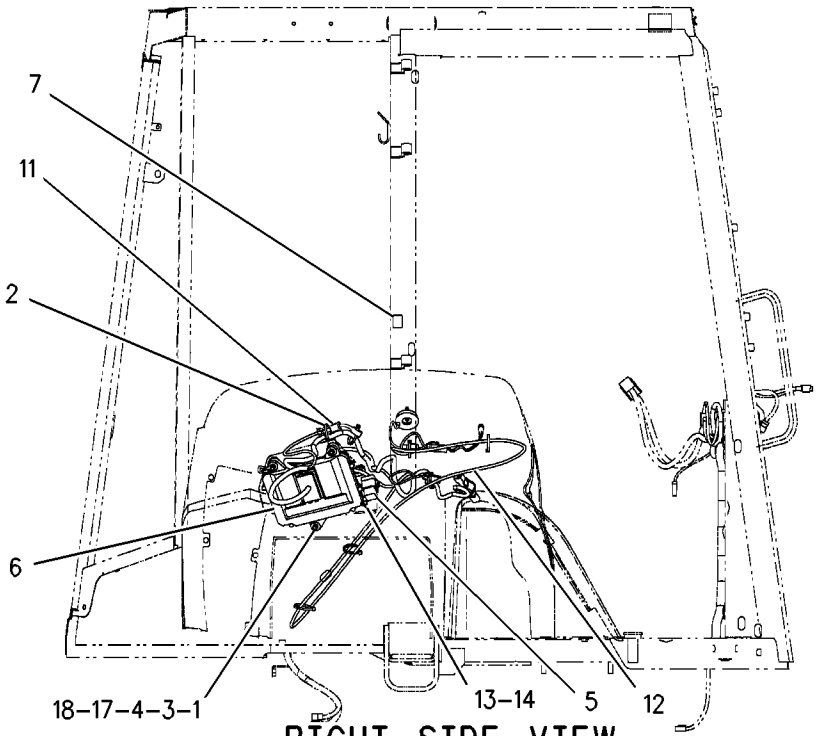

RIGHT SIDE VIEW

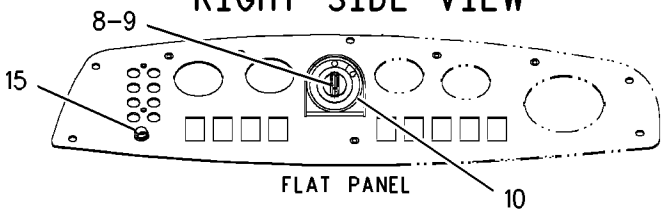

FLAT PANEL

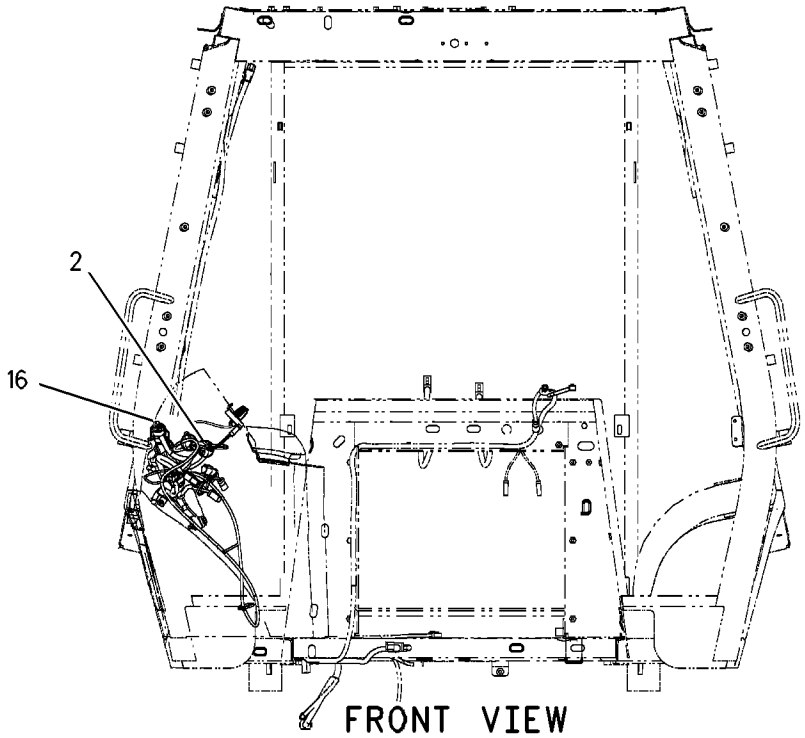

FRONT VIEW

GRAPHIC #1 **<END>** g00859939

207-5262 INSTALLATION GP-SECURITY

S/N: BFP12900-UP

PART OF 222-9924 INSTALLATION GP-SECURITY

SMCS-7631 **i02014197**

NOTE	REF NO	GRAPHIC REF	PART NUMBER	QTY	PART NAME 1 2 3 4 5 6 (PRODUCT LEVEL)	SEE PAGE
	1	1	*156-6155*	1	CONTROL GP-UNPROGRAMMED (SECURITY)	
	1A	1	**7X-6315**	1	STRAP AS-GROUND	
	1B	1	**184-2472**	1	SCREW-PAN HEAD (NO.8-32X9.52-MM)	
	1C	1	**134-4126**	1	WASHER (4.52X8.28X.76-MM THK)	
	2	1	**232-9737**	1	SOFTWARE GP-MACHINE (SECURITY)	
	3	1	**206-5162**	2	KEY AS-ELECTRONIC (YELLOW)	
					—OR—	
		1	**206-5165**	1	KEY AS-ELECTRONIC (GRAY)	
	4	1	**219-6314**	2	KEY RING (IDENTIFICATION)	

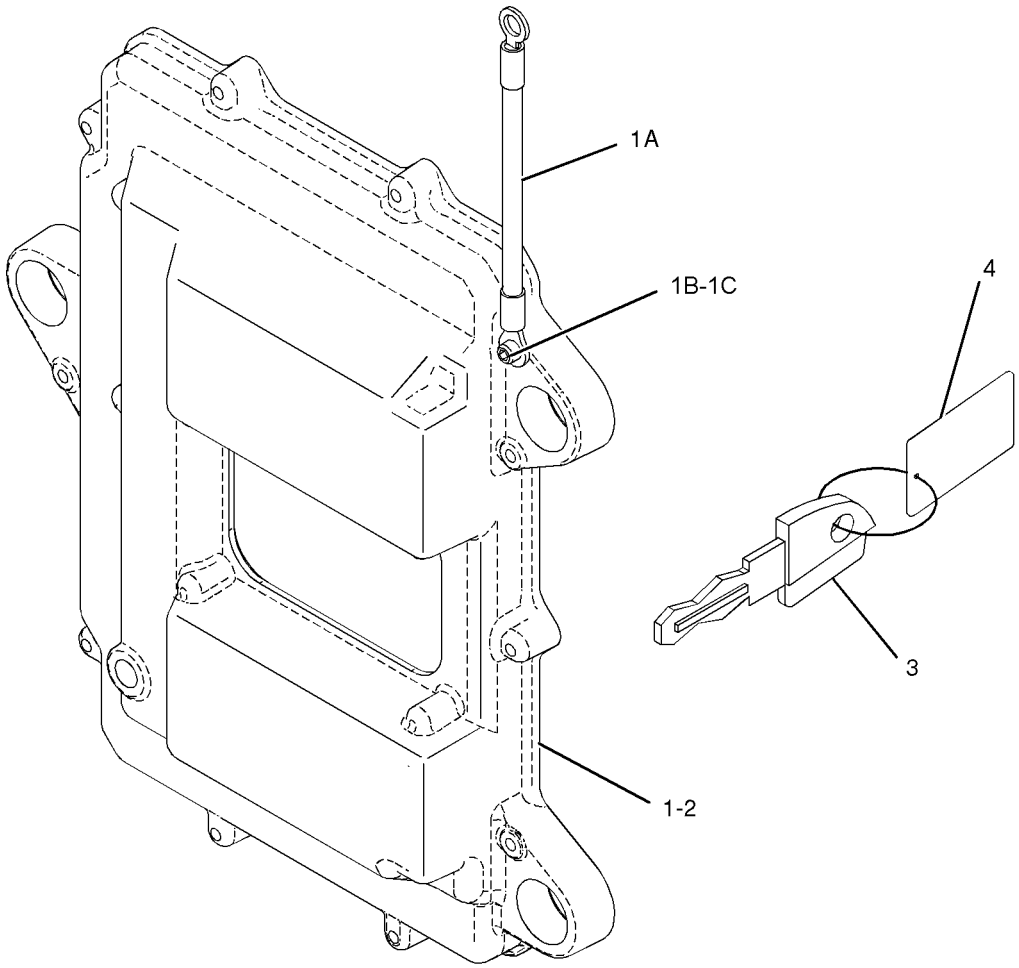

GRAPHIC #1 **<END>** g01026135

222-9924 INSTALLATION GP-SECURITY

S/N: BFP12900-UP
FIELD INSTALLATION

SMCS-7631 **i02019354**

NOTE	PART NUMBER	QTY	PART NAME 1 2 3 4 5 6 (PRODUCT LEVEL)	SEE PAGE
M	**7X-0818**	3	BOLT (M8X1.25X45-MM)	
M	**147-4502**	1	BOLT-SOCKET HEAD (M6X1X10.0-MM)	
	4P-7581	1	CLIP	
	205-8257	1	COIL AS (EXCITER)	
	186-3735	2	PIN-CONNECTOR	
	207-5271	1	WASHER	
	222-3870	1	COIL AS (FERRITE)	
	102-8802	1	KIT-RECEPTACLE (2-PIN)	
	186-3735	4	PIN-CONNECTOR	
	9X-1813		SLEEVE (15CM)	
Y	**207-5262**	1	INSTALLATION GP-SECURITY	289
	198-5389	1	FILM (IGNITION SWITCH)	
	205-0826	1	FILM (SECURITY)	
	224-3385	1	FILM (START) (MACHINE SECURITY SYSTEM)	
	211-1813	1	HARNESS AS-CONTROL (SECURITY)	
	102-8802	3	KIT-RECEPTACLE (2-PIN)	
	102-8803	1	KIT-RECEPTACLE (3-PIN)	
	102-8804	1	KIT-RECEPTACLE (4-PIN)	
	155-2260	2	KIT-CONNECTING PLUG (3-PIN)	
	155-2270	3	KIT-CONNECTING PLUG (2-PIN)	
	155-2271	1	KIT-CONNECTING PLUG (4-PIN)	
	102-8802	1	KIT-RECEPTACLE (2-PIN)	
	102-8803	1	KIT-RECEPTACLE (3-PIN)	
	165-5655	1	LAMP AS (12-VOLT)	
	186-3735	3	PIN-CONNECTOR	
M	**129-3178**	1	LOCKNUT (M6X1-THD)	
	8T-9655	6	MOUNT (ISOLATION)	
M	**5C-7261**	3	NUT (M8X1.25-THD)	
	115-1615	1	RELAY AS (12-VOLT)	
	6I-1418	3	SPACER (8.2X12.7X28.7-MM THK)	
	7K-1181	9	STRAP-CABLE	
	9N-0869	6	WASHER-HARD (8.8X25.5X2.0-MM THK)	

M-METRIC PART
Y-SEPARATE ILLUSTRATION

<END>

234-4328 LAMP GP-FLOOD

S/N: BFP12900-UP
12-VOLT. SUSPENDED
PART OF 241-0097 LIGHTING GP-FLOOD, 241-0098 LIGHTING GP-FLOOD & SIGNAL
AN ATTACHMENT

SMCS-1429, 1434 **i02001265**

NOTE	REF NO	GRAPHIC REF	PART NUMBER	QTY	PART NAME 1 2 3 4 5 6 (PRODUCT LEVEL)	SEE PAGE
	1	1	**9W-0607**	1	LAMP (12 VOLT, 55 WATT)	
M	2	1	**8T-4133**	1	NUT (M10X1.5 THD)	
	3	1	**9X-4244**	2	SCREW	
	4	1	**202-6614**	1	LENS AS (FLOOD)	
	5	1	**234-7730**	1	BODY AS	
	6	1	**164-7556**	1	CLIP	
	7	1	**234-7731**	1	BRACKET AS	

M-METRIC PART

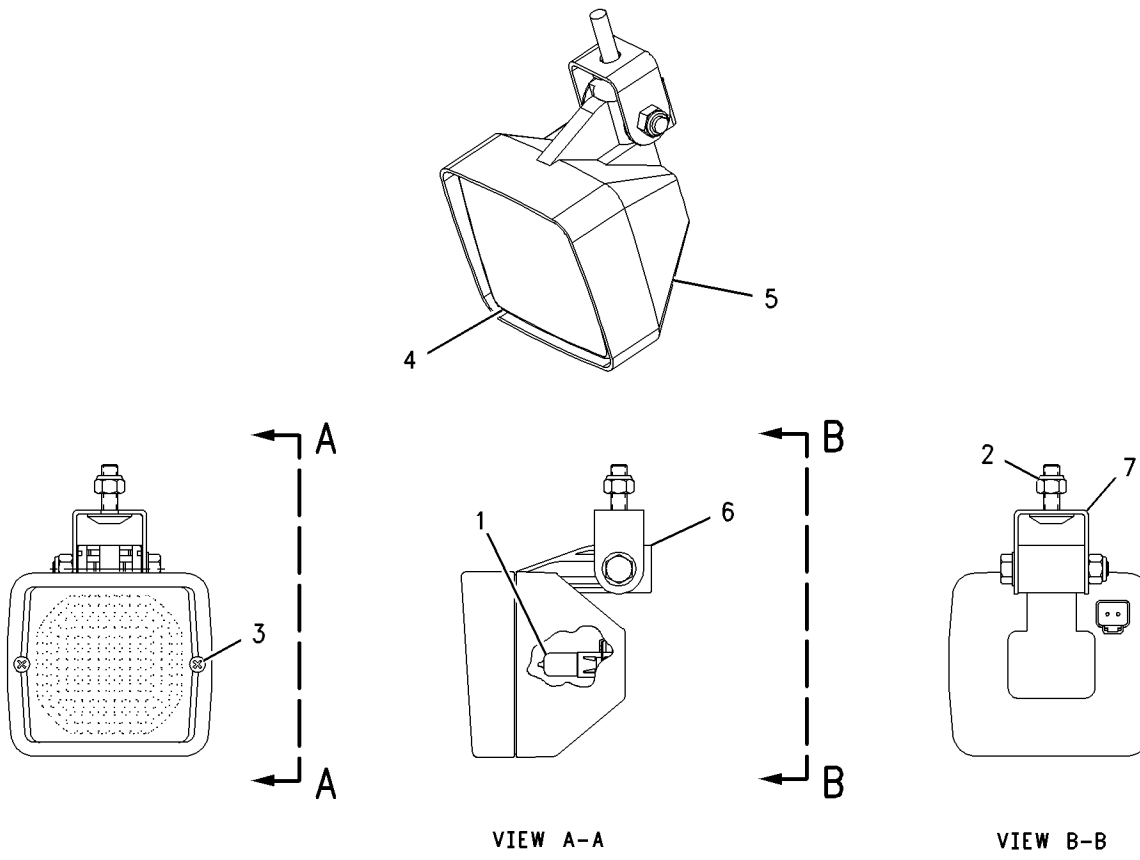

GRAPHIC #1 **<END>** g01004557

115-1716 LAMP GP-SIGNAL

S/N: BFP12900-UP

PART OF 241-0097 LIGHTING GP-FLOOD, 241-0098 LIGHTING GP-FLOOD & SIGNAL

AN ATTACHMENT

SMCS-1429, 1430, 1432 **i02001588**

NOTE	REF NO	GRAPHIC REF	PART NUMBER	QTY	PART NAME 1 2 3 4 5 6 (PRODUCT LEVEL)	SEE PAGE
	1	1	**9W-3326**	1	LAMP (12-VOLT, 24-WATT)	
	2	1	**102-8802**	1	KIT-RECEPTACLE (2-PIN)	
					(KIT INCLUDES RECEPTACLE AS. & WEDGE)	
M	3	1	**173-2685**	2	SCREW-FLAT HEAD (M5X.8X50MM)	
	4	1	**173-8340**	2	SCREW-PAN HEAD	
	5	1	**174-8957**	1	LENS (AMBER)	

M-METRIC PART

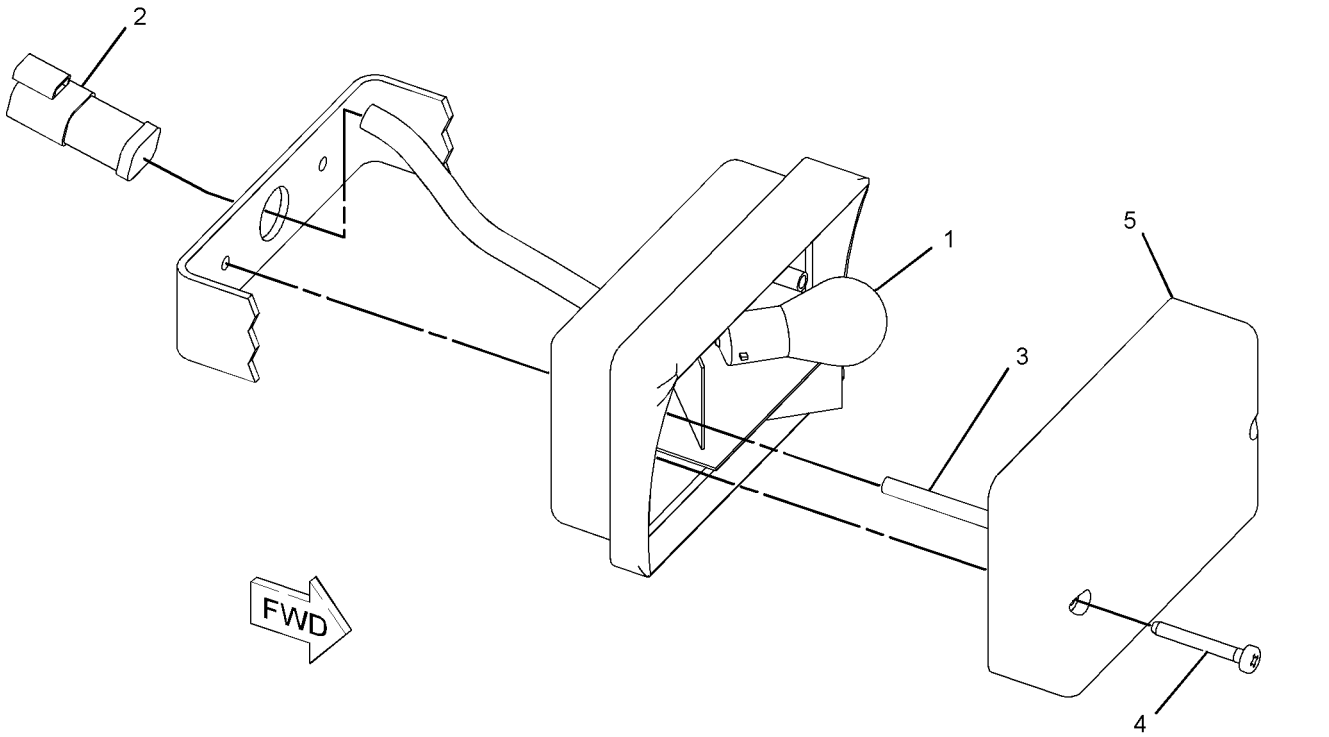

GRAPHIC #1 **<END>** g01038265

115-1715 LAMP GP-STOP & TAIL

S/N: BFP12900-UP; CXP940-UP
PART OF 185-8812, 201-3261, 201-3263, 241-0097 LIGHTING GP-FLOOD, 241-0098 LIGHTING GP-FLOOD & SIGNAL
AN ATTACHMENT

SMCS-1432 **i01953291**

NOTE	REF NO	GRAPHIC REF	PART NUMBER	QTY	PART NAME 1 2 3 4 5 6 (PRODUCT LEVEL)	SEE PAGE
	1	1	**3C-6516**	1	LAMP (12VOLT/21/5WATT)	
	2	1	**9W-3326**	1	LAMP (12 VOLT/21 WATT)	
	3	1	**102-8804**	1	KIT-RECEPTACLE (4 PIN)	
					(KIT SERVICES RECEPTACLE AS AND WEDGE)	
M	4	1	**173-2685**	2	SCREW-FLAT HEAD	
	5	1	**173-8340**	2	SCREW-PAN HEAD	
	6	1	**174-8958**	1	LENS	

M-METRIC PART

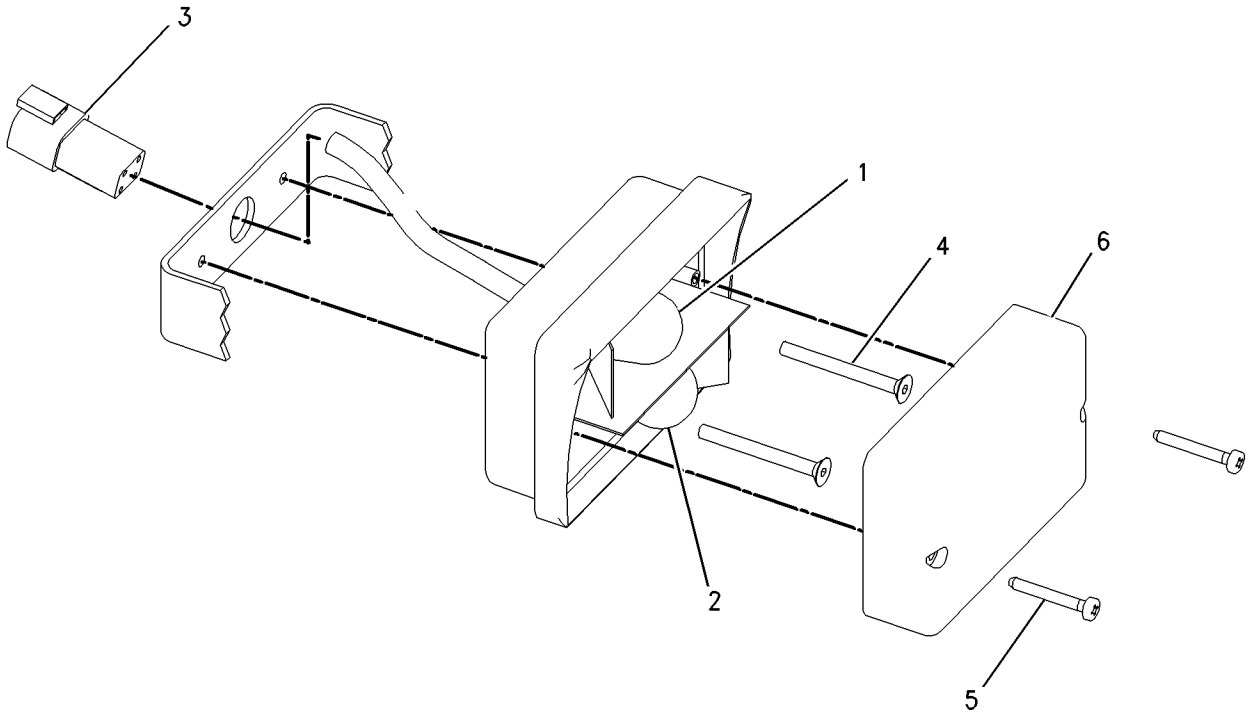

GRAPHIC #1 **<END>** g00848968

180-3663 LAMP GP-WARNING BEACON

S/N: BFP12900-UP
PART OF 141-8292 LIGHTING GP-WARNING BEACON
AN ATTACHMENT

SMCS-1431 **i01647428**

NOTE	REF NO	GRAPHIC REF	PART NUMBER	QTY	PART NAME 1 2 3 4 5 6 (PRODUCT LEVEL)	SEE PAGE
	1	1	**185-7015**	1	LAMP GP	
	2	1	**8T-4205**	3	WASHER-HARD (7.2X14.5X2MM THK)	
	3	1	**9X-8121**	1	LENS-AMBER	
	4	1	**9X-8118**	1	LAMP (12 VOLT)	
	5	1	**9X-8139**	1	BELT-DRIVE	
M	6	1	**5C-2890**	3	NUT (M6X1 THD)	
	7	1	**179-5434**	1	PLUG AS	
	8	1	**3K-8782**	1	FUSE (10 AMP)	

M-METRIC PART

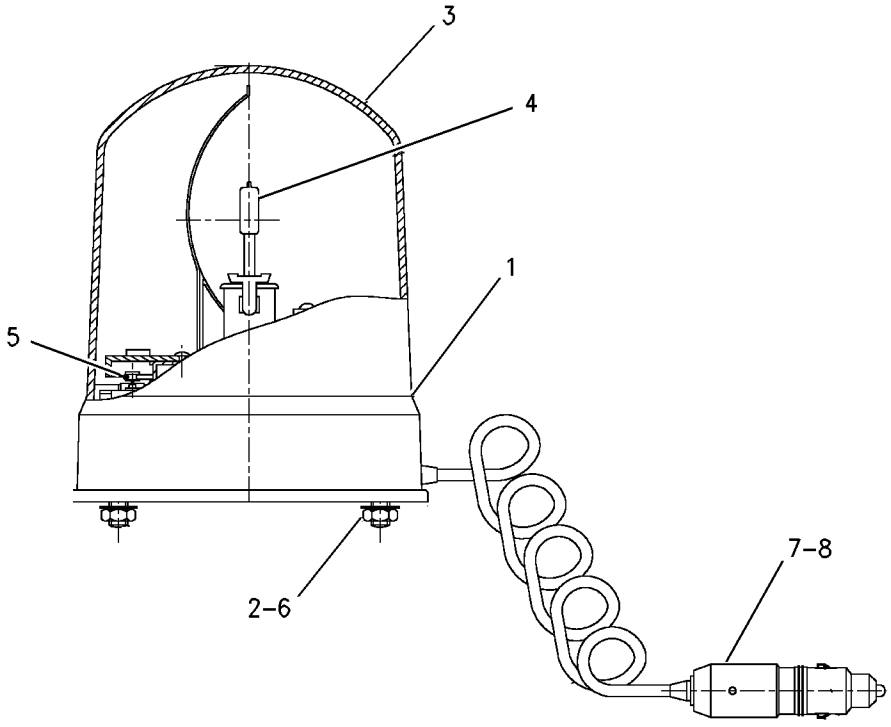

GRAPHIC #1 **<END>** g00851234

180-3664 LAMP GP-WARNING BEACON

S/N: BFP12900-UP
PART OF 104-9502 LIGHTING GP-WARNING BEACON
AN ATTACHMENT

SMCS-1431 **i01647422**

NOTE	REF NO	GRAPHIC REF	PART NUMBER	QTY	PART NAME 1 2 3 4 5 6 (PRODUCT LEVEL)	SEE PAGE
	1	1	**185-7016**	1	LAMP GP	
	2	1	**9X-8139**	1	BELT-DRIVE	
	3	1	**9X-8121**	1	LENS-AMBER	
	4	1	**9X-8118**	1	LAMP (12 VOLT)	
	5	1	**179-5434**	1	PLUG AS	
	6	1	**3K-8782**	1	FUSE (10 AMP)	

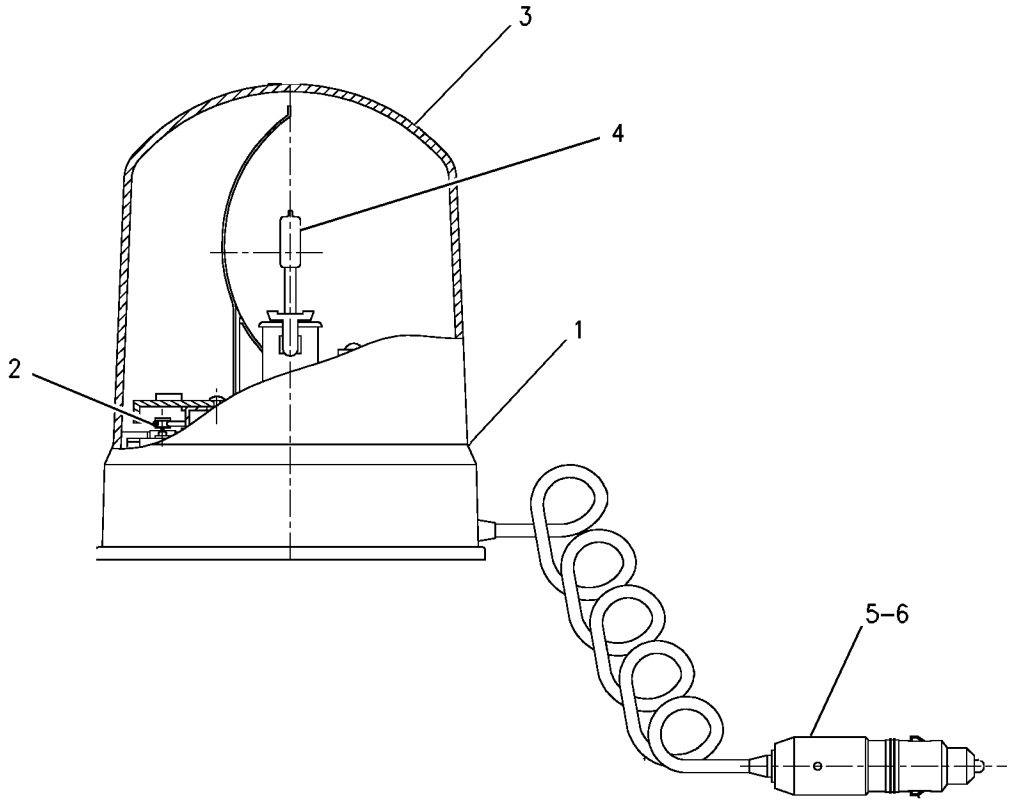

GRAPHIC #1 **<END>** g00851233

ELECTRICAL AND STARTING SYSTEM

185-8812 LIGHTING GP-FLOOD

S/N: CXP940-UP
STANDARD
AN ATTACHMENT

SMCS-1434 **i02019418**

NOTE	REF NO	GRAPHIC REF	PART NUMBER	QTY	PART NAME 1 2 3 4 5 6 (PRODUCT LEVEL)	SEE PAGE
D	1	1	**141-0924**		SEAL (5.8M)	
	2	1	**3S-2093**	18	STRAP-CABLE	
	3	1	**9R-1499**	2	REFLECTOR	
	4	1	**104-3912**	1	ROOF	
	5	1	**105-8069**	2	LAMP GP-FLOOD	
					(EACH INCLUDES)	
		1	**9W-0607**	1	LAMP (12-VOLT, 55-WATT)	
		1	**142-5789**	4	SCREW	
	6	1	**113-8491**	2	FUSE (15-AMPERE)	
Y	7	1	**115-1715**	2	LAMP GP-STOP & TAIL	293
	8	1	**115-1716**	2	LAMP GP-SIGNAL	
					(EACH INCLUDES)	
		1	**9W-3326**	1	LAMP (12-VOLT, 24-WATT)	
		1	**102-8802**	1	KIT-RECEPTACLE (2-PIN)	
M		1	**173-2685**	2	SCREW-FLAT HEAD (M5X.8X50-MM)	
		1	**173-8340**	2	SCREW-PAN HEAD	
		1	**174-8957**	1	LENS (AMBER)	
	9	1	**146-9439**	2	RELAY AS (12-VOLT)	
	10	1	**155-6457**	2	MOUNT	
	11	1	**156-0283**	7	WASHER-HARD (8.4X35X2.5-MM THK)	
	12	1	**167-3713**	1	HARNESS AS-LIGHTING (ROOF)	
		1	**102-8805**	1	KIT-RECEPTACLE (6-PIN)	
		1	**155-2270**	1	KIT-CONNECTING PLUG (2-PIN)	
		1	**155-2271**	1	KIT-CONNECTING PLUG (4-PIN)	
		1	**155-2274**	1	KIT-CONNECTING PLUG (6-PIN)	
	13	1	**169-0590**	1	SWITCH AS (REAR FLOOD)	
		1	**111-7899**	1	GASKET	
	14	1	**169-0592**	1	SWITCH AS (FRONT FLOOD)	
		1	**111-7899**	1	GASKET	
	15	1	**176-0311**	2	LAMP GP-FLOOD	
					(EACH INCLUDES)	
		1	**9W-0607**	1	LAMP (12-VOLT, 55-WATT)	
		1	**102-8804**	1	KIT-RECEPTACLE (4-PIN)	
		1	**176-0346**	1	LENS (CLEAR)	
	16	1	**183-4429**	1	HARNESS AS (LIGHTING) (EXTENSION)	
		1	**102-8805**	1	KIT-RECEPTACLE (6-PIN)	
		1	**155-2274**	1	KIT-CONNECTING PLUG (6-PIN)	
	17	1	**191-0698**	2	WIRE AS	
M	18	1	**8T-4133**	2	NUT (M10X1.5-THD)	
M	19	1	**8T-5093**	7	BOLT-LOCKING (M8X1.25X25-MM)	
D	20	1	**141-0924**	2	SEAL (0.035M)	
D	21	1	**141-0924**	3	SEAL (0.025M)	

D-ORDER BY THE METER
M-METRIC PART
Y-SEPARATE ILLUSTRATION

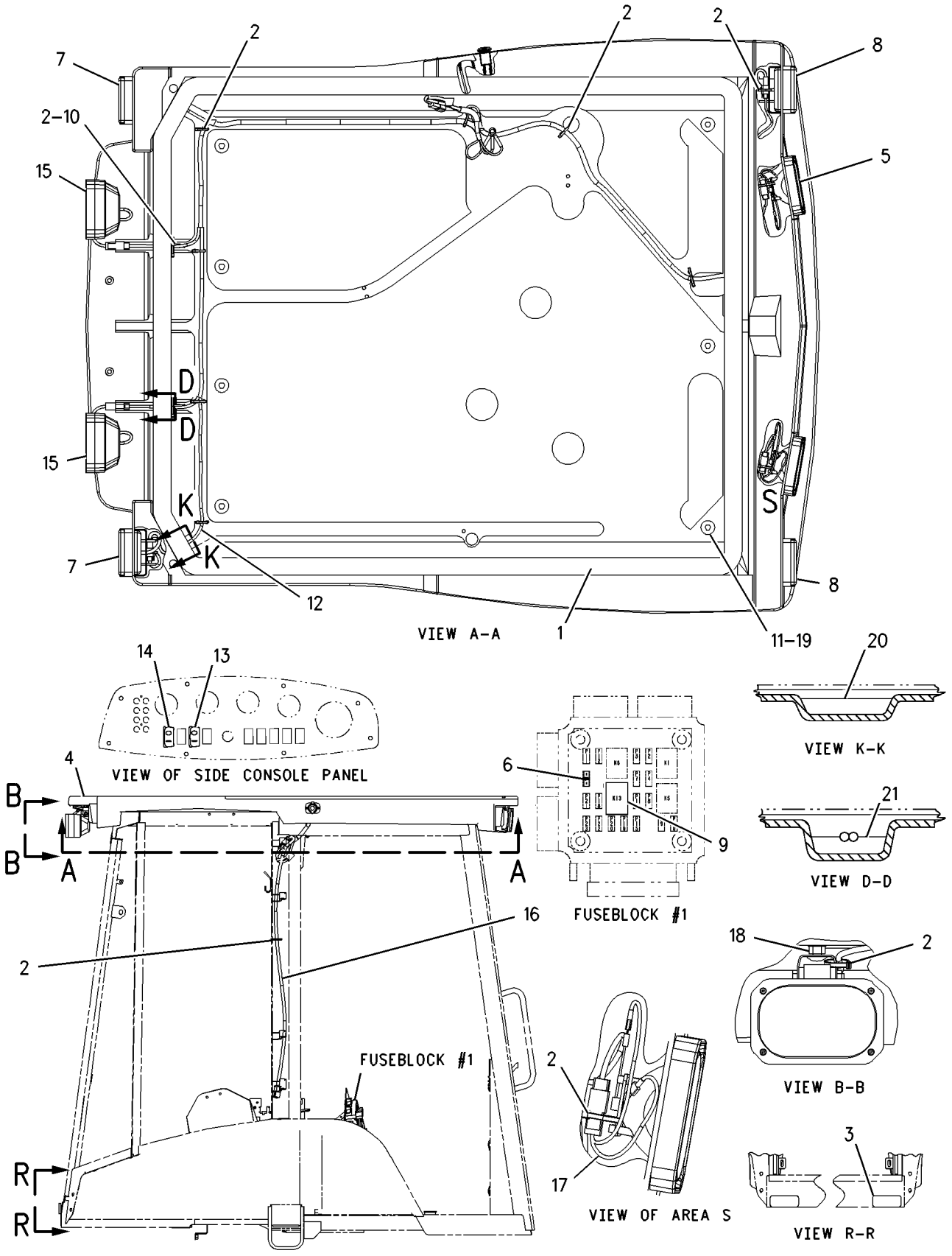

GRAPHIC #1 **<END>** g00850151

ELECTRICAL AND STARTING SYSTEM

201-3261 LIGHTING GP-FLOOD

S/N: BFP12900-UP
AN ATTACHMENT

SMCS-1434 **i02019490**

NOTE	REF NO	GRAPHIC REF	PART NUMBER	QTY	PART NAME 1 2 3 4 5 6 (PRODUCT LEVEL)	SEE PAGE
D	1	1	**141-0924**		SEAL (5.8M)	
	2	1	**3S-2093**	18	STRAP-CABLE	
	3	1	**9R-1499**	2	REFLECTOR	
	4	1	**104-3912**	1	ROOF	
	5	1	**105-8069**	2	LAMP GP-FLOOD	
					(EACH INCLUDES)	
		1	**9W-0607**	1	LAMP (12-VOLT, 55-WATT)	
		1	**142-5789**	4	SCREW	
	6	1	**113-8491**	2	FUSE (15-AMPERE)	
Y	7	1	**115-1715**	2	LAMP GP-STOP & TAIL	293
	8	1	**115-1716**	2	LAMP GP-SIGNAL	
					(EACH LAMP AS INCLUDES)	
		1	**9W-3326**	1	LAMP (12-VOLT, 24-WATT)	
		1	**102-8802**	1	KIT-RECEPTACLE (2-PIN)	
					(KIT SERVICES RECEPTACLE AS. AND WEDGE)	
M		1	**173-2685**	2	SCREW-FLAT HEAD (M5X.8X50-MM)	
		1	**173-8340**	2	SCREW-PAN HEAD	
		1	**174-8957**	1	LENS (AMBER)	
	9	1	**146-9439**	2	RELAY AS (12-VOLT)	
	10	1	**155-6457**	2	MOUNT	
	11	1	**169-0590**	1	SWITCH AS (REAR FLOODS)	
		1	**111-7899**	1	GASKET	
	12	1	**169-0592**	1	SWITCH AS (FRONT FLOODS)	
		1	**111-7899**	1	GASKET	
	13	1	**176-0311**	2	LAMP GP-FLOOD	
					(EACH INCLUDES)	
		1	**8T-8737**	2	PLUG-SEAL	
		1	**9W-0607**	1	LAMP (12-VOLT, 55-WATT)	
		1	**102-8804**	1	KIT-RECEPTACLE (4-PIN)	
		1	**176-0346**	1	LENS (CLEAR)	
	14	1	**201-3152**	1	HARNESS AS-CAB (ROOF)	
		1	**102-8805**	1	KIT-RECEPTACLE (6-PIN)	
					(KIT SERVICES RECEPTACLE AS AND WEDGE)	
	15	1	**156-0283**	7	WASHER-HARD (8.4X35X2.5-MM THK)	
M	16	1	**8T-4133**	2	NUT (M10X1.5-THD)	
M	17	1	**8T-5093**	7	BOLT-LOCKING (M8X1.25X25-MM)	
D	18	1	**141-0924**	2	SEAL (0.035M)	
D	19	1	**141-0924**	3	SEAL (0.025M)	

D-ORDER BY THE METER
M-METRIC PART
Y-SEPARATE ILLUSTRATION

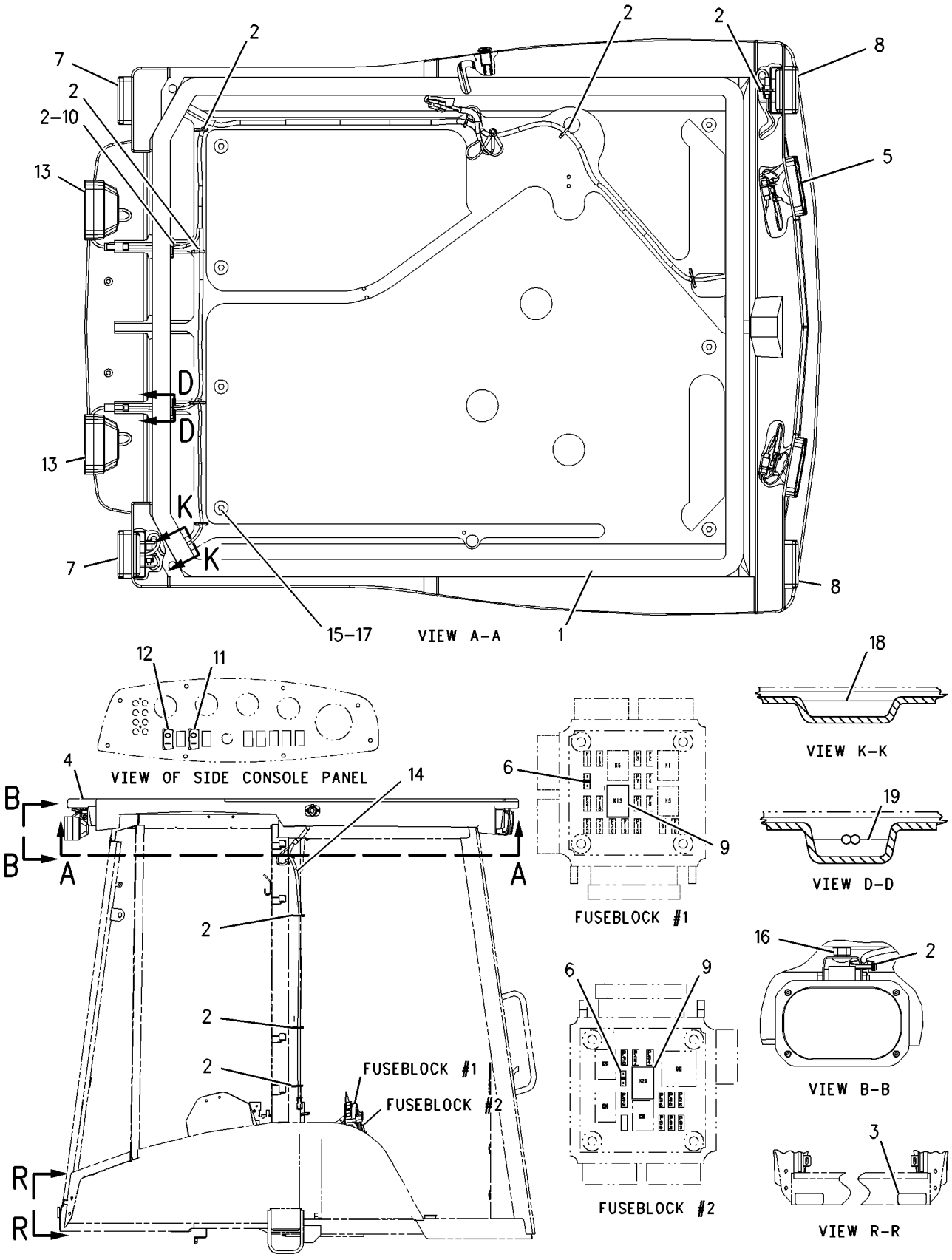

GRAPHIC #1 **<END>** g00879460

ELECTRICAL AND STARTING SYSTEM

201-3263 LIGHTING GP-FLOOD

S/N: BFP12900-UP
AN ATTACHMENT

SMCS-1434 **i01944284**

NOTE	REF NO	GRAPHIC REF	PART NUMBER	QTY	PART NAME 1 2 3 4 5 6 (PRODUCT LEVEL)	SEE PAGE
D	1	1	**141-0924**		SEAL (5.8M)	
	2	1	**3S-2093**	20	STRAP-CABLE	
	3	1	**9R-1499**	2	REFLECTOR	
	4	1	**105-8069**	4	LAMP GP-FLOOD	
					(EACH INCLUDES)	
		1	**9W-0607**	1	LAMP (12 VOLT/55 WATT)	
		1	**142-5789**	4	SCREW	
	5	1	**113-8490**	2	FUSE (10 AMP)	
	6	1	**113-8491**	2	FUSE (15 AMP)	
Y	7	1	**115-1715**	2	LAMP GP-STOP & TAIL	293
	8	1	**115-1716**	2	LAMP GP-STOP & TAIL	
					(EACH INCLUDES)	
		1	**9W-3326**	1	LAMP (12 VOLT/21 WATT)	
		1	**102-8802**	1	KIT-RECEPTACLE (2 PIN)	
M		1	**173-2685**	2	SCREW-FLAT HEAD	
		1	**173-8340**	2	SCREW-PAN HEAD	
		1	**174-8957**	1	LENS (AMBER)	
	9	1	**122-9356**	1	ROOF	
	10	1	**146-9439**	3	RELAY AS (12 VOLT)	
	11	1	**155-6457**	2	MOUNT	
	12	1	**169-0591**	1	SWITCH AS (REAR FLOOD)	
		1	**111-7899**	1	GASKET	
	13	1	**169-0593**	1	SWITCH AS (FRONT FLOOD)	
		1	**111-7899**	1	GASKET	
	14	1	**176-0311**	2	LAMP GP-FLOOD	
					(EACH INCLUDES)	
		1	**8T-8737**	2	PLUG-SEAL	
		1	**9W-0607**	1	LAMP (12 VOLT/55 WATT)	
		1	**102-8804**	1	KIT-RECEPTACLE (4 PIN)	
		1	**176-0346**	1	LENS (CLEAR)	
	15	1	**176-0312**	2	LAMP GP-FLOOD	
					(EACH INCLUDES)	
		1	**186-3735**	2	PIN-CONNECTOR	
		1	**9W-0607**	1	LAMP (12 VOLT/55 WATT)	
		1	**176-0346**	1	LENS (CLEAR)	
	16	1	**201-3152**	1	HARNESS AS-CAB (ROOF)	
		1	**102-8805**	1	KIT-RECEPTACLE (6 PIN)	
		1	**155-2271**	1	KIT-CONNECTING PLUG (4 PIN)	
		1	**155-2270**	1	KIT-CONNECTING PLUG (2 PIN)	
	17	1	**156-0283**	7	WASHER-HARD (8.4X35X2.5MM THK)	
M	18	1	**8T-4133**	4	NUT (M10X1.5 THD)	
M	19	1	**8T-5093**	7	BOLT-LOCKING (M8X1.25X25MM)	
D	20	1	**141-0924**		SEAL (0.035M)	
D	21	1	**141-0924**		SEAL (0.025M)	

D-ORDER BY THE METER
M-METRIC PART
Y-SEPARATE ILLUSTRATION

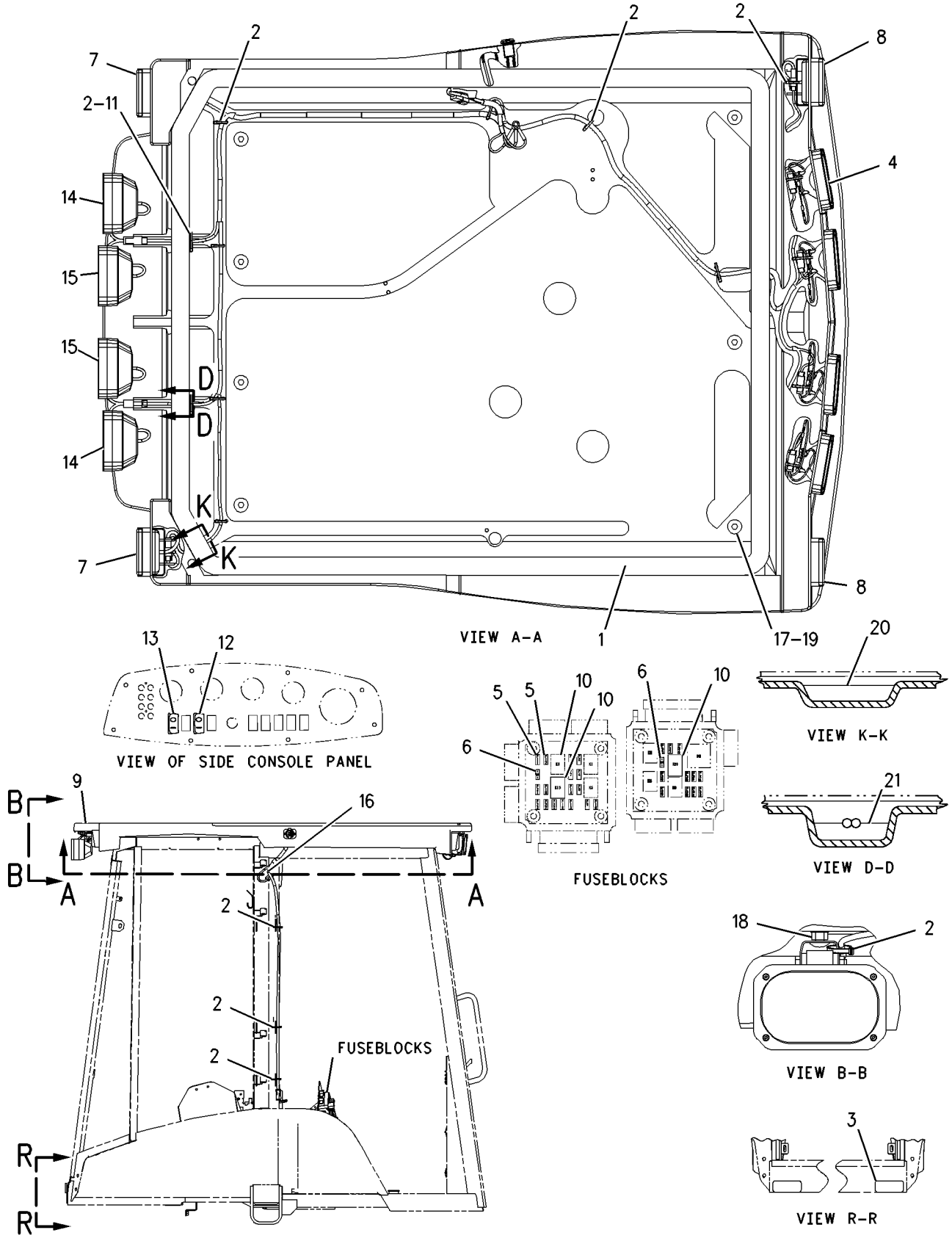

GRAPHIC #1 **<END>** g00879435

ELECTRICAL AND STARTING SYSTEM

241-0097 LIGHTING GP-FLOOD

S/N: BFP12900-UP
AN ATTACHMENT

SMCS-1434 **i02001535**

NOTE	REF NO	GRAPHIC REF	PART NUMBER	QTY	PART NAME 1 2 3 4 5 6 (PRODUCT LEVEL)	SEE PAGE
	1	1	**9R-1499**	2	REFLECTOR	
	2	2	**104-3912**	1	ROOF	
	3	1	**105-8069**	2	LAMP GP-FLOOD	
					(EACH INCLUDES)	
		1	**9W-0607**	1	LAMP (12-VOLT, 55-WATT)	
		1	**142-5789**	4	SCREW	
	4	1	**113-8491**	2	FUSE (15 AMP)	
Y	5	2	**115-1715**	2	LAMP GP-STOP & TAIL	293
Y	6	1	**115-1716**	2	LAMP GP-SIGNAL	292
	7	1	**146-9439**	2	RELAY AS (12 VOLT)	
	8	2	**155-6457**	2	MOUNT	
	9	1	**169-0590**	1	SWITCH AS (REAR FLOOD)	
		1	**111-7899**	1	GASKET	
	10	1	**169-0592**	1	SWITCH AS (FRONT FLOOD)	
		1	**111-7899**	1	GASKET	
Y	11	2	**234-4328**	2	LAMP GP-FLOOD	291
	12	2	**156-0283**	7	WASHER-HARD (8.4X35X2.5MM THK)	
	13	2	**241-0094**	1	HARNESS AS-LIGHTING (ROOF)	
		2	**102-8805**	1	KIT-RECEPTACLE (6-PIN)	
					(KIT INCLUDES RECEPTACLE AS. & WEDGE)	
		2	**155-2270**	1	KIT-CONNECTING PLUG (2-PIN)	
					(KIT INCLUDES PLUG AS., WEDGE & INTERFACE SEAL)	
		2	**155-2271**	1	KIT-CONNECTING PLUG (4-PIN)	
					(KIT INCLUDES PLUG AS., WEDGE & INTERFACE SEAL)	
		2	**155-2274**	1	KIT-CONNECTING PLUG (6-PIN)	
					(KIT INCLUDES PLUG AS., WEDGE & INTERFACE SEAL)	
	14	1,2	**3S-2093**	17	STRAP-CABLE	
M	15	2	**8T-5093**	7	BOLT-LOCKING (M8X1.25X25MM)	
D	16	2	**141-0924**		SEAL (.6M)	

D-ORDER BY THE METER
M-METRIC PART
Y-SEPARATE ILLUSTRATION

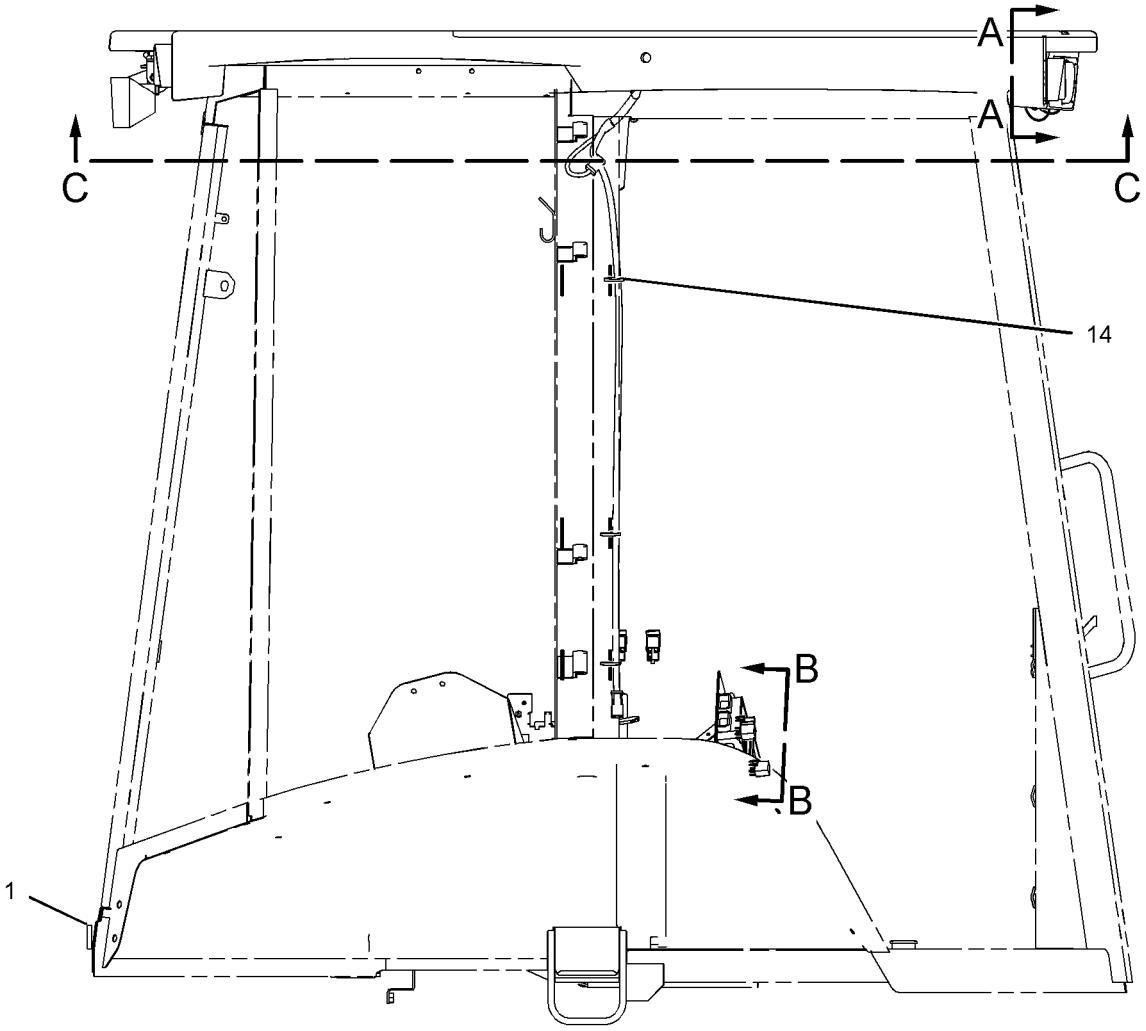

RIGHT SIDE VIEW

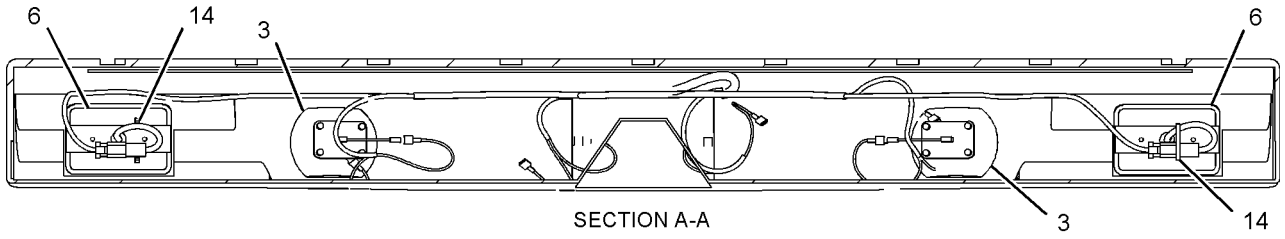

SECTION A-A

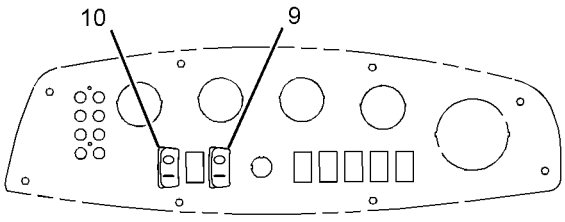

VIEW OF CONSOLE PANEL
FROM INSIDE OF CAB

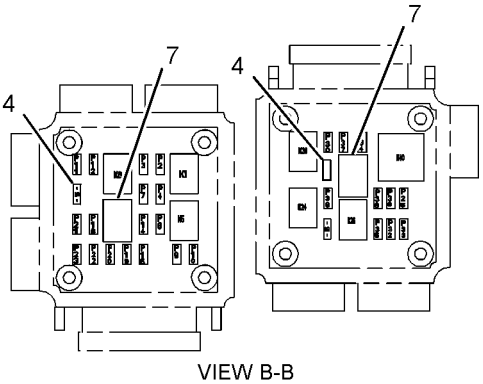

VIEW B-B

GRAPHIC #1

g01038709

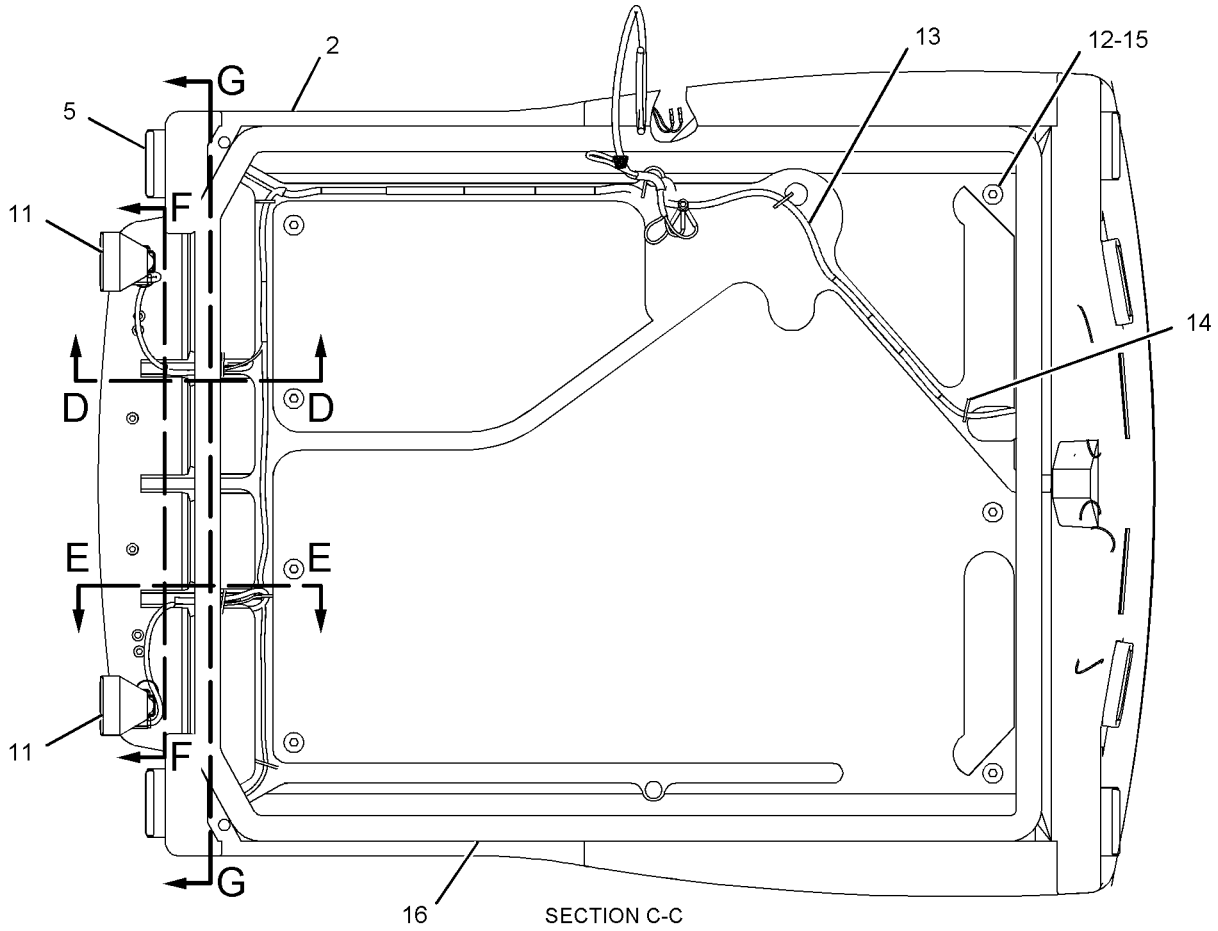

SECTION C-C

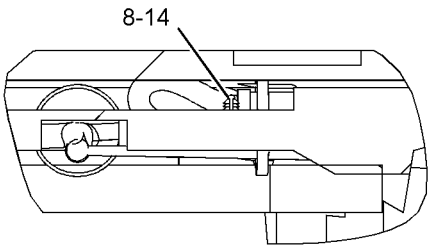

SECTION D-D

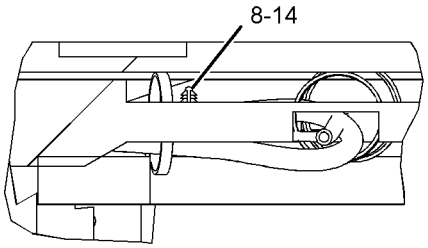

SECTION E-E

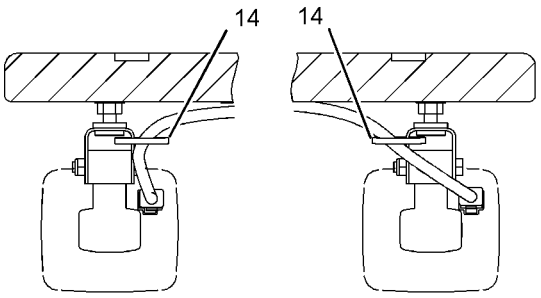

SECTION F-F

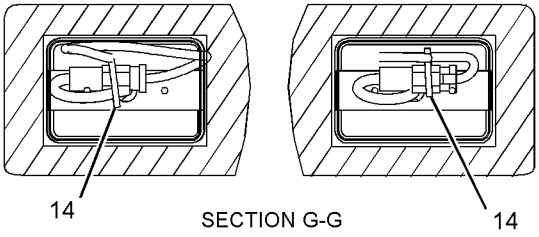

SECTION G-G

GRAPHIC #2 **<END>** g01038710

241-0098 LIGHTING GP-FLOOD & SIGNAL

S/N: BFP12900-UP
AN ATTACHMENT

SMCS-1429, 1430, 1432, 1434 **i02007498**

NOTE	REF NO	GRAPHIC REF	PART NUMBER	QTY	PART NAME 1 2 3 4 5 6 (PRODUCT LEVEL)	SEE PAGE
	1	1	**9R-1499**	2	REFLECTOR	
	2	2	**105-8069**	4	LAMP GP-FLOOD	
					(EACH INCLUDES)	
		2	**9W-0607**	1	LAMP (12-VOLT, 55-WATT)	
		2	**142-5789**	4	SCREW	
	3	2	**113-8490**	2	FUSE (10-AMPERE)	
	4	2	**113-8491**	2	FUSE (15-AMPERE)	
Y	5	2	**115-1715**	2	LAMP GP-STOP & TAIL	293
Y	6	2	**115-1716**	2	LAMP GP-SIGNAL	292
	7	2	**146-9439**	3	RELAY AS (12 VOLT)	
	8	2	**155-6457**	2	MOUNT	
	9	2	**169-0591**	1	SWITCH AS-ROCKER (REAR FLOOD)	
		2	**111-7899**	1	GASKET	
	10	2	**169-0593**	1	SWITCH AS-ROCKER (FRONT FLOOD)	
		2	**111-7899**	1	GASKET	
Y	11	2	**234-4328**	2	LAMP GP-FLOOD	291
	12	2	**241-0094**	1	HARNESS AS-LIGHTING	
		2	**102-8805**	1	KIT-RECEPTACLE (6-PIN)	
					(KIT INCLUDES RECEPTACLE AS. & WEDGE.)	
		2	**155-2270**	6	KIT-CONNECTING PLUG (2-PIN)	
					(EACH KIT INCLUDES PLUG AS., INTERFACE SEAL, & WEDGE.)	
		2	**155-2271**	2	KIT-CONNECTING PLUG (4-PIN)	
					(EACH KIT INCLUDES PLUG AS., INTERFACE SEAL, & WEDGE.)	
		2	**155-2274**	1	KIT-CONNECTING PLUG (6-PIN)	
					(KIT INCLUDES PLUG AS., INTERFACE SEAL, & WEDGE.)	
	13	2	**122-9356**	1	ROOF	
		2	**104-3912**	1	ROOF	
	14	2	**156-0283**	7	WASHER-HARD (8.4X35X2.5MM THK)	
	15	2	**234-4329**	2	LAMP GP-FLOOD	
	16	1,2	**3S-2093**	20	STRAP-CABLE	
M	17	2	**8T-5093**	7	BOLT-LOCKING (M8X1.25X25MM)	
D	18	2	**141-0924**		SEAL (.6M)	

D-ORDER BY THE METER
M-METRIC PART
Y-SEPARATE ILLUSTRATION

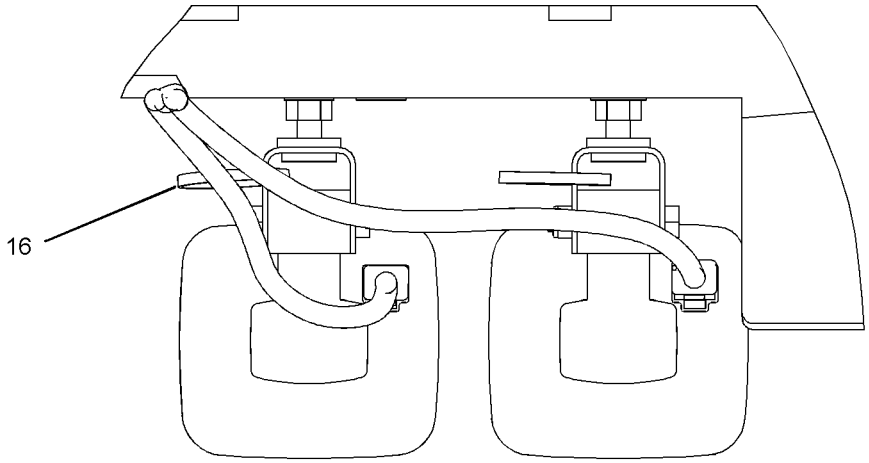

SECTION B-B

REFER TO ALL ILLUSTRATIONS OF
THIS GROUP FOR AUXILIARY VIEWS

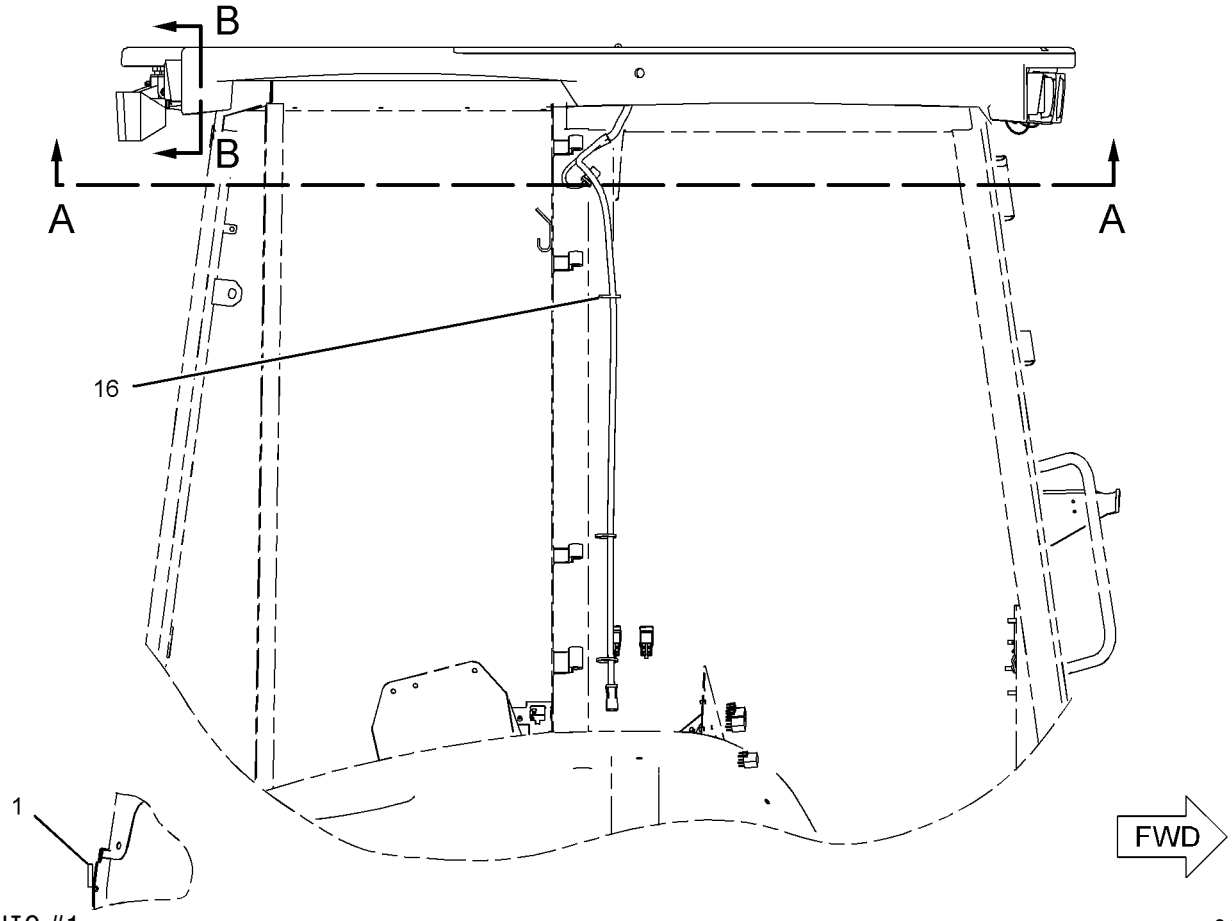

GRAPHIC #1

g01039561

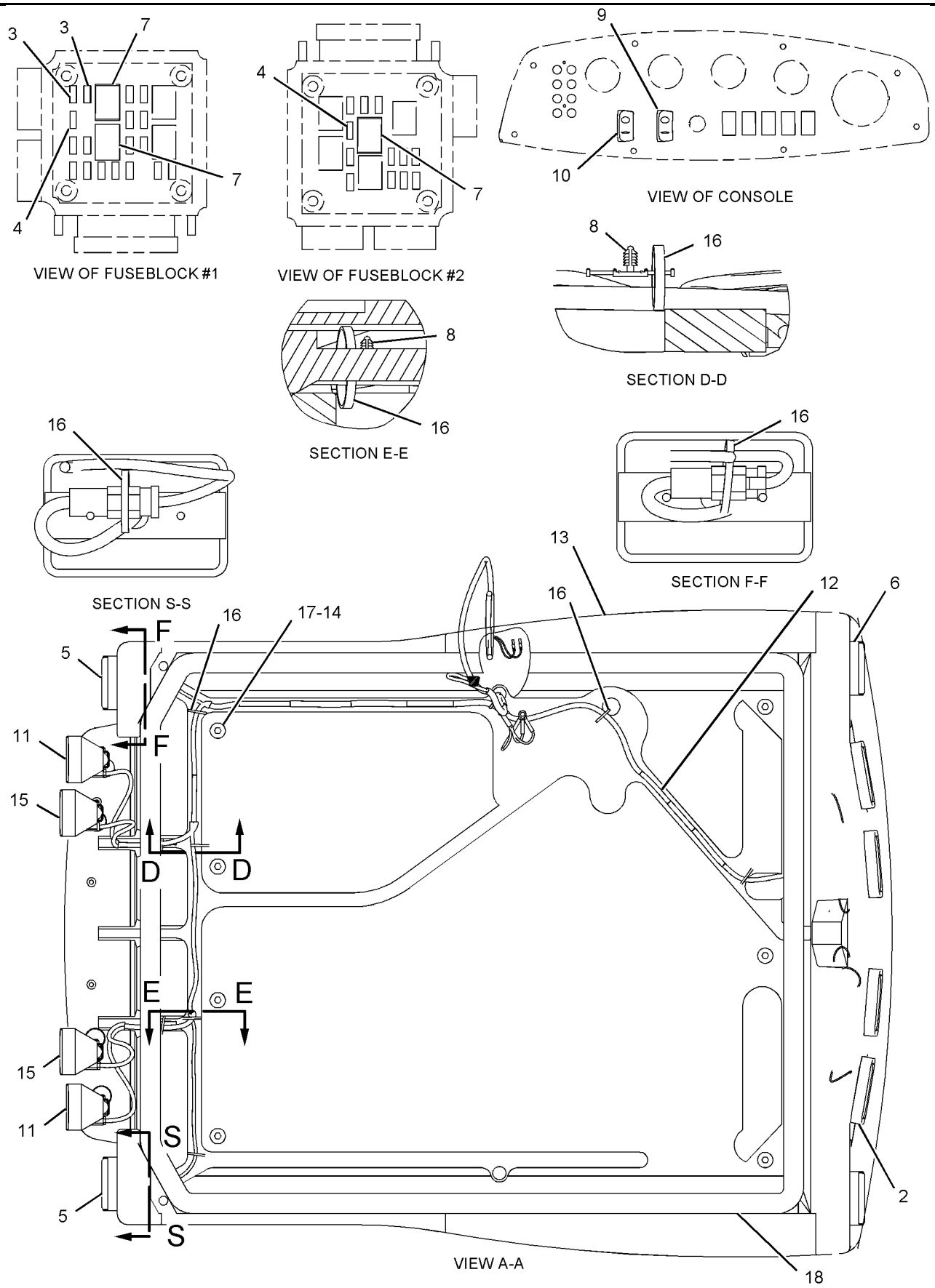

GRAPHIC #2 **<END>** g01039562

104-9502 LIGHTING GP-WARNING BEACON

S/N: BFP12900-UP
MAGNETIC
AN ATTACHMENT

SMCS-1431 **i01522500**

NOTE	REF NO	GRAPHIC REF	PART NUMBER	QTY	PART NAME 1 2 3 4 5 6 (PRODUCT LEVEL)	SEE PAGE
CY	1	1	**180-3664**	1	LAMP GP-WARNING BEACON	295
	2	1	**104-9504**	1	PLATE	
M	3	1	**135-7242**	3	SCREW-PAN HEAD	

C-CHANGE FROM PREVIOUS TYPE
M-METRIC PART
Y-SEPARATE ILLUSTRATION

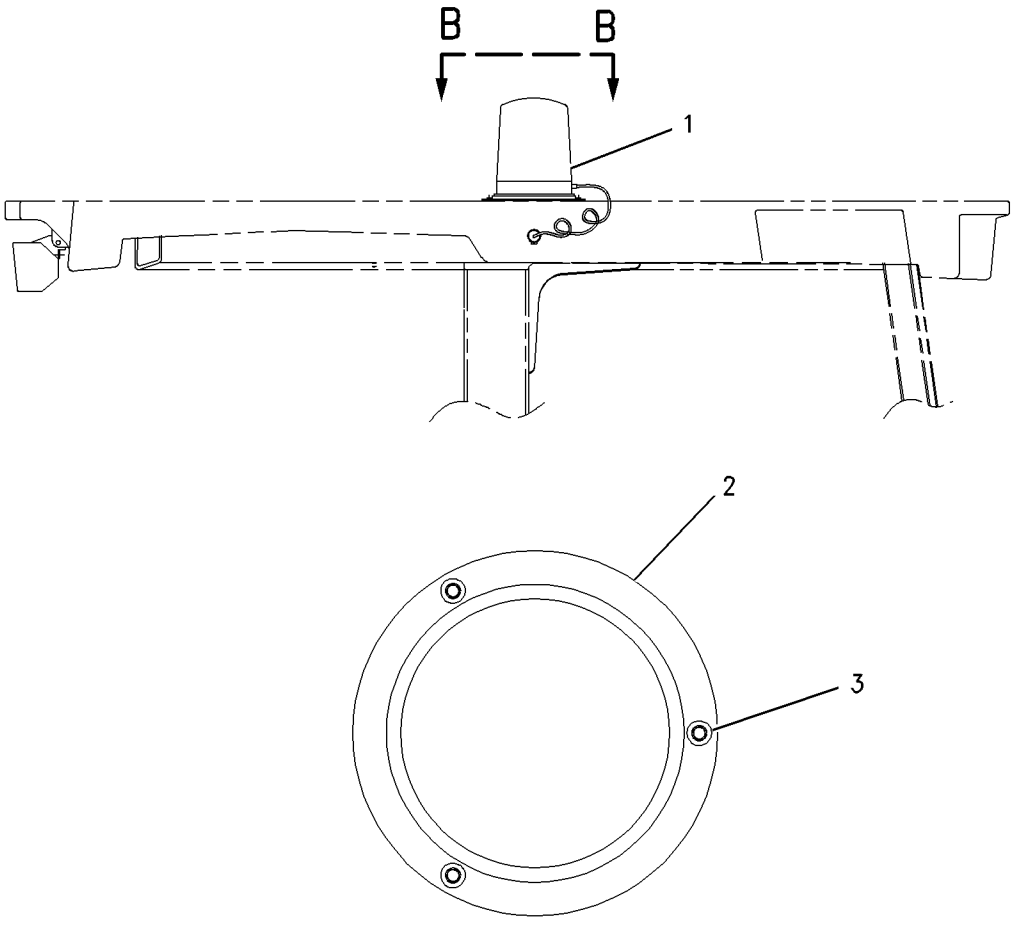

VIEW B-B

GRAPHIC #1 **<END>** g00673018

141-8292 LIGHTING GP-WARNING BEACON

S/N: BFP12900-UP
FIXED MOUNT
AN ATTACHMENT

SMCS-1431 **i01262760**

NOTE	REF NO	GRAPHIC REF	PART NUMBER	QTY	PART NAME 1 2 3 4 5 6 (PRODUCT LEVEL)	SEE PAGE
CY	1	1	**180-3663**	1	LAMP GP-WARNING BEACON	294
	2	1	**114-4916**	1	BRACKET AS-RH	
	3	1	**146-0218**	3	NUT	
M	4	1	**132-0111**	3	SCREW (M6X1.0X35MM) (M6X1.0X20MM)	
	5	1	**8T-4205**	3	WASHER-HARD (2MM THK)	

C-CHANGE FROM PREVIOUS TYPE
M-METRIC PART
Y-SEPARATE ILLUSTRATION

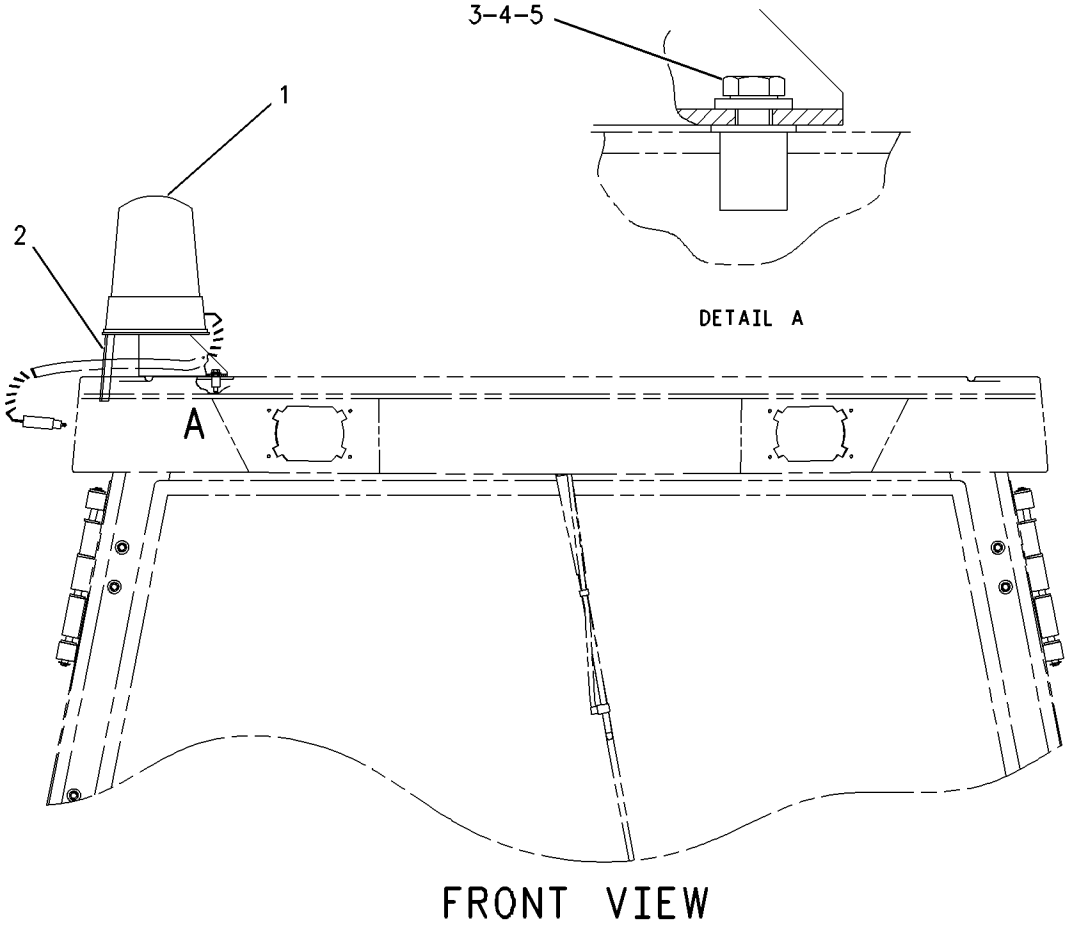

FRONT VIEW

GRAPHIC #1 **<END>** g00672105

148-9687 STARTING AID GP

S/N: 7BJ19000-64615
PART OF 188-0883 ENGINE AR-PRIMARY
AN ATTACHMENT

SMCS-1090 **i01937489**

NOTE	REF NO	GRAPHIC REF	PART NUMBER	QTY	PART NAME 1 2 3 4 5 6 (PRODUCT LEVEL)	SEE PAGE
	1	1	**067-6998**	1	NUT	
	2	1	**067-6999**	1	OLIVE	
	3	1	**169-6761**	1	TUBE AS	
	3A	1	**101-3985**	1	CLIP	
	3B	1	**101-3986**	1	CLIP	
	3C	1	**101-3984**	1	OLIVE	
	3D	1	**101-3983**	1	NUT (3/16)	

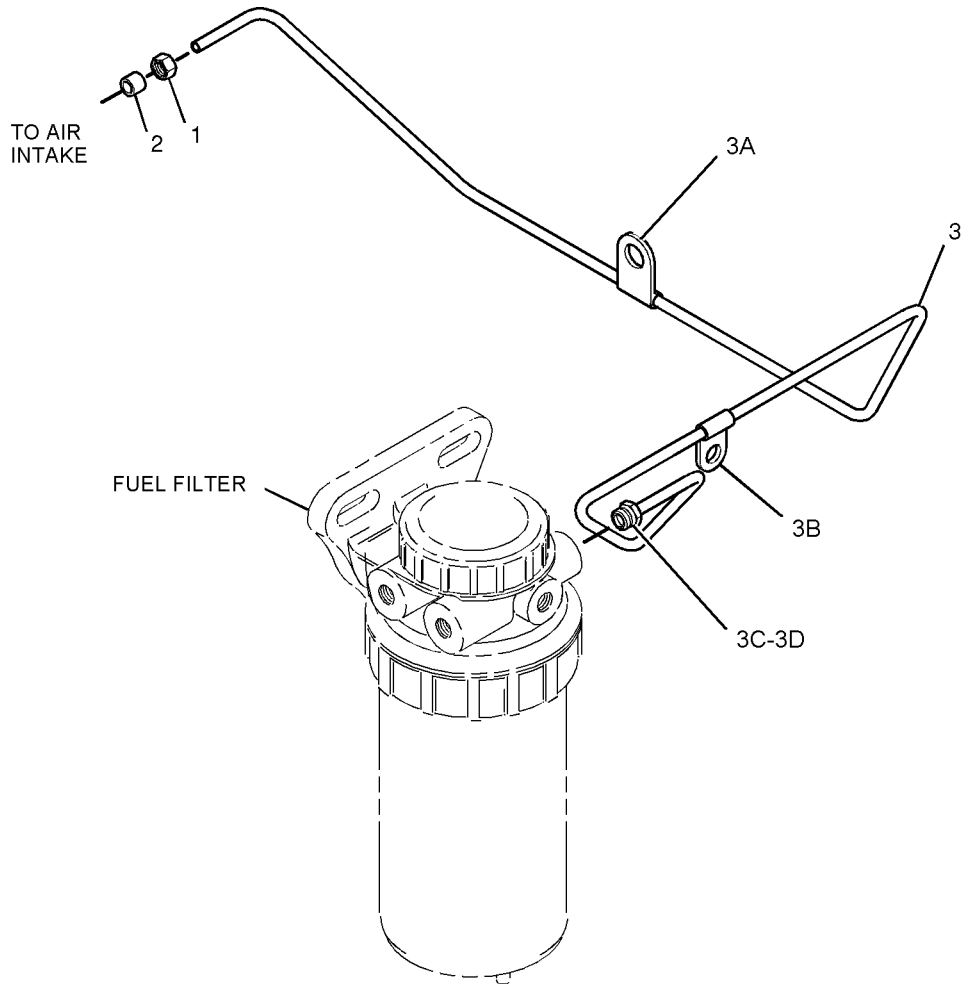

GRAPHIC #1

<END>

g01008322

186-4273 STARTING AID GP

S/N: 7SG1-UP
PART OF 187-8016 ENGINE AR-PRIMARY
AN ATTACHMENT

SMCS-1090 **i01611292**

NOTE	REF NO	GRAPHIC REF	PART NUMBER	QTY	PART NAME 1 2 3 4 5 6 (PRODUCT LEVEL)	SEE PAGE
	1	1	**186-4272**	1	HEATER (AIR INLET)	

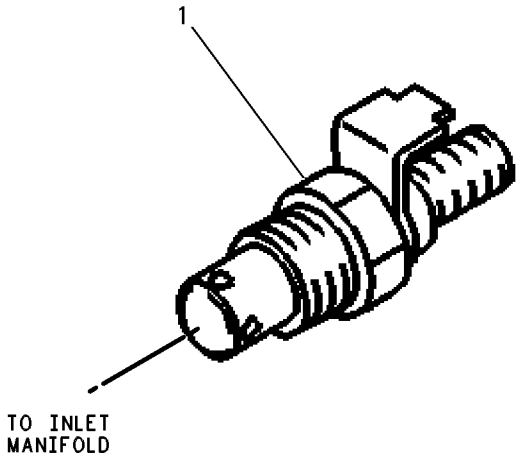

GRAPHIC #1 **<END>** g00131680

197-9245 STARTING AID GP

S/N: 7SG1-UP
PART OF 187-8016 ENGINE AR-PRIMARY
AN ATTACHMENT

SMCS-1090 **i01405608**

NOTE	REF NO	GRAPHIC REF	PART NUMBER	QTY	PART NAME 1 2 3 4 5 6 (PRODUCT LEVEL)	SEE PAGE
	1	1	**067-6998**	1	NUT	
	2	1	**067-6999**	1	FERRULE	
	3	1	**197-9403**	1	LINE-FUEL	
	4	1	**101-3986**	1	CLIP	

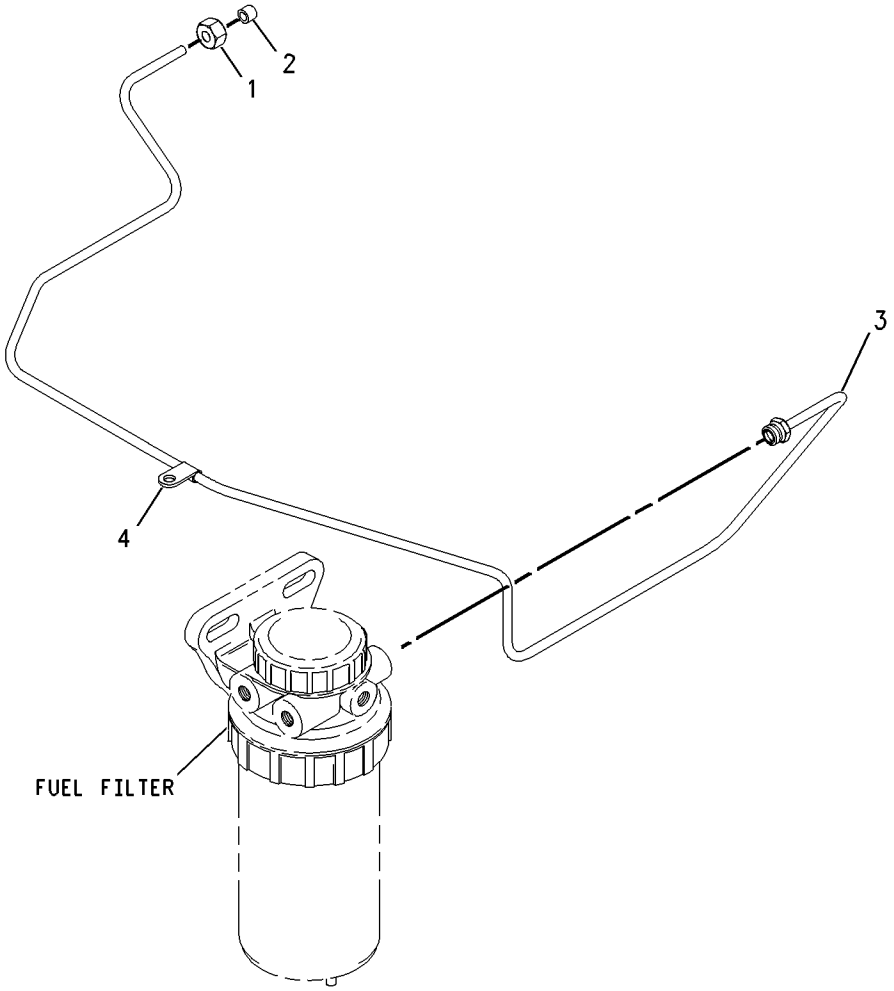

GRAPHIC #1 **<END>** g00742873

219-2343 STARTING AID GP

S/N: 7BJ64616-UP
PART OF 188-0883 ENGINE AR-PRIMARY
AN ATTACHMENT

SMCS-1090 **i01689264**

NOTE	REF NO	GRAPHIC REF	PART NUMBER	QTY	PART NAME 1 2 3 4 5 6 (PRODUCT LEVEL)	SEE PAGE
	1	1	**067-6998**	1	NUT	
	2	1	**067-6999**	1	FERRULE	
	3	1	**219-2332**	1	TUBE AS	
	3A	1	**101-3986**	1	CLIP	
	3B	1	**101-3983**	1	NUT (3/16)	
	3C	1	**101-3984**	1	FERRULE	

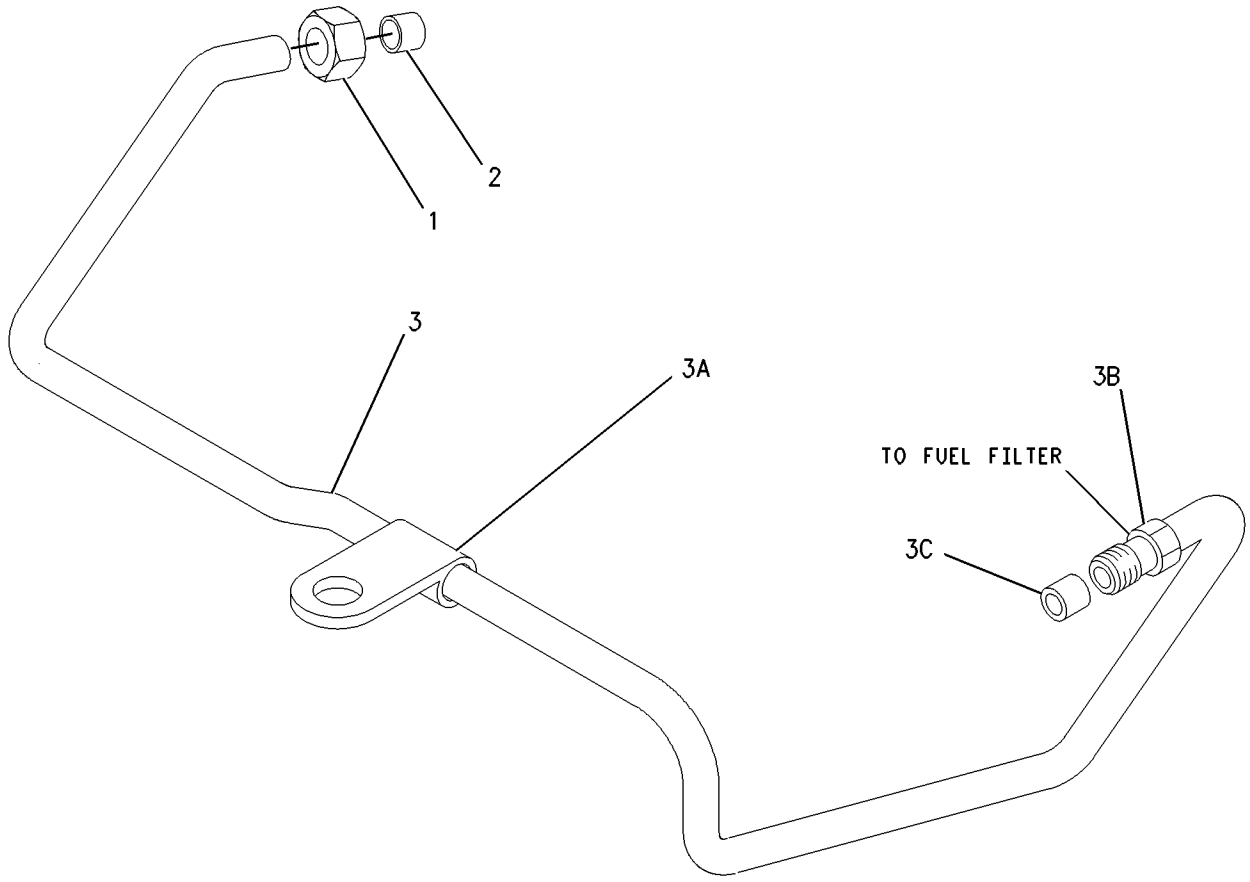

GRAPHIC #1 **<END>** g00872460

221-7683 HEATER GP-STARTING AID

S/N: 7BJ19000-UP
PART OF 188-0883 ENGINE AR-PRIMARY
AN ATTACHMENT

SMCS-1090 **i01708734**

NOTE	REF NO	GRAPHIC REF	PART NUMBER	QTY	PART NAME 1 2 3 4 5 6 (PRODUCT LEVEL)	SEE PAGE
	1	1	**127-2956**	1	WASHER	
	2	1	**186-4272**	1	HEATER (AIR INLET)	

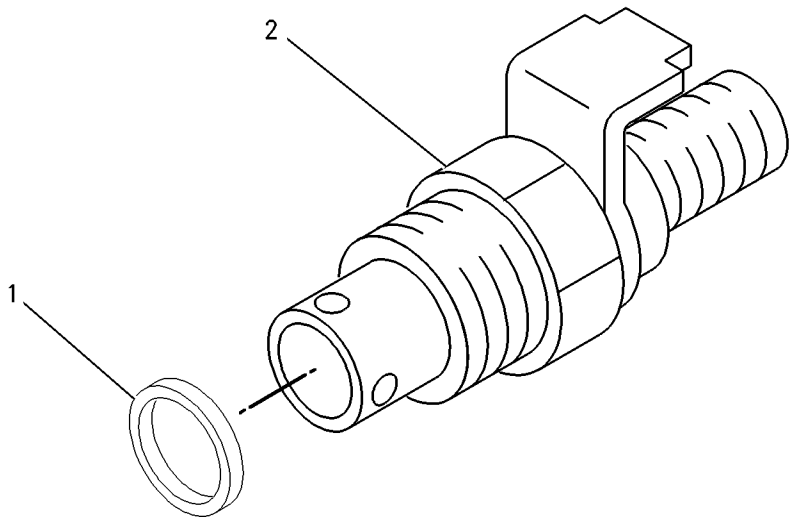

GRAPHIC #1 **<END>** g00893738

112-1767 STARTING MOTOR GP-ELECTRIC

S/N: CXP940-UP

PART OF 185-1887 INSTALLATION AR-ENGINE

SMCS-1453 **i00711933**

NOTE	REF NO	GRAPHIC REF	PART NUMBER	QTY	PART NAME 1 2 3 4 5 6 (PRODUCT LEVEL)	SEE PAGE
CY	1	1	**143-0539**	1	STARTING MOTOR GP-ELECTRIC	316
	2	1	**8T-4121**	3	WASHER (2.5MM THK)	
M	3	1	**8T-4133**	3	NUT (M10X1.50 THD)	

C-CHANGE FROM PREVIOUS TYPE
M-METRIC PART
Y-SEPARATE ILLUSTRATION

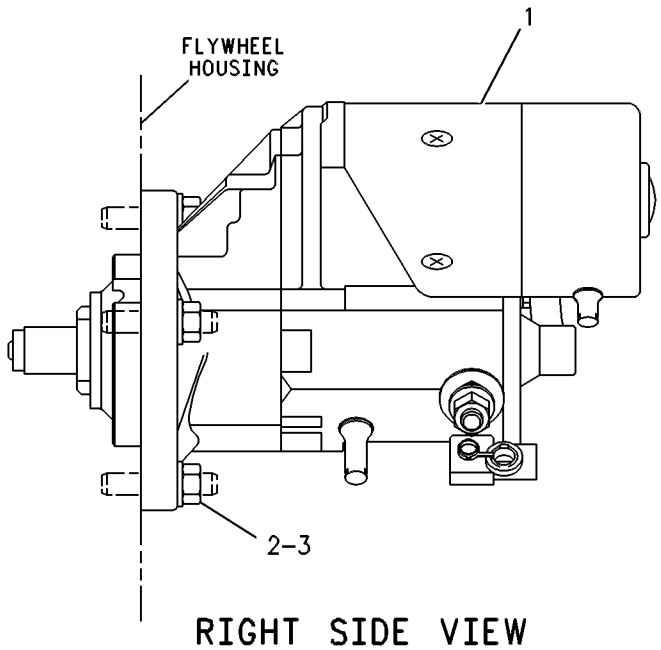

RIGHT SIDE VIEW

GRAPHIC #1 **<END>** g00131660

ELECTRICAL AND STARTING SYSTEM

143-0539 STARTING MOTOR GP-ELECTRIC*R

S/N: CXP940-UP; CRS1-UP
12 VOLT
PART OF 112-1767, 237-0024 STARTING MOTOR GP-ELECTRIC
ALSO AN ATTACHMENT

SMCS-1453 **i01955579**

NOTE	REF NO	GRAPHIC REF	PART NUMBER	QTY	PART NAME 1 2 3 4 5 6 (PRODUCT LEVEL)	SEE PAGE
	1	1	**8C-9778**	1	PLUNGER AS	
	2	1	**8C-9783**	1	GASKET	
	3	1	**2P-8104**	1	BEARING	
	4	1	**7T-6092**	1	HOLDER AS-BRUSH	
M	5	1	**8T-4133**	2	NUT (M10X1.5 THD)	
	6	1	**7T-6088**	1	BEARING AS	
	7	1	**7T-6087**	1	WASHER	
	8	1	**7T-6093**	1	CLUTCH AS	
	9	1	**8J-4455**	1	BALL	
	10	1	**7T-6090**	1	SPRING	
	11	1	**8T-4121**	2	WASHER-HARD (11X21X2.5MM THK)	
	12	1	**3E-5153**	1	COVER-STARTING MOTOR	
M	13	1	**9X-2036**	1	SCREW-PAN HEAD	
	14	1	**8F-1434**	1	LOCKWASHER	
	15	1	**100-4113**	1	SWITCH AS (STARTER - 12V)	
	16	1	**100-4119**	1	ARMATURE AS	
	17	1	**100-4118**	1	CASE AS-STARTING MOTOR	
	18	1	**100-4115**	1	HOUSING-STARTING MOTOR	
	19	1	**143-1344**	1	FRAME-STARTER	
	20	1	**100-3685**	1	CAP	
	21	1	**3E-5154**	1	BUSHING-STARTING MOTOR	
					AVAILABLE REPAIR KIT(S):	
			7T-6099	1	KIT-GEAR (STARTING MOTOR)	
					(INCLUDES RETAINER, PINION & ROLLERS)	
			146-6729	1	KIT-HARDWARE (STARTING MOTOR)	
					(INCLUDES BOLTS, SCREWS, SCREW ASSEMBLIES & PLATE)	
			100-4112	1	KIT-CONTACT (STARTING MOTOR)	
					(INCLUDES NUT, WASHERS, SEAL, BUSHINGS, PLATE & BOLT)	

M-METRIC PART

143-0539 STARTING MOTOR GP-ELECTRIC *(contd.)* **i01955579**

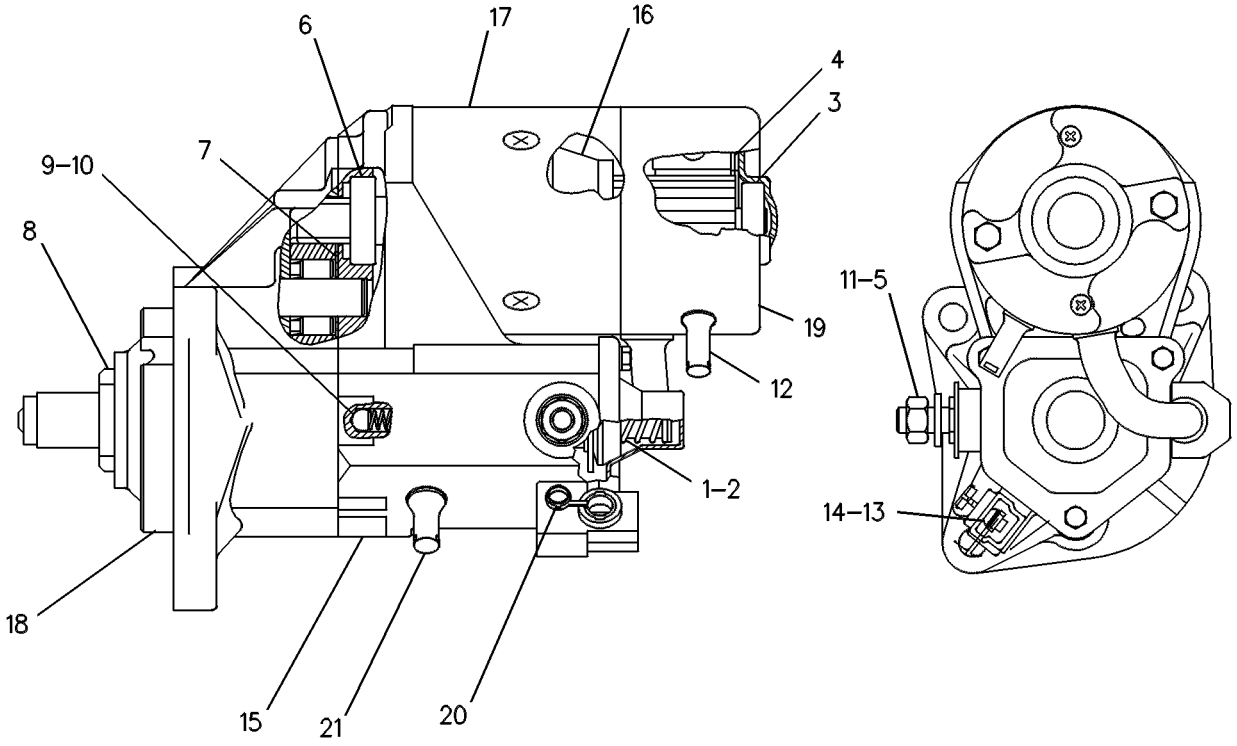

GRAPHIC #1 **<END>** g00131126

ELECTRICAL AND STARTING SYSTEM

237-0024 STARTING MOTOR GP-ELECTRIC

S/N: CRS1-UP
PART OF 234-3058, 234-3059 ENGINE AR-PRIMARY
AN ATTACHMENT

SMCS-1453 **i01991979**

NOTE	REF NO	GRAPHIC REF	PART NUMBER	QTY	PART NAME 1 2 3 4 5 6 (PRODUCT LEVEL)	SEE PAGE
	1	1	**6I-0364**	3	STUD (M10X1.5X30MM)	
	2	1	**6I-0594**	3	NUT (M10X1.5)	
YR	3	1	**143-0539**	1	STARTING MOTOR GP-ELECTRIC	316

R-REMFG PART MAY BE AVAILABLE
Y-SEPARATE ILLUSTRATION

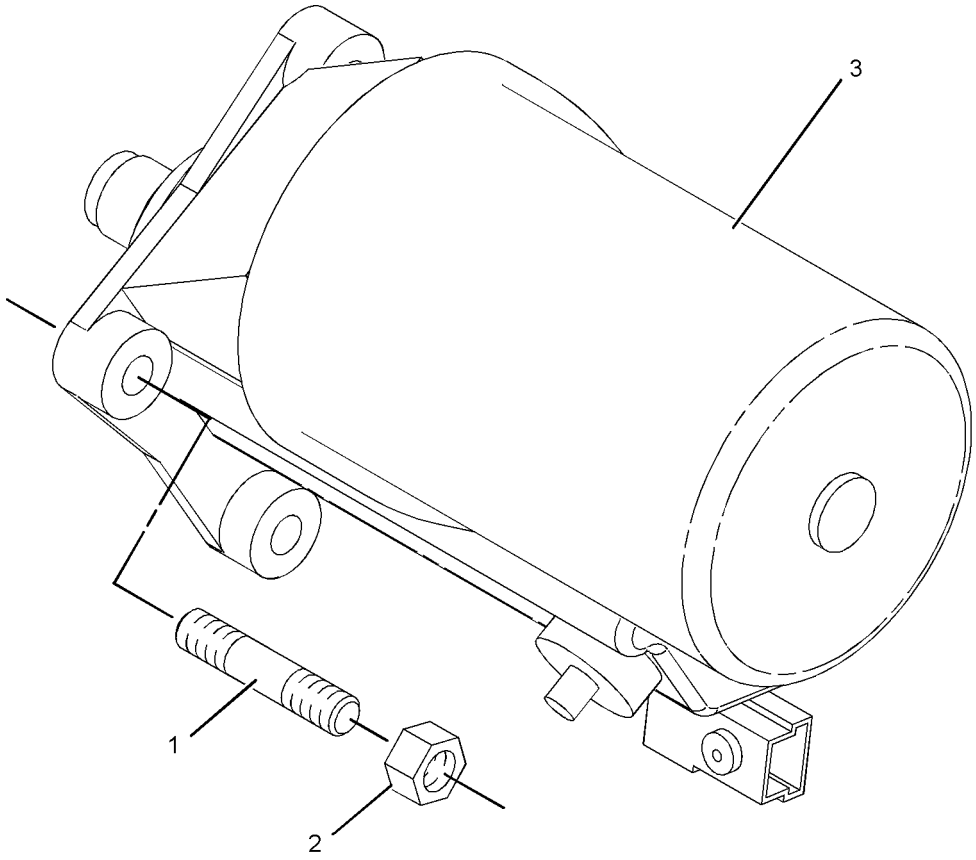

GRAPHIC #1 **<END>** g01039910

130-4653 SWITCH GP-PRESSURE

S/N: 7BJ19000-UP
PART OF 188-0883 ENGINE AR-PRIMARY
AN ATTACHMENT

SMCS-1435 **i01428566**

NOTE	REF NO	GRAPHIC REF	PART NUMBER	QTY	PART NAME 1 2 3 4 5 6 (PRODUCT LEVEL)	SEE PAGE
	1	1	**7W-1238**	1	SWITCH-PRESSURE (ENGINE OIL)	
	2	1	**035-8063**	1	PLUG	

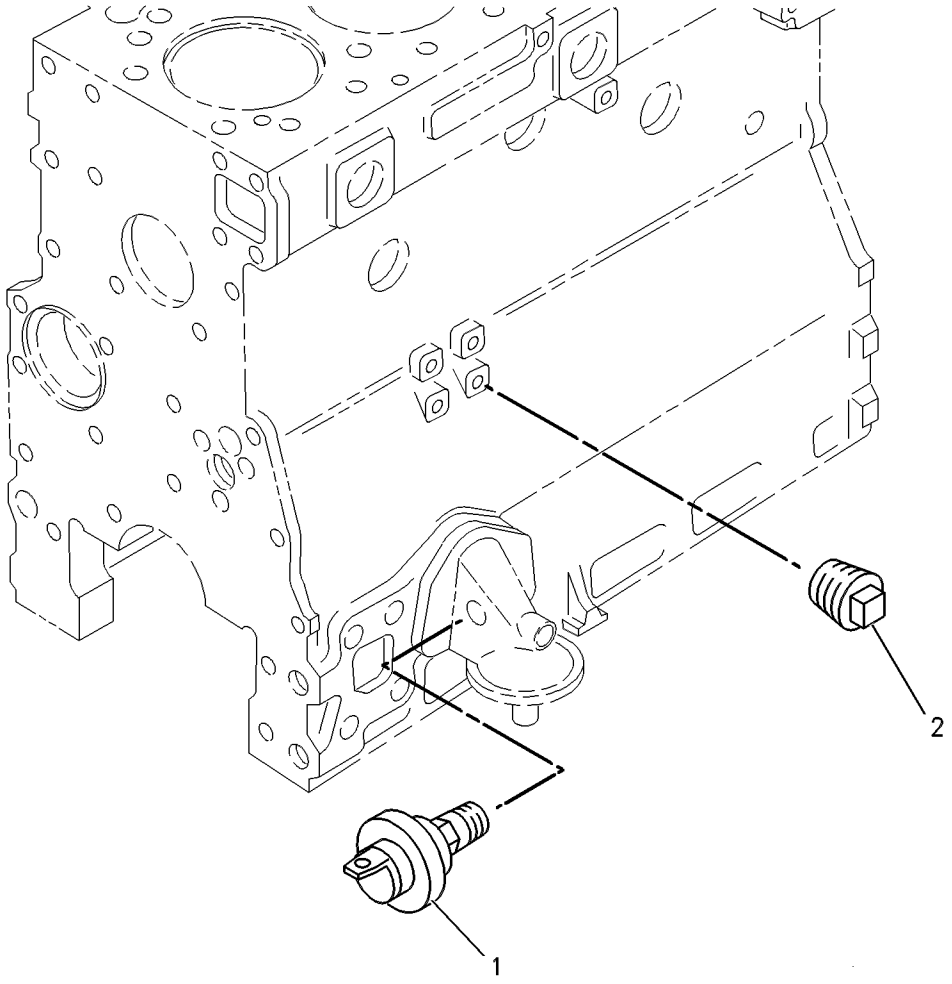

GRAPHIC #1 **<END>** g00400662

197-9401 SWITCH GP-PRESSURE

S/N: 7SG1-UP
PART OF 187-8016 ENGINE AR-PRIMARY
AN ATTACHMENT

SMCS-1435 **i01405578**

NOTE	REF NO	GRAPHIC REF	PART NUMBER	QTY	PART NAME 1 2 3 4 5 6 (PRODUCT LEVEL)	SEE PAGE
	1	1	**7W-1238**	1	SWITCH-PRESSURE (ENGINE OIL)	
	2	1	**035-8063**	1	PLUG	

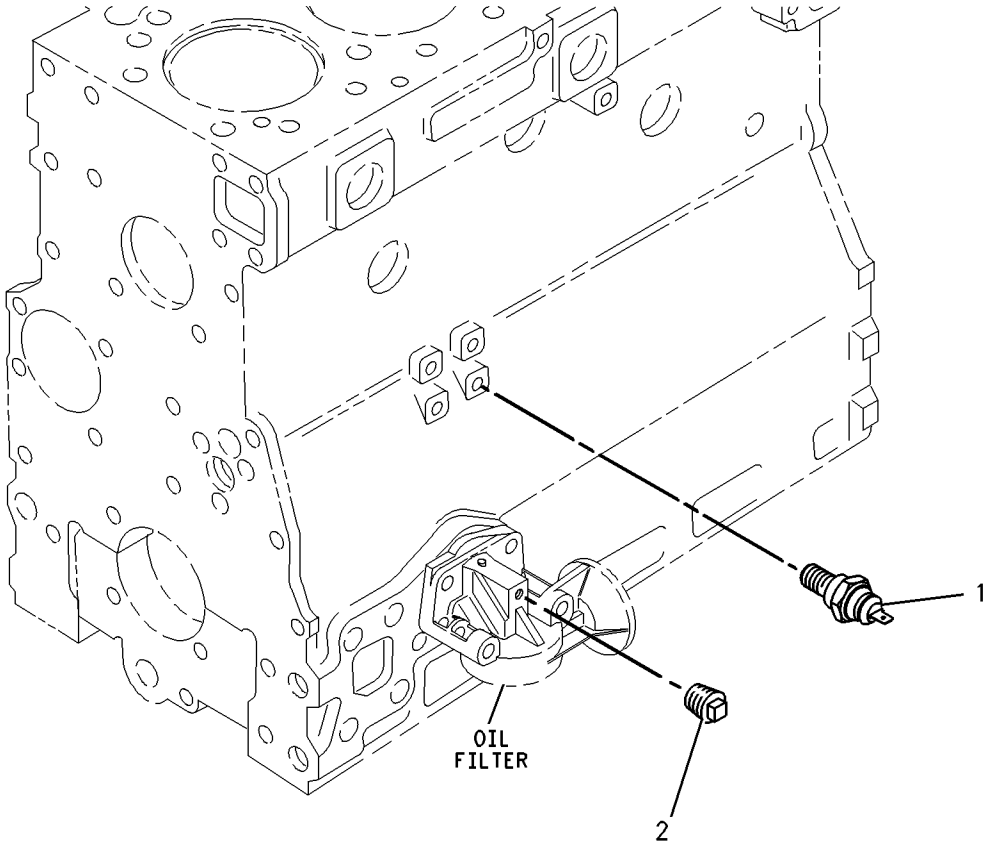

GRAPHIC #1 **<END>** g00744374

237-4896 SWITCH GP-PRESSURE

S/N: CRS1-UP

PART OF 234-3058, 234-3059 ENGINE AR-PRIMARY

AN ATTACHMENT

SMCS-1435 **i02002679**

NOTE	REF NO	GRAPHIC REF	PART NUMBER	QTY	PART NAME 1 2 3 4 5 6 (PRODUCT LEVEL)	SEE PAGE
	1	1	**237-4894**	1	SWITCH-OIL PRESS (ENGINE)	

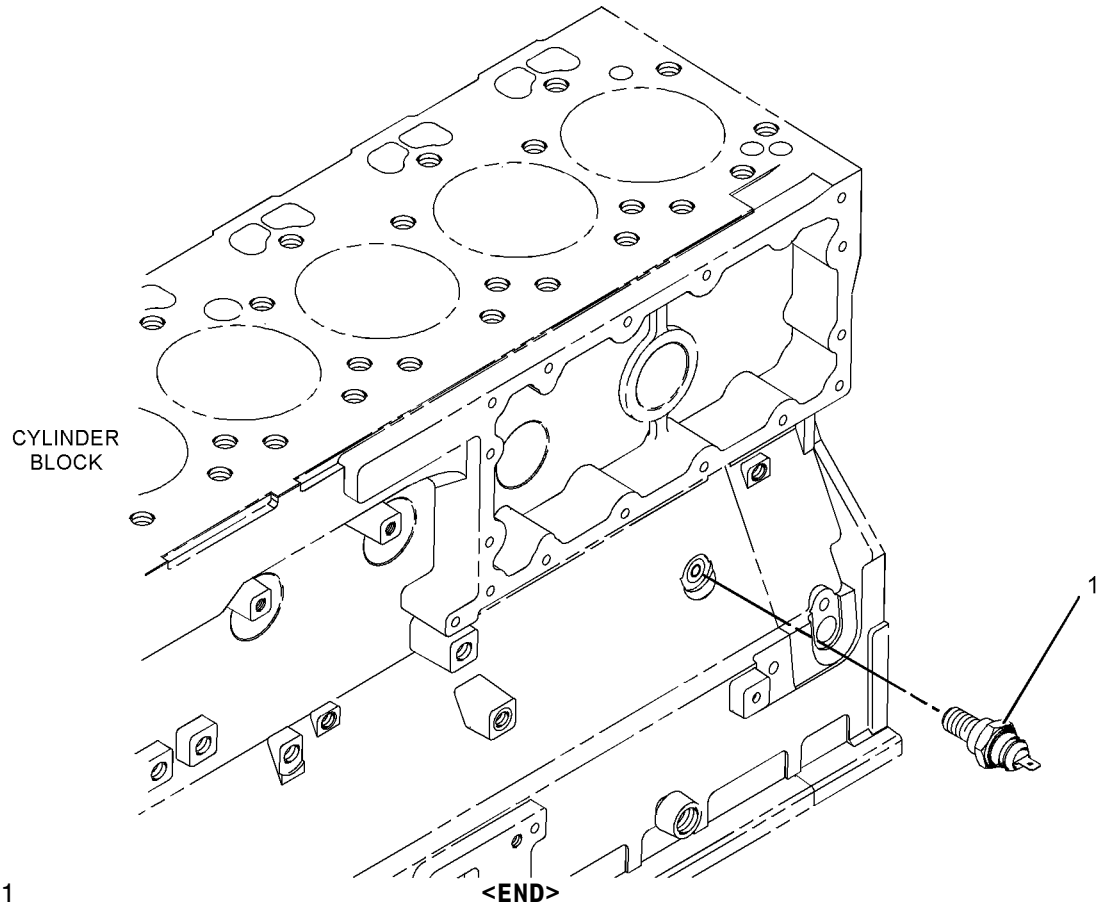

GRAPHIC #1 g01039594

<END>

235-8749 SWITCH GP-TEMPERATURE

S/N: CRS1-UP
PART OF 234-3058, 234-3059 ENGINE AR-PRIMARY
AN ATTACHMENT

SMCS-7400, 7417 **i02001280**

NOTE	REF NO	GRAPHIC REF	PART NUMBER	QTY	PART NAME 1 2 3 4 5 6 (PRODUCT LEVEL)	SEE PAGE
	1	1	**199-9751**	1	SEAL-O-RING	
	2	1	**235-8747**	1	SWITCH-WATER TEMPERATURE	

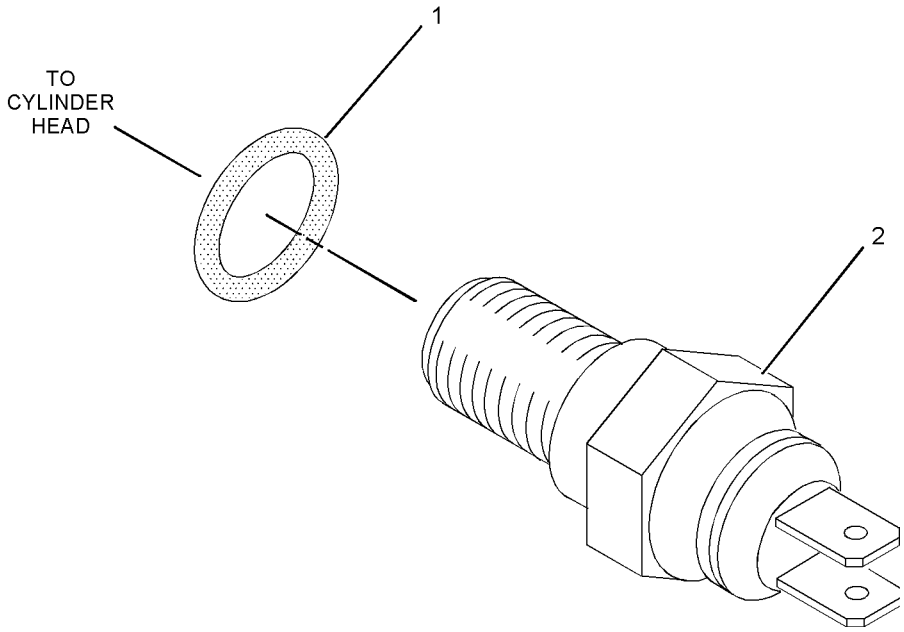

GRAPHIC #1 **<END>** g01036068

202-5797 WIRING GP-AIR CONDITIONER

S/N: BFP12900-UP
PART OF 236-6960 AIR CONDITIONER AR
AN ATTACHMENT

SMCS-1408, 7320 **i02019707**

NOTE	REF NO	GRAPHIC REF	PART NUMBER	QTY	PART NAME 1 2 3 4 5 6 (PRODUCT LEVEL)	SEE PAGE
	1	1	**3E-9362**	1	RELAY AS (12-VOLT)	
	2	1,2	**3S-2093**	4	STRAP-CABLE	
	3	2	**8Y-7833**	1	WIRE AS	
		2	**8T-8729**	2	PIN-CONNECTOR	
		2	**102-8802**	1	KIT-RECEPTACLE (2-PIN)	
	4	2	**9U-2277**	1	CLIP AS	
		2	**8C-3334**	1	RIVET-TUBULAR	
	5	2	**106-8704**	1	SUPPRESSOR AS-ARC	
		2	**8T-8729**	2	PIN-CONNECTOR	
		2	**102-8802**	1	KIT-RECEPTACLE (2-PIN)	
	6	1	**113-8490**	1	FUSE (10-AMPERE)	
	7	2	**114-5333**	1	SWITCH AS-PRESSURE	
		2	**8T-8729**	2	PIN-CONNECTOR	
		2	**102-8802**	1	KIT-RECEPTACLE (2-PIN)	
	8	1	**131-3201**	2	BOOT	
	9	1	**169-0605**	1	SWITCH AS-ROCKER (HEATER FAN SPEED)	
		1	**111-7899**	1	GASKET	
	10	1	**169-0606**	1	SWITCH AS-ROCKER (HEAT/AC)	
		1	**111-7899**	1	GASKET	
	11	1	**170-2237**	1	RELAY AS (12-VOLT)	
	12	2	**174-6417**	1	HARNESS AS-AIR CONDITIONER	
		2	**102-8802**	1	KIT-RECEPTACLE (2-PIN)	
		2	**155-2270**	1	KIT-CONNECTING PLUG (2-PIN)	
	13	1	**229-8377**	1	CIRCUIT BREAKER AS (35-AMPERE)	
		1	**6V-8378**	2	NUT (10-32-THD)	
		1	**8F-1434**	2	LOCKWASHER (INTERNAL TOOTH)	
		1	**8T-0328**	2	WASHER-HARD (5.5X10X1-MM THK)	
	14	1	**220-4141**	1	HARNESS AS-HEATER & AIR COND	
		1	**102-8802**	1	KIT-RECEPTACLE (2-PIN)	
		1	**102-8804**	1	KIT-RECEPTACLE (4-PIN)	
		1	**155-2270**	1	KIT-CONNECTING PLUG (2-PIN)	
		1	**177-9648**	1	KIT-CONNECTING PLUG (2-PIN)	
		1	**177-9645**		KIT-RECEPTACLE (2-PIN) (1)	
M	15	2	**138-8454**	1	SCREW-TRUSS HEAD (M4X0.7X10-MM)	
	16	1	**213-7315**	2	SCREW-TRUSS HEAD (M4X0.7X25-MM)	
	17	2	**4B-4863**	1	WASHER (4.7X11X1.2-MM THK)	
	18	2	**4P-8134**	1	CLIP	
	19	2	**8T-4121**	1	WASHER-HARD (11X21X2.5-MM THK)	
M	20	2	**8T-4133**	1	NUT (M10X1.5-THD)	
M	21	2	**8T-4195**	1	BOLT (M10X1.5X30-MM)	

M-METRIC PART

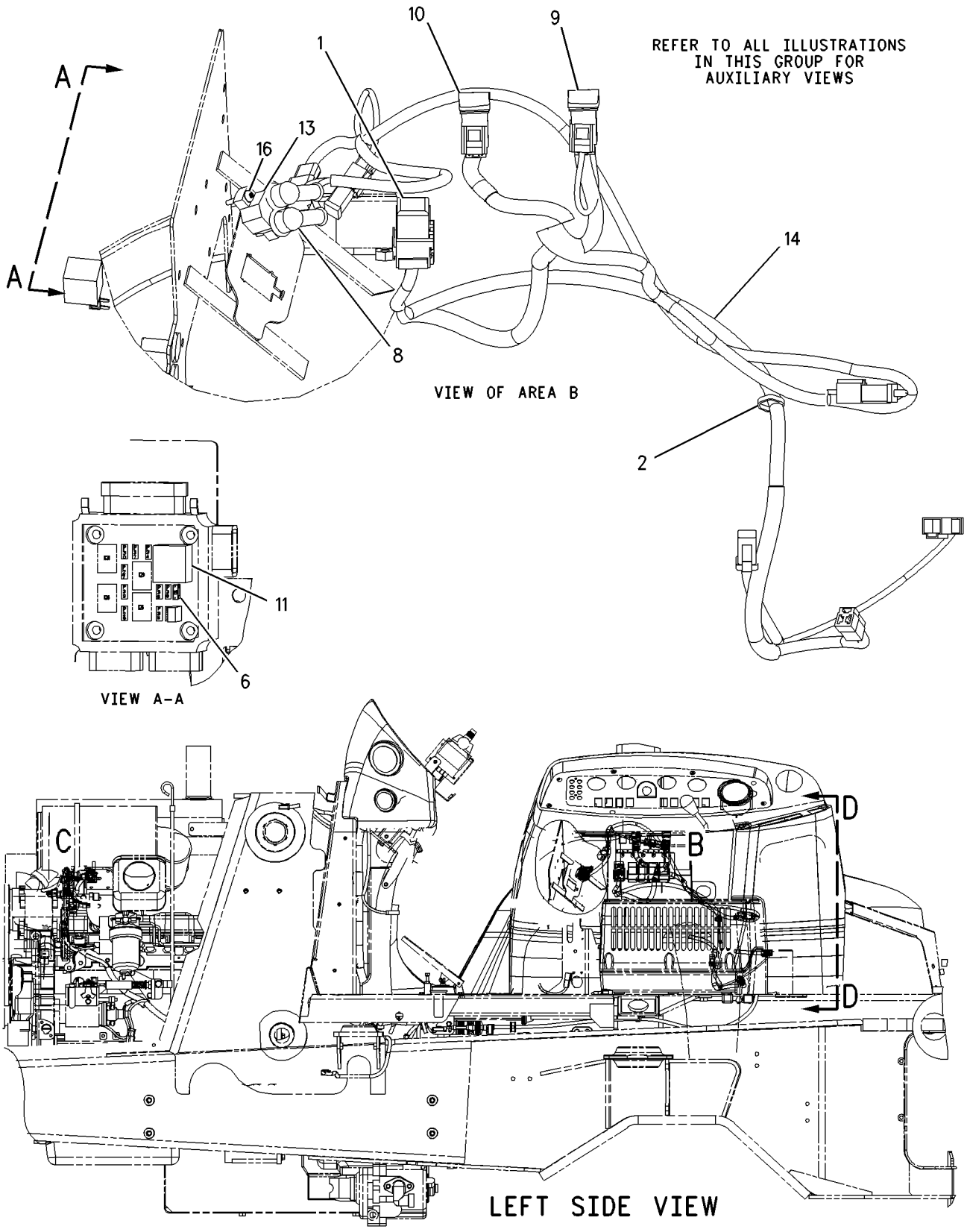

GRAPHIC #1 g00960366

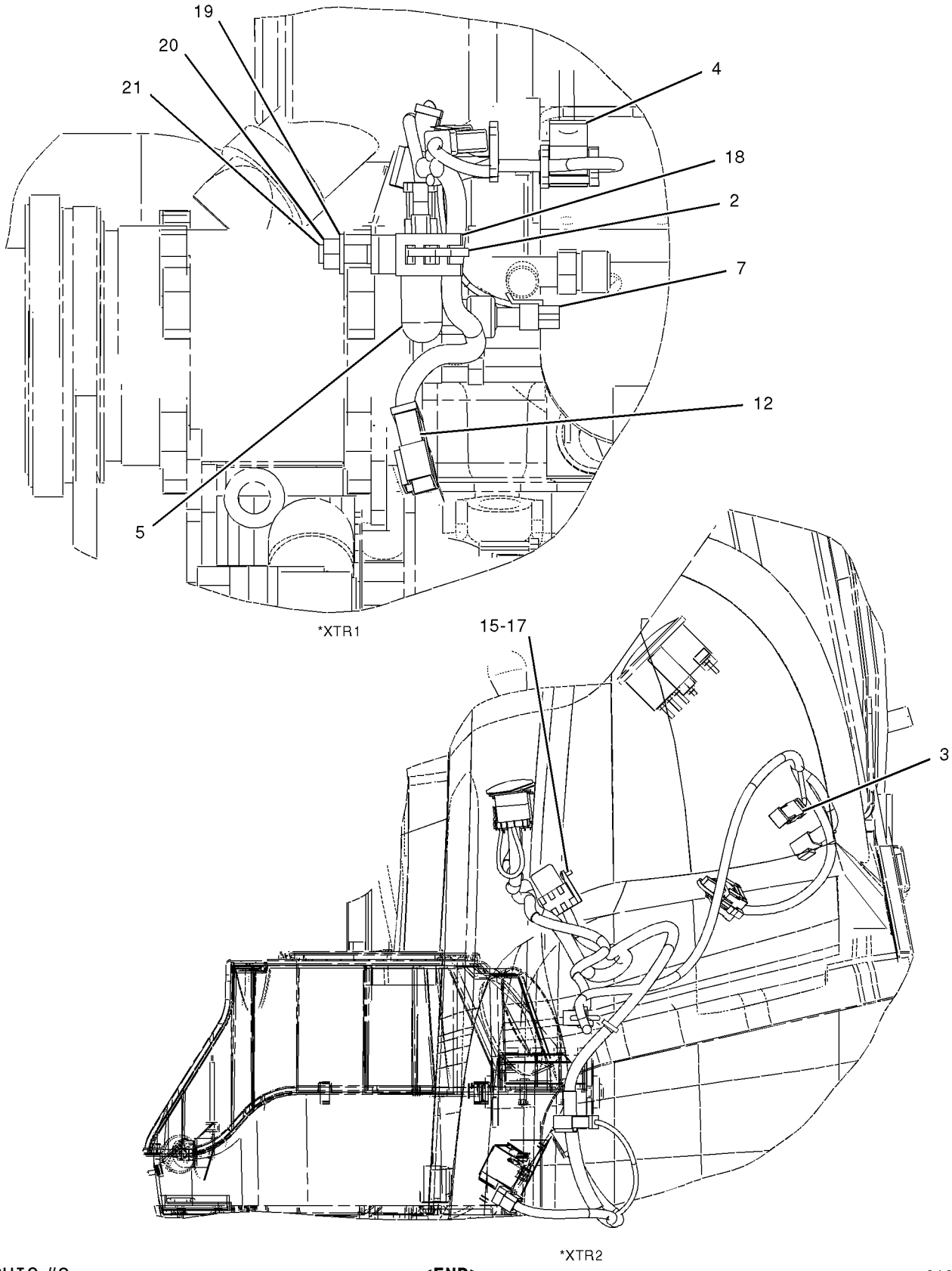

GRAPHIC #2 **<END>** g01043414

202-6107 WIRING GP-AIR CONDITIONER

S/N: BFP12900-UP
SHUT-OFF
PART OF 202-5775 COOLING AR
AN ATTACHMENT

SMCS-1408, 7320 **i02019576**

NOTE	REF NO	GRAPHIC REF	PART NUMBER	QTY	PART NAME 1 2 3 4 5 6 (PRODUCT LEVEL)	SEE PAGE
	1	1	**3E-9362**	1	RELAY AS (12-VOLT)	
B	2	1	**3S-2093**	6	STRAP-CABLE	
	3	1	**202-6108**	1	HARNESS AS-HEATER & AIR COND	
		1	**102-8802**	1	KIT-RECEPTACLE (2-PIN)	
		1	**8L-8413**	12	STRAP-CABLE	
		1	**111-6795**	1	HOUSING-RELAY	
		1	**111-6816**	1	LOCK	
	4	1	**131-1424**	1	SEAL	
	5	1	**188-2470**	1	TACHOMETER AS (12-VOLT)	
		1	**4B-2043**	6	NUT (8-32-THD)	
		1	**9B-7233**	6	LOCKWASHER	
		1	**122-7137**	1	LAMP (12-VOLT)	

B-USE AS REQUIRED

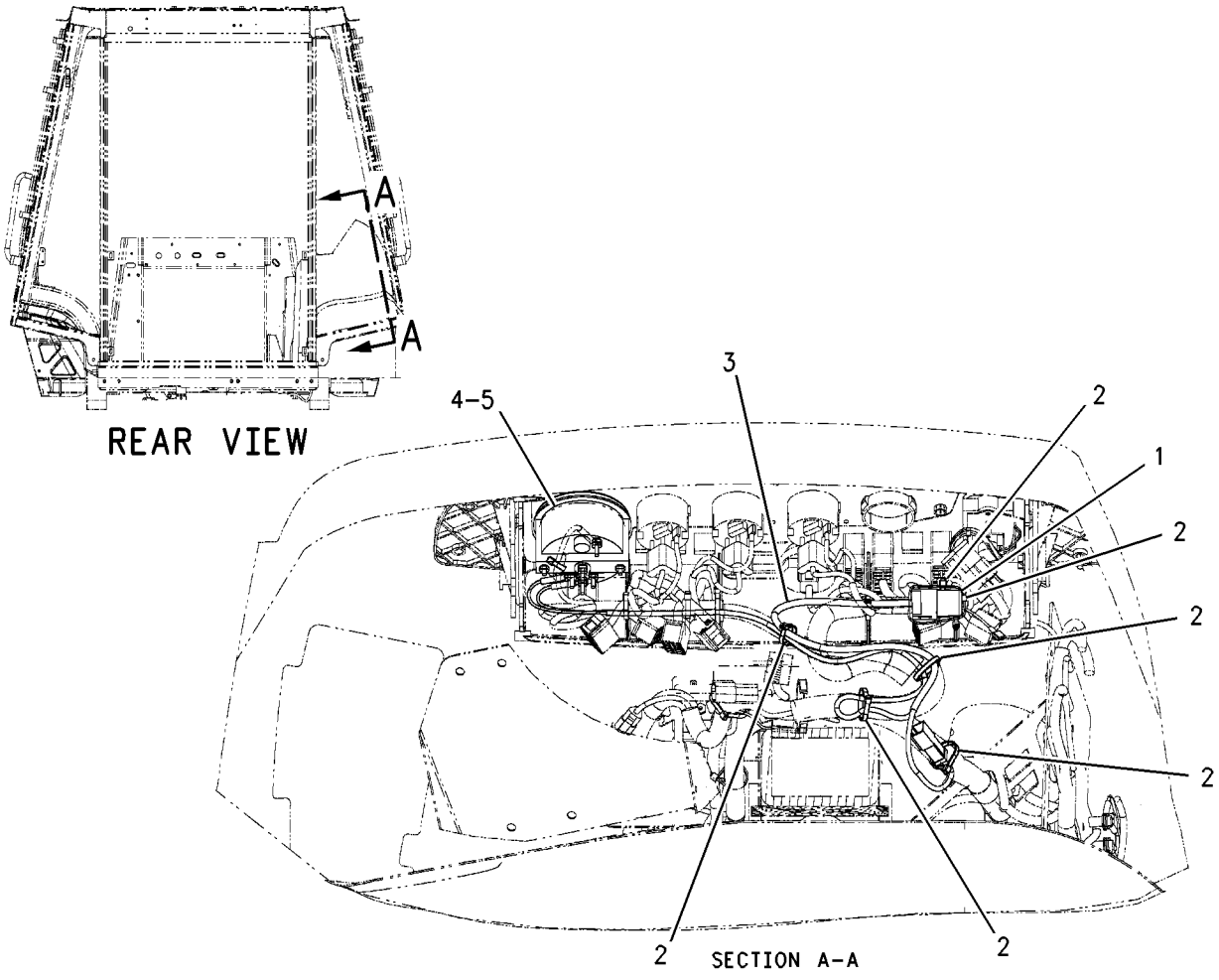

GRAPHIC #1 **<END>** g00810229

238-1811 WIRING GP-AIR CONDITIONER

S/N: BFP12900-UP
PART OF 239-5562 CAB AR
AN ATTACHMENT

SMCS-1408, 7320 **i01988997**

NOTE	REF NO	GRAPHIC REF	PART NUMBER	QTY	PART NAME 1 2 3 4 5 6 (PRODUCT LEVEL)	SEE PAGE
	1	1	**3E-9362**	1	RELAY AS (12 VOLT) (HIGH SPEED)	
	2	1	**8Y-7833**	1	WIRE AS	
	3	2	**106-8704**	1	SUPPRESSOR AS-ARC	
		2	**102-8802**	1	KIT-RECEPTACLE (2-PIN)	
					(INCLUDES RECEPTACLE AND WEDGE)	
		2	**186-3735**	2	PIN-CONNECTOR	
	4	2	**113-8490**	1	FUSE (10 AMP)	
	5	1	**131-3201**	2	BOOT	
	6	2	**169-0605**	1	SWITCH AS-ROCKER (HEATER FAN SPEED)	
		2	**111-7899**	1	GASKET	
	7	2	**169-0606**	1	SWITCH AS-ROCKER (HEATER/AC)	
		2	**111-7899**	1	GASKET	
	8	2	**170-2237**	1	RELAY AS (12 VOLT)	
	9	1	**229-8377**	1	CIRCUIT BREAKER AS (35AMP)	
		1	**6V-8378**	2	NUT (10-32 THD)	
		1	**8F-1434**	2	LOCKWASHER (INTERNAL TOOTH)	
		1	**8T-0328**	2	WASHER-HARD (5.5X10X1MM THK)	
	10	1	**229-8413**	1	HARNESS AS-HEATER & AIR COND	
		1	**102-8802**	1	KIT-RECEPTACLE (2-PIN)	
					(INCLUDES RECEPTACLE AND WEDGE)	
		1	**102-8804**	1	KIT-RECEPTACLE (4-PIN)	
					(INCLUDES RECEPTACLE AND WEDGE)	
		1	**155-2270**	1	KIT-CONNECTING PLUG (2-PIN)	
					(INCLUDES PLUG AND WEDGE)	
		1	**177-9645**	1	KIT-RECEPTACLE (2-PIN)	
					(INCLUDES RECEPTACLE AND WEDGE)	
		1	**177-9648**	1	KIT-CONNECTING PLUG (2-PIN)	
					(INCLUDES PLUG AND WEDGE)	
	11	2	**236-6923**	1	SWITCH AS-PRESSURE (HIGH - LOW)	
	12	2	**238-7492**	1	HARNESS AS-HEATER & AIR COND	
		2	**102-8802**	1	KIT-RECEPTACLE (2-PIN)	
					(INCLUDES RECEPTACLE AND WEDGE)	
		2	**155-2270**	2	KIT-CONNECTING PLUG (2-PIN)	
					(INCLUDES PLUG AND WEDGE)	
M	13	1	**138-8454**	1	SCREW-TRUSS HEAD (M4X0.7X10MM)	
	14	1	**213-7315**	2	SCREW-TRUSS HEAD (M4X0.7X25MM)	
	15	1,2	**3S-2093**	3	STRAP-CABLE	
	16	1	**4B-4863**	1	WASHER (4.7X11X1.2MM THK)	
	17	2	**4P-8134**	1	CLIP	
	18	2	**8T-4121**	2	WASHER-HARD (11X21X2.5MM THK)	
M	19	2	**8T-4133**	1	NUT (M10X1.5 THD)	
M	20	2	**8T-4195**	1	BOLT (M10X1.5X30MM)	

M-METRIC PART

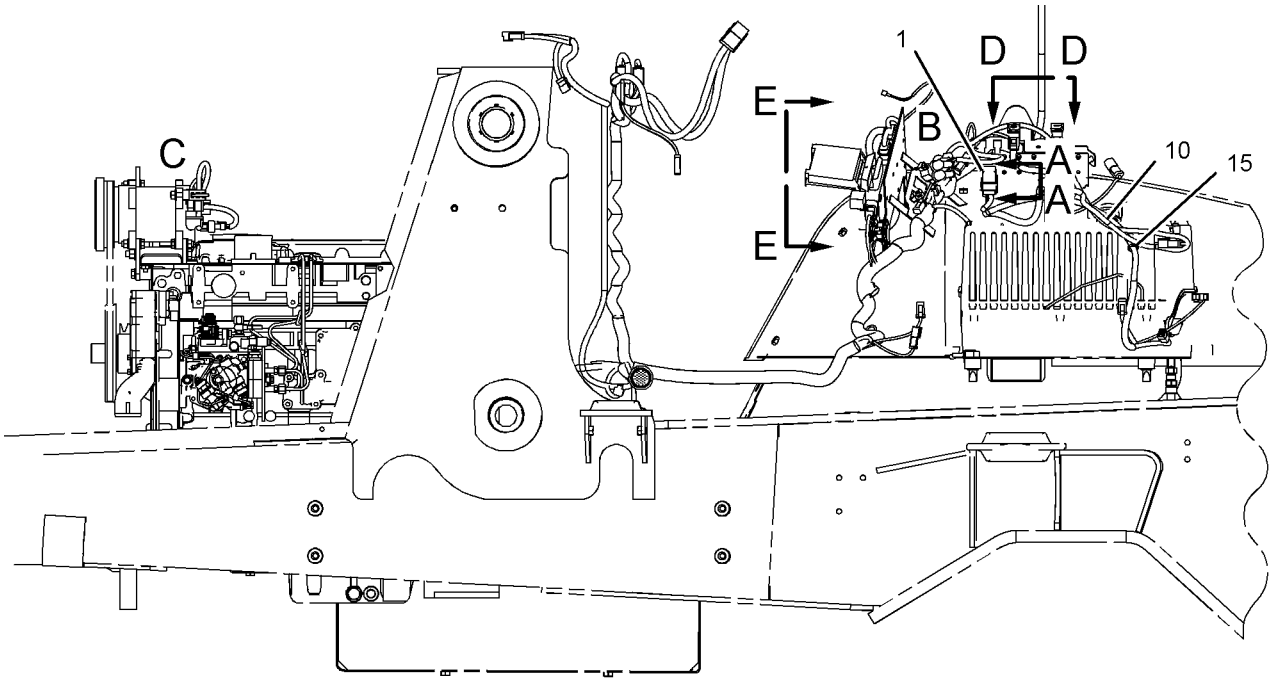

LEFT SIDE VIEW

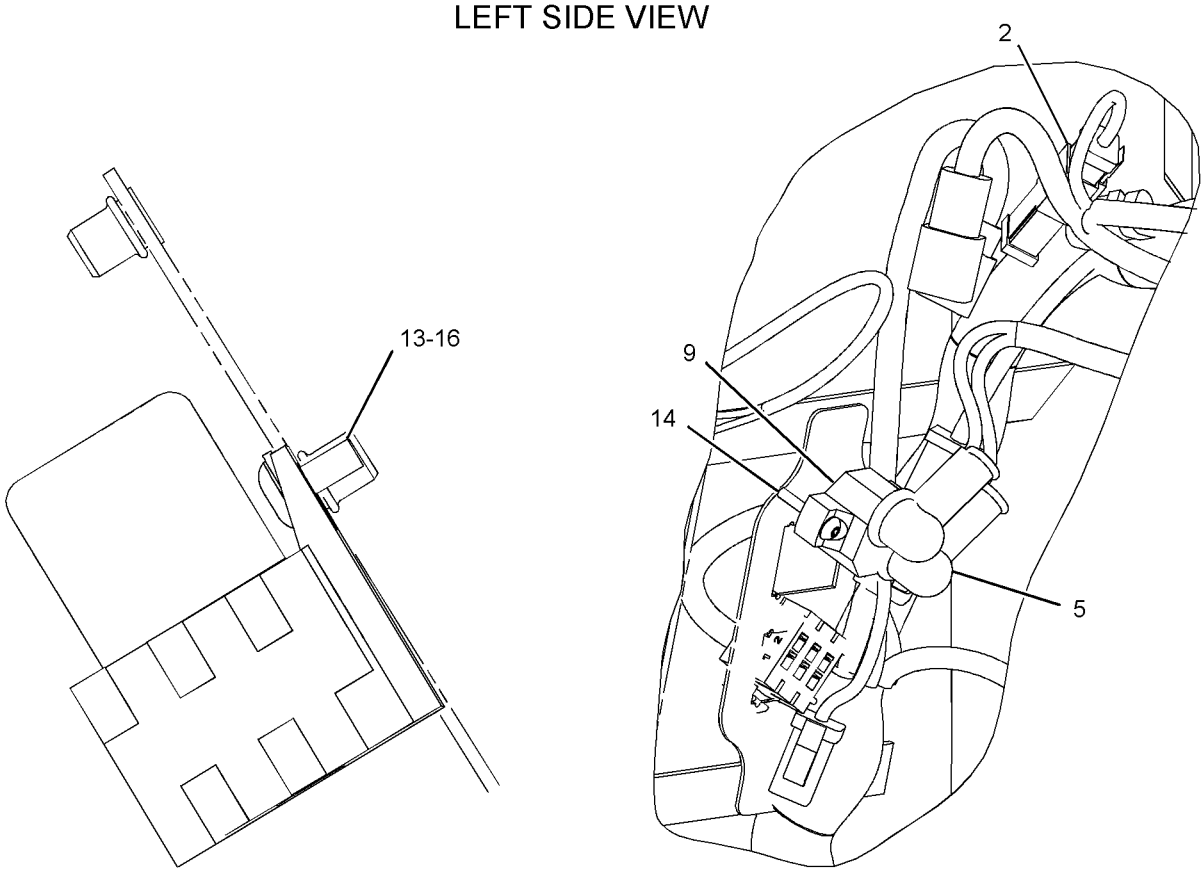

VIEW A-A

VIEW OF AREA B

GRAPHIC #1

g01032230

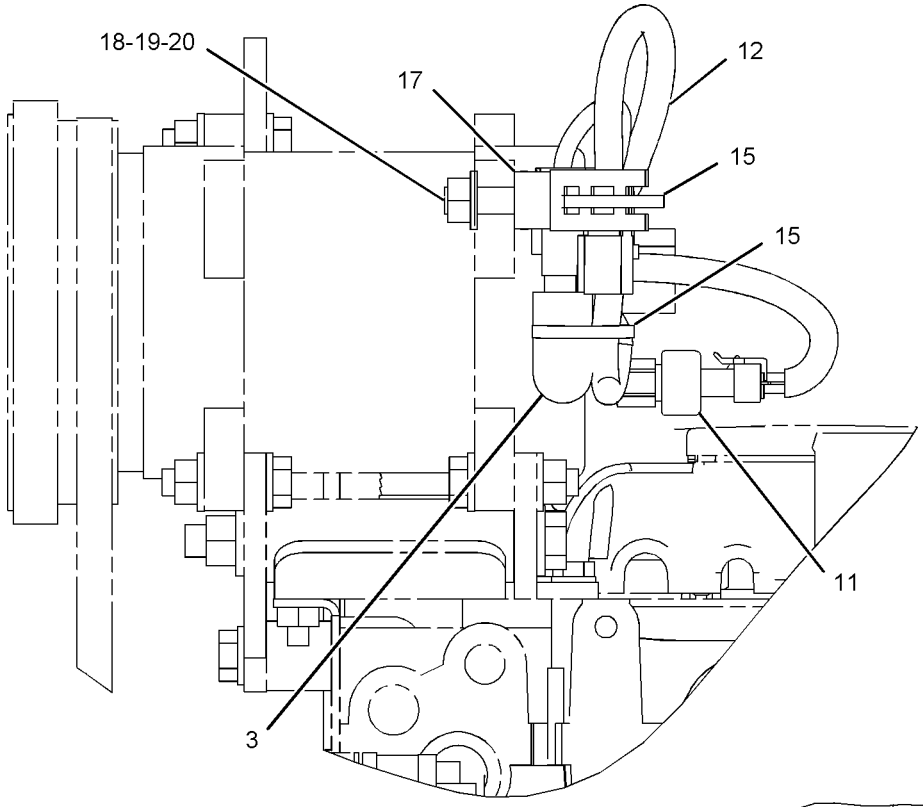

VIEW OF AREA C

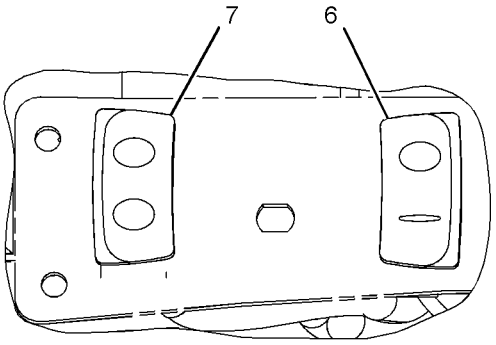

VIEW D-D

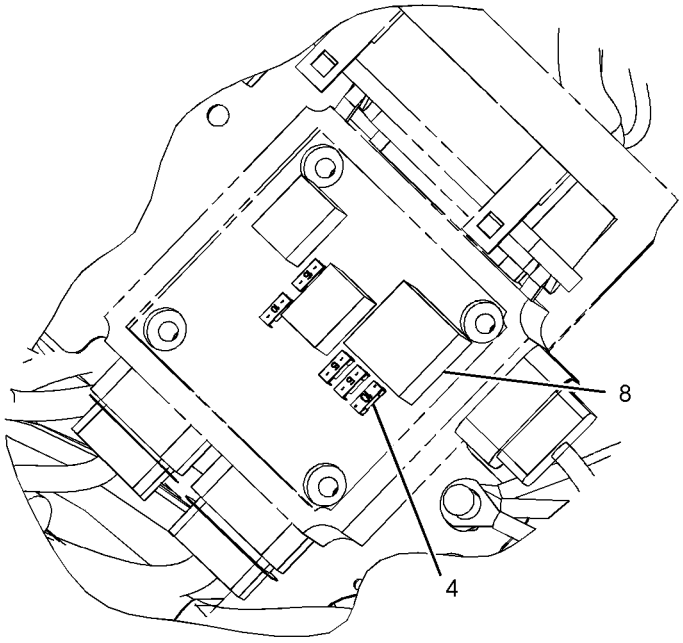

VIEW E-E

GRAPHIC #2 **<END>** g01032231

185-8801 WIRING GP-CAB

S/N: BFP12900-UP
STANDARD
PART OF 184-9735, 205-2177, 239-5561, 239-5562 CAB AR
AN ATTACHMENT

SMCS-1408, 7301 **i02014050**

NOTE	REF NO	GRAPHIC REF	PART NUMBER	QTY	PART NAME 1 2 3 4 5 6 (PRODUCT LEVEL)	SEE PAGE
	1	1	**3S-2093**	6	STRAP-CABLE	
	2	1	**8E-1118**	1	ANTENNA AS	
	3	1	**8R-6111**	1	CABLE AS-COAXIAL	
	4	1	**113-8492**	2	FUSE (20-AMPERE)	
	5	1	**141-2759**	1	FUSE (5-AMPERE)	
	6	1	**146-9439**	1	RELAY AS (12-VOLT)	
	7	1	**169-0596**	1	SWITCH AS (REAR WIPER, WASHER)	
		1	**111-7899**	1	GASKET	
	8	1	**179-1215**	1	HARNESS AS-CAB (UPPER CAB CONTROLS)	
		1	**102-8806**	1	KIT-RECEPTACLE (8-PIN)	
		1	**155-2260**	1	KIT-CONNECTING PLUG (3-PIN)	
		1	**155-2271**	1	KIT-CONNECTING PLUG (4-PIN)	
		1	**155-2274**	1	KIT-CONNECTING PLUG (6-PIN)	
		1	**155-2265**	1	KIT-CONNECTING PLUG (8-PIN)	
	9	1	**235-4752**	1	WIRE AS	
	10	1	**238-7448**	1	SWITCH AS (LIGHTS, TURN SIGNALS, WIPER)	
	11	1	**4P-8134**	1	CLIP	
M	12	1	**8T-0352**	2	BOLT (M5X0.8X45-MM)	
	13	1	**8T-4121**	2	WASHER-HARD (11X21X2.5-MM THK)	
M	14	1	**8T-4133**	2	NUT (M10X1.5-THD)	

M-METRIC PART

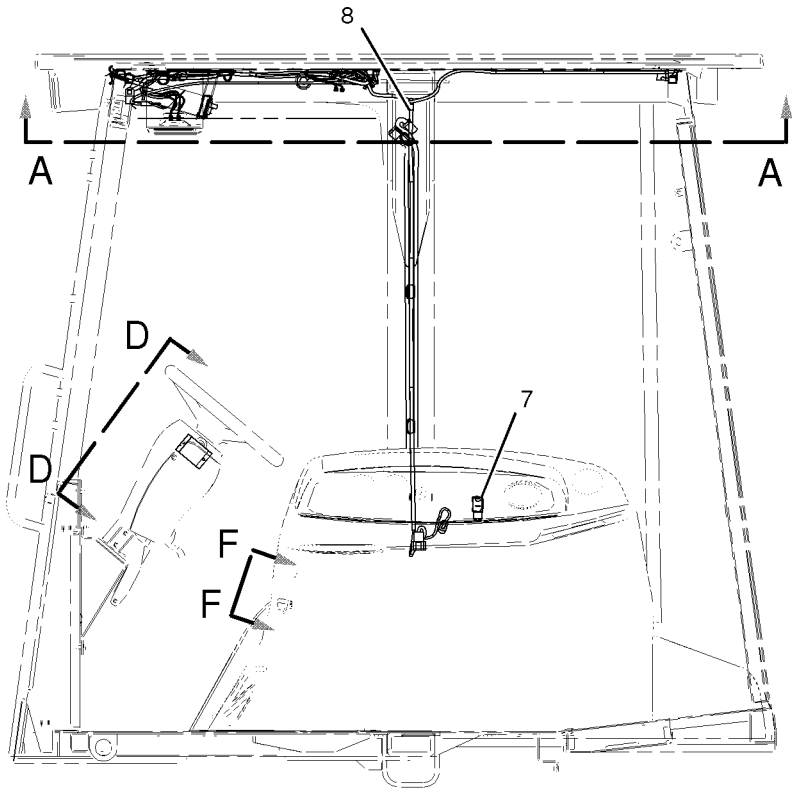

LEFT SIDE VIEW

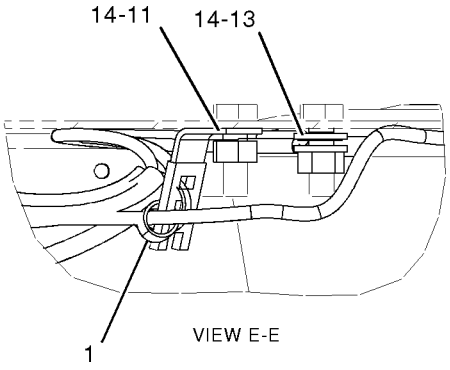

VIEW E-E

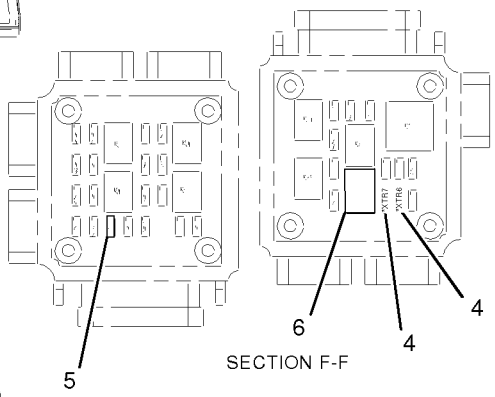

SECTION F-F

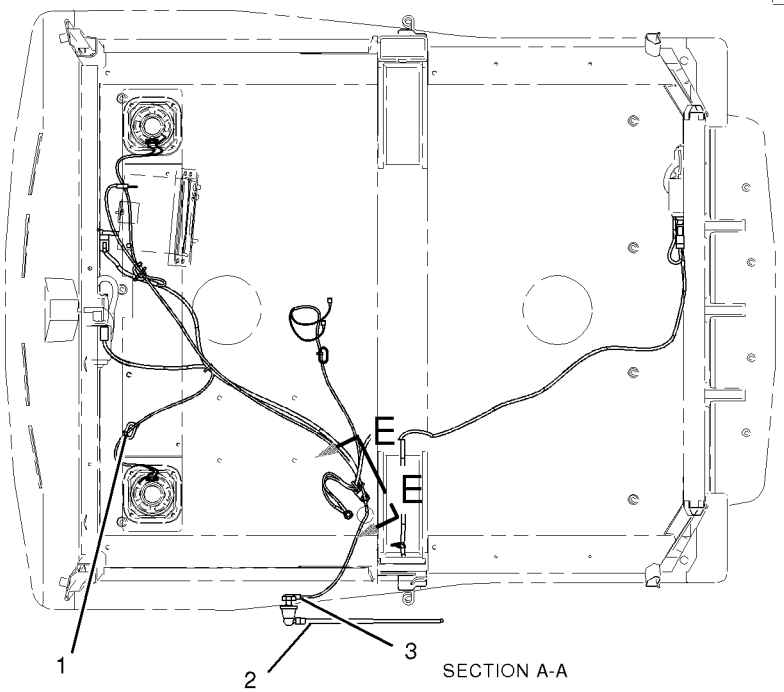

SECTION A-A

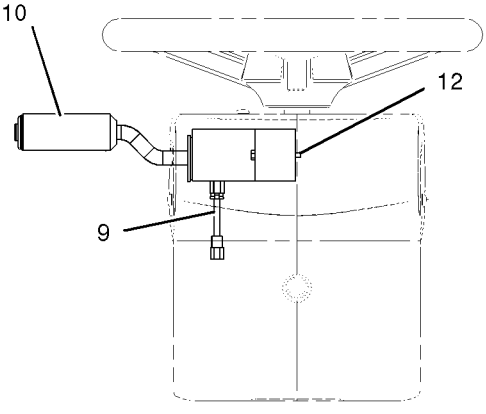

SECTION D-D

GRAPHIC #1 **<END>** g01043715

185-8802 WIRING GP-CAB

S/N: BFP12900-UP; CXP940-UP
CANOPY
PART OF 184-9733, 239-5558 CANOPY AR
AN ATTACHMENT

SMCS-1408, 7301 **i02019745**

NOTE	REF NO	GRAPHIC REF	PART NUMBER	QTY	PART NAME 1 2 3 4 5 6 (PRODUCT LEVEL)	SEE PAGE
	1	1	**138-4894**	1	SWITCH AS (TURN SIGNAL)	
		1	**111-7899**	1	GASKET	
	2	1	**164-1601**	1	BRACKET	
	3	1	**183-4492**	1	HARNESS AS-OPERATOR CONTROLS (TURN SIGNAL) (TURN SIGNAL)	
		1	**102-8801**	1	KIT-RECEPTACLE (12-PIN)	
M	4	1	**125-3298**	3	BOLT-SOCKET HEAD (M5X.8X12-MM)	

M-METRIC PART

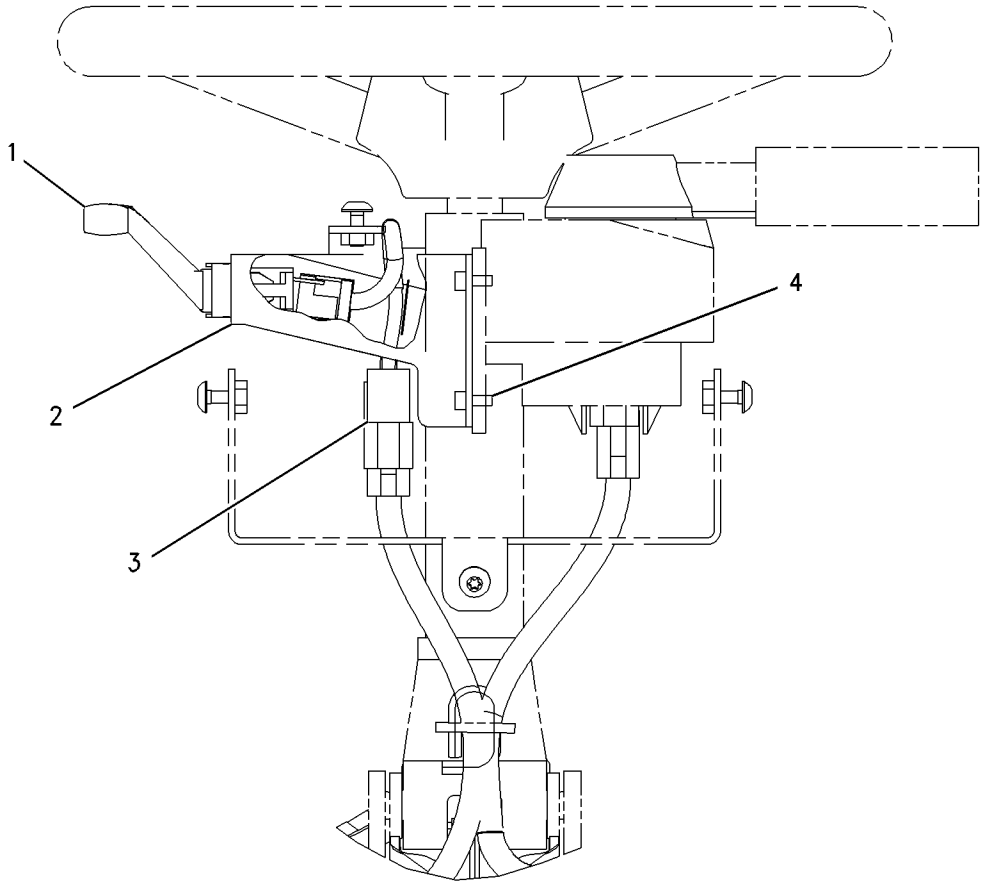

GRAPHIC #1 **<END>** g00746428

186-0303 WIRING GP-CAB

S/N: BFP12900-UP
UTILITY
PART OF 239-5560 CAB AR
AN ATTACHMENT

SMCS-1408, 7301 **i02019304**

NOTE	REF NO	GRAPHIC REF	PART NUMBER	QTY	PART NAME 1 2 3 4 5 6 (PRODUCT LEVEL)	SEE PAGE
	1	2	**113-8492**	2	FUSE (20-AMPERE)	
	2	2	**146-9439**	1	RELAY AS (12-VOLT)	
	3	1	**167-3704**	1	HARNESS AS-CAB (UPPER CAB CONTROLS)	
		1	**102-8806**	1	KIT-RECEPTACLE (8-PIN)	
		1	**155-2260**	1	KIT-CONNECTING PLUG (3-PIN)	
		1	**155-2271**	1	KIT-CONNECTING PLUG (4-PIN)	
		1	**155-2274**	1	KIT-CONNECTING PLUG (6-PIN)	
	4	1	**169-0596**	1	SWITCH AS (REAR WIPER, WASHER)	
		1	**111-7899**	1	GASKET	
	5	1	*235-4752*	1	WIRE AS	
		1	**3E-5180**	1	WEDGE-RECEPTACLE LOCK (12-PIN)	
		1	**8T-8737**	2	PLUG-SEAL	
	6	2	**238-7448**	1	SWITCH AS	
	7	1,2	**3S-2093**	13	STRAP-CABLE	
M	8	2	**8T-0352**	2	BOLT (M5X0.8X45-MM)	
	9	2	**8T-4121**	2	WASHER-HARD (11X21X2.5-MM THK)	
M	10	2	**8T-4133**	1	NUT (M10X1.5-THD)	

M-METRIC PART

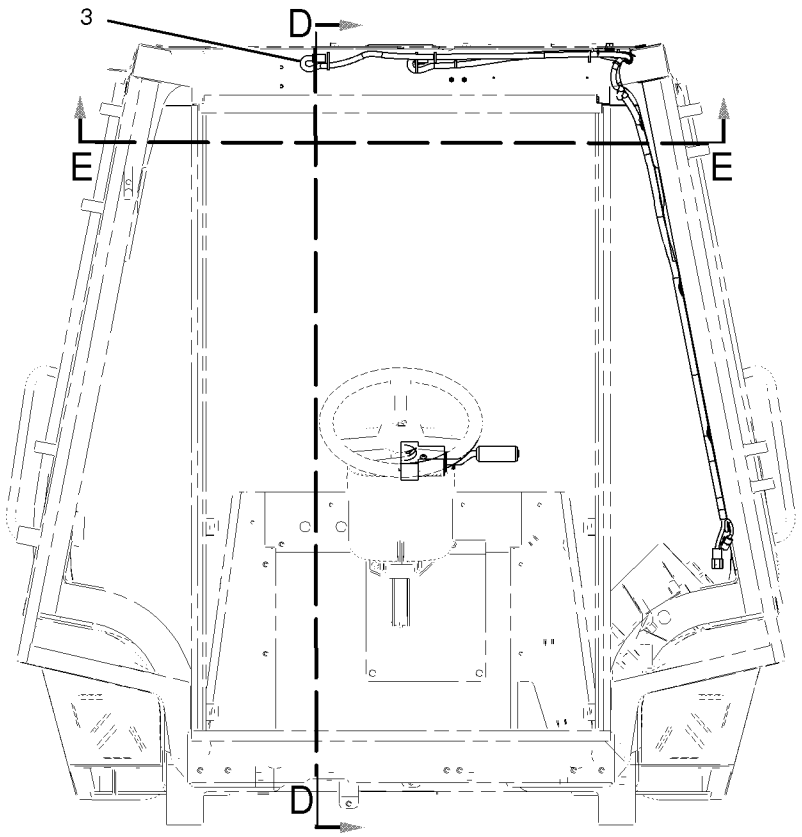

REAR VIEW

REFER TO ALL VIEWS IN THIS GROUP FOR AUXILIARY VIEWS

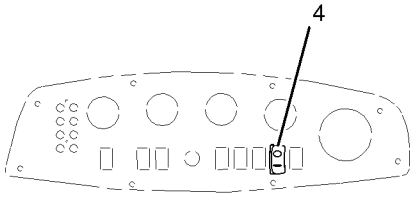

VIEW OF RH SIDE OF CONSOLE PANEL

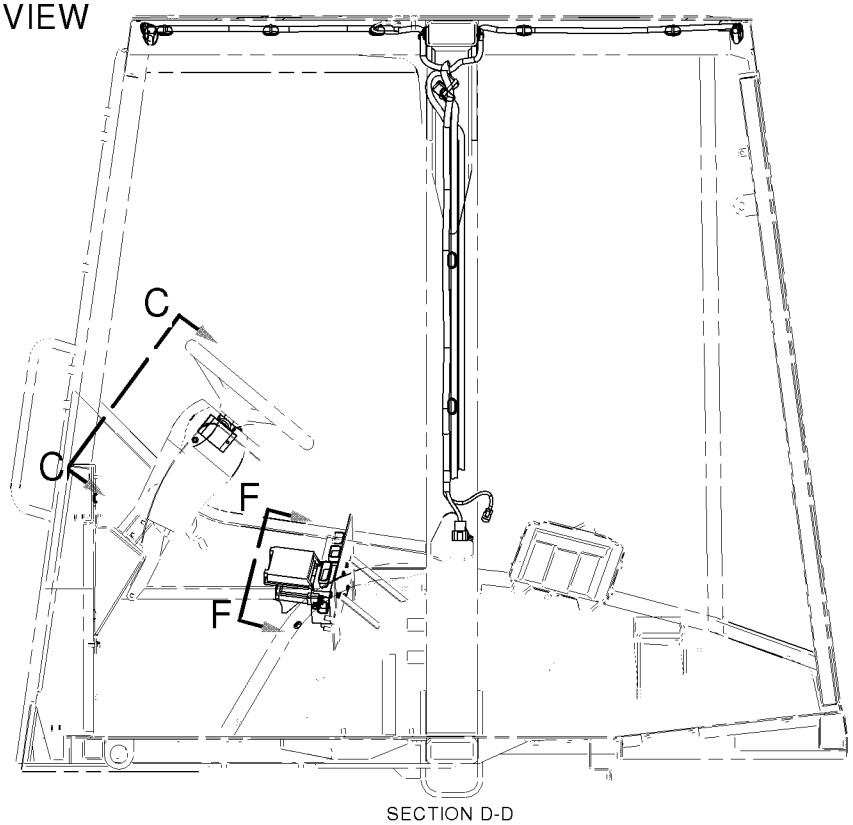

SECTION D-D

GRAPHIC #1

g01043317

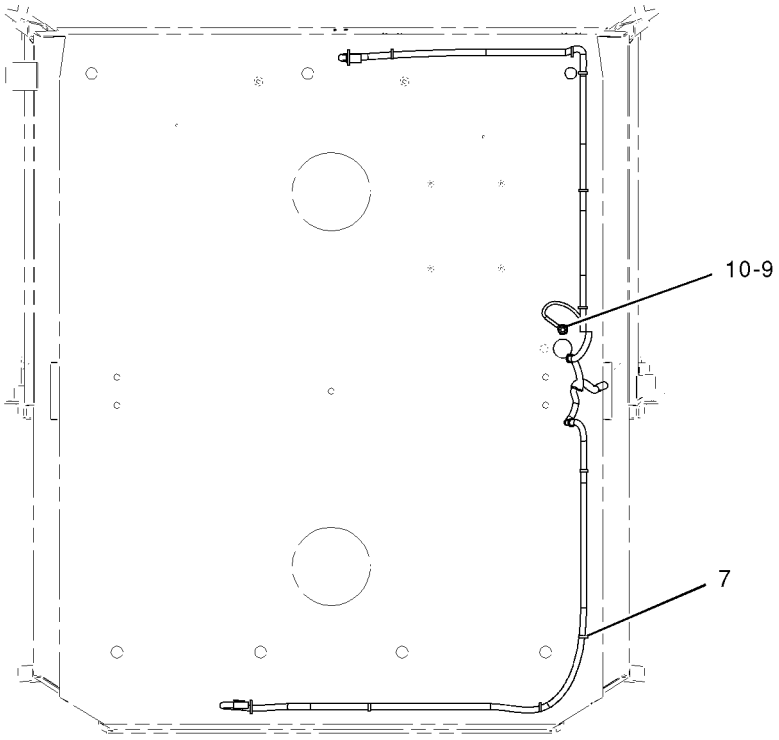

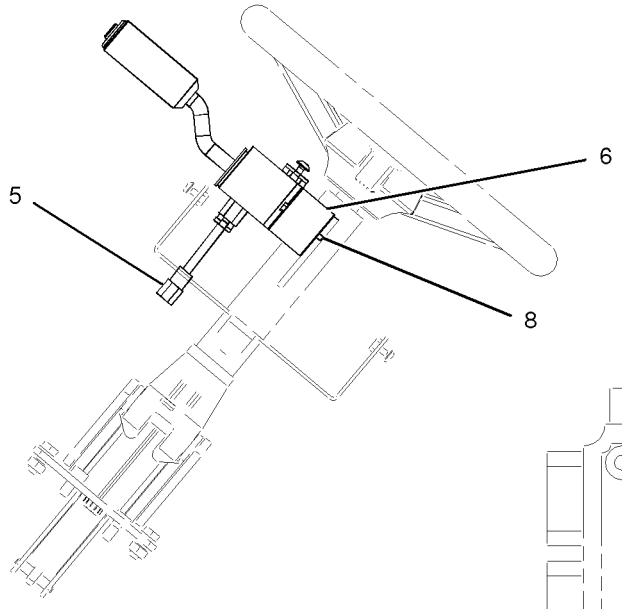

SECTION C-C

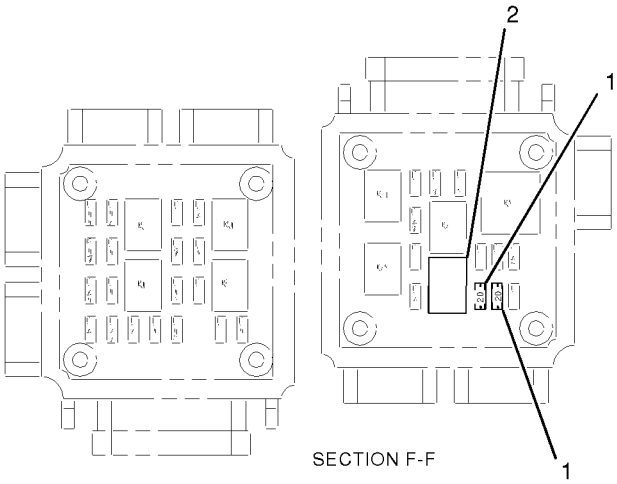

SECTION F-F

GRAPHIC #2 **<END>** g01043318

186-0306 WIRING GP-CAB

S/N: BFP12900-UP; CXP940-UP
PART OF 184-9735, 205-2177, 239-5560, 239-5561, 239-5562 CAB AR, 184-9733, 239-5558, 239-5559 CANOPY AR
AN ATTACHMENT

SMCS-1408, 7301 **i01690316**

NOTE	REF NO	GRAPHIC REF	PART NUMBER	QTY	PART NAME 1 2 3 4 5 6 (PRODUCT LEVEL)	SEE PAGE
	1	1	**113-8491**	1	FUSE (15 AMP)	
B	2	1	**146-9439**	1	RELAY AS (12 VOLT)	
	3	1	**169-0595**	1	SWITCH AS (BEACON)	
		1	**111-7899**	1	GASKET	
	4	1	**178-7539**	1	RECEPTACLE AS	
	5	1	**179-5435**	1	FLANGE	
	6	1	**3E-6922**	2	SCREW-RECESS FLAT HEAD (NO. 6-19X12.7MM)	

B-USE AS REQUIRED

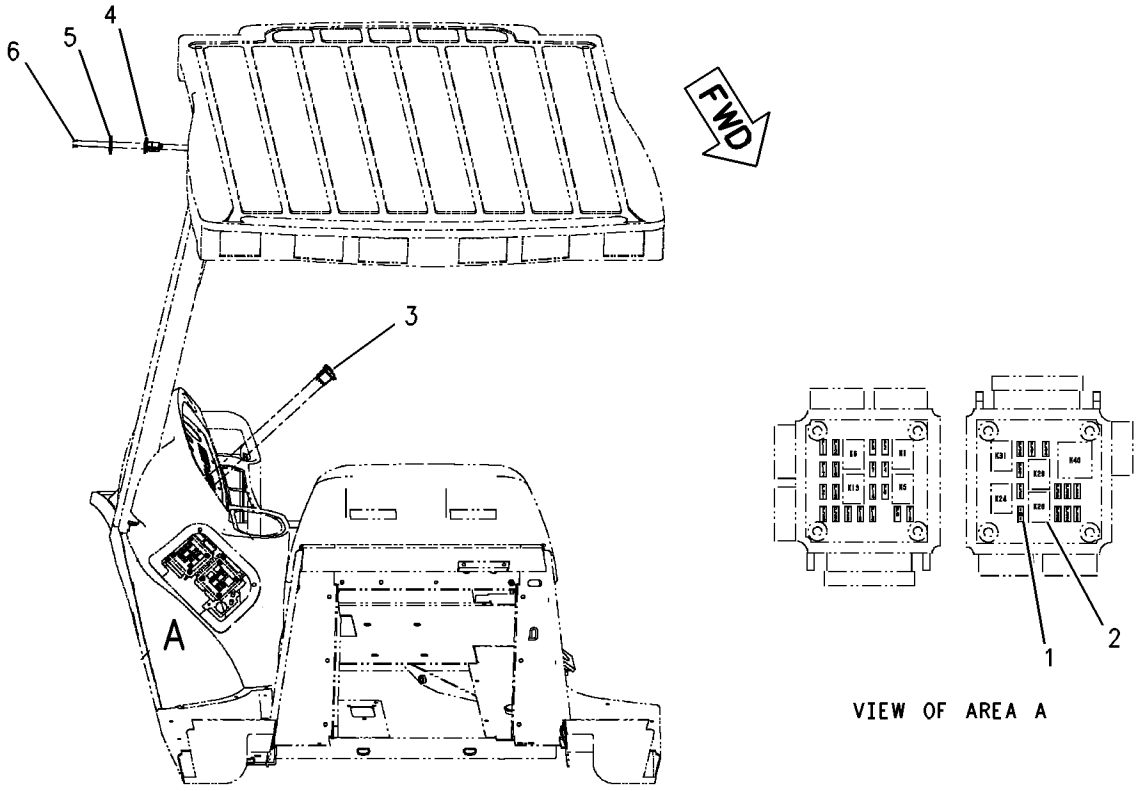

VIEW OF AREA A

GRAPHIC #1 **<END>** g00870937

206-9476 WIRING GP-CAB

S/N: BFP12900-UP
UTILITY, RADIO READY
PART OF 206-9475 LINER GP-CAB

SMCS-1408, 7301 **i01797687**

NOTE	REF NO	GRAPHIC REF	PART NUMBER	QTY	PART NAME 1 2 3 4 5 6 (PRODUCT LEVEL)	SEE PAGE
	1	1	**3S-2093**	6	STRAP-CABLE	
	2	1	**8E-1118**	1	ANTENNA AS	
	3	1	**8R-6111**	1	CABLE AS-COAXIAL	
	4	1	**141-2759**	1	FUSE (5-AMPERE)	
	5	1	**179-1215**	1	HARNESS AS-CAB (UPPER CAB CONTROLS)	
		1	**102-8806**	1	KIT-RECEPTACLE (8-PIN)	
		1	**155-2265**	1	KIT-CONNECTING PLUG (8-PIN)	
		1	**155-2260**	1	KIT-CONNECTING PLUG (3-PIN)	
		1	**155-2271**	1	KIT-CONNECTING PLUG (4-PIN)	
		1	**155-2274**	1	KIT-CONNECTING PLUG (6-PIN)	
	6	1	**4P-8134**	1	CLIP	
M	7	1	**8T-4133**	1	NUT (M10X1.5-THD)	

M-METRIC PART

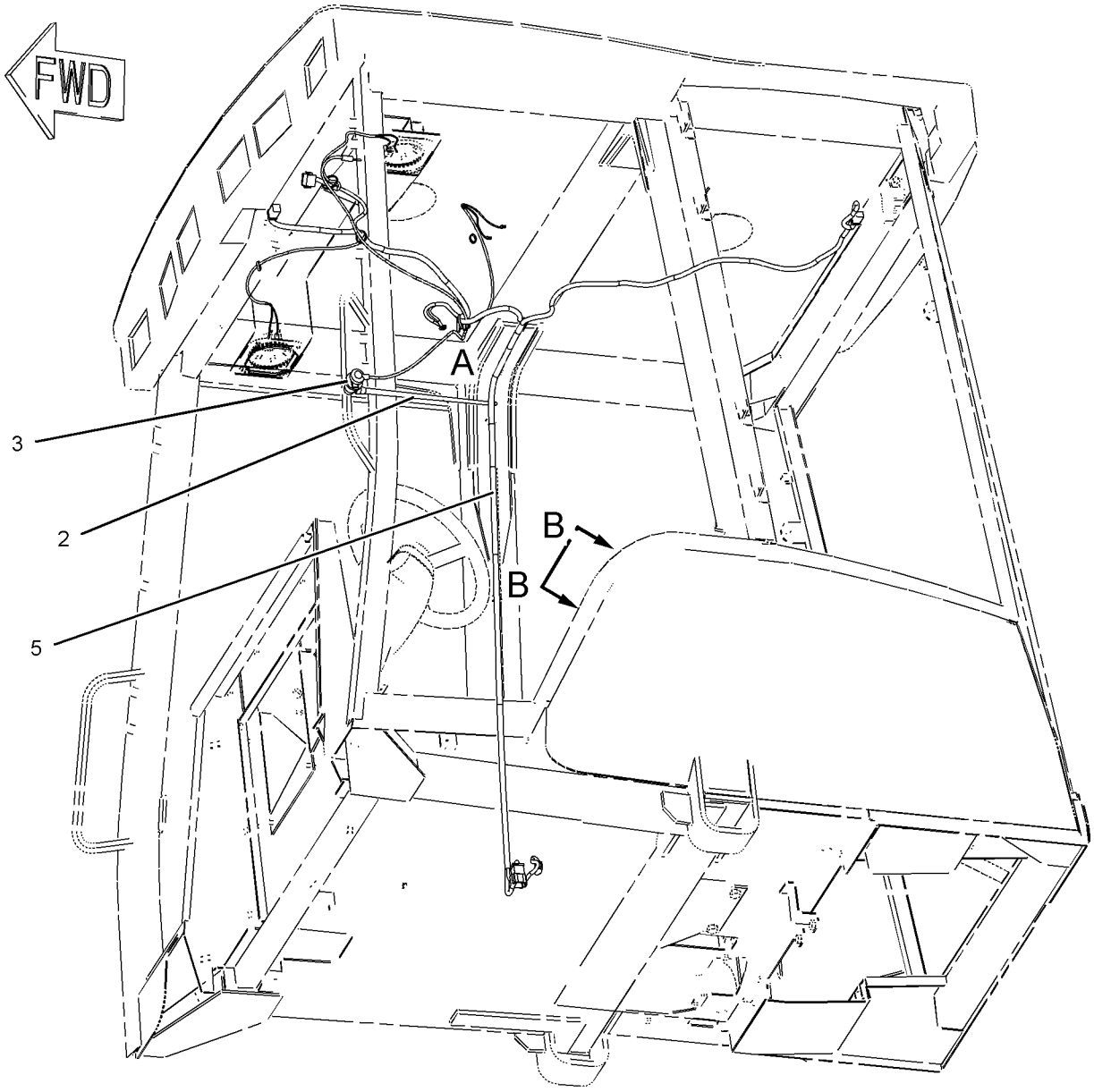

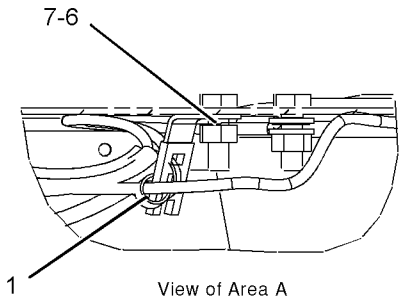

View of Area A

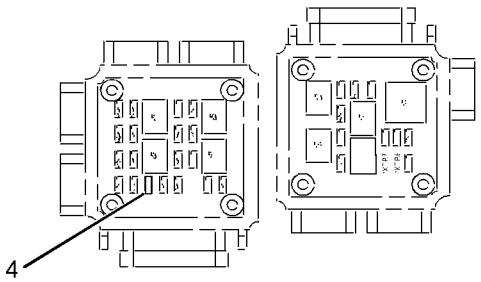

Section B-B

GRAPHIC #1 **<END>** g00995665

207-6050 WIRING GP-CAB

S/N: BFP12900-UP
PART OF 239-5559 CANOPY AR
AN ATTACHMENT

SMCS-1408, 7301 **i02020901**

NOTE	REF NO	GRAPHIC REF	PART NUMBER	QTY	PART NAME 1 2 3 4 5 6 (PRODUCT LEVEL)	SEE PAGE
	1	2	**113-8491**	1	FUSE (15-AMPERE)	
	2	2	**146-9439**	1	RELAY AS (12-VOLT)	
	3	1	**167-3704**	1	HARNESS AS-CAB (UPPER CAB CONTROLS)	
		1	**102-8806**	1	KIT-RECEPTACLE (8-PIN)	
		1	**155-2260**	1	KIT-CONNECTING PLUG (3-PIN)	
		1	**155-2271**	1	KIT-CONNECTING PLUG (4-PIN)	
		1	**155-2274**	1	KIT-CONNECTING PLUG (6-PIN)	
	4	2	**213-8479**	1	SWITCH AS-MULTIFUNCTION (LIGHTS, TURN SIGNALS, WIPER)	
	5	2	**3S-2093**	4	STRAP-CABLE	
M	6	2	**8T-0352**	2	BOLT (M5X0.8X45-MM)	
	7	2	**8T-4121**	2	WASHER-HARD (11X21X2.5-MM THK)	
M	8	2	**8T-4133**	1	NUT (M10X1.5-THD)	
FM			**125-3298**	3	BOLT-SOCKET HEAD (M5X.8X12-MM)	
F			**6V-3265**	2	CLIP	

F-NOT SHOWN
M-METRIC PART

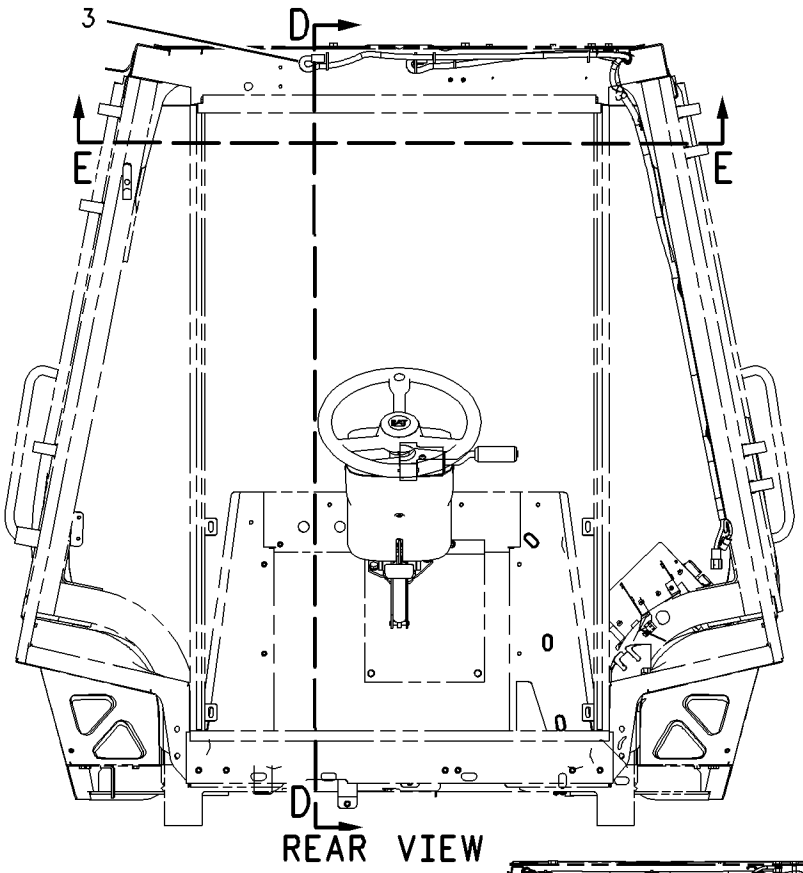

REAR VIEW

REFER TO ALL ILLUSTRATIONS
IN THIS GROUP FOR
AUXILIARY VIEWS

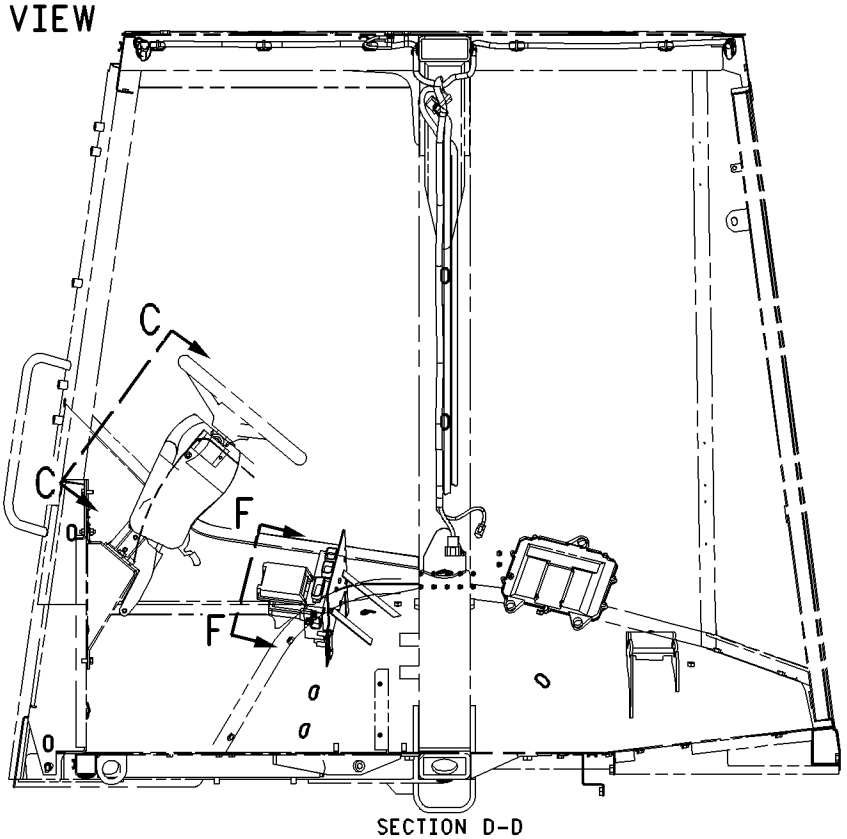

SECTION D-D

GRAPHIC #1

g00949703

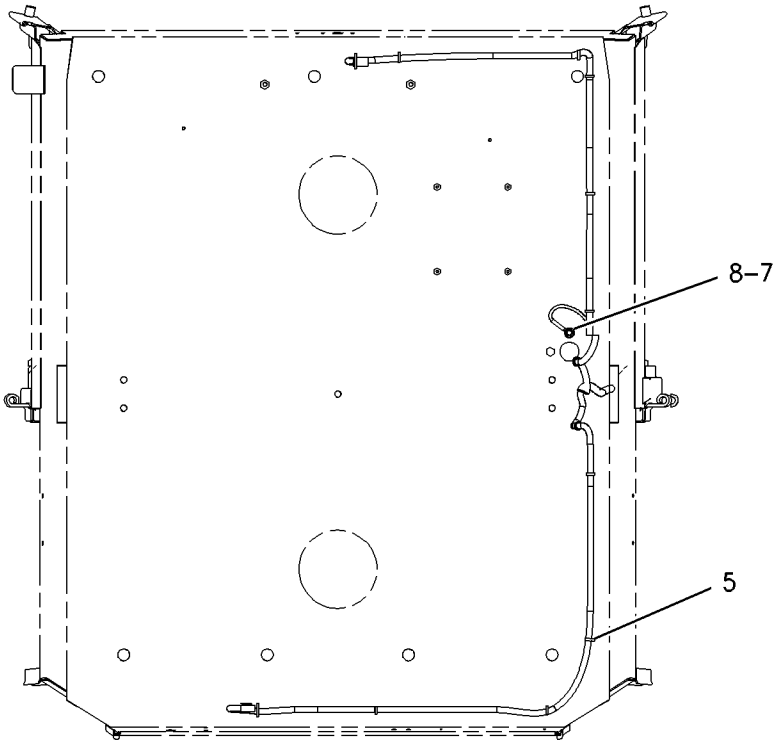

SECTION E-E

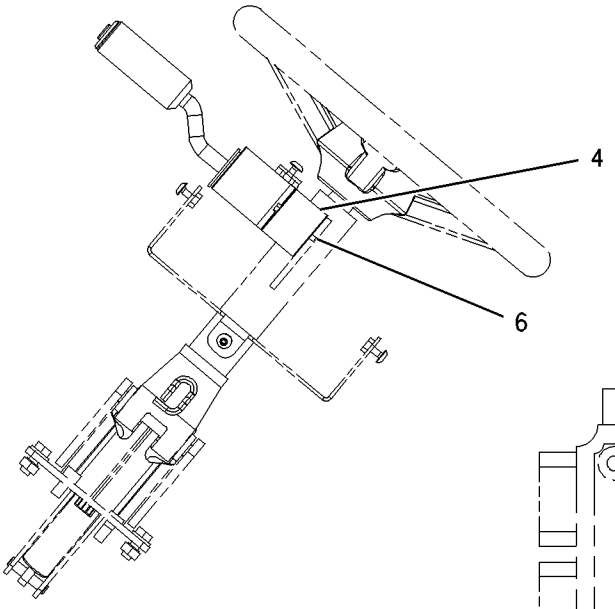

SECTION C-C

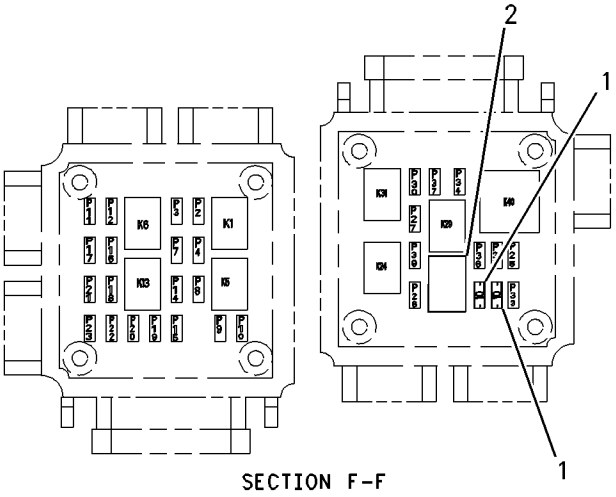

SECTION F-F

GRAPHIC #2 **<END>** g00949705

169-0625 WIRING GP-CONSOLE

S/N: CXP940-UP
FRONT, BASIC
PART OF 215-6888 COMMON AR

SMCS-1408 **i02016394**

NOTE	REF NO	GRAPHIC REF	PART NUMBER	QTY	PART NAME 1 2 3 4 5 6 (PRODUCT LEVEL)	SEE PAGE
	1	1	**3S-2093**	6	STRAP-CABLE	
Y	2	1	**144-9931**	1	MODULE GP-WARNING INDICATOR (WITHOUT ALARM)	937
	3	1	**157-1997**	2	SPACER (4.34X15.88X6.34-MM THK) (6.34MM THK) (NYLON)	
	4	1	**167-3701**	1	HARNESS AS-CONSOLE	
		1	**102-8805**	1	KIT-RECEPTACLE (6-PIN)	
		1	**155-2270**	1	KIT-CONNECTING PLUG (2-PIN)	
		1	**155-2265**	1	KIT-CONNECTING PLUG (8-PIN)	
		1	**155-2255**	1	KIT-CONNECTING PLUG (12-PIN)	
	5	1	**169-0587**	1	SWITCH AS (HORN)	
		1	**111-7899**	1	GASKET	
	6	1	**169-0588**	1	SWITCH AS (NEUTRAL LOCK)	
		1	**111-7899**	1	GASKET	
	7	1	**229-8182**	1	SWITCH AS-ROCKER (HAZZARD)	
		1	**111-7899**	1	GASKET	
	8	1	**187-1644**	7	PLUG	
M	9	1	**095-0741**	2	SCREW-MACHINE (M6X1-THD)	
M	10	1	**099-0492**	2	LOCKNUT (M6X1-THD)	
	11	1	**116-7491**	2	ANCHOR	
	12	1	**205-7700**	1	KIT-SERVICE METER	
					(KIT SERVICES FILM AND METER)	
	13	1	**188-0863**	1	FILM-INDICATOR	
M	14	1	**8T-2659**	2	LOCKNUT (M4X6H THD)	

M-METRIC PART
Y-SEPARATE ILLUSTRATION

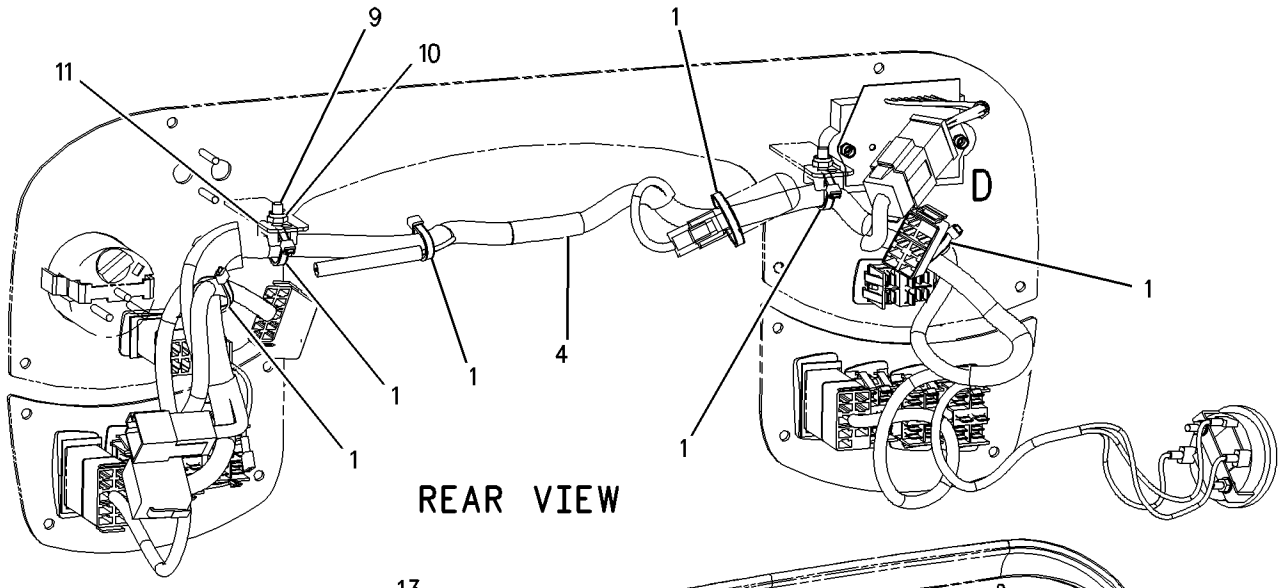

REAR VIEW

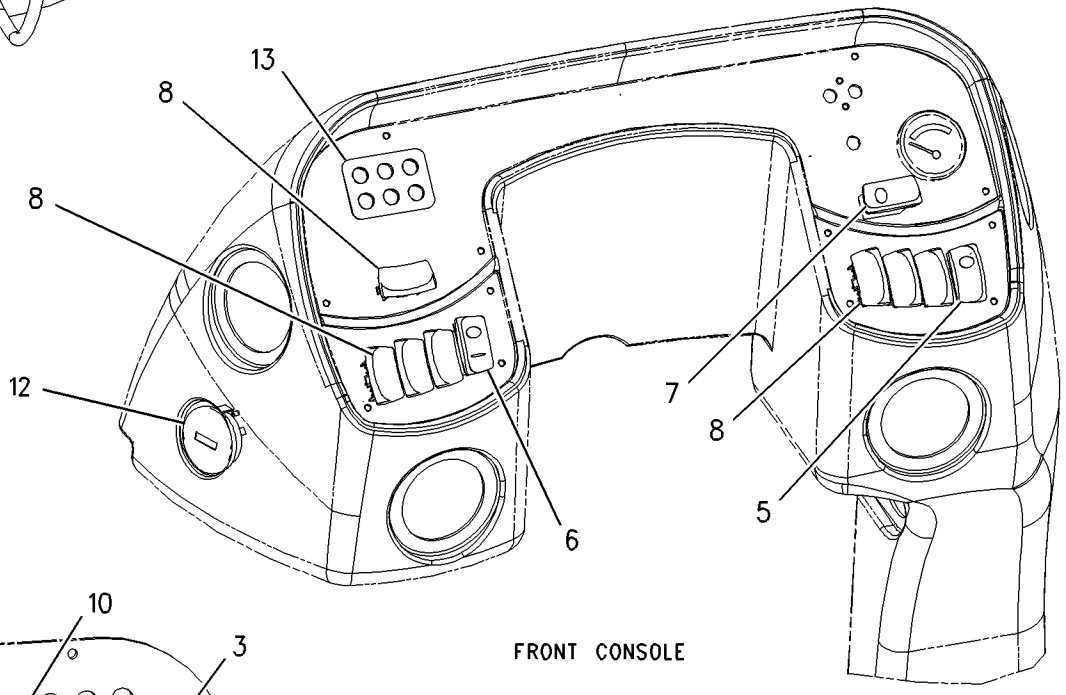

FRONT CONSOLE

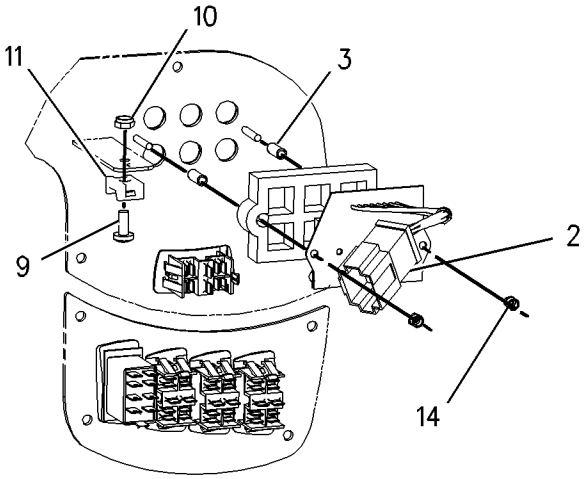

VIEW OF AREA D

GRAPHIC #1 **<END>** g00744994

202-5810 WIRING GP-CONSOLE

S/N: BFP12900-UP; CXP940-UP
SIDE
PART OF 184-9735, 205-2177 CAB AR, 184-9733 CANOPY AR
AN ATTACHMENT

SMCS-1408 **i01943751**

NOTE	REF NO	GRAPHIC REF	PART NUMBER	QTY	PART NAME 1 2 3 4 5 6 (PRODUCT LEVEL)	SEE PAGE
B	1	1	**3S-2093**	12	STRAP-CABLE	
	2	1	**6K-0806**	4	STRAP-CABLE	
	3	1	**7K-1181**	3	STRAP-CABLE	
Y	4	2	**143-0421**	1	FILTER GP-OIL (HYDRAULIC)	564
Y	5	2	**144-9930**	1	MODULE GP-WARNING INDICATOR	936
	6	2	**157-1997**	2	SPACER (4.34X15.88X6.34MM THK)	
	7	1	**169-0586**	1	SWITCH AS (START AID)	
		1	**111-7899**	1	GASKET	
	8	1	**172-9200**	1	SUPPRESSOR-ARC	
B	9	1	**184-5293**	1	PLUG	
B	10	1	**187-1644**	6	PLUG	
	11	1	**205-4286**	1	HARNESS AS-CONSOLE (SIDE CONSOLE)	
		1	**102-8803**	1	KIT-RECEPTACLE (3 PIN)	
		1	**155-2255**	1	KIT-CONNECTING PLUG (12 PIN)	
		1	**155-2270**	1	KIT-CONNECTING PLUG (2 PIN)	
		1	**155-2271**	1	KIT-CONNECTING PLUG (4 PIN)	
		1	**155-2274**	1	KIT-CONNECTING PLUG (6 PIN)	
	12	1	**226-7164**	1	GAUGE GP-COOLANT TEMPERATURE (COOLANT TEMP)	
		1	**4B-2043**	3	NUT (8-32 THD)	
		1	**7X-9065**	1	LAMP (12 VOLT)	
		1	**9B-7233**	3	LOCKWASHER	
M	13	2	**095-0741**	1	SCREW-MACHINE (M6X1THD)	
	14	2	**116-7491**	1	ANCHOR	
	15	1	**134-2305**	3	SEAL	
	16	1	**170-6305**	1	INDICATOR AS (FUEL LEVEL)	
		1	**4B-2043**	3	NUT (8-32 THD)	
		1	**7X-9065**	1	LAMP (12 VOLT)	
		1	**9B-7233**	3	LOCKWASHER	
	17	1	**170-6542**	1	INDICATOR AS (CONVERTER OIL TEMP)	
		1	**4B-2043**	3	NUT (8-32 THD)	
		1	**7X-9065**	1	LAMP (12 VOLT)	
		1	**9B-7233**	3	LOCKWASHER	
	18	1	**196-2966**	1	PLUG	
	19	1	**198-0099**	1	FILM (INDICATOR)	
B	20	2	**4P-8134**	3	CLIP	
M	21	2	**8T-2659**	2	LOCKNUT (M4X6H THD)	
BM	22	2	**8T-4133**	3	NUT (M10X1.5 THD)	
BM	23	2	**8T-4191**	3	BOLT (M10X1.5X16MM)	

B-USE AS REQUIRED
M-METRIC PART
Y-SEPARATE ILLUSTRATION

REFER TO ALL ILLUSTRATIONS
IN THIS GROUP FOR
AUXILIARY VIEWS

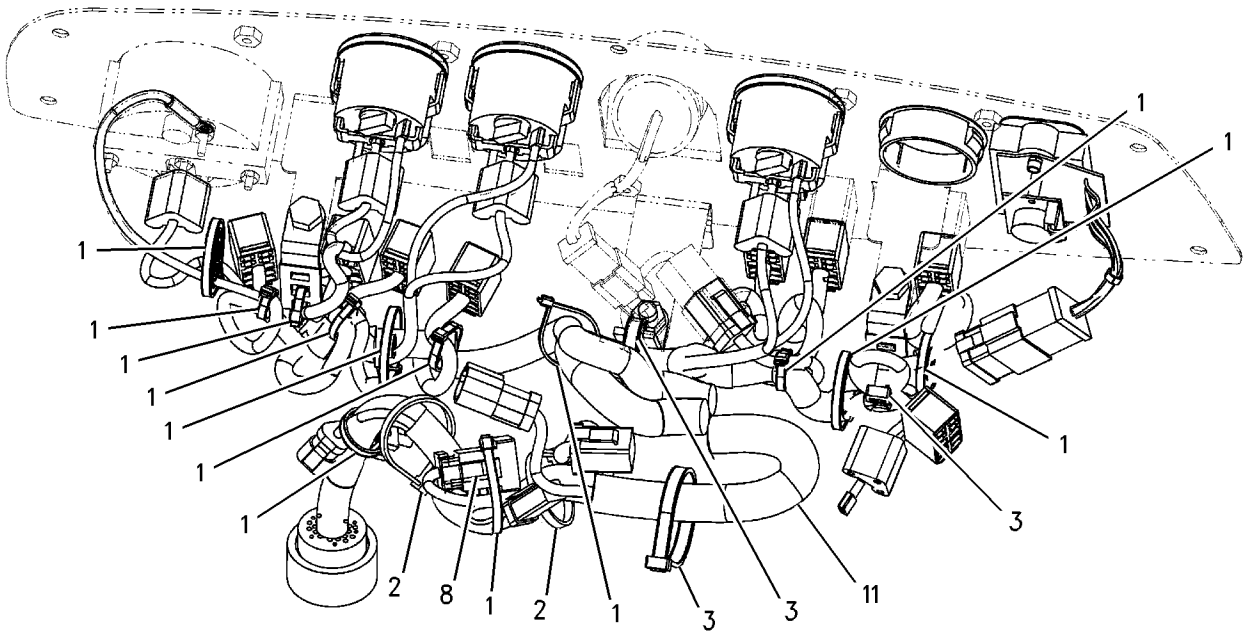

BACK OF SIDE CONSOLE

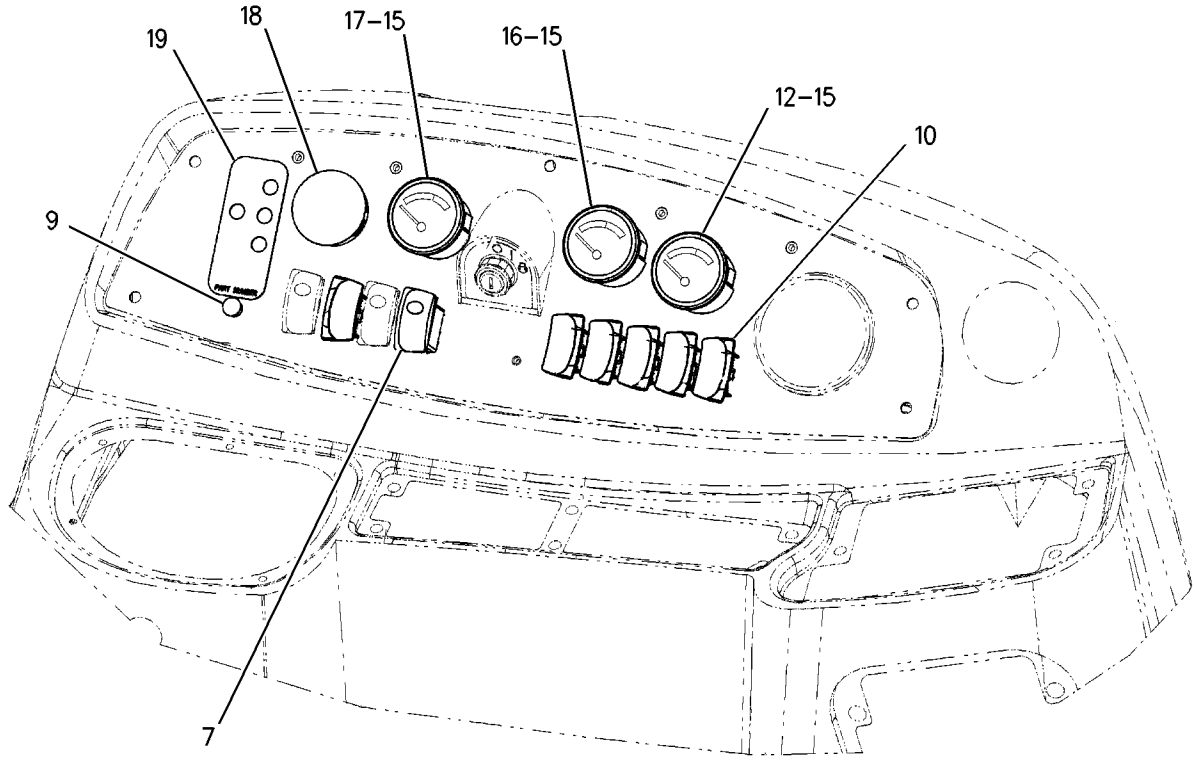

SIDE CONSOLE

GRAPHIC #1 g00953493

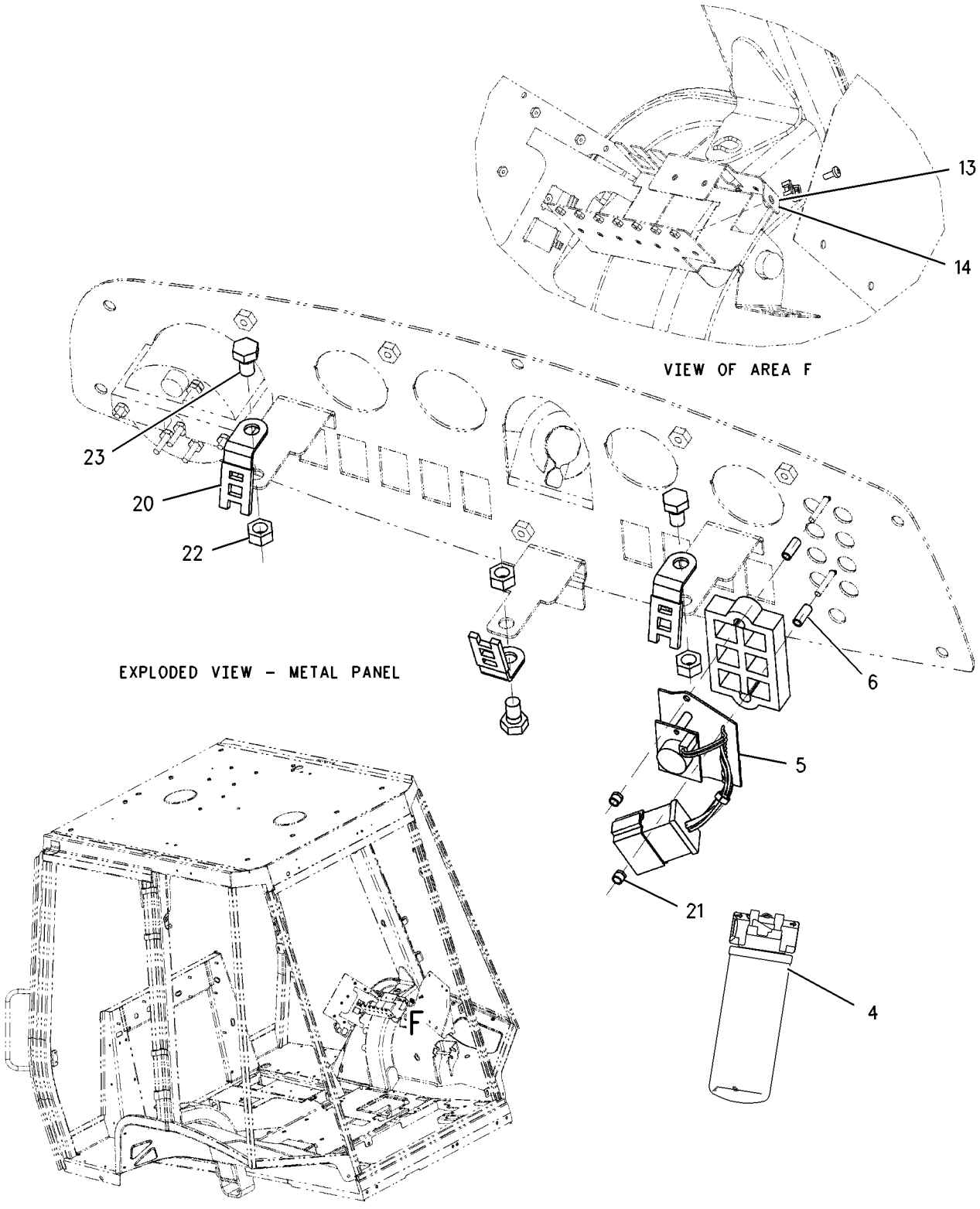

GRAPHIC #2 **<END>** g00953469

238-1165 WIRING GP-CONSOLE–FRONT

S/N: BFP12900-UP

PART OF 214-6950 CHASSIS AR

SMCS-1408 **i02019382**

NOTE	REF NO	GRAPHIC REF	PART NUMBER	QTY	PART NAME 1 2 3 4 5 6 (PRODUCT LEVEL)	SEE PAGE
Y	1	2	**144-9931**	1	MODULE GP-WARNING INDICATOR (WITHOUT ALARM)	937
	2	2	**157-1997**	2	SPACER (4.34X15.88X6.34-MM THK)	
	3	2	**167-3701**	1	HARNESS AS-CONSOLE	
		2	**102-8805**	1	KIT-RECEPTACLE (6-PIN)	
		2	**155-2255**	1	KIT-CONNECTING PLUG (12-PIN)	
		2	**155-2265**	1	KIT-CONNECTING PLUG (8-PIN)	
	4	2	**169-0587**	1	SWITCH AS (HORN)	
		2	**111-7899**	1	GASKET	
	5	2	**169-0588**	1	SWITCH AS (NEUTRA; LOCK)	
		2	**111-7899**	1	GASKET	
	6	2	**187-1644**	7	PLUG	
	7	2	**205-7700**	1	KIT-SERVICE METER	
					INCLUDES FILM	
	8	2	**229-8182**	1	SWITCH AS-ROCKER (HAZARD)	
		2	**111-7899**	1	GASKET	
M	9	2	**095-0741**	2	SCREW-MACHINE (M6X1-THD)	
M	10	2	**099-0492**	2	LOCKNUT (M6X1-THD)	
	11	2	**116-7491**	2	ANCHOR	
	12	2	**188-0863**	1	FILM-INDICATOR	
	13	2	**3S-2093**	6	STRAP-CABLE	
M	14	2	**8T-2659**	2	LOCKNUT (M4X6H THD)	

M-METRIC PART
Y-SEPARATE ILLUSTRATION

REFER TO ALL ILLUSTRATIONS OF THIS GROUP FOR AUXILIARY VIEWS

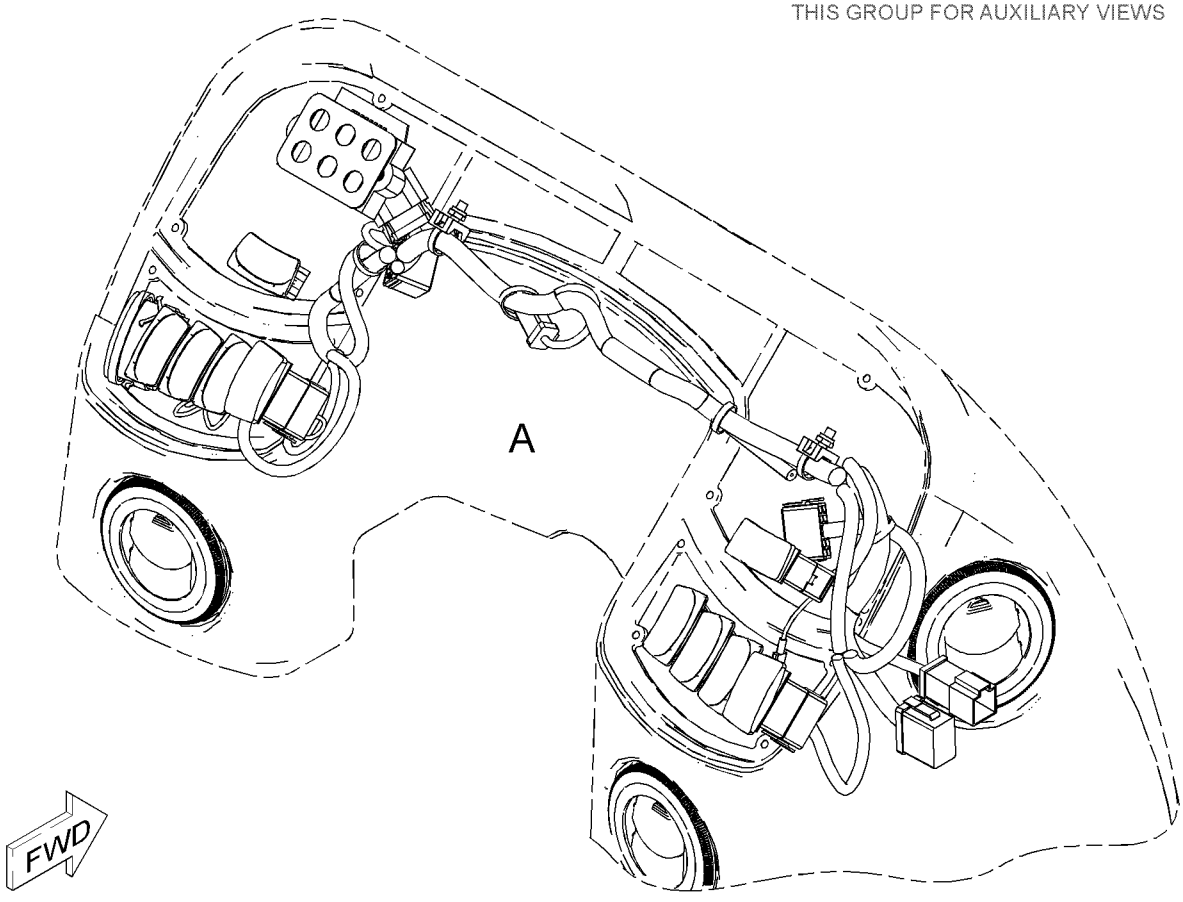

GRAPHIC #1 g01034859

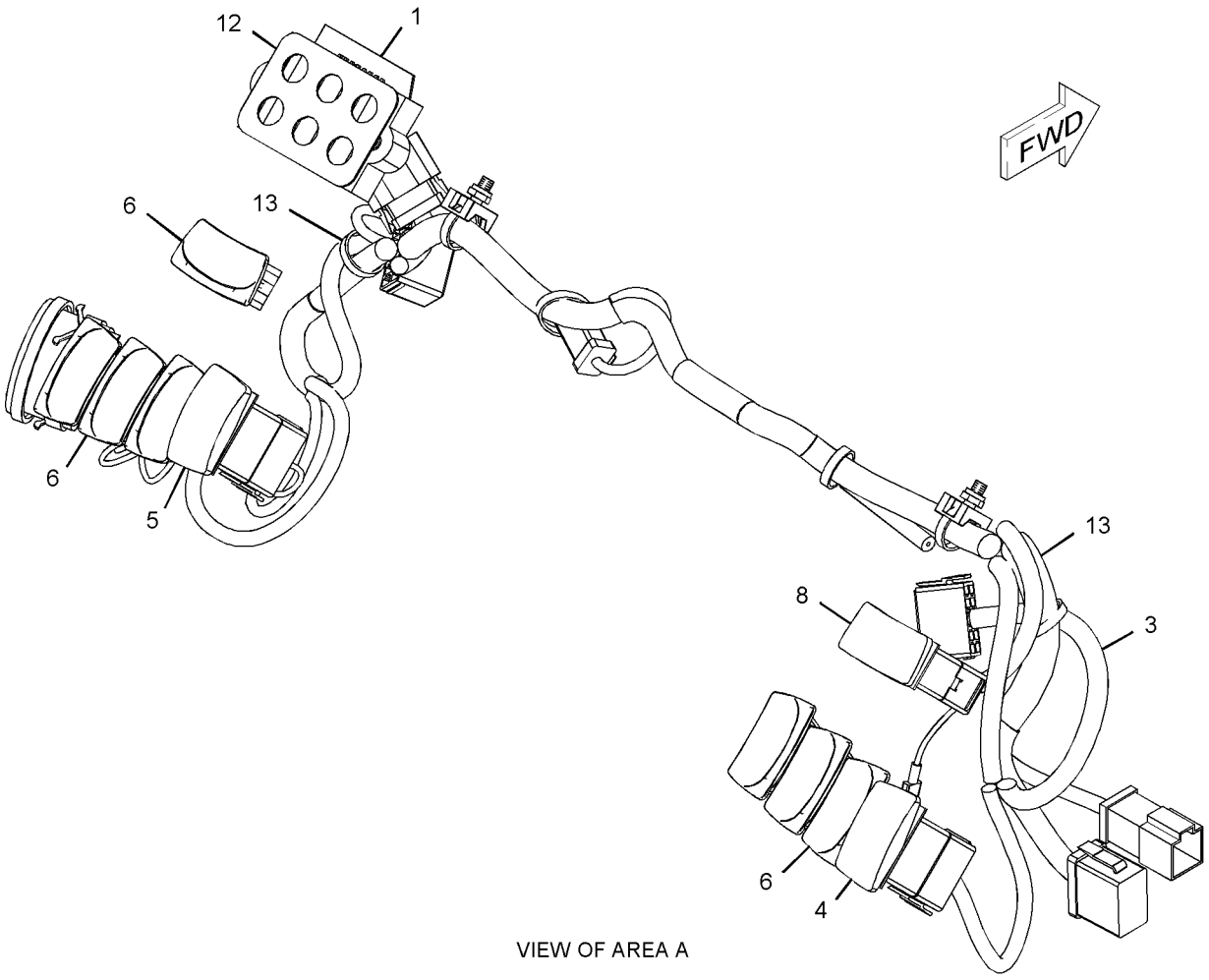

VIEW OF AREA A

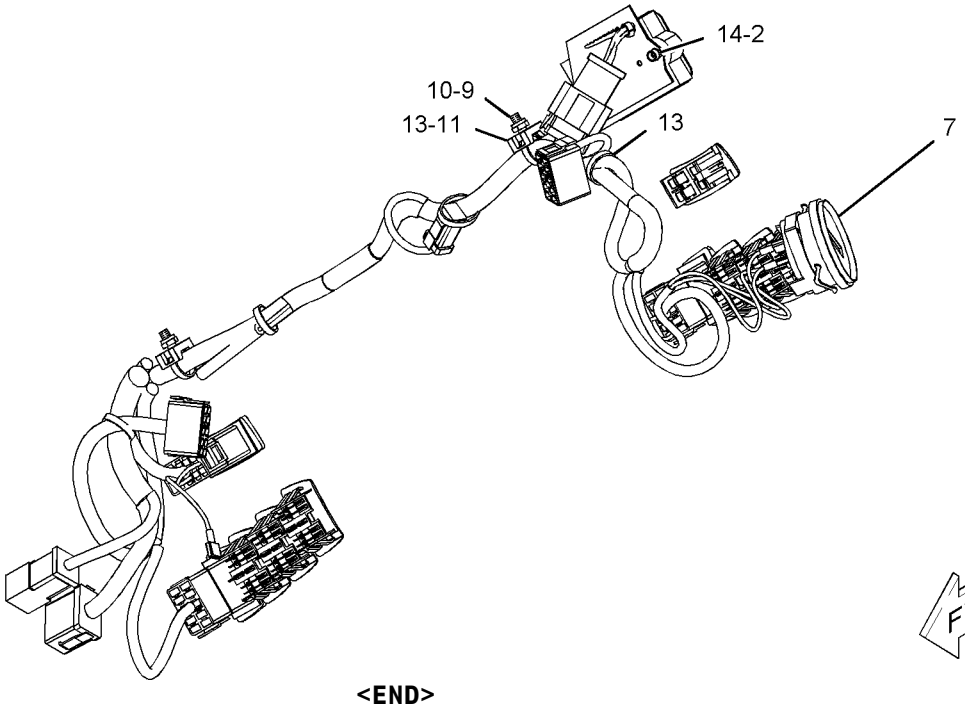

GRAPHIC #2 **<END>** g01034860

238-1166 WIRING GP-CONSOLE

S/N: BFP12900-UP

PART OF 239-5560, 239-5561, 239-5562 CAB AR, 239-5558, 239-5559 CANOPY AR AN ATTACHMENT

SMCS-1408 **i02015696**

NOTE	REF NO	GRAPHIC REF	PART NUMBER	QTY	PART NAME 1 2 3 4 5 6 (PRODUCT LEVEL)	SEE PAGE
	1	1	**6K-0806**	4	STRAP-CABLE	
	2	1	**7K-1181**	3	STRAP-CABLE	
	3	1	**157-1997**	2	SPACER (4.34X15.88X6.34-MM THK)	
	4	1	**169-0586**	1	SWITCH AS-ROCKER (STARTING AID)	
		1	**111-7899**	1	GASKET	
	5	1	**172-9200**	1	SUPPRESSOR-ARC	
	6	1	**184-5293**	1	PLUG	
	7	1	**187-1644**	6	PLUG	
	8	1	**205-4286**	1	HARNESS AS-INSTRUMENT PANEL	
		1	**102-8803**	1	KIT-RECEPTACLE (3-PIN)	
		1	**102-8804**	1	KIT-RECEPTACLE (4-PIN)	
		1	**155-2255**	1	KIT-CONNECTING PLUG (12-PIN)	
		1	**155-2260**	1	KIT-CONNECTING PLUG (3-PIN)	
		1	**155-2270**	1	KIT-CONNECTING PLUG (2-PIN)	
		1	**155-2271**	2	KIT-CONNECTING PLUG (4-PIN)	
		1	**155-2274**	2	KIT-CONNECTING PLUG (6-PIN)	
	9	1	**172-6224**	1	FILM-INDICATOR	
	10	1	*223-6539*	1	MODULE GP-WARNING INDICATOR	
		1	**3E-5180**	1	WEDGE-RECEPTACLE LOCK (12-PIN)	
		1	**8T-8737**	1	PLUG-SEAL	
		1	**102-8801**	1	KIT-RECEPTACLE (12-PIN)	
		1	**186-3735**	9	PIN-CONNECTOR	
		1	**232-4706**	1	GASKET	
	11	1	**226-7164**	1	GAUGE GP-COOLANT TEMPERATURE	
		1	**4B-2043**	3	NUT (8-32-THD)	
		1	**7X-9065**	1	LAMP (12-VOLT)	
		1	**9B-7233**	3	LOCKWASHER	
M	12	1	**095-0741**	1	SCREW-MACHINE (M6X1-THD)	
	13	1	**116-7491**	1	ANCHOR	
	14	1	**134-2305**	3	SEAL	
	15	1	**170-6305**	1	INDICATOR AS (FUEL LEVEL)	
		1	**4B-2043**	3	NUT (8-32-THD)	
		1	**7X-9065**	1	LAMP (12-VOLT)	
		1	**9B-7233**	3	LOCKWASHER	
	16	1	**170-6542**	1	INDICATOR AS (CONVERTER OIL TEMP)	
		1	**4B-2043**	3	NUT (8-32-THD)	
		1	**7X-9065**	1	LAMP (12-VOLT)	
		1	**9B-7233**	3	LOCKWASHER	
	17	1	**196-2966**	1	PLUG	
	18	1	**3S-2093**	11	STRAP-CABLE	
	19	1	**4P-8134**	3	CLIP	
M	20	1	**8T-2659**	2	LOCKNUT (M4X6H THD)	
M	21	1	**8T-4133**	3	NUT (M10X1.5-THD)	
M	22	1	**8T-4191**	3	BOLT (M10X1.5X16-MM)	

M-METRIC PART

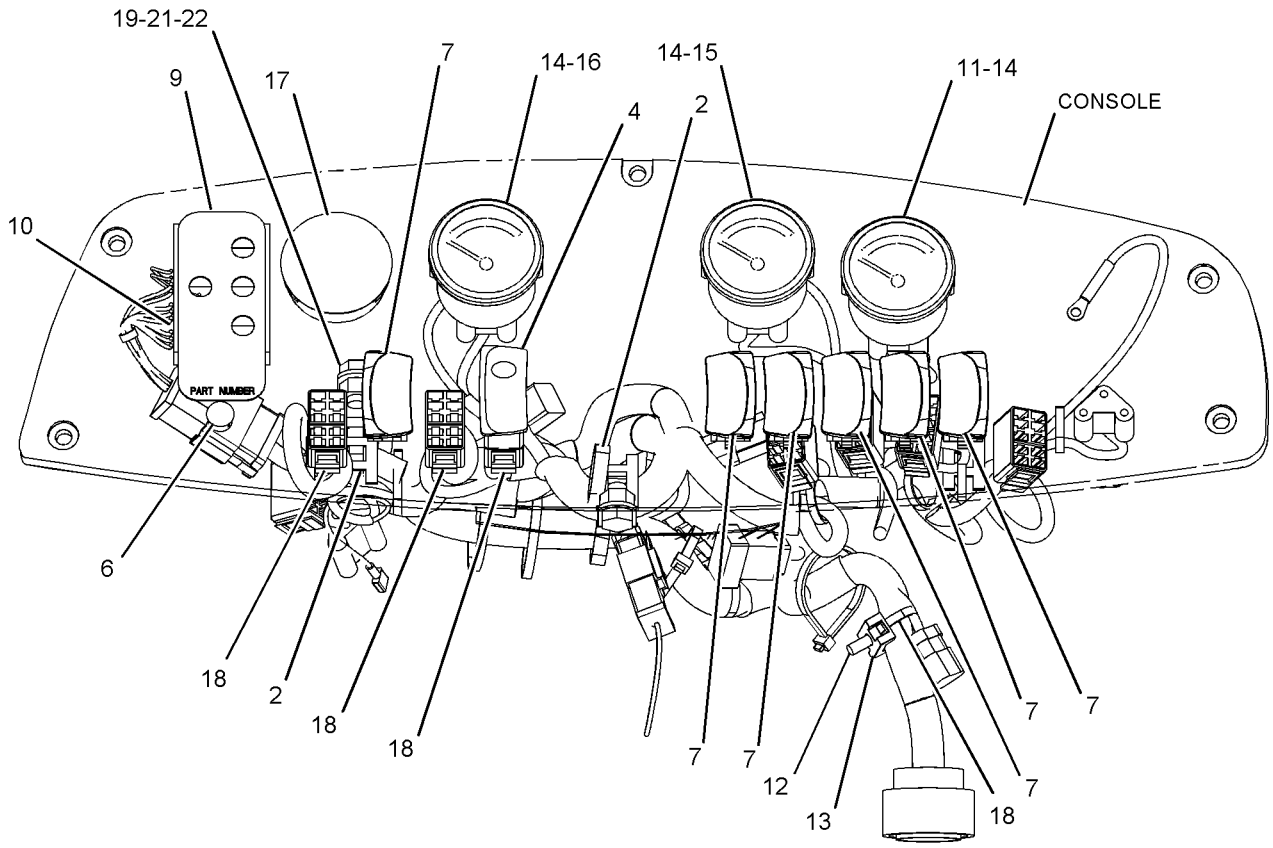

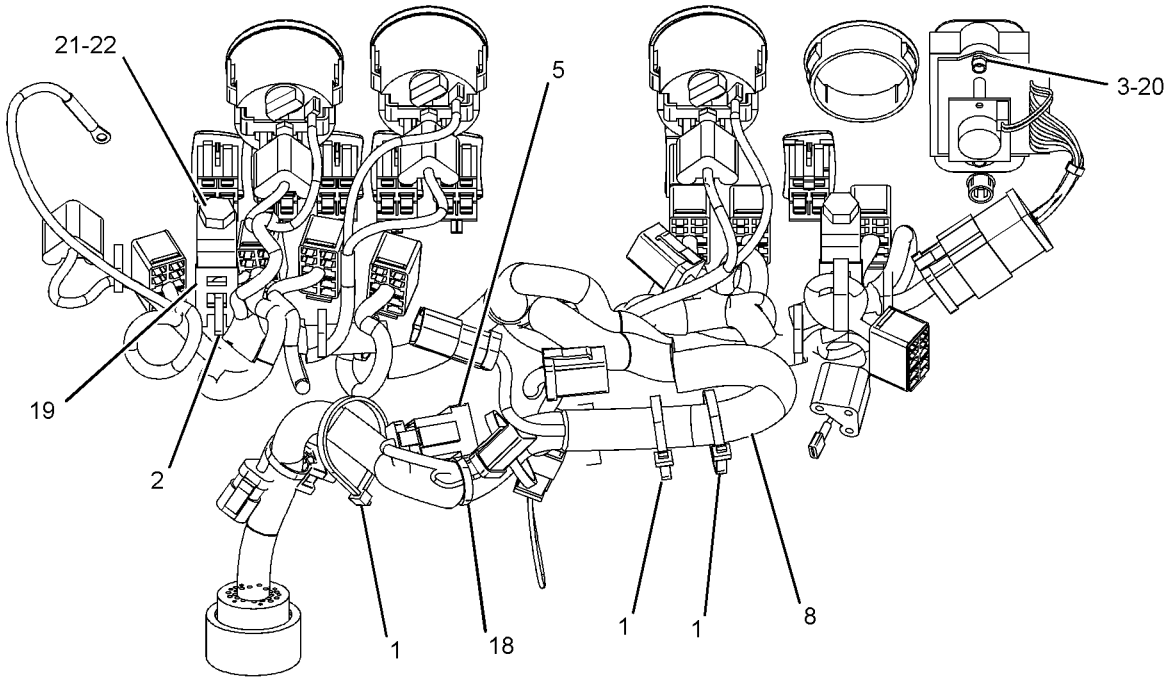

GRAPHIC #1 **<END>** g01026150

185-8803 WIRING GP-ENGINE

S/N: BFP12900-UP; CXP940-UP
PART OF 186-0598, 186-0600 ENGINE AR
AN ATTACHMENT

SMCS-1408 **i01794725**

NOTE	REF NO	GRAPHIC REF	PART NUMBER	QTY	PART NAME 1 2 3 4 5 6 (PRODUCT LEVEL)	SEE PAGE
	1	1,2,3	**3S-2093**	31	STRAP-CABLE	
	2	2	**4W-9972**	1	SENDER-TEMPERATURE (TORQUE CONVERTER OIL)	
		1	**4B-2049**	1	NUT (10-32 THD)	
		1	**8F-1434**	1	LOCKWASHER	
		1	**8T-0328**	1	WASHER-HARD (5.5X10X1MM THK)	
	3	1,3	**6K-0806**	2	STRAP-CABLE	
	4	1,3	**7K-1181**	2	STRAP-CABLE	
	5	1,2	**8T-8737**	12	PLUG-SEAL	
	6	3	**8T-8799**	1	BOOT	
	7	1	**164-9425**	1	HORN AS	
	8	1	**167-3703**	1	HARNESS AS (ENGINE)	
		1	**102-8802**	1	KIT-RECEPTACLE (2 PIN)	
		1	**155-2260**	3	KIT-CONNECTING PLUG (3 PIN)	
		1	**155-2270**	9	KIT-CONNECTING PLUG (2 PIN)	
	9	3	**175-3070**	1	SENDER AS-TEMPERATURE (COOLANT)	
		3	**102-8802**	1	KIT-RECEPTACLE (2 PIN)	
	10	1	**178-8465**	1	HARNESS AS	
		1	**102-8802**	1	KIT-RECEPTACLE (2 PIN)	
	11	1	**183-2530**	1	WIRE AS	
	12	2	**192-3341**	1	WIRE AS	
		1	**102-8802**	1	KIT-RECEPTACLE (2 PIN)	
	13	1	**155-2270**	1	KIT-CONNECTING PLUG (2 PIN)	
	14	3	**203-3219**	1	SWITCH AS-TEMPERATURE (COOLANT)	
		3	**6V-8376**	2	SCREW-MACHINE (8-32X0.25 IN)	
		3	**9B-7233**	2	LOCKWASHER	
	15	2	**102-8802**	2	KIT-RECEPTACLE (2 PIN)	
	16	1	**102-8803**	2	KIT-RECEPTACLE (3 PIN)	
	17	2	**3J-1907**	1	SEAL-O-RING	
B	18	1,2,3	**3S-2093**	1	STRAP-CABLE	
	19	2,3	**4P-7581**	6	CLIP	
	20	2	**4P-8134**	6	CLIP	
	21	1,3	**5P-4116**	1	WASHER-HARD (8.8X20.5X2MM THK)	
	22	1	**8T-4121**	8	WASHER-HARD (11X21X2.5MM THK)	
M	23	1,2	**8T-4136**	1	BOLT (M10X1.5X25MM)	
M	24	3	**8T-4137**	5	BOLT (M10X1.5X20MM)	
BM	25	2	**8T-4189**	1	BOLT (M8X1.25X20MM)	
M	26	3	**8T-4200**	1	BOLT (M8X1.25X16MM)	
B	27	3	**4P-8134**	1	CLIP	
B	28	3	**5P-4116**	1	WASHER-HARD (8.8X20.5X2MM THK)	

B-USE AS REQUIRED
M-METRIC PART

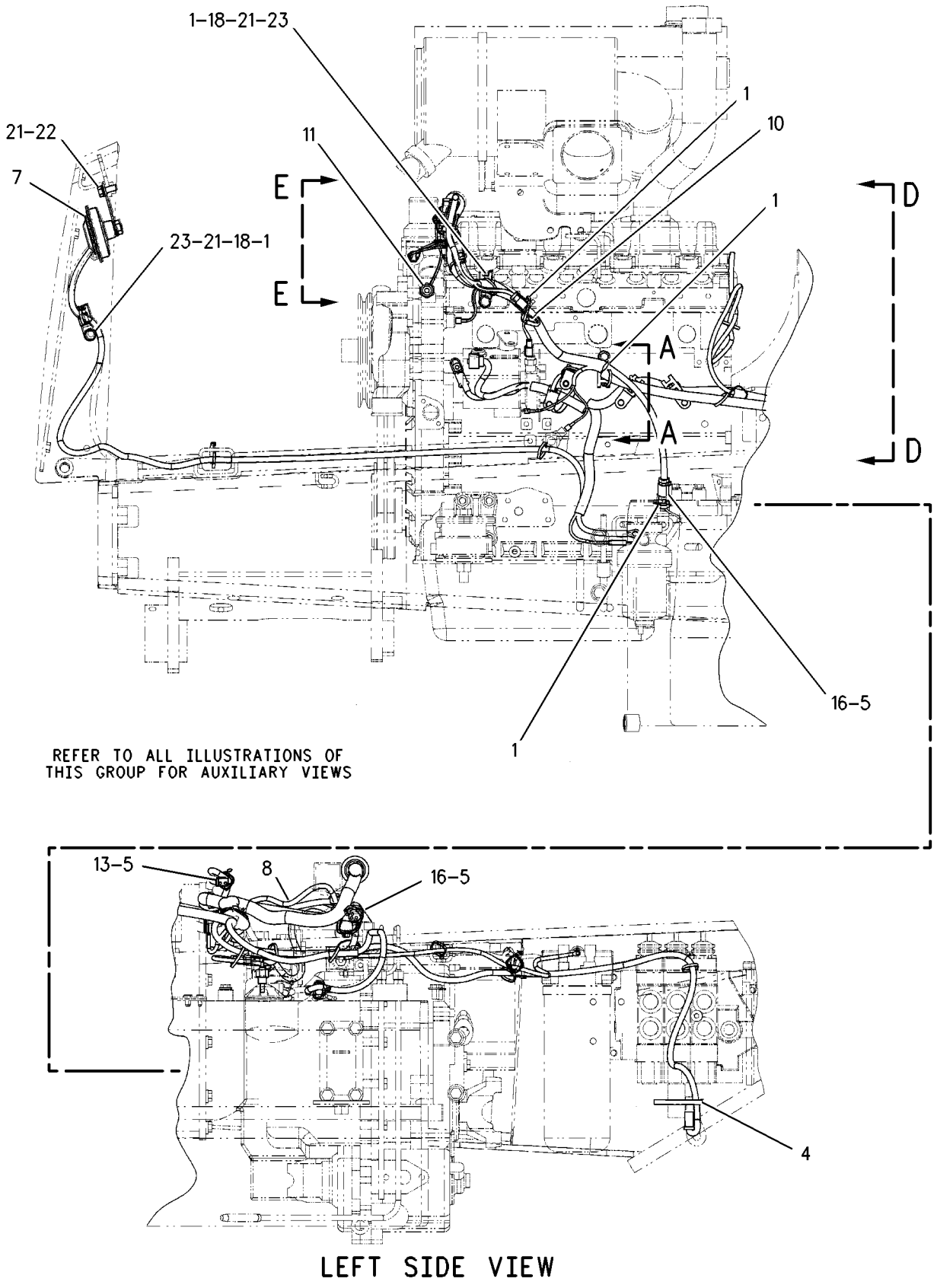

GRAPHIC #1 g00870699

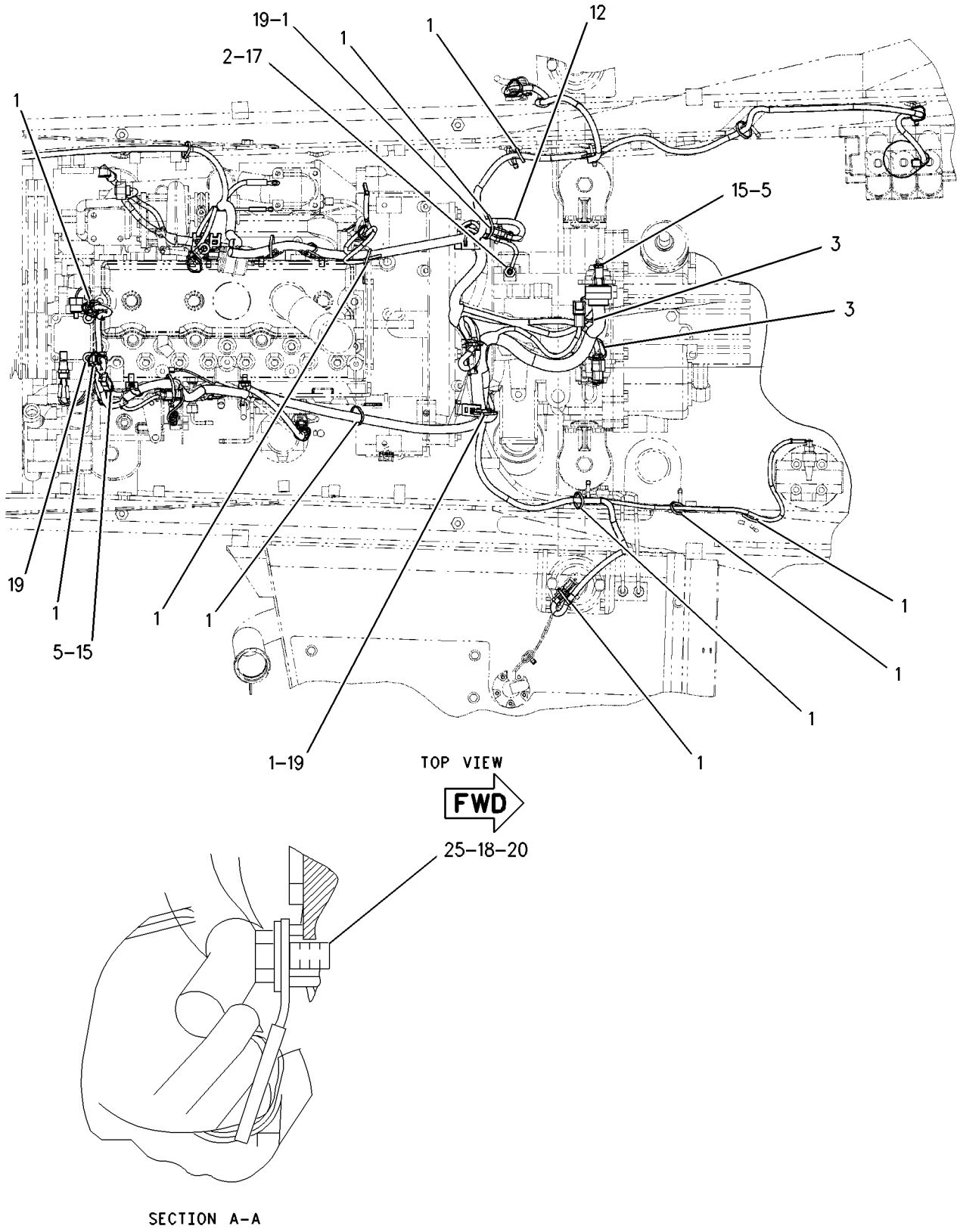

GRAPHIC #2

g00870700

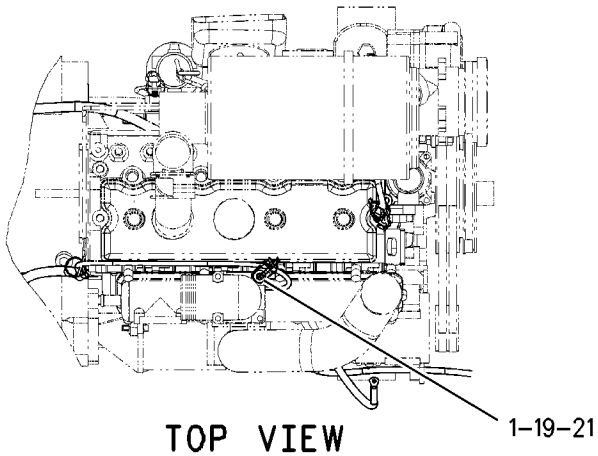

TOP VIEW
NATURALLY ASPIRATED ENGINE OPTION

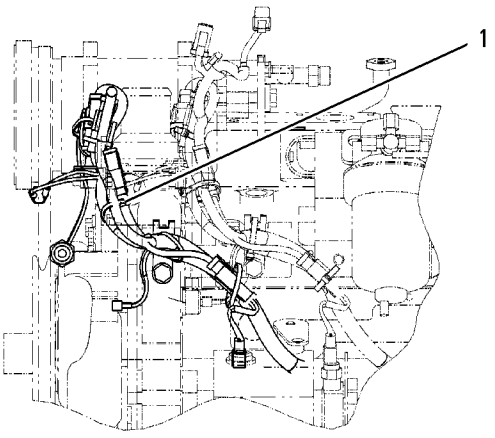

LEFT SIDE VIEW
A/C OPTION

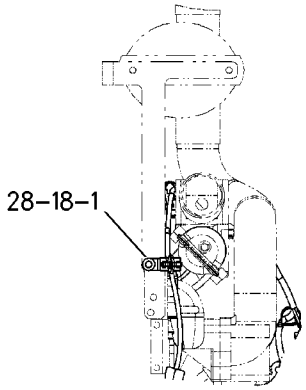

VIEW D-D

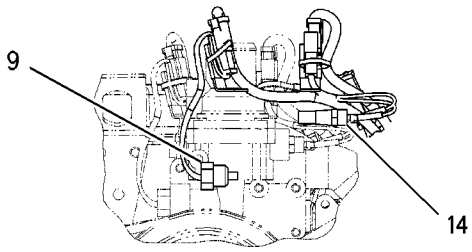

VIEW E-E

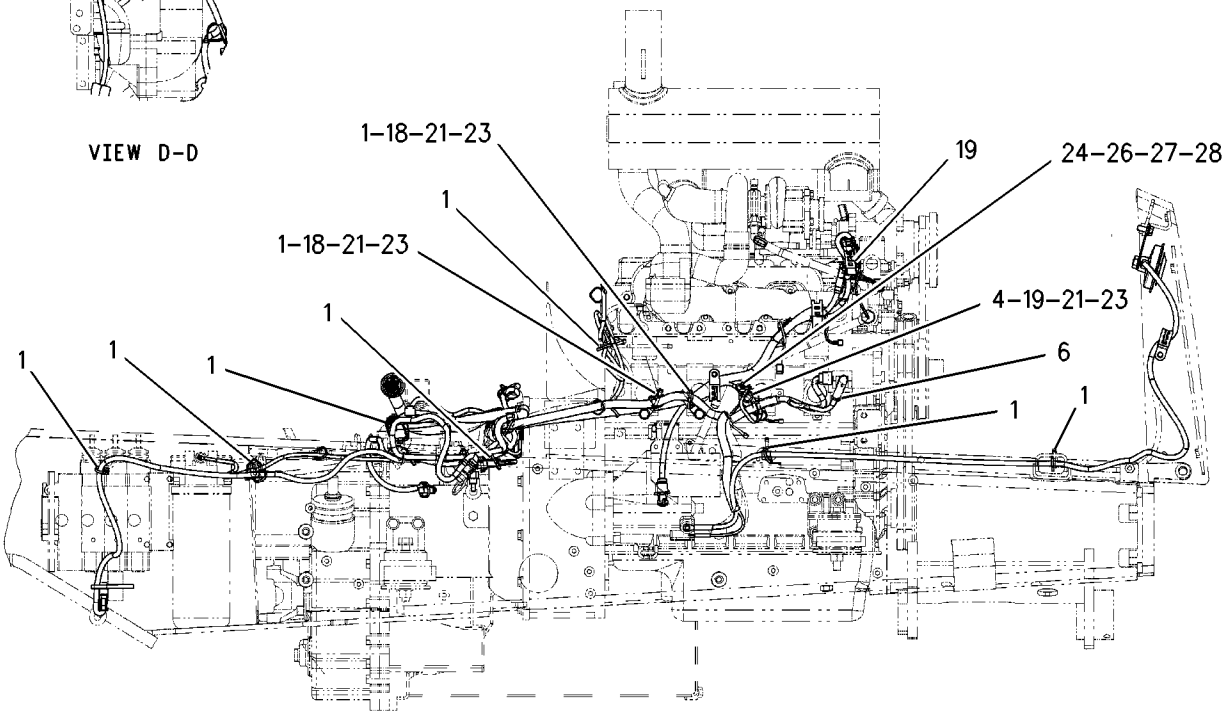

RIGHT SIDE VIEW

GRAPHIC #3 **<END>** g00870701

201-3325 WIRING GP-ENGINE

S/N: BFP12900-UP
PART OF 202-5742, 206-6325 ENGINE AR
AN ATTACHMENT

SMCS-1408 **i01772182**

NOTE	REF NO	GRAPHIC REF	PART NUMBER	QTY	PART NAME 1 2 3 4 5 6 (PRODUCT LEVEL)	SEE PAGE
	1	3,4	**4W-9972**	1	SENDER-TEMPERATURE ((TORQUE CONVERTER OIL))	
		3,4	**4B-2049**	1	NUT (10-32 THD)	
		3,4	**8F-1434**	1	LOCKWASHER	
		3,4	**8T-0328**	1	WASHER-HARD (5.5X10X1MM THK)	
	2	5	**6K-0806**	2	STRAP-CABLE	
	3	1	**7K-1181**	1	STRAP-CABLE	
	4	2	**8T-8799**	1	BOOT	
B	5	5	**155-8522**	1	MOUNT (HARNESS)	
	6	1	**164-9425**	1	HORN AS	
	7	3	**175-3070**	1	SENDER AS-TEMPERATURE ((COOLANT))	
		3	**3E-3365**	1	WEDGE-RECEPTACLE LOCK (2 PIN)	
		3	**186-3735**	2	PIN-CONNECTOR	
		3	**102-8802**	1	KIT-RECEPTACLE (2 PIN)	
	8	1	**183-2530**	1	WIRE AS	
		1	**102-8802**	1	KIT-RECEPTACLE (2 PIN)	
		1	**3E-3365**	1	WEDGE-RECEPTACLE LOCK (2 PIN)	
		1	**144-1636**	2	PIN-CONNECTOR	
	9	1	**201-3159**	1	HARNESS AS-ENGINE	
		1	**155-2270**	7	KIT-CONNECTING PLUG (2 PIN)	
		1	**177-9645**	1	KIT-RECEPTACLE (2 PIN)	
		1	**102-8802**	1	KIT-RECEPTACLE (2 PIN)	
		1	**155-2260**	3	KIT-CONNECTING PLUG (3 PIN)	
	10	3	**203-3219**	1	SWITCH AS-TEMPERATURE	
		3	**6V-8376**	2	SCREW-MACHINE (8-32X0.25 IN)	
		3	**9B-7233**	2	LOCKWASHER	
	11	4	**3J-1907**	1	SEAL-O-RING	
	12	1,2,4,5	**3S-2093**	30	STRAP-CABLE	
	13	1,2,3,5	**4P-7581**	6	CLIP	
	14	2,3,4	**4P-8134**	4	CLIP	
	15	5	**5P-4116**	1	WASHER-HARD (8.8X20.5X2MM THK)	
	16	1,2,3	**8T-4121**	8	WASHER-HARD (11X21X2.5MM THK)	
M	17	1	**8T-4136**	1	BOLT (M10X1.5X25MM)	
M	18	1,2	**8T-4137**	5	BOLT (M10X1.5X20MM)	
BM	19	2	**8T-4189**	1	BOLT (M8X1.25X20MM)	
M	20	5	**8T-4200**	1	BOLT (M8X1.25X16MM)	
B	25	2	**4P-8134**	1	CLIP	
B	27	2	**5P-4116**	1	WASHER-HARD (8.8X20.5X2MM THK)	
B	28	2	**3S-2093**	1	STRAP-CABLE	
B	29	5	**3S-2093**	1	STRAP-CABLE	
BF			**8T-8737**	12	PLUG-SEAL	
BF			**155-2270**	1	KIT-CONNECTING PLUG (2 PIN)	
BF			**102-8803**	2	KIT-RECEPTACLE (3 PIN)	
BF			**102-8802**	2	KIT-RECEPTACLE (2 PIN)	

B-USE AS REQUIRED
F-NOT SHOWN
M-METRIC PART

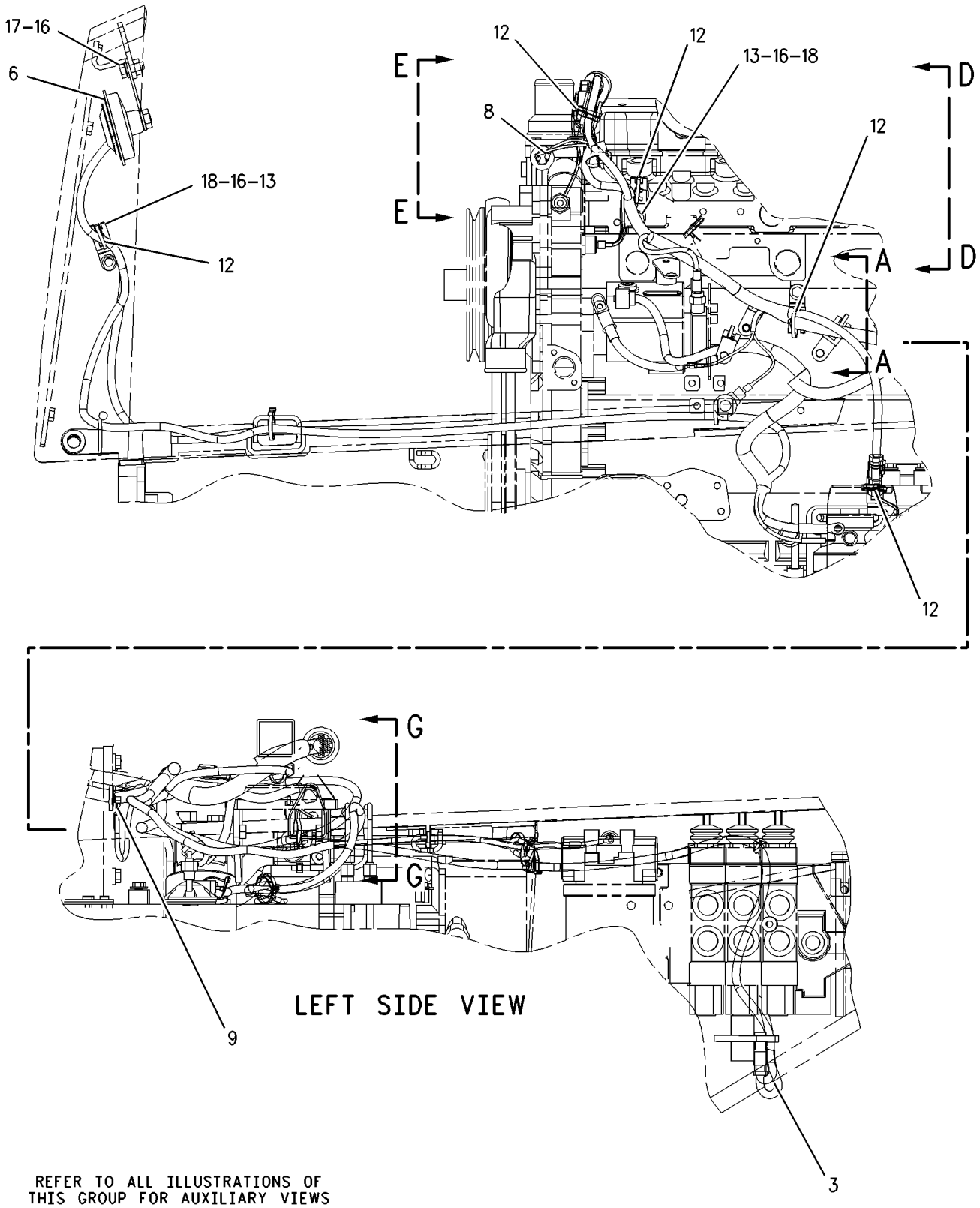

GRAPHIC #1 g00873403

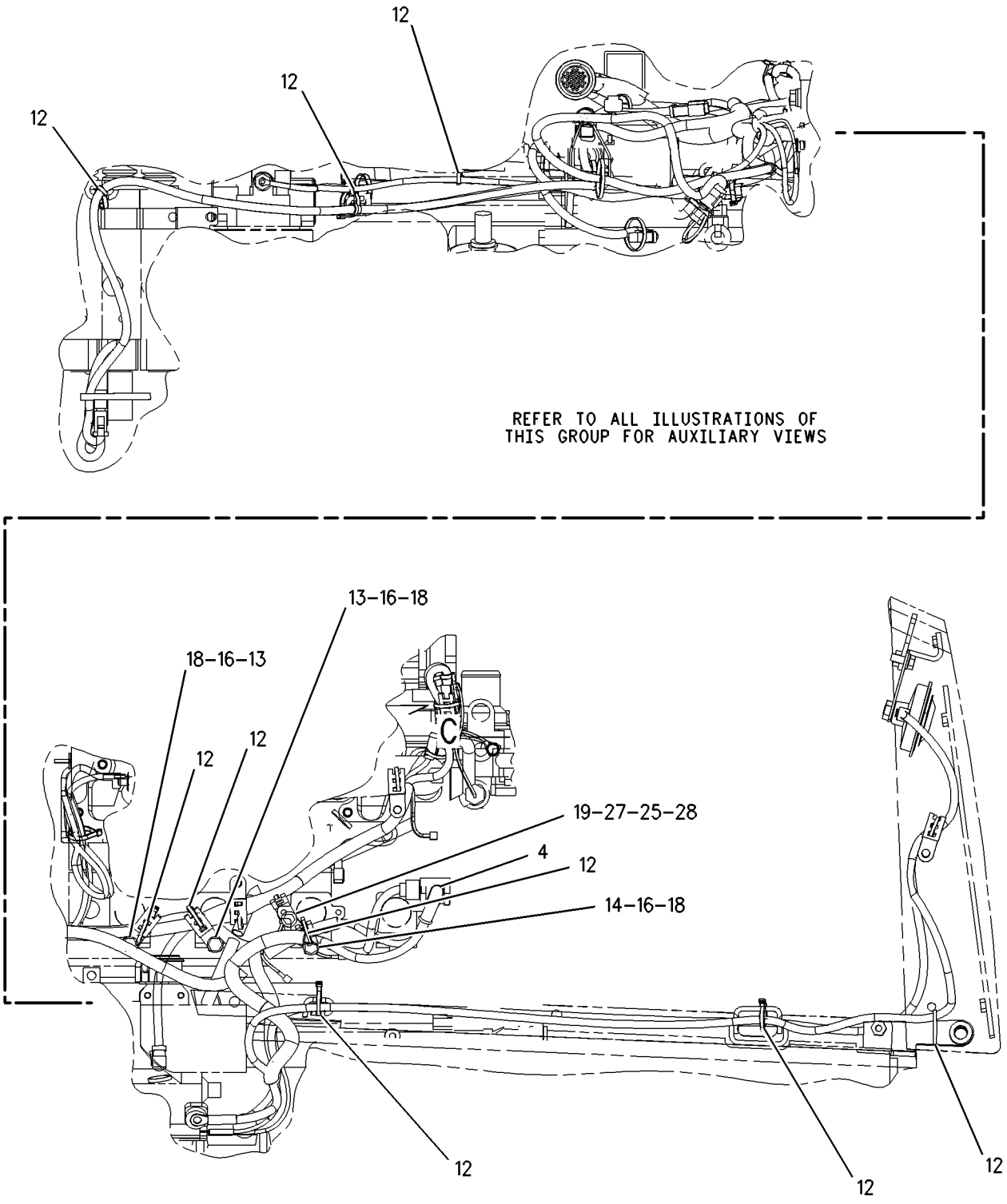

RIGHT SIDE VIEW

GRAPHIC #2 g00873404

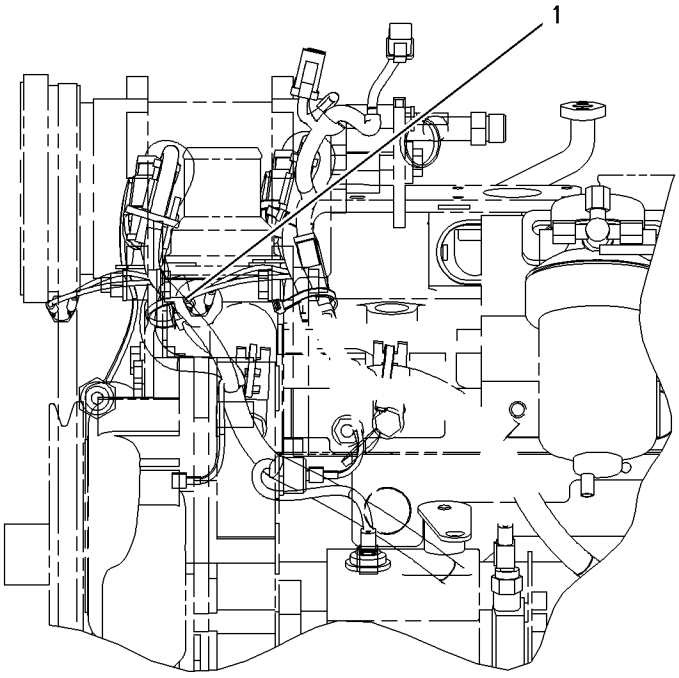

LEFT SIDE VIEW
A/C OPTION

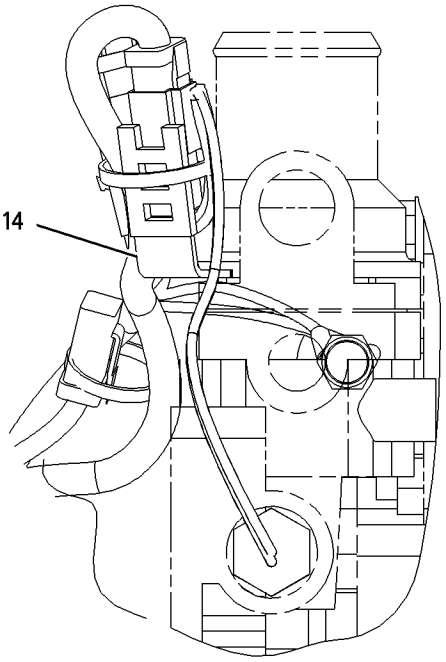

VIEW OF AREA C

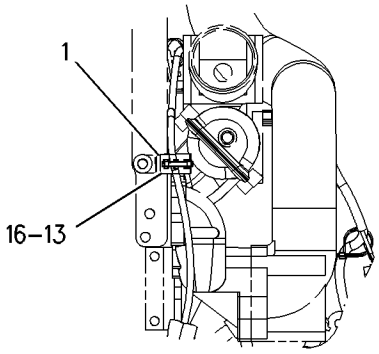

VIEW D-D

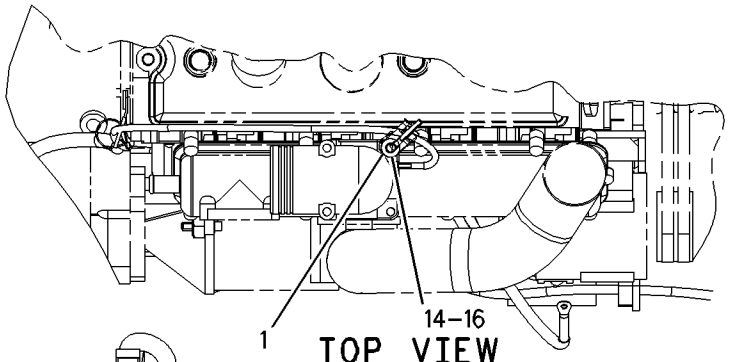

TOP VIEW
NATURALLY ASPIRATED ENGINE OPTION

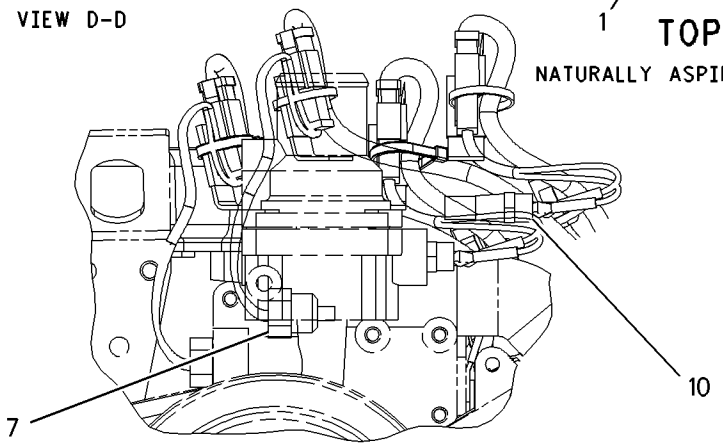

VIEW E-E

GRAPHIC #3 g00873405

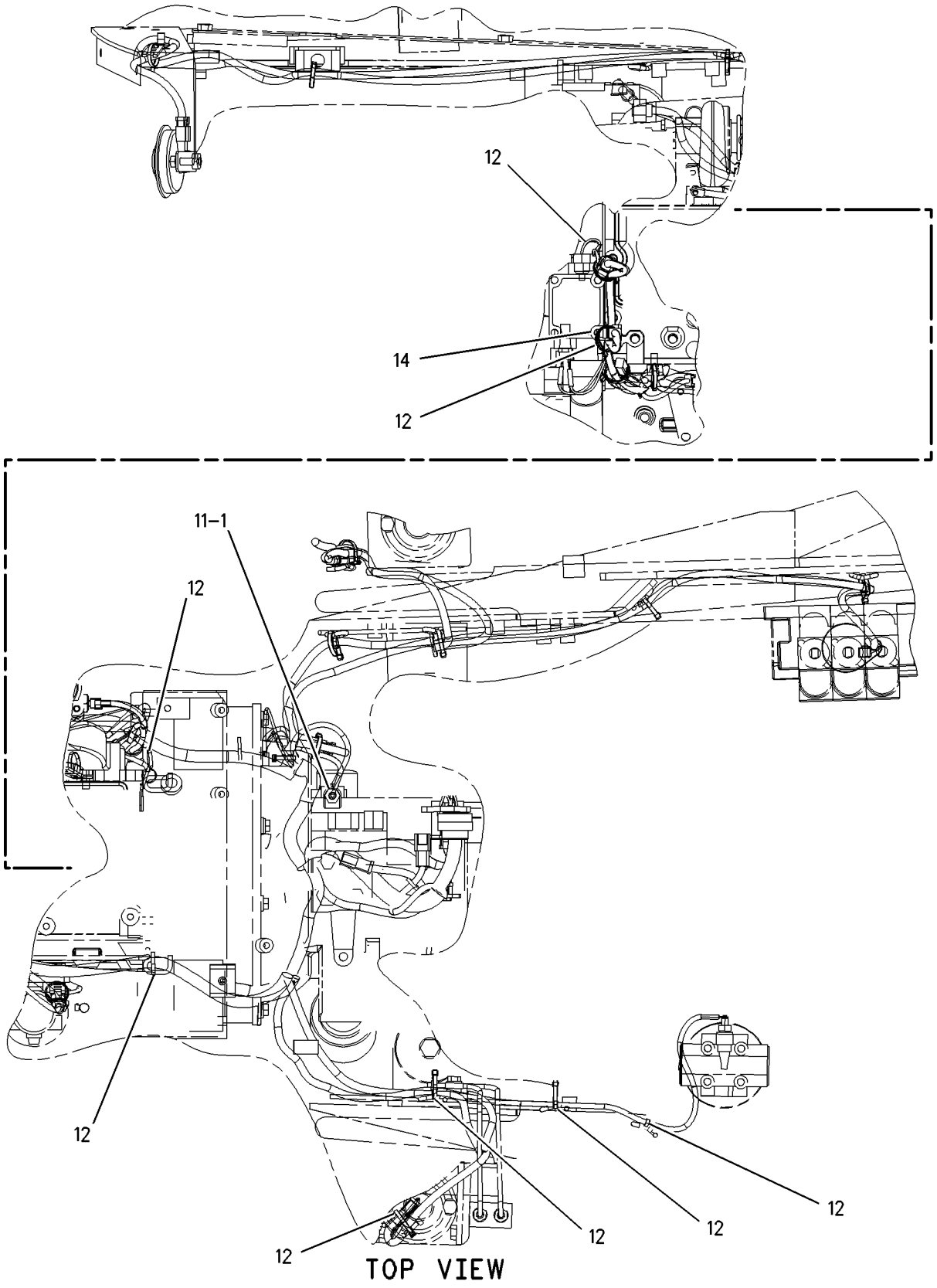

GRAPHIC #4 g00873406

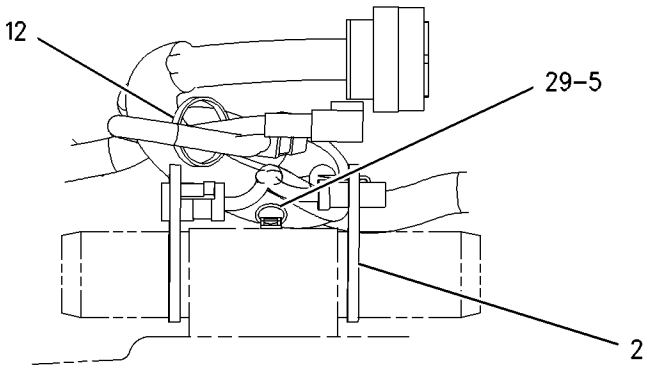

VIEW G-G

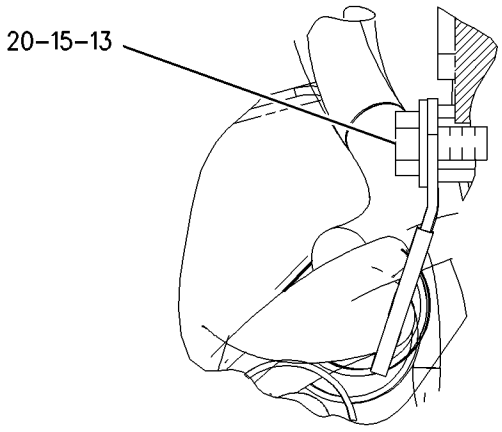

SECTION A-A

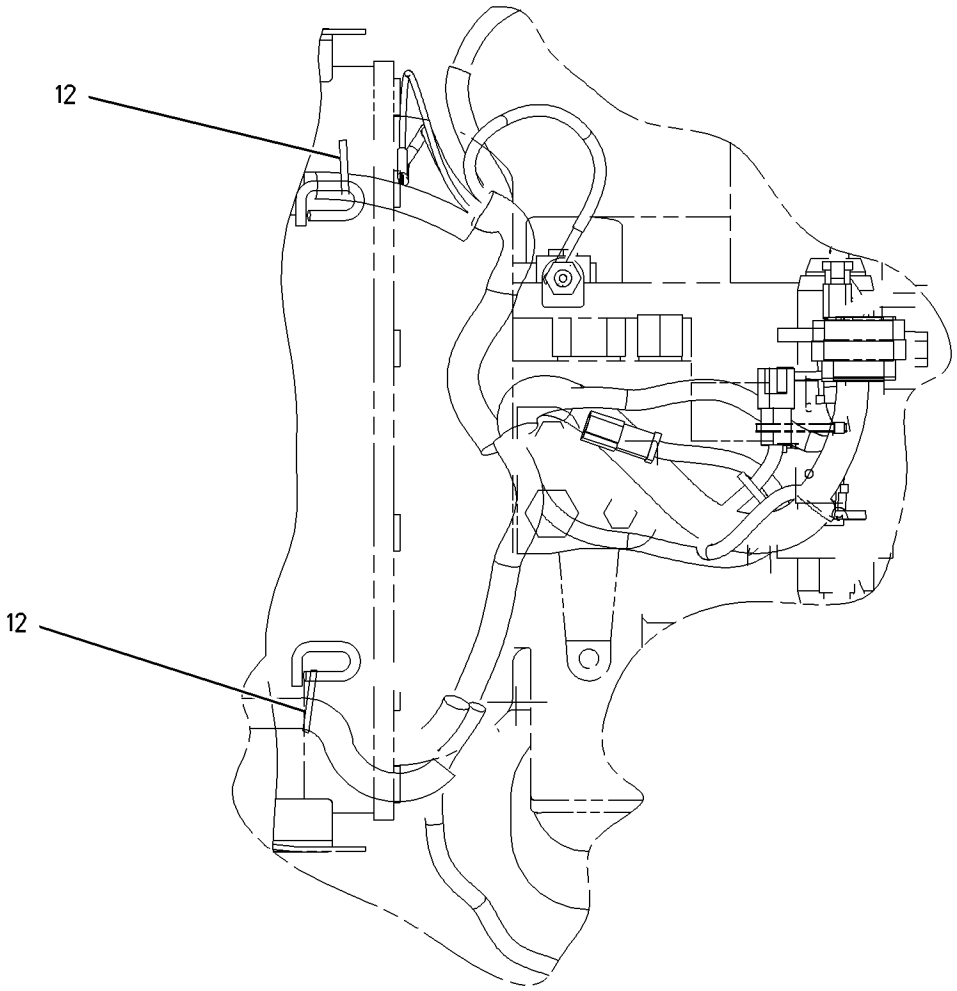

TOP VIEW

DIRECT DRIVE TRANSMISSION (AWD)

GRAPHIC #5 **<END>** g00873408

ELECTRICAL AND STARTING SYSTEM

234-1991 WIRING GP-ENGINE

S/N: BFP12900-UP
PART OF 214-6890, 214-6891 ENGINE AR
AN ATTACHMENT

SMCS-1408 **i01991948**

NOTE	REF NO	GRAPHIC REF	PART NUMBER	QTY	PART NAME 1 2 3 4 5 6 (PRODUCT LEVEL)	SEE PAGE
	1	1	**4W-9972**	1	SENDER-TEMPERATURE	
		1	**4B-2049**	1	NUT (10-32 THD)	
		1	**8F-1434**	1	LOCKWASHER (INTERNAL TOOTH)	
		1	**8T-0328**	1	WASHER-HARD (5.5X10X1MM THK)	
	2	1,2	**7K-1181**	2	STRAP-CABLE	
B	3	1	**8T-8737**	7	PLUG-SEAL	
	4	1,2	**115-1615**	2	RELAY AS (12-VOLT)	
	5	1	**155-8522**	1	MOUNT	
	6	2	**164-9425**	1	HORN AS (LOW TONE)	
	7	2	**178-8465**	1	HARNESS AS (WIRE)	
		2	**102-8802**	1	KIT-RECEPTACLE (2-PIN)	
					(INCLUDES RECEPTACLE AS AND WEDGE)	
		2	**100-3320**	1	PLUG AS-CONNECTOR (2 PIN)	
	8	2	**213-6094**	1	CABLE AS	
E		2	**8C-3056**		CABLE (2 GA) (85CM)	
		2	**8T-8799**	1	BOOT	
E		2	**119-3662**		TUBE-HEAT SHRINK (7CM)	
	9	2	**234-1992**	1	HARNESS AS-ENGINE	
		2	**102-8802**	1	KIT-RECEPTACLE (2-PIN)	
					(INCLUDES RECEPTACLE AS AND WEDGE)	
		2	**9X-1054**	2	PLUG AS-CONNECTOR (4 PIN)	
		2	**155-2260**	3	KIT-CONNECTING PLUG (3-PIN)	
					(INCLUDES PLUG AS AND WEDGE)	
		2	**155-2270**	12	KIT-CONNECTING PLUG (2-PIN)	
		2	**167-3693**	1	PLUG AS	
		2	**177-9645**	1	KIT-RECEPTACLE (2-PIN)	
					(INCLUDES RECEPTACLE AS AND WEDGE)	
	10	1	**238-9397**	1	RESISTOR AS	
	11	2	**243-5027**	1	NUT AS	
	12	2	**244-3106**	1	SENDER AS-TEMPERATURE	
		2	**102-8802**	1	KIT-RECEPTACLE (2-PIN)	
					(INCLUDES RECEPTACLE AS AND WEDGE)	
		2	**186-3735**	2	PIN-CONNECTOR	
	13	1	**155-2270**	1	KIT-CONNECTING PLUG (2-PIN)	
					(INCLUDES PLUG AS AND WEDGE)	
	14	1	**102-8802**	1	KIT-RECEPTACLE (2-PIN)	
	15	1	**102-8803**	1	KIT-RECEPTACLE (3-PIN)	
					(BOTH INCLUDE RECEPTACLE AS AND WEDGE)	
	16	1	**3J-1907**	1	SEAL-O-RING	
	17	1,2	**3S-2093**	32	STRAP-CABLE	
	18	2	**4P-7581**	8	CLIP	
	19	2	**4P-8134**	5	CLIP	
M	20	2	**5C-2874**	2	NUT (M5X.8 THD)	
M	21	1	**5C-2890**	1	NUT (M6X1 THD)	
	22	1	**6K-0806**	3	STRAP-CABLE	
M	23	1	**6V-7357**	1	BOLT (M6X1.0X25MM)	
	24	2	**8F-1434**	2	LOCKWASHER (INTERNAL TOOTH)	
	25	2	**8T-0328**	2	WASHER-HARD (5.5X10X1MM THK)	
	26	2	**8T-4121**	9	WASHER-HARD (11X21X2.5MM THK)	
M	27	2	**8T-4136**	1	BOLT (M10X1.5X25MM)	
M	28	2	**8T-4137**	8	BOLT (M10X1.5X20MM)	
M	29	2	**8T-4138**	1	BOLT (M6X1X20MM)	
M	30	2	**8T-4189**	1	BOLT (M8X1.25X20MM)	
	31	1,2	**8T-4205**	3	WASHER-HARD (7.2X14.5X2MM THK)	
	32	2	**8T-4224**	1	WASHER-HARD (8.8X16X2MM THK)	

B-USE AS REQUIRED
E-ORDER BY THE CENTIMETER
M-METRIC PART

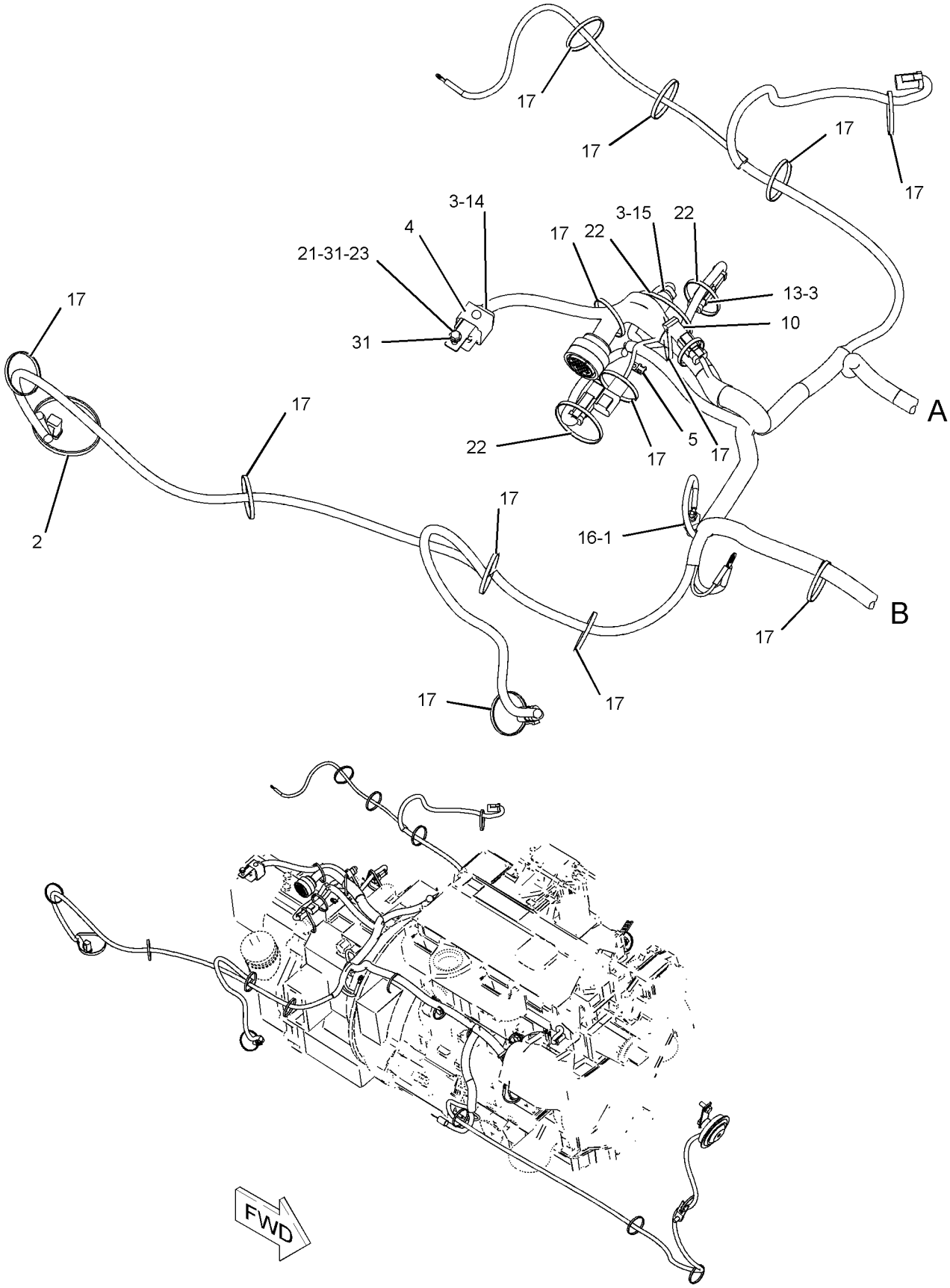

GRAPHIC #1 g01039490

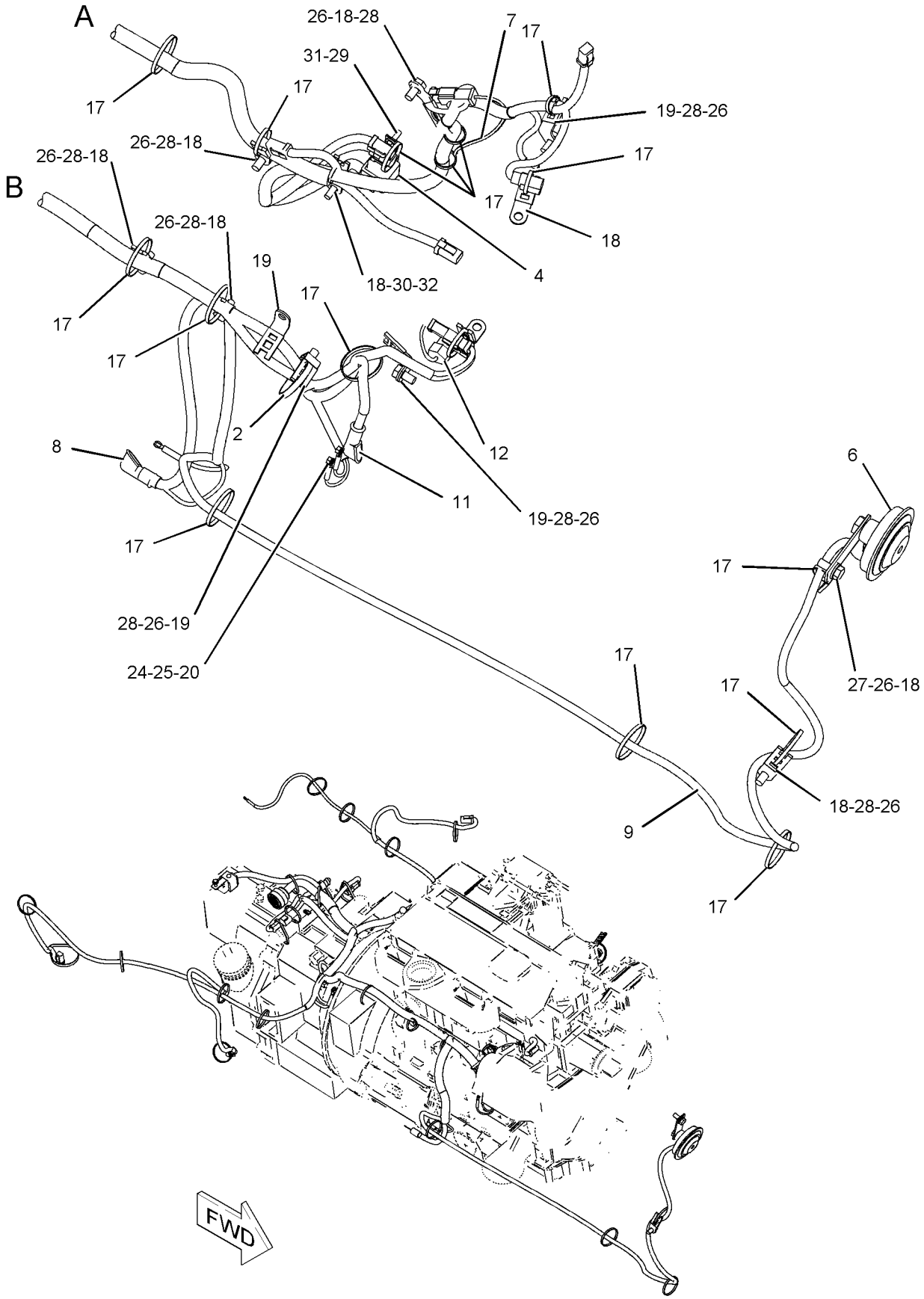

GRAPHIC #2 **<END>** g01039491

186-2731 WIRING GP-HEATER

S/N: BFP12900-UP
PART OF 205-2177, 239-5560, 239-5561 CAB AR
AN ATTACHMENT

SMCS-1408, 7304 **i02019629**

NOTE	REF NO	GRAPHIC REF	PART NUMBER	QTY	PART NAME 1 2 3 4 5 6 (PRODUCT LEVEL)	SEE PAGE
	1	1	**3E-9362**	1	RELAY AS (12-VOLT)	
	2	1	**3S-2093**	3	STRAP-CABLE	
	3	1	**131-3201**	2	BOOT	
	4	1	**169-0605**	1	SWITCH AS-ROCKER (HEATER FAN SPEED)	
		1	**111-7899**	1	GASKET	
	5	1	**170-2237**	1	RELAY AS (12-VOLT)	
	6	1	**184-2422**	1	SWITCH AS (HEATER)	
		1	**111-7899**	1	GASKET	
C	7	1	**229-8377**	1	CIRCUIT BREAKER AS (35-AMPERE)	
		1	**6V-8378**	2	NUT (10-32-THD)	
		1	**8F-1434**	2	LOCKWASHER (INTERNAL TOOTH)	
		1	**8T-0328**	2	WASHER-HARD (5.5X10X1-MM THK)	
C	8	1	**229-8413**	1	HARNESS AS-HEATER & AIR COND	
		1	**102-8802**	1	KIT-RECEPTACLE (2-PIN)	
		1	**102-8804**	1	KIT-RECEPTACLE (4-PIN)	
		1	**155-2270**	1	KIT-CONNECTING PLUG (2-PIN)	
		1	**177-9645**	1	KIT-RECEPTACLE (2-PIN)	
		1	**177-9648**	1	KIT-CONNECTING PLUG (2-PIN)	
M	9	1	**138-8454**	1	SCREW-TRUSS HEAD (M4X0.7X10-MM)	
	10	1	**213-7315**	2	SCREW-TRUSS HEAD (M4X0.7X25-MM)	
	11	1	**4B-4863**	1	WASHER (4.7X11X1.2-MM THK)	

C-CHANGE FROM PREVIOUS TYPE
M-METRIC PART

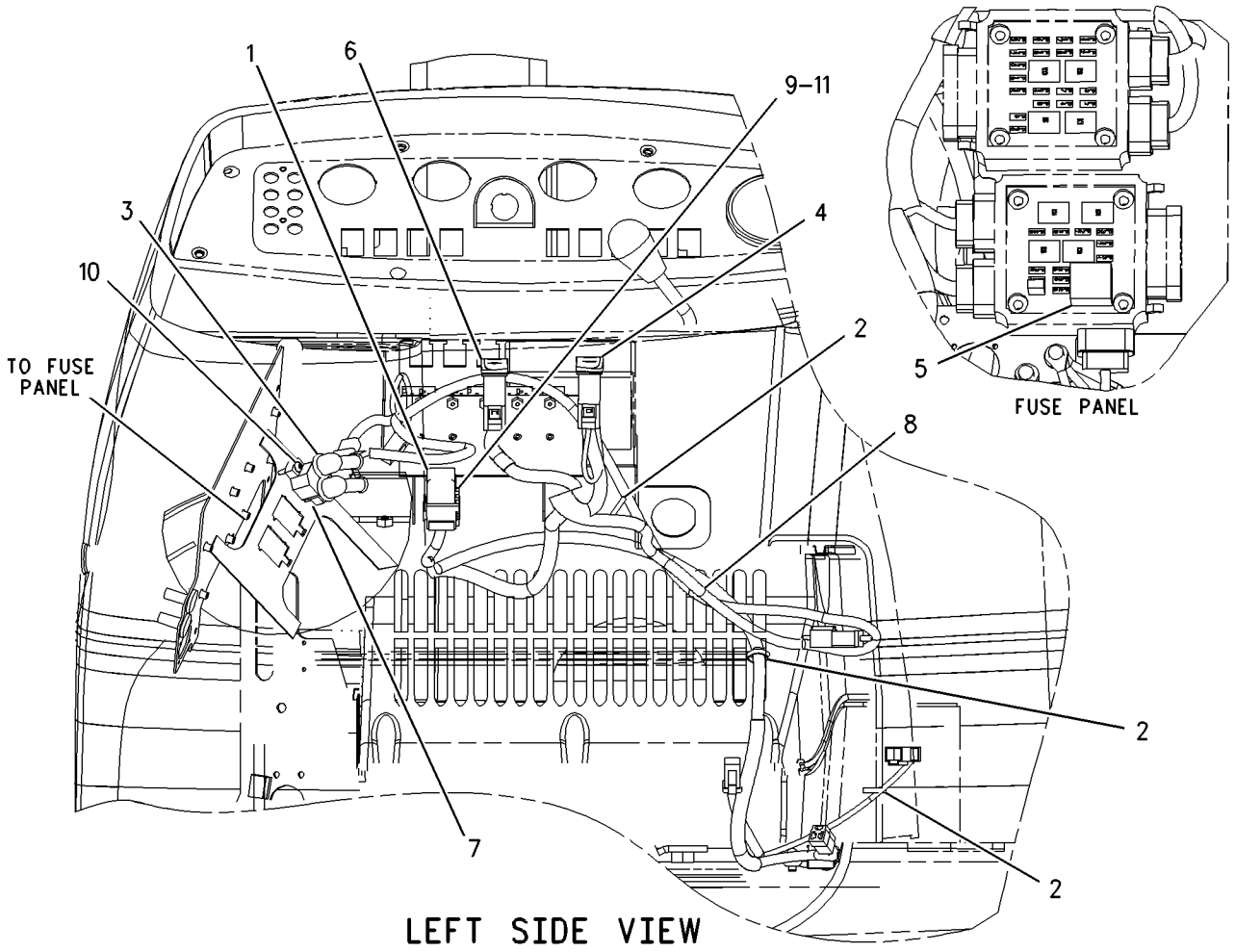

GRAPHIC #1 **<END>** g00996660

ELECTRICAL AND STARTING SYSTEM

185-8800 WIRING GP-PLATFORM

S/N: CXP940-UP

PART OF 215-6888 COMMON AR

SMCS-1408 **i01768061**

NOTE	REF NO	GRAPHIC REF	PART NUMBER	QTY	PART NAME 1 2 3 4 5 6 (PRODUCT LEVEL)	SEE PAGE
D	1	3	**5P-5923**		SEAL (0.035M)	
D	2	2	**5P-7657**	3	SEAL (0.032M)	
	3	1,3	**6K-0806**	8	STRAP-CABLE	
	4	2	**7G-1060**	1	STRAP AS-GROUND	
	5	3	**7T-4848**	1	FLASHER AS-SIGNAL	
	6	2	**7Y-3883**	1	CABLE AS	
		2	**1S-7251**	2	TERMINAL-RING (FOR 1/2 IN BOLT)	
		2	**5P-0747**	1	CABLE (00GA)(BLACK) (40CM)	
B	7	3	**8T-8737**	8	PLUG-SEAL	
	8	1	**128-4249**	2	LOCKWASHER	
	9	2	**164-1056**	1	CHANNEL	
	10	1	**167-3700**	1	HARNESS AS-PLATFORM	
		1	**102-8802**	1	KIT-RECEPTACLE (2 PIN)	
		1	**102-8803**	1	KIT-RECEPTACLE (3 PIN)	
		1	**102-8804**	1	KIT-RECEPTACLE (4 PIN)	
		1	**102-8805**	2	KIT-RECEPTACLE (6 PIN)	
		1	**102-8806**	1	KIT-RECEPTACLE (8 PIN)	
		1	**102-8801**	1	KIT-RECEPTACLE (12 PIN)	
		1	**155-2265**	1	KIT-CONNECTING PLUG (8 PIN)	
		1	**155-2260**	4	KIT-CONNECTING PLUG (3 PIN)	
		1	**155-2270**	6	KIT-CONNECTING PLUG (2 PIN)	
		1	**167-3692**	2	RECEPTACLE AS	
		1	**155-2271**	3	KIT-CONNECTING PLUG (4 PIN)	
		1	**155-2274**	1	KIT-CONNECTING PLUG (6 PIN)	
		1	**155-2265**	1	KIT-CONNECTING PLUG (8 PIN)	
		1	**155-2255**	2	KIT-CONNECTING PLUG (12 PIN)	
		1	**196-2383**	2	KIT-PLUG	
		1	**196-2384**	2	KIT-PLUG	
		1	**177-9648**	2	KIT-CONNECTING PLUG (2 PIN)	
		1	**196-2385**	1	KIT-PLUG	
		1	**196-2386**	1	KIT-PLUG	
	11	1	**174-6400**	1	HARNESS AS (BATTERY POWER)	
		1	**196-2381**	2	PLUG GP-CONNECTOR	
		1	**196-2382**	2	PLUG GP-CONNECTOR	
	12	1	**184-6430**	1	COVER	
	13	1	**210-6059**	1	BLOCK AS-FUSE	
		1	**113-8490**	5	FUSE (10 AMP)	
		1	**113-8491**	3	FUSE (15 AMP)	
		1	**113-8492**	2	FUSE (20 AMP)	
		1	**141-2759**	3	FUSE (5 AMP)	
		1	**146-9439**	3	RELAY AS (12 VOLT)	
	14	1	**210-6060**	1	BLOCK AS-FUSE	
		1	**113-8490**	1	FUSE (10 AMP)	
		1	**113-8491**	1	FUSE (15 AMP)	
		1	**141-2759**	2	FUSE (5 AMP)	
		1	**146-9439**	2	RELAY AS (12 VOLT)	
	15	1	**211-0052**	2	NUT	
M	16	1	**095-0733**	8	SCREW-MACHINE	
M	17	3	**138-8454**	3	SCREW-TRUSS HEAD	
B	18	3	**102-8802**	4	KIT-RECEPTACLE (2 PIN)	
B	19	3	**102-8803**	1	KIT-RECEPTACLE (3 PIN)	
B	20	3	**102-8804**	1	KIT-RECEPTACLE (4 PIN)	
	21	1,2,3	**3S-2093**	34	STRAP-CABLE	
	22	1,3	**4B-4863**	11	WASHER (4.7X11X1.2MM THK)	
	23	2	**7X-7729**	2	WASHER (11X25X3MM THK)	
	24	2,3	**8T-4121**	6	WASHER-HARD (11X21X2.5MM THK)	

185-8800 **WIRING GP-PLATFORM** ***(contd.)*** **i01768061**

NOTE	REF NO	GRAPHIC REF	PART NUMBER	QTY	PART NAME 1 2 3 4 5 6 (PRODUCT LEVEL)	SEE PAGE
M	25	3	**8T-4133**	2	NUT (M10X1.5 THD)	
M	26	2	**8T-4136**	3	BOLT (M10X1.5X25MM)	
M	27	2	**8T-4171**	2	BOLT (M6X1X12MM)	
M	28	2	**8T-4179**	1	BOLT (M12X1.75X20MM)	
	29	2	**8T-4205**	2	WASHER-HARD (7.2X14.5X2MM THK)	
	30	2	**8T-4223**	1	WASHER-HARD (13.5X25.5X3MM THK)	

B-USE AS REQUIRED
D-ORDER BY THE METER
M-METRIC PART

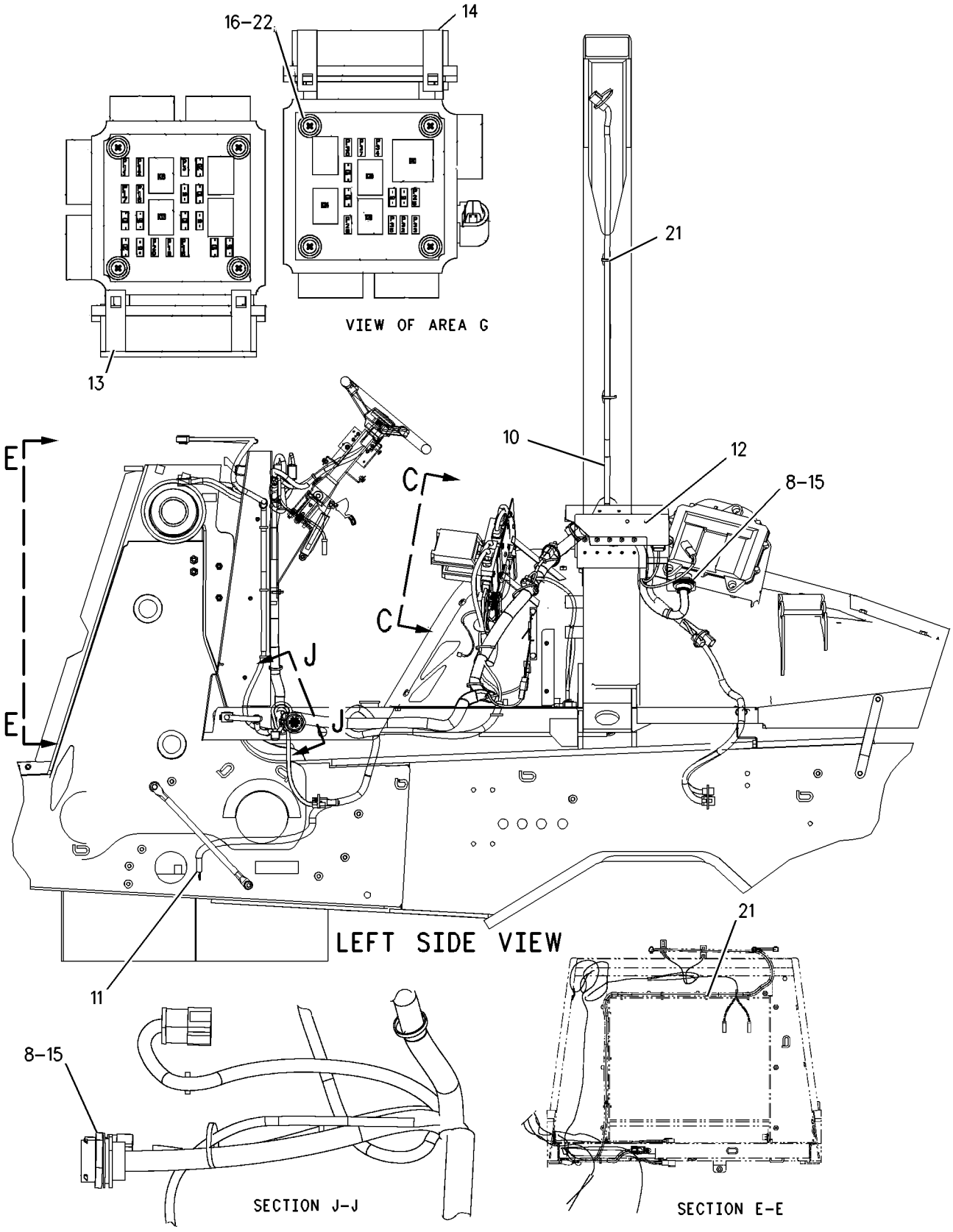

GRAPHIC #1 g00904298

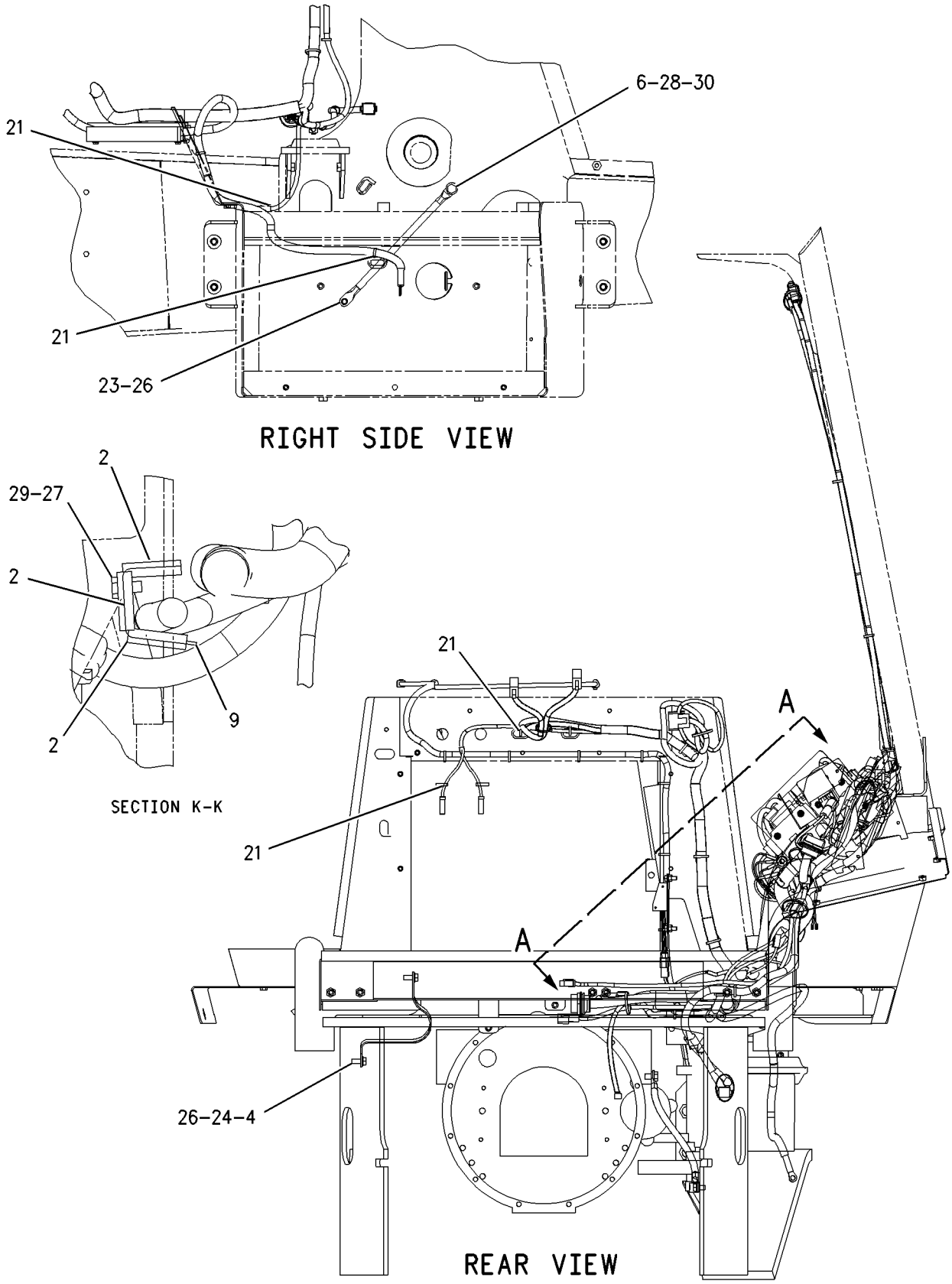

GRAPHIC #2 g00904301

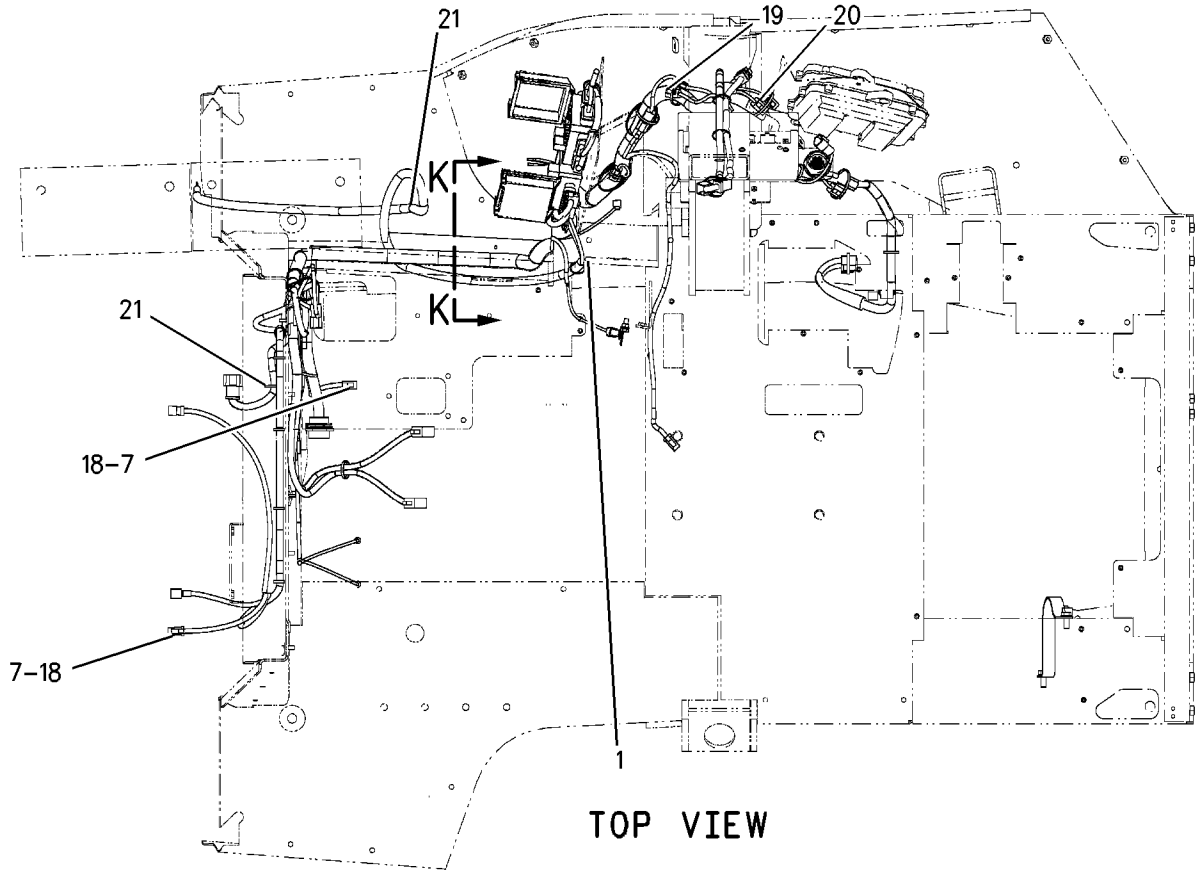

TOP VIEW

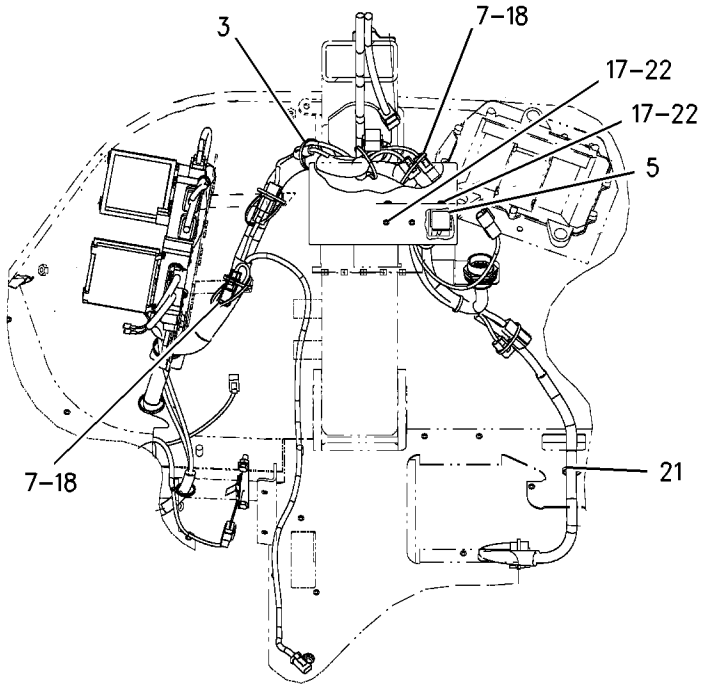

SECTION A-A

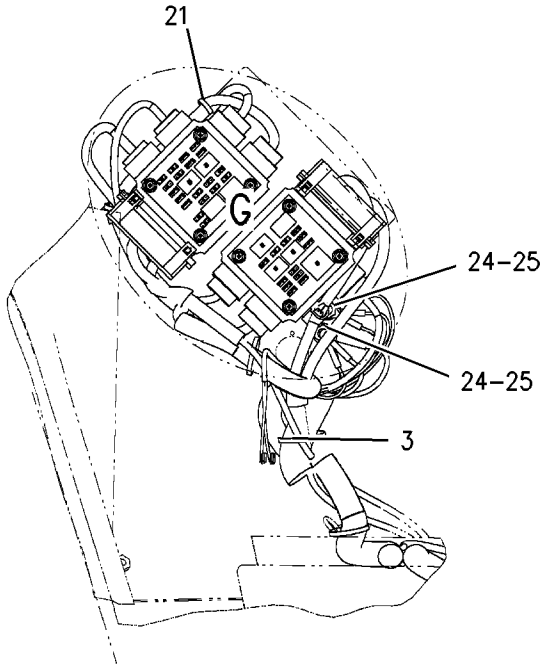

SECTION C-C

GRAPHIC #3 **<END>** g00904302

186-0304 WIRING GP-PLATFORM

S/N: BFP12900-UP
SERVICE
AN ATTACHMENT

SMCS-1408 **i01781113**

NOTE	REF NO	GRAPHIC REF	PART NUMBER	QTY	PART NAME 1 2 3 4 5 6 (PRODUCT LEVEL)	SEE PAGE
	1	1	**3S-2093**	4	STRAP-CABLE	
	2	1	**4I-3038**	4	WASHER (3.3X8X0.5MM THK)	
	3	1	**183-7581**	1	HARNESS AS-PLATFORM	
		1	**102-8802**	1	KIT-RECEPTACLE (2 PIN)	
	4	1	**224-6193**	4	BOLT-SOCKET HEAD	
M	5	1	**8T-2658**	4	LOCKNUT (M3X0.5 THD)	

M-METRIC PART

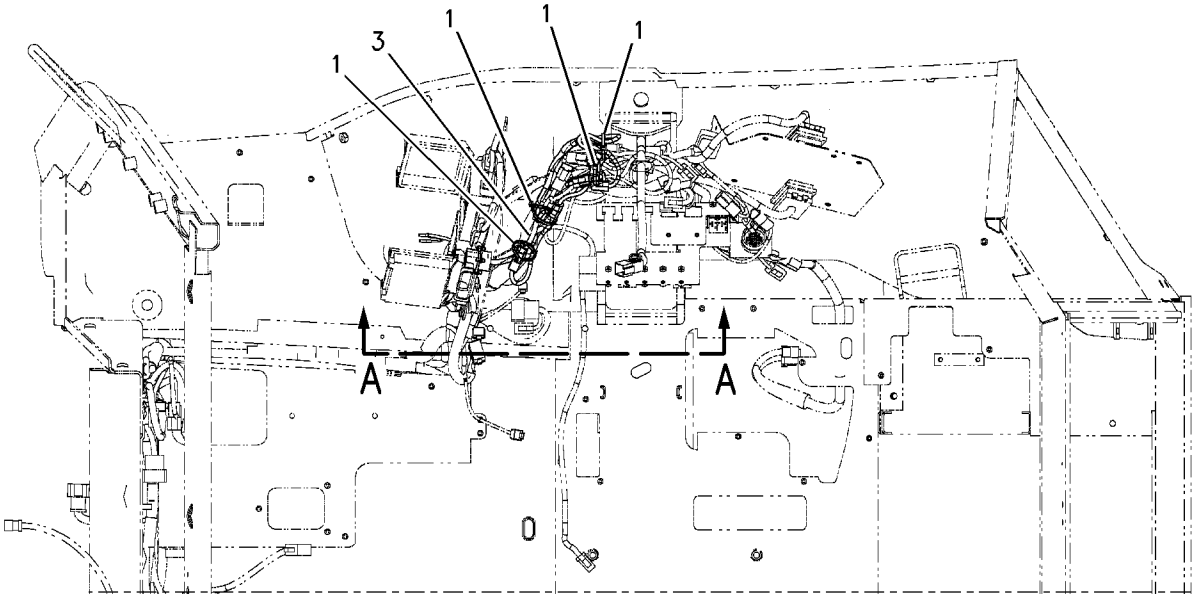

TOP VIEW

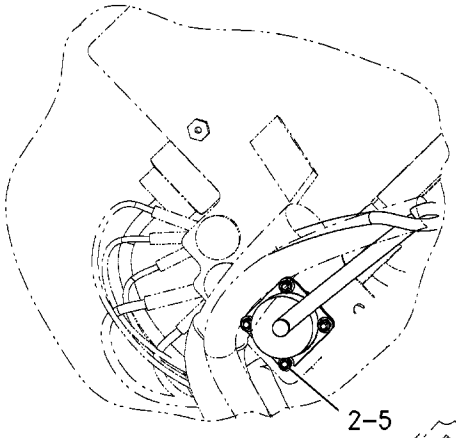

SECTION C-C

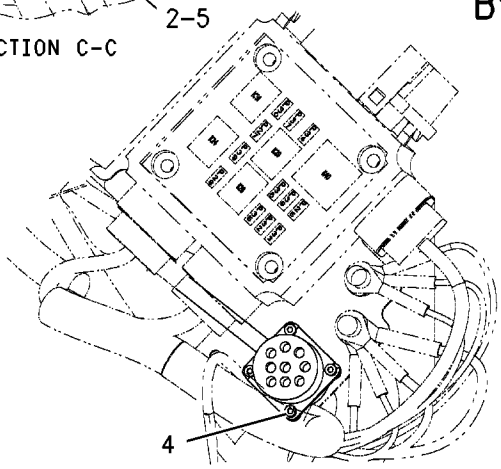

SECTION B-B

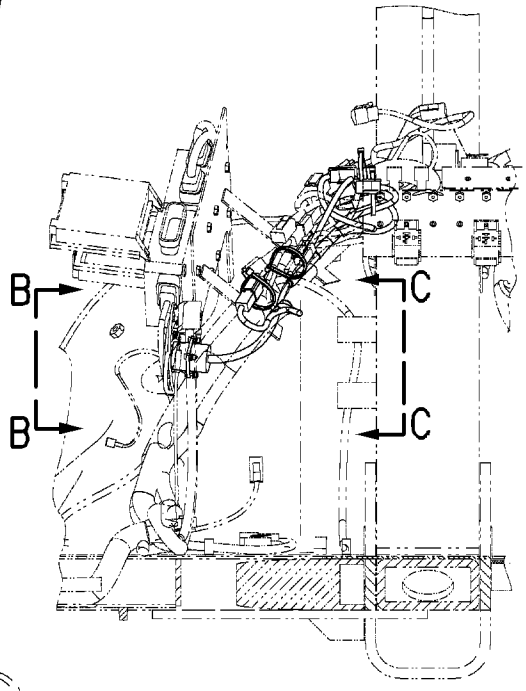

SECTION A-A

GRAPHIC #1 **<END>** g00743623

238-1821 WIRING GP-PLATFORM

S/N: BFP12900-UP

PART OF 214-6950 CHASSIS AR

SMCS-1408 **i01986608**

NOTE	REF NO	GRAPHIC REF	PART NUMBER	QTY	PART NAME 1 2 3 4 5 6 (PRODUCT LEVEL)	SEE PAGE
D	1	1	**5P-5923**		SEAL (.035M)	
D	2	1	**5P-7657**		SEAL (.032M)	
	3	2	**6K-0806**	8	STRAP-CABLE	
	4	1	**7G-1060**	1	STRAP AS-GROUND	
	5	2	**7T-4848**	1	FLASHER AS	
	6	1	**7Y-3883**	1	CABLE AS	
		1	**1S-7251**	2	TERMINAL-RING (FOR 1/2IN BOLT)	
		1	**5P-0747**	40	CABLE (00GA)(BLACK)	
B	7	1,2	**8T-8737**	15	PLUG-SEAL	
	8	1,2	**128-4249**	2	LOCKWASHER	
	9	2	**164-1056**	1	CHANNEL	
	10	2	**167-3700**	1	HARNESS AS-PLATFORM	
		2	**102-8802**	1	KIT-RECEPTACLE (2-PIN)	
					(INCLUDES RECEPTACLE AND WEDGE)	
		2	**102-8803**	1	KIT-RECEPTACLE (3-PIN)	
					(INCLUDES RECEPTACLE AND WEDGE)	
		2	**102-8804**	1	KIT-RECEPTACLE (4-PIN)	
					(INCLUDES RECEPTACLE AND WEDGE)	
		2	**102-8805**	1	KIT-RECEPTACLE (6-PIN)	
					(INCLUDES RECEPTACLE AND WEDGE)	
		2	**102-8806**	1	KIT-RECEPTACLE (8-PIN)	
					(INCLUDES RECEPTACLE AND WEDGE)	
		2	**102-8801**	1	KIT-RECEPTACLE (12-PIN)	
					(INCLUDES RECEPTACLE AND WEDGE)	
		2	**155-2255**	2	KIT-CONNECTING PLUG (12-PIN)	
					(EACH INCLUDES PLUG AND WEDGE)	
		2	**155-2265**	2	KIT-CONNECTING PLUG (8-PIN)	
					(EACH INCLUDES PLUG AND WEDGE)	
		2	**155-2260**	3	KIT-CONNECTING PLUG (3-PIN)	
					(EACH INCLUDES PLUG AND WEDGE)	
		2	**155-2270**	6	KIT-CONNECTING PLUG (2-PIN)	
					(EACH INCLUDES PLUG AND WEDGE)	
		2	**155-2271**	3	KIT-CONNECTING PLUG (4-PIN)	
					(EACH INCLUDES PLUG AND WEDGE)	
		2	**155-2274**	1	KIT-CONNECTING PLUG (6-PIN)	
					(INCLUDES PLUG AND WEDGE)	
		2	**196-2383**	2	KIT-PLUG (8 PIN)	
					(EACH INCLUDES PLUG AND WEDGE)	
		2	**196-2384**	2	KIT-PLUG (8 PIN)	
					(EACH INCLUDES PLUG AND WEDGE)	
		2	**177-9648**	2	KIT-CONNECTING PLUG (2-PIN)	
					(EACH INCLUDES PLUG AND WEDGE)	
		2	**196-2385**	2	KIT-PLUG (8 PIN)	
					(EACH INCLUDES PLUG AND WEDGE)	
		2	**196-2386**	1	KIT-PLUG	
					(INCLUDES PLUG AND WEDGE)	
	11	2	**184-6430**	1	COVER	
	12	1,2	**211-0052**	2	NUT (11/16-18 THD)	
	13	2	**8T-4224**	2	WASHER-HARD (8.8X16X2MM THK)	
D	14	1	**5P-7657**		SEAL (.032M)	
D	15	1	**5P-7657**		SEAL (.032M)	
M	16	2	**095-0733**	8	SCREW-MACHINE	
M	17	2	**138-8454**	3	SCREW-TRUSS HEAD (M4X0.7X10MM)	
B	18	1,2	**102-8802**	4	KIT-RECEPTACLE (2-PIN)	
					(EACH INCLUDES RECEPTACLE AND WEDGE)	

238-1821 **WIRING GP-PLATFORM** ***(contd.)*** **i01986608**

NOTE	REF NO	GRAPHIC REF	PART NUMBER	QTY	PART NAME 1 2 3 4 5 6 (PRODUCT LEVEL)	SEE PAGE
B	19	2	**102-8803**	1	KIT-RECEPTACLE (3-PIN)	
					(INCLUDES RECEPTACLE AND WEDGE)	
B	20	2	**102-8804**	1	KIT-RECEPTACLE (4-PIN)	
					(INCLUDES RECEPTACLE AND WEDGE)	
	21	1,2	**3S-2093**	32	STRAP-CABLE	
	22	2	**4B-4863**	11	WASHER (4.7X11X1.2MM THK)	
M	23	2	**5C-7261**	2	NUT (M8X1.25 THD)	
	24	1	**7X-7729**	2	WASHER (11X25X3MM THK)	
	25	1,2	**8T-4121**	6	WASHER-HARD (11X21X2.5MM THK)	
M	26	2	**8T-4133**	2	NUT (M10X1.5 THD)	
M	27	1	**8T-4136**	3	BOLT (M10X1.5X25MM)	
M	28	2	**8T-4171**	2	BOLT (M6X1X12MM)	
M	29	1	**8T-4179**	1	BOLT (M12X1.75X20MM)	
	30	2	**8T-4205**	2	WASHER-HARD (7.2X14.5X2MM THK)	
	31	1	**8T-4223**	1	WASHER-HARD (13.5X25.5X3MM THK)	

B-USE AS REQUIRED
D-ORDER BY THE METER
M-METRIC PART

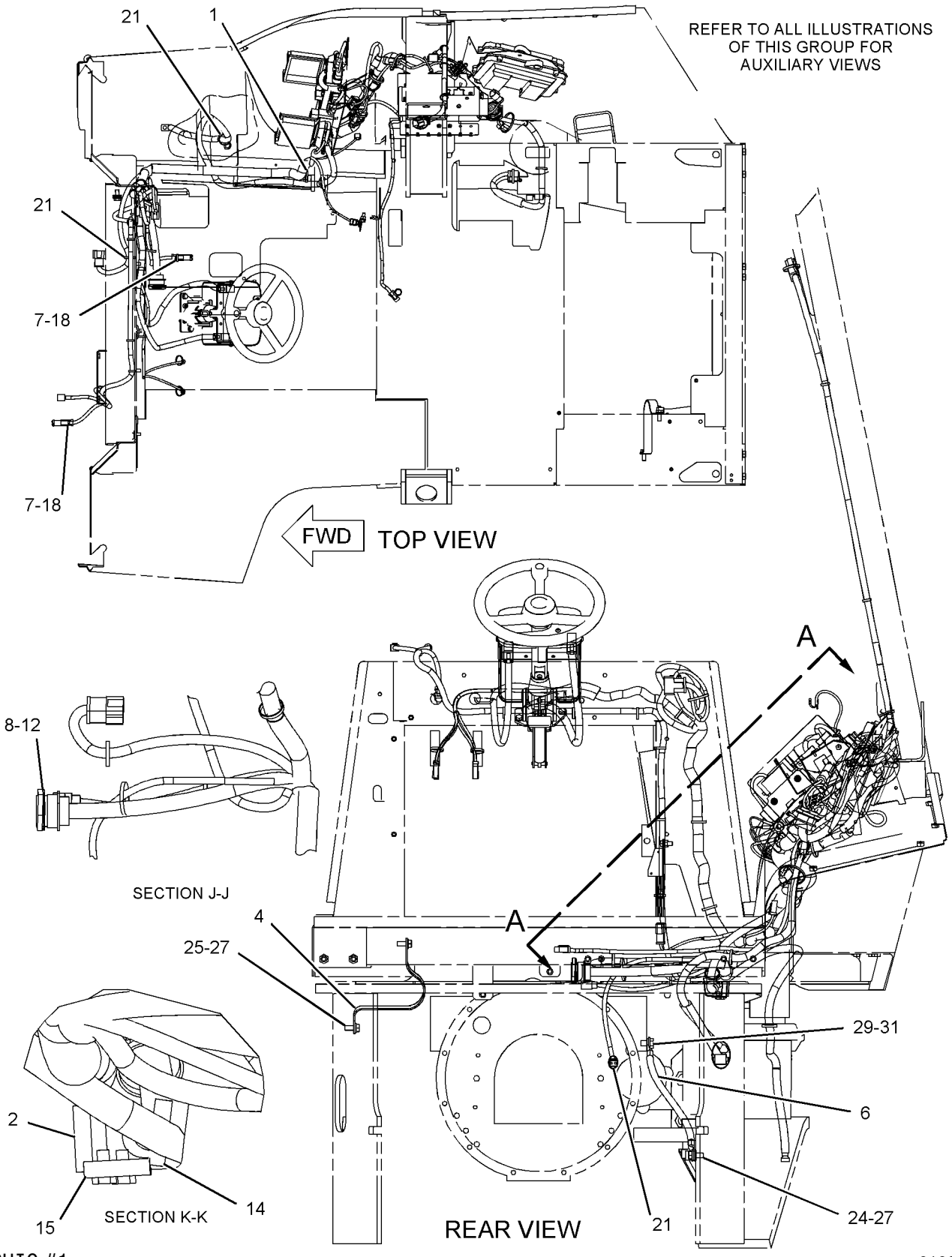

GRAPHIC #1

g01030217

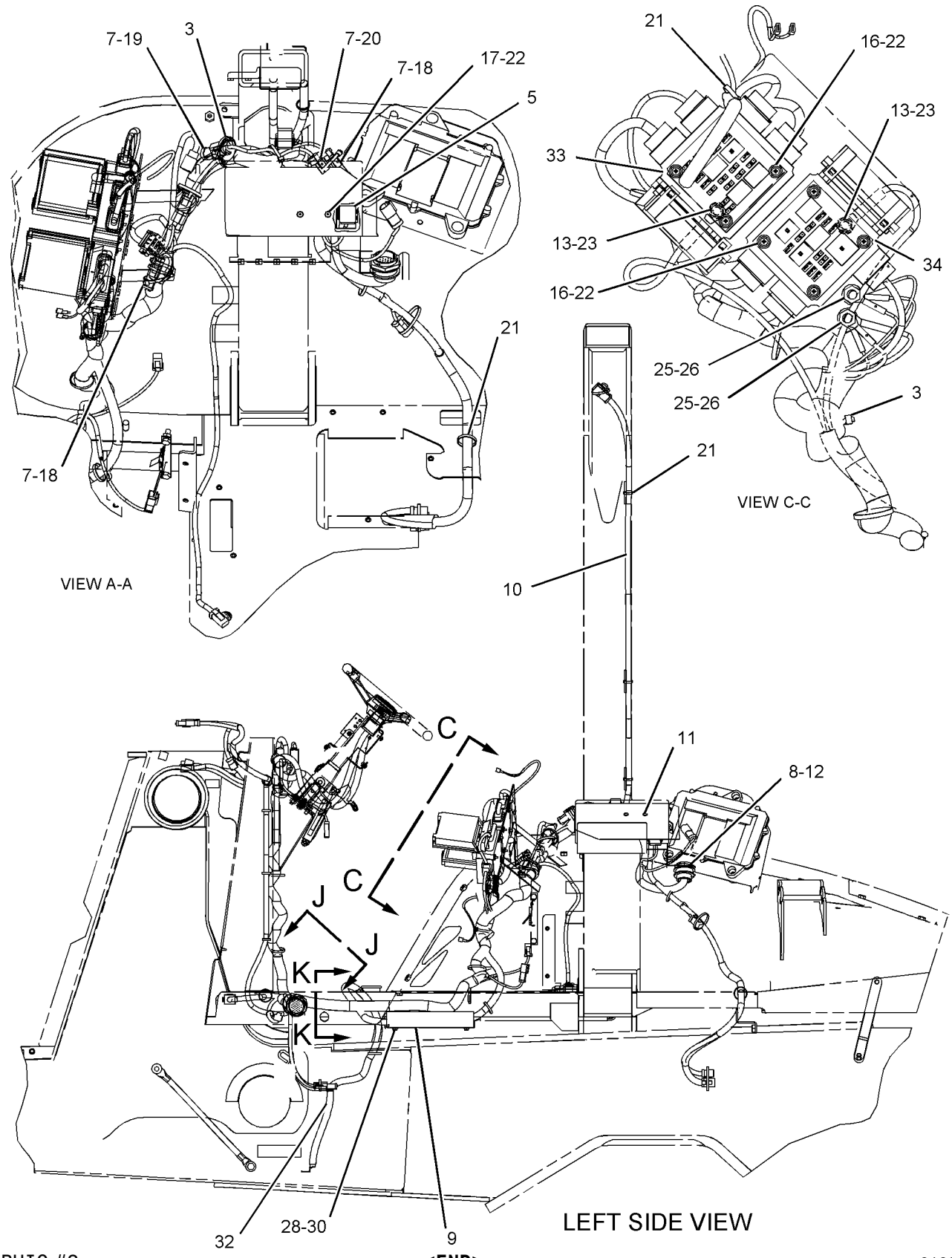

GRAPHIC #2

<END>

g01030218

190-7557 WIRING GP-POWER RECEPTACLE

S/N: BFP12900-UP

PART OF 184-9735, 205-2177, 239-5561, 239-5562 CAB AR

AN ATTACHMENT

SMCS-1408, 7301 **i01961654**

NOTE	REF NO	GRAPHIC REF	PART NUMBER	QTY	PART NAME 1 2 3 4 5 6 (PRODUCT LEVEL)	SEE PAGE
	1	1	**113-8490**	1	FUSE (10 AMP)	
	2	1	**178-7539**	1	RECEPTACLE AS	
	3	1	**3S-2093**	1	STRAP-CABLE	

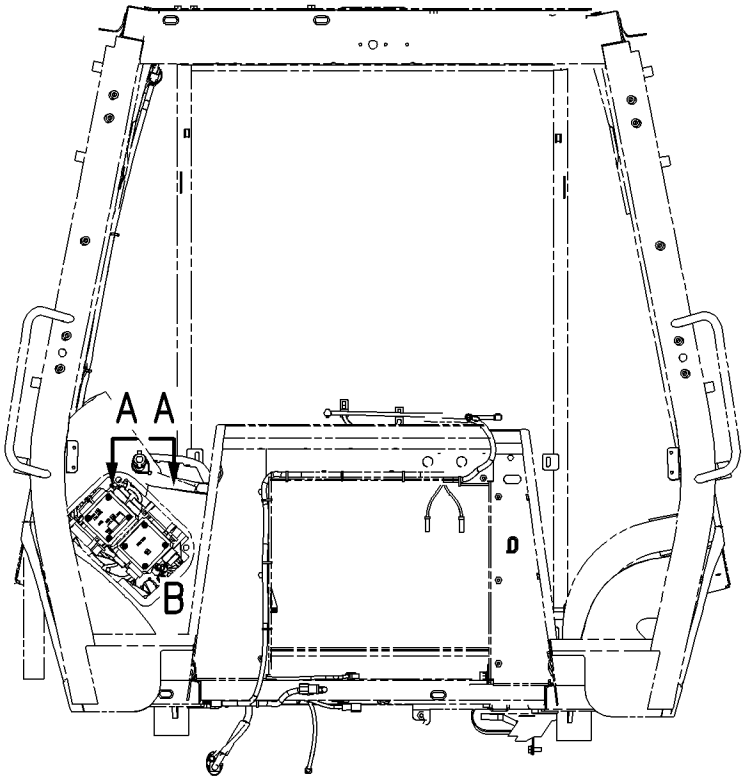

FRONT VIEW

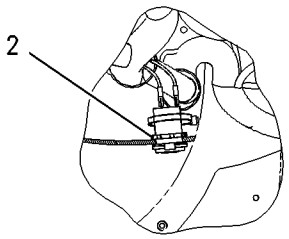

SECTION A-A

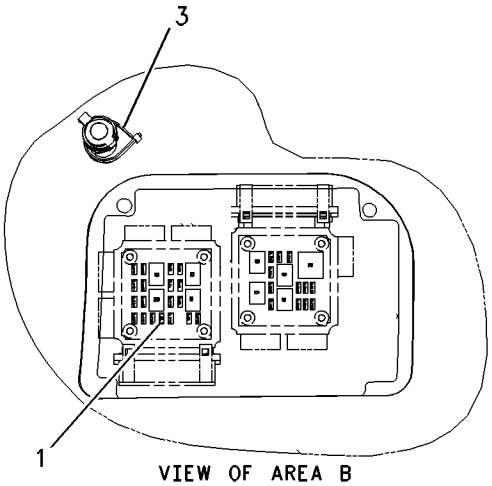

VIEW OF AREA B

GRAPHIC #1 **<END>** g00878859

185-8808 WIRING GP-REAR

S/N: BFP12900-UP; CXP940-UP
CENTER PIVOT
PART OF 237-6458, 237-6459, 237-6461 DRIVE AR-BACKHOE LOADER
AN ATTACHMENT

SMCS-1408 **i02019777**

NOTE	REF NO	GRAPHIC REF	PART NUMBER	QTY	PART NAME 1 2 3 4 5 6 (PRODUCT LEVEL)	SEE PAGE
	1	1	**7K-1181**	1	STRAP-CABLE	
B	2	1,2	**8T-8737**	4	PLUG-SEAL	
	3	2	**9U-2277**	1	CLIP AS	
		2	**8C-3334**	1	RIVET-TUBULAR	
	4	2	**154-5428**	1	WARNING GP-BACKUP	
		2	**102-8802**	1	KIT-RECEPTACLE (2-PIN)	
	5	1	**167-3708**	1	HARNESS AS-REAR	
		1	**102-8803**	1	KIT-RECEPTACLE (3-PIN)	
		1	**102-8806**	1	KIT-RECEPTACLE (8-PIN)	
		1	**155-2270**	1	KIT-CONNECTING PLUG (2-PIN)	
M	6	2	**111-4627**	2	SCREW-MACHINE (M6X1.0X30-MM)	
	7	2	**132-5789**	1	CLIP	
B	8	1,2	**102-8802**	2	KIT-RECEPTACLE (2-PIN)	
	9	1	**3S-2093**	5	STRAP-CABLE	
M	10	2	**8T-4134**	1	NUT (M6X1-THD)	
M	11	2	**8T-4136**	1	BOLT (M10X1.5X25-MM)	
	12	2	**9X-6165**	1	WASHER (6.5X22X2.5-MM THK)	

B-USE AS REQUIRED
M-METRIC PART

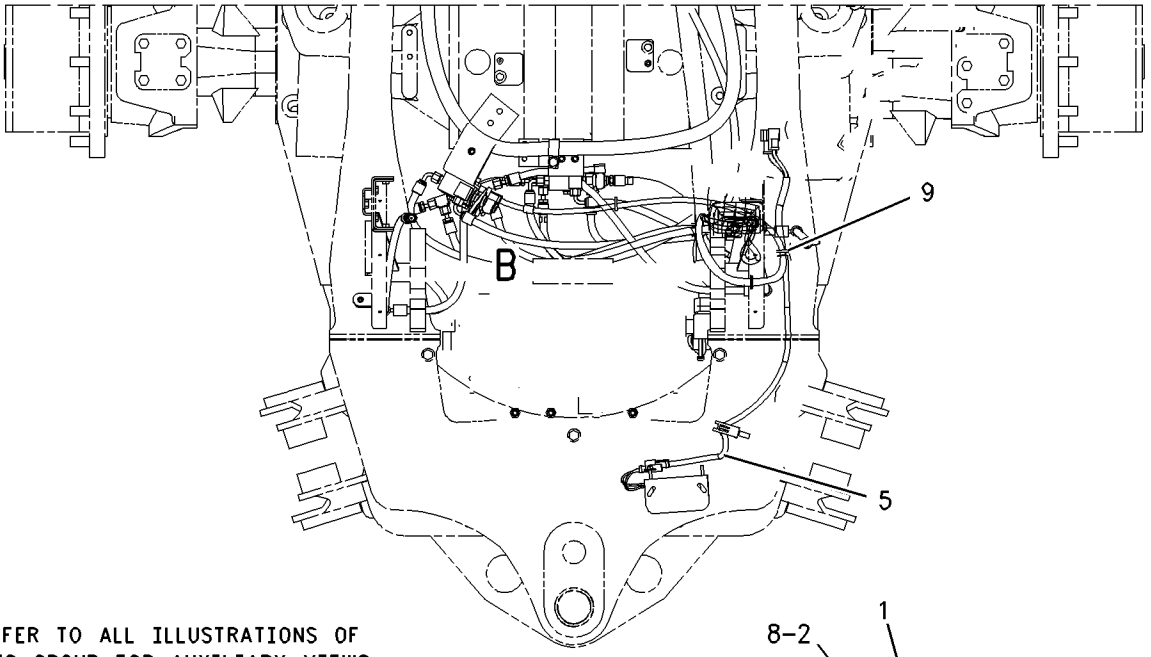

REFER TO ALL ILLUSTRATIONS OF THIS GROUP FOR AUXILIARY VIEWS

TOP VIEW

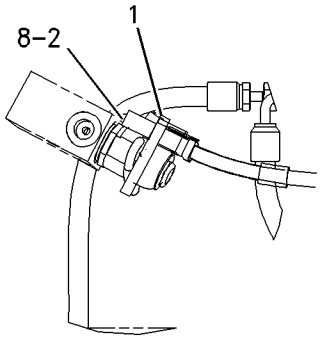

VIEW OF AREA B

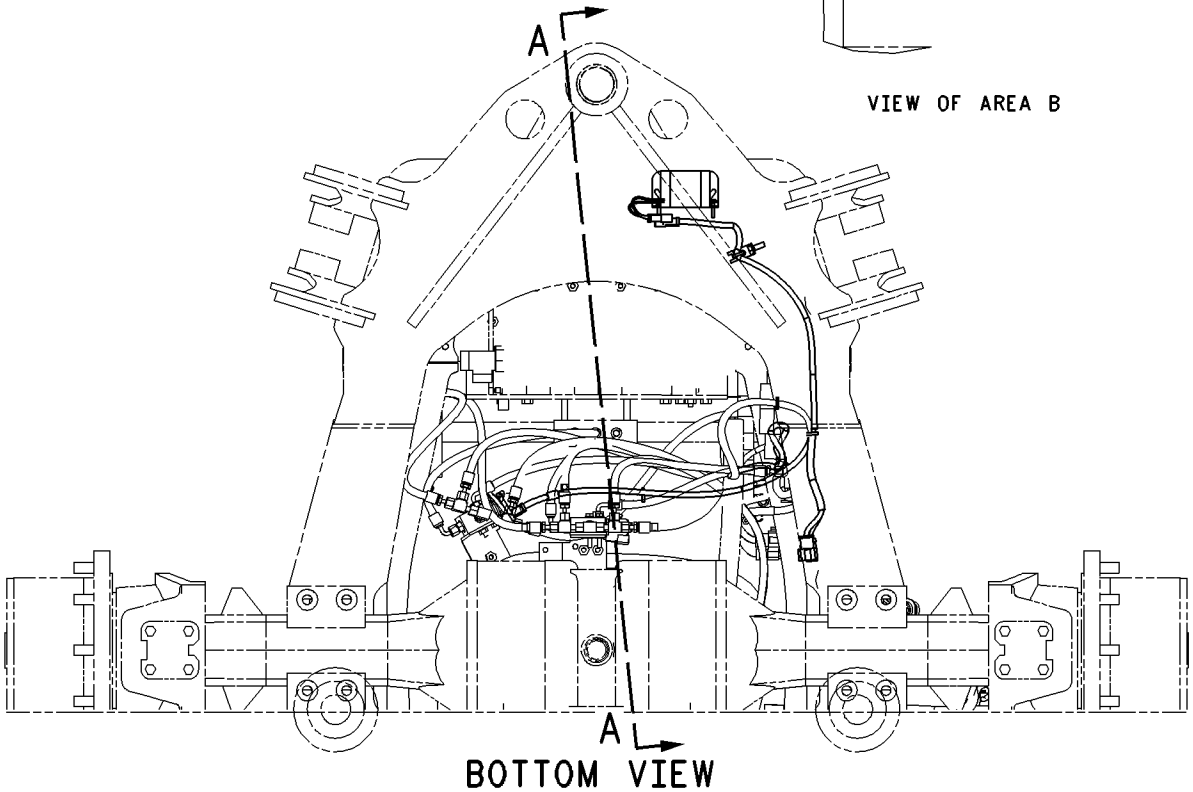

BOTTOM VIEW

GRAPHIC #1 g00904558

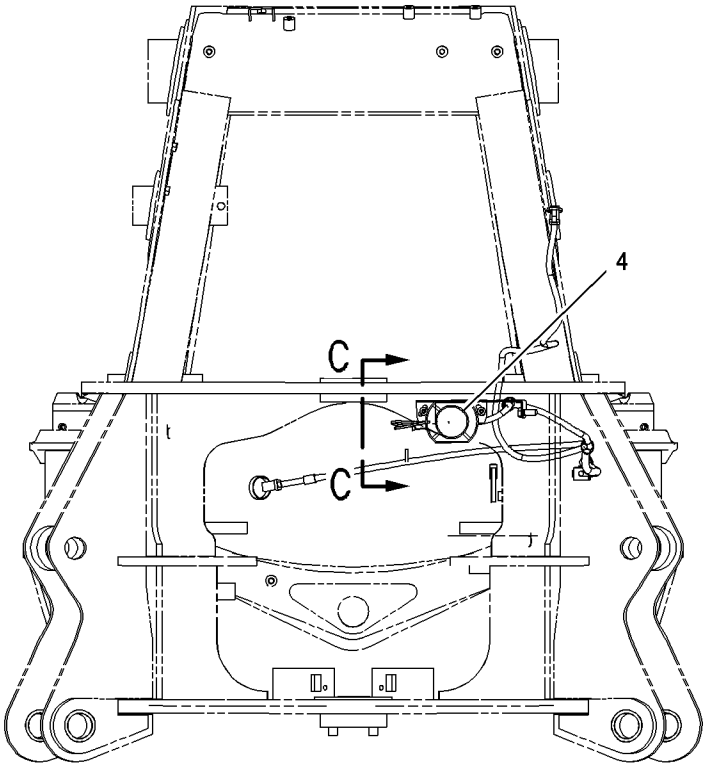

REAR VIEW

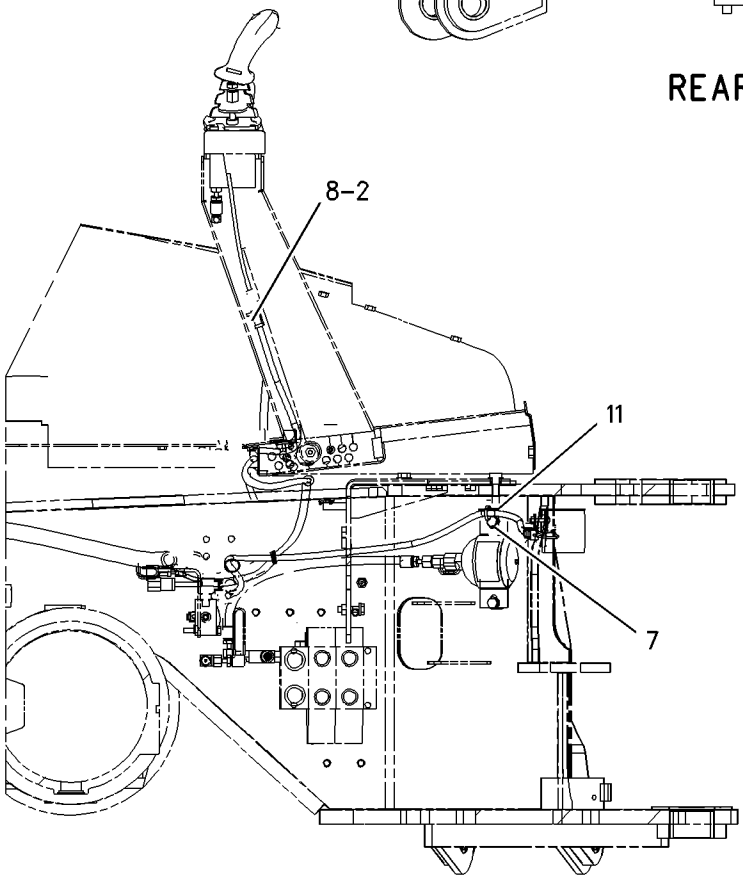

SECTION A-A

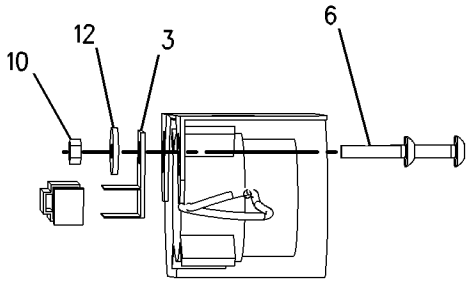

SECTION C-C

GRAPHIC #2 **<END>** g00905164

186-0311 WIRING GP-RIDE CONTROL

S/N: BFP12900-UP

PART OF 185-1482, 239-9245 CONTROL AR-RIDE, 200-6284, 236-5458 KIT-RIDE CONTROL AN ATTACHMENT

SMCS-1408 **i02019646**

NOTE	REF NO	GRAPHIC REF	PART NUMBER	QTY	PART NAME 1 2 3 4 5 6 (PRODUCT LEVEL)	SEE PAGE
	1	1	**3E-9362**	1	RELAY AS (12-VOLT)	
	2	1	**3S-2093**	18	STRAP-CABLE	
	3	1	**106-8704**	1	SUPPRESSOR AS-ARC	
		1	**3E-3365**	1	WEDGE-RECEPTACLE LOCK (2-PIN)	
		1	**186-3735**	2	PIN-CONNECTOR	
		1	**102-8802**	1	KIT-RECEPTACLE (2-PIN)	
	4	1	**113-8490**	1	FUSE (10-AMPERE)	
	5	1	**131-9203**	1	SWITCH AS-PRESSURE	
		1	**186-3735**	3	PIN-CONNECTOR	
		1	**3E-3371**	1	WEDGE-RECEPTACLE LOCK (3-PIN)	
		1	**102-8803**	1	KIT-RECEPTACLE (3-PIN)	
	6	1	**169-0607**	1	SWITCH AS-ROCKER (RIDE CONTROL)	
		1	**111-7899**	1	GASKET	
	7	1	**174-6395**	1	HARNESS AS-RIDE CONTROL (FRONT CONSOLE)	
		1	**155-2270**	1	KIT-CONNECTING PLUG (2-PIN)	
		1	**155-2274**	1	KIT-CONNECTING PLUG (6-PIN)	
	8	1	**174-6398**	1	HARNESS AS-RIDE CONTROL (PLATFORM)	
		1	**102-8804**	1	KIT-RECEPTACLE (4-PIN)	
		1	**102-8805**	1	KIT-RECEPTACLE (6-PIN)	
		1	**155-2270**	2	KIT-CONNECTING PLUG (2-PIN)	
		1	**155-2260**	1	KIT-CONNECTING PLUG (3-PIN)	
		1	**155-2274**	1	KIT-CONNECTING PLUG (6-PIN)	
	9	1	**200-2996**	1	HARNESS AS-RIDE CONTROL (FRAME, LEFT SIDE)	
		1	**102-8803**	1	KIT-RECEPTACLE (3-PIN)	
		1	**155-2260**	1	KIT-CONNECTING PLUG (3-PIN)	
		1	**155-2270**	1	KIT-CONNECTING PLUG (2-PIN)	
M	10	1	**138-8454**	1	SCREW-TRUSS HEAD (M4X0.7X10-MM)	
	11	1	**3J-1907**	1	SEAL-O-RING	
	12	1	**4B-4863**	1	WASHER (4.7X11X1.2-MM THK)	
	13	1	**4P-8134**	1	CLIP	

M-METRIC PART

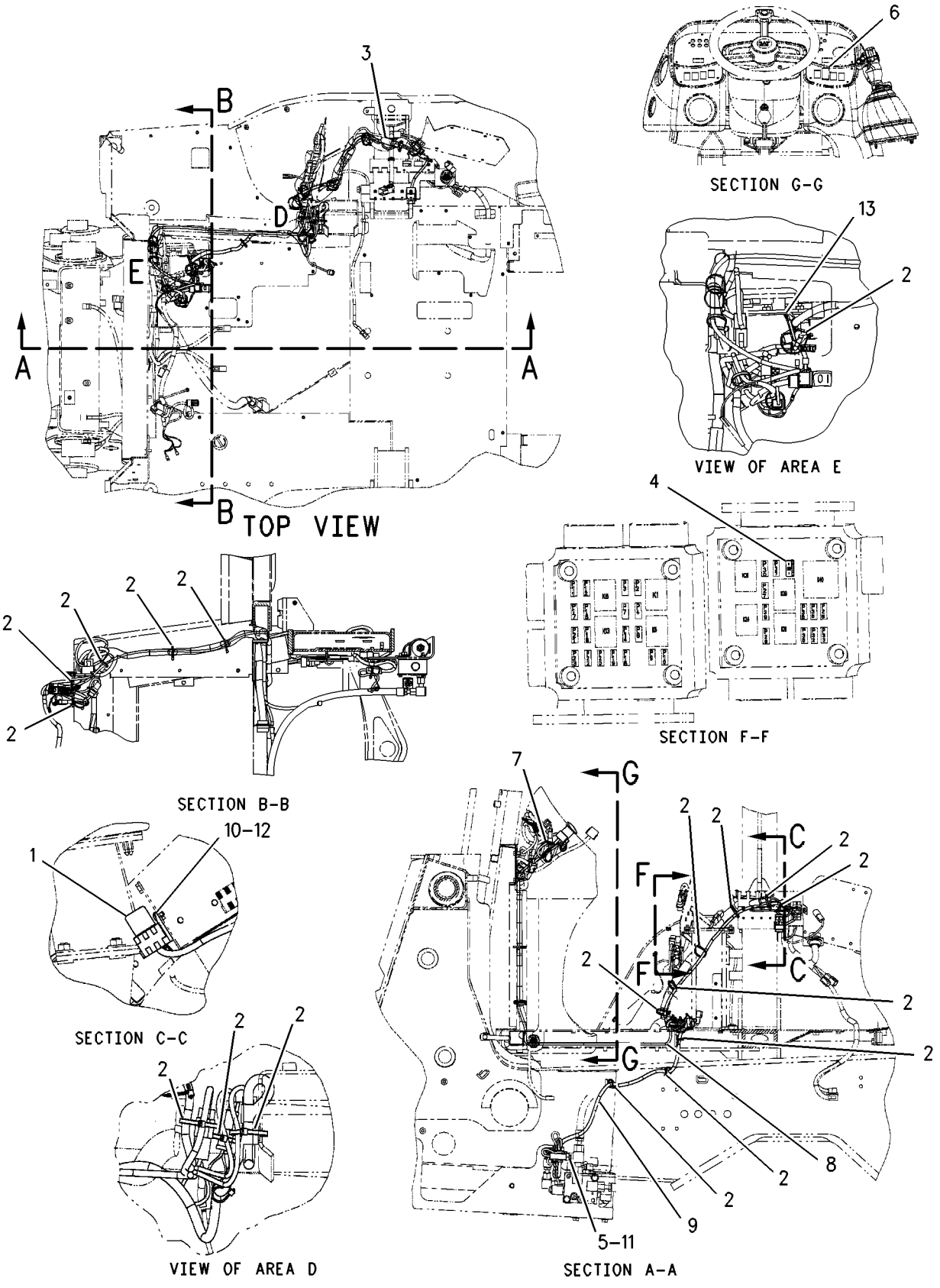

GRAPHIC #1 **<END>** g00775260

186-0312 WIRING GP-RIDE CONTROL

S/N: BFP12900-UP
AUTOSHIFT
PART OF 239-9248 CONTROL AR-RIDE, 236-5459 KIT-RIDE CONTROL
AN ATTACHMENT

SMCS-1408 **i02019658**

NOTE	REF NO	GRAPHIC REF	PART NUMBER	QTY	PART NAME 1 2 3 4 5 6 (PRODUCT LEVEL)	SEE PAGE
	1	1	**3E-9362**	1	RELAY AS (12-VOLT)	
	2	1	**3S-2093**	18	STRAP-CABLE	
	3	1	**106-8704**	2	SUPPRESSOR AS-ARC	
					(EACH INCLUDES)	
		1	**102-8802**	1	KIT-RECEPTACLE (2-PIN)	
					(KIT SERVICES RECEPTACLE AS AND WEDGE)	
		1	**186-3735**	2	PIN-CONNECTOR	
	4	1	**113-8490**	1	FUSE (10-AMPERE)	
	5	1	**131-9203**	1	SWITCH AS-PRESSURE	
		1	**102-8803**	1	KIT-RECEPTACLE (3-PIN)	
					(KIT SERVICES RECEPTACLE AS AND WEDGE)	
		1	**186-3735**	3	PIN-CONNECTOR	
	6	1	**169-0608**	1	SWITCH AS-ROCKER (RIDE CONTROL)	
		1	**111-7899**	1	GASKET	
	7	1	**174-6395**	1	HARNESS AS-RIDE CONTROL (FRONT CONSOLE)	
		1	**155-2270**	1	KIT-CONNECTING PLUG (2-PIN)	
					(KIT SERVICES PLUG AS AND WEDGE)	
		1	**155-2274**	1	KIT-CONNECTING PLUG (6-PIN)	
					(KIT SERVICES PLUG AS AND WEDGE)	
	8	1	**174-6398**	1	HARNESS AS-RIDE CONTROL (PLATFORM)	
		1	**102-8804**	1	KIT-RECEPTACLE (4-PIN)	
					(KIT SERVICES RECEPTACLE AS AND WEDGE)	
		1	**102-8805**	1	KIT-RECEPTACLE (6-PIN)	
					(KIT SERVICES RECEPTACLE AS AND WEDGE)	
		1	**155-2270**	1	KIT-CONNECTING PLUG (2-PIN)	
					(KIT SERVICES PLUG AS AND WEDGE)	
		1	**155-2260**	1	KIT-CONNECTING PLUG (3-PIN)	
					(KIT SERVICES PLUG AS AND WEDGE)	
		1	**155-2274**	1	KIT-CONNECTING PLUG (6-PIN)	
					(KIT SERVICES PLUG AS AND WEDGE)	
	9	1	**200-2996**	1	HARNESS AS-RIDE CONTROL (FRAME, LEFT SIDE)	
		1	**102-8803**	1	KIT-RECEPTACLE (3-PIN)	
					(KIT SERVICES RECEPTACLE AS AND WEDGE)	
		1	**155-2260**	1	KIT-CONNECTING PLUG (3-PIN)	
					(KIT SERVICES PLUG AS AND WEDGE)	
		1	**155-2270**	1	KIT-CONNECTING PLUG (2-PIN)	
					(KIT SERVICES PLUG AS AND WEDGE)	
M	10	1	**138-8454**	1	SCREW-TRUSS HEAD (M4X0.7X10-MM)	
	11	1	**3J-1907**	1	SEAL-O-RING	
	12	1	**4B-4863**	1	WASHER (4.7X11X1.2-MM THK)	
	13	1	**4P-8134**	1	CLIP	

M-METRIC PART

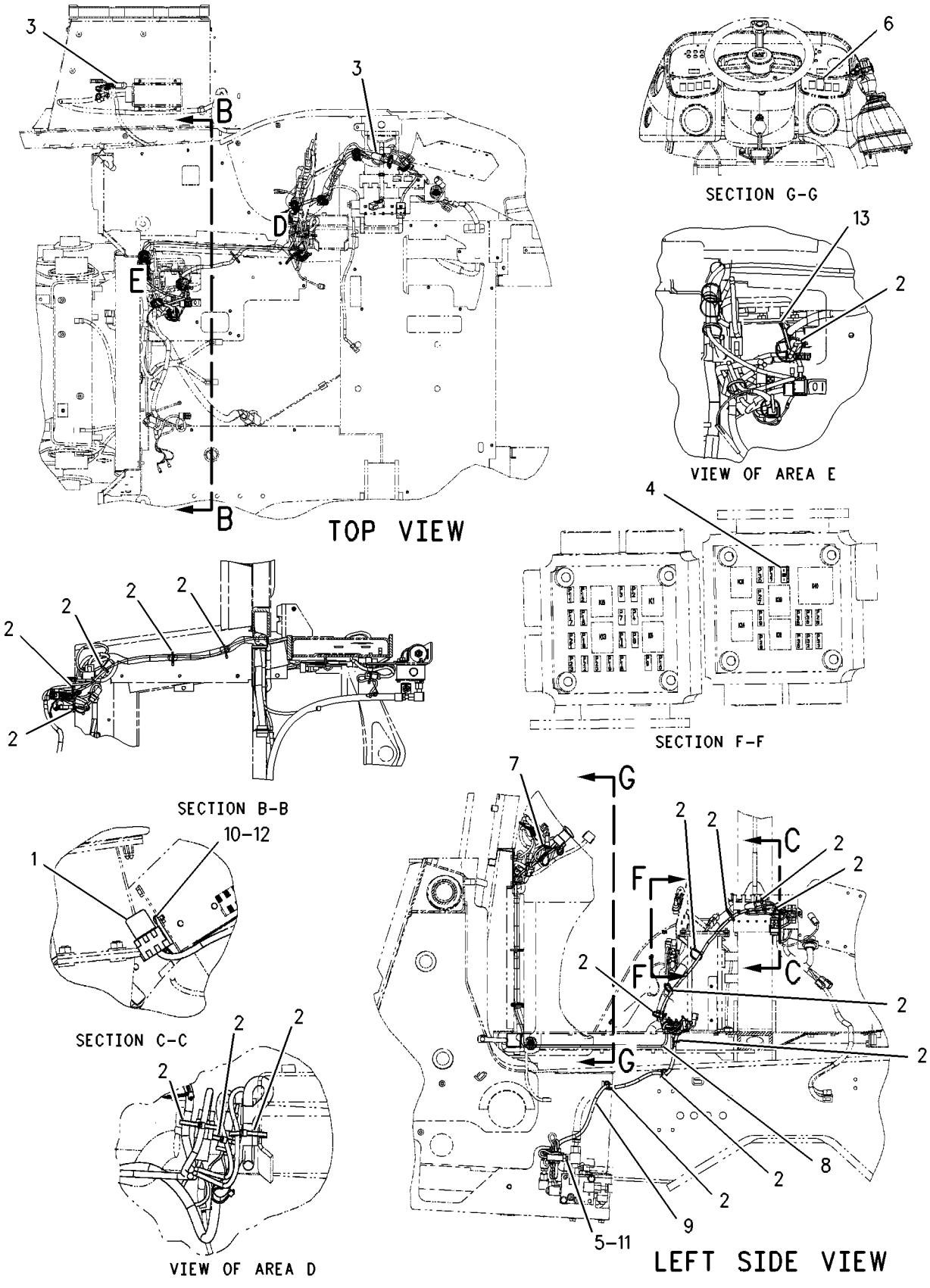

GRAPHIC #1 **<END>** g00863443

122-1645 WIRING GP-SENSOR

S/N: BFP12900-UP; CXP940-UP
PART OF 107-3313 LOADER AR
ALSO AN ATTACHMENT

SMCS-1408 **i02019787**

NOTE	REF NO	GRAPHIC REF	PART NUMBER	QTY	PART NAME 1 2 3 4 5 6 (PRODUCT LEVEL)	SEE PAGE
	1	1	**3S-2093**	38	STRAP-CABLE	
	2	1	**118-7790**	1	BRACKET AS	
M	3	1	**8T-4138**	2	BOLT (M6X1X20-MM)	
	4	1	**8T-4205**	2	WASHER-HARD (7.2X14.5X2-MM THK)	
	5	1	**107-5605**	1	HARNESS AS-WORK TOOL (SENSOR)	
		1	**102-8803**	1	KIT-RECEPTACLE (3-PIN)	
	6	1	**206-1486**	1	SWITCH AS-ROLLER	
		1	**2H-3922**	1	LOCKWASHER	
		1	**6V-8363**	2	SCREW (10-32X0.312-IN)	
		1	**6V-8370**	1	NUT-HEX (3/4-32-THD)	
		1	**8F-1434**	2	LOCKWASHER (INTERNAL TOOTH)	
		1	**9X-0199**	1	BOOT-SWITCH	

M-METRIC PART

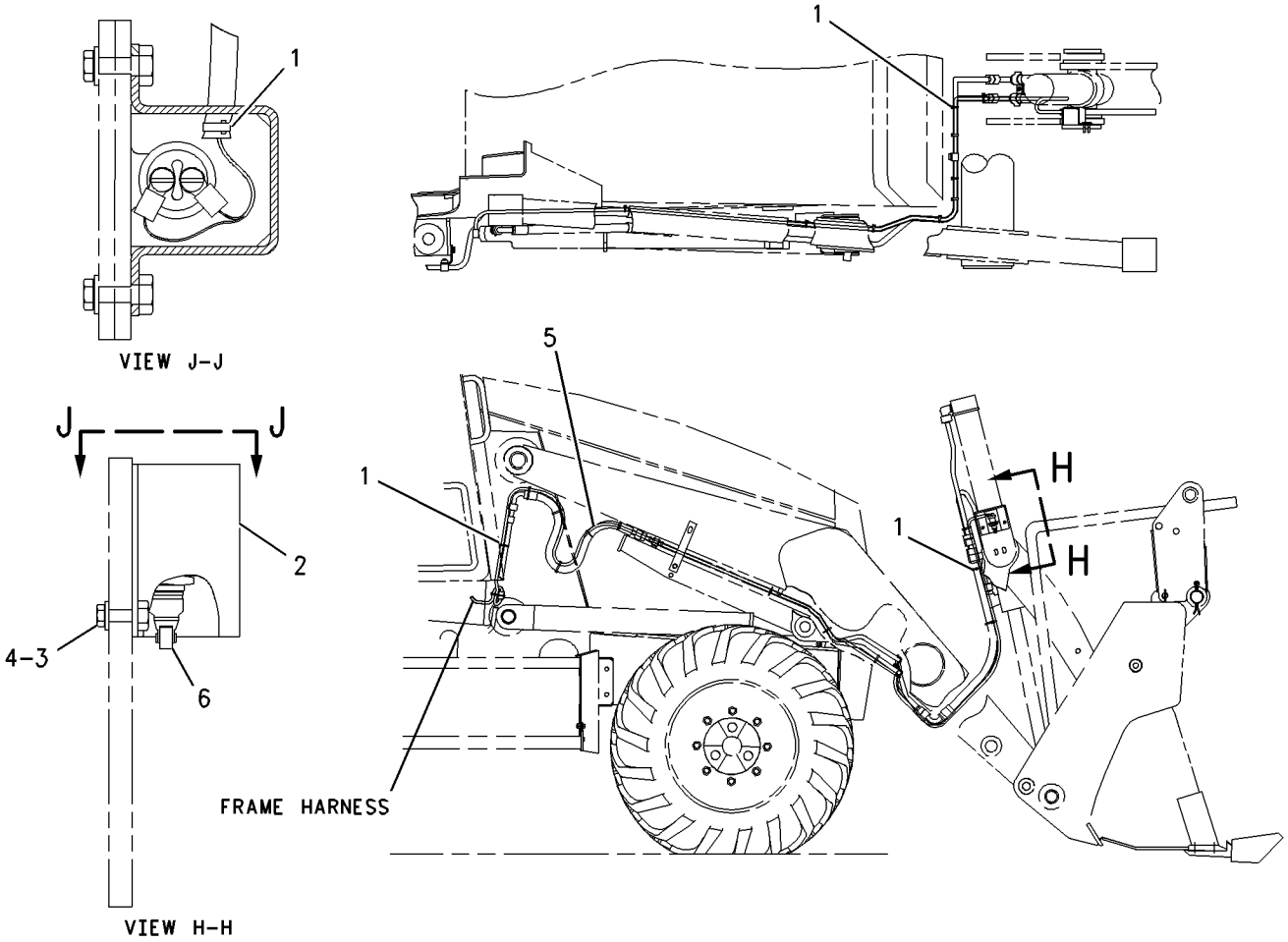

GRAPHIC #1 **<END>** g00889194

186-0309 WIRING GP-STEERING

S/N: BFP12900-UP; CXP940-UP
ALL WHEEL DRIVE
PART OF 237-6459, 237-6461 DRIVE AR-BACKHOE LOADER
AN ATTACHMENT

SMCS-1408, 4334 **i01794709**

NOTE	REF NO	GRAPHIC REF	PART NUMBER	QTY	PART NAME 1 2 3 4 5 6 (PRODUCT LEVEL)	SEE PAGE
	1	1	**3S-2093**	1	STRAP-CABLE	
	2	1	**106-8704**	1	SUPPRESSOR AS-ARC	
		1	**102-8802**	1	KIT-RECEPTACLE (2 PIN)	
		1	**3E-3365**	1	WEDGE-RECEPTACLE LOCK (2 PIN)	
		1	**8T-8729**	2	PIN-CONNECTOR	
	3	1	**141-2759**	1	FUSE (5 AMP)	
	4	1	**146-9439**	1	RELAY AS (12 VOLT)	
	5	1	**169-0598**	1	SWITCH AS (ALL WHEEL DRIVE)	
		1	**111-7899**	1	GASKET	

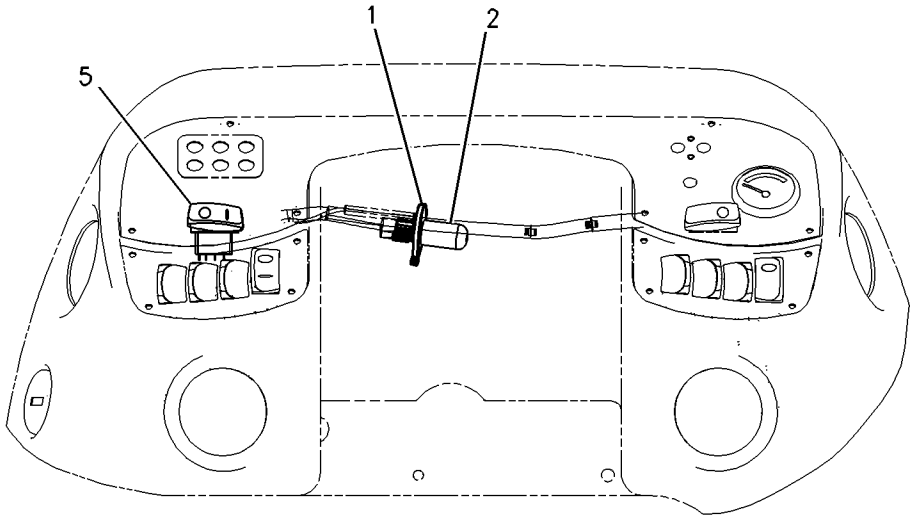

FRONT VIEW

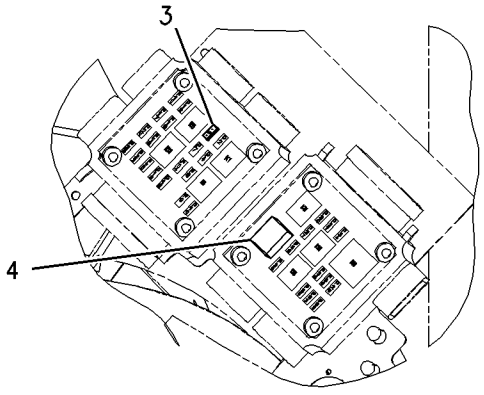

FUSE PANEL

GRAPHIC #1 **<END>** g00732887

POWER TRAIN

107-3716 AXLE & MTG GP-REAR

S/N: BFP12900-UP
PART OF 237-6458 DRIVE AR-BACKHOE LOADER
AN ATTACHMENT

SMCS-3259, 3260, 3278 **i01945749**

NOTE	REF NO	GRAPHIC REF	PART NUMBER	QTY	PART NAME 1 2 3 4 5 6 (PRODUCT LEVEL)	SEE PAGE
	1	1	**5F-5434**	1	VALVE AS-RELIEF (AIR VENT)	
Y	2	1	**156-2853**	1	AXLE GP-REAR	393
M	3	1	**7X-2570**	8	BOLT (M20X2.5X220MM)	
M	4	1	**8T-4131**	8	NUT (M20X2.5 THD)	
	5	1	**8T-5439**	16	WASHER (21.5X45X6MM THK)	

M-METRIC PART
Y-SEPARATE ILLUSTRATION

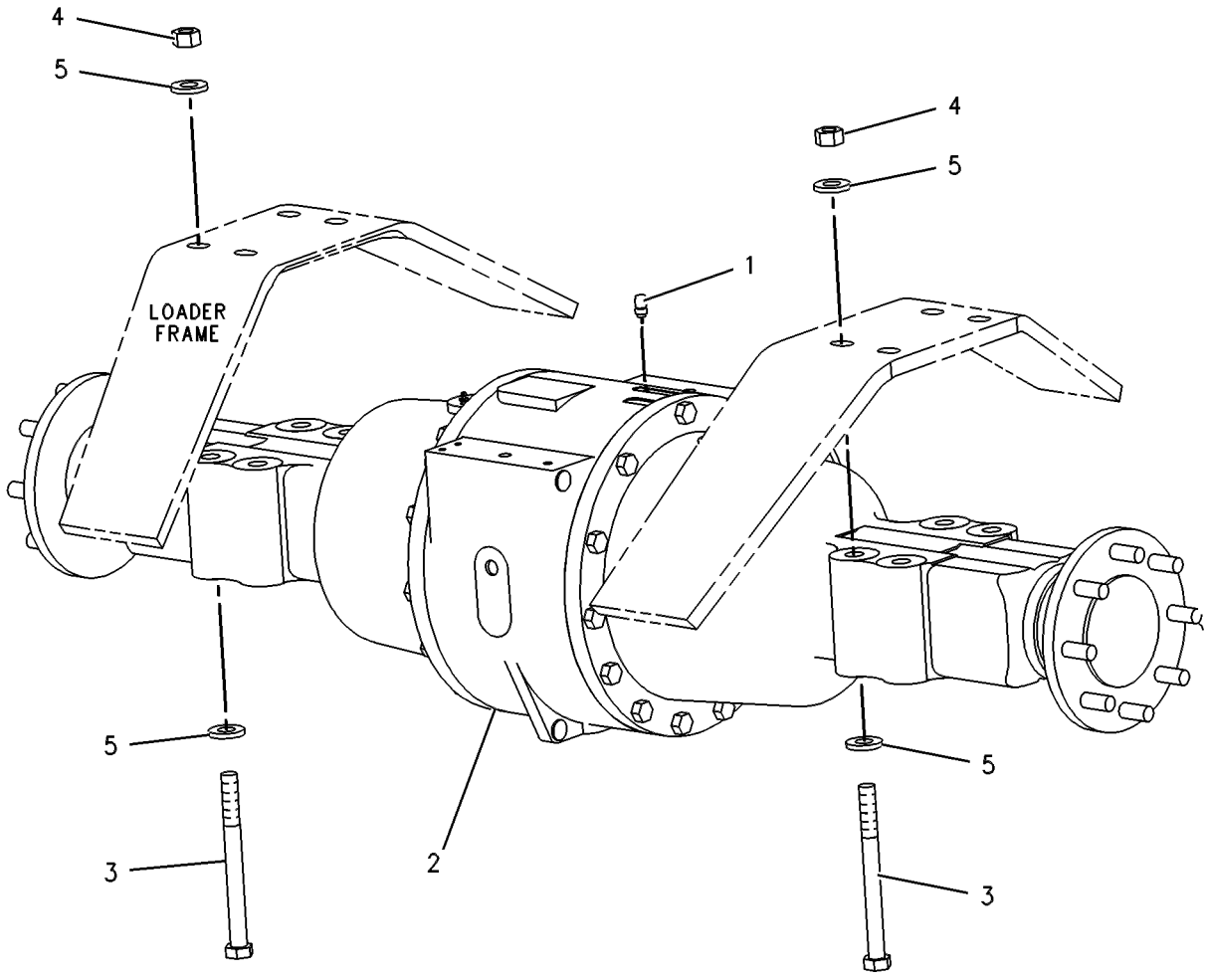

GRAPHIC #1 **<END>** g00363841

202-6195 AXLE & MTG GP-REAR

S/N: BFP12900-UP; CXP940-UP
PART OF 237-6459, 237-6461 DRIVE AR-BACKHOE LOADER
AN ATTACHMENT

SMCS-3259, 3260, 3278 **i01914007**

NOTE	REF NO	GRAPHIC REF	PART NUMBER	QTY	PART NAME 1 2 3 4 5 6 (PRODUCT LEVEL)	SEE PAGE
	1	1	**5F-5434**	1	VALVE AS-RELIEF (AIR VENT)	
Y	2	1	**156-2853**	1	AXLE GP-REAR	393
	3	1	**194-2847**	2	PLATE	
M	4	1	**089-7990**	8	BOLT (M20X2.50X250)	
M	5	1	**8T-4131**	8	NUT (M20X2.5 THD)	
	6	1	**8T-5439**	16	WASHER (21.5X45X6MM THK)	

M-METRIC PART
Y-SEPARATE ILLUSTRATION

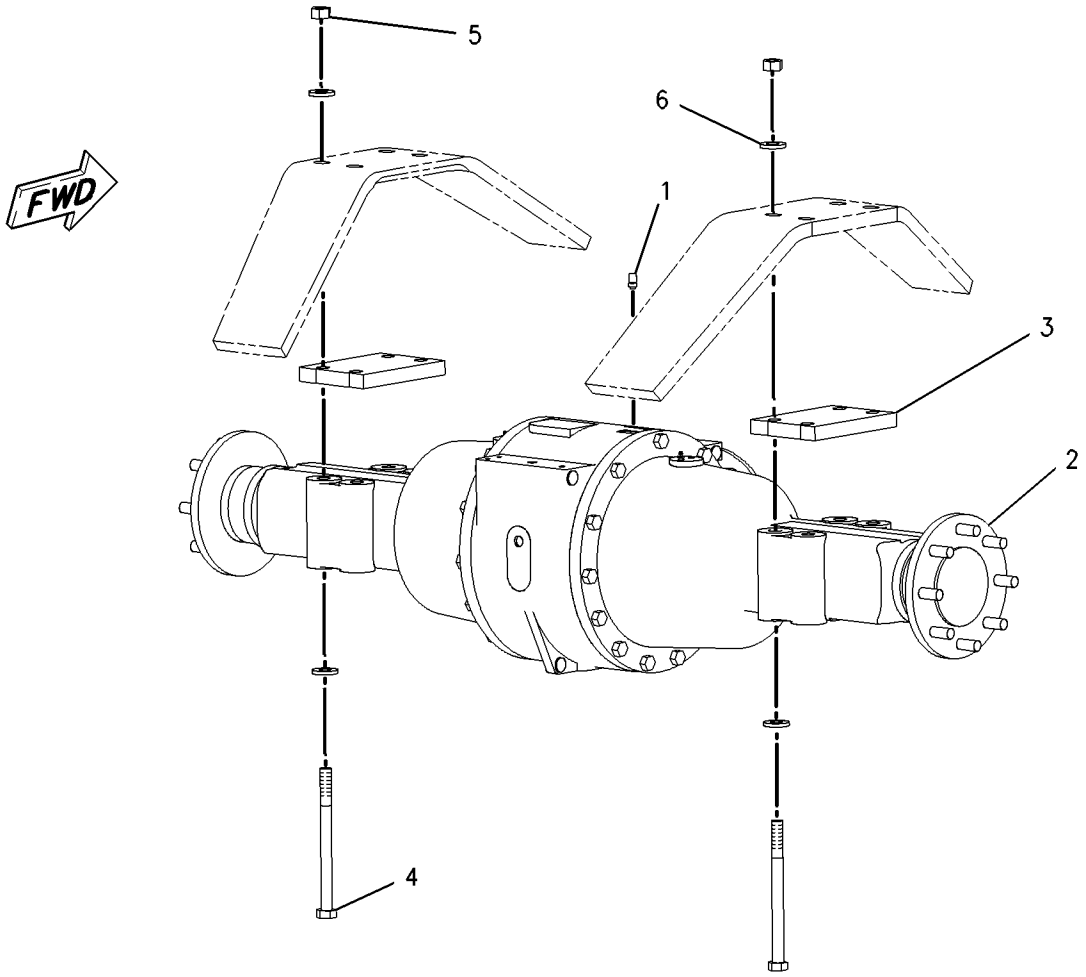

GRAPHIC #1 **<END>** g00997540

168-7446 AXLE GP-DRIVE & STEERING–FRONT

S/N: BFP12900-UP; CXP940-UP
(13.846/1 RATIO)
PART OF 202-6196 AXLE GP-DRIVE & STEERING
AN ATTACHMENT

SMCS-3020, 3250, 3258, 3259, 3260, 3264, 3278, 4050, 4313 **i01913982**

NOTE	REF NO	GRAPHIC REF	PART NUMBER	QTY	PART NAME 1 2 3 4 5 6 (PRODUCT LEVEL)	SEE PAGE
	1	1	**154-5404**	2	BEARING	
	2	1	**199-0639**	4	SCREW (WHEEL HUB)	
	3	1	**207-4254**	6	BOLT	
	4	1	**207-4258**	2	NUT	
	5	1	**219-8798**	2	SEAL-LIP TYPE	
	6	1	**209-9875**	2	DOWEL	
	7	1	**197-9155**	1	BREATHER (AXLE)	
	8	1	**209-7456**	2	BUSHING	
	9	1	**211-6735**	2	SEAL-O-RING	
	10	1	**214-5097**	1	CYLINDER GP-STEERING	
		1	**215-2023**	1	KIT-SEAL	
	11	1	**152-6144**	3	PLUG-MAGNETIC	
	12	1	**208-0321**	11	BOLT-FLANGE HEAD	
	13	1	**209-7464**	2	SEAL	
M	14	1	**199-0683**	16	BOLT (M16X2X38MM)	
	15	1	**210-5937**	2	WASHER	
B	16	1	**198-7841**	8	SHIM (.15MM THK)	
B	17	1	**198-7842**	4	SHIM (.2MM THK)	
B	18	1	**198-7843**	4	SHIM (.5MM THK)	
Y	19	1	**209-9882**	1	DIFFERENTIAL & BEVEL GEAR GP	400
	20	1	**210-5942**	2	RING	
	21	1	**209-9883**	1	HOUSING	
	22	1	**210-5946**	2	SHAFT GP-AXLE	
					(EACH INCLUDES)	
		1	**174-4643**	4	KIT-SPIDER	
		1	**174-4671**	1	YOKE	
	23	1	**209-9886**	2	TIE ROD GP	
					(EACH INCLUDES)	
	23A	1	**217-2883**	1	TIE ROD	
	23B	1	**217-2884**	1	BALL JOINT	
	23C	1	**217-2885**	1	NUT	
	24	1	**209-9887**	1	BUSHING	
	25	1	**210-5947**	2	WASHER-THRUST	
	26	1	**216-7473**	4	PIN GP-AXLE	
					(EACH INCLUDES)	
	26A	1	**198-7823**	1	BEARING AS	
	26B	1	**198-7825**	1	SEAL	
	26C	1	**198-7838**	1	PIN	
Y	27	1	**210-5924**	2	PLANETARY GP-FINAL DRIVE	417
Y	28	1	**209-9884**	1	HOUSING & FLANGE GP-AXLE (RH)	413
Y	29	1	**209-9885**	1	HOUSING & FLANGE GP-AXLE (LH)	415
	30	1	**069-4707**	1	SEALANT (GASKET)	

B-USE AS REQUIRED
M-METRIC PART
Y-SEPARATE ILLUSTRATION

168-7446 AXLE GP-DRIVE & STEERING *(contd.)* i01913982

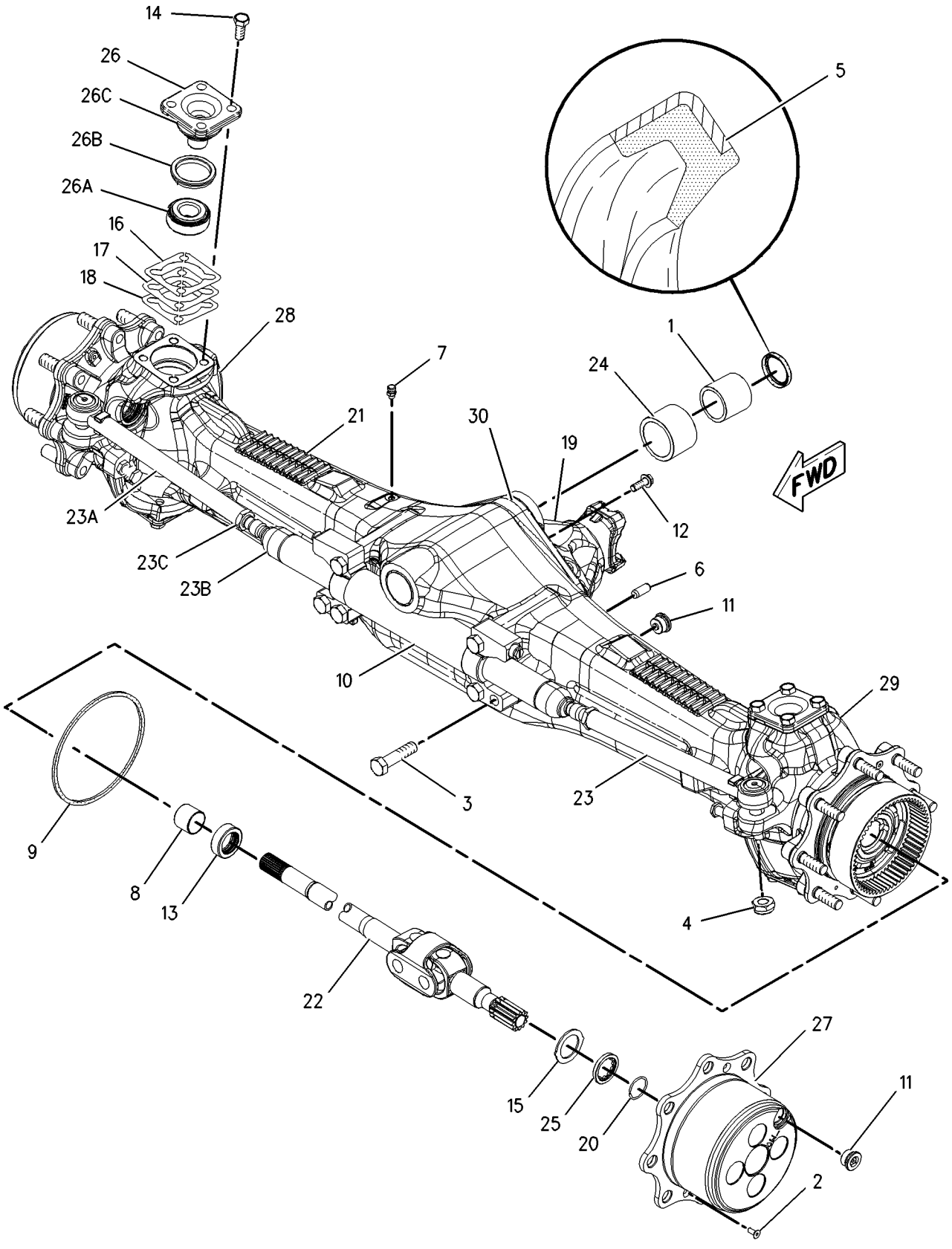

GRAPHIC #1 **<END>** g00997535

202-6196 AXLE GP-DRIVE & STEERING

S/N: BFP12900-UP; CXP940-UP
PART OF 237-6459, 237-6461 DRIVE AR-BACKHOE LOADER
AN ATTACHMENT

SMCS-3020, 3250, 3258, 3259, 3260, 3264, 3278, 4050, 4313 **i01913992**

NOTE	REF NO	GRAPHIC REF	PART NUMBER	QTY	PART NAME 1 2 3 4 5 6 (PRODUCT LEVEL)	SEE PAGE
B	1	1	**1K-7082**	1	WASHER (1/32IN THK)	
B	2	1	**9R-9702**	2	WASHER	
	3	1	**112-9629**	1	PIN	
	4	1	**165-8996**	2	WASHER-THRUST (55.5X100.5X5MM THK)	
Y	5	1	**168-7446**	1	AXLE GP-DRIVE & STEERING	390
M	6	1	**8T-5041**	1	BOLT (M12X1.75X120MM)	
M	7	1	**8T-8549**	1	LOCKNUT	

B-USE AS REQUIRED
M-METRIC PART
Y-SEPARATE ILLUSTRATION

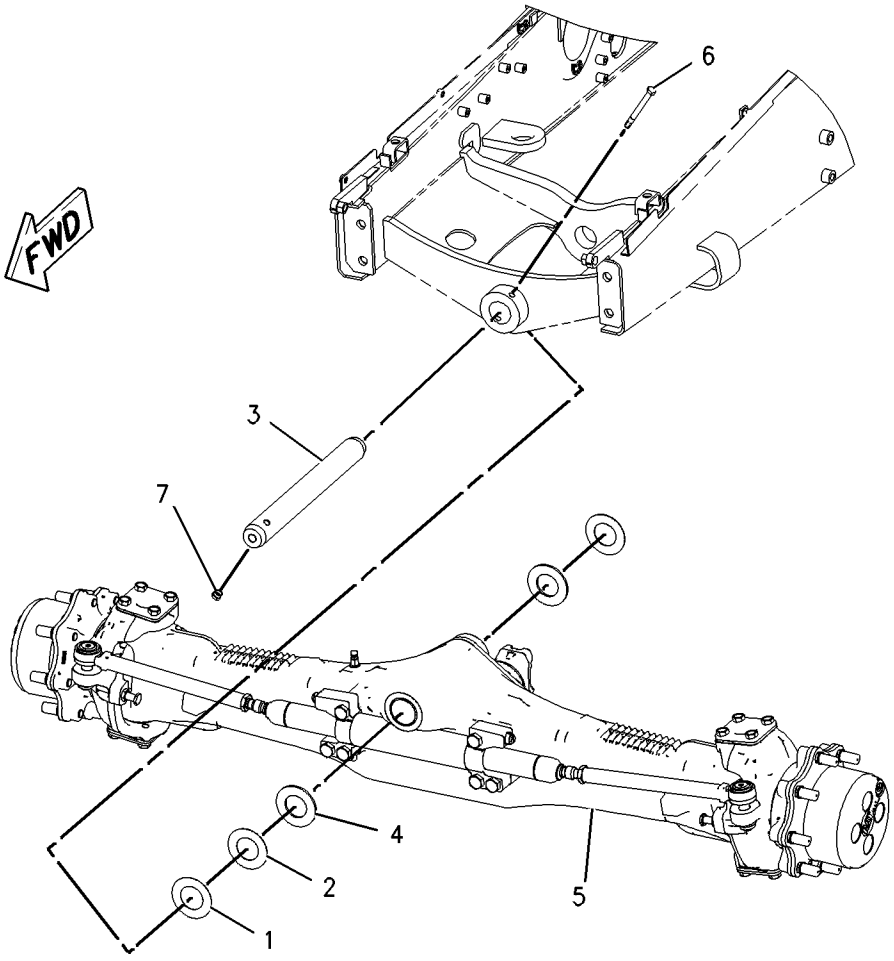

GRAPHIC #1 **<END>** g00997560

POWER TRAIN

156-2853 AXLE GP-REAR

S/N: BFP12900-UP; CXP940-UP
RATIO 18.5
PART OF 107-3716, 202-6195 AXLE & MTG GP-REAR
AN ATTACHMENT

SMCS-3278, 3282 **i01943902**

NOTE	REF NO	GRAPHIC REF	PART NUMBER	QTY	PART NAME 1 2 3 4 5 6 (PRODUCT LEVEL)	SEE PAGE
	1	1	**118-5837**	2	SHAFT AS	
					(EACH INCLUDES)	
	1A	1	**9R-5219**	8	BOLT-SPECIAL	
	2	2	**9R-2407**	1	RETAINER AS	
	2A	2	**3N-6408**	1	CUP-BEARING (TAPERED ROLLER BEARING)	
	2B	2	**4K-5843**	1	CUP-BEARING (TAPERED ROLLER BEARING)	
	3	1	**156-1928**	1	HOUSING AS-LH	
	3A	1	**6Y-7652**	1	CUP-BEARING (TAPERED ROLLER BEARING)	
	3B	1	**8S-9151**	1	CUP-BEARING (TAPERED ROLLER BEARING)	
	3C	1	**156-1929**	2	STUD	
	3D	1	**156-1930**	1	GEAR-PLANET RING	
	4	1	**156-2571**	1	HOUSING AS-RH	
	4A	1	**6Y-7652**	1	CUP-BEARING (TAPERED ROLLER BEARING)	
	4B	1	**8S-9151**	1	CUP-BEARING (TAPERED ROLLER BEARING)	
	4C	1	**156-1929**	2	STUD	
	4D	1	**156-1930**	1	GEAR-PLANET RING	
	5	1	**186-4117**	2	CARRIER AS	
					(EACH INCLUDES)	
	5A	1	**7T-6652**	1	CONE-BEARING (TAPERED ROLLER BEARING)	
	5B	1	**9R-2417**	3	WASHER (33.07X48.38X1.06MM THK)	
	5C	1	**9R-2418**	6	WASHER (32.94X57.21X.78MM THK)	
	5D	1	**9R-2419**	3	KIT-BEARING	
	5E	1	**9R-2420**	1	RETAINER	
	5F	1	**9R-2421**	3	SHAFT	
	5G	1	**186-4118**	3	GEAR-PLANET (20 TEETH)	
	6	1	**9F-2167**	2	SCREW-PURGE	
	7	1	**9R-0883**	1	PIN	
	8	1	**9R-0823**	1	LEVER AS	
B	9	1	**9R-2427**	1	SHIM (0.965MM THK)	
B		1	**9R-2428**	1	SHIM (1.118MM THK)	
B		1	**9R-2429**	1	SHIM (1.270MM THK)	
B		1	**9R-2430**	1	SHIM (1.422MM THK)	
B		1	**9R-2431**	1	SHIM (1.575MM THK)	
B		1	**9R-2432**	1	SHIM (1.727MM THK)	
B		1	**9R-2433**	1	SHIM (1.880MM THK)	
B		1	**9R-2434**	1	SHIM (2.032MM THK)	
	10	1	**9R-2425**	2	WASHER (23.088X69.6X9.52MM THK)	
	11	1	**156-2572**	1	HOUSING-REAR BRAKE (RH)	
	12	1	**9R-9410**	2	SEAL-REAR BRAKE	
	13	1	**9R-9409**	2	SEAL-REAR BRAKE	
	14	1	**9R-9408**	2	PISTON-REAR BRAKE	
B	15	2	**9R-2446**	1	SPACER (45.86X50.98X31.858MM THK)	
B		2	**9R-2447**	1	SPACER (45.86X50.98X31.908MM THK)	
B		2	**9R-2448**	1	SPACER (45.86X50.98X31.959MM THK)	
B		2	**9R-2449**	1	SPACER (45.86X50.98X32.010MM THK)	
B		2	**9R-2450**	1	SPACER (45.86X50.98X32.061MM THK)	
B		2	**9R-2451**	1	SPACER (45.86X50.98X32.112MM THK)	
B		2	**9R-2452**	1	SPACER (45.86X50.98X32.162MM THK)	
B		2	**9R-2453**	1	SPACER (45.86X50.98X32.213MM THK)	
B		2	**9R-2454**	1	SPACER (45.86X50.98X32.264MM THK)	
B		2	**9R-2455**	1	SPACER (45.86X50.98X32.315MM THK)	
B		2	**9R-2456**	1	SPACER (45.86X50.98X32.366MM THK)	
B		2	**9R-2457**	1	SPACER (45.86X50.98X32.416MM THK)	
B		2	**9R-2458**	1	SPACER (45.86X50.98X32.467MM THK)	

156-2853 AXLE GP-REAR *(contd.)* i01943902

NOTE	REF NO	GRAPHIC REF	PART NUMBER	QTY	PART NAME 1 2 3 4 5 6 (PRODUCT LEVEL)	SEE PAGE
B		2	**9R-2459**	1	SPACER (45.86X50.98X32.518MM THK)	
B		2	**9R-2460**	1	SPACER (45.86X50.98X32.569MM THK)	
	16	1	**230-4017**	8	DISC-BRAKE	
	17	1	**9R-2474**	2	PIN	
	18	1	**9R-9401**	8	PLATE	
	19	1	**8S-4740**	12	BOLT (9/16-12X5 IN)	
	20	1	**9R-9398**	2	MANIFOLD-BRAKE TUBE	
	21	1	**8H-1607**	2	SEAL-O-RING	
	22	1	**9R-2424**	2	GEAR (16 TEETH)	
	23	1	**8M-8157**	4	SEAL-O-RING	
	24	2	**2A-4576**	1	CUP-BEARING (TAPERED ROLLER BEARING)	
	25	2	**5L-9656**	1	CONE-BEARING (TAPERED ROLLER BEARING)	
	26	1	**9X-8880**	25	BOLT (5/8-11X2 IN)	
	27	2	**9R-2508**	1	HOUSING	
	28	2	**113-1147**	1	FLANGE	
	29	2	**9R-2497**	1	SEAL	
	30	2	**9R-2501**	1	WASHER (32.5X60.5X5.6MM THK) (5.6MM THK)	
	31	2	**9R-2502**	1	NUT (1 1/4-18 THD)	
	32	2	**3B-5302**	1	PIN-COTTER	
	33	2	**9R-2498**	1	RETAINER	
	34	2	**3B-4509**	6	LOCKWASHER	
	35	2	**3K-3379**	6	BOLT (9/16-12X1IN)	
	36	1	**9X-8883**	1	BOLT (5/8-11X2.75 IN)	
	37	1	**5L-9018**	4	BOLT-SOCKET HEAD (1/4X20X1.75 IN)	
	38	1	**8T-6760**	2	PLUG-PIPE	
	39	2	**9R-2499**	1	SEAL AS	
	40	2	**9R-2496**	1	SEAL	
	41	2	**7T-6653**	1	CONE-BEARING (TAPERED ROLLER BEARING)	
	42	1	**118-5839**	2	SEAL-REAR AXLE	
	43	2	**9R-2512**	1	SEAL	
	44	1	**030-1957**	2	CONE-BEARING (TAPERED ROLLER BEARING)	
	45	2	**7T-6654**	1	CONE-BEARING (TAPERED ROLLER BEARING)	
	46	1	**9R-2505**	1	SEAL	
	47	1	**9R-2504**	1	SHAFT	
M	48	1	**9R-2507**	1	SCREW-SPECIAL	
	49	2	**7T-7621**	1	BEARING AS	
	50	2	**9R-2494**	1	RING	
	51	2	**9R-2480**	1	CASE AS	
	52	2	**2S-0480**	1	CUP-BEARING (TAPERED ROLLER BEARING)	
	53	2	**2S-0479**	1	CONE-BEARING (TAPERED ROLLER BEARING)	
	54	1	**9R-2506**	1	FORK	
	55	2	**9R-2492**	1	WASHER (64.389X78.74X3.124MM THK) (3.1MM THK)	
	56	2	**9R-2493**	1	RING	
	57	2	**9R-2488**	1	GEAR (16 TEETH)	
	58	2	**9R-2482**	1	COUPLING	
	59	1	**156-1934**	1	HOUSING-BRAKE	
	60	2	**9R-2486**	1	SPRING	
	61	2	**9R-2483**	1	ADAPTER	
	62	2	**9R-2484**	2	BUSHING-TERMINAL	
	63	2	**9R-2490**	2	WASHER (76.2X101.6X1.5MM THK)	
	64	2	**9R-2491**	1	SPIDER	
	65	2	**9R-9403**	4	PINION	
	66	2	**9R-2489**	4	WASHER-SPRING	
	67	2	**9R-2485**	8	BOLT (1/2-13X1.85IN)	
	68	1	**9R-2495**	2	SEAL	
	69	2	**9R-5241**	1	GEAR SET	
M	70	2	**9R-6671**	12	BOLT (1/2-20X1.62IN)	
	71	2	**2M-2570**	12	LOCKNUT	
	72	2	**9R-2503**	1	BLOCK	

156-2853 AXLE GP-REAR *(contd.)*

i01943902

NOTE	REF NO	GRAPHIC REF	PART NUMBER	QTY	PART NAME 1 2 3 4 5 6 (PRODUCT LEVEL)	SEE PAGE
	73	1	**2L-6267**	1	LOCKNUT	
	74	2	**0T-0318**	2	BOLT (7/16-14X1 IN)	
	75	2	**9R-2487**	1	GEAR (16 TEETH)	
B	76	1	**9R-2435**	2	SPACER (22.86X53.85X1.25MM THK)	
B		1	**9R-2436**	2	SPACER (22.86X53.85X1.35MM THK)	
B		1	**9R-2437**	2	SPACER (22.86X53.85X1.45MM THK)	
B		1	**9R-2438**	2	SPACER (22.86X53.85X1.55MM THK)	
B		1	**9R-2439**	2	SPACER (22.86X53.85X1.65MM THK)	
B		1	**9R-2440**	2	SPACER (22.86X53.85X1.75MM THK)	
B		1	**9R-2441**	2	SPACER (22.86X53.85X1.85MM THK)	
B		1	**9R-2442**	2	SPACER (22.86X53.85X1.96MM THK)	
B		1	**9R-2443**	2	SPACER (22.86X53.85X2.06MM THK)	
B		1	**9R-2444**	2	SPACER (22.86X53.85X2.16MM THK)	
B		1	**9R-2445**	2	SPACER (22.86X53.85X2.26MM THK)	
	77	2	**9R-6602**	2	PLUG-MAGNETIC	
	78	1	**5P-0540**	4	NUT-HEX FULL (9/16-18 THD)	
	79	1	**156-2573**	1	HOUSING-BRAKE	
	80	1	**156-1933**	1	HOUSING-REAR BRAKE (LH)	
	81	1	**9R-2426**	2	LOCK	
M	82	1	**9R-2466**	2	BOLT (7/8-14X1.625IN)	

B-USE AS REQUIRED
M-METRIC PART

156-2853 AXLE GP-REAR *(contd.)* i01943902

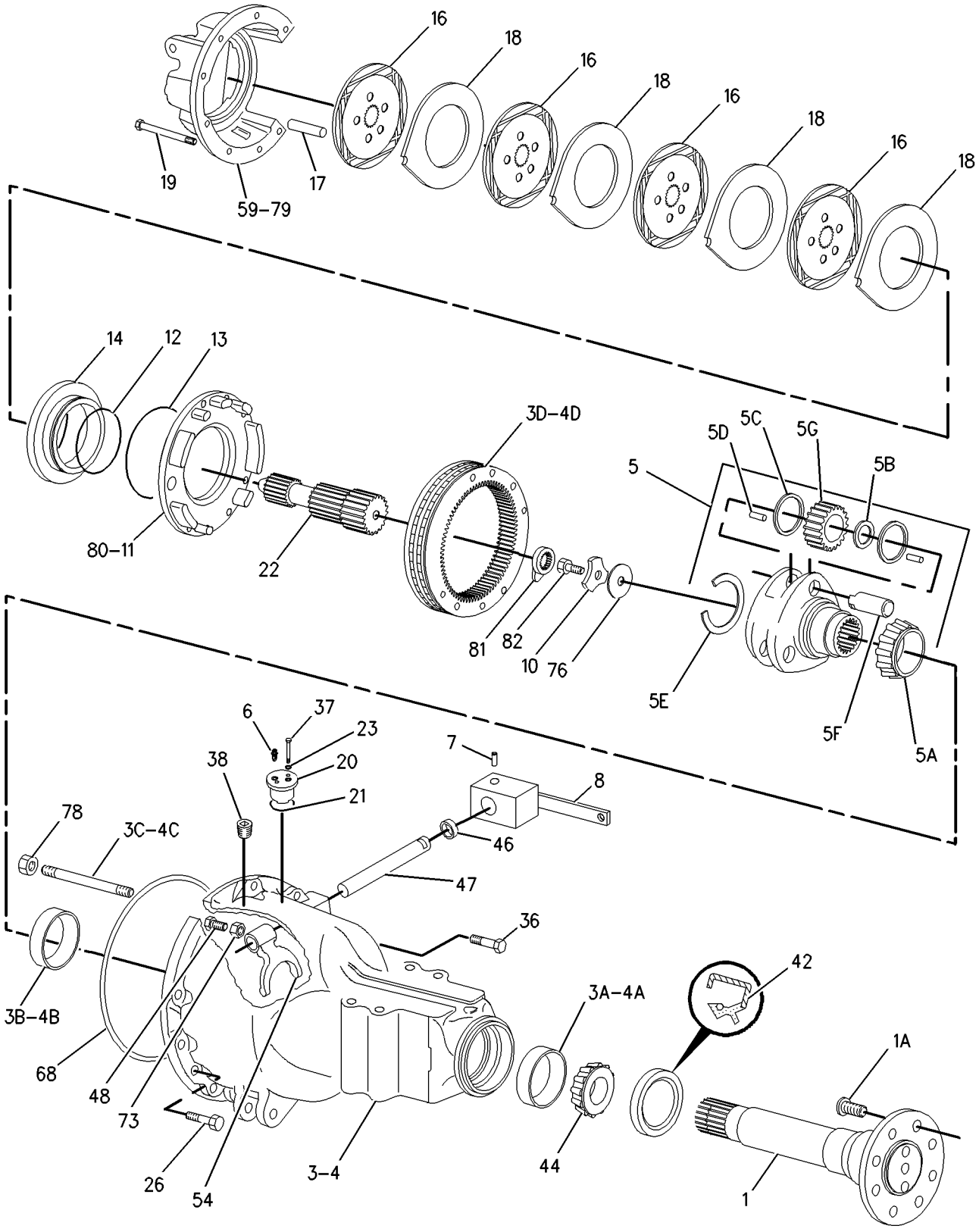

GRAPHIC #1 g00986345

156-2853 AXLE GP-REAR *(contd.)* **i01943902**

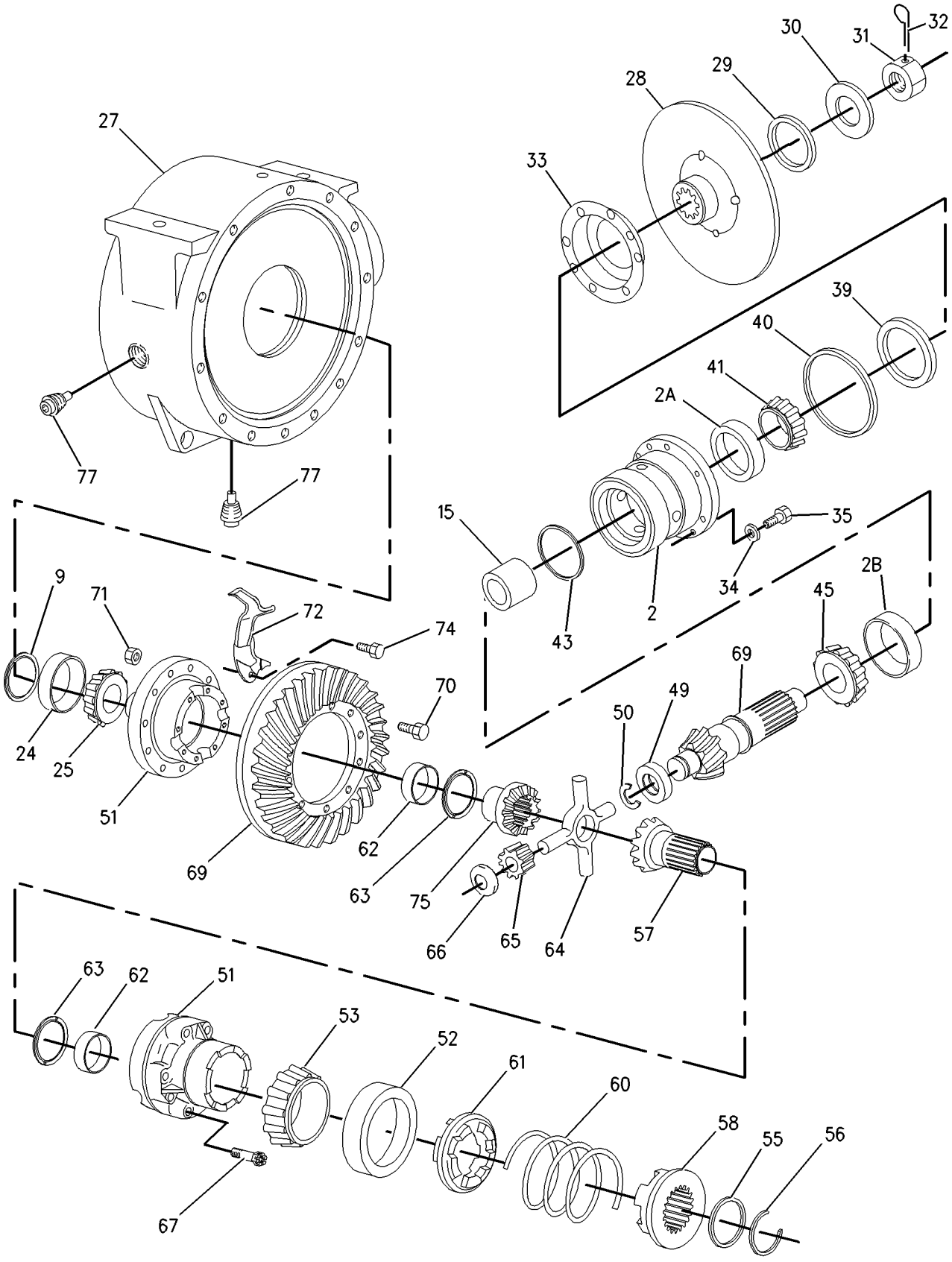

GRAPHIC #2 **<END>** g00986346

191-9114 CONTROL GP-DIFFERENTIAL LOCK

S/N: BFP12900-UP; CXP940-UP

PART OF 184-7970 POWER TRAIN AR

SMCS-3264, 3272, 3273 **i01945798**

NOTE	REF NO	GRAPHIC REF	PART NUMBER	QTY	PART NAME 1 2 3 4 5 6 (PRODUCT LEVEL)	SEE PAGE
	1	1	**9R-5567**	1	PLATE AS	
M	2	1	**8T-4244**	1	NUT (M12X1.75 THD)	
	3	1	**5P-0372**	2	LOCK PIN	
	4	1	**8B-1419**	1	PIN-CLEVIS	
	5	1	**191-9113**	1	ROD AS	
C	6	1	**8T-4815**	1	ROD END	
	7	1	**8C-4987**	1	PIN-CLEVIS	
M	8	1	**8T-4133**	1	NUT (M10X1.5 THD)	
	9	1	**9R-3051**	1	ROD	
	10	1	**9R-2806**	1	PIN	
	11	1	**9R-2807**	1	CLIP	
	12	1	**103-4867**	1	SPRING	
	13	1	**9R-1581**	1	BOOT	
C	14	1	**8T-5063**	1	ROD END	

C-CHANGE FROM PREVIOUS TYPE
M-METRIC PART

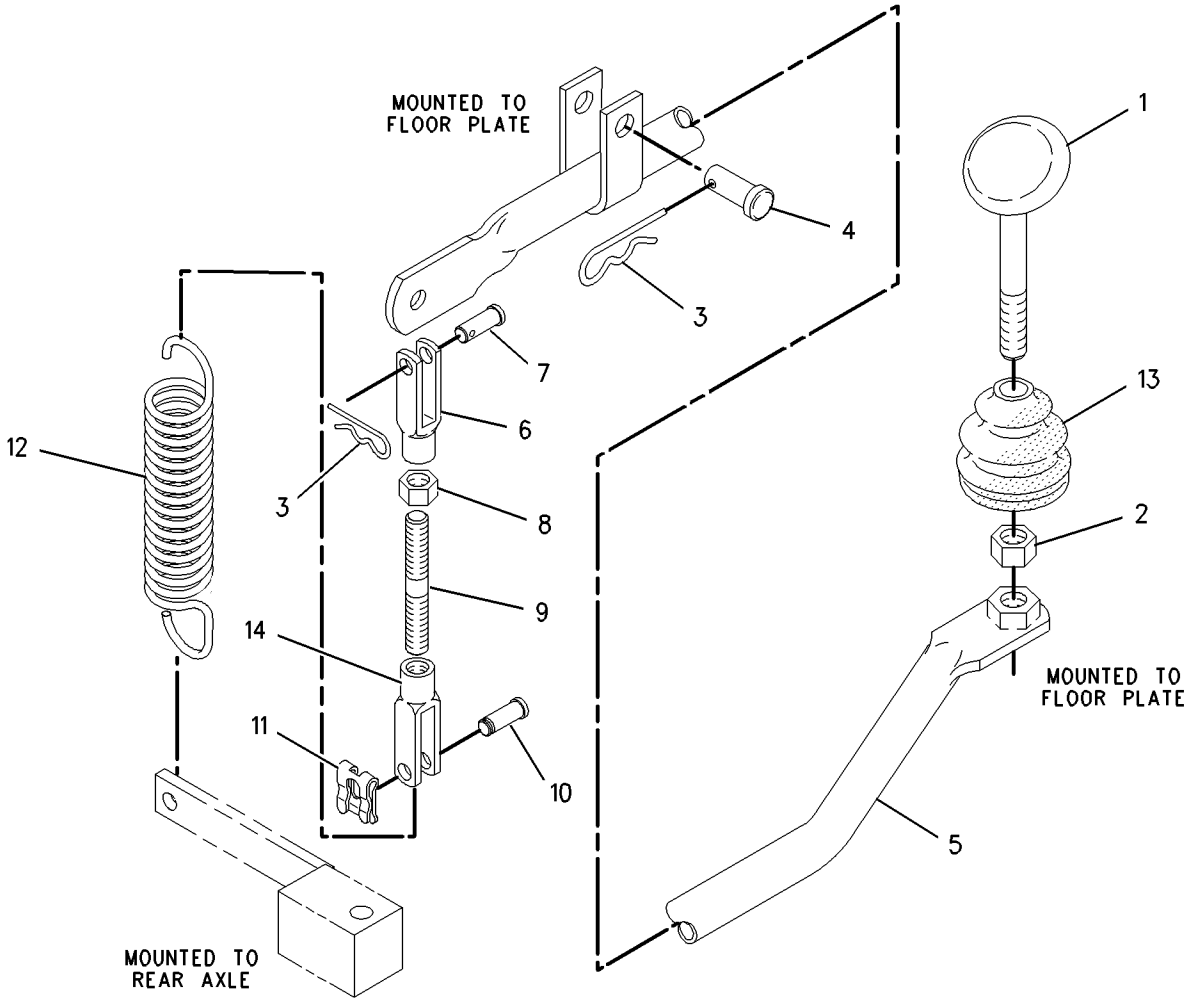

GRAPHIC #1 **<END>** g00995446

164-1130 CONTROL GP-TRANSMISSION

S/N: BFP12900-UP; CXP940-UP
PART OF 192-4661, 192-4663, 192-4665, 192-4666, 214-6955, 214-6956, 214-6958, 231-9348 POWER TRAIN AR
AN ATTACHMENT

SMCS-3065 **i01979127**

NOTE	REF NO	GRAPHIC REF	PART NUMBER	QTY	PART NAME 1 2 3 4 5 6 (PRODUCT LEVEL)	SEE PAGE
	1	1	**102-8802**	1	KIT-RECEPTACLE (2-PIN)	
	2	1	**3E-3365**	1	WEDGE-RECEPTACLE LOCK (2 PIN)	
	3	1	**9R-1766**	1	KNOB	
	4	1	**9R-1767**	1	BOOT	
	5	1	**9R-9868**	1	SWITCH AS-PUSH BUTTON (NEUTRALIZER)	
		1	**186-3735**	2	PIN-CONNECTOR	
	6	1	**107-5591**	1	NUT-JAM (3/4-16 THD)	
	7	1	**164-1113**	1	PLATE	
	8	1	**164-1153**	1	KNOB	
	9	1	**164-1197**	1	ROD AS	
	10	1	**164-1365**	1	BOOT	
	11	1	**164-1368**	4	CLIP	
	12	1	**174-6640**	1	CONTROL GP-TRANSMISSION	
M	13	1	**192-4522**	4	SCREW-FLAT HEAD	
	14	1	**8T-4223**	1	WASHER-HARD (13.5X25.5X3MM THK)	
M	15	1	**8T-4956**	1	BOLT (M12X1.75X35MM)	
	16	1	**8T-9501**	2	SCREW (10-16X.75 IN)	

M-METRIC PART

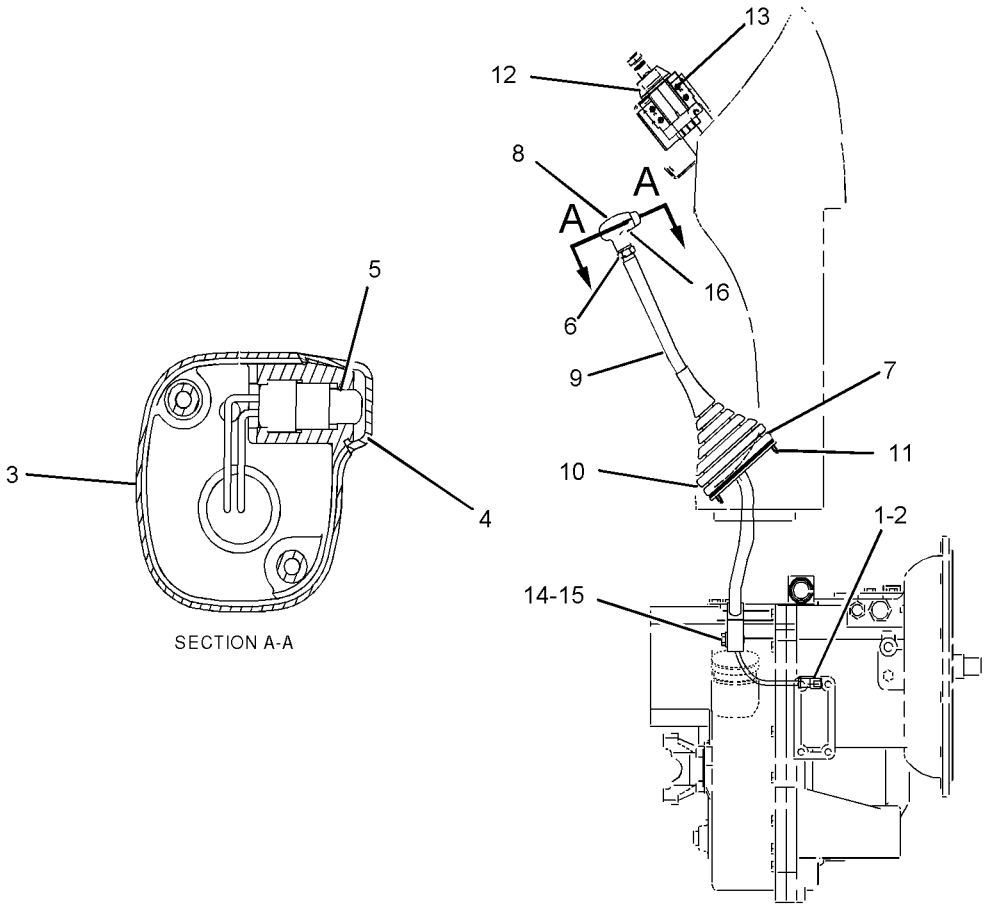

GRAPHIC #1 **<END>** g01026121

209-9882 DIFFERENTIAL & BEVEL GEAR GP

S/N: BFP12900-UP; CXP940-UP
PART OF 168-7446 AXLE GP-DRIVE & STEERING
AN ATTACHMENT

SMCS-3256, 3258, 3281, 3283, 3284 **i01918576**

NOTE	REF NO	GRAPHIC REF	PART NUMBER	QTY	PART NAME 1 2 3 4 5 6 (PRODUCT LEVEL)	SEE PAGE
	1	1	**4J-0520**	1	SEAL-O-RING	
	2	1	**216-4457**	1	SEAL	
	3	1	**216-4458**	2	BEARING	
	4	1	**136-7808**	1	BEARING AS-TAPERED ROLLER	
	5	1	**216-4461**	1	BEARING	
	6	1	**209-7454**	2	NUT (M94X2 THD)	
	7	1	**152-6144**	1	PLUG-MAGNETIC	
	8	1	**209-7462**	2	WASHER (40X50X.06MM THK)	
	9	1	**209-7463**	1	SLEEVE (COLLAPSIBLE)	
M	10	1	**199-0695**	2	BOLT (M6X1X14MM)	
	11	1	**209-7472**	1	NUT (M24X1.5 THD)	
	12	1	**216-4465**	1	WASHER (24.5X52X10MM THK)	
	13	1	**216-4464**	1	YOKE	
	14	1	**199-0858**	2	RETAINER	
Y	15	1	**216-9498**	1	DIFFERENTIAL GP	402
	16	1	**217-2868**	1	GEAR GP-BEVEL & PINION	
		1	**216-4466**	1	GEAR GP-BEVEL & PINION (KIT)	
					(INCLUDES GEARS,WASHERS,SPACERS,NUT AND O-RING)	
	17	1	**217-2880**	4	DOWEL	
	18	1	**216-5515**	1	HOUSING GP-DIFFERENTIAL	
	18A	1	**208-0322**	4	BOLT-FLANGE HEAD	
B	19	1	**209-7473**	1	SHIM (2.5MM THK)	
B			**219-8751**	1	SHIM (2.6MM THK)	
B			**219-8752**	1	SHIM (2.7MM THK)	
B			**219-8753**	1	SHIM (2.8MM THK)	
B			**219-8754**	1	SHIM (2.9MM THK)	
B			**219-8755**	1	SHIM (3.0MM THK)	
B			**219-8756**	1	SHIM (3.1MM THK)	
B			**219-8757**	1	SHIM (3.2MM THK)	
B			**219-8758**	1	SHIM (3.3MM THK)	
B			**219-8759**	1	SHIM (3.4MM THK)	

B-USE AS REQUIRED
M-METRIC PART
Y-SEPARATE ILLUSTRATION

209-9882 DIFFERENTIAL & BEVEL GEAR GP *(contd.)*

i01918576

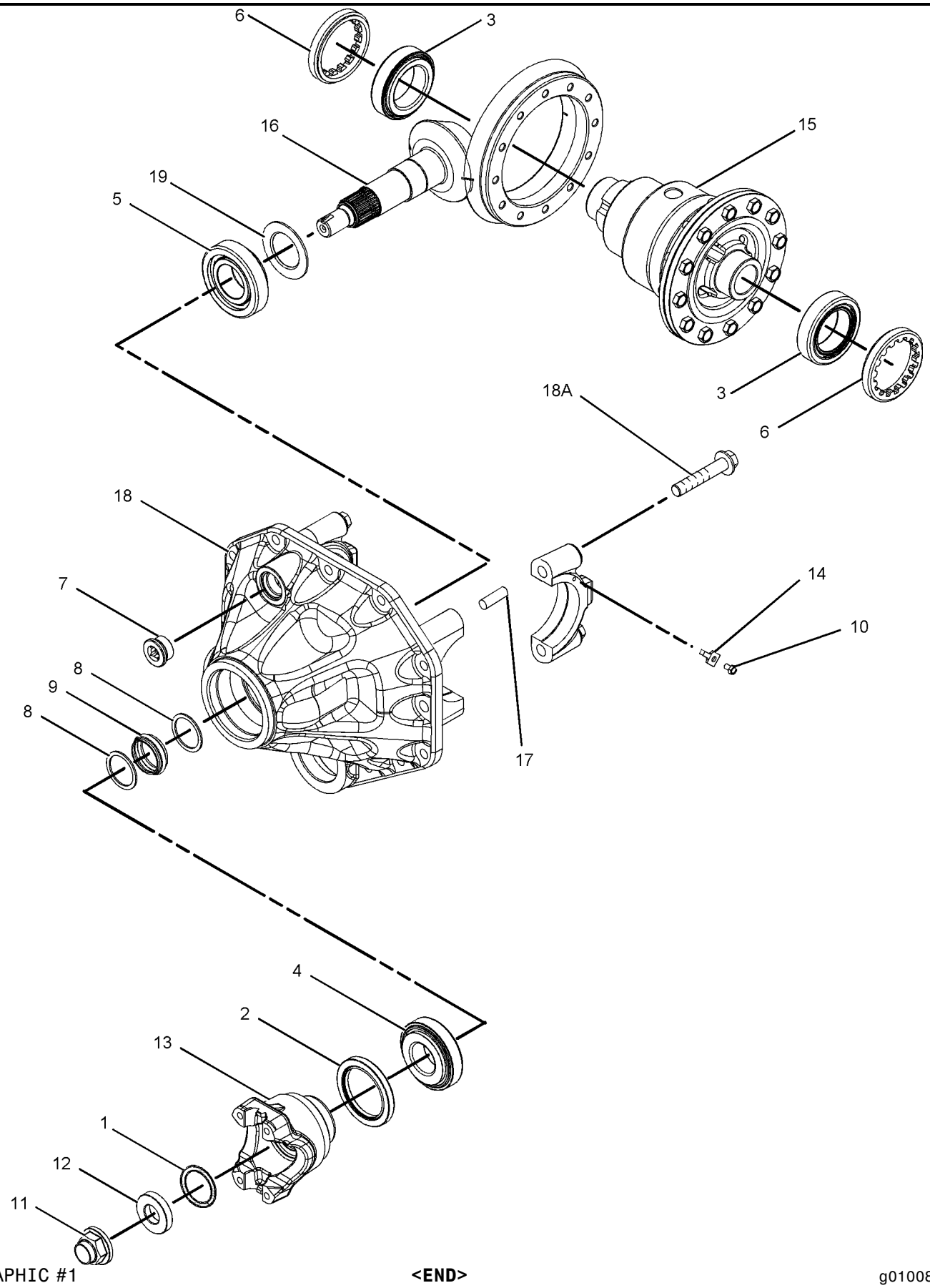

GRAPHIC #1

<END>

g01008372

216-9498 DIFFERENTIAL GP

S/N: BFP12900-UP; CXP940-UP
PART OF 209-9882 DIFFERENTIAL & BEVEL GEAR GP
AN ATTACHMENT

SMCS-3258 **i02017281**

NOTE	REF NO	GRAPHIC REF	PART NUMBER	QTY	PART NAME 1 2 3 4 5 6 (PRODUCT LEVEL)	SEE PAGE
	1	1	**216-8687**	1	COVER	
	2	1	**216-8689**	1	HOUSING-DIFFERENTIAL	
	3	1	**229-5093**	2	WASHER-THRUST (49X72X1.5-MM THK)	
M	4	1	**144-6734**	12	BOLT (M10X1.5X30-MM)	
	5	1	**211-0092**	2	WASHER-THRUST (22X42X2-MM THK)	
	6	1	**209-7455**	1	PIN	
	7	1	**216-8691**	1	RETAINER	
	8	1	**216-9497**	1	GEAR GP-DIFFERENTIAL & BEVEL	
					AVAILABLE REPAIR KIT(S):	
			216-8700		GEAR GP-BEVEL (KIT)	
					(INCLUDES PIN,WASHERS,PIN,DISC AND GEARS)	

M-METRIC PART

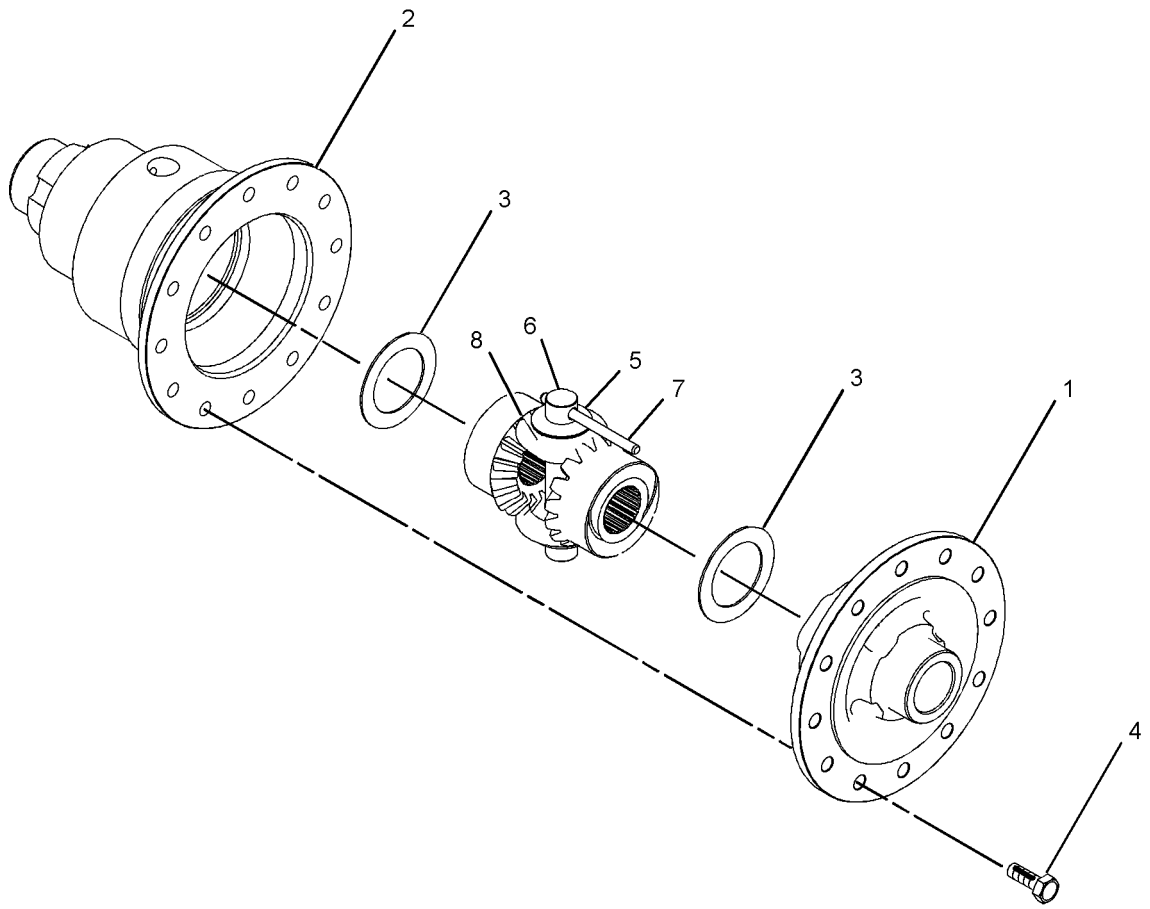

GRAPHIC #1 **<END>** g01043312

237-6458 DRIVE AR-BACKHOE LOADER–
2 WHEEL STEER, 2 WHEEL DRIVE
S/N: BFP12900-UP
PART OF 214-6955, 214-6958 POWER TRAIN AR
AN ATTACHMENT

SMCS-3278, 4313 **i02015771**

NOTE	PART NUMBER	QTY	PART NAME 1 2 3 4 5 6 (PRODUCT LEVEL)	SEE PAGE
Y	*107-3716*	1	AXLE & MTG GP-REAR	388
Y	*202-6198*	1	AXLE GP-FRONT	461
Y	*190-8954*	1	LINES GP-PUMP	637
Y	*185-3413*	1	LINES GP-STABILIZER	656
Y	*202-5712*	1	LINES GP-STEERING	467
Y	*185-9784*	1	VALVE & MTG GP-BANK (STABILIZER)	682
Y	*185-8808*	1	WIRING GP-REAR	379
	202-5710	1	FILM-IDENTIFICATION (FUSE PANEL)	
	231-9352	1	FILM-IDENTIFICATION (FUSE PANEL)	
	238-8550	1	PUMP GP-METERING	
	227-4709	1	KIT-SEAL (STEERING METERING PUMP)	

Y-SEPARATE ILLUSTRATION

<END>

237-6459 DRIVE AR-BACKHOE LOADER–
2 WHEEL STEER, ALL WHEEL DRIVE
S/N: BFP12900-UP
PART OF 214-6956 POWER TRAIN AR
AN ATTACHMENT

SMCS-3278, 4313 **i02015851**

NOTE	PART NUMBER	QTY	PART NAME 1 2 3 4 5 6 (PRODUCT LEVEL)	SEE PAGE
Y	*202-6195*	1	AXLE & MTG GP-REAR	389
Y	*202-6196*	1	AXLE GP-DRIVE & STEERING	392
Y	*9R-1233*	1	GUARD GP-DRIVE SHAFT	493
Y	*190-8954*	1	LINES GP-PUMP	637
Y	*185-3413*	1	LINES GP-STABILIZER	656
Y	*202-5711*	1	LINES GP-STEERING	464
Y	*185-9784*	1	VALVE & MTG GP-BANK (STABILIZER)	682
Y	*185-8808*	1	WIRING GP-REAR	379
Y	*186-0309*	1	WIRING GP-STEERING (AWD)	387
	202-5710	1	FILM-IDENTIFICATION (FUSE PANEL)	
	231-9352	1	FILM-IDENTIFICATION (FUSE PANEL)	
	238-8550	1	PUMP GP-METERING	
	227-4709	1	KIT-SEAL (STEERING METERING PUMP)	

Y-SEPARATE ILLUSTRATION

<END>

237-6461 DRIVE AR-BACKHOE LOADER

S/N: CXP940-UP

AN ATTACHMENT

SMCS-3278, 4313 **i02009137**

NOTE	PART NUMBER	QTY	PART NAME 1 2 3 4 5 6 (PRODUCT LEVEL)	SEE PAGE
Y	*202-6195*	1	AXLE & MTG GP-REAR	389
Y	*202-6196*	1	AXLE GP-DRIVE & STEERING	392
	202-5710	1	FILM-IDENTIFICATION (FUSE PANEL)	
	231-9352	1	FILM-IDENTIFICATION (FUSE PANEL)	
Y	*229-0779*	1	LINES GP-PUMP	642
Y	*202-5711*	1	LINES GP-STEERING	464
Y	**238-8550**	1	PUMP GP-METERING	469
Y	**185-1129**	1	SUPPRESSION AR-SOUND	504
Y	*185-8808*	1	WIRING GP-REAR	379
Y	*186-0309*	1	WIRING GP-STEERING (AWD)	387

Y-SEPARATE ILLUSTRATION

<END>

111-7907 DRIVE GP-FLEXIBLE COUPLING

S/N: BFP12900-UP; CXP940-UP
PART OF 185-7585, 185-7586 TRANSMISSION AR-DIRECT DRIVE
AN ATTACHMENT

SMCS-3252 **i00512643**

NOTE	REF NO	GRAPHIC REF	PART NUMBER	QTY	PART NAME 1 2 3 4 5 6 (PRODUCT LEVEL)	SEE PAGE
M	1	1	**8T-4200**	8	BOLT (M8X1.25X16MM)	
M	2	1	**6V-8455**	6	BOLT (M10X1.5X16MM)	
	3	1	**117-9713**	1	PLATE-CONVERTER REINFORCEMENT	
	4	1	**8T-4224**	8	WASHER-HARD (2MM THK)	
	5	1	**111-7906**	1	PLATE-CONVERTER DRIVE	

M-METRIC PART

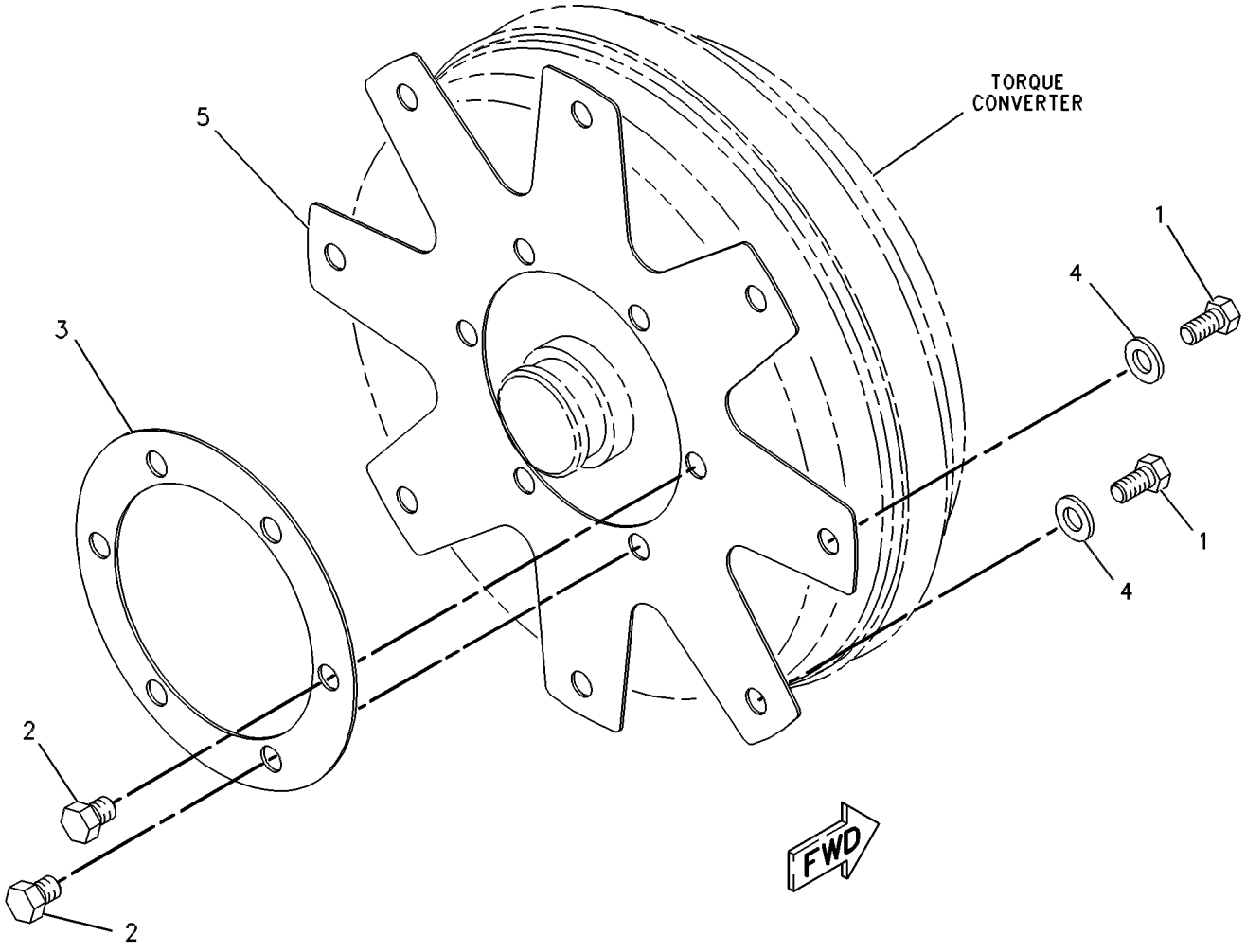

GRAPHIC #1 **<END>** g00131506

8Y-7483 FILLER GP-POWER TRAIN OIL

S/N: BFP12900-UP; CXP940-UP
ALL WHEEL DRIVE
PART OF 192-4661, 192-4665, 231-9348 POWER TRAIN AR
AN ATTACHMENT

SMCS-3005, 3081 **i01797055**

NOTE	REF NO	GRAPHIC REF	PART NUMBER	QTY	PART NAME 1 2 3 4 5 6 (PRODUCT LEVEL)	SEE PAGE
	1	1	**3J-1907**	2	SEAL-O-RING	
	2	1	**6V-0852**	2	CAP-DUST	
	3	1	**6V-3965**	2	FITTING AS	
	4	1	**7C-8246**	1	SPACER (10.5X20X24MM THK)	
	5	1	**104-8566**	1	GAUGE AS	
	6	1	**112-6219**	1	BRACKET AS	
	7	1	**125-0851**	1	TUBE AS	
	8	1	**146-1816**	1	BRACKET AS	
M	9	1	**148-1899**	1	BOLT	
	10	1	*150-3065*	1	ADAPTER GP	
		1	**3J-1907**	1	SEAL-O-RING	
		1	**6V-0484**	1	FITTING	
	11	1	**4J-0522**	1	SEAL-O-RING	
	12	1	**5P-7854**	2	CLIP	
	13	1	**8T-4121**	4	WASHER-HARD (11X21X2.5MM THK)	
M	14	1	**8T-4133**	1	NUT (M10X1.5 THD)	
M	15	1	**8T-4137**	3	BOLT (M10X1.5X20MM)	
M	16	1	**8T-4192**	2	BOLT (M12X1.75X25MM)	
	17	1	**8T-4223**	5	WASHER-HARD (13.5X25.5X3MM THK)	
M	18	1	**8T-4956**	2	BOLT (M12X1.75X35MM)	

M-METRIC PART

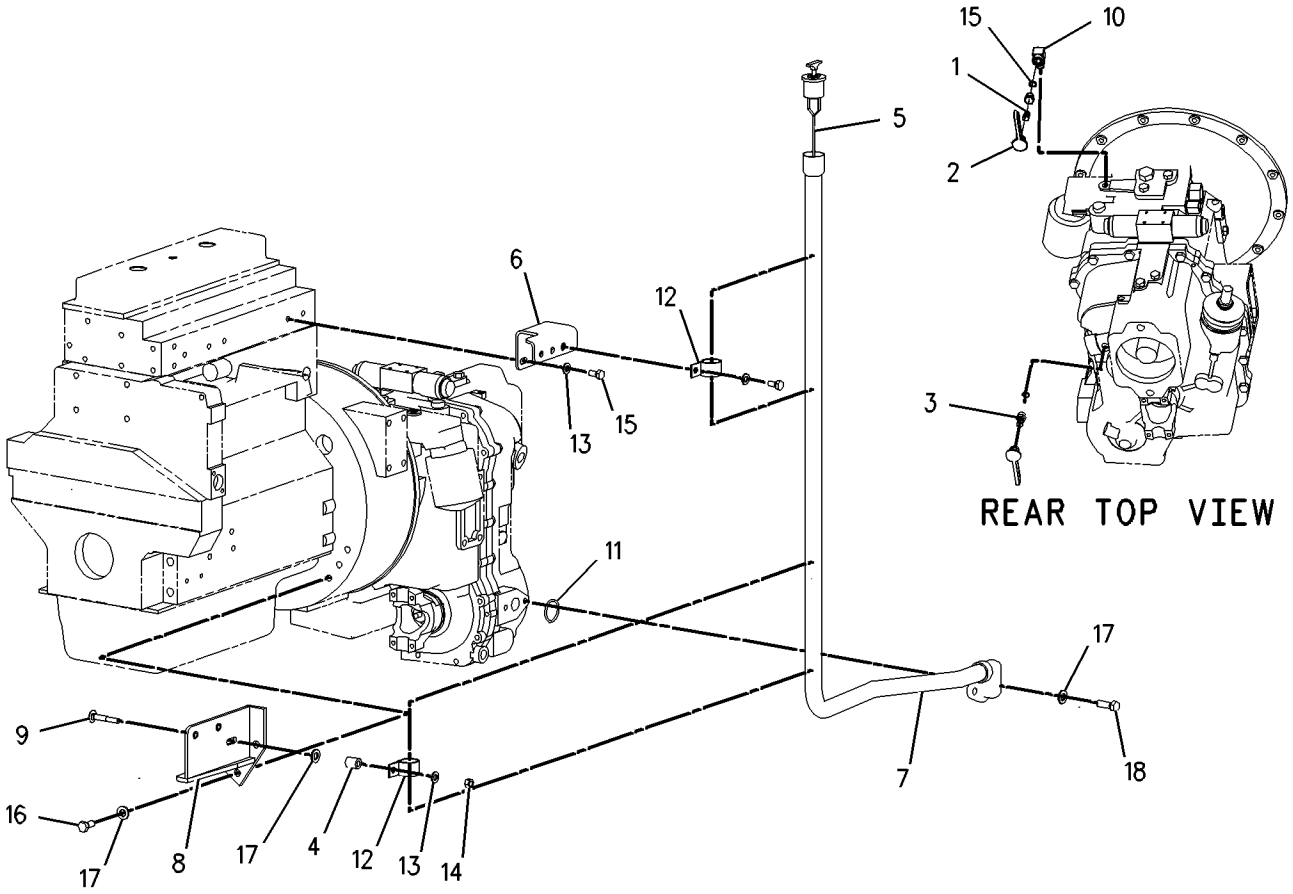

GRAPHIC #1 **<END>** g00920166

136-3110 FILLER GP-POWER TRAIN OIL

S/N: BFP12900-UP
TWO WHEEL DRIVE
PART OF 192-4663, 192-4666 POWER TRAIN AR
AN ATTACHMENT

SMCS-3005, 3081 **i01797068**

NOTE	REF NO	GRAPHIC REF	PART NUMBER	QTY	PART NAME 1 2 3 4 5 6 (PRODUCT LEVEL)	SEE PAGE
	1	1	**4J-0522**	2	SEAL-O-RING	
	2	1	**5P-7854**	2	CLIP	
	3	1	**7C-8246**	1	SPACER (10.5X20X24MM THK)	
	4	1	**104-8566**	1	GAUGE AS	
	5	1	**112-6219**	1	BRACKET AS	
	6	1	**146-1816**	1	BRACKET AS	
	7	1	**125-0851**	1	TUBE AS	
	8	1	**136-3112**	1	SPACER	
	9	1	**8T-4121**	4	WASHER-HARD (11X21X2.5MM THK)	
M	10	1	**8T-4133**	1	NUT (M10X1.5 THD)	
M	11	1	**8T-4137**	3	BOLT (M10X1.5X20MM)	
M	12	1	**8T-4192**	2	BOLT (M12X1.75X25MM)	
	13	1	**8T-4223**	5	WASHER-HARD (13.5X25.5X3MM THK)	
M	14	1	**8T-4194**	2	BOLT (M12X1.75X50MM)	
M	15	1	**148-1899**	1	BOLT (M10X1.50X60MM)	
	16	1	**3J-1907**	2	SEAL-O-RING	
	17	1	**6V-0852**	2	CAP-DUST	
	18	1	**6V-3965**	2	FITTING AS	
	19	1	*150-3065*	1	ADAPTER GP	
		1	**3J-1907**	1	SEAL-O-RING	
		1	**6V-0484**	1	FITTING	

M-METRIC PART

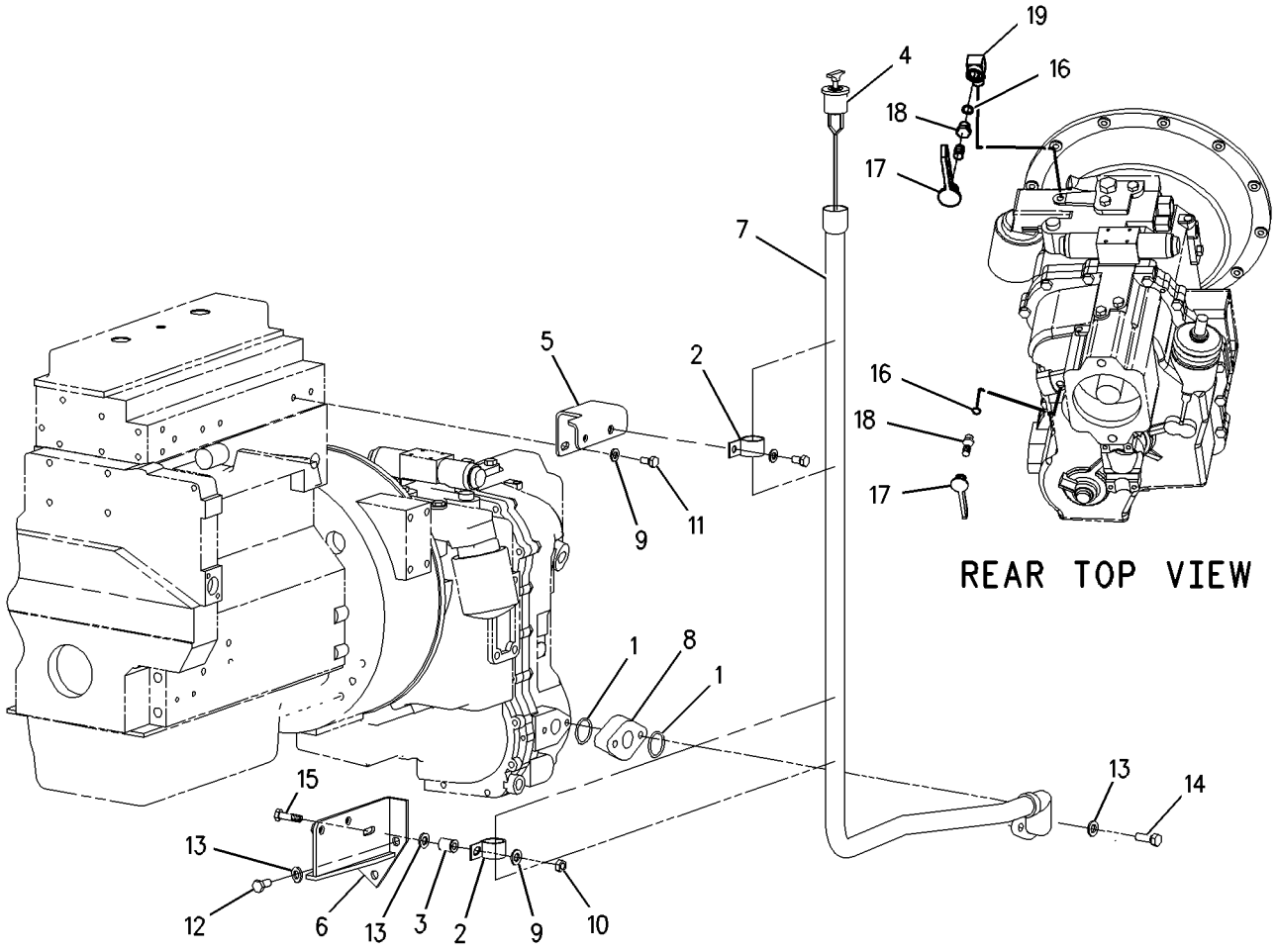

GRAPHIC #1 **<END>** g00920171

234-3387 FILLER GP-POWER TRAIN OIL

S/N: BFP12900-UP
PART OF 214-6955, 214-6958 POWER TRAIN AR
AN ATTACHMENT

SMCS-3005, 3081 **i02013145**

NOTE	REF NO	GRAPHIC REF	PART NUMBER	QTY	PART NAME 1 2 3 4 5 6 (PRODUCT LEVEL)	SEE PAGE
	1	1	**9P-1872**	1	SPACER	
	2	1	**136-3112**	1	SPACER	
	3	1	**234-9613**	1	TUBE AS	
	4	1	**236-7295**	1	GAUGE GP-OIL LEVEL (DIPSTICK)	
	5	1	**4J-0522**	2	SEAL-O-RING	
	6	1	**8D-9947**	1	CLIP	
	7	1	**8S-0023**	1	CLIP (SLOT)	
	8	1	**8S-0024**	1	CLIP (TAB)	
	9	1	**8T-4121**	1	WASHER-HARD (11X21X2.5-MM THK)	
M	10	1	**8T-4136**	1	BOLT (M10X1.5X25-MM)	
M	11	1	**8T-4194**	2	BOLT (M12X1.75X50-MM)	
	12	1	**8T-4223**	3	WASHER-HARD (13.5X25.5X3-MM THK)	
M	13	1	**8T-6868**	1	BOLT (M12X1.75X80-MM)	

M-METRIC PART

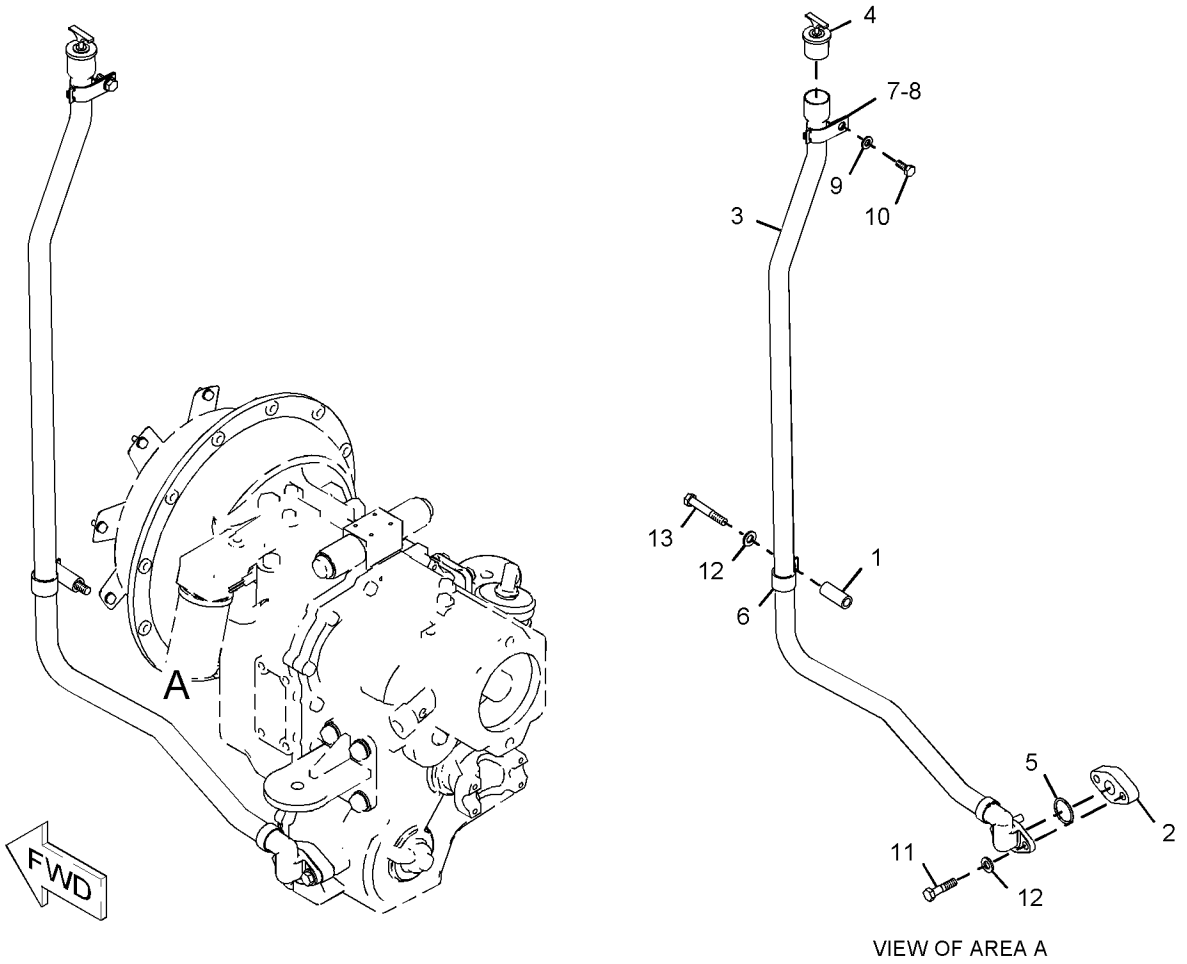

VIEW OF AREA A

GRAPHIC #1 **<END>** g01035251

234-7527 FILLER GP-POWER TRAIN OIL

S/N: BFP12900-UP
PART OF 214-6956 POWER TRAIN AR
AN ATTACHMENT

SMCS-3005, 3081 **i02013157**

NOTE	REF NO	GRAPHIC REF	PART NUMBER	QTY	PART NAME 1 2 3 4 5 6 (PRODUCT LEVEL)	SEE PAGE
	1	1	**9P-1872**	1	SPACER	
	2	1	**234-9613**	1	TUBE AS	
	3	1	**236-7295**	1	GAUGE GP-OIL LEVEL (DIPSTICK)	
	4	1	**4J-0522**	1	SEAL-O-RING	
	5	1	**8D-9947**	1	CLIP	
	6	1	**8S-0023**	1	CLIP (SLOT)	
	7	1	**8S-0024**	1	CLIP (TAB)	
	8	1	**8T-4121**	1	WASHER-HARD (11X21X2.5-MM THK)	
M	9	1	**8T-4136**	1	BOLT (M10X1.5X25-MM)	
	10	1	**8T-4223**	3	WASHER-HARD (13.5X25.5X3-MM THK)	
M	11	1	**8T-4956**	2	BOLT (M12X1.75X35-MM)	
M	12	1	**8T-6868**	1	BOLT (M12X1.75X80-MM)	

M-METRIC PART

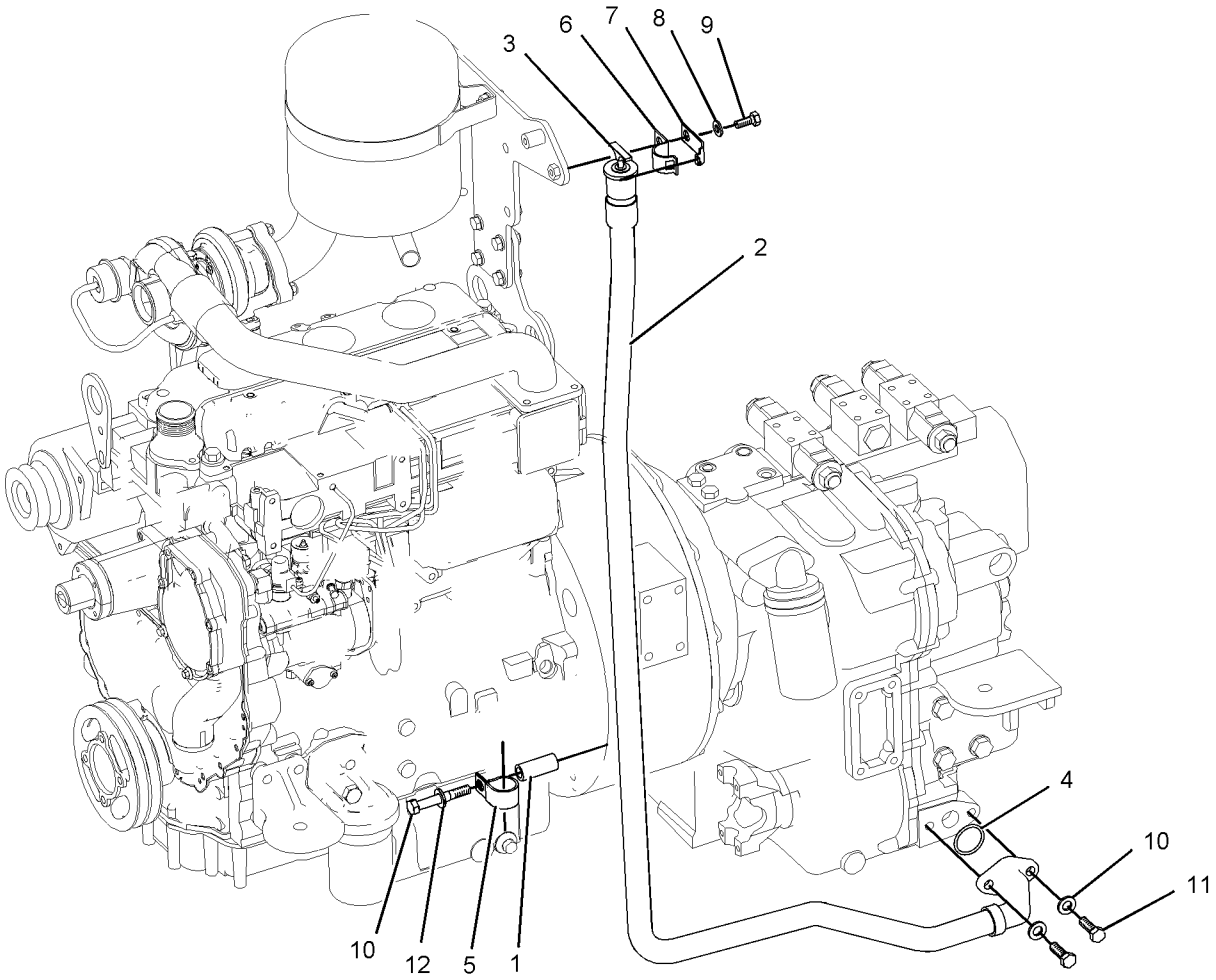

GRAPHIC #1 **<END>** g01042510

231-0683 FLANGE GP-WHEEL

S/N: BFP12900-UP
PART OF 189-1834 AXLE GP-FRONT
AN ATTACHMENT

SMCS-4057 **i02013085**

NOTE	REF NO	GRAPHIC REF	PART NUMBER	QTY	PART NAME 1 2 3 4 5 6 (PRODUCT LEVEL)	SEE PAGE
	1	1	**207-4263**	1	BEARING AS	
	2	1	**207-4267**	1	BEARING AS	
	3	1	**238-5228**	1	HUB GP-WHEEL	
	3A	1	**231-0687**	8	STUD	
	4	1	**231-0688**	1	SEAL	

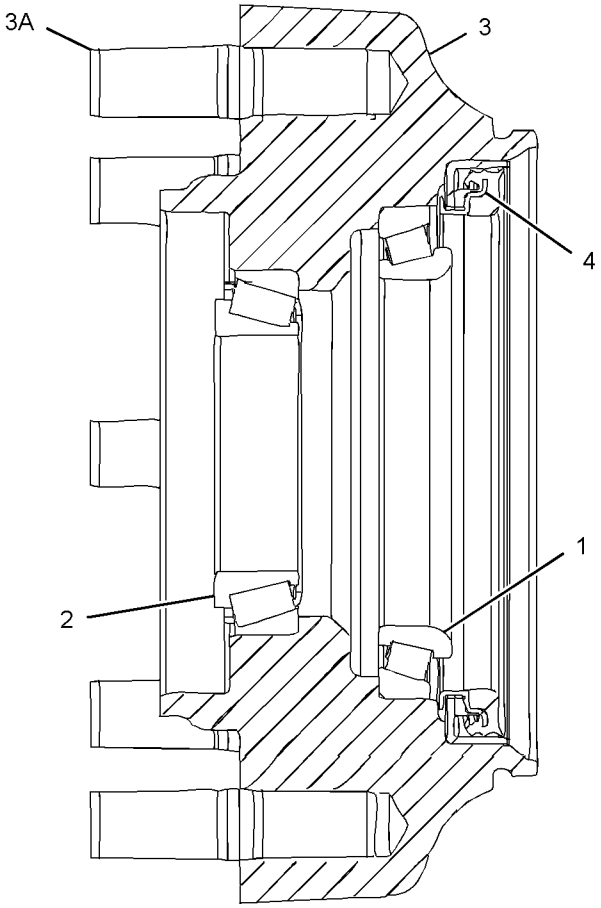

GRAPHIC #1

<END>

g01042234

209-9884 HOUSING & FLANGE GP-AXLE—RH

S/N: BFP12900-UP; CXP940-UP
PART OF 168-7446 AXLE GP-DRIVE & STEERING
AN ATTACHMENT

SMCS-4057, 4234 **i01918346**

NOTE	REF NO	GRAPHIC REF	PART NUMBER	QTY	PART NAME 1 2 3 4 5 6 (PRODUCT LEVEL)	SEE PAGE
	1	1	**217-2877**	1	HOUSING GP-AXLE (RH)	
	1A	1	**199-0648**	1	NUT-JAM	
	1B	1	**198-7814**	1	BOLT (M16X100MM)	
	1C	1	**209-7460**	1	BUSHING	
	1D	1	**209-7465**	1	SEAL	
	1E	1	**231-0700**	1	HOUSING	
	2	1	*231-0703*	1	FLANGE AS	
	2A	1	**2S-0480**	2	CUP-BEARING (TAPERED ROLLER BEARING)	
	2B	1	**178-8608**	2	CONE	
	2C	1	**226-4346**	8	STUD-WHEEL	
	2D	1	**229-5092**	1	SEAL	
	3	1	**229-5080**	1	NUT-SPANNER	
	4	1	**229-5083**	1	PIN	
	5	1	**229-5085**	1	SPACER	
	6	1	**229-5088**	1	GEAR GP-RING (60 TEETH)	
	7	1	**3E-4363**	1	RING-RETAINING	
					AVAILABLE REPAIR KIT(S):	
			231-0676	1	KIT-FLANGE	
					(INCLUDES STUDS)	

209-9884 HOUSING & FLANGE GP-AXLE *(contd.)* **i01918346**

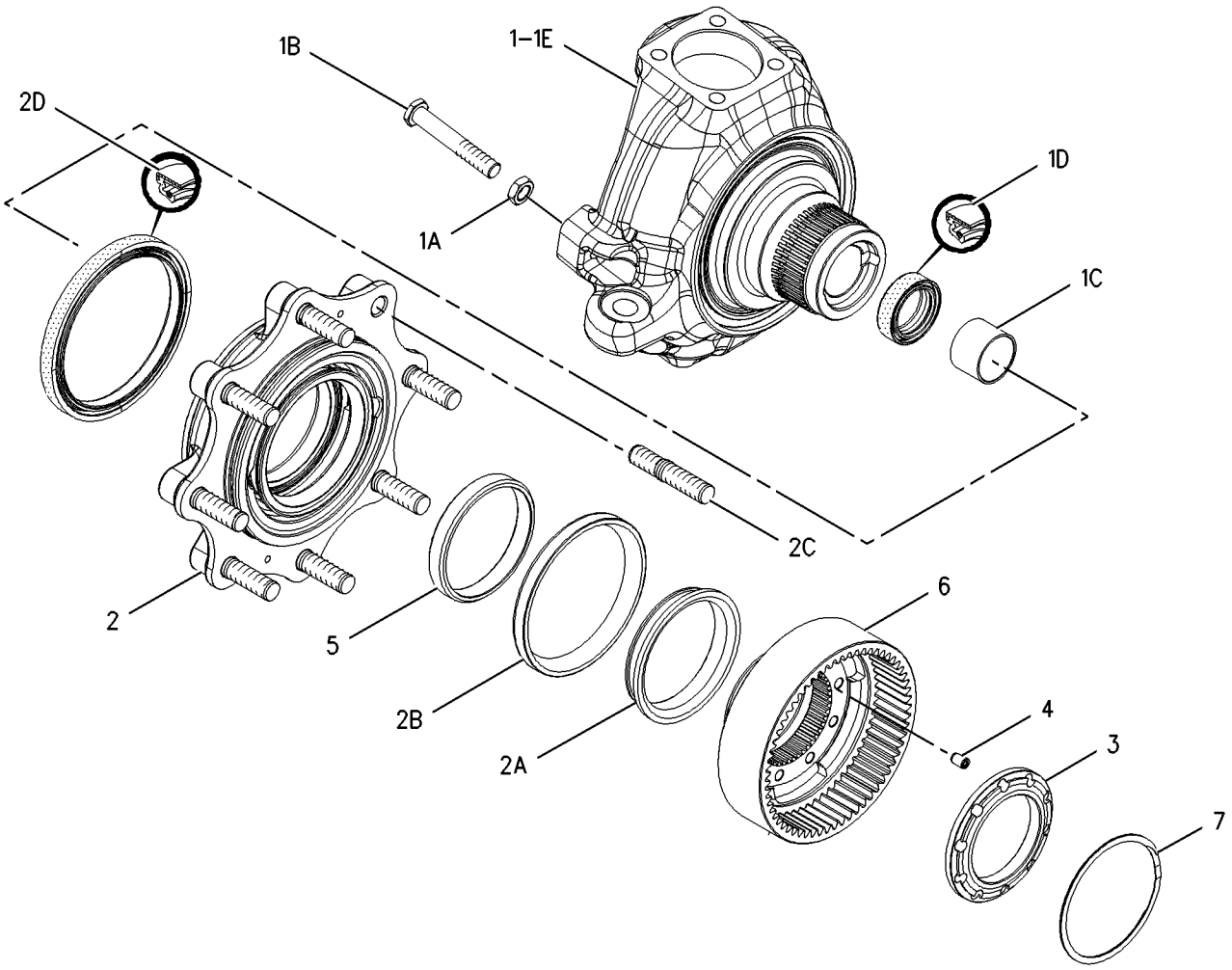

GRAPHIC #1 **<END>** g00998951

209-9885 HOUSING & FLANGE GP-AXLE—LH

S/N: BFP12900-UP; CXP940-UP
PART OF 168-7446 AXLE GP-DRIVE & STEERING
AN ATTACHMENT

SMCS-4057, 4234 **i01918352**

NOTE	REF NO	GRAPHIC REF	PART NUMBER	QTY	PART NAME 1 2 3 4 5 6 (PRODUCT LEVEL)	SEE PAGE
	1	1	**217-2878**	1	HOUSING GP-AXLE (LH)	
	1A	1	**198-7814**	1	BOLT (M16X100MM)	
	1B	1	**199-0648**	1	NUT-JAM	
	1C	1	**209-7460**	1	BUSHING	
	1D	1	**209-7465**	1	SEAL	
	1E	1	**231-0701**	1	HOUSING	
	2	1	*231-0703*	1	FLANGE AS	
	2A	1	**2S-0480**	2	CUP-BEARING (TAPERED ROLLER BEARING)	
	2B	1	**178-8608**	2	CONE	
	2C	1	**226-4346**	8	STUD-WHEEL	
	2D	1	**229-5092**	1	SEAL	
	3	1	**229-5080**	1	NUT-SPANNER	
	4	1	**229-5083**	1	PIN	
	5	1	**229-5085**	1	SPACER	
	6	1	**229-5088**	1	GEAR GP-RING (60 TEETH)	
	7	1	**3E-4363**	1	RING-RETAINING	
					AVAILABLE REPAIR KIT(S):	
			231-0676	1	KIT-FLANGE	
					(INCLUDES STUD)	

209-9885 HOUSING & FLANGE GP-AXLE *(contd.)* **i01918352**

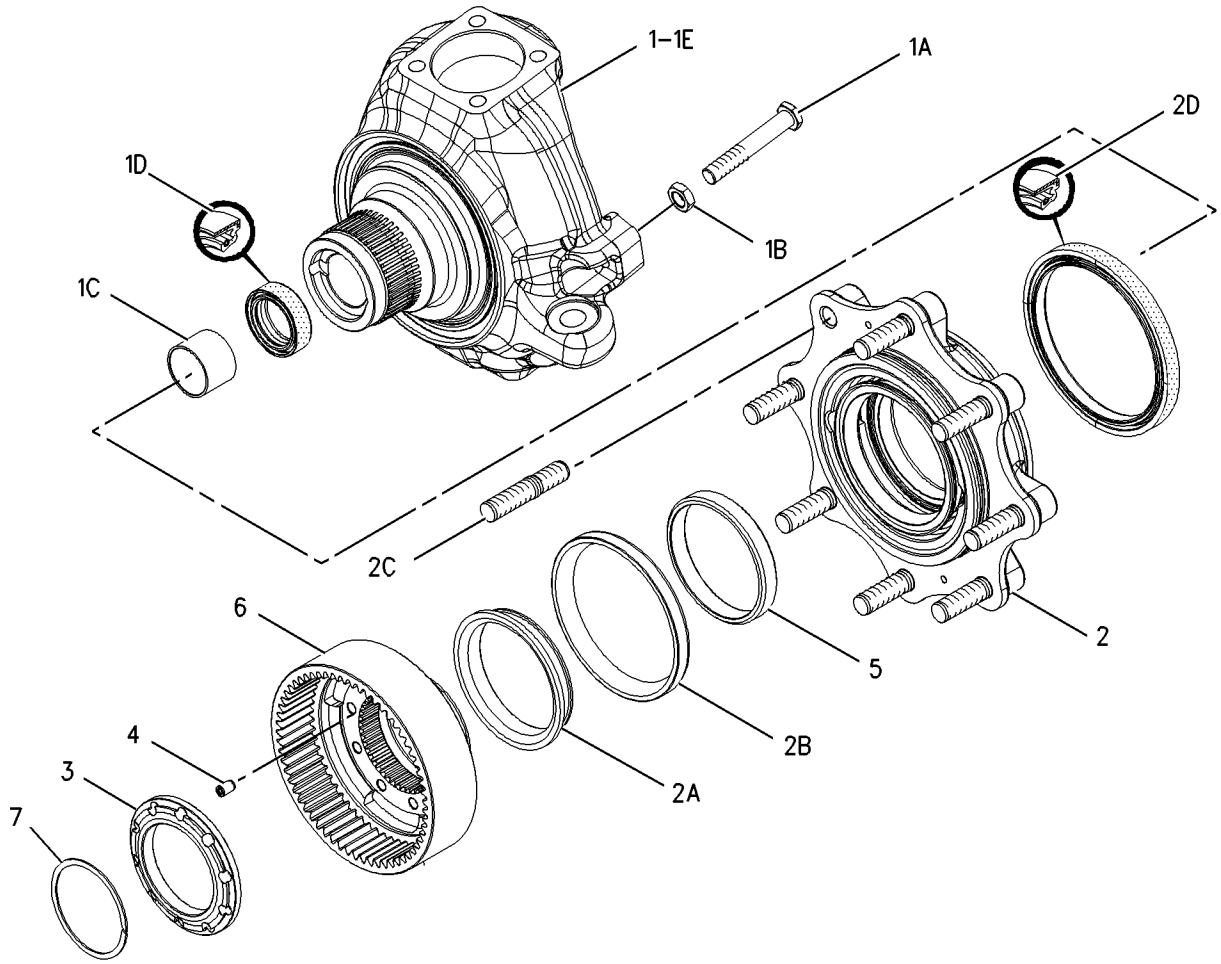

GRAPHIC #1 **<END>** g00998962

210-5924 PLANETARY GP-FINAL DRIVE

S/N: BFP12900-UP; CXP940-UP
PART OF 168-7446 AXLE GP-DRIVE & STEERING
AN ATTACHMENT

SMCS-4050 **i01946426**

NOTE	REF NO	GRAPHIC REF	PART NUMBER	QTY	PART NAME 1 2 3 4 5 6 (PRODUCT LEVEL)	SEE PAGE
	1	1	**210-5931**	4	RETAINER	
	2	1	**210-5934**	4	GEAR-PLANET	
	3	1	**095-0924**	4	RING-RETAINING	
	4	1	**209-7466**	1	KIT-PLANETARY CARRIER	
					(INCLUDES PLUG AND SHAFTS)	
	5	1	**219-8783**	23	KIT-ROLLER BEARING	
					(INCLUDES NEEDLES)	

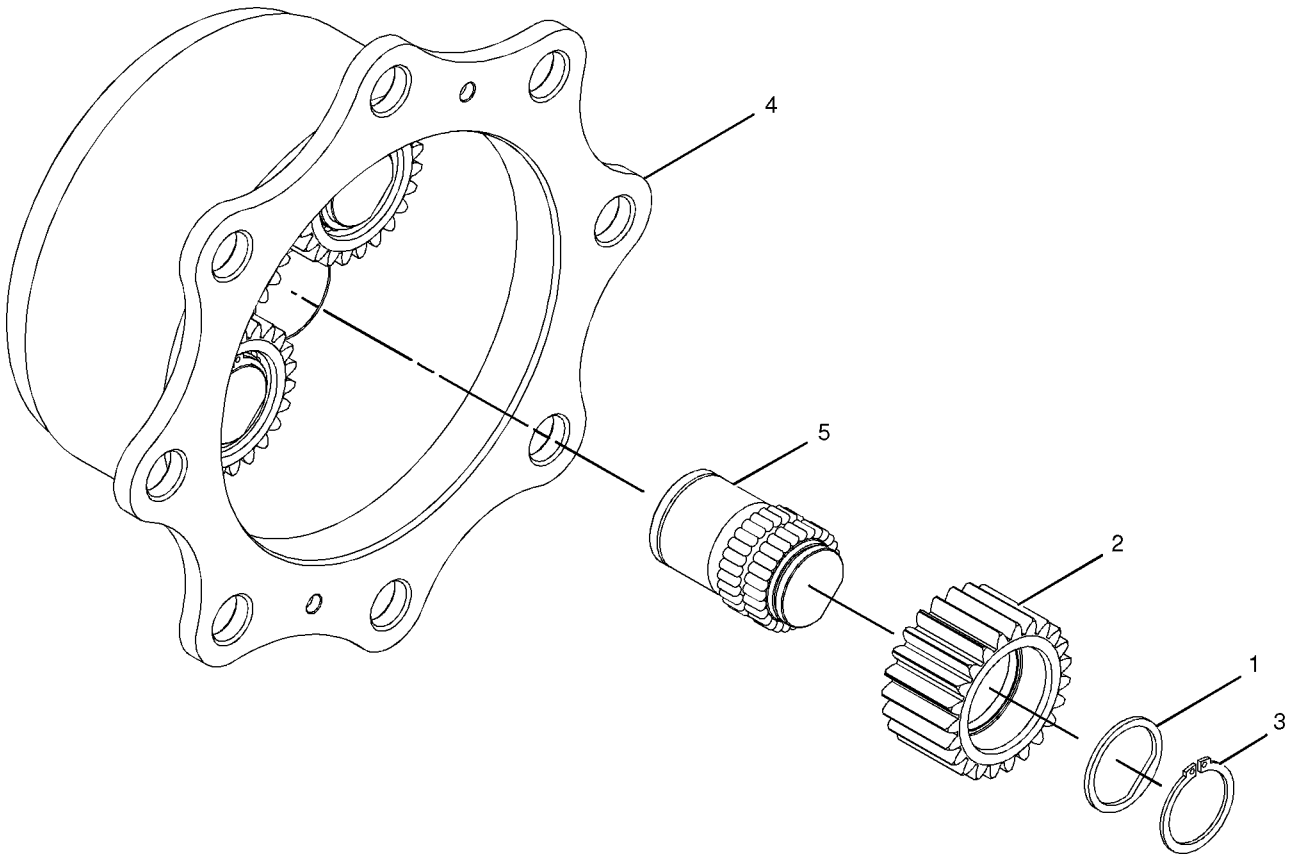

GRAPHIC #1 **<END>** g01013213

184-7970 POWER TRAIN AR–2 WHEEL DRIVE

S/N: BFP12900-UP; CXP940-UP

PART OF 214-6885, 215-6888 COMMON AR

SMCS-3000, 4000 **i01439915**

NOTE	PART NUMBER	QTY	PART NAME 1 2 3 4 5 6 (PRODUCT LEVEL)	SEE PAGE
Y	*191-9114*	1	CONTROL GP-DIFFERENTIAL LOCK	398
Y	*184-6570*	1	CONTROL GP-PARKING BRAKE	453
Y	*165-6918*	1	CONTROL GP-SERVICE BRAKE	454
Y	*184-7898*	1	MOUNTING GP-INSTRUMENT PANEL	939
Y	*113-1151*	1	SHAFT GP-DRIVE	423

Y-SEPARATE ILLUSTRATION

<END>

192-4661 POWER TRAIN AR–ALL WHEEL DRIVE, STANDARD SHIFT

S/N: BFP12900-UP

AN ATTACHMENT

SMCS-3000, 4000 **i01909580**

NOTE	PART NUMBER	QTY	PART NAME 1 2 3 4 5 6 (PRODUCT LEVEL)	SEE PAGE
Y	*188-0860*	1	BOX GP-BATTERY	472
Y	*183-4995*	1	CONSOLE GP-FRONT	893
Y	*164-1130*	1	CONTROL GP-TRANSMISSION	399
Y	*164-1141*	1	DUCT GP-AIR	912
Y	*8Y-7483*	1	FILLER GP-POWER TRAIN OIL	406
Y	*143-0786*	1	LINES GP-POWER TRAIN COOLER	183
Y	*143-0782*	1	MOUNTING GP-ENGINE & TMSN	97
Y	*185-3525*	1	MOUNTING GP-INSTRUMENT PANEL	940
Y	*202-5733*	1	SHAFT GP-DRIVE	424
Y	*209-4172*	1	STABILIZER AR	677
Y	*185-7586*	1	TRANSMISSION AR-DIRECT DRIVE	427

Y-SEPARATE ILLUSTRATION

<END>

POWER TRAIN

192-4663 POWER TRAIN AR–2 WHEEL DRIVE, STANDARD SHIFT

S/N: BFP12900-UP

AN ATTACHMENT

SMCS-3000, 4000 **i01705546**

NOTE	PART NUMBER	QTY	PART NAME 1 2 3 4 5 6 (PRODUCT LEVEL)	SEE PAGE
Y	*188-0860*	1	BOX GP-BATTERY	472
Y	*183-4995*	1	CONSOLE GP-FRONT	893
Y	*164-1130*	1	CONTROL GP-TRANSMISSION	399
Y	*164-1141*	1	DUCT GP-AIR	912
Y	*136-3110*	1	FILLER GP-POWER TRAIN OIL	408
Y	*143-0786*	1	LINES GP-POWER TRAIN COOLER	183
Y	*143-0782*	1	MOUNTING GP-ENGINE & TMSN	97
Y	*185-3525*	1	MOUNTING GP-INSTRUMENT PANEL	940
Y	*209-4172*	1	STABILIZER AR	677
Y	*185-7585*	1	TRANSMISSION AR-DIRECT DRIVE	427
Y-SEPARATE ILLUSTRATION				

<END>

192-4665 POWER TRAIN AR–ALL WHEEL DRIVE, STANDARD SHIFT

S/N: BFP12900-UP; CXP940-UP

AN ATTACHMENT

SMCS-3000, 4000 **i01919966**

NOTE	PART NUMBER	QTY	PART NAME 1 2 3 4 5 6 (PRODUCT LEVEL)	SEE PAGE
Y	*188-0860*	1	BOX GP-BATTERY	472
	164-1105	1	CONSOLE-FRONT	
Y	*164-1130*	1	CONTROL GP-TRANSMISSION	399
Y	*8Y-7483*	1	FILLER GP-POWER TRAIN OIL	406
Y	*143-0786*	1	LINES GP-POWER TRAIN COOLER	183
Y	*143-0782*	1	MOUNTING GP-ENGINE & TMSN	97
Y	*185-3525*	1	MOUNTING GP-INSTRUMENT PANEL	940
Y	*202-5733*	1	SHAFT GP-DRIVE (FRONT)	424
Y	*209-4172*	1	STABILIZER AR	677
			S/N: BFP12900-UP	
Y	*185-7586*	1	TRANSMISSION AR-DIRECT DRIVE	427
Y-SEPARATE ILLUSTRATION				

<END>

POWER TRAIN

192-4666 POWER TRAIN AR–2 WHEEL DRIVE, STANDARD SHIFT

S/N: BFP12900-UP

AN ATTACHMENT

SMCS-3000, 4000 **i01705576**

NOTE	PART NUMBER	QTY	PART NAME 1 2 3 4 5 6 (PRODUCT LEVEL)	SEE PAGE
Y	*188-0860*	1	BOX GP-BATTERY	472
Y	*164-1130*	1	CONTROL GP-TRANSMISSION	399
Y	*136-3110*	1	FILLER GP-POWER TRAIN OIL	408
Y	*143-0786*	1	LINES GP-POWER TRAIN COOLER	183
Y	*143-0782*	1	MOUNTING GP-ENGINE & TMSN	97
Y	*185-3525*	1	MOUNTING GP-INSTRUMENT PANEL	940
Y	*209-4172*	1	STABILIZER AR	677
Y	*185-7585*	1	TRANSMISSION AR-DIRECT DRIVE	427
	164-1105	1	CONSOLE-FRONT	

Y-SEPARATE ILLUSTRATION

<END>

214-6955 POWER TRAIN AR–2 WHEEL DRIVE, STANDARD SHIFT

S/N: BFP12900-UP

AN ATTACHMENT

SMCS-3000, 4000 **i01990439**

NOTE	PART NUMBER	QTY	PART NAME 1 2 3 4 5 6 (PRODUCT LEVEL)	SEE PAGE
Y	*237-6415*	1	BOX GP-BATTERY	473
	164-1105	1	CONSOLE-FRONT	
Y	*164-1130*	1	CONTROL GP-TRANSMISSION	399
Y	*237-6458*	1	DRIVE AR-BACKHOE LOADER (2WS, 2WD)	403
Y	*234-3387*	1	FILLER GP-POWER TRAIN OIL	410
Y	*143-0786*	1	LINES GP-POWER TRAIN COOLER	183
Y	*143-0782*	1	MOUNTING GP-ENGINE & TMSN	97
Y	*185-3525*	1	MOUNTING GP-INSTRUMENT PANEL	940
Y	*209-4172*	1	STABILIZER AR	677
Y	*185-7585*	1	TRANSMISSION AR-DIRECT DRIVE	427

Y-SEPARATE ILLUSTRATION

<END>

214-6956 POWER TRAIN AR–ALL WHEEL DRIVE, STANDARD SHIFT

S/N: BFP12900-UP

AN ATTACHMENT

SMCS-3000, 4000 **i01990438**

NOTE	PART NUMBER	QTY	PART NAME 1 2 3 4 5 6 (PRODUCT LEVEL)	SEE PAGE
Y	*237-6415*	1	BOX GP-BATTERY	473
	164-1105	1	CONSOLE-FRONT	
Y	*164-1130*	1	CONTROL GP-TRANSMISSION	399
Y	*237-6459*	1	DRIVE AR-BACKHOE LOADER (AWD, 2WS)	403
Y	*234-7527*	1	FILLER GP-POWER TRAIN OIL	411
Y	*143-0786*	1	LINES GP-POWER TRAIN COOLER	183
Y	*143-0782*	1	MOUNTING GP-ENGINE & TMSN	97
Y	*185-3525*	1	MOUNTING GP-INSTRUMENT PANEL	940
Y	*202-5733*	1	SHAFT GP-DRIVE	424
Y	*209-4172*	1	STABILIZER AR	677
Y	*185-7586*	1	TRANSMISSION AR-DIRECT DRIVE	427

Y-SEPARATE ILLUSTRATION

<END>

214-6958 POWER TRAIN AR–2 WHEEL DRIVE, STANDARD SHIFT

S/N: BFP12900-UP

AN ATTACHMENT

SMCS-3000, 4000 **i01990435**

NOTE	PART NUMBER	QTY	PART NAME 1 2 3 4 5 6 (PRODUCT LEVEL)	SEE PAGE
Y	*237-6415*	1	BOX GP-BATTERY	473
Y	*183-4995*	1	CONSOLE GP-FRONT	893
Y	*164-1130*	1	CONTROL GP-TRANSMISSION	399
Y	*237-6458*	1	DRIVE AR-BACKHOE LOADER (2WS, 2WD)	403
Y	*164-1141*	1	DUCT GP-AIR	912
Y	*234-3387*	1	FILLER GP-POWER TRAIN OIL	410
Y	*143-0786*	1	LINES GP-POWER TRAIN COOLER	183
Y	*143-0782*	1	MOUNTING GP-ENGINE & TMSN	97
Y	*185-3525*	1	MOUNTING GP-INSTRUMENT PANEL	940
Y	*209-4172*	1	STABILIZER AR	677
Y	*185-7585*	1	TRANSMISSION AR-DIRECT DRIVE	427

Y-SEPARATE ILLUSTRATION

<END>

231-9348 POWER TRAIN AR

S/N: CXP940-UP
AN ATTACHMENT

SMCS-3000, 4000 **i01909751**

NOTE	PART NUMBER	QTY	PART NAME 1 2 3 4 5 6 (PRODUCT LEVEL)	SEE PAGE
Y	*188-0860*	1	BOX GP-BATTERY	472
Y	*183-4995*	1	CONSOLE GP-FRONT	893
Y	*164-1130*	1	CONTROL GP-TRANSMISSION	399
Y	*164-1141*	1	DUCT GP-AIR	912
Y	*8Y-7483*	1	FILLER GP-POWER TRAIN OIL	406
Y	*143-0786*	1	LINES GP-POWER TRAIN COOLER	183
Y	*143-0782*	1	MOUNTING GP-ENGINE & TMSN	97
Y	*185-3525*	1	MOUNTING GP-INSTRUMENT PANEL	940
Y	*202-5733*	1	SHAFT GP-DRIVE	424
Y	*185-7586*	1	TRANSMISSION AR-DIRECT DRIVE	427

Y-SEPARATE ILLUSTRATION

<END>

POWER TRAIN

113-1151 SHAFT GP-DRIVE–REAR

S/N: BFP12900-UP; CXP940-UP

PART OF 184-7970 POWER TRAIN AR

SMCS-3253 **i00512258**

NOTE	REF NO	GRAPHIC REF	PART NUMBER	QTY	PART NAME 1 2 3 4 5 6 (PRODUCT LEVEL)	SEE PAGE
	1	1	**8T-0799**	4	BOLT (1/2-20X1-1/2)	
	2	1	**5V-2545**	2	STRAP	
	3	1	**107-6826**	4	BOLT	
	4	1	**113-1150**	1	SHAFT AS-MAIN	
		1	**117-9887**	2	KIT-SPIDER & BEARING	
	5	1	**8T-4223**	4	WASHER-HARD (3MM THK)	

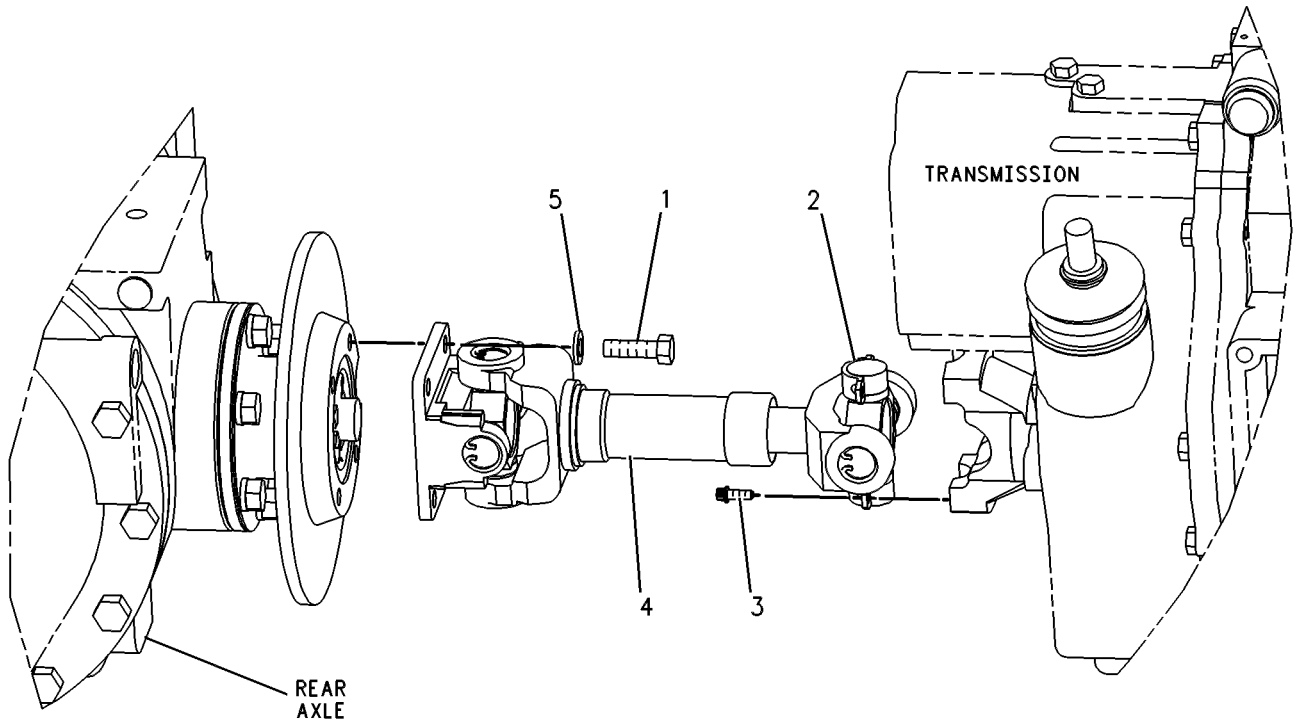

GRAPHIC #1 **<END>** g00131518

202-5733 SHAFT GP-DRIVE–FRONT

S/N: BFP12900-UP; CXP940-UP
STANDARD
PART OF 192-4661, 192-4665, 214-6956, 231-9348 POWER TRAIN AR
AN ATTACHMENT

SMCS-3253 **i01909541**

NOTE	REF NO	GRAPHIC REF	PART NUMBER	QTY	PART NAME 1 2 3 4 5 6 (PRODUCT LEVEL)	SEE PAGE
	1	1	**5V-2545**	4	STRAP	
M	2	1	**107-6826**	8	BOLT (M24X19.1MM)	
	3	1	**202-7874**	1	SHAFT AS (FRONT)	
		1	**117-9887**	2	KIT-SPIDER & BEARING	

M-METRIC PART

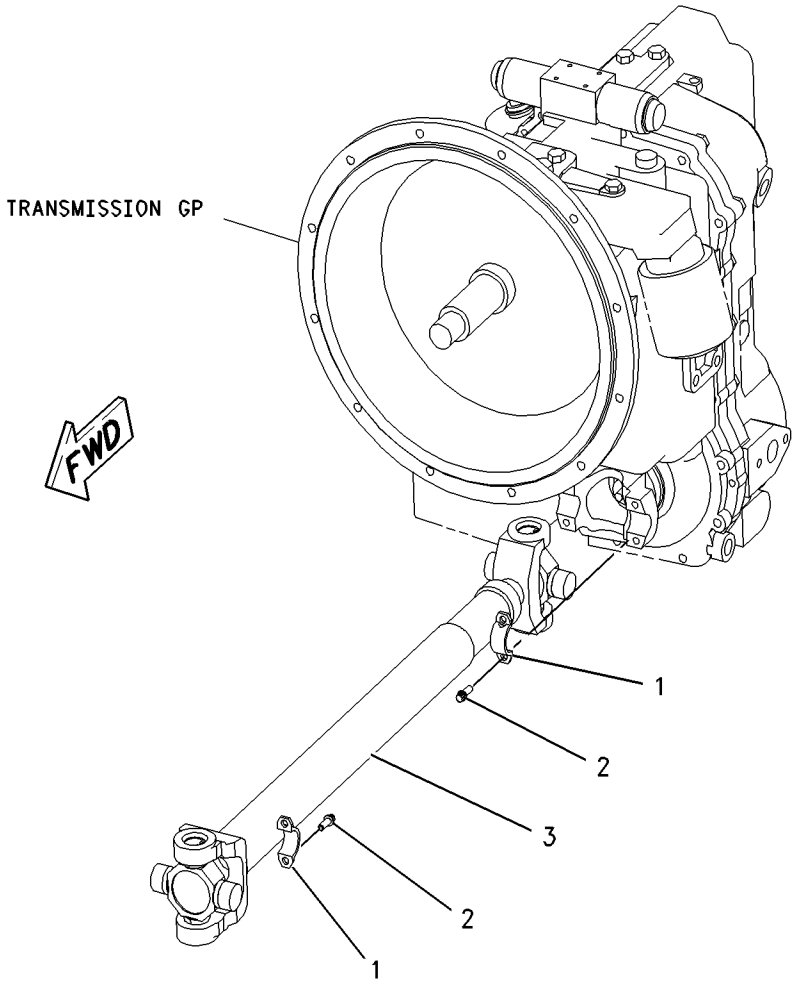

GRAPHIC #1 **<END>** g00995397

202-6007 TRANSMISSION & MOUNTING GP

S/N: BFP12900-UP
STANDARD SHIFT, TWO WHEEL DRIVE
PART OF 185-7585 TRANSMISSION AR-DIRECT DRIVE
AN ATTACHMENT

SMCS-3030 **i01943923**

NOTE	REF NO	GRAPHIC REF	PART NUMBER	QTY	PART NAME 1 2 3 4 5 6 (PRODUCT LEVEL)	SEE PAGE
	1	1	**113-9221**	1	SUPPORT-REAR	
	2	1	**138-7137**	1	SUPPORT AS	
Y	3	1	**201-8561**	1	TRANSMISSION GP-DIRECT DRIVE	428
M	4	1	**7X-2553**	4	BOLT (M16X2X40MM)	
	5	1	**8T-4223**	4	WASHER-HARD (13.5X25.5X3MM THK)	
M	6	1	**8T-4956**	4	BOLT (M12X1.75X35MM)	
	7	1	**9X-8257**	4	WASHER (17.5X30X3.5MM THK)	

M-METRIC PART
Y-SEPARATE ILLUSTRATION

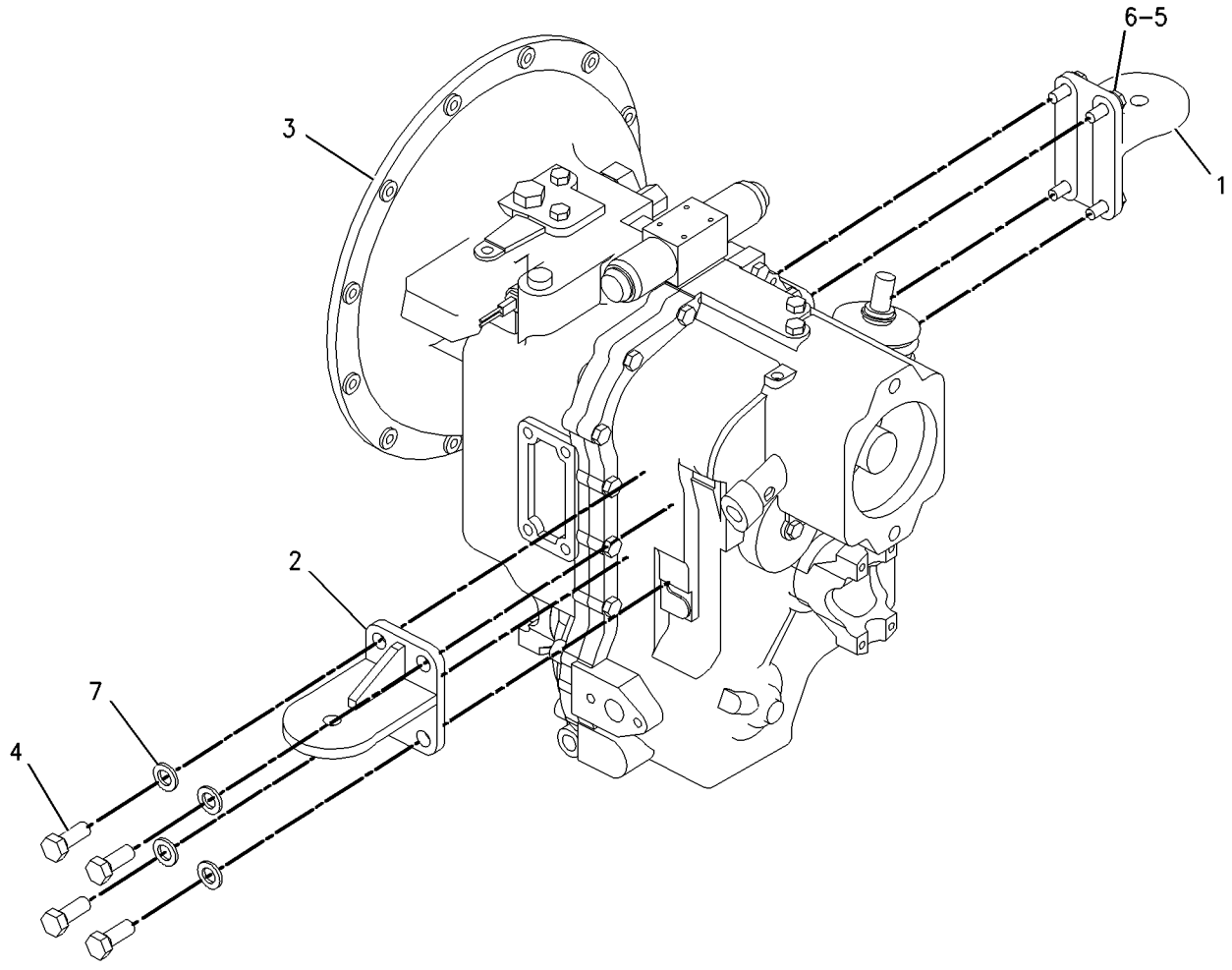

GRAPHIC #1 **<END>** g00869087

202-6008 TRANSMISSION & MOUNTING GP

S/N: BFP12900-UP; CXP940-UP
STANDARD SHIFT, ALL WHEEL DRIVE
PART OF 185-7586 TRANSMISSION AR-DIRECT DRIVE
AN ATTACHMENT

SMCS-3030 **i01944201**

NOTE	REF NO	GRAPHIC REF	PART NUMBER	QTY	PART NAME 1 2 3 4 5 6 (PRODUCT LEVEL)	SEE PAGE
	1	1	**113-9221**	1	SUPPORT-REAR	
	2	1	**138-7137**	1	SUPPORT AS	
Y	3	1	**201-8562**	1	TRANSMISSION GP-DIRECT DRIVE	434
M	4	1	**7X-2553**	4	BOLT (M16X2X40MM)	
	5	1	**8T-4223**	4	WASHER-HARD (13.5X25.5X3MM THK)	
M	6	1	**8T-4956**	4	BOLT (M12X1.75X35MM)	
	7	1	**9X-8257**	4	WASHER (17.5X30X3.5MM THK)	

M-METRIC PART
Y-SEPARATE ILLUSTRATION

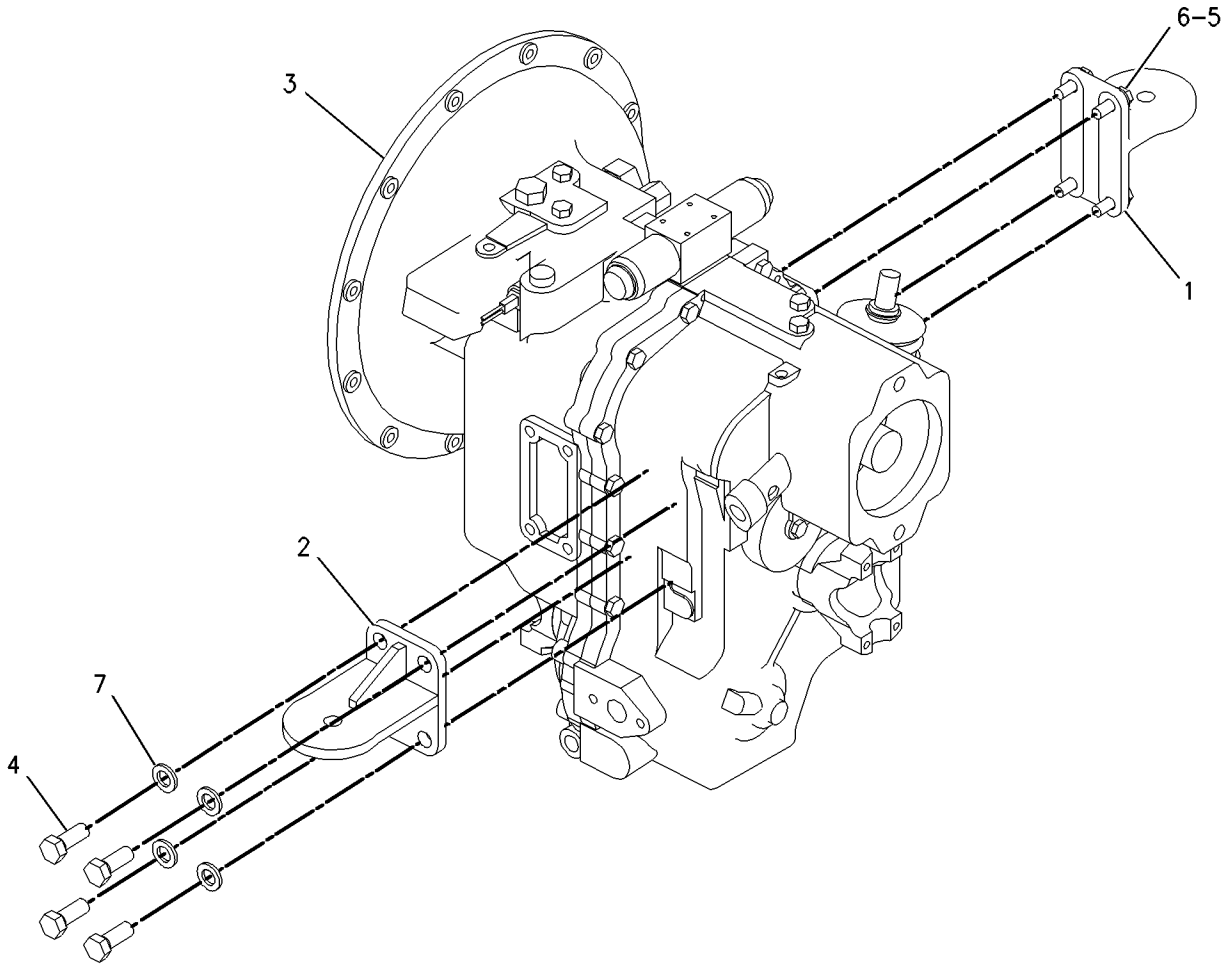

GRAPHIC #1 **<END>** g00869096

185-7585 TRANSMISSION AR-DIRECT DRIVE

S/N: BFP12900-UP
TWO WHEEL
PART OF 192-4663, 192-4666, 214-6955, 214-6958 POWER TRAIN AR
AN ATTACHMENT

SMCS-3030 **i01949802**

NOTE	PART NUMBER	QTY	PART NAME 1 2 3 4 5 6 (PRODUCT LEVEL)	SEE PAGE
Y	*111-7907*	1	DRIVE GP-FLEXIBLE COUPLING	405
Y	**202-6007**	1	TRANSMISSION & MOUNTING GP	425
	119-4740	1	FILTER AS-OIL (TRANSMISSION)	
	140-7393	1	TORQUE CONVERTER AS	

Y-SEPARATE ILLUSTRATION

<END>

185-7586 TRANSMISSION AR-DIRECT DRIVE

S/N: BFP12900-UP; CXP940-UP
ALL WHEEL DRIVE
PART OF 192-4661, 192-4665, 214-6956, 231-9348 POWER TRAIN AR
AN ATTACHMENT

SMCS-3030 **i01985454**

NOTE	PART NUMBER	QTY	PART NAME 1 2 3 4 5 6 (PRODUCT LEVEL)	SEE PAGE
Y	*111-7907*	1	DRIVE GP-FLEXIBLE COUPLING	405
Y	*202-6008*	1	TRANSMISSION & MOUNTING GP	426
	119-4740	1	FILTER AS-OIL (TRANSMISSION)	
	212-6215	1	TORQUE CONVERTER AS	

Y-SEPARATE ILLUSTRATION

<END>

201-8561 TRANSMISSION GP-DIRECT DRIVE

S/N: BFP12900-UP

PART OF 202-6007 TRANSMISSION & MOUNTING GP

AN ATTACHMENT

SMCS-3030 **i01938943**

NOTE	REF NO	GRAPHIC REF	PART NUMBER	QTY	PART NAME 1 2 3 4 5 6 (PRODUCT LEVEL)	SEE PAGE
	1	2	**178-8133**	2	GUIDE-SPRING	
	2	3	**174-9711**	1	GASKET	
	3	3	**175-0054**	1	SEAL-O-RING	
	4	3	**9M-1974**	3	WASHER-HARD (8.8X16X2MM THK)	
	5	2	**122-3649**	2	RING-RETAINING	
	6	3	**122-3652**	2	PLUG	
	7	3	**121-7405**	1	VALVE GP-RELIEF	
	7A	3	**6V-9178**	1	SEAL-O-RING	
	7B	3	**7X-4744**	1	SEAL-O-RING	
	7C	3	**106-9586**	1	SEAL-O-RING	
	8	3	**121-7396**	1	VALVE GP-RELIEF	
	8A	3	**6V-4589**	1	SEAL-O-RING	
	8B	3	**8L-2746**	1	SEAL-O-RING	
	9	2	**192-0843**	1	CASE AS	
	10	2	**156-9276**	1	CASE-TRANSMISSION	
	11	1,3	**9S-4191**	10	PLUG	
	12	1,3	**3J-1907**	11	SEAL-O-RING	
M	13	1	**6V-8335**	17	BOLT-SELF LOCKING (M10X1.5X40MM)	
	14	2	**7T-3022**	2	SLEEVE	
	15	2	**123-8906**	1	CUP-TAPERED ROLLER	
	16	2	**123-8905**	1	CONE	
	17	2	**9U-8886**	4	RING-SEAL (44.95MM ID)	
	18	2	**7T-3021**	2	SYNCHRONIZER GP	
	19	2	**211-6758**	1	GEAR (19 TEETH)	
	20	2	**121-1251**	1	GEAR (28 TEETH)	
	21	2	**117-4650**	1	GEAR (37 TEETH)	
	22	2	**6T-9160**	1	GEAR (43 TEETH)	
	23	2	**6V-8500**	2	BEARING	
	24	2	**7T-3017**	1	SPACER (9.6MM THK)	
	25	2	**7T-3018**	1	SLEEVE	
	26	2	**6Y-2326**	1	RING	
	27	2	**121-2062**	1	WASHER-THRUST	
	28	2	**7T-3034**	1	SHIM (2.02MM THK)	
B	29	2	**6T-9144**	1	SHIM (.051MM THK)	
B		2	**6T-9147**	1	SHIM (.076MM THK)	
B		2	**6T-9146**	1	SHIM (.127MM THK)	
B		2	**6T-9145**	1	SHIM (.178MM THK)	
B		2	**6T-9143**	1	SHIM (.381MM THK)	
B		2	**6T-9142**	1	SHIM (.508MM THK)	
M	30	1,3	**8C-5748**	7	BOLT (M8X1.25X55MM)	
	31	1	**9P-9150**	4	WASHER (8.25X18X.84MM THK)	
M	32	3	**6V-7731**	2	BOLT (M10X1.5X70MM)	
	33	3	**6Y-2035**	1	GASKET	
	34	3	**7T-3119**	1	HOUSING	
	35	2	**005-0469**	2	CUP-BEARING	
	36	2	**005-0471**	2	CONE-BEARING	
	37	2	**211-6759**	1	SHAFT (OUTPUT)	
	38	2	**123-8910**	1	CUP-TAPERED ROLLER	
	39	2	**123-8909**	1	CONE-BEARING	
	40	2	**7T-2646**	2	SPACER (66X79.5X2.02MM THK)	
B	41	2	**6T-9166**	2	SHIM (0.051MM THK)	
B		2	**6T-9165**	2	SHIM (0.076MM THK)	
B		2	**6T-9164**	2	SHIM (0.178MM THK)	
B		2	**6T-9163**	2	SHIM (0.599MM THK)	
	42	2	**6Y-2936**	1	SPACER	

201-8561 TRANSMISSION GP-DIRECT DRIVE *(contd.)* i01938943

NOTE	REF NO	GRAPHIC REF	PART NUMBER	QTY	PART NAME 1 2 3 4 5 6 (PRODUCT LEVEL)	SEE PAGE
	43	1	**122-6785**	1	PLUG AS	
	44	3	**1H-9721**	1	PLUG-EXPANSION	
	45	2	**7T-3051**	1	PLUG	
	46	2	**8T-1580**	1	CUP	
	47	2	**8T-1581**	1	CONE	
	48	2	**6Y-2737**	1	CUP-BEARING	
	49	2	**6Y-2736**	1	CONE-BEARING	
	50	2	**121-2500**	3	WASHER-THRUST	
	51	2	**121-2511**	1	SHAFT	
	52	2	**121-2537**	1	SHAFT-REVERSE	
	53	2	**121-2545**	1	SHAFT AS-INPUT	
		2	**123-0714**	1	BEARING	
		2	**123-2920**	3	PLUG	
	54	2	**121-2603**	1	GEAR (40 TEETH)	
	55	2	**121-2604**	1	GEAR (27 TEETH)	
	56	2	**121-0694**	1	WASHER-THRUST	
	57	2	**122-1882**	2	PLATE-END	
	58	2	**122-1881**	12	PLATE-CLUTCH	
	59	2	**122-1880**	12	DISC	
	60	2	**6V-8757**	3	RING	
	61	2	**178-8200**	2	RETAINER-SPRING	
	62	2	**178-8134**	2	SPRING	
	63	2	**178-8132**	2	SEAL	
	64	2	**122-6787**	1	YOKE AS	
		2	**123-1377**	1	GUARD	
	65	2	**122-1885**	2	SPACER (4MM THK)	
	66	2	**123-8913**	4	BEARING-ROLLER	
	67	2	**172-5317**	2	BEARING-SPECIAL	
	68	2	**7T-3195**	1	WASHER (12.3X47X6.35MM THK)	
M	69	2	**6V-8097**	1	BOLT (M12X1.75X30MM)	
	70	2	**5P-8066**	1	SEAL-O-RING	
	71	2	**121-7385**	1	PUMP GP-TRANSMISSION	
		1	**124-6612**	1	SEAL-LIP TYPE (57.15MM ID)	
	72	2	**7X-4741**	1	SEAL (140MM ID)	
	73	2	**122-1886**	1	RING-SEAL	
	74	1	**014-5645**	3	BALL	
	75	1	**6Y-1341**	2	SPRING	
	76	1	**121-7403**	1	FORK-SHIFT	
	77	1	**121-7389**	1	ROD AS-GEARSHIFT	
	78	1	**121-7390**	1	ROD AS-GEARSHIFT	
	79	1	**7T-3249**	2	SCREW	
	80	2	**123-8907**	2	CONE-BEARING	
	81	2	**123-8908**	2	CUP-TAPERED ROLLER	
	82	3	**127-3017**	1	SEAT AS	
	83	3	**7T-3109**	1	PIN	
	84	1	**121-7404**	1	FORK-SHIFT	
	85	3	**3S-2093**	1	STRAP-CABLE	
	86	2	**1U-8846**	1	SEALANT-GASKET	
	87	1	**6Y-1896**	1	PLUG AS	
		1	**5P-6718**	1	SEAL-O-RING	
	88	2	**121-7398**	1	SPACER (2MM THK)	
B	89	2	**121-7399**	1	SHIM (0.05MM THK)	
B		2	**121-7400**	1	SHIM (0.08MM THK)	
B		2	**121-7401**	1	SHIM (0.18MM THK)	
B		2	**121-7402**	1	SHIM (0.6MM THK)	
	90	3	**6K-0806**	1	STRAP-CABLE	
	91	3	**7T-3111**	1	COVER	
	92	1	**120-9762**	3	SEAL-O-RING	
M	93	1	**9X-6615**	4	BOLT (M5X.8X30MM)	

201-8561 TRANSMISSION GP-DIRECT DRIVE *(contd.)* i01938943

NOTE	REF NO	GRAPHIC REF	PART NUMBER	QTY	PART NAME 1 2 3 4 5 6 (PRODUCT LEVEL)	SEE PAGE
Y	94	3	**223-8181**	1	VALVE GP-SOLENOID	441
	95	1	**3G-6927**	1	ADAPTER	
	96	1	**7T-3253**	2	DOWEL	
	97	2	**216-2267**	1	SEAL-LIP TYPE	
	98	1	**7T-2651**	1	STRAINER	
	99	1	**4F-7952**	1	SEAL-O-RING	
	100	1	**9W-5460**	1	RING	
	101	1	**106-9861**	1	PLATE-COVER	
M	102	1	**6V-8210**	2	BOLT (M8X1.25X16 MM)	
	103	3	**7T-3251**	1	BREATHER (TRANSMISSION)	
	104	3	**121-7391**	1	LEVER	

B-USE AS REQUIRED
M-METRIC PART
Y-SEPARATE ILLUSTRATION

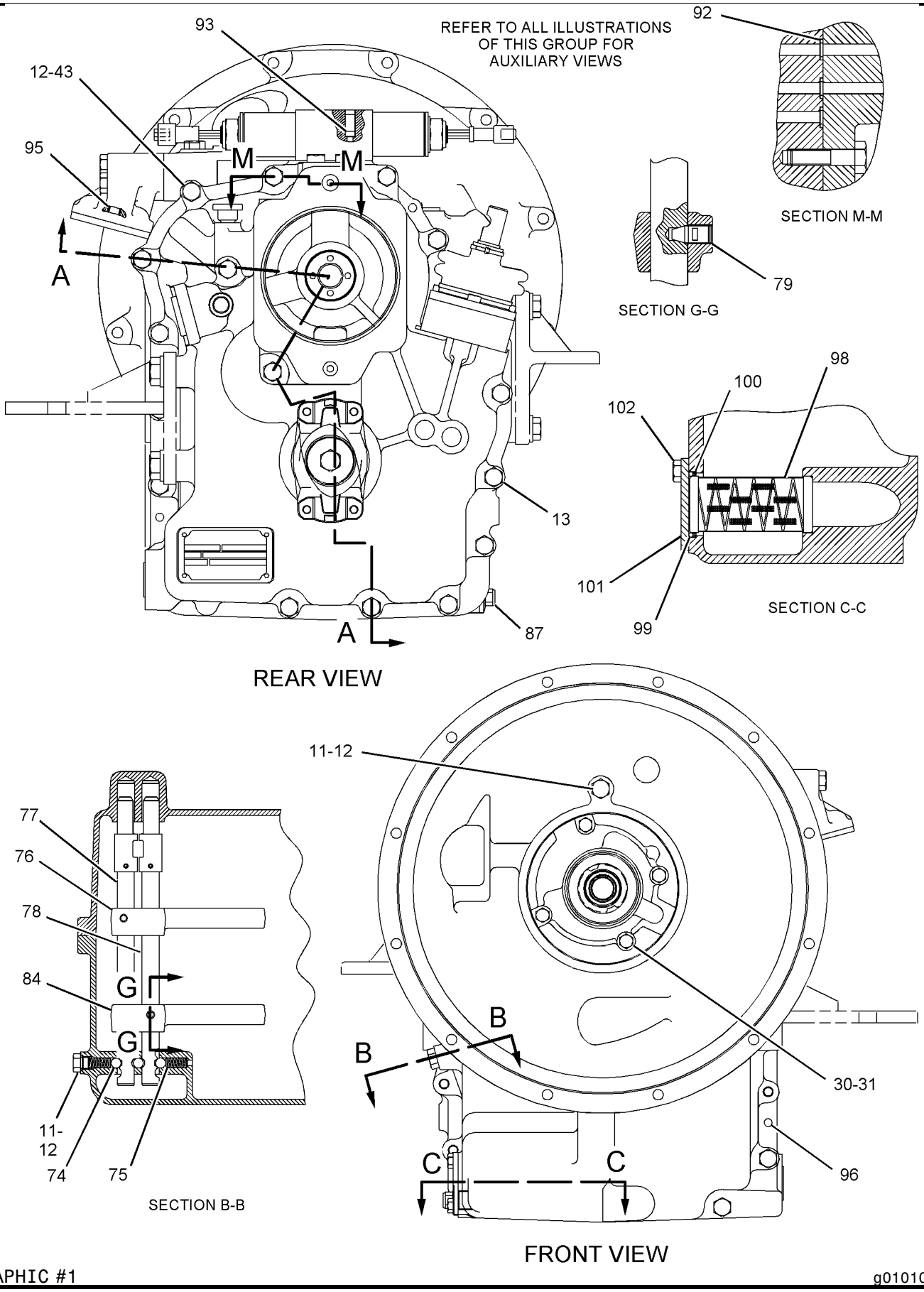

GRAPHIC #1 g01010544

201-8561 TRANSMISSION GP-DIRECT DRIVE *(contd.)*

i01938943

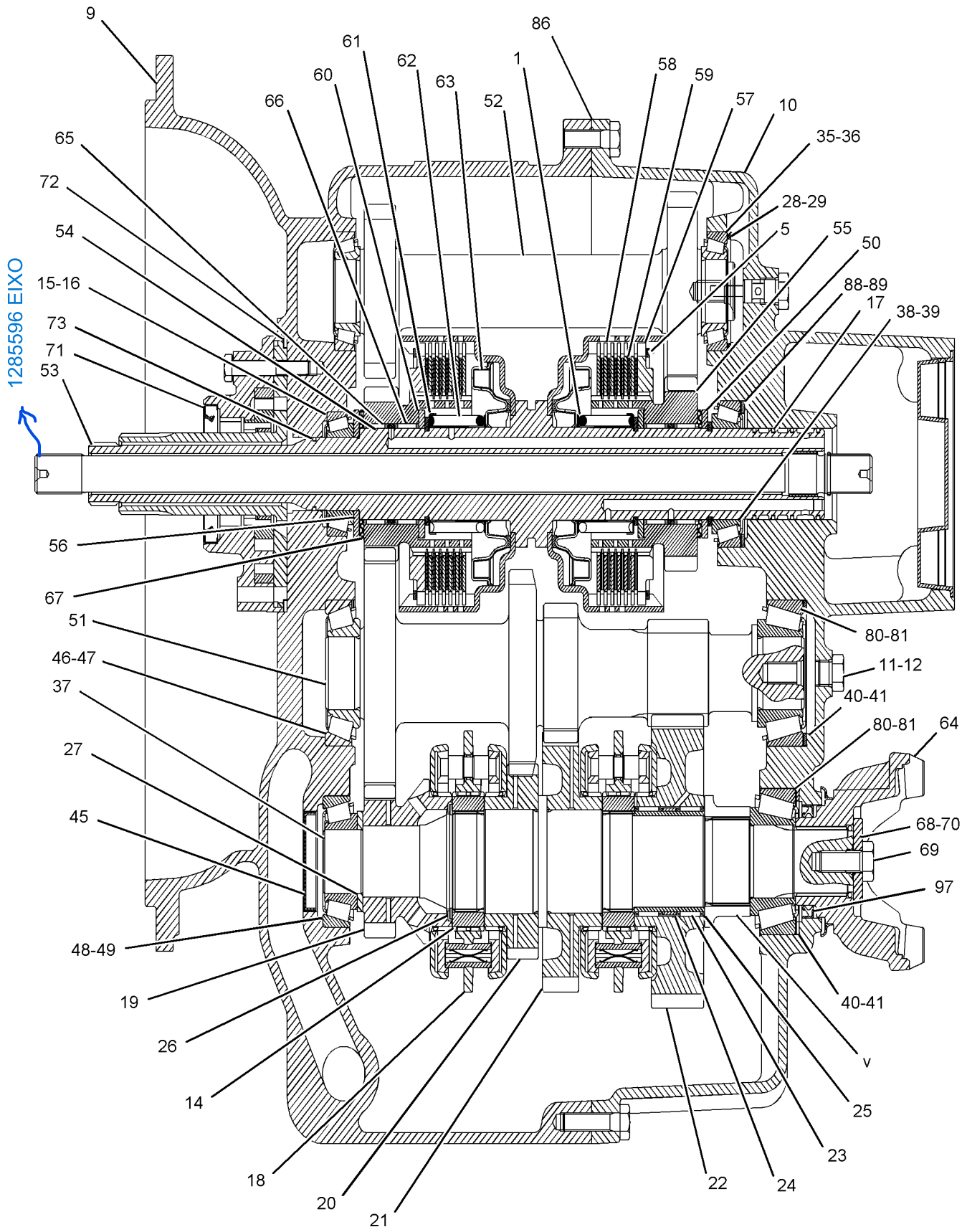

SECTION A-A

GRAPHIC #2

g01010546

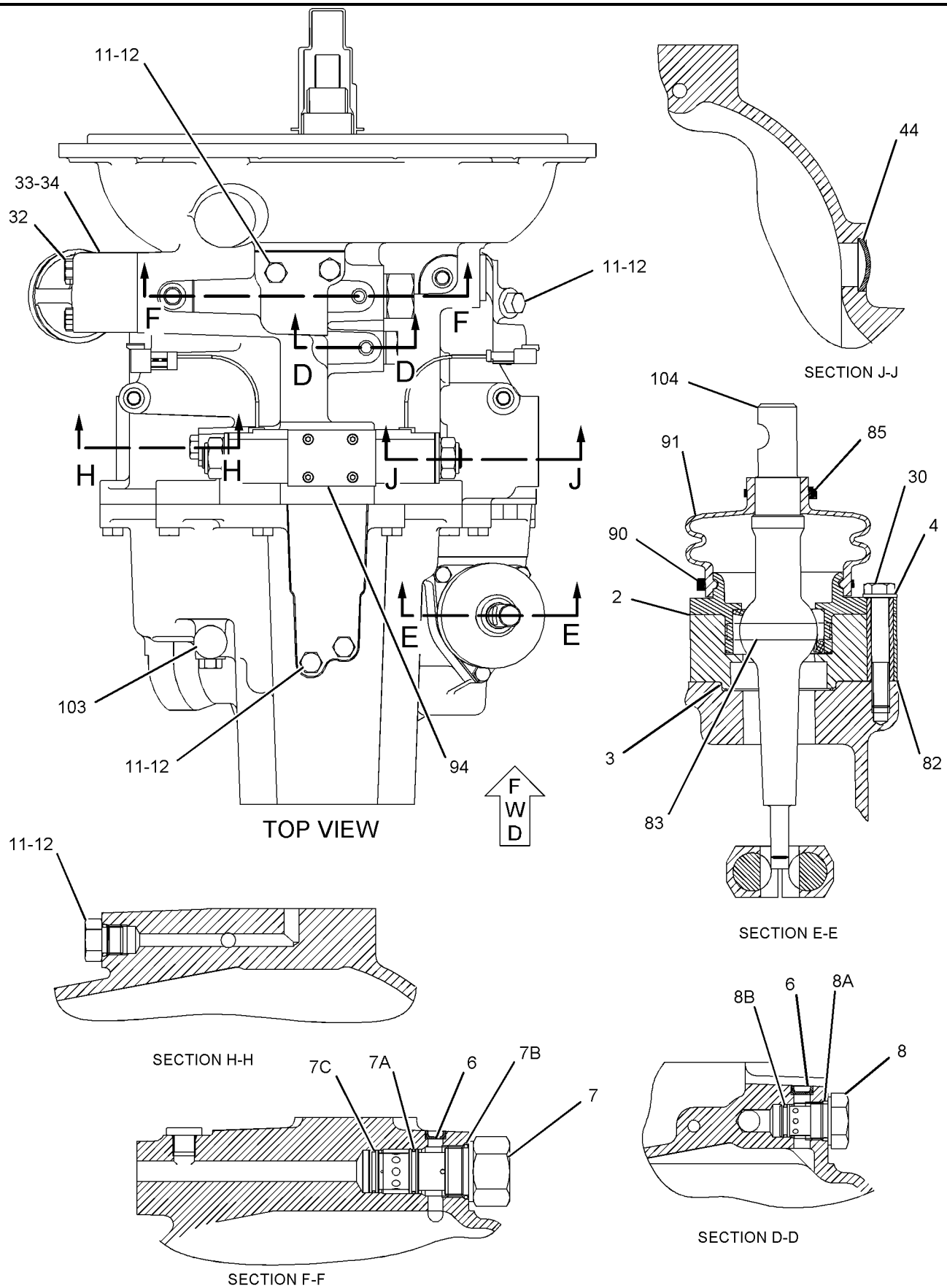

GRAPHIC #3 **<END>** g01010547

201-8562 TRANSMISSION GP-DIRECT DRIVE

S/N: BFP12900-UP; CXP940-UP
PART OF 202-6008 TRANSMISSION & MOUNTING GP
AN ATTACHMENT

SMCS-3030 **i02015814**

NOTE	REF NO	GRAPHIC REF	PART NUMBER	QTY	PART NAME 1 2 3 4 5 6 (PRODUCT LEVEL)	SEE PAGE
	1	3	**174-9711**	1	GASKET	
	2	3	**175-0054**	1	SEAL-O-RING	
	3	3	**9M-1974**	3	WASHER-HARD (8.8X16X2-MM THK)	
	4	3	**122-3652**	2	PLUG	
	5	3	**121-7405**	1	VALVE GP-RELIEF	
	5A	3	**6V-9178**	1	SEAL-O-RING	
	5B	3	**7X-4744**	1	SEAL-O-RING	
	5C	3	**106-9586**	1	SEAL-O-RING	
	6	3	**121-7396**	1	VALVE GP-RELIEF	
	6A	3	**6V-4589**	1	SEAL-O-RING	
	6B	3	**8L-2746**	1	SEAL-O-RING	
M	7	1,3	**8C-5748**	7	BOLT (M8X1.25X55-MM)	
	8	1	**9P-9150**	4	WASHER (8.25X18X.84-MM THK)	
	9	2	**192-0845**	1	CASE AS	
	10	2	**156-9275**	1	CASE-TRANSMISSION	
	11	1,2,3	**9S-4191**	10	PLUG	
	12	1,2,3	**3J-1907**	11	SEAL-O-RING	
M	13	1	**6V-8335**	14	BOLT-SELF LOCKING (M10X1.5X40-MM)	
	14	2	**7T-3022**	2	SLEEVE	
	15	2	**123-8906**	3	CUP-TAPERED ROLLER	
	16	2	**123-8905**	3	CONE	
	17	2	**9U-8886**	4	RING-SEAL (44.95-MM ID)	
	18	2	**7T-3021**	2	SYNCHRONIZER GP	
	19	2	**161-3249**	1	RING-RETAINING	
	20	2	**8E-5707**	1	PLATE-END	
	21	2	**121-0697**	1	WASHER-THRUST (45X65X5-MM THK)	
	22	2	**172-6050**	2	BEARING-SPECIAL	
	23	2	**095-0927**	1	RING-RETAINING	
	24	2	**121-0714**	1	PISTON	
	25	2	**178-9566**	1	SPRING-PISTON	
	26	2	**121-0885**	1	RETAINER	
	27	2	**6T-9196**	1	SEAL	
	28	2	**6T-9194**	8	PLATE	
	29	2	**6Y-7957**	8	DISC-FRICTION	
	30	2	**190-9767**	1	SHAFT AS	
	31	2	**121-0904**	1	GEAR AS	
	32	2	**123-8912**	2	BEARING-ROLLER	
	33	2	**122-1877**	1	WASHER-THRUST (40X65X4-MM THK)	
	34	2	**211-6758**	1	GEAR (19 TEETH)	
	35	2	**121-1251**	1	GEAR (28 TEETH)	
	36	2	**117-4650**	1	GEAR (37 TEETH)	
	37	2	**6T-9160**	1	GEAR (43 TEETH)	
	38	2	**121-1253**	1	GEAR (37 TEETH)	
	39	2	**6V-8500**	2	BEARING	
	40	2	**7T-3017**	1	SPACER (52.5X59X9.6-MM THK)	
	41	2	**7T-3018**	1	SLEEVE	
	42	2	**6Y-2326**	1	RING	
	43	2	**122-1878**	1	RING-SEAL	
	44	2	**122-1879**	1	SPACER (58X67.5X2-MM THK)	
B	45	2	**104-3288**	1	SHIM (0.05-MM THK)	
B		2	**121-2059**	1	SHIM (0.08-MM THK)	
B		2	**121-2060**	1	SHIM (0.18-MM THK)	
B		2	**121-2061**	1	SHIM (0.6-MM THK)	
M	46	3	**6V-7731**	2	BOLT (M10X1.5X70-MM)	
	47	3	**6Y-2035**	1	GASKET	

201-8562 TRANSMISSION GP-DIRECT DRIVE *(contd.)* i02015814

NOTE	REF NO	GRAPHIC REF	PART NUMBER	QTY	PART NAME 1 2 3 4 5 6 (PRODUCT LEVEL)	SEE PAGE
	48	3	**7T-3119**	1	HOUSING	
	49	2	**121-2062**	1	WASHER-THRUST (35X55X4-MM THK)	
	50	2	**7T-3034**		SHIM (2.02-MM THK)	
B	51	2	**6T-9144**	1	SHIM (.051-MM THK)	
B		2	**6T-9147**	1	SHIM (.076-MM THK)	
B		2	**6T-9146**	1	SHIM (.127-MM THK)	
B		2	**6T-9145**	1	SHIM (.178-MM THK)	
B		2	**6T-9143**	1	SHIM (.381-MM THK)	
B		2	**6T-9142**	1	SHIM (.508-MM THK)	
	52	3	**1H-9721**	1	PLUG-EXPANSION	
	53	3	**6K-0806**	1	STRAP-CABLE	
	54	3	**7T-3111**	1	COVER	
	55	1	**120-9762**	4	SEAL-O-RING	
	56	3	**121-7391**	1	LEVER	
	57	2	**005-0469**	2	CUP-BEARING	
	58	2	**005-0471**	2	CONE-BEARING	
	59	2	**211-6759**	1	SHAFT (OUTPUT)	
	60	2	**123-8910**	1	CUP-TAPERED ROLLER	
	61	2	**123-8909**	1	CONE-BEARING	
	62	2	**7T-2646**	2	SPACER (66X79.5X2.02-MM THK)	
B	63	2	**6T-9166**	2	SHIM (0.051-MM THK)	
B		2	**6T-9165**	2	SHIM (0.076-MM THK)	
B		2	**6T-9164**	2	SHIM (0.178-MM THK)	
B		2	**6T-9163**	2	SHIM (0.599-MM THK)	
	64	3	**7T-3251**	1	BREATHER (TRANSMISSION)	
M	65	1	**6V-8210**	2	BOLT (M8X1.25X16-MM)	
	66	1	**106-9861**	1	PLATE-COVER	
	67	2	**7T-3051**	1	PLUG	
	68	2	**8T-1580**	1	CUP	
	69	2	**8T-1581**	1	CONE	
	70	2	**6Y-2737**	1	CUP-BEARING	
	71	2	**6Y-2736**	1	CONE-BEARING	
	72	2	**121-2500**	3	WASHER-THRUST (50X70X4-MM THK)	
	73	2	**121-2511**	1	SHAFT	
	74	2	**121-2537**	1	SHAFT-REVERSE	
	75	2	**121-2545**	1	SHAFT AS-INPUT	
		2	**123-0714**	1	BEARING	
		2	**123-2920**	3	PLUG	
	76	2	**121-2603**	1	GEAR (40 TEETH)	
	77	2	**121-2604**	1	GEAR (27 TEETH)	
	78	2	**121-0694**	1	WASHER-THRUST (40X70X4-MM THK)	
	79	2	**122-1882**	2	PLATE-END	
	80	2	**122-1881**	12	PLATE-CLUTCH	
	81	2	**122-1880**	12	DISC	
	82	2	**6V-8757**	3	RING	
	83	2	**178-8200**	2	RETAINER-SPRING	
	84	2	**178-8134**	2	SPRING	
	85	2	**178-8132**	2	SEAL	
M	86	1	**121-9875**	4	BOLT (M10X1.5X55-MM)	
	87	2	**122-6787**	2	YOKE AS	
		2	**123-1377**	1	GUARD	
	88	2	**122-1883**	1	SPACER (38X45X5-MM THK)	
	89	2	**122-1885**	2	SPACER (51X55X4-MM THK)	
	90	2	**123-8913**	4	BEARING-ROLLER	
	91	2	**172-5317**	2	BEARING-SPECIAL	
	92	2	**122-3649**	2	RING-RETAINING	
	93	2	**7T-3195**	2	WASHER (12.3X47X6.35-MM THK)	
	94	3	**123-2920**	1	PLUG	
M	95	2	**6V-8097**	2	BOLT (M12X1.75X30-MM)	

201-8562 TRANSMISSION GP-DIRECT DRIVE *(contd.)* i02015814

NOTE	REF NO	GRAPHIC REF	PART NUMBER	QTY	PART NAME 1 2 3 4 5 6 (PRODUCT LEVEL)	SEE PAGE
	96	2	**5P-8066**	2	SEAL-O-RING	
	97	2	**122-1884**	1	SPACER (45X49X8-MM THK)	
	98	2	**121-7385**	1	PUMP GP-TRANSMISSION	
	99	2	**7X-4741**	1	SEAL (140-MM ID)	
	100	2	**122-1886**	1	RING-SEAL	
	101	1	**014-5645**	3	BALL	
	102	1	**6Y-1341**	2	SPRING	
	103	1	**121-7403**	1	FORK-SHIFT	
	104	1	**121-7389**	1	ROD AS-GEARSHIFT	
	105	1	**121-7390**	1	ROD AS-GEARSHIFT	
	106	1	**7T-3249**	2	SCREW (3/8-24X0.75-IN)	
	107	2	**123-8907**	2	CONE-BEARING	
	108	2	**123-8908**	2	CUP-TAPERED ROLLER	
	109	3	**7T-3109**	1	PIN	
	110	1	**121-7404**	1	FORK-SHIFT	
	111	3	**127-3017**	1	SEAT AS	
	112	2	**6V-5100**	1	SEAL-O-RING	
	113	3	**3S-2093**	1	STRAP-CABLE	
	114	2	**1U-8846**	1	SEALANT-GASKET	
	115	1	**123-2919**	2	NUT (M11X1-THD)	
	116	1	**122-1876**	1	TUBE	
	117	1	**6Y-1896**	1	PLUG AS	
		1	**5P-6718**	1	SEAL-O-RING	
	118	1	**123-2918**	1	SLEEVE	
	119	2	**121-7398**	1	SPACER (70X79.5X2-MM THK)	
B	120	2	**121-7399**	1	SHIM (0.05-MM THK)	
B		2	**121-7400**	1	SHIM (0.08-MM THK)	
B		2	**121-7401**	1	SHIM (0.18-MM THK)	
B		2	**121-7402**	1	SHIM (0.6-MM THK)	
	121	1	**9W-5460**	1	RING	
	122	1	**4F-7952**	1	SEAL-O-RING	
	123	1	**7T-2651**	1	STRAINER	
	124	2	**178-8133**	2	GUIDE-SPRING	
M	125	1	**9X-6615**	4	BOLT (M5X.8X30-MM)	
Y	126	3	**121-4036**	1	VALVE GP-SOLENOID	440
Y	127	3	**223-8181**	1	VALVE GP-SOLENOID	441
	128	1	**3G-6927**	1	ADAPTER	
	129	1	**7T-3253**	2	DOWEL	
	130	2	**216-2267**	2	SEAL-LIP TYPE	
	131	1	**122-6785**	1	PLUG AS	

B-USE AS REQUIRED
M-METRIC PART
Y-SEPARATE ILLUSTRATION

201-8562 TRANSMISSION GP-DIRECT DRIVE *(contd.)* i02015814

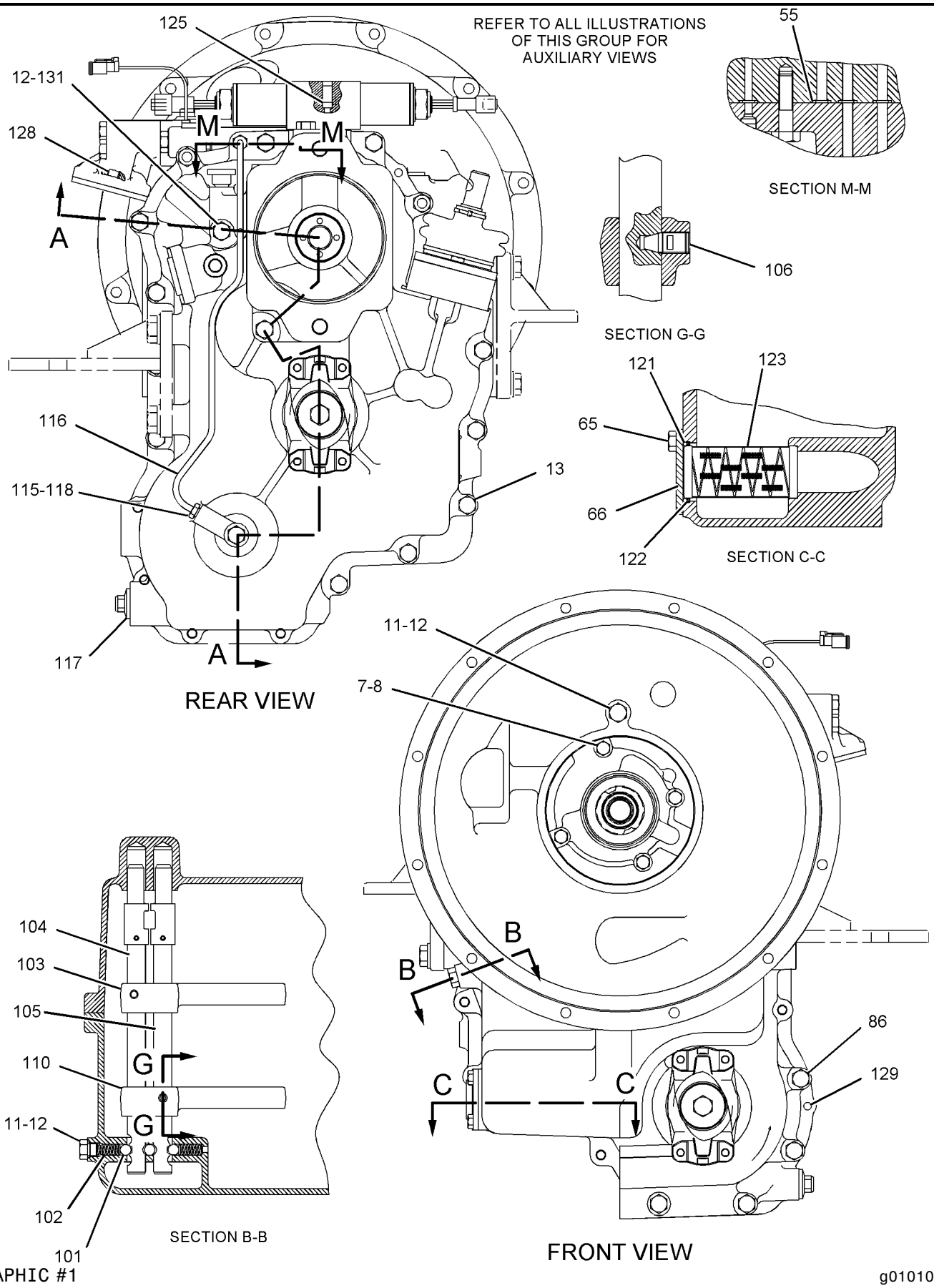

GRAPHIC #1

g01010746

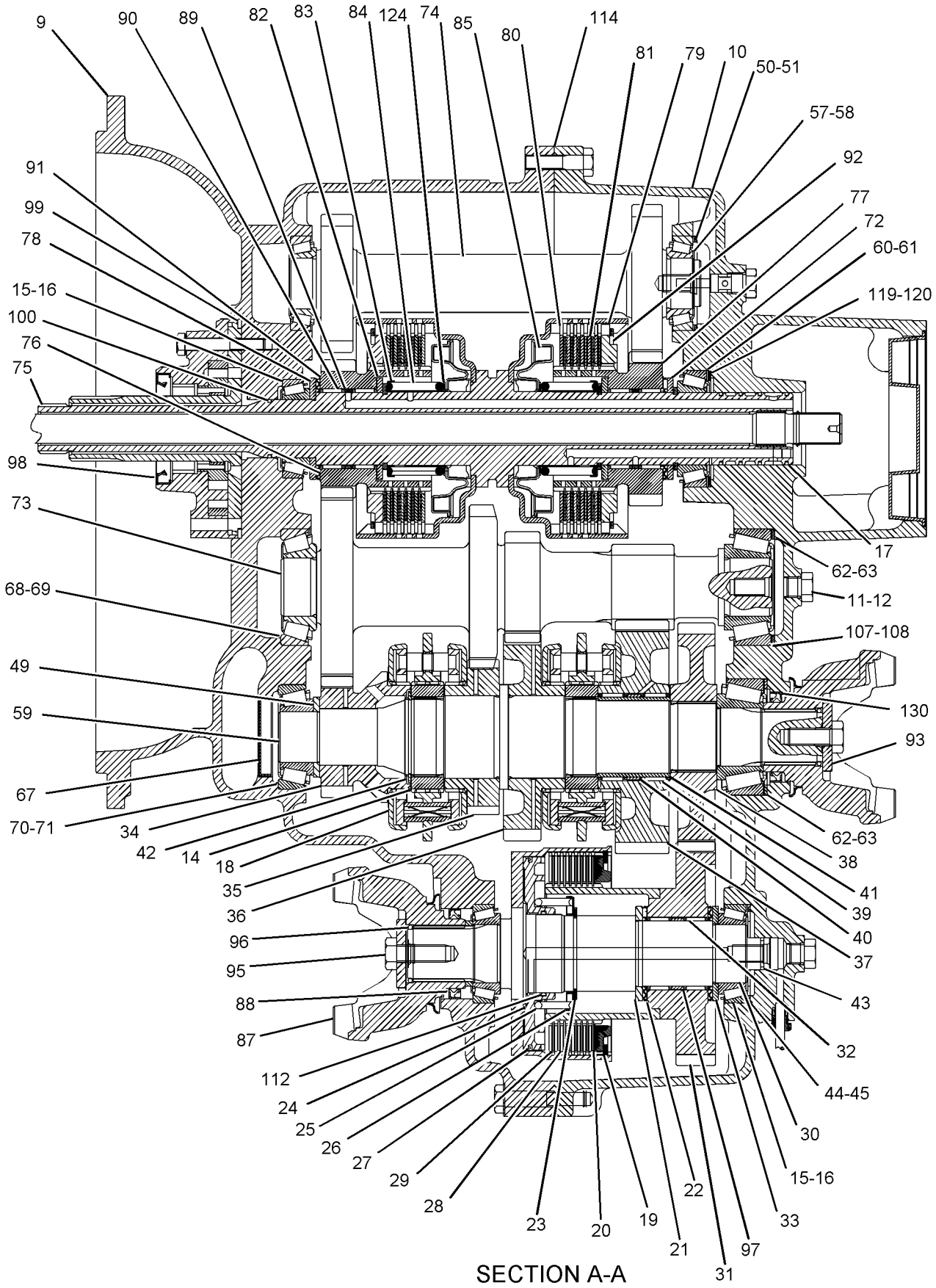

SECTION A-A

GRAPHIC #2 g01019426

201-8562 TRANSMISSION GP-DIRECT DRIVE *(contd.)* i02015814

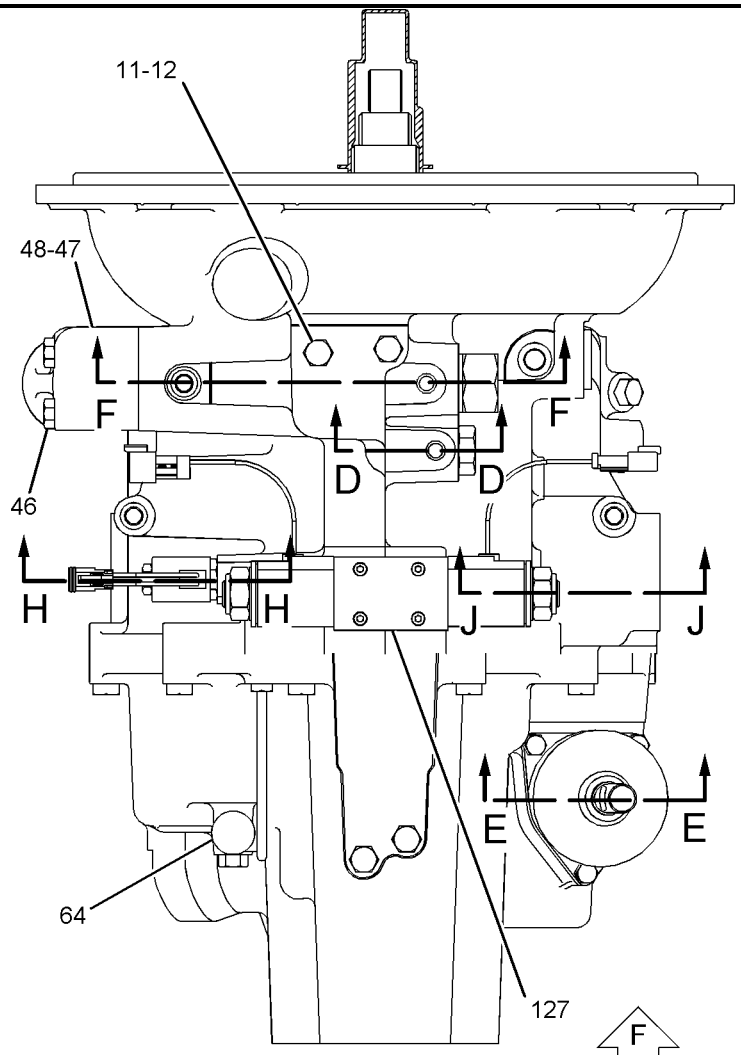

TOP VIEW

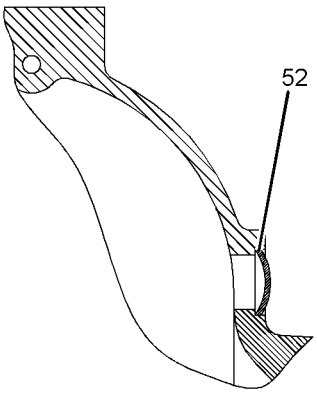

SECTION J-J

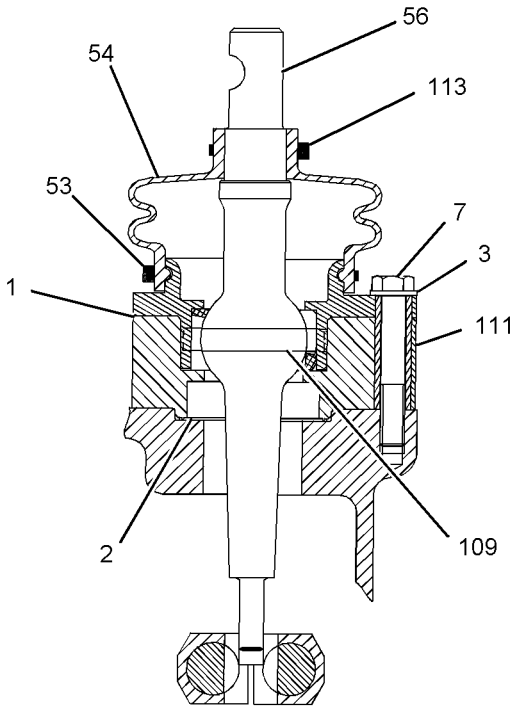

SECTION E-E

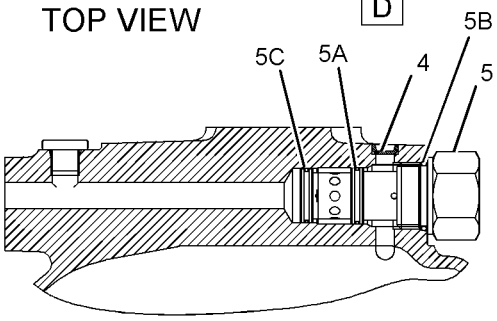

SECTION F-F

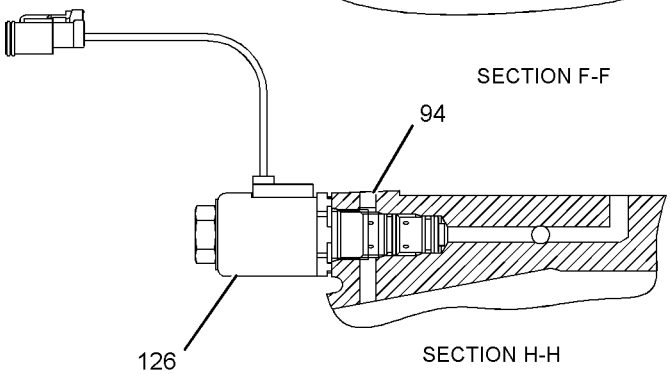

SECTION H-H

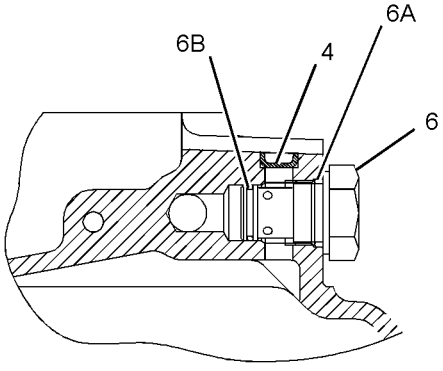

SECTION D-D

GRAPHIC #3 **<END>** g01010751

121-4036 VALVE GP-SOLENOID

S/N: BFP12900-UP; CXP940-UP
PART OF 201-8562 TRANSMISSION GP-DIRECT DRIVE
AN ATTACHMENT

SMCS-3174 **i01517232**

NOTE	REF NO	GRAPHIC REF	PART NUMBER	QTY	PART NAME 1 2 3 4 5 6 (PRODUCT LEVEL)	SEE PAGE
	1	1	**3J-9196**	1	NUT-JAM (1/2-20 THD)	
	2	1	**122-1672**	1	CARTRIDGE AS	
	3	1	**130-0013**	1	COIL AS	
	4	1	**1S-9593**	2	STRAP-CABLE	
	5	1	**3E-3362**	1	WEDGE-PLUG LOCK (2 PIN)	
	6	1	**186-3736**	2	SOCKET-CONNECTOR	
	7	1	**155-2270**	1	KIT-CONNECTING PLUG (2 PIN)	
					(KIT SERVICES PLUG AS. AND WEDGE)	
					AVAILABLE REPAIR KIT(S):	
			122-1135	1	KIT-SEAL	

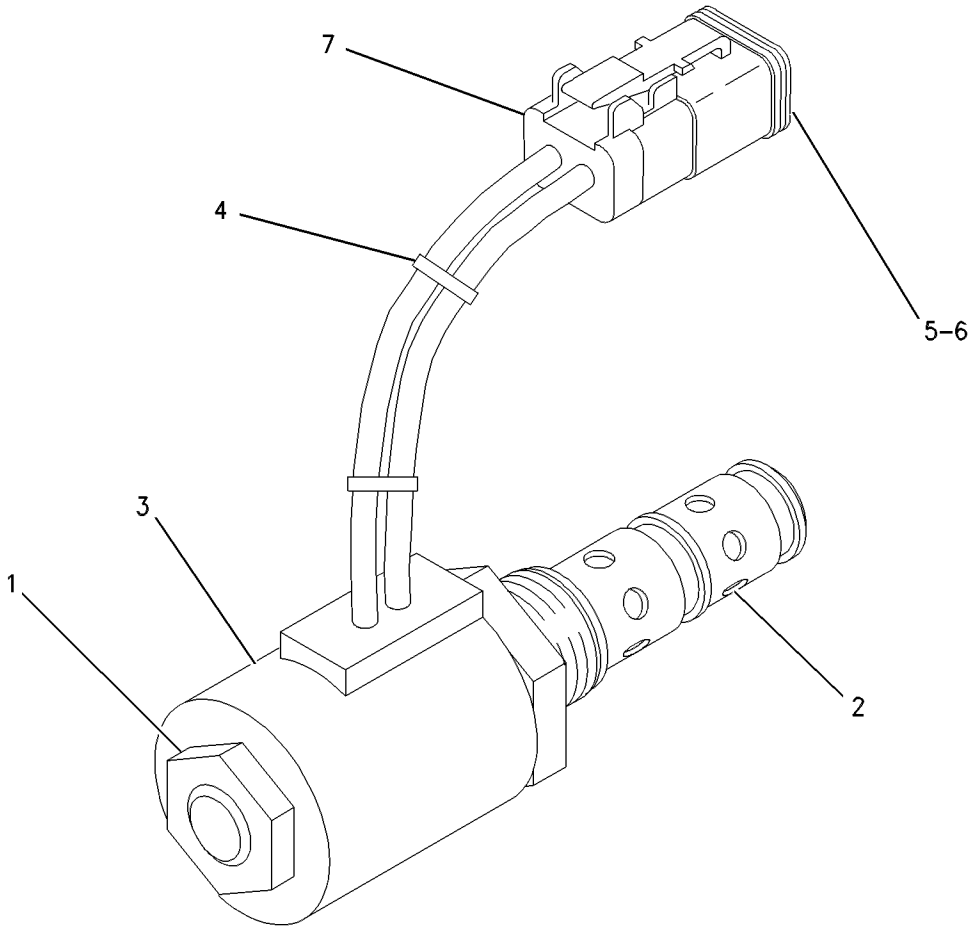

GRAPHIC #1 **<END>** g00582971

223-8181 VALVE GP-SOLENOID—TRANSMISSION

S/N: BFP12900-UP; CXP940-UP
PART OF 201-8561, 201-8562 TRANSMISSION GP-DIRECT DRIVE
AN ATTACHMENT

SMCS-3174 **i01958696**

NOTE	REF NO	GRAPHIC REF	PART NUMBER	QTY	PART NAME 1 2 3 4 5 6 (PRODUCT LEVEL)	SEE PAGE
	1	1	**117-2911**	1	COIL AS	
		1	**1S-9593**	2	STRAP-CABLE	
		1	**102-8802**	1	KIT-RECEPTACLE (2 PIN)	
		1	**3E-3365**	1	WEDGE-RECEPTACLE LOCK (2 PIN)	
		1	**186-3735**	2	PIN-CONNECTOR	
	2	1	**130-0912**	1	COIL AS	
		1	**1S-9593**	2	STRAP-CABLE	
		1	**102-8803**	1	KIT-RECEPTACLE (3 PIN)	
		1	**3E-3371**	1	WEDGE-RECEPTACLE LOCK (3 PIN)	
		1	**186-3735**	2	PIN-CONNECTOR	
		1	**8T-8737**	1	PLUG-SEAL	
	3	1	**143-6227**	1	PLUG-ORIFICE	
	4	1	**202-0040**	2	NUT-LOCKING	
	5	1	**061-8639**	2	SEAL-O-RING	
	6	1	**143-4655**	2	WASHER (M18.4X24.8X0.8MM THK)	
	7	1	**8L-2779**	4	SEAL-O-RING	

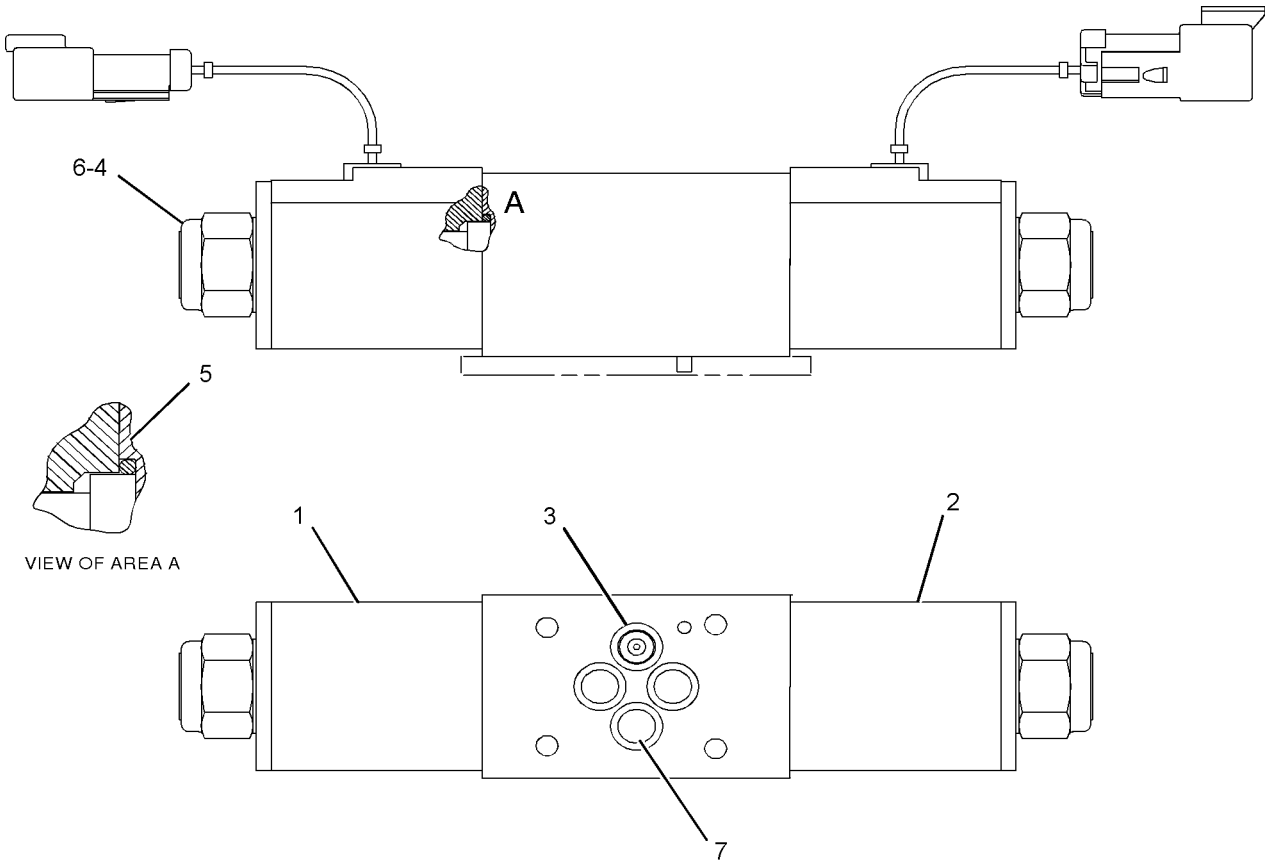

GRAPHIC #1 **<END>** g01017996

6D-0337 VALVE GP-TIRE

S/N: BFP12900-UP; CXP940-UP

PART OF 112-9332, 112-9334, 112-9337, 127-4289, 127-4290, 9R-2822 WHEEL & TIRE GP

AN ATTACHMENT

SMCS-4203 **i01720866**

NOTE	REF NO	GRAPHIC REF	PART NUMBER	QTY	PART NAME 1 2 3 4 5 6 (PRODUCT LEVEL)	SEE PAGE
	1	1	**6D-0443**	1	HOUSING AS-CORE	
	2	1	**2D-2628**	1	CORE-VALVE	
	3	1	**2D-2633**	1	CAP	
	4	1	**8D-2707**	1	SPUD AS	
	5	1	**2D-2629**	1	GROMMET	
	6	1	**2D-2630**	1	WASHER	
	7	1	**2D-2631**	1	NUT (.482-26 THD)	

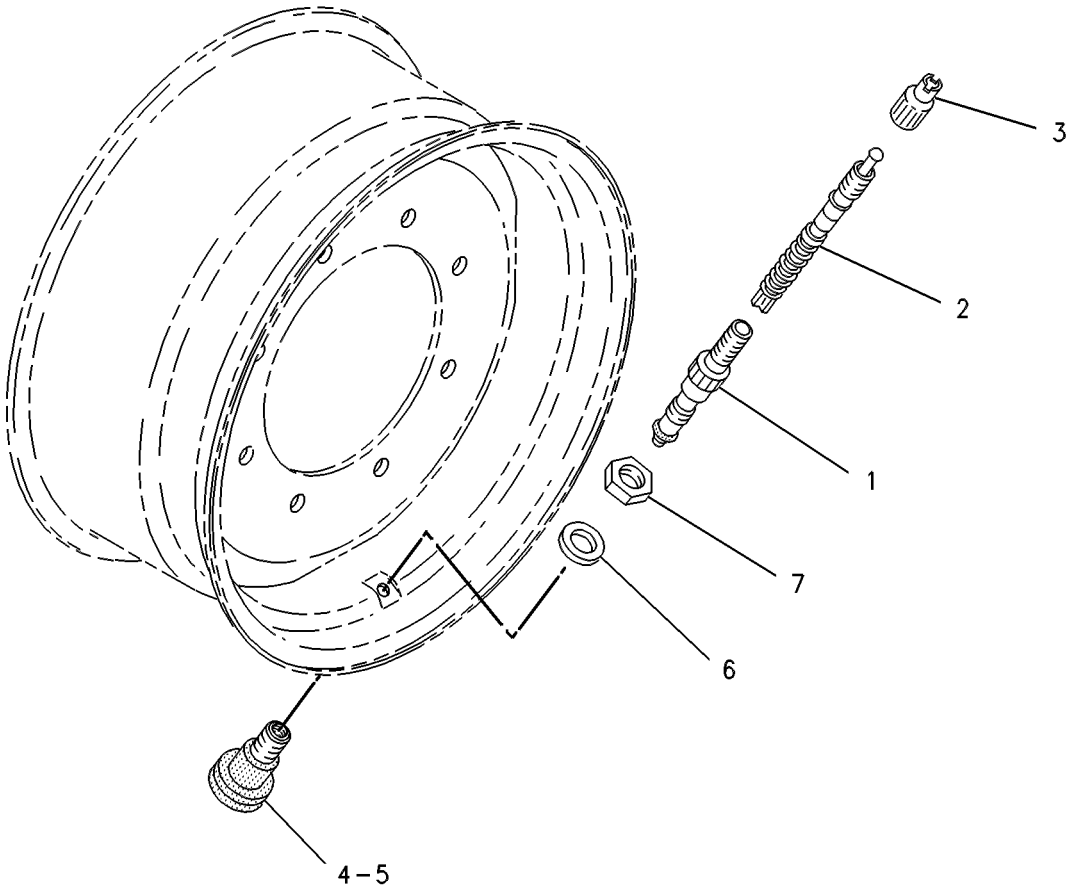

GRAPHIC #1 **<END>** g00121904

201-1920 VALVE GP-TIRE

S/N: BFP12900-UP; CXP940-UP
PART OF 201-1863, 201-1864, 201-1875, 201-1876, 201-1878 WHEEL & TIRE GP
AN ATTACHMENT

SMCS-4203 **i01550599**

NOTE	PART NUMBER	QTY	PART NAME 1 2 3 4 5 6 (PRODUCT LEVEL)	SEE PAGE
	6D-0337	1	VALVE GP-TIRE	
	6D-0443	1	HOUSING AS-CORE	
	2D-2628	1	CORE-VALVE	
	2D-2633	1	CAP	
	8D-2707	1	SPUD AS	
	2D-2629	1	GROMMET	
	2D-2630	1	WASHER-RING	
	2D-2631	1	NUT (.482-26 THD)	

<END>

229-2327 WHEEL & TIRE AR–2 WHEEL DRIVE

S/N: BFP12900-UP
AN ATTACHMENT

SMCS-4201, 4202, 4203, 4208, 4209 **i01935250**

NOTE	PART NUMBER	QTY	PART NAME 1 2 3 4 5 6 (PRODUCT LEVEL)	SEE PAGE
Y	*112-9334*	1	WHEEL & TIRE GP (REAR)	446
Y	*201-1878*	1	WHEEL & TIRE GP (FRONT)	450

Y-SEPARATE ILLUSTRATION

<END>

229-2328 WHEEL & TIRE AR–ALL WHEEL DRIVE

S/N: BFP12900-UP
AN ATTACHMENT

SMCS-4201, 4202, 4203, 4208, 4209 **i01935249**

NOTE	PART NUMBER	QTY	PART NAME 1 2 3 4 5 6 (PRODUCT LEVEL)	SEE PAGE
Y	*112-9334*	1	WHEEL & TIRE GP (REAR)	446
Y	*201-1876*	1	WHEEL & TIRE GP (FRONT)	450

Y-SEPARATE ILLUSTRATION

<END>

229-2329 WHEEL & TIRE AR–2 WHEEL DRIVE

S/N: BFP12900-UP
AN ATTACHMENT

SMCS-4201, 4202, 4203, 4208, 4209 **i01935248**

NOTE	PART NUMBER	QTY	PART NAME 1 2 3 4 5 6 (PRODUCT LEVEL)	SEE PAGE
Y	*127-4290*	1	WHEEL & TIRE GP (REAR)	447
Y	*201-1864*	1	WHEEL & TIRE GP (FRONT)	449

Y-SEPARATE ILLUSTRATION

<END>

229-2330 WHEEL & TIRE AR–2 WHEEL DRIVE, ALL WHEEL DRIVE

S/N: BFP12900-UP

AN ATTACHMENT

SMCS-4201, 4202, 4203, 4208, 4209 **i01935247**

NOTE	PART NUMBER	QTY	PART NAME 1 2 3 4 5 6 (PRODUCT LEVEL)	SEE PAGE
Y	*112-9334*	1	WHEEL & TIRE GP (REAR)	446
Y	*201-1864*	1	WHEEL & TIRE GP (FRONT)	449

Y-SEPARATE ILLUSTRATION

<END>

231-8118 WHEEL & TIRE AR–2 WHEEL DRIVE

S/N: BFP12900-UP

AN ATTACHMENT

SMCS-4201, 4202, 4203, 4208, 4209 **i01935246**

NOTE	PART NUMBER	QTY	PART NAME 1 2 3 4 5 6 (PRODUCT LEVEL)	SEE PAGE
Y	*127-4285*	1	WHEEL & TIRE GP (REAR)	447
Y	*201-1877*	1	WHEEL & TIRE GP (FRONT)	450

Y-SEPARATE ILLUSTRATION

<END>

238-0297 WHEEL & TIRE AR–2 WHEEL DRIVE

S/N: BFP12900-UP

AN ATTACHMENT

SMCS-4201, 4202, 4203, 4208, 4209 **i01935244**

NOTE	PART NUMBER	QTY	PART NAME 1 2 3 4 5 6 (PRODUCT LEVEL)	SEE PAGE
Y	*112-9331*	1	WHEEL & TIRE GP (REAR)	445
Y	*201-1877*	1	WHEEL & TIRE GP (FRONT)	450

Y-SEPARATE ILLUSTRATION

<END>

238-0298 WHEEL & TIRE AR–A WHEEL DRIVE

S/N: BFP12900-UP; CXP940-UP

AN ATTACHMENT

SMCS-4201, 4202, 4203, 4208, 4209 **i01935242**

NOTE	PART NUMBER	QTY	PART NAME 1 2 3 4 5 6 (PRODUCT LEVEL)	SEE PAGE
Y	*112-9331*	1	WHEEL & TIRE GP (REAR)	445
Y	*201-1874*	1	WHEEL & TIRE GP (FRONT)	449

Y-SEPARATE ILLUSTRATION

<END>

238-0299 WHEEL & TIRE AR—ALL WHEEL DRIVE

S/N: BFP12900-UP
AN ATTACHMENT

SMCS-4201, 4202, 4203, 4208, 4209 **i01935241**

NOTE	PART NUMBER	QTY	PART NAME 1 2 3 4 5 6 (PRODUCT LEVEL)	SEE PAGE
Y	*127-4285*	1	WHEEL & TIRE GP (REAR)	447
Y	*201-1862*	1	WHEEL & TIRE GP (FRONT)	448
Y-SEPARATE ILLUSTRATION				

<END>

238-0300 WHEEL & TIRE AR—2 WHEEL DRIVE, ALL WHEEL DRIVE

S/N: BFP12900-UP
AN ATTACHMENT

SMCS-4201, 4202, 4203, 4208, 4209 **i01935240**

NOTE	PART NUMBER	QTY	PART NAME 1 2 3 4 5 6 (PRODUCT LEVEL)	SEE PAGE
Y	*112-9331*	1	WHEEL & TIRE GP (REAR)	445
Y	*201-1862*	1	WHEEL & TIRE GP (FRONT)	448
Y-SEPARATE ILLUSTRATION				

<END>

9R-2822 WHEEL & TIRE GP—FRONT

S/N: BFP12900-UP
PART OF 133-3213 WHEEL & TIRE GP
AN ATTACHMENT

SMCS-4201, 4202, 4203, 4208, 4209 **i01935276**

NOTE	PART NUMBER	QTY	PART NAME 1 2 3 4 5 6 (PRODUCT LEVEL)	SEE PAGE
	9R-1956	1	TIRE (11L-16)	
Y	**6D-0337**	1	VALVE GP-TIRE	442
	9R-0315	1	WHEEL AS (FRONT)	
Y-SEPARATE ILLUSTRATION				

<END>

112-9331 WHEEL & TIRE GP—REAR

S/N: BFP12900-UP; CXP940-UP
PART OF 238-0297, 238-0298, 238-0300 WHEEL & TIRE AR
AN ATTACHMENT

SMCS-4201, 4202, 4203, 4208, 4209 **i01935274**

NOTE	PART NUMBER	QTY	PART NAME 1 2 3 4 5 6 (PRODUCT LEVEL)	SEE PAGE
	141-7221	16	NUT-HEX FLANGE (3/4-16 THD)	
Y	*112-9334*	1	WHEEL & TIRE GP (RH)	446
Y	*112-9332*	1	WHEEL & TIRE GP (LH)	446
Y-SEPARATE ILLUSTRATION				

<END>

112-9332 WHEEL & TIRE GP–LH

S/N: BFP12900-UP; CXP940-UP
PART OF 112-9331 WHEEL & TIRE GP
AN ATTACHMENT

SMCS-4201, 4202, 4203, 4208, 4209 **i01935273**

NOTE	PART NUMBER	QTY	PART NAME 1 2 3 4 5 6 (PRODUCT LEVEL)	SEE PAGE
	9R-1882	1	TIRE (19.5LX24-10PLY)	
Y	**6D-0337**	1	VALVE GP-TIRE	442
	112-4411	1	WHEEL AS (REAR)	

Y-SEPARATE ILLUSTRATION

<END>

112-9334 WHEEL & TIRE GP–RH

S/N: BFP12900-UP; CXP940-UP
PART OF 229-2327, 229-2328, 229-2330 WHEEL & TIRE AR, 112-9331 WHEEL & TIRE GP
AN ATTACHMENT

SMCS-4201, 4202, 4203, 4208, 4209 **i01935272**

NOTE	PART NUMBER	QTY	PART NAME 1 2 3 4 5 6 (PRODUCT LEVEL)	SEE PAGE
	9R-1882	1	TIRE (19.5LX24-10PLY)	
Y	**6D-0337**	1	VALVE GP-TIRE	442
	112-4411	1	WHEEL AS (REAR)	

Y-SEPARATE ILLUSTRATION

<END>

112-9337 WHEEL & TIRE GP–RH

S/N: BFP12900-UP
PART OF 229-2330 WHEEL & TIRE AR
AN ATTACHMENT

SMCS-4201, 4202, 4203, 4208, 4209 **i01935267**

NOTE	PART NUMBER	QTY	PART NAME 1 2 3 4 5 6 (PRODUCT LEVEL)	SEE PAGE
	112-9338	1	TIRE (340/80R18)	
Y	**6D-0337**	1	VALVE GP-TIRE	442
	135-0786	1	WHEEL AS (FRONT)	

Y-SEPARATE ILLUSTRATION

<END>

127-4285 WHEEL & TIRE GP–REAR

S/N: BFP12900-UP
PART OF 231-8118, 238-0299 WHEEL & TIRE AR
AN ATTACHMENT

SMCS-4201, 4202, 4203, 4208, 4209 **i01935266**

NOTE	PART NUMBER	QTY	PART NAME 1 2 3 4 5 6 (PRODUCT LEVEL)	SEE PAGE
	141-7221	16	NUT-HEX FLANGE (3/4-16 THD)	
Y	*127-4290*	1	WHEEL & TIRE GP (RH)	447
Y	*127-4289*	1	WHEEL & TIRE GP (LH)	447

Y-SEPARATE ILLUSTRATION

<END>

127-4289 WHEEL & TIRE GP–LH

S/N: BFP12900-UP
PART OF 127-4285 WHEEL & TIRE GP
AN ATTACHMENT

SMCS-4201, 4202, 4203, 4208, 4209 **i01935265**

NOTE	PART NUMBER	QTY	PART NAME 1 2 3 4 5 6 (PRODUCT LEVEL)	SEE PAGE
	127-4293	1	TIRE (19.5LR-24)	
Y	**6D-0337**	1	VALVE GP-TIRE	442
	112-4411	1	WHEEL AS (REAR)	

Y-SEPARATE ILLUSTRATION

<END>

127-4290 WHEEL & TIRE GP–RH

S/N: BFP12900-UP
PART OF 229-2329 WHEEL & TIRE AR, 127-4285 WHEEL & TIRE GP
AN ATTACHMENT

SMCS-4201, 4202, 4203, 4208, 4209 **i01935263**

NOTE	PART NUMBER	QTY	PART NAME 1 2 3 4 5 6 (PRODUCT LEVEL)	SEE PAGE
	127-4293	1	TIRE (19.5LR-24)	
Y	**6D-0337**	1	VALVE GP-TIRE	442
	112-4411	1	WHEEL AS (REAR)	

Y-SEPARATE ILLUSTRATION

<END>

133-3213 WHEEL & TIRE GP—FRONT

S/N: BFP12900-UP
PART OF 231-8118 WHEEL & TIRE AR
AN ATTACHMENT

SMCS-4201, 4202, 4203, 4208, 4209 **i01935262**

NOTE	PART NUMBER	QTY	PART NAME 1 2 3 4 5 6 (PRODUCT LEVEL)	SEE PAGE
	141-7221	16	NUT-HEX FLANGE (3/4-16 THD)	
Y	*9R-2822*	2	WHEEL & TIRE GP (FRONT)	445

Y-SEPARATE ILLUSTRATION

<END>

201-1862 WHEEL & TIRE GP—FRONT

S/N: BFP12900-UP
PART OF 238-0299, 238-0300 WHEEL & TIRE AR
AN ATTACHMENT

SMCS-4201, 4202, 4203, 4208, 4209 **i01935258**

NOTE	PART NUMBER	QTY	PART NAME 1 2 3 4 5 6 (PRODUCT LEVEL)	SEE PAGE
	201-1915	1	MOUNTING GP-WHEEL	
	8T-5439	16	WASHER (21.5X45X6MM THK)	
	201-1919	16	NUT (M20X1.5 THD)	
Y	*201-1863*	1	WHEEL & TIRE GP (LH)	448
Y	*201-1864*	1	WHEEL & TIRE GP (RH)	449

Y-SEPARATE ILLUSTRATION

<END>

201-1863 WHEEL & TIRE GP—LH

S/N: BFP12900-UP
PART OF 201-1862 WHEEL & TIRE GP
AN ATTACHMENT

SMCS-4201, 4202, 4203, 4208, 4209 **i01935257**

NOTE	PART NUMBER	QTY	PART NAME 1 2 3 4 5 6 (PRODUCT LEVEL)	SEE PAGE
	112-9338	1	TIRE (340/80R18)	
Y	*201-1920*	1	VALVE GP-TIRE	443
	202-6186	1	WHEEL AS (FRONT)	

Y-SEPARATE ILLUSTRATION

<END>

201-1864 WHEEL & TIRE GP–RH

S/N: BFP12900-UP
PART OF 229-2329, 229-2330 WHEEL & TIRE AR, 201-1862 WHEEL & TIRE GP
AN ATTACHMENT

SMCS-4201, 4202, 4203, 4208, 4209 **i01935256**

NOTE	PART NUMBER	QTY	PART NAME 1 2 3 4 5 6 (PRODUCT LEVEL)	SEE PAGE
	112-9338	1	TIRE (340/80R18)	
Y	*201-1920*	1	VALVE GP-TIRE	443
	202-6186	1	WHEEL AS (FRONT)	

Y-SEPARATE ILLUSTRATION

<END>

201-1874 WHEEL & TIRE GP–FRONT

S/N: BFP12900-UP; CXP940-UP
PART OF 238-0298 WHEEL & TIRE AR
AN ATTACHMENT

SMCS-4201, 4202, 4203, 4208, 4209 **i01935255**

NOTE	PART NUMBER	QTY	PART NAME 1 2 3 4 5 6 (PRODUCT LEVEL)	SEE PAGE
	201-1915	1	MOUNTING GP-WHEEL	
	8T-5439	16	WASHER (21.5X45X6MM THK)	
M	**178-1304**	16	NUT-HEX FLANGE (M20X1.5 THD)	
Y	*201-1875*	1	WHEEL & TIRE GP (LH)	449
Y	*201-1876*	1	WHEEL & TIRE GP (RH)	450

M-METRIC PART
Y-SEPARATE ILLUSTRATION

<END>

201-1875 WHEEL & TIRE GP–LH

S/N: BFP12900-UP; CXP940-UP
PART OF 201-1874 WHEEL & TIRE GP
AN ATTACHMENT

SMCS-4201, 4202, 4203, 4208, 4209 **i01935254**

NOTE	PART NUMBER	QTY	PART NAME 1 2 3 4 5 6 (PRODUCT LEVEL)	SEE PAGE
	9R-6481	1	TIRE (12.5X18-10PLY)	
Y	*201-1920*	1	VALVE GP-TIRE	443
	202-6186	1	WHEEL AS (FRONT)	

Y-SEPARATE ILLUSTRATION

<END>

201-1876 WHEEL & TIRE GP—RH

S/N: BFP12900-UP; CXP940-UP
PART OF 229-2328 WHEEL & TIRE AR, 201-1874 WHEEL & TIRE GP
AN ATTACHMENT

SMCS-4201, 4202, 4203, 4208, 4209 **i01935253**

NOTE	PART NUMBER	QTY	PART NAME 1 2 3 4 5 6 (PRODUCT LEVEL)	SEE PAGE
	9R-6481	1	TIRE (12.5X18-10PLY)	
Y	*201-1920*	1	VALVE GP-TIRE	443
	202-6186	1	WHEEL AS (FRONT)	

Y-SEPARATE ILLUSTRATION

<END>

201-1877 WHEEL & TIRE GP—FRONT

S/N: BFP12900-UP
PART OF 231-8118, 238-0297 WHEEL & TIRE AR
AN ATTACHMENT

SMCS-4201, 4202, 4203, 4208, 4209 **i01935252**

NOTE	PART NUMBER	QTY	PART NAME 1 2 3 4 5 6 (PRODUCT LEVEL)	SEE PAGE
	201-1915	1	MOUNTING GP-WHEEL	
	8T-5439	16	WASHER (21.5X45X6MM THK)	
	201-1919	16	NUT (M20X1.5 THD)	
Y	*201-1878*	2	WHEEL & TIRE GP (FRONT)	450

Y-SEPARATE ILLUSTRATION

<END>

201-1878 WHEEL & TIRE GP—FRONT

S/N: BFP12900-UP
PART OF 229-2327 WHEEL & TIRE AR, 201-1877 WHEEL & TIRE GP
AN ATTACHMENT

SMCS-4201, 4202, 4203, 4208, 4209 **i01935251**

NOTE	PART NUMBER	QTY	PART NAME 1 2 3 4 5 6 (PRODUCT LEVEL)	SEE PAGE
	9R-1956	1	TIRE (11L-16)	
Y	*201-1920*	1	VALVE GP-TIRE	443
	195-6341	1	WHEEL AS (FRONT)	

Y-SEPARATE ILLUSTRATION

<END>

129-0138 BRAKE GP-PARKING

S/N: BFP12900-UP; CXP940-UP

PART OF 184-6570 CONTROL GP-PARKING BRAKE

SMCS-3275, 3276, 3277, 4267 **i02021491**

NOTE	REF NO	GRAPHIC REF	PART NUMBER	QTY	PART NAME 1 2 3 4 5 6 (PRODUCT LEVEL)	SEE PAGE
	1	1	**230-3809**	1	BRAKE AS	
		1	**230-3810**	1	KIT-BRAKE LINING	
					(INCLUDES LINING AND SPRING)	
		1	**230-3811**	1	KIT-BRAKE CALIPER	
					(INCLUDES LINING,NUTS,WASHERS,BOOT,	
					THRUST BEARING,BOLT,SLEEVE/BOLT AS,SLEEVE PROTECTORS)	
		1	**166-9413**	1	KIT-CAM (COUNTERCLOCKWISE)	
					(INCLUDES CAM,BEARING,RETAINER)	
	2	1	**124-9464**	1	BRACKET	
	3	1	**130-7282**	1	BRACKET	

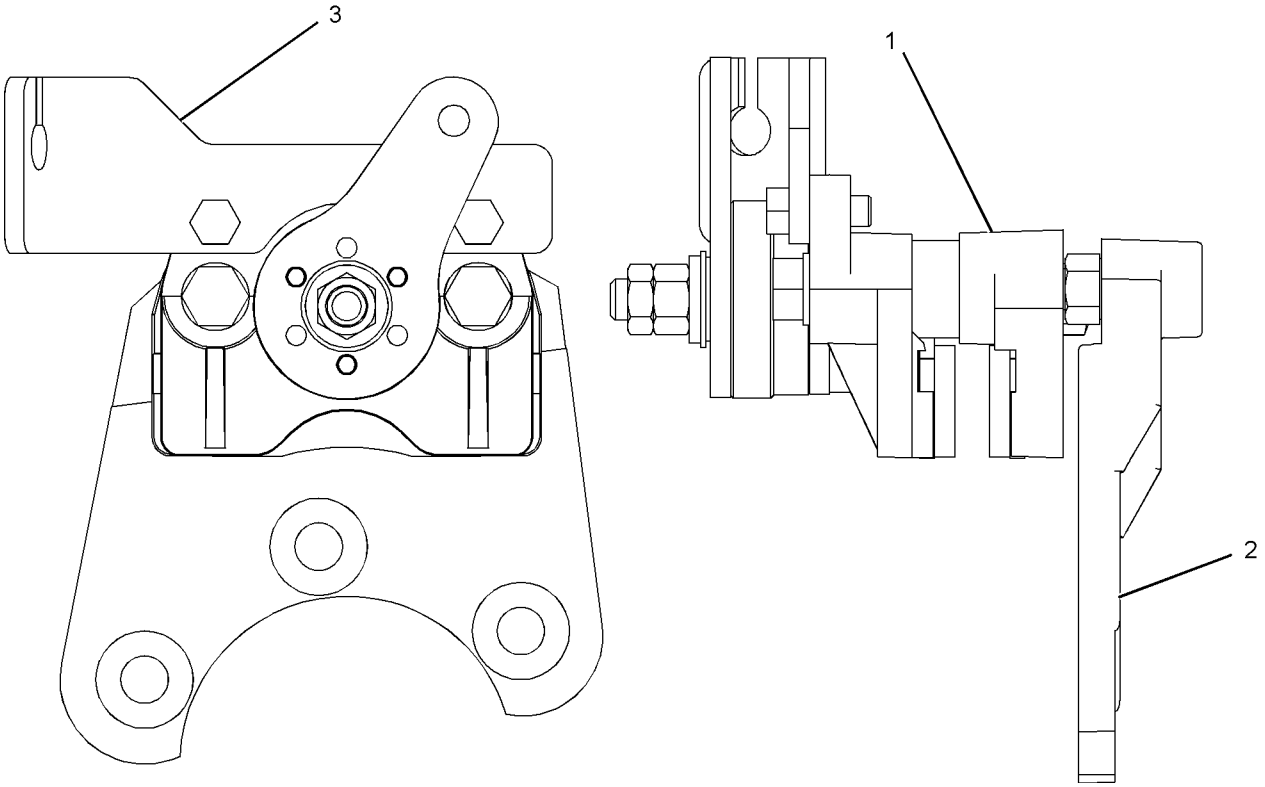

GRAPHIC #1 **<END>** g01043911

163-0754 CONTROL GP-PARKING BRAKE

S/N: BFP12900-UP; CXP940-UP

PART OF 184-6570 CONTROL GP-PARKING BRAKE

SMCS-4282, 4284 **i01380364**

NOTE	REF NO	GRAPHIC REF	PART NUMBER	QTY	PART NAME 1 2 3 4 5 6 (PRODUCT LEVEL)	SEE PAGE
Y	1	1	**163-0753**	1	LEVER GP-HAND CONTROL	457
	2	1	**163-0755**	1	CABLE GP	
		1	**6V-8759**	1	RING-RETAINING	

Y-SEPARATE ILLUSTRATION

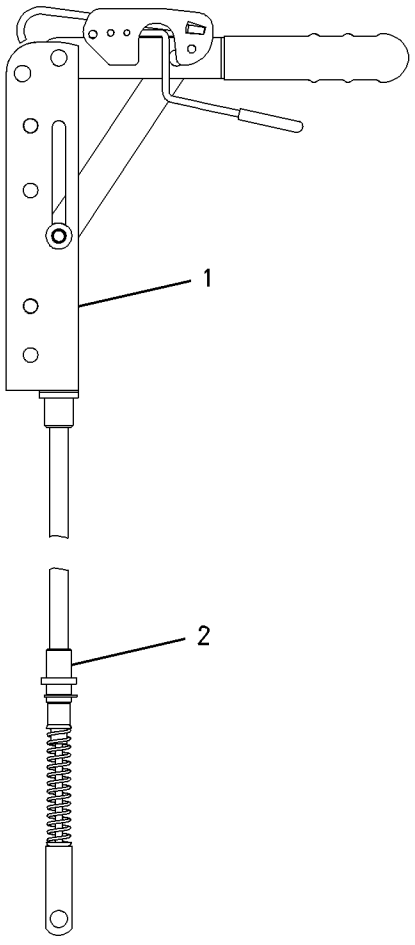

GRAPHIC #1 **<END>** g00729449

BRAKING SYSTEM

184-6570 CONTROL GP-PARKING BRAKE

S/N: BFP12900-UP; CXP940-UP
PART OF 184-7970 POWER TRAIN AR

SMCS-4282, 4284 **i01949822**

NOTE	REF NO	GRAPHIC REF	PART NUMBER	QTY	PART NAME 1 2 3 4 5 6 (PRODUCT LEVEL)	SEE PAGE
Y	1	1	**129-0138**	1	BRAKE GP-PARKING	451
	2	1	**154-5416**	1	SWITCH AS (PARKING BRAKE ALARM)	
		1	**155-2270**	1	KIT-CONNECTING PLUG (2 PIN)	
					(KIT SERVICES PLUG AS AND WEDGE)	
Y	3	1	**163-0754**	1	CONTROL GP-PARKING BRAKE	452
	4	1	**180-7245**	1	BRACKET AS	
M	5	1	**6V-9189**	2	LOCKNUT	
	6	1	**7M-0242**	3	WASHER (5MM THK)	
	7	1	**8S-4734**	3	BOLT (9/16-12X2 IN)	
M	8	1	**8T-0276**	2	BOLT (M8X1.25X45MM)	
	9	1	**8T-4224**	2	WASHER-HARD (8.8X16X2MM THK)	
	10	1	**9R-2806**	1	PIN	
	11	1	**9R-2807**	1	CLIP	
M	12	1	**9X-2043**	4	SCREW-TRUSS HEAD (M6X1X14MM)	

M-METRIC PART
Y-SEPARATE ILLUSTRATION

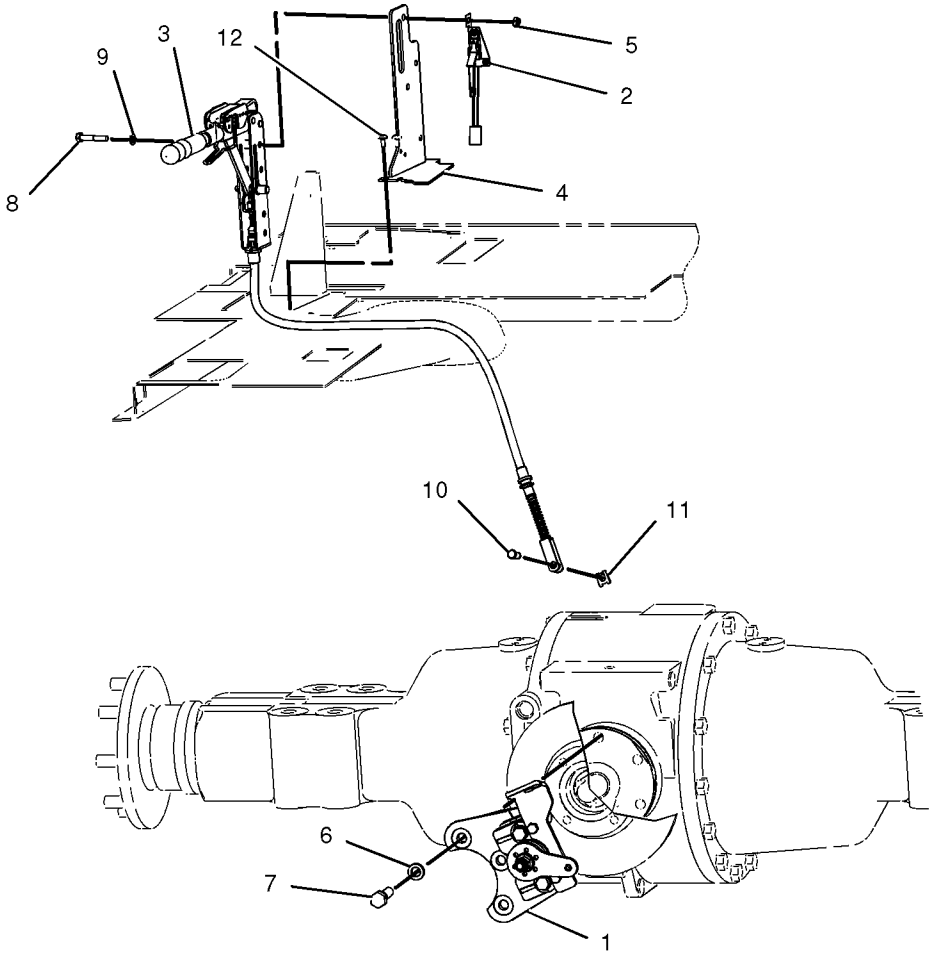

GRAPHIC #1 **<END>** g01014688

BRAKING SYSTEM

165-6918 CONTROL GP-SERVICE BRAKE

S/N: BFP12900-UP; CXP940-UP
PART OF 184-7970 POWER TRAIN AR

SMCS-4269 **i01943924**

NOTE	REF NO	GRAPHIC REF	PART NUMBER	QTY	PART NAME 1 2 3 4 5 6 (PRODUCT LEVEL)	SEE PAGE
Y	1	1	**4E-8619**	1	RESERVOIR GP-BRAKE	458
	2	1	**5G-8108**	1	CLAMP	
	3	1	**6S-8620**	4	CLAMP-HOSE	
	4	1	**9R-8189**	2	PUSHROD	
	5	1	**9R-9334**	1	BRACKET AS	
		1	**5G-8108**		CLAMP	
	6	1	**105-8034**	2	SWITCH AS-LIMIT (BRAKE)	
I	7	1	**155-8154**	2	HOSE AS	
	8	1	**165-6595**	1	PIN AS	
	9	1	**165-6599**	2	ROD END (YOKE)	
	10	1	**165-6601**	2	SPACER	
	11	1	**165-6602**	2	SPRING	
	12	1	**165-6603**	1	PLATE	
	13	1	**167-8160**	1	PLATE AS	
	14	1	*167-8161*	1	CYLINDER AS	
		1	**201-2157**	1	KIT-SERVICE	
		1	**113-5049**	1	TUBE AS	
I	15	1	**167-8164**	2	HOSE AS	
	16	1	**171-8623**	1	GROMMET	
	17	1	**174-7820**	2	TUBE AS	
	18	1	*184-6581*	2	CONNECTOR AS	
					(EACH INCLUDES)	
		1	**3J-1907**	1	SEAL-O-RING	
		1	**195-5830**	1	CONNECTOR	
C	19	1	**205-3759**	1	BRACKET AS	
M		1	**8T-7547**	4	BOLT (M8X1.25X30MM)	
C	20	1	**205-3760**	1	PEDAL AS-LH	
		1	**165-6585**	1	BEARING-SLEEVE	
C	21	1	**205-3761**	1	PEDAL AS-RH	
		1	**165-6585**	1	BEARING-SLEEVE	
	22	1	**212-3518**	1	PLATE AS	
	23	1	*148-8325*	2	CONNECTOR GP	
					(EACH INCLUDES)	
		1	**3J-1907**	1	SEAL-O-RING	
		1	**4J-5477**	1	SEAL-O-RING	
		1	**6V-8641**	1	CONNECTOR	
	24	1	*148-8368*	2	ELBOW GP	
					(EACH INCLUDES)	
		1	**3J-1907**	1	SEAL-O-RING	
		1	**4J-5477**	1	SEAL-O-RING	
		1	**6V-8627**	1	ELBOW	
	25	1	**1A-0621**	2	GROMMET	
	26	1	**1A-5350**	2	CLIP	
	27	1	**1H-1200**	1	PIN-SPRING	
	28	1	**2P-1279**	2	LOCKNUT	
	29	1	**3S-2093**	1	STRAP-CABLE	
	30	1	**4J-5477**	4	SEAL-O-RING	
M	31	1	**5C-7261**	9	NUT (M8X1.25 THD)	
M	32	1	**8T-4133**	2	NUT (M10X1.5 THD)	
M	33	1	**8T-4138**	6	BOLT (M6X1X20MM)	
M	34	1	**8T-4189**	4	BOLT (M8X1.25X20MM)	
M	35	1	**8T-4200**	1	BOLT (M8X1.25X16MM)	
	36	1	**8T-4205**	6	WASHER-HARD (7.2X14.5X2MM THK)	
	37	1	**8T-4224**	14	WASHER-HARD (8.8X16X2MM THK)	
	38	1	**9R-2807**	2	CLIP	
	39	1	**9R-7138**	2	PIN-CLEVIS	

165-6918 **CONTROL GP-SERVICE BRAKE** ***(contd.)*** **i01943924**

NOTE	REF NO	GRAPHIC REF	PART NUMBER	QTY	PART NAME 1 2 3 4 5 6 (PRODUCT LEVEL)	SEE PAGE
M	40	1	**9X-2042**	7	SCREW-TRUSS HEAD (M6X1X12MM)	
E	41	1	**5P-1442**	2	HOSE (23.6CM)	

C-CHANGE FROM PREVIOUS TYPE
E-ORDER BY THE CENTIMETER
I-SEE HOSE FABRICATION GUIDE
M-METRIC PART
Y-SEPARATE ILLUSTRATION

165-6918 **CONTROL GP-SERVICE BRAKE** ***(contd.)*** **i01943924**

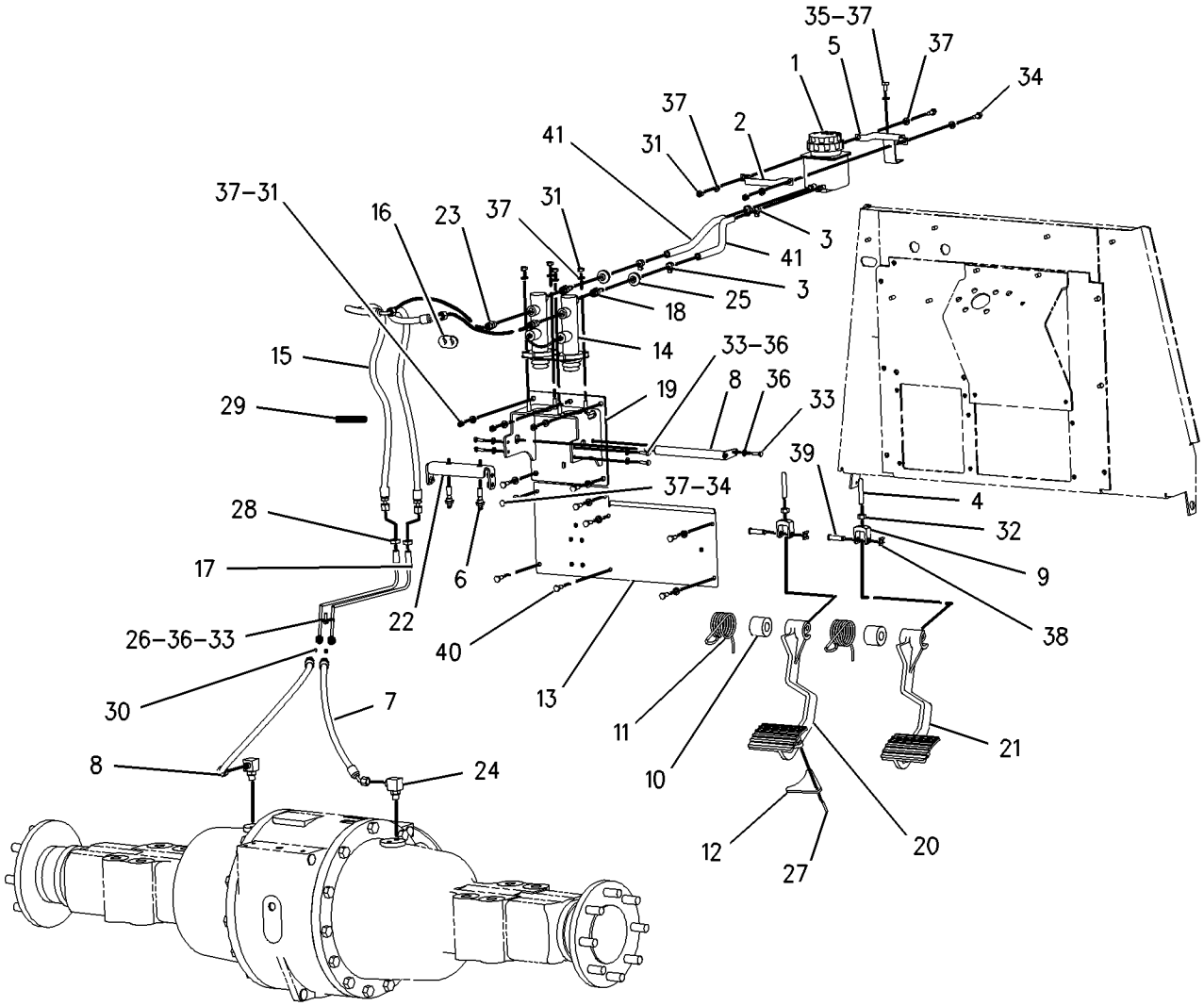

GRAPHIC #1 **<END>** g00906394

163-0753 LEVER GP-HAND CONTROL

S/N: BFP12900-UP; CXP940-UP

PART OF 163-0754 CONTROL GP-PARKING BRAKE

SMCS-4284 **i01548326**

NOTE	REF NO	GRAPHIC REF	PART NUMBER	QTY	PART NAME 1 2 3 4 5 6 (PRODUCT LEVEL)	SEE PAGE
	1	1	**7R-8239**	2	SPACER	
	2	1	**039-9133**	1	PIN	
	3	1	**164-9598**	1	GRIP	
	4	1	**164-9599**	1	COVER	
	5	1	**3B-4610**	1	PIN-COTTER	
	6	1	**8T-4224**	2	WASHER-HARD (8.8X16X2MM THK)	

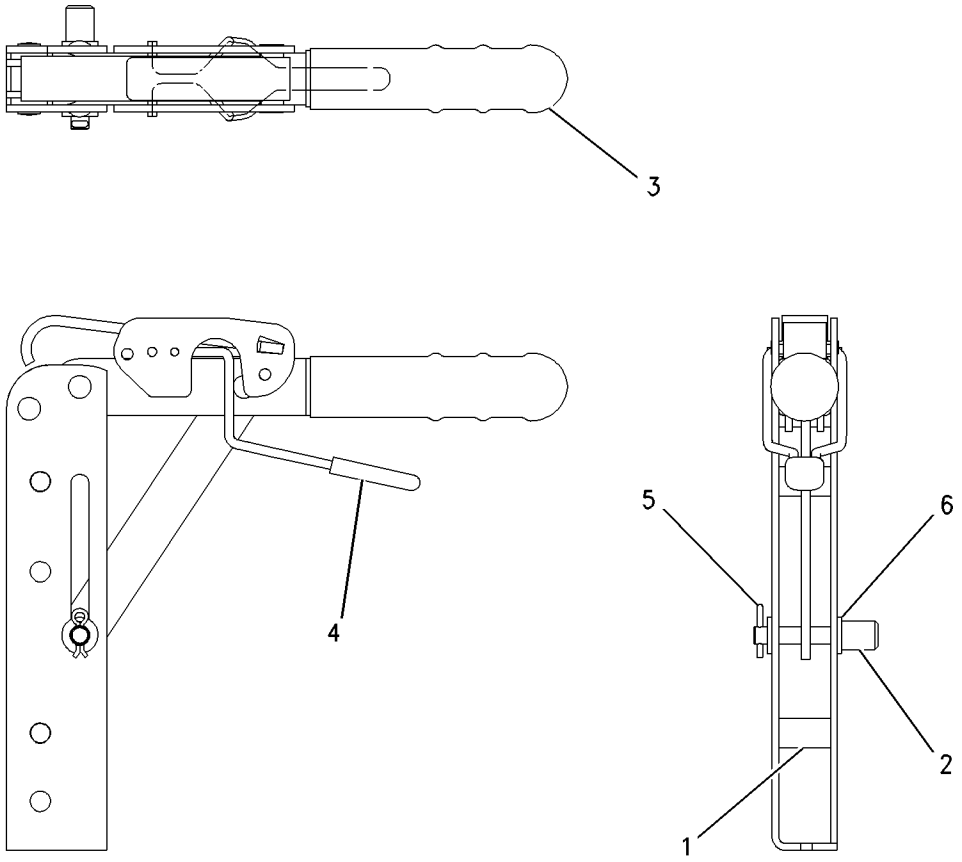

GRAPHIC #1 **<END>** g00729504

4E-8619 RESERVOIR GP-BRAKE

S/N: BFP12900-UP; CXP940-UP

PART OF 165-6918 CONTROL GP-SERVICE BRAKE

SMCS-4291 **i01772838**

NOTE	REF NO	GRAPHIC REF	PART NUMBER	QTY	PART NAME 1 2 3 4 5 6 (PRODUCT LEVEL)	SEE PAGE
	1	1	**7N-9737**	1	HOUSING-PLUG	
	2	1	**7N-7780**	1	PIN-CONNECTOR	
	3	1	**7N-7779**	1	SOCKET-CONNECTOR	
F			**8R-6263**	1	INDICATOR AS	
					AVAILABLE REPAIR KIT(S):	
			159-7907	1	KIT-BRAKE RESERVOIR	

F-NOT SHOWN

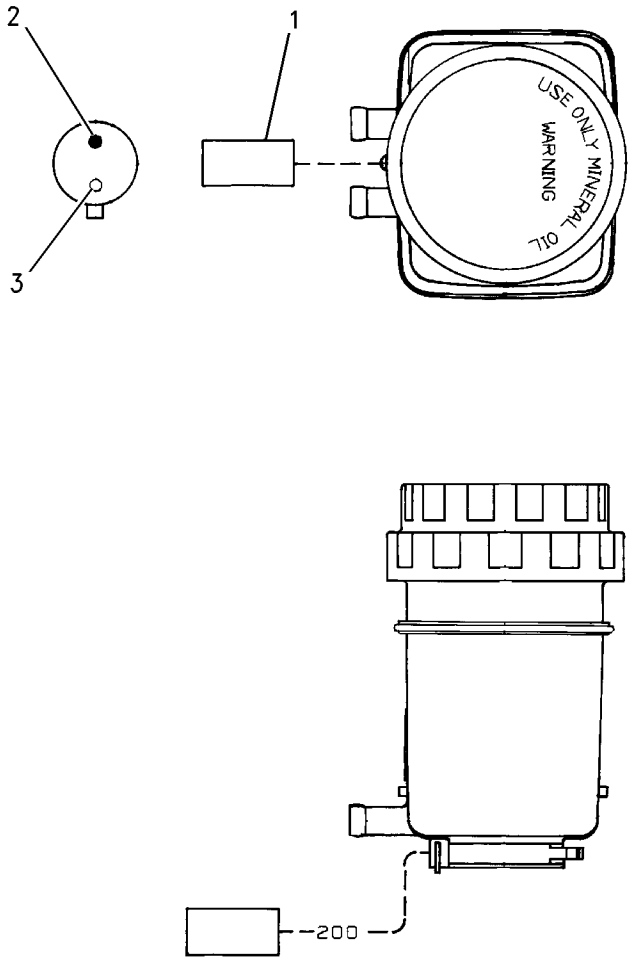

GRAPHIC #1 **<END>** g00906412

STEERING SYSTEM

189-1834 AXLE GP-FRONT

S/N: BFP12900-UP
PART OF 202-6198 AXLE GP-FRONT
AN ATTACHMENT

SMCS-3282 **i02016396**

NOTE	REF NO	GRAPHIC REF	PART NUMBER	QTY	PART NAME 1 2 3 4 5 6 (PRODUCT LEVEL)	SEE PAGE
	1	1	**154-5404**	2	BEARING	
	2	1	**198-7823**	4	BEARING AS	
	3	1	**198-7825**	4	SEAL	
	4	1	**198-7838**	4	PIN	
B	5	1	**198-7841**	4	SHIM (.15-MM THK)	
B	6	1	**198-7842**	4	SHIM (.2-MM THK)	
B	7	1	**198-7843**	4	SHIM (.5-MM THK)	
M	8	1	**199-0683**	16	BOLT (M16X2X38-MM)	
	9	1	**207-4254**	6	BOLT (STEER CYLINDER)	
	10	1	**207-4255**	2	PLUG	
	11	1	**207-4258**	2	NUT	
	12	1	**207-4260**	2	PLATE	
	13	1	**207-4262**	2	STOP	
	14	1	**207-4266**	2	RETAINER	
	15	1	**207-4268**	1	BEAM	
	16	1	**207-4271**	2	COVER	
	17	1	**207-4272**	2	TIE ROD GP	
					(EACH INCLUDES)	
		1	**204-3080**	1	BALL JOINT	
		1	**216-4459**	1	TIE ROD	
		1	**217-2885**	1	NUT	
	18	1	**214-5097**	1	CYLINDER GP-STEERING	
		1	**215-2023**	1	KIT-SEAL	
	19	1	**219-8798**	2	SEAL-LIP TYPE	
Y	20	1	**231-0683**	2	FLANGE GP-WHEEL	412
	21	1	**231-0684**	1	KNUCKLE (RH)	
	22	1	**231-0685**	1	KNUCKLE (LH)	
	23	1	**199-0648**	2	NUT-JAM	
M	24	1	**8T-4139**	6	BOLT (M12X1.75X30-MM)	
	25	1	**129-1938**	1	CARTRIDGE-GREASE	

B-USE AS REQUIRED
M-METRIC PART
Y-SEPARATE ILLUSTRATION

189-1834 AXLE GP-FRONT *(contd.)* i02016396

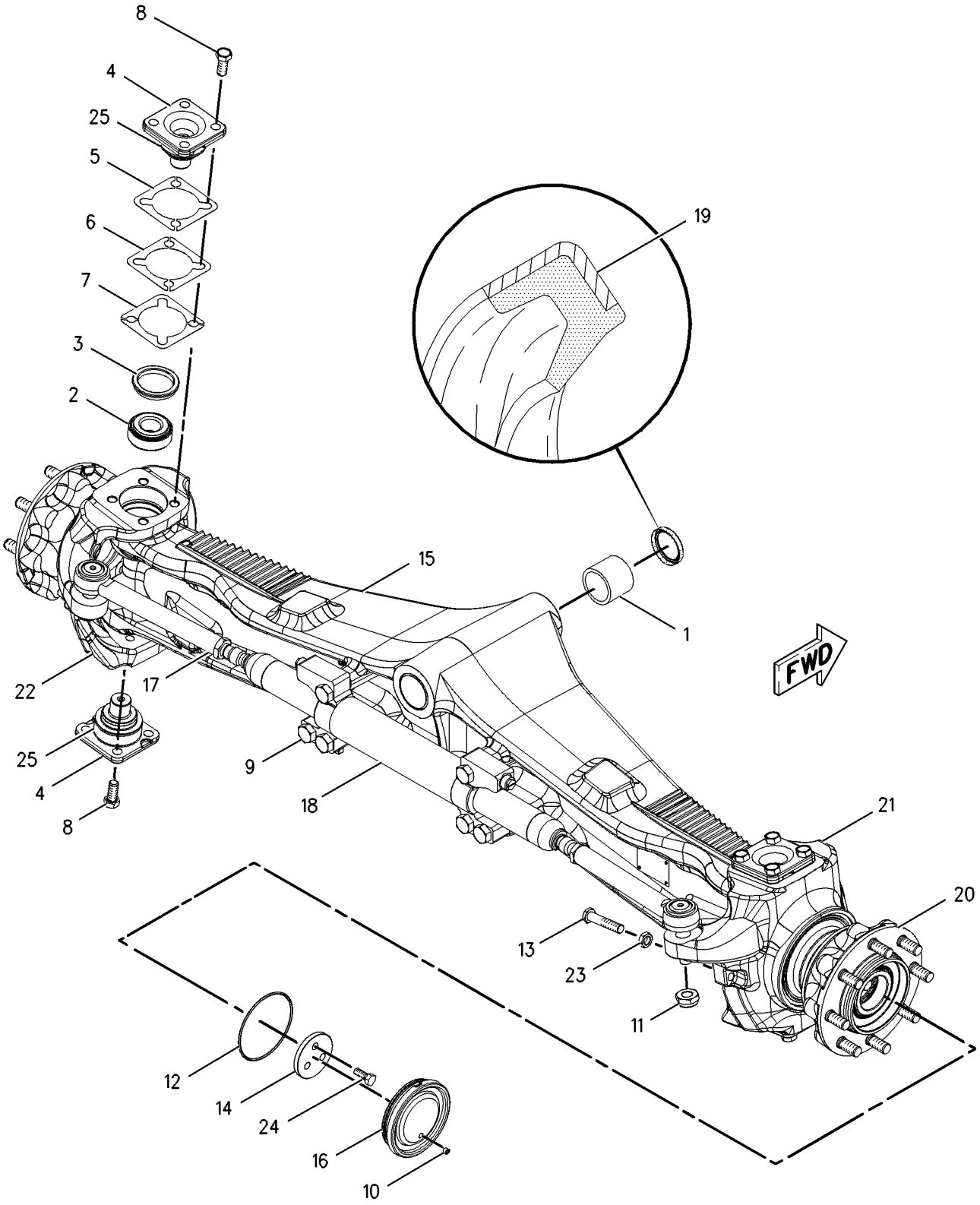

GRAPHIC #1 **<END>** g00997558

STEERING SYSTEM

202-6198 AXLE GP-FRONT

S/N: BFP12900-UP
PART OF 237-6458 DRIVE AR-BACKHOE LOADER
AN ATTACHMENT

SMCS-3282 **i01913957**

NOTE	REF NO	GRAPHIC REF	PART NUMBER	QTY	PART NAME 1 2 3 4 5 6 (PRODUCT LEVEL)	SEE PAGE
B	1	1	**1K-7082**	1	WASHER (1/32IN THK)	
B	2	1	**9R-9702**	2	WASHER	
	3	1	**112-9629**	1	PIN	
	4	1	**165-8996**	2	WASHER-THRUST (55.5X100.5X5MM THK)	
Y	5	1	**189-1834**	1	AXLE GP-FRONT	459
M	6	1	**8T-5041**	1	BOLT (M12X1.75X120MM)	
M	7	1	**8T-8549**	1	LOCKNUT	

B-USE AS REQUIRED
M-METRIC PART
Y-SEPARATE ILLUSTRATION

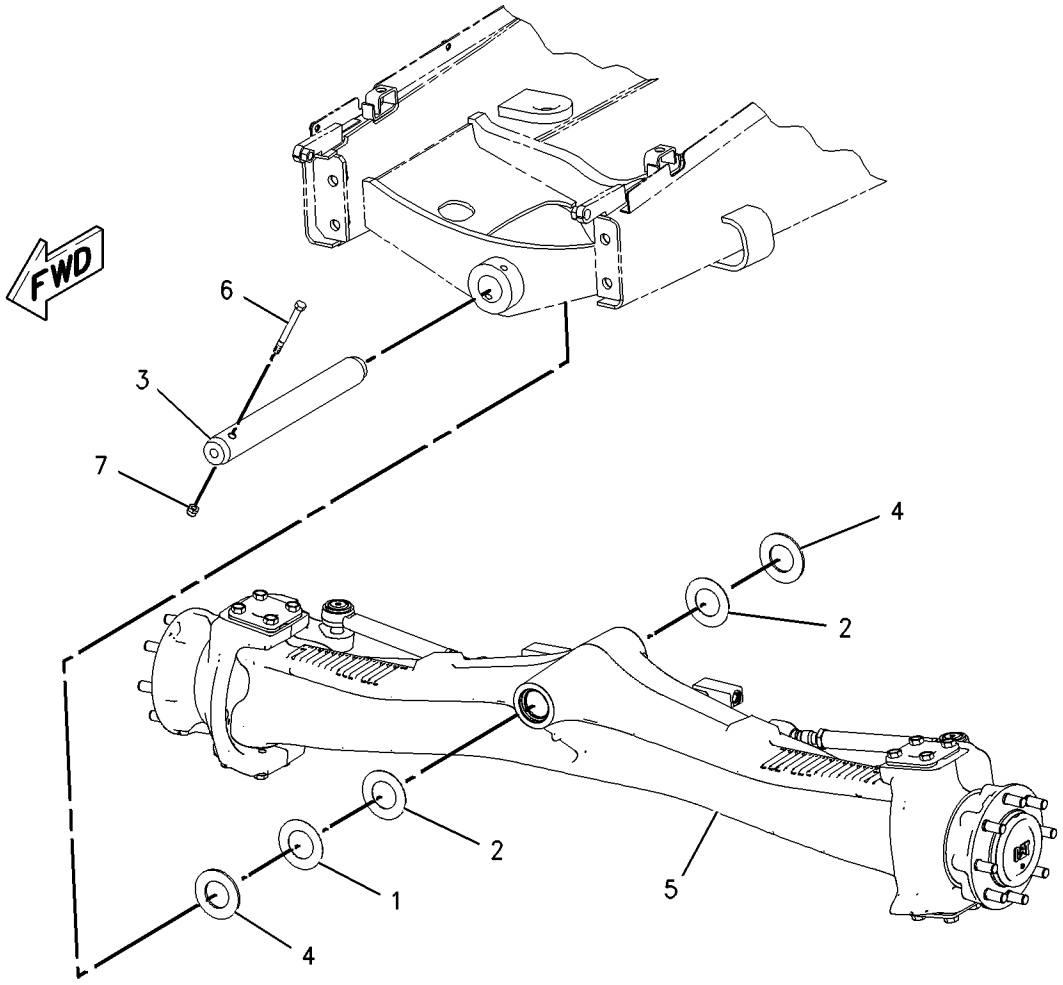

GRAPHIC #1 **<END>** g00997563

STEERING SYSTEM

183-4897 CONTROL GP-STEERING

S/N: BFP12900-UP

PART OF 184-9735, 205-2177, 239-5561, 239-5562 CAB AR

AN ATTACHMENT

SMCS-4309, 4310, 4322, 4338, 4343 **i01773550**

NOTE	REF NO	GRAPHIC REF	PART NUMBER	QTY	PART NAME 1 2 3 4 5 6 (PRODUCT LEVEL)	SEE PAGE
Y	1	1	*153-9580*	1	STEERING WHEEL GP	470
	2	1	**163-7940**	1	PANEL AS	
	3	1	**185-3529**	1	CONSOLE AS	
	4	1	**206-6974**	1	STEERING COLUMN AS	
M	5	1	**5C-7261**	2	NUT (M8X1.25 THD)	
	6	1	**8T-4121**	2	WASHER-HARD (11X21X2.5MM THK)	
M	7	1	**8T-4136**	2	BOLT (M10X1.5X25MM)	
M	8	1	**8T-4189**	2	BOLT (M8X1.25X20MM)	
	9	1	**8T-4224**	4	WASHER-HARD (8.8X16X2MM THK)	
M	10	1	**8T-8894**	4	BOLT-SOCKET HEAD (M10X1.5X20MM)	
M	11	1	**9X-2044**	6	SCREW-TRUSS HEAD (M6X1X16MM)	

M-METRIC PART
Y-SEPARATE ILLUSTRATION

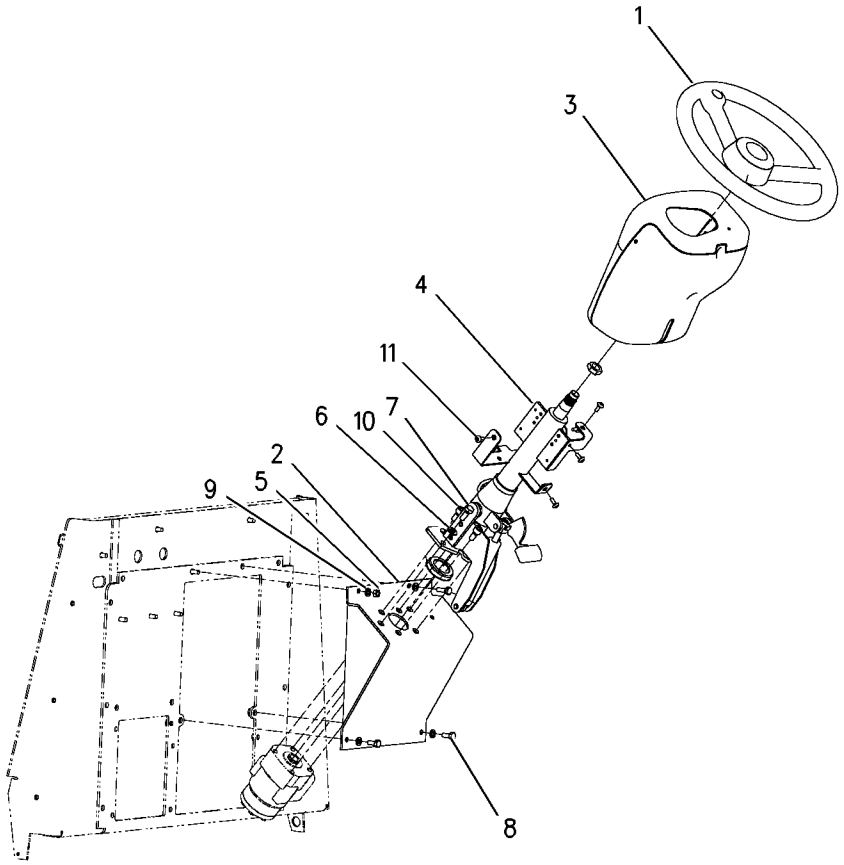

GRAPHIC #1 **<END>** g00875322

STEERING SYSTEM

183-4898 CONTROL GP-STEERING

S/N: BFP12900-UP; CXP940-UP

PART OF 239-5560 CAB AR, 184-9733, 239-5558, 239-5559 CANOPY AR

AN ATTACHMENT

SMCS-4309, 4310, 4322, 4338, 4343 **i01660354**

NOTE	REF NO	GRAPHIC REF	PART NUMBER	QTY	PART NAME 1 2 3 4 5 6 (PRODUCT LEVEL)	SEE PAGE
	1	1	**1V-9385**	1	COVER-EMBLEM	
	2	1	**163-7940**	1	PANEL AS	
	3	1	**180-8170**	1	COLUMN AS-STEER	
	4	1	**185-3529**	1	CONSOLE AS	
	5	1	**032-1557**	1	STEERING WHEEL	
M	6	1	**5C-7261**	2	NUT (M8X1.25 THD)	
	7	1	**8T-4121**	2	WASHER-HARD (11X21X2.5MM THK)	
M	8	1	**8T-4136**	2	BOLT (M10X1.5X25MM)	
M	9	1	**8T-4189**	2	BOLT (M8X1.25X20MM)	
	10	1	**8T-4224**	4	WASHER-HARD (8.8X16X2MM THK)	
M	11	1	**8T-8894**	4	BOLT-SOCKET HEAD (M10X1.5X20MM)	
	12	1	**9K-5635**	3	SCREW-TAPPING (8-18X1.0 IN)	
M	13	1	**9X-2044**	6	SCREW-TRUSS HEAD (M6X1X16MM)	

M-METRIC PART

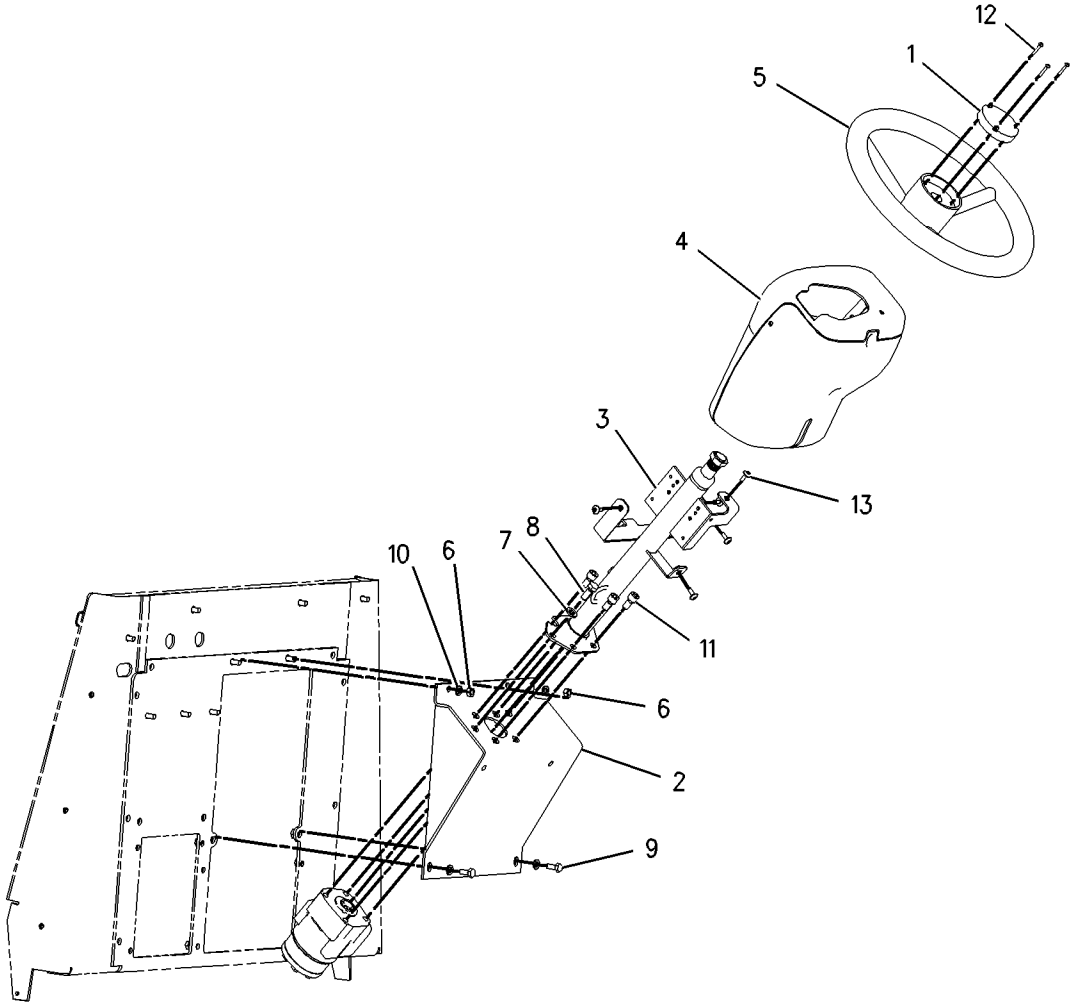

GRAPHIC #1 **<END>** g00856951

STEERING SYSTEM

202-5711 LINES GP-STEERING

S/N: BFP12900-UP; CXP940-UP
TWO WHEEL STEER, ALL WHEEL DRIVE
PART OF 237-6459, 237-6461 DRIVE AR-BACKHOE LOADER
AN ATTACHMENT

SMCS-4304 **i01909543**

NOTE	REF NO	GRAPHIC REF	PART NUMBER	QTY	PART NAME 1 2 3 4 5 6 (PRODUCT LEVEL)	SEE PAGE
G	1	1	**160-2248**		SLEEVE-ABRASION (8IN)	
	2	1	**5D-1026**	2	CLAMP-HOSE	
	3	1	**7K-1181**	5	STRAP-CABLE	
I	4	1	**117-3242**	1	HOSE AS	
	5	1	*195-2037*	1	FITTING AS	
		1	**3K-0360**	1	SEAL-O-RING	
		1	**034-3679**	1	FITTING	
	6	1	**204-0317**	1	CONNECTOR AS	
		1	**3K-0360**	1	SEAL-O-RING	
		1	**6V-8397**	1	SEAL-O-RING	
		1	**092-3635**	1	CONNECTOR	
	7	1	**210-7465**	1	HOSE AS	
	8	1	**210-7466**	1	HOSE AS	
I	9	1	**214-3159**	1	HOSE AS	
	10	1	*148-8316*	1	CONNECTOR AS	
		1	**3J-7354**	1	SEAL-O-RING	
		1	**4J-5477**	1	SEAL-O-RING	
		1	**6V-8647**	1	CONNECTOR	
	11	1	*148-8318*	2	CONNECTOR GP	
					(EACH INCLUDES)	
		1	**3K-0360**	1	SEAL-O-RING	
		1	**6V-8397**	1	SEAL-O-RING	
		1	**6V-8634**	1	CONNECTOR	
	12	1	*148-8346*	1	ELBOW GP	
		1	**3K-0360**	1	SEAL-O-RING	
		1	**6V-8398**	1	SEAL-O-RING	
		1	**8T-1686**	1	ELBOW	
	13	1	*148-8367*	1	ELBOW GP	
		1	**6V-8397**	1	SEAL-O-RING	
		1	**6V-9850**	1	ELBOW (SWIVEL)	
	14	1	*148-8369*	1	ELBOW GP	
		1	**3J-7354**	1	SEAL-O-RING	
		1	**4J-5477**	1	SEAL-O-RING	
		1	**6V-8628**	1	ELBOW	
	15	1	*148-8383*	2	ELBOW AS	
					(EACH INCLUDES)	
		1	**3K-0360**	1	SEAL-O-RING	
		1	**6V-8397**	1	SEAL-O-RING	
		1	**8T-1683**	1	ELBOW	
	16	1	*164-5544*	2	ELBOW GP	
					(EACH INCLUDES)	
		1	**3E-2333**	1	ELBOW	
		1	**6V-8398**	1	SEAL-O-RING	
	17	1	**5K-5338**	1	CLIP	
	18	1	**5P-4295**	2	CLIP	
	19	1	**5P-7462**	1	CLIP (SLOT)	
	20	1	**5P-7463**	1	CLIP (TAB)	
	21	1	**6D-4246**	1	CLIP	
	22	1	**6V-0683**	1	GROMMET	
	23	1	**8T-4121**	4	WASHER-HARD (11X21X2.5MM THK)	
M	24	1	**8T-4136**	4	BOLT (M10X1.5X25MM)	
	25	1	**9M-8406**	1	CLIP	
E	26	1	**5P-1505**		HOSE (53CM)	

E-ORDER BY THE CENTIMETER
G-ORDER BY THE INCH
I-SEE HOSE FABRICATION GUIDE
M-METRIC PART

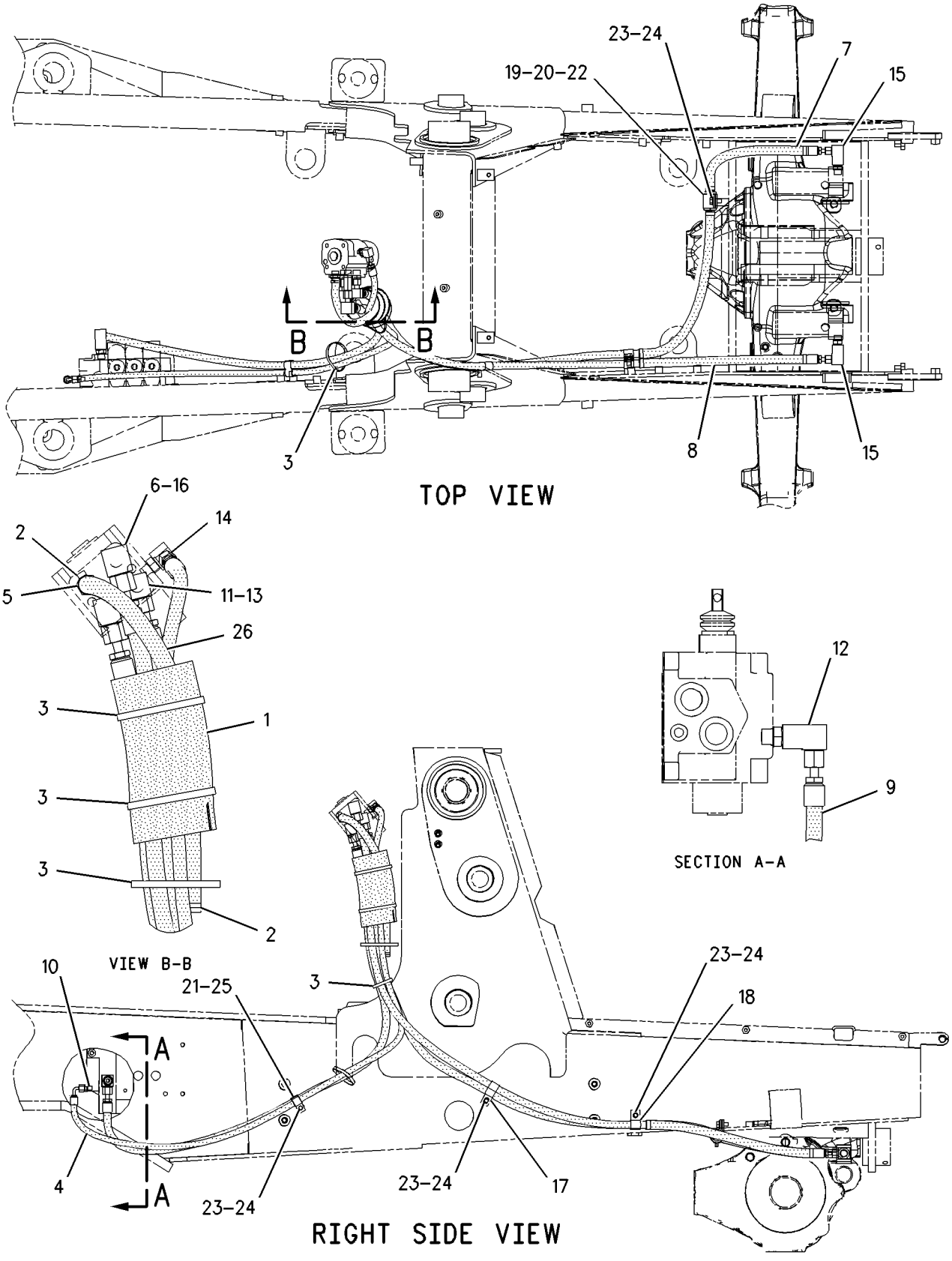

GRAPHIC #1 **<END>** g00995068

STEERING SYSTEM

202-5712 LINES GP-STEERING

S/N: BFP12900-UP
PART OF 237-6458 DRIVE AR-BACKHOE LOADER
AN ATTACHMENT

SMCS-4304 **i01911021**

NOTE	REF NO	GRAPHIC REF	PART NUMBER	QTY	PART NAME 1 2 3 4 5 6 (PRODUCT LEVEL)	SEE PAGE
G	1	1	**160-2248**		SLEEVE-ABRASION (8IN)	
	2	1	**5D-1026**	2	CLAMP-HOSE	
	3	1	**7K-1181**	5	STRAP-CABLE	
I	4	1	**117-3242**	1	HOSE AS	
	5	1	*195-2037*	1	FITTING AS	
		1	**3K-0360**	1	SEAL-O-RING	
		1	**034-3679**	1	FITTING	
I	6	1	**201-3398**	1	HOSE AS	
I	7	1	**202-1009**	1	HOSE AS	
	8	1	*204-0317*	1	CONNECTOR AS	
		1	**3K-0360**	1	SEAL-O-RING	
		1	**6V-8397**	1	SEAL-O-RING	
		1	**092-3635**	1	CONNECTOR	
I	9	1	**214-3159**	1	HOSE AS	
	10	1	*148-8316*	1	CONNECTOR AS	
		1	**3J-7354**	1	SEAL-O-RING	
		1	**4J-5477**	1	SEAL-O-RING	
		1	**6V-8647**	1	CONNECTOR	
	11	1	*148-8318*	2	CONNECTOR GP	
					(EACH INCLUDES)	
		1	**3K-0360**	1	SEAL-O-RING	
		1	**6V-8397**	1	SEAL-O-RING	
		1	**6V-8634**	1	CONNECTOR	
	12	1	*148-8346*	1	ELBOW GP	
		1	**3K-0360**	1	SEAL-O-RING	
		1	**6V-8398**	1	SEAL-O-RING	
		1	**8T-1686**	1	ELBOW	
	13	1	*148-8367*	1	ELBOW GP	
		1	**6V-8397**	1	SEAL-O-RING	
		1	**6V-9850**	1	ELBOW (SWIVEL)	
	14	1	*148-8369*	1	ELBOW GP	
		1	**3J-7354**	1	SEAL-O-RING	
		1	**4J-5477**	1	SEAL-O-RING	
		1	**6V-8628**	1	ELBOW	
	15	1	*148-8374*	2	ELBOW GP	
					(EACH INCLUDES)	
		1	**3K-0360**	1	SEAL-O-RING	
		1	**6V-8397**	1	SEAL-O-RING	
		1	**6V-8723**	1	ELBOW	
	16	1	*164-5544*	2	ELBOW GP	
					(EACH INCLUDES)	
		1	**3E-2333**	1	ELBOW	
		1	**6V-8398**	1	SEAL-O-RING	
	17	1	**5K-5338**	1	CLIP	
	18	1	**5P-4295**	2	CLIP	
	19	1	**6D-4246**	1	CLIP	
	20	1	**8T-4121**	3	WASHER-HARD (11X21X2.5MM THK)	
M	21	1	**8T-4136**	3	BOLT (M10X1.5X25MM)	
	22	1	**9M-8406**	1	CLIP	
E	23	1	**5P-1505**		HOSE (53CM)	

E-ORDER BY THE CENTIMETER
G-ORDER BY THE INCH
I-SEE HOSE FABRICATION GUIDE
M-METRIC PART

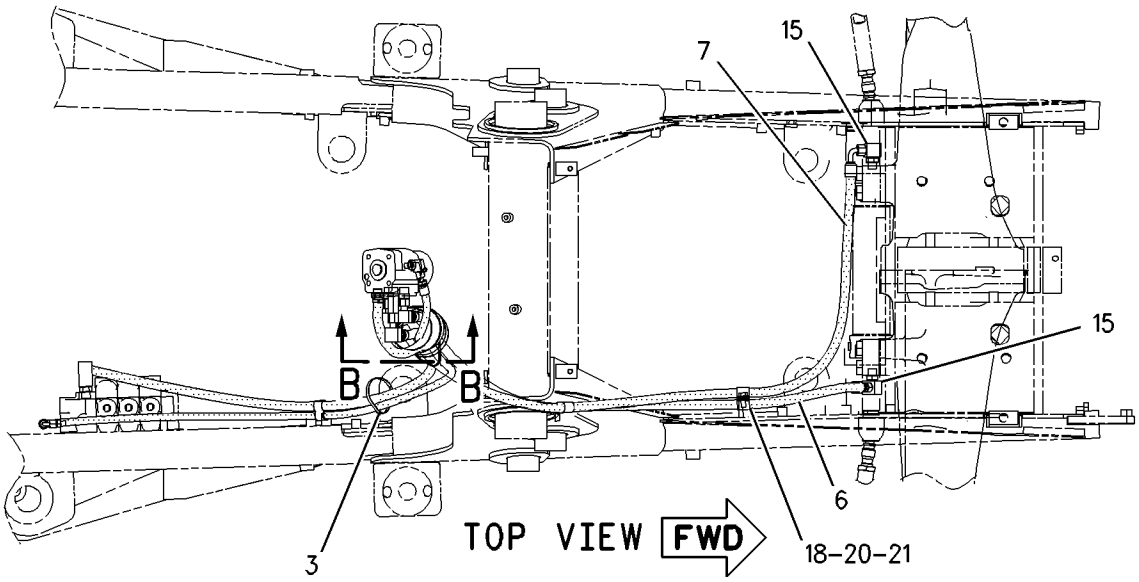

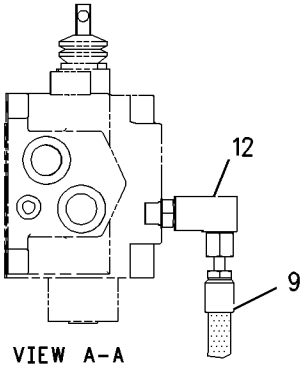

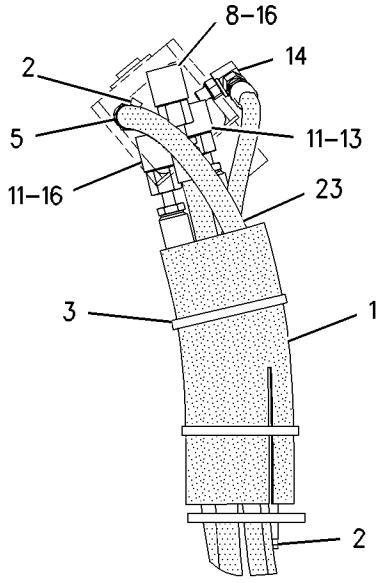

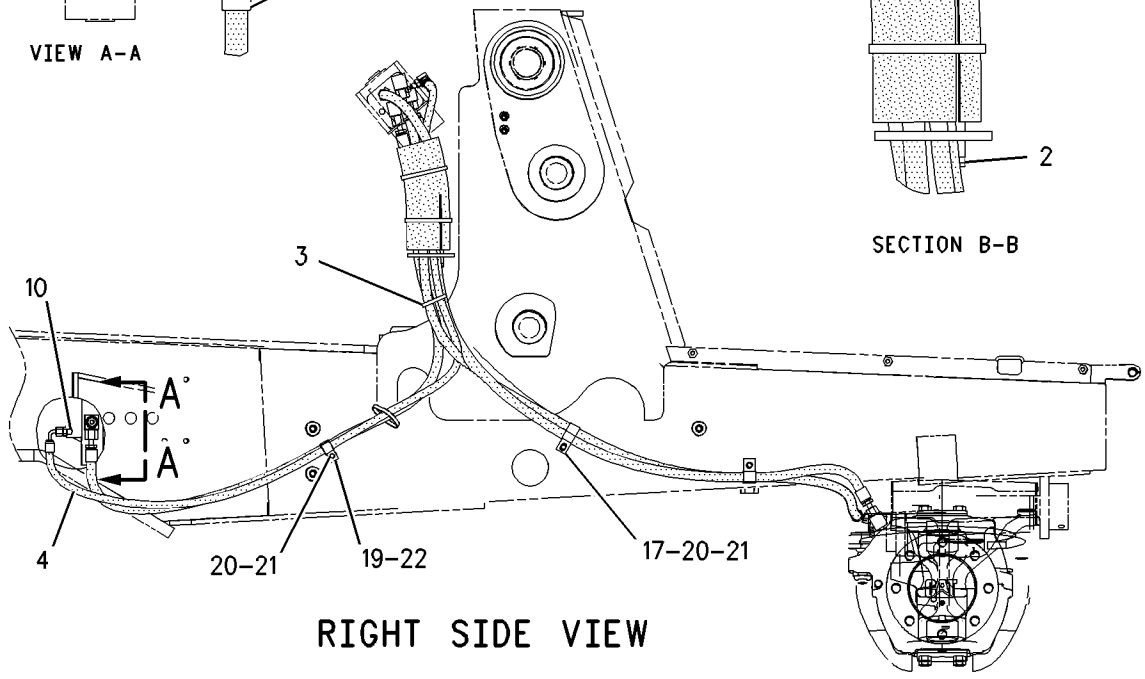

GRAPHIC #1 **<END>** g00995495

STEERING SYSTEM

238-8550 PUMP GP-METERING

S/N: CXP940-UP

PART OF 237-6461 DRIVE AR-BACKHOE LOADER

AN ATTACHMENT

SMCS-4312 **i02015847**

NOTE	PART NUMBER	QTY	PART NAME 1 2 3 4 5 6 (PRODUCT LEVEL)	SEE PAGE
	227-4709	1	KIT-SEAL (STEERING METERING PUMP)	

<END>

STEERING SYSTEM

153-9580 STEERING WHEEL GP

S/N: BFP12900-UP
PART OF 183-4897 CONTROL GP-STEERING
AN ATTACHMENT

SMCS-4309 **i01108895**

NOTE	REF NO	GRAPHIC REF	PART NUMBER	QTY	PART NAME 1 2 3 4 5 6 (PRODUCT LEVEL)	SEE PAGE
	1	1	**8R-2916**	1	BUTTON AS	
	2	1	**145-9291**	1	WHEEL AS-STEERING	
	3	1	**153-7368**	1	PLUG	

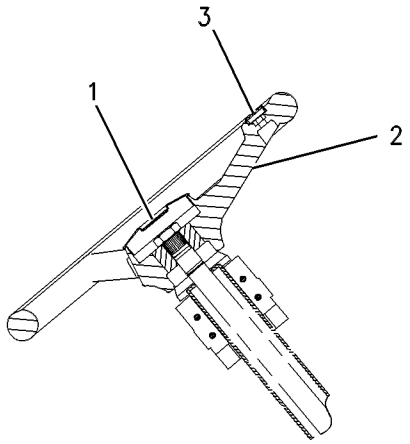

SECTION A-A

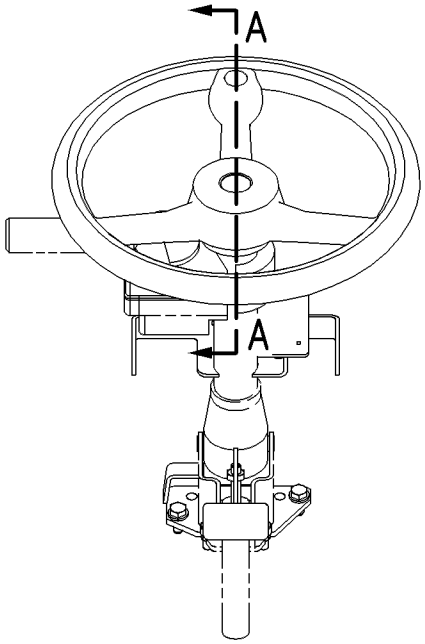

GRAPHIC #1 **<END>** g00586606

188-7471 VALVE GP-PRIORITY–STEERING

S/N: BFP12900-UP; CXP940-UP
PART OF 185-5906 VALVE GP-BANK 2, 185-5907 VALVE GP-BANK 3
AN ATTACHMENT

SMCS-4320, 5137 **i01695203**

NOTE	REF NO	GRAPHIC REF	PART NUMBER	QTY	PART NAME 1 2 3 4 5 6 (PRODUCT LEVEL)	SEE PAGE
	1	1	**9S-8006**	1	PLUG	
	2	1	**103-4754**	1	SPRING	
	3	1	**9T-0655**	1	VALVE GP-RELIEF	
	3A	1	**1S-8947**	1	SEAL-O-RING	
	3B	1	**3D-2824**	1	SEAL-O-RING	
	3C	1	**9T-0656**	1	RING	
	4	1	**5B-9318**	1	BALL	
	5	1	**180-9157**	1	SEAT AS	
	5A	1	**4T-7807**	1	RING-BACKUP	
	5B	1	**7J-0204**	1	SEAL-O-RING	
	5C	1	**8T-2360**	1	SEAL-O-RING	
	6	1	**9S-9334**	1	PLUG	
	7	1	**7M-8485**	1	SEAL-O-RING	

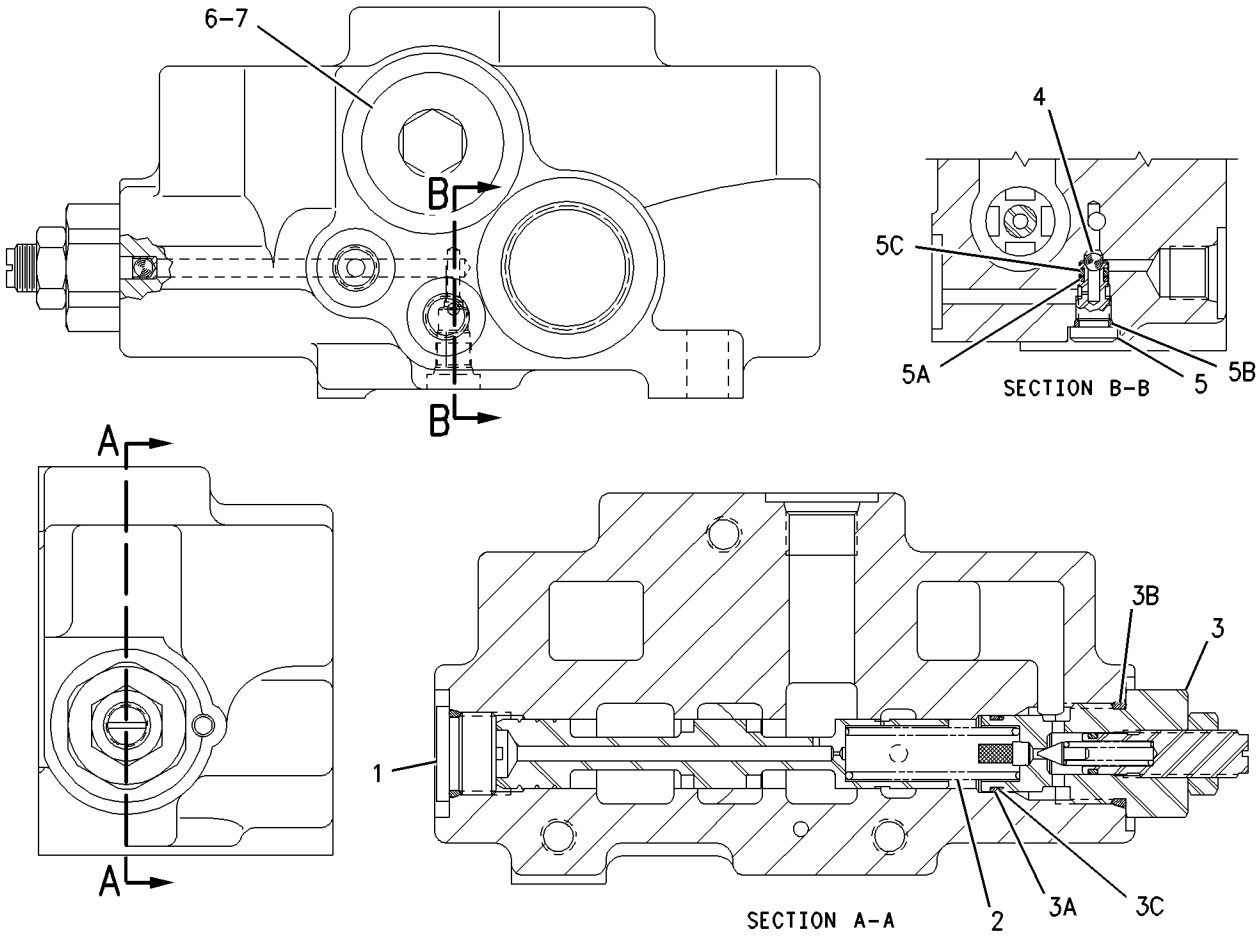

GRAPHIC #1 **<END>** g00872884

188-0860 BOX GP-BATTERY

S/N: BFP12900-UP; CXP940-UP
PART OF 192-4661, 192-4663, 192-4665, 192-4666, 231-9348 POWER TRAIN AR
AN ATTACHMENT

SMCS-7257 **i01650181**

NOTE	REF NO	GRAPHIC REF	PART NUMBER	QTY	PART NAME 1 2 3 4 5 6 (PRODUCT LEVEL)	SEE PAGE
	1	1	**7T-8895**	1	GROMMET	
Y	2	1	**118-6842**	1	DOOR GP-BATTERY	480
	3	1	**118-6854**	1	TREAD	
	4	1	**164-3876**	1	STEP AS	
	5	1	**188-0857**	1	BATTERY BOX AS	
	6	1	**190-5122**	1	PLATE AS	
	7	1	**5P-4116**	6	WASHER-HARD (8.8X20.5X2MM THK)	
M	8	1	**8T-4183**	4	BOLT (M12X1.75X40MM)	
M	9	1	**8T-4189**	6	BOLT (M8X1.25X20MM)	
M	10	1	**8T-4200**	7	BOLT (M8X1.25X16MM)	
	11	1	**8T-4223**	4	WASHER-HARD (13.5X25.5X3MM THK)	
	12	1	**8T-4224**	7	WASHER-HARD (8.8X16X2MM THK)	
M	13	1	**8T-7963**	1	LOCKNUT	

M-METRIC PART
Y-SEPARATE ILLUSTRATION

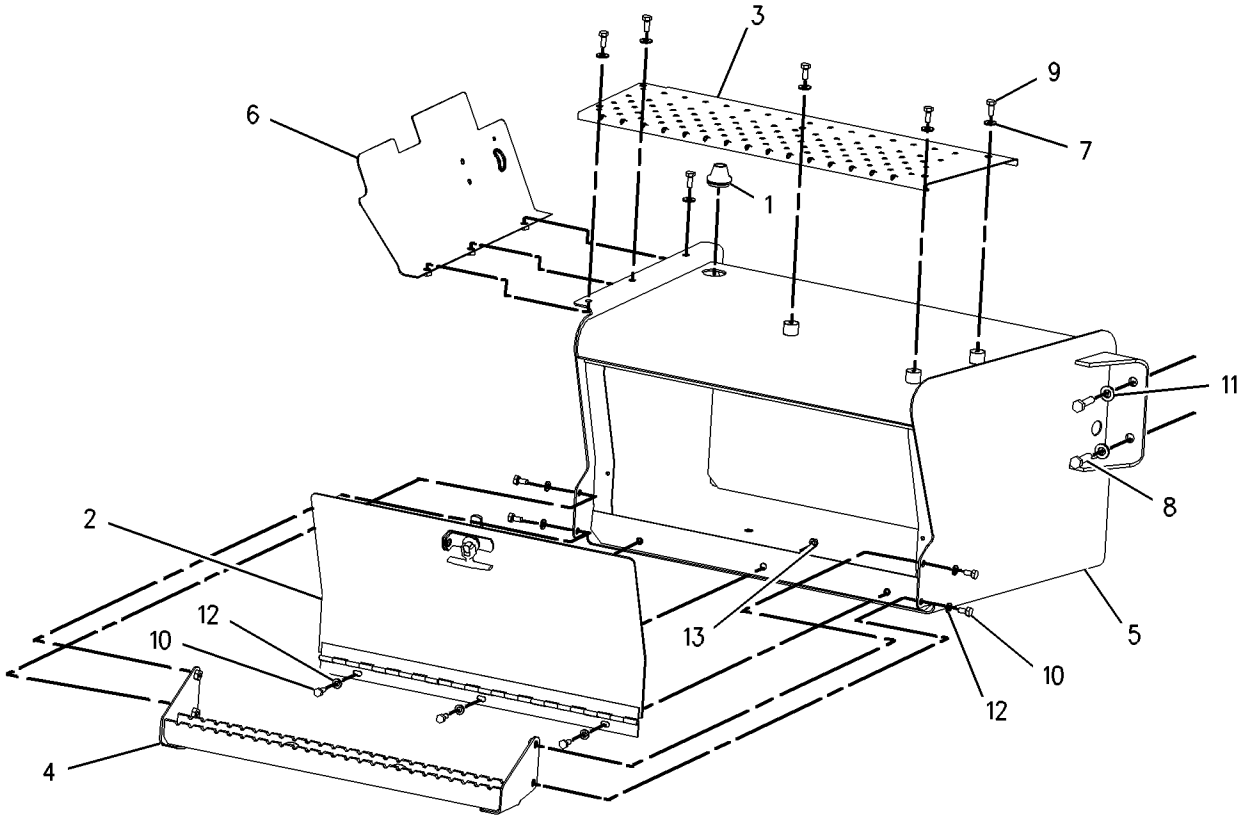

GRAPHIC #1 **<END>** g00852685

FRAME AND BODY

237-6415 BOX GP-BATTERY

S/N: BFP12900-UP
PART OF 214-6955, 214-6956, 214-6958 POWER TRAIN AR
AN ATTACHMENT

SMCS-7257 **i01970325**

NOTE	REF NO	GRAPHIC REF	PART NUMBER	QTY	PART NAME 1 2 3 4 5 6 (PRODUCT LEVEL)	SEE PAGE
	1	1	**7T-8895**	1	GROMMET	
Y	2	1	**118-6842**	1	DOOR GP-BATTERY	480
	3	1	**118-6854**	1	TREAD	
	4	1	**164-3876**	1	STEP AS	
	5	1	**190-5122**	1	PLATE AS	
		1	**7T-1099**	1	LINK	
	6	1	**237-6412**	1	BOX AS-BATTERY	
		1	**7T-1099**	1	LINK	
	7	1	**5P-4116**	6	WASHER-HARD (8.8X20.5X2MM THK)	
M	8	1	**8T-4183**	4	BOLT (M12X1.75X40MM)	
M	9	1	**8T-4189**	6	BOLT (M8X1.25X20MM)	
M	10	1	**8T-4200**	7	BOLT (M8X1.25X16MM)	
	11	1	**8T-4223**	4	WASHER-HARD (13.5X25.5X3MM THK)	
	12	1	**8T-4224**	7	WASHER-HARD (8.8X16X2MM THK)	
M	13	1	**8T-7963**	1	LOCKNUT (M8X1.25 THD)	

M-METRIC PART
Y-SEPARATE ILLUSTRATION

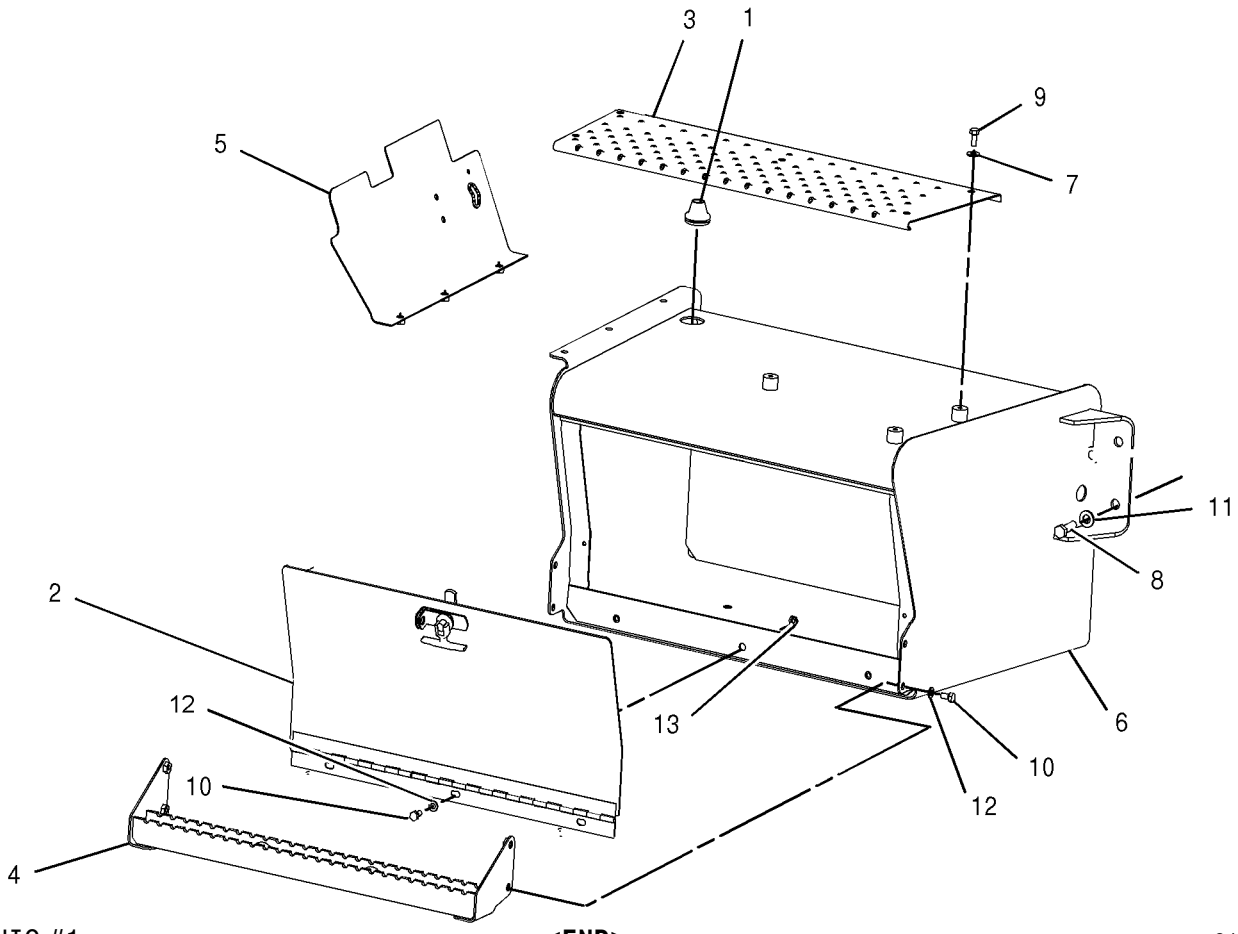

GRAPHIC #1 **<END>** g01023151

FRAME AND BODY

112-1809 BUMPER GP-FRONT

S/N: BFP12900-UP; CXP940-UP

AN ATTACHMENT

SMCS-7156 **i00814097**

NOTE	REF NO	GRAPHIC REF	PART NUMBER	QTY	PART NAME 1 2 3 4 5 6 (PRODUCT LEVEL)	SEE PAGE
	1	1	**7X-0572**	4	WASHER-HARD	
	2	1	**113-4495**	1	BUMPER AS	
M	3	1	**7X-2568**	4	BOLT (M20X2.5X180MM)	

M-METRIC PART

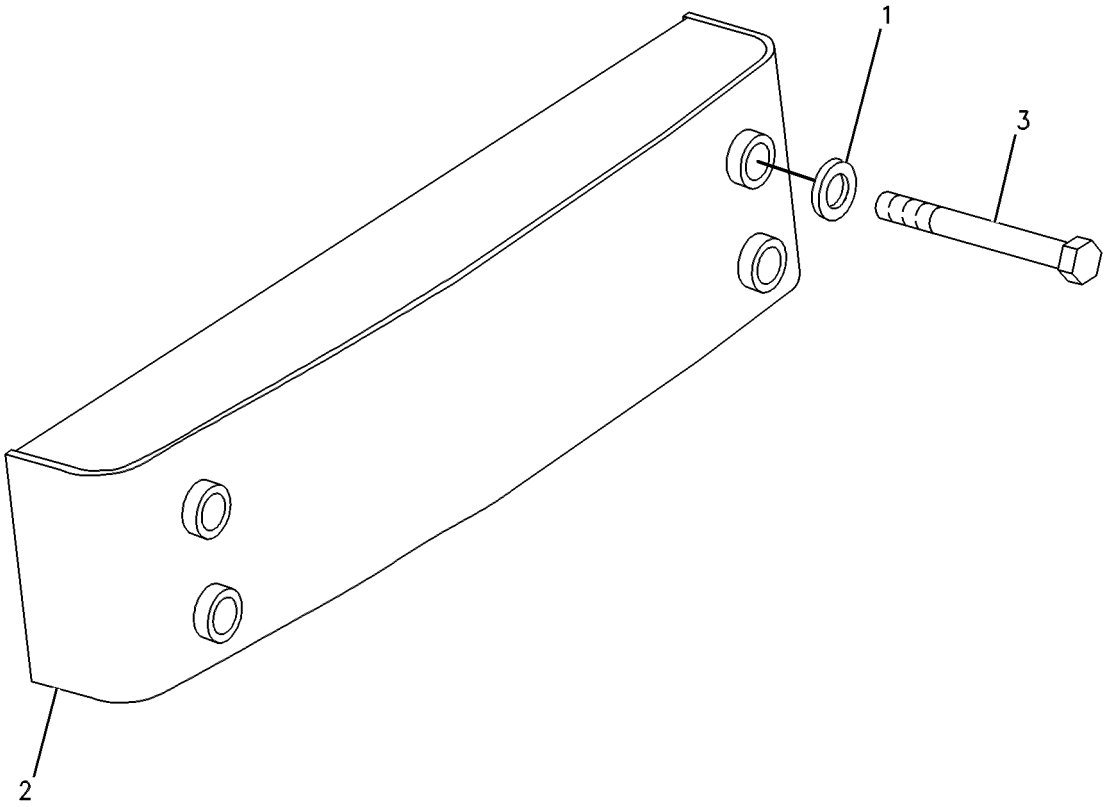

GRAPHIC #1 **<END>** g00257015

106-5878 COUNTERWEIGHT GP

S/N: BFP12900-UP
145KG (320LB)
AN ATTACHMENT

SMCS-7056 **i00523472**

NOTE	REF NO	GRAPHIC REF	PART NUMBER	QTY	PART NAME 1 2 3 4 5 6 (PRODUCT LEVEL)	SEE PAGE
	1	1	**112-4417**	1	COUNTERWEIGHT	
M	2	1	**8C-8478**	4	BOLT (M20X2.5X140MM)	
	3	1	**8T-4123**	4	WASHER-PLATED (3.5MM THK)	

M-METRIC PART

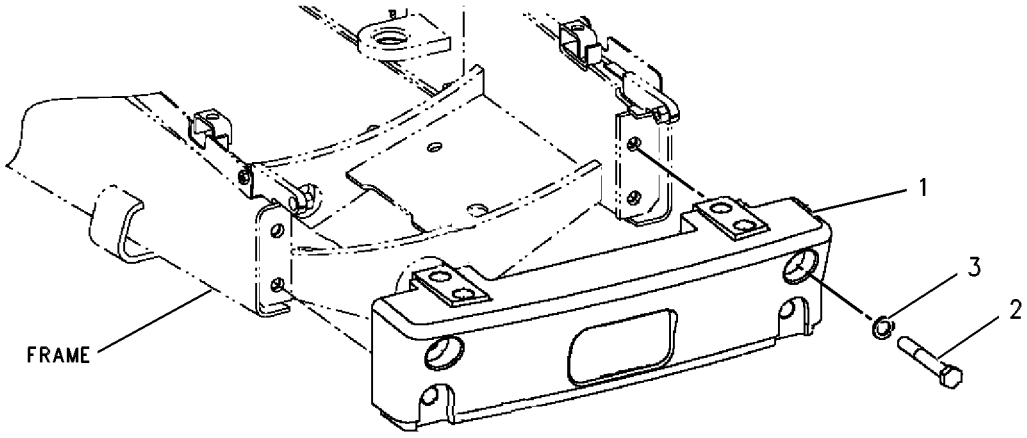

GRAPHIC #1 **<END>** g00131763

FRAME AND BODY

106-5879 COUNTERWEIGHT GP

S/N: BFP12900-UP
249KG (550LB)
AN ATTACHMENT

SMCS-7056 **i01934185**

NOTE	REF NO	GRAPHIC REF	PART NUMBER	QTY	PART NAME 1 2 3 4 5 6 (PRODUCT LEVEL)	SEE PAGE
	1	1	**112-4417**	1	COUNTERWEIGHT (144KG)	
	2	1	**112-4418**	1	COUNTERWEIGHT (102.7KG)	
	3	1	**113-7906**	2	U-BOLT	
M	4	1	**8T-4001**	4	NUT (M24X3 THD)	
	5	1	**8T-4167**	4	WASHER-HARD (26X44X4MM THK)	
M	6	1	**8C-8478**	4	BOLT (M20X2.5X140MM)	
	7	1	**8T-4123**	4	WASHER-PLATED (22X35X3.5MM THK)	

M-METRIC PART

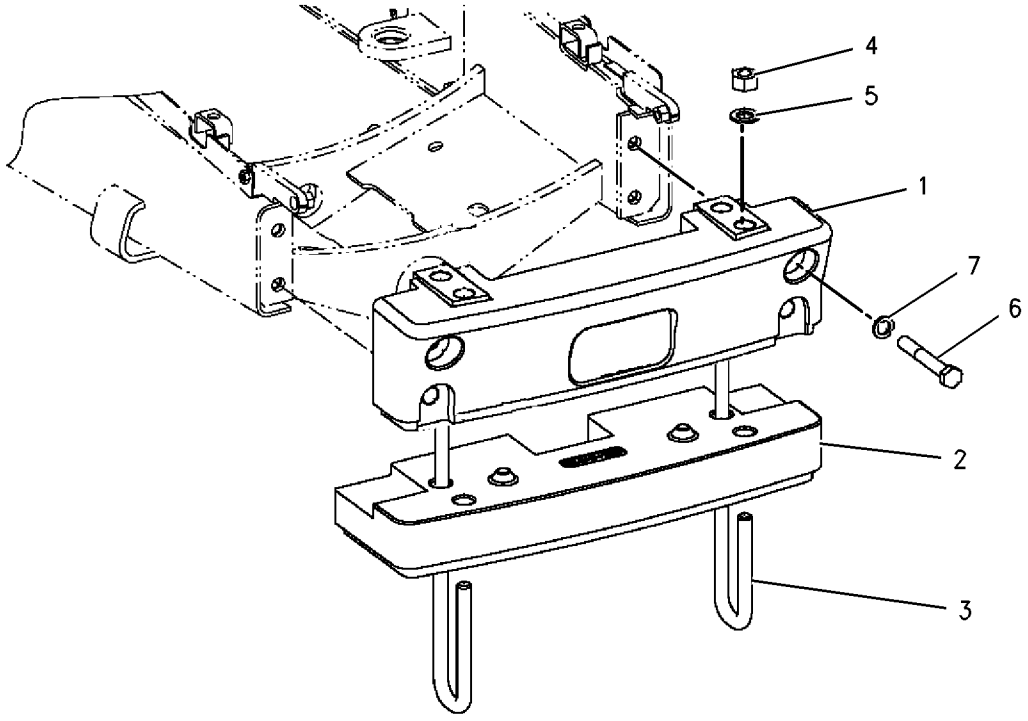

GRAPHIC #1 **<END>** g01006598

106-5880 COUNTERWEIGHT GP

S/N: BFP12900-UP
354KG (780LB)
AN ATTACHMENT

SMCS-7056 **i01934186**

NOTE	REF NO	GRAPHIC REF	PART NUMBER	QTY	PART NAME 1 2 3 4 5 6 (PRODUCT LEVEL)	SEE PAGE
	1	1	**112-4417**	1	COUNTERWEIGHT (144KG)	
	2	1	**112-4418**	2	COUNTERWEIGHT (102.7KG)	
	3	1	**113-7905**	2	U-BOLT	
M	4	1	**8T-4001**	4	NUT (M24X3 THD)	
	5	1	**8T-4167**	4	WASHER-HARD (26X44X4MM THK)	
M	6	1	**8C-8478**	4	BOLT (M20X2.5X140MM)	
	7	1	**8T-4123**	4	WASHER-PLATED (22X35X3.5MM THK)	

M-METRIC PART

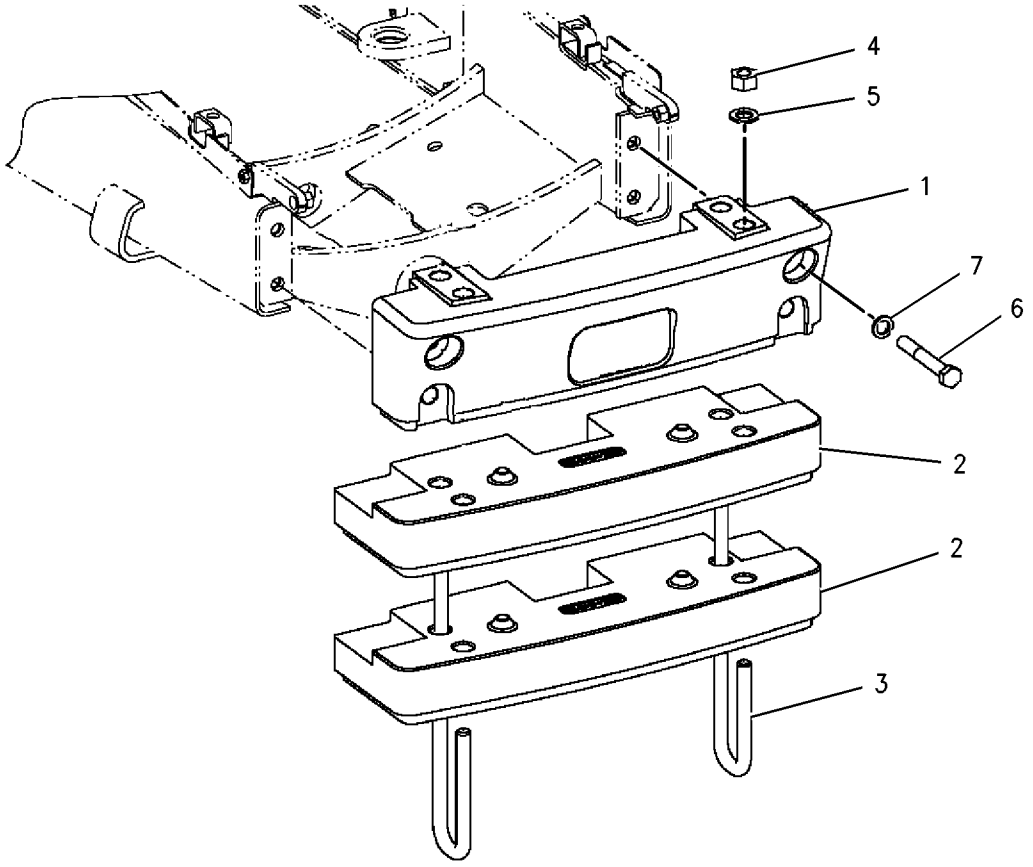

GRAPHIC #1 **<END>** g01006613

FRAME AND BODY

106-5881 COUNTERWEIGHT GP

S/N: BFP12900-UP
459KG (1010LB)
AN ATTACHMENT

SMCS-7056 **i01934187**

NOTE	REF NO	GRAPHIC REF	PART NUMBER	QTY	PART NAME 1 2 3 4 5 6 (PRODUCT LEVEL)	SEE PAGE
	1	1	**112-4417**	1	COUNTERWEIGHT (144KG)	
	2	1	**112-4418**	3	COUNTERWEIGHT (102.7KG)	
	3	1	**113-2662**	2	U-BOLT	
M	4	1	**8T-4001**	4	NUT (M24X3 THD)	
	5	1	**8T-4167**	4	WASHER-HARD (26X44X4MM THK)	
M	6	1	**8C-8478**	4	BOLT (M20X2.5X140MM)	
	7	1	**8T-4123**	4	WASHER-PLATED (22X35X3.5MM THK)	

M-METRIC PART

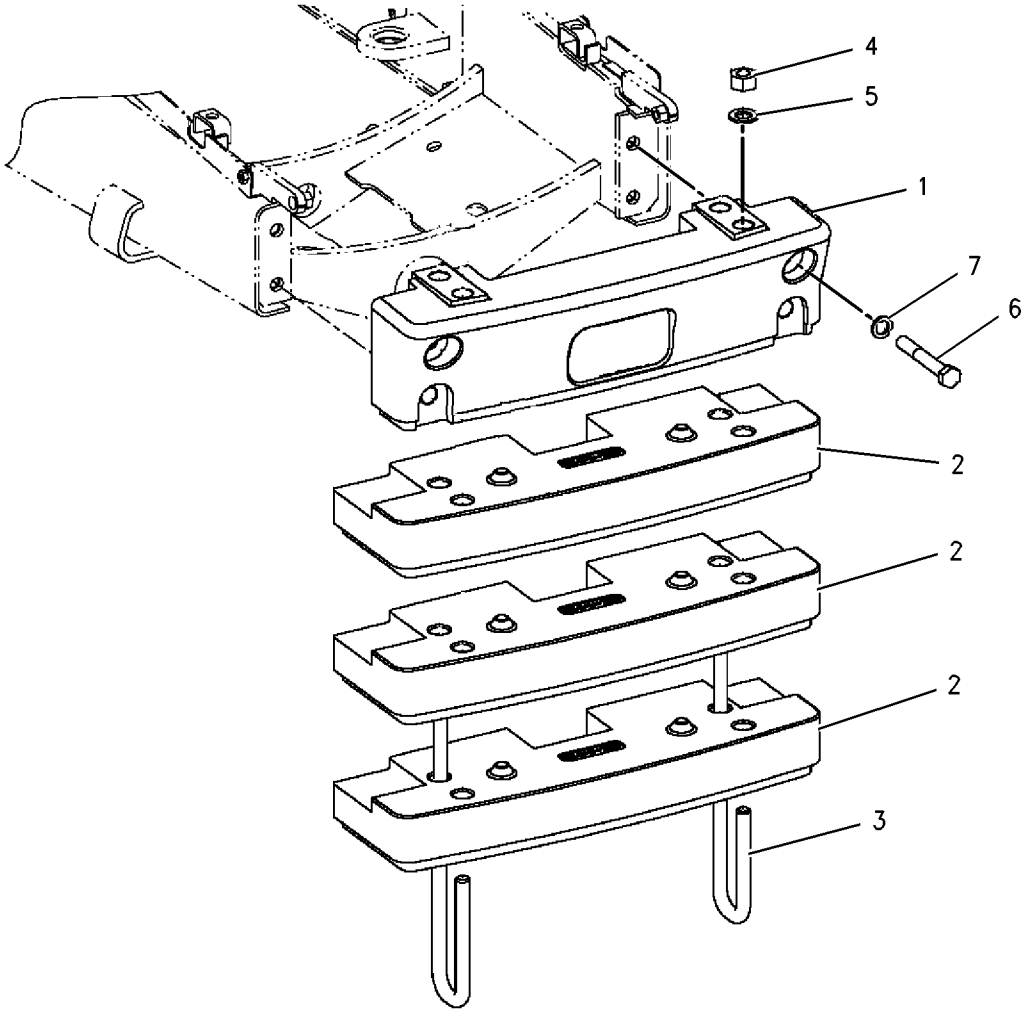

GRAPHIC #1 **<END>** g01006625

120-8482 COUNTERWEIGHT GP

S/N: BFP12900-UP
510KG (1260LB)
AN ATTACHMENT

SMCS-7056 **i01935716**

NOTE	REF NO	GRAPHIC REF	PART NUMBER	QTY	PART NAME 1 2 3 4 5 6 (PRODUCT LEVEL)	SEE PAGE
	1	1	**112-4417**	1	COUNTERWEIGHT	
	2	1	**112-4418**	1	COUNTERWEIGHT	
	3	1	**113-2662**	2	U-BOLT	
	4	1	**201-0190**	1	COUNTERWEIGHT AS	
M	5	1	**8T-4001**	4	NUT (M24X3 THD)	
	6	1	**8T-4167**	4	WASHER-HARD (26X44X4MM THK)	
M	7	1	**8C-8478**	4	BOLT (M20X2.5X140MM)	
	8	1	**8T-4123**	4	WASHER-PLATED (22X35X3.5MM THK)	

M-METRIC PART

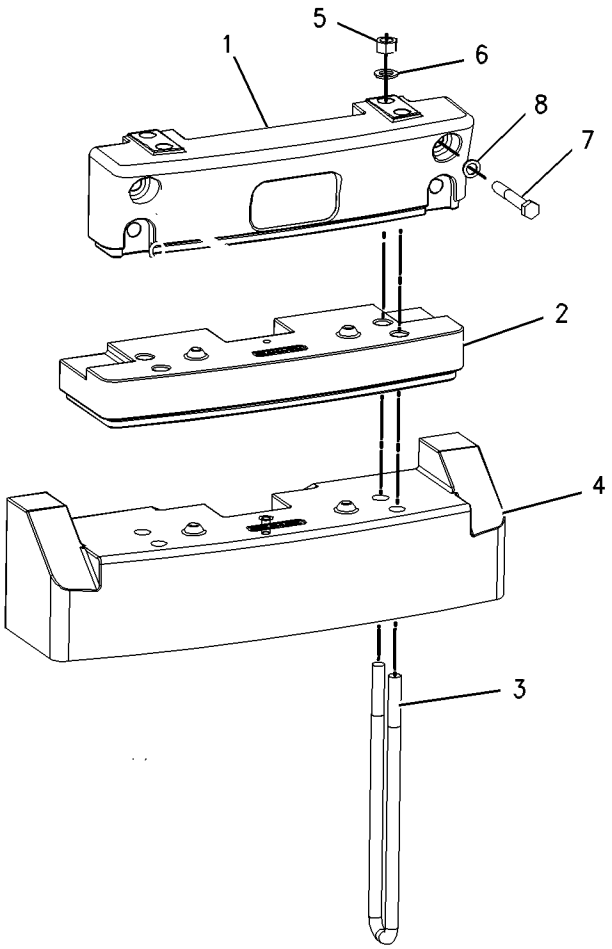

GRAPHIC #1 **<END>** g01007516

118-6842 DOOR GP-BATTERY

S/N: BFP12900-UP; CXP940-UP
PART OF 188-0860, 237-6415 BOX GP-BATTERY
AN ATTACHMENT

SMCS-7273 **i01399512**

NOTE	REF NO	GRAPHIC REF	PART NUMBER	QTY	PART NAME 1 2 3 4 5 6 (PRODUCT LEVEL)	SEE PAGE
	1	1	**8C-8522**	1	PAWL-LATCH	
	2	1	**129-4741**	1	LATCH AS-T-BAR	
	3	1	**151-2963**	1	DOOR AS	
M	4	1	**6V-7743**	2	LOCKNUT (M6X1 THD)	
M	5	1	**8T-4133**	2	NUT (M10X1.5 THD)	
	6	1	**8T-4205**	2	WASHER-HARD (7.2X14.5X2MM THK)	

M-METRIC PART

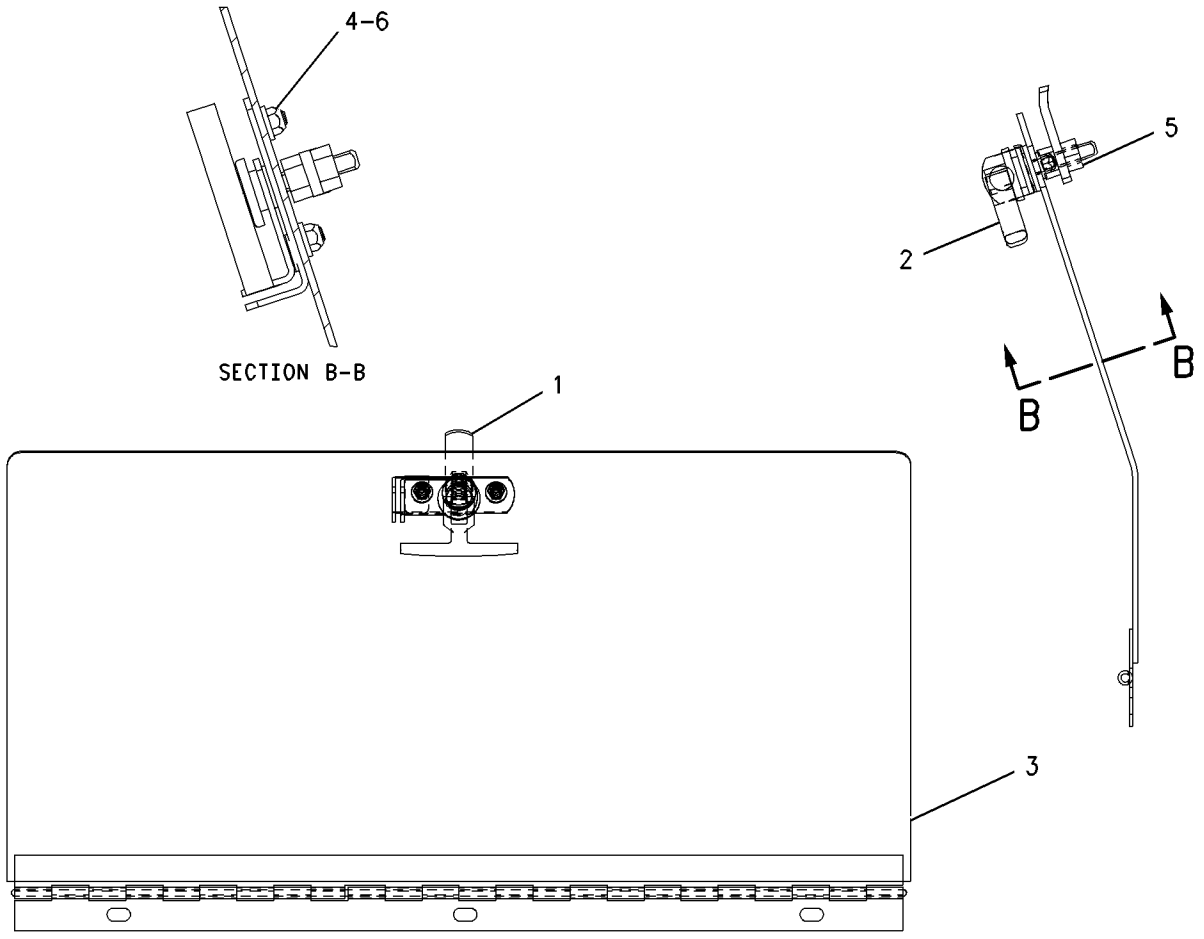

GRAPHIC #1 **<END>** g00739059

FRAME AND BODY

201-3954 FENDER GP-FRONT

S/N: BFP12900-UP; CXP940-UP

AN ATTACHMENT

SMCS-7252 **i01914688**

NOTE	REF NO	GRAPHIC REF	PART NUMBER	QTY	PART NAME 1 2 3 4 5 6 (PRODUCT LEVEL)	SEE PAGE
	1	1	**162-4004**	2	FENDER (FRONT)	
M	2	1	**199-0783**	8	BOLT (M16X2X38MM)	
	3	1	**222-1801**	1	BRACKET AS (LH)	
	4	1	**222-1802**	1	BRACKET AS (RH)	
M	5	1	**6V-7744**	4	LOCKNUT (M10X1.5 THD)	
	6	1	**8T-4121**	4	WASHER-HARD (11X21X2.5MM THK)	
M	7	1	**8T-4132**	8	NUT (M16X2 THD)	
M	8	1	**8T-4195**	4	BOLT (M10X1.5X30MM)	
	9	1	**8T-4222**	4	WASHER-PLATED (11X32X2.5MM THK)	
	10	1	**9X-8257**	8	WASHER (17.5X30X3.5MM THK)	

M-METRIC PART

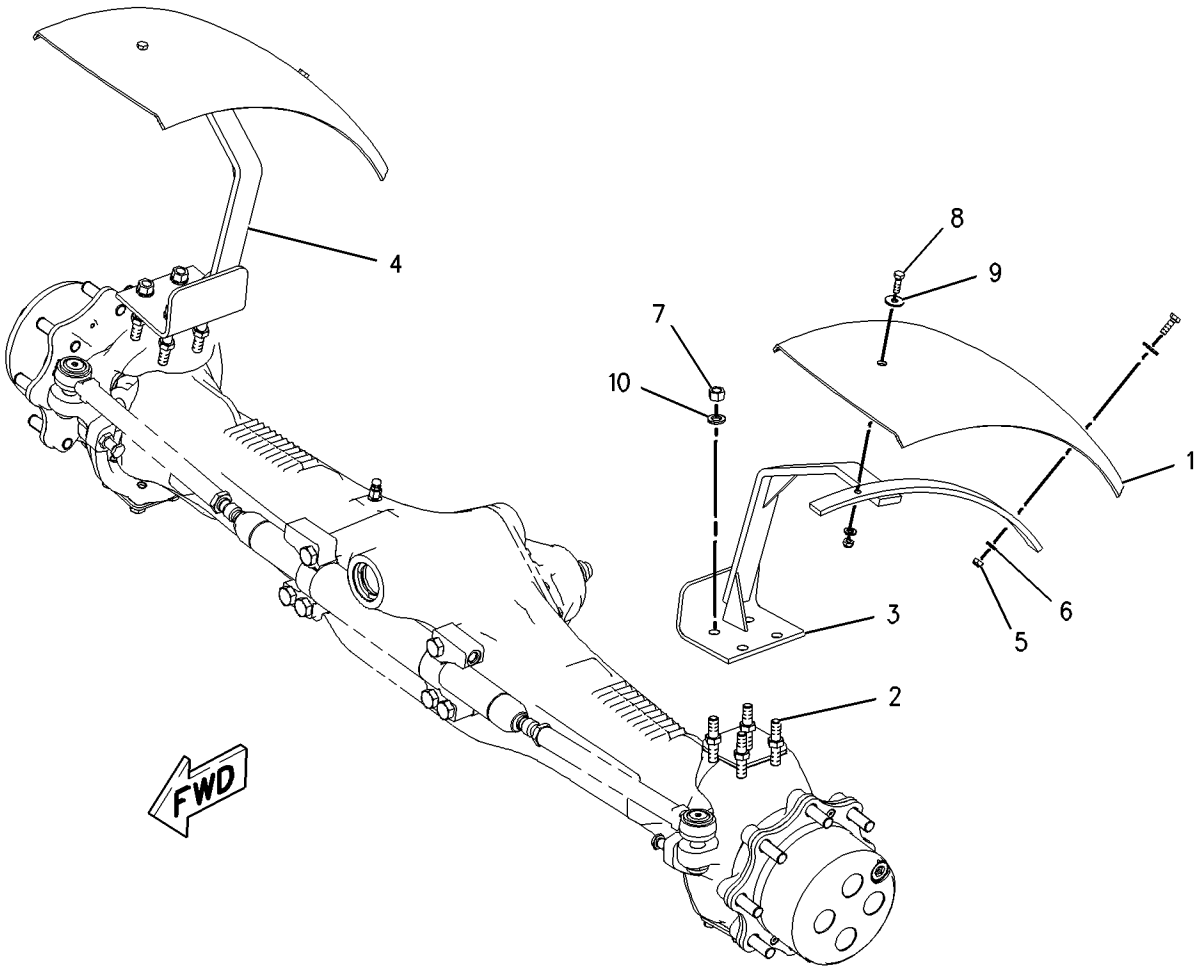

GRAPHIC #1 **<END>** g00997676

164-1148 FENDER GP-REAR

S/N: BFP12900-UP

PART OF 184-9735, 205-2177, 239-5561, 239-5562 CAB AR

AN ATTACHMENT

SMCS-7252 **i01352830**

NOTE	REF NO	GRAPHIC REF	PART NUMBER	QTY	PART NAME 1 2 3 4 5 6 (PRODUCT LEVEL)	SEE PAGE
	1	1	**156-0283**	14	WASHER-HARD (2.5MM THK)	
	2	1	**167-8253**	1	FENDER-RH	
	3	1	**167-8254**	1	FENDER-LH	
M	4	1	**8T-4189**	14	BOLT (M8X1.25X20MM)	

M-METRIC PART

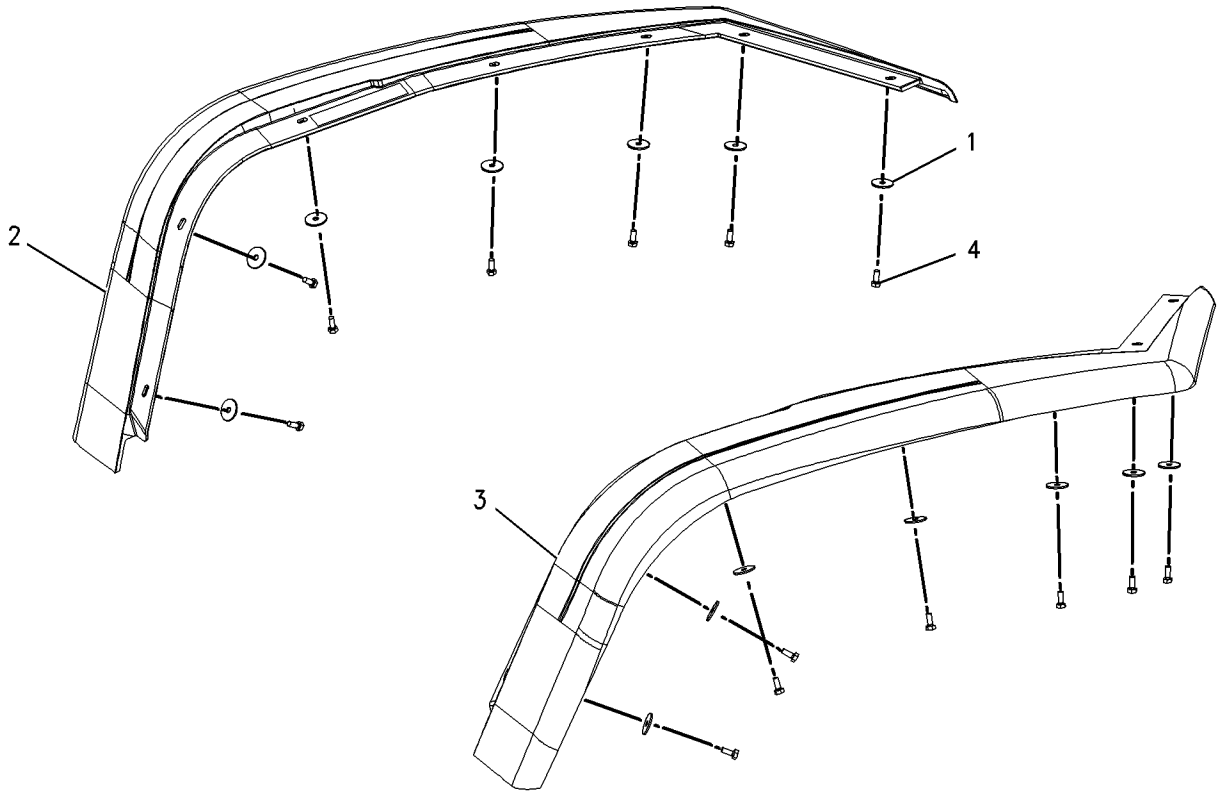

GRAPHIC #1 **<END>** g00713968

195-3898 FENDER GP-REAR

S/N: BFP12900-UP; CXP940-UP
PART OF 239-5560 CAB AR, 184-9733, 239-5558, 239-5559 CANOPY AR
AN ATTACHMENT

SMCS-7252 **i01376569**

NOTE	REF NO	GRAPHIC REF	PART NUMBER	QTY	PART NAME 1 2 3 4 5 6 (PRODUCT LEVEL)	SEE PAGE
	1	1	**156-0283**	14	WASHER-HARD (2.5MM THK)	
	2	1	**167-8253**	1	FENDER-RH	
	3	1	**167-8254**	1	FENDER-LH	
	4	1	**195-3699**	7	NUT	
M	5	1	**8T-4189**	7	BOLT (M8X1.25X20MM)	
M	6	1	**8T-4908**	7	BOLT (M8X1.25X25MM)	

M-METRIC PART

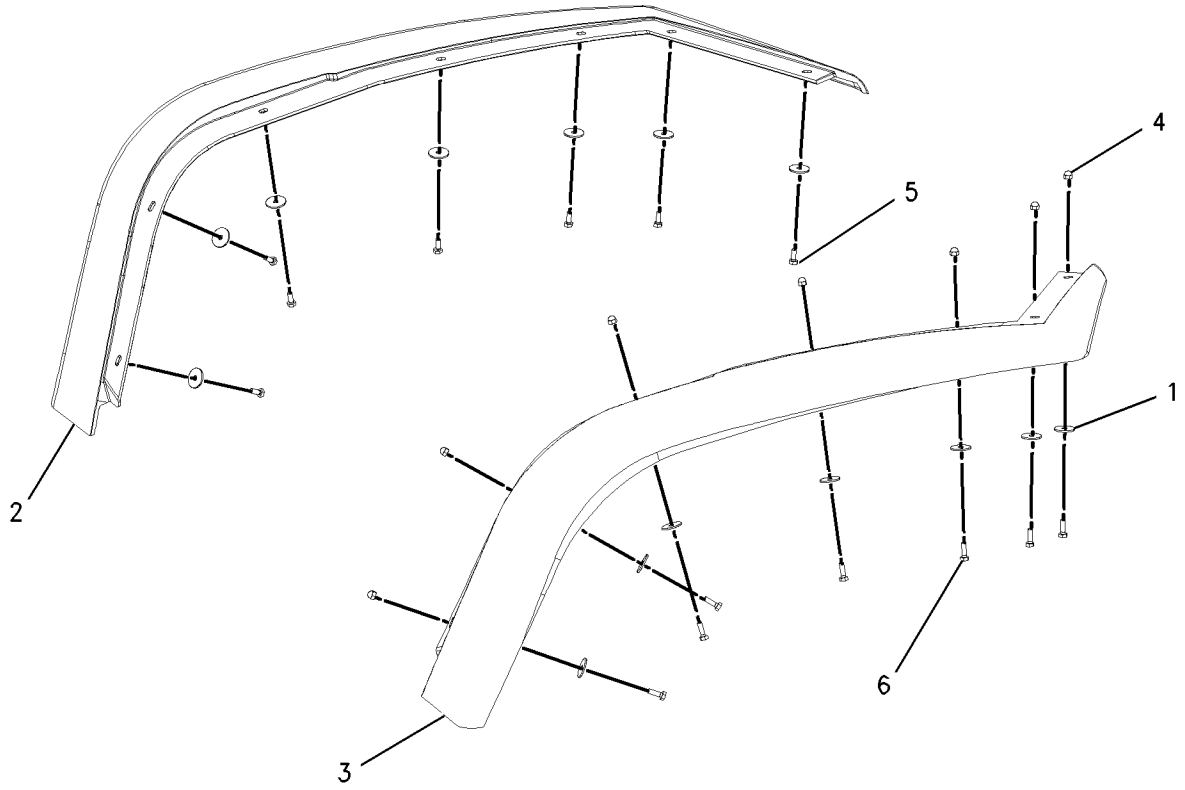

GRAPHIC #1 **<END>** g00727879

185-0080 FLOORPLATE GP

S/N: BFP12900-UP

PART OF 214-6950 CHASSIS AR

SMCS-7265 **i01768757**

NOTE	REF NO	GRAPHIC REF	PART NUMBER	QTY	PART NAME 1 2 3 4 5 6 (PRODUCT LEVEL)	SEE PAGE
B	1	1	**9R-0393**	6	SHIM (1.6 MM THK)	
	2	1	**9R-0394**	2	MOUNT AS	
	3	1	**118-2990**	2	MOUNT AS	
	4	1	**164-1102**	1	PLATE AS	
	5	1	**164-1103**	1	PLATE	
	6	1	**184-6436**	1	PLATE	
	7	1	**201-4822**	1	PLATE AS	
	8	1	**1L-6377**	2	BUTTON-PLUG	
	9	1	**8C-3291**	4	WASHER (M17X90X10MM THK)	
	10	1	**8M-2770**	1	CLIP	
M	11	1	**8T-4001**	2	NUT (M24X3 THD)	
	12	1	**8T-4121**	1	WASHER-HARD (11X21X2.5MM THK)	
	13	1	**8T-4122**	2	WASHER-HARD (17X32X3.5MM THK)	
M	14	1	**8T-4132**	2	NUT (M16X2 THD)	
M	15	1	**8T-4137**	1	BOLT (M10X1.5X20MM)	
	16	1	**8T-4167**	2	WASHER-HARD (26X44X4MM THK)	
M	17	1	**8T-4174**	2	BOLT (M16X2.0X120MM)	
M	18	1	**8T-4649**	2	BOLT (M24X3X140MM)	
	19	1	**9R-9869**	4	WASHER-HARD (M26X120X10MM THK)	
M	20	1	**9X-2042**	11	SCREW-TRUSS HEAD (M6X1X12MM)	

B-USE AS REQUIRED
M-METRIC PART

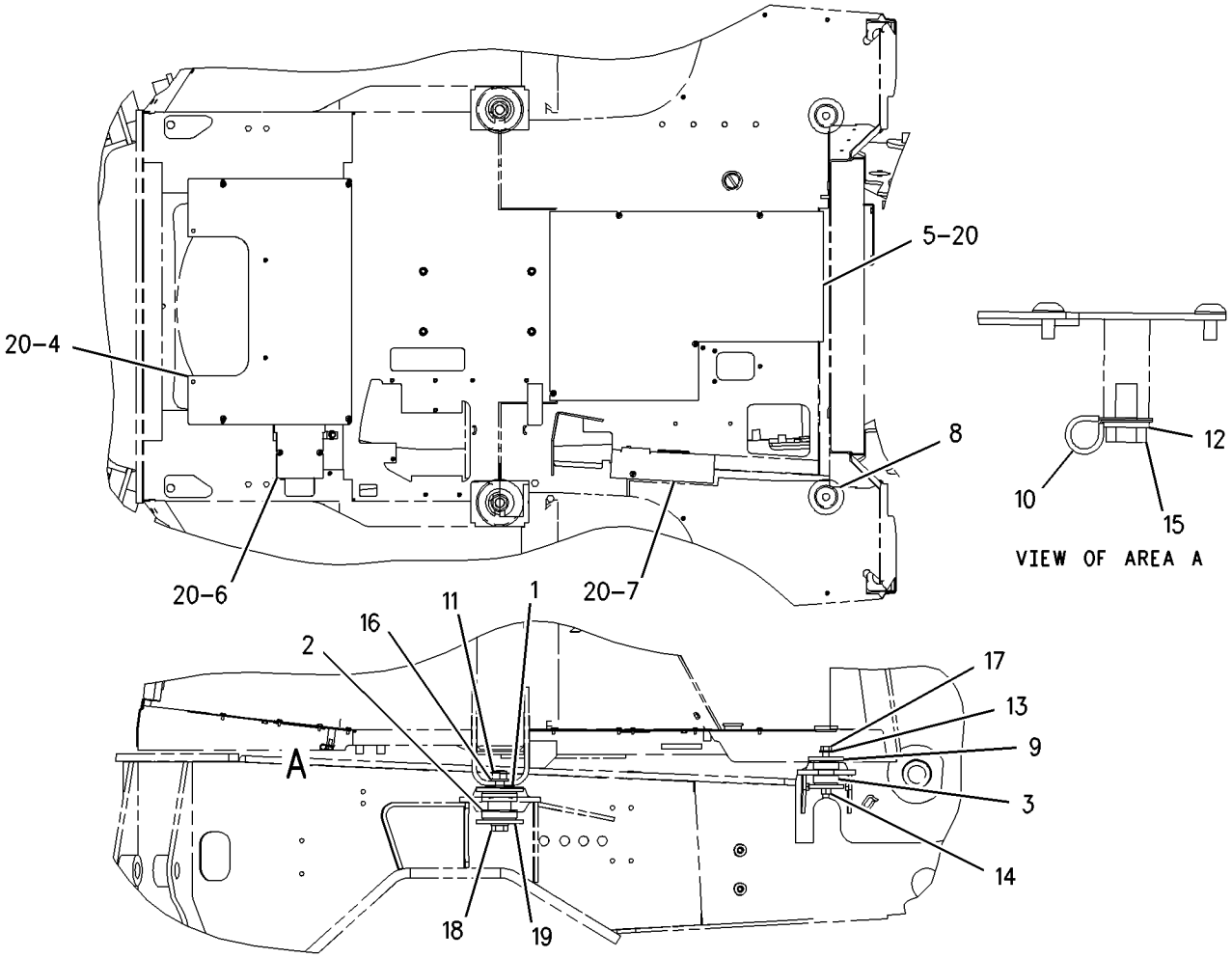

GRAPHIC #1 **<END>** g00809282

201-9732 FL00RPLATE GP

S/N: BFP12900-UP
PART 0F 239-5560 CAB AR
AN ATTACHMENT

SMCS-7265 **i01516341**

NOTE	REF NO	GRAPHIC REF	PART NUMBER	QTY	PART NAME 1 2 3 4 5 6 (PRODUCT LEVEL)	SEE PAGE
	1	1	**201-9733**	1	COVER	
M	2	1	**9X-2042**	1	SCREW-TRUSS HEAD (M6X1X12MM)	

M-METRIC PART

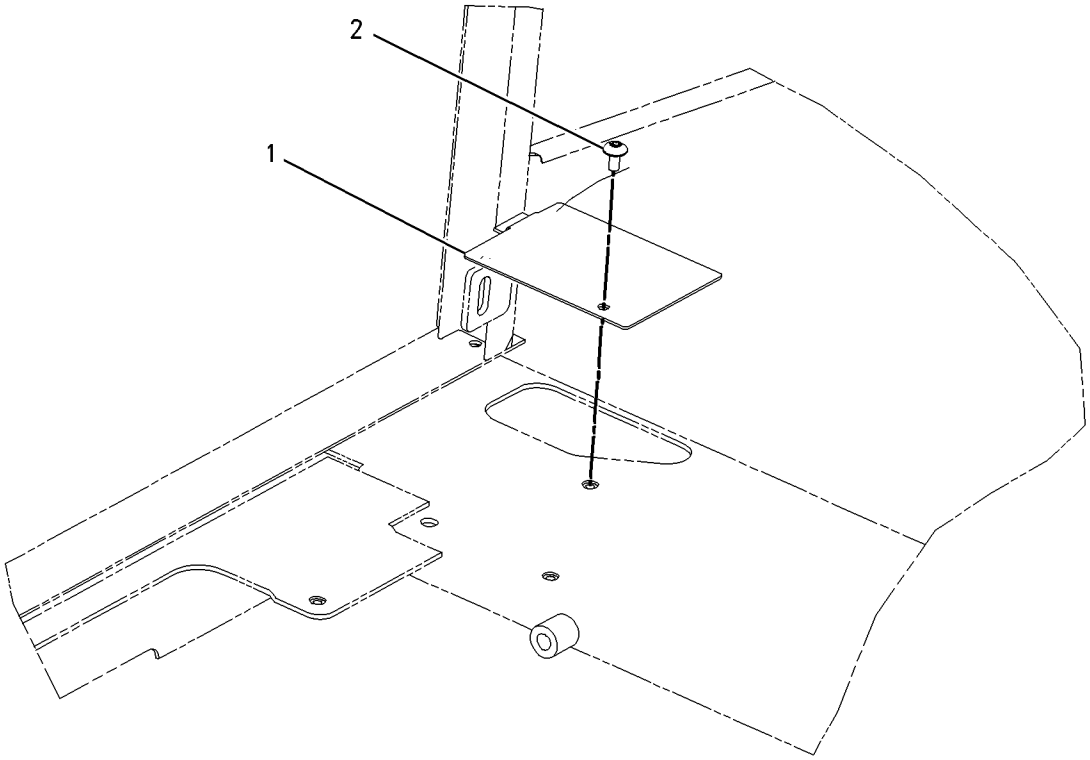

GRAPHIC #1 **<END>** g00790974

FRAME AND BODY

231-9349 FLOORPLATE GP

S/N: CXP940-UP
AN ATTACHMENT

SMCS-7265 **i02015046**

NOTE	REF NO	GRAPHIC REF	PART NUMBER	QTY	PART NAME 1 2 3 4 5 6 (PRODUCT LEVEL)	SEE PAGE
B	1	1	**9R-0393**	6	SHIM (1.6-MM THK)	
	2	1	**9R-0394**	2	MOUNT AS	
	3	1	**118-2990**	2	MOUNT AS	
	4	1	**164-1103**	1	PLATE	
	5	1	**236-4990**	1	FLOORPLATE AS	
M		1	**6V-9632**	1	NUT-WELD (M6X1-THD)	
	6	1	**184-6436**	1	PLATE	
	7	1	**201-4822**	1	PLATE AS	
	8	1	**1L-6377**	2	BUTTON-PLUG	
	9	1	**8C-3291**	4	WASHER (M17X90X10-MM THK)	
	10	1	**8M-2770**	1	CLIP	
M	11	1	**8T-4001**	2	NUT (M24X3-THD)	
	12	1	**8T-4121**	1	WASHER-HARD (11X21X2.5-MM THK)	
	13	1	**8T-4122**	2	WASHER-HARD (17X32X3.5-MM THK)	
M	14	1	**8T-4132**	2	NUT (M16X2-THD)	
M	15	1	**8T-4137**	1	BOLT (M10X1.5X20-MM)	
	16	1	**8T-4167**	2	WASHER-HARD (26X44X4-MM THK)	
M	17	1	**8T-4174**	2	BOLT (M16X2.0X120-MM)	
M	18	1	**8T-4649**	2	BOLT (M24X3X140-MM)	
	19	1	**9R-9869**	4	WASHER-HARD (M26X120X10-MM THK)	
M	20	1	**9X-2042**	15	SCREW-TRUSS HEAD (M6X1X12-MM)	
	21	1	**236-4991**	1	FLOORPLATE	

B-USE AS REQUIRED
M-METRIC PART

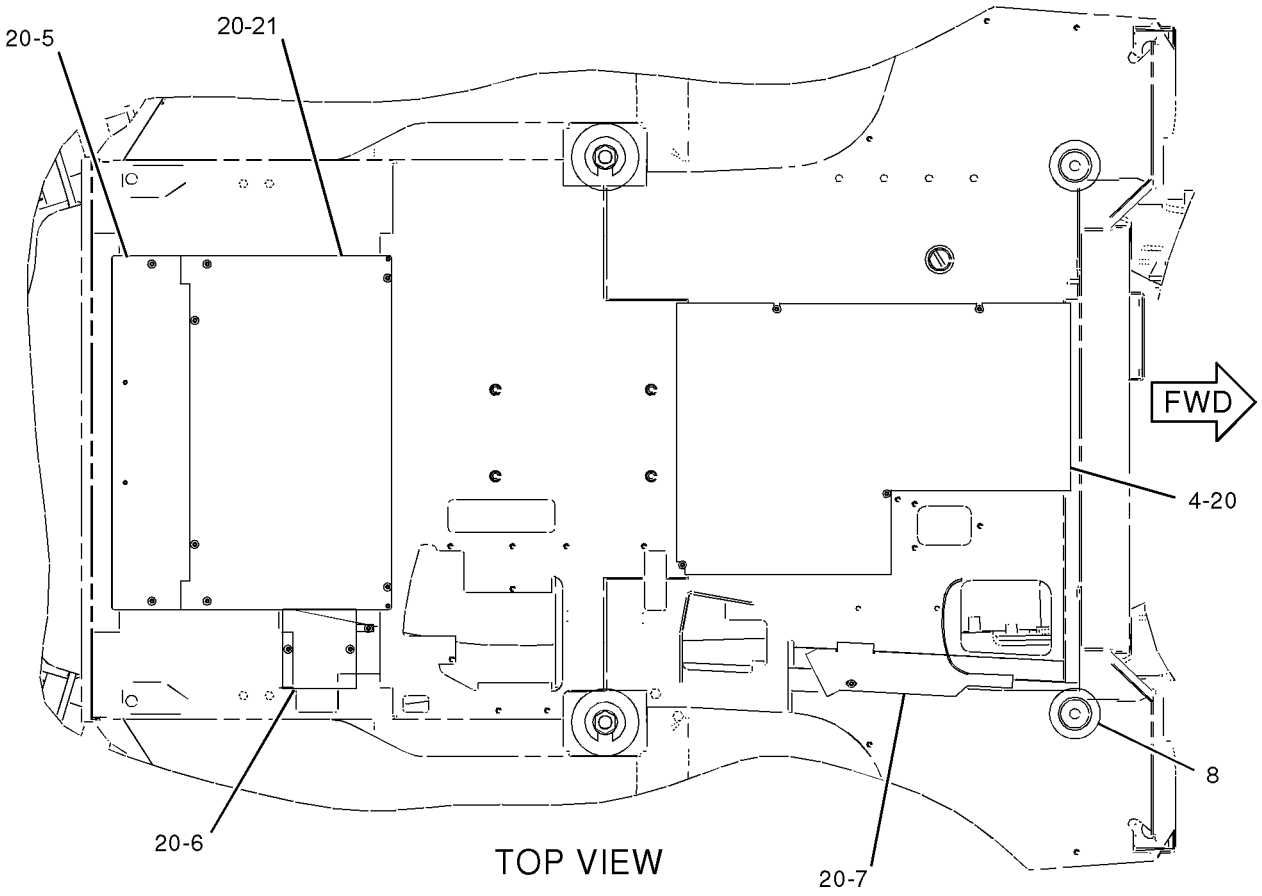

TOP VIEW

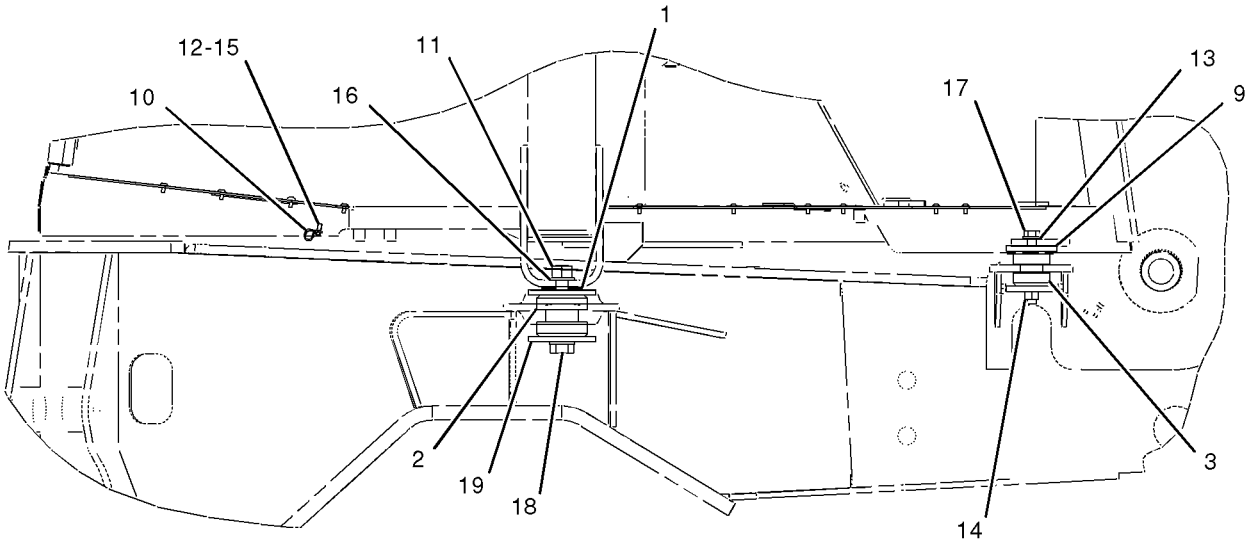

RIGHT SIDE VIEW

GRAPHIC #1

<END>

g01041757

FRAME AND BODY

186-6159 FRAME AS-LOADER

S/N: CXP940-UP

PART OF 215-6888 COMMON AR

SMCS-7054 **i01722893**

NOTE	REF NO	GRAPHIC REF	PART NUMBER	QTY	PART NAME 1 2 3 4 5 6 (PRODUCT LEVEL)	SEE PAGE
	1	1	*131-5134*	2	BRACKET AS	
	1A	1	**9R-0431**	2	BEARING-SLEEVE	
	2	1	*131-5133*	2	BRACKET AS	
	2A	1	**9R-0431**	2	BEARING-SLEEVE	
	3	1	*210-3165*	1	PLATE AS	
	3A	1	**102-4560**	1	BEARING-SLEEVE	
	4	1	*131-5127*	1	PLATE AS	
	4A	1	**9R-0366**	1	WASHER (5MM THK)	
	4B	1	**9R-0413**	1	BEARING	
		1	**9R-4110**	2	BEARING-SLEEVE	
	5	1	**111-3832**	1	SUPPORT AS	

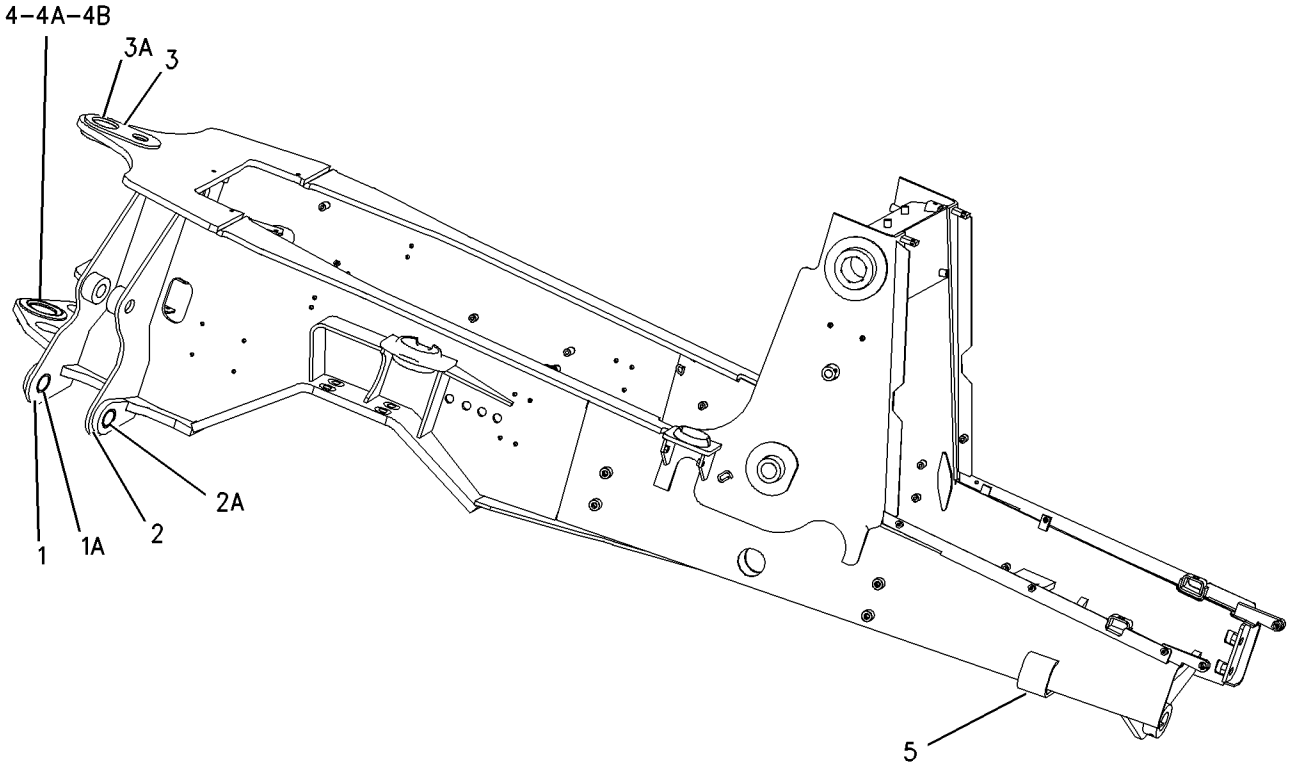

GRAPHIC #1 **<END>** g00885633

FRAME AND BODY

214-6944 FRAME GP-LOADER—SINGLE TILT

S/N: BFP12900-UP

PART OF 214-6950 CHASSIS AR

SMCS-7054 **i01967013**

NOTE	REF NO	GRAPHIC REF	PART NUMBER	QTY	PART NAME 1 2 3 4 5 6 (PRODUCT LEVEL)	SEE PAGE
	1		**9R-0481**	2	WASHER (71X110X4MM THK)	
	2		**9R-7701**	1	CAP AS	
			9R-4110	2	BEARING-SLEEVE	
M	3		**114-6099**	6	BOLT (M24X3X80MM)	
	4		**214-6946**	1	FRAME AS	
	5		**3B-8488**	2	FITTING-GREASE (1/8-27 THD)	
	6		**3B-8489**	2	FITTING-GREASE (1/8-27 THD)	
M	7		**8T-4001**	6	NUT (M24X3 THD)	
	8		**8T-4167**	12	WASHER-HARD (26X44X4MM THK)	

M-METRIC PART

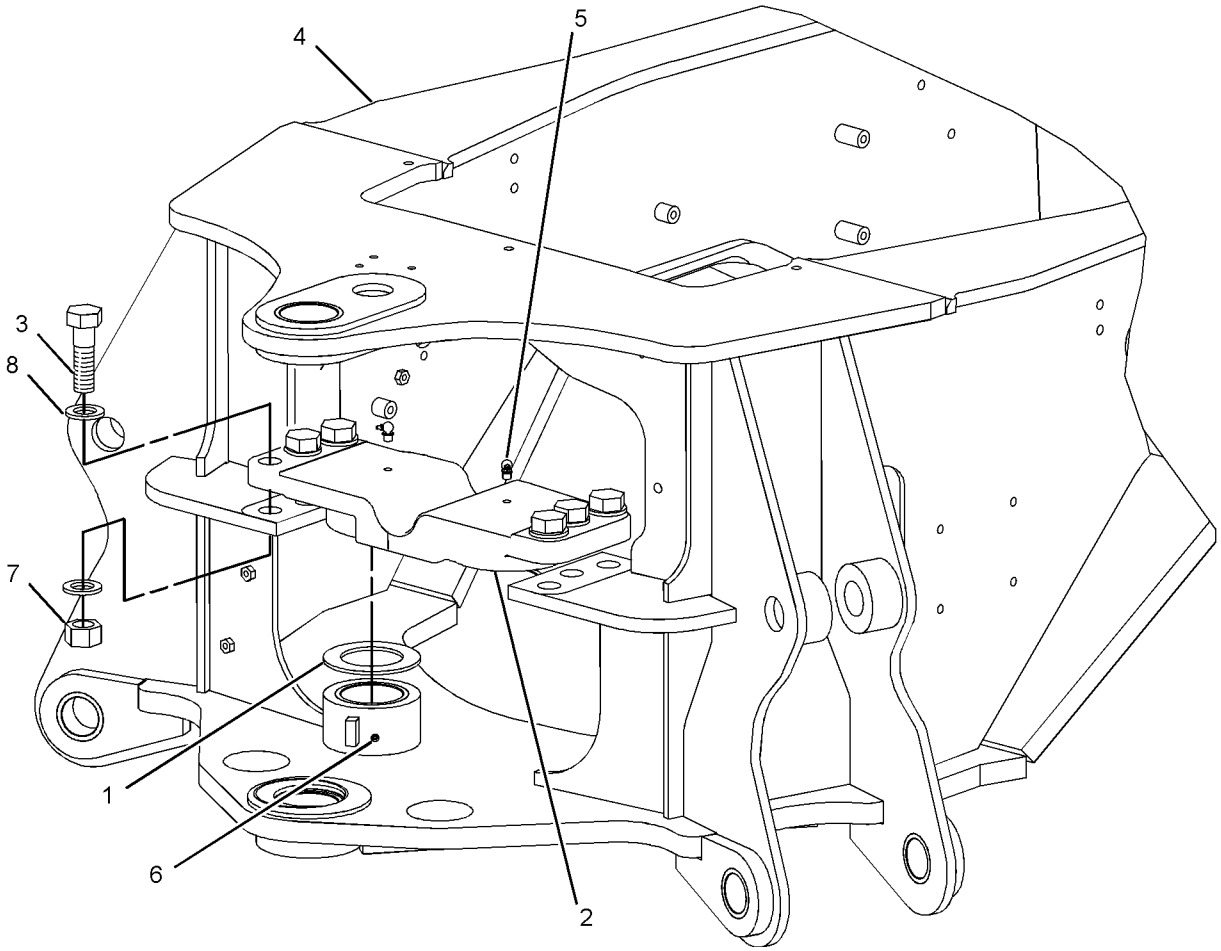

GRAPHIC #1 **<END>** g01025227

FRAME AND BODY

183-6056 FRAME GP-SWING

S/N: BFP12900-UP

PART OF 214-6950 CHASSIS AR

SMCS-6506 **i01969562**

NOTE	REF NO	GRAPHIC REF	PART NUMBER	QTY	PART NAME 1 2 3 4 5 6 (PRODUCT LEVEL)	SEE PAGE
	1	1	**5P-7958**	1	SLEEVE-CABLE SPLICE	
	2	1	**8T-4837**	1	WASHER (48X85X6MM THK)	
	3	1	**8Y-7203**	1	WEDGE	
	4	1	**8Y-7204**	1	WEDGE	
	5	1	**130-0484**	1	PIN	
B	6	1	**9R-5429**	2	SPACER (67.5X120X3MM THK)	
B	7	1	**9R-5437**	4	WASHER (56X90X.5MM THK)	
C	8	1	**236-6954**	1	FRAME AS	
		1	**9R-0366**	1	WASHER (80X140X5MM THK)	
	9	1	**9R-7882**	2	SPACER (14X25X7MM THK)	
B	10	1	**9R-8291**	2	SPACER (66X125X1MM THK)	
	11	1	**9R-8594**	1	PIN AS	
	12	1	**9R-8599**	1	PLATE	
	13	1	**9R-8760**	2	PLATE	
	14	1	**101-4015**	1	BRACKET	
	15	1	**101-4016**	1	PLATE AS	
	16	1	**101-4020**	1	PIN AS	
	17	1	**159-0960**	1	PIN AS	
	18	1	**102-1940**	1	STOP	
C	19	1	**237-5330**	2	PIN	
	20	1	**131-8775**	1	BRACKET AS	
	21	1	**134-0143**	1	CABLE	
	22	1	*142-6132*	1	ROD AS	
M		1	**6V-7687**	1	LOCKNUT (M12X1.75THD)	
		1	**123-7034**	1	ROD	
C	23	1	**237-0803**	1	SPRING	
B	24	1	**210-1706**	1	SHIM (0.5MM THK)	
B	25	1	**210-1707**	1	SHIM (1MM THK)	
	26	1	**222-0844**	1	CABLE AS	
	27	1	**3B-8489**	6	FITTING-GREASE (1/8-27 THD)	
	28	1	**4D-7794**	1	CLIP	
M	29	1	**6V-7687**	3	LOCKNUT (M12X1.75THD)	
	30	1	**7X-7729**	2	WASHER (11X25X3MM THK)	
M	31	1	**8T-3652**	1	NUT (M42X25THD)	
	32	1	**8T-4121**	6	WASHER-HARD (11X21X2.5MM THK)	
M	33	1	**8T-4136**	5	BOLT (M10X1.5X25MM)	
M	34	1	**8T-4139**	2	BOLT (M12X1.75X30MM)	
M	35	1	**8T-4195**	2	BOLT (M10X1.5X30MM)	
	36	1	**8T-4224**	4	WASHER-HARD (8.8X16X2MM THK)	
	37	1	**8T-4821**	2	WASHER (13.5X40X3MM THK)	
M	38	1	**8T-4908**	4	BOLT (M8X1.25X25MM)	
CM	39	1	**8T-5092**	2	BOLT (M12X1.75X150MM)	
M	40	1	**8T-8894**	1	BOLT-SOCKET HEAD (M10X1.5X20MM)	
C	41	1	**236-8182**	2	PIN	

B-USE AS REQUIRED
C-CHANGE FROM PREVIOUS TYPE
M-METRIC PART

183-6056 **FRAME GP-SWING** *(contd.)* **i01969562**

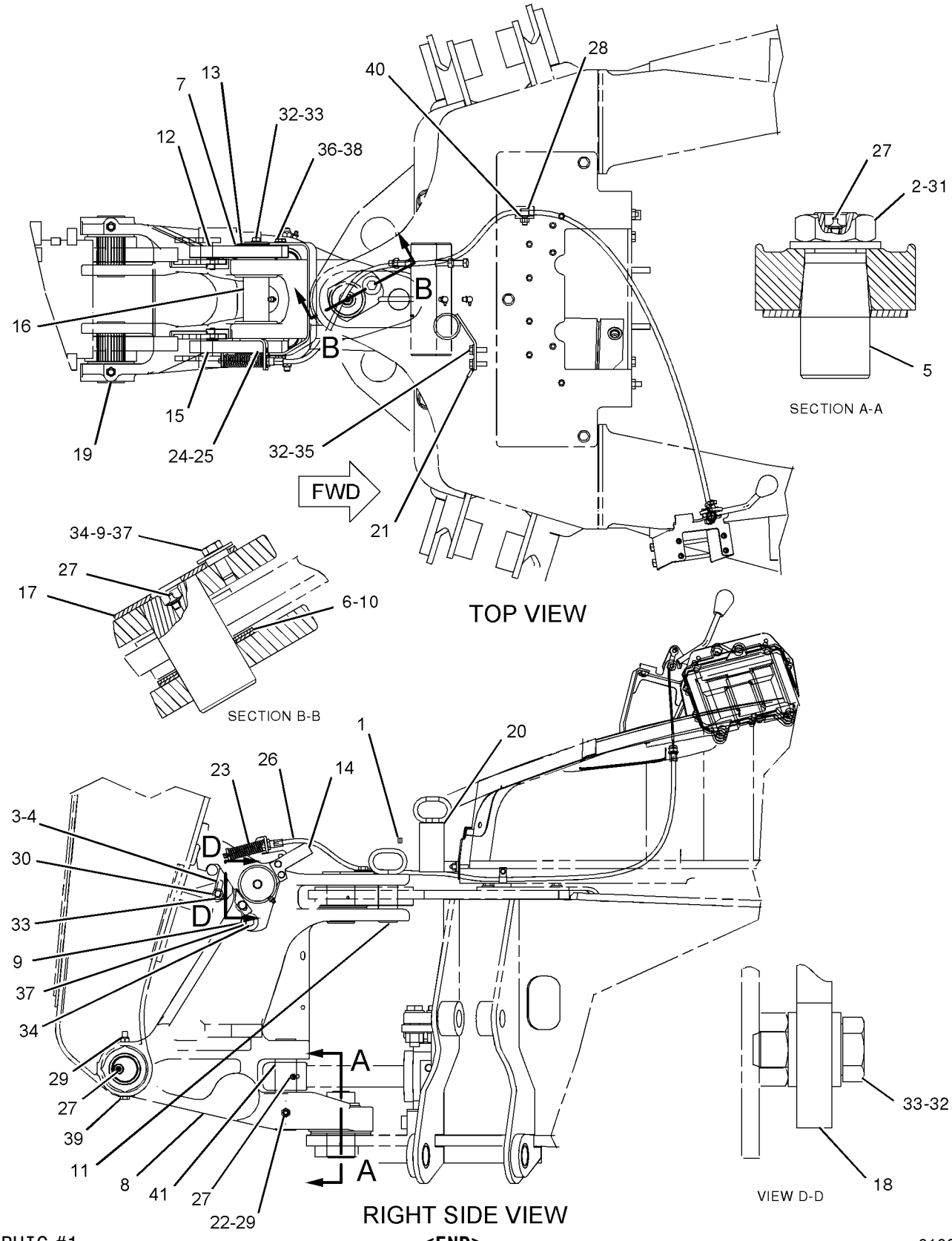

GRAPHIC #1

<END>

g01022586

9R-1233 GUARD GP-DRIVE SHAFT

S/N: BFP12900-UP
PART OF 237-6459 DRIVE AR-BACKHOE LOADER
AN ATTACHMENT

SMCS-7153 **i01811205**

NOTE	REF NO	GRAPHIC REF	PART NUMBER	QTY	PART NAME 1 2 3 4 5 6 (PRODUCT LEVEL)	SEE PAGE
	1	1	**213-8481**	1	GUARD AS	
M	2	1	**8T-4183**	4	BOLT (M12X1.75X40MM)	
	3	1	**8T-4223**	4	WASHER-HARD (13.5X25.5X3MM THK)	

M-METRIC PART

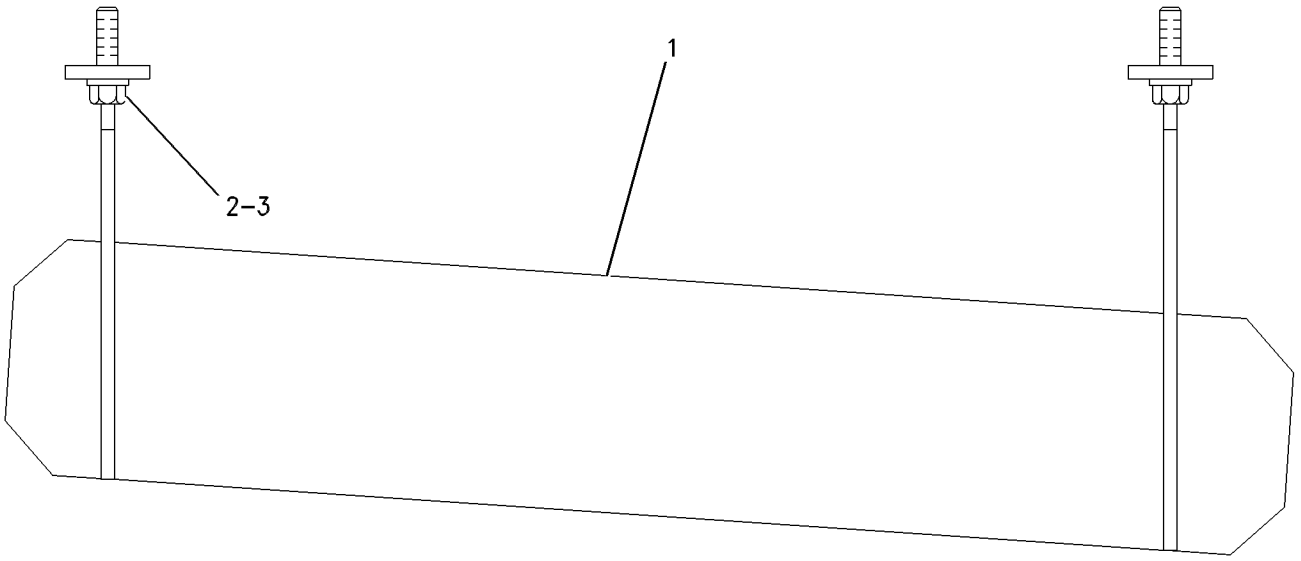

GRAPHIC #1 **<END>** g00287430

FRAME AND BODY

185-8842 HOOD & GUARD GP

S/N: CXP940-UP

PART OF 215-6888 COMMON AR

SMCS-7150, 7251 **i01788041**

NOTE	REF NO	GRAPHIC REF	PART NUMBER	QTY	PART NAME 1 2 3 4 5 6 (PRODUCT LEVEL)	SEE PAGE
E	1	1	**3E-6600**		SEAL (83CM)	
E	2	1	**123-3827**		SEAL (60CM)	
E	3	1	**179-5571**		SEAL (61CM)	
	4	1	**9R-2620**	1	PLUG	
	5	1	**112-4415**	2	BUMPER AS	
	6	1	**112-4416**	1	GUARD AS	
	7	1	**198-8341**	1	CABLE AS	
	8	1	**123-0428**	2	BAR	
	9	1	**123-4065**	6	RIVET-POP	
	10	1	**135-9886**	1	SPRING	
	11	1	**141-7514**	2	BAFFLE	
	12	1	**145-4476**	1	ENCLOSURE GP	
E		1	**3E-6600**		SEAL (117CM)	
	13	1	**145-4477**	1	ENCLOSURE GP	
E		1	**177-4122**		SEAL (95CM)	
	14	1	**188-0862**	1	GRILL AS	
	15	1	**188-0865**	1	BAFFLE	
Y	16	1	*190-5124*	1	HOOD GP-ENGINE	498
	17	1	**3S-2093**	4	STRAP-CABLE	
	18	1	**5P-4115**	1	WASHER-HARD (7.2X19X2MM THK)	
	19	1	**6P-6590**	1	GROMMET	
M	20	1	**7X-2554**	2	BOLT (M16X2X70MM)	
	21	1	**7X-7729**	3	WASHER (11X25X3MM THK)	
	22	1	**8T-4121**	8	WASHER-HARD (11X21X2.5MM THK)	
M	23	1	**8T-4136**	4	BOLT (M10X1.5X25MM)	
M	24	1	**8T-4137**	6	BOLT (M10X1.5X20MM)	
M	25	1	**8T-4138**	1	BOLT (M6X1X20MM)	
M	26	1	**8T-4182**	2	BOLT (M10X1.5X45MM)	
M	27	1	**8T-4191**	3	BOLT (M10X1.5X16MM)	
	28	1	**8T-4222**	4	WASHER-PLATED (11X32X2.5MM THK)	
	29	1	**8T-4224**	6	WASHER-HARD (8.8X16X2MM THK)	
M	30	1	**8T-7547**	6	BOLT (M8X1.25X30MM)	
	31	1	**9X-8257**	2	WASHER (17.5X30X3.5MM THK)	
	32	1	**209-4162**	1	GUARD	

E-ORDER BY THE CENTIMETER
M-METRIC PART
Y-SEPARATE ILLUSTRATION

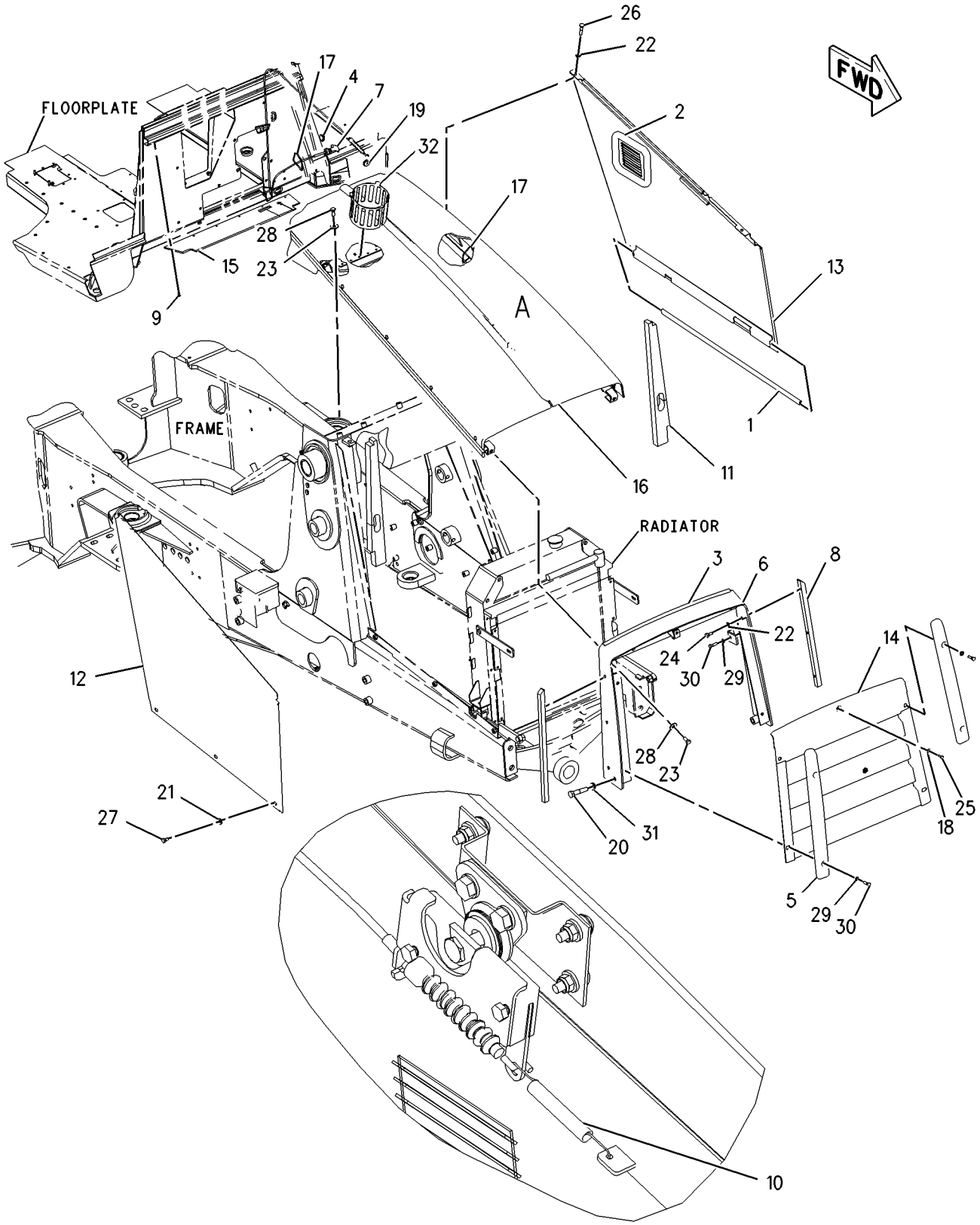

VIEW OF AREA A

GRAPHIC #1 **<END>** g00916378

FRAME AND BODY

234-9065 HOOD & GUARD GP

S/N: BFP12900-UP

PART OF 214-6950 CHASSIS AR

SMCS-7150, 7251 **i01986736**

NOTE	REF NO	GRAPHIC REF	PART NUMBER	QTY	PART NAME 1 2 3 4 5 6 (PRODUCT LEVEL)	SEE PAGE
E	1	1	**3E-6600**		SEAL (83 CM)	
	2	1	**9R-2620**	1	PLUG	
	3	1	**112-4415**	2	BUMPER AS	
	4	1	**112-4416**	1	GUARD AS	
M		1	**6V-9632**	1	NUT-WELD (M6X1 THD)	
M		1	**8T-3490**	1	NUT-WELD (M10X1.5 THD)	
M		1	**8T-3612**	6	NUT-WELD (M8X1.25 THD)	
	5	1	**123-0428**	2	BAR	
	6	1	**123-4065**	6	RIVET-POP	
	7	1	**135-9886**	1	SPRING	
	8	1	**141-7514**	2	BAFFLE	
	9	1	**145-4476**	1	ENCLOSURE GP (RH)	
E	10	1	**179-5571**		SEAL (61 CM)	
	11	1	**188-0862**	1	GRILL AS	
	12	1	**188-0865**	1	BAFFLE	
	13	1	**198-8341**	1	CABLE AS	
	14	1	**234-9066**	1	ENCLOSURE GP-ENGINE	
Y	15	1	*234-9522*	1	HOOD GP-ENGINE	501
	16	1	**3S-2093**	4	STRAP-CABLE	
	17	1	**5P-4115**	1	WASHER-HARD (7.2X19X2MM THK)	
	18	1	**6P-6590**	1	GROMMET	
M	19	1	**7X-2554**	2	BOLT (M16X2X70MM)	
	20	1	**7X-7729**	3	WASHER (11X25X3MM THK)	
	21	1	**8T-4121**	8	WASHER-HARD (11X21X2.5MM THK)	
M	22	1	**8T-4133**	1	NUT (M10X1.5 THD)	
M	23	1	**8T-4136**	2	BOLT (M10X1.5X25MM)	
M	24	1	**8T-4137**	6	BOLT (M10X1.5X20MM)	
M	25	1	**8T-4138**	1	BOLT (M6X1X20MM)	
M	26	1	**8T-4182**	2	BOLT (M10X1.5X45MM)	
M	27	1	**8T-4191**	3	BOLT (M10X1.5X16MM)	
M	28	1	**8T-4196**	2	BOLT (M10X1.5X35MM)	
	29	1	**8T-4222**	5	WASHER-PLATED (11X32X2.5MM THK)	
	30	1	**8T-4224**	6	WASHER-HARD (8.8X16X2MM THK)	
M	31	1	**8T-7547**	6	BOLT (M8X1.25X30MM)	
	32	1	**9X-8257**	2	WASHER (17.5X30X3.5MM THK)	

E-ORDER BY THE CENTIMETER
M-METRIC PART
Y-SEPARATE ILLUSTRATION

234-9065 **HOOD & GUARD GP** *(contd.)* **i01986736**

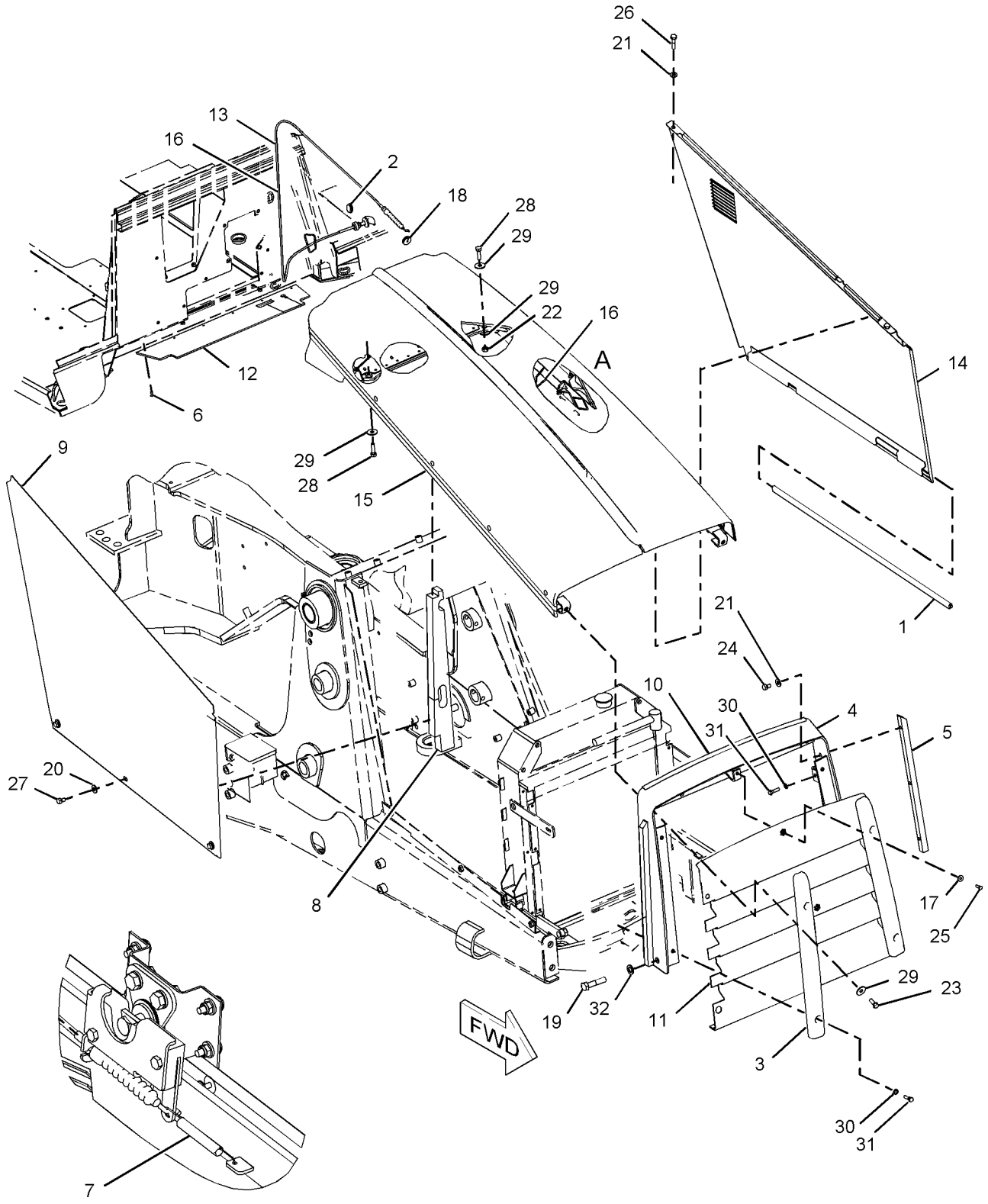

VIEW OF AREA A

GRAPHIC #1 **<END>** g01030238

FRAME AND BODY

190-5124 HOOD GP-ENGINE

S/N: CXP940-UP

PART OF 185-8842 HOOD & GUARD GP

SMCS-7251 **i01781141**

NOTE	REF NO	GRAPHIC REF	PART NUMBER	QTY	PART NAME 1 2 3 4 5 6 (PRODUCT LEVEL)	SEE PAGE
E	1	1	**126-8472**		SEAL (35.8CM)	
	2	1	**4V-5091**	2	GROMMET	
	3	2	**5D-4822**	4	RING-RETAINING	
	4	1	**5V-8309**	1	STRIKER AS	
B	5	2	**8T-0318**	3	SHIM (0.8MM THK)	
	6	1	**8T-2444**	4	STUD-BALL	
	7	1	**8Y-6998**	1	LATCH AS-ROTARY	
	8	2	**9R-4784**	1	PLATE AS	
	9	2	**114-8861**	2	SPRING AS-GAS	
	10	2	**114-8972**	2	HINGE AS	
	11	1	**114-8973**	2	HINGE AS	
	12	1	**115-5219**	1	PLATE AS	
	13	1	**115-5220**	1	PLATE	
	14	1	**122-5923**	1	BAFFLE	
	15	1	**123-4065**	11	RIVET-POP	
	16	1	**131-0827**	1	PLATE-LH	
	17	1	**131-0828**	1	PLATE-RH	
	18	1	**141-7515**	1	BAFFLE	
	19	1	**190-5125**	1	SUPPORT AS	
B		1	**7T-0525**	2	SHIM (3MM THK)	
	20	2	**191-9109**	1	HOOD AS-LH	
		2	**8T-9501**	6	SCREW (10-16X.75 IN)	
	21	2	**191-9110**	1	HOOD AS-RH	
M	22	1	**129-3178**	4	LOCKNUT (M6X1 THD)	
	23	1	**139-3785**	9	RIVET-POP	
	24	2	**4B-4274**	9	WASHER (5.5X13X1.2MM THK)	
M	25	1	**5C-7261**	6	NUT (M8X1.25 THD)	
	26	1	**7X-0579**	4	WASHER-HARD (8.8X25.5X2MM THK)	
M	27	1	**8T-4181**	2	BOLT (M6X1X20MM)	
M	28	2	**8T-4189**	12	BOLT (M8X1.25X20MM)	
M	29	1	**8T-4197**	3	BOLT (M8X1.25X40MM)	
	30	1	**8T-4205**	4	WASHER-HARD (7.2X14.5X2MM THK)	
	31	2	**8T-4224**	19	WASHER-HARD (8.8X16X2MM THK)	
M	32	2	**8T-5091**	2	BOLT (M8X1.25X20MM)	
M	33	1	**9X-2045**	4	SCREW-TRUSS HEAD (M6X1X20MM)	
	34	2	**191-9111**	1	FILM-CAT	
	35	2	**132-3895**	1	FILM-INSTRUCTION	
E	36	1	**3E-8211**	2	FILM-STRIPE (139CM)	

B-USE AS REQUIRED
E-ORDER BY THE CENTIMETER
M-METRIC PART

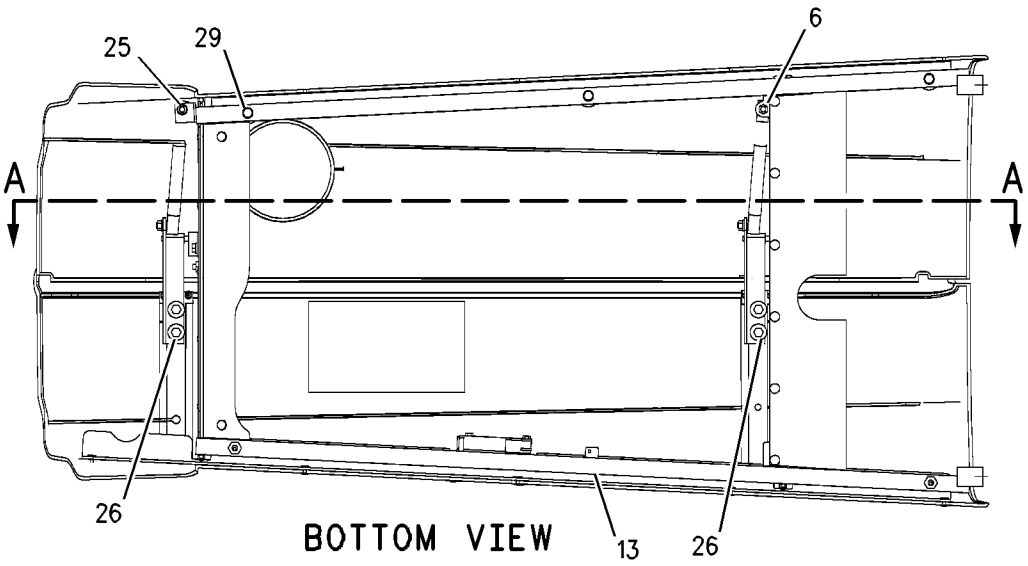

BOTTOM VIEW

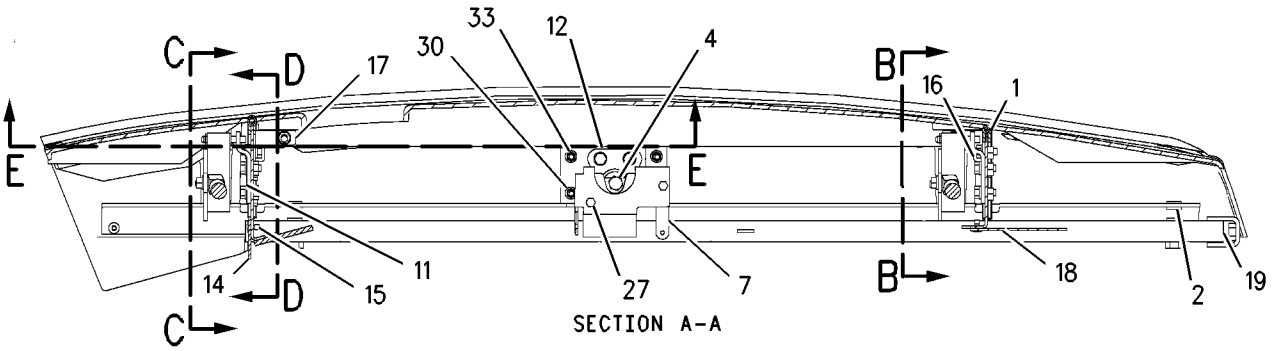

SECTION A-A

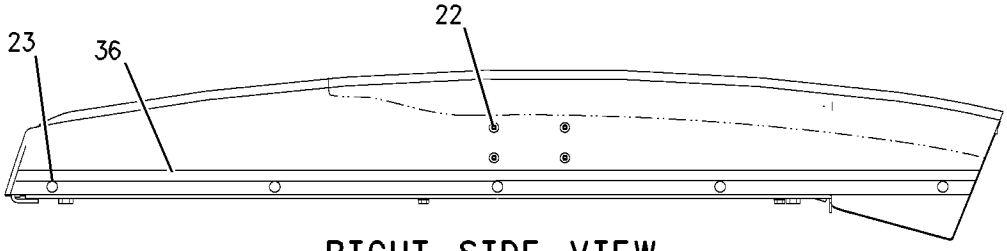

RIGHT SIDE VIEW

REFER TO ALL ILLUSTRATIONS
IN THIS GROUP FOR
AUXILIARY VIEWS

GRAPHIC #1 g00743336

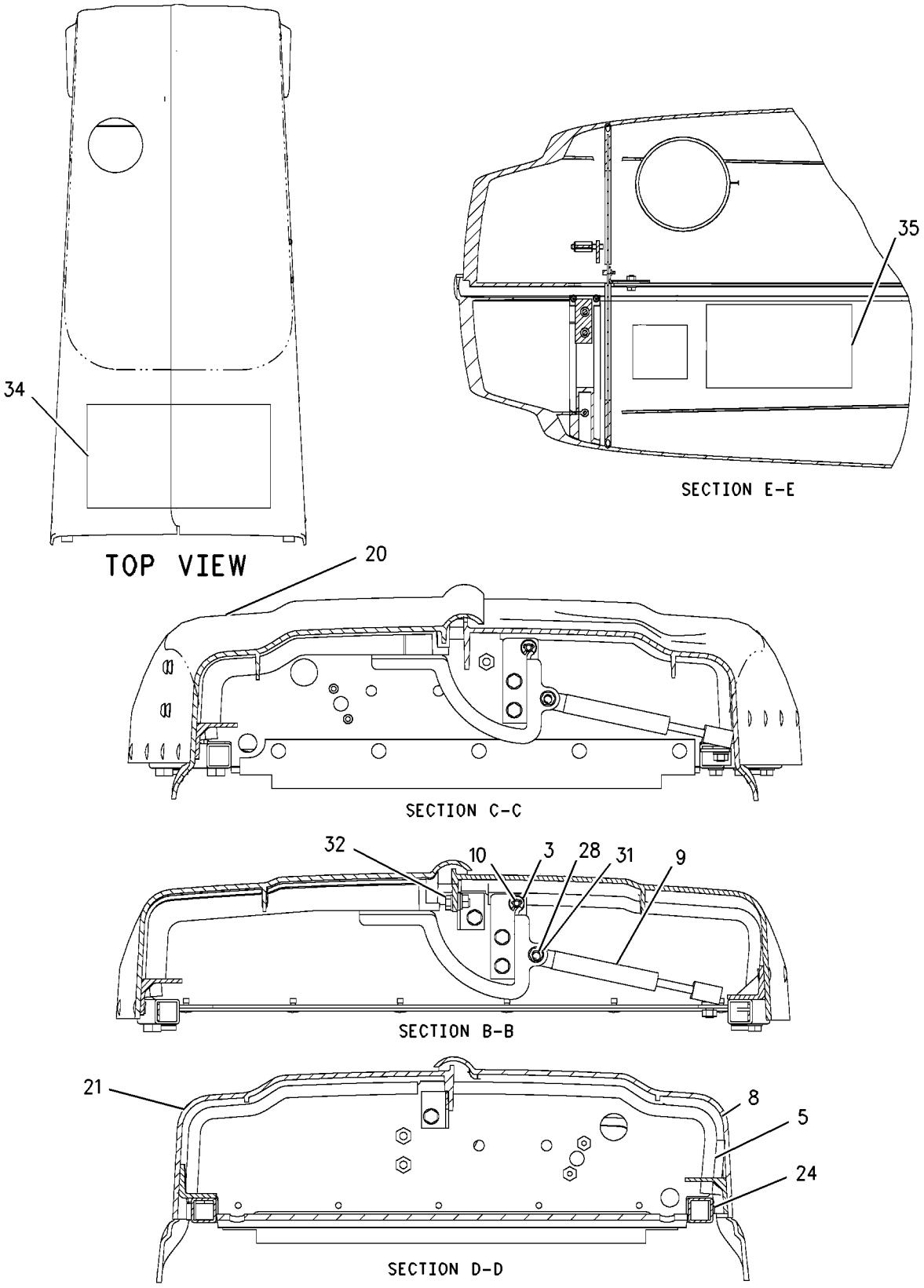

GRAPHIC #2 **<END>** g00723871

FRAME AND BODY

234-9522 HOOD GP-ENGINE

S/N: BFP12900-UP

PART OF 234-9065 HOOD & GUARD GP

SMCS-7251 **i02019782**

NOTE	REF NO	GRAPHIC REF	PART NUMBER	QTY	PART NAME 1 2 3 4 5 6 (PRODUCT LEVEL)	SEE PAGE
	1	1	**3E-8211**	278	FILM-STRIPE	
	2	1	**126-8472**	144	SEAL	
	3	1	**4V-5091**	2	GROMMET	
	4	2	**5D-4822**	4	RING-RETAINING	
	5	1	**5V-8309**	1	STRIKER AS	
	6	2	**8T-0318**	3	SHIM (0.8-MM THK)	
	7	1	**8T-2444**	4	STUD-BALL	
	8	1	**8Y-6998**	1	LATCH AS-ROTARY	
	9	1	**9R-4784**	1	PLATE AS	
M		1	**8T-3612**	2	NUT-WELD (M8X1.25-THD)	
	10	2	**114-8861**	2	SPRING AS-GAS	
	11	2	**114-8972**	2	HINGE AS	
	12	1	**114-8973**	2	HINGE AS	
	13	1	**115-5219**	1	PLATE AS	
		1	**1F-0750**	1	NUT-WELD (3/8-16-THD)	
	14	1	**115-5220**	1	PLATE	
	15	1	**122-5923**	1	BAFFLE	
	16	1	**123-4065**	11	RIVET-POP	
	17	1	**131-0827**	1	PLATE-LH	
	18	1	**131-0828**	1	PLATE-RH	
	19	1	**141-7515**	1	BAFFLE	
	20	2	**191-9109**	1	HOOD AS	
		2	**8T-9501**	6	SCREW (10-16X.75-IN)	
	21	2	**191-9110**	1	HOOD AS	
	22	2	**224-8945**	1	FILM-WARNING (ETHER)	
	23	1	**234-9523**	1	SUPPORT AS	
		1	**7T-0525**	2	SHIM (3-MM THK)	
M		1	**8T-3490**	5	NUT-WELD (M10X1.5-THD)	
M		1	**6V-9632**	2	NUT-WELD (M6X1-THD)	
M		1	**8T-3612**	3	NUT-WELD (M8X1.25-THD)	
M		1	**6V-9632**	2	NUT-WELD (M6X1-THD)	
M		1	**8T-3612**	3	NUT-WELD (M8X1.25-THD)	
	24	2	**132-3895**	1	FILM-INSTRUCTION (LUBRICANTS)	
M	25	1	**129-3178**	4	LOCKNUT (M6X1-THD)	
	26	1	**139-3785**	9	RIVET-POP	
	27	2	**4B-4274**	9	WASHER (5.5X13X1.2-MM THK)	
M	28	1	**5C-7261**	6	NUT (M8X1.25-THD)	
	29	1	**7X-0579**	4	WASHER-HARD (8.8X25.5X2-MM THK)	
M	30	1	**8T-4181**	2	BOLT (M6X1X20-MM)	
M	31	2	**8T-4189**	12	BOLT (M8X1.25X20-MM)	
M	32	1	**8T-4197**	3	BOLT (M8X1.25X40-MM)	
	33	1	**8T-4205**	4	WASHER-HARD (7.2X14.5X2-MM THK)	
M	34	2	**8T-4224**	19	WASHER-HARD (8.8X16X2-MM THK)	
M	35	2	**8T-5091**	2	BOLT (M8X1.25X20-MM)	
M	36	1	**9X-2045**	4	SCREW-TRUSS HEAD (M6X1X20-MM)	
	37	2	**191-9111**	1	FILM-CAT	

M-METRIC PART

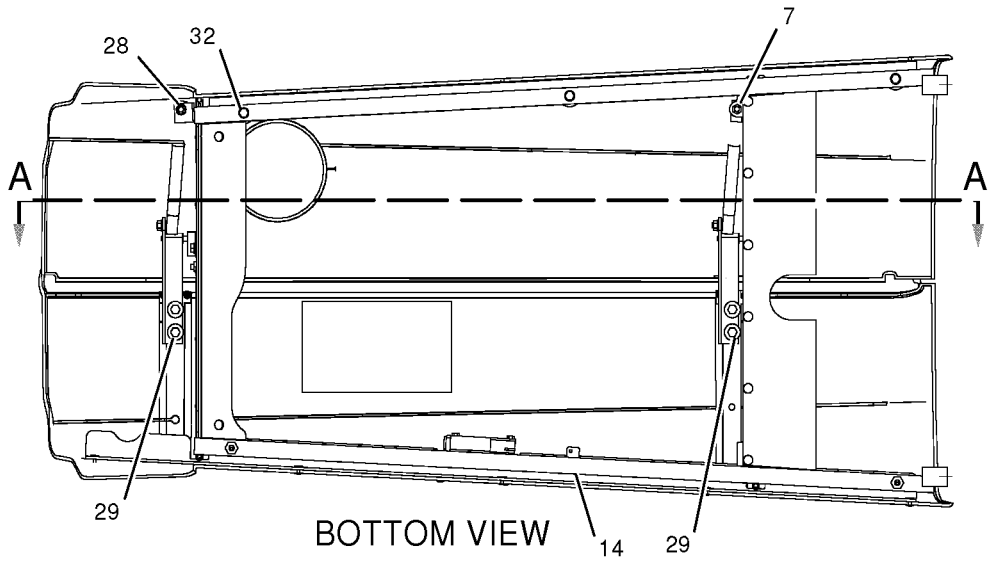

BOTTOM VIEW

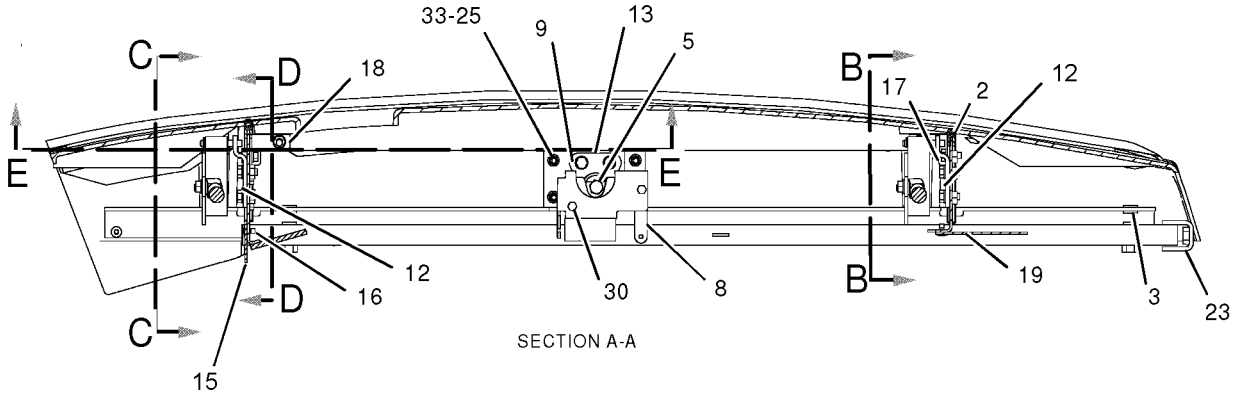

SECTION A-A

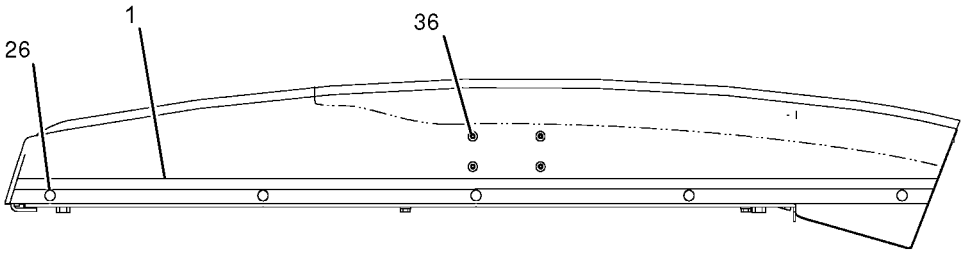

RIGHT SIDE VIEW

REFER TO ALL ILLUSTRATIONS IN THIS GROUP FOR AUXILIARY VIEWS

GRAPHIC #1 g01023309

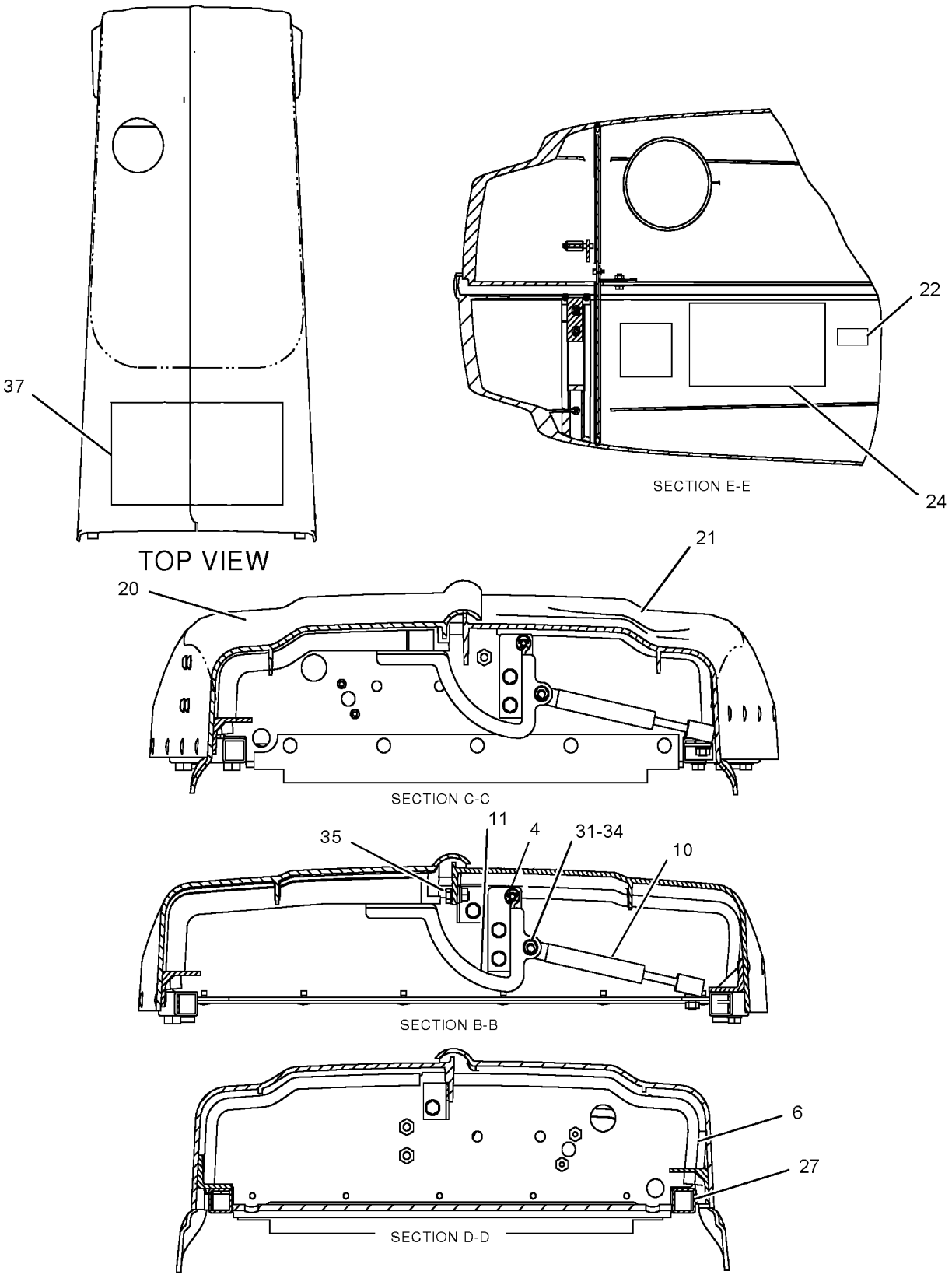

GRAPHIC #2 **<END>** g01023308

FRAME AND BODY

185-1129 SUPPRESSION AR-SOUND

S/N: CXP940-UP
STANDARD
PART OF 237-6461 DRIVE AR-BACKHOE LOADER
AN ATTACHMENT

SMCS-7076, 7261 **i01522206**

NOTE	PART NUMBER	QTY	PART NAME 1 2 3 4 5 6 (PRODUCT LEVEL)	SEE PAGE
Y	*197-3263*	1	AIR CLEANER GP	203
Y	*174-7153*	1	LINES GP-PUMP	633

Y-SEPARATE ILLUSTRATION

<END>

162-3960 ACCUMULATOR GP-RIDE CONTROL–CHARGED

S/N: BFP12900-UP

PART OF 162-3961 ACCUMULATOR GP-RIDE CONTROL, 195-1284, 235-5844 LINES GP-RIDE CONTROL

FIELD REPLACEMENT ORDER 162-3961–PAGE 506

AN ATTACHMENT

SMCS-5077 **i01980261**

NOTE	REF NO	GRAPHIC REF	PART NUMBER	QTY	PART NAME 1 2 3 4 5 6 (PRODUCT LEVEL)	SEE PAGE
	1	1	**158-2306**	1	VALVE-GAS	
	2	1	**170-0503**	1	FILM (PLATE-NAME)	
					AVAILABLE REPAIR KIT(S):	
			160-0496	1	KIT-ACCUMULATOR SERVICE	

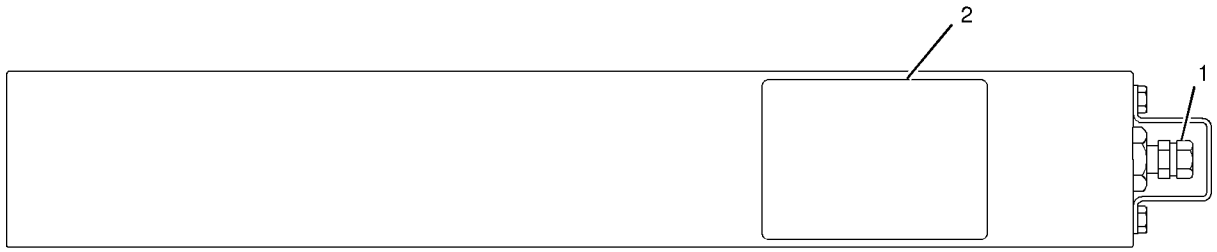

GRAPHIC #1 **<END>** g01027026

162-3961 ACCUMULATOR GP-RIDE CONTROL—UNCHARGED

S/N: BFP12900-UP

FIELD REPLACEMENT FOR 162-3960—PAGE 505

SMCS-5077 **i01980268**

NOTE	REF NO	GRAPHIC REF	PART NUMBER	QTY	PART NAME 1 2 3 4 5 6 (PRODUCT LEVEL)	SEE PAGE
Y	1	1	*162-3960*	1	ACCUMULATOR GP-RIDE CONTROL (CHARGED)	505

Y-SEPARATE ILLUSTRATION

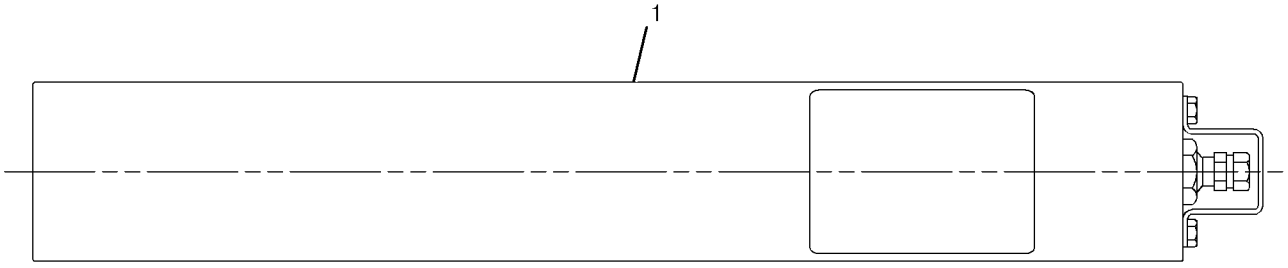

GRAPHIC #1 **<END>** g01027019

HYDRAULIC SYSTEM

170-0606 CONNECTOR GP-VALVE

S/N: BFP12900-UP

PART OF 214-6980 HYDRAULIC AR

SMCS-5079, 5137, 7553 **i01701268**

NOTE	REF NO	GRAPHIC REF	PART NUMBER	QTY	PART NAME 1 2 3 4 5 6 (PRODUCT LEVEL)	SEE PAGE
	1	1	*215-4424*	1	TEE AS	
		1	**5K-9090**	1	SEAL-O-RING	
		1	**6V-9746**	1	SEAL-O-RING	
		1	**7M-8485**	1	SEAL-O-RING	
	2	1	*148-8327*	2	CONNECTOR GP	
					(EACH INCLUDES)	
		1	**3D-2824**	1	SEAL-O-RING	
		1	**6V-8637**	1	CONNECTOR-SEAL	
		1	**6V-9746**	1	SEAL-O-RING	
	3	1	*148-8328*	2	CONNECTOR GP	
					(EACH INCLUDES)	
		1	**3D-2824**	1	SEAL-O-RING	
		1	**6V-8398**	1	SEAL-O-RING	
		1	**6V-8633**	1	CONNECTOR	
	4	1	*148-8340*	1	CONNECTOR GP	
		1	**3K-0360**	1	SEAL-O-RING	
		1	**6V-8398**	1	SEAL-O-RING	
		1	**6V-8639**	1	CONNECTOR	
	5	1	*148-8341*	2	CONNECTOR GP	
					(EACH INCLUDES)	
		1	**3D-2824**	1	SEAL-O-RING	
		1	**6V-8713**	1	CONNECTOR	
		1	**7J-9108**	1	SEAL-O-RING	
	6	1	*148-8364*	1	ELBOW GP	
		1	**3K-0360**	1	SEAL-O-RING	
		1	**6V-8398**	1	SEAL-O-RING	
		1	**6V-8625**	1	ELBOW	
	7	1	*148-8370*	1	ELBOW GP	
		1	**6V-8398**	1	SEAL-O-RING	
		1	**6V-9851**	1	ELBOW	

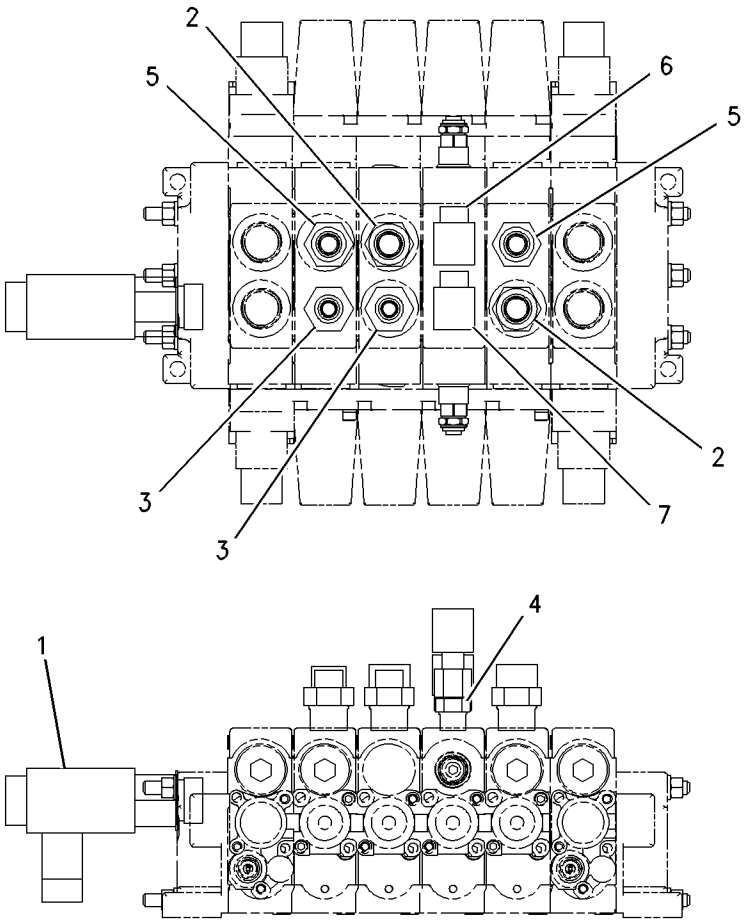

GRAPHIC #1 **<END>** g00876097

HYDRAULIC SYSTEM

202-6139 CONNECTOR GP-VALVE

S/N: BFP12900-UP

PART OF 214-6980 HYDRAULIC AR

SMCS-5079, 5137, 7553 **i01824247**

NOTE	REF NO	GRAPHIC REF	PART NUMBER	QTY	PART NAME 1 2 3 4 5 6 (PRODUCT LEVEL)	SEE PAGE
	1	1	**6V-0852**	1	CAP-DUST	
	2	1	*150-3062*	1	TEE AS	
		1	**3J-7354**	1	SEAL-O-RING	
		1	**4J-5477**	1	SEAL-O-RING	
		1	**101-1787**	1	TEE AS	
	3	1	*164-5567*	1	FITTING AS	
		1	**3J-1907**	1	SEAL-O-RING	
		1	**6V-3965**	1	FITTING AS (QUICK DISCONNECT)	
I	4	1	**190-8957**	1	HOSE AS	
	5	1	*200-3947*		ADAPTER AS	
		1	**3J-1907**	1	SEAL-O-RING	
		1	**4J-5477**	1	SEAL-O-RING	
		1	**200-3946**	1	ADAPTER	
	6	1	*148-8316*	1	CONNECTOR AS	
		1	**3J-7354**	1	SEAL-O-RING	
		1	**4J-5477**	1	SEAL-O-RING	
		1	**6V-8647**	1	CONNECTOR	

I-SEE HOSE FABRICATION GUIDE

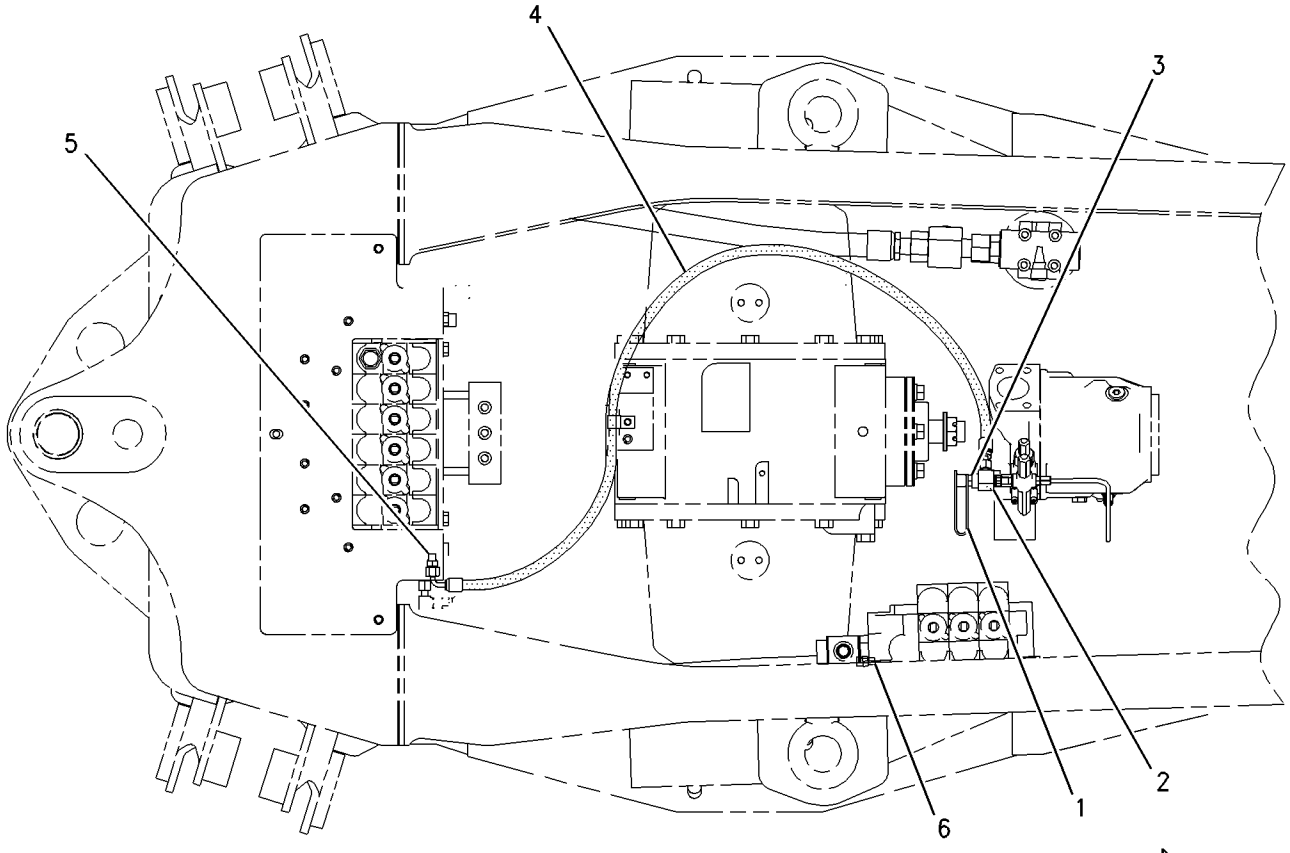

TOP VIEW

GRAPHIC #1 **<END>** g00998155

HYDRAULIC SYSTEM

185-1482 CONTROL AR-RIDE

S/N: BFP12900-UP
STANDARD SHIFT
AN ATTACHMENT

SMCS-5004 **i01443636**

NOTE	PART NUMBER	QTY	PART NAME 1 2 3 4 5 6 (PRODUCT LEVEL)	SEE PAGE
Y	*195-1284*	1	LINES GP-RIDE CONTROL	652
Y	*186-0311*	1	WIRING GP-RIDE CONTROL	382

Y-SEPARATE ILLUSTRATION

<END>

239-9245 CONTROL AR-RIDE

S/N: BFP12900-UP
AN ATTACHMENT

SMCS-5004 **i01971909**

NOTE	PART NUMBER	QTY	PART NAME 1 2 3 4 5 6 (PRODUCT LEVEL)	SEE PAGE
Y	*235-5844*	1	LINES GP-RIDE CONTROL	654
Y	*186-0311*	1	WIRING GP-RIDE CONTROL	382

Y-SEPARATE ILLUSTRATION

<END>

239-9248 CONTROL AR-RIDE–KIT

S/N: BFP12900-UP
FIELD INSTALLATION

SMCS-5004 **i02003579**

NOTE	PART NUMBER	QTY	PART NAME 1 2 3 4 5 6 (PRODUCT LEVEL)	SEE PAGE
	173-4514	2	FILM (RIDE CONTROL)	
Y	*235-5844*	1	LINES GP-RIDE CONTROL	654
	169-0607	1	SWITCH AS-ROCKER (RIDE CONTROL)	
	111-7899	1	GASKET	
Y	*186-0312*	1	WIRING GP-RIDE CONTROL	384

Y-SEPARATE ILLUSTRATION

<END>

164-1400 CONTROL GP-HYDRAULIC HAND

S/N: BFP12900-UP; CXP940-UP
STANDARD
PART OF 164-1410 CONVERSION GP-HYD HAND CONTROL
AN ATTACHMENT

SMCS-5063 **i01434311**

NOTE	REF NO	GRAPHIC REF	PART NUMBER	QTY	PART NAME 1 2 3 4 5 6 (PRODUCT LEVEL)	SEE PAGE
	1	1	**8T-4773**	4	BALL JOINT	
	2	1	**8T-4815**	4	ROD END	
	3	1	**9R-9901**	6	FASTENER (CLIP)	
	4	1	**164-1361**	2	BOOT	
	5	1	**164-1371**	1	PLATE	
	6	1	**164-1399**	2	KNOB	
	7	1	**164-1402**	2	SLEEVE	
	8	1	**164-1404**	2	SPACER (23MM THK)	
	9	1	**164-1406**	4	ROD	
	10	1	**164-1409**	1	LEVER AS	
	11	1	**164-1411**	1	LEVER AS	
	12	1	**164-1435**	2	PLATE	
	13	1	**164-1560**	1	TOWER AS	
	14	1	**167-8248**	1	CONSOLE-REAR	
	15	1	**170-6312**	4	BEARING	
	16	1	**179-8235**	4	LOCKPIN	
	17	1	**190-5130**	1	FILM	
M	18	1	**6V-7744**	8	LOCKNUT (M10X1.50 THD)	
	19	1	**7X-7729**	8	WASHER (11X25X3MM THK)	
	20	1	**8C-4987**	4	PIN-CLEVIS	
	21	1	**8T-4121**	8	WASHER-HARD (11X21X2.5MM THK)	
M	22	1	**8T-4133**	8	NUT (M10X1.5 THD)	
M	23	1	**8T-4138**	6	BOLT (M6X1X20MM)	
M	24	1	**8T-4172**	2	BOLT (M10X1.50X80MM)	
M	25	1	**8T-4195**	2	BOLT (M10X1.5X30MM)	
M	26	1	**8T-6466**	2	BOLT (M10X1.50X60MM)	
	27	1	**9X-2038**	4	WASHER (7X19X2MM THK)	
M	28	1	**9X-2045**	4	SCREW-TRUSS HEAD (M6X1X20MM)	
	29	1	**9X-8256**	6	WASHER (6.6X12X2MM THK)	

M-METRIC PART

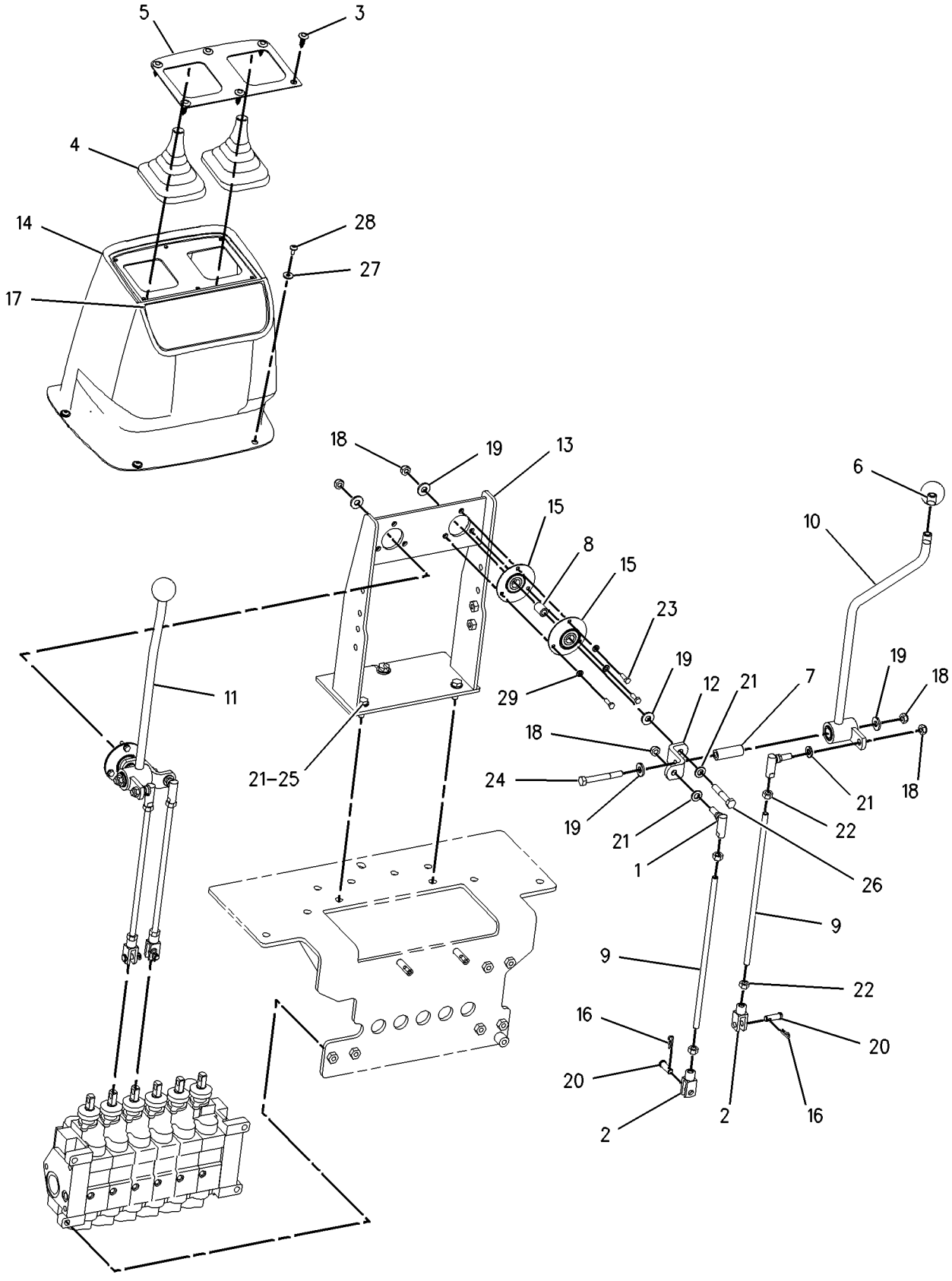

GRAPHIC #1 **<END>** g00739022

164-1420 CONTROL GP-HYDRAULIC HAND

S/N: BFP12900-UP
EXCAVATOR
PART OF 164-1430 CONVERSION GP-HYD HAND CONTROL
AN ATTACHMENT

SMCS-5063 **i01445724**

NOTE	REF NO	GRAPHIC REF	PART NUMBER	QTY	PART NAME 1 2 3 4 5 6 (PRODUCT LEVEL)	SEE PAGE
	1	1	**9X-8256**	6	WASHER (6.6X12X2MM THK)	
	2	1	**8T-4773**	10	BALL JOINT	
	3	1	**8T-4815**	2	ROD END	
	4	1	**9R-9901**	6	FASTENER (CLIP)	
	5	1	**142-7405**	2	COLLAR	
	6	1	**164-1361**	2	BOOT	
	7	1	**164-1371**	1	PLATE	
	8	1	**164-1399**	2	KNOB	
	9	1	**164-1402**	2	SLEEVE	
	10	1	**164-1404**	2	SPACER (23MM THK)	
	11	1	**164-1409**	1	LEVER AS	
	12	1	**164-1411**	1	LEVER AS	
	13	1	**164-1421**	1	PLATE	
	14	1	**164-1422**	1	SHAFT AS	
	15	1	**164-1425**	1	COUPLER AS	
	16	1	**164-1427**	2	ROD	
	17	1	**164-1429**	1	COUPLER AS	
	18	1	**164-1435**	2	PLATE	
	19	1	**164-1438**	2	ROD	
	20	1	**164-1441**	2	ROD	
	21	1	**164-1560**	1	TOWER AS	
	22	1	**167-8248**	1	CONSOLE-REAR	
	23	1	**170-6312**	4	BEARING	
	24	1	**9R-2807**	2	CLIP	
	25	1	**190-5128**	1	FILM	
M	26	1	**6V-7744**	14	LOCKNUT	
M	27	1	**6V-8932**	2	SETSCREW-SOCKET	
	28	1	**7X-7729**	8	WASHER (11X25X3MM THK)	
	29	1	**9R-2806**	2	PIN	
	30	1	**8T-4121**	20	WASHER-HARD (11X21X2.5MM THK)	
M	31	1	**8T-4133**	16	NUT (M10X1.5 THD)	
M	32	1	**8T-4138**	6	BOLT (M6X1X20MM)	
M	33	1	**8T-4172**	2	BOLT (M10X1.50X80MM)	
M	34	1	**8T-4195**	6	BOLT (M10X1.5X30MM)	
M	35	1	**8T-6466**	2	BOLT (M10X1.50X60MM)	
	36	1	**9X-2038**	4	WASHER (7X19X2MM THK)	
M	37	1	**9X-2045**	4	SCREW-TRUSS HEAD (M6X1X20MM)	

M-METRIC PART

164-1420 **CONTROL GP-HYDRAULIC HAND** *(contd.)* **i01445724**

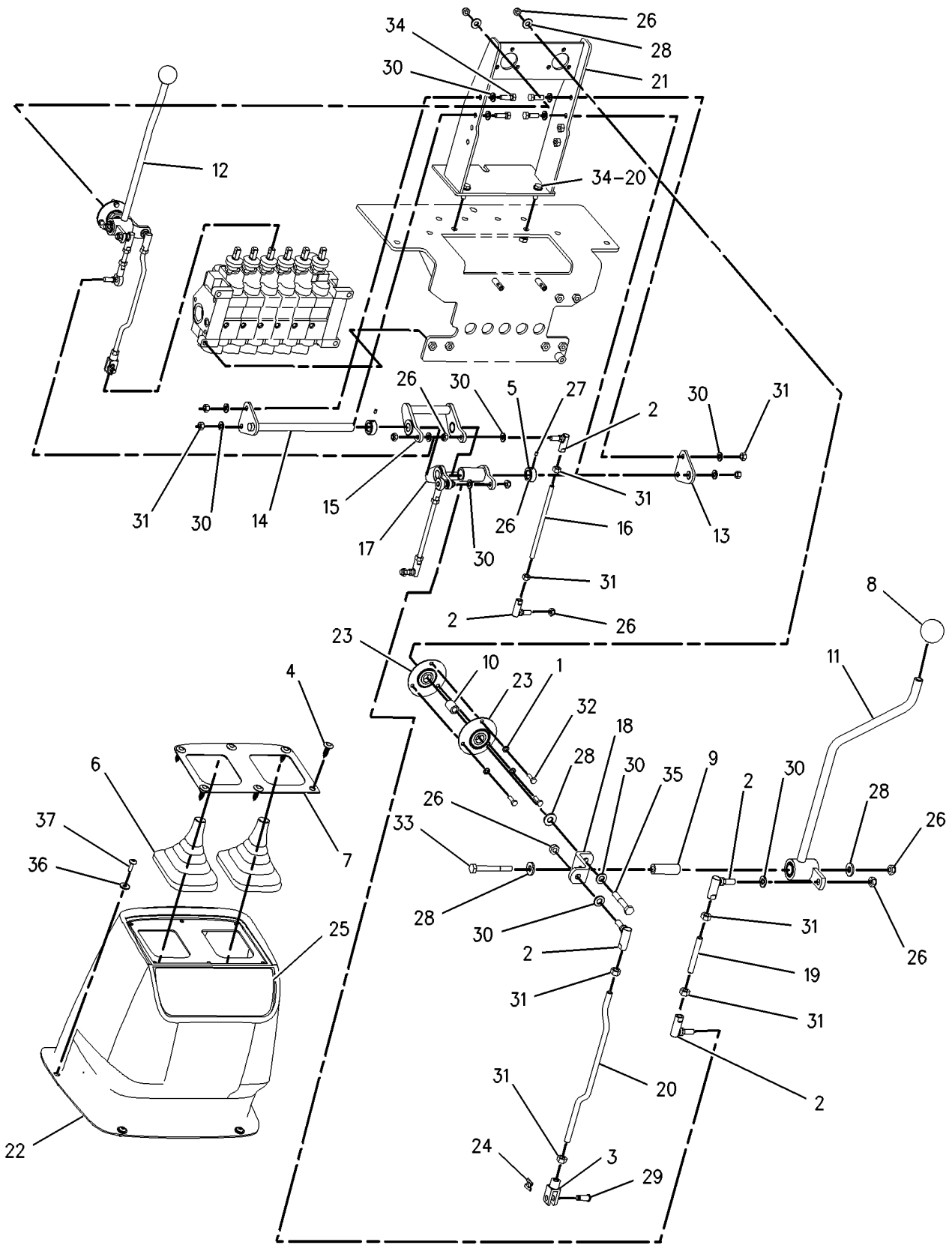

GRAPHIC #1 **<END>** g00756911

164-1440 CONTROL GP-HYDRAULIC HAND

S/N: BFP12900-UP
STANDARD, CROSS
PART OF 164-1450 CONTROL GP-HYDRAULIC HAND

SMCS-5063 **i02015161**

NOTE	REF NO	GRAPHIC REF	PART NUMBER	QTY	PART NAME 1 2 3 4 5 6 (PRODUCT LEVEL)	SEE PAGE
	1	1	**8T-4773**	4	BALL JOINT	
	2	1	**8T-4815**	4	ROD END	
	3	1	**9R-9901**	6	FASTENER (CLIP)	
	4	1	**164-1361**	2	BOOT	
	5	1	**164-1371**	1	PLATE	
	6	1	**164-1399**	2	KNOB	
	7	1	**164-1406**	2	ROD	
	8	1	**164-1441**	2	ROD	
	9	1	**164-1447**	1	LEVER AS-RH	
	10	1	**164-1451**	1	BRACKET AS	
	11	1	**164-1452**	1	BRACKET AS	
	12	1	**164-1455**	1	LEVER AS-LH	
	13	1	**164-1565**	1	TOWER AS	
	14	1	**167-8248**	1	CONSOLE-REAR	
	15	1	**179-8235**	4	LOCK PIN	
	16	1	**239-9436**	1	PLATE-WARNING (ALTERNATE CONTROL PATTERN)	
	17	1	**190-5134**	2	FILM (STD CROSS PATTERN)	
M	18	1	**6V-7744**	4	LOCKNUT (M10X1.5-THD)	
	19	1	**8C-4987**	4	PIN-CLEVIS	
	20	1	**8T-4121**	6	WASHER-HARD (11X21X2.5-MM THK)	
M	21	1	**8T-4133**	8	NUT (M10X1.5-THD)	
M	22	1	**8T-4195**	2	BOLT (M10X1.5X30-MM)	
	23	1	**8T-4224**	8	WASHER-HARD (8.8X16X2-MM THK)	
M	24	1	**8T-7547**	8	BOLT (M8X1.25X30-MM)	
	25	1	**9X-2038**	4	WASHER (7X19X2-MM THK)	
M	26	1	**9X-2045**	4	SCREW-TRUSS HEAD (M6X1X20-MM)	

M-METRIC PART

164-1440 **CONTROL GP-HYDRAULIC HAND** *(contd.)* **i02015161**

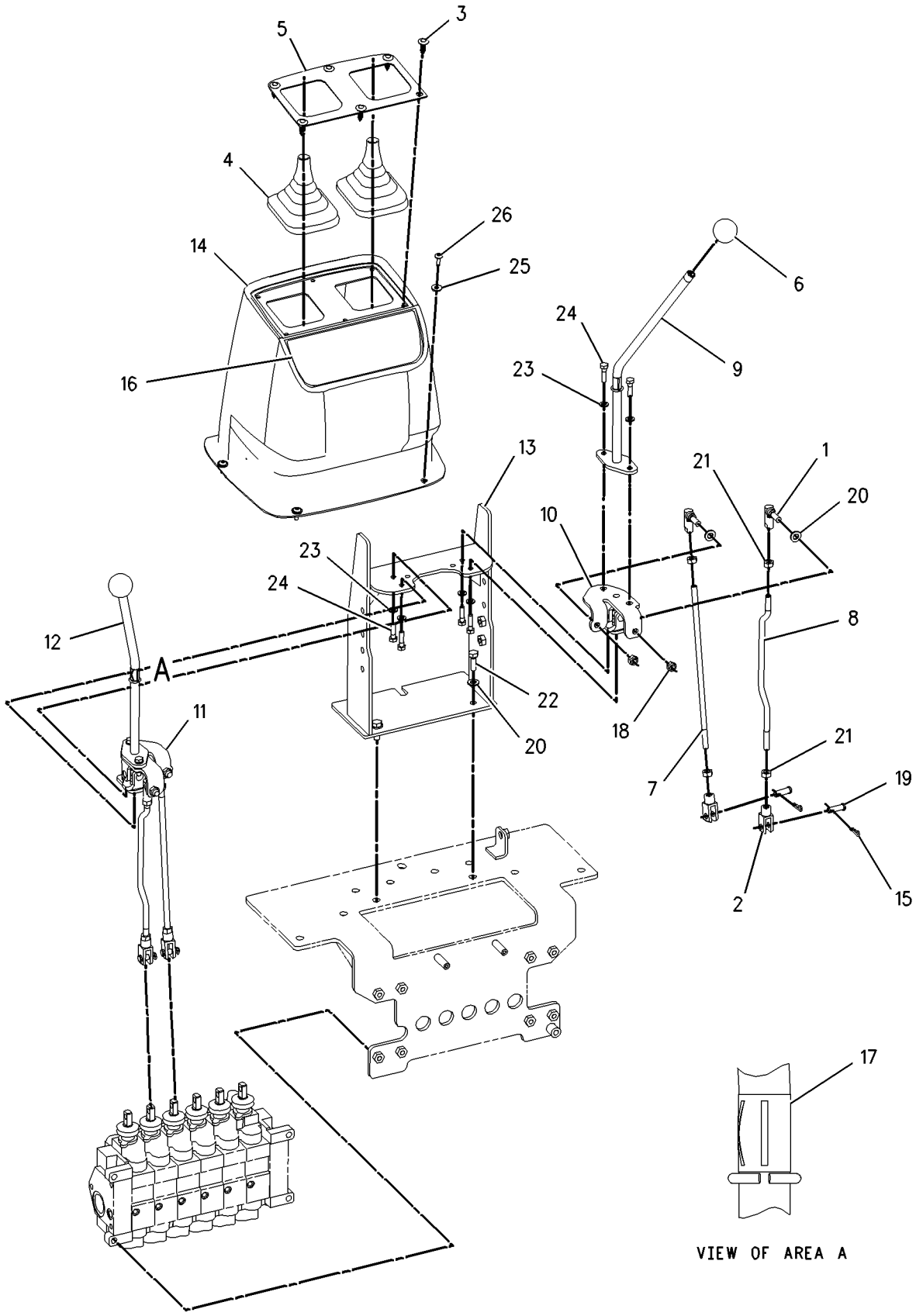

GRAPHIC #1 **<END>** g00860216

HYDRAULIC SYSTEM

164-1450 CONTROL GP-HYDRAULIC HAND–KIT

S/N: BFP12900-UP

FIELD INSTALLATION

SMCS-5063 **i01904863**

NOTE	REF NO	GRAPHIC REF	PART NUMBER	QTY	PART NAME 1 2 3 4 5 6 (PRODUCT LEVEL)	SEE PAGE
Y	1	1	*164-1440*	1	CONTROL GP-HYDRAULIC HAND	515

Y-SEPARATE ILLUSTRATION

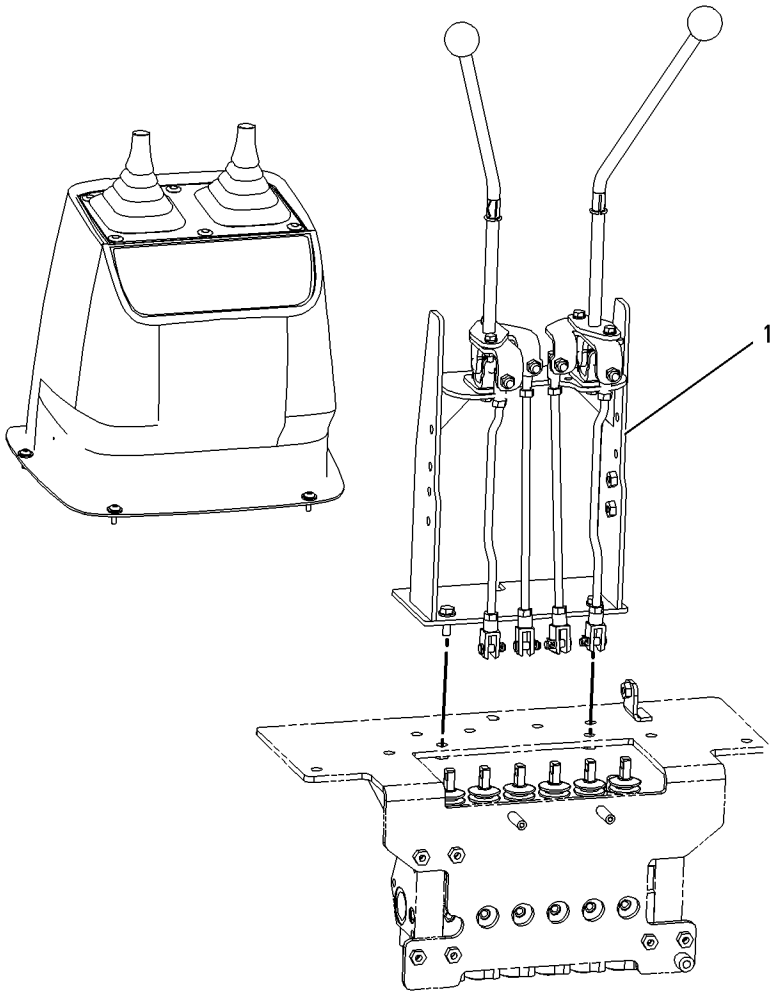

GRAPHIC #1 **<END>** g00779256

HYDRAULIC SYSTEM

164-1500 CONTROL GP-HYDRAULIC HAND

S/N: BFP12900-UP
3 LEVER FOOT SWING
PART OF 164-1510 CONVERSION GP-HYD HAND CONTROL
AN ATTACHMENT

SMCS-5063 **i02019799**

NOTE	REF NO	GRAPHIC REF	PART NUMBER	QTY	PART NAME 1 2 3 4 5 6 (PRODUCT LEVEL)	SEE PAGE
	1	1	**8F-7702**	4	SEAL-LIP TYPE	
	2	1	**8T-4773**	4	BALL JOINT	
	3	1	**8T-4815**	5	ROD END	
	4	1	**8T-6431**	2	ROD END	
	5	1	**9R-9901**	6	FASTENER (CLIP)	
	6	1	**117-5672**	3	BOOT	
B	7	1	**136-7439**	2	SPACER (3-MM THK)	
B	8	1	**136-7440**	2	SHIM (1-MM THK)	
	9	1	**142-7405**	2	COLLAR	
	10	1	**164-1373**	1	PLATE	
	11	1	**164-1397**	3	KNOB	
	12	1	**164-1427**	1	ROD	
	13	1	**164-1441**	1	ROD	
	14	1	**164-1501**	1	LEVER AS-BUCKET	
	15	1	**164-1502**	1	LEVER AS-STICK	
	16	1	**164-1503**	1	LEVER AS-BOOM	
	17	1	**164-1514**	2	ROD	
	18	1	**164-1515**	2	SUPPORT AS	
	19	1	**164-1517**	2	SHAFT AS-PEDAL	
	20	1	**164-1519**	1	SHAFT-LEVER	
	21	1	**164-1521**	1	SHAFT AS	
	22	1	**164-1523**	2	BEARING	
	23	1	**164-1525**	1	ROD	
	24	1	**164-1526**	1	GASKET	
	25	1	**164-1527**	2	SEAL	
	26	1	**164-1541**	1	PEDAL AS-RH	
	27	1	**164-1551**	1	PEDAL AS-LH	
	28	1	**164-1570**	1	TOWER AS	
	29	1	**179-8235**	4	LOCK PIN	
	30	1	**183-4994**	1	CONSOLE-REAR	
	31	1	**186-1583**	1	ROD END AS	
	32	1	**190-5129**	1	FILM (BUCKET CONTROL)	
M	33	1	**6V-7744**	6	LOCKNUT (M10X1.5-THD)	
M	34	1	**6V-8335**	2	BOLT-SELF LOCKING (M10X1.5X40-MM)	
M	35	1	**6V-8932**	2	SETSCREW-SOCKET (M6X1X10-MM)	
	36	1	**8C-4987**	4	PIN-CLEVIS	
	37	1	**8M-3175**	4	WASHER-HARD (10.2X16X3-MM THK)	
	38	1	**8T-4121**	13	WASHER-HARD (11X21X2.5-MM THK)	
M	39	1	**8T-4133**	11	NUT (M10X1.5-THD)	
M	40	1	**8T-4186**	2	BOLT (M10X1.5X40-MM)	
M	41	1	**8T-4195**	6	BOLT (M10X1.5X30-MM)	
M	42	1	**8T-4224**	6	WASHER-HARD (8.8X16X2-MM THK)	
M	43	1	**8T-4908**	4	BOLT (M8X1.25X25-MM)	
M	44	1	**8T-7547**	2	BOLT (M8X1.25X30-MM)	
	45	1	**9R-2806**	2	PIN	
	46	1	**9R-2807**	2	CLIP	
	47	1	**9X-2038**	4	WASHER (7X19X2-MM THK)	
M	48	1	**9X-2043**	4	SCREW-TRUSS HEAD (M6X1X14-MM)	

B-USE AS REQUIRED
M-METRIC PART

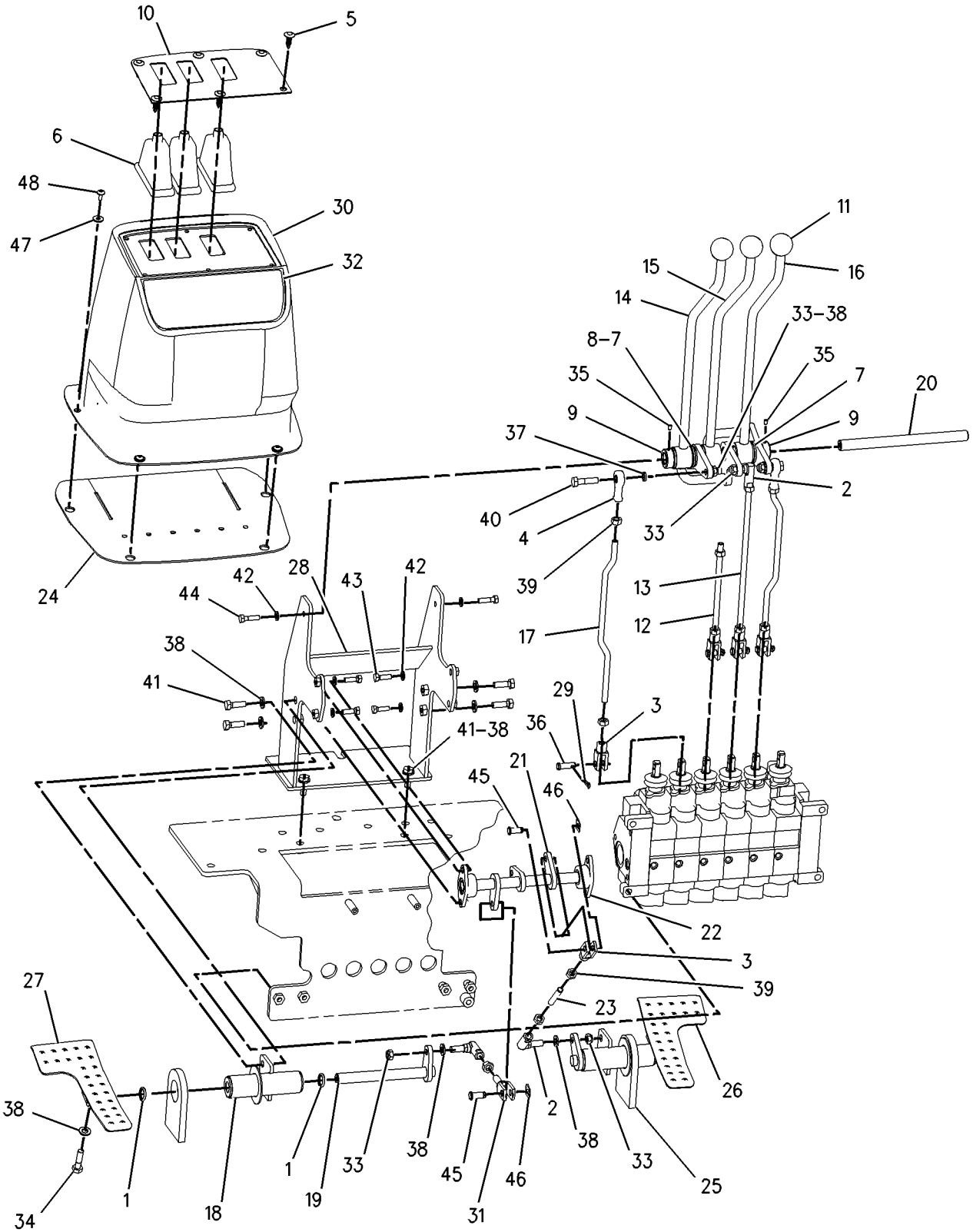

GRAPHIC #1 **<END>** g00768343

HYDRAULIC SYSTEM

164-1520 CONTROL GP-HYDRAULIC HAND

S/N: BFP12900-UP
4 LEVER FOOT SWING
PART OF 164-1530 CONVERSION GP-HYD HAND CONTROL
AN ATTACHMENT

SMCS-5063 **i02019805**

NOTE	REF NO	GRAPHIC REF	PART NUMBER	QTY	PART NAME 1 2 3 4 5 6 (PRODUCT LEVEL)	SEE PAGE
	1	1	**8F-7702**	4	SEAL-LIP TYPE	
	2	1	**8T-4773**	4	BALL JOINT	
	3	1	**8T-4815**	6	ROD END	
	4	1	**8T-6431**	3	ROD END	
	5	1	**9R-9901**	6	FASTENER (CLIP)	
	6	1	**101-2788**	1	FILM-INSTRUCTION (EXTENDABLE STICK)	
	7	1	**117-5672**	4	BOOT	
B	8	1	**136-7439**	5	SPACER (3-MM THK)	
B	9	1	**136-7440**	1	SHIM (1-MM THK)	
	10	1	**142-7405**	1	COLLAR	
	11	1	**164-1372**	1	PLATE	
	12	1	**164-1397**	4	KNOB	
	13	1	**164-1427**	1	ROD	
	14	1	**164-1441**	1	ROD	
	15	1	**164-1501**	1	LEVER AS-BUCKET	
	16	1	**164-1502**	1	LEVER AS-STICK	
	17	1	**164-1503**	1	LEVER AS-BOOM	
	18	1	**164-1511**	1	LEVER AS	
	19	1	**164-1514**	3	ROD	
	20	1	**164-1515**	2	SUPPORT AS	
		1	**5V-4410**	2	BEARING-SLEEVE	
	21	1	**164-1517**	2	SHAFT AS-PEDAL	
	22	1	**164-1519**	1	SHAFT-LEVER	
	23	1	**164-1521**	1	SHAFT AS	
	24	1	**164-1523**	2	BEARING	
	25	1	**164-1525**	1	ROD	
	26	1	**164-1526**	1	GASKET	
	27	1	**164-1527**	2	SEAL	
	28	1	**164-1541**	1	PEDAL AS-RH	
	29	1	**164-1551**	1	PEDAL AS-LH	
	30	1	**164-1570**	1	TOWER AS	
	31	1	**179-8235**	5	LOCK PIN	
	32	1	**183-4999**	1	CONSOLE-REAR	
	33	1	**186-1583**	1	ROD END AS	
	34	1	**190-5129**	1	FILM (BUCKET CONTROL)	
M	35	1	**6V-7744**	7	LOCKNUT (M10X1.5-THD)	
M	36	1	**6V-8335**	2	BOLT-SELF LOCKING (M10X1.5X40-MM)	
M	37	1	**6V-8932**	1	SETSCREW-SOCKET (M6X1X10-MM)	
	38	1	**8C-4987**	5	PIN-CLEVIS	
	39	1	**8M-3175**	3	WASHER-HARD (10.2X16X3-MM THK)	
	40	1	**8T-4121**	14	WASHER-HARD (11X21X2.5-MM THK)	
M	41	1	**8T-4133**	13	NUT (M10X1.5-THD)	
M	42	1	**8T-4186**	3	BOLT (M10X1.5X40-MM)	
M	43	1	**8T-4195**	6	BOLT (M10X1.5X30-MM)	
M	44	1	**8T-4224**	6	WASHER-HARD (8.8X16X2-MM THK)	
M	45	1	**8T-4908**	4	BOLT (M8X1.25X25-MM)	
M	46	1	**8T-7547**	2	BOLT (M8X1.25X30-MM)	
	47	1	**9R-2806**	2	PIN	
	48	1	**9R-2807**	2	CLIP	
	49	1	**9X-2038**	4	WASHER (7X19X2-MM THK)	
M	50	1	**9X-2045**	4	SCREW-TRUSS HEAD (M6X1X20-MM)	

B-USE AS REQUIRED
M-METRIC PART

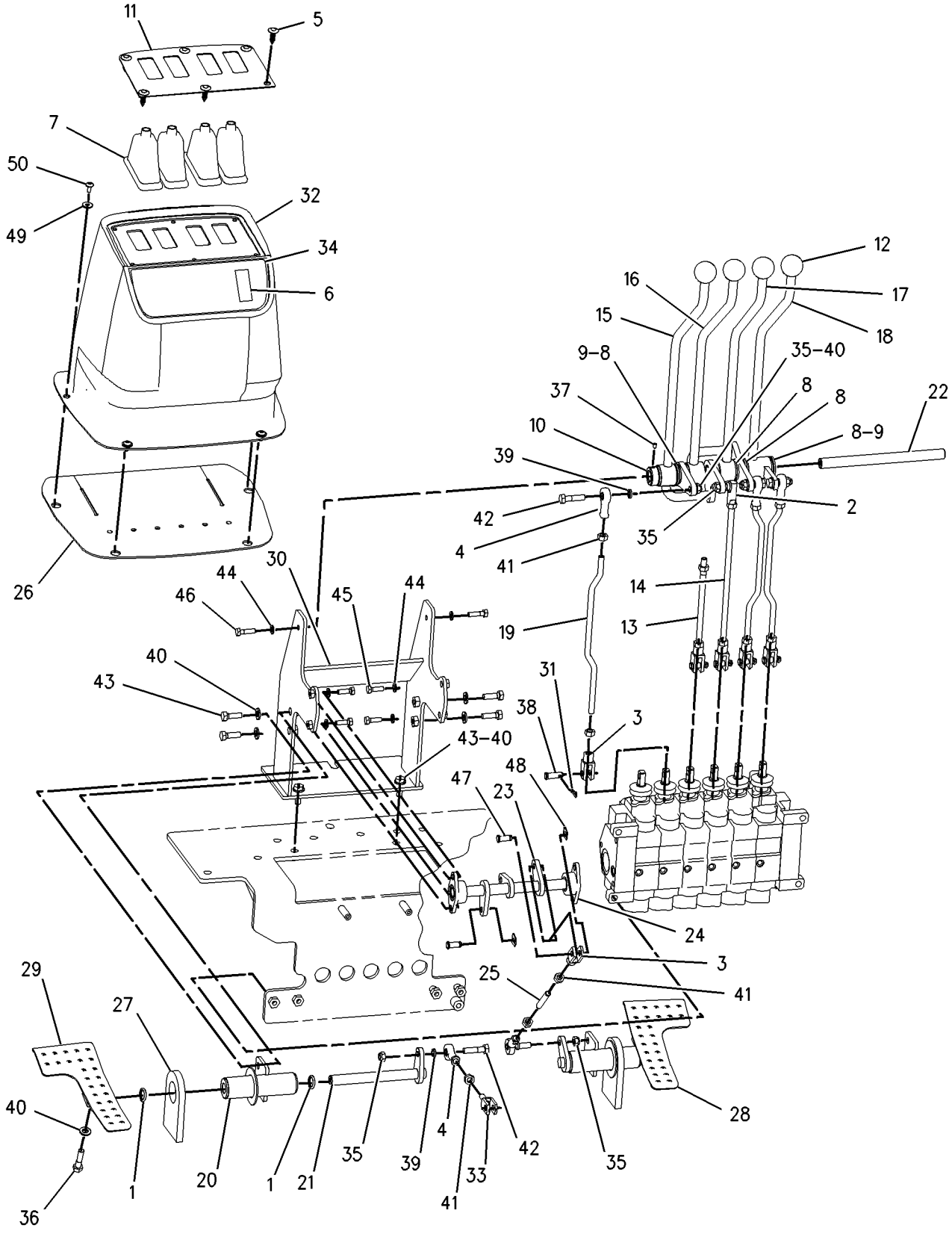

GRAPHIC #1 **<END>** g00768415

HYDRAULIC SYSTEM

183-3120 CONTROL GP-HYDRAULIC HAND–LOADER

S/N: BFP12900-UP; CXP940-UP
SINGLE TILT
PART OF 214-6950 CHASSIS AR, 215-6888 COMMON AR

SMCS-5063 **i01739869**

NOTE	REF NO	GRAPHIC REF	PART NUMBER	QTY	PART NAME 1 2 3 4 5 6 (PRODUCT LEVEL)	SEE PAGE
B	1	1	**1K-0502**	7	WASHER (25.4X16.3X1.2MM THK)	
	2	1	**2R-0364**	3	RING-RETAINING	
	3	1	**3E-3365**	1	WEDGE-RECEPTACLE LOCK (2 PIN)	
	4	1	**5H-3193**	1	PIN-SPRING	
	5	1	**8T-4766**	1	ROD END	
	6	1	**8T-4773**	1	BALL JOINT	
	7	1	**8T-4815**	2	ROD END	
	8	1	**9R-1765**	1	KNOB	
	9	1	**9R-1766**	1	KNOB	
	10	1	**9R-1767**	1	BOOT	
	11	1	**9R-9868**	1	SWITCH AS-PUSH BUTTON	
		1	**186-3735**	2	PIN-CONNECTOR	
	12	1	**107-5591**	1	NUT-JAM (3/4-16 THD)	
M	13	1	**134-0453**	2	TURN BUCKLE	
	14	1	**140-6021**	1	PLATE	
	15	1	**164-1368**	8	CLIP	
	16	1	**164-1369**	1	PLATE	
	17	1	**179-8235**	1	LOCK PIN	
	18	1	**183-3121**	1	BRACKET AS	
	19	1	**183-3122**	1	LEVER AS	
	20	1	**183-3131**	1	DAMPER AS	
		1	**095-9230**	1	PIN-SPRING	
		1	**183-3132**	1	CYLINDER	
	21	1	**183-3135**	1	JOINT AS	
		1	**183-3136**	1	BEARING	
	22	1	**183-3137**	1	PIN	
	23	1	**183-3153**	1	ROD	
	24	1	**183-3155**	1	ROD	
	25	1	**183-3156**	1	ROD	
	26	1	**201-8069**	1	SEAL	
	27	1	**102-8802**	1	KIT-RECEPTACLE (2 PIN)	
					(KIT SERVICES RECEPTACLE AS AND WEDGE)	
	28	1	**3S-2093**	1	STRAP-CABLE	
M	29	1	**6V-7744**	2	LOCKNUT (M10X1.5 THD)	
	30	1	**8C-4987**	1	PIN-CLEVIS	
	31	1	**8T-4121**	4	WASHER-HARD (11X21X2.5MM THK)	
M	32	1	**8T-4133**	8	NUT (M10X1.5 THD)	
M	33	1	**8T-4136**	2	BOLT (M10X1.5X25MM)	
M	34	1	**8T-4195**	2	BOLT (M10X1.5X30MM)	
	35	1	**8T-4223**	4	WASHER-HARD (13.5X25.5X3MM THK)	
	36	1	**8T-9501**	2	SCREW (10-16X.75 IN)	
	37	1	**9R-2807**	1	CLIP	
	38	1	**9R-3067**	1	PIN	
M	39	1	**9X-2065**	2	NUT	

B-USE AS REQUIRED
M-METRIC PART

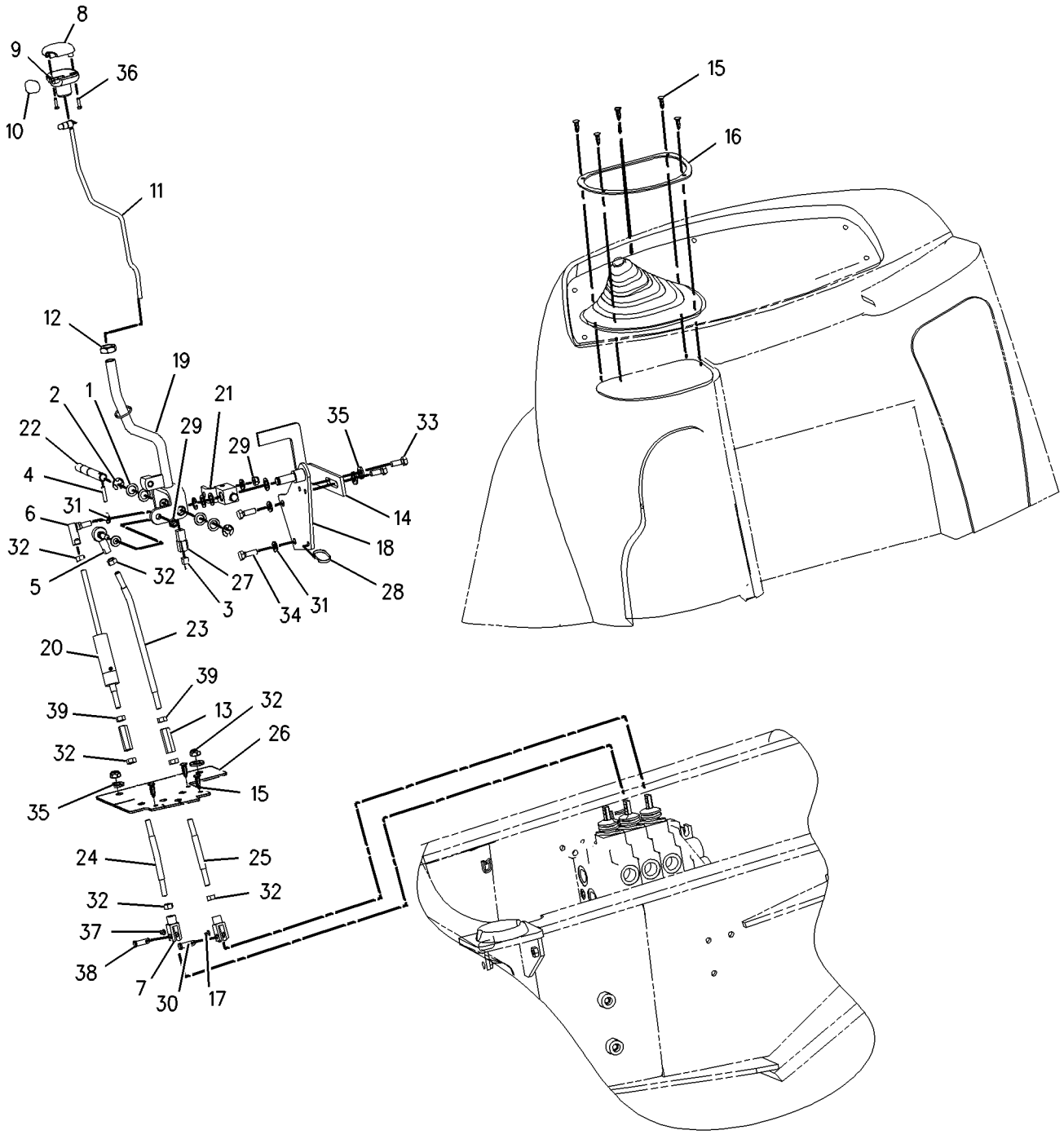

GRAPHIC #1 **<END>** g00861982

HYDRAULIC SYSTEM

183-3150 CONTROL GP-HYDRAULIC HAND–LEVER

S/N: BFP12900-UP
MULTIPURPOSE
PART OF 186-5333 HYDRAULIC AR
AN ATTACHMENT

SMCS-5063 **i01657346**

NOTE	REF NO	GRAPHIC REF	PART NUMBER	QTY	PART NAME 1 2 3 4 5 6 (PRODUCT LEVEL)	SEE PAGE
	1	1	**1K-0502**	3	WASHER (25.4X16.3X1.2MM THK)	
	2	1	**2R-0364**	1	RING-RETAINING	
	3	1	**8T-4773**	1	BALL JOINT	
	4	1	**8T-4815**	1	ROD END	
M	5	1	**134-0453**	1	TURN BUCKLE	
	6	1	**164-1395**	1	KNOB	
	7	1	**179-8235**	1	LOCK PIN	
	8	1	**183-3151**	1	LEVER AS	
		1	**183-3136**	1	BEARING	
	9	1	**183-3153**	1	ROD	
	10	1	**183-3156**	1	ROD	
	11	1	**8C-4987**	1	PIN-CLEVIS	
	12	1	**8T-4121**	1	WASHER-HARD (11X21X2.5MM THK)	
M	13	1	**8T-4133**	3	NUT (M10X1.5 THD)	
M	14	1	**9X-2065**	1	NUT	

M-METRIC PART

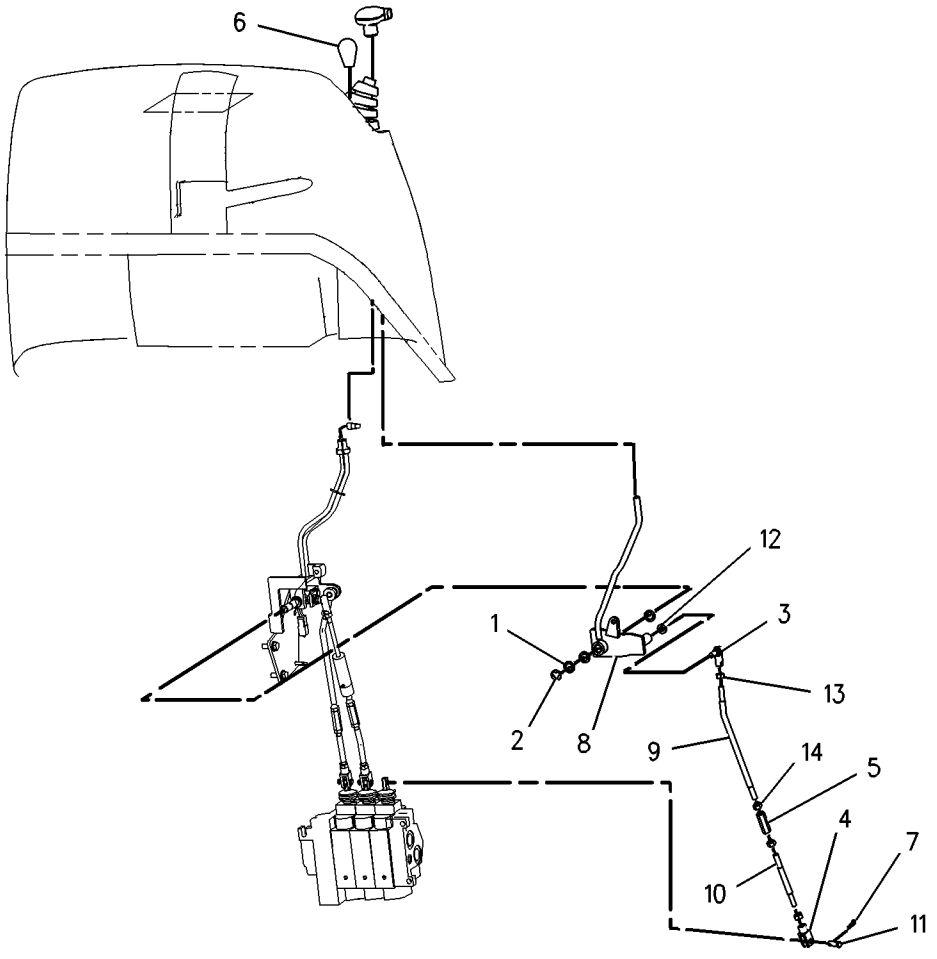

GRAPHIC #1 **<END>** g00738135

217-8367 CONTROL GP-HYDRAULIC HAND

S/N: BFP12900-UP
PART OF 217-8368 CONVERSION GP-HYD HAND CONTROL
AN ATTACHMENT

SMCS-5063 **i01735662**

NOTE	REF NO	GRAPHIC REF	PART NUMBER	QTY	PART NAME 1 2 3 4 5 6 (PRODUCT LEVEL)	SEE PAGE
	1	1	**8T-4773**	4	BALL JOINT	
	2	1	**8T-4815**	4	ROD END	
	3	1	**136-7439**	7	SPACER (3MM THK)	
B	4	1	**136-7440**	5	SHIM (1MM THK)	
	5	1	**164-1519**	1	SHAFT-LEVER	
	6	1	**179-8235**	4	LOCK PIN	
	7	1	**217-8369**	1	LEVER AS	
		1	**222-7791**	2	BEARING	
	8	1	**217-8370**	1	LEVER AS	
		1	**222-7791**	2	BEARING	
	9	1	**217-8371**	1	LEVER AS	
		1	**222-7791**	2	BEARING	
	10	1	**217-8372**	1	LEVER AS	
	11	1	**217-8373**	1	TOWER AS	
	12	1	**217-8378**	4	ROD	
M	13	1	**6V-7744**	4	LOCKNUT (M10X1.5 THD)	
	14	1	**8C-4987**	4	PIN-CLEVIS	
	15	1	**8T-4121**	4	WASHER-HARD (11X21X2.5MM THK)	
M	16	1	**8T-4133**	8	NUT (M10X1.5 THD)	
	17	1	**8T-4224**	2	WASHER-HARD (8.8X16X2MM THK)	
M	18	1	**8T-7547**	2	BOLT (M8X1.25X30MM)	

B-USE AS REQUIRED
M-METRIC PART

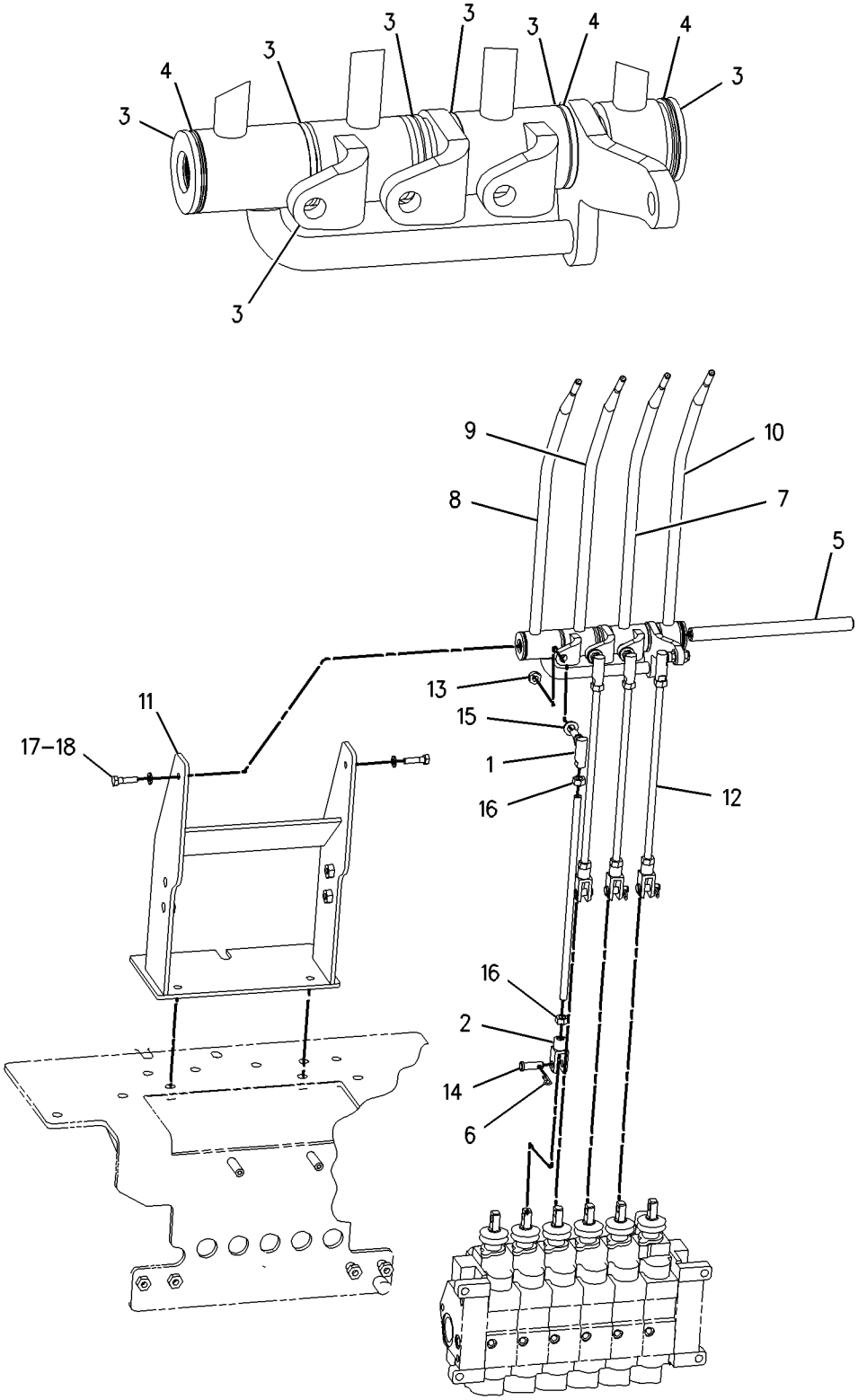

GRAPHIC #1 **<END>** g00889865

164-1540 CONTROL GP-HYDRAULIC PEDAL

S/N: BFP12900-UP
E-STICK
PART OF 196-8860 HYDRAULIC AR, 186-4965 VALVE AR-BANK 5, 186-4966, 214-7003 VALVE AR-BANK 6
AN ATTACHMENT

SMCS-5063 **i01565226**

NOTE	REF NO	GRAPHIC REF	PART NUMBER	QTY	PART NAME 1 2 3 4 5 6 (PRODUCT LEVEL)	SEE PAGE
M	1	1	**6V-8335**	1	BOLT-SELF LOCKING (M10X1.5X40MM)	
	2	1	**8T-4815**	1	ROD END	
	3	1	**8T-6431**	1	ROD END (M10X1.50 THD)	
	4	1	**109-0533**	1	SEAL	
	5	1	**133-8916**	1	FILM-INSTRUCTION (E-STICK)	
	6	1	**164-1541**	1	PEDAL AS-RH	
	7	1	**164-1544**	1	SUPPORT AS	
	8	1	**164-1547**	1	SHAFT AS	
	9	1	**164-1549**	1	ROD	
	10	1	**179-8235**	1	LOCKPIN	
	11	1	**198-0098**	1	FILM (STANDARD STICK)	
M	12	1	**6V-7744**	1	LOCKNUT (M10X1.5 THD)	
	13	1	**8C-4987**	1	PIN-CLEVIS	
	14	1	**8M-3175**	1	WASHER-HARD (10.2X16X3MM THK)	
	15	1	**8T-4121**	4	WASHER-HARD (11X21X2.5MM THK)	
M	16	1	**8T-4133**	2	NUT (M10X1.5 THD)	
M	17	1	**8T-4186**	1	BOLT (M10X1.5X40MM)	
M	18	1	**8T-4195**	2	BOLT (M10X1.5X30MM)	

M-METRIC PART

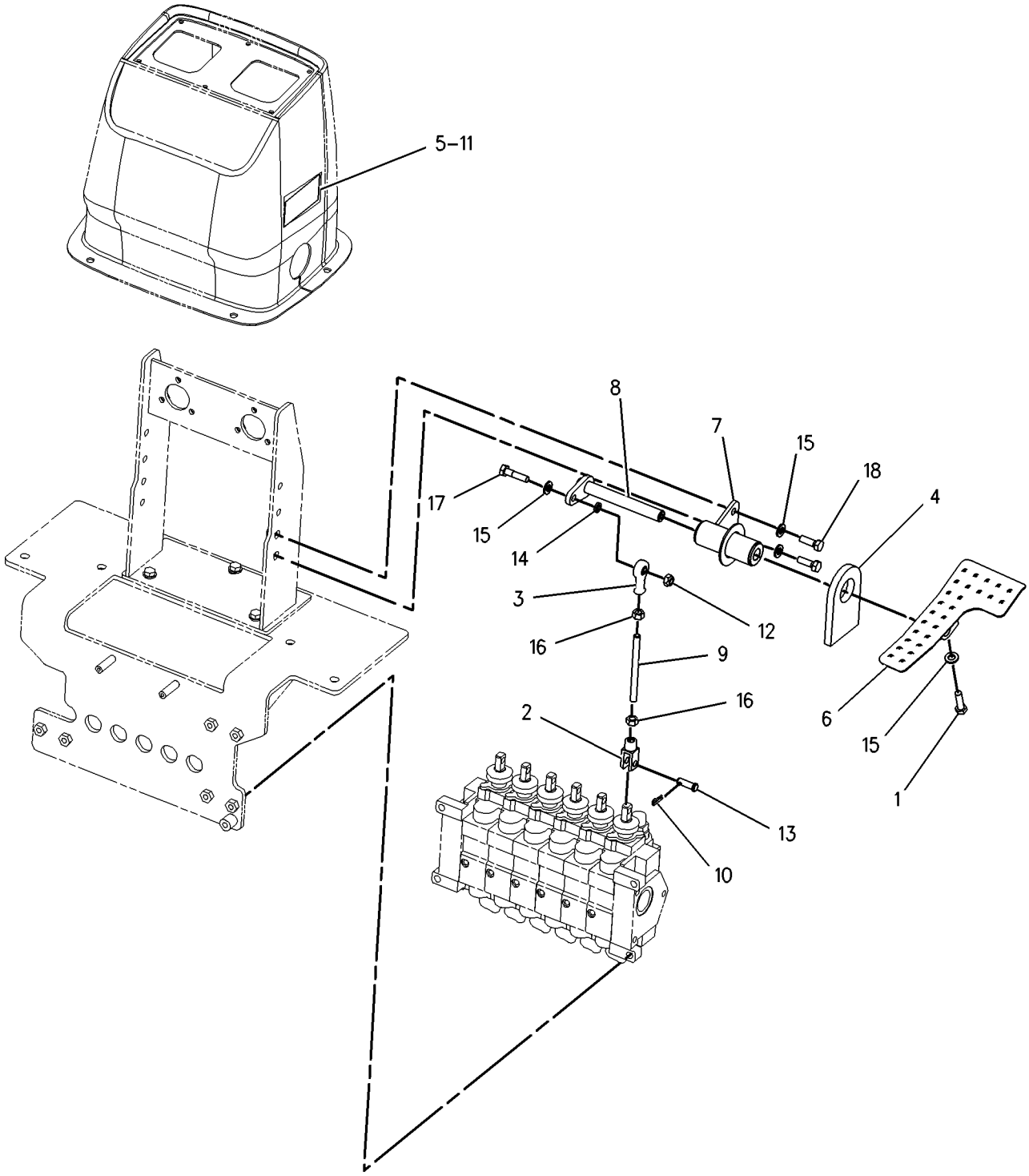

GRAPHIC #1 **<END>** g00813432

164-1550 CONTROL GP-HYDRAULIC PEDAL

S/N: BFP12900-UP
AUXILIARY
PART OF 186-4966, 214-7003 VALVE AR-BANK 6
AN ATTACHMENT

SMCS-5063 **i01412953**

NOTE	REF NO	GRAPHIC REF	PART NUMBER	QTY	PART NAME 1 2 3 4 5 6 (PRODUCT LEVEL)	SEE PAGE
M	1	1	**6V-8335**	1	BOLT-SELF LOCKING (M10X1.5X40MM)	
	2	1	**8T-4815**	1	ROD END	
	3	1	**8T-6431**	1	ROD END (M10X1.50 THD)	
	4	1	**109-0533**	1	SEAL	
	5	1	**164-1544**	1	SUPPORT AS	
	6	1	**164-1547**	1	SHAFT AS	
	7	1	**164-1549**	1	ROD	
	8	1	**164-1551**	1	PEDAL AS-LH	
	9	1	**179-8235**	1	LOCKPIN	
M	10	1	**6V-7744**	1	LOCKNUT (M10X1.50 THD)	
	11	1	**8C-4987**	1	PIN-CLEVIS	
	12	1	**8M-3175**	1	WASHER-HARD (10.2X16X3MM THK)	
	13	1	**8T-4121**	6	WASHER-HARD (11X21X2.5MM THK)	
M	14	1	**8T-4133**	4	NUT (M10X1.5 THD)	
M	15	1	**8T-4186**	1	BOLT (M10X1.5X40MM)	
M	16	1	**8T-4195**	2	BOLT (M10X1.5X30MM)	

M-METRIC PART

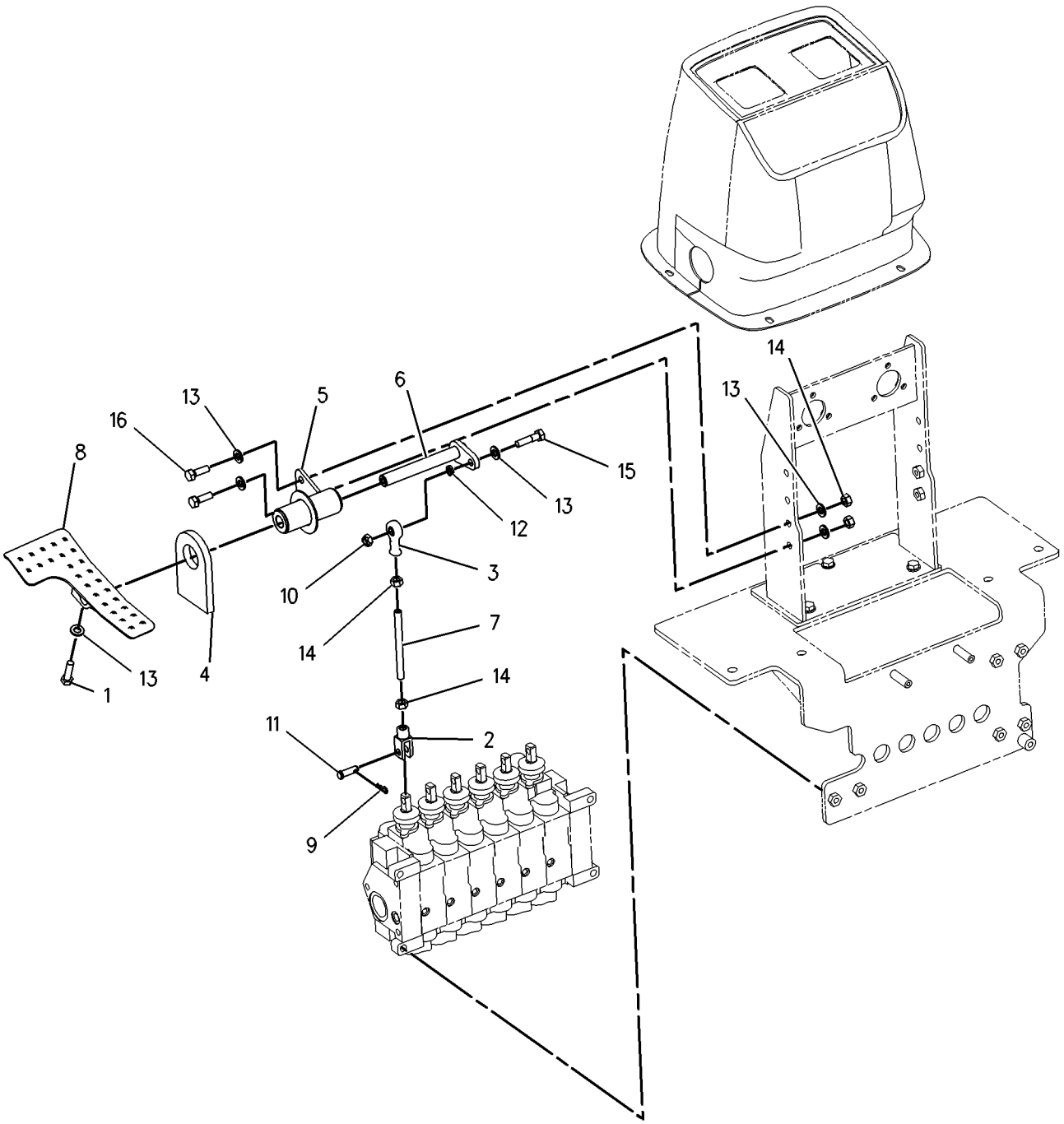

GRAPHIC #1 **<END>** g00745736

184-4483 CONTROL GP-HYDRAULIC PEDAL

S/N: BFP12900-UP
EXTENDABLE STICK
PART OF 210-8530 HYDRAULIC AR
AN ATTACHMENT

SMCS-5063 **i01944217**

NOTE	REF NO	GRAPHIC REF	PART NUMBER	QTY	PART NAME 1 2 3 4 5 6 (PRODUCT LEVEL)	SEE PAGE
	1	1	**184-4488**	1	SUPPORT AS	
	2	1	**184-4491**	1	PEDAL AS	
	3	1	**184-5417**	1	SHAFT AS	
	4	1	**186-1581**	1	COVER	
	5	1	**186-1582**	1	PLATE	
	6	1	**186-1592**	1	TUBE	
	7	1	**186-1597**	1	CONNECTOR	
B	8	1	**198-0097**	1	FILM (PEDAL CONTROL AND E-STICK)	
B	9	1	**198-0098**	1	FILM (AUX PEDAL CONTROL)	
	10	1	**218-4513**	1	CONNECTOR AS	
	11	1	**218-4516**	1	BALL JOINT	
M	12	1	**6V-7744**	3	LOCKNUT	
M	13	1	**6V-8335**	1	BOLT-SELF LOCKING (M10X1.5X40MM)	
M	14	1	**7X-2544**	1	BOLT (M10X1.5X104MM)	
	15	1	**8T-4121**	8	WASHER-HARD (11X21X2.5MM THK)	
M	16	1	**8T-4195**	3	BOLT (M10X1.5X30MM)	
	17	1	**9R-2806**	3	PIN	
	18	1	**9R-2807**	2	CLIP	
M	19	1	**9X-2045**	4	SCREW-TRUSS HEAD (M6X1X20MM)	

B-USE AS REQUIRED
M-METRIC PART

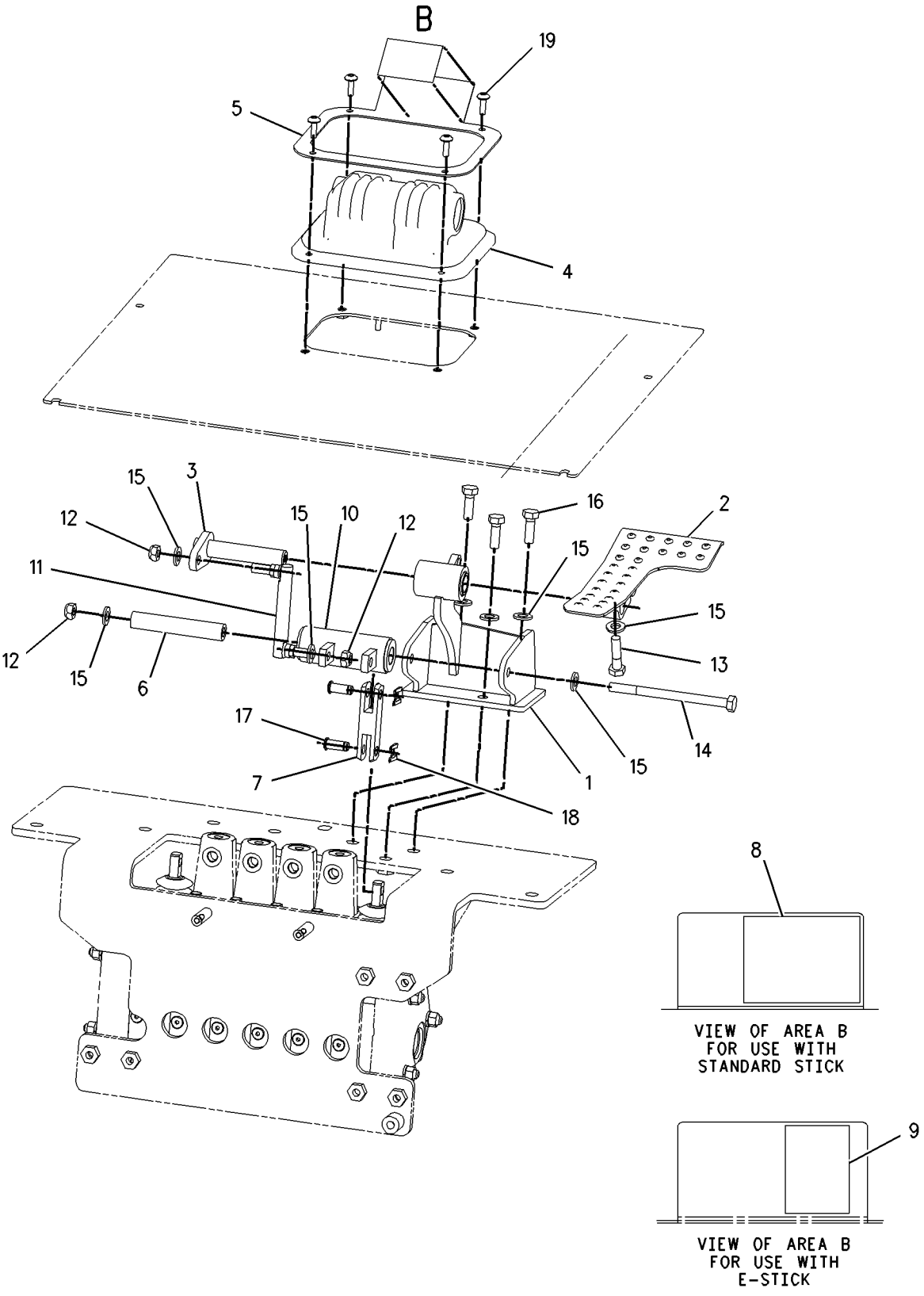

GRAPHIC #1 **<END>** g00879491

HYDRAULIC SYSTEM

202-6126 CONVERSION AR-CUSHION SWING–KIT

S/N: BFP12900-UP
CENTER PIVOT, NON LOW LEAK BACKHOE
AN ATTACHMENT

SMCS-5057, 5105, 5454 **i01809458**

NOTE	REF NO	GRAPHIC REF	PART NUMBER	QTY	PART NAME 1 2 3 4 5 6 (PRODUCT LEVEL)	SEE PAGE
	1	1	**206-3685**	1	VALVE GP-CROSSOVER RELIEF	
		1	**7I-8084**	2	PLUG	
I	2	1	**208-3600**	1	HOSE AS	
	3	1	*214-4253*	1	TEE AS	
		1	**4J-5477**	1	SEAL-O-RING	
		1	**6V-8398**	1	SEAL-O-RING	
		1	**214-4252**	1	TEE	
I	4	1	**217-1387**	1	HOSE AS	
	5	1	**226-5634**	2	CONNECTOR AS	
					(EACH INCLUDES)	
		1	**3J-1907**	1	SEAL-O-RING	
		1	**4J-5477**	1	SEAL-O-RING	
		1	**167-0566**	1	CARTRIDGE	
		1	**226-5633**	1	CONNECTOR	
	6	1	*148-8351*	2	ELBOW GP	
					(EACH INCLUDES)	
		1	**4J-5477**	1	SEAL-O-RING	
		1	**6V-9849**	1	ELBOW-SWIVEL	
	7	1	*148-8428*	1	TEE GP	
		1	**3K-0360**	1	SEAL-O-RING	
		1	**6V-8398**	2	SEAL-O-RING	
		1	**6V-8782**	1	TEE-FACE SEAL	
	8	1	*164-8908*	1	CONNECTOR GP	
		1	**3K-0360**	1	SEAL-O-RING	
		1	**6V-8398**	1	SEAL-O-RING	
		1	**8T-0077**	1	CONNECTOR	
M	9	1	**8T-3612**	2	NUT-WELD (M8X1.25 THD)	
	10	1	**8T-4224**	2	WASHER-HARD (8.8X16X2MM THK)	
M	11	1	**8T-6870**	2	BOLT (M8X1.25X70MM)	
I	12	1	**208-3601**	1	HOSE AS	

I-SEE HOSE FABRICATION GUIDE
M-METRIC PART

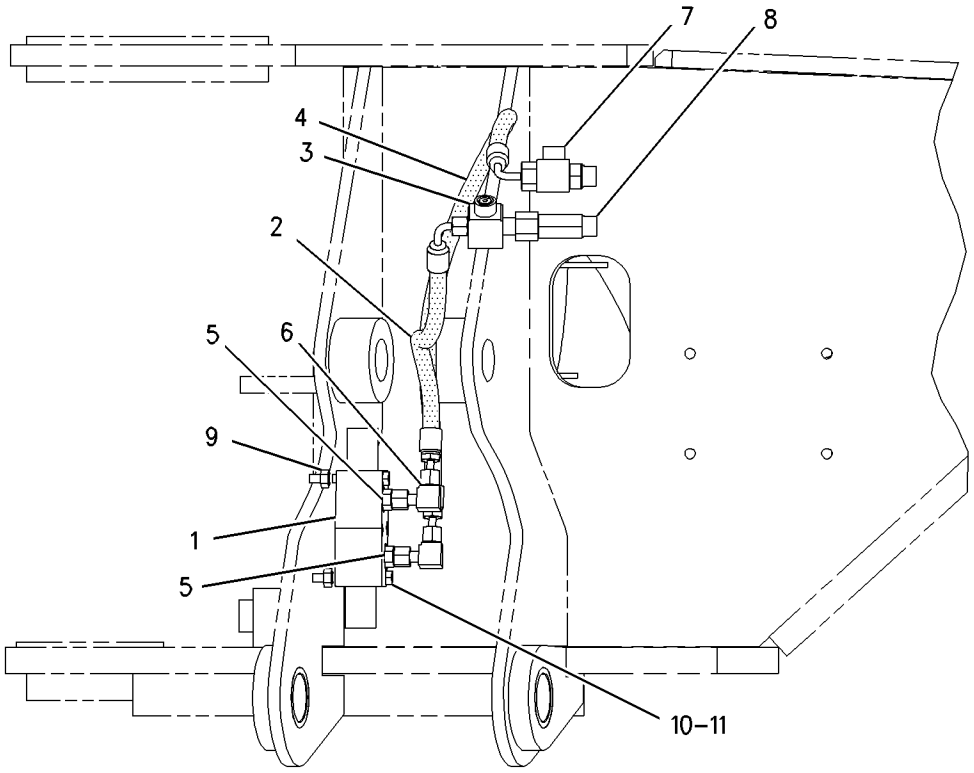

RIGHT SIDE VIEW
WITHOUT ANTI-DRIFT VALVE

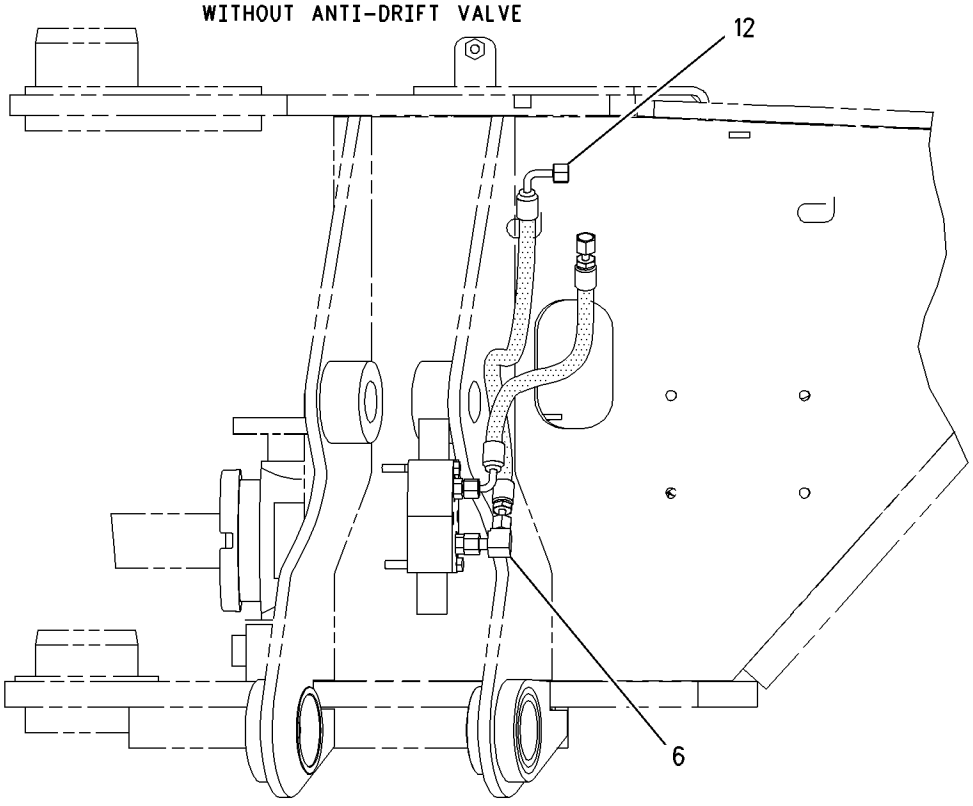

RIGHT SIDE VIEW
WITH ANTI-DRIFT VALVE

GRAPHIC #1 **<END>** g00930149

198-7412 CONVERSION GP-CONTROL VALVE

S/N: BFP12900-UP
FOUR BANK TO FIVE BANK
PART OF 196-8860 HYDRAULIC AR
AN ATTACHMENT

SMCS-5051 **i01645370**

NOTE	PART NUMBER	QTY	PART NAME 1 2 3 4 5 6 (PRODUCT LEVEL)	SEE PAGE
Y	**190-3450**	1	VALVE GP-CONTROL	709
	9S-8752	6	NUT-FULL (3/8-16 THD)	
	4D-9986	2	SEAL-O-RING	
	4J-5140	1	SEAL-O-RING	
	4J-5267	1	SEAL-O-RING	
B	**4T-2723**	3	SHIM (0.076MM THK)	
	107-8117	3	STUD	
	5M-2894	6	WASHER-HARD (10.2X18.5X2.5MM THK)	

B-USE AS REQUIRED
Y-SEPARATE ILLUSTRATION

<END>

201-6902 CONVERSION GP-CONTROL VALVE–KIT

S/N: BFP12900-UP
FIVE BANK TO SIX BANK
AN ATTACHMENT

SMCS-5051 **i01645716**

NOTE	PART NUMBER	QTY	PART NAME 1 2 3 4 5 6 (PRODUCT LEVEL)	SEE PAGE
Y	**190-3450**	1	VALVE GP-CONTROL	709
	9S-8752	6	NUT-FULL (3/8-16 THD)	
	4D-9986	2	SEAL-O-RING	
	4J-5140	1	SEAL-O-RING	
	4J-5267	1	SEAL-O-RING	
B	**4T-2723**	3	SHIM (0.076MM THK)	
	116-1316	3	STUD	
	5M-2894	6	WASHER-HARD (10.2X18.5X2.5MM THK)	

B-USE AS REQUIRED
Y-SEPARATE ILLUSTRATION

<END>

202-0964 CONVERSION GP-CONTROL VALVE–KIT

S/N: BFP12900-UP
FOUR BANK TO FIVE BANK
AN ATTACHMENT

SMCS-5051 **i02003956**

NOTE	PART NUMBER	QTY	PART NAME 1 2 3 4 5 6 (PRODUCT LEVEL)	SEE PAGE
	9S-8752	6	NUT-FULL (3/8-16 THD)	
	4J-5267	1	SEAL-O-RING	
B	**4T-2723**	3	SHIM (0.076MM THK)	
	118-2228	3	STUD	
Y	**190-3450**	1	VALVE GP-CONTROL	709
	5M-2894	6	WASHER-HARD (10.2X18.5X2.5MM THK)	

B-USE AS REQUIRED
Y-SEPARATE ILLUSTRATION

<END>

230-9105 CONVERSION GP-CONTROL VALVE–KIT

S/N: BFP12900-UP
PART OF 210-8530 HYDRAULIC AR
AN ATTACHMENT

SMCS-5051 **i02016145**

NOTE	PART NUMBER	QTY	PART NAME 1 2 3 4 5 6 (PRODUCT LEVEL)	SEE PAGE
Y	**201-0664**	1	VALVE GP-CONTROL	713
	9S-8752	6	NUT-FULL (3/8-16-THD)	
	4D-9986	2	SEAL-O-RING	
	4J-5140	1	SEAL-O-RING	
	4J-5267	1	SEAL-O-RING	
	4T-2723	3	SHIM (0.076-MM THK)	
	107-8117	3	STUD	
	5M-2894	6	WASHER-HARD (10.2X18.5X2.5-MM THK)	

Y-SEPARATE ILLUSTRATION

<END>

164-1410 CONVERSION GP-HYD HAND CONTROL

S/N: BFP12900-UP

KIT-HYDRAULIC HAND CONTROL-STANDARD TWO LEVER

AN ATTACHMENT

SMCS-5063 **i01958775**

NOTE	REF NO	GRAPHIC REF	PART NUMBER	QTY	PART NAME 1 2 3 4 5 6 (PRODUCT LEVEL)	SEE PAGE
Y	1	1	*164-1400*	1	CONTROL GP-HYDRAULIC HAND	511

Y-SEPARATE ILLUSTRATION

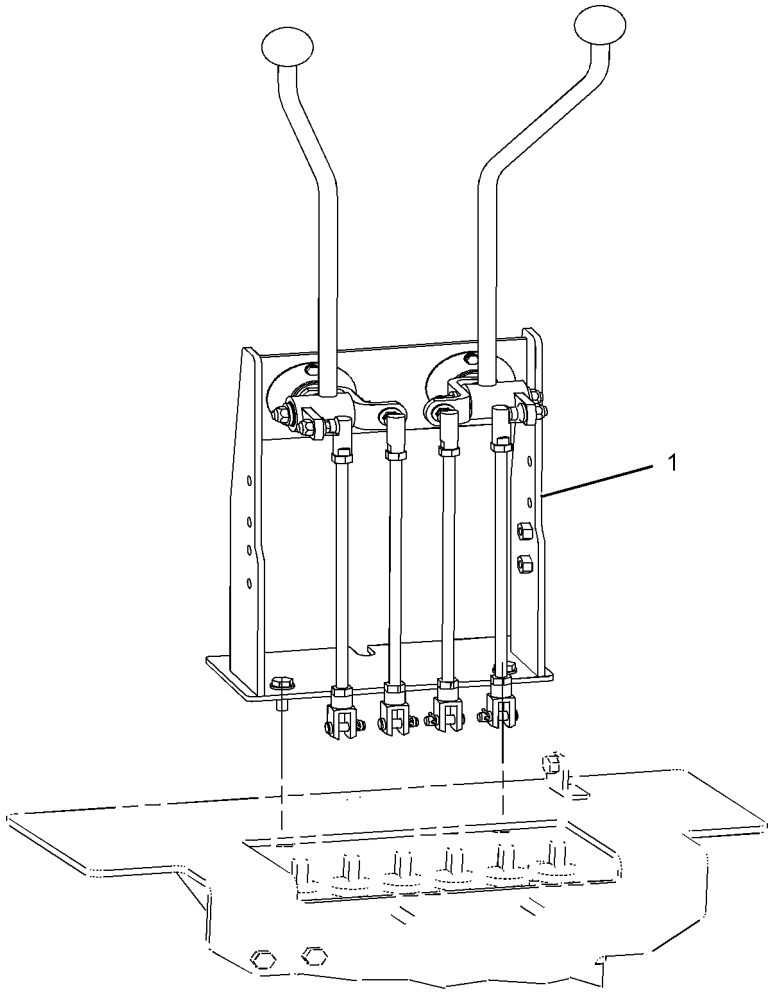

GRAPHIC #1 g01018037

<END>

164-1430 CONVERSION GP-HYD HAND CONTROL

S/N: BFP12900-UP

KIT-HYDRAULIC HAND CONTROL-EXCAVATOR TWO LEVER

AN ATTACHMENT

SMCS-5063 **i01958765**

NOTE	REF NO	GRAPHIC REF	PART NUMBER	QTY	PART NAME 1 2 3 4 5 6 (PRODUCT LEVEL)	SEE PAGE
Y	1	1	*164-1420*	1	CONTROL GP-HYDRAULIC HAND	513

Y-SEPARATE ILLUSTRATION

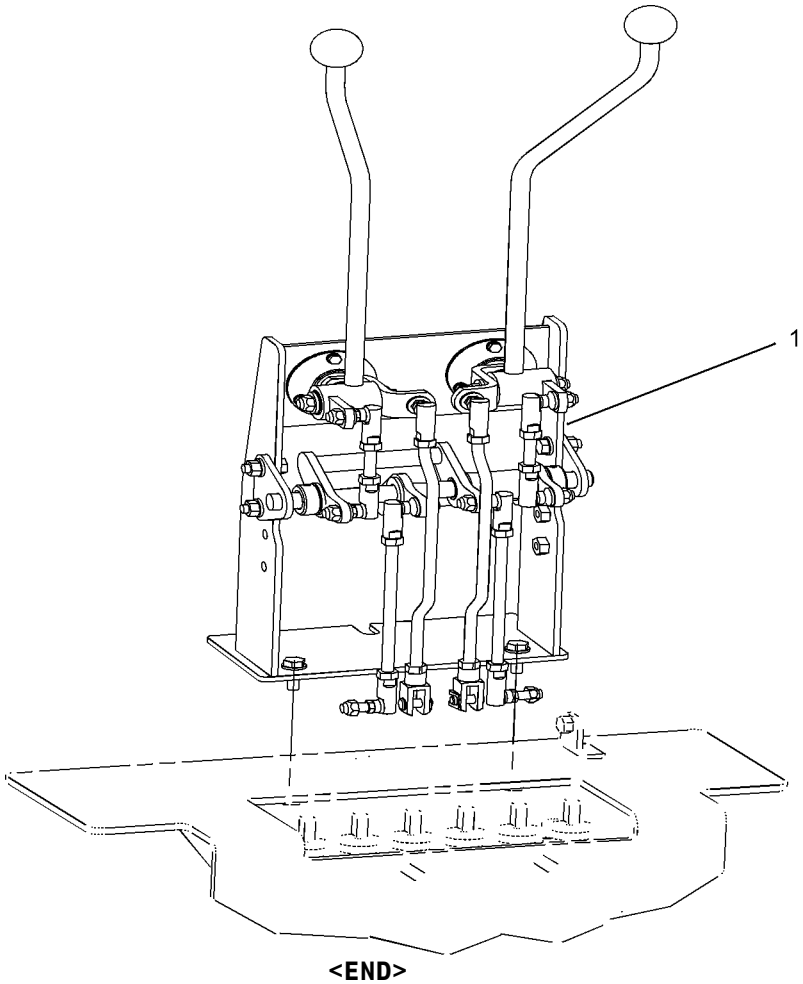

GRAPHIC #1 **<END>** g01018025

164-1510 CONVERSION GP-HYD HAND CONTROL

S/N: BFP12900-UP

KIT-HYDRAULIC HAND CONTROL-CASE THREE LEVER AND FOOT AN ATTACHMENT

SMCS-5063 **i02015664**

NOTE	REF NO	GRAPHIC REF	PART NUMBER	QTY	PART NAME 1 2 3 4 5 6 (PRODUCT LEVEL)	SEE PAGE
Y	1	1	*164-1500*	1	CONTROL GP-HYDRAULIC HAND	518
B	2	1	**205-7048**	6	INSERT-THREADED	

B-USE AS REQUIRED
Y-SEPARATE ILLUSTRATION

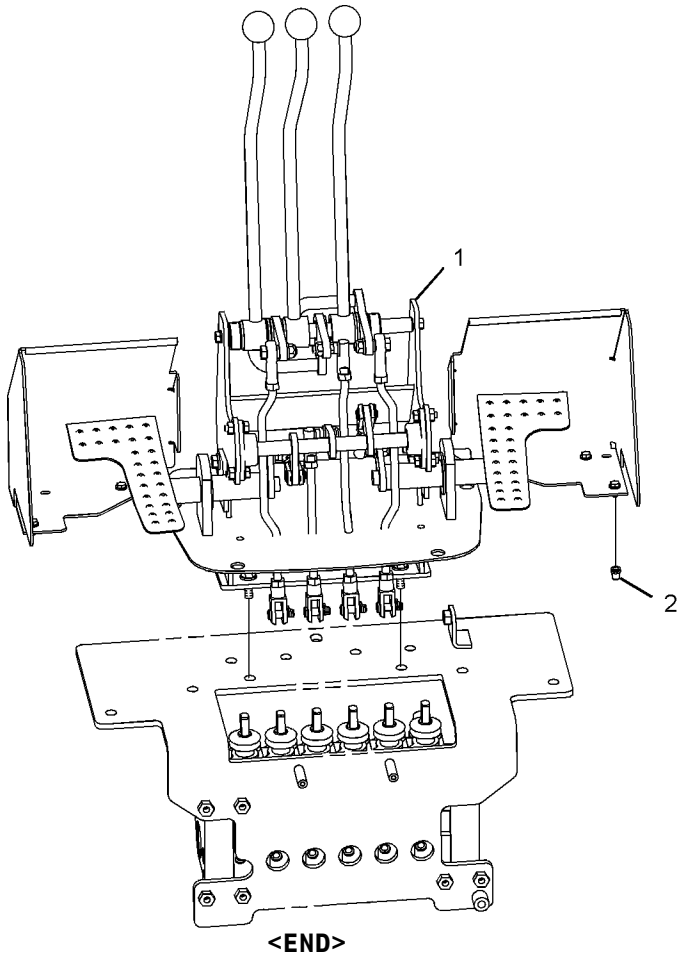

GRAPHIC #1

<END>

g01042057

164-1530 CONVERSION GP-HYD HAND CONTROL

S/N: BFP12900-UP

KIT-HYDRAULIC HAND CONTROL-CASE FOUR LEVER AND FOOT AN ATTACHMENT

SMCS-5063 **i02015663**

NOTE	REF NO	GRAPHIC REF	PART NUMBER	QTY	PART NAME 1 2 3 4 5 6 (PRODUCT LEVEL)	SEE PAGE
Y	1	1	*164-1520*	1	CONTROL GP-HYDRAULIC HAND	520
B	2	1	**205-7048**	6	INSERT-THREADED	

B-USE AS REQUIRED
Y-SEPARATE ILLUSTRATION

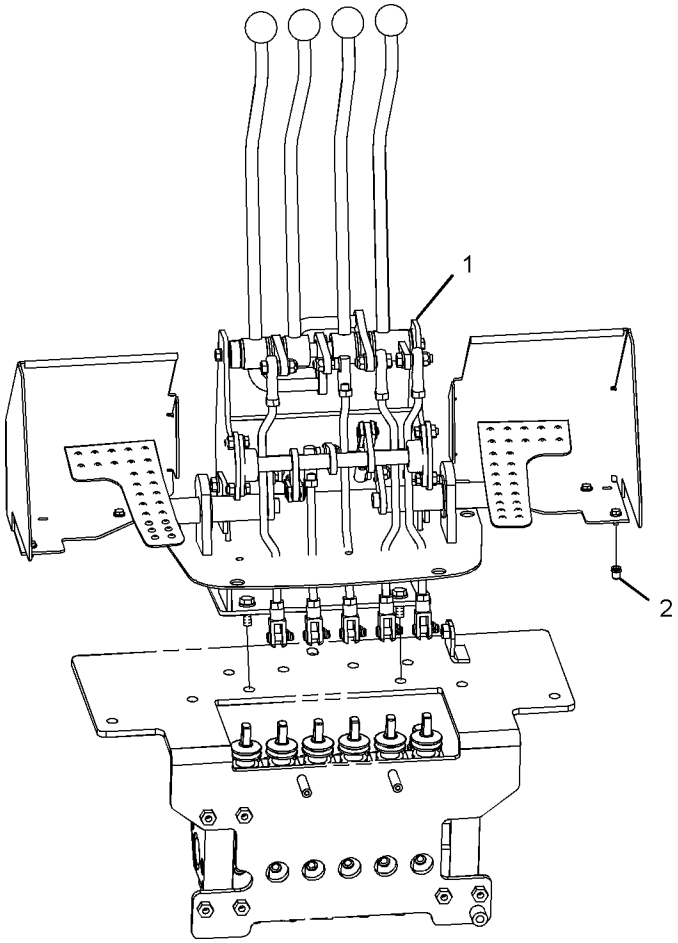

GRAPHIC #1

<END>

g01042070

217-8368 CONVERSION GP-HYD HAND CONTROL

S/N: BFP12900-UP
CENTER PIVOT
AN ATTACHMENT

SMCS-5063 **i02020400**

NOTE	REF NO	GRAPHIC REF	PART NUMBER	QTY	PART NAME 1 2 3 4 5 6 (PRODUCT LEVEL)	SEE PAGE
	1	1	**9R-4918**	4	KNOB	
	2	1	**9R-9901**	6	FASTENER (CLIP)	
	3	1	**117-5672**	4	BOOT	
	4	1	**164-1526**	1	GASKET	
Y	5	1	*217-8367*	1	CONTROL GP-HYDRAULIC HAND	525
	6	1	**217-8380**	1	CONSOLE-REAR	
	7	1	**218-2192**	1	FILM-INSTRUCTION (LEVER CONTROLS)	
	8	1	**218-2193**	1	PLATE	
	9	1	**8T-4121**	2	WASHER-HARD (11X21X2.5-MM THK)	
M	10	1	**8T-4133**	4	NUT (M10X1.5-THD)	
M	11	1	**8T-4195**	2	BOLT (M10X1.5X30-MM)	
	12	1	**9X-2038**	4	WASHER (7X19X2-MM THK)	
M	13	1	**9X-2045**	4	SCREW-TRUSS HEAD (M6X1X20-MM)	

M-METRIC PART
Y-SEPARATE ILLUSTRATION

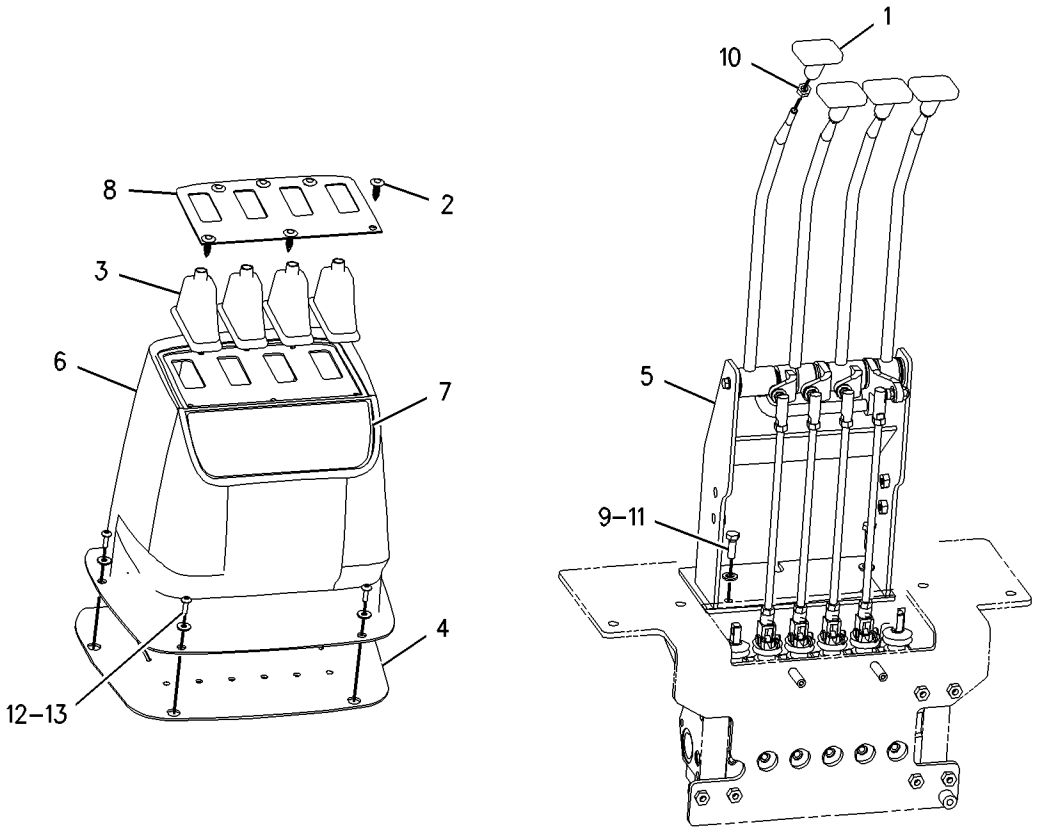

GRAPHIC #1 **<END>** g00892024

HYDRAULIC SYSTEM

132-8769 COUPLING GP

S/N: BFP12900-UP

AN ATTACHMENT

SMCS-5057 **i01450413**

NOTE	REF NO	GRAPHIC REF	PART NUMBER	QTY	PART NAME 1 2 3 4 5 6 (PRODUCT LEVEL)	SEE PAGE
	1	1	**106-0406**	1	COUPLING	
	2	1	**106-0401**	1	COUPLING	

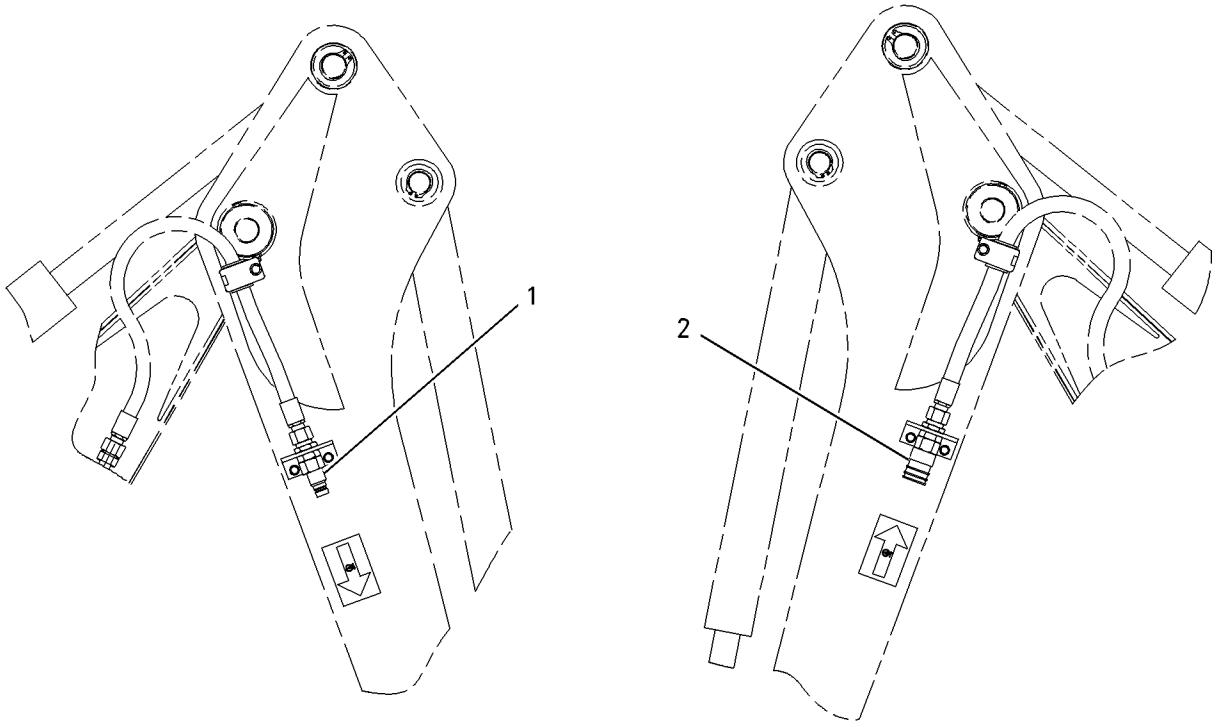

LEFT SIDE VIEW RIGHT SIDE VIEW

GRAPHIC #1 **<END>** g00759123

239-2226 COVER GP-CONTROL VALVE

S/N: BFP12900-UP
PART OF 185-5898 VALVE GP-BANK 2
AN ATTACHMENT

SMCS-5051 **i02013251**

NOTE	REF NO	GRAPHIC REF	PART NUMBER	QTY	PART NAME 1 2 3 4 5 6 (PRODUCT LEVEL)	SEE PAGE
	1	1	**192-2080**	1	SPRING	
	2	1	**7J-9108**	1	SEAL-O-RING	
	3	1	**192-7863**	1	PLUG	
	4	1	**192-2075**	1	VALVE GP-CHECK	
	5	1	**192-7512**	1	SEAL-O-RING	

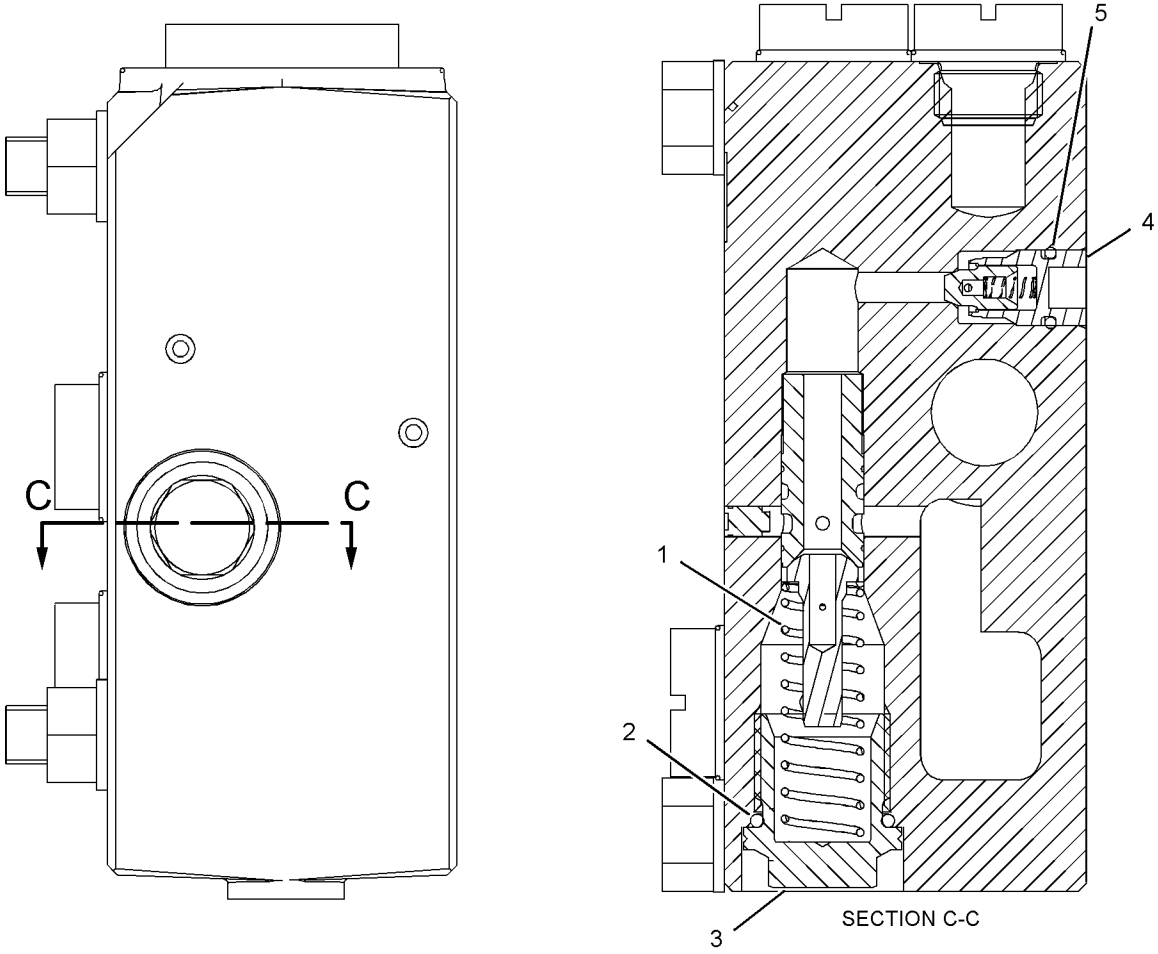

GRAPHIC #1 **<END>** g01025137

224-6236 CYLINDER & LINES GP-THUMB–STANDARD STICK

S/N: BFP12900-UP

PART OF 224-6224, 224-6225, 224-6226, 224-6227 THUMB AR

AN ATTACHMENT

SMCS-5057, 5362 **i01920960**

NOTE	REF NO	GRAPHIC REF	PART NUMBER	QTY	PART NAME 1 2 3 4 5 6 (PRODUCT LEVEL)	SEE PAGE
I	1	1	**221-4312**	2	HOSE AS	
Y	2	1	**221-4350**	1	CYLINDER GP-THUMB	562
	3	1	**5P-7464**	2	CLIP (SLOT)	
	4	1	**5P-7465**	2	CLIP (TAB)	
	5	1	**6V-1249**	2	GROMMET	
	6	1	**6V-8398**	2	SEAL-O-RING	
	7	1	**8T-4223**	4	WASHER-HARD (13.5X25.5X3MM THK)	
M	8	1	**8T-4956**	2	BOLT (M12X1.75X35MM)	

I-SEE HOSE FABRICATION GUIDE
M-METRIC PART
Y-SEPARATE ILLUSTRATION

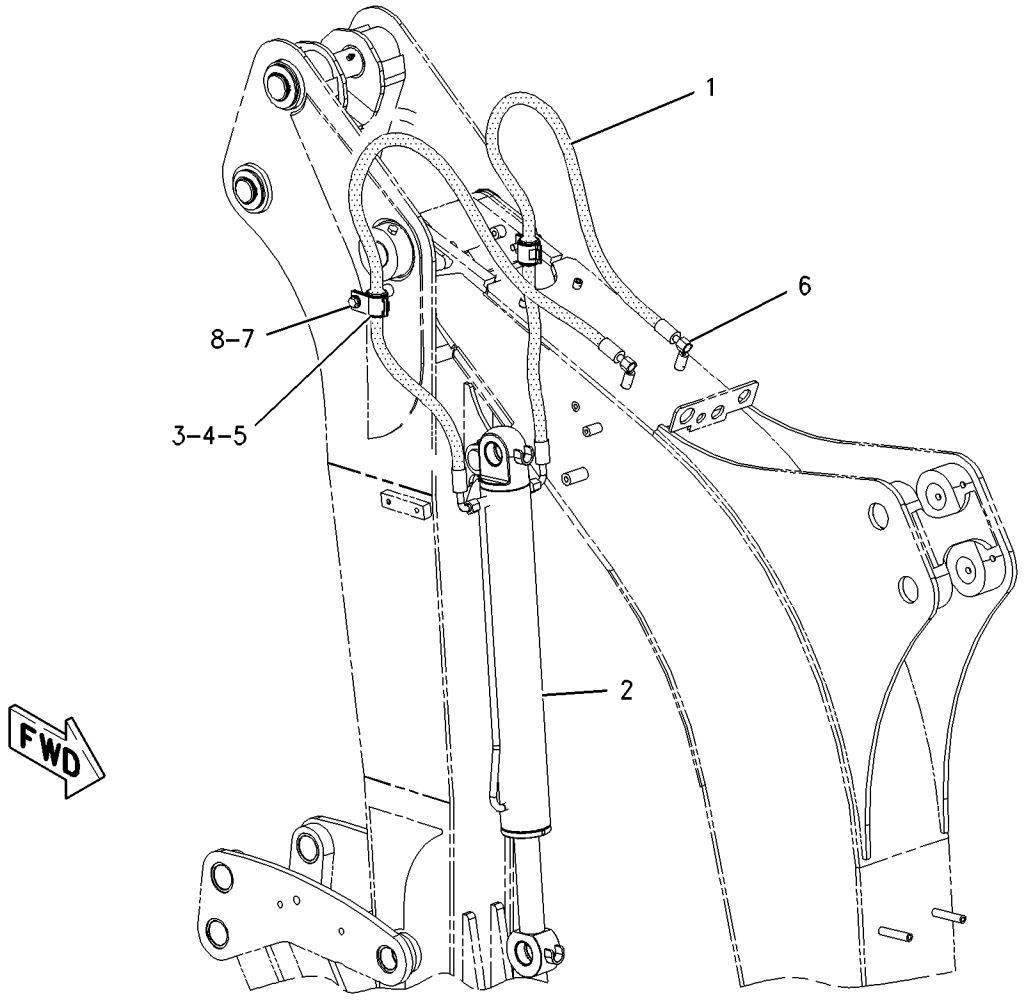

GRAPHIC #1 **<END>** g01003765

180-4239 CYLINDER GP-BACKHOE BUCKET

S/N: BFP12900-UP
88.9MM BORE X 854MM STROKE
PART OF 184-7905 BACKHOE AR-STANDARD STICK
AN ATTACHMENT

SMCS-5457 **i01945652**

NOTE	REF NO	GRAPHIC REF	PART NUMBER	QTY	PART NAME 1 2 3 4 5 6 (PRODUCT LEVEL)	SEE PAGE
	1	1	**178-4533**	1	CYLINDER AS	
	1A	1	**9R-7960**	2	BEARING-SLEEVE	
	2	1	**178-4639**	1	ROD AS	
	2A	1	**9R-0162**	2	BEARING	
	2B	1	**178-5164**	1	ROD	
	3	1	**180-6603**	1	PISTON	
	4	1	**187-3510**	1	HEAD	
	5	1	**106-1251**	1	WASHER	
J	6	1	**167-2201**	1	SEAL AS-BUFFER	
J	7	1	**167-2312**	1	SEAL-U-CUP	
J	8	1	**2H-3931**	1	SEAL-O-RING	
J	9	1	**2H-4145**	1	SEAL-O-RING	
J	10	1	**4J-9224**	1	RING-BACKUP	
J	11	1	**4T-8054**	1	SEAL AS	
J	12	1	**5J-8156**	1	WIPER-ROD	
J	13	1	**7J-9885**	1	RING-WEAR	
M	14	1	**8T-1605**	1	BOLT (M36X4X100MM)	
J	15	1	**8T-0785**	1	RING-WEAR	
					AVAILABLE REPAIR KIT(S):	
J			**223-5945**	1	KIT-SEAL	

J-KIT MARKED J INCLUDES PARTS MARKED J
M-METRIC PART

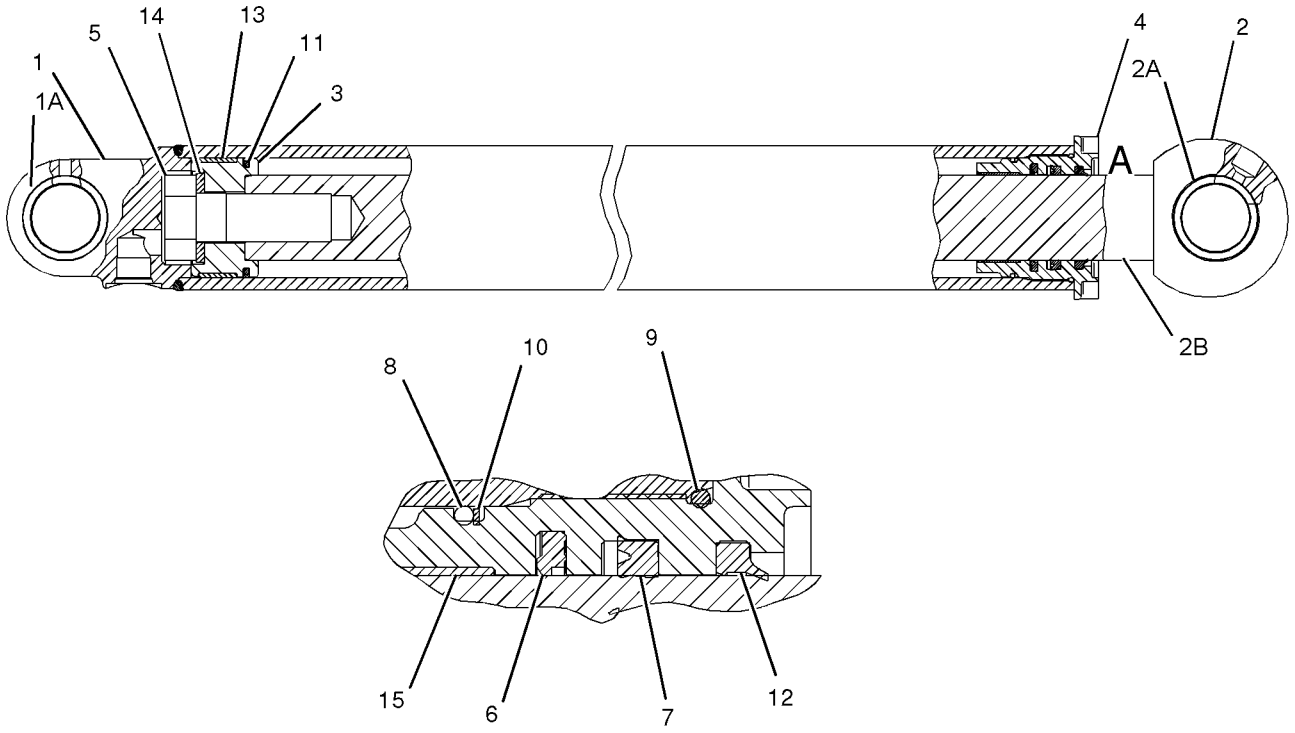

VIEW OF AREA A

GRAPHIC #1 **<END>** g01012630

206-0514 CYLINDER GP-BACKHOE BUCKET

S/N: BFP12900-UP
88.9MM BORE X 854MM STROKE
PART OF 184-7903, 184-7905, 184-7907, 238-4780, 238-4781, 238-4782 BACKHOE
AR-STANDARD STICK
AN ATTACHMENT

SMCS-5457 **i01945663**

NOTE	REF NO	GRAPHIC REF	PART NUMBER	QTY	PART NAME 1 2 3 4 5 6 (PRODUCT LEVEL)	SEE PAGE
	1	1	**180-6603**	1	PISTON	
	2	1	**187-3510**	1	HEAD	
	3	1	**206-0513**	1	CYLINDER AS	
	3A	1	**9R-7960**	2	BEARING-SLEEVE	
	3B	1	**6V-8398**	1	SEAL-O-RING	
	4	1	**209-9241**	1	ROD AS	
	4A	1	**9R-0162**	2	BEARING	
	5	1	**106-1251**	1	WASHER	
J	6	1	**167-2201**	1	SEAL AS-BUFFER	
J	7	1	**167-2312**	1	SEAL-U-CUP	
J	8	1	**2H-3931**	1	SEAL-O-RING	
J	9	1	**2H-4145**	1	SEAL-O-RING	
J	10	1	**4J-9224**	1	RING-BACKUP	
J	11	1	**4T-8054**	1	SEAL AS	
J	12	1	**5J-8156**	1	WIPER-ROD	
J	13	1	**7J-9885**	1	RING-WEAR	
J	14	1	**8T-0785**	1	RING-WEAR	
M	15	1	**8T-1605**	1	BOLT (M36X4X100MM)	
					AVAILABLE REPAIR KIT(S):	
J			**223-5945**	1	KIT-SEAL	

J-KIT MARKED J INCLUDES PARTS MARKED J
M-METRIC PART

206-0514 CYLINDER GP-BACKHOE BUCKET *(contd.)* i01945663

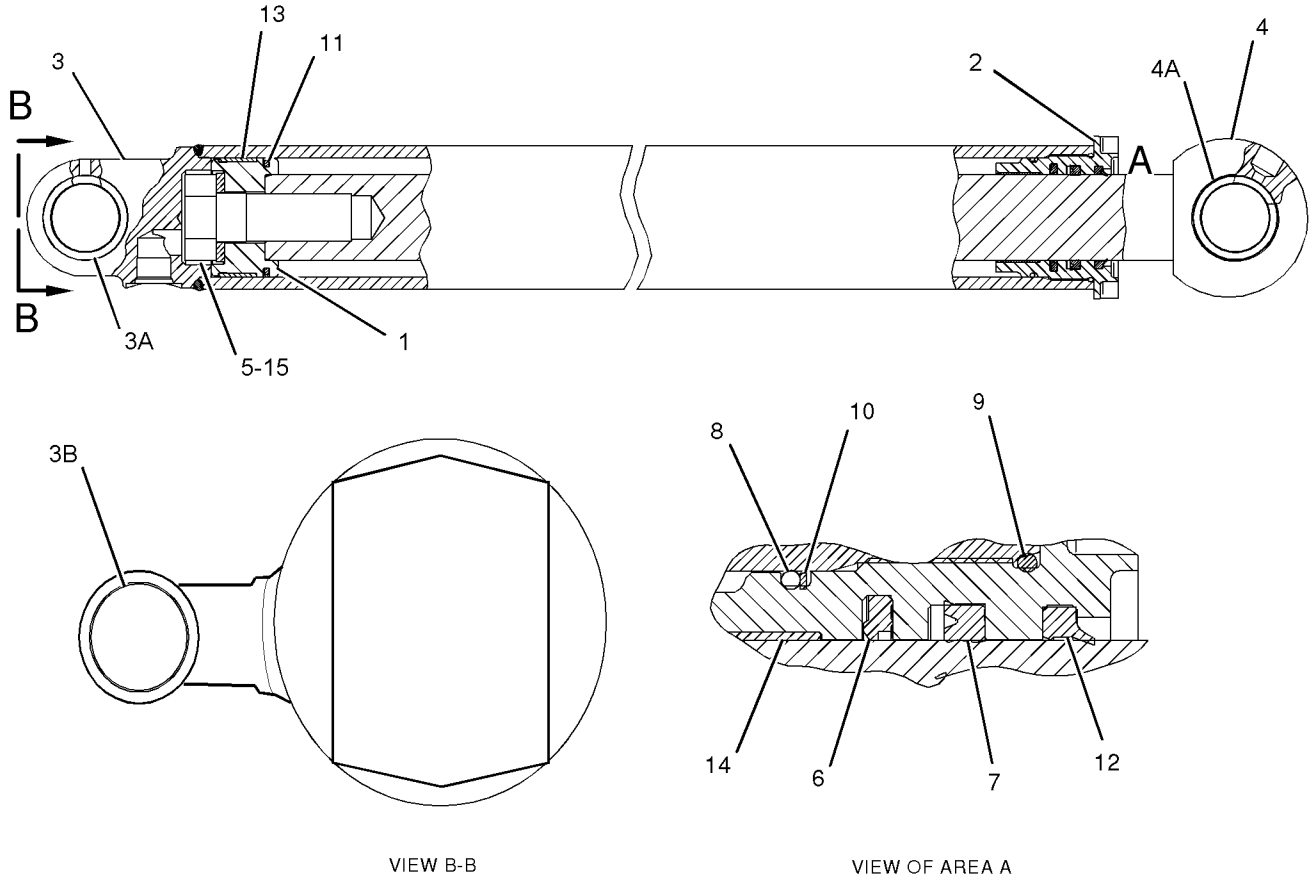

VIEW B-B

VIEW OF AREA A

GRAPHIC #1 **<END>** g01012815

206-0518 CYLINDER GP-BACKHOE BUCKET—EXTENDABLE STICK

S/N: BFP12900-UP
88.9MM BORE X 854MM STROKE
PART OF 184-7909, 184-7911, 238-4783, 238-4784 BACKHOE AR-EXTENDABLE STICK
AN ATTACHMENT

SMCS-5457 **i01911088**

NOTE	REF NO	GRAPHIC REF	PART NUMBER	QTY	PART NAME 1 2 3 4 5 6 (PRODUCT LEVEL)	SEE PAGE
	1	1	**180-6111**	1	ROD AS	
	1A	1	**9R-0162**	2	BEARING	
	2	1	**180-6603**	1	PISTON	
	3	1	**187-3510**	1	HEAD	
	4	1	**206-0517**	1	CYLINDER AS	
	4A	1	**6V-8398**	1	SEAL-O-RING	
	4B	1	**180-6110**	1	CAP	
	5	1	**106-1251**	1	WASHER	
	6	1	**167-2201**	1	SEAL AS-BUFFER	
	7	1	**167-2312**	1	SEAL-U-CUP	
	8	1	**2H-3931**	1	SEAL-O-RING	
	9	1	**2H-4145**	1	SEAL-O-RING	
	10	1	**4J-9224**	1	RING-BACKUP	
	11	1	**4T-8054**	1	SEAL AS	
	12	1	**5J-8156**	1	WIPER-ROD	
	13	1	**7J-9885**	1	RING-WEAR	
	14	1	**8T-0785**	1	RING-WEAR	
M	15	1	**8T-1605**	1	BOLT (M36X4X100MM)	
					AVAILABLE REPAIR KIT(S):	
			223-5945	1	KIT-SEAL	
					(INCLUDES RINGS AND SEALS)	

M-METRIC PART

206-0518 CYLINDER GP-BACKHOE BUCKET *(contd.)* i01911088

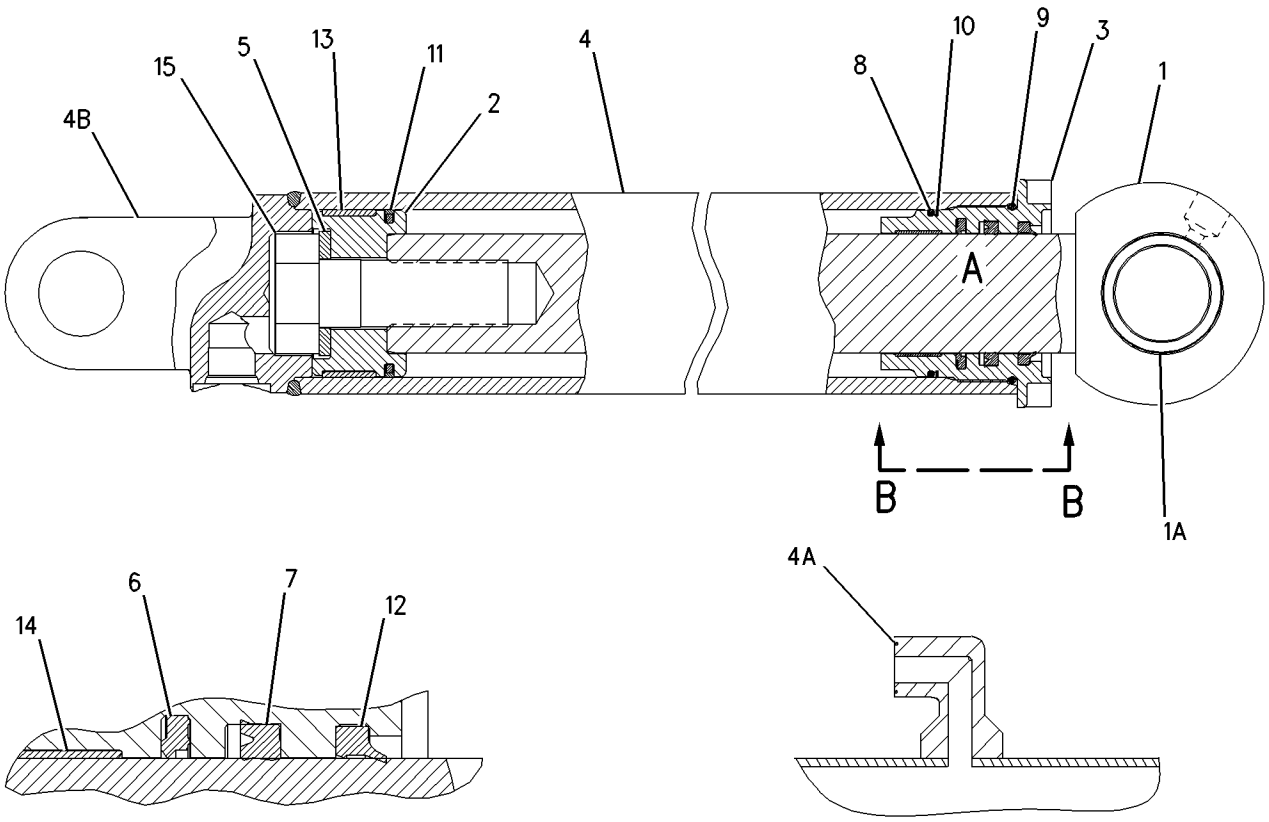

VIEW OF AREA A

VIEW B-B

GRAPHIC #1 **<END>** g00997126

HYDRAULIC SYSTEM

206-3628 CYLINDER GP-BOOM

S/N: BFP12900-UP
114.3MM BORE X 1000MM STROKE
PART OF 214-6980 HYDRAULIC AR

SMCS-5456 **i01944936**

NOTE	REF NO	GRAPHIC REF	PART NUMBER	QTY	PART NAME 1 2 3 4 5 6 (PRODUCT LEVEL)	SEE PAGE
	1	1	**206-3627**	1	CYLINDER AS	
	1A	1	**9R-0139**	2	BEARING-SLEEVE	
	2	1	**170-9066**	1	BOLT (1 1/2-12X101.6MM)	
	3	1	**3S-6162**	1	WASHER-HARD (40.5X67X6MM THK)	
J	4	1	**4J-3745**	1	RING-WEAR	
J	5	1	**5J-4986**	1	SEAL AS	
J	6	1	**9X-7260**	1	RING-WEAR	
J	7	1	**167-2202**	1	SEAL AS-BUFFER	
J	8	1	**167-2310**	1	SEAL-U-CUP	
J	9	1	**4M-0189**	1	SEAL-O-RING	
	10	1	**225-3280**	1	SEAL-WIPER	
J	11	1	**175-7902**	1	SEAL-O-RING	
J	12	1	**4J-9220**	1	RING-BACKUP	
R	13	1	**6E-1522**	1	ROD AS	
	13A	1	**9R-0139**	2	BEARING-SLEEVE	
	14	1	**6E-0276**	1	PISTON	
	15	1	**9T-5444**	1	PLUNGER	
	16	1	**6L-6208**	1	SPRING	
					AVAILABLE REPAIR KIT(S):	
J			**235-0972**	1	KIT-SEAL	

J-KIT MARKED J INCLUDES PARTS MARKED J
R-REMFG PART MAY BE AVAILABLE

206-3628 CYLINDER GP-BOOM *(contd.)* **i01944936**

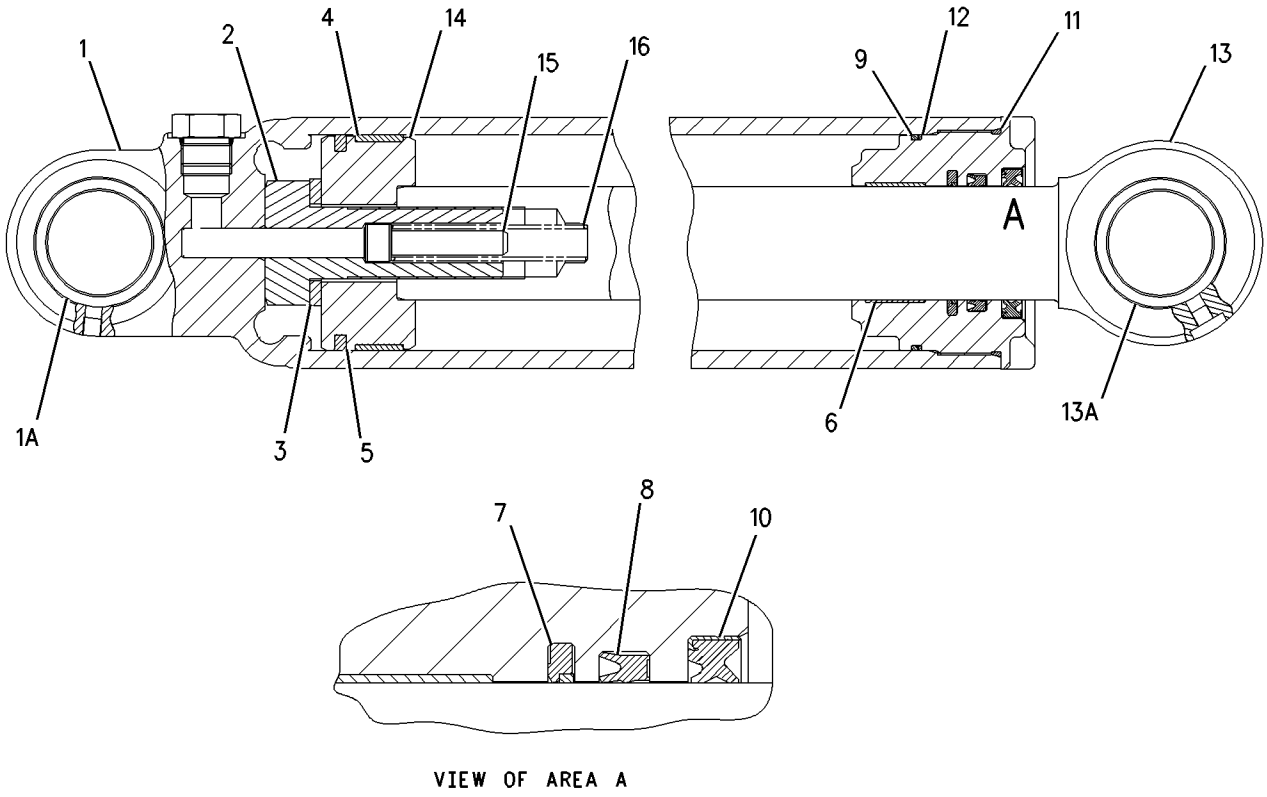

VIEW OF AREA A

GRAPHIC #1 **<END>** g00956509

HYDRAULIC SYSTEM

155-6586 CYLINDER GP-EXTENDABLE STICK

S/N: BFP12900-UP

PART OF 197-2733 STICK GP-EXTENDABLE

AN ATTACHMENT

SMCS-5486 **i01913015**

NOTE	PART NUMBER	QTY	PART NAME 1 2 3 4 5 6 (PRODUCT LEVEL)	SEE PAGE
Y	**191-7725**	1	CYLINDER GP-EXTENDABLE STICK	553
Y	*162-2351*	1	LINES GP-EXTENDABLE STICK	614

Y-SEPARATE ILLUSTRATION

<END>

191-7725 CYLINDER GP-EXTENDABLE STICK

S/N: BFP12900-UP
76.2MM BORE X 1067MM STROKE
PART OF 155-6586 CYLINDER GP-EXTENDABLE STICK
AN ATTACHMENT

SMCS-5486 **i01864203**

NOTE	REF NO	GRAPHIC REF	PART NUMBER	QTY	PART NAME 1 2 3 4 5 6 (PRODUCT LEVEL)	SEE PAGE
	1	1	**9T-2212**	1	PISTON	
	2	1	**164-7176**	1	ROD AS	
	3	1	**191-7727**	1	CYLINDER AS	
		1	**6V-8398**	1	SEAL-O-RING	
	4	1	**167-2186**	1	SEAL AS-BUFFER	
	5	1	**167-2294**	1	SEAL-U-CUP	
	6	1	**226-8202**	1	SEAL-WIPER	
M	7	1	**173-9779**	1	BOLT-HEX HEAD (M24X3.0X80MM)	
	8	1	**175-7896**	1	SEAL-O-RING	
	9	1	**191-6159**	1	HEAD	
	10	1	**4T-6780**	1	RING-WEAR	
	11	1	**5H-8848**	1	SEAL-O-RING	
	12	1	**6J-1972**	1	SEAL AS	
	13	1	**6J-5731**	1	RING-BACKUP	
	14	1	**6J-5733**	1	RING-WEAR	
	15	1	**6V-8237**	1	WASHER (26X44X4MM THK)	

M-METRIC PART

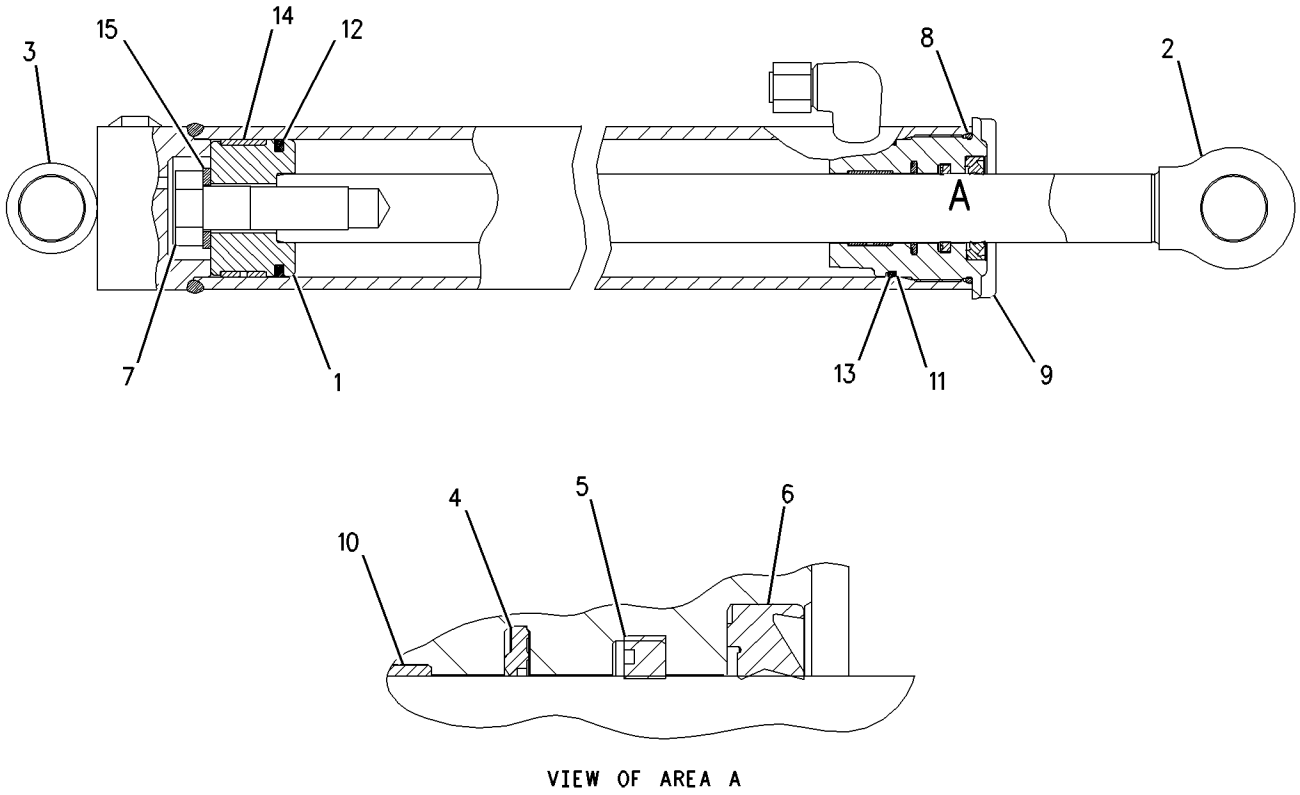

VIEW OF AREA A

GRAPHIC #1 **<END>** g00950327

206-3549 CYLINDER GP-LIFT

S/N: BFP12900-UP; CXP940-UP
82.55MM BORE X 705.4MM STROKE
PART OF 215-6888 COMMON AR
ALSO AN ATTACHMENT

SMCS-5102 **i01945515**

NOTE	REF NO	GRAPHIC REF	PART NUMBER	QTY	PART NAME 1 2 3 4 5 6 (PRODUCT LEVEL)	SEE PAGE
	1	1	**206-3548**	1	CYLINDER AS	
	1A	1	**9R-0153**	2	BEARING-SLEEVE	
	1B	1	**7J-9108**	1	SEAL-O-RING	
	2	1	**7J-5639**	1	BOLT-LOCKING (1-14X2.5 IN)	
	3	1	**5P-8250**	1	WASHER (28X49X5MM THK)	
J	4	1	**8J-6371**	1	RING-WEAR	
J	5	1	**6J-0793**	1	SEAL AS	
	6	1	**4T-7010**	1	PISTON	
	7	1	**191-6112**	1	HEAD	
J	8	1	**167-2302**	1	SEAL-U-CUP	
J	9	1	**2H-3931**	1	SEAL-O-RING	
J	10	1	**8J-2574**	1	RING-BACKUP	
R	11	1	**9T-0661**	1	ROD AS	
	11A	1	**9R-0321**	2	BEARING-SLEEVE	
J	12	1	**227-1143**	1	SEAL-WIPER	
J	13	1	**167-2192**	1	SEAL AS-BUFFER	
J	14	1	**4T-6779**	1	RING	
J	15	1	**1H-7339**	1	SEAL-O-RING	
					AVAILABLE REPAIR KIT(S):	
J			**234-2593**	1	KIT-SEAL	

J-KIT MARKED J INCLUDES PARTS MARKED J
R-REMFG PART MAY BE AVAILABLE

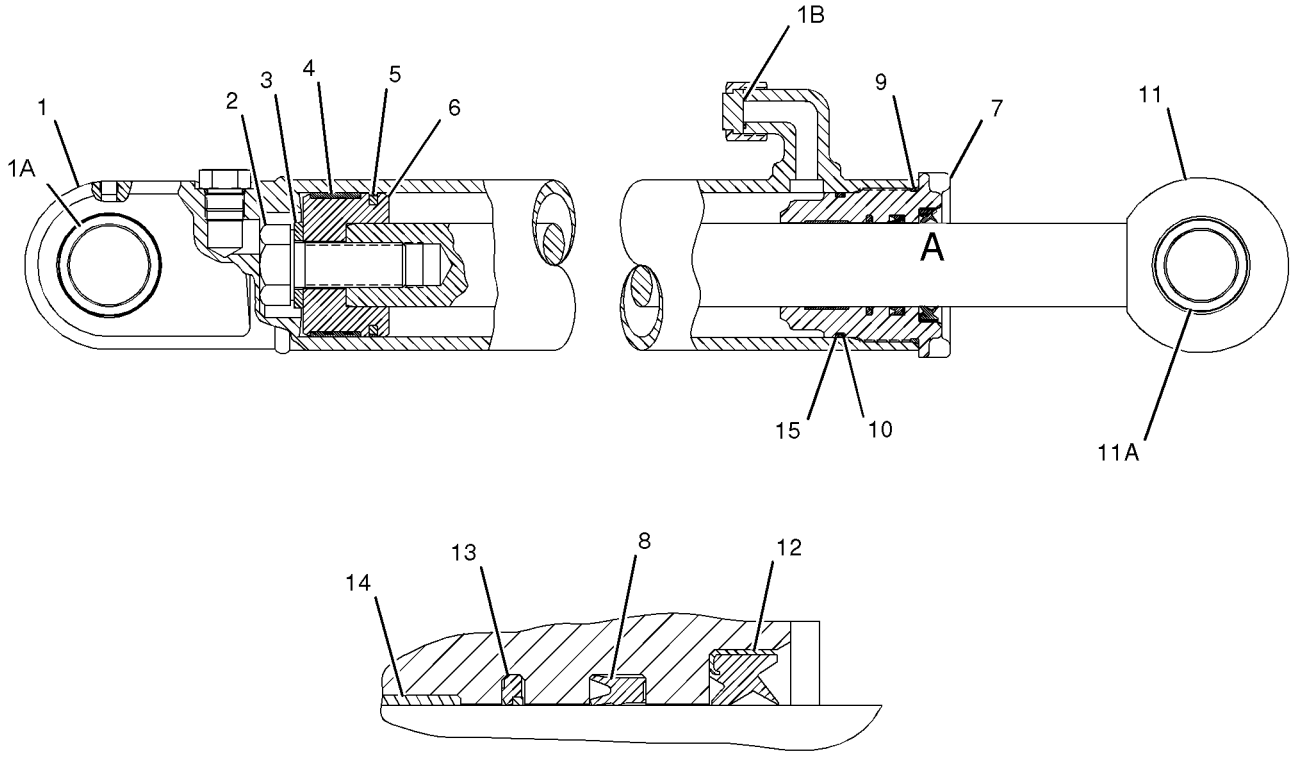

VIEW OF AREA A

GRAPHIC #1 **<END>** g01012502

HYDRAULIC SYSTEM

230-0979 CYLINDER GP-LIFT

S/N: BFP12900-UP

PART OF 214-6980 HYDRAULIC AR

SMCS-5102 **i02014856**

NOTE	REF NO	GRAPHIC REF	PART NUMBER	QTY	PART NAME 1 2 3 4 5 6 (PRODUCT LEVEL)	SEE PAGE
J	1	1	**8J-6371**	1	RING-WEAR	
J	2	1	**227-1143**	1	SEAL-WIPER	
	3	1	**233-2568**	1	ROD AS	
	4	1	**233-2578**	1	PISTON	
	5	1	**233-2590**	1	HEAD AS	
J	6	1	**233-2597**	1	SEAL-O-RING	
J	7	1	**233-2599**	1	RING-BACKUP	
J	8	1	**233-2601**	1	SEAL-O-RING	
J	9	1	**233-2609**	1	SEAL-U-CUP	
	10	1	**233-2617**	1	CYLINDER AS	
J	11	1	**244-3839**	1	SEAL-PISTON	
	12	1	**3B-8489**	2	FITTING-GREASE	
	13	1	**9R-0153**	2	BEARING-SLEEVE	
	14	1	**9R-0321**	2	BEARING-SLEEVE	
JM	15	1	**9X-6611**	1	SETSCREW-SOCKET	
					AVAILABLE REPAIR KIT(S):	
J			**233-2628**	1	KIT-SEAL	

J-KIT MARKED J INCLUDES PARTS MARKED J
M-METRIC PART

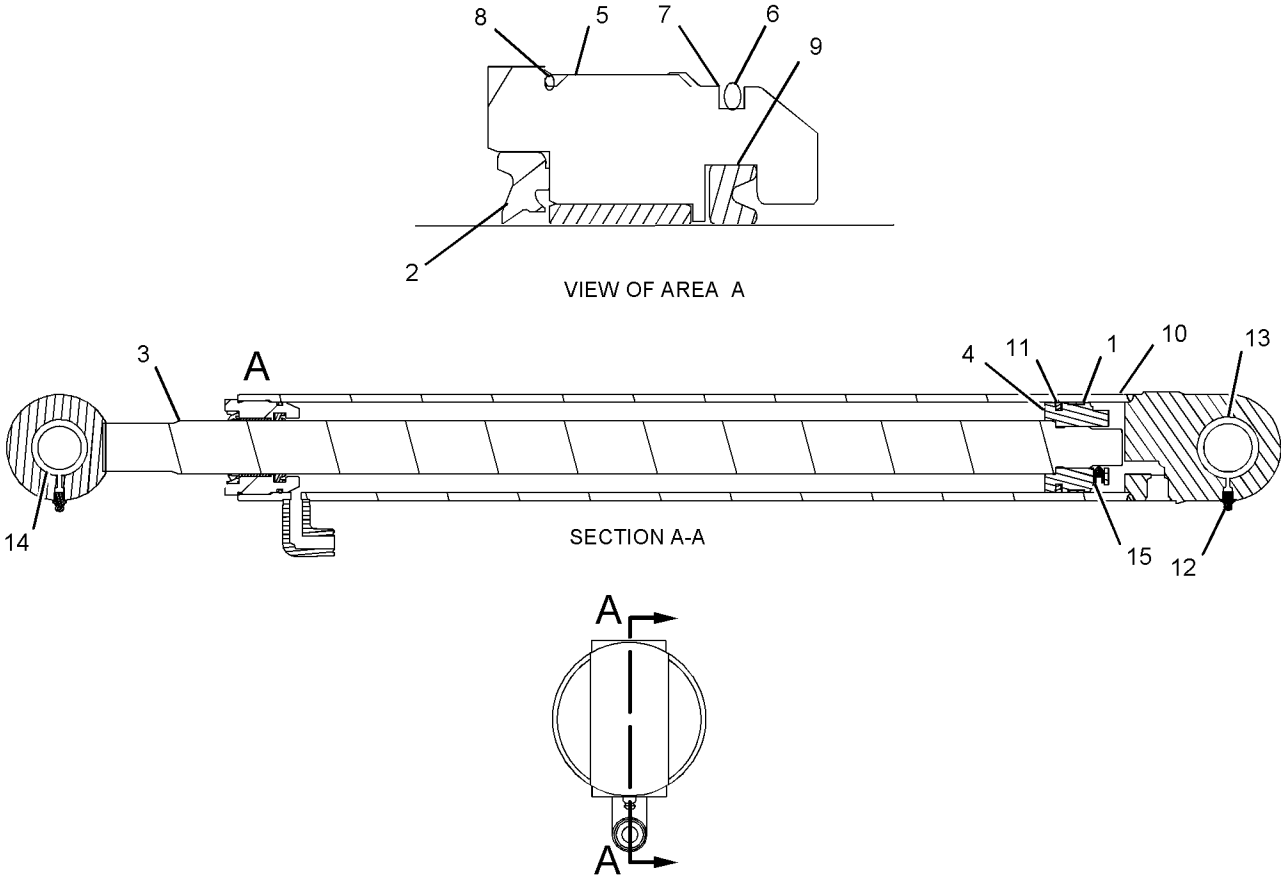

GRAPHIC #1

<END>

g01043685

185-1839 CYLINDER GP-MULTIPURPOSE BUKT

S/N: BFP12900-UP
76.2MM BORE X 260MM STROKE
PART OF 111-8634, 111-8635, 112-0938, 112-0939 BUCKET AR-MULTIPURPOSE AN ATTACHMENT

SMCS-5457 **i02020473**

NOTE	REF NO	GRAPHIC REF	PART NUMBER	QTY	PART NAME 1 2 3 4 5 6 (PRODUCT LEVEL)	SEE PAGE
	1	1	**6E-0122**	1	HEAD	
	2	1	**9T-2212**	1	PISTON	
R	3	1	**9T-4008**	1	ROD AS	
	3A	1	**9T-4007**	2	BEARING	
R	4	1	**9T-4009**	1	CYLINDER AS	
	5	1	**167-2186**	1	SEAL AS-BUFFER	
	6	1	**167-2294**	1	SEAL-U-CUP	
	7	1	**167-2450**	1	SEAL-WIPER	
	8	1	**1H-7339**	1	SEAL-O-RING	
	9	1	**4T-6780**	1	RING-WEAR	
	10	1	**5P-8250**	1	WASHER (28X49X5-MM THK)	
	11	1	**6F-7037**	1	BOLT (1-14X3.25-IN)	
	12	1	**6J-1972**	1	SEAL AS	
	13	1	**6J-5733**	1	RING-WEAR	
	14	1	**8J-2574**	1	RING-BACKUP	
					AVAILABLE REPAIR KIT(S):	
			235-0354	1	KIT-SEAL	
					(INCLUDES RINGS AND SEALS)	

R-REMFG PART MAY BE AVAILABLE

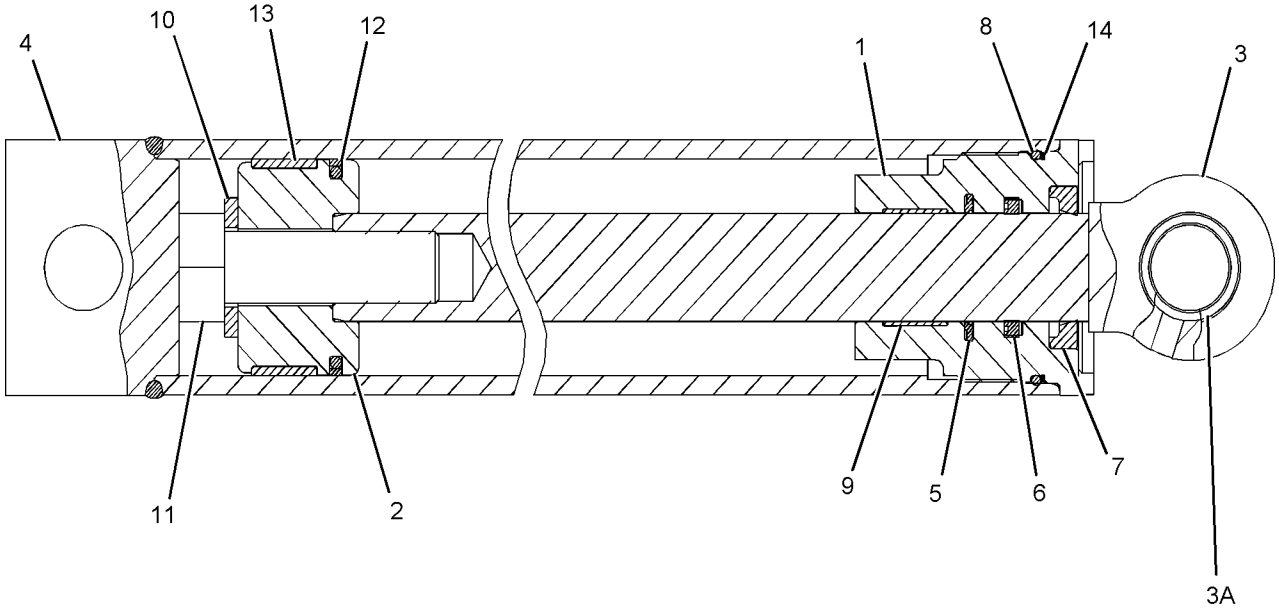

GRAPHIC #1 **<END>** g01043543

HYDRAULIC SYSTEM

206-0520 CYLINDER GP-STABILIZER

S/N: BFP12900-UP
101.6MM BORE X 541MM STROKE
PART OF 214-6980 HYDRAULIC AR

SMCS-5468 **i01889013**

NOTE	REF NO	GRAPHIC REF	PART NUMBER	QTY	PART NAME 1 2 3 4 5 6 (PRODUCT LEVEL)	SEE PAGE
	1	1	**189-5629**	1	HEAD	
	2	1	**206-0519**	1	CYLINDER AS	
	2A	1	**9R-0321**	2	BEARING-SLEEVE	
		1	**6V-8398**	1	SEAL-O-RING	
	3	1	**167-2197**	1	SEAL AS-BUFFER	
	4	1	**167-2305**	1	SEAL-U-CUP	
	5	1	**227-1145**	1	SEAL-WIPER	
	6	1	**172-2353**	1	PISTON	
	7	1	**172-2354**	1	ROD AS	
	7A	1	**9R-0321**	2	BEARING-SLEEVE	
	8	1	**2K-6830**	1	RING-BACKUP	
	9	1	**3S-7023**	1	WASHER (34X57X6MM THK)	
	10	1	**4T-6128**	1	RING	
	11	1	**5J-5402**	1	SEAL AS	
	12	1	**6J-2797**	1	RING-WEAR	
	13	1	**7F-6112**	1	BOLT (1 1/4-12X3 IN)	
	14	1	**8H-7521**	1	SEAL-O-RING	
	15	1	**9X-4611**	1	SEAL-O-RING	

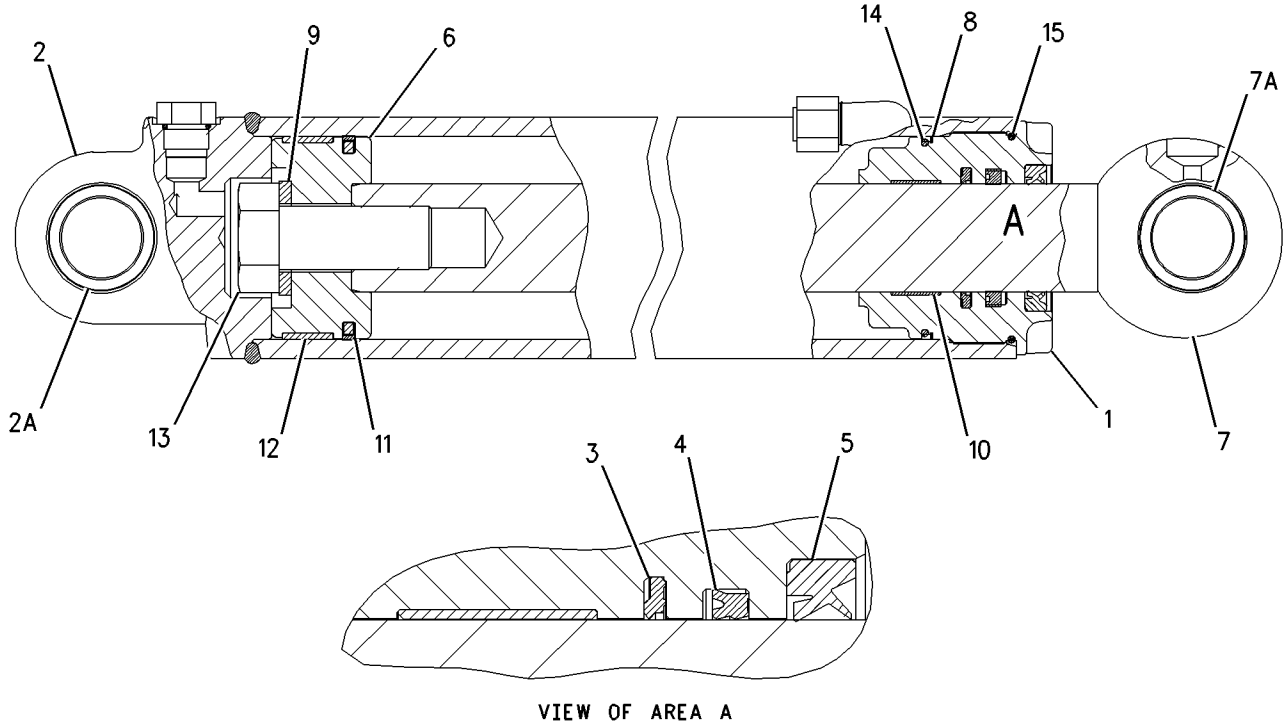

VIEW OF AREA A

GRAPHIC #1 **<END>** g00981022

206-0522 CYLINDER GP-STABILIZER

S/N: BFP12900-UP
101.6MM BORE X 541MM STROKE
PART OF 214-6980 HYDRAULIC AR

SMCS-5468 **i01945835**

NOTE	REF NO	GRAPHIC REF	PART NUMBER	QTY	PART NAME 1 2 3 4 5 6 (PRODUCT LEVEL)	SEE PAGE
	1	1	**189-5629**	1	HEAD	
	2	1	**206-0521**	1	CYLINDER AS	
	2A	1	**9R-0321**	2	BEARING-SLEEVE	
	2B	1	**6V-8398**	1	SEAL-O-RING	
	3	1	**167-2197**	1	SEAL AS-BUFFER	
	4	1	**167-2305**	1	SEAL-U-CUP	
	5	1	**227-1145**	1	SEAL-WIPER	
	6	1	**172-2353**	1	PISTON	
	7	1	**172-2354**	1	ROD AS	
	7A	1	**9R-0321**	2	BEARING-SLEEVE	
	8	1	**2K-6830**	1	RING-BACKUP	
	9	1	**3S-7023**	1	WASHER (34X57X6MM THK)	
	10	1	**4T-6128**	1	RING	
	11	1	**5J-5402**	1	SEAL AS	
	12	1	**6J-2797**	1	RING-WEAR	
	13	1	**7F-6112**	1	BOLT (1 1/4-12X3 IN)	
	14	1	**8H-7521**	1	SEAL-O-RING	
	15	1	**9X-4611**	1	SEAL-O-RING	

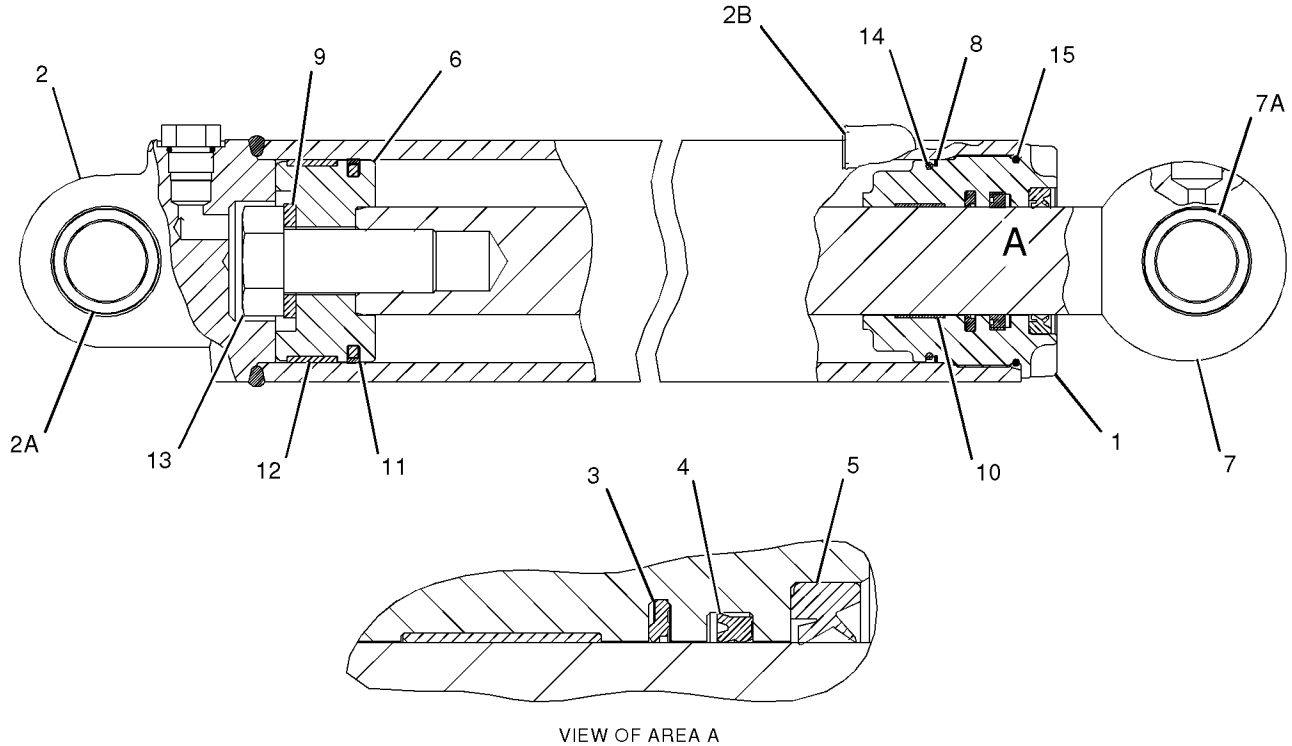

VIEW OF AREA A

GRAPHIC #1 **<END>** g01012767

HYDRAULIC SYSTEM

235-9829 CYLINDER GP-STICK

S/N: BFP12900-UP
114.3MM BORE X 695MM STROKE
PART OF 214-6980 HYDRAULIC AR

SMCS-5458 **i01948833**

NOTE	REF NO	GRAPHIC REF	PART NUMBER	QTY	PART NAME 1 2 3 4 5 6 (PRODUCT LEVEL)	SEE PAGE
	1	1	**206-0502**	1	CYLINDER AS	
	1A	1	**6V-8398**	1	SEAL-O-RING	
	1B	1	**9R-0139**	2	BEARING-SLEEVE	
	2	1	**235-9832**	1	HEAD	
	3	1	**235-9833**	1	PISTON	
	4	1	**235-9835**	1	ROD AS	
	4A	1	**9R-0139**	2	BEARING-SLEEVE	
	5	1	**167-2201**	1	SEAL AS-BUFFER	
	6	1	**167-2312**	1	SEAL-U-CUP	
	7	1	**175-7902**	1	SEAL-O-RING	
	8	1	**225-3281**	1	SEAL-WIPER	
	9	1	**4J-3745**	1	RING-WEAR	
	10	1	**4J-9220**	1	RING-BACKUP	
	11	1	**4M-0189**	1	SEAL-O-RING	
	12	1	**5J-4986**	1	SEAL AS	
	13	1	**5J-7878**	1	NUT-SELF LOCKING	
	14	1	**8T-0785**	1	RING-WEAR	

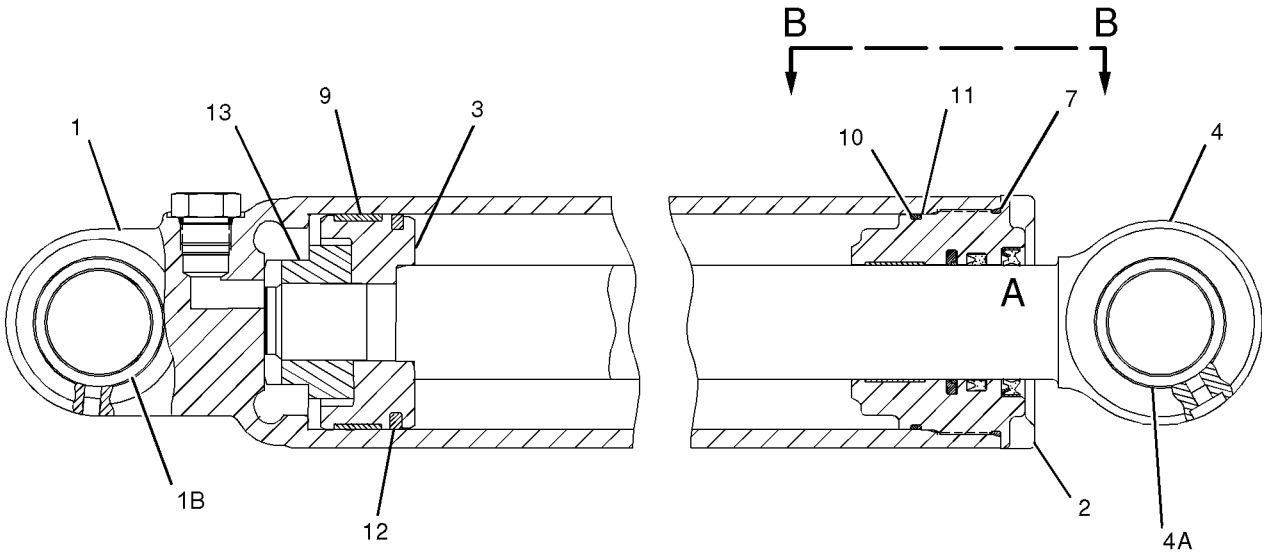

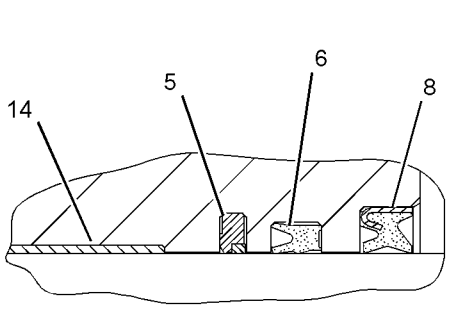

VIEW OF AREA A

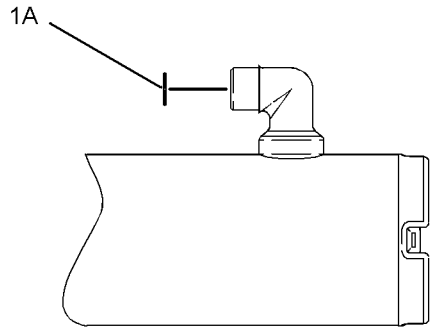

VIEW B-B

GRAPHIC #1 **<END>** g01014398

191-8161 CYLINDER GP-SWING

S/N: BFP12900-UP
101.6MM BORE X 249MM STROKE
PART OF 214-6980 HYDRAULIC AR

SMCS-5105 **i02015260**

NOTE	REF NO	GRAPHIC REF	PART NUMBER	QTY	PART NAME 1 2 3 4 5 6 (PRODUCT LEVEL)	SEE PAGE
	1	1	**191-7738**	1	CYLINDER AS	
	1A	1	**9T-2883**	2	BEARING	
	2	1	**169-6947**	1	NUT (1 1/2X12-THD)	
	3	1	**6J-2797**	1	RING-WEAR	
	4	1	**5J-5402**	1	SEAL AS	
	5	1	**112-1773**	1	PISTON	
	6	1	**9X-4611**	1	SEAL-O-RING	
	7	1	**2K-6830**	1	RING-BACKUP	
	8	1	**201-4826**	1	HEAD	
R	9	1	**125-7894**	1	ROD AS	
	9A	1	**6E-1478**	1	PLUNGER	
	9B	1	**2Y-5821**	1	RING	
	9C	1	**102-3582**	1	WASHER (2.5-MM THK)	
	9D	1	**3N-5739**	1	SPRING	
	9E	1	**9R-9505**	2	BEARING-SLEEVE	
	10	1	**229-9382**	1	SEAL-WIPER	
	11	1	**167-2304**	1	SEAL-U-CUP	
	12	1	**167-2195**	1	SEAL AS-BUFFER	
	13	1	**4T-5613**	1	RING-WEAR	
	14	1	**8H-7521**	1	SEAL-O-RING	

R-REMFG PART MAY BE AVAILABLE

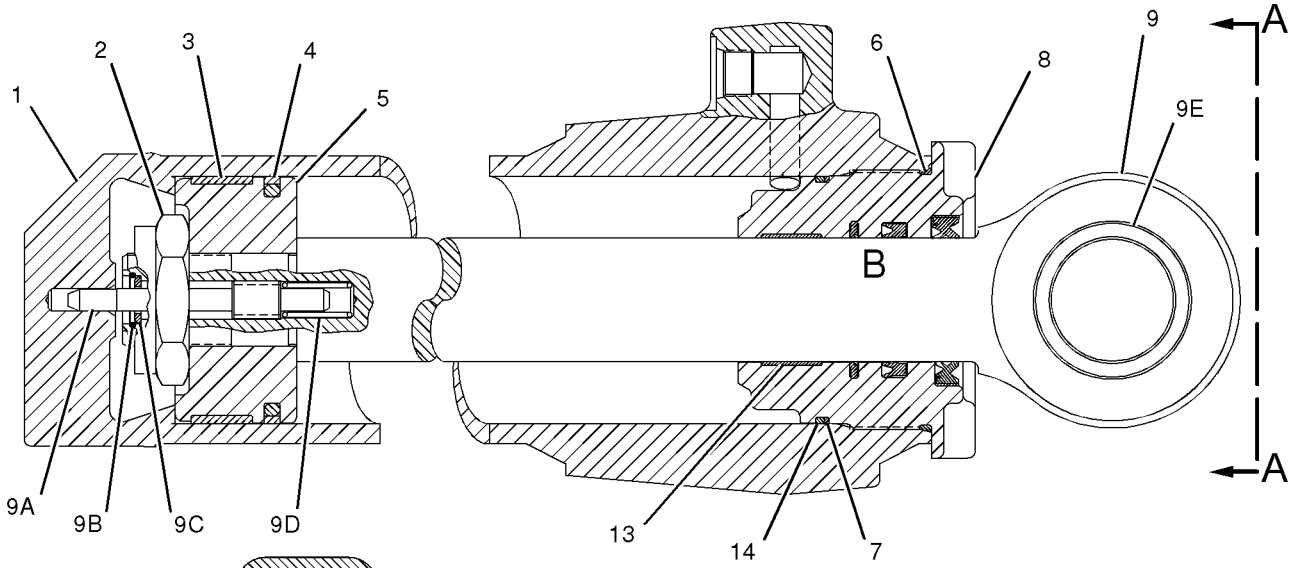

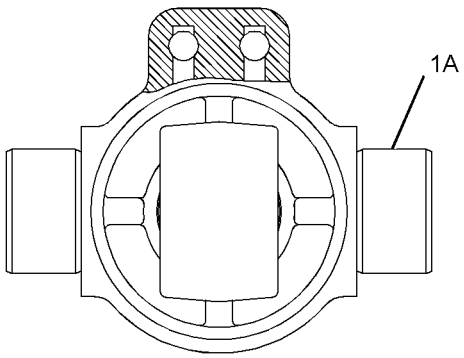

VIEW A-A

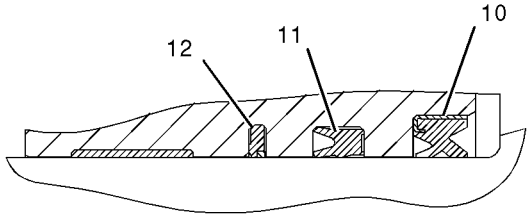

VIEW OF AREA B

GRAPHIC #1 **<END>** g01012218

HYDRAULIC SYSTEM

221-4350 CYLINDER GP-THUMB

S/N: BFP12900-UP
85MM(3.35IN) BORE X 595MM(23.43IN) STROKE
PART OF 224-6236 CYLINDER & LINES GP-THUMB
AN ATTACHMENT

SMCS-5362 **i01923540**

NOTE	REF NO	GRAPHIC REF	PART NUMBER	QTY	PART NAME 1 2 3 4 5 6 (PRODUCT LEVEL)	SEE PAGE
	1	1	**3B-8489**	2	FITTING-GREASE	
	2	1	**9R-0320**	4	BEARING	

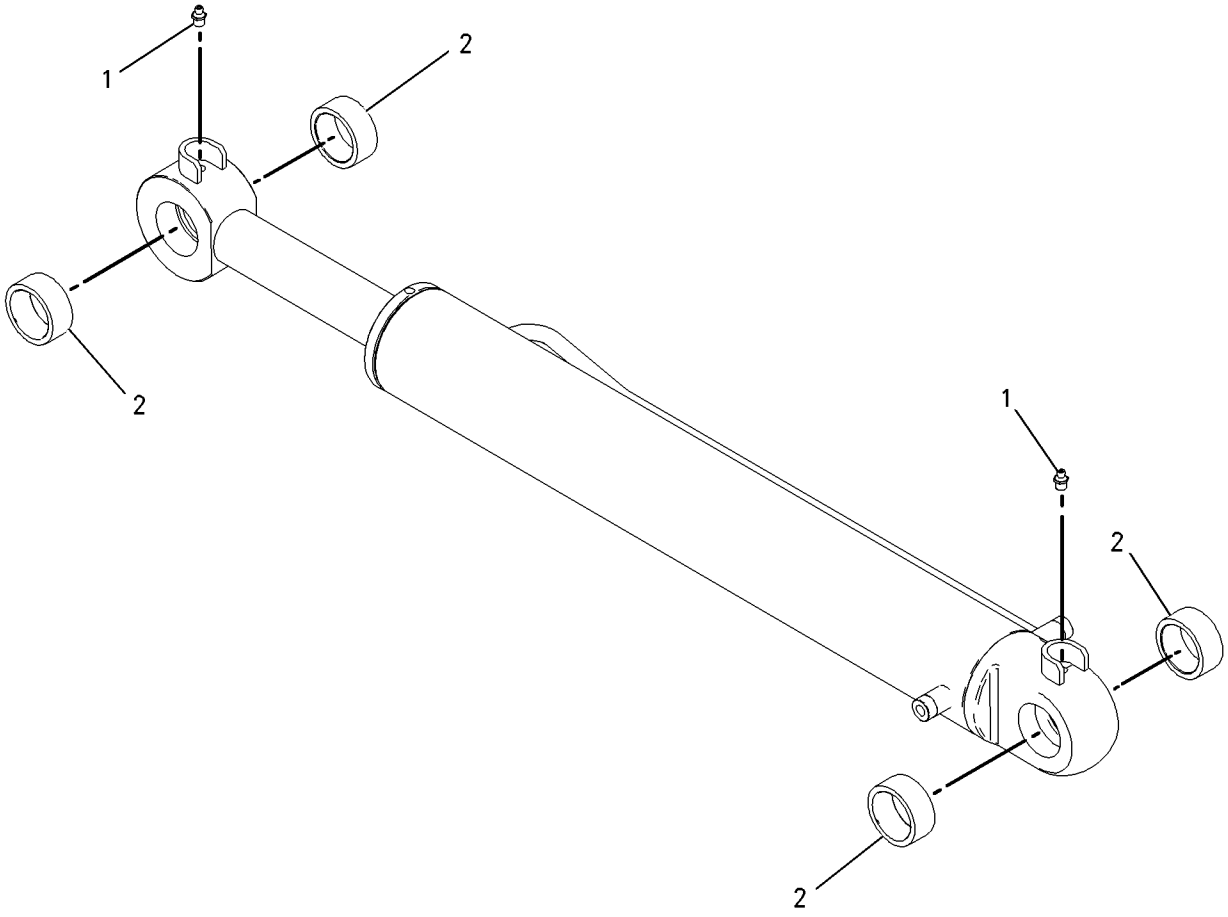

GRAPHIC #1 **<END>** g01003520

206-3553 CYLINDER GP-TILT

S/N: BFP12900-UP; CXP940-UP
82.55MM BORE X 642.1MM STROKE
PART OF 215-6888 COMMON AR, 214-6980 HYDRAULIC AR

SMCS-5104 **i01945562**

NOTE	REF NO	GRAPHIC REF	PART NUMBER	QTY	PART NAME 1 2 3 4 5 6 (PRODUCT LEVEL)	SEE PAGE
	1	1	**4T-7010**	1	PISTON	
R	2	1	**9T-3948**	1	ROD AS	
	2A	1	**9R-0320**	2	BEARING	
	3	1	**206-3552**	1	CYLINDER AS	
	3A	1	**7J-9108**	2	SEAL-O-RING	
	3B	1	**9T-0766**	1	BEARING	
	4	1	**167-2192**	1	SEAL AS-BUFFER	
	5	1	**167-2302**	1	SEAL-U-CUP	
	6	1	**227-1143**	1	SEAL-WIPER	
	7	1	**191-6112**	1	HEAD	
	8	1	**1H-7339**	1	SEAL-O-RING	
	9	1	**2H-3931**	1	SEAL-O-RING	
	10	1	**4T-6779**	1	RING	
	11	1	**5P-8250**	1	WASHER (28X49X5MM THK)	
	12	1	**6J-0793**	1	SEAL AS	
	13	1	**7J-5639**	1	BOLT-LOCKING (1-14X2.5 IN)	
	14	1	**8J-2574**	1	RING-BACKUP	
	15	1	**8J-6371**	1	RING-WEAR	

R-REMFG PART MAY BE AVAILABLE

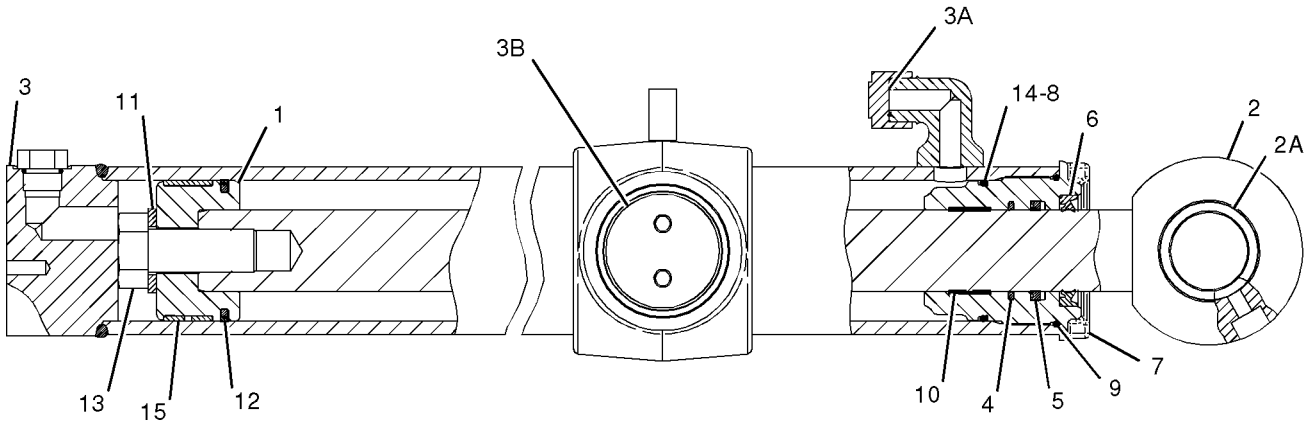

GRAPHIC #1 **<END>** g01012548

143-0421 FILTER GP-OIL–HYDRAULIC

S/N: BFP12900-UP; CXP940-UP
PART OF 202-5810 WIRING GP-CONSOLE
AN ATTACHMENT

SMCS-5068 **i01496654**

NOTE	REF NO	GRAPHIC REF	PART NUMBER	QTY	PART NAME 1 2 3 4 5 6 (PRODUCT LEVEL)	SEE PAGE
	1	1	**134-3014**	1	FILTER AS-HYDRAULIC	

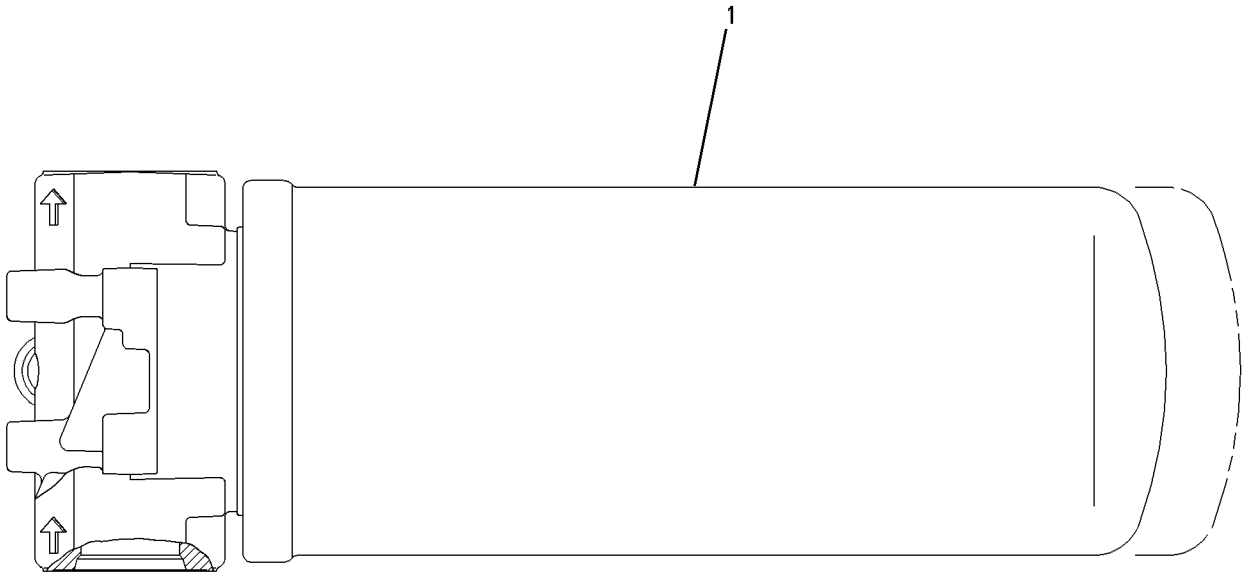

GRAPHIC #1 **<END>** g00639103

133-3361 GUARD GP-STABILIZER CYLINDER

S/N: BFP12900-UP

FOR USE WITH 9R-6007 PAD GP-STABILIZER, 9R-1085 PAD GP-STREET, 116-4942 PAD GP AN ATTACHMENT

SMCS-5468, 7150 **i01556327**

NOTE	REF NO	GRAPHIC REF	PART NUMBER	QTY	PART NAME 1 2 3 4 5 6 (PRODUCT LEVEL)	SEE PAGE
	1	1	**8T-4986**	4	CLAMP-HOSE	
	2	1	**130-1638**	2	PIN	
	3	1	**130-1640**	2	GUARD AS	
	4	1	**188-3953**	2	PAD	
B	5	1	**9R-0109**	12	WASHER (3MM THK)	
	6	1	**201-5812**	2	PLATE AS	
	7	1	**5P-4116**	2	WASHER-HARD (8.8X20.5X2MM THK)	
	8	1	**6V-8144**	4	RING	
M	9	1	**7X-2537**	2	BOLT (M8X1.25X35MM)	

B-USE AS REQUIRED
M-METRIC PART

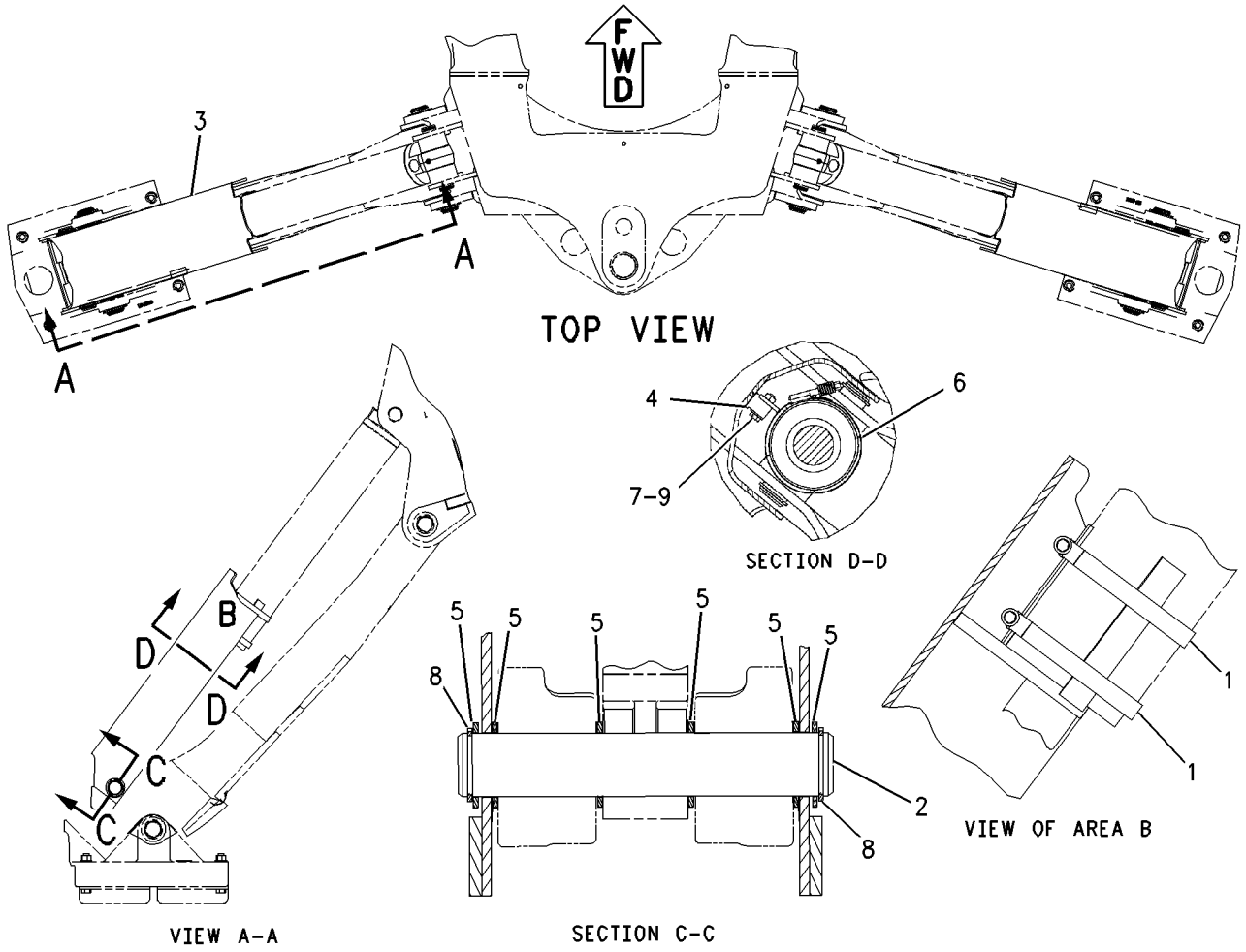

GRAPHIC #1 **<END>** g00808940

HYDRAULIC SYSTEM

135-4744 GUARD GP-STABILIZER CYLINDER

S/N: BFP12900-UP
FOR USE WITH 9R-6007 PAD GP-STABILIZER
AN ATTACHMENT

SMCS-5468, 7150 **i01532898**

NOTE	REF NO	GRAPHIC REF	PART NUMBER	QTY	PART NAME 1 2 3 4 5 6 (PRODUCT LEVEL)	SEE PAGE
	1	1	**8T-4986**	4	CLAMP-HOSE	
	2	1	**130-1640**	2	GUARD AS	
	3	1	**146-1589**	4	LATCH	
	4	1	**146-1590**	4	LATCH	
	5	1	**188-3953**	2	PAD	
	6	1	**201-5810**	2	PLATE	
	7	1	**201-5812**	2	PLATE AS	
	8	1	**5P-4116**	2	WASHER-HARD (8.8X20.5X2MM THK)	
	9	1	**6V-5729**	4	LOCKNUT	
	10	1	**7X-0310**	4	BOLT (7/16-14X2 IN)	
M	11	1	**7X-2537**	2	BOLT (M8X1.25X35MM)	
	12	1	**8T-5360**	8	WASHER (12X22.5X2.5MM THK)	
B	13	1	**9R-0109**	12	WASHER (3MM THK)	

B-USE AS REQUIRED
M-METRIC PART

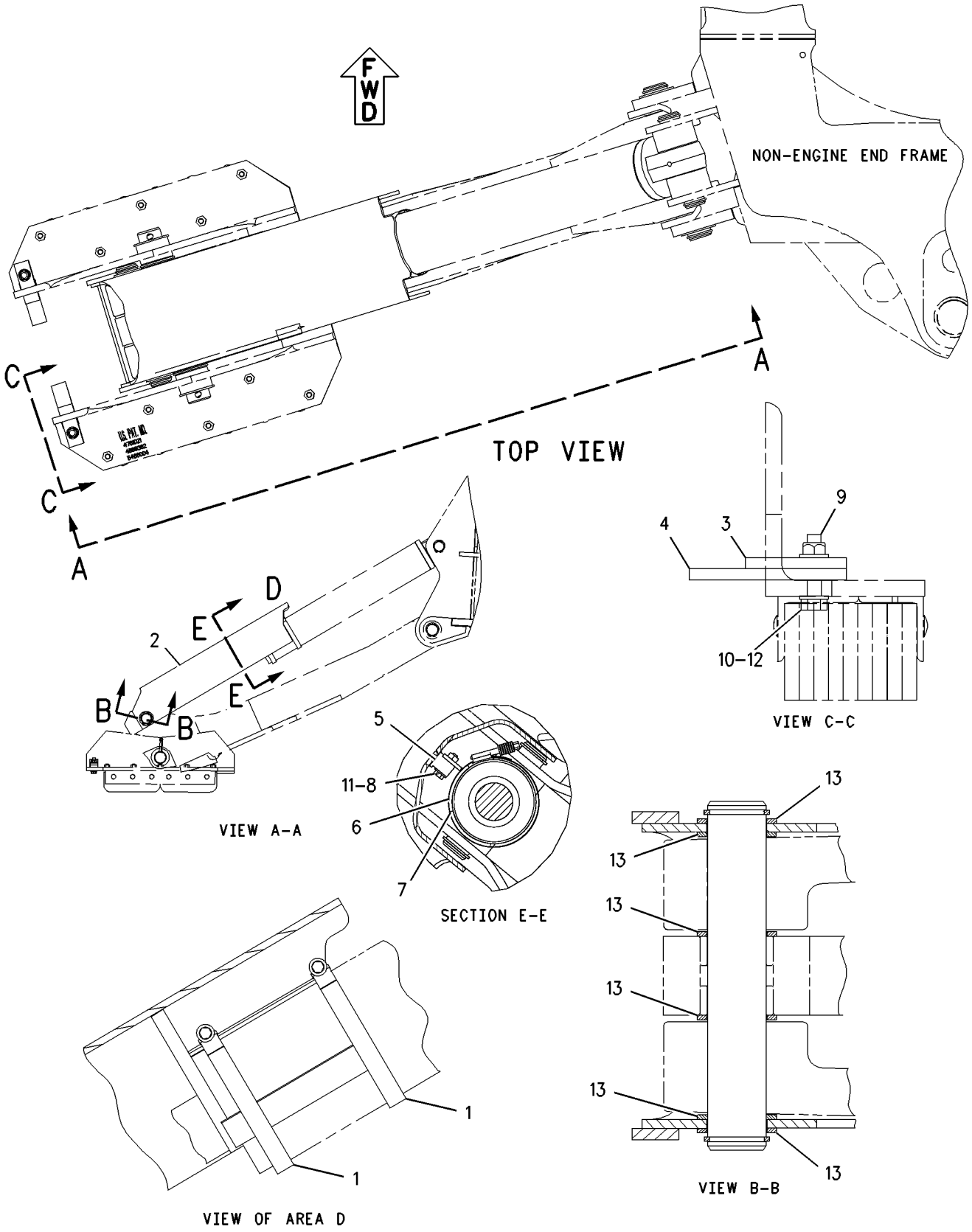

GRAPHIC #1 **<END>** g00795712

HYDRAULIC SYSTEM

186-5331 HYDRAULIC AR

S/N: BFP12900-UP; CXP940-UP
TWO BANK, SINGLE TILT
AN ATTACHMENT

SMCS-5050 **i01927993**

NOTE	PART NUMBER	QTY	PART NAME 1 2 3 4 5 6 (PRODUCT LEVEL)	SEE PAGE
	164-1363	1	BOOT	
	186-5298	1	FILM-INSTRUCTION (BUCKET CONTROL)	
Y	*144-6253*	1	LINES GP-LIFT CYLINDER	617
Y	*163-9371*	1	LINES GP-LIFT CYLINDER	618
Y	*189-0555*	1	LINES GP-TILT CYLINDER	660
Y	*185-1598*	1	MOUNTING GP-BANK VALVE	663
Y	**185-5906**	1	VALVE GP-BANK 2	688

Y-SEPARATE ILLUSTRATION

<END>

186-5332 HYDRAULIC AR

S/N: CXP940-UP
AN ATTACHMENT

SMCS-5050 **i01946264**

NOTE	PART NUMBER	QTY	PART NAME 1 2 3 4 5 6 (PRODUCT LEVEL)	SEE PAGE
	164-1363	1	BOOT	
	186-5298	1	FILM-INSTRUCTION (BUCKET CONTROL)	
Y	*183-8560*	1	LINES GP-CHECK VALVE	605
Y	*185-1598*	1	MOUNTING GP-BANK VALVE	663
	211-3372	1	SWITCH GP (HYDRAULIC LOCK)	
	130-2758	1	HOUSING-SWITCH	
	130-2759	1	HOUSING-DETENT	
	131-0379	1	SWITCH AS	
Y	**185-5906**	1	VALVE GP-BANK 2	688

Y-SEPARATE ILLUSTRATION

<END>

HYDRAULIC SYSTEM

186-5333 HYDRAULIC AR

S/N: BFP12900-UP
THREE BANK, SINGLE TILT
AN ATTACHMENT

SMCS-5050 **i01927994**

NOTE	PART NUMBER	QTY	PART NAME 1 2 3 4 5 6 (PRODUCT LEVEL)	SEE PAGE
	164-1364	1	BOOT	
Y	*183-3150*	1	CONTROL GP-HYDRAULIC HAND	524
	198-0102	1	FILM (MULTIPURPOSE BUCKET)	
	186-5298	1	FILM-INSTRUCTION (BUCKET CONTROL)	
Y	*163-9371*	1	LINES GP-LIFT CYLINDER	618
Y	**144-6253**	1	LINES GP-LIFT CYLINDER	617
Y	*106-5876*	1	LINES GP-LOADER AUXILIARY	623
Y	*189-0555*	1	LINES GP-TILT CYLINDER	660
Y	*185-1598*	1	MOUNTING GP-BANK VALVE	663
Y	**185-5907**	1	VALVE GP-BANK 3	689

Y-SEPARATE ILLUSTRATION

<END>

196-8860 HYDRAULIC AR—KIT

S/N: BFP12900-UP
KIT-AUXILIARY HYDRAULIC, ONE-WAY FLOW (FOR FOUR BANK AND MECHANICAL CONTROLS), STANDARD STICK
AN ATTACHMENT

SMCS-5050 **i02013344**

NOTE	PART NUMBER	QTY	PART NAME 1 2 3 4 5 6 (PRODUCT LEVEL)	SEE PAGE
Y	*164-1540*	1	CONTROL GP-HYDRAULIC PEDAL	527
Y	*196-8861*	1	LINES GP-BACKHOE AUXILIARY	588
Y	*198-7412*	1	CONVERSION GP-CONTROL VALVE	535

Y-SEPARATE ILLUSTRATION

<END>

196-8862 HYDRAULIC AR—KIT

S/N: BFP12900-UP
KIT-AUXILIARY HYDRAULIC, ONE-WAY FLOW (FOR 5 BANK AND MECHANICAL CONTROLS CONVERSION), STANDARD STICK
AN ATTACHMENT

SMCS-5050 **i01641453**

NOTE	PART NUMBER	QTY	PART NAME 1 2 3 4 5 6 (PRODUCT LEVEL)	SEE PAGE
Y	*196-8861*	1	LINES GP-BACKHOE AUXILIARY	588

Y-SEPARATE ILLUSTRATION

<END>

HYDRAULIC SYSTEM

196-8995 HYDRAULIC AR–KIT

S/N: BFP12900-UP
KIT-AUXILIARY HYDRAULIC,
ONE-WAY FLOW (FOR FIVE BANK, EXTENDABLE STICK,AND MECHANICAL CONTROLS)
AN ATTACHMENT

SMCS-5050 **i01440019**

NOTE	PART NUMBER	QTY	PART NAME 1 2 3 4 5 6 (PRODUCT LEVEL)	SEE PAGE
Y	*194-1978*	1	LINES GP-BACKHOE AUXILIARY	584

Y-SEPARATE ILLUSTRATION

<END>

210-8530 HYDRAULIC AR

S/N: BFP12900-UP
AN ATTACHMENT

SMCS-5050 **i02015226**

NOTE	PART NUMBER	QTY	PART NAME 1 2 3 4 5 6 (PRODUCT LEVEL)	SEE PAGE
Y	*184-4483*	1	CONTROL GP-HYDRAULIC PEDAL	531
Y	*230-9105*	1	CONVERSION GP-CONTROL VALVE	536
Y	*192-4018*	1	FOOTREST GP	917
Y	*202-5946*	1	LINES GP-BACKHOE AUXILIARY	592
BM	**5C-2890**	2	NUT (M6X1-THD)	
	236-4992	1	PLATE AS	
	236-4993	1	PLATE AS	
M	**9X-2042**	4	SCREW-TRUSS HEAD (M6X1X12-MM)	
B	**8T-4205**	2	WASHER-HARD (7.2X14.5X2-MM THK)	

B-USE AS REQUIRED
M-METRIC PART
Y-SEPARATE ILLUSTRATION

<END>

HYDRAULIC SYSTEM

214-6980 HYDRAULIC AR

S/N: BFP12900-UP

PART OF 214-6885 COMMON AR

SMCS-5050 **i02010570**

NOTE	PART NUMBER	QTY	PART NAME 1 2 3 4 5 6 (PRODUCT LEVEL)	SEE PAGE
Y	*170-0606*	1	CONNECTOR GP-VALVE	507
Y	*202-6139*	1	CONNECTOR GP-VALVE	509
Y	**206-3628**	1	CYLINDER GP-BOOM	550
Y	**230-0979**	2	CYLINDER GP-LIFT	556
Y	**206-0520**	1	CYLINDER GP-STABILIZER (LH)	558
Y	**206-0522**	1	CYLINDER GP-STABILIZER (RH)	559
Y	**235-9829**	1	CYLINDER GP-STICK	560
Y	**191-8161**	2	CYLINDER GP-SWING	561
Y	**206-3553**	1	CYLINDER GP-TILT	563
	210-6243	1	FILTER GP-OIL (HYDRAULIC)	
	126-1817		FILTER AS-OIL (CLEANOUT/HIGH EFFICIENCY)	
			—OR—	
	134-3014		FILTER AS-OIL (HYDRAULIC) (FLAME RESISTANT)	
Y	*202-5928*	1	LINES GP-PILOT (STABILIZER)	630
Y	*235-4549*	1	LINES GP-PUMP	643
Y	*235-4788*	1	LINES GP-RETURN	651
Y	*167-8264*	1	LINES GP-SWING	659
Y	*185-3165*	1	MOUNTING GP-BANK VALVE	664
Y	*112-1826*	1	MOUNTING GP-HYDRAULIC PUMP	668
Y	**245-8998**	1	PUMP GP-PISTON	673
Y	*234-6926*	1	TANK GP-HYDRAULIC	680

Y-SEPARATE ILLUSTRATION

<END>

HYDRAULIC SYSTEM

106-9046 KICKOUT & POSITIONER GP

S/N: BFP12900-UP; CXP940-UP
PART OF 107-3313 LOADER AR
ALSO AN ATTACHMENT

SMCS-5109, 5112 **i01434315**

NOTE	REF NO	GRAPHIC REF	PART NUMBER	QTY	PART NAME 1 2 3 4 5 6 (PRODUCT LEVEL)	SEE PAGE
	1	1	**9R-7797**	1	PLATE	
	2	1	**9R-3255**	1	LEVER	
	3	1	**128-7902**	1	SPACER (6MM THK)	
	4	1	**9R-5301**	2	PIN-COTTER	
	5	1	**135-9420**	1	PIVOT	
	6	1	**140-6009**	1	LEVER AS	
	7	1	**9R-9146**	1	PIPE AS	
	8	1	**128-7905**	3	SPACER (1MM THK)	
	9	1	**128-7903**	3	SPACER (3MM THK)	
	10	1	**1B-0676**	1	PIN	
	11	1	**5P-0372**	1	LOCKPIN	
	12	1	**3B-8489**	2	FITTING-GREASE	
	13	1	**8T-0706**	1	RING-RETAINING (18 X 1.2)	
C	14	1	**141-6343**	1	SPRING	
	15	1	**9R-2806**	2	PIN	
	16	1	**9R-2807**	4	CLIP	
	17	1	**8T-5063**	1	ROD END	
M	18	1	**8T-4133**	2	NUT (M10X1.5 THD)	
	19	1	**8C-6955**	1	END-YOKE ROD	
M	20	1	**8T-4182**	1	BOLT (M10X1.5X45MM)	
	21	1	**130-5774**	1	LINK AS	
	22	1	**130-7952**	1	PLATE	
	23	1	**8T-4123**	4	WASHER-PLATED (22X35X3.5MM THK)	
	24	1	**1B-8736**	1	KEY-WOODRUFF	
	25	1	**112-5494**	1	LEVER AS	
		1	**7Y-0336**	1	SPACER (24MM THK)	
	26	1	**9R-2614**	1	BEARING	
	27	1	**106-7301**	1	ROD AS	
M	28	1	**2Y-5829**	1	NUT (M10X1.5 THD)	
	29	1	**130-5891**	1	LEVER AS	
		1	**7Y-0336**	1	SPACER (24MM THK)	
	30	1	**9R-3135**	1	PIN	
	31	1	**9R-2614**	1	BEARING	
	32	1	**9X-2334**	1	FILM (BUCKET INDICATOR)	

C-CHANGE FROM PREVIOUS TYPE
M-METRIC PART

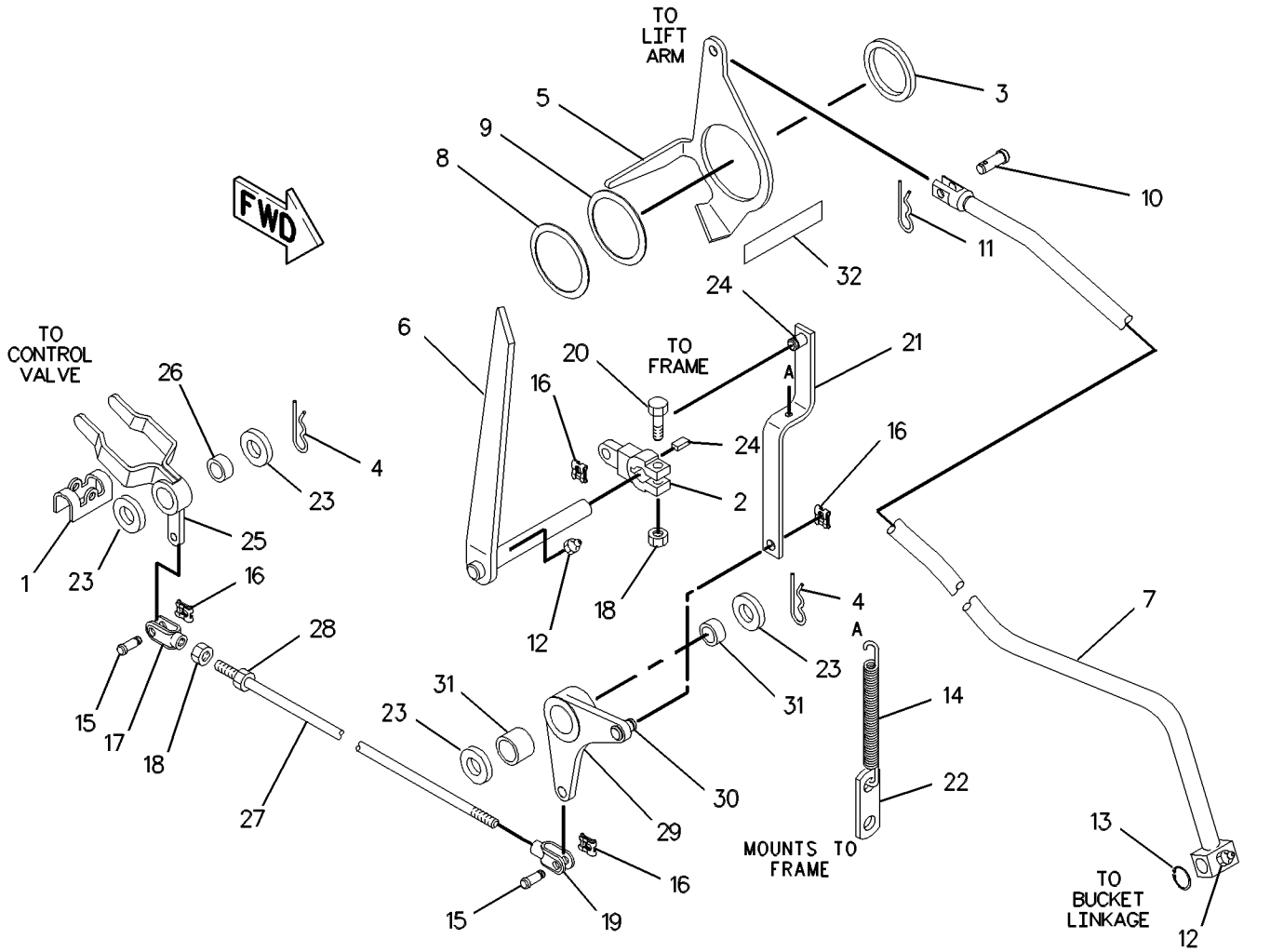

GRAPHIC #1 **<END>** g00277804

HYDRAULIC SYSTEM

200-6284 KIT-RIDE CONTROL

S/N: BFP12900-UP
FIELD INSTALLATION, STANDARD SHIFT ONLY
AN ATTACHMENT

SMCS-5004 **i02014245**

NOTE	PART NUMBER	QTY	PART NAME 1 2 3 4 5 6 (PRODUCT LEVEL)	SEE PAGE
	173-4514	2	FILM (RIDE CONTROL)	
			(ON HOOD IN PLACE OF TURBO DECAL)	
Y	*195-1284*	1	LINES GP-RIDE CONTROL	652
Y	*186-0311*	1	WIRING GP-RIDE CONTROL	382

Y-SEPARATE ILLUSTRATION

<END>

236-5458 KIT-RIDE CONTROL

S/N: BFP12900-UP
FOR USE WITH STANDARD SHIFT
FIELD INSTALLATION

SMCS-5004 **i01917538**

NOTE	PART NUMBER	QTY	PART NAME 1 2 3 4 5 6 (PRODUCT LEVEL)	SEE PAGE
	173-4514	2	FILM (RIDE CONTROL)	
			ON CAB DOOR OR ON HOOD IN PLACE OF TURBO DECAL	
Y	*195-1284*	1	LINES GP-RIDE CONTROL	652
Y	*186-0311*	1	WIRING GP-RIDE CONTROL	382

Y-SEPARATE ILLUSTRATION

<END>

236-5459 KIT-RIDE CONTROL

S/N: BFP12900-UP
FOR USE WITH AUTOSHIFT
AN ATTACHMENT

SMCS-5004 **i01917543**

NOTE	PART NUMBER	QTY	PART NAME 1 2 3 4 5 6 (PRODUCT LEVEL)	SEE PAGE
Y	*195-1284*	1	LINES GP-RIDE CONTROL	652
Y	*186-0312*	1	WIRING GP-RIDE CONTROL	384
	173-4514	2	FILM (RIDE CONTROL)	
			ON CAB DOOR OR ON HOOD IN PLACE OF TURBO DECAL	

Y-SEPARATE ILLUSTRATION

<END>

HYDRAULIC SYSTEM

171-2427 LINES GP-BACKHOE AUXILIARY

S/N: BFP12900-UP
PART OF 184-7907, 238-4782 BACKHOE AR-STANDARD STICK
AN ATTACHMENT

SMCS-5057 **i01602914**

NOTE	REF NO	GRAPHIC REF	PART NUMBER	QTY	PART NAME 1 2 3 4 5 6 (PRODUCT LEVEL)	SEE PAGE
	1	1	**2M-6102**	2	PIPE	
	2	1	**9R-9253**	1	PLATE	
I	3	1	**169-2935**	2	HOSE AS	
	4	1	**177-0856**	1	TUBE AS	
	5	1	**177-2171**	1	TUBE AS	
	6	1	*148-8328*	2	CONNECTOR GP	
					(EACH INCLUDES)	
		1	**3D-2824**	1	SEAL-O-RING	
		1	**6V-8398**	1	SEAL-O-RING	
		1	**6V-8633**	1	CONNECTOR	
	7	1	**6V-8398**	4	SEAL-O-RING	
	8	1	**6V-9830**	2	CAP AS	
	9	1	**8T-4121**	4	WASHER-HARD (11X21X2.5MM THK)	
M	10	1	**8T-4136**	2	BOLT (M10X1.5X25MM)	
M	11	1	**8T-4185**	2	BOLT (M10X1.5X50MM)	
	12	1	**9R-1004**	2	CLIP (TAB)	
	13	1	**9R-1005**	2	CLIP (SLOT)	

I-SEE HOSE FABRICATION GUIDE
M-METRIC PART

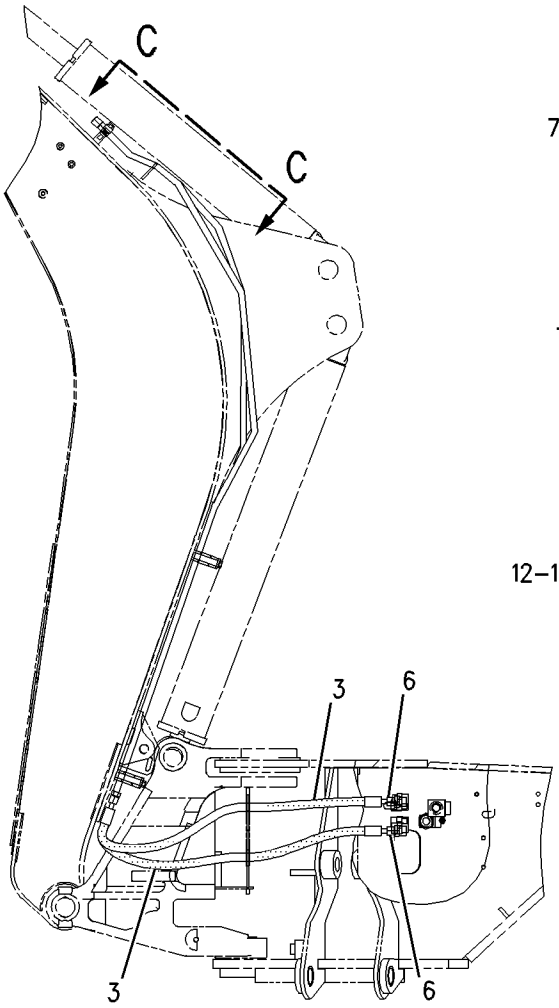

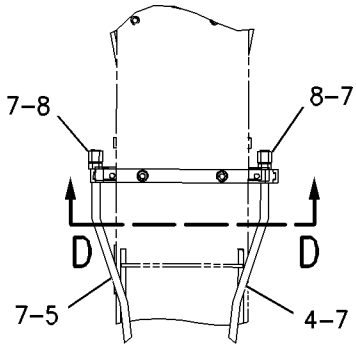

VIEW C-C

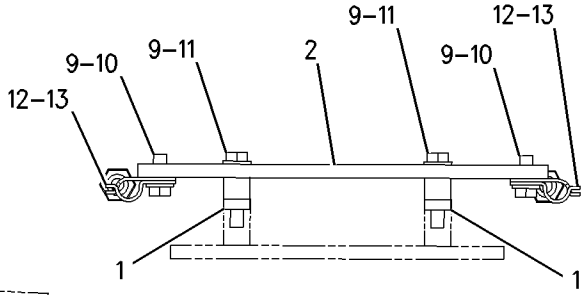

SECTION D-D

GRAPHIC #1 **<END>** g00702307

HYDRAULIC SYSTEM

171-2428 LINES GP-BACKHOE AUXILIARY

S/N: BFP12900-UP
PART OF 184-7905 BACKHOE AR-STANDARD STICK
AN ATTACHMENT

SMCS-5057 **i02015130**

NOTE	REF NO	GRAPHIC REF	PART NUMBER	QTY	PART NAME 1 2 3 4 5 6 (PRODUCT LEVEL)	SEE PAGE
	1	1	**101-0863**	2	FILM-INSTRUCTION (RETURN FLOW)	
I	2	1	**106-0409**	1	HOSE AS	
	3	1	**107-6708**	1	BRACKET	
	4	1	**109-1260**	1	BRACKET	
	5	1	**110-7709**	1	TUBE AS	
	6	1	**110-7710**	1	TUBE AS	
	7	1	**123-7637**	2	CAP	
	8	1	**124-2528**	1	SPACER (11X20X10-MM THK)	
	9	1	*148-8450*	1	TEE AS	
		1	**3E-7443**	1	TEE-UNION	
		1	**5K-9090**	1	SEAL-O-RING	
		1	**6V-9746**	2	SEAL-O-RING	
I	10	1	**168-8493**	1	HOSE AS	
I	11	1	**172-2252**	1	HOSE AS	
C	12	1	**205-9014**	1	TUBE AS	
C	13	1	**205-8845**	1	HOSE AS	
	14	1	*148-8327*	1	CONNECTOR AS	
		1	**3D-2824**	1	SEAL-O-RING	
		1	**6V-8637**	1	CONNECTOR	
		1	**6V-9746**	1	SEAL-O-RING	
	15	1	*148-8352*	2	ELBOW GP	
					(EACH INCLUDES)	
		1	**5K-9090**	1	SEAL-O-RING	
		1	**6V-9854**	1	ELBOW (SWIVEL)	
	16	1	*148-8386*	1	ELBOW AS	
		1	**3E-7426**	1	ELBOW	
		1	**5K-9090**	1	SEAL-O-RING	
		1	**6V-8400**	1	SEAL-O-RING	
	17	1	*148-8387*	1	ELBOW GP	
		1	**6V-8400**	1	SEAL-O-RING	
		1	**6V-9855**	1	ELBOW	
	18	1	*148-8408*	1	PLUG AS	
		1	**3D-2824**	1	SEAL-O-RING	
		1	**9S-4183**	1	PLUG	
	19	1	*150-3052*	1	CONNECTOR AS	
		1	**5K-9090**	1	SEAL-O-RING	
		1	**7M-8485**	1	SEAL-O-RING	
		1	**107-6709**	1	CONNECTOR	
	20	1	*150-3053*	1	CONNECTOR AS	
		1	**6V-9746**	1	SEAL-O-RING	
		1	**7M-8485**	1	SEAL-O-RING	
		1	**108-3872**	1	CONNECTOR	
	21	1	**2P-1293**	2	LOCKNUT (1 3/16-12-THD)	
	22	1	**5K-9090**	2	SEAL-O-RING	
	23	1	**5P-7466**	1	CLIP (SLOT)	
	24	1	**5P-7467**	1	CLIP (TAB)	
	25	1	**5P-7468**	1	CLIP (SLOT)	
	26	1	**5P-7469**	1	CLIP (TAB)	
	27	1	**5P-8112**	1	GROMMET	
	28	1	**5P-8444**	1	GROMMET	
	29	1	**6V-9172**	2	NUT (1 7/16-12-THD)	
	30	1	**6V-9746**	1	SEAL-O-RING	
	31	1	**6V-9832**	1	CAP AS	
	32	1	**7S-3916**	1	CLIP (TAB)	
	33	1	**7S-3919**	1	CLIP (SLOT)	

171-2428 LINES GP-BACKHOE AUXILIARY *(contd.)* i02015130

NOTE	REF NO	GRAPHIC REF	PART NUMBER	QTY	PART NAME 1 2 3 4 5 6 (PRODUCT LEVEL)	SEE PAGE
	34	1	**8S-0023**	1	CLIP (SLOT)	
	35	1	**8S-0024**	1	CLIP (TAB)	
	36	1	**8T-1889**	1	CLIP (SLOT)	
	37	1	**8T-1890**	1	CLIP (TAB)	
	38	1	**8T-4121**	5	WASHER-HARD (11X21X2.5-MM THK)	
CM	39	1	**8T-4136**	5	BOLT (M10X1.5X25-MM)	
M	40	1	**8T-4139**	2	BOLT (M12X1.75X30-MM)	
M	41	1	**8T-4192**	2	BOLT (M12X1.75X25-MM)	
	42	1	**8T-4223**	4	WASHER-HARD (13.5X25.5X3-MM THK)	
C	43	1	**241-8448**	4	FILM-WARNING (HYDRAULIC PRESSURE)	

C-CHANGE FROM PREVIOUS TYPE
I-REFER TO HYDRAULIC INFORMATION SYSTEM
M-METRIC PART

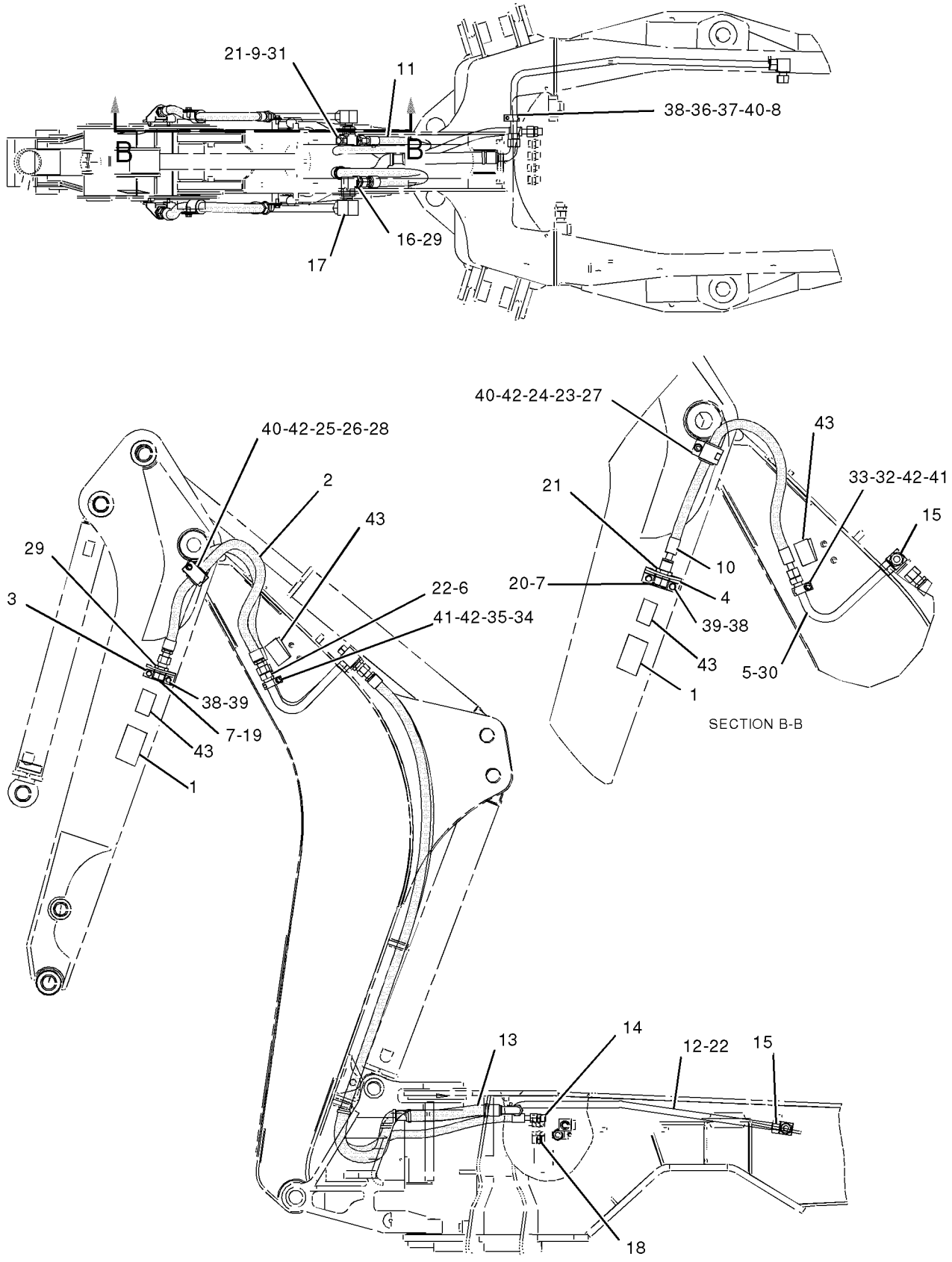

GRAPHIC #1

<END>

g01026421

HYDRAULIC SYSTEM

171-2429 LINES GP-BACKHOE AUXILIARY

S/N: BFP12900-UP
HYDRAULIC
PART OF 184-7911 BACKHOE AR-EXTENDABLE STICK
AN ATTACHMENT

SMCS-5057 **i02017599**

NOTE	REF NO	GRAPHIC REF	PART NUMBER	QTY	PART NAME 1 2 3 4 5 6 (PRODUCT LEVEL)	SEE PAGE
	1	1	**5P-0599**	1	CLAMP	
	2	1	**9R-5948**	1	BLOCK	
	3	2	**9R-9253**	1	PLATE	
	4	1,2	**101-0862**	2	PLATE-WARNING (E-STICK)	
	5	1,2	**101-0863**	2	FILM-INSTRUCTION (RETURN FLOW)	
I	6	1	**106-0409**	1	HOSE AS	
	7	1	**107-6708**	1	BRACKET	
	8	2	**109-1260**	1	BRACKET	
	9	2	**110-7709**	1	TUBE AS	
	10	2	**110-7710**	1	TUBE AS	
	11	2	**110-7713**	1	TUBE AS	
	12	1,2	**123-7637**	2	CAP	
	13	1	**124-2528**	1	SPACER (11X20X10-MM THK)	
	14	2	*148-8450*	1	TEE AS	
		2	**3E-7443**	1	TEE-UNION	
		2	**5K-9090**	1	SEAL-O-RING	
		2	**6V-9746**	2	SEAL-O-RING	
I	15	2	**160-6026**	1	HOSE AS	
	16	1,2	**162-2356**	2	TUBE AS	
I	17	1,2	**167-3896**	2	HOSE AS	
I	18	2	**168-8493**	1	HOSE AS	
I	19	1	**169-2935**	1	HOSE AS	
I	20	2	**169-2983**	1	HOSE AS	
I	21	2	**172-2252**	1	HOSE AS	
CI	22	2	**168-8497**	1	HOSE AS	
	23	2	**177-0856**	1	TUBE AS	
C	24	1	**205-9014**	1	TUBE AS	
	25	2	**187-4333**	1	TUBE AS	
	26	2	**187-4344**	1	TUBE AS	
C	27	1	**205-8845**	1	HOSE AS	
CI	28	1	**168-8644**	1	HOSE AS	
	29	1	*148-8327*	1	CONNECTOR AS	
		1	**3D-2824**	1	SEAL-O-RING	
		1	**6V-8637**	1	CONNECTOR	
		1	**6V-9746**	1	SEAL-O-RING	
	30	1	*148-8328*	1	CONNECTOR GP	
		1	**3D-2824**	1	SEAL-O-RING	
		1	**6V-8398**	1	SEAL-O-RING	
		1	**6V-8633**	1	CONNECTOR	
	31	2	*148-8347*	1	ELBOW GP	
		2	**3D-2824**	1	SEAL-O-RING	
		2	**6V-9007**	1	ELBOW	
		2	**6V-9746**	1	SEAL-O-RING	
	32	1,2	*148-8352*	2	ELBOW GP	
					(EACH INCLUDES)	
		1,2	**5K-9090**	1	SEAL-O-RING	
		1,2	**6V-9854**	1	ELBOW (SWIVEL)	
	33	2	*148-8386*	1	ELBOW AS	
		2	**3E-7426**	1	ELBOW	
		2	**5K-9090**	1	SEAL-O-RING	
		2	**6V-8400**	1	SEAL-O-RING	
	34	2	*148-8387*	1	ELBOW GP	
		2	**6V-8400**	1	SEAL-O-RING	
		2	**6V-9855**	1	ELBOW	

171-2429 LINES GP-BACKHOE AUXILIARY *(contd.)* i02017599

NOTE	REF NO	GRAPHIC REF	PART NUMBER	QTY	PART NAME 1 2 3 4 5 6 (PRODUCT LEVEL)	SEE PAGE
	35	2	*148-8392*	1	ELBOW GP	
		2	**6V-9746**	1	SEAL-O-RING	
		2	**6V-9853**	1	ELBOW	
	36	1	*150-3052*	1	CONNECTOR AS	
		1	**5K-9090**	1	SEAL-O-RING	
		1	**7M-8485**	1	SEAL-O-RING	
		1	**107-6709**	1	CONNECTOR	
	37	2	*150-3053*	1	CONNECTOR AS	
		2	**6V-9746**	1	SEAL-O-RING	
		2	**7M-8485**	1	SEAL-O-RING	
		2	**108-3872**	1	CONNECTOR	
	38	2	**2P-1293**	3	LOCKNUT (1 3/16-12-THD)	
	39	1,2	**5K-9090**	2	SEAL-O-RING	
	40	1,2	**5P-7464**	5	CLIP (SLOT)	
	41	1,2	**5P-7465**	5	CLIP (TAB)	
	42	2	**5P-7466**	3	CLIP (SLOT)	
	43	2	**5P-7467**	3	CLIP (TAB)	
	44	1,2	**5P-7468**	2	CLIP (SLOT)	
	45	1,2	**5P-7469**	2	CLIP (TAB)	
	46	2	**5P-8112**	3	GROMMET	
	47	1	**5P-8444**	1	GROMMET	
	48	1,2	**6V-1249**	5	GROMMET	
	49	1,2	**6V-8398**	7	SEAL-O-RING	
	50	2	**6V-9169**	1	NUT-BULKHEAD (13/16-16-THD)	
	51	1,2	**6V-9172**	2	NUT (1 7/16-12-THD)	
	52	2	**6V-9746**	3	SEAL-O-RING	
	53	1,2	**7J-9108**	2	SEAL-O-RING	
	54	2	**7S-3916**	1	CLIP (TAB)	
	55	2	**7S-3919**	1	CLIP (SLOT)	
	56	1	**8S-0023**	1	CLIP (SLOT)	
	57	1	**8S-0024**	1	CLIP (TAB)	
	58	1,2	**8T-1889**	2	CLIP (SLOT)	
	59	1,2	**8T-1890**	2	CLIP (TAB)	
	60	1,2	**8T-4121**	13	WASHER-HARD (11X21X2.5-MM THK)	
CM	61	1,2	**8T-4136**	9	BOLT (M10X1.5X25-MM)	
M	62	1,2	**8T-4139**	4	BOLT (M12X1.75X30-MM)	
M	63	1,2	**8T-4184**	4	BOLT (M12X1.75X45-MM)	
M	64	1,2	**8T-4192**	2	BOLT (M12X1.75X25-MM)	
M	65	1,2	**8T-4195**	4	BOLT (M10X1.5X30-MM)	
	66	1,2	**8T-4223**	10	WASHER-HARD (13.5X25.5X3-MM THK)	
	67	2	**8T-7087**	1	GROMMET	
	68	1,2	**9R-1004**	5	CLIP (TAB)	
	69	1,2	**9R-1005**	5	CLIP (SLOT)	
C	70	1,2	**241-8448**	4	FILM-WARNING (HYDRAULIC PRESSURE)	

C-CHANGE FROM PREVIOUS TYPE
I-REFER TO HYDRAULIC INFORMATION SYSTEM
M-METRIC PART

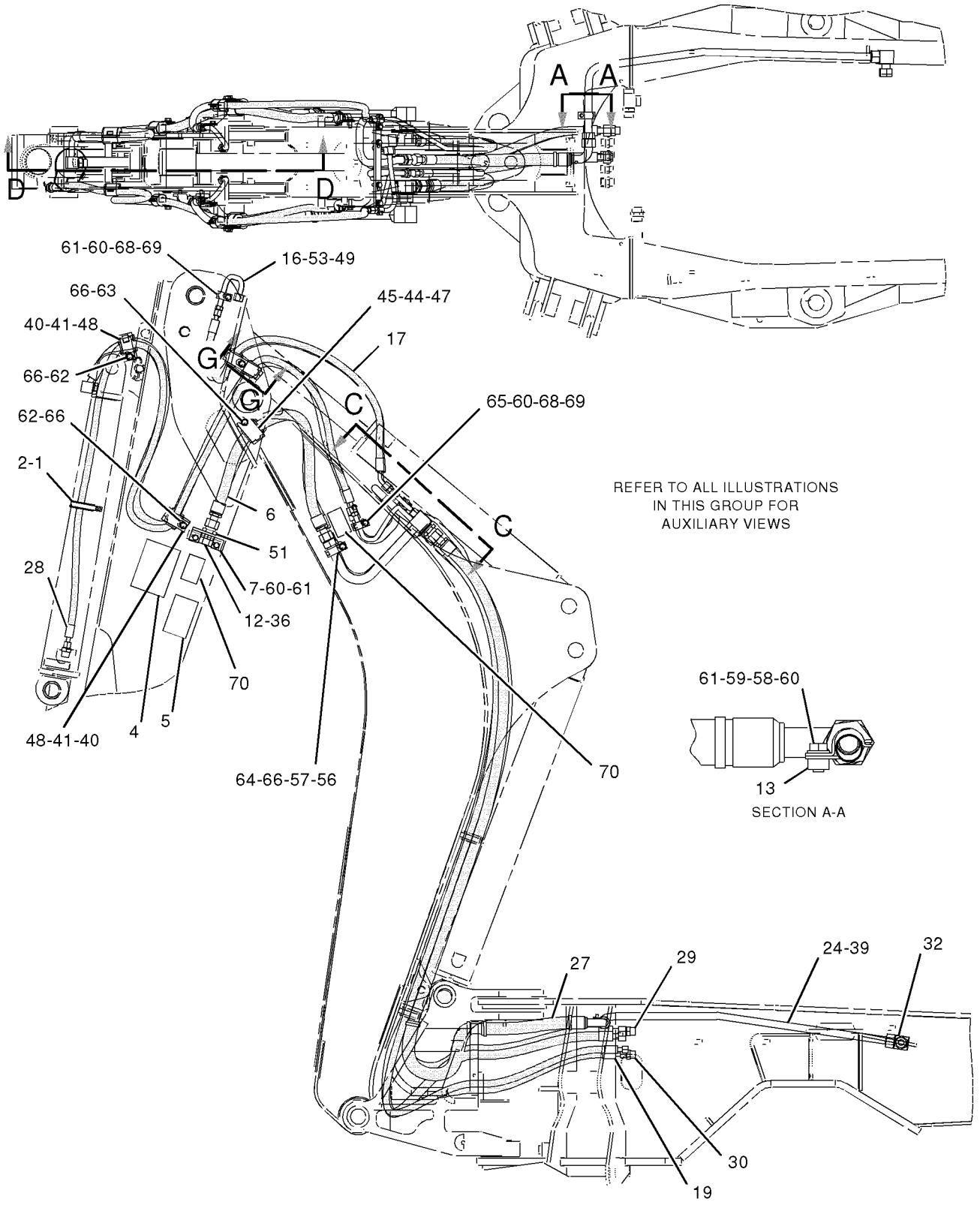

GRAPHIC #1

g01026502

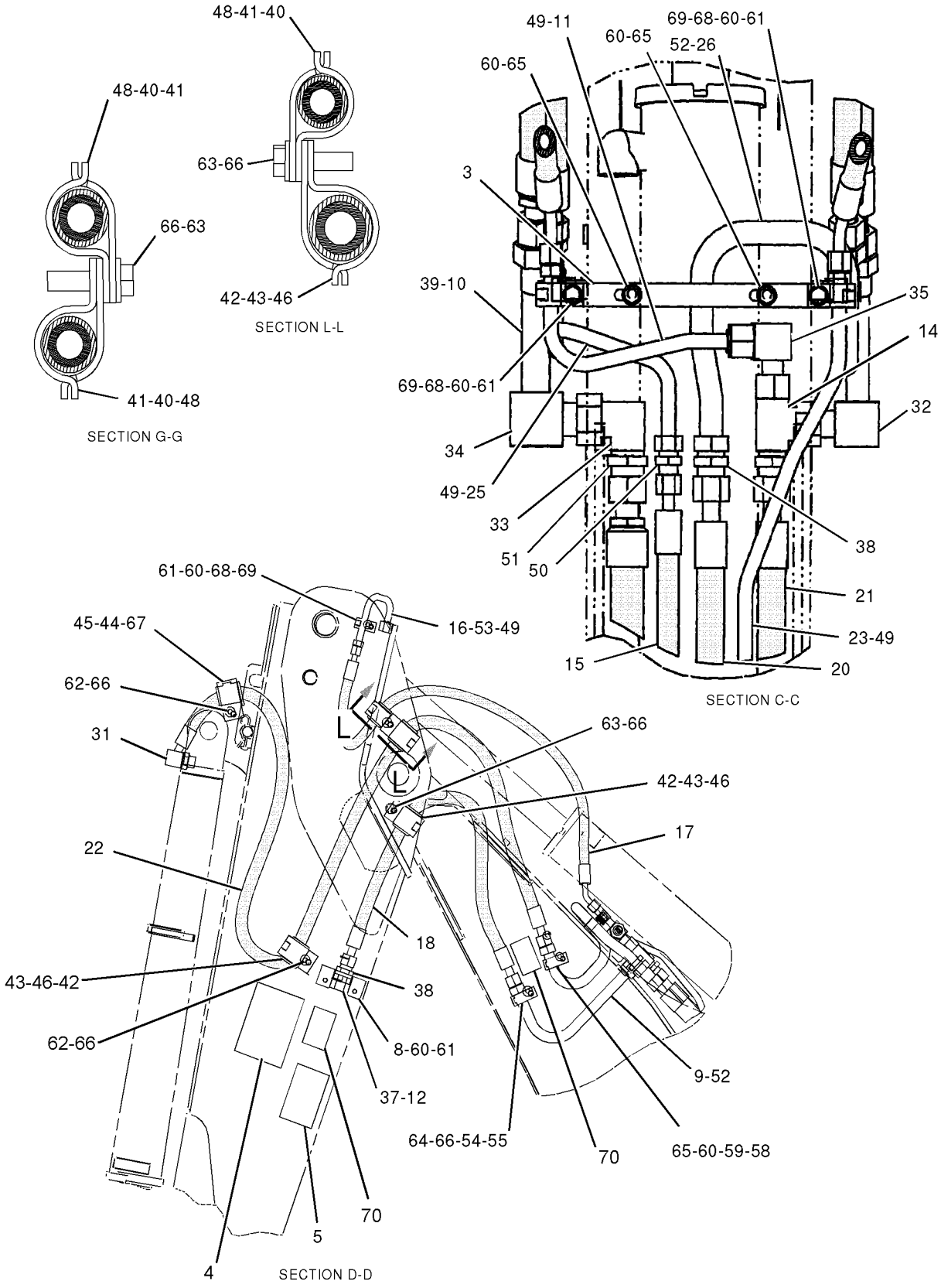

GRAPHIC #2 **<END>** g01026635

HYDRAULIC SYSTEM

194-1978 LINES GP-BACKHOE AUXILIARY

S/N: BFP12900-UP
FIELD INSTALLED
PART OF 196-8995 HYDRAULIC AR
AN ATTACHMENT

SMCS-5057 **i01705417**

NOTE	REF NO	GRAPHIC REF	PART NUMBER	QTY	PART NAME 1 2 3 4 5 6 (PRODUCT LEVEL)	SEE PAGE
	1	1,2	**101-0863**	2	FILM-INSTRUCTION (RETURN FLOW)	
I	2	2	**106-0409**	1	HOSE AS	
	3	2	**106-0425**	1	PLATE AS	
	4	2	**107-6708**	1	BRACKET	
	5	1	**109-1260**	1	BRACKET	
	6	1	**110-7709**	1	TUBE AS	
	7	1	**110-7710**	1	TUBE AS	
	8	1	**110-7713**	1	TUBE AS	
	9	1,2	**123-7637**	2	CAP	
	10	2	**124-2528**	1	SPACER (10MM THK)	
	11	1	*148-8450*	1	TEE AS-ORFS	
		1	**3E-7443**	1	TEE-UNION	
		1	**5K-9090**	1	SEAL-O-RING	
		1	**6V-9746**	2	SEAL-O-RING	
I	12	1	**168-8493**	1	HOSE AS	
I	13	1	**172-2252**	1	HOSE AS	
	14	1	**177-0857**	1	TUBE AS	
	15	1	**177-7148**	2	BLOCK	
	16	1	**177-7149**	2	BLOCK	
	17	1	**191-4850**	1	BLOCK	
	18	1	**191-4851**	1	BLOCK	
	19	1	**193-6355**	2	BLOCK	
	20	1	**197-0571**	1	HOSE AS	
	21	1	*148-8327*	1	CONNECTOR GP	
		1	**3D-2824**	1	SEAL-O-RING	
		1	**6V-8637**	1	CONNECTOR-SEAL	
		1	**6V-9746**	1	SEAL-O-RING	
	22	1	*148-8352*	2	ELBOW GP	
					(EACH INCLUDES)	
		1	**5K-9090**	1	SEAL-O-RING	
		1	**6V-9854**	1	ELBOW-SWIVEL	
	23	1	*148-8386*	1	ELBOW AS	
		1	**3E-7426**	1	ELBOW	
		1	**5K-9090**	1	SEAL-O-RING	
		1	**6V-8400**	1	SEAL-O-RING	
	24	1	*148-8387*	1	ELBOW GP	
		1	**6V-8400**	1	SEAL-O-RING	
		1	**6V-9855**	1	ELBOW	
	25	1	*148-8392*	1	ELBOW GP	
		1	**6V-9746**	1	SEAL-O-RING	
		1	**6V-9853**	1	ELBOW-SWIVEL	
	26	2	*150-3052*	1	CONNECTOR AS	
		2	**5K-9090**	1	SEAL-O-RING	
		2	**7M-8485**	1	SEAL-O-RING	
		2	**107-6709**	1	CONNECTOR	
	27	1	*150-3053*	1	CONNECTOR AS	
		1	**6V-9746**	1	SEAL-O-RING	
		1	**7M-8485**	1	SEAL-O-RING	
		1	**108-3872**	1	CONNECTOR	
	28	1	**2P-1293**	2	LOCKNUT-BULKHEAD (1 3/16-12 THD)	
	29	1	**5K-9090**	2	SEAL-O-RING	
	30	1	**5P-7466**	1	CLIP (SLOT)	
	31	1	**5P-7467**	1	CLIP (TAB)	
	32	1	**5P-7468**	1	CLIP (SLOT)	

194-1978 LINES GP-BACKHOE AUXILIARY *(contd.)* i01705417

NOTE	REF NO	GRAPHIC REF	PART NUMBER	QTY	PART NAME 1 2 3 4 5 6 (PRODUCT LEVEL)	SEE PAGE
	33	1	**5P-7469**	1	CLIP (TAB)	
	34	1	**5P-8112**	1	GROMMET	
	35	1	**5P-8444**	1	GROMMET	
	36	1	**6V-8398**	1	SEAL-O-RING	
	37	1,2	**6V-9172**	2	NUT (1 7/16-12 THD)	
M	38	1	**6V-9189**	2	LOCKNUT (M8X1.25 THD)	
	39	1	**6V-9746**	1	SEAL-O-RING	
	40	1	**7S-3916**	1	CLIP (TAB)	
	41	1	**7S-3919**	1	CLIP (SLOT)	
	42	1	**8S-0023**	1	CLIP (SLOT)	
	43	1	**8S-0024**	1	CLIP (TAB)	
	44	2	**8T-1889**	1	CLIP (SLOT)	
	45	2	**8T-1890**	1	CLIP (TAB)	
	46	1,2	**8T-4121**	5	WASHER-HARD (11X21X2.5MM THK)	
M	47	1,2	**8T-4136**	4	BOLT (M10X1.5X25MM)	
M	48	2	**8T-4137**	1	BOLT (M10X1.5X20MM)	
M	49	1	**8T-4184**	2	BOLT (M12X1.75X45MM)	
M	50	1	**8T-4192**	2	BOLT (M12X1.75X25MM)	
	51	1	**8T-4223**	4	WASHER-HARD (13.5X25.5X3MM THK)	

I-SEE HOSE FABRICATION GUIDE
M-METRIC PART

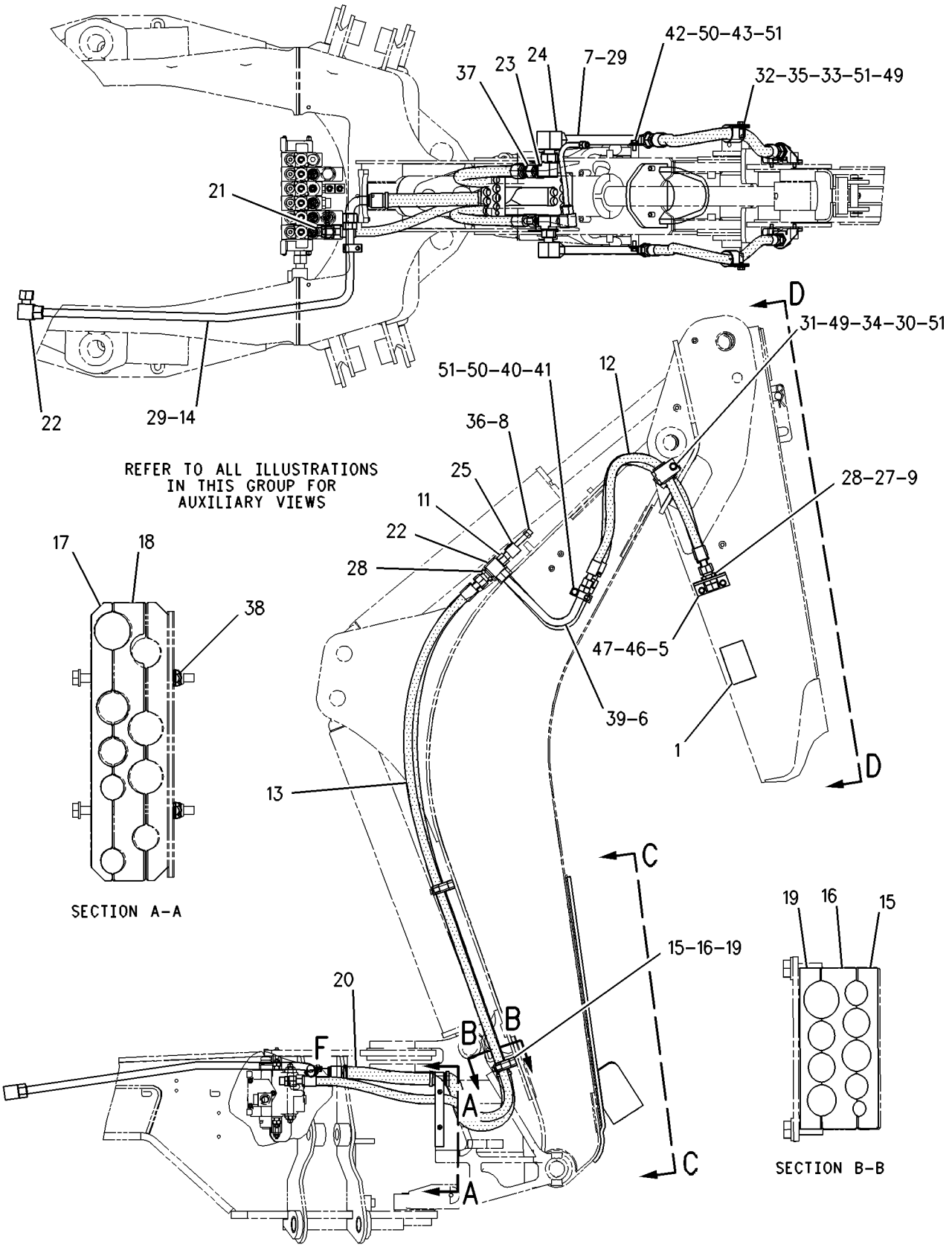

GRAPHIC #1

g00864754

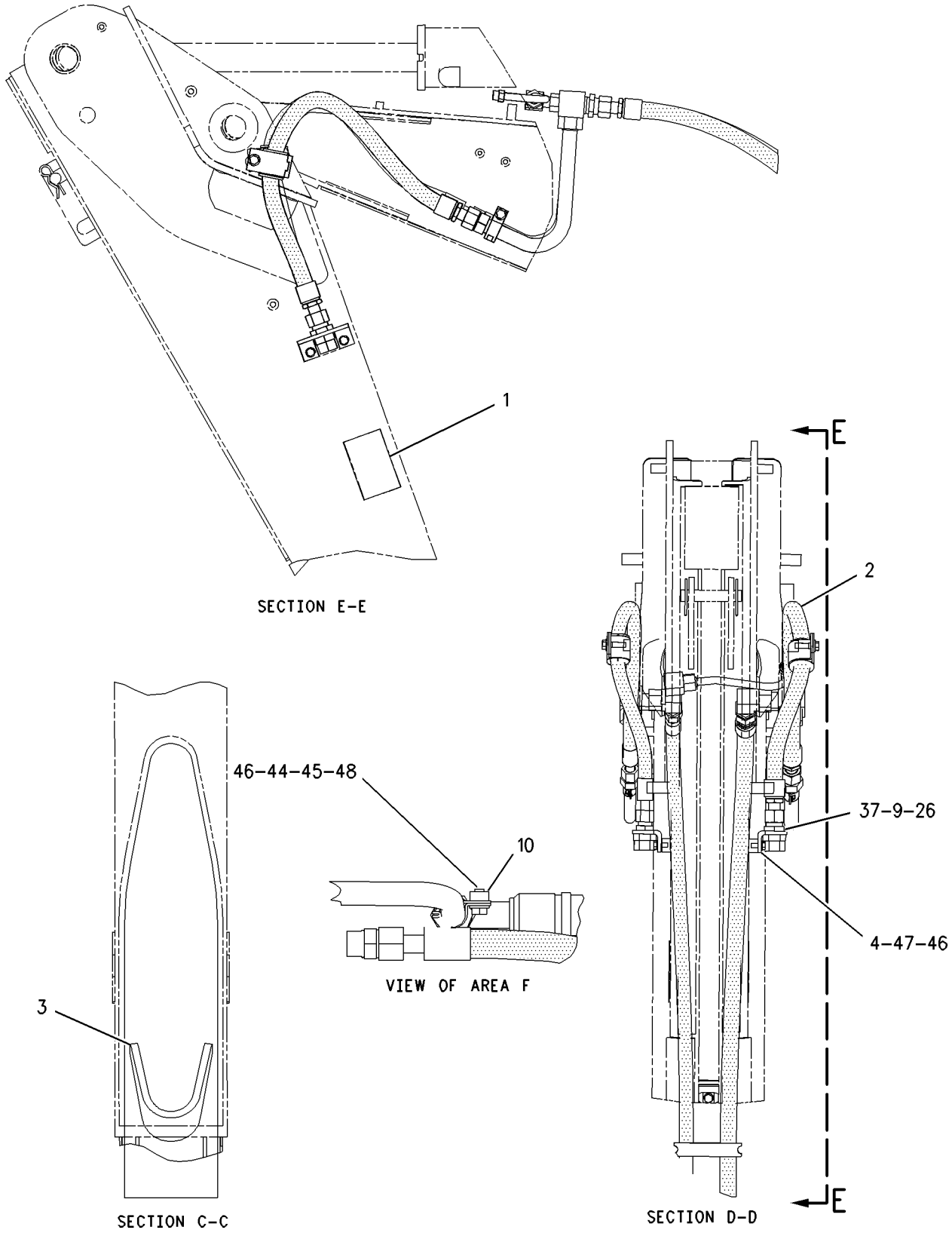

GRAPHIC #2 **<END>** g00864755

HYDRAULIC SYSTEM

196-8861 LINES GP-BACKHOE AUXILIARY

S/N: BFP12900-UP
FIELD INSTALLED
PART OF 196-8860, 196-8862 HYDRAULIC AR
AN ATTACHMENT

SMCS-5057 **i02020483**

NOTE	REF NO	GRAPHIC REF	PART NUMBER	QTY	PART NAME 1 2 3 4 5 6 (PRODUCT LEVEL)	SEE PAGE
	1	1,2	**101-0863**	2	FILM-INSTRUCTION (RETURN FLOW)	
I	2	2	**106-0409**	1	HOSE AS	
	3	1	**106-0425**	1	PLATE AS (TOOL)	
	4	2	**107-6708**	1	BRACKET	
	5	1	**109-1260**	1	BRACKET	
	6	1	**110-7709**	1	TUBE AS	
	7	2	**110-7710**	1	TUBE AS	
	8	1,2	**123-7637**	2	CAP	
	9	1	**124-2528**	1	SPACER (11X20X10-MM THK)	
	10	1	*148-8450*	1	TEE AS	
		1	**3E-7443**	1	TEE-UNION	
		1	**5K-9090**	1	SEAL-O-RING	
		1	**6V-9746**	2	SEAL-O-RING	
I	11	1	**168-8493**	1	HOSE AS	
HI	12	2	**169-2944**	1	HOSE AS	
I	13	1	**172-2252**	1	HOSE AS	
	14	1	**177-7148**	2	BLOCK	
	15	1	**177-7149**	2	BLOCK	
HY	16	2	*178-7481*	1	VALVE GP-CHECK	694
	17	1	**191-4850**	1	BLOCK	
	18	1	**191-4851**	1	BLOCK	
	19	1	**193-6355**	2	BLOCK	
	20	1	**205-8845**	1	HOSE AS	
H	21	2	**205-9014**	1	TUBE AS	
J	22	2	**236-5901**	1	TUBE AS	
JI	23	2	**236-9900**	1	HOSE AS	
	24	2	*148-8327*	1	CONNECTOR AS	
		2	**3D-2824**	1	SEAL-O-RING	
		2	**6V-8637**	1	CONNECTOR	
		2	**6V-9746**	1	SEAL-O-RING	
J	25	2	*148-8335*	1	CONNECTOR AS	
		2	**5K-9090**	1	SEAL-O-RING	
		2	**6V-8635**	1	CONNECTOR	
		2	**7M-8485**	1	SEAL-O-RING	
B	26	1,2	*148-8352*	2	ELBOW GP	
					(EACH INCLUDES)	
		1,2	**5K-9090**	1	SEAL-O-RING	
		1,2	**6V-9854**	1	ELBOW (SWIVEL)	
	27	1	*148-8386*	1	ELBOW AS	
		1	**3E-7426**	1	ELBOW	
		1	**5K-9090**	1	SEAL-O-RING	
		1	**6V-8400**	1	SEAL-O-RING	
	28	1	*148-8387*	1	ELBOW GP	
		1	**6V-8400**	1	SEAL-O-RING	
		1	**6V-9855**	1	ELBOW	
B	29	2	*148-8408*	1	PLUG AS	
		2	**3D-2824**	1	SEAL-O-RING	
		2	**9S-4183**	1	PLUG	
	30	2	*150-3052*	1	CONNECTOR AS	
		2	**5K-9090**	1	SEAL-O-RING	
		2	**7M-8485**	1	SEAL-O-RING	
		2	**107-6709**	1	CONNECTOR	
	31	1	*150-3053*	1	CONNECTOR AS	
		1	**6V-9746**	1	SEAL-O-RING	

196-8861 LINES GP-BACKHOE AUXILIARY *(contd.)* i02020483

NOTE	REF NO	GRAPHIC REF	PART NUMBER	QTY	PART NAME 1 2 3 4 5 6 (PRODUCT LEVEL)	SEE PAGE
		1	**7M-8485**	1	SEAL-O-RING	
		1	**108-3872**	1	CONNECTOR	
	32	1	**2P-1293**	2	LOCKNUT (1 3/16-12-THD)	
B	33	2	**5K-9090**	2	SEAL-O-RING	
	34	1	**5P-7466**	1	CLIP (SLOT)	
	35	1	**5P-7467**	1	CLIP (TAB)	
	36	1	**5P-7468**	1	CLIP (SLOT)	
	37	1	**5P-7469**	1	CLIP (TAB)	
	38	1	**5P-8112**	1	GROMMET	
	39	1	**5P-8444**	1	GROMMET	
	40	1,2	**6V-9172**	2	NUT (1 7/16-12-THD)	
M	41	1	**6V-9189**	2	LOCKNUT (M8X1.25-THD)	
	42	1	**6V-9746**	1	SEAL-O-RING	
	43	1	**6V-9832**	1	CAP AS	
	44	1	**7S-3916**	1	CLIP (TAB)	
	45	1	**7S-3919**	1	CLIP (SLOT)	
	46	1	**8S-0023**	1	CLIP (SLOT)	
	47	1	**8S-0024**	1	CLIP (TAB)	
B	48	1	**8T-1889**	2	CLIP (SLOT)	
B	49	1	**8T-1890**	2	CLIP (TAB)	
B	50	1,2	**8T-4121**	6	WASHER-HARD (11X21X2.5-MM THK)	
BM	51	1,2	**8T-4136**	6	BOLT (M10X1.5X25-MM)	
M	52	1	**8T-4139**	2	BOLT (M12X1.75X30-MM)	
M	53	1	**8T-4192**	2	BOLT (M12X1.75X25-MM)	
	54	1	**8T-4223**	4	WASHER-HARD (13.5X25.5X3-MM THK)	

B-USE AS REQUIRED
H-USE THESE PARTS FOR MACHINES SERIAL # BFP12899 & BELOW
I-REFER TO HYDRAULIC INFORMATION SYSTEM
J-USE THEESE PARTS FOR MACHINES SERIAL # BFP12900 AND ABOVE
M-METRIC PART
Y-SEPARATE ILLUSTRATION

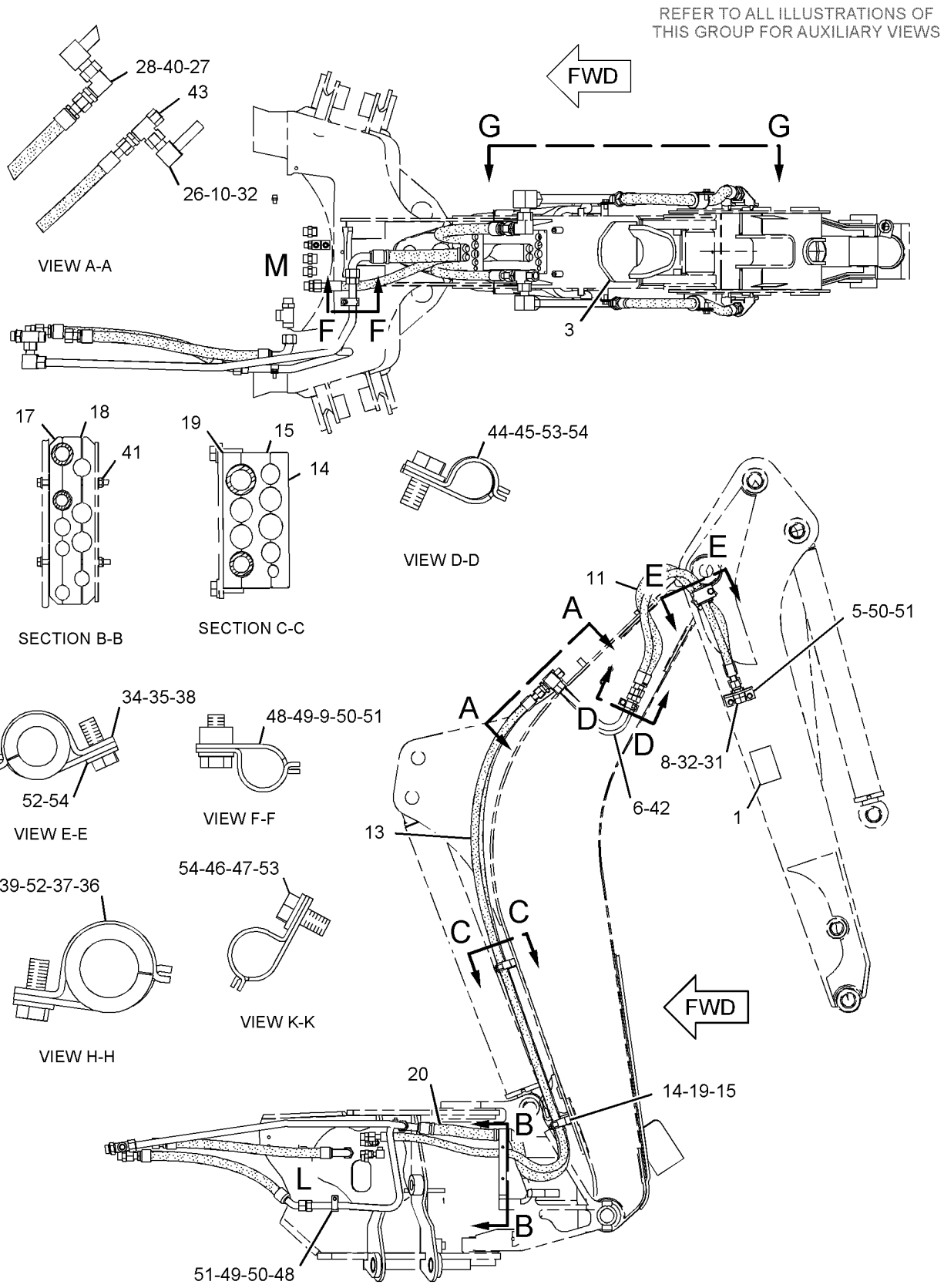

LEFT SIDE VIEW

GRAPHIC #1

g01038060

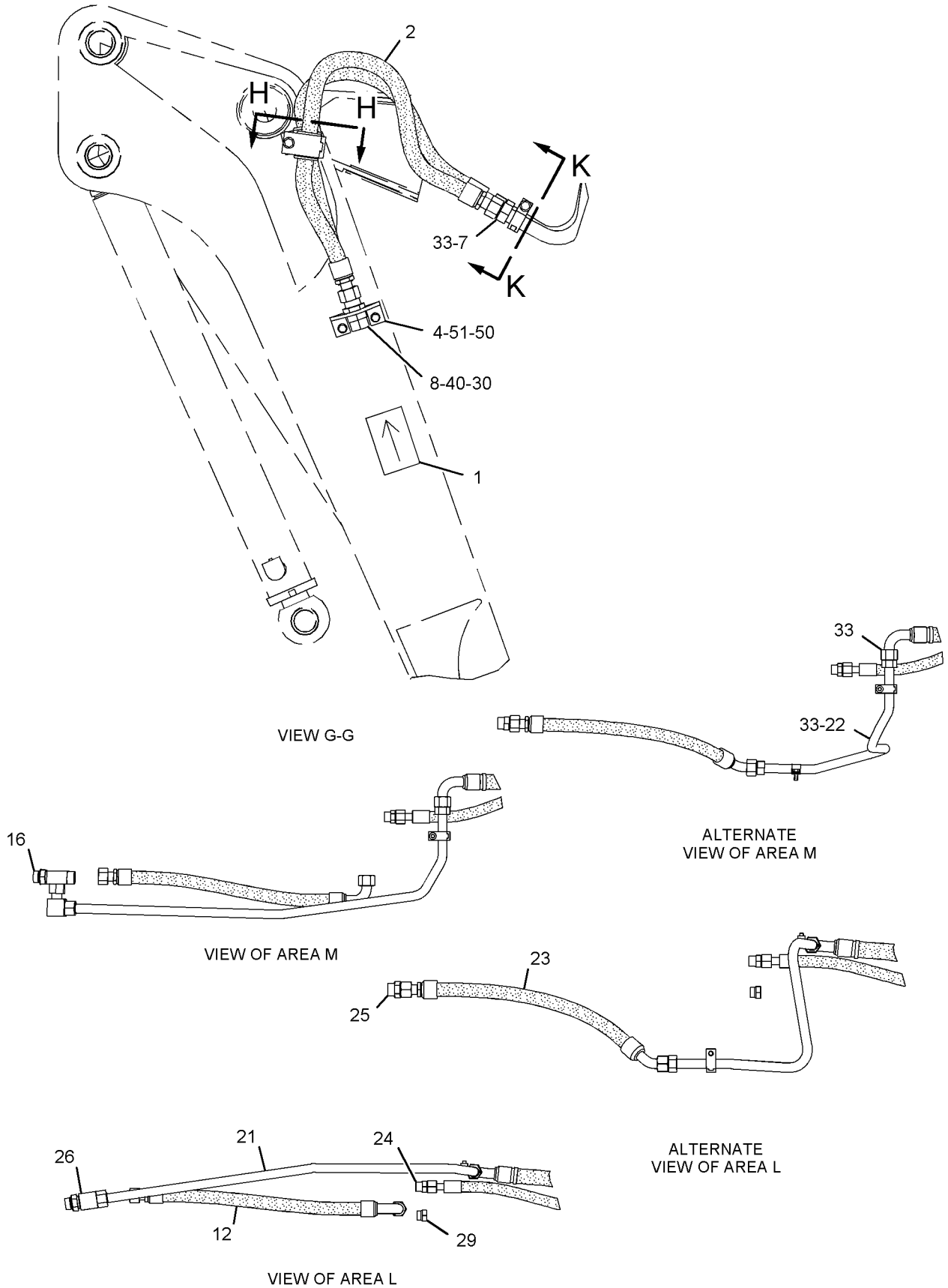

GRAPHIC #2 **<END>** g01038061

HYDRAULIC SYSTEM

202-5946 LINES GP-BACKHOE AUXILIARY

S/N: BFP12900-UP
TWO-WAY, LOW LEAK, ANTI-DRIFT
PART OF 210-8530 HYDRAULIC AR
AN ATTACHMENT

SMCS-5057 **i02015672**

NOTE	REF NO	GRAPHIC REF	PART NUMBER	QTY	PART NAME 1 2 3 4 5 6 (PRODUCT LEVEL)	SEE PAGE
	1	1	**9R-9253**	1	PLATE	
	2	1	**177-0856**	1	TUBE AS	
	3	1	**177-2171**	1	TUBE AS	
	4	1	**201-3633**	1	HOSE AS	
	5	1	**201-3636**	1	HOSE AS	
	6	1	*148-8328*	2	CONNECTOR GP	
					(EACH INCLUDES)	
		1	**3D-2824**	1	SEAL-O-RING	
		1	**6V-8398**	1	SEAL-O-RING	
		1	**6V-8633**	1	CONNECTOR	
	7	1	**2M-6102**	2	PIPE	
	8	1	**6V-8398**	4	SEAL-O-RING	
	9	1	**6V-9830**	2	CAP AS	
	10	1	**8T-4121**	4	WASHER-HARD (11X21X2.5-MM THK)	
M	11	1	**8T-4136**	2	BOLT (M10X1.5X25-MM)	
M	12	1	**8T-4185**	2	BOLT (M10X1.5X50-MM)	
	13	1	**9R-1004**	2	CLIP (TAB)	
	14	1	**9R-1005**	2	CLIP (SLOT)	

M-METRIC PART

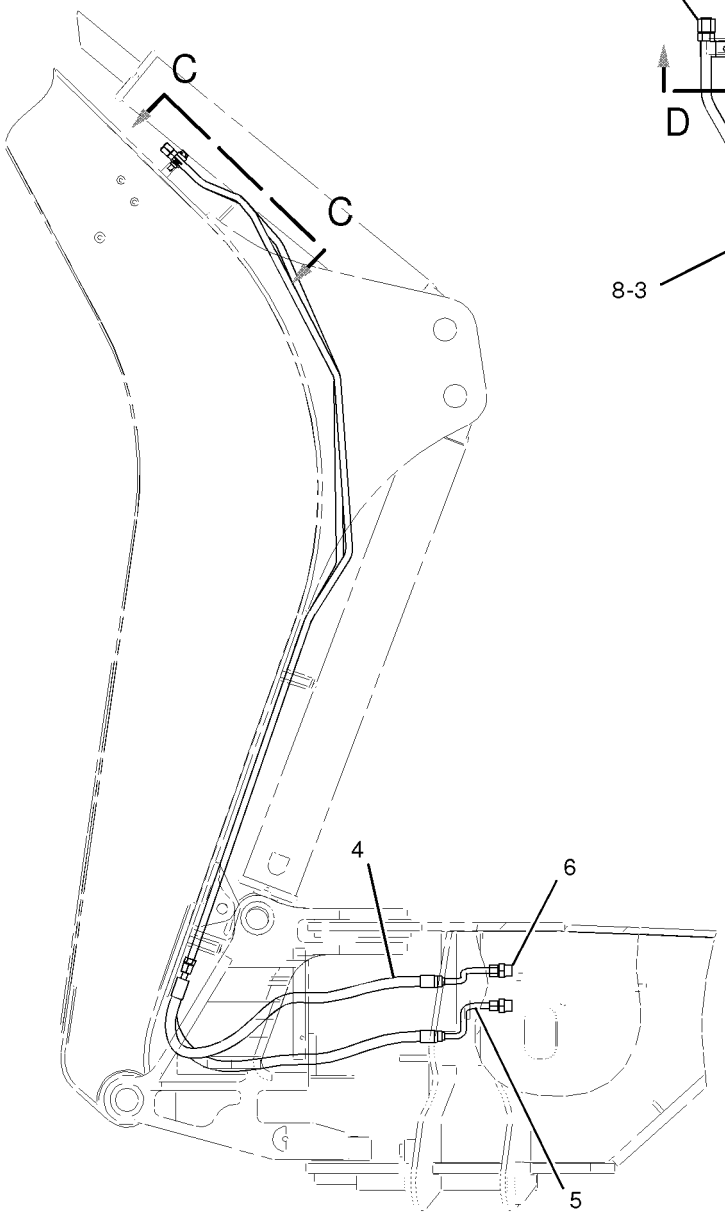

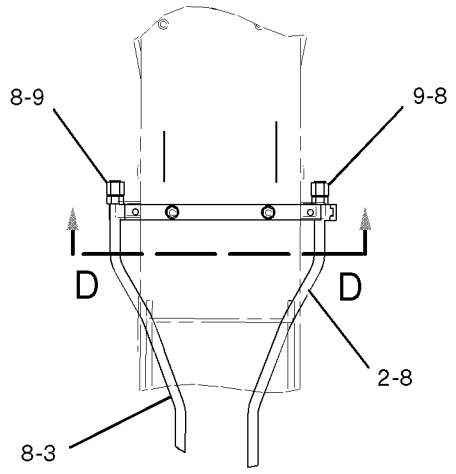

VIEW C-C

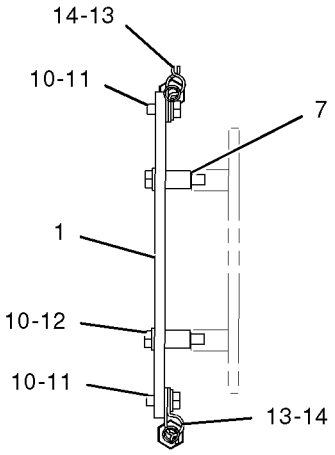

SECTION D-D

GRAPHIC #1 **<END>** g01042030

HYDRAULIC SYSTEM

235-5848 LINES GP-BACKHOE AUXILIARY–1 WAY LINES

S/N: BFP12900-UP

PART OF 238-4781 BACKHOE AR-STANDARD STICK

AN ATTACHMENT

SMCS-5057 **i02015159**

NOTE	REF NO	GRAPHIC REF	PART NUMBER	QTY	PART NAME 1 2 3 4 5 6 (PRODUCT LEVEL)	SEE PAGE
	1	1	**101-0863**	2	FILM-INSTRUCTION (RETURN FLOW)	
I	2	1	**106-0409**	1	HOSE AS	
	3	1	**107-6708**	1	BRACKET	
	4	1	**109-1260**	1	BRACKET	
	5	1	**110-7709**	1	TUBE AS	
	6	1	**110-7710**	1	TUBE AS	
	7	1	**123-7637**	2	CAP	
	8	1	**124-2528**	1	SPACER (11X20X10-MM THK)	
	9	1	*148-8450*	1	TEE AS	
		1	**3E-7443**	1	TEE-UNION	
		1	**5K-9090**	1	SEAL-O-RING	
		1	**6V-9746**	2	SEAL-O-RING	
I	10	1	**168-8493**	1	HOSE AS	
	11	1	**241-8448**	4	FILM-WARNING (HYDRAULIC PRESSURE)	
I	12	1	**172-2252**	1	HOSE AS	
	13	1	**205-8845**	1	HOSE AS	
	14	1	**236-5901**	1	TUBE AS	
I	15	1	**236-9900**	1	HOSE AS	
	16	1	*148-8327*	1	CONNECTOR AS	
		1	**3D-2824**	1	SEAL-O-RING	
		1	**6V-8637**	1	CONNECTOR	
		1	**6V-9746**	1	SEAL-O-RING	
	17	1	*148-8335*	1	CONNECTOR AS	
		1	**5K-9090**	1	SEAL-O-RING	
		1	**6V-8635**	1	CONNECTOR	
		1	**7M-8485**	1	SEAL-O-RING	
	18	1	*148-8352*	1	ELBOW GP	
		1	**5K-9090**	1	SEAL-O-RING	
		1	**6V-9854**	1	ELBOW (SWIVEL)	
	19	1	*148-8386*	1	ELBOW AS	
		1	**3E-7426**	1	ELBOW	
		1	**5K-9090**	1	SEAL-O-RING	
		1	**6V-8400**	1	SEAL-O-RING	
	20	1	*148-8387*	1	ELBOW GP	
		1	**6V-8400**	1	SEAL-O-RING	
		1	**6V-9855**	1	ELBOW	
	21	1	*148-8408*	1	PLUG AS	
		1	**3D-2824**	1	SEAL-O-RING	
		1	**9S-4183**	1	PLUG	
	22	1	*150-3052*	1	CONNECTOR AS	
		1	**5K-9090**	1	SEAL-O-RING	
		1	**7M-8485**	1	SEAL-O-RING	
		1	**107-6709**	1	CONNECTOR	
	23	1	*150-3053*	1	CONNECTOR AS	
		1	**6V-9746**	1	SEAL-O-RING	
		1	**7M-8485**	1	SEAL-O-RING	
		1	**108-3872**	1	CONNECTOR	
	24	1	**2P-1293**	2	LOCKNUT (1 3/16-12-THD)	
	25	1	**5K-9090**	3	SEAL-O-RING	
	26	1	**5P-7466**	1	CLIP (SLOT)	
	27	1	**5P-7467**	1	CLIP (TAB)	
	28	1	**5P-7468**	1	CLIP (SLOT)	
	29	1	**5P-7469**	1	CLIP (TAB)	
	30	1	**5P-8112**	1	GROMMET	
	31	1	**5P-8444**	1	GROMMET	

235-5848 LINES GP-BACKHOE AUXILIARY *(contd.)* i02015159

NOTE	REF NO	GRAPHIC REF	PART NUMBER	QTY	PART NAME 1 2 3 4 5 6 (PRODUCT LEVEL)	SEE PAGE
	32	1	**6V-9172**	2	NUT (1 7/16-12-THD)	
	33	1	**6V-9746**	1	SEAL-O-RING	
	34	1	**6V-9832**	1	CAP AS	
	35	1	**7S-3916**	1	CLIP (TAB)	
	36	1	**7S-3919**	1	CLIP (SLOT)	
	37	1	**8S-0023**	1	CLIP (SLOT)	
	38	1	**8S-0024**	1	CLIP (TAB)	
	39	1	**8T-1889**	2	CLIP (SLOT)	
	40	1	**8T-1890**	2	CLIP (TAB)	
	41	1	**8T-4121**	6	WASHER-HARD (11X21X2.5-MM THK)	
M	42	1	**8T-4136**	5	BOLT (M10X1.5X25-MM)	
M	43	1	**8T-4139**	2	BOLT (M12X1.75X30-MM)	
M	44	1	**8T-4192**	2	BOLT (M12X1.75X25-MM)	
	45	1	**8T-4223**	4	WASHER-HARD (13.5X25.5X3-MM THK)	
M	46	1	**8T-4195**	1	BOLT (M10X1.5X30-MM)	

I-REFER TO HYDRAULIC INFORMATION SYSTEM
M-METRIC PART

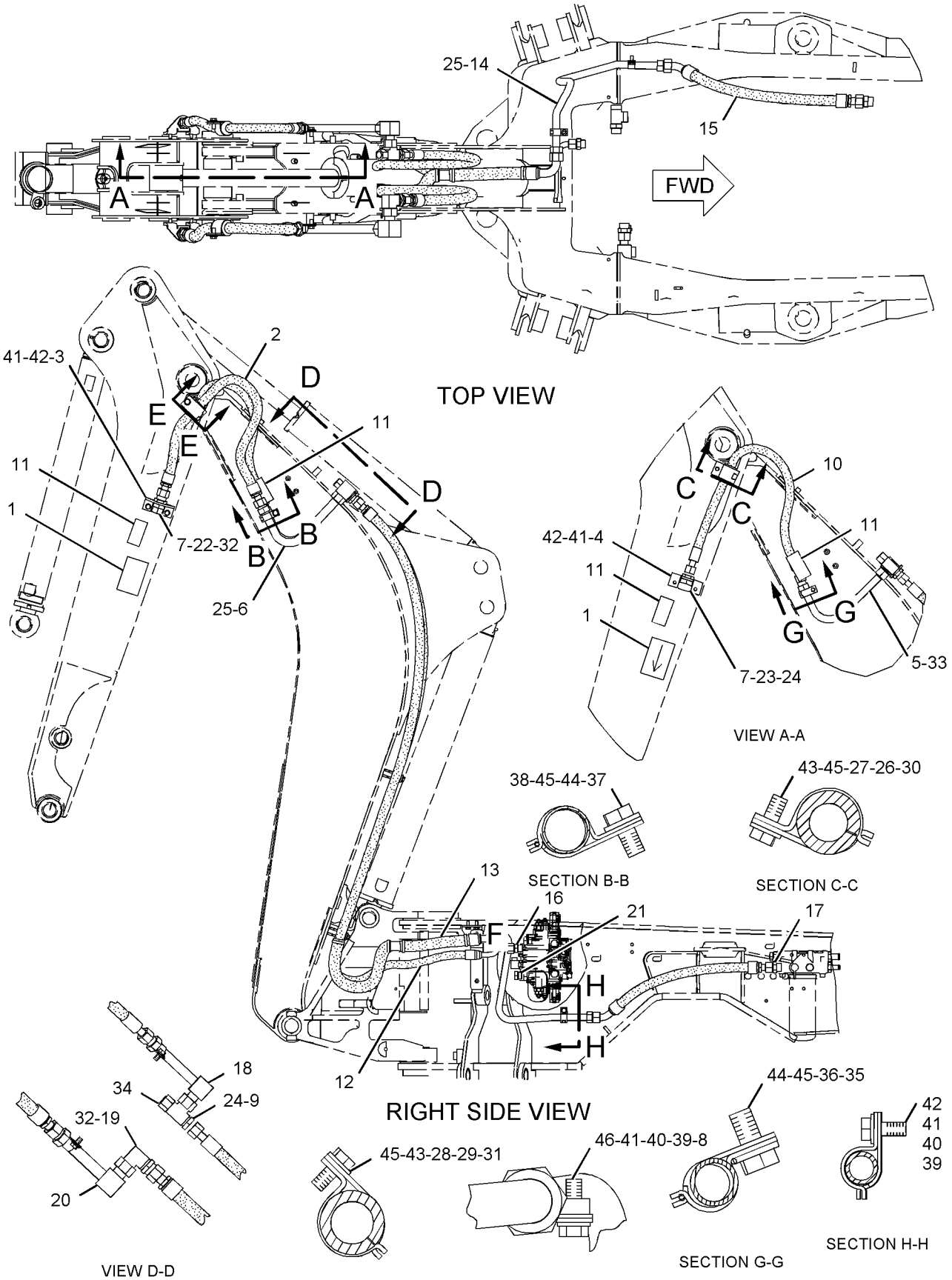

GRAPHIC #1 **<END>** g01041848

HYDRAULIC SYSTEM

235-5849 LINES GP-BACKHOE AUXILIARY

S/N: BFP12900-UP

PART OF 238-4784 BACKHOE AR-EXTENDABLE STICK

AN ATTACHMENT

SMCS-5057 **i01971147**

NOTE	REF NO	GRAPHIC REF	PART NUMBER	QTY	PART NAME 1 2 3 4 5 6 (PRODUCT LEVEL)	SEE PAGE
	1	1	**5P-0599**	1	CLAMP	
	2	1	**9R-5948**	1	BLOCK	
	3	2	**9R-9253**	1	PLATE	
	4	1,2	**101-0862**	2	PLATE-WARNING (E-STICK)	
	5	1,2	**101-0863**	2	FILM-INSTRUCTION (RETURN FLOW)	
I	6	1	**106-0409**	1	HOSE AS	
	7	1	**107-6708**	1	BRACKET	
	8	2	**109-1260**	1	BRACKET	
	9	2	**110-7709**	1	TUBE AS	
	10	1	**110-7710**	1	TUBE AS	
	11	2	**110-7713**	1	TUBE AS	
	12	1,2	**123-7637**	2	CAP	
	13	1	**124-2528**	1	SPACER (11X20X10-MM THK)	
	14	2	*148-8450*	1	TEE AS	
		2	**3E-7443**	1	TEE-UNION	
		2	**5K-9090**	1	SEAL-O-RING	
		2	**6V-9746**	2	SEAL-O-RING	
I	15	1	**160-6026**	1	HOSE AS	
	16	2	**162-2356**	2	TUBE AS	
I	17	1,2	**167-3896**	2	HOSE AS	
I	18	2	**168-8493**	1	HOSE AS	
I	19	2	**168-8497**	1	HOSE AS	
I	20	1	**168-8644**	1	HOSE AS	
I	21	1	**169-2935**	1	HOSE AS	
I	22	1	**169-2983**	1	HOSE AS	
I	23	1	**172-2252**	1	HOSE AS	
	24	2	**177-0856**	1	TUBE AS	
	25	2	**187-4333**	1	TUBE AS	
	26	2	**187-4344**	1	TUBE AS	
	27	1,2	**202-6018**	4	FILM-WARNING (HIGH PRESSURE CYLINDER)	
	28	1	**205-8845**	1	HOSE AS	
	29	1	**236-5901**	1	TUBE AS	
I	30	1	**236-9900**	1	HOSE AS	
	31	1	*148-8327*	1	CONNECTOR AS	
		1	**3D-2824**	1	SEAL-O-RING	
		1	**6V-8637**	1	CONNECTOR	
		1	**6V-9746**	1	SEAL-O-RING	
	32	1	*148-8328*	1	CONNECTOR GP	
		1	**3D-2824**	1	SEAL-O-RING	
		1	**6V-8398**	1	SEAL-O-RING	
		1	**6V-8633**	1	CONNECTOR	
	33	1	*148-8335*	1	CONNECTOR AS	
		1	**5K-9090**	1	SEAL-O-RING	
		1	**6V-8635**	1	CONNECTOR	
		1	**7M-8485**	1	SEAL-O-RING	
	34	1,2	*148-8347*	1	ELBOW GP	
		1,2	**3D-2824**	1	SEAL-O-RING	
		1,2	**6V-9007**	1	ELBOW	
		1,2	**6V-9746**	1	SEAL-O-RING	
	35	2	*148-8352*	1	ELBOW GP	
		2	**5K-9090**	1	SEAL-O-RING	
		2	**6V-9854**	1	ELBOW (SWIVEL)	
	36	2	*148-8386*	1	ELBOW AS	
		2	**3E-7426**	1	ELBOW	
		2	**5K-9090**	1	SEAL-O-RING	

235-5849 LINES GP-BACKHOE AUXILIARY *(contd.)* i01971147

NOTE	REF NO	GRAPHIC REF	PART NUMBER	QTY	PART NAME 1 2 3 4 5 6 (PRODUCT LEVEL)	SEE PAGE
		2	**6V-8400**	1	SEAL-O-RING	
	37	2	*148-8387*	1	ELBOW GP	
		2	**6V-8400**	1	SEAL-O-RING	
		2	**6V-9855**	1	ELBOW	
	38	2	*148-8392*	1	ELBOW GP	
		2	**6V-9746**	1	SEAL-O-RING	
		2	**6V-9853**	1	ELBOW	
	39	1	*150-3052*	1	CONNECTOR AS	
		1	**5K-9090**	1	SEAL-O-RING	
		1	**7M-8485**	1	SEAL-O-RING	
		1	**107-6709**	1	CONNECTOR	
	40	2	*150-3053*	1	CONNECTOR AS	
		2	**6V-9746**	1	SEAL-O-RING	
		2	**7M-8485**	1	SEAL-O-RING	
		2	**108-3872**	1	CONNECTOR	
	41	2	**2P-1293**	3	LOCKNUT (1 3/16-12-THD)	
	42	1	**5K-9090**	3	SEAL-O-RING	
	43	1,2	**5P-7464**	5	CLIP (SLOT)	
	44	1,2	**5P-7465**	5	CLIP (TAB)	
	45	2	**5P-7466**	3	CLIP (SLOT)	
	46	2	**5P-7467**	3	CLIP (TAB)	
	47	1,2	**5P-7468**	2	CLIP (SLOT)	
	48	1,2	**5P-7469**	2	CLIP (TAB)	
	49	2	**5P-8112**	3	GROMMET	
	50	1	**5P-8444**	1	GROMMET	
	51	1,2	**6V-1249**	5	GROMMET	
	52	1,2	**6V-8398**	7	SEAL-O-RING	
	53	2	**6V-9169**	1	NUT-BULKHEAD (13/16-16-THD)	
	54	1,2	**6V-9172**	2	NUT (1 7/16-12-THD)	
	55	2	**6V-9746**	3	SEAL-O-RING	
	56	1,2	**7J-9108**	2	SEAL-O-RING	
	57	2	**7S-3916**	1	CLIP (TAB)	
	58	2	**7S-3919**	1	CLIP (SLOT)	
	59	1	**8S-0023**	1	CLIP (SLOT)	
	60	1	**8S-0024**	1	CLIP (TAB)	
	61	1,2	**8T-1889**	3	CLIP (SLOT)	
	62	1,2	**8T-1890**	3	CLIP (TAB)	
	63	1,2	**8T-4121**	14	WASHER-HARD (11X21X2.5-MM THK)	
M	64	1,2	**8T-4136**	10	BOLT (M10X1.5X25-MM)	
M	65	1,2	**8T-4139**	4	BOLT (M12X1.75X30-MM)	
M	66	1,2	**8T-4184**	4	BOLT (M12X1.75X45-MM)	
M	67	1,2	**8T-4192**	2	BOLT (M12X1.75X25-MM)	
M	68	1,2	**8T-4195**	4	BOLT (M10X1.5X30-MM)	
	69	1,2	**8T-4223**	10	WASHER-HARD (13.5X25.5X3-MM THK)	
	70	2	**8T-7087**	1	GROMMET	
	71	1,2	**9R-1004**	5	CLIP (TAB)	
	72	1,2	**9R-1005**	5	CLIP (SLOT)	

I-REFER TO HYDRAULIC INFORMATION SYSTEM
M-METRIC PART

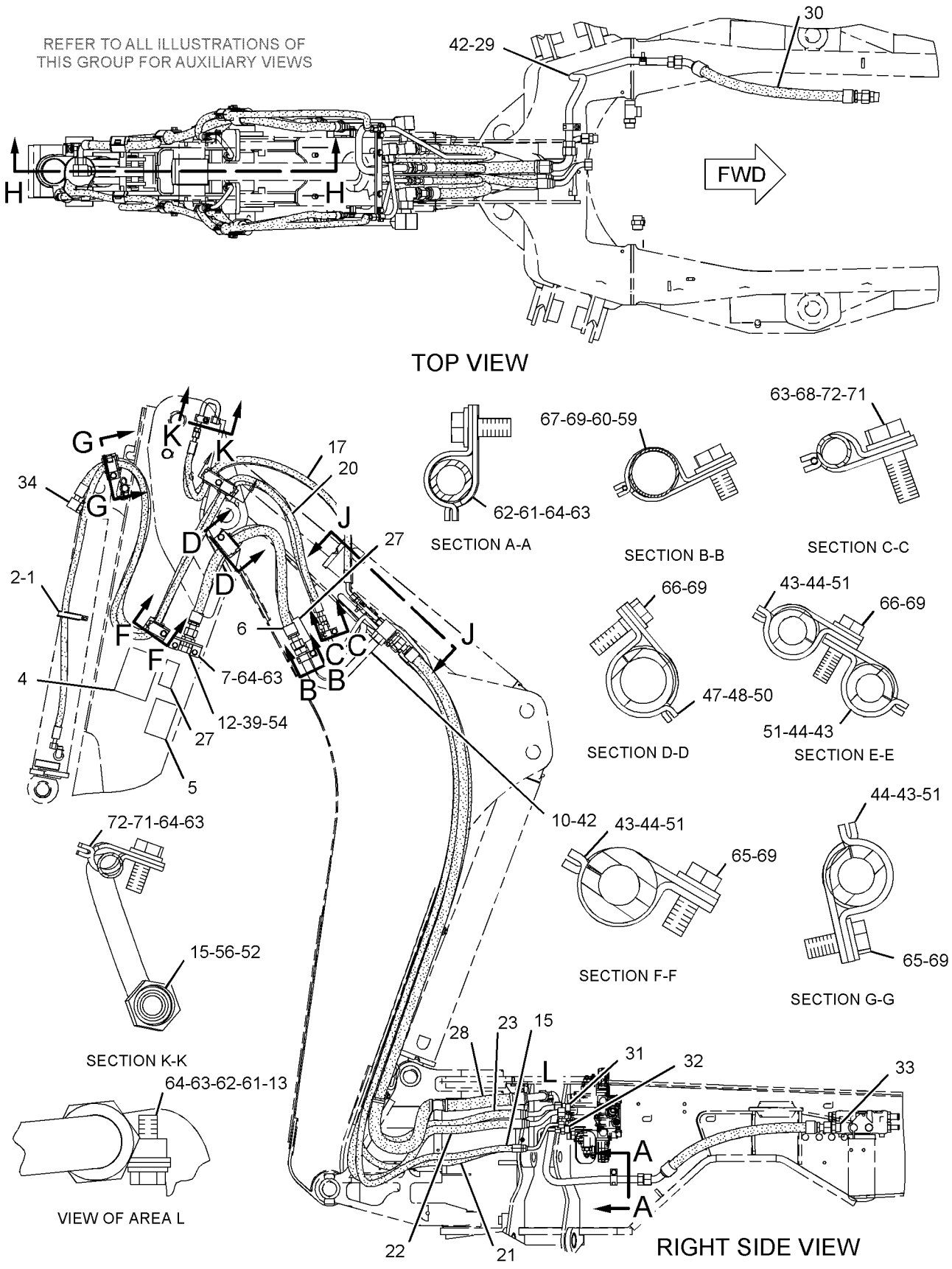

GRAPHIC #1

g01043094

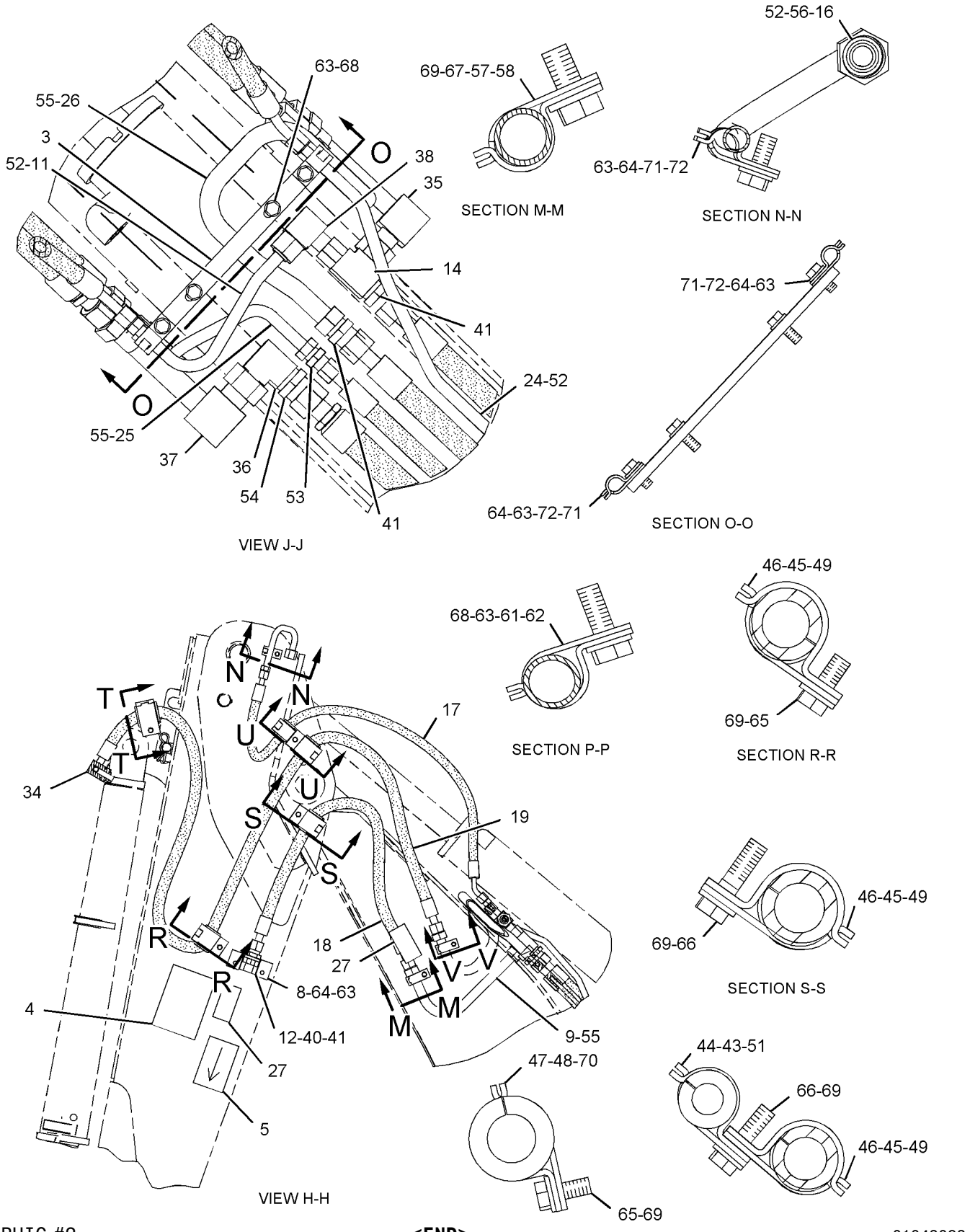

GRAPHIC #2 **<END>** g01043093

HYDRAULIC SYSTEM

167-8270 LINES GP-BOOM

S/N: BFP12900-UP

PART OF 238-4783, 238-4784 BACKHOE AR-EXTENDABLE STICK, 238-4780, 238-4781, 238-4782 BACKHOE AR-STANDARD STICK

AN ATTACHMENT

SMCS-5057, 5456 **i01773577**

NOTE	REF NO	GRAPHIC REF	PART NUMBER	QTY	PART NAME 1 2 3 4 5 6 (PRODUCT LEVEL)	SEE PAGE
	1	1	**5P-0599**	1	CLAMP	
	2	1	**9R-4619**	1	SUPPORT AS	
I	3	1	**169-2978**	1	HOSE AS	
I	4	1	**172-3820**	1	HOSE AS	
	5	1	**207-5477**	1	TUBE AS	
		1	**6V-8556**	1	NUT (1 3/16-12 THD)	
		1	**6V-8563**	1	SLEEVE-O-RING	
	6	1	*148-8327*	1	CONNECTOR GP	
		1	**3D-2824**	1	SEAL-O-RING	
		1	**6V-8637**	1	CONNECTOR-SEAL	
		1	**6V-9746**	1	SEAL-O-RING	
	7	1	**7J-9108**	1	SEAL-O-RING	
	8	1	**8T-1887**	1	CLIP (SLOT)	
	9	1	**8T-1888**	1	CLIP (TAB)	
	10	1	**8T-4121**	1	WASHER-HARD (11X21X2.5MM THK)	
M	11	1	**8T-4137**	1	BOLT (M10X1.5X20MM)	

I-SEE HOSE FABRICATION GUIDE
M-METRIC PART

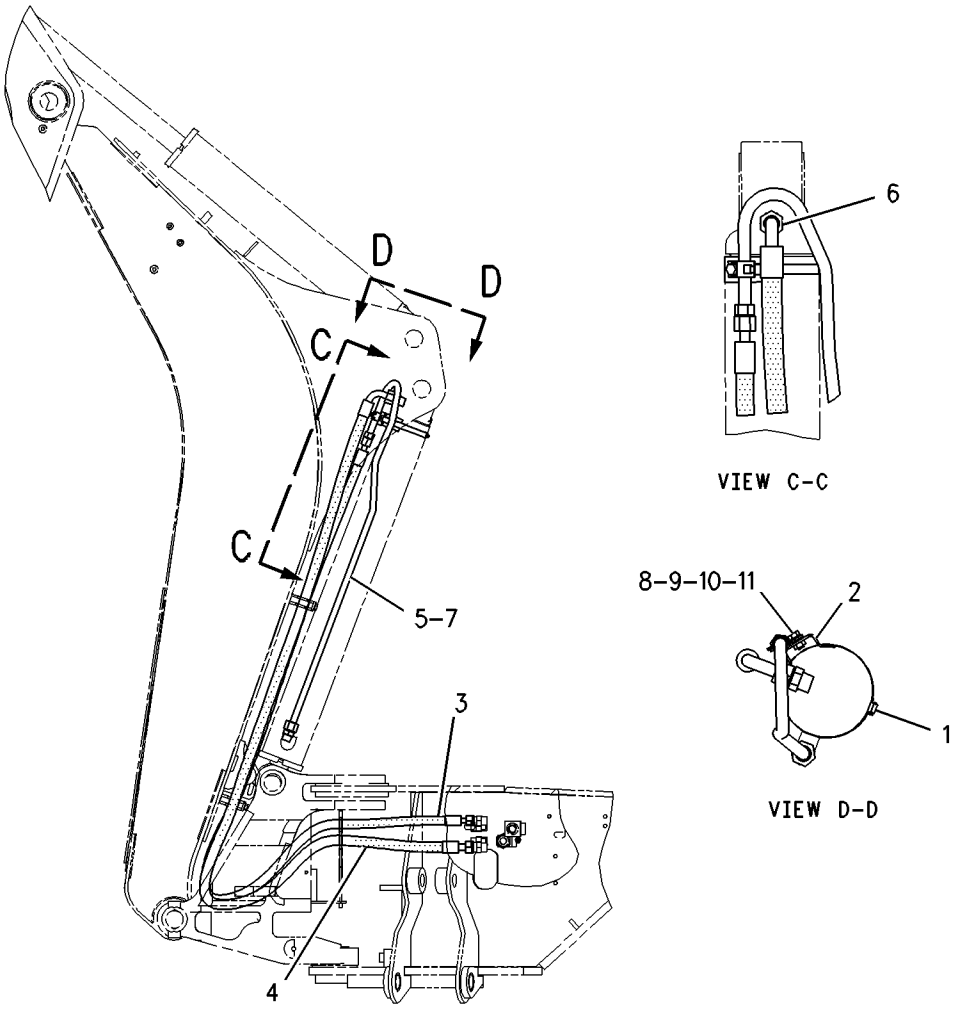

GRAPHIC #1 **<END>** g00860767

HYDRAULIC SYSTEM

167-8275 LINES GP-BUCKET CYLINDER

S/N: BFP12900-UP
PART OF 184-7903, 184-7905, 184-7907, 238-4780, 238-4781, 238-4782 BACKHOE
AR-STANDARD STICK
AN ATTACHMENT

SMCS-5057, 5457 **i01663585**

NOTE	REF NO	GRAPHIC REF	PART NUMBER	QTY	PART NAME 1 2 3 4 5 6 (PRODUCT LEVEL)	SEE PAGE
	1	1	**5P-0599**	2	CLAMP	
	2	1	**9R-5948**	1	BLOCK	
I	3	1	**160-6026**	1	HOSE AS	
I	4	1	**169-2983**	1	HOSE AS	
	5	1	**187-4343**	1	TUBE AS	
	6	1	**195-0268**	1	BRACKET AS	
I	7	1	**197-0573**	1	HOSE AS	
	8	1	**212-9338**	1	HOSE AS	
	9	1	*148-8362*	1	ELBOW GP	
		1	**3D-2824**	1	SEAL-O-RING	
		1	**5K-9090**	1	SEAL-O-RING	
		1	**8T-6684**	1	ELBOW	
	10	1	*148-8455*	1	UNION GP	
		1	**6V-8997**	1	UNION	
		1	**6V-9746**	2	SEAL-O-RING	
	11	1	*148-8457*	1	UNION GP	
		1	**6V-8398**	2	SEAL-O-RING	
		1	**6V-8995**	1	UNION-BULKHEAD	
	12	1	**2P-1293**	1	LOCKNUT-BULKHEAD (1 3/16-12 THD)	
	13	1	**5P-7464**	1	CLIP (SLOT)	
	14	1	**5P-7465**	1	CLIP (TAB)	
	15	1	**5P-7466**	1	CLIP (SLOT)	
	16	1	**5P-7467**	1	CLIP (TAB)	
	17	1	**5P-8112**	1	GROMMET	
	18	1	**6V-1249**	1	GROMMET	
	19	1	**6V-9169**	1	NUT-BULKHEAD (13/16-16 THD)	
	20	1	**6V-9746**	1	SEAL-O-RING	
	21	1	**8T-1889**	1	CLIP (SLOT)	
	22	1	**8T-1890**	1	CLIP (TAB)	
	23	1	**8T-4121**	1	WASHER-HARD (11X21X2.5MM THK)	
M	24	1	**8T-4137**	1	BOLT (M10X1.5X20MM)	
M	25	1	**8T-4139**	2	BOLT (M12X1.75X30MM)	
	26	1	**8T-4223**	2	WASHER-HARD (13.5X25.5X3MM THK)	

I-SEE HOSE FABRICATION GUIDE
M-METRIC PART

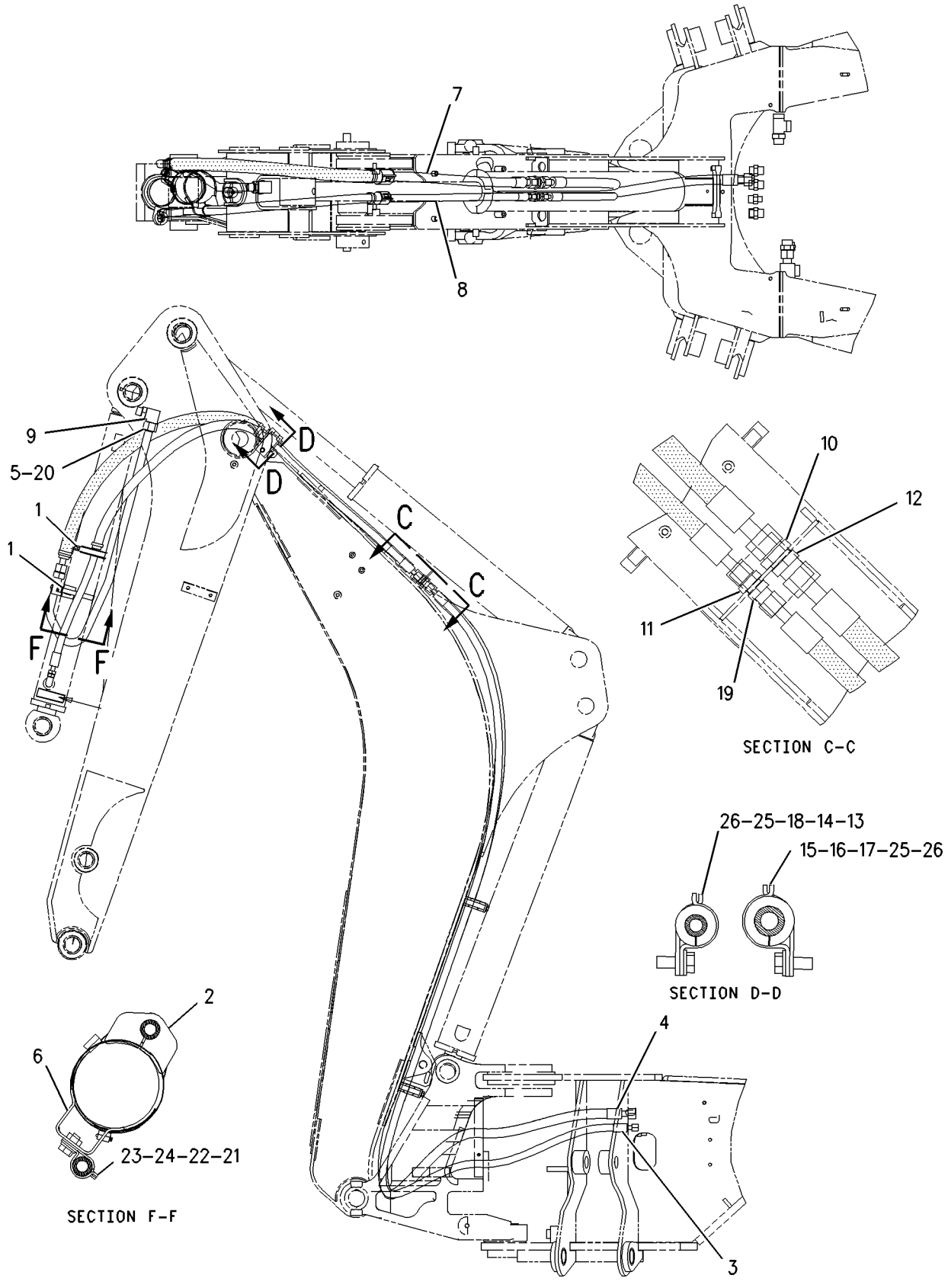

GRAPHIC #1 **<END>** g00858873

HYDRAULIC SYSTEM

183-8560 LINES GP-CHECK VALVE

S/N: CXP940-UP
LIFT AND TILT, S/T
PART OF 186-5332 HYDRAULIC AR
AN ATTACHMENT
TYPE 1

SMCS-5057, 5067 **i01932641**

NOTE	REF NO	GRAPHIC REF	PART NUMBER	QTY	PART NAME 1 2 3 4 5 6 (PRODUCT LEVEL)	SEE PAGE
	1	2	**5P-0599**	1	CLAMP	
	2	1	**7K-1181**	3	STRAP-CABLE	
	3	2	**8T-6726**	4	CLAMP-HOSE	
I	4	1	**8W-4002**	2	HOSE AS	
I	5	1	**9R-7069**	4	HOSE AS	
I	6	1	**9R-9198**	2	HOSE AS	
	7	1	**9R-9316**	1	BRACKET AS	
M		1	**8T-3490**	1	NUT-WELD (M10X1.5 THD)	
	8	2	**9R-9375**	1	PLATE	
Y	9	1	**9T-5455**	1	VALVE GP-LOAD CONTROL	715
	10	1	**112-5825**	1	TUBE AS	
	11	1	**112-5828**	1	TUBE AS	
	12	1	**122-4872**	1	BRACKET AS	
M		1	**8T-3490**	1	NUT-WELD (M10X1.5 THD)	
	13	1	**122-4873**	1	BRACKET AS	
M		1	**8T-3490**	1	NUT-WELD (M10X1.5 THD)	
	14	1	**122-5822**	1	BRACKET AS	
M		1	**8T-3490**	1	NUT-WELD (M10X1.5 THD)	
	15	1	**151-4841**	3	BLOCK	
	16	2	**156-3837**	2	CLIP (SLOT)	
	17	2	**156-3838**	1	CLIP (TAB)	
	18	1,2	**158-3412**	16	CLIP (SLOT)	
	19	2	**158-5964**	1	BRACKET AS	
M		2	**8T-3490**	1	NUT-WELD (M10X1.5 THD)	
	20	2	**158-5965**	1	BRACKET AS	
M		2	**8T-3490**	1	NUT-WELD (M10X1.5 THD)	
	21	2	**158-8625**	1	TUBE AS	
	22	2	**158-8626**	1	TUBE AS	
	23	2	**158-8628**	1	TUBE AS	
	24	2	**158-8629**	1	TUBE AS	
I	25	2	**161-3981**	2	HOSE AS	
	26	1	**163-5676**	1	TUBE AS	
	27	1	**163-5677**	1	TUBE AS	
	28	2	**175-6916**	2	VALVE GP-LOAD CONTROL	
I	29	1	**180-4194**	1	HOSE AS	
	30	1	**187-3162**	1	TUBE AS	
	31	1	**187-3163**	1	TUBE AS	
	32	1	**187-3164**	1	TUBE AS	
	33	1	**187-3166**	1	TUBE AS	
	34	1	**192-8775**	1	TUBE AS	
	35	1	**203-9680**	1	TUBE AS	
	36	1	**203-9681**	1	TUBE AS	
	37	1	**207-8595**	1	TUBE AS	
	38	2	*148-8315*	3	CONNECTOR GP	
					(EACH INCLUDES)	
		2	**2M-9780**	1	SEAL-O-RING	
		2	**6V-8642**	1	CONNECTOR-SEAL	
		2	**7J-9108**	1	SEAL-O-RING	
	39	1	*148-8340*	2	CONNECTOR GP	
					(EACH INCLUDES)	
		1	**3K-0360**	1	SEAL-O-RING	
		1	**6V-8398**	1	SEAL-O-RING	
		1	**6V-8639**	1	CONNECTOR	

183-8560 LINES GP-CHECK VALVE *(contd.)* i01932641

NOTE	REF NO	GRAPHIC REF	PART NUMBER	QTY	PART NAME 1 2 3 4 5 6 (PRODUCT LEVEL)	SEE PAGE
	40	1	*148-8341*	3	CONNECTOR GP	
					(EACH INCLUDES)	
		1	**3D-2824**	1	SEAL-O-RING	
		1	**6V-8713**	1	CONNECTOR	
		1	**7J-9108**	1	SEAL-O-RING	
	41	1	*148-8342*	1	CONNECTOR GP	
		1	**3K-0360**	1	SEAL-O-RING	
		1	**6V-8632**	1	CONNECTOR	
		1	**7J-9108**	1	SEAL-O-RING	
	42	2	*148-8368*	2	ELBOW GP	
					(EACH INCLUDES)	
		2	**3J-1907**	1	SEAL-O-RING	
		2	**4J-5477**	1	SEAL-O-RING	
		2	**6V-8627**	1	ELBOW	
	43	1,2	*148-8390*	3	ELBOW GP	
					(EACH INCLUDES)	
		1,2	**2M-9780**	1	SEAL-O-RING	
		1,2	**6V-8626**	1	ELBOW	
		1,2	**7J-9108**	1	SEAL-O-RING	
	44	1	*148-8393*	2	ELBOW GP	
					(EACH INCLUDES)	
		1	**6V-9852**	1	ELBOW (SWIVEL)	
		1	**7J-9108**	1	SEAL-O-RING	
	45	1	*148-8446*	5	TEE GP-SWIVEL	
					(EACH INCLUDES)	
		1	**6V-9838**	1	TEE-SWIVEL	
		1	**7J-9108**	2	SEAL-O-RING	
	46	1	*150-3037*	1	ELBOW GP	
		1	**3K-0360**	1	SEAL-O-RING	
		1	**7J-9108**	1	SEAL-O-RING	
		1	**8T-2530**	1	ELBOW	
	47	1	*150-3063*	1	TEE AS	
		1	**3D-2824**	1	SEAL-O-RING	
		1	**7J-9108**	2	SEAL-O-RING	
		1	**120-9809**	1	TEE	
	48	2	*156-3691*	2	ADAPTER AS	
					(EACH INCLUDES)	
		2	**3J-1907**	1	SEAL-O-RING	
		2	**4J-5477**	1	SEAL-O-RING	
		2	**081-6352**	1	ADAPTER	
M	49	2	**3T-0850**	2	SCREW	
	50	1	**6V-8397**	2	SEAL-O-RING	
	51	1,2	**6V-8398**	14	SEAL-O-RING	
	52	1	**6V-8555**	2	NUT-FACE SEAL (1-14THD)	
	53	1	**6V-8938**	2	REDUCER-O-RING	
	54	1	**6V-9831**	2	CAP AS	
	55	1	**8T-1891**	2	CLIP (SLOT)	
	56	1	**8T-1892**	2	CLIP (TAB)	
	57	1,2	**8T-4121**	15	WASHER-HARD (11X21X2.5MM THK)	
M	58	1,2	**8T-4136**	10	BOLT (M10X1.5X25MM)	
M	59	1	**8T-4137**	1	BOLT (M10X1.5X20MM)	
M	60	1,2	**8T-4195**	4	BOLT (M10X1.5X30MM)	
M	61	2	**8T-6912**	4	BOLT (M8X1.25X50MM)	
M	62	2	**8T-7963**	4	LOCKNUT (M8X1.25 THD)	
	63	1,2	**9R-7803**	8	CLIP (TAB)	
B	64	1	**3S-2093**	45	STRAP-CABLE	

B-USE AS REQUIRED
I-SEE HOSE FABRICATION GUIDE
M-METRIC PART
Y-SEPARATE ILLUSTRATION

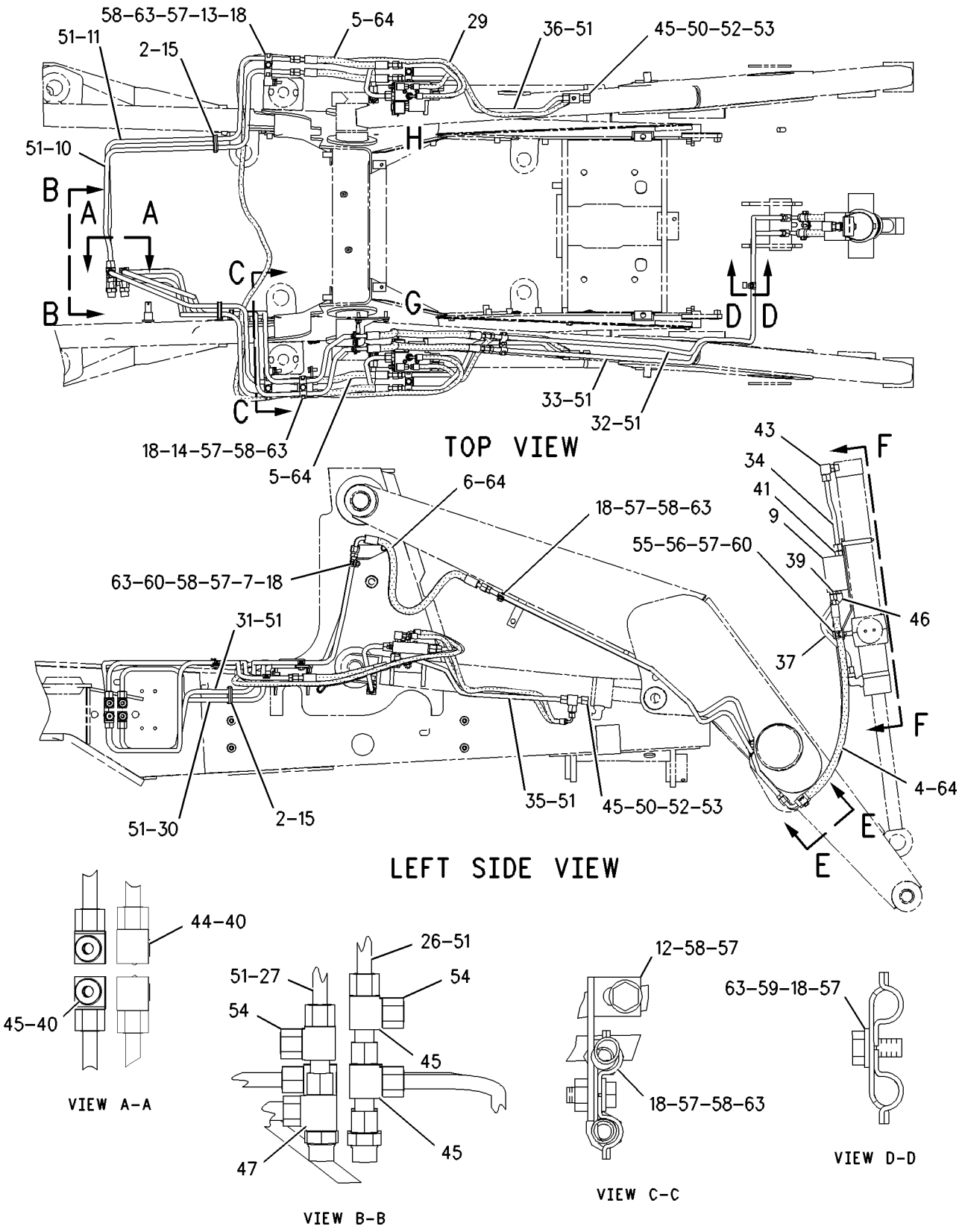

GRAPHIC #1 g01006359

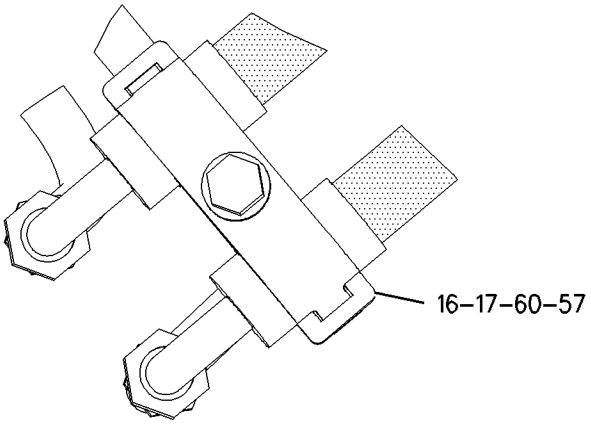

VIEW E-E

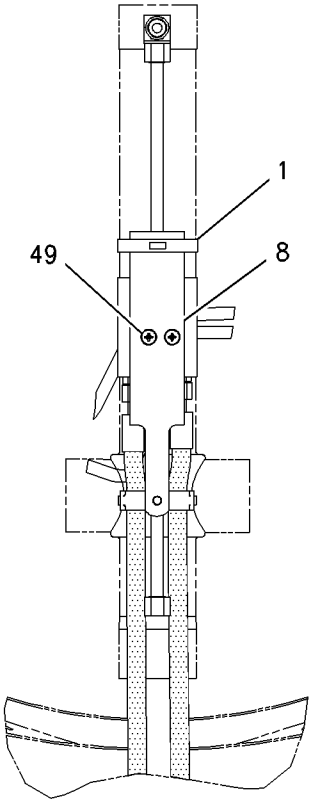

VIEW F-F

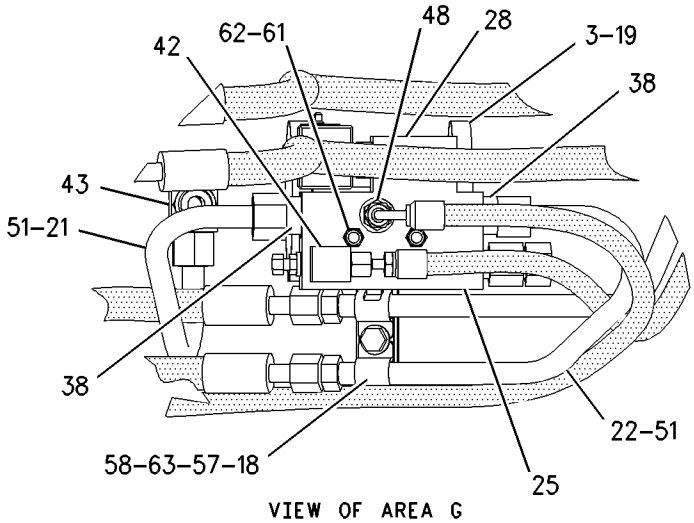

VIEW OF AREA G

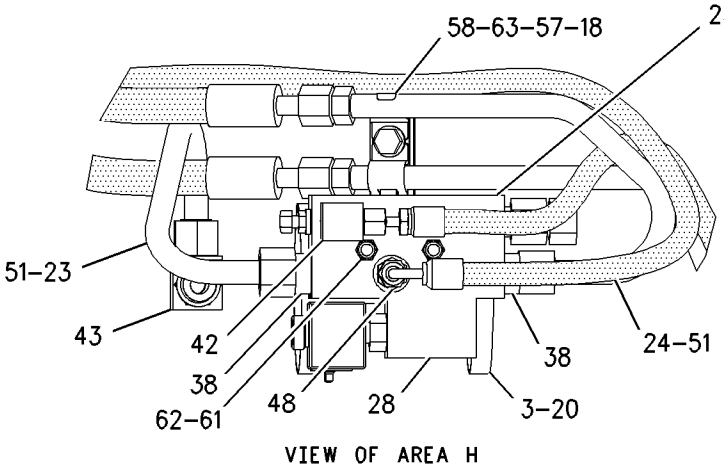

VIEW OF AREA H

GRAPHIC #2 **<END>** g01006365

HYDRAULIC SYSTEM

183-8560 LINES GP-CHECK VALVE

S/N: CXP940-UP
LIFT AND TILT, S/T
PART OF 186-5332 HYDRAULIC AR
AN ATTACHMENT
TYPE 2

SMCS-5057, 5067 **i01932666**

NOTE	REF NO	GRAPHIC REF	PART NUMBER	QTY	PART NAME 1 2 3 4 5 6 (PRODUCT LEVEL)	SEE PAGE
	1	2	**5P-0599**	1	CLAMP	
	2	1	**7K-1181**	2	STRAP-CABLE	
	3	2	**8T-6726**	4	CLAMP-HOSE	
I	4	1	**8W-4002**	2	HOSE AS	
I	5	1	**9R-7069**	4	HOSE AS	
I	6	1	**9R-9198**	2	HOSE AS	
	7	1	**9R-9316**	1	BRACKET AS	
M		1	**8T-3490**	1	NUT-WELD (M10X1.5 THD)	
	8	2	**9R-9375**	1	PLATE	
Y	9	1	**9T-5455**	1	VALVE GP-LOAD CONTROL	715
	10	1	**112-5823**	1	TUBE AS	
	11	1	**112-5827**	1	TUBE AS	
	12	1	**122-4872**	1	BRACKET AS	
M		1	**8T-3490**	1	NUT-WELD (M10X1.5 THD)	
	13	1	**122-4873**	1	BRACKET AS	
M		1	**8T-3490**	1	NUT-WELD (M10X1.5 THD)	
	14	1	**122-5822**	1	BRACKET AS	
M		1	**8T-3490**	1	NUT-WELD (M10X1.5 THD)	
	15	2	**156-3837**	2	CLIP (SLOT)	
	16	2	**156-3838**	1	CLIP (TAB)	
	17	1,2	**158-3412**	18	CLIP (SLOT)	
	18	2	**158-5964**	1	BRACKET AS	
M		2	**8T-3490**	1	NUT-WELD (M10X1.5 THD)	
	19	2	**158-5965**	1	BRACKET AS	
M		2	**8T-3490**	1	NUT-WELD (M10X1.5 THD)	
	20	2	**158-8625**	1	TUBE AS	
	21	2	**158-8626**	1	TUBE AS	
	22	2	**158-8628**	1	TUBE AS	
	23	2	**158-8629**	1	TUBE AS	
I	24	2	**161-3981**	2	HOSE AS	
	25	2	**175-6916**	2	VALVE GP-LOAD CONTROL	
I	26	1	**180-4194**	1	HOSE AS	
	27	1	**187-3162**	1	TUBE AS	
	28	1	**187-3163**	1	TUBE AS	
	29	1	**187-3164**	1	TUBE AS	
	30	1	**187-3166**	1	TUBE AS	
	31	1	**192-8775**	1	TUBE AS	
	32	1	**203-9680**	1	TUBE AS	
	33	1	**203-9681**	1	TUBE AS	
	34	1	**207-8595**	1	TUBE AS	
	35	1	**230-7649**	1	TUBE AS	
	36	1	**230-7650**	1	TUBE AS	
	37	1	**230-7651**	1	TUBE AS	
	38	2	*148-8315*	4	CONNECTOR GP	
					(EACH INCLUDES)	
		2	**2M-9780**	1	SEAL-O-RING	
		2	**6V-8642**	1	CONNECTOR-SEAL	
		2	**7J-9108**	1	SEAL-O-RING	
	39	1	*148-8340*	2	CONNECTOR GP	
					(EACH INCLUDES)	
		1	**3K-0360**	1	SEAL-O-RING	
		1	**6V-8398**	1	SEAL-O-RING	
		1	**6V-8639**	1	CONNECTOR	

183-8560 LINES GP-CHECK VALVE *(contd.)* i01932666

NOTE	REF NO	GRAPHIC REF	PART NUMBER	QTY	PART NAME 1 2 3 4 5 6 (PRODUCT LEVEL)	SEE PAGE
	40	1	*148-8341*	3	CONNECTOR GP	
					(EACH INCLUDES)	
		1	**3D-2824**	1	SEAL-O-RING	
		1	**6V-8713**	1	CONNECTOR	
		1	**7J-9108**	1	SEAL-O-RING	
	41	1	*148-8342*	1	CONNECTOR GP	
		1	**3K-0360**	1	SEAL-O-RING	
		1	**6V-8632**	1	CONNECTOR	
		1	**7J-9108**	1	SEAL-O-RING	
	42	2	*148-8368*	2	ELBOW GP	
					(EACH INCLUDES)	
		2	**3J-1907**	1	SEAL-O-RING	
		2	**4J-5477**	1	SEAL-O-RING	
		2	**6V-8627**	1	ELBOW	
	43	1,2	*148-8390*	3	ELBOW GP	
					(EACH INCLUDES)	
		1,2	**2M-9780**	1	SEAL-O-RING	
		1,2	**6V-8626**	1	ELBOW	
		1,2	**7J-9108**	1	SEAL-O-RING	
	44	1	*148-8393*	2	ELBOW GP	
					(EACH INCLUDES)	
		1	**6V-9852**	1	ELBOW (SWIVEL)	
		1	**7J-9108**	1	SEAL-O-RING	
	45	1	*148-8446*	5	TEE GP-SWIVEL	
					(EACH INCLUDES)	
		1	**6V-9838**	1	TEE-SWIVEL	
		1	**7J-9108**	2	SEAL-O-RING	
	46	1	*150-3037*	1	ELBOW GP	
		1	**3K-0360**	1	SEAL-O-RING	
		1	**7J-9108**	1	SEAL-O-RING	
		1	**8T-2530**	1	ELBOW	
	47	1	*150-3063*	1	TEE AS	
		1	**3D-2824**	1	SEAL-O-RING	
		1	**7J-9108**	2	SEAL-O-RING	
		1	**120-9809**	1	TEE	
	48	1	**151-4841**	2	BLOCK	
	49	2	*156-3691*	2	ADAPTER AS	
					(EACH INCLUDES)	
		2	**3J-1907**	1	SEAL-O-RING	
		2	**4J-5477**	1	SEAL-O-RING	
		2	**081-6352**	1	ADAPTER	
M	50	2	**3T-0850**	2	SCREW	
	51	1	**6V-8397**	2	SEAL-O-RING	
	52	1,2	**6V-8398**	14	SEAL-O-RING	
	53	1	**6V-8555**	2	NUT-FACE SEAL (1-14THD)	
	54	1	**6V-8938**	2	REDUCER-O-RING	
	55	1	**6V-9831**	2	CAP AS	
	56	1	**7J-9108**	1	SEAL-O-RING	
	57	1	**8T-1891**	2	CLIP (SLOT)	
	58	1	**8T-1892**	2	CLIP (TAB)	
	59	1,2	**8T-4121**	16	WASHER-HARD (11X21X2.5MM THK)	
M	60	1	**8T-4133**	1	NUT (M10X1.5 THD)	
M	61	1,2	**8T-4136**	10	BOLT (M10X1.5X25MM)	
M	62	1	**8T-4137**	2	BOLT (M10X1.5X20MM)	
M	63	1,2	**8T-4195**	4	BOLT (M10X1.5X30MM)	
M	64	2	**8T-6912**	4	BOLT (M8X1.25X50MM)	
M	65	2	**8T-7963**	4	LOCKNUT (M8X1.25 THD)	
	66	1,2	**9R-7803**	9	CLIP (TAB)	
B	67	1	**3S-2093**	45	STRAP-CABLE	

B-USE AS REQUIRED
I-SEE HOSE FABRICATION GUIDE
M-METRIC PART
Y-SEPARATE ILLUSTRATION

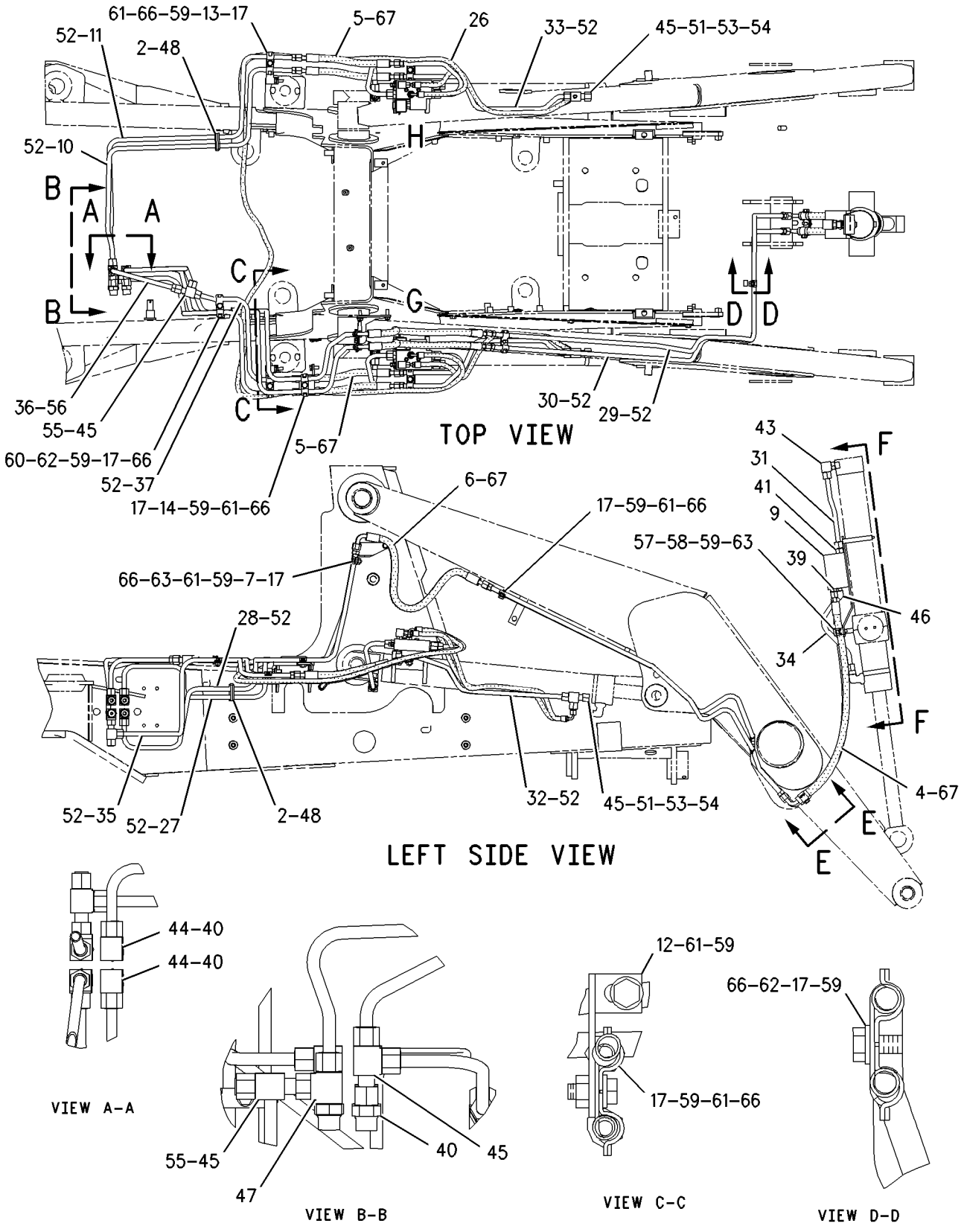

GRAPHIC #1 g01006092

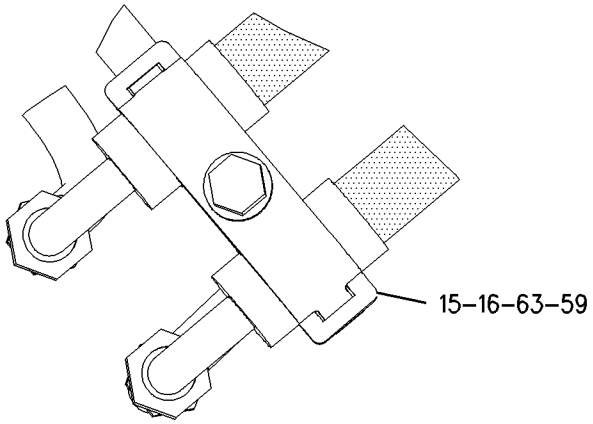

VIEW E-E

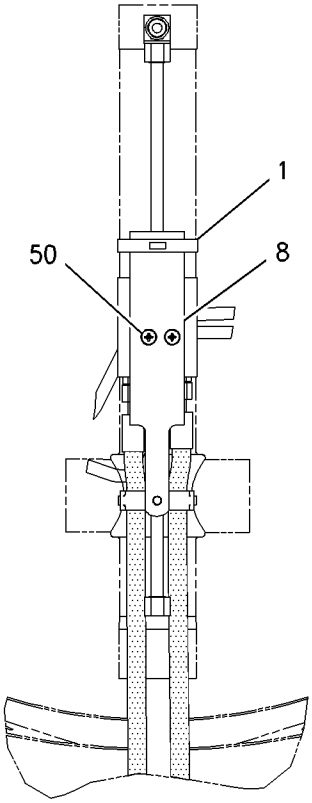

VIEW F-F

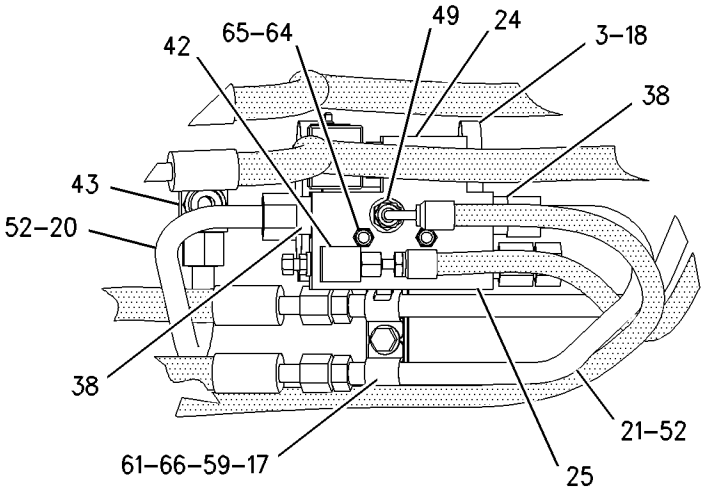

VIEW OF AREA G

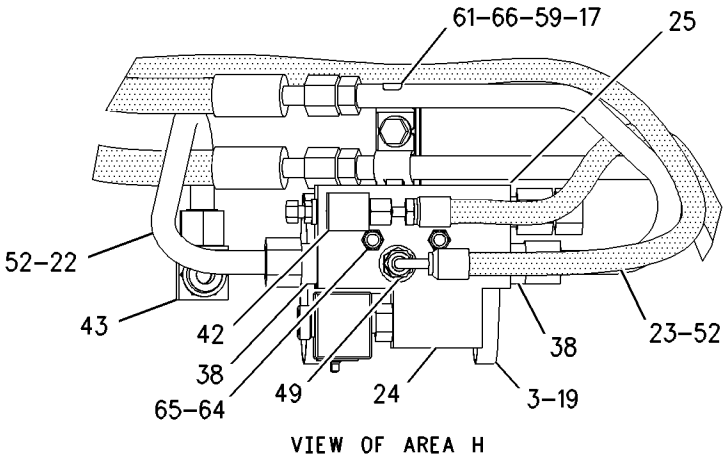

VIEW OF AREA H

GRAPHIC #2 **<END>** g01006094

HYDRAULIC SYSTEM

162-2351 LINES GP-EXTENDABLE STICK

S/N: BFP12900-UP

PART OF 155-6586 CYLINDER GP-EXTENDABLE STICK

AN ATTACHMENT

SMCS-5057 **i01888626**

NOTE	REF NO	GRAPHIC REF	PART NUMBER	QTY	PART NAME 1 2 3 4 5 6 (PRODUCT LEVEL)	SEE PAGE
	1	1	**5P-0598**	1	CLAMP	
	2	1	**9R-2004**	1	BLOCK	
	3	1	**162-2353**	1	TUBE AS	
	4	1	**203-9048**	1	TUBE AS	
	5	1	*148-8390*	1	ELBOW GP	
		1	**2M-9780**	1	SEAL-O-RING	
		1	**6V-8626**	1	ELBOW	
		1	**7J-9108**	1	SEAL-O-RING	

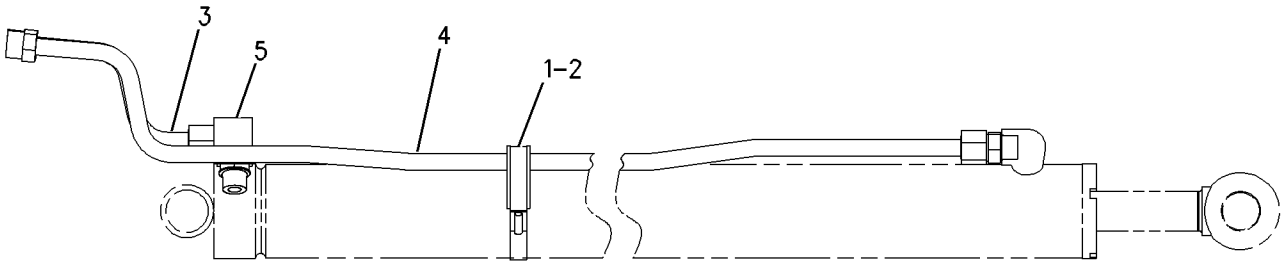

GRAPHIC #1 **<END>** g00865371

HYDRAULIC SYSTEM

167-8276 LINES GP-EXTENDABLE STICK

S/N: BFP12900-UP
EXTENDED
PART OF 184-7909, 238-4783 BACKHOE AR-EXTENDABLE STICK
AN ATTACHMENT

SMCS-5057 **i01979935**

NOTE	REF NO	GRAPHIC REF	PART NUMBER	QTY	PART NAME 1 2 3 4 5 6 (PRODUCT LEVEL)	SEE PAGE
	1	1	**5P-0599**	1	CLAMP	
	2	1	**9R-5948**	1	BLOCK	
	3	1	**9R-9253**	1	PLATE	
	4	1	**101-0862**	2	PLATE-WARNING (E-STICK)	
I	5	1	**160-6026**	1	HOSE AS	
	6	1	**162-2356**	2	TUBE AS	
I	7	1	**167-3896**	2	HOSE AS	
I	8	1	**169-2935**	2	HOSE AS	
I	9	1	**169-2983**	1	HOSE AS	
I	10	1	**168-8497**	1	HOSE AS	
	11	1	**177-0856**	1	TUBE AS	
	12	1	**177-2171**	1	TUBE AS	
	13	1	**187-4333**	1	TUBE AS	
	14	1	**187-4344**	1	TUBE AS	
I	15	1	**168-8644**	1	HOSE AS	
	16	1	*148-8328*	2	CONNECTOR GP	
					(EACH INCLUDES)	
		1	**3D-2824**	1	SEAL-O-RING	
		1	**6V-8398**	1	SEAL-O-RING	
		1	**6V-8633**	1	CONNECTOR	
	17	1	*148-8347*	1	ELBOW GP	
		1	**3D-2824**	1	SEAL-O-RING	
		1	**6V-9007**	1	ELBOW	
		1	**6V-9746**	1	SEAL-O-RING	
	18	1	**2P-1293**	1	LOCKNUT (1 3/16-12 THD)	
	19	1	**5P-7464**	5	CLIP (SLOT)	
	20	1	**5P-7465**	5	CLIP (TAB)	
	21	1	**5P-7466**	2	CLIP (SLOT)	
	22	1	**5P-7467**	2	CLIP (TAB)	
	23	1	**5P-7468**	1	CLIP (SLOT)	
	24	1	**5P-7469**	1	CLIP (TAB)	
	25	1	**5P-8112**	2	GROMMET	
	26	1	**6V-1249**	5	GROMMET	
	27	1	**6V-8398**	8	SEAL-O-RING	
	28	1	**6V-9169**	1	NUT-BULKHEAD (13/16-16 THD)	
	29	1	**6V-9746**	2	SEAL-O-RING	
	30	1	**7J-9108**	2	SEAL-O-RING	
	31	1	**8T-1889**	1	CLIP (SLOT)	
	32	1	**8T-1890**	1	CLIP (TAB)	
	33	1	**8T-4121**	8	WASHER-HARD (11X21X2.5MM THK)	
M	34	1	**8T-4136**	4	BOLT (M10X1.5X25MM)	
M	35	1	**8T-4139**	4	BOLT (M12X1.75X30MM)	
M	36	1	**8T-4184**	2	BOLT (M12X1.75X45MM)	
M	37	1	**8T-4195**	4	BOLT (M10X1.5X30MM)	
	38	1	**8T-4223**	6	WASHER-HARD (13.5X25.5X3MM THK)	
	39	1	**8T-7087**	1	GROMMET	
	40	1	**9R-1004**	5	CLIP (TAB)	
	41	1	**9R-1005**	5	CLIP (SLOT)	

I-REFER TO HYDRAULIC INFORMATION SYSTEM
M-METRIC PART

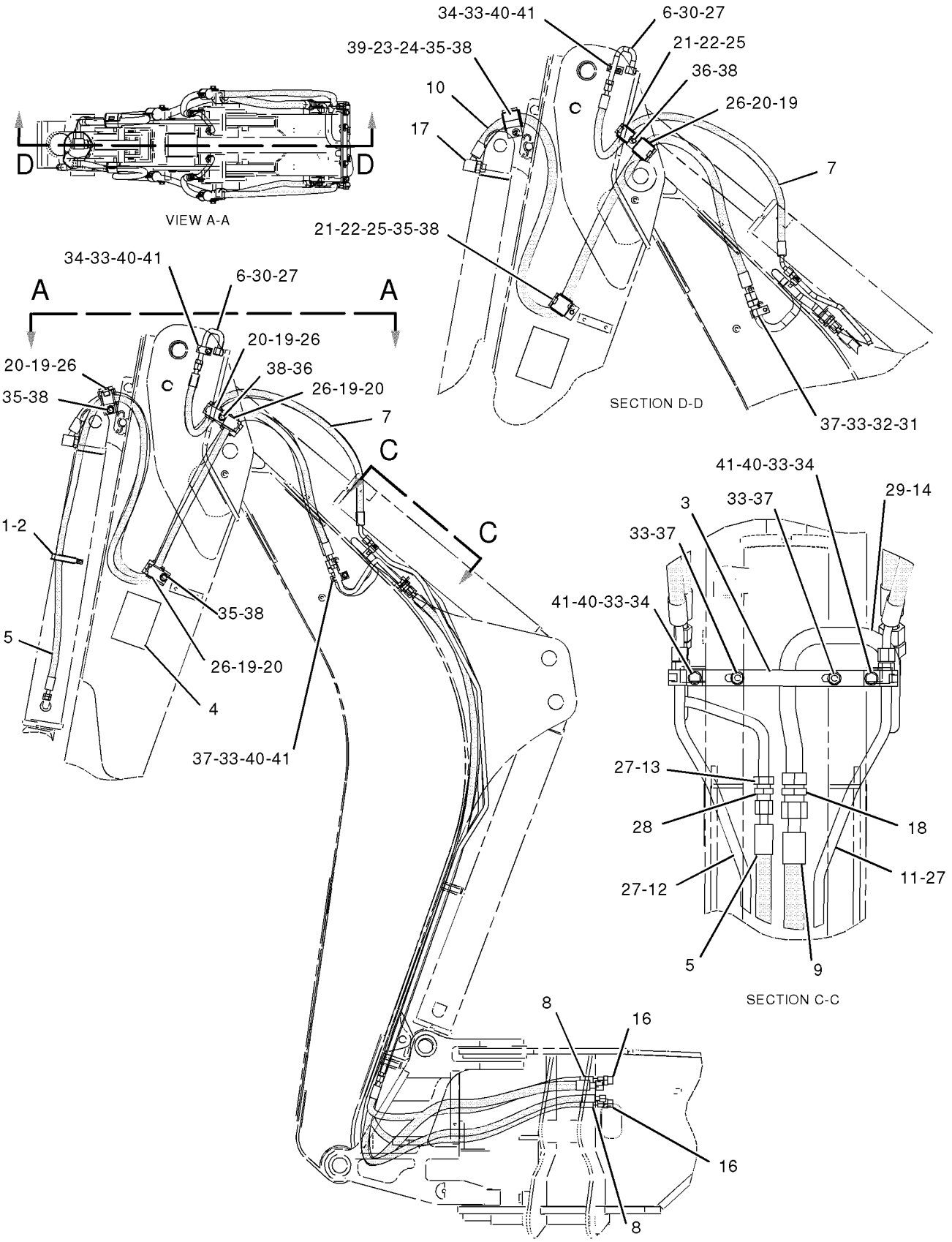

GRAPHIC #1 **<END>** g01026357

HYDRAULIC SYSTEM

144-6253 LINES GP-LIFT CYLINDER

S/N: BFP12900-UP; CXP940-UP
PART OF 186-5331, 186-5333 HYDRAULIC AR
AN ATTACHMENT

SMCS-5057, 5102 **i01645831**

NOTE	REF NO	GRAPHIC REF	PART NUMBER	QTY	PART NAME 1 2 3 4 5 6 (PRODUCT LEVEL)	SEE PAGE
	1	1	**8T-6726**	4	CLAMP-HOSE	
	2	1	**9R-7070**	1	PLATE AS	
	3	1	**9R-7071**	1	PLATE AS	
	4	1	**144-6256**	1	TUBE AS	
	5	1	**144-6258**	1	TUBE AS	
	6	1	**158-3412**	4	CLIP (SLOT)	
	7	1	**207-5479**	1	TUBE AS	
	8	1	**207-5480**	1	TUBE AS	
	9	1	*148-8390*	2	ELBOW GP	
					(EACH INCLUDES)	
		1	**2M-9780**	1	SEAL-O-RING	
		1	**6V-8626**	1	ELBOW	
		1	**7J-9108**	1	SEAL-O-RING	
	10	1	**6V-8398**	4	SEAL-O-RING	
	11	1	**8T-4121**	2	WASHER-HARD (11X21X2.5MM THK)	
M	12	1	**8T-4136**	2	BOLT (M10X1.5X25MM)	
	13	1	**9R-7803**	2	CLIP	

M-METRIC PART

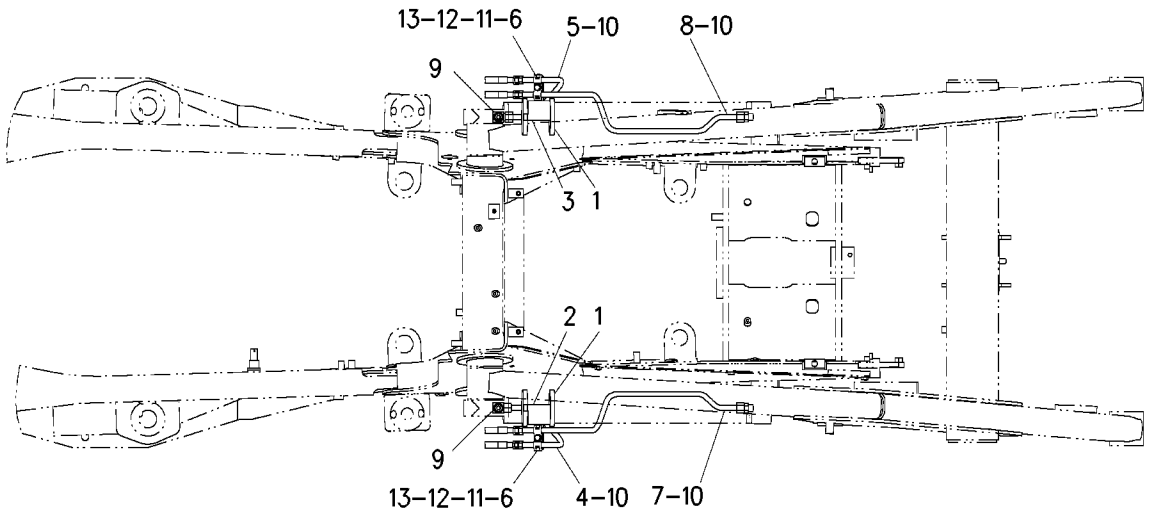

GRAPHIC #1 **<END>** g00850638

HYDRAULIC SYSTEM

163-9371 LINES GP-LIFT CYLINDER

S/N: BFP12900-UP; CXP940-UP
PART OF 186-5331, 186-5333 HYDRAULIC AR
AN ATTACHMENT

SMCS-5057, 5102 **i01910947**

NOTE	REF NO	GRAPHIC REF	PART NUMBER	QTY	PART NAME 1 2 3 4 5 6 (PRODUCT LEVEL)	SEE PAGE
	1	1	**7K-1181**	1	STRAP-CABLE	
C	2	1	**112-5823**	1	TUBE AS	
C	3	1	**112-5827**	1	TUBE AS	
I	4	1	**120-1324**	4	HOSE AS	
	5	1	**122-4872**	1	BRACKET AS	
	6	1	**122-4873**	1	BRACKET AS	
	7	1	**158-3412**	6	CLIP (SLOT)	
C	8	1	**230-7649**	1	TUBE AS	
C	9	1	**230-7651**	1	TUBE AS	
	10	1	*148-8341*	1	CONNECTOR GP	
		1	**3D-2824**	1	SEAL-O-RING	
		1	**6V-8713**	1	CONNECTOR	
		1	**7J-9108**	1	SEAL-O-RING	
	11	1	*148-8446*	3	TEE GP-SWIVEL	
					(EACH INCLUDES)	
		1	**6V-9838**	1	TEE-SWIVEL	
		1	**7J-9108**	2	SEAL-O-RING	
	12	1	*150-3063*	1	TEE AS	
		1	**3D-2824**	1	SEAL-O-RING	
		1	**7J-9108**	2	SEAL-O-RING	
		1	**120-9809**	1	TEE	
	13	1	**151-4841**	1	BLOCK	
C	14	1	**230-7650**	1	TUBE AS	
	15	1	**6V-8398**	4	SEAL-O-RING	
	16	1	**6V-9831**	2	CAP AS	
	17	1	**7J-9108**	1	SEAL-O-RING	
	18	1	**8T-4121**	5	WASHER-HARD (11X21X2.5MM THK)	
CM	19	1	**8T-4133**	1	NUT (M10X1.5 THD)	
M	20	1	**8T-4136**	4	BOLT (M10X1.5X25MM)	
CM	21	1	**8T-4137**	1	BOLT (M10X1.5X20MM)	
	22	1	**9R-7803**	3	CLIP (TAB)	

C-CHANGE FROM PREVIOUS TYPE
I-SEE HOSE FABRICATION GUIDE
M-METRIC PART

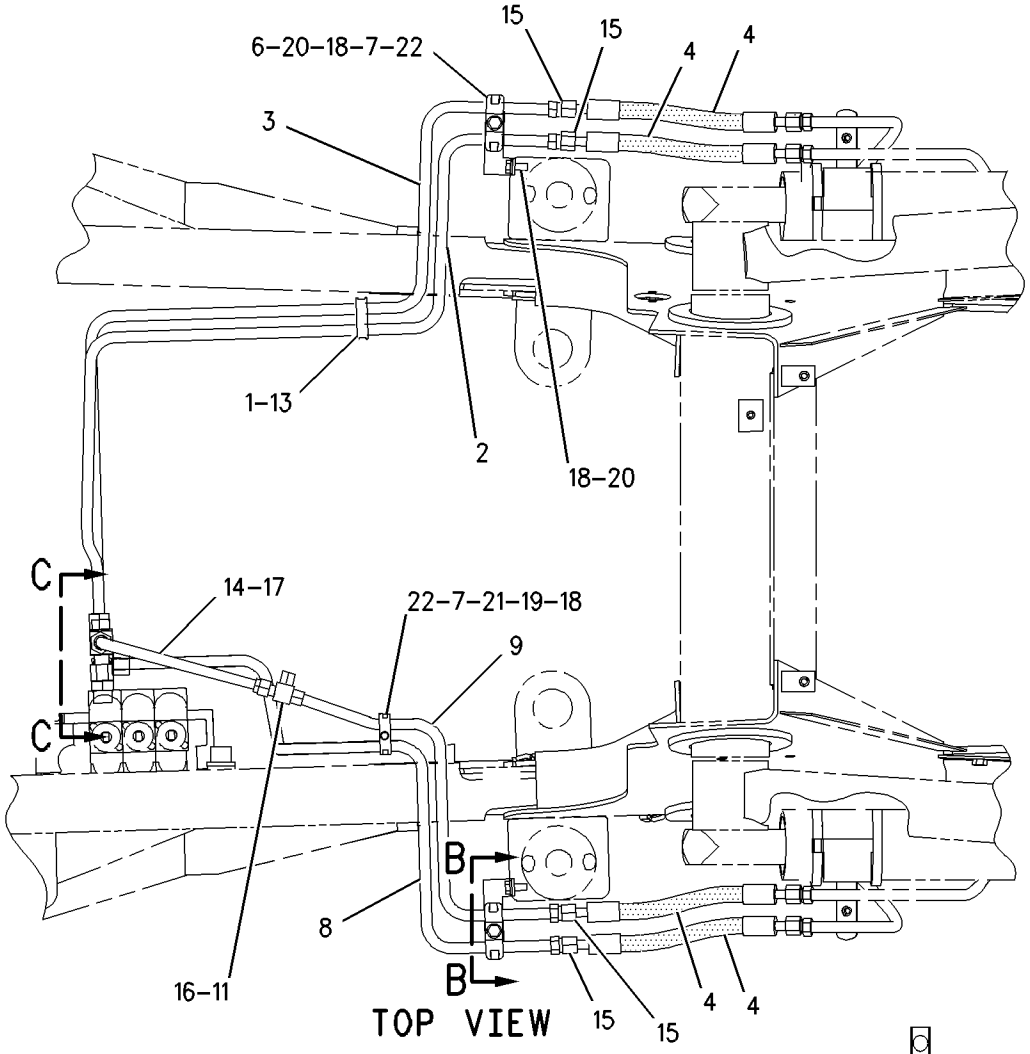

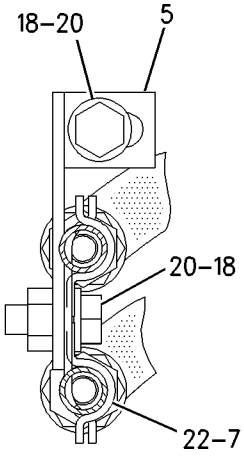

VIEW B-B

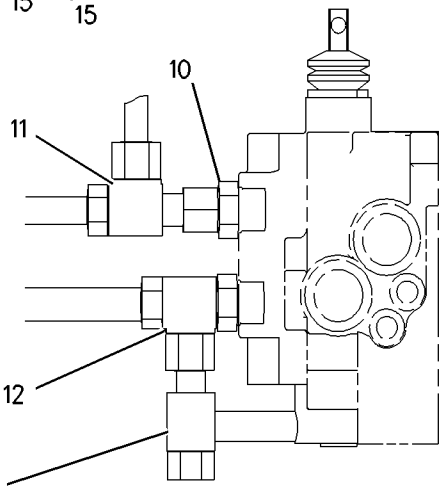

VIEW C-C

GRAPHIC #1 **<END>** g00995757

HYDRAULIC SYSTEM

185-6159 LINES GP-LOAD CONTROL VALVE—BACKHOE

S/N: BFP12900-UP
BOOM AND STICK
PART OF 184-7909, 184-7911 BACKHOE AR-EXTENDABLE STICK, 184-7903, 184-7905, 184-7907 BACKHOE AR-STANDARD STICK
AN ATTACHMENT

SMCS-5057, 5811 **i01929355**

NOTE	REF NO	GRAPHIC REF	PART NUMBER	QTY	PART NAME 1 2 3 4 5 6 (PRODUCT LEVEL)	SEE PAGE
	1	1	**5P-0599**	6	CLAMP	
	2	1	**7X-3164**	1	ADAPTER-SWIVEL	
	3	1	**9R-4619**	1	SUPPORT AS	
	4	1	**9R-5948**	1	BLOCK	
	5	1	**160-8282**	1	BRACKET	
	6	1	**160-9777**	1	BRACKET	
I	7	1	**161-1024**	1	HOSE AS	
	8	1	*161-9916*	1	ADAPTER GP	
		1	**2M-9780**	1	SEAL-O-RING	
		1	**6V-7420**	1	ADAPTER-STRAIGHT THREAD	
I	9	1	**169-2978**	1	HOSE AS	
	10	1	**175-6918**	1	VALVE GP-LOAD CONTROL	
	11	1	**175-6919**	1	VALVE GP-LOAD CONTROL	
I	12	1	**191-1730**	1	HOSE AS	
I	13	1	**191-1839**	1	HOSE AS	
I	14	1	**191-2204**	1	HOSE AS	
	15	1	**207-8598**	1	TUBE AS	
	16	1	*215-3191*	1	REDUCER AS	
		1	**4J-5477**	1	SEAL-O-RING	
		1	**6V-8937**	1	REDUCER-O-RING	
I	17	1	**235-9625**	1	HOSE AS	
I	18	1	**235-9637**	1	HOSE AS	
I	19	1	**237-0505**	1	HOSE AS	
	20	1	*148-8322*	1	CONNECTOR GP	
					(EACH INCLUDES)	
		1	**2M-9780**	1	SEAL-O-RING	
		1	**6V-8640**	1	CONNECTOR-SEAL	
		1	**6V-9746**	1	SEAL-O-RING	
	21	1	*148-8325*	1	CONNECTOR GP	
		1	**3J-1907**	1	SEAL-O-RING	
		1	**4J-5477**	1	SEAL-O-RING	
		1	**6V-8641**	1	CONNECTOR	
	22	1	*148-8326*	1	CONNECTOR GP	
		1	**3J-7354**	1	SEAL-O-RING	
		1	**6V-8397**	1	SEAL-O-RING	
		1	**6V-9872**	1	CONNECTOR	
	23	1	*148-8336*	1	CONNECTOR AS	
		1	**3J-1907**	1	SEAL-O-RING	
		1	**6V-8397**	1	SEAL-O-RING	
		1	**6V-8636**	1	CONNECTOR	
	24	1	*148-8341*	1	CONNECTOR GP	
		1	**3D-2824**	1	SEAL-O-RING	
		1	**6V-8713**	1	CONNECTOR	
		1	**7J-9108**	1	SEAL-O-RING	
	25	1	*148-8345*	1	CONNECTOR GP	
		1	**2M-9780**	1	SEAL-O-RING	
		1	**6V-8398**	1	SEAL-O-RING	
		1	**6V-8638**	1	CONNECTOR-SEAL	
	26	1	*148-8347*	1	ELBOW GP	
		1	**3D-2824**	1	SEAL-O-RING	
		1	**6V-9007**	1	ELBOW	
		1	**6V-9746**	1	SEAL-O-RING	
	27	1	*148-8368*	1	ELBOW GP	

185-6159 LINES GP-LOAD CONTROL VALVE *(contd.)* i01929355

NOTE	REF NO	GRAPHIC REF	PART NUMBER	QTY	PART NAME 1 2 3 4 5 6 (PRODUCT LEVEL)	SEE PAGE
		1	**3J-1907**	1	SEAL-O-RING	
		1	**4J-5477**	1	SEAL-O-RING	
		1	**6V-8627**	1	ELBOW	
	28	1	*148-8417*	1	REDUCER AS	
		1	**6V-8397**	1	SEAL-O-RING	
		1	**6V-8941**	1	REDUCER	
	29	1	*148-8435*	1	TEE AS	
		1	**3J-1907**	1	SEAL-O-RING	
		1	**6V-8397**	2	SEAL-O-RING	
		1	**6V-8781**	1	TEE-FACE SEAL	
	30	1	*148-8446*	1	TEE GP-SWIVEL	
		1	**6V-9838**	1	TEE-SWIVEL	
		1	**7J-9108**	2	SEAL-O-RING	
	31	1	*148-8449*	1	TEE GP-SWIVEL	
		1	**6V-9746**	2	SEAL-O-RING	
		1	**6V-9839**	1	TEE-SWIVEL	
	32	1	**164-5561**	1	ADAPTER AS	
		1	**2M-9780**	1	SEAL-O-RING	
		1	**5P-1042**	1	ADAPTER-O-RING	
	33	1	**3D-2824**	1	SEAL-O-RING	
	34	1	**3K-0360**	1	SEAL-O-RING	
M	35	1	**6V-7744**	1	LOCKNUT	
	36	1	**6V-8555**	1	NUT-FACE SEAL (1-14THD)	
	37	1	**6V-8556**	1	NUT (1 3/16-12 THD)	
	38	1	**7J-9108**	1	SEAL-O-RING	
	39	1	**7X-3166**	1	ADAPTER-SWIVEL	
	40	1	**8M-2773**	2	CLIP	
	41	1	**8T-1887**	1	CLIP (SLOT)	
	42	1	**8T-1888**	1	CLIP (TAB)	
	43	1	**8T-4121**	3	WASHER-HARD (11X21X2.5MM THK)	
M	44	1	**8T-4137**	1	BOLT (M10X1.5X20MM)	
	45	1	**8T-4224**	4	WASHER-HARD (8.8X16X2MM THK)	
M	46	1	**8T-6466**	1	BOLT (M10X1.50X60MM)	
M	47	1	**8T-7329**	1	BOLT (M8X1.25X55MM)	
M	48	1	**8T-7963**	1	LOCKNUT	
BF			**3S-2093**	45	STRAP-CABLE	

B-USE AS REQUIRED
F-NOT SHOWN
I-SEE HOSE FABRICATION GUIDE
M-METRIC PART

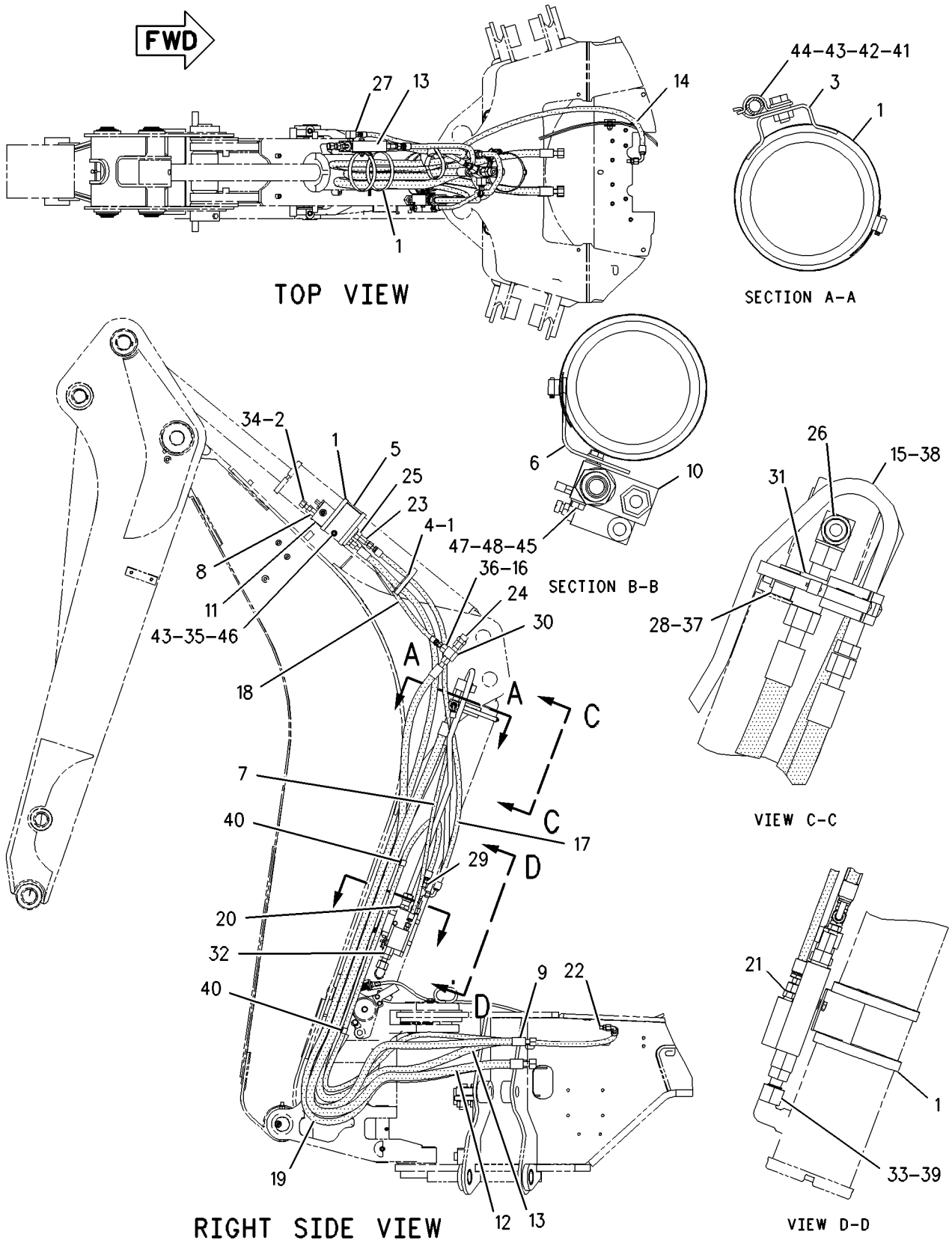

GRAPHIC #1 **<END>** g01004021

HYDRAULIC SYSTEM

106-5876 LINES GP-LOADER AUXILIARY

S/N: BFP12900-UP
ONE CIRCUIT, SCISSORS
PART OF 186-5333 HYDRAULIC AR
AN ATTACHMENT

SMCS-5057 **i01986465**

NOTE	REF NO	GRAPHIC REF	PART NUMBER	QTY	PART NAME 1 2 3 4 5 6 (PRODUCT LEVEL)	SEE PAGE
	1	1	**6V-9830**	2	CAP AS	
I	2	1	**9R-9198**	2	HOSE AS	
	3	1	**9R-9319**	1	BRACKET AS	
M		1	**8T-3490**	1	NUT-WELD (M10X1.5 THD)	
	4	1	**116-4616**	1	TUBE AS	
	5	1	**116-4617**	1	TUBE AS	
	6	1	**122-5823**	1	BRACKET AS	
M		1	**8T-3490**	1	NUT-WELD (M10X1.5 THD)	
	7	1	**151-4841**	1	BLOCK	
	8	1	**133-7332**	1	TUBE AS	
	9	1	**133-7333**	1	TUBE AS	
	10	1	**9R-7803**	4	CLIP (TAB)	
	11	1	**6V-8398**	6	SEAL-O-RING	
	12	1	*148-8341*	2	CONNECTOR GP	
					(EACH INCLUDES)	
		1	**3D-2824**	1	SEAL-O-RING	
		1	**6V-8713**	1	CONNECTOR	
		1	**7J-9108**	1	SEAL-O-RING	
M	13	1	**8T-4137**	1	BOLT (M10X1.5X20MM)	
	14	1	**8T-4121**	8	WASHER-HARD (11X21X2.5MM THK)	
	15	1	**7K-1181**	1	STRAP-CABLE	
M	16	1	**8T-4136**	3	BOLT (M10X1.5X25MM)	
M	17	1	**8T-4195**	3	BOLT (M10X1.5X30MM)	
	18	1	**158-3412**	8	CLIP (SLOT)	

I-REFER TO HYDRAULIC INFORMATION SYSTEM
M-METRIC PART

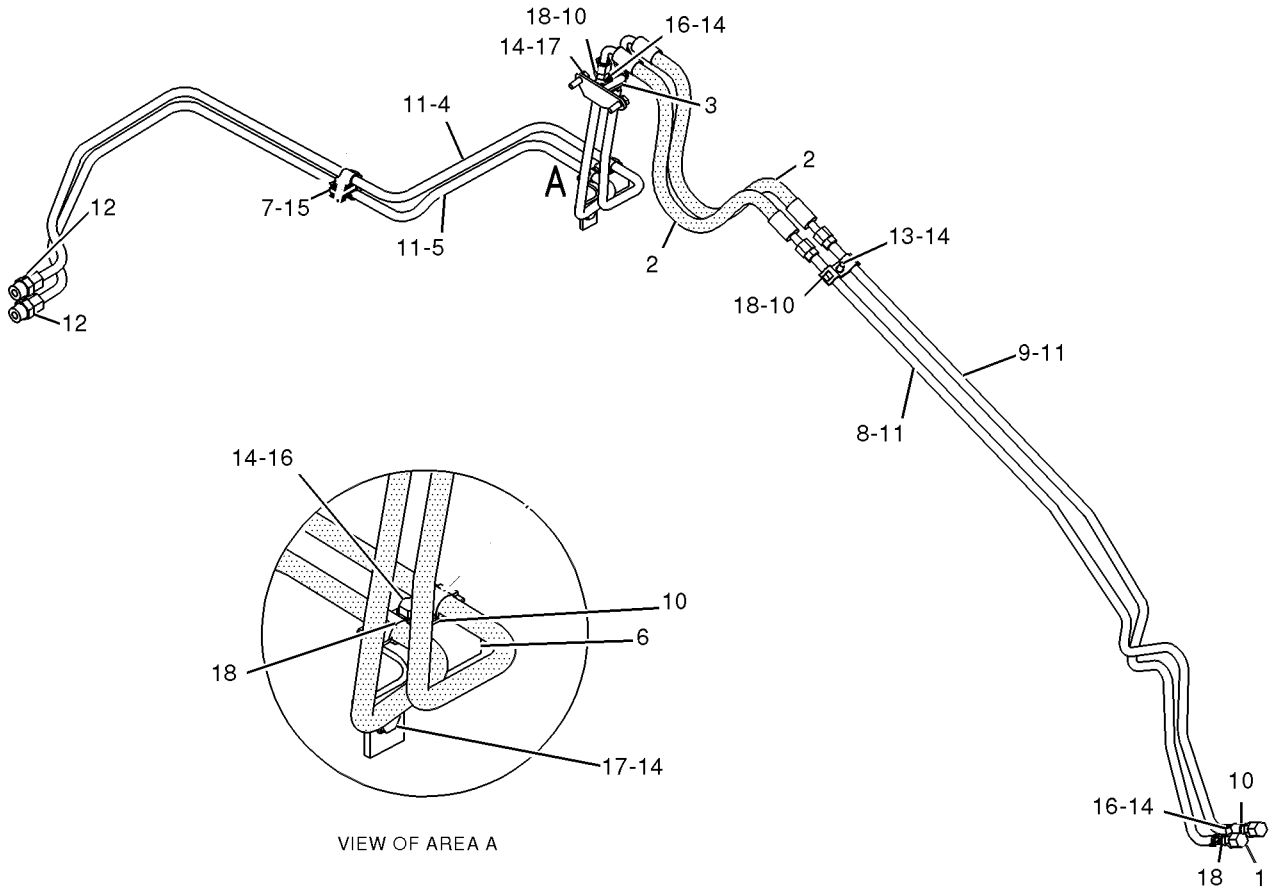

VIEW OF AREA A

GRAPHIC #1 **<END>** g01029236

9R-3712 LINES GP-MULTIPURPOSE BUCKET

S/N: BFP12900-UP
BOTTOM DUMP
PART OF 112-0938, 112-0939 BUCKET AR-MULTIPURPOSE
AN ATTACHMENT

SMCS-5057 **i01710063**

NOTE	REF NO	GRAPHIC REF	PART NUMBER	QTY	PART NAME 1 2 3 4 5 6 (PRODUCT LEVEL)	SEE PAGE
	1	1	**6V-1249**	2	GROMMET	
I	2	1	**8E-3081**	1	HOSE AS	
I	3	1	**9R-0418**	2	HOSE AS	
I	4	1	**9R-5971**	1	HOSE AS	
I	5	1	**100-7442**	1	HOSE AS	
I	6	1	**117-7520**	1	HOSE AS	
	7	1	**148-8336**	4	CONNECTOR GP	
					(EACH INCLUDES)	
		1	**3J-1907**	1	SEAL-O-RING	
		1	**6V-8397**	1	SEAL-O-RING	
		1	**6V-8636**	1	CONNECTOR	
	8	1	**150-3060**	2	TEE AS	
					(EACH INCLUDES)	
		1	**6V-8397**	2	SEAL-O-RING	
		1	**6V-8398**	1	SEAL-O-RING	
		1	**8T-3444**	1	TEE-UNION ORIFICE	
	9	1	**5P-7464**	2	CLIP (SLOT)	
	10	1	**5P-7465**	2	CLIP (TAB)	
	11	1	**8T-1891**	4	CLIP (SLOT)	
	12	1	**8T-1892**	4	CLIP (TAB)	
	13	1	**8T-4121**	2	WASHER-HARD (11X21X2.5MM THK)	
M	14	1	**8T-4136**	2	BOLT (M10X1.5X25MM)	
M	15	1	**8T-4192**	2	BOLT (M12X1.75X25MM)	
	16	1	**8T-4223**	2	WASHER-HARD (13.5X25.5X3MM THK)	

I-SEE HOSE FABRICATION GUIDE
M-METRIC PART

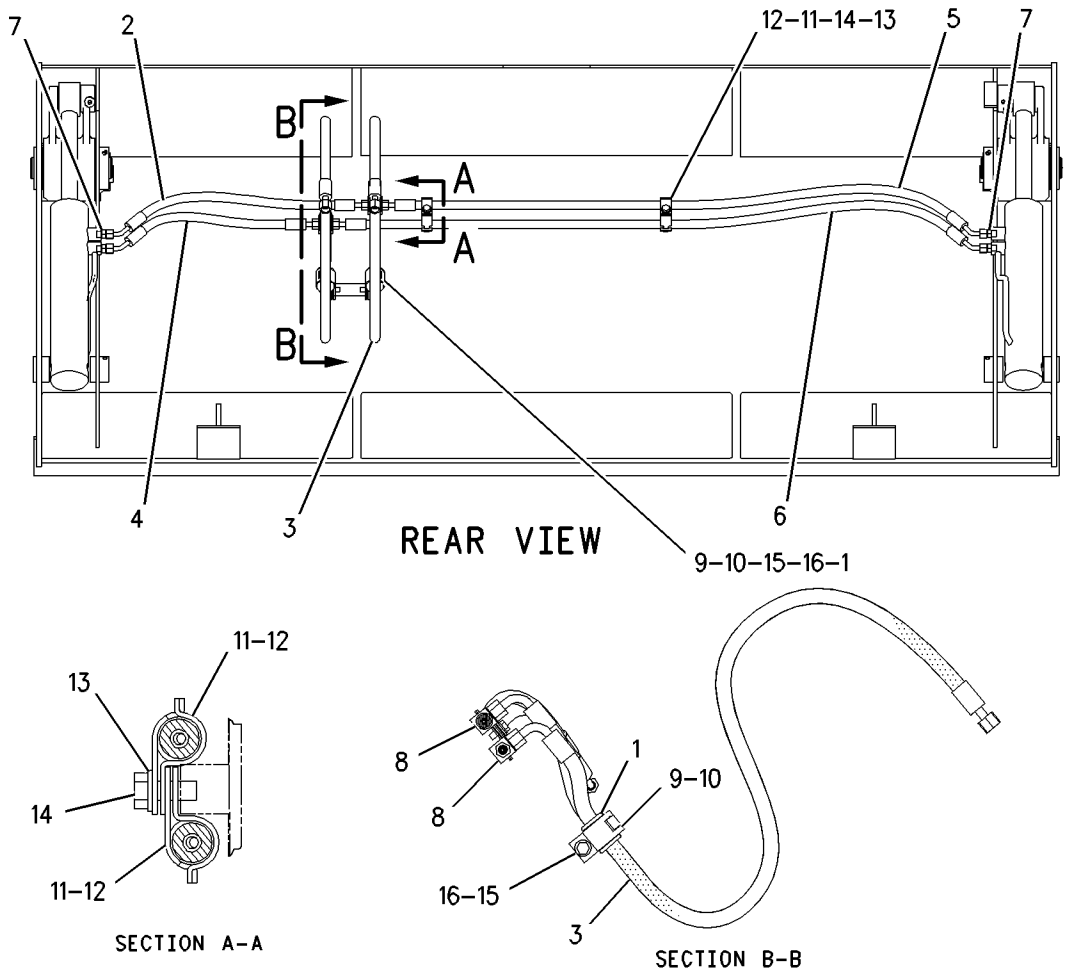

GRAPHIC #1 **<END>** g00882884

HYDRAULIC SYSTEM

9R-5788 LINES GP-MULTIPURPOSE BUCKET

S/N: BFP12900-UP
BOTTOM DUMP
PART OF 111-8634, 111-8635 BUCKET AR-MULTIPURPOSE
AN ATTACHMENT

SMCS-5057 **i01711627**

NOTE	REF NO	GRAPHIC REF	PART NUMBER	QTY	PART NAME 1 2 3 4 5 6 (PRODUCT LEVEL)	SEE PAGE
	1	1	**6V-1249**	2	GROMMET	
I	2	1	**7I-5486**	1	HOSE AS	
I	3	1	**9R-0418**	2	HOSE AS	
I	4	1	**100-7443**	1	HOSE AS	
I	5	1	**100-7444**	1	HOSE AS	
I	6	1	**131-2127**	1	HOSE AS	
	7	1	*148-8336*	4	CONNECTOR GP	
					(EACH INCLUDES)	
		1	**3J-1907**	1	SEAL-O-RING	
		1	**6V-8397**	1	SEAL-O-RING	
		1	**6V-8636**	1	CONNECTOR	
	8	1	*150-3060*	2	TEE AS	
					(EACH INCLUDES)	
		1	**6V-8397**	2	SEAL-O-RING	
		1	**6V-8398**	1	SEAL-O-RING	
		1	**8T-3444**	1	TEE-UNION ORIFICE	
	9	1	**5P-7464**	2	CLIP (SLOT)	
	10	1	**5P-7465**	2	CLIP (TAB)	
C	11	1	**8T-1891**	4	CLIP (SLOT)	
C	12	1	**8T-1892**	4	CLIP (TAB)	
C	13	1	**8T-4121**	2	WASHER-HARD (11X21X2.5MM THK)	
CM	14	1	**8T-4136**	2	BOLT (M10X1.5X25MM)	
M	15	1	**8T-4192**	2	BOLT (M12X1.75X25MM)	
	16	1	**8T-4223**	2	WASHER-HARD (13.5X25.5X3MM THK)	

C-CHANGE FROM PREVIOUS TYPE
I-SEE HOSE FABRICATION GUIDE
M-METRIC PART

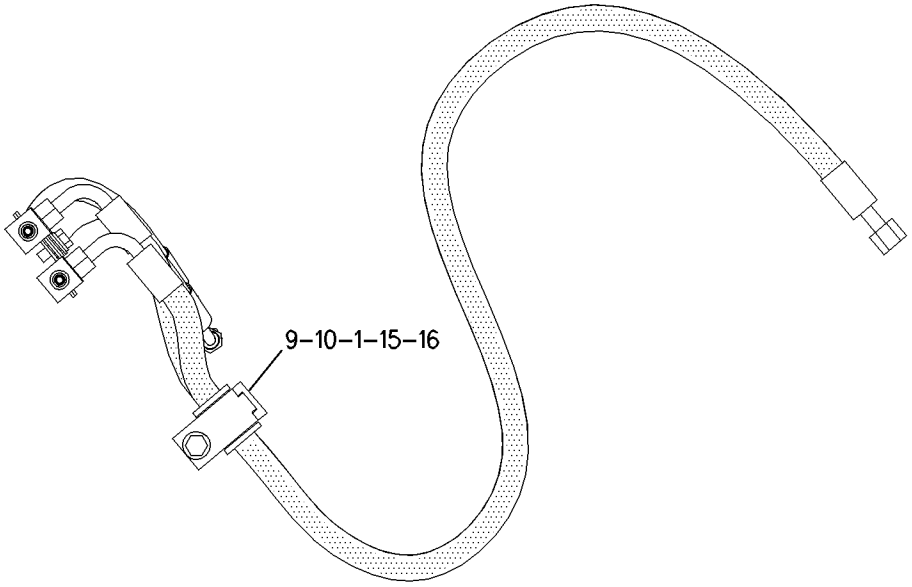

SECTION B–B

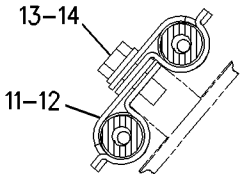

SECTION A–A

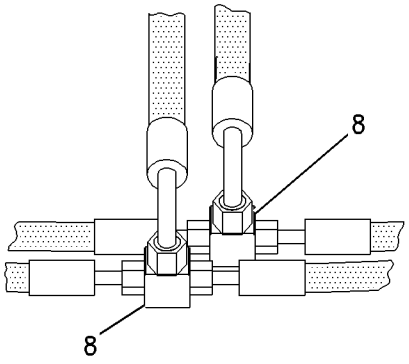

SECTION C–C

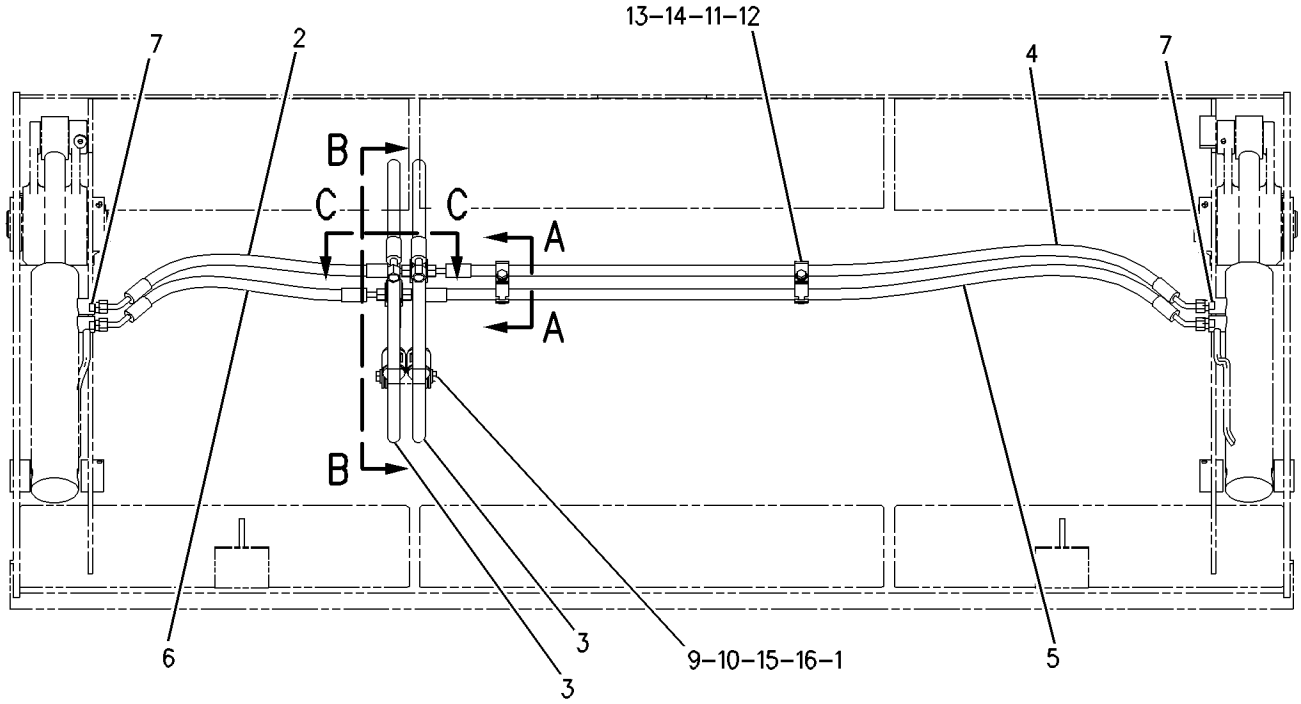

GRAPHIC #1 **<END>** g00879948

HYDRAULIC SYSTEM

188-9097 LINES GP-PILOT

S/N: BFP12900-UP
PRESSURE, STABILIZER ONLY
PART OF 214-6950 CHASSIS AR

SMCS-5057, 5059 **i01617629**

NOTE	REF NO	GRAPHIC REF	PART NUMBER	QTY	PART NAME 1 2 3 4 5 6 (PRODUCT LEVEL)	SEE PAGE
	1	1	**6V-0852**	1	CAP-DUST	
	2	1	**133-5813**	2	BAND-HOSE (P-GRAY)	
	3	1	*164-5567*	1	FITTING GP	
		1	**3J-1907**	1	SEAL-O-RING	
		1	**6V-3965**	1	FITTING AS	
	4	1	*166-2033*	1	FITTING GP	
		1	**4J-5477**	1	SEAL-O-RING	
		1	**7X-2444**	1	TEE-SWIVEL	
	5	1	**202-5923**	1	BLOCK	
	6	1	**205-3126**	1	HOSE AS	
	7	1	*148-8325*	2	CONNECTOR GP	
					(EACH INCLUDES)	
		1	**3J-1907**	1	SEAL-O-RING	
		1	**4J-5477**	1	SEAL-O-RING	
		1	**6V-8641**	1	CONNECTOR	
	8	1	**6V-9828**	1	CAP AS	

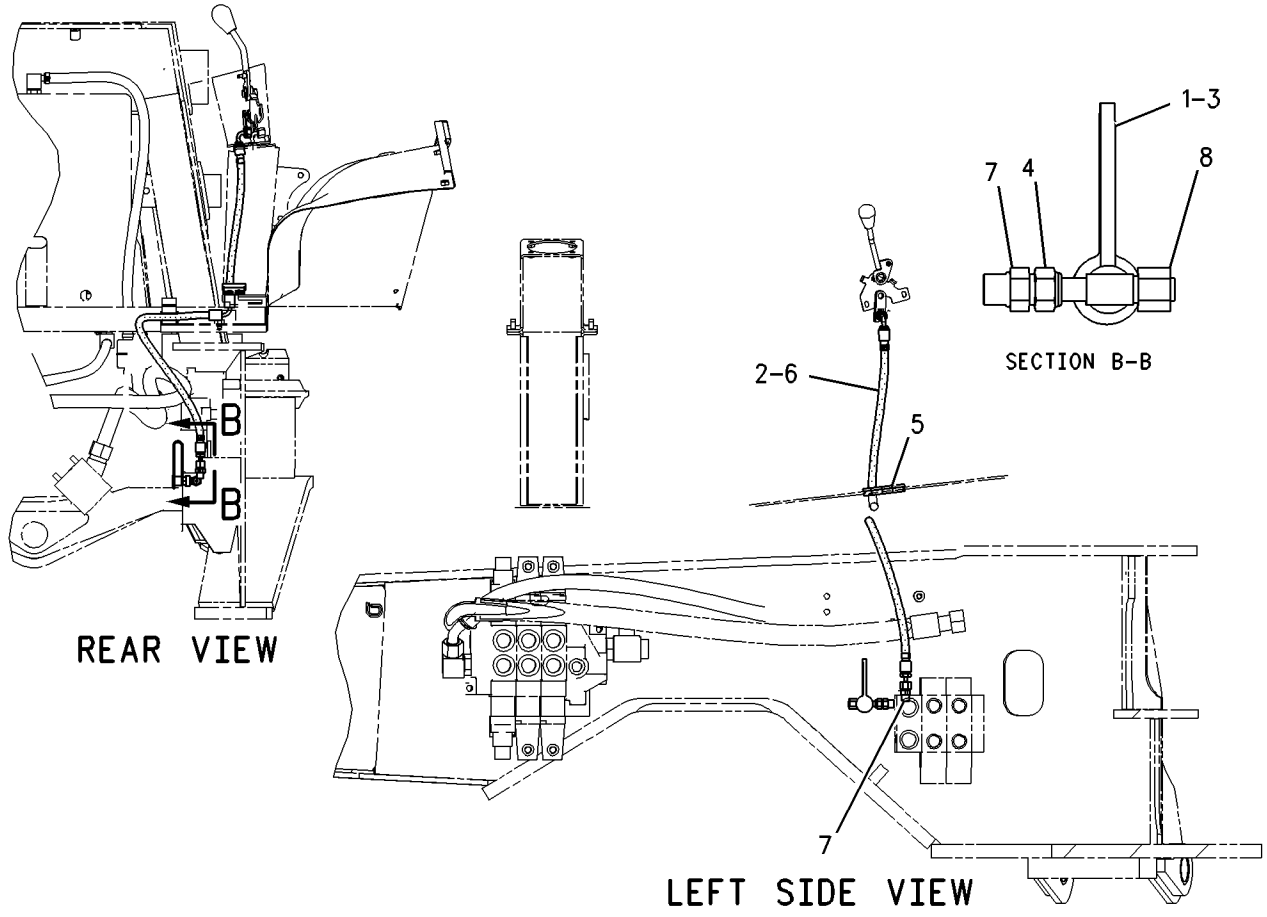

GRAPHIC #1 **<END>** g00837301

HYDRAULIC SYSTEM

202-5928 LINES GP-PILOT

S/N: BFP12900-UP
STABILIZER
PART OF 214-6980 HYDRAULIC AR

SMCS-5057, 5059 **i02014879**

NOTE	REF NO	GRAPHIC REF	PART NUMBER	QTY	PART NAME 1 2 3 4 5 6 (PRODUCT LEVEL)	SEE PAGE
	1	2	**5D-1026**	2	CLAMP-HOSE	
	2	2	**7K-1181**	1	STRAP-CABLE	
	3	1	**143-3158**	1	CONNECTOR	
B	4	1,2	*155-3624*	7	PLUG GP	
					(EACH INCLUDES)	
		1,2	**3J-7354**	1	SEAL-O-RING	
		1,2	**9S-4182**	1	PLUG	
	5	1	*174-6740*	1	TEE AS	
		1	**2M-9780**	1	SEAL-O-RING	
		1	**122-1113**	1	TEE-O-RING (12.7-MM ID)	
	6	2	**186-3629**	1	MANIFOLD	
I	7	1	**188-8715**	1	HOSE AS	
	8	2	**195-0260**	2	BAND-HOSE	
	9	2	**195-0261**	2	BAND-HOSE	
	10	1	**195-0262**	2	BAND-HOSE	
	11	2	**195-0263**	2	BAND-HOSE	
	12	2	**205-6373**	1	HOSE AS	
	13	2	**205-6374**	1	HOSE AS	
	14	1	**205-6375**	1	HOSE AS	
	15	2	**205-6376**	1	HOSE AS	
	16	1	**205-6377**	1	HOSE AS	
	17	1,2	*148-8325*	7	CONNECTOR GP	
					(EACH INCLUDES)	
		1,2	**3J-1907**	1	SEAL-O-RING	
		1,2	**4J-5477**	1	SEAL-O-RING	
		1,2	**6V-8641**	1	CONNECTOR	
	18	1	*148-8369*	2	ELBOW GP	
					(EACH INCLUDES)	
		1	**3J-7354**	1	SEAL-O-RING	
		1	**4J-5477**	1	SEAL-O-RING	
		1	**6V-8628**	1	ELBOW	
	19	1	*150-3033*	4	CONNECTOR GP	
					(EACH INCLUDES)	
		1	**3J-1907**	1	SEAL-O-RING	
		1	**4J-5477**	1	SEAL-O-RING	
		1	**8T-0164**	1	ELBOW	
	20	1	**2M-9780**	1	SEAL-O-RING	
	21	1	**6D-4246**	4	CLIP	
	22	1	**7D-7233**	1	CLIP	
M	23	1	**8T-3844**	2	BOLT (M6X1X70-MM)	
	24	1	**8T-4121**	4	WASHER-HARD (11X21X2.5-MM THK)	
M	25	1	**8T-4133**	2	NUT (M10X1.5-THD)	
M	26	1	**8T-4195**	2	BOLT (M10X1.5X30-MM)	
	27	1	**8T-4205**	2	WASHER-HARD (7.2X14.5X2-MM THK)	
	28	1	**9M-8406**	1	CLIP	
E	29	1	**5P-1505**		HOSE (220CM)	

B-USE AS REQUIRED
E-ORDER BY THE CENTIMETER
I-REFER TO HYDRAULIC INFORMATION SYSTEM
M-METRIC PART

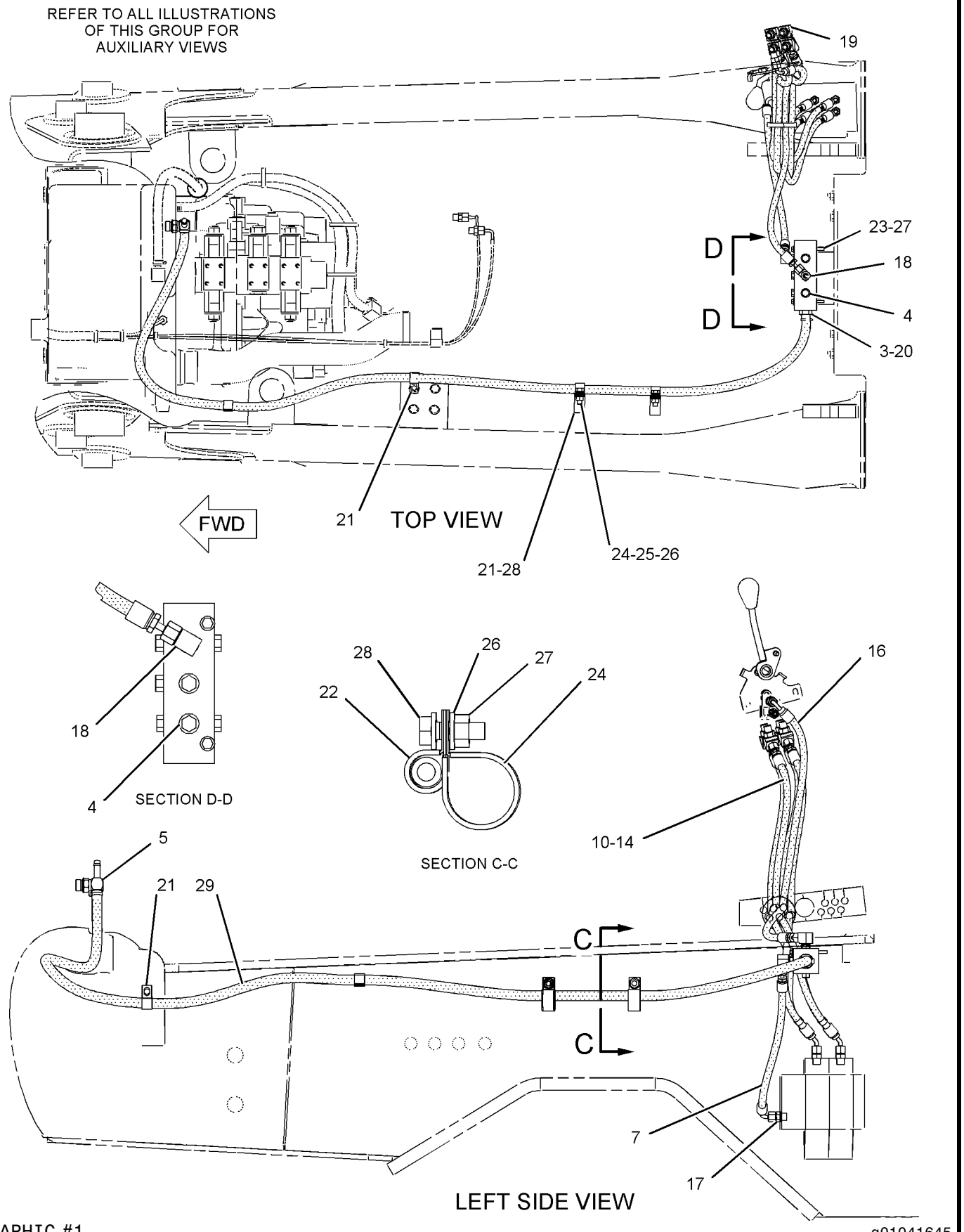

GRAPHIC #1

g01041645

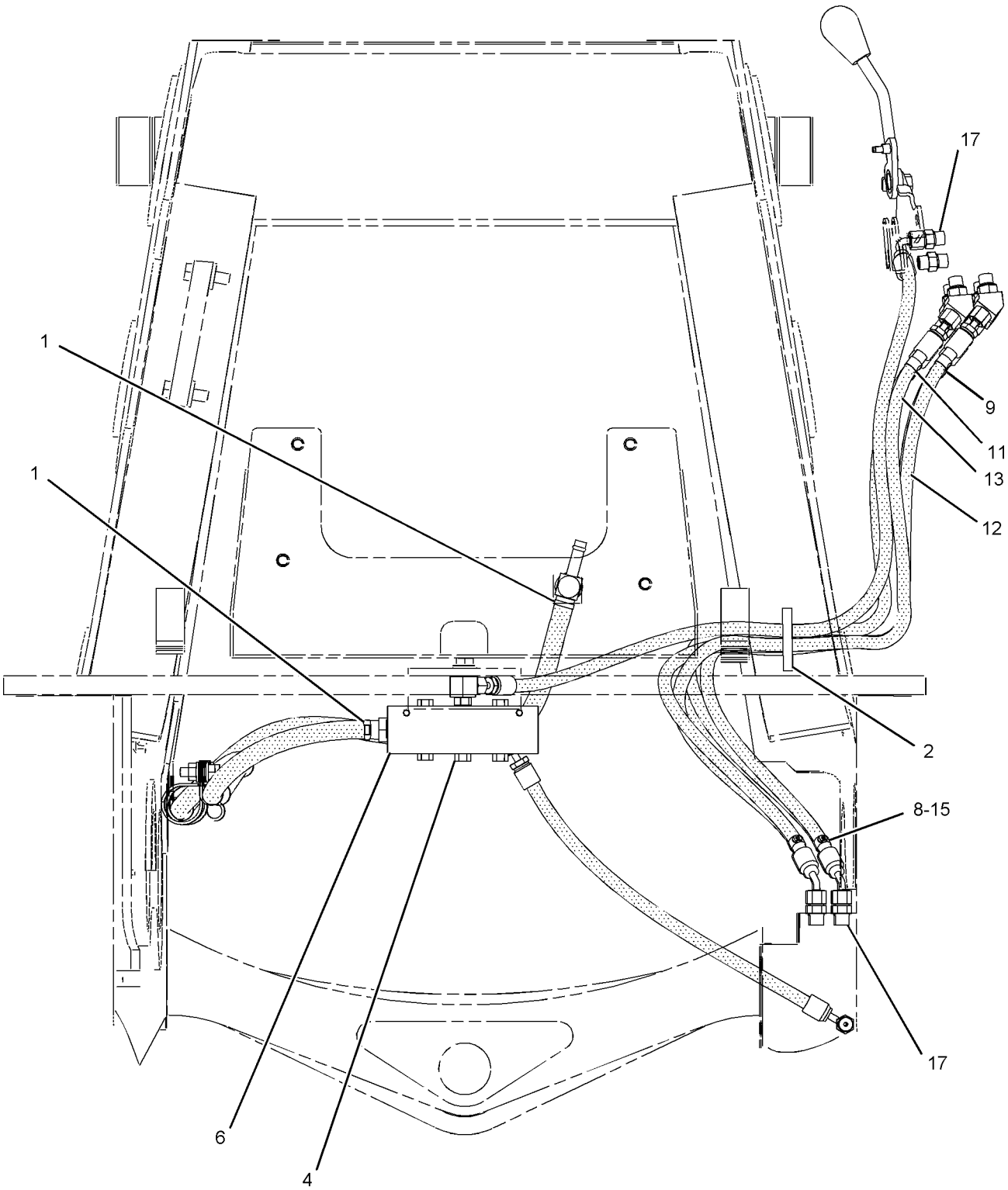

REAR VIEW

GRAPHIC #2

<END>

g01041654

HYDRAULIC SYSTEM

174-7153 LINES GP-PUMP

S/N: CXP940-UP
COMMON
PART OF 185-1129 SUPPRESSION AR-SOUND
AN ATTACHMENT

SMCS-5057 **i01913092**

NOTE	REF NO	GRAPHIC REF	PART NUMBER	QTY	PART NAME 1 2 3 4 5 6 (PRODUCT LEVEL)	SEE PAGE
E	1	2	**5P-0743**		HOSE (40CM)	
	2	2	**1P-3709**	1	SEAL-RECTANGULAR	
	3	1,2	**5D-1026**	2	CLAMP-HOSE	
	4	2	**5P-4868**	2	CLAMP-HOSE	
	5	2	**6V-0852**	1	CAP-DUST	
	6	1	**7K-1181**	4	STRAP-CABLE	
	7	2	**8T-0154**	1	CLAMP-HOSE	
	8	2	**110-2445**	4	CLAMP-HOSE	
	9	2	**114-4777**	1	BRACKET AS	
	10	1	**130-9984**	1	CLIP	
	11	1	**144-0367**	1	CLAMP-HOSE	
	12	2	**146-8958**	1	FITTING	
	13	2	**159-0186**	4	CLAMP	
	14	2	*164-5567*	1	FITTING AS	
		2	**3J-1907**	1	SEAL-O-RING	
		2	**6V-3965**	1	FITTING AS (QUICK DISCONNECT)	
	15	2	*165-2273*	1	VALVE GP-SHUTOFF	
		2	**3K-0360**	1	SEAL-O-RING	
		2	**6V-7238**	1	VALVE-SHUTOFF	
	16	1	**174-7147**	1	HOSE	
	17	2	**190-2932**	1	FLANGE	
	18	2	*190-3032*	1	ELBOW AS	
		2	**5K-9090**	1	SEAL-O-RING	
		2	**7M-8485**	1	SEAL-O-RING	
		2	**194-1958**	1	ELBOW	
	19	2	**195-8665**	1	ELBOW	
	20	1	**207-7589**	1	HOSE AS	
E	21	1	**136-1955**		HOSE (96CM EACH)	
	22	1	*219-6768*	1	TEE AS	
		1	**6V-9746**	1	SEAL-O-RING	
		1	**7M-8485**	1	SEAL-O-RING	
		1	**211-3522**	1	TEE	
	23	2	*148-8352*	1	ELBOW GP	
		2	**5K-9090**	1	SEAL-O-RING	
		2	**6V-9854**	1	ELBOW (SWIVEL)	
	24	1	*148-8362*	1	ELBOW GP	
		1	**3D-2824**	1	SEAL-O-RING	
		1	**5K-9090**	1	SEAL-O-RING	
		1	**8T-6684**	1	ELBOW	
	25	2	*148-8422*	1	TEE AS	
		2	**5K-9090**	1	SEAL-O-RING	
		2	**6V-9746**	1	SEAL-O-RING	
		2	**7M-8485**	1	SEAL-O-RING	
		2	**8T-6356**	1	TEE-O-RING PORT	
	26	2	*150-3027*	1	ELBOW AS	
		2	**2M-9780**	1	SEAL-O-RING	
		2	**6V-5653**	1	ELBOW (7/8-14 THD)	
	27	2	*150-3065*	1	ADAPTER GP	
		2	**3J-1907**	1	SEAL-O-RING	
		2	**6V-0484**	1	ADAPTER-O-RING	
	28	2	*155-3624*	1	PLUG GP	
		2	**3J-7354**	1	SEAL-O-RING	
		2	**9S-4182**	1	PLUG (7/16-20 THD)	
M	29	2	**172-9966**	2	BOLT	

174-7153 **LINES GP-PUMP** ***(contd.)*** **i01913092**

NOTE	REF NO	GRAPHIC REF	PART NUMBER	QTY	PART NAME 1 2 3 4 5 6 (PRODUCT LEVEL)	SEE PAGE
	30	2	**1P-3703**	1	SEAL-RECTANGULAR	
	31	2	**5P-4116**	2	WASHER-HARD (8.8X20.5X2MM THK)	
	32	2	**6V-9832**	1	CAP AS	
C	33	1	**7D-7233**	4	CLIP	
M	34	2	**7X-2550**	2	BOLT (M12X1.75X110MM)	
	35	1,2	**8T-4121**	16	WASHER-HARD (11X21X2.5MM THK)	
M	36	1	**8T-4136**	5	BOLT (M10X1.5X25MM)	
M	37	1,2	**8T-4137**	4	BOLT (M10X1.5X20MM)	
M	38	2	**8T-4189**	2	BOLT (M8X1.25X20MM)	
M	39	1	**8T-4195**	3	BOLT (M10X1.5X30MM)	
M	40	2	**8T-4198**	4	BOLT (M10X1.5X100MM)	
	41	2	**8T-4223**	6	WASHER-HARD (13.5X25.5X3MM THK)	
	42	2	**8T-7529**	2	CLIP	
E	43	1	**5P-1505**		HOSE (72CM)	
CD	44	1	**5P-1506**		HOSE (94CM)	
CD	45	1	**5P-1506**		HOSE (55CM)	

C-CHANGE FROM PREVIOUS TYPE
D-ORDER BY THE METER
E-ORDER BY THE CENTIMETER
M-METRIC PART

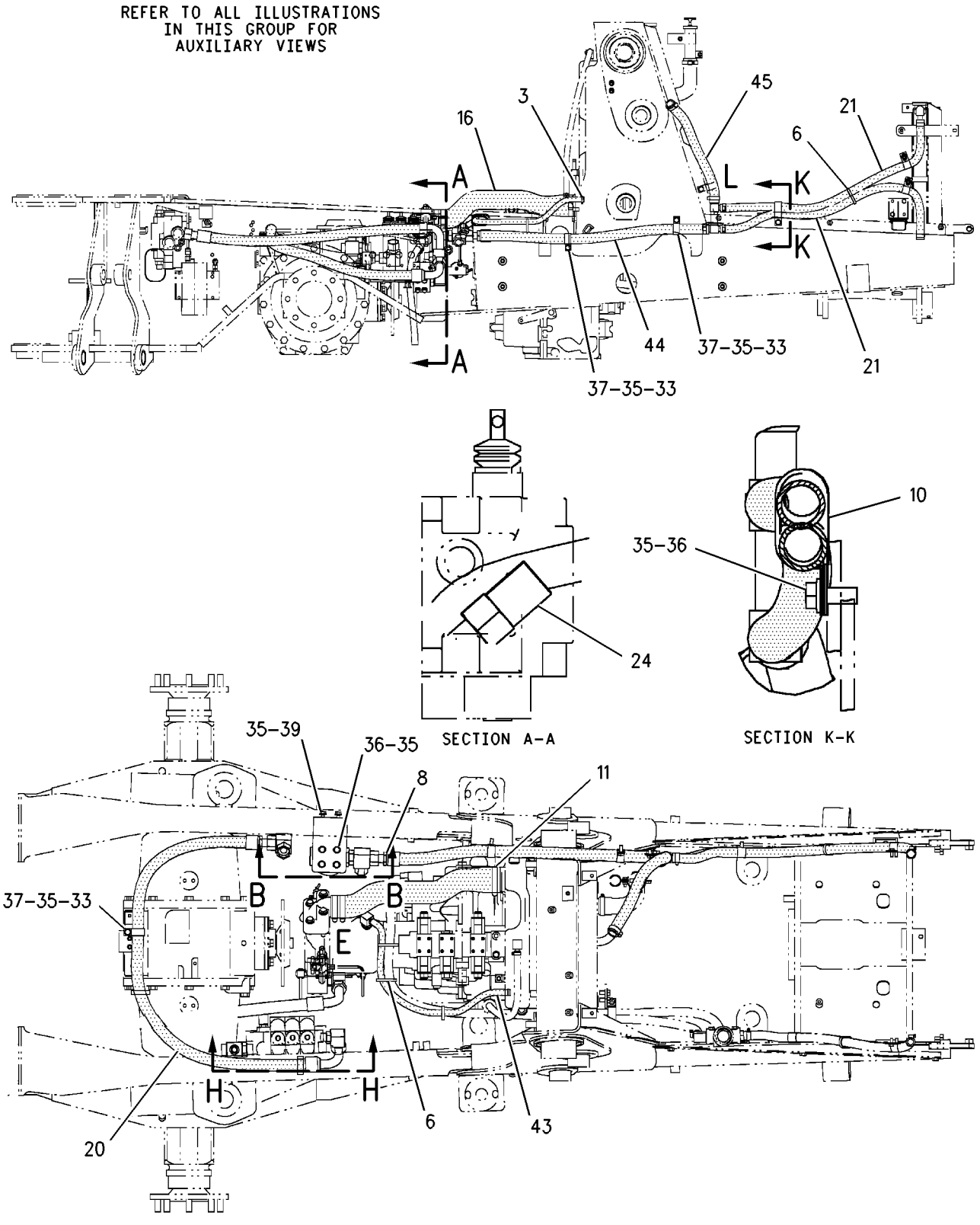

GRAPHIC #1 g00996351

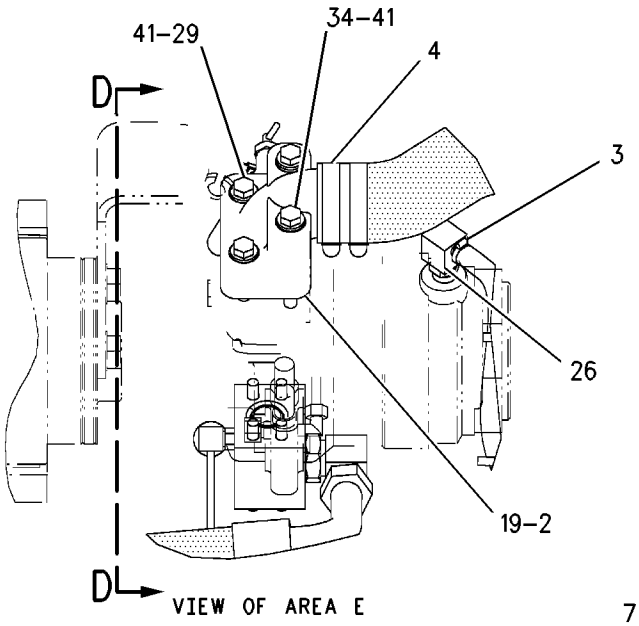

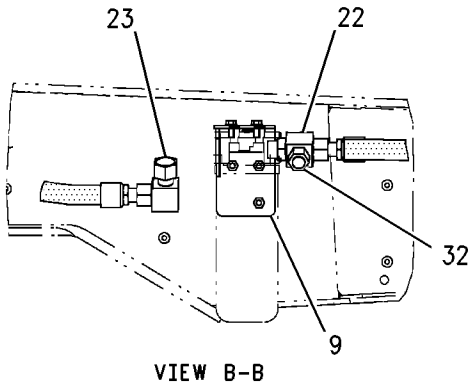

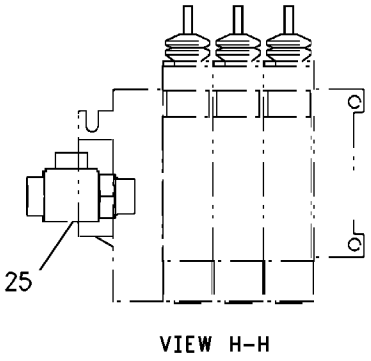

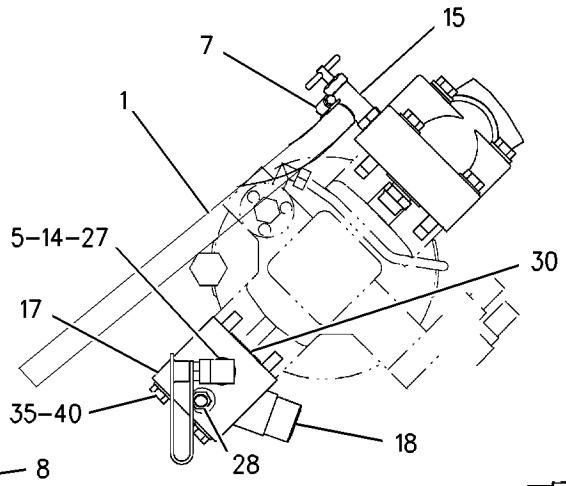

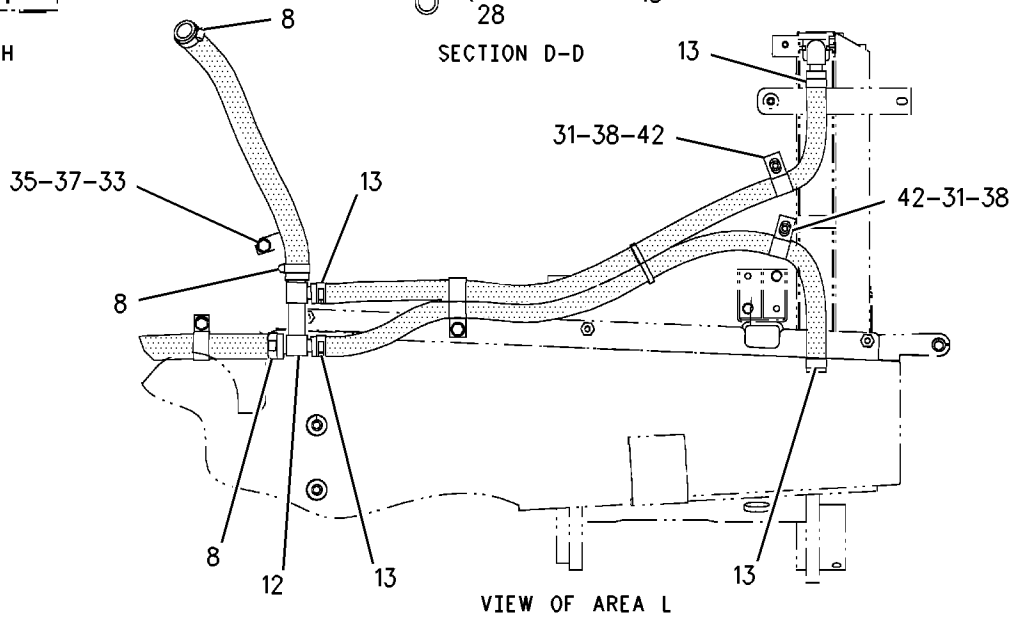

GRAPHIC #2 **<END>** g00951405

HYDRAULIC SYSTEM

190-8954 LINES GP-PUMP

S/N: BFP12900-UP
PART OF 237-6458, 237-6459 DRIVE AR-BACKHOE LOADER
AN ATTACHMENT

SMCS-5057 **i01821528**

NOTE	REF NO	GRAPHIC REF	PART NUMBER	QTY	PART NAME 1 2 3 4 5 6 (PRODUCT LEVEL)	SEE PAGE
I	1	1	**120-4604**	1	HOSE AS	
I	2	1	**190-8956**	1	HOSE AS	
	3	1	**220-0248**	1	PLATE AS	
	4	1	*148-8316*	2	CONNECTOR AS	
					(EACH INCLUDES)	
		1	**3J-7354**	1	SEAL-O-RING	
		1	**4J-5477**	1	SEAL-O-RING	
		1	**6V-8647**	1	CONNECTOR	
	5	1	*148-8351*	1	ELBOW GP	
		1	**4J-5477**	1	SEAL-O-RING	
		1	**6V-9849**	1	ELBOW (SWIVEL)	
	6	1	*148-8369*	1	ELBOW GP	
		1	**3J-7354**	1	SEAL-O-RING	
		1	**4J-5477**	1	SEAL-O-RING	
		1	**6V-8628**	1	ELBOW	
	7	1	**5K-0906**	2	BOLT (5/16-18X0.63 IN)	
	8	1	**6K-8178**	1	CLIP	
	9	1	**8T-4121**	1	WASHER-HARD (11X21X2.5MM THK)	
M	10	1	**8T-4137**	1	BOLT (M10X1.5X20MM)	
	11	1	**8T-4224**	2	WASHER-HARD (8.8X16X2MM THK)	
	12	1	**9M-8406**	1	CLIP	

I-SEE HOSE FABRICATION GUIDE
M-METRIC PART

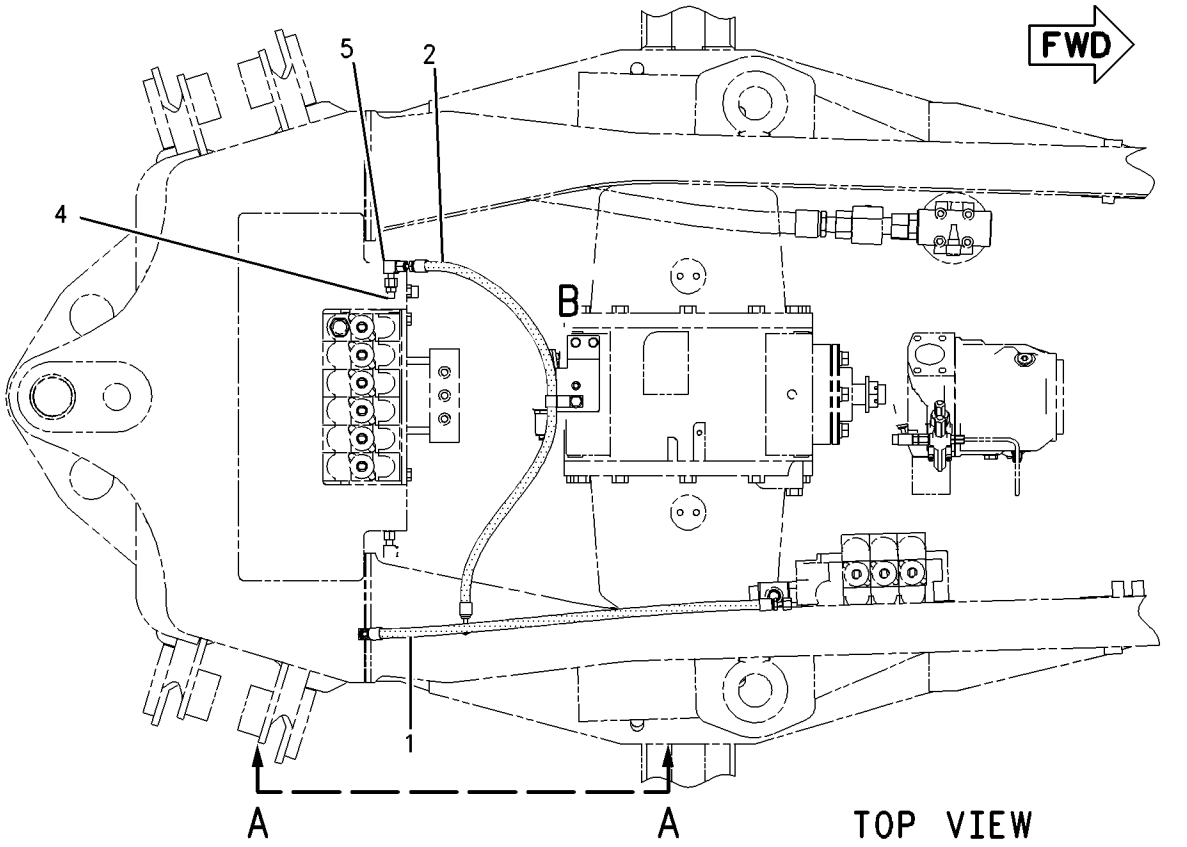

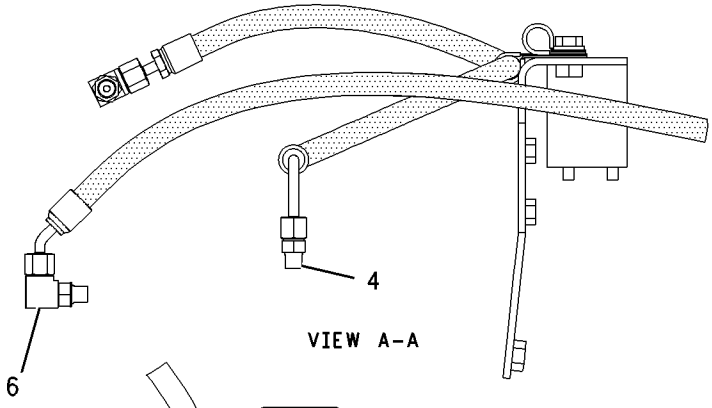

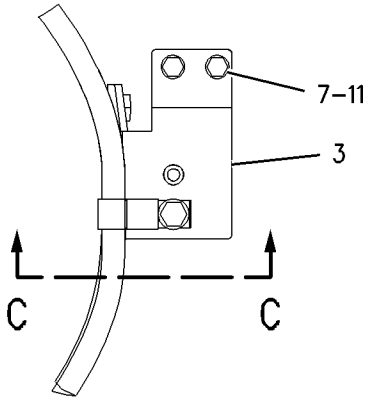

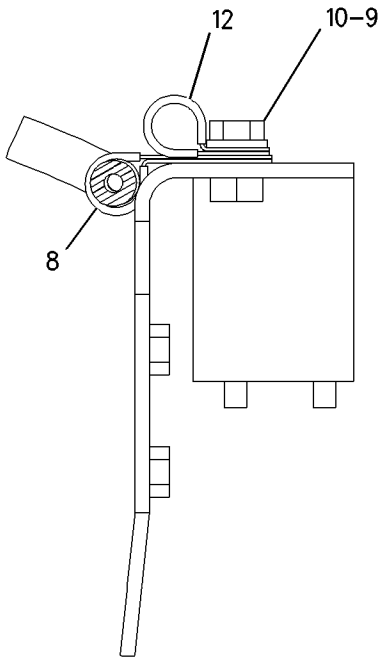

GRAPHIC #1 **<END>** g00995705

HYDRAULIC SYSTEM

191-5462 LINES GP-PUMP

S/N: CXP940-UP
FOUR OR FIVE BANK
PART OF 186-4964 VALVE AR-BANK 4
AN ATTACHMENT

SMCS-5057 **i01931539**

NOTE	REF NO	GRAPHIC REF	PART NUMBER	QTY	PART NAME 1 2 3 4 5 6 (PRODUCT LEVEL)	SEE PAGE
I	1	1	**191-5464**	1	HOSE AS	
	2	1	*148-8335*	1	CONNECTOR AS	
		1	**5K-9090**	1	SEAL-O-RING	
		1	**6V-8635**	1	CONNECTOR	
		1	**7M-8485**	1	SEAL-O-RING	
	3	1	*148-8429*	1	TEE AS	
		1	**5K-9090**	2	SEAL-O-RING	
		1	**6V-9840**	1	TEE-SWIVEL	

I-SEE HOSE FABRICATION GUIDE

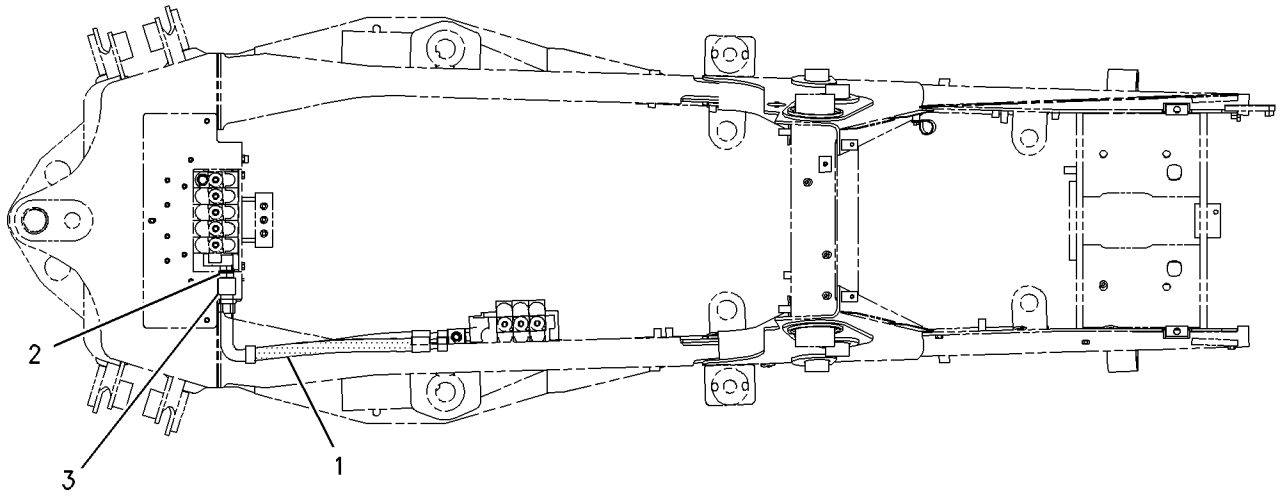

GRAPHIC #1 **<END>** g01004837

HYDRAULIC SYSTEM

191-5462 LINES GP-PUMP

S/N: BFP12900-UP
FOUR OR FIVE BANK
PART OF 186-4964 VALVE AR-BANK 4, 186-4965 VALVE AR-BANK 5
AN ATTACHMENT

SMCS-5057 **i01913444**

NOTE	REF NO	GRAPHIC REF	PART NUMBER	QTY	PART NAME 1 2 3 4 5 6 (PRODUCT LEVEL)	SEE PAGE
I	1	1	**214-0701**	1	HOSE AS	
I	2	1	**214-0706**	1	HOSE AS	
C	3	1	*148-8335*	1	CONNECTOR AS	
		1	**5K-9090**	1	SEAL-O-RING	
		1	**6V-8635**	1	CONNECTOR	
		1	**7M-8485**	1	SEAL-O-RING	
C	4	1	*148-8352*	1	ELBOW GP	
		1	**5K-9090**	1	SEAL-O-RING	
		1	**6V-9854**	1	ELBOW (SWIVEL)	
	5	1	**148-8429**	1	TEE AS	
		1	**5K-9090**	1	SEAL-O-RING	
		1	**6V-9854**	1	ELBOW (SWIVEL)	

C-CHANGE FROM PREVIOUS TYPE
I-SEE HOSE FABRICATION GUIDE

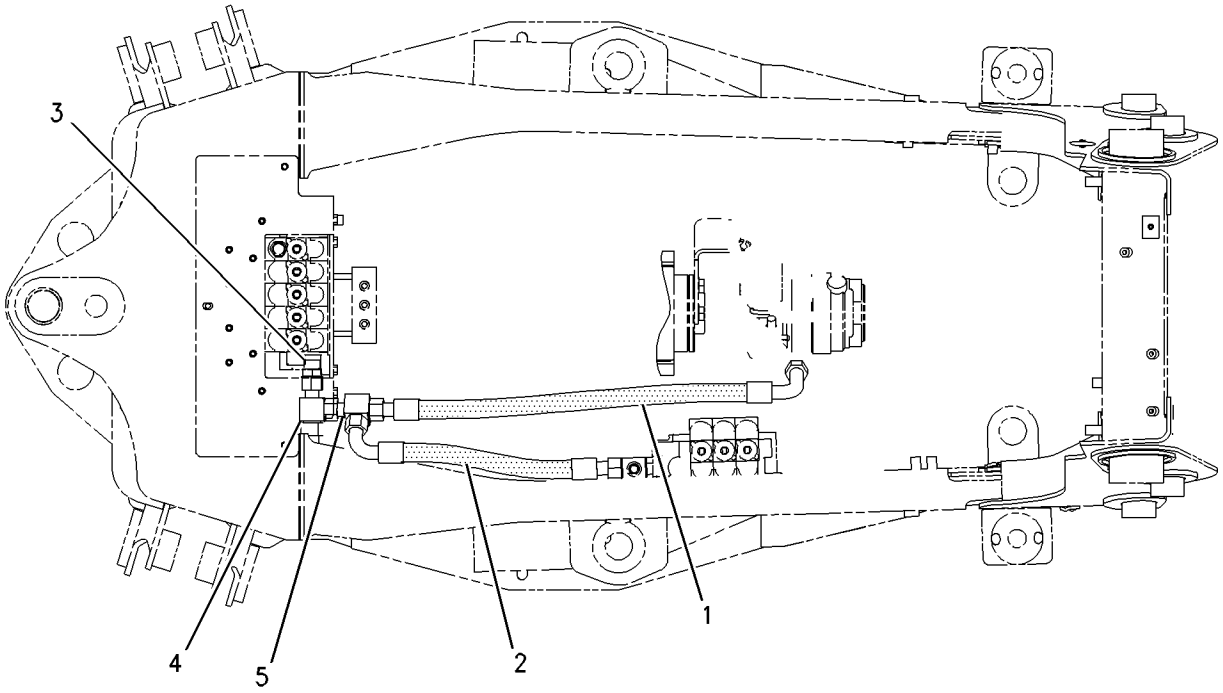

GRAPHIC #1 **<END>** g00997460

HYDRAULIC SYSTEM

216-4274 LINES GP-PUMP

S/N: BFP12900-UP
PART OF 186-4966 VALVE AR-BANK 6
AN ATTACHMENT

SMCS-5057 **i01930404**

NOTE	REF NO	GRAPHIC REF	PART NUMBER	QTY	PART NAME 1 2 3 4 5 6 (PRODUCT LEVEL)	SEE PAGE
I	1	1	**214-0701**	1	HOSE AS	
I	2	1	**214-0706**	1	HOSE AS	
	3	1	*148-8357*	1	ELBOW GP	
		1	**5K-9090**	1	SEAL-O-RING	
		1	**6V-9008**	1	ELBOW	
		1	**7M-8485**	1	SEAL-O-RING	
	4	1	*148-8429*	1	TEE AS	
		1	**5K-9090**	2	SEAL-O-RING	
		1	**6V-9840**	1	TEE-SWIVEL	

I-SEE HOSE FABRICATION GUIDE

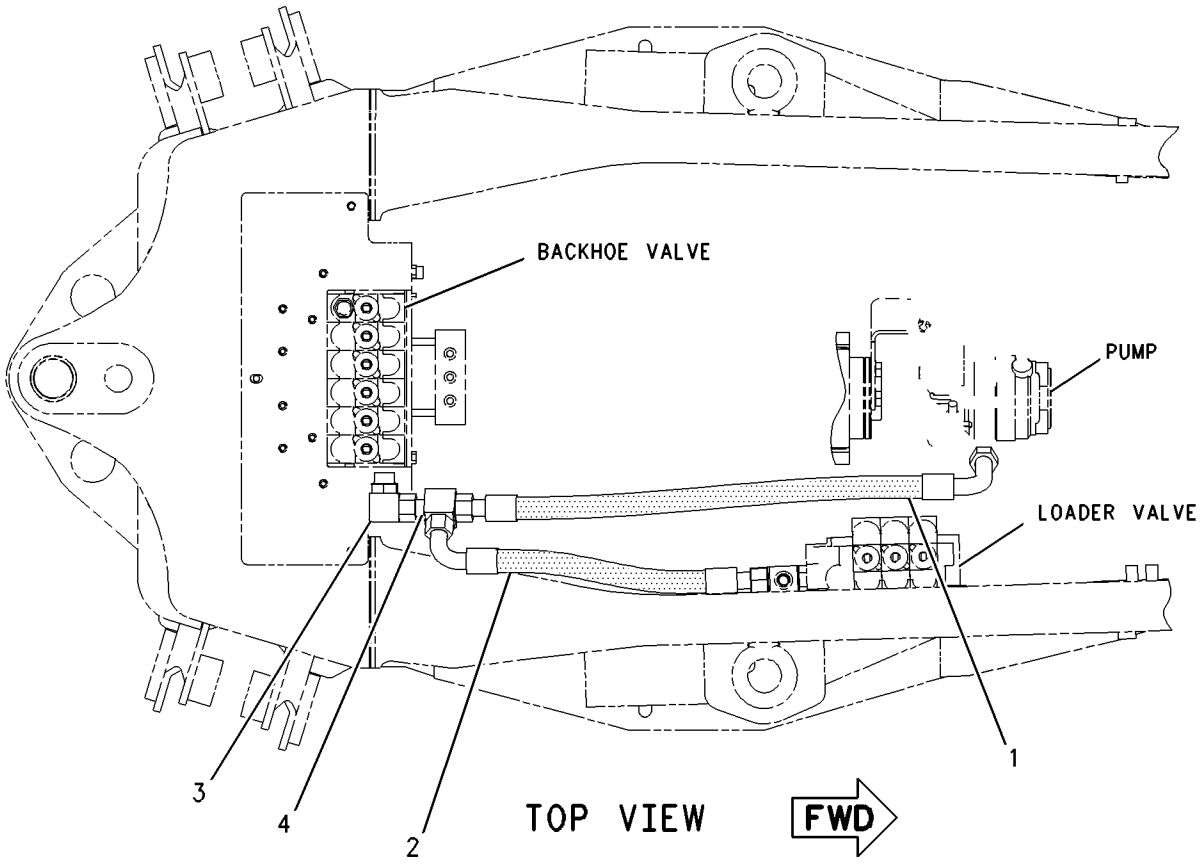

GRAPHIC #1 **<END>** g01004502

HYDRAULIC SYSTEM

229-0779 LINES GP-PUMP

S/N: CXP940-UP
PART OF 237-6461 DRIVE AR-BACKHOE LOADER
AN ATTACHMENT

SMCS-5057 **i01914364**

NOTE	REF NO	GRAPHIC REF	PART NUMBER	QTY	PART NAME 1 2 3 4 5 6 (PRODUCT LEVEL)	SEE PAGE
I	1	1	**117-3235**	1	HOSE AS	
	2	1	**162-9636**	1	TUBE AS	
	3	1	*148-8335*	1	CONNECTOR AS	
		1	**5K-9090**	1	SEAL-O-RING	
		1	**6V-8635**	1	CONNECTOR	
		1	**7M-8485**	1	SEAL-O-RING	
	4	1	*148-8431*	1	TEE GP	
		1	**5K-9090**	2	SEAL-O-RING	
		1	**6V-8785**	1	TEE	
		1	**7M-8485**	1	SEAL-O-RING	
	5	1	**5K-9090**	1	SEAL-O-RING	
	6	1	**6V-9833**	1	CAP AS	
	7	1	**8T-1889**	1	CLIP (SLOT)	
	8	1	**8T-1890**	1	CLIP (TAB)	
	9	1	**8T-4121**	1	WASHER-HARD (11X21X2.5MM THK)	
M	10	1	**8T-4136**	1	BOLT (M10X1.5X25MM)	

I-SEE HOSE FABRICATION GUIDE
M-METRIC PART

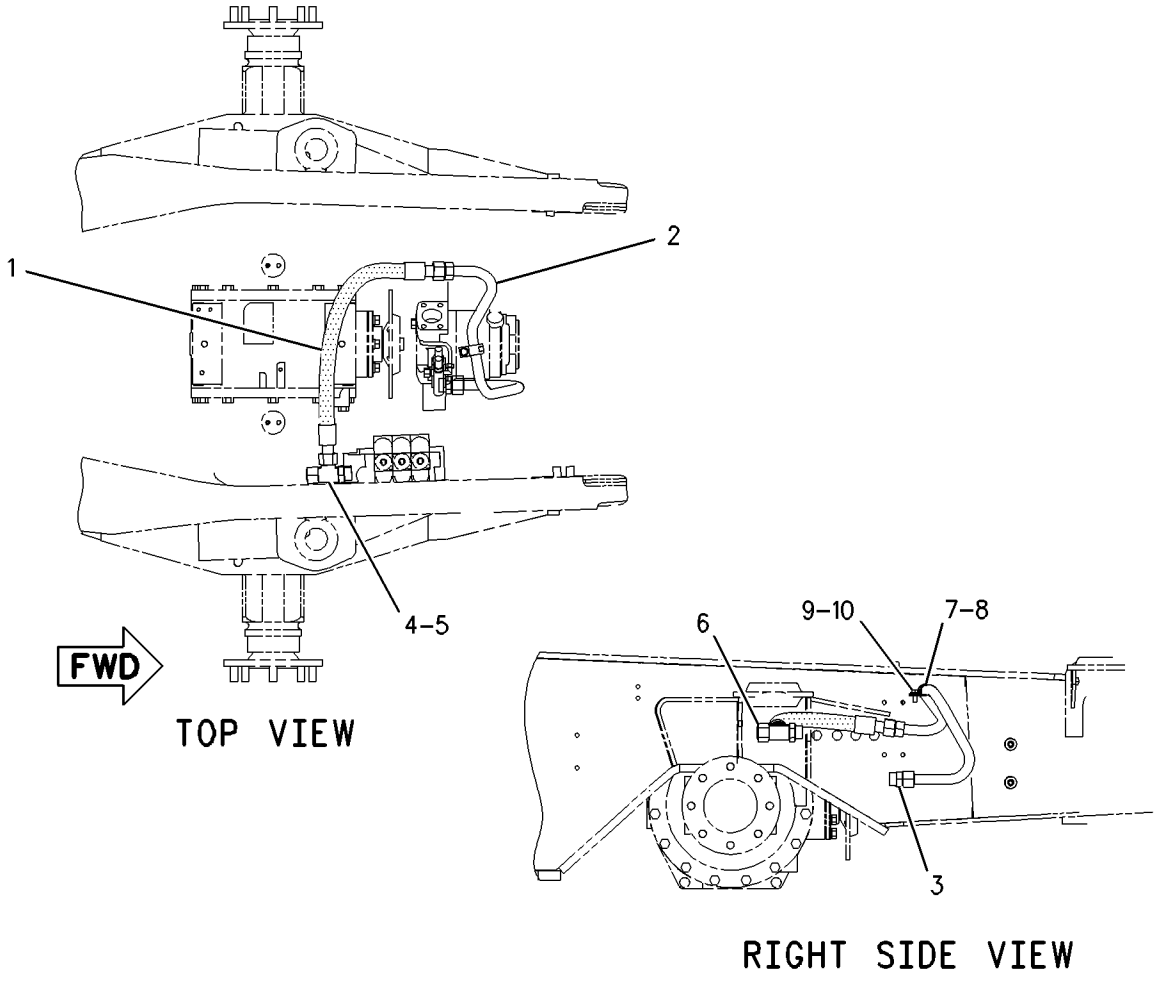

GRAPHIC #1 **<END>** g00999430

HYDRAULIC SYSTEM

235-4549 LINES GP-PUMP

S/N: BFP12900-UP

PART OF 214-6980 HYDRAULIC AR

SMCS-5057 **i02018267**

NOTE	REF NO	GRAPHIC REF	PART NUMBER	QTY	PART NAME 1 2 3 4 5 6 (PRODUCT LEVEL)	SEE PAGE
	1	1	**5D-1026**	2	CLAMP-HOSE	
	2	1	**5P-4868**	2	CLAMP-HOSE	
	3	1	**6V-0852**	1	CAP-DUST	
	4	1	**7K-1181**	5	STRAP-CABLE	
	5	1	**8T-0154**	1	CLAMP-HOSE	
	6	1	**110-2445**	4	CLAMP-HOSE	
	7	1	**130-9984**	1	CLIP	
	8	1	**144-0367**	1	CLAMP-HOSE	
	9	1	**159-0186**	4	CLAMP	
	10	1	*165-2273*	1	VALVE GP-SHUTOFF	
		1	**3K-0360**	1	SEAL-O-RING	
		1	**6V-7238**	1	VALVE-SHUTOFF	
	11	1	*166-2033*	1	TEE GP	
		1	**4J-5477**	1	SEAL-O-RING	
		1	**7X-2444**	1	TEE-SWIVEL	
	12	1	**211-4348**	1	ELBOW	
	13	1	**215-9632**	1	SPACER (12X20X20-MM THK)	
	14	1	**232-0252**	1	TEE	
	15	1	**235-4553**	1	BRACKET AS	
M		1	**8T-3490**	3	NUT-WELD (M10X1.5-THD)	
I	16	1	**235-5306**	1	HOSE AS	
	17	1	**235-7091**	1	HOSE	
	18	1	**235-8528**	1	HOSE	
	19	1	**148-8325**	1	CONNECTOR GP	
	20	1	*148-8352*	1	ELBOW GP	
		1	**5K-9090**	1	SEAL-O-RING	
		1	**6V-9854**	1	ELBOW (SWIVEL)	
	21	1	*148-8357*	1	ELBOW GP	
		1	**5K-9090**	1	SEAL-O-RING	
		1	**6V-9008**	1	ELBOW	
		1	**7M-8485**	1	SEAL-O-RING	
	22	1	*148-8362*	1	ELBOW GP	
		1	**3D-2824**	1	SEAL-O-RING	
		1	**5K-9090**	1	SEAL-O-RING	
		1	**8T-6684**	1	ELBOW	
	23	1	*148-8422*	1	TEE AS	
		1	**5K-9090**	1	SEAL-O-RING	
		1	**6V-9746**	1	SEAL-O-RING	
		1	**7M-8485**	1	SEAL-O-RING	
		1	**8T-6356**	1	TEE-O-RING PORT	
	24	1	*150-3027*	1	ELBOW AS	
		1	**2M-9780**	1	SEAL-O-RING	
		1	**6V-5653**	1	ELBOW (7/8-14-THD)	
	25	1	*164-5567*	1	FITTING AS	
		1	**3J-1907**	1	SEAL-O-RING	
		1	**6V-3965**	1	FITTING (QUICK DISCONNECT)	
	26	1	**1P-4584**	2	FLANGE-HALF	
	27	1	**5P-4116**	2	WASHER-HARD (8.8X20.5X2-MM THK)	
	28	1	**6J-2680**	1	SEAL-O-RING	
	29	1	**6V-9828**	1	CAP AS	
	30	1	**7D-7233**	3	CLIP	
	31	1	**8T-4121**	11	WASHER-HARD (11X21X2.5-MM THK)	
M	32	1	**8T-4136**	5	BOLT (M10X1.5X25-MM)	
M	33	1	**8T-4137**	2	BOLT (M10X1.5X20-MM)	
M	34	1	**8T-4182**	1	BOLT (M10X1.5X45-MM)	
M	35	1	**8T-4183**	4	BOLT (M12X1.75X40-MM)	

235-4549 **LINES GP-PUMP** ***(contd.)*** **i02018267**

NOTE	REF NO	GRAPHIC REF	PART NUMBER	QTY	PART NAME 1 2 3 4 5 6 (PRODUCT LEVEL)	SEE PAGE
M	36	1	**8T-4189**	2	BOLT (M8X1.25X20-MM)	
M	37	1	**8T-4195**	3	BOLT (M10X1.5X30-MM)	
	38	1	**8T-4223**	4	WASHER-HARD (13.5X25.5X3-MM THK)	
	39	1	**8T-7529**	3	CLIP	
E	40	1	**5P-0743**		HOSE (35CM)	
E	41	1	**5P-1505**		HOSE (72CM)	
E	42	1	**5P-1506**		HOSE (88CM)	
E	43	1	**136-1955**		HOSE (107CM)	
E	44	1	**136-1955**		HOSE (201CM)	

E-ORDER BY THE CENTIMETER
I-REFER TO HYDRAULIC INFORMATION SYSTEM
M-METRIC PART

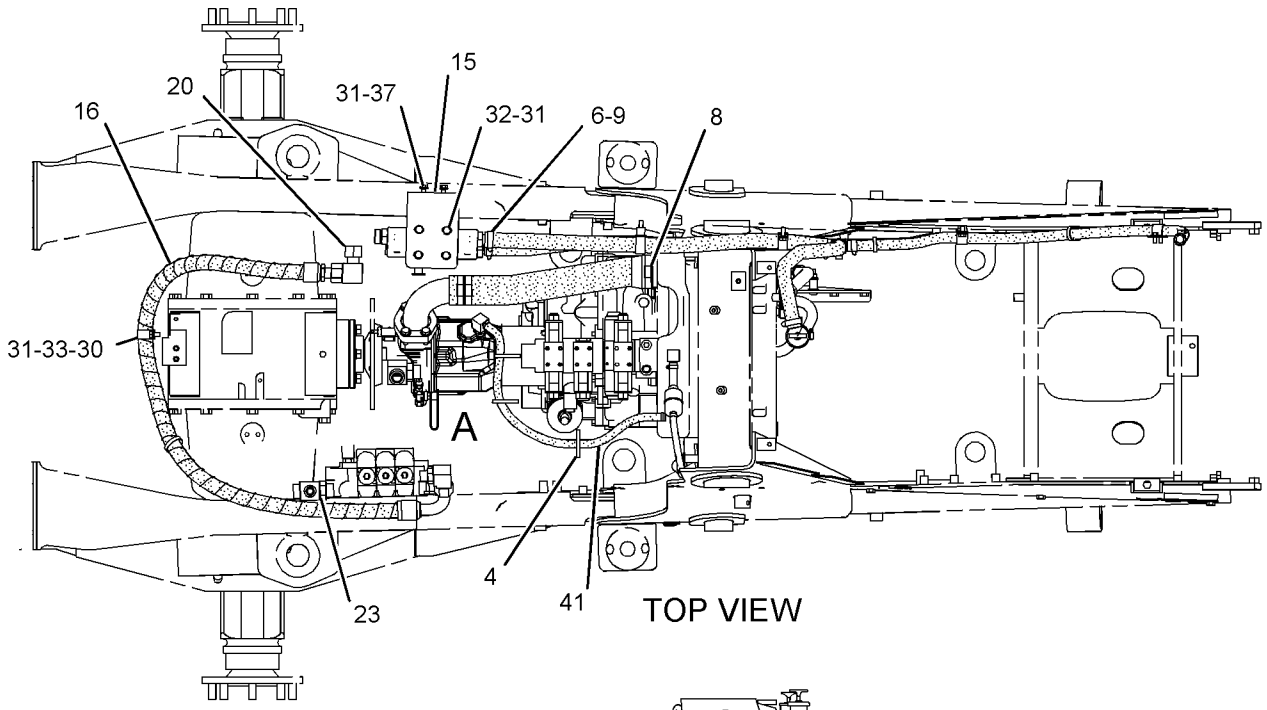

TOP VIEW

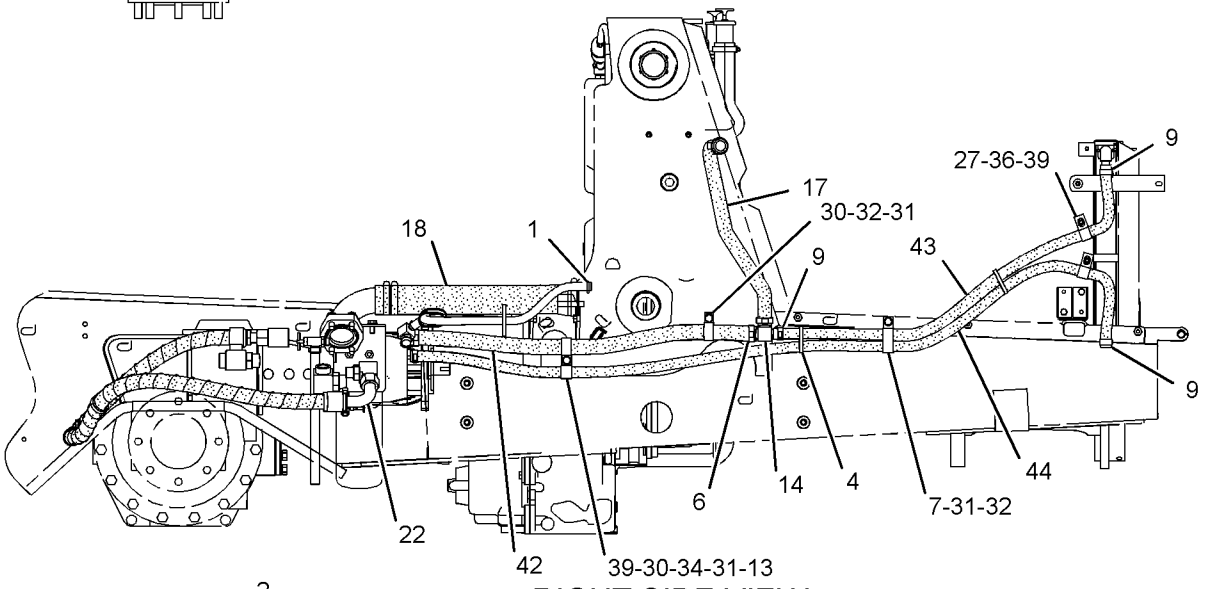

RIGHT SIDE VIEW

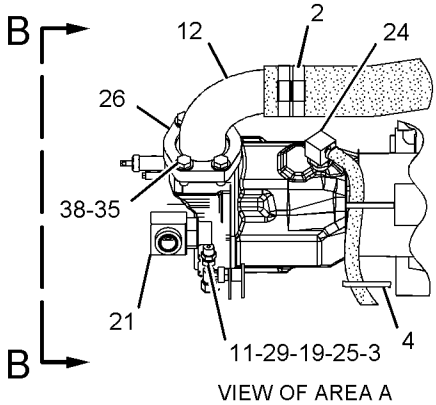

VIEW OF AREA A

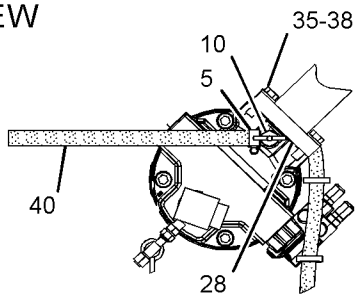

VIEW B-B

GRAPHIC #1 **<END>** g01043415

HYDRAULIC SYSTEM

235-5854 LINES GP-PUMP

S/N: BFP12900-UP
PART OF 214-7002 VALVE AR-BANK 5
AN ATTACHMENT

SMCS-5057 **i01990841**

NOTE	REF NO	GRAPHIC REF	PART NUMBER	QTY	PART NAME 1 2 3 4 5 6 (PRODUCT LEVEL)	SEE PAGE
I	1	1	**214-0706**	1	HOSE AS	
I	2	1	**239-1162**	1	HOSE AS	
	3	1	*148-8335*	1	CONNECTOR AS	
		1	**5K-9090**	1	SEAL-O-RING	
		1	**6V-8635**	1	CONNECTOR	
		1	**7M-8485**	1	SEAL-O-RING	
	4	1	*148-8352*	1	ELBOW GP	
		1	**5K-9090**	1	SEAL-O-RING	
		1	**6V-9840**	1	TEE-SWIVEL	
	5	1	*148-8429*	1	TEE AS	
		1	**5K-9090**	1	SEAL-O-RING	
		1	**6V-9840**	1	TEE-SWIVEL	

I-REFER TO HYDRAULIC INFORMATION SYSTEM

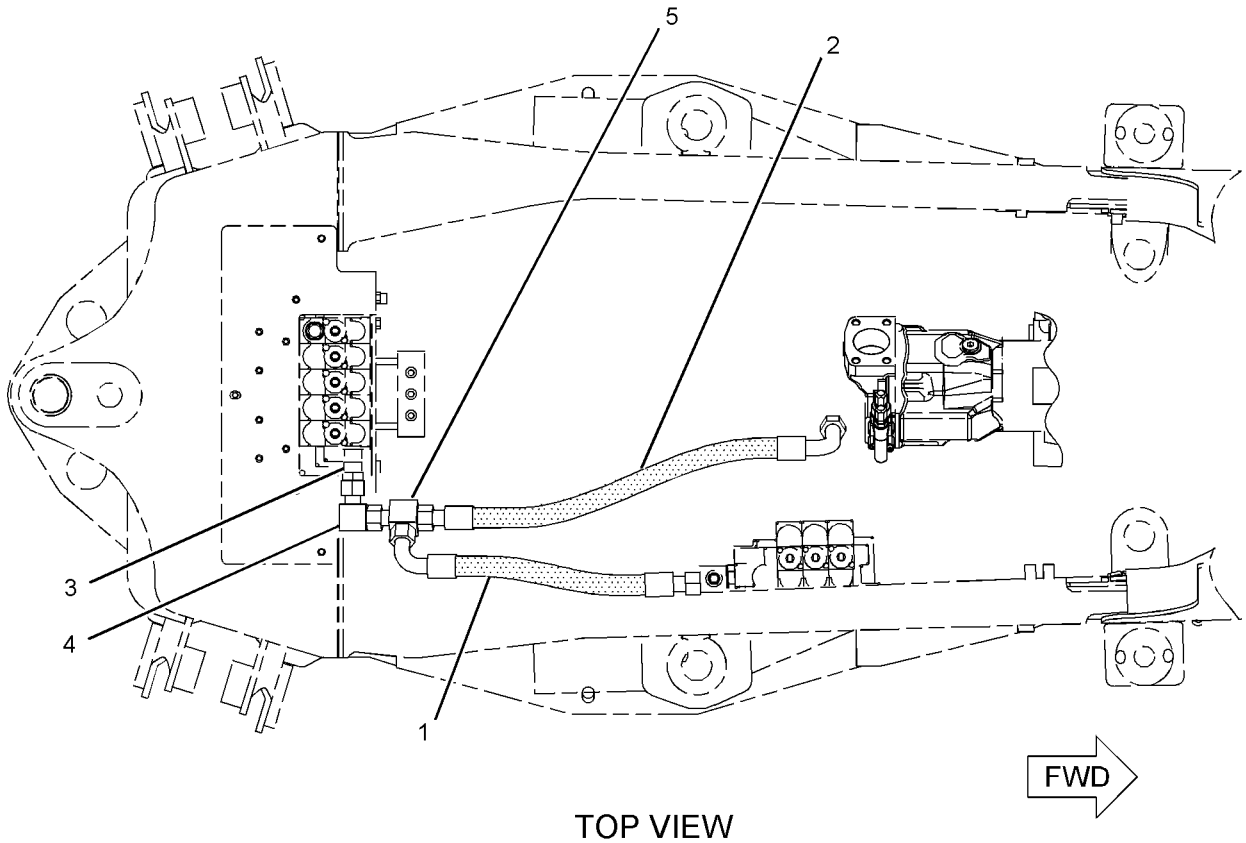

TOP VIEW

GRAPHIC #1 **<END>** g01037856

HYDRAULIC SYSTEM

235-5856 LINES GP-PUMP

S/N: BFP12900-UP
PART OF 214-7003 VALVE AR-BANK 6
AN ATTACHMENT

SMCS-5057 **i01990834**

NOTE	REF NO	GRAPHIC REF	PART NUMBER	QTY	PART NAME 1 2 3 4 5 6 (PRODUCT LEVEL)	SEE PAGE
I	1	1	**214-0706**	1	HOSE AS	
I	2	1	**239-1162**	1	HOSE AS	
	3	1	**148-8357**	1	ELBOW GP	
		1	**5K-9090**	1	SEAL-O-RING	
		1	**6V-9008**	1	ELBOW	
		1	**7M-8485**	1	SEAL-O-RING	
	4	1	*148-8429*	1	TEE AS	
		1	**5K-9090**	2	SEAL-O-RING	
		1	**6V-9840**	1	TEE-SWIVEL	

I-REFER TO HYDRAULIC INFORMATION SYSTEM

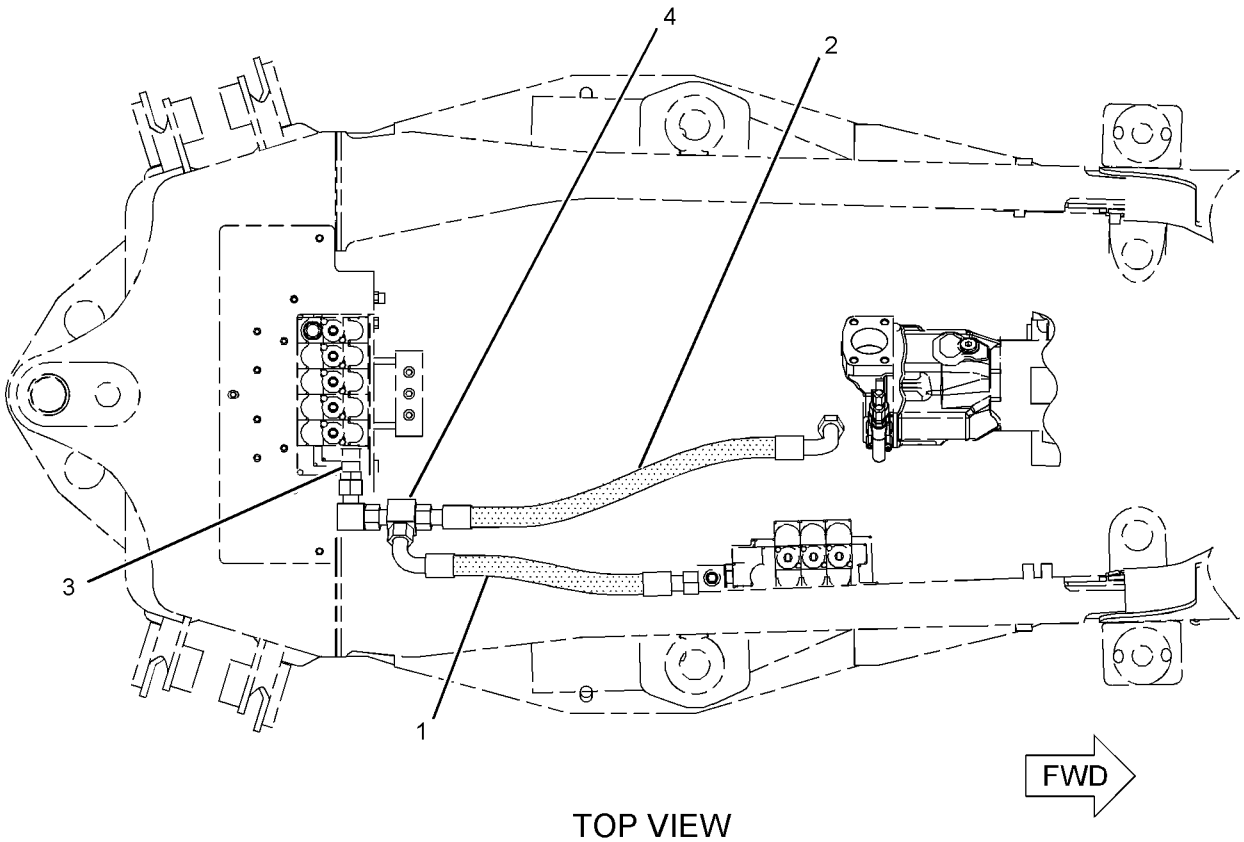

TOP VIEW

GRAPHIC #1 **<END>** g01037861

HYDRAULIC SYSTEM

176-9208 LINES GP-RETURN

S/N: BFP12900-UP

PART OF 184-7911 BACKHOE AR-EXTENDABLE STICK, 184-7905 BACKHOE AR-STANDARD STICK AN ATTACHMENT

SMCS-5057 **i01325785**

NOTE	REF NO	GRAPHIC REF	PART NUMBER	QTY	PART NAME 1 2 3 4 5 6 (PRODUCT LEVEL)	SEE PAGE
I	1	1	**169-2944**	1	HOSE AS	
Y	2	1	*178-7481*	1	VALVE GP-CHECK	694
	3	1	*148-8429*	1	TEE AS-ORFS	
		1	**5K-9090**	2	SEAL-O-RING (23.52MM ID)	
		1	**6V-9840**	1	TEE-SWIVEL	

I-SEE HOSE FABRICATION GUIDE
Y-SEPARATE ILLUSTRATION

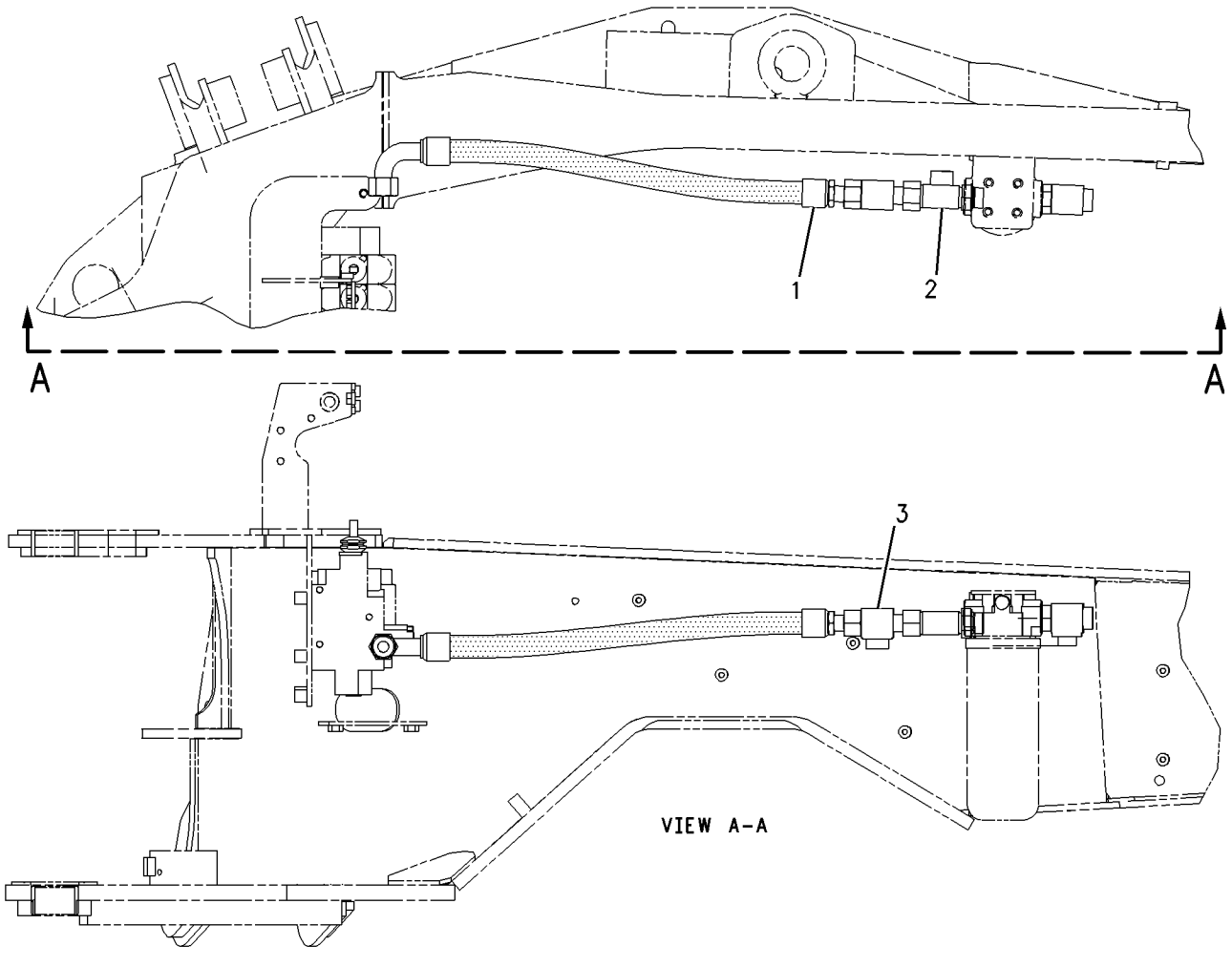

GRAPHIC #1 **<END>** g00702268

HYDRAULIC SYSTEM

176-9209 LINES GP-RETURN

S/N: BFP12900-UP
PART OF 184-7903, 184-7907 BACKHOE AR-STANDARD STICK
AN ATTACHMENT

SMCS-5057 **i01324533**

NOTE	REF NO	GRAPHIC REF	PART NUMBER	QTY	PART NAME 1 2 3 4 5 6 (PRODUCT LEVEL)	SEE PAGE
Y	1	1	*178-7480*	1	VALVE GP-CHECK	693
I	2	1	**185-6572**	1	HOSE AS	
	3	1	*148-8429*	1	TEE AS-ORFS	
		1	**5K-9090**	2	SEAL-O-RING (23.52MM ID)	
		1	**6V-9840**	1	TEE-SWIVEL	

I-SEE HOSE FABRICATION GUIDE
Y-SEPARATE ILLUSTRATION

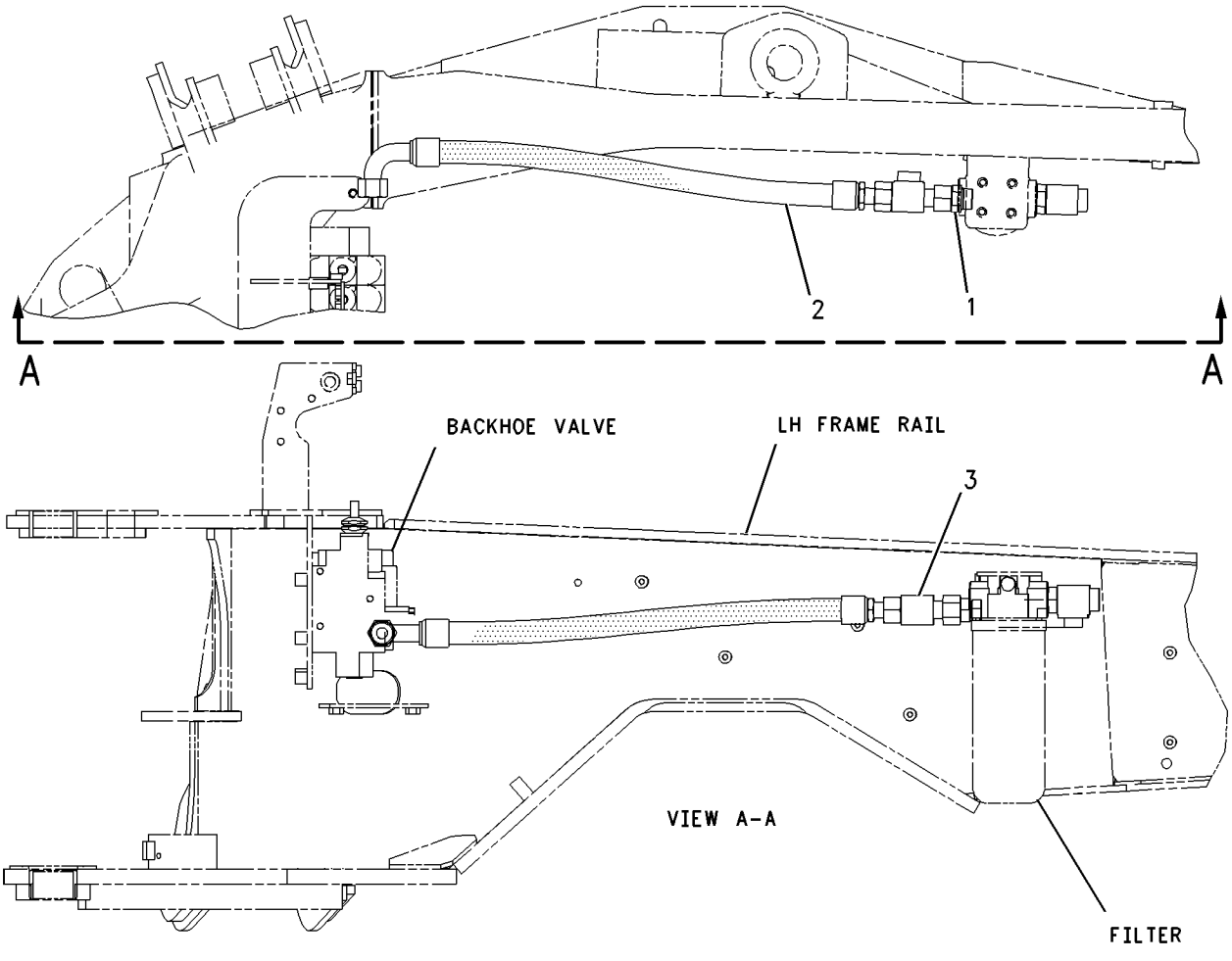

GRAPHIC #1 **<END>** g00701041

HYDRAULIC SYSTEM

197-6818 LINES GP-RETURN

S/N: BFP12900-UP
PART OF 184-7909 BACKHOE AR-EXTENDABLE STICK
AN ATTACHMENT

SMCS-5057 **i01409250**

NOTE	REF NO	GRAPHIC REF	PART NUMBER	QTY	PART NAME 1 2 3 4 5 6 (PRODUCT LEVEL)	SEE PAGE
I	1	1	**169-2944**	1	HOSE AS	
Y	2	1	*178-7481*	1	VALVE GP-CHECK	694
	3	1	*148-8429*	1	FITTING GP	
		1	**5K-9090**	2	SEAL-O-RING (23.52MM ID)	
		1	**6V-9840**	1	TEE-SWIVEL	
	4	1	**6V-9833**	1	CAP AS	

I-SEE HOSE FABRICATION GUIDE
Y-SEPARATE ILLUSTRATION

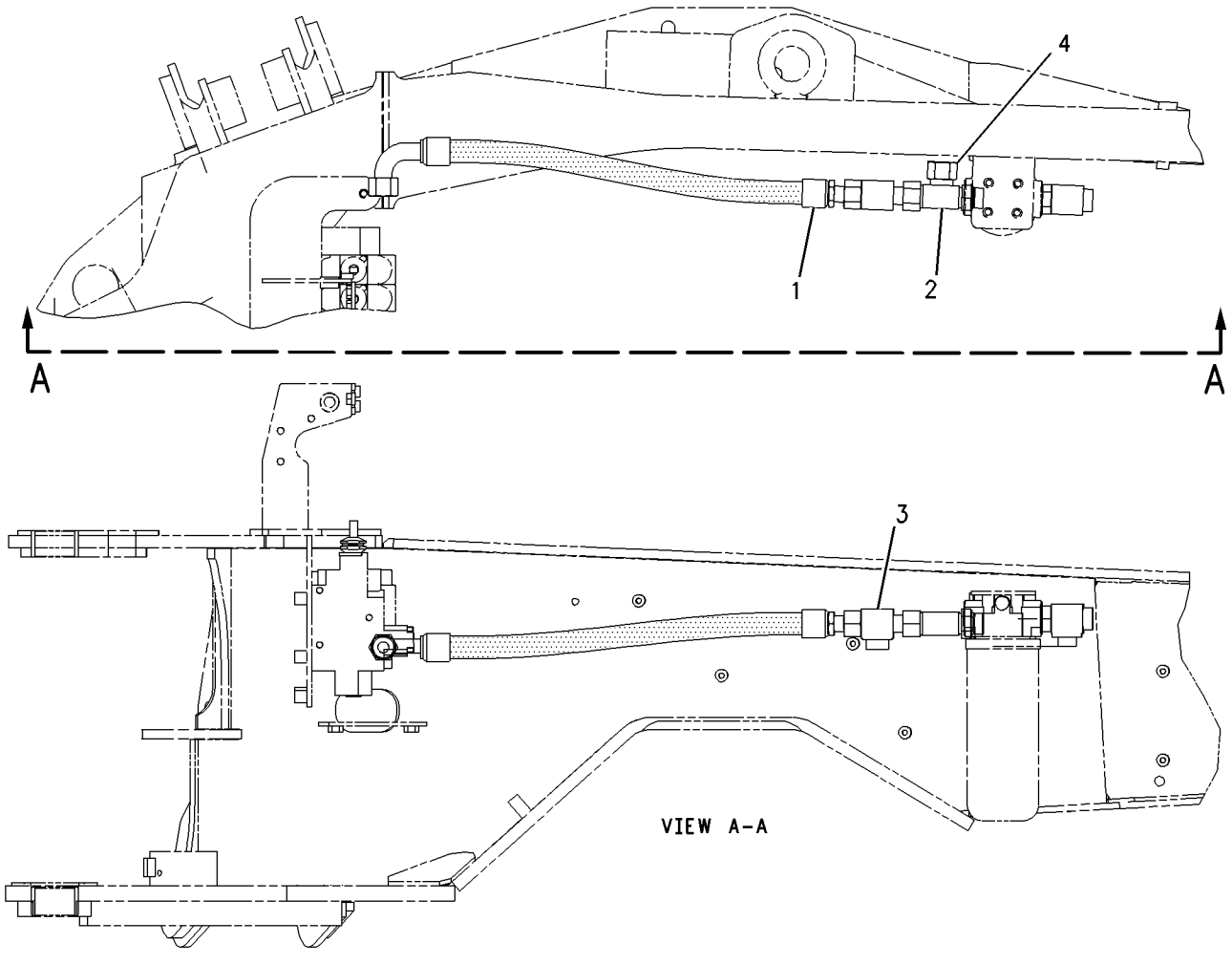

GRAPHIC #1 **<END>** g00741832

HYDRAULIC SYSTEM

235-4788 LINES GP-RETURN

S/N: BFP12900-UP

PART OF 214-6980 HYDRAULIC AR

SMCS-5057 **i02009711**

NOTE	REF NO	GRAPHIC REF	PART NUMBER	QTY	PART NAME 1 2 3 4 5 6 (PRODUCT LEVEL)	SEE PAGE
I	1	1	**6R-3299**	1	HOSE AS	
	2	1	**148-8429**	1	TEE AS	
		1	**5K-9090**	2	SEAL-O-RING	

I-REFER TO HYDRAULIC INFORMATION SYSTEM

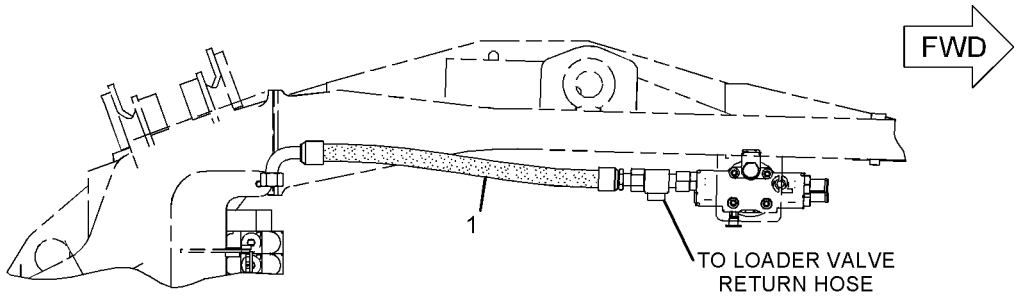

TOP VIEW

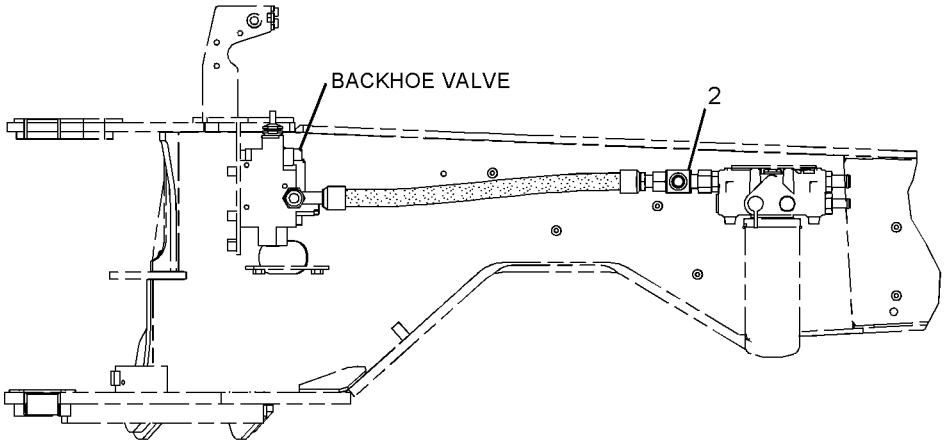

RIGHT SIDE VIEW

GRAPHIC #1

<END>

g01034089

HYDRAULIC SYSTEM

195-1284 LINES GP-RIDE CONTROL

S/N: BFP12900-UP

PART OF 185-1482 CONTROL AR-RIDE, 200-6284, 236-5458, 236-5459 KIT-RIDE CONTROL AN ATTACHMENT

SMCS-5057, 5077 **i02015798**

NOTE	REF NO	GRAPHIC REF	PART NUMBER	QTY	PART NAME 1 2 3 4 5 6 (PRODUCT LEVEL)	SEE PAGE
	1	1	**224-7830**	1	FILM-WARNING (HIGH PRESSURE CYLINDER)	
Y	2	1	**162-3960**	1	ACCUMULATOR GP-RIDE CONTROL (CHARGED)	505
I	3	1	**162-5380**	1	HOSE AS	
Y	4	1	**190-8315**	1	VALVE & MTG GP-SOLENOID (RIDE CONTROL)	683
I	5	1	**232-7497**	1	HOSE AS	
I	6	1	**232-7498**	1	HOSE AS	
I	7	1	**195-1288**	1	HOSE AS	
	8	1	**195-1289**	1	BRACKET AS	
	9	1	**195-1736**	1	TUBE AS	
	10	1	**109-1633**	2	CLIP (SLOT)	
	11	1	**109-1634**	2	CLIP (TAB)	
	12	1	*148-8316*	1	CONNECTOR AS	
		1	**3J-7354**	1	SEAL-O-RING	
		1	**4J-5477**	1	SEAL-O-RING	
		1	**6V-8647**	1	CONNECTOR	
	13	1	*148-8345*	1	CONNECTOR GP	
		1	**2M-9780**	1	SEAL-O-RING	
		1	**6V-8398**	1	SEAL-O-RING	
		1	**6V-8638**	1	CONNECTOR	
	14	1	*148-8370*	1	ELBOW GP	
		1	**6V-8398**	1	SEAL-O-RING	
		1	**6V-9851**	1	ELBOW	
	15	1	*148-8372*	1	ELBOW GP	
		1	**2M-9780**	1	SEAL-O-RING	
		1	**6V-8398**	1	SEAL-O-RING	
		1	**6V-8721**	1	ELBOW	
	16	1	*148-8378*	1	ELBOW AS	
		1	**3J-1907**	1	SEAL-O-RING	
		1	**6V-8397**	1	SEAL-O-RING	
		1	**6V-8724**	1	ELBOW	
	17	1	*148-8390*	2	ELBOW GP	
					(EACH INCLUDES)	
		1	**2M-9780**	1	SEAL-O-RING	
		1	**6V-8626**	1	ELBOW	
		1	**7J-9108**	1	SEAL-O-RING	
	18	1	*148-8418*	1	REDUCER GP	
		1	**6V-8398**	1	SEAL-O-RING	
		1	**6V-8942**	1	REDUCER-O-RING (FACE)	
	19	1	*148-8447*	1	TEE AS-SWIVEL	
		1	**7J-9108**	1	SEAL-O-RING	
		1	**7X-0872**	1	TEE-SWIVEL	
	20	1	*150-4043*	1	CONNECTOR GP	
		1	**3J-1907**	1	SEAL-O-RING	
		1	**6V-8398**	1	SEAL-O-RING	
		1	**6V-9873**	1	CONNECTOR	
M	21	1	**7X-2549**	2	BOLT (M12X1.75X100-MM)	
	22	1	**8T-4121**	3	WASHER-HARD (11X21X2.5-MM THK)	
M	23	1	**8T-4137**	3	BOLT (M10X1.5X20-MM)	
M	24	1	**8T-4139**	2	BOLT (M12X1.75X30-MM)	
	25	1	**8T-4223**	4	WASHER-HARD (13.5X25.5X3-MM THK)	
	26	1	**9X-6580**	1	NUT-O-RING SEAL	

I-REFER TO HYDRAULIC INFORMATION SYSTEM
M-METRIC PART
Y-SEPARATE ILLUSTRATION

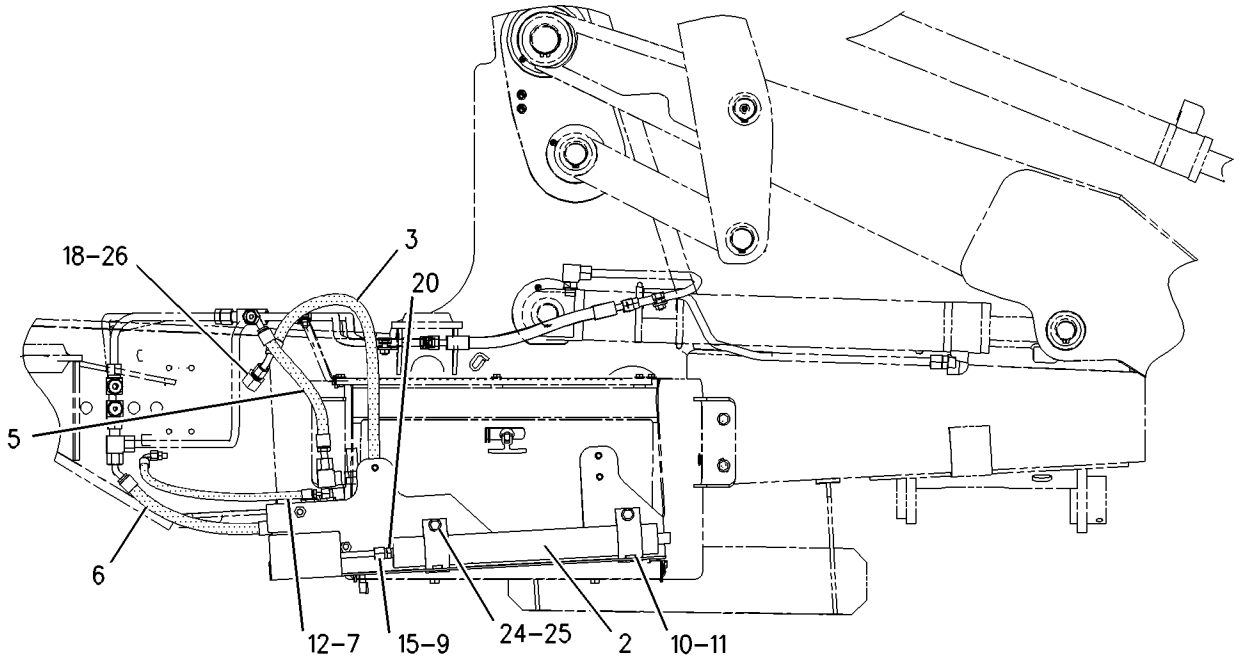

LEFT SIDE VIEW

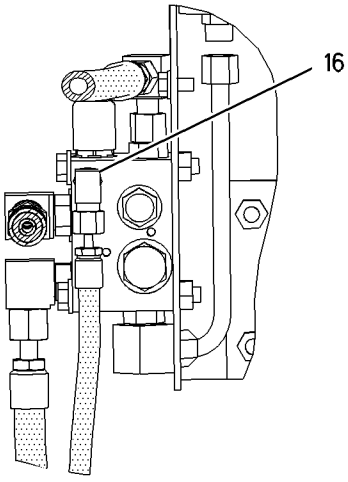

SECTION D-D

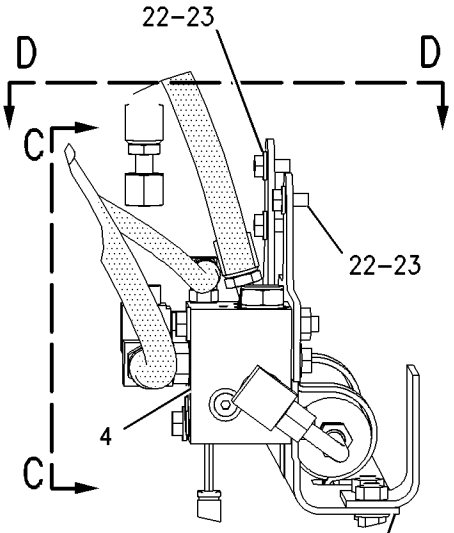

SECTION B-B

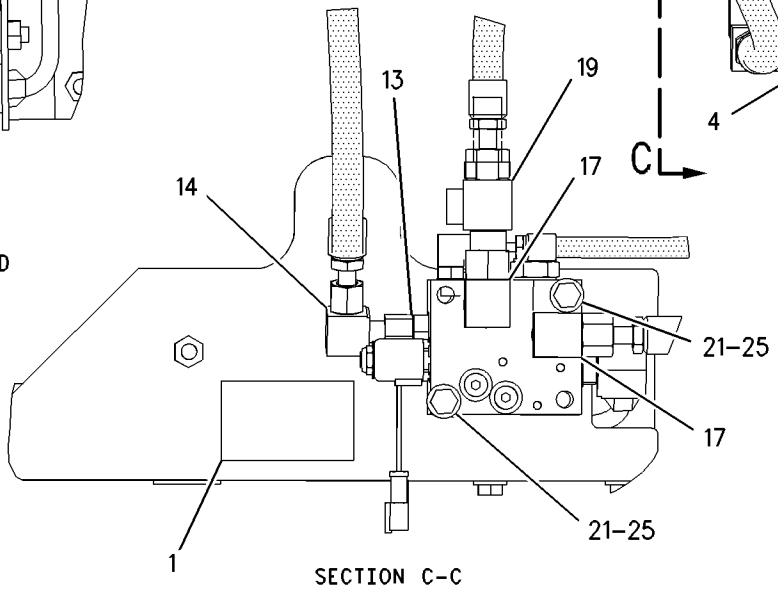

SECTION C-C

GRAPHIC #1 **<END>** g00996506

HYDRAULIC SYSTEM

235-5844 LINES GP-RIDE CONTROL

S/N: BFP12900-UP
PART OF 239-9245, 239-9248 CONTROL AR-RIDE
AN ATTACHMENT

SMCS-5057, 5077 **i01994202**

NOTE	REF NO	GRAPHIC REF	PART NUMBER	QTY	PART NAME 1 2 3 4 5 6 (PRODUCT LEVEL)	SEE PAGE
	1	1	**7K-1181**	1	STRAP-CABLE	
Y	2	1	*162-3960*	1	ACCUMULATOR GP-RIDE CONTROL (CHARGED)	505
I	3	1	**169-9049**	1	HOSE AS	
Y	4	1	**190-8315**	1	VALVE & MTG GP-SOLENOID (RIDE CONTROL)	683
	5	1	**195-1289**	1	BRACKET AS	
M		1	**8T-3597**	4	NUT-WELD (M12X1.75 THD)	
	6	1	**195-1736**	1	TUBE AS	
		1	**6V-8554**	2	NUT (13/16-16 THD)	
		1	**6V-8561**	2	SLEEVE	
	7	1	**224-7830**	1	FILM-WARNING (HIGH PRESSURE CYLINDER)	
I	8	1	**232-7497**	1	HOSE AS	
I	9	1	**232-7498**	1	HOSE AS	
I	10	1	**239-0625**	1	HOSE AS	
	11	1	**109-1633**	2	CLIP (SLOT)	
	12	1	**109-1634**	2	CLIP (TAB)	
	13	1	*148-8345*	1	CONNECTOR GP	
		1	**2M-9780**	1	SEAL-O-RING	
		1	**6V-8398**	1	SEAL-O-RING	
		1	**6V-8638**	1	CONNECTOR	
	14	1	*148-8368*	1	ELBOW GP	
		1	**3J-1907**	1	SEAL-O-RING	
		1	**4J-5477**	1	SEAL-O-RING	
		1	**6V-8627**	1	ELBOW	
	15	1	*148-8370*	1	ELBOW GP	
		1	**6V-8398**	1	SEAL-O-RING	
		1	**6V-9851**	1	ELBOW	
	16	1	*148-8372*	1	ELBOW GP	
		1	**2M-9780**	1	SEAL-O-RING	
		1	**6V-8398**	1	SEAL-O-RING	
		1	**6V-8721**	1	ELBOW	
	17	1	*148-8390*	2	ELBOW GP	
					(EACH INCLUDES)	
		1	**2M-9780**	1	SEAL-O-RING	
		1	**6V-8626**	1	ELBOW	
		1	**7J-9108**	1	SEAL-O-RING	
	18	1	*148-8447*	1	TEE AS-SWIVEL	
		1	**7J-9108**	1	SEAL-O-RING	
		1	**7X-0872**	1	TEE-SWIVEL	
	19	1	*150-4043*	1	CONNECTOR GP	
		1	**3J-1907**	1	SEAL-O-RING	
		1	**6V-8398**	1	SEAL-O-RING	
		1	**6V-9873**	1	CONNECTOR	
M	20	1	**7X-2549**	2	BOLT (M12X1.75X100MM)	
	21	1	**8T-4121**	3	WASHER-HARD (11X21X2.5MM THK)	
M	22	1	**8T-4137**	3	BOLT (M10X1.5X20MM)	
M	23	1	**8T-4139**	2	BOLT (M12X1.75X30MM)	
	24	1	**8T-4223**	4	WASHER-HARD (13.5X25.5X3MM THK)	

I-REFER TO HYDRAULIC INFORMATION SYSTEM
M-METRIC PART
Y-SEPARATE ILLUSTRATION

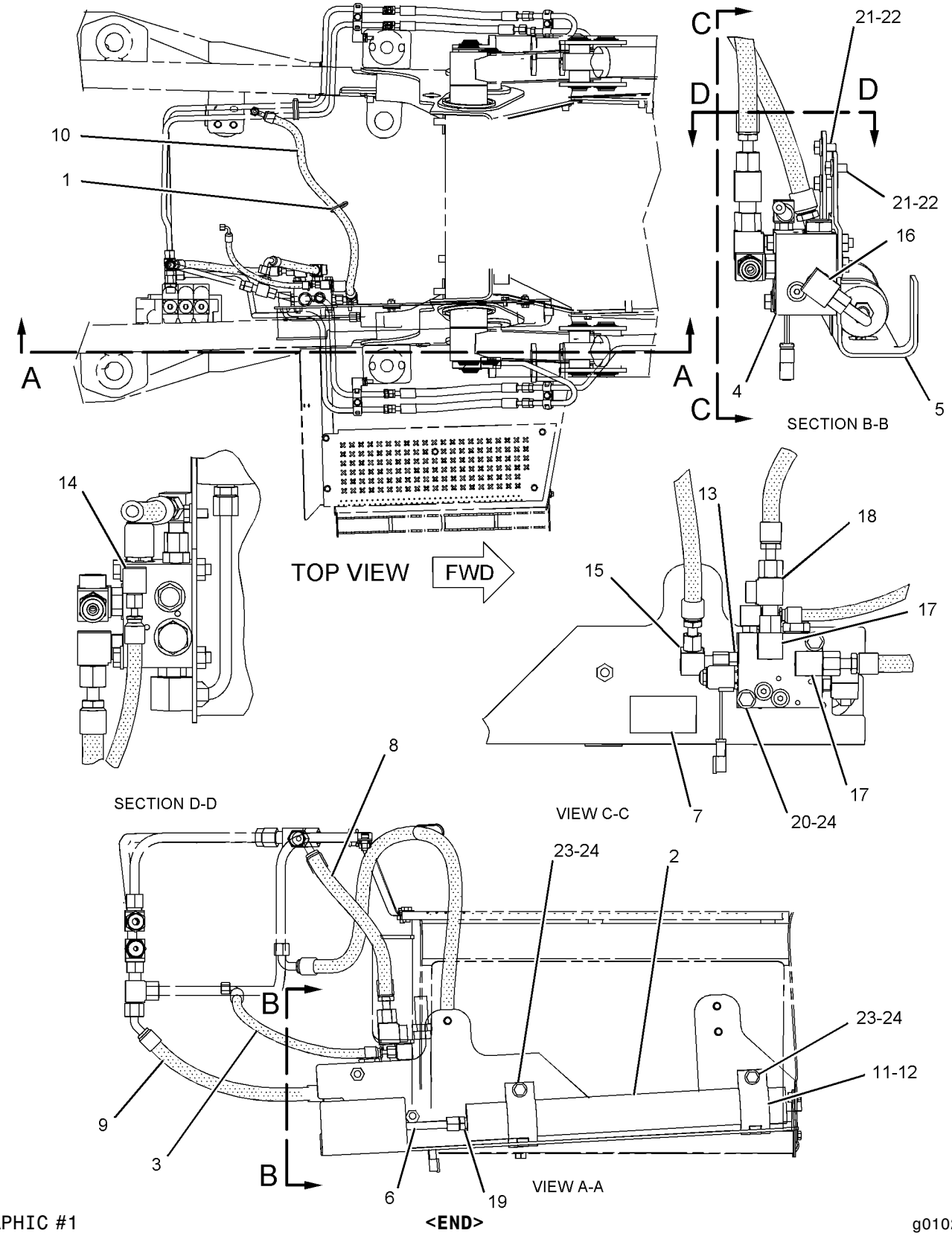

GRAPHIC #1

<END>

g01024033

HYDRAULIC SYSTEM

185-3413 LINES GP-STABILIZER

S/N: BFP12900-UP

PART OF 237-6458, 237-6459 DRIVE AR-BACKHOE LOADER

AN ATTACHMENT

SMCS-5057, 5468 **i01739890**

NOTE	REF NO	GRAPHIC REF	PART NUMBER	QTY	PART NAME 1 2 3 4 5 6 (PRODUCT LEVEL)	SEE PAGE
	1	1	**5P-0599**	4	CLAMP	
	2	1	**9R-2052**	2	BLOCK	
	3	1	**9R-2053**	2	BLOCK	
	4	1	**134-7323**	1	TUBE AS	
	5	1	**134-7324**	1	TUBE AS	
I	6	1	**174-4306**	1	HOSE AS	
I	7	1	**174-5699**	1	HOSE AS	
I	8	1	**174-5700**	1	HOSE AS	
I	9	1	**174-5701**	1	HOSE AS	
I	10	1	**174-5702**	1	HOSE AS	
I	11	1	**177-7094**	1	HOSE AS	
	12	1	*148-8327*	1	CONNECTOR GP	
		1	**3D-2824**	1	SEAL-O-RING	
		1	**6V-8637**	1	CONNECTOR-SEAL	
		1	**6V-9746**	1	SEAL-O-RING	
	13	1	*148-8345*	4	CONNECTOR GP	
					(EACH INCLUDES)	
		1	**2M-9780**	1	SEAL-O-RING (19.8MM ID)	
		1	**6V-8398**	1	SEAL-O-RING	
		1	**6V-8638**	1	CONNECTOR-SEAL	
	14	1	*148-8347*	1	ELBOW GP	
		1	**3D-2824**	1	SEAL-O-RING	
		1	**6V-9007**	1	ELBOW	
		1	**6V-9746**	1	SEAL-O-RING	
	15	1	*148-8372*	2	ELBOW GP	
					(EACH INCLUDES)	
		1	**2M-9780**	1	SEAL-O-RING (19.8MM ID)	
		1	**6V-8398**	1	SEAL-O-RING	
		1	**6V-8721**	1	ELBOW	
	16	1	**5P-7462**	6	CLIP (SLOT)	
	17	1	**5P-7463**	6	CLIP (TAB)	
	18	1	**6V-0683**	6	GROMMET	
	19	1	**8T-4121**	9	WASHER-HARD (11X21X2.5MM THK)	
M	20	1	**8T-4133**	4	NUT (M10X1.5 THD)	
M	21	1	**8T-4186**	4	BOLT (M10X1.5X40MM)	
M	22	1	**8T-4196**	1	BOLT (M10X1.5X35MM)	

I-SEE HOSE FABRICATION GUIDE
M-METRIC PART

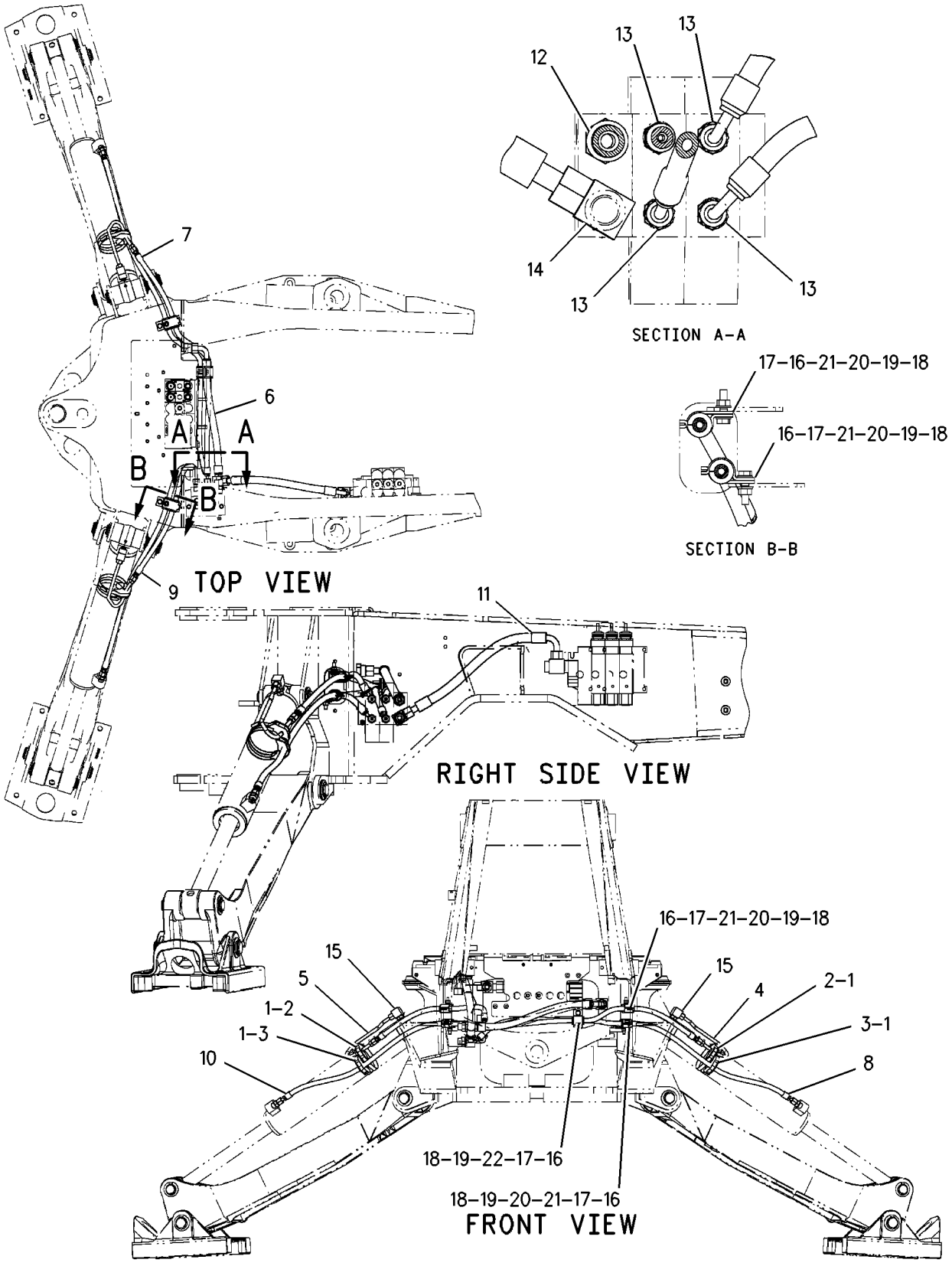

GRAPHIC #1 **<END>** g00889567

HYDRAULIC SYSTEM

167-8273 LINES GP-STICK

S/N: BFP12900-UP

PART OF 238-4783, 238-4784 BACKHOE AR-EXTENDABLE STICK, 238-4780, 238-4781, 238-4782 BACKHOE AR-STANDARD STICK AN ATTACHMENT

SMCS-5057, 5458 **i01928736**

NOTE	REF NO	GRAPHIC REF	PART NUMBER	QTY	PART NAME 1 2 3 4 5 6 (PRODUCT LEVEL)	SEE PAGE
	1	1	**5P-3860**	1	CLAMP-HOSE	
I	2	1	**169-2980**	1	HOSE AS	
I	3	1	**172-3821**	1	HOSE AS	
	4	1	**9R-5948**	1	BLOCK	
	5	1	*148-8341*	1	CONNECTOR GP	
		1	**3D-2824**	1	SEAL-O-RING	
		1	**6V-8713**	1	CONNECTOR	
		1	**7J-9108**	1	SEAL-O-RING	

I-SEE HOSE FABRICATION GUIDE

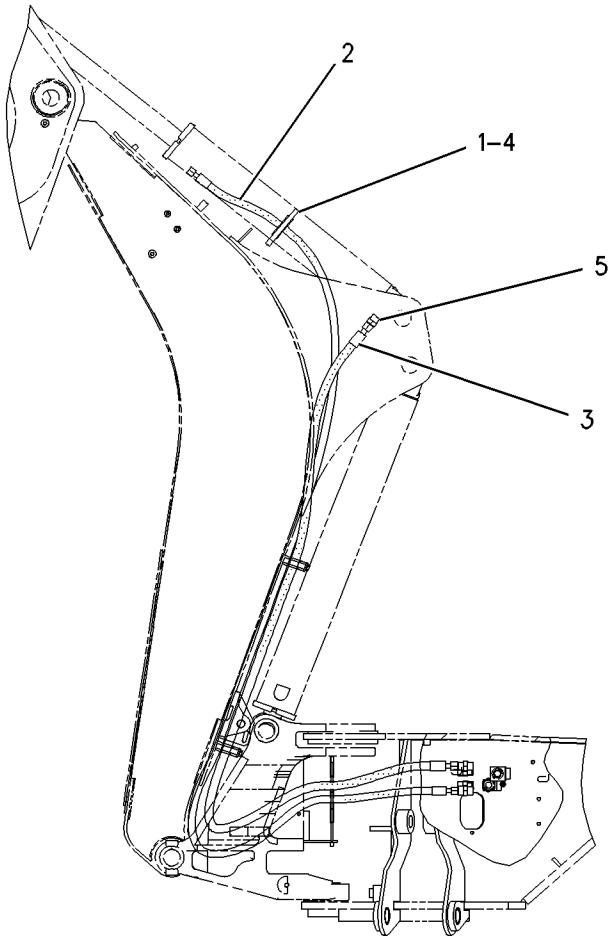

RIGHT SIDE VIEW

GRAPHIC #1 **<END>** g01003298

167-8264 LINES GP-SWING

S/N: BFP12900-UP

PART OF 214-6980 HYDRAULIC AR

SMCS-5057, 5105 **i01650785**

NOTE	REF NO	GRAPHIC REF	PART NUMBER	QTY	PART NAME 1 2 3 4 5 6 (PRODUCT LEVEL)	SEE PAGE
	1	1	**5P-0599**	2	CLAMP	
	2	1	**9R-2053**	2	BLOCK	
I	3	1	**9R-9005**	2	HOSE AS	
I	4	1	**176-7228**	1	HOSE AS	
I	5	1	**178-1123**	1	HOSE AS	
	6	1	*148-8340*	4	CONNECTOR GP	
					(EACH INCLUDES)	
		1	**3K-0360**	1	SEAL-O-RING	
		1	**6V-8398**	1	SEAL-O-RING	
		1	**6V-8639**	1	CONNECTOR	
	7	1	*148-8364*	2	ELBOW GP	
					(EACH INCLUDES)	
		1	**3K-0360**	1	SEAL-O-RING	
		1	**6V-8398**	1	SEAL-O-RING	
		1	**6V-8625**	1	ELBOW	

I-SEE HOSE FABRICATION GUIDE

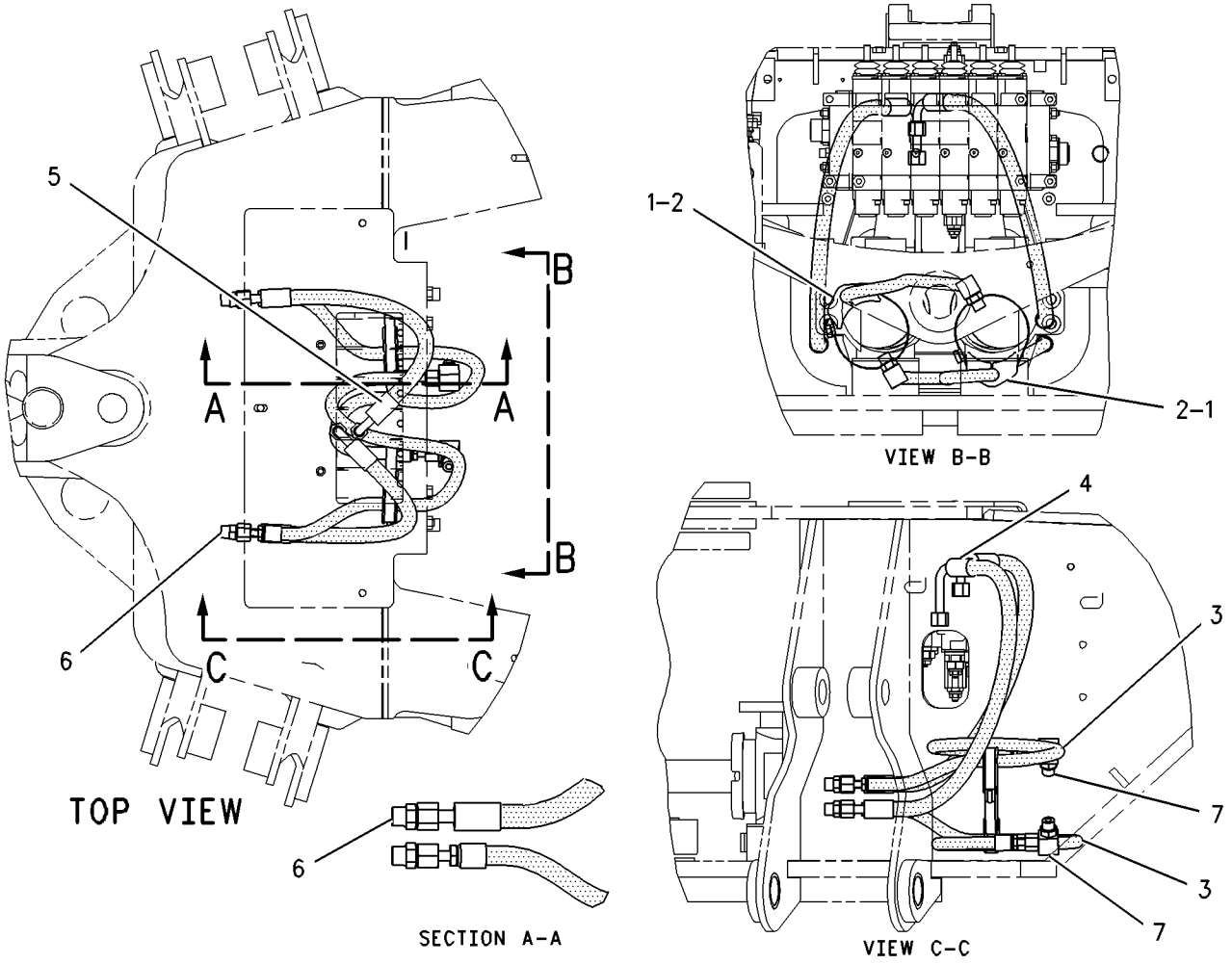

GRAPHIC #1 **<END>** g00726021

HYDRAULIC SYSTEM

189-0555 LINES GP-TILT CYLINDER

S/N: BFP12900-UP; CXP940-UP
PART OF 186-5331, 186-5333 HYDRAULIC AR
AN ATTACHMENT

SMCS-5057, 5104 **i01678790**

NOTE	REF NO	GRAPHIC REF	PART NUMBER	QTY	PART NAME 1 2 3 4 5 6 (PRODUCT LEVEL)	SEE PAGE
	1	1	**7K-1181**	1	STRAP-CABLE	
I	2	1	**9R-1034**	2	HOSE AS	
I	3	1	**9R-9198**	2	HOSE AS	
	4	1	**9R-9316**	1	BRACKET AS	
	5	1	**122-5822**	1	BRACKET AS	
	6	1	**151-4841**	1	BLOCK	
	7	1	**156-3837**	4	CLIP (SLOT)	
	8	1	**156-3838**	2	CLIP (TAB)	
	9	1	**158-3412**	8	CLIP (SLOT)	
	10	1	**187-3162**	1	TUBE AS	
	11	1	**187-3163**	1	TUBE AS	
	12	1	**187-3164**	1	TUBE AS	
	13	1	**187-3166**	1	TUBE AS	
	14	1	**187-4329**	1	TUBE AS	
	15	1	**207-7581**	1	TUBE AS	
	16	1	*148-8341*	2	CONNECTOR GP	
					(EACH INCLUDES)	
		1	**3D-2824**	1	SEAL-O-RING	
		1	**6V-8713**	1	CONNECTOR	
		1	**7J-9108**	1	SEAL-O-RING	
	17	1	*148-8390*	1	ELBOW GP	
		1	**2M-9780**	1	SEAL-O-RING	
		1	**6V-8626**	1	ELBOW	
		1	**7J-9108**	1	SEAL-O-RING	
	18	1	*148-8393*	2	ELBOW GP	
					(EACH INCLUDES)	
		1	**6V-9852**	1	ELBOW-SWIVEL	
		1	**7J-9108**	1	SEAL-O-RING	
	19	1	**6V-8398**	8	SEAL-O-RING	
	20	1	**8T-4121**	10	WASHER-HARD (11X21X2.5MM THK)	
M	21	1	**8T-4136**	5	BOLT (M10X1.5X25MM)	
M	22	1	**8T-4137**	2	BOLT (M10X1.5X20MM)	
M	23	1	**8T-4195**	2	BOLT (M10X1.5X30MM)	
	24	1	**9R-7803**	4	CLIP	

I-SEE HOSE FABRICATION GUIDE
M-METRIC PART

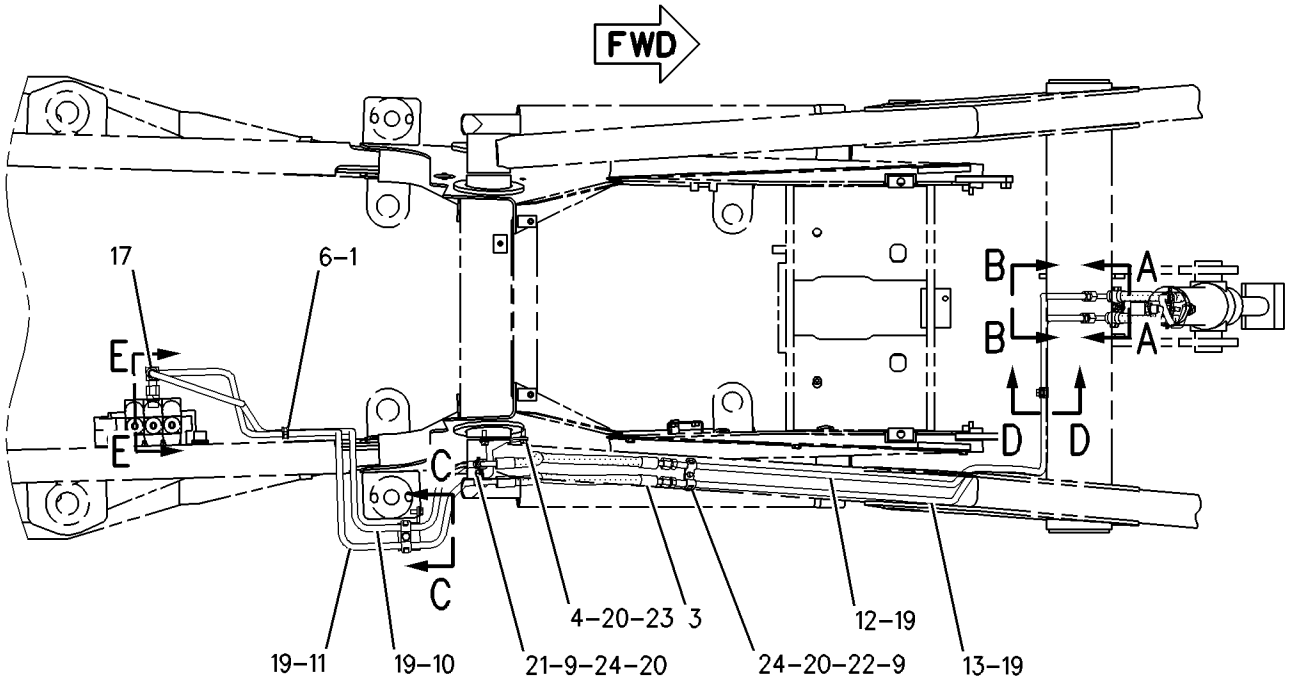

TOP VIEW

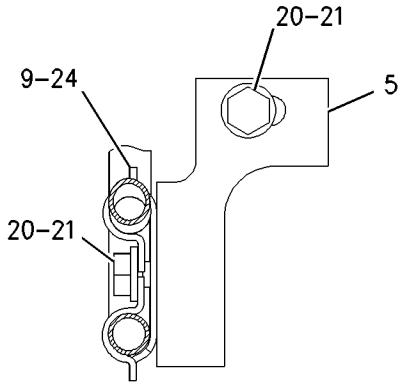

SECTION C-C

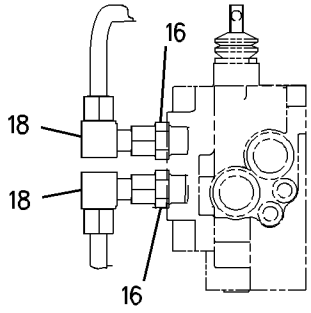

SECTION E-E

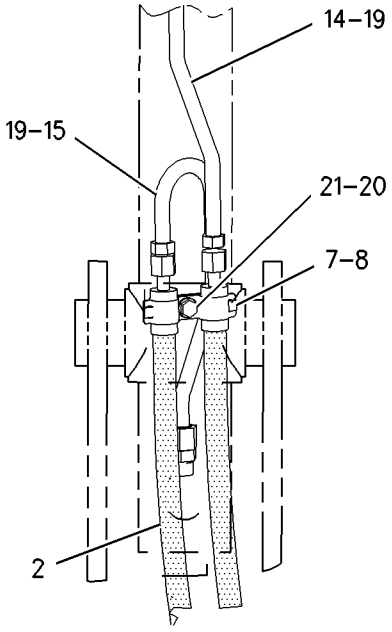

VIEW B-B

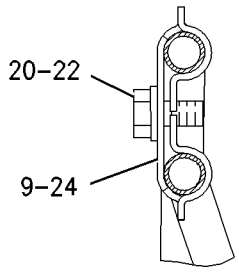

SECTION D-D

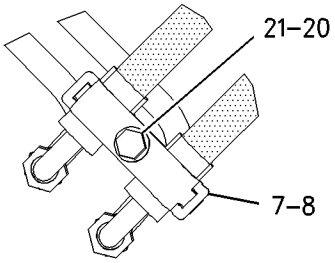

SECTION A-A

GRAPHIC #1 **<END>** g00866352

HYDRAULIC SYSTEM

106-2404 LOCK GP-HYDRAULIC HAND CONTROL

S/N: BFP12900-UP

AN ATTACHMENT

SMCS-5001 **i00523396**

NOTE	REF NO	GRAPHIC REF	PART NUMBER	QTY	PART NAME 1 2 3 4 5 6 (PRODUCT LEVEL)	SEE PAGE
	1	1	**106-2405**	1	PLATE AS	
	2	1	**106-2409**	1	PIN	
M	3	1	**8T-4136**	2	BOLT (M10X1.50X25MM)	
	4	1	**8T-4223**	2	WASHER-HARD (3MM THK)	

M-METRIC PART

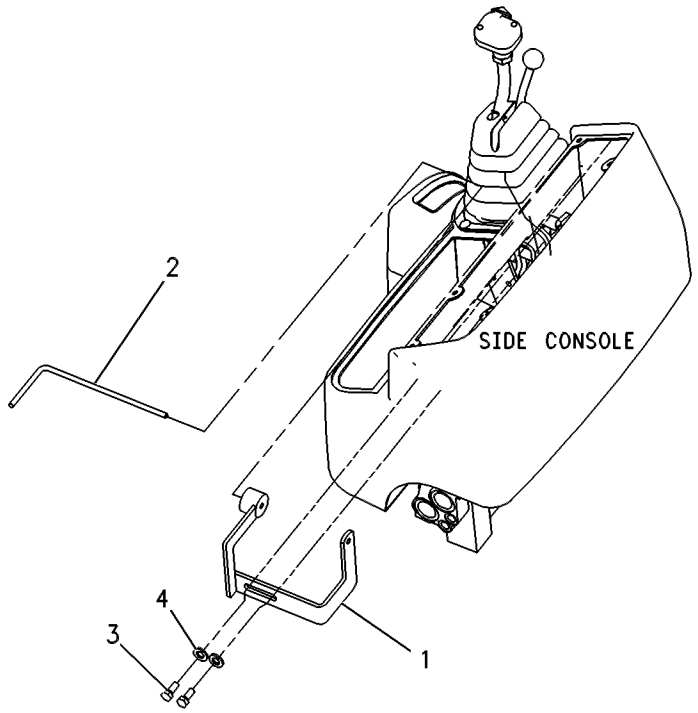

GRAPHIC #1 **<END>** g00131793

185-1598 MOUNTING GP-BANK VALVE–LOADER

S/N: BFP12900-UP; CXP940-UP
PART OF 186-5331, 186-5332, 186-5333 HYDRAULIC AR
AN ATTACHMENT

SMCS-5051 **i01655822**

NOTE	REF NO	GRAPHIC REF	PART NUMBER	QTY	PART NAME 1 2 3 4 5 6 (PRODUCT LEVEL)	SEE PAGE
	1	1	**199-7854**	2	SPACER (11.8X20X45MM THK)	
M	2	1	**8T-0389**	2	LOCKNUT (M10X1.5 THD)	
	3	1	**8T-4121**	5	WASHER-HARD (11X21X2.5MM THK)	
M	4	1	**8T-4186**	1	BOLT (M10X1.5X40MM)	
M	5	1	**8T-4198**	2	BOLT (M10X1.5X100MM)	

M-METRIC PART

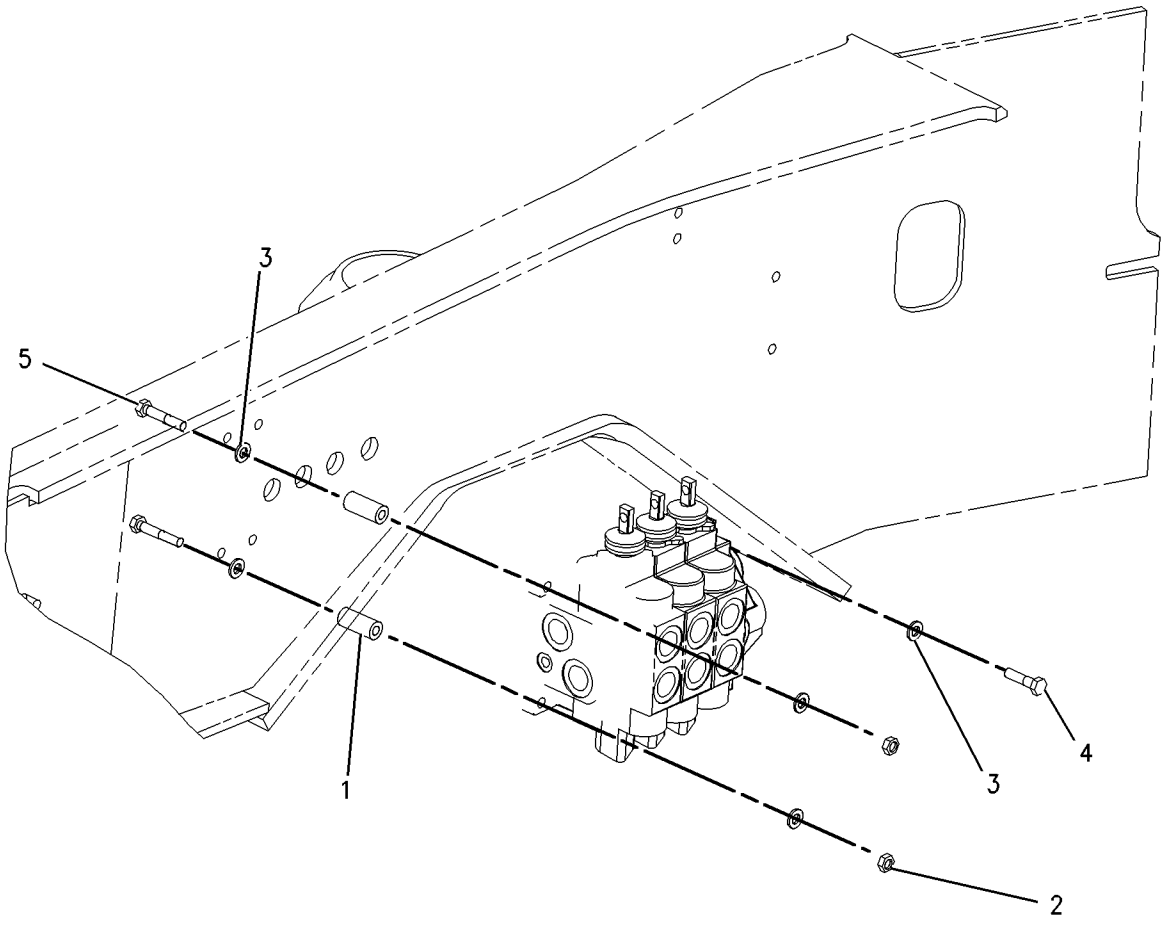

GRAPHIC #1 **<END>** g00791744

185-3165 MOUNTING GP-BANK VALVE–BACKHOE

S/N: BFP12900-UP
CENTER PIVOT
PART OF 214-6980 HYDRAULIC AR

SMCS-5051 **i01519108**

NOTE	REF NO	GRAPHIC REF	PART NUMBER	QTY	PART NAME 1 2 3 4 5 6 (PRODUCT LEVEL)	SEE PAGE
	1	1	**164-1481**	1	BRACKET AS	
M	2	1	**165-7019**	1	BOLT-HEX HEAD	
	3	1	**8T-4121**	5	WASHER-HARD (11X21X2.5MM THK)	
M	4	1	**8T-4183**	2	BOLT (M12X1.75X40 MM)	
M	5	1	**8T-4185**	1	BOLT (M10X1.5X50MM)	
M	6	1	**8T-4186**	2	BOLT (M10X1.5X40MM)	
	7	1	**8T-4223**	3	WASHER-HARD (13.5X25.5X3MM THK)	

M-METRIC PART

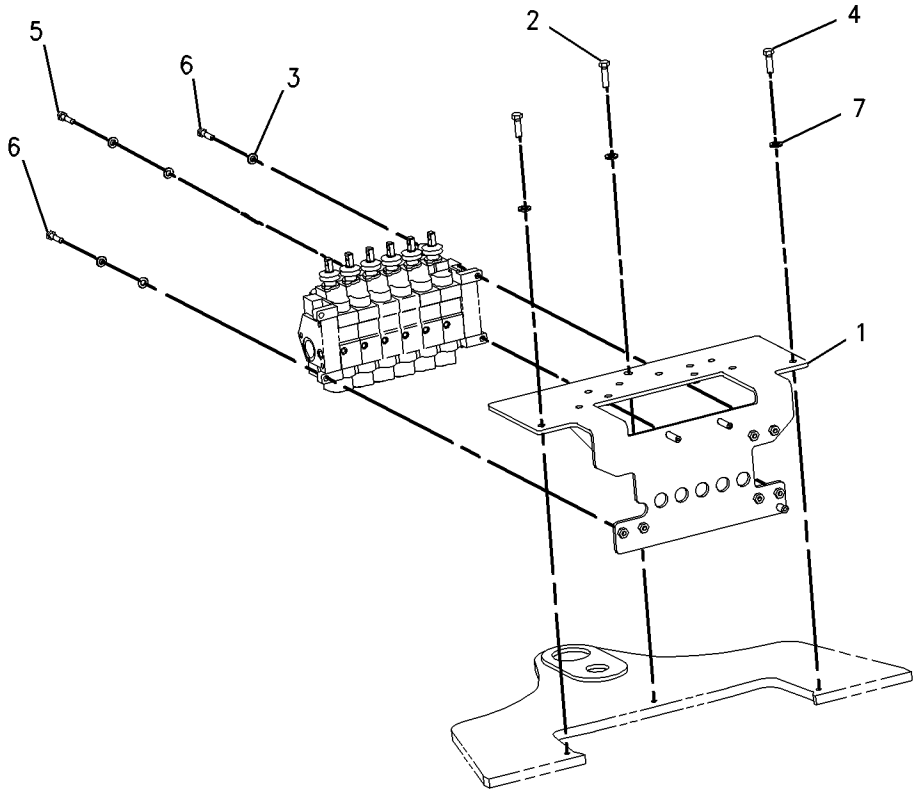

GRAPHIC #1 **<END>** g00771410

9R-4668 MOUNTING GP-CYLINDER

S/N: BFP12900-UP

PART OF 111-8634, 111-8635, 112-0938, 112-0939 BUCKET AR-MULTIPURPOSE AN ATTACHMENT

SMCS-5102, 6068, 7562 **i01450458**

NOTE	REF NO	GRAPHIC REF	PART NUMBER	QTY	PART NAME 1 2 3 4 5 6 (PRODUCT LEVEL)	SEE PAGE
	1	1	**9R-4677**	2	PIN	
	2	1	**3B-5317**	4	COTTER	
	3	1	**9R-4678**	2	PIN	
	4	1	**3B-8489**	4	FITTING-GREASE	

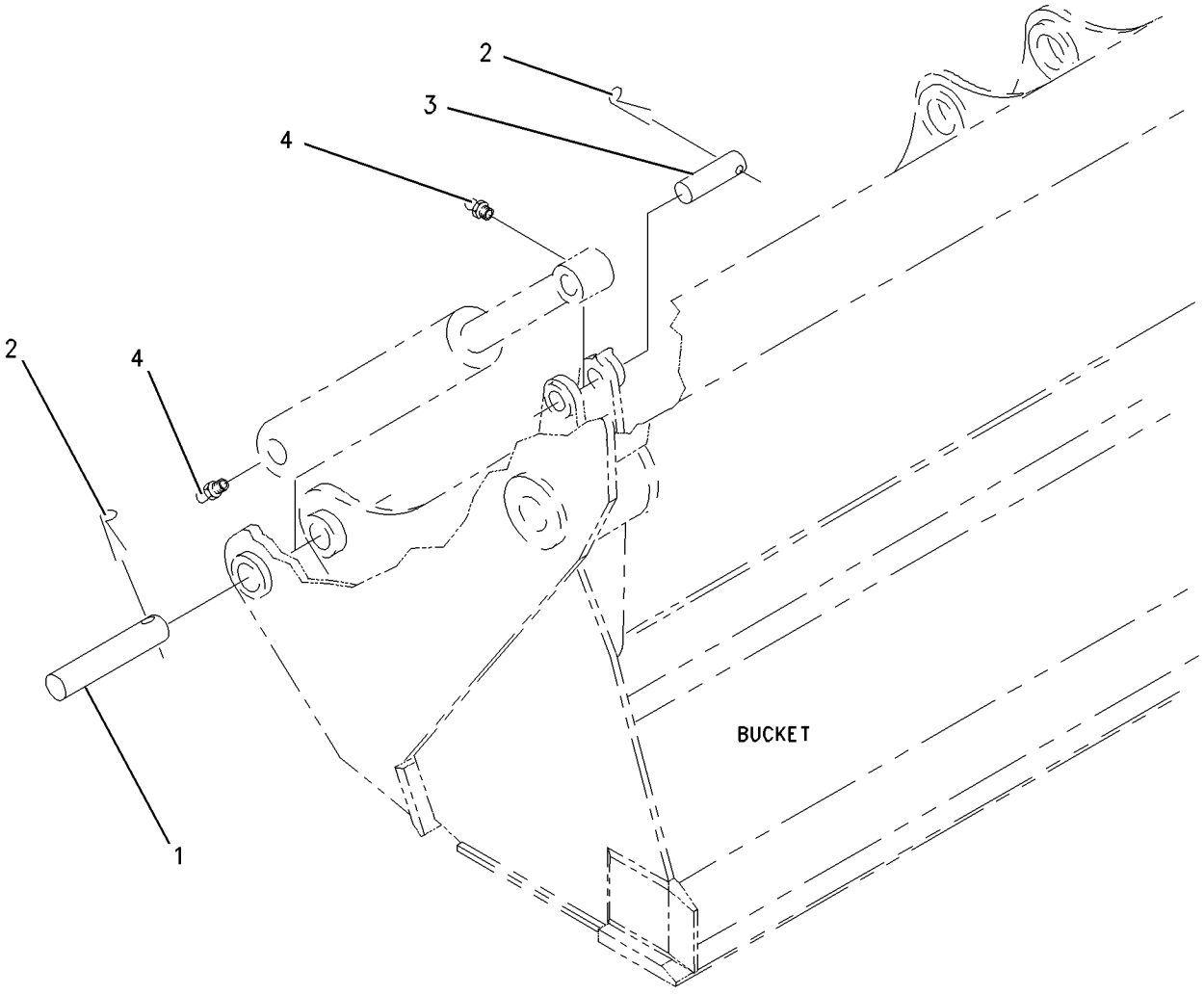

GRAPHIC #1 **<END>** g00759178

221-4265 MOUNTING GP-CYLINDER

S/N: BFP12900-UP
PART OF 221-4260 THUMB AR
AN ATTACHMENT

SMCS-5102, 6068, 7562 **i01920956**

NOTE	REF NO	GRAPHIC REF	PART NUMBER	QTY	PART NAME 1 2 3 4 5 6 (PRODUCT LEVEL)	SEE PAGE
	1	1	**9R-1510**	8	WASHER (4MM THK)	
	2	1	**221-4295**	1	PIN	
	3	1	**221-4296**	1	PIN	
	4	1	**221-4297**	1	PIN	
	5	1	**221-4315**	1	STOP AS	
	6	1	**221-4316**	1	BRACKET AS	
	7	1	**3B-5319**	2	PIN-COTTER	
	8	1	**6V-3213**	2	RING-RETAINING	
M	9	1	**6V-9189**	1	LOCKNUT	
M	10	1	**8T-3647**	1	BOLT (M8X1.25X80MM)	
	11	1	**9R-0158**	2	WASHER (46X69X3MM THK)	

M-METRIC PART

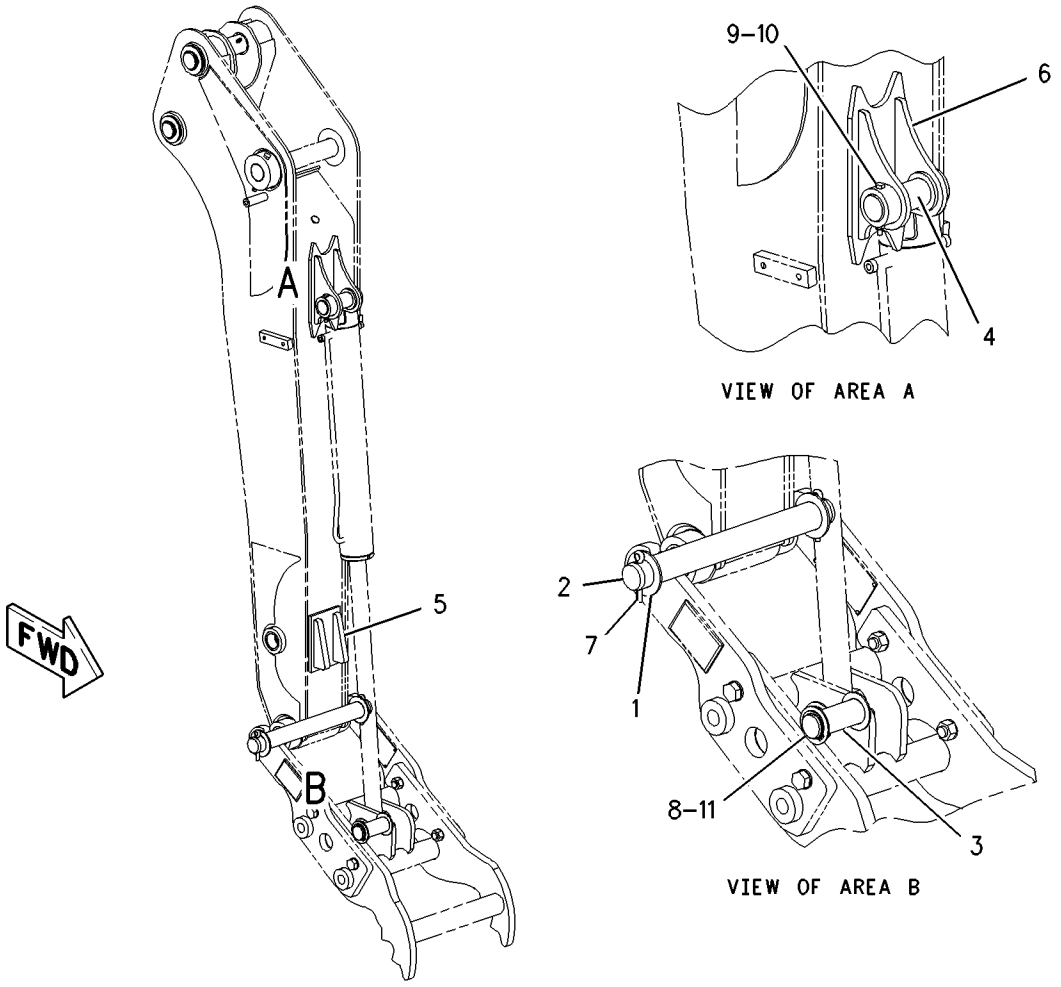

GRAPHIC #1 **<END>** g01003739

183-6078 MOUNTING GP-HYDRAULIC CONTROL–STABILIZER

S/N: BFP12900-UP; CXP940-UP
PART OF 209-4172 STABILIZER AR
AN ATTACHMENT

SMCS-5063 **i01801011**

NOTE	REF NO	GRAPHIC REF	PART NUMBER	QTY	PART NAME 1 2 3 4 5 6 (PRODUCT LEVEL)	SEE PAGE
	1	1	**164-1398**	2	KNOB	
	2	1	**190-5136**	1	FILM (STABILIZER CONTROL)	
	3	1	**205-5798**	1	PLATE	
M	4	1	**8T-4189**	4	BOLT (M8X1.25X20MM)	
	5	1	**8T-4224**	4	WASHER-HARD (8.8X16X2MM THK)	
M	6	1	**9X-2043**	3	SCREW-TRUSS HEAD (M6X1X14MM)	

M-METRIC PART

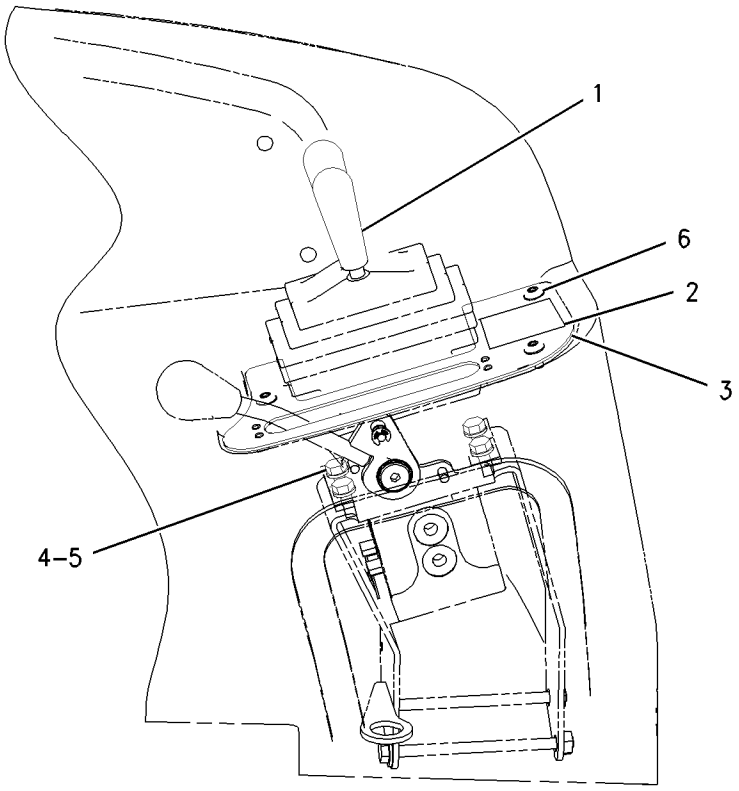

GRAPHIC #1 **<END>** g00882860

112-1826 MOUNTING GP-HYDRAULIC PUMP

S/N: BFP12900-UP; CXP940-UP

PART OF 215-6888 COMMON AR, 214-6980 HYDRAULIC AR

SMCS-5070 **i00512831**

NOTE	REF NO	GRAPHIC REF	PART NUMBER	QTY	PART NAME 1 2 3 4 5 6 (PRODUCT LEVEL)	SEE PAGE
M	1	1	**8T-9405**	4	BOLT-SOCKET HEAD (M4X0.7X16MM)	
	2	1	**9U-8886**	1	RING-SEAL (44.95MM ID)	
	3	1	**115-1918**	1	PLATE	
	4	1	**117-3534**	1	ADAPTER	
	5	1	**117-3535**	1	HUB	
Y	6	1	**128-5596**	1	SHAFT GP-POWER TAKE-OFF	676
	7	1	**5F-3106**	1	SEAL-O-RING (126.59MM ID)	
	8	1	**8T-4122**	2	WASHER (3.5MM THK)	
M	9	1	**8T-7338**	2	BOLT (M16X2.0X45MM)	

M-METRIC PART
Y-SEPARATE ILLUSTRATION

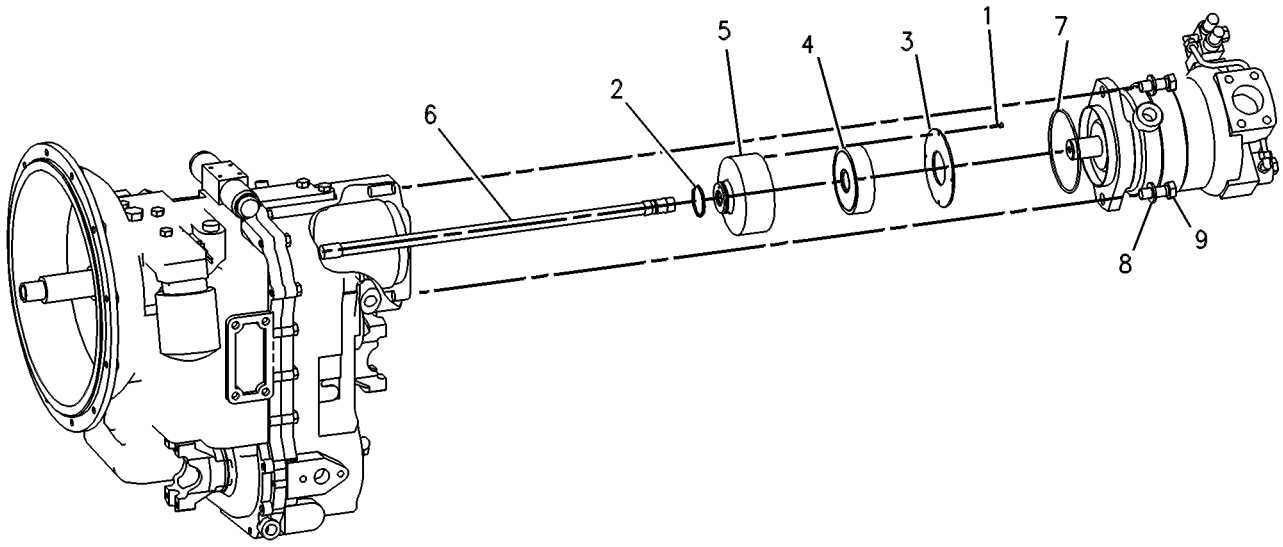

GRAPHIC #1 **<END>** g00131524

171-2101 MOUNTING GP-LINES

S/N: BFP12900-UP

PART OF 184-7909, 238-4783 BACKHOE AR-EXTENDABLE STICK, 184-7903, 184-7907, 238-4780, 238-4782 BACKHOE AR-STANDARD STICK AN ATTACHMENT

SMCS-5057, 5456 **i01519506**

NOTE	REF NO	GRAPHIC REF	PART NUMBER	QTY	PART NAME 1 2 3 4 5 6 (PRODUCT LEVEL)	SEE PAGE
	1	1	**9R-8874**	2	PLATE	
	2	1	**120-4397**	1	PLATE	
	3	1	**201-1034**	2	BLOCK	
	4	1	**172-2363**	2	BLOCK	
	5	1	**201-1035**	2	BLOCK	
	6	1	**191-4852**	1	BLOCK	
	7	1	**193-6352**	1	BLOCK	
	8	1	**193-6353**	1	BLOCK	
M	9	1	**6V-9189**	2	LOCKNUT (M8X1.25 THD)	
M	10	1	**7X-2539**	2	BOLT (M8X1.25X110MM)	
	11	1	**8T-4121**	4	WASHER-HARD (11X21X2.5MM THK)	
M	12	1	**8T-4136**	4	BOLT (M10X1.5X25MM)	
	13	1	**8T-4224**	4	WASHER-HARD (8.8X16X2MM THK)	

M-METRIC PART

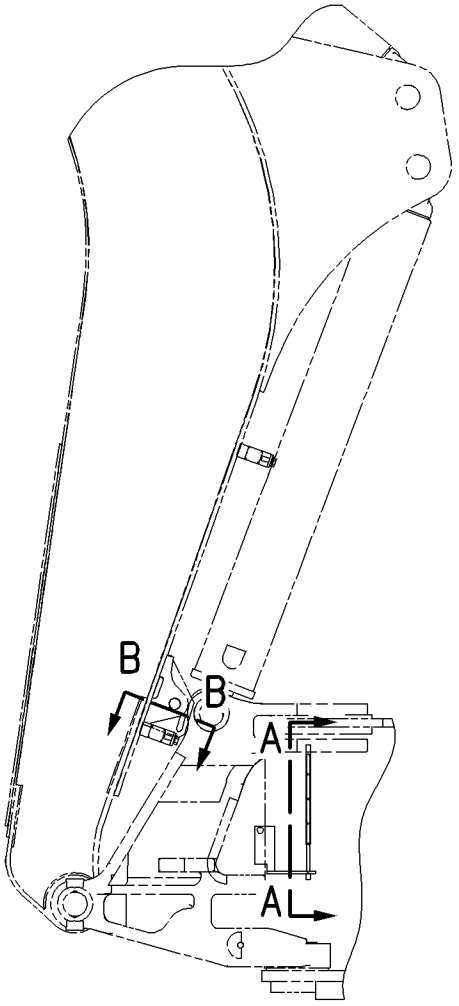

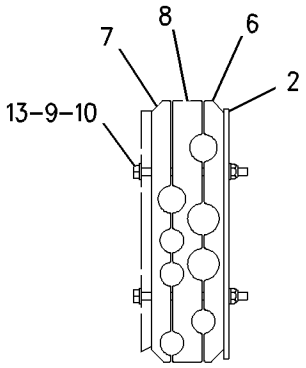

SECTION A-A

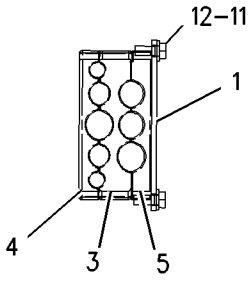

SECTION B-B

GRAPHIC #1 **<END>** g00788993

HYDRAULIC SYSTEM

172-3190 MOUNTING GP-LINES

S/N: BFP12900-UP

PART OF 184-7911, 238-4784 BACKHOE AR-EXTENDABLE STICK, 184-7905, 238-4781 BACKHOE AR-STANDARD STICK AN ATTACHMENT

SMCS-5057, 5456 **i01520729**

NOTE	REF NO	GRAPHIC REF	PART NUMBER	QTY	PART NAME 1 2 3 4 5 6 (PRODUCT LEVEL)	SEE PAGE
	1	1	**120-4397**	1	PLATE	
	2	1	**177-7148**	2	BLOCK	
	3	1	**177-7149**	2	BLOCK	
	4	1	**191-4850**	1	BLOCK	
	5	1	**191-4851**	1	BLOCK	
	6	1	**191-4852**	1	BLOCK	
	7	1	**193-6355**	2	BLOCK	
M	8	1	**6V-9189**	2	LOCKNUT (M8X1.25 THD)	
M	9	1	**7X-2539**	2	BOLT (M8X1.25X110MM)	
	10	1	**8T-4121**	4	WASHER-HARD (11X21X2.5MM THK)	
M	11	1	**8T-4136**	4	BOLT (M10X1.5X25MM)	
	12	1	**8T-4224**	4	WASHER-HARD (8.8X16X2MM THK)	
	13	1	**9R-8874**	2	PLATE	

M-METRIC PART

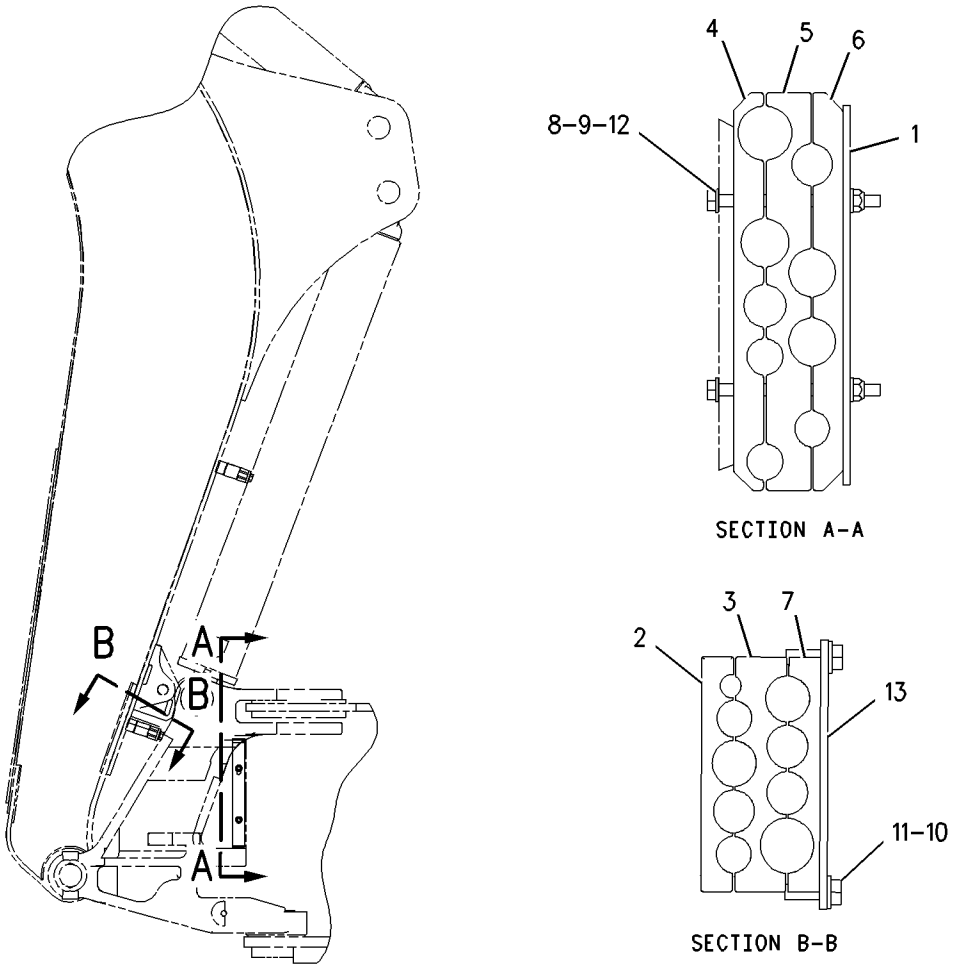

GRAPHIC #1 **<END>** g00789796

HYDRAULIC SYSTEM

180-9588 PUMP GP-PISTON*R

S/N: CXP940-UP

PART OF 215-6888 COMMON AR

SMCS-5070 **i02020775**

NOTE	REF NO	GRAPHIC REF	PART NUMBER	QTY	PART NAME 1 2 3 4 5 6 (PRODUCT LEVEL)	SEE PAGE
	1	1	**180-6213**	1	RING-RETAINING	
	2	1	**6E-4003**	2	BEARING	
	3	1	**173-0637**	1	HOUSING-PUMP	
Y	4	1	**120-5726**	1	ROTATING GP-PUMP	675
	5	1	**3E-6769**	4	SEAL-O-RING	
M	6	1	**095-9805**	4	BOLT-SOCKET HEAD (M14X2X40-MM)	
	7	1	**1P-6872**	1	CUP-BEARING	
	8	1	**8C-7110**	1	CONE-BEARING	
	9	1	**103-5520**	1	CARRIER-PIN	
	10	1	**6E-4000**	1	SPACER (25.5X35X3-MM THK) (3MM THK)	
	11	1	**3E-6770**	1	SEAL-O-RING	
	12	1	**6E-6175**	1	CYLINDER	
	13	1	**6E-6176**	1	SPRING	
	14	1	**6E-6174**	1	PLUNGER	
	15	1	**9S-8006**	1	PLUG	
	16	1	**2M-9780**	1	SEAL-O-RING	
	17	1	**162-1604**	1	SHAFT-PUMP	
	18	1	**6V-2323**	1	CONE-BEARING	
	19	1	**3B-5790**	1	CUP-BEARING	
	20	1	**6E-4004**	2	SEAL-SHAFT	
	21	1	**173-0639**	1	SWASHPLATE AS	
	22	1	**120-5727**	1	PISTON-CONTROL	
	23	1	**120-5729**	1	GUIDE-PISTON	
	24	1	**136-8423**	1	PLUG-BREAK OFF	
	25	1	**083-4419**	1	PIN	
	26	1	**173-0641**	1	PLUG-FILTER	
	27	1	**173-0638**	1	HEAD-PUMP	
	28	1	**103-5522**	1	ADAPTER AS	
		1	**3J-7354**	1	SEAL-O-RING	
	29	1	**3J-7352**	2	CONNECTOR	
	30	1	**3J-7354**	3	SEAL-O-RING	
	31	1	**193-8648**	1	TUBE AS	
Y	32	1	**103-5519**	1	VALVE GP-PUMP CONTROL (POWER COMPENSATOR)	722
M	33	1	**6V-5683**	1	BOLT (M6X1X16-MM)	
	34	1	**3C-8388**	1	PIN-ROLL	
Y	35	1	**173-0640**	1	VALVE GP-PUMP CONTROL (PRESSURE, FLOW COMPENSATOR)	723
	36	1	**194-6196**	1	SPACER (28X34X3.5-MM THK)	
	37	1	**9X-7680**	3	SEAL-O-RING	

M-METRIC PART
Y-SEPARATE ILLUSTRATION

180-9588 PUMP GP-PISTON *(contd.)* i02020775

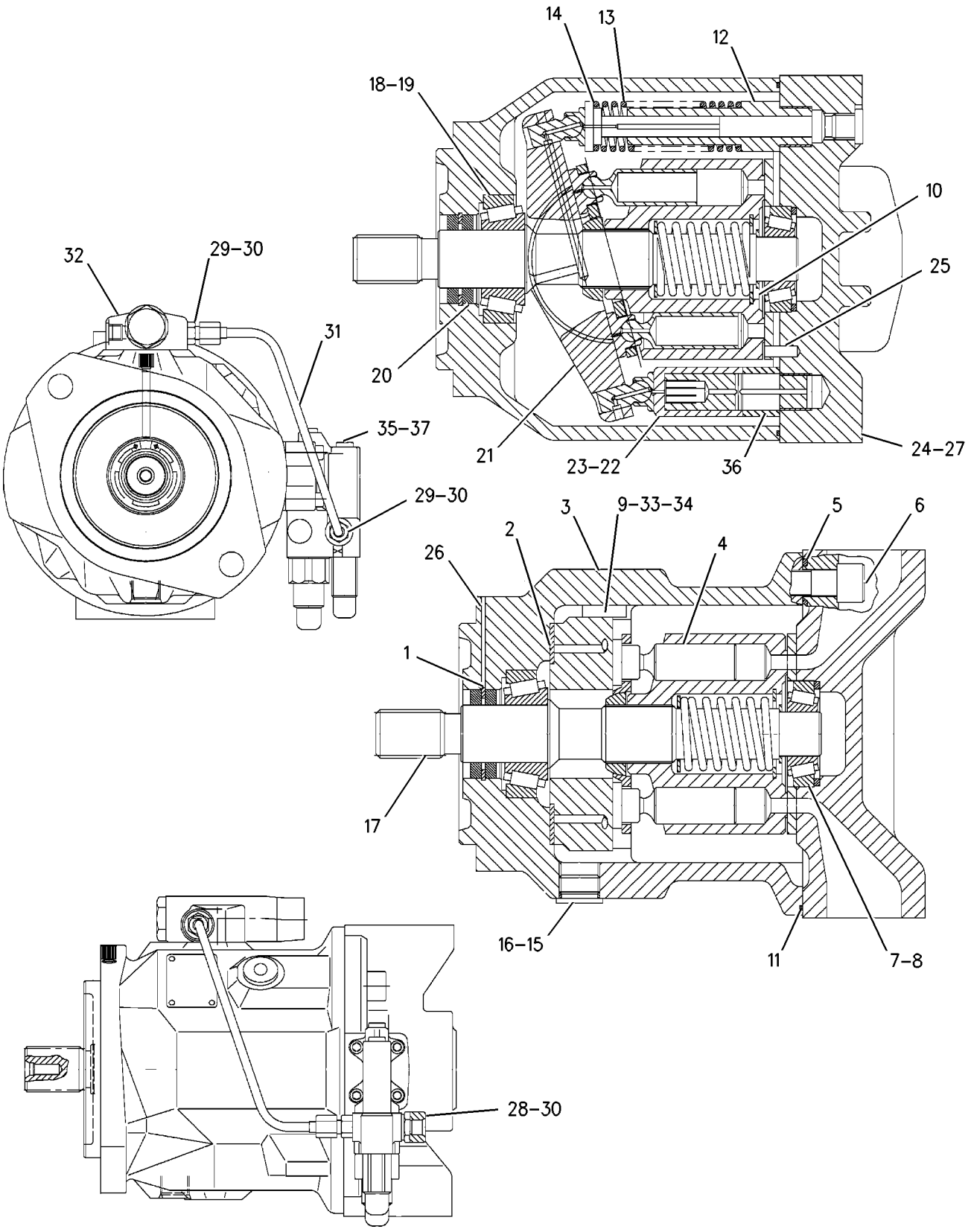

GRAPHIC #1 **<END>** g00847539

HYDRAULIC SYSTEM

245-8998 PUMP GP-PISTON

S/N: BFP12900-UP

PART OF 214-6980 HYDRAULIC AR

SMCS-5070 **i02013218**

NOTE	REF NO	GRAPHIC REF	PART NUMBER	QTY	PART NAME 1 2 3 4 5 6 (PRODUCT LEVEL)	SEE PAGE
	1	1	**180-6213**	1	RING-RETAINING	
	2	1	**6E-4003**	2	BEARING	
	3	1	**173-0637**	1	HOUSING-PUMP	
Y	4	1	**120-5726**	1	ROTATING GP-PUMP	675
	5	1	**3E-6769**	4	SEAL-O-RING	
M	6	1	**095-9805**	4	BOLT-SOCKET HEAD (M14X2X40-MM)	
	7	1	**1P-6872**	1	CUP-BEARING	
	8	1	**8C-7110**	1	CONE-BEARING	
	9	1	**103-5520**	1	CARRIER-PIN	
	10	1	**6E-4000**	1	SPACER (25.5X35X3-MM THK)	
	11	1	**3E-6770**	1	SEAL-O-RING	
	12	1	**6E-6175**	1	CYLINDER	
	13	1	**6E-6176**	1	SPRING	
	14	1	**6E-6174**	1	PLUNGER	
	15	1	**9S-8006**	1	PLUG	
	16	1	**2M-9780**	1	SEAL-O-RING	
	17	1	**162-1604**	1	SHAFT-PUMP	
	18	1	**6V-2323**	1	CONE-BEARING	
	19	1	**3B-5790**	1	CUP-BEARING	
	20	1	**6E-4004**	2	SEAL-SHAFT	
	21	1	**173-0639**	1	SWASHPLATE AS	
	22	1	**120-5727**	1	PISTON-CONTROL	
	23	1	**120-5729**	1	GUIDE-PISTON	
	24	1	**136-8423**	1	PLUG-BREAK OFF	
	25	1	**083-4419**	1	PIN	
	26	1	**173-0641**	1	PLUG-FILTER	
	27	1	**173-0638**	1	HEAD-PUMP	
	28	1	**215-9219**	1	ADAPTER AS	
		1	**3J-7354**	1	SEAL-O-RING	
	29	1	**3J-7352**	2	CONNECTOR	
	30	1	**3J-7354**	3	SEAL-O-RING	
	31	1	**193-8648**	1	TUBE AS	
Y	32	1	**103-5519**	1	VALVE GP-PUMP CONTROL (POWER COMPENSATOR)	722
M	33	1	**6V-5683**	1	BOLT (M6X1X16-MM)	
	34	1	**3C-8388**	1	PIN-ROLL	
Y	35	1	**173-0640**	1	VALVE GP-PUMP CONTROL (PRESSURE, FLOW COMPENSATOR)	723
	36	1	**194-6196**	1	SPACER (28X34X3.5-MM THK)	
	37	1	**9X-7680**	3	SEAL-O-RING	

M-METRIC PART
Y-SEPARATE ILLUSTRATION

245-8998 PUMP GP-PISTON *(contd.)* i02013218

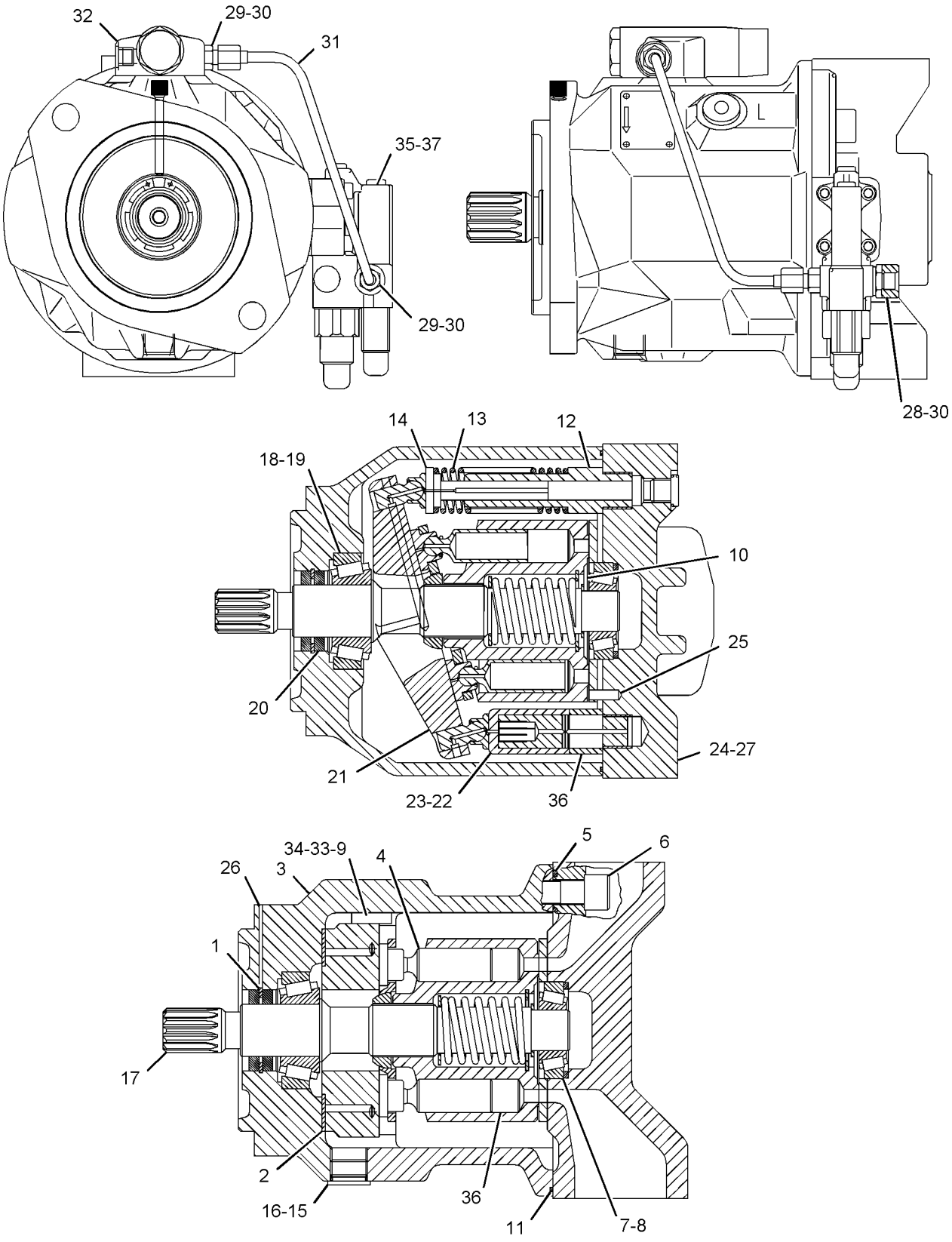

GRAPHIC #1 **<END>** g01042228

120-5726 ROTATING GP-PUMP

S/N: BFP12900-UP; CXP940-UP

PART OF 180-9588, 245-8998 PUMP GP-PISTON

SMCS-5070 **i00733625**

NOTE	REF NO	GRAPHIC REF	PART NUMBER	QTY	PART NAME 1 2 3 4 5 6 (PRODUCT LEVEL)	SEE PAGE
	1	1	**6E-6151**	9	PISTON AS	
	2	1	**6E-6154**	1	PLATE-RETRACTION	
	3	1	**6E-6155**	1	BEARING	
	4	1	**6E-4007**	1	BARREL	
	5	1	**6E-3341**	1	SEAT-SPRING	
	6	1	**6E-4009**	1	SPRING	
	7	1	**6E-6158**	1	RING	
	8	1	**120-5724**	1	PLATE-VALVE	
	9	1	**6E-6157**	3	PIN	

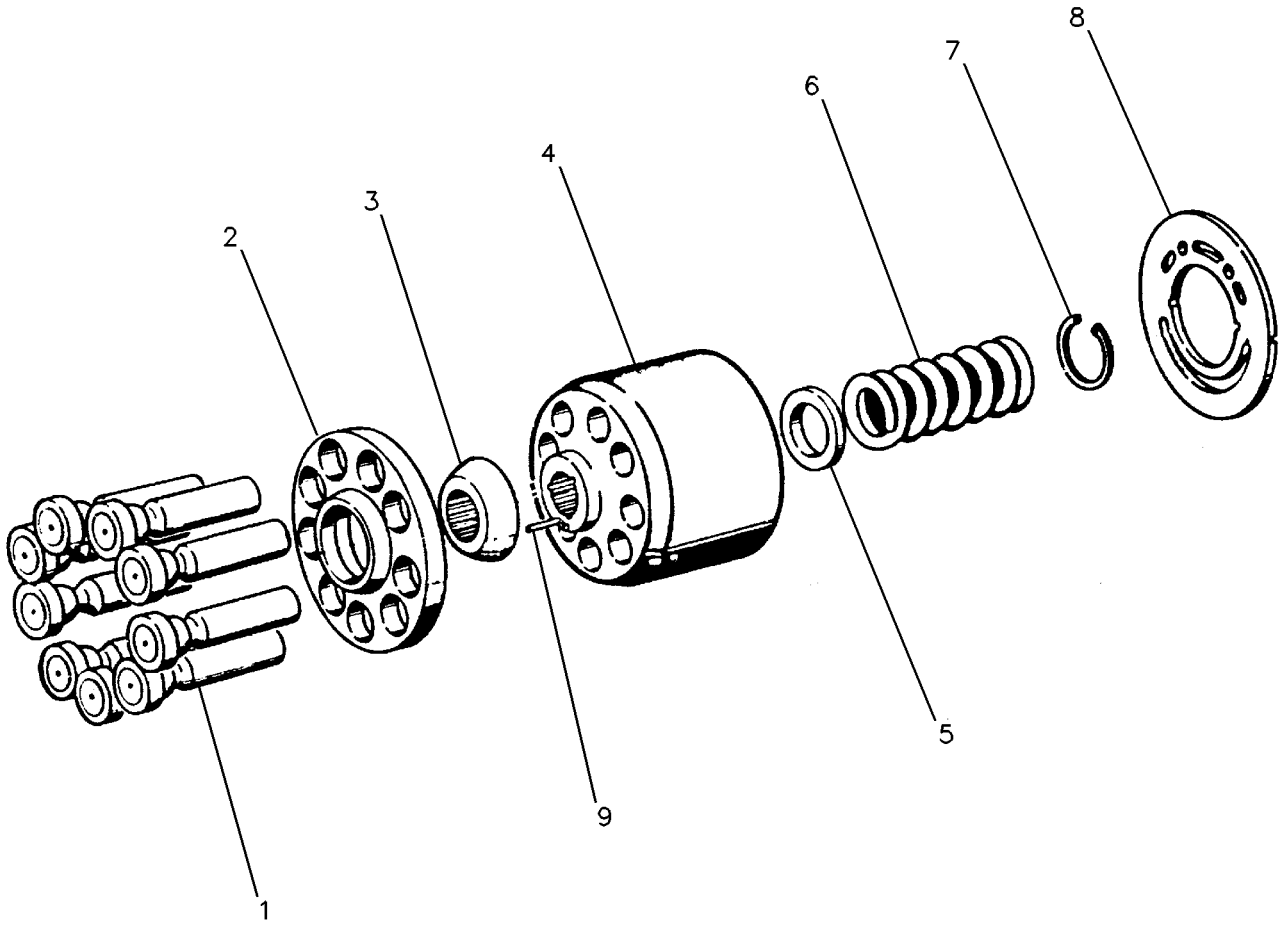

GRAPHIC #1 **<END>** g00119332

HYDRAULIC SYSTEM

128-5596 SHAFT GP-POWER TAKE-OFF

S/N: BFP12900-UP; CXP940-UP

PART OF 112-1826 MOUNTING GP-HYDRAULIC PUMP

SMCS-3107 **i00512642**

NOTE	REF NO	GRAPHIC REF	PART NUMBER	QTY	PART NAME 1 2 3 4 5 6 (PRODUCT LEVEL)	SEE PAGE
	1	1	**130-8150**	1	RING-RETAINING	

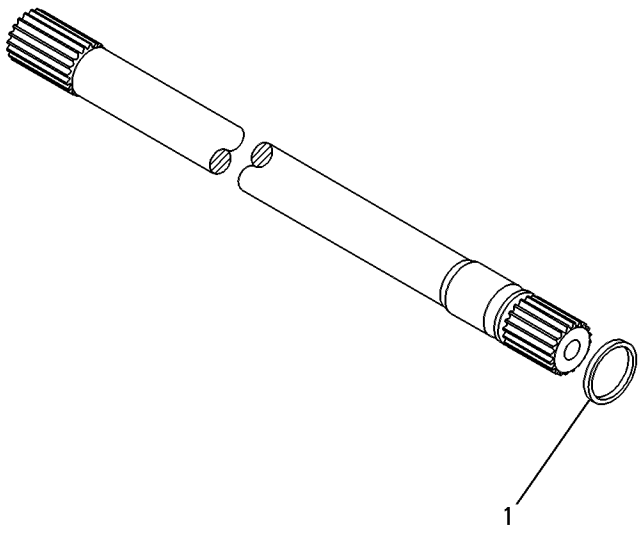

GRAPHIC #1 **<END>** g00131851

HYDRAULIC SYSTEM

209-4172 STABILIZER AR

S/N: BFP12900-UP; CXP940-UP
STANDARD
PART OF 192-4661, 192-4663, 192-4665, 192-4666, 214-6955, 214-6956, 214-6958
POWER TRAIN AR
AN ATTACHMENT

SMCS-1408, 5059, 7222 **i01701082**

NOTE	PART NUMBER	QTY	PART NAME 1 2 3 4 5 6 (PRODUCT LEVEL)	SEE PAGE
Y	*183-6078*	1	MOUNTING GP-HYDRAULIC CONTROL	667
Y	**185-5902**	1	VALVE GP-PILOT	718

Y-SEPARATE ILLUSTRATION

<END>

HYDRAULIC SYSTEM

163-7934 TANK & MTG GP-HYDRAULIC

S/N: CXP940-UP

PART OF 215-6888 COMMON AR

SMCS-5056 **i01951427**

NOTE	REF NO	GRAPHIC REF	PART NUMBER	QTY	PART NAME 1 2 3 4 5 6 (PRODUCT LEVEL)	SEE PAGE
	1	1	**1P-4278**	1	CLAMP-HOSE	
	2	1	**5D-1026**	2	CLAMP-HOSE	
	3	1	**9M-0164**	2	CLAMP-HOSE	
	4	1	**9R-9925**	1	FILTER (BREATHER)(HYDRAULIC)	
	5	1	**119-7749**	1	HOSE	
	6	1	**120-9926**	2	CLAMP	
	7	1	**123-0867**	1	CAP-FILLER (HYDRAULIC OIL)	
	8	1	**132-3056**	1	SEAL-O-RING	
	9	1	*163-7936*	1	TANK GP-HYDRAULIC	
		1	**222-5838**	1	TANK	
		1	**170-1644**	1	GAUGE-SIGHT	
	10	1	**168-9902**	1	BRACKET AS	
	11	1	**170-1645**	1	DIFFUSER AS	
	12	1	**174-7479**	1	TUBE AS	
	13	1	**222-4067**	6	BOLT-SOCKET HEAD (M5X.8X14MM)	
	14	1	*150-3027*	2	ELBOW AS	
					(EACH INCLUDES)	
		1	**2M-9780**	1	SEAL-O-RING	
		1	**6V-5653**	1	ELBOW (7/8-14 THD)	
M	15	1	**5C-7261**	1	NUT (M8X1.25 THD)	
	16	1	**6D-3479**	1	CLIP	
	17	1	**7X-7729**	4	WASHER (11X25X3MM THK)	
	18	1	**8T-4121**	1	WASHER-HARD (11X21X2.5MM THK)	
M	19	1	**8T-4137**	1	BOLT (M10X1.5X20MM)	
M	20	1	**8T-4139**	1	BOLT (M12X1.75X30MM)	
M	21	1	**8T-4179**	3	BOLT (M12X1.75X20MM)	
M	22	1	**8T-4191**	4	BOLT (M10X1.5X16MM)	
	23	1	**8T-4223**	4	WASHER-HARD (13.5X25.5X3MM THK)	
	24	1	**8T-4224**	2	WASHER-HARD (8.8X16X2MM THK)	
M	25	1	**8T-4908**	1	BOLT (M8X1.25X25MM)	
E	26	1	**5P-1505**		HOSE (8CM)	
E	27	1	**5P-1442**		HOSE (124CM)	

E-ORDER BY THE CENTIMETER
M-METRIC PART

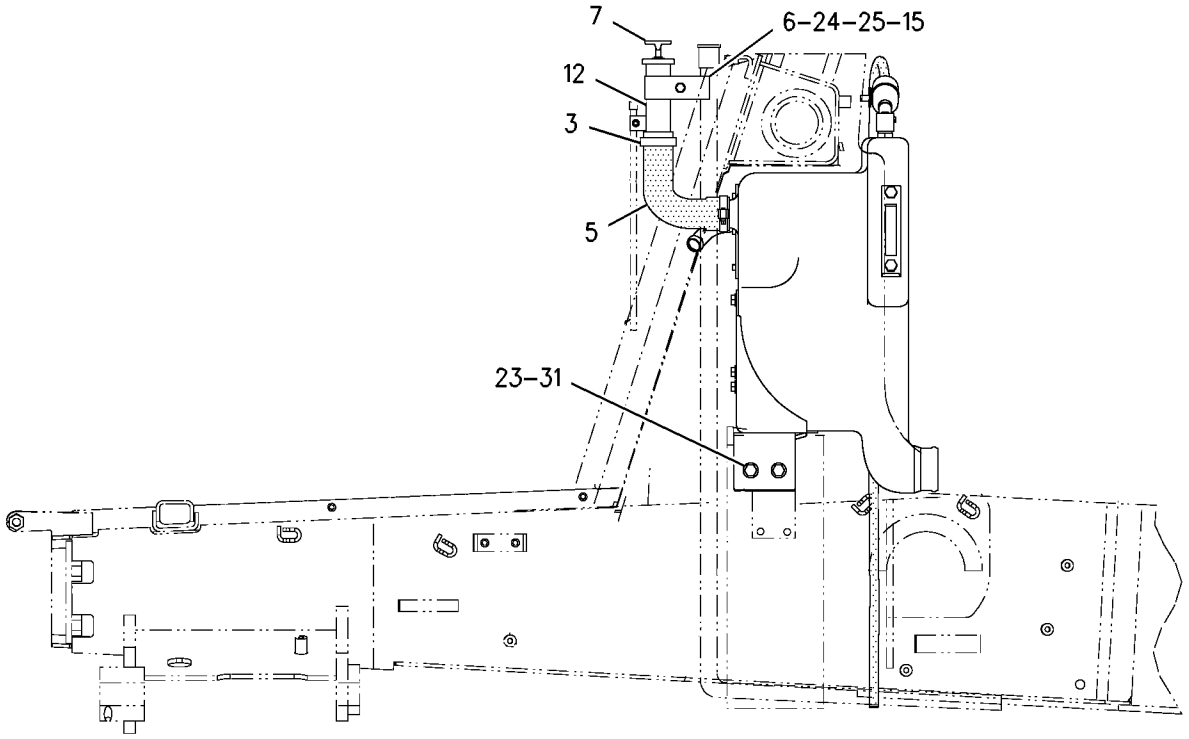

LEFT SIDE VIEW

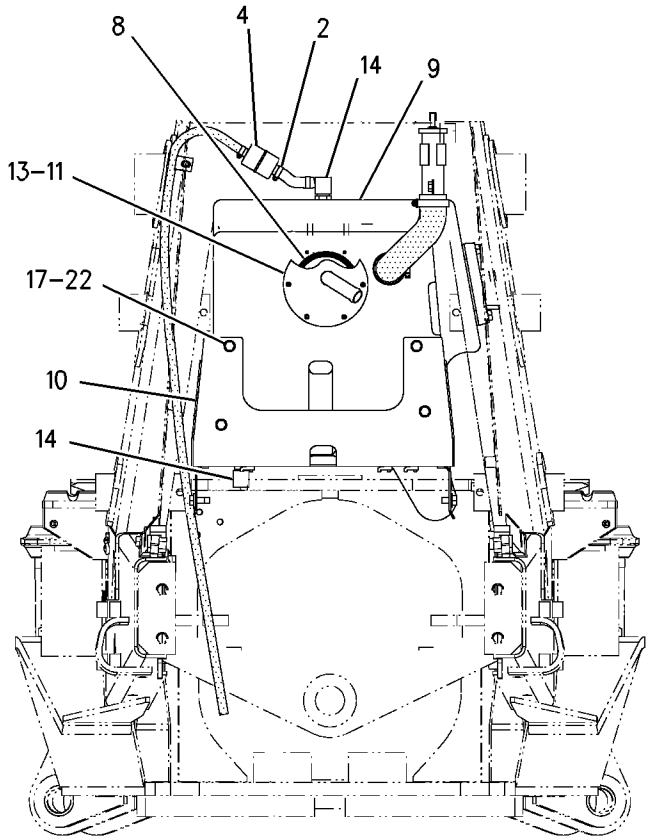

FRONT VIEW

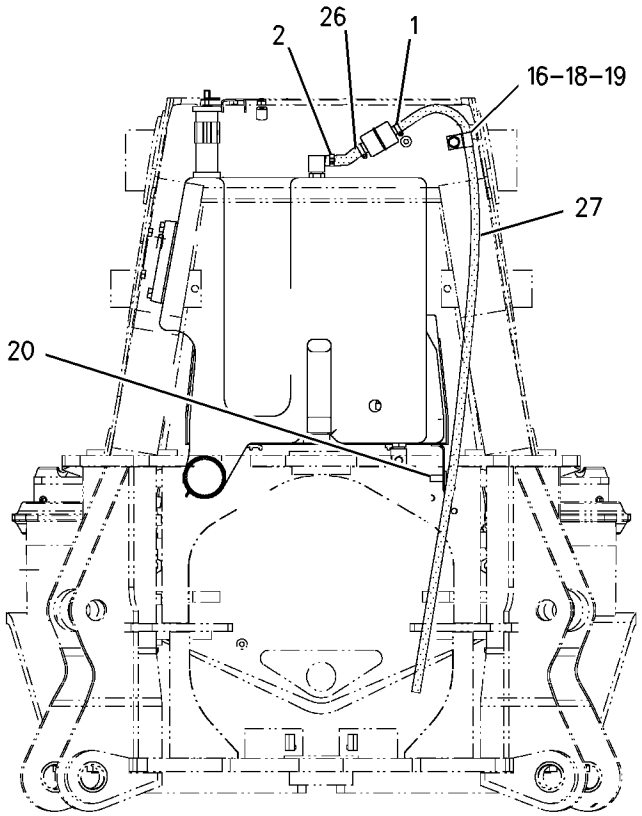

REAR VIEW

GRAPHIC #1 **<END>** g00995036

HYDRAULIC SYSTEM

234-6926 TANK GP-HYDRAULIC

S/N: BFP12900-UP

PART OF 214-6980 HYDRAULIC AR

SMCS-5056 **i02015713**

NOTE	REF NO	GRAPHIC REF	PART NUMBER	QTY	PART NAME 1 2 3 4 5 6 (PRODUCT LEVEL)	SEE PAGE
	1	1	**1P-4278**	1	CLAMP-HOSE	
	2	1	**5D-1026**	2	CLAMP-HOSE	
	3	1	**9M-0164**	1	CLAMP-HOSE	
	4	1	**9R-9925**	1	FILTER (HYDRAULIC TANK BREATHER)	
	5	1	**132-3056**	1	SEAL-O-RING	
	6	1	**222-4067**	6	BOLT-SOCKET HEAD (M5X.8X14-MM)	
	7	1	**234-6927**	1	HOSE	
	8	1	**234-8815**	1	TUBE AS	
	9	1	**235-5843**	1	DIFFUSER AS	
	10	1	**237-3797**	1	CAP-FILL (HYDRAULIC OIL)	
	11	1	**240-9671**	1	BRACKET AS	
		1	**7T-1099**	3	LINK	
			9G-9155	1	CLIP	
	12	1	**240-9721**	1	TANK GP-HYDRAULIC	
		1	**240-9716**	1	TANK AS-HYDRAULIC	
		1	**170-1644**	1	GAUGE-SIGHT (HYDRAULIC OIL LEVEL)	
	13	1	*150-3027*	2	ELBOW AS	
		1	**2M-9780**	1	SEAL-O-RING	
		1	**6V-5653**	1	ELBOW (7/8-14-THD)	
	14	1	**6D-3479**	1	CLIP	
	15	1	**8T-4121**	6	WASHER-HARD (11X21X2.5-MM THK)	
M	16	1	**8T-4136**	1	BOLT (M10X1.5X25-MM)	
M	17	1	**8T-4137**	1	BOLT (M10X1.5X20-MM)	
M	18	1	**8T-4139**	1	BOLT (M12X1.75X30-MM)	
M	19	1	**8T-4179**	3	BOLT (M12X1.75X20-MM)	
M	20	1	**8T-4191**	4	BOLT (M10X1.5X16-MM)	
	21	1	**8T-4223**	4	WASHER-HARD (13.5X25.5X3-MM THK)	
E	22	1	**5P-1505**		HOSE (8CM)	
E	23	1	**5P-1442**		HOSE (124CM)	
	24	1	**127-4471**	1	CLAMP-HOSE	

E-ORDER BY THE CENTIMETER
M-METRIC PART

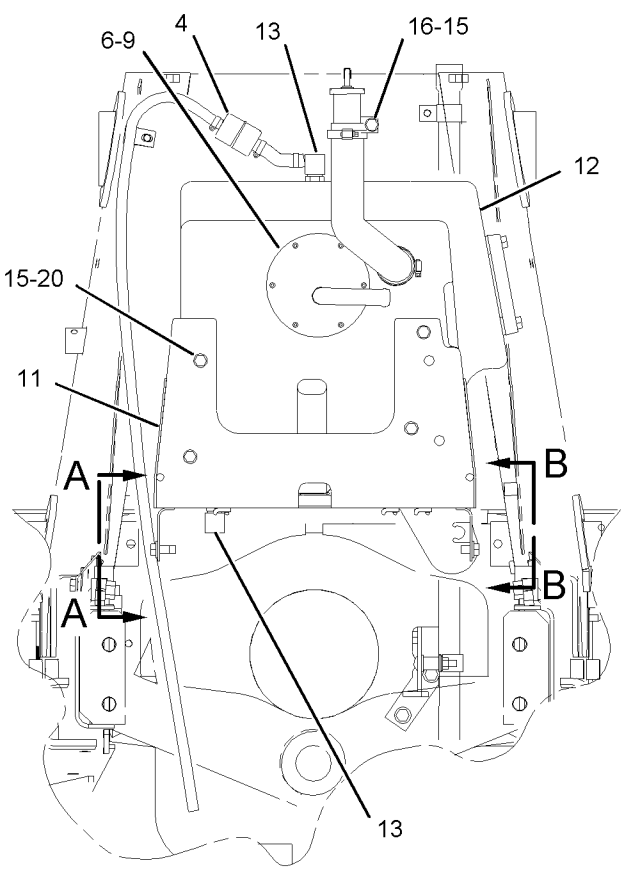

FRONT VIEW

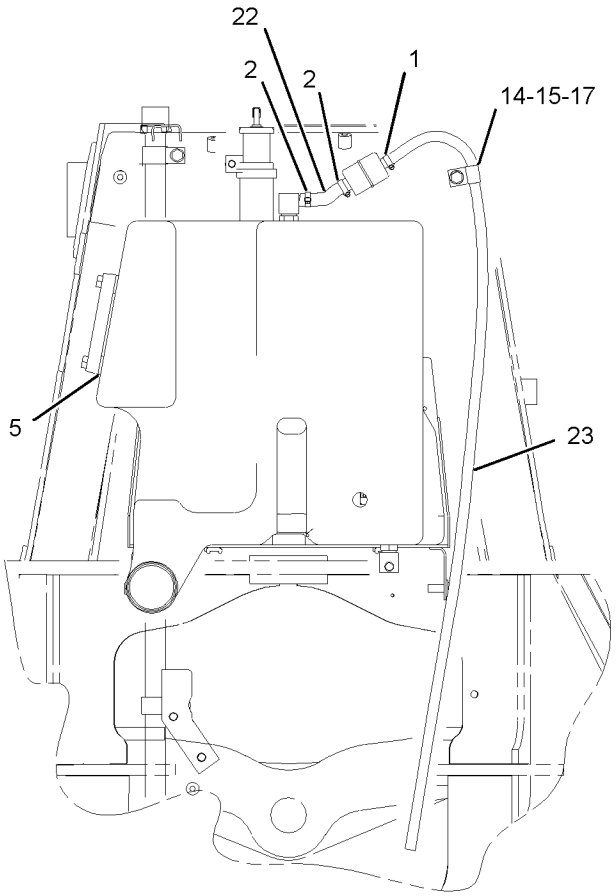

REAR VIEW

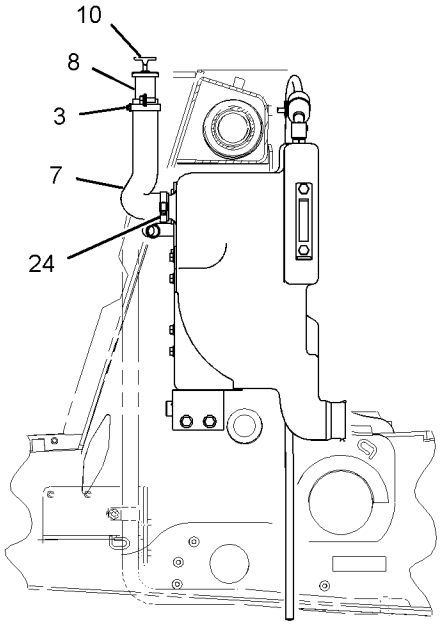

LEFT SIDE VIEW

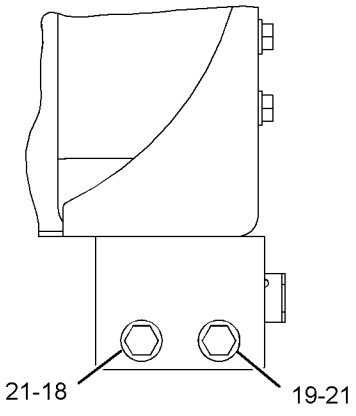

VIEW A-A

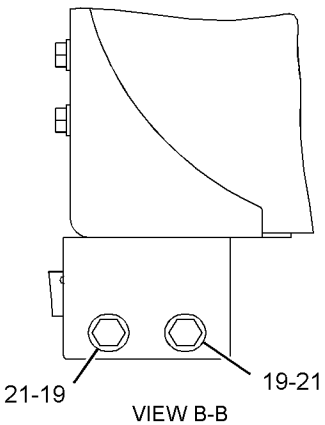

VIEW B-B

GRAPHIC #1 **<END>** g01042066

HYDRAULIC SYSTEM

185-9784 VALVE & MTG GP-BANK–STABILIZER

S/N: BFP12900-UP

PART OF 237-6458, 237-6459 DRIVE AR-BACKHOE LOADER

AN ATTACHMENT

SMCS-5051, 5057, 7265 **i01988385**

NOTE	REF NO	GRAPHIC REF	PART NUMBER	QTY	PART NAME 1 2 3 4 5 6 (PRODUCT LEVEL)	SEE PAGE
Y	1	1	**185-5898**	1	VALVE GP-BANK 2	686
	2	1	**232-5849**	4	STUD-TAPERLOCK	
M	3	1	**5C-7261**	4	NUT (M8X1.25 THD)	
	4	1	**8T-4224**	4	WASHER-HARD (8.8X16X2MM THK)	

M-METRIC PART
Y-SEPARATE ILLUSTRATION

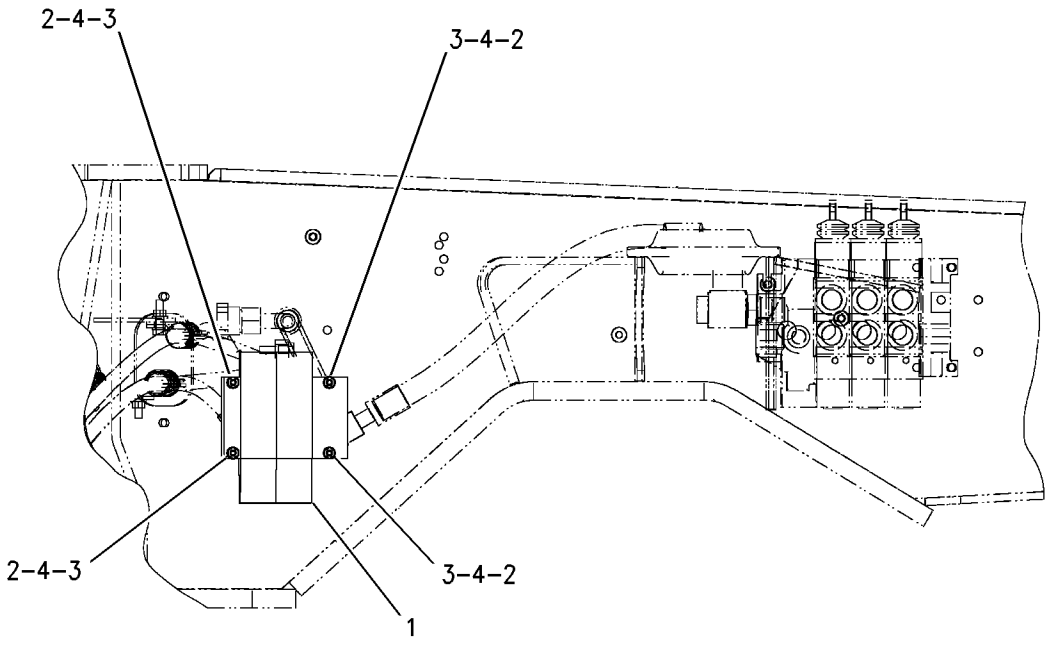

GRAPHIC #1 **<END>** g00723571

190-8315 VALVE & MTG GP-SOLENOID

S/N: BFP12900-UP
PART OF 195-1284, 235-5844 LINES GP-RIDE CONTROL
AN ATTACHMENT

SMCS-4805, 5479 **i01711730**

NOTE	REF NO	GRAPHIC REF	PART NUMBER	QTY	PART NAME 1 2 3 4 5 6 (PRODUCT LEVEL)	SEE PAGE
	1	1	**160-0269**	2	ORIFICE GP	
		1	**4J-7533**	1	SEAL-O-RING	
Y	2	1	*171-8775*	1	VALVE GP-SOLENOID	725
J	3	1	**190-8308**	1	CARTRIDGE AS	
	4	1	**190-8310**	1	MANIFOLD AS	
L	5	1	**190-8312**	1	VALVE AS-CHECK	
	6	1	**190-8314**	1	SPOOL-VALVE	
	7	1	**9S-8004**	4	PLUG	
					AVAILABLE REPAIR KIT(S):	
J			**193-5958**	1	KIT-SEAL	
L			**143-5446**	1	KIT-SEAL	

J-KIT MARKED J AVAILABLE FOR PART MARKED J
L-KIT MARKED L AVAILABLE FOR PART MARKED L
Y-SEPARATE ILLUSTRATION

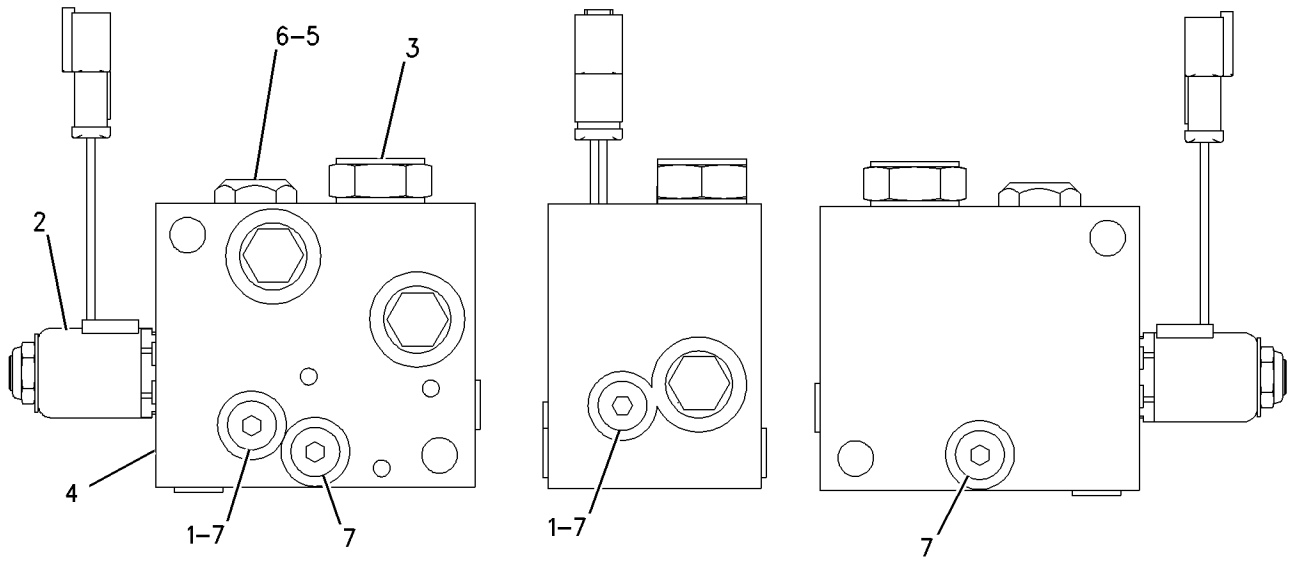

GRAPHIC #1 **<END>** g00778200

HYDRAULIC SYSTEM

186-4964 VALVE AR-BANK 4

S/N: BFP12900-UP; CXP940-UP
AN ATTACHMENT

SMCS-5051 **i01412402**

NOTE	PART NUMBER	QTY	PART NAME 1 2 3 4 5 6 (PRODUCT LEVEL)	SEE PAGE
Y	**180-8592**	1	VALVE GP-BANK 4	690
Y	*191-5462*	1	LINES GP-PUMP	639
Y-SEPARATE ILLUSTRATION				

<END>

186-4965 VALVE AR-BANK 5

S/N: BFP12900-UP
AN ATTACHMENT

SMCS-5051 **i01426758**

NOTE	PART NUMBER	QTY	PART NAME 1 2 3 4 5 6 (PRODUCT LEVEL)	SEE PAGE
Y	*164-1540*	1	CONTROL GP-HYDRAULIC PEDAL	527
Y	*191-5462*	1	LINES GP-PUMP	639
	148-8408	2	PLUG AS	
			(EACH INCLUDES)	
	3D-2824	1	SEAL-O-RING (23.47MM ID)	
	9S-4183	1	PLUG	
Y	**180-8593**	1	VALVE GP-BANK 5	691
Y-SEPARATE ILLUSTRATION				

<END>

214-7002 VALVE AR-BANK 5

S/N: BFP12900-UP
AN ATTACHMENT

SMCS-5051 **i02003594**

NOTE	PART NUMBER	QTY	PART NAME 1 2 3 4 5 6 (PRODUCT LEVEL)	SEE PAGE
Y	*235-5854*	1	LINES GP-PUMP	646
	148-8408	2	PLUG AS	
			(EACH INCLUDES)	
	3D-2824	1	SEAL-O-RING	
	9S-4183	1	PLUG	
Y	**180-8593**	1	VALVE GP-BANK 5	691
Y-SEPARATE ILLUSTRATION				

<END>

HYDRAULIC SYSTEM

186-4966 VALVE AR-BANK 6

S/N: BFP12900-UP
AN ATTACHMENT

SMCS-5051 **i01930470**

NOTE	PART NUMBER	QTY	PART NAME 1 2 3 4 5 6 (PRODUCT LEVEL)	SEE PAGE
Y	**164-1540**	1	CONTROL GP-HYDRAULIC PEDAL	527
Y	**164-1550**	1	CONTROL GP-HYDRAULIC PEDAL	529
Y	*216-4274*	1	LINES GP-PUMP	641
Y	**180-8594**	1	VALVE GP-BANK 6	692
	148-8408	2	PLUG AS	
			(EACH INCLUDES)	
	3D-2824	1	SEAL-O-RING	
	9S-4183	1	PLUG	
Y-SEPARATE ILLUSTRATION				

<END>

214-7003 VALVE AR-BANK 6

S/N: BFP12900-UP
AN ATTACHMENT

SMCS-5051 **i01990856**

NOTE	PART NUMBER	QTY	PART NAME 1 2 3 4 5 6 (PRODUCT LEVEL)	SEE PAGE
Y	*164-1540*	1	CONTROL GP-HYDRAULIC PEDAL	527
Y	*164-1550*	1	CONTROL GP-HYDRAULIC PEDAL	529
Y	*235-5856*	1	LINES GP-PUMP	647
	148-8408	2	PLUG AS	
			(EACH INCLUDES)	
	3D-2824	1	SEAL-O-RING	
	9S-4183	1	PLUG	
Y	**180-8594**	1	VALVE GP-BANK 6	692
Y-SEPARATE ILLUSTRATION				

<END>

185-5898 VALVE GP-BANK 2—STABILIZER

S/N: BFP12900-UP
PART OF 185-9784 VALVE & MTG GP-BANK
AN ATTACHMENT

SMCS-5051 **i02015158**

NOTE	REF NO	GRAPHIC REF	PART NUMBER	QTY	PART NAME 1 2 3 4 5 6 (PRODUCT LEVEL)	SEE PAGE
	1	1	**192-4489**	3	STUD	
M	2	1	**5C-7261**	6	NUT (M8X1.25-THD)	
	3	1	**8T-4205**	6	WASHER-HARD (7.2X14.5X2-MM THK)	
	4	1	**192-7506**	20	SEAL-O-RING	
	5	1	**192-7511**	1	SEAL	
	6	1	**192-7508**	10	SEAL-O-RING	
	7	1	**192-7509**	2	SEAL-O-RING	
Y	8	1	**239-2226**	1	COVER GP-CONTROL VALVE	543
	9	1	**192-0826**	1	COVER-END	
Y	10	1	**192-0827**	2	VALVE GP-CONTROL	711
	11	1	**192-2060**	2	COVER AS	
					(EACH INCLUDES)	
		1	**192-7506**	2	SEAL-O-RING	
		1	**192-7516**	1	SEAL	
	12	1	**192-7516**	2	SEAL	
	13	1	**192-7505**	2	SEAL-O-RING	
M	14	1	**149-4311**	16	BOLT-SOCKET HEAD (M6X1X16-MM)	
	15	1	**192-7507**	2	SEAL-O-RING	
	16	1	**192-7864**	2	PLUG	
	17	1	**192-4491**	2	DISC	
	18	1	**192-4492**	2	BALL	
	19	1	**192-0828**	2	VALVE GP-COMPENSATING	
					(EACH INCLUDES)	
	19A	1	**192-4488**	1	RING	
	19B	1	**192-7512**	1	SEAL-O-RING	
	19C	1	**192-7515**	1	SEAL-O-RING	
	20	1	**192-2061**	2	COVER AS	
					(EACH INCLUDES)	
		1	**192-7505**	1	SEAL-O-RING	
		1	**192-7506**	4	SEAL-O-RING	
	21	1	**220-0407**	2	VALVE GP-CONTROL	
					(EACH INCLUDES)	
	21A	1	**192-7506**	2	SEAL-O-RING	
	21B	1	**192-7507**	1	SEAL-O-RING	

M-METRIC PART
Y-SEPARATE ILLUSTRATION

185-5898 VALVE GP-BANK 2 ***(contd.)*** **i02015158**

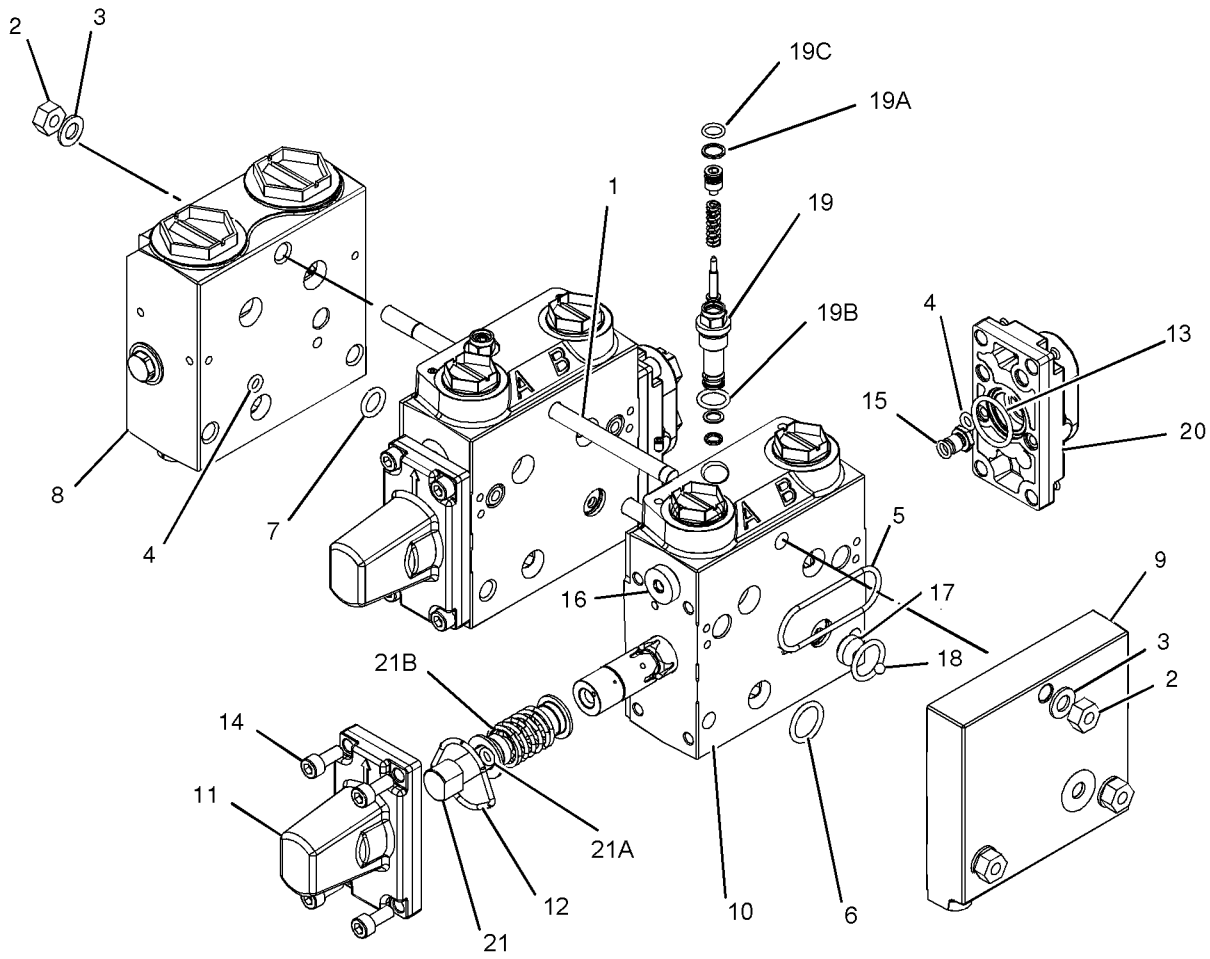

GRAPHIC #1 **<END>** g01017938

HYDRAULIC SYSTEM

185-5906 VALVE GP-BANK 2

S/N: BFP12900-UP; CXP940-UP
PART OF 186-5331, 186-5332 HYDRAULIC AR
AN ATTACHMENT

SMCS-5051 **i01944225**

NOTE	REF NO	GRAPHIC REF	PART NUMBER	QTY	PART NAME 1 2 3 4 5 6 (PRODUCT LEVEL)	SEE PAGE
Y	1	1	**188-7471**	1	VALVE GP-PRIORITY (STEERING)	471
	2	1	**191-4010**	1	COVER GP (END COVER)	
Y	3	1	**130-6520**	1	VALVE GP-CONTROL (LIFT)	697
Y	4	1	**168-0361**	1	VALVE GP-CONTROL (TILT)	701
	5	1	**5M-2894**	3	WASHER-HARD (10.2X18.5X2.5MM THK)	
	6	1	**9S-8752**	3	NUT-FULL (3/8-16 THD)	
	7	1	**4T-4538**	3	STUD	
	8	1	**4D-9986**	6	SEAL-O-RING	
	9	1	**4J-5140**	3	SEAL-O-RING	
	10	1	**4J-5267**	3	SEAL-O-RING	
	11	1	**4T-2723**	9	SHIM (0.076MM THK)	

Y-SEPARATE ILLUSTRATION

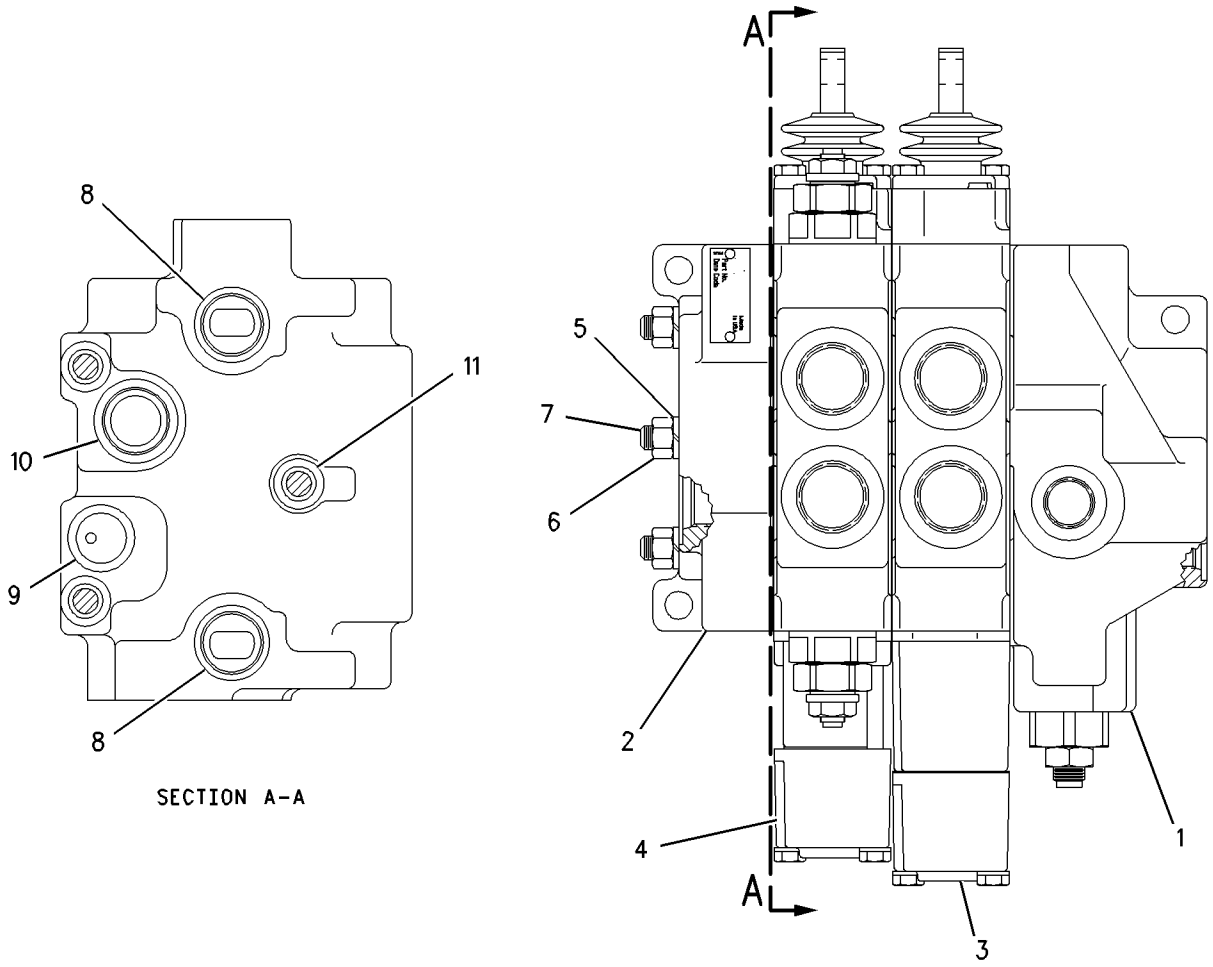

SECTION A-A

GRAPHIC #1 **<END>** g00746353

185-5907 VALVE GP-BANK 3

S/N: BFP12900-UP
PART OF 186-5333 HYDRAULIC AR
AN ATTACHMENT

SMCS-5051 **i01944303**

NOTE	REF NO	GRAPHIC REF	PART NUMBER	QTY	PART NAME 1 2 3 4 5 6 (PRODUCT LEVEL)	SEE PAGE
Y	1	1	**188-7471**	1	VALVE GP-PRIORITY (STEERING)	471
	2	1	**191-4010**	1	COVER GP (END COVER)	
Y	3	1	**130-6520**	1	VALVE GP-CONTROL (LIFT)	697
Y	4	1	**168-0361**	1	VALVE GP-CONTROL (TILT)	701
Y	5	1	**124-8818**	1	VALVE GP-CONTROL (AUXILIARY)	695
	6	1	**5M-2894**	3	WASHER-HARD (10.2X18.5X2.5MM THK)	
	7	1	**9S-8752**	3	NUT-FULL (3/8-16 THD)	
	8	1	**4T-4518**	3	STUD	
	9	1	**4D-9986**	8	SEAL-O-RING	
	10	1	**4J-5140**	4	SEAL-O-RING	
	11	1	**4J-5267**	4	SEAL-O-RING	
B	12	1	**4T-2723**	12	SHIM (0.076MM THK)	

B-USE AS REQUIRED
Y-SEPARATE ILLUSTRATION

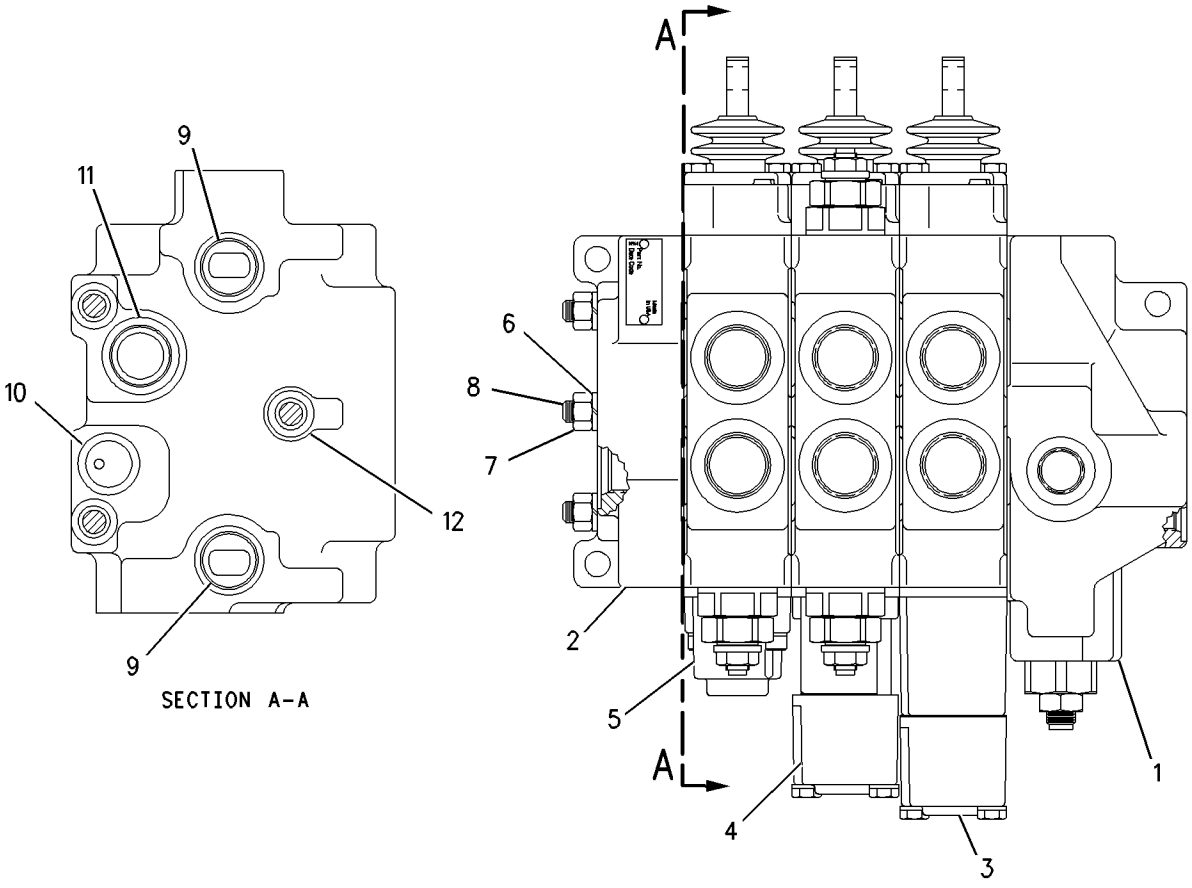

SECTION A-A

GRAPHIC #1 **<END>** g00746383

180-8592 VALVE GP-BANK 4

S/N: BFP12900-UP; CXP940-UP
PART OF 186-4964 VALVE AR-BANK 4
AN ATTACHMENT

SMCS-5051 **i01455155**

NOTE	REF NO	GRAPHIC REF	PART NUMBER	QTY	PART NAME 1 2 3 4 5 6 (PRODUCT LEVEL)	SEE PAGE
	1	1	**200-0161**	1	COVER (END)	
	2	1	**6E-4158**	1	COVER (END)	
Y	3	1	**190-3397**	1	VALVE GP-CONTROL (BOOM)	703
Y	4	1	**166-7950**	1	VALVE GP-CONTROL (SWING)	699
Y	5	1	**190-3400**	1	VALVE GP-CONTROL (BUCKET)	705
Y	6	1	**190-3402**	1	VALVE GP-CONTROL (STICK)	707
	7	1	**5M-2894**	6	WASHER-HARD (10.2X18.5X2.5MM THK)	
	8	1	**9S-8752**	6	NUT-FULL (3/8-16 THD)	
	9	1	**4T-4218**	3	STUD	
	10	1	**4D-9986**	10	SEAL-O-RING	
	11	1	**4J-5140**	5	SEAL-O-RING	
	12	1	**4J-5267**	5	SEAL-O-RING	
	13	1	**4T-2723**	15	SHIM (0.076MM THK)	

Y-SEPARATE ILLUSTRATION

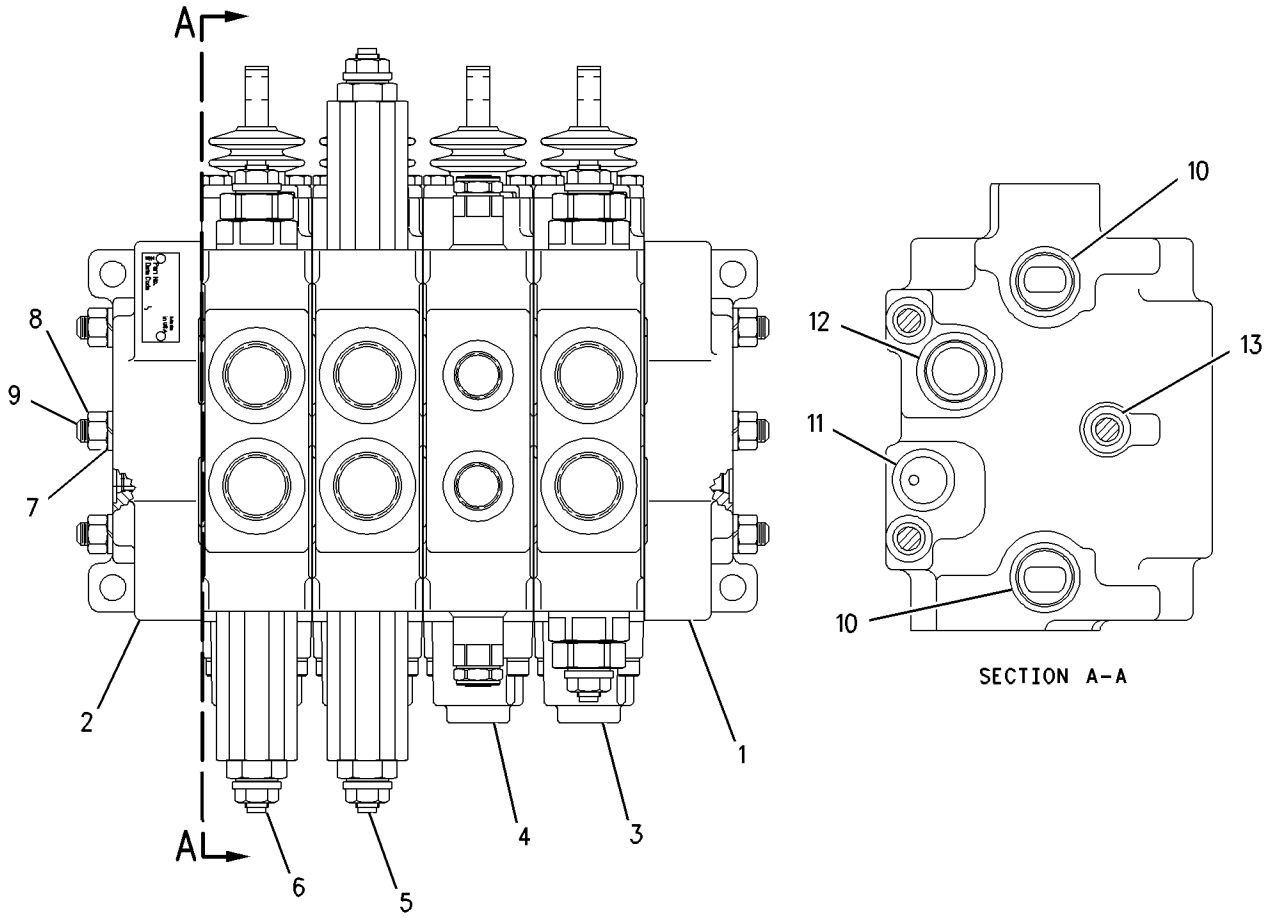

GRAPHIC #1 **<END>** g00745797

180-8593 VALVE GP-BANK 5

S/N: BFP12900-UP
PART OF 186-4965, 214-7002 VALVE AR-BANK 5
AN ATTACHMENT

SMCS-5051 **i01455239**

NOTE	REF NO	GRAPHIC REF	PART NUMBER	QTY	PART NAME 1 2 3 4 5 6 (PRODUCT LEVEL)	SEE PAGE
	1	1	**200-0161**	1	COVER (END)	
	2	1	**6E-4158**	1	COVER (END)	
Y	3	1	**190-3397**	1	VALVE GP-CONTROL (BOOM)	703
Y	4	1	**166-7950**	1	VALVE GP-CONTROL (SWING)	699
Y	5	1	**190-3400**	1	VALVE GP-CONTROL (BUCKET)	705
Y	6	1	**190-3402**	1	VALVE GP-CONTROL (STICK)	707
Y	7	1	**190-3450**	1	VALVE GP-CONTROL (EXTENDABLE STICK)	709
	8	1	**5M-2894**	6	WASHER-HARD (10.2X18.5X2.5MM THK)	
	9	1	**9S-8752**	6	NUT-FULL (3/8-16 THD)	
	10	1	**107-8117**	3	STUD	
	11	1	**4D-9986**	12	SEAL-O-RING	
	12	1	**4J-5140**	6	SEAL-O-RING	
	13	1	**4J-5267**	6	SEAL-O-RING	
	14	1	**4T-2723**	18	SHIM (0.076MM THK)	

Y-SEPARATE ILLUSTRATION

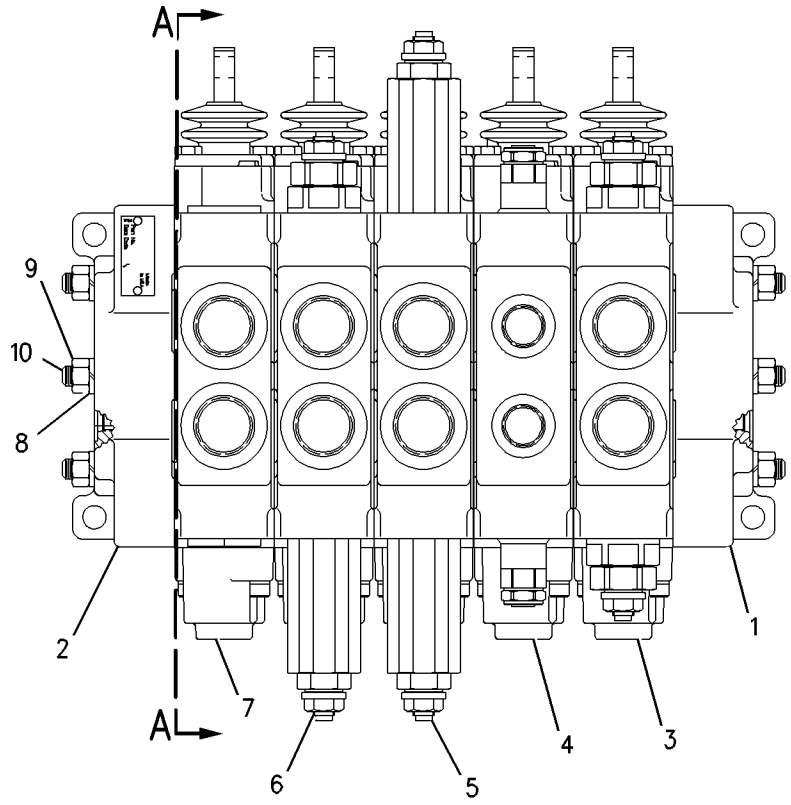

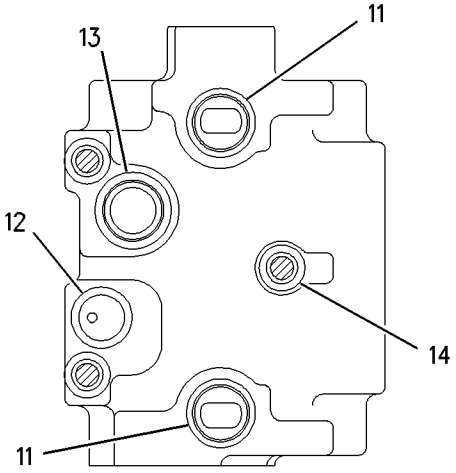

SECTION A-A

GRAPHIC #1 **<END>** g00745808

HYDRAULIC SYSTEM

180-8594 VALVE GP-BANK 6

S/N: BFP12900-UP
PART OF 186-4966, 214-7003 VALVE AR-BANK 6
AN ATTACHMENT

SMCS-5051 **i01534344**

NOTE	REF NO	GRAPHIC REF	PART NUMBER	QTY	PART NAME 1 2 3 4 5 6 (PRODUCT LEVEL)	SEE PAGE
	1	1	**200-0161**	1	COVER (END)	
	2	1	**6E-4158**	1	COVER (END)	
Y	3	1	**190-3450**	2	VALVE GP-CONTROL (EXTENDABLE STICK)	709
Y	4	1	**190-3397**	1	VALVE GP-CONTROL (BOOM)	703
Y	5	1	**166-7950**	1	VALVE GP-CONTROL (SWING)	699
Y	6	1	**190-3400**	1	VALVE GP-CONTROL (BUCKET)	705
Y	7	1	**190-3402**	1	VALVE GP-CONTROL (STICK)	707
	8	1	**5M-2894**	6	WASHER-HARD (10.2X18.5X2.5MM THK)	
	9	1	**9S-8752**	6	NUT-FULL (3/8-16 THD)	
	10	1	**116-1316**	3	STUD	
	11	1	**4D-9986**	14	SEAL-O-RING	
	12	1	**4J-5140**	7	SEAL-O-RING	
	13	1	**4J-5267**	7	SEAL-O-RING	
	14	1	**4T-2723**	21	SHIM (0.076MM THK)	

Y-SEPARATE ILLUSTRATION

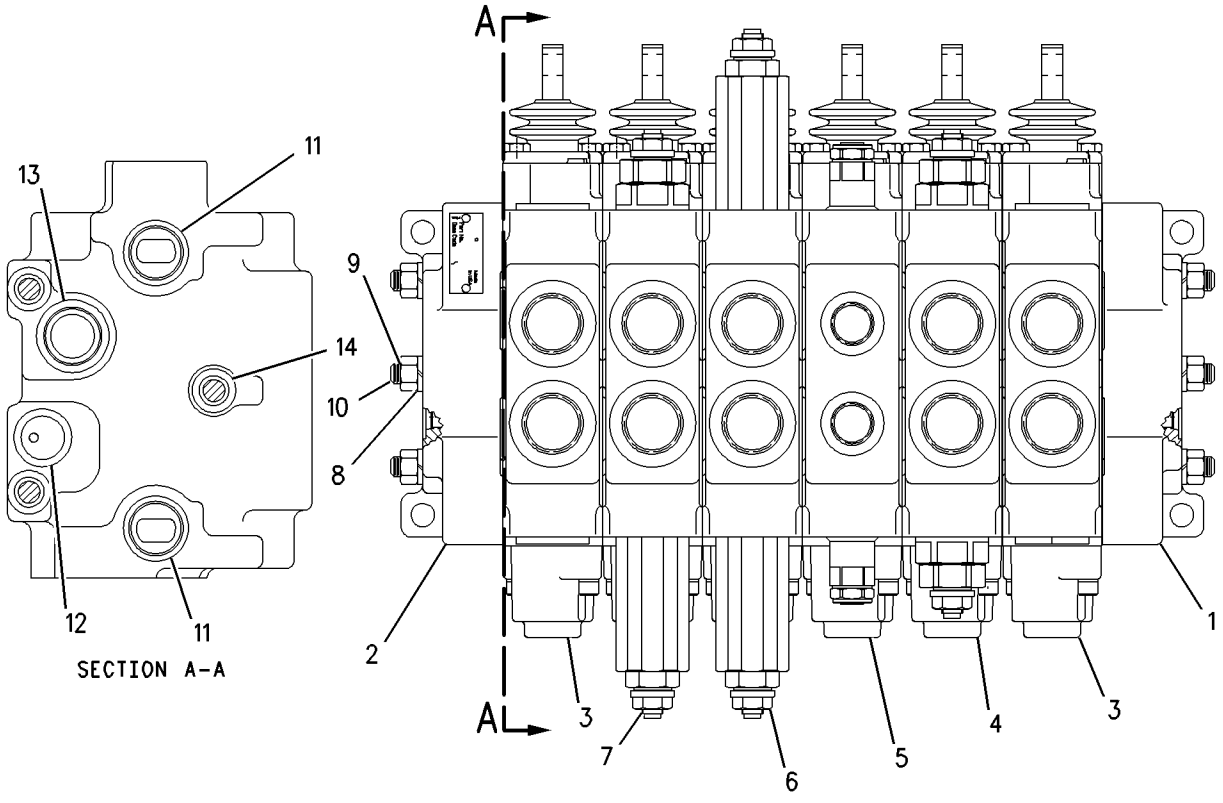

GRAPHIC #1 **<END>** g00745364

178-7480 VALVE GP-CHECK–RETURN OIL

S/N: BFP12900-UP
PRE-INSTALLED O-RINGS
PART OF 176-9209 LINES GP-RETURN
AN ATTACHMENT

SMCS-5067 **i01946260**

NOTE	REF NO	GRAPHIC REF	PART NUMBER	QTY	PART NAME 1 2 3 4 5 6 (PRODUCT LEVEL)	SEE PAGE
	1	1	**5K-9090**	1	SEAL-O-RING	
	2	1	**7M-8485**	1	SEAL-O-RING	

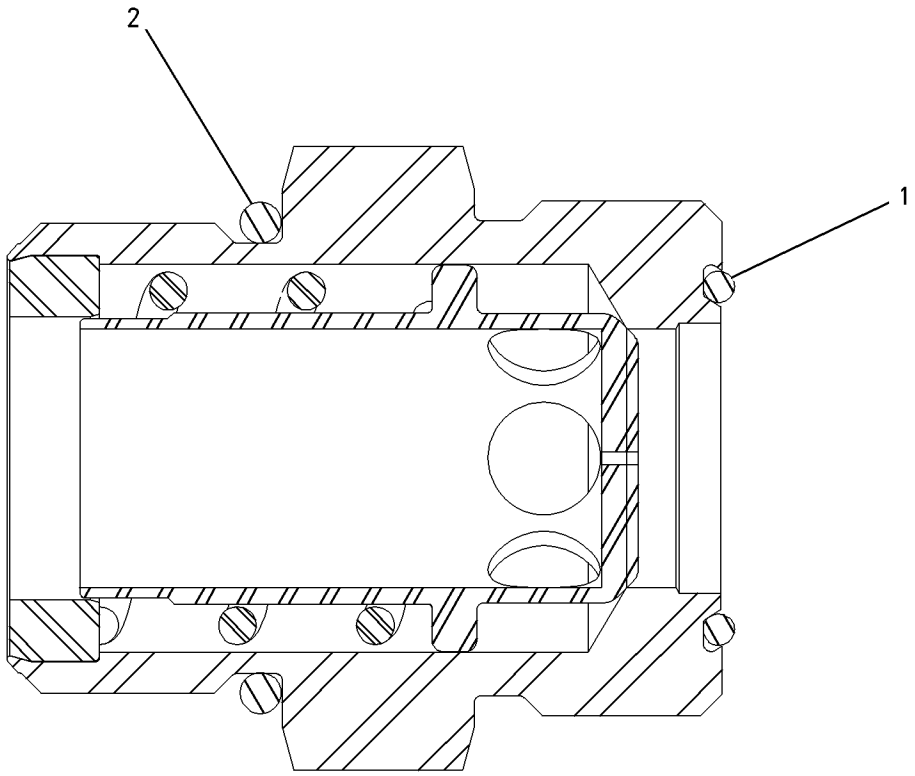

GRAPHIC #1 **<END>** g00756300

178-7481 VALVE GP-CHECK–BACK PRESSURE

S/N: BFP12900-UP
PRE-INSTALLED O-RINGS
PART OF 196-8861 LINES GP-BACKHOE AUXILIARY, 176-9208, 197-6818 LINES GP-RETURN AN ATTACHMENT

SMCS-5067 **i01496587**

NOTE	REF NO	GRAPHIC REF	PART NUMBER	QTY	PART NAME 1 2 3 4 5 6 (PRODUCT LEVEL)	SEE PAGE
	1	1	**5K-9090**	2	SEAL-O-RING	
	2	1	**7M-8485**	1	SEAL-O-RING	

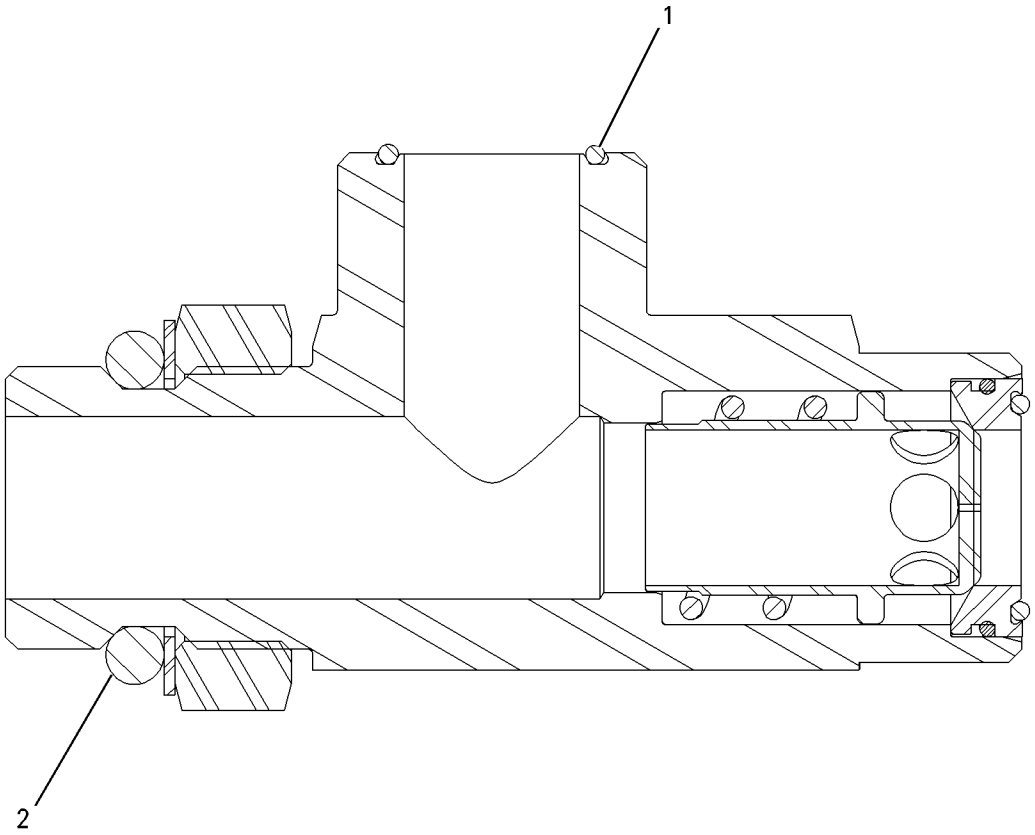

GRAPHIC #1 **<END>** g00774246

HYDRAULIC SYSTEM

124-8818 VALVE GP-CONTROL–CLAM

S/N: BFP12900-UP
LOADER
PART OF 185-5907 VALVE GP-BANK 3
AN ATTACHMENT

SMCS-5051 **i01450466**

NOTE	REF NO	GRAPHIC REF	PART NUMBER	QTY	PART NAME 1 2 3 4 5 6 (PRODUCT LEVEL)	SEE PAGE
	1	1	**4T-4524**	1	GUARD-DUST	
	2	1	**031-0214**	2	BOLT-LOCKING (1/4-20X0.5 IN)	
	3	1	**8H-0707**	2	BOLT (1/4-20X1 IN)	
	4	1	**4T-4516**	1	SPRING	
	5	1	**031-5085**	1	BOLT-LOCKING (1/4-20X1.00 IN)	
	6	1	**167-6768**	1	HOUSING	
	7	1	**4T-4521**	2	RETAINER	
	8	1	**4T-4533**	1	SPACER	
	9	1	**195-2139**	2	SEAL-O-RING	
	10	1	**6E-4317**	1	SPRING	
	11	1	**2M-9780**	1	SEAL-O-RING	
	12	1	**9S-8006**	1	PLUG	
	13	1	**4T-4520**	1	FILTER	
	14	1	**4T-4528**	1	RETAINER	
	15	1	**5B-9318**	1	BALL	
	16	1	**9T-0704**	1	VALVE GP-RELIEF	
	17	1	**4K-1388**	1	SEAL-O-RING (26.59MM ID)	
	18	1	**6E-0358**	1	RING-BACKUP	
	19	1	**5K-9090**	1	SEAL-O-RING	
	20	1	**126-5476**	1	SEAT AS-SHUTTLE	
	21	1	**4T-7807**	1	RING-BACKUP (5.13MM ID)	
	22	1	**7J-0204**	1	SEAL-O-RING (7.65MM ID)	
	23	1	**8T-2360**	1	SEAL-O-RING (4.5MM ID)	
	24	1	**155-9836**	1	HOUSING AS	
	25	1	**1P-7363**	1	SEAL-O-RING (6.07MM ID)	
	26	1	**3J-7354**	1	SEAL-O-RING	
	27	1	**8T-2361**	1	SEAL-O-RING (5.28MM ID)	
	28	1	**126-5984**	1	RING-BACKUP (5.94MM ID)	
	29	1	**126-5985**	1	RING-BACKUP (6.73MM ID)	

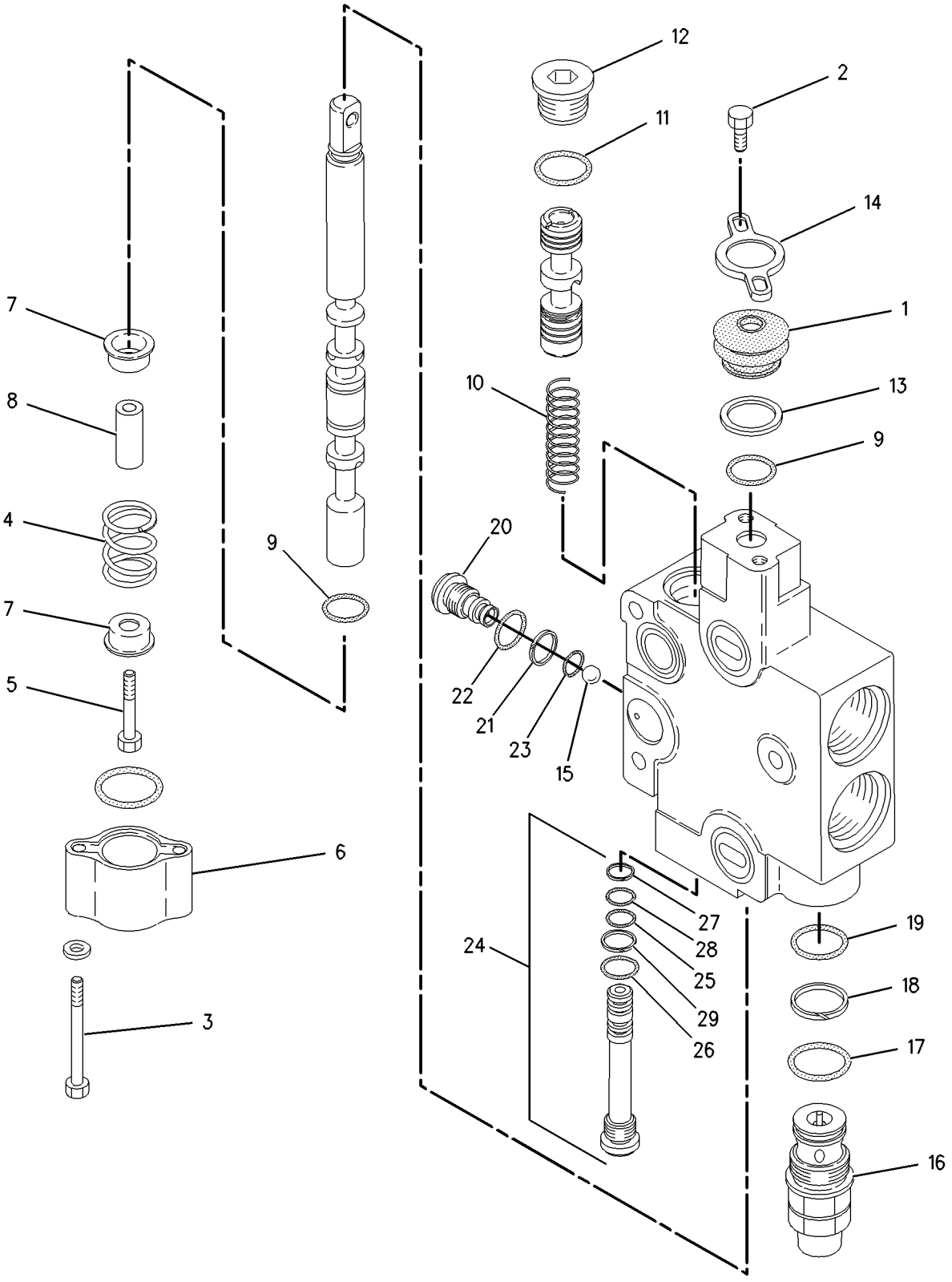

GRAPHIC #1 **<END>** g00745853

HYDRAULIC SYSTEM

130-6520 VALVE GP-CONTROL–LIFT

S/N: BFP12900-UP; CXP940-UP
PART OF 185-5906 VALVE GP-BANK 2, 185-5907 VALVE GP-BANK 3
AN ATTACHMENT

SMCS-5051 **i01655841**

NOTE	REF NO	GRAPHIC REF	PART NUMBER	QTY	PART NAME 1 2 3 4 5 6 (PRODUCT LEVEL)	SEE PAGE
	1	1	**4T-4524**	1	GUARD-DUST	
	2	1	**031-0214**	2	BOLT-LOCKING (1/4-20X0.5 IN)	
	3	1	**4T-4531**	1	PLUG	
	4	1	**4T-4513**	1	SPRING	
	5	1	**100-3567**	1	HOUSING-DETENT	
	6	1	**100-3566**	1	PISTON-DETENT	
	7	1	**4B-9782**	1	BALL	
	8	1	**4T-4532**	1	HOUSING	
	9	1	**144-4277**	1	SHAFT AS-DETENT	
	10	1	**8S-4710**	2	BOLT (1/4-20X4 IN)	
	11	1	**5P-0537**	2	WASHER-HARD (7.2X14.5X2MM THK)	
	12	1	**100-3564**	1	SPRING	
	13	1	**4T-4521**	2	RETAINER	
	14	1	**100-3563**	1	SPACER-DETENT	
	15	1	**8F-0212**	1	SEAL-O-RING	
	16	1	**6E-4317**	1	SPRING	
	17	1	**2M-9780**	1	SEAL-O-RING	
	18	1	**9S-8006**	1	PLUG	
	19	1	**4T-4520**	1	FILTER	
	20	1	**4T-4528**	1	RETAINER	
	21	1	**126-5476**	1	SEAT AS-SHUTTLE	
	21A	1	**4T-7807**	1	RING-BACKUP	
	21B	1	**7J-0204**	1	SEAL-O-RING	
	21C	1	**8T-2360**	1	SEAL-O-RING	
	22	1	**5B-9318**	7	BALL	
	23	1	**155-9836**	1	VALVE GP-RELIEF	
	23A	1	**1P-7363**	1	SEAL-O-RING	
	23B	1	**3J-7354**	1	SEAL-O-RING	
	23C	1	**8T-2361**	1	SEAL-O-RING	
	23D	1	**126-5984**	1	RING-BACKUP	
	23E	1	**126-5985**	1	RING-BACKUP	
	24	1	**4K-1388**	1	SEAL-O-RING	
	25	1	**6E-0358**	1	RING-BACKUP	
	26	1	**5K-9090**	1	SEAL-O-RING	
	27	1	**128-2776**	1	GASKET	
	28	1	**195-2139**	1	SEAL-O-RING	

130-6520 VALVE GP-CONTROL *(contd.)* i01655841

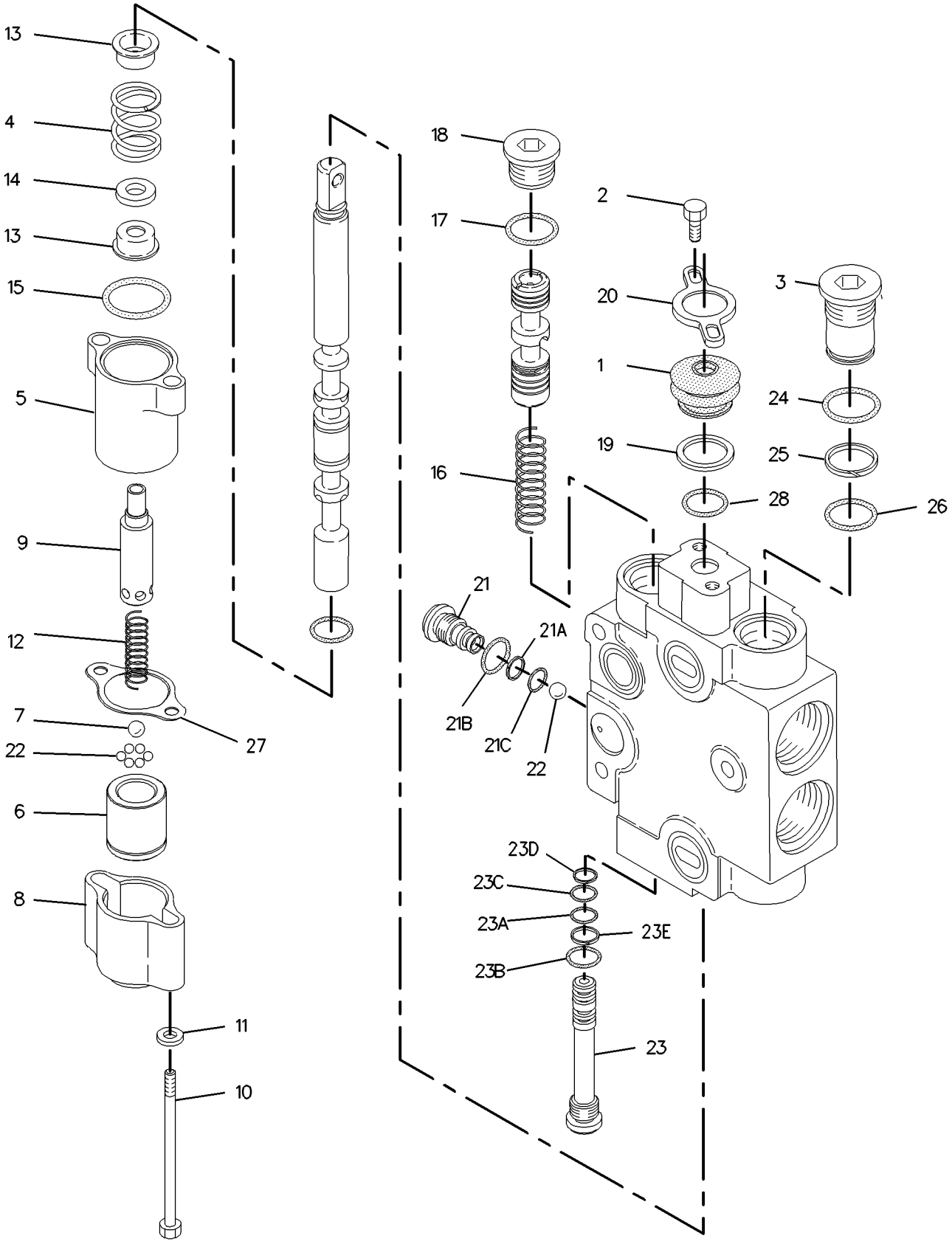

GRAPHIC #1 **<END>** g00855145

HYDRAULIC SYSTEM

166-7950 VALVE GP-CONTROL–SWING

S/N: BFP12900-UP; CXP940-UP

PART OF 180-8592 VALVE GP-BANK 4, 180-8593 VALVE GP-BANK 5, 180-8594 VALVE GP-BANK 6

AN ATTACHMENT

SMCS-5051 **i01579703**

NOTE	REF NO	GRAPHIC REF	PART NUMBER	QTY	PART NAME 1 2 3 4 5 6 (PRODUCT LEVEL)	SEE PAGE
	1	1	**4T-4524**	1	GUARD-DUST	
	2	1	**031-0214**	2	BOLT-LOCKING (1/4-20X0.5 IN)	
	3	1	**137-9466**	2	VALVE GP-RELIEF	
		1	**147-1659**	1	KIT-SEAL	
	4	1	**195-2406**	1	SPRING	
	5	1	**0S-1614**	1	BOLT (1/4-20X0.5 IN)	
	6	1	**167-6768**	1	HOUSING	
	7	1	**4T-4521**	2	RETAINER	
	8	1	**9X-2027**	1	WASHER (11X18X2MM THK)	
	9	1	**195-2139**	2	SEAL-O-RING	
	10	1	**6E-4317**	1	SPRING	
	11	1	**126-5796**	1	HOUSING GP	
		1	**1P-7363**	1	SEAL-O-RING	
		1	**3J-7354**	1	SEAL-O-RING	
		1	**8T-2361**	1	SEAL-O-RING	
		1	**126-5984**	1	RING-BACKUP	
		1	**126-5985**	1	RING-BACKUP	
	12	1	**2M-9780**	1	SEAL-O-RING	
	13	1	**9S-8006**	1	PLUG	
	14	1	**4T-4520**	1	FILTER	
	15	1	**4T-4528**	1	RETAINER	
	16	1	**126-5476**	1	SEAT AS-SHUTTLE	
		1	**4T-7807**	1	RING-BACKUP	
		1	**7J-0204**	1	SEAL-O-RING	
		1	**8T-2360**	1	SEAL-O-RING	
	17	1	**5B-9318**	1	BALL	
	18	1	**8H-0707**	2	BOLT (1/4-20X1 IN)	
	19	1	**5P-0537**	1	WASHER-HARD (7.2X14.5X2MM THK)	

166-7950 VALVE GP-CONTROL *(contd.)* i01579703

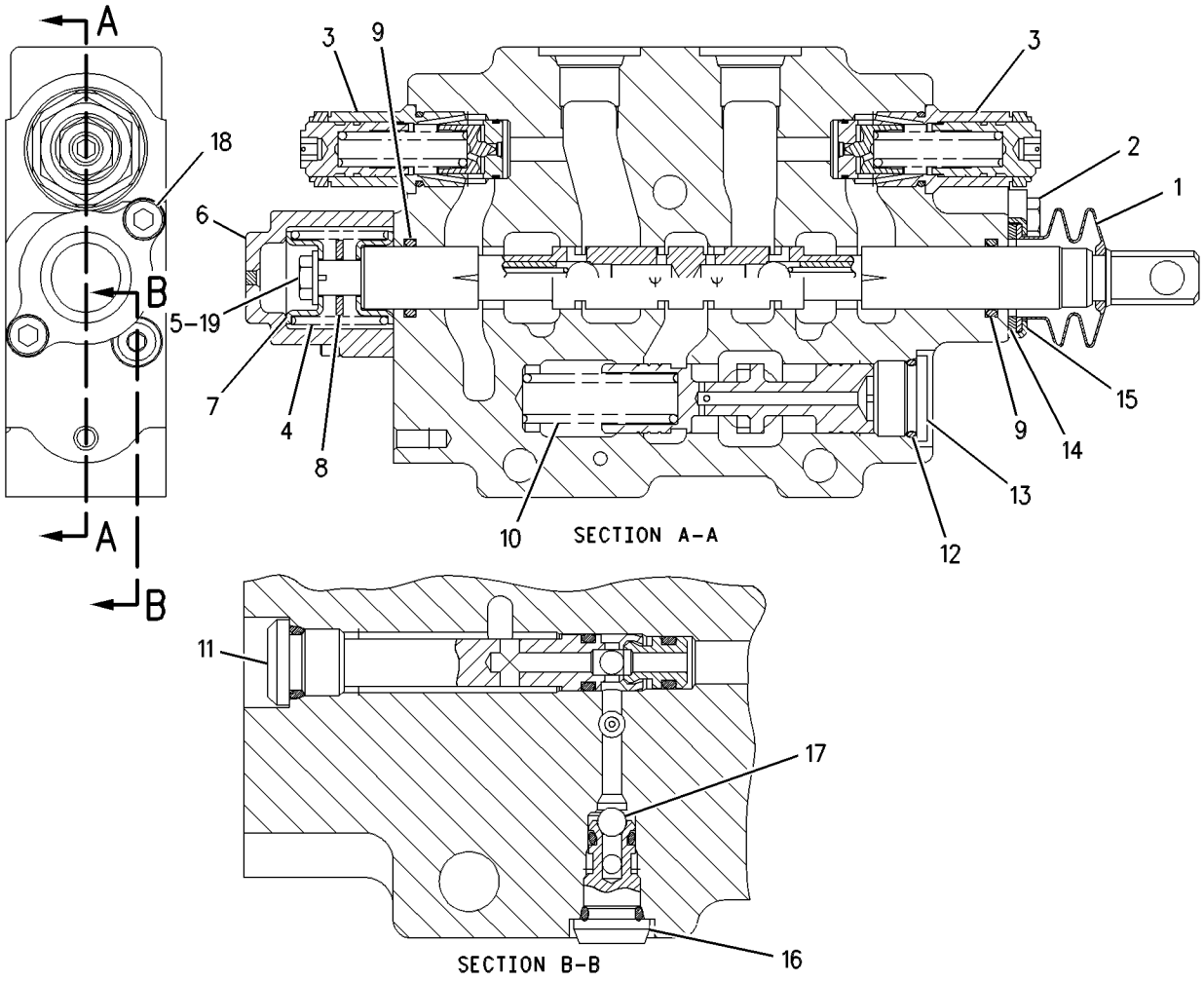

GRAPHIC #1 **<END>** g00535913

HYDRAULIC SYSTEM

168-0361 VALVE GP-CONTROL–TILT

S/N: BFP12900-UP; CXP940-UP
PART OF 185-5906 VALVE GP-BANK 2, 185-5907 VALVE GP-BANK 3
AN ATTACHMENT

SMCS-5051 **i01692299**

NOTE	REF NO	GRAPHIC REF	PART NUMBER	QTY	PART NAME 1 2 3 4 5 6 (PRODUCT LEVEL)	SEE PAGE
	1	1	**4T-4524**	1	GUARD-DUST	
	2	1	**031-0214**	2	BOLT-LOCKING (1/4-20X0.5 IN)	
	3	1	**9T-0704**	2	VALVE GP-RELIEF	
					(EACH INCLUDES)	
		1	**4K-1388**	1	SEAL-O-RING	
		1	**6E-0358**	1	RING-BACKUP	
		1	**5K-9090**	1	SEAL-O-RING	
	4	1	**4J-7533**	1	SEAL-O-RING	
	5	1	**4T-4521**	2	RETAINER	
	6	1	**128-2776**	1	GASKET	
	7	1	**9T-0642**	1	COUPLING	
	8	1	**5L-9023**	1	RING-RETAINING	
	9	1	**4T-4532**	1	HOUSING	
	10	1	**9T-0644**	1	SPRING	
	11	1	**9T-7309**	1	PLATE	
	12	1	**3E-8620**	1	COIL AS-SOLENOID	
		1	**1S-9593**	2	STRAP-CABLE	
		1	**102-8802**	1	KIT-RECEPTACLE (2 PIN)	
					(KIT SERVICES RECEPTACLE AS AND WEDGE)	
		1	**3E-3365**	1	WEDGE-RECEPTACLE LOCK (2 PIN)	
		1	**8T-8729**	2	PIN-CONNECTOR	
	13	1	**4T-4516**	1	SPRING	
	14	1	**197-3698**	1	SEAL-O-RING	
	15	1	**195-2139**	2	SEAL-O-RING	
	16	1	**6E-4317**	1	SPRING	
	17	1	**2M-9780**	1	SEAL-O-RING	
	18	1	**9S-8006**	1	PLUG	
	19	1	**4T-4520**	1	FILTER	
	20	1	**4T-4528**	1	RETAINER	
	21	1	**126-5476**	1	SEAT AS-SHUTTLE	
		1	**4T-7807**	1	RING-BACKUP	
		1	**7J-0204**	1	SEAL-O-RING	
		1	**8T-2360**	1	SEAL-O-RING	
	22	1	**5B-9318**	1	BALL	
	23	1	**155-9836**	1	VALVE GP-RELIEF	
		1	**1P-7363**	1	SEAL-O-RING	
		1	**3J-7354**	1	SEAL-O-RING	
		1	**8T-2361**	1	SEAL-O-RING	
		1	**126-5984**	1	RING-BACKUP	
		1	**126-5985**	1	RING-BACKUP	
	24	1	**8F-6302**	2	BOLT (1/4-20X3.75IN)	
	25	1	**5P-0537**	2	WASHER-HARD (7.2X14.5X2MM THK)	
	26	1	**197-3121**	1	RING-GUIDE	

168-0361 VALVE GP-CONTROL *(contd.)* i01692299

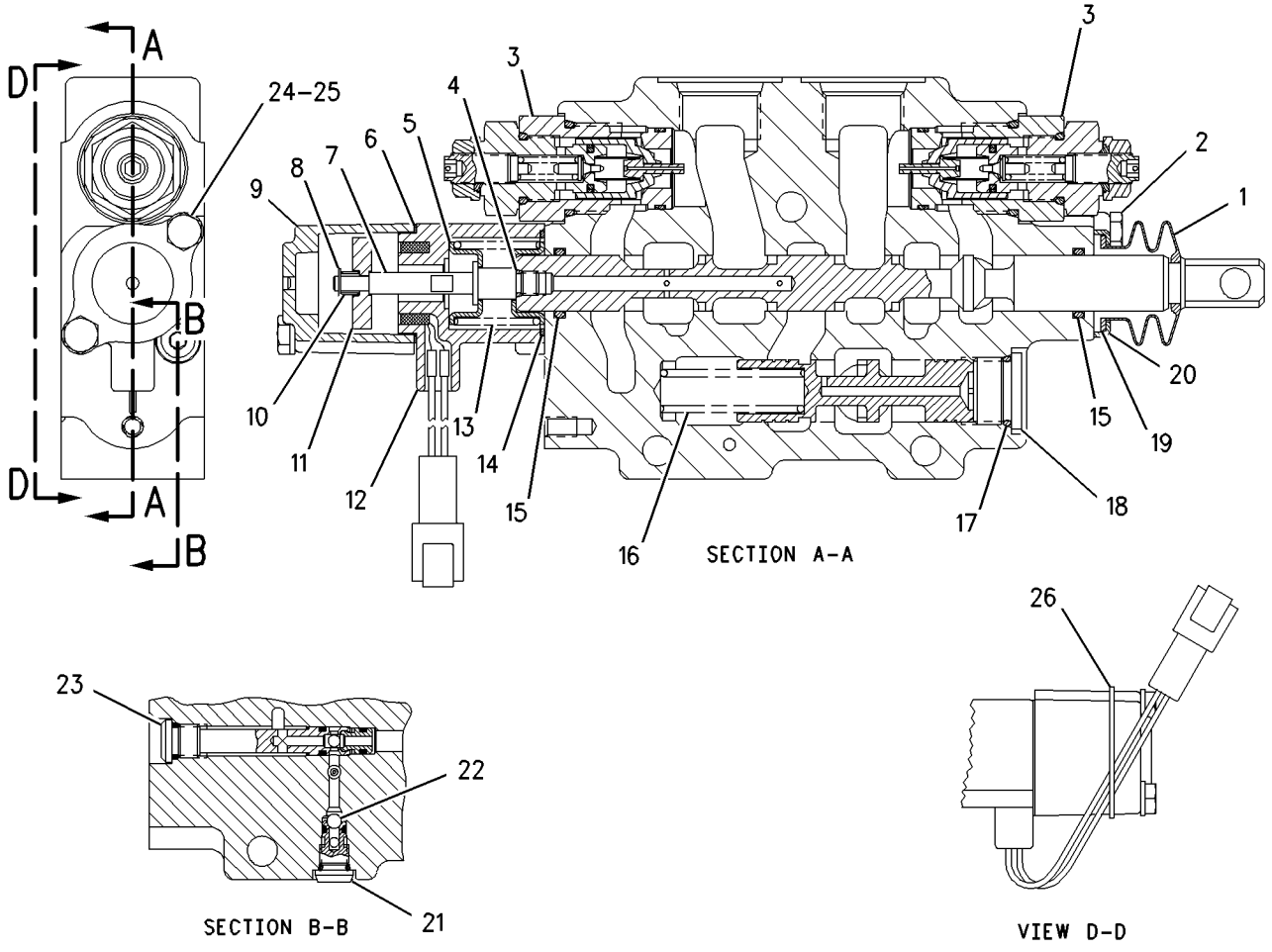

GRAPHIC #1 **<END>** g00871259

HYDRAULIC SYSTEM

190-3397 VALVE GP-CONTROL–BOOM

S/N: BFP12900-UP; CXP940-UP

PART OF 180-8592 VALVE GP-BANK 4, 180-8593 VALVE GP-BANK 5, 180-8594 VALVE GP-BANK 6

AN ATTACHMENT

SMCS-5051 **i01412565**

NOTE	REF NO	GRAPHIC REF	PART NUMBER	QTY	PART NAME 1 2 3 4 5 6 (PRODUCT LEVEL)	SEE PAGE
	1	1	**195-2139**	2	SEAL-O-RING	
	2	1	**9S-8006**	1	PLUG	
	3	1	**197-2709**	1	SPRING	
	4	1	**126-5796**	1	HOUSING AS	
		1	**1P-7363**	1	SEAL-O-RING (6.07MM ID)	
		1	**3J-7354**	1	SEAL-O-RING (8.92MM ID)	
		1	**8T-2361**	1	SEAL-O-RING (5.28MM ID)	
		1	**126-5984**	1	RING-BACKUP (5.94MM ID)	
		1	**126-5985**	1	RING-BACKUP (6.73MM ID)	
	5	1	**5B-9318**	1	BALL (4.76MM DIA)	
	6	1	**126-5476**	1	SEAT AS-SHUTTLE	
		1	**4T-7807**	1	RING-BACKUP (5.13MM ID)	
		1	**7J-0204**	1	SEAL-O-RING (7.65MM ID)	
		1	**8T-2360**	1	SEAL-O-RING (4.5MM ID)	
	7	1	**109-9685**	1	SEAL-O-RING (6.07MM ID)	
	8	1	**8H-0707**	2	BOLT (1/4-20X1 IN)	
	9	1	**195-2406**	1	SPRING	
	10	1	**167-6768**	1	HOUSING	
	11	1	**9T-0650**	1	SPACER	
	12	1	**4T-4521**	2	RETAINER	
	13	1	**197-2714**	1	SPACER	
	14	1	**6E-6284**	1	VALVE GP-MAKEUP & RELIEF	
		1	**4K-1388**	1	SEAL-O-RING (26.59MM ID)	
		1	**5K-9090**	1	SEAL-O-RING (23.52MM ID)	
		1	**6E-0358**	1	RING-BACKUP	
	15	1	**6E-6285**	1	VALVE GP-RELIEF	
		1	**4K-1388**	1	SEAL-O-RING (26.59MM ID)	
		1	**5K-9090**	1	SEAL-O-RING (23.52MM ID)	
		1	**6E-0358**	1	RING-BACKUP	
	16	1	**031-0214**	2	BOLT-LOCKING (1/4-20X0.5 IN)	
	17	1	**4T-4524**	1	GUARD-DUST	
	18	1	**4T-4528**	1	RETAINER	
	19	1	**4T-4520**	1	FILTER	
	20	1	**2M-9780**	1	SEAL-O-RING (19.18MM ID)	

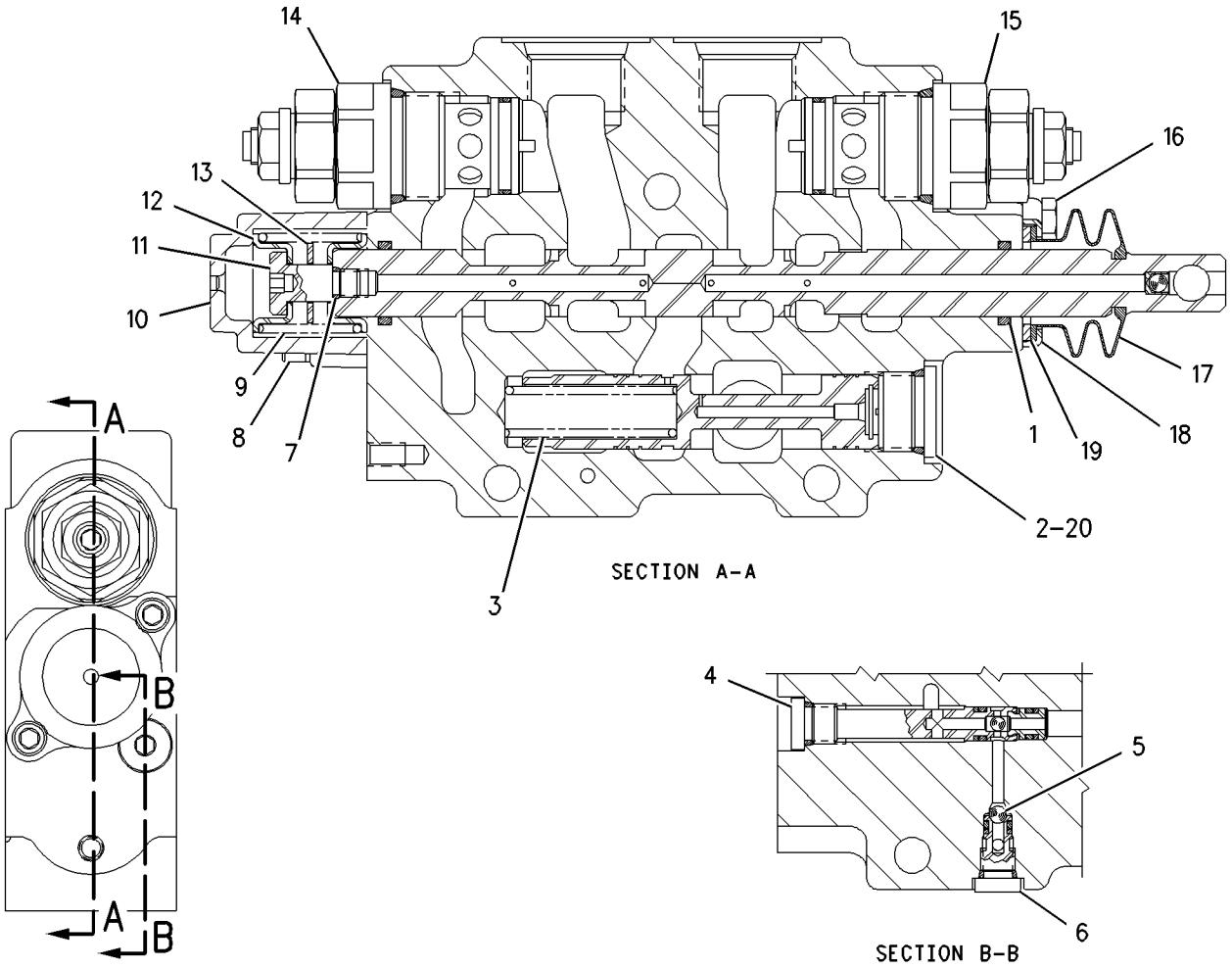

GRAPHIC #1 **<END>** g00744254

190-3400 VALVE GP-CONTROL—BUCKET

S/N: BFP12900-UP; CXP940-UP

PART OF 180-8592 VALVE GP-BANK 4, 180-8593 VALVE GP-BANK 5, 180-8594 VALVE GP-BANK 6

AN ATTACHMENT

SMCS-5051 **i01412568**

NOTE	REF NO	GRAPHIC REF	PART NUMBER	QTY	PART NAME 1 2 3 4 5 6 (PRODUCT LEVEL)	SEE PAGE
	1	1	**195-2139**	2	SEAL-O-RING	
	2	1	**9S-8006**	1	PLUG	
	3	1	**197-2709**	1	SPRING	
	4	1	**126-5796**	1	HOUSING AS	
		1	**1P-7363**	1	SEAL-O-RING (6.07MM ID)	
		1	**3J-7354**	1	SEAL-O-RING (8.92MM ID)	
		1	**8T-2361**	1	SEAL-O-RING (5.28MM ID)	
		1	**126-5984**	1	RING-BACKUP (5.94MM ID)	
		1	**126-5985**	1	RING-BACKUP (6.73MM ID)	
	5	1	**5B-9318**	1	BALL (4.76MM DIA)	
	6	1	**126-5476**	1	SEAT AS-SHUTTLE	
		1	**4T-7807**	1	RING-BACKUP (5.13MM ID)	
		1	**7J-0204**	1	SEAL-O-RING (7.65MM ID)	
		1	**8T-2360**	1	SEAL-O-RING (4.5MM ID)	
	7	1	**195-2406**	1	SPRING	
	8	1	**8H-0707**	2	BOLT (1/4-20X1 IN)	
	9	1	**4T-4533**	1	SPACER	
	10	1	**4T-4521**	2	RETAINER	
	11	1	**167-6768**	1	HOUSING	
	12	1	**031-5085**	1	BOLT-LOCKING (1/4-20X1.00 IN)	
	13	1	**197-2714**	1	SPACER	
	14	1	**187-0527**	1	VALVE GP-RELIEF	
		1	**3K-0360**	1	SEAL-O-RING (16.36MM ID)	
		1	**4K-1388**	1	SEAL-O-RING (26.59MM ID)	
		1	**5K-9090**	1	SEAL-O-RING (23.52MM ID)	
		1	**6E-0358**		RING-BACKUP	
	15	1	**187-0524**	1	VALVE GP-RELIEF	
		1	**3K-0360**	1	SEAL-O-RING (16.36MM ID)	
		1	**4K-1388**	1	SEAL-O-RING (26.59MM ID)	
		1	**5K-9090**	1	SEAL-O-RING (23.52MM ID)	
		1	**6E-0358**	1	RING-BACKUP	
	16	1	**031-0214**	2	BOLT-LOCKING (1/4-20X0.5 IN)	
	17	1	**4T-4524**	1	GUARD-DUST	
	18	1	**4T-4528**	1	RETAINER	
	19	1	**4T-4520**	1	FILTER	
	20	1	**2M-9780**	1	SEAL-O-RING (19.18MM ID)	

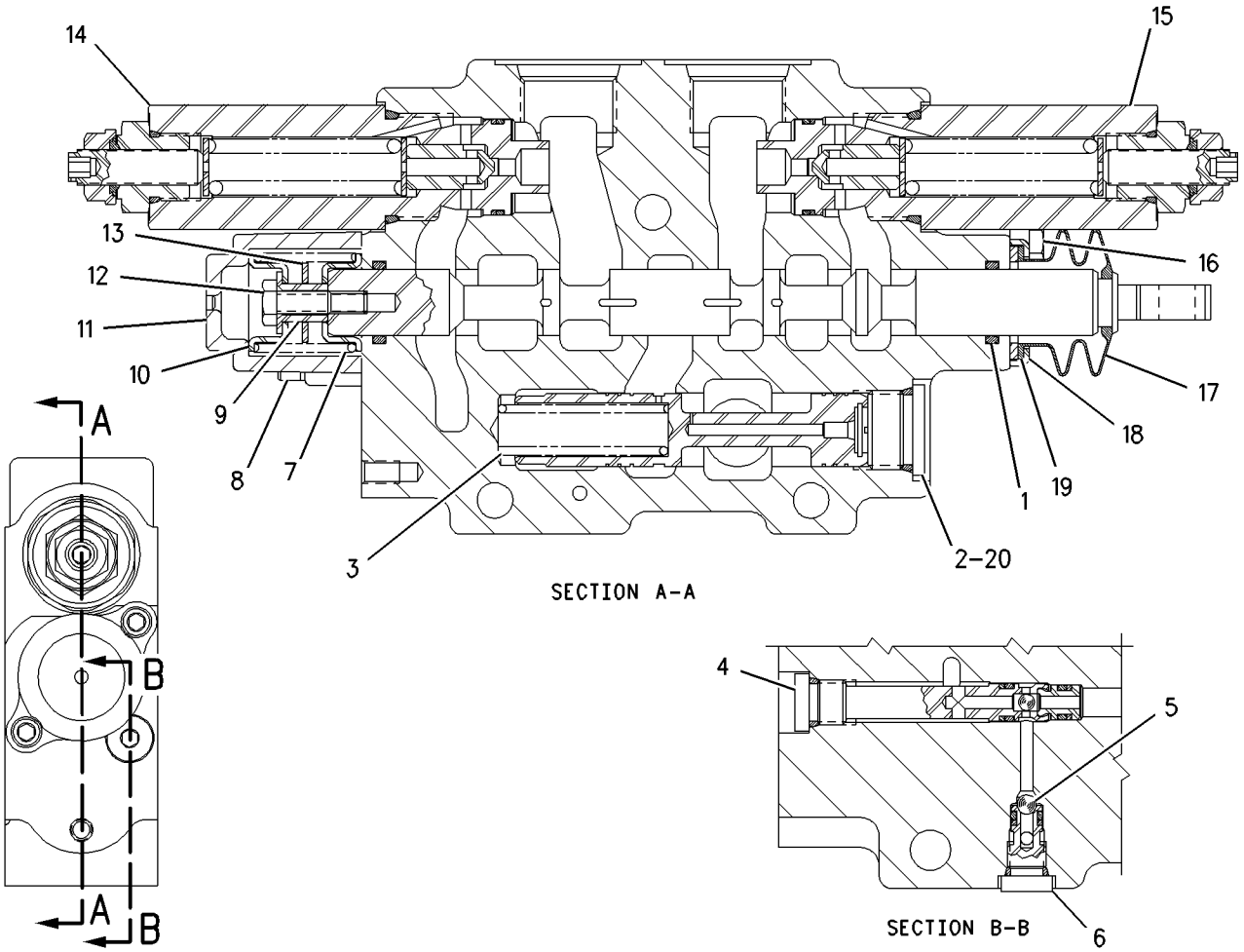

GRAPHIC #1 **<END>** g00744293

190-3402 VALVE GP-CONTROL–STICK

S/N: BFP12900-UP; CXP940-UP

PART OF 180-8592 VALVE GP-BANK 4, 180-8593 VALVE GP-BANK 5, 180-8594 VALVE GP-BANK 6

AN ATTACHMENT

SMCS-5051 **i01412567**

NOTE	REF NO	GRAPHIC REF	PART NUMBER	QTY	PART NAME 1 2 3 4 5 6 (PRODUCT LEVEL)	SEE PAGE
	1	1	**195-2139**	2	SEAL-O-RING	
	2	1	**9S-8006**	1	PLUG	
	3	1	**197-2709**	1	SPRING	
	4	1	**126-5796**	1	HOUSING AS	
		1	**1P-7363**	1	SEAL-O-RING (6.07MM ID)	
		1	**3J-7354**	1	SEAL-O-RING (8.92MM ID)	
		1	**8T-2361**	1	SEAL-O-RING (5.28MM ID)	
		1	**126-5984**	1	RING-BACKUP (5.94MM ID)	
		1	**126-5985**	1	RING-BACKUP (6.73MM ID)	
	5	1	**5B-9318**	1	BALL (4.76MM DIA)	
	6	1	**126-5476**	1	SEAT AS-SHUTTLE	
		1	**4T-7807**	1	RING-BACKUP (5.13MM ID)	
		1	**7J-0204**	1	SEAL-O-RING (7.65MM ID)	
		1	**8T-2360**	1	SEAL-O-RING (4.5MM ID)	
	7	1	**109-9685**	1	SEAL-O-RING (6.07MM ID)	
	8	1	**197-2714**	1	SPACER	
	9	1	**8H-0707**	2	BOLT (1/4-20X1 IN)	
	10	1	**195-2406**	1	SPRING	
	11	1	**4T-4521**	2	RETAINER	
	12	1	**167-6768**	1	HOUSING	
	13	1	**9T-0650**	1	SPACER	
	14	1	**6E-6281**	1	VALVE GP-RELIEF	
		1	**3K-0360**	1	SEAL-O-RING (16.36MM ID)	
		1	**4K-1388**	1	SEAL-O-RING (26.59MM ID)	
		1	**5K-9090**	1	SEAL-O-RING (23.52MM ID)	
		1	**6E-0358**	1	RING-BACKUP	
	15	1	**6E-6286**	1	VALVE GP-RELIEF	
		1	**4K-1388**	1	SEAL-O-RING (26.59MM ID)	
		1	**5K-9090**	1	SEAL-O-RING (23.52MM ID)	
		1	**6E-0358**	1	RING-BACKUP	
	16	1	**031-0214**	2	BOLT-LOCKING (1/4-20X0.5 IN)	
	17	1	**4T-4524**	1	GUARD-DUST	
	18	1	**4T-4528**	1	RETAINER	
	19	1	**4T-4520**	1	FILTER	
	20	1	**2M-9780**	1	SEAL-O-RING (19.18MM ID)	

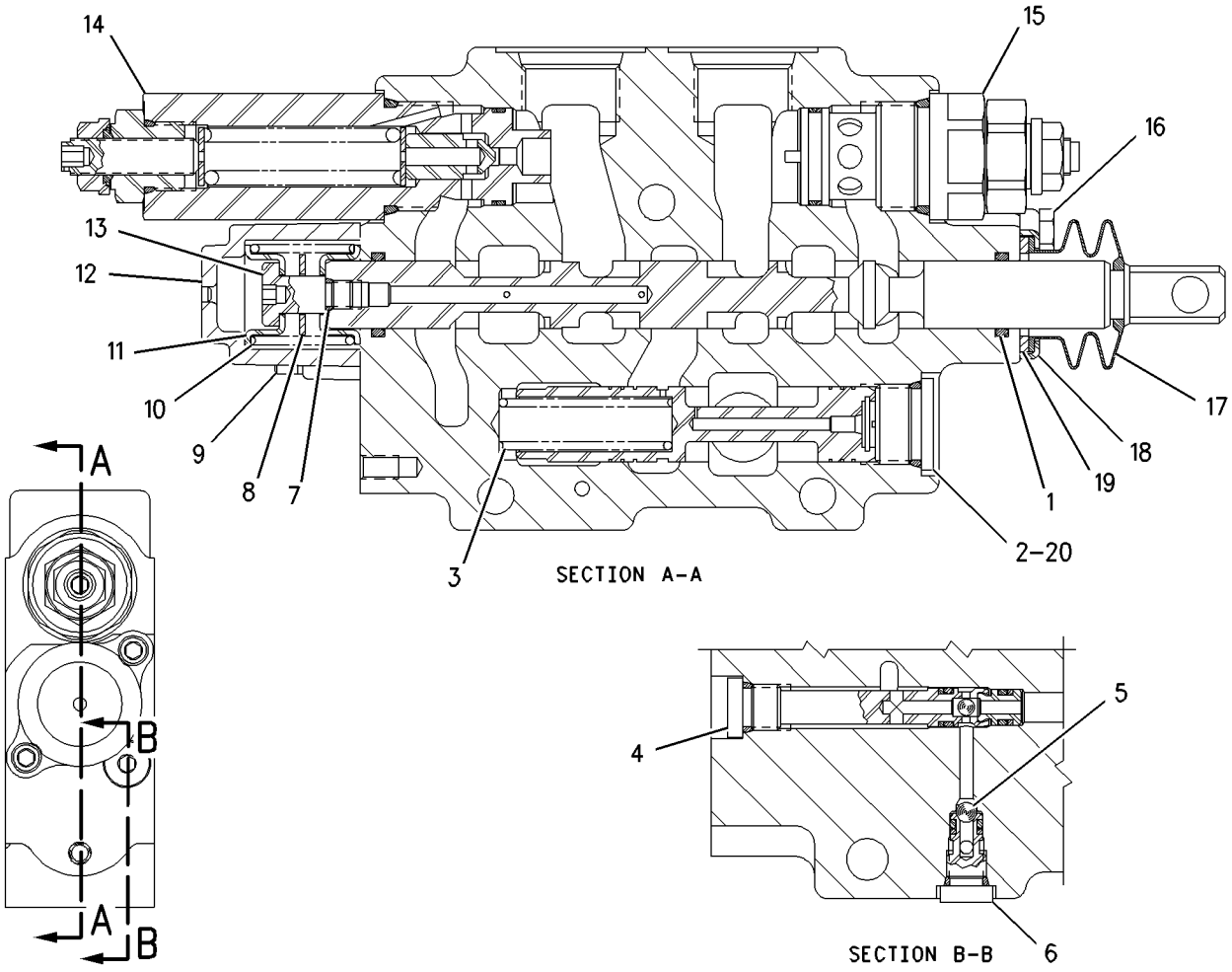

GRAPHIC #1 **<END>** g00744340

190-3450 VALVE GP-CONTROL—EXTENDABLE STICK;AUXILIARY

S/N: BFP12900-UP

PART OF 198-7412, 201-6902, 202-0964 CONVERSION GP-CONTROL VALVE, 180-8593 VALVE GP-BANK 5, 180-8594 VALVE GP-BANK 6

AN ATTACHMENT

SMCS-5051 **i01781168**

NOTE	REF NO	GRAPHIC REF	PART NUMBER	QTY	PART NAME 1 2 3 4 5 6 (PRODUCT LEVEL)	SEE PAGE
	1	1	**195-2139**	2	SEAL-O-RING	
	2	1	**9S-8009**	1	PLUG	
	3	1	**197-2709**	1	SPRING	
	4	1	**155-9836**	1	VALVE GP-RELIEF	
	4A	1	**1P-7363**	1	SEAL-O-RING	
	4B	1	**3J-7354**	1	SEAL-O-RING	
	4C	1	**8T-2361**	1	SEAL-O-RING	
	4D	1	**126-5984**	1	RING-BACKUP	
	4E	1	**126-5985**	1	RING-BACKUP	
	5	1	**5B-9318**	1	BALL	
	6	1	**126-5476**	1	SEAT AS-SHUTTLE	
	6A	1	**4T-7807**	1	RING-BACKUP	
	6B	1	**7J-0204**	1	SEAL-O-RING	
	6C	1	**8T-2360**	1	SEAL-O-RING	
	7	1	**4T-4516**	1	SPRING	
	8	1	**8H-0707**	2	BOLT (1/4-20X1 IN)	
	9	1	**4T-4533**	1	SPACER (7.1X10.2X17.3MM DIA)	
	10	1	**167-6768**	1	HOUSING	
	11	1	**031-5085**	1	BOLT-LOCKING (1/4-20X1.00 IN)	
	12	1	**4T-4521**	2	RETAINER	
	13	1	**6E-0131**	2	WASHER	
	14	1	**4T-4531**	2	PLUG	
	15	1	**031-0214**	2	BOLT-LOCKING (1/4-20X0.5 IN)	
	16	1	**4T-4524**	1	GUARD-DUST	
	17	1	**4T-4528**	1	RETAINER	
	18	1	**4T-4520**	1	FILTER	
	19	1	**2M-9780**	1	SEAL-O-RING	
	20	1	**4K-1388**	2	SEAL-O-RING	
	21	1	**5K-9090**	2	SEAL-O-RING	
	22	1	**6E-0358**	2	RING-BACKUP	

190-3450 VALVE GP-CONTROL *(contd.)* i01781168

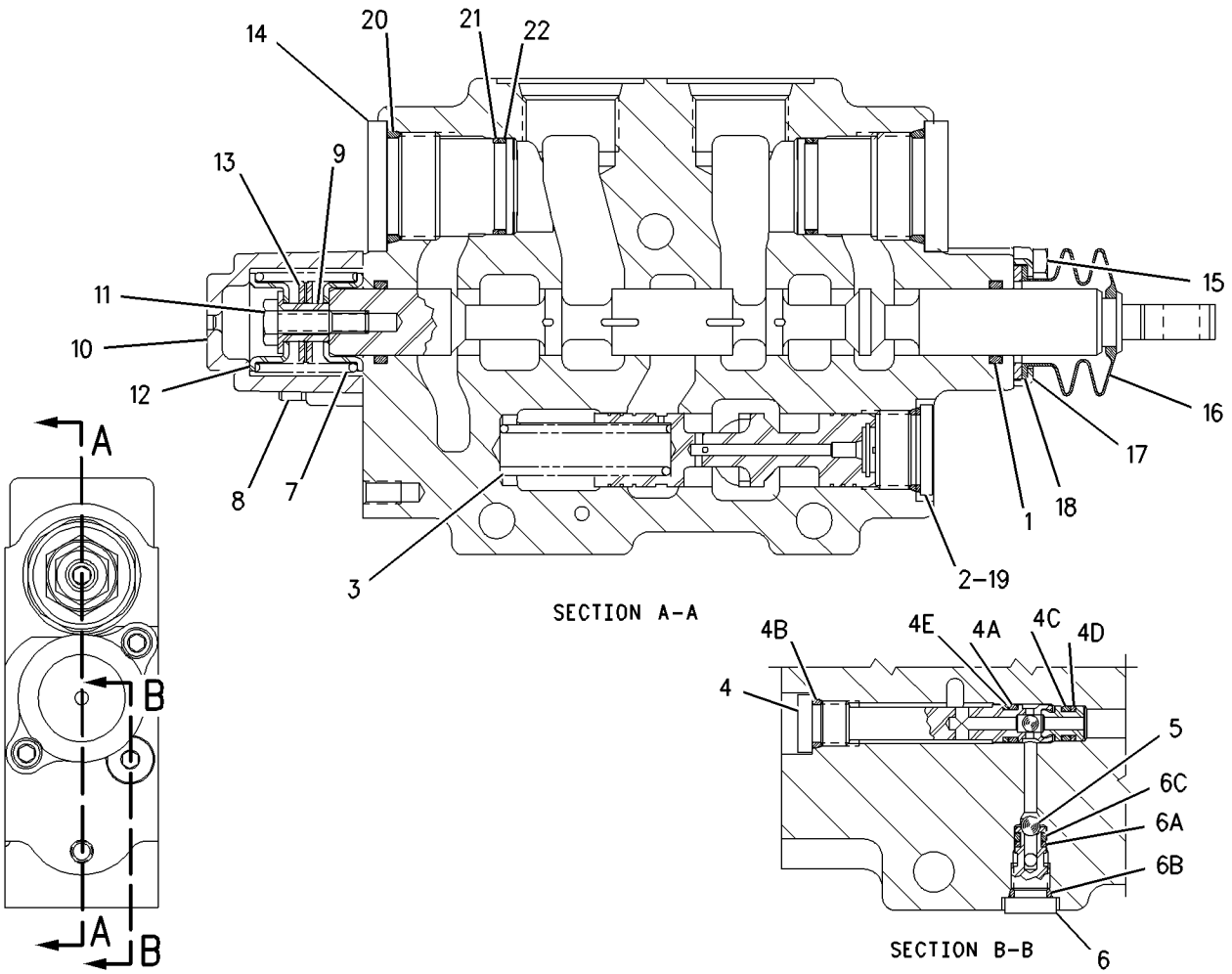

GRAPHIC #1 **<END>** g00910842

HYDRAULIC SYSTEM

192-0827 VALVE GP-CONTROL–STABILIZER

S/N: BFP12900-UP
PART OF 185-5898 VALVE GP-BANK 2
AN ATTACHMENT

SMCS-5051 **i01699289**

NOTE	REF NO	GRAPHIC REF	PART NUMBER	QTY	PART NAME 1 2 3 4 5 6 (PRODUCT LEVEL)	SEE PAGE
	1	1	**192-7512**	4	SEAL-O-RING	
	2	1	**192-2060**	1	COVER AS	
		1	**192-7506**	2	SEAL-O-RING	
		1	**192-7516**	1	SEAL	
	3	1	**192-7864**	2	PLUG	
	4	1	**192-7510**	2	SEAL-O-RING	
	5	1	**192-2081**	2	SPRING	
	6	1	**192-4490**	2	VALVE GP-CHECK	
	7	1	**192-2082**	2	SPRING	
	8	1	**192-7513**	2	SEAL-O-RING	
	9	1	**192-4488**	2	RING	
	10	1	**192-4487**	2	RING	
	11	1	**192-7514**	2	SEAL-O-RING	
	12	1	**192-4491**	1	DISC	
	13	1	**192-4492**	1	BALL	
	14	1	**192-0828**	1	VALVE GP-COMPENSATING	
		1	**192-4488**	1	RING	
		1	**192-7512**	1	SEAL-O-RING	
		1	**192-7515**	1	SEAL-O-RING	
	15	1	**214-6350**	2	PISTON	

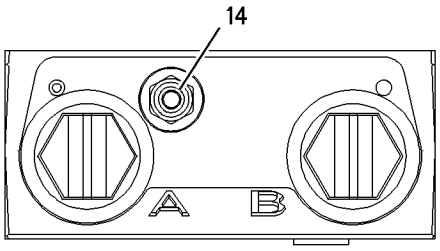

TOP VIEW

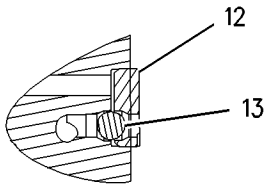

SECTION E-E

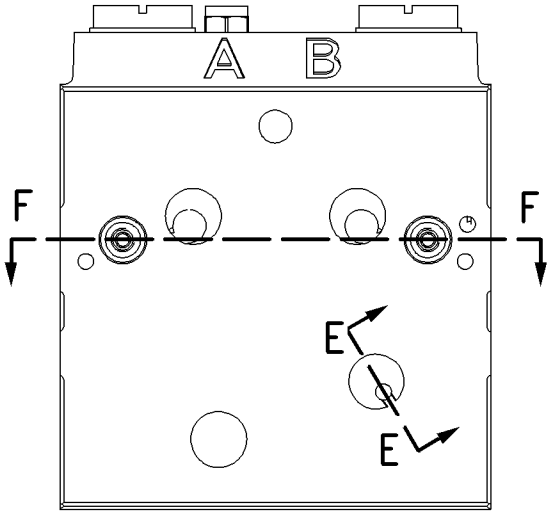

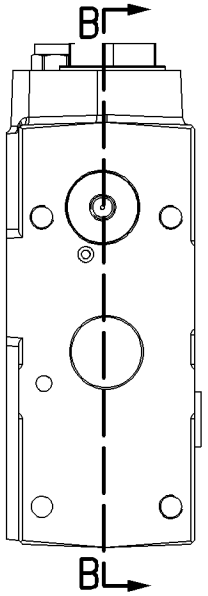

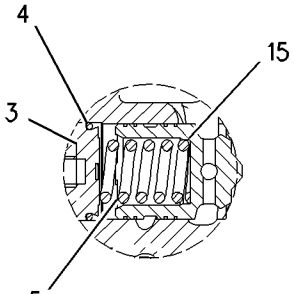

VIEW OF AREA A

RIGHT SIDE VIEW

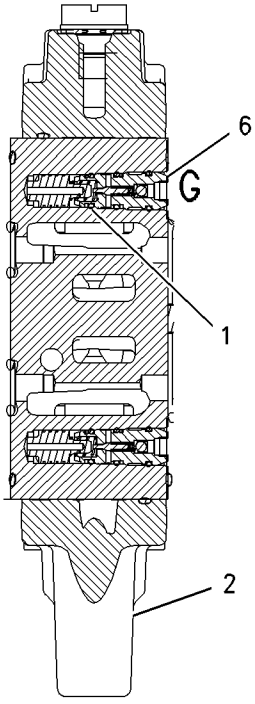

SECTION F-F

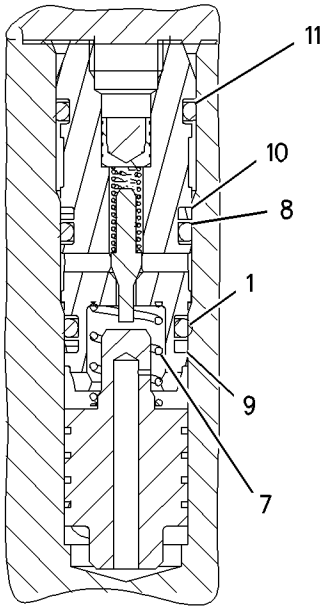

VIEW OF AREA G

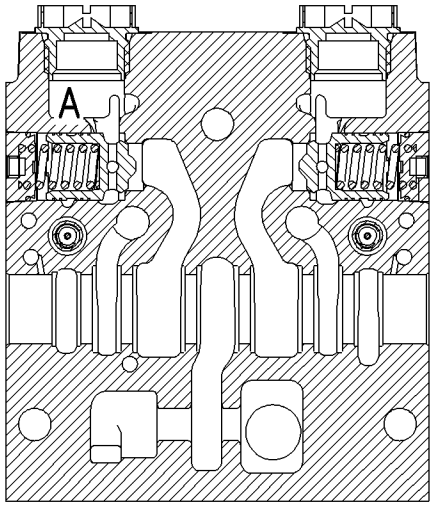

SECTION B-B

GRAPHIC #1 **<END>** g00874817

201-0664 VALVE GP-CONTROL–EXTENDABLE STICK

S/N: BFP12900-UP
PART OF 230-9105 CONVERSION GP-CONTROL VALVE
AN ATTACHMENT

SMCS-5051 **i01644333**

NOTE	REF NO	GRAPHIC REF	PART NUMBER	QTY	PART NAME 1 2 3 4 5 6 (PRODUCT LEVEL)	SEE PAGE
	1	1	**195-2139**	2	SEAL-O-RING	
	2	1	**9S-8006**	1	PLUG	
	3	1	**6E-4317**	1	SPRING	
	4	1	**155-9836**	1	VALVE GP-RELIEF	
		1	**1P-7363**	1	SEAL-O-RING	
		1	**3J-7354**	1	SEAL-O-RING	
		1	**8T-2361**	1	SEAL-O-RING	
		1	**126-5984**	1	RING-BACKUP	
		1	**126-5985**	1	RING-BACKUP	
	5	1	**5B-9318**	1	BALL	
	6	1	**126-5476**	1	SEAT AS-SHUTTLE	
		1	**4T-7807**	1	RING-BACKUP	
		1	**7J-0204**	1	SEAL-O-RING	
		1	**8T-2360**	1	SEAL-O-RING	
	7	1	**4T-4516**	1	SPRING	
	8	1	**8H-0707**	2	BOLT (1/4-20X1 IN)	
	9	1	**6E-0131**	2	WASHER	
	10	1	**4T-4533**	1	SPACER	
	11	1	**167-6768**	1	HOUSING	
	12	1	**031-5085**	1	BOLT-LOCKING (1/4-20X1.00 IN)	
	13	1	**4T-4521**	2	RETAINER	
	14	1	**206-5107**	1	PLUG AS	
		1	**4K-1388**	1	SEAL-O-RING	
		1	**5K-9090**	1	SEAL-O-RING	
		1	**6E-0358**	1	RING-BACKUP	
		1	**197-1742**	1	PLUG	
	15	1	**211-3539**	1	VALVE GP-RELIEF	
		1	**6V-5326**	1	SEAL-O-RING	
		1	**208-1463**	1	SEAL-O-RING	
		1	**208-9791**	1	RING-BACKUP	
		1	**208-9801**	1	RING-BACKUP	
	16	1	**206-9978**	1	VALVE-POPPET	
	17	1	**175-5453**	1	SEAT	
	18	1	**175-5454**	1	POPPET	
	19	1	**8T-2275**	1	BALL	
	20	1	**175-5457**	1	RETAINER-SPRING	
	21	1	**175-5458**	1	SPRING	
	22	1	**175-5452**	1	PLUG	
	23	1	**031-0214**	2	BOLT-LOCKING (1/4-20X0.5 IN)	
	24	1	**4T-4524**	1	GUARD-DUST	
	25	1	**4T-4528**	1	RETAINER	
	26	1	**4T-4520**	1	FILTER	
	27	1	**132-5303**	1	VALVE GP-RELIEF	
		1	**4K-1388**	1	SEAL-O-RING	
		1	**5K-9090**	1	SEAL-O-RING	
		1	**6E-0358**	1	RING-BACKUP	
	28	1	**2M-9780**	1	SEAL-O-RING	

201-0664 VALVE GP-CONTROL *(contd.)* **i01644333**

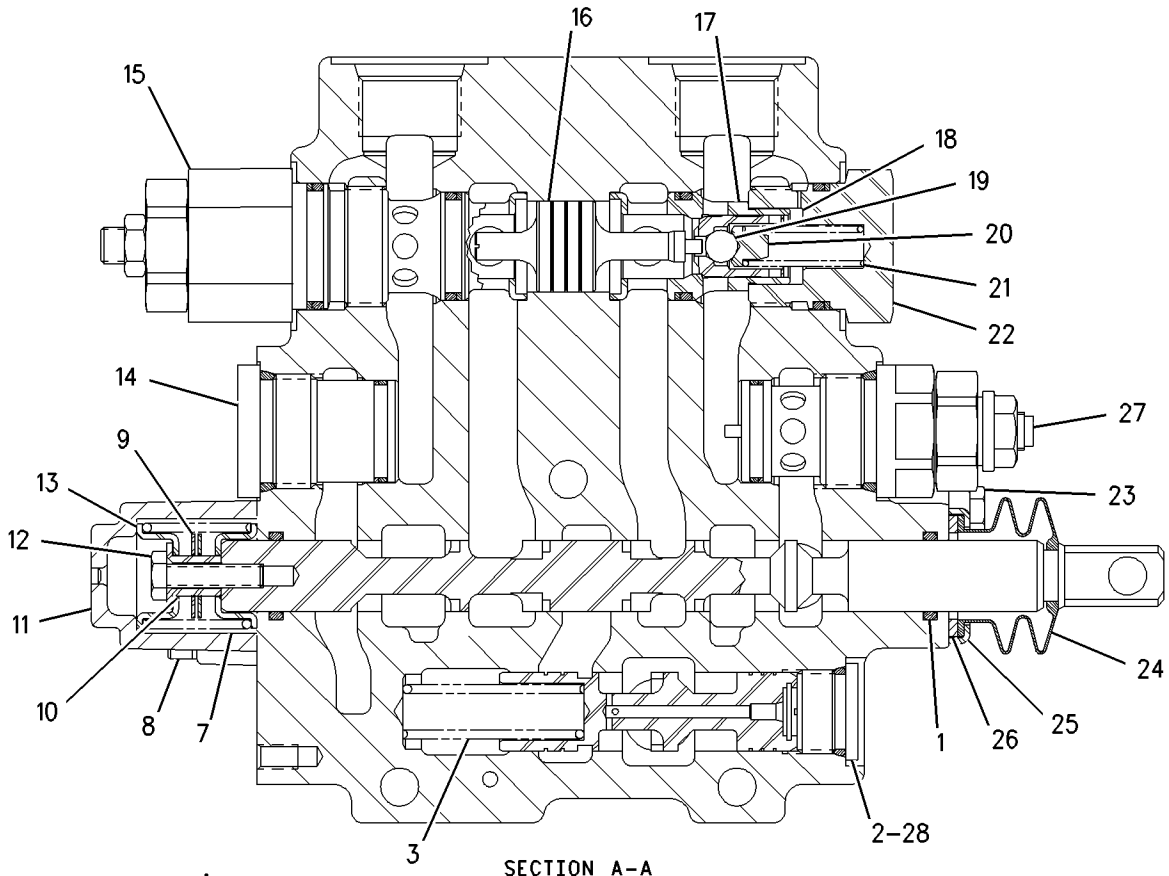

SECTION A–A

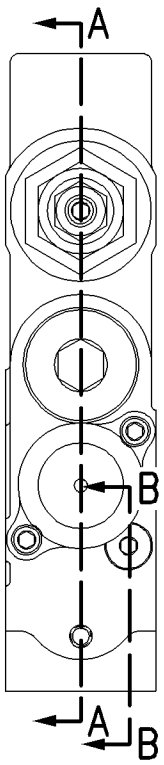

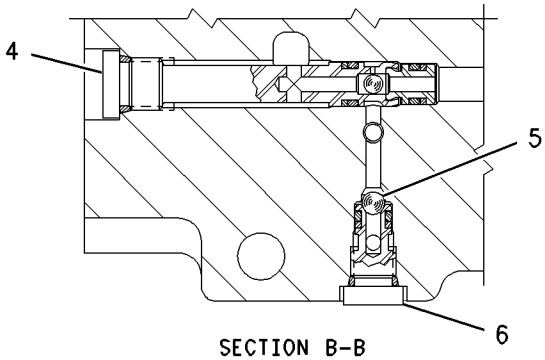

SECTION B–B

GRAPHIC #1 **<END>** g00849960

HYDRAULIC SYSTEM

9T-5455 VALVE GP-LOAD CONTROL

S/N: CXP940-UP
PART OF 183-8560 LINES GP-CHECK VALVE
AN ATTACHMENT

SMCS-5811 **i00730502**

NOTE	REF NO	GRAPHIC REF	PART NUMBER	QTY	PART NAME 1 2 3 4 5 6 (PRODUCT LEVEL)	SEE PAGE
	1	1	**106-9427**	1	VALVE GP-SEQUENCE	
		1	**6E-4753**	1	KIT-SEAL	
	2	1	**9S-8002**	4	PLUG-O-RING (7/16-20 THD)	
	3	1	**3J-7354**	4	SEAL-O-RING (8.92MM ID)	
	4	1	**106-9430**	1	VALVE GP-CHECK	
J		1	**2M-9780**	1	SEAL-O-RING (19.18MM ID)	
J		1	**4M-6582**	1	SEAL-O-RING (15.88MM ID)	
J		1	**5P-2199**	1	RING-BACKUP	
J		1	**6E-3583**	1	KIT-SEAL	
CY	5	1	**150-5150**	1	VALVE GP-LOAD CONTROL	717
	6	1	**9S-8007**	2	PLUG-O-RING (3/8-24 THD)	
	7	1	**7J-0204**	2	SEAL-O-RING (7.65MM ID)	
	8	1	**4J-9780**	1	PLUG-ORIFICE	
	9	1	**7Y-4224**	1	ORIFICE	
	10	1	**9S-8004**	2	PLUG-O-RING (9/16-18 THD)	
	11	1	**3J-1907**	2	SEAL-O-RING (11.89MM ID)	

C-CHANGE FROM PREVIOUS TYPE
J-PARTS MARKED J INCLUDED IN KIT MARKED J
Y-SEPARATE ILLUSTRATION

9T-5455 VALVE GP-LOAD CONTROL *(contd.)* i00730502

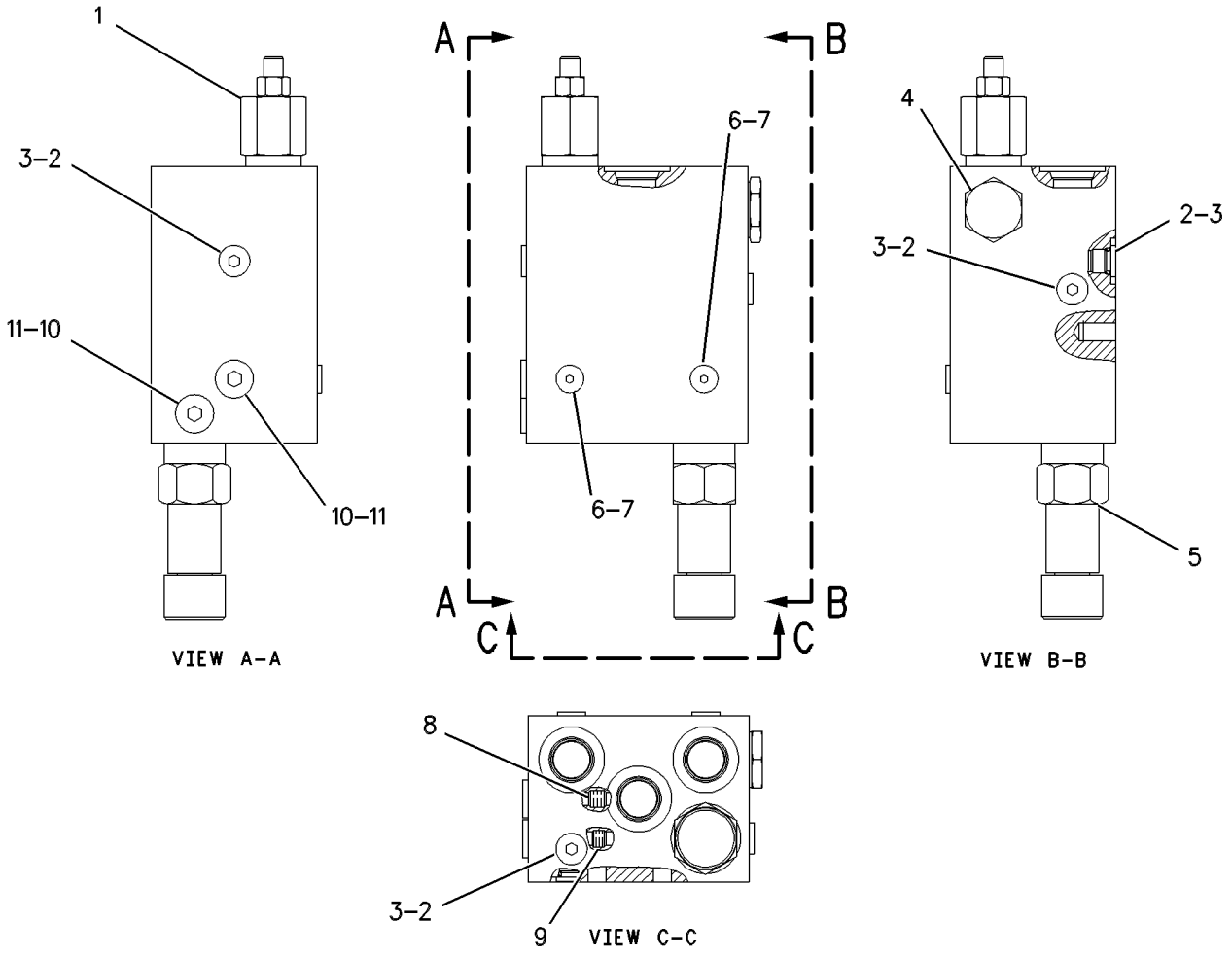

GRAPHIC #1

<END>

g00324416

150-5150 VALVE GP-LOAD CONTROL

S/N: CXP940-UP
PART OF 9T-5455 VALVE GP-LOAD CONTROL
AN ATTACHMENT

SMCS-5811 **i01782692**

NOTE	REF NO	GRAPHIC REF	PART NUMBER	QTY	PART NAME 1 2 3 4 5 6 (PRODUCT LEVEL)	SEE PAGE
	1	1	**2M-9780**	1	SEAL-O-RING	
	2	1	**6V-8399**	2	SEAL-O-RING	
	3	1	**149-4091**	3	RING-BACKUP	

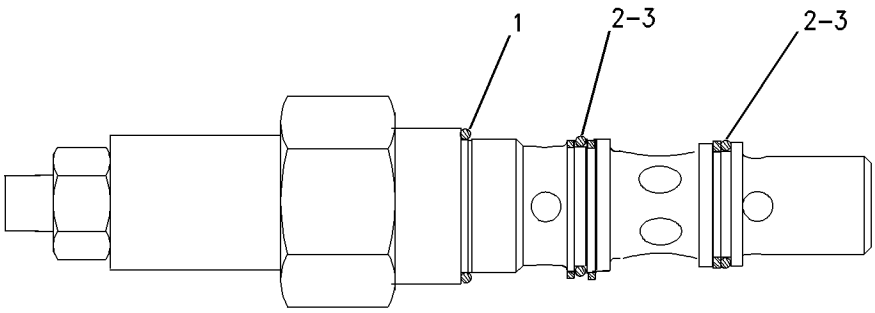

GRAPHIC #1 **<END>** g00911856

185-5902 VALVE GP-PILOT–STABILIZER

S/N: BFP12900-UP; CXP940-UP
PART OF 209-4172 STABILIZER AR
AN ATTACHMENT

SMCS-5059 **i01533770**

NOTE	REF NO	GRAPHIC REF	PART NUMBER	QTY	PART NAME 1 2 3 4 5 6 (PRODUCT LEVEL)	SEE PAGE
Y	1	1	**200-1726**	1	VALVE GP-PILOT	719
Y	2	1	**200-1728**	1	VALVE GP-PILOT	720
	3	1	**198-6515**	1	KIT-SEAL	
M	4	1	**7I-8935**	2	BOLT-SOCKET HEAD (M8X1.25X75MM)	
M	5	1	**176-8541**	2	NUT	

M-METRIC PART
Y-SEPARATE ILLUSTRATION

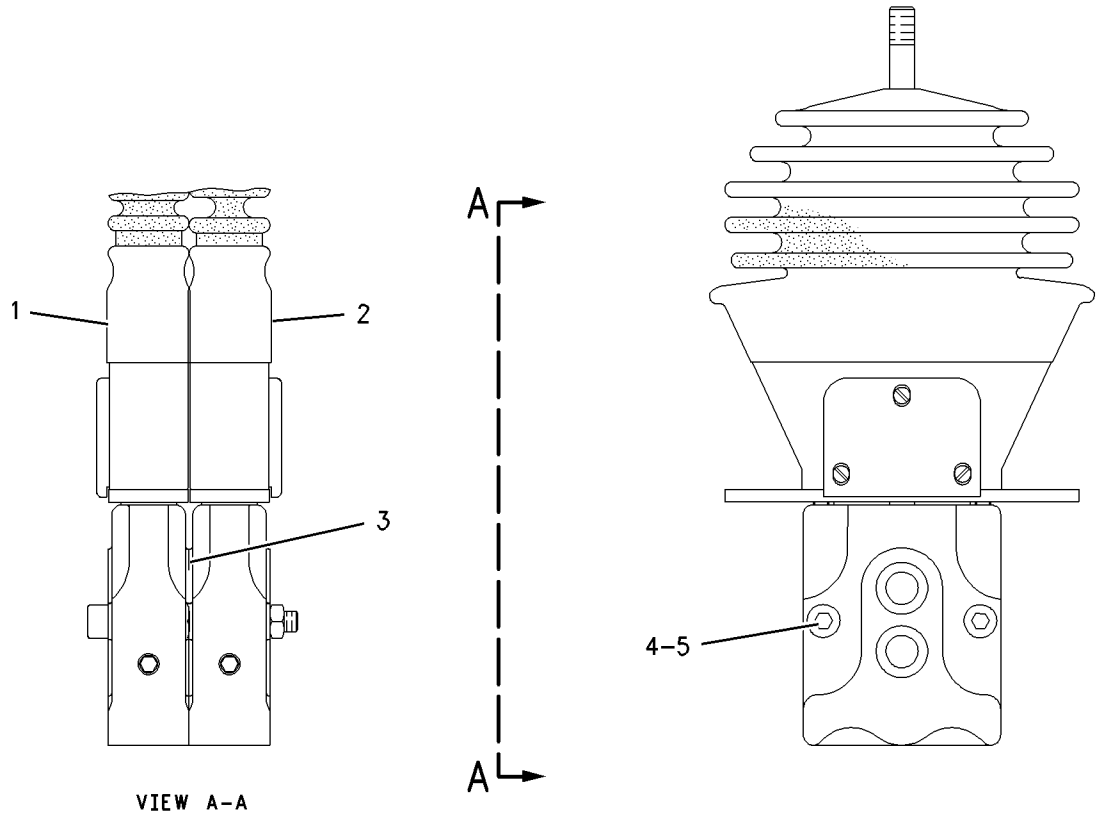

GRAPHIC #1 **<END>** g00754474

200-1726 VALVE GP-PILOT–STABILIZER

S/N: BFP12900-UP; CXP940-UP
PART OF 185-5902 VALVE GP-PILOT
AN ATTACHMENT

SMCS-5059 **i01696254**

NOTE	REF NO	GRAPHIC REF	PART NUMBER	QTY	PART NAME 1 2 3 4 5 6 (PRODUCT LEVEL)	SEE PAGE
	1	1	**198-6498**	1	BOOT	
	2	1	**200-4023**	1	KIT-LEVER	
	3	1	**200-4025**	1	VALVE GP-PILOT	
	3A	1	**200-4019**	2	KIT-PLUNGER	
	3B	1	**198-6511**	2	KIT-REGULATOR	
	3C	1	**198-6513**	2	KIT-SPRING	
	4	1	**116-4481**	1	PLATE	
	5	1	**202-3263**	1	SEAL	

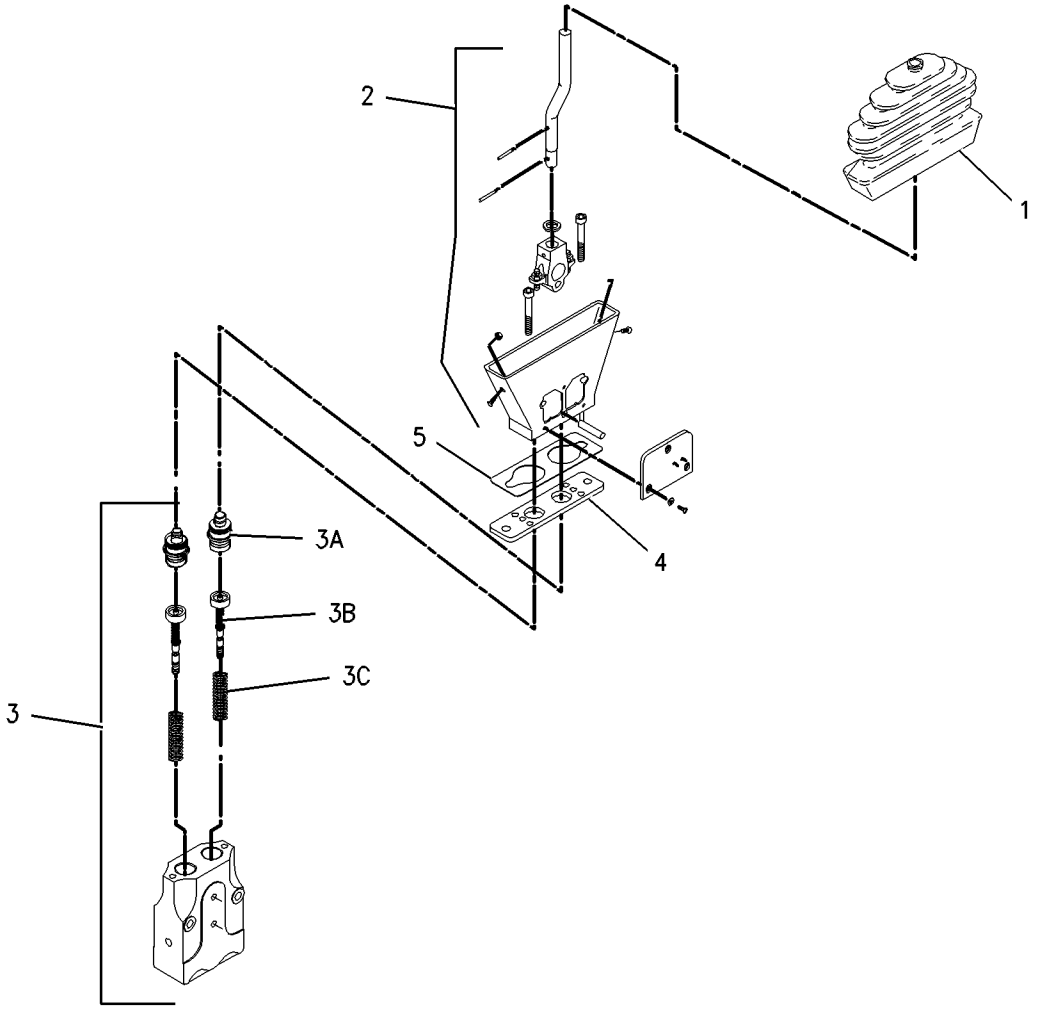

GRAPHIC #1 **<END>** g00778213

200-1728 VALVE GP-PILOT—STABILIZER

S/N: BFP12900-UP; CXP940-UP
PART OF 185-5902 VALVE GP-PILOT
AN ATTACHMENT

SMCS-5059 **i01696302**

NOTE	REF NO	GRAPHIC REF	PART NUMBER	QTY	PART NAME 1 2 3 4 5 6 (PRODUCT LEVEL)	SEE PAGE
	1	1	**198-6498**	1	BOOT	
	2	1	**200-4022**	1	KIT-LEVER	
Y	3	1	**200-4024**	1	VALVE GP-PILOT	721
	4	1	**116-4481**	1	PLATE	
	5	1	**202-3263**	1	SEAL	

Y-SEPARATE ILLUSTRATION

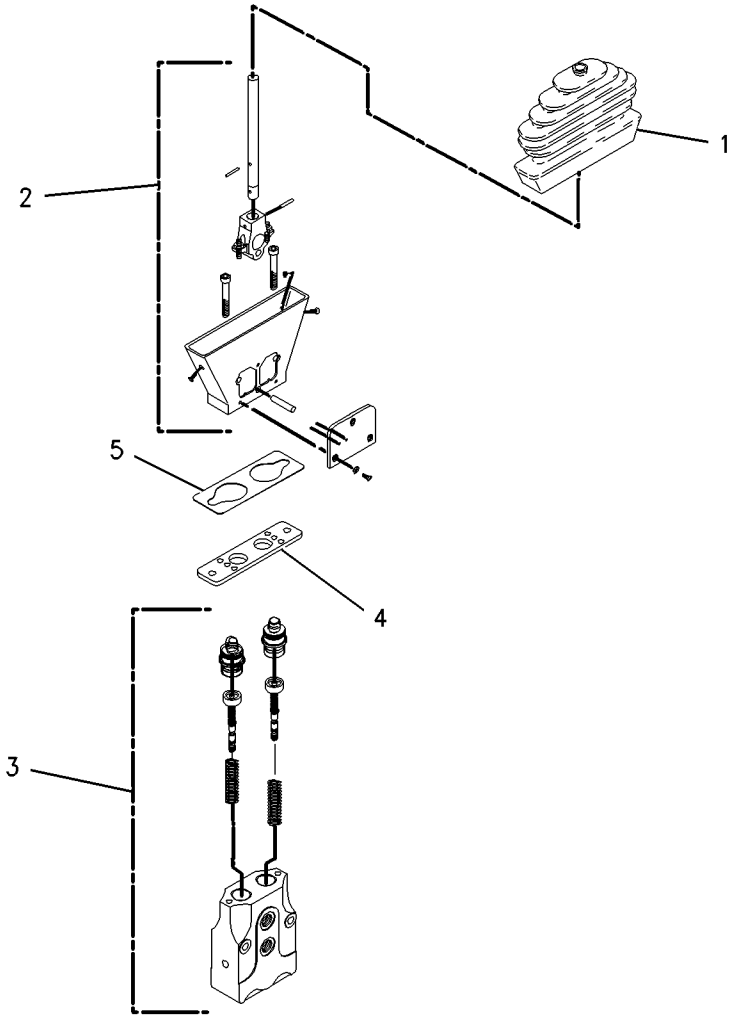

GRAPHIC #1 **<END>** g00776221

HYDRAULIC SYSTEM

200-4024 VALVE GP-PILOT

S/N: BFP12900-UP; CXP940-UP
PART OF 200-1728 VALVE GP-PILOT
AN ATTACHMENT

SMCS-5059 **i01637655**

NOTE	REF NO	GRAPHIC REF	PART NUMBER	QTY	PART NAME 1 2 3 4 5 6 (PRODUCT LEVEL)	SEE PAGE
	1	1	**8U-9427**	2	KIT-REPAIR	
	2	1	**198-6511**	2	KIT-REGULATOR	
	3	1	**158-4466**	1	KIT-SPRING	

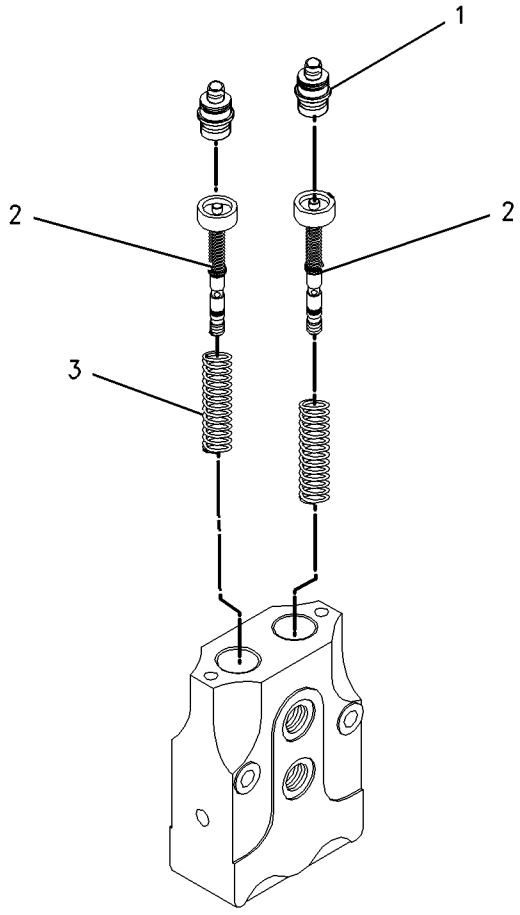

GRAPHIC #1 **<END>** g00843722

103-5519 VALVE GP-PUMP CONTROL–POWER COMPENSATOR

S/N: BFP12900-UP; CXP940-UP

PART OF 180-9588, 245-8998 PUMP GP-PISTON

SMCS-5455 **i01739597**

NOTE	REF NO	GRAPHIC REF	PART NUMBER	QTY	PART NAME 1 2 3 4 5 6 (PRODUCT LEVEL)	SEE PAGE
	1	1	**105-1434**	1	PLUG	
	2	1	**5P-5599**	1	SEAL-O-RING	
	3	1	**105-1435**	1	SPRING	
	4	1	**105-1436**	1	RETAINER-SPRING	
	5	1	**214-0592**	1	GASKET	
	6	1	**6V-8236**	1	PIN-SPRING	
	7	1	**6E-6528**	1	SEAL	
M	8	1	**3T-0849**	2	BOLT-SOCKET HEAD (M6X1X25MM)	
	9	1	**105-1437**	1	RETAINER-SPRING	
	10	1	**105-1438**	1	SPRING	
	11	1	**033-6044**	1	SEAL-O-RING	
	12	1	**105-1439**	1	ADJUSTER	
	13	1	**105-1440**	1	CAP	
	14	1	**105-1441**	1	PLUG	

M-METRIC PART

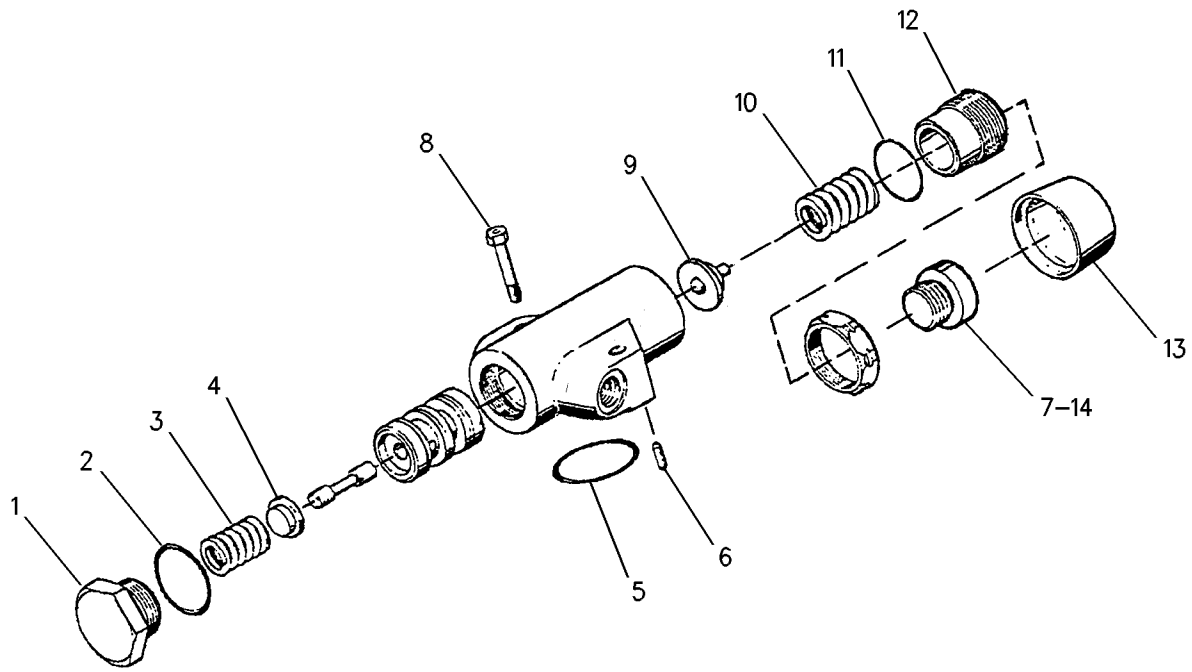

GRAPHIC #1 **<END>** g00890883

173-0640 VALVE GP-PUMP CONTROL–PRESSURE,FLOW COMPENSATOR

S/N: BFP12900-UP; CXP940-UP

PART OF 180-9588, 245-8998 PUMP GP-PISTON

SMCS-5455 **i01523868**

NOTE	REF NO	GRAPHIC REF	PART NUMBER	QTY	PART NAME 1 2 3 4 5 6 (PRODUCT LEVEL)	SEE PAGE
	1	1	**6E-3268**	1	RETAINER-SPRING	
	2	1	**6E-3269**	1	RETAINER-SPRING	
	3	1	**200-5359**	1	HOUSING	
	4	1	**200-5360**	1	HOUSING	
	5	1	**6E-3272**	1	SEAT	
	6	1	**6E-3273**	1	SEAT	
	7	1	**6E-3274**	1	SPRING	
	8	1	**6E-3275**	1	SPRING	
	9	1	**6E-3276**	1	SPRING	
	10	1	**105-2145**	1	VALVE-ORIFICE	
	11	1	**202-7503**	2	RETAINER	
	12	1	**6E-6527**	2	PLUG	
	13	1	**193-1036**	1	SPRING	
	14	1	**033-6043**	1	SEAL-O-RING	
	15	1	**6V-8352**	1	SEAL-O-RING	
	16	1	**6E-6528**	2	SEAL (9.3MM ID)	
	17	1	**5P-9262**	1	SEAL-O-RING	
	18	1	**200-5361**	2	NUT	
	19	1	**200-5362**	2	SEAL-O-RING	
	20	1	**200-5363**	2	RING-THRUST	
	21	1	**200-5364**	2	CAP	

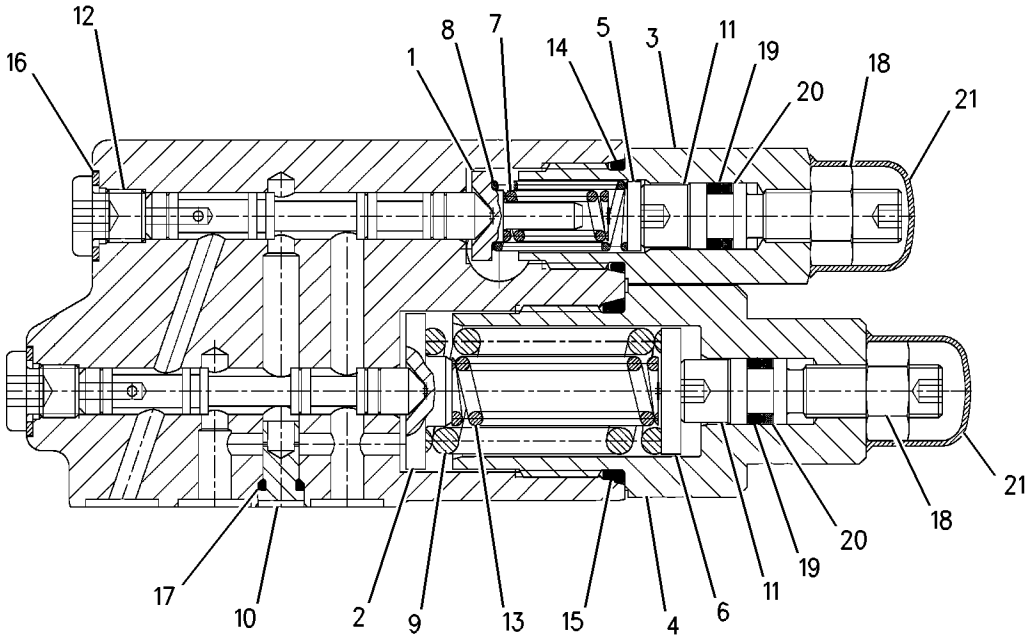

GRAPHIC #1 **<END>** g00791680

HYDRAULIC SYSTEM

171-8775 VALVE GP-SOLENOID

S/N: BFP12900-UP
PART OF 190-8315 VALVE & MTG GP-SOLENOID
AN ATTACHMENT

SMCS-5132, 5479 **i01794684**

NOTE	REF NO	GRAPHIC REF	PART NUMBER	QTY	PART NAME 1 2 3 4 5 6 (PRODUCT LEVEL)	SEE PAGE
	1	1	**3E-8621**	1	COIL AS	
		1	**1S-9593**	1	STRAP-CABLE	
		1	**102-8802**	1	KIT-RECEPTACLE (2 PIN)	
		1	**3E-3365**	1	WEDGE-RECEPTACLE LOCK (2 PIN)	
		1	**186-3735**	2	PIN-CONNECTOR	
	2	1	**156-5970**	1	NUT (1/2-20-2B THD)	
J	3	1	**171-8772**	1	VALVE AS-SOLENOID	
		1	**156-5970**	1	NUT (1/2-20-2B THD)	
					AVAILABLE REPAIR KIT(S):	
J			**195-7430**	1	KIT-SEAL	

J-KIT MARKED J IS AVAILABLE FOR PART MARKED J

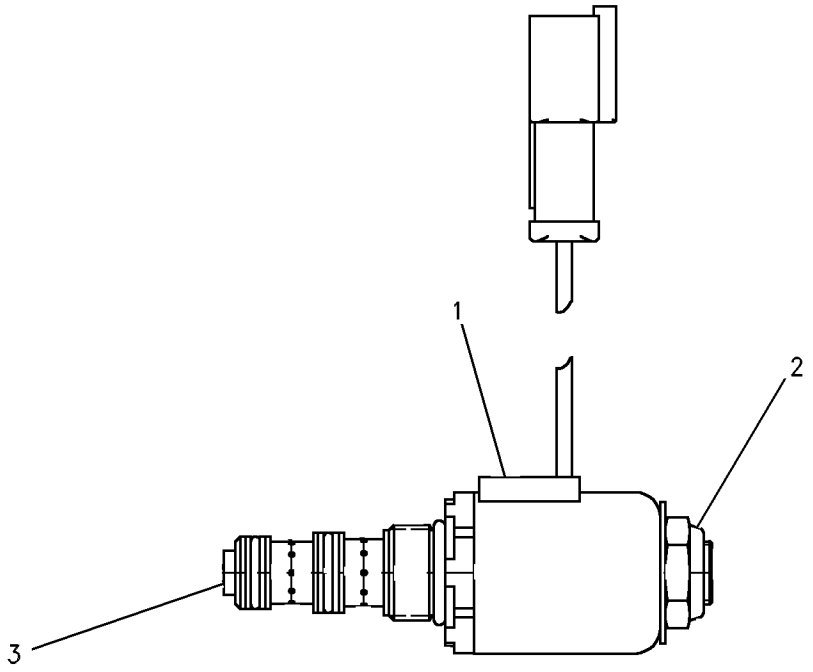

GRAPHIC #1 **<END>** g00628325

IMPLEMENTS

129-9121 ARM GP-LIFT

S/N: BFP12900-UP; CXP940-UP
PART OF 107-3313 LOADER AR
ALSO AN ATTACHMENT

SMCS-6118, 6119 **i01739733**

NOTE	REF NO	GRAPHIC REF	PART NUMBER	QTY	PART NAME 1 2 3 4 5 6 (PRODUCT LEVEL)	SEE PAGE
M	1	1	**8T-4176**	2	BOLT (M12X1.75X90MM)	
M	2	1	**6V-7687**	2	LOCKNUT (M12X1.75 THD)	
	3	1	**9R-0158**	2	WASHER (46X69X3MM THK)	
	4	1	**6V-3213**	2	RING-RETAINING	
	5	1	**130-5451**	2	PIN	
	6	1	**6V-8144**	6	RING	
B	7	1	**9R-0109**	8	WASHER (3MM THK)	
	8	1	**9R-3182**	2	PIN	
	9	1	**129-9120**	1	ARM AS-LIFT	
	9A	1	**9R-0111**	4	BEARING-SLEEVE	
	9B	1	**9R-0119**	2	BOSS	
	9C	1	**9R-6690**	4	BEARING-SLEEVE	
	9D	1	**112-4498**	1	BOSS	
	10	1	**3B-8488**	4	FITTING-GREASE (1/8-27 THD)	
	11	1	**9R-9373**	1	PIN AS	
	12	1	**127-8987**	2	RING-RETAINING	
B	13	1	**9R-8390**	2	SPACER (1.0MM THK)	
	14	1	**128-5010**	1	PIN	
	15	1	**3B-8489**	5	FITTING-GREASE (1/8-27 THD)	
	16	1	**132-6496**	1	PIN AS	
B	17	1	**9R-4066**	2	WASHER (4MM THK)	

B-USE AS REQUIRED
M-METRIC PART

129-9121 **ARM GP-LIFT** *(contd.)* **i01739733**

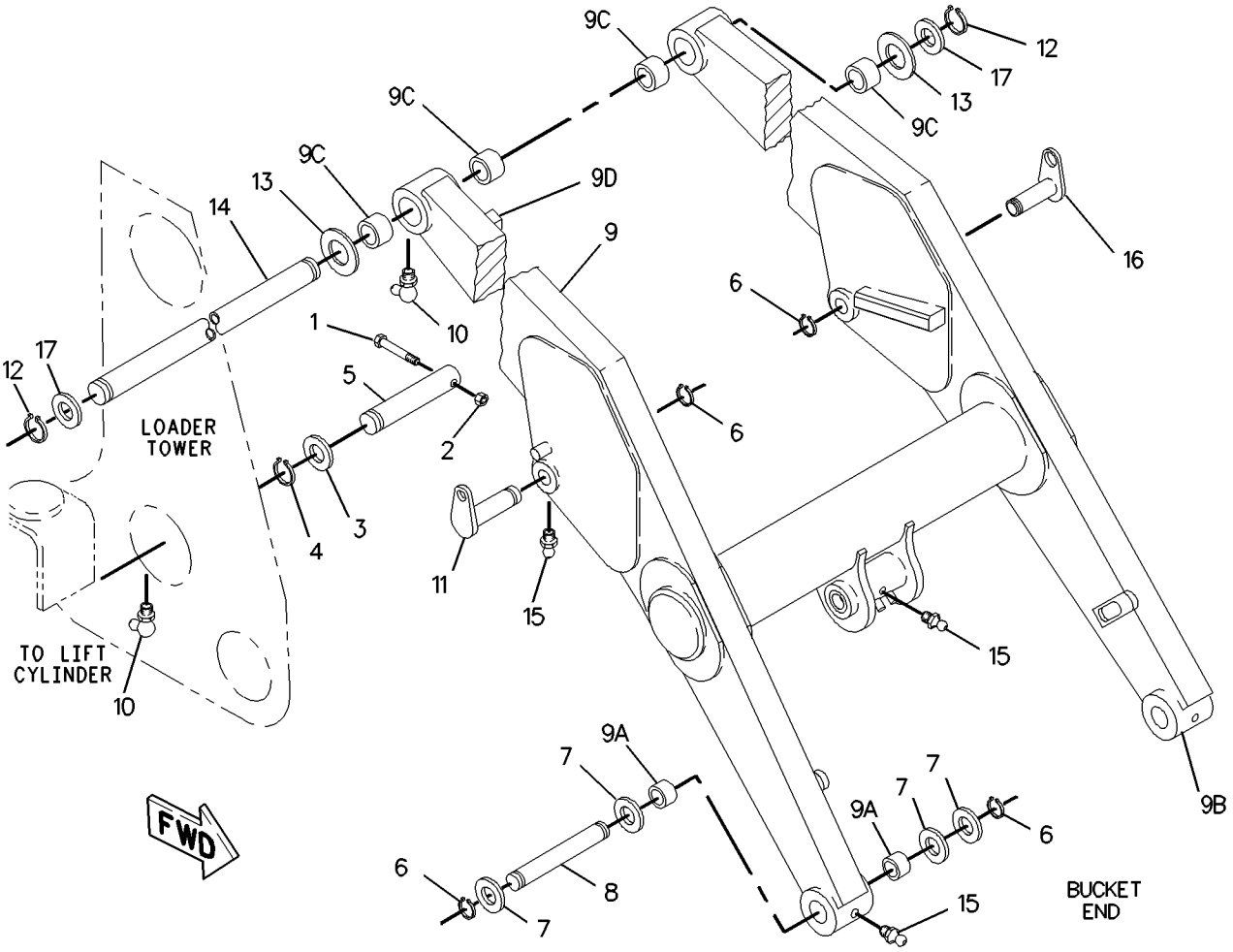

GRAPHIC #1 **<END>** g00890885

IMPLEMENTS

159-2798 BOOM GP

S/N: BFP12900-UP

PART OF 184-7909, 238-4783 BACKHOE AR-EXTENDABLE STICK, 184-7903, 184-7907, 238-4780, 238-4782 BACKHOE AR-STANDARD STICK

AN ATTACHMENT

SMCS-6501 **i01991035**

NOTE	REF NO	GRAPHIC REF	PART NUMBER	QTY	PART NAME 1 2 3 4 5 6 (PRODUCT LEVEL)	SEE PAGE
C	1	1	**237-5197**	1	BOOM AS	
	1A	1	**8Y-4489**	4	BOSS (M10X35MM)	
	1B	1	**9R-8523**	2	PIN	
	1C	1	**174-6812**	2	BOSS	
	1D	1	**106-0421**	2	BOSS	
	1E	1	**106-0424**	1	PLATE	
	1F	1	**111-0483**	2	BOSS (M10X1.5MM)	
	2	1	**3B-8488**	3	FITTING-GREASE	
	3	1	**9R-9812**	2	PIN	
M	4	1	**8T-5001**	2	BOLT (M12X1.75X130MM)	
M	5	1	**6V-7687**	2	LOCKNUT (M12X1.75THD)	
	6	1	**3B-8489**	1	FITTING-GREASE	
	7	1	**179-9961**	1	PLUG-PROTECTIVE	

C-CHANGE FROM PREVIOUS TYPE
M-METRIC PART

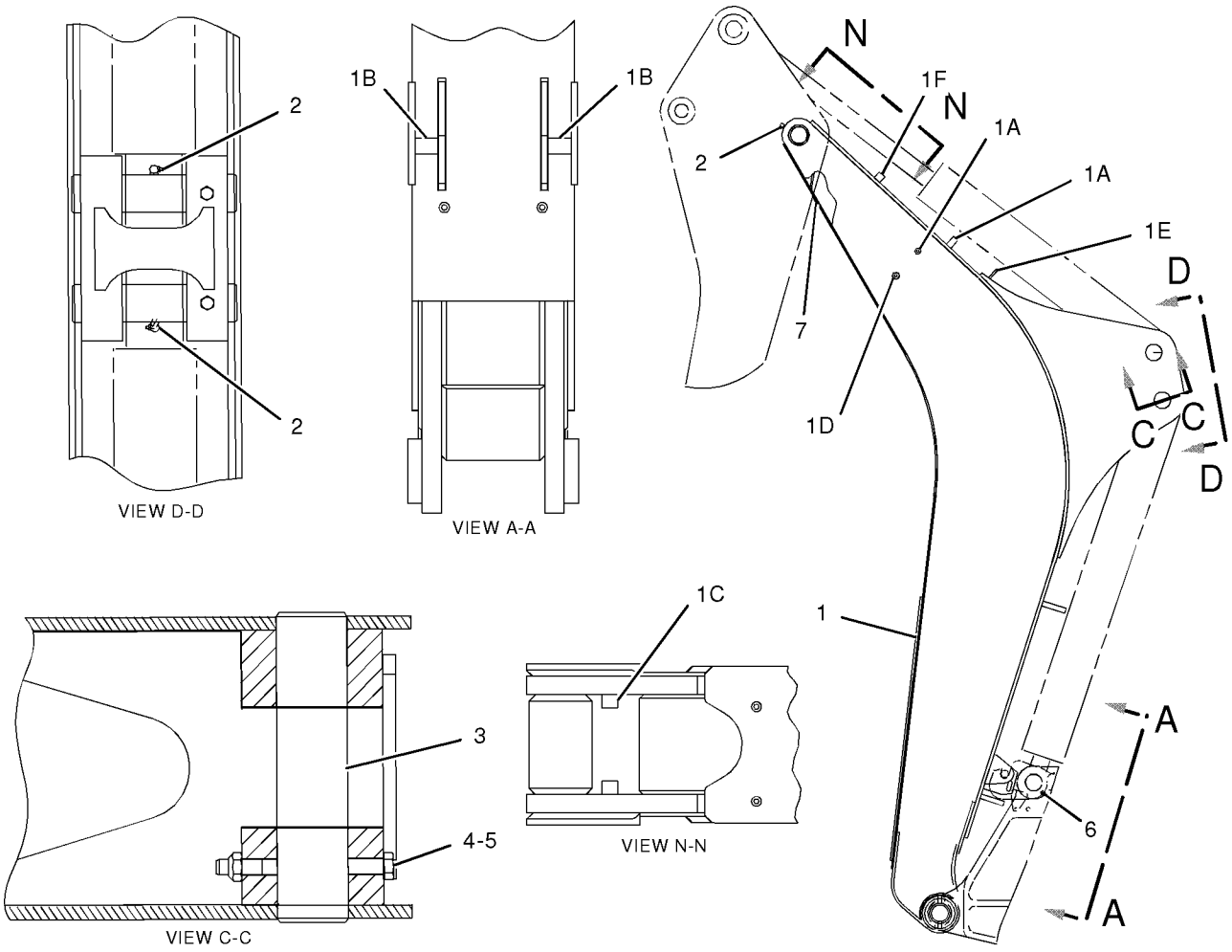

GRAPHIC #1 **<END>** g01032342

159-2799 BOOM GP

S/N: BFP12900-UP

PART OF 184-7911, 238-4784 BACKHOE AR-EXTENDABLE STICK, 184-7905, 238-4781 BACKHOE AR-STANDARD STICK AN ATTACHMENT

SMCS-6501 **i02014864**

NOTE	REF NO	GRAPHIC REF	PART NUMBER	QTY	PART NAME 1 2 3 4 5 6 (PRODUCT LEVEL)	SEE PAGE
	1	1	**179-9961**	1	PLUG-PROTECTIVE	
C	2	1	**237-3853**	1	BOOM AS	
	2A	1	**8Y-4489**	4	BOSS (M10X35-MM)	
	2B	1	**9R-8523**	2	PIN	
	2C	1	**106-0421**	2	BOSS	
	2D	1	**106-0424**	1	PLATE	
	2E	1	**106-0425**	1	PLATE AS (TOOL)	
	2F	1	**111-0483**	2	BOSS (M10X1.5-MM)	
	2G	1	**174-6812**	2	BOSS	
	3	1	**3B-8488**	3	FITTING-GREASE	
	4	1	**3B-8489**	1	FITTING-GREASE	
M	5	1	**6V-7687**	2	LOCKNUT (M12X1.75-THD)	
M	6	1	**8T-5001**	2	BOLT (M12X1.75X130-MM)	
	7	1	**9R-9812**	2	PIN	

C-CHANGE FROM PREVIOUS TYPE
M-METRIC PART

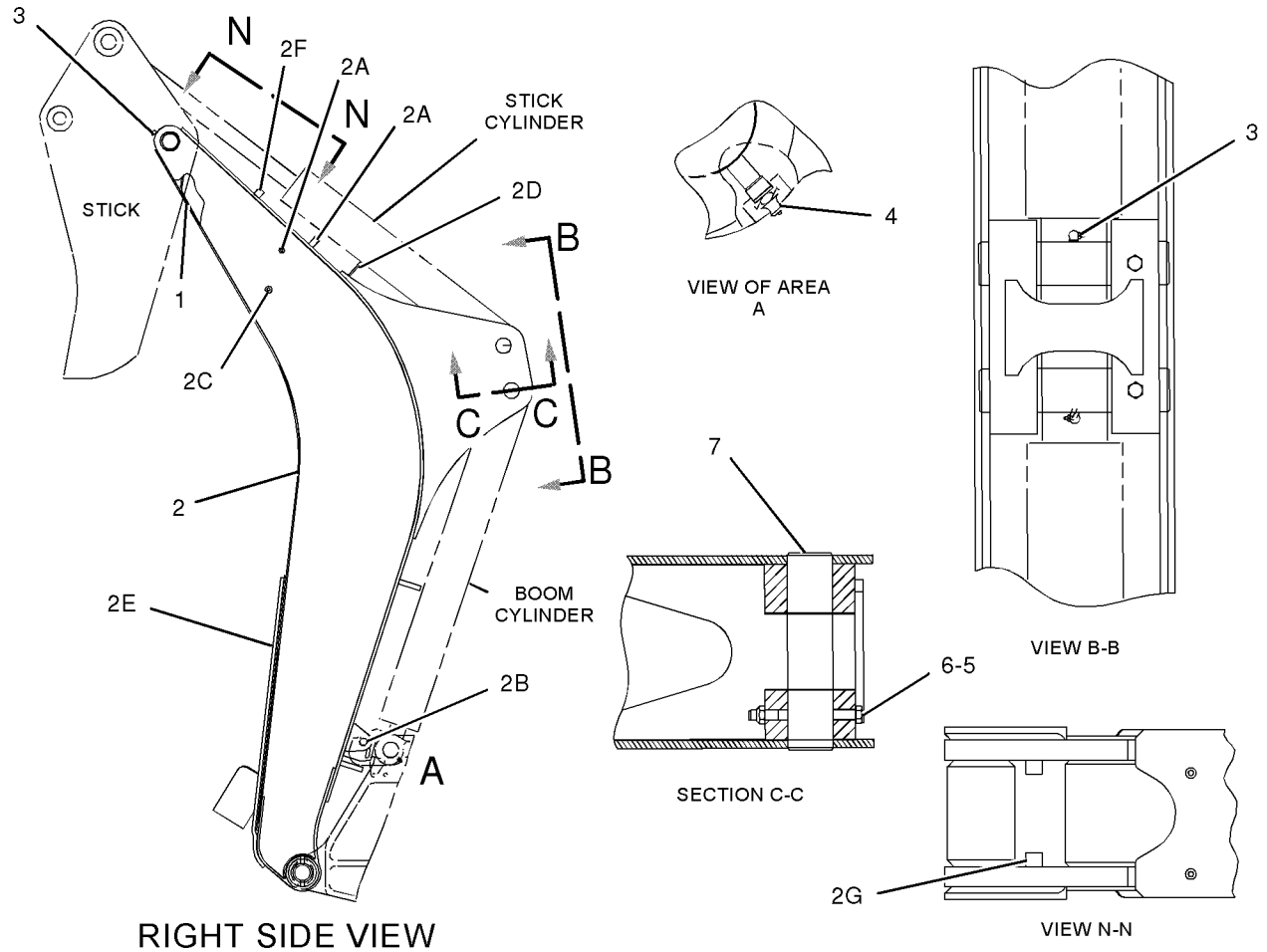

GRAPHIC #1 **<END>** g01041876

9R-0036 BRACE GP-LIFT CYLINDER

S/N: BFP12900-UP; CXP940-UP
PART OF 107-3313 LOADER AR
ALSO AN ATTACHMENT

SMCS-7507 **i00457750**

NOTE	REF NO	GRAPHIC REF	PART NUMBER	QTY	PART NAME 1 2 3 4 5 6 (PRODUCT LEVEL)	SEE PAGE
	1	1	**9R-0189**	1	PIN	
	2	1	**132-6497**	1	BRACE AS	
C	3	1	**9R-5301**	1	PIN-COTTER	
C	4	1	**8C-4447**	1	FILM-INDICATOR	

C-CHANGE FROM PREVIOUS TYPE

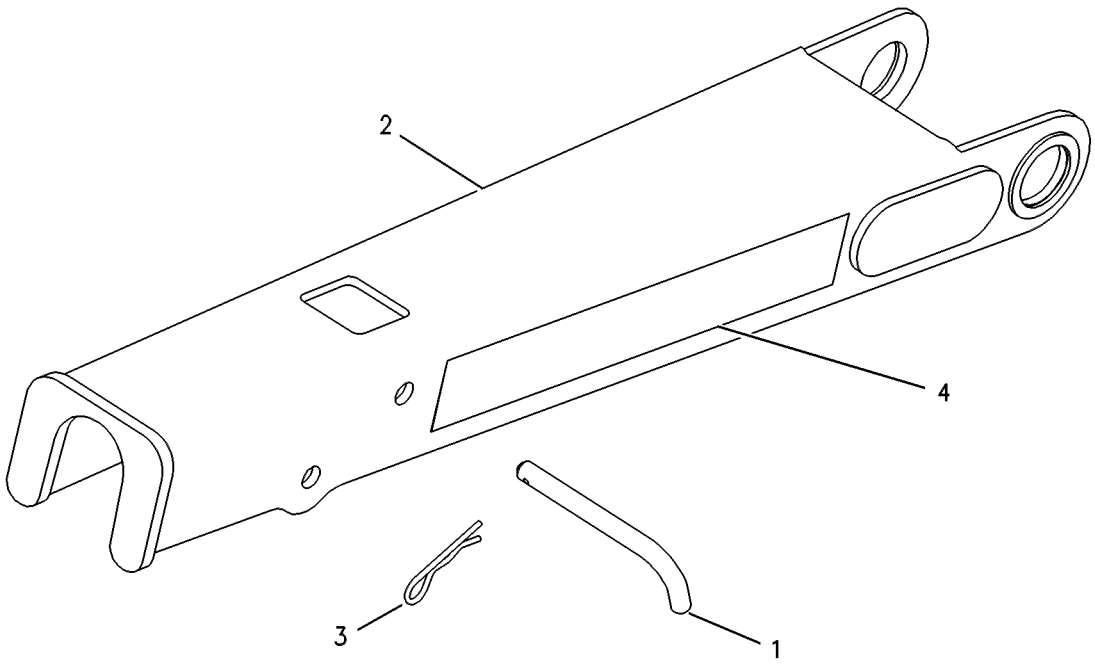

GRAPHIC #1 **<END>** g00131910

120-9289 BRACKET GP-TRANSPORT

S/N: BFP12900-UP
PART OF 119-1530 SHIPPING AR-BUCKET
AN ATTACHMENT

SMCS-7505 **i01500845**

NOTE	REF NO	GRAPHIC REF	PART NUMBER	QTY	PART NAME 1 2 3 4 5 6 (PRODUCT LEVEL)	SEE PAGE
	1	1	**3B-5322**	2	PIN-COTTER	
	2	1	**9R-0109**	2	WASHER (3MM THK)	
B	3	1	**9R-4066**	6	WASHER (4MM THK)	
	4	1	**9R-6014**	4	TUBE	
	5	1	**034-1432**	2	STRAP-CABLE	
	6	1	**120-9332**	2	BLOCK	
	7	1	**120-9333**	1	TUBE	

B-USE AS REQUIRED

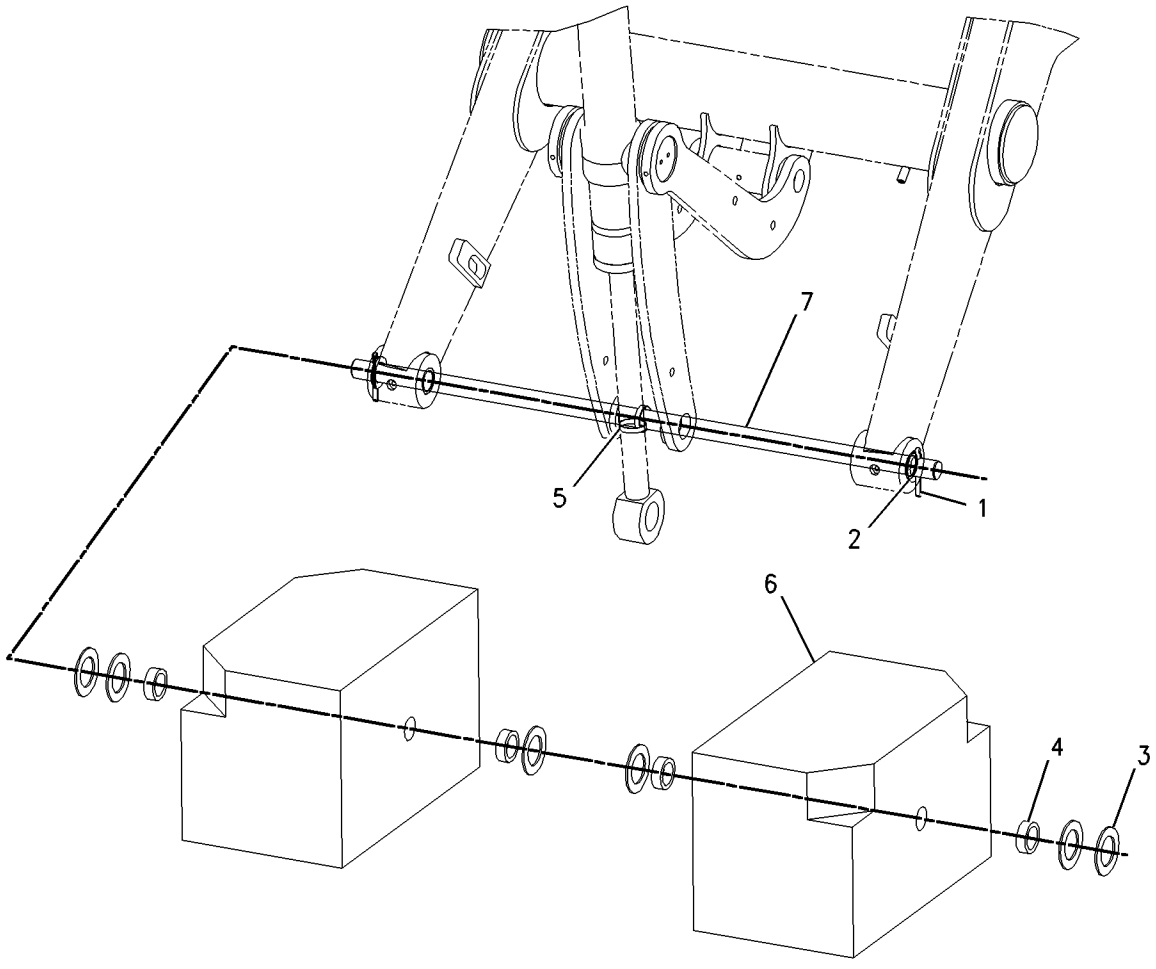

GRAPHIC #1 **<END>** g00778843

IMPLEMENTS

175-7877 LINK GP-SHIPPING

S/N: BFP12900-UP

AN ATTACHMENT

SMCS-6513 **i01411821**

NOTE	PART NUMBER	QTY	PART NAME 1 2 3 4 5 6 (PRODUCT LEVEL)	SEE PAGE
	120-9286	1	PLATE	

<END>

221-4276 LINK GP-THUMB

S/N: BFP12900-UP

PART OF 224-6232, 224-6233, 224-6234, 224-6235 THUMB AR

AN ATTACHMENT

SMCS-6547 **i01923588**

NOTE	REF NO	GRAPHIC REF	PART NUMBER	QTY	PART NAME 1 2 3 4 5 6 (PRODUCT LEVEL)	SEE PAGE
	1	1	**221-4271**	1	LINK AS	
	2	1	**221-4272**	1	LINK AS	
	3	1	**224-4527**	1	PIN AS	

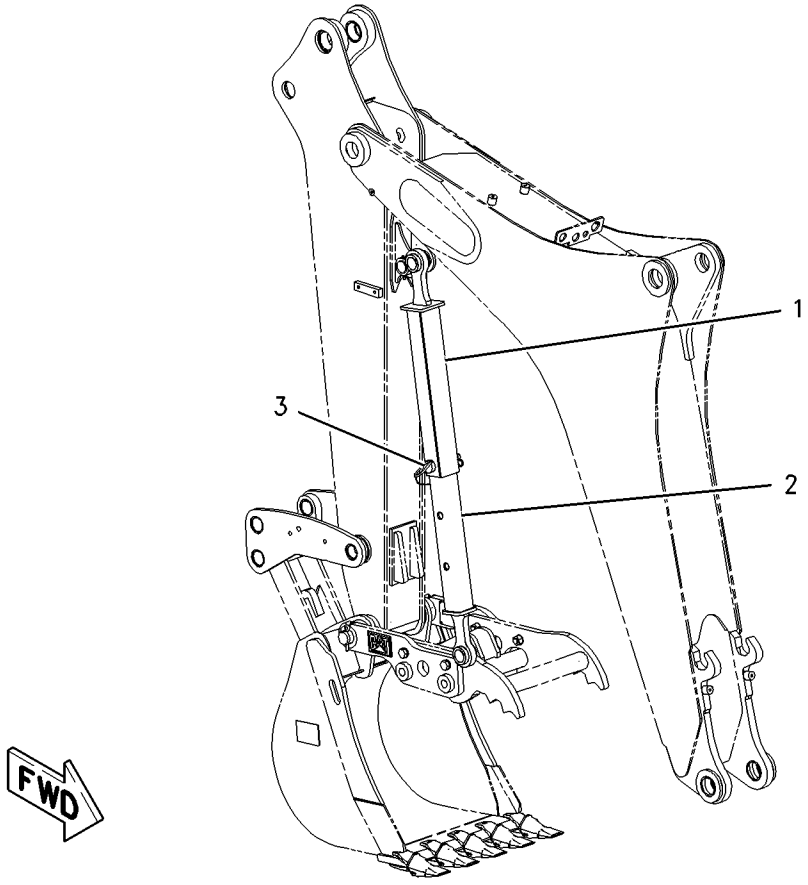

GRAPHIC #1 **<END>** g01003484

151-7928 LINKAGE GP-BACKHOE BUCKET

S/N: BFP12900-UP

PART OF 184-7909, 184-7911, 238-4783, 238-4784 BACKHOE AR-EXTENDABLE STICK, 184-7903, 184-7905, 184-7907, 238-4780, 238-4781, 238-4782 BACKHOE AR-STANDARD STICK

AN ATTACHMENT

SMCS-6513 **i01994647**

NOTE	REF NO	GRAPHIC REF	PART NUMBER	QTY	PART NAME 1 2 3 4 5 6 (PRODUCT LEVEL)	SEE PAGE
	1	1	**9R-0158**	10	WASHER (46X69X3MM THK)	
	2	1	**9R-1510**	13	WASHER (51X82X4MM THK)	
	3	1	**6V-4364**	4	RING-RETAINING	
	4	1	**145-8337**	1	GUIDE AS-RH	
		1	**9R-0162**	1	BEARING	
		1	**9R-0411**	1	BEARING-SLEEVE	
	5	1	**145-8344**	1	GUIDE AS-LH	
		1	**9R-0162**	2	BEARING	
		1	**9R-0411**	1	BEARING-SLEEVE	
	6	1	**154-5265**	1	LINK AS	
		1	**9R-3092**	2	BEARING-SLEEVE	
		1	**9R-0147**	2	BEARING	
	7	1	**154-5277**	1	PIN	
	8	1	**154-5278**	2	PIN	
	9	1	**154-5279**	1	PIN	
	10	1	**154-5280**	1	PIN	
	11	1	**239-9435**	1	FILM-INSTRUCTION	
	12	1	**3B-5319**	4	PIN-COTTER	
	13	1	**3B-8489**	5	FITTING-GREASE	
	14	1	**6V-3213**	2	RING-RETAINING	

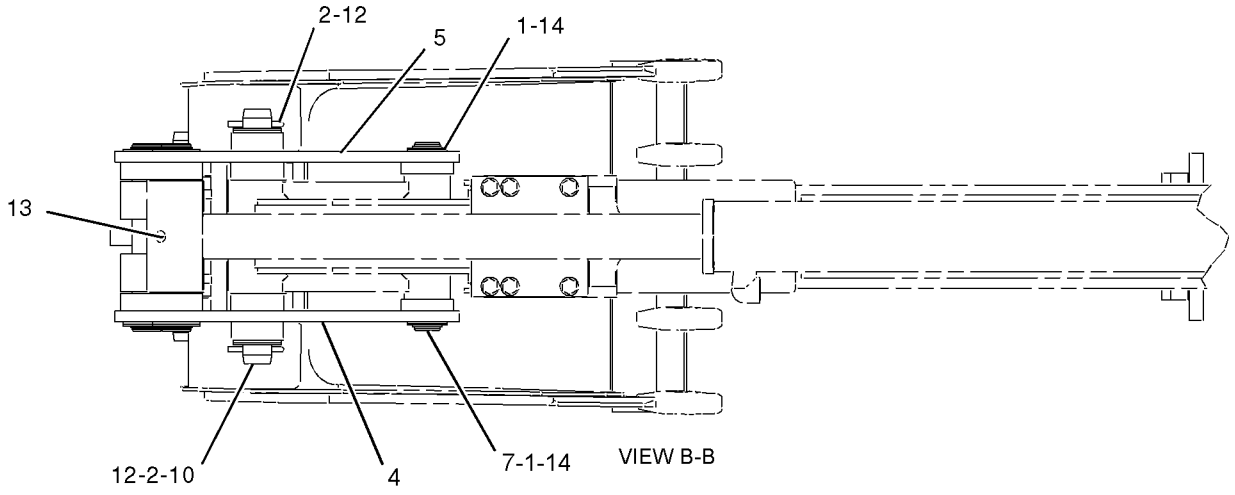

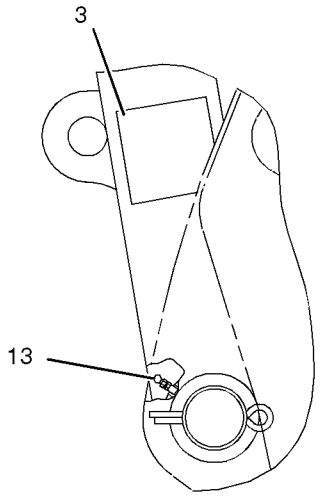

VIEW OF AREA A

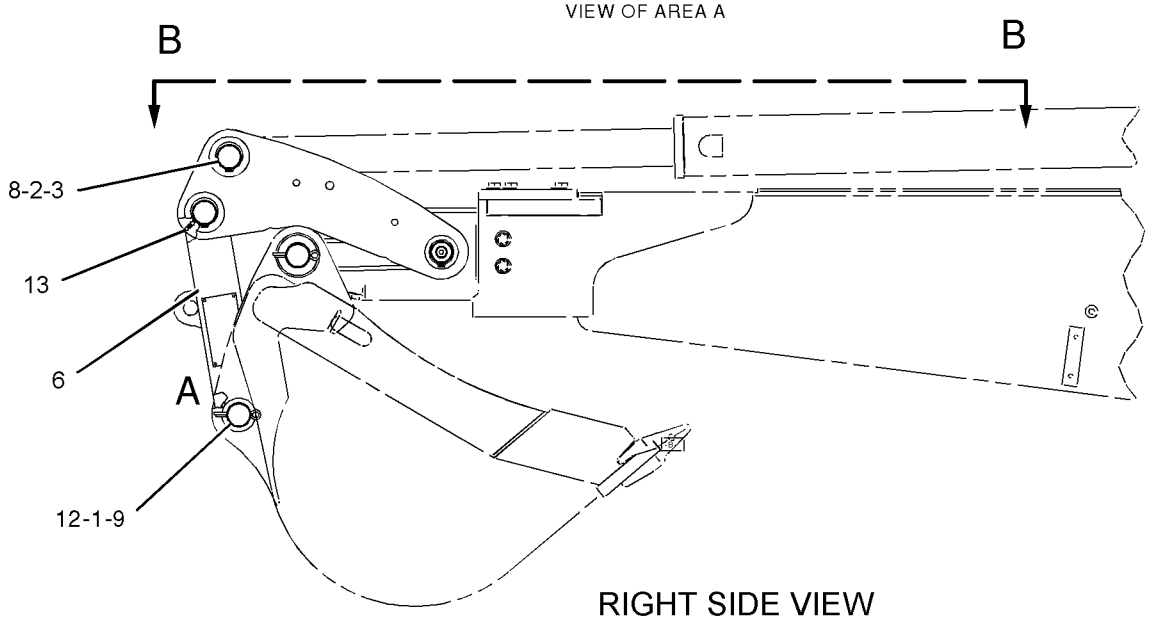

RIGHT SIDE VIEW

GRAPHIC #1 **<END>** g01032311

9R-9140 LINKAGE GP-LOADER BUCKET

S/N: BFP12900-UP; CXP940-UP
PART OF 107-3313 LOADER AR
ALSO AN ATTACHMENT

SMCS-6513 **i01655806**

NOTE	REF NO	GRAPHIC REF	PART NUMBER	QTY	PART NAME 1 2 3 4 5 6 (PRODUCT LEVEL)	SEE PAGE
M	1	1	**8T-4137**	4	BOLT (M10X1.5X20MM)	
	2	1	**8T-4121**	4	WASHER-HARD (11X21X2.5MM THK)	
	3	1	**101-0117**	1	PLATE	
	4	1	**9R-5834**	1	LINK AS-RH	
	5	1	**9R-1107**	1	BEARING	
	6	1	**9R-5828**	1	BEARING-SLEEVE	
	7	1	**9R-5835**	1	LINK AS-LH	
	8	1	**9R-1107**	1	BEARING	
	9	1	**9R-5828**	1	BEARING-SLEEVE	
	10	1	**3B-8489**	7	FITTING-GREASE (1/8-27 THD)	
	11	1	**118-7789**	1	PLATE	
	12	1	**9R-4494**	3	PIN AS	
B	13	1	**9R-0158**	8	WASHER (46X69X3MM THK)	
	14	1	**6V-3213**	3	RING-RETAINING	
	15	1	**9R-4482**	1	SPACER	
	16	1	**9R-5063**	1	GUIDE AS	
	17	1	**9R-1104**	1	BEARING	
	18	1	**9R-9152**	1	GUIDE AS-RH	
	19	1	**9R-1104**	1	BEARING	
	20	1	**9R-3933**	1	PIN	
	21	1	**9R-9153**	1	GUIDE	
B	22	1	**111-4337**	10	WASHER (1MM THK)	

B-USE AS REQUIRED
M-METRIC PART

9R-9140 **LINKAGE GP-LOADER BUCKET** *(contd.)* **i01655806**

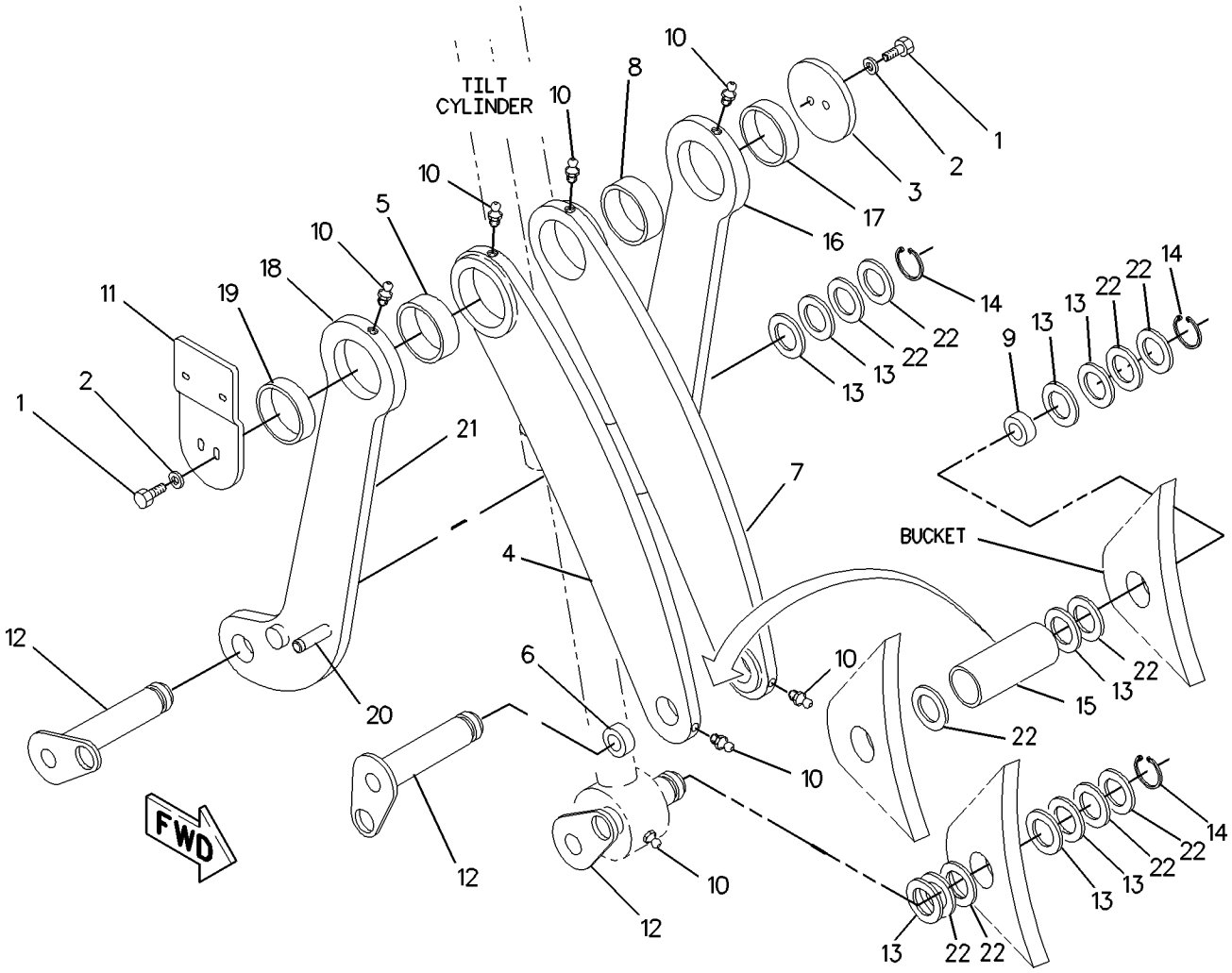

GRAPHIC #1 **<END>** g00834314

IMPLEMENTS

107-3313 LOADER AR

S/N: BFP12900-UP; CXP940-UP
PART OF 214-6885 COMMON AR
ALSO AN ATTACHMENT

SMCS-6100 **i00776224**

NOTE	PART NUMBER	QTY	PART NAME 1 2 3 4 5 6 (PRODUCT LEVEL)	SEE PAGE
Y	*129-9121*	1	ARM GP-LIFT	726
Y	*9R-0036*	1	BRACE GP-LIFT CYLINDER	730
Y	*106-9046*	1	KICKOUT & POSITIONER GP	572
Y	*9R-9140*	1	LINKAGE GP-LOADER BUCKET	736
Y	*122-1645*	1	WIRING GP-SENSOR	386

Y-SEPARATE ILLUSTRATION

<END>

IMPLEMENTS

177-4726 LOCK GP-TRANSPORT

S/N: BFP12900-UP
EXTENDABLE STICK
AN ATTACHMENT

SMCS-7505 **i01655875**

NOTE	REF NO	GRAPHIC REF	PART NUMBER	QTY	PART NAME 1 2 3 4 5 6 (PRODUCT LEVEL)	SEE PAGE
	1	1	**177-4729**	1	CABLE AS	
	2	1	**9R-5301**	2	PIN-COTTER	
	3	1	**9R-9028**	1	PIN	

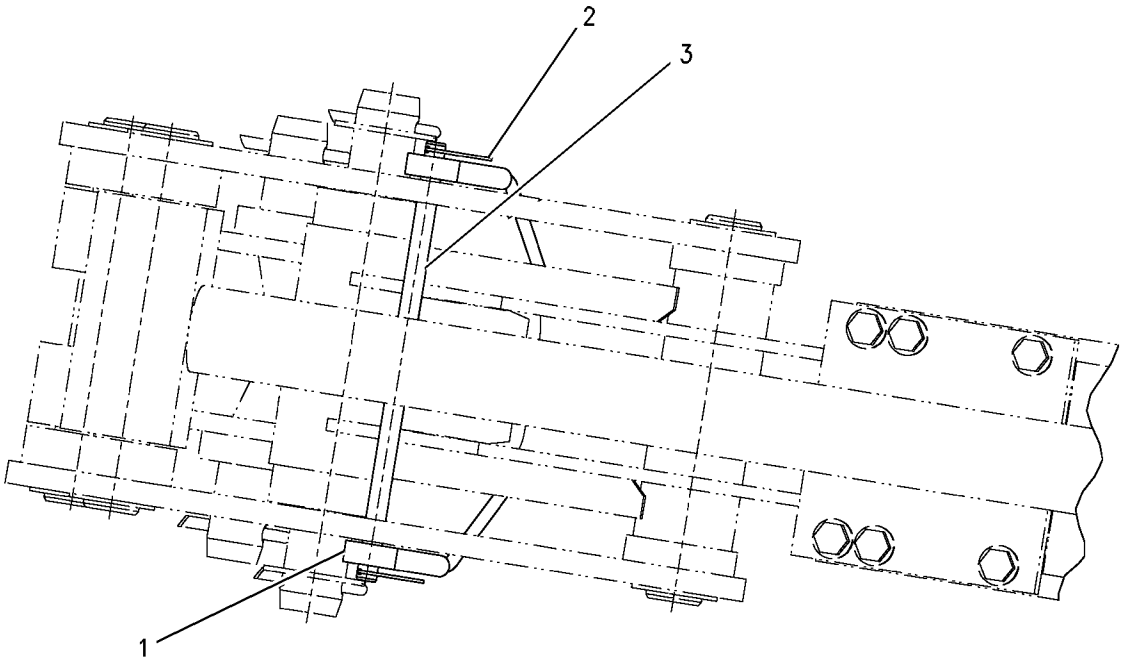

GRAPHIC #1 **<END>** g00855152

IMPLEMENTS

177-4727 LOCK GP-TRANSPORT

S/N: BFP12900-UP
STANDARD STICK
AN ATTACHMENT

SMCS-7505 **i01655894**

NOTE	REF NO	GRAPHIC REF	PART NUMBER	QTY	PART NAME 1 2 3 4 5 6 (PRODUCT LEVEL)	SEE PAGE
	1	1	**177-4733**	1	CABLE AS	
	2	1	**9R-5301**	2	PIN-COTTER	
	3	1	**9R-9028**	1	PIN	

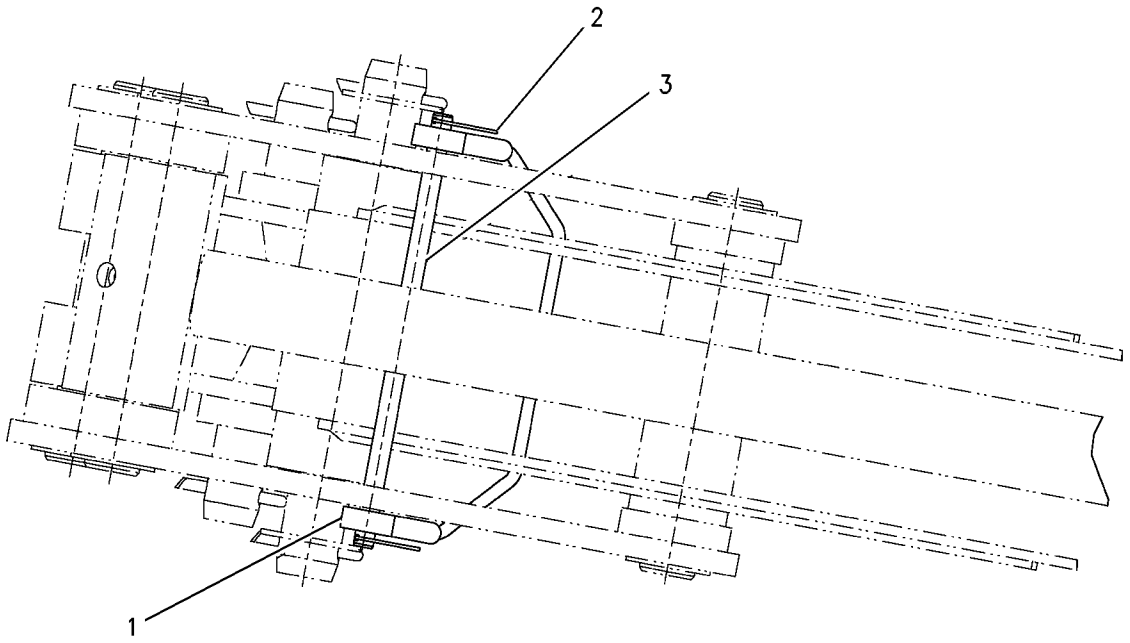

GRAPHIC #1 **<END>** g00855154

183-6076 LOCK GP-TRANSPORT

S/N: BFP12900-UP

PART OF 214-6950 CHASSIS AR

SMCS-7505 **i01984600**

NOTE	REF NO	GRAPHIC REF	PART NUMBER	QTY	PART NAME 1 2 3 4 5 6 (PRODUCT LEVEL)	SEE PAGE
	1	1	**8T-6902**	1	CLIP	
M	2	1	**108-2989**	2	BOLT (M8X1.25X130MM)	
	3	1	**164-1395**	1	KNOB	
	4	1	**183-6051**	1	BRACKET AS	
	5	1	**183-6075**	1	LEVER AS	
	6	1	**183-6081**	1	BOLT	
	7	1	**183-6084**	1	BEARING	
	8	1	**183-6085**	2	BEARING	
	9	1	**5P-4116**	2	WASHER-HARD (8.8X20.5X2MM THK)	

M-METRIC PART

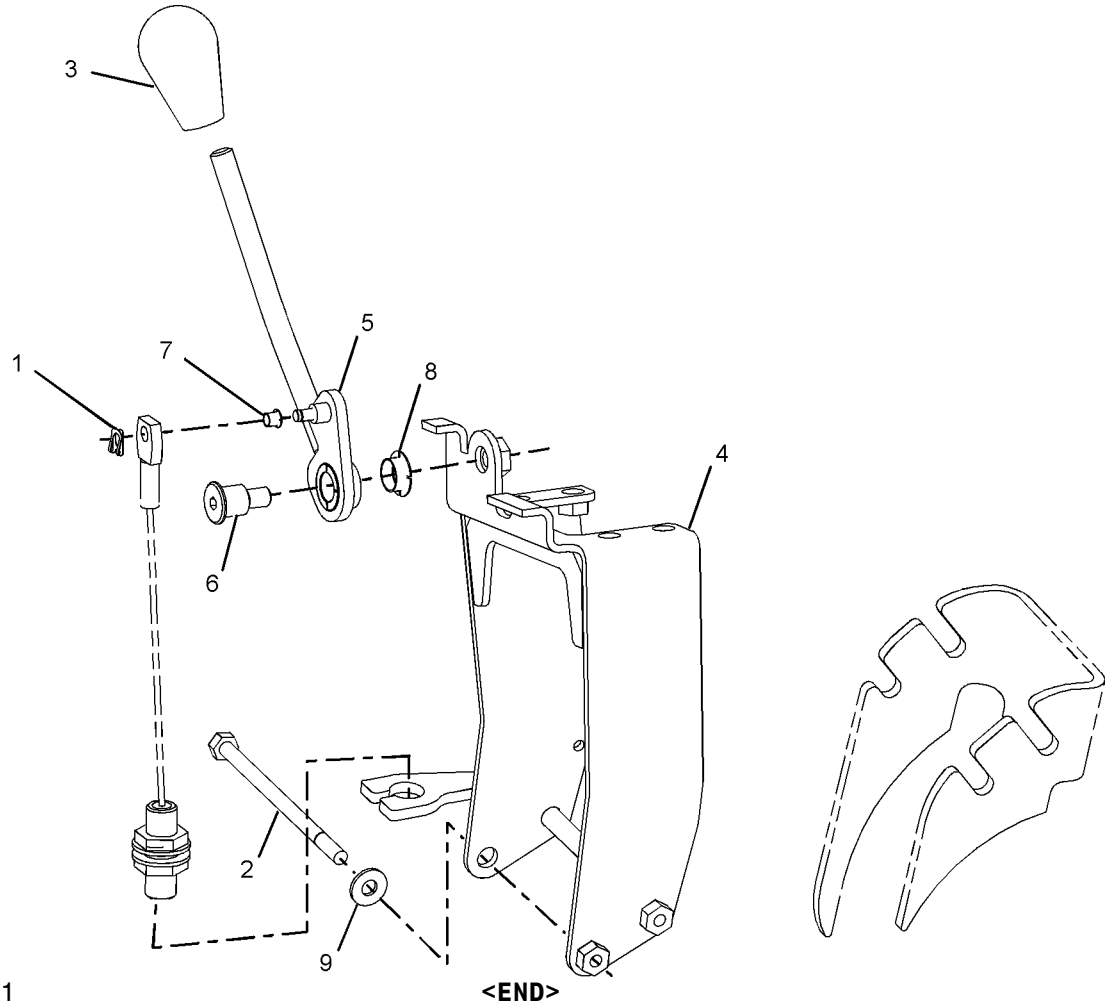

GRAPHIC #1 **<END>** g01028464

152-9736 MOUNTING GP-STICK

S/N: BFP12900-UP

PART OF 184-7909, 184-7911, 238-4783, 238-4784 BACKHOE AR-EXTENDABLE STICK AN ATTACHMENT

SMCS-6502 **i01467813**

NOTE	REF NO	GRAPHIC REF	PART NUMBER	QTY	PART NAME 1 2 3 4 5 6 (PRODUCT LEVEL)	SEE PAGE
B	1	1	**9R-1502**	4	WASHER (4MM THK)	
	2	1	**9R-6163**	1	PIN	
	3	1	**159-0961**	1	PIN	
B	4	1	**124-0360**	3	WASHER-THRUST	
	5	1	**152-9735**	1	PIN	
	6	1	**2K-3549**	1	PIN-SPRING	
	7	1	**3B-8489**	2	FITTING-GREASE	
M	8	1	**6V-7687**	1	LOCKNUT	
	9	1	**6V-8344**	2	RING	
M	10	1	**8T-5001**	1	BOLT (M12X1.75X130MM)	

B-USE AS REQUIRED
M-METRIC PART

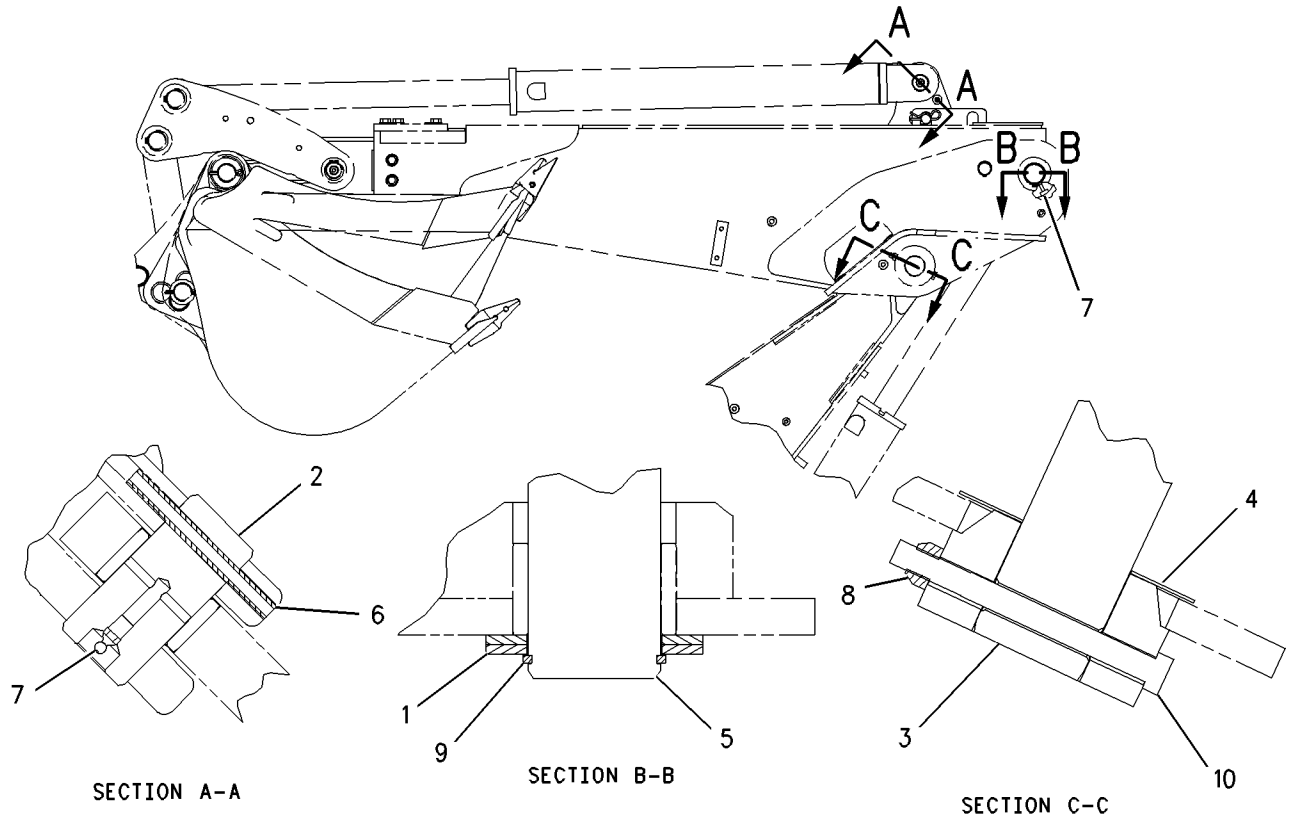

GRAPHIC #1 **<END>** g00765997

133-3362 PAD & GUARD GP-STABILIZER

S/N: BFP12900-UP
FLIPOVER
AN ATTACHMENT

SMCS-7222 **i01601282**

NOTE	REF NO	GRAPHIC REF	PART NUMBER	QTY	PART NAME 1 2 3 4 5 6 (PRODUCT LEVEL)	SEE PAGE
	1	1	**3B-5322**	4	PIN-COTTER	
	2	1	**8T-4986**	4	CLAMP-HOSE	
	3	1	**130-1637**	2	SHAFT	
	4	1	**130-1638**	2	PIN	
	5	1	**130-1640**	2	GUARD AS	
Y	6	1	*135-2876*	2	PAD GP-STABILIZER	749
	7	1	**188-3953**	2	PAD	
	8	1	**201-5810**	2	PLATE	
	9	1	**201-5812**	2	PLATE AS	
	10	1	**5P-4116**	2	WASHER-HARD (8.8X20.5X2MM THK)	
	11	1	**6V-8144**	4	RING	
M	12	1	**7X-2537**	2	BOLT (M8X1.25X35MM)	
B	13	1	**9R-0109**	12	WASHER (3MM THK)	
B	14	1	**9R-0158**	8	WASHER (46X69X3MM THK)	

B-USE AS REQUIRED
M-METRIC PART
Y-SEPARATE ILLUSTRATION

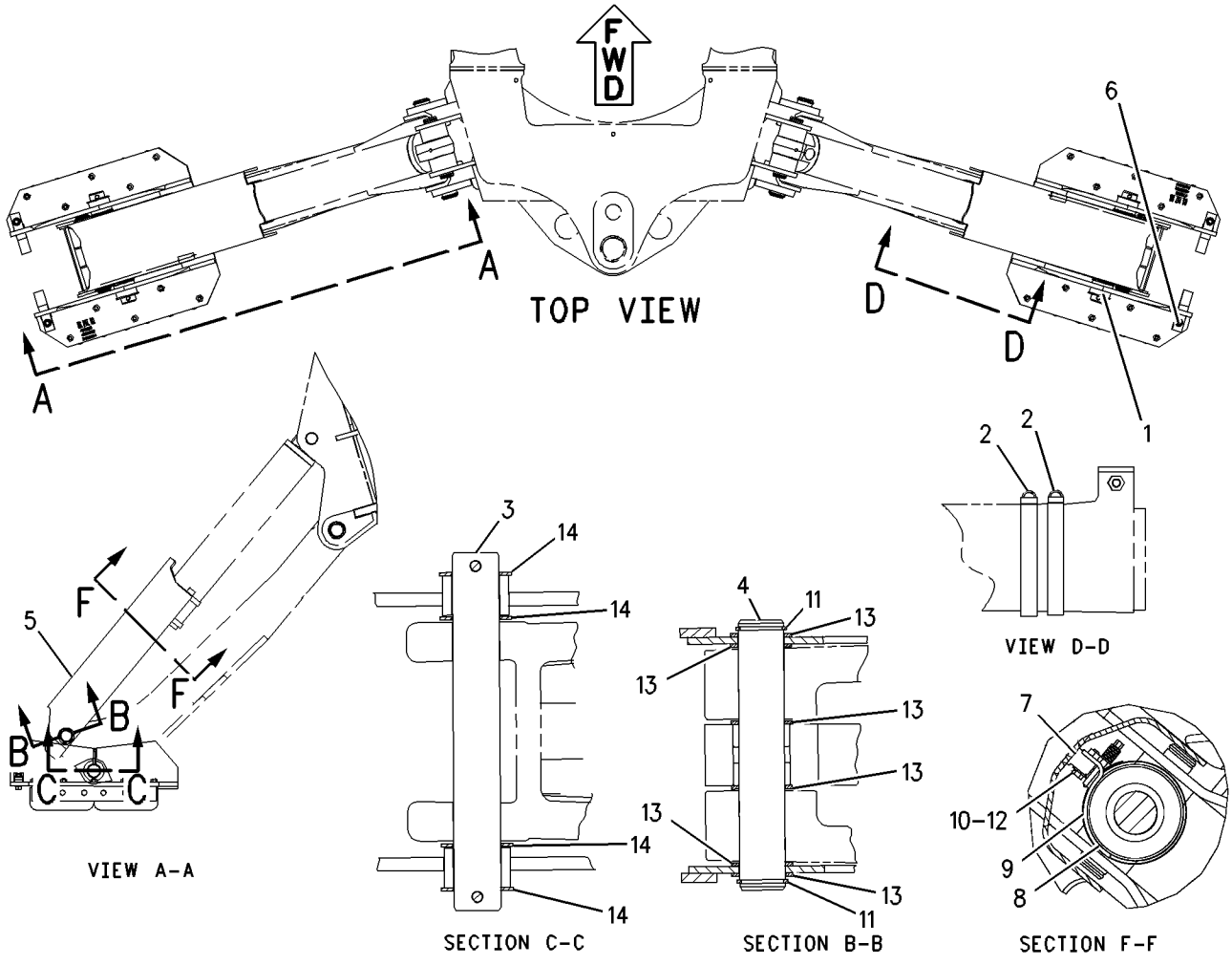

GRAPHIC #1 **<END>** g00829705

IMPLEMENTS

133-3363 PAD & GUARD GP-STABILIZER

S/N: BFP12900-UP
GROUSER
AN ATTACHMENT

SMCS-7222 **i01600877**

NOTE	REF NO	GRAPHIC REF	PART NUMBER	QTY	PART NAME 1 2 3 4 5 6 (PRODUCT LEVEL)	SEE PAGE
	1	1	**8T-4986**	4	CLAMP-HOSE	
	2	1	**9R-0424**	2	PIN	
	3	1	**130-1638**	2	PIN	
	4	1	**130-1640**	2	GUARD AS	
	5	1	**141-6208**	2	PAD-STABILIZER	
	6	1	**188-3953**	2	PAD	
	7	1	**201-5810**	2	PLATE	
	8	1	**201-5812**	2	PLATE AS	
	9	1	**5P-4116**	2	WASHER-HARD (8.8X20.5X2MM THK)	
	10	1	**6V-3213**	4	RING-RETAINING	
	11	1	**6V-8144**	4	RING	
M	12	1	**7X-2537**	2	BOLT (M8X1.25X35MM)	
	13	1	**9R-0109**	12	WASHER (3MM THK)	
	14	1	**9R-0158**	8	WASHER (46X69X3MM THK)	

M-METRIC PART

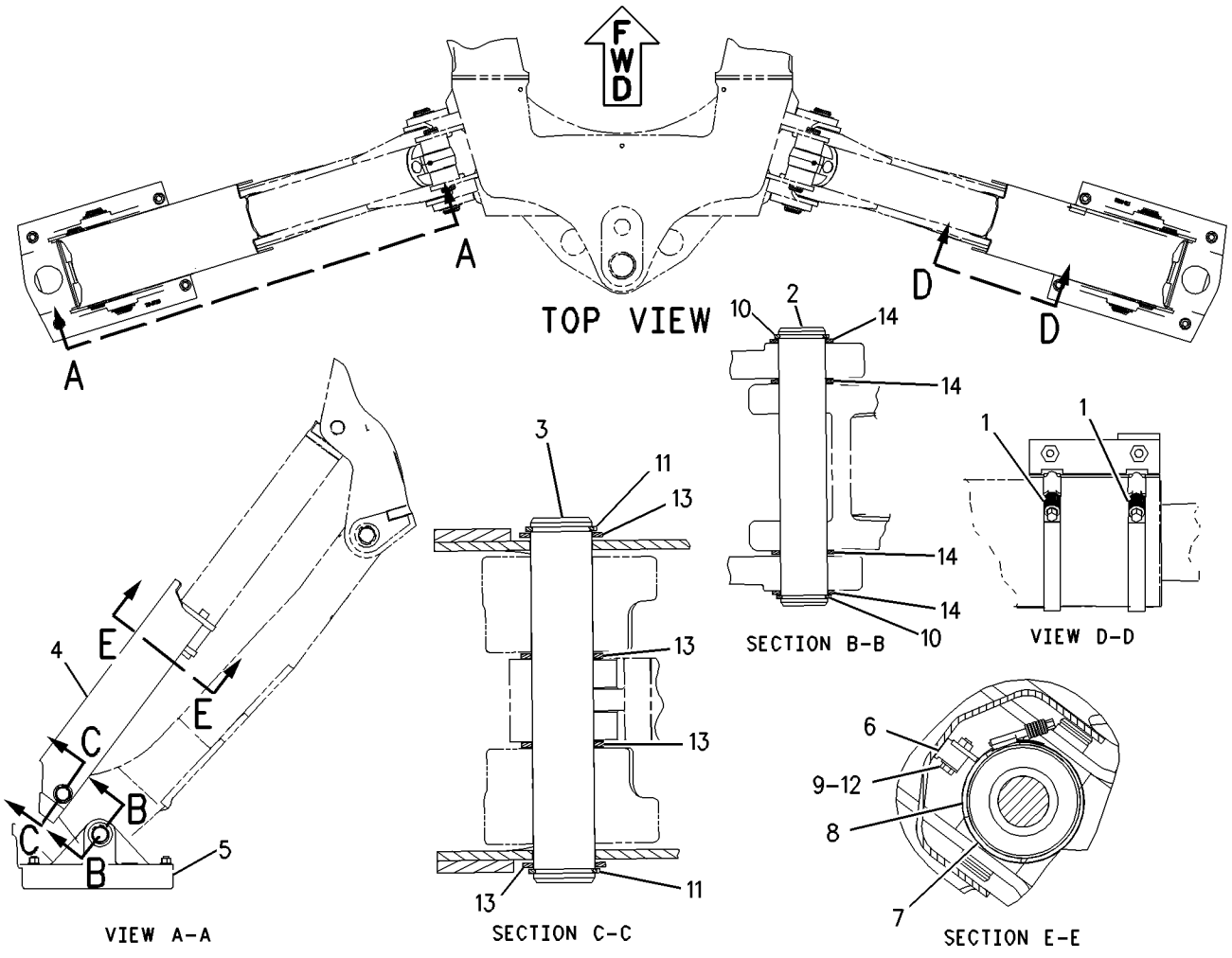

GRAPHIC #1 **<END>** g00832076

9R-1085 PAD & MTG GP-STABILIZER–STREET

S/N: BFP12900-UP
AN ATTACHMENT

SMCS-7222 **i01514650**

NOTE	REF NO	GRAPHIC REF	PART NUMBER	QTY	PART NAME 1 2 3 4 5 6 (PRODUCT LEVEL)	SEE PAGE
	1	1	**141-5150**	4	PAD AS	
M	2	1	**8T-4132**	12	NUT (M16X2 THD)	
	3	1	**9R-0424**	2	PIN	
	4	1	**8T-4122**	12	WASHER-HARD (17X32X3.5MM THK)	
	5	1	**6V-3213**	4	RING-RETAINING	
	6	1	**6V-8144**	4	RING	
C	7	1	**141-6208**	2	PAD-STABILIZER	
BC	8	1	**9R-0109**	8	WASHER (3MM THK)	
BC	9	1	**9R-0158**	8	WASHER	
	10	1	**9R-0422**	2	PIN	

B-USE AS REQUIRED
C-CHANGE FROM PREVIOUS TYPE
M-METRIC PART

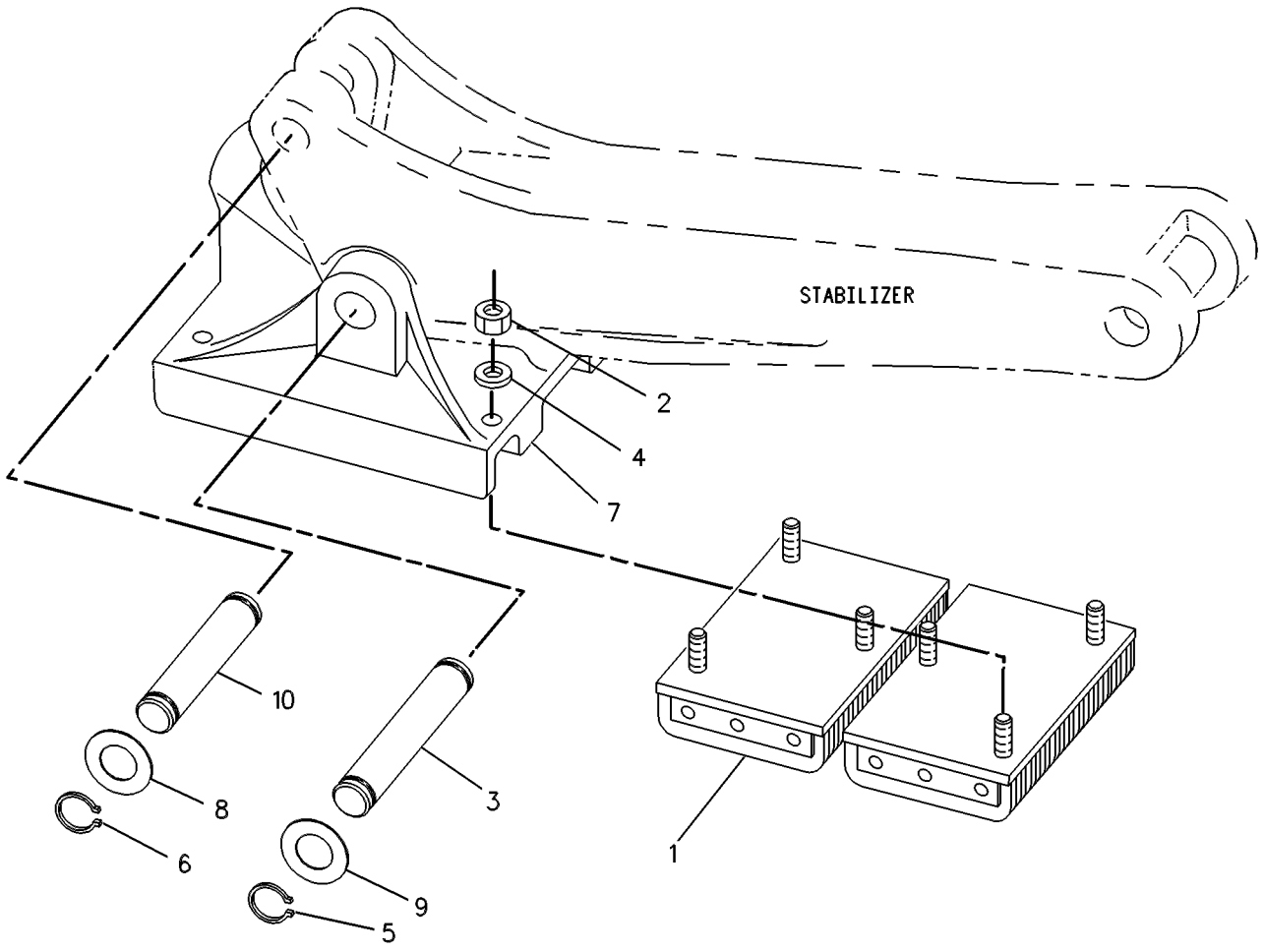

GRAPHIC #1 **<END>** g00282112

9R-6007 PAD & MTG GP-STABILIZER—FLIPOVER

S/N: BFP12900-UP
AN ATTACHMENT

SMCS-7222 **i01780277**

NOTE	REF NO	GRAPHIC REF	PART NUMBER	QTY	PART NAME 1 2 3 4 5 6 (PRODUCT LEVEL)	SEE PAGE
B	1	1	**9R-0109**	14	WASHER (3MM THK)	
B	2	1	**9R-0158**	8	WASHER (46X69X3MM THK)	
Y	3	1	*9R-6062*	2	PAD GP-STABILIZER	748
	4	1	**6V-8144**	4	RING	
	5	1	**130-1638**	2	PIN	
	6	1	**188-5004**	2	CABLE AS	
	7	1	**130-1637**	2	SHAFT	
	8	1	**3B-5322**	4	PIN-COTTER	

B-USE AS REQUIRED
Y-SEPARATE ILLUSTRATION

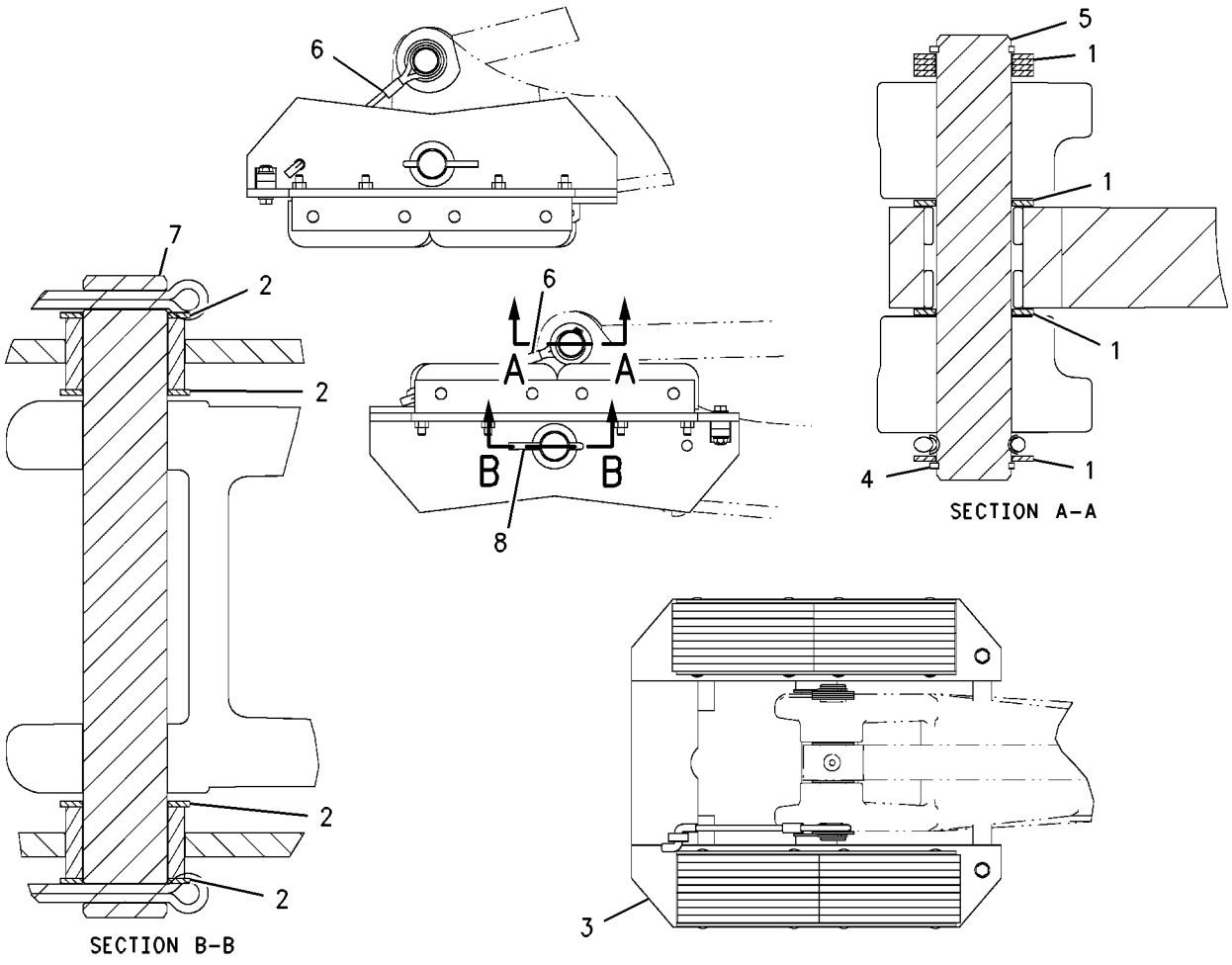

GRAPHIC #1 **<END>** g00877632

116-4942 PAD & MTG GP-STABILIZER–GROUSER

S/N: BFP12900-UP
AN ATTACHMENT

SMCS-7222 **i01542172**

NOTE	REF NO	GRAPHIC REF	PART NUMBER	QTY	PART NAME 1 2 3 4 5 6 (PRODUCT LEVEL)	SEE PAGE
BC	1	1	**9R-0109**	12	WASHER (3MM THK)	
BC	2	1	**9R-0158**	14	WASHER (46X69X3MM THK)	
	3	1	**9R-0422**	2	PIN	
	4	1	**9R-0424**	2	PIN	
C	5	1	**141-6208**	2	PAD-STABILIZER	
	6	1	**6V-3213**	4	RING-RETAINING	
	7	1	**6V-8144**	4	RING	

B-USE AS REQUIRED
C-CHANGE FROM PREVIOUS TYPE

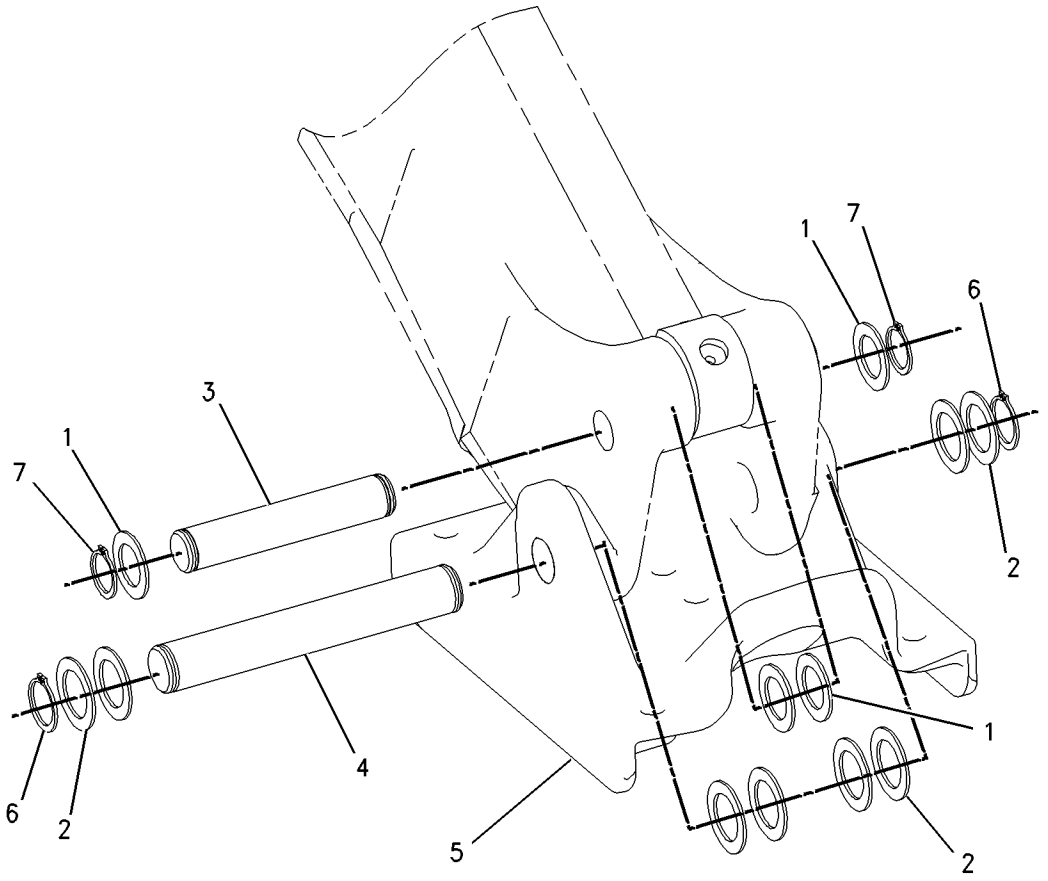

GRAPHIC #1 **<END>** g00801165

9R-6062 PAD GP-STABILIZER

S/N: BFP12900-UP
PART OF 9R-6007 PAD & MTG GP-STABILIZER
AN ATTACHMENT

SMCS-7222 **i01786475**

NOTE	REF NO	GRAPHIC REF	PART NUMBER	QTY	PART NAME 1 2 3 4 5 6 (PRODUCT LEVEL)	SEE PAGE
	1	1	**9R-5555**	2	PAD AS	
	2	1	**130-1642**	1	PAD AS	
C	3	1	**146-1591**	2	LATCH	
	4	1	**6V-5729**	2	LOCKNUT	
	5	1	**7X-0310**	2	BOLT (7/16-14X2 IN)	
	6	1	**7X-0447**	8	NUT (7/16-14 THD)	
	7	1	**8T-5360**	4	WASHER (12X22.5X2.5MM THK)	

C-CHANGE FROM PREVIOUS TYPE

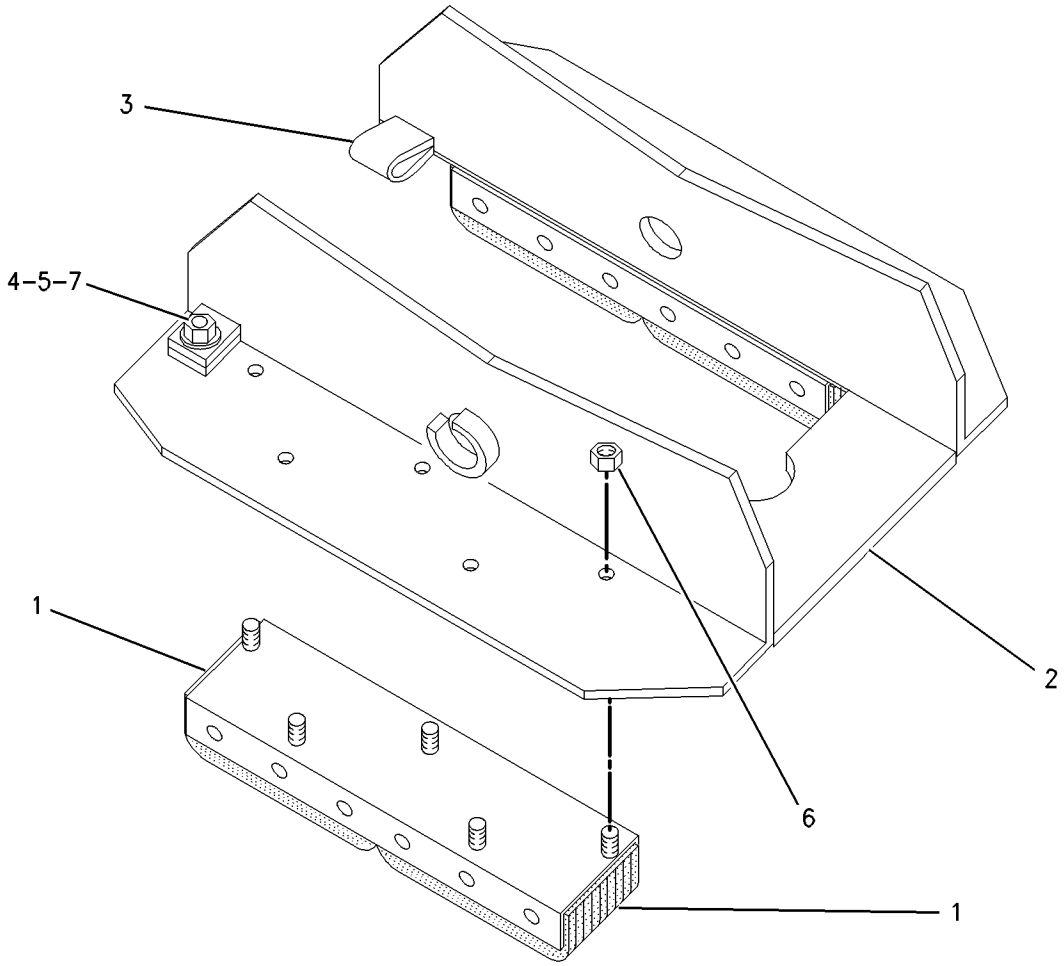

GRAPHIC #1 **<END>** g00844245

135-2876 PAD GP-STABILIZER

S/N: BFP12900-UP
PART OF 133-3362 PAD & GUARD GP-STABILIZER
AN ATTACHMENT

SMCS-7222 **i01786479**

NOTE	REF NO	GRAPHIC REF	PART NUMBER	QTY	PART NAME 1 2 3 4 5 6 (PRODUCT LEVEL)	SEE PAGE
	1	1	**9R-5555**	2	PAD AS	
	2	1	**130-1642**	1	PAD AS	
	3	1	**146-1589**	2	LATCH	
	4	1	**146-1590**	2	LATCH	
	5	1	**6V-5729**	2	LOCKNUT	
	6	1	**7X-0310**	2	BOLT (7/16-14X2 IN)	
	7	1	**7X-0447**	8	NUT (7/16-14 THD)	
	8	1	**8T-5360**	4	WASHER (12X22.5X2.5MM THK)	

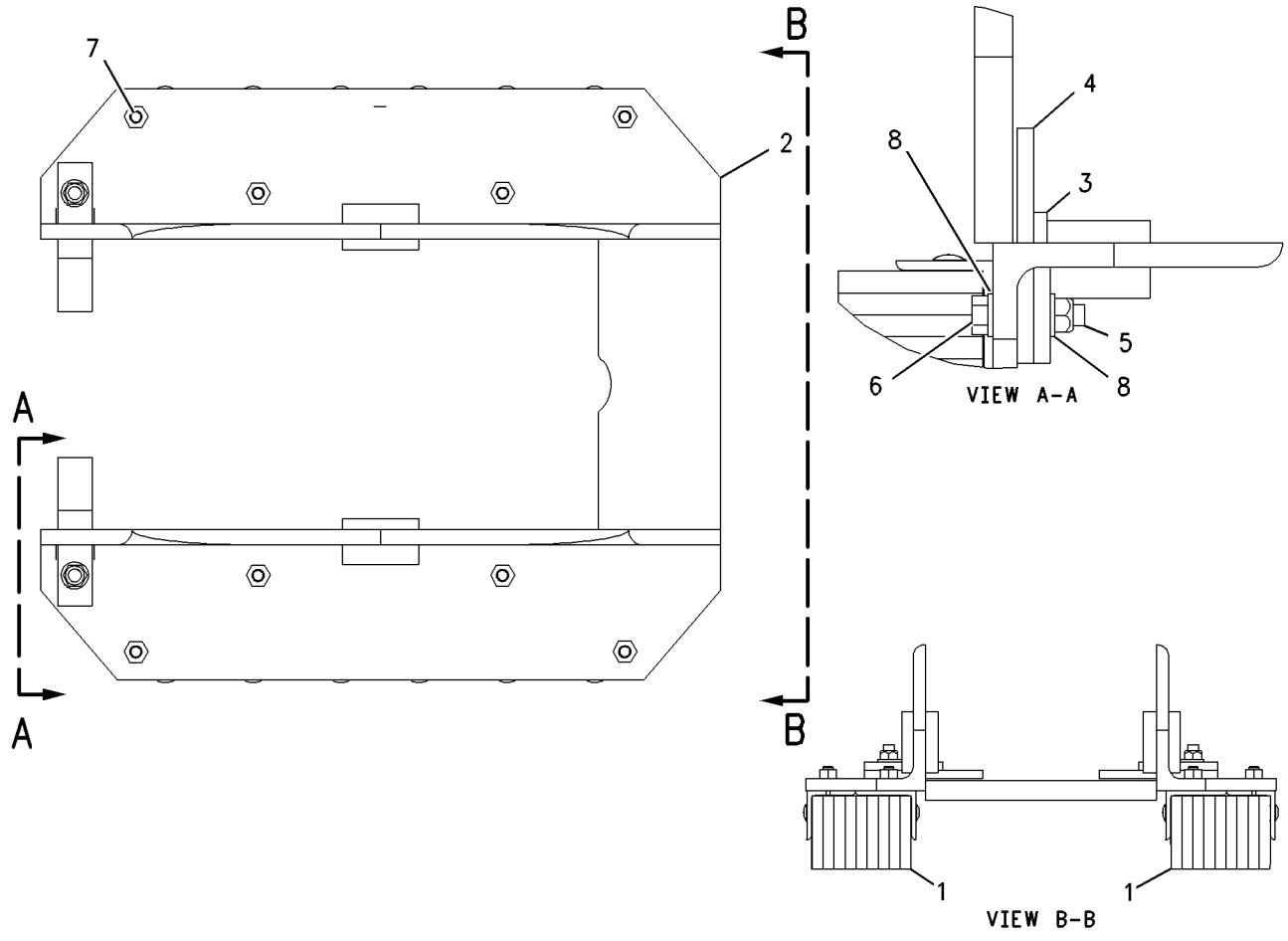

GRAPHIC #1 **<END>** g00845450

9R-0041 STABILIZER GP-BACKHOE

S/N: BFP12900-UP

PART OF 214-6950 CHASSIS AR

SMCS-7222 **i01711668**

NOTE	REF NO	GRAPHIC REF	PART NUMBER	QTY	PART NAME 1 2 3 4 5 6 (PRODUCT LEVEL)	SEE PAGE
B	1	1	**9R-0109**	8	WASHER (3MM THK)	
B	2	1	**9R-0158**	14	WASHER (46X69X3MM THK)	
	3	1	**9R-0423**	2	PIN	
	4	1	**9R-0424**	2	PIN	
B	5	1	**111-4337**	2	WASHER (1MM THK)	
B	6	1	**119-4594**	2	WASHER (1MM THK)	
	7	1	**130-0777**	2	STABILIZER AS	
					(EACH INCLUDES)	
		1	**9R-0411**	2	BEARING-SLEEVE	
	8	1	**3B-8489**	4	FITTING-GREASE (1/8-27 THD)	
	9	1	**6V-3213**	4	RING-RETAINING	
	10	1	**6V-8144**	4	RING	

B-USE AS REQUIRED

9R-0041 **STABILIZER GP-BACKHOE** *(contd.)* **i01711668**

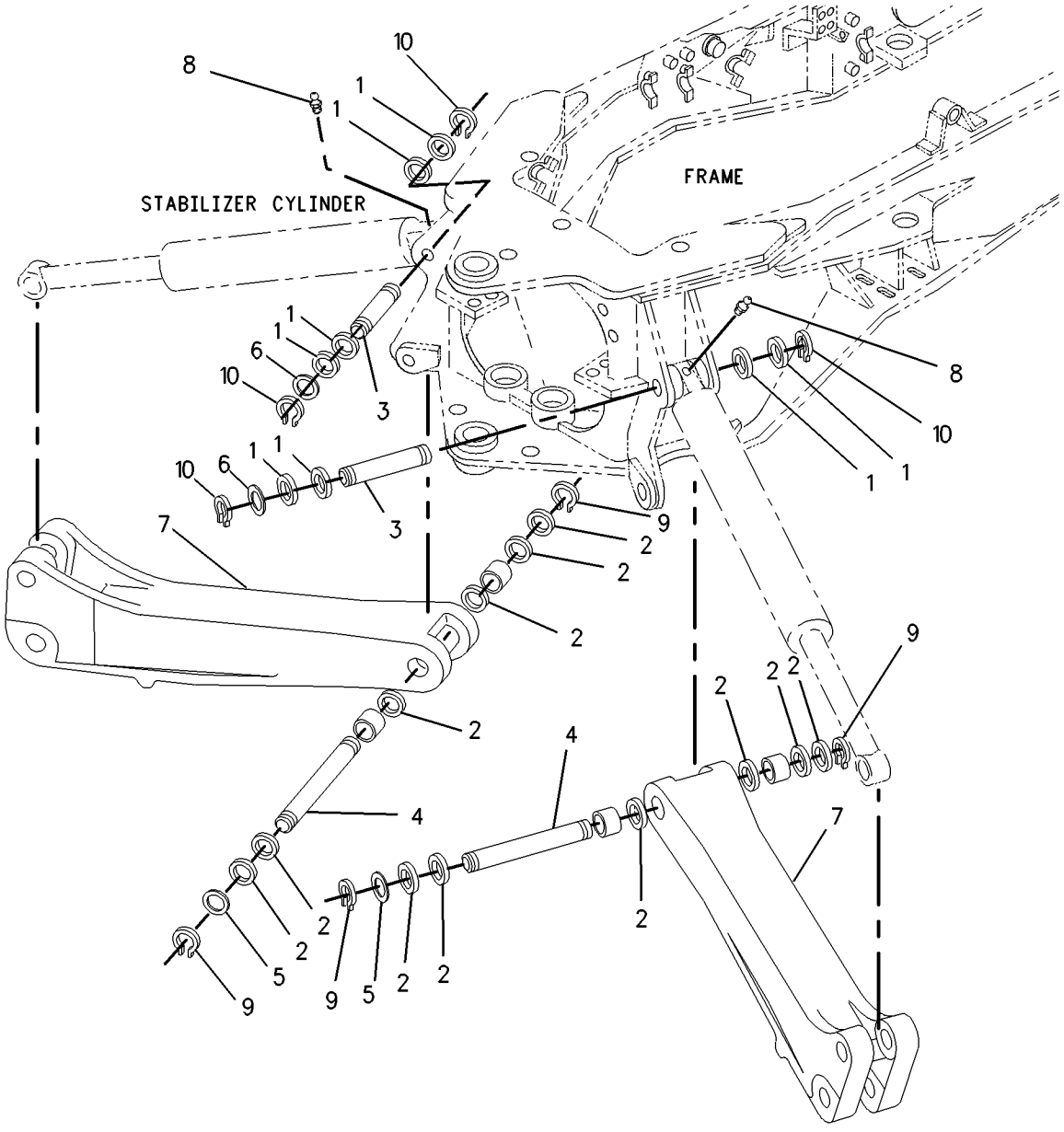

GRAPHIC #1 **<END>** g00880840

IMPLEMENTS

197-2733 STICK GP-EXTENDABLE

S/N: BFP12900-UP

PART OF 184-7909, 184-7911, 238-4783, 238-4784 BACKHOE AR-EXTENDABLE STICK

AN ATTACHMENT

SMCS-6533 **i01944316**

NOTE	REF NO	GRAPHIC REF	PART NUMBER	QTY	PART NAME 1 2 3 4 5 6 (PRODUCT LEVEL)	SEE PAGE
	1	1	**9R-2958**	1	PIN	
	2	1	**9R-2959**	2	CLIP	
B	3	1	**117-0754**	4	SHIM (1MM THK)	
Y	4	1	*155-6586*	1	CYLINDER GP-EXTENDABLE STICK	552
	5	1	**159-4930**	1	PLATE	
	6	1	**173-2769**	1	PIN	
	7	1	**173-7757**	1	PIN	
	8	1	**184-6785**	1	EXTENSION AS	
	8A	1	**9R-0411**	3	BEARING-SLEEVE	
	8B	1	**9R-0162**	2	BEARING	
		1	**9R-9254**	2	BOSS	
	9	1	**187-3825**	1	PAD AS	
	10	1	**187-3826**	4	PAD AS	
	11	1	**187-3827**	2	PAD AS	
	12	1	**187-3828**	1	PAD AS	
B	13	1	**187-3832**	12	SHIM (1MM THK)	
B		1	**187-3833**	4	SHIM (0.5MM THK)	
B	15	1	**187-3834**	6	SHIM (1MM THK)	
B		1	**187-3835**	4	SHIM (0.5MM THK)	
B	17	1	**187-3836**	3	SHIM (1MM THK)	
B		1	**187-3837**	2	SHIM (0.5MM THK)	
	19	1	**197-2734**	1	HOUSING AS	
		1	**8Y-4489**	5	BOSS (M10X35MM)	
	19A	1	**9R-0139**	2	BEARING-SLEEVE	
		1	**9R-9254**	2	BOSS	
		1	**107-6711**	2	BLOCK	
		1	**158-8778**	2	BOSS	
		1	**188-9954**	2	STOP	
B	20	1	**198-0014**	3	SHIM (1MM THK)	
B		1	**198-0015**	2	SHIM (0.5MM THK)	
	22	1	**1J-6474**	2	RING-RETAINING	
	23	1	**1L-3768**	2	RING-RETAINING	
	24	1	**3B-8489**	1	FITTING-GREASE	
	25	1	**8T-4122**	6	WASHER-HARD (17X32X3.5MM THK)	
M	26	1	**8T-4179**	4	BOLT (M12X1.75X20MM)	
M	27	1	**8T-4184**	2	BOLT (M12X1.75X45MM)	
M	28	1	**8T-4192**	10	BOLT (M12X1.75X25MM)	
	29	1	**8T-4223**	6	WASHER-HARD (13.5X25.5X3MM THK)	
M	30	1	**8T-7338**	6	BOLT (M16X2.0X45MM)	
	31	1	**8T-7971**	8	WASHER-HARD (13.5X25.5X5MM THK)	

B-USE AS REQUIRED
M-METRIC PART
Y-SEPARATE ILLUSTRATION

197-2733 **STICK GP-EXTENDABLE** *(contd.)* **i01944316**

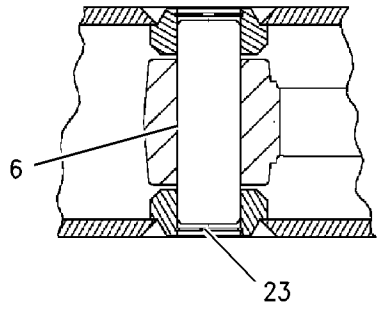

SECTION A-A

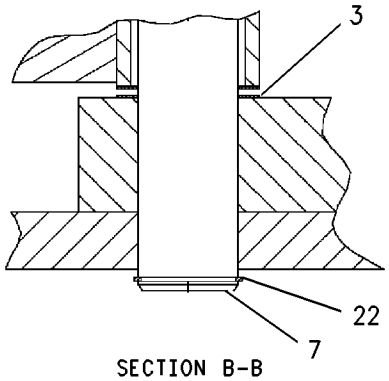

SECTION B-B

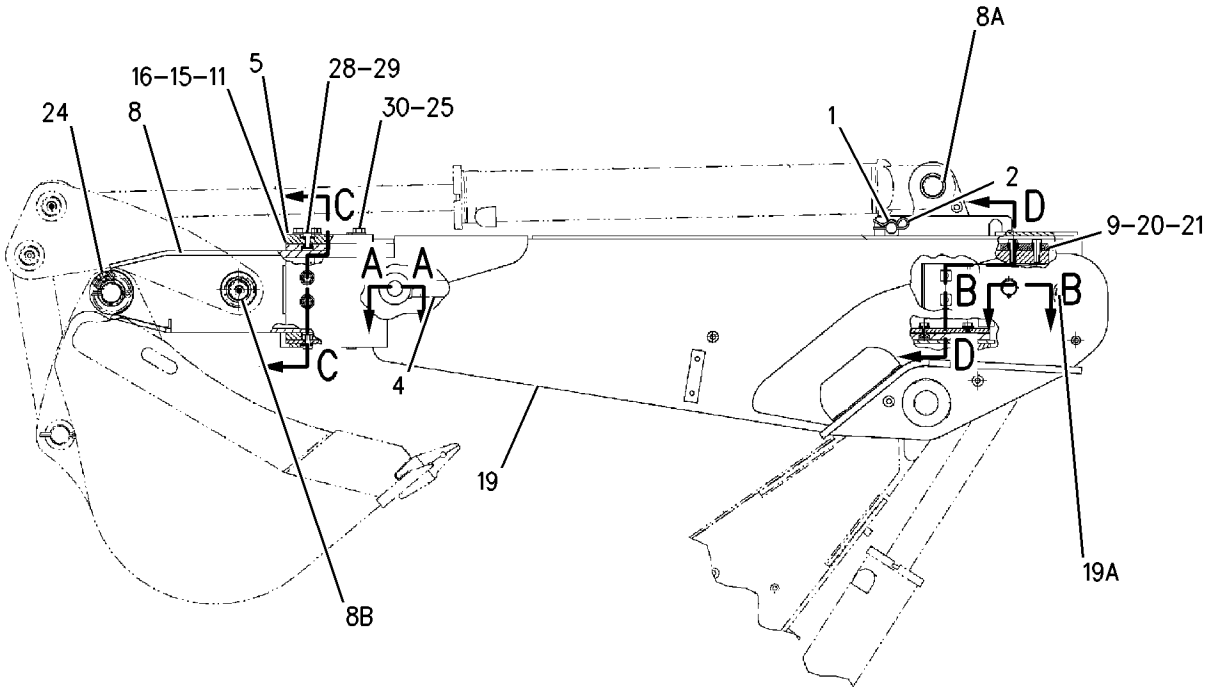

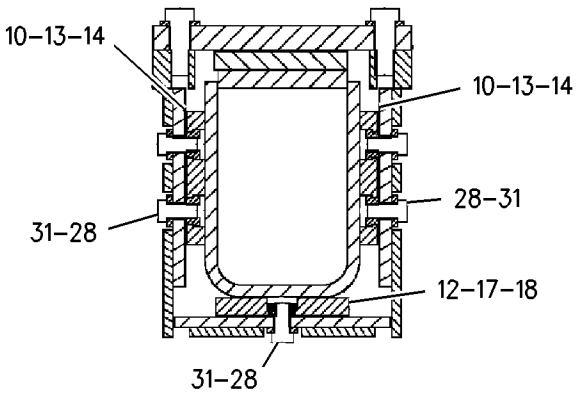

SECTION C-C

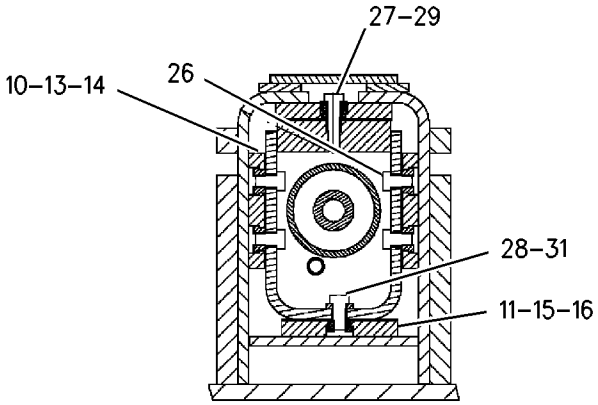

SECTION D-D

GRAPHIC #1 **<END>** g00855160

IMPLEMENTS

151-7316 STICK GP-HOE

S/N: BFP12900-UP
PART OF 184-7903, 184-7905, 184-7907, 238-4780, 238-4781, 238-4782 BACKHOE
AR-STANDARD STICK
AN ATTACHMENT

SMCS-6502 **i01468855**

NOTE	REF NO	GRAPHIC REF	PART NUMBER	QTY	PART NAME 1 2 3 4 5 6 (PRODUCT LEVEL)	SEE PAGE
	1	1	**3B-8488**	1	FITTING-HYDRAULIC	
	2	1	**9R-1502**	4	WASHER (4MM THK)	
	3	1	**9R-1510**	4	WASHER (4MM THK)	
	4	1	**9R-8663**	1	PIN	
	5	1	**144-3528**	1	STICK AS	
	5A	1	**9R-0139**	2	BEARING-SLEEVE	
	5B	1	**9R-0411**	2	BEARING-SLEEVE	
	5C	1	**9R-0162**	4	BEARING	
	5D	1	**172-9992**	2	BOSS	
	5E	1	**107-6711**	2	BLOCK	
	6	1	**179-9961**	1	PLUG-PROTECTIVE	
	7	1	**174-5696**	1	PIN	
	8	1	**3B-8489**	2	FITTING-GREASE	
	9	1	**6V-4364**	2	RING-RETAINING	
M	10	1	**6V-7687**	1	LOCKNUT (M12X1.75 THD)	
	11	1	**6V-8344**	2	RING	
M	12	1	**8T-5001**	1	BOLT (M12X1.75X130MM)	
	13	1	**159-0961**	1	PIN	
B	14	1	**124-0360**	3	WASHER-THRUST	

B-USE AS REQUIRED
M-METRIC PART

151-7316 **STICK GP-HOE** *(contd.)* **i01468855**

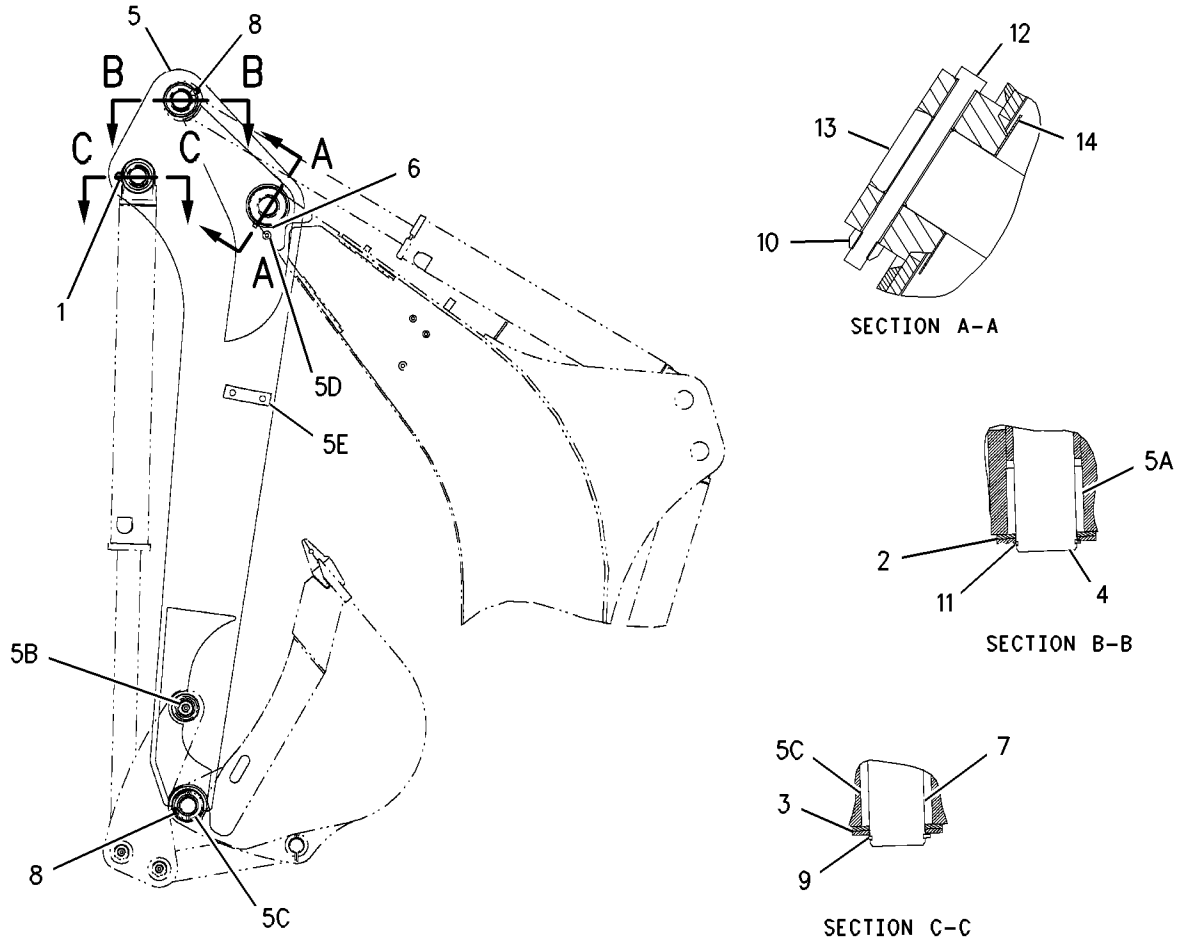

GRAPHIC #1 **<END>** g00766374

WORK TOOLS

111-8634 BUCKET AR-MULTIPURPOSE

S/N: BFP12900-UP
PART OF 111-8636 BUCKET AR-MULTIPURPOSE
AN ATTACHMENT

SMCS-6104 **i01422436**

NOTE	PART NUMBER	QTY	PART NAME 1 2 3 4 5 6 (PRODUCT LEVEL)	SEE PAGE
Y	**104-3965**	1	BUCKET GP-MULTIPURPOSE	825
Y	**185-1839**	2	CYLINDER GP-MULTIPURPOSE BUKT	557
Y	*9R-5788*	1	LINES GP-MULTIPURPOSE BUCKET	627
Y	*9R-4668*	1	MOUNTING GP-CYLINDER	665

Y-SEPARATE ILLUSTRATION

<END>

111-8635 BUCKET AR-MULTIPURPOSE

S/N: BFP12900-UP
WITH FORKS
PART OF 111-8637 BUCKET AR-MULTIPURPOSE
AN ATTACHMENT

SMCS-6104 **i01422956**

NOTE	PART NUMBER	QTY	PART NAME 1 2 3 4 5 6 (PRODUCT LEVEL)	SEE PAGE
Y	**104-3964**	1	BUCKET GP-MULTIPURPOSE	824
Y	**185-1839**	2	CYLINDER GP-MULTIPURPOSE BUKT	557
Y	*104-6310*	1	FORK GP	837
Y	*9R-5788*	1	LINES GP-MULTIPURPOSE BUCKET	627
Y	*9R-4668*	1	MOUNTING GP-CYLINDER	665

Y-SEPARATE ILLUSTRATION

<END>

111-8636 BUCKET AR-MULTIPURPOSE

S/N: BFP12900-UP
AN ATTACHMENT

SMCS-6104 **i01658044**

NOTE	PART NUMBER	QTY	PART NAME 1 2 3 4 5 6 (PRODUCT LEVEL)	SEE PAGE
Y	**111-8634**	1	BUCKET AR-MULTIPURPOSE	756
	106-9387	1	FILM-INDICATOR (BUCKET)	

Y-SEPARATE ILLUSTRATION

<END>

WORK TOOLS

111-8637 BUCKET AR-MULTIPURPOSE

S/N: BFP12900-UP
WITH FORKS
AN ATTACHMENT

SMCS-6104 **i01658045**

NOTE	PART NUMBER	QTY	PART NAME 1 2 3 4 5 6 (PRODUCT LEVEL)	SEE PAGE
Y	**111-8635**	1	BUCKET AR-MULTIPURPOSE	756
	106-9387	1	FILM-INDICATOR (BUCKET)	

Y-SEPARATE ILLUSTRATION

<END>

112-0938 BUCKET AR-MULTIPURPOSE

S/N: BFP12900-UP
PART OF 112-0940 BUCKET AR-MULTIPURPOSE
AN ATTACHMENT

SMCS-6104 **i01422430**

NOTE	PART NUMBER	QTY	PART NAME 1 2 3 4 5 6 (PRODUCT LEVEL)	SEE PAGE
Y	**108-3036**	1	BUCKET GP-MULTIPURPOSE	826
Y	**185-1839**	2	CYLINDER GP-MULTIPURPOSE BUKT	557
Y	*9R-3712*	1	LINES GP-MULTIPURPOSE BUCKET	625
Y	*9R-4668*	1	MOUNTING GP-CYLINDER	665

Y-SEPARATE ILLUSTRATION

<END>

112-0939 BUCKET AR-MULTIPURPOSE

S/N: BFP12900-UP
WITH FORKS
PART OF 112-0941 BUCKET AR-MULTIPURPOSE
AN ATTACHMENT

SMCS-6104 **i01441761**

NOTE	PART NUMBER	QTY	PART NAME 1 2 3 4 5 6 (PRODUCT LEVEL)	SEE PAGE
Y	**112-1778**	1	BUCKET GP-MULTIPURPOSE	827
Y	**185-1839**	2	CYLINDER GP-MULTIPURPOSE BUKT	557
Y	*104-6310*	1	FORK GP	837
Y	*9R-3712*	1	LINES GP-MULTIPURPOSE BUCKET	625
Y	*9R-4668*	1	MOUNTING GP-CYLINDER	665

Y-SEPARATE ILLUSTRATION

<END>

112-0940 BUCKET AR-MULTIPURPOSE

S/N: BFP12900-UP
AN ATTACHMENT

SMCS-6104 **i01658064**

NOTE	PART NUMBER	QTY	PART NAME 1 2 3 4 5 6 (PRODUCT LEVEL)	SEE PAGE
Y	**112-0938**	1	BUCKET AR-MULTIPURPOSE	757
	106-9387	1	FILM-INDICATOR (BUCKET)	

Y-SEPARATE ILLUSTRATION

<END>

112-0941 BUCKET AR-MULTIPURPOSE

S/N: BFP12900-UP
WITH FORKS
CANNOT BE USED WITH ALL WHEEL STEER
AN ATTACHMENT

SMCS-6104 **i01658065**

NOTE	PART NUMBER	QTY	PART NAME 1 2 3 4 5 6 (PRODUCT LEVEL)	SEE PAGE
Y	**112-0939**	1	BUCKET AR-MULTIPURPOSE	757
	106-9387	1	FILM-INDICATOR (BUCKET)	

Y-SEPARATE ILLUSTRATION

<END>

9R-5201 BUCKET AS-GENERAL PURPOSE

S/N: BFP12900-UP; CXP940-UP
0.76 CU M (1.00 CU YD)
PART OF 190-1055, 190-1078 BUCKET GP-GENERAL PURPOSE
AN ATTACHMENT

SMCS-6101 **i01933593**

NOTE	REF NO	GRAPHIC REF	PART NUMBER	QTY	PART NAME 1 2 3 4 5 6 (PRODUCT LEVEL)	SEE PAGE
	1	1	**9R-5205**	1	EDGE-LH	
	2	1	**9R-5206**	1	EDGE-RH	
	3	1	**9R-0347**	2	EDGE	
	4	1	**9R-4672**	1	EDGE	
	5	1	*9R-0336*	2	BRACKET AS-LIFT (RH)	
					(EACH INCLUDES)	
	5A	1	**9R-0111**	1	BEARING-SLEEVE	
	6	1	*9R-0343*	2	BRACKET AS-LIFT (LH)	
					(EACH INCLUDES)	
	6A	1	**9R-0111**	1	BEARING-SLEEVE	
	7	1	*9R-4483*	1	BRACKET AS-TILT (RH)	
	7A	1	**9R-4485**	1	BOSS	
	7B	1	**9R-4486**	1	BOSS	
	8	1	**9R-4487**	1	BRACKET AS-TILT (LH)	
	8A	1	**9R-4485**	1	BOSS	
	8B	1	**9R-4486**	1	BOSS	

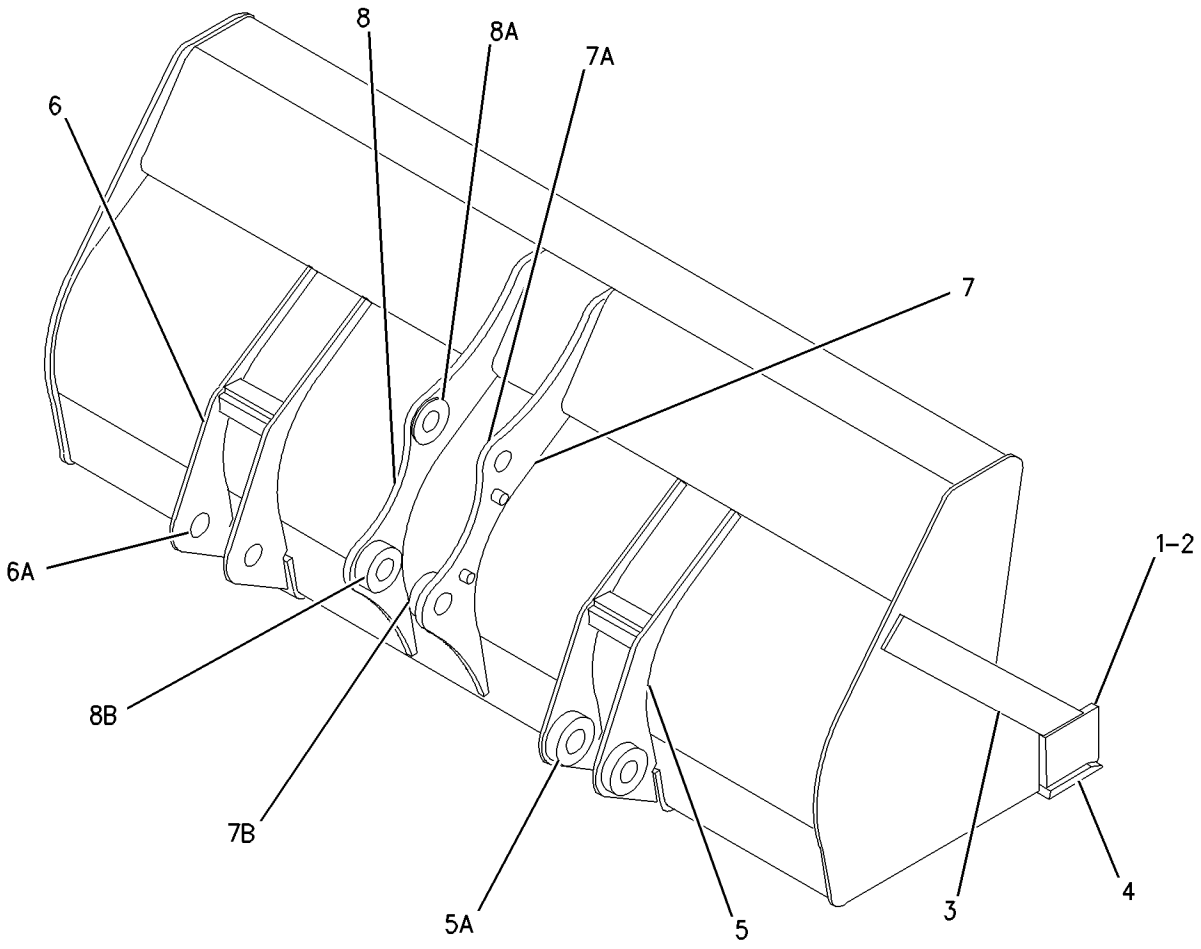

GRAPHIC #1 **<END>** g01006050

WORK TOOLS

9R-5202 BUCKET AS-GENERAL PURPOSE

S/N: BFP12900-UP
1.0 CU M (1.31 CU YD)
PART OF 190-1056, 190-1079 BUCKET GP-GENERAL PURPOSE
FOR USE WITH ALL WHEEL STEER
AN ATTACHMENT

SMCS-6101 **i01933594**

NOTE	REF NO	GRAPHIC REF	PART NUMBER	QTY	PART NAME 1 2 3 4 5 6 (PRODUCT LEVEL)	SEE PAGE
	1	1	**9R-5206**	1	EDGE-RH	
	2	1	**9R-5205**	1	EDGE-LH	
	3	1	**9R-5832**	2	EDGE	
	4	1	**9R-5313**	1	EDGE	
	5	1	**9R-0336**	2	BRACKET AS-LIFT (RH)	
					(EACH INCLUDES)	
	5A	1	**9R-0111**	1	BEARING-SLEEVE	
	6	1	**9R-0343**	2	BRACKET AS-LIFT (LH)	
					(EACH INCLUDES)	
	6A	1	**9R-0111**	1	BEARING-SLEEVE	
	7	1	**9R-0371**	1	BRACKET AS-TILT (RH)	
	7A	1	**9R-4485**	1	BOSS	
	7B	1	**9R-4486**	1	BOSS	
	8	1	**9R-0372**	1	BRACKET AS-TILT (LH)	
	8A	1	**9R-4485**	1	BOSS	
	8B	1	**9R-4486**	1	BOSS	

9R-5202 BUCKET AS-GENERAL PURPOSE *(contd.)* i01933594

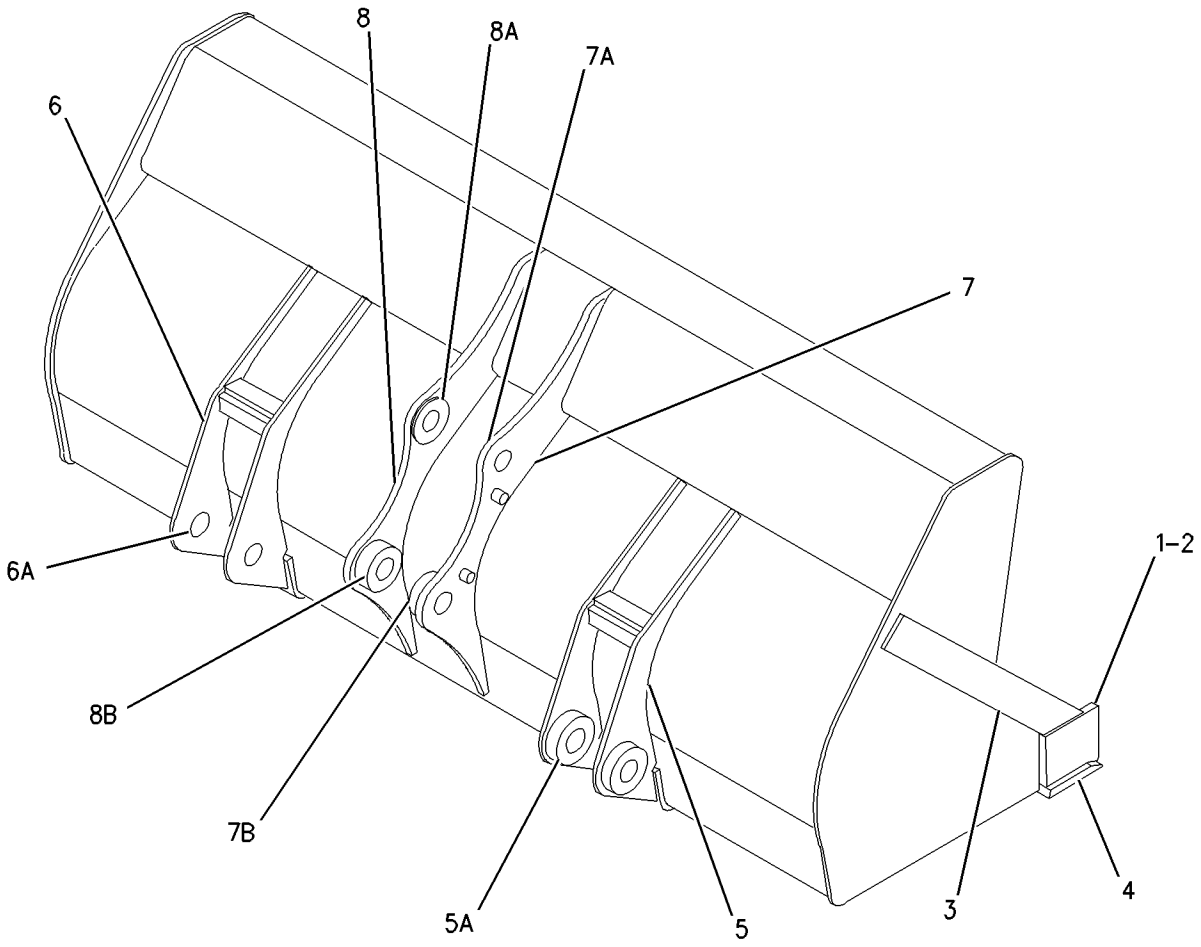

GRAPHIC #1 **<END>** g01006050

WORK TOOLS

9R-5988 BUCKET AS-GENERAL PURPOSE

S/N: BFP12900-UP
1.07 CU M (1.40 CU YD)
AN ATTACHMENT

SMCS-6101 **i01933595**

NOTE	REF NO	GRAPHIC REF	PART NUMBER	QTY	PART NAME 1 2 3 4 5 6 (PRODUCT LEVEL)	SEE PAGE
	1	1	**9R-5205**	1	EDGE-LH	
	2	1	**9R-5206**	1	EDGE-RH	
	3	1	**9R-0376**	2	EDGE	
	4	1	**9R-4672**	1	EDGE	
	5	1	*9R-5898*	2	BRACKET AS-LIFT (RH)	
					(EACH INCLUDES)	
	5A	1	**9R-0111**	1	BEARING-SLEEVE	
	6	1	*9R-5899*	2	BRACKET AS-LIFT (LH)	
					(EACH INCLUDES)	
	6A	1	**9R-0111**	1	BEARING-SLEEVE	
	7	1	*9R-5901*	1	BRACKET AS-TILT (RH)	
	7A	1	**9R-4485**	1	BOSS	
	7B	1	**9R-4486**	1	BOSS	
	8	1	*9R-5902*	1	BRACKET AS-TILT (LH)	
	8A	1	**9R-4485**	1	BOSS	
	8B	1	**9R-4486**	1	BOSS	

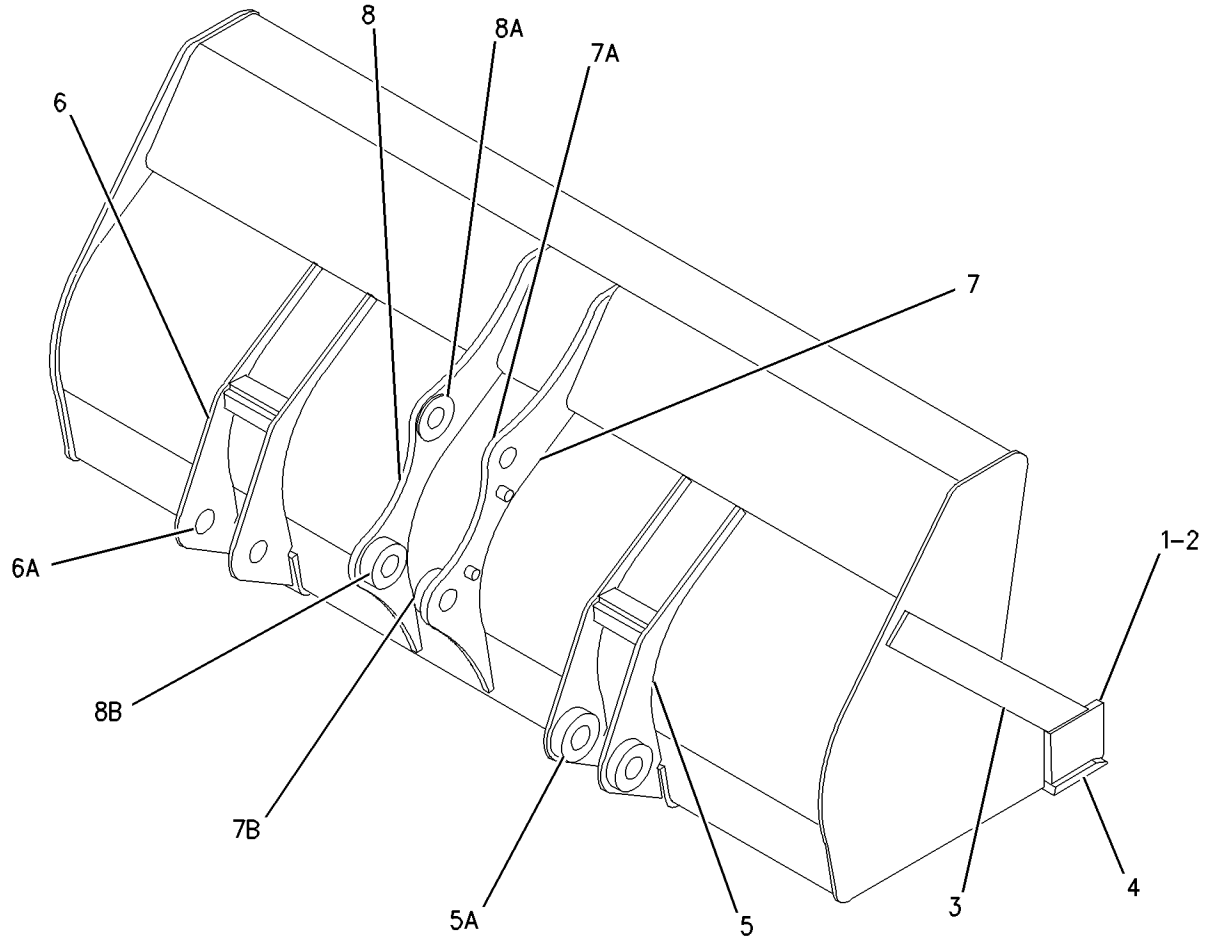

GRAPHIC #1 **<END>** g01006050

WORK TOOLS

9R-5989 BUCKET AS-GENERAL PURPOSE

S/N: BFP12900-UP
0.96 CU M (1.25 CU YD)
AN ATTACHMENT

SMCS-6101 **i01933597**

NOTE	REF NO	GRAPHIC REF	PART NUMBER	QTY	PART NAME 1 2 3 4 5 6 (PRODUCT LEVEL)	SEE PAGE
	1	1	**9R-5205**	1	EDGE-LH	
	2	1	**9R-5206**	1	EDGE-RH	
	3	1	**9R-0376**	2	EDGE	
	4	1	**9R-4672**	1	EDGE	
	5	1	*9R-0336*	2	BRACKET AS-LIFT (RH)	
	5A	1	**9R-0111**	2	BEARING-SLEEVE	
	6	1	*9R-0343*	2	BRACKET AS-LIFT (LH)	
	6A	1	**9R-0111**	2	BEARING-SLEEVE	
	7	1	*9R-0371*	1	BRACKET AS-TILT (RH)	
	7A	1	**9R-4485**	1	BOSS	
	7B	1	**9R-4486**	1	BOSS	
	8	1	*9R-0372*	1	BRACKET AS-TILT (LH)	
	8A	1	**9R-4485**	1	BOSS	
	8B	1	**9R-4486**	1	BOSS	

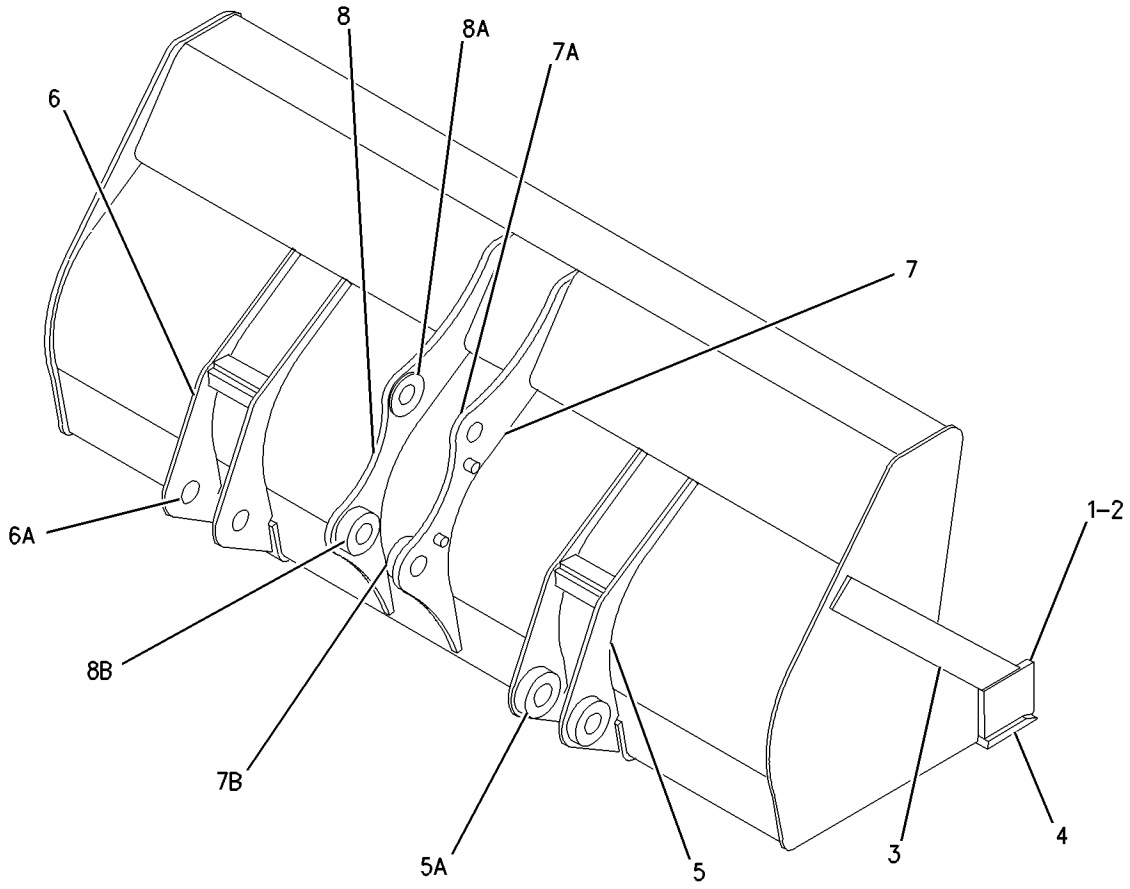

GRAPHIC #1 **<END>** g01006074

WORK TOOLS

191-6261 BUCKET AS-HOE—DITCH CLEANING

S/N: BFP12900-UP
1200MM (47IN)
AN ATTACHMENT

SMCS-6503 **i01643673**

NOTE	REF NO	GRAPHIC REF	PART NUMBER	QTY	PART NAME 1 2 3 4 5 6 (PRODUCT LEVEL)	SEE PAGE
	1	1	**136-3766**	1	EDGE	
	2	1	**191-6253**	1	PLATE (TORQUE)	
	3	1	**191-6259**	2	BRACKET AS	

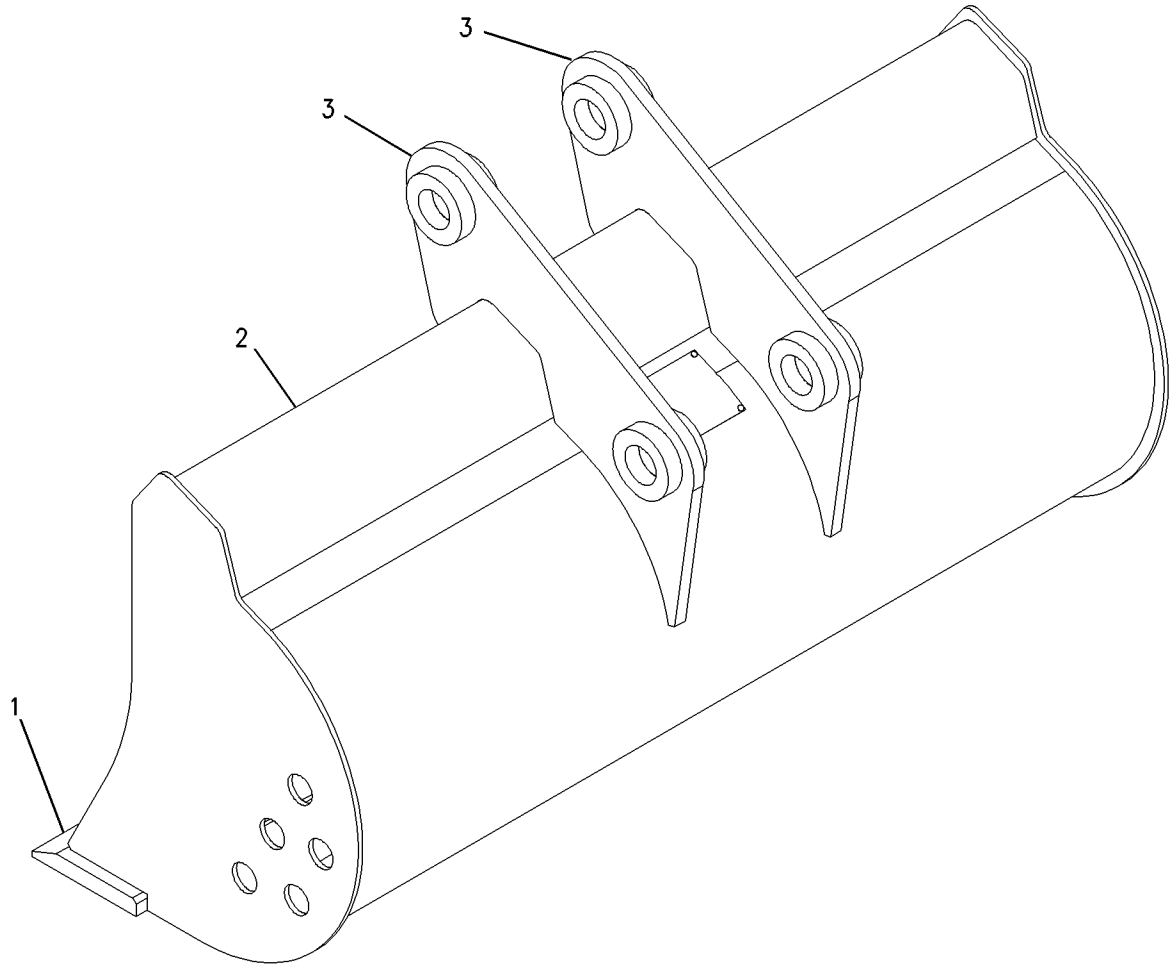

GRAPHIC #1 **<END>** g00757686

WORK TOOLS

191-6262 BUCKET AS-HOE—DITCH CLEANING

S/N: BFP12900-UP
1500MM (59IN)
AN ATTACHMENT

SMCS-6503 **i01643676**

NOTE	REF NO	GRAPHIC REF	PART NUMBER	QTY	PART NAME 1 2 3 4 5 6 (PRODUCT LEVEL)	SEE PAGE
	1	1	**121-7238**	1	EDGE (CUTTING)	
	2	1	**191-6254**	1	PLATE (TORQUE)	
	3	1	**191-6259**	2	BRACKET AS	

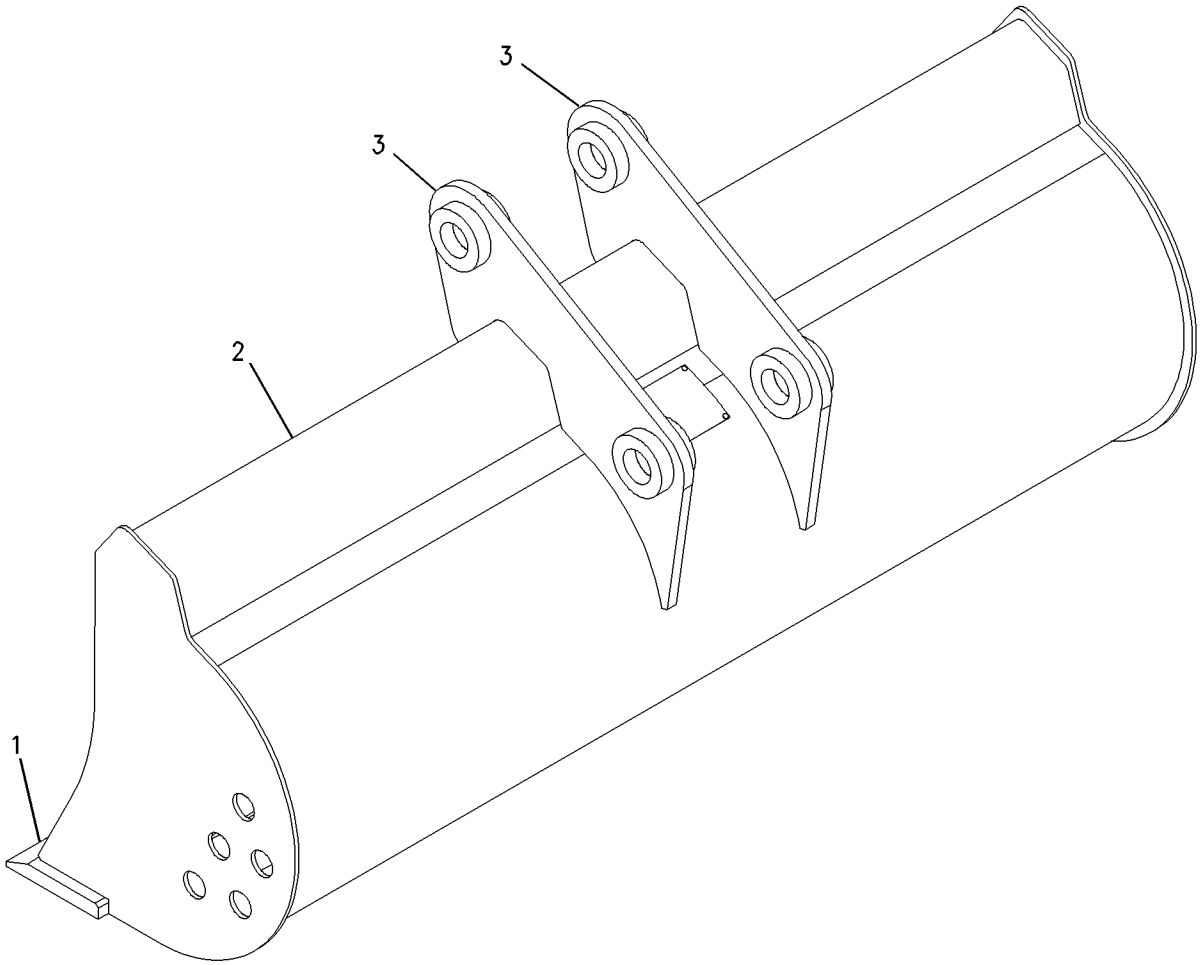

GRAPHIC #1 **<END>** g00757684

WORK TOOLS

191-6263 BUCKET AS-HOE—DITCH CLEANING

S/N: BFP12900-UP
1800MM (71IN)
AN ATTACHMENT

SMCS-6503 **i01643678**

NOTE	REF NO	GRAPHIC REF	PART NUMBER	QTY	PART NAME 1 2 3 4 5 6 (PRODUCT LEVEL)	SEE PAGE
	1	1	**130-6591**	1	EDGE (CUTTING)	
	2	1	**191-6255**	1	PLATE (TORQUE)	
	3	1	**191-6259**	2	BRACKET AS	

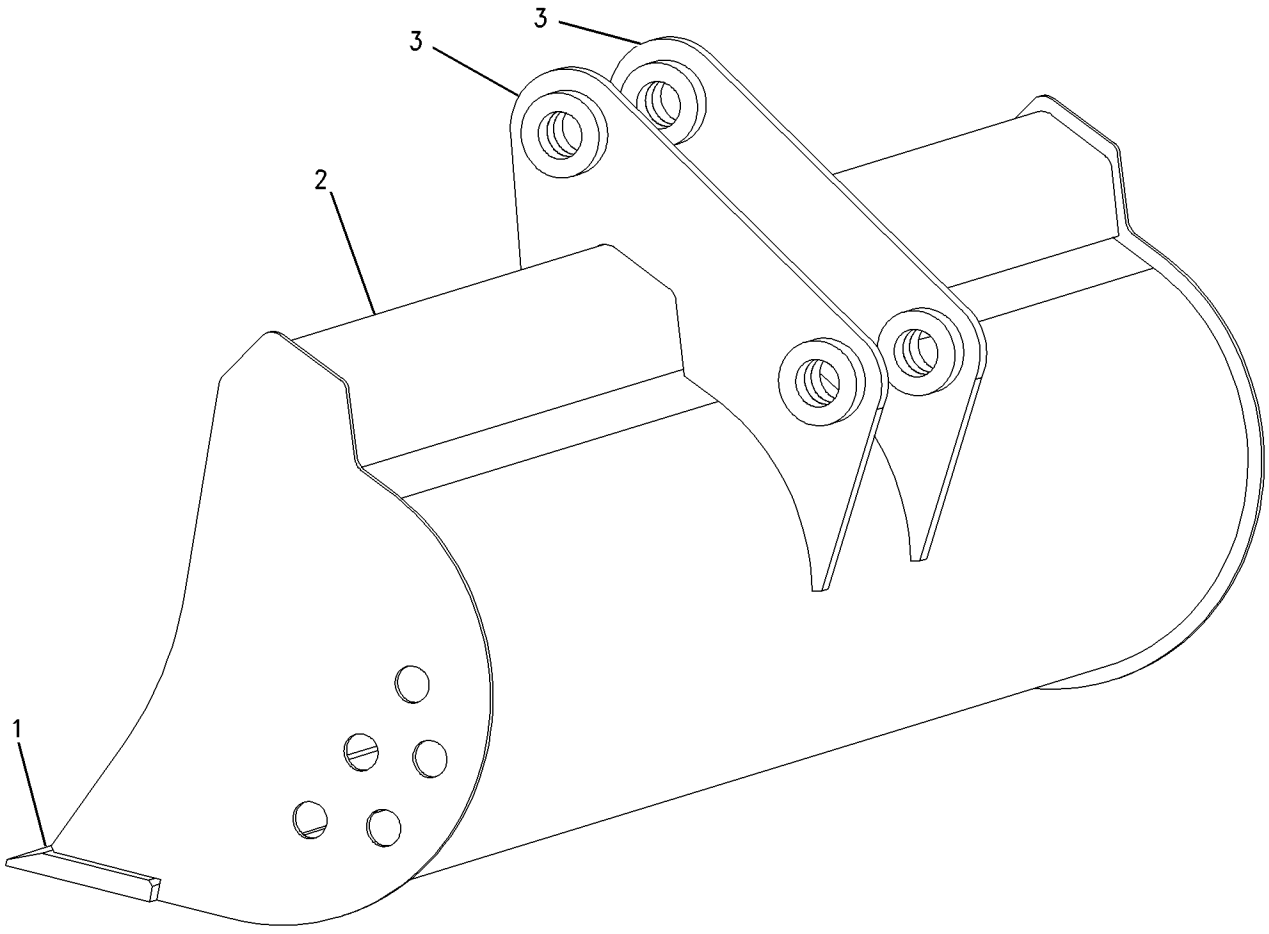

GRAPHIC #1 **<END>** g00757682

WORK TOOLS

191-9555 BUCKET AS-HOE—DITCH CLEANING

S/N: BFP12900-UP
1500MM (59IN)
AN ATTACHMENT

SMCS-6503 **i01643740**

NOTE	REF NO	GRAPHIC REF	PART NUMBER	QTY	PART NAME 1 2 3 4 5 6 (PRODUCT LEVEL)	SEE PAGE
	1	1	**121-7238**	1	EDGE	
	2	1	**191-6254**	1	PLATE (TORQUE)	
	3	1	**192-1194**	1	BRACKET AS (LH)	
	4	1	**192-1196**	1	BRACKET AS (RH)	

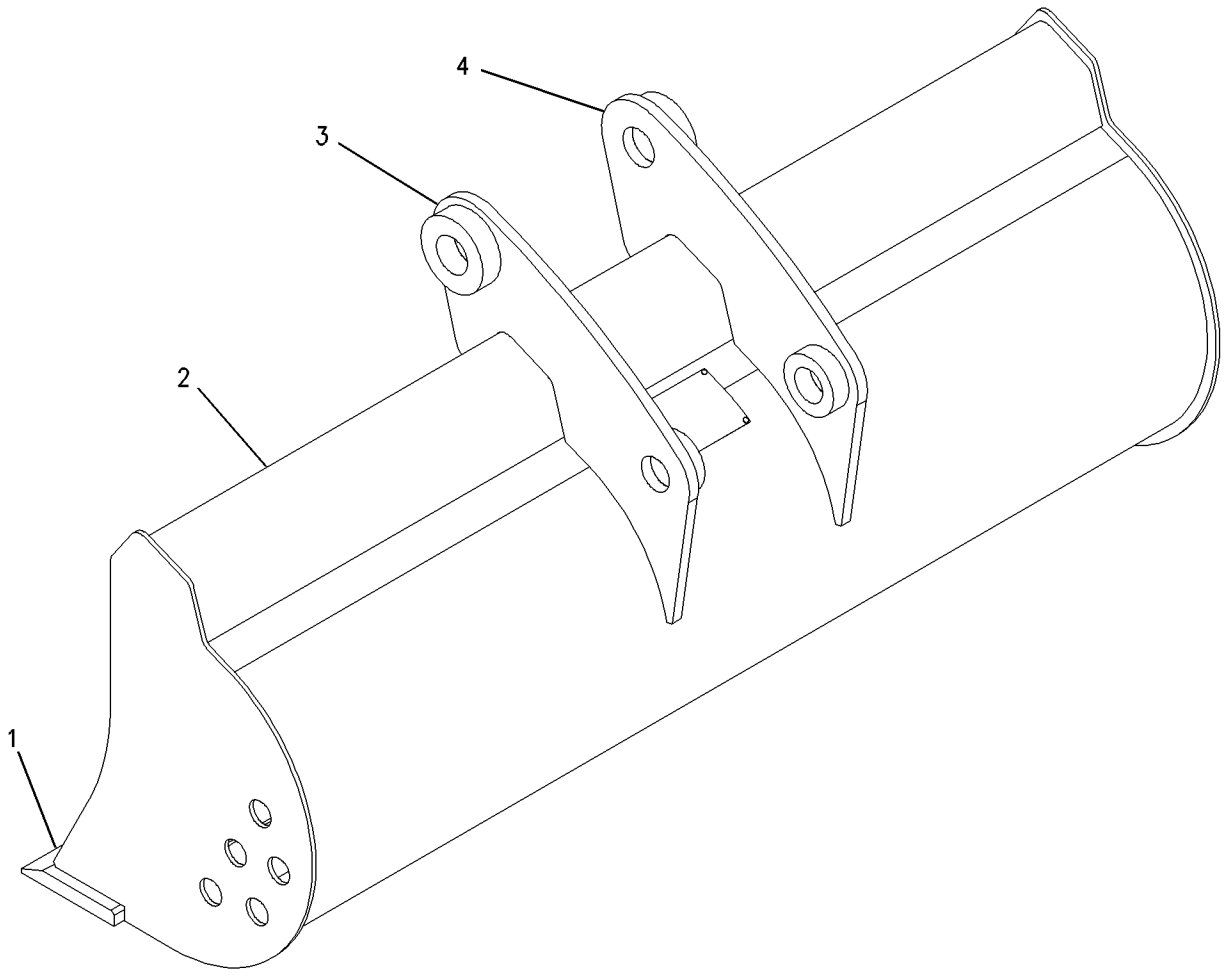

GRAPHIC #1 **<END>** g00757689

WORK TOOLS

192-0657 BUCKET AS-HOE—DITCH CLEANING

S/N: BFP12900-UP
1200MM (47IN)
AN ATTACHMENT

SMCS-6503 **i01643910**

NOTE	REF NO	GRAPHIC REF	PART NUMBER	QTY	PART NAME 1 2 3 4 5 6 (PRODUCT LEVEL)	SEE PAGE
	1	1	**136-3766**	1	EDGE (CUTTING)	
	2	1	**191-6253**	1	PLATE (TORQUE)	
	3	1	**192-1194**	1	BRACKET AS (LH)	
	4	1	**192-1196**	1	BRACKET AS (RH)	

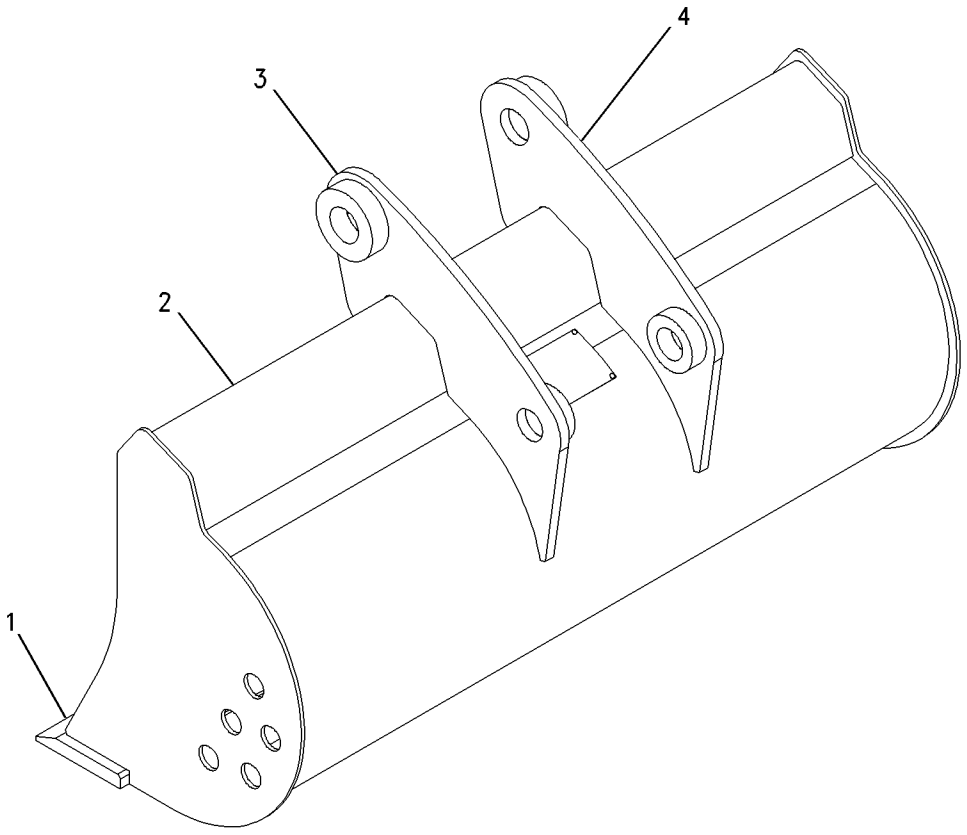

GRAPHIC #1 **<END>** g00757679

WORK TOOLS

192-0658 BUCKET AS-HOE—DITCH CLEANING

S/N: BFP12900-UP
1400MM (55IN)
AN ATTACHMENT

SMCS-6503 **i01643914**

NOTE	REF NO	GRAPHIC REF	PART NUMBER	QTY	PART NAME 1 2 3 4 5 6 (PRODUCT LEVEL)	SEE PAGE
	1	1	**192-0662**	1	PLATE (TORQUE)	
	2	1	**192-0666**	1	EDGE-CUTTING	
	3	1	**192-1194**	1	BRACKET AS (LH)	
	4	1	**192-1196**	1	BRACKET AS (RH)	

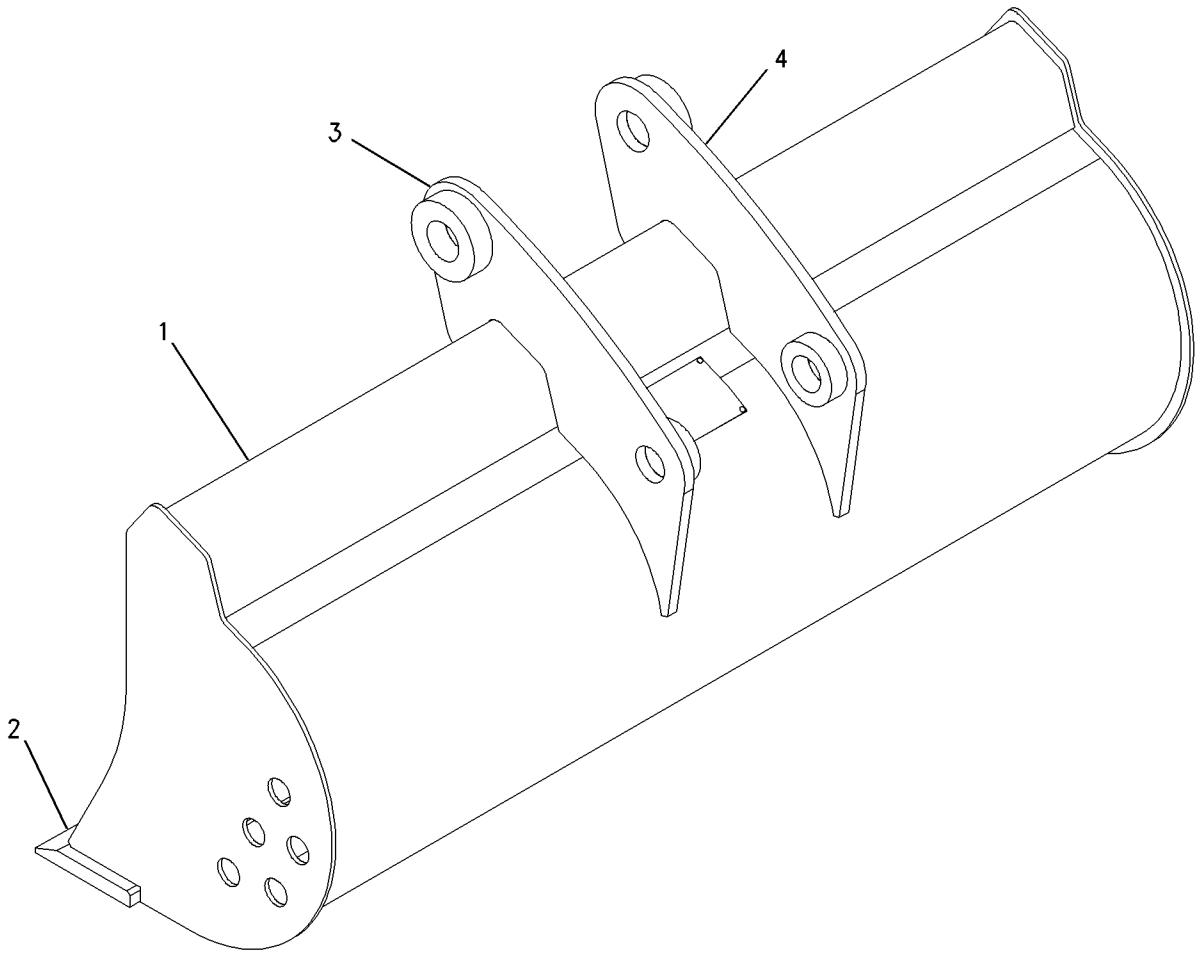

GRAPHIC #1 **<END>** g00757680

192-0660 BUCKET AS-HOE—DITCH CLEANING

S/N: BFP12900-UP
1600MM (63IN)
AN ATTACHMENT

SMCS-6503 **i01643863**

NOTE	REF NO	GRAPHIC REF	PART NUMBER	QTY	PART NAME 1 2 3 4 5 6 (PRODUCT LEVEL)	SEE PAGE
	1	1	**192-0667**	1	EDGE-CUTTING	
	2	1	**192-0663**	1	PLATE (TORQUE)	
	3	1	**192-1194**	1	BRACKET AS (LH)	
	4	1	**192-1196**	1	BRACKET AS (RH)	

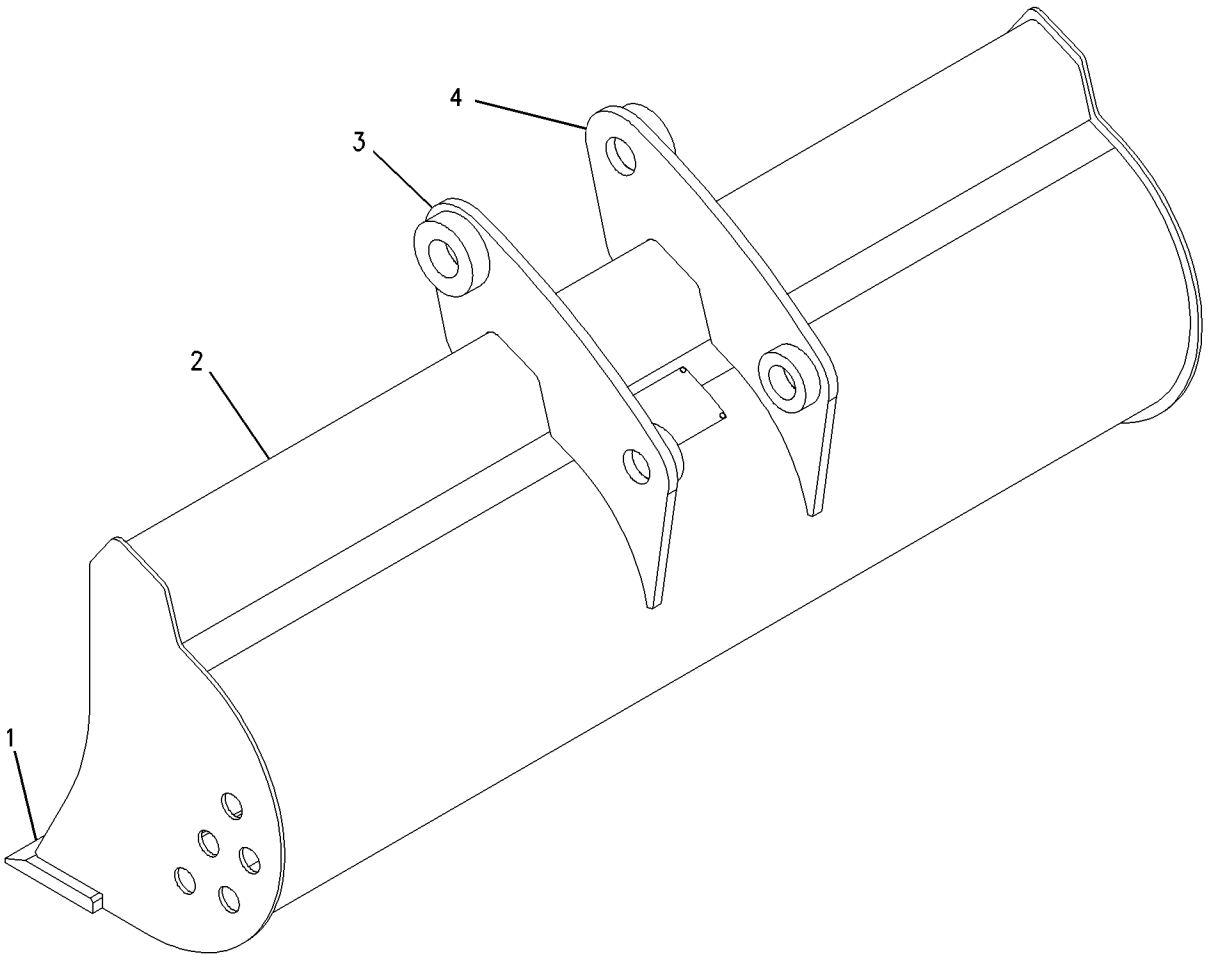

GRAPHIC #1 **<END>** g00757691

WORK TOOLS

192-0661 BUCKET AS-HOE—DITCH CLEANING

S/N: BFP12900-UP
1800MM (71IN)
AN ATTACHMENT

SMCS-6503 **i01643866**

NOTE	REF NO	GRAPHIC REF	PART NUMBER	QTY	PART NAME 1 2 3 4 5 6 (PRODUCT LEVEL)	SEE PAGE
	1	1	**130-6591**	1	EDGE	
	2	1	**191-6255**	1	PLATE (TORQUE)	
	3	1	**192-1194**	1	BRACKET AS (LH)	
	4	1	**192-1196**	1	BRACKET AS (RH)	

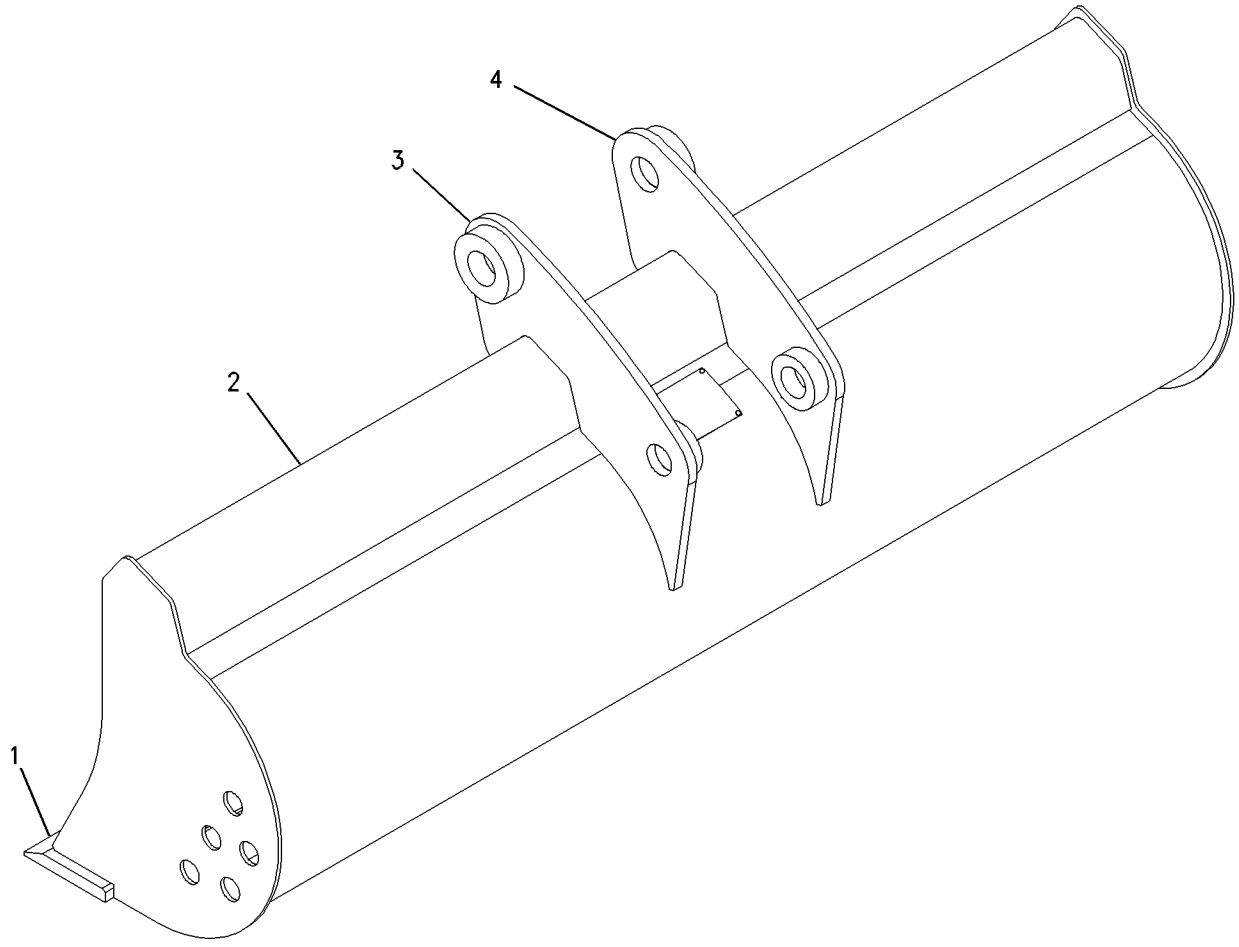

GRAPHIC #1 **<END>** g00757694

WORK TOOLS

192-2825 BUCKET AS-HOE—DITCH CLEANING

S/N: BFP12900-UP
1400MM (55IN)
AN ATTACHMENT

SMCS-6503 **i01643869**

NOTE	REF NO	GRAPHIC REF	PART NUMBER	QTY	PART NAME 1 2 3 4 5 6 (PRODUCT LEVEL)	SEE PAGE
	1	1	**191-6259**	2	BRACKET AS	
	2	1	**192-0662**	1	PLATE (TORQUE)	
	3	1	**192-0666**	1	EDGE-CUTTING	

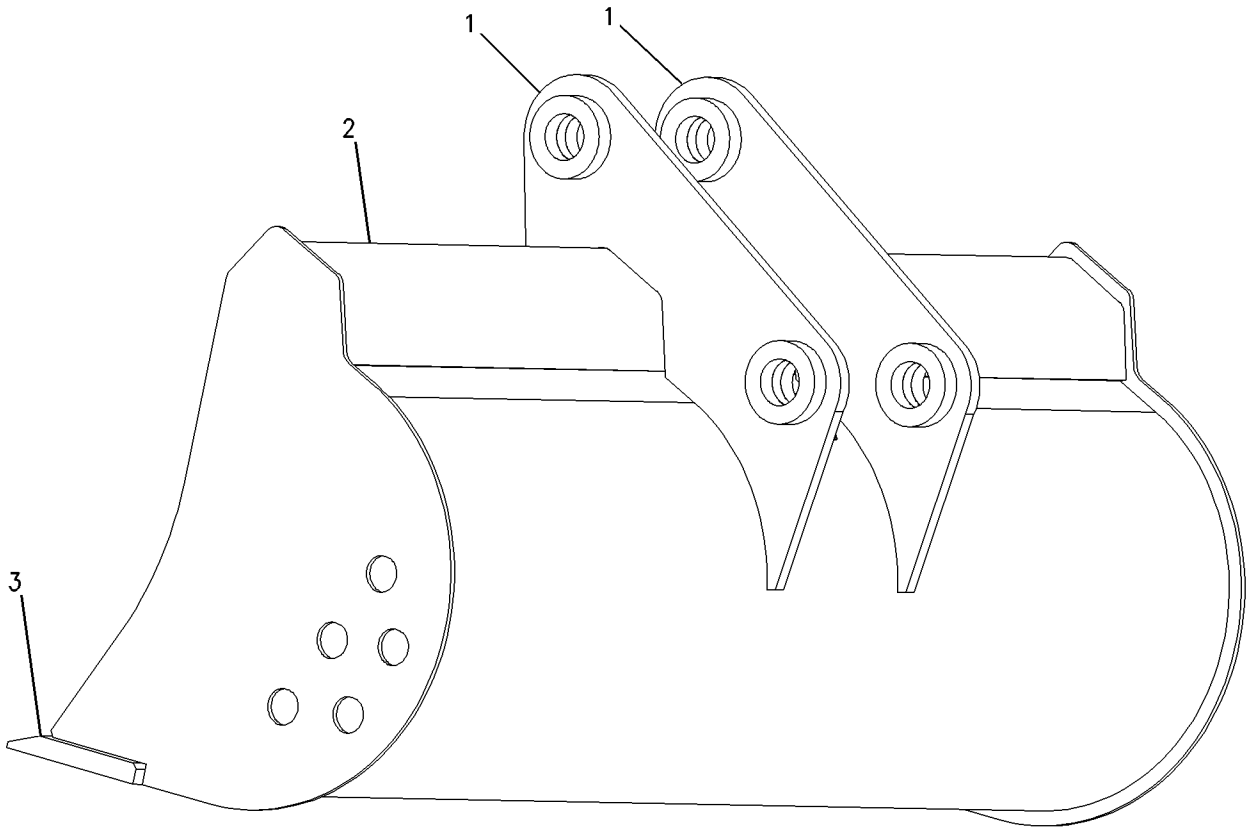

GRAPHIC #1 **<END>** g00757681

WORK TOOLS

192-2826 BUCKET AS-HOE—DITCH CLEANING

S/N: BFP12900-UP
1600MM (63IN)
AN ATTACHMENT

SMCS-6503 **i01643870**

NOTE	REF NO	GRAPHIC REF	PART NUMBER	QTY	PART NAME 1 2 3 4 5 6 (PRODUCT LEVEL)	SEE PAGE
	1	1	**191-6259**	2	BRACKET AS	
	2	1	**192-0663**	1	PLATE (TORQUE)	
	3	1	**192-0667**	1	EDGE-CUTTING	

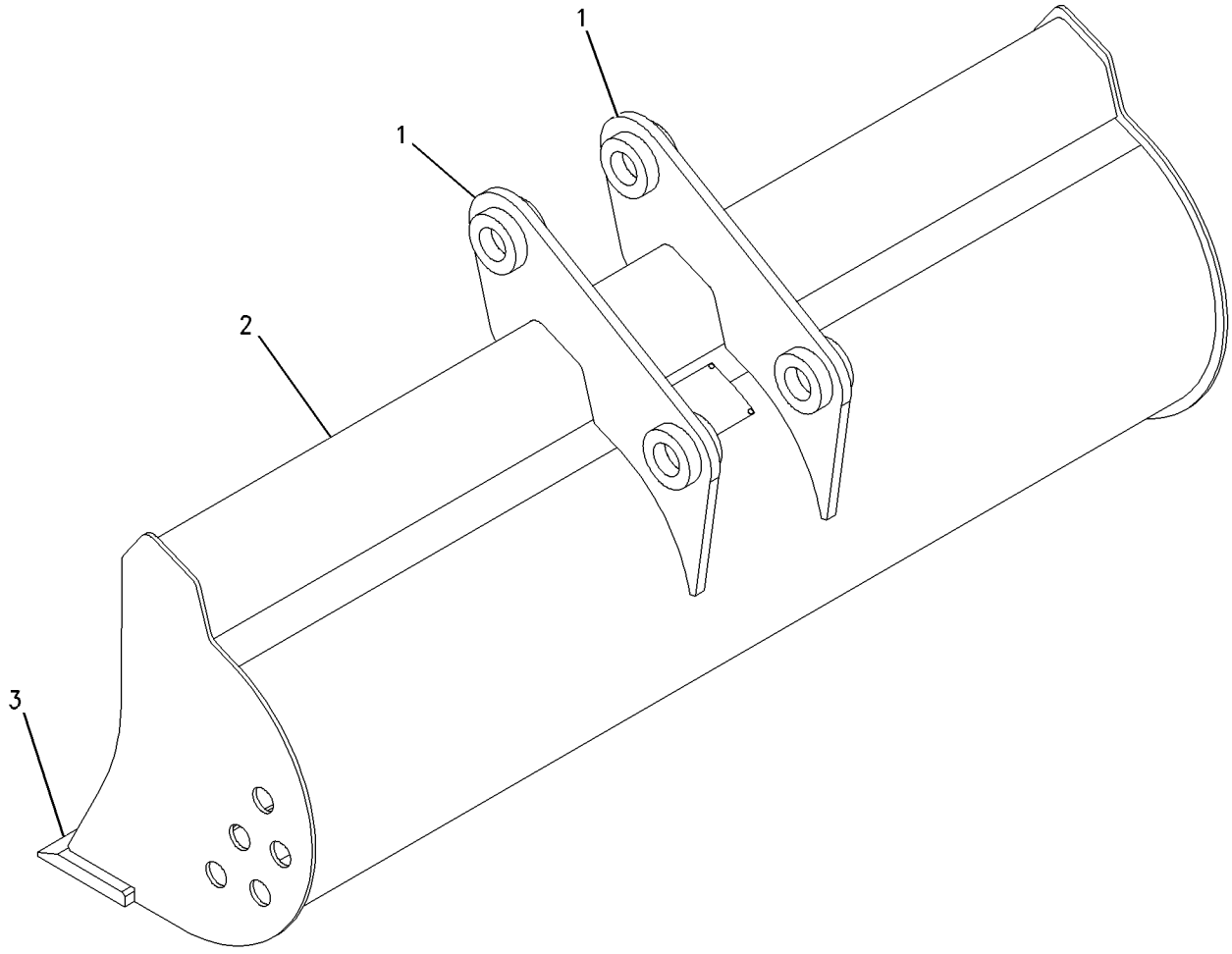

GRAPHIC #1 **<END>** g00757687

WORK TOOLS

190-1055 BUCKET GP-GENERAL PURPOSE

S/N: BFP12900-UP
AN ATTACHMENT

SMCS-6101 **i01306875**

NOTE	PART NUMBER	QTY	PART NAME 1 2 3 4 5 6 (PRODUCT LEVEL)	SEE PAGE
Y	**9R-5201**	1	BUCKET AS-GENERAL PURPOSE	759
Y	*9R-5866*	1	TOOTH GP-UNI	853

Y-SEPARATE ILLUSTRATION

<END>

190-1056 BUCKET GP-GENERAL PURPOSE

S/N: BFP12900-UP
AN ATTACHMENT

SMCS-6101 **i01306920**

NOTE	PART NUMBER	QTY	PART NAME 1 2 3 4 5 6 (PRODUCT LEVEL)	SEE PAGE
Y	**9R-5202**	1	BUCKET AS-GENERAL PURPOSE	760
Y	*9R-5866*	1	TOOTH GP-UNI	853

Y-SEPARATE ILLUSTRATION

<END>

190-1078 BUCKET GP-GENERAL PURPOSE

S/N: BFP12900-UP
AN ATTACHMENT

SMCS-6101 **i01306818**

NOTE	PART NUMBER	QTY	PART NAME 1 2 3 4 5 6 (PRODUCT LEVEL)	SEE PAGE
Y	**9R-5201**	1	BUCKET AS-GENERAL PURPOSE	759
Y	*9R-5321*	1	EDGE GP-CUTTING	835

Y-SEPARATE ILLUSTRATION

<END>

190-1079 BUCKET GP-GENERAL PURPOSE

S/N: BFP12900-UP
AN ATTACHMENT

SMCS-6101 **i01306828**

NOTE	PART NUMBER	QTY	PART NAME 1 2 3 4 5 6 (PRODUCT LEVEL)	SEE PAGE
Y	**9R-5202**	1	BUCKET AS-GENERAL PURPOSE	760
Y	*9R-5320*	1	EDGE GP-CUTTING	834

Y-SEPARATE ILLUSTRATION

<END>

WORK TOOLS

232-2712 BUCKET GP-GENERAL PURPOSE

S/N: BFP12900-UP; CXP940-UP

AN ATTACHMENT

SMCS-6101 **i02001567**

NOTE	REF NO	GRAPHIC REF	PART NUMBER	QTY	PART NAME 1 2 3 4 5 6 (PRODUCT LEVEL)	SEE PAGE
Y	1	1	*9R-5321*	1	EDGE GP-CUTTING	835
	2	1	*216-8760*	1	BUCKET AS	
		1	**9R-0111**	4	BEARING-SLEEVE	

Y-SEPARATE ILLUSTRATION

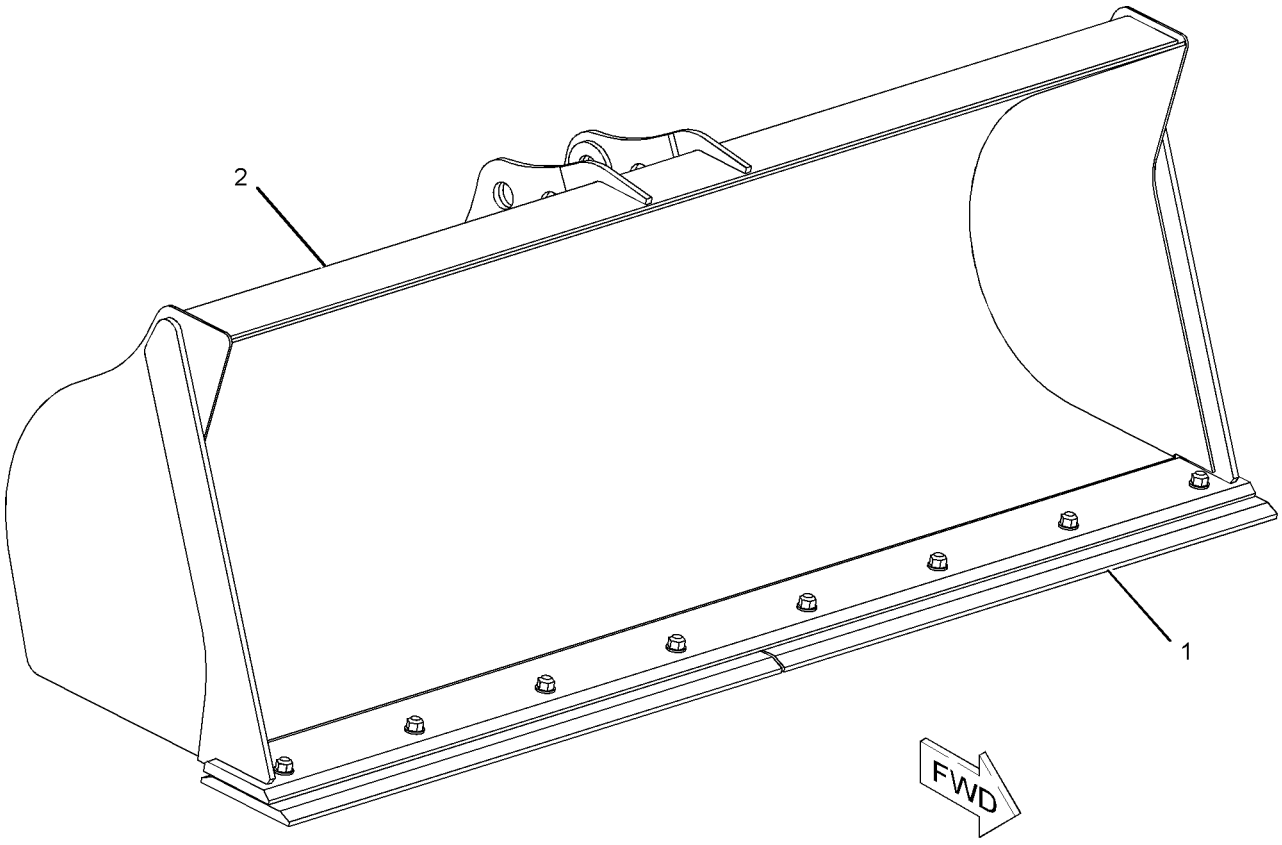

GRAPHIC #1 **<END>** g01038241

WORK TOOLS

151-7866 BUCKET GP-HOE–STANDARD DUTY

S/N: BFP12900-UP
(305MM) 12 INCH
PART OF 174-6362 BUCKET GP-HOE
AN ATTACHMENT

SMCS-6503 **i01922720**

NOTE	REF NO	GRAPHIC REF	PART NUMBER	QTY	PART NAME 1 2 3 4 5 6 (PRODUCT LEVEL)	SEE PAGE
C	1	1	*135-8206*	3	TOOTH GP-UNI	
					(EACH INCLUDES)	
	1A	1	**4F-3657**	2	BOLT-PLOW (5/8-11X2.75 IN)	
	1B	1	**4K-0367**	2	NUT-FULL (5/8-11 THD)	
	1C	1	**135-8203**	1	TOOTH-UNI	
	2	1	**154-5255**	1	EDGE	
	3	1	*151-7929*	1	BRACKET AS-LH	
	3A	1	**9R-0320**	1	BEARING	
	3B	1	**154-5257**	1	BEARING	
	4	1	*151-7930*	1	BRACKET AS-RH	
	4A	1	**9R-0320**	1	BEARING	
	4B	1	**154-5257**	1	BEARING	

C-CHANGE FROM PREVIOUS TYPE

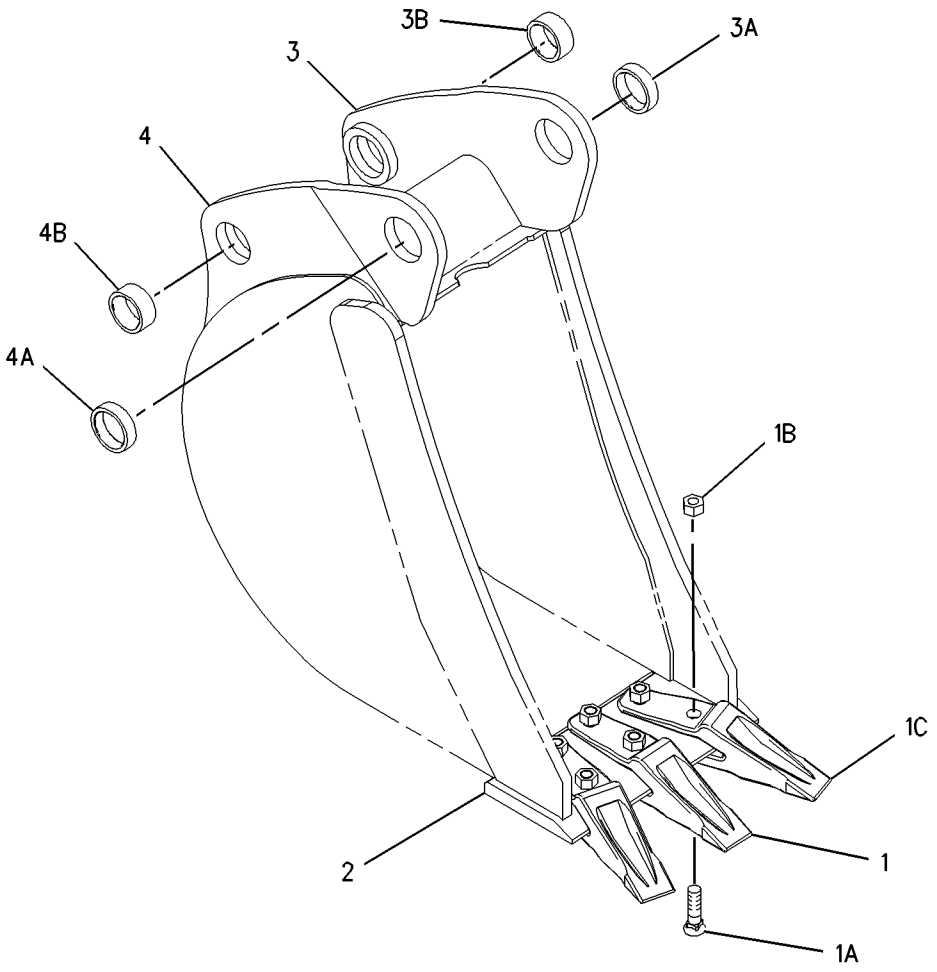

GRAPHIC #1 **<END>** g01001382

151-7867 BUCKET GP-HOE–STANDARD DUTY

S/N: BFP12900-UP
(458MM) 18 INCH
AN ATTACHMENT

SMCS-6503 **i01922704**

NOTE	REF NO	GRAPHIC REF	PART NUMBER	QTY	PART NAME 1 2 3 4 5 6 (PRODUCT LEVEL)	SEE PAGE
C	1	1	*135-8206*	3	TOOTH GP-UNI	
					(EACH INCLUDES)	
	1A	1	**4F-3657**	2	BOLT-PLOW (5/8-11X2.75 IN)	
	1B	1	**4K-0367**	2	NUT-FULL (5/8-11 THD)	
	1C	1	**135-8203**	1	TOOTH-UNI	
	2	1	**128-3778**	1	EDGE	
	3	1	*151-7902*	1	BRACKET AS-LH	
	3A	1	**9R-0162**	1	BEARING	
	3B	1	**168-0480**	1	BEARING-SLEEVE	
	4	1	*151-7903*	1	BRACKET AS-RH	
	4A	1	**9R-0162**	1	BEARING	
	4B	1	**168-0480**	1	BEARING-SLEEVE	

C-CHANGE FROM PREVIOUS TYPE

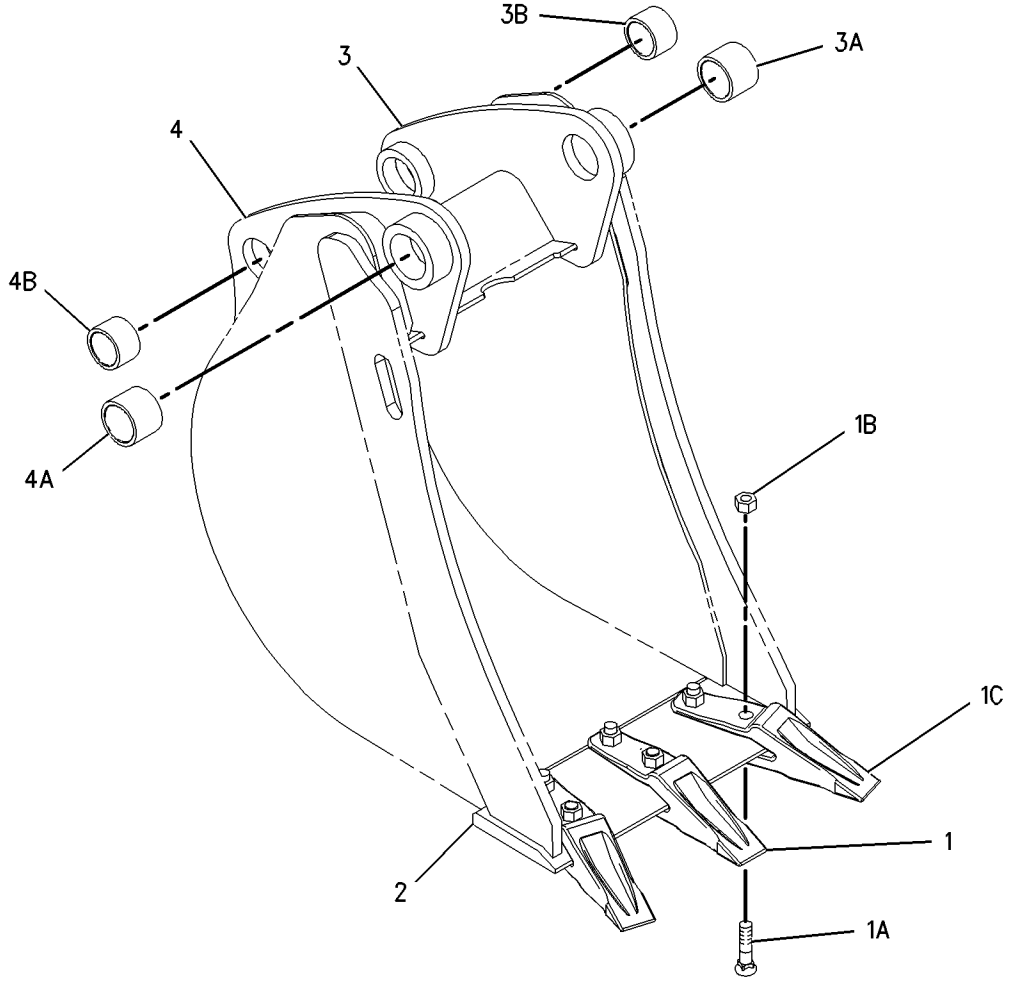

GRAPHIC #1 **<END>** g01001213

WORK TOOLS

151-7868 BUCKET GP-HOE–STANDARD DUTY

S/N: BFP12900-UP
(610MM) 24INCH
AN ATTACHMENT

SMCS-6503 **i01922711**

NOTE	REF NO	GRAPHIC REF	PART NUMBER	QTY	PART NAME 1 2 3 4 5 6 (PRODUCT LEVEL)	SEE PAGE
	1	1	*135-8206*	4	TOOTH GP-UNI	
					(EACH INCLUDES)	
	1A	1	**4F-3657**	2	BOLT-PLOW (5/8-11X2.75 IN)	
	1B	1	**4K-0367**	2	NUT-FULL (5/8-11 THD)	
	1C	1	**135-8203**	1	TOOTH-UNI	
	2	1	**128-3094**	1	EDGE	
	3	1	*151-7902*	1	BRACKET AS-LH	
	3A	1	**9R-0162**	1	BEARING	
	3B	1	**168-0480**	1	BEARING-SLEEVE	
	4	1	*151-7903*	1	BRACKET AS-RH	
	4A	1	**9R-0162**	1	BEARING	
	4B	1	**168-0480**	1	BEARING-SLEEVE	

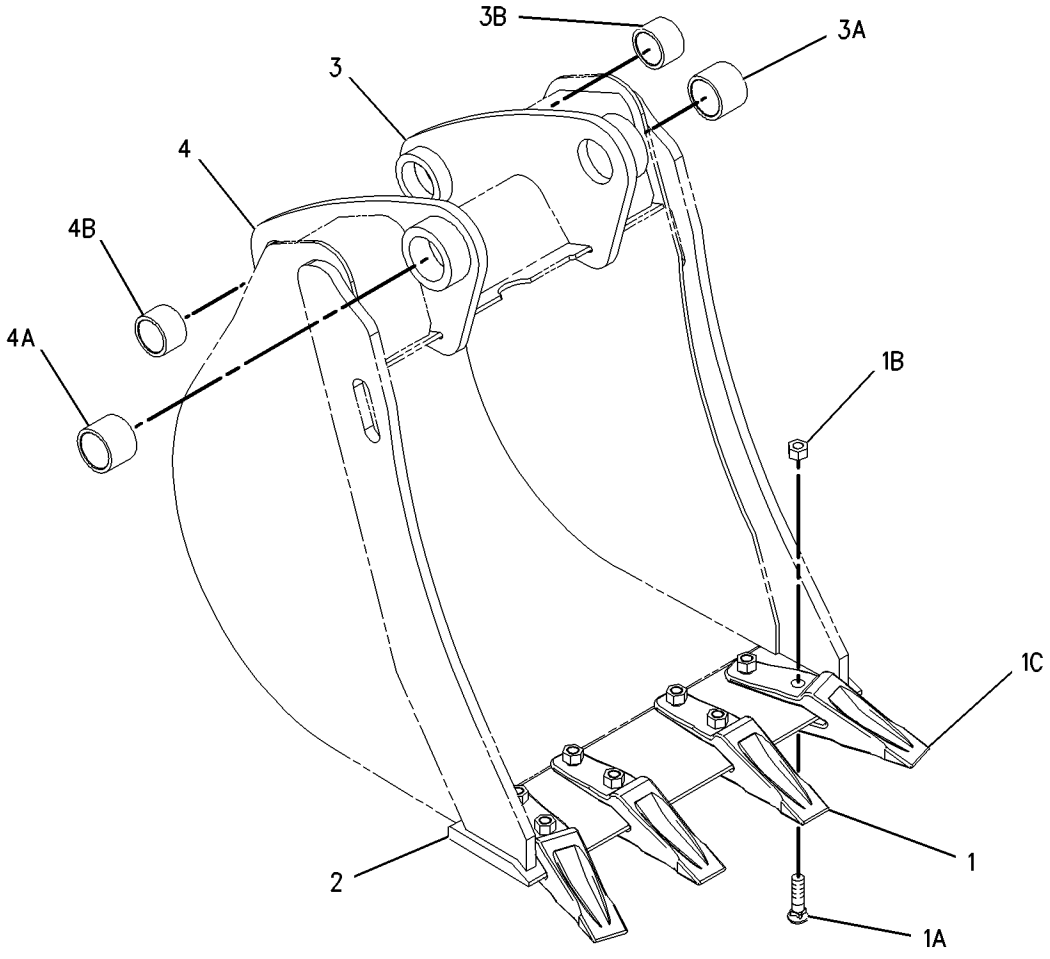

GRAPHIC #1 **<END>** g01001341

WORK TOOLS

151-7869 BUCKET GP-HOE–STANDARD DUTY

S/N: BFP12900-UP
(762MM) 30INCH
AN ATTACHMENT

SMCS-6503 **i01922717**

NOTE	REF NO	GRAPHIC REF	PART NUMBER	QTY	PART NAME 1 2 3 4 5 6 (PRODUCT LEVEL)	SEE PAGE
C	1	1	*135-8206*	5	TOOTH GP-UNI	
					(EACH INCLUDES)	
	1A	1	**4F-3657**	2	BOLT-PLOW (5/8-11X2.75 IN)	
	1B	1	**4K-0367**	2	NUT-FULL (5/8-11 THD)	
	1C	1	**135-8203**	1	TOOTH-UNI	
	2	1	**131-2117**	1	EDGE	
	3	1	*151-7902*	1	BRACKET AS-LH	
	3A	1	**9R-0162**	1	BEARING	
	3B	1	**168-0480**	1	BEARING-SLEEVE	
	4	1	*151-7903*	1	BRACKET AS-RH	
	4A	1	**9R-0162**	1	BEARING	
	4B	1	**168-0480**	1	BEARING-SLEEVE	

C-CHANGE FROM PREVIOUS TYPE

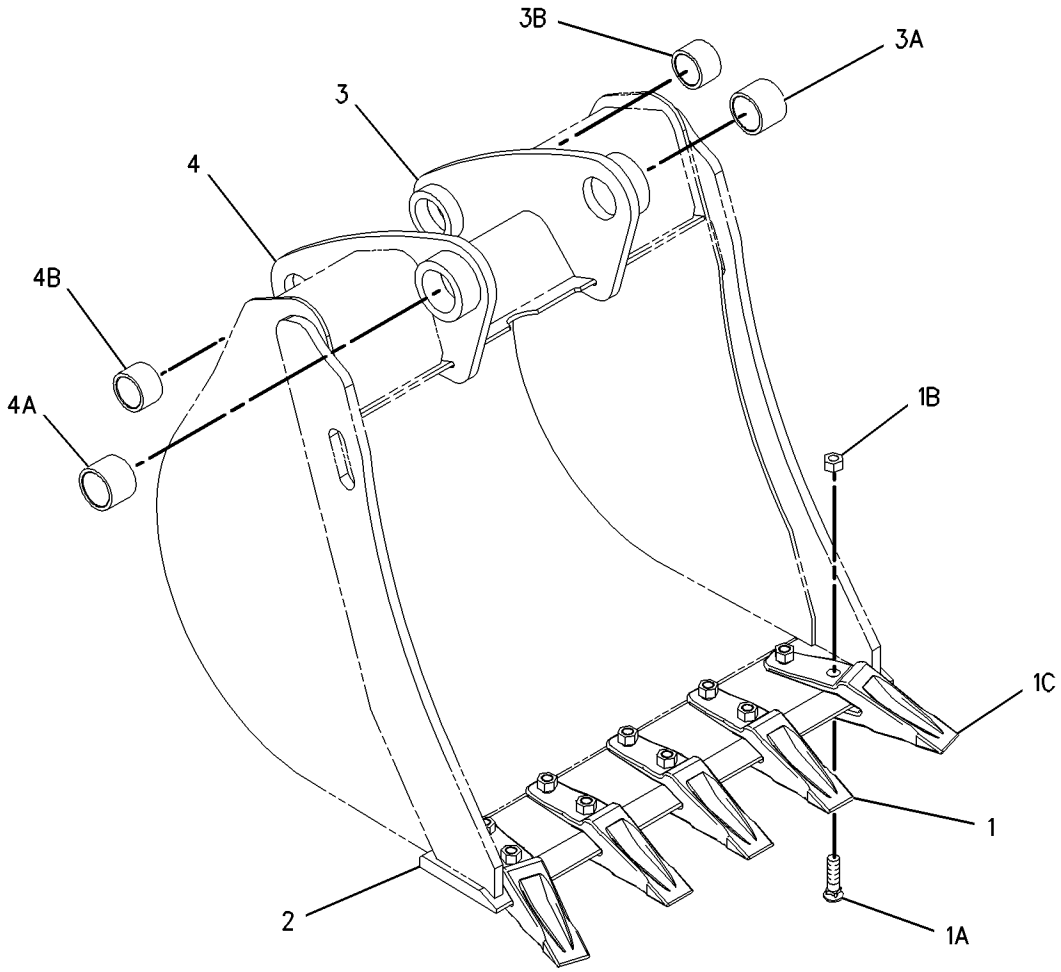

GRAPHIC #1 **<END>** g01001315

WORK TOOLS

151-7870 BUCKET GP-HOE–STANDARD DUTY

S/N: BFP12900-UP
(914MM) 36 INCH
AN ATTACHMENT

SMCS-6503 **i01922719**

NOTE	REF NO	GRAPHIC REF	PART NUMBER	QTY	PART NAME 1 2 3 4 5 6 (PRODUCT LEVEL)	SEE PAGE
	1	1	*135-8206*	6	TOOTH GP-UNI	
					(EACH INCLUDES)	
	1A	1	**4F-3657**	2	BOLT-PLOW (5/8-11X2.75 IN)	
	1B	1	**4K-0367**	2	NUT-FULL (5/8-11 THD)	
	1C	1	**135-8203**	1	TOOTH-UNI	
	2	1	**130-2057**	1	EDGE	
	3	1	*151-7902*	1	BRACKET AS-LH	
	3A	1	**9R-0162**	1	BEARING	
	3B	1	**168-0480**	1	BEARING-SLEEVE	
	4	1	*151-7903*	1	BRACKET AS-RH	
	4A	1	**9R-0162**	1	BEARING	
	4B	1	**168-0480**	1	BEARING-SLEEVE	

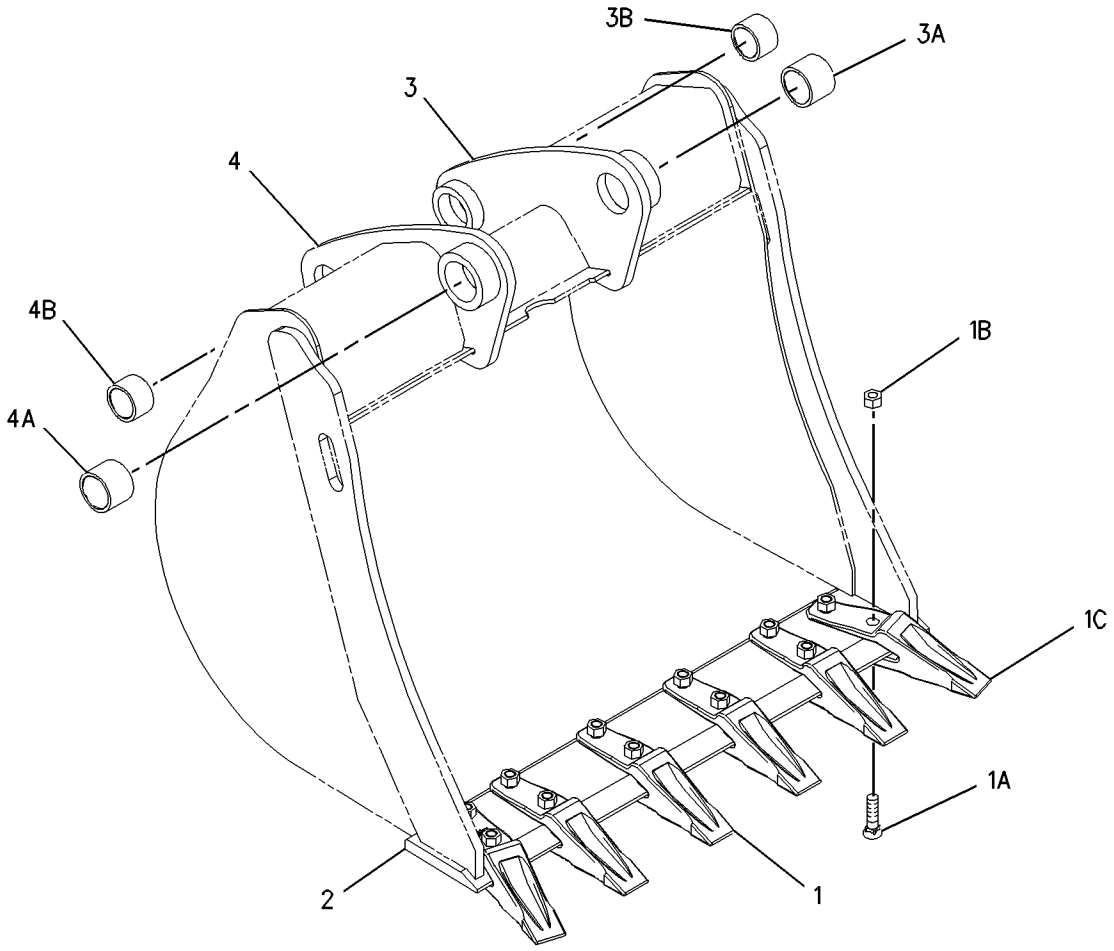

GRAPHIC #1 **<END>** g01001288

151-7877 BUCKET GP-HOE–HEAVY DUTY

S/N: BFP12900-UP
(305MM) 12 INCH
PART OF 174-6365 BUCKET GP-HOE
AN ATTACHMENT

SMCS-6503 **i01951361**

NOTE	REF NO	GRAPHIC REF	PART NUMBER	QTY	PART NAME 1 2 3 4 5 6 (PRODUCT LEVEL)	SEE PAGE
C	1	1	*135-8206*	3	TOOTH GP-UNI	
					(EACH INCLUDES)	
	1A	1	**4F-3657**	1	BOLT-PLOW (5/8-11X2.75 IN)	
	1B	1	**4K-0367**	1	NUT-FULL (5/8-11 THD)	
	1C	1	**135-8203**	1	TOOTH-UNI	
	2	1	**9R-8987**	1	EDGE-LH	
	3	1	**9R-8988**	1	EDGE-RH	
	4	1	*151-7929*	1	BRACKET AS-LH	
	4A	1	**9R-0320**	1	BEARING	
	4B	1	**154-5257**	1	BEARING	
	5	1	*151-7930*	1	BRACKET AS-RH	
	5A	1	**9R-0320**	1	BEARING	
	5B	1	**154-5257**	1	BEARING	
	6	1	**154-5255**	1	EDGE	
	7	1	**151-7927**	2	PLATE	

C-CHANGE FROM PREVIOUS TYPE

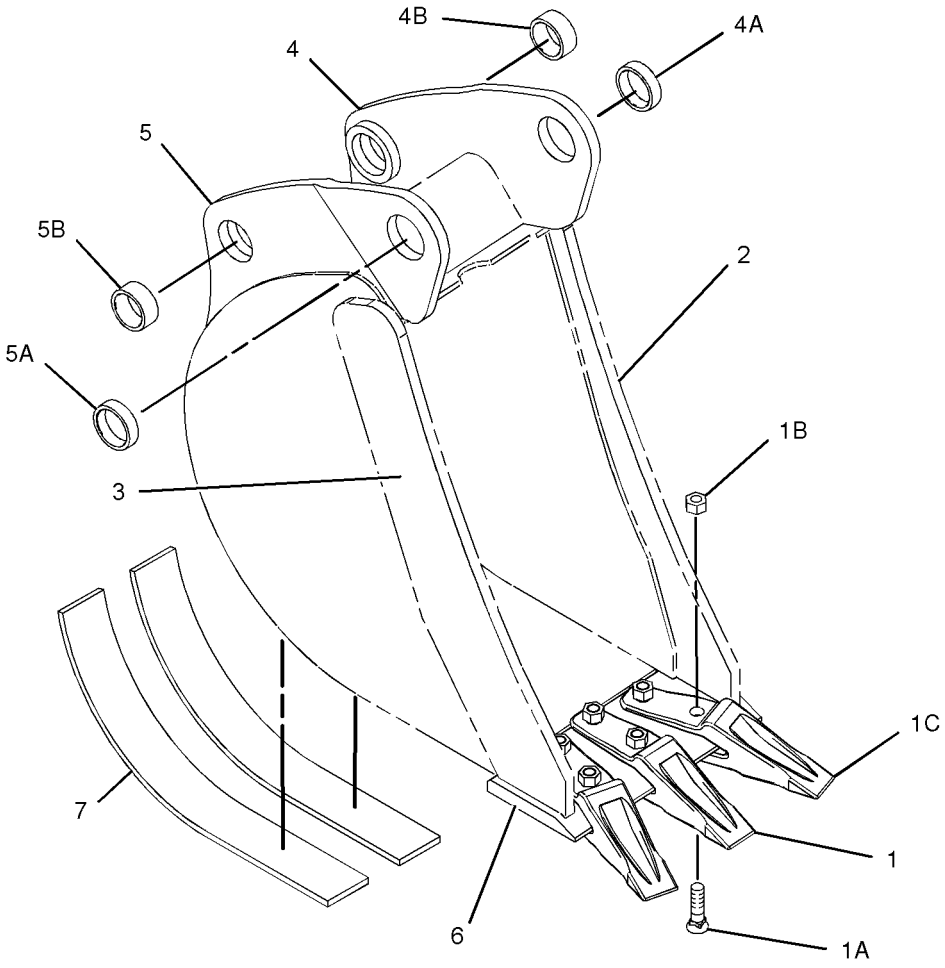

GRAPHIC #1 **<END>** g01015081

WORK TOOLS

151-7879 BUCKET GP-HOE–HEAVY DUTY

S/N: BFP12900-UP
(458MM) 18 INCH
AN ATTACHMENT

SMCS-6503 **i01925862**

NOTE	REF NO	GRAPHIC REF	PART NUMBER	QTY	PART NAME 1 2 3 4 5 6 (PRODUCT LEVEL)	SEE PAGE
C	1	1	*135-8206*	3	TOOTH GP-UNI	
					(EACH INCLUDES)	
C	1A	1	**4F-3657**	2	BOLT-PLOW (5/8-11X2.75 IN)	
	1B	1	**4K-0367**	2	NUT-FULL (5/8-11 THD)	
	1C	1	**135-8203**	1	TOOTH-UNI	
	2	1	**9R-8987**	1	EDGE-LH	
	3	1	**9R-8988**	1	EDGE-RH	
	4	1	**128-3778**	1	EDGE	
	5	1	**151-7927**	3	PLATE	
	6	1	*151-7902*	1	BRACKET AS-LH	
	6A	1	**9R-0162**	1	BEARING	
	6B	1	**168-0480**	1	BEARING-SLEEVE	
	7	1	*151-7903*	1	BRACKET AS-RH	
	7A	1	**9R-0162**	1	BEARING	
	7B	1	**168-0480**	1	BEARING-SLEEVE	

C-CHANGE FROM PREVIOUS TYPE

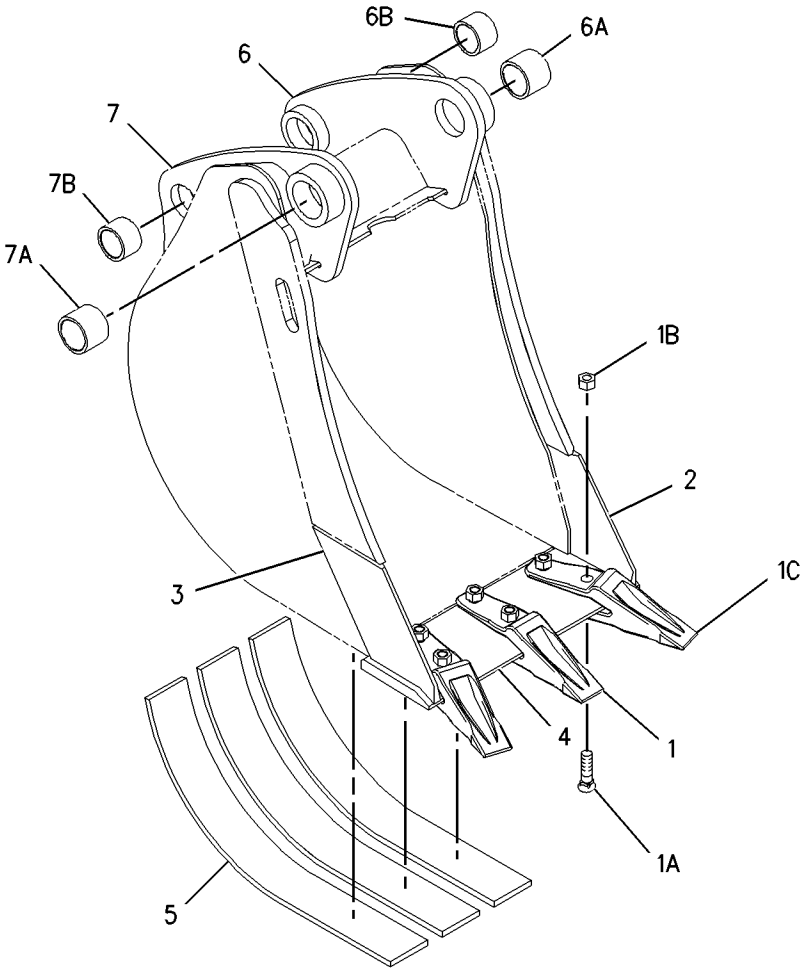

GRAPHIC #1 **<END>** g01002992

WORK TOOLS

151-7880 BUCKET GP-HOE—HEAVY DUTY

S/N: BFP12900-UP
(610MM) 24 INCH
AN ATTACHMENT

SMCS-6503 **i01925864**

NOTE	REF NO	GRAPHIC REF	PART NUMBER	QTY	PART NAME 1 2 3 4 5 6 (PRODUCT LEVEL)	SEE PAGE
C	1	1	*135-8206*	4	TOOTH GP-UNI	
					(EACH INCLUDES)	
C	1A	1	**4F-3657**	2	BOLT-PLOW (5/8-11X2.75 IN)	
	1B	1	**4K-0367**	2	NUT-FULL (5/8-11 THD)	
	1C	1	**135-8203**	1	TOOTH-UNI	
	2	1	**9R-8987**	1	EDGE-LH	
	3	1	**9R-8988**	1	EDGE-RH	
	4	1	**128-3094**	1	EDGE	
	5	1	**151-7927**	4	PLATE	
	6	1	*151-7902*	1	BRACKET AS-LH	
	6A	1	**9R-0162**	1	BEARING	
	6B	1	**168-0480**	1	BEARING-SLEEVE	
	7	1	*151-7903*	1	BRACKET AS-RH	
	7A	1	**9R-0162**	1	BEARING	
	7B	1	**168-0480**	1	BEARING-SLEEVE	

C-CHANGE FROM PREVIOUS TYPE

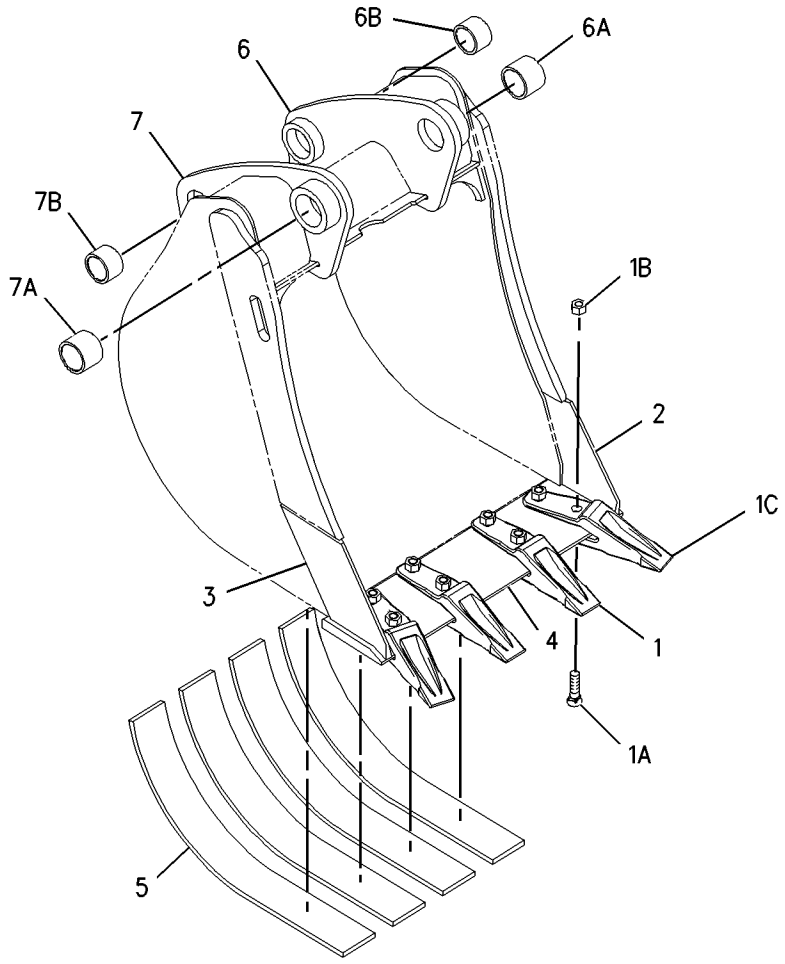

GRAPHIC #1 **<END>** g01003054

WORK TOOLS

151-7881 BUCKET GP-HOE–HEAVY DUTY

S/N: BFP12900-UP
(762MM) 30 INCH
AN ATTACHMENT

SMCS-6503 **i01925871**

NOTE	REF NO	GRAPHIC REF	PART NUMBER	QTY	PART NAME 1 2 3 4 5 6 (PRODUCT LEVEL)	SEE PAGE
C	1	1	*135-8206*	5	TOOTH GP-UNI	
					(EACH INCLUDES)	
C	1A	1	**4F-3657**	2	BOLT-PLOW (5/8-11X2.75 IN)	
	1B	1	**4K-0367**	2	NUT-FULL (5/8-11 THD)	
	1C	1	**135-8203**	1	TOOTH-UNI	
	2	1	**9R-8987**	1	EDGE-LH	
	3	1	**9R-8988**	1	EDGE-RH	
	4	1	**131-2117**	1	EDGE	
	5	1	**151-7927**	4	PLATE	
	6	1	*151-7902*	1	BRACKET AS-LH	
	6A	1	**9R-0162**	1	BEARING	
	6B	1	**168-0480**	1	BEARING-SLEEVE	
	7	1	*151-7903*	1	BRACKET AS-RH	
	7A	1	**9R-0162**	1	BEARING	
	7B	1	**168-0480**	1	BEARING-SLEEVE	

C-CHANGE FROM PREVIOUS TYPE

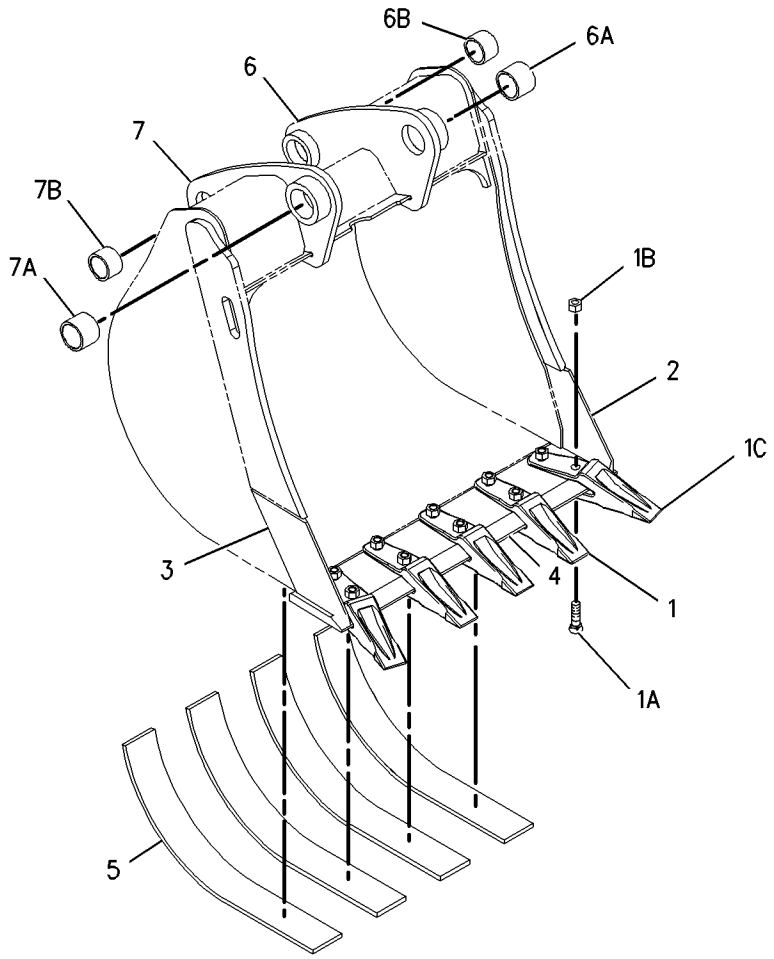

GRAPHIC #1 **<END>** g01003078

WORK TOOLS

151-7882 BUCKET GP-HOE–HEAVY DUTY

S/N: BFP12900-UP
(914MM) 36 INCH
AN ATTACHMENT

SMCS-6503 **i01925877**

NOTE	REF NO	GRAPHIC REF	PART NUMBER	QTY	PART NAME 1 2 3 4 5 6 (PRODUCT LEVEL)	SEE PAGE
C	1	1	*135-8206*	6	TOOTH GP-UNI	
					(EACH INCLUDES)	
C	1A	1	**4F-3657**	2	BOLT-PLOW (5/8-11X2.75 IN)	
	1B	1	**4K-0367**	2	NUT-FULL (5/8-11 THD)	
	1C	1	**135-8203**	1	TOOTH-UNI	
	2	1	**9R-8987**	1	EDGE-LH	
	3	1	**9R-8988**	1	EDGE-RH	
	4	1	**130-2057**	1	EDGE	
	5	1	**151-7927**	5	PLATE	
	6	1	*151-7902*	1	BRACKET AS-LH	
	6A	1	**9R-0162**	1	BEARING	
	6B	1	**168-0480**	1	BEARING-SLEEVE	
	7	1	*151-7903*	1	BRACKET AS-RH	
	7A	1	**9R-0162**	1	BEARING	
	7B	1	**168-0480**	1	BEARING-SLEEVE	

C-CHANGE FROM PREVIOUS TYPE

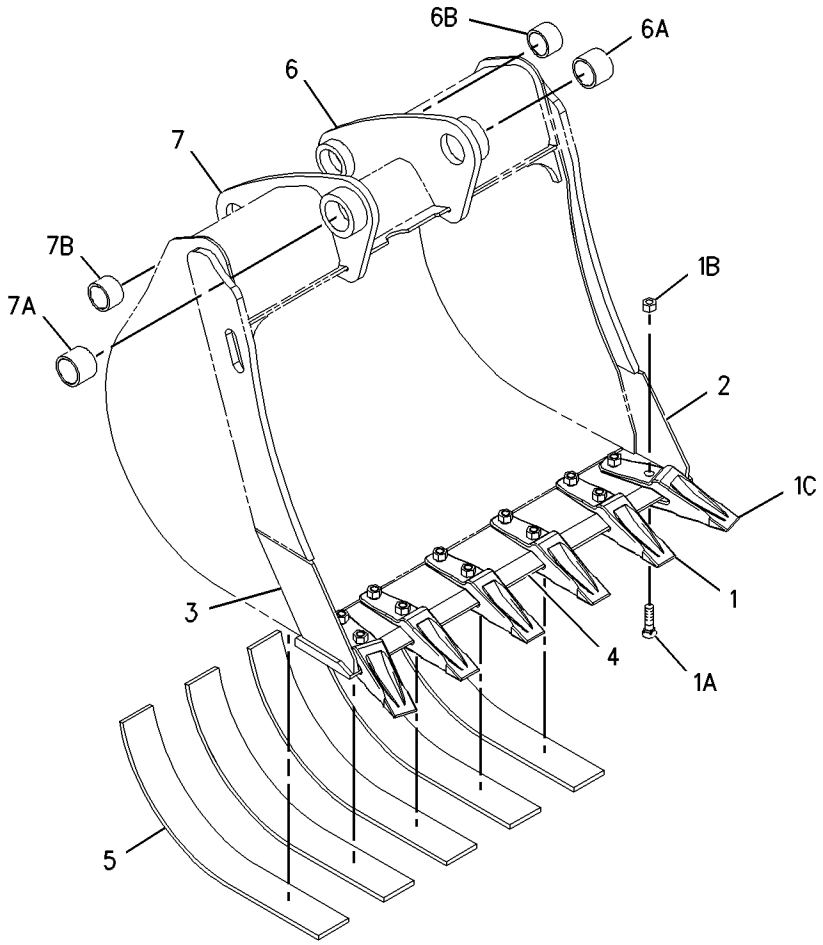

GRAPHIC #1 **<END>** g01003214

WORK TOOLS

151-7887 BUCKET GP-HOE—HIGH CAPACITY

S/N: BFP12900-UP
(458MM) 18 INCH
AN ATTACHMENT

SMCS-6503 **i01923081**

NOTE	REF NO	GRAPHIC REF	PART NUMBER	QTY	PART NAME 1 2 3 4 5 6 (PRODUCT LEVEL)	SEE PAGE
C	1	1	*135-8206*	3	TOOTH GP-UNI	
					(EACH INCLUDES)	
	1A	1	**4F-3657**	2	BOLT-PLOW (5/8-11X2.75 IN)	
	1B	1	**4K-0367**	2	NUT-FULL (5/8-11 THD)	
	1C	1	**135-8203**	1	TOOTH-UNI	
	2	1	**9R-8987**	1	EDGE-LH	
	3	1	**9R-8988**	1	EDGE-RH	
	4	1	**128-3778**	1	EDGE	
	5	1	*151-7902*	1	BRACKET AS-LH	
	5A	1	**9R-0162**	1	BEARING	
	5B	1	**168-0480**	1	BEARING-SLEEVE	
	6	1	*151-7903*	1	BRACKET AS-RH	
	6A	1	**9R-0162**	1	BEARING	
	6B	1	**168-0480**	1	BEARING-SLEEVE	

C-CHANGE FROM PREVIOUS TYPE

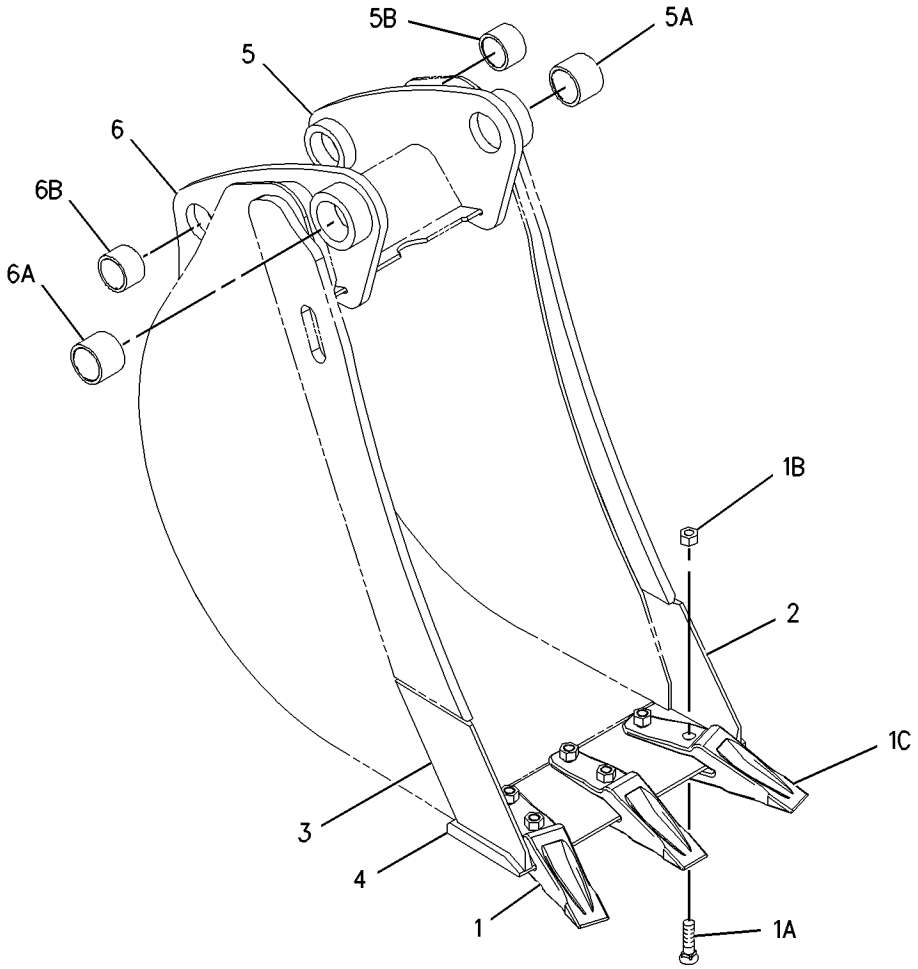

GRAPHIC #1 **<END>** g01002171

WORK TOOLS

151-7888 BUCKET GP-HOE—HIGH CAPACITY

S/N: BFP12900-UP
(610MM) 24 INCH
AN ATTACHMENT

SMCS-6503 **i01923345**

NOTE	REF NO	GRAPHIC REF	PART NUMBER	QTY	PART NAME 1 2 3 4 5 6 (PRODUCT LEVEL)	SEE PAGE
C	1	1	*135-8206*	4	TOOTH GP-UNI	
					(EACH INCLUDES)	
	1A	1	**4F-3657**	2	BOLT-PLOW (5/8-11X2.75 IN)	
	1B	1	**4K-0367**	2	NUT-FULL (5/8-11 THD)	
	1C	1	**135-8203**	1	TOOTH-UNI	
	2	1	**9R-8987**	1	EDGE-LH	
	3	1	**9R-8988**	1	EDGE-RH	
	4	1	**128-3094**	1	EDGE	
	5	1	*151-7902*	1	BRACKET AS-LH	
	5A	1	**9R-0162**	1	BEARING	
	5B	1	**168-0480**	1	BEARING-SLEEVE	
	6	1	*151-7903*	1	BRACKET AS-RH	
	6A	1	**9R-0162**	1	BEARING	
	6B	1	**168-0480**	1	BEARING-SLEEVE	

C-CHANGE FROM PREVIOUS TYPE

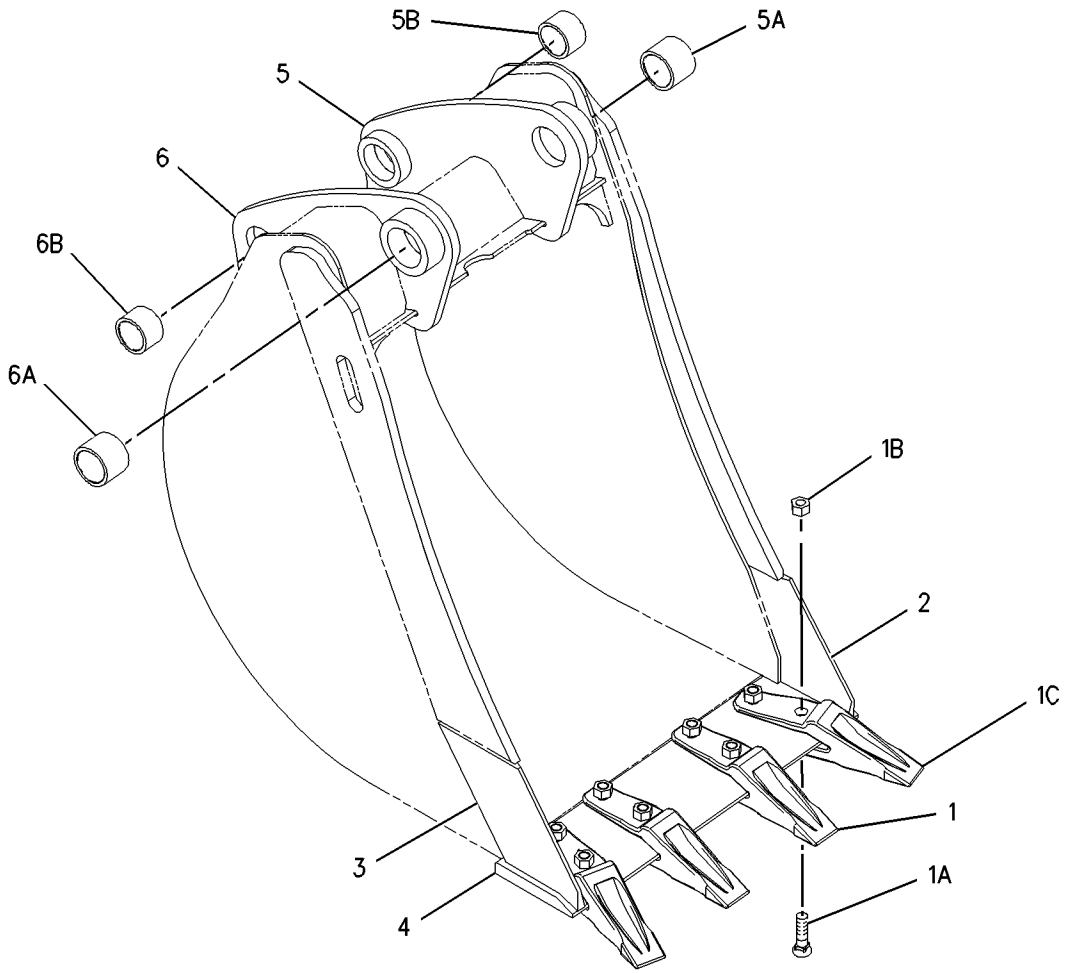

GRAPHIC #1 **<END>** g01002186

WORK TOOLS

151-7889 BUCKET GP-HOE—HIGH CAPACITY

S/N: BFP12900-UP
(762MM) 30 INCH
AN ATTACHMENT

SMCS-6503 **i01923346**

NOTE	REF NO	GRAPHIC REF	PART NUMBER	QTY	PART NAME 1 2 3 4 5 6 (PRODUCT LEVEL)	SEE PAGE
C	1	1	*135-8206*	5	TOOTH GP-UNI	
					(EACH INCLUDES)	
	1A	1	**4F-3657**	2	BOLT-PLOW (5/8-11X2.75 IN)	
	1B	1	**4K-0367**	2	NUT-FULL (5/8-11 THD)	
	1C	1	**135-8203**	2	TOOTH-UNI	
	2	1	**9R-8987**	1	EDGE-LH	
	3	1	**9R-8988**	1	EDGE-RH	
	4	1	**131-2117**	1	EDGE	
	5	1	*151-7902*	1	BRACKET AS-LH	
	5A	1	**9R-0162**	1	BEARING	
	5B	1	**168-0480**	1	BEARING-SLEEVE	
	6	1	*151-7903*	1	BRACKET AS-RH	
	6A	1	**9R-0162**	1	BEARING	
	6B	1	**168-0480**	1	BEARING-SLEEVE	

C-CHANGE FROM PREVIOUS TYPE

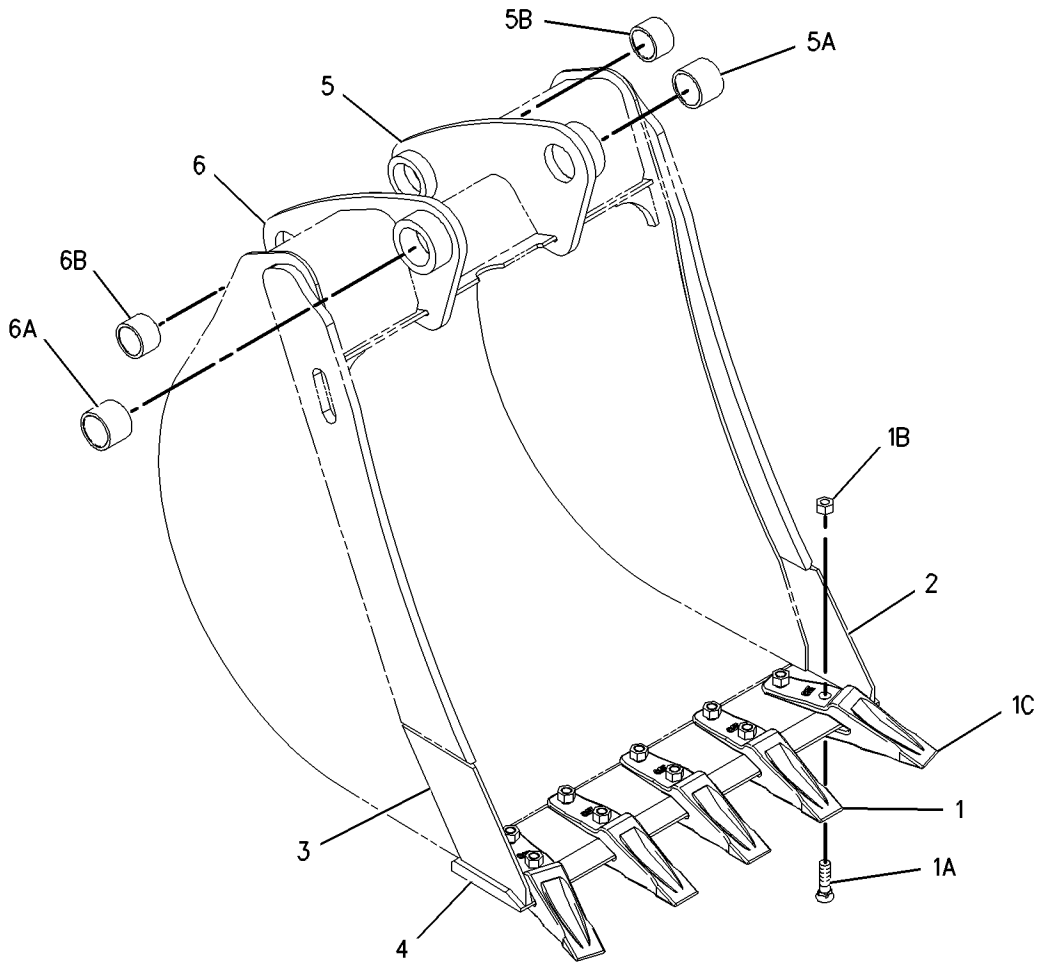

GRAPHIC #1 **<END>** g01002193

151-7890 BUCKET GP-HOE—HIGH CAPACITY

S/N: BFP12900-UP
914MM (36IN)
AN ATTACHMENT

SMCS-6503 **i01923347**

NOTE	REF NO	GRAPHIC REF	PART NUMBER	QTY	PART NAME 1 2 3 4 5 6 (PRODUCT LEVEL)	SEE PAGE
	1	1	*135-8206*	6	TOOTH GP-UNI	
					(EACH INCLUDES)	
	1A	1	**4F-3657**	2	BOLT-PLOW (5/8-11X2.75 IN)	
	1B	1	**4K-0367**	2	NUT-FULL (5/8-11 THD)	
	1C	1	**135-8203**	1	TOOTH-UNI	
	2	1	**9R-8987**	1	EDGE-LH	
	3	1	**9R-8988**	1	EDGE-RH	
	4	1	**130-2057**	1	EDGE	
	5	1	*151-7902*	1	BRACKET AS-LH	
	5A	1	**9R-0162**	1	BEARING	
	5B	1	**168-0480**	1	BEARING-SLEEVE	
	6	1	*151-7903*	1	BRACKET AS-RH	
	6A	1	**9R-0162**	1	BEARING	
	6B	1	**168-0480**	1	BEARING-SLEEVE	

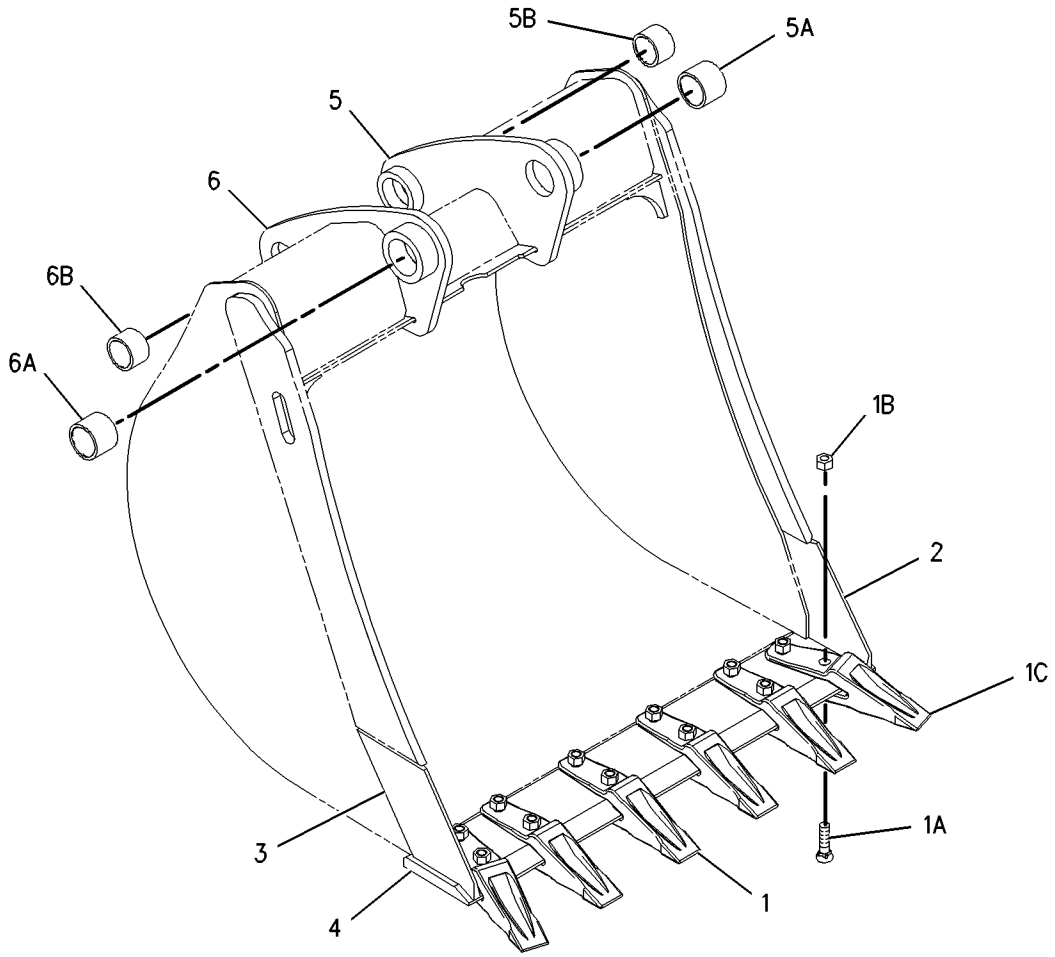

GRAPHIC #1 **<END>** g01002306

WORK TOOLS

174-6362 BUCKET GP-HOE–STANDARD DUTY

S/N: BFP12900-UP
305MM (12IN)
AN ATTACHMENT

SMCS-6503 **i01949840**

NOTE	REF NO	GRAPHIC REF	PART NUMBER	QTY	PART NAME 1 2 3 4 5 6 (PRODUCT LEVEL)	SEE PAGE
	1	1	**9R-0158**	5	WASHER (46X69X3MM THK)	
	2	1	**9R-1510**	3	WASHER (51X82X4MM THK)	
Y	3	1	**151-7866**	1	BUCKET GP-HOE	776
	4	1	**168-0443**	1	PIN	
	5	1	**168-0444**	1	PIN	
	6	1	**6V-3213**	2	RING-RETAINING	
	7	1	**6V-4364**	2	RING-RETAINING	

Y-SEPARATE ILLUSTRATION

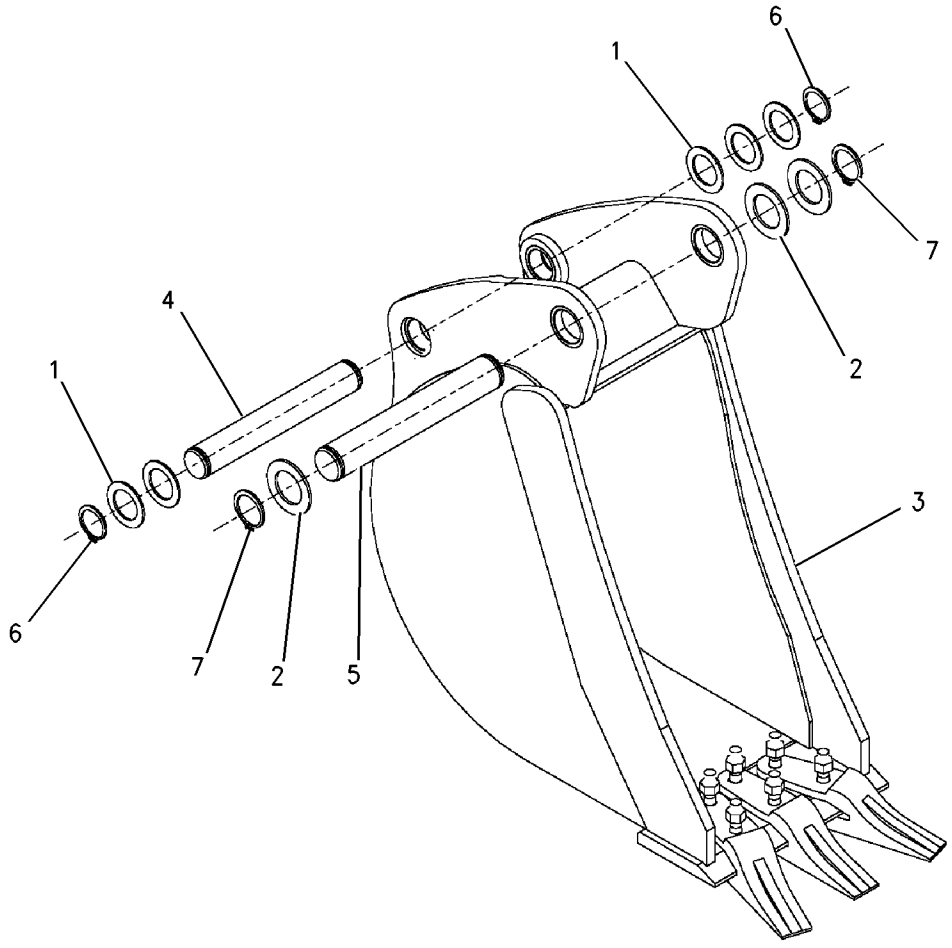

GRAPHIC #1 **<END>** g00713100

174-6365 BUCKET GP-HOE–HEAVY DUTY

S/N: BFP12900-UP
305MM (12IN)
AN ATTACHMENT

SMCS-6503 **i01949839**

NOTE	REF NO	GRAPHIC REF	PART NUMBER	QTY	PART NAME 1 2 3 4 5 6 (PRODUCT LEVEL)	SEE PAGE
	1	1	**9R-0158**	5	WASHER (46X69X3MM THK)	
	2	1	**9R-1510**	3	WASHER (51X82X4MM THK)	
Y	3	1	**151-7877**	1	BUCKET GP-HOE	781
	4	1	**168-0443**	1	PIN	
	5	1	**168-0444**	1	PIN	
	6	1	**6V-3213**	2	RING-RETAINING	
	7	1	**6V-4364**	2	RING-RETAINING	

Y-SEPARATE ILLUSTRATION

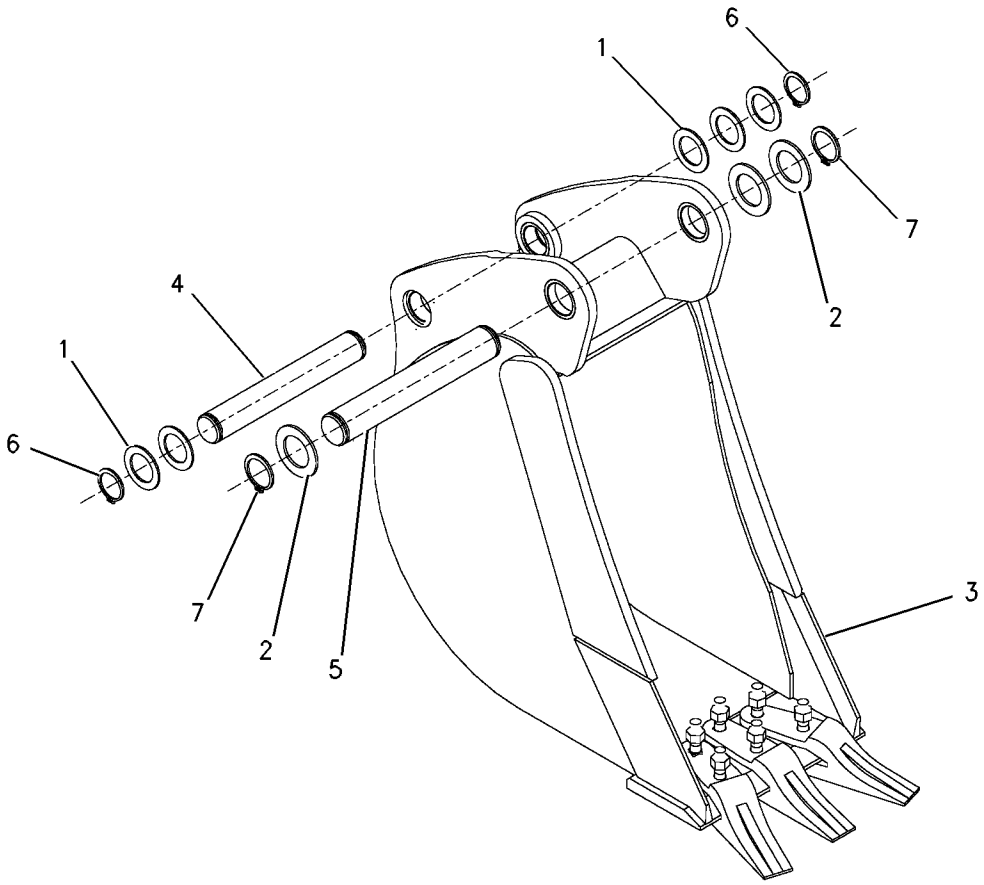

GRAPHIC #1 **<END>** g00713078

191-6939 BUCKET GP-HOE–UTILITY

S/N: BFP12900-UP
1200MM (47IN)
AN ATTACHMENT

SMCS-6503 **i01949885**

NOTE	REF NO	GRAPHIC REF	PART NUMBER	QTY	PART NAME 1 2 3 4 5 6 (PRODUCT LEVEL)	SEE PAGE
	1	1	**167-0495**	1	BUCKET AS-HOE	
	2	1	*151-7902*	1	BRACKET AS-LH	
	2A	1	**9R-0162**	1	BEARING	
	2B	1	**168-0480**	1	BEARING-SLEEVE	
	3	1	*151-7903*	1	BRACKET AS-RH	
	3A	1	**9R-0162**	1	BEARING	
	3B	1	**168-0480**	1	BEARING-SLEEVE	
	4	1	**167-0499**	1	EDGE	

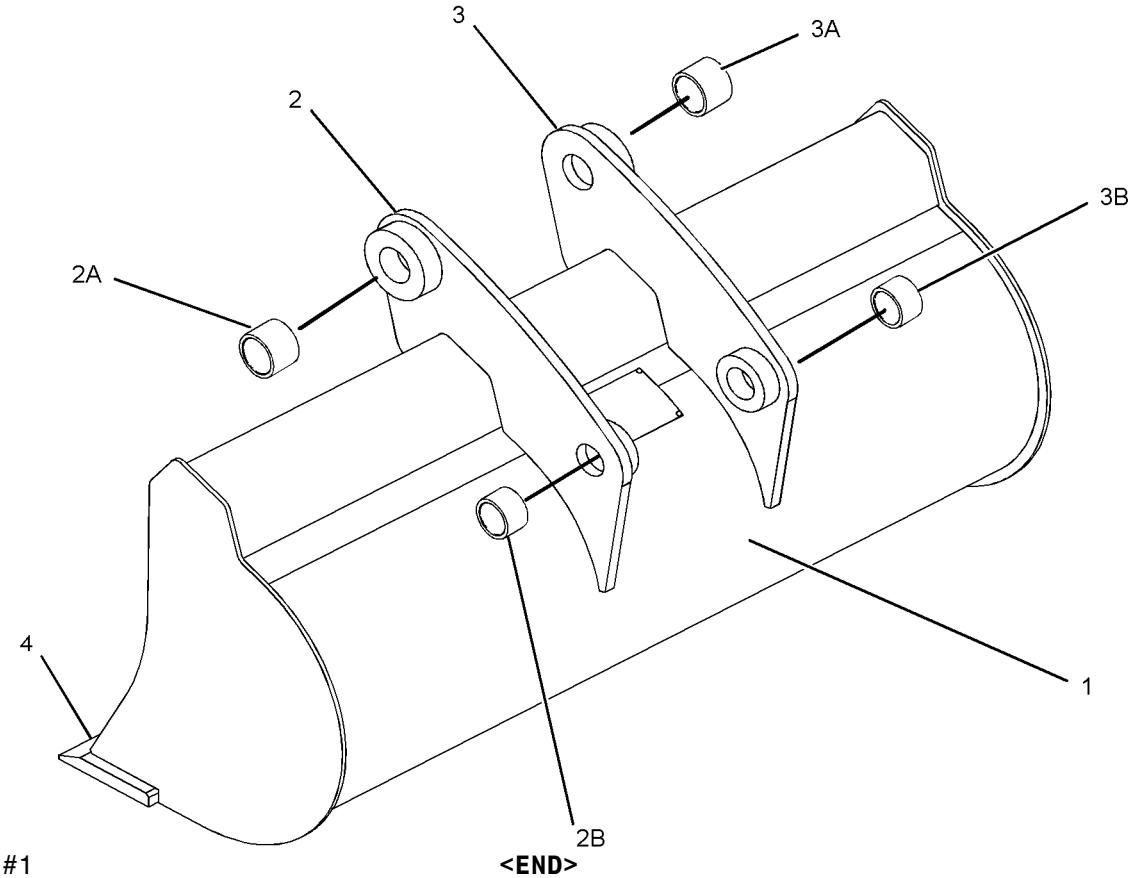

GRAPHIC #1 **<END>** g01014849

WORK TOOLS

191-6940 BUCKET GP-HOE—UTILITY

S/N: BFP12900-UP
1200MM (47IN)
AN ATTACHMENT

SMCS-6503 **i01949890**

NOTE	REF NO	GRAPHIC REF	PART NUMBER	QTY	PART NAME 1 2 3 4 5 6 (PRODUCT LEVEL)	SEE PAGE
	1	1	**167-0500**	1	BUCKET AS-HOE	
	2	1	*151-7902*	1	BRACKET AS-LH	
	2A	1	**9R-0162**	1	BEARING	
	2B	1	**168-0480**	1	BEARING-SLEEVE	
	3	1	*151-7903*	1	BRACKET AS-RH	
	3A	1	**9R-0162**	1	BEARING	
	3B	1	**168-0480**	1	BEARING-SLEEVE	
	4	1	**136-3766**	1	EDGE	

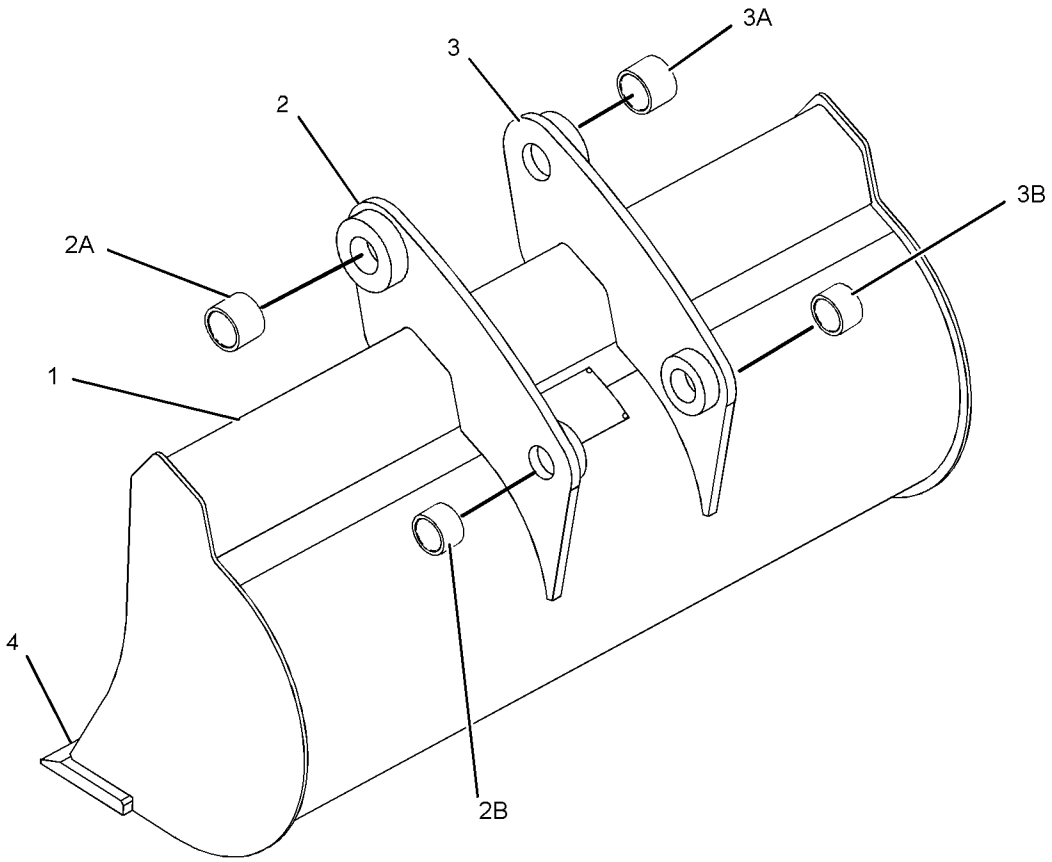

GRAPHIC #1 **<END>** g01014815

WORK TOOLS

212-8738 BUCKET GP-HOE—DITCH CLEANING

S/N: BFP12900-UP
1200MM (47IN)
AN ATTACHMENT

SMCS-6503 **i02021904**

NOTE	REF NO	GRAPHIC REF	PART NUMBER	QTY	PART NAME 1 2 3 4 5 6 (PRODUCT LEVEL)	SEE PAGE
	1	1	*200-0235*	1	BUCKET AS-HOE	
	1A	1	**200-0219**	1	EDGE	
F		1	*200-0222*	1	BRACKET AS (RH)	
	1B	1	**9R-0162**	1	BEARING	
	1C	1	**168-0480**	1	BEARING-SLEEVE	
F		1	*200-0223*	1	BRACKET AS (LH)	
	1D	1	**9R-0162**	1	BEARING	
	1E	1	**168-0480**	1	BEARING-SLEEVE	

F-NOT SHOWN

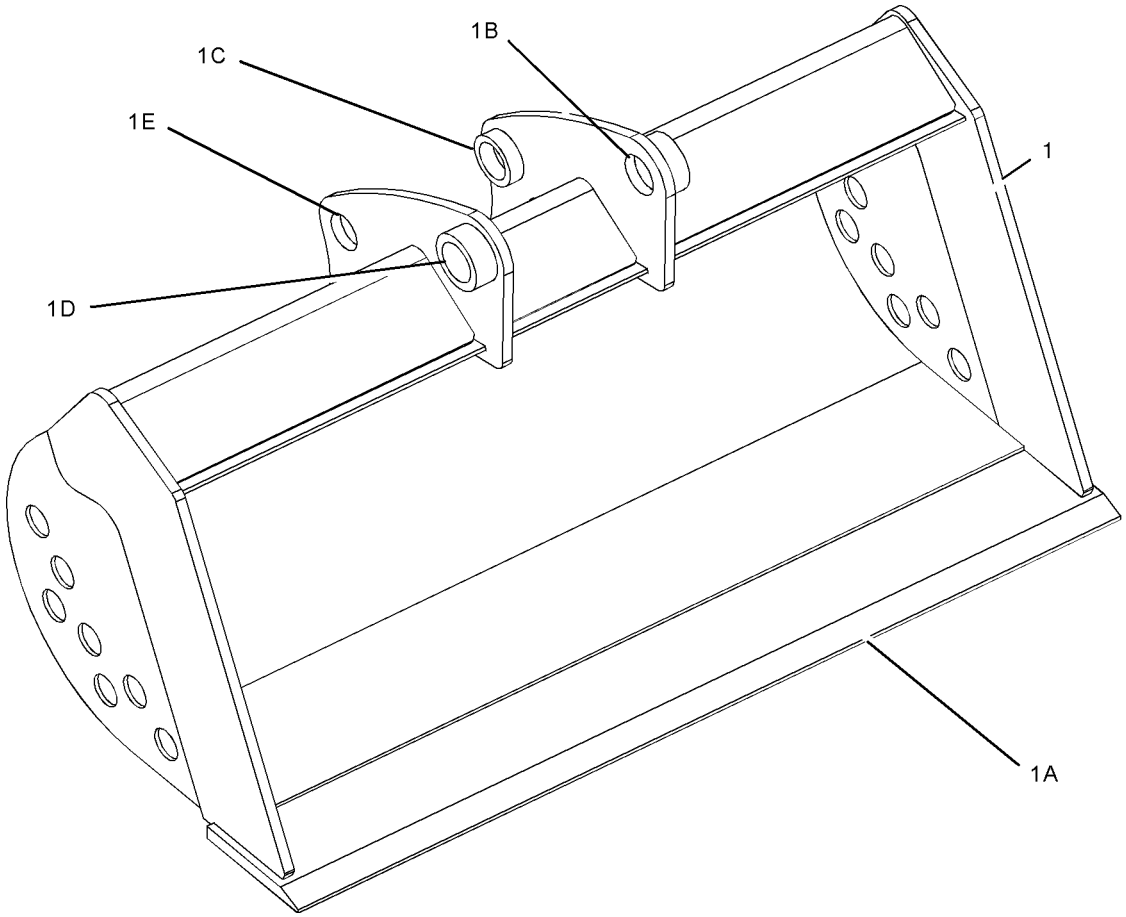

GRAPHIC #1 **<END>** g01044155

WORK TOOLS

212-8740 BUCKET GP-HOE—DITCH CLEANING

S/N: BFP12900-UP
1400MM (55IN)
AN ATTACHMENT

SMCS-6503 **i02021902**

NOTE	REF NO	GRAPHIC REF	PART NUMBER	QTY	PART NAME 1 2 3 4 5 6 (PRODUCT LEVEL)	SEE PAGE
	1	1	*200-0236*	1	BUCKET AS-HOE	
	1A	1	**200-0220**	1	EDGE	
F		1	*200-0222*	1	BRACKET AS (RH)	
	1B	1	**9R-0162**	1	BEARING	
	1C	1	**168-0480**	1	BEARING-SLEEVE	
F		1	*200-0223*	1	BRACKET AS (LH)	
	1D	1	**9R-0162**	1	BEARING	
	1E	1	**168-0480**	1	BEARING-SLEEVE	

F-NOT SHOWN

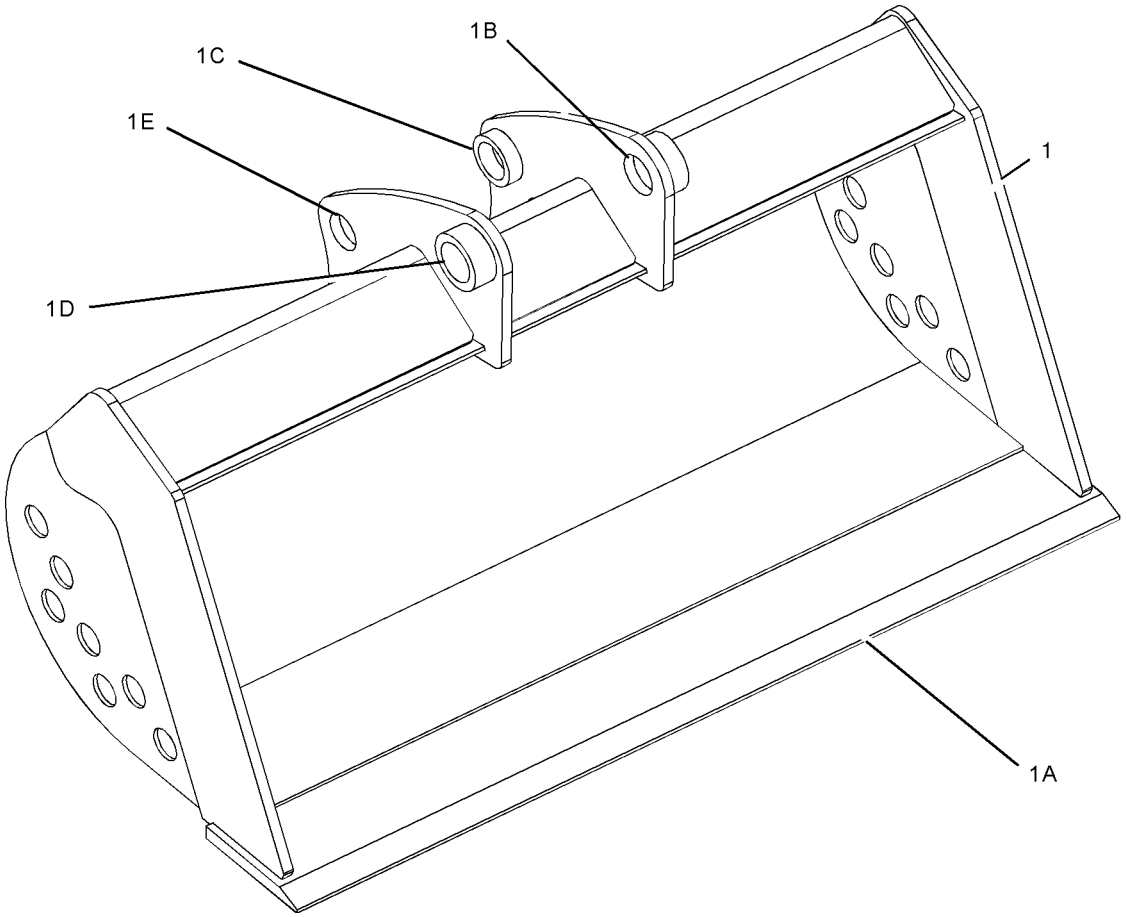

GRAPHIC #1 **<END>** g01044155

WORK TOOLS

219-3379 BUCKET GP-HOE–STANDARD DUTY

S/N: BFP12900-UP
305MM (12IN)
PART OF 219-3410 BUCKET GP-HOE
AN ATTACHMENT

SMCS-6503 **i01916339**

NOTE	REF NO	GRAPHIC REF	PART NUMBER	QTY	PART NAME 1 2 3 4 5 6 (PRODUCT LEVEL)	SEE PAGE
	1	1	*208-5245*	3	TIP GP-PENETRATION	
					(EACH INCLUDES)	
	1A	1	**201-1238**	1	PIN	
	1B	1	**201-1239**	1	RETAINER AS	
	1C	1	**208-5235**	1	TIP-PENETRATION	
	2	1	*151-7929*	1	BRACKET AS-LH	
	2A	1	**9R-0320**	1	BEARING	
	2B	1	**154-5257**	1	BEARING	
	3	1	*151-7930*	1	BRACKET AS-RH	
	3A	1	**9R-0320**	1	BEARING	
	3B	1	**154-5257**	1	BEARING	

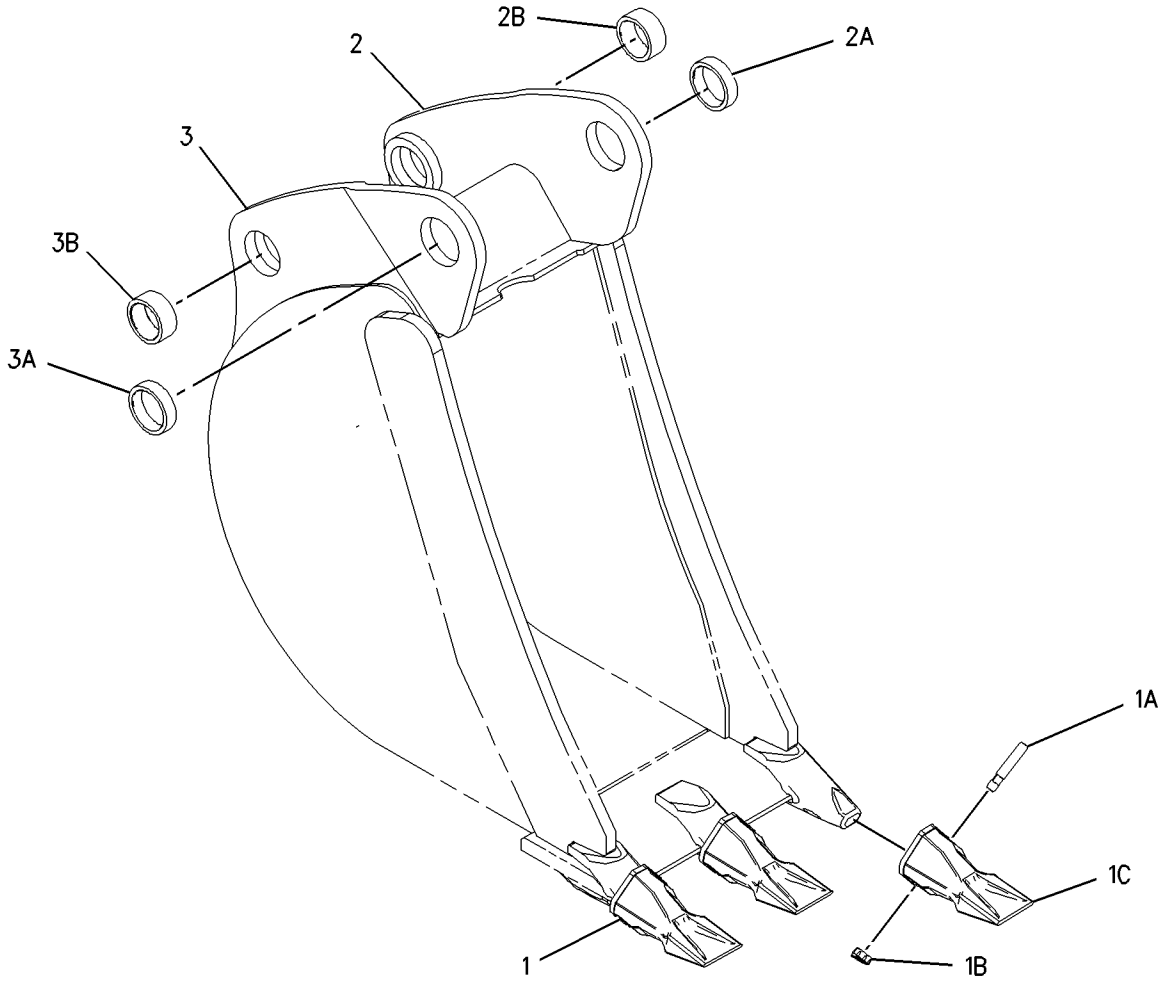

GRAPHIC #1 **<END>** g01001647

219-3380 BUCKET GP-HOE–STANDARD DUTY

S/N: BFP12900-UP
458MM (18IN)
AN ATTACHMENT

SMCS-6503 **i01916416**

NOTE	REF NO	GRAPHIC REF	PART NUMBER	QTY	PART NAME 1 2 3 4 5 6 (PRODUCT LEVEL)	SEE PAGE
	1	1	*208-5245*	4	TIP GP-PENETRATION	
					(EACH INCLUDES)	
	1A	1	**201-1238**	1	PIN	
	1B	1	**201-1239**	1	RETAINER AS	
	1C	1	**208-5235**	1	TIP-PENETRATION	
	2	1	*151-7902*	1	BRACKET AS-LH	
	2A	1	**9R-0162**	1	BEARING	
	2B	1	**168-0480**	1	BEARING-SLEEVE	
	3	1	*151-7903*	1	BRACKET AS-RH	
	3A	1	**9R-0162**	1	BEARING	
	3B	1	**168-0480**	1	BEARING-SLEEVE	

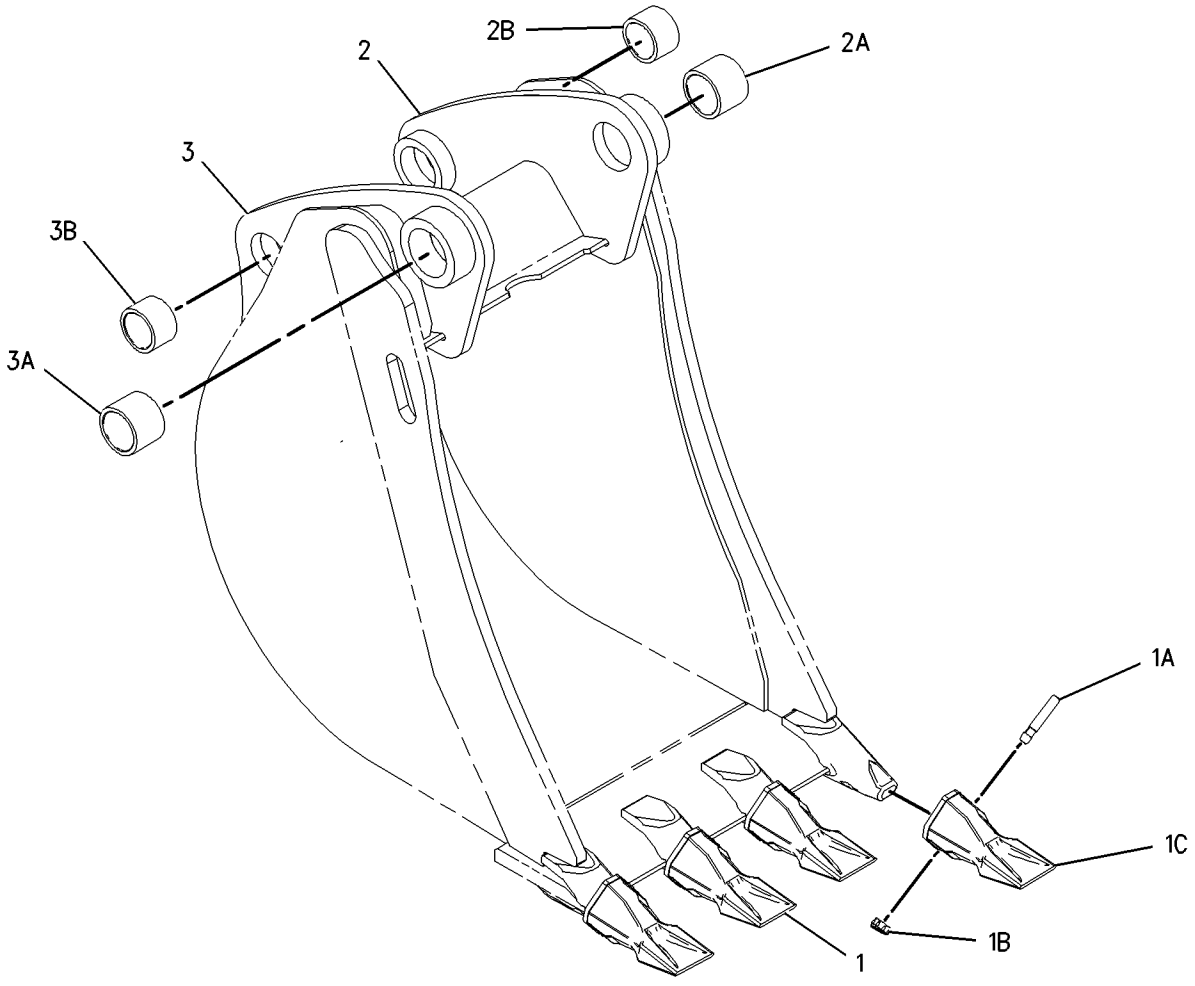

GRAPHIC #1 **<END>** g01001636

WORK TOOLS

219-3381 BUCKET GP-H0E–STANDARD DUTY

S/N: BFP12900-UP
610MM (24IN)
AN ATTACHMENT

SMCS-6503 **i01946855**

NOTE	REF NO	GRAPHIC REF	PART NUMBER	QTY	PART NAME 1 2 3 4 5 6 (PRODUCT LEVEL)	SEE PAGE
	1	1	*208-5245*	5	TIP GP-PENETRATION	
					(EACH INCLUDES)	
	1A	1	**201-1238**	1	PIN	
	1B	1	**201-1239**	1	RETAINER AS	
	1C	1	**208-5235**	1	TIP-PENETRATION	
	2	1	*151-7902*	1	BRACKET AS-LH	
	2A	1	**9R-0162**	1	BEARING	
	2B	1	**168-0480**	1	BEARING-SLEEVE	
	3	1	*151-7903*	1	BRACKET AS-RH	
	3A	1	**9R-0162**	1	BEARING	
	3B	1	**168-0480**	1	BEARING-SLEEVE	
	4	1	**219-9488**	1	EDGE	
	5	1	**201-1235**	5	ADAPTER	

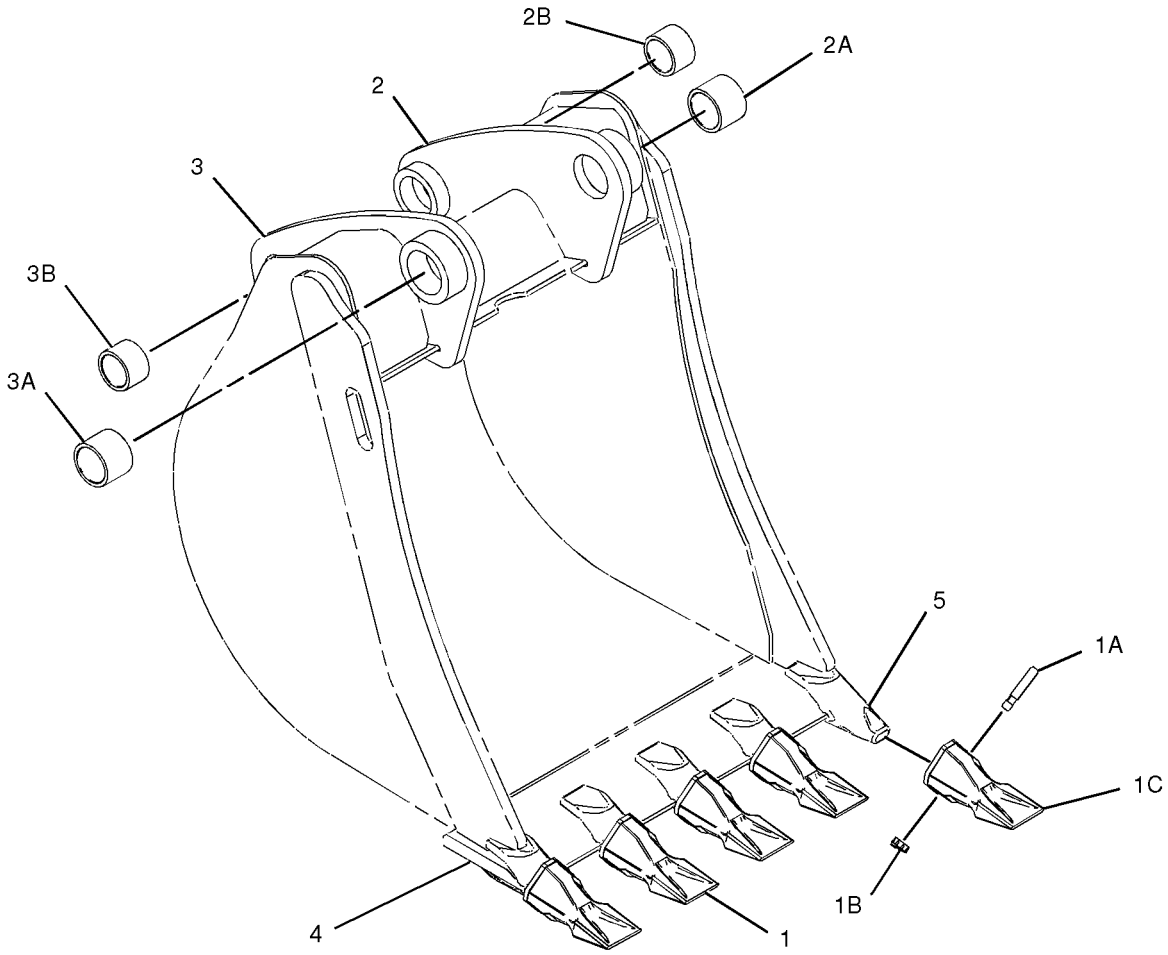

GRAPHIC #1 **<END>** g01013630

219-3382 BUCKET GP-HOE–STANDARD DUTY

S/N: BFP12900-UP
762MM (30IN)
AN ATTACHMENT

SMCS-6503 **i01916518**

NOTE	REF NO	GRAPHIC REF	PART NUMBER	QTY	PART NAME 1 2 3 4 5 6 (PRODUCT LEVEL)	SEE PAGE
	1	1	*208-5245*	5	TIP GP-PENETRATION	
					(EACH INCLUDES)	
	1A	1	**201-1238**	1	PIN	
	1B	1	**201-1239**	1	RETAINER AS	
	1C	1	**208-5235**	1	TIP-PENETRATION	
	2	1	*151-7902*	1	BRACKET AS-LH	
	2A	1	**9R-0162**	1	BEARING	
	2B	1	**168-0480**	1	BEARING-SLEEVE	
	3	1	*151-7903*	1	BRACKET AS-RH	
	3A	1	**9R-0162**	1	BEARING	
	3B	1	**168-0480**	1	BEARING-SLEEVE	

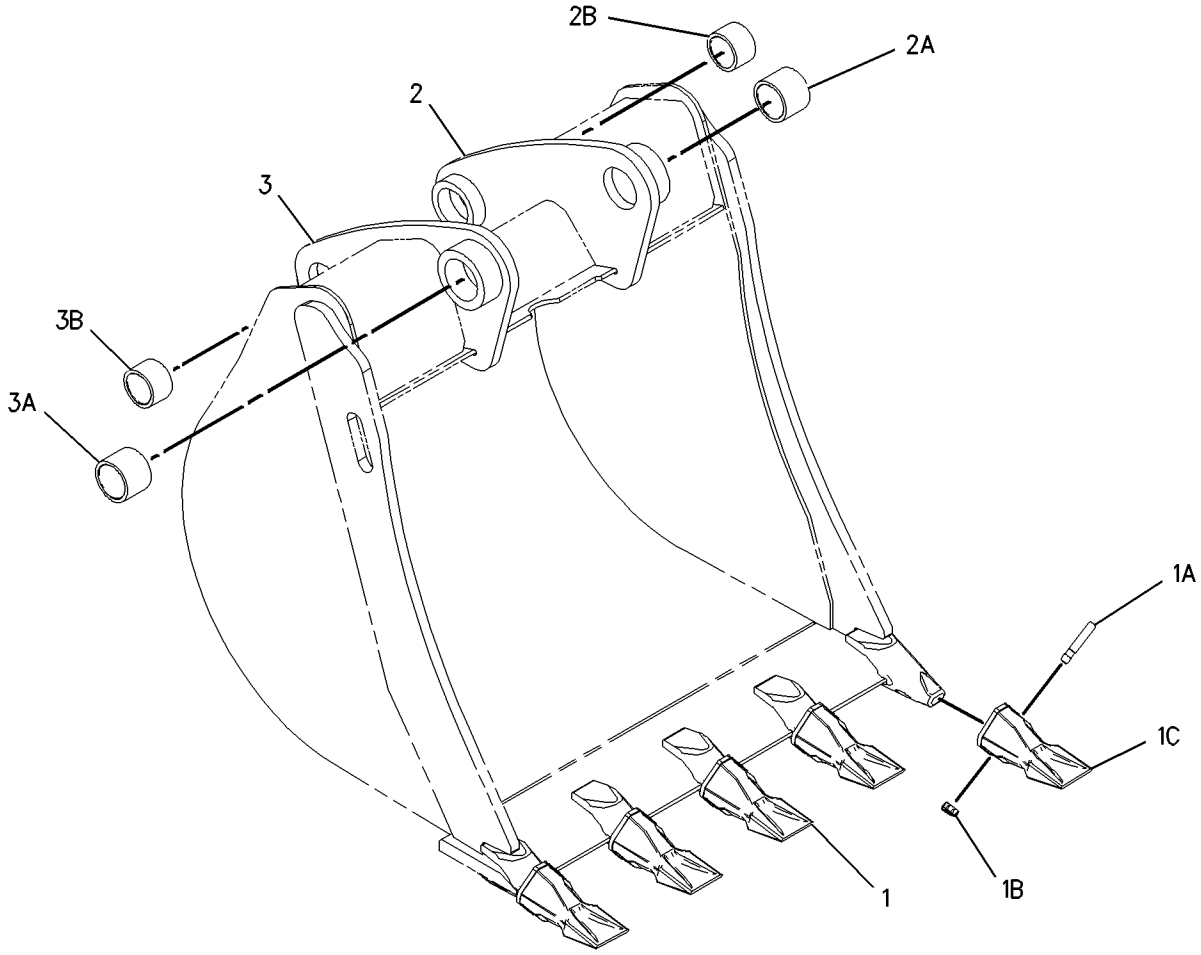

GRAPHIC #1 **<END>** g01001590

WORK TOOLS

219-3383 BUCKET GP-H0E–STANDARD DUTY

S/N: BFP12900-UP
914MM (36IN)
AN ATTACHMENT

SMCS-6503 **i01916522**

NOTE	REF NO	GRAPHIC REF	PART NUMBER	QTY	PART NAME 1 2 3 4 5 6 (PRODUCT LEVEL)	SEE PAGE
	1	1	*208-5245*	6	TIP GP-PENETRATION	
					(EACH INCLUDES)	
	1A	1	**201-1238**	1	PIN	
	1B	1	**201-1239**	1	RETAINER AS	
	1C	1	**208-5235**	1	TIP-PENETRATION	
	2	1	*151-7902*	1	BRACKET AS-LH	
	2A	1	**9R-0162**	1	BEARING	
	2B	1	**168-0480**	1	BEARING-SLEEVE	
	3	1	*151-7903*	1	BRACKET AS-RH	
	3A	1	**9R-0162**	1	BEARING	
	3B	1	**168-0480**	1	BEARING-SLEEVE	

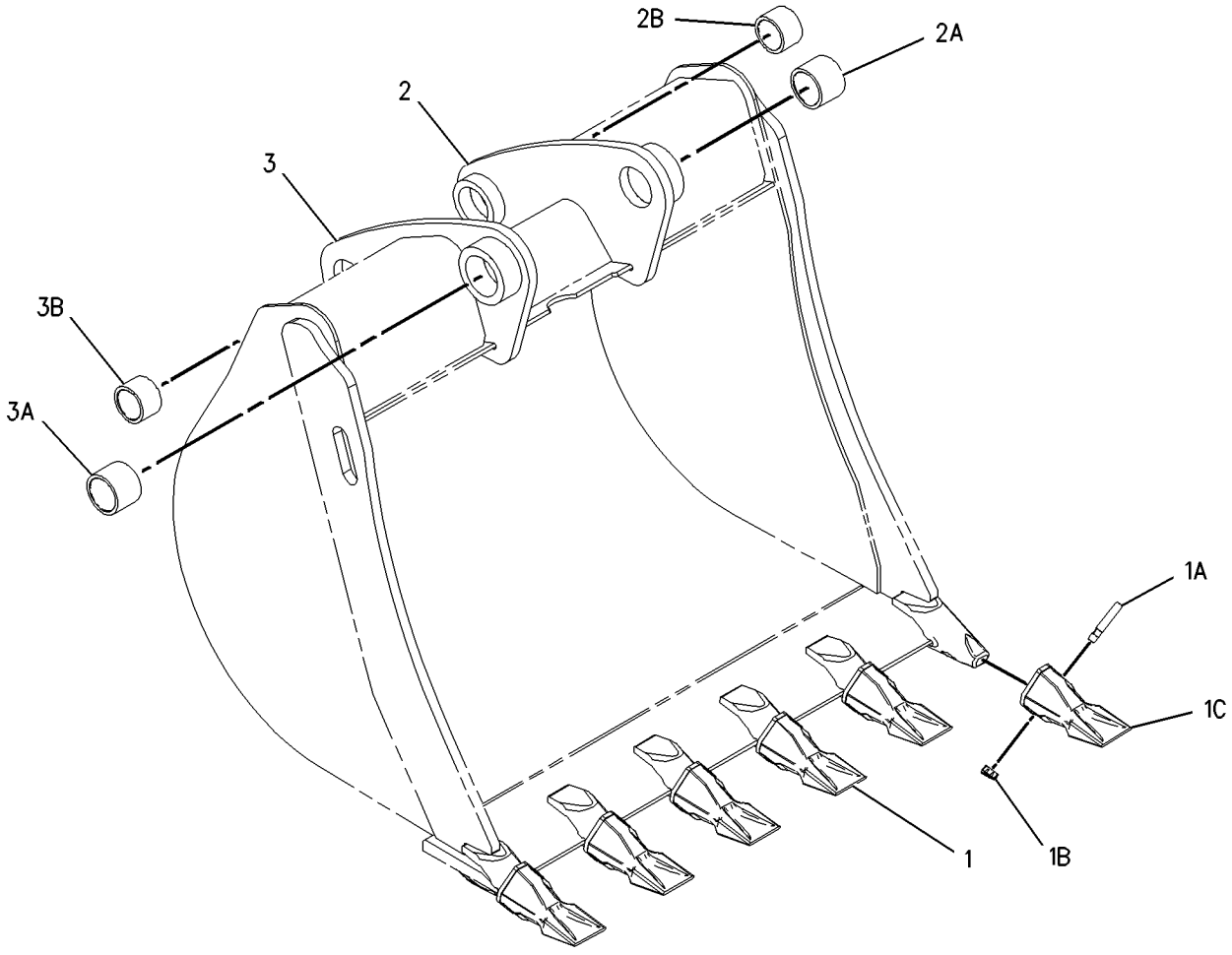

GRAPHIC #1 **<END>** g01001601

219-3384 BUCKET GP-HOE—HEAVY DUTY

S/N: BFP12900-UP
305MM (18IN)
PART OF 219-3411 BUCKET GP-HOE
AN ATTACHMENT

SMCS-6503 **i01917203**

NOTE	REF NO	GRAPHIC REF	PART NUMBER	QTY	PART NAME 1 2 3 4 5 6 (PRODUCT LEVEL)	SEE PAGE
	1	1	*208-5245*	3	TIP GP-PENETRATION	
					(EACH INCLUDES)	
	1A	1	**201-1238**	1	PIN	
	1B	1	**201-1239**	1	RETAINER AS	
	1C	1	**208-5235**	1	TIP-PENETRATION	
	2	1	*151-7929*	1	BRACKET AS-LH	
	2A	1	**9R-0320**	1	BEARING	
	2B	1	**154-5257**	1	BEARING	
	3	1	*151-7930*	1	BRACKET AS-RH	
	3A	1	**9R-0320**	1	BEARING	
	3B	1	**154-5257**	1	BEARING	
	4	1	**219-9482**	1	EDGE	

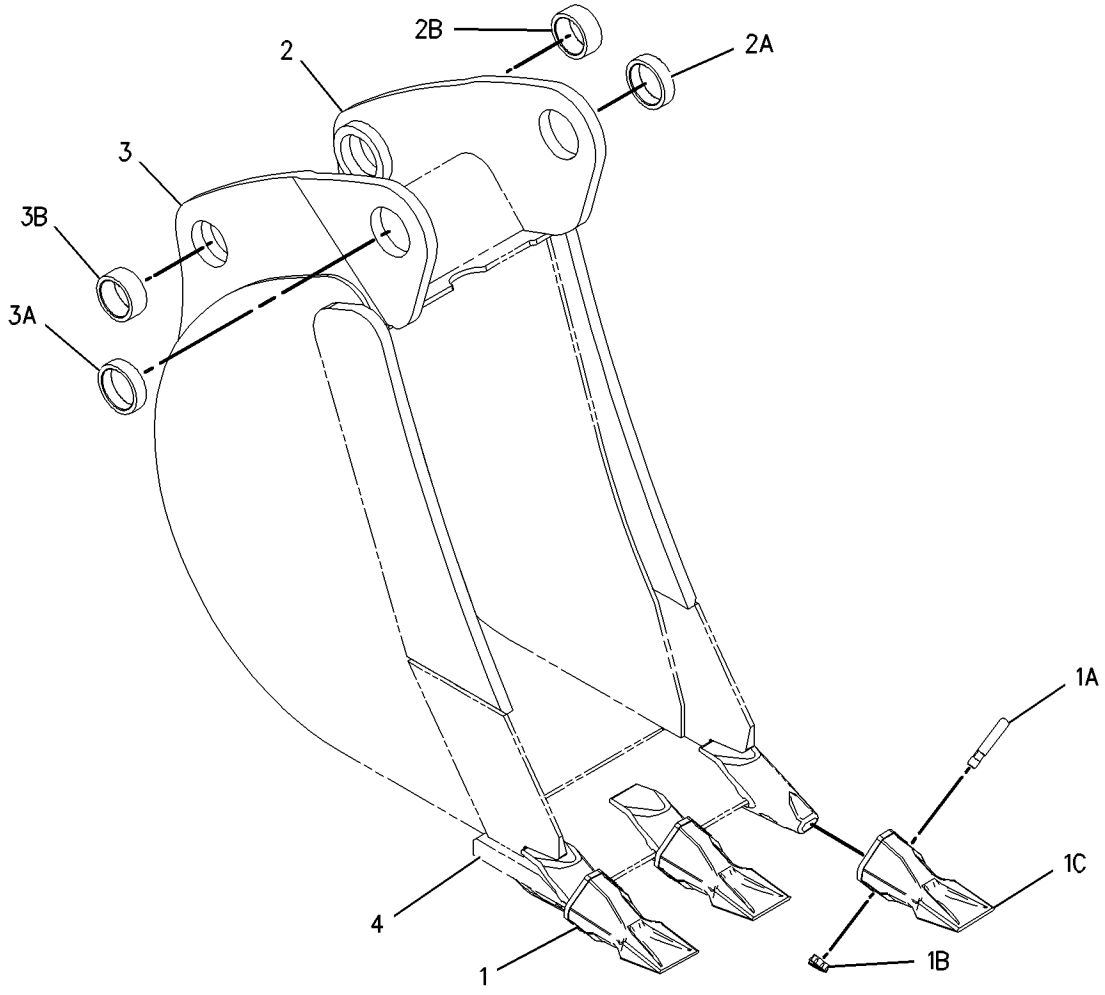

GRAPHIC #1 **<END>** g01001916

WORK TOOLS

219-3385 BUCKET GP-H0E–HEAVY DUTY

S/N: BFP12900-UP
407MM (16IN)
AN ATTACHMENT

SMCS-6503 **i01917327**

NOTE	REF NO	GRAPHIC REF	PART NUMBER	QTY	PART NAME 1 2 3 4 5 6 (PRODUCT LEVEL)	SEE PAGE
	1	1	*208-5245*	3	TIP GP-PENETRATION	
					(EACH INCLUDES)	
	1A	1	**201-1238**	1	PIN	
	1B	1	**201-1239**	1	RETAINER AS	
	1C	1	**208-5235**	1	TIP-PENETRATION	
	2	1	*151-7902*	1	BRACKET AS-LH	
	2A	1	**9R-0162**	1	BEARING	
	2B	1	**168-0480**	1	BEARING-SLEEVE	
	3	1	*151-7903*	1	BRACKET AS-RH	
	3A	1	**9R-0162**	1	BEARING	
	3B	1	**168-0480**	1	BEARING-SLEEVE	
	4	1	**219-9482**	1	EDGE	

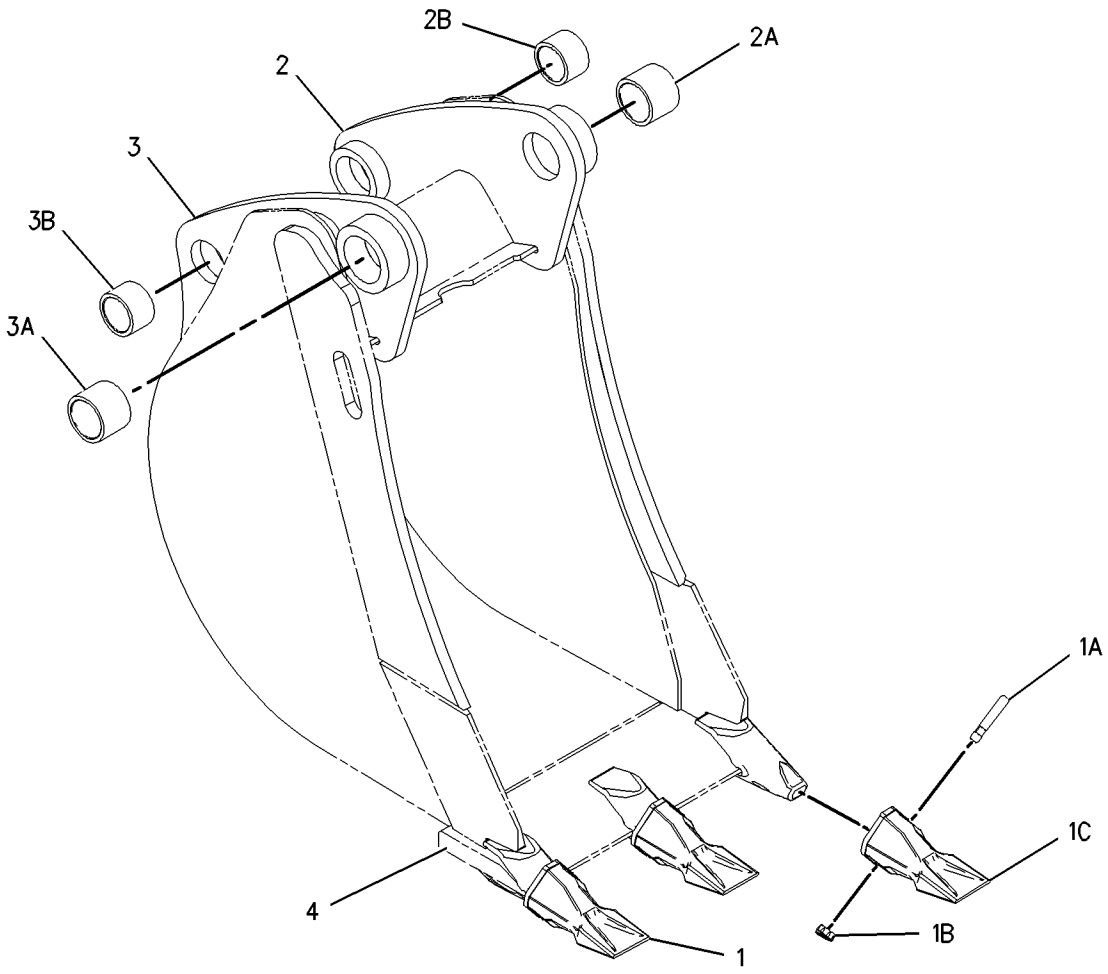

GRAPHIC #1 **<END>** g01001972

219-3386 BUCKET GP-HOE–HEAVY DUTY

S/N: BFP12900-UP
458MM (18IN)
AN ATTACHMENT

SMCS-6503 **i01917356**

NOTE	REF NO	GRAPHIC REF	PART NUMBER	QTY	PART NAME 1 2 3 4 5 6 (PRODUCT LEVEL)	SEE PAGE
	1	1	*208-5245*	4	TIP GP-PENETRATION	
					(EACH INCLUDES)	
	1A	1	**201-1238**	1	PIN	
	1B	1	**201-1239**	1	RETAINER AS	
	1C	1	**208-5235**	1	TIP-PENETRATION	
	2	1	*151-7902*	1	BRACKET AS-LH	
	2A	1	**9R-0162**	1	BEARING	
	2B	1	**168-0480**	1	BEARING-SLEEVE	
	3	1	*151-7903*	1	BRACKET AS-RH	
	3A	1	**9R-0162**	1	BEARING	
	3B	1	**168-0480**	1	BEARING-SLEEVE	
	4	1	**219-9483**	1	EDGE	

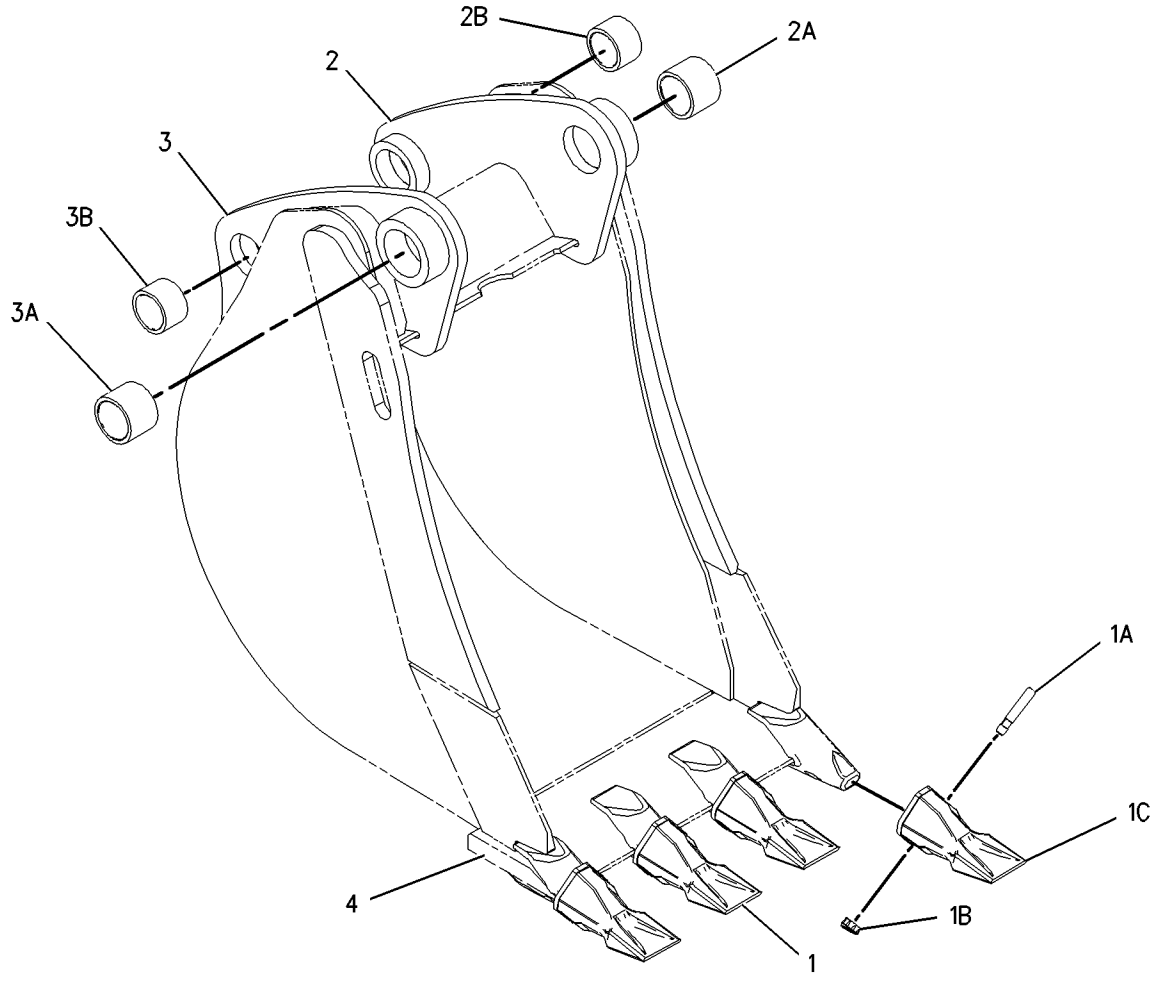

GRAPHIC #1 **<END>** g01001988

WORK TOOLS

219-3387 BUCKET GP-H0E–HEAVY DUTY

S/N: BFP12900-UP
610MM (24IN)
AN ATTACHMENT

SMCS-6503 **i01917364**

NOTE	REF NO	GRAPHIC REF	PART NUMBER	QTY	PART NAME 1 2 3 4 5 6 (PRODUCT LEVEL)	SEE PAGE
	1	1	*208-5245*	5	TIP GP-PENETRATION	
					(EACH INCLUDES)	
	1A	1	**201-1238**	1	PIN	
	1B	1	**201-1239**	1	RETAINER AS	
	1C	1	**208-5235**	1	TIP-PENETRATION	
	2	1	*151-7902*	1	BRACKET AS-LH	
	2A	1	**9R-0162**	1	BEARING	
	2B	1	**168-0480**	1	BEARING-SLEEVE	
	3	1	*151-7903*	1	BRACKET AS-RH	
	3A	1	**9R-0162**	1	BEARING	
	3B	1	**168-0480**	1	BEARING-SLEEVE	
	4	1	**219-9484**	1	EDGE	

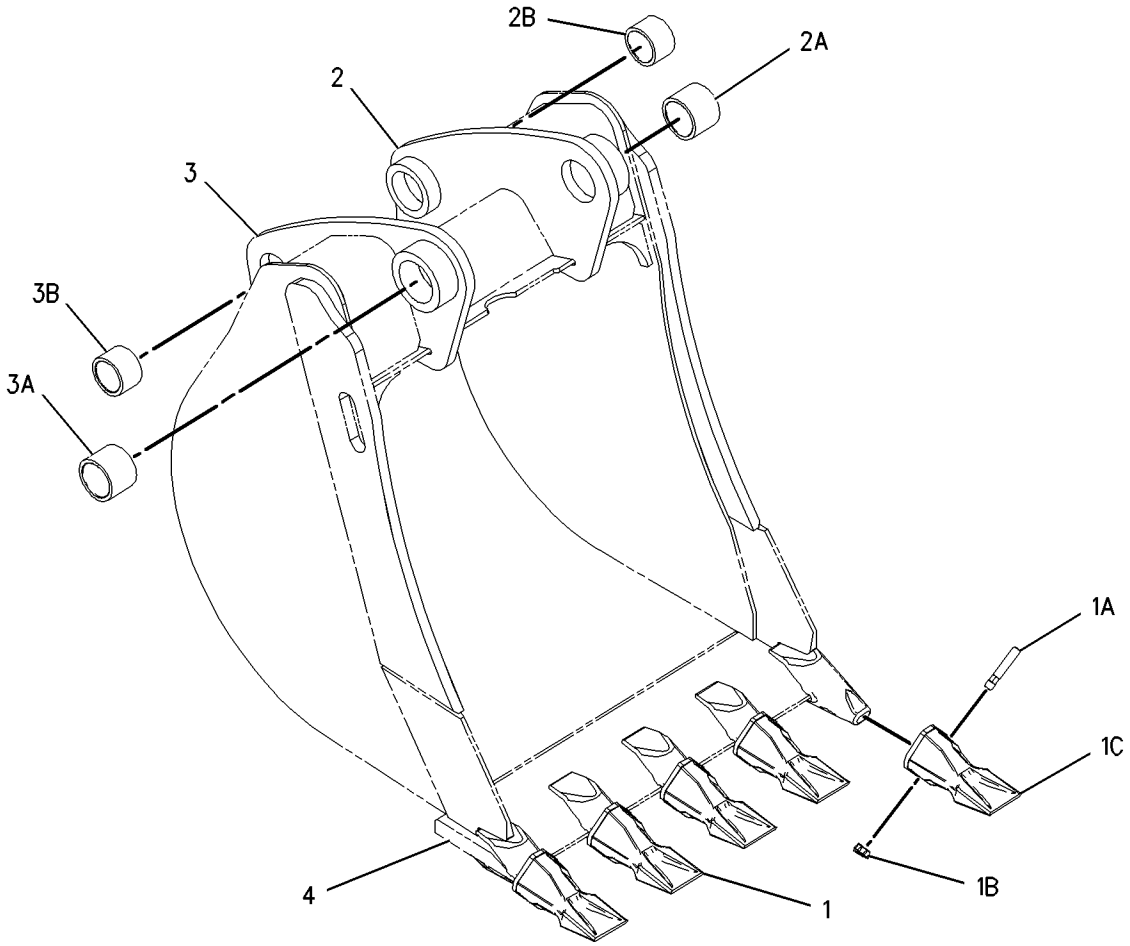

GRAPHIC #1 **<END>** g01002004

WORK TOOLS

219-3388 BUCKET GP-HOE–HEAVY DUTY

S/N: BFP12900-UP
762MM (30IN)
AN ATTACHMENT

SMCS-6503 **i01917366**

NOTE	REF NO	GRAPHIC REF	PART NUMBER	QTY	PART NAME 1 2 3 4 5 6 (PRODUCT LEVEL)	SEE PAGE
	1	1	*208-5245*	5	TIP GP-PENETRATION	
					(EACH INCLUDES)	
	1A	1	**201-1238**	1	PIN	
	1B	1	**201-1239**	1	RETAINER AS	
	1C	1	**208-5235**	1	TIP-PENETRATION	
	2	1	*151-7902*	1	BRACKET AS-LH	
	2A	1	**9R-0162**	1	BEARING	
	2B	1	**168-0480**	1	BEARING-SLEEVE	
	3	1	*151-7903*	1	BRACKET AS-RH	
	3A	1	**9R-0162**	1	BEARING	
	3B	1	**168-0480**	1	BEARING-SLEEVE	
	4	1	**219-9485**	1	EDGE	

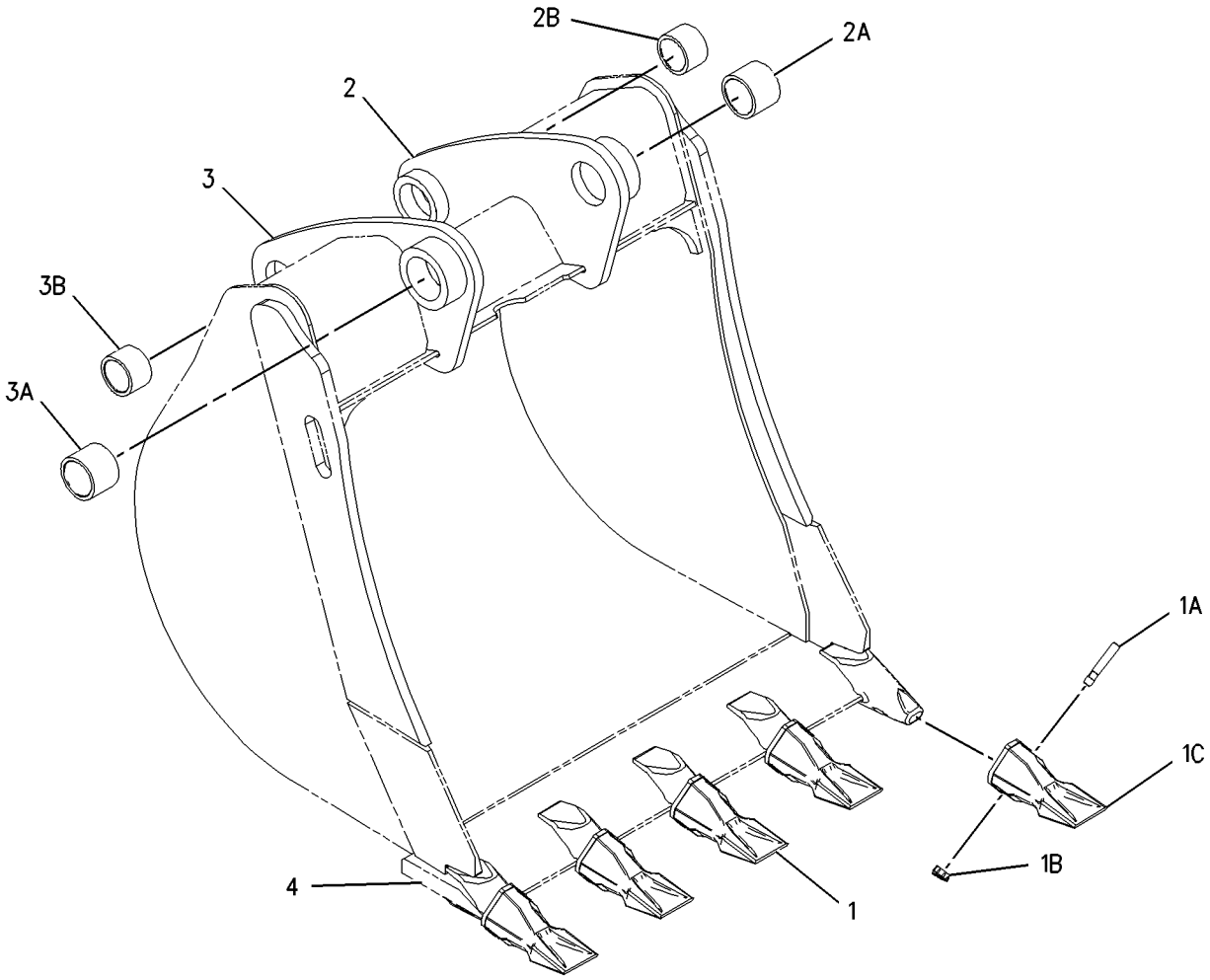

GRAPHIC #1 **<END>** g01002018

WORK TOOLS

219-3389 BUCKET GP-HOE–HEAVY DUTY

S/N: BFP12900-UP
914MM (36IN)
AN ATTACHMENT

SMCS-6503 **i01917647**

NOTE	REF NO	GRAPHIC REF	PART NUMBER	QTY	PART NAME 1 2 3 4 5 6 (PRODUCT LEVEL)	SEE PAGE
	1	1	*208-5245*	6	TIP GP-PENETRATION	
					(EACH INCLUDES)	
	1A	1	**201-1238**	1	PIN	
	1B	1	**201-1239**	1	RETAINER AS	
	1C	1	**208-5235**	1	TIP-PENETRATION	
	2	1	*151-7902*	1	BRACKET AS-LH	
	2A	1	**9R-0162**	1	BEARING	
	2B	1	**168-0480**	1	BEARING-SLEEVE	
	3	1	*151-7903*	1	BRACKET AS-RH	
	3A	1	**9R-0162**	1	BEARING	
	3B	1	**168-0480**	1	BEARING-SLEEVE	
	4	1	**219-9486**	1	EDGE	

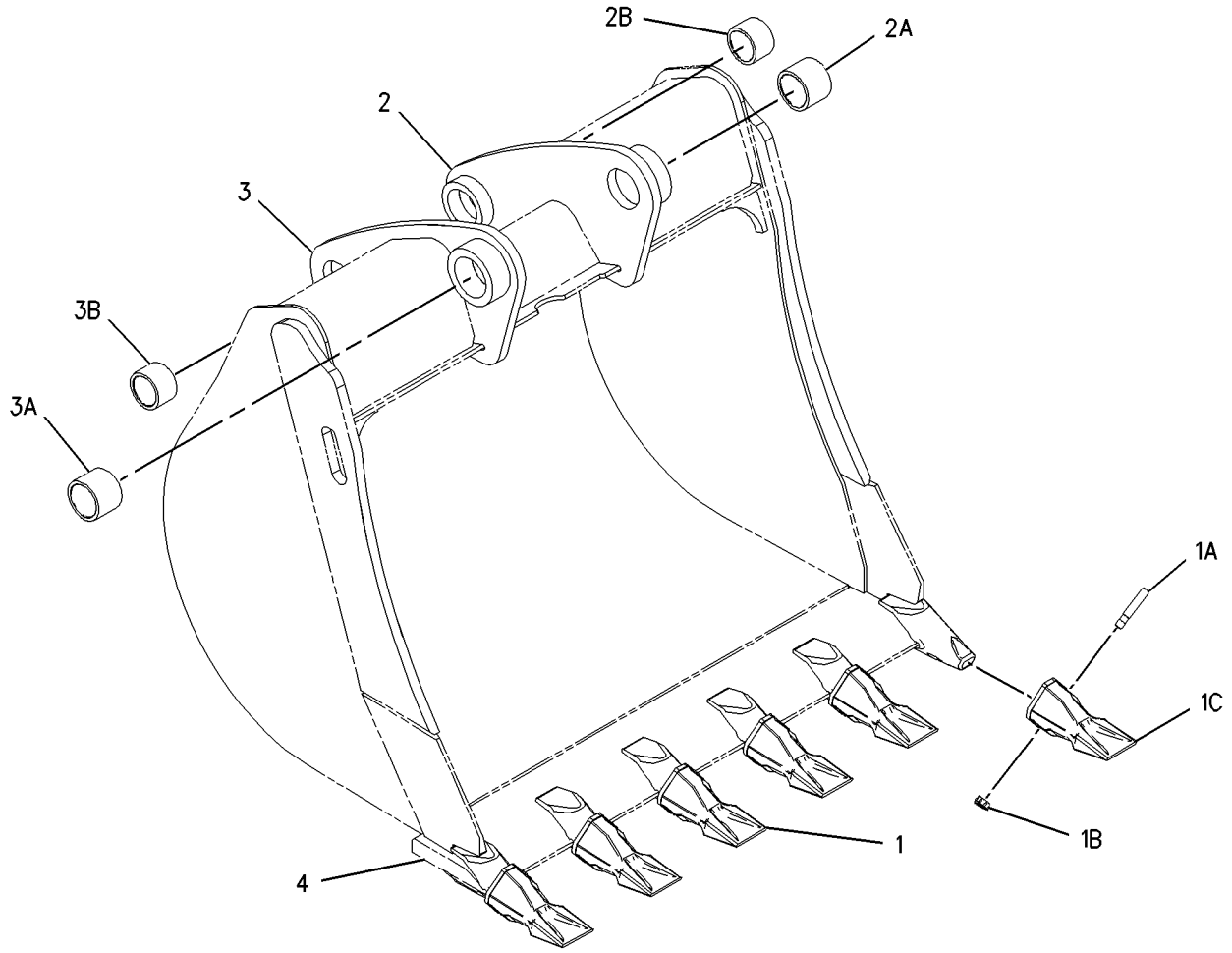

GRAPHIC #1 **<END>** g01002037

WORK TOOLS

219-3390 BUCKET GP-HOE—HIGH CAPACITY

S/N: BFP12900-UP
458MM (18IN)
AN ATTACHMENT

SMCS-6503 **i01917633**

NOTE	REF NO	GRAPHIC REF	PART NUMBER	QTY	PART NAME 1 2 3 4 5 6 (PRODUCT LEVEL)	SEE PAGE
	1	1	*208-5245*	4	TIP GP-PENETRATION	
					(EACH INCLUDES)	
	1A	1	**201-1238**	1	PIN	
	1B	1	**201-1239**	1	RETAINER AS	
	1C	1	**208-5235**	1	TIP-PENETRATION	
	2	1	*151-7902*	1	BRACKET AS-LH	
	2A	1	**9R-0162**	1	BEARING	
	2B	1	**168-0480**	1	BEARING-SLEEVE	
	3	1	*151-7903*	1	BRACKET AS-RH	
	3A	1	**9R-0162**	1	BEARING	
	3B	1	**168-0480**	1	BEARING-SLEEVE	
	4	1	**219-9483**	1	EDGE	

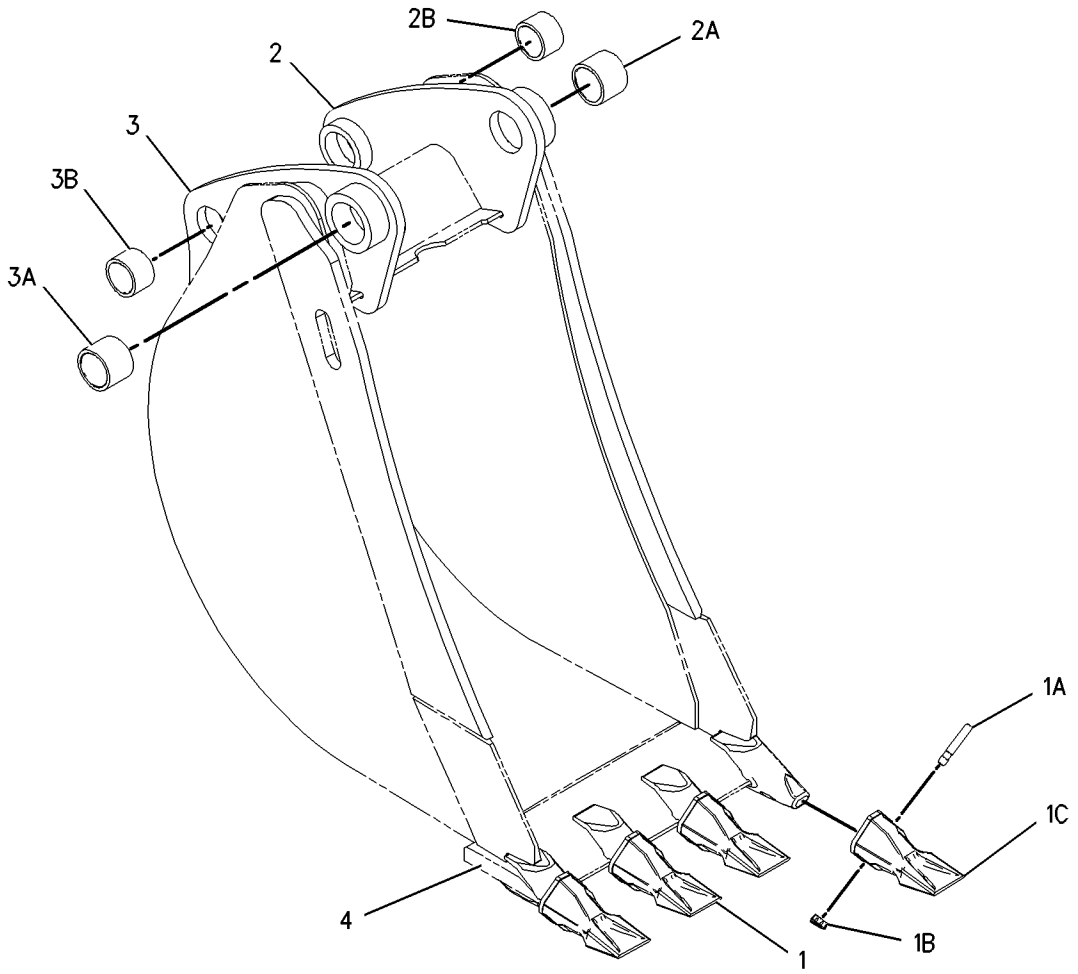

GRAPHIC #1 **<END>** g01002001

WORK TOOLS

219-3391 BUCKET GP-HOE—HIGH CAPACITY

S/N: BFP12900-UP
610MM (24IN)
AN ATTACHMENT

SMCS-6503 **i01917651**

NOTE	REF NO	GRAPHIC REF	PART NUMBER	QTY	PART NAME 1 2 3 4 5 6 (PRODUCT LEVEL)	SEE PAGE
	1	1	*208-5245*	5	TIP GP-PENETRATION	
					(EACH INCLUDES)	
	1A	1	**201-1238**	1	PIN	
	1B	1	**201-1239**	1	RETAINER AS	
	1C	1	**208-5235**	1	TIP-PENETRATION	
	2	1	*151-7902*	1	BRACKET AS-LH	
	2A	1	**9R-0162**	1	BEARING	
	2B	1	**168-0480**	1	BEARING-SLEEVE	
	3	1	**151-7903**	1	BRACKET AS-RH	
	3A	1	**9R-0162**	1	BEARING	
	3B	1	**168-0480**	1	BEARING-SLEEVE	
	4	1	**219-9484**	1	EDGE	

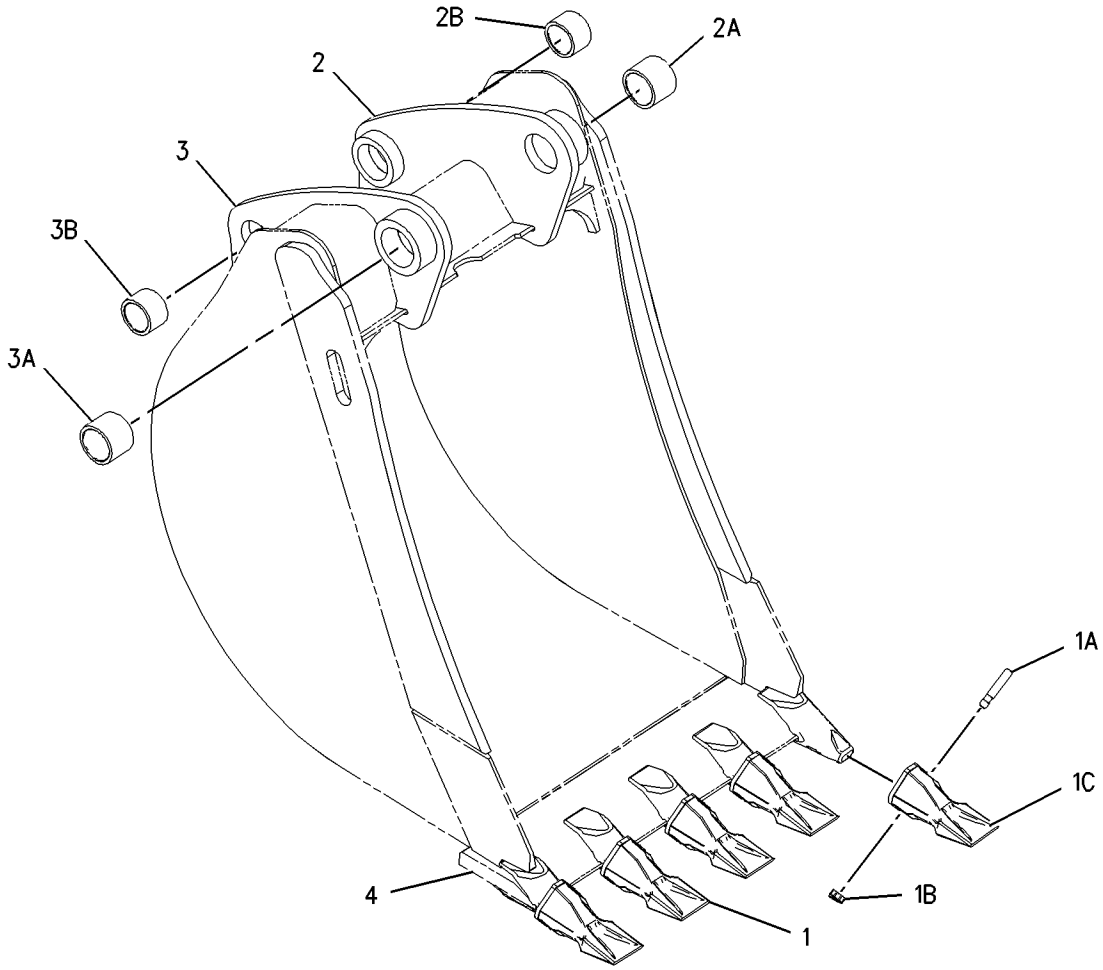

GRAPHIC #1 **<END>** g01002058

219-3392 BUCKET GP-HOE—HIGH CAPACITY

S/N: BFP12900-UP
762MM (30IN)
AN ATTACHMENT

SMCS-6503 **i01917655**

NOTE	REF NO	GRAPHIC REF	PART NUMBER	QTY	PART NAME 1 2 3 4 5 6 (PRODUCT LEVEL)	SEE PAGE
	1	1	*208-5245*	5	TIP GP-PENETRATION	
					(EACH INCLUDES)	
	1A	1	**201-1238**	1	PIN	
	1B	1	**201-1239**	1	RETAINER AS	
	1C	1	**208-5235**	1	TIP-PENETRATION	
	2	1	*151-7902*	1	BRACKET AS-LH	
	2A	1	**9R-0162**	1	BEARING	
	2B	1	**168-0480**	1	BEARING-SLEEVE	
	3	1	*151-7903*	1	BRACKET AS-RH	
	3A	1	**9R-0162**	1	BEARING	
	3B	1	**168-0480**	1	BEARING-SLEEVE	
	4	1	**219-9485**	1	EDGE	

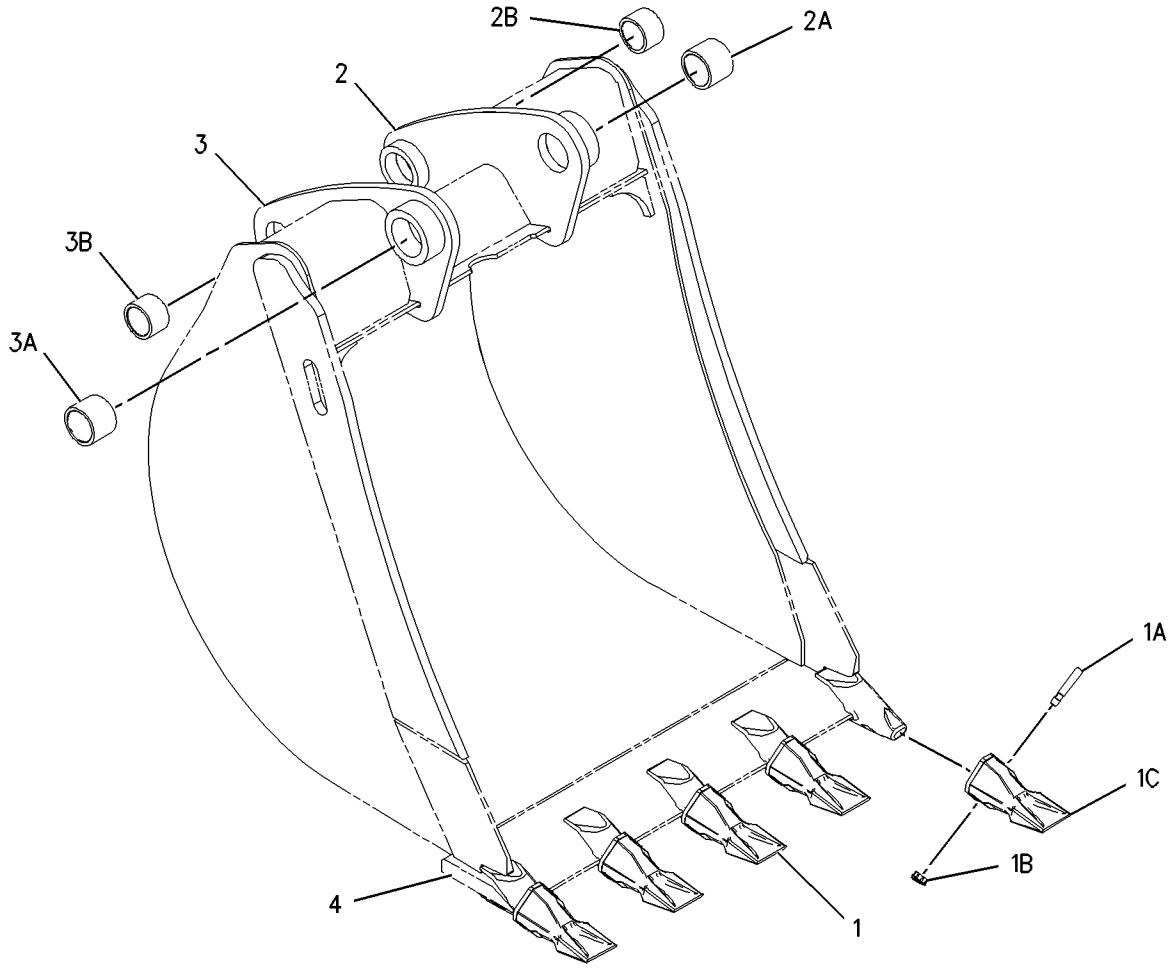

GRAPHIC #1 **<END>** g01002066

WORK TOOLS

219-3393 BUCKET GP-HOE—HIGH CAPACITY

S/N: BFP12900-UP
914MM (36IN)
AN ATTACHMENT

SMCS-6503 **i01916154**

NOTE	REF NO	GRAPHIC REF	PART NUMBER	QTY	PART NAME 1 2 3 4 5 6 (PRODUCT LEVEL)	SEE PAGE
	1	1	*208-5245*	6	TIP GP-PENETRATION	
					(EACH INCLUDES)	
	1A	1	**201-1238**	1	PIN	
	1B	1	**201-1239**	1	RETAINER AS	
	1C	1	**208-5235**	1	TIP-PENETRATION	
	2	1	*151-7902*	1	BRACKET AS-LH	
	2A	1	**9R-0162**	1	BEARING	
	2B	1	**168-0480**	1	BEARING-SLEEVE	
	3	1	*151-7903*	1	BRACKET AS-RH	
	3A	1	**9R-0162**	1	BEARING	
	3B	1	**168-0480**	1	BEARING-SLEEVE	
	4	1	**219-9486**	1	EDGE	

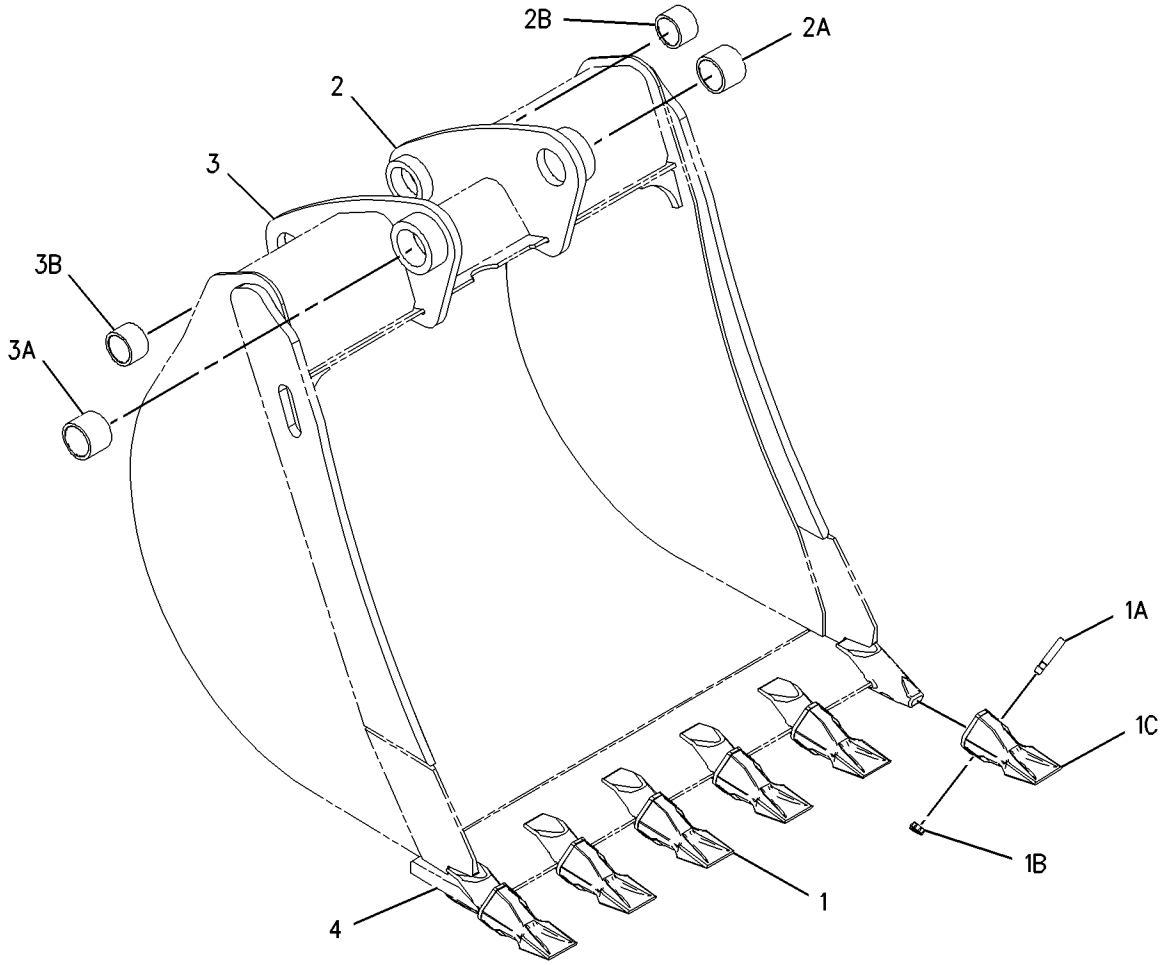

GRAPHIC #1 **<END>** g01002085

219-3394 BUCKET GP-HOE–ROCK

S/N: BFP12900-UP
305MM (12IN)
PART OF 219-3412 BUCKET GP-HOE
AN ATTACHMENT

SMCS-6503 **i01916167**

NOTE	REF NO	GRAPHIC REF	PART NUMBER	QTY	PART NAME 1 2 3 4 5 6 (PRODUCT LEVEL)	SEE PAGE
	1	1	*208-5245*	3	TIP GP-PENETRATION	
					(EACH INCLUDES)	
	1A	1	**201-1238**	1	PIN	
	1B	1	**201-1239**	1	RETAINER AS	
	1C	1	**208-5235**	1	TIP-PENETRATION	
	2	1	*151-7929*	1	BRACKET AS-LH	
	2A	1	**9R-0320**	1	BEARING	
	2B	1	**154-5257**	1	BEARING	
	3	1	*151-7930*	1	BRACKET AS-RH	
	3A	1	**9R-0320**	1	BEARING	
	3B	1	**154-5257**	1	BEARING	
	4	1	**219-9493**	1	EDGE	

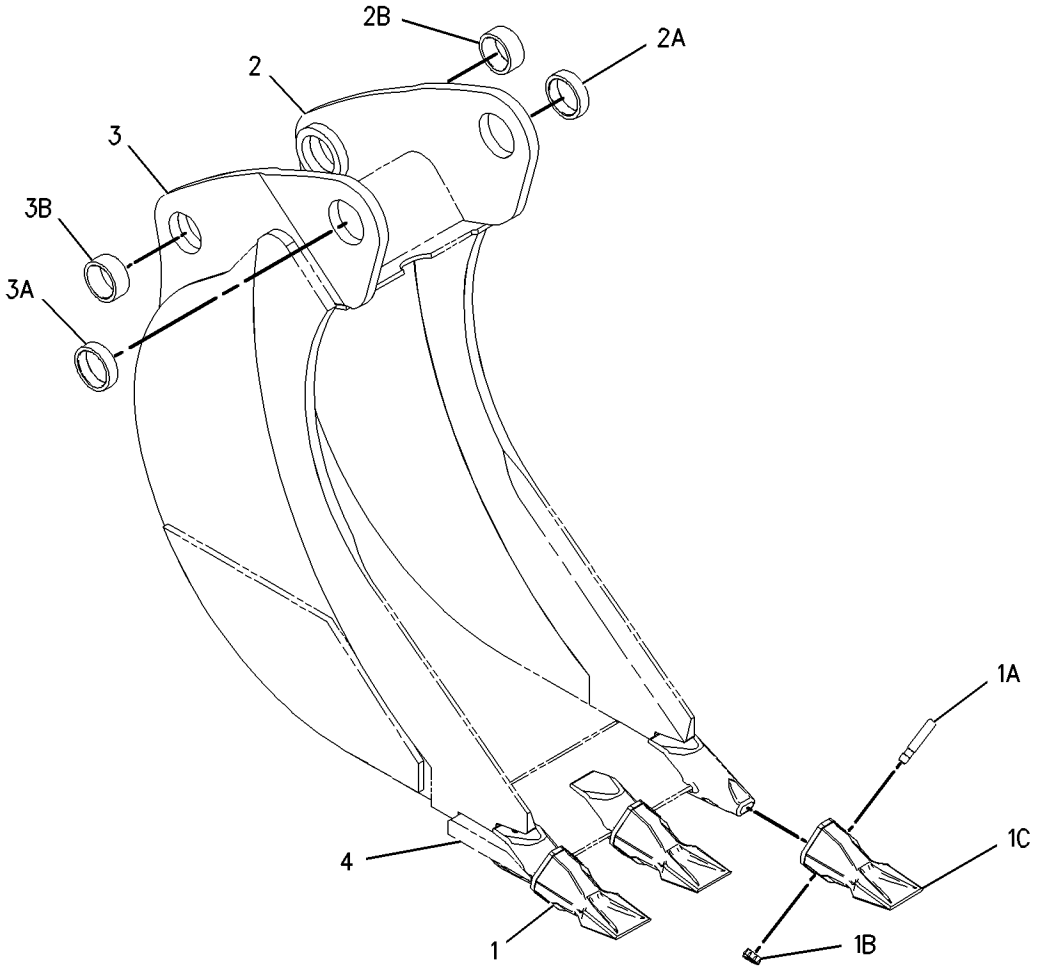

GRAPHIC #1 **<END>** g01001954

WORK TOOLS

219-3395 BUCKET GP-H0E–ROCK

S/N: BFP12900-UP
458MM (18IN)
AN ATTACHMENT

SMCS-6503 **i01916165**

NOTE	REF NO	GRAPHIC REF	PART NUMBER	QTY	PART NAME 1 2 3 4 5 6 (PRODUCT LEVEL)	SEE PAGE
	1	1	*208-5245*	4	TIP GP-PENETRATION	
					(EACH INCLUDES)	
	1A	1	**201-1238**	1	PIN	
	1B	1	**201-1239**	1	RETAINER AS	
	1C	1	**208-5235**	1	TIP-PENETRATION	
	2	1	*151-7902*	1	BRACKET AS-LH	
	2A	1	**9R-0162**	1	BEARING	
	2B	1	**168-0480**	1	BEARING-SLEEVE	
	3	1	*151-7903*	1	BRACKET AS-RH	
	3A	1	**9R-0162**	1	BEARING	
	3B	1	**168-0480**	1	BEARING-SLEEVE	
	4	1	**219-9483**	1	EDGE	

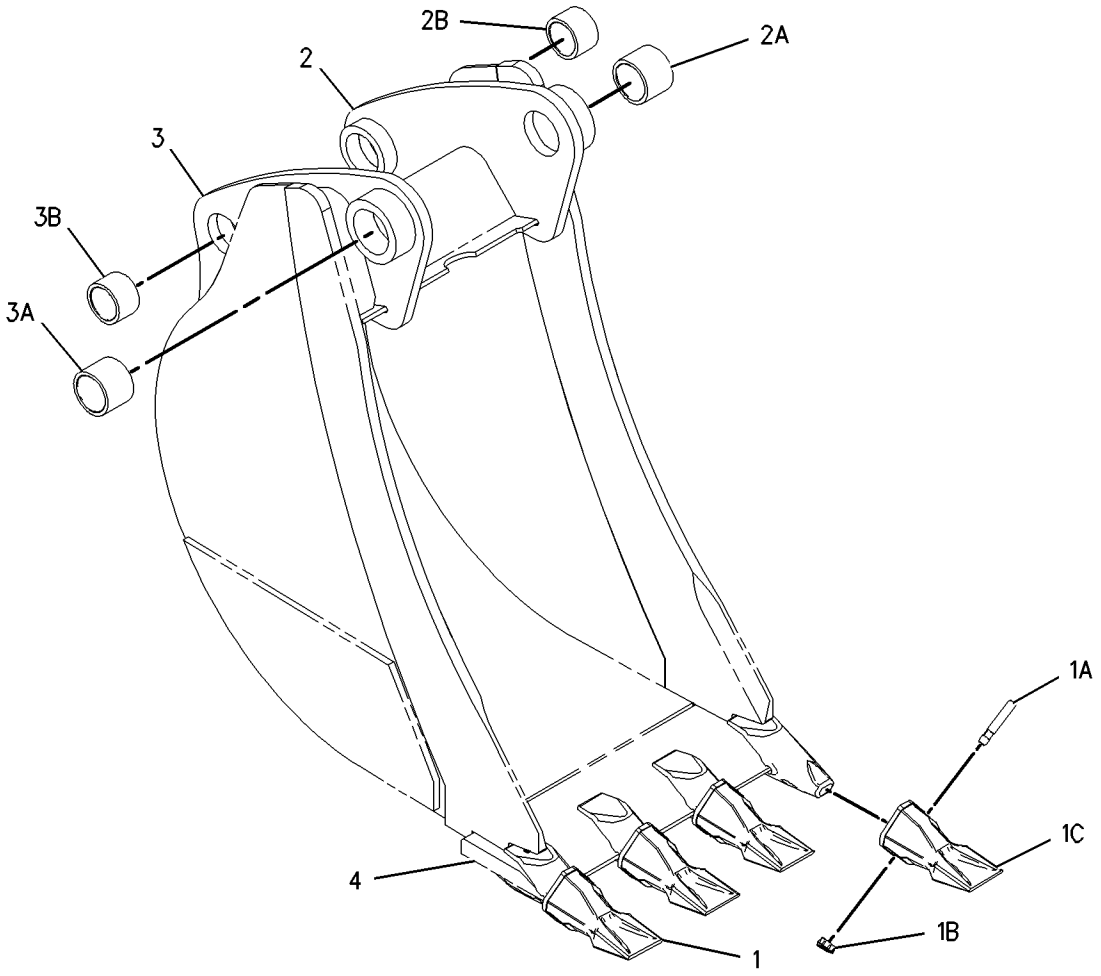

GRAPHIC #1 **<END>** g01001940

WORK TOOLS

219-3396 BUCKET GP-HOE–ROCK

S/N: BFP12900-UP
610MM (24IN)
AN ATTACHMENT

SMCS-6503 **i01916161**

NOTE	REF NO	GRAPHIC REF	PART NUMBER	QTY	PART NAME 1 2 3 4 5 6 (PRODUCT LEVEL)	SEE PAGE
	1	1	*208-5245*	5	TIP GP-PENETRATION	
					(EACH INCLUDES)	
	1A	1	**201-1238**	1	PIN	
	1B	1	**201-1239**	1	RETAINER AS	
	1C	1	**208-5235**	1	TIP-PENETRATION	
	2	1	*151-7902*	1	BRACKET AS-LH	
	2A	1	**9R-0162**	1	BEARING	
	2B	1	**168-0480**	1	BEARING-SLEEVE	
	3	1	*151-7903*	1	BRACKET AS-RH	
	3A	1	**9R-0162**	1	BEARING	
	3B	1	**168-0480**	1	BEARING-SLEEVE	
	4	1	**219-9484**	1	EDGE	

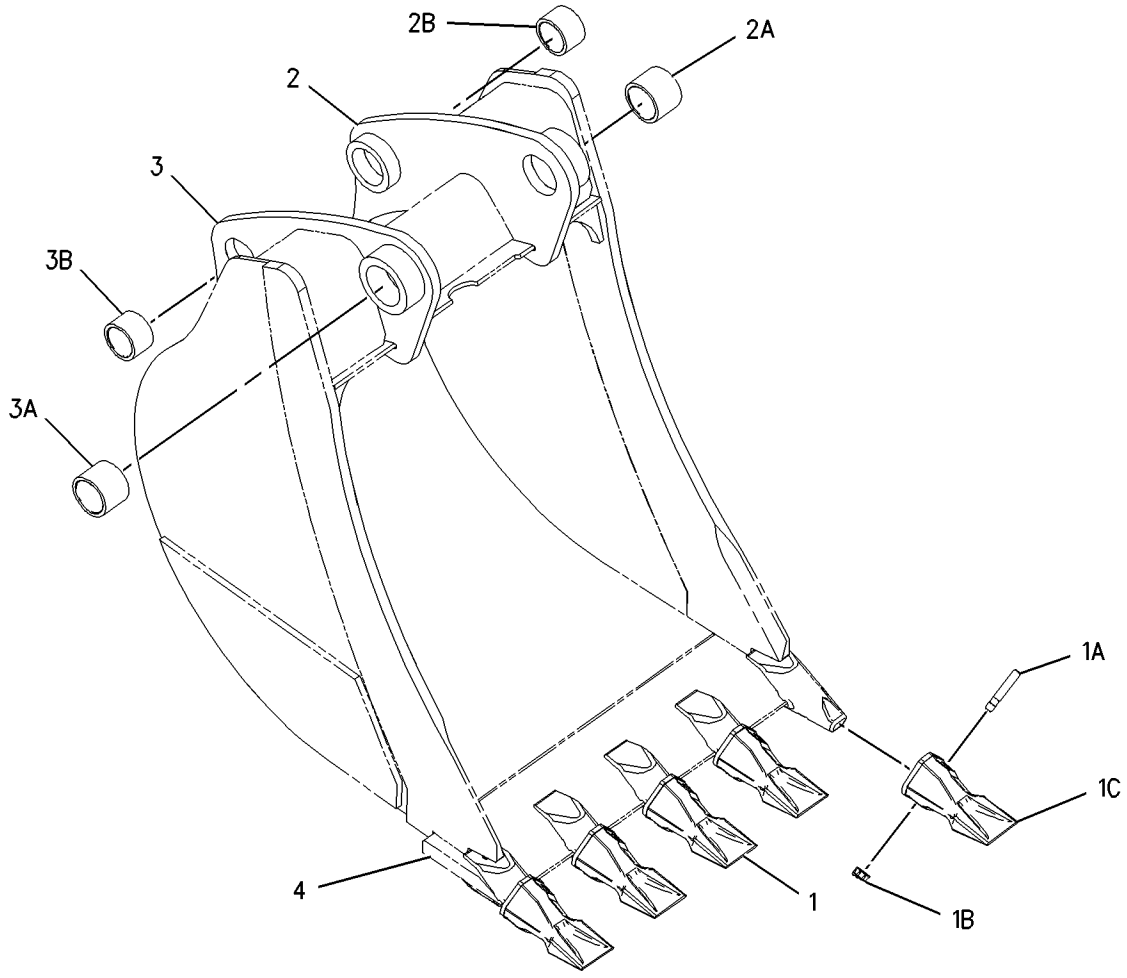

GRAPHIC #1 **<END>** g01002082

WORK TOOLS

219-3397 BUCKET GP-HOE–ROCK

S/N: BFP12900-UP
762MM (30IN)
AN ATTACHMENT

SMCS-6503 **i01916156**

NOTE	REF NO	GRAPHIC REF	PART NUMBER	QTY	PART NAME 1 2 3 4 5 6 (PRODUCT LEVEL)	SEE PAGE
	1	1	*208-5245*	5	TIP GP-PENETRATION	
					(EACH INCLUDES)	
	1A	1	**201-1238**	1	PIN	
	1B	1	**201-1239**	1	RETAINER AS	
	1C	1	**208-5235**	1	TIP-PENETRATION	
	2	1	*151-7902*	1	BRACKET AS-LH	
	2A	1	**9R-0162**	1	BEARING	
	2B	1	**168-0480**	1	BEARING-SLEEVE	
	3	1	*151-7903*	1	BRACKET AS-RH	
	3A	1	**9R-0162**	1	BEARING	
	3B	1	**168-0480**	1	BEARING-SLEEVE	
	4	1	**219-9485**	1	EDGE	

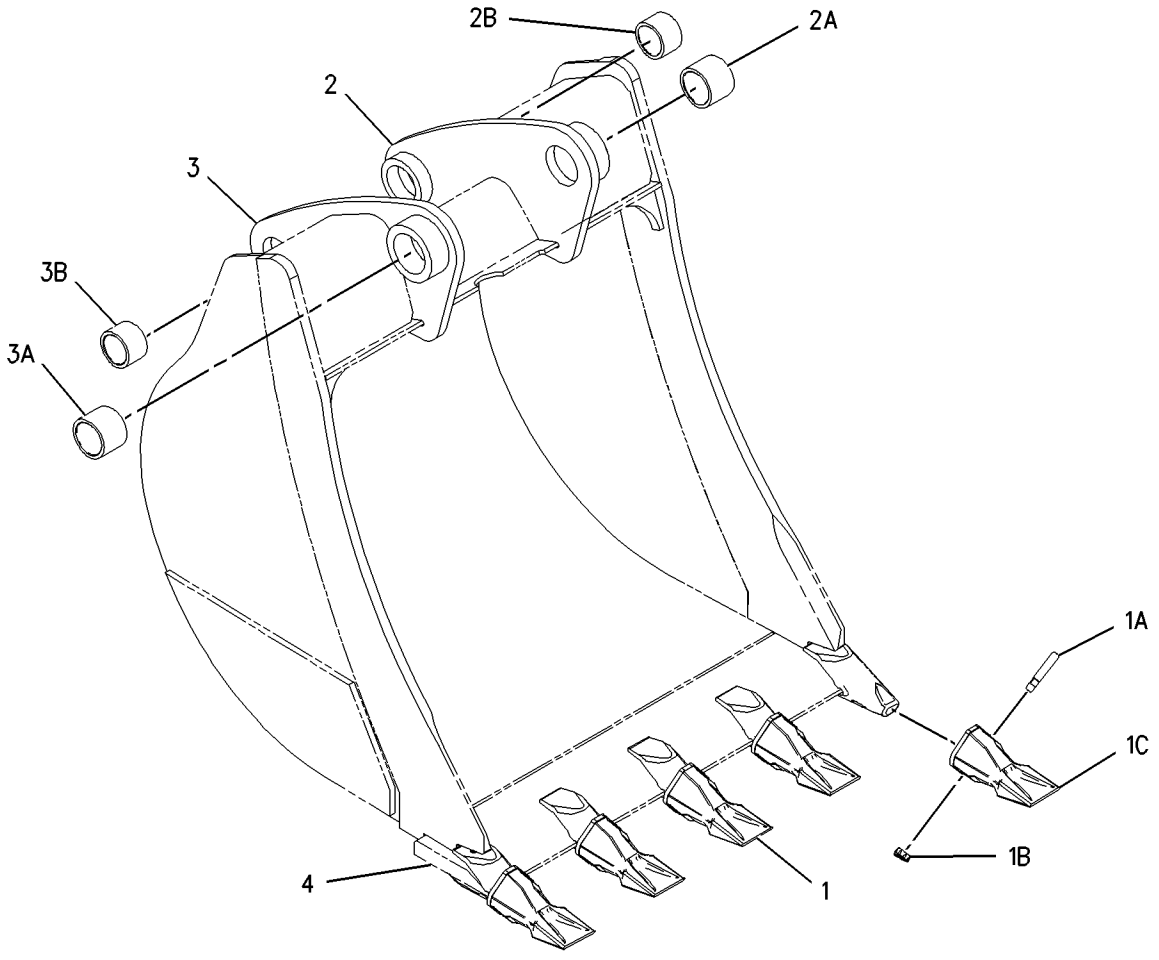

GRAPHIC #1 **<END>** g01002078

WORK TOOLS

219-3398 BUCKET GP-HOE–ROCK

S/N: BFP12900-UP
914MM (36IN)
AN ATTACHMENT

SMCS-6503 **i01916065**

NOTE	REF NO	GRAPHIC REF	PART NUMBER	QTY	PART NAME 1 2 3 4 5 6 (PRODUCT LEVEL)	SEE PAGE
	1	1	*208-5245*	6	TIP GP-PENETRATION	
					(EACH INCLUDES)	
	1A	1	**201-1238**	1	PIN	
	1B	1	**201-1239**	1	RETAINER AS	
	1C	1	**208-5235**	1	TIP-PENETRATION	
	2	1	*151-7902*	1	BRACKET AS-LH	
	2A	1	**9R-7902**	1	COVER AS	
	2B	1	**168-0480**	1	BEARING-SLEEVE	
	3	1	*151-7903*	1	BRACKET AS-RH	
	3A	1	**9R-0162**	1	BEARING	
	3B	1	**168-0480**	1	BEARING-SLEEVE	
	4	1	**219-9486**	1	EDGE	

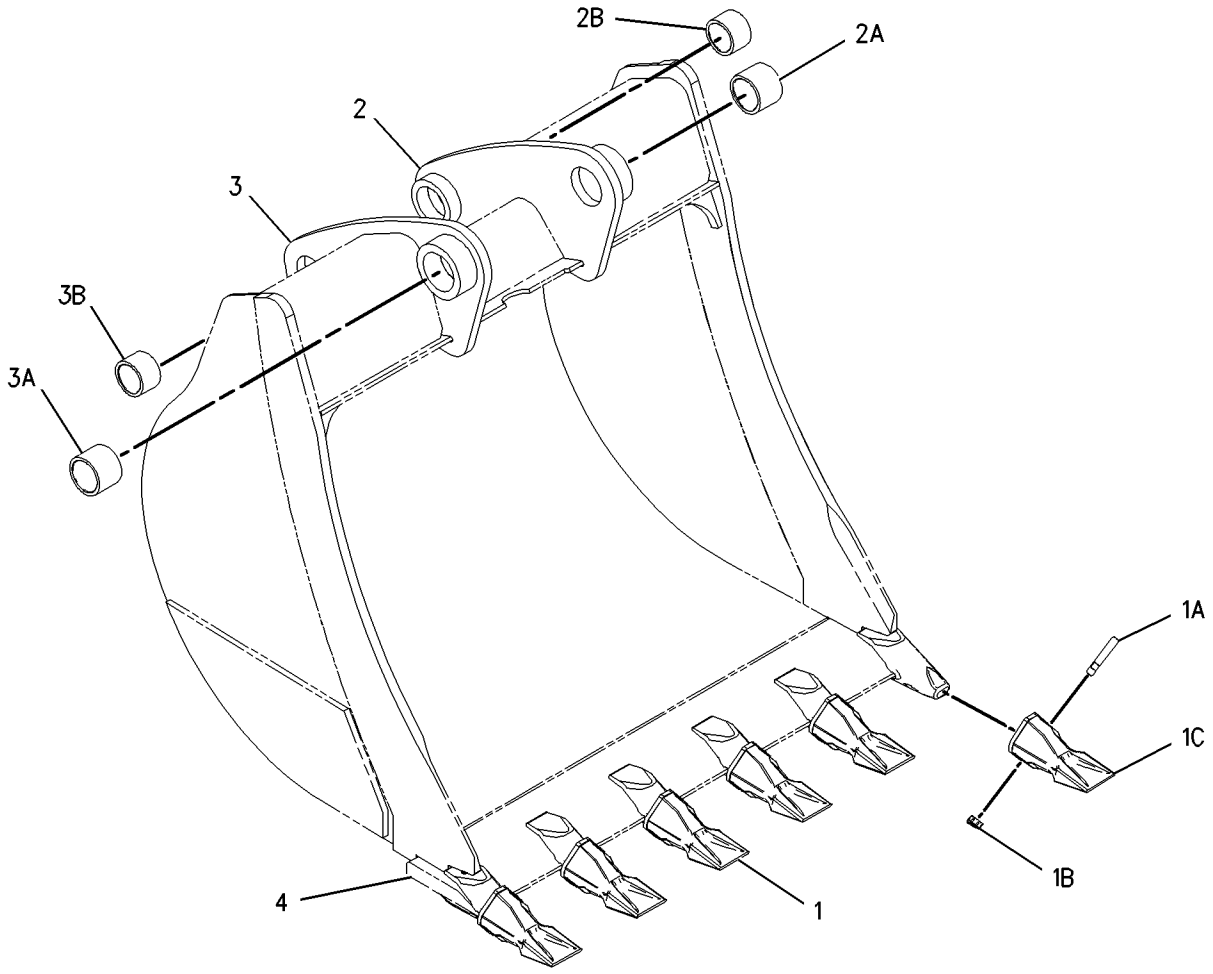

GRAPHIC #1 **<END>** g01002088

WORK TOOLS

219-3399 BUCKET GP-HOE—CORAL

S/N: BFP12900-UP
305MM (12IN)
PART OF 219-3413 BUCKET GP-HOE
AN ATTACHMENT

SMCS-6503 **i01916120**

NOTE	REF NO	GRAPHIC REF	PART NUMBER	QTY	PART NAME 1 2 3 4 5 6 (PRODUCT LEVEL)	SEE PAGE
	1	1	*208-5242*	4	TIP GP-CHISEL	
					(EACH INCLUDES)	
	1A	1	**201-1238**	1	PIN	
	1B	1	**201-1239**	1	RETAINER AS	
	1C	1	**208-5232**	1	TIP-CHISEL	
	2	1	*202-4162*	1	BRACKET AS-LH	
	2A	1	**9R-0320**	1	BEARING	
	2B	1	**154-5257**	1	BEARING	
	3	1	*202-4163*	1	BRACKET AS-RH	
	3A	1	**9R-0320**	1	BEARING	
	3B	1	**154-5257**	1	BEARING	
	4	1	**219-9496**	1	EDGE	

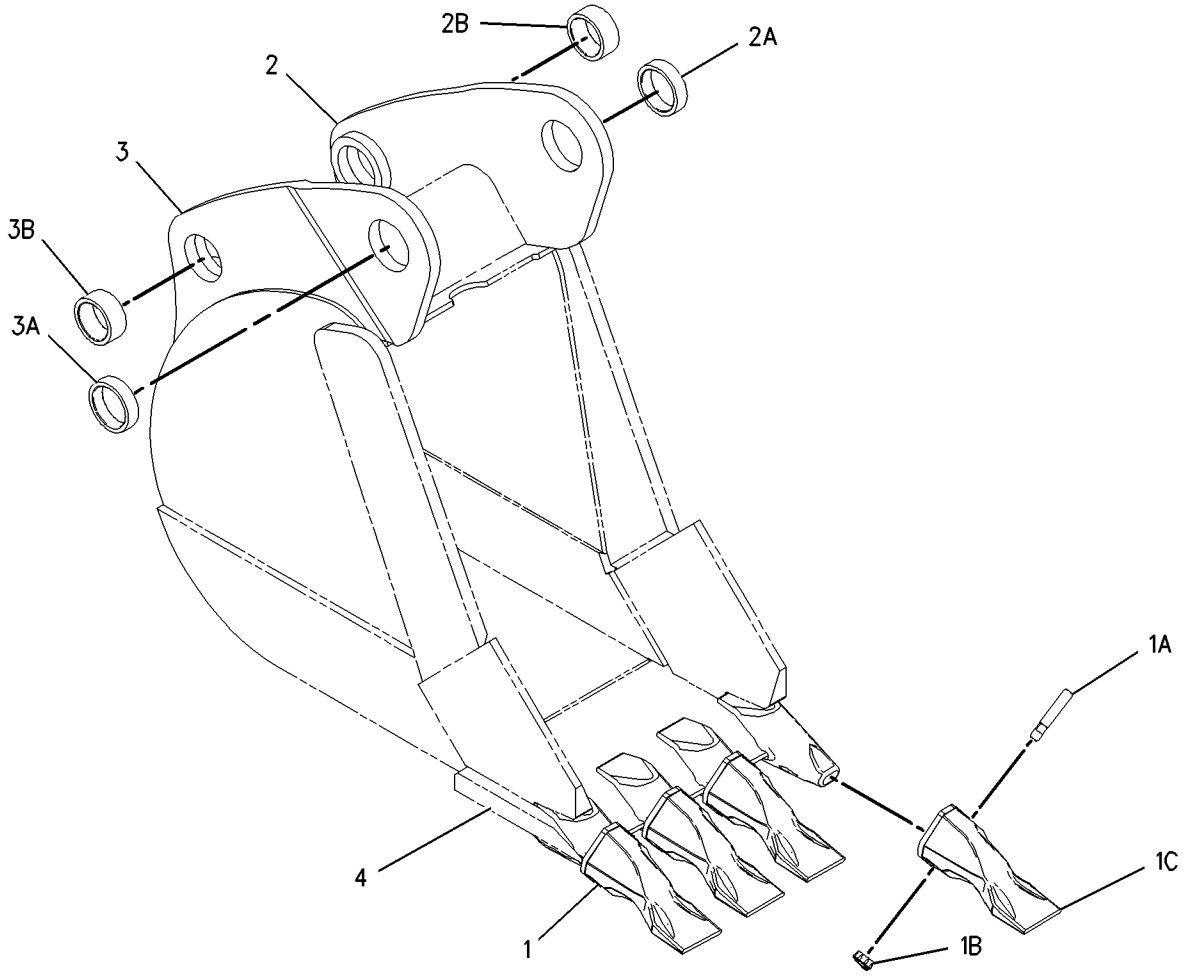

GRAPHIC #1 **<END>** g01002114

WORK TOOLS

219-3400 BUCKET GP-HOE—CORAL

S/N: BFP12900-UP
458MM (18IN)
AN ATTACHMENT

SMCS-6503 **i01916125**

NOTE	REF NO	GRAPHIC REF	PART NUMBER	QTY	PART NAME 1 2 3 4 5 6 (PRODUCT LEVEL)	SEE PAGE
	1	1	*208-5242*	6	TIP GP-CHISEL	
					(EACH INCLUDES)	
	1A	1	**201-1238**	1	PIN	
	1B	1	**201-1239**	1	RETAINER AS	
	1C	1	**208-5232**	1	TIP-CHISEL	
	2	1	*202-0596*	1	BRACKET AS-LH	
	2A	1	**9R-0162**	1	BEARING	
	2B	1	**168-0480**	1	BEARING-SLEEVE	
	3	1	*202-0597*	1	BRACKET AS-RH	
	3A	1	**9R-0162**	1	BEARING	
	3B	1	**168-0480**	1	BEARING-SLEEVE	
	4	1	**219-9491**	1	EDGE	

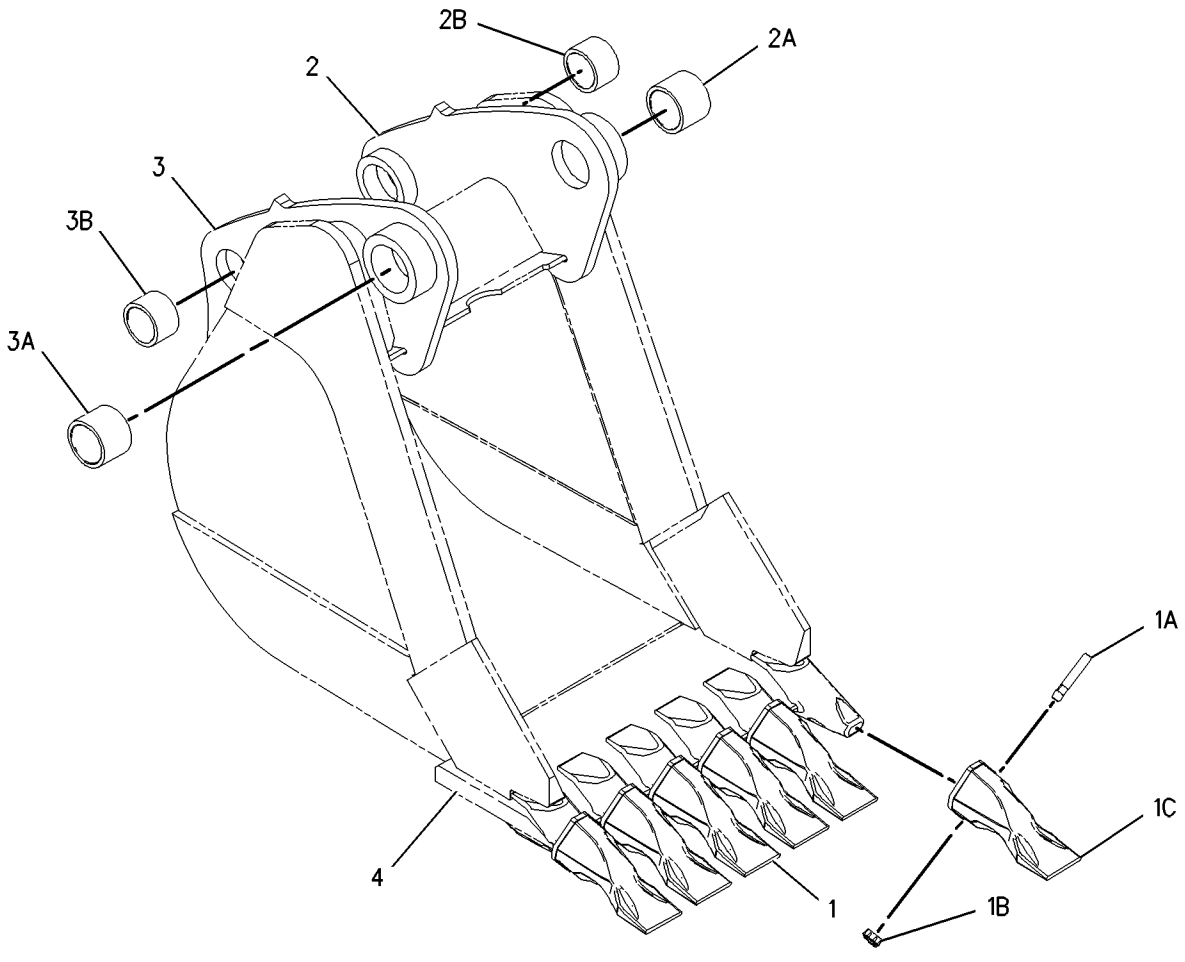

GRAPHIC #1 **<END>** g01002128

WORK TOOLS

219-3401 BUCKET GP-HOE–CORAL

S/N: BFP12900-UP
610MM (24IN)
AN ATTACHMENT

SMCS-6503 **i01916127**

NOTE	REF NO	GRAPHIC REF	PART NUMBER	QTY	PART NAME 1 2 3 4 5 6 (PRODUCT LEVEL)	SEE PAGE
	1	1	*208-5242*	8	TIP GP-CHISEL	
					(EACH INCLUDES)	
	1A	1	**201-1238**	1	PIN	
	1B	1	**201-1239**	1	RETAINER AS	
	1C	1	**208-5232**	1	TIP-CHISEL	
	2	1	*202-0596*	1	BRACKET AS-LH	
	2A	1	**9R-0162**	1	BEARING	
	2B	1	**168-0480**	1	BEARING-SLEEVE	
	3	1	*202-0597*	1	BRACKET AS-RH	
	3A	1	**9R-0162**	1	BEARING	
	3B	1	**168-0480**	1	BEARING-SLEEVE	
	4	1	**219-9492**	1	EDGE	

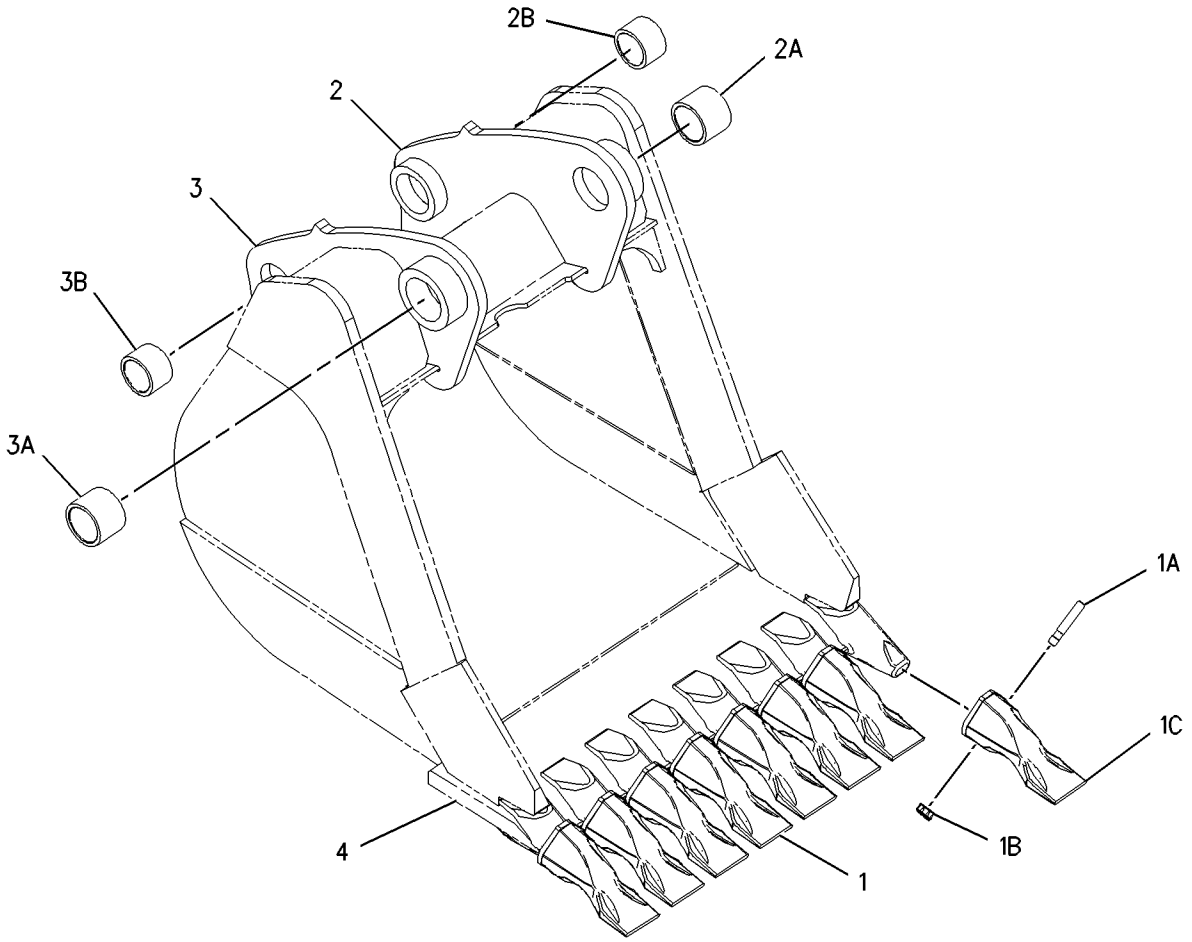

GRAPHIC #1 **<END>** g01002141

WORK TOOLS

219-3402 BUCKET GP-HOE–CORAL

S/N: BFP12900-UP
762MM (30IN)
AN ATTACHMENT

SMCS-6503 **i01916134**

NOTE	REF NO	GRAPHIC REF	PART NUMBER	QTY	PART NAME 1 2 3 4 5 6 (PRODUCT LEVEL)	SEE PAGE
	1	1	*208-5242*	10	TIP GP-CHISEL	
					(EACH INCLUDES)	
	1A	1	**201-1238**	1	PIN	
	1B	1	**201-1239**	1	RETAINER AS	
	1C	1	**208-5235**	1	TIP-PENETRATION	
	2	1	*202-0596*	1	BRACKET AS-LH	
	2A	1	**9R-0162**	1	BEARING	
	2B	1	**168-0480**	1	BEARING-SLEEVE	
	3	1	*202-0597*	1	BRACKET AS-RH	
	3A	1	**9R-0162**	1	BEARING	
	3B	1	**168-0480**	1	BEARING-SLEEVE	
	4	1	**219-9495**	1	EDGE	

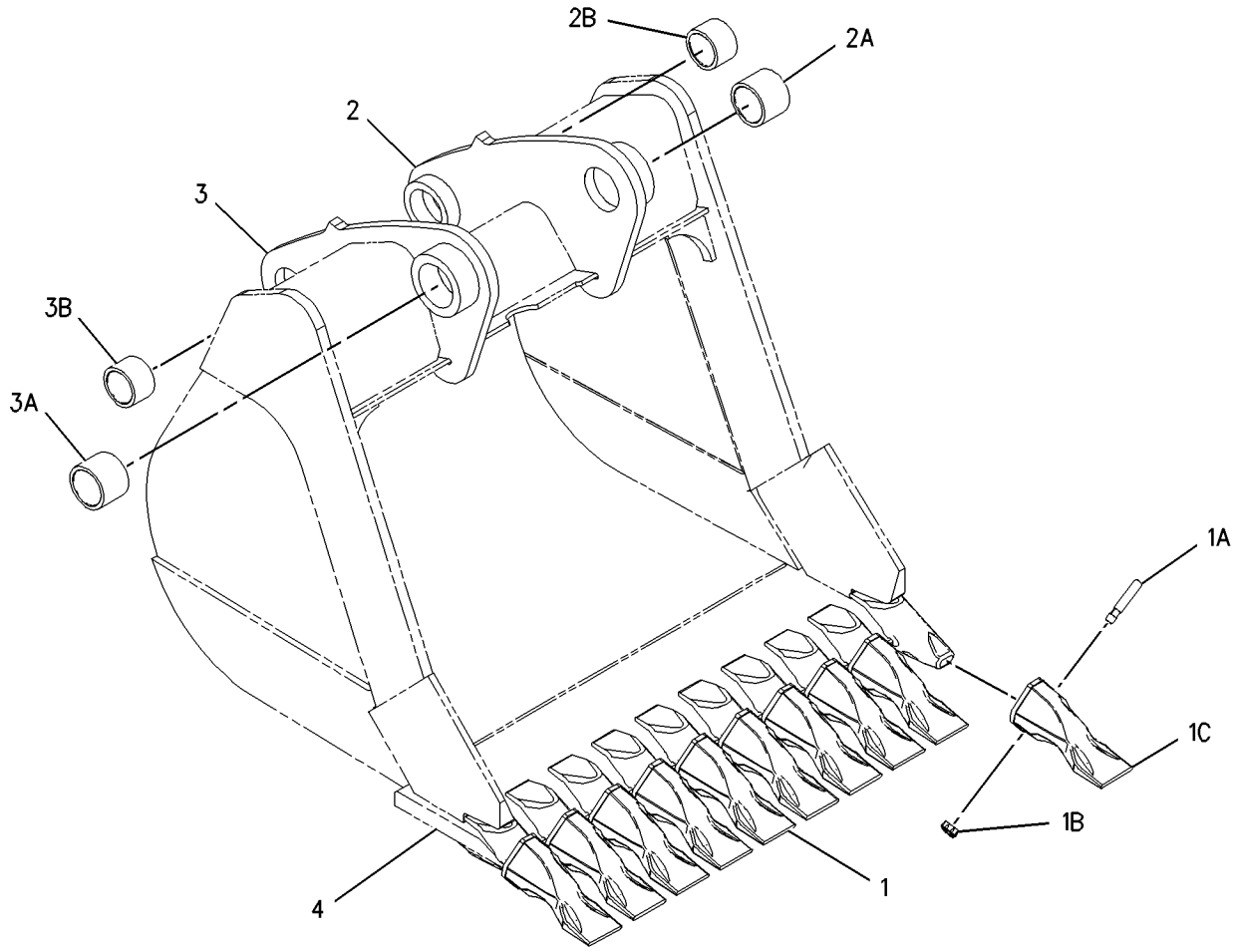

GRAPHIC #1 **<END>** g01002149

219-3410 BUCKET GP-HOE–STANDARD DUTY

S/N: BFP12900-UP
305MM(12IN)
AN ATTACHMENT

SMCS-6503 **i01916048**

NOTE	REF NO	GRAPHIC REF	PART NUMBER	QTY	PART NAME 1 2 3 4 5 6 (PRODUCT LEVEL)	SEE PAGE
	1	1	**6V-3213**	2	RING-RETAINING	
	2	1	**6V-4364**	2	RING-RETAINING	
	3	1	**9R-0158**	5	WASHER (46X69X3MM THK)	
	4	1	**9R-1510**	3	WASHER (4MM THK)	
	5	1	**168-0443**	1	PIN	
	6	1	**168-0444**	1	PIN	
Y	7	1	**219-3379**	1	BUCKET GP-HOE	796

Y-SEPARATE ILLUSTRATION

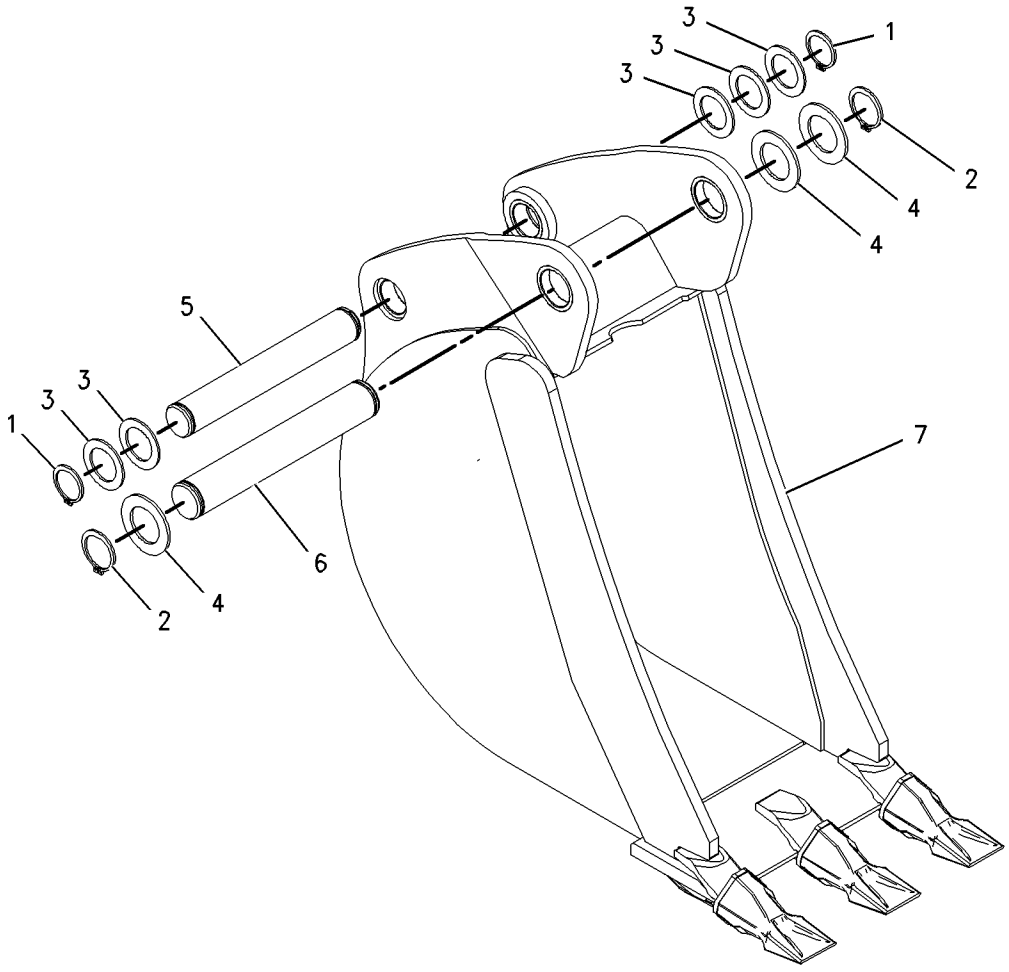

GRAPHIC #1 **<END>** g01001892

WORK TOOLS

219-3411 BUCKET GP-HOE–HEAVY DUTY

S/N: BFP12900-UP
305MM(12IN)
AN ATTACHMENT

SMCS-6503 **i01916050**

NOTE	REF NO	GRAPHIC REF	PART NUMBER	QTY	PART NAME 1 2 3 4 5 6 (PRODUCT LEVEL)	SEE PAGE
	1	1	**6V-3213**	2	RING-RETAINING	
	2	1	**6V-4364**	2	RING-RETAINING	
	3	1	**9R-0158**	5	WASHER (46X69X3MM THK)	
	4	1	**9R-1510**	3	WASHER (4MM THK)	
	5	1	**168-0443**	1	PIN	
	6	1	**168-0444**	1	PIN	
Y	7	1	**219-3384**	1	BUCKET GP-HOE	801

Y-SEPARATE ILLUSTRATION

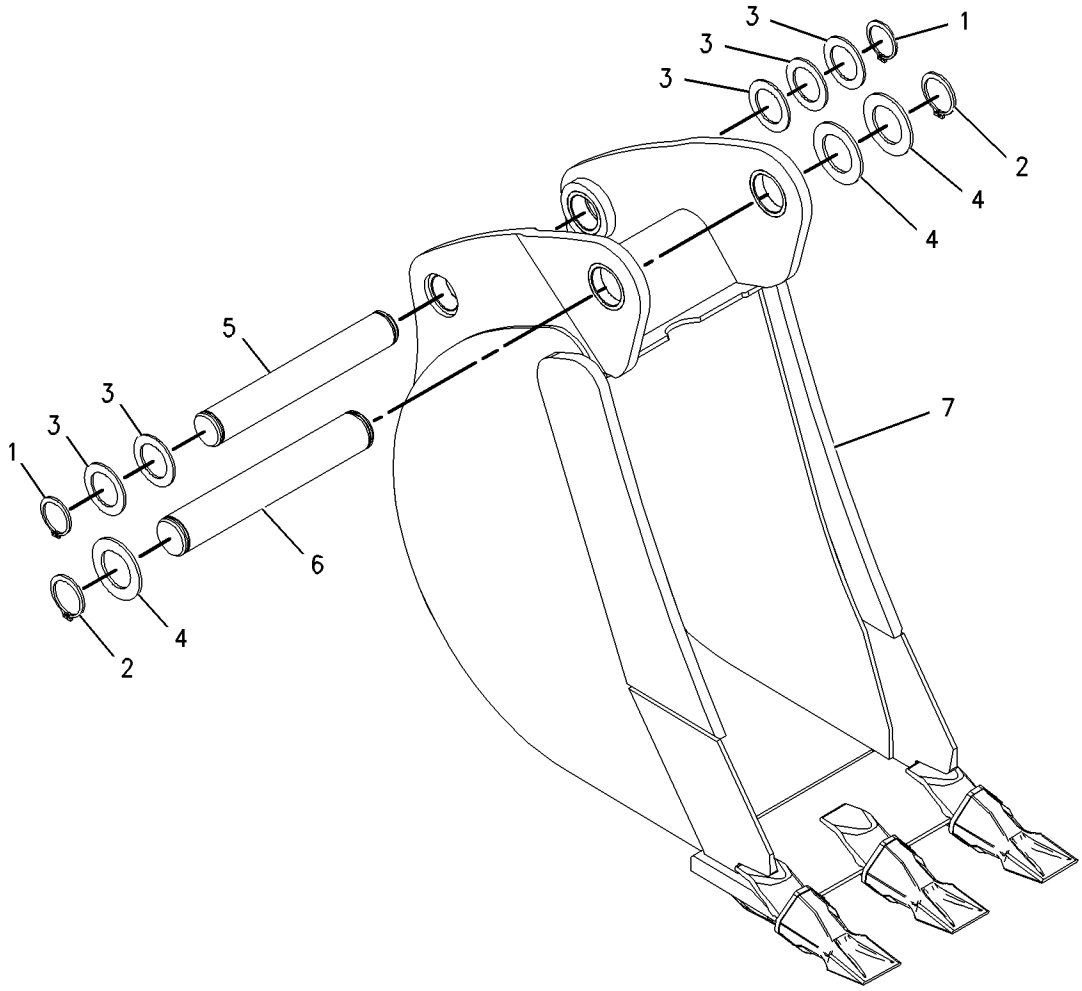

GRAPHIC #1 **<END>** g01001906

WORK TOOLS

219-3412 BUCKET GP-HOE—CORAL

S/N: BFP12900-UP
305MM(12IN)
AN ATTACHMENT

SMCS-6503 **i01916052**

NOTE	REF NO	GRAPHIC REF	PART NUMBER	QTY	PART NAME 1 2 3 4 5 6 (PRODUCT LEVEL)	SEE PAGE
	1	1	**6V-3213**	2	RING-RETAINING	
	2	1	**6V-4364**	2	RING-RETAINING	
	3	1	**9R-0158**	4	WASHER (46X69X3MM THK)	
	4	1	**9R-1510**	3	WASHER (4MM THK)	
	5	1	**168-0443**	1	PIN	
	6	1	**168-0444**	1	PIN	
Y	7	1	**219-3394**	1	BUCKET GP-HOE	811

Y-SEPARATE ILLUSTRATION

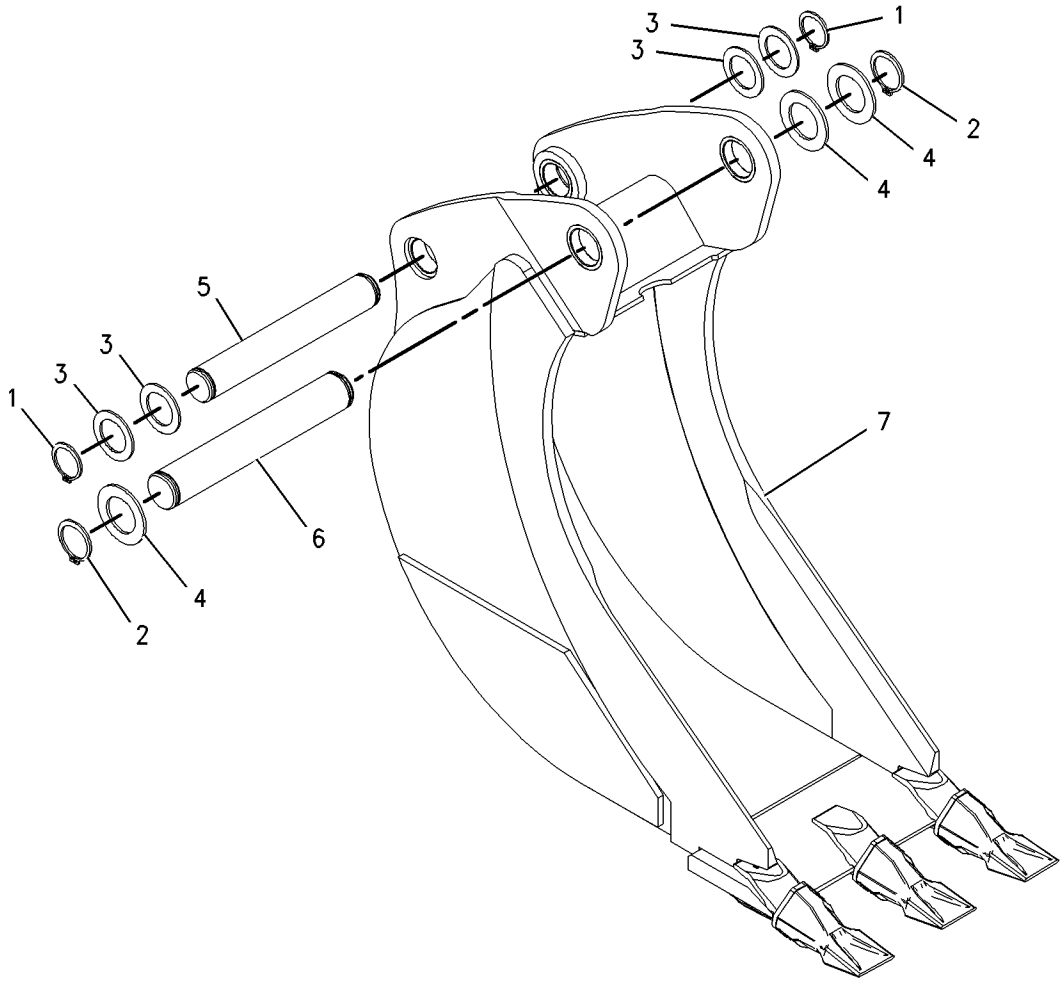

GRAPHIC #1 **<END>** g01001913

WORK TOOLS

219-3413 BUCKET GP-HOE–ROCK

S/N: BFP12900-UP
305MM(12IN)
AN ATTACHMENT

SMCS-6503 **i01916055**

NOTE	REF NO	GRAPHIC REF	PART NUMBER	QTY	PART NAME 1 2 3 4 5 6 (PRODUCT LEVEL)	SEE PAGE
	1	1	**6V-3213**	2	RING-RETAINING	
	2	1	**6V-4364**	2	RING-RETAINING	
	3	1	**9R-0158**	4	WASHER (46X69X3MM THK)	
	4	1	**9R-1510**	3	WASHER (4MM THK)	
	5	1	**168-0443**	1	PIN	
	6	1	**168-0444**	1	PIN	
Y	7	1	**219-3399**	1	BUCKET GP-HOE	816

Y-SEPARATE ILLUSTRATION

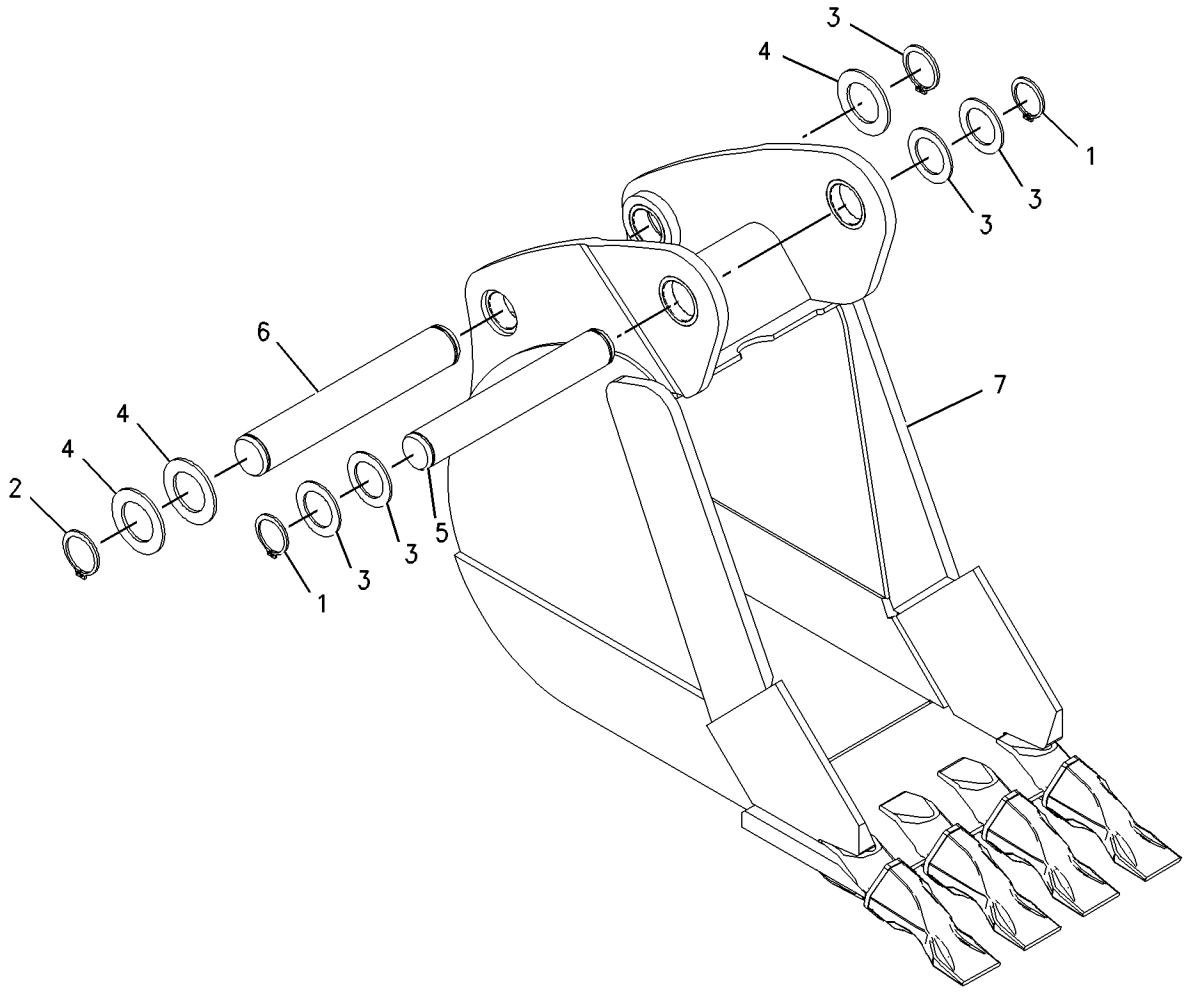

GRAPHIC #1 **<END>** g01001674

104-3964 BUCKET GP-MULTIPURPOSE

S/N: BFP12900-UP
1.03 CU M (1.35 CU YD)
PART OF 111-8635 BUCKET AR-MULTIPURPOSE
AN ATTACHMENT

SMCS-6104 **i01115824**

NOTE	REF NO	GRAPHIC REF	PART NUMBER	QTY	PART NAME 1 2 3 4 5 6 (PRODUCT LEVEL)	SEE PAGE
	1	1	**104-3966**	1	BULLDOZER AS	
	2	1	**104-6314**	2	BRACKET	
	3	1	**104-6313**	1	BRACKET AS	
	4	1	**106-9388**	1	BRACKET	
	5	1	**104-3967**	1	BULLDOZER AS	
	6	1	**9R-5786**	1	EDGE	
	7	1	**9R-0111**	2	BEARING-SLEEVE	
	8	1	**110-2861**	4	BRACKET	
	9	1	**126-4225**	1	CLAM AS	
	10	1	**9R-4675**	2	BUSHING-TERMINAL	
	11	1	**9R-5313**	1	EDGE	
	12	1	**9R-5294**	2	HINGE	
	13	1	**4J-1888**	2	COTTER	
	14	1	**3B-8489**	2	FITTING-GREASE (1/8-27 THD)	
	15	1	**9R-4676**	2	PIN	

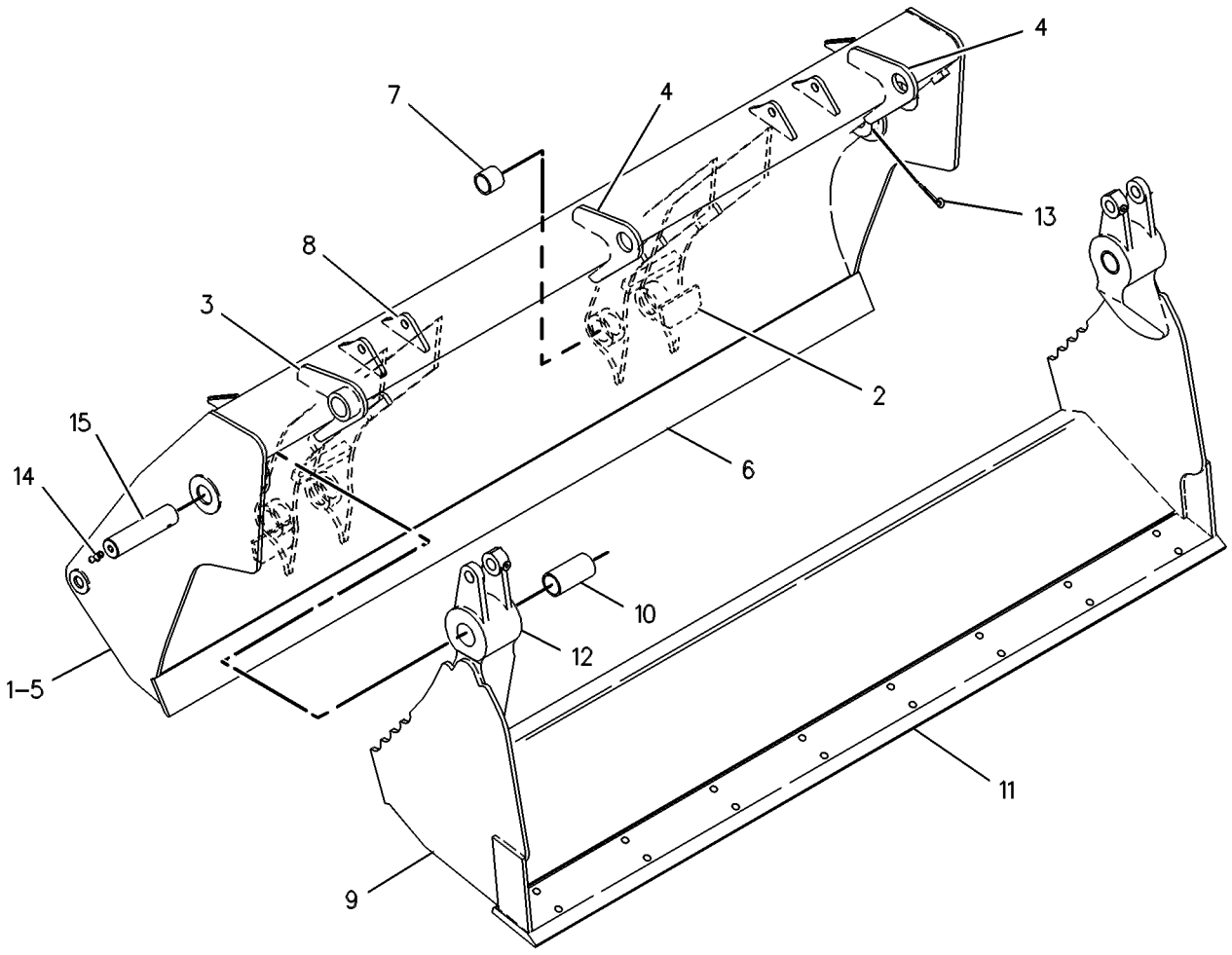

GRAPHIC #1 **<END>** g00131436

WORK TOOLS

104-3965 BUCKET GP-MULTIPURPOSE

S/N: BFP12900-UP
1.03 CU M (1.35 CU YD)
PART OF 111-8634 BUCKET AR-MULTIPURPOSE
AN ATTACHMENT

SMCS-6104 **i01115832**

NOTE	REF NO	GRAPHIC REF	PART NUMBER	QTY	PART NAME 1 2 3 4 5 6 (PRODUCT LEVEL)	SEE PAGE
	1	1	**104-3967**	1	BULLDOZER AS	
	2	1	**9R-5786**	1	EDGE	
	3	1	**9R-0111**	2	BEARING-SLEEVE	
	4	1	**126-4225**	1	CLAM AS	
	5	1	**9R-4675**	2	BUSHING-TERMINAL	
	6	1	**9R-5313**	1	EDGE	
	7	1	**9R-5294**	2	HINGE	
	8	1	**4J-1888**	2	COTTER	
	9	1	**3B-8489**	2	FITTING-GREASE (1/8-27 THD)	
	10	1	**9R-4676**	2	PIN	

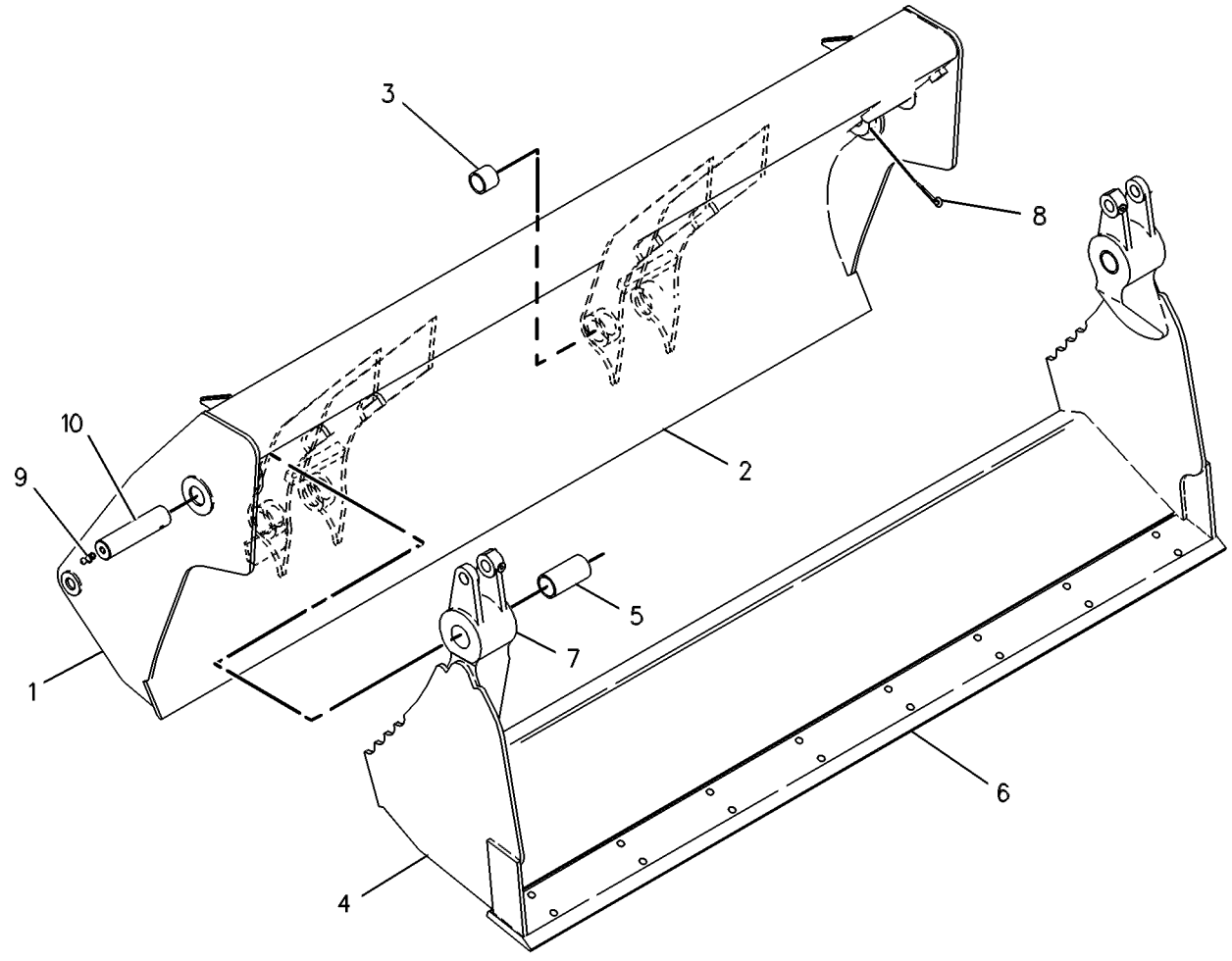

GRAPHIC #1 **<END>** g00131434

WORK TOOLS

108-3036 BUCKET GP-MULTIPURPOSE

S/N: BFP12900-UP
0.96 CU M (1.25 CU YD)
PART OF 112-0938 BUCKET AR-MULTIPURPOSE
AN ATTACHMENT

SMCS-6104 **i01531717**

NOTE	REF NO	GRAPHIC REF	PART NUMBER	QTY	PART NAME 1 2 3 4 5 6 (PRODUCT LEVEL)	SEE PAGE
	1	1	**108-3037**	1	BULLDOZER AS	
	2	1	**9R-4670**	1	EDGE	
	3	1	**9R-0111**	2	BEARING-SLEEVE	
	4	1	**126-4224**	1	CLAM AS	
	5	1	**9R-4675**	2	BUSHING-TERMINAL	
	6	1	**9R-4672**	1	EDGE	
	7	1	**9R-5294**	2	HINGE	
	8	1	**125-7116**	1	EDGE	
	9	1	**4J-1888**	2	COTTER	
	10	1	**3B-8489**	2	FITTING-GREASE	
	11	1	**9R-4676**	2	PIN	

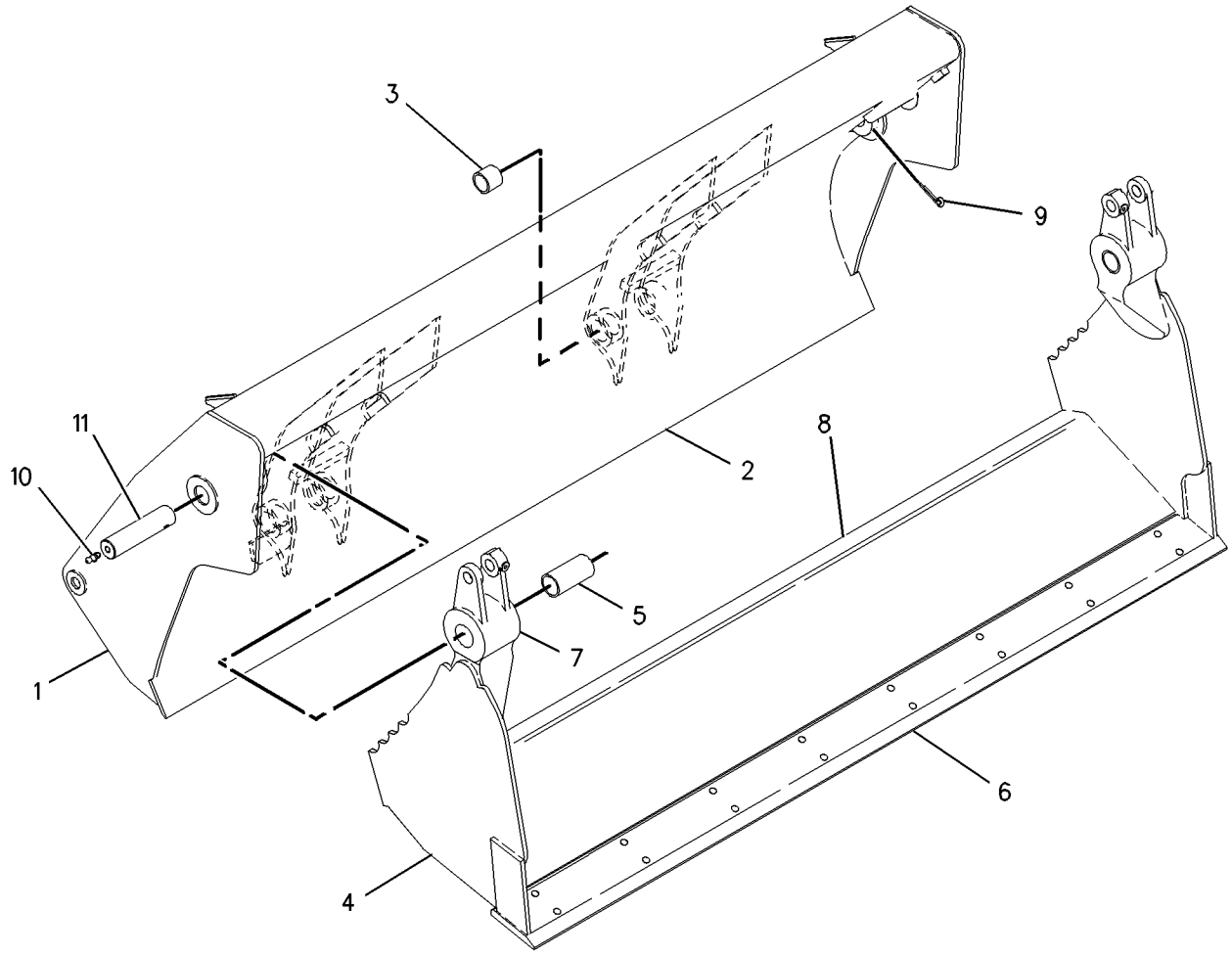

GRAPHIC #1 **<END>** g00795236

WORK TOOLS

112-1778 BUCKET GP-MULTIPURPOSE

S/N: BFP12900-UP
0.95 CU M (1.25 CU YD)
PART OF 112-0939 BUCKET AR-MULTIPURPOSE
AN ATTACHMENT

SMCS-6104 **i01115857**

NOTE	REF NO	GRAPHIC REF	PART NUMBER	QTY	PART NAME 1 2 3 4 5 6 (PRODUCT LEVEL)	SEE PAGE
	1	1	**112-1777**	1	BULLDOZER AS	
	2	1	**104-6314**	2	BRACKET	
	3	1	**104-6313**	1	BRACKET AS	
	4	1	**106-9388**	1	BRACKET	
	5	1	**108-3037**	1	BULLDOZER AS	
	6	1	**9R-4670**	1	EDGE	
	7	1	**9R-0111**	2	BEARING-SLEEVE	
	8	1	**110-2861**	4	BRACKET	
	9	1	**126-4224**	1	CLAM AS	
	10	1	**9R-4675**	2	BUSHING-TERMINAL	
	11	1	**9R-4672**	1	EDGE	
	12	1	**9R-5294**	2	HINGE	
	13	1	**4J-1888**	2	COTTER	
	14	1	**3B-8489**	2	FITTING-GREASE (1/8-27 THD)	
	15	1	**9R-4676**	2	PIN	

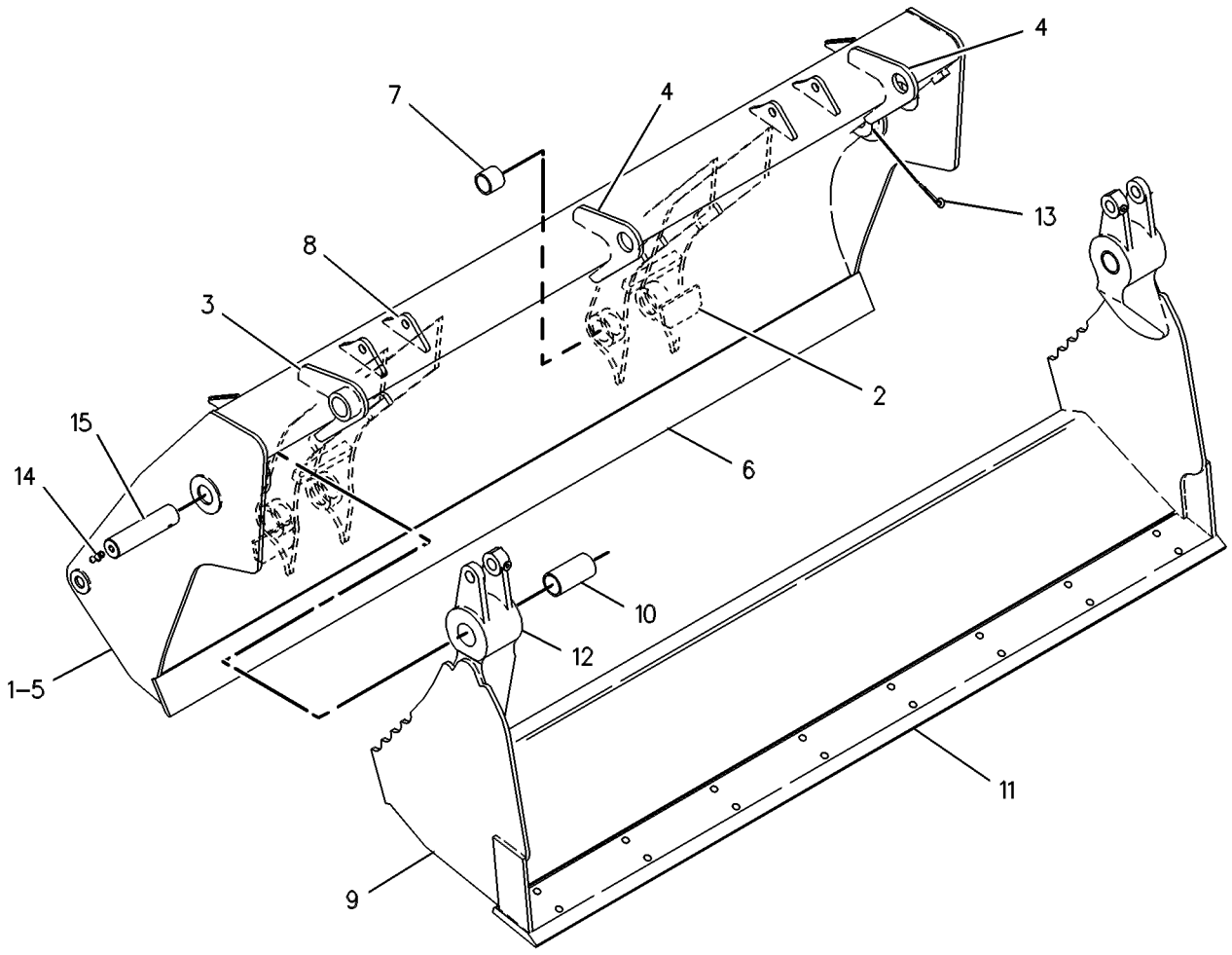

GRAPHIC #1 **<END>** g00131436

WORK TOOLS

222-7379 COUPLER AR-QUICK

S/N: BFP12900-UP
PIN-LOCK SERIES II
AN ATTACHMENT

SMCS-6129 **i01797725**

NOTE	PART NUMBER	QTY	PART NAME 1 2 3 4 5 6 (PRODUCT LEVEL)	SEE PAGE
Y	*222-7464*	1	COUPLER GP-QUICK	833
Y	*216-0928*	1	PIN GP-COUPLER	846
Y	*215-9478*	1	PIN GP-COUPLER	845

Y-SEPARATE ILLUSTRATION

<END>

WORK TOOLS

176-6247 COUPLER GP-QUICK

S/N: BFP12900-UP
HOE
PART OF 178-8849 COUPLER GP-QUICK
AN ATTACHMENT

SMCS-6129 **i01853638**

NOTE	REF NO	GRAPHIC REF	PART NUMBER	QTY	PART NAME 1 2 3 4 5 6 (PRODUCT LEVEL)	SEE PAGE
	1	1	**176-6248**	1	COUPLER	
	2	1	**200-5921**	1	HOOK	
	3	1	**132-3725**	1	SPRING	
	4	1	**132-3721**	1	PIN AS	
	5	1	**132-3723**	1	LOCK PIN	
	6	1	**091-5928**	1	FITTING	
F		1	**132-3821**	1	LEVER-ACTUATING	

F-NOT SHOWN

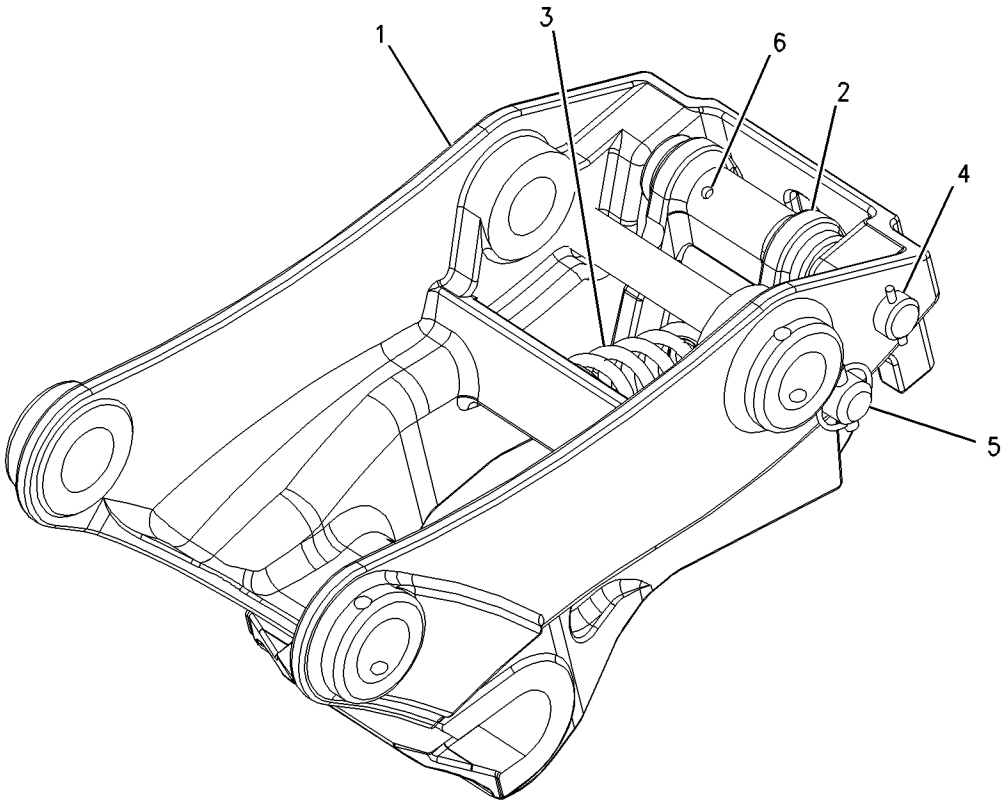

GRAPHIC #1 **<END>** g00888629

WORK TOOLS

176-6251 COUPLER GP-QUICK

S/N: BFP12900-UP
HOE
PART OF 178-8850 COUPLER GP-QUICK
AN ATTACHMENT

SMCS-6129 **i01860101**

NOTE	REF NO	GRAPHIC REF	PART NUMBER	QTY	PART NAME 1 2 3 4 5 6 (PRODUCT LEVEL)	SEE PAGE
	1	1	**176-6252**	1	COUPLER	
	2	1	**200-5921**	1	HOOK	
	3	1	**132-3725**	1	SPRING	
	4	1	**132-3721**	1	PIN AS (HOOK)	
	5	1	**132-3723**	1	LOCK PIN	
	6	1	**091-5928**	1	FITTING	
F			**132-3821**	1	LEVER-ACTUATING	

F-NOT SHOWN

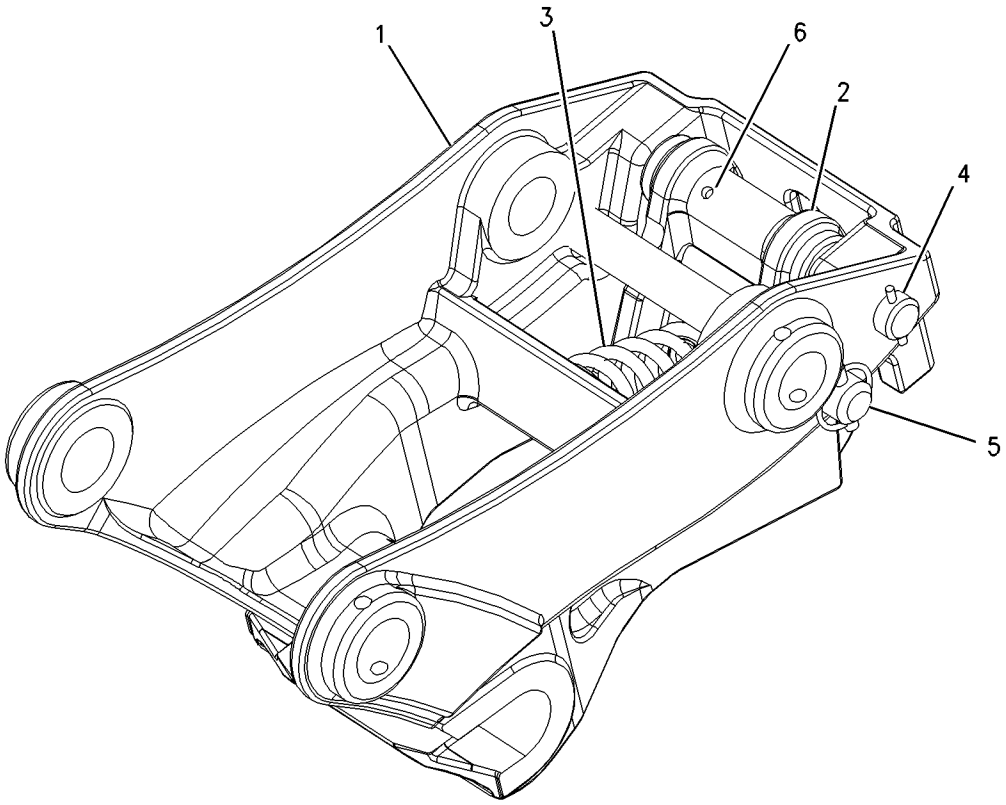

GRAPHIC #1 **<END>** g00888576

WORK TOOLS

178-8849 COUPLER GP-QUICK

S/N: BFP12900-UP

AN ATTACHMENT

SMCS-6129 **i01797235**

NOTE	PART NUMBER	QTY	PART NAME 1 2 3 4 5 6 (PRODUCT LEVEL)	SEE PAGE
Y	**176-6247**	1	COUPLER GP-QUICK	829
	132-3777	1	PIN (345MM)	
	132-3778	1	PIN (330MM)	
	4J-1888	2	PIN-COTTER	

Y-SEPARATE ILLUSTRATION

<END>

WORK TOOLS

178-8850 COUPLER GP-QUICK

S/N: BFP12900-UP
AN ATTACHMENT

SMCS-6129 **i01768722**

NOTE	REF NO	GRAPHIC REF	PART NUMBER	QTY	PART NAME 1 2 3 4 5 6 (PRODUCT LEVEL)	SEE PAGE
	1	1	**4J-1888**	2	PIN-COTTER	
	2	1	**132-3777**	1	PIN	
	3	1	**132-3778**	1	PIN	
Y	4	1	**176-6251**	1	COUPLER GP-QUICK	830

Y-SEPARATE ILLUSTRATION

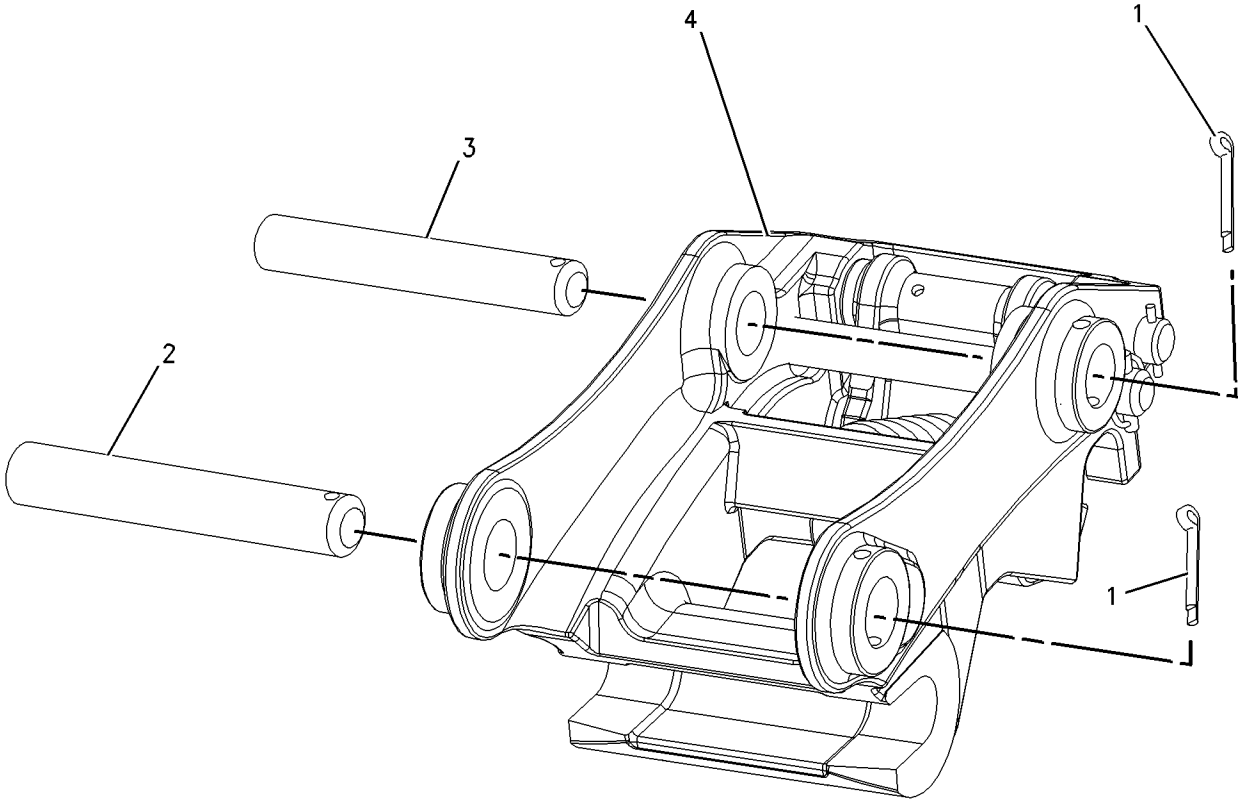

GRAPHIC #1 **<END>** g00904540

WORK TOOLS

222-7464 COUPLER GP-QUICK

S/N: BFP12900-UP
PIN-LOCK SERIES II
PART OF 222-7379 COUPLER AR-QUICK
AN ATTACHMENT

SMCS-6129 **i01753972**

NOTE	REF NO	GRAPHIC REF	PART NUMBER	QTY	PART NAME 1 2 3 4 5 6 (PRODUCT LEVEL)	SEE PAGE
	1	1	**9H-3771**	1	FITTING	
	2	1	**210-1145**	2	BEARING-SLEEVE	
	3	1	**9R-0320**	2	BEARING	
	4	1	**9R-3700**	2	BEARING-SLEEVE	

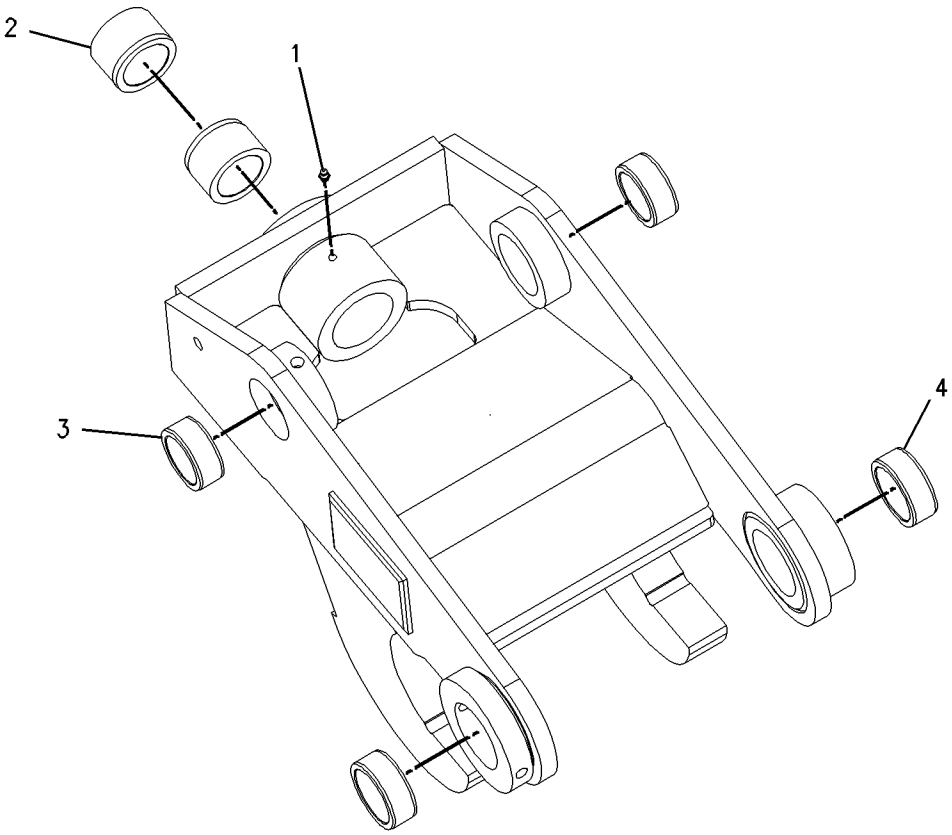

GRAPHIC #1 **<END>** g00897210

WORK TOOLS

9R-5320 EDGE GP-CUTTING

S/N: BFP12900-UP
PART OF 190-1079 BUCKET GP-GENERAL PURPOSE
AN ATTACHMENT

SMCS-6801 **i00457549**

NOTE	REF NO	GRAPHIC REF	PART NUMBER	QTY	PART NAME 1 2 3 4 5 6 (PRODUCT LEVEL)	SEE PAGE
	1	1	**118-7110**	2	EDGE-CUTTING	
	2	1	**4F-3657**	8	BOLT-PLOW	
	3	1	**4K-0367**	8	NUT (5/8-11 THD)	
	4	1	**8T-4122**	8	WASHER (3.5MM THK)	

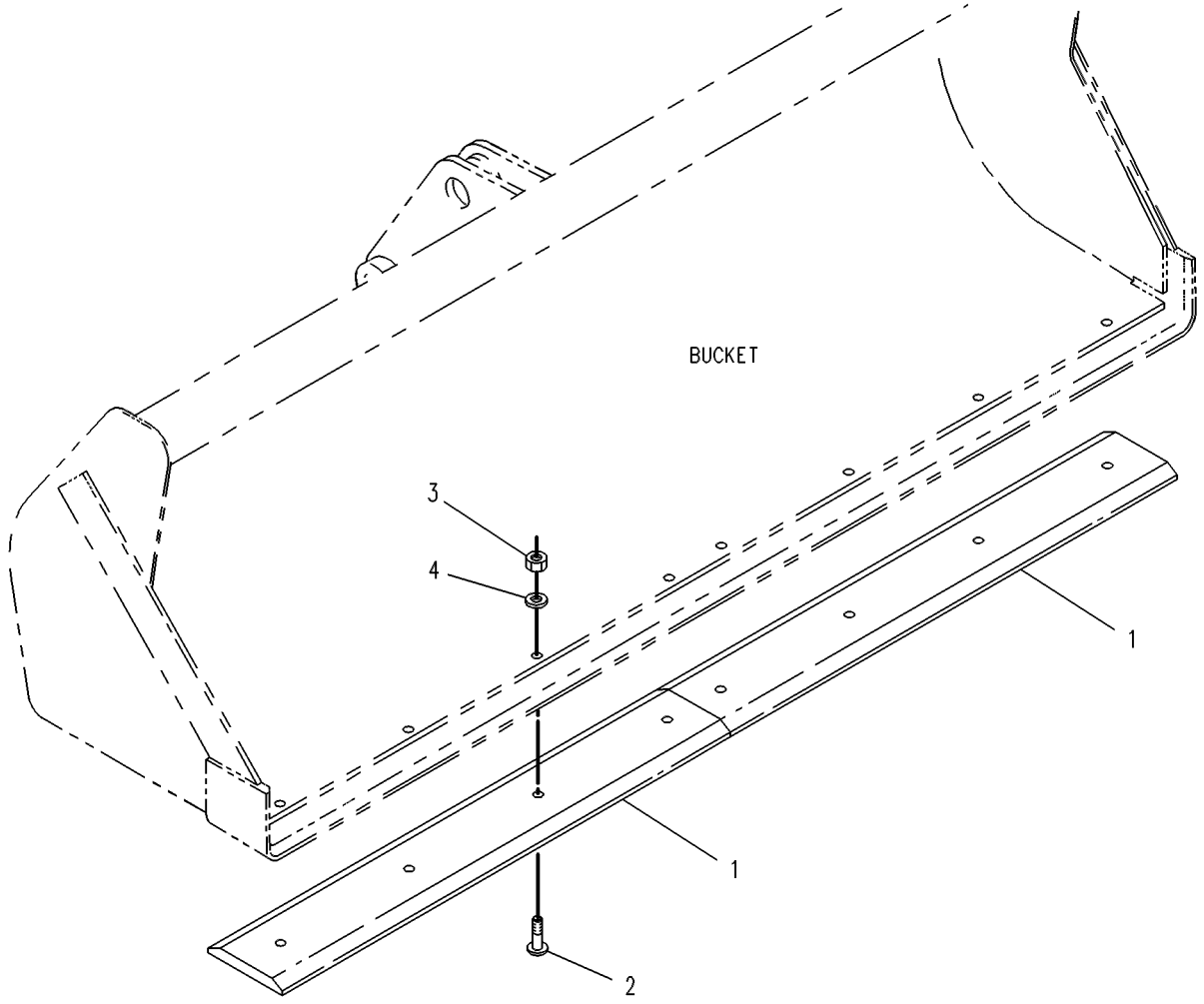

GRAPHIC #1 **<END>** g00131376

9R-5321 EDGE GP-CUTTING

S/N: BFP12900-UP; CXP940-UP
PART OF 190-1078, 232-2712 BUCKET GP-GENERAL PURPOSE
AN ATTACHMENT

SMCS-6801 **i00921780**

NOTE	REF NO	GRAPHIC REF	PART NUMBER	QTY	PART NAME 1 2 3 4 5 6 (PRODUCT LEVEL)	SEE PAGE
	1	1	**9W-8215**	2	EDGE-CUTTING	
	2	1	**3F-5108**	8	BOLT-PLOW	
	3	1	**4K-0367**	8	NUT (5/8-11 THD)	
	4	1	**8T-4122**	8	WASHER (3.5MM THK)	

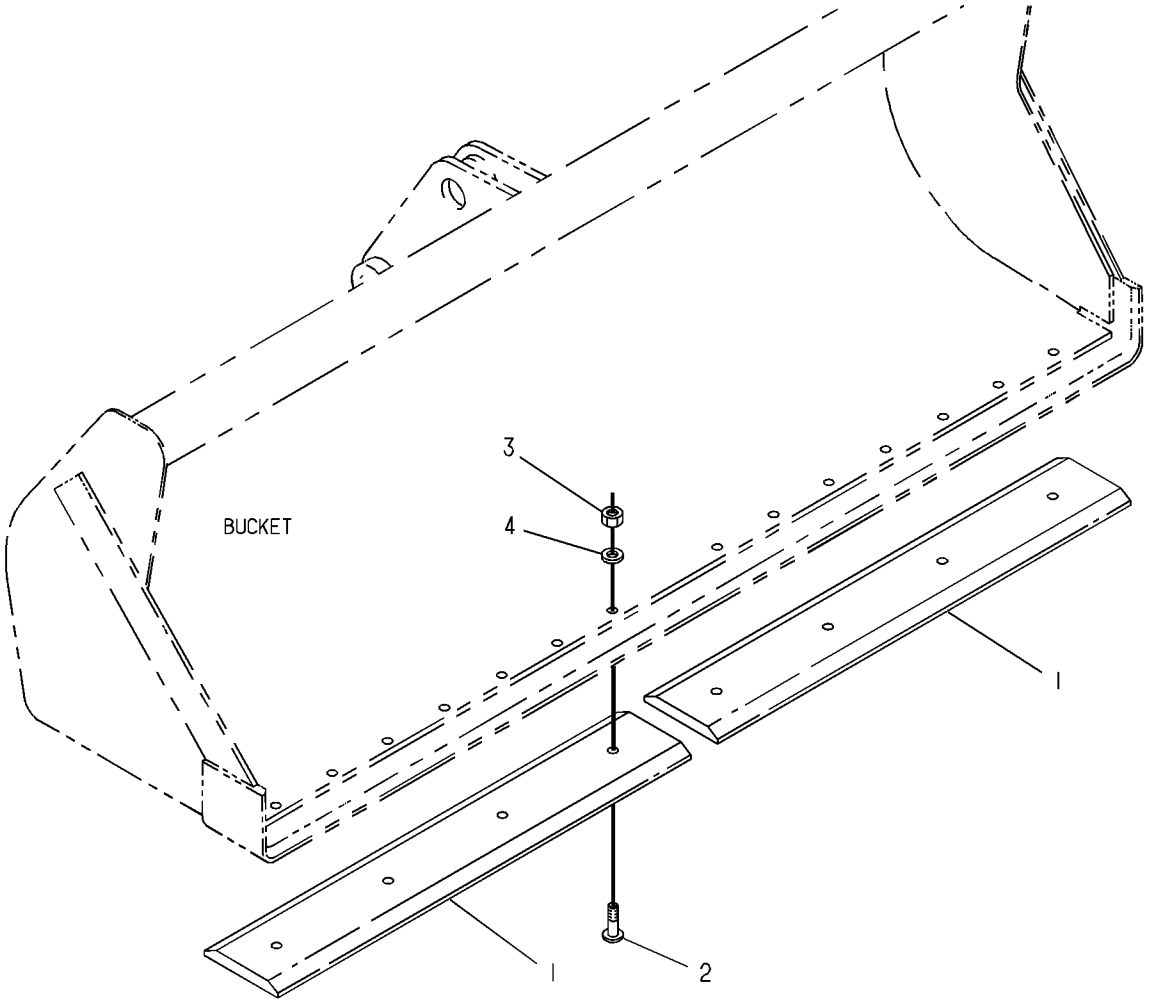

GRAPHIC #1 **<END>** g00130834

112-0942 FORK AR

S/N: BFP12900-UP

FOR USE WITH 112-0938 BUCKET AR-MULTIPURPOSE, 111-8636 BUCKET AR-MULTIPURPOSE, 9R-8002 HYDRAULIC AR

AN ATTACHMENT

SMCS-6405 **i00755991**

NOTE	PART NUMBER	QTY	PART NAME 1 2 3 4 5 6 (PRODUCT LEVEL)	SEE PAGE
Y	*104-6310*	1	FORK GP	837
Y	*108-1587*	1	MOUNTING GP-FORK	844

Y-SEPARATE ILLUSTRATION

<END>

WORK TOOLS

104-6310 FORK GP

S/N: BFP12900-UP

PART OF 111-8635, 112-0939 BUCKET AR-MULTIPURPOSE, 112-0942 FORK AR

AN ATTACHMENT

SMCS-6405 **i00714346**

NOTE	REF NO	GRAPHIC REF	PART NUMBER	QTY	PART NAME 1 2 3 4 5 6 (PRODUCT LEVEL)	SEE PAGE
	1	1	**104-6311**	2	BRACKET AS	
	2	1	**104-6312**	2	FORK AS	
	3	1	**104-6316**	1	PIN	
	4	1	**104-6317**	2	PIN	
	5	1	**4J-1888**	1	COTTER	
	6	1	**9R-0109**	4	WASHER (3MM THK)	
	7	1	**112-1776**	2	PIN AS	
	8	1	**6V-8144**	4	RING	
	9	1	**5D-8159**	2	PIN AS	

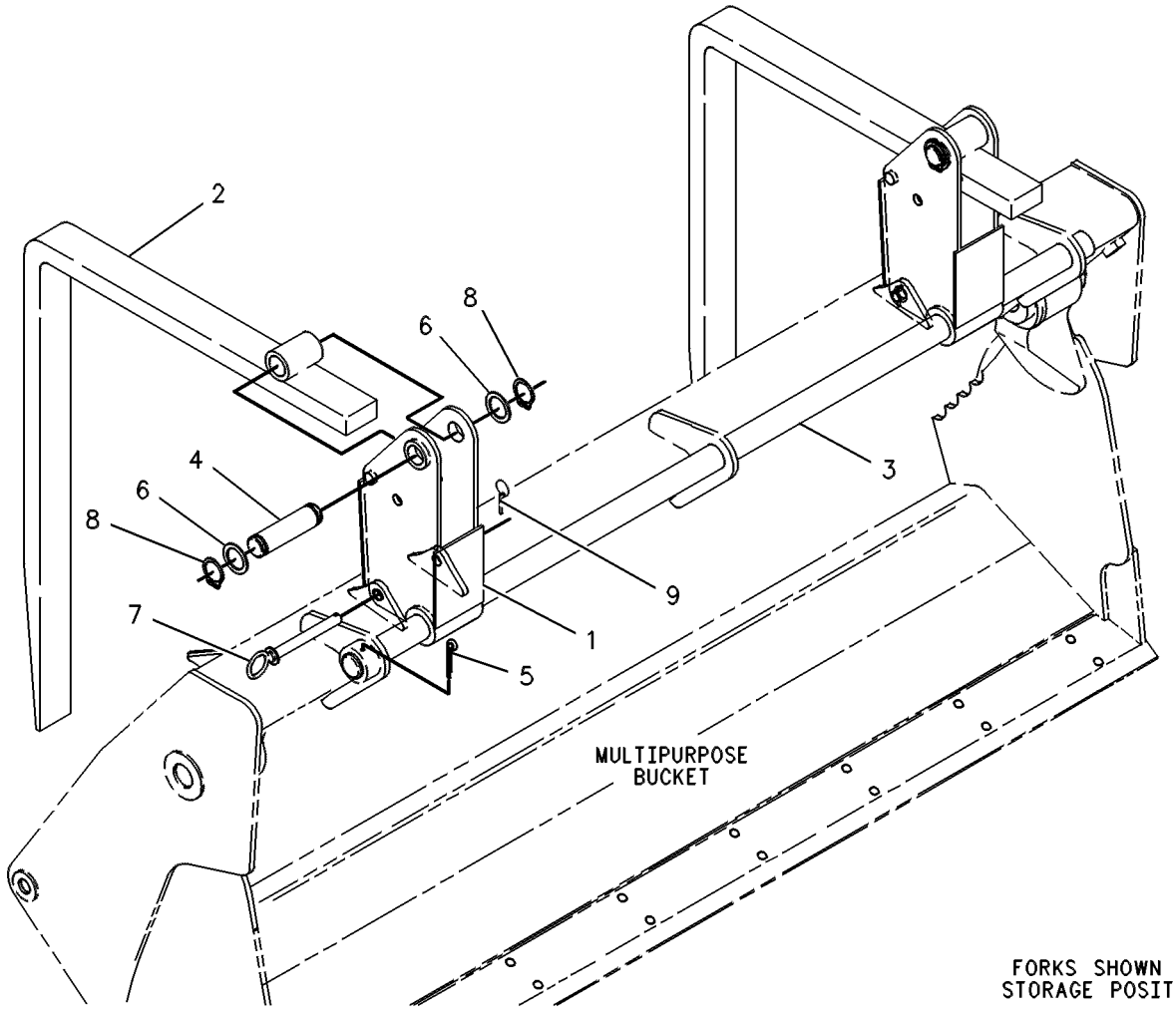

GRAPHIC #1 **<END>** g00131084

101-4408 GUARD GP-BUCKET—FRONT BUCKET

S/N: BFP12900-UP

AN ATTACHMENT

SMCS-6001, 6800, 6805 **i01768667**

NOTE	PART NUMBER	QTY	PART NAME 1 2 3 4 5 6 (PRODUCT LEVEL)	SEE PAGE
Y	*101-4409*	1	GUARD GP-BUCKET	839
	101-4415	1	REFLECTOR	

Y-SEPARATE ILLUSTRATION

<END>

WORK TOOLS

101-4409 GUARD GP-BUCKET

S/N: BFP12900-UP
PART OF 101-4408 GUARD GP-BUCKET
AN ATTACHMENT

SMCS-6001, 6800, 6805 **i00824356**

NOTE	REF NO	GRAPHIC REF	PART NUMBER	QTY	PART NAME 1 2 3 4 5 6 (PRODUCT LEVEL)	SEE PAGE
	1	1	**101-4410**	1	GUARD AS	
	2	1	**101-4411**	2	RETAINER AS	
	3	1	**101-4412**	2	CHAIN	
	4	1	**101-4413**	2	SPRING	
	5	1	**101-4414**	2	HOOK AS	

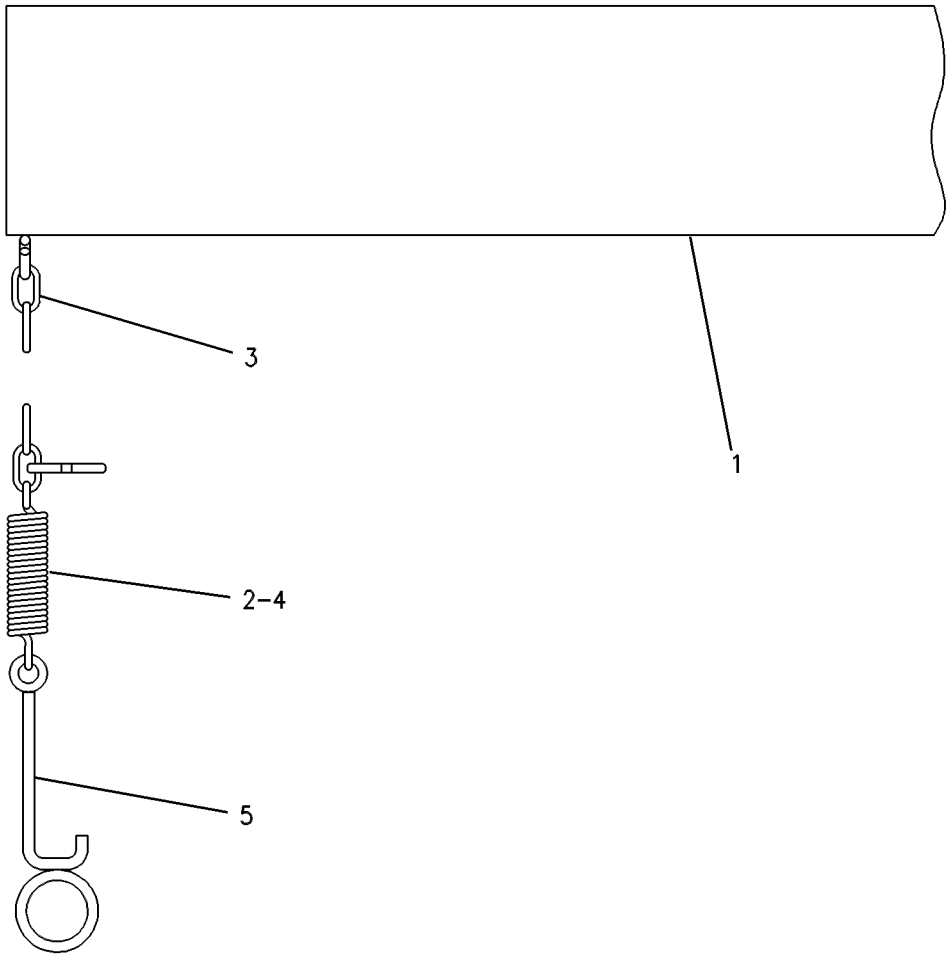

GRAPHIC #1 **<END>** g00265135

WORK TOOLS

223-8120 KIT-ADAPTER TIP

S/N: BFP12900-UP

AN ATTACHMENT

SMCS-6800, 6803 **i02003589**

NOTE	REF NO	GRAPHIC REF	PART NUMBER	QTY	PART NAME 1 2 3 4 5 6 (PRODUCT LEVEL)	SEE PAGE
	1	1	**201-1235**	5	ADAPTER	
	2	1	**201-1238**	5	PIN	
	3	1	**201-1239**	5	RETAINER AS	

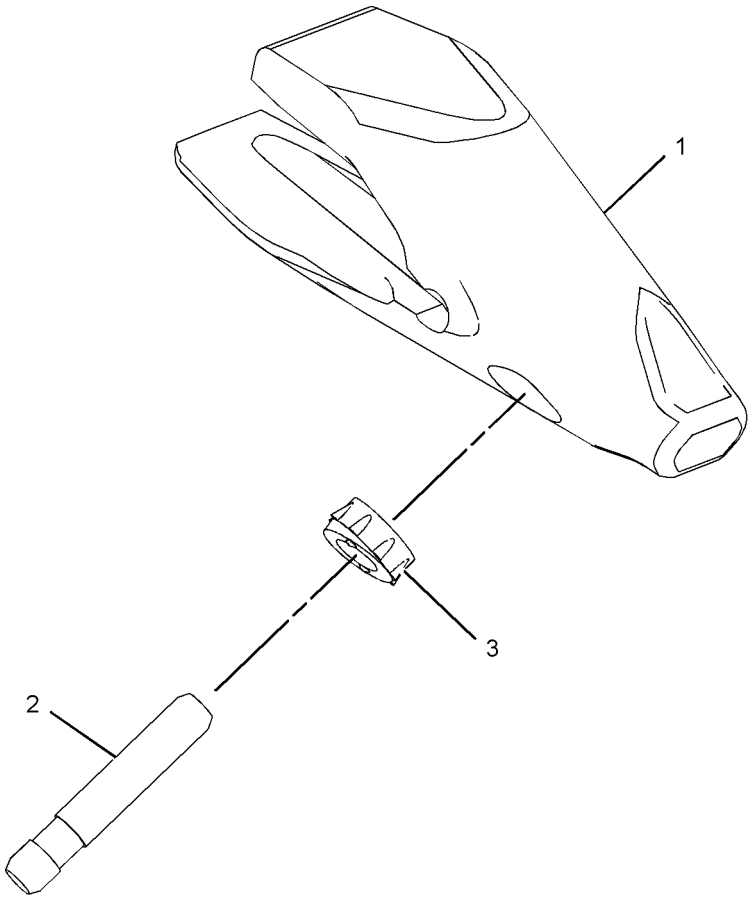

GRAPHIC #1 **<END>** g01038549

WORK TOOLS

223-8125 KIT-ADAPTER TIP

S/N: BFP12900-UP

AN ATTACHMENT

SMCS-6800, 6803 **i02003586**

NOTE	REF NO	GRAPHIC REF	PART NUMBER	QTY	PART NAME 1 2 3 4 5 6 (PRODUCT LEVEL)	SEE PAGE
	1	1	**201-1234**	5	ADAPTER	
	2	1	**201-1238**	5	PIN	
	3	1	**201-1239**	5	RETAINER AS	

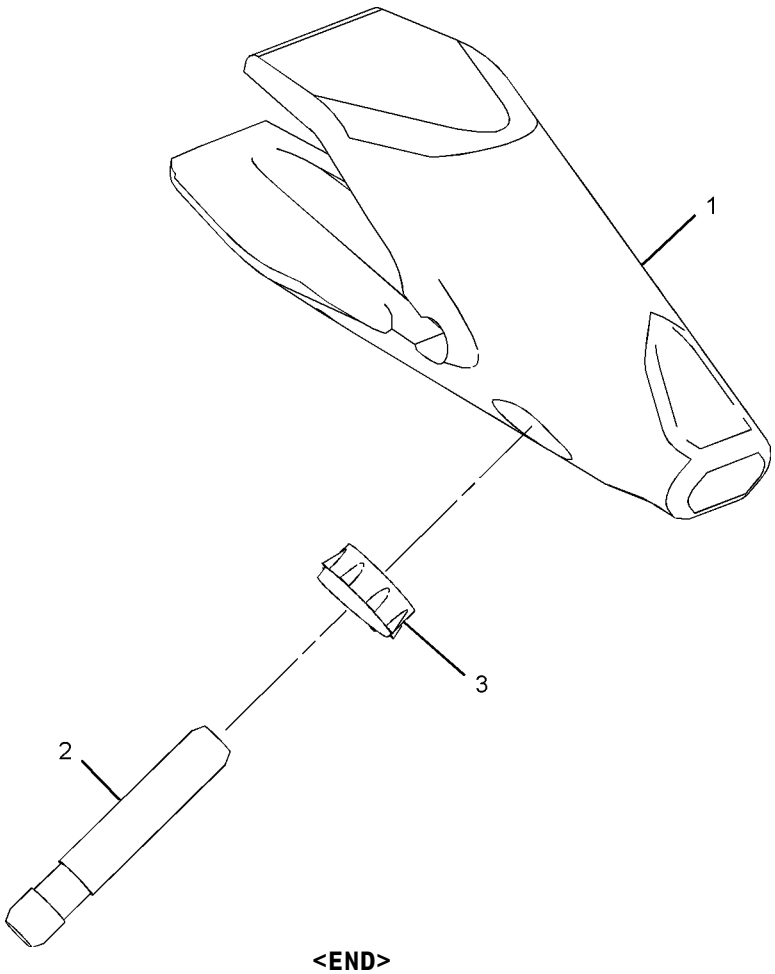

GRAPHIC #1 **<END>** g01038546

WORK TOOLS

137-3848 MOUNTING GP-BUCKET

S/N: BFP12900-UP
QUICK COUPLER-BACKHOE
AN ATTACHMENT

SMCS-6101 **i01271145**

NOTE	REF NO	GRAPHIC REF	PART NUMBER	QTY	PART NAME 1 2 3 4 5 6 (PRODUCT LEVEL)	SEE PAGE
	1	1	**9R-0158**	5	WASHER (3MM THK)	
	2	1	**3B-5319**	4	COTTER	
	3	1	**9R-6162**	1	PIN	
	4	1	**9R-1510**	2	WASHER (4MM THK)	
	5	1	**154-5279**	1	PIN	

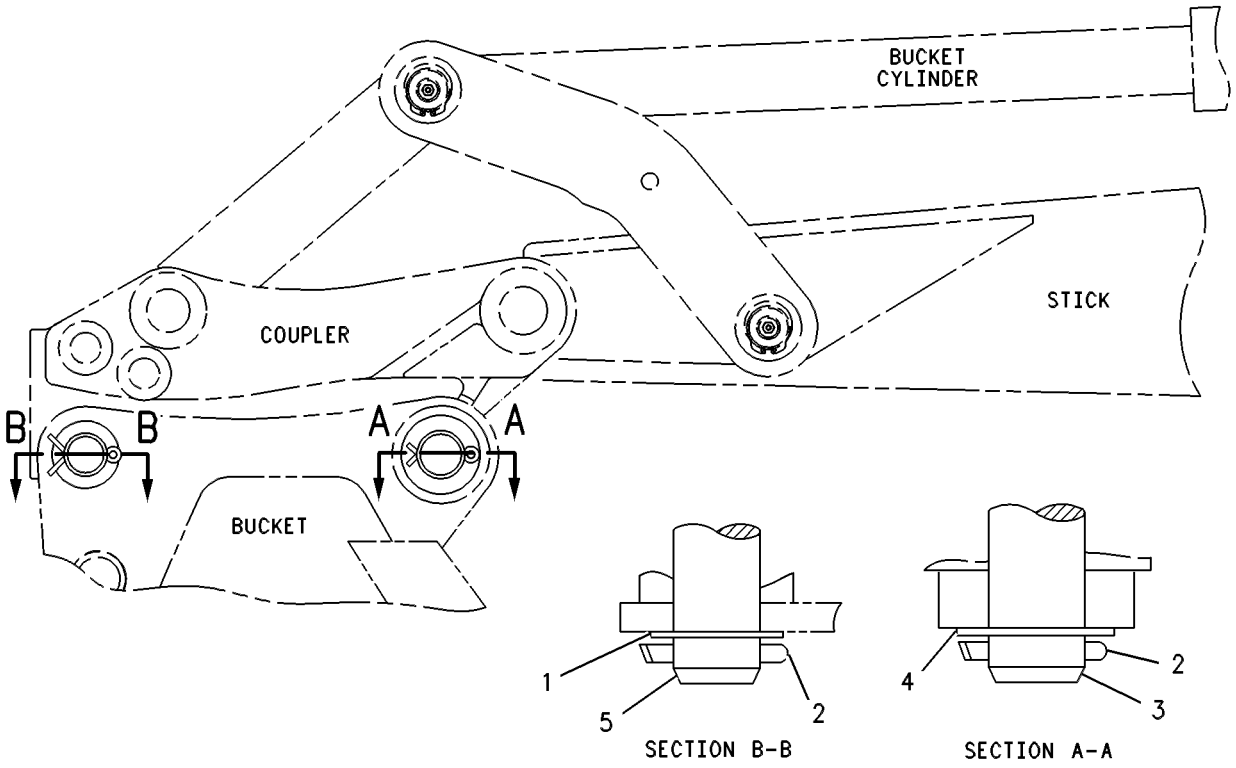

GRAPHIC #1 **<END>** g00131819

WORK TOOLS

178-3593 MOUNTING GP-BUCKET

S/N: BFP12900-UP
QUICK COUPLER-BACKHOE
AN ATTACHMENT

SMCS-6101 **i01351210**

NOTE	PART NUMBER	QTY	PART NAME 1 2 3 4 5 6 (PRODUCT LEVEL)	SEE PAGE
	3B-5319	4	COTTER	
	154-5279	1	PIN	
	154-5280	1	PIN	
B	**9R-0158**	5	WASHER (3MM THK)	
B	**9R-1510**	5	WASHER (4MM THK)	

B-USE AS REQUIRED

<END>

108-1587 MOUNTING GP-FORK

S/N: BFP12900-UP
PART OF 112-0942 FORK AR
AN ATTACHMENT

SMCS-6405 **i00457503**

NOTE	REF NO	GRAPHIC REF	PART NUMBER	QTY	PART NAME 1 2 3 4 5 6 (PRODUCT LEVEL)	SEE PAGE
	1	1	**110-2861**	4	BRACKET	
	2	1	**104-6313**	1	BRACKET AS	
	3	1	**104-6314**	2	BRACKET	
	4	1	**106-9388**	2	BRACKET	

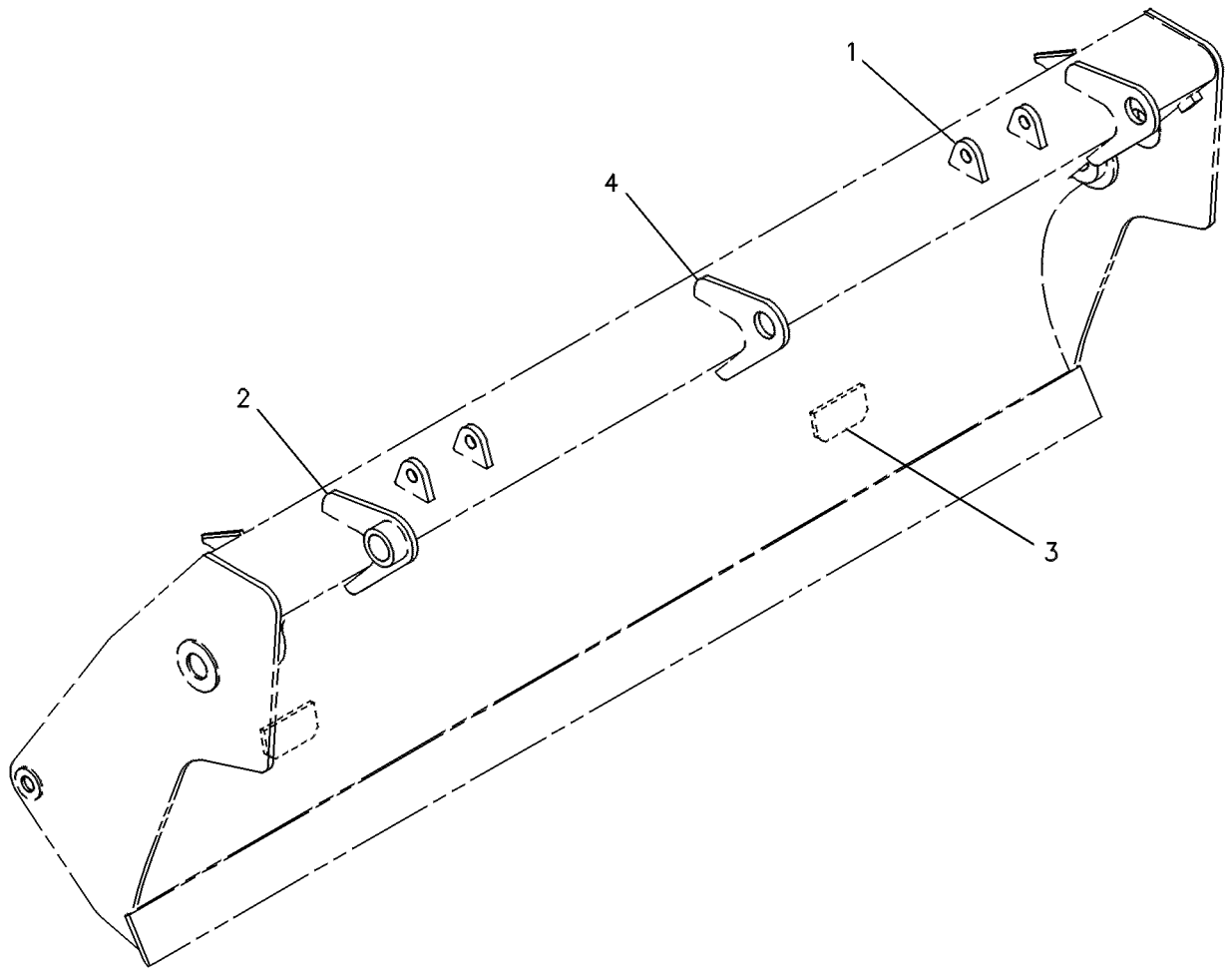

GRAPHIC #1 **<END>** g00131197

WORK TOOLS

215-9478 PIN GP-COUPLER

S/N: BFP12900-UP
MACHINE
PART OF 222-7379 COUPLER AR-QUICK
AN ATTACHMENT

SMCS-6129 **i01797195**

NOTE	REF NO	GRAPHIC REF	PART NUMBER	QTY	PART NAME 1 2 3 4 5 6 (PRODUCT LEVEL)	SEE PAGE
	1	1	**215-3373**	1	PIN	
	2	1	**168-0425**	1	PIN	
M	3	1	**6V-7744**	2	LOCKNUT (M10X1.5 THD)	
M	4	1	**7X-2543**	1	BOLT (M10X1.5X120MM)	
M	5	1	**8T-4198**	1	BOLT (M10X1.5X100MM)	

M-METRIC PART

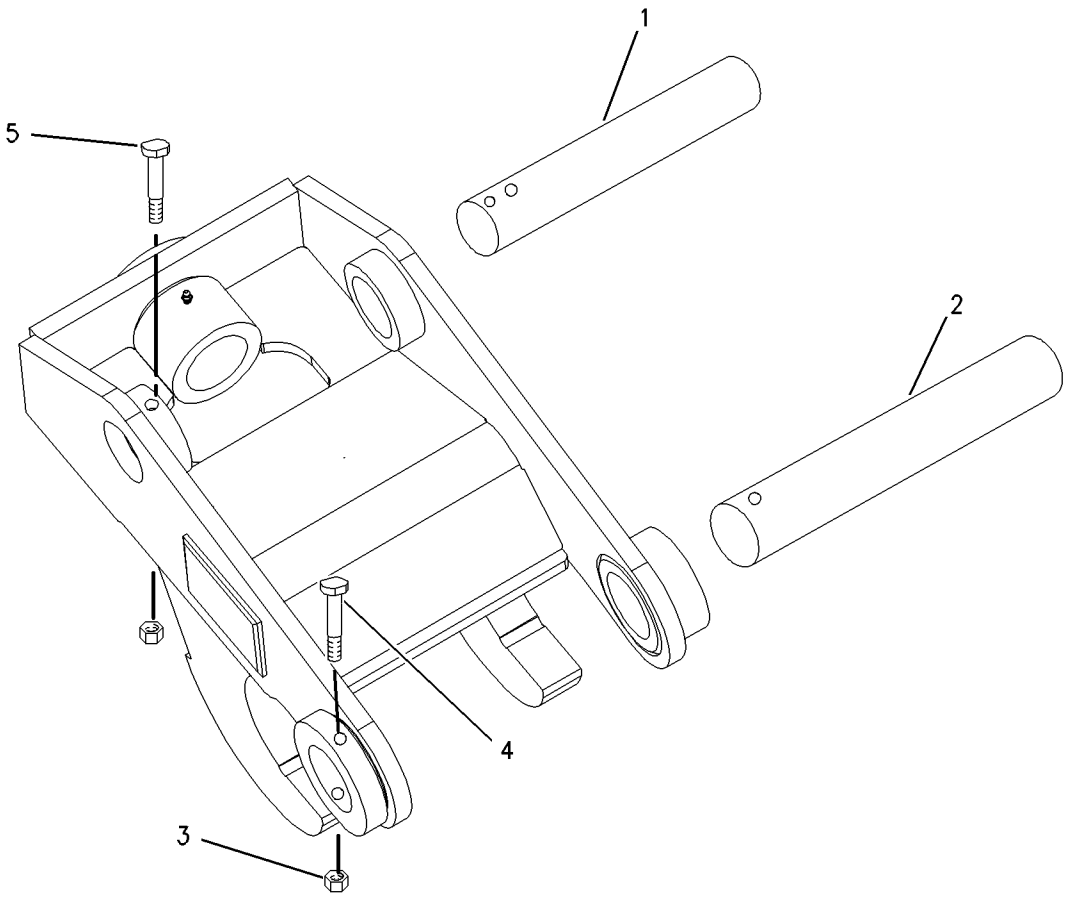

GRAPHIC #1 **<END>** g00920584

WORK TOOLS

216-0928 PIN GP-COUPLER

S/N: BFP12900-UP
PART OF 222-7379 COUPLER AR-QUICK
AN ATTACHMENT

SMCS-6129 **i01797167**

NOTE	REF NO	GRAPHIC REF	PART NUMBER	QTY	PART NAME 1 2 3 4 5 6 (PRODUCT LEVEL)	SEE PAGE
	1	1	**210-1115**	1	PIN AS	
	2	1	**216-3712**	1	PIN	

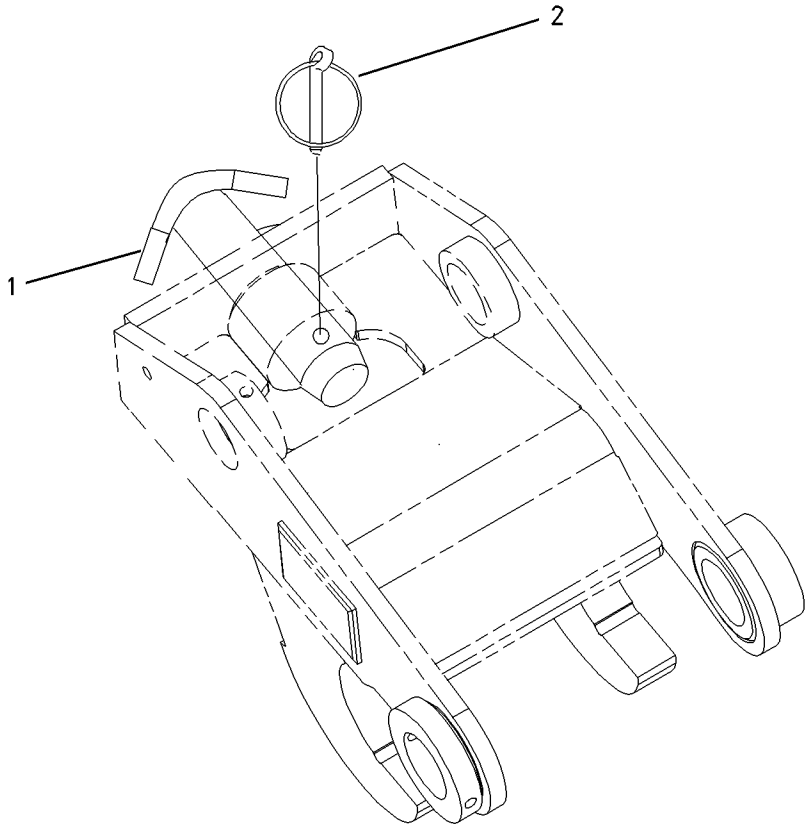

GRAPHIC #1 **<END>** g00920705

WORK TOOLS

119-1530 SHIPPING AR-BUCKET

S/N: BFP12900-UP
TRANSPORT (NO BUCKET OPTION)
AN ATTACHMENT

SMCS-7505 **i00756012**

NOTE	PART NUMBER	QTY	PART NAME 1 2 3 4 5 6 (PRODUCT LEVEL)	SEE PAGE
Y	*120-9289*	1	BRACKET GP-TRANSPORT	731
Y-SEPARATE ILLUSTRATION				

<END>

WORK TOOLS

177-4903 STOP GP-BUCKET

S/N: BFP12900-UP

AN ATTACHMENT

SMCS-6001 **i01876858**

NOTE	REF NO	GRAPHIC REF	PART NUMBER	QTY	PART NAME 1 2 3 4 5 6 (PRODUCT LEVEL)	SEE PAGE
	1	1	**178-4200**	1	STOP AS	
	2	1	**180-3773**	1	STOP AS	
	3	1	**7X-7729**	4	WASHER (11X25X3MM THK)	
M	4	1	**8T-0389**	4	LOCKNUT (M10X1.5 THD)	
M	5	1	**8T-4182**	4	BOLT (M10X1.5X45MM)	

M-METRIC PART

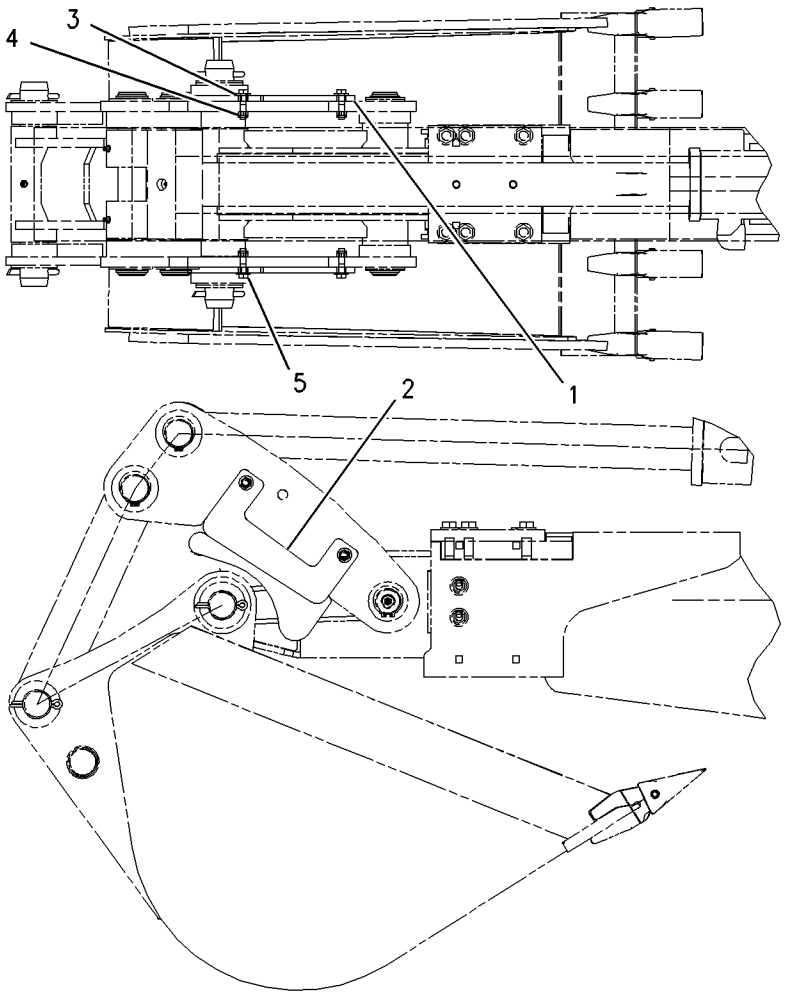

GRAPHIC #1 **<END>** g00954944

WORK TOOLS

221-4260 THUMB AR

S/N: BFP12900-UP
PART OF 224-6224, 224-6225, 224-6226, 224-6227, 224-6232, 224-6233, 224-6234, 224-6235 THUMB AR
AN ATTACHMENT

SMCS-6547 **i01920959**

NOTE	PART NUMBER	QTY	PART NAME 1 2 3 4 5 6 (PRODUCT LEVEL)	SEE PAGE
Y	*221-4265*	1	MOUNTING GP-CYLINDER (THUMB)	666
Y	*221-4267*	1	THUMB GP (BAKCHOE LOADER)	852

Y-SEPARATE ILLUSTRATION

<END>

224-6224 THUMB AR–HEAVY DUTY

S/N: BFP12900-UP
24IN
FOR USE WITH STANDARD STICK
AN ATTACHMENT

SMCS-6547 **i01920554**

NOTE	PART NUMBER	QTY	PART NAME 1 2 3 4 5 6 (PRODUCT LEVEL)	SEE PAGE
Y	**224-6236**	1	CYLINDER & LINES GP-THUMB	544
Y	**221-4260**	1	THUMB AR	849
	221-4282	1	TINE AS	

Y-SEPARATE ILLUSTRATION

<END>

224-6225 THUMB AR–HEAVY DUTY

S/N: BFP12900-UP
24 IN
FOR USE WITH COUPLER
AN ATTACHMENT

SMCS-6547 **i01920636**

NOTE	PART NUMBER	QTY	PART NAME 1 2 3 4 5 6 (PRODUCT LEVEL)	SEE PAGE
Y	**224-6236**	1	CYLINDER & LINES GP-THUMB	544
Y	**221-4260**	1	THUMB AR	849
	221-4283	1	TINE AS	

Y-SEPARATE ILLUSTRATION

<END>

224-6226 THUMB AR–ROCK

S/N: BFP12900-UP
24 IN
FOR USE WITH STANDARD STICK
AN ATTACHMENT

SMCS-6547 **i01920641**

NOTE	PART NUMBER	QTY	PART NAME 1 2 3 4 5 6 (PRODUCT LEVEL)	SEE PAGE
Y	**224-6236**	1	CYLINDER & LINES GP-THUMB	544
Y	**221-4260**	1	THUMB AR	849
	221-4284	1	TINE AS	

Y-SEPARATE ILLUSTRATION

<END>

224-6227 THUMB AR–ROCK

S/N: BFP12900-UP
24IN
FOR USE WITH COUPLER
AN ATTACHMENT

SMCS-6547 **i01920648**

NOTE	PART NUMBER	QTY	PART NAME 1 2 3 4 5 6 (PRODUCT LEVEL)	SEE PAGE
Y	**224-6236**	1	CYLINDER & LINES GP-THUMB	544
Y	**221-4260**	1	THUMB AR	849
	221-4285	1	TINE AS	

Y-SEPARATE ILLUSTRATION

<END>

224-6232 THUMB AR–HEAVY DUTY

S/N: BFP12900-UP
24IN
FOR USE WITH STIFF-LINK
AN ATTACHMENT

SMCS-6547 **i01920653**

NOTE	PART NUMBER	QTY	PART NAME 1 2 3 4 5 6 (PRODUCT LEVEL)	SEE PAGE
Y	**221-4276**	1	LINK GP-THUMB	733
Y	**221-4260**	1	THUMB AR	849
	221-4282	1	TINE AS	

Y-SEPARATE ILLUSTRATION

<END>

224-6233 THUMB AR–HEAVY DUTY

S/N: BFP12900-UP
24IN
FOR USE WITH COUPLER/STIFF-LINK
AN ATTACHMENT

SMCS-6547 **i01920656**

NOTE	PART NUMBER	QTY	PART NAME 1 2 3 4 5 6 (PRODUCT LEVEL)	SEE PAGE
Y	**221-4276**	1	LINK GP-THUMB	733
Y	**221-4260**	1	THUMB AR	849
	221-4283	1	TINE AS	

Y-SEPARATE ILLUSTRATION

<END>

224-6234 THUMB AR–ROCK

S/N: BFP12900-UP
24IN
FOR USE WITH STIFF-LINK
AN ATTACHMENT

SMCS-6547 **i01920659**

NOTE	PART NUMBER	QTY	PART NAME 1 2 3 4 5 6 (PRODUCT LEVEL)	SEE PAGE
Y	**221-4276**	1	LINK GP-THUMB	733
Y	**221-4260**	1	THUMB AR	849
	221-4284	1	TINE AS	

Y-SEPARATE ILLUSTRATION

<END>

224-6235 THUMB AR–ROCK

S/N: BFP12900-UP
24IN
FOR USE WITH COUPLER/STIFF-LINK
AN ATTACHMENT

SMCS-6547 **i01920662**

NOTE	PART NUMBER	QTY	PART NAME 1 2 3 4 5 6 (PRODUCT LEVEL)	SEE PAGE
Y	**221-4276**	1	LINK GP-THUMB	733
Y	**221-4260**	1	THUMB AR	849
	221-4285	1	TINE AS	

Y-SEPARATE ILLUSTRATION

<END>

WORK TOOLS

221-4267 THUMB GP

S/N: BFP12900-UP
PART OF 221-4260 THUMB AR
AN ATTACHMENT

SMCS-6547 **i01923131**

NOTE	REF NO	GRAPHIC REF	PART NUMBER	QTY	PART NAME 1 2 3 4 5 6 (PRODUCT LEVEL)	SEE PAGE
	1	1	**221-4263**	1	THUMB AS	
	2	1	**3B-8489**	2	FITTING-GREASE	
	3	1	**8T-4123**	8	WASHER-PLATED (22X35X3.5MM THK)	
M	4	1	**8T-4131**	4	NUT (M20X2.5 THD)	
M	5	1	**8T-4187**	4	BOLT (M20X2.5X80MM)	

M-METRIC PART

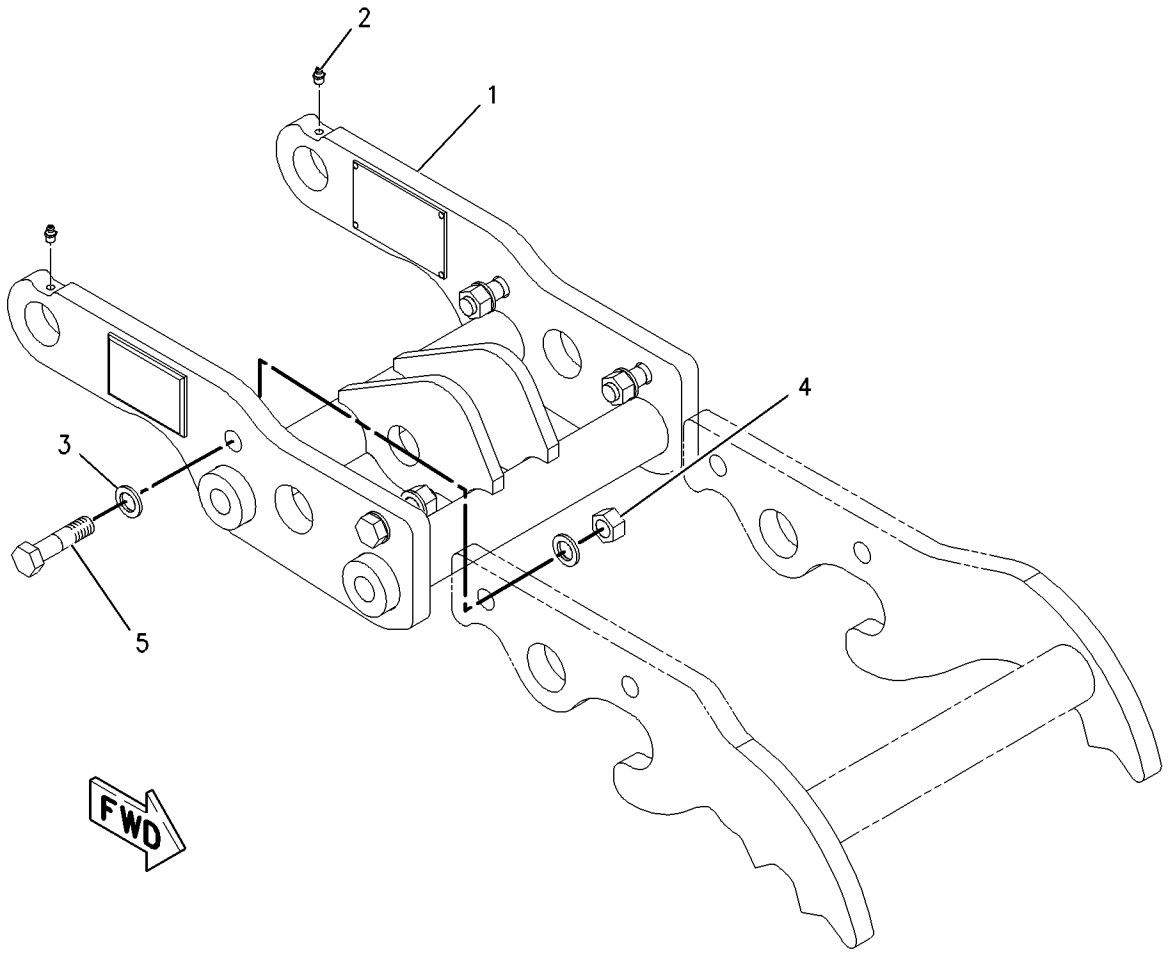

GRAPHIC #1 **<END>** g01003468

WORK TOOLS

9R-5866 TOOTH GP-UNI

S/N: BFP12900-UP
PART OF 190-1055, 190-1056 BUCKET GP-GENERAL PURPOSE
FOR USE WITH LOADER BUCKETS
AN ATTACHMENT

SMCS-6822 **i01789917**

NOTE	REF NO	GRAPHIC REF	PART NUMBER	QTY	PART NAME 1 2 3 4 5 6 (PRODUCT LEVEL)	SEE PAGE
	1	1	**135-8203**	8	TOOTH-UNI	
	2	1	**4F-3657**	16	BOLT-PLOW (5/8-11X2.75 IN)	
	3	1	**4K-0367**	16	NUT-FULL (5/8-11 THD)	

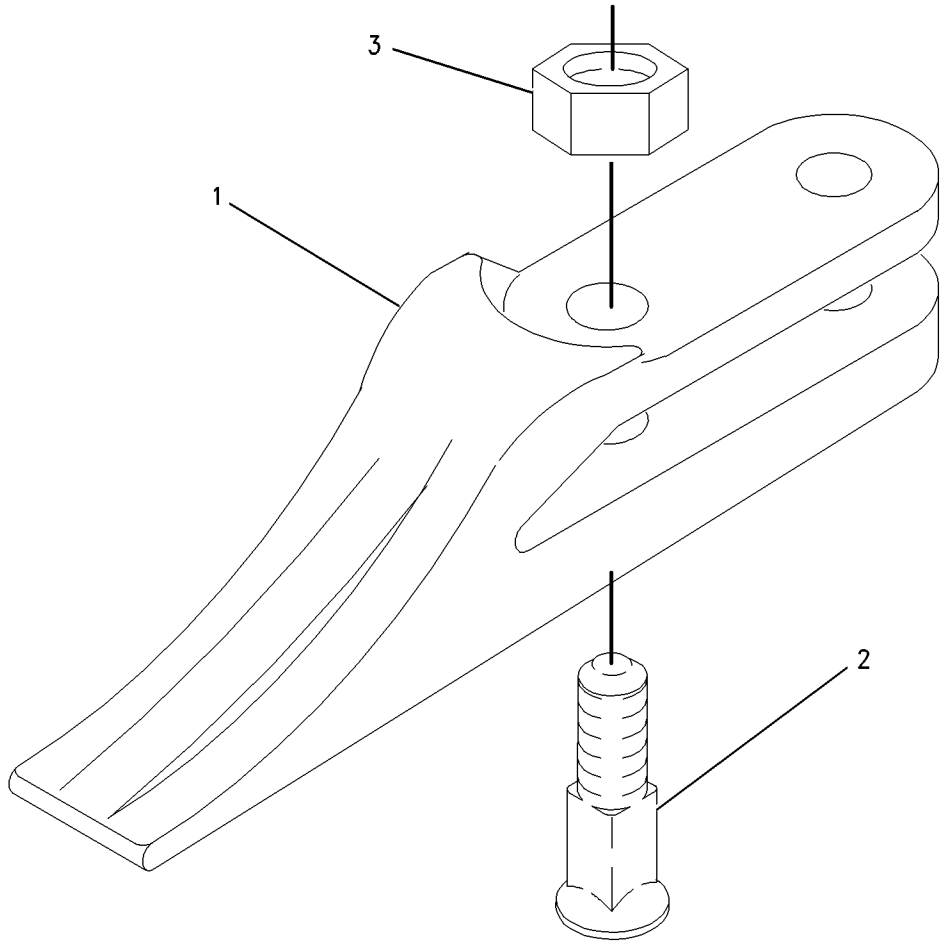

GRAPHIC #1 **<END>** g00915958

OPERATOR STATION

186-6190 ACCUMULATOR GP-REFRIGERANT–CHARGED

S/N: BFP12900-UP

PART OF 234-2617 LINES GP-HEATER & AIR COND

AN ATTACHMENT

SMCS-7320 **i02018341**

NOTE	PART NUMBER	QTY	PART NAME 1 2 3 4 5 6 (PRODUCT LEVEL)	SEE PAGE
			(NO SERVICED PARTS)	

<END>

OPERATOR STATION

164-1278 ADJUSTER GP-SEAT

S/N: BFP12900-UP; CXP940-UP
PART OF 164-1205 SEAT GP-STATIC
AN ATTACHMENT

SMCS-7321 **i01691410**

NOTE	REF NO	GRAPHIC REF	PART NUMBER	QTY	PART NAME 1 2 3 4 5 6 (PRODUCT LEVEL)	SEE PAGE
	1	1	**9X-2027**	4	WASHER (11X18X2MM THK)	
	2	1	**164-1279**	1	BASE AS	
	3	1	**164-1281**	1	ROD	
	4	1	**164-1282**	1	HANDLE	
	5	1	**164-1287**	1	BRACKET AS	
	6	1	**164-1288**	1	BRACKET AS	
	7	1	**164-1290**	2	SPRING-TORSION	
	8	1	**164-1291**	4	BOLT-SHOULDER	
	9	1	**2K-4973**	8	LOCKNUT (3/8-16 THD)	
	10	1	*164-1283*	1	KIT-LATCH	
		1	**2L-5893**	1	PIN-SPRING	
		1	**164-1284**	1	LATCH AS	
		1	**164-1285**	1	SPRING-TORSION	
	11	1	**4V-8264**	2	LINK	
	12	1	**164-1289**	2	PLATE AS	
	13	1	**7X-0605**	8	WASHER-HARD (13X28X1.6MM THK)	
	14	1	**1K-6872**	2	LOCKNUT (1/2-13 THD)	
	15	1	**0S-1621**	2	BOLT (1/2-13X1 IN)	
	16	1	**164-1280**	1	KIT-TETHER	
		1	**0S-1621**	2	BOLT (1/2-13X1 IN)	
		1	**1K-6872**	2	LOCKNUT (1/2-13 THD)	
		1	**7X-0605**	4	WASHER-HARD (13X28X1.6MM THK)	

164-1278 ADJUSTER GP-SEAT *(contd.)* i01691410

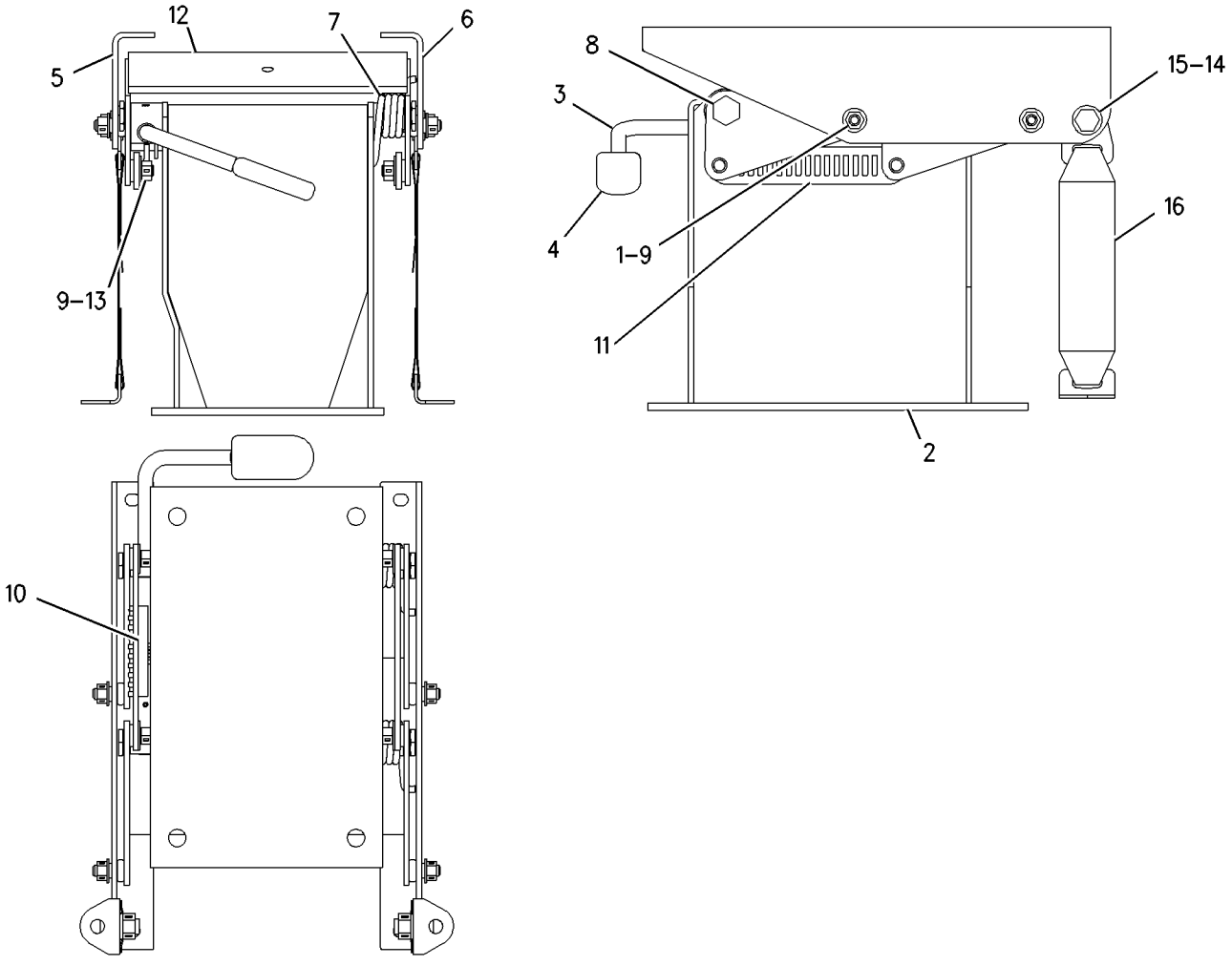

GRAPHIC #1 **<END>** g00744116

OPERATOR STATION

164-1032 AIR CONDITIONER & MOUNTING GP

S/N: BFP12900-UP
PART OF 236-6960 AIR CONDITIONER AR
AN ATTACHMENT

SMCS-7320 **i01946259**

NOTE	REF NO	GRAPHIC REF	PART NUMBER	QTY	PART NAME 1 2 3 4 5 6 (PRODUCT LEVEL)	SEE PAGE
E	1	1	**6V-6813**		HOSE (40CM)	
	2	1	**6L-4725**	2	CLAMP-HOSE	
	3	1	**8Y-5737**	1	CLAMP	
C	4	1	**8Y-6967**	1	LOUVER AS	
	5	1	**9M-7959**	1	CLAMP (HOSE)	
	6	1	**9R-9901**	5	FASTENER (CLIP)	
	7	1	**110-6109**	1	KNOB-CONTROL	
	8	1	**130-4832**	2	SCREW (8-18X.39 IN)	
	9	1	**164-1042**	1	DUCT-OUTLET	
	10	1	**164-1196**	1	CABLE AS	
		1	**143-8874**	1	BOOT	
Y	11	1	**170-0075**	1	AIR CONDITIONER GP	862
	12	1	**184-6560**	1	BRACKET	
	13	1	**184-6561**	1	HOSE-AIR	
	14	1	**184-6564**	1	GASKET	
	15	1	**184-6567**	1	GASKET	
	16	1	**184-6572**	1	INSULATION	
	17	1	**184-6573**	1	INSULATION	
	18	1	**184-6574**	1	INSULATION	
	19	1	**190-5132**	1	FILM-CONTROL (AIR CONDITIONER)	
	20	1	**194-5622**	1	VALVE AS (WATER)	
	20A	1	**6V-6717**	1	SCREW-WASHER HEAD (8-32X.375 IN)	
		1	**124-0312**	2	SCREW-PAN HEAD (8-16X.32 IN)	
	21	1	**206-7512**	1	COVER	
	22	1	**206-7513**	2	BRACKET	
	23	1	**206-7514**	1	FILTER (AIR CONDITIONER)	
C	24	1	**228-0297**	1	PLATE AS	
C	25	1	**228-0298**	1	DUCT-AIR	
C	26	1	**228-0560**	1	SEAL	
C	27	1	**228-4284**	1	AIR DUCT GP	
		1	**104-2091**	8	SCREW-FLAT HEAD (6-20X0.5 IN)	
		1	**164-8473**	2	LOUVER AS	
		1	**228-3178**	1	DUCT-AIR	
	28	1	**2H-3920**	1	LOCKWASHER	
C	29	1	**5P-4115**		WASHER-HARD (7.2X19X2MM THK)	
CM	30	1	**9X-2042**	3	SCREW-TRUSS HEAD (M6X1X12MM)	
M	31	1	**9X-2044**	2	SCREW-TRUSS HEAD (M6X1X16MM)	
M	32	1	**9X-2045**	2	SCREW-TRUSS HEAD (M6X1X20MM)	
E	33	1	**5P-3915**		HOSE (30CM)	
	34	1	**170-7272**	1	FILTER-AIR (AIR CONDITIONER)	

C-CHANGE FROM PREVIOUS TYPE
E-ORDER BY THE CENTIMETER
M-METRIC PART
Y-SEPARATE ILLUSTRATION

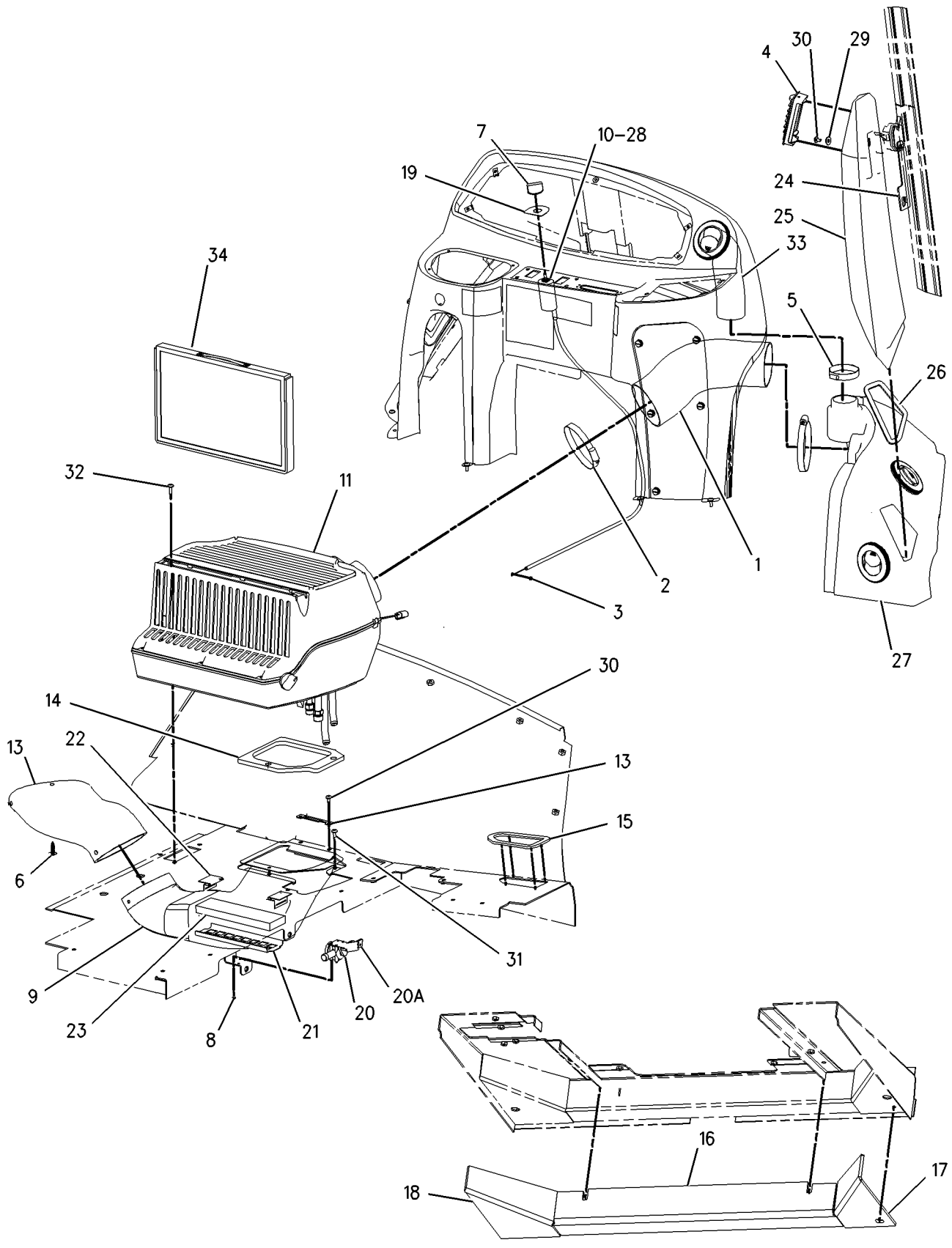

GRAPHIC #1 **<END>** g00952378

OPERATOR STATION

236-6966 AIR CONDITIONER & MOUNTING GP

S/N: BFP12900-UP
PART OF 239-5562 CAB AR
AN ATTACHMENT

SMCS-7320 **i01980967**

NOTE	REF NO	GRAPHIC REF	PART NUMBER	QTY	PART NAME 1 2 3 4 5 6 (PRODUCT LEVEL)	SEE PAGE
E	1	1	**6V-6813**		HOSE (40CM)	
	2	1	**6L-4725**	2	CLAMP-HOSE	
	3	1	**8Y-5737**	1	CLAMP	
	4	1	**8Y-6967**	1	LOUVER AS	
	5	1	**9M-7959**	1	CLAMP (HOSE)	
	6	1	**9P-6571**	2	PLUG	
	7	1	**110-6109**	1	KNOB-CONTROL	
	8	1	**130-4832**	2	SCREW (8-18X.39 IN)	
	9	1	**164-1042**	1	DUCT-OUTLET	
	10	1	**164-1196**	1	CABLE AS	
		1	**143-8874**	1	BOOT	
Y	11	1	**170-0075**	1	AIR CONDITIONER GP	862
	12	1	**184-6560**	1	BRACKET	
	13	1	**184-6561**	1	HOSE-AIR	
	14	1	**184-6564**	1	GASKET	
	15	1	**190-5132**	1	FILM-CONTROL (AIR CONDITIONER)	
	16	1	**194-5622**	1	VALVE AS (WATER)	
		1	**6V-6717**	1	SCREW-WASHER HEAD (8-32X.375 IN)	
		1	**124-0312**	2	SCREW-PAN HEAD (8-16X.32 IN)	
	17	1	**206-7512**	1	COVER	
	18	1	**206-7513**	2	BRACKET	
	19	1	**206-7514**	1	FILTER (AIR CONDITIONER)	
	20	1	**228-0297**	1	PLATE AS	
M		1	**6V-9632**	1	NUT-WELD (M6X1 THD)	
	21	1	**228-0298**	1	DUCT-AIR	
	22	1	**228-0560**	1	SEAL	
	23	1	**232-4666**	1	DUCT-AIR	
	24	1	**232-4874**	1	DUCT GP-AIR	
		1	**164-8473**	2	LOUVER AS	
		1	**104-2091**	8	SCREW-FLAT HEAD (6-20X0.5 IN)	
	25	1	**236-6985**	1	GASKET	
	26	1	**2H-3920**	1	LOCKWASHER	
	27	1	**5P-4115**	1	WASHER-HARD (7.2X19X2MM THK)	
	28	1	**9R-9901**	5	FASTENER (CLIP)	
	29	1	**9X-2038**	2	WASHER (7X19X2MM THK)	
M	30	1	**9X-2042**	3	SCREW-TRUSS HEAD (M6X1X12MM)	
M	31	1	**9X-2044**	2	SCREW-TRUSS HEAD (M6X1X16MM)	
M	32	1	**9X-2045**	4	SCREW-TRUSS HEAD (M6X1X20MM)	
E	33	1	**5P-3915**		HOSE (30CM)	

E-ORDER BY THE CENTIMETER
M-METRIC PART
Y-SEPARATE ILLUSTRATION

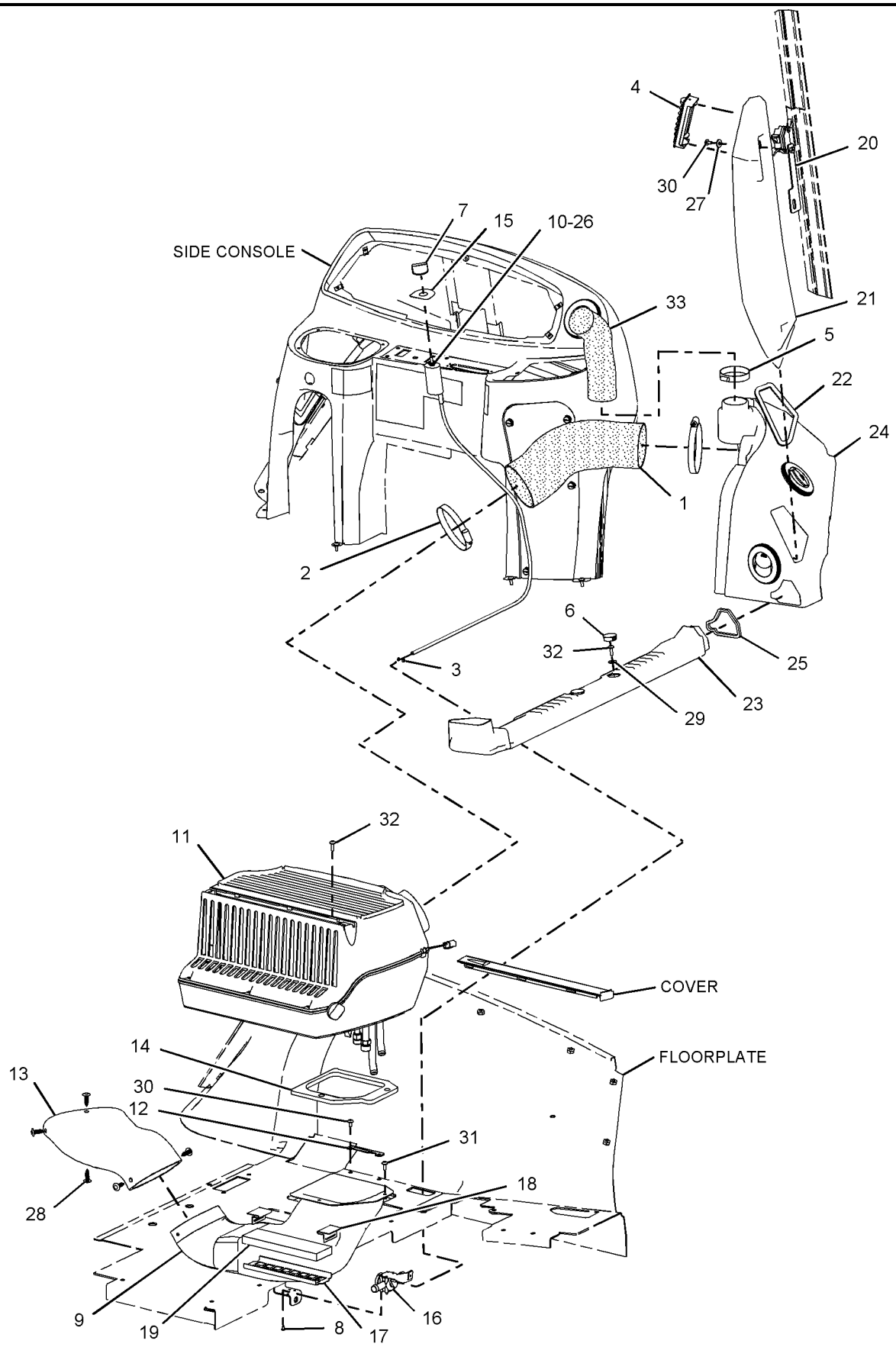

GRAPHIC #1 **<END>** g01027732

OPERATOR STATION

236-6960 AIR CONDITIONER AR

S/N: BFP12900-UP
PART OF 184-9735 CAB AR
AN ATTACHMENT

SMCS-7320 **i02015421**

NOTE	PART NUMBER	QTY	PART NAME 1 2 3 4 5 6 (PRODUCT LEVEL)	SEE PAGE
Y	*164-1032*	1	AIR CONDITIONER & MOUNTING GP	857
Y	*202-5746*	1	COMPRESSOR GP-REFRIGERANT	889
Y	*144-2222*	1	CONDENSER & MTG GP-REFRIGERANT	892
Y	*198-9723*	1	FITTING GP-HEATER & AIR COND	182
Y	*164-1033*	1	LINES GP-HEATER & AIR COND	930
Y	*202-5797*	1	WIRING GP-AIR CONDITIONER	323

Y-SEPARATE ILLUSTRATION

<END>

OPERATOR STATION

170-0075 AIR CONDITIONER GP

S/N: BFP12900-UP

BASIC

PART OF 164-1032, 236-6966 AIR CONDITIONER & MOUNTING GP

AN ATTACHMENT

SMCS-7320 **i01944030**

NOTE	REF NO	GRAPHIC REF	PART NUMBER	QTY	PART NAME 1 2 3 4 5 6 (PRODUCT LEVEL)	SEE PAGE
	1	1	**119-9631**	1	SWITCH-THERMOSTAT (AIR CONDITIONER)	
	2	1	**164-4139**	1	COIL AS	
		1	**7X-2049**	1	TUBE AS-REFRIGERANT ORIFICE	
		1	**201-1635**	1	GASKET	
		1	**201-1636**	1	GASKET	
	3	1	**168-2313**	1	FAN AS	
		1	**7T-0093**	2	PIN-CONNECTOR	
	4	1	**170-7269**	1	COVER	
	5	1	**170-7270**	1	CASE AS	
		1	**6C-3680**	4	RIVET-POP	
M		1	**129-3178**	4	LOCKNUT (M6X1 THD)	
		1	**188-2711**	1	GUARD AS	
	6	1	**170-7271**	1	COVER	
	7	1	**170-7272**	1	FILTER-AIR (AIR CONDITIONER)	
	8	1	**170-7274**	1	HARNESS AS-HEATER & AIR COND	
		1	**155-2270**	1	KIT-CONNECTING PLUG (2 PIN)	
	9	1	**170-7281**	1	GASKET	
	10	1	**170-7282**	1	GASKET	
	11	1	**185-4015**	4	CLIP	
	12	1	**188-2706**	2	GASKET	
	13	1	**188-2708**	1	GASKET	
	14	1	**188-2709**	1	GASKET	
	15	1	**188-2710**	1	GASKET	
	16	1	**188-2712**	2	FITTING	
	17	1	**191-6034**	1	GROMMET	
	18	1	**199-3729**	1	DOOR AS	
		1	**191-6033**	1	CONTROL AS	
		1	**191-6035**	1	RETAINER	
		1	**201-1634**	1	LINK	
	19	1	**204-9921**	1	RESISTOR AS	
	20	1	**206-7398**	1	KNOB-CONTROL	
	21	1	**213-9270**	1	FILM (AIR RECIRCULATION)	
	22	1	**2S-3745**	6	SCREW-TAPPING (10-16X.5 IN)	
	23	1	**5P-7921**	3	SCREW-WASHER HEAD (1/4-20X3/4 IN)	
	24	1	**6V-6717**	2	SCREW-WASHER HEAD (8-32X.375 IN)	
M	25	1	**6V-7357**	4	BOLT (M6X1.0X25MM)	
	26	1	**8T-4205**	4	WASHER-HARD (7.2X14.5X2MM THK)	
D	27	1	**5P-6011**		TUBE (0.0381M)	

D-ORDER BY THE METER
M-METRIC PART

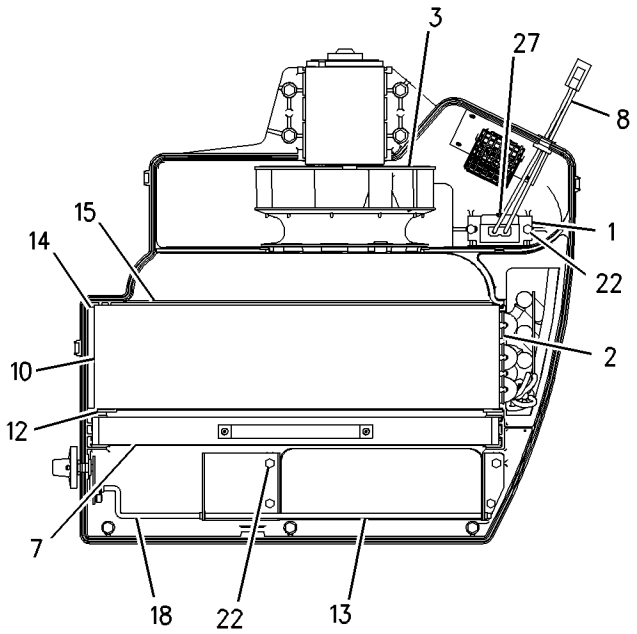

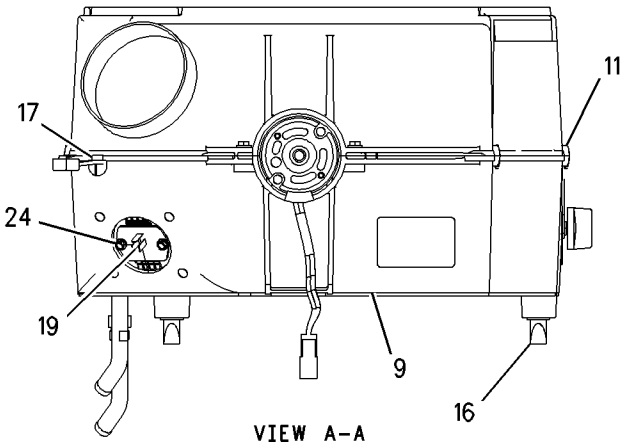

VIEW A-A

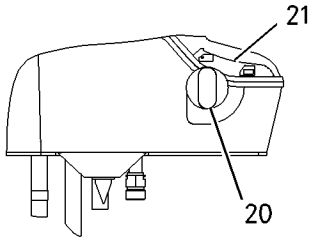

VIEW D-D

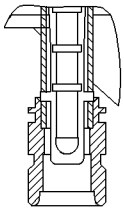

VIEW OF AREA C

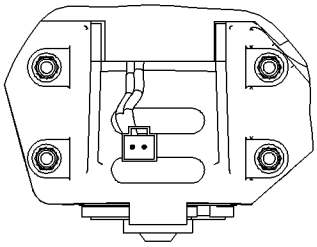

VIEW B-B

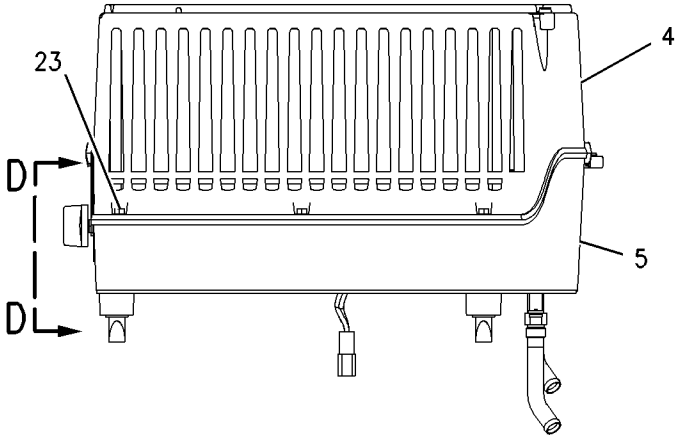

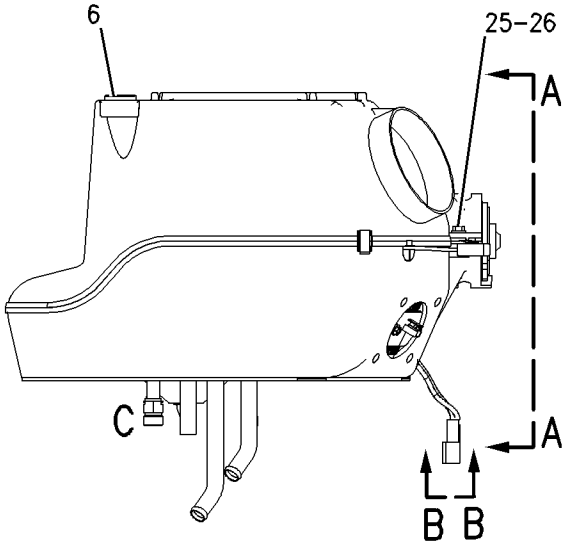

GRAPHIC #1 **<END>** g00952723

OPERATOR STATION

8Y-5904 ARMREST GP

S/N: BFP12900-UP
PART OF 164-1209, 164-1210 SEAT GP
AN ATTACHMENT

SMCS-7307, 7312 **i01683504**

NOTE	REF NO	GRAPHIC REF	PART NUMBER	QTY	PART NAME 1 2 3 4 5 6 (PRODUCT LEVEL)	SEE PAGE
	1	1	**8Y-5906**	1	BASE-ARMREST	
L	2	1	**8S-7803**	1	RING-RETAINING	
J	3	1	**6V-2687**	4	SCREW-PAN HEAD	
L	4	1	**8T-8641**	1	WASHER (M9.8X16.0X0.8MM THK)	
L	5	1	**3E-4312**	1	NUT-SQUARE (3/8-16 THD)	
					AVAILABLE REPAIR KIT(S):	
J			**8Y-5988**	1	KIT-CUSHION (ARMREST)	
					(INCLUDES CUSHION AS & SCREWS)	
L			**8Y-6028**	1	KIT-ADJUSTER (ARMREST)	
					(INCLUDES KNOB AS, NUT, WASHER, RING & SPRING)	

J-KIT MARKED J INCLUDES PART MARKED J
L-KIT MARKED L INCLUDES PART(S) MARKED L

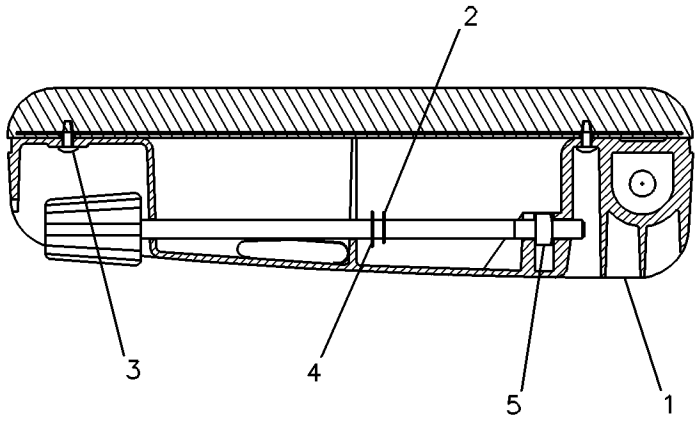

GRAPHIC #1 **<END>** g00083048

OPERATOR STATION

206-9474 BRACKET GP-MOUNTING

S/N: BFP12900-UP

PART OF 206-9475 LINER GP-CAB

SMCS-7301 **i02003937**

NOTE	REF NO	GRAPHIC REF	PART NUMBER	QTY	PART NAME 1 2 3 4 5 6 (PRODUCT LEVEL)	SEE PAGE
	1	1	**204-6011**	1	BRACKET AS	
M		1	**6V-9632**	4	NUT-WELD (M6X1 THD)	
M	2	1	**5C-7261**	1	NUT (M8X1.25 THD)	
	3	1	**5P-4116**	1	WASHER-HARD (8.8X20.5X2MM THK)	
M	4	1	**8T-7547**	1	BOLT (M8X1.25X30MM)	
M	5	1	**9X-2042**	2	SCREW-TRUSS HEAD (M6X1X12MM)	

M-METRIC PART

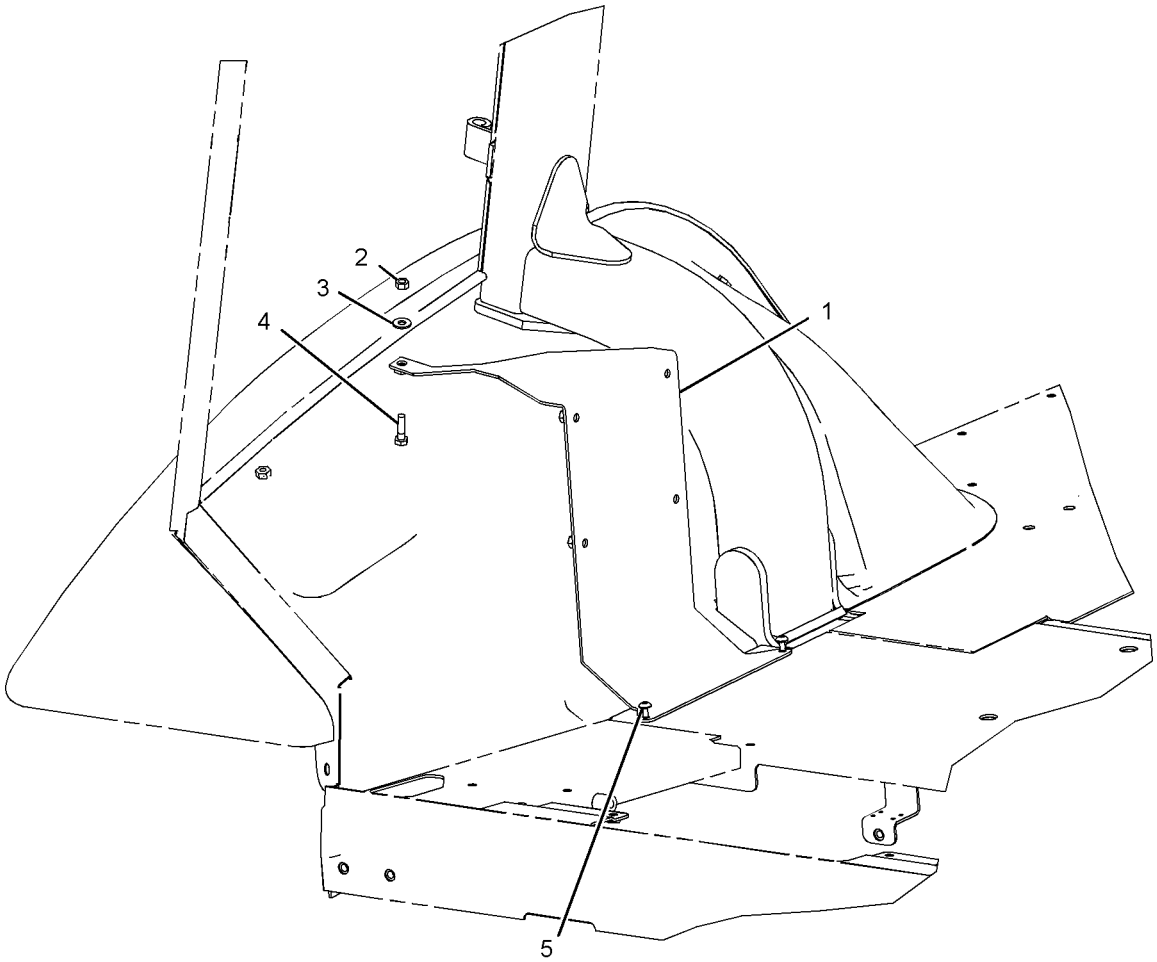

GRAPHIC #1

<END>

g01039803

OPERATOR STATION

184-9735 CAB AR

S/N: BFP12900-UP
UTILITY PLUS
AN ATTACHMENT

SMCS-7301, 7325, 7335 **i02015687**

NOTE	PART NUMBER	QTY	PART NAME 1 2 3 4 5 6 (PRODUCT LEVEL)	SEE PAGE
Y	*236-6960*	1	AIR CONDITIONER AR	861
Y	*164-1140*	1	CAB GP	877
Y	*185-3524*	1	CONSOLE GP-OPERATOR	894
Y	*164-1388*	1	CONSOLE GP-SIDE (LH)	896
Y	*183-4897*	1	CONTROL GP-STEERING	462
Y	*186-0252*	1	COVER GP-FIREWALL (LOWER)	903
Y	*164-1148*	1	FENDER GP-REAR	482
Y	*180-5760*	1	FLOOR MAT GP	915
Y	*184-7900*	1	INDICATOR GP-AIR FILTER CHANGE	212
Y	*186-0306*	1	WIRING GP-CAB (WARNING BEACON)	336
Y	*164-1155*	1	MIRROR GP-REAR VIEW	935
Y	*164-1165*	1	SUPPRESSION GP-SOUND	961
Y	*164-1370*	1	TRIM GP-CAB	970
Y	*167-8187*	1	WASHER GP-WINDOW	972
Y	*174-2024*	1	WIPER GP-WINDOW	986
Y	*185-8801*	1	WIRING GP-CAB	330
Y	*202-5810*	1	WIRING GP-CONSOLE	344
Y	*190-7557*	1	WIRING GP-POWER RECEPTACLE	378
	110-0037	1	FILM (CATERPILLAR) (ON WINDSHIELD)	
BE	**3E-8211**		FILM-STRIPE (399CM)	

B-USE AS REQUIRED
E-ORDER BY THE CENTIMETER
Y-SEPARATE ILLUSTRATION

<END>

OPERATOR STATION

205-2177 CAB AR

S/N: BFP12900-UP
UTILITY PLUS, WITHOUT A/C
AN ATTACHMENT

SMCS-7301, 7325, 7335 **i01699856**

NOTE	PART NUMBER	QTY	PART NAME 1 2 3 4 5 6 (PRODUCT LEVEL)	SEE PAGE
Y	*164-1140*	1	CAB GP	877
Y	*185-3524*	1	CONSOLE GP-OPERATOR	894
Y	*164-1388*	1	CONSOLE GP-SIDE (LH)	896
Y	*183-4897*	1	CONTROL GP-STEERING	462
Y	*186-0252*	1	COVER GP-FIREWALL (LOWER)	903
Y	*164-1148*	1	FENDER GP-REAR	482
Y	*180-5760*	1	FLOOR MAT GP	915
Y	*164-1045*	1	HEATER GP-CAB	918
Y	*184-7900*	1	INDICATOR GP-AIR FILTER CHANGE	212
Y	*186-0306*	1	WIRING GP-CAB	336
Y	*164-1155*	1	MIRROR GP-REAR VIEW	935
Y	*164-1165*	1	SUPPRESSION GP-SOUND	961
Y	*164-1370*	1	TRIM GP-CAB	970
Y	*167-8187*	1	WASHER GP-WINDOW	972
Y	*174-2024*	1	WIPER GP-WINDOW	986
Y	*185-8801*	1	WIRING GP-CAB	330
Y	*202-5810*	1	WIRING GP-CONSOLE	344
Y	*186-2731*	1	WIRING GP-HEATER	365
Y	*190-7557*	1	WIRING GP-POWER RECEPTACLE	378
	110-0037	1	FILM (WINDSHIELD SUN VISOR)	
E	**3E-8211**		FILM-STRIPE (399CM)	

E-ORDER BY THE CENTIMETER
Y-SEPARATE ILLUSTRATION

<END>

OPERATOR STATION

239-5560 CAB AR

S/N: BFP12900-UP

AN ATTACHMENT

SMCS-7301, 7325, 7335 **i01994405**

NOTE	PART NUMBER	QTY	PART NAME 1 2 3 4 5 6 (PRODUCT LEVEL)	SEE PAGE
Y	**164-1125**	1	CAB GP (CENTER PIVOT)	875
Y	*185-3524*	1	CONSOLE GP-OPERATOR	894
Y	*183-4898*	1	CONTROL GP-STEERING	463
Y	*186-0252*	1	COVER GP-FIREWALL (LOWER)	903
Y	*185-3527*	1	COVER GP-PARKING BRAKE	905
Y	**198-1289**	1	COVER GP-POST (RH)	907
Y	*145-6713*	1	FAN GP-SUCTION	179
Y	*195-3898*	1	FENDER GP-REAR	483
Y	*198-9723*	1	FITTING GP-HEATER & AIR COND	182
Y	*180-5764*	1	FLOOR MAT GP	916
Y	*201-9732*	1	FLOORPLATE GP	486
Y	*164-1045*	1	HEATER GP-CAB	918
Y	*236-6657*	1	LINES GP-HEATER	928
Y	*164-1155*	1	MIRROR GP-REAR VIEW	935
Y	*180-5770*	1	SEAT GP-SUSPENSION	960
Y	**239-1081**	1	TACHOMETER GP-ELECTRIC	969
Y	*167-8187*	1	WASHER GP-WINDOW	972
Y	*174-2024*	1	WIPER GP-WINDOW	986
Y	*186-0303*	1	WIRING GP-CAB	333
Y	*186-0306*	1	WIRING GP-CAB (WARNING BEACON)	336
Y	*238-1166*	1	WIRING GP-CONSOLE	349
Y	*186-2731*	1	WIRING GP-HEATER	365
	110-0037	1	FILM (CATERPILLAR)	
	3E-8211		FILM-STRIPE (399CM)	
	5L-3308	1	V-BELT SET (INCLUDES 2 BELTS)	

Y-SEPARATE ILLUSTRATION

<END>

OPERATOR STATION

239-5561 CAB AR

S/N: BFP12900-UP

AN ATTACHMENT

SMCS-7301, 7325, 7335 **i02012693**

NOTE	PART NUMBER	QTY	PART NAME 1 2 3 4 5 6 (PRODUCT LEVEL)	SEE PAGE
Y	*164-1140*	1	CAB GP	877
Y	*185-3524*	1	CONSOLE GP-OPERATOR	894
Y	*164-1388*	1	CONSOLE GP-SIDE (LH)	896
Y	*183-4897*	1	CONTROL GP-STEERING	462
Y	*186-0252*	1	COVER GP-FIREWALL (LOWER)	903
Y	*145-6713*	1	FAN GP-SUCTION	179
Y	*164-1148*	1	FENDER GP-REAR	482
	110-0037	1	FILM (CATERPILLAR)	
	3E-8211		FILM-STRIPE (399CM)	
Y	*180-5760*	1	FLOOR MAT GP	915
Y	*164-1045*	1	HEATER GP-CAB	918
Y	*236-6657*	1	LINES GP-HEATER	928
Y	*164-1155*	1	MIRROR GP-REAR VIEW	935
Y	*180-5770*	1	SEAT GP-SUSPENSION	960
Y	*164-1165*	1	SUPPRESSION GP-SOUND	961
Y	**239-1081**	1	TACHOMETER GP-ELECTRIC	969
Y	*164-1370*	1	TRIM GP-CAB	970
	5L-3308	1	V-BELT SET (INCLUDES 2 BELTS)	
Y	*167-8187*	1	WASHER GP-WINDOW	972
Y	*174-2024*	1	WIPER GP-WINDOW	986
Y	*185-8801*	1	WIRING GP-CAB	330
Y	*186-0306*	1	WIRING GP-CAB (WARNING BEACON)	336
Y	*238-1166*	1	WIRING GP-CONSOLE	349
Y	*186-2731*	1	WIRING GP-HEATER	365
Y	*190-7557*	1	WIRING GP-POWER RECEPTACLE	378

Y-SEPARATE ILLUSTRATION

<END>

OPERATOR STATION

239-5562 CAB AR

S/N: BFP12900-UP

AN ATTACHMENT

SMCS-7301, 7325, 7335 **i01994403**

NOTE	PART NUMBER	QTY	PART NAME 1 2 3 4 5 6 (PRODUCT LEVEL)	SEE PAGE
Y	*236-6966*	1	AIR CONDITIONER & MOUNTING GP	859
Y	*164-1140*	1	CAB GP	877
Y	*234-8601*	1	COMPRESSOR GP-REFRIGERANT	891
Y	*144-2222*	1	CONDENSER & MTG GP-REFRIGERANT	892
Y	*185-3524*	1	CONSOLE GP-OPERATOR	894
Y	*164-1388*	1	CONSOLE GP-SIDE (LH)	896
Y	*183-4897*	1	CONTROL GP-STEERING	462
Y	*186-0252*	1	COVER GP-FIREWALL (LOWER)	903
Y	*147-1559*	1	FAN GP-SUCTION	180
Y	*164-1148*	1	FENDER GP-REAR	482
	110-0037	1	FILM (CATERPILLAR)	
	3E-8211		FILM-STRIPE (399CM)	
Y	*180-5760*	1	FLOOR MAT GP	915
Y	*234-2617*	1	LINES GP-HEATER & AIR COND	933
Y	*164-1155*	1	MIRROR GP-REAR VIEW	935
Y	*180-5770*	1	SEAT GP-SUSPENSION	960
Y	*164-1165*	1	SUPPRESSION GP-SOUND	961
Y	**239-1080**	1	TACHOMETER GP-ELECTRIC	968
Y	*164-1370*	1	TRIM GP-CAB	970
	3N-1491	1	V-BELT SET (INCLUDES 2 BELTS)	
Y	*167-8187*	1	WASHER GP-WINDOW	972
Y	*174-2024*	1	WIPER GP-WINDOW	986
Y	*238-1811*	1	WIRING GP-AIR CONDITIONER	327
Y	*185-8801*	1	WIRING GP-CAB	330
Y	*186-0306*	1	WIRING GP-CAB (WARNING BEACON)	336
Y	*238-1166*	1	WIRING GP-CONSOLE	349
Y	*190-7557*	1	WIRING GP-POWER RECEPTACLE	378

Y-SEPARATE ILLUSTRATION

<END>

OPERATOR STATION

164-1150 CAB AS

S/N: BFP12900-UP
PART OF 164-1140 CAB GP
AN ATTACHMENT

SMCS-7301, 7325, 7335 **i01514622**

NOTE	REF NO	GRAPHIC REF	PART NUMBER	QTY	PART NAME 1 2 3 4 5 6 (PRODUCT LEVEL)	SEE PAGE
	1	1	**7T-1099**	1	LINK	
	2	1	**8Y-7311**	2	HINGE	
	3	1	**9R-2589**	1	BOSS	
	4	1	**113-5973**	6	HINGE	
Y	5	1	*164-1050*	1	CANOPY AS	885
M	6	1	**8T-4967**	2	STUD (M10X1.5X23MM)	

M-METRIC PART
Y-SEPARATE ILLUSTRATION

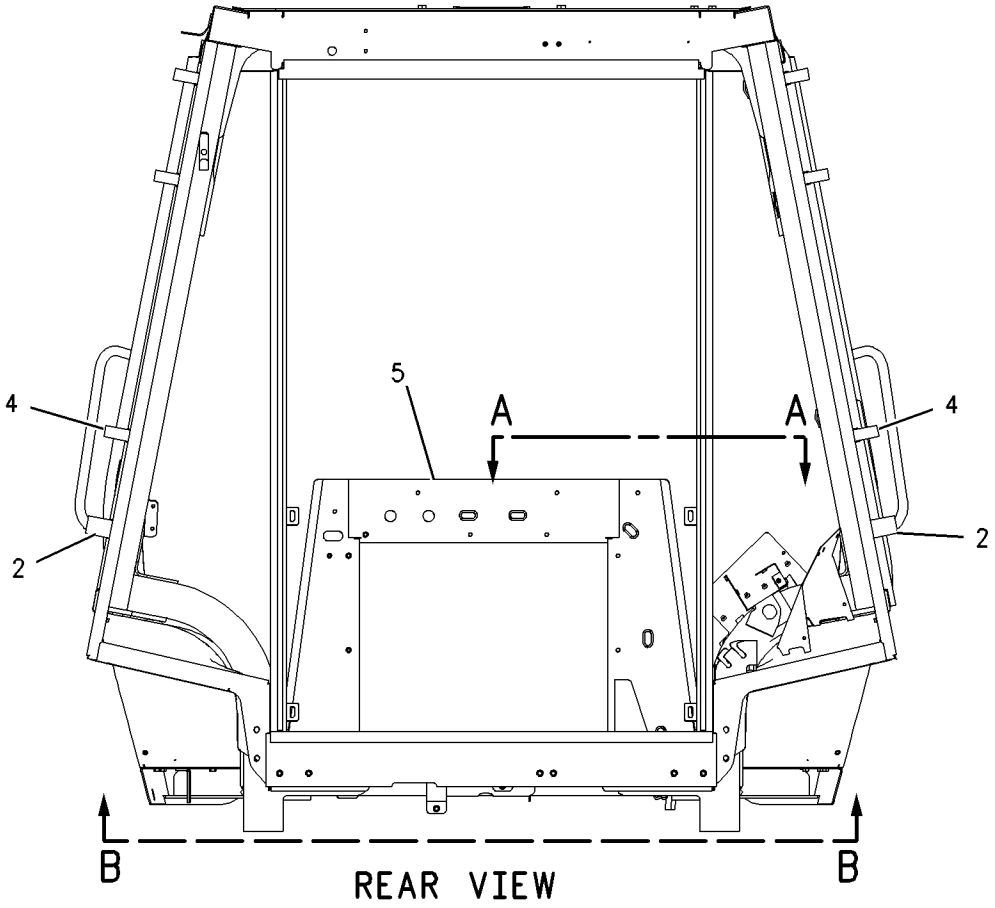

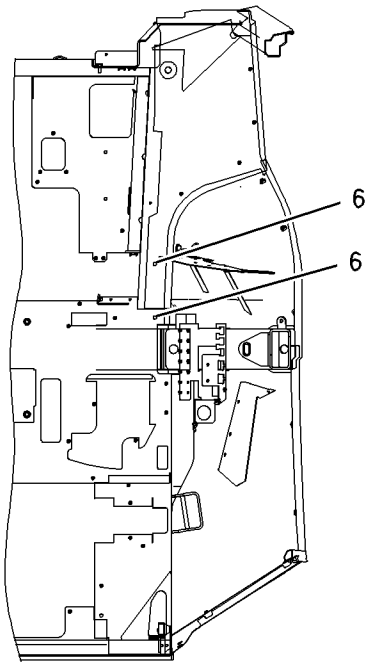

VIEW A-A

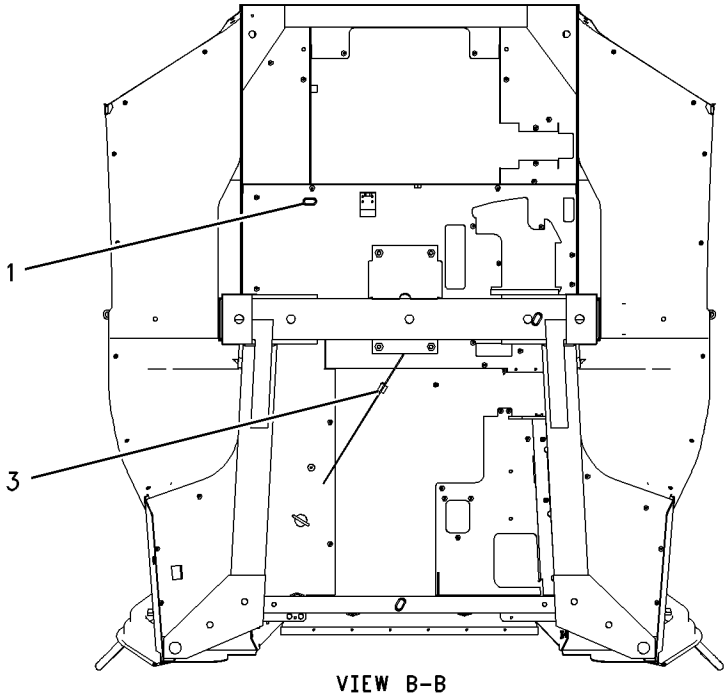

VIEW B-B

GRAPHIC #1 **<END>** g00785826

OPERATOR STATION

164-1375 CAB AS

S/N: BFP12900-UP
PART OF 164-1125 CAB GP
AN ATTACHMENT

SMCS-7301, 7325, 7335 **i01596169**

NOTE	REF NO	GRAPHIC REF	PART NUMBER	QTY	PART NAME 1 2 3 4 5 6 (PRODUCT LEVEL)	SEE PAGE
	1	1	**7T-1099**	6	LINK	
	2	1	**8Y-7311**	1	HINGE	
	3	1	**9R-2589**	1	BOSS	
	4	1	**113-5973**	7	HINGE	
M	5	1	**6V-9632**	4	NUT-WELD (M6X1 THD)	
M	6	1	**8T-3490**	2	NUT-WELD (M10X1.5 THD)	
M	7	1	**8T-4967**	2	STUD-WELD (M10X1.5X23MM OAL)	
Y	8	1	*164-1050*	1	CANOPY AS	885

M-METRIC PART
Y-SEPARATE ILLUSTRATION

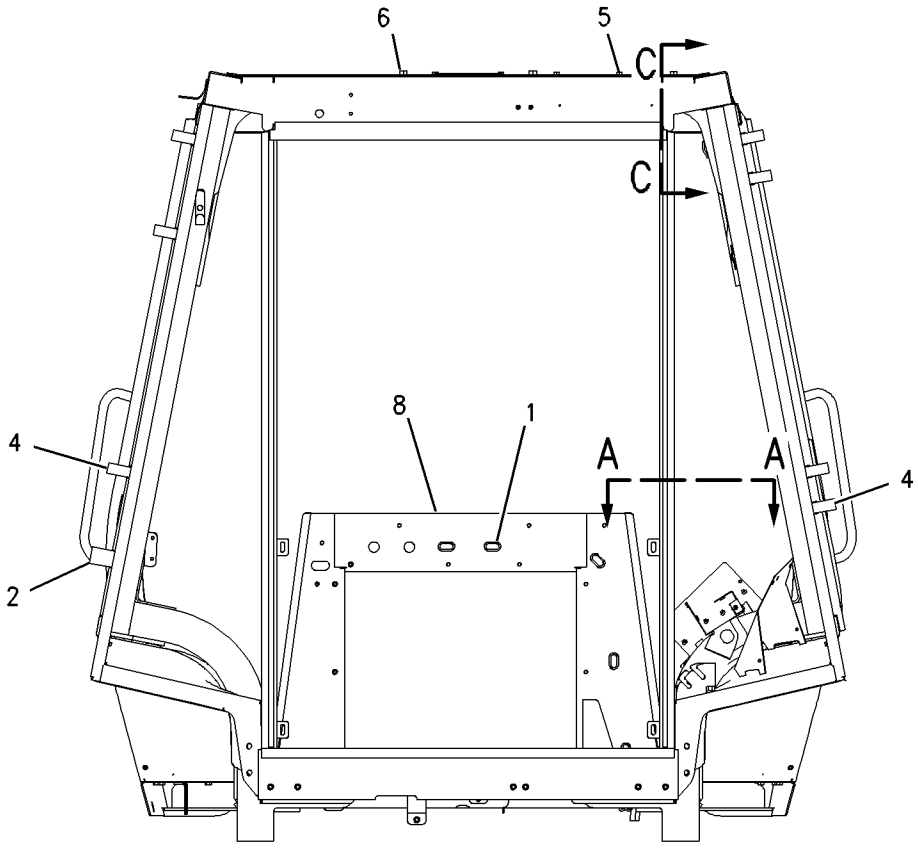

REAR VIEW

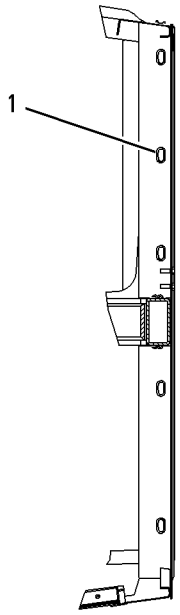

SECTION C-C

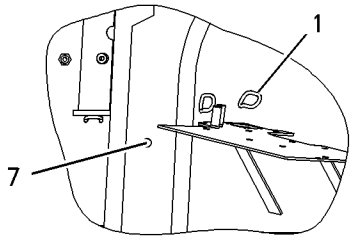

VIEW A-A

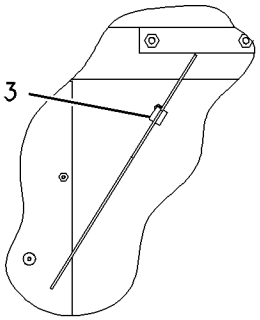

VIEW OF AREA B

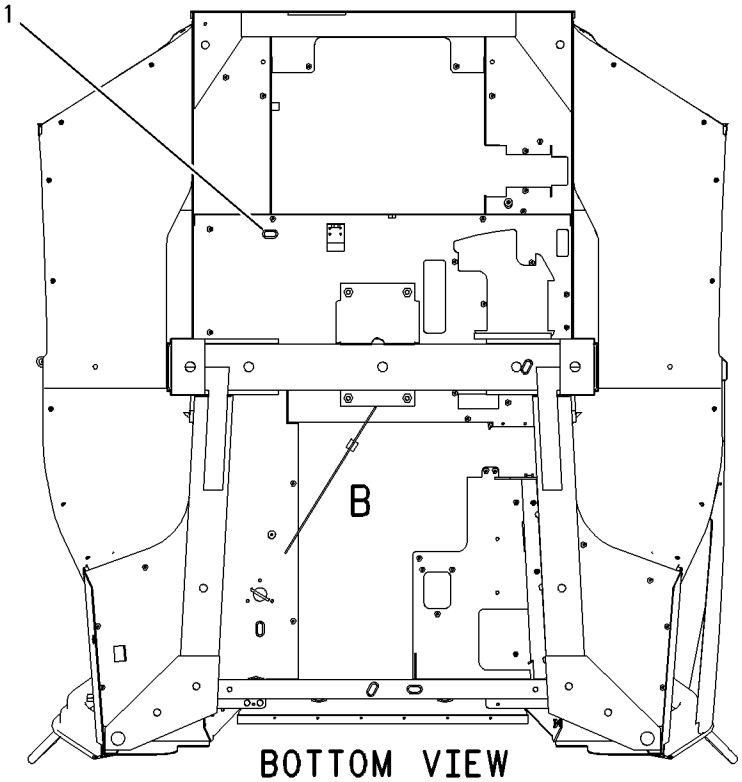

BOTTOM VIEW

GRAPHIC #1 **<END>** g00828625

OPERATOR STATION

164-1125 CAB GP

S/N: BFP12900-UP
UTILITY, CENTER PIVOT
PART OF 239-5560 CAB AR
AN ATTACHMENT

SMCS-7301, 7325, 7335 **i01596462**

NOTE	REF NO	GRAPHIC REF	PART NUMBER	QTY	PART NAME 1 2 3 4 5 6 (PRODUCT LEVEL)	SEE PAGE
	1	1	**8S-7803**	8	RING-RETAINING	
	2	1	**8Y-7444**	1	PIN	
	3	1	**117-7414**	1	PIN	
	4	1	**129-5256**	8	BUSHING	
	5	1	**129-5257**	8	BUSHING	
	6	1	**134-3059**	1	GUARD-STRIKER	
	7	1	**134-3060**	1	PLATE	
	8	1	**134-3062**	1	STRIKER	
	9	1	**143-2830**	1	LATCH AS	
M		1	**6V-7743**	2	LOCKNUT (M6X1 THD)	
M		1	**9X-2045**	2	SCREW-TRUSS HEAD (M6X1X20MM)	
		1	**143-2827**	1	SPRING	
	10	1	**159-4945**	2	KEEPER-REAR (LH)	
	11	1	**159-4946**	2	KEEPER-REAR (RH)	
	12	1	**163-7939**	1	PLATE AS	
Y	13	1	*164-1059*	1	WINDOW GP-CAB (RH)	976
Y	14	1	*164-1060*	1	WINDOW GP-CAB (LH)	978
Y	15	1	*164-1062*	1	DOOR GP-LH	908
J	16	1	**164-1068**	1	GLASS-RH	
J	17	1	**164-1069**	1	GLASS-LH	
J	18	1	**164-1070**	1	GLASS (FRONT)	
J	19	1	**164-1071**	1	GLASS-RH	
J	20	1	**164-1072**	1	GLASS-LH	
Y	21	1	*164-1325*	1	WINDOW GP-CAB (REAR)	980
Y	22	1	**164-1375**	1	CAB AS	873
B	23	1	**177-4877**	2	SHIM	
J	24	1	**180-7218**	1	GLASS-UPPER	
J	25	1	**180-7219**	1	GLASS-LOWER	
	26	1	**180-7232**	1	PIN	
	27	1	**180-7233**	1	PIN	
	28	1	**108-4311**	1	SCREW-MACHINE	
M	29	1	**131-3987**	8	SCREW (M4X0.7X12MM)	
	30	1	**3S-2093**	5	STRAP-CABLE	
M	31	1	**5C-7261**	2	NUT (M8X1.25 THD)	
	32	1	**5P-4116**	9	WASHER-HARD (8.8X20.5X2MM THK)	
	33	1	**8T-4121**	4	WASHER-HARD (11X21X2.5MM THK)	
M	34	1	**8T-4137**	4	BOLT (M10X1.5X20MM)	
M	35	1	**8T-4189**	5	BOLT (M8X1.25X20MM)	
M	36	1	**8T-4200**	2	BOLT (M8X1.25X16MM)	
	37	1	**9R-5616**	4	PLUG	
E	38	1	**144-0195**	2	HOSE (410CM)	

B-USE AS REQUIRED
E-ORDER BY THE CENTIMETER
J-USE ADHESIVE AS REQUIRED
M-METRIC PART
Y-SEPARATE ILLUSTRATION

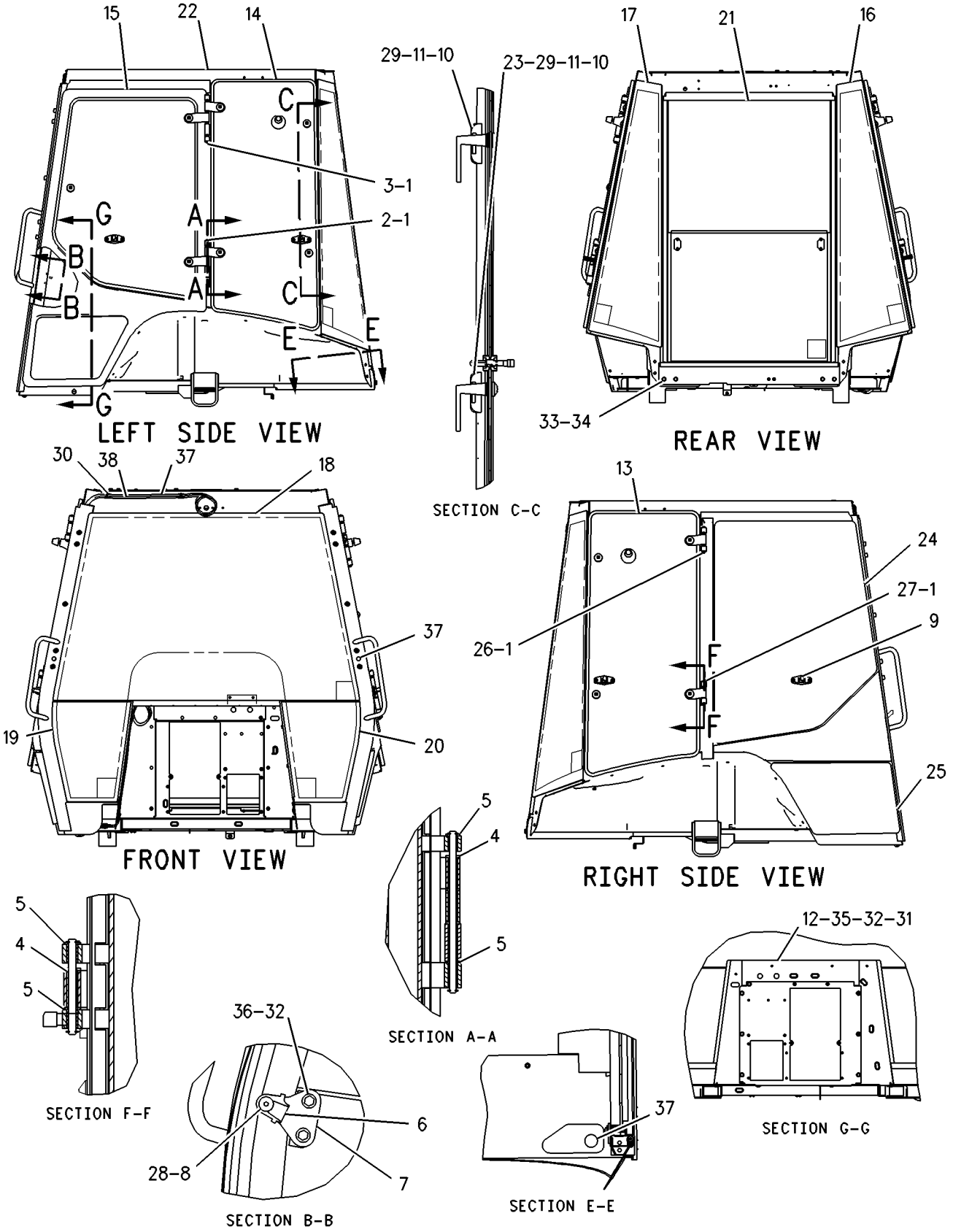

GRAPHIC #1 **<END>** g00827445

OPERATOR STATION

164-1140 CAB GP

S/N: BFP12900-UP
CENTER PIVOT
PART OF 184-9735, 205-2177, 239-5561, 239-5562 CAB AR
AN ATTACHMENT

SMCS-7301, 7325, 7335 **i01596472**

NOTE	REF NO	GRAPHIC REF	PART NUMBER	QTY	PART NAME 1 2 3 4 5 6 (PRODUCT LEVEL)	SEE PAGE
	1	1	**8S-7803**	8	RING-RETAINING	
	2	1	**8Y-7444**	2	PIN	
	3	1	**117-7414**	2	PIN	
	4	1	**129-5256**	12	BUSHING	
	5	1	**129-5257**	8	BUSHING	
	6	1	**134-3059**	1	GUARD-STRIKER	
	7	1	**134-3060**	1	PLATE	
	8	1	**134-3061**	1	PLATE	
	9	1	**134-3062**	2	STRIKER	
	10	1	**134-3503**	1	GUARD-STRIKER	
	11	1	**159-4945**	2	KEEPER-REAR (LH)	
	12	1	**159-4946**	2	KEEPER-REAR (RH)	
	13	1	**163-7939**	1	PLATE AS	
Y	14	1	*164-1059*	1	WINDOW GP-CAB (RH)	976
Y	15	1	*164-1060*	1	WINDOW GP-CAB (LH)	978
Y	16	1	**164-1061**	1	DOOR GP-RH	910
Y	17	1	*164-1062*	1	DOOR GP-LH	908
J	18	1	**164-1068**	1	GLASS-RH	
J	19	1	**164-1069**	1	GLASS-LH	
J	20	1	**164-1070**	1	GLASS (FRONT)	
J	21	1	**164-1071**	1	GLASS-RH	
J	22	1	**164-1072**	1	GLASS-LH	
Y	23	1	**164-1150**	1	CAB AS	871
Y	24	1	*164-1325*	1	WINDOW GP-CAB (REAR)	980
B	25	1	**177-4877**	2	SHIM	
	26	1	**108-4311**	2	SCREW-MACHINE	
M	27	1	**131-3987**	8	SCREW (M4X0.7X12MM)	
	28	1	**3S-2093**	5	STRAP-CABLE	
M	29	1	**5C-7261**	2	NUT (M8X1.25 THD)	
	30	1	**5P-4116**	11	WASHER-HARD (8.8X20.5X2MM THK)	
	31	1	**8T-4121**	4	WASHER-HARD (11X21X2.5MM THK)	
M	32	1	**8T-4137**	4	BOLT (M10X1.5X20MM)	
M	33	1	**8T-4189**	5	BOLT (M8X1.25X20MM)	
M	34	1	**8T-4200**	4	BOLT (M8X1.25X16MM)	
	35	1	**9R-5616**	4	PLUG	
E	36	1	**144-0195**	2	HOSE (410CM)	

B-USE AS REQUIRED
E-ORDER BY THE CENTIMETER
J-USE ADHESIVE AS REQUIRED
M-METRIC PART
Y-SEPARATE ILLUSTRATION

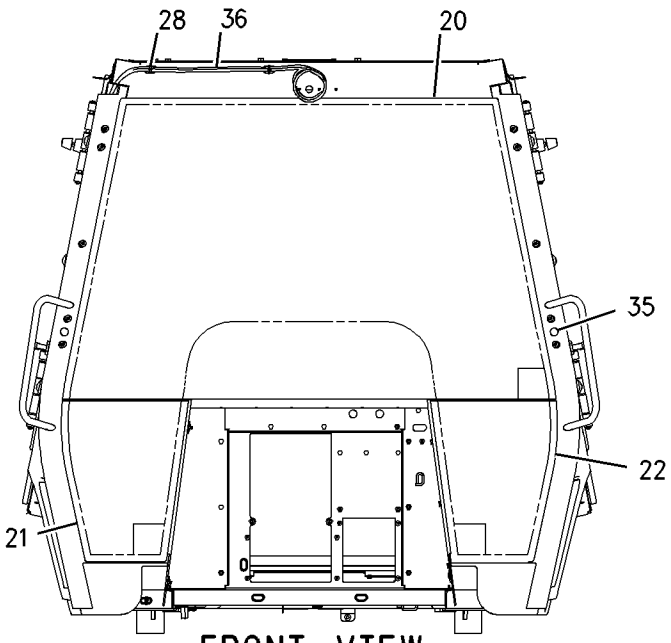

FRONT VIEW

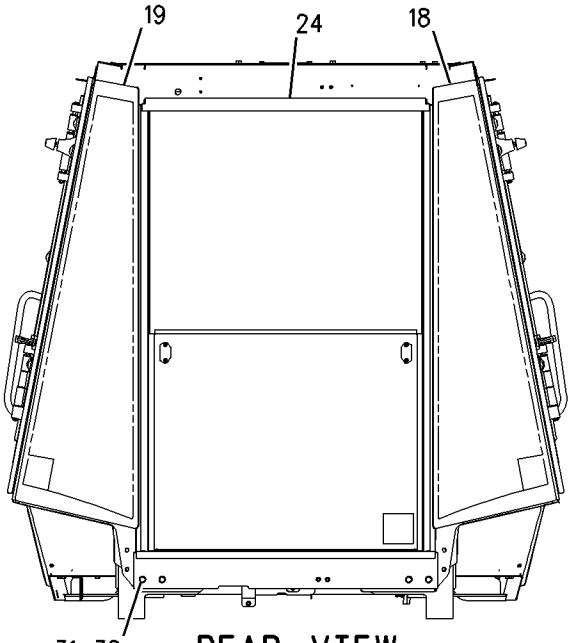

REAR VIEW

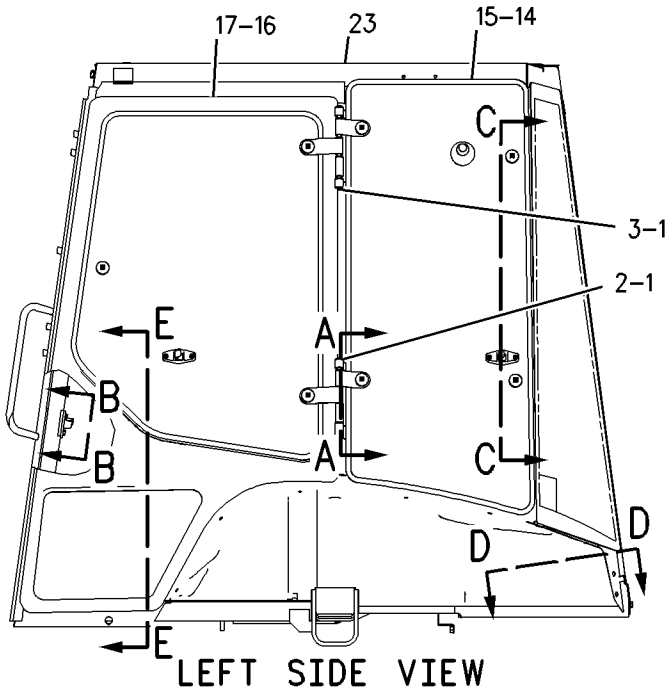

LEFT SIDE VIEW

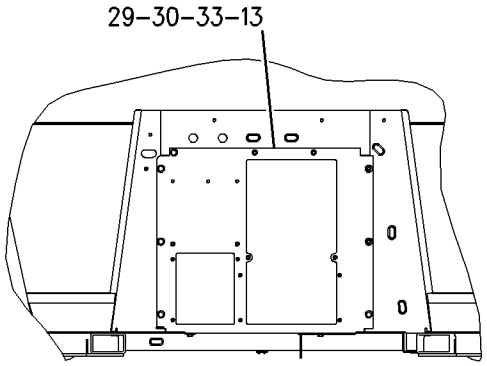

SECTION E-E

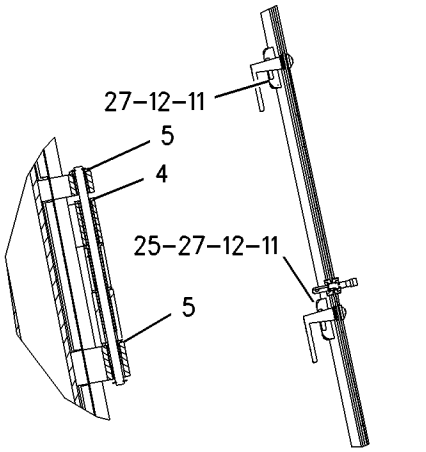

SECTION A-A

SECTION C-C

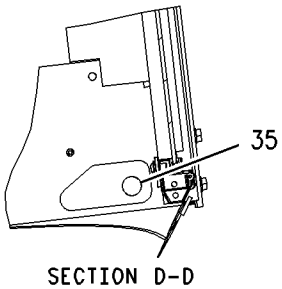

SECTION D-D

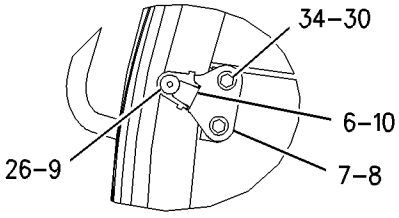

SECTION B-B

GRAPHIC #1 **<END>** g00827455

OPERATOR STATION

184-9733 CANOPY AR

S/N: BFP12900-UP; CXP940-UP
UTILITY
AN ATTACHMENT

SMCS-7302 **i01843887**

NOTE	PART NUMBER	QTY	PART NAME 1 2 3 4 5 6 (PRODUCT LEVEL)	SEE PAGE
Y	*164-1350*	1	CANOPY GP-OPEN ROPS	886
Y	*185-3530*	1	CONSOLE GP-SIDE	899
Y	*183-4898*	1	CONTROL GP-STEERING	463
Y	*186-0252*	1	COVER GP-FIREWALL (LOWER)	903
Y	*198-0104*	1	COVER GP-FIREWALL (UPPER)	904
Y	*185-3527*	1	COVER GP-PARKING BRAKE	905
Y	**197-7564**	1	COVER GP-POST (RH)	906
Y	*195-3898*	1	FENDER GP-REAR	483
Y	*180-5764*	1	FLOOR MAT GP	916
Y	*184-7900*	1	INDICATOR GP-AIR FILTER CHANGE	212
Y	*186-0306*	1	WIRING GP-CAB	336
Y	*164-1155*	1	MIRROR GP-REAR VIEW	935
Y	*185-8802*	1	WIRING GP-CAB	332
Y	*202-5810*	1	WIRING GP-CONSOLE	344
	203-4158	1	PLUG GP	
	9J-1874	1	PLUG	
	187-1644	2	PLUG	

Y-SEPARATE ILLUSTRATION

<END>

OPERATOR STATION

239-5558 CANOPY AR

S/N: BFP12900-UP

AN ATTACHMENT

SMCS-7302 **i02015251**

NOTE	PART NUMBER	QTY	PART NAME 1 2 3 4 5 6 (PRODUCT LEVEL)	SEE PAGE
Y	*164-1350*	1	CANOPY GP-OPEN ROPS	886
Y	*185-3530*	1	CONSOLE GP-SIDE	899
Y	*183-4898*	1	CONTROL GP-STEERING	463
Y	*186-0252*	1	COVER GP-FIREWALL (LOWER)	903
Y	*198-0104*	1	COVER GP-FIREWALL (UPPER)	904
Y	*185-3527*	1	COVER GP-PARKING BRAKE	905
Y	**197-7564**	1	COVER GP-POST (RH)	906
Y	*145-6713*	1	FAN GP-SUCTION	179
Y	*195-3898*	1	FENDER GP-REAR	483
Y	*180-5764*	1	FLOOR MAT GP	916
Y	*164-1155*	1	MIRROR GP-REAR VIEW	935
	203-4158	1	PLUG GP (CONSOLE)	
	9J-1874	1	PLUG	
	187-1644	2	PLUG	
Y	*180-5771*	1	SEAT GP-SUSPENSION	960
Y	**239-1081**	1	TACHOMETER GP-ELECTRIC	969
	5L-3308	1	V-BELT SET (INCLUDES 2 BELTS)	
Y	*185-8802*	1	WIRING GP-CAB	332
Y	*186-0306*	1	WIRING GP-CAB (WARNING BEACON)	336
Y	*238-1166*	1	WIRING GP-CONSOLE	349

Y-SEPARATE ILLUSTRATION

<END>

OPERATOR STATION

239-5559 CANOPY AR

S/N: BFP12900-UP

AN ATTACHMENT

SMCS-7302 **i01990026**

NOTE	PART NUMBER	QTY	PART NAME 1 2 3 4 5 6 (PRODUCT LEVEL)	SEE PAGE
	110-7524	11	BUTTON	
Y	*164-1350*	1	CANOPY GP-OPEN ROPS	886
Y	*194-4183*	1	COMPARTMENT GP-LITERATURE	887
Y	*185-3530*	1	CONSOLE GP-SIDE	899
Y	*183-4898*	1	CONTROL GP-STEERING	463
	206-4703	1	COVER	
Y	*186-0252*	1	COVER GP-FIREWALL (LOWER)	903
Y	*185-3527*	1	COVER GP-PARKING BRAKE	905
Y	**197-7564**	1	COVER GP-POST (RH)	906
Y	*145-6713*	1	FAN GP-SUCTION	179
Y	*195-3898*	1	FENDER GP-REAR	483
	110-0037	1	FILM (CATERPILLAR)	
Y	*180-5764*	1	FLOOR MAT GP	916
	164-1070	1	GLASS (FRONT)	
Y	*164-1155*	1	MIRROR GP-REAR VIEW	935
	203-4158	1	PLUG GP	
	9J-1874	1	PLUG	
	187-1644	2	PLUG	
M	**9X-2041**	2	SCREW-TRUSS HEAD (M10X1.5X20MM)	
Y	*180-5771*	1	SEAT GP-SUSPENSION	960
Y	**239-1081**	1	TACHOMETER GP-ELECTRIC	969
	5L-3308	1	V-BELT SET (INCLUDES 2 BELTS)	
Y	*207-6052*	1	WASHER GP-WINDOW	974
Y	*207-6051*	1	WIPER GP-WINDOW	988
Y	*186-0306*	1	WIRING GP-CAB (WARNING BEACON)	336
Y	*207-6050*	1	WIRING GP-CAB	339
Y	*238-1166*	1	WIRING GP-CONSOLE	349

M-METRIC PART
Y-SEPARATE ILLUSTRATION

<END>

OPERATOR STATION

164-1025 CANOPY AS

S/N: BFP12900-UP; CXP940-UP
PART OF 164-1350 CANOPY GP-OPEN ROPS
AN ATTACHMENT

SMCS-7302 **i01988388**

NOTE	REF NO	GRAPHIC REF	PART NUMBER	QTY	PART NAME 1 2 3 4 5 6 (PRODUCT LEVEL)	SEE PAGE
	1	1	**7T-1099**	26	LINK	
	2	1	**8Y-7292**	2	HANDHOLD (RH)	
	3	2	**9R-2589**	1	BOSS	
	4	1	**140-2959**	2	HANDHOLD (LH)	
	5	1	**5D-9629**	6	ROD	
M	6	2	**8T-4967**	2	STUD-WELD (M10X1.5X23MM OAL)	
	7	1	**164-1051**	2	FENDER AS-RH	
M		1	**8T-3612**	7	NUT-WELD (M8X1.25 THD)	
		1	*173-7661*	1	BRACKET AS	
M		1	**8T-5413**	2	STUD-WELD (M10X1.5X25MM OAL)	
		1	**205-7047**	10	INSERT-THREADED	
	8	1	**164-1052**	2	FENDER AS-LH	

M-METRIC PART

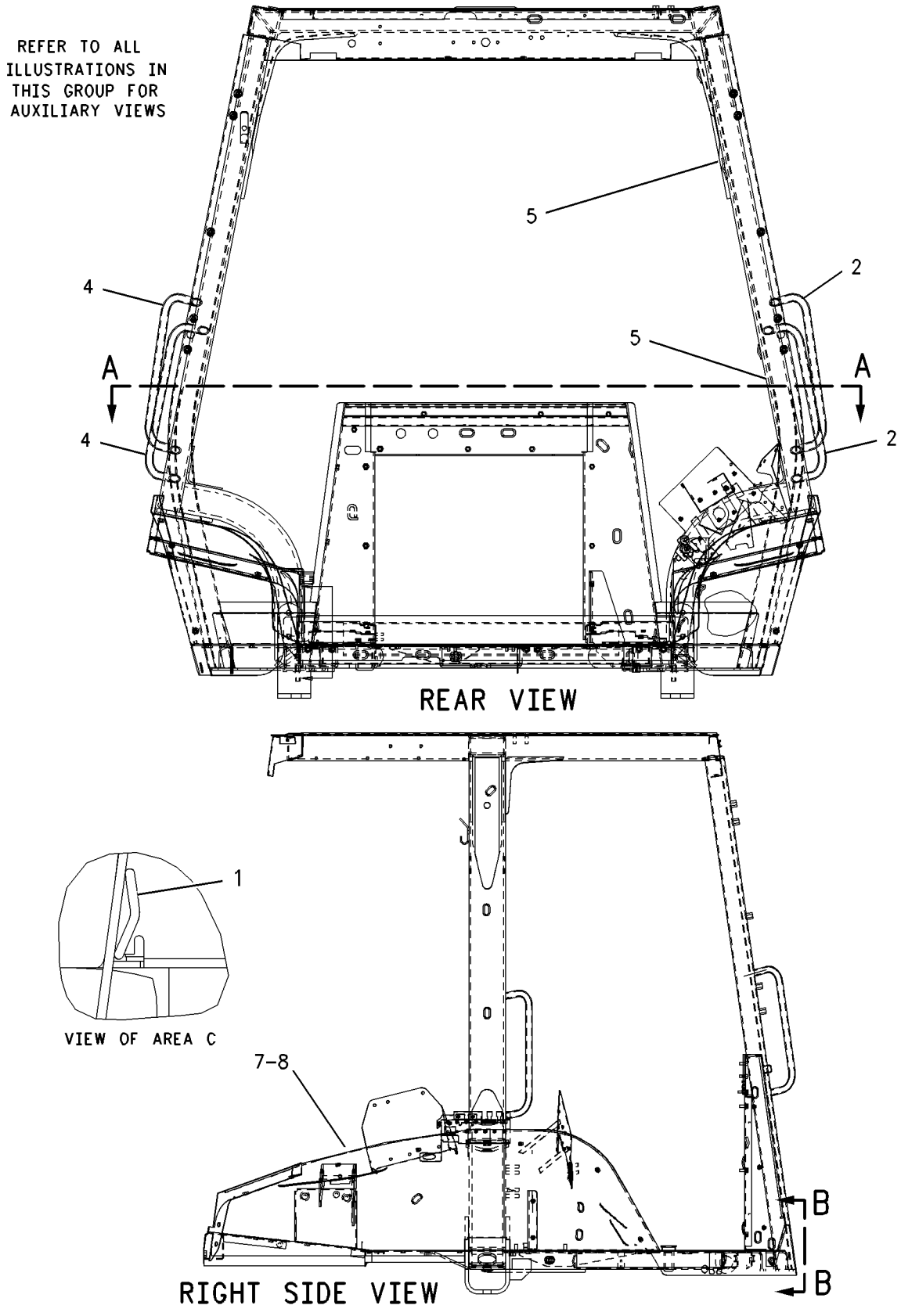

GRAPHIC #1 g00986746

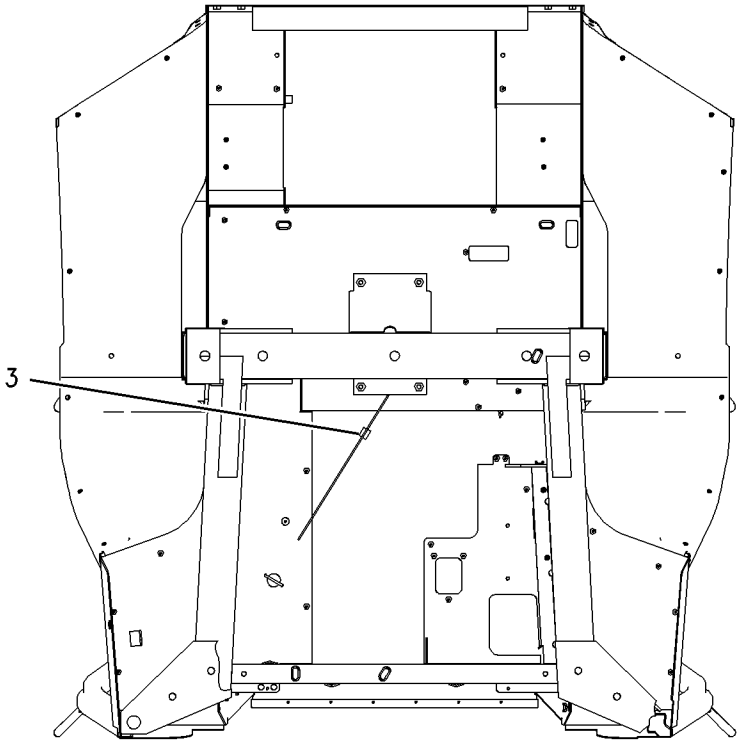

BOTTOM VIEW

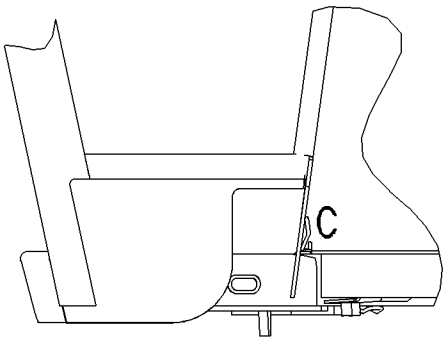

VIEW B-B

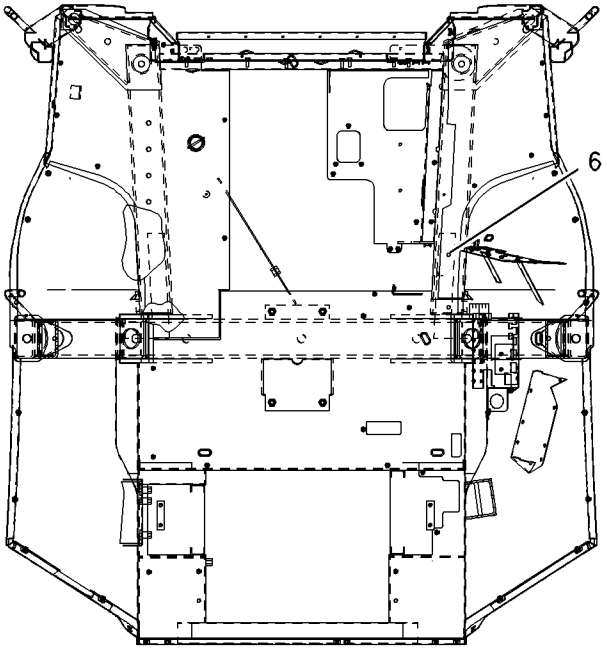

SECTION A-A

GRAPHIC #2 **<END>** g00786953

OPERATOR STATION

164-1050 CANOPY AS

S/N: BFP12900-UP
PART OF 164-1150, 164-1375 CAB AS
AN ATTACHMENT

SMCS-7302 **i01896412**

NOTE	REF NO	GRAPHIC REF	PART NUMBER	QTY	PART NAME 1 2 3 4 5 6 (PRODUCT LEVEL)	SEE PAGE
	1	1	**7T-1099**	27	LINK	
	2	1	*163-7938*	1	PLATE AS	
		1	**7T-1099**	1	LINK	
M		1	**8T-4189**	6	BOLT (M8X1.25X20MM)	
M		1	**8T-4908**	2	BOLT (M8X1.25X25MM)	
M	3	1	**6V-9632**	2	NUT-WELD (M6X1 THD)	
	4	1	**5D-9629**	6	ROD	
	5	1	**164-1051**	1	FENDER AS-RH	
M		1	**8T-3612**	7	NUT-WELD (M8X1.25 THD)	
		1	*173-7661*	1	BRACKET AS	
M		1	**8T-5413**	2	STUD-WELD (M10X1.5X25MM OAL)	
		1	**205-7047**	10	INSERT-THREADED	
	6	1	**164-1052**	1	FENDER AS-LH	
M		1	**8T-3612**	7	NUT-WELD (M8X1.25 THD)	
	7	1	**164-1654**	1	GRAB-HANDLE	
	8	1	**164-1671**	1	GRAB-HANDLE	

M-METRIC PART

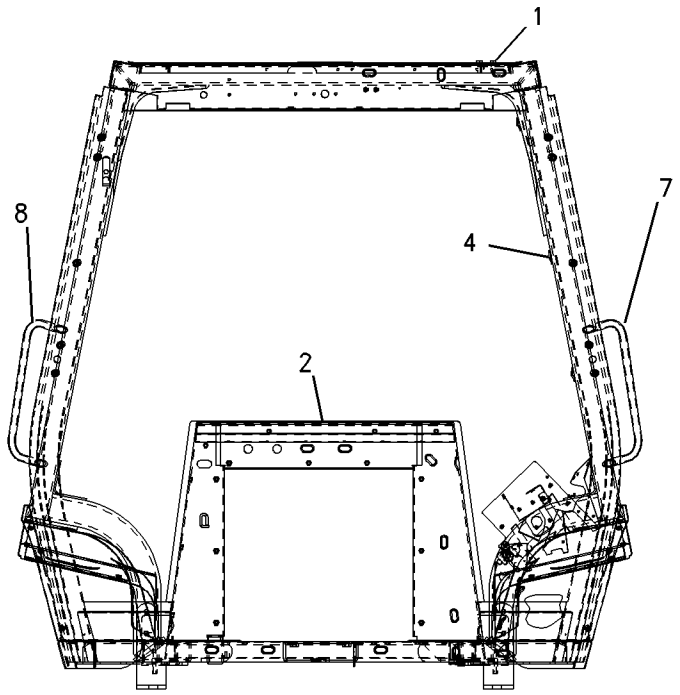

REAR VIEW

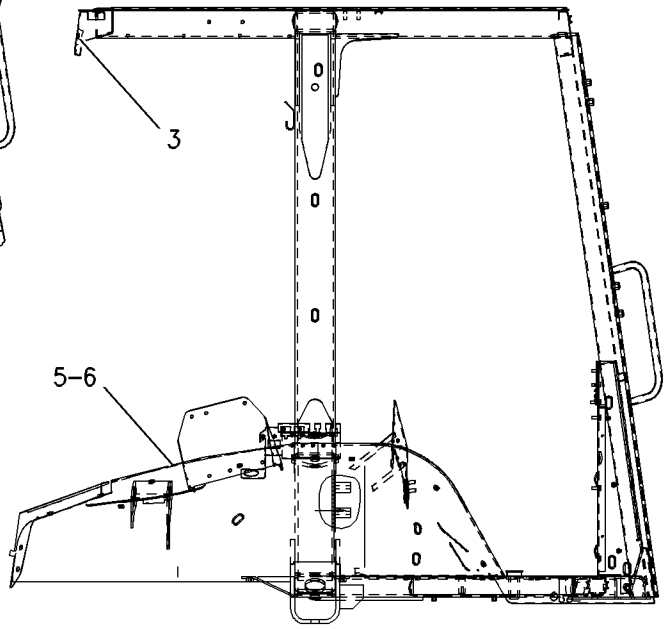

RIGHT SIDE VIEW

GRAPHIC #1 **<END>** g00986632

OPERATOR STATION

164-1350 CANOPY GP-OPEN ROPS

S/N: BFP12900-UP; CXP940-UP
MECHANICAL BACK HOE CONTROLS
PART OF 184-9733, 239-5558, 239-5559 CANOPY AR
AN ATTACHMENT

SMCS-7302, 7323 **i01655815**

NOTE	REF NO	GRAPHIC REF	PART NUMBER	QTY	PART NAME 1 2 3 4 5 6 (PRODUCT LEVEL)	SEE PAGE
	1	1	**9R-5616**	2	PLUG	
	2	1	**163-7939**	1	PLATE AS	
		1	**7T-1099**	1	LINK	
M		1	**8T-4189**	3	BOLT (M8X1.25X20MM)	
Y	3	1	**164-1025**	1	CANOPY AS	882
	4	1	**164-1071**	1	GLASS-RH	
	5	1	**164-1072**	1	GLASS-LH	
M	6	1	**5C-7261**	2	NUT (M8X1.25 THD)	
	7	1	**5P-4116**	7	WASHER-HARD (8.8X20.5X2MM THK)	
M	8	1	**8T-4189**	5	BOLT (M8X1.25X20MM)	
E	9	1	**9X-2092**	2	STRIP-EDGE (40CM)	

E-ORDER BY THE CENTIMETER
M-METRIC PART
Y-SEPARATE ILLUSTRATION

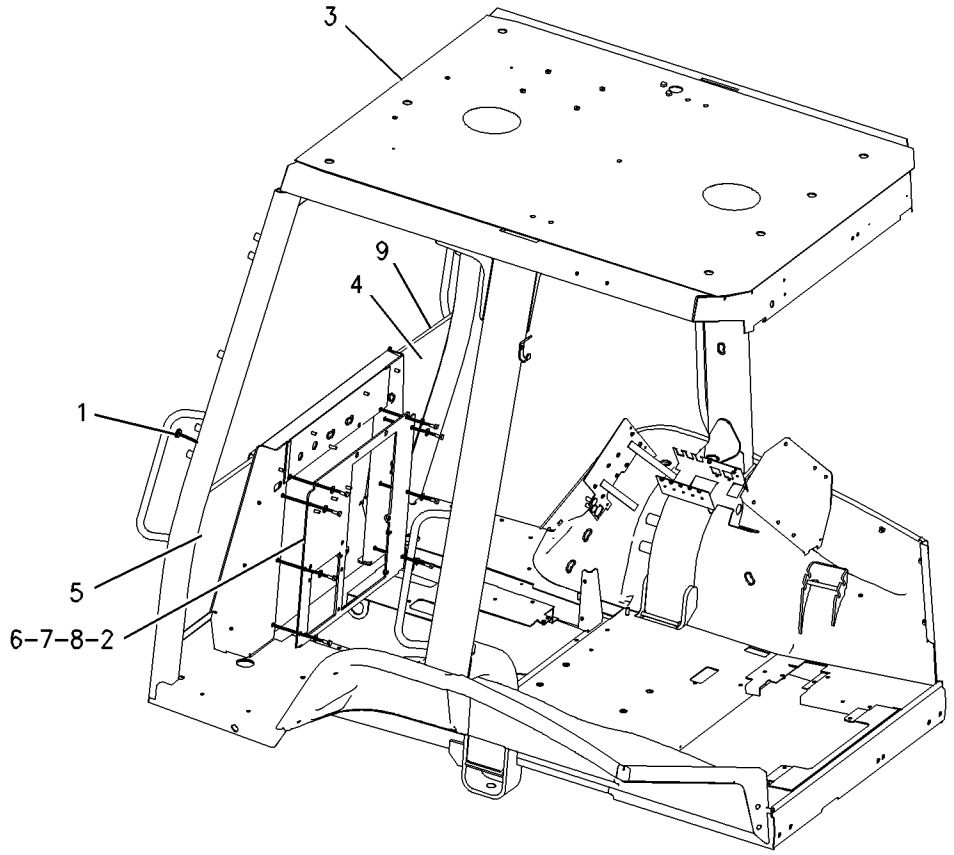

GRAPHIC #1 **<END>** g00827125

OPERATOR STATION

194-4183 COMPARTMENT GP-LITERATURE

S/N: BFP12900-UP
PART OF 239-5559 CANOPY AR
AN ATTACHMENT

SMCS-7268 **i01377903**

NOTE	REF NO	GRAPHIC REF	PART NUMBER	QTY	PART NAME 1 2 3 4 5 6 (PRODUCT LEVEL)	SEE PAGE
	1	1	**5P-7957**	1	LANYARD	
M	2	1	**9X-2044**	4	SCREW-TRUSS HEAD (M6X1X16MM)	
	3	1	**194-4184**	1	COMPARTMENT AS	
	4	1	**9X-2038**	4	WASHER (7X19X2MM THK)	

M-METRIC PART

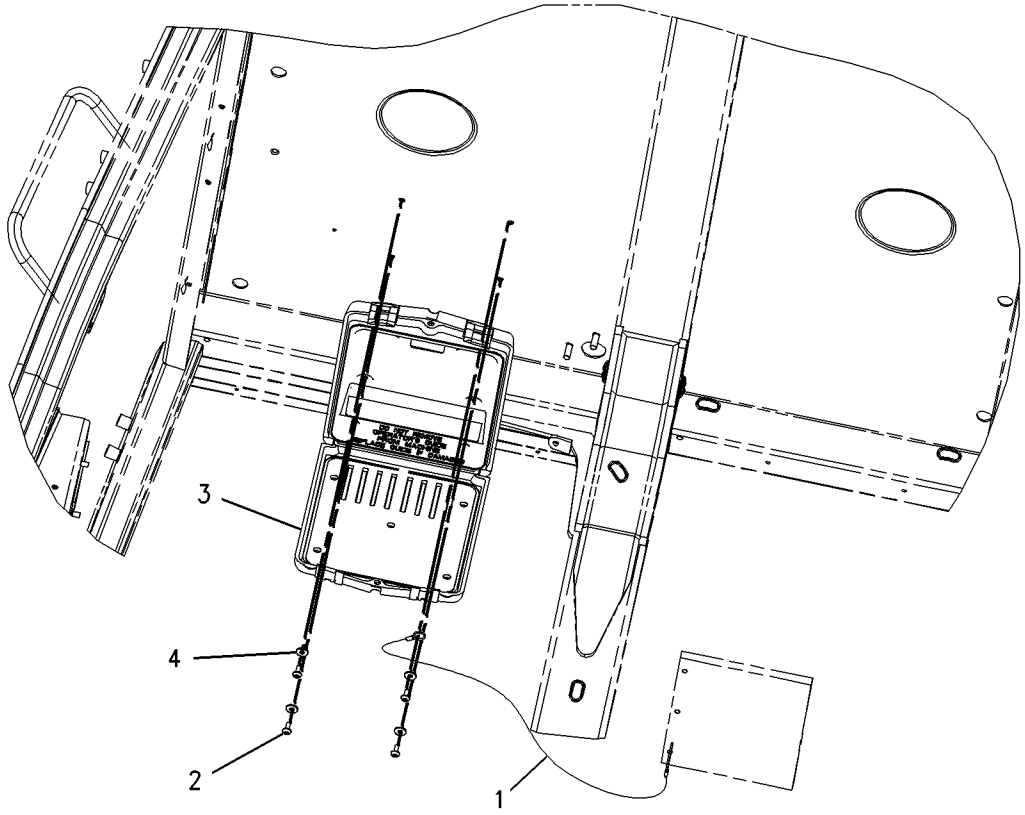

GRAPHIC #1 **<END>** g00728983

OPERATOR STATION

3E-1908 COMPRESSOR GP-REFRIGERANT

S/N: BFP12900-UP

PART OF 234-8601 COMPRESSOR GP-REFRIGERANT

AN ATTACHMENT

SMCS-1802 **i01947698**

NOTE	REF NO	GRAPHIC REF	PART NUMBER	QTY	PART NAME 1 2 3 4 5 6 (PRODUCT LEVEL)	SEE PAGE
	1	1	**102-8802**	1	KIT-RECEPTACLE (2 PIN)	
					(INCLUDES RECEPTACLE AS & WEDGE)	
	2	1	**114-3469**	1	VALVE GP-RELIEF (AIR CONDITIONER)	
		1	**9X-7378**	1	SEAL-O-RING	
	3	1	**7T-4532**	1	PLUG AS	
	4	1	**9X-7385**	2	SEAL-O-RING	

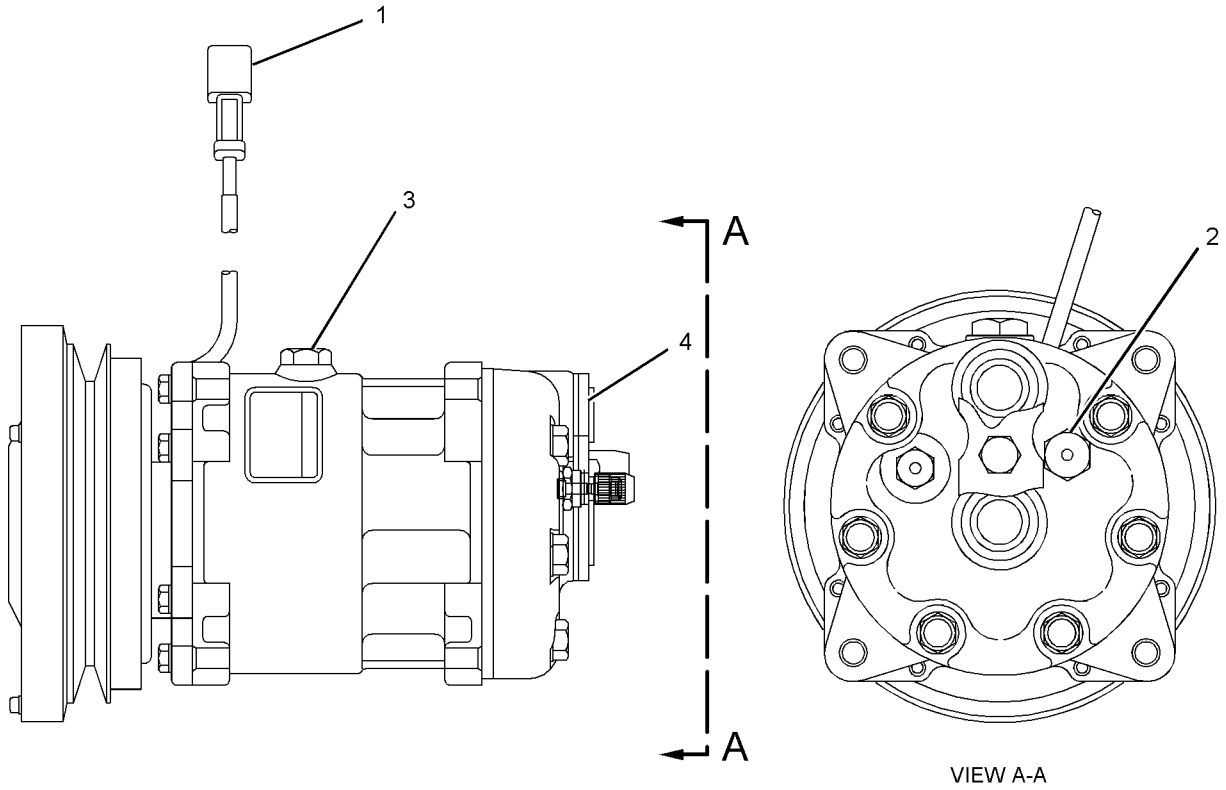

VIEW A-A

GRAPHIC #1 **<END>** g01014389

OPERATOR STATION

202-5746 COMPRESSOR GP-REFRIGERANT

S/N: BFP12900-UP
PART OF 236-6960 AIR CONDITIONER AR
AN ATTACHMENT

SMCS-1802 **i01740283**

NOTE	REF NO	GRAPHIC REF	PART NUMBER	QTY	PART NAME 1 2 3 4 5 6 (PRODUCT LEVEL)	SEE PAGE
	1	1	**2Y-9255**	1	SPACER	
	2	1	**3E-1908**	1	COMPRESSOR GP-REFRIGERANT	
		1	**7T-4532**	1	PLUG AS	
		1	**9X-7385**	2	SEAL-O-RING	
	3	1	**105-9411**	1	SUPPORT	
	4	1	**137-7141**	1	PLATE	
	5	1	**137-7142**	1	BRACKET AS	
	6	1	**139-0219**	1	PLATE AS	
	7	1	**146-0797**	1	FITTING AS-AIR CONDITIONER	
		1	**3E-4051**	1	CAP-SEAL (AIR CONDITIONER)(LOW SIDE)	
		1	**3E-4057**	1	VALVE AS-AIR CONDITIONER (LOW SIDE)	
	8	1	**7X-7729**	1	WASHER (11X25X3MM THK)	
	9	1	**8T-2561**	1	WASHER-HARD (10.5X28.5X5MM THK)	
	10	1	**8T-4121**	7	WASHER-HARD (11X21X2.5MM THK)	
M	11	1	**8T-4133**	2	NUT (M10X1.5 THD)	
M	12	1	**8T-4186**	3	BOLT (M10X1.5X40MM)	
M	13	1	**8T-4195**	3	BOLT (M10X1.5X30MM)	
	14	1	**8T-4224**	2	WASHER-HARD (8.8X16X2MM THK)	
M	15	1	**8T-4908**	1	BOLT (M8X1.25X25MM)	
M	16	1	**8T-6466**	1	BOLT (M10X1.50X60MM)	
M	17	1	**8T-6869**	1	BOLT (M8X1.25X60MM)	

M-METRIC PART

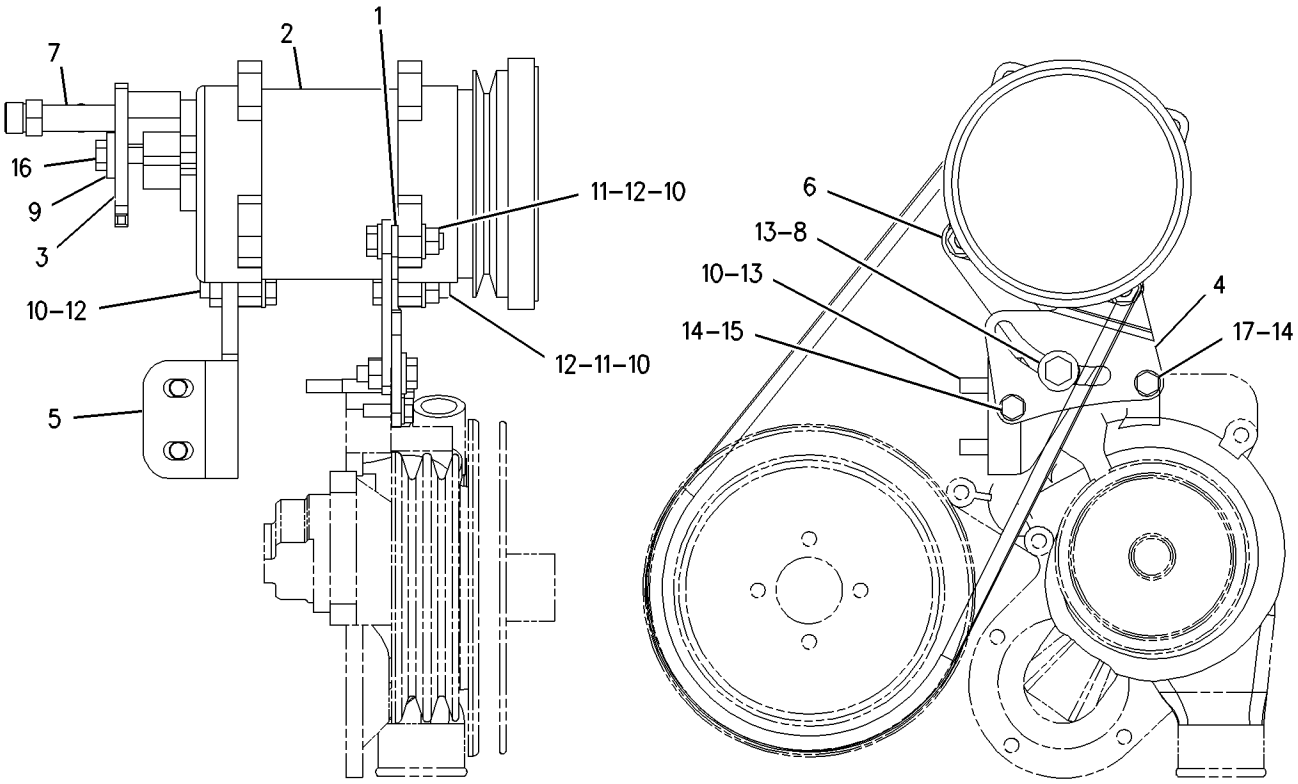

GRAPHIC #1 **<END>** g00844025

OPERATOR STATION

234-8601 COMPRESSOR GP-REFRIGERANT

S/N: BFP12900-UP
PART OF 239-5562 CAB AR
AN ATTACHMENT

SMCS-1802 **i02013164**

NOTE	REF NO	GRAPHIC REF	PART NUMBER	QTY	PART NAME 1 2 3 4 5 6 (PRODUCT LEVEL)	SEE PAGE
	1	1	**1W-2934**	1	V-BELT (AIR CONDITIONER)	
Y	2	1	**3E-1908**	1	COMPRESSOR GP-REFRIGERANT	888
	3	1	**124-6524**	1	SPACER (11X25X10.5-MM THK)	
	4	1	**140-3881**	1	COVER AS-TANK	
	5	1	**234-9430**	1	PLATE AS	
	6	1	**234-9554**	1	PLATE	
	7	1	**235-1056**	1	PLATE	
	8	1	**239-0602**	1	PLATE	
	9	1	**244-2104**	1	PLATE	
	10	1	**8T-4121**	12	WASHER-HARD (11X21X2.5-MM THK)	
M	11	1	**8T-4133**	5	NUT (M10X1.5-THD)	
M	12	1	**8T-4185**	1	BOLT (M10X1.5X50-MM)	
M	13	1	**8T-4186**	5	BOLT (M10X1.5X40-MM)	
M	14	1	**8T-4195**	1	BOLT (M10X1.5X30-MM)	
	15	1	**8T-4223**	2	WASHER-HARD (13.5X25.5X3-MM THK)	
M	16	1	**8T-4224**	4	WASHER-HARD (8.8X16X2-MM THK)	
M	17	1	**8T-4244**	1	NUT (M12X1.75-THD)	
M	18	1	**8T-4908**	4	BOLT (M8X1.25X25-MM)	
M	19	1	**8T-5001**	1	BOLT (M12X1.75X130-MM)	

M-METRIC PART
Y-SEPARATE ILLUSTRATION

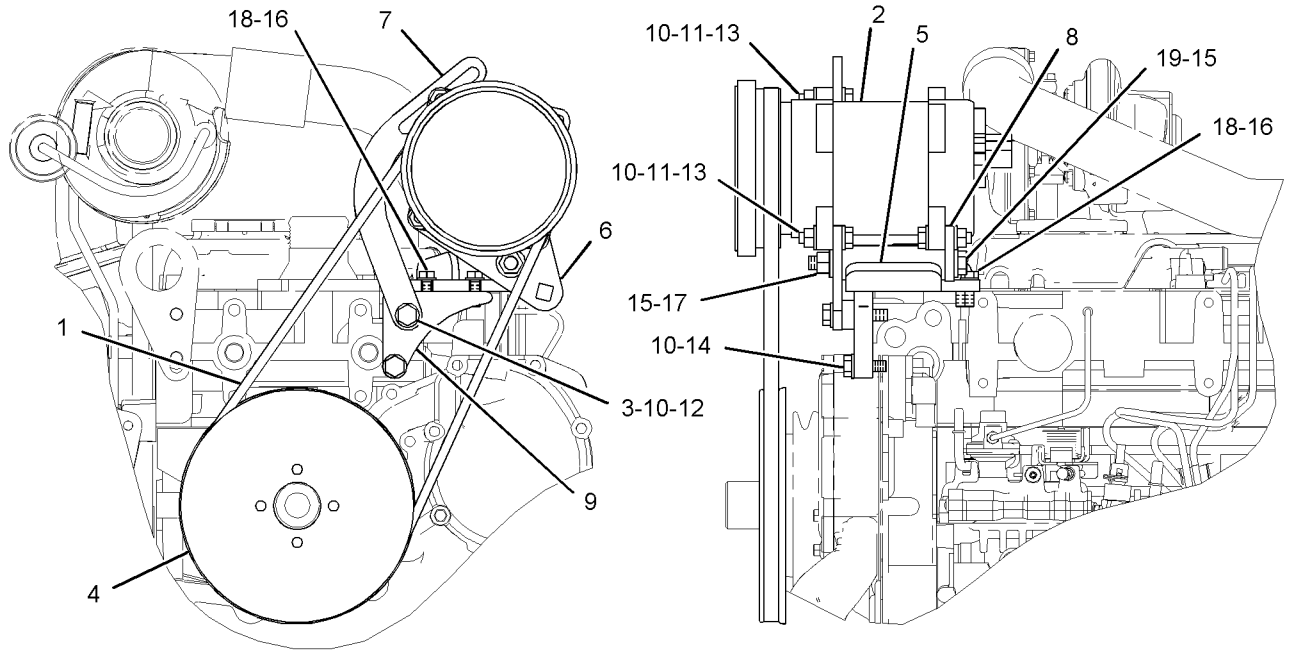

FRONT VIEW LEFT SIDE VIEW

GRAPHIC #1 **<END>** g01043205

OPERATOR STATION

144-2222 CONDENSER & MTG GP-REFRIGERANT

S/N: BFP12900-UP
PART OF 236-6960 AIR CONDITIONER AR, 239-5562 CAB AR
AN ATTACHMENT

SMCS-1805 **i02011525**

NOTE	REF NO	GRAPHIC REF	PART NUMBER	QTY	PART NAME 1 2 3 4 5 6 (PRODUCT LEVEL)	SEE PAGE
	1	1	**7X-0579**	7	WASHER-HARD (8.8X25.5X2MM THK)	
	2	1	**166-2861**	1	CORE AS	
	3	1	**240-2614**	2	SPACER (10X19.5X60MM THK)	
M	4	1	**153-3061**	1	BOLT (M8X1.25X130MM)	
M	5	1	**8T-3647**	1	BOLT (M8X1.25X80MM)	
M	6	1	**8T-4200**	4	BOLT (M8X1.25X16MM)	

M-METRIC PART

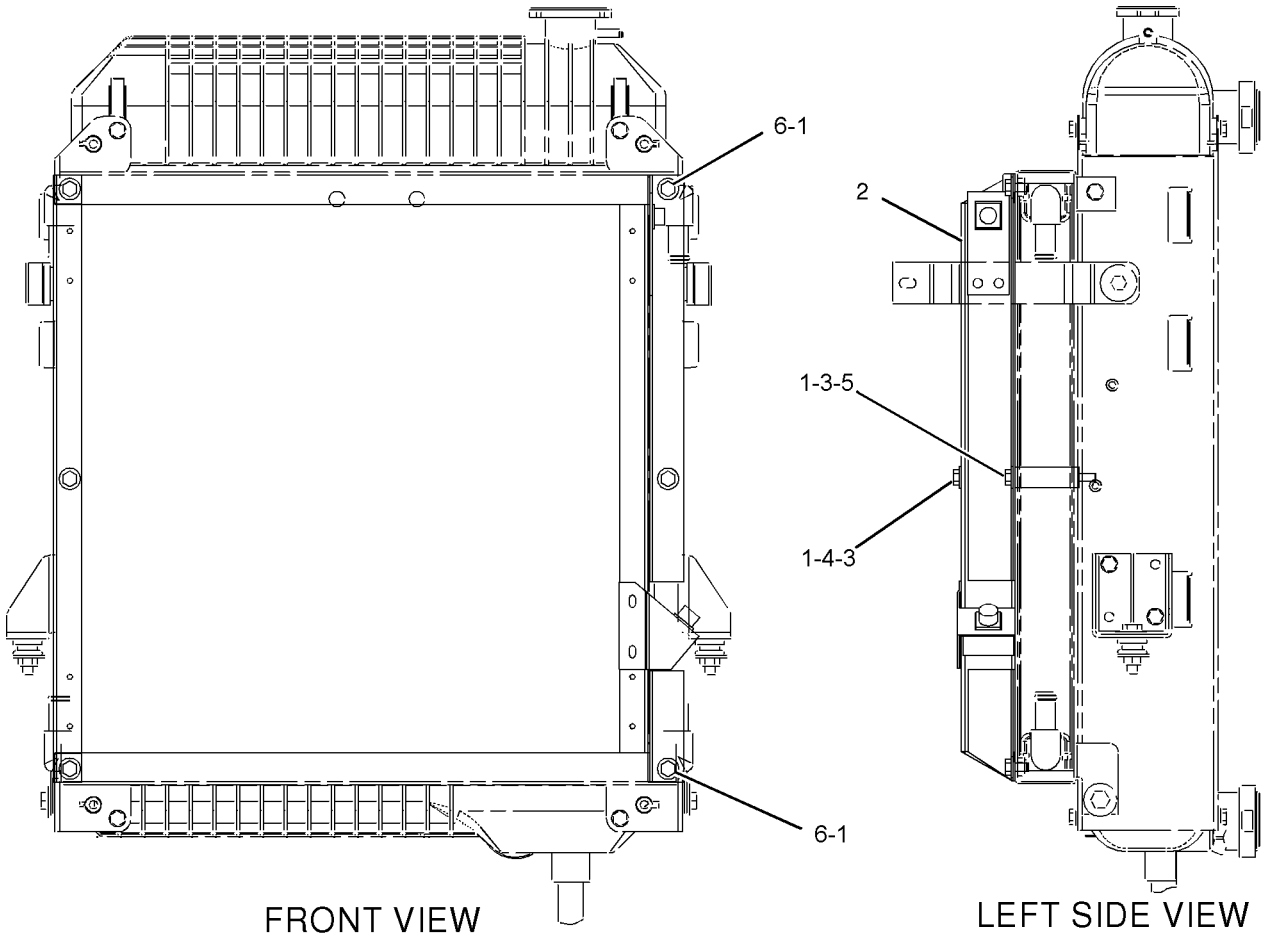

GRAPHIC #1 **<END>** g01026368

OPERATOR STATION

183-4995 CONSOLE GP-FRONT

S/N: BFP12900-UP; CXP940-UP
PART OF 192-4661, 192-4663, 214-6958, 231-9348 POWER TRAIN AR
AN ATTACHMENT

SMCS-5258 **i01410573**

NOTE	REF NO	GRAPHIC REF	PART NUMBER	QTY	PART NAME 1 2 3 4 5 6 (PRODUCT LEVEL)	SEE PAGE
	1	1	**8Y-6388**	1	LOUVER AS	
	2	1	**151-5715**	2	LOUVER AS	
	3	1	**164-8473**	5	LOUVER AS	
	4	1	**167-8246**	1	CONSOLE AS-FRONT	
	5	1	**104-2091**	22	SCREW-FLAT HEAD (NO.6-20X0.5 IN)	
	6	1	**148-3626**	4	SCREW-FLAT HEAD	

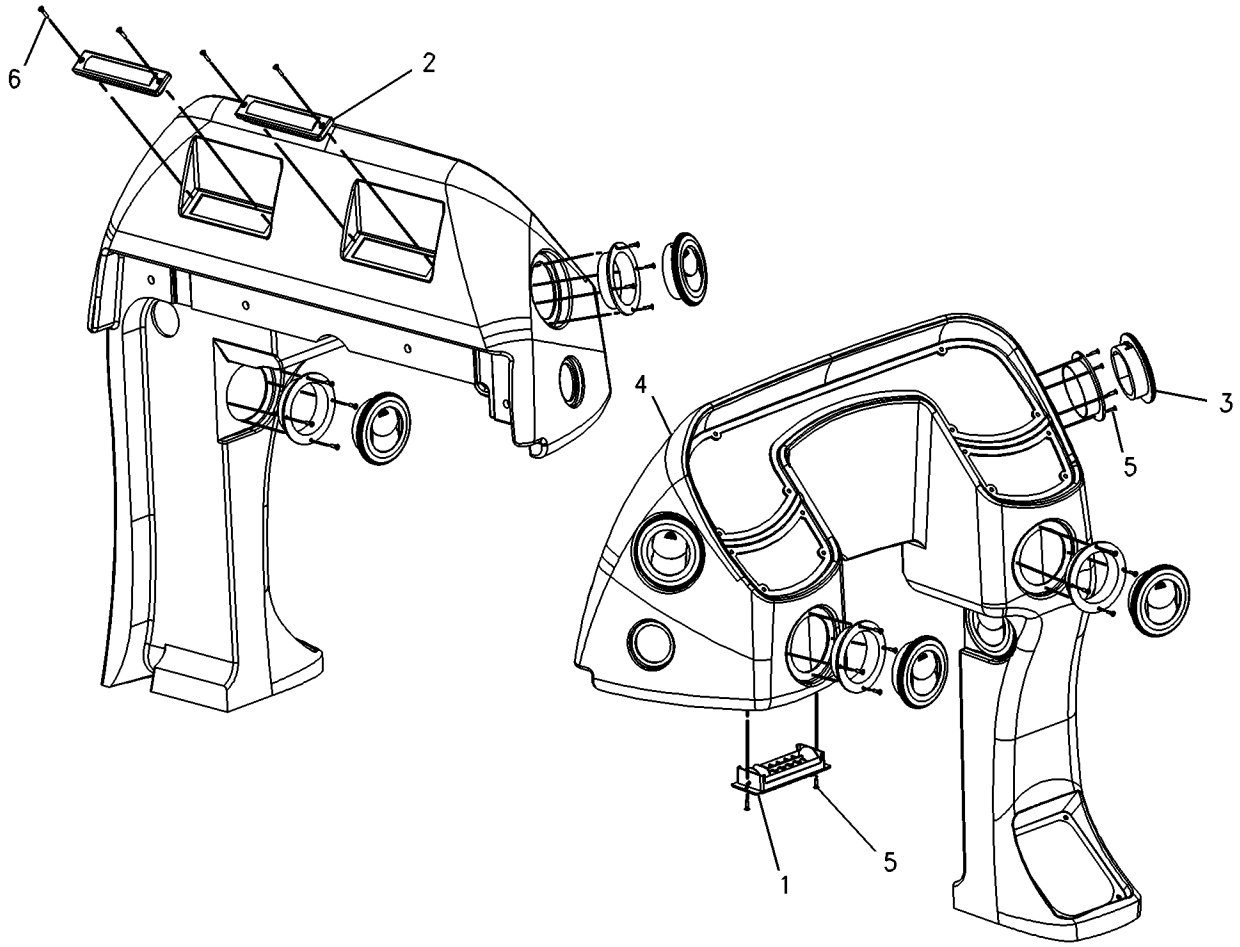

GRAPHIC #1 **<END>** g00743525

OPERATOR STATION

185-3524 CONSOLE GP-OPERATOR–RH

S/N: BFP12900-UP

PART OF 184-9735, 205-2177, 239-5560, 239-5561, 239-5562 CAB AR

AN ATTACHMENT

SMCS-5258, 7451 **i01555564**

NOTE	REF NO	GRAPHIC REF	PART NUMBER	QTY	PART NAME 1 2 3 4 5 6 (PRODUCT LEVEL)	SEE PAGE
BC	1	1	**9P-6571**	1	PLUG	
M	2	1	**178-9983**	4	LOCKNUT	
Y	3	1	*183-4998*	1	CONSOLE GP-SIDE (RH)	898
	4	1	**205-9980**	4	SCREW-TRUSS HEAD	
CM	5	1	**8T-3998**	4	BOLT (M4X0.7X12MM)	
M	6	1	**9X-2044**	5	SCREW-TRUSS HEAD (M6X1X16MM)	

B-USE AS REQUIRED
C-CHANGE FROM PREVIOUS TYPE
M-METRIC PART
Y-SEPARATE ILLUSTRATION

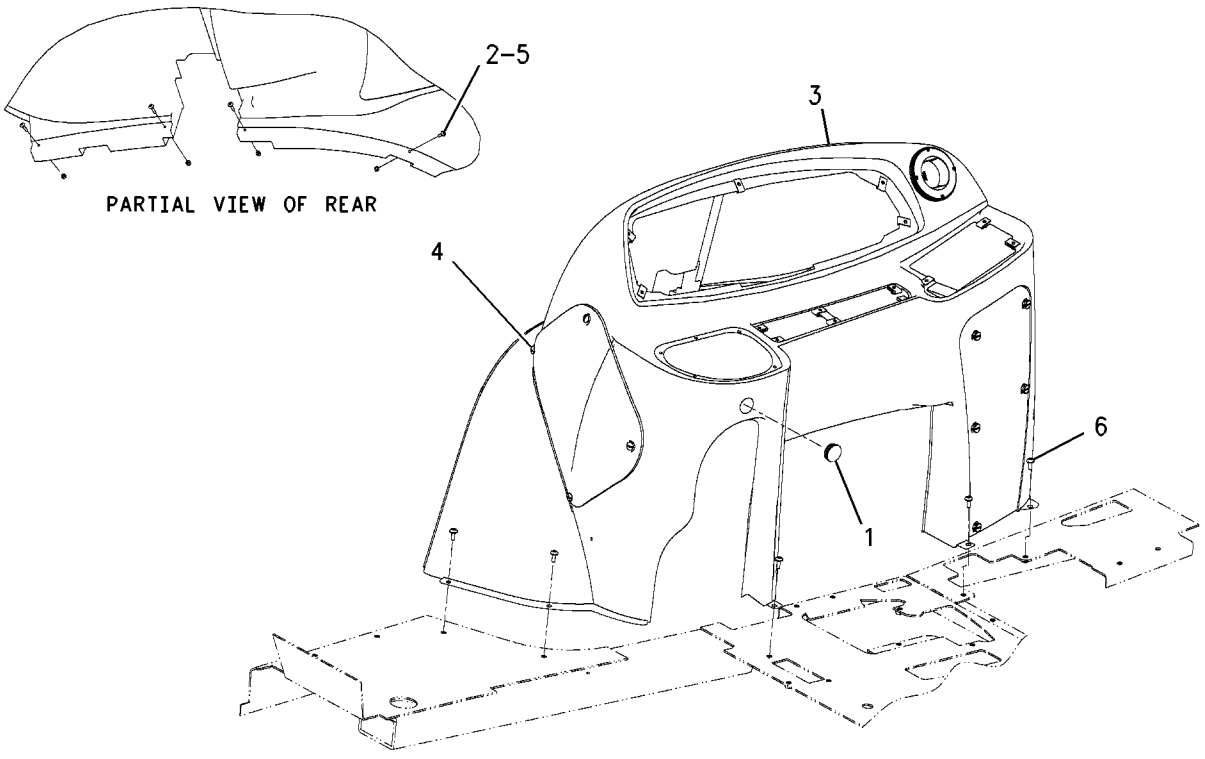

GRAPHIC #1 **<END>** g00808569

OPERATOR STATION

164-1131 CONSOLE GP-SIDE

S/N: BFP12900-UP
AIR CONDITIONING
PART OF 164-1388 CONSOLE GP-SIDE
AN ATTACHMENT

SMCS-7451 **i01941457**

NOTE	REF NO	GRAPHIC REF	PART NUMBER	QTY	PART NAME 1 2 3 4 5 6 (PRODUCT LEVEL)	SEE PAGE
J	1	1	**5P-9000**	1	LOCK AS-CYLINDER	
	2	1	**118-5503**	2	LOUVER AS	
	3	1	**164-1133**	1	COVER	
	4	1	**164-1134**	1	PIN	
	5	1	**167-8252**	1	CONSOLE-LH	
	6	1	**188-7760**	1	PLATE	
	7	1	**104-2091**	8	SCREW-FLAT HEAD (6-20X0.5 IN)	
	8	1	**200-2673**	1	PLATE	

J-REQUIRES 5P8500 KEY

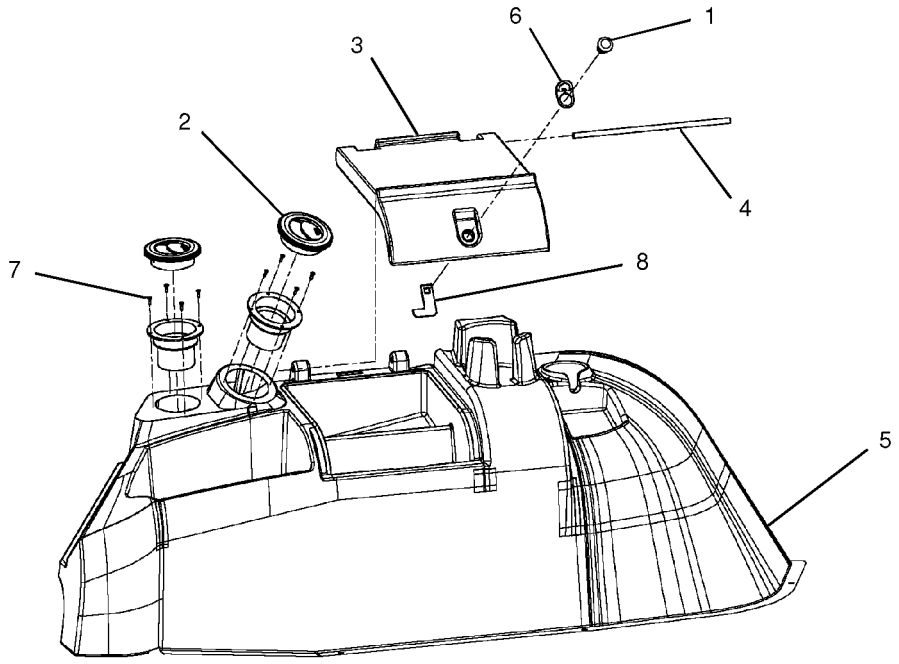

EXPLODED VIEW

GRAPHIC #1 **<END>** g01010396

OPERATOR STATION

164-1388 CONSOLE GP-SIDE

S/N: BFP12900-UP
AIR CONDITIONING
PART OF 184-9735, 205-2177, 239-5561, 239-5562 CAB AR
AN ATTACHMENT

SMCS-7451 **i01665840**

NOTE	REF NO	GRAPHIC REF	PART NUMBER	QTY	PART NAME 1 2 3 4 5 6 (PRODUCT LEVEL)	SEE PAGE
B	1	1	**9P-6571**	3	PLUG	
Y	2	1	*164-1131*	1	CONSOLE GP-SIDE	895
M	3	1	**178-9983**	3	LOCKNUT	
	4	1	**184-6558**	1	HOSE	
	5	1	**184-6566**	1	GASKET	
	6	1	**198-6886**	1	PLATE	
M	7	1	**8T-3998**	3	BOLT (M4X0.7X12MM)	
	8	1	**9X-2038**	3	WASHER (7X19X2MM THK)	
M	9	1	**9X-2044**	4	SCREW-TRUSS HEAD (M6X1X16MM)	

B-USE AS REQUIRED
M-METRIC PART
Y-SEPARATE ILLUSTRATION

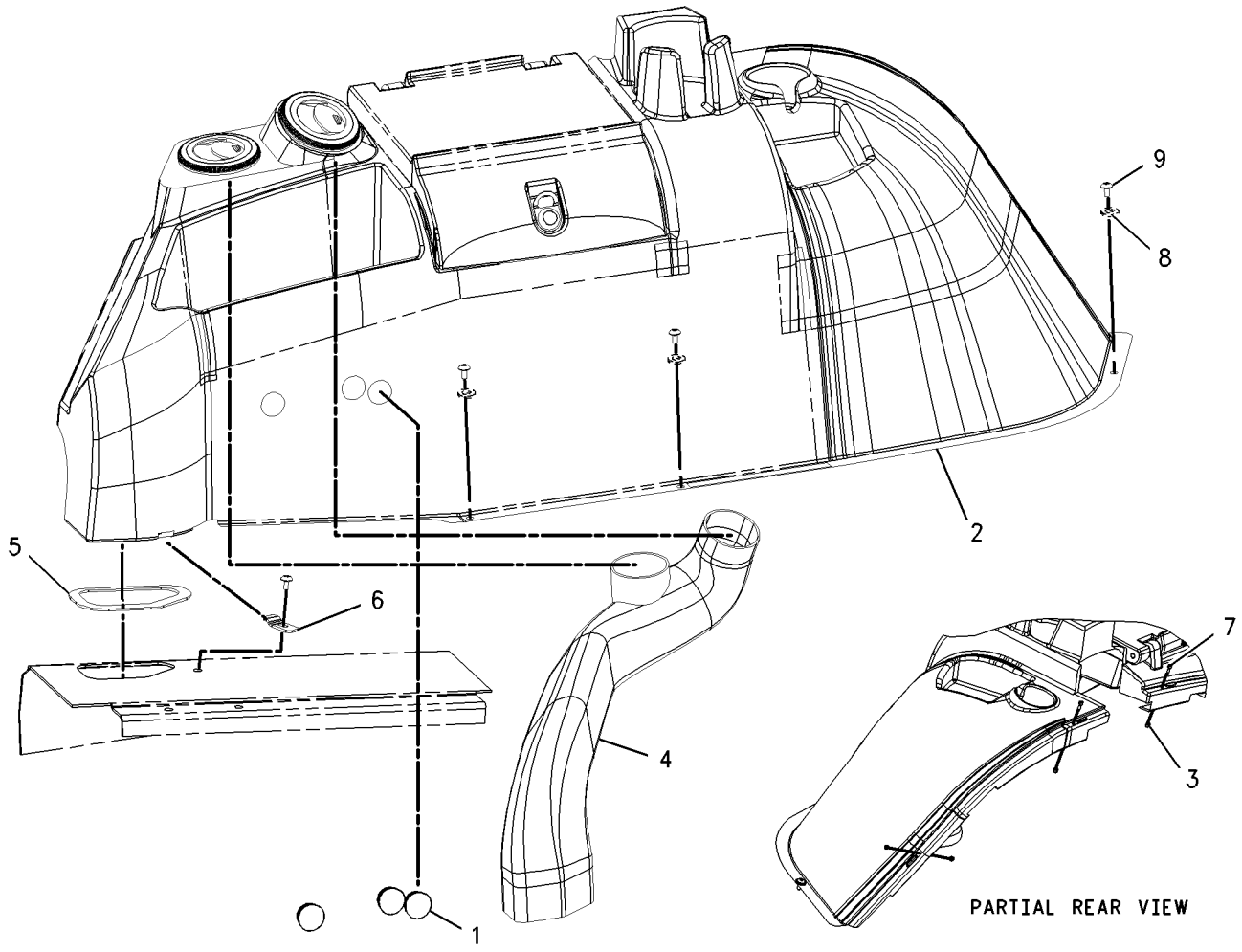

GRAPHIC #1 **<END>** g00860220

OPERATOR STATION

183-4997 CONSOLE GP-SIDE

S/N: BFP12900-UP; CXP940-UP
PART OF 185-3530 CONSOLE GP-SIDE
AN ATTACHMENT

SMCS-7451 **i01636578**

NOTE	REF NO	GRAPHIC REF	PART NUMBER	QTY	PART NAME 1 2 3 4 5 6 (PRODUCT LEVEL)	SEE PAGE
	1	1	**164-1178**	5	CLIP	
	2	1	**172-8591**	16	NUT-SPRING	
Y	3	1	*183-4991*	1	COVER GP-CONSOLE	900
	4	1	**202-6141**	1	CONSOLE	
	5	1	**204-7341**	1	COVER-FUSE	

Y-SEPARATE ILLUSTRATION

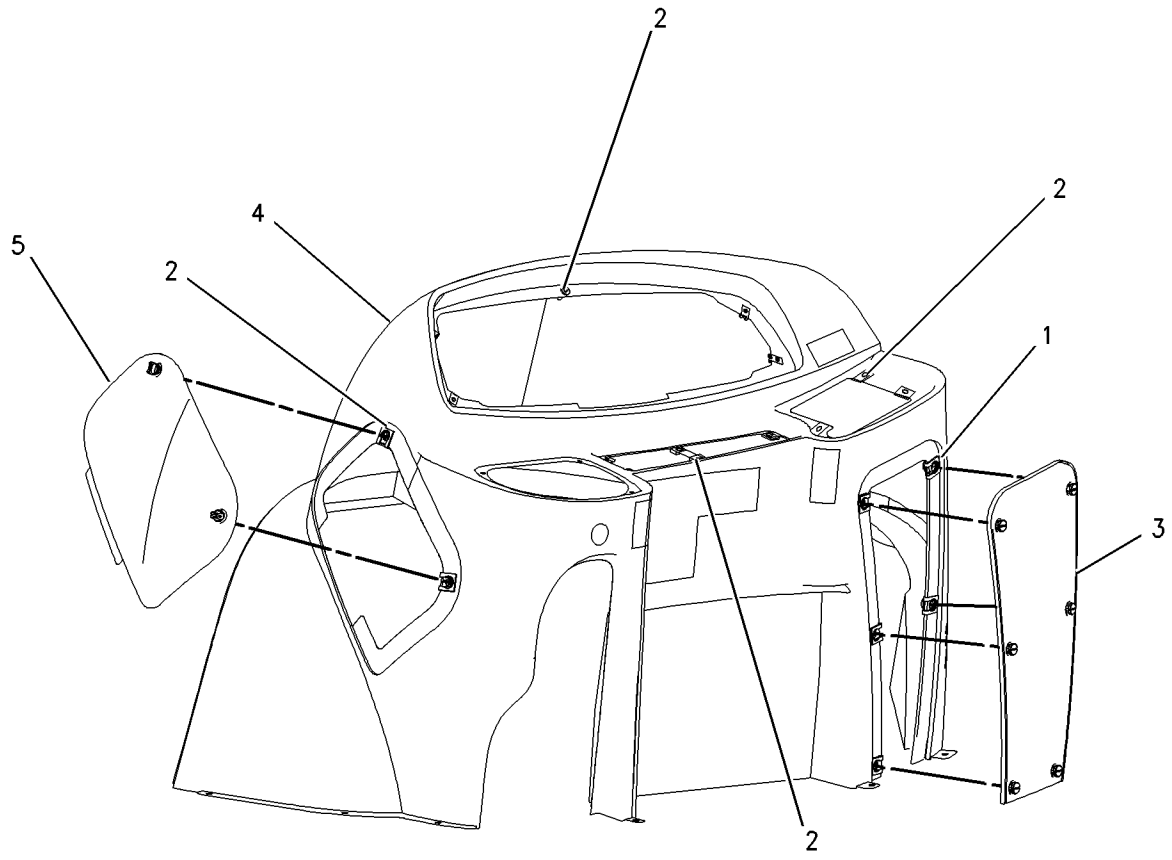

GRAPHIC #1 **<END>** g00847304

OPERATOR STATION

183-4998 CONSOLE GP-SIDE

S/N: BFP12900-UP
PART OF 185-3524 CONSOLE GP-OPERATOR
AN ATTACHMENT

SMCS-7451 **i01663927**

NOTE	REF NO	GRAPHIC REF	PART NUMBER	QTY	PART NAME 1 2 3 4 5 6 (PRODUCT LEVEL)	SEE PAGE
	1	1	**118-5503**	1	LOUVER AS	
C	2	1	**164-1178**	5	CLIP	
C	3	1	**172-8591**	16	NUT-SPRING	
Y	4	1	*183-4991*	1	COVER GP-CONSOLE	900
C	5	1	**202-6142**	1	CONSOLE-SIDE	
	6	1	**204-7341**	1	COVER-FUSE	
	7	1	**104-2091**	4	SCREW-FLAT HEAD (6-20X0.5 IN)	

C-CHANGE FROM PREVIOUS TYPE
Y-SEPARATE ILLUSTRATION

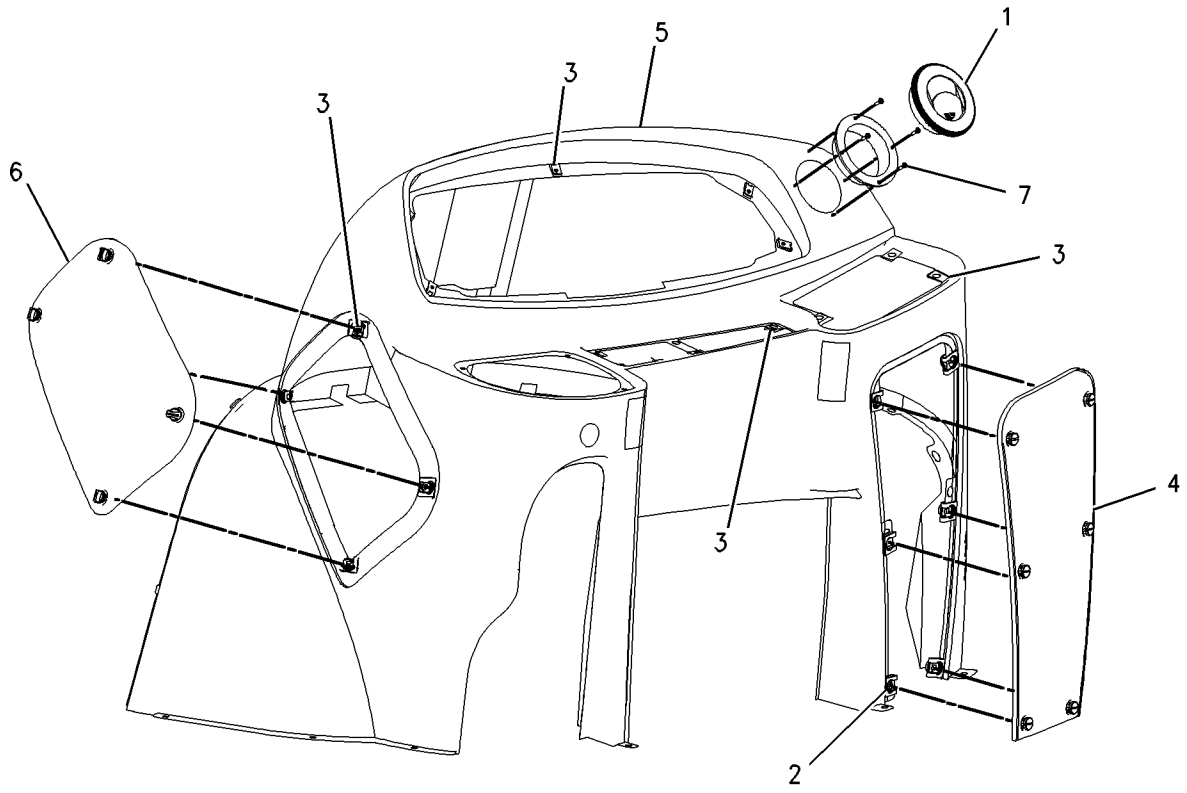

GRAPHIC #1 **<END>** g00859080

OPERATOR STATION

185-3530 CONSOLE GP-SIDE

S/N: BFP12900-UP; CXP940-UP
PART OF 184-9733, 239-5558, 239-5559 CANOPY AR
AN ATTACHMENT

SMCS-7451 **i01980650**

NOTE	REF NO	GRAPHIC REF	PART NUMBER	QTY	PART NAME 1 2 3 4 5 6 (PRODUCT LEVEL)	SEE PAGE
B	1	1	**9P-6571**	1	PLUG	
	2	1	**164-1107**	1	CONSOLE-STORAGE	
M	3	1	**178-9983**	4	LOCKNUT (M4X0.7 THD)	
Y	4	1	*183-4997*	1	CONSOLE GP-SIDE	897
	5	1	**184-6557**	1	CONSOLE	
	6	1	**205-9980**	4	SCREW-TRUSS HEAD	
M	7	1	**8T-3998**	4	BOLT (M4X0.7X12MM)	
	8	1	**9X-2038**	2	WASHER (7X19X2MM THK)	
M	9	1	**9X-2044**	5	SCREW-TRUSS HEAD (M6X1X16MM)	
M	10	1	**121-9870**	2	SCREW-MACHINE (M6X1X40MM)	

B-USE AS REQUIRED
M-METRIC PART
Y-SEPARATE ILLUSTRATION

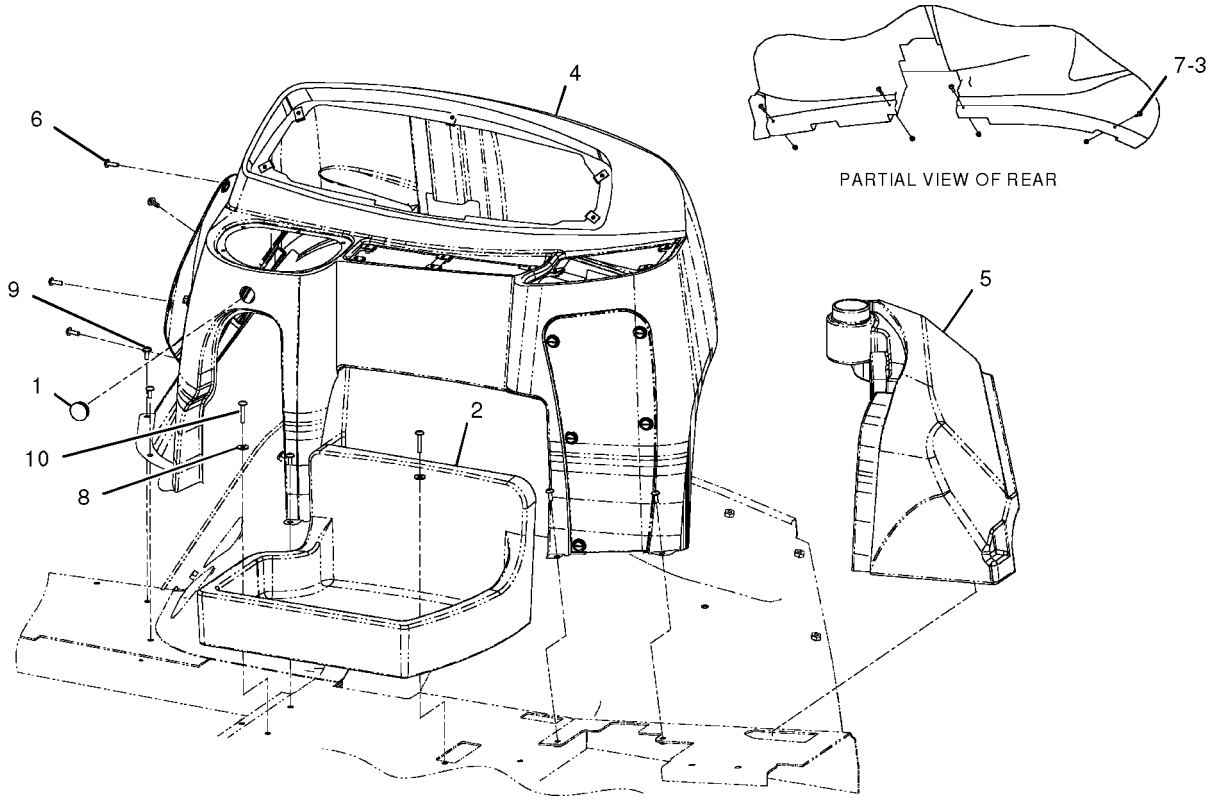

GRAPHIC #1 **<END>** g01026663

OPERATOR STATION

183-4991 COVER GP-CONSOLE

S/N: BFP12900-UP; CXP940-UP
BOOM LOCK
PART OF 183-4997, 183-4998 CONSOLE GP-SIDE
AN ATTACHMENT

SMCS-5258 **i01419851**

NOTE	REF NO	GRAPHIC REF	PART NUMBER	QTY	PART NAME 1 2 3 4 5 6 (PRODUCT LEVEL)	SEE PAGE
	1	1	**117-3789**	5	RETAINER-STUD	
	2	1	**164-1108**	1	COVER	
	3	1	**167-8251**	5	STUD	

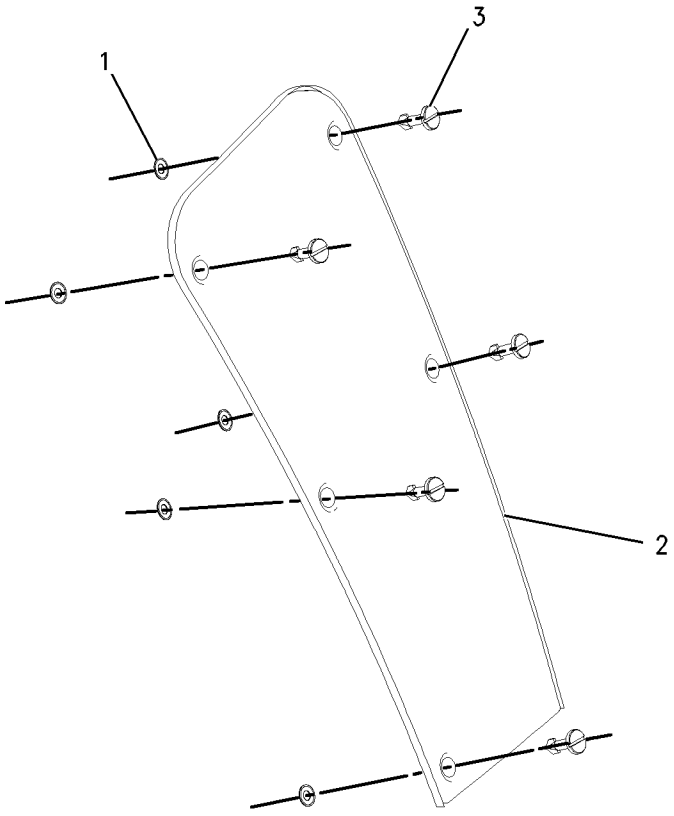

GRAPHIC #1 **<END>** g00744971

OPERATOR STATION

191-1784 COVER GP-CONSOLE

S/N: BFP12900-UP
VANDAL
AN ATTACHMENT

SMCS-5258 **i01697107**

NOTE	REF NO	GRAPHIC REF	PART NUMBER	QTY	PART NAME 1 2 3 4 5 6 (PRODUCT LEVEL)	SEE PAGE
	1	1	**9C-9785**	1	BUMPER	
	2	1	**124-8105**	1	PLATE	
	3	1	**130-7912**	1	SPRING	
	4	1	**130-7913**	2	WASHER	
	5	1	**130-7914**	1	BUSHING (40MM THK)	
	6	1	**186-5298**	1	FILM (BUCKET CONTROL)	
	7	1	**186-5300**	1	FILM (CONTROL PILOT LOADER)	
	8	1	**188-0861**	1	FILM (BUCKET MULTIPURPOSE)	
	9	1	**188-0864**	1	FILM-INSTRUCTION (AUXILIARY)	
	10	1	**194-9497**	1	SUPPORT AS	
	11	1	**194-9645**	1	COVER AS	
	12	1	**195-6523**	1	PLATE	
	13	1	**198-0102**	1	FILM (BUCKET)	
	14	1	**113-8277**	1	SCREW-PAN HEAD (8-32X12.7MM)	
J	15	1	**125-2086**	1	LOCK AS-CYLINDER	
M	16	1	**5C-2890**	1	NUT (M6X1 THD)	
M	17	1	**6V-7743**	1	LOCKNUT (M6X1 THD)	
M	18	1	**8T-3844**	1	BOLT (M6X1X70MM)	

J-REQUIRES A 5P8500 KEY
M-METRIC PART

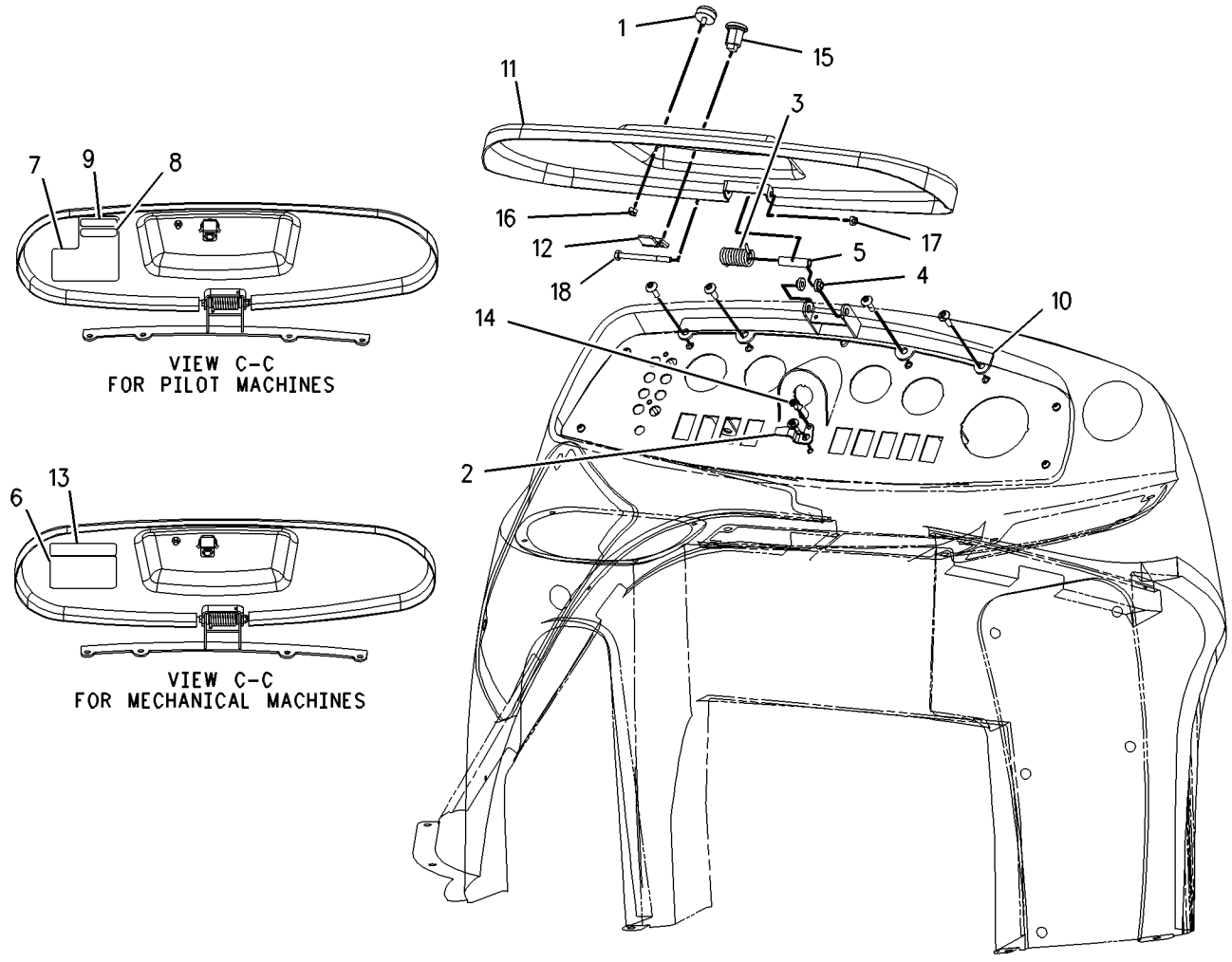

GRAPHIC #1 **<END>** g00867910

OPERATOR STATION

186-0252 COVER GP-FIREWALL

S/N: BFP12900-UP; CXP940-UP
LOWER
PART OF 184-9735, 205-2177, 239-5560, 239-5561, 239-5562 CAB AR, 184-9733, 239-5558, 239-5559 CANOPY AR
AN ATTACHMENT

SMCS-7262 **i01668267**

NOTE	REF NO	GRAPHIC REF	PART NUMBER	QTY	PART NAME 1 2 3 4 5 6 (PRODUCT LEVEL)	SEE PAGE
	1	1	**164-1137**	1	COVER-FIREWALL	
	2	1	**9X-2038**	12	WASHER (7X19X2MM THK)	
M	3	1	**9X-2045**	12	SCREW-TRUSS HEAD (M6X1X20MM)	

M-METRIC PART

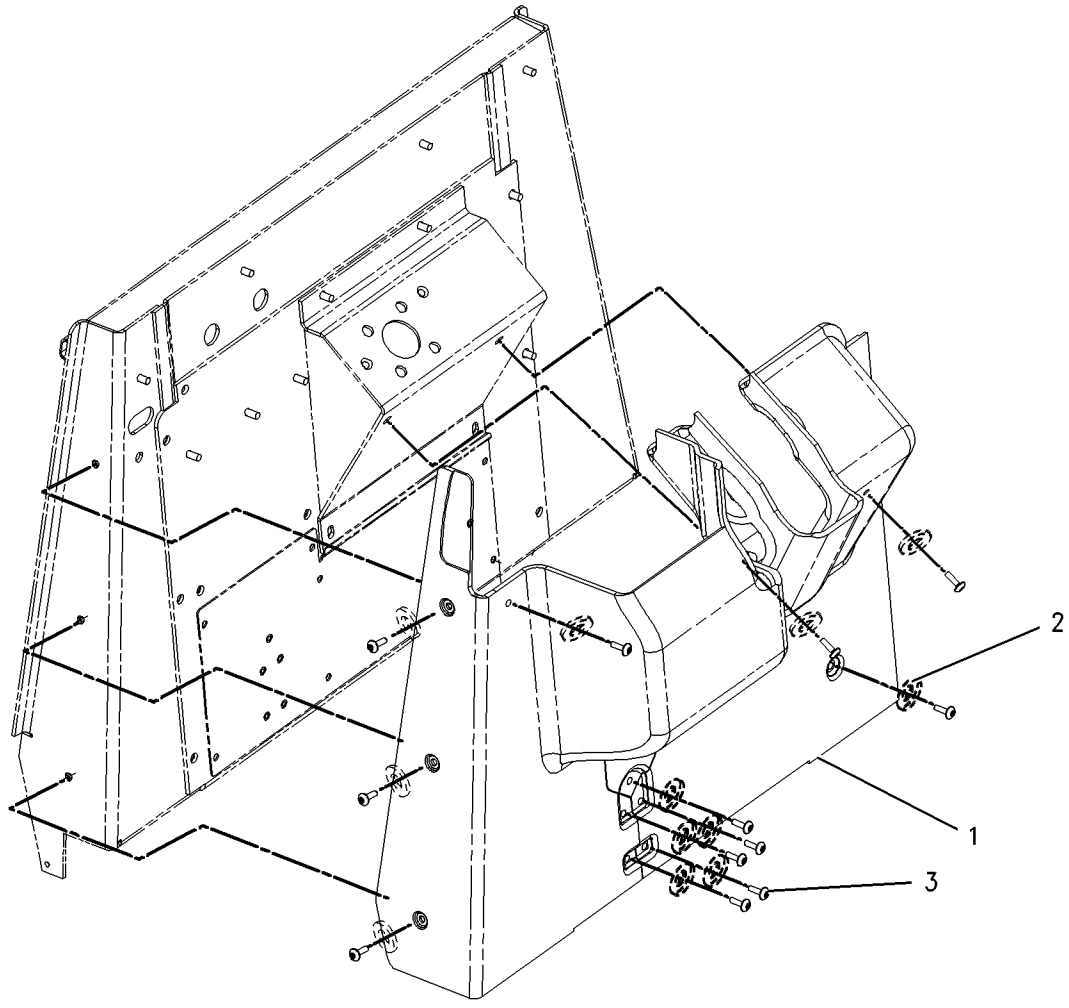

GRAPHIC #1 **<END>** g00861665

OPERATOR STATION

198-0104 COVER GP-FIREWALL

S/N: BFP12900-UP; CXP940-UP
UPPER
PART OF 184-9733, 239-5558 CANOPY AR
AN ATTACHMENT

SMCS-7262 **i01535914**

NOTE	REF NO	GRAPHIC REF	PART NUMBER	QTY	PART NAME 1 2 3 4 5 6 (PRODUCT LEVEL)	SEE PAGE
E	1	1	**126-8472**		SEAL (84CM)	
	2	1	**198-0103**	1	PLATE	
	3	1	**8T-4121**	1	WASHER-HARD (11X21X2.5MM THK)	
M	4	1	**8T-4137**	1	BOLT (M10X1.5X20MM)	

E-ORDER BY THE CENTIMETER
M-METRIC PART

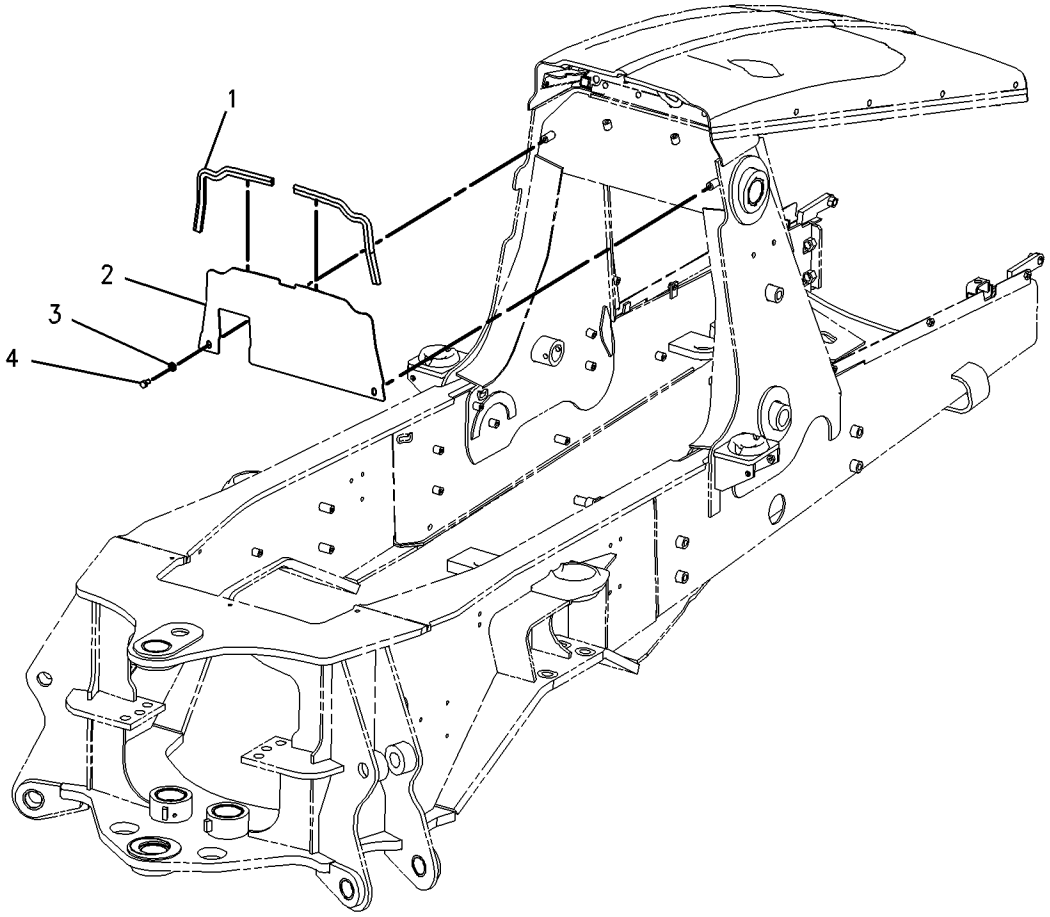

GRAPHIC #1 **<END>** g00797673

OPERATOR STATION

185-3527 COVER GP-PARKING BRAKE

S/N: BFP12900-UP; CXP940-UP
PART OF 239-5560 CAB AR, 184-9733, 239-5558, 239-5559 CANOPY AR
AN ATTACHMENT

SMCS-4284 **i01437175**

NOTE	REF NO	GRAPHIC REF	PART NUMBER	QTY	PART NAME 1 2 3 4 5 6 (PRODUCT LEVEL)	SEE PAGE
	1	1	**164-1110**	1	COVER	
M	2	1	**9X-2044**	2	SCREW-TRUSS HEAD (M6X1X16MM)	

M-METRIC PART

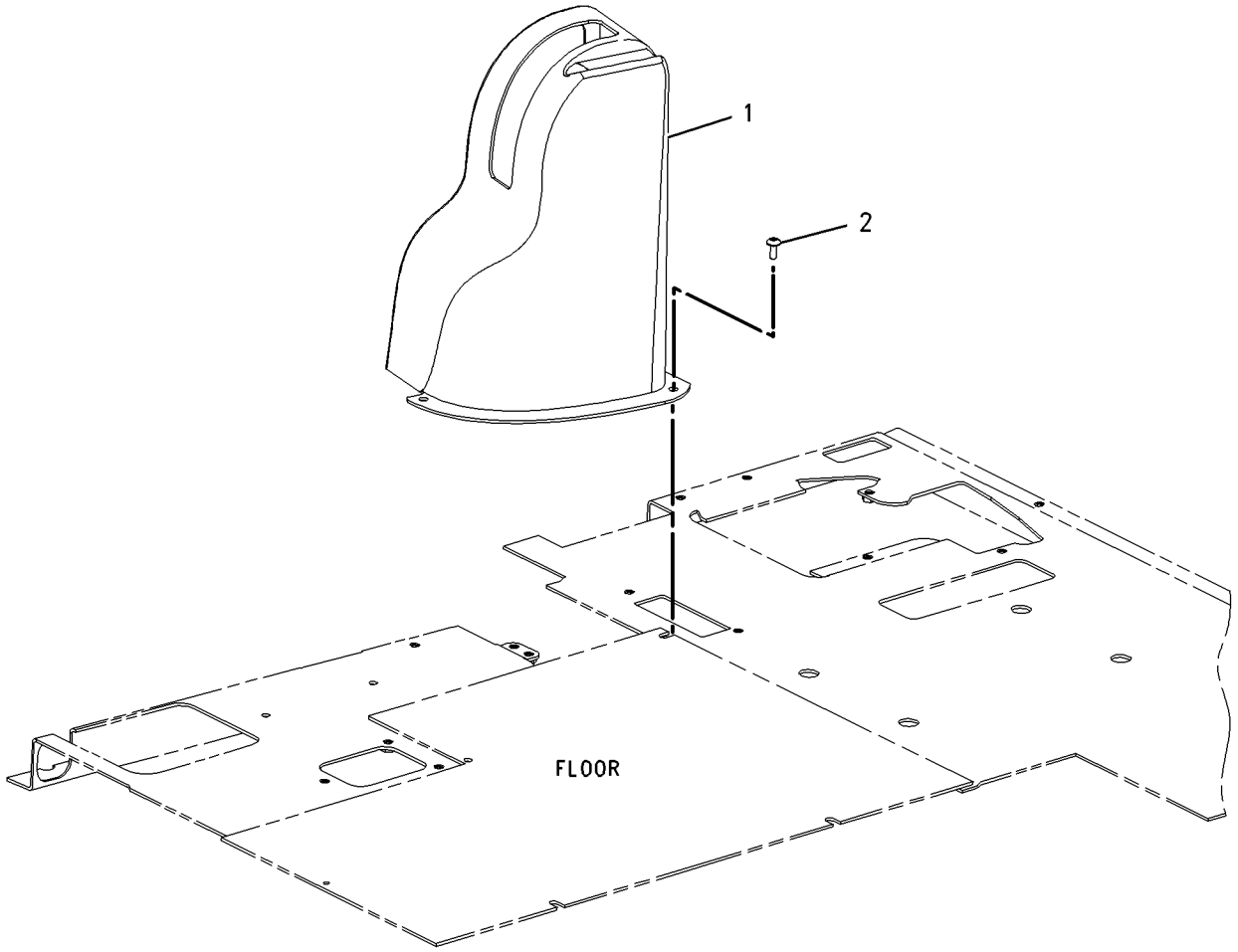

GRAPHIC #1 **<END>** g00753168

OPERATOR STATION

197-7564 COVER GP-POST—RH

S/N: BFP12900-UP; CXP940-UP
PART OF 184-9733, 239-5558, 239-5559 CANOPY AR
AN ATTACHMENT

SMCS-7329 **i02011806**

NOTE	REF NO	GRAPHIC REF	PART NUMBER	QTY	PART NAME 1 2 3 4 5 6 (PRODUCT LEVEL)	SEE PAGE
E	1	1	**129-1854**	5	FASTENER-LOOP (18CM EA)	
E	2	1	**129-1855**	5	FASTENER-HOOK (18CM EA)	
	3	1	**197-7230**	1	COVER-POST	
	4	1	**9X-2038**	2	WASHER (7X19X2MM THK)	
M	5	1	**9X-2042**	2	SCREW-TRUSS HEAD (M6X1X12MM)	
E	6	1	**129-1854**		FASTENER-LOOP (10CM)	
E	7	1	**129-1855**		FASTENER-HOOK (10CM)	
E	8	1	**129-1854**		FASTENER-LOOP (8CM)	
E	9	1	**129-1855**		FASTENER-HOOK (8CM)	

E-ORDER BY THE CENTIMETER
M-METRIC PART

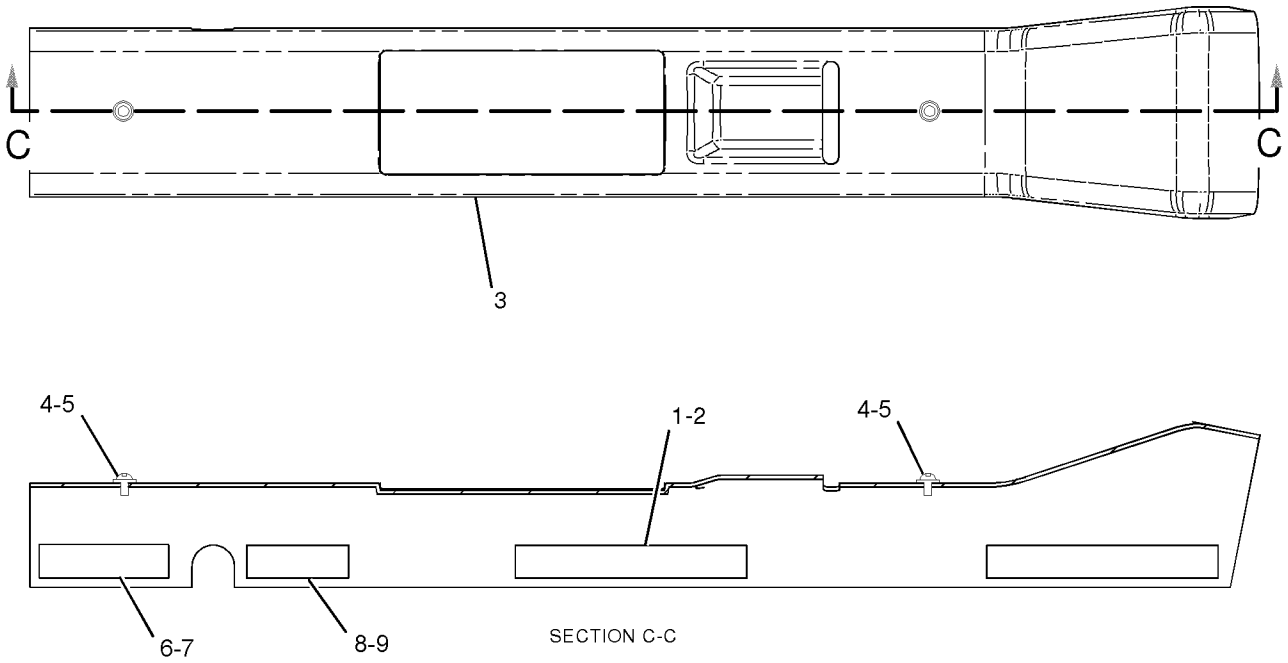

GRAPHIC #1 **<END>** g01028944

OPERATOR STATION

198-1289 COVER GP-POST–RH

S/N: BFP12900-UP
PART OF 239-5560 CAB AR
AN ATTACHMENT

SMCS-7329 **i01622428**

NOTE	REF NO	GRAPHIC REF	PART NUMBER	QTY	PART NAME 1 2 3 4 5 6 (PRODUCT LEVEL)	SEE PAGE
	1	1	**164-1156**	1	COVER	
	2	1	**206-4703**	1	COVER	
M	3	1	**9X-2041**	2	SCREW-TRUSS HEAD (M10X1.5X20MM)	
E	4	1	**129-1854**	6	FASTENER-LOOP (18CM)	
E	5	1	**129-1855**	6	FASTENER-HOOK (18CM)	

E-ORDER BY THE CENTIMETER
M-METRIC PART

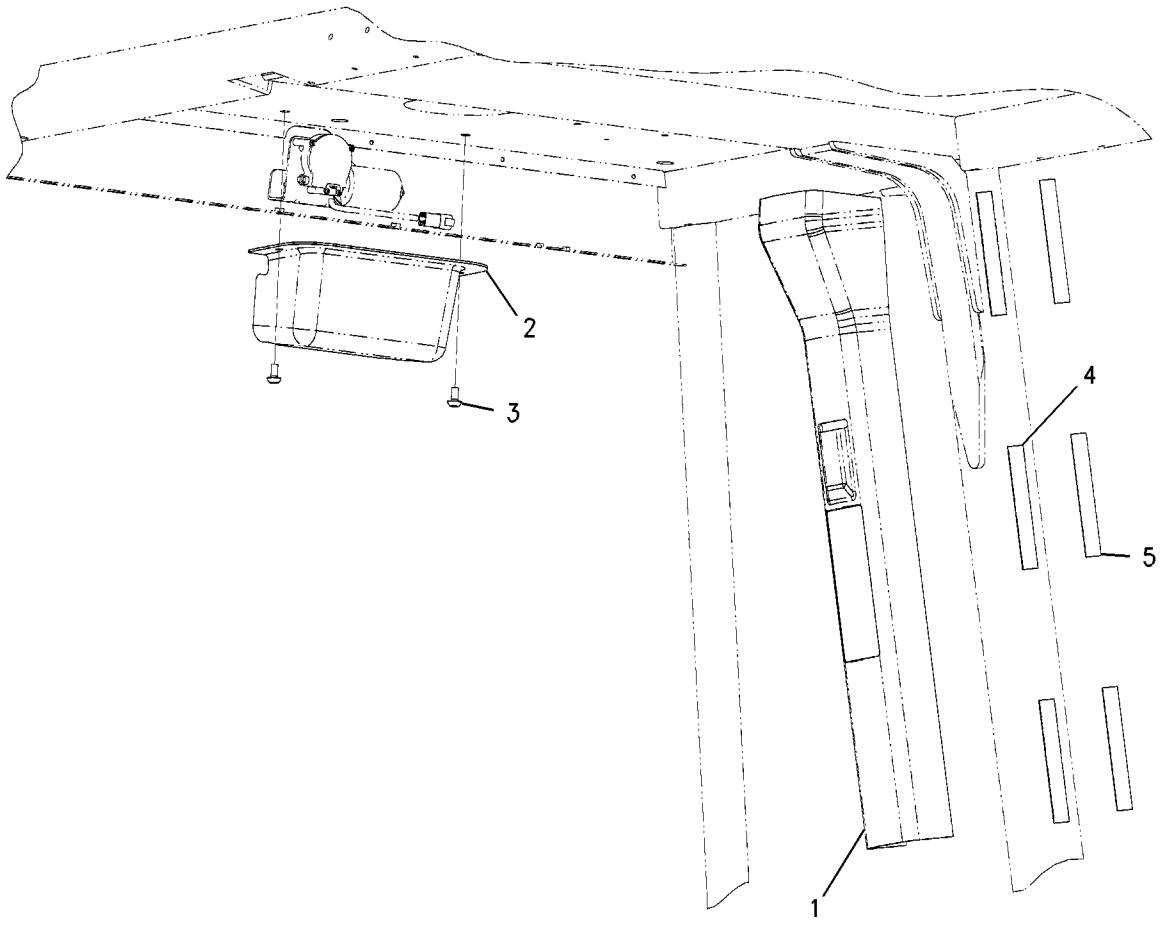

GRAPHIC #1 **<END>** g00840758

OPERATOR STATION

164-1062 DOOR GP-LH

S/N: BFP12900-UP
PART OF 164-1125, 164-1140 CAB GP
AN ATTACHMENT

SMCS-7308 **i01513678**

NOTE	REF NO	GRAPHIC REF	PART NUMBER	QTY	PART NAME 1 2 3 4 5 6 (PRODUCT LEVEL)	SEE PAGE
J	1	1	**159-4269**	1	SPRING AS-GAS	
E	2	1	**148-5355**		SEAL (478CM)	
	3	1	**5P-4116**	2	WASHER-HARD (8.8X20.5X2MM THK)	
M	4	1	**8T-4171**	1	BOLT (M6X1X12MM)	
	5	1	**7X-2497**	1	HANDLE-DOOR	
	6	1	**159-4953**	1	DOOR AS-LH	
		1	**154-5406**	1	PLATE	
M		1	**8T-3612**	1	NUT-WELD (M8X1.25 THD)	
		1	**8Y-7310**	2	HINGE AS-LH	
Y	7	1	*164-1074*	1	WINDOW GP-DOOR (LH)	984
L	8	1	**8Y-7264**	1	GLASS	
M	9	1	**8T-4180**	4	SCREW-MACHINE (M5X0.8X20MM)	
	10	1	**8Y-6386**	1	SEAL-HANDLE	
	11	1	**148-7319**	1	HANDLE AS-PADDLE	
	12	1	**147-3019**	2	BRACKET	
	13	1	**8Y-7306**	1	COVER	
M	14	1	**131-3987**	6	SCREW (M4X0.7X12MM)	
	15	1	**148-7311**	1	LATCH AS-ROTARY	
M	16	1	**8T-4181**	4	BOLT (M6X1X20MM)	
	17	1	**159-4946**	1	KEEPER-REAR (RH)	
					AVAILABLE REPAIR KIT(S):	
J			**161-9044**	1	KIT-FITTING (INCLUDES FITTING AND NUT)	

E-ORDER BY THE CENTIMETER
J-KIT MARKED J SERVICES PART MARKED J
L-MAY REQUIRE ADHESIVE
M-METRIC PART
Y-SEPARATE ILLUSTRATION

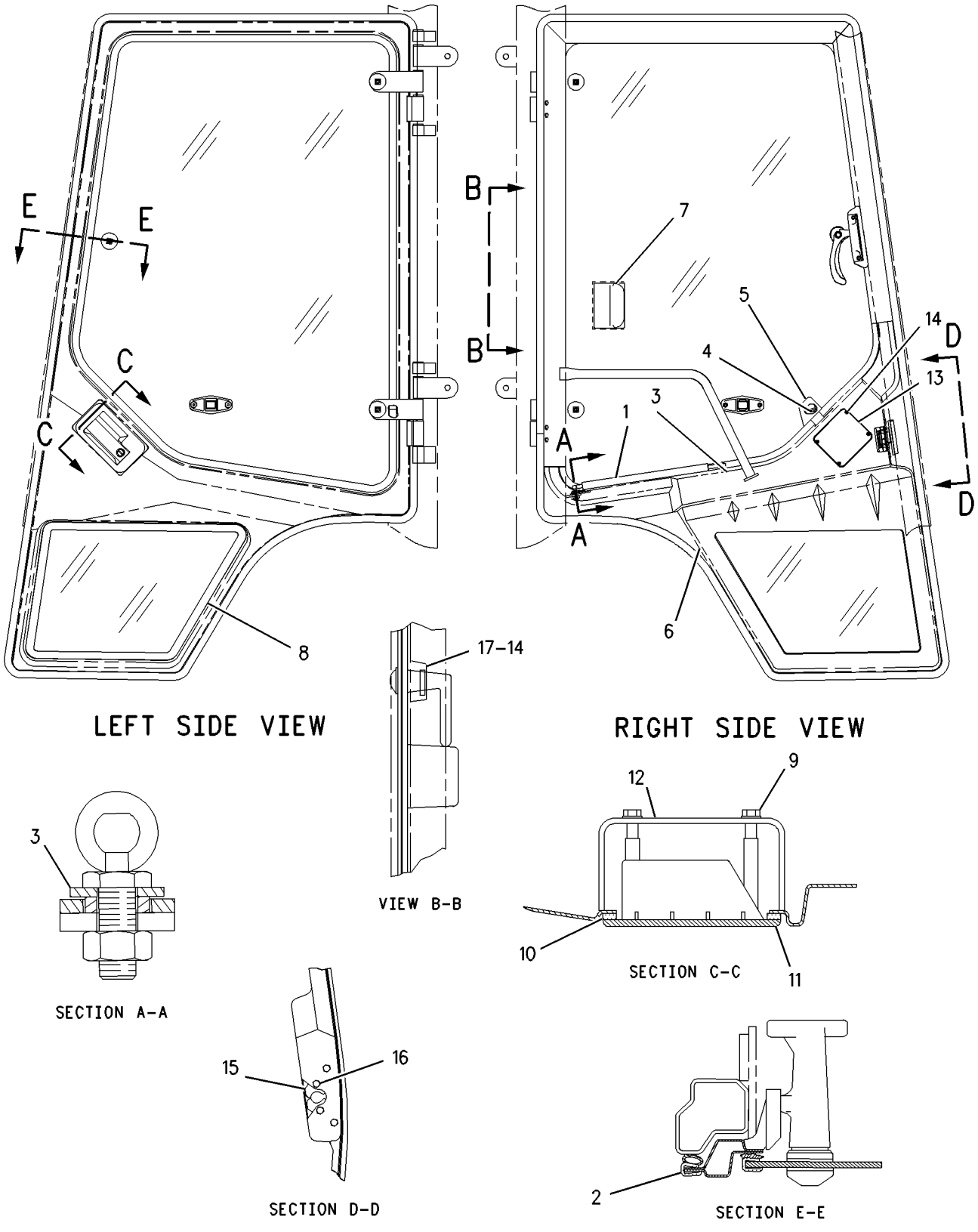

GRAPHIC #1 **<END>** g00755606

OPERATOR STATION

164-1061 DOOR GP-RH

S/N: BFP12900-UP
PART OF 164-1140 CAB GP
AN ATTACHMENT

SMCS-7308 **i01380266**

NOTE	REF NO	GRAPHIC REF	PART NUMBER	QTY	PART NAME 1 2 3 4 5 6 (PRODUCT LEVEL)	SEE PAGE
J	1	1	**159-4269**	1	SPRING AS-GAS	
E	2	1	**148-5355**		SEAL (478CM)	
	3	1	**5P-4116**	2	WASHER (8.8X20.5X2MM THK)	
M	4	1	**8T-4171**	1	BOLT (M6X1.0X12MM)	
	5	1	**7X-2497**	1	HANDLE-DOOR	
	6	1	**159-4954**	1	DOOR AS-RH	
M		1	**8T-3612**	1	NUT-WELD (M8X1.25 THD)	
		1	**8Y-7310**	2	HINGE AS-LH	
Y	7	1	**164-1073**	1	WINDOW GP-DOOR	982
	8	1	**8Y-7263**	1	GLASS	
M	9	1	**8T-4180**	4	SCREW-MACHINE (M5X0.8X20MM)	
	10	1	**8Y-6386**	1	SEAL-HANDLE	
L	11	1	**148-7318**	1	HANDLE AS-PADDLE	
	12	1	**147-3019**	2	BRACKET	
	13	1	**8Y-7306**	1	COVER	
M	14	1	**131-3987**	6	SCREW (M4X0.7X12MM)	
	15	1	**148-7310**	1	LATCH AS-ROTARY	
M	16	1	**8T-4181**	4	BOLT (M6X1X20MM)	
	17	1	**159-4945**	1	KEEPER-REAR	
					AVAILABLE REPAIR KIT(S):	
J			**161-9044**	1	KIT-FITTING	

E-ORDER BY THE CENTIMETER
J-REPAIR KIT MARKED J AVAILABLE FOR PART MARKED J
L-REQUIRES A 5P-8500 KEY
M-METRIC PART
Y-SEPARATE ILLUSTRATION

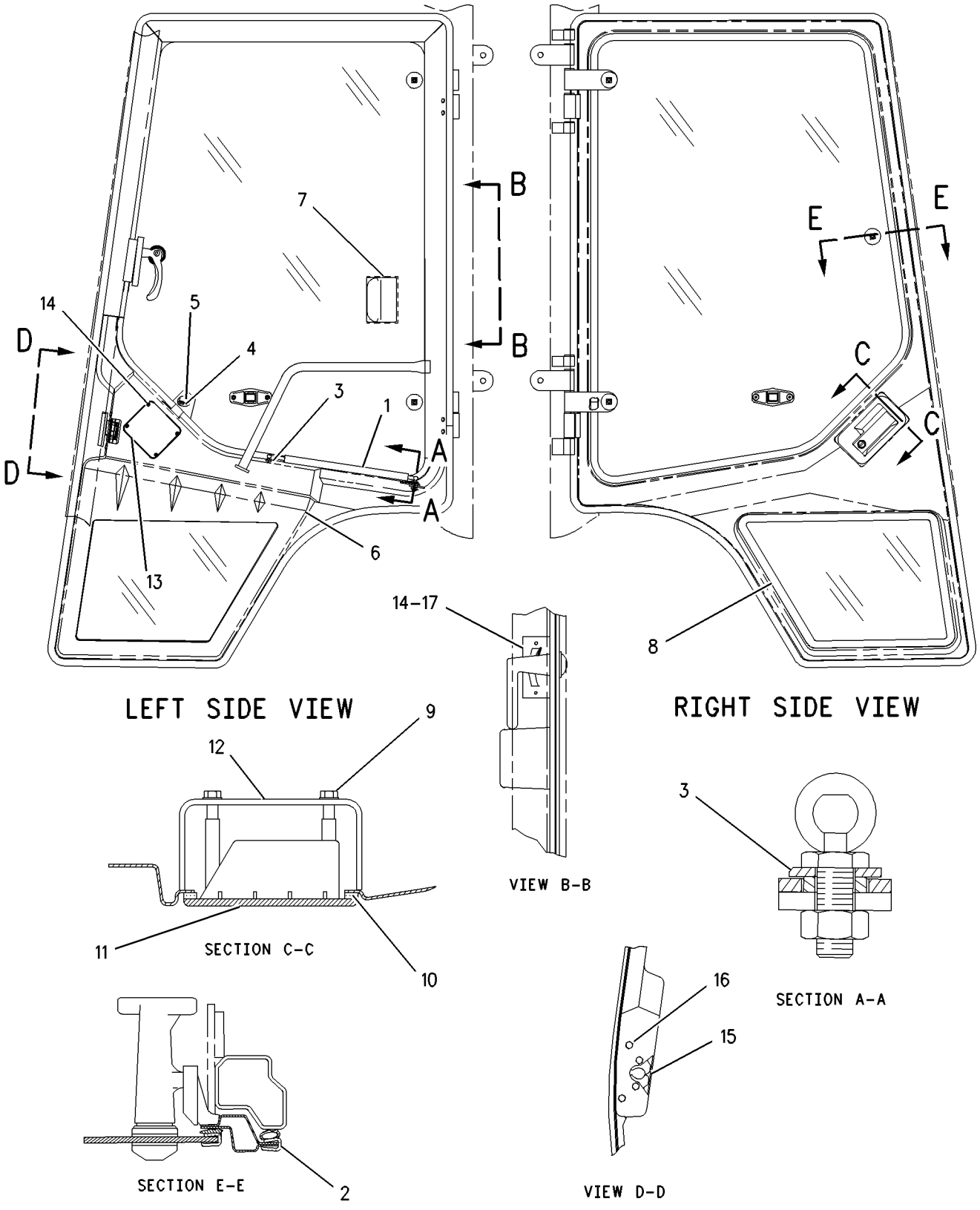

GRAPHIC #1 **<END>** g00728856

OPERATOR STATION

164-1141 DUCT GP-AIR

S/N: BFP12900-UP; CXP940-UP
BASIC, STANDARD SHIFT
PART OF 192-4661, 192-4663, 214-6958, 231-9348 POWER TRAIN AR
AN ATTACHMENT

SMCS-734D **i01399213**

NOTE	REF NO	GRAPHIC REF	PART NUMBER	QTY	PART NAME 1 2 3 4 5 6 (PRODUCT LEVEL)	SEE PAGE
	1	1	**164-1043**	1	DUCT AS-FRONT	
	2	1	**164-1198**	1	BOOT	
	3	1	**164-1368**	4	CLIP	
	4	1	**184-6562**	1	PLATE	
	5	1	**184-6563**	1	GASKET	
	6	1	**185-3528**	1	SEAL	
M	7	1	**9X-2042**	2	SCREW-TRUSS HEAD (M6X1.0X12MM)	

M-METRIC PART

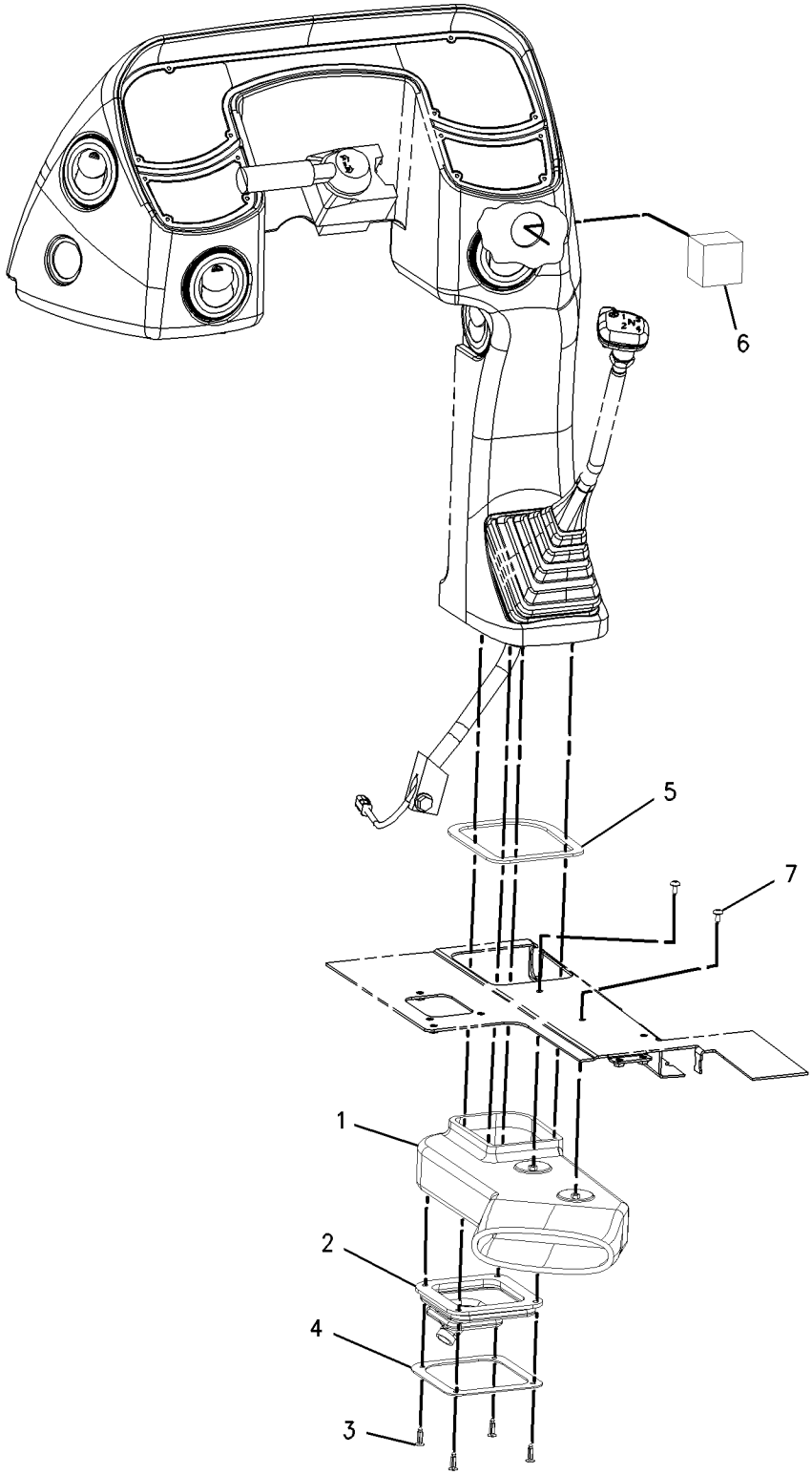

GRAPHIC #1 **<END>** g00739067

OPERATOR STATION

184-6577 DUCT GP-AIR

S/N: BFP12900-UP
HEATER
PART OF 164-1045 HEATER GP-CAB
AN ATTACHMENT

SMCS-734D **i01392086**

NOTE	REF NO	GRAPHIC REF	PART NUMBER	QTY	PART NAME 1 2 3 4 5 6 (PRODUCT LEVEL)	SEE PAGE
	1	1	**151-5715**	1	LOUVER AS	
	2	1	**164-8473**	2	LOUVER AS	
	3	1	**184-6559**	1	DUCT-AIR	
	4	1	**104-2091**	8	SCREW-FLAT HEAD (NO.6-20X0.5IN)	
	5	1	**148-3626**	2	SCREW-FLAT HEAD	

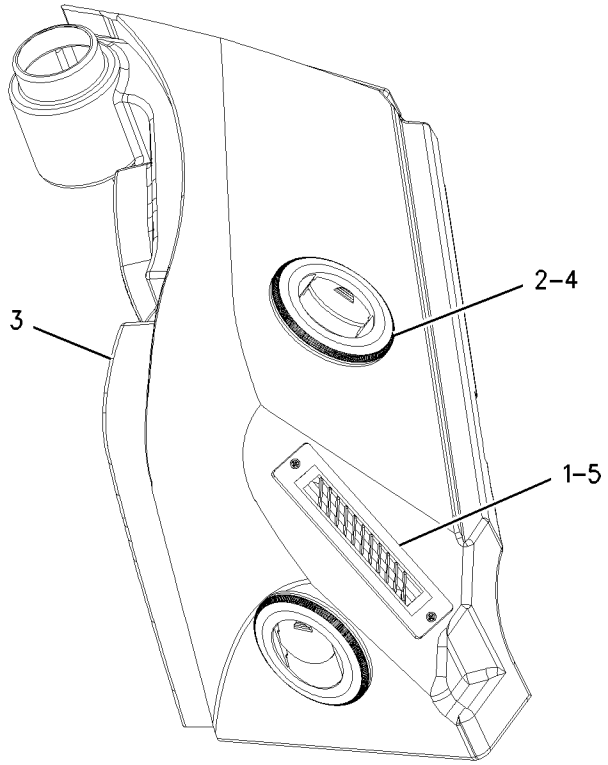

GRAPHIC #1 **<END>** g00734534

OPERATOR STATION

180-5760 FLOOR MAT GP

S/N: BFP12900-UP

PART OF 184-9735, 205-2177, 239-5561, 239-5562 CAB AR

AN ATTACHMENT

SMCS-7265 **i01374872**

NOTE	REF NO	GRAPHIC REF	PART NUMBER	QTY	PART NAME 1 2 3 4 5 6 (PRODUCT LEVEL)	SEE PAGE
	1	1	**180-5750**	1	FLOOR MAT	
	2	1	**180-5754**	2	PLATE	
	3	1	**1H-3244**	4	LOCKWASHER	
M	4	1	**9X-2045**	4	SCREW-TRUSS HEAD (M6X1X20MM)	

M-METRIC PART

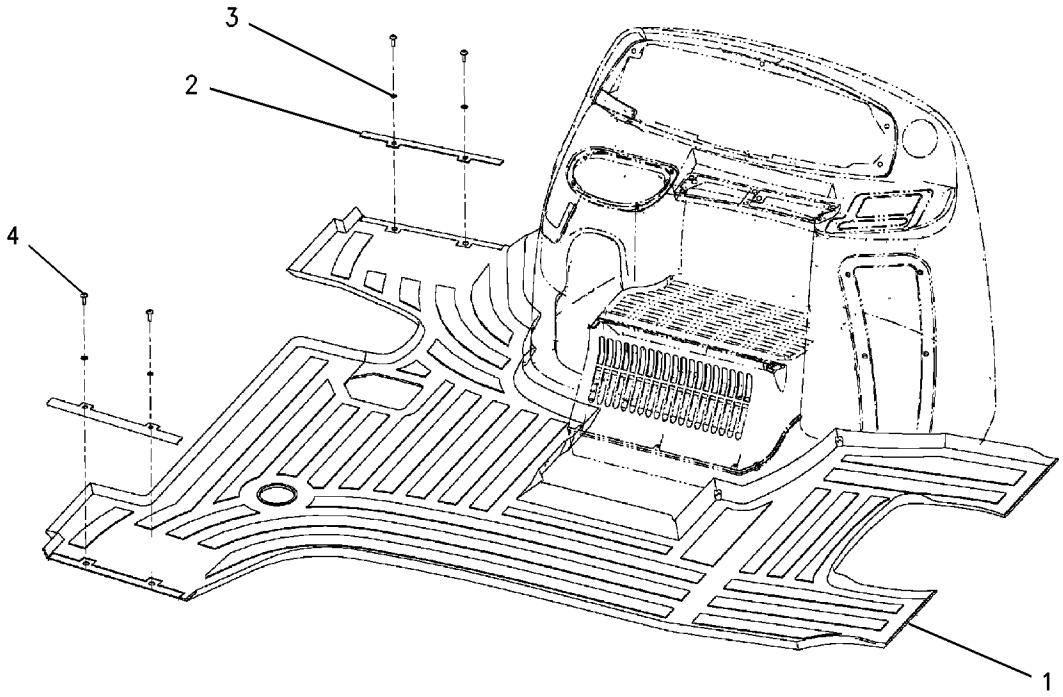

GRAPHIC #1 **<END>** g00727772

OPERATOR STATION

180-5764 FLOOR MAT GP

S/N: BFP12900-UP; CXP940-UP

PART OF 239-5560 CAB AR, 184-9733, 239-5558, 239-5559 CANOPY AR

AN ATTACHMENT

SMCS-7265 **i01377960**

NOTE	REF NO	GRAPHIC REF	PART NUMBER	QTY	PART NAME 1 2 3 4 5 6 (PRODUCT LEVEL)	SEE PAGE
	1	1	**180-5754**	2	PLATE	
	2	1	**180-5758**	1	FLOOR MAT	
	3	1	**1H-3244**	4	LOCKWASHER	
M	4	1	**9X-2045**	4	SCREW-TRUSS HEAD (M6X1X20MM)	

M-METRIC PART

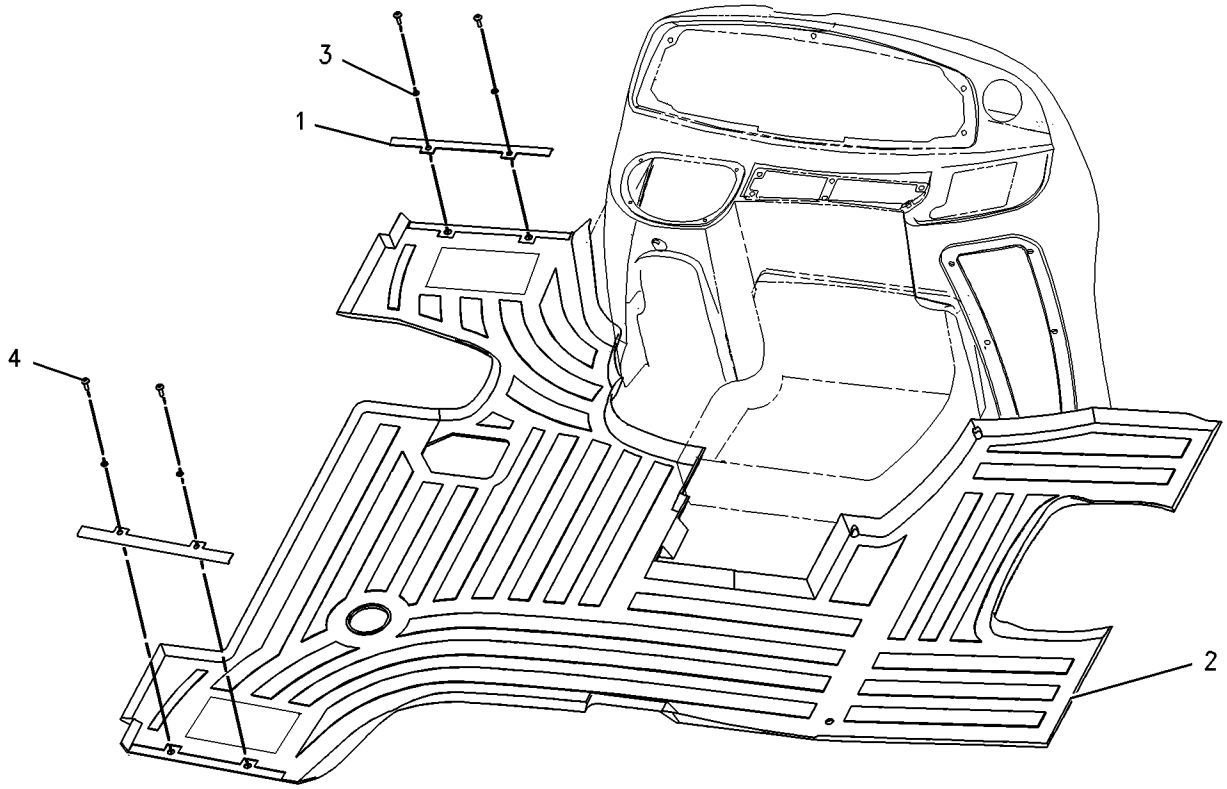

GRAPHIC #1 **<END>** g00728663

OPERATOR STATION

192-4018 F00TREST GP

S/N: BFP12900-UP
PART OF 210-8530 HYDRAULIC AR
AN ATTACHMENT

SMCS-0635 **i01440216**

NOTE	REF NO	GRAPHIC REF	PART NUMBER	QTY	PART NAME 1 2 3 4 5 6 (PRODUCT LEVEL)	SEE PAGE
	1	1	**192-4019**	1	BRACKET AS	
M	2	1	**6V-7743**	2	LOCKNUT (M6X1 THD)	
	3	1	**9X-8256**	2	WASHER (6.6X12X2MM THK)	

M-METRIC PART

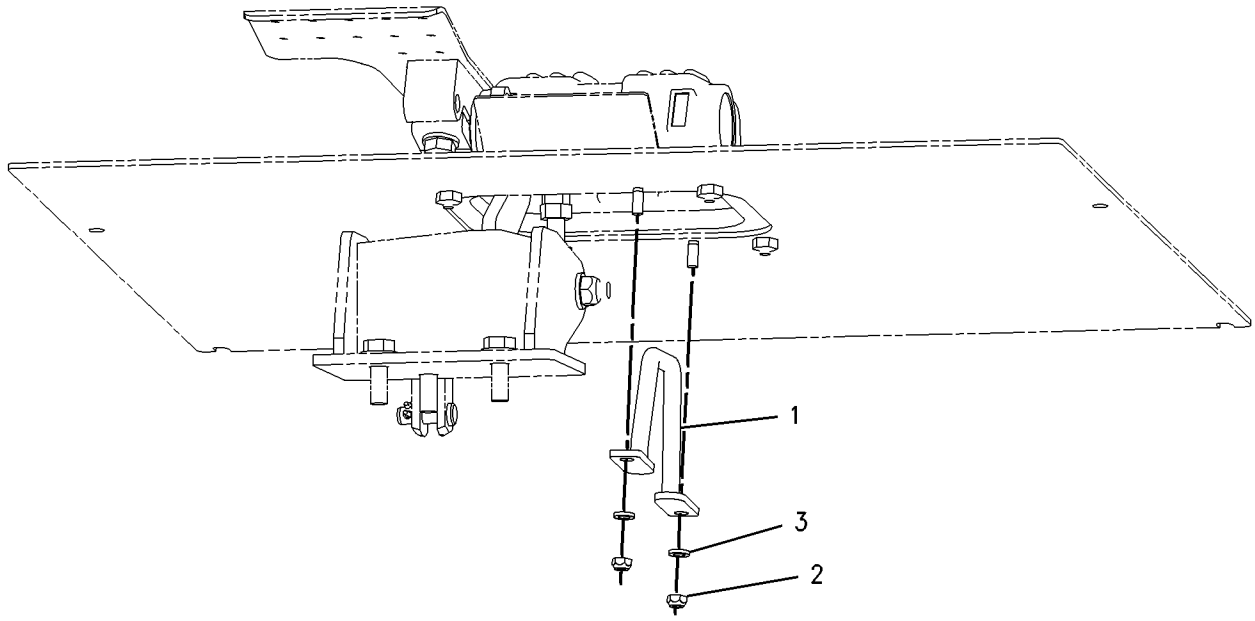

GRAPHIC #1 **<END>** g00754480

OPERATOR STATION

164-1045 HEATER GP-CAB

S/N: BFP12900-UP
PART OF 205-2177, 239-5560, 239-5561 CAB AR
AN ATTACHMENT

SMCS-7304 **i01944345**

NOTE	REF NO	GRAPHIC REF	PART NUMBER	QTY	PART NAME 1 2 3 4 5 6 (PRODUCT LEVEL)	SEE PAGE
	1	1	**6L-4725**	2	CLAMP-HOSE	
	2	1	**8Y-5737**	1	CLAMP	
	3	1	**9M-7959**	1	CLAMP (HOSE)	
	4	1	**9R-9901**	5	FASTENER (CLIP)	
	5	1	**110-6109**	1	KNOB-CONTROL	
	6	1	**130-4832**	2	SCREW (8-18X.39 IN)	
	7	1	**164-1037**	1	DUCT	
	8	1	**164-1196**	1	CABLE AS	
		1	**143-8874**	1	BOOT	
Y	9	1	**170-0076**	1	HEATER GP-CAB	920
	10	1	**184-6560**	1	BRACKET	
	11	1	**184-6561**	1	HOSE-AIR	
	12	1	**184-6564**	1	GASKET	
Y	13	1	*184-6577*	1	DUCT GP-AIR	914
	14	1	**190-5132**	1	FILM-CONTROL (AIR CONDITIONER)	
	15	1	**194-5622**	1	VALVE AS (WATER)	
		1	**6V-6717**	1	SCREW-WASHER HEAD (8-32X.375 IN)	
		1	**124-0312**	2	SCREW-PAN HEAD (8-16X.32 IN)	
	16	1	**206-7512**	1	COVER	
	17	1	**206-7513**	2	BRACKET	
	18	1	**206-7514**	1	FILTER (HEATER)	
	19	1	**2H-3920**	1	LOCKWASHER	
M	20	1	**9X-2042**	2	SCREW-TRUSS HEAD (M6X1X12MM)	
M	21	1	**9X-2044**	2	SCREW-TRUSS HEAD (M6X1X16MM)	
M	22	1	**9X-2045**	2	SCREW-TRUSS HEAD (M6X1X20MM)	
E	23	1	**5P-3915**		HOSE (30CM)	
E	24	1	**6V-6813**		HOSE (40CM)	

E-ORDER BY THE CENTIMETER
M-METRIC PART
Y-SEPARATE ILLUSTRATION

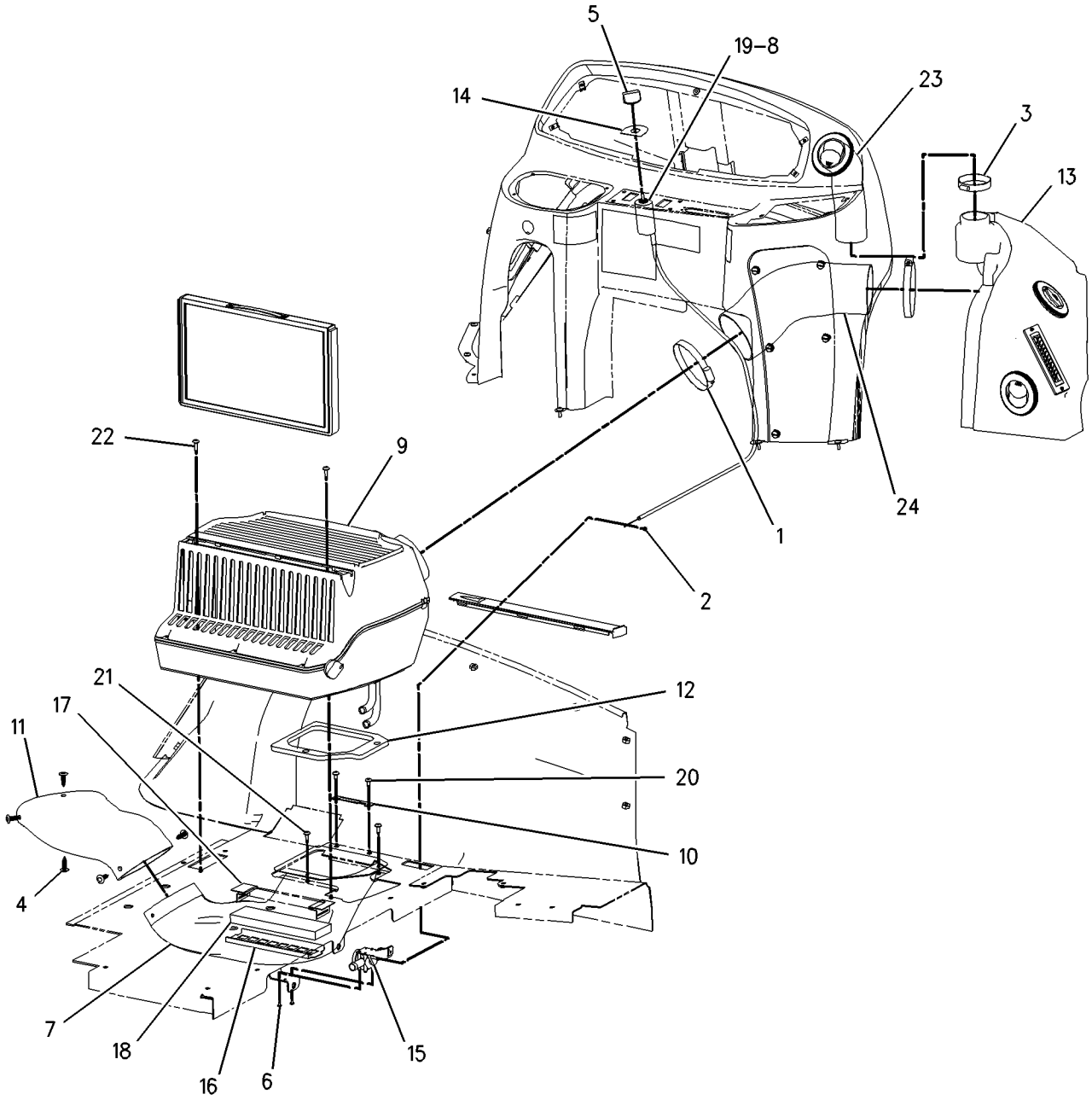

GRAPHIC #1 **<END>** g00956393

OPERATOR STATION

170-0076 HEATER GP-CAB

S/N: BFP12900-UP
BASIC
PART OF 164-1045 HEATER GP-CAB
AN ATTACHMENT

SMCS-7304 **i01944369**

NOTE	REF NO	GRAPHIC REF	PART NUMBER	QTY	PART NAME 1 2 3 4 5 6 (PRODUCT LEVEL)	SEE PAGE
	1	1	**164-6613**	1	COIL AS-HEATER	
		1	**201-1637**	1	GASKET	
		1	**201-1638**	1	GASKET	
	2	1	**168-2313**	1	FAN AS	
		1	**7T-0093**	2	PIN-CONNECTOR	
	3	1	**170-7269**	1	COVER	
	4	1	**170-7270**	1	CASE AS	
		1	**6C-3680**	4	RIVET-POP	
M		1	**129-3178**	4	LOCKNUT (M6X1 THD)	
		1	**188-2711**	1	GUARD AS	
	5	1	**170-7271**	1	COVER	
	6	1	**170-7272**	1	FILTER-AIR (CAB)	
	7	1	**170-7281**	1	GASKET	
	8	1	**170-7282**	1	GASKET	
	9	1	**185-4015**	4	CLIP	
	10	1	**188-2704**	1	GASKET	
	11	1	**188-2706**	4	GASKET	
	12	1	**188-2708**	1	GASKET	
	13	1	**188-2715**	1	BRACKET	
	14	1	**199-3729**	1	DOOR AS	
		1	**191-6033**	1	CONTROL AS	
		1	**191-6035**	1	RETAINER	
		1	**201-1634**	1	LINK	
	15	1	**204-9921**	1	RESISTOR AS	
	16	1	**206-7398**	1	KNOB-CONTROL	
	17	1	**213-9270**	1	FILM (AIR RECIRCULATION)	
	18	1	**2S-3745**	4	SCREW-TAPPING (10-16X.5 IN)	
	19	1	**5P-7921**	3	SCREW-WASHER HEAD (1/4-20X3/4 IN)	
	20	1	**6V-6717**	2	SCREW-WASHER HEAD (8-32X.375 IN)	
M	21	1	**6V-7357**	4	BOLT (M6X1.0X25MM)	
	22	1	**8T-4205**	4	WASHER-HARD (7.2X14.5X2MM THK)	

M-METRIC PART

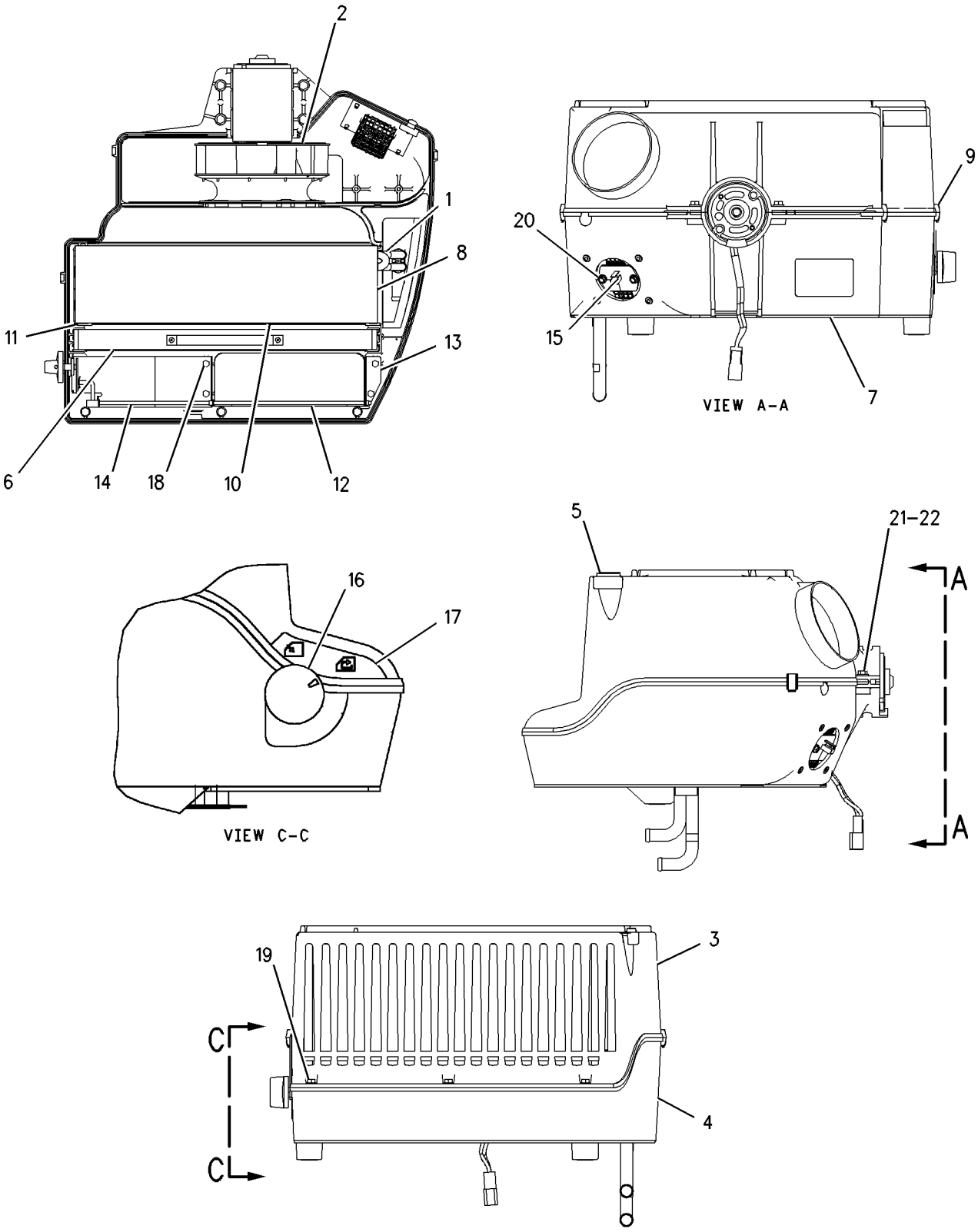

GRAPHIC #1 **<END>** g00952802

OPERATOR STATION

193-2342 HORN GP-ELECTRIC

S/N: BFP12900-UP
REAR
AN ATTACHMENT

SMCS-7402 **i01656633**

NOTE	REF NO	GRAPHIC REF	PART NUMBER	QTY	PART NAME 1 2 3 4 5 6 (PRODUCT LEVEL)	SEE PAGE
B	1	1	**3S-2093**	1	STRAP-CABLE	
	2	1	**164-9425**	1	HORN AS	
	3	1	**169-0587**	1	SWITCH AS (HORN)	
		1	**111-7899**	1	GASKET	
	4	1	**096-4415**	1	LOCKWASHER	
B	5	1	**4P-8134**	1	CLIP	
M	6	1	**8T-4133**	1	NUT (M10X1.5 THD)	
M	7	1	**8T-4195**	1	BOLT (M10X1.5X30MM)	

B-USE AS REQUIRED
M-METRIC PART

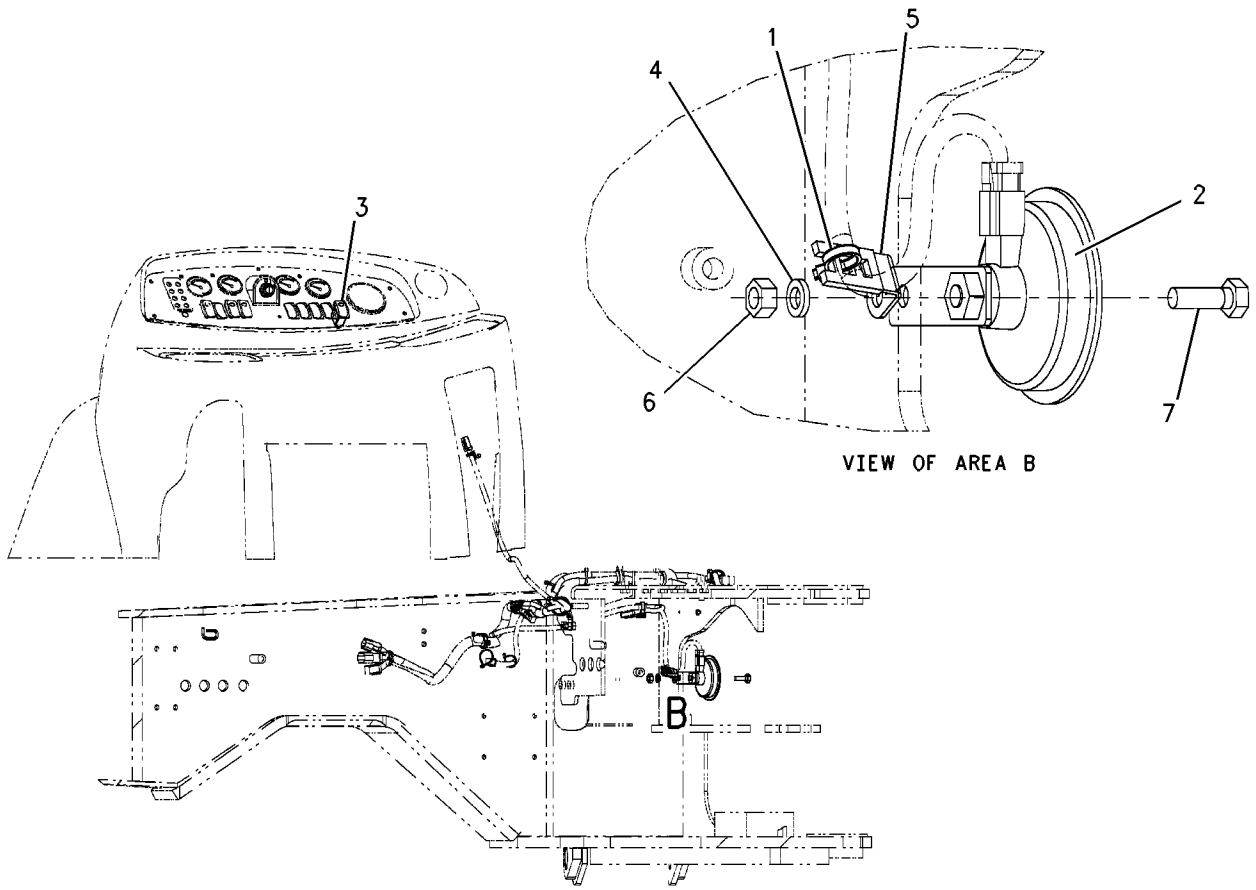

GRAPHIC #1 **<END>** g00823261

OPERATOR STATION

243-5245 KIT-PEDAL GUARD

S/N: BFP12900-UP

AN ATTACHMENT

SMCS-6544, 7150 **i02015155**

NOTE	REF NO	GRAPHIC REF	PART NUMBER	QTY	PART NAME 1 2 3 4 5 6 (PRODUCT LEVEL)	SEE PAGE
	1	1	**241-4954**	1	GUARD (RH)	
	2	1	**241-4955**	1	GUARD (LH)	
	3	1	**205-7048**	6	INSERT-THREADED	
M	4	1	**5C-9553**	6	BOLT (M6X1X16-MM)	
	5	1	**8T-4205**	6	WASHER-HARD (7.2X14.5X2-MM THK)	

M-METRIC PART

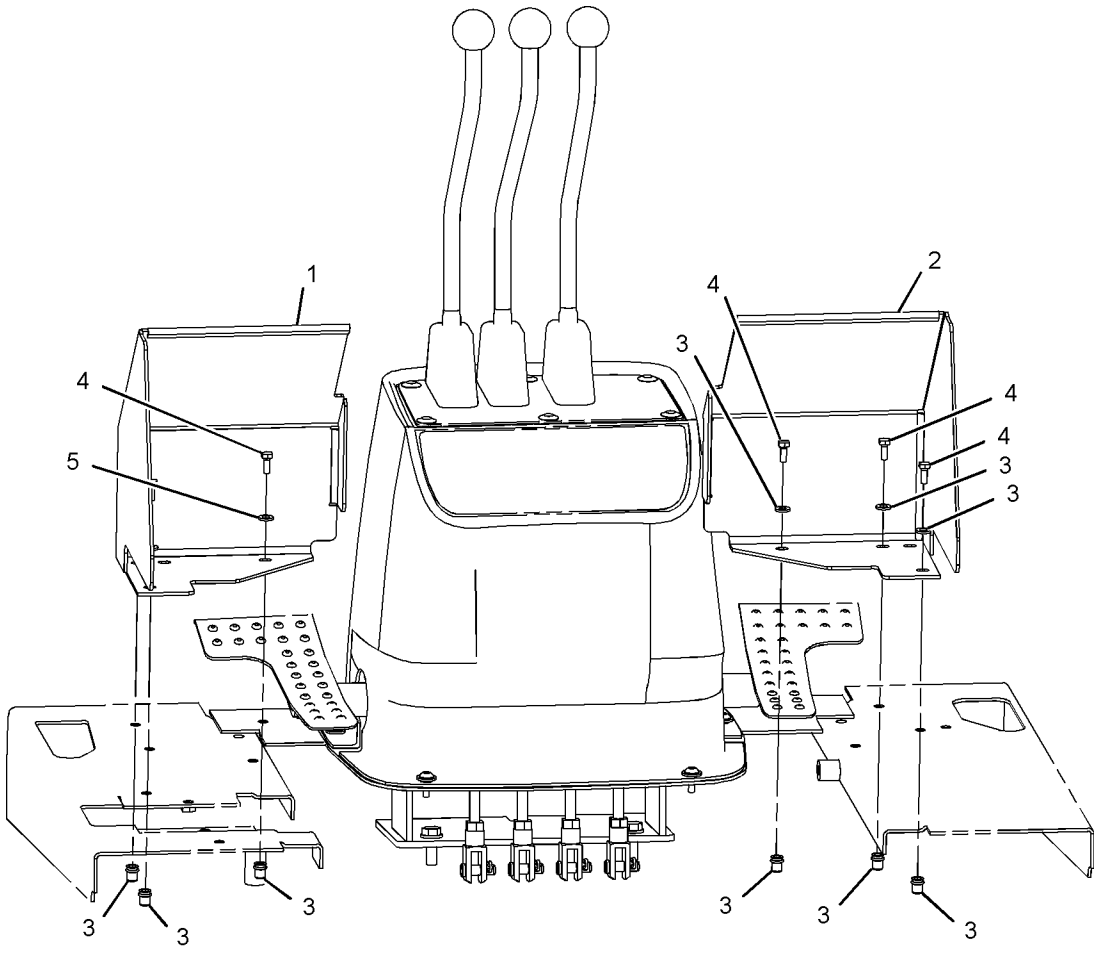

GRAPHIC #1 **<END>** g01042084

183-3887 LEVER GP-GOVERNOR CONTROL

S/N: BFP12900-UP; CXP940-UP

BASIC

PART OF 164-1076, 234-8892 CONTROL GP-GOV & ACCELERATOR

SMCS-1265 **i01412217**

NOTE	REF NO	GRAPHIC REF	PART NUMBER	QTY	PART NAME 1 2 3 4 5 6 (PRODUCT LEVEL)	SEE PAGE
	1	1	**8T-4742**	1	END-YOKE ROD	
	2	1	**8T-4744**	1	PIN AS-SPRING	
	3	1	**164-1079**	1	CABLE AS	
	4	1	**164-1083**	1	LEVER AS	
M	5	1	**8T-4971**	1	BOLT (M6X1.0X30MM)	
M	6	1	**129-3178**	1	LOCKNUT	

M-METRIC PART

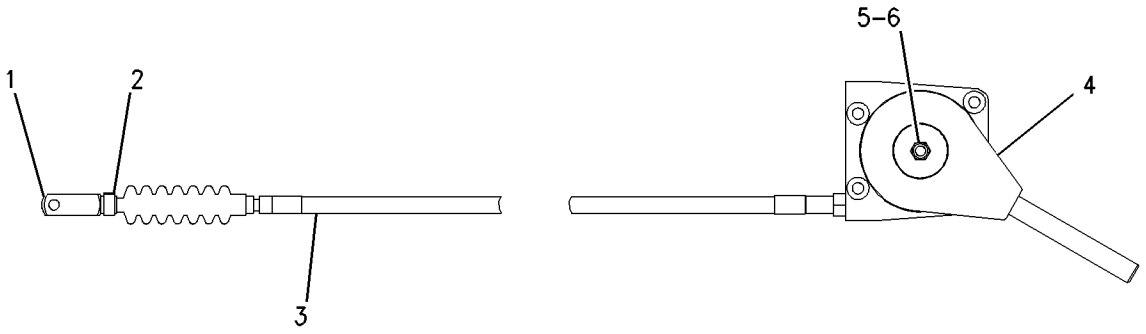

GRAPHIC #1 **<END>** g00743371

OPERATOR STATION

206-9475 LINER GP-CAB—KIT

S/N: BFP12900-UP

FIELD INSTALLATION

SMCS-7329 **i02003854**

NOTE	PART NUMBER	QTY	PART NAME 1 2 3 4 5 6 (PRODUCT LEVEL)	SEE PAGE
Y	*206-9474*	1	BRACKET GP-MOUNTING	865
Y	*206-9477*	1	LINER GP-CAB	926
Y	*206-9476*	1	WIRING GP-CAB	337

Y-SEPARATE ILLUSTRATION

<END>

OPERATOR STATION

206-9477 LINER GP-CAB

S/N: BFP12900-UP
UTILITY, RADIO READY
PART OF 206-9475 LINER GP-CAB

SMCS-7329 **i01928170**

NOTE	REF NO	GRAPHIC REF	PART NUMBER	QTY	PART NAME 1 2 3 4 5 6 (PRODUCT LEVEL)	SEE PAGE
	1	1	**9U-8263**	1	COVER	
	2	1	**084-4277**	1	LAMP GP-DOME	
		1	**6R-7490**	1	LAMP (12 VOLT)(10 WATT)	
M	3	1	**113-0920**	8	BOLT-HEX SOCKET (M4X0.7X35MM)	
	4	1	**130-8432**	1	PLATE-FACE	
	5	1	**164-1152**	1	BRACKET AS	
M		1	**6V-9632**	4	NUT-WELD (M6X1 THD)	
		1	**7T-1099**	2	LINK	
	6	1	**164-1166**	1	HEADLINER	
	7	1	**169-7290**	2	SPEAKER	
	8	1	**169-7291**	2	COVER-SPEAKER	
	9	1	**197-8973**	6	FASTENER-PANEL	
	10	1	**200-5356**	1	PLATE AS	
	11	1	**229-6051**	8	SPACER (4.5X8X10MM THK)	
	12	1	**229-6052**	6	SPACER (9.7X12.7X7.5MM THK)	
M	13	1	**131-3985**	2	SCREW (M6X1 THD)	
	14	1	**200-3004**	2	SCREW-TRUSS HEAD (M6X1X45MM)	
	15	1	**6V-2410**	8	SCREW-WASHER HEAD	
	16	1	**8T-4121**	2	WASHER-HARD (11X21X2.5MM THK)	
M	17	1	**8T-4137**	2	BOLT (M10X1.5X20MM)	
	18	1	**8T-4205**	2	WASHER-HARD (7.2X14.5X2MM THK)	
M	19	1	**9X-2041**	4	SCREW-TRUSS HEAD (M10X1.5X20MM)	
M	20	1	**9X-2045**	4	SCREW-TRUSS HEAD (M6X1X20MM)	

M-METRIC PART

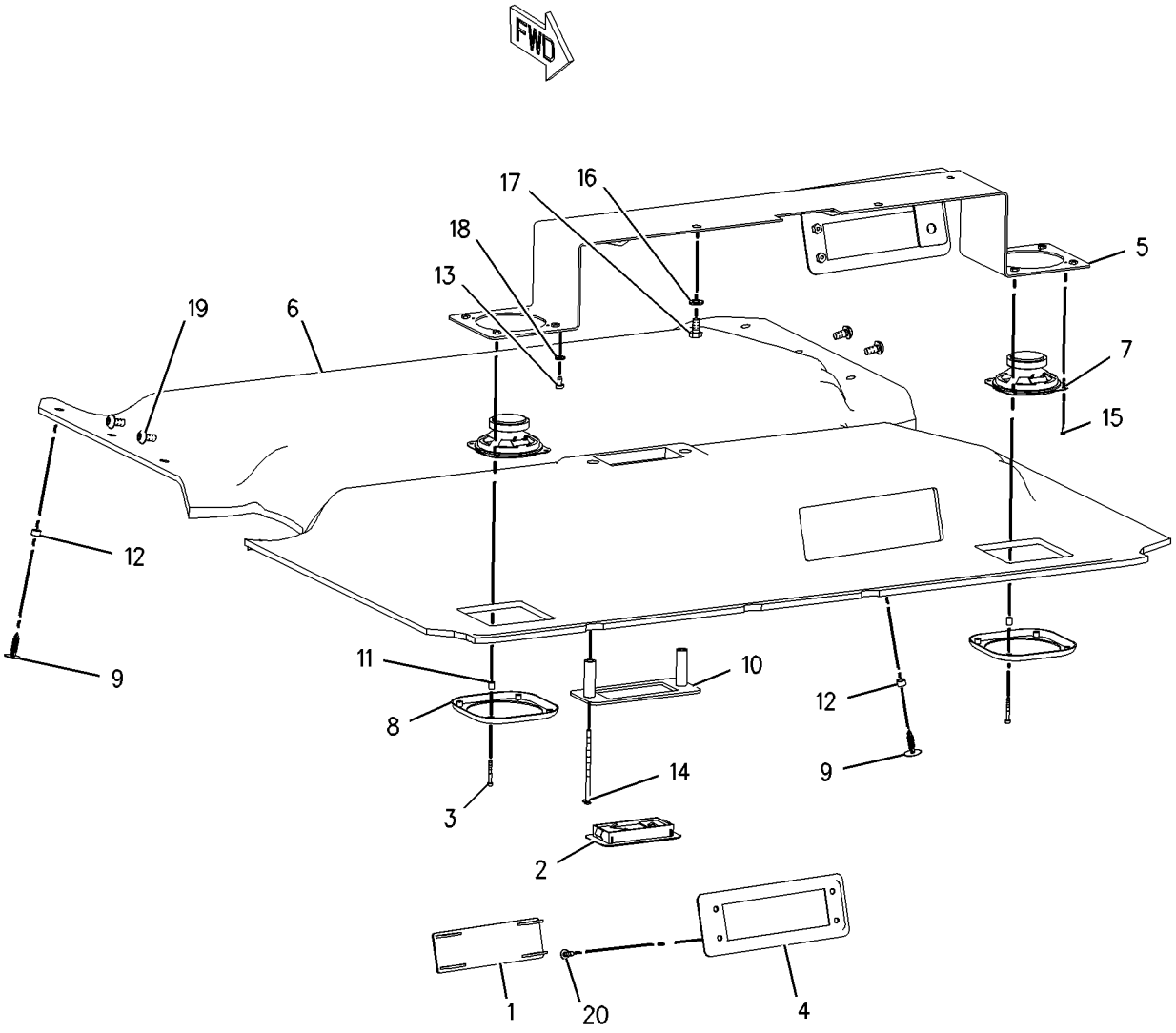

GRAPHIC #1 **<END>** g01002916

OPERATOR STATION

236-6657 LINES GP-HEATER

S/N: BFP12900-UP
PART OF 239-5560, 239-5561 CAB AR
AN ATTACHMENT

SMCS-7304 **i02016250**

NOTE	REF NO	GRAPHIC REF	PART NUMBER	QTY	PART NAME 1 2 3 4 5 6 (PRODUCT LEVEL)	SEE PAGE
	1	1	**5D-1026**	8	CLAMP-HOSE	
	2	1	**9M-8406**	1	CLIP	
	3	1	**6P-8855**	1	SPACER (.56X.625X3-MM THK)	
	4	1	**9M-4814**	1	CONNECTOR-HOSE	
	5	1	**3E-4321**	5	CLIP	
	6	1	**8T-4121**	6	WASHER-HARD (11X21X2.5-MM THK)	
M	7	1	**8T-4137**	5	BOLT (M10X1.5X20-MM)	
M	8	1	**8T-4189**	1	BOLT (M8X1.25X20-MM)	
	9	1	**5P-0767**		HOSE (275CM)	
	10	1	**5P-0767**		HOSE (295CM)	
	11	1	**5P-0767**		HOSE (42.5CM EACH)	
	12	1	**134-3856**	1	ELBOW	

M-METRIC PART

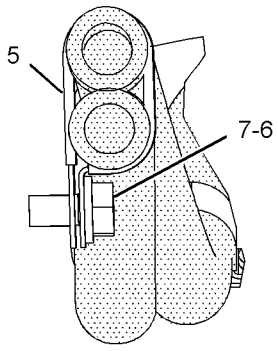

SECTION E-E

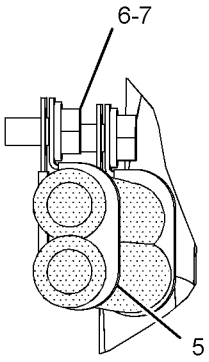

SECTION C-C

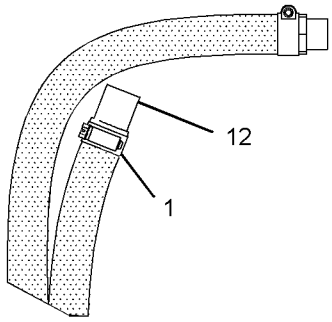

VIEW G-G

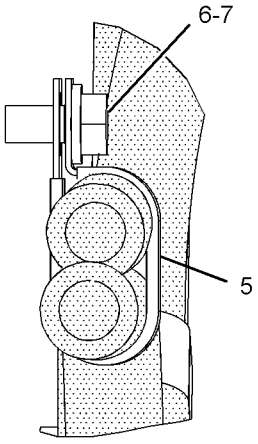

SECTION D-D

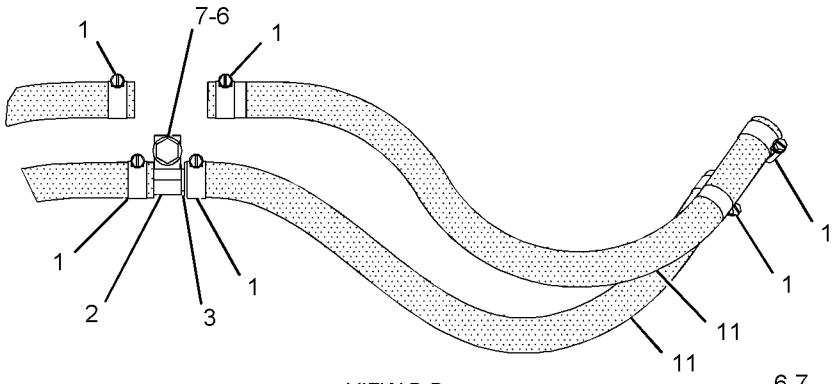

VIEW B-B

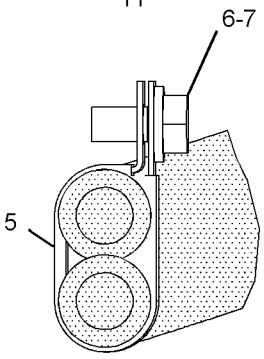

SECTION A-A

LEFT SIDE VIEW

GRAPHIC #1

<END>

g01036311

OPERATOR STATION

164-1033 LINES GP-HEATER & AIR COND

S/N: BFP12900-UP
PART OF 236-6960 AIR CONDITIONER AR
AN ATTACHMENT

SMCS-1380, 1808, 7304 **i01979174**

NOTE	REF NO	GRAPHIC REF	PART NUMBER	QTY	PART NAME 1 2 3 4 5 6 (PRODUCT LEVEL)	SEE PAGE
E	1	1	**5P-0767**		HOSE (265CM)	
	2	1	**3S-2093**	3	STRAP-CABLE	
	3	1,2	**5D-1026**	8	CLAMP-HOSE	
	4	2	**6P-8855**	1	SPACER (.56X.625X3MM THK)	
I	5	1	**104-9494**	1	HOSE AS	
	6	1	**118-9517**	1	FITTING AS	
		1	**3E-4052**	1	CAP AS (AIR CONDITIONER)	
		1	**3E-4058**	1	VALVE AS (AIR CONDITIONER)	
I	7	1	**125-3416**	1	HOSE AS	
	8	1	**152-8417**	1	STRAP	
I	9	2	**164-1040**	1	HOSE AS	
I	10	2	**164-1041**	1	HOSE AS	
	11	1	**184-6565**	1	BRACKET AS	
	12	2	**176-3900**	1	ACCUMULATOR GP-AIR CONDITIONER	
	13	1	**199-6243**	1	PLATE	
C	14	1	**201-1842**	1	HOSE AS	
	15	2	**223-1598**	1	BRACKET AS	
	16	1	**3E-4321**	4	CLIP	
	17	1	**6D-4246**	1	CLIP (SLOT)	
	18	1	**6K-8178**	1	CLIP (SLOT)	
	19	1,2	**7C-4354**	6	CLIP (SLOT)	
	20	1,2	**8T-4121**	16	WASHER-HARD (11X21X2.5MM THK)	
M	21	1	**8T-4136**	3	BOLT (M10X1.5X25MM)	
M	22	1,2	**8T-4137**	7	BOLT (M10X1.5X20MM)	
M	23	1,2	**8T-4195**	5	BOLT (M10X1.5X30MM)	
	24	2	**8T-4224**	1	WASHER-HARD (8.8X16X2MM THK)	
M	25	2	**8T-4908**	1	BOLT (M8X1.25X25MM)	
	26	1,2	**9M-8406**	6	CLIP	
	27	1,2	**9X-7380**	2	SEAL-O-RING	
	28	1,2	**9X-7381**	3	SEAL-O-RING	
	29	1,2	**9X-7382**	2	SEAL-O-RING	
	30	2	**9X-7383**	2	SEAL-O-RING	
M	31	1	**7X-2621**	1	BOLT (M10X1.50X12MM)	
D	32	1	**5P-5924**		SEAL (0.3M)	
E	33	1	**160-2245**		SLEEVE-ABRASION (30CM)	
E	34	1	**5P-0767**		HOSE (230CM)	
E	35	2	**5P-0767**		HOSE (42.5CM EACH)	

C-CHANGE FROM PREVIOUS TYPE
D-ORDER BY THE METER
E-ORDER BY THE CENTIMETER
I-REFER TO HYDRAULIC INFORMATION SYSTEM
M-METRIC PART

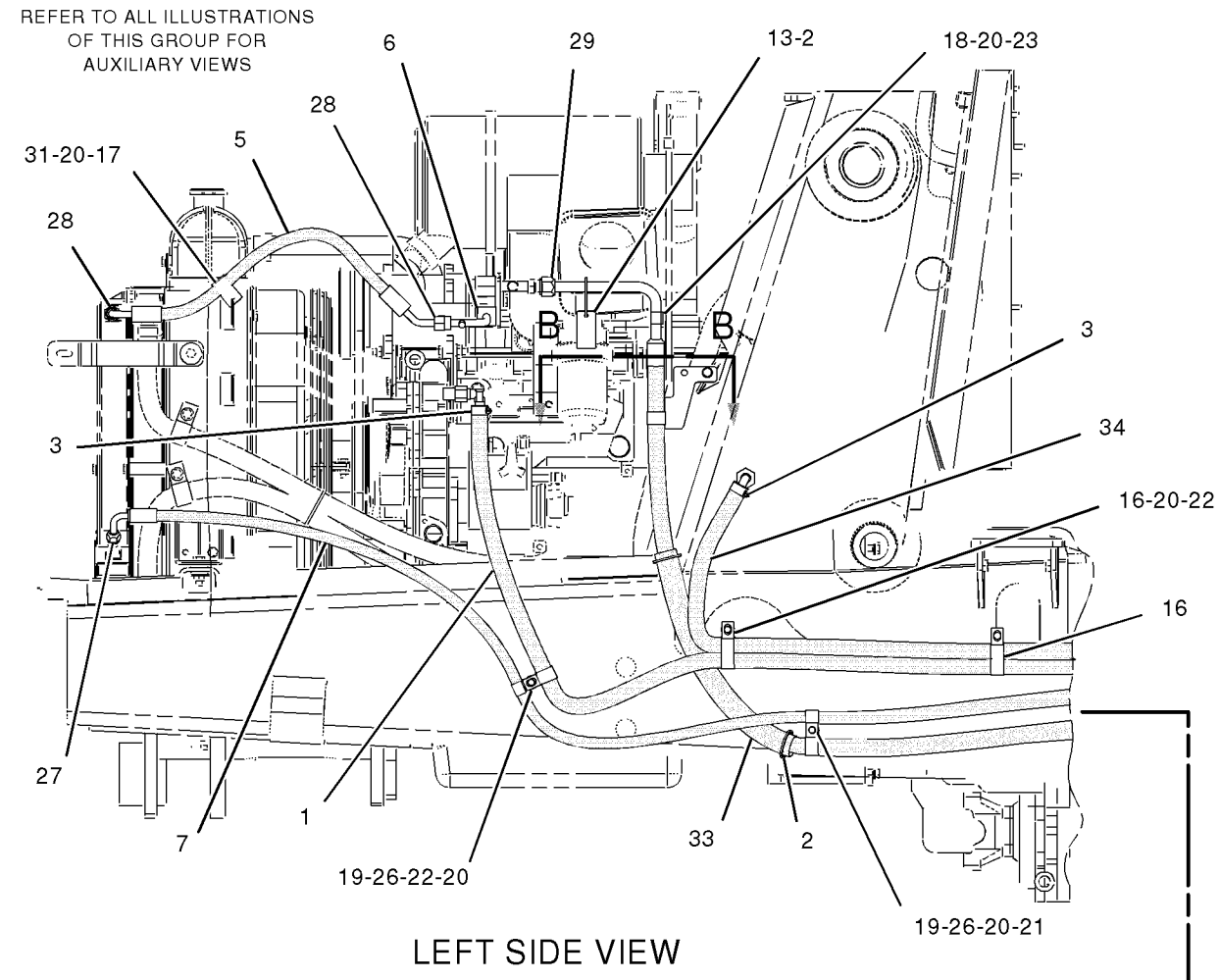

LEFT SIDE VIEW

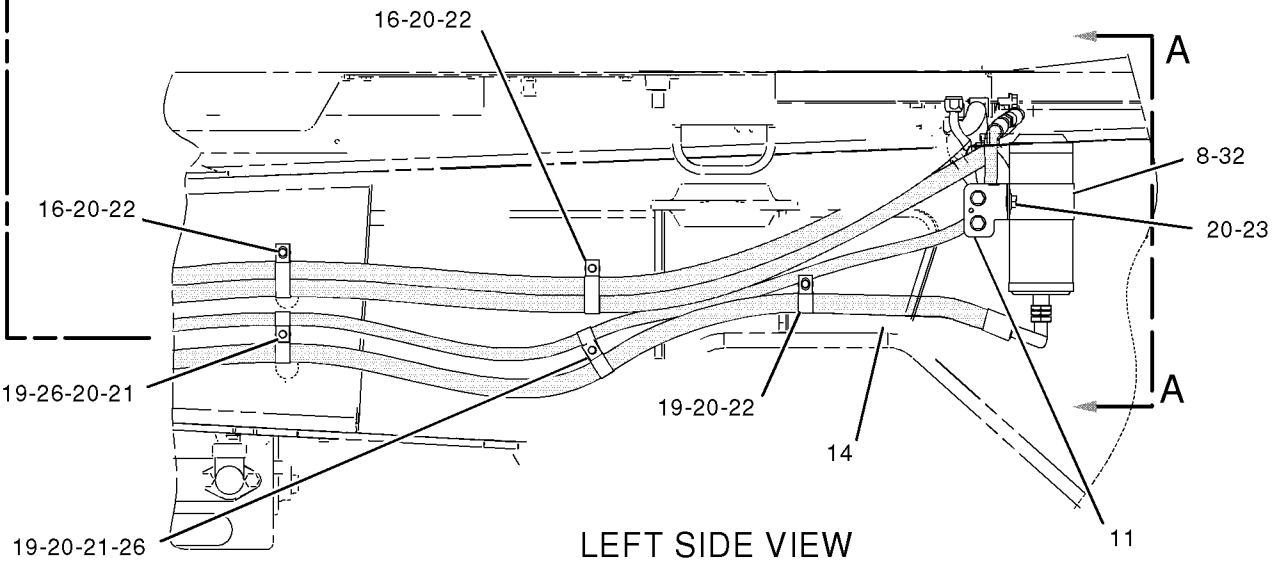

LEFT SIDE VIEW

GRAPHIC #1

g01026272

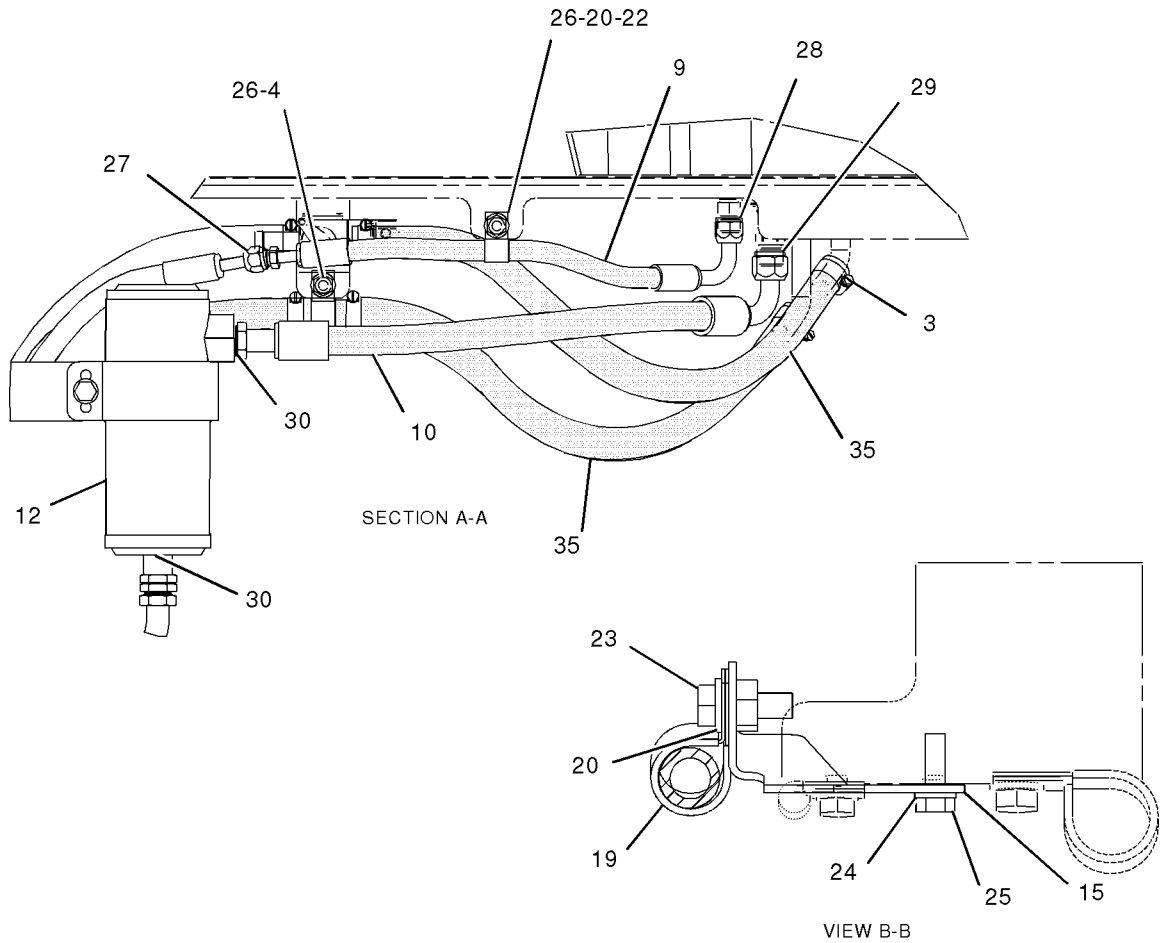

GRAPHIC #2 **<END>** g01026273

OPERATOR STATION

234-2617 LINES GP-HEATER & AIR COND

S/N: BFP12900-UP
PART OF 239-5562 CAB AR
AN ATTACHMENT

SMCS-1380, 1808, 7304 **i02017601**

NOTE	REF NO	GRAPHIC REF	PART NUMBER	QTY	PART NAME 1 2 3 4 5 6 (PRODUCT LEVEL)	SEE PAGE
	1	1	**3S-2093**	3	STRAP-CABLE	
	2	1	**5D-1026**	8	CLAMP-HOSE	
E	3	1	**5P-0767**		HOSE (295CM)	
	4	1	**6P-8855**	1	SPACER (.56X.625X3-MM THK)	
E	5	1	**160-2245**		SLEEVE-ABRASION (28CM)	
	6	1	**9M-4814**	1	CONNECTOR-HOSE	
	7	1	**105-9411**	1	SUPPORT	
I	8	1	**125-3416**	1	HOSE AS	
	9	1	**152-8417**	1	STRAP	
I	10	1	**164-1040**	1	HOSE AS	
I	11	1	**164-1041**	1	HOSE AS	
	12	1	**184-6565**	1	BRACKET AS	
M		1	**8T-3490**	3	NUT-WELD (M10X1.5-THD)	
Y	13	1	*186-6190*	1	ACCUMULATOR GP-REFRIGERANT (CHARGED)	854
	14	1	**199-6243**	1	PLATE (INSTRUCTION)	
	15	1	**234-2484**	1	HOSE AS	
	16	1	**234-2485**	1	HOSE AS	
	17	1	**3E-4321**	5	CLIP	
	18	1	**5P-7854**	1	CLIP	
	19	1	**6D-4246**	1	CLIP	
	20	1	**7F-6998**	1	LOCKWASHER	
	21	1	**8T-4121**	18	WASHER-HARD (11X21X2.5-MM THK)	
M	22	1	**8T-4133**	1	NUT (M10X1.5-THD)	
M	23	1	**8T-4136**	5	BOLT (M10X1.5X25-MM)	
M	24	1	**8T-4137**	8	BOLT (M10X1.5X20-MM)	
M	25	1	**8T-4189**	1	BOLT (M8X1.25X20-MM)	
M	26	1	**8T-4195**	3	BOLT (M10X1.5X30-MM)	
	27	1	**9M-4972**	5	CLIP	
	28	1	**9M-8406**	6	CLIP	
	29	1	**9X-7380**	2	SEAL-O-RING	
	30	1	**9X-7381**	2	SEAL-O-RING	
	31	1	**9X-7382**	1	SEAL-O-RING	
	32	1	**9X-7383**	2	SEAL-O-RING	
D	33	1	**5P-5924**		SEAL (.3M)	
E	34	1	**5P-0767**		HOSE (275CM)	
E	35	1	**5P-0767**	2	HOSE (42.5CM)	
	36	1	**134-3856**	1	ELBOW	

D-ORDER BY THE METER
E-ORDER BY THE CENTIMETER
I-REFER TO HYDRAULIC INFORMATION SYSTEM
M-METRIC PART
Y-SEPARATE ILLUSTRATION

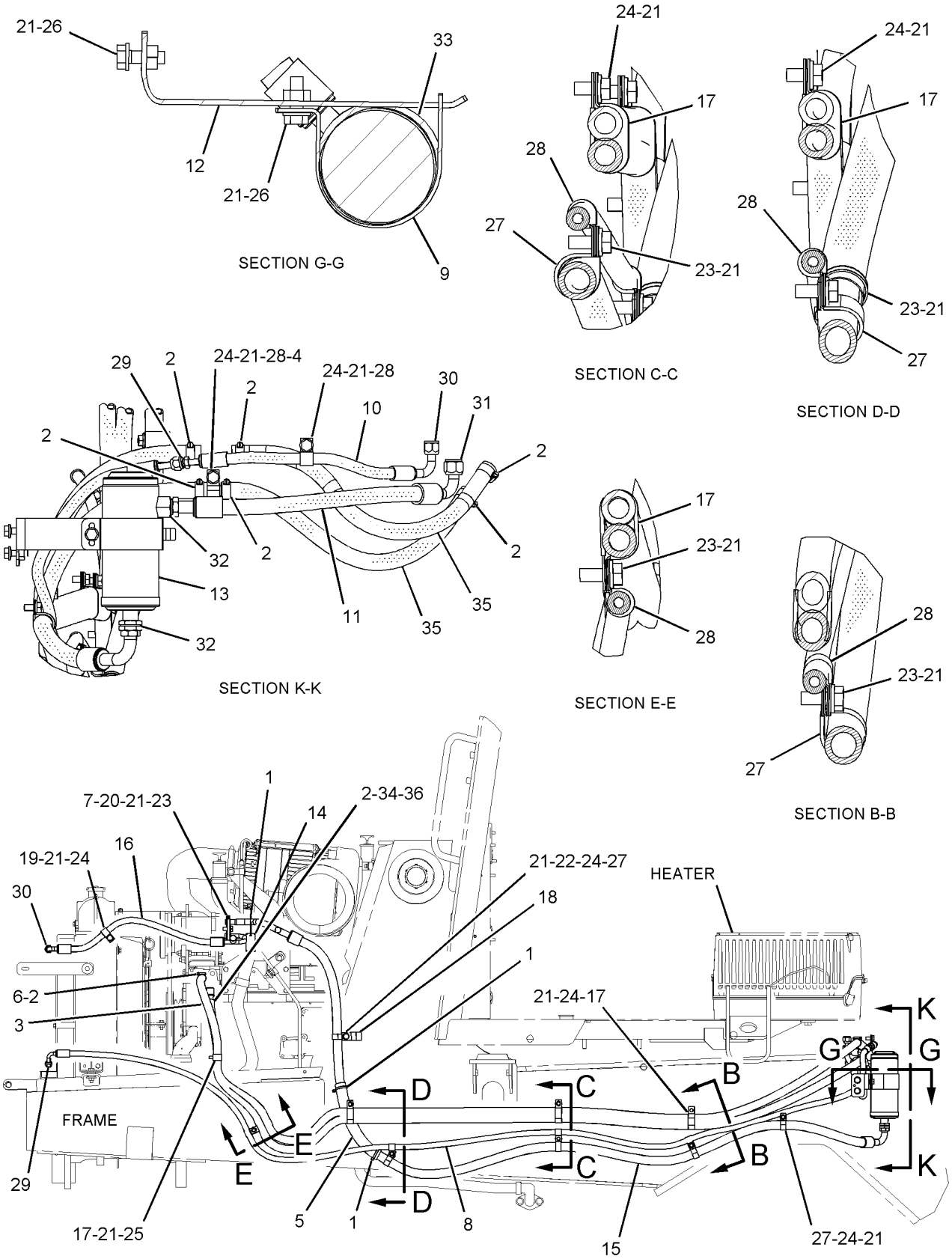

RIGHT SIDE VIEW

GRAPHIC #1

<END>

g01042921

OPERATOR STATION

164-1155 MIRROR GP-REAR VIEW

S/N: BFP12900-UP; CXP940-UP
PART OF 184-9735, 205-2177, 239-5560, 239-5561, 239-5562 CAB AR, 184-9733, 239-5558, 239-5559 CANOPY AR
AN ATTACHMENT

SMCS-7319 **i01718696**

NOTE	REF NO	GRAPHIC REF	PART NUMBER	QTY	PART NAME 1 2 3 4 5 6 (PRODUCT LEVEL)	SEE PAGE
M	1	1	**8C-4982**	2	BOLT-SOCKET HEAD (M4X0.7X20 MM)	
	2	1	**199-0929**	1	MIRROR AS	
	3	1	**205-7047**	2	INSERT-THREADED	
	4	1	**096-6166**	2	WASHER-HARD (4.5X9X1MM THK)	

M-METRIC PART

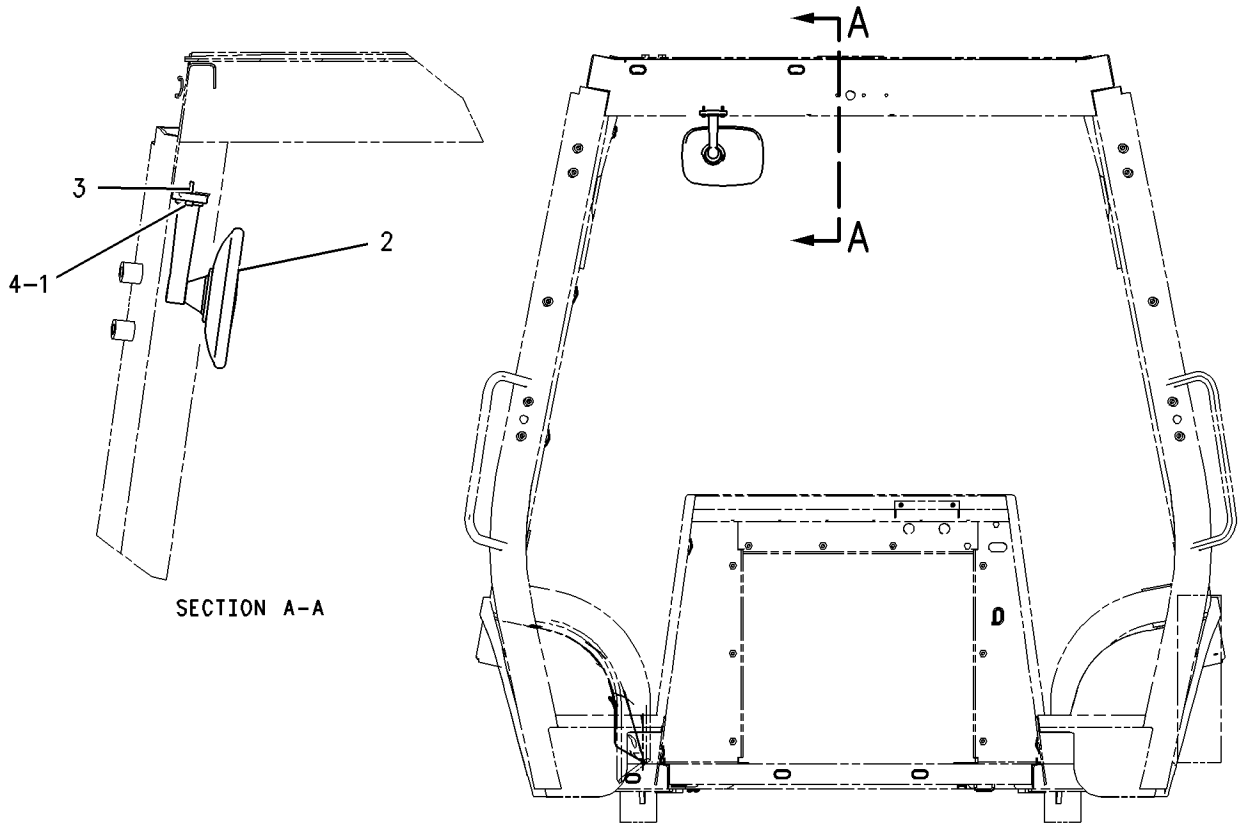

GRAPHIC #1 **<END>** g00883594

OPERATOR STATION

144-9930 MODULE GP-WARNING INDICATOR

S/N: BFP12900-UP; CXP940-UP
12 VOLT. WITH ALARM
PART OF 202-5810 WIRING GP-CONSOLE
AN ATTACHMENT

SMCS-7407, 7431 **i02009766**

NOTE	REF NO	GRAPHIC REF	PART NUMBER	QTY	PART NAME 1 2 3 4 5 6 (PRODUCT LEVEL)	SEE PAGE
	1	1	**144-9934**	1	GASKET	
	2	1	**102-8801**	1	KIT-RECEPTACLE (12-PIN)	

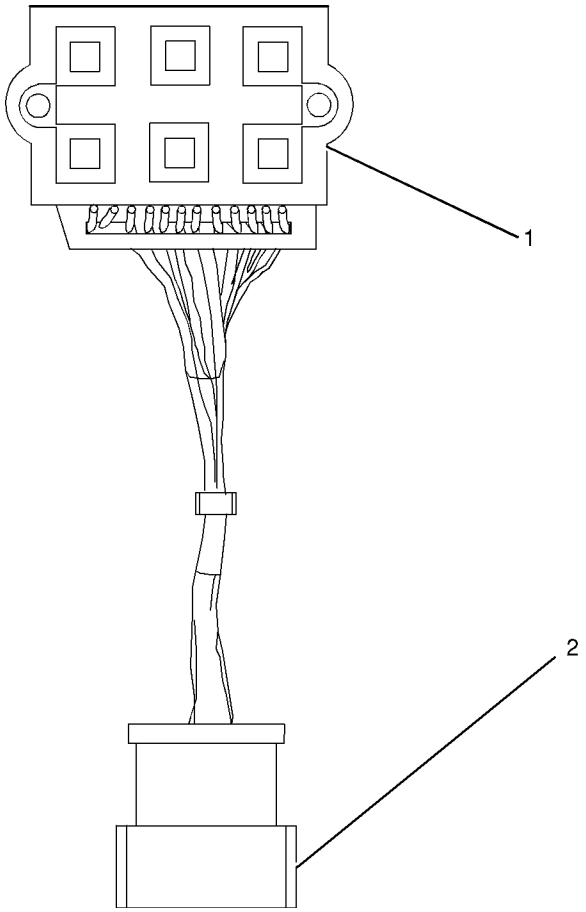

GRAPHIC #1

<END>

g01039137

OPERATOR STATION

144-9931 MODULE GP-WARNING INDICATOR

S/N: BFP12900-UP; CXP940-UP
12 VOLT. WITHOUT ALARM
PART OF 169-0625, 238-1165 WIRING GP-CONSOLE

SMCS-7407, 7431 **i01739777**

NOTE	REF NO	GRAPHIC REF	PART NUMBER	QTY	PART NAME 1 2 3 4 5 6 (PRODUCT LEVEL)	SEE PAGE
	1	1	**144-9934**	1	GASKET	
	2	1	**102-8806**	1	KIT-RECEPTACLE (8 PIN)	
					(KIT SERVICES RECEPTACLE AS AND WEDGE)	
F			**189-3610**	1	LAMP	

F-NOT SHOWN

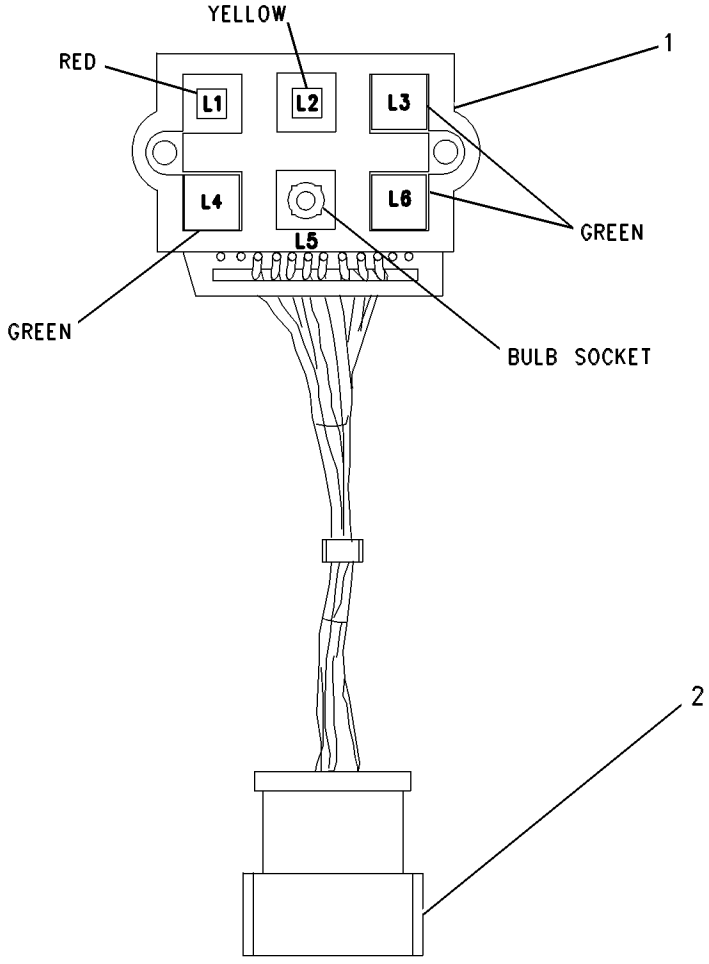

GRAPHIC #1 **<END>** g00464170

OPERATOR STATION

186-2589 MOTOR GP-WINDOW WIPER

S/N: BFP12900-UP
12 VOLT
PART OF 174-2024, 207-6051 WIPER GP-WINDOW
AN ATTACHMENT

SMCS-7305 **i01373590**

NOTE	REF NO	GRAPHIC REF	PART NUMBER	QTY	PART NAME 1 2 3 4 5 6 (PRODUCT LEVEL)	SEE PAGE
M	1	1	**5C-7261**	1	NUT (M8X1.25 THD)	
	2	1	**3F-9556**	1	LOCKWASHER (8.4MM ID)	
	3	1	**102-8805**	1	KIT-RECEPTACLE (6 PIN)	
	4	1	**9G-3695**	1	PLUG-SEALING (GROMMET)	
	5	1	**186-3735**	5	PIN-CONNECTOR	

M-METRIC PART

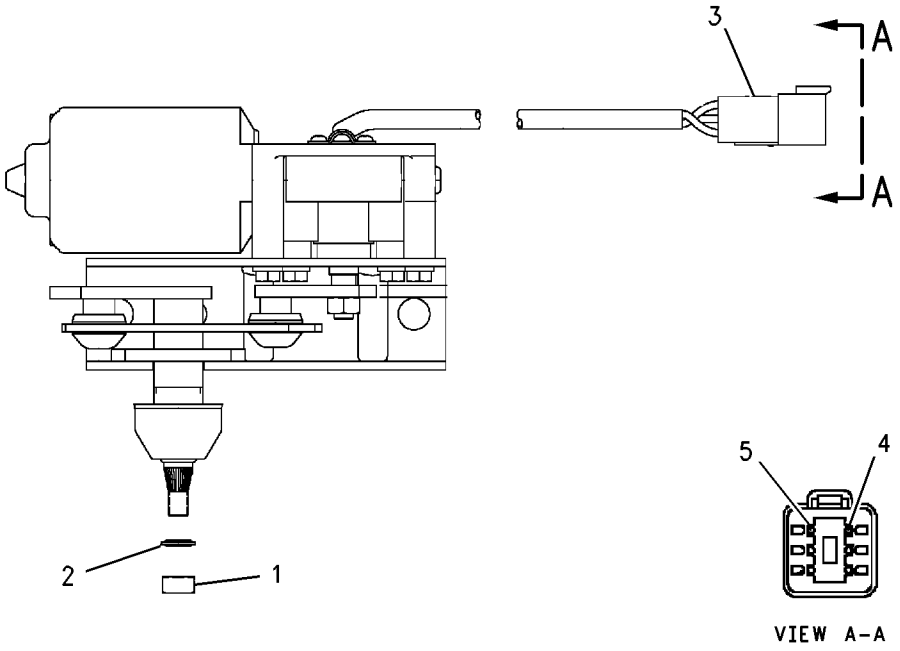

GRAPHIC #1 **<END>** g00726430

OPERATOR STATION

184-7898 MOUNTING GP-INSTRUMENT PANEL

S/N: BFP12900-UP; CXP940-UP
TWO WHEEL STEER, FRONT CONSOLE
PART OF 184-7970 POWER TRAIN AR

SMCS-7451 **i01439921**

NOTE	REF NO	GRAPHIC REF	PART NUMBER	QTY	PART NAME 1 2 3 4 5 6 (PRODUCT LEVEL)	SEE PAGE
	1	1	**167-8278**	2	PLATE	
	2	1	**167-8279**	1	PANEL AS	
M	3	1	**9X-1046**	14	SCREW (M4X0.7X18MM)	

M-METRIC PART

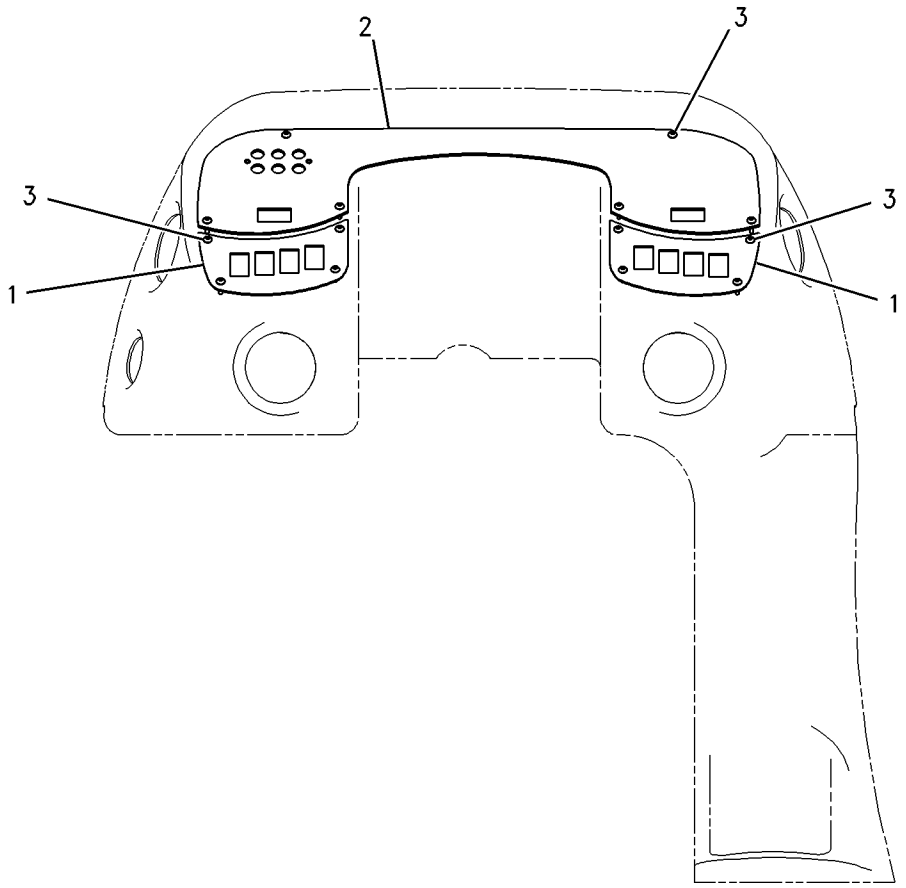

GRAPHIC #1 **<END>** g00754349

OPERATOR STATION

185-3525 MOUNTING GP-INSTRUMENT PANEL

S/N: BFP12900-UP; CXP940-UP
PART OF 192-4661, 192-4663, 192-4665, 192-4666, 214-6955, 214-6956, 214-6958, 231-9348 POWER TRAIN AR
AN ATTACHMENT

SMCS-7451 **i01443017**

NOTE	REF NO	GRAPHIC REF	PART NUMBER	QTY	PART NAME 1 2 3 4 5 6 (PRODUCT LEVEL)	SEE PAGE
	1	1	**5P-4116**	4	WASHER-HARD (8.8X20.5X2MM THK)	
M	2	1	**6V-9189**	4	LOCKNUT	

M-METRIC PART

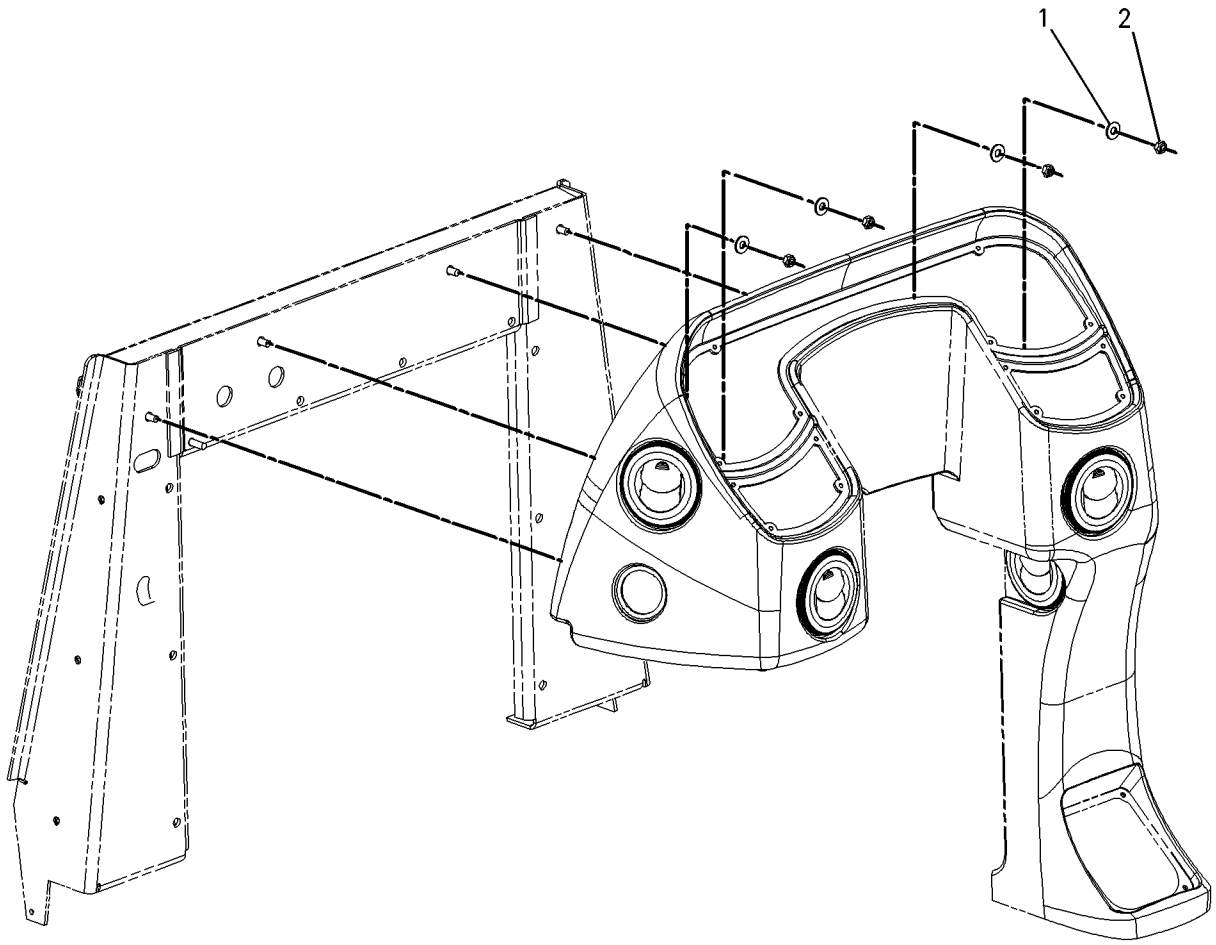

GRAPHIC #1 **<END>** g00756122

OPERATOR STATION

190-7374 MOUNTING GP-INSTRUMENT PANEL—SIDE CONSOLE

S/N: BFP12900-UP; CXP940-UP
PART OF 215-6888 COMMON AR
ALSO AN ATTACHMENT

SMCS-7451 **i01506886**

NOTE	REF NO	GRAPHIC REF	PART NUMBER	QTY	PART NAME 1 2 3 4 5 6 (PRODUCT LEVEL)	SEE PAGE
	1	1	**167-8283**	1	PANEL AS-INSTRUMENT	
M	2	1	**9X-2045**	10	SCREW-TRUSS HEAD (M6X1X20MM)	

M-METRIC PART

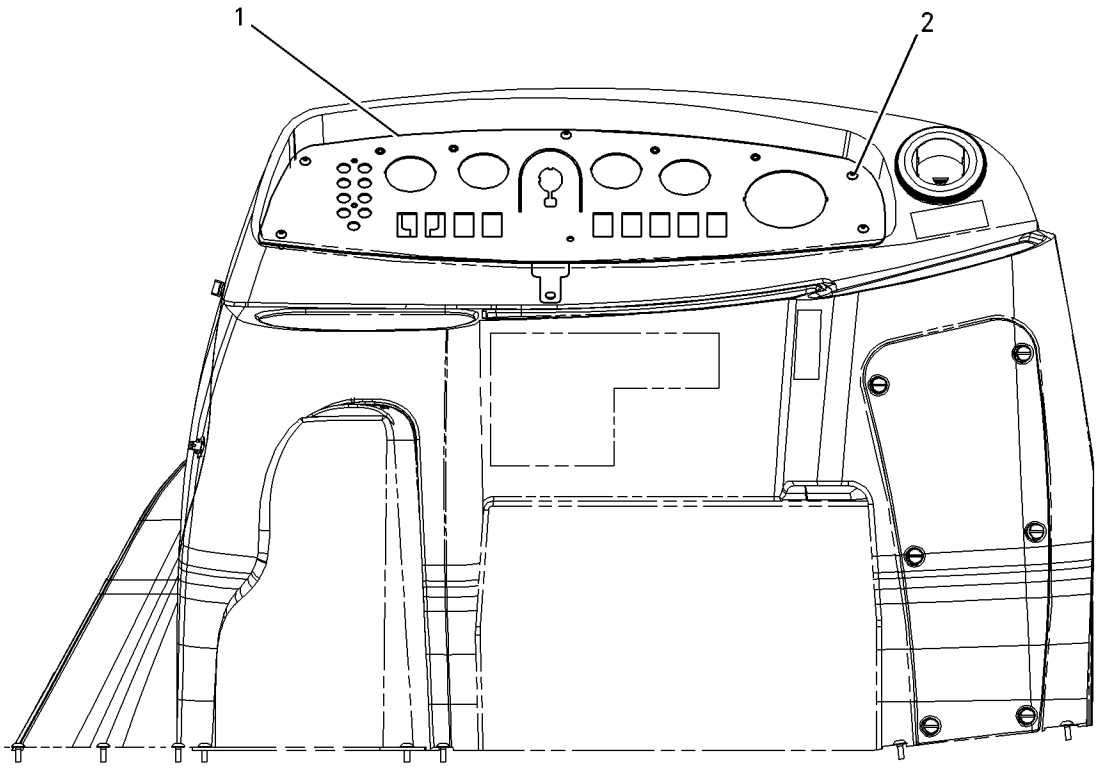

GRAPHIC #1 **<END>** g00735774

OPERATOR STATION

202-5724 MOUNTING GP-INSTRUMENT PANEL

S/N: BFP12900-UP
ROTATING VANDALISM GUARD
AN ATTACHMENT

SMCS-7451 **i01673590**

NOTE	REF NO	GRAPHIC REF	PART NUMBER	QTY	PART NAME 1 2 3 4 5 6 (PRODUCT LEVEL)	SEE PAGE
J	1	1	**5P-9000**	1	LOCK AS-CYLINDER	
	2	1	**164-1122**	1	BODY	
	3	1	**164-1123**	1	BEZEL	
	4	1	**164-1177**	2	CAP-END	
	5	1	**168-4609**	1	SWITCH AS-START	
		1	**7T-6799**	1	NUT-MOUNTING (1-32 THD)	
	6	1	**185-9777**	1	PLATE	
	7	1	**191-5104**	4	MOUNT	
	8	1	**192-7355**	2	PLATE	
	9	1	**194-4250**	2	PIN	
	10	1	**197-7499**	2	BOLT (M4X.7X25MM)	
	11	1	**202-5979**	1	HANDLE	
	12	1	**202-6063**	1	FILM	
M	13	1	**131-3540**	2	LOCKNUT (M8X1.25 THD)	
	15	1	**214-9035**	8	BOLT	
	16	1	**4B-4863**	2	WASHER (4.7X11X1.2MM THK)	
M	17	1	**8T-2659**	8	LOCKNUT (M4X0.7 THD)	
	18	1	**8T-4224**	4	WASHER-HARD (8.8X16X2MM THK)	
M	19	1	**8T-4908**	2	BOLT (M8X1.25X25MM)	
M	20	1	**9X-2045**	5	SCREW-TRUSS HEAD (M6X1X20MM)	

J-REQUIRES 5P8500 KEY
M-METRIC PART

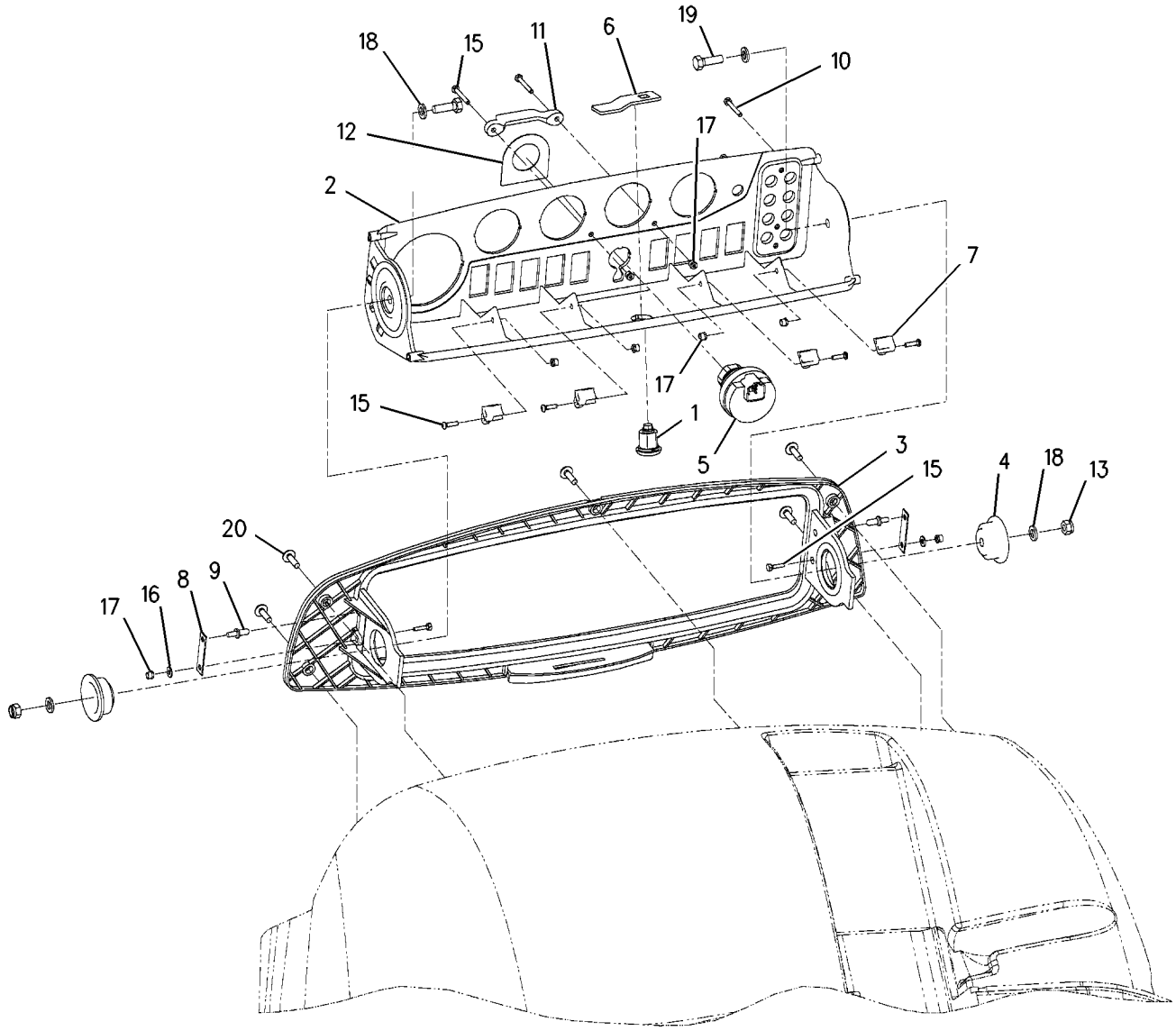

GRAPHIC #1 **<END>** g00864598

OPERATOR STATION

202-5812 PANEL GP-INSTRUMENT–SIDE

S/N: BFP12900-UP
FLAT GAUGE PANEL
AN ATTACHMENT

SMCS-1435, 7450, 7451, 7453, 7462, 7463, 7477, 7481 **i01626400**

NOTE	REF NO	GRAPHIC REF	PART NUMBER	QTY	PART NAME 1 2 3 4 5 6 (PRODUCT LEVEL)	SEE PAGE
J	1	1	**142-8858**	1	SWITCH AS-KEY START	
	2	1	**167-8283**	1	PANEL AS-INSTRUMENT	
	3	1	**193-1509**	1	WIRE AS	
	4	1	**191-9104**	1	FILM	
M	5	1	**9X-2045**	10	SCREW-TRUSS HEAD (M6X1X20MM)	

J-REQUIRES 5P8500 KEY
M-METRIC PART

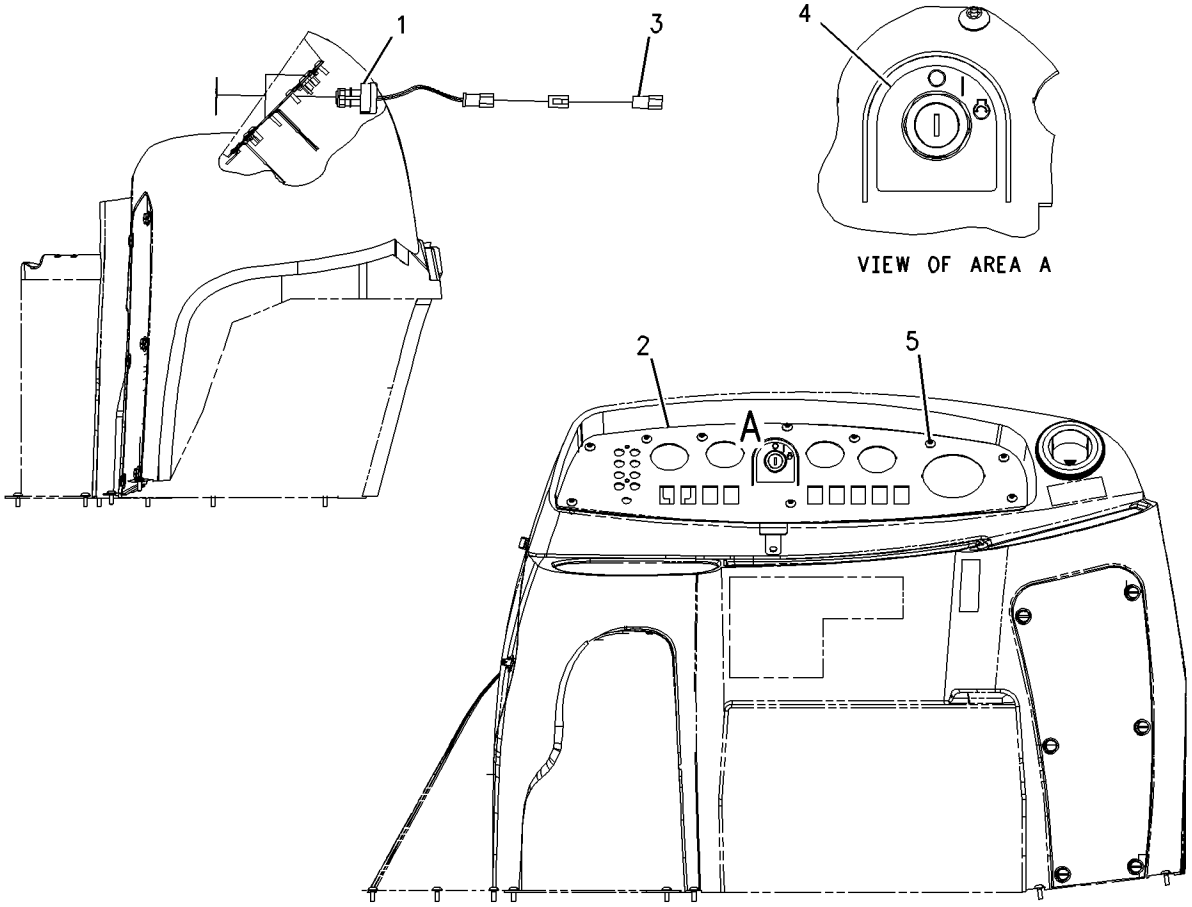

GRAPHIC #1 **<END>** g00844991

OPERATOR STATION

164-1078 PEDAL GP-GOVERNOR

S/N: BFP12900-UP; CXP940-UP

PART OF 164-1076, 234-8892 CONTROL GP-GOV & ACCELERATOR

SMCS-1265 **i01928735**

NOTE	REF NO	GRAPHIC REF	PART NUMBER	QTY	PART NAME 1 2 3 4 5 6 (PRODUCT LEVEL)	SEE PAGE
M	1	1	**129-3178**	1	LOCKNUT	
M	2	1	**5C-7261**	1	NUT (M8X1.25 THD)	
M	3	1	**5C-9553**	1	BOLT (M6X1X16MM)	
	4	1	**8T-4205**	1	WASHER-HARD (7.2X14.5X2MM THK)	
	5	1	**8T-6902**	3	CLIP	
	6	1	**3F-9556**	2	LOCKWASHER	
M	7	1	**095-0641**	4	BOLT-SOCKET HEAD (M4X0.7X10MM)	
	8	1	**6V-8186**	2	NUT-FULL (5/16-24 THD)	
M	9	1	**9X-2842**	1	BOLT (M8X1.25 THD)	
					AVAILABLE REPAIR KIT(S):	
			164-1154	1	KIT-SERVICE	
					(INCLUDES CLAMPS AND SCREW)	

M-METRIC PART

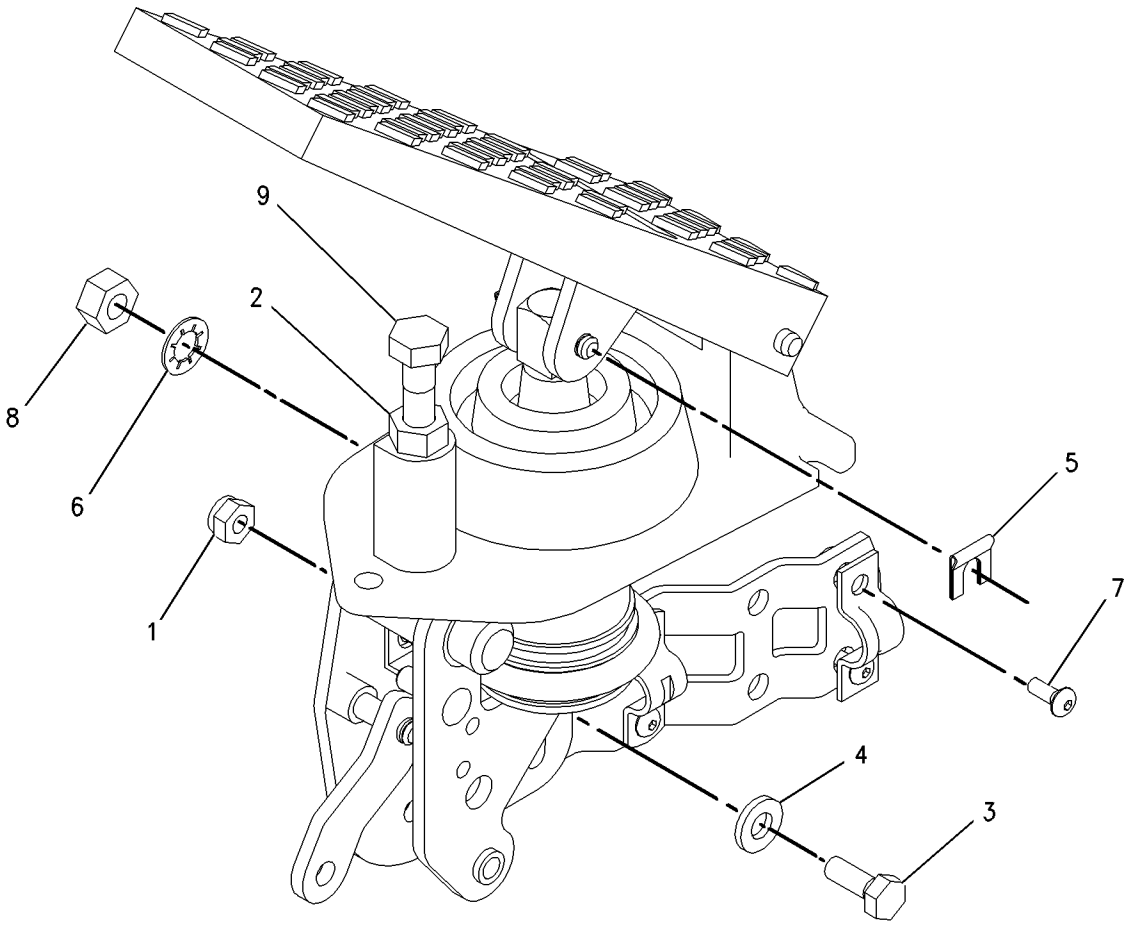

GRAPHIC #1 **<END>** g00832396

OPERATOR STATION

190-8918 SEAT BELT GP

S/N: BFP12900-UP; CXP940-UP
2 IN. RETRACTABLE
AN ATTACHMENT

SMCS-7327 **i01506882**

NOTE	REF NO	GRAPHIC REF	PART NUMBER	QTY	PART NAME 1 2 3 4 5 6 (PRODUCT LEVEL)	SEE PAGE
	1	1	**7X-0546**	3	WASHER-HARD (2MM THK)	
M	2	1	**8C-8992**	1	BOLT-LOCKING (M12X1.75X30MM) (4MM THK)	
	3	1	**194-9625**	1	WASHER-HARD (4MM THK)	
M	4	1	**3E-8004**	1	BOLT (M12X1.75X45MM) (M12X1.75)	

M-METRIC PART

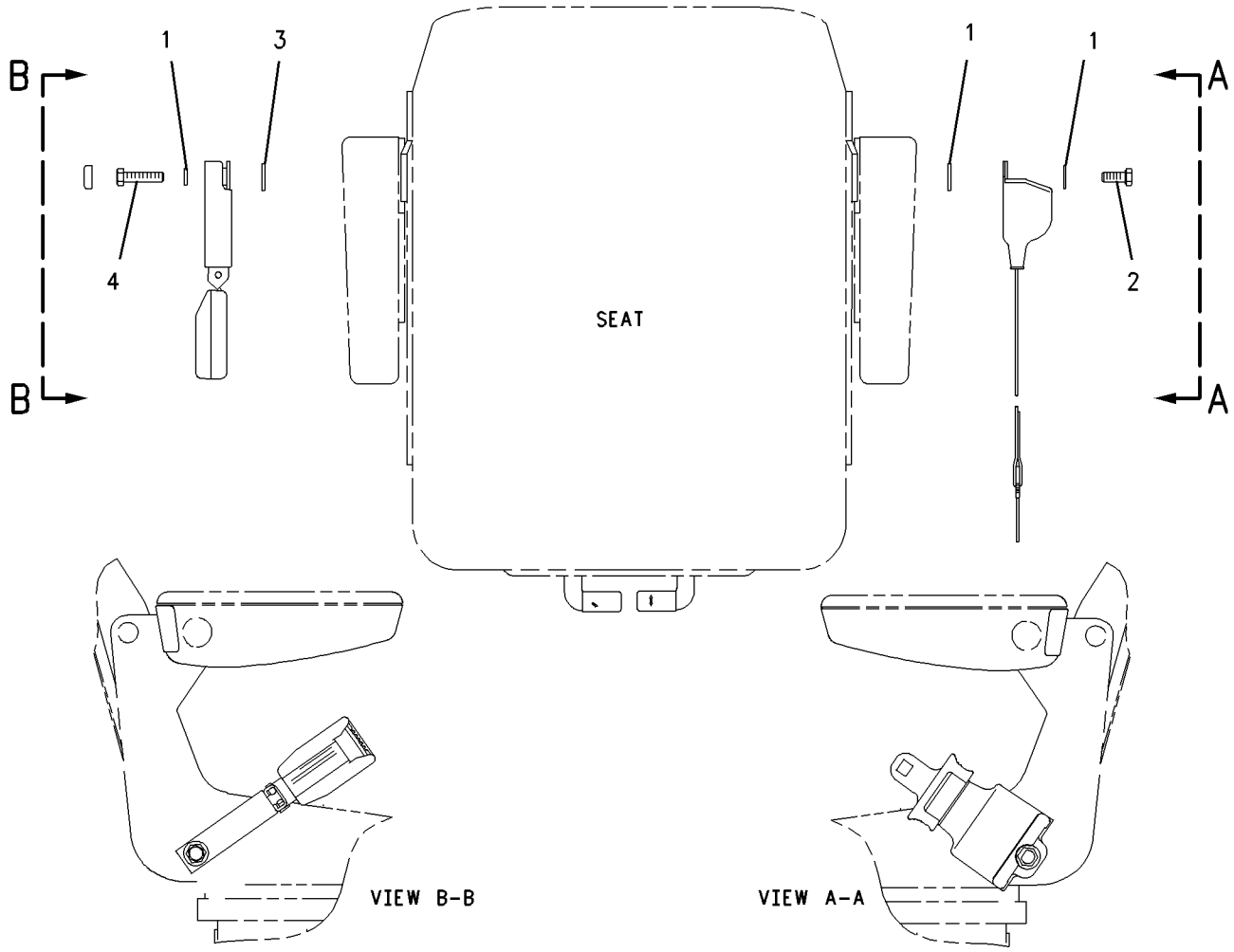

GRAPHIC #1 **<END>** g00778928

OPERATOR STATION

190-8919 SEAT BELT GP

S/N: BFP12900-UP
3 IN. RETRACTABLE
AN ATTACHMENT

SMCS-7327 **i01450481**

NOTE	REF NO	GRAPHIC REF	PART NUMBER	QTY	PART NAME 1 2 3 4 5 6 (PRODUCT LEVEL)	SEE PAGE
M	1	1	**8C-8992**	1	BOLT-LOCKING (M12X1.75X30MM)	
M	2	1	**3E-8004**	1	BOLT (M12X1.75X45MM)	
	3	1	**7X-0546**	3	WASHER-HARD (2MM THK)	
	4	1	**194-9625**	1	WASHER-HARD	

M-METRIC PART

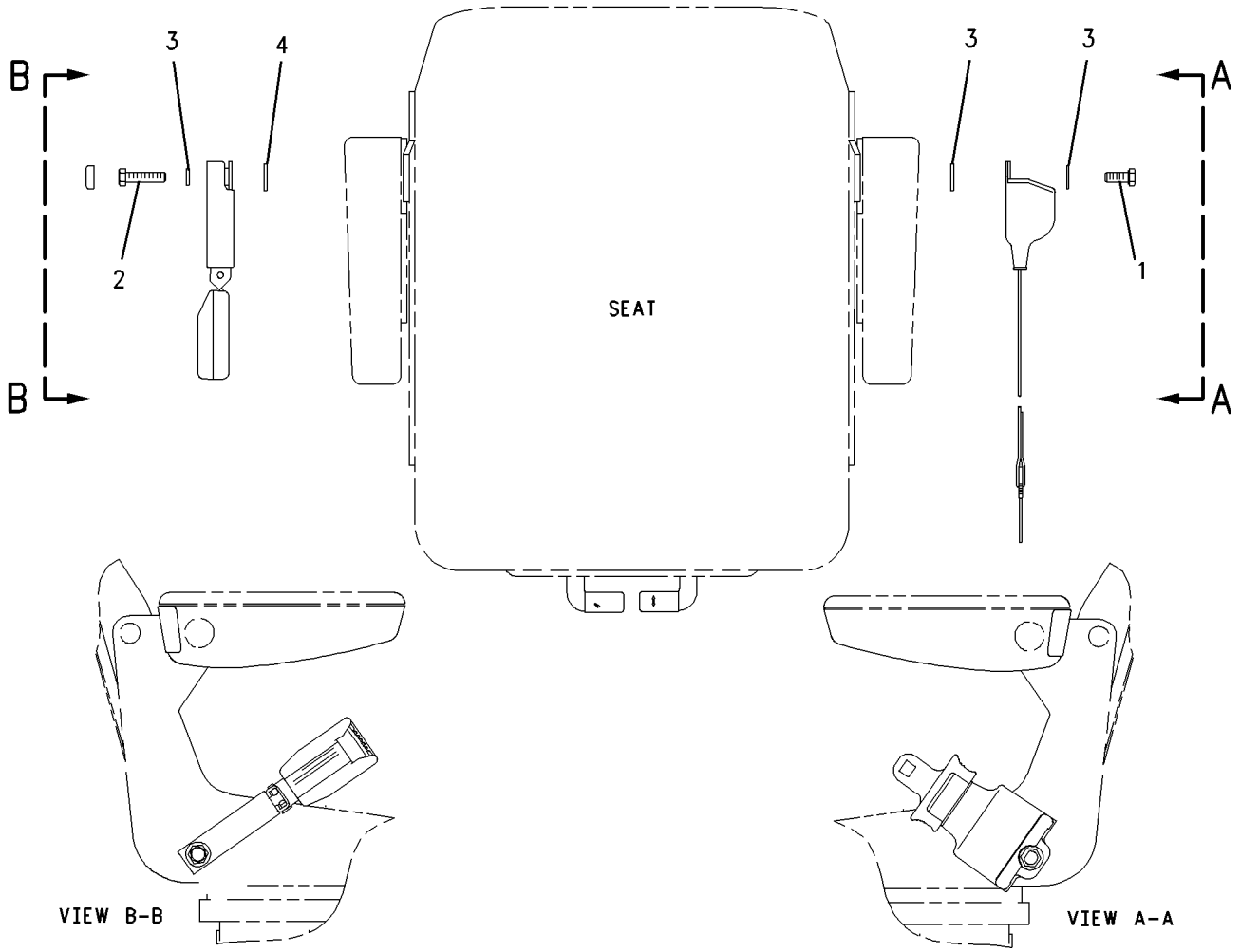

GRAPHIC #1 **<END>** g00759204

OPERATOR STATION

164-1209 SEAT GP

S/N: BFP12900-UP
STANDARD FABRIC
PART OF 164-1201 SEAT GP-SUSPENSION
AN ATTACHMENT

SMCS-7312, 7321, 7324, 7336 **i01514493**

NOTE	REF NO	GRAPHIC REF	PART NUMBER	QTY	PART NAME 1 2 3 4 5 6 (PRODUCT LEVEL)	SEE PAGE
Y	1	1	**8Y-5904**	2	ARMREST GP	864
M	2	1	**105-3481**	2	BOLT-HEX SOCKET (M8X1.25X20MM)	
	3	1	**164-1214**	4	KNOB	
	4	1	**164-1244**	1	CUSHION AS	
	5	1	**164-1247**	1	BRACKET AS	
	6	1	**164-1248**	1	PAN	
	7	1	**164-1249**	1	LEVER AS	
	8	1	**164-1250**	1	HANDLE	
	9	1	**164-1251**	1	SPRING	
	10	1	**164-1252**	1	SPRING	
	14	1	**164-1256**	2	SPACER	
	15	1	**164-1258**	1	BRACKET AS	
	16	1	**164-1259**	1	BRACKET AS	
	17	1	**164-1261**	1	BRACKET AS	
	18	1	**164-1265**	4	BOLT	
	21	1	**180-5796**	1	CUSHION AS-SEAT	
	22	1	**180-5797**	1	PAN AS	
	23	1	**195-9223**	2	SCREW-PAN HEAD	
M	24	1	**129-3180**	2	LOCKNUT (M12X1.75 THD)	
M	25	1	**131-3540**	8	LOCKNUT (M8X1.25 THD)	
	26	1	**1K-6872**	2	LOCKNUT (1/2-13 THD)	
	27	1	**4B-5271**	4	WASHER (25.5X11.2X2MM THK)	
	28	1	**5P-8245**	4	WASHER-HARD (13.5X25.5X3MM THK)	
M	29	1	**8T-4200**	2	BOLT (M8X1.25X16MM)	
	30	1	**8T-9501**	2	SCREW (10-16X.75 IN)	
	31	1	**9X-8873**	2	BOLT (1/2-13X2.25 IN)	

M-METRIC PART
Y-SEPARATE ILLUSTRATION

164-1209 SEAT GP ***(contd.)*** **i01514493**

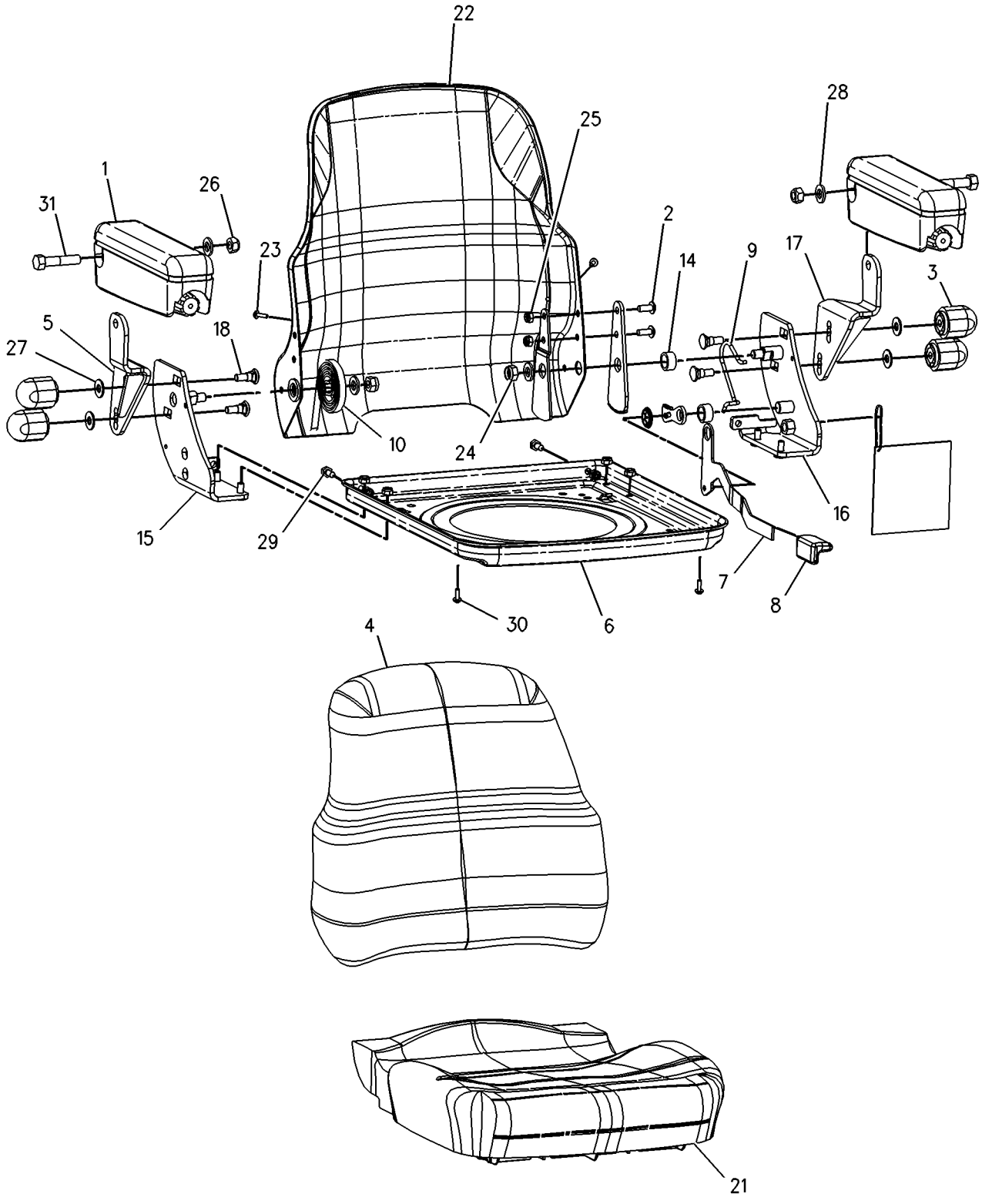

GRAPHIC #1 **<END>** g00785719

OPERATOR STATION

164-1210 SEAT GP

S/N: BFP12900-UP
STANDARD VINYL
PART OF 164-1202 SEAT GP-SUSPENSION
AN ATTACHMENT

SMCS-7312, 7321, 7324, 7336 **i01515948**

NOTE	REF NO	GRAPHIC REF	PART NUMBER	QTY	PART NAME 1 2 3 4 5 6 (PRODUCT LEVEL)	SEE PAGE
Y	1	1	**8Y-5904**	2	ARMREST GP	864
M	2	1	**105-3481**	2	BOLT-HEX SOCKET (M8X1.25X20MM)	
	3	1	**164-1214**	4	KNOB	
	4	1	**164-1247**	1	BRACKET AS	
	5	1	**164-1248**	1	PAN	
	6	1	**164-1249**	1	LEVER AS	
	7	1	**164-1250**	1	HANDLE	
	8	1	**164-1251**	1	SPRING	
	9	1	**164-1252**	1	SPRING	
	13	1	**164-1256**	2	SPACER (12.5MM THK)	
	14	1	**8T-9501**	2	SCREW (10-16X.75 IN) (15.9MM THK)	
	15	1	**164-1258**	1	BRACKET AS	
	16	1	**164-1259**	1	BRACKET AS	
	17	1	**180-5797**	1	PAN AS	
	18	1	**164-1261**	1	BRACKET AS	
	19	1	**164-1265**	4	BOLT	
	20	1	**164-1266**	1	CUSHION AS-BACK	
	21	1	**180-5795**	1	CUSHION AS-SEAT	
	24	1	**195-9223**	2	SCREW-PAN HEAD	
M	25	1	**129-3180**	2	LOCKNUT (M12X1.75 THD)	
M	26	1	**131-3540**	8	LOCKNUT (M8X1.25 THD)	
	27	1	**1K-6872**	2	LOCKNUT (1/2-13 THD)	
	28	1	**4B-5271**	4	WASHER (25.5X11.2X2MM THK)	
	29	1	**5P-8245**	4	WASHER-HARD (13.5X25.5X3MM THK)	
M	30	1	**8T-4200**	2	BOLT (M8X1.25X16MM)	
	31	1	**9X-8873**	2	BOLT (1/2-13X2.25 IN)	

M-METRIC PART
Y-SEPARATE ILLUSTRATION

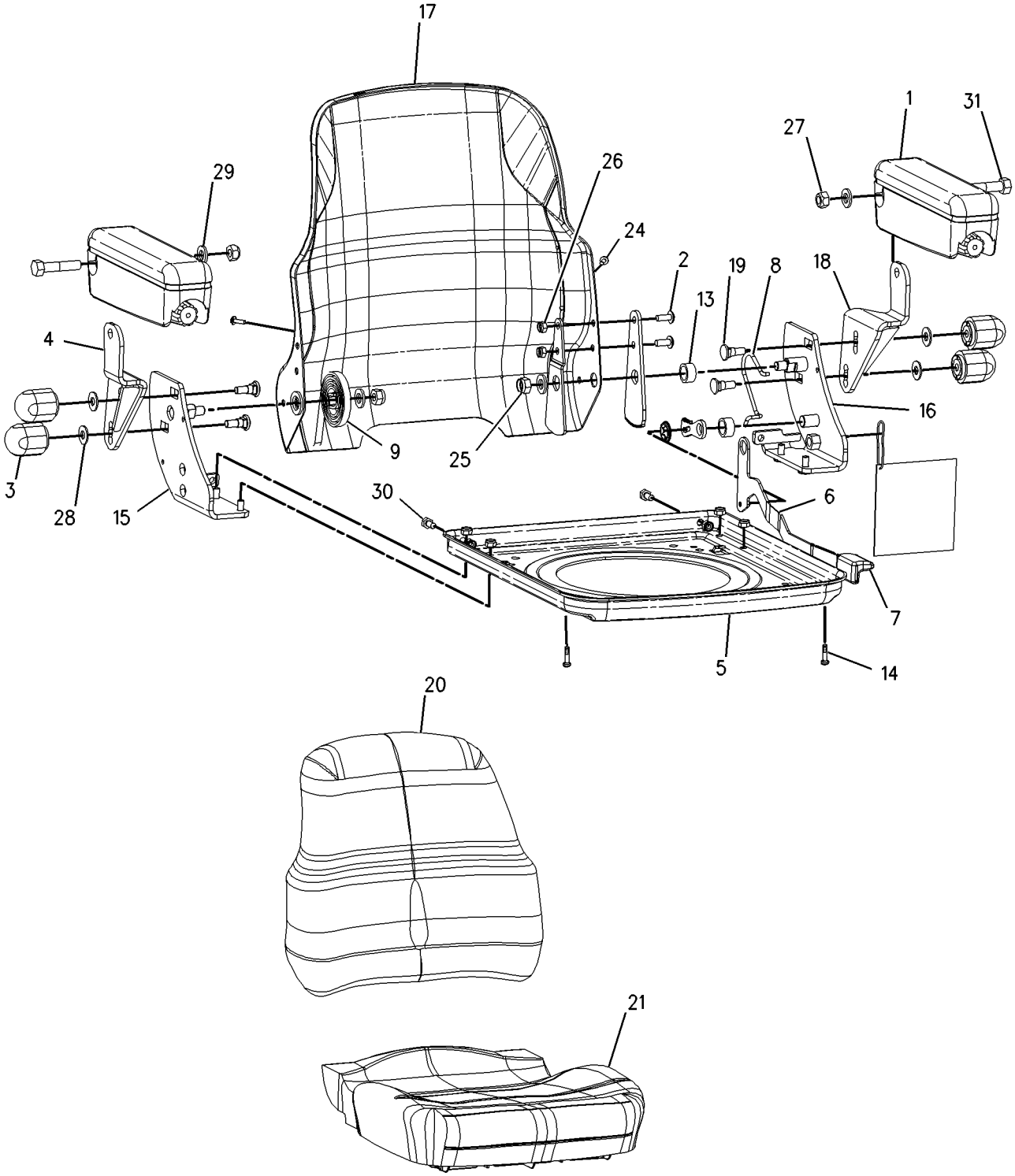

GRAPHIC #1 **<END>** g00786601

OPERATOR STATION

164-1296 SEAT GP

S/N: BFP12900-UP; CXP940-UP
LOW COST/STATIC
PART OF 164-1205 SEAT GP-STATIC
AN ATTACHMENT

SMCS-7312, 7321, 7324, 7336 **i01656504**

NOTE	REF NO	GRAPHIC REF	PART NUMBER	QTY	PART NAME 1 2 3 4 5 6 (PRODUCT LEVEL)	SEE PAGE
	1	1	**7X-0622**	2	WASHER (13X24X2.5MM THK)	
M	2	1	**7X-2537**	2	BOLT (M8X1.25X35MM)	
M	3	1	**8T-4200**	2	BOLT (M8X1.25X16MM)	
	4	1	**9M-1974**	2	WASHER-HARD (8.8X16X2MM THK)	
M	5	1	**129-3180**	2	LOCKNUT (M12X1.75 THD)	
M	6	1	**131-3540**	8	LOCKNUT (M8X1.25 THD)	
	7	1	**164-1260**	1	PAN-BACK	
	8	1	**164-1266**	1	CUSHION AS-BACK	
	9	1	**180-5795**	1	CUSHION AS-SEAT	
	10	1	**164-1297**	1	BRACKET AS	
	11	1	**164-1298**	1	BRACKET AS	
	12	1	**164-1299**	2	BLOCK	
	13	1	**195-7056**	2	SPACER (19.8X26.2X9MM THK)	
	14	1	**195-9223**	2	SCREW-PAN HEAD	
	15	1	**164-1248**	1	PAN	
	16	1	**8T-9501**	2	SCREW (10-16X.75 IN)	

M-METRIC PART

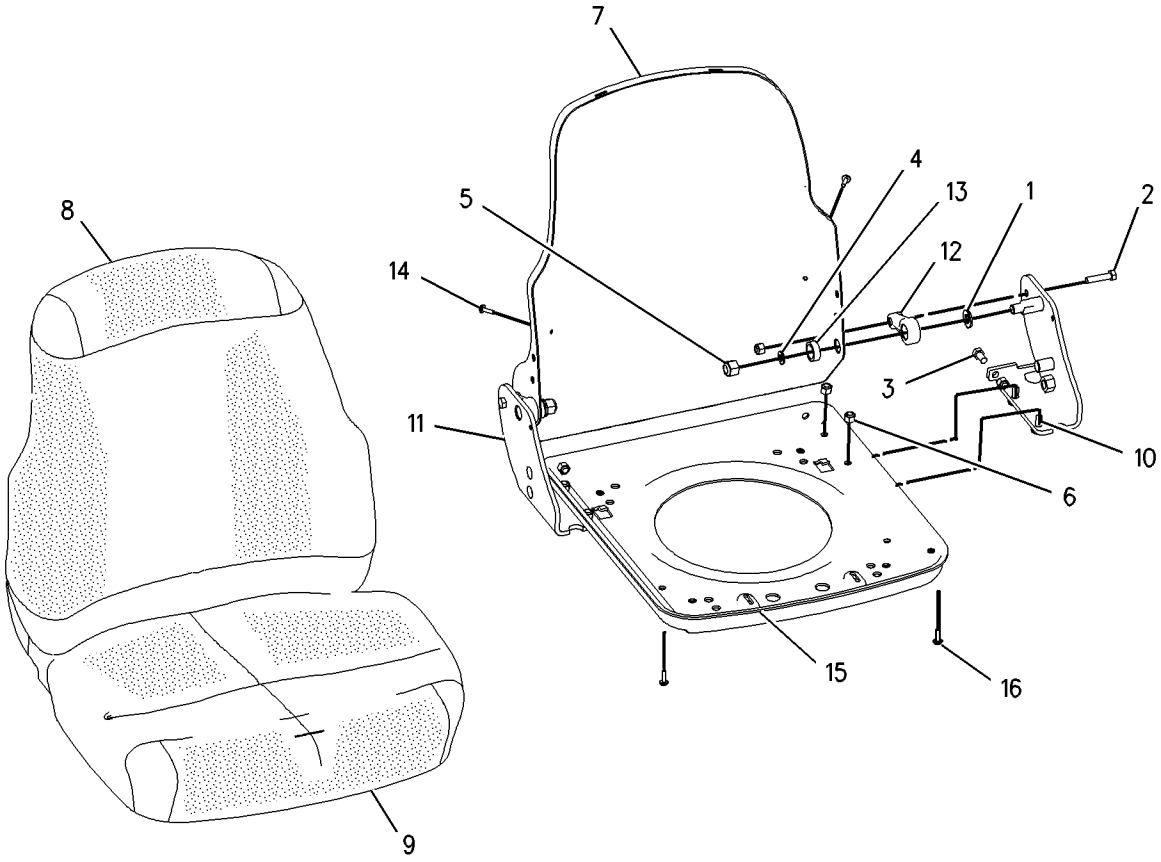

GRAPHIC #1 **<END>** g00796317

164-1205 SEAT GP-STATIC

S/N: BFP12900-UP; CXP940-UP
SWIVEL-VINYL
PART OF 180-5774 SEAT GP-STATIC
AN ATTACHMENT

SMCS-7312 **i01413034**

NOTE	REF NO	GRAPHIC REF	PART NUMBER	QTY	PART NAME 1 2 3 4 5 6 (PRODUCT LEVEL)	SEE PAGE
	1	1	**4L-6454**	8	BOLT (3/8-16X1 IN)	
	2	1	**2K-4973**	8	LOCKNUT	
	3	1	**5P-1075**	4	WASHER-HARD (10.2X22.5X3MM THK)	
Y	4	1	**164-1296**	1	SEAT GP	952
Y	5	1	**164-1292**	1	SWIVEL & SLIDE GP-SEAT	965
Y	6	1	**164-1278**	1	ADJUSTER GP-SEAT	855
	7	1	**195-7055**	4	WASHER-HARD (9.9X28.5X3.2THK)	

Y-SEPARATE ILLUSTRATION

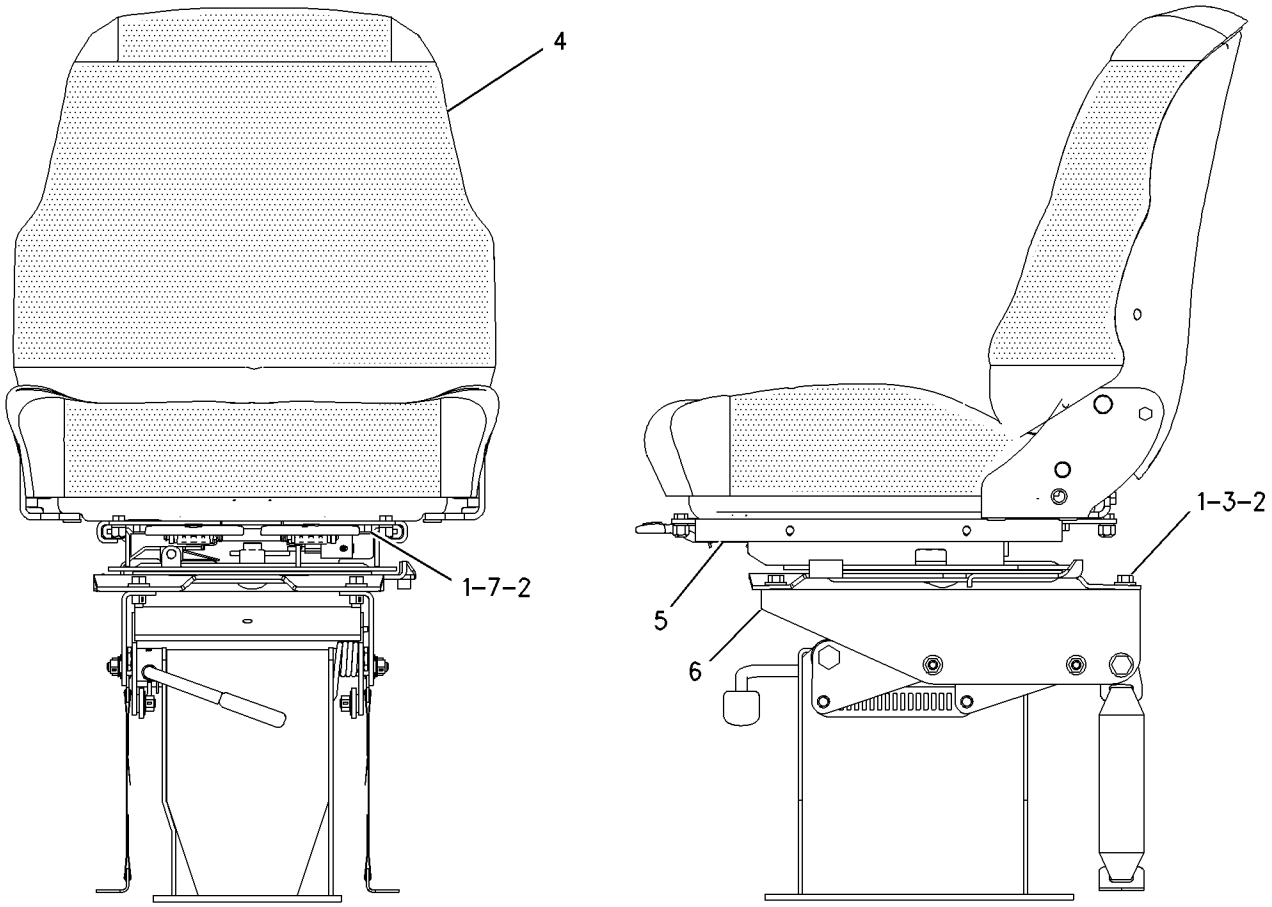

GRAPHIC #1 **<END>** g00744096

OPERATOR STATION

180-5774 SEAT GP-STATIC

S/N: BFP12900-UP; CXP940-UP
VINYL, UTILITY
AN ATTACHMENT

SMCS-7312 **i01391763**

NOTE	PART NUMBER	QTY	PART NAME 1 2 3 4 5 6 (PRODUCT LEVEL)	SEE PAGE
M	**8T-4139**	4	BOLT (M12X1.75X30MM)	
Y	**164-1205**	1	SEAT GP-STATIC	954
	8T-4223	4	WASHER-HARD (13.5X25.5X3MM THK)	

M-METRIC PART
Y-SEPARATE ILLUSTRATION

<END>

OPERATOR STATION

164-1201 SEAT GP-SUSPENSION

S/N: BFP12900-UP
FABRIC
PART OF 180-5770 SEAT GP-SUSPENSION
AN ATTACHMENT

SMCS-7324, 7336 **i01516250**

NOTE	REF NO	GRAPHIC REF	PART NUMBER	QTY	PART NAME 1 2 3 4 5 6 (PRODUCT LEVEL)	SEE PAGE
	1	1	**8S-7803**	2	RING-RETAINING	
	2	1	**095-0878**	2	PIN-SPRING	
	3	1	**123-6077**	1	SHAFT-PIVOT	
	4	1	**132-9240**	1	LATCH AS	
	5	1	**135-1706**	1	SPRING	
	6	1	**149-4745**	2	KIT-SLIDER BLOCK	
					(EACH INCLUDES SLIDER BLOCKS AND BOLT)	
	7	1	**154-8278**	1	SPRING-RETURN	
	8	1	**154-8280**	1	SPRING-RETURN	
	9	1	**154-8284**	1	TUBE	
J	10	1	**161-9289**	2	BLOCK-SLIDER	
	11	1	**161-9290**	1	WASHER (11.9X20.7X2.3MM THK)	
Y	12	1	**164-1207**	1	SUSPENSION GP-SEAT	963
Y	13	1	**164-1209**	1	SEAT GP	948
	14	1	**164-1211**	1	LEVER	
	15	1	**164-1212**	1	LEVER	
	16	1	**164-1295**	1	PLATE AS-SLIDE	
J	17	1	**173-5787**	2	SETSCREW	
	18	1	**195-7055**	4	WASHER-HARD (3.2MM THK)	
	19	1	**031-4155**	4	LOCKNUT	
	20	1	**2K-4973**	4	LOCKNUT (3/8-16 THD)	
	21	1	**3B-4505**	4	LOCKWASHER	
	22	1	**4L-6454**	4	BOLT (3/8-16X1 IN)	
	23	1	**4M-0061**	4	BOLT (5/16-18X0.750 IN)	
					AVAILABLE REPAIR KIT(S):	
J			**161-9744**	1	KIT-SLIDER BLOCK	

J-KIT MARKED J INCLUDES PART MARKED J
Y-SEPARATE ILLUSTRATION

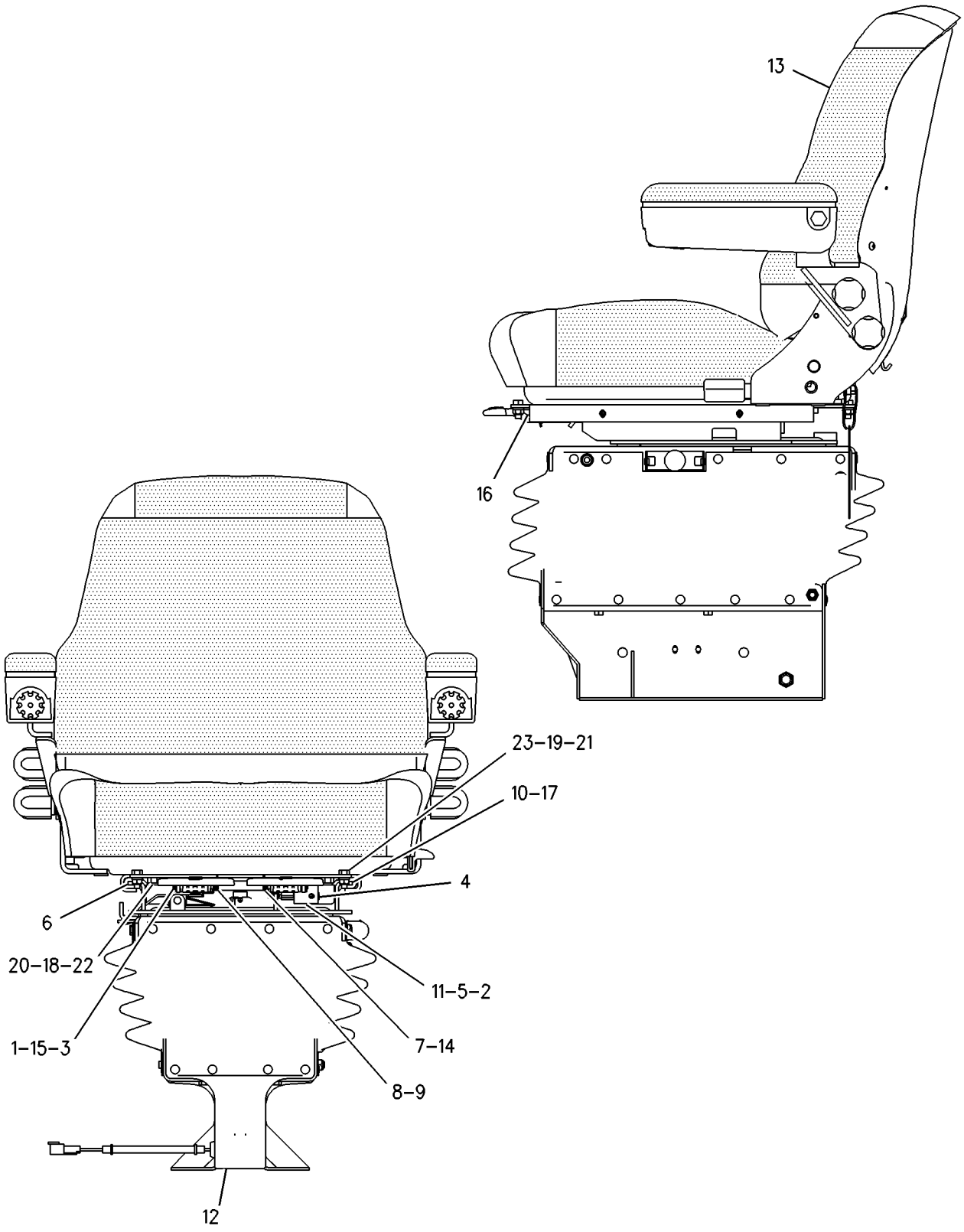

GRAPHIC #1 **<END>** g00759727

OPERATOR STATION

164-1202 SEAT GP-SUSPENSION

S/N: BFP12900-UP
VINYL
PART OF 180-5771 SEAT GP-SUSPENSION
AN ATTACHMENT

SMCS-7324, 7336 **i01516264**

NOTE	REF NO	GRAPHIC REF	PART NUMBER	QTY	PART NAME 1 2 3 4 5 6 (PRODUCT LEVEL)	SEE PAGE
	1	1	**8S-7803**	2	RING-RETAINING	
	2	1	**123-6077**	1	SHAFT-PIVOT	
	3	1	**132-9240**	1	LATCH AS	
	4	1	**135-1706**	1	SPRING	
	5	1	**149-4745**	2	KIT-SLIDER BLOCK	
					(EACH INCLUDES SLIDER BLOCKS AND BOLT)	
	6	1	**154-8278**	1	SPRING-RETURN	
	7	1	**154-8280**	1	SPRING-RETURN	
	8	1	**154-8284**	1	TUBE	
J	9	1	**161-9289**	2	BLOCK-SLIDER	
	10	1	**161-9290**	1	WASHER (11.9X20.7X2.3MM THK)	
Y	11	1	**164-1207**	1	SUSPENSION GP-SEAT	963
Y	12	1	**164-1210**	1	SEAT GP	950
	13	1	**164-1211**	1	LEVER	
	14	1	**164-1212**	1	LEVER	
	15	1	**164-1295**	1	PLATE AS-SLIDE	
J	16	1	**173-5787**	2	SETSCREW	
	17	1	**195-7055**	4	WASHER-HARD (3.2MM THK)	
	18	1	**031-4155**	4	LOCKNUT	
	19	1	**095-0878**	2	PIN-SPRING	
	20	1	**2K-4973**	4	LOCKNUT (3/8-16 THD)	
	21	1	**3B-4505**	4	LOCKWASHER	
	22	1	**4L-6454**	4	BOLT (3/8-16X1 IN)	
	23	1	**4M-0061**	4	BOLT (5/16-18X0.750 IN)	
					AVAILABLE REPAIR KIT(S):	
J			**161-9744**	1	KIT-SLIDER BLOCK	

J-KIT MARKED J INCLUDES PART MARKED J
Y-SEPARATE ILLUSTRATION

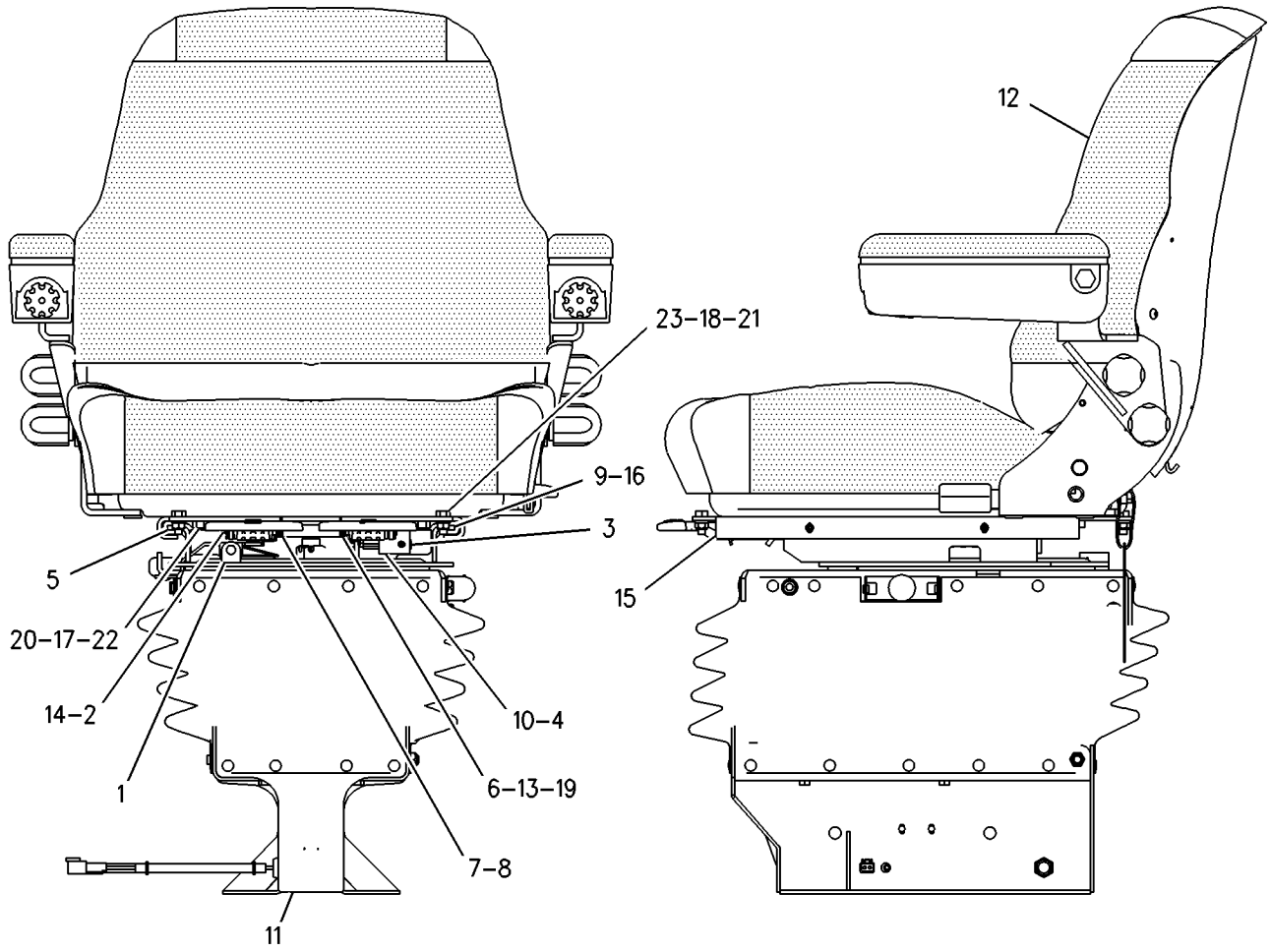

GRAPHIC #1 **<END>** g00759725

180-5770 SEAT GP-SUSPENSION

S/N: BFP12900-UP
FABRIC, STANDARD
PART OF 239-5560, 239-5561, 239-5562 CAB AR
AN ATTACHMENT

SMCS-7324, 7336 **i01453039**

NOTE	PART NUMBER	QTY	PART NAME 1 2 3 4 5 6 (PRODUCT LEVEL)	SEE PAGE
M	**8T-4139**	4	BOLT (M12X1.75X30MM)	
Y	**164-1201**	1	SEAT GP-SUSPENSION	956
	3S-2093	1	STRAP-CABLE	
	8T-4223	4	WASHER-HARD (13.5X25.5X3MM THK)	

M-METRIC PART
Y-SEPARATE ILLUSTRATION

<END>

180-5771 SEAT GP-SUSPENSION

S/N: BFP12900-UP
VINYL, STANDARD
PART OF 239-5558, 239-5559 CANOPY AR
AN ATTACHMENT

SMCS-7324, 7336 **i01453041**

NOTE	PART NUMBER	QTY	PART NAME 1 2 3 4 5 6 (PRODUCT LEVEL)	SEE PAGE
M	**8T-4139**	4	BOLT (M12X1.75X30MM)	
Y	**164-1202**	1	SEAT GP-SUSPENSION	958
	3S-2093	1	STRAP-CABLE	
	8T-4223	4	WASHER-HARD (13.5X25.5X3MM THK)	

M-METRIC PART
Y-SEPARATE ILLUSTRATION

<END>

OPERATOR STATION

164-1165 SUPPRESSION GP-SOUND

S/N: BFP12900-UP

PART OF 184-9735, 205-2177, 239-5561, 239-5562 CAB AR

AN ATTACHMENT

SMCS-7329, 7330 **i01969762**

NOTE	REF NO	GRAPHIC REF	PART NUMBER	QTY	PART NAME 1 2 3 4 5 6 (PRODUCT LEVEL)	SEE PAGE
	1	1	**229-6051**	8	SPACER (4.5X8X10MM THK)	
	2	1	**4V-2264**	8	NUT-PUSH	
	3	1	**9U-8263**	1	COVER	
	4	1	**084-4277**	1	LAMP GP-DOME	
		1	**6R-7490**	1	LAMP (12-VOLT, 10-WATT)	
M	5	1	**113-0920**	8	BOLT-HEX SOCKET (M4X0.7X35MM)	
	6	1	**130-8432**	1	PLATE-FACE	
	7	1	**164-1152**	1	BRACKET AS	
	8	1	**164-1156**	1	COVER	
	9	1	**164-1157**	1	COVER	
	10	1	**164-1166**	1	LINER-CAB	
	11	1	**169-7290**	2	SPEAKER	
	12	1	**169-7291**	2	COVER-SPEAKER	
	13	1	**197-8973**	6	FASTENER-PANEL	
	14	1	**200-5356**	1	PLATE AS	
	15	1	**229-6052**	6	SPACER (9.7X12.7X7.5MM THK)	
M	16	1	**131-3985**	2	SCREW (M6X1 THD)	
	17	1	**200-3004**	2	SCREW-TRUSS HEAD (M6X1X45MM)	
	18	1	**6V-2410**	8	SCREW-WASHER HEAD	
	19	1	**8T-4121**	2	WASHER-HARD (11X21X2.5MM THK)	
M	20	1	**8T-4137**	2	BOLT (M10X1.5X20MM)	
	21	1	**8T-4205**	2	WASHER-HARD (7.2X14.5X2MM THK)	
M	22	1	**9X-2041**	4	SCREW-TRUSS HEAD (M10X1.5X20MM)	
M	23	1	**9X-2045**	4	SCREW-TRUSS HEAD (M6X1X20MM)	
E	24	1	**129-1855**		FASTENER-HOOK (18CM EACH)	
E	25	1	**129-1854**		FASTENER-LOOP (18CM EACH)	
E	26	1	**129-1855**		FASTENER-HOOK (16CM)	
E	27	1	**129-1854**		FASTENER-LOOP (16CM)	

E-ORDER BY THE CENTIMETER
M-METRIC PART

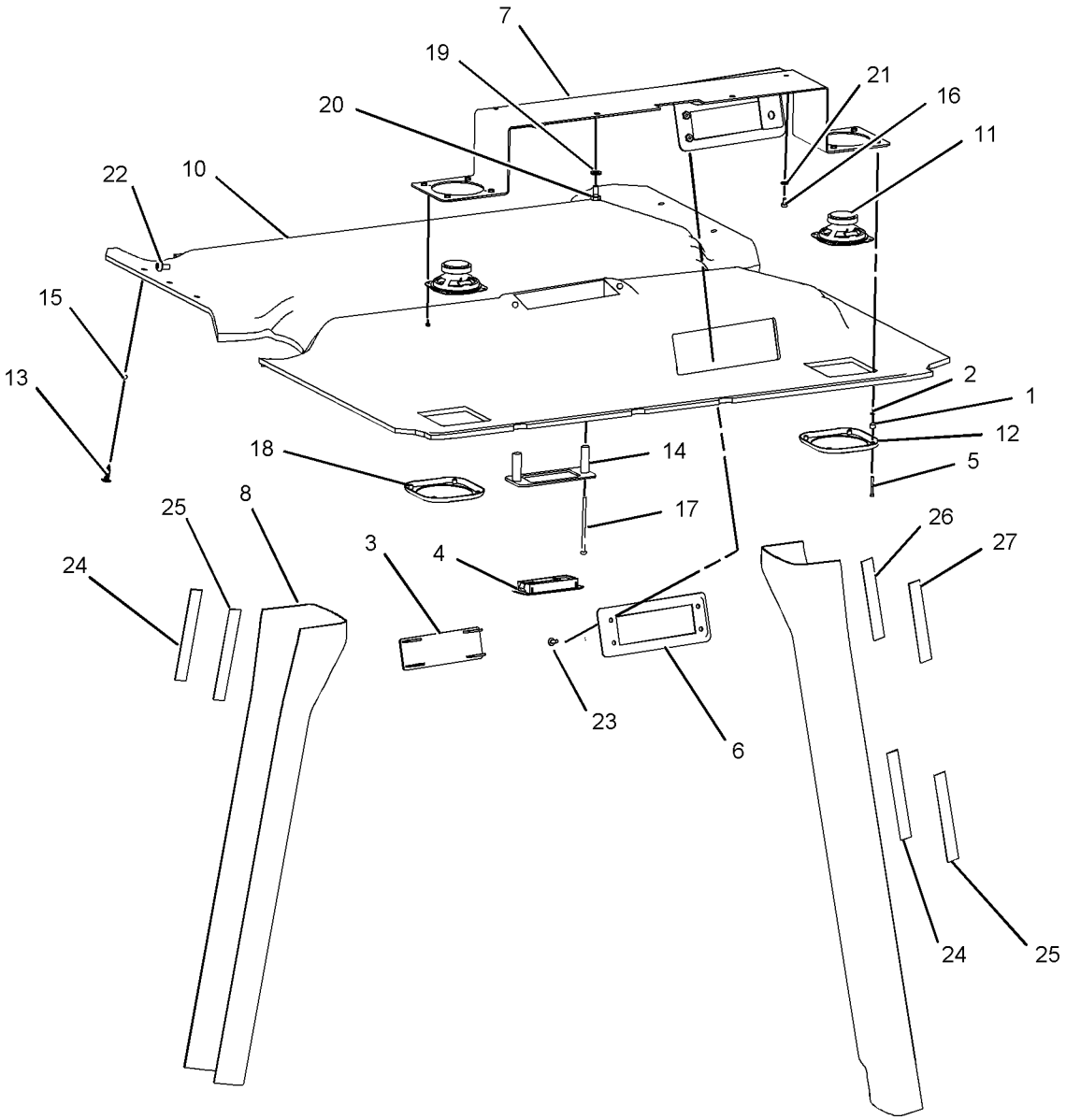

GRAPHIC #1 **<END>** g01022625

OPERATOR STATION

164-1207 SUSPENSION GP-SEAT

S/N: BFP12900-UP

PART OF 164-1201, 164-1202 SEAT GP-SUSPENSION

AN ATTACHMENT

SMCS-7312, 7324 **i01945135**

NOTE	REF NO	GRAPHIC REF	PART NUMBER	QTY	PART NAME 1 2 3 4 5 6 (PRODUCT LEVEL)	SEE PAGE
	1	1	**111-5042**	34	FASTENER	
M	2	1	**129-3180**	1	LOCKNUT	
	3	1	**130-8343**	1	SCREW-BUTTON HEAD	
	4	1	**161-9282**	1	BOLT (3/4-10 X1.5)	
	5	1	**161-9283**	1	WASHER (1.6MM THK)	
	6	1	**161-9285**	1	NUT (3/4-10 THD)	
	7	1	**163-1135**	1	SPRING	
	8	1	**163-1139**	1	BRACKET	
	9	1	**164-1208**	1	PLATE AS	
	9A	1	**161-9286**	1	SPRING-LATCH	
	9B	1	**161-9288**	1	SHAFT-PIVOT	
	9C	1	**164-1294**	1	LATCH GP-SEAT SWIVEL	
	9D	1	**8S-7803**	1	RING-RETAINING	
	10	1	**164-1215**	1	ABSORBER AS-SHOCK	
	11	1	**164-1216**	1	BASE AS	
	12	1	**164-1217**	1	ARM AS-SUSPENSION	
	13	1	**164-1218**	2	ARM AS-SUSPENSION	
	14	1	**164-1219**	1	BRACKET AS	
	15	1	**164-1220**	1	BRACKET AS	
	16	1	**164-1221**	1	AIR COMPRESSOR GP	
	17	1	**164-1224**	2	SHAFT AS	
	18	1	**164-1225**	2	SHAFT AS	
	19	1	**164-1226**	2	SHAFT	
	20	1	**164-1228**	1	HARNESS AS-RIDE CONTROL	
	21	1	**164-1229**	4	BUMPER	
	22	1	**164-1230**	12	BEARING	
	23	1	**5V-4845**	2	BEARING	
	24	1	**164-1232**	1	PLATE	
	25	1	**164-1233**	2	SPACER (13X25.4X20.5MM THK)	
	26	1	**164-1234**	1	PLATE	
	27	1	**164-1237**	1	BUSHING	
	28	1	**164-1238**	1	SPACER (12.8X22.2X3.1MM THK)	
	29	1	**164-1239**	2	SPACER (13.5X19X61.9MM THK)	
	30	1	**164-1240**	1	BOOT	
	31	1	**185-3890**	2	SCREW-PAN HEAD	
	32	1	**215-8196**	1	VALVE AS	
	33	1	**215-1242**	1	RING	
	34	1	**197-6657**	1	BOLT-ROUND HEAD	
	35	1	**1K-6872**	1	LOCKNUT	
	36	1	**2K-4973**	8	LOCKNUT (3/8-16 THD)	
	37	1	**3S-2093**	2	STRAP-CABLE	
	38	1	**4B-9784**	8	BALL	
	39	1	**4K-0499**	2	LOCKWASHER	
	40	1	**5M-3062**	1	BOLT (3/8-16X0.75 IN)	
	41	1	**6V-8185**	8	NUT (1/4-20 THD)	
	42	1	**7X-0481**	1	BOLT (203.2MM)	
	43	1	**7X-0622**	2	WASHER (13X24X2.5MM THK)	
	44	1	**8T-9364**	4	BOLT (1/4-20X0.625 IN)	
	45	1	**1H-3337**	2	BOLT (1/4-20X0.875 IN)	
	46	1	**164-1236**	2	PLATE AS	
	47	1	**180-5794**	2	PLATE	
	48	1	**197-6658**	1	WASHER	
	49	1	**3B-4631**	1	PIN-COTTER	
	50	1	**164-1235**	1	KNOB	

M-METRIC PART

164-1207 SUSPENSION GP-SEAT *(contd.)* i01945135

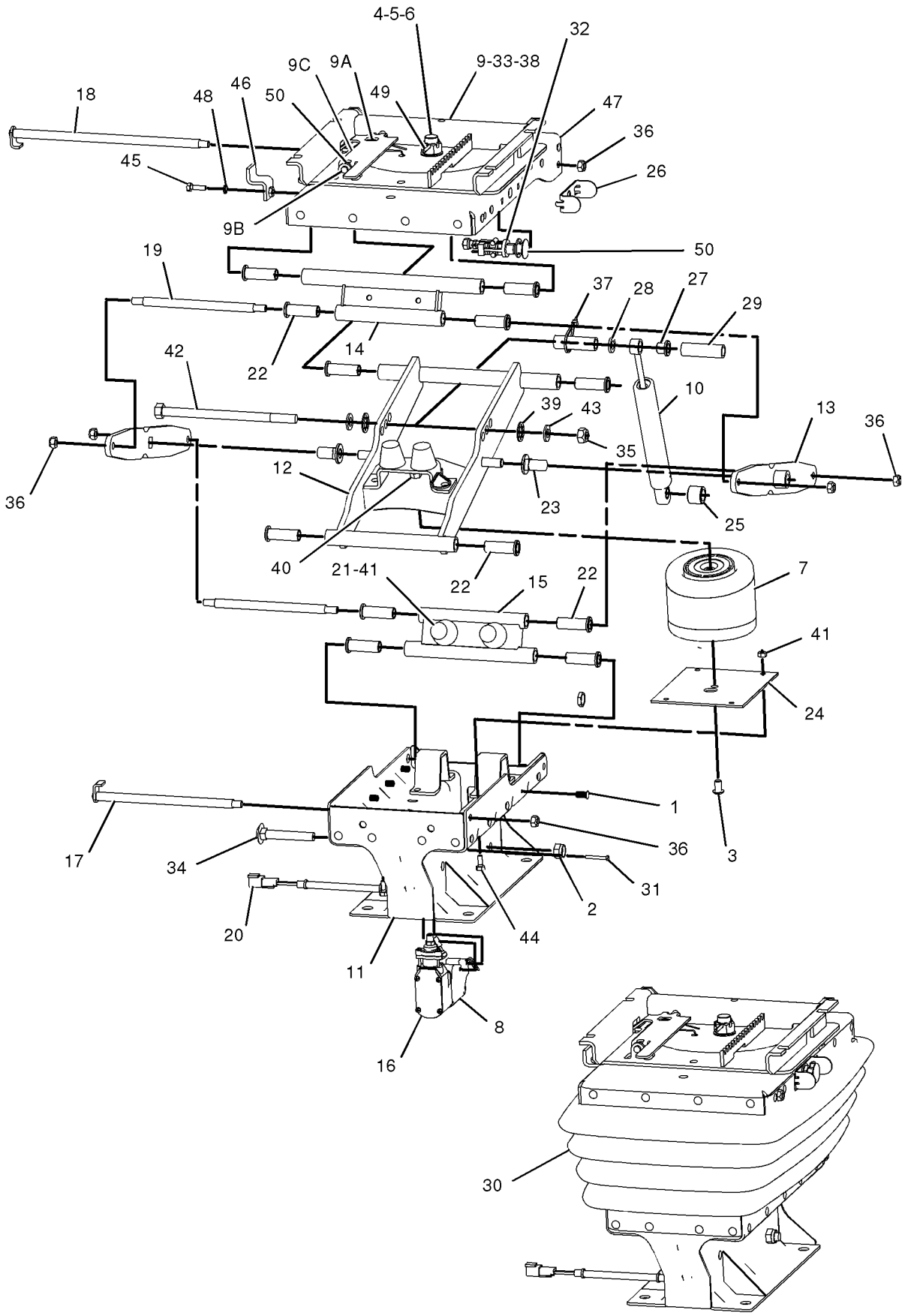

GRAPHIC #1 **<END>** g01012383

OPERATOR STATION

164-1292 SWIVEL & SLIDE GP-SEAT

S/N: BFP12900-UP; CXP940-UP
PART OF 164-1205 SEAT GP-STATIC
AN ATTACHMENT

SMCS-7312, 7321 **i01399932**

NOTE	REF NO	GRAPHIC REF	PART NUMBER	QTY	PART NAME 1 2 3 4 5 6 (PRODUCT LEVEL)	SEE PAGE
Y	1	1	**164-1293**	1	SWIVEL GP-SEAT	967
	2	1	**095-0878**	2	PIN-SPRING	
	3	1	**031-4155**	4	LOCKNUT (5/16-18 THD)	
	4	1	**123-6077**	1	SHAFT-PIVOT	
	5	1	**132-9240**	1	LATCH AS	
	6	1	**135-1706**	1	SPRING	
	7	1	**154-8278**	1	SPRING-RETURN	
	8	1	**154-8280**	1	SPRING-RETURN	
	9	1	**154-8284**	1	TUBE	
	10	1	**161-9744**	1	KIT-SLIDER BLOCK	
		1	**161-9289**	2	BLOCK-SLIDER	
		1	**173-5787**	2	SETSCREW	
	11	1	**164-1211**	1	LEVER	
	12	1	**164-1212**	1	LEVER	
	13	1	**164-1295**	1	PLATE AS-SLIDE	
	14	1	**3B-4505**	4	LOCKWASHER	
	15	1	**4M-0061**	4	BOLT (5/16-18X.750 IN)	
	16	1	**8S-7803**	2	RING-RETAINING	
	17	1	**161-9290**	1	WASHER (2.3MM THK)	

Y-SEPARATE ILLUSTRATION

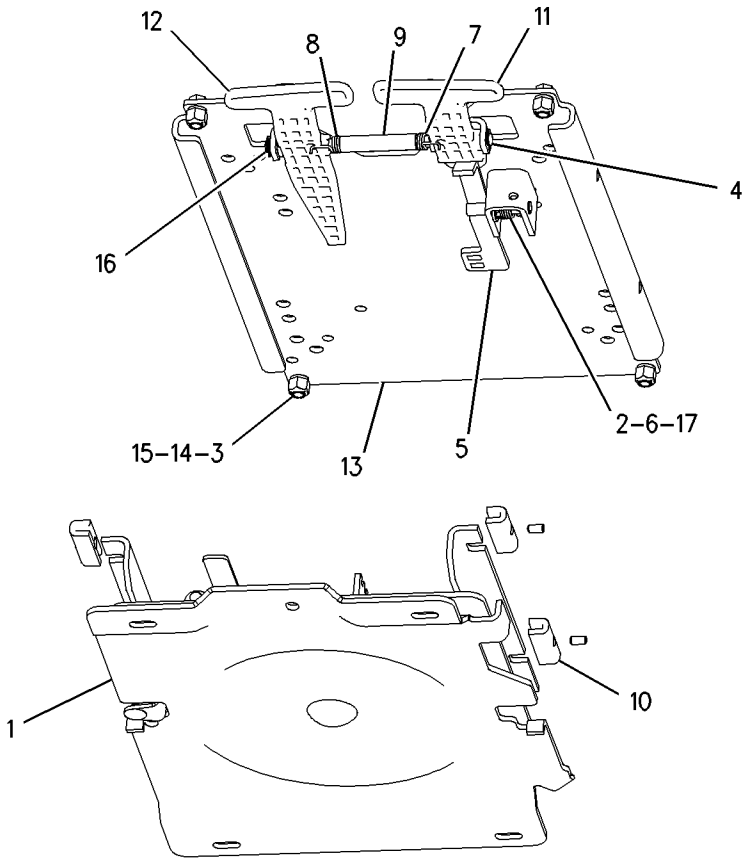

GRAPHIC #1 **<END>** g00739102

OPERATOR STATION

164-1293 SWIVEL GP-SEAT

S/N: BFP12900-UP; CXP940-UP
PART OF 164-1292 SWIVEL & SLIDE GP-SEAT
AN ATTACHMENT

SMCS-7312, 7321 **i01399935**

NOTE	REF NO	GRAPHIC REF	PART NUMBER	QTY	PART NAME 1 2 3 4 5 6 (PRODUCT LEVEL)	SEE PAGE
	1	1	**8S-7803**	1	RING-RETAINING	
	2	1	**161-9282**	1	BOLT (3/4-10 X1.5)	
	3	1	**161-9283**	1	WASHER (1.6MM THK)	
	4	1	**161-9285**	1	NUT (3/4-10 THD)	
	5	1	**161-9286**	1	SPRING-LATCH	
	6	1	**161-9288**	1	SHAFT-PIVOT	
	7	1	**164-1294**	1	LATCH GP-SEAT SWIVEL	
		1	**9C-4457**	1	FASTENER	
	8	1	**3B-4631**	1	COTTER	

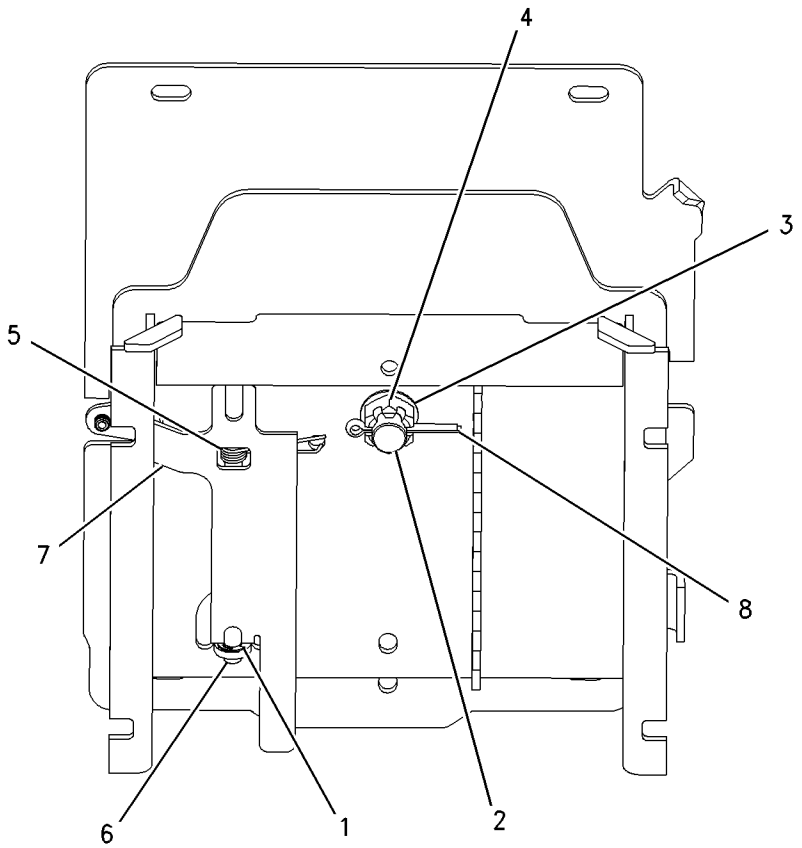

GRAPHIC #1 **<END>** g00737841

OPERATOR STATION

239-1080 TACHOMETER GP-ELECTRIC

S/N: BFP12900-UP
PART OF 239-5562 CAB AR
AN ATTACHMENT

SMCS-7462 **i01986564**

NOTE	REF NO	GRAPHIC REF	PART NUMBER	QTY	PART NAME 1 2 3 4 5 6 (PRODUCT LEVEL)	SEE PAGE
	1	1	**4B-2043**	7	NUT (8-32 THD)	
	2	1	**9B-7233**	7	LOCKWASHER	
	3	1	**122-7137**	1	LAMP (12-VOLT)	
	4	1	**131-1424**	1	SEAL	

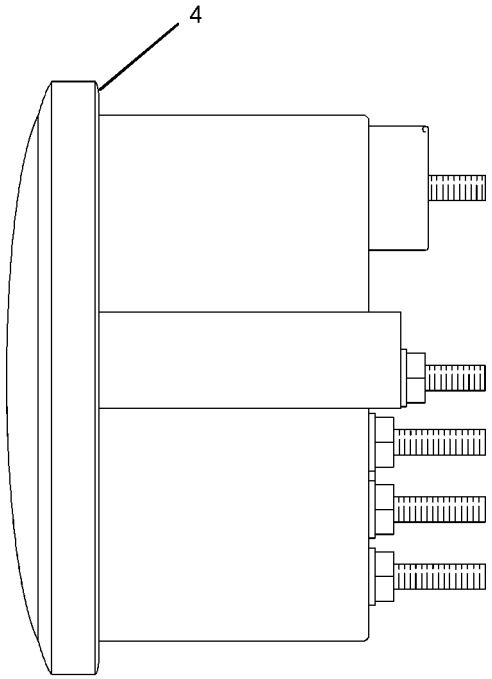

LEFT SIDE VIEW

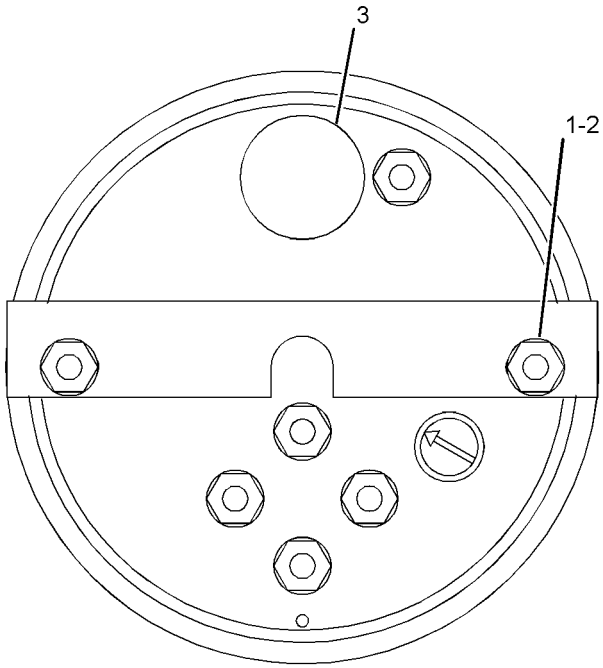

REAR VIEW

GRAPHIC #1 **<END>** g01030658

OPERATOR STATION

239-1081 TACHOMETER GP-ELECTRIC

S/N: BFP12900-UP

PART OF 239-5560, 239-5561 CAB AR, 239-5558, 239-5559 CANOPY AR

AN ATTACHMENT

SMCS-7462 **i01986539**

NOTE	REF NO	GRAPHIC REF	PART NUMBER	QTY	PART NAME 1 2 3 4 5 6 (PRODUCT LEVEL)	SEE PAGE
	1	1	**4B-2043**	6	NUT (8-32 THD)	
	2	1	**9B-7233**	6	LOCKWASHER	
	3	1	**122-7137**	1	LAMP (12 VOLT)	
	4	1	**131-1424**	1	SEAL	

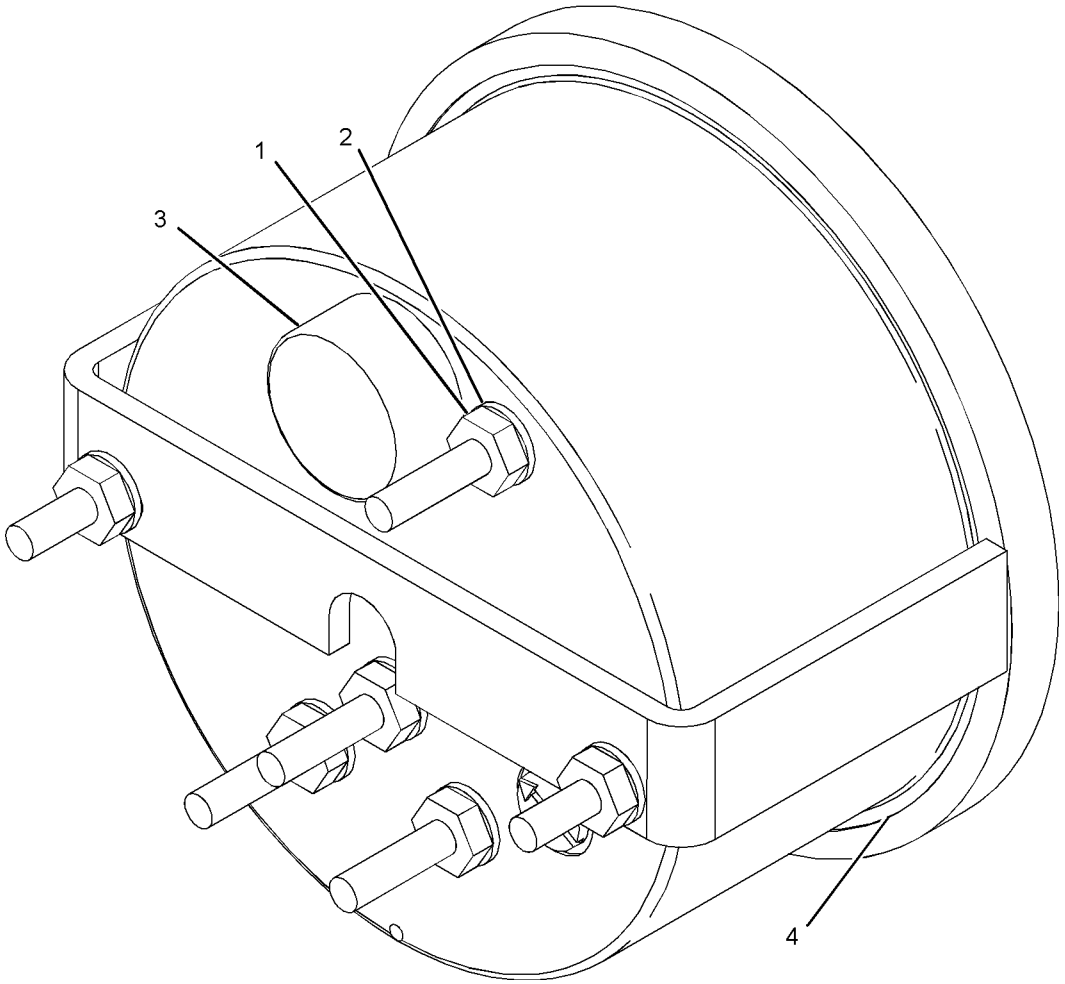

GRAPHIC #1

<END>

g01029988

OPERATOR STATION

164-1370 TRIM GP-CAB

S/N: BFP12900-UP

PART OF 184-9735, 205-2177, 239-5561, 239-5562 CAB AR

AN ATTACHMENT

SMCS-7329, 7451 **i01617347**

NOTE	REF NO	GRAPHIC REF	PART NUMBER	QTY	PART NAME 1 2 3 4 5 6 (PRODUCT LEVEL)	SEE PAGE
	1	1	**9R-1948**	8	RIVET	
	2	1	**164-1366**	1	BRUSH AS	
	3	1	**164-1374**	1	BRUSH AS	
C	4	1	**164-1110**	1	COVER	
M	5	1	**9X-2044**	2	SCREW-TRUSS HEAD (M6X1X16MM)	

C-CHANGE FROM PREVIOUS TYPE
M-METRIC PART

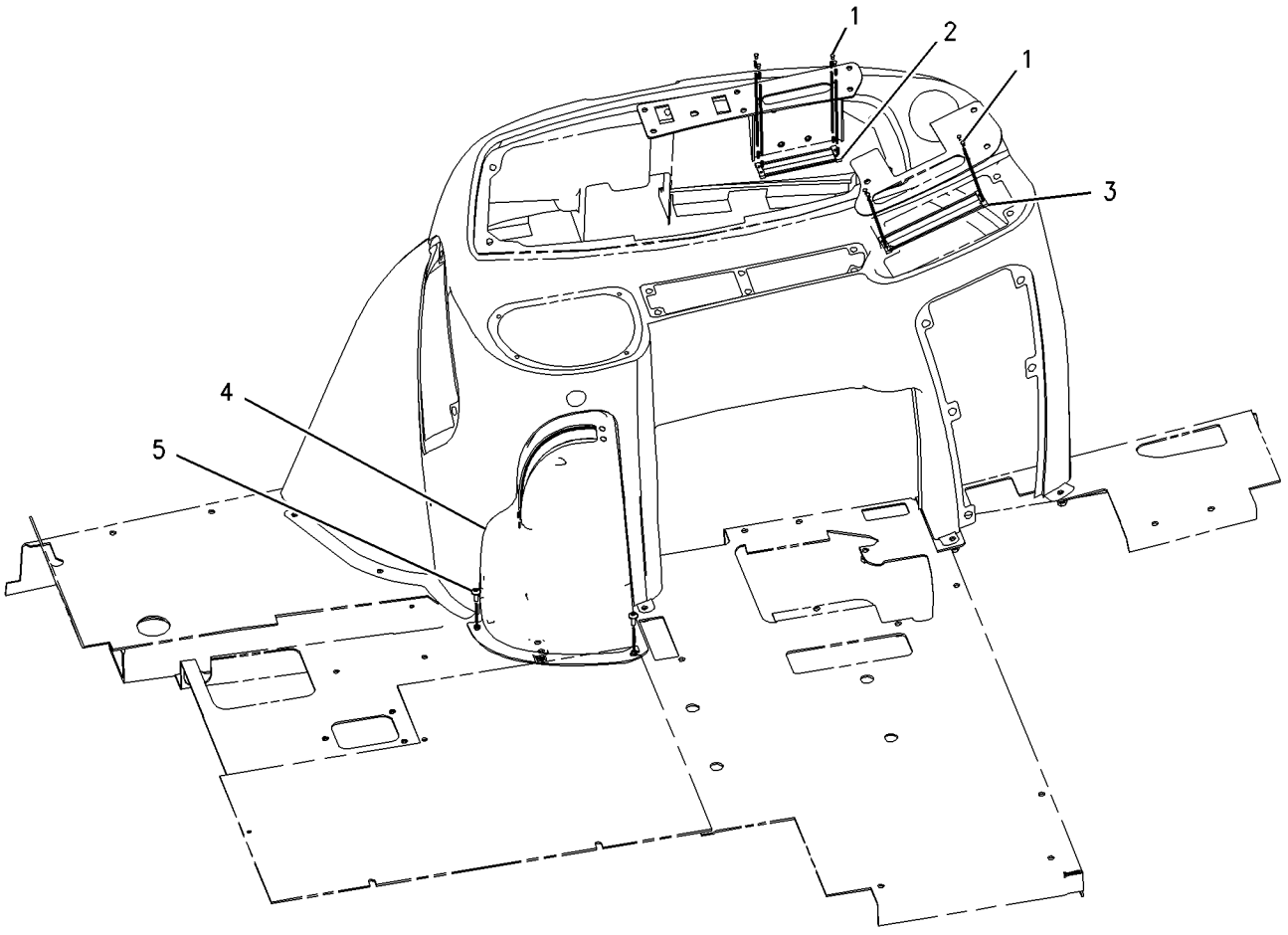

GRAPHIC #1 **<END>** g00796683

OPERATOR STATION

108-8251 VISOR GP-CAB

S/N: BFP12900-UP
FOR USE WITH AIR CONDITIONER
AN ATTACHMENT

SMCS-7301, 7325, 7335 **i01447419**

NOTE	REF NO	GRAPHIC REF	PART NUMBER	QTY	PART NAME 1 2 3 4 5 6 (PRODUCT LEVEL)	SEE PAGE
	1	1	**9R-3205**	1	VISOR AS	
	2	1	**9R-3204**	1	PLATE AS	
M	3	1	**8T-4171**	4	BOLT (M6X1X12MM)	
	4	1	**9R-3203**	2	PLATE	

M-METRIC PART

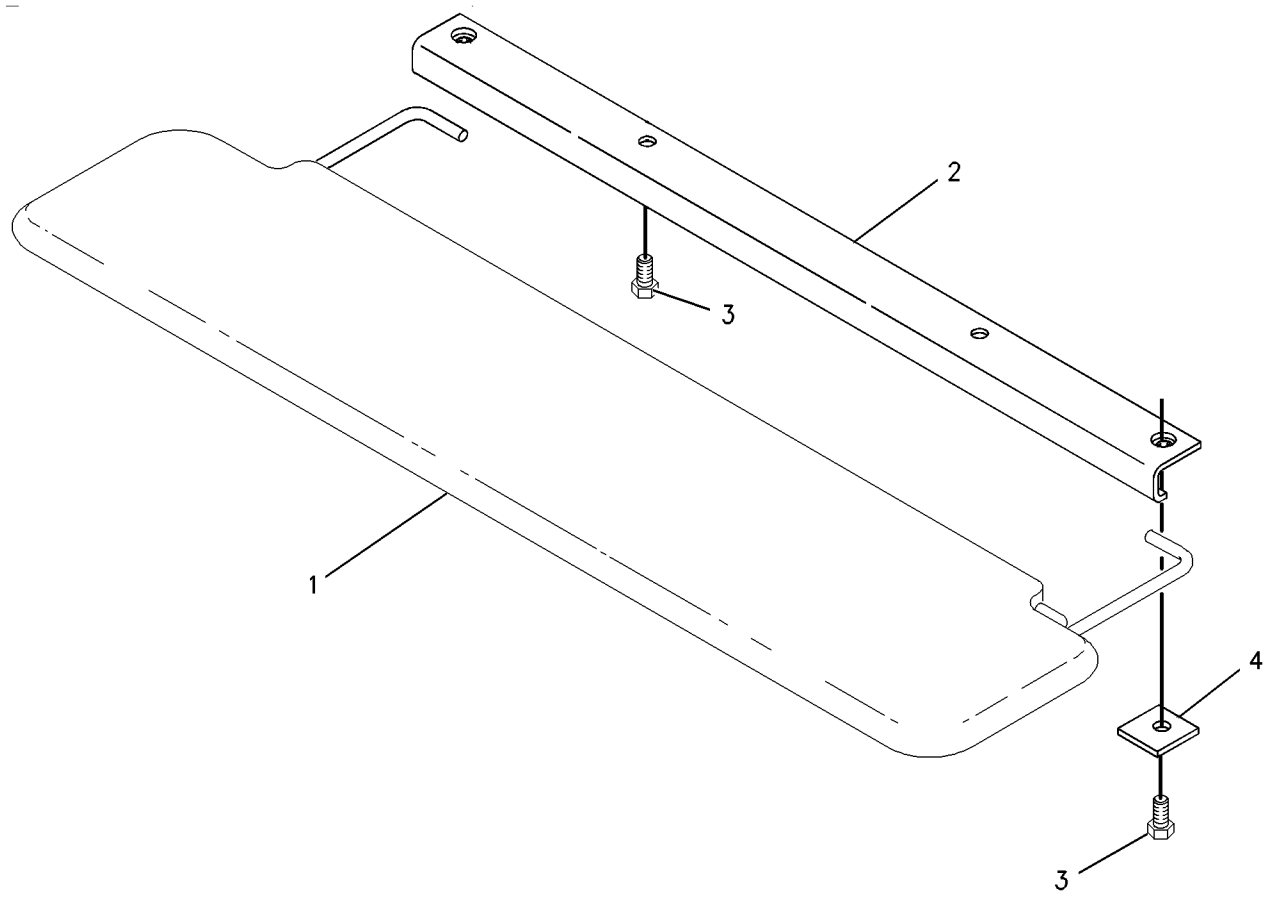

GRAPHIC #1 **<END>** g00757829

OPERATOR STATION

167-8187 WASHER GP-WINDOW

S/N: BFP12900-UP

WINDSHIELD

PART OF 184-9735, 205-2177, 239-5560, 239-5561, 239-5562 CAB AR

AN ATTACHMENT

SMCS-7306 **i01794723**

NOTE	REF NO	GRAPHIC REF	PART NUMBER	QTY	PART NAME 1 2 3 4 5 6 (PRODUCT LEVEL)	SEE PAGE
	1	1	**3S-2093**	2	STRAP-CABLE	
	2	1	**8T-0789**	1	CLIP-HOSE	
	3	1	**8T-1118**	1	NOZZLE AS	
	4	1	**9R-3469**	2	DIAPHRAGM	
	5	1	**112-9450**	1	PLATE	
	6	1	**121-6936**	2	CONNECTOR	
	7	1	**123-8670**	1	TANK AS	
		1	**123-8669**	1	TANK	
		1	**117-2823**	1	CAP	
		1	**117-2824**	2	GROMMET	
		1	**117-2826**	2	PUMP AS	
	8	1	**131-1368**	1	HARNESS AS (WIPER SWITCH)	
		1	**102-8803**	1	KIT-RECEPTACLE (3 PIN)	
	9	1	**168-9906**	1	BRACKET	
	10	1	**186-0817**	1	WASHER-HARD (7X19X2MM THK)	
M	11	1	**129-3178**	1	LOCKNUT (M6X1 THD)	
	12	1	**7X-7729**	1	WASHER (11X25X3MM THK)	
	13	1	**8T-4121**	2	WASHER-HARD (11X21X2.5MM THK)	
M	14	1	**8T-4201**	2	BOLT-LOCKING (M10X1.5X20MM)	
	15	1	**8T-4205**	1	WASHER-HARD (7.2X14.5X2MM THK)	
M	16	1	**8T-4971**	1	BOLT (M6X1X30MM)	
E	17	1	**144-0195**	2	HOSE (15CM)	
E	18	1	**144-0195**		HOSE (226CM)	

E-ORDER BY THE CENTIMETER
M-METRIC PART

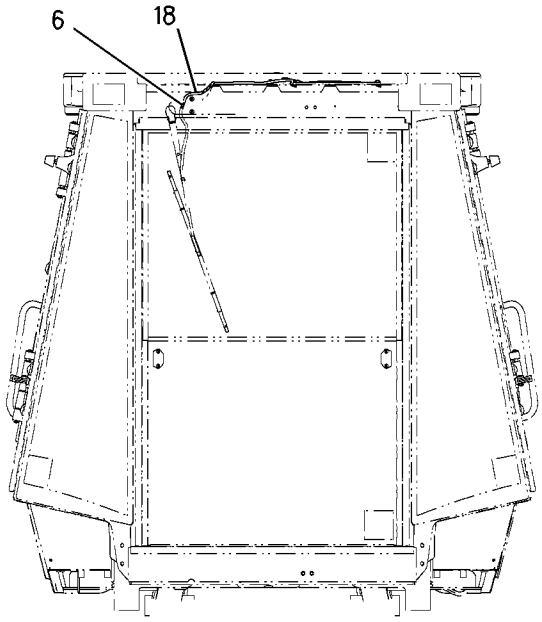

REAR VIEW

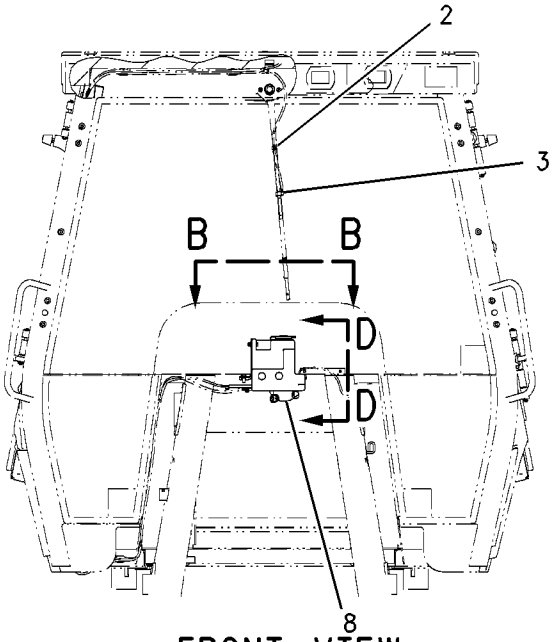

FRONT VIEW

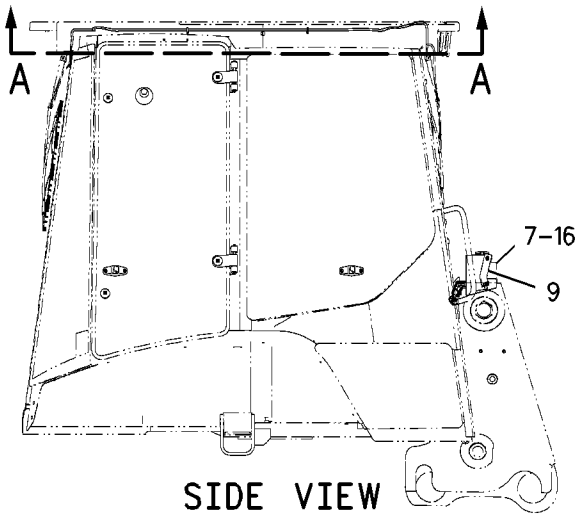

SIDE VIEW

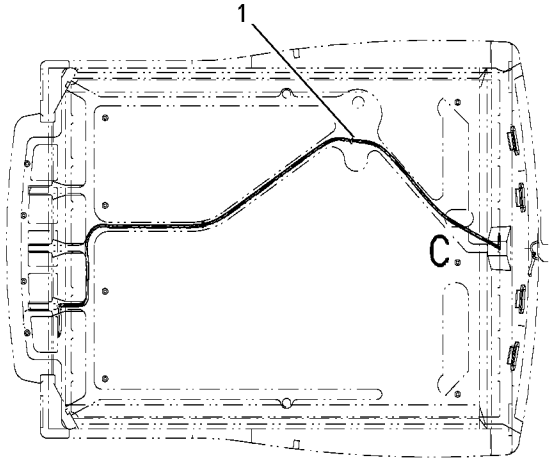

SECTION A-A

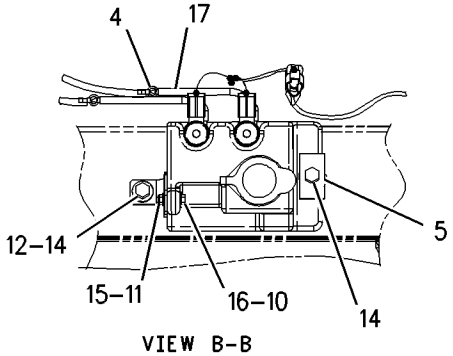

VIEW B-B

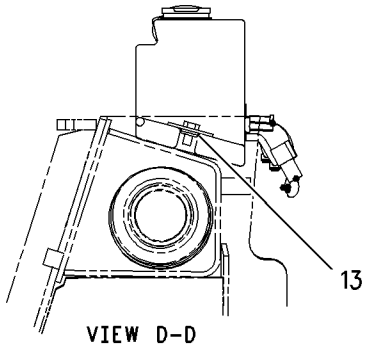

VIEW D-D

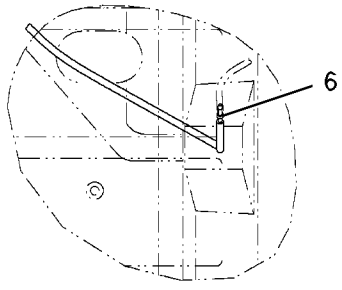

DETAIL C

GRAPHIC #1 **<END>** g00745155

OPERATOR STATION

207-6052 WASHER GP-WINDOW

S/N: BFP12900-UP
PART OF 239-5559 CANOPY AR
AN ATTACHMENT

SMCS-7306 **i02020876**

NOTE	REF NO	GRAPHIC REF	PART NUMBER	QTY	PART NAME 1 2 3 4 5 6 (PRODUCT LEVEL)	SEE PAGE
	1	1	**3S-2093**	2	STRAP-CABLE	
	2	1	**8T-0789**	1	CLIP-HOSE	
	3	1	**8T-1118**	1	NOZZLE AS	
	4	1	**9R-3469**	2	DIAPHRAGM	
	5	1	**112-9450**	1	PLATE	
	6	1	**6K-9632**	1	TEE	
	7	1	**123-8670**	1	TANK AS	
		1	**117-2823**	1	CAP	
		1	**117-2824**	2	GROMMET	
		1	**117-2826**	2	PUMP AS-WASHER	
		1	**123-8669**	1	TANK	
	8	1	**131-1368**	1	HARNESS AS-WINDOW WIPER	
		1	**102-8803**	1	KIT-RECEPTACLE (3-PIN)	
					(KIT SERVICES RECEPTACLE AND WEDGE)	
	9	1	**168-9906**	1	BRACKET	
	10	1	**186-0817**	1	WASHER-HARD (7X19X2-MM THK)	
M	11	1	**129-3178**	1	LOCKNUT (M6X1-THD)	
	12	1	**7X-7729**	1	WASHER (11X25X3-MM THK)	
B	13	1	**8T-4121**	2	WASHER-HARD (11X21X2.5-MM THK)	
M	14	1	**8T-4201**	2	BOLT-LOCKING (M10X1.5X20-MM)	
	15	1	**8T-4205**	1	WASHER-HARD (7.2X14.5X2-MM THK)	
M	16	1	**8T-4971**	1	BOLT (M6X1X30-MM)	
E	17	1	**144-0195**		HOSE (450CM)	
E	18	1	**144-0195**		HOSE (450CM)	

B-USE AS REQUIRED
E-ORDER BY THE CENTIMETER
M-METRIC PART

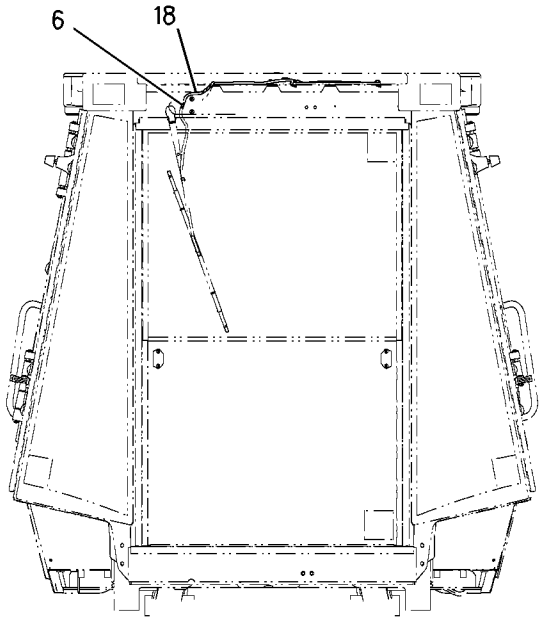

REAR VIEW

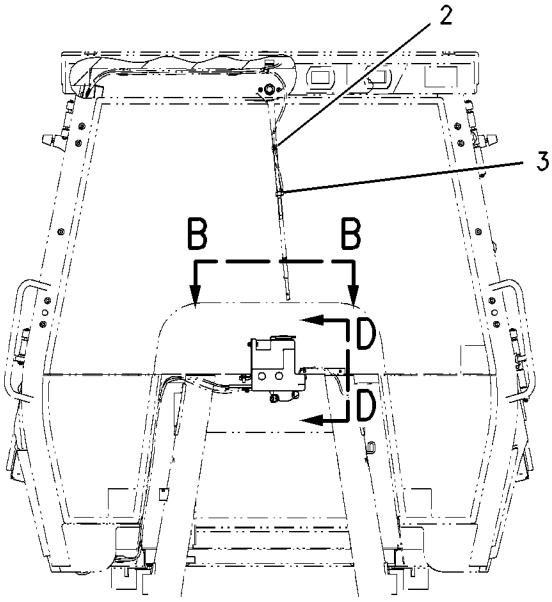

FRONT VIEW

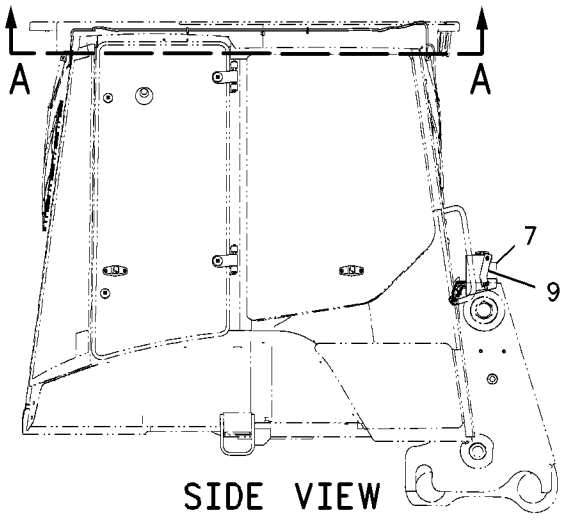

SIDE VIEW

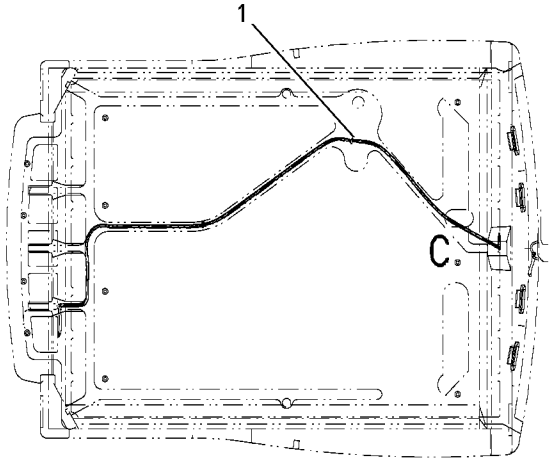

SECTION A-A

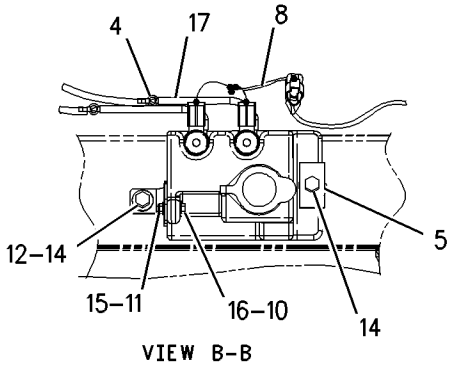

VIEW B-B

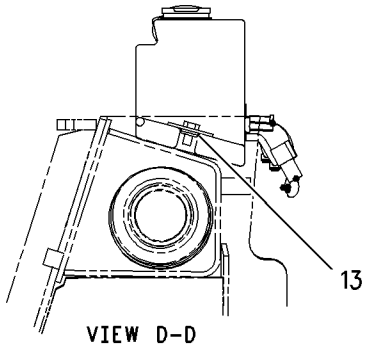

VIEW D-D

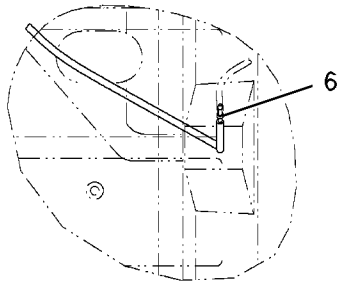

DETAIL C

GRAPHIC #1 **<END>** g00909894

OPERATOR STATION

164-1059 WINDOW GP-CAB—RH

S/N: BFP12900-UP
PART OF 164-1125, 164-1140 CAB GP
AN ATTACHMENT

SMCS-7310 **i01374492**

NOTE	REF NO	GRAPHIC REF	PART NUMBER	QTY	PART NAME 1 2 3 4 5 6 (PRODUCT LEVEL)	SEE PAGE
	1	1	**7X-2393**	1	BUMPER-CONICAL	
	2	1	**8Y-7309**	1	RETAINER	
	3	1	**100-7608**	1	HANDLE	
	4	1	**129-8542**	6	RETAINER	
	5	1	**129-8545**	8	WASHER (3MM THK)	
M	6	1	**136-4192**	4	BOLT (M6X1.0X35MM)	
	7	1	**143-2830**	1	LATCH AS	
M		1	**6V-7743**	2	LOCKNUT (M6X1 THD)	
M		1	**9X-2045**	2	SCREW-TRUSS HEAD (M6X1X20MM)	
		1	**143-2827**	1	SPRING	
	8	1	**154-5423**	2	SPACER	
	9	1	**154-5424**	2	HINGE	
	10	1	**159-4951**	2	LATCH AS	
M		1	**5C-2874**	2	NUT (M5X.8 THD)	
M		1	**161-6984**	2	SCREW-TRUSS HEAD (M5X0.8X20MM)	
		1	**161-6987**	2	WASHER-HARD (1.5MM THK)	
		1	**161-9294**	2	SPRING-FLAT WIRE	
M		1	**162-6556**	2	LOCKNUT (M6X1.0 THD)	
	11	1	**164-1064**	1	GLASS-RH	
M	12	1	**5C-7261**	1	NUT (M8X1.25 THD)	
M	13	1	**6V-7743**	2	LOCKNUT (M6X1 THD)	
E	14	1	**148-5353**		SEAL (342CM) (378CM)	

E-ORDER BY THE CENTIMETER
M-METRIC PART

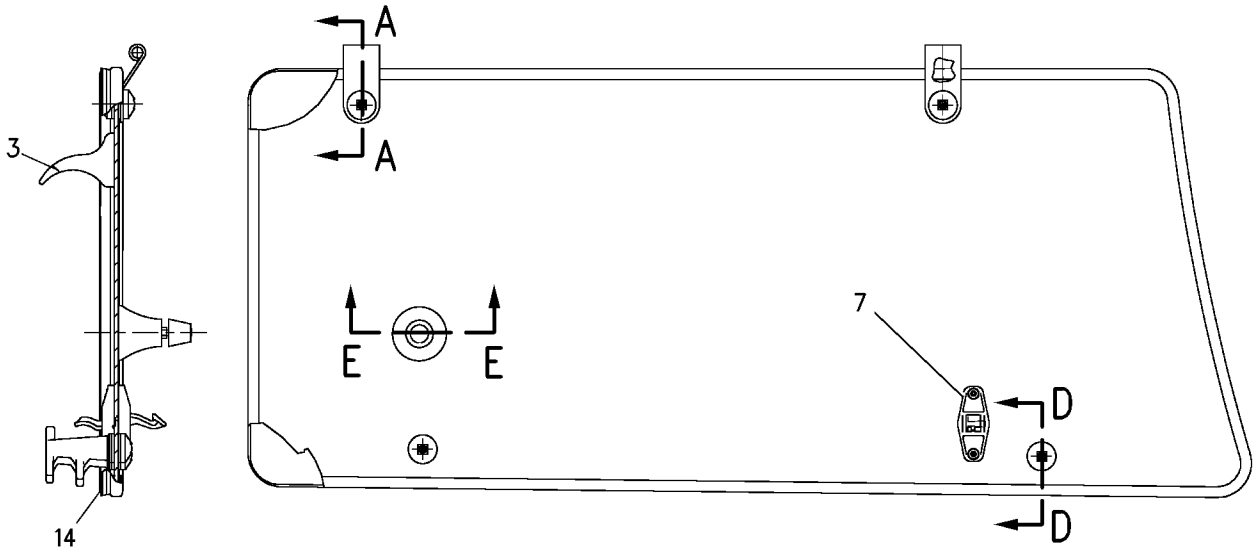

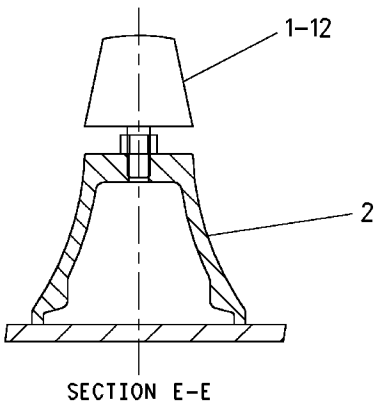

SECTION E-E

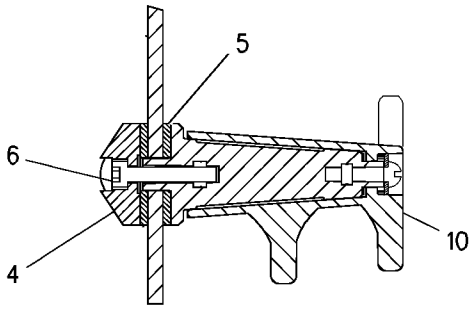

SECTION D-D

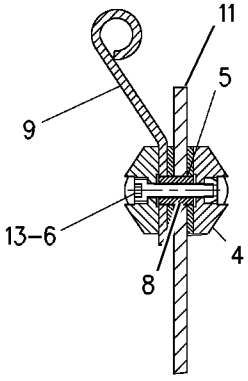

SECTION A-A

GRAPHIC #1 **<END>** g00725900

OPERATOR STATION

164-1060 WINDOW GP-CAB—LH

S/N: BFP12900-UP
PART OF 164-1125, 164-1140 CAB GP
AN ATTACHMENT

SMCS-7310 **i01374530**

NOTE	REF NO	GRAPHIC REF	PART NUMBER	QTY	PART NAME 1 2 3 4 5 6 (PRODUCT LEVEL)	SEE PAGE
	1	1	**7X-2393**	1	BUMPER-CONICAL	
	2	1	**8Y-7309**	1	RETAINER	
	3	1	**100-7608**	1	HANDLE	
	4	1	**129-8542**	6	RETAINER	
	5	1	**129-8545**	8	WASHER (3MM THK)	
M	6	1	**136-4192**	4	BOLT (M6X1.0X35MM)	
	7	1	**143-2830**	1	LATCH AS	
M		1	**6V-7743**	2	LOCKNUT (M6X1 THD)	
M		1	**9X-2045**	2	SCREW-TRUSS HEAD (M6X1X20MM)	
		1	**143-2827**	1	SPRING	
	8	1	**154-5423**	2	SPACER	
	9	1	**154-5424**	2	HINGE	
	10	1	**159-4950**	2	LATCH AS	
M		1	**5C-2874**	2	NUT (M5X.8 THD)	
M		1	**161-6984**	2	SCREW-TRUSS HEAD (M5X0.8X20MM)	
		1	**161-6987**	2	WASHER-HARD (1.5MM THK)	
		1	**161-9294**	2	SPRING-FLAT WIRE	
M		1	**162-6556**	2	LOCKNUT (M6X1.0 THD)	
	11	1	**164-1065**	1	GLASS-LH	
M	12	1	**5C-7261**	1	NUT (M8X1.25 THD)	
M	13	1	**6V-7743**	2	LOCKNUT (M6X1 THD)	
E	14	1	**148-5353**		SEAL (378CM)	

E-ORDER BY THE CENTIMETER
M-METRIC PART

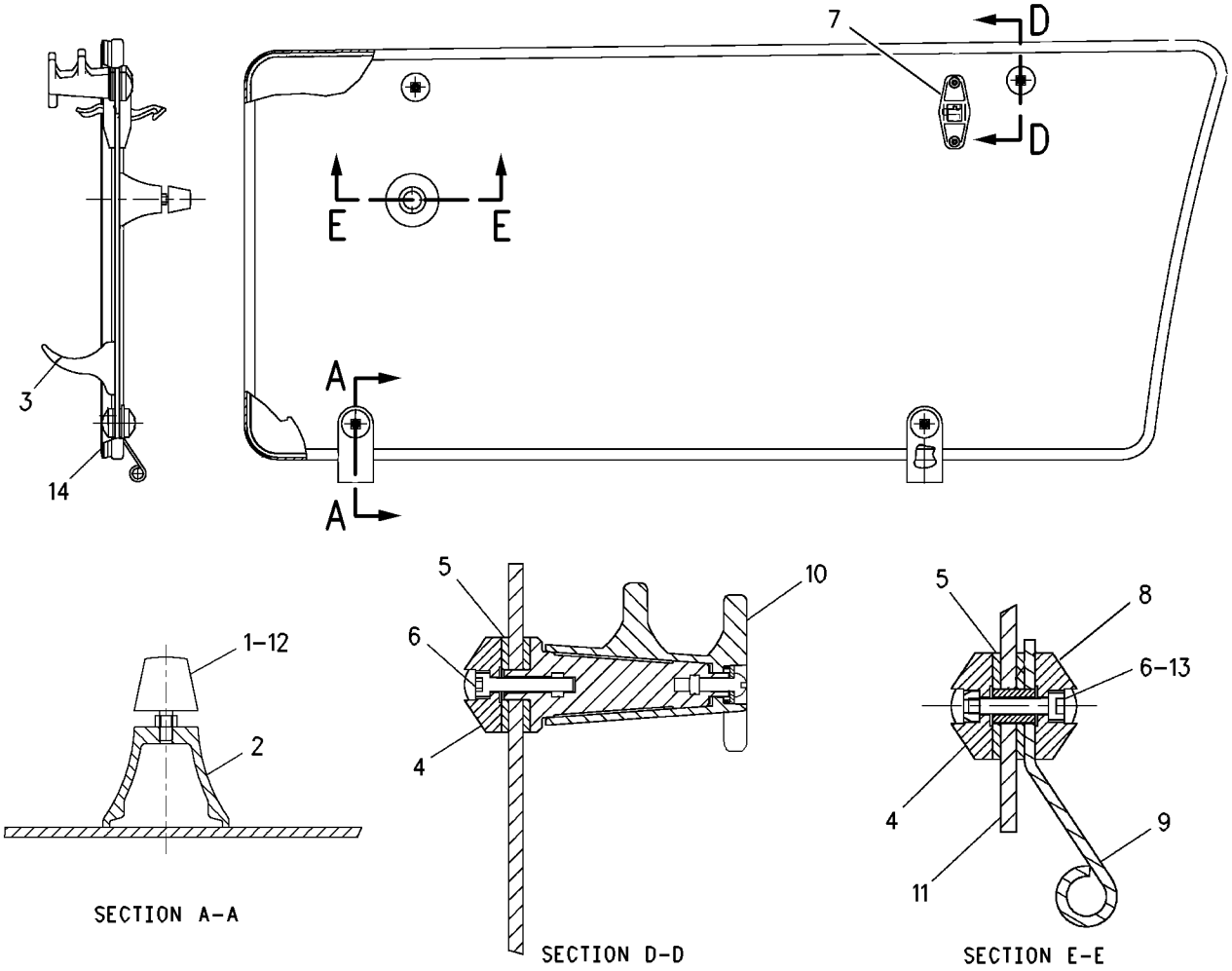

GRAPHIC #1 **<END>** g00725887

OPERATOR STATION

164-1325 WINDOW GP-CAB—REAR

S/N: BFP12900-UP
PART OF 164-1125, 164-1140 CAB GP
AN ATTACHMENT

SMCS-7310 **i01961857**

NOTE	REF NO	GRAPHIC REF	PART NUMBER	QTY	PART NAME 1 2 3 4 5 6 (PRODUCT LEVEL)	SEE PAGE
	1	1	**110-5602**	2	KNOB	
M	2	1	**131-8203**	4	SCREW-FLAT HEAD	
	3	1	**140-9921**	2	INSERT-THREADED	
	4	1	**146-7744**	1	KIT-LATCH (LH)	
	5	1	**146-7745**	1	KIT-LATCH (RH)	
	6	1	**150-8015**	2	GASKET	
	7	1	**164-1308**	2	ROLLER	
	8	1	**164-1311**	1	LINKAGE AS	
	9	1	**164-1327**	1	GLASS	
	10	1	**164-1328**	2	SPRING AS-GAS	
	11	1	**164-1331**	1	FRAME AS	
		1	**140-9921**	4	INSERT-THREADED	
	12	1	**164-1342**	4	BOLT-SPECIAL	
	13	1	**164-1343**	4	WASHER-THRUST	
	14	1	**164-1344**	4	WASHER-THRUST	
	15	1	**164-1345**	4	BEARING	
	16	1	**164-1346**	4	STRIKER	
	17	1	**164-1347**	1	WINDOW AS	
		1	**164-1326**	1	GLASS	
	18	1	**164-1351**	2	PIN	
	19	1	**164-1352**	1	LATCH AS	
	20	1	**164-1353**	1	LATCH AS	
	21	1	**167-8182**	2	BUMPER	
	22	1	**171-2870**	2	SPACER (7X10X5.4MM THK)	
BC	23	1	**201-9465**	4	SHIM (1MM THK)	
C	24	1	**205-7536**	1	BRACKET AS	
C	25	1	**205-7538**	1	BRACKET AS	
	26	1	**119-8349**	2	CAP	
	27	1	**121-9743**	1	SEAL	
CM	28	1	**129-3180**	4	LOCKNUT (M12X1.75 THD)	
	29	1	**5P-4115**	6	WASHER-HARD (7.2X19X2MM THK)	
	30	1	**5P-4116**	4	WASHER-HARD (8.8X20.5X2MM THK)	
M	31	1	**8T-4138**	2	BOLT (M6X1X20MM)	
M	32	1	**8T-4200**	4	BOLT (M8X1.25X16MM)	
	33	1	**8T-4223**	4	WASHER-HARD (13.5X25.5X3MM THK)	
M	34	1	**9X-2044**	4	SCREW-TRUSS HEAD (M6X1X16MM)	
	35	1	**9X-2132**	4	RETAINER	
E	36	1	**164-1354**		CHANNEL-WINDOW (86.6CM)	
D	37	1	**5P-5637**		SEAL (0.85M)	
E	38	1	**9X-6383**		SEAL (85CM)	
E	39	1	**164-1314**		SEAL-LAMP (148.5CM EACH)	
E	40	1	**164-1354**		CHANNEL-WINDOW (72.5CM EACH)	
E	41	1	**164-1354**		CHANNEL-WINDOW (73.8CM EACH)	

B-USE AS REQUIRED
C-CHANGE FROM PREVIOUS TYPE
D-ORDER BY THE METER
E-ORDER BY THE CENTIMETER
M-METRIC PART

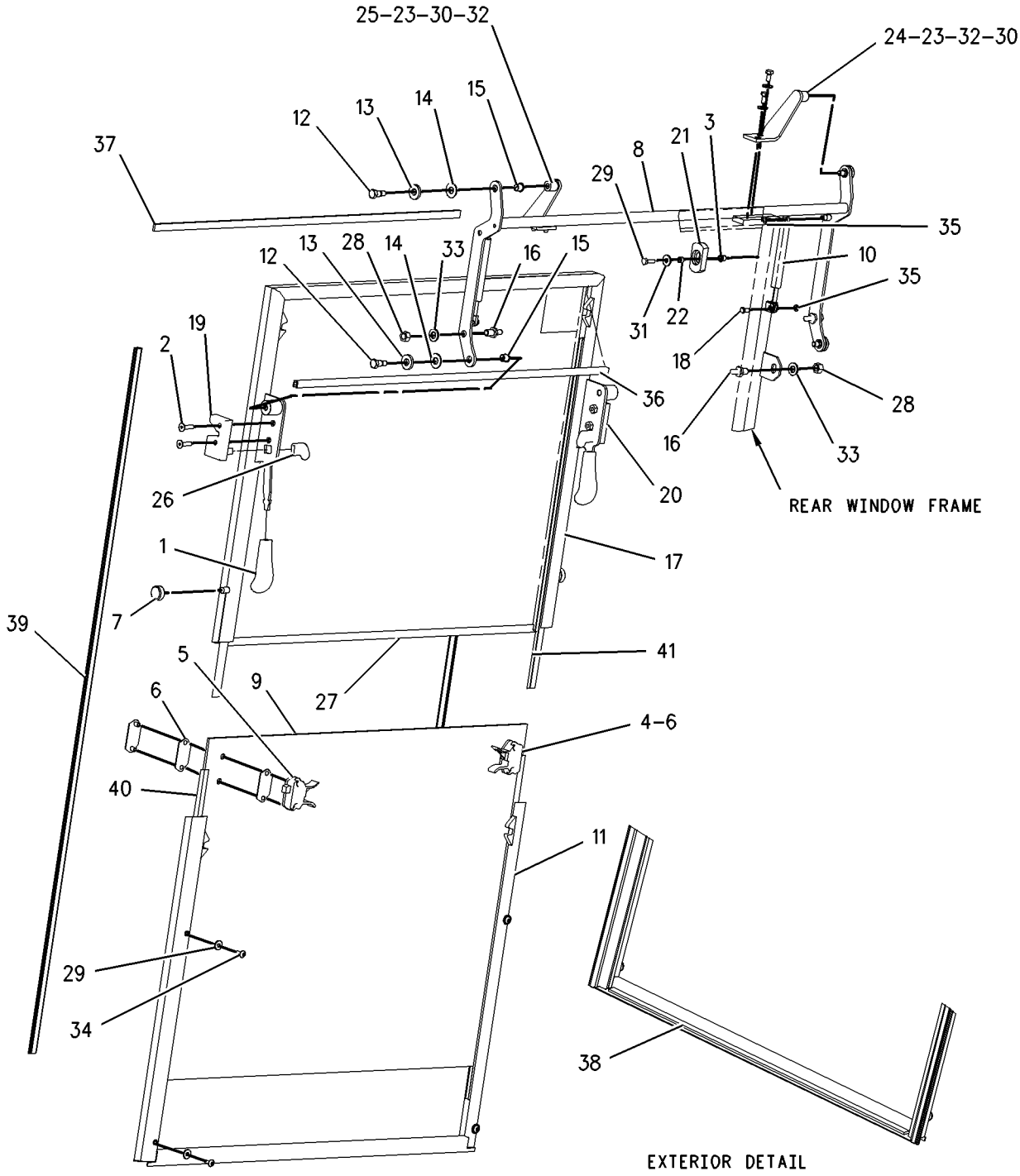

GRAPHIC #1 **<END>** g00814848

OPERATOR STATION

164-1073 WINDOW GP-DOOR–RH

S/N: BFP12900-UP
PART OF 164-1061 DOOR GP-RH
AN ATTACHMENT

SMCS-7308, 7310 **i01706415**

NOTE	REF NO	GRAPHIC REF	PART NUMBER	QTY	PART NAME 1 2 3 4 5 6 (PRODUCT LEVEL)	SEE PAGE
	1	1	**8Y-7287**	2	HINGE	
	2	1	**100-7608**	1	HANDLE	
	3	1	**129-8542**	5	RETAINER	
	4	1	**129-8543**	2	SPACER (16MM THK)	
	5	1	**129-8545**	6	WASHER (3MM THK)	
M	6	1	**136-4192**	3	BOLT (M6X1.0X35MM)	
	7	1	**143-2830**	1	LATCH AS	
M		1	**6V-7743**	2	LOCKNUT (M6X1 THD)	
M		1	**9X-2045**	2	SCREW-TRUSS HEAD (M6X1X20MM)	
		1	**143-2827**	1	SPRING	
	8	1	**159-4950**	1	LATCH AS	
M		1	**5C-2874**	1	NUT (M5X.8 THD)	
M		1	**161-6984**	1	SCREW-TRUSS HEAD (M5X0.8X20MM)	
		1	**161-6987**	1	WASHER-HARD	
		1	**161-9294**	1	SPRING-FLAT WIRE	
M		1	**162-6556**	1	LOCKNUT	
	9	1	**164-1066**	1	GLASS	
M	10	1	**6V-7743**	2	LOCKNUT (M6X1 THD)	
E	11	1	**148-5353**		SEAL (342CM)	

E-ORDER BY THE CENTIMETER
M-METRIC PART

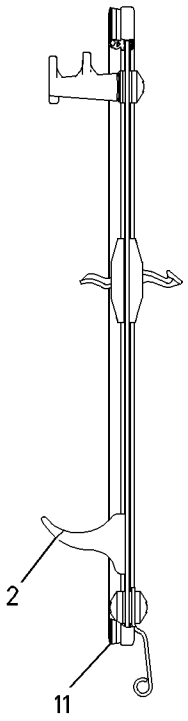

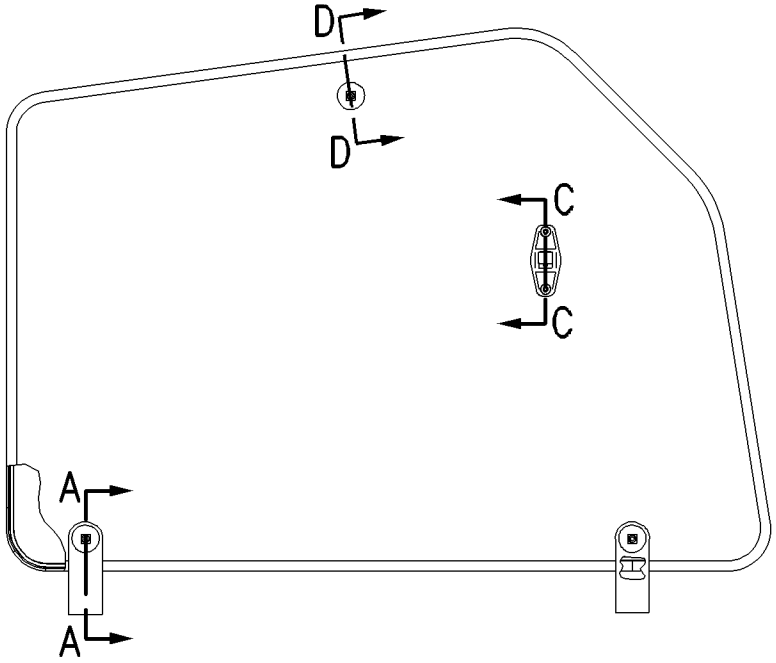

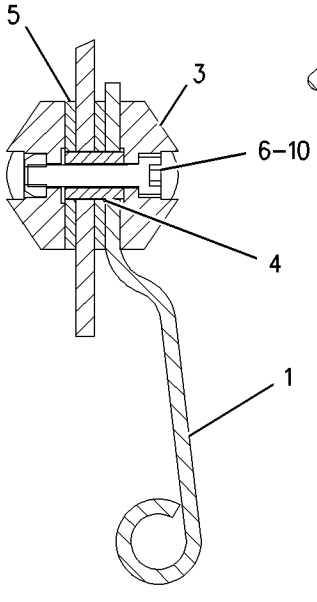

SECTION A-A

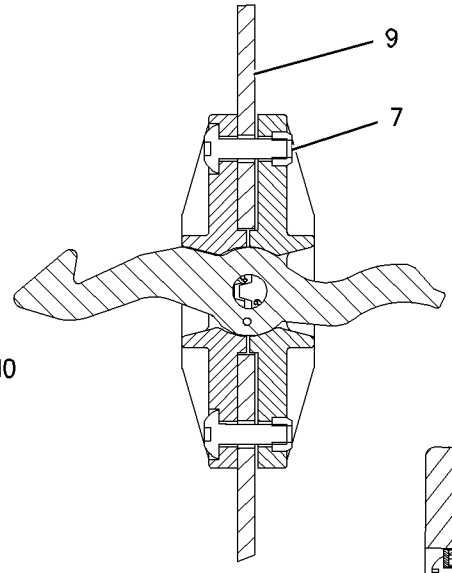

SECTION C-C

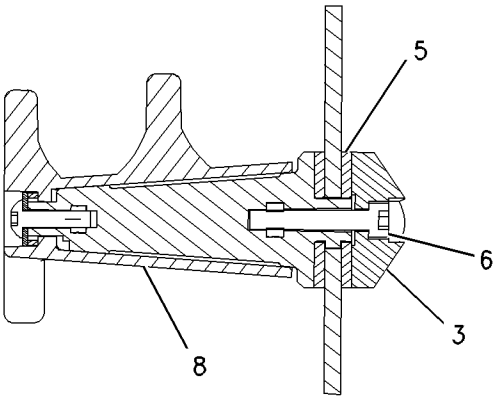

SECTION D-D

GRAPHIC #1 **<END>** g00878022

OPERATOR STATION

164-1074 WINDOW GP-DOOR—LH

S/N: BFP12900-UP
PART OF 164-1062 DOOR GP-LH
AN ATTACHMENT

SMCS-7308, 7310 **i01706432**

NOTE	REF NO	GRAPHIC REF	PART NUMBER	QTY	PART NAME 1 2 3 4 5 6 (PRODUCT LEVEL)	SEE PAGE
	1	1	**8Y-7287**	2	HINGE	
	2	1	**100-7608**	1	HANDLE	
	3	1	**129-8542**	5	RETAINER	
	4	1	**129-8543**	2	SPACER (16MM THK)	
	5	1	**129-8545**	6	WASHER (3MM THK)	
M	6	1	**136-4192**	3	BOLT (M6X1.0X35MM)	
	7	1	**143-2830**	1	LATCH AS	
M		1	**6V-7743**	2	LOCKNUT (M6X1 THD)	
M		1	**9X-2045**	2	SCREW-TRUSS HEAD (M6X1X20MM)	
		1	**143-2827**	1	SPRING	
	8	1	**159-4951**	1	LATCH AS	
M		1	**5C-2874**	1	NUT (M5X.8 THD)	
M		1	**161-6984**	1	SCREW-TRUSS HEAD (M5X0.8X20MM)	
		1	**161-6987**	1	WASHER-HARD	
		1	**161-9294**	1	SPRING-FLAT WIRE	
M		1	**162-6556**	1	LOCKNUT	
	9	1	**164-1067**	1	GLASS	
M	10	1	**6V-7743**	2	LOCKNUT (M6X1 THD)	
E	11	1	**148-5353**		SEAL (342CM)	

E-ORDER BY THE CENTIMETER
M-METRIC PART

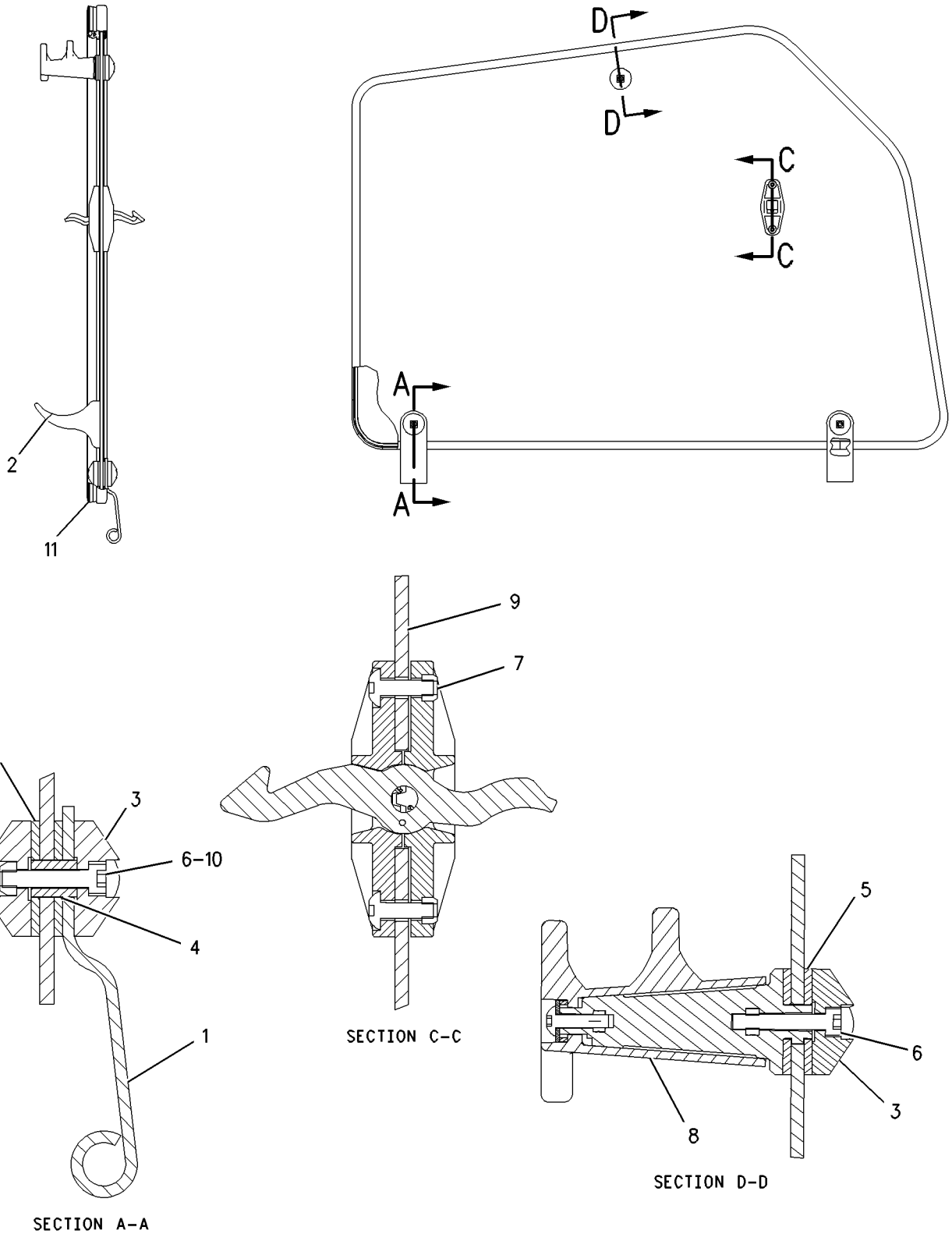

GRAPHIC #1 **<END>** g00878022

OPERATOR STATION

174-2024 WIPER GP-WINDOW

S/N: BFP12900-UP

PART OF 184-9735, 205-2177, 239-5560, 239-5561, 239-5562 CAB AR

AN ATTACHMENT

SMCS-7305 **i01517867**

NOTE	REF NO	GRAPHIC REF	PART NUMBER	QTY	PART NAME 1 2 3 4 5 6 (PRODUCT LEVEL)	SEE PAGE
	1	1	**6K-0806**	1	STRAP-CABLE	
M	2	1	**8T-4970**	5	BOLT (M6X1X14MM)	
	3	1	**102-2940**	2	BLADE AS	
	4	1	**132-2249**	2	SPACER	
	5	1	**132-2250**	1	SPACER	
	6	1	**154-5410**	1	ARM AS-WIPER	
	7	1	**174-2025**	1	MOTOR GP-WINDOW WIPER	
		1	**102-8805**	1	KIT-RECEPTACLE (6 PIN)	
					(KIT SERVICES RECEPTACLE AS. AND WEDGE)	
		1	**186-3735**	4	PIN-CONNECTOR	
J	8	1	**174-2026**	1	ARM AS	
E		1	**194-5171**		HOSE (33CM)	
	9	1	**174-5456**	1	PLATE	
Y	10	1	**186-2589**	1	MOTOR GP-WINDOW WIPER	938
M	11	1	**8C-8451**	2	BOLT (M6X1X40MM)	
	12	1	**8T-4205**	7	WASHER-HARD (7.2X14.5X2MM THK)	
					AVAILABLE REPAIR KIT(S):	
J			**163-4759**	1	KIT-REPAIR	

E-ORDER BY THE CENTIMETER
J-REPAIR KIT MARKED J AVAILABLE FOR PART MARKED J
M-METRIC PART
Y-SEPARATE ILLUSTRATION

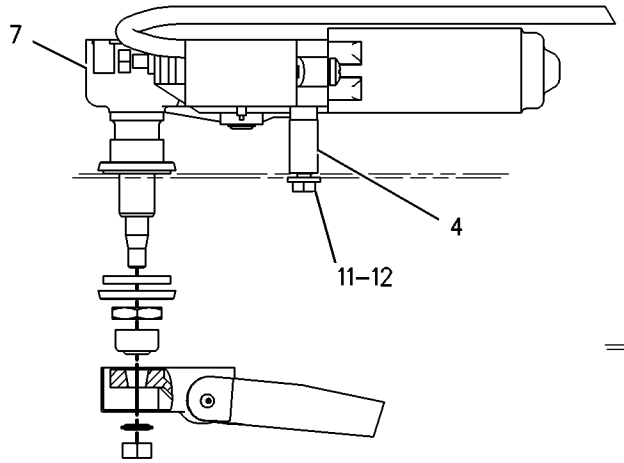

VIEW A–A

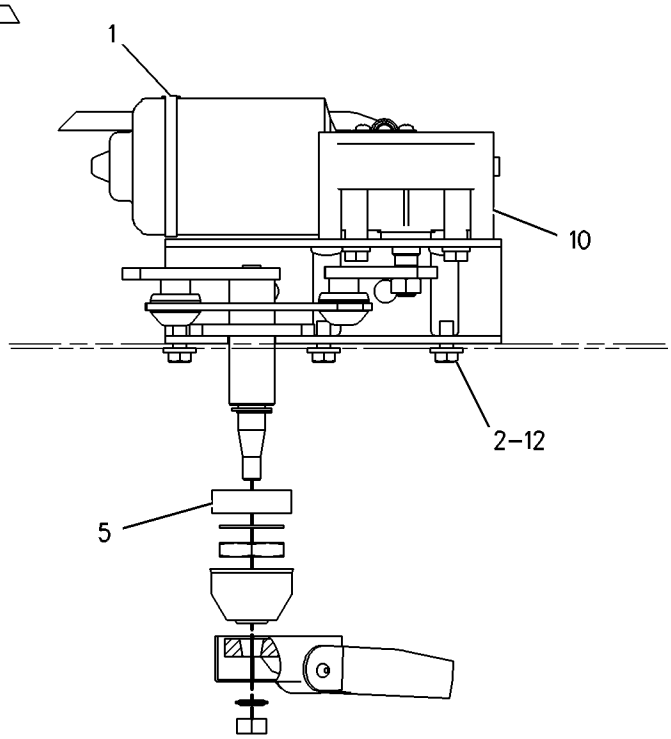

VIEW B–B

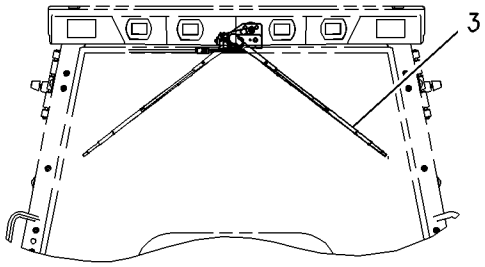

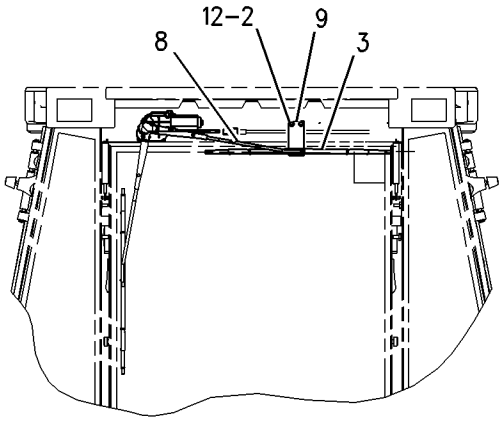

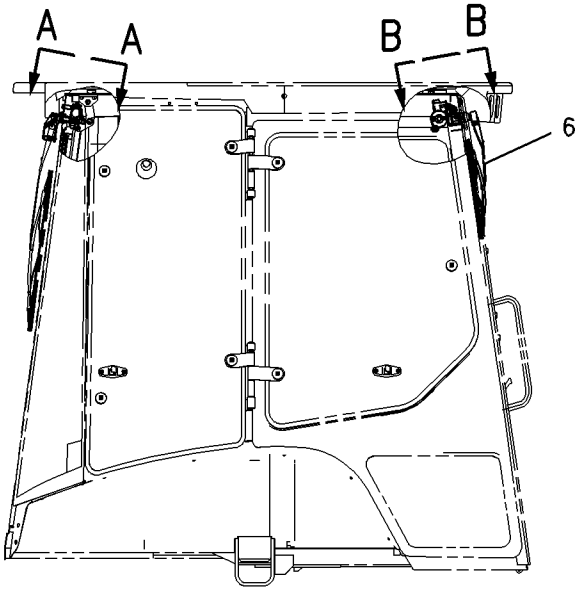

GRAPHIC #1 **<END>** g00726930

OPERATOR STATION

207-6051 WIPER GP-WINDOW

S/N: BFP12900-UP
PART OF 239-5559 CANOPY AR
AN ATTACHMENT

SMCS-7305 **i02020903**

NOTE	PART NUMBER	QTY	PART NAME 1 2 3 4 5 6 (PRODUCT LEVEL)	SEE PAGE
Y	**186-2589**	1	MOTOR GP-WINDOW WIPER	938
	154-5410	1	ARM AS-WIPER	
	101-0745	1	BLADE	
M	**8T-4970**	3	BOLT (M6X1X14-MM)	
	132-2250	1	SPACER (21X35X10-MM THK)	
	6K-0806	1	STRAP-CABLE	
	8T-4205	3	WASHER-HARD (7.2X14.5X2-MM THK)	

M-METRIC PART
Y-SEPARATE ILLUSTRATION

<END>

186-5286 FILM GP

S/N: BFP12900-UP; CXP940-UP

PART OF 185-7736 PLATE & FILM GP

SMCS-7405, 7557 **i01543385**

NOTE	REF NO	GRAPHIC REF	PART NUMBER	QTY	PART NAME 1 2 3 4 5 6 (PRODUCT LEVEL)	SEE PAGE
	1	1	**186-5265**	1	FILM (416D) (RH)	
	2	1	**101-0003**	8	FASTENER	
	3	1	**3E-8123**	1	FILM-STRIPE (RH)	
	4	1	**3E-8124**	1	FILM-STRIPE (LH)	
	5	1	**186-5266**	1	FILM (416D) (LH)	

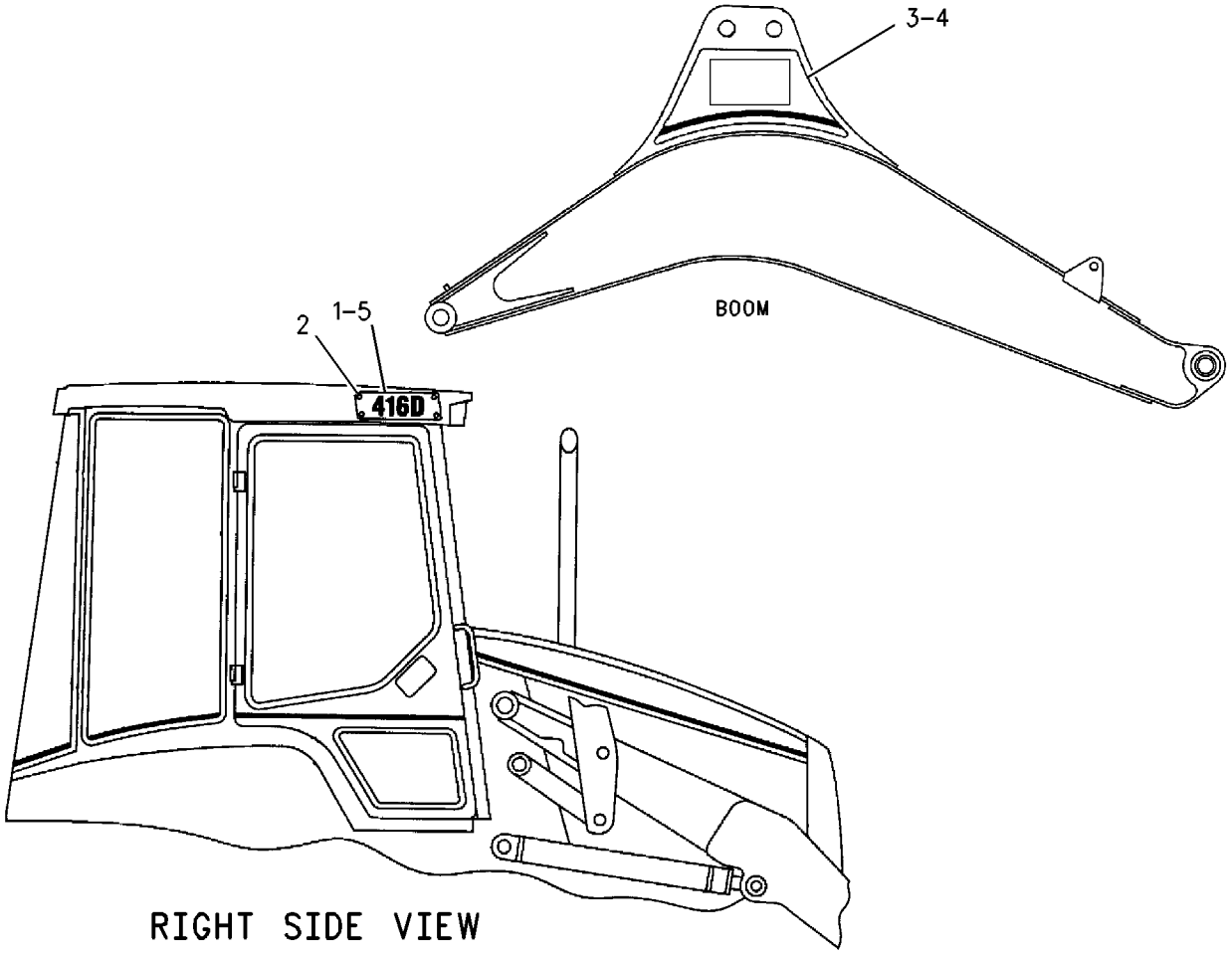

GRAPHIC #1 **<END>** g00710569

SERVICE EQUIPMENT AND SUPPLIES

113-0018 INSTALLATION AR-WHEEL CHOCK

S/N: BFP12900-UP
FIELD INSTALLATION ONLY
AN ATTACHMENT

SMCS-7000 **i00730797**

NOTE	REF NO	GRAPHIC REF	PART NUMBER	QTY	PART NAME 1 2 3 4 5 6 (PRODUCT LEVEL)	SEE PAGE
	1	1	**114-9342**	2	WHEEL CHOCK	
	2	1	**130-7452**	2	PLATE	

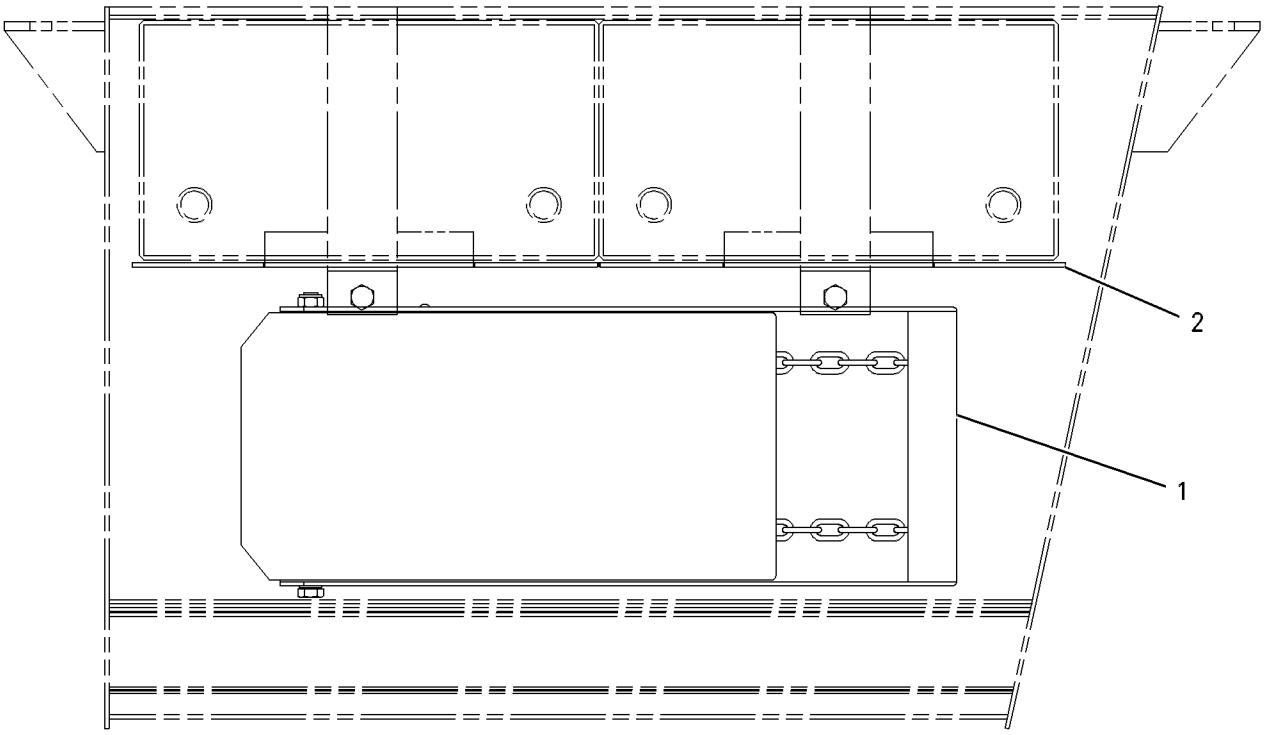

GRAPHIC #1 **<END>** g00307295

SERVICE EQUIPMENT AND SUPPLIES

134-8204 LOCK GP-VANDALISM

S/N: BFP12900-UP
SINGLE TILT
AN ATTACHMENT

SMCS-7315 **i00797701**

NOTE	REF NO	GRAPHIC REF	PART NUMBER	QTY	PART NAME 1 2 3 4 5 6 (PRODUCT LEVEL)	SEE PAGE
	1	1	**5P-8502**	2	PADLOCK GP	
					(EACH INCLUDES)	
		1	**5P-8500**	1	KEY	
		1	**8Y-6364**	1	SLEEVE	
	2	1	**125-2086**	1	LOCK AS-CYLINDER	
		1	**7F-9223**	1	LOCKWASHER (0.91MM THK)	
		1	**8T-5004**	1	SCREW-MACHINE (1/4-28X0.375IN)	

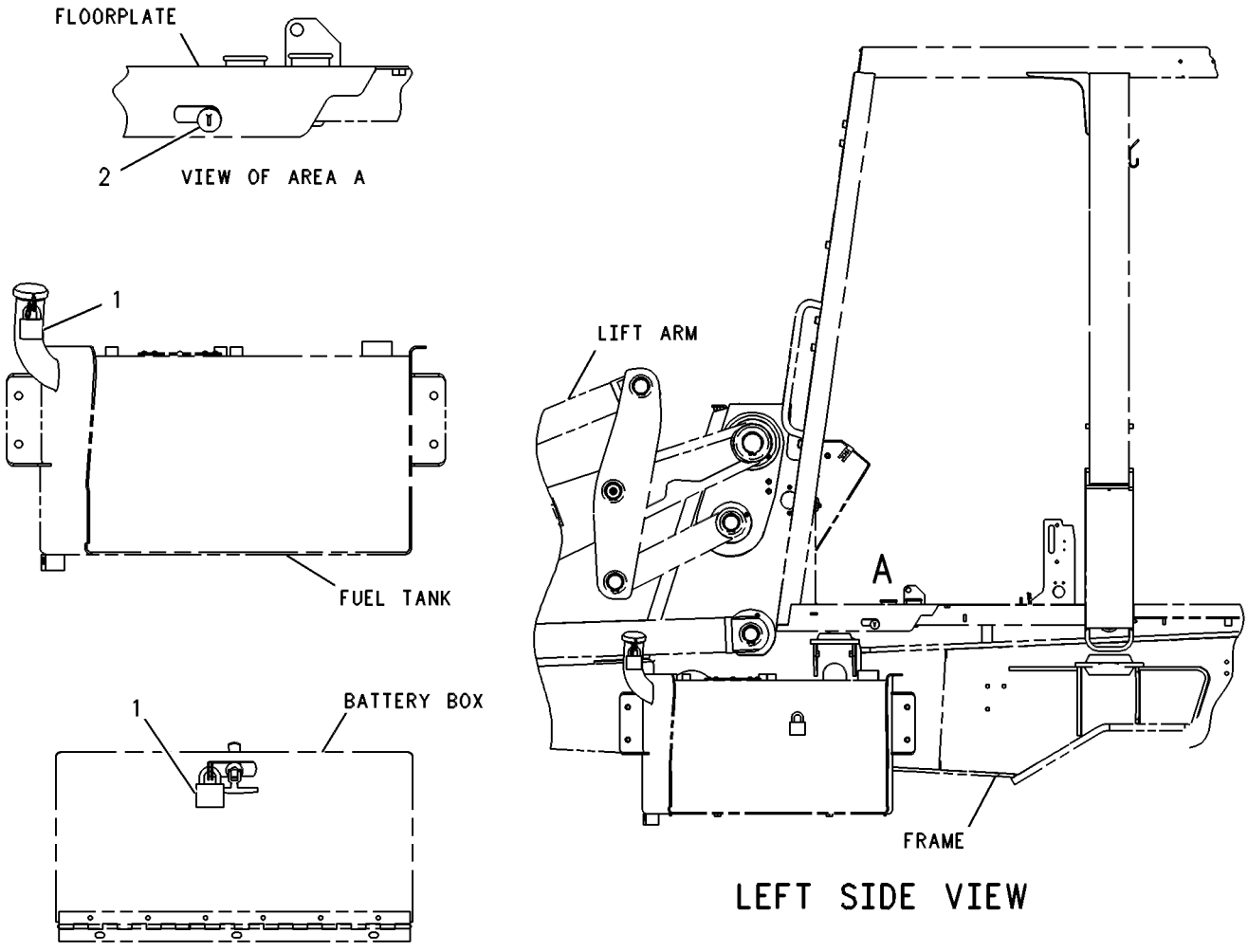

GRAPHIC #1 **<END>** g00131833

SERVICE EQUIPMENT AND SUPPLIES

185-7736 PLATE & FILM GP

S/N: BFP12900-UP; CXP940-UP
TWO WHEEL STEER, SINGLE TILT
PART OF 214-6950 CHASSIS AR, 215-6888 COMMON AR

SMCS-7405 **i01410538**

NOTE	PART NUMBER	QTY	PART NAME 1 2 3 4 5 6 (PRODUCT LEVEL)	SEE PAGE
Y	*186-5286*	1	FILM GP	989
	1P-2807	4	FILM-LIFT	
			(LOCATE 2 ON FRONT SIDE OF FRONT AXLE AND 1 ON BOTH LH AND RH STABILIZER PADS)	
	186-5296	1	FILM-NOTICE	
			(LOCATE ON BACK SURFACE OF RH CONSOLE)	
	7X-7644	4	FILM-TIE DOWN	
			(LOCATE 2 ON FRONT AXLE AND 2 AT REAR OF FRAME)	
	130-5582	1	FILM-WARNING	
			(LOCATE ON LH LOADER ARM)	

Y-SEPARATE ILLUSTRATION

<END>

185-7756 PLATE & FILM GP—FRENCH

S/N: BFP12900-UP
AN ATTACHMENT

SMCS-7405 **i01951425**

NOTE	PART NUMBER	QTY	PART NAME 1 2 3 4 5 6 (PRODUCT LEVEL)	SEE PAGE
	3E-8186	1	FILM-NOTICE (ENGINE START)	
			(CENTER ABOVE WARNING FILM)	
B	**196-4852**	1	FILM-WARNING (CONTROL PATTERN SELECTION)	
			(LOCATE ON LH B POST)	
B	**196-4866**	1	FILM-WARNING (CONTROL PATTERN SELECTION)	
			(PART OF CONTROL GP-VALVE)	
B	**196-4985**	1	FILM-WARNING (CONTROL PATTERN SELECTION)	
			(LOCATE ON LH B POST)	
	133-8490	1	FILM-WARNING (PARALLEL LIFT LINKAGE)	
			(LOCATE ON LH LOADER ARM)	
	133-8502	1	FILM-WARNING (SINGLE TILT LINKAGE)	
			(LOCATE ON LH LOADER ARM)	
	174-3335	1	FILM-WARNING	
			(LOCATE ON RH B POST)	
	101-0568	1	FILM-WARNING (CABLE CONNECTION)	
			(LOCATE INSIDE BATTERY BOX DOOR)	
B	**128-5964**	2	PLATE-WARNING (E-STICK)	
	4S-8264	2	RIVET-POP	

B-USE AS REQUIRED

<END>

SERVICE EQUIPMENT AND SUPPLIES

185-7757 PLATE & FILM GP—SPANISH

S/N: BFP12900-UP

AN ATTACHMENT

SMCS-7405 **i01951426**

NOTE	PART NUMBER	QTY	PART NAME 1 2 3 4 5 6 (PRODUCT LEVEL)	SEE PAGE
	3E-8187	1	FILM-NOTICE (STARTING PROCEDURE)	
			(CENTER ABOVE WARNING FILM)	
B	**196-4859**	1	FILM-WARNING (CONTROL PATTERN SELECTION)	
			(LOCATE ON LH B POST)	
B	**196-4978**	1	FILM-WARNING (CONTROL PATTERN SELECTION)	
			(PART OF CONTROL GP-VALVE)	
B	**196-5759**	1	FILM-WARNING (CONTROL PATTERN SELECTION)	
			(LOCATE ON LH B POST)	
	133-8491	1	FILM-WARNING (LIFT ARM BRACE)	
			(LOCATE ON LH LOADER ARM)	
	133-8503	1	FILM-WARNING (LIFT ARM BRACE)	
			(LOCATE ON LH LOADER ARM)	
	174-3336	1	FILM-WARNING	
			(LOCATE ON RH B POST)	
	101-0569	1	FILM-WARNING (CABLE CONNECTION)	
			(LOCATE INSIDE BATTERY BOX DOOR)	
B	**128-5965**	2	PLATE-WARNING (E-STICK)	
	4S-8264	2	RIVET-POP	

B-USE AS REQUIRED

<END>

185-7758 PLATE & FILM GP—PORTUGUESE

S/N: BFP12900-UP

AN ATTACHMENT

SMCS-7405 **i01951428**

NOTE	PART NUMBER	QTY	PART NAME 1 2 3 4 5 6 (PRODUCT LEVEL)	SEE PAGE
	3E-8188	1	FILM-NOTICE (STARTING PROCEDURE)	
			(CENTER ABOVE WARNING FILM)	
B	**196-4858**	1	FILM-WARNING	
			(LOCATE ON LH B POST)	
B	**196-5758**	1	FILM-WARNING (CONTROL PATTERN SELECTION)	
			(LOCATE ON LH B-POST)	
B	**200-7143**	1	FILM-WARNING (CONTROL PATTERN SELECTION)	
			(LOCATED ON LH B POST)	
	133-8492	1	FILM-WARNING (LIFT ARM BRACE)	
			(LOCATE ON LH LOADER ARM)	
	133-8504	1	FILM-WARNING (LIFT ARM BRACE)	
			(LOCATE ON LH LOADER ARM)	
	174-3337	1	FILM-WARNING	
			(LOCATE ON RH B POST)	
	101-0570	1	FILM-WARNING (CABLE CONNECTION)	
			(LOCATE INSIDE BATTERY BOX DOOR)	
B	**128-5966**	2	PLATE-WARNING (E-STICK)	
			(PART OF LINES GP-EXT STICK)	
	4S-8264	2	RIVET-POP	

B-USE AS REQUIRED

<END>

SERVICE EQUIPMENT AND SUPPLIES

185-7759 PLATE & FILM GP—GERMAN

S/N: BFP12900-UP

AN ATTACHMENT

SMCS-7405 **i01951429**

NOTE	PART NUMBER	QTY	PART NAME 1 2 3 4 5 6 (PRODUCT LEVEL)	SEE PAGE
	3E-8189	1	FILM-NOTICE (ENGINE START)	
			(CENTER ABOVE WARNING FILM)	
B	**196-4867**	1	FILM-WARNING (CONTROL PATTERN SELECTION)	
			(PART OF CONTROL GP-VALVE)	
B	**196-4853**	1	FILM-WARNING (CONTROL PATTERN SELECTION)	
			(LOCATE ON LH B POST)	
B	**196-5753**	1	FILM-WARNING (CONTROL PATTERN SELECTION)	
			(LOCATE ON LH B POST)	
	133-8493	1	FILM-WARNING (LIFT ARM BRACE)	
			(LOCATE ON LH LOADER ARM)	
	133-8505	1	FILM-WARNING (LIFT ARM BRACE)	
			(LOCATE ON LH LOADER ARM)	
	174-3338	1	FILM-WARNING	
			(LOCATE ON RH B POST)	
	101-0571	1	FILM-WARNING (CABLE CONNECTION)	
			(LOCATE INSIDE BATTERY BOX DOOR OR LEFT INSIDE FACE OF BOX)	
B	**128-5967**	2	PLATE-WARNING (E-STICK)	
	4S-8264	2	RIVET-POP	

B-USE AS REQUIRED

<END>

SERVICE EQUIPMENT AND SUPPLIES

185-7760 PLATE & FILM GP—ITALIAN

S/N: BFP12900-UP

AN ATTACHMENT

SMCS-7405 **i01951430**

NOTE	PART NUMBER	QTY	PART NAME 1 2 3 4 5 6 (PRODUCT LEVEL)	SEE PAGE
	3E-8190	1	FILM-NOTICE (ENGINE START)	
			(CENTER ABOVE WARNING FILM ON BATTERY BOX DOOR)	
B	**196-4870**	1	FILM-WARNING (CONTROL PATTERN SELECTION)	
			(LOCATE ON REAR CONSOLE)	
B	**196-4856**	1	FILM-WARNING (CONTROL PATTERN SELECTION)	
			(LOCATE ON LH B POST COVER)	
B	**196-5756**	1	FILM-WARNING (CONTROL PATTERN SELECTION)	
			(LOCATE ON LH B POST COVER)	
	131-2011	1	FILM-WARNING (LIFT ARM BRACE)	
			(LOCATE ON LH LOADER ARM)	
	131-2012	1	FILM-WARNING (LIFT ARM BRACE)	
			(LOCATE ON LH LOADER ARM)	
	174-3339	1	FILM-WARNING	
			(LOCATE ON RH B POST)	
	101-0572	1	FILM-WARNING (CABLE CONNECTION)	
			(LOCATE LEFT INSIDE FACE OF BATTERY BOX DOOR)	
B	**128-5968**	2	PLATE-WARNING (E-STICK)	
			(LOCATE ON EACH SIDE OF E-STICK)	
	4S-8264	2	RIVET-POP	

B-USE AS REQUIRED

<END>

SERVICE EQUIPMENT AND SUPPLIES

185-7761 PLATE & FILM GP—DANISH

S/N: BFP12900-UP

AN ATTACHMENT

SMCS-7405 **i01951432**

NOTE	PART NUMBER	QTY	PART NAME 1 2 3 4 5 6 (PRODUCT LEVEL)	SEE PAGE
	3E-8191	1	FILM-NOTICE (ENGINE START)	
			(CENTER ABOVE WARNING FILM ON BATTERY BOX DOOR)	
B	**196-4863**	1	FILM-WARNING (CONTROL PATTERN SELECTION)	
			(LOCATE ON REAR CONSOLE)	
B	**196-4849**	1	FILM-WARNING (CONTROL PATTERN SELECTION)	
			(LOCATE ON LH B POST COVER)	
B	**196-4982**	1	FILM-WARNING (CONTROL PATTERN SELECTION)	
			(LOCATE ON LH B POST COVER)	
	133-8494	1	FILM-WARNING (LIFT ARM BRACE)	
			(LOCATE ON LH LOADER ARM)	
	133-8506	1	FILM-WARNING (LIFT ARM BRACE)	
			(LOCATE ON LH LOADER ARM)	
	174-3340	1	FILM-WARNING	
			(LOCATE ON RH B POST)	
	101-0573	1	FILM-WARNING (CABLE CONNECTION)	
			(LOCATE ON LEFT INSIDE FACE OF BATTERY BOX DOOR)	
B	**128-5969**	2	PLATE-WARNING (E-STICK)	
			(LOCATE ON EACH SIDE OF E-STICK)	
	4S-8264	2	RIVET-POP	

B-USE AS REQUIRED

<END>

185-7762 PLATE & FILM GP—ARABIC

S/N: BFP12900-UP

AN ATTACHMENT

SMCS-7405 **i01951433**

NOTE	PART NUMBER	QTY	PART NAME 1 2 3 4 5 6 (PRODUCT LEVEL)	SEE PAGE
	3E-8194	1	FILM-NOTICE (ENGINE START)	
			(CENTER ABOVE WARNING FILM)	
B	**196-4847**	1	FILM-WARNING (CONTROL PATTERN SELECTION)	
			(LOCATE ON LH B POST)	
B	**196-4861**	1	FILM-WARNING	
			(PART OF CONTROL GP-VALVE)	
B	**196-4980**	1	FILM-WARNING (CONTROL PATTERN SELECTION)	
			(LOCATE ON LH B POST)	
	133-8498	1	FILM-WARNING (LIFT ARM BRACE)	
			(LOCATE ON LH LOADER ARM)	
	133-8509	1	FILM-WARNING (LIFT ARM BRACE)	
			(LOCATE ON LH LOADER ARM)	
	174-3343	1	FILM-WARNING	
			(LOCATE ON RH B POST)	
	101-0576	1	FILM-WARNING (CABLE CONNECTION)	
			(LOCATE INSIDE BATTERY BOX DOOR)	
B	**128-5972**	2	PLATE-WARNING (E-STICK)	
	4S-8264	2	RIVET-POP	

B-USE AS REQUIRED

<END>

185-7764 PLATE & FILM GP

S/N: BFP12900-UP; CXP940-UP

AN ATTACHMENT

SMCS-7405 **i01945445**

NOTE	PART NUMBER	QTY	PART NAME 1 2 3 4 5 6 (PRODUCT LEVEL)	SEE PAGE
	3E-8185	1	FILM-NOTICE (ENGINE START)	
			(LOCATE INSIDE BATTERY BOX DOOR)	
	8C-7588	1	FILM-WARNING (BATTERY)	
			(LOCATE INSIDE BATTERY BOX DOOR)	
	173-9813	1	FILM-WARNING	
			(LOCATE ON RIGHT HAND B POST)	

<END>

SERVICE EQUIPMENT AND SUPPLIES

185-7765 PLATE & FILM GP–FINNISH

S/N: BFP12900-UP

AN ATTACHMENT

SMCS-7405 **i01951436**

NOTE	PART NUMBER	QTY	PART NAME 1 2 3 4 5 6 (PRODUCT LEVEL)	SEE PAGE
	127-1942	1	FILM-NOTICE (ENGINE START)	
			(CENTER ABOVE WARNING FILM)	
B	**196-4851**	1	FILM-WARNING (CONTROL PATTERN SELECTION)	
			(LOCATE ON LH B POST)	
B	**196-4865**	1	FILM-WARNING (CONTROL PATTERN SELECTION)	
			(PART OF CONTROL GP-VALVE)	
B	**196-4984**	1	FILM-WARNING (CONTROL PATTERN SELECTION)	
			(LOCATE ON LH B POST)	
	133-8500	1	FILM-WARNING (LIFT ARM BRACE)	
			(LOCATE ON LH LOADER ARM)	
	133-8512	1	FILM-WARNING (LIFT ARM BRACE)	
			(LOCATE ON LH LOADER ARM)	
	174-3347	1	FILM-WARNING	
			(LOCATE ON RH B POST)	
	128-8583	1	FILM-WARNING (CABLE CONNECTION)	
			(LOCATE INSIDE BATTERY BOX DOOR)	
B	**128-5974**	2	PLATE-WARNING (E-STICK)	
	4S-8264	2	RIVET-POP	

B-USE AS REQUIRED

<END>

185-7766 PLATE & FILM GP–CZECH

S/N: BFP12900-UP

AN ATTACHMENT

SMCS-7405 **i01951439**

NOTE	PART NUMBER	QTY	PART NAME 1 2 3 4 5 6 (PRODUCT LEVEL)	SEE PAGE
	140-8773	1	FILM-NOTICE (ENGINE START)	
			(CENTER ABOVE WARNING FILM)	
B	**196-4848**	1	FILM-WARNING (CONTROL PATTERN SELECTION)	
			(LOCATE ON LH B POST)	
B	**196-4862**	1	FILM-WARNING (CONTROL PATTERN SELECTION)	
			(PART OF CONTROL GP-VALVE)	
B	**196-4981**	1	FILM-WARNING (CONTROL PATTERN SELECTION)	
			(LOCATE ON LH B POST)	
	140-8761	1	FILM-WARNING (LIFT ARM BRACE)	
			(LOCATE ON LH LOADER ARM)	
	140-8767	1	FILM-WARNING (LIFT ARM BRACE)	
			(LOCATE ON LH LOADER ARM)	
	174-3346	1	FILM-WARNING	
			(LOCATE ON RH B POST)	
	140-8760	1	FILM-WARNING (CABLE CONNECTION)	
			(LOCATE INSIDE BATTERY BOX DOOR)	
B	**140-8764**	2	PLATE-WARNING (E-STICK)	
	4S-8264	2	RIVET-POP	

B-USE AS REQUIRED

<END>

185-7767 PLATE & FILM GP—HEBREW

S/N: BFP12900-UP

AN ATTACHMENT

SMCS-7405 **i01951441**

NOTE	PART NUMBER	QTY	PART NAME 1 2 3 4 5 6 (PRODUCT LEVEL)	SEE PAGE
	141-4801	1	FILM-NOTICE (ENGINE START)	
			(CENTER ABOVE WARNING FILM)	
B	**196-4855**	1	FILM-WARNING (CONTROL PATTERN SELECTION)	
			(LOCATE ON LH B POST)	
B	**196-4869**	1	FILM-WARNING (CONTROL PATTERN SELECTION)	
			(PART OF CONTROL GP-VALVE)	
B	**196-5755**	1	FILM-WARNING (CONTROL PATTERN SELECTION)	
			(LOCATE ON LH B POST)	
	141-4799	1	FILM-WARNING (LIFT ARM BRACE)	
			(LOCATE ON LH LOADER ARM)	
	141-4800	1	FILM-WARNING (LIFT ARM BRACE)	
			(LOCATE ON LH LOADER ARM)	
	174-3345	1	FILM-WARNING	
			(LOCATE ON RH B POST)	
	141-4797	1	FILM-WARNING (CABLE CONNECTION)	
			(LOCATE INSIDE BATTERY BOX DOOR)	
B	**141-4796**	2	PLATE-WARNING (E-STICK)	
	4S-8264	2	RIVET-POP	

B-USE AS REQUIRED

<END>

185-7768 PLATE & FILM GP—POLISH

S/N: BFP12900-UP

AN ATTACHMENT

SMCS-7405 **i01951444**

NOTE	PART NUMBER	QTY	PART NAME 1 2 3 4 5 6 (PRODUCT LEVEL)	SEE PAGE
	152-9787	1	FILM-NOTICE (ENGINE START)	
			(CENTER ABOVE WARNING FILM)	
	196-4857	1	FILM-WARNING (CONTROL PATTERN SELECTION)	
			(LOCATE ON LH B POST)	
	196-5757	1	FILM-WARNING (CONTROL PATTERN SELECTION)	
			(LOCATE ON LH B POST)	
	200-7144	1	FILM-WARNING (CONTROL PATTERN SELECTION)	
			(PART OF CONTROL GP-VALVE)	
	152-9785	1	FILM-WARNING (LIFT ARM BRACE)	
			(LOCATE ON LH LOADER ARM)	
	152-9786	1	FILM-WARNING (LIFT ARM BRACE)	
			(LOCATE ON LH LOADER ARM)	
	174-3348	1	FILM-WARNING	
			(LOCATE ON RH B POST)	
	152-9784	1	FILM-WARNING (CABLE CONNECTION)	
			(LOCATE INSIDE BATTERY BOX DOOR)	
	152-9788	2	PLATE-WARNING (E-STICK)	
	4S-8264	2	RIVET-POP	

<END>

SERVICE EQUIPMENT AND SUPPLIES

185-7769 PLATE & FILM GP—DUTCH

S/N: BFP12900-UP

AN ATTACHMENT

SMCS-7405 **i01951445**

NOTE	PART NUMBER	QTY	PART NAME 1 2 3 4 5 6 (PRODUCT LEVEL)	SEE PAGE
	3E-8193	1	FILM-NOTICE (ENGINE START)	
			(CENTER ABOVE WARNING FILM)	
B	**196-4850**	1	FILM-WARNING (CONTROL PATTERN SELECTION)	
			(LOCATE ON LH B POST)	
B	**196-4864**	1	FILM-WARNING (CONTROL PATTERN SELECTION)	
			(PART OF CONTROL GP-VALVE)	
B	**196-4983**	1	FILM-WARNING (CONTROL PATTERN SELECTION)	
			(LOCATE ON RH CONSOLE)	
	133-8497	1	FILM-WARNING (LIFT ARM BRACE)	
			(LOCATE ON LH LOADER ARM)	
	133-8508	1	FILM-WARNING (LIFT ARM BRACE)	
			(LOCATE ON LH LOADER ARM)	
	174-3342	1	FILM-WARNING	
			(LOCATE ON RH B POST)	
	101-0575	1	FILM-WARNING (CABLE CONNECTION)	
			(LOCATE INSIDE BATTERY BOX DOOR)	
B	**128-5971**	2	PLATE-WARNING (E-STICK)	
	4S-8264	2	RIVET-POP	

B-USE AS REQUIRED

<END>

185-7770 PLATE & FILM GP—GREEK

S/N: BFP12900-UP

AN ATTACHMENT

SMCS-7405 **i01951446**

NOTE	PART NUMBER	QTY	PART NAME 1 2 3 4 5 6 (PRODUCT LEVEL)	SEE PAGE
	3E-8192	1	FILM-NOTICE (ENGINE START)	
			(CENTER ABOVE WARNING FILM)	
B	**196-4854**	1	FILM-WARNING (CONTROL PATTERN SELECTION)	
			(LOCATE ON LH B POST)	
B	**196-4868**	1	FILM-WARNING (CONTROL PATTERN SELECTION)	
			(PART OF CONTROL GP-VALVE)	
B	**196-5754**	1	FILM-WARNING (CONTROL PATTERN SELECTION)	
			(LOCATE ON LH B POST)	
	133-8495	1	FILM-WARNING (LIFT ARM BRACE)	
			(LOCATE ON LH LOADER ARM)	
	133-8507	1	FILM-WARNING (LIFT ARM BRACE)	
			(LOCATE ON LH LOADER ARM)	
	174-3341	1	FILM-WARNING	
			(LOCATE ON RH B POST)	
	101-0574	1	FILM-WARNING (CABLE CONNECTION)	
			(LOCATE INSIDE BATTERY BOX DOOR)	
B	**128-5970**	2	PLATE-WARNING (E-STICK)	
	4S-8264	2	RIVET-POP	

B-USE AS REQUIRED

<END>

215-6894 PLATE & FILM GP

S/N: CXP940-UP

PART OF 215-6888 COMMON AR

SMCS-7405 **i01641578**

NOTE	PART NUMBER	QTY	PART NAME 1 2 3 4 5 6 (PRODUCT LEVEL)	SEE PAGE
	199-6245	1	FILM	
			(LOCATE ON SIDE OF FUEL TANK)	
	101-0333	1	FILM-IDENTIFICATION (HYDRAULIC OIL)	
			(LOCATE ON BRAKE FLUID RESERVOIR CAP)	
	124-2456	1	FILM-INSTRUCTION (NO STEP)	
			(LOCATE ON INSIDE OF BATTERY BOX DOOR)	
	191-9108	2	FILM-WARNING (RADIATOR)	
			(LOCATE ON BOTH SIDES OF FRONT BAFFLE PLATE ON LH SIDE OF MACHINE)	
	209-4121	2	FILM-WARNING	
			(LOCATE ON CAB STRUCTURE IN REAR AT BOTTOM)	
	194-0856	1	PLATE (PRODUCT IDENTIFICATION)	
	082-2817	4	TACK	

<END>

228-3600 PLATE & FILM GP

S/N: BFP12900-UP

PART OF 214-6950 CHASSIS AR

SMCS-7405 **i02012768**

NOTE	PART NUMBER	QTY	PART NAME 1 2 3 4 5 6 (PRODUCT LEVEL)	SEE PAGE
	224-9855	1	FILM (STARTING AID)	
			ON RH B-POST.	
	7X-7644	4	FILM (TIE-DOWN)	
			ONE ON EACH SIDE OF THE MACHINE ON THE MAIN FRAME NEAR FRONT AXLE SUPPORT NEXT TO THE TIEDOWN HOLES.	
			TO THE REAR OF THE MAIN FRAME ON LOWER HORIZONTAL SURFACE NEAR LH & RH SIDE NEXT TO THE TIEDOWN HOLES.	
	1P-2807	4	FILM (LIFT EYE LOCATION)	
			TO THE FRONT SIDE OF THE FRONT AXLE BETWEEN CHASSIS AND WHEEL ASSEMBLY ON THE LH & RH SIDE OF THE MACHINE.	
			ONE ON EACH LH & RH STABILIZER PAD BESIDE TOP LIFTING HOLE SO ARROW POINTS UP WHEN STABILIZERS ARE IN THE UP POSITION.	
	199-6245	1	FILM (SEPARATOR)	
			ON SIDE OF FUEL TANK.	
	101-0333	1	FILM-IDENTIFICATION (HYDRAULIC OIL)	
			ON BRAKE FLUID RESERVOIR CAP.	
	226-1242	1	FILM-WARNING (STAY BACK)	
			ON BOOM.	
	240-7094	2	FILM-WARNING (NO ENTRANCE, EXIT)	
			ON THE CAB STRUCTURE IN THE REAR.	
	224-9021	1	FILM-WARNING (SEATBELT)	
			ON RH B-POST.	
	240-7956	1	FILM-WARNING (UNIVERSAL)	
			ON RH B-POST.	
	219-0305	1	FILM-WARNING (NO WELD, NO DRILL)	
			ON UPPER REAR SHEET METAL PANEL OF CAB STRUCTURE,	
	239-9429	1	FILM-WARNING (ARM BRACE)	
			FOR SINGLE TILT MACHINES:	
			ON LH SIDE LIFT ARM.	

NOTE	PART NUMBER	QTY	PART NAME 1 2 3 4 5 6 (PRODUCT LEVEL)	SEE PAGE
			FOR PARALLEL LIFT MACHINES:	
			ON LH SIDE LIFT ARM.	
	225-4256	2	FILM-WARNING (HOT FLUID)	
			ON BOTH SIDES OF FRONT BAFFLE PLATE ON LH SIDE OF THE MACHINE.	
	239-6989	1	PLATE (PIN)	
			CENTERED ON UPPER RH SIDE FRAME RAIL.	
A	**190-5128**	1	FILM (BUCKET CONTROL)	
			ON REAR CONSOLE FOR MECHANICAL EXCAVATOR BACKHOE CONTROLES.	
A	**239-9437**	1	FILM (CONTROL PATTERN)	
			ON THE LH B-POST.	
A	**190-5129**	1	FILM (BUCKET CONTROL)	
			ON REAR CONSOLE FOR MECHANICAL CASE STYLE BACKHOE CONTROLS.	
A	**190-5134**	1	FILM (STD CROSS PATTERN)	
			ON REAR CONSOLE FOR MECHANICAL STANDARD/CROSS BACKHOE CONTROLS.	
A	**238-4441**	1	FILM (LUBRICANTS)	
			IN HOOD GP - ENG.	
A	**190-5139**	1	FILM (VARIABLE SPEED)	
			IN CONTROL GP - GOV.	
A	**190-5136**	1	FILM (CENTER PIVOT, BOOM LOCK)	
			IN MOUNTING GP - VALVE FOR CENTER PIVOT MACHINES.	
A	**198-0102**	1	FILM (MULTIPURPOSE BUCKET)	
			ON HYD AR. WHICH ARE MECHANICAL LOADER CONTROL.	
A	**191-9104**	1	FILM (START SWITCH)	
			AROUND KEY SWITCH.	
A	**130-6662**	1	FILM-AWS	
			IN WIRING GP - STER.	
A	**8C-3274**	1	FILM-BUCKET INDICATOR	
			ON UPPER RH LOADER ARM BOSS.	
A	**190-5132**	1	FILM-CONTROL (AIR CONDITIONER)	
			ON THE RH CONSOLE AROUND THE TEMPERATURE CONTROL KNOB.	
A	**159-8033**	1	FILM-IDENTIFICATION (12-VOLT)	
			INSIDE BATTERY BOX DOOR.	
A	**231-9352**	1	FILM-IDENTIFICATION (FUSE PANEL)	
			INSIDE RH CONSOLE ACESS PANEL.	
A	**172-6224**	1	FILM-INDICATOR	
			IN WIRING GP - CSL.	
A	**188-0863**	1	FILM-INDICATOR	
			IN WIRING GP - CSL.	
A	**8C-4447**	1	FILM-INDICATOR	
			IN BRACE GP - LFT CYL.	
A	**246-3457**	1	FILM-INSTRUCTION (MACHINE CONTROL)	
			ON B-POST CENTERED ABOVE RH CONSOLE.	
A	**124-2456**	1	FILM-INSTRUCTION (NO STEP)	
			INSIDE BATTERY BOX DOOR.	
A	**101-0863**	1	FILM-INSTRUCTION (RETURN FLOW)	
			IN LINES GP - AUX HYD.	
A	**239-9435**	1	FILM-INSTRUCTION (LINK)	
			ON THE LINKAGE PLATE.	
A	**190-5130**	1	FILM-INSTRUCTION	
			ON REAR CONSOLE FOR MECHANICAL BACKHOE STANDARD CONTROLS.	
A	**133-8916**	1	FILM-INSTRUCTION (EXTENDABLE STICK)	
			ON HORIZONTAL SMOOTH SPOT ON RH SIDE OF REAR CONSOLE.	

228-3600 **PLATE & FILM GP** ***(contd.)*** **i02012768**

NOTE	PART NUMBER	QTY	PART NAME 1 2 3 4 5 6 (PRODUCT LEVEL)	SEE PAGE
A	**101-2788**	1	FILM-INSTRUCTION (EXTENDABLE STICK)	
			IN CONTROL GP - VALVE.	
A	**186-5298**	1	FILM-INSTRUCTION (BUCKET CONTROL)	
			ON B-POST CENTERED ABOVE RH CONSOLE.	
A	**239-9427**	2	FILM-NOTICE (STICK)	
			IN LINES GP. ON THE STICK. &	
			IN STICK GP - EXT.	
A	**225-0313**	1	FILM-WARNING (JUMP START)	
			INSIDE OF BATTERY BOX DOOR.	
A	**224-8945**	1	FILM-WARNING (ETHER)	
			IN HOOD GP - ENG.	
A	**224-7830**	1	FILM-WARNING (HIGH PRESSURE CYLINDER)	
			IN LINES GP - RIDE CONTROL.	
A	**239-9433**	2	FILM-WARNING (QUICK COUPLER)	
			ON RH B-POST.	
A	**199-6243**	1	PLATE (INSTRUCTION)	
			IN A/C LINES GP.	
A	**239-9436**	1	PLATE-WARNING (ALTERNATE CONTROL PATTERN)	
			ON REAR CONSOLE FOR MECHANICAL STANDARD/CROSS BACKHOE CONTROLS.	
A	**4P-6236**	1	PLATE-SERIAL NUMBER (ENGINE)	
			ON MOUNTING PAD ON LH SIDE OF ENGINE BLOCK.	
A	**4P-6396**	1	PLATE-CAT	
			ON TOP OF VALVE COVER READABLE FROM LH SIDE OF ENGINE.	
AB	**8T-6656**	1	FILM-IDENTIFICATION (OIL FILTER)	
			ON SPIN-ON OIL FILTER	
A	**4P-6422**	1	FILM-WARNING (NO ETHER, AIR INTAKE)	
			ON SIDE OF VALVE COVER IN VISABLE LOCATION.	
A	**4P-6423**	1	PLATE-IDENTIFICATION	
			ON LOWER LH SIDE OF BLOCK TOWARDS REAR OF ENGINE MOUNTING PAD.	
			PLATE MAY BE INSTALLED ON RH SIDE IF OBSCURED BY STARTER.	

A-NOT PART OF THIS GROUP
B-USE AS REQUIRED

<END>

MEMORANDA

PART NUMBER INDEX

Part	Page
0	
0L-1138	62
0S-0550	247
	249
0S-1603	81
	82
0S-1614	699
0S-1621	855
0T-0318	395
1	
1A-0621	454
1A-5350	454
1B-0676	572
1B-8736	21
	22
	23
	24
	25
	26
	37
	38
	39
	40
	42
	44
	89
	572
1F-0750	501
1H-1200	454
1H-3244	270
	273
	915
	916
1H-3337	963
1H-7339	555
	557
	563
1H-9721	429
	435
1J-6474	752
1K-0502	522
	524
1K-6872	855
	948
	950
	963
1K-7082	392
	461
1L-3768	752
1L-6377	484
	487
1M-1230	286
1M-6119	275
	277
	279
	281
1M-6120	275
	277
	279
	281
1N-3743	177
1N-3762	48
	52
	54
	56
	58
	60
	62
	70
	71
1P-2807	992
	1001
1P-3703	634
1P-3709	633
1P-4278	247
	249
	265
	678
	680
1P-4584	643
1P-6872	671
	673
1P-7009	247
1P-7363	695
	697
	699
	701
	703
	705
	707
	709
	713
1S-7251	275
	277
	279
	367
	374
1S-7252	275
	277
	281
1S-8947	471
1S-9593	440
	441
	701
	725
1U-8846	429
	436
1V-9385	463
1W-2934	891
2	
2A-4576	394
2B-0858	75
	130
	131
	132
	185
	187
2B-2404	265
2D-2628	442
	443
2D-2629	442
	443
2D-2630	442
	443
2D-2631	442
	443
2D-2633	442
	443
2D-6392	194
	197
	200
2H-3920	857
	859
	918
2H-3922	386
2H-3931	545
	546
	548
	555
	563
2H-4145	545
	546
	548
2K-3549	742
2K-4973	855
	954
	956
	958
	963
2K-6830	558
	559
	561
2L-5893	855
2L-6267	395
2M-2570	394
2M-6102	575
	592
2M-9780	605
	606
	609
	610
	614
	617
	620
	621
	630
	633
	643
	652
	654
	656
	660
	671
	673
	678
	680
	695
	697
	699
	701
	703
	705
	707
	709
	713
	715
	717
2P-1279	454
2P-1293	577
	581
	584
	589
	594
	598
	603
	615
2P-4191	272
2P-8104	316
2R-0364	522
	524
2S-0479	394
2S-0480	394
	413
	415
2S-3745	862
	920
2W-1529	21
	22
	23
	24
2W-9710	193
	196
	198
2Y-5821	561
2Y-5829	222
	572
2Y-9255	889
3	
3B-4505	956
	958
	965
3B-4509	394
3B-4610	457
3B-4631	963
	967
3B-5302	394
3B-5317	665
3B-5319	666
	734
	842
	843
3B-5322	731
	743
	746
3B-5790	671
	673
3B-8488	490
	726
	728
	729
	754
3B-8489	490
	491
	556
	562
	572
	665
	726
	728
	729

► **PRIMARY REFERENCE**

PART NUMBER INDEX

Part	Page
	734
	736
	742
	750
	752
	754
	824
	825
	826
	827
	852
3C-6516	293
3C-8388	671
	673
3D-2824	471
	507
	575
	577
	580
	584
	588
	592
	594
	597
	601
	603
	606
	610
	615
	618
	620
	621
	623
	633
	643
	656
	658
	660
	684
	685
3E-1908	▶888
	889
	891
3E-2333	464
	467
3E-3362	440
3E-3365	265
	267
	355
	382
	387
	399
	441
	522
	701
	725
3E-3371	382
	441
3E-4051	889
3E-4052	930
3E-4057	889
3E-4058	930
3E-4312	864
3E-4321	928
	930
	933
3E-4363	413
	415
3E-4892	97
3E-4924	97
3E-5153	316
3E-5154	316
3E-5180	333
	349
3E-6600	494
	496
3E-6769	671
	673
3E-6770	671
	673
3E-6922	336
3E-7426	577
	580
	584
	588
	594
	597
3E-7443	577
	580
	584
	588
	594
	597
3E-8004	946
	947
3E-8123	989
3E-8124	989
3E-8185	997
3E-8186	992
3E-8187	993
3E-8188	993
3E-8189	994
3E-8190	995
3E-8191	996
3E-8192	1000
3E-8193	1000
3E-8194	997
3E-8211	498
	501
	866
	867
	868
	869
	870
3E-8620	701
3E-8621	725
3E-9362	323
	326
	327
	365
	382
	384
3F-5108	835
3F-9556	938
	945
3G-6927	430
	436
3J-1907	262
	264
	268
	351
	355
	361
	382
	384
	406
	408
	428
	434
	454
	509
	533
	606
	610
	620
	621
	625
	627
	629
	630
	633
	643
	652
	654
	715
3J-7352	671
	673
3J-7354	264
	268
	464
	467
	509
	620
	630
	633
	637
	652
	671
	673
	695
	697
	699
	701
	703
	705
	707
	709
	713
	715
3J-9196	440
3K-0360	464
	467
	507
	533
	605
	606
	609
	610
	621
	633
	643
	659
	705
	707
3K-3379	394
3K-8782	294
	295
3N-1491	870
3N-5739	561
3N-6408	393
3S-2093	236
	238
	262
	275
	277
	284
	285
	286
	296
	298
	300
	302
	305
	323
	326
	327
	330
	333
	337
	339
	342
	344
	347
	349
	351
	355
	361
	365
	367
	372
	375
	378
	379
	382
	384
	386
	387
	429
	436
	454
	494
	496
	522
	606
	610
	621
	875
	877
	922
	930
	933
	960
	963
	972
	974
3S-6049	275
	277
	281
3S-6050	275
	277

▶ **PRIMARY REFERENCE**

PART NUMBER INDEX

Part	Page
	281
3S-6162	550
3S-7023	558
	559
3T-0849	722
3T-0850	606
	610
3T-3349	275
3T-5760	275
	277
4	
4B-2043	176
	177
	178
	326
	344
	349
	968
	969
4B-2049	351
	355
	361
4B-4274	498
	501
4B-4281	29
	31
4B-4863	323
	327
	365
	367
	375
	382
	384
	942
4B-5271	948
	950
4B-9782	697
4B-9784	963
4D-7794	491
4D-9986	535
	536
	688
	689
	690
	691
	692
4E-8619	454
	▶458
4F-3657	776
	777
	778
	779
	780
	781
	782
	783
	784
	785
	786
	787
	788
	789
4F-7952	430
	436
4H-2494	261
4H-2558	275
	277
	279
4H-2804	99
	101
	103
	105
	107
	109
	111
4I-3038	372
4J-0520	400
4J-0522	406
	408
	410
	411
4J-1888	824
	825
	826
	827
	831
	832
	837
4J-3745	550
	560
4J-5140	535
	536
	688
	689
	690
	691
	692
4J-5267	535
	536
	688
	689
	690
	691
	692
4J-5477	264
	454
	464
	467
	509
	533
	606
	610
	620
	621
	629
	630
	637
	643
	652
	654
4J-7533	683
	701
4J-9220	550
	560
4J-9224	545
	546
	548
4J-9780	715
4K-0367	776
	777
	778
	779
	780
	781
	782
	783
	784
	785
	786
	787
	788
	789
	834
4K-0499	963
4K-1388	695
	697
	701
	703
	705
	707
	709
	713
4K-5843	393
4K-8864	249
4L-6454	954
	956
	958
4M-0061	956
	958
	965
4M-0189	550
	560
4M-6582	715
4N-8597	177
	178
	272
4P-6236	1003
4P-6396	1003
4P-6422	1003
4P-6423	1003
4P-7581	287
	290
	351
	355
	361
4P-8134	275
	277
	323
	327
	330
	337
	344
	349
	351
	355
	361
	382
	384
4P-9944	37
	38
	39
	40
4P-9945	37
	38
	39
	40
4P-9946	37
	38
	39
	40
4P-9947	37
	38
	39
	40
4P-9948	37
	38
	39
4S-8264	992
	993
	994
	995
	996
	997
	998
	999
	1000
4T-2723	535
	536
	688
	689
	690
	691
	692
4T-4218	690
4T-4513	697
4T-4516	695
	701
	709
	713
4T-4518	689
4T-4520	695
	697
	699
	701
	703
	705
	707
	709
	713
4T-4521	695
	697
	699
	701
	703
	705
	707
	709
	713
4T-4524	695
	697
	699
	701

▶ **PRIMARY REFERENCE**

PART NUMBER INDEX

Part	Page
	703
	705
	707
	709
	713
4T-4528	695
	697
	699
	701
	703
	705
	707
	709
	713
4T-4531	697
	709
4T-4532	697
	701
4T-4533	695
	705
	709
	713
4T-4538	688
4T-5613	561
4T-6128	558
	559
4T-6779	555
	563
4T-6780	553
	557
4T-7010	555
	563
4T-7807	471
	695
	697
	699
	701
	703
	705
	707
	709
	713
4T-8054	545
	546
	548
4V-2264	961
4V-5091	498
	501
4V-8264	855
4W-5359	85
	86
	87
	88
4W-5360	46
4W-9972	351
	355
	361
5	
5B-0486	93
5B-9079	144
	145
5B-9318	471
	695
	697
	699
	701
	703
	705
	707
	709
	713
5C-1777	242
5C-1798	99
	101
	103
	111
5C-1809	105
	107
	109
5C-2874	361
	976
	978
	982
	984
5C-2890	236
	238
	270
	273
	294
	361
	570
	901
5C-7261	287
	290
	375
	454
	462
	463
	498
	501
	678
	682
	686
	865
	875
	877
	886
	938
	945
	976
	978
5C-9553	923
	945
5D-1026	33
	149
	168
	170
	220
	227
	229
	231
	464
	467
	630
	633
	643
	678
	680
	928
	930
	933
5D-4822	498
	501
5D-8159	837
5D-9629	882
	885
5F-3106	668
5F-5434	388
	389
5F-9144	194
	197
	200
5G-8108	454
5H-3193	522
5H-8848	553
5J-4986	550
	560
5J-5402	558
	559
	561
5J-7878	560
5J-8156	545
	546
	548
5K-0906	637
5K-5338	464
	467
5K-9090	507
	577
	580
	581
	584
	588
	589
	594
	597
	598
	603
	633
	639
	640
	641
	642
	643
	646
	647
	648
	649
	650
	651
	693
	694
	695
	697
	701
	703
	705
	707
	709
	713
5L-3308	868
	869
	880
	881
5L-9018	394
5L-9023	701
5L-9656	394
5M-2894	535
	536
	688
	689
	690
	691
	692
5M-3062	963
5P-0078	247
	249
5P-0372	398
	572
5P-0537	697
	699
	701
5P-0540	395
5P-0598	614
5P-0599	580
	597
	601
	603
	605
	609
	615
	620
	656
	659
5P-0600	204
	206
5P-0743	633
	644
5P-0747	275
	277
	279
	281
	367
	374
5P-0761	275
	277
	279
	281
5P-0767	928
	930
	933
5P-1042	621
5P-1075	954
5P-1420	247
	249
5P-1442	247
	249
	265
	455
	678
	680
5P-1505	147
	149
	151
	464
	467
	630

► **PRIMARY REFERENCE**

PART NUMBER INDEX

Part	Page
	634
	644
	678
	680
5P-1506	634
	644
5P-2199	715
5P-3860	658
5P-3915	857
	859
	918
5P-4115	494
	496
	857
	859
	980
5P-4116	93
	179
	180
	181
	183
	263
	265
	351
	355
	472
	473
	565
	566
	634
	643
	741
	743
	744
	865
	875
	877
	886
	908
	910
	940
	980
5P-4295	464
	467
5P-4868	204
	215
	633
	643
5P-5599	722
5P-5637	980
5P-5923	367
	374
5P-5924	930
	933
5P-6011	862
5P-6129	193
	196
	198
5P-6442	265
5P-6718	99
	101
	103
	105
	107
	109
	111
	113
	429
	436
5P-7462	464
	656
5P-7463	464
	656
5P-7464	544
	581
	598
	603
	615
	625
	627
5P-7465	544
	581
	598
	603
	615
	625
	627
5P-7466	577
	581
	584
	589
	594
	598
	603
	615
5P-7467	577
	581
	584
	589
	594
	598
	603
	615
5P-7468	577
	581
	584
	589
	594
	598
	603
	615
5P-7469	577
	581
	585
	589
	594
	598
	603
	615
5P-7657	367
	374
5P-7854	265
	406
	408
	933
5P-7921	862
	920
5P-7957	887
5P-7958	491
5P-8066	429
	436
5P-8112	577
	581
	585
	589
	594
	598
	603
	615
5P-8245	81
	82
	948
	950
5P-8250	555
	557
	563
5P-8444	577
	581
	585
	589
	594
	598
5P-8500	991
5P-8502	991
5P-9000	895
	942
5P-9262	723
5V-2545	423
	424
5V-4410	520
5V-4845	963
5V-8309	498
	501
5W-9411	212
	213
	214
6B-0933	274
6B-4661	182
6C-3680	862
	920
6D-0044	46
6D-0337	▶442
	443
	445
	446
	447
6D-0443	442
	443
6D-3479	678
	680
6D-4246	147
	149
	151
	464
	467
	630
	930
	933
6D-7573	247
	249
	265
6E-0122	557
6E-0131	709
6E-0276	550
6E-0358	695
	697
	701
	703
	705
	707
	709
	713
6E-1478	561
6E-1522	550
6E-3268	723
6E-3269	723
6E-3272	723
6E-3273	723
6E-3274	723
6E-3275	723
6E-3276	723
6E-3341	675
6E-3583	715
6E-4000	671
	673
6E-4003	671
	673
6E-4004	671
	673
6E-4007	675
6E-4009	675
6E-4158	690
	691
	692
6E-4317	695
	697
	699
	701
	713
6E-4753	715
6E-6151	675
6E-6154	675
6E-6155	675
6E-6157	675
6E-6158	675
6E-6174	671
	673
6E-6175	671
	673
6E-6176	671
	673
6E-6281	707
6E-6284	703
6E-6285	703
6E-6286	707
6E-6527	723
6E-6528	722
	723
6F-7037	557
6H-3616	96
6I-0195	48
	56
	58
	60
6I-0217	29
	31
	46

6

▶ **PRIMARY REFERENCE**

PART NUMBER INDEX

Part	Page	Part	Page	Part	Page	Part	Page
	85		163		58		172
	86	6I-0257	157		60		174
	87		159		62		185
	88		161		99		187
	89		163		101	6I-0646	27
	99	6I-0258	157		103		28
	101		159		105		131
	103		161		107	6I-0650	157
	105		163		109		159
	107	6I-0259	157		111		161
	109		159		113		163
	111		161	6I-0364	98	6I-0654	91
	113		163		225		240
	189	6I-0260	33		318		242
	220		35	6I-0423	83	6I-0686	48
	234		85		84		52
	240		86	6I-0454	274		54
	251		87	6I-0456	187		56
	253		99	6I-0500	15		58
	255		101		17		60
	257		103		►134		62
6I-0219	52		105	6I-0501	134	6I-0787	157
	54		107		135		159
	62		109	6I-0502	134		161
6I-0220	52		111		135		163
	54		113	6I-0563	224	6I-0789	21
	62		157		225		22
	227		159		227		23
	229		161		229		24
	231		163		231		89
6I-0223	37		166		234	6I-0836	85
	38		167	6I-0572	52		86
	39		172		54		87
	40		174		62	6I-0839	85
6I-0233	136		209		65		86
	138		220		113		87
	140		227		172		88
	142		255		174		94
6I-0234	136		257		208	6I-0846	33
	138		274		210		35
	140	6I-0289	99		227		85
	142		101		229		86
6I-0235	136		103		231		87
	138		105		234		88
	140		107		240	6I-0847	83
	142		109		242		84
6I-0253	159		111	6I-0593	27	6I-0912	157
	161		113		28		163
6I-0254	85	6I-0291	251		91	6I-0917	33
	86		253		240		35
	87		255		242		240
	88		257	6I-0594	274		242
	94	6I-0298	52		318	6I-0918	240
	157		54	6I-0630	240	6I-1052	168
	159		62		242	6I-1074	48
	161		168	6I-0631	227		52
	163		170		229		54
	189	6I-0301	168		231		56
6I-0255	157	6I-0302	52		240		58
	159		54		242		60
	161		62	6I-0645	85		62
	163		168		86	6I-1075	48
6I-0256	157	6I-0363	52		87		52
	159		54		88		54
	161		56		89		56

► **PRIMARY REFERENCE**

PART NUMBER INDEX

Part	Page
	58
	60
	62
6I-1076	48
	52
	54
	56
	58
	60
	62
6I-1090	99
	101
	103
	105
	107
	109
	111
6I-1110	168
	170
6I-1206	136
	138
	140
	142
6I-1418	287
	290
6I-1497	147
	149
	151
	154
	155
6I-2604	168
	170
6I-2608	240
	242
6I-3717	136
	138
	140
	142
6I-3718	136
	138
	140
	142
6I-4039	217
	225
6I-4067	99
	101
	103
	105
	107
	109
	111
6I-4068	99
	101
	103
	105
	107
	109
	111
6I-4069	99
	101
	103
	105
	107
	109
	111
6I-4072	99
	101
	103
	105
	107
	109
	111
6I-4076	99
	101
6I-4079	149
	155
6I-4374	172
	174
	185
	187
6I-4793	185
	187
6J-0793	555
	563
6J-1972	553
	557
6J-2680	643
6J-2797	558
	559
	561
6J-5731	553
6J-5733	553
	557
6K-0806	287
	344
	349
	351
	355
	361
	367
	374
	429
	435
	986
	988
6K-8178	247
	265
	637
	930
6K-9632	974
6L-4725	857
	859
	918
6L-6208	550
6N-6984	193
	196
	198
6P-6590	494
	496
6P-8855	928
	930
	933
6R-3299	651
6R-7490	926
	961
6S-8620	147
	149
	151
	265
	454
6T-9142	428
	435
6T-9143	428
	435
6T-9144	428
	435
6T-9145	428
	435
6T-9146	428
	435
6T-9147	428
	435
6T-9160	428
	434
6T-9163	428
	435
6T-9164	428
	435
6T-9165	428
	435
6T-9166	428
	435
6T-9194	434
6T-9196	434
6V-0484	406
	408
	633
6V-0683	464
	656
6V-0852	406
	408
	509
	629
	633
	643
6V-1249	544
	581
	598
	603
	615
	625
	627
6V-1363	212
6V-2323	671
	673
6V-2410	926
	961
6V-2687	864
6V-2722	275
	277
6V-3213	666
	726
	734
	736
	744
	745
	747
	750
	790
	791
	820
	821
	822
	823
6V-3265	339
6V-3582	204
	206
6V-3965	406
	408
	509
	629
	633
	643
6V-4364	734
	754
	790
	791
	820
	821
	822
	823
6V-4589	428
	434
6V-5100	436
6V-5326	713
6V-5653	633
	643
	678
	680
6V-5683	671
	673
6V-5729	566
	748
	749
6V-5839	222
	223
6V-6717	857
	859
	862
	918
	920
6V-6813	857
	859
	918
6V-7238	633
	643
6V-7357	361
	862
	920
6V-7420	620
6V-7687	491
	726
	728
	729
	742
	754
6V-7731	428
	434
6V-7743	147
	480
	875
	901
	917
	976
	978
	982
	984
6V-7744	481
	511
	513

► **PRIMARY REFERENCE**

PART NUMBER INDEX

Part	Page	Part	Page	Part	Page	Part	Page
	515		548	6V-8628	464		656
	518		553		467	6V-8723	467
	520		558		630	6V-8724	652
	522		559		637	6V-8757	429
	525		560	6V-8632	606		435
	527		575		610	6V-8759	452
	529		580	6V-8633	507	6V-8781	621
	531		581		575	6V-8782	533
	621		585		580	6V-8785	642
	845		592		592	6V-8801	279
6V-8097	429		597		597	6V-8932	513
	435		598		615		518
6V-8144	565		603	6V-8634	464		520
	726		605		467	6V-8937	620
	743		606	6V-8635	588	6V-8938	606
	744		609		594		610
	745		610		597	6V-8941	621
	746		615		639	6V-8942	652
	747		617		640	6V-8995	603
	750		618		642	6V-8997	603
	837		620		646	6V-9007	580
6V-8183	136		623	6V-8636	620		597
	138		625		625		615
	140		627		627		620
	142		652	6V-8637	507		656
6V-8185	963		654		577	6V-9008	641
6V-8186	945		656		580		643
6V-8210	430		659		584		647
	435		660		588	6V-9169	581
6V-8236	722	6V-8399	717		594		598
6V-8237	553	6V-8400	577		597		603
6V-8335	428		580		601		615
	434		584		656	6V-9172	577
	518		588	6V-8638	620		581
	520		594		652		585
	527		598		654		589
	529	6V-8455	405		656		595
	531	6V-8500	428	6V-8639	507		598
6V-8344	742		434		605	6V-9178	428
	754	6V-8553	247		609		434
6V-8352	723		249		659	6V-9182	183
6V-8363	386	6V-8554	654	6V-8640	620	6V-9189	453
6V-8370	386	6V-8555	606	6V-8641	454		585
6V-8376	351		610		620		589
	355		621		629		666
6V-8378	323	6V-8556	601		630		669
	327		621	6V-8642	605		670
	365	6V-8560	247		609		940
6V-8397	264		249	6V-8647	264	6V-9632	149
	268	6V-8561	654		464		151
	464	6V-8563	601		467		222
	467	6V-8625	507		509		223
	606		659		637		238
	610	6V-8626	606		652		487
	620		610	6V-8713	507		496
	621		614		606		501
	625		617		610		859
	627		652		618		865
	652		654		620		873
6V-8398	464		660		623		885
	467	6V-8627	454		658		926
	507		606		660	6V-9746	183
	533		610	6V-8716	183		507
	544		621	6V-8721	652		577
	546		654		654		580

► **PRIMARY REFERENCE**

PART NUMBER INDEX

Part	Page
	581
	584
	585
	588
	589
	594
	595
	597
	598
	601
	603
	615
	620
	621
	633
	643
	656
6V-9828	629
	643
6V-9830	575
	592
	623
6V-9831	606
	610
	618
6V-9832	577
	589
	595
	634
6V-9833	642
	650
6V-9838	606
	610
	618
	621
6V-9839	621
6V-9840	639
	641
	646
	647
	648
	649
	650
6V-9849	533
	637
6V-9850	464
	467
6V-9851	507
	652
	654
6V-9852	606
	610
	660
6V-9853	581
	584
	598
6V-9854	577
	580
	584
	588
	594
	597
	633
	640
	643
6V-9855	577
	580
	584
	588
	594
	598
6V-9872	264
	268
	620
6V-9873	652
	654
6Y-1341	429
	436
6Y-1896	429
	436
6Y-2035	428
	434
6Y-2326	428
	434
6Y-2736	429
	435
6Y-2737	429
	435
6Y-2936	428
6Y-7652	393
6Y-7957	434
6Y-9915	97
7	
7C-0351	99
	101
	103
	105
	107
	109
	111
	113
7C-1224	113
7C-1271	138
	140
7C-1281	29
	31
	33
7C-2729	168
	170
7C-2851	70
	71
7C-3195	40
7C-3196	40
7C-4354	930
7C-4616	21
	22
	23
	24
	89
7C-8246	406
	408
7C-9465	93
7D-7233	155
	630
	634
	643
7E-3870	211
7E-4636	7
	▶261
7E-4642	8
	11
	▶222
7E-4643	9
	10
	▶223
7E-4644	20
	▶93
7F-6112	558
	559
7F-6998	933
7F-9223	991
7G-1060	367
	374
7I-5486	627
7I-8084	533
7I-8935	718
7J-0204	471
	695
	697
	699
	701
	703
	705
	707
	709
	713
	715
7J-5639	555
	563
7J-9108	507
	543
	555
	563
	581
	598
	601
	605
	606
	609
	610
	614
	615
	617
	618
	620
	621
	623
	652
	654
	658
	660
7J-9885	545
	546
	548
7K-1181	147
	149
	151
	183
	236
	238
	275
	277
7M-0242	453
7M-1530	202
7M-7410	170
7M-8485	183
	471
	507
	577
	581
	584
	588
	589
	594
	597
	598
	633
	639
	640
	641
	642
	643
	646
	647
	693
	694
7N-5274	275
	277
	281
7N-7779	458
7N-7780	458
7N-9737	458
7R-8239	457
7S-3916	577
	581
	585
	589
	595
	598
7S-3919	577
	581
	585
	589
	595
	598
7T-0093	862
	920
7T-0525	498

▶ **PRIMARY REFERENCE**

PART NUMBER INDEX

Part	Page
	501
7T-1099	268
	473
	680
	871
	873
	882
	885
	886
	926
7T-2646	428
	435
7T-2651	430
	436
7T-3017	428
	434
7T-3018	428
	434
7T-3021	428
	434
7T-3022	428
	434
7T-3034	428
	435
7T-3051	429
	435
7T-3109	429
	436
7T-3111	429
	435
7T-3119	428
	435
7T-3195	429
	435
7T-3249	429
	436
7T-3251	430
	435
7T-3253	430
	436
7T-4532	888
	889
7T-4848	367
	374
7T-6087	316
7T-6088	316
7T-6090	316
7T-6092	316
7T-6093	316
7T-6099	316
7T-6652	393
7T-6653	394
7T-6654	394
7T-6799	942
7T-7621	394
7T-8895	472
	473
7T-9987	275
	281
7W-0187	168
	170
7W-1176	83
	84
7W-1238	319
	320
7W-2326	14
	154
	155
7W-2501	46
	47
	52
	54
	62
	64
7W-2505	118
	120
	122
7W-2518	69
	74
7W-2519	69
	72
	73
	74
7W-2520	69
	74
7W-2632	274
7W-3896	176
	177
7W-4553	242
7W-4634	134
	135
7W-4642	83
	84
7W-4648	157
	159
	161
	163
7W-4782	157
	159
	161
	163
7W-4842	22
7W-7417	212
	213
7X-0310	566
	748
	749
7X-0447	748
	749
7X-0481	963
7X-0546	946
	947
7X-0572	474
7X-0579	191
	192
	195
	498
	501
	892
7X-0603	193
	196
	198
7X-0605	855
7X-0613	149
	151
7X-0622	952
	963
7X-0818	287
	290
7X-0872	652
	654
7X-2049	862
7X-2393	976
	978
7X-2444	629
	643
7X-2497	908
	910
7X-2537	565
	566
	743
	744
	952
7X-2539	669
	670
7X-2543	845
7X-2544	531
7X-2549	652
	654
7X-2550	634
7X-2553	425
	426
7X-2554	494
	496
7X-2568	474
7X-2570	388
7X-2621	930
7X-3164	620
7X-3166	621
7X-4741	429
	436
7X-4744	428
	434
7X-6315	287
	289
7X-7644	992
	1001
7X-7729	93
	155
	275
	277
	279
	281
	367
	375
	491
	494
	496
	511
	513
	678
	848
	889
	972
	974
7X-9065	344
	349
7Y-0336	572
7Y-3883	367
	374
7Y-4224	715

8

Part	Page
8B-1419	398
8B-6127	247
	249
	265
8C-0572	194
	197
	200
8C-3056	361
8C-3274	1002
8C-3291	484
	487
8C-3334	323
	379
8C-3798	147
	149
	151
8C-4447	730
	1002
8C-4982	935
8C-4987	398
	511
	515
	518
	520
	522
	524
	525
	527
	529
8C-5748	428
	434
8C-6955	572
8C-7110	671
	673
8C-7588	997
8C-8451	986
8C-8478	475
	476
	477
	478
	479
8C-8522	480
8C-8992	946
	947
8C-9778	316
8C-9783	316
8D-2707	442
	443
8D-9947	410
	411
8E-1118	330
	337
8E-3081	625
8E-5707	434
8F-0212	697
8F-1434	316
	323
	327
	351
	355
	361
	365
	386

► **PRIMARY REFERENCE**

PART NUMBER INDEX

Part	Page
8F-2534	48
	52
	56
	58
8F-6302	701
8F-7702	518
	520
8F-8151	182
8H-0707	695
	699
	703
	705
	707
	709
	713
8H-1607	394
8H-7521	558
	559
	561
8J-2574	555
	557
	563
8J-4455	316
8J-6371	555
	556
	563
8L-2746	428
	434
8L-2779	441
8L-8413	265
	267
	279
	281
	287
	326
8M-2770	484
	487
8M-2773	621
8M-3175	518
	520
	527
	529
8M-8157	394
8N-0869	275
	277
	281
8N-2694	214
8N-7998	157
	159
	161
	163
8R-2916	470
8R-6111	330
	337
8R-6263	458
8S-0023	410
	411
	578
	581
	585
	589
	595
	598
8S-0024	410
	411
	578
	581
	585
	589
	595
	598
8S-3020	281
8S-4710	697
8S-4734	453
8S-4740	394
8S-7803	864
	875
	877
	956
	958
	963
	965
	967
8S-9151	393
8T-0077	533
8T-0154	633
	643
8T-0164	630
8T-0272	93
8T-0276	453
8T-0318	498
	501
8T-0328	323
	327
	351
	355
	361
	365
8T-0352	330
	333
	339
8T-0389	663
	848
8T-0706	572
8T-0722	222
	223
8T-0785	545
	546
	548
	560
8T-0789	972
	974
8T-0799	423
8T-1118	972
	974
8T-1159	247
	249
	265
8T-1580	429
	435
8T-1581	429
	435
8T-1605	545
	546
	548
8T-1683	464
8T-1686	464
	467
8T-1887	601
	621
8T-1888	601
	621
8T-1889	578
	581
	585
	589
	595
	598
	603
	615
	642
8T-1890	578
	581
	585
	589
	595
	598
	603
	615
	642
8T-1891	606
	610
	625
	627
8T-1892	606
	610
	625
	627
8T-2275	713
8T-2360	471
	695
	697
	699
	701
	703
	705
	707
	709
	713
8T-2361	695
	697
	699
	701
	703
	705
	707
	709
	713
8T-2444	498
	501
8T-2530	606
	610
8T-2561	889
8T-2563	204
	206
8T-2658	372
8T-2659	342
	344
	347
	349
	942
8T-3444	625
	627
8T-3490	155
	223
	224
	225
	496
	501
	605
	609
	623
	643
	873
	933
8T-3597	654
8T-3612	238
	286
	496
	501
	533
	882
	885
	908
	910
8T-3647	666
	892
8T-3652	491
8T-3844	630
	901
8T-3998	894
	896
	899
8T-4001	476
	477
	478
	479
	484
	487
	490
8T-4121	93
	97
	147
	149
	151
	183
	211
	217
	222
	223
	224
	225
	247
	249
	261
	262
	265
	277
	315
	316
	323
	327
	330
	333
	339
	351
	355
	361
	367
	375

► **PRIMARY REFERENCE**

PART NUMBER INDEX

Part	Page	Part	Page	Part	Page	Part	Page
	406		904		513		643
	408		926		515		660
	410		928		518		662
	411		930		520		669
	462		933		522		670
	463		961		524		680
	464		972		525		930
	467		974		527		933
	481	8T-4122	484		529	8T-4137	147
	484		487		541		149
	487		668		572		151
	491		745		610		183
	494		752		618		275
	496		834		630		277
	511		835		656		279
	513	8T-4123	475		889		281
	515		476		891		351
	518		477		922		355
	520		478		933		361
	522		479	8T-4134	379		406
	524		572	8T-4136	93		408
	525		852		155		484
	527	8T-4131	388		183		487
	529		389		211		494
	531		852		215		496
	541	8T-4132	97		222		585
	575		481		223		601
	578		484		224		603
	581		487		225		606
	585		745		262		610
	589	8T-4133	93		265		618
	592		155		351		621
	595		193		355		623
	598		196		361		634
	601		198		368		637
	603		224		375		643
	606		225		379		652
	610		265		410		654
	615		275		411		660
	617		277		462		678
	618		279		463		680
	621		281		464		736
	623		291		467		875
	625		296		491		877
	627		298		494		904
	630		300		496		926
	634		315		522		928
	637		316		575		930
	642		323		578		933
	643		327		581		961
	652		330		585	8T-4138	154
	654		333		589		212
	656		337		592		236
	660		339		595		238
	663		344		598		361
	664		349		606		386
	669		368		610		454
	670		375		615		494
	678		398		617		496
	680		406		618		511
	736		408		623		513
	875		454		625		980
	877		480		627	8T-4139	459
	889		496		634		491
	891		511		642		578

PART NUMBER INDEX

Part	Page	Part	Page	Part	Page	Part	Page
	581		592		625		877
	589		664		627		892
	595		891		752		948
	598	8T-4186	193	8T-4194	408		950
	603		196		410		952
	615		198	8T-4195	155		980
	652		518		224	8T-4201	972
	654		520		225		974
	678		527		323	8T-4205	147
	680		529		327		149
	955		656		481		151
	960		663		491		154
8T-4167	476		664		511		212
	477		889		513		236
	478		891		515		238
	479	8T-4187	852		518		270
	484	8T-4189	147		520		273
	487		149		522		294
	490		154		527		309
8T-4171	368		183		529		361
	375		203		531		368
	908		204		541		375
	910		206		581		386
	971		236		595		454
8T-4172	511		249		598		480
	513		263		606		498
8T-4174	97		265		610		501
	484		284		615		570
	487		286		623		630
8T-4176	726		351		630		686
8T-4179	247		355		634		862
	249		361		644		920
	265		454		660		923
	368		462		889		926
	375		463		891		945
	678		472		922		961
	680		473		930		972
	752		482		933		974
8T-4180	908		483	8T-4196	97		986
	910		498		261		988
8T-4181	147		501		262	8T-4222	193
	498		634		496		196
	501		644		656		198
	908		667	8T-4197	215		481
	910		875		498		494
8T-4182	494		877		501		496
	496		885	8T-4198	217	8T-4223	183
	572		886		634		247
	643		928		663		249
	848		933		845		263
8T-4183	263	8T-4191	344	8T-4200	191		265
	265		349		192		275
	472		494		194		277
	473		496		195		368
	493		678		197		375
	643		680		200		399
	664	8T-4192	183		263		406
8T-4184	581		406		265		408
	585		408		351		410
	598		578		355		411
	615		581		405		423
	752		585		454		425
8T-4185	222		589		472		426
	223		595		473		472
	575		598		875		473

► **PRIMARY REFERENCE**

PART NUMBER INDEX

Part	Page	Part	Page	Part	Page	Part	Page
	493		637		406		231
	522		667		411	8T-6726	215
	544		669		425		217
	578		670		426		605
	581		678		544		609
	585		682	8T-4967	871		617
	589		889		873	8T-6760	394
	595		891		882	8T-6868	410
	598		930	8T-4970	986		411
	603		942		988	8T-6869	889
	615	8T-4244	398	8T-4971	924	8T-6870	533
	625		891		972	8T-6902	741
	627	8T-4649	484		974		945
	634		487	8T-4986	565	8T-6912	606
	644	8T-4742	236		566		610
	652		238		743	8T-7087	581
	654		924		744		598
	662	8T-4744	236	8T-5001	728		615
	664		238		729	8T-7329	621
	678		924		742	8T-7338	668
	680	8T-4766	522		754		752
	752	8T-4773	511		891	8T-7529	183
	891		513	8T-5004	991		634
	955		515	8T-5005	275		644
	960		518		277	8T-7547	204
	980		520		279		206
8T-4224	93		522		281		273
	154		524	8T-5041	392		454
	179		525		461		494
	180	8T-4815	398	8T-5063	398		496
	181		511		572		515
	194		513	8T-5091	498		518
	197		515		501		520
	200		518	8T-5092	491		525
	203		520	8T-5093	296		865
	204		522		298	8T-7876	172
	206		524		300		174
	215		525		302	8T-7963	472
	236		527		305		473
	238		529	8T-5360	566		606
	263	8T-4821	491		748		610
	265	8T-4837	491		749		621
	284	8T-4908	93	8T-5413	882	8T-7971	752
	286		149		885	8T-8549	392
	361		151	8T-5439	388		461
	374		154		389	8T-8641	864
	405		179		448	8T-8729	323
	453		180		449		387
	454		181		450		701
	457		193	8T-6356	633	8T-8737	287
	462		196		643		298
	463		198	8T-6431	518		300
	472		236		520		333
	473		238		527		349
	491		483		529		351
	494		491	8T-6466	511		355
	496		518		513		361
	498		520		621		367
	501		678		889		374
	515		885	8T-6656	1003		379
	518		889	8T-6684	603		441
	520		891		633	8T-8799	351
	525		930		643		355
	533		942	8T-6703	227		361
	621	8T-4956	399		229	8T-8894	462

PART NUMBER INDEX

Part	Page
	463
	491
8T-9364	963
8T-9402	147
	149
	151
8T-9405	668
8T-9501	399
	498
	501
	522
	948
	950
	952
8T-9655	287
	290
8U-9427	721
8W-4002	605
	609
8X-5489	238
8Y-4489	728
	729
	752
8Y-5737	857
	859
	918
8Y-5904	▶864
	948
	950
8Y-5906	864
8Y-5988	864
8Y-6028	864
8Y-6364	991
8Y-6386	908
	910
8Y-6388	893
8Y-6967	857
	859
8Y-6998	498
	501
8Y-7203	491
8Y-7204	491
8Y-7263	910
8Y-7264	908
8Y-7287	982
	984
8Y-7292	882
8Y-7306	908
	910
8Y-7309	976
	978
8Y-7310	908
	910
8Y-7311	871
	873
8Y-7444	875
	877
8Y-7483	▶406
	418
	419
	422
8Y-7833	323
	327
8Y-8081	275
	277

9

Part	Page
9B-7233	176
	177
	178
	326
	344
	349
	351
	355
	968
	969
9C-4457	967
9C-9785	901
9F-2167	393
9F-2247	255
9G-3695	938
9G-8909	281
9G-9155	680
9H-3771	833
9J-1874	879
	880
	881
9K-5635	463
9M-0164	154
	678
	680
9M-1974	428
	434
	952
9M-4814	928
	933
9M-4972	933
9M-7958	155
9M-7959	857
	859
	918
9M-8406	249
	464
	467
	630
	637
	928
	930
	933
9N-0869	287
	290
9P-1872	410
	411
9P-6571	859
	894
	896
	899
9P-9150	428
	434
9R-0036	▶730
	738
9R-0041	6
	▶750
9R-0109	565
	566
	726

Part	Page
	731
	743
	744
	745
	746
	747
	750
	837
9R-0111	726
	759
	760
	762
	763
	775
	824
	825
	826
	827
9R-0119	726
9R-0139	550
	560
	752
	754
9R-0147	734
9R-0153	555
	556
9R-0158	666
	726
	734
	736
	743
	744
	745
	746
	747
	750
	790
	791
	820
	821
	822
	823
	842
	843
9R-0162	545
	546
	548
	734
	752
	754
	777
	778
	779
	780
	782
	783
	784
	785
	786
	787
	788
	789
	792
	793
	794

Part	Page
	795
	797
	798
	799
	800
	802
	803
	804
	805
	806
	807
	808
	809
	810
	812
	813
	814
	815
	817
	818
	819
9R-0189	730
9R-0315	445
9R-0320	562
	563
	776
	781
	796
	801
	811
	816
	833
9R-0321	555
	556
	558
	559
9R-0336	759
	760
	763
9R-0343	759
	760
	763
9R-0347	759
9R-0366	489
	491
9R-0371	760
	763
9R-0372	760
	763
9R-0376	762
	763
9R-0393	484
	487
9R-0394	484
	487
9R-0411	734
	750
	752
	754
9R-0413	489
9R-0418	625
	627
9R-0422	745
	747
9R-0423	750

▶ **PRIMARY REFERENCE**

PART NUMBER INDEX

Part	Page
9R-0424	744
	745
	747
	750
9R-0431	489
9R-0481	490
9R-0823	393
9R-0883	393
9R-1004	575
	581
	592
	598
	615
9R-1005	575
	581
	592
	598
	615
9R-1034	660
9R-1085	▶745
9R-1104	736
9R-1107	736
9R-1233	403
	▶493
9R-1499	296
	298
	300
	302
	305
9R-1502	742
	754
9R-1510	666
	734
	754
	790
	791
	820
	821
	822
	823
	842
	843
9R-1581	398
9R-1765	522
9R-1766	399
	522
9R-1767	399
	522
9R-1882	446
9R-1948	970
9R-1956	445
	450
9R-2004	614
9R-2052	656
9R-2053	656
	659
9R-2407	393
9R-2417	393
9R-2418	393
9R-2419	393
9R-2420	393
9R-2421	393
9R-2424	394
9R-2425	393
9R-2426	395
9R-2427	393
9R-2428	393
9R-2429	393
9R-2430	393
9R-2431	393
9R-2432	393
9R-2433	393
9R-2434	393
9R-2435	395
9R-2436	395
9R-2437	395
9R-2438	395
9R-2439	395
9R-2440	395
9R-2441	395
9R-2442	395
9R-2443	395
9R-2444	395
9R-2445	395
9R-2446	393
9R-2447	393
9R-2448	393
9R-2449	393
9R-2450	393
9R-2451	393
9R-2452	393
9R-2453	393
9R-2454	393
9R-2455	393
9R-2456	393
9R-2457	393
9R-2458	393
9R-2459	394
9R-2460	394
9R-2466	395
9R-2474	394
9R-2480	394
9R-2482	394
9R-2483	394
9R-2484	394
9R-2485	394
9R-2486	394
9R-2487	395
9R-2488	394
9R-2489	394
9R-2490	394
9R-2491	394
9R-2492	394
9R-2493	394
9R-2494	394
9R-2495	394
9R-2496	394
9R-2497	394
9R-2498	394
9R-2499	394
9R-2501	394
9R-2502	394
9R-2503	394
9R-2504	394
9R-2505	394
9R-2506	394
9R-2507	394
9R-2508	394
9R-2512	394
9R-2589	871
	873
	882
9R-2603	261
9R-2614	572
9R-2620	494
	496
9R-2806	398
	453
	513
	518
	520
	531
	572
9R-2807	398
	453
	454
	513
	518
	520
	522
	531
	572
9R-2822	▶445
	448
9R-2958	752
9R-2959	752
9R-3051	398
9R-3067	522
9R-3092	734
9R-3135	572
9R-3182	726
9R-3203	971
9R-3204	971
9R-3205	971
9R-3255	572
9R-3469	972
	974
9R-3700	833
9R-3712	▶625
	757
9R-3933	736
9R-4066	726
	731
9R-4110	489
	490
9R-4482	736
9R-4483	759
9R-4485	759
	760
	762
	763
9R-4486	759
	760
	762
	763
9R-4487	759
9R-4494	736
9R-4619	601
	620
9R-4668	▶665
	756
9R-4670	826
	827
9R-4672	759
9R-4675	824
	825
	826
	827
9R-4676	824
	825
	826
	827
9R-4677	665
9R-4678	665
9R-4784	498
	501
9R-4918	541
9R-5063	736
9R-5201	▶759
	774
9R-5202	▶760
	774
9R-5205	759
	760
	762
	763
9R-5206	759
	760
	762
	763
9R-5219	393
9R-5241	394
9R-5294	824
	825
	826
	827
9R-5301	572
	730
	739
	740
9R-5313	760
	824
	825
9R-5320	774
	▶834
9R-5321	774
	775
	▶835
9R-5429	491
9R-5437	491
9R-5555	748
	749
9R-5567	398
9R-5616	875
	877
	886
9R-5786	824
	825
9R-5788	▶627
	756
9R-5828	736
9R-5832	760
9R-5834	736
9R-5835	736
9R-5866	774

▶ **PRIMARY REFERENCE**

PART NUMBER INDEX

Part	Page
	▶853
9R-5898	762
9R-5899	762
9R-5901	762
9R-5902	762
9R-5948	580
	597
	603
	615
	620
	658
9R-5971	625
9R-5988	▶762
9R-5989	▶763
9R-6007	▶746
9R-6014	731
9R-6062	746
	▶748
9R-6162	842
9R-6163	742
9R-6481	449
	450
9R-6602	395
9R-6671	394
9R-6690	726
9R-7069	605
	609
9R-7070	617
9R-7071	617
9R-7138	454
9R-7240	265
	267
9R-7701	490
9R-7797	572
9R-7803	606
	610
	617
	618
	623
	660
9R-7882	491
9R-7902	815
9R-7960	545
	546
9R-8189	454
9R-8291	491
9R-8390	726
9R-8523	728
	729
9R-8594	491
9R-8599	491
9R-8663	754
9R-8760	491
9R-8874	669
	670
9R-8987	781
	782
	783
	784
	785
	786
	787
	788
	789
9R-8988	781
9R-9005	659
9R-9028	739
	740
9R-9140	▶736
	738
9R-9146	572
9R-9152	736
9R-9153	736
9R-9198	605
	609
	623
	660
9R-9253	575
	580
	592
	597
	615
9R-9254	752
9R-9316	605
	609
9R-9319	623
9R-9334	454
9R-9373	726
9R-9375	605
	609
9R-9398	394
9R-9401	394
9R-9403	394
9R-9408	393
9R-9409	393
9R-9410	393
9R-9505	561
9R-9702	392
	461
9R-9812	728
	729
9R-9868	399
	522
9R-9869	484
	487
9R-9901	511
	513
	515
	518
	520
	541
	857
	859
	918
9R-9925	678
	680
9S-4182	630
	633
9S-4183	577
	588
	594
9S-4191	262
	264
	268
	428
	434
9S-8002	715
9S-8004	683
	715
9S-8006	471
	671
	673
	695
	697
	699
	701
	703
	705
	707
	713
9S-8007	715
9S-8009	709
9S-8752	535
	536
	688
	689
	690
	691
	692
9S-9334	471
9T-0642	701
9T-0644	701
9T-0650	703
	707
9T-0655	471
9T-0656	471
9T-0661	555
9T-0704	695
	701
9T-0766	563
9T-2212	553
	557
9T-2883	561
9T-3948	563
9T-4007	557
9T-4008	557
9T-4009	557
9T-5444	550
9T-5455	605
	609
	▶715
9T-7309	701
9U-2277	323
	379
9U-8263	926
	961
9U-8886	428
	434
	668
9W-0607	291
	296
	298
	300
	302
	684
	685
	715
	428
	434
	471
	671
	673
	695
	697
	699
	701
	703
	705
	707
	713
	715
	709
	535
	536
	688
	689
	690
	691
	692
9S-9334	471
9T-0642	701
9T-0644	701
9T-0650	703
	707
9T-0655	471
9T-0656	471
9T-0661	555
9T-0704	695
	701
9T-0766	563
9T-2212	553
	557
9T-2883	561
9T-3948	563
9T-4007	557
9T-4008	557
9T-4009	557
9T-5444	550
9T-5455	605
	609
	▶715
9T-7309	701
9U-2277	323
	379
9U-8263	926
	961
9U-8886	428
	434
	668
9W-0607	291
	296
	298
	300
	302
	684
9W-3326	685
	262
	264
	268
	428
	434
9W-5460	715
9W-8215	683
9W-9953	715
9X-0199	471
9X-1046	671
9X-1054	673
	695
9X-1813	697
9X-2027	699
	701
9X-2036	703
9X-2038	705
	707
	713
	715
	709
	535
	536
	688
	689
	690
	691
	692
9X-2041	471
	701
	701
	703
9X-2042	707
	471
	471
	555
	695
	701
	563
	553
	557
	561
	563
9X-2043	557
	557
	557
9X-2044	550
	605
	609
	▶715
	701
	323
	379
	926
	961
	428
	434
	668
	291
	296
	298
9X-2045	298
	300
	302
	305
9W-3326	292
	293
	296
	298
	300
9W-5460	430
	436
9W-8215	835
9W-9953	97
9X-0199	386
9X-1046	939
9X-1054	287
	361
9X-1813	290
9X-2027	699
	855
9X-2036	316
9X-2038	511
	513
	515
	518
	520
	541
	859
	887
	896
	899
	903
	906
9X-2041	881
	907
	926
	961
9X-2042	455
	484
	486
	487
	570
	857
	859
	865
	906
	912
	918
9X-2043	453
	518
	667
9X-2044	236
	238
	462
	463
	857
	859
	887
	894
	896
	899
	905
	918
	970
	980
9X-2045	498
	501
	511

▶ **PRIMARY REFERENCE**

PART NUMBER INDEX

Part ..... Page

513
515
520
531
541
857
859
875
903
915
916
918
926
941
942
944
961
976
978
982
984
9X-2065 522
524
9X-2092 886
9X-2132 980
9X-2334 572
9X-2842 945
9X-4244 291
9X-4611 558
559
561
9X-6165 379
9X-6383 980
9X-6580 652
9X-6611 556
9X-6615 429
436
9X-7260 550
9X-7378 888
9X-7380 930
933
9X-7381 930
933
9X-7382 930
933
9X-7383 930
933
9X-7385 888
889
9X-7680 671
673
9X-8118 294
295
9X-8121 294
295
9X-8139 294
295
9X-8256 511
513
917
9X-8257 97
425
426
481
494

496
9X-8873 948
950
9X-8880 394
9X-8883 394
9Y-0176 222
223
9Y-2633 21
22
23
24
9Y-5015 46
47
48
52
54
56
58
60
62
64
75
9Y-5124 99
101
103
105
107
109
111
9Y-5132 99
101
103
105
107
109
111

0

004-6557 182
004-6810 182
005-0469 428
435
005-0471 428
435
006-8606 136
138
140
142
006-8865 194
014-5645 429
436
030-1957 394
031-0214 695
697
699
701
703
705
707
709
713
031-4155 956
958

965
031-5085 695
705
709
713
032-1557 463
032-8062 170
032-8100 242
261
032-9090 37
38
39
40
42
44
032-9091 37
38
39
40
42
44
032-9946 99
101
103
105
107
109
111
147
033-2379 37
38
39
40
033-2380 37
38
39
40
033-2381 37
38
39
40
033-6043 723
033-6044 722
033-7687 81
82
033-7849 242
261
034-1432 731
034-3679 464
467
035-8063 251
319
320
035-8068 48
52
54
56
58
60
62
65
036-5802 48
52
54
56

58
60
62
038-9317 275
277
279
281
039-9133 457
061-8639 441
067-6002 48
52
54
56
58
60
62
65
067-6006 48
52
54
56
58
60
62
65
75
067-6043 48
52
54
56
58
60
62
65
70
71
067-6044 71
129
067-6045 71
129
067-6083 136
138
140
142
067-6087 136
138
140
142
067-6088 136
138
140
142
067-6095 136
138
140
142
144
145
067-6123 83
84
067-6178 21
23
24
067-6179 21
22

▶ PRIMARY REFERENCE

PART NUMBER INDEX

Part	Page
	23
	24
	89
067-6213	99
	101
	103
	105
	107
	109
	111
	113
067-6268	240
	242
	246
067-6269	240
	242
	246
067-6366	274
067-6805	48
	52
	54
	56
	58
	60
	62
067-6808	46
	47
	52
	54
	62
	64
067-6810	27
	28
	131
067-6869	37
	38
	39
	40
067-6873	37
	38
	39
	40
	42
	44
067-6874	37
	38
	39
	40
	42
	44
067-6883	118
	120
	122
067-6897	21
	22
	23
	24
	89
067-6899	21
	22
	23
	24
	89
067-6900	21
	22

Part	Page
	23
	24
	89
067-6927	157
	159
	161
	163
067-6928	157
	159
	161
	163
067-6998	240
	242
	251
067-6999	240
	242
	251
	310
	312
	313
067-9520	62
069-1124	52
	54
	62
	128
069-4080	262
069-4707	390
081-6352	606
	610
082-2817	1001
083-4419	671
	673
084-4277	926
	961
089-7990	389
091-5928	829
	830
092-3635	464
	467
095-0641	945
095-0733	367
	374
095-0741	342
	344
	347
	349
095-0878	956
	958
	965
095-0924	417
095-0927	434
095-9230	522
095-9805	671
	673
096-4415	922
096-6166	935
099-0492	342
	347

1

Part	Page
	361
100-3320	697
100-3563	697
100-3564	697
100-3566	697
100-3567	316
100-3685	89
100-3751	185
	187
	189
	227
100-4112	316
100-4113	316
100-4115	316
100-4118	316
100-4119	316
100-4461	165
100-4830	27
	28
	92
	251
	253
	255
	257
100-4841	33
	35
	65
100-7442	625
100-7443	627
100-7444	627
100-7608	976
	978
	982
	984
100-8451	210
	274
101-0003	989
101-0117	736
101-0333	1001
101-0568	992
101-0569	993
101-0570	993
101-0571	994
101-0572	995
101-0573	996
101-0574	1000
101-0575	1000
101-0576	997
101-0745	988
101-0862	580
	597
	615
101-0863	577
	580
	584
	588
	594
	597
	1002
101-1787	509
101-2788	520
	1003
101-2987	95

Part	Page
	96
101-3415	157
	159
	161
	163
101-3617	83
	84
101-3675	29
	31
101-3739	244
101-3740	244
101-3741	244
101-3742	244
101-3743	244
101-3771	113
	185
	187
101-3802	94
101-3805	185
	187
	220
101-3895	172
	174
101-3906	240
	242
101-3907	240
	242
101-3921	227
	229
	231
101-3923	52
	54
	62
101-3983	310
	313
101-3984	310
	313
101-3985	310
101-3986	310
	312
	313
101-4015	491
101-4016	491
101-4020	491
101-4408	▶838
101-4409	838
	▶839
101-4410	839
101-4411	839
101-4412	839
101-4413	839
101-4414	839
101-4415	838
102-1940	491
102-2940	986
102-3582	561
102-4560	489
102-8801	332
	349
	367
	374
	936
102-8802	265
	267
	287

▶ **PRIMARY REFERENCE**

PART NUMBER INDEX

Part	Page	Part	Page	Part	Page	Part	Page
	290		374	105-1440	722	106-9430	715
	292		382	105-1441	722	106-9586	428
	296		384	105-2145	723		434
	298		938	105-2740	227	106-9861	430
	300		986		229		435
	323	102-8806	330		231	107-3313	6
	326		333	105-2812	▶270		▶738
	327		337		272	107-3716	▶388
	351		339	105-3481	948		403
	355		367		950	107-5591	399
	361		374	105-4173	168		522
	365		379		170	107-5605	386
	367		937	105-8034	454	107-6708	577
	372	103-4754	471	105-8069	296		580
	374	103-4867	398		298		584
	379	103-5519	671		300		588
	382		673		302		594
	384		▶722		305		597
	387	103-5520	671	105-9411	889	107-6709	577
	399		673		933		581
	441	103-5522	671	106-0401	542		584
	522	103-5687	78	106-0406	542		588
	701	104-2091	857	106-0409	577		594
	725		859		580		598
	888		893		584	107-6711	752
102-8803	287		895		588		754
	290		898		594	107-6826	423
	344		914		597		424
	349	104-3288	434	106-0421	728	107-8117	535
	351	104-3912	296		729		536
	355		298	106-0424	728		691
	361		302		729	108-1587	836
	367		305	106-0425	584		▶844
	374	104-3964	756		588	108-2989	741
	375		▶824		729	108-3036	757
	379	104-3965	756	106-1251	545		▶826
	382		▶825		546	108-3037	826
	384	104-3966	824		548		827
	386	104-3967	824	106-2404	▶662	108-3872	577
	441		825	106-2405	662		581
	972	104-6310	756	106-2409	662		584
	974		757	106-5876	569		589
102-8804	287		836		▶623		594
	290		▶837	106-5878	▶475		598
	293	104-6311	837	106-5879	▶476	108-4311	875
	296	104-6312	837	106-5880	▶477		877
	298	104-6313	824	106-5881	▶478	108-8251	▶971
	300		827	106-7301	572	109-0533	527
	323		844	106-8020	264		529
	327	104-6314	824		268	109-1260	577
	349		827	106-8704	323		580
	365		844		327		584
	367	104-6316	837		382		588
	374	104-6317	837		384		594
	375	104-8566	406		387		597
	382		408	106-8916	234	109-1633	652
	384	104-9494	930	106-9046	▶572		654
102-8805	296	104-9502	▶308		738	109-1634	652
	298	104-9504	308	106-9387	756		654
	300	105-1434	722		757	109-9685	703
	302	105-1435	722		758		707
	305	105-1436	722	106-9388	824	110-0037	866
	342	105-1437	722		827		867
	347	105-1438	722		844		868
	367	105-1439	722	106-9427	715		869

▶ **PRIMARY REFERENCE**

PART NUMBER INDEX

Part	Page
	870
	881
110-2445	204
	206
	633
	643
110-2861	824
	827
	844
110-5602	980
110-6109	857
	859
	918
110-6326	201
110-6331	201
110-7524	881
110-7709	577
	580
	584
	588
	594
	597
110-7710	577
	580
	584
	588
	594
	597
110-7713	580
	584
	597
111-0483	728
	729
111-0859	79
111-1815	48
	56
	58
	60
	62
111-3422	255
111-3423	255
111-3832	489
111-4337	736
	750
111-4627	379
111-5042	963
111-6795	326
111-6816	326
111-7899	296
	298
	300
	302
	305
	323
	327
	330
	332
	333
	336
	342
	344
	347
	349
	365
	382
	384
	387
	510
	922
111-7906	405
111-7907	▶405
	427
111-8222	27
	28
111-8634	756
111-8635	▶756
	757
111-8636	▶756
111-8637	▶757
112-0938	▶757
	758
112-0939	▶757
	758
112-0940	▶758
112-0941	▶758
112-0942	▶836
112-1767	20
	▶315
112-1773	561
112-1776	837
112-1777	827
112-1778	757
	▶827
112-1809	▶474
112-1826	7
	571
	▶668
112-4411	446
	447
112-4415	494
	496
112-4416	494
	496
112-4417	475
	476
	477
	478
	479
112-4418	476
	477
	478
	479
112-4498	726
112-5089	222
112-5090	223
112-5091	▶221
112-5494	572
112-5540	46
112-5541	46
112-5823	609
	618
112-5825	605
112-5827	609
	618
112-5828	605
112-6219	406
	408
112-9331	444
	▶445
112-9332	445
	▶446
112-9334	443
	444
	445
	▶446
112-9337	▶446
112-9338	446
	448
	449
112-9450	972
	974
112-9514	222
	223
112-9629	392
	461
112-9689	▶201
	202
112-9717	201
113-0018	▶990
113-0309	52
	56
	99
113-0920	926
	961
113-1147	394
113-1150	423
113-1151	418
	▶423
113-1505	29
	31
113-2662	478
	479
113-4495	474
113-5049	454
113-5973	871
	873
113-6349	274
113-7905	477
113-7906	476
113-8129	189
113-8277	901
113-8490	300
	305
	323
	327
	367
	378
	382
	384
113-8491	296
	298
	300
	302
	305
	336
	339
	367
113-8492	330
	333
	367
113-9221	425
	426
114-2579	208
	210
	220
114-2589	240
	242
114-2590	227
	229
	231
114-2863	270
114-2865	270
114-2866	270
114-2867	270
114-2868	270
114-2869	270
114-2870	270
114-2871	270
114-2872	270
114-2873	270
114-2874	270
114-2875	270
114-3469	888
114-4363	83
	84
114-4777	633
114-4916	309
114-5333	323
114-6099	490
114-8861	498
	501
114-8972	498
	501
114-8973	498
	501
114-9342	990
115-1162	208
	210
115-1615	287
	290
	361
115-1715	▶293
	296
	298
	300
	302
	305
115-1716	▶292
	296
	298
	300
	302
	305
115-1918	668
115-5219	498
	501
115-5220	498
	501
116-1316	535
	692
116-3864	93
116-3865	93
116-3866	93
116-4481	719
	720
116-4616	623
116-4617	623
116-4942	▶747
116-7491	342
	344

▶ **PRIMARY REFERENCE**

PART NUMBER INDEX

Part	Page
	347
	349
117-0754	752
117-2823	972
	974
117-2824	972
	974
117-2826	972
	974
117-2911	441
117-3235	642
117-3242	464
	467
117-3534	668
117-3535	668
117-3789	900
117-4650	428
	434
117-5672	518
	520
	541
117-7414	875
	877
117-7520	625
117-9713	405
117-9887	423
	424
118-2228	536
118-2990	484
	487
118-5503	895
	898
118-5837	393
118-5839	394
118-6842	472
	473
	▶480
118-6854	472
	473
118-7110	834
118-7286	183
118-7789	736
118-7790	386
118-8118	244
	245
	260
118-8119	245
118-9143	168
	170
118-9144	168
	170
118-9145	168
	170
	172
	174
118-9517	930
119-1530	▶847
119-3662	361
119-4594	750
119-4740	427
119-5025	236
	238
119-6723	212
119-7749	678
119-8016	▶275
119-8349	980
119-9631	862
120-1324	618
120-4397	669
	670
120-4604	637
120-5724	675
120-5726	671
	673
	▶675
120-5727	671
	673
120-5729	671
	673
120-8469	20
	▶154
120-8482	▶479
120-8717	154
120-8718	154
120-9286	732
120-9289	▶731
	847
120-9332	731
120-9333	731
120-9762	429
	435
120-9809	606
	610
	618
120-9926	678
121-0694	429
	435
121-0697	434
121-0714	434
121-0883	83
	84
121-0885	434
121-0904	434
121-1251	428
	434
121-1253	434
121-1288	154
121-1289	154
121-2059	434
121-2060	434
121-2061	434
121-2062	428
	435
121-2500	429
	435
121-2511	429
	435
121-2537	429
	435
121-2545	429
	435
121-2603	429
	435
121-2604	429
	435
121-4036	436
	▶440
121-4480	245
121-5830	▶272
121-6936	972
121-7034	240
121-7238	765
	767
121-7385	429
	436
121-7389	429
	436
121-7390	429
	436
121-7391	430
	435
121-7396	428
	434
121-7398	429
	436
121-7399	429
	436
121-7400	429
	436
121-7401	429
	436
121-7402	429
	436
121-7403	429
	436
121-7404	429
	436
121-7405	428
	434
121-9743	980
121-9870	899
121-9875	435
122-1113	630
122-1135	440
122-1645	▶386
	738
122-1672	440
122-1876	436
122-1877	434
122-1878	434
122-1879	434
122-1880	429
	435
122-1881	429
	435
122-1882	429
	435
122-1883	435
122-1884	436
122-1885	429
	435
122-1886	429
	436
122-3649	428
	435
122-3652	428
	434
122-4872	605
	609
	618
122-4873	605
	609
	618
122-5822	605
	609
	660
122-5823	623
122-5865	▶277
122-5923	498
	501
122-6785	429
	436
122-6787	429
	435
122-7137	176
	177
	178
	326
	968
	969
122-9356	300
	305
123-0275	212
123-0428	494
	496
123-0714	429
	435
123-0867	678
123-1377	429
	435
123-2900	91
123-2918	436
123-2919	436
123-2920	429
	435
123-3827	494
123-4065	191
	192
	194
	195
	197
	200
	494
	496
	498
	501
123-4364	168
	170
123-4365	168
	170
123-4950	264
	265
	267
	268
123-6077	956
	958
	965
123-7034	491
123-7637	577
	580
	584
	588
	594
	597
123-8669	972
	974
123-8670	972
	974
123-8905	428
	434

▶ **PRIMARY REFERENCE**

PART NUMBER INDEX

Part	Page
123-8906	428
	434
123-8907	429
	436
123-8908	429
	436
123-8909	428
	435
123-8910	428
	435
123-8912	434
123-8913	429
	435
124-0312	857
	859
	918
124-0360	742
	754
124-0506	154
124-2456	1001
	1002
124-2528	577
	580
	584
	588
	594
	597
124-3532	116
124-3533	116
124-3536	116
	118
	120
	124
	126
124-3713	251
	253
124-3714	251
	253
124-3815	80
	89
	99
	101
	103
	105
	107
	109
	111
	168
	170
	209
	227
	229
	231
	251
	253
	255
	257
124-6524	891
124-6612	429
124-8105	901
124-8818	689
	▶695
124-9464	451
125-0851	406
	408
125-2086	901
	991
125-3298	332
	339
125-3416	930
	933
125-7116	826
125-7894	561
126-1817	571
126-2231	46
126-4224	826
	827
126-4225	824
	825
126-5476	695
	697
	699
	701
	703
	705
	707
	709
	713
126-5796	699
	703
	705
	707
126-5984	695
	697
	699
	701
	703
	705
	707
	709
	713
126-5985	695
	697
	699
	701
	703
	705
	707
	709
	713
126-8472	498
	501
	904
127-1942	998
127-2956	314
127-3017	429
	436
127-3294	157
	159
	161
	163
127-4285	444
	445
	▶447
127-4289	447
127-4290	443
	447
127-4293	447
127-4471	155
	204
	206
	680
127-5079	170
127-6980	179
	180
	181
127-8162	240
127-8167	261
127-8281	168
	170
127-8286	185
	187
127-8987	726
127-9768	48
	56
	58
	60
	62
128-2776	697
	701
128-3094	778
	783
	787
128-3778	777
	782
	786
128-4249	367
	374
128-5010	726
128-5596	668
	▶676
128-5964	992
128-5965	993
128-5966	993
128-5967	994
128-5968	995
128-5969	996
128-5970	1000
128-5971	1000
128-5972	997
128-5974	998
128-7902	572
128-7903	572
128-7905	572
128-8583	998
129-0138	▶451
	453
129-1854	906
	907
	961
129-1855	906
	907
	961
129-1938	459
129-3178	287
	290
	498
	501
	862
	920
	924
	945
	972
	974
129-3180	948
	950
	952
	963
	980
129-3493	136
	138
	140
	142
129-4741	480
129-5256	875
	877
129-5257	875
	877
129-8542	976
	978
	982
	984
129-8543	982
	984
129-8545	976
	978
	982
	984
129-9120	726
129-9121	▶726
	738
130-0013	440
130-0165	284
	286
130-0484	491
130-0777	750
130-0912	441
130-1422	14
	16
	▶81
130-1423	81
130-1427	14
	16
	▶94
130-1470	▶202
	203
130-1637	743
	746
130-1638	565
	743
	744
	746
130-1640	565
	566
	743
	744
130-1642	748
	749
130-2057	780
	785
	789
130-2758	568
130-2759	568
130-3879	180
	181
130-3880	179
130-3881	181
130-4646	14
	16
	▶246

▶ **PRIMARY REFERENCE**

PART NUMBER INDEX

Part	Page
130-4647	14
	16
	▶129
130-4648	14
	16
	▶128
130-4653	17
	▶319
130-4654	14
	16
	▶98
130-4832	857
	859
	918
130-5451	726
130-5582	992
130-5774	572
130-5891	572
130-6001	154
130-6352	14
	16
	▶83
130-6520	688
	689
	▶697
130-6591	766
	771
130-6662	1002
130-7092	▶245
	261
130-7282	451
130-7452	990
130-7912	901
130-7913	901
130-7914	901
130-7952	572
130-7964	261
130-8150	676
130-8292	277
130-8293	275
130-8343	963
130-8432	926
	961
130-9984	183
	633
	643
131-0232	265
	267
131-0379	568
131-0827	498
	501
131-0828	498
	501
131-1368	972
	974
131-1424	176
	177
	178
	326
	968
	969
131-1812	245
131-2011	995
131-2012	995
131-2117	779
	784
	788
131-2127	627
131-3201	323
	327
	365
131-3540	942
	948
	950
	952
131-3985	926
	961
131-3987	875
	877
	908
	910
131-5127	489
131-5133	489
131-5134	489
131-8203	980
131-8775	491
131-9203	382
	384
132-0111	309
132-2249	986
132-2250	986
	988
132-3056	678
	680
132-3721	829
	830
132-3723	829
	830
132-3725	829
	830
132-3777	831
	832
132-3778	831
	832
132-3821	829
	830
132-3895	498
	501
132-5303	713
132-5789	147
	149
	151
	379
132-6496	726
132-6497	730
132-8238	78
132-8769	▶542
132-9240	956
	958
	965
133-1011	21
	22
	23
	24
	89
133-3213	▶448
133-3260	222
	223
133-3361	▶565
133-3362	▶743
133-3363	▶744
133-3413	286
133-5512	154
133-5813	629
133-6517	286
133-7332	623
133-7333	623
133-8470	95
133-8490	992
133-8491	993
133-8492	993
133-8493	994
133-8494	996
133-8495	1000
133-8497	1000
133-8498	997
133-8500	998
133-8502	992
133-8503	993
133-8504	993
133-8505	994
133-8506	996
133-8507	1000
133-8508	1000
133-8509	997
133-8512	998
133-8916	527
	1002
134-0143	491
134-0453	522
	524
134-2305	344
	349
134-3014	564
	571
134-3059	875
	877
134-3060	875
	877
134-3061	877
134-3062	875
	877
134-3503	877
134-3854	168
	170
134-3856	168
	170
	928
	933
134-3987	154
134-4126	287
	289
134-7323	656
134-7324	656
134-8204	▶991
135-0786	446
135-1706	956
	958
	965
135-2876	743
	▶749
135-4744	▶566
135-7242	308
135-8167	222
	223
135-8168	222
	223
135-8203	776
	777
	778
	779
	780
	781
	782
	783
	784
	785
	786
	787
	788
	789
	853
135-8206	776
	777
	778
	779
	780
	781
	782
	783
	784
	785
	786
	787
	788
	789
135-9420	572
135-9886	494
	496
136-1955	147
	149
	151
	633
	644
136-3110	▶408
	419
	420
136-3112	408
	410
136-3608	154
136-3766	764
	768
	793
136-4192	976
	978
	982
	984
136-7439	518
	520
	525
136-7440	518
	520
	525
136-7808	400
136-8423	671
	673
137-3507	▶272
137-3848	▶842
137-7141	889
137-7142	889

▶ **PRIMARY REFERENCE**

PART NUMBER INDEX

Part	Page
137-9466	699
138-2043	227
	229
	231
138-2048	116
	118
	120
	122
138-2053	136
	138
	140
	142
	144
	145
138-2054	136
	138
	140
	142
138-2060	70
	71
138-2065	227
	229
	231
138-2068	27
138-2073	115
	122
	123
138-3096	240
	242
	▶244
138-4894	332
138-6903	215
138-6904	183
138-6913	183
138-7137	425
	426
138-8454	323
	327
	365
	367
	374
	382
	384
139-0056	168
	170
139-0219	889
139-2614	15
	▶185
139-3785	498
	501
139-5514	136
	138
	140
139-7009	227
	229
	231
139-7018	40
140-2358	194
	197
	200
140-2959	882
140-3634	194
	197
	200
140-3635	194
	197
140-3637	193
140-3638	193
140-3639	194
	197
140-3640	193
	196
	198
140-3881	891
140-6009	572
140-6021	522
140-7391	136
	138
	140
	142
140-7392	136
	142
140-7393	427
140-7443	85
	86
140-7444	85
	86
140-7445	85
	86
140-7504	185
	187
140-7505	185
	187
140-7506	185
	187
140-7512	185
	187
140-7515	166
140-8175	14
	16
	▶99
	▶101
	▶103
	▶105
	▶107
	▶109
140-8713	251
	253
140-8714	251
	253
	255
	257
140-8718	251
	253
	255
	257
140-8719	251
	253
140-8720	251
	253
140-8760	998
140-8761	998
140-8764	998
140-8767	998
140-8773	998
140-8783	274
140-9921	980
141-0728	14
	16
	▶130
141-0924	296
	298
	300
	302
	305
141-1656	277
141-1658	275
141-1667	234
141-2759	330
	337
	367
	387
141-4796	999
141-4797	999
141-4799	999
141-4800	999
141-4801	999
141-5150	745
141-6149	14
	16
	▶27
	▶28
141-6188	166
141-6208	744
	745
	747
141-6343	572
141-7221	445
	447
	448
141-7512	191
	192
	195
141-7514	494
	496
141-7515	498
	501
141-8292	▶309
141-8947	251
	253
142-0349	91
142-0724	194
	197
142-3018	21
	24
142-3388	179
	180
	181
142-3391	179
	180
	181
142-4248	251
	253
142-5789	296
	298
	300
	302
	305
142-6132	491
142-7405	513
	518
	520
142-8858	944
143-0421	344
	▶564
143-0539	315
	▶316
	318
143-0782	▶97
	418
	419
	420
	421
	422
143-0786	▶183
	418
	419
	420
	421
	422
143-1344	316
143-2827	875
	976
	978
	982
	984
143-2830	875
	976
	978
	982
	984
143-3158	630
143-4534	227
	229
	231
143-4655	441
143-5446	683
143-6227	441
143-8874	857
	859
	918
144-0195	875
	877
	972
	974
144-0367	633
	643
144-1636	355
144-2222	861
	870
	▶892
144-3528	754
144-4277	697
144-6253	568
	569
	▶617
144-6256	617
144-6258	617
144-6734	402
144-9930	344
	▶936
144-9931	342
	347
	▶937
144-9934	936
	937
145-4476	494
	496
145-4477	494
145-6005	194

▶ **PRIMARY REFERENCE**

PART NUMBER INDEX

Part	Page
	197
	200
145-6685	16
	▶46
	▶47
145-6688	16
	▶37
145-6690	16
	▶115
145-6713	176
	177
	▶179
	868
	869
	880
	881
145-6852	16
	▶69
145-6853	70
145-6854	70
145-6855	70
145-6856	70
145-6857	70
145-6858	70
	71
145-8327	257
145-8337	734
145-8344	734
145-8471	17
	▶136
145-8479	16
	▶85
145-8504	16
	▶21
145-8636	17
	▶157
145-9291	470
146-0001	14
	16
	▶166
146-0180	16
	▶80
146-0218	309
146-0797	889
146-1589	566
	749
146-1590	566
	749
146-1591	748
146-1816	406
	408
146-1840	218
146-1841	227
	229
	231
146-6729	316
146-7744	980
146-7745	980
146-8958	633
146-9439	296
	298
	300
	302
	305
	330
	333
	336
	339
	367
	387
147-0385	155
147-0679	240
	242
147-1557	176
	177
	178
	▶193
147-1558	▶194
	195
147-1559	177
	178
	▶180
	870
147-1560	177
	▶181
147-1659	699
147-1978	48
	56
	58
	60
	62
	70
147-1979	70
	71
	75
147-3019	908
	910
147-4502	287
	290
147-5553	224
147-6240	251
	253
147-6539	240
	242
147-8096	218
147-8590	91
148-1899	406
	408
148-3026	48
	52
	54
	56
	58
	60
	62
148-3626	893
	914
148-5353	976
	978
	982
	984
148-5355	908
	910
148-7127	227
148-7128	227
148-7132	227
	229
	231
148-7135	227
	229
	231
148-7136	227
	229
	231
148-7138	227
	229
	231
148-7139	227
	229
	231
148-7183	▶226
	227
	229
148-7310	910
148-7311	908
148-7318	910
148-7319	908
148-8315	605
	609
148-8316	264
	464
	467
	509
	637
	652
148-8318	464
	467
148-8322	620
148-8325	454
	620
	629
	630
	643
148-8326	264
	268
	620
148-8327	507
	577
	580
	584
	588
	594
	597
	601
	656
148-8328	507
	575
	580
	592
	597
	615
148-8335	588
	594
	597
	639
	640
	642
	646
148-8336	620
	625
	627
148-8339	183
148-8340	507
	605
	609
148-8341	507
	606
	610
	618
	620
	623
	658
	660
148-8342	606
	610
148-8345	620
	652
	654
	656
148-8346	464
	467
148-8347	580
	597
	615
	620
	656
148-8351	533
	637
148-8352	577
	580
	584
	588
	594
	597
	633
	640
	643
	646
148-8357	641
	643
	647
148-8360	183
148-8362	603
	633
	643
148-8364	507
	659
148-8367	464
	467
148-8368	454
	606
	610
	620
	654
148-8369	464
	467
	630
	637
148-8370	507
	652
	654
148-8372	652
	654
	656
148-8374	467
148-8378	652
148-8383	464
148-8386	577
	580

▶ **PRIMARY REFERENCE**

PART NUMBER INDEX

Part	Page
	584
	588
	594
	597
148-8387	577
	580
	584
	588
	594
	598
148-8390	606
	610
	614
	617
	652
	654
	660
148-8392	581
	584
	598
148-8393	606
	610
	660
148-8407	264
	268
148-8408	577
	588
	594
	684
	685
148-8417	621
148-8418	652
148-8422	633
	643
148-8428	533
148-8429	639
	640
	641
	646
	647
	648
	649
	650
	651
148-8431	642
148-8435	621
148-8446	606
	610
	618
	621
148-8447	652
	654
148-8449	621
148-8450	577
	580
	584
	588
	594
	597
148-8455	603
148-8457	603
148-9679	14
	16
	▶78
148-9685	14
	16
	▶91
148-9687	16
	▶310
149-4091	717
149-4236	227
	229
	231
	234
149-4311	686
149-4745	956
	958
149-6116	240
	242
149-6117	240
	242
149-7678	265
149-9954	260
150-3027	633
	643
	678
	680
150-3033	630
150-3037	606
	610
150-3052	577
	581
	584
	588
	594
	598
150-3053	577
	581
	584
	588
	594
	598
150-3060	625
	627
150-3062	509
150-3063	606
	610
	618
150-3065	406
	408
	633
150-4043	652
	654
150-5150	715
	▶717
150-6766	287
150-7732	33
	35
150-8015	980
151-2963	480
151-4841	236
	238
	605
	610
	618
	623
	660
151-5715	893
	914
151-7316	3
	4
	5
	▶754
151-7866	▶776
	790
151-7867	▶777
151-7868	▶778
151-7869	▶779
151-7870	▶780
151-7877	▶781
	791
151-7879	▶782
151-7880	▶783
151-7881	▶784
151-7882	▶785
151-7887	▶786
151-7888	▶787
151-7889	▶788
151-7890	▶789
151-7902	777
	778
	779
	780
	782
	783
	784
	785
	786
	787
	788
	789
	792
	793
	797
	798
	799
	800
	802
	803
	804
	805
	806
	807
	808
	809
	810
	812
	813
	814
	815
151-7903	777
	778
	779
	780
	782
	783
	784
	785
	786
	787
	788
	789
	792
	793
	797
	798
	799
	800
	802
	803
	804
	805
	806
	807
	808
	809
	810
	812
	813
	814
	815
151-7927	781
	782
	783
	784
	785
151-7928	1
	2
	3
	4
	5
	▶734
151-7929	776
	781
	796
	801
	811
151-7930	776
	781
	796
	801
	811
151-8752	194
	197
	200
152-1390	115
	122
	123
152-2884	46
	▶48
152-2927	69
152-3968	251
	253
152-6144	390
	400
152-8417	930
	933
152-9735	742
152-9736	1
	2
	▶742
152-9784	999
152-9785	999
152-9786	999
152-9787	999
152-9788	999
153-3061	179
	180
	181
	892

▶ **PRIMARY REFERENCE**

PART NUMBER INDEX

Part	Page
153-4953	14
	▶209
153-7368	470
153-9580	462
	▶470
154-3799	193
	▶195
154-5255	776
	781
154-5257	776
	781
	796
	801
	811
	816
154-5265	734
154-5277	734
154-5278	734
154-5279	734
	842
	843
154-5280	734
	843
154-5404	390
	459
154-5406	908
154-5410	986
	988
154-5416	453
154-5423	976
	978
154-5424	976
	978
154-5428	379
154-6015	251
	253
154-6016	251
	253
154-8044	227
	229
	231
154-8278	956
	958
	965
154-8280	956
	958
	965
154-8284	956
	958
	965
155-2255	342
	344
	347
	349
	367
	374
155-2260	287
	290
	330
	333
	337
	339
	349
	351
	355
	361
	367
	374
	382
	384
155-2265	330
	337
	342
	347
	367
	374
155-2270	287
	290
	296
	300
	302
	305
	323
	327
	342
	344
	349
	351
	355
	361
	367
	374
	382
	384
	440
	453
	862
155-2271	287
	290
	296
	300
	302
	305
	330
	333
	337
	339
	344
	349
	367
	374
155-2274	296
	302
	305
	330
	333
	337
	339
	344
	349
	367
	374
	382
	384
155-3624	630
	633
155-6457	296
	298
	300
	302
	305
	▶552
	752
155-8154	454
155-8522	355
	361
155-8804	257
155-9836	695
	697
	701
	709
	713
156-0283	296
	298
	300
	302
	305
	482
	483
156-1928	393
156-1929	393
156-1930	393
156-1933	395
156-1934	394
156-2571	393
156-2572	393
156-2573	395
156-2853	388
	389
	▶393
156-3691	606
	610
156-3837	605
	609
	660
156-3838	605
	609
	660
156-5970	725
156-6155	287
	289
156-6964	220
156-9275	434
156-9276	428
157-1669	262
157-1997	342
	344
	347
	349
158-2306	505
158-3412	605
	609
	617
	618
	623
	660
158-4466	721
158-5964	605
	609
158-5965	605
	609
158-8625	605
	609
158-8626	605
	609
158-8628	605
	609
158-8629	605
	609
158-8778	752
159-0186	183
	633
	643
159-0960	491
159-0961	742
	754
159-2798	1
	2
	3
	4
	5
	▶728
159-2799	1
	2
	3
	5
	▶729
159-4269	908
	910
159-4930	752
159-4945	875
	877
	910
159-4946	875
	877
	908
159-4950	978
	982
159-4951	976
	984
159-4953	908
159-4954	910
159-6102	244
159-7907	458
159-8033	1002
159-9322	287
160-0161	74
160-0269	683
160-0496	505
160-2245	930
	933
160-2248	464
	467
160-3510	88
160-6026	580
	597
	603
	615
160-6493	115
	116
	118
	122
160-6494	115
	116
	118
	122
	123
160-6495	115

▶ **PRIMARY REFERENCE**

PART NUMBER INDEX

Part	Page
	116
	118
	122
160-6496	115
	116
	118
	122
160-7213	242
160-8282	620
160-9777	620
160-9801	240
	242
161-1024	620
161-3249	434
161-3981	605
	609
161-4150	284
161-6984	976
	978
	982
	984
161-6987	976
	978
	982
	984
161-8198	284
161-8199	285
161-8200	284
	285
161-9044	908
	910
161-9282	963
	967
161-9283	963
	967
161-9285	963
	967
161-9286	963
	967
161-9288	963
	967
161-9289	956
	958
	965
161-9290	956
	958
	965
161-9294	976
	978
	982
	984
161-9744	956
	958
	965
161-9820	62
	69
	74
161-9916	620
162-0236	166
162-1565	29
	31
	33
162-1591	227
	229
	231
162-1604	671
	673
162-2088	227
	229
	231
162-2351	552
	▶614
162-2353	614
162-2356	580
	597
	615
162-3874	285
162-3960	▶505
	506
	652
	654
162-3961	▶506
162-4004	481
162-5380	652
162-6556	976
	978
	982
	984
162-9636	642
163-0753	452
	▶457
163-0754	▶452
	453
163-0755	452
163-1135	963
163-1139	963
163-4759	986
163-5676	605
163-5677	605
163-7934	7
	▶678
163-7936	678
163-7938	885
163-7939	875
	877
	886
163-7940	462
	463
163-9254	69
	▶70
	74
163-9256	70
	71
163-9371	568
	569
	▶618
164-0302	240
164-0792	85
	86
164-1025	▶882
	886
164-1032	▶857
	861
164-1033	861
	▶930
164-1037	918
164-1040	930
	933
164-1041	930
	933
164-1042	857
	859
164-1043	912
164-1045	867
	868
	869
	▶918
164-1050	871
	873
	▶885
164-1051	882
	885
164-1052	882
	885
164-1056	367
	374
164-1059	875
	877
	▶976
164-1060	875
	877
	▶978
164-1061	877
	▶910
164-1062	875
	877
	▶908
164-1064	976
164-1065	978
164-1066	982
164-1067	984
164-1068	875
	877
164-1069	875
	877
164-1070	875
	877
	881
164-1071	875
	877
	886
164-1072	875
	877
	886
164-1073	910
	▶982
164-1074	908
	▶984
164-1076	7
	▶236
164-1077	236
	238
164-1078	236
	238
	▶945
164-1079	924
164-1083	924
164-1102	484
164-1103	484
	487
164-1105	419
	420
	421
164-1107	899
164-1108	900
164-1110	905
	970
164-1113	399
164-1122	942
164-1123	942
164-1125	868
	▶875
164-1130	▶399
	418
	419
	420
	421
	422
164-1131	▶895
	896
164-1133	895
164-1134	895
164-1137	903
164-1140	866
	867
	869
	870
	▶877
164-1141	418
	419
	421
	422
	▶912
164-1148	▶482
	866
	867
	869
	870
164-1150	▶871
	877
164-1152	926
	961
164-1153	399
164-1154	945
164-1155	866
	867
	868
	869
	870
	879
	880
	881
	▶935
164-1156	907
	961
164-1157	961
164-1165	866
	867
	869
	870
	▶961
164-1166	926
	961
164-1177	942
164-1178	897
	898
164-1196	857
	859
	918
164-1197	399

▶ **PRIMARY REFERENCE**

PART NUMBER INDEX

Part	Page
164-1198	912
164-1201	▶956
	960
164-1202	▶958
	960
164-1205	▶954
	955
164-1207	956
	958
	▶963
164-1208	963
164-1209	▶948
	956
164-1210	▶950
	958
164-1211	956
	958
	965
164-1212	956
	958
	965
164-1214	948
	950
164-1215	963
164-1216	963
164-1217	963
164-1218	963
164-1219	963
164-1220	963
164-1221	963
164-1224	963
164-1225	963
164-1226	963
164-1228	963
164-1229	963
164-1230	963
164-1232	963
164-1233	963
164-1234	963
164-1235	963
164-1236	963
164-1237	963
164-1238	963
164-1239	963
164-1240	963
164-1244	948
164-1247	948
	950
164-1248	948
	950
	952
164-1249	948
	950
164-1250	948
	950
164-1251	948
	950
164-1252	948
	950
164-1256	948
	950
164-1258	948
	950
164-1259	948
	950
164-1260	952
164-1261	948
	950
164-1265	948
	950
164-1266	950
	952
164-1278	▶855
	954
164-1279	855
164-1280	855
164-1281	855
164-1282	855
164-1283	855
164-1284	855
164-1285	855
164-1287	855
164-1288	855
164-1289	855
164-1290	855
164-1291	855
164-1292	954
	▶965
164-1293	965
	▶967
164-1294	963
	967
164-1295	956
	958
	965
164-1296	▶952
	954
164-1297	952
164-1298	952
164-1299	952
164-1308	980
164-1311	980
164-1314	980
164-1325	875
	877
	▶980
164-1326	980
164-1327	980
164-1328	980
164-1331	980
164-1342	980
164-1343	980
164-1344	980
164-1345	980
164-1346	980
164-1347	980
164-1350	879
	880
	881
	▶886
164-1351	980
164-1352	980
164-1353	980
164-1354	980
164-1361	511
	513
	515
164-1363	568
164-1364	569
164-1365	399
164-1366	970
164-1368	399
	522
	912
164-1369	522
164-1370	866
	867
	869
	870
	▶970
164-1371	511
	513
	515
164-1372	520
164-1373	518
164-1374	970
164-1375	▶873
	875
164-1388	866
	867
	869
	870
	▶896
164-1395	236
	238
	524
	741
164-1397	518
	520
164-1398	667
164-1399	511
	513
	515
164-1400	▶511
	537
164-1402	511
	513
164-1404	511
	513
164-1406	511
	515
164-1409	511
	513
164-1410	▶537
164-1411	511
	513
164-1420	▶513
	538
164-1421	513
164-1422	513
164-1425	513
164-1427	513
	518
	520
164-1429	513
164-1430	▶538
164-1435	511
	513
164-1438	513
164-1440	▶515
	517
164-1441	513
	515
	518
	520
164-1447	515
164-1450	▶517
164-1451	515
164-1452	515
164-1455	515
164-1481	664
164-1500	▶518
	539
164-1501	518
	520
164-1502	518
	520
164-1503	518
	520
164-1510	▶539
164-1511	520
164-1514	518
	520
164-1515	518
	520
164-1517	518
	520
164-1519	518
	520
	525
164-1520	▶520
	540
164-1521	518
	520
164-1523	518
	520
164-1525	518
	520
164-1526	518
	520
	541
164-1527	518
	520
164-1530	▶540
164-1540	▶527
	569
	684
	685
164-1541	518
	520
	527
164-1544	527
	529
164-1547	527
	529
164-1549	527
	529
164-1550	▶529
	685
164-1551	518
	520
	529
164-1560	511
	513
164-1565	515
164-1570	518
	520
164-1601	332
164-1654	885
164-1671	885

▶ **PRIMARY REFERENCE**

PART NUMBER INDEX

Part	Page
164-2158	17
164-3258	16
164-3322	17
164-3876	263
	265
	472
	473
164-4019	227
	229
	231
164-4139	862
164-5544	464
	467
164-5561	621
164-5567	509
	629
	633
	643
164-6613	920
164-7176	553
164-7556	291
164-8473	857
	859
	893
	914
164-8908	533
164-9425	351
	355
	361
	922
164-9598	457
164-9599	457
165-2273	633
	643
165-4021	147
	149
	151
165-4496	240
165-5655	287
	290
165-6585	454
165-6595	454
165-6599	454
165-6601	454
165-6602	454
165-6603	454
165-6918	418
	▶454
165-7019	664
165-7951	262
165-8357	284
	286
165-8996	392
	461
166-0658	▶284
166-0659	▶285
166-2033	629
	643
166-2786	226
	233
166-2787	226
	233
166-2861	892
166-2864	226
	233
166-3786	15
166-7950	690
	691
	692
	▶699
166-9413	451
167-0495	792
167-0499	792
167-0500	793
167-0566	533
167-2153	87
	88
167-2186	553
	557
167-2192	555
	563
167-2195	561
167-2197	558
	559
167-2201	545
	546
	548
	560
167-2202	550
167-2294	553
	557
167-2302	555
	563
167-2304	561
167-2305	558
	559
167-2310	550
167-2312	545
	546
	548
	560
167-2450	557
167-3692	367
167-3693	361
167-3700	367
	374
167-3701	342
	347
167-3703	351
167-3704	333
	339
167-3708	379
167-3713	296
167-3896	580
	597
	615
167-6768	695
	699
	703
	705
	707
	709
	713
167-6921	227
	229
167-8160	454
167-8161	454
167-8164	454
167-8182	980
167-8187	866
	867
	868
	869
	870
	▶972
167-8246	893
167-8248	511
	513
	515
167-8251	900
167-8252	895
167-8253	482
	483
167-8254	482
	483
167-8258	9
	10
	▶215
167-8259	215
167-8260	215
167-8261	215
167-8264	571
	▶659
167-8270	2
	4
	5
	▶601
167-8273	2
	4
	5
	▶658
167-8275	3
	4
	5
	▶603
167-8276	1
	2
	▶615
167-8278	939
167-8279	939
167-8283	941
	944
168-0289	14
	16
	▶111
168-0361	688
	689
	▶701
168-0425	845
168-0443	790
	791
	820
	821
	822
	823
168-0444	790
	791
	820
	821
	822
	823
168-0480	777
	778
	779
	780
	782
	783
	784
	785
	786
	787
	788
	789
	792
	793
	794
	795
	797
	798
	799
	800
	802
	803
	804
	805
	806
	807
	808
	809
	810
	812
	813
	814
	815
	817
	818
	819
168-2313	862
	920
168-4511	286
168-4609	942
168-7446	▶390
	392
168-8493	577
	580
	584
	588
	594
	597
168-8497	580
	597
	615
168-8644	580
	597
	615
168-9902	678
168-9906	972
	974
169-0586	344
	349
169-0587	342
	347
	922
169-0588	342
	347
169-0590	296
	298
	302
169-0591	300
	305

▶ **PRIMARY REFERENCE**

PART NUMBER INDEX

Part	Page
169-0592	296
	298
	302
169-0593	300
	305
169-0595	336
169-0596	330
	333
169-0598	387
169-0605	323
	327
	365
169-0606	323
	327
169-0607	382
	510
169-0608	384
169-0625	7
	▶342
169-2935	575
	580
	597
	615
169-2944	588
	648
	650
169-2978	601
	620
169-2980	658
169-2983	580
	597
	603
	615
169-6761	310
169-6947	561
169-7290	926
	961
169-7291	926
	961
169-9049	654
170-0075	857
	859
	▶862
170-0076	918
	▶920
170-0503	505
170-0580	251
	253
170-0582	251
	253
170-0583	251
	253
170-0606	▶507
	571
170-1644	678
	680
170-1645	678
170-2237	323
	327
	365
170-2377	251
	253
170-2387	251
170-2388	251
170-6305	344
	349
170-6308	176
	177
	178
170-6312	511
	513
170-6542	344
	349
170-7269	862
	920
170-7270	862
	920
170-7271	862
	920
170-7272	857
	862
	920
170-7274	862
170-7281	862
	920
170-7282	862
	920
170-9066	550
171-1076	185
	187
171-2101	1
	2
	3
	4
	5
	▶669
171-2427	4
	5
	▶575
171-2428	3
	▶577
171-2429	1
	▶580
171-2870	980
171-8623	454
171-8772	725
171-8775	683
	▶725
172-2252	577
	580
	584
	588
	594
	597
172-2353	558
	559
172-2354	558
	559
172-2363	669
172-3190	1
	2
	3
	5
	▶670
172-3820	601
172-3821	658
172-4844	185
	187
172-5317	429
	435
172-6050	434
172-6224	349
	1002
172-7207	185
	187
172-8591	897
	898
172-9200	344
	349
172-9966	633
172-9992	754
173-0126	157
	163
173-0637	671
	673
173-0638	671
	673
173-0639	671
	673
173-0640	671
	673
	▶723
173-0641	671
	673
173-2685	292
	293
	296
	298
	300
173-2769	752
173-4514	510
	574
173-5787	956
	958
	965
173-7527	251
	253
173-7661	882
	885
173-7757	752
173-8340	292
	293
	296
	298
	300
173-9779	553
173-9813	997
174-2024	866
	867
	868
	869
	870
	▶986
174-2025	986
174-2026	986
174-3335	992
174-3336	993
174-3337	993
174-3338	994
174-3339	995
174-3340	996
174-3341	1000
174-3342	1000
174-3343	997
174-3345	999
174-3346	998
174-3347	998
174-3348	999
174-4306	656
174-4643	390
174-4671	390
174-5456	986
174-5696	754
174-5699	656
174-5700	656
174-5701	656
174-5702	656
174-6362	▶790
174-6365	▶791
174-6395	382
	384
174-6398	382
	384
174-6400	367
174-6417	323
174-6640	399
174-6740	630
174-6812	728
	729
174-7147	633
174-7153	504
	▶633
174-7479	678
174-7820	454
174-8957	292
	296
	298
	300
174-8958	293
174-9638	219
	227
	229
	231
	234
174-9711	428
	434
175-0054	428
	434
175-0083	29
	31
175-0084	29
	31
175-3070	351
	355
175-5452	713
175-5453	713
175-5454	713
175-5457	713
175-5458	713
175-6916	605
	609
175-6918	620
175-6919	620
175-7877	▶732
175-7896	553
175-7902	550
	560
176-0311	296
	298
	300

▶ **PRIMARY REFERENCE**

PART NUMBER INDEX

Part	Page
176-0312	300
176-0346	296
	298
	300
176-1358	14
176-1361	52
	54
176-3133	▶71
	72
	73
176-3134	71
176-3135	71
176-3137	71
176-3138	71
176-3139	71
176-3900	930
176-6219	251
	253
176-6247	▶829
	831
176-6248	829
176-6251	▶830
	832
176-6252	830
176-7228	659
176-8541	718
176-9208	1
	3
	▶648
176-9209	3
	4
	▶649
177-0856	575
	580
	592
	597
	615
177-0857	584
177-2171	575
	592
	615
177-2391	87
177-2939	29
	31
177-4122	494
177-4726	▶739
177-4727	▶740
177-4729	739
177-4733	740
177-4877	875
	877
177-4903	▶848
177-7094	656
177-7148	584
	588
	670
177-7149	584
	588
	670
177-8782	185
	187
177-9645	323
	327
	355
	361
177-9648	323
	327
	365
	367
	374
178-1123	659
178-1304	449
178-3593	▶843
178-4200	848
178-4533	545
178-4639	545
178-5164	545
178-7480	649
	▶693
178-7481	588
	648
	650
	▶694
178-7539	336
	378
178-8132	429
	435
178-8133	428
	436
178-8134	429
	435
178-8200	429
	435
178-8465	351
	361
178-8608	413
	415
178-8849	▶831
178-8850	▶832
178-9242	275
	277
178-9566	434
178-9983	894
	896
	899
179-1215	330
	337
179-5434	294
	295
179-5435	336
179-5571	494
	496
179-6896	17
	▶187
179-8235	511
	515
	518
	520
	522
	524
	525
	527
	529
179-9961	728
	729
	754
180-2441	191
	192
	195
180-3663	▶294
	309
180-3664	▶295
	308
180-3773	848
180-4194	605
	609
180-4239	3
	▶545
180-5750	915
180-5754	915
	916
180-5758	916
180-5760	866
	867
	869
	870
	▶915
180-5764	868
	879
	880
	881
	▶916
180-5770	868
	869
	870
	▶960
180-5771	880
	881
	▶960
180-5774	▶955
180-5794	963
180-5795	950
	952
180-5796	948
180-5797	948
	950
180-6110	548
180-6111	548
180-6213	671
	673
180-6603	545
	546
	548
180-7218	875
180-7219	875
180-7232	875
180-7233	875
180-7245	453
180-8170	463
180-8592	684
	▶690
180-8593	684
	▶691
180-8594	685
	▶692
180-9157	471
180-9588	7
	▶671
183-2530	351
	355
183-3120	6
	7
	▶522
183-3121	522
183-3122	522
183-3131	522
183-3132	522
183-3135	522
183-3136	522
	524
183-3137	522
183-3150	▶524
	569
183-3151	524
183-3153	522
	524
183-3155	522
183-3156	522
	524
183-3887	236
	238
	▶924
183-4429	296
183-4492	332
183-4897	▶462
	866
	867
	868
	869
	870
183-4898	▶463
	868
	879
	880
	881
183-4991	897
	898
	▶900
183-4994	518
183-4995	418
	419
	421
	422
	▶893
183-4997	▶897
	899
183-4998	894
	▶898
183-4999	520
183-6051	741
183-6056	6
	▶491
183-6075	741
183-6076	6
	▶741
183-6078	▶667
	677
183-6081	741
183-6084	741
183-6085	741
183-6317	85
	86
183-7581	372
183-8560	568
	▶605
	▶609
184-2422	365
184-2472	287
	289
184-4483	▶531

▶ **PRIMARY REFERENCE**

PART NUMBER INDEX

Part	Page	Part	Page	Part	Page	Part	Page
	570		118		867	185-6623	220
184-4488	531		120		868	185-6627	220
184-4491	531	185-0110	116		869	185-6629	220
184-5293	344		118		870	185-6643	147
	349		120		▶894		149
184-5417	531	185-0111	116	185-3525	418		151
184-6430	367		118		419	185-7015	294
	374		120		420	185-7016	295
184-6436	484	185-0113	138		421	185-7585	419
	487		140		422		420
184-6557	899	185-0882	70		▶940		421
184-6558	896		71	185-3527	868		▶427
184-6559	914		75		879	185-7586	418
184-6560	857	185-0883	71		880		419
	859	185-0884	65		881		421
	918		72		▶905		422
184-6561	857		73	185-3528	912		▶427
	859	185-0885	72	185-3529	462	185-7602	▶176
	918		73		463	185-7603	▶178
184-6562	912	185-0886	72	185-3530	879	185-7736	6
184-6563	912		73		880		7
184-6564	857	185-0888	72		881		▶992
	859		73		▶899	185-7756	▶992
	918	185-0889	72	185-3890	963	185-7757	▶993
184-6565	930		73	185-4015	862	185-7758	▶993
	933	185-1129	404		920	185-7759	▶994
184-6566	896		▶504	185-4594	14	185-7760	▶995
184-6567	857	185-1482	▶510		▶51	185-7761	▶996
184-6570	418	185-1546	136	185-4599	14	185-7762	▶997
	▶453		138		▶39	185-7764	▶997
184-6572	857		140	185-4602	14	185-7765	▶998
184-6573	857		142		▶118	185-7766	▶998
184-6574	857		144		▶120	185-7767	▶999
184-6577	▶914		145	185-4603	14	185-7768	▶999
	918	185-1570	22		▶73	185-7769	▶1000
184-6581	454		23	185-4605	15	185-7770	▶1000
184-6785	752	185-1598	568		▶140	185-8005	14
184-7898	418		569	185-4611	14		▶218
	▶939		▶663		▶87	185-8007	218
184-7900	▶212	185-1839	▶557	185-4617	14	185-8800	7
	866		756		▶23		▶367
	867		757	185-4621	15	185-8801	▶330
	879	185-1887	7		▶161		866
184-7903	▶3		▶20	185-4629	87		867
184-7905	▶3	185-3165	571		88		869
184-7907	▶4		▶664	185-4631	88		870
184-7909	▶1	185-3189	14	185-4632	87	185-8802	▶332
184-7911	▶1		▶50	185-4669	87		879
184-7970	6	185-3190	14	185-5754	253		880
	7		▶38	185-5898	682	185-8803	8
	▶418	185-3191	14		▶686		9
184-9733	▶879		▶116	185-5902	677		▶351
184-9735	▶866	185-3192	14		▶718	185-8808	▶379
185-0080	6		▶72	185-5906	568		403
	▶484	185-3193	15		▶688		404
185-0104	116		▶138	185-5907	569	185-8812	▶296
	118	185-3194	14		▶689	185-8842	7
	120		▶86	185-6159	1		▶494
185-0106	116	185-3195	14		3	185-9777	942
	118		▶22		4	185-9784	403
	120	185-3196	15		▶620		▶682
185-0107	116		▶159	185-6374	251	186-0252	866
	118	185-3413	403	185-6572	649		867
	120		▶656	185-6621	220		868
185-0109	116	185-3524	866	185-6622	220		869

▶ **PRIMARY REFERENCE**

PART NUMBER INDEX

Part	Page	Part	Page	Part	Page	Part	Page
	870	186-4117	393	187-4343	603	189-6344	159
	879	186-4118	393	187-4344	580		161
	880	186-4272	311		597	189-6350	157
	881		314		615	189-6353	159
	▶903	186-4273	14	187-8016	8		161
186-0303	▶333		▶311		11	190-1055	▶774
	868	186-4964	▶684		▶14	190-1056	▶774
186-0304	▶372	186-4965	▶684	187-8936	265	190-1078	▶774
186-0306	▶336	186-4966	▶685		267	190-1079	▶774
	866	186-5265	989	188-0857	472	190-1118	265
	867	186-5266	989	188-0860	418	190-2932	633
	868	186-5286	▶989		419	190-3032	633
	869		992		420	190-3397	690
	870	186-5296	992		422		691
	879	186-5298	568		▶472		692
	880		569	188-0861	901		▶703
	881		901	188-0862	494	190-3400	690
186-0309	▶387		1003		496		691
	403	186-5300	901	188-0863	342		692
	404	186-5331	▶568		347		▶705
186-0310	▶287	186-5332	▶568		1002	190-3402	690
186-0311	▶382	186-5333	▶569	188-0864	901		691
	510	186-6159	7	188-0865	494		692
	574		▶489		496		▶707
186-0312	▶384	186-6190	▶854	188-0883	9	190-3450	535
	510		933		10		536
	574	187-0524	705		▶16		691
186-0598	▶8	187-0527	705	188-2470	326		692
186-0600	▶9	187-1290	15	188-2704	920		▶709
186-0817	972	187-1644	342	188-2706	862	190-5122	472
	974		344		920		473
186-0871	14		347	188-2708	862	190-5123	263
	16		349		920		265
	▶131		879	188-2709	862	190-5124	494
186-1581	531		880	188-2710	862		▶498
186-1582	531		881	188-2711	862	190-5125	498
186-1583	518	187-3162	605		920	190-5128	513
	520		609	188-2712	862		1002
186-1592	531		660	188-2715	920	190-5129	518
186-1597	531	187-3163	605	188-3953	565		520
186-2589	▶938		609		566		1002
	986		660		743	190-5130	511
	988	187-3164	605		744		1002
186-2731	▶365		609	188-5004	746	190-5132	857
	867		660	188-7471	▶471		859
	868	187-3166	605		688		918
	869		609		689		1002
186-3629	630		660	188-7760	895	190-5134	515
186-3735	265	187-3510	545	188-8715	630		1002
	267		546	188-9097	6	190-5136	667
	290		548		▶629		1002
	300	187-3825	752	188-9954	752	190-5139	236
	327	187-3826	752	189-0555	568		238
	349	187-3827	752		569		1002
	355	187-3828	752		▶660	190-7374	7
	361	187-3832	752	189-1834	▶459		▶941
	382	187-3833	752		461	190-7557	▶378
	384	187-3834	752	189-3610	937		866
	399	187-3835	752	189-5629	558		867
	441	187-3836	752		559		869
	522	187-3837	752	189-5639	8		870
	725	187-4329	660		11	190-8308	683
	938	187-4333	580		▶217	190-8310	683
	986		597	189-5640	217	190-8312	683
186-3736	440		615	189-5641	217	190-8314	683

▶ **PRIMARY REFERENCE**

PART NUMBER INDEX

Part	Page
190-8315	652
	654
	▶683
190-8918	▶946
190-8919	▶947
190-8954	403
	▶637
190-8956	637
190-8957	509
190-9767	434
190-9838	247
	249
	265
191-0698	296
191-1730	620
191-1784	▶901
191-1839	620
191-2204	620
191-4010	688
	689
191-4850	584
	588
	670
191-4851	584
	588
	670
191-4852	669
	670
191-5104	942
191-5462	▶639
	▶640
	684
191-5464	639
191-6033	862
	920
191-6034	862
191-6035	862
	920
191-6112	555
	563
191-6159	553
191-6253	764
	768
191-6254	765
	767
191-6255	766
	771
191-6259	764
	765
	766
	772
	773
191-6261	▶764
191-6262	▶765
191-6263	▶766
191-6939	▶792
191-6940	▶793
191-7725	552
	▶553
191-7727	553
191-7738	561
191-8161	▶561
	571
191-9104	944
	1002
191-9108	1001
191-9109	498
	501
191-9110	498
	501
191-9111	498
	501
191-9113	398
191-9114	▶398
	418
191-9555	▶767
192-0657	▶768
192-0658	▶769
192-0660	▶770
192-0661	▶771
192-0662	769
	772
192-0663	770
	773
192-0666	769
	772
192-0667	770
	773
192-0826	686
192-0827	686
	▶711
192-0828	686
	711
192-0843	428
192-0845	434
192-1194	767
	768
	769
	770
	771
192-1196	767
	768
	769
	770
	771
192-2060	686
	711
192-2061	686
192-2075	543
192-2080	543
192-2081	711
192-2082	711
192-2825	▶772
192-2826	▶773
192-3341	351
192-4018	570
	▶917
192-4019	917
192-4487	711
192-4488	686
	711
192-4489	686
192-4490	711
192-4491	686
	711
192-4492	686
	711
192-4522	399
192-4661	▶418
192-4663	▶419
192-4665	▶419
192-4666	▶420
192-7355	942
192-7505	686
192-7506	686
	711
192-7507	686
192-7508	686
192-7509	686
192-7510	711
192-7511	686
192-7512	543
	686
	711
192-7513	711
192-7514	711
192-7515	686
	711
192-7516	686
	711
192-7863	543
192-7864	686
	711
192-7877	260
192-8775	605
	609
193-0161	253
193-0618	260
193-1036	723
193-1509	944
193-2342	▶922
193-5958	683
193-6352	669
193-6353	669
193-6355	584
	588
	670
193-8648	671
	673
194-0856	1001
194-1958	633
194-1978	570
	▶584
194-2466	118
	120
	122
194-2847	389
194-4183	881
	▶887
194-4184	887
194-4250	942
194-5171	986
194-5390	227
	229
	231
	234
194-5622	857
	859
	918
194-6196	671
	673
194-9497	901
194-9625	946
	947
194-9645	901
195-0260	630
195-0261	630
195-0262	630
195-0263	630
195-0268	603
195-1284	510
	574
	▶652
195-1288	652
195-1289	652
	654
195-1736	652
	654
195-2037	464
	467
195-2130	14
	16
	▶95
195-2132	95
	96
195-2134	95
	96
195-2136	95
	96
195-2139	695
	697
	699
	701
	703
	705
	707
	709
	713
195-2221	95
	96
195-2406	699
	703
	705
	707
195-3699	483
195-3898	▶483
	868
	879
	880
	881
195-5830	454
195-6341	450
195-6523	901
195-7004	136
	142
195-7055	954
	956
	958
195-7056	952
195-7430	725
195-8665	633
195-9223	948
	950
	952
196-2381	367
196-2382	367
196-2383	367
	374
196-2384	367
	374

▶ **PRIMARY REFERENCE**

PART NUMBER INDEX

Part	Page
196-2385	367
	374
196-2386	367
	374
196-2966	344
	349
196-4102	16
	▶29
196-4847	997
196-4848	998
196-4849	996
196-4850	1000
196-4851	998
196-4852	992
196-4853	994
196-4854	1000
196-4855	999
196-4856	995
196-4857	999
196-4858	993
196-4859	993
196-4861	997
196-4862	998
196-4863	996
196-4864	1000
196-4865	998
196-4866	992
196-4867	994
196-4868	1000
196-4869	999
196-4870	995
196-4886	29
196-4978	993
196-4980	997
196-4981	998
196-4982	996
196-4983	1000
196-4984	998
196-4985	992
196-5753	994
196-5754	1000
196-5755	999
196-5756	995
196-5757	999
196-5758	993
196-5759	993
196-8860	▶569
196-8861	569
	▶588
196-8862	▶569
196-8995	▶570
197-0571	584
197-0573	603
197-1742	713
197-2709	703
	705
	707
	709
197-2714	703
	705
	707
197-2733	1
	2
	▶752
197-2734	752
197-3121	701
197-3263	▶203
	504
197-3698	701
197-3880	16
	▶168
197-3924	16
	▶240
197-3925	240
197-5013	29
197-5014	29
197-5015	29
	31
197-5918	220
197-6657	963
197-6658	963
197-6818	1
	▶650
197-7230	906
197-7237	17
	▶251
197-7499	942
197-7564	879
	880
	881
	▶906
197-8973	926
	961
197-9155	390
197-9245	14
	▶312
197-9401	15
	▶320
197-9403	312
197-9405	14
	▶170
197-9414	15
	▶253
197-9416	253
197-9417	253
197-9435	14
	▶220
197-9438	242
197-9439	242
197-9440	14
	▶242
198-0014	752
198-0015	752
198-0097	531
198-0098	527
	531
198-0099	344
198-0102	569
	901
	1002
198-0103	904
198-0104	879
	880
	▶904
198-1289	868
	▶907
198-4777	222
	223
198-5389	287
	290
198-6498	719
	720
198-6511	719
	721
198-6513	719
198-6515	718
198-6886	896
198-7412	▶535
	569
198-7814	413
	415
198-7823	390
	459
198-7825	390
	459
198-7838	390
	459
198-7841	390
	459
198-7842	390
	459
198-7843	390
	459
198-8341	494
	496
198-8645	33
198-9723	▶182
	861
	868
199-0639	390
199-0648	413
	415
	459
199-0683	390
	459
199-0695	400
199-0783	481
199-0858	400
199-0929	935
199-3729	862
	920
199-6243	930
	933
	1003
199-6245	1001
199-7854	663
199-9252	257
199-9267	172
	174
199-9751	75
	257
	322
200-0161	690
	691
	692
200-0219	794
200-0220	795
200-0222	794
	795
200-0223	794
	795
200-0235	794
200-0236	795
200-1726	718
	▶719
200-1728	718
	▶720
200-2673	895
200-2996	382
	384
200-3004	926
	961
200-3946	509
200-3947	509
200-4019	719
200-4022	720
200-4023	719
200-4024	720
	▶721
200-4025	719
200-5356	926
	961
200-5359	723
200-5360	723
200-5361	723
200-5362	723
200-5363	723
200-5364	723
200-5921	829
	830
200-6284	▶574
200-6374	31
200-7143	993
200-7144	999
201-0190	479
201-0330	264
	268
201-0664	536
	▶713
201-0877	240
	242
201-0878	242
201-1034	669
201-1035	669
201-1234	841
201-1235	798
	840
201-1238	796
	797
	798
	799
	800
	801
	802
	803
	804
	805
	806
	807
	808
	809
	810
	811
	812
	813
	814

2

▶ **PRIMARY REFERENCE**

PART NUMBER INDEX

Part	Page
	815
	816
	817
	818
	819
	840
	841
201-1239	796
	797
	798
	799
	800
	801
	802
	803
	804
	805
	806
	807
	808
	809
	810
	811
	812
	813
	814
	815
	816
	817
	818
	819
	840
	841
201-1634	862
	920
201-1635	862
201-1636	862
201-1637	920
201-1638	920
201-1835	264
	268
201-1836	264
201-1837	263
	265
201-1842	930
201-1862	445
	▶448
201-1863	▶448
201-1864	443
	444
	448
	▶449
201-1874	444
	▶449
201-1875	449
201-1876	443
	449
	▶450
201-1877	444
	▶450
201-1878	443
	450
201-1915	448
	449
	450
201-1919	448
	450
201-1920	▶443
	448
	449
	450
201-2157	454
201-3152	298
	300
201-3159	355
201-3261	▶298
201-3263	▶300
201-3325	10
	11
	▶355
201-3398	467
201-3633	592
201-3636	592
201-3954	▶481
201-4822	484
	487
201-4826	561
201-5810	566
	743
	744
201-5812	565
	566
	743
	744
201-6902	▶535
201-8069	522
201-8561	425
	▶428
201-8562	426
	▶434
201-9465	980
201-9732	▶486
	868
201-9733	486
202-0040	441
202-0596	817
	818
	819
202-0597	817
	818
	819
202-0964	▶536
202-1009	467
202-3263	719
	720
202-4162	816
202-4163	816
202-5710	403
	404
202-5711	403
	404
	▶464
202-5712	403
	▶467
202-5724	▶942
202-5733	418
	419
	421
	422
	▶424
202-5742	▶10
202-5746	861
	▶889
202-5748	▶272
202-5749	▶273
202-5773	▶176
202-5774	▶177
202-5775	▶177
202-5797	▶323
	861
202-5807	147
202-5810	▶344
	866
	867
	879
202-5812	▶944
202-5909	147
	149
	151
202-5912	▶146
202-5913	▶147
202-5914	146
	▶149
202-5923	629
202-5928	571
	▶630
202-5946	570
	▶592
202-5979	942
202-6007	▶425
	427
202-6008	▶426
	427
202-6018	597
202-6019	▶264
	265
202-6051	7
	▶265
202-6063	942
202-6107	177
	▶326
202-6108	326
202-6113	236
	238
202-6126	▶533
202-6139	▶509
	571
202-6141	897
202-6142	898
202-6186	448
	449
	450
202-6195	▶389
	403
	404
202-6196	▶392
	403
	404
202-6198	403
	▶461
202-6614	291
202-7503	723
202-7874	424
203-3219	351
	355
203-4158	879
	880
	881
203-9048	614
203-9680	605
	609
203-9681	605
	609
204-0317	464
	467
204-3080	459
204-4127	168
204-6011	865
204-7341	897
	898
204-9921	862
	920
205-0826	287
	290
205-2177	▶867
205-3126	629
205-3759	454
205-3760	454
205-3761	454
205-4286	344
	349
205-5798	667
205-6373	630
205-6374	630
205-6375	630
205-6376	630
205-6377	630
205-7047	882
	885
	935
205-7048	539
	540
	923
205-7536	980
205-7538	980
205-7700	342
	347
205-8257	287
	290
205-8845	577
	580
	588
	594
	597
205-9014	577
	580
	588
205-9980	894
	899
206-0502	560
206-0513	546
206-0514	3
	4
	5
	▶546
206-0517	548
206-0518	1
	2
	▶548
206-0519	558

▶ **PRIMARY REFERENCE**

PART NUMBER INDEX

Part	Page
206-0520	▶558
	571
206-0521	559
206-0522	▶559
	571
206-1486	386
206-3548	555
206-3549	7
	▶555
206-3552	563
206-3553	7
	▶563
	571
206-3627	550
206-3628	▶550
	571
206-3685	533
206-4127	70
206-4277	27
206-4703	881
	907
206-5107	713
206-5162	287
	289
206-5165	287
	289
206-5203	287
206-6325	▶11
206-6974	462
206-7398	862
	920
206-7512	857
	859
	918
206-7513	857
	859
	918
206-7514	857
	859
	918
206-9474	▶865
	925
206-9475	▶925
206-9476	▶337
	925
206-9477	925
	▶926
206-9978	713
207-1753	52
	54
207-1754	50
	51
	▶52
	▶54
207-4254	390
	459
207-4255	459
207-4258	390
	459
207-4260	459
207-4262	459
207-4263	412
207-4266	459
207-4267	412
207-4268	459
207-4271	459
207-4272	459
207-5262	▶289
	290
207-5271	287
	290
207-5477	601
207-5479	617
207-5480	617
207-6050	▶339
	881
207-6051	881
	▶988
207-6052	881
	▶974
207-7014	220
207-7353	220
207-7581	660
207-7589	633
207-7920	17
	▶227
	▶229
	▶231
207-7925	227
207-7954	14
	▶31
207-8595	605
	609
207-8598	620
208-0321	390
208-0322	400
208-1463	713
208-3600	533
208-3601	533
208-3702	287
208-5232	816
	817
	818
208-5235	796
	797
	798
	799
	800
	801
	802
	803
	804
	805
	806
	807
	808
	809
	810
	811
	812
	813
	814
	815
208-5242	816
	817
	818
	819
208-5245	796
	797
	798
	799
	800
	801
	802
	803
	804
	805
	806
	807
	808
	809
	810
	811
	812
	813
	814
	815
208-9791	713
208-9801	713
209-0091	136
	138
	140
	142
209-0092	136
	138
	140
	142
209-0093	142
209-4121	1001
209-4162	494
209-4172	418
	419
	420
	421
	▶677
209-5502	28
209-5503	28
209-5562	47
	▶56
	▶58
	▶60
	64
209-6725	▶62
209-7454	400
209-7455	402
209-7456	390
209-7460	413
	415
209-7462	400
209-7463	400
209-7464	390
209-7465	413
	415
209-7466	417
209-7472	400
209-7473	400
209-8228	47
	50
	51
209-9218	47
	50
	51
	64
209-9219	47
209-9241	546
209-9875	390
209-9882	390
	▶400
209-9883	390
209-9884	390
	▶413
209-9885	390
	▶415
209-9886	390
209-9887	390
210-1115	846
210-1145	833
210-1706	491
210-1707	491
210-3165	489
210-5924	390
	▶417
210-5931	417
210-5934	417
210-5937	390
210-5942	390
210-5946	390
210-5947	390
210-6059	367
210-6060	367
210-6243	571
210-7465	464
210-7466	464
210-8530	▶570
211-0052	367
	374
211-0067	54
	58
	60
	62
	101
	103
	105
	107
	109
	111
211-0092	402
211-1813	287
	290
211-1871	103
	107
	111
	147
211-1872	147
	251
	253
211-3372	568
211-3522	633
211-3539	713
211-4348	643
211-6735	390
211-6758	428
	434
211-6759	428

▶ **PRIMARY REFERENCE**

PART NUMBER INDEX

Part	Page	Part	Page	Part	Page	Part	Page
	435		198	217-8371	525	219-8758	400
212-3518	454	214-9035	942	217-8372	525	219-8759	400
212-6215	427	215-1242	963	217-8373	525	219-8783	417
212-8738	▶794	215-2023	390	217-8378	525	219-8798	390
212-8740	▶795		459	217-8380	541		459
212-9338	603	215-2103	54	218-2192	541	219-9482	801
213-4881	251		60	218-2193	541		802
213-6088	279		62	218-2214	88	219-9483	803
213-6091	281	215-3191	620	218-2218	88		807
213-6092	281	215-3373	845	218-2685	147		812
213-6094	361	215-4424	507		149	219-9484	804
213-7315	323	215-6888	▶7	218-4513	531		808
	327	215-6894	7	218-4516	531		813
	365		▶1001	218-8568	227	219-9485	805
213-8479	339	215-8196	963	219-0305	1001		809
213-8481	493	215-9219	673	219-2329	229		814
213-9270	862	215-9478	828		231	219-9486	806
	920		▶845	219-2330	229		810
214-0592	722	215-9513	247		231		815
214-0701	640		249	219-2332	313	219-9488	798
	641	215-9515	249	219-2343	16	219-9491	817
214-0706	640	215-9632	643		▶313	219-9492	818
	641	216-0928	828	219-2512	64	219-9493	811
	646		▶846	219-3273	286	219-9495	819
	647	216-2267	430	219-3379	▶796	219-9496	816
214-1668	54		436		820	219-9773	231
	60	216-3712	846	219-3380	▶797		▶233
	62	216-4274	▶641	219-3381	▶798	220-0248	637
214-3159	464		685	219-3382	▶799	220-0407	686
	467	216-4457	400	219-3383	▶800	220-1492	240
214-3281	105	216-4458	400	219-3384	▶801		242
	109	216-4459	459		821	220-1510	163
214-3520	192	216-4461	400	219-3385	▶802	220-2668	16
214-4252	533	216-4464	400	219-3386	▶803		▶64
214-4253	533	216-4465	400	219-3387	▶804	220-2669	16
214-5097	390	216-4466	400	219-3388	▶805		▶40
	459	216-5515	400	219-3389	▶806	220-2670	16
214-6282	31	216-7473	390	219-3390	▶807		▶122
214-6350	711	216-8314	42	219-3391	▶808		▶123
214-6885	▶6		44	219-3392	▶809	220-2671	16
214-6890	▶12	216-8633	89	219-3393	▶810		▶74
214-6891	▶13	216-8634	89	219-3394	▶811	220-2672	17
214-6894	▶177	216-8687	402		822		▶142
214-6895	▶178	216-8689	402	219-3395	▶812	220-2673	16
214-6908	6	216-8691	402	219-3396	▶813		▶24
	▶263	216-8700	402	219-3397	▶814	220-2674	17
214-6944	6	216-8760	775	219-3398	▶815		▶163
	▶490	216-9497	402	219-3399	▶816	220-2675	16
214-6946	490	216-9498	400		823		▶88
214-6948	268		▶402	219-3400	▶817	220-2748	166
214-6949	263	217-1387	533	219-3401	▶818	220-4141	323
	▶267	217-1589	273	219-3402	▶819	220-8631	83
214-6950	▶6	217-2868	400	219-3410	▶820		84
214-6955	▶420	217-2877	413	219-3411	▶821	221-0750	149
214-6956	▶421	217-2878	415	219-3412	▶822	221-3133	236
214-6958	▶421	217-2880	400	219-3413	▶823	221-4137	236
214-6980	6	217-2883	390	219-6314	289	221-4260	▶849
	▶571	217-2884	390	219-6768	633		850
214-7002	▶684	217-2885	390	219-8751	400		851
214-7003	▶685		459	219-8752	400	221-4263	852
214-7457	193	217-8367	▶525	219-8753	400	221-4265	▶666
	196		541	219-8754	400		849
	198	217-8368	▶541	219-8755	400	221-4267	849
214-7458	193	217-8369	525	219-8756	400		▶852
	196	217-8370	525	219-8757	400	221-4271	733

▶ **PRIMARY REFERENCE**

PART NUMBER INDEX

Part	Page
221-4272	733
221-4276	▶733
	850
	851
221-4282	849
	850
221-4283	849
	851
221-4284	850
	851
221-4285	850
	851
221-4295	666
221-4296	666
221-4297	666
221-4312	544
221-4315	666
221-4316	666
221-4350	544
	▶562
221-7683	16
	▶314
222-0844	491
222-1801	481
222-1802	481
222-2690	236
	238
222-3870	290
222-4067	678
	680
222-5838	678
222-7379	▶828
222-7464	828
	▶833
222-7791	525
222-9924	▶290
223-1598	930
223-5945	545
	546
	548
223-6539	349
223-8120	▶840
223-8125	▶841
223-8181	430
	436
	▶441
224-3385	290
224-4527	733
224-6193	372
224-6224	▶849
224-6225	▶849
224-6226	▶850
224-6227	▶850
224-6232	▶850
224-6233	▶851
224-6234	▶851
224-6235	▶851
224-6236	▶544
	849
	850
224-7830	652
	654
	1003
224-8945	501
	1003
224-8978	240
224-9021	1001
224-9855	1001
225-0313	1003
225-3145	274
225-3280	550
225-3281	560
225-4256	1002
225-4317	18
	19
	▶132
225-5436	124
	126
225-5437	124
225-5438	123
	124
	126
225-5439	123
	124
	126
225-5441	120
	123
	124
	126
225-5451	120
	124
	126
225-5453	120
	124
	126
225-5454	120
	123
	124
	126
225-5458	120
	124
	126
225-5459	120
	124
	126
225-5493	75
225-5494	75
225-5495	75
225-5496	75
225-5497	75
225-5498	75
225-5499	75
225-5501	76
	77
225-5502	76
	77
225-5625	144
	145
225-5629	144
	145
225-5634	144
	145
225-5638	144
	145
225-5640	144
	145
225-5959	144
	145
225-5960	144
	145
225-5961	144
	145
225-5962	144
	145
225-5963	144
	145
225-5967	25
225-6004	113
225-6005	113
225-6041	113
225-6451	35
225-6455	33
	35
225-6456	35
225-6461	35
225-6464	35
225-6477	35
225-6478	35
225-6479	35
225-6517	33
	35
225-6522	33
	35
225-6817	172
225-6818	172
	174
225-6820	172
	174
225-6908	167
225-6909	167
225-7738	189
225-7739	189
225-7741	189
225-7772	42
	44
225-7781	42
	44
225-7941	172
	174
225-7944	65
	172
	174
225-8016	189
225-8019	189
225-8278	89
225-8280	89
225-8281	89
225-8282	89
225-8329	165
225-8524	234
225-8526	234
225-8530	234
225-8533	234
225-8534	234
225-8536	219
	234
225-8848	92
225-8858	65
226-1242	1001
226-4346	413
	415
226-5633	533
226-5634	533
226-7164	344
	349
226-8202	553
227-1143	555
	556
	563
227-1145	558
	559
227-4376	197
	200
227-4709	403
	469
227-7447	207
227-7448	207
227-7449	207
228-0297	857
	859
228-0298	857
	859
228-0560	857
	859
228-3178	857
228-3600	6
	▶1001
228-4284	857
228-4525	212
228-9129	▶260
	262
228-9130	260
228-9132	260
228-9897	166
229-0779	404
	▶642
229-2327	▶443
229-2328	▶443
229-2329	▶443
229-2330	▶444
229-4896	33
	35
229-5080	413
	415
229-5083	413
	415
229-5085	413
	415
229-5088	413
	415
229-5092	413
	415
229-5093	402
229-6051	926
	961
229-6052	926
	961
229-8182	342
	347
229-8377	323
	327
	365
229-8413	327
	365
229-8670	170
229-9382	561
230-0979	▶556
	571
230-3809	451
230-3810	451

▶ **PRIMARY REFERENCE**

PART NUMBER INDEX

Part	Page
230-3811	451
230-4017	394
230-6368	279
	281
230-7300	18
	19
	▶82
230-7353	18
	19
	▶135
230-7355	18
	19
	▶189
230-7569	18
	19
	▶133
230-7578	18
	19
	▶165
230-7649	609
	618
230-7650	609
	618
230-7651	609
	618
230-8065	79
230-8094	113
230-8279	172
	174
230-8989	255
230-8995	255
230-8996	255
230-8997	255
230-8998	255
230-9105	▶536
	570
230-9125	35
230-9127	33
	35
230-9144	33
230-9527	257
231-0030	167
231-0033	18
	19
	▶167
231-0046	133
231-0149	19
	▶208
231-0676	413
	415
231-0683	▶412
	459
231-0684	459
231-0685	459
231-0687	412
231-0688	412
231-0700	413
231-0701	415
231-0703	413
	415
231-3052	286
231-3054	286
231-3488	87
	88
231-4457	240
231-8118	▶444
231-9348	▶422
231-9349	▶487
231-9352	403
	404
	1002
232-0252	643
232-1117	257
232-1295	257
232-1322	75
	257
232-1323	255
	257
232-1328	255
232-1793	255
232-1794	255
232-2712	▶775
232-2720	257
232-2721	257
232-2722	257
232-2723	257
232-2725	255
	257
232-2726	255
	257
232-3126	255
232-3149	255
	257
232-3157	255
	257
232-3158	257
232-3263	257
232-3274	255
	257
232-3657	89
232-3666	89
232-3670	18
	19
	▶89
232-3722	172
232-3751	65
	172
	174
232-3861	172
	174
232-4666	859
232-4706	349
232-4874	859
232-5849	682
232-6177	19
	▶172
232-6661	18
	19
	▶283
232-6662	283
232-7400	42
232-7439	19
	▶42
232-7440	65
232-7442	19
	▶124
232-7449	67
	68
232-7454	65
232-7497	652
	654
232-7498	652
	654
232-7519	▶75
	76
	77
232-7524	19
	▶76
232-7526	19
	▶144
232-7528	19
	▶25
232-7596	65
232-7597	65
232-7599	65
232-7600	65
232-7603	65
232-7604	▶65
	67
	68
232-7606	19
	▶67
232-9737	289
233-2568	556
233-2578	556
233-2590	556
233-2597	556
233-2599	556
233-2601	556
233-2609	556
233-2617	556
233-2628	556
233-3784	42
	44
233-3785	42
	44
233-3786	42
	44
233-3788	42
	44
233-3789	42
	44
233-3790	42
	44
233-7007	18
	▶68
233-7009	44
233-7027	18
	▶44
233-7104	257
233-7214	257
233-7222	174
233-7223	174
233-7229	18
	▶174
233-7232	126
233-7233	18
	▶126
233-7234	18
	▶77
233-7235	18
	▶145
233-7236	18
	▶26
233-7244	26
233-7432	18
	19
	▶92
233-7490	210
233-7972	257
233-9530	274
233-9531	274
233-9532	274
234-0387	257
234-1711	▶286
234-1979	13
	▶204
234-1980	12
	▶206
234-1981	204
	206
	▶207
234-1991	12
	13
	▶361
234-1992	361
234-2484	933
234-2485	933
234-2593	555
234-2617	870
	▶933
234-2622	204
	206
234-2628	206
234-3029	234
234-3030	234
234-3058	12
	▶18
234-3059	13
	▶19
234-3387	▶410
	420
	421
234-4328	▶291
	302
	305
234-4329	305
234-5121	204
234-6926	571
	▶680
234-6927	680
234-7509	155
234-7510	12
	13
	▶155
234-7527	▶411
	421
234-7730	291
234-7731	291
234-7834	▶191
	196
234-7836	177
	▶196
234-7954	155
234-8601	870
	▶891
234-8815	155
	680
234-8892	6
	▶238

PART NUMBER INDEX

Part	Page
234-9065	6
	▶496
234-9066	496
234-9430	891
234-9522	496
	▶501
234-9523	501
234-9554	891
234-9613	410
	411
235-0128	238
235-0354	557
235-0972	550
235-1056	891
235-1790	255
235-1966	196
	198
235-1967	196
	198
235-1974	191
	▶197
235-1975	200
235-2451	210
235-2488	210
235-2489	18
	▶210
235-2491	155
235-2853	6
	▶279
235-2854	▶281
235-2972	13
	▶247
235-3170	12
	13
	▶262
235-3420	13
	▶224
235-3556	18
	19
235-4549	571
	▶643
235-4553	643
235-4752	330
	333
235-4788	571
	▶651
235-5306	643
235-5363	224
235-5364	225
235-5776	279
235-5843	680
235-5844	510
	▶654
235-5848	5
	▶594
235-5849	2
	▶597
235-5854	▶646
	684
235-5856	▶647
	685
235-7091	643
235-8528	643
235-8747	322
235-8749	18
	19
	▶322
235-9625	620
235-9637	620
235-9829	▶560
	571
235-9832	560
235-9833	560
235-9835	560
236-1673	255
236-1674	255
236-2485	12
	▶225
236-2486	12
	13
	▶211
236-2507	224
	225
236-4990	487
236-4991	487
236-4992	570
236-4993	570
236-5458	▶574
236-5459	▶574
236-5807	178
	▶198
236-5808	▶192
	198
236-5809	192
	▶200
236-5860	211
236-5901	588
	594
	597
236-6651	155
236-6652	155
236-6657	868
	869
	▶928
236-6923	327
236-6954	491
236-6960	▶861
	866
236-6966	▶859
	870
236-6985	859
236-7295	410
	411
236-8182	491
236-8238	18
	19
	▶84
236-8241	18
	19
	▶79
236-9900	588
	594
	597
237-0024	18
	19
	▶318
237-0025	18
	19
	▶113
237-0026	35
237-0027	18
	19
	▶274
237-0505	620
237-0769	33
	35
237-0803	491
237-0975	224
	225
237-0976	224
	225
237-1911	77
237-2197	262
237-2527	255
237-2528	19
	▶255
237-2799	234
237-3658	18
	19
	▶96
237-3786	234
237-3791	234
237-3794	234
237-3797	680
237-3853	729
237-3921	234
237-3922	234
237-3923	234
237-3924	19
	▶234
237-4157	207
237-4894	321
237-4896	18
	19
	▶321
237-5197	728
237-5330	491
237-5393	257
237-5394	18
	▶257
237-5405	219
237-5408	18
	▶219
237-6412	473
237-6415	420
	421
	▶473
237-6458	▶403
	420
	421
237-6459	▶403
	421
237-6461	▶404
238-0297	▶444
238-0298	▶444
238-0299	▶445
238-0300	▶445
238-1165	6
	▶347
238-1166	▶349
	868
	869
	870
	880
	881
238-1811	▶327
	870
238-1821	6
	▶374
238-1830	247
	249
238-4441	1002
238-4780	▶4
238-4781	▶5
238-4782	▶5
238-4783	▶2
238-4784	▶2
238-5228	412
238-7448	330
	333
238-7492	327
238-8550	403
	404
	▶469
238-8671	255
238-9192	204
	206
238-9397	361
238-9827	12
	▶213
238-9828	13
	▶214
239-0602	891
239-0625	654
239-1080	870
	▶968
239-1081	868
	869
	880
	881
	▶969
239-1162	646
	647
239-1434	238
239-1435	238
239-2226	▶543
	686
239-2270	211
239-3683	155
239-5558	▶880
239-5559	▶881
239-5560	▶868
239-5561	▶869
239-5562	▶870
239-5760	▶151
	153
239-5765	151
239-6989	1002
239-7421	151
239-9245	▶510
239-9248	▶510
239-9427	1003
239-9429	1001
239-9433	1003
239-9435	734
	1002
239-9436	515
	1003
239-9437	1002
239-9897	18

▶ **PRIMARY REFERENCE**

PART NUMBER INDEX

Part	Page	Part	Page	Part	Page	Part	Page
	19						
240-2614	892						
240-4639	279						
	281						
240-5571	255						
240-7094	1001						
240-7194	76						
240-7956	1001						
240-8459	206						
240-9671	680						
240-9716	680						
240-9721	680						
240-9743	12						
	▶249						
241-0022	247						
241-0023	249						
241-0094	302						
	305						
241-0097	▶302						
241-0098	▶305						
241-4275	247						
	249						
241-4954	923						
241-4955	923						
241-8448	578						
	581						
	594						
242-1920	204						
	206						
242-9946	▶153						
243-5027	361						
243-5245	▶923						
244-2104	891						
244-2603	267						
	▶268						
244-3106	361						
244-3316	283						
244-3839	556						
245-8998	571						
	▶673						
245-9828	82						
246-0568	12						
246-1163	33						
	35						
246-2582	19						
	▶33						
246-2583	18						
	▶35						
246-3457	1002						

▶ **PRIMARY REFERENCE**



© 2003 Caterpillar
All Rights Reserved

Printed in U.S.A.