CATERPILLAR®

SEBP4184
February 2004

RUTHZIL TRATOR COMERCIAL DE PEÇAS LTDA 11 97083-6812 ROLANDO

Parts Manual



See "General Information" for New Parts Manual Features.

416D Backhoe Loader

B2D1-Up (Machine)
CRS1-Up (Engine)

Powered By 3054C Engine
This Parts Manual is also Available in .PDF Format on Compact Disc (CD-ROM)- Caterpillar Form No. SERP4184

Product and Dealer Information

Note: For product identification plate locations, see the section “Product Identification Information” in the Operation and Maintenance Manual.

Delivery Date: _____

Product Information

Model: _____

Product Identification Number: _____

Engine Serial Number: _____

Transmission Serial Number: _____

Generator Serial Number: _____

Attachment Serial Numbers: _____

Attachment Information: _____

Customer Equipment Number: _____

Dealer Equipment Number: _____

Dealer Information

Name: _____ Branch: _____

Address: _____

_____

_____

	Dealer Contact	Phone Number	Hours
Sales:	_____	_____	_____
Parts:	_____	_____	_____
Service:	_____	_____	_____

Informations produit et concessionnaire

Nota: Voir l'emplacement de la plaque signalétique du produit au chapitre "Informations produit" du guide d'utilisation et d'entretien.

Date de livraison: _____

Informations produit

Modèle: _____

Numéro d'identification produit: _____

Numéro de série du moteur: _____

Numéro de série de la boîte de vitesses: _____

Numéro de série de l'alternateur: _____

Numéros de série d'équipement: _____

Informations sur l'équipement: _____

Numéro matériel client: _____

Numéro matériel concessionnaire: _____

Informations concessionnaire

Nom: _____ Agence: _____

Adresse: _____

_____

_____

	Contact concessionnaire	Numéro de téléphone	Heures
Ventes:			
Pièces:			
Service:			

Información del Producto/Distribuidor

Nota: Para saber la ubicación de las placas de identificación del producto, ver la sección “Información sobre identificación del producto” en el Manual de Operación y Mantenimiento.

Fecha de entrega: _____

Información del producto

Modelo: _____

Número de identificación del producto: _____

Número de serie del motor: _____

Número de serie de la transmisión: _____

Número de serie del generador: _____

Números de serie de los accesorios: _____

Información sobre los accesorios: _____

Número del equipo del cliente: _____

Número del equipo del distribuidor: _____

Información del distribuidor

Nombre: _____ Sucursal: _____

Dirección: _____

_____

_____

	Comunicación con el distribuidor	Número de teléfono	Horas
Ventas:	_____	_____	_____
Piezas:	_____	_____	_____
Servicio:	_____	_____	_____

Informações Sobre Produto e Revendedor

Nota: Para localizações da placa de identificação do produto, consulte a seção, “Informações Sobre Identificação do Produto” no Manual de Operação e Manutenção.

Data de Entrega: _____

Informações Sobre o Produto

Modelo: _____

Número de Identificação do Produto: _____

Número de Série do Motor: _____

Número de Série da Transmissão: _____

Número de Série do Gerador: _____

Números de Série de Acessórios: _____

Informações Sobre Acessórios: _____

Número do Equipamento do Cliente: _____

Número do Equipamento do Revendedor: _____

Informações Sobre o Revendedor

Nome: _____ Filial: _____

Endereço: _____

_____

_____

	Contato do Revendedor	Telefone	Horas
Vendas:	_____	_____	_____
Peças:	_____	_____	_____
Serviço:	_____	_____	_____

Produkt- und Händlerinformation

Anmerkung: Für die Lage der Produkt-Identnummer und Seriennummern siehe Abschnitt "Produkt-Identinformation" im Betriebs- und Wartungshandbuch.

Lieferdatum: _____

Produkt-Identinformation

Modell: _____

Produkt-Identnummer: _____

Seriennummer des Motors: _____

Seriennummer des Getriebes: _____

Seriennummer des Generators: _____

Seriennummern der Arbeitsgeräte: _____

Arbeitsgeräteinformation: _____

Kundennummer: _____

Händlernummer: _____

Händlerinformation

Name: _____ Niederlassung: _____

Adresse: _____

_____

_____

	Kontaktperson beim Händler	Telefon	Dienststunden
Verkauf:	_____	_____	_____
Ersatzteile:	_____	_____	_____
Service:	_____	_____	_____

MEMORANDA

TABLE OF CONTENTS

Name	Page
GENERAL INFORMATION	A20
REPAIR ALTERNATIVES	A39
SUPPLEMENTAL COOLANT ADDITIVES	A44
ENGLISH-PORTUGUESE PARTS NOMENCLATURE	A49
MAINTENANCE PARTS	A57
INDEX	A76
MACHINE ARRANGEMENT	1
BACKHOE AR-EXTENDABLE STICK	1
BACKHOE AR-STANDARD STICK	2
CHASSIS AR	3
COMMON AR	4
ENGINE ARRANGEMENT	5
ENGINE AR	5
ENGINE AR-PRIMARY	7
BASIC ENGINE	9
CAMSHAFT GP	9
COVER GP-FRONT HOUSING	11
COVER GP-VALVE MECHANISM	12
CRANKSHAFT GP	16
CYLINDER BLOCK GP	20
CYLINDER HEAD GP	24
DRIVE GP-FAN	27
FLYWHEEL GP	28
HOUSING GP-FLYWHEEL	29
HOUSING GP-FRONT	30
LIFTING GP-ENGINE	32
MOUNTING GP-ENGINE	33
MOUNTING GP-ENGINE & TMSN	34
PAN GP-OIL	35
PISTON & ROD GP	37
PLUG GP-CYLINDER BLOCK	41
PLUG GP-ENGINE	42
PULLEY GP-CRANKSHAFT	43
VALVE MECHANISM GP	44
LUBRICATION SYSTEM	46
BREATHER GP	46
FILLER GP-ENGINE OIL	49
PUMP GP-ENGINE OIL	51
COOLING SYSTEM	52
CONNECTION GP-WATER	52
COOLER GP-FLTR BASE & ENG OIL	53
FAN GP-SUCTION	57
FITTING GP-HEATER & AIR COND	60
LINES GP-POWER TRAIN COOLER	61
PUMP GP-WATER	63
RADIATOR & FAN GP	65
RADIATOR & HYD OIL COOLER GP	67
AIR INLET AND EXHAUST SYSTEM	71
AIR CLEANER GP	71
ELBOW GP-AIR INLET	75
EXTENSION GP-EXHAUST	76
INDICATOR GP-AIR FILTER CHANGE	77
MANIFOLD GP-EXHAUST	79
MUFFLER GP	80
TURBOCHARGER GP	82
FUEL SYSTEM	84
CONTROL GP-GOV & ACCELERATOR	84
LINES GP-FUEL	86
PUMP GP-FUEL INJECTION	90
PUMP GP-FUEL PRIMING	95
SEPARATOR GP-WATER	96
TANK & MTG GP-FUEL	97
TANK GP-FUEL	98
ELECTRICAL AND STARTING SYSTEM	101
ALTERNATOR GP-CHARGING	101
BATTERY GP	102
GLOW PLUG GP	108
HEATER GP-JACKET WATER	109
LAMP GP-FLOOD	110
LAMP GP-SIGNAL	112
LAMP GP-STOP & TAIL	113
LAMP GP-WARNING BEACON	114
LIGHTING GP-FLOOD	116
LIGHTING GP-FLOOD & SIGNAL	119
LIGHTING GP-WARNING BEACON	122
STARTING MOTOR GP-ELECTRIC	124
SWITCH GP-PRESSURE	127
SWITCH GP-TEMPERATURE	128
WIRING GP-AIR CONDITIONER	129
WIRING GP-CAB	132
WIRING GP-CONSOLE	142
WIRING GP-ENGINE	148
WIRING GP-HEATER	152
WIRING GP-PLATFORM	154
WIRING GP-POWER RECEPTACLE	158
WIRING GP-REAR	159
WIRING GP-SENSOR	162
POWER TRAIN	163
AXLE & MTG GP-REAR	163
AXLE GP-DRIVE & STEERING	165
AXLE GP-REAR	168
CONTROL GP-DIFFERENTIAL LOCK	173
CONTROL GP-TRANSMISSION	174
DIFFERENTIAL & BEVEL GEAR GP	176

TABLE OF CONTENTS

Name	Page
DIFFERENTIAL GP	178
DRIVE AR-BACKHOE LOADER	179
DRIVE GP-FLEXIBLE COUPLING	180
FILLER GP-POWER TRAIN OIL	181
HOUSING & FLANGE GP-AXLE	183
PLANETARY GP-FINAL DRIVE	187
POWER TRAIN AR	188
SHAFT GP-DRIVE	191
TRANSMISSION & MOUNTING GP	193
TRANSMISSION AR-DIRECT DRIVE	195
TRANSMISSION GP-DIRECT DRIVE	196
VALVE GP-SOLENOID	208
VALVE GP-TIRE	210
WHEEL & TIRE AR	211
WHEEL & TIRE GP	213
BRAKING SYSTEM	220
BRAKE GP-PARKING	220
CONTROL GP-PARKING BRAKE	221
CONTROL GP-SERVICE BRAKE	223
LEVER GP-HAND CONTROL	226
RESERVOIR GP-BRAKE	227
STEERING SYSTEM	228
AXLE GP-FRONT	228
CONTROL GP-STEERING	231
LINES GP-STEERING	233
STEERING WHEEL GP	238
VALVE GP-PRIORITY	239
FRAME AND BODY	240
BOX GP-BATTERY	240
BUMPER GP-FRONT	241
COUNTERWEIGHT GP	242
DOOR GP-BATTERY	247
FENDER GP-REAR	248
FLOORPLATE GP	250
FRAME GP-LOADER	253
FRAME GP-SWING	254
GUARD GP-DRIVE SHAFT	256
HOOD & GUARD GP	257
HOOD GP-ENGINE	259
HYDRAULIC SYSTEM	262
CONNECTOR GP-VALVE	262
CONTROL GP-HYDRAULIC HAND	265
CONTROL GP-HYDRAULIC PEDAL	276
CONVERSION AR-CUSHION SWING	280
CONVERSION GP-CONTROL VALVE	282
CONVERSION GP-HYD HAND CONTROL	283
COUPLING GP	287
CYLINDER GP-BACKHOE BUCKET	288
CYLINDER GP-BOOM	292
CYLINDER GP-EXTENDABLE STICK	294
CYLINDER GP-LIFT	297
CYLINDER GP-MULTIPURPOSE BUKT	298
CYLINDER GP-STABILIZER	299
CYLINDER GP-STICK	301
CYLINDER GP-SWING	302
CYLINDER GP-TILT	304
GUARD GP-STABILIZER CYLINDER	306
HYDRAULIC AR	309
KICKOUT & POSITIONER GP	312
LINES GP-BACKHOE AUXILIARY	314
LINES GP-BOOM	332
LINES GP-BUCKET CYLINDER	333
LINES GP-EXTENDABLE STICK	335
LINES GP-LIFT CYLINDER	338
LINES GP-LOADER AUXILIARY	341
LINES GP-MULTIPURPOSE BUCKET	343
LINES GP-PILOT	345
LINES GP-PUMP	348
LINES GP-RETURN	355
LINES GP-STABILIZER	356
LINES GP-STICK	358
LINES GP-SWING	359
LINES GP-TILT CYLINDER	360
LOCK GP-HYDRAULIC HAND CONTROL	362
MOUNTING GP-BANK VALVE	363
MOUNTING GP-CYLINDER	365
MOUNTING GP-HYDRAULIC CONTROL	366
MOUNTING GP-HYDRAULIC PUMP	367
MOUNTING GP-LINES	368
PUMP GP-PISTON	370
ROTATING GP-PUMP	372
STABILIZER AR	373
TANK GP-HYDRAULIC	374
VALVE & MTG GP-BANK	376
VALVE AR-BANK 4	377
VALVE AR-BANK 5	377
VALVE AR-BANK 6	378
VALVE GP-BANK 2	379
VALVE GP-BANK 3	382
VALVE GP-BANK 4	383
VALVE GP-BANK 5	384
VALVE GP-BANK 6	385
VALVE GP-CHECK	386
VALVE GP-CONTROL	387
VALVE GP-PILOT	407
VALVE GP-PUMP CONTROL	410
IMPLEMENTS	413
ARM GP-LIFT	413
BOOM GP	415
BRACE GP-LIFT CYLINDER	417
LINKAGE GP-BACKHOE BUCKET	418

TABLE OF CONTENTS

Name	Page
LINKAGE GP-LOADER BUCKET	420
LOADER AR	422
LOCK GP-TRANSPORT	423
MOUNTING GP-STICK	427
PAD & GUARD GP-STABILIZER	428
PAD & MTG GP-STABILIZER	431
PAD GP-STABILIZER	434
STABILIZER GP-BACKHOE	436
STICK GP-EXTENDABLE	438
STICK GP-HOE	440
WORK TOOLS	442
BUCKET AR-MULTIPURPOSE	442
BUCKET AS-GENERAL PURPOSE	444
BUCKET GP-HOE	446
BUCKET GP-MULTIPURPOSE	469
COUPLER GP-QUICK	472
EDGE GP-CUTTING	477
FORK GP	478
MOUNTING GP-BUCKET	479
STOP GP-BUCKET	481
TOOTH GP-UNI	482
OPERATOR STATION	483
ADJUSTER GP-SEAT	483
AIR CONDITIONER & MOUNTING GP	484
AIR CONDITIONER GP	486
ARMREST GP	488
CAB AR	489
CAB AS	492
CAB GP	495
CANOPY AR	499
CANOPY AS	501
CANOPY GP-OPEN ROPS	503
COMPARTMENT GP-LITERATURE	504
COMPRESSOR GP-REFRIGERANT	506
CONDENSER & MTG GP-REFRIGERANT	508
CONSOLE GP-FRONT	509
CONSOLE GP-OPERATOR	510
CONSOLE GP-SIDE	511
COVER GP-CONSOLE	516
COVER GP-FIREWALL	517
COVER GP-PARKING BRAKE	519
COVER GP-POST	520
DOOR GP-LH	522
DOOR GP-RH	524
DUCT GP-AIR	526
FLOOR MAT GP	529
HEATER GP-CAB	531
HORN GP-ELECTRIC	535
KIT-SEAT	536
LEVER GP-GOVERNOR CONTROL	538
LINES GP-HEATER	539
LINES GP-HEATER & AIR COND	541
MIRROR GP-REAR VIEW	543
MODULE GP-WARNING INDICATOR	545
MOTOR GP-WINDOW WIPER	546
MOUNTING GP-INSTRUMENT PANEL	547
PANEL GP-INSTRUMENT	551
PEDAL GP-GOVERNOR	552
SEAT BELT GP	553
SEAT GP	554
SEAT GP-STATIC	561
SEAT GP-SUSPENSION	563
SUPPRESSION GP-SOUND	568
SUSPENSION GP-SEAT	570
SWIVEL & SLIDE GP-SEAT	572
SWIVEL GP-SEAT	574
TACHOMETER GP-ELECTRIC	575
TRIM GP-CAB	577
WASHER GP-WINDOW	578
WINDOW GP-CAB	582
WINDOW GP-DOOR	588
WIPER GP-WINDOW	592
SERVICE EQUIPMENT AND SUPPLIES	596
FILM GP	596
INSTALLATION AR-WHEEL CHOCK	597
LOCK GP-VANDALISM	598
PLATE & FILM GP	599
PART NUMBER INDEX	B1

TABLE DES MATIÈRES

Désignation	Page
GÉNÉRALITÉS	A23
OPTIONS DE RÉPARATION	A40
ADDITIFS POUR LIQUIDE DE REFROIDISSEMENT	A45
PIÈCES DE RECHANGE	A61
INDEX	A84
VERSION DE MACHINE	1
PELLE RÉTRO - BRAS TÉLESCOPIQUE (VERSION)	1
PELLE RÉTRO - BRAS NORMAL (VERSION)	2
VERSION DE CHASSIS	3
VERSION NORMALE	4
VERSION DE MOTEUR	5
MOTEUR (VERSION)	5
MOTEUR (VERSION PRINCIPALE)	7
MOTEUR STANDARD	9
ARBRE A CAMES (ASS)	9
COUVERCLE DE CARTER AV (ASS)	11
CACHE-SOUPAPES (ASS)	12
VILEBREQUIN (ASS)	16
BLOC-CYLINDRES (ASS)	20
CULASSE (ASS)	24
ENTRAÎNEMENT DE VENTILATEUR (ASS)	27
VOLANT MOTEUR (ASS)	28
CARTER DE VOLANT (ASS)	29
CARTER AV (ASS)	30
OEILLETONS DE LEVAGE MOTEUR (ASS)	32
MONTAGE DE MOTEUR (ASS)	33
MONTAGE DE MOTEUR ET BOÎTE (ASS)	34
HUILE MOTEUR - CARTER (ASS)	35
PISTON ET BIELLE (ASS)	37
BOUCHON - BLOC-CYLINDRES	41
BOUCHON DE MOTEUR (ASS)	42
VILEBREQUIN - POULIE (ASS)	43
CULBUTERIE (ASS)	44
CIRCUIT DE GRAISSAGE	46
RENIFLARD (ASS)	46
BOUCHON DE REMPLISSAGE D'HUILE MOTEUR (ASS)	49
POMPE A HUILE MOTEUR (ASS)	51

Désignation	Page
CIRCUIT DE REFROIDISSEMENT	52
RACCORD D'EAU (ASS)	52
SUPPORT DE FILTRE ET REFROIDISSEUR D'HUILE MOTEUR	53
VENTILATEUR ASPIRANT (ASS)	57
RACCORD-RÉCHAUFFEUR ET CLIMATISEUR (ASS)	60
CANALISATIONS DE REFROIDIS. DE TRANSMISSION	61
POMPE A EAU (ASS)	63
RADIATEUR ET VENTILATEUR (ASS)	65
RADIATEUR ET REFROIDISSEUR D'HUILE HYDRAULIQUE (ASS)	67
CIRCUIT D'ADMISSION D'AIR ET D'ÉCHAPPEMENT	71
FILTRE A AIR (ASS)	71
COUDE D'ADMISSION D'AIR (ASS)	75
RALLONGE D'ÉCHAPPEMENT (ASS)	76
INDICATEUR DE COLMATAGE DE FILTRE À AIR (ASS)	77
COLLECTEUR D'ÉCHAPPEMENT (ASS)	79
SILENCIEUX (ASS)	80
TURBOCOMPRESSEUR (ASS)	82
CIRCUIT DE CARBURANT	84
COMMANDE DE RÉGULATEUR ET D'ACCÉLÉRATEUR (ASS)	84
CANALISATIONS DE CARBURANT (ASS)	86
POMPE D'INJECTION DE CARBURANT (ASS)	90
POMPE D'AMORÇAGE DE CARBURANT (ASS)	95
SÉPARATEUR D'EAU (ASS)	96
RÉSERVOIR DE CARBURANT ET MONTAGE (ASS)	97
RÉSERVOIR DE CARBURANT (ASS)	98
CIRCUIT ÉLECTRIQUE ET DE DÉMARRAGE	101
ALTERNATEUR DE CHARGE (ASS)	101
BATTERIE (ASS)	102
BOUGIE DE PRÉCHAUFFAGE (ASS)	108
EAU DES CHEMISES - RECHAUFFEUR (ASS)	109
LAMPE - PHARE (ASS)	110
LAMPE - CLIGNOTANT DE DIRECTION (ASS)	112
FEUX ARRIÈRE ET FEUX D'ARRÊT	113
LAMPE - GYROPHARE (ASS)	114
ÉCLAIRAGE - PROJECTEURS (ASS)	116

* TRADUCTION NON DISPONIBLE AU MOMENT DE LA PUBLICATION

TABLE DES MATIÈRES

Désignation	Page
ÉCLAIRAGE - PROJECTEURS ET CLIGNOTANTS (ASS)	119
ÉCLAIRAGE - GYROPHARE (ASS)	122
DÉMARREUR ÉLECTRIQUE (ASS)	124
MANOCONTACT	127
BOUTON DE TEMPÉRATURE	128
CABLAGE - CLIMATISEUR (ASS)	129
CABLAGE DE CABINE (ASS)	132
*WIRING GP-CONSOLE	142
CABLAGE DE CONSOLE (ASS)	143
CABLAGE DE MOTEUR (ASS)	148
CABLAGE DU CHAUFFAGE DE CABINE (ASS)	152
CABLAGE - PLATE-FORME (ASS)	154
CABLAGE DE PRISE DE FORCE	158
CABLAGE AR (ASS)	159
CABLAGE - CAPTEUR (ASS)	162
TRANSMISSION	163
ESSIEU ET MONTAGE -ARRIÈRE (ASS)	163
ESSIEU MOTEUR ET DIRECTEUR (ASS)	165
ESSIEU AR (ASS)	168
COMMANDE DE DIFFÉRENTIEL - VERROUILLAGE (ASS)	173
COMMANDE DE BOITE DE VITESSES (ASS)	174
COURONNE ET DIFFERENTIEL (ASS)	176
DIFFERENTIEL (ASS)	178
VERSION D'ENTRAÎNEMENT DE CHARGEUSE-PELLETEUSE	179
ENTRAÎNEMENT D'ACCOUPLEMENT FLEXIBLE (ASS)	180
GOULOTTE DE REMPLISSAGE D'HUILE DE TRANSMISSION	181
CARTER ET BRIDE D'ESSIEU (ASS)	183
TRAINS PLANÉTAIRES-RÉDUCTEURS (ASS)	187
TRANSMISSION (VERSION)	188
ARBRE D'ENTRAÎNEMENT (ASS)	191
BOITE DE VITESSES ET MONTAGE (ASS)	193
BOITE MECANIQUE (VERSION)	195
BOÎTE MÉCANIQUE (ASS)	196
SOUPAPE - SOLÉNOÏDE (ASS)	208
PNEU - GROUPE DE VALVE	210
ROUE ET PNEU (VERSION)	211
ROUE ET PNEU (ASS)	213
CIRCUIT DE FREINAGE	220
FREIN DE STATIONNEMENT (ASS)	220
COMMANDE DE FREIN DE STATIONNEMENT (ASS)	221
FREIN DE MANOEUVRE - COMMANDE (ASS)	223
LEVIER DE COMMANDE MANUELLE	226
RÉSERVOIR-FREIN (ASS)	227
CIRCUIT DE DIRECTION	228
ESSIEU AV (ASS)	228
COMMANDE DE DIRECTION (ASS)	231
CANALISATIONS DE DIRECTION (ASS)	233
VOLANT DE DIRECTION (ASS)	238
SOUPAPE DE PRIORITE (ASS)	239
CHÂSSIS ET BENNE	240
COMPARTIMENT DE BATTERIE (ASS)	240
PARE-CHOCS AV (ASS)	241
CONTREPOIDS (ASS)	242
PORTE DE BATTERIE (ASS)	247
GARDE-BOUE AR (ASS)	248
TÔLE DE PLANCHER (ASS)	250
BATI - CHARGEUSE (ASS)	253
BÂTI D'ORIENTATION (ASS)	254
BLINDAGE D'ARBRE DE TRANSMISSION (ASS)	256
CAPOT ET PROTECTION (ASS)	257
CAPOT DU MOTEUR (ASS)	259
CIRCUIT HYDRAULIQUE	262
RACCORD DE SOUPAPE (ASS)	262
COMMANDE HYDRAULIQUE MANUELLE (ASS)	265
COMMANDE HYDRAULIQUE DE PÉDALE (ASS)	276
VERSION DE TRANSFORMATION D'ORIENTATION D'AMORTISSEUR	280
TRANSFORMATION - DISTRIBUTEUR (ASS)	282
ENSEMBLE DE TRANSFORM.-COMMANDE MANUELLE HYDR.	283
ACCOUPLEMENT (ASS)	287
VÉRIN DE GODET RÉTRO (ASS)	288
VERIN DE FLECHE (ASS)	292
VÉRIN DU BRAS TELESCOPIQUE (ASS)	294
VÉRIN DE LEVAGE (ASS)	297
VÉRIN - GODET TOUS-TRAVAUX (ASS)	298
VERIN DE STABILISATEUR (ASS)	299
VERIN DE BRAS (ASS)	301
VÉRIN D'ORIENTATION (ASS)	302
VÉRIN D'INCLINAISON (ASS)	304

* TRADUCTION NON DISPONIBLE AU MOMENT DE LA PUBLICATION

TABLE DES MATIÈRES

Désignation	Page
PROTECTEUR DE VÉRIN DE STABILISATEUR (ASS)	306
*HYDRAULIC AR	309
VERSION HYDRAULIQUE	309
*HYDRAULIC AR	310
VERSION HYDRAULIQUE	311
LIMITEUR DE LEVAGE ET RETOUR À L'ANGLE DE CAVAGE	312
CANALISATIONS SECONDAIRES DE PELLE RÉTRO (ASS)	314
FLECHE - CANALISATIONS	332
CANALISATIONS DE VÉRIN DE GODET (ASS)	333
CANALISATIONS DU BRAS TELESCOPIQUE (ASS)	335
CANALISATIONS DE VÉRIN DE LEVAGE (ASS)	338
CANALISATIONS-CHARGEUSE AUXILIAIRE (ASS)	341
CANALISATIONS - GODET TOUS-TRAVAUX (ASS)	343
CANALISATIONS A COMMANDE PILOTE (ASS)	345
CANALISATIONS DE POMPE (ASS)	348
CANALISATIONS DE RETOUR (ASS)	355
CANALISATIONS DE STABILISATEUR (ASS)	356
CANALISATIONS DE BRAS (ASS)	358
CANALISATIONS D'ORIENTATION (ASS)	359
CANALISATIONS DU VÉRIN D'INCLINAISON (ASS)	360
VERROUILLAGE DE COMMANDE MANUELLE HYDRAUL. (ASS)	362
MONTAGE-DISTRIBUTEUR (ASS)	363
MONTAGE DE VÉRIN (ASS)	365
MONTAGE DE COMMANDE HYDRAULIQUE (ASS)	366
MONTAGE - POMPE HYDRAULIQUE (ASS)	367
MONTAGE DE CANALISATIONS (ASS)	368
POMPE A PISTONS (ASS)	370
GROUPE DE ROTATION DE POMPE	372
STABILISATEUR (VERSION)	373
RÉSERVOIR HYDRAULIQUE (ASS)	374
DISTRIBUTEURS ET MONTAGE (ASS)	376
DISTRIBUTEUR 4 ÉLÉMENTS (VERSION)	377
DISTRIBUTEUR 5 ÉLÉMENTS (VERSION)	377
DISTRIBUTEUR 6 ÉLÉMENTS (VERSION)	378
DISTRIBUTEUR DOUBLE ÉLÉMENT (ASS)	379
DISTRIBUTEUR TRIPLE ÉLÉMENT (ASS)	382
DISTRIBUTEUR 4 ÉLÉMENTS (ASS)	383
DISTRIBUTEUR 5 ÉLÉMENTS (ASS)	384
DISTRIBUTEUR 6 ÉLÉMENTS (ASS)	385
*VALVE GP-CHECK	386
DISTRIBUTEUR (ASS)	387
SOUPAPE PILOTE (ASS)	407
*VALVE GP-PUMP CONTROL	410
ÉQUIPEMENTS	413
BRAS DE LEVAGE (ASS)	413
FLECHE (ASS)	415
TIRANT DE VÉRIN DE LEVAGE (ASS)	417
TIMONERIE DE GODET RÉTRO (ASS)	418
TIMONERIE DE GODET DE CHARGEUSE (ASS)	420
CHARGEUSE (VERSION)	422
VERROUILLAGE POUR L'EXPÉDITION (ASS)	423
MONTAGE DE BRAS (ASS)	427
SEMELLE ET PROTECTION DE STABILISATEUR (ASS)	428
SEMELLE ET MONTAGE DE STABILISATEUR	431
SEMELLE DE STABILISATEUR	434
PELLE RÉTRO - STABILISATEUR (ASS)	436
BRAS TÉLESCOPIQUE (ASS)	438
BRAS DE PELLE RETRO (ASS)	440
OUTILS DE TRAVAIL	442
GODET TOUS-TRAVAUX (VERSION)	442
GODET NORMAL (ENS)	444
GODET RETRO (ASS)	446
GODET TOUS-TRAVAUX (ASS)	469
COUPLEUR EXPRESS (ASS)	472
LAME DE COUPE (ASS)	477
FOURCHE (ASS)	478
GODET - MONTAGE (ASS)	479
ARRÊT-GODET (ASS)	481
DENT MONOBLOC (ASS)	482
POSTE DE CONDUITE	483
REGLAGE DE SIEGE (ASS)	483
CLIMATISEUR ET MONTAGE (ASS)	484
CLIMATISEUR (ASS)	486
ACCOUDOIR (ASS)	488
CABINE (VERSION)	489
CABINE (ENS)	492
CABINE (ASS)	495

* TRADUCTION NON DISPONIBLE AU MOMENT DE LA PUBLICATION

TABLE DES MATIÈRES

Désignation	Page
TOIT (VERSION)	499
TOIT (ENS)	501
TOIT-ROPS OUVERT (ASS)	503
POCHE A DOCUMENTS (ASS)	504
COMPRESSEUR DE REFRIGERANT (ASS)	506
CONDENSATEUR ET MONTAGE (RÉFRIGÉRANT)	508
CONSOLE AV (ASS)	509
CONSOLE DE CONDUITE (ASS)	510
CONSOLE LATÉRALE (ASS)	511
COUVERCLE DE LA CONSOLE (ASS)	516
COUVERCLE-CLOISON PARE-FEU (ENS)	517
COUVERCLE (ASS)-FREIN DE STATIONNEMENT	519
COUVERCLE (ASS) MONTANT	520
PORTIERE GAUCHE (ASS)	522
PORTIERE DROITE (ASS)	524
GAINE D'AIR (ASS)	526
TAPIS DU PLANCHER (ASS)	529
CHAUFFAGE DE CABINE (ASS)	531
KLAXON ÉLECTRIQUE (ASS)	535
KIT DE SIÈGE	536
LEVIER DE COMMANDE DE REGULATEUR (ASS)	538
CANALISATIONS DE CHAUFFAGE (ASS)	539
CANALISATIONS-RÉCHAUFFEUR ET CLIMATISEUR (ASS)	541
RÉTROVISEUR (ASS)	543
MODULE - TÉMOIN (ASS)	545
MOTEUR D'ESSUIE-GLACE (ASS)	546
MONTAGE DU TABLEAU DE BORD (ASS)	547
TABLEAU DE BORD (ASS)	551
RÉGULATEUR - PÉDALE (ASS)	552
CEINTURE DE SECURITE (ASS)	553
SIÈGE (ASS)	554
SIÈGE À ÉQUILIBRAGE STATIQUE (ASS)	561
SIÈGE AVEC SUSPENSION (ASS)	563
INSONORISATION (ASS)	568
SIÈGE AVEC SUSPENSION (ASS)	570
GROUPE D'ORIENTATION ET DE GLISSIÈRE DE SIÈGE	572
ORIENTATION-SIÈGE (ASS)	574
COMPTE-TOURS ÉLECTRIQUE (ASS)	575
GARNITURE POUR CABINE (ASS)	577
LAVE-GLACE - VITRE (ASS)	578
VITRE DE CABINE (ASS)	582
GLACE DE PORTIÈRE (ASS)	588
ESSUIE-GLACE (ASS)	592
MATÉRIEL ET FOURNITURES D'ENTRETIEN	596
PLAQUE SIGNALÉTIQUE (ASS)	596
MONTAGE DE CALE DE ROUE (VERSION)	597
VERROUILLAGE ANTI-VANDALISME (ASS)	598
PLAQUES SIGNALETIQUES ET AUTOCOLLANTS (ASS)	599
INDEX DE NUMÉROS DE PIÈCES	B1

* TRADUCTION NON DISPONIBLE AU MOMENT DE LA PUBLICATION

CONTENIDO

Nombre	Página
INFORMACIÓN GENERAL	A27
ALTERNATIVAS DE REPARACIÓN	A41
ADITIVOS DE REFRIGERANTE SUPLEMENTARIOS	A46
PIEZAS DE MANTENIMIENTO	A65
INDICE	A93
CONFIGURACIÓN DE MÁQUINA	1
BRAZO EXTENDIBLE DE RETROEXCAVADOR (CONFIG)	1
BRAZO ESTÁNDAR DE RETROEXCAVADOR (CONFIG)	2
CHASIS (CONFIG)	3
CONFIGURACIÓN COMÚN	4
CONFIGURACIÓN DE MOTOR	5
CONFIGURACIÓN DE MOTORES	5
MOTOR PRIMARIO (CONFIG)	7
MOTOR BÁSICO	9
ÁRBOL DE LEVAS (GR)	9
TAPA DE LA CAJA DELANTERA (GR)	11
TAPA DEL MECANISMO DE VÁLVULAS (GR)	12
CIGÜEÑAL (GR)	16
BLOQUE MOTOR (GR)	20
CULATA DE CILINDROS (GR)	24
IMPULSOR DE VENTILADOR (GR)	27
VOLANTE (GR)	28
VOLANTE - CAJA DE (GR)	29
CAJA DELANTERA (GR)	30
CÁNCAMOS DE LEVANTAMIENTO DEL MOTOR (GR)	32
MONTAJE DEL MOTOR (GR)	33
MONTAJE DEL MOTOR Y LA TRANSMISIÓN (GR)	34
CÁRTER - COLECTOR DEL (GR)	35
PISTÓN Y BIELA (GR)	37
TAPÓN DEL BLOQUE MOTOR (GR)	41
TAPÓN DEL MOTOR (GR)	42
CIGÜEÑAL - POLEA DE (GR)	43
MECANISMO DE VÁLVULAS (GR)	44
SISTEMA DE LUBRICACIÓN	46
RESPIRADERO (GR)	46
TUBO DE LLENADO DE ACEITE (GR)	49
BOMBA DE ACEITE DEL MOTOR (GR)	51
SISTEMA DE ENFRIAMIENTO	52
AGUA - CONEXIÓN DE (GR)	52
ENFRIADOR DE ACEITE DEL MOTOR Y BASE DEL FILTRO	53
SUCCIÓN - VENTILADOR DE (GR)	57
CONEXION DE CALENTADOR Y ACOND. DE AIRE (GR)	60
TUBERÍAS DEL ENFRIADOR DEL TREN DE FUERZA (GR)	61
BOMBA DE AGUA (GR)	63
RADIADOR Y VENTILADOR (GR)	65
RADIADOR Y ENFRIADOR DE ACEITE HIDRÁULICO (GR)	67
SISTEMA DE ADMISIÓN Y ESCAPE	71
FILTRO DE AIRE (GR)	71
CODO DE ADMISIÓN DE AIRE (GR)	75
EXTENSIÓN DEL ESCAPE (GR)	76
INDICADOR DE CAMBIO DE FILTRO DE ACEITE (GR)	77
MÚLTIPLE DE ESCAPE (GR)	79
SILENCIADOR (GR)	80
TURBOCOMPRESOR (GR)	82
SISTEMA DE COMBUSTIBLE	84
CONTROL DEL REGULADOR Y ACELERADOR (GR)	84
TUBERÍAS DE COMBUSTIBLE (GR)	86
BOMBA DE INYECCIÓN DE COMBUSTIBLE (GR)	90
BOMBA DE CEBADO DE COMBUSTIBLE (GR)	95
SEPARADOR DE AGUA (GR)	96
TANQUE DE COMBUSTIBLE Y GRUPO DE MONTAJE	97
COMBUSTIBLE - TANQUE DE (GR)	98
SISTEMA ELÉCTRICO Y DE ARRANQUE	101
CARGA - ALTERNADOR DE (GR)	101
BATERÍA (GR)	102
BUJÍA INCANDESCENTE (GR)	108
AGUA DE LAS CAMISAS - CALENTADOR DEL (GR)	109
REFLECTOR (GR)	110
LUZ DE SEÑAL DE GIRO (GR)	112
LUCES DE PARADA Y COLA (GR)	113
LÁMPARA DE BALIZA DE ADVERTENCIA (GR)	114
LUCES DE REFLECTOR (GR)	116
LUCES DE REFLECTOR Y CAMBIO DE DIRECCION (GR)	119
LUZ DE BALIZA (GR)	122

* NO HAY TRADUCCION DISPONIBLE EN EL MOMENTO DE LA IMPRESION

CONTENIDO

Nombre	Página
MOTOR DE ARRANQUE ELÉCTRICO (GR)	124
INTERRUPTOR DE PRESIÓN (GR)	127
INTERRUPTOR PARA LA TEMPERATURA (GR)	128
CABLES DEL ACONDICIONADOR DE AIRE (GR)	129
CABLES DE LA CABINA (GR)	132
*WIRING GP-CONSOLE	142
CABLES DE LA CONSOLA (GR)	143
CABLES DEL MOTOR (GR)	148
CABLES DE CALEFACCIÓN (GR)	152
CABLES DE LA PLATAFORMA (GR)	154
CABLES DEL RECEPTÁCULO DE FUERZA (GR)	158
CABLES POSTERIORES (GR)	159
CABLES DE SENSOR (GR)	162
TREN DE FUERZA	163
MONTAJE DEL EJE TRASERO (GR)	163
EJE DE IMPULSIÓN Y DE DIRECCIÓN (GR)	165
EJE TRASERO (GR)	168
CONTROL DE TRABA DEL DIFERENCIAL (GR)	173
CONTROL DE LA TRANSMISIÓN (GR)	174
DIFERENCIAL Y CORONA (GR)	176
DIFERENCIAL (GR)	178
CONFIG. DEL MANDO, CARGADOR RETROEXCAVADORA	179
ACOPLAMIENTO FLEXIBLE - MANDO DE (GR)	180
TUBO DE LLENADO DE ACEITE DE LA TRANSMISIÓN (GR)	181
GRUPO DE PESTAÑA Y RESINTO, EJE	183
GRUPO PLANETARIO, MANDO FINAL	187
TREN DE FUERZA (CONFIG)	188
EJE DE MANDO (GR)	191
MONTAJE Y TRANSMISIÓN(GR)	193
TRANSMISION DIRECTA (CONFIG)	195
TRANSMISIÓN DIRECTA (GR)	196
VÁLVULA DE SOLENOIDE (GR)	208
VÁLVULA DEL NEUMÁTICO (GR)	210
RUEDA Y LLANTA (CONFIG)	211
RUEDA Y NEUMÁTICO (GR)	213
SISTEMA DE FRENOS	220
FRENO DE ESTACIONAMIENTO (GR)	220
CONTROL DEL FRENO DE ESTACIONAMIENTO	221
FRENO DE SERVICIO - CONTROL (GR)	223
CONTROL MANUAL DE PALANCA (GR)	226
TANQUE DEL SISTEMA DE FRENOS (GR)	227
SISTEMA DE DIRECCIÓN	228
EJE DELANTERO (GR)	228
CONTROL DE DIRECCIÓN (GR)	231
TUBERÍAS DE DIRECCIÓN (GR)	233
VOLANTE DE DIRECCIÓN (GR)	238
PRIORIDAD - VÁLVULA DE (GR)	239
BASTIDOR Y CAJA	240
CAJA DE BATERÍA	240
PARAGOLPES DELANTERO	241
CONTRAPESO (GR)	242
TAPA DE LA BATERÍA (GR)	247
GUARDABARROS TRASERO (GR)	248
PLANCHA DEL PISO (GR)	250
BASTIDOR DEL CARGADOR (GR)	253
BASTIDOR DE ROTACIÓN (GR)	254
PROTECTOR DEL EJE IMPULSOR (GR)	256
CAPO Y PROTECTOR (GR)	257
CAPÓ DEL MOTOR (GR)	259
SISTEMA HIDRÁULICO	262
CONECTOR DE VALVULA (GR)	262
CONTROL HIDRÁULICO MANUAL (GR)	265
GRUPO DE CONTROL DE PEDAL HIDRÁULICO	276
CONVERSIÓN DE ROTACIÓN AMORTIGUADA (CONFIG)	280
CONVERSIÓN DE LA VÁLVULA DE CONTROL (GR)	282
CONVERSION DE CONTROL DE MANO HIDRAULICO (GR)	283
ACOPLAMIENTO (GR)	287
CILINDRO DE CUCHARÓN RETROEXCAVADOR (GR)	288
CILINDRO DE LA PLUMA (GR)	292
CILINDRO DEL BRAZO EXTENSIBLE (GR)	294
CILINDRO DE LEVANTAMIENTO (GR)	297
CILINDRO DE CUCHARÓN DE USO MÚLTIPLE (GR)	298
CILINDRO ESTABILIZADOR (GR)	299
CILINDRO DEL BRAZO (GR)	301
CILINDRO DE ROTACIÓN (GR)	302
INCLINACIÓN HORIZONTAL - CILINDRO DE (GR)	304

* NO HAY TRADUCCION DISPONIBLE EN EL MOMENTO DE LA IMPRESION

CONTENIDO

Nombre	Página
PROTECTOR DE CILINDRO ESTABILIZADOR (GR)	306
*HYDRAULIC AR	309
HIDRÁULICA (CONFIG)	309
*HYDRAULIC AR	310
HIDRÁULICA (CONFIG)	311
POSICIONADOR DEL CUCHARÓN Y DESCONEXIÓN (GR)	312
TUBERIAS AUXILIARES-RETROEXCAVADORA (GR)	314
TUBERÍAS DE LA PLUMA (GR)	332
TUBERÍAS DEL CILINDRO DEL CUCHARÓN (GR)	333
TUBERÍAS DE LA PALANCA EXTENDIBLE (GR)	335
CILINDRO DE LEVANTAMIENTO - TUBERÍAS DEL (GR)	338
TUBERIAS DE AUXILIAR DE CARGADOR (GR)	341
TUBERÍAS DEL CUCHARÓN DE USO MÚLTIPLE	343
TUBERÍAS CON SERVOMANDO (GR)	345
BOMBA - TUBERÍAS DE (GR)	348
TUBERÍAS DE RETORNO (GR)	355
TUBERÍAS DEL ESTABILIZADOR (GR)	356
TUBERÍAS DEL BRAZO (GR)	358
TUBERÍAS DE GIRO (GR)	359
TUBERÍAS DEL CILINDRO DE INCLINACIÓN (GR)	360
TRABA DE CONTROL HIDRÁULICO MANUAL (GR)	362
MONTAJE DE BANCADA DE VALVULA (GR)	363
MONTAJE DE CILINDRO (GR)	365
MONTAJE DEL CONTROL HIDRÁULICO (GR)	366
MONTAJE DE LA BOMBA HIDRÁULICA (GR)	367
MONTAJE DE TUBERIAS (GR)	368
BOMBA DE PISTONES (GR)	370
GRUPO GIRATORIO DE BOMBA	372
ESTABILIZADOR (CONFIG)	373
TANQUE HIDRÁULICO (GR)	374
MONTAJE Y VALVULA DEL BANCO(GR)	376
GRUPO DE CUATRO VALVULAS (CONFIG)	377
GRUPO DE 5 VALVULAS (CONFIG)	377
GRUPO DE 6 VALVULAS (CONFIG)	378
VÁLVULAS HIDRÁULICAS - GRUPO DE 2	379
GRUPO DE 3 VÁLVULAS HIDRÁULICAS	382
GRUPO DE 4 VÁLVULAS HIDRÁULICAS	383
BANCADA 5 (GR)	384
VÁLVULAS HIDRÁULICAS - GRUPO DE 6	385
*VALVE GP-CHECK	386
VÁLVULA DE CONTROL (GR)	387
VÁLVULA PILOTO (GR)	407
*VALVE GP-PUMP CONTROL	410
IMPLEMENTOS	413
GRUPO DE BRAZO DE LEVANTAMIENTO	413
PLUMA (GR)	415
SOPORTE DEL CILINDRO DE LEVANTAMIENTO (GR)	417
VARILLAJE DEL CUCHARÓN RETROEXCAVADOR (GR)	418
VARILLAJE DE CUCHARÓN CARGADOR (GR)	420
CARGADOR (CONFIG)	422
TRABA DE TRANSPORTE DE LA MÁQUINA (GR)	423
MONTAJE DEL BRAZO (GR)	427
ZAPATA Y PROTECTOR DEL ESTABILIZADOR	428
ALMOHADILLA Y MONTAJE DEL ESTABILIZADOR (GR)	431
ZAPATA DE ESTABILIZADOR (GR)	434
RETROEXCAVADOR - ESTABILIZADOR DEL (GR)	436
BRAZO EXTENSIBLE (GR)	438
BRAZO DE RETROEXCAVADOR (GR)	440
HERRAMIENTAS	442
CUCHARÓN DE USO MÚLTIPLE (CONFIG)	442
CUCHARÓN DE USO GENERAL (CONJ)	444
CUCHARÓN RETROEXCAVADOR (GR)	446
CUCHARÓN DE USO MÚLTIPLE (GR)	469
ACOPLADOR RÁPIDO (GR)	472
CUCHILLA (GR)	477
HORQUILLA (GR)	478
MONTAJE DEL CUCHARÓN (GR)	479
TOPE DE CUCHARON (GR)	481
DIENTE DE UNA PIEZA (UNI-TOOTH) (GR)	482

* NO HAY TRADUCCION DISPONIBLE EN EL MOMENTO DE LA IMPRESION

CONTENIDO

Nombre	Página
PUESTO DEL OPERADOR	483
AJUSTADOR DEL ASIENTO (GR)	483
ACONDICIONADOR DE AIRE Y MONTAJE (GR)	484
ACONDICIONADOR DE AIRE (GR)	486
POSABRAZOS (GR)	488
CABINA (CONFIG)	489
CABINA (CONJ)	492
CABINA (GR)	495
TECHO (CONFIG)	499
PABELLON (CONJ)	501
TECHO ROPS ABIERTO (GR)	503
COMPARTIMIENTO DE LITERATURA DE SERVICIO (GR)	504
COMPRESOR DE REFRIGERANTE (GR)	506
CONDENSADOR DEL REFRIGERANTE Y MONTAJE (GR)	508
CONSOLA DELANTERA (GR)	509
CONSOLA DEL OPERADOR (GR)	510
CONSOLA LATERAL (GR)	511
TAPA DE LA CONSOLA (GR)	516
TAPA DE MAMPARA PARAFUEGO (GR)	517
TAPA DE FRENO DE ESTACIONAMIENTO (GR)	519
TAPA DE POSTE (GR)	520
PUERTA IZQUIERDA (GR)	522
PUERTA DERECHA (GR)	524
CONDUCTO DE AIRE (GR)	526
ALFOMBRILLA DEL PISO (GR)	529
CALEFACCIÓN DE LA CABINA (GR)	531
BOCINA ELÉCTRICA (GR)	535
JUEGO DE ASIENTO	536
PALANCA DE CONTROL DEL REGULADOR (GR)	538
TUBERÍAS DE LA CALEFACCIÓN (GR)	539
TUBERIAS DE CALENTEDOR Y ACONDICIONADOR DE AIRE (GR)	541
RETROVISOR (GR)	543
MÓDULO INDICADOR DE ADVERTENCIA (GR)	545
MOTOR-LIMPIAPARABRISAS (GR)	546
MONTAJE DEL TABLERO DE INSTRUMENTOS (GR)	547
TABLERO DE INSTRUMENTOS (GR)	551
REGULADOR - PEDAL DEL (GR)	552
CINTURÓN DE SEGURIDAD (GR)	553
ASIENTO (GR)	554
ASIENTO FIJO (GR)	561
SUSPENSIÓN - ASIENTO CON (GR)	563
INSONORIZADOR (GR)	568
ASIENTO CON SUSPENSIÓN (GR)	570
GIRAR Y DESLIZAR DEL ASIENTO (GR)	572
ASIENTO GIRATORIO (GR)	574
TACÓMETRO ELÉCTRICO (GR)	575
GUARNICIONES DE LA CABINA (GR)	577
LAVAPARABRISAS DE LA VENTANA (GR)	578
VENTANA DE LA CABINA (GR)	582
VENTANA DE LA PUERTA (GR)	588
LIMPIAPARABRISAS DE LA VENTANA (GR)	592
EQUIPOS Y SUMINISTRO DE SERVICIOS	596
ETIQUETA DE ADVERTENCIA (GR)	596
INSTALACIÓN DE LA TRABA DE LA RUEDA	597
TRABA CONTRA EL VANDALISMO (GR)	598
CALCOMANÍAS Y PLACAS DE IDENTIFICACIÓN (GR)	599
INDICE DE NUMEROS DE PIEZA	B1

* NO HAY TRADUCCION DISPONIBLE EN EL MOMENTO DE LA IMPRESION

ÍNDICE

Designação	Página
INFORMAÇÃO GERAL	A31
ALTERNATIVAS DE REPARO	A42
ADITIVOS SUPLEMENTARES DO LÍQUIDO ARREFECEDOR	A47
NOMENCLATURA DE PEÇAS INGLÊS-PORTUGUÊS	A49
PEÇAS DE MANUTENÇÃO	A69
ÍNDICE	A102
ARRANJO DA MÁQUINA	1
RETROESCAVADEIRA - BRAÇO ESTENDÍVEL	1
RETROESCAVADEIRA - BRAÇO PADRÃO	2
CHASSI	3
ARRANJO BÁSICO	4
ARRANJO DO MOTOR	5
MOTOR	5
MOTOR PRIMÁRIO	7
MOTOR BÁSICO	9
EIXO-COMANDO DE VÁLVULA	9
TAMPA - CAIXA DIANTEIRA	11
TAMPA - MECANISMO DAS VÁLVULAS	12
VIRABREQUIM	16
BLOCO DO MOTOR	20
CABEÇOTE DO MOTOR	24
COMANDO DO VENTILADOR	27
VOLANTE DO MOTOR	28
CAIXA DO VOLANTE DO MOTOR	29
CAIXA DIANTEIRA	30
LEVANTAMENTO DO MOTOR	32
MONTAGEM - MOTOR	33
MONTAGEM - MOTOR E TRANSMISSÃO	34
CÁRTER DO ÓLEO DO MOTOR	35
PISTÃO E BIELA	37
BUJÃO DO BLOCO DO CILINDRO	41
BUJÃO DO MOTOR	42
POLIA DO VIRABREQUIM	43
MECANISMO DAS VÁLVULAS	44
SISTEMA DE LUBRIFICAÇÃO	46
RESPIRO	46
BOCAL DE ENCHIMENTO DE ÓLEO DO MOTOR	49
BOMBA DE ÓLEO - MOTOR	51
SISTEMA DE ARREFECIMENTO	52
CONEXÃO - TUBO D'ÁGUA	52
ARREFECEDOR DE ÓLEO DO MOTOR E BASE DO FILTRO	53
VENTILADOR DE SUCÇÃO	57
CONEXÃO-AQUECEDOR & AR CONDICIONADO	60
TUBOS - ARREFECEDOR DO TREM DE FORÇA	61
BOMBA DE ÁGUA	63
RADIADOR E VENTILADOR	65
RADIADOR E ARREFECEDOR DO ÓLEO HIDRÁULICO	67
SISTEMA DE ADMISSÃO E ESCAPE DE AR	71
PURIFICADOR DE AR	71
COTOVELO DE ADMISSÃO DE AR	75
EXTENSÃO DO TUBO DE ESCAPE	76
INDICADOR - TROCA DO FILTRO DE AR	77
COLETOR DE ESCAPE	79
SILENCIADOR	80
TURBOALIMENTADOR	82
SISTEMA DO COMBUSTÍVEL	84
CONTROLE DO GOVERNADOR E ACELERADOR	84
TUBOS - COMBUSTÍVEL	86
BOMBA DE INJEÇÃO DO COMBUSTÍVEL	90
BOMBA DE ESCORVA DO COMBUSTÍVEL	95
SEPARADOR DE ÁGUA	96
TANQUE DE COMBUSTÍVEL E MONTAGEM	97
TANQUE DE COMBUSTÍVEL	98
SISTEMA ELÉTRICO DE PARTIDA	101
ALTERNADOR DE CORRENTE	101
BATERIA	102
VELA DE AQUECIMENTO; VELA INCANDESCENTE	108
AQUECEDOR DA ÁGUA DO MOTOR	109
LÂMPADA - FAROL	110
LÂMPADA - SINALIZAÇÃO	112
LUZ TRASEIRA E DE FREIO	113
LUZ GIRATÓRIA DE ALARME	114
SISTEMA DE ILUMINAÇÃO - FARÓIS	116
SISTEMA DE ILUMINAÇÃO - FARÓIS E SINAL	119

* TRADUÇÃO NÃO DISPONÍVEL NO MOMENTO DA IMPRESSÃO

ÍNDICE

Designação	Página
SIST. DE ILUMINAÇÃO - PISCA-PISCA GIRATÓRIO DE ADVERTÊNCIA	122
MOTOR ELÉTRICO DE PARTIDA	124
INTERRUPTOR - PRESSÃO	127
INTERRUPTOR - TEMPERATURA	128
CABOS/FIOS ELÉTRICOS - AR CONDICIONADO	129
CABOS/FIOS ELÉTRICOS - CABINE	132
*WIRING GP-CONSOLE	142
CABOS/FIOS ELÉTRICOS DO CONSOLE	143
CABOS/FIOS ELÉTRICOS - MOTOR	148
CABOS/FIOS ELÉTRICOS - AQUECEDOR	152
CABOS/FIOS ELÉTRICOS - PLATAFORMA	154
CABOS/FIOS ELÉTRICOS - TOMADA DE FORÇA	158
CABOS/FIOS ELÉTRICOS - TRASEIROS	159
CABOS/FIOS ELÉTRICOS - SENSOR	162
TREM DE FORÇA	163
EIXO TRASEIRO E MONTAGEM	163
EIXO DE PROPULSÃO E DIREÇÃO	165
SEMI-EIXO TRASEIRO	168
CONTROLE DA TRAVA DO DIFERENCIAL	173
CONTROLE DA TRANSMISSÃO	174
DIFERENCIAL E COROA	176
DIFERENCIAL	178
COMANDO - RETROESCAVADEIRA	179
COMANDO - ACOPLAMENTO FLEXÍVEL	180
BOCAL DE ENCHIMENTO DE ÓLEO DO TREM DE FORÇA	181
ALOJAMENTO E FLANGE - EIXO	183
GR. PLANETÁRIO - COMANDO FINAL	187
TREM DE FORÇA	188
EIXO DE TRANSMISSÃO	191
TRANSMISSÃO E MONTAGEM	193
TRANSMISSÃO DIRETA	195
VÁLVULA SOLENÓIDE	208
VÁLVULA DE PNEU	210
RODA E PNEU	211
SISTEMA DE FREIOS	220
FREIO DE ESTACIONAMENTO	220
CONTROLE DO FREIO DE ESTACIONAMENTO	221
CONTROLE DO FREIO DE SERVIÇO	223
ALAVANCA DE CONTROLE MANUAL	226
TANQUE DO FREIO	227
SISTEMA DE DIREÇÃO	228
EIXO DIANTEIRO	228
CONTROLE DE DIREÇÃO	231
TUBOS - DIREÇÃO	233
VOLANTE	238
VÁLVULA DE PRIORIDADE	239
CHASSI E CARCAÇA	240
CAIXA - BATERIA	240
PÁRA-CHOQUE DIANTEIRO	241
CONTRAPESO	242
TAMPA - ACESSO À BATERIA	247
PÁRA-LAMA TRASEIRO	248
CHAPA DO PISO	250
CHASSI DIANTEIRO	253
ARMAÇÃO OSCILANTE	254
PROTETOR - EIXO DE TRANSMISSÃO	256
CAPÔ E PROTETOR	257
CAPÔ DO MOTOR	259
SISTEMA HIDRÁULICO	262
VÁLVULA DO CONECTOR	262
CONTROLE HIDRÁULICO MANUAL	265
CONTROLE - PEDAL HIDRÁULICO	276
GRUPO DE CONVERSÃO - ESTOFAMENTO DE GIRO	280
GR. DE CONVERSÃO - VÁLVULA DE CONTROLE	282
CONVERSÃO-CONTROLE MANUAL HIDRÁULICO	283
ACOPLAMENTO	287
CILINDRO DA CAÇAMBA RETROESCAVADEIRA	288
CILINDRO DA LANÇA	292
CILINDRO DO BRAÇO ESTENDÍVEL	294
CILINDRO DE LEVANTAMENTO	297
CILINDRO - CAÇAMBA DE MÚLTIPLAS APLICAÇÕES	298
CILINDRO DO ESTABILIZADOR	299
CILINDRO DO BRAÇO	301
CILINDRO DE GIRO	302
CILINDRO DE INCLINAÇÃO	304
PROTETOR - CILINDRO DO ESTABILIZADOR	306
*HYDRAULIC AR	309
COMANDO HIDRÁULICO	309
*HYDRAULIC AR	310
COMANDO HIDRÁULICO	311
DESENGATE E POSICIONADOR DA CAÇAMBA	312
TUBOS AUXILIARES - RETROESCAVADEIRA	314

* TRADUÇÃO NÃO DISPONÍVEL NO MOMENTO DA IMPRESSÃO

ÍNDICE

Designação	Página
TUBOS - LANÇA	332
TUBOS - CILINDRO DA CAÇAMBA	333
TUBOS - BRAÇO COM EXTENSÃO	335
TUBOS - CILINDRO DE LEVANTAMENTO	338
TUBOS AUXILIARES	341
TUBOS - CAÇAMBA DE MÚLTIPLAS APLICAÇÕES	343
TUBOS - CIRCUITO PILOTO	345
TUBOS - BOMBA	348
TUBOS - RETORNO	355
TUBOS - ESTABILIZADOR	356
TUBOS - BRAÇO	358
TUBOS - GIRO	359
TUBOS - CILINDRO DE INCLINAÇÃO	360
TRAVA - CONTROLE MANUAL HIDRÁULICO	362
MONTAGEM - BANCO DE VÁLVULAS	363
MONTAGEM - CILINDRO	365
MONTAGEM - CONTROLE HIDRÁULICO	366
MONTAGEM - BOMBA HIDRÁULICA	367
MONTAGEM - TUBOS	368
BOMBA DE PISTÃO	370
GRUPO ROTATIVO DA BOMBA	372
ESTABILIZADOR	373
TANQUE HIDRÁULICO	374
VÁLVULA DE CONTROLE E MONTAGEM	376
CONJUNTO DE 4 VÁLVULAS	377
GRUPO DE VÁLVULAS - 5	377
GRUPO DE VÁLVULAS - SEIS	378
GRUPO DE VÁLVULAS DE CONTROLE - DUPLO	379
GRUPO DE VÁLVULAS DE CONTROLE - TRIPLO	382
GRUPO DE VÁLVULAS DE CONTROLE - QUÁDRUPLO	383
GRUPO DE VÁLVULAS DE CONTROLE - CINCO	384
GRUPO DE VÁLVULAS DE CONTROLE - SEIS	385
*VALVE GP-CHECK	386
VÁLVULA DE CONTROLE	387
VÁLVULA DE CONTROLE PILOTO	407
*VALVE GP-PUMP CONTROL	410
ACESSÓRIOS	413
BRAÇO DE LEVANTAMENTO	413
LANÇA	415
TIRANTE DO CILINDRO DE LEVANTAMENTO	417
ARTICULAÇÃO DA CAÇAMBA DA RETROESCAVADEIRA	418
ARTICULAÇÃO DAS CAÇAMBAS DAS CARREGADEIRAS	420
CAÇAMBA DIANTEIRA	422
TRAVA - TRANSPORTE	423
MONTAGEM - BRAÇO	427
COXIM E PROTETOR DO ESTABILIZADOR	428
CALÇO DO ESTABILIZADOR E MONTAGEM	431
CALÇO DO ESTABILIZADOR	434
ESTABILIZADOR - RETROESCAVADEIRA	436
BRAÇO ESTENDÍVEL	438
BRAÇO - CAÇAMBA RETRO-ESCAVADORA	440
FERRAMENTAS DE TRABALHO	442
CAÇAMBA DE MÚLTIPLAS APLICAÇÕES	442
CAÇAMBA PARA APLICAÇÃO GERAL	444
CAÇAMBA RETROESCAVADORA	446
CAÇAMBA DE MÚLTIPLAS APLICAÇÕES	469
ACOPLADOR RÁPIDO	472
BORDA CORTANTE	477
GARFO	478
MONTAGEM - CAÇAMBA	479
BATENTE - CAÇAMBA	481
UNI-DENTE	482
POSTO DO OPERADOR	483
AJUSTADOR DO ASSENTO	483
CONDICIONADOR DE AR E MONTAGEM	484
CONDICIONADOR DE AR	486
BRAÇO DO ASSENTO	488
CABINE	489
TOLDO	499
COBERTA TOLDO	501
TOLDO - ESTRUTURA ROPS ABERTA	503
COMPARTIMENTO PARA LITERATURA	504
COMPRESSOR DE REFRIGERANTE	506
CONDENSADOR DO REFRIGERANTE E MONTAGEM	508
POSTO DE CONTROLE/CONSOLE DIANTEIRO	509
CONSOLE DO OPERADOR	510
CONSOLE LATERAL	511
TAMPA - CONSOLO	516

* TRADUÇÃO NÃO DISPONÍVEL NO MOMENTO DA IMPRESSÃO

ÍNDICE

Designação	Página
TAMPA-PAINEL TRASEIRO DO MOTOR	517
TAMPA-FREIO DE ESTACIONAMENTO	519
TAMPA-COLUNA	520
PORTA - LADO ESQUERDO	522
PORTA - LADO DIREITO	524
DUCTO DE AR	526
TAPETE	529
AQUECEDOR DA CABINE	531
BUZINA ELÉTRICA	535
JOGO - ASSENTO	536
ALAVANCA DE CONTROLE DO GOVERNADOR	538
TUBOS - AQUECEDOR	539
TUBULAÇÕES - AQUECEDOR E AR CONDICIONADO	541
ESPELHO RETROVISOR	543
MÓDULO - INDICADOR DE ALARME	545
MOTOR - LIMPADOR DO VIDRO	546
MONTAGEM - PAINEL DE INSTRUMENTOS	547
PAINEL DE INSTRUMENTOS	551
PEDAL DO GOVERNADOR	552
CINTO DE SEGURANÇA	553
ASSENTO	554
ASSENTO ESTÁTICO	561
ASSENTO COM SUSPENSÃO	563
REDUÇÃO DE RUÍDO	568
SUSPENSÃO - ASSENTO	570
GRUPO DE DESLIZE E ARTICULAÇÃO GIRATÓRIA	572
ASSENTO GIRATÓRIO	574
TACÔMETRO - ELÉTRICO	575
LISTRA DA CABINE	577
LAVADOR DO VIDRO	578
JANELA DA CABINE	582
VIDRO DA PORTA	588
LIMPADOR DO VIDRO	592
EQUIPAMENTOS DE SERVIÇO E SUPRIMENTOS	596
DECALQUE	596
GR. DE INSTALAÇÃO - CALÇO DA RODA	597
CADEADO CONTRA VANDALISMO	598
PLACA E DECALQUE	599
ÍNDICE DE NÚMERO DE PEÇA	B1

* TRADUÇÃO NÃO DISPONÍVEL NO MOMENTO DA IMPRESSÃO

INHALTSVERZEICHNIS

Bezeichnung	Seite
ALLGEMEINE HINWEISE	A35
REPARATURALTERNATIVEN	A43
KÜHLMITTELZUSATZ	A48
WARTUNGSTEILE	A73
STICHWORTVERZEICHNIS	A111
MASCHINE	1
HECKBAGGER-TELESKOPSTIEL	1
STANDARDHECKBAGGERSTIEL	2
FAHRWERK	3
GRUNDAUSFÜHRUNG	4
MOTOR	5
MOTORAUSFÜHRUNG	5
MOTOR (GRUNDAUSFÜHRUNG)	9
NOCKENWELLE	9
STIRNRADGEHÄUSEDECKEL	11
VENTILDECKEL	12
KURBELWELLE	16
MOTORBLOCK	20
ZYLINDERKOPF	24
LÜFTERANTRIEB	27
SCHWUNGRAD	28
SCHWUNGRADGEHÄUSE	29
STIRNRADGEHÄUSE	30
MOTORHUBÖSE	32
MOTORAUFLAGER	33
MOTOR- UND GETRIEBEAUFLAGER	34
ÖLWANNE	35
PLEUELSTANGE UND KOLBEN	37
ZYLINDERBLOCKSCHRAUBE	41
MOTORSTOPFEN	42
KURBELWELLEN-RIEMENSCHEIBE	43
VENTILSTEUERUNG	44
SCHMIERSYSTEM	46
ENTLÜFTER	46
MOTORÖLEINFÜLLSTUTZEN	49
SCHMIERPUMPE	51
KÜHLSYSTEM	52
KÜHLWASSERANSCHLUSS	52
MOTORÖLKÜHLER UND FILTER-SOCKEL	53
SAUGLÜFTER	57
ANSCHLUSS - HEIZUNG U. KLIMAANLAGE	60
ÖLKÜHLERLEITUNGEN (KRAFTÜBERTRAGUNG)	61
KÜHLWASSERPUMPE	63
KÜHLER UND LÜFTER	65
KÜHLER UND HYDRAULIKÖLKÜHLER	67
LUFTANSAUG- UND ABGASSYSTEM	71
LUFTREINIGER	71
LUFTEINLASSBOGEN	75
AUSPUFFROHRVERLÄNGERUNG	76
LUFTFILTERWARTUNGSANZEIGE	77
AUSPUFFKRÜMMER	79
SCHALLDÄMPFER	80
TURBOLADER	82
KRAFTSTOFFSYSTEM	84
REGLER- UND GASPEDALGESTÄNGE	84
KRAFTSTOFFLEITUNGEN	86
KRAFTSTOFFEINSPRITZPUMPE	90
KRAFTSTOFF-ENTLÜFTUNGSPUMPE	95
WASSERABSCHEIDER	96
KRAFTSTOFFTANK U. BEFESTIGUNG	97
KRAFTSTOFFTANK	98
ELEKTRISCHE ANLAGE UND STARTSYSTEM	101
DREHSTROMGENERATOR	101
BATTERIE	102
GLÜHKERZE	108
UMLAUFKÜHLWASSERHEIZUNG	109
ARBEITSLEUCHTEN	110
BLINKLEUCHTE	112
BREMS- UND RÜCKLEUCHTE	113
RUNDUM-KENNLEUCHTE	114
ARBEITSLEUCHTEN	116
ARBEITS- U. SIGNALLEUCHTE	119
RUNDUM-KENNLEUCHTE	122
STARTERMOTOR	124
DRUCKSCHALTER	127
TEMPERATURSCHALTER	128
KLIMAANLAGENVERDRAHTUNG	129
FAHRERHAUSVERDRAHTUNG	132
*WIRING GP-CONSOLE	142
KONSOLENVERDRAHTUNG	143
MOTORVERDRAHTUNG	148
HEIZUNGSVERDRAHTUNG	152
FAHRERPLATTFORMVERDRAHTUNG	154
STECKDOSENVERDRAHTUNG	158

* ÜBERSETZUNG ZUM ZEITPUNKT DER DRUCKLEGUNG NICHT VORHANDEN

INHALTSVERZEICHNIS

Bezeichnung	Seite
VERDRAHTUNG, HINTEN	159
SENSORVERDRAHTUNG	162
KRAFTÜBERTRAGUNG	163
HINTERACHSE U. BEFESTIGUNG	163
ANTRIEBS- UND LENKACHSE	165
HINTERACHSE	168
DIFFERENTIALSPERRENGESTÄNGE	173
GETRIEBESTEUERUNG	174
DIFFERENTIAL UND TELLERRAD	176
DIFFERENTIAL	178
ANTRIEB - BAGGERLADER	179
KUPPLUNGSANTRIEB, ELAST.	180
GETRIEBEÖLFÜLLSTUTZEN	181
ACHSGEHÄUSEFLANSCH	183
SEITENANTRIEB - PLANETENGETRIEBE	187
KRAFTÜBERTRAGUNG	188
ANTRIEBSWELLE	191
GETRIEBE U. BEFESTIGUNG	193
MECHANISCHES GETRIEBE	195
WECHSELGETRIEBE	196
MAGNETVENTIL	208
REIFENVENTIL	210
RAD UND REIFEN	211
BREMSSYSTEM	220
FESTSTELLBREMSE	220
FESTSTELLBREMSGESTÄNGE	221
BREMSGESTÄNGE	223
HANDSTEUERHEBEL	226
BREMSTANK	227
LENKSYSTEM	228
VORDERACHSE	228
LENKBETÄTIGUNG	231
LENKÖLLEITUNGEN	233
LENKRAD	238
VORRANGVENTIL	239
RAHMEN UND FAHRGESTELL	240
BATTERIEKASTEN	240
FRONTSTOSSSTANGE	241
GEGENGEWICHT	242
BATTERIEDECKEL	247
SCHUTZBLECHE, HINTEN	248
BODENBLECH	250
LADERRAHMEN	253
SCHWENKRAHMEN	254
ANTRIEBSWELLENVERKLEIDUNG	256
MOTORHAUBE UND VERKLEIDUNG	257
MOTORHAUBE	259

Bezeichnung	Seite
HYDRAULIKSYSTEM	262
VERBINDUNGSVENTIL	262
HYDRAULIKHANDSTEUERUNG	265
HYDRAULIKPEDALSTEUERUNG	276
UMRÜSTSATZ - GEFEDERETE SCHWENKVORRICHTUNG	280
UMBAUSATZ - STEUERVENTIL	282
UMRÜSTSATZ - HYDRAULIKHEBEL	283
ANSCHLUSS	287
HECKBAGGERLÖFFELZYLINDER	288
AUSLEGERZYLINDER	292
TELESKOPSTIELZYLINDER	294
HUBZYLINDER	297
KOMBISCHAUFELZYLINDER	298
SEITENSTÜTZENZYLINDER	299
STIELZYLINDER	301
SCHWENKZYLINDER	302
KIPPZYLINDER	304
SEITENSTÜTZENZYLINDERSCHUTZ	306
*HYDRAULIC AR	309
HYDRAULIKSYSTEM	309
*HYDRAULIC AR	310
HYDRAULIKSYSTEM	311
SCHAUFELAUSSCHALTER UND -EINSTELLER	312
TIEFLÖFFEL-HYDRAULIKNOTLEITUNGEN	314
AUSLEGERLEITUNGEN	332
LÖFFELZYLINDERLEITUNGEN	333
TELESKOPSTIELLEITUNGEN	335
HUBZYLINDERLEITUNGEN	338
LADERZUSATZLEITUNGEN	341
KOMBISCHAUFELLEITUNGEN	343
VORSTEUERLEITUNGEN	345
HYDRAULIKPUMPE UND LEITUNGEN	348
RÜCKLAUFLEITUNG	355
SEITENSTÜTZENLEITUNGEN	356
STIELZYLINDERLEITUNGEN	358
SCHWENKLEITUNGEN	359
NEIGEZYLINDERLEITUNGEN	360
HYDRAULIKSPERRE (HANDBEDIENUNG)	362
VENTILANORDNUNGS-BEFESTIGUNGSSATZ	363
ZYLINDERAUFHÄNGUNG	365
HYDRAULIKSTEUERUNGSAUFHÄNGUNG	366
HYDRAULIKPUMPENBEFESTIGUNG	367
LEITUNGS-BEFESTIGUNGSTEILE	368
KOLBENPUMPE	370
KOLBENPUMPENUMLAUFSATZ	372
SEITENSTÜTZEN	373

* ÜBERSETZUNG ZUM ZEITPUNKT DER DRUCKLEGUNG NICHT VORHANDEN

INHALTSVERZEICHNIS

Bezeichnung	Seite
HYDRAULIKTANK	374
VENTILBLOCK U. BEFESTIGUNG	376
4-BLOCK-VENTILSATZ	377
5-VENTIL-BLOCK	377
6-FACH-VENTILBLOCK	378
VENTILSATZ (2-VENTIL)	379
VENTILSATZ (3-VENTIL)	382
VENTILSATZ (4-VENTIL)	383
VENTILSATZ (5-VENTIL)	384
VENTILSATZ (6-VENTIL)	385
*VALVE GP-CHECK	386
STEUERVENTIL	387
VORSTEUERVENTIL	407
*VALVE GP-PUMP CONTROL	410
ARBEITSGERÄTE	413
HUBARM	413
AUSLEGER	415
HUBZYLINDER-HALTERUNG	417
HECKBAGGERLÖFFELGESTÄNGE	418
SCHAUFELGESTÄNGE	420
LADESCHAUFEL	422
TRANSPORTSPERRE	423
STIELAUFHÄNGUNG	427
SEITENSTÜTZENPLATTEN UND SCHUTZABDECKUNG	428
STÜTZPLATTEN U. BEFESTIGUNG	431
SEITENSTÜTZENPLATTEN	434
SEITENSTÜTZEN	436
TELESKOPSTIEL	438
LÖFFELSTIEL	440
ARBEITSGERÄTE	442
KOMBISCHAUFEL	442
UNIVERSALSCHAUFEL	444
HECKBAGGERLÖFFEL	446
KOMBISCHAUFEL	469
SCHNELLWECHSELEINRICHTUNG	472
SCHNEIDMESSER	477
PALETTENGABEL	478
SCHAUFELAUFHÄNGUNG	479
SCHAUFELANSCHLAG	481
UNIVERSAL-ZAHNSPITZE	482
FAHRERHAUS	483
FAHRERSITZVERSTELLER	483
KLIMAANLAGE UND AUFHÄNGUNG	484
KLIMAANLAGE	486
ARMLEHNE	488
FAHRERHAUS	489
WETTERDACH	499
SCHUTZDACHSATZ	501
FAHRERHAUS M. OFFENEM ÜBERROLLSCHUTZ	503
LITERATURABLAGE	504
KÄLTEMITTELKOMPRESSOR	506
KÄLTEMITTELKONDENSATOR U. BEFESTIGUNGSTEILE	508
FRONTSTEUERPULT	509
STEUERKONSOLE	510
SEITENKONSOLE	511
STEUERKONSOLENABDECKUNG	516
FEUERWANDABDECKUNG	517
FESTSTELLBREMSABDECKUNG	519
PFOSTENABDECKUNG	520
FAHRERHAUSTÜR (LINKS)	522
FAHRERHAUSTÜR (RECHTS)	524
LUFTKANAL	526
FUSSMATTE	529
FAHRERHAUSHEIZUNG	531
WARNHORN, ELEKTR.	535
FAHRERSITZ-EINBAUSATZ	536
DREHZAHLREGLER - STEUERHEBEL	538
HEIZUNGSLEITUNGEN	539
HEIZUNGS- U. KLIMAANLAGENLEITUNGEN	541
RÜCKSPIEGEL	543
WARNANZEIGEMODUL	545
SCHEIBENWISCHERMOTOR	546
INASTRUMENTENTAFEL-EINBAUSATZ	547
INSTRUMENTENTAFEL	551
GASPEDAL	552
SICHERHEITSGURT	553
FAHRERSITZ	554
FAHRERSITZ, FESTSTEHEND	561
SCHWINGSITZ	563
SCHALLDÄMPFUNG	568
FAHRERSITZFEDERUNG	570
SITZDREH- U. -SCHIEBEVORRICHTUNG	572
SITZSCHWENKVORRICHTUNG	574
DREHZAHLMESSER, ELEKTR.	575
FAHRERHAUS - HALTETEILE	577
SCHEIBENWASCHANLAGE	578
FAHRERHAUSFENSTER	582
TÜRFENSTER	588
SCHEIBENWISCHER	592
WARTUNGSAUSRÜSTUNG UND -ZUBEHÖR	596
AUFKLEBER	596
UNTERLEGKEIL - EINBAUSATZ	597
VORHÄNGESCHLOSS	598

* ÜBERSETZUNG ZUM ZEITPUNKT DER DRUCKLEGUNG NICHT VORHANDEN

INHALTSVERZEICHNIS

Bezeichnung	Seite	Bezeichnung	Seite
SCHILD UND AUFKLEBER	599		
ERSATZTEILNUMMERNINDEX	B1		

* ÜBERSETZUNG ZUM ZEITPUNKT DER DRUCKLEGUNG NICHT VORHANDEN

GENERAL INFORMATION

1. MACHINE IDENTIFICATION

Caterpillar machines are identified by Product Identification Numbers (PIN). Some components included in a machine may be identified by Serial Numbers (S/N). Typical components that will be serialized include engines, transmissions, bulldozers, and rippers. The machine and engine are further identified by arrangement numbers and in some cases modification numbers. These numbers are shown on the product identification plate(s) and on the master plate in the operator's compartment.

Caterpillar dealers need all of these numbers to determine accurate parts identification.

SIS ***New Feature***

Effective First Quarter 2001 the Caterpillar Product Identification Number (PIN) changed from 8 to 17 characters. In an effort to provide uniform equipment identification, Caterpillar and other construction equipment manufacturers are moving to comply with the latest version of the product identification numbering standard. Non-road machine PINs are defined by ISO 10261. The new PIN format will apply to all Caterpillar machines and generator sets. The PIN plates and frame marking will display the 17 character PIN. The new format will look like the following:

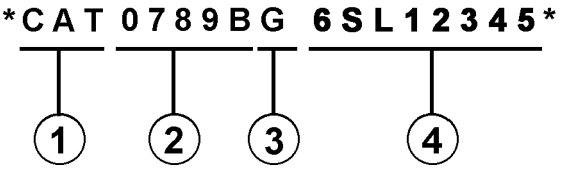

Where:

1. Caterpillar's World Manufacturing Code (characters 1-3)

2. Machine Descriptor (characters 4-8)

3. Check Character (character 9)

4. Machine Indicator Section (MIS) or Product Sequence Number (characters 10-17). These were previously referred to as the Serial Number.

Machines and generator sets produced before First Quarter 2001 will maintain their 8 character PIN format.

Components such as engines, transmissions, axles, etc. and work tools will continue to use an 8 character Serial Number (S/N).

2. ORDERING PARTS

⚠ WARNING

When replacement parts are required for this product Caterpillar recommends using Caterpillar replacement parts or parts with equivalent specifications including, but not limited to, physical dimensions, type, strength and material.

Failure to heed this warning can lead to premature failures, product damage, personal injury or death.

Quality Caterpillar replacement parts are available from Caterpillar dealers throughout the world. Their parts inventories are up to date and include all parts normally required to protect your investment in Caterpillar machines. Dealers may offer repair kits or remanufactured parts to allow selection of the most effective repair alternative for a particular situation. When ordering parts, your order should specify the quantity, part number, part name, and the serial number/product identification number of the machine for which the parts are needed.

3. PARTS MANUAL ORGANIZATION

Product information in this manual is presented as "information elements" that represent all of the components for the specific model. Engine Arrangement and Seat Group are examples of information elements. The information elements are organized alphabetically by part name and secondarily by part number within each major section of the manual.

4. TABLE OF CONTENTS

A table of contents (TOC) is found at the beginning of the manual. The TOC lists each section of the manual with a complete list of all information elements organized as they appear in the manual. Page numbers are provided for quick reference to detailed parts identification illustrations and serviceable consist lists.

5. MAINTENANCE PARTS INDEX

The Maintenance Parts Index, located near the beginning of the manual, references most frequently used maintenance part numbers, providing description, quantity, usage and page number. This information is organized alphabetically by part description.

6. INDEX

The index located near the front of the manual is an alphabetical listing of all information elements included in the manual. Page numbers are provided for quick reference to detailed parts identification illustrations and serviceable consist lists.

7. PART NUMBER INDEX

A numerical index listing all part numbers and the corresponding page number(s) appears at the back of the manual.

8. CAPTIONS

Captions located at the beginning of each information element identify the part number and part name along with additional descriptive information. PIN and S/N information found in each caption should be used to select correct information for a specific machine. Field replacement options, identification of optional attachment components, and where used ("part of") information is also provided.

The first line of a caption is shown in larger type font to indicate the beginning of an information element. Captions for additional pages that may be required to illustrate an information element will be shown in standard type font and will include the term *(contd.)* .

9. NON-SERVICED PARTS

In some instances it is necessary to display non-serviced parts that are a link to a lower level serviceable consist lists. These non-serviced part numbers are shown in *italic* type indicating that they are not available.

10. PARTS LIST REFERENCE NUMBERS

Numbers shown in the Ref No column correspond to numbers used in the associated graphic(s). An alphabetic suffix may be added to a reference number to identify lower level consist items. Numbers shown in the Graphic Ref column refer to the graphic number identifier displayed in the lower left corner of each illustration. The Graphic Ref number may be used in combination with the item Ref No to determine the correct part number. There may be intentional omission of a Ref No in a consist list as information is updated to reflect the latest serviceable part numbers.

11. INDENTED PART NAMES

When a part name is indented in a parts list, it is part of (included in) the group or assembly under which it is indented.

12. ILLUSTRATION REFERENCE LETTERS

When necessary, illustrations contain reference letters (A, B, C etc.) that are intended to track lines and harnesses from one point to another. They are also used to show where to reconnect illustrations that have been separated.

13. ABBREVIATIONS AND SYMBOLS

O.D. – Outside Diameter
I.D. – Inside Diameter
A – Not Part Of This Group
B – Use As Required
C – Change From Previous Type
D – Order By The Meter
E – Order By The Centimeter
F – Not Shown
G – Order By The Inch
I – See Hose Fabrication Guide
M – Metric Part
R – Remfg Part May Be Available
Y – Separate Illustration
Z – Not Serviced Separately

SIS *New Feature*

14.<END>

This symbol indicates the end of an information element.

NOTE:

Continuing improvement and advancement of product design may cause changes to your machine which may not be included in this publication. Whenever a question arises regarding your caterpillar product or this publication, please consult your caterpillar dealer for the latest available information.

FRAME AND BODY

8E-3299 PLATFORM GP-CAB

PIN 38K1-99999

SMCS-7283 — 100090751

NOTE	REF NO	GRAPHIC REF	PART NUMBER	QTY	PART NAME 1 2 3 4 5 6 (PRODUCT LEVEL)	SEE PAGE
	1	1	3T-3953	1	PLATE AS	
	2	1	6B-3062	25	BOLT (3/8-16X.750IN)	
	3	1	6P-1075	41	WASHER-HARD (9MM THK)	
	4	1	9F-1444	2	SUPPORT AS-FOOT	
	5	1	7P-2229	19	BOLT (1/2-13X1IN)	
		1	6P-[illegible]	19	WASHER-HARD (4MM THK)	
	6	1	8E-8134	1	COVER AS-LH	
		1	9F-2979	5	NUT-WELD (3/8-16 THD)	
		1	1P-8188	1	CLIP	
	7	1	7S-2411	4	COVER	
	8		6J-0468	19	SCREW-HEAD (3/8-16X.875IN)	
	9	1	[illegible]-4674	1	COVER	
		1	8E-8972	[illegible]	GASKET	
	10	1	8E-3248	1	[illegible]	
		1	8E-3250	1	GASKET	
	11	1	3T-3939	1	HANDHOLD	
	12	1	8E-8978	1	COVER AS	
		1	9F-2978	8	NUT-WELD (3/8-16 THD)	
		1	8E-8979	1	GASKET	
	13	1	7T-0131	1	FLOORPLATE AS	
		1	1F-0748	4	NUT-WELD (1/2-13 THD)	
	14	1	7V-8087	1	PLUG-BUTTON	
	15	1	7T-0136	1	PLATE AS	
		1	9F-2979	5	NUT-WELD (3/8-16 THD)	
	16	1	7T-8098	1	COVER	
		1	7T-0779	1	GASKET	
	17	1	3T-3951	1	PLATE AS	
	18	1	6T-8364	4	BOLT (1/4-20X.625IN)	
M		1	6T-4205	4	WASHER-HARD (2MM THK)	
	19	1	6I-8464	1	FLOOR MAT	
	20	1	8E-8946	1	MODULE AS-OPERATOR	
	21	1	3T-3934	1	HANDHOLD	
	22	1	9P-8871	2	PLUG	
	23	2	6T-8364	4	BOLT (1/4-20X.625IN)	
M		2	6T-4205	4	WASHER-HARD (2MM THK)	
	24	2	6B-3062	17	BOLT (3/8-16X.750IN)	
	25	2	6P-1075	21	WASHER-HARD (9MM THK)	
	26	2	7T-0136	1	SEAL	
	27	2	7X-0378	2	BOLT (3/4-10X5IN)	
		2	7X-0682	2	WASHER-HARD (6MM THK)	
	28	2	3T-3482	2	PLATE	
	29	2	3T-8290	1	PLATE AS	
		2	7S-4838	6	SPACER	
	30	2	3T-8291	1	SEAL	
	31	2	7S-8817	1	GASKET	
	32	2	7S-8916	1	COVER AS	
		2	2R-2376	2	WASHER	
		2	6P-8826	2	SCREW-KNURLED	
	33	2	9W-3429	1	COVER	
	34	2	8E-8937	1	COVER	
	35	2	9D-3931	8	SCREW-SOCKET HEAD	
	36	2	9W-3142	8	MOUNTING	
	37	2	9W-9027	2	PLATE	
	38	2	7X-0360	2	BOLT (7/8-9X5IN)	
		2	7X-0672	2	WASHER-HARD	
	39	2	6L-4454	4	BOLT (3/8-16X1.0IN)	
	40	2	3T-4788	1	COVER	

12 FRAME AND BODY — 1 of 4 — SELP4570-01

FRAME AND BODY

8E-3299 PLATFORM GP-CAB (contd.)

100090751

NOTE	REF NO	GRAPHIC REF	PART NUMBER	QTY	PART NAME 1 2 3 4 5 6 (PRODUCT LEVEL)	SEE PAGE
	41	2	8E-2515	1	COVER	
	42	2	7T-0134	1	PLATE	
	43	2	7T-0138	1	GASKET	
	44	2	7S-8724	1	GASKET	
	45	2	7S-8723	1	COVER	
	46	[illegible]	6V-1958	2	PLUG-BUTTON	
M-METRIC PART						

SELP4570-01 — 2 of 4 — FRAME AND BODY 13

FRAME AND BODY

8E-3299 PLATFORM GP-CAB (contd.)

100090751

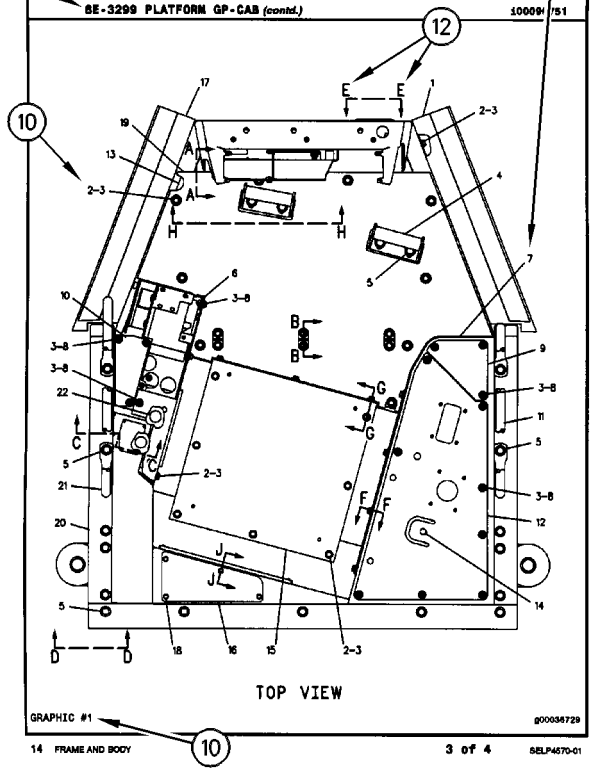

GRAPHIC #1 — g00036729

14 FRAME AND BODY — 3 of 4 — SELP4570-01

FRAME AND BODY

8E-3299 PLATFORM GP-CAB (contd.)

100090751

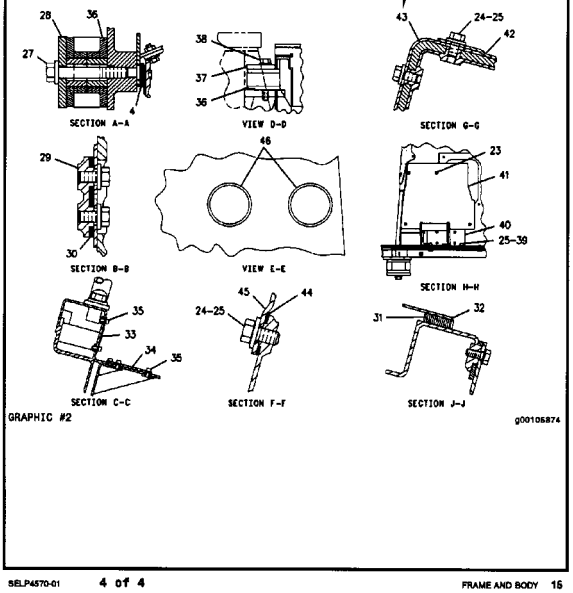

GRAPHIC #2 — g00105874

SELP4570-01 — 4 of 4 — FRAME AND BODY 16

1. IDENTIFICATION DE LA MACHINE

Toutes les machines Caterpillar portent un numéro d'identification (PIN). Certains composants des machines peuvent porter des numéros de série (S/N). En général, parmi les composants qui portent des numéros de série il y a les moteurs, les transmissions, les bulldozers et les rippers. En plus, la machine et le moteur peuvent recevoir des numéros de version, et dans certains cas, de modification. Ces numéros figurent sur les plaques de numéro de série et sur la plaque signalétique principale qui se trouve dans le poste de conduite.

Les concessionnaires Caterpillar doivent connaître tous ces numéros pour identifier correctement les pièces.

SIS *Nouvelle Caractéristique*

À partir du premier trimestre 2001, le numéro d'identification produit (PIN) Caterpillar passe de 8 à 17 caractères. Afin de permettre une identification uniforme des matériels, Caterpillar et d'autres constructeurs de machines de travaux publics s'efforcent de se conformer à la norme la plus récente portant sur les numéros d'identification des produits. Les numéros d'identification (PIN) de machines de chantier sont définis par la norme ISO 10261. Le nouveau format du numéro d'identification est valable pour toutes les machines et tous les groupes électrogènes Caterpillar. Le numéro d'identification produit (PIN) figurant sur la plaque et sur le châssis se composera de 17 caractères. Le nouveau format ressemblera à ceci:

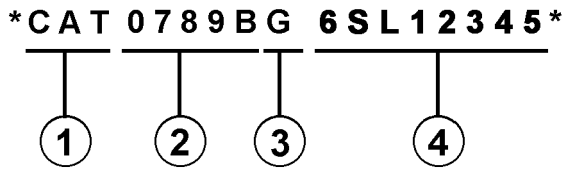

Il se décomposera de la façon suivante:

1. Code international de fabrication de Caterpillar (caractères 1 à 3)

2. Descriptif de la machine (caractères 4 à 8)

3. Contrôle (caractère 9)

4. Indicateur machine (MIS) ou numéro de séquence produit (caractères 10 à 17). Ceux-ci étaient auparavant désignés sous le terme de numéro de série.

Les machines et les groupes électrogènes construits avant le premier trimestre 2001 garderont le format à 8 caractères du numéro d'identification produit (PIN).

Les organes tels que les moteurs, les boîtes de vitesses, les essieux, etc., continueront d'être désignés par un numéro de série (S/N) à 8 caractères.

2. COMMANDE DE PIÈCES

⚠ DANGER

Lorsqu'il faut remplacer des pièces de rechange pour ce produit Caterpillar recommande d'utiliser les pièces de rechange Caterpillar ou les pièces qui ont des spécifications équivalentes dont les dimensions physiques, le type, la force et le matériau. Ces équivalences ne se limitent pas à l'énoncé précédent.

L'inobservation de cette mise en garde peut entraîner des défaillances prématurées, des dommages au produit, des blessures ou même la mort.

Les concessionnaires Caterpillar fournissent dans le monde entier des pièces de rechange de qualité Caterpillar. Leurs stocks de pièces sont constamment réapprovisionnés et comptent toutes les pièces nécessaires pour assurer la bonne marche de vos machines Caterpillar. Certains concessionnaires proposent également des kits de réparation ou des pièces rénovées, ce qui permet de choisir la solution la plus économique dans une situation donnée. Lors des commandes de pièces, mentionner la quantité, le numéro et la désignation des pièces ainsi que le numéro de série ou le numéro d'identification (PIN) de la machine pour laquelle ces pièces sont requises.

3. ORGANISATION DU CATALOGUE DE PIÈCES

Les renseignements sur les produits sont présentés sous forme de "Information element" (élément d'information) représentant tous les composants d'un modèle donné. "Engine Arrangement" (version de moteur) et "Seat Group" (assemblage de siège)" sont des exemples d'éléments d'information. Les éléments d'information sont classés par ordre alphabétique par la désignation standard des pièces et par numéros de pièces dans chaque partie importante du manuel.

4. TABLE DES MATIÈRES

Nouvelle Caractéristique

La table des matières se trouve au début du manuel. La table des matières fournit la liste de tous les chapitres du manuel avec une liste complète de tous les éléments d'information classés par ordre d'apparition dans le manuel. Les numéros de page sont fournis afin que l'utilisateur puisse trouver rapidement les illustrations détaillées concernant l'identification des pièces et les listes des pièces d'entretien.

5. INDEX DES PIÈCES D'ENTRETIEN

La rubrique "Index des pièces d'entretien" qui se trouve au début du manuel renvoie aux pièces d'entretien les plus fréquemment utilisées en précisant la désignation, la quantité, là où la pièce est utilisée et le numéro de page. Ces pièces sont classés par ordre alphabétique.

6. INDEX

L'index qui se trouve vers le début du manuel est une liste alphabétique de tous les éléments d'information du manuel. Les numéros de page sont fournis afin que l'utilisateur puisse trouver rapidement les illustrations détaillées concernant l'identification des pièces et les listes des pièces d'entretien.

7. INDEX DES NUMÉROS DE PIÈCES

Une liste numérique de tous les numéros de pièces et des pages correspondantes se trouve à la fin du manuel.

8. LÉGENDES

Les légendes qui se trouvent en haut de chaque page de chaque élément d'information fournissent le numéro de pièce, la désignation ainsi que des renseignements supplémentaires sur les pièces. Les renseignements concernant les numéros de série (S/N) qui se trouvent dans chaque légende doivent être utilisés pour sélectionner les informations correctes pour un moteur donné. Les informations concernant les options de remplacement sur le chantier, l'identification des composants des équipements offerts en option et les lieux d'application sont aussi fournies.

Nouvelle Caractéristique

Les lettres de la première ligne d'une légende sont présentées en police plus grande afin d'indiquer le début d'une unité d'information. Les légendes qui pourraient être requises pour des pages supplémentaires afin d'illustrer une unité d'information seront présentées en police standard et comprendront le terme (à suivre).

9. PIÈCES NON FOURNIES

Nouvelle Caractéristique

Dans certains cas, il est nécessaire d'indiquer les pièces non fournies qui sont en aval de la liste des pièces d'entretien. Les numéros des pièces non fournies dans la liste des pièces et les légendes seront en italique pour signaler qu'ils ne sont pas disponibles.

10. NUMÉROS DE RÉFÉRENCE DE LA LISTE DES PIÈCES

Nouvelle Caractéristique

Les numéros indiqués dans la colonne des numéros de références correspondent aux numéros utilisés dans les illustrations auxquelles ils sont associés. Un suffixe alphabétique peut être ajouté à un numéro de référence pour identifier la liste des articles en aval. Les numéros indiqués dans la colonne de référence de l'illustration renvoient à l'identification du numéro affiché dans le coin inférieur gauche de chaque illustration. Le numéro de référence de l'illustration pourrait être utilisé avec le numéro de référence de l'article pour déterminer le numéro de pièce correct. Il peut y avoir une omission intentionnelle d'un numéro de référence dans une liste de pièces suite à la mise à jour des informations en vue de refléter les numéros de pièces les plus récentes.

11. DÉSIGNATIONS DE PIÈCES EN RETRAIT

Lorsqu'une désignation de pièce est en retrait, cela veut dire que l'article en regard fait partie de l'ensemble sous lequel il figure.

12. LETTRES DE RÉFÉRENCE DES ILLUSTRATIONS

Quand cela est nécessaire, les illustrations comportent des lettres de référence (A, B, C, etc.) pour montrer le trajet des canalisations et faisceaux de câbles d'un point à l'autre. Elles sont utilisées également pour indiquer où relier les illustrations séparées auparavant.

13. ABRÉVIATIONS ET SYMBOLES

O.D. – Diamètre extérieur
I.D. – Diamètre intérieur
A – Ne fait pas partie de ce groupe
B – Utiliser selon besoin
C – Modification
D – Commander par mètre
E – Commander par centimètre
F – Non représenté
G – Commander par pouce
I – Voir "Hose Fabrication Guide"
M – Pièce métrique
R – Pièce rénovée éventuellement disponible
Y – Illustration séparée
Z – Non fourni séparément

NOTA:

En raison du progrès technique et des améliorations continuelles apportées au matériel, votre machine comporte peut-être des modifications qui n'apparaissent pas dans la présente publication. En cas de doute sur un détail de votre machine Caterpillar ou sur le texte de la présente publication, adressez-vous à votre concessionnaire Caterpillar.

FRAME AND BODY

8E-3299 PLATFORM GP-CAB

PIN 38K1-99999

SMCS-7283 — 100090751

NOTE	REF NO	GRAPHIC REF	PART NUMBER	QTY	PART NAME (1 2 3 4 5 6 PRODUCT LEVEL)	SEE PAGE
	1	1	3T-3953	1	PLATE AS	
	2	1	6B-3062	25	BOLT (3/8-16X.750IN)	
	3	1	6P-1075	41	WASHER-HARD (9MM THK)	
	4	1	9F-1444	2	SUPPORT AS-FOOT	
	5	1	7P-2229	19	BOLT (1/2-13X1IN)	
		1	6P-[illegible]	19	WASHER-HARD (4MM THK)	
	6	1	8E-8194	1	COVER AS-LH	
		1	9F-2979	5	NUT-WELD (3/8-16 THD)	
		1	1P-8199	1	CLIP	
	7	1	7S-2411	4	COVER	
	8		6J-0468	19	SCREW-HEAD (3/8-16X.875IN)	
	9	1	[illegible]-4674	1	COVER	
		1	8E-8972	1	GASKET	
	10	1	8E-3248	1	[illegible]	
		1	8E-3250	1	GASKET	
	11	1	3T-3939	1	HANDHOLD	
	12	1	8E-8978	1	COVER AS	
		1	9F-2978	8	NUT-WELD (3/8-16 THD)	
		1	8E-8978	1	GASKET	
	13	1	7T-0131	1	FLOORPLATE AS	
		1	1F-0748	4	NUT-WELD (1/2-13 THD)	
	14	1	7Y-8087	1	PLUG-BUTTON	
	15	1	7T-0136	1	PLATE AS	
		1	9F-2979	5	NUT-WELD (3/8-16 THD)	
	16	1	7T-8098	1	COVER	
		1	7T-0779	1	GASKET	
	17	1	3T-3951	1	PLATE AS	
	18	1	6T-8364	4	BOLT (1/4-20X.625IN)	
M		1	9T-4205	4	WASHER-HARD (2MM THK)	
	19	1	8X-8464	1	FLOOR MAT	
	20	1	8E-8946	1	MODULE AS-OPERATOR	
	21	1	3T-3934	1	HANDHOLD	
	22	1	9P-8871	2	PLUG	
	23	2	6T-8364	4	BOLT (1/4-20X.625IN)	
M		2	9T-4205	4	WASHER-HARD (2MM THK)	
	24	2	6B-3062	17	BOLT (3/8-16X.750IN)	
	25	2	6P-1075	21	WASHER-HARD (9MM THK)	
	26	2	7T-0136	1	SEAL	
	27	2	7X-0378	2	BOLT (3/4-10X5IN)	
		2	7X-0682	2	WASHER-HARD (6MM THK)	
	28	2	3T-3482	2	PLATE	
	29	2	3T-8290	1	PLATE AS	
		2	7S-4888	6	SPACER	
	30	2	3T-8291	1	SEAL	
	31	2	7S-8817	1	GASKET	
	32	2	7S-8916	1	COVER AS	
		2	2R-2376	2	WASHER	
		2	6P-8826	2	SCREW-KNURLED	
	33	2	9W-3429	1	COVER	
	34	2	8E-8897	1	COVER	
	35	2	9D-3931	8	SCREW-SOCKET HEAD	
	36	2	9W-3142	8	MOUNTING	
	37	2	9W-9027	2	PLATE	
	38	2	7X-0360	2	BOLT (7/8-9X5IN)	
		2	7X-0672	2	WASHER-HARD	
	39	2	6L-6454	4	BOLT (3/8-16X1.0IN)	
	40	2	3T-4788	1	COVER	

12 FRAME AND BODY — 1 of 4 — SELP4570-01

FRAME AND BODY

8E-3299 PLATFORM GP-CAB (contd.)

100090751

NOTE	REF NO	GRAPHIC REF	PART NUMBER	QTY	PART NAME (1 2 3 4 5 6 PRODUCT LEVEL)	SEE PAGE
	41	2	8E-2515	1	COVER	
	42	2	7T-0134	1	PLATE	
	43	2	7T-0138	1	GASKET	
	44	2	7S-8724	1	GASKET	
	45	2	7S-8723	1	COVER	
	46	[illegible]	6V-1958	2	PLUG-BUTTON	
M-METRIC PART						

SELP4570-01 — 2 of 4 — FRAME AND BODY 13

FRAME AND BODY

8E-3299 PLATFORM GP-CAB (contd.)

100090751

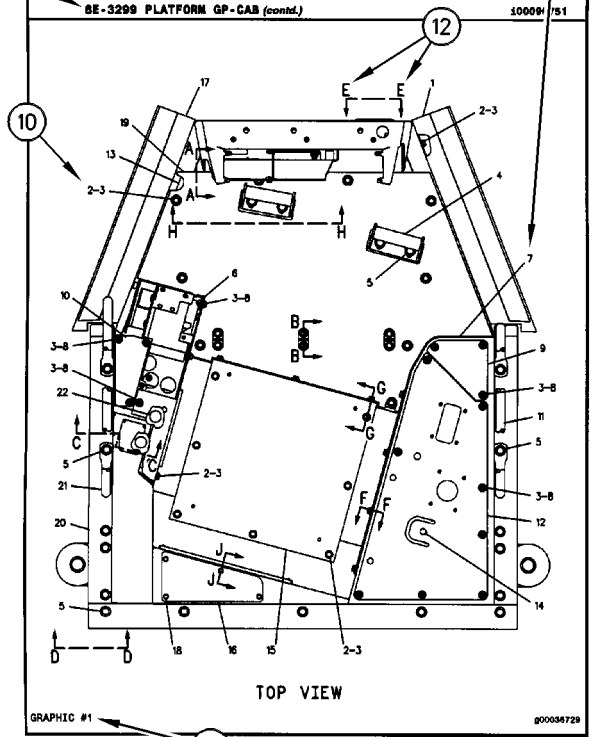

GRAPHIC #1 — g00036729

14 FRAME AND BODY — 3 of 4 — SELP4570-01

FRAME AND BODY

8E-3299 PLATFORM GP-CAB (contd.)

100090751

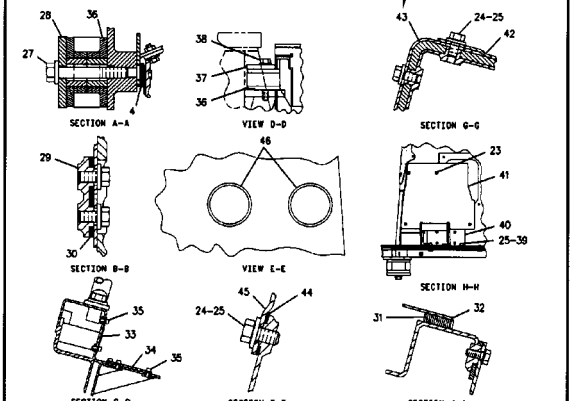

GRAPHIC #2 — g00105874

SELP4570-01 — 4 of 4 — FRAME AND BODY 16

1. MÁQUINAS

Las máquinas Caterpillar se identifican con Números de Identificación del Producto (PIN). Algunos componentes incluídos en la máquina pueden estar identificados con Números de Serie (N/S). Los componentes que tienen típicamente esta identificación incluyen motores, transmisiones, hojas topadoras y desgarradores. La máquina y el motor se identifican además con Números de Configuración y en algunos casos, Números de Modificación. Estos números están en las placas de identificación del producto o en la placa principal en la cabina del operador.

Los distribuidores Caterpillar necesitan estos números para identificar con exactitud los números de piezas de repuesto.

SIS *Nueva Característica*

A partir del primer trimestre del 2001, el Número de Identificación de Producto (PIN) de Caterpillar cambió de 8 a 17 caracteres. Para hacer más uniforme el método de identificación de equipos, Caterpillar y otros fabricantes de equipo de construcción han tomado medidas para cumplir con la versión más reciente de la norma de numeración de identificación de productos. Los Números de Identificación de Producto para máquinas que no se operan en carreteras son definidos por la norma ISO 10261. El nuevo formato PIN corresponderá a todas las máquinas y grupos electrógenos Caterpillar. Las placas y los caracteres PIN estampados en el bastidor mostrarán el PIN de 17 caracteres. El nuevo formato tendrá la apariencia siguiente:

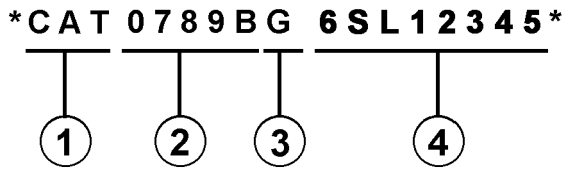

Significado de los caracteres:

1. Código de Fabricación Mundial de Caterpillar (caracteres 1-3)

2. Sección Descriptor de la Máquina (caracteres 4-8)

3. Carácter de Verificación (carácter 9)

4. Sección Indicador de la Máquina (MIS) o Número de Secuencia de Producto (caracteres 10-17). Anteriormente, estos caracteres constituían el Número de Serie.

Las máquinas y grupos electrógenos producidos antes del primer semestre del 2001 mantendrán su formato PIN de 8 caracteres.

Los componentes como motores, transmisiones, ejes, herramientas de trabajo, etc., continuarán usando un Número de Serie (S/N) de 8 caracteres.

2. COMO PEDIR REPUESTOS

⚠ ADVERTENCIA

Cuando se necesiten piezas de repuesto para este producto, Caterpillar recomienda usar piezas de repuesto Caterpillar o piezas que tengan especificaciones equivalentes incluyendo, pero sin estar limitadas a, dimensiones físicas, tipo, fortaleza y material.

El no hacer caso de esta advertencia puede llevar a fallas prematuras, daños al producto y lesiones graves o mortales.

Las piezas de repuesto Caterpillar de calidad están a la disposición de los distribuidores Caterpillar en todo el mundo. Sus existencias actualizadas incluyen todas las piezas normalmente requeridas para proteger su inversión en máquinas Caterpillar. Los distribuidores pueden tener juegos de reparación o piezas remanufacturadas para permitir la selección de la mejor alternativa de reparación en un caso en particular. Al pedir piezas de repuesto, especifique en su pedido la cantidad, el número de pieza, el nombre de la pieza y el número de serie/número de identificación del producto, de la máquina para la cual se necesitan estas piezas.

3. ORGANIZACION DEL MANUAL DE PIEZAS

La información sobre el producto, se presenta en este manual, como "elementos de información" que representan todos los componentes de un modelo específico. Las configuraciones de motores y los grupos de asientos son ejemplos de elementos de información. Los elementos de información están organizados primeramente por nombres de piezas en orden alfabético y en segundo lugar, por el número de pieza dentro de cada sección principal del manual.

4. CONTENIDO

La página de Contenido se encuentra al principio del manual. El Contenido indica cada sección del manual con una lista completa de todos los elementos de información organizados en el orden que aparecen en el manual. Los números de página proporcionan una referencia rápida a las ilustraciones detalladas de identificación de piezas y a las listas de componentes de repuesto de dichas piezas.

5. ÍNDICE DE PIEZAS DE MANTENIMIENTO

Al principio de este catálogo se encuentra un índice de los números de piezas utilizadas más frecuentemente para el mantenimiento, que incluye descripción, cantidad necesaria, lugar de utilización y número de página. Esta información está organizada alfabéticamente, por descripción de la pieza.

6. ÍNDICE

El Índice, ubicado cerca del principio del manual, es una lista en orden alfabético de todos los elementos de información incluídos en el manual. Los números de página proporcionan una referencia rápida a las ilustraciones detalladas de identificación de piezas y a las listas de componentes de repuesto de dichas piezas.

7. INDICE NUMÉRICO DE PIEZAS

Un índice numérico de piezas con el correspondiente número de página aparece al final de este catálogo.

8. TÍTULOS

Los títulos ubicados al principio de cada elemento de información identifican el número y el nombre de la pieza junto con información descriptiva. Se debe usar información sobre los Números de Identificación de Pieza (PIN) y los números de serie (S/N) para seleccionar la información que corresponda a una máquina en particular. También se suministra información sobre las opciones de reparación en el campo, la identificación de componentes de accesorios optativos y el lugar de ubicación de la pieza ("es parte de").

La primera línea del título se muestra con un tipo de letra más grande para indicar el comienzo de un elemento de información. Si se requieren páginas adicionales para ilustrar un elemento de información, los títulos se muestran con un tipo de letra normal y la continuación se indica entre paréntesis.

9. PIEZAS QUE NO SE SUMINISTRAN COMO REPUESTO

En algunos casos es necesario indicar piezas que no se suministran como repuesto pero que pueden estar conectadas a listas de componentes de otras piezas de repuesto. En tal caso, dichas piezas se muestran en cursiva para indicar que no son piezas disponibles.

10. NÚMEROS DE REFERENCIA

Los números en la columna de No. de Referencia corresponden a los números indicados en la ilustración que pertenece a ese número de pieza. Los números que tienen un sufijo alfabético identifican artículos de las listas de componentes de piezas. Los números en la columna de Referencia de la ilustración se identifican en la esquina inferior izquierda de cada ilustración. Para determinar el número de pieza correcto se puede utilizar tanto el No. de Referencia de la ilustración como el No. de Referencia del artículo. A medida que se actualiza la información para indicar los más recientes números de piezas de repuesto, puede omitirse intencionalmente un No. de Referencia en una lista de componentes de piezas.

11. NOMBRES DE PIEZA SANGRADOS

Cuando el nombre de una pieza está sangrado en una lista, significa que esta pieza forma parte del grupo o conjunto del renglón inmediatamente superior.

12. LETRAS DE REFERENCIA DE ILUSTRACIONES

Las ilustraciones contienen algunas veces letras de referencia (A, B, C etc.) cuyo propósito es seguir el trayecto de líneas y mazos de cables de un punto a otro. También se utilizan para mostrar dónde volver a unir ilustraciones que se habían separado.

13. ABREVIATURAS Y SIMBOLOS

O.D. – Diámetro exterior
I.D. – Diámetro interior
A – No es pieza de este grupo
B – Utilizado según la demanda
C – Indica cambio
D – Se pide por metro
E – Se pide por centímetro
F – No se muestra
G – Se pide por pulgada
I – Ver "Hose Fabrication Guide"
M – Pieza métrica
R – Puede estar disponible como pieza remanufacturada
Y – Ilustración separada
Z – No se suministra por separado

SIS *Nueva Característica*

14.<END>

Este símbolo indica el final de un elemento de información.

NOTA:

Las contínuas mejoras y adelantos en diseño podrían originar cambios a su máquina que no se incluyen en esta publicación. Cuando tenga alguna pregunta acerca de su producto Caterpillar o de esta publicación, consulte al distribuidor Caterpillar para obtener la información más reciente.

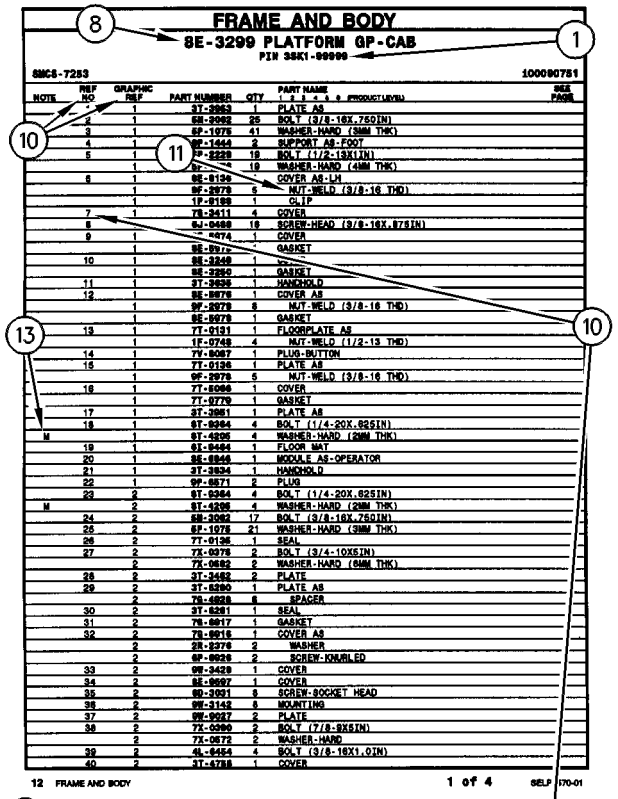

FRAME AND BODY

8E-3299 PLATFORM GP-CAB

PIN 38K1-99999

SMCS-7283 100090751

NOTE	REF NO	GRAPHIC REF	PART NUMBER	QTY	PART NAME 1 2 3 4 5 6 (PRODUCT LEVEL)	SEE PAGE
	1	1	3T-3953	1	PLATE AS	
	2	1	6B-3062	25	BOLT (3/8-16X.750IN)	
	3	1	6P-1075	41	WASHER-HARD (9MM THK)	
	4	1	9F-1444	2	SUPPORT AS-FOOT	
	5	1	7P-2229	19	BOLT (1/2-13X1IN)	
		1	6P-[illegible]	19	WASHER-HARD (4MM THK)	
	6	1	8E-8194	1	COVER AS-LH	
		1	9F-2979	5	NUT-WELD (3/8-16 THD)	
		1	1P-8199	1	CLIP	
	7	1	7S-2411	4	COVER	
	8		6J-0468	19	SCREW-HEAD (3/8-16X.875IN)	
	9	1	[illegible]-4674	1	COVER	
		1	8E-8972	1	GASKET	
	10	1	8E-3248	1	[illegible]	
		1	8E-3250	1	GASKET	
	11	1	3T-3939	1	HANDHOLD	
	12	1	8E-8978	1	COVER AS	
		1	9F-2978	8	NUT-WELD (3/8-16 THD)	
		1	8E-8979	1	GASKET	
	13	1	7T-0131	1	FLOORPLATE AS	
		1	1F-0748	4	NUT-WELD (1/2-13 THD)	
	14	1	7Y-8087	1	PLUG-BUTTON	
	15	1	7T-0136	1	PLATE AS	
		1	9F-2979	5	NUT-WELD (3/8-16 THD)	
	16	1	7T-8098	1	COVER	
		1	7T-0779	1	GASKET	
	17	1	3T-3951	1	PLATE AS	
	18	1	6T-8364	4	BOLT (1/4-20X.625IN)	
M		1	6T-4205	4	WASHER-HARD (2MM THK)	
	19	1	6I-8464	1	FLOOR MAT	
	20	1	8E-8946	1	MODULE AS-OPERATOR	
	21	1	3T-3934	1	HANDHOLD	
	22	1	9P-8871	2	PLUG	
	23	2	6T-8364	4	BOLT (1/4-20X.625IN)	
M		2	6T-4205	4	WASHER-HARD (2MM THK)	
	24	2	6B-3062	17	BOLT (3/8-16X.750IN)	
	25	2	6P-1075	21	WASHER-HARD (9MM THK)	
	26	2	7T-0136	1	SEAL	
	27	2	7X-0378	2	BOLT (3/4-10X5IN)	
		2	7X-0682	2	WASHER-HARD (6MM THK)	
	28	2	3T-3482	2	PLATE	
	29	2	3T-8290	1	PLATE AS	
		2	7S-4838	6	SPACER	
	30	2	3T-8291	1	SEAL	
	31	2	7S-8817	1	GASKET	
	32	2	7S-8916	1	COVER AS	
		2	2R-2376	2	WASHER	
		2	6P-8826	2	SCREW-KNURLED	
	33	2	9W-3429	1	COVER	
	34	2	8E-8937	1	COVER	
	35	2	9D-3931	8	SCREW-SOCKET HEAD	
	36	2	9W-3142	8	MOUNTING	
	37	2	9W-9027	2	PLATE	
	38	2	7X-0360	2	BOLT (7/8-9X6IN)	
		2	7X-0672	2	WASHER-HARD	
	39	2	6L-4454	4	BOLT (3/8-16X1.0IN)	
	40	2	3T-4788	1	COVER	

12 FRAME AND BODY 1 of 4 SELP4570-01

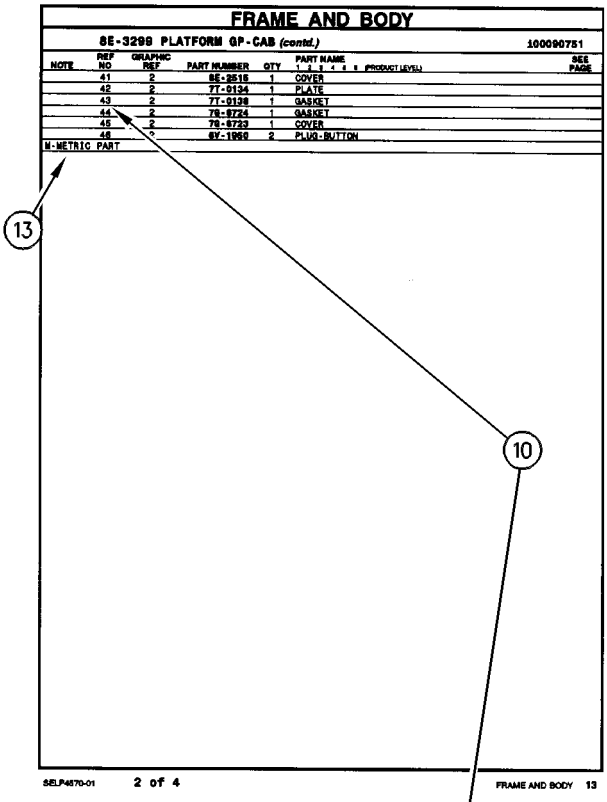

FRAME AND BODY

8E-3299 PLATFORM GP-CAB (contd.) 100090751

NOTE	REF NO	GRAPHIC REF	PART NUMBER	QTY	PART NAME 1 2 3 4 5 6 (PRODUCT LEVEL)	SEE PAGE
	41	2	8E-2515	1	COVER	
	42	2	7T-0134	1	PLATE	
	43	2	7T-0138	1	GASKET	
	44	2	7S-8724	1	GASKET	
	45	2	7S-8723	1	COVER	
	46	[illegible]	6V-1958	2	PLUG-BUTTON	
M-METRIC PART						

SELP4570-01 2 of 4 FRAME AND BODY 13

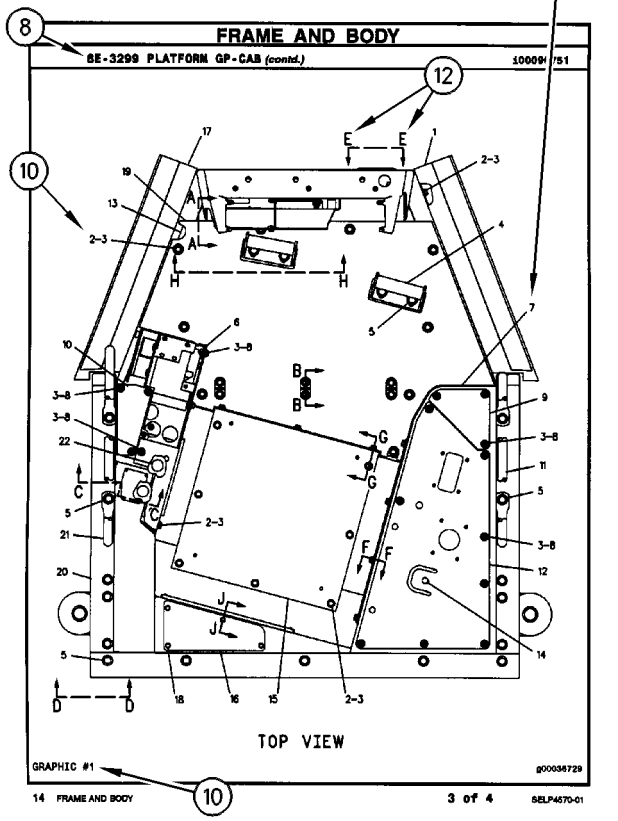

FRAME AND BODY

8E-3299 PLATFORM GP-CAB (contd.) 100090751

GRAPHIC #1 g00036729

TOP VIEW

14 FRAME AND BODY 3 of 4 SELP4570-01

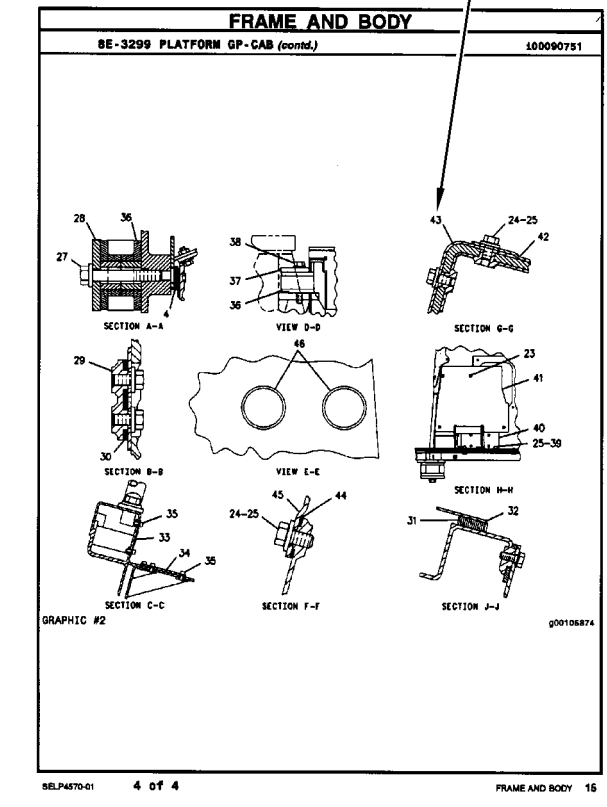

FRAME AND BODY

8E-3299 PLATFORM GP-CAB (contd.) 100090751

SECTION A-A

VIEW D-D

SECTION G-G

SECTION B-B

VIEW E-E

SECTION H-H

SECTION C-C

SECTION F-F

SECTION J-J

GRAPHIC #2 g00105874

SELP4570-01 4 of 4 FRAME AND BODY 16

INFORMAÇÃO GERAL

1. IDENTIFICAÇÃO DA MÁQUINA

As máquinas Caterpillar são identificadas pelos Números de Informação do Produto (PIN). Alguns componentes incluídos numa máquina podem ser identificados por Números de Série (S/N). Componentes típicos que serão enumerados com números de série incluem motores, transmissões, lâminas e ríperes. Além do número de série, a máquina e o motor são ainda identificados por números de arranjo e, em alguns casos, números de modificações. Tais números encontram-se na(s) placa(s) de identificação do produto e na placa mestre no compartimento do operador.

Novidades

A partir do primeiro trimestre de 2001 o Número de Identificação de Produto da Caterpillar (PIN) precisa ser mudado de 8 para 17 caracteres. Esforçando-se para fornecer uma identificação uniforme de equipamentos, a Caterpillar e outros fabricantes de equipamento de construção estão mudando para atender a versão mais atualizada do padrão de identificação de produtos. Os números de PIN para produtos de aplicações não rodoviárias são definidos pela ISO 10261. O novo formato de número PIN será adotado em todas as máquinas e grupos geradores Caterpillar. As placas e as marcações do chassi mostrarão os 17 dígitos de PIN. O novo formato terá a seguinte disposição:

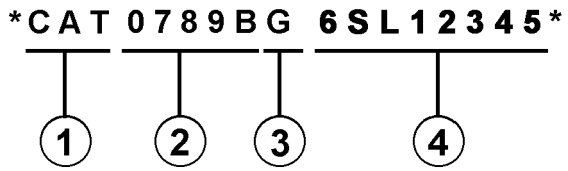

Onde:

1. Código de Fabricação Mundial da Caterpillar (dígitos 1-3)

2. Descrição da Máquina (dígitos 4-8)

3. Dígito de Verificação (dígito 9)

4. Seção de Indicador da Máquina (MIS) ou Número de Seqüência de Produto (dígitos 10-17). Estes eram anteriormente chamados de Número de Série.

Máquinas e grupos geradores produzidos antes do primeiro trimestre de 2001 manterão o formato de 8 caracteres de PIN.

Componentes como motores, transmissões, eixos, ferramentas de trabalho, etc. continuarão a usar Número de Série (S/N) com oito caracteres.

2. COMO OBTER PEÇAS

⚠ CUIDADO

Quando peças de substituição são exigidas para este produto, a Caterpillar recomenda a utilização de peças de substituição Caterpillar ou peças com as especificações equivalentes incluindo, mas não limitadas, à dimensões físicas, tipos, resistência e materiais.

A inobservância desta advertência poderá resultar em falhas prematuras, danos ao produto, ferimentos ou morte.

As Peças de Reposição de Qualidade Caterpillar encontram-se disponíveis nos revendedores Caterpillar no mundo inteiro. Seus estoques de peças são atualizados e incluem todas as peças normalmente necessárias para proteger seu investimento em máquinas Caterpillar. Alguns revendedores podem oferecer jogos de reparo ou peças de troca/remanufaturadas disponíveis como uma opção da alternativa de reparo mais eficaz para uma situação específica. Ao encomendar peças, seu pedido deve especificar a quantidade, o número e o nome da peça e o número de série/número de identificação do produto referentes à máquina para a qual as peças se destinam.

3. ORGANIZAÇÃO DO MANUAL DE PEÇAS

A informação do produto neste manual é apresentada em forma de "elementos de informação" que representam todos os componentes para o modelo específico. Arranjo de Motor e Grupo de Assento são exemplos de elementos de informação. Os elementos de informação são organizados em ordem alfabética por nome de peça ou secundariamente, por número de peça incluído em cada seção principal do manual.

4. LISTA DE CONTEÚDOS

A Lista de Conteúdos (TOC) se encontra no princípio do manual. A Lista de Conteúdos (TOC) relaciona em cada seção do manual uma lista completa com todos os elementos de informação organizados conforme aparecem no manual. Números de página são fornecidos para que se tenha referência rápida de ilustrações de peças detalhadas e listas de conteúdos que podem receber serviço de manutenção.

5. ÍNDICE DE PEÇAS DE MANUTENÇÃO

O Índice de Peças de Manutenção, localizado perto do princípio do manual, faz referência aos números de peça de manutenção usados com maior frequência, fornecendo uma descrição, a quantidade, o uso e o número de página. Esta informação é organizada com a descrição da peça em ordem alfabética.

6. ÍNDICE

O Índice localizado perto do princípio do manual, consiste de uma lista em ordem alfabética de todos os elementos de informação incluídos no manual. Números de página são fornecidos para que se tenha referência rápida de ilustrações de peças detalhadas e listas de conteúdos que podem receber serviço de manutenção.

7. ÍNDICE DE NÚMERO DE PEÇA

Um índice numérico relacionando todos os números de peça e a(s) página(s) correspondentes, aparece no final do manual.

8. LEGENDAS

As legendas localizadas no início de cada elemento de informação identificam o número e o nome de peça, juntamente com informação descritiva adicional. Informações sobre o Número de Informação do Produto (PIN) e o Número de Série (S/N) encontradas em cada legenda devem ser usadas para selecionar a informação correta sobre uma máquina específica. Opções de substituição no campo, identificação de componentes de acessórios opcionais e informações sobre onde são utilizados ("parte de") são também fornecidas.

A primeira linha de uma legenda é indicada em tipo maior para indicar o princípio de um elemento de informação. Legendas para páginas adicionais que podem ser necessárias para ilustrar um elemento de informação serão apresentadas em tipo padrão e incluirão o termo *(continua)* .

9. NÃO DISPONÍVEL SEPARADAMENTE

Em alguns casos, é necessário mostrar peças não disponíveis separadamente que têm uma ligação com listas de conteúdos de nível inferior que podem receber serviço de manutenção. Os números de peça destes componentes não disponíveis aparecerão em *itálico* , a fim de indicar que não estão disponíveis.

10. NÙMEROS DE REFERÊNCIA À LISTA DE PEÇAS

Os números indicados na coluna Ref No (No. de Referência) correspondem-se aos números usados no(s) gráfico(s) correspondente(s). Um sufixo com letras pode ser acrescentado a um número de referência para identificar itens de conteúdo de nível inferior. Os números indicados na coluna Graphic Ref (Referência de Gráfico) referem-se ao identificador de número de gráfico presente no canto esquerdo inferior de cada ilustração. O número de Referência de Gráfico pode ser usado em combinação com o item Ref No para determinar-se o número de peça correto. Poderá haver omissão intencional de um número de referência (Ref No) de uma lista de conteúdos uma vez que as informações são atualizadas para refletir os números de peça mais recentes que podem receber serviço de manutenção.

11. NOMES DE PEÇAS DESALINHADOS

Quando um nome de peça encontra-se desalinhado numa lista de peças, significa que tal item faz parte do (está incluído no) grupo ou conjunto sob o qual está relacionado.

12. LETRAS DE REFERÊNCIA NAS ILUSTRAÇÕES

Quando necessário, as ilustrações contêm letras de referência (A, B, C, etc.) que são utilizadas para seguir tubulações e cabos elétricos de um ponto a outro. Também foram utilizadas para indicar onde se pode reconectar as ilustrações que foram separadas.

13. ABREVIAÇÕES E SÍMBOLOS

O.D. – "Outside Diameter" (Diâmetro Externo)
I.D. – "Inside Diameter" (Diâmetro Interno)
A – Não faz parte deste grupo
B – Use conforme necessário
C – Indica modificação
D – Vendido por metro
E – Vendido por centímetro
F – Não ilustrado
G – Vendido por polegada
I – Consulte o seu revendedor quanto a mangueira
M – Peça métrica
R – Peça remanufaturada pode estar disponível; consulte o seu revendedor Cat
Y – Ilustração separada
Z – Não disponível separadamente

SIS *Novidades*

14. <END>

Este símbolo indica o final de um elemento de informação.

NOTA:

Os contínuos aperfeiçoamentos e avanços no projeto do produto podem ocasionar modificações em sua máquina que talvez ainda não estejam incluídas nesta publicação. Sempre que surgirem dúvidas quanto a um produto Caterpillar ou quanto à presente publicação, consulte o seu revendedor Caterpillar para obter as informações mais recentes disponíveis.

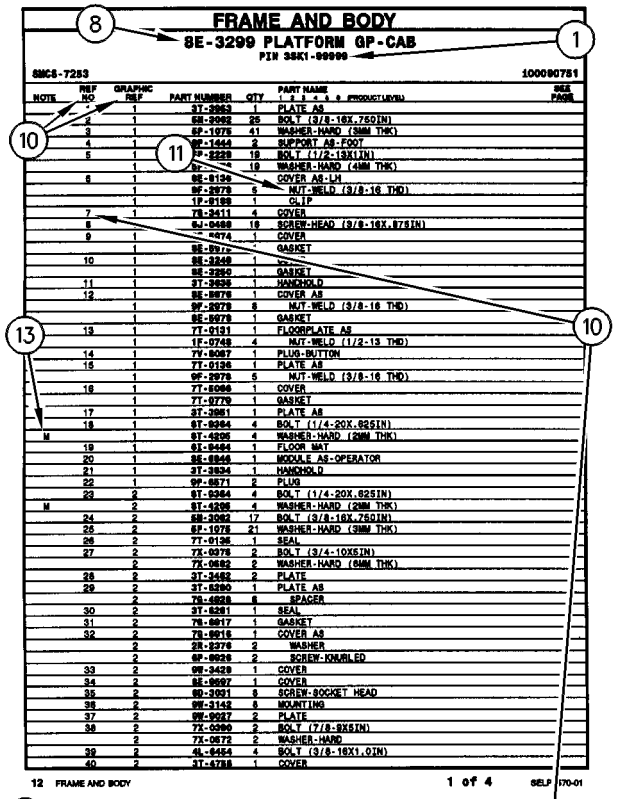

FRAME AND BODY

8E-3299 PLATFORM GP-CAB

PIN 38K1-99999

SMCS-7283 100090751

NOTE	REF NO	GRAPHIC REF	PART NUMBER	QTY	PART NAME (1 2 3 4 5 6 PRODUCT LEVEL)	SEE PAGE
	1	1	3T-3953	1	PLATE AS	
	2	1	6B-3062	25	BOLT (3/8-16X.750IN)	
	3	1	6P-1075	41	WASHER-HARD (9MM THK)	
	4	1	9F-1444	2	SUPPORT AS-FOOT	
	5	1	6P-2229	19	BOLT (1/2-13X1IN)	
		1	6P-[illegible]	19	WASHER-HARD (4MM THK)	
	6	1	8E-8134	1	COVER AS-LH	
		1	9F-2979	5	NUT-WELD (3/8-16 THD)	
		1	1P-8188	1	CLIP	
	7	1	7S-3411	4	COVER	
	8		6J-0468	19	SCREW-HEAD (3/8-16X.875IN)	
	9	1	[illegible]-4674	1	COVER	
		1	8E-8972	1	GASKET	
	10	1	8E-3248	1	[illegible]	
		1	8E-3250	1	GASKET	
	11	1	3T-3939	1	HANDHOLD	
	12	1	8E-8978	1	COVER AS	
		1	9F-2978	8	NUT-WELD (3/8-16 THD)	
		1	8E-8978	1	GASKET	
	13	1	7T-0131	1	FLOORPLATE AS	
		1	1F-0748	4	NUT-WELD (1/2-13 THD)	
	14	1	7Y-8087	1	PLUG-BUTTON	
	15	1	7T-0136	1	PLATE AS	
		1	9F-2979	5	NUT-WELD (3/8-16 THD)	
	16	1	7T-8098	1	COVER	
		1	7T-0779	1	GASKET	
	17	1	3T-3951	1	PLATE AS	
	18	1	6T-8364	4	BOLT (1/4-20X.625IN)	
M		1	9T-4205	4	WASHER-HARD (2MM THK)	
	19	1	8X-8464	1	FLOOR MAT	
	20	1	8E-8946	1	MODULE AS-OPERATOR	
	21	1	3T-3934	1	HANDHOLD	
	22	1	9P-8871	2	PLUG	
	23	2	6T-8364	4	BOLT (1/4-20X.625IN)	
M		2	9T-4205	4	WASHER-HARD (2MM THK)	
	24	2	6B-3062	17	BOLT (3/8-16X.750IN)	
	25	2	6P-1075	21	WASHER-HARD (9MM THK)	
	26	2	7T-0136	1	SEAL	
	27	2	7X-0378	2	BOLT (3/4-10X5IN)	
		2	7X-0682	2	WASHER-HARD (6MM THK)	
	28	2	3T-3482	2	PLATE	
	29	2	3T-8290	1	PLATE AS	
		2	7S-4838	6	SPACER	
	30	2	3T-8291	1	SEAL	
	31	2	7S-8817	1	GASKET	
	32	2	7S-8916	1	COVER AS	
		2	2R-2376	2	WASHER	
		2	6P-8826	2	SCREW-KNURLED	
	33	2	9W-3429	1	COVER	
	34	2	8E-8937	1	COVER	
	35	2	9D-3931	8	SCREW-SOCKET HEAD	
	36	2	9W-3142	8	MOUNTING	
	37	2	9W-9027	2	PLATE	
	38	2	7X-0360	2	BOLT (7/8-9X5IN)	
		2	7X-0672	2	WASHER-HARD	
	39	2	4L-4454	4	BOLT (3/8-16X1.0IN)	
	40	2	3T-4788	1	COVER	

12 FRAME AND BODY 1 of 4 SELP4570-01

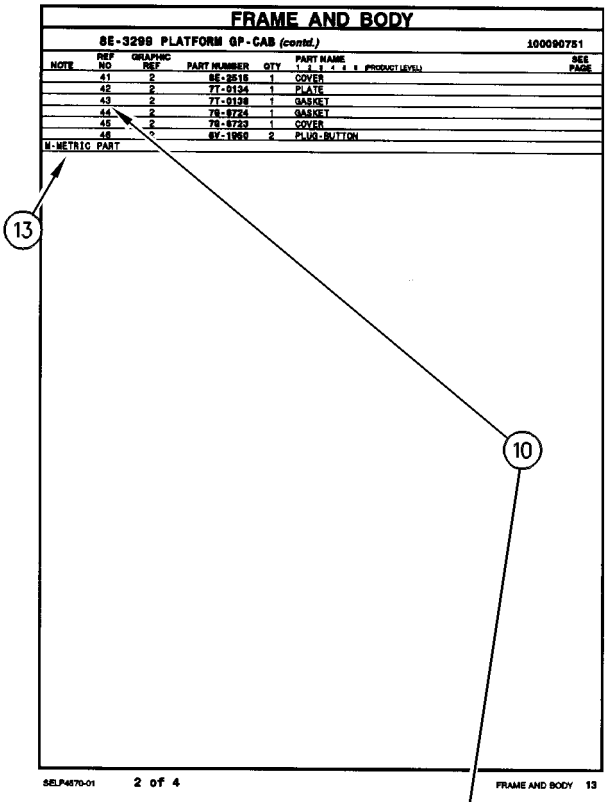

FRAME AND BODY

8E-3299 PLATFORM GP-CAB (contd.) 100090751

NOTE	REF NO	GRAPHIC REF	PART NUMBER	QTY	PART NAME (1 2 3 4 5 6 PRODUCT LEVEL)	SEE PAGE
	41	2	8E-2515	1	COVER	
	42	2	7T-0134	1	PLATE	
	43	2	7T-0138	1	GASKET	
	44	2	7S-8724	1	GASKET	
	45	2	7S-8723	1	COVER	
	46	[illegible]	6V-1958	2	PLUG-BUTTON	
M-METRIC PART						

SELP4570-01 2 of 4 FRAME AND BODY 13

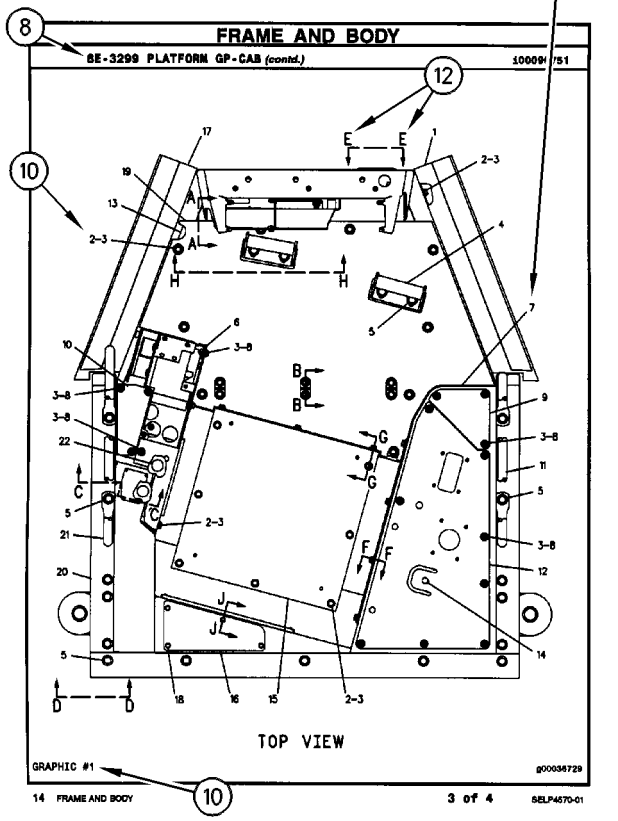

FRAME AND BODY

8E-3299 PLATFORM GP-CAB (contd.) 100090751

TOP VIEW

GRAPHIC #1 g00036729

14 FRAME AND BODY 3 of 4 SELP4570-01

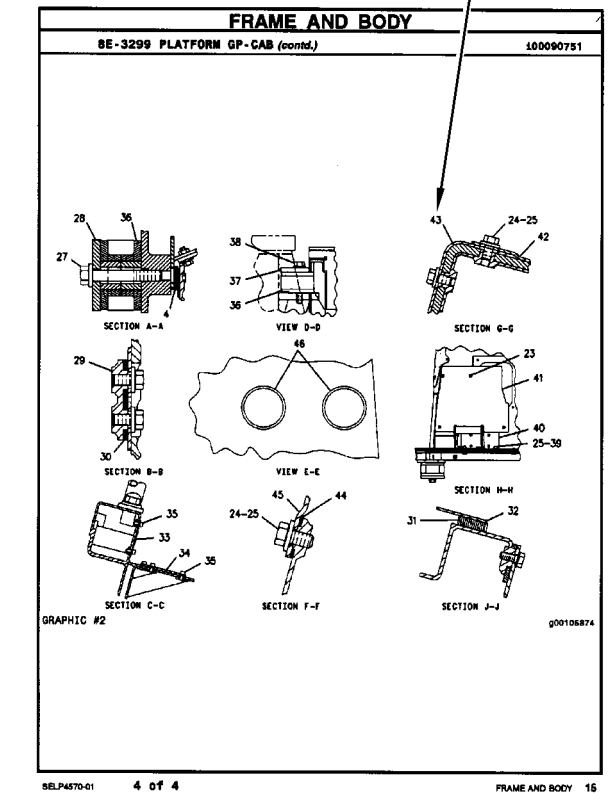

FRAME AND BODY

8E-3299 PLATFORM GP-CAB (contd.) 100090751

SECTION A-A

VIEW D-D

SECTION G-G

SECTION B-B

VIEW E-E

SECTION H-H

SECTION C-C

SECTION F-F

SECTION J-J

GRAPHIC #2 g00105874

SELP4570-01 4 of 4 FRAME AND BODY 16

ALLGEMEINE HINWEISE

1. MASCHINENKENNZEICHNUNG

Caterpillar-Maschinen sind mit PRODUCT IDENTIFICATION NUMBERS (PIN) (Produkt-Identnummern) gekennzeichnet. Einige Baugruppen, z.B. Motoren, Getriebe, Planierschilde und Aufreißer, sind mit SERIAL NUMBERS (S/N) (Seriennummern) gekennzeichnet. An der Maschine und am Motor befinden sich außerdem ARRANGEMENT NUMBERS (Ausrüstungsnummern) sowie in einigen Fällen MODIFICATION NUMBERS (Änderungsnummern). Sie befinden sich auf den PIN-Schildern und auf dem Typenschild im Fahrerhaus.

Bei Ersatzteilbestellungen müssen dem Händler alle diese Nummern zur Verfügung gestellt werden.

SIS ***Neu im Parts Manual***

Vom ersten Quartal 2001 ab wurde die Caterpillar Produkt-Identnummer (PIN) von 8 auf 17 Zeichen geändert. Um zur Standardisierung der Produkt-Identnummer beizutragen, sind Caterpillar und andere Baumaschinenhersteller bestrebt, die aktuellste Norm zur Produkt-Identnummerierung einzuführen. Produkt-Identnummern für Baumaschinen sind durch ISO 10261 definiert. Das neue Format der Produkt-Identnummern gilt für alle Caterpillar-Maschinen und -Stromaggregate. Die Produkt-Identschilder und -Identrahmenmarkierung enthalten die aus 17 Zeichen bestehende Identnummer. Das neue Format hat folgende Abschnitte:

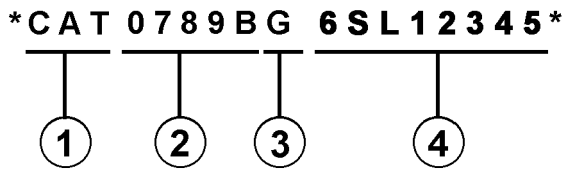

Abschnitte:

1. Caterpillars weltweiter Herstellungscode (Zeichen 1-3)

2. Modell (Zeichen 4-8)

3. Kontrollzeichen (Zeichen 9)

4. Maschinenspezifische Kennung (MIS) oder Produktsequenznummer (Zeichen 10-17). Diese wurde früher als Seriennummer bezeichnet.

Für vor dem ersten Quartal 2001 hergestellte Maschinen und Stromaggregate wird das aus 8 Zeichen bestehende PIN-Format beibehalten.

Bauteile wie z.B. Motoren, Getriebe, Achsen sowie Arbeitsgeräte werden weiterhin eine aus 8 Zeichen bestehende Seriennummer (S/N) aufweisen.

2. BESTELLEN VON ERSATZTEILEN

⚠ WARNUNG

Wenn für diese Maschine Ersatzteile benötigt werden, empfiehlt Caterpillar, ausschließlich Caterpillar-Ersatzteile oder solche zu verwenden, die die gleichen technischen Merkmale hinsichtlich Typ, Festigkeit, Werkzeugeigenschaften und die gleichen Maße aufweisen.

Bei Nichtbeachtung dieser Warnung besteht Verletzungs- oder sogar Lebensgefahr! Ferner kann Nichtbeachtung vorzeitige Ausfälle der Teile und Beschädigung der Maschine zur Folge haben.

Original Caterpillar-Ersatzteile können weltweit bei jedem Caterpillar-Händlern bestellt werden. Die umfangreichen Händlerlager enthalten normalerweise alle Teile, die Sie für Ihre Caterpillar-Maschine benötigen. Einige Händler bieten Reparatursätze, Austausch- oder werküberholte Teile an, so daß Sie eine Auswahl unter verschiedenen Reparaturmöglichkeiten treffen können. Ihre Bestellung muß folgende Angaben enthalten: Anzahl der benötigten Teile, Bestellnummer, Bezeichnung des Teils, Serien-Nr./Produkt-Ident-Nr., Ausrüstungs-Nr. und Änderungs-Nr. der Maschine, für die diese Teile benötigt werden.

3. AUFBAU DES PARTS MANUAL

Die Produktinformationen für alle Komponenten eines bestimmten Modells sind in INFORMATION ELEMENTS (Informationseinheiten) gegliedert. ENGINE ARRANGEMENT (Motorausführung) und SEAT GROUP (Fahrersitz) sind Beispiele für solche Informationseinheiten. Sie sind innerhalb jeder Gruppe alphabetisch, entsprechend der Ersatzteilbezeichnung, und zusätzlich numerisch, entsprechend der Ersatzteilnummer, geordnet.

4. INHALTSVERZEICHNIS

Das Inhaltsverzeichnis befindet sich am Anfang des Buches. Im Inhaltsverzeichnis werden die einzelnen Abschnitte des Buches aufgeführt. Die Abschnitte enthalten eine vollständige Aufstellung aller Informationseinheiten. Diese sind entsprechend ihrem Erscheinen im Buch geordnet. Das Inhaltsverzeichnis enthält Seitenangaben für Schnellverweise auf detaillierte Abbildungen und Teillisten.

ALLGEMEINE HINWEISE

5. INDEX FÜR WARTUNGSTEILE

Der Index für Wartungsteile vorn im Buch enthält die Bestellnummern, Seitenangaben, Mengenangaben und Informationen über den Einsatzbereich für die am häufigsten benötigten Ersatzteile. Die Angaben sind alphabetisch entsprechend der Teilebezeichnung geordnet.

6. INDEX

Der Index vorn im Buch enthält eine alphabetische Liste aller Informationseinheiten. Er enthält Seitenangaben für Schnellverweise auf detaillierte Abbildungen und Teillisten.

7. INDEX FÜR BESTELLNUMMERN

Hinten im Buch befindet sich ein numerischer Index, mit allen Bestellnummern und dem Hinweis auf die Seite, auf der sich die betreffende Abbildung befindet.

8. ÜBERSCHRIFTEN

Die Überschriften, die sich am Anfang jeder der Informationseinheiten befinden, enthalten Bestellnummern, Ersatzteilbezeichnungen und zusätzliche beschreibende Informationen. Produkt-Ident- und Seriennummern in den Überschriften sollten zur Auswahl der richtigen Informationen für die betreffende Maschine verwendet werden. Die Überschriften enthalten außerdem Informationen über möglichen Außendienstersatz, mögliche Baugerätekomponenten und die Baugruppe, zu der das Teil gehört.

Die erste Zeile einer Überschrift erscheint in einer größeren Schriftart, um den Anfang einer Informationseinheit zu kennzeichnen. Überschriften für zusätzliche Seiten, die zur Erläuterung einer Informationseinheit notwendig sind, erscheinen in normaler Schriftart und enthalten den Begriff "(contd.)".

9. NICHT EINZELN LIEFERBARE TEILE

In einigen Fällen ist es notwendig nicht lieferbare Teile, die selbst mit einer eigenen Teilliste im Buch vertreten sind, aufzuführen. Die Bestellnummern dieser nicht einzeln lieferbaren Teile erscheinen kursiv, wodurch angezeigt wird, daß sie nur in Verbindung mit anderen Teilen lieferbar sind.

10. REFERENZNUMMER FÜR ERSATZTEILE

Die Zahlen, die in der Spalte "Ref No" aufgeführt sind, stimmen mit den Zahlen in den beigefügten Abbildungen überein. Ein Buchstaben-Suffix kann zu einer Referenznummer hinzugefügt werden, um zu kennzeichnen, daß das Teil mit einer eigenen Teilliste im Buch aufgeführt ist. Die in der Spalte "Graphic Ref" angeführten Zahlen verweisen auf die Identifikationsnummer der Abbildung, die sich in der linken unteren Ecke der Abbildung befindet. Diese Nummer kann zusammen mit der Referenznummer des Teils angegeben werden, um die richtige Ersatzteilnummer zu ermitteln. Referenznummern können absichtlich weggelassen werden, da die Nummern der lieferbaren Ersatzteile ständig aktualisiert werden.

11. EINGERÜCKTE BEZEICHNUNGEN

Wenn eine Bezeichnung eingerückt ist, wird dadurch angezeigt, daß das Teil zu einer Baugruppe gehört, unter deren Bezeichnung es eingerückt ist.

12. REFERENZBUCHSTABEN

Falls erforderlich sind in den Abbildungen Referenzbuchstaben enthalten (z.B. A, B, C, usw.), die Leitungen und Kabelbäume von einem Punkt zum anderen verfolgen. Außerdem geben sie die Stelle an, an der getrennte Abbildungen fortgesetzt werden.

13. ABKÜRZUNGEN UND SYMBOLE

O.D. – Außendurchmesser
I.D. – Innendurchmesser
A – kein Teil dieser Gruppe
B – nach Bedarf verwenden
C – Hinweis auf eine Änderung
D – in Meter-Länge bestellen
E – in Zentimeter-Länge bestellen
F – nicht gezeigt
G – in Zoll-Länge bestellen
I – siehe "Hose Fabrication Guide"
M – metrisches Teil
R – werküberholtes Teil unter Umständen lieferbar
Y – separate Abbildung
Z – nicht einzeln lieferbar

SIS *Neu im Parts Manual*

14. <END>

Dieses Symbol zeigt das Ende eines Informationselements an.

ANMERKUNG:

Ständig vorgenommene Verbesserungen und Weiterentwicklungen an Ihrer Maschine können Änderungen verursachen, die in der vorliegenden Ausgabe noch nicht berücksichtigt sind. Fragen zu Ihrer Caterpillar-Maschine oder diesem Ersatzteilbuch beantwortet Ihr Caterpillar-Händler.

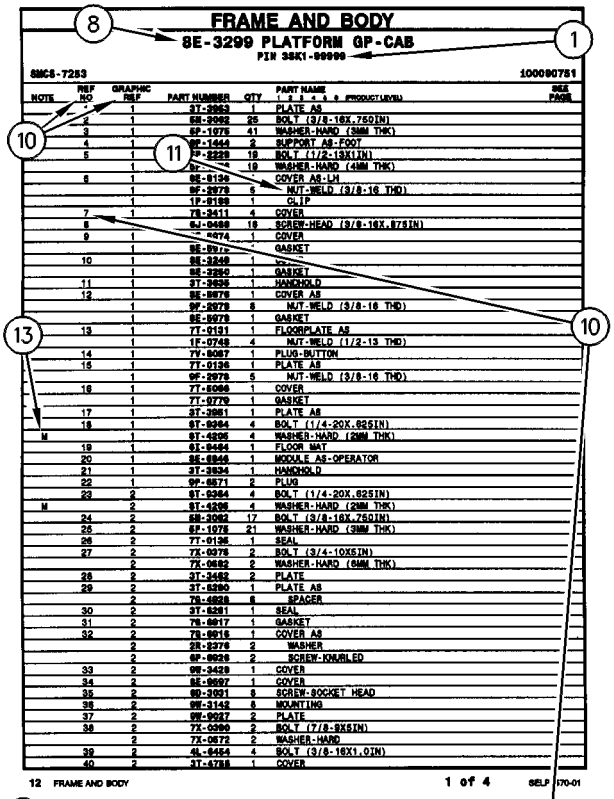

FRAME AND BODY

8E-3299 PLATFORM GP-CAB

PIN 38K1-99999

SMCS-7283 100090751

NOTE	REF NO	GRAPHIC REF	PART NUMBER	QTY	PART NAME 1 2 3 4 5 6 (PRODUCT LEVEL)	SEE PAGE
	1	1	3T-3953	1	PLATE AS	
	2	1	6B-3062	25	BOLT (3/8-16X.750IN)	
	3	1	6P-1075	41	WASHER-HARD (9MM THK)	
	4	1	9F-1444	2	SUPPORT AS-FOOT	
	5	1	7P-2229	19	BOLT (1/2-13X1IN)	
		1	6P-[illegible]	19	WASHER-HARD (4MM THK)	
	6	1	8E-8194	1	COVER AS-LH	
		1	9F-2979	5	NUT-WELD (3/8-16 THD)	
		1	1P-8199	1	CLIP	
	7	1	7S-3411	4	COVER	
	8		6J-0468	19	SCREW-HEAD (3/8-16X.875IN)	
	9	1	[illegible]-4674	1	COVER	
		1	8E-8972	1	GASKET	
	10	1	8E-3248	1	[illegible]	
		1	8E-3250	1	GASKET	
	11	1	3T-3939	1	HANDHOLD	
	12	1	8E-8978	1	COVER AS	
		1	9F-2978	8	NUT-WELD (3/8-16 THD)	
		1	8E-8978	1	GASKET	
	13	1	7T-0131	1	FLOORPLATE AS	
		1	1F-0748	4	NUT-WELD (1/2-13 THD)	
	14	1	7Y-8087	1	PLUG-BUTTON	
	15	1	7T-0136	1	PLATE AS	
		1	9F-2979	5	NUT-WELD (3/8-16 THD)	
	16	1	7T-8098	1	COVER	
		1	7T-0779	1	GASKET	
	17	1	3T-3951	1	PLATE AS	
	18	1	6T-8364	4	BOLT (1/4-20X.625IN)	
M		1	6T-4205	4	WASHER-HARD (2MM THK)	
	19	1	6X-8464	1	FLOOR MAT	
	20	1	8E-8946	1	MODULE AS-OPERATOR	
	21	1	3T-3934	1	HANDHOLD	
	22	1	9P-8871	2	PLUG	
	23	2	6T-8364	4	BOLT (1/4-20X.625IN)	
M		2	6T-4205	4	WASHER-HARD (2MM THK)	
	24	2	6B-3062	17	BOLT (3/8-16X.750IN)	
	25	2	6P-1075	21	WASHER-HARD (9MM THK)	
	26	2	7T-0136	1	SEAL	
	27	2	7X-0378	2	BOLT (3/4-10X5IN)	
		2	7X-0682	2	WASHER-HARD (6MM THK)	
	28	2	3T-3482	2	PLATE	
	29	2	3T-8290	1	PLATE AS	
		2	7S-4838	6	SPACER	
	30	2	3T-8291	1	SEAL	
	31	2	7S-8817	1	GASKET	
	32	2	7S-8916	1	COVER AS	
		2	2R-2376	2	WASHER	
		2	6P-8826	2	SCREW-KNURLED	
	33	2	9W-3429	1	COVER	
	34	2	8E-8897	1	COVER	
	35	2	9D-3901	8	SCREW-SOCKET HEAD	
	36	2	9W-3142	8	MOUNTING	
	37	2	9W-9027	2	PLATE	
	38	2	7X-0360	2	BOLT (7/8-9X6IN)	
		2	7X-0672	2	WASHER-HARD	
	39	2	6L-4454	4	BOLT (3/8-16X1.0IN)	
	40	2	3T-4788	1	COVER	

12 FRAME AND BODY 1 of 4 SELP4570-01

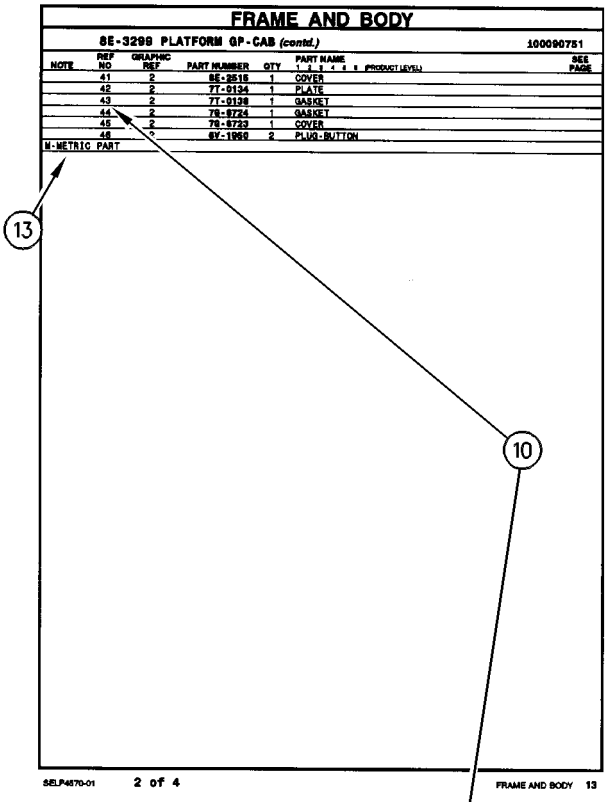

FRAME AND BODY

8E-3299 PLATFORM GP-CAB (contd.) 100090751

NOTE	REF NO	GRAPHIC REF	PART NUMBER	QTY	PART NAME 1 2 3 4 5 6 (PRODUCT LEVEL)	SEE PAGE
	41	2	8E-2515	1	COVER	
	42	2	7T-0134	1	PLATE	
	43	2	7T-0138	1	GASKET	
	44	2	7S-8724	1	GASKET	
	45	2	7S-8723	1	COVER	
	46	[illegible]	6V-1958	2	PLUG-BUTTON	
M-METRIC PART						

SELP4570-01 2 of 4 FRAME AND BODY 13

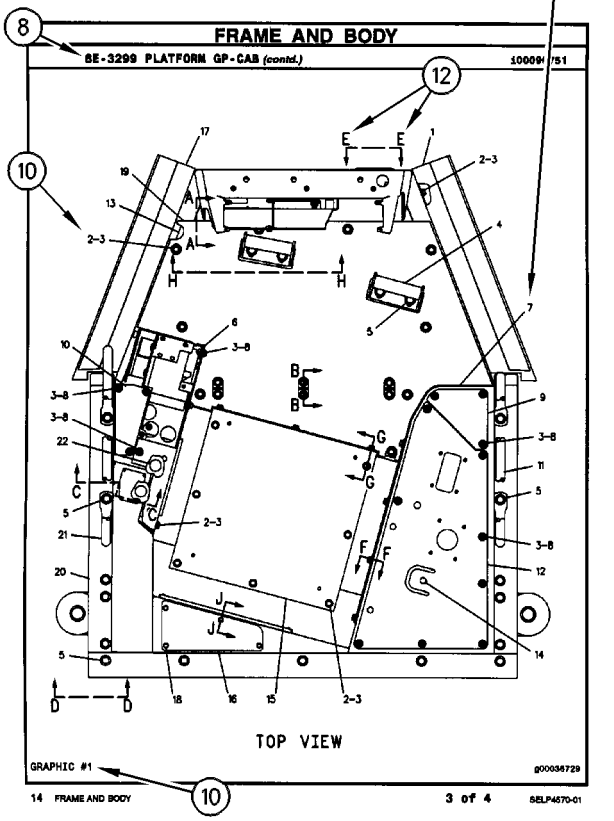

FRAME AND BODY

8E-3299 PLATFORM GP-CAB (contd.) 100090751

TOP VIEW

GRAPHIC #1 g00036729

14 FRAME AND BODY 3 of 4 SELP4570-01

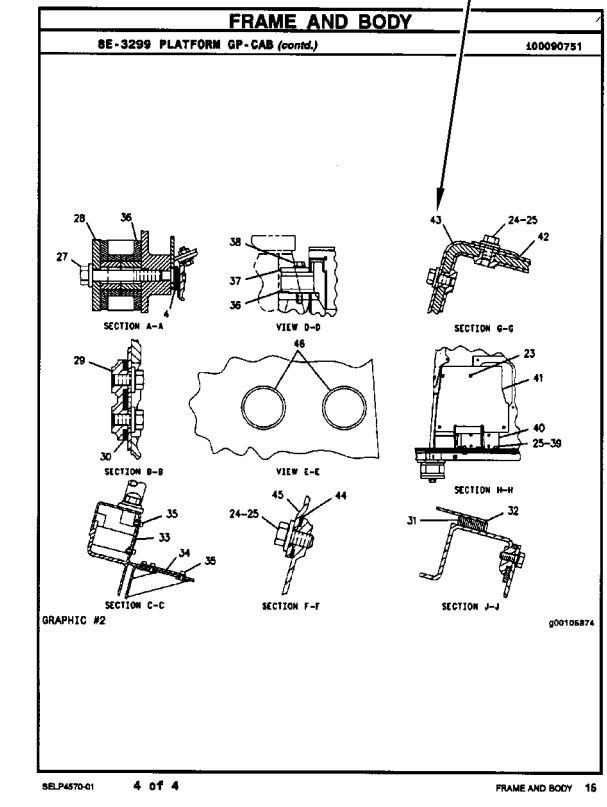

FRAME AND BODY

8E-3299 PLATFORM GP-CAB (contd.) 100090751

SECTION A-A VIEW D-D SECTION G-G

SECTION B-B VIEW E-E SECTION H-H

SECTION C-C SECTION F-F SECTION J-J

GRAPHIC #2 g00105874

SELP4570-01 4 of 4 FRAME AND BODY 16

REMANUFACTURED COMPONENTS

As an option when making repairs consider Caterpillar Remanufactured Components. Components that are available through the Caterpillar Remanufactured Program are identified three ways in the parts book:

- with the letter R in the note field of the parts list
- with an R* at the beginning of the first line of the caption
- with an *R at the end of the first line of the caption

Typical components included in the Remanufacturing Program include:

ALTERNATORS
CONNECTING RODS
CRANKSHAFTS - UNDERSIZE
CRANKSHAFTS - UPGRADE TO NEW
CYLINDER HEADS
ELECTRONIC CONTROL MODULES (ECM)
ELECTRONIC SENSORS
FUEL INJECTORS
FUEL NOZZLES
FUEL PUMPS
GOVERNORS
OIL PUMPS
PISTONS
SHORT BLOCKS
STARTERS
TURBOCHARGERS - COMPLETE
TURBOCHARGER CARTRIDGES
WATER PUMPS

Caterpillar Remanufactured engines for many engine arrangements are also available.

OPTIONS DE RÉPARATION

COMPOSANTS RÉNOVÉS

Comme option de réparation, considérer les composants rénovés Caterpillar. Les composants disponibles dans le cadre du programme Caterpillar de composants rénovés sont identifiés de trois façons dans le catalogue de pièces:

- avec la lettre "R" dans l'espace note de la liste des pièces
- avec R* au début de la première ligne des légendes
- avec *R à la fin de la première ligne des légendes

Les composants suivants figurent parmi les composants typiques du programme de rénovation:

ALTERNATEURS
BIELLES
VILEBREQUINS - SOUS-DIMENSIONNÉS
VILEBREQUINS - REMIS À NEUF
CULASSES
MODULES DE COMMANDE ÉLECTRONIQUE (ECM)
CAPTEURS ÉLECTRONIQUES
INJECTEURS
TÊTES D'INJECTEURS
POMPES À CARBURANT
RÉGULATEURS
POMPES À HUILE
PISTONS
BLOCS EMBIELLÉS
DÉMARREURS
TURBOCOMPRESSEURS - COMPLETS
CARTOUCHES DE TURBOCOMPRESSEUR
POMPES À EAU

Des moteurs rénovés sont aussi disponibles pour plusieurs versions de moteur.

COMPONENTES REMANUFACTURADOS

Al hacer reparaciones, tenga en cuenta la opción de Componentes Remanufacturados Caterpillar. Los componentes que están disponibles por medio del programa de Productos Remanufacturados Caterpillar se identifican de tres maneras en el manual de piezas:

- con la letra R en el espacio de Nota de la lista de piezas
- con una R* al comienzo de la primera línea de la leyenda
- con una *R al final de la primera línea de la leyenda

Los componentes que se incluyen típicamente en el Programa de Productos Remanufacturados son:

ALTERNADORES
BIELAS
CIGÜEÑALES - BAJOMEDIDA
CIGÜEÑALES - REMANUFACTURADOS A NUEVO
CULATAS
MÓDULOS DE CONTROL ELECTRÓNICO (ECM)
SENSORES ELECTRONICOS
INYECTORES
BOQUILLAS
BOMBAS DE COMBUSTIBLE
REGULADORES
BOMBAS DE ACEITE
PISTONES
MONOBLOQUES
MOTORES DE ARRANQUE
TURBOCOMPRESORES - COMPLETOS
NÚCLEOS DE TURBOCOMPRESOR
BOMBAS DE AGUA

También hay disponibles motores Remanufacturados Caterpillar para muchas de las configuraciones de motores.

ALTERNATIVAS DE REPARO

COMPONENTES REMANUFATURADOS

Considere o uso de Componentes Remanufaturados Caterpillar ao efetuar reparos. Os componentes disponíveis através do Programa de Remanufatura Caterpillar são identificados de três formas no manual de peças:

- com um R na área da nota da lista de peças
- com um R* no princípio da primeira linha da legenda
- com um *R no final da primeira linha da legenda

Os componentes típicos que constam no Programa de Remanufatura incluem:

ALTERNADORES
BIELAS
VIRABREQUINS - SUBMEDIDAS
VIRABREQUINS - ATUALIZAÇÃO
CABEÇOTES
MÓDULOS DE CONTROLE ELETRÔNICO (ECM)
SENSORES ELETRÔNICOS
INJETORES DE COMBUSTÍVEL
BICOS DE ABASTECIMENTO DE COMBUSTÍVEL
BOMBAS DE COMBUSTÍVEL
GOVERNADORES
BOMBAS DE ÓLEO
PISTÕES
BLOCOS BÁSICOS DO MOTOR
MOTORES DE PARTIDA
TURBOALIMENTADORES - COMPLETOS
CARTUCHOS DE TURBOALIMENTADORES
BOMBAS D'ÁGUA

Motores Remanufaturados Caterpillar também encontram-se disponíveis para diversos arranjos de motor.

WERKÜBERHOLTE AT-PRODUKTE

Bei Reparaturen sollten werküberholte AT-Produkte von Caterpillar in Betracht gezogen werden. Die durch das AT-Programm von Caterpillar erhältlichen Teile sind im Parts Book auf drei verschiedene Arten gekennzeichnet:

- mit dem Buchstaben R in der Spalte NOTE der Ersatzteilliste
- mit einem R* am Anfang der ersten Zeile der Überschrift
- mit einem *R am Ende der ersten Zeile der Überschrift

Das AT-Programm umfaßt u.a. folgende Produkte:

DREHSTROMGENERATOREN
PLEUELSTANGEN
KURBELWELLEN - MIT UNTERMASS
KURBELWELLEN - MIT ORIGINALMASS
ZYLINDERKÖPFE
ELEKTRONISCHE STEUEREINHEITEN (EMC)
ELEKTRONISCHE SENSOREN
PUMPENDÜSEN
EINSPRITZDÜSEN
KRAFTSTOFFPUMPEN
DREHZAHLREGLER
ÖLPUMPEN
KOLBEN
TEILMOTOREN
ANLASSER
TURBOLADER - KOMPLETT
TURBOLADERLAUFZEUGE
KÜHLWASSERPUMPEN

Viele Motoren können durch werküberholte AT-Motoren von Caterpillar ersetzt werden.

SUPPLEMENTAL COOLANT ADDITIVES

CUSTOMER BENEFITS:

Protects against cavitation, foam, erosion, corrosion, and scale buildup in cooling systems.

- Provides measured coolant conditioner.

DESCRIPTION:

Additives deplete from the coolant with normal operation. For this reason, Supplemental Coolant Additives (SCA) must be added to all heavy duty coolants at regular intervals. In addition, when not using a fully formulated, pre-charged antifreeze, like Caterpillar's DEAC, an initial charge of SCA must be added to the cooling system. The amount of SCA added to the system is dependent on the capacity of the system.

The SCA for initial fill is provided as a liquid. SCA's for maintenance intervals are available in liquid form and as a spin-on element. (No Spin-on available for 3600 Family of Engines)

NOTE:

The amount of SCA added at initial fill is not the same as the amount added at maintenance intervals.

The coolant additive elements can be used with any ethylene or propylene glycol type antifreeze which meets ASTM D4985 or ASTM D5345 Specifications.

NOTE:

For use with standard heavy duty coolant only, not for use with Extended Life Coolant.

PARTS NEEDED:

Cooling System Capacity		Liquid SCA at Initial Fill	Liquid SCA at Maintenance*	Spin-on SCA Maintenance Element*
Liters	Gallons			
22-30	(6-8)	3P-2044 (1)	6V-3542 (1)	111-2370 (1)
30-38	(8-10)	3P-2044 (1) 6V-3542 (1)	111-2372 (1)	111-2369 (1)
38-49	(10-13)	3P-2044 (1) 8T-1589 (1)	111-2372 (1)	111-2369 (1)
49-64	(13-17)	3P-2044 (2)	8T-1589 (1)	9N-3368 (1)
64-83	(17-22)	3P-2044 (2) 8T-1589 (1)	111-2372 (1) 6V-3542 (1)	111-2371 (1)
83-114	(22-30)	3P-2044 (3) 8T-1589 (1)	3P-2044 (1)	9N-3718 (1)
114-163	(30-43)	3P-2044 (5)	3P-2044 (1) 6V-3542 (1)	111-2371 (2)
163-242	(43-64)	3P-2044 (8)	3P-2044 (2)	9N-3718 (2)

** Normal maintenance period is 250 hrs. See your Operation and Maintenance Manual for complete coolant maintenance instructions.*

( ) Indicates quantity required.

ADDITIFS POUR LIQUIDE DE REFROIDISSEMENT

AVANTAGES POUR LE CLIENT

L'additif protège contre la cavitation, la mousse, l'érosion, la corrosion et l'accumulation de dépôts dans le circuit de refroidissement.

- L'additif complémentaire fournit une quantité mesurée d'additif.

DESCRIPTION:

Les additifs s'épuisent pendant l'utilisation du moteur. C'est pourquoi l'on doit ajouter de l'additif au liquide de refroidissement/antigel pour moteurs diesel à intervalles réguliers. En plus, si l'on n'utilise pas de l'antigel entièrement formulé et pré-chargé comme le liquide de refroidissement/antigel Caterpillar pour moteurs diesel, une quantité initiale d'additif doit être ajoutée au circuit de refroidissement. La quantité d'additif à ajouter au circuit dépend de la contenance du circuit.

L'additif pour le remplissage initial est fourni sous forme liquide. L'additif pour l'entretien ultérieur est disponible sous forme liquide et sous forme d'élément à visser. (Il n'y a pas d'élément à visser pour les moteurs de la famille 3600).

NOTA:

La quantité d'additif à ajouter au remplissage initial diffère de la quantité à ajouter aux intervalles d'entretien.

Les éléments d'additif peuvent être utilisés avec tout antigel de type éthylène ou propylène-glycol conforme à la norme ASTM D4985 ou ASTM D5345.

NOTA:

A utiliser uniquement avec du liquide de refroidissement pour moteurs diesel et non avec le liquide de refroidissement longue durée.

PIÈCES NÉCESSAIRES:

Contenance du circuit de refroidissement		Additif liquide au remplissage initial	Additif liquide aux intervalles d'entretien*	Elément d'additif à visser aux intervalles d'entretien*
Litres	Gallons U.S.			
22-30	(6-8)	3P-2044 (1)	6V-3542 (1)	111-2370 (1)
30-38	(8-10)	3P-2044 (1) 6V-3542 (1)	111-2372 (1)	111-2369 (1)
38-49	(10-13)	3P-2044 (1) 8T-1589 (1)	111-2372 (1)	111-2369 (1)
49-64	(13-17)	3P-2044 (2)	8T-1589 (1)	9N-3368 (1)
64-83	(17-22)	3P-2044 (2) 8T-1589 (1)	111-2372 (1) 6V-3542 (1)	111-2371 (1)
83-114	(22-30)	3P-2044 (3) 8T-1589 (1)	3P-2044 (1)	9N-3718 (1)
114-163	(30-43)	3P-2044 (5)	3P-2044 (1) 6V-3542 (1)	111-2371 (2)
163-242	(43-64)	3P-2044 (8)	3P-2044 (2)	9N-3718 (2)

** L'intervalle d'entretien normal est de 250 heures-service. Voir le Guide d'utilisation et d'entretien pour de plus amples renseignements concernant l'entretien du circuit de refroidissement.*

( ) Indique la quantité exigée.

ADITIVOS DE REFRIGERANTE SUPLEMENTARIOS

VENTAJAS PARA EL USUARIO:

Protegen contra la cavitación, la formación de espuma, la corrosión y la acumulación de escamas en los sistemas de enfriamiento.

- Suministra un acondicionador dosificado de refrigerante.

DESCRIPCIÓN:

Los aditivos en el refrigerante se agotan con la operación normal. Por esta razón, se debe agregar Aditivo de refrigerante suplementario (SCA) a todos los refrigerantes para servicio pesado, a intervalos regulares. Además, cuando no se usa un anticongelante de precarga completo, tal como el DEAC de Caterpillar, es necesario agregar una cantidad de aditivo de refrigerante suplementario inicial al sistema de enfriamiento. La cantidad de aditivo que se debe agregar depende de la capacidad del sistema.

El SCA de llenado inicial es líquido. El que se usa para el mantenimiento está disponible tanto en líquido como en un elemento enroscable. (No hay elemento enroscable disponible para la Familia de Motores 3600).

NOTA:

La cantidad de aditivo de llenado inicial no es la misma que se agrega en los intervalos de mantenimiento.

Los elementos de aditivo de refrigerante se pueden usar con cualquier anticongelante de tipo glicol etilénico o propílico que esté de acuerdo con las especificaciones de las normas ASTM D4985 o ASTM D5345.

NOTA:

Se debe utilizar únicamente con refrigerante estándar para servicio pesado; no se debe usar con Refrigerante de Larga Duración.

PIEZAS NECESARIAS:

Capacidad del Sistema de Enfriamiento		SCA líquido de llenado inicial	SCA líquido de mantenimiento*	Elemento de mantenimiento enroscable*
litros	gal EE.UU.			
22-30	6-8	3P-2044 (1)	6V-3542 (1)	111-2370 (1)
30-38	8-10	3P-2044 (1) 6V-3542 (1)	111-2372 (1)	111-2369 (1)
38-49	10-13	3P-2044 (1) 8T-1589 (1)	111-2372 (1)	111-2369 (1)
49-64	13-17	3P-2044 (2)	8T-1589 (1)	9N-3368 (1)
64-83	17-22	3P-2044 (2) 8T-1589 (1)	111-2372 (1) 6V-3542 (1)	111-2371 (1)
83-114	22-30	3P-2044 (3) 8T-1589 (1)	3P-2044 (1)	9N-3718 (1)
114-163	30-43	3P-2044 (5)	3P-2044 (1) 6V-3542 (1)	111-2371 (2)
163-242	43-64	3P-2044 (8)	3P-2044 (2)	9N-3718 (2)

** El período normal de mantenimiento es de 250 horas. Para ver las instrucciones completas sobre el mantenimiento del refrigerante, consulte el Manual de Operación y Mantenimiento.*

( ) Indica la cantidad necesaria.

ADITIVOS SUPLEMENTARES DO LÍQUIDO ARREFECEDOR

BENEFÍCIOS PARA O CLIENTE:

Protege contra cavitação, espuma, erosão, corrosão e acúmulo de crostas nos sistemas de arrefecimento.

- Fornece uma quantidade pré-determinada de condicionador de arrefecimento.

DESCRIÇÃO:

Com a operação normal, os aditivos se esgotam do líquido arrefecedor. Por isso, Aditivos Suplementares do Líquido Arrefecedor (SCA) devem ser acrescentados a todos os líquidos arrefecedores para serviço pesado em intervalos regulares. Além disso, quando um anticongelante pré-carregado, totalmente formulado não for usado, como o DEAC Caterpillar, uma carga inicial de SCA deve ser acrescentada ao sistema de arrefecimento. A quantidade de SCA acrescentada ao sistema depende da capacidade do sistema.

O SCA para abastecimento inicial é fornecido em forma de líquido. Os aditivos suplementares (SCA) para intervalos de manutenção estão à disposição em forma líquida e como um elemento com roscas. (Exceto os Motores da Família 3600)

NOTA:

A quantidade de SCA adicionada no abastecimento inicial não é a mesma que a acrescentada nos intervalos de manutenção.

Os elementos do aditivo do líquido arrefecedor podem ser usados com qualquer tipo de anticongelante etileno ou propileno que satisfaz as Especificações ASTM D4985 ou ASTM D5345.

NOTA:

Para uso apenas com líquido arrefecedor para serviço pesado padrão, não deve ser usado com Líquido Arrefecedor de Vida Longa.

PEÇAS NECESSÁRIAS:

Capacidade do Sistema de Arrefecimento		Líquido SCA Durante Abastecimento Inicial	Líquido SCA Durante Manutenção*	Elemento de Manutenção de SCA com Roscas*
Litros	Galões			
22-30	6-8	3P-2044 (1)	6V-3542 (1)	111-2370 (1)
30-38	8-10	3P-2044 (1) 6V-3542 (1)	111-2372 (1)	111-2369 (1)
38-49	10-13	3P-2044 (1) 8T-1589 (1)	111-2372 (1)	111-2369 (1)
49-64	13-17	3P-2044 (2)	8T-1589 (1)	9N-3368 (1)
64-83	17-22	3P-2044 (2) 8T-1589 (1)	111-2372 (1) 6V-3542 (1)	111-2371 (1)
83-114	22-30	3P-2044 (3) 8T-1589 (1)	3P-2044 (1)	9N-3718 (1)
114-163	30-43	3P-2044 (5)	3P-2044 (1) 6V-3542 (1)	111-2371 (2)
163-242	43-64	3P-2044 (8)	3P-2044 (2)	9N-3718 (2)

** O período normal de manutenção é de 250 horas. Consulte o Manual de Operação e Manutenção para obter instruções completas quanto à manutenção do líquido arrefecedor.*

( ) Indica a quantidade exigida.

KÜHLMITTELZUSATZ

VORTEILE FÜR DEN KUNDEN:

Schutz gegen Kavitation, Schaumbildung, Erosion, Korrosion und Kesselsteinbildung in Kühlsystemen.

- Richtig dosierter Kühlmittelzusatz

BESCHREIBUNG:

Additive erschöpfen sich während des Motorbetriebs. Deshalb muß allen HD-Kühlmitteln regelmäßig Kühlmittelzusatz beigefügt werden. Wenn bei Erstfüllung kein vollwertiges Fertigkühlmittel, wie das Frostschutz- und Kühlmittel für Dieselmotoren von Caterpiller (DEAC), verwendet wird, muß bei Erstfüllung Kühlmittelzusatz beigefügt werden. Wieviel Kühlmittelzusatz beigefügt werden muß, hängt vom Inhalt des Kühlsystems ab.

Für Erstfüllung ist Kühlmittelzusatz nur in flüssiger Form erhältlich. Für Wartungsintervalle ist Kühlmittelzusatz in flüssiger Form und als Zusatzelement erhältlich. (Für die Motorbaureihe 3600 sind keine Zusatzelemente erhältlich.)

ANMERKUNG:

Die Kühlmittelmenge bei Erstfüllung ist nicht die gleiche Menge, die bei Wartungsintervallen beigefügt werden muß.

Die Kühlmittelzusatzelemente können mit allen Frostschutzmitteln auf Ethylen- oder Propylenglykolbasis verwendet werden, die den Standards nach ASTM D4985 oder ASTM D5345 entsprechen.

ANMERKUNG:

Den Kühlmittelzusatz nicht mit Langzeitkühlmittel (ELC) von Caterpillar verwenden. Der Kühlmittelzusatz ist nur für HD-Kühlmittel bestimmt.

TEILEBEZEICHNUNG:

Kühlsysteminhalt		Kühlmittelzusatz bei Erstfüllung	Flüssiger Kühlmittelzusatz bei Wartung*	Kühlmittelzusatzelement bei Wartung*
Liter	US-Gall.			
22-30	(6-8)	3P-2044 (1)	6V-3542 (1)	111-2370 (1)
30-38	(8-10)	3P-2044 (1) 6V-3542 (1)	111-2372 (1)	111-2369 (1)
38-49	(10-13)	3P-2044 (1) 8T-1589 (1)	111-2372 (1)	111-2369 (1)
49-64	(13-17)	3P-2044 (2)	8T-1589 (1)	9N-3368 (1)
64-83	(17-22)	3P-2044 (2) 8T-1589 (1)	111-2372 (1) 6V-3542 (1)	111-2371 (1)
83-114	(22-30)	3P-2044 (3) 8T-1589 (1)	3P-2044 (1)	9N-3718 (1)
114-163	(30-43)	3P-2044 (5)	3P-2044 (1) 6V-3542 (1)	111-2371 (2)
163-242	(43-64)	3P-2044 (8)	3P-2044 (2)	9N-3718 (2)

** Der normale Wartungsintervall beträgt 250 Betriebsstunden. Für vollständige Anweisungen zur Wartung des Kühlsystems, siehe Betriebs- und Wartungshandbuch.*

( ) Erforderliche Anzahl

NOMENCLATURA DE PEÇAS INGLÊS-PORTUGUÊS

INGLÊS	PORTUGUÊS
ABOVE	Acima
ABSORBER	Amortecedor
ACCESSORY	Acessório
ACTUATOR	Acionador
ADAPTER	Adaptador
ADHESIVE	Adesivo
ADJUSTER	Adjustador
AFTERCOOLER	Pós-resfriador
AIR	Ar
AIR CLEANER	Purificador de ar
AIR SYSTEM	Sistema de ar
ALARM	Alarme
ALTERNATOR	Alternador
AMMETER	Amperímetro
ANCHOR	Âncora, fixador
ANGLE	Ângulo, canto
ANVIL A.	Bigorna conj.
ARBOR	Mandril, eixo
ARM	Braço
ARMATURE	Armadura, Induzida
ARM REST	Apoio para braço
ARRESTER	Detentor
ASSEM. = ASSEMBLY	Conjunto
ATTACHMENT	Acessório
AVAILABLE	Disponível
AXLE	Eixo
AXLE SHAFT	Semi-eixo, ponta
BACK-UP ALARM	Alarme de marcha à ré
BACK-UP LIGHT	Luz da marcha à ré
BACK-UP SWITCH	Interruptor de marcha à ré
BACKBOARD	Prancha traseira
BACK CUSHION	Encosto
BACKHOE	Retroescavadeira
BAFFLE	Defletor
BAG	Saco, sacola
BAIL	Alça
BALANCER	Balanceador
BALL	Esfera
BALLCHECK ASSEMBLY	Conjunto de (válvula) de esfera de retenção
BALL JOINT	Junta esférica
BALLSTUD	Munhão esférica
BAND	Banda, cinta, tira
BAND & LINING	Banda e revestimento
BAR	Barra
BARREL	Cilindro
BARRIER	Barreira
BASE	Base
BASIN	Bacia, coletor
BATTERY	Bateria
BEAM	Barra, viga, trave
BEARING	Mancal, rolamento
BEARING BALL	Rolamento de esferas
BEARING-SLEEVE	Mancal tipo luva
BEARING-NEEDLE	Rolamento de agulha
BEARING-ROLLER	Rolamento tipo roletes
BELL	Campânula
BELLCRANK	Alavanca angular
BELLOWS	Fole
BELOW	Abaixo
BELT	Correia, cinto
BELT TIGHTENER	Ajustador de correia
BEVEL GEAR	Coroa
BIT-CUTTER	Broca, fresa
BLACK	Preto
BLADE	Lâmina
BLEEDER	Sangrador
BLOCK	Bloco, calço
BLOWER	Ventilador
BLUE	Azul
BOARD	Prancha, tábua
BODY	Corpo
BOLT	Parafuso
BONNET	Tampa
BOOM	Lança
BOOSTER	Reforçador
BOOT	Protetor contra poeira
BORE	Furo
BOSS	Ressalto
BOTH	Ambos (as)
BOTTOM	Fundo
BOWL	Caçamba
BOX	Caixa
BRACE	Tirante
BRACKET	Suporte
BRAKE	Freio
BREAKER	Interruptor
BREATHER	Respiro
BRIDGE	Braço
BROWN	Marrom
BRUSH	Escova
BUCKET	Caçamba
BULB	Bulbo
BULLDOZER	Bulldozer
BUMPER	Pára-choque
BUSHING	Bucha
BUTTON	Botão
BUZZER WARNING	Alarme sonoro
C = CHANGE	Alteração
CAB	Cabina
CABINET	Gabinete
CABLE	Cabo
CAGE	Alojamento
CALIPER	Calibrador
CAM	Excêntrico, ressalto
CAMSHAFT	Eixo-comando-de-válvulas
CANOPY	Coberta, toldo

NOMENCLATURA DE PEÇAS INGLÊS-PORTUGUÊS

INGLÊS	PORTUGUÊS
CAP	Tampa
CAPACITOR	Capacitor, condensador
CARBURETOR	Caburador
CARCASS	Carcaça
CARRIER	Suporte
CARTON	Caixa de papelão
CARTRIDGE	Cartucho
CASE	Caixa, alojamento
CASING	Invólucro, revestimento
CASTER	Rolete, roldana
CAST IRON	Ferro fundido
CATWALK	Passadiço
CENTER	Centro
CHAIN	Corrente
CHAMBER	Câmara
CHANGEOVER	Modificação
CHANNEL	Canal
CHASSIS	Chassi, armação
CHECK-VALVE	Válvula de retenção
CIRCUIT	Circuito
CIRCUIT BREAKER	Interruptor de circuito
CLAMP	Braçadeira
CLASP	Fecho, grampo
CLEANER	Purificador
CLEVIS	Forquilha, garfo
CLIP	Clipe, presilha, grampo
CLOSURE	Fecho
CLUTCH	Embreagem
COARSE	Grosso, áspero
COATING	Capa, revestimento
COCK	Torneira
COIL	Bobina, serpentina
COLLAR	Colar
COLLECTOR	Coletor
COLLET	Mandril
COLUMN	Coluna
COMPACTOR	Compactador
COMPARTMENT	Compartimento
COMPLETE	Completo
COMPOUND	Composto
COMPRESSOR	Compressor
CONCAVE	Côncavo
CONDITIONER	Condicionador
CONDUIT	Conduite, eletroduto
CONE	Cone
CONNECTING	Ligação
CONNECTED ROD	Biela
CONNECTION	Conexão
CONNECTOR	Conetor
CONSISTS OF	Consiste de
CONSOLE	Consolo
CONTACT	Contato, platinado
CONTACTOR	Contactador
CONTINUED FROM	Continuação de
CONTROL	Controle
CONVERSION	Conversão
CONVERTER	Conversor
COOLER	Arrefecedor
COOLING	Arrefecimento
CORK	Cortiça
CORE	Núcleo
CORNER	Canto
COTTER PIN	Contrapino
COUNTER	Contador, tacômetro
COUNTERWEIGHT	Contrapeso
COUPLER	Acoplador, engate
COUPLING	Acoplamento, conexão
COVER	Tampa
COWL	Capota
COWLING	Capota
CRADLE	Armação, suporte
CRANK	Manivela
CRANKCASE	Cárter
CRANKSHAFT	Virabrequim
CROSS UNION	Junta transversal
CROSSBAR	Barra transversal
CUP	Capa, anel externa
CURTAIN	Cortina
CUSHION	Almofada, amortecedor
CUTTER	Fresa, cortador
CUTTING EDGE	Borda cortante
CYLINDER	Cilindro
CYLINDER BLOCK	Bloco do motor
CYLINDER HEAD	Cabeçote
DAMPER	Amortecedor
DARK GREEN	Verde escuro
DASH	Painel
DASH PANEL	Painel de Instrumento
DECELERATOR	Desacelerador
DEFLECTOR	Defletor
DETENT	Retém, pino de trava
DIAGRAM-WIRING	Diagrama dos circuitos elétricos
DIAL	Medidor de dial
DIAPHRAGM	Diafragma
DIESEL ENGINE COMPLETE	Motor diesel completo
DIFFERENTIAL	Diferencial
DIFFUSER	Difusor
DIMMER	Redutor de luminosidade
DIODE	Diodo
DIRECTOR	Diretor
DISC	Disco
DISCONNECT	Desligar
DISPOSABLE	Disponível, substituível
DISSIPATOR	Dissipador de calor
DISTRIBUTOR	Distribuidor
DM = DECIMETER	dm = decímetro

NOMENCLATURA DE PEÇAS INGLÊS-PORTUGUÊS

INGLÊS	PORTUGUÊS
DOME LIGHT	Lâmpada do teto
DOOR	Porta
DOWEL	Pino-guia, cavilha
DOWNSHIFT	Mudança para marcha mais baixa
DOZER	Bulldozer (lâmina)
DRAIN	Dreno
DRAWBAR	Barra de tração
DRILL	Broca
DRILLED	Broqueado, perturado
DRIVE	Comando, acionamento, propulsão
DRIVER	Acionador, mecanismo propulsor
DRIVESHAFT	Eixo acionador, eixo de transmissão
DRUM	Tambor
DUCT	Conduto, canal
EACH	Cada
EDGE	Borda, canto
EFFECTIVE WITH	Efetivo a partir de
EJECTOR	Ejetor
ELBOW	Cotovelo
ELEMENT	Elemento
ENCLOSURE	Cobertura
END	Extremidade
END BIT	Canto de lâmina
END VIEW	Vista traseira
ENGINE	Motor
ENGINE ARRANGEMENT	Arranjo do motor
EXCEPT	Exceto
EXHAUST	Escape
EXHAUST PIPE	Cano de escape
EXPANDER	Expansor
EXPANSION PLUG	Bujão de expansão
EXTENSION	Extensão
EXTINGUISHER	Extintor
EXTRACTOR	Extrator
EYE	Olhal
EYEBOLT	Parafuso de olhal
FABRIC	Tecido, tela textura
FACING	Revestimento, forro
FAN	Ventilador
FASTENED	Fixo, preso
FASTENER	Fixador, prendedor
FENDER	Pára-lamas
FERRULE	Virola
FIELD COIL	Bobina indutora, ou de campo
FIELD REPLACEMENT	Reposicão ou substituicão no campo
FILLER	Bocal de enchimento
FILM	Película
FILTER	Filtro
FINAL DRIVE	Comando final
FINGER	Dedo
FIREWALL	Parede contra fogo
FITTING	Graxeira, conexão
FIXTURE	Dispositivo, Aparelho
FLANGE	Flange
FLASHER	Luz intermitente
FLOAT	Flutuar, livre
FLOOD-LAMP	Farol
FLOOR	Piso
FLOORMAT	Tapete
FLOORPLATE	Chapa do piso
FLYWEIGHT	Peso volante
FLYWHEEL	Volante
FOLLOWER	Seguidor
FOOT	Pé
FORK	Garfo
FOR USE WITH	Para usar com
FOUNDATION	Assentamento, alicerce
FRAME	Armacão, chassi
FRONT	Frente, dianteiro
FT = FOOT	Pé
FUEL INJECTION	Injecão de combustível
FUEL PUMP	Bomba de combustível
FUEL RATIO	Limitador de combustível
FUEL SYSTEM	Sistema do combustível
FUEL TANK	Tanque do combustível
FUMES DISPOSAL	Eliminação de vapores do cárter
FUSE	Fusível
G = GROUP	Grupo
GAGE	Indicador, manômetro
GAP	Folga, lacuna, intervalo
GASKET	Junta
GASKET KIT	Jogo de junta
GATE	Entrada, trava
GAUGE	Indicador, manômetro
GEAR	Engrenagem, marcha
GEAR BOX	Caixa de engrenagem
GEAR PUMP	Bomba de engrenagem
GENERATOR	Gerador
GLAND	Junta, gaxeta, vedacão sobreposta
GLASS	Vidro
GLOW PLUG	Vela incandescente
GOVERNOR	Governador
GRAB IRON	Balaústre corrimão
GRATE	Grade, grelha
GRAY	Cinza
GRID	Grade, grelha
GRILL	Grade, grelha
GRIP	Pega, garra, cabo

NOMENCLATURA DE PEÇAS INGLÊS-PORTUGUÊS

INGLÊS	PORTUGUÊS
GROMMET	Ilhós
GROUND BRUSH	Escova-terra
GROUND (ELECTRIC)	Terra (eletricidade)
GROUSER	Garra (de sapata)
GUARD	Protetor
GUIDE	Guia
GUSSET	Cantoneira
HACKSAW	Serra para metais
HALF	Metade, meio (a)
HALF LINK	Semi-elo
HAMMER	Martelo
HAND CONTROL	Controle manual
HANDLE	Cabo, alça
HANDRAIL	Corrimão, balaústre
HANGER	Suporte, dispositivo de suspensão
HARDWARE	Ferragem
HARDWARE KIT	Jogo de ferragem
HARNESS	Chicote
HEAD = HD	Cabeça
HEADER	Coletor
HEADLAMP	Farol dianteiro
HEADLIGHT	Farol dianteiro
HEAT SINK	Difusor de calor
HEATER	Aquecedor
HIGH-IDLE	Marcha acelerada em vazio
HINGE	Dobradiça, articulacão
HITCH	Engate
HOIST	Guincho, talha
HOLD	Suporte, fixador
HOLD DOWN	Fixar, reter, manter abaixado
HOLDER	Fixador, suporte
HOLE	Furo, buraco
HOOD	Capô
HOOD & DASH	Capô e painel
HOOK	Gancho
HORN	Buzina
HOSE	Mangueira
HOUSING	Alojamento
HUB	Cubo
HYDRAULIC	Hidráulico
ID = INSIDE DIAMETER	Diâmetro interno
IDLER	Roda-guia
IDLER & SHAFT	Roda-guia e eixo
IDLER GEAR	Engrenagem intermediária
IDLER PULLEY	Polia intermediária
IMPELLER	Impulsor, rotor
IN = INCH	Polegada
INCLUDES	Inclui
INDICATE	Indicam
INDICATOR	Indicador
INLAY	Incrustação
INLET	Admissão, entrada
INPUT	Entrada
INSERT	Inserção
INSTALLATION	Instalação
INSTALLED ON MODEL	Instalação no modelo
INSTRUCTION	Instrução
INSTRUMENT	Instrumento
INSULATED BRUSH	Escova isolada
INSULATION	Isolação, isolamento
INSULATOR	Isolante, isolador
INTAKE	Admissão
INTERLOCK	Trava interna
INTERMEDIATE	Intermediário
INTERNAL	Interno
INVERTER	Inversor
IRON	Ferro
JACK	Macaco
JAW	Mandíbula, garra
JET	Jato, vaporizador
JOINT	Junta, articulação
JUNCTION	Junção
KEY	Chaveta
KINGBOLT	Pino de engate
KNIFE	Faca, lâmina
KNOB	Maçaneta, botão
LADDER	Escada
LAMP	Lâmpada
LARGE	Grande
LATCH	Trinco, lingüeta
LEAD	Condutor, cabo
LEG	Perna
LENS	Lente
LEVEL	Nível
LEVER	Alavanca
L.H. = LEFT HAND	Lado esquerdo
LID	Placa, tampa
LIFT	Levantar
LIFT CYLINDER	Cilindro de levantamento
LIFTER	Tucho
LIFTING EYE	Olhal de levantamento
LIGHT GREEN	Verde claro
LIGHTING	Sistema de iluminação
LINE	Tubulação
LINER	Camisa
LINES & PUMP	Tubulação e bomba
LINES & VALVE	Tubulação e válvula
LINING	Revestimento, lona
LINK	Elo
LINKAGE	Articulação
LIP	Lábio, borda
LISTED	Relacionamento
LITERATURE	Literatura
LOCATED	Localizado

NOMENCLATURA DE PEÇAS INGLÊS-PORTUGUÊS

INGLÊS	PORTUGUÊS
LOCATOR	Localizador
LOCK	Trava
LOCKNUT	Contraporca
LOCKWASHER	Arruela de pressão
LOCKWIRE	Arame de trava
LONG	Longo
LOOM	Tubo isolador
LOW IDLE	Marcha lenta
LOUVER	Persiana
LOWER	Abaixar, inferior
LUBRICANT	Lubrificante
LUG	Ressalto, orelha
MACHINE SCREW	Parafuso de fenda
MAGNET	Imã magneto
MAIN	Principal
MAINTENANCE	Manutenção
MANIFOLD	Coletor
MARKED	Marcado (a)
MARKER	Marcador
MASTER PIN	Pino mestre
MAT	Capacho, esteira
METER	Medidor, contador
MINOR	Menor
MIRROR	Espelho
MISCELLANEOUS	Miscelânea
MODIFICATION	Modificação
MOLDBOARD	Armação da lâmina
MOTOR	Motor
MOULDING	Moldura
MOUNT	Montar
MOUNTED	Montado (a)
MOUNTING	Montagem
MUFFLER	Silenciador
NAMEPLATE	Plaqueta de identificação
N.C. (THREAD)	Rosca grossa
NEEDLE	Agulha
N.F. (THREAD)	Rosca fina
NIB	Ponta, bico
NIPPLE	Conexão
NONE	Nenhum (a)
NORMALIZING	Normalização
NOT PART OF	Não faz parte de
NOZZLE	Bocal, bico injetor
N/S = NOT SERVICED	Não vendável
NUMBER (No)	Número (No)
NUT	Porca
NUT-WING	Porca borboleta
NUT-CASTLE	Porca acastelada
NUT-WELD	Porca-soldada
NUT-CAP	Porca cega
NUT-HEX	Porca sextavada
NUT-LOCK	Contraporca
NUT-IMPERIAL	Porca imperial
NUT-JAM	Porca de trava, contraporca
NUT-LOW CROWN	Porca de meia coroa
NUT-RETAINING	Porca de retenção
NUT-SELF LOCK	Porca de autotravamento
NUT-SLOTTED	Porca fendada
NUT-SPANNER	Porca para chaves
O.D. = OUTSIDE DIAMETER	Diâmetro externo
O-RING	Anel "O"
OIL	Óleo
OILPAN	Cárter
OIL PUMP	Bomba de óleo
OIL SYSTEM	Sistema de lubrificação
OILER	Almotolia, lubrificador
ORANGE	Laranja
TO ORDER	Para pedir
ORIFICE	Orifício
OUTER	Externo
OUTER RACE	Anel externo
OUTPUT	Saída
OVERALL	Geral, total
OVERHAUL	Revisão
OVER SIZE	Sobremedida
PACKING	Embalagem, gaxeta
PAD	Coxim, calço
PADLOCK	Cadeado
PAINT	Pintura
PAN	Cárter
PANEL	Painel
PARKING BRAKE	Freio de estacionamento
PARTITION	Separacão
PARTS G	Grupo de peças
PARTS OF	Peça de
PARTS OF ALL ENGINE ARRANGEMENTS	Peças de todos os arranjos do motor exceto
PAWL	Garra
PEDAL	Pedal
PEDESTAL	Pedestal
PERFORMANCE	Desempenho
PILOT	Piloto
PIN	Pino
PIN & BUSHING	Pino e bucha
PIN-COTTER	Contrapino
PINCH BAR	Pé de cabra
PINION	Pinhão
PIPE	Tubo
PISTON	Pistão
PIVOT	Articulação, pivô
PLANETARY	Planetário
PLATE	Placa
PLATFORM	Plataforma
PLUG	Bujão
PLUNGER	Pistão, êmbolo
POINT	Ponta, ponto

NOMENCLATURA DE PEÇAS INGLÊS-PORTUGUÊS

INGLÊS	PORTUGUÊS
POINTER	Ponteiro
POLE & COIL	Polo e bobina
POLE	Polo, lança, vara
POPPET	Gatilho
POST	Poste, coluna
POTENTIOMETER	Potenciômetro
POWER TAKE OFF	Tomada de força
POWER TRAIN	Trem de força
PRE-SCREENER	Tela protetora
PRECHAMBER	Câmara de pré-combustão
PRECLEANER	Pré-purificador
PRECOMBUSTION	Pré-combustão
PRESS	Prensa
PRESS = PRESSURE	Pressão
PREVIOUS	Prévio, anterior
PRIMARY	Primário, principal
PROBE	Prova
PROJECTOR	Projeter
PROTECTION	Proteção
PROTECTOR	Proteter
PULLER	Extrator, sacador
PULLEY	Polia
PUMP	Bomba
PURPLE	Roxo
PUSHROD	Haste de empuxo
QTY = QUANTITY	Quantidade
RACE	Pista
RACE & ROLLER	Pista e rolete
RACK	Cremalheira
RADIATOR	Radiador
RAIL	Trilho, guia
RANGE TRANSM	Transmissão manual
RATCHET	Catraca
REAR	Traseiro (a)
REBORED	Escareado, alargado
REBUILD KIT	Jogo de recondicionamento
RECEPTACLE	Recipiente
RECTIFIER	Retificador
RED	Vermelho
REDUCER	Redutor
REFER	Referir
REGULATOR	Regulador
RELATED REPAIR ITEMS	Itens de reparos relacionados
RELAY	Relé
RELIEF VALVE	Válvula de alívio
REPAIR G	Grupo de reparo
REPAIR KIT	Jogo de reparo
REPAIR ITEMS	Itens de reparo
REPLACEMENT	Reposição, substituição
REQUIRED	Necessário
RESERVOIR A	Reservatôrio
RESIN	Resina
RESISTOR	Resistência
RETAINER	Fixador
RETARDER	Retardador
REVERSIBLE	Reversível
R.H. = RIGHT HAND	Lado direito
RIM	Aro
RIM & TIRE	Aro e pneu
RING	Anel
RIVET	Rebite
ROCKET	Balancim
ROD	Haste
ROD END	Extremidade da haste
ROLLER	Rolete
ROPE-STARTING	Partida à corda
ROTATOR	Girador
ROTOCHAMBER	Càmara pneumática
ROTOCOIL	Girador de válvula
ROTOR	Rotor
RUST INHIBITOR	Antioxidante
SADDLE	Sela, assento
SAFETY	Segurança
SAFETY TREAD	Tiras antiderrapante
SCRAPER	Tampa
SCREEN	Tela
SCREW	Parafuso
SCREW-HEX HD	Parafuso de cabeça hexagonal
SCREW-KIT	Jogos de parafuso
SCREW-MACHINE	Parafuso de fenda
SCREW-ROUND HD	Parafuso de cabeça redonda
SCREW-FLANGED	Parafuso com flange
SCREW-LOCKING	Parafuso de trava
SCREW-THUMB	Parafuso de orelhas
SCREWDRIVER	Chave de fenda
SEAL	Retentor
SEALED UNIT	Unidade vedada
SEALER	Vedador isolante
SEAT	Assento
SECONDARY	Secundário
SECTION	Seção
SEGMENT	Segmento
SENDER	Emissor
SENSOR	Sensor
SEPARATE	Separar, separado
SEPARATOR	Separador
SERIAL NUMBER PLATE	Placa de número de série
SERVICE	Serviço, manutenção
SERVICE KIT	Jogo de manutenção
SERVICE METER	Horômetro
SETSCREW	Parafuso de fixação
SHACKLE	Grilheto, anel, manilha
SHAFT	Eixo
SHANK	Porta-ponta do escarificador

NOMENCLATURA DE PEÇAS INGLÊS-PORTUGUÊS

INGLÊS	PORTUGUÊS
SHEAVE	Polia, roldana
SHEET	Folha, lâmina
SHELL	Invólucro, cápsula, casquilho
SHIELD	Blindagem, protetor
SHIFT	Mudança
SHIM	Calço
SHIPPING	Embarque
SHOCK ABSORBER	Amortecedor de choques
SHOCKMOUNT	Montagem a prova de choques
SHOE	Sapata
SHORT	Curto
SHOWN	Ilustrado, mostrado
SHROUD	Tampa de proteção
SHUNT	Derivação
SHUT OFF	Desligar, parada
SHUTTLE	Pistão de vaivém
SIDE	Lateral
SIDE VIEW	Vista lateral
SILICONE	Silicone
SINK	Absorvente de calor
SKIVING	Desbaste
SLACK ADJUSTER	Adjustador de folga
SLEEVE	Luva, manga, camisa
SLIDER	Cursor, deslizador
SLIDE RAIL	Trilho deslizante
SLING	Cabos, amarras, linga
SLINGER	Defletor
SLUG	Pistão de reação, pistãozinho
SMALL	Pequeno
SNAP RING	Anel de retenção, anel de pressão
SNUBBER	Amortecedor
SOCKET	Soquete, tomada
SOLENOID	Solenóide
SPACER	Espaçador
SPARE	Sobressalente
SPARK PLUG	Vela de ignição
SPECIAL	Especial
SPEEDOMETER	Velocimetro
SPIDER	Cruzeta
SPINDLE	Ponta de eixo
SPLINE	Estria
SPOOL	Carretel
SPOUT	Calha, tubo
SPRING	Mola
SPROCKET	Roda motriz, roda dentada
STABILIZER	Estabilizador
STACK	Chaminé, cano de escapamento
STAND	Suporte, cavalete
STANDPIPE	Suporte vertical de sucção
STAPLE	Grampo
STARTER	Arranque motor de partida
STATOR	Estator
STEERING	Direção
STEM	Haste
STEP	Degrau
STICK	Vareta
STOP	Parar
STORAGE	Armazenagem
STRAINER	Tela filtrante
STRAP	Tira, cinta, suporte de fixação
STREET ELL	Conexão cotovelo
STRIP	Tira, fita, listra
STROKE	Curso do pistão
STUD	Prisioneiro
SUMP	Tanque, reservatório
SUPPLY VALVE	Válvula de suprimento
SUPPORT	Suporte
SUSPENSION	Suspensão
SWITCH	Interruptor
SWIVEL	Articulação giratória
TAB	Tira, aba, lingüeta
TABLE	Mesa
TACHOGRAPH	Tacógrafo
TACHOMETER	Tacômetro
TAG	Etiqueta
TAIL LAMP	Farol traseiro
TAN	Castanho
TANG	Lingüeta
TANK	Tanque
TAP	Macho
TAPE	Fita
TAPPET	Tucho
TEE	Conexão em "T"
TEMP. = TEMPERATURE	Temperatura
TERMINAL	Terminal
TEST UNIT	Unidade de teste
TESTER	Aparelho de teste
THERMISTOR	Termistor
THERMOCOUPLE	Termopar
THERMOMETER	Termômetro
THERMOSTAT	Termostato
THERMOSWITCH	Interruptor térmico
THICK	Grosso (a) espesso (a)
TIE	Ligação, tirante
THREAD (OF NUT)	Rosca (de porca)
THROTTLE	Acelerador de
THROWER	Defletor
THRU = THROUGH	Através de
TIGHTENER	Tensor
TILT CYLINDER	Cilindro de inclinação
TIMING	Sincronização, Distribuição
TIP	Ponta

NOMENCLATURA DE PEÇAS INGLÊS-PORTUGUÊS

INGLÊS	PORTUGUÊS
TIRE	Pneu
TIRE & RIM	Pneu e aro
TONGUE	Língua, lingueta
TOOL	Ferramenta
TOOLCABINET	Armário para ferramenta
TOOTH/TEETH	Dente/dentes
TOP	Topo, parte superior
TORQUE	Torque
TORQ. CONV.	Conversor de torque
TORQ. DIVIDER	Divisor de torque
TOWER	Torre
TRACK	Esteira
TRACK PIN	Pino de esteira
TRACTOR	Trator
TRAILING UNIT	Unidade rebocada
TRANSFER	Decalcomania
TRANSFORMER	Transformador
TRANSISTOR	Transistor
TRANSMISSION	Transmissão
TRANSMISSION OVERHAUL	Revisão da transmissão
TREAD	Piso, banda de rodagem
TREADLE	Pedal
TROLLY	Carrinho
TRUCK	Caminhão
TRUNNION	Munhão
TUBE	Tubo, cano
TUBING	Tubulagem canalização
TURBINE	Turbina
TURBOCHARGER	Turboalimentador
U-BOLT	Parafuso em "U"
U-JOINT	Junta universal
UNDERSIZE	Submedida
UNION	União
UPPER	Superior
USE AS REQUIRED	Usar conforme necessitar
VALUE	Valor
VALVE	Válvula
VALVE GRINDING	Retificação das válvulas
VEE BELT	Correia "V"
VEE BELT SET	Jogo de correia em "V"
VENT	Respiro
VIEW	Vista
VISE	Morsa, torno
VISOR	Pára-sol
WALKWAY	Passadiço, corredor
WARNING G.	Grupo de alarma
WASHER	Arruela
WATER PUMP	Bomba d'água
WEARPLATE	Placa de desgaste
WEDGE	Cunha
WEIGHT	Peso
WELD	Solda
WELDNUT	Porca soldada
WHEEL	Roda
WHITE	Branco
WICK	Mecha, pavio
WINCH	Guincho
WINDOW	Janela
WINDSHIELD	Pára-brisa
WIPER	Limpador
WIRE	Fio
WIRING	Sistema elétrico
WIRING DIAGRAM	Diagrama do sistema elétrico
WITH	Com
WRAPPER	Invólucro, envoltório
WRENCH	Chave
YELLOW	Amarelo
YOKE	Garfo

MAINTENANCE PARTS

DESCRIPTION	PART NUMBER	QTY	WHERE USED	PAGE
AIR INLET AND EXHAUST SYSTEM				
INDICATOR-AIR FILTER CHANGE	7W-7417	1	INDICATOR GP-AIR FILTER CHANGE	77
INDICATOR GP-AIR FILTER CHANGE	8N-2694	1	INDICATOR GP-AIR FILTER CHANGE	78
BASIC ENGINE				
GASKET (VALVE COVER)	225-6451	1	COVER GP-VALVE MECHANISM	12
		1	COVER GP-VALVE MECHANISM	14
HOSE (BREATHER)	198-8645	1	COVER GP-VALVE MECHANISM	12
PLUG-SUMP DRAIN	7C-0351	2	PAN GP-OIL	35
SEAL-O-RING (ENGINE OIL DRAIN)	5P-6718	2	PAN GP-OIL	35
SPRING (BREATHER HOSE)	162-1565	1	COVER GP-VALVE MECHANISM	12
COOLING SYSTEM				
CAP AS (RADIATOR)	227-4376	1	RADIATOR & HYD OIL COOLER GP	68
		1	RADIATOR & HYD OIL COOLER GP	70
REGULATOR-WATER TEMPERATURE	225-6908	1	CONNECTION GP-WATER	52
SEAL-O-RING (WATER TEMPERATURE REGULATOR)	225-6909	1	CONNECTION GP-WATER	52

MAINTENANCE PARTS

DESCRIPTION	PART NUMBER	QTY	WHERE USED	PAGE
ELECTRICAL AND STARTING SYSTEM				
BATTERY (12 VOLT, HEAVY DUTY)	230-6368	1	BATTERY GP	102
BATTERY (12-VOLT, HEAVY DUTY)	230-6368	1	BATTERY GP	104
BATTERY (12-VOLT, 750-AMPERE)	3T-5760	1	BATTERY GP	107
BATTERY (12-VOLT, 750-AMPERE) (MAINTENANCE FREE)	3T-5760	1	BATTERY GP	106
BELT-DRIVE	9X-8139	1	LAMP GP-WARNING BEACON	115
FUSE (10 AMP)	3K-8782	1	LAMP GP-WARNING BEACON	115
	113-8490	1	WIRING GP-POWER RECEPTACLE	158
FUSE (10-AMPERE)	3K-8782	1	LAMP GP-WARNING BEACON	114
	113-8490	2	LIGHTING GP-FLOOD & SIGNAL	119
		1	WIRING GP-AIR CONDITIONER	129
FUSE (15 AMP)	113-8491	1	WIRING GP-CAB	138
FUSE (15-AMPERE)	113-8491	2	LIGHTING GP-FLOOD	116
		2	LIGHTING GP-FLOOD & SIGNAL	119
		1	WIRING GP-CAB	139
FUSE (20-AMPERE)	113-8492	2	WIRING GP-CAB	132
		2	WIRING GP-CAB	135
FUSE (5 AMP)	141-2759	1	WIRING GP-CONSOLE	142
FUSE (5-AMPERE)	141-2759	1	WIRING GP-CAB	132
GLOW PLUG	232-6662	4	GLOW PLUG GP	108
HOLDER AS-BRUSH	7T-6092	1	STARTING MOTOR GP-ELECTRIC	124
LAMP (12 VOLT)	9X-8118	1	LAMP GP-WARNING BEACON	115
LAMP (12-VOLT)	7X-9065	1	WIRING GP-CONSOLE	146
LAMP (12-VOLT, 21/5-WATT)	3C-6516	1	LAMP GP-STOP & TAIL	113
LAMP (12-VOLT, 24-WATT)	9W-3326	1	LAMP GP-STOP & TAIL	113
		1	LAMP GP-SIGNAL	112
LAMP (12-VOLT, 55-WATT)	9W-0607	1	LAMP GP-FLOOD	110
		1	LIGHTING GP-FLOOD & SIGNAL	119
	9X-8118	1	LAMP GP-WARNING BEACON	114
	9W-0607	1	LAMP GP-FLOOD	111
		1	LIGHTING GP-FLOOD	116
LENS (AMBER)	174-8957	1	LAMP GP-SIGNAL	112
LENS-AMBER	9X-8121	1	LAMP GP-WARNING BEACON	115
LENS (AMBER, WARNING BEACON)	9X-8121	1	LAMP GP-WARNING BEACON	114
LENS AS (FLOOD)	202-6611	1	LAMP GP-FLOOD	111
LENS AS (FLOODLIGHT) (FLOOD)	202-6614	1	LAMP GP-FLOOD	110
LENS (RED, AMBER)	174-8958	1	LAMP GP-STOP & TAIL	113
FRAME AND BODY				
FITTING-GREASE (1/8-27 THD)	3B-8489	6	FRAME GP-SWING	254
FUEL SYSTEM				
CAP-FUEL	201-0330	1	TANK GP-FUEL	99
ELEMENT-FILTER (FUEL)	228-9130	1	PUMP GP-FUEL PRIMING	95
FILTER AS-FUEL (FILLER NECK SCREEN)	180-3730	1	TANK GP-FUEL	99

MAINTENANCE PARTS

DESCRIPTION	PART NUMBER	QTY	WHERE USED	PAGE
HYDRAULIC SYSTEM				
CAP-DUST	6V-0852	1	LINES GP-PILOT	345
CAP-FILL (HYDRAULIC OIL)	237-3797	1	TANK GP-HYDRAULIC	374
FILTER	4T-4520	1	VALVE GP-CONTROL	387
		1	VALVE GP-CONTROL	389
		1	VALVE GP-CONTROL	391
		1	VALVE GP-CONTROL	393
		1	VALVE GP-CONTROL	395
		1	VALVE GP-CONTROL	397
		1	VALVE GP-CONTROL	399
		1	VALVE GP-CONTROL	401
FILTER AS-OIL (CLEANOUT, HIGH EFFICIENCY)	126-1817		HYDRAULIC AR	311
FILTER AS-OIL (HYDRAULIC) (FLAME RESISTANT)	134-3014		HYDRAULIC AR	311
FILTER (HYDRAULIC TANK BREATHER)	9R-9925	1	TANK GP-HYDRAULIC	374
FITTING-GREASE	3B-8489	2	KICKOUT & POSITIONER GP	312
		4	MOUNTING GP-CYLINDER	365
IMPLEMENTS				
FITTING-GREASE	3B-8489	7	LINKAGE GP-LOADER BUCKET	420
		2	MOUNTING GP-STICK	427
		2	STICK GP-HOE	440
PAD AS	141-5150	4	PAD & MTG GP-STABILIZER	431
PAD AS-STABILIZER (STREET)	9R-5555	2	PAD GP-STABILIZER	434
LUBRICATION SYSTEM				
CANISTER AS-BREATHER	165-4021	1	BREATHER GP	46
CAP AS (ENGINE OIL FILLER)	236-6651	1	FILLER GP-ENGINE OIL	49
FILTER AS-ENGINE OIL	7W-2326	1	FILLER GP-ENGINE OIL	49
SEAL (BREATHER)	185-6643	1	BREATHER GP	46
OPERATOR STATION				
BLADE AS	102-2940	2	WIPER GP-WINDOW	592
FILTER-AIR (AIR CONDITIONER)	170-7272	1	AIR CONDITIONER GP	486
FILTER (AIR CONDITIONER)	206-7514	1	AIR CONDITIONER & MOUNTING GP	484
FILTER-AIR (HEATER)	170-7272	1	HEATER GP-CAB	533
FILTER (HEATER)	206-7514	1	HEATER GP-CAB	531
KEY	5P-8500	2	COMPARTMENT GP-LITERATURE	505
LAMP (12 VOLT)	189-3610	1	MODULE GP-WARNING INDICATOR	545
LAMP (12-VOLT)	122-7137	1	TACHOMETER GP-ELECTRIC	575
		1	TACHOMETER GP-ELECTRIC	576
LAMP (12-VOLT, 10-WATT)	6R-7490	1	SUPPRESSION GP-SOUND	568
V-BELT (AIR CONDITIONER)	1W-2934	1	COMPRESSOR GP-REFRIGERANT	507
V-BELT SET (INCLUDES 2 BELTS)	3N-1491	1	CAB AR	490
	5L-3308	1	CAB AR	489
		1	CAB AR	491
		1	CANOPY AR	499
		1	CANOPY AR	500

MAINTENANCE PARTS

DESCRIPTION	PART NUMBER	QTY	WHERE USED	PAGE
POWER TRAIN				
BREATHER (AXLE)	197-9155	1	AXLE GP-DRIVE & STEERING	165
BREATHER (TRANSMISSION)	7T-3251	1	TRANSMISSION GP-DIRECT DRIVE	198
		1	TRANSMISSION GP-DIRECT DRIVE	203
CAP	2D-2633	1	VALVE GP-TIRE	210
FILTER AS-OIL (HYDRAULIC)	119-4740	1	TRANSMISSION AR-DIRECT DRIVE	195
PLUG-MAGNETIC	9R-6602	2	AXLE GP-REAR	170
SEAL-O-RING	5P-6718	1	TRANSMISSION GP-DIRECT DRIVE	197
STRAINER	7T-2651	1	TRANSMISSION GP-DIRECT DRIVE	198
		1	TRANSMISSION GP-DIRECT DRIVE	204
VALVE AS-RELIEF (AIR VENT)	5F-5434	1	AXLE & MTG GP-REAR	164
SERVICE EQUIPMENT AND SUPPLIES				
KEY	5P-8500	1	LOCK GP-VANDALISM	598
PADLOCK GP	5P-8502	2	LOCK GP-VANDALISM	598
WORK TOOLS				
FITTING-GREASE	3B-8489	2	BUCKET GP-MULTIPURPOSE	469
		2	BUCKET GP-MULTIPURPOSE	470

PIÈCES DE RECHANGE

DESCRIPTION	NUMÉRO DE PIECÈS	QTÉ	DOMAINE D'APPLICATION	PAGE
CHÂSSIS ET BENNE				
GRAISSEUR (FILET 1/8-27)	3B-8489	6	BÂTI D'ORIENTATION (ASS)	254
CIRCUIT D'ADMISSION D'AIR ET D'ÉCHAPPEMENT				
INDICATEUR DE COLMATAGE DE FILTRE À AIR (ASS)	8N-2694	1	INDICATEUR DE COLMATAGE DE FILTRE À AIR (ASS)	78
INDICATEUR DE REMPLACEMENT DE FILTRE À AIR	7W-7417	1	INDICATEUR DE COLMATAGE DE FILTRE À AIR (ASS)	77
CIRCUIT DE CARBURANT				
BOUCHON DE CARBURANT	201-0330	1	RÉSERVOIR DE CARBURANT (ASS)	99
ÉLÉMENT DE FILTRE (CARBURANT)	228-9130	1	POMPE D'AMORÇAGE DE CARBURANT (ASS)	95
FILTRE A CARBURANT (ENS) (TAMIS DE GOULOTTE DE REMPLISSAGE)	180-3730	1	RÉSERVOIR DE CARBURANT (ASS)	99
CIRCUIT DE GRAISSAGE				
BOÎTIER-RENIFLARD	165-4021	1	RENIFLARD (ASS)	46
BOURRELET D'ÉTANCHÉITÉ (RENIFLARD)	185-6643	1	RENIFLARD (ASS)	46
CHAPEAU (ENS) (GOULOTTE DE REMPLISSAGE D'HUILE MOTEUR)	236-6651	1	BOUCHON DE REMPLISSAGE D'HUILE MOTEUR (ASS)	49
FILTRE A HUILE MOTEUR (ENS)	7W-2326	1	BOUCHON DE REMPLISSAGE D'HUILE MOTEUR (ASS)	49
CIRCUIT DE REFROIDISSEMENT				
CHAPEAU (ENS) (RADIATEUR)	227-4376	1	RADIATEUR ET REFROIDISSEUR D'HUILE HYDRAULIQUE (ASS)	68
		1	RADIATEUR ET REFROIDISSEUR D'HUILE HYDRAULIQUE (ASS)	70
JOINT TORIQUE (RÉGULATEUR DE TEMPÉRATURE D'EAU)	225-6909	1	RACCORD D'EAU (ASS)	52
THERMOSTAT-TEMPÉRATURE D'EAU	225-6908	1	RACCORD D'EAU (ASS)	52

PIÈCES DE RECHANGE

DESCRIPTION	NUMÉRO DE PIECÈS	QTÉ	DOMAINE D'APPLICATION	PAGE
CIRCUIT ÉLECTRIQUE ET DE DÉMARRAGE				
AMPOULE (12 VOLTS)	7X-9065	1	CABLAGE DE CONSOLE (ASS)	146
	9X-8118	1	LAMPE - GYROPHARE (ASS)	115
AMPOULE (12V, 21/5W)	3C-6516	1	FEUX ARRIÈRE ET FEUX D'ARRÊT	113
AMPOULE (12V, 24W)	9W-3326	1	LAMPE - CLIGNOTANT DE DIRECTION (ASS)	112
		1	FEUX ARRIÈRE ET FEUX D'ARRÊT	113
AMPOULE (12V, 55W)	9W-0607	1	LAMPE - PHARE (ASS)	110
		1	LAMPE - PHARE (ASS)	111
	9X-8118	1	LAMPE - GYROPHARE (ASS)	114
	9W-0607	1	ÉCLAIRAGE - PROJECTEURS (ASS)	116
		1	ÉCLAIRAGE - PROJECTEURS ET CLIGNOTANTS (ASS)	119
BATTERIE (12V, GRANDE CAPACITÉ)	230-6368	1	BATTERIE (ASS)	104
BATTERIE (12V, INDUSTRIELLE)	230-6368	1	BATTERIE (ASS)	102
BATTERIE (12V, 750A)	3T-5760	1	BATTERIE (ASS)	107
BATTERIE (12V, 750A) (SANS ENTRETIEN)	3T-5760	1	BATTERIE (ASS)	106
BOUGIE DE PRECHAUFFAGE	232-6662	4	BOUGIE DE PRÉCHAUFFAGE (ASS)	108
ENTRAÎNEMENT POUR COURROIE	9X-8139	1	LAMPE - GYROPHARE (ASS)	115
FUSIBLE (10A)	3K-8782	1	LAMPE - GYROPHARE (ASS)	114
		1	LAMPE - GYROPHARE (ASS)	115
	113-8490	1	CABLAGE - CLIMATISEUR (ASS)	129
		1	CABLAGE DE PRISE DE FORCE	158
		2	ÉCLAIRAGE - PROJECTEURS ET CLIGNOTANTS (ASS)	119
FUSIBLE (15A)	113-8491	2	ÉCLAIRAGE - PROJECTEURS (ASS)	116
		2	ÉCLAIRAGE - PROJECTEURS ET CLIGNOTANTS (ASS)	119
		1	CABLAGE DE CABINE (ASS)	138
		1	CABLAGE DE CABINE (ASS)	139
FUSIBLE (20A)	113-8492	2	CABLAGE DE CABINE (ASS)	132
		2	CABLAGE DE CABINE (ASS)	135
FUSIBLE (5A)	141-2759	1	CABLAGE DE CABINE (ASS)	132
		1	*WIRING GP-CONSOLE	142
LENTILLE (ENS) (PLAFONNIER) (PROJECTEUR)	202-6614	1	LAMPE - PHARE (ASS)	110
LENTILLE (ENS) (PROJECTEUR)	202-6611	1	LAMPE - PHARE (ASS)	111
LENTILLE (GYROPHARE JAUNE)	9X-8121	1	LAMPE - GYROPHARE (ASS)	114
LENTILLE (JAUNE)	174-8957	1	LAMPE - CLIGNOTANT DE DIRECTION (ASS)	112
LENTILLE ORANGE	9X-8121	1	LAMPE - GYROPHARE (ASS)	115
LENTILLE (ROUGE, JAUNE)	174-8958	1	FEUX ARRIÈRE ET FEUX D'ARRÊT	113
PORTE-BALAIS (ENS)	7T-6092	1	DÉMARREUR ÉLECTRIQUE (ASS)	124

PIÈCES DE RECHANGE

DESCRIPTION	NUMÉRO DE PIECÈS	QTÉ	DOMAINE D'APPLICATION	PAGE
CIRCUIT HYDRAULIQUE				
BOUCHON DE REMPLISSAGE (HUILE HYDRAULIQUE)	237-3797	1	RÉSERVOIR HYDRAULIQUE (ASS)	374
FILTRE	4T-4520	1	DISTRIBUTEUR (ASS)	387
		1	DISTRIBUTEUR (ASS)	389
		1	DISTRIBUTEUR (ASS)	391
		1	DISTRIBUTEUR (ASS)	393
		1	DISTRIBUTEUR (ASS)	395
		1	DISTRIBUTEUR (ASS)	397
		1	DISTRIBUTEUR (ASS)	399
		1	DISTRIBUTEUR (ASS)	401
FILTRE À HUILE (ENS) (HYDRAULIQUE) (RÉSISTANT AU FEU)	134-3014		VERSION HYDRAULIQUE	311
FILTRE À HUILE (ENS) (NETTOYAGE, GRANDE EFFICACITÉ)	126-1817		VERSION HYDRAULIQUE	311
FILTRE (RENIFLARD DE RÉSERVOIR HYDRAULIQUE)	9R-9925	1	RÉSERVOIR HYDRAULIQUE (ASS)	374
GRAISSEUR	3B-8489	2	LIMITEUR DE LEVAGE ET RETOUR À L'ANGLE DE CAVAGE	312
		4	MONTAGE DE VÉRIN (ASS)	365
PARE-POUSSIERE	6V-0852	1	CANALISATIONS A COMMANDE PILOTE (ASS)	345
ÉQUIPEMENTS				
GRAISSEUR	3B-8489	2	BRAS DE PELLE RETRO (ASS)	440
		2	MONTAGE DE BRAS (ASS)	427
		7	TIMONERIE DE GODET DE CHARGEUSE (ASS)	420
PATIN (ENS)	141-5150	4	SEMELLE ET MONTAGE DE STABILISATEUR	431
SEMELLE DE STABILISATEUR (ENS) (RUE)	9R-5555	2	SEMELLE DE STABILISATEUR	434
MATÉRIEL ET FOURNITURES D'ENTRETIEN				
CADENAS (ASS)	5P-8502	2	VERROUILLAGE ANTI-VANDALISME (ASS)	598
CLÉ	5P-8500	1	VERROUILLAGE ANTI-VANDALISME (ASS)	598
MOTEUR STANDARD				
BOUCHON-VIDANGE DU CARTER	7C-0351	2	HUILE MOTEUR - CARTER (ASS)	35
FLEXIBLE (RENIFLARD)	198-8645	1	CACHE-SOUPAPES (ASS)	12
JOINT PLAT (CACHE-SOUPAPES)	225-6451	1	CACHE-SOUPAPES (ASS)	12
		1	CACHE-SOUPAPES (ASS)	14
JOINT TORIQUE (VIDANGE D'HUILE MOTEUR)	5P-6718	2	HUILE MOTEUR - CARTER (ASS)	35
RESSORT (FLEXIBLE DE RENIFLARD)	162-1565	1	CACHE-SOUPAPES (ASS)	12
OUTILS DE TRAVAIL				
GRAISSEUR	3B-8489	2	GODET TOUS-TRAVAUX (ASS)	469
		2	GODET TOUS-TRAVAUX (ASS)	470

PIÈCES DE RECHANGE

DESCRIPTION	NUMÉRO DE PIECÈS	QTÉ	DOMAINE D'APPLICATION	PAGE
POSTE DE CONDUITE				
AMPOULE (12 VOLTS)	122-7137	1	COMPTE-TOURS ÉLECTRIQUE (ASS)	575
		1	COMPTE-TOURS ÉLECTRIQUE (ASS)	576
	189-3610	1	MODULE - TÉMOIN (ASS)	545
AMPOULE (12V, 10W)	6R-7490	1	INSONORISATION (ASS)	568
BALAI D'ESSUIE-GLACE (ENS)	102-2940	2	ESSUIE-GLACE (ASS)	592
CLÉ	5P-8500	2	POCHE A DOCUMENTS (ASS)	505
COURROIE TRAPEZOIDALE (CLIMATISEUR)	1W-2934	1	COMPRESSEUR DE REFRIGERANT (ASS)	507
FILTRE À AIR (CLIMATISEUR)	170-7272	1	CLIMATISEUR (ASS)	486
FILTRE À AIR (RÉCHAUFFEUR)	170-7272	1	CHAUFFAGE DE CABINE (ASS)	533
FILTRE (CLIMATISEUR)	206-7514	1	CLIMATISEUR ET MONTAGE (ASS)	484
FILTRE (RÉCHAUFFEUR)	206-7514	1	CHAUFFAGE DE CABINE (ASS)	531
JEU DE COURROIES TRAPEZOIDALES (COMPREND 2 COURROIES)	3N-1491	1	CABINE (VERSION)	490
	5L-3308	1	CABINE (VERSION)	489
		1	CABINE (VERSION)	491
		1	TOIT (VERSION)	499
		1	TOIT (VERSION)	500
TRANSMISSION				
BOUCHON AIMANTÉ	9R-6602	2	ESSIEU AR (ASS)	170
CHAPEAU	2D-2633	1	PNEU - GROUPE DE VALVE	210
CLAPET DE DECHARGE (PURGEUR D'AIR)	5F-5434	1	ESSIEU ET MONTAGE -ARRIÈRE (ASS)	164
CREPINE	7T-2651	1	BOÎTE MÉCANIQUE (ASS)	198
		1	BOÎTE MÉCANIQUE (ASS)	204
FILTRE À HUILE (ENS) (HYDRAULIQUE)	119-4740	1	BOITE MECANIQUE (VERSION)	195
JOINT TORIQUE	5P-6718	1	BOÎTE MÉCANIQUE (ASS)	197
RENIFLARD (BOîTE DE VITESSES)	7T-3251	1	BOÎTE MÉCANIQUE (ASS)	198
		1	BOÎTE MÉCANIQUE (ASS)	203
RENIFLARD (ESSIEU)	197-9155	1	ESSIEU MOTEUR ET DIRECTEUR (ASS)	165

PIEZAS DE MANTENIMIENTO

DESCRIPCION	NUMERO DE PIEZA	CANT	SE UTILIZA EN	PAGINA
BASTIDOR Y CAJA				
CONEXIÓN DE ENGRASE (ROSCA DE 1/8-27)	3B-8489	6	BASTIDOR DE ROTACIÓN (GR)	254
EQUIPOS Y SUMINISTRO DE SERVICIOS				
CANDADO (GR)	5P-8502	2	TRABA CONTRA EL VANDALISMO (GR)	598
LLAVE	5P-8500	1	TRABA CONTRA EL VANDALISMO (GR)	598
HERRAMIENTAS				
CONEXIÓN DE ENGRASE	3B-8489	2	CUCHARÓN DE USO MÚLTIPLE (GR)	469
		2	CUCHARÓN DE USO MÚLTIPLE (GR)	470
IMPLEMENTOS				
ALMOHADILLA (CONJ)	141-5150	4	ALMOHADILLA Y MONTAJE DEL ESTABILIZADOR (GR)	431
CONEXIÓN DE ENGRASE	3B-8489	2	BRAZO DE RETROEXCAVADOR (GR)	440
		2	MONTAJE DEL BRAZO (GR)	427
		7	VARILLAJE DE CUCHARÓN CARGADOR (GR)	420
CONJUNTO DE ARMOHADILLAS-ESTABILIZADOR (CALLE)	9R-5555	2	ZAPATA DE ESTABILIZADOR (GR)	434
MOTOR BÁSICO				
EMPAQUETADURA (TAPA DE VÁLVULA)	225-6451	1	TAPA DEL MECANISMO DE VÁLVULAS (GR)	12
		1	TAPA DEL MECANISMO DE VÁLVULAS (GR)	14
MANGUERA (RESPIRADERO)	198-8645	1	TAPA DEL MECANISMO DE VÁLVULAS (GR)	12
RESORTE (RESPIRADERO DE MANGUERA)	162-1565	1	TAPA DEL MECANISMO DE VÁLVULAS (GR)	12
SELLO ANULAR (DRENAJE DE ACEITE DE MOTOR)	5P-6718	2	CÁRTER - COLECTOR DEL (GR)	35
TAPON DE DRENAJE DE SUMIDERO	7C-0351	2	CÁRTER - COLECTOR DEL (GR)	35

PIEZAS DE MANTENIMIENTO

DESCRIPCION	NUMERO DE PIEZA	CANT	SE UTILIZA EN	PAGINA
PUESTO DEL OPERADOR				
CORREA TRAPEZOIDAL (AIRE ACONDICIONADO)	1W-2934	1	COMPRESOR DE REFRIGERANTE (GR)	507
FILTRO (AIRE ACONDICIONADO)	206-7514	1	ACONDICIONADOR DE AIRE Y MONTAJE (GR)	484
FILTRO (CALEFACTOR)	206-7514	1	CALEFACCIÓN DE LA CABINA (GR)	531
FILTRO DE AIRE (AIRE ACONDICIONADO)	170-7272	1	ACONDICIONADOR DE AIRE (GR)	486
FILTRO DE AIRE (CALEFACTOR)	170-7272	1	CALEFACCIÓN DE LA CABINA (GR)	533
HOJA DE LIMPIAPARABRISAS (CONJ)	102-2940	2	LIMPIAPARABRISAS DE LA VENTANA (GR)	592
JUEGO DE CORREAS TRAPEZOIDALES (INCLUYE 2 CORREAS)	3N-1491	1	CABINA (CONFIG)	490
	5L-3308	1	CABINA (CONFIG)	489
		1	CABINA (CONFIG)	491
		1	TECHO (CONFIG)	499
		1	TECHO (CONFIG)	500
LÁMPARA (12 VOLTIOS)	122-7137	1	TACÓMETRO ELÉCTRICO (GR)	575
		1	TACÓMETRO ELÉCTRICO (GR)	576
	189-3610	1	MÓDULO INDICADOR DE ADVERTENCIA (GR)	545
LÁMPARA (12 VOLTIOS, 10 VATIOS)	6R-7490	1	INSONORIZADOR (GR)	568
LLAVE	5P-8500	2	COMPARTIMIENTO DE LITERATURA DE SERVICIO (GR)	505
SISTEMA DE ADMISIÓN Y ESCAPE				
INDICADOR- CAMBIO DE FILTRO DE AIRE	7W-7417	1	INDICADOR DE CAMBIO DE FILTRO DE ACEITE (GR)	77
INDICADOR DE CAMBIO DE FILTRO DE ACEITE (GR)	8N-2694	1	INDICADOR DE CAMBIO DE FILTRO DE ACEITE (GR)	78
SISTEMA DE COMBUSTIBLE				
ELEMENTO DE FILTRO (COMBUSTIBLE)	228-9130	1	BOMBA DE CEBADO DE COMBUSTIBLE (GR)	95
FILTRO DE COMBUSTIBLE (CONJ) (REJILLA DE TUBO DE LLENADO)	180-3730	1	COMBUSTIBLE - TANQUE DE (GR)	99
TAPA PARA EL COMBUSTIBLE	201-0330	1	COMBUSTIBLE - TANQUE DE (GR)	99
SISTEMA DE ENFRIAMIENTO				
REGULADOR DE TEMPERATURA DEL AGUA	225-6908	1	AGUA - CONEXIÓN DE (GR)	52
SELLO ANULAR (REGULADOR DE TEMPERATURA DEL AGUA)	225-6909	1	AGUA - CONEXIÓN DE (GR)	52
TAPÓN (CONJ) (RADIADOR)	227-4376	1	RADIADOR Y ENFRIADOR DE ACEITE HIDRÁULICO (GR)	68
		1	RADIADOR Y ENFRIADOR DE ACEITE HIDRÁULICO (GR)	70
SISTEMA DE LUBRICACIÓN				
FILTRO DE ACEITE DEL MOTOR (CONJ)	7W-2326	1	TUBO DE LLENADO DE ACEITE (GR)	49
LATA DE RESPIRADERO (CONJ)	165-4021	1	RESPIRADERO (GR)	46
SELLO (RESPIRADERO)	185-6643	1	RESPIRADERO (GR)	46
TAPÓN (CONJ) (LLENADO DE ACEITE DE MOTOR)	236-6651	1	TUBO DE LLENADO DE ACEITE (GR)	49

PIEZAS DE MANTENIMIENTO

DESCRIPCION	NUMERO DE PIEZA	CANT	SE UTILIZA EN	PAGINA
SISTEMA ELÉCTRICO Y DE ARRANQUE				
BATERÍA (12 VOLTIOS, SERVICIO PESADO)	230-6368	1	BATERÍA (GR)	102
		1	BATERÍA (GR)	104
BATERÍA (12-VOLTIOS, 750-AMPERIOS)	3T-5760	1	BATERÍA (GR)	107
BATERÍA (12-VOLTIOS, 750-AMPERIOS) (LIBRE DE MANTENIMIENTO)	3T-5760	1	BATERÍA (GR)	106
BUJÍA INCANDESCENTE	232-6662	4	BUJÍA INCANDESCENTE (GR)	108
CRISTAL (AMBAR)	174-8957	1	LUZ DE SEÑAL DE GIRO (GR)	112
CRISTAL (AMBAR, BALIZA DE ADVERTENCIA)	9X-8121	1	LÁMPARA DE BALIZA DE ADVERTENCIA (GR)	114
CRISTAL (ROJO, AMBAR)	174-8958	1	LUCES DE PARADA Y COLA (GR)	113
FUSIBLE (10 A)	3K-8782	1	LÁMPARA DE BALIZA DE ADVERTENCIA (GR)	115
	113-8490	1	CABLES DEL RECEPTÁCULO DE FUERZA (GR)	158
FUSIBLE (10-AMPERIOS)	113-8490	1	CABLES DEL ACONDICIONADOR DE AIRE (GR)	129
		2	LUCES DE REFLECTOR Y CAMBIO DE DIRECCION (GR)	119
	3K-8782	1	LÁMPARA DE BALIZA DE ADVERTENCIA (GR)	114
		1	LÁMPARA DE BALIZA DE ADVERTENCIA (GR)	114
FUSIBLE (15 A)	113-8491	1	CABLES DE LA CABINA (GR)	138
FUSIBLE (15 AMPERIOS)	113-8491	1	CABLES DE LA CABINA (GR)	139
		2	LUCES DE REFLECTOR (GR)	116
		2	LUCES DE REFLECTOR Y CAMBIO DE DIRECCION (GR)	119
FUSIBLE (20-AMPERIOS)	113-8492	2	CABLES DE LA CABINA (GR)	132
		2	CABLES DE LA CABINA (GR)	135
FUSIBLE (5 AMP)	141-2759	1	*WIRING GP-CONSOLE	142
FUSIBLE (5-AMPERIOS)	141-2759	1	CABLES DE LA CABINA (GR)	132
LÁMPARA (12 VOLTIOS)	7X-9065	1	CABLES DE LA CONSOLA (GR)	146
	9X-8118	1	LÁMPARA DE BALIZA DE ADVERTENCIA (GR)	115
LÁMPARA (12 VOLTIOS, 21/5-VATIOS)	3C-6516	1	LUCES DE PARADA Y COLA (GR)	113
LÁMPARA (12 VOLTIOS, 24 VATIOS)	9W-3326	1	LUCES DE PARADA Y COLA (GR)	113
		1	LUZ DE SEÑAL DE GIRO (GR)	112
LÁMPARA (12 VOLTIOS, 55 VATIOS)	9W-0607	1	LUCES DE REFLECTOR (GR)	116
		1	LUCES DE REFLECTOR Y CAMBIO DE DIRECCION (GR)	119
		1	REFLECTOR (GR)	110
		1	REFLECTOR (GR)	111
	9X-8118	1	LÁMPARA DE BALIZA DE ADVERTENCIA (GR)	114
LENTE AMBAR	9X-8121	1	LÁMPARA DE BALIZA DE ADVERTENCIA (GR)	115
MANDO DE CORREA	9X-8139	1	LÁMPARA DE BALIZA DE ADVERTENCIA (GR)	115
PORTAESCOBILLAS (CONJ)	7T-6092	1	MOTOR DE ARRANQUE ELÉCTRICO (GR)	124
VIDRIO (CONJ) (FARO)	202-6611	1	REFLECTOR (GR)	111

PIEZAS DE MANTENIMIENTO

DESCRIPCION	NUMERO DE PIEZA	CANT	SE UTILIZA EN	PAGINA
VIDRIO (CONJ) (REFLECTOR) (REFLECTOR)	202-6614	1	REFLECTOR (GR)	110
SISTEMA HIDRÁULICO				
CONEXIÓN DE ENGRASE	3B-8489	4	MONTAJE DE CILINDRO (GR)	365
		2	POSICIONADOR DEL CUCHARÓN Y DESCONEXIÓN (GR)	312
FILTRO	4T-4520	1	VÁLVULA DE CONTROL (GR)	387
		1	VÁLVULA DE CONTROL (GR)	389
		1	VÁLVULA DE CONTROL (GR)	391
		1	VÁLVULA DE CONTROL (GR)	393
		1	VÁLVULA DE CONTROL (GR)	395
		1	VÁLVULA DE CONTROL (GR)	397
		1	VÁLVULA DE CONTROL (GR)	399
		1	VÁLVULA DE CONTROL (GR)	401
FILTRO DE ACEITE (CONJ) (FILTRO, ALTA EFICIENCIA)	126-1817		HIDRÁULICA (CONFIG)	311
FILTRO DE ACEITE (CONJ) (HIDRAULICO) (RESISTENTE AL FUEGO)	134-3014		HIDRÁULICA (CONFIG)	311
FILTRO (RESPIRADERO DEL TANQUE)	9R-9925	1	TANQUE HIDRÁULICO (GR)	374
TAPA CONTRA EL POLVO	6V-0852	1	TUBERÍAS CON SERVOMANDO (GR)	345
TAPA, LLENADO (ACEITE HIDRÁULICO)	237-3797	1	TANQUE HIDRÁULICO (GR)	374
TREN DE FUERZA				
COLADOR	7T-2651	1	TRANSMISIÓN DIRECTA (GR)	204
		1	TRANSMISIÓN DIRECTA (GR)	198
FILTRO DE ACEITE (CONJ) (HIDRAULICO)	119-4740	1	TRANSMISION DIRECTA (CONFIG)	195
RESPIRADERO (EJE)	197-9155	1	EJE DE IMPULSIÓN Y DE DIRECCIÓN (GR)	165
RESPIRADERO (TRANSMISION)	7T-3251	1	TRANSMISIÓN DIRECTA (GR)	198
		1	TRANSMISIÓN DIRECTA (GR)	203
SELLO ANULAR	5P-6718	1	TRANSMISIÓN DIRECTA (GR)	197
TAPA	2D-2633	1	VÁLVULA DEL NEUMÁTICO (GR)	210
TAPÓN MAGNÉTICO	9R-6602	2	EJE TRASERO (GR)	170
VALVULA (RESPIRADERO DE AIRE)	5F-5434	1	MONTAJE DEL EJE TRASERO (GR)	164

PEÇAS DE MANUTENÇÃO

DESCRIÇÃO	NÚMERO DE PEÇA	QUANT	UTILIZADA EM	PÁGINA
ACESSÓRIOS				
CALCO	141-5150	4	CALÇO DO ESTABILIZADOR E MONTAGEM	431
CALÇO - ESTABILIZADOR (RUA)	9R-5555	2	CALÇO DO ESTABILIZADOR	434
GRAXEIRA	3B-8489	7	ARTICULAÇÃO DAS CAÇAMBAS DAS CARREGADEIRAS	420
		2	BRAÇO - CAÇAMBA RETRO-ESCAVADORA	440
		2	MONTAGEM - BRAÇO	427
CHASSI E CARCAÇA				
GRAXEIRA (ROSCA 1/8-27 POL)	3B-8489	6	ARMAÇÃO OSCILANTE	254
EQUIPAMENTOS DE SERVIÇO E SUPRIMENTOS				
CADEADO	5P-8502	2	CADEADO CONTRA VANDALISMO	598
CHAVE	5P-8500	1	CADEADO CONTRA VANDALISMO	598
FERRAMENTAS DE TRABALHO				
GRAXEIRA	3B-8489	2	CAÇAMBA DE MÚLTIPLAS APLICAÇÕES	469
		2	CAÇAMBA DE MÚLTIPLAS APLICAÇÕES	470
MOTOR BÁSICO				
BUJÃO - DRENAGEM DO RESERVATÓRIO	7C-0351	2	CÁRTER DO ÓLEO DO MOTOR	35
JUNTA (TAMPA DA VÁLVULA)	225-6451	1	TAMPA - MECANISMO DAS VÁLVULAS	12
		1	TAMPA - MECANISMO DAS VÁLVULAS	14
MANGUEIRA (RESPIRO)	198-8645	1	TAMPA - MECANISMO DAS VÁLVULAS	12
MOLA (MANGUEIRA DO RESPIRO)	162-1565	1	TAMPA - MECANISMO DAS VÁLVULAS	12
RETENTOR DE ANEL-O (DRENO DO ÓLEO DO MOTOR)	5P-6718	2	CÁRTER DO ÓLEO DO MOTOR	35
POSTO DO OPERADOR				
CHAVE	5P-8500	2	COMPARTIMENTO PARA LITERATURA	505
CORREIA EM V (AR CONDICIONADO)	1W-2934	1	COMPRESSOR DE REFRIGERANTE	507
FILTRO - AR (AQUECEDOR)	170-7272	1	AQUECEDOR DA CABINE	533
FILTRO - AR (AR CONDICIONADO)	170-7272	1	CONDICIONADOR DE AR	486
FILTRO (AQUECEDOR)	206-7514	1	AQUECEDOR DA CABINE	531
FILTRO (AR CONDICIONADO)	206-7514	1	CONDICIONADOR DE AR E MONTAGEM	484
JOGO DE CORREIAS EM V (INCLUI 2 CORREIAS)	3N-1491	1	CABINE	490
	5L-3308	1	CABINE	489
		1	CABINE	491
		1	TOLDO	499
		1	TOLDO	500
LÂMINA	102-2940	2	LIMPADOR DO VIDRO	592
LÂMPADA (12 V)	189-3610	1	MÓDULO - INDICADOR DE ALARME	545
LÂMPADA (12-VOLTS)	122-7137	1	TACÔMETRO - ELÉTRICO	575
		1	TACÔMETRO - ELÉTRICO	576
LÂMPADA (12-VOLTS, 10-WATTS)	6R-7490	1	REDUÇÃO DE RUÍDO	568

PEÇAS DE MANUTENÇÃO

DESCRIÇÃO	NÚMERO DE PEÇA	QUANT	UTILIZADA EM	PÁGINA
SISTEMA DE ADMISSÃO E ESCAPE DE AR				
INDICADOR - TROCA DO FILTRO DE AR	8N-2694	1	INDICADOR - TROCA DO FILTRO DE AR	78
INDICADOR-TROCAR FILTRO DE AR	7W-7417	1	INDICADOR - TROCA DO FILTRO DE AR	77
SISTEMA DE ARREFECIMENTO				
REGULADOR DE TEMPERATURA DA ÁGUA	225-6908	1	CONEXÃO - TUBO D'ÁGUA	52
RETENTOR DE ANEL-O (REGULADOR DA TEMPERATURA DA ÁGUA)	225-6909	1	CONEXÃO - TUBO D'ÁGUA	52
TAMPA (RADIADOR)	227-4376	1	RADIADOR E ARREFECEDOR DO ÓLEO HIDRÁULICO	68
		1	RADIADOR E ARREFECEDOR DO ÓLEO HIDRÁULICO	70
SISTEMA DE LUBRIFICAÇÃO				
FILTRO - ÓLEO DO MOTOR	7W-2326	1	BOCAL DE ENCHIMENTO DE ÓLEO DO MOTOR	49
LATA - RESPIRO	165-4021	1	RESPIRO	46
RETENTOR (RESPIRO)	185-6643	1	RESPIRO	46
TAMPA (BOCAL DE ENCHIMENTO DO OLEO DO MOTOR)	236-6651	1	BOCAL DE ENCHIMENTO DE ÓLEO DO MOTOR	49
SISTEMA DO COMBUSTÍVEL				
ELEMENTO - FILTRANTE (COMBUSTÍVEL)	228-9130	1	BOMBA DE ESCORVA DO COMBUSTÍVEL	95
FILTRO - COMBUSTÍVEL (TELA DO BOCAL DE ENCHIMENTO)	180-3730	1	TANQUE DE COMBUSTÍVEL	99
TAMPA - TANQUE DE COMBUSTÍVEL	201-0330	1	TANQUE DE COMBUSTÍVEL	99

PEÇAS DE MANUTENÇÃO

DESCRIÇÃO	NÚMERO DE PEÇA	QUANT	UTILIZADA EM	PÁGINA
SISTEMA ELÉTRICO DE PARTIDA				
BATERIA (12 VOLTS, SERVIÇO PESADO)	230-6368	1	BATERIA	102
		1	BATERIA	104
BATERIA (12 VOLTS, 750 AMPERES)	3T-5760	1	BATERIA	107
BATERIA (12 VOLTS, 750 AMPERES) (LIVRE DE MANUTENÇÃO)	3T-5760	1	BATERIA	106
CORREIA DE COMANDO	9X-8139	1	LUZ GIRATÓRIA DE ALARME	115
FUSÍVEL (10 A)	3K-8782	1	LUZ GIRATÓRIA DE ALARME	115
	113-8490	1	CABOS/FIOS ELÉTRICOS - TOMADA DE FORÇA	158
FUSÍVEL (10 AMPERES)	3K-8782	1	LUZ GIRATÓRIA DE ALARME	114
	113-8490	1	CABOS/FIOS ELÉTRICOS - AR CONDICIONADO	129
		2	SISTEMA DE ILUMINAÇÃO - FARÓIS E SINAL	119
FUSÍVEL (15 A)	113-8491	1	CABOS/FIOS ELÉTRICOS - CABINE	138
FUSÍVEL (15 AMPERES)	113-8491	2	SISTEMA DE ILUMINAÇÃO - FARÓIS	116
		2	SISTEMA DE ILUMINAÇÃO - FARÓIS E SINAL	119
		1	CABOS/FIOS ELÉTRICOS - CABINE	139
FUSÍVEL (20-AMPERES)	113-8492	2	CABOS/FIOS ELÉTRICOS - CABINE	132
		2	CABOS/FIOS ELÉTRICOS - CABINE	135
FUSÍVEL (5 AMP)	141-2759	1	*WIRING GP-CONSOLE	142
FUSÍVEL (5 AMPÈRES)	141-2759	1	CABOS/FIOS ELÉTRICOS - CABINE	132
LÂMPADA (12 V)	9X-8118	1	LUZ GIRATÓRIA DE ALARME	115
LÂMPADA (12-VOLTS)	7X-9065	1	CABOS/FIOS ELÉTRICOS DO CONSOLE	146
LÂMPADA (12-VOLTS, 21/5-WATTS)	3C-6516	1	LUZ TRASEIRA E DE FREIO	113
LÂMPADA (12-VOLTS, 24-WATTS)	9W-3326	1	LÂMPADA - SINALIZAÇÃO	112
		1	LUZ TRASEIRA E DE FREIO	113
LÂMPADA (12-VOLTS, 55-WATTS)	9W-0607	1	LÂMPADA - FAROL	110
		1	LÂMPADA - FAROL	111
	9X-8118	1	LUZ GIRATÓRIA DE ALARME	114
	9W-0607	1	SISTEMA DE ILUMINAÇÃO - FARÓIS	116
		1	SISTEMA DE ILUMINAÇÃO - FARÓIS E SINAL	119
	9X-8118	1	LUZ GIRATÓRIA DE ALARME	114
LENTE ÂMBAR	9X-8121	1	LUZ GIRATÓRIA DE ALARME	115
LENTE (ÂMBAR, PISCA-ALERTA)	9X-8121	1	LUZ GIRATÓRIA DE ALARME	114
LENTE (ÂMBER)	174-8957	1	LÂMPADA - SINALIZAÇÃO	112
LENTE (FAROL DIANTEIRO)	202-6611	1	LÂMPADA - FAROL	111
LENTE (HOLOFOTE) (FAROL)	202-6614	1	LÂMPADA - FAROL	110
LENTE (VERMELHA, ÂMBAR)	174-8958	1	LUZ TRASEIRA E DE FREIO	113
SUPORTE - ESCOVA	7T-6092	1	MOTOR ELÉTRICO DE PARTIDA	124
VELA DE AQUECIMENTO; VELA INCANDESCENTE	232-6662	4	VELA DE AQUECIMENTO; VELA INCANDESCENTE	108

PEÇAS DE MANUTENÇÃO

DESCRIÇÃO	NÚMERO DE PEÇA	QUANT	UTILIZADA EM	PÁGINA
SISTEMA HIDRÁULICO				
FILTRO	4T-4520	1	VÁLVULA DE CONTROLE	387
		1	VÁLVULA DE CONTROLE	389
		1	VÁLVULA DE CONTROLE	391
		1	VÁLVULA DE CONTROLE	393
		1	VÁLVULA DE CONTROLE	395
		1	VÁLVULA DE CONTROLE	397
		1	VÁLVULA DE CONTROLE	399
		1	VÁLVULA DE CONTROLE	401
FILTRO - ÓLEO (HIDRÁULICO) (RESISTENTE A FOGO)	134-3014		COMANDO HIDRÁULICO	311
FILTRO - ÓLEO (LIMPEZA, ALTA EFICIÊNCIA)	126-1817		COMANDO HIDRÁULICO	311
FILTRO (RESPIRO DO TANQUE HIDRAULICO)	9R-9925	1	TANQUE HIDRÁULICO	374
GRAXEIRA	3B-8489	2	DESENGATE E POSICIONADOR DA CAÇAMBA	312
		4	MONTAGEM - CILINDRO	365
TAMPA - ENCHIMENTO (ÓLEO HIDRÁULICO)	237-3797	1	TANQUE HIDRÁULICO	374
TAMPA CONTRA POEIRA	6V-0852	1	TUBOS - CIRCUITO PILOTO	345
TREM DE FORÇA				
BUJÃO MAGNÉTICO	9R-6602	2	SEMI-EIXO TRASEIRO	170
FILTRO - ÓLEO (HIDRÁULICO)	119-4740	1	TRANSMISSÃO DIRETA	195
RESPIRO (EIXO)	197-9155	1	EIXO DE PROPULSÃO E DIREÇÃO	165
RESPIRO (TRANSMISSÃO)	7T-3251	1	TRANSMISSÃO DIRETA	198
		1	TRANSMISSÃO DIRETA	203
RETENTOR DE ANEL-O	5P-6718	1	TRANSMISSÃO DIRETA	197
TAMPA	2D-2633	1	VÁLVULA DE PNEU	210
TELA FILTRANTE	7T-2651	1	TRANSMISSÃO DIRETA	198
		1	TRANSMISSÃO DIRETA	204
VÁLVULA DE ALÍVIO (RESPIRO DE AR)	5F-5434	1	EIXO TRASEIRO E MONTAGEM	164

WARTUNGSTEILE

BESCHREIBUNG	ERSATZTEIL-NUMMER	MENGE	VERWENDET IN	SEITE
ARBEITSGERÄTE				
POLSTER	141-5150	4	STÜTZPLATTEN U. BEFESTIGUNG	431
SCHMIERNIPPEL	3B-8489	2	KOMBISCHAUFEL	469
		2	KOMBISCHAUFEL	470
		2	LÖFFELSTIEL	440
		7	SCHAUFELGESTÄNGE	420
		2	STIELAUFHÄNGUNG	427
STABILISATORUNTERLAGE (STRASSE)	9R-5555	2	SEITENSTÜTZENPLATTEN	434
ELEKTRISCHE ANLAGE UND STARTSYSTEM				
ABDECKGLAS (ARBEITSSCHEIN-WERFER)	202-6611	1	ARBEITSLEUCHTEN	111
ABDECKGLAS (ARBEITSSCHEINWER-FER) (ARBEITSSCHEINWERFER)	202-6614	1	ARBEITSLEUCHTEN	110
ABDECKGLAS (GELB)	9X-8121	1	RUNDUM-KENNLEUCHTE	115
	174-8957	1	BLINKLEUCHTE	112
ABDECKGLAS (GELB, RUNDUM-KENNLEUCHTE)	9X-8121	1	RUNDUM-KENNLEUCHTE	114
		1	RUNDUM-KENNLEUCHTE	114
ABDECKGLAS (ROT, GELB)	174-8958	1	BREMS- UND RÜCKLEUCHTE	113
BATTERIE (12 V, HD)	230-6368	1	BATTERIE	102
BATTERIE (12V, DH)	230-6368	1	BATTERIE	104
BATTERIE (12V, 750 A)	3T-5760	1	BATTERIE	107
BATTERIE (12V, 750 A) (WARTUNGSFREI)	3T-5760	1	BATTERIE	106
BÜRSTENHALTER	7T-6092	1	STARTERMOTOR	124
GLÜHKERZE	232-6662	4	GLÜHKERZE	108
LAUFBAND UND ANTRIEB	9X-8139	1	RUNDUM-KENNLEUCHTE	115
LEUCHTE (12 V)	7X-9065	1	KONSOLENVERDRAHTUNG	146
	9X-8118	1	RUNDUM-KENNLEUCHTE	115
LEUCHTE (12 V, 21/5 W)	3C-6516	1	BREMS- UND RÜCKLEUCHTE	113
LEUCHTE (12 V, 24 W)	9W-3326	1	BLINKLEUCHTE	112
		1	BREMS- UND RÜCKLEUCHTE	113
LEUCHTE (12 V, 55 W)	9W-0607	1	ARBEITS- U. SIGNALLEUCHTE	119
		1	ARBEITSLEUCHTEN	110
		1	ARBEITSLEUCHTEN	111
		1	ARBEITSLEUCHTEN	116
	9X-8118	1	RUNDUM-KENNLEUCHTE	114
SICHERUNG (10 A)	3K-8782	1	RUNDUM-KENNLEUCHTE	114
		1	RUNDUM-KENNLEUCHTE	115
	113-8490	2	ARBEITS- U. SIGNALLEUCHTE	119
		1	KLIMAANLAGENVERDRAHTUNG	129
		1	STECKDOSENVERDRAHTUNG	158
SICHERUNG (15 A)	113-8491	2	ARBEITS- U. SIGNALLEUCHTE	119
		2	ARBEITSLEUCHTEN	116
		1	FAHRERHAUSVERDRAHTUNG	138
		1	FAHRERHAUSVERDRAHTUNG	139
SICHERUNG (20 A)	113-8492	2	FAHRERHAUSVERDRAHTUNG	132
		2	FAHRERHAUSVERDRAHTUNG	135
SICHERUNG (5 A)	141-2759	1	FAHRERHAUSVERDRAHTUNG	132
		1	*WIRING GP-CONSOLE	142

WARTUNGSTEILE

BESCHREIBUNG	ERSATZTEIL-NUMMER	MENGE	VERWENDET IN	SEITE
FAHRERHAUS				
FILTER (HEIZUNG)	206-7514	1	FAHRERHAUSHEIZUNG	531
FILTER (KLIMAANLAGE)	206-7514	1	KLIMAANLAGE UND AUFHÄNGUNG	484
KEILRIEMEN (KLIMAANLAGE)	1W-2934	1	KÄLTEMITTELKOMPRESSOR	507
KEILRIEMENSATZ (EINSCHL. 2 RIEMEN)	3N-1491	1	FAHRERHAUS	490
	5L-3308	1	FAHRERHAUS	489
		1	FAHRERHAUS	491
		1	WETTERDACH	499
		1	WETTERDACH	500
LEUCHTE (12 V)	122-7137	1	DREHZAHLMESSER, ELEKTR.	575
		1	DREHZAHLMESSER, ELEKTR.	576
	189-3610	1	WARNANZEIGEMODUL	545
LEUCHTE (12 V, 10 W)	6R-7490	1	SCHALLDÄMPFUNG	568
LUFTFILTER (HEIZUNG)	170-7272	1	FAHRERHAUSHEIZUNG	533
LUFTFILTER (KLIMAANLAGE)	170-7272	1	KLIMAANLAGE	486
SCHEIBENWISCHERBLATT	102-2940	2	SCHEIBENWISCHER	592
SCHLÜSSEL	5P-8500	2	LITERATURABLAGE	505
HYDRAULIKSYSTEM				
EINFÜLLKAPPE (HYDRAULIKÖL)	237-3797	1	HYDRAULIKTANK	374
FILTER	4T-4520	1	STEUERVENTIL	387
		1	STEUERVENTIL	389
		1	STEUERVENTIL	391
		1	STEUERVENTIL	393
		1	STEUERVENTIL	395
		1	STEUERVENTIL	397
		1	STEUERVENTIL	399
		1	STEUERVENTIL	401
FILTER (HYDRAULIKTANKENTLÜFTER)	9R-9925	1	HYDRAULIKTANK	374
ÖLFILTER (HOCHLEISTUNGSREINIGUNG)	126-1817		HYDRAULIKSYSTEM	311
ÖLFILTER (HYDRAULISCH) (FEUERFEST)	134-3014		HYDRAULIKSYSTEM	311
SCHMIERNIPPEL	3B-8489	2	SCHAUFELAUSSCHALTER UND -EINSTELLER	312
		4	ZYLINDERAUFHÄNGUNG	365
STAUBKAPPE	6V-0852	1	VORSTEUERLEITUNGEN	345
KRAFTSTOFFSYSTEM				
FILTER (KRAFTSTOFF)	228-9130	1	KRAFTSTOFF-ENTLÜFTUNGSPUMPE	95
KRAFTSTOFFILTER (EINFÜLLSTURZENSIEB)	180-3730	1	KRAFTSTOFFTANK	99
KRAFTSTOFFTANKKAPPE	201-0330	1	KRAFTSTOFFTANK	99

WARTUNGSTEILE

BESCHREIBUNG	ERSATZTEIL-NUMMER	MENGE	VERWENDET IN	SEITE
KRAFTÜBERTRAGUNG				
DRUCKBEGRENZUNGSVENTIL (ENTLÜFTUNGSVORRICHTUNG)	5F-5434	1	HINTERACHSE U. BEFESTIGUNG	164
ENTLÜFTER (ACHSE)	197-9155	1	ANTRIEBS- UND LENKACHSE	165
ENTLÜFTER (GETRIEBE)	7T-3251	1	WECHSELGETRIEBE	198
		1	WECHSELGETRIEBE	203
KAPPE	2D-2633	1	REIFENVENTIL	210
MAGNETSTOPFEN	9R-6602	2	HINTERACHSE	170
O-RING-DICHTUNG	5P-6718	1	WECHSELGETRIEBE	197
ÖLFILTER (HYDRAULISCH)	119-4740	1	MECHANISCHES GETRIEBE	195
SIEB	7T-2651	1	WECHSELGETRIEBE	198
		1	WECHSELGETRIEBE	204
KÜHLSYSTEM				
KAPPE (KÜHLER)	227-4376	1	KÜHLER UND HYDRAULIKÖLKÜHLER	68
		1	KÜHLER UND HYDRAULIKÖLKÜHLER	70
O-RING-DICHTUNG (KÜHLWASSERTHERMOSTAT)	225-6909	1	KÜHLWASSERANSCHLUSS	52
WASSERTEMPERATURREGLER	225-6908	1	KÜHLWASSERANSCHLUSS	52
LUFTANSAUG- UND ABGASSYSTEM				
LUFTFILTERWARTUNGSANZEIGE	8N-2694	1	LUFTFILTERWARTUNGSANZEIGE	78
LUFTFILTERWECHSELANZEIGE	7W-7417	1	LUFTFILTERWARTUNGSANZEIGE	77
MOTOR (GRUNDAUSFÜHRUNG)				
DICHTUNG (VENTILDECKEL)	225-6451	1	VENTILDECKEL	12
		1	VENTILDECKEL	14
FEDER (ENTLÜFTERSCHLAUCH)	162-1565	1	VENTILDECKEL	12
O-RING-DICHTUNG (MOTORÖLABLASS)	5P-6718	2	ÖLWANNE	35
ÖLWANNEN-ABLASSSCHRAUBE	7C-0351	2	ÖLWANNE	35
SCHLAUCHLEITUNG (ENTLÜFTER)	198-8645	1	VENTILDECKEL	12
RAHMEN UND FAHRGESTELL				
SCHMIERNIPPEL (1/8-27-GEWINDE)	3B-8489	6	SCHWENKRAHMEN	254
SCHMIERSYSTEM				
DICHTUNG (ENTLÜFTER)	185-6643	1	ENTLÜFTER	46
ENTLÜFTERPATRONE	165-4021	1	ENTLÜFTER	46
KAPPE (MOTORÖLEINFÜLLUNG)	236-6651	1	MOTORÖLEINFÜLLSTUTZEN	49
ÖLFILTER	7W-2326	1	MOTORÖLEINFÜLLSTUTZEN	49
WARTUNGSAUSRÜSTUNG UND -ZUBEHÖR				
SCHLÜSSEL	5P-8500	1	VORHÄNGESCHLOSS	598
VORHÄNGESCHLOSS	5P-8502	2	VORHÄNGESCHLOSS	598

INDEX

Name	Page
A	
ADJUSTER GP-SEAT	483
AIR CLEANER GP	71
	73
	74
AIR CONDITIONER & MOUNTING GP	484
AIR CONDITIONER GP	486
ALTERNATOR GP-CHARGING	101
ARM GP-LIFT	413
ARMREST GP	488
AXLE & MTG GP-REAR	163
	164
AXLE GP-DRIVE & STEERING	165
	167
AXLE GP-FRONT	228
	230
AXLE GP-REAR	168
B	
BACKHOE AR-EXTENDABLE STICK	1
BACKHOE AR-EXTENDABLE STICK–ONE WAY LINES	1
BACKHOE AR-STANDARD STICK	2
BACKHOE AR-STANDARD STICK–ONE WAY LINES	2
BACKHOE AR-STANDARD STICK–2-WAY LINES	3
BATTERY GP	102
	104
	106
	107
BATTERY (12 VOLT, HEAVY DUTY)	102
BATTERY (12-VOLT, HEAVY DUTY)	104
BATTERY (12-VOLT, 750-AMPERE)	107
BATTERY (12-VOLT, 750-AMPERE) (MAINTENANCE FREE)	106
BELT-DRIVE	115
BLADE AS	592
BOOM GP	415
	416
BOOT	408
	409
BOX GP-BATTERY	240
BRACE GP-LIFT CYLINDER	417
BRACKET AS	106
	107
BRAKE GP-PARKING	220
BREATHER (AXLE)	165
BREATHER GP	46
	48
BREATHER (TRANSMISSION)	198
	203
BUCKET AR-MULTIPURPOSE	442
	443
BUCKET AS-GENERAL PURPOSE	444
	445
BUCKET GP-HOE	451
BUCKET GP-HOE–HEAVY DUTY	452
	453
	454
	455
	456
	467
BUCKET GP-HOE–HIGH CAPACITY	457
	458
	459
	460
BUCKET GP-HOE–ROCK	461
	462
	463
	464
	465
	468
BUCKET GP-HOE–STANDARD DUTY	446
	447
	448
	449
	450
	466
BUCKET GP-MULTIPURPOSE	469
	470
BUMPER GP-FRONT	241
C	
CAB AR	489
	490
	491
CAB AS	492
	494
CAB GP	495
	497
CAMSHAFT GP	9
	10
CANISTER AS-BREATHER	46
CANOPY AR	499
	500
CANOPY AS	501
	502
CANOPY GP-OPEN ROPS	503
CAP	210
CAP AS	314
CAP AS (ENGINE OIL FILLER)	49
CAP AS (RADIATOR)	68
	70
CAP-DUST	345
CAP-FILL (HYDRAULIC OIL)	374
CAP-FUEL	99

INDEX

Name	Page
CHASSIS AR	3
COMMON AR	4
COMPARTMENT GP-LITERATURE	504
	505
COMPRESSOR GP-REFRIGERANT	506
	507
CONDENSER & MTG GP-REFRIGERANT	508
CONNECTION GP-WATER	52
CONNECTOR GP	336
	350
CONNECTOR GP-VALVE	262
	264
CONSOLE GP-FRONT	509
CONSOLE GP-OPERATOR	510
CONSOLE GP-SIDE	511
	512
	513
	514
	515
CONTROL GP-DIFFERENTIAL LOCK	173
CONTROL GP-GOV & ACCELERATOR	84
CONTROL GP-HYDRAULIC HAND	265
	267
	269
	271
	273
	275
CONTROL GP-HYDRAULIC PEDAL	276
	278
CONTROL GP-PARKING BRAKE	221
	222
CONTROL GP-SERVICE BRAKE	223
CONTROL GP-STEERING	231
	232
CONTROL GP-TRANSMISSION	174
CONVERSION AR-CUSHION SWING	280
CONVERSION GP-CONTROL VALVE	282
CONVERSION GP-HYD HAND CONTROL	283
	284
	285
	286
COOLANT HEATER LINES	539
	541
COOLER GP-ENGINE OIL	53
COOLER GP-FLTR BASE & ENG OIL	53
	55
COUNTERWEIGHT GP	242
	243
	244
	245
	246
COUPLER GP-QUICK	472
	473
	474
	475
	476
COUPLING GP	287
COVER GP-CONSOLE	516
COVER GP-FIREWALL	517
	518
COVER GP-FRONT HOUSING	11
COVER GP-PARKING BRAKE	519
COVER GP-POST	521
COVER GP-POST–RH	520
COVER GP-VALVE MECHANISM	12
	14
CRANKSHAFT GP	16
	18
CYLINDER AS	223
CYLINDER BLOCK GP	20
	22
	23
CYLINDER GP-BACKHOE BUCKET	288
	290
CYLINDER GP-BOOM	292
CYLINDER GP-EXTENDABLE STICK	294
	295
CYLINDER GP-LIFT	297
CYLINDER GP-MULTIPURPOSE BUKT	298
CYLINDER GP-STABILIZER	299
	300
CYLINDER GP-STICK	301
CYLINDER GP-SWING	302
CYLINDER GP-TILT	304
CYLINDER HEAD GP	24
	25
	26

D

DIFFERENTIAL & BEVEL GEAR GP	176
DIFFERENTIAL GP	178
DOOR GP-BATTERY	247
DOOR GP-LH	522
DOOR GP-RH	524
DRIVE AR-BACKHOE LOADER– ALL WHEEL DRIVE, 2-WHEEL STEER	179
DRIVE AR-BACKHOE LOADER– 2-WHEEL DRIVE, 2-WHEEL STEER	179
DRIVE GP-FAN	27
DRIVE GP-FLEXIBLE COUPLING	180
DUCT GP-AIR	526
	528

E

EDGE GP-CUTTING	477
ELBOW GP	338
ELBOW GP-AIR INLET	75
ELEMENT-FILTER (FUEL)	95

INDEX

Name	Page
ENGINE AR	5, 6
ENGINE AR-PRIMARY	7, 8
EXTENSION GP-EXHAUST	76

F

Name	Page
FAN AS	486, 533
FAN GP-SUCTION	57, 58, 59
FENDER GP-REAR	248, 249
FILLER GP-ENGINE OIL	49
FILLER GP-POWER TRAIN OIL	181, 182
FILM	366
FILM (AIR RECIRCULATION)	486, 533
FILM-AWS	600
FILM (BUCKET CONTROL)	267, 269, 271, 600
FILM (BUCKET CONTROL)	600
FILM-BUCKET INDICATOR	312
FILM (BULK) (.095M)	600
FILM-CAT (HOOD)	259
FILM (CATERPILLAR)	489, 490, 491, 500
FILM (CENTER PIVOT, BOOM LOCK)	600
FILM-CONTROL (AIR CONDITIONER)	484, 600
FILM-CONTROL (AIR CONDITIONER)	531
FILM (CONTROL PLATE)	600
FILM GP	596
FILM-IDENTIFICATION (FUSE PANEL)	179, 600
FILM-INDICATOR	143, 146, 600, 601
FILM-INDICATOR (BUCKET)	442, 443
FILM-INDICATOR (RED)	417
FILM-INSTRUCTION	271, 601
FILM-INSTRUCTION (BUCKET CONTROL)	265, 309, 601
FILM-INSTRUCTION (E-STICK)	276
FILM-INSTRUCTION (EXTENDABLE STICK)	601
FILM-INSTRUCTION (MULTIPURPOSE BUCKET)	600
FILM-INSTRUCTION (NO STEP)	599
FILM-INSTRUCTION (RETURN FLOW)	316, 320, 325, 328, 601
FILM (MULTIPURPOSE BUCKET)	309, 600
FILM (SIDESHIFT, BOOM LOCK)	600
FILM (START SWITCH)	549, 551, 600
FILM (STD CROSS PATTERN)	600
FILM-STRIPE (278-CM)	259
FILM-STRIPE (399CM)	489, 490
FILM (VARIABLE SPEED)	84, 600
FILM-WARNING (HIGH PRESSURE CYLINDER)	601
FILTER	387, 389, 391, 393, 395, 397, 399, 401
FILTER-AIR (AIR CONDITIONER)	486
FILTER (AIR CONDITIONER)	484
FILTER-AIR (HEATER)	533
FILTER AS-ENGINE OIL	49
FILTER AS-FUEL (FILLER NECK SCREEN)	99
FILTER AS-OIL (CLEANOUT, HIGH EFFICIENCY)	311
FILTER AS-OIL (HYDRAULIC)	195
FILTER AS-OIL (HYDRAULIC) (FLAME RESISTANT)	311
FILTER BASE & ENG OIL COOLER	53, 55
FILTER (HEATER)	531
FILTER (HYDRAULIC TANK BREATHER)	374
FITTING GP-HEATER & AIR COND	60
FITTING-GREASE	312, 365, 420, 427, 440, 469, 470
FITTING-GREASE (1/8-27 THD)	413
FITTING-GREASE (1/8-27 THD)	254

INDEX

Name	Page
FLASHER AS	154
FLOOR MAT GP	529, 530
FLOORPLATE GP	250, 252
FLYWHEEL GP	28
FORK GP	478
FRAME GP-LOADER	253
FRAME GP-SWING	254
FUSE (10 AMP)	115, 158
FUSE (10-AMPERE)	114, 119, 129
FUSE (15 AMP)	138
FUSE (15-AMPERE)	116, 119, 139
FUSE (20-AMPERE)	132, 135
FUSE (5 AMP)	142
FUSE (5-AMPERE)	132
G	
GASKET (VALVE COVER)	12, 14
GAUGE GP-FUEL LEVEL	146
GEAR GP-BEVEL & PINION	176
GLOW PLUG	108
GLOW PLUG GP	108
GUARD GP-DRIVE SHAFT	256
GUARD GP-STABILIZER CYLINDER	306, 307
H	
HEATER GP-CAB	531, 533
HEATER GP-JACKET WATER	109
HOLDER AS-BRUSH	124
HOOD & GUARD GP	257
HOOD GP-ENGINE	259
HORN GP-ELECTRIC	535
HOSE (BREATHER)	12
HOUSING & FLANGE GP-AXLE–LH	185
HOUSING & FLANGE GP-AXLE–RH	183
HOUSING GP	395
HOUSING GP-DIFFERENTIAL	176
HOUSING GP-FLYWHEEL	29
HOUSING GP-FRONT	30
HYDRAULIC AR	309, 311
HYDRAULIC AR–KIT	309, 310
I	
INDICATOR-AIR FILTER CHANGE	77
INDICATOR GP-AIR FILTER CHANGE	77, 78
INSTALLATION AR-WHEEL CHOCK	597
K	
KEY	505, 598
KICKOUT & POSITIONER GP	312
KIT-ADJUSTER	488
KIT-BEARING	168
KIT-CONNECTING PLUG (2 PIN)	152, 208, 222
KIT-CONNECTING PLUG (2-PIN)	486
KIT-CONTACT (STARTING MOTOR)	124
KIT-CRANKSHAFT BEARING (0.25-MM US)	16, 18
KIT-CRANKSHAFT BEARING (0.50-MM US)	16, 18
KIT-CRANKSHAFT BEARING (0.76-MM US)	16, 18
KIT-CUSHION	488
KIT-GEAR (STARTING MOTOR)	124
KIT-LINING	220
KIT-LINING REBUILD	220
KIT-PISTON RING	37, 39
KIT-PLANETARY CARRIER	187
KIT-RECEPTACLE (12 PIN)	134
KIT-RECEPTACLE (2 PIN)	142, 152, 209, 273, 486
KIT-RECEPTACLE (2-PIN)	154, 159, 393
KIT-RECEPTACLE (3 PIN)	162, 209, 578, 580
KIT-RECEPTACLE (4 PIN)	152
KIT-RECEPTACLE (6 PIN)	546, 551, 592
KIT-RECEPTACLE (8 PIN)	545
KIT-REPAIR	592
KIT-ROD BEARING (0.25-MM US)	16, 18
KIT-ROD BEARING (0.50-MM US)	16, 18

INDEX

Name	Page
KIT-ROD BEARING (0.76-MM US)	16
	18
KIT-ROLLER BEARING	187
KIT-SEAL	109
KIT-SEAL (STEERING METERING PUMP)	179
KIT-SEAT–SWIVEL	536
KIT-SERVICE	552
KIT-SERVICE METER	143
KIT-SLIDER BLOCK	563
	565
KIT-SPIDER	165
KIT-SPIDER & BEARING	191
	192
L	
LAMP GP-DOME	568
LAMP GP-FLOOD–REAR	110
	111
LAMP GP-SIGNAL	112
LAMP GP-STOP & TAIL	113
LAMP GP-WARNING BEACON	114
	115
LAMP (12 VOLT)	115
	545
LAMP (12-VOLT)	146
	575
	576
LAMP (12-VOLT, 10-WATT)	568
LAMP (12-VOLT, 21/5-WATT)	113
LAMP (12-VOLT, 24-WATT)	113
LAMP (12-VOLT, 24-WATT)	112
LAMP (12-VOLT, 55-WATT)	110
	114
	116
	119
LAMP (12-VOLT, 55-WATT)	111
LENS (AMBER)	112
LENS-AMBER	115
LENS (AMBER, WARNING BEACON)	114
LENS AS (FLOOD)	111
LENS AS (FLOODLIGHT) (FLOOD)	110
LENS (RED, AMBER)	113
LEVER GP-GOVERNOR CONTROL	538
LEVER GP-HAND CONTROL	226
LIFTING GP-ENGINE	32
LIGHTING GP-FLOOD–ROCK	116
LIGHTING GP-FLOOD & SIGNAL	119
LIGHTING GP-WARNING BEACON	122
	123
LINES GP-BACKHOE AUXILIARY	314
	316
	320
	325
LINES GP-BACKHOE AUXILIARY–EXTENDABLE STICK	328
LINES GP-BOOM	332
LINES GP-BUCKET CYLINDER	333
LINES GP-EXTENDABLE STICK	335
	336
LINES GP-FUEL	86
	88
LINES GP-HEATER	539
LINES GP-HEATER & AIR COND	541
LINES GP-LIFT CYLINDER	338
	339
LINES GP-LOADER AUXILIARY	341
LINES GP-MULTIPURPOSE BUCKET	343
LINES GP-PILOT	345
	346
LINES GP-POWER TRAIN COOLER	61
LINES GP-PUMP	348
	350
	353
	354
LINES GP-RETURN	355
LINES GP-STABILIZER	356
LINES GP-STEERING	233
	236
LINES GP-STICK	358
LINES GP-SWING	359
LINES GP-TILT CYLINDER	360
LINKAGE GP-BACKHOE BUCKET	418
LINKAGE GP-LOADER BUCKET	420
LOADER AR	422
LOCK GP-HYDRAULIC HAND CONTROL	362
LOCK GP-TRANSPORT	423
	424
	425
	426
LOCK GP-VANDALISM	598
M	
MANIFOLD GP-EXHAUST	79
MIRROR GP-REAR VIEW	543
	544
MODULE GP-WARNING INDICATOR	545
MOTOR GP-WINDOW WIPER	546
MOUNTING GP-BANK VALVE	363
	364
MOUNTING GP-BUCKET	479
	480
MOUNTING GP-CYLINDER	365
MOUNTING GP-ENGINE	33
MOUNTING GP-ENGINE & TMSN	34
MOUNTING GP-HYDRAULIC CONTROL	366
MOUNTING GP-HYDRAULIC PUMP	367
MOUNTING GP-INSTRUMENT PANEL	547

INDEX

Name	Page
	548
	549
MOUNTING GP-LINES	368
	369
MOUNTING GP-STICK	427
MUFFLER GP	80
	81

P

PAD & GUARD GP-STABILIZER	429
PAD & GUARD GP-STABILIZER–STREET	428
	430
PAD & MTG GP-STABILIZER	433
PAD & MTG GP-STABILIZER–STREET	431
	432
PAD AS	431
PAD AS-STABILIZER (STREET)	434
PAD GP-STABILIZER–STREET	434
	435
PADLOCK GP	598
PAN GP-OIL	35
PANEL GP-INSTRUMENT	551
PEDAL GP-GOVERNOR	552
PIN GP-AXLE	165
PISTON & ROD GP	37
	39
PLANETARY GP-FINAL DRIVE	187
PLATE & FILM GP	599
PLUG GP-CYLINDER BLOCK	41
PLUG GP-ENGINE	42
PLUG-MAGNETIC	170
PLUG-SUMP DRAIN	35
POWER TRAIN AR	188
POWER TRAIN AR– ALL WHEEL DRIVE, STANDARD SHIFT	189
	190
POWER TRAIN AR– 2-WHEEL DRIVE, STANDARD SHIFT	188
	189
PULLEY GP-CRANKSHAFT	43
PUMP GP-ENGINE OIL	51
PUMP GP-FUEL INJECTION	90
	92
PUMP GP-FUEL PRIMING	95
PUMP GP-PISTON	370
PUMP GP-TRANSMISSION	197
	204
PUMP GP-WATER	63

R

RADIATOR & FAN GP	65
	66
RADIATOR & HYD OIL COOLER GP	67
	68
	69
	70
REGULATOR-WATER TEMPERATURE	52
RELAY AS (12 VOLT)	138
	142
	152
RELAY AS (12 VOLT)	152
RELAY AS (12-VOLT)	116
	119
	132
	135
	139
	148
RELAY AS (12-VOLT)	129
RELAY AS (12-VOLT) (HIGH SPEED)	129
RESERVOIR GP-BRAKE	227
ROTATING GP-PUMP	372

S

SEAL (BREATHER)	46
SEAL-O-RING	197
	350
SEAL-O-RING (ENGINE OIL DRAIN)	35
SEAL-O-RING (WATER TEMPERATURE REGULATOR)	52
SEAT BELT GP	553
SEAT GP	554
	556
	558
	560
SEAT GP-STATIC	561
	562
SEAT GP-SUSPENSION	563
	565
	567
SENDER-TEMPERATURE	148
SEPARATOR GP-WATER	96
SHAFT GP-DRIVE–FRONT	192
SHAFT GP-DRIVE–REAR	191
SLEEVE-CABLE SPLICE	504
SPEAKER	568
SPRING (BREATHER HOSE)	12
STABILIZER AR	373
STABILIZER GP-BACKHOE	436
STARTING MOTOR GP-ELECTRIC	124
	126
STEERING WHEEL	232
STEERING WHEEL GP	238
STICK GP-EXTENDABLE	438
STICK GP-HOE	440
STOP GP-BUCKET	481
STRAINER	198
	204

INDEX

Name	Page
SUPPRESSION GP-SOUND	568
SUSPENSION GP-SEAT	570
SWITCH AS (HEATER)	152
SWITCH AS-KEY START	551
SWITCH AS-LIMIT	223
SWITCH AS-PRESSURE (HIGH - LOW)	129
SWITCH AS-PUSH BUTTON	174
	273
SWITCH AS-ROCKER (BLOWER FAN SPEED) (HEATER FAN SPEED)	129
SWITCH AS-ROCKER (FRONT FLOOD)	119
SWITCH AS-ROCKER (HAZARD WARNING LIGHTS)	143
SWITCH AS-ROCKER (HEATER, AIR CONDITIONER) (HEAT/AC)	129
SWITCH AS-ROCKER (HEATER FAN SPEED)	152
SWITCH AS-ROCKER (HORN) (HORN)	143
SWITCH AS-ROCKER (NEUTRAL LOCK)	143
SWITCH AS-ROCKER (REAR FLOOD)	119
SWITCH AS-ROLLER (KICKOUT)	162
SWITCH AS (TURN SIGNAL)	134
SWITCH GP-PRESSURE	127
SWITCH GP-TEMPERATURE	128
SWITCH (TEMPERATURE)	90
SWITCH-TEMPERATURE (AIR CONDITIONER)	486
SWIVEL & SLIDE GP-SEAT	572
SWIVEL GP-SEAT	574
SYNCHRONIZER GP	196
	202

T

Name	Page
TACHOMETER GP-ELECTRIC	489
	490
	491
	499
	500
	575
	576
TANK & MTG GP-FUEL	97
TANK GP-FUEL	98
	99
TANK GP-HYDRAULIC	374
TOOTH GP-UNI	482
TRANSMISSION & MOUNTING GP– ALL WHEEL DRIVE	194
TRANSMISSION & MOUNTING GP– TWO WHEEL DRIVE	193
TRANSMISSION AR-DIRECT DRIVE	195
TRANSMISSION GP-DIRECT DRIVE– ALL WHEEL DRIVE	202
TRANSMISSION GP-DIRECT DRIVE– TWO WHEEL DRIVE	196
TRIM GP-CAB	577
TURBOCHARGER GP	82

V

Name	Page
V-BELT (AIR CONDITIONER)	507
V-BELT SET (INCLUDES 2 BELTS)	489
	490
	491
	499
	500
VALVE & MTG GP-BANK	376
VALVE AR-BANK 4	377
VALVE AR-BANK 5	377
VALVE AR-BANK 6	378
VALVE AS-RELIEF (AIR VENT)	164
VALVE AS (WATER)	484
	531
VALVE GP-BANK 2–LOADER	381
VALVE GP-BANK 2–STABILIZER	379
VALVE GP-BANK 3–LOADER	382
VALVE GP-BANK 4–BACKHOE	383
VALVE GP-BANK 5–BACKHOE	384
VALVE GP-BANK 6–BACKHOE	385
VALVE GP-CHECK	393
	397
VALVE GP-CHECK–BACK PRESSURE	386
VALVE GP-CONTROL	403
	405
VALVE GP-CONTROL–BOOM	395
VALVE GP-CONTROL–BUCKET	397
VALVE GP-CONTROL–CLAM	387
VALVE GP-CONTROL– EXTENDABLE STICK;AUXILIARY	401
VALVE GP-CONTROL–LIFT	389
VALVE GP-CONTROL–STICK	399
VALVE GP-CONTROL–SWING	391
VALVE GP-CONTROL–TILT	393
VALVE GP-PILOT	407
VALVE GP-PILOT–STABILIZER	408
	409
VALVE GP-PRIORITY–STEERING	239
VALVE GP-PUMP CONTROL	410
	411
VALVE GP-RELIEF	196
	202
	239
	387
	393
	395
VALVE GP-SHUTOFF	350
VALVE GP-SOLENOID–TRANSMISSION	208
	209
VALVE GP-TIRE	210
	211

INDEX

Name	Page	Name	Page
VALVE MECHANISM GP	44		
	45		
VALVE-SHUTOFF	60		
	350		

W

WASHER GP-WINDOW	578		
	580		
WHEEL & TIRE AR–AWD	212		
WHEEL & TIRE AR–2WD	211		
	212		
WHEEL & TIRE GP–FRONT	216		
	217		
	218		
WHEEL & TIRE GP–LH	213		
	214		
	215		
	216		
	217		
WHEEL & TIRE GP–REAR	213		
	215		
	218		
	219		
WHEEL & TIRE GP–RH	213		
	214		
	215		
	216		
	217		
WINDOW GP-CAB	582		
	584		
	586		
WINDOW GP-DOOR	588		
	590		
WIPER GP-WINDOW	592		
	594		
WIRING GP-AIR CONDITIONER	129		
WIRING GP-CAB	132		
	138		
	139		
WIRING GP-CAB–CANOPY	134		
WIRING GP-CAB–UTILITY	135		
WIRING GP-CONSOLE	142		
WIRING GP-CONSOLE–FRONT	143		
WIRING GP-CONSOLE–SIDE	146		
WIRING GP-ENGINE	148		
WIRING GP-HEATER	152		
WIRING GP-PLATFORM	154		
WIRING GP-POWER RECEPTACLE	158		
WIRING GP-REAR	159		
WIRING GP-SENSOR	162		

INDEX

Désignation	Page

A

ACCOUDOIR (ASS)	488
ACCOUPLEMENT (ASS)	287
ALTERNATEUR DE CHARGE (ASS)	101
AMPOULE (12 VOLTS)	115
	146
	545
	575
	576
AMPOULE (12V, 10W)	568
AMPOULE (12V, 21/5W)	113
AMPOULE (12V, 24W)	112
AMPOULE (12V, 24W)	113
AMPOULE (12V, 55W)	110
	111
	114
	116
	119
AMPOULE (12V, 55W)	114
ARBRE A CAMES (ASS)	9
	10
ARBRE D'ENTRAÎNEMENT (ASS)	191
	192
ARRÊT-GODET (ASS)	481
AUTOCOLLANT	366
AUTOCOLLANT - DIRECTION INTÉGRALE	600
AUTOCOLLANT (ALTERNANCE DIAGONALE STANDARD)	600
AUTOCOLLANT (ARTICULATION CENTRALE, VERROUILLAGE DE FLÈCHE)	600
AUTOCOLLANT-CAT (CAPOT)	259
AUTOCOLLANT (CATERPILLAR)	489
	490
	491
	500
AUTOCOLLANT-COMMANDE (CLIMATISEUR)	600
AUTOCOLLANT-COMMANDE (CLIMATISEUR)	484
AUTOCOLLANT-COMMANDE (CLIMATISEUR)	531
AUTOCOLLANT (COMMANDE DE GODET)	271
	600
AUTOCOLLANT (COMMANDE DE GODET)	267
	269
AUTOCOLLANT (COMMANDE DE GODET)	600
AUTOCOLLANT (CONTACTEUR DE DÉMARRAGE)	549
	551
	600
AUTOCOLLANT DE MISE EN GARDE (VÉRIN HAUTE PRESSION)	601
AUTOCOLLANT (DÉPORT LATÉRAL, VERROUILLAGE DE LA FLÈCHE)	600
AUTOCOLLANT D'IDENTIFICATION (PANNEAU DE FUSIBLES)	179
	600
AUTOCOLLANT (EN ROULEAU) (0,095M)	600
AUTOCOLLANT (GODET TOUS-TRAVAUX)	309
	600
AUTOCOLLANT-INDICATEUR DE GODET	312
AUTOCOLLANT (PLAQUE DE COMMANDE)	600
AUTOCOLLANT (RECIRCULATION D'AIR)	533
AUTOCOLLANT (RECIRCULATION D'AIR)	486
AUTOCOLLANT (VITESSE VARIABLE)	84
	600
AXE D'ESSIEU (ASS)	165

B

BAÏONNETTE- NIVEAU DE CARBURANT (ASS)	146
BALAI D'ESSUIE-GLACE (ENS)	592
BANDE AUTOCOLLANTE (278-CM)	259
BANDE AUTOCOLLANTE (399CM)	489
	490
BATI - CHARGEUSE (ASS)	253
BÂTI D'ORIENTATION (ASS)	254
BATTERIE (ASS)	102
	104
	106
BATTERIE (ASS)	107
BATTERIE (12V, GRANDE CAPACITÉ)	104
BATTERIE (12V, INDUSTRIELLE)	102
BATTERIE (12V, 750A)	107
BATTERIE (12V, 750A) (SANS ENTRETIEN)	106
BLINDAGE D'ARBRE DE TRANSMISSION (ASS)	256
BLOC-CYLINDRES (ASS)	20
	22
	23
BOITE DE VITESSES ET MONTAGE (ASS)	193
	194
BOÎTE MÉCANIQUE (ASS)	202
BOÎTE MÉCANIQUE (ASS)	196
BOITE MECANIQUE (VERSION)	195
BOITE MECANIQUE (VERSION)	195
BOÎTIER-RENIFLARD	46
BOUCHON - BLOC-CYLINDRES	41
BOUCHON AIMANTÉ	170
BOUCHON DE CARBURANT	99
BOUCHON DE MOTEUR (ASS)	42
BOUCHON DE REMPLISSAGE D'HUILE MOTEUR (ASS)	49
BOUCHON DE REMPLISSAGE (HUILE HYDRAULIQUE)	374
BOUCHON-VIDANGE DU CARTER	35
BOUGIE DE PRECHAUFFAGE	108
BOUGIE DE PRÉCHAUFFAGE (ASS)	108

INDEX

Désignation	Page
BOURRELET D'ÉTANCHÉITÉ (RENIFLARD)	46
BOUTON DE TEMPÉRATURE	128
BRAS DE LEVAGE (ASS)	413
BRAS DE PELLE RETRO (ASS)	440
BRAS TÉLESCOPIQUE (ASS)	438

C

CABINE (ASS)	495 497
CABINE (ENS)	492 494
CABINE (VERSION)	490 491
CABINE (VERSION)	489
CABLAGE - CAPTEUR (ASS)	162
CABLAGE - CLIMATISEUR (ASS)	129
CABLAGE - PLATE-FORME (ASS)	154
CABLAGE AR (ASS)	159
CABLAGE DE CABINE (ASS)	134 135 138 139
CABLAGE DE CABINE (ASS)	132
CABLAGE DE CONSOLE (ASS)	143
CABLAGE DE CONSOLE (ASS)	146
CABLAGE DE MOTEUR (ASS)	148
CABLAGE DE PRISE DE FORCE	158
CABLAGE DU CHAUFFAGE DE CABINE (ASS)	152
CACHE-SOUPAPES (ASS)	12 14
CADENAS (ASS)	598
CANALISATIONS - GODET TOUS-TRAVAUX (ASS)	343
CANALISATIONS A COMMANDE PILOTE (ASS)	345 346
CANALISATIONS-CHARGEUSE AUXILIAIRE (ASS)	341
CANALISATIONS DE BRAS (ASS)	358
CANALISATIONS DE CARBURANT (ASS)	86 88
CANALISATIONS DE CHAUFFAGE (ASS)	539
CANALISATIONS DE DIRECTION (ASS)	233 236
CANALISATIONS DE POMPE (ASS)	348 350
CANALISATIONS DE POMPE (ASS)	353 354
CANALISATIONS DE RÉCHAUFFEUR DE LIQUIDE DE REFROIDISSEMENT	539 541
CANALISATIONS DE REFROIDIS. DE TRANSMISSION	61
CANALISATIONS DE RETOUR (ASS)	355
CANALISATIONS DE STABILISATEUR (ASS)	356
CANALISATIONS DE VÉRIN DE GODET (ASS)	333
CANALISATIONS DE VÉRIN DE LEVAGE (ASS)	338 339
CANALISATIONS D'ORIENTATION (ASS)	359
CANALISATIONS DU BRAS TELESCOPIQUE (ASS)	335 336
CANALISATIONS DU VÉRIN D'INCLINAISON (ASS)	360
CANALISATIONS-RÉCHAUFFEUR ET CLIMATISEUR (ASS)	541
CANALISATIONS SECONDAIRES DE PELLE RÉTRO (ASS)	314 316
CANALISATIONS SECONDAIRES DE PELLE RÉTRO (ASS)	320 325 328
CAPOT DU MOTEUR (ASS)	259
CAPOT ET PROTECTION (ASS)	257
CARTER (ASS)	395
CARTER AV (ASS)	30
CARTER DE DIFFÉRENTIEL (ASS)	176
CARTER DE VOLANT (ASS)	29
CARTER ET BRIDE D'ESSIEU (ASS)	183 185
CEINTURE DE SECURITE (ASS)	553
CHAPEAU	210
CHAPEAU (ENS)	314
CHAPEAU (ENS) (GOULOTTE DE REMPLISSAGE D'HUILE MOTEUR)	49
CHAPEAU (ENS) (RADIATEUR)	68 70
CHARGEUSE (VERSION)	422
CHAUFFAGE DE CABINE (ASS)	531 533
CLAPET DE DECHARGE (ASS)	202 239
CLAPET DE DECHARGE (ASS)	196
CLAPET DE DECHARGE (ASS)	387 393
CLAPET DE DECHARGE (ASS)	395
CLAPET DE DECHARGE (PURGEUR D'AIR)	164
CLAPET DE RETENUE (ENS)	393 397
CLAPET (ENS) (EAU)	484 531
CLÉ	505 598
CLIGNOTANT (ENS)	154
CLIMATISEUR (ASS)	486

INDEX

Désignation	Page
CLIMATISEUR ET MONTAGE (ASS)	484
COLLECTEUR D'ÉCHAPPEMENT (ASS)	79
COMMANDE DE BOITE DE VITESSES (ASS)	174
COMMANDE DE DIFFÉRENTIEL - VERROUILLAGE (ASS)	173
COMMANDE DE DIRECTION (ASS)	231
	232
COMMANDE DE FREIN DE STATIONNEMENT (ASS)	221
	222
COMMANDE DE RÉGULATEUR ET D'ACCÉLÉRATEUR (ASS)	84
COMMANDE HYDRAULIQUE DE PÉDALE (ASS)	278
COMMANDE HYDRAULIQUE DE PÉDALE (ASS)	276
COMMANDE HYDRAULIQUE MANUELLE (ASS)	267
	269
	271
	273
	275
COMMANDE HYDRAULIQUE MANUELLE (ASS)	265
COMPARTIMENT DE BATTERIE (ASS)	240
COMPRESSEUR DE REFRIGERANT (ASS)	506
	507
COMPTE-TOURS ÉLECTRIQUE (ASS)	489
	490
	491
	499
	500
COMPTE-TOURS ÉLECTRIQUE (ASS)	575
	576
CONDENSATEUR ET MONTAGE (RÉFRIGÉRANT)	508
CONNEXION (ASS)	336
CONNEXION (ASS)	350
CONSOLE AV (ASS)	509
CONSOLE DE CONDUITE (ASS)	510
CONSOLE LATÉRALE (ASS)	511
	512
	513
	514
	515
CONTACTEUR DE DÉMARRAGE À CLÉ (ENS)	551
CONTACTEUR (ENS) (CLIGNOTANT DE DIRECTION)	134
CONTACTEUR (ENS) (RÉCHAUFFEUR)	152
CONTREPOIDS (ASS)	242
	243
	244
	245
	246
COUDE (ASS)	338
COUDE D'ADMISSION D'AIR (ASS)	75
COUPLEUR EXPRESS (ASS)	472
	473
	474
	475
	476
COURONNE CONIQUE ET PIGNON	176
COURONNE ET DIFFERENTIEL (ASS)	176
COURROIE TRAPEZOIDALE (CLIMATISEUR)	507
COUVERCLE (ASS)-FREIN DE STATIONNEMENT	519
COUVERCLE (ASS) MONTANT	520
	521
COUVERCLE-CLOISON PARE-FEU (ENS)	517
	518
COUVERCLE DE CARTER AV (ASS)	11
COUVERCLE DE LA CONSOLE (ASS)	516
CREPINE	198
	204
CULASSE (ASS)	24
	25
	26
CULBUTERIE (ASS)	44
	45

D

Désignation	Page
DÉMARREUR ÉLECTRIQUE (ASS)	124
	126
DENT MONOBLOC (ASS)	482
DIFFERENTIEL (ASS)	178
DISJONCTEUR DE SECURITE (ENS)	223
DISTRIBUTEUR (ASS)	387
	389
	391
	393
	395
	397
	399
	401
	403
	405
DISTRIBUTEUR DOUBLE ÉLÉMENT (ASS)	379
	381
DISTRIBUTEUR TRIPLE ÉLÉMENT (ASS)	382
DISTRIBUTEUR 4 ÉLÉMENTS (ASS)	383
DISTRIBUTEUR 4 ÉLÉMENTS (VERSION)	377
DISTRIBUTEUR 5 ÉLÉMENTS (ASS)	384
DISTRIBUTEUR 5 ÉLÉMENTS (VERSION)	377
DISTRIBUTEUR 6 ÉLÉMENTS (ASS)	385
DISTRIBUTEUR 6 ÉLÉMENTS (VERSION)	378
DISTRIBUTEURS ET MONTAGE (ASS)	376

INDEX

Désignation	Page

E

EAU DES CHEMISES - RECHAUFFEUR (ASS) 109
ÉCLAIRAGE - GYROPHARE (ASS) 122, 123
ÉCLAIRAGE - PROJECTEURS (ASS) 116
ÉCLAIRAGE - PROJECTEURS ET CLIGNOTANTS (ASS) 119
ÉLÉMENT DE FILTRE (CARBURANT) 95
ENSEMBLE DE TRANSFORM.-COMMANDE MANUELLE HYDR. 283, 284, 285, 286
ENTRAÎNEMENT D'ACCOUPLEMENT FLEXIBLE (ASS) 180
ENTRAÎNEMENT DE VENTILATEUR (ASS) 27
ENTRAÎNEMENT POUR COURROIE 115
ESSIEU AR (ASS) 168
ESSIEU AV (ASS) 228, 230
ESSIEU ET MONTAGE -ARRIÈRE (ASS) 163, 164
ESSIEU MOTEUR ET DIRECTEUR (ASS) 165, 167
ESSUIE-GLACE (ASS) 592, 594

F

FEUX ARRIÈRE ET FEUX D'ARRÊT 113
FILTRE 387, 389, 391, 393, 395, 397, 399, 401
FILTRE A AIR (ASS) 71, 73, 74
FILTRE À AIR (CLIMATISEUR) 486
FILTRE À AIR (RÉCHAUFFEUR) 533
FILTRE A CARBURANT (ENS) (TAMIS DE GOULOTTE DE REMPLISSAGE) 99
FILTRE À HUILE (ENS) (HYDRAULIQUE) 195
FILTRE À HUILE (ENS) (HYDRAULIQUE) (RÉSISTANT AU FEU) 311
FILTRE À HUILE (ENS) (NETTOYAGE, GRANDE EFFICACITÉ) 311
FILTRE A HUILE MOTEUR (ENS) 49
FILTRE (CLIMATISEUR) 484
FILTRE (RÉCHAUFFEUR) 531
FILTRE (RENIFLARD DE RÉSERVOIR HYDRAULIQUE) 374
FLECHE - CANALISATIONS 332
FLECHE (ASS) 415, 416
FLEXIBLE (RENIFLARD) 12
FOURCHE (ASS) 478
FREIN DE MANOEUVRE - COMMANDE (ASS) 223
FREIN DE STATIONNEMENT (ASS) 220
FUSIBLE (10A) 114, 115, 119, 158
FUSIBLE (10A) 129
FUSIBLE (15A) 116, 119, 138, 139
FUSIBLE (20A) 132, 135
FUSIBLE (5A) 132, 142

G

GAINE 408, 409
GAINE D'AIR (ASS) 526, 528
GARDE-BOUE AR (ASS) 248, 249
GARNITURE POUR CABINE (ASS) 577
GLACE DE PORTIÈRE (ASS) 588, 590
GODET - MONTAGE (ASS) 479, 480
GODET NORMAL (ENS) 444, 445
GODET RETRO (ASS) 446, 447, 448, 449, 450, 451, 452, 453, 454, 455, 456, 457, 458, 459, 460, 461

INDEX

Désignation	Page
	462
	463
	464
	465
	466
	467
	468
GODET TOUS-TRAVAUX (ASS)	469
	470
GODET TOUS-TRAVAUX (VERSION)	442
GODET TOUS-TRAVAUX (VERSION)	443
GOULOTTE DE REMPLISSAGE D'HUILE DE TRANSMISSION	181
	182
GRAISSEUR	312
	365
	420
	427
	440
	469
	470
GRAISSEUR (FILET 1/8-27)	254
	413
GROUPE DE ROTATION DE POMPE	372
GROUPE D'ORIENTATION ET DE GLISSIÈRE DE SIÈGE	572

H

HAUT-PARLEUR	568
HUILE MOTEUR - CARTER (ASS)	35
*HYDRAULIC AR	309
	310

I

INDICATEUR DE COLMATAGE DE FILTRE À AIR (ASS)	77
	78
INDICATEUR DE REMPLACEMENT DE FILTRE À AIR	77
INSONORISATION (ASS)	568
INTERRUPTEUR - BOUTON-POUSSOIR (ENS)	174
	273
INTERRUPTEUR - CONTACTEUR (TEMPÉRATURE)	90
INTERRUPTEUR BALANCIER (ENS) (CHAUFFAGE, CLIMATISATION) (CHAUFFAGE/CLIMATISATION)	129
INTERRUPTEUR BALANCIER (ENS) (FEUX DE DÉTRESSE)	143
INTERRUPTEUR BALANCIER (ENS) (KLAXON) (KLAXON)	143
INTERRUPTEUR BALANCIER (ENS) (PROJECTEUR ARRIÈRE)	119
INTERRUPTEUR BALANCIER (ENS) (PROJECTEUR AVANT)	119
INTERRUPTEUR BALANCIER (ENS) (VERROUILLAGE DU POINT MORT)	143
INTERRUPTEUR BALANCIER (ENS) (VITESSE DE VENTILATEUR DE RÉCHAUFFEUR)	152
INTERRUPTEUR BALANCIER (ENS) (VITESSE DU VENTILATEUR DE SOUFFLANTE) (VITESSE DE VENTILATEUR DE RÉCHAUFFEUR)	129
INTERRUPTEUR ROTATIF (RAPPEL/LIMITEUR)	162

J

JEU DE COURROIES TRAPEZOIDALES (COMPREND 2 COURROIES)	489
	490
	491
	499
	500
JOINT PLAT (CACHE-SOUPAPES)	12
	14
JOINT TORIQUE	197
	350
JOINT TORIQUE (RÉGULATEUR DE TEMPÉRATURE D'EAU)	52
JOINT TORIQUE (VIDANGE D'HUILE MOTEUR)	35

K

KIT - COUSSIN	488
KIT DE BLOC COULISSANT	563
	565
KIT DE BOUGIE (2 BROCHES)	152
	208
	222
KIT DE BOUGIE (2 BROCHES)	486
KIT DE COMPTEUR D'ENTRETIEN	143
KIT DE CONTACTEUR (DÉMARREUR)	124
KIT DE COUSSINET	168
KIT DE COUSSINET DE BIELLE (0,25-MM US)	16
	18
KIT DE COUSSINET DE BIELLE (0,50-MM US)	16
	18
KIT DE COUSSINET DE BIELLE (0,76-MM US)	16
	18
KIT DE COUSSINET DE VILEBREQUIN (0,25-MM US)	18

INDEX

Désignation	Page
KIT DE COUSSINET DE VILEBREQUIN (0,25-MM US)	16
KIT DE COUSSINET DE VILEBREQUIN (0,50-MM US)	18
KIT DE COUSSINET DE VILEBREQUIN (0,50-MM US)	16
KIT DE COUSSINET DE VILEBREQUIN (0,76-MM US)	18
KIT DE COUSSINET DE VILEBREQUIN (0,76-MM US)	16
KIT DE CROISILLON	165
KIT DE CROISILLON ET ROULEMENT	191
	192
KIT DE GARNITURE	220
KIT DE JOINTS	109
KIT DE JOINTS (POMPE DOSEUSE DE DIRECTION)	179
KIT DE PORTEUR PLANÉTAIRE	187
KIT DE PRISE FEMELLE (12 BROCHES)	134
KIT DE PRISE FEMELLE (2 BROCHES)	142
	393
	486
KIT DE PRISE FEMELLE (2 BROCHES)	152
	154
	159
	273
KIT DE PRISE FEMELLE (2 BROCHES)	209
KIT DE PRISE FEMELLE (3 BROCHES)	578
	580
KIT DE PRISE FEMELLE (3 BROCHES)	162
KIT DE PRISE FEMELLE (3 BROCHES)	209
KIT DE PRISE FEMELLE (4 BROCHES)	152
KIT DE PRISE FEMELLE (6 BROCHES)	546
	551
	592
KIT DE PRISE FEMELLE (8 BROCHES)	545
KIT DE REGLAGE	488
KIT DE RÉNOVATION DE GARNITURE	220
KIT DE RÉPARATION	592
KIT DE ROULEMENT À GALETS	187
KIT DE SEGMENT DE PISTON	37
	39
KIT DE SIÈGE	536
KIT D'ENGRENAGE (DÉMARREUR)	124
KIT D'ENTRETIEN	552
KLAXON ÉLECTRIQUE (ASS)	535

L

Désignation	Page
LAME DE COUPE (ASS)	477
LAMPE - CLIGNOTANT DE DIRECTION (ASS)	112
LAMPE - GYROPHARE (ASS)	114
	115
LAMPE - PHARE (ASS)	110
LAMPE - PHARE (ASS)	111
LAVE-GLACE - VITRE (ASS)	578
	580
LENTILLE (ENS) (PLAFONNIER) (PROJECTEUR)	110
LENTILLE (ENS) (PROJECTEUR)	111
LENTILLE (GYROPHARE JAUNE)	114
LENTILLE (JAUNE)	112
LENTILLE ORANGE	115
LENTILLE (ROUGE, JAUNE)	113
LEVIER DE COMMANDE DE REGULATEUR (ASS)	538
LEVIER DE COMMANDE MANUELLE	226
LIMITEUR DE LEVAGE ET RETOUR À L'ANGLE DE CAVAGE	312

M

Désignation	Page
MANCHON DE JONCTION DE CABLES	504
MANOCONTACT	127
MANOCONTACT (ENS) (HAUTE - BASSE)	129
MODULE - TÉMOIN (ASS)	545
MONTAGE - POMPE HYDRAULIQUE (ASS)	367
MONTAGE DE BRAS (ASS)	427
MONTAGE DE CALE DE ROUE (VERSION)	597
MONTAGE DE CANALISATIONS (ASS)	368
	369
MONTAGE DE COMMANDE HYDRAULIQUE (ASS)	366
MONTAGE DE MOTEUR (ASS)	33
MONTAGE DE MOTEUR ET BOÎTE (ASS)	34
MONTAGE DE VÉRIN (ASS)	365
MONTAGE-DISTRIBUTEUR (ASS)	363
	364
MONTAGE DU TABLEAU DE BORD (ASS)	547
	548
	549
MOTEUR D'ESSUIE-GLACE (ASS)	546
MOTEUR (VERSION)	5
	6
MOTEUR (VERSION PRINCIPALE)	7
	8

O

Désignation	Page
OEILLETONS DE LEVAGE MOTEUR (ASS)	32
ORIENTATION-SIÈGE (ASS)	574

P

Désignation	Page
PARE-CHOCS AV (ASS)	241
PARE-POUSSIERE	345
PATIN (ENS)	431
PELLE RÉTRO - BRAS NORMAL (VERSION)	2
	3

INDEX

Désignation	Page
PELLE RÉTRO - BRAS TÉLESCOPIQUE (VERSION)	1
PELLE RÉTRO - STABILISATEUR (ASS)	436
PISTON ET BIELLE (ASS)	37
	39
PLAFONNIER (ASS)	568
PLAQUE SIGNALETIQUE	143
	146
	600
	601
PLAQUE SIGNALÉTIQUE (ASS)	596
PLAQUE SIGNALETIQUE (GODET)	442
	443
PLAQUE SIGNALETIQUE (ROUGE)	417
PLAQUES SIGNALETIQUES ET AUTOCOLLANTS (ASS)	599
PNEU - GROUPE DE VALVE	210
	211
POCHE A DOCUMENTS (ASS)	505
POCHE A DOCUMENTS (ASS)	504
POMPE A EAU (ASS)	63
POMPE A HUILE MOTEUR (ASS)	51
POMPE A PISTONS (ASS)	370
POMPE D'AMORÇAGE DE CARBURANT (ASS)	95
POMPE DE BOÎTE DE VITESSES (ASS)	197
	204
POMPE D'INJECTION DE CARBURANT (ASS)	90
	92
PORTE-BALAIS (ENS)	124
PORTE DE BATTERIE (ASS)	247
PORTIERE DROITE (ASS)	524
PORTIERE GAUCHE (ASS)	522
PROTECTEUR DE VÉRIN DE STABILISATEUR (ASS)	306
	307

R

Désignation	Page
RACCORD DE SOUPAPE (ASS)	262
	264
RACCORD D'EAU (ASS)	52
RACCORD-RÉCHAUFFEUR ET CLIMATISEUR (ASS)	60
RADIATEUR ET REFROIDISSEUR D'HUILE HYDRAULIQUE (ASS)	67
	68
RADIATEUR ET REFROIDISSEUR D'HUILE HYDRAULIQUE (ASS)	69
	70
RADIATEUR ET VENTILATEUR (ASS)	65
	66
RALLONGE D'ÉCHAPPEMENT (ASS)	76
REFROIDISSEUR D'HUILE MOTEUR (ASS)	53
REFROIDISSEUR HUILE MOTEUR ET SUPPORT DE FILTRE	53
	55
REGLAGE DE SIEGE (ASS)	483
RÉGULATEUR - PÉDALE (ASS)	552
RELAIS (ENS) (12 VOLTS)	119
	129
	132
	135
	138
	139
	142
	148
	152
RELAIS (ENS) (12 VOLTS)	116
RELAIS (ENS) (12 VOLTS) (VITESSE RAPIDE)	129
RENIFLARD (ASS)	46
	48
RENIFLARD (BOÎTE DE VITESSES)	198
	203
RENIFLARD (ESSIEU)	165
RÉSERVOIR DE CARBURANT (ASS)	98
	99
RÉSERVOIR DE CARBURANT ET MONTAGE (ASS)	97
RÉSERVOIR-FREIN (ASS)	227
RÉSERVOIR HYDRAULIQUE (ASS)	374
RESSORT (FLEXIBLE DE RENIFLARD)	12
RÉTROVISEUR (ASS)	543
	544
ROTATION DE LA ROUE DU VENTILATEUR SOUFFLANT	271
	601
ROTATION DE LA ROUE DU VENTILATEUR SOUFFLANT (BRAS-E)	276
ROTATION DE LA ROUE DU VENTILATEUR SOUFFLANT (BRAS TÉLESCOPIQUE)	601
ROTATION DE LA ROUE DU VENTILATEUR SOUFFLANT (COMMANDE DE GODET)	265
	309
	601
ROTATION DE LA ROUE DU VENTILATEUR SOUFFLANT (DÉBIT DE RETOUR)	316
	320
	325
	328
	601
ROTATION DE LA ROUE DU VENTILATEUR SOUFFLANT (GODET TOUS-TRAVAUX)	600
ROTATION DE LA ROUE DU VENTILATEUR SOUFFLANT (N. D'ÉTAPE)	599
ROUE ET PNEU (ASS)	213
	214
	215

INDEX

Désignation	Page
	216
	217
	218
	219
ROUE ET PNEU (VERSION)	211
	212

S

SEMELLE DE STABILISATEUR	434
	435
SEMELLE DE STABILISATEUR (ENS) (RUE)	434
SEMELLE ET MONTAGE DE STABILISATEUR	431
	432
	433
SEMELLE ET PROTECTION DE STABILISATEUR (ASS)	428
	429
	430
SÉPARATEUR D'EAU (ASS)	96
SIÈGE À ÉQUILIBRAGE STATIQUE (ASS)	561
	562
SIÈGE (ASS)	554
	556
	558
	560
SIÈGE AVEC SUSPENSION (ASS)	563
	565
	567
	570
SILENCIEUX (ASS)	80
	81
SONDE THERMIQUE	148
SOUPAPE - SOLÉNOÏDE (ASS)	208
	209
SOUPAPE D'ARRÊT	60
	350
SOUPAPE D'ARRÊT (ASS)	350
SOUPAPE DE PRIORITE (ASS)	239
SOUPAPE PILOTE (ASS)	407
	408
	409
STABILISATEUR (VERSION)	373
SUPPORT DE FILTRE ET REFROIDISSEUR D'HUILE MOTEUR	53
SUPPORT DE FILTRE ET REFROIDISSEUR D'HUILE MOTEUR	55
SUPPORT (ENS)	106
	107
SYNCHRONISEUR (ASS)	196
	202

T

TABLEAU DE BORD (ASS)	551
TAPIS DU PLANCHER (ASS)	529
	530
THERMOCONTACT (CLIMATISEUR)	486
THERMOSTAT-TEMPÉRATURE D'EAU	52
TIMONERIE DE GODET DE CHARGEUSE (ASS)	420
TIMONERIE DE GODET RÉTRO (ASS)	418
TIRANT DE VÉRIN DE LEVAGE (ASS)	417
TOIT (ENS)	501
	502
TOIT-ROPS OUVERT (ASS)	503
TOIT (VERSION)	499
	500
TÔLE DE PLANCHER (ASS)	250
	252
TRAINS PLANÉTAIRES-RÉDUCTEURS (ASS)	187
TRANSFORMATION - DISTRIBUTEUR (ASS)	282
TRANSMISSION (VERSION)	188
	189
	190
TURBOCOMPRESSEUR (ASS)	82

V

*VALVE GP-CHECK	386
*VALVE GP-PUMP CONTROL	410
	411
VENTILATEUR ASPIRANT (ASS)	57
	58
	59
VENTILATEUR (ENS)	486
	533
VÉRIN - GODET TOUS-TRAVAUX (ASS)	298
VERIN DE BRAS (ASS)	301
VERIN DE FLECHE (ASS)	292
VÉRIN DE GODET RÉTRO (ASS)	288
	290
VÉRIN DE LEVAGE (ASS)	297
VERIN DE STABILISATEUR (ASS)	299
	300
VÉRIN D'INCLINAISON (ASS)	304
VÉRIN D'ORIENTATION (ASS)	302
VÉRIN DU BRAS TELESCOPIQUE (ASS)	294
	295
VERIN (ENS)	223
VERROUILLAGE ANTI-VANDALISME (ASS)	598
VERROUILLAGE DE COMMANDE MANUELLE HYDRAUL. (ASS)	362
VERROUILLAGE POUR L'EXPÉDITION (ASS)	423
	424
	425
	426
VERSION DE CHASSIS	3

INDEX

Désignation	Page
VERSION DE TRANSFORMATION D'ORIENTATION D'AMORTISSEUR	280
VERSION D'ENTRAÎNEMENT DE CHARGEUSE-PELLETEUSE	179
VERSION HYDRAULIQUE	309
	311
VERSION NORMALE	4
VILEBREQUIN - POULIE (ASS)	43
VILEBREQUIN (ASS)	18
VILEBREQUIN (ASS)	16
VITRE DE CABINE (ASS)	582
	584
	586
VOLANT DE DIRECTION	232
VOLANT DE DIRECTION (ASS)	238
VOLANT MOTEUR (ASS)	28

W

Désignation	Page
*WIRING GP-CONSOLE	142

INDICE

Nombre	Página
A	
ACONDICIONADOR DE AIRE (GR)	486
ACONDICIONADOR DE AIRE Y MONTAJE (GR)	484
ACOPLADOR RÁPIDO (GR)	472
	473
	474
	475
	476
ACOPLAMIENTO FLEXIBLE - MANDO DE (GR)	180
ACOPLAMIENTO (GR)	287
AGUA - CONEXIÓN DE (GR)	52
AGUA DE LAS CAMISAS - CALENTADOR DEL (GR)	109
AJUSTADOR DEL ASIENTO (GR)	483
ALFOMBRILLA DEL PISO (GR)	529
	530
ALMOHADILLA (CONJ)	431
ALMOHADILLA Y MONTAJE DEL ESTABILIZADOR (GR)	431
	432
	433
ALOJAMIENTO GR-DIFERENCIAL	176
ALTAVOZ	568
ÁRBOL DE LEVAS (GR)	9
	10
ASIENTO CON SUSPENSIÓN (GR)	570
ASIENTO FIJO (GR)	561
	562
ASIENTO GIRATORIO (GR)	574
ASIENTO (GR)	554
	556
	558
	560
B	
BANCADA 5 (GR)	384
BASE DEL FILTRO Y ACEITE REFRIGERANTE DE MOTOR	53
	55
BASTIDOR DE ROTACIÓN (GR)	254
BASTIDOR DEL CARGADOR (GR)	253
BATERÍA (GR)	102
	104
	106
	107
BATERÍA (12 VOLTIOS, SERVICIO PESADO)	102
	104
BATERÍA (12-VOLTIOS, 750-AMPERIOS)	107
BATERÍA (12-VOLTIOS, 750-AMPERIOS) (LIBRE DE MANTENIMIENTO)	106
BLOQUE DESLIZANTE-JUEGO	563
	565
BLOQUE MOTOR (GR)	20
	22
	23
BOCINA ELÉCTRICA (GR)	535
BOMBA - TUBERÍAS DE (GR)	348
	350
	353
	354
BOMBA DE ACEITE DEL MOTOR (GR)	51
BOMBA DE AGUA (GR)	63
BOMBA DE CEBADO DE COMBUSTIBLE (GR)	95
BOMBA DE INYECCIÓN DE COMBUSTIBLE (GR)	90
	92
BOMBA DE LA TRANSMISIÓN (GR)	204
BOMBA DE LA TRANSMISIÓN (GR)	197
BOMBA DE PISTONES (GR)	370
BRAZO DE RETROEXCAVADOR (GR)	440
BRAZO ESTÁNDAR DE RETROEXCAVADOR (CONFIG)	2
	3
BRAZO EXTENDIBLE DE RETROEXCAVADOR (CONFIG)	1
BRAZO EXTENSIBLE (GR)	438
BUJÍA INCANDESCENTE	108
BUJÍA INCANDESCENTE (GR)	108
C	
CABINA (CONFIG)	489
	490
	491
CABINA (CONJ)	492
	494
CABINA (GR)	495
	497
CABLES DE CALEFACCIÓN (GR)	152
CABLES DE LA CABINA (GR)	134
	135
	138
	139
CABLES DE LA CABINA (GR)	132
CABLES DE LA CONSOLA (GR)	143
CABLES DE LA CONSOLA (GR)	146
CABLES DE LA PLATAFORMA (GR)	154
CABLES DE SENSOR (GR)	162
CABLES DEL ACONDICIONADOR DE AIRE (GR)	129
CABLES DEL MOTOR (GR)	148

* NO HAY TRADUCCION DISPONIBLE EN EL MOMENTO DE LA IMPRESION

INDICE

Nombre	Página
CABLES DEL RECEPTÁCULO DE FUERZA (GR)	158
CABLES POSTERIORES (GR)	159
CAJA DE BATERÍA	240
CAJA DELANTERA (GR)	30
CAJA (GR)	395
CALCOMANÍA	366
CALCOMANÍA (CATERPILLAR)	489
	490
	491
	500
CALCOMANÍA (CONTROL DE CUCHARÓN)	267
	269
	271
CALCOMANÍA (CONTROL DE CUCHARÓN)	600
CALCOMANÍA (CUCHARÓN DE USO MULTIPLE)	309
	600
CALCOMANÍA DE ADVERTENCIA	271
	601
CALCOMANÍA DE ADVERTENCIA (BRAZO-E)	276
CALCOMANÍA DE ADVERTENCIA (CILINDRO PARA ALTA PRESION)	601
CALCOMANÍA DE ADVERTENCIA (CONTROL DE CUCHARÓN)	309
	601
CALCOMANÍA DE ADVERTENCIA (CONTROL DEL CUCHARON)	265
CALCOMANÍA DE ADVERTENCIA (CUCHARÓN DE USO MULTIPLE)	600
CALCOMANÍA DE ADVERTENCIA (FLUJO DE RETORNO)	316
	320
	325
	328
	601
CALCOMANÍA DE ADVERTENCIA (NO PISAR)	599
CALCOMANÍA DE ADVERTENCIA (VARILLA RETRACTIL)	601
CALCOMANÍA DE IDENTIFICACIÓN (TABLERO DE FUSIBLES)	179
	600
CALCOMANÍA DE RAYAS (278 CM)	259
CALCOMANÍA DE RAYAS (399CM)	489
	490
CALCOMANÍA (DESPLAZADOR LATERAL, TRABA DE LA PLUMA)	600
CALCOMANÍA-DIRECCIÓN EN TODAS LAS RUEDAS	600
CALCOMANIA-INDICADOR DE CUCHARON	312
CALCOMANÍA (INTERRUPTOR DE ARRANQUE)	549
	551
	600
CALCOMANÍA (PATRON ESTANDAR/ CRUZADO)	600
CALCOMANÍA (PIVOTE CENTRAL, TRABA DE LA PLUMA)	600
CALCOMANÍA (PLACA DE CONTROL)	600
CALCOMANÍA (RECIRCULACIÓN DE AIRE)	486
	533
CALCOMANÍA (VELOCIDAD VARIABLE)	84
	600
CALCOMANÍA (VOLUMEN) (.095M)	600
CALCOMANÍAS Y PLACAS DE IDENTIFICACIÓN (GR)	599
CALEFACCIÓN DE LA CABINA (GR)	531
	533
CÁNCAMOS DE LEVANTAMIENTO DEL MOTOR (GR)	32
CANDADO (GR)	598
CAPÓ DEL MOTOR (GR)	259
CAPO Y PROTECTOR (GR)	257
CARGA - ALTERNADOR DE (GR)	101
CARGADOR (CONFIG)	422
CÁRTER - COLECTOR DEL (GR)	35
CHASIS (CONFIG)	3
CIGÜEÑAL - POLEA DE (GR)	43
CIGÜEÑAL (GR)	16
	18
CILINDRO (CONJ)	223
CILINDRO DE CUCHARÓN DE USO MÚLTIPLE (GR)	298
CILINDRO DE CUCHARÓN RETROEXCAVADOR (GR)	288
	290
CILINDRO DE LA PLUMA (GR)	292
CILINDRO DE LEVANTAMIENTO - TUBERÍAS DEL (GR)	338
	339
CILINDRO DE LEVANTAMIENTO (GR)	297
CILINDRO DE ROTACIÓN (GR)	302
CILINDRO DEL BRAZO EXTENSIBLE (GR)	294
	295
CILINDRO DEL BRAZO (GR)	301
CILINDRO ESTABILIZADOR (GR)	299
	300
CINTURÓN DE SEGURIDAD (GR)	553
CODO DE ADMISIÓN DE AIRE (GR)	75
COLADOR	198
	204
COMBUSTIBLE - TANQUE DE (GR)	98
	99

* NO HAY TRADUCCION DISPONIBLE EN EL MOMENTO DE LA IMPRESION

INDICE

Nombre	Página
COMPARTIMIENTO DE LITERATURA DE SERVICIO (GR)	504 505
COMPRESOR DE REFRIGERANTE (GR)	506 507
CONDENSADOR DEL REFRIGERANTE Y MONTAJE (GR)	508
CONDUCTO DE AIRE (GR)	526 528
CONECTOR DE VALVULA (GR)	262 264
CONEXION DE CALENTADOR Y ACOND. DE AIRE (GR)	60
CONEXIÓN DE ENGRASE	312 365 420 427 440 469 470
CONEXIÓN DE ENGRASE (ROSCA DE 1/8-27)	254 413
CONFIG. DEL MANDO, CARGADOR RETROEXCAVADORA	179
CONFIGURACIÓN COMÚN	4
CONFIGURACIÓN DE MOTORES	5 6
CONJUNTO DE ARMOHADILLAS-ESTABILIZADOR (CALLE)	434
CONJUNTO DE DESTELLADOR	154
CONSOLA DEL OPERADOR (GR)	510
CONSOLA DELANTERA (GR)	509
CONSOLA LATERAL (GR)	511 512 513 514 515
CONTRAPESO (GR)	242 243 244 245 246
CONTROL DE DIRECCIÓN (GR)	231 232
CONTROL DE LA TRANSMISIÓN (GR)	174
CONTROL DE TRABA DEL DIFERENCIAL (GR)	173
CONTROL DEL FRENO DE ESTACIONAMIENTO	221 222
CONTROL DEL REGULADOR Y ACELERADOR (GR)	84
CONTROL HIDRÁULICO MANUAL (GR)	265 267 269 271 273 275
CONTROL MANUAL DE PALANCA (GR)	226
CONVERSION DE CONTROL DE MANO HIDRAULICO (GR)	283 284 285 286
CONVERSIÓN DE LA VÁLVULA DE CONTROL (GR)	282
CONVERSIÓN DE ROTACIÓN AMORTIGUADA (CONFIG)	280
CORREA TRAPEZOIDAL (AIRE ACONDICIONADO)	507
CRISTAL (AMBAR)	112
CRISTAL (AMBAR, BALIZA DE ADVERTENCIA)	114
CRISTAL (ROJO, AMBAR)	113
CUCHARÓN DE USO GENERAL (CONJ)	444 445
CUCHARÓN DE USO MÚLTIPLE (CONFIG)	443
CUCHARÓN DE USO MÚLTIPLE (CONFIG)	442
CUCHARÓN DE USO MÚLTIPLE (GR)	469 470
CUCHARÓN RETROEXCAVADOR (GR)	446 447 448 449 450 451 452 453 454 455 456 457 458 459 460 461 462 463 464 465 466 467 468
CUCHILLA (GR)	477
CULATA DE CILINDROS (GR)	24

* NO HAY TRADUCCION DISPONIBLE EN EL MOMENTO DE LA IMPRESION

INDICE

Nombre	Página
	25
	26
D	
DETECTOR DE TEMPERATURA	148
DIENTE DE UNA PIEZA (UNI-TOOTH) (GR)	482
DIFERENCIAL (GR)	178
DIFERENCIAL Y CORONA (GR)	176
E	
EJE DE IMPULSIÓN Y DE DIRECCIÓN (GR)	165
	167
EJE DE MANDO (GR)	191
	192
EJE DELANTERO (GR)	228
	230
EJE TRASERO (GR)	168
ELEMENTO DE FILTRO (COMBUSTIBLE)	95
EMPAQUETADURA (TAPA DE VÁLVULA)	12
	14
ENFRIADOR DE ACEITE DEL MOTOR (GR)	53
ENFRIADOR DE ACEITE DEL MOTOR Y BASE DEL FILTRO	53
	55
ENGRANAJE DE CORONA Y PIÑÓN (GR)	176
ESTABILIZADOR (CONFIG)	373
ETIQUETA DE ADVERTENCIA (GR)	596
EXTENSIÓN DEL ESCAPE (GR)	76
F	
FILTRO	387
	389
	391
	393
	395
	397
	399
	401
FILTRO (AIRE ACONDICIONADO)	484
FILTRO (CALEFACTOR)	531
FILTRO DE ACEITE (CONJ) (FILTRO, ALTA EFICIENCIA)	311
FILTRO DE ACEITE (CONJ) (HIDRAULICO)	195
FILTRO DE ACEITE (CONJ) (HIDRAULICO) (RESISTENTE AL FUEGO)	311
FILTRO DE ACEITE DEL MOTOR (CONJ)	49
FILTRO DE AIRE (AIRE ACONDICIONADO)	486
FILTRO DE AIRE (CALEFACTOR)	533
FILTRO DE AIRE (GR)	71
	73
	74
FILTRO DE COMBUSTIBLE (CONJ) (REJILLA DE TUBO DE LLENADO)	99
FILTRO (RESPIRADERO DEL TANQUE)	374
FRENO DE ESTACIONAMIENTO (GR)	220
FRENO DE SERVICIO - CONTROL (GR)	223
FUNDA	408
	409
FUSIBLE (10 A)	115
	158
FUSIBLE (10-AMPERIOS)	114
	129
FUSIBLE (10-AMPERIOS)	114
	119
FUSIBLE (15 A)	138
FUSIBLE (15 AMPERIOS)	139
FUSIBLE (15 AMPERIOS)	116
	119
FUSIBLE (20-AMPERIOS)	132
	135
FUSIBLE (5 AMP)	142
FUSIBLE (5-AMPERIOS)	132
G	
GIRAR Y DESLIZAR DEL ASIENTO (GR)	572
GRUPO DE BRAZO DE LEVANTAMIENTO	413
GRUPO DE CLAVIJA, EJE	165
GRUPO DE CODO	338
GRUPO DE CONEXIÓN	336
	350
GRUPO DE CONTROL DE PEDAL HIDRÁULICO	276
	278
GRUPO DE CUATRO VALVULAS (CONFIG)	377
GRUPO DE PESTAÑA Y RESINTO, EJE	183
	185
GRUPO DE 3 VÁLVULAS HIDRÁULICAS	382
GRUPO DE 4 VÁLVULAS HIDRÁULICAS	383
GRUPO DE 5 VALVULAS (CONFIG)	377
GRUPO DE 6 VALVULAS (CONFIG)	378
GRUPO GIRATORIO DE BOMBA	372
GRUPO PLANETARIO, MANDO FINAL	187
GUARDABARROS TRASERO (GR)	248
	249
GUARNICIONES DE LA CABINA (GR)	577
H	
HIDRÁULICA (CONFIG)	309
	311
HOJA DE LIMPIAPARABRISAS (CONJ)	592
HORQUILLA (GR)	478

* NO HAY TRADUCCION DISPONIBLE EN EL MOMENTO DE LA IMPRESION

INDICE

Nombre	Página
*HYDRAULIC AR	309 310

I

Nombre	Página
IMPULSOR DE VENTILADOR (GR)	27
INCLINACIÓN HORIZONTAL - CILINDRO DE (GR)	304
INDICADOR- CAMBIO DE FILTRO DE AIRE	77
INDICADOR DE CAMBIO DE FILTRO DE ACEITE (GR)	77 78
INDICADOR DEL NIVEL DE ACEITE (GR)	146
INSONORIZADOR (GR)	568
INSTALACIÓN DE LA TRABA DE LA RUEDA	597
INTERRUPTOR (CONJ) (CALEFACTOR)	152
INTERRUPTOR (CONJ) (SEÑAL DE VIRAJE)	134
INTERRUPTOR DE ARRANQUE CON LLAVE (CONJ)	551
INTERRUPTOR DE LÍMITE (CONJ)	223
INTERRUPTOR DE PRESIÓN (CONJ) (ALTA - BAJA)	129
INTERRUPTOR DE PRESIÓN (GR)	127
INTERRUPTOR DE RODILLO (CONJ) (DESCONEXIÓN)	162
INTERRUPTOR DE TEMPERATURA (AIRE ACONDICIONADO)	486
INTERRUPTOR DE VOLQUETE (CONJ) (BOCINA) (BOCINA)	143
INTERRUPTOR DE VOLQUETE (CONJ) (CALEFACCION, ACONDICIONADOR DE AIRE) (CALEFACCIÓN/ACONDICIONADOR DE AIRE)	129
INTERRUPTOR DE VOLQUETE (CONJ) (LUCES DE ADVERTENCIA DE PELIGRO)	143
INTERRUPTOR DE VOLQUETE (CONJ) (LUZ DE TRABAJO DELANTERA)	119
INTERRUPTOR DE VOLQUETE (CONJ) (*NEUTRAL LOCK)	143
INTERRUPTOR DE VOLQUETE (CONJ) (REFLECTORES TRASEROS)	119
INTERRUPTOR DE VOLQUETE (CONJ) (VELOCIDAD DEL VENTILADOR DEL CALENTADOR)	152
INTERRUPTOR DE VOLQUETE (CONJ) (VELOCIDAD DEL VENTILADOR) (VELOCIDAD DEL VENTILADOR DEL CALENTADOR)	129
INTERRUPTOR PARA LA TEMPERATURA (GR)	128
INTERRUPTOR PULSADOR (CONJ)	174 273
INTERRUPTOR (TEMPERATURA)	90

J

Nombre	Página
JUEGO DE AJUSTE DEL ASIENTO	488
JUEGO DE AMORTIGUADOR	488
JUEGO DE ANILLO DE PISTON	37 39
JUEGO DE ASIENTO	536
JUEGO DE COJINETE DE RODILLOS	187
JUEGO DE COJINETES	168
JUEGO DE COJINETES DE BANCADA (0,25 MM EE.UU.)	18
JUEGO DE COJINETES DE BANCADA (0,25 MM EE.UU.)	16
JUEGO DE COJINETES DE BANCADA (0,50 MM EE.UU.)	16 18
JUEGO DE COJINETES DE BANCADA (0,76 MM EE.UU.)	16 18
JUEGO DE COJINETES DE BIELA (0,25 MM EE.UU.)	16 18
JUEGO DE COJINETES DE BIELA (0,50 MM EE.UU.)	16 18
JUEGO DE COJINETES DE BIELA (0,76 MM EE.UU.)	16 18
JUEGO DE CONTACTOR (MOTOR DE ARRANQUE)	124
JUEGO DE CORREAS TRAPEZOIDALES (INCLUYE 2 CORREAS)	489 490 491 499 500
JUEGO DE CRUCETA	165
JUEGO DE CRUCETA Y COJINETE	191 192
JUEGO DE ENCHUFE (2 CLAVIJAS)	152 222 486
JUEGO DE ENCHUFE (2 CLAVIJAS)	208
JUEGO DE ENGRANAJES (MOTOR DE ARRANQUE)	124
JUEGO DE FORRO	220
JUEGO DE MEDIDOR DE SERVICIO	143
JUEGO DE RECEPTÁCULO (12 CLAVIJAS)	134
JUEGO DE RECEPTÁCULO (2 CLAVIJAS)	142 152 154 159 209 393

* NO HAY TRADUCCION DISPONIBLE EN EL MOMENTO DE LA IMPRESION

INDICE

Nombre	Página
	486
JUEGO DE RECEPTÁCULO (2 CLAVIJAS)	273
JUEGO DE RECEPTÁCULO (3 CLAVIJAS)	162
	209
JUEGO DE RECEPTÁCULO (3 CLAVIJAS)	578
	580
JUEGO DE RECEPTÁCULO (4 CLAVIJAS)	152
JUEGO DE RECEPTÁCULO (6 CLAVIJAS)	551
	592
JUEGO DE RECEPTÁCULO (6 CLAVIJAS)	546
JUEGO DE RECEPTÁCULO (8 CLAVIJAS)	545
JUEGO DE RECONSTRUCCIÓN DE FORRO	220
JUEGO DE REPARACIÓN (TUBERÍAS DEL FRENO)	592
JUEGO DE SELLOS	109
JUEGO DE SELLOS (BOMBA DOSIFICADORA DE SERVODIRECCION)	179
JUEGO DE SERVICIO	552
JUEGO-PORTA PLANETARIO	187

L

LÁMPARA DE BALIZA DE ADVERTENCIA (GR)	114
	115
LÁMPARA DEL TECHO (GR)	568
LÁMPARA (12 VOLTIOS)	115
	146
	545
	575
	576
LÁMPARA (12 VOLTIOS, 10 VATIOS)	568
LÁMPARA (12 VOLTIOS, 21/5-VATIOS)	113
LÁMPARA (12 VOLTIOS, 24 VATIOS)	112
	113
LÁMPARA (12 VOLTIOS, 55 VATIOS)	110
	111
	114
	119
LÁMPARA (12 VOLTIOS, 55 VATIOS)	116
LATA DE RESPIRADERO (CONJ)	46
LAVAPARABRISAS DE LA VENTANA (GR)	578
	580
LENTE AMBAR	115
LIMPIAPARABRISAS DE LA VENTANA (GR)	592
	594
LLAVE	505
	598
LUCES DE PARADA Y COLA (GR)	113
LUCES DE REFLECTOR (GR)	116
LUCES DE REFLECTOR Y CAMBIO DE DIRECCION (GR)	119
LUZ DE BALIZA (GR)	122
	123
LUZ DE SEÑAL DE GIRO (GR)	112

M

MANDO DE CORREA	115
MANGUERA (RESPIRADERO)	12
MANGUITO DE EMPALME DE CABLE	504
MECANISMO DE VÁLVULAS (GR)	44
	45
MÓDULO INDICADOR DE ADVERTENCIA (GR)	545
MONTAJE DE BANCADA DE VALVULA (GR)	363
	364
MONTAJE DE CILINDRO (GR)	365
MONTAJE DE LA BOMBA HIDRÁULICA (GR)	367
MONTAJE DE TUBERIAS (GR)	368
	369
MONTAJE DEL BRAZO (GR)	427
MONTAJE DEL CONTROL HIDRÁULICO (GR)	366
MONTAJE DEL CUCHARÓN (GR)	479
	480
MONTAJE DEL EJE TRASERO (GR)	163
	164
MONTAJE DEL MOTOR (GR)	33
MONTAJE DEL MOTOR Y LA TRANSMISIÓN (GR)	34
MONTAJE DEL TABLERO DE INSTRUMENTOS (GR)	547
	548
	549
MONTAJE Y TRANSMISIÓN(GR)	193
	194
MONTAJE Y VALVULA DEL BANCO(GR)	376
MOTOR DE ARRANQUE ELÉCTRICO (GR)	124
	126
MOTOR-LIMPIAPARABRISAS (GR)	546
MOTOR PRIMARIO (CONFIG)	7
	8
MÚLTIPLE DE ESCAPE (GR)	79

P

PABELLON (CONJ)	501
	502
PALANCA DE CONTROL DEL REGULADOR (GR)	538
PARAGOLPES DELANTERO	241
PISTÓN Y BIELA (GR)	37
	39
PLACA-CAT (CAPÓ)	259

* NO HAY TRADUCCION DISPONIBLE EN EL MOMENTO DE LA IMPRESION

INDICE

Nombre	Página
PLACA DE CONTROL (ACONDICIONADOR DE AIRE)	484, 531, 600
PLACA INDICADORA	143, 146, 600, 601
PLACA INDICADORA (CUCHARÓN)	442, 443
PLACA INDICADORA (ROJO)	417
PLANCHA DEL PISO (GR)	250, 252
PLUMA (GR)	415, 416
PORTAESCOBILLAS (CONJ)	124
POSABRAZOS (GR)	488
POSICIONADOR DEL CUCHARÓN Y DESCONEXIÓN (GR)	312
PRIORIDAD - VÁLVULA DE (GR)	239
PROTECTOR DE CILINDRO ESTABILIZADOR (GR)	306, 307
PROTECTOR DEL EJE IMPULSOR (GR)	256
PUERTA DERECHA (GR)	524
PUERTA IZQUIERDA (GR)	522
RESORTE (RESPIRADERO DE MANGUERA)	12
RESPIRADERO (EJE)	165
RESPIRADERO (GR)	46, 48
RESPIRADERO (TRANSMISION)	198
RESPIRADERO (TRANSMISION)	203
RETROEXCAVADOR - ESTABILIZADOR DEL (GR)	436
RETROVISOR (GR)	543, 544
RUEDA Y LLANTA (CONFIG)	211, 212
RUEDA Y NEUMÁTICO (GR)	213, 214, 215, 216, 217, 218, 219

R

Nombre	Página
RADIADOR Y ENFRIADOR DE ACEITE HIDRÁULICO (GR)	67, 68, 69, 70
RADIADOR Y VENTILADOR (GR)	65, 66
REFLECTOR (GR)	110
REFLECTOR (GR)	111
REGULADOR - PEDAL DEL (GR)	552
REGULADOR DE TEMPERATURA DEL AGUA	52
RELÉ (CONJ) (12 VOLTIOS)	116, 119, 129, 132, 135, 138, 139, 142, 148, 152
RELÉ (CONJ) (12 VOLTIOS) (ALTA VELOCIDAD)	129

S

Nombre	Página
SELLO ANULAR	197, 350
SELLO ANULAR (DRENAJE DE ACEITE DE MOTOR)	35
SELLO ANULAR (REGULADOR DE TEMPERATURA DEL AGUA)	52
SELLO (RESPIRADERO)	46
SEPARADOR DE AGUA (GR)	96
SILENCIADOR (GR)	80, 81
SINCRONIZADOR (GR)	196, 202
SOPORTE (CONJ)	106, 107
SOPORTE DEL CILINDRO DE LEVANTAMIENTO (GR)	417
SUCCIÓN - VENTILADOR DE (GR)	57, 58, 59
SUSPENSIÓN - ASIENTO CON (GR)	563, 565, 567

T

Nombre	Página
TABLERO DE INSTRUMENTOS (GR)	551
TACÓMETRO ELÉCTRICO (GR)	489, 490, 491, 499, 500

* NO HAY TRADUCCION DISPONIBLE EN EL MOMENTO DE LA IMPRESION

INDICE

Nombre	Página
	575
	576
TANQUE DE COMBUSTIBLE Y GRUPO DE MONTAJE	97
TANQUE DEL SISTEMA DE FRENOS (GR)	227
TANQUE HIDRÁULICO (GR)	374
TAPA	210
TAPA CONTRA EL POLVO	345
TAPA DE FRENO DE ESTACIONAMIENTO (GR)	519
TAPA DE LA BATERÍA (GR)	247
TAPA DE LA CAJA DELANTERA (GR)	11
TAPA DE LA CONSOLA (GR)	516
TAPA DE MAMPARA PARAFUEGO (GR)	517
	518
TAPA DE POSTE (GR)	520
	521
TAPA DEL MECANISMO DE VÁLVULAS (GR)	14
TAPA DEL MECANISMO DE VÁLVULAS (GR)	12
TAPA, LLENADO (ACEITE HIDRÁULICO)	374
TAPA PARA EL COMBUSTIBLE	99
TAPÓN (CONJ)	314
TAPÓN (CONJ) (LLENADO DE ACEITE DE MOTOR)	49
TAPÓN (CONJ) (RADIADOR)	68
	70
TAPON DE DRENAJE DE SUMIDERO	35
TAPÓN DEL BLOQUE MOTOR (GR)	41
TAPÓN DEL MOTOR (GR)	42
TAPÓN MAGNÉTICO	170
TECHO (CONFIG)	500
TECHO (CONFIG)	499
TECHO ROPS ABIERTO (GR)	503
TOPE DE CUCHARON (GR)	481
TRABA CONTRA EL VANDALISMO (GR)	598
TRABA DE CONTROL HIDRÁULICO MANUAL (GR)	362
TRABA DE TRANSPORTE DE LA MÁQUINA (GR)	423
	424
	425
	426
TRANSMISION DIRECTA (CONFIG)	195
TRANSMISIÓN DIRECTA (GR)	202
TRANSMISIÓN DIRECTA (GR)	196
TREN DE FUERZA (CONFIG)	188
	189
	190
TUBERIAS AUXILIARES-RETROEXCAVADORA (GR)	314
	316
	320
	325
	328
TUBERÍAS CON SERVOMANDO (GR)	345
	346
TUBERIAS DE AUXILIAR DE CARGADOR (GR)	341
TUBERIAS DE CALEFACCION	539
	541
TUBERIAS DE CALENTEDOR Y ACONDICIONADOR DE AIRE (GR)	541
TUBERÍAS DE COMBUSTIBLE (GR)	86
	88
TUBERÍAS DE DIRECCIÓN (GR)	233
	236
TUBERÍAS DE GIRO (GR)	359
TUBERÍAS DE LA CALEFACCIÓN (GR)	539
TUBERÍAS DE LA PALANCA EXTENDIBLE (GR)	335
	336
TUBERÍAS DE LA PLUMA (GR)	332
TUBERÍAS DE RETORNO (GR)	355
TUBERÍAS DEL BRAZO (GR)	358
TUBERÍAS DEL CILINDRO DE INCLINACIÓN (GR)	360
TUBERÍAS DEL CILINDRO DEL CUCHARÓN (GR)	333
TUBERÍAS DEL CUCHARÓN DE USO MÚLTIPLE	343
TUBERÍAS DEL ENFRIADOR DEL TREN DE FUERZA (GR)	61
TUBERÍAS DEL ESTABILIZADOR (GR)	356
TUBO DE LLENADO DE ACEITE DE LA TRANSMISIÓN (GR)	181
	182
TUBO DE LLENADO DE ACEITE (GR)	49
TURBOCOMPRESOR (GR)	82

V

*VALVE GP-CHECK	386
*VALVE GP-PUMP CONTROL	410
	411
VÁLVULA (CONJ) (AGUA)	484
	531
VÁLVULA DE ALIVIO (GR)	196
	202
	239
	387
	393
	395
VÁLVULA DE CONTROL (GR)	387
	395
	399
	401

* NO HAY TRADUCCION DISPONIBLE EN EL MOMENTO DE LA IMPRESION

INDICE

Nombre	Página	Nombre	Página
	403		
	405		
VÁLVULA DE CONTROL (GR)	389		
	391		
	393		
	397		
VÁLVULA DE CORTE	60		
	350		
VÁLVULA DE CORTE (GR)	350		
VÁLVULA DE RETENCIÓN (GR)	393		
	397		
VÁLVULA DE SOLENOIDE (GR)	209		
VÁLVULA DE SOLENOIDE (GR)	208		
VÁLVULA DEL NEUMÁTICO (GR)	210		
	211		
VÁLVULA PILOTO (GR)	407		
	408		
	409		
VALVULA (RESPIRADERO DE AIRE)	164		
VÁLVULAS HIDRÁULICAS - GRUPO DE 2	379		
	381		
VÁLVULAS HIDRÁULICAS - GRUPO DE 6	385		
VARILLAJE DE CUCHARÓN CARGADOR (GR)	420		
VARILLAJE DEL CUCHARÓN RETROEXCAVADOR (GR)	418		
VENTANA DE LA CABINA (GR)	582		
	584		
	586		
VENTANA DE LA PUERTA (GR)	588		
	590		
VENTILADOR (CONJ)	486		
	533		
VIDRIO (CONJ) (FARO)	111		
VIDRIO (CONJ) (REFLECTOR) (REFLECTOR)	110		
VOLANTE - CAJA DE (GR)	29		
VOLANTE DE DIRECCIÓN	232		
VOLANTE DE DIRECCIÓN (GR)	238		
VOLANTE (GR)	28		

W

*WIRING GP-CONSOLE	142		

Z

ZAPATA DE ESTABILIZADOR (GR)	434		
	435		
ZAPATA Y PROTECTOR DEL ESTABILIZADOR	428		
	429		
	430		

* NO HAY TRADUCCION DISPONIBLE EN EL MOMENTO DE LA IMPRESION

ÍNDICE

Designação	Página
A	
ACOPLADOR RÁPIDO	472, 473, 474, 475, 476
ACOPLAMENTO	287
AJUSTADOR DO ASSENTO	483
ALAVANCA DE CONTROLE DO GOVERNADOR	538
ALAVANCA DE CONTROLE MANUAL	226
ALOJAMENTO	395
ALOJAMENTO - DIFERENCIAL	176
ALOJAMENTO E FLANGE - EIXO	183, 185
ALTERNADOR DE CORRENTE	101
ALTO-FALANTE	568
AQUECEDOR DA ÁGUA DO MOTOR	109
AQUECEDOR DA CABINE	531, 533
ARMAÇÃO OSCILANTE	254
ARRANJO BÁSICO	4
ARREFECEDOR - ÓLEO DO MOTOR	53
ARREFECEDOR DE ÓLEO DO MOTOR E BASE DO FILTRO	53, 55
ARTICULAÇÃO DA CAÇAMBA DA RETROESCAVADEIRA	418
ARTICULAÇÃO DAS CAÇAMBAS DAS CARREGADEIRAS	420
ASSENTO	554, 556, 558, 560
ASSENTO COM SUSPENSÃO	563, 565, 567
ASSENTO ESTÁTICO	561, 562
ASSENTO GIRATÓRIO	574
B	
BATENTE - CAÇAMBA	481
BATERIA	102, 104, 106, 107
BATERIA (12 VOLTS, SERVIÇO PESADO)	102, 104
BATERIA (12 VOLTS, 750 AMPERES)	107
BATERIA (12 VOLTS, 750 AMPERES) (LIVRE DE MANUTENÇÃO)	106
BLOCO DO MOTOR	20, 22, 23
BOCAL DE ENCHIMENTO DE ÓLEO DO MOTOR	49
BOCAL DE ENCHIMENTO DE ÓLEO DO TREM DE FORÇA	181, 182
BOMBA DA TRANSMISSÃO	197, 204
BOMBA DE ÁGUA	63
BOMBA DE ESCORVA DO COMBUSTÍVEL	95
BOMBA DE INJEÇÃO DO COMBUSTÍVEL	90, 92
BOMBA DE ÓLEO - MOTOR	51
BOMBA DE PISTÃO	370
BORDA CORTANTE	477
BRAÇO - CAÇAMBA RETRO-ESCAVADORA	440
BRAÇO DE LEVANTAMENTO	413
BRAÇO DO ASSENTO	488
BRAÇO ESTENDÍVEL	438
BUJÃO - DRENAGEM DO RESERVATÓRIO	35
BUJÃO DO BLOCO DO CILINDRO	41
BUJÃO DO MOTOR	42
BUJÃO MAGNÉTICO	170
BUZINA ELÉTRICA	535
C	
CABEÇOTE DO MOTOR	24, 25, 26
CABINE	489, 490, 491, 492, 494, 495, 497
CABOS/FIOS ELÉTRICOS - AQUECEDOR	152
CABOS/FIOS ELÉTRICOS - AR CONDICIONADO	129
CABOS/FIOS ELÉTRICOS - CABINE	132, 134, 135, 138, 139
CABOS/FIOS ELÉTRICOS - MOTOR	148
CABOS/FIOS ELÉTRICOS - PLATAFORMA	154
CABOS/FIOS ELÉTRICOS - SENSOR	162
CABOS/FIOS ELÉTRICOS - TOMADA DE FORÇA	158
CABOS/FIOS ELÉTRICOS - TRASEIROS	159

* TRADUÇÃO NÃO DISPONÍVEL NO MOMENTO DA IMPRESSÃO

ÍNDICE

Designação	Página
CABOS/FIOS ELÉTRICOS DO CONSOLE	143
	146
CAÇAMBA DE MÚLTIPLAS APLICAÇÕES	442
	443
	469
	470
CAÇAMBA DIANTEIRA	422
CAÇAMBA PARA APLICAÇÃO GERAL	444
	445
CAÇAMBA RETROESCAVADORA	446
	447
	448
	449
	450
	451
	452
	453
	454
	455
	456
	457
	458
	459
	460
	461
	462
	463
	464
	465
	466
	467
	468
CADEADO	598
CADEADO CONTRA VANDALISMO	598
CAIXA - BATERIA	240
CAIXA DIANTEIRA	30
CAIXA DO VOLANTE DO MOTOR	29
CALCO	431
CALÇO - ESTABILIZADOR (RUA)	434
CALÇO DO ESTABILIZADOR	434
	435
CALÇO DO ESTABILIZADOR E MONTAGEM	431
	432
	433
CAPÔ DO MOTOR	259
CAPÔ E PROTETOR	257
CÁRTER DO ÓLEO DO MOTOR	35
CHAPA DO PISO	250
	252
CHASSI	3
CHASSI DIANTEIRO	253
CHAVE	505
	598

Designação	Página
CHAVE INTERRUPTORA DE PARTIDA	551
CILINDRO	223
CILINDRO - CAÇAMBA DE MÚLTIPLAS APLICAÇÕES	298
CILINDRO DA CAÇAMBA RETROESCAVADEIRA	288
	290
CILINDRO DA LANÇA	292
CILINDRO DE GIRO	302
CILINDRO DE INCLINAÇÃO	304
CILINDRO DE LEVANTAMENTO	297
CILINDRO DO BRAÇO	301
CILINDRO DO BRAÇO ESTENDÍVEL	294
	295
CILINDRO DO ESTABILIZADOR	299
	300
CINTO DE SEGURANÇA	553
COBERTA TOLDO	501
	502
COLETOR DE ESCAPE	79
COMANDO - ACOPLAMENTO FLEXÍVEL	180
COMANDO - RETROESCAVADEIRA	179
COMANDO DO VENTILADOR	27
COMANDO HIDRÁULICO	309
	311
COMPARTIMENTO PARA LITERATURA	504
	505
COMPRESSOR DE REFRIGERANTE	506
	507
CONDENSADOR DO REFRIGERANTE E MONTAGEM	508
CONDICIONADOR DE AR	486
CONDICIONADOR DE AR E MONTAGEM	484
CONECTOR	336
	350
CONEXÃO - TUBO D'ÁGUA	52
CONEXÃO-AQUECEDOR & AR CONDICIONADO	60
CONJUNTO DE 4 VÁLVULAS	377
CONSOLE DO OPERADOR	510
CONSOLE LATERAL	511
	512
	513
	514
	515
CONTRAPESO	242
	243
	244
	245
	246
CONTROLE - PEDAL HIDRÁULICO	276
	278
CONTROLE DA TRANSMISSÃO	174

* TRADUÇÃO NÃO DISPONÍVEL NO MOMENTO DA IMPRESSÃO

ÍNDICE

Designação	Página
CONTROLE DA TRAVA DO DIFERENCIAL	173
CONTROLE DE DIREÇÃO	231
	232
CONTROLE DO FREIO DE ESTACIONAMENTO	221
	222
CONTROLE DO FREIO DE SERVIÇO	223
CONTROLE DO GOVERNADOR E ACELERADOR	84
CONTROLE HIDRÁULICO MANUAL	265
	267
	269
	271
	273
	275
CONVERSÃO-CONTROLE MANUAL HIDRÁULICO	283
	284
	285
	286
CORREIA DE COMANDO	115
CORREIA EM V (AR CONDICIONADO)	507
COTOVELO	338
COTOVELO DE ADMISSÃO DE AR	75
COXIM E PROTETOR DO ESTABILIZADOR	428
	429
	430

D

DECALQUE	366
	596
DECALQUE - ADVERTÊNCIA (CILINDRO DE ALTA PRESSÃO)	601
DECALQUE - CAT (CAPÔ)	259
DECALQUE - CONTROLE (CONDICIONADOR DE AR)	484
	531
	600
DECALQUE - DIREÇÃO EM TODAS AS RODAS	600
DECALQUE - IDENTIFICAÇÃO (PAINEL DE FUSÍVEIS)	179
DECALQUE - IDENTIFICAÇÃO (PAINEL DE FUSÍVEIS)	179
	600
DECALQUE - INDICADOR	143
	146
	600
	601
DECALQUE - INDICADOR (CAÇAMBA)	442
	443
DECALQUE - INDICADOR (VERMELHO)	417
DECALQUE - INSTRUÇÃO	271
	601
DECALQUE - INSTRUÇÃO (BRAÇO - E)	276
DECALQUE - INSTRUÇÃO (BRAÇO EXTENSÍVEL)	601
DECALQUE - INSTRUÇÃO (CAÇAMBA PARA MÚLTIPLAS APLICAÇÕES)	600
DECALQUE - INSTRUÇÃO (CONTROLE DA CAÇAMBA)	265
	309
	601
DECALQUE - INSTRUÇÃO (FLUXO DE RETORNO)	316
	320
	325
	328
	601
DECALQUE - INSTRUÇÃO (SEM DEGRAUS)	599
DECALQUE - TIRA (278 CM)	259
DECALQUE - TIRA (399 CM)	489
	490
DECALQUE (CAÇAMBA PARA MÚLTIPLAS APLICAÇÕES)	309
	600
DECALQUE (CATERPILLAR)	489
	490
	491
	500
DECALQUE (CHAVE INTERRUPTORA DE PARTIDA)	600
DECALQUE (CONTROLE DA CAÇAMBA)	267
	269
	271
	600
DECALQUE (DESLOCAMENTO LATERAL, TRAVA DA LANÇA)	600
DECALQUE (GRANEL) (0,095 M)	600
DECALQUE-INDICADOR DE CAÇAMBA	312
DECALQUE (INTERRUPTOR DE PARTIDA)	549
	551
DECALQUE (PADRÃO CRUZADO PADRÃO)	600
DECALQUE (PIVÔ CENTRAL, TRAVA DA LANÇA)	600
DECALQUE (PLACA DE CONTROLE)	600
DECALQUE (RECIRCULAÇÃO DE AR)	486
	533
DECALQUE (VELOCIDADE VARIÁVEL)	84
	600
DESENGATE E POSICIONADOR DA CAÇAMBA	312
DIFERENCIAL	178
DIFERENCIAL E COROA	176
DUCTO DE AR	526

* TRADUÇÃO NÃO DISPONÍVEL NO MOMENTO DA IMPRESSÃO

ÍNDICE

Designação	Página
	528

E

EIXO-COMANDO DE VÁLVULA	9 10
EIXO DE PROPULSÃO E DIREÇÃO	165 167
EIXO DE TRANSMISSÃO	191 192
EIXO DIANTEIRO	228 230
EIXO TRASEIRO E MONTAGEM	163 164
ELEMENTO - FILTRANTE (COMBUSTÍVEL)	95
EMISSOR - TEMPERATURA	148
ENGRENAGEM-COROA E PINHÃO	176
ESPELHO RETROVISOR	543 544
ESTABILIZADOR	373
ESTABILIZADOR - RETROESCAVADEIRA	436
EXTENSÃO DO TUBO DE ESCAPE	76

F

FILTRO	387 389 391 393 395 397 399 401
FILTRO - AR (AQUECEDOR)	533
FILTRO - AR (AR CONDICIONADO)	486
FILTRO - COMBUSTÍVEL (TELA DO BOCAL DE ENCHIMENTO)	99
FILTRO - ÓLEO DO MOTOR	49
FILTRO - ÓLEO (HIDRÁULICO)	195
FILTRO - ÓLEO (HIDRÁULICO) (RESISTENTE A FOGO)	311
FILTRO - ÓLEO (LIMPEZA, ALTA EFICIÊNCIA)	311
FILTRO (AQUECEDOR)	531
FILTRO (AR CONDICIONADO)	484
FILTRO (RESPIRO DO TANQUE HIDRAULICO)	374
FREIO DE ESTACIONAMENTO	220
FUSÍVEL (10 A)	115 158
FUSÍVEL (10 AMPERES)	114 119 129
FUSÍVEL (15 A)	138
FUSÍVEL (15 AMPERES)	116 119 139
FUSÍVEL (20-AMPERES)	132 135
FUSÍVEL (5 AMP)	142
FUSÍVEL (5 AMPÈRES)	132

G

GARFO	478
GR. DE CONVERSÃO - VÁLVULA DE CONTROLE	282
GR. DE INSTALAÇÃO - CALÇO DA RODA	597
GR. PLANETÁRIO - COMANDO FINAL	187
GRAXEIRA	312 365 420 427 440 469 470
GRAXEIRA (ROSCA 1/8-27 POL)	254 413
GRUPO DE CONVERSÃO - ESTOFAMENTO DE GIRO	280
GRUPO DE DESLIZE E ARTICULAÇÃO GIRATÓRIA	572
GRUPO DE VÁLVULAS - SEIS	378
GRUPO DE VÁLVULAS - 5	377
GRUPO DE VÁLVULAS DE CONTROLE - CINCO	384
GRUPO DE VÁLVULAS DE CONTROLE - DUPLO	379 381
GRUPO DE VÁLVULAS DE CONTROLE - QUÁDRUPLO	383
GRUPO DE VÁLVULAS DE CONTROLE - SEIS	385
GRUPO DE VÁLVULAS DE CONTROLE - TRIPLO	382
GRUPO ROTATIVO DA BOMBA	372

H

*HYDRAULIC AR	309 310

I

INDICADOR - TROCA DO FILTRO DE AR	77 78

* TRADUÇÃO NÃO DISPONÍVEL NO MOMENTO DA IMPRESSÃO

ÍNDICE

Designação	Página
INDICADOR-TROCAR FILTRO DE AR	77
INTERRUPTOR - BALANCIM (AQUECEDOR, AR CONDICIONADO) (AQUECEDOR / CONDICIONADOR DE AR)	129
INTERRUPTOR - BALANCIM (BUZINA) (BUZINA)	143
INTERRUPTOR - BALANCIM (FAROL DIANTEIRO)	119
INTERRUPTOR - BALANCIM (FAROL TRASEIRO)	119
INTERRUPTOR - BALANCIM (LUZES DE ADVERTÊNCIA CONTRA PERIGO)	143
INTERRUPTOR - BALANCIM (TRAVA NEUTRA)	143
INTERRUPTOR - BALANCIM (VELOCIDADE DO VENTILADOR DO AQUECEDOR)	152
INTERRUPTOR - BALANCIM (VELOCIDADE DO VENTILADOR) (VELOCIDADE DO VENTILADOR DO AQUECEDOR)	129
INTERRUPTOR - BOTÃO	174 273
INTERRUPTOR - LIMITADOR	223
INTERRUPTOR - PRESSÃO	127
INTERRUPTOR - PRESSÃO (ALTA - BAIXA)	129
INTERRUPTOR - ROLETAS (DESENGATE AUTOMÁTICO)	162
INTERRUPTOR - TEMPERATURA	128
INTERRUPTOR - TEMPERATURA (AR CONDICIONADO)	486
INTERRUPTOR (AQUECEDOR)	152
INTERRUPTOR (SETA DE DIREÇÃO)	134
INTERRUPTOR (TEMPERATURA)	90

J

JANELA DA CABINE	582 584 586
JOGO - ASSENTO	536
JOGO - PORTA SISTEMA PLANETÁRIO	187
JOGO DE AJUSTADOR	488
JOGO DE ALMOFADA	488
JOGO DE ANEL DE PISTÃO	37 39
JOGO DE BLOCO DESLIZADOR	563 565
JOGO DE CONTATO (MOTOR DE PARTIDA)	124
JOGO DE CORREIAS EM V (INCLUI 2 CORREIAS)	489 490 491 499 500
JOGO DE CRUZETA	165
JOGO DE CRUZETA E MANCAL	191 192
JOGO DE ENGRENAGEM (MOTOR DE PARTIDA)	124
JOGO DE MANCAL	168
JOGO DE MANCAL DA BIELA (0,25-MM US)	16 18
JOGO DE MANCAL DA BIELA (0,50-MM US)	16 18
JOGO DE MANCAL DA BIELA (0,76-MM US)	16 18
JOGO DE MANCAL PRINCIPAL DO MOTOR (0,25-MM US)	16 18
JOGO DE MANCAL PRINCIPAL DO MOTOR (0,50-MM US)	16 18
JOGO DE MANCAL PRINCIPAL DO MOTOR (0,76-MM US)	16 18
JOGO DE MANUTENÇÃO	552
JOGO DE MARCADOR DE HORAS DE SERVIÇO	143
JOGO DE RECEPTÁCULO (12 PINOS)	134
JOGO DE RECEPTÁCULO (2 PINOS)	142 152 154 159 209 273 393 486
JOGO DE RECEPTÁCULO (3 PINOS)	162 209 578 580
JOGO DE RECEPTÁCULO (4 PINOS)	152
JOGO DE RECEPTÁCULO (6 PINOS)	546 551 592
JOGO DE RECEPTÁCULO (8 PINOS)	545
JOGO DE RECONDICIONAMENTO DO REVESTIMENTO	220
JOGO DE REPARO	592
JOGO DE RETENTOR	109
JOGO DE RETENTOR (BOMBA DE MEDIÇÃO DA DIREÇÃO)	179
JOGO DE REVESTIMENTO	220
JOGO DE ROLAMENTO DOS ROLETES	187
JOGO DE TOMADA DE CONEXÃO (2 PINOS)	152 208 222

* TRADUÇÃO NÃO DISPONÍVEL NO MOMENTO DA IMPRESSÃO

ÍNDICE

Designação	Página
	486
JUNTA (TAMPA DA VÁLVULA)	12
	14

L

LÂMINA	592
LÂMPADA - FAROL	110
	111
LÂMPADA - SINALIZAÇÃO	112
LÂMPADA - TETO	568
LÂMPADA (12 V)	115
	545
LÂMPADA (12-VOLTS)	146
	575
	576
LÂMPADA (12-VOLTS, 10-WATTS)	568
LÂMPADA (12-VOLTS, 21/5-WATTS)	113
LÂMPADA (12-VOLTS, 24-WATTS)	112
	113
LÂMPADA (12-VOLTS, 55-WATTS)	110
	111
	114
	116
	119
LÂMPADA (12-VOLTS, 55-WATTS)	114
LANÇA	415
	416
LATA - RESPIRO	46
LAVADOR DO VIDRO	578
	580
LENTE ÂMBAR	115
LENTE (ÂMBAR, PISCA-ALERTA)	114
LENTE (ÂMBER)	112
LENTE (FAROL DIANTEIRO)	111
LENTE (HOLOFOTE) (FAROL)	110
LENTE (VERMELHA, ÂMBAR)	113
LEVANTAMENTO DO MOTOR	32
LIMPADOR DO VIDRO	592
	594
LISTRA DA CABINE	577
LUVA DE JUNÇÃO DE CABO	504
LUZ GIRATÓRIA DE ALARME	114
	115
LUZ INTERMITENTE	154
LUZ TRASEIRA E DE FREIO	113

M

MANGUEIRA (RESPIRO)	12
MECANISMO DAS VÁLVULAS	44
	45
MEDIDOR - NÍVEL DE COMBUSTÍVEL	146
MÓDULO - INDICADOR DE ALARME	545
MOLA (MANGUEIRA DO RESPIRO)	12
MONTAGEM - BANCO DE VÁLVULAS	363
	364
MONTAGEM - BOMBA HIDRÁULICA	367
MONTAGEM - BRAÇO	427
MONTAGEM - CAÇAMBA	479
	480
MONTAGEM - CILINDRO	365
MONTAGEM - CONTROLE HIDRÁULICO	366
MONTAGEM - MOTOR	33
MONTAGEM - MOTOR E TRANSMISSÃO	34
MONTAGEM - PAINEL DE INSTRUMENTOS	547
	548
	549
MONTAGEM - TUBOS	368
	369
MOTOR	5
	6
MOTOR - LIMPADOR DO VIDRO	546
MOTOR ELÉTRICO DE PARTIDA	124
	126
MOTOR PRIMÁRIO	7
	8

P

PAINEL DE INSTRUMENTOS	551
PÁRA-CHOQUE DIANTEIRO	241
PÁRA-LAMA TRASEIRO	248
	249
PEDAL DO GOVERNADOR	552
PINO - EIXO	165
PISTÃO E BIELA	37
	39
PLACA E DECALQUE	599
POLIA DO VIRABREQUIM	43
PORTA - LADO DIREITO	524
PORTA - LADO ESQUERDO	522
POSTO DE CONTROLE/CONSOLE DIANTEIRO	509
PROTETOR - CILINDRO DO ESTABILIZADOR	306
	307
PROTETOR - EIXO DE TRANSMISSÃO	256
PROTETOR DE BORRACHA CONTRA POEIRA	408
	409
PURIFICADOR DE AR	71
	73
	74

* TRADUÇÃO NÃO DISPONÍVEL NO MOMENTO DA IMPRESSÃO

ÍNDICE

Designação	Página

R

RADIADOR E ARREFECEDOR DO ÓLEO HIDRÁULICO 67 68 69 70
RADIADOR E VENTILADOR 65 66
REDUÇÃO DE RUÍDO 568
REGULADOR DE TEMPERATURA DA ÁGUA . . . 52
RELÉ (CONJ) (12 V) 138 142 152
RELÉ (CONJ) (12-VOLTS) 116 119 132 135 139 148
RELÉ (CONJ) (12-VOLTS) 129
RELÉ (CONJ) (12-VOLTS) (ALTA VELOCIDADE) 129
RESPIRO 46 48
RESPIRO (EIXO) 165
RESPIRO (TRANSMISSÃO) 198 203
RETENTOR DE ANEL-O 197 350
RETENTOR DE ANEL-O (DRENO DO ÓLEO DO MOTOR) 35
RETENTOR DE ANEL-O (REGULADOR DA TEMPERATURA DA ÁGUA) 52
RETENTOR (RESPIRO) 46
RETROESCAVADEIRA - BRAÇO ESTENDÍVEL 1
RETROESCAVADEIRA - BRAÇO PADRÃO 2 3
RODA E PNEU 211 212 213 214 215 216 217 218 219

S

SEMI-EIXO TRASEIRO 168
SEPARADOR DE ÁGUA 96
SILENCIADOR 80 81
SINCRONIZADOR 196 202
SIST. DE ILUMINAÇÃO - PISCA-PISCA GIRATÓRIO DE ADVERTÊNCIA 122 123
SISTEMA DE ILUMINAÇÃO - FARÓIS 116
SISTEMA DE ILUMINAÇÃO - FARÓIS E SINAL 119
SUPORTE 106 107
SUPORTE - ESCOVA 124
SUSPENSÃO - ASSENTO 570

T

TACÔMETRO - ELÉTRICO 489 490 491 499 500 575 576
TAMPA 210 314
TAMPA - ACESSO À BATERIA 247
TAMPA - CAIXA DIANTEIRA 11
TAMPA - CONSOLO 516
TAMPA - ENCHIMENTO (ÓLEO HIDRÁULICO) 374
TAMPA - MECANISMO DAS VÁLVULAS 12 14
TAMPA - TANQUE DE COMBUSTÍVEL 99
TAMPA (BOCAL DE ENCHIMENTO DO OLEO DO MOTOR) 49
TAMPA-COLUNA 520 521
TAMPA CONTRA POEIRA 345
TAMPA-FREIO DE ESTACIONAMENTO 519
TAMPA-PAINEL TRASEIRO DO MOTOR 517 518
TAMPA (RADIADOR) 68 70
TANQUE DE COMBUSTÍVEL 98 99
TANQUE DE COMBUSTÍVEL E MONTAGEM . . . 97
TANQUE DO FREIO 227
TANQUE HIDRÁULICO 374
TAPETE 529 530
TELA FILTRANTE 198 204

* TRADUÇÃO NÃO DISPONÍVEL NO MOMENTO DA IMPRESSÃO

ÍNDICE

Designação	Página
TIRANTE DO CILINDRO DE LEVANTAMENTO	417
TOLDO	499, 500
TOLDO - ESTRUTURA ROPS ABERTA	503
TRANSMISSÃO DIRETA	195, 196, 202
TRANSMISSÃO E MONTAGEM	193, 194
TRAVA - CONTROLE MANUAL HIDRÁULICO	362
TRAVA - TRANSPORTE	423, 424, 425, 426
TREM DE FORÇA	188, 189, 190
TUBOS - AQUECEDOR	539
TUBOS - ARREFECEDOR DO TREM DE FORÇA	61
TUBOS - BOMBA	348, 350, 353, 354
TUBOS - BRAÇO	358
TUBOS - BRAÇO COM EXTENSÃO	335, 336
TUBOS - CAÇAMBA DE MÚLTIPLAS APLICAÇÕES	343
TUBOS - CILINDRO DA CAÇAMBA	333
TUBOS - CILINDRO DE INCLINAÇÃO	360
TUBOS - CILINDRO DE LEVANTAMENTO	338, 339
TUBOS - CIRCUITO PILOTO	345, 346
TUBOS - COMBUSTÍVEL	86, 88
TUBOS - DIREÇÃO	233, 236
TUBOS - ESTABILIZADOR	356
TUBOS - GIRO	359
TUBOS - LANÇA	332
TUBOS - RETORNO	355
TUBOS AUXILIARES	341
TUBOS AUXILIARES - RETROESCAVADEIRA	314, 316, 320, 325, 328
TUBOS DO AQUECEDOR	539, 541
TUBULAÇÕES - AQUECEDOR E AR CONDICIONADO	541
TURBOALIMENTADOR	82

U

UNI-DENTE	482

V

*VALVE GP-CHECK	386
*VALVE GP-PUMP CONTROL	410, 411
VÁLVULA (ÁGUA)	484, 531
VÁLVULA DE ALÍVIO	196, 202, 239, 387, 393, 395
VÁLVULA DE ALÍVIO (RESPIRO DE AR)	164
VÁLVULA DE CONTROLE	387, 389, 391, 393, 395, 397, 399, 401, 403, 405
VÁLVULA DE CONTROLE E MONTAGEM	376
VÁLVULA DE CONTROLE PILOTO	407, 408, 409
VÁLVULA DE PARADA	60, 350
VÁLVULA DE PNEU	210, 211
VÁLVULA DE PRIORIDADE	239
VÁLVULA DE RETENÇÃO	393, 397
VÁLVULA DO CONECTOR	262, 264
VÁLVULA SOLENÓIDE	208, 209
VELA DE AQUECIMENTO; VELA INCANDESCENTE	108
VENTILADOR	486, 533
VENTILADOR DE SUCÇÃO	57, 58

* TRADUÇÃO NÃO DISPONÍVEL NO MOMENTO DA IMPRESSÃO

ÍNDICE

Designação	Página	Designação	Página
	59		
VIDRO DA PORTA	588		
	590		
VIRABREQUIM	16		
	18		
VOLANTE	238		
VOLANTE DA DIREÇÃO	232		
VOLANTE DO MOTOR	28		

W

*WIRING GP-CONSOLE	142		

* TRADUÇÃO NÃO DISPONÍVEL NO MOMENTO DA IMPRESSÃO

STICHWORTVERZEICHNIS

Bezeichnung	Seite
A	
ABDECKGLAS (ARBEITSSCHEINWERFER)	111
ABDECKGLAS (ARBEITSSCHEINWERFER) (ARBEITSSCHEINWERFER)	110
ABDECKGLAS (GELB)	112, 115
ABDECKGLAS (GELB, RUNDUM-KENNLEUCHTE)	114
ABDECKGLAS (GELB, RUNDUM-KENNLEUCHTE)	114
ABDECKGLAS (ROT, GELB)	113
ABSPERRVENTIL	60, 350
ACHSBOLZEN	165
ACHSGEHÄUSEFLANSCH	183, 185
ANSCHLUSS	287
ANSCHLUSS - HEIZUNG U. KLIMAANLAGE	60
ANTRIEB - BAGGERLADER	179
ANTRIEBS- UND LENKACHSE	165, 167
ANTRIEBSWELLE	191, 192
ANTRIEBSWELLENVERKLEIDUNG	256
ARBEITS- U. SIGNALLEUCHTE	119
ARBEITSLEUCHTEN	110, 111, 116
ARMLEHNE	488
AUFKLEBER	366, 596
AUFKLEBER - ALLRADLENKUNG	600
AUFKLEBER - ANZEIGE	143, 146, 600, 601
AUFKLEBER - ANZEIGE (ROT)	417
AUFKLEBER - ANZEIGE (SCHAUFEL)	442, 443
AUFKLEBER - CAT (HAUBE)	259
AUFKLEBER - SCHAUFELANZEIGE	312
AUFKLEBER (BULK) (0,095M)	600
AUFKLEBER (CATERPILLAR)	490, 491, 500
AUFKLEBER (CATERPILLAR)	489
AUFKLEBER (KOMBISCHAUFEL)	309, 600
AUFKLEBER (KONTROLLE) (KLIMAANLAGE)	484, 531, 600
AUFKLEBER (LUFTUMLAUF)	486
AUFKLEBER (LUFTUMLAUF)	533
AUFKLEBER (SCHAUFELSTEUERUNG)	267, 269, 271, 600
AUFKLEBER (SEITENSCHUB, AUSLEGER-SPERRE)	600
AUFKLEBER (STANDARD-KREUZMUSTER)	600
AUFKLEBER (STARTSCHALTER)	549, 600
AUFKLEBER (STARTSCHALTER)	551
AUFKLEBER (STEUERPLATTE)	600
AUFKLEBER (VARIABLE GESCHWINDIG-KEIT)	84, 600
AUFKLEBER (ZENTRALE DREHVORRICH-TUNG, AUSLEGERSPERRE)	600
AUFKLEBER (278-CM)	259
AUFKLEBER (399 CM)	489, 490
AUSLEGER	415, 416
AUSLEGERLEITUNGEN	332
AUSLEGERZYLINDER	292
AUSPUFFKRÜMMER	79
AUSPUFFROHRVERLÄNGERUNG	76
B	
BATTERIE	102, 104, 106, 107
BATTERIE (12 V, HD)	102
BATTERIE (12V, DH)	104
BATTERIE (12V, 750 A)	107
BATTERIE (12V, 750 A) (WARTUNGSFREI)	106
BATTERIEDECKEL	247
BATTERIEKASTEN	240
BELAG - EINBAUSATZ	220
BELAG - REGENERIERSATZ	220
BLINKER	154
BLINKLEUCHTE	112
BODENBLECH	250, 252
BREMS- UND RÜCKLEUCHTE	113
BREMSGESTÄNGE	223
BREMSTANK	227
BUCHSE - KABELSPLEISSUNG	504
BÜRSTENHALTER	124

* ÜBERSETZUNG ZUM ZEITPUNKT DER DRUCKLEGUNG NICHT VORHANDEN

STICHWORTVERZEICHNIS

Bezeichnung	Seite

D

DICHTUNG (ENTLÜFTER) 46
DICHTUNG (VENTILDECKEL) 12
14
DICHTUNGSSATZ 109
DICHTUNGSSATZ (LENKUNGSZUMESSPUMPE) 179
DIFFERENTIAL 178
DIFFERENTIAL UND TELLERRAD 176
DIFFERENTIALSPERRENGESTÄNGE 173
DIFFERENZIALGEHÄUSE 176
DREHSTROMGENERATOR 101
DREHZAHLMESSER, ELEKTR. 490
491
499
500
575
576
DREHZAHLMESSER, ELEKTR. 489
DREHZAHLREGLER - STEUERHEBEL 538
DRUCKBEGRENZUNGSVENTIL (ENTLÜFTUNGSVORRICHTUNG) 164
DRUCKKNOPFSCHALTER 174
273
DRUCKSCHALTER 127
DRUCKSCHALTER (HOCH - NIEDRIG) 129

E

EINFÜLLKAPPE (HYDRAULIKÖL) 374
EINSTELLER-EINBAUSATZ 488
ENDSCHALTER 223
ENTLÜFTER 46
48
ENTLÜFTER (ACHSE) 165
ENTLÜFTER (GETRIEBE) 198
203
ENTLÜFTERPATRONE 46

F

FAHRERHAUS 489
490
491
492
494
495
497
FAHRERHAUS - HALTETEILE 577
FAHRERHAUS M. OFFENEM ÜBERROLLSCHUTZ 503
FAHRERHAUSBELEUCHTUNG 568
FAHRERHAUSFENSTER 582
584
586
FAHRERHAUSHEIZUNG 531
533
FAHRERHAUSTÜR (LINKS) 522
FAHRERHAUSTÜR (RECHTS) 524
FAHRERHAUSVERDRAHTUNG 132
134
135
138
139
FAHRERPLATTFORMVERDRAHTUNG 154
FAHRERSITZ 554
556
558
560
FAHRERSITZ-EINBAUSATZ 536
FAHRERSITZ, FESTSTEHEND 561
562
FAHRERSITZFEDERUNG 570
FAHRERSITZVERSTELLER 483
FAHRWERK 3
FEDER (ENTLÜFTERSCHLAUCH) 12
FESTSTELLBREMSABDECKUNG 519
FESTSTELLBREMSE 220
FESTSTELLBREMSGESTÄNGE 221
222
FEUERWANDABDECKUNG 517
518
FILTER 387
389
391
393
395
397
399
401
FILTER (HEIZUNG) 531
FILTER (HYDRAULIKTANKENTLÜFTER) 374
FILTER (KLIMAANLAGE) 484
FILTER (KRAFTSTOFF) 95
FILTERSOCKEL U. MOTORÖLKÜHLER 53
55
FRONTSTEUERPULT 509
FRONTSTOSSSTANGE 241
FUSSMATTE 529
530

G

GASPEDAL 552
GEGENGEWICHT 242
243

* ÜBERSETZUNG ZUM ZEITPUNKT DER DRUCKLEGUNG NICHT VORHANDEN

STICHWORTVERZEICHNIS

Bezeichnung	Seite
	244
	245
	246
GEHÄUSE	395
GETRIEBE U. BEFESTIGUNG	193
	194
GETRIEBEÖLFÜLLSTUTZEN	181
	182
GETRIEBEPUMPE	197
	204
GETRIEBESTEUERUNG	174
GETRIEBESYNCHRONISIERSATZ	196
	202
GLEITSCHIENENBLOCK-EINBAUSATZ	563
	565
GLÜHKERZE	108
GRUNDAUSFÜHRUNG	4

H

HALTERUNG	106
	107
HANDSTEUERHEBEL	226
HECKBAGGER-TELESKOPSTIEL	1
HECKBAGGERLÖFFEL	446
	447
	448
	449
	450
	451
	452
	453
	454
	455
	456
	457
	458
	459
	460
	461
	462
	463
	464
	465
	466
	467
	468
HECKBAGGERLÖFFELGESTÄNGE	418
HECKBAGGERLÖFFELZYLINDER	288
	290
HEIZUNGS- U. KLIMAANLAGENLEITUNGEN	541
HEIZUNGSLEITUNGEN	539
	541
HEIZUNGSVERDRAHTUNG	152
HINTERACHSE	168
HINTERACHSE U. BEFESTIGUNG	163
	164
HUBARM	413
HUBZYLINDER	297
HUBZYLINDER-HALTERUNG	417
HUBZYLINDERLEITUNGEN	338
	339
*HYDRAULIC AR	309
	310
HYDRAULIKHANDSTEUERUNG	265
	267
	269
	271
	273
	275
HYDRAULIKPEDALSTEUERUNG	276
	278
HYDRAULIKPUMPE UND LEITUNGEN	348
	350
	353
	354
HYDRAULIKPUMPENBEFESTIGUNG	367
HYDRAULIKSPERRE (HANDBEDIENUNG)	362
HYDRAULIKSTEUERUNGSAUFHÄNGUNG	366
HYDRAULIKSYSTEM	309
	311
HYDRAULIKTANK	374

I

IDENTIFIZIERUNGS-AUFKLEBER (SICHERUNGSTAFEL)	179
	600
INASTRUMENTENTAFEL-EINBAUSATZ	547
	548
	549
INSTRUKTIONS-AUFKLEBER	271
	601
INSTRUKTIONS-AUFKLEBER (AUSFAHRBARER STIEL)	601
INSTRUKTIONS-AUFKLEBER (E-STIEL)	276
INSTRUKTIONS-AUFKLEBER (KOMBISCHAUFEL)	600
INSTRUKTIONS-AUFKLEBER (NICHT BETRETEN)	599
INSTRUKTIONS-AUFKLEBER (RÜCKFLUSS)	316
	320
	325
	328
	601

* ÜBERSETZUNG ZUM ZEITPUNKT DER DRUCKLEGUNG NICHT VORHANDEN

STICHWORTVERZEICHNIS

Bezeichnung	Seite
INSTRUKTIONS-AUFKLEBER (SCHAUFEL-STEUERUNG)	265, 309, 601
INSTRUMENTENTAFEL	551

K

Bezeichnung	Seite
KÄLTEMITTELKOMPRESSOR	506, 507
KÄLTEMITTELKONDENSATOR U. BEFESTIGUNGSTEILE	508
KAPPE	210, 314
KAPPE (KÜHLER)	68, 70
KAPPE (MOTORÖLEINFÜLLUNG)	49
KEILRIEMEN (KLIMAANLAGE)	507
KEILRIEMENSATZ (EINSCHL. 2 RIEMEN)	489, 490, 491, 500
KEILRIEMENSATZ (EINSCHL. 2 RIEMEN)	499
KIPPSCHALTER (GEBLÄSEGESCHWINDIG-KEIT) (HEIZGEBLÄSEGESCHWINGIGKEITS-STUFE)	129
KIPPSCHALTER (HEIZGEBLÄSEGESCHWIN-GIGKEITSSTUFE)	152
KIPPSCHALTER (HEIZUNG, KLIMAANLAGE) (HEIZUNG/KLIMAANLAGE)	129
KIPPSCHALTER (HINTERER ARBEITSSCHEIN-WERFER)	119
KIPPSCHALTER (NEUTRALSPERRE)	143
KIPPSCHALTER (VORDERE ARBEITSSCHEIN-WERFER)	119
KIPPSCHALTER (WARNHORN) (HUPE)	143
KIPPSCHALTER (WARNLEUCHTEN)	143
KIPPZYLINDER	304
KLIMAANLAGE	486
KLIMAANLAGE UND AUFHÄNGUNG	484
KLIMAANLAGENVERDRAHTUNG	129
KNIESTÜCK	338
KOLBENPUMPE	370
KOLBENPUMPENUMLAUFSATZ	372
KOLBENRINGSATZ	37, 39
KOMBISCHAUFEL	442, 443, 469, 470
KOMBISCHAUFELLEITUNGEN	343
KOMBISCHAUFELZYLINDER	298
KONSOLENVERDRAHTUNG	143
	146
KONTAKT-EINBAUSATZ (STARTERMOTOR)	124
KRAFTSTOFF-ENTLÜFTUNGSPUMPE	95
KRAFTSTOFFEINSPRITZPUMPE	90, 92
KRAFTSTOFFILTER (EINFÜLLSTURZEN-SIEB)	99
KRAFTSTOFFLEITUNGEN	86, 88
KRAFTSTOFFSTANDANZEIGE	146
KRAFTSTOFFTANK	98, 99
KRAFTSTOFFTANK U. BEFESTIGUNG	97
KRAFTSTOFFTANKKAPPE	99
KRAFTÜBERTRAGUNG	188, 189, 190
KREUZGELENK-EINBAUSATZ	165
KREUZGELENKLAGER-EINBAUSATZ	191, 192
KÜHLER UND HYDRAULIKÖLKÜHLER	67, 68, 69, 70
KÜHLER UND LÜFTER	65, 66
KÜHLWASSERANSCHLUSS	52
KÜHLWASSERPUMPE	63
KUPPLUNGSANTRIEB, ELAST.	180
KURBELLAGER-EINBAUSATZ (0,25-MM US)	16, 18
KURBELLAGER-EINBAUSATZ (0,50-MM US)	16, 18
KURBELLAGER-EINBAUSATZ (0,76-MM US)	16, 18
KURBELWELLE	16, 18
KURBELWELLEN-RIEMENSCHEIBE	43

L

Bezeichnung	Seite
LADERRAHMEN	253
LADERZUSATZLEITUNGEN	341
LADESCHAUFEL	422
LAGERSATZ	168
LAUFBAND UND ANTRIEB	115
LAUFROLLENSCHALTER (AUSCHALTUNG)	162
LAUTSPRECHER	568
LEITUNGS-BEFESTIGUNGSTEILE	368, 369
LENKBETÄTIGUNG	231, 232
LENKÖLLEITUNGEN	233

* ÜBERSETZUNG ZUM ZEITPUNKT DER DRUCKLEGUNG NICHT VORHANDEN

STICHWORTVERZEICHNIS

Bezeichnung	Seite
	236
LENKRAD	232
	238
LEUCHTE (12 V)	115
	146
	545
	575
	576
LEUCHTE (12 V, 10 W)	568
LEUCHTE (12 V, 21/5 W)	113
LEUCHTE (12 V, 24 W)	112
	113
LEUCHTE (12 V, 55 W)	110
	111
	114
	116
	119
LITERATURABLAGE	504
	505
LÖFFELSTIEL	440
LÖFFELZYLINDERLEITUNGEN	333
LUFTEINLASSBOGEN	75
LÜFTER	486
	533
LÜFTERANTRIEB	27
LUFTFILTER (HEIZUNG)	533
LUFTFILTER (KLIMAANLAGE)	486
LUFTFILTERWARTUNGSANZEIGE	77
	78
LUFTFILTERWECHSELANZEIGE	77
LUFTKANAL	526
	528
LUFTREINIGER	71
	73
	74

M

MAGNETSTOPFEN	170
MAGNETVENTIL	208
	209
MANSCHETTE	408
	409
MECHANISCHES GETRIEBE	195
MOTOR- UND GETRIEBEAUFLAGER	34
MOTORAUFLAGER	33
MOTORAUSFÜHRUNG	5
	6
	7
	8
MOTORBLOCK	20
	22
	23
MOTORHAUBE	259
MOTORHAUBE UND VERKLEIDUNG	257
MOTORHUBÖSE	32
MOTORÖLEINFÜLLSTUTZEN	49
MOTORÖLKÜHLER	53
MOTORÖLKÜHLER UND FILTERSOCKEL	53
	55
MOTORSTOPFEN	42
MOTORVERDRAHTUNG	148

N

NEIGEZYLINDERLEITUNGEN	360
NOCKENWELLE	9
	10

O

O-RING-DICHTUNG	197
	350
O-RING-DICHTUNG (KÜHLWASSERTHERMOSTAT)	52
O-RING-DICHTUNG (MOTORÖLABLASS)	35
ÖLFILTER	49
ÖLFILTER (HOCHLEISTUNGSREINIGUNG)	311
ÖLFILTER (HYDRAULISCH)	195
ÖLFILTER (HYDRAULISCH) (FEUERFEST)	311
ÖLKÜHLERLEITUNGEN (KRAFTÜBERTRAGUNG)	61
ÖLWANNE	35
ÖLWANNEN-ABLASSCHRAUBE	35

P

PALETTENGABEL	478
PANETENTRÄGERSATZ	187
PFOSTENABDECKUNG	520
	521
PLEUELLAGER-EINBAUSATZ (0,25-MM US)	16
	18
PLEUELLAGER-EINBAUSATZ (0,50-MM US)	16
	18
PLEUELLAGER-EINBAUSATZ (0,76-MM US)	16
	18
PLEUELSTANGE UND KOLBEN	37
	39
POLSTER	431
POLSTEREINBAUSATZ	488

R

RAD UND REIFEN	211
	212

* ÜBERSETZUNG ZUM ZEITPUNKT DER DRUCKLEGUNG NICHT VORHANDEN

STICHWORTVERZEICHNIS

Bezeichnung	Seite
	213
	214
	215
	216
	217
	218
	219
REGLER- UND GASPEDALGESTÄNGE	84
REIFENVENTIL	210
	211
RELAIS (12 V)	116
	119
	129
	132
	135
	138
	139
	142
	148
	152
RELAIS (12 V) (HOHE GESCHWINDIGKEIT)	129
REPARATURSATZ	592
ROLLENLAGER-EINBAUSATZ	187
RÜCKLAUFLEITUNG	355
RÜCKSPIEGEL	543
	544
RUNDUM-KENNLEUCHTE	114
	115
	122
	123

S

SAUGLÜFTER	57
	58
	59
SCHALLDÄMPFER	80
	81
SCHALLDÄMPFUNG	568
SCHALTER (FAHRTRICHTUNGSANZEIGER)	134
SCHALTER (HEIZUNG)	152
SCHALTER (TEMPERATUR)	90
SCHAUFELANSCHLAG	481
SCHAUFELAUFHÄNGUNG	479
	480
SCHAUFELAUSSCHALTER UND -EINSTELLER	312
SCHAUFELGESTÄNGE	420
SCHEIBENWASCHANLAGE	578
	580
SCHEIBENWISCHER	592
	594
SCHEIBENWISCHERBLATT	592
SCHEIBENWISCHERMOTOR	546
SCHILD UND AUFKLEBER	599
SCHLAUCHLEITUNG (ENTLÜFTER)	12
SCHLÜSSEL	505
	598
SCHMIERNIPPEL	312
	365
	420
	427
	440
	469
	470
SCHMIERNIPPEL (1/8-27-GEWINDE)	254
	413
SCHMIERPUMPE	51
SCHNEIDMESSER	477
SCHNELLWECHSELEINRICHTUNG	472
	473
	474
	475
	476
SCHUTZBLECHE, HINTEN	248
	249
SCHUTZDACHSATZ	501
	502
SCHWENKLEITUNGEN	359
SCHWENKRAHMEN	254
SCHWENKZYLINDER	302
SCHWINGSITZ	563
	565
	567
SCHWUNGRAD	28
SCHWUNGRADGEHÄUSE	29
SEITENANTRIEB - PLANETENGETRIEBE	187
SEITENKONSOLE	511
	512
	513
	514
	515
SEITENSTÜTZEN	373
	436
SEITENSTÜTZENLEITUNGEN	356
SEITENSTÜTZENPLATTEN	434
	435
SEITENSTÜTZENPLATTEN UND SCHUTZABDECKUNG	428
	429
	430
SEITENSTÜTZENZYLINDER	299
	300
SEITENSTÜTZENZYLINDERSCHUTZ	306
	307
SENSORANSCHLUSSSATZ (2POLIG)	152

* ÜBERSETZUNG ZUM ZEITPUNKT DER DRUCKLEGUNG NICHT VORHANDEN

STICHWORTVERZEICHNIS

Bezeichnung	Seite
	208
	222
	486
SENSORVERDRAHTUNG	162
SICHERHEITSGURT	553
SICHERUNG (10 A)	114
	115
	119
	129
	158
SICHERUNG (15 A)	116
	119
	138
	139
SICHERUNG (20 A)	132
	135
SICHERUNG (5 A)	132
	142
SIEB	198
	204
SITZDREH- U. -SCHIEBEVORRICHTUNG	572
SITZSCHWENKVORRICHTUNG	574
SPERRVENTIL	393
	397
STABILISATORUNTERLAGE (STRASSE)	434
STANDARDHECKBAGGERSTIEL	2
	3
STARTERMOTOR	124
	126
STARTSCHLÜSSELSCHALTER	551
STAUBKAPPE	345
STECKDOSEN - EINBAUSATZ (12POLIG)	134
STECKDOSEN - EINBAUSATZ (2POLIG)	142
	152
	154
	159
	209
	273
	486
STECKDOSEN - EINBAUSATZ (2POLIG)	393
STECKDOSEN - EINBAUSATZ (3POLIG)	162
	209
STECKDOSEN - EINBAUSATZ (3POLIG)	578
	580
STECKDOSEN - EINBAUSATZ (4 POLIG)	152
STECKDOSEN - EINBAUSATZ (6POLIG)	546
	551
STECKDOSEN - EINBAUSATZ (6POLIG)	592
STECKDOSEN - EINBAUSATZ (8POLIG)	545
STECKDOSENVERDRAHTUNG	158
STEUERKONSOLE	510
STEUERKONSOLENABDECKUNG	516
STEUERVENTIL	387
	389
	391
	393
	395
	397
	399
	401
	403
	405
STIELAUFHÄNGUNG	427
STIELZYLINDER	301
STIELZYLINDERLEITUNGEN	358
STIRNRADGEHÄUSE	30
STIRNRADGEHÄUSEDECKEL	11
STÜTZPLATTEN U. BEFESTIGUNG	431
	432
	433

T

TELESKOPSTIEL	438
TELESKOPSTIELLEITUNGEN	335
	336
TELESKOPSTIELZYLINDER	294
	295
TELLER- UND KEGELRAD	176
TEMPERATURGEBER	148
TEMPERATURSCHALTER	128
TEMPERATURSCHALTER (KLIMAANLAGE)	486
TIEFLÖFFEL-HYDRAULIKNOTLEITUNGEN	314
	316
	320
	325
	328
TRANSPORTSPERRE	423
	424
	425
	426
TURBOLADER	82
TÜRFENSTER	588
	590

U

ÜBERDRUCKVENTIL	196
	202
	239
	387
	393
	395
UMBAUSATZ - STEUERVENTIL	282
UMLAUFKÜHLWASSERHEIZUNG	109

* ÜBERSETZUNG ZUM ZEITPUNKT DER DRUCKLEGUNG NICHT VORHANDEN

STICHWORTVERZEICHNIS

Bezeichnung	Seite
UMRÜSTSATZ - GEFEDERETE SCHWENKVORRICHTUNG	280
UMRÜSTSATZ - HYDRAULIKHEBEL	283
	284
	285
	286
UNIVERSAL-ZAHNSPITZE	482
UNIVERSALSCHAUFEL	444
	445
UNTERLEGKEIL - EINBAUSATZ	597

V

*VALVE GP-CHECK	386
*VALVE GP-PUMP CONTROL	410
	411
VENTIL (WASSER)	484
	531
VENTILANORDNUNGS-BEFESTIGUNGS-SATZ	363
	364
VENTILBLOCK U. BEFESTIGUNG	376
VENTILDECKEL	12
	14
VENTILSATZ (2-VENTIL)	379
	381
VENTILSATZ (3-VENTIL)	382
VENTILSATZ (4-VENTIL)	383
VENTILSATZ (5-VENTIL)	384
VENTILSATZ (6-VENTIL)	385
VENTILSTEUERUNG	44
	45
VERBINDER	336
	350
VERBINDUNGSVENTIL	262
	264
VERDRAHTUNG, HINTEN	159
VORDERACHSE	228
	230
VORHÄNGESCHLOSS	598
VORRANGVENTIL	239
VORSTEUERLEITUNGEN	345
	346
VORSTEUERVENTIL	407
	408
	409

W

WARNANZEIGEMODUL	545
WARNAUFKLEBER (HOCHDRUCKZYLIN-DER)	601
WARNHORN, ELEKTR.	535
WARTUNGSMESSER	143
WARTUNGSSATZ	552
WASSERABSCHEIDER	96
WASSERTEMPERATURREGLER	52
WECHSELGETRIEBE	196
	202
WETTERDACH	499
	500
*WIRING GP-CONSOLE	142

Z

ZAHNRADSATZ (STARTERMOTOR)	124
ZYLINDER	223
ZYLINDERAUFHÄNGUNG	365
ZYLINDERBLOCKSCHRAUBE	41
ZYLINDERKOPF	24
	25
	26

4

4-BLOCK-VENTILSATZ	377

5

5-VENTIL-BLOCK	377

6

6-FACH-VENTILBLOCK	378

* ÜBERSETZUNG ZUM ZEITPUNKT DER DRUCKLEGUNG NICHT VORHANDEN

MACHINE ARRANGEMENT

238-4783 BACKHOE AR-EXTENDABLE STICK

S/N: B2D1-UP
AN ATTACHMENT

SMCS-6504, 6533 **i02023672**

NOTE	PART NUMBER	QTY	PART NAME 1 2 3 4 5 6 (PRODUCT LEVEL)	SEE PAGE
Y	*159-2798*	1	BOOM GP	415
Y	**206-0518**	1	CYLINDER GP-BACKHOE BUCKET	290
Y	*167-8270*	1	LINES GP-BOOM	332
Y	*167-8276*	1	LINES GP-EXTENDABLE STICK	336
Y	*167-8273*	1	LINES GP-STICK	358
Y	*151-7928*	1	LINKAGE GP-BACKHOE BUCKET	418
Y	*171-2101*	1	MOUNTING GP-LINES	368
Y	*152-9736*	1	MOUNTING GP-STICK	427
Y	*197-2733*	1	STICK GP-EXTENDABLE	438

Y-SEPARATE ILLUSTRATION

<END>

238-4784 BACKHOE AR-EXTENDABLE STICK–ONE WAY LINES

S/N: B2D1-UP
AN ATTACHMENT

SMCS-6504, 6533 **i02023639**

NOTE	PART NUMBER	QTY	PART NAME 1 2 3 4 5 6 (PRODUCT LEVEL)	SEE PAGE
Y	*159-2799*	1	BOOM GP	416
Y	**206-0518**	1	CYLINDER GP-BACKHOE BUCKET	290
Y	*235-5849*	1	LINES GP-BACKHOE AUXILIARY	328
Y	*167-8270*	1	LINES GP-BOOM	332
Y	*167-8273*	1	LINES GP-STICK	358
Y	*151-7928*	1	LINKAGE GP-BACKHOE BUCKET	418
Y	*172-3190*	1	MOUNTING GP-LINES	369
Y	*152-9736*	1	MOUNTING GP-STICK	427
Y	*197-2733*	1	STICK GP-EXTENDABLE	438

Y-SEPARATE ILLUSTRATION

<END>

MACHINE ARRANGEMENT

238-4780 BACKHOE AR-STANDARD STICK

S/N: B2D1-UP

AN ATTACHMENT

SMCS-6502, 6504 **i02023711**

NOTE	PART NUMBER	QTY	PART NAME 1 2 3 4 5 6 (PRODUCT LEVEL)	SEE PAGE
Y	*159-2798*	1	BOOM GP	415
Y	**206-0514**	1	CYLINDER GP-BACKHOE BUCKET	288
Y	*167-8270*	1	LINES GP-BOOM	332
Y	*167-8275*	1	LINES GP-BUCKET CYLINDER	333
Y	*167-8273*	1	LINES GP-STICK	358
Y	*151-7928*	1	LINKAGE GP-BACKHOE BUCKET	418
Y	*171-2101*	1	MOUNTING GP-LINES	368
Y	*151-7316*	1	STICK GP-HOE	440

Y-SEPARATE ILLUSTRATION

<END>

238-4781 BACKHOE AR-STANDARD STICK–ONE WAY LINES

S/N: B2D1-UP

AN ATTACHMENT

SMCS-6502, 6504 **i02023703**

NOTE	PART NUMBER	QTY	PART NAME 1 2 3 4 5 6 (PRODUCT LEVEL)	SEE PAGE
Y	*159-2799*	1	BOOM GP	416
Y	**206-0514**	1	CYLINDER GP-BACKHOE BUCKET	288
Y	*235-5848*	1	LINES GP-BACKHOE AUXILIARY	325
Y	*167-8270*	1	LINES GP-BOOM	332
Y	*167-8275*	1	LINES GP-BUCKET CYLINDER	333
Y	*167-8273*	1	LINES GP-STICK	358
Y	*151-7928*	1	LINKAGE GP-BACKHOE BUCKET	418
Y	*172-3190*	1	MOUNTING GP-LINES	369
Y	*151-7316*	1	STICK GP-HOE	440

Y-SEPARATE ILLUSTRATION

<END>

MACHINE ARRANGEMENT

238-4782 BACKHOE AR-STANDARD STICK–2-WAY LINES

S/N: B2D1-UP

AN ATTACHMENT

SMCS-6502, 6504 **i02023688**

NOTE	PART NUMBER	QTY	PART NAME 1 2 3 4 5 6 (PRODUCT LEVEL)	SEE PAGE
Y	*159-2798*	1	BOOM GP	415
Y	**206-0514**	1	CYLINDER GP-BACKHOE BUCKET	288
Y	*171-2427*	1	LINES GP-BACKHOE AUXILIARY	314
Y	*167-8270*	1	LINES GP-BOOM	332
Y	*167-8275*	1	LINES GP-BUCKET CYLINDER	333
Y	*167-8273*	1	LINES GP-STICK	358
Y	*151-7928*	1	LINKAGE GP-BACKHOE BUCKET	418
Y	*171-2101*	1	MOUNTING GP-LINES	368
Y	*151-7316*	1	STICK GP-HOE	440

Y-SEPARATE ILLUSTRATION

<END>

214-6950 CHASSIS AR

S/N: B2D1-UP

PART OF 214-6885 COMMON AR

SMCS-7000 **i02035639**

NOTE	PART NUMBER	QTY	PART NAME 1 2 3 4 5 6 (PRODUCT LEVEL)	SEE PAGE
Y	*234-8892*	1	CONTROL GP-GOV & ACCELERATOR	84
Y	*183-3120*	1	CONTROL GP-HYDRAULIC HAND	273
Y	*185-0080*	1	FLOORPLATE GP	250
Y	*214-6944*	1	FRAME GP-LOADER	253
Y	*183-6056*	1	FRAME GP-SWING	254
Y	*234-9065*	1	HOOD & GUARD GP	257
Y	*188-9097*	1	LINES GP-PILOT	345
Y	*183-6076*	1	LOCK GP-TRANSPORT	426
Y	*185-7736*	1	PLATE & FILM GP	599
Y	*238-6700*	1	PLATE & FILM GP	599
Y	*9R-0041*	1	STABILIZER GP-BACKHOE	436
Y	*214-6908*	1	TANK & MTG GP-FUEL	97
Y	*238-1165*	1	WIRING GP-CONSOLE	143
Y	*238-1821*	1	WIRING GP-PLATFORM	154

Y-SEPARATE ILLUSTRATION

<END>

MACHINE ARRANGEMENT

214-6885 COMMON AR

S/N: B2D1-UP

SMCS-7000 **i02035093**

NOTE	PART NUMBER	QTY	PART NAME 1 2 3 4 5 6 (PRODUCT LEVEL)	SEE PAGE
Y	*214-6950*	1	CHASSIS AR	3
Y	*214-6980*	1	HYDRAULIC AR	311
Y	*107-3313*	1	LOADER AR	422
Y	*184-7970*	1	POWER TRAIN AR	188

Y-SEPARATE ILLUSTRATION

<END>

ENGINE ARRANGEMENT

214-6890 ENGINE AR

S/N: B2D1-UP

AN ATTACHMENT

SMCS-1000 **i01991933**

NOTE	PART NUMBER	QTY	PART NAME 1 2 3 4 5 6 (PRODUCT LEVEL)	SEE PAGE
Y	*234-1980*	1	AIR CLEANER GP	73
Y	*234-3058*	1	ENGINE AR-PRIMARY	7
Y	*236-2486*	1	EXTENSION GP-EXHAUST	76
Y	*234-7510*	1	FILLER GP-ENGINE OIL	49
Y	**238-9827**	1	INDICATOR GP-AIR FILTER CHANGE	77
Y	*240-9743*	1	LINES GP-FUEL	88
Y	*236-2485*	1	MUFFLER GP	81
Y	*235-3170*	1	SEPARATOR GP-WATER	96
	246-0568	1	WIRE AS (ENGINE SHUTOFF SOLENOID)	
Y	*234-1991*	1	WIRING GP-ENGINE	148

Y-SEPARATE ILLUSTRATION

ENGINE ARRANGEMENT

214-6891 ENGINE AR

S/N: B2D1-UP
62 BRAKE KW (83 BHP) AT 2200 RPM
AN ATTACHMENT

SMCS-1000 **i02046429**

NOTE	PART NUMBER	QTY	PART NAME 1 2 3 4 5 6 (PRODUCT LEVEL)	SEE PAGE
Y	*234-1979*	1	AIR CLEANER GP	71
Y	**234-3059**	1	ENGINE AR-PRIMARY	8
Y	*236-2486*	1	EXTENSION GP-EXHAUST	76
Y	*234-7510*	1	FILLER GP-ENGINE OIL	49
Y	*238-9828*	1	INDICATOR GP-AIR FILTER CHANGE	78
Y	*235-2972*	1	LINES GP-FUEL	86
Y	*235-3420*	1	MUFFLER GP	80
Y	*235-3170*	1	SEPARATOR GP-WATER	96
Y	*234-1991*	1	WIRING GP-ENGINE	148

Y-SEPARATE ILLUSTRATION

ENGINE ARRANGEMENT

234-3058 ENGINE AR-PRIMARY

S/N: CRS1-UP
56 BRAKE KW (75 BHP) AT 2200 RPM
PART OF 214-6890 ENGINE AR
AN ATTACHMENT

SMCS-1000 **i01991973**

NOTE	PART NUMBER	QTY	PART NAME 1 2 3 4 5 6 (PRODUCT LEVEL)	SEE PAGE
Y	*237-0027*	1	ALTERNATOR GP-CHARGING	101
Y	*233-7236*	1	CAMSHAFT GP	10
Y	*231-0033*	1	CONNECTION GP-WATER	52
Y	*233-7229*	1	COOLER GP-FLTR BASE & ENG OIL	55
Y	*246-2583*	1	COVER GP-VALVE MECHANISM	14
Y	*233-7027*	1	CRANKSHAFT GP	18
Y	*233-7007*	1	CYLINDER BLOCK GP	23
Y	*233-7234*	1	CYLINDER HEAD GP	26
Y	*236-8241*	1	DRIVE GP-FAN	27
Y	*235-2489*	1	ELBOW GP-AIR INLET	75
Y	*230-7300*	1	FLYWHEEL GP	28
Y	*232-6661*	1	GLOW PLUG GP	108
Y	*236-8238*	1	HOUSING GP-FLYWHEEL	29
Y	*232-3670*	1	HOUSING GP-FRONT	30
Y	*233-7432*	1	LIFTING GP-ENGINE	32
Y	*237-5408*	1	MANIFOLD GP-EXHAUST	79
Y	*237-3658*	1	MOUNTING GP-ENGINE	33
Y	*237-0025*	1	PAN GP-OIL	35
Y	*233-7233*	1	PISTON & ROD GP	39
Y	*225-4317*	1	PLUG GP-ENGINE	42
Y	*230-7569*	1	PLUG GP-CYLINDER BLOCK	41
Y	*230-7353*	1	PULLEY GP-CRANKSHAFT	43
Y	*230-7578*	1	PUMP GP-ENGINE OIL	51
Y	*237-5394*	1	PUMP GP-FUEL INJECTION	92
Y	*230-7355*	1	PUMP GP-WATER	63
Y	*237-0024*	1	STARTING MOTOR GP-ELECTRIC	126
Y	*237-4896*	1	SWITCH GP-PRESSURE	127
Y	*235-8749*	1	SWITCH GP-TEMPERATURE	128
Y	*233-7235*	1	VALVE MECHANISM GP	45
			AVAILABLE REPLACEMENT PART(S):	
	239-9897	1	KIT-GASKET (TOP)	
	235-3556	1	KIT-GASKET (BOTTOM)	

Y-SEPARATE ILLUSTRATION

ENGINE ARRANGEMENT

234-3059 ENGINE AR-PRIMARY

S/N: CRS1-UP
PART OF 214-6891 ENGINE AR
AN ATTACHMENT

SMCS-1000 **i02052141**

NOTE	PART NUMBER	QTY	PART NAME 1 2 3 4 5 6 (PRODUCT LEVEL)	SEE PAGE
Y	*237-0027*	1	ALTERNATOR GP-CHARGING	101
Y	*232-7528*	1	CAMSHAFT GP	9
Y	*231-0033*	1	CONNECTION GP-WATER	52
Y	*232-6177*	1	COOLER GP-FLTR BASE & ENG OIL	53
Y	*231-0149*	1	COVER GP-FRONT HOUSING	11
Y	*246-2582*	1	COVER GP-VALVE MECHANISM	12
Y	*232-7439*	1	CRANKSHAFT GP	16
Y	*232-7606*	1	CYLINDER BLOCK GP	22
Y	*232-7524*	1	CYLINDER HEAD GP	25
Y	*236-8241*	1	DRIVE GP-FAN	27
Y	*230-7300*	1	FLYWHEEL GP	28
Y	*232-6661*	1	GLOW PLUG GP	108
Y	*236-8238*	1	HOUSING GP-FLYWHEEL	29
Y	*232-3670*	1	HOUSING GP-FRONT	30
Y	*233-7432*	1	LIFTING GP-ENGINE	32
Y	*237-3658*	1	MOUNTING GP-ENGINE	33
Y	*237-0025*	1	PAN GP-OIL	35
Y	*232-7442*	1	PISTON & ROD GP	37
Y	*230-7569*	1	PLUG GP-CYLINDER BLOCK	41
Y	*225-4317*	1	PLUG GP-ENGINE	42
Y	*230-7353*	1	PULLEY GP-CRANKSHAFT	43
Y	*230-7578*	1	PUMP GP-ENGINE OIL	51
Y	*237-2528*	1	PUMP GP-FUEL INJECTION	90
Y	*230-7355*	1	PUMP GP-WATER	63
Y	*237-0024*	1	STARTING MOTOR GP-ELECTRIC	126
Y	*237-4896*	1	SWITCH GP-PRESSURE	127
Y	*235-8749*	1	SWITCH GP-TEMPERATURE	128
Y	*237-3924*	1	TURBOCHARGER GP	82
Y	*232-7526*	1	VALVE MECHANISM GP	44
			AVAILABLE GASKET KIT(S):	
	239-9897	1	KIT-GASKET (TOP)	
	235-3556	1	KIT-GASKET (BOTTOM)	

Y-SEPARATE ILLUSTRATION

BASIC ENGINE

232-7528 CAMSHAFT GP

S/N: CRS1-UP
PART OF 234-3059 ENGINE AR-PRIMARY
AN ATTACHMENT

SMCS-1210, 1211, 1212 **i02053604**

NOTE	REF NO	GRAPHIC REF	PART NUMBER	QTY	PART NAME 1 2 3 4 5 6 (PRODUCT LEVEL)	SEE PAGE
	1	1	**1B-8736**	1	KEY-WOODRUFF	
	2	1	**225-5967**	1	CAMSHAFT	

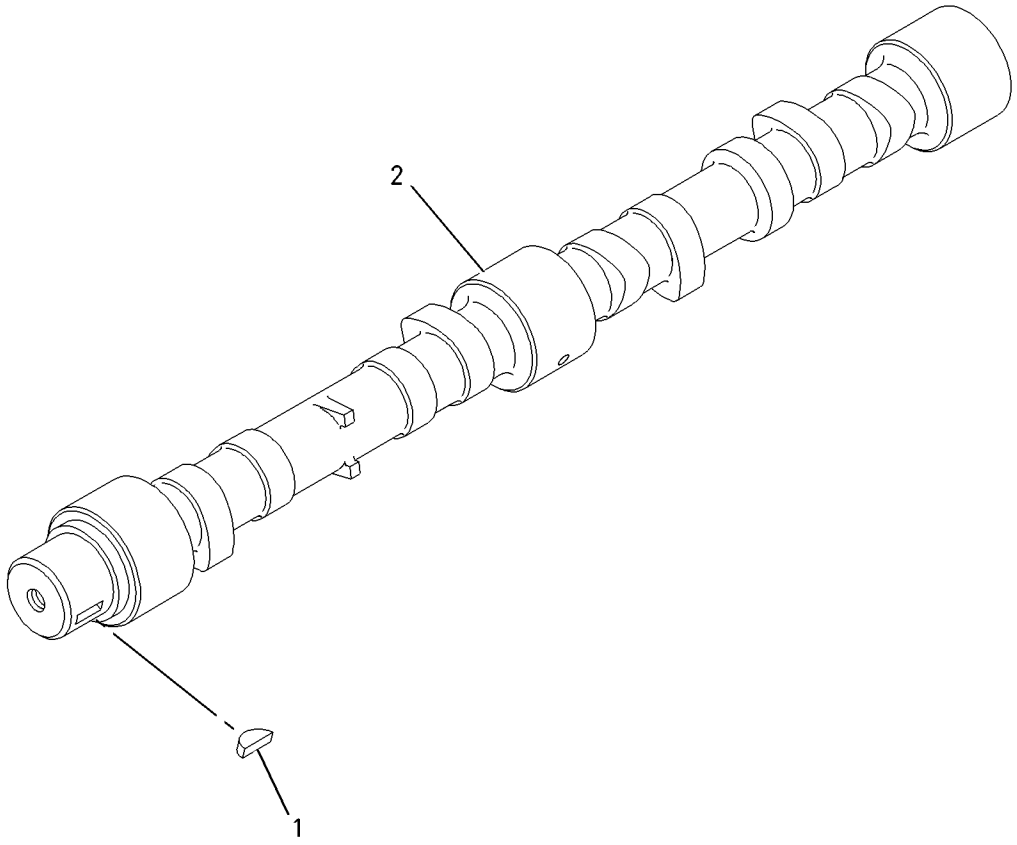

GRAPHIC #1 **<END>** g00911297

BASIC ENGINE

233-7236 CAMSHAFT GP

S/N: CRS1-UP
PART OF 234-3058 ENGINE AR-PRIMARY
AN ATTACHMENT

SMCS-1210, 1211, 1212 **i02052221**

NOTE	REF NO	GRAPHIC REF	PART NUMBER	QTY	PART NAME 1 2 3 4 5 6 (PRODUCT LEVEL)	SEE PAGE
	1	1	**1B-8736**	1	KEY-WOODRUFF	
	2	1	**233-7244**	1	CAMSHAFT	

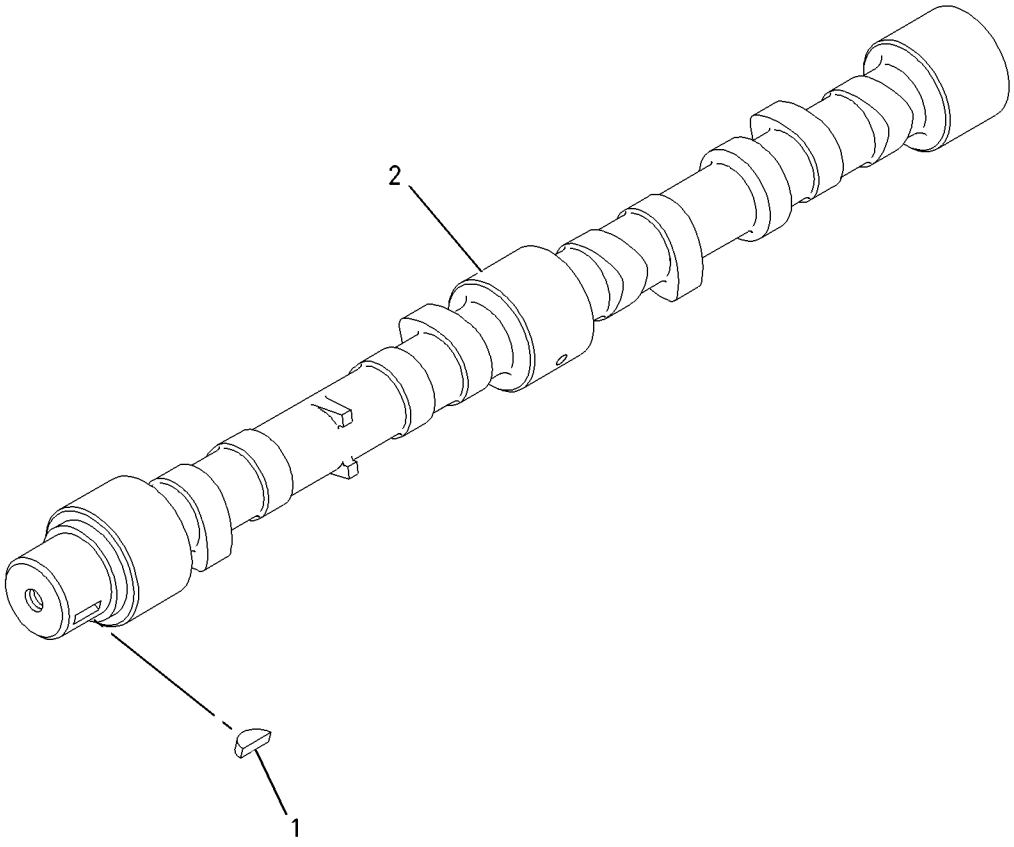

GRAPHIC #1 **<END>** g00911297

BASIC ENGINE

231-0149 COVER GP-FRONT HOUSING

S/N: CRS1-UP
PART OF 234-3059 ENGINE AR-PRIMARY
AN ATTACHMENT

SMCS-1151, 1162, 1166 **i02053619**

NOTE	REF NO	GRAPHIC REF	PART NUMBER	QTY	PART NAME 1 2 3 4 5 6 (PRODUCT LEVEL)	SEE PAGE
	1	1	**6I-0572**	12	BOLT (M8X1.25X20-MM)	
	2	1	**114-2579**	3	GASKET	
	3	1	**115-1162**	3	PLATE	

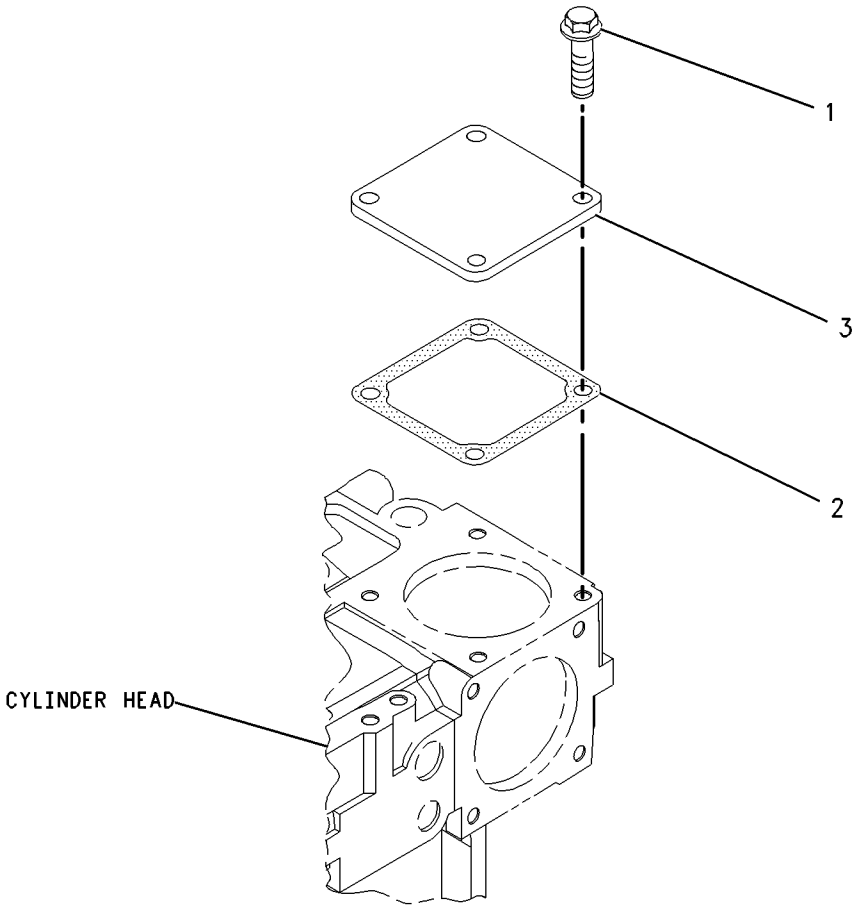

GRAPHIC #1 **<END>** g00986217

BASIC ENGINE

246-2582 COVER GP-VALVE MECHANISM

S/N: CRS1-UP
PART OF 234-3059 ENGINE AR-PRIMARY
AN ATTACHMENT

SMCS-1107, 1120 **i02053608**

NOTE	REF NO	GRAPHIC REF	PART NUMBER	QTY	PART NAME 1 2 3 4 5 6 (PRODUCT LEVEL)	SEE PAGE
	1	1	**6I-0260**	2	BOLT (M8X1.25X25-MM)	
	2	1	**6I-0846**	3	BOLT (M6X1.0X14-MM)	
	3	1	**6I-0917**	1	BOLT (M6X1.0X25-MM)	
	4	1	**7C-1281**	1	BRACKET	
	5	1	**100-4841**	2	BOLT (M6X1.0X10-MM)	
	6	1	**5D-1026**	1	CLAMP-HOSE	
	7	1	**162-1565**	1	SPRING (BREATHER HOSE)	
	8	1	**198-8645**	1	HOSE (BREATHER)	
	9	1	**225-6522**	1	PLUG-CUP	
	10	1	**230-9127**	1	COVER	
	11	1	**230-9144**	1	CONNECTOR	
	11A	1	**150-7732**	1	SEAL-O-RING	
	11B	1	**225-6455**	2	BOLT	
	11C	1	**225-6517**	1	GASKET	
	12	1	**237-0769**	1	SHIELD-HEAT	
	13	1	**246-1163**	1	FILLER AS-OIL	
	13A	1	**229-4896**	1	SEAL-O-RING	
	14	1	**247-7798**	1	COVER AS	
	14A	1	**225-6451**	1	GASKET (VALVE COVER)	
	14B	1	**225-6455**	10	BOLT (ISOLATOR)	
	14C	1	**225-6456**	1	SPRING (BREATHER VALVE)	
	14D	1	**225-6461**	1	CAP (BREATHER VALVE)	
	14E	1	**225-6464**	1	DIAPHRAGM	
	14F	1	**225-6477**	1	PLATE	
	14G	1	**225-6478**	4	SCREW-MACHINE	
	14H	1	**225-6479**	1	CAP (BREATHER VALVE)	

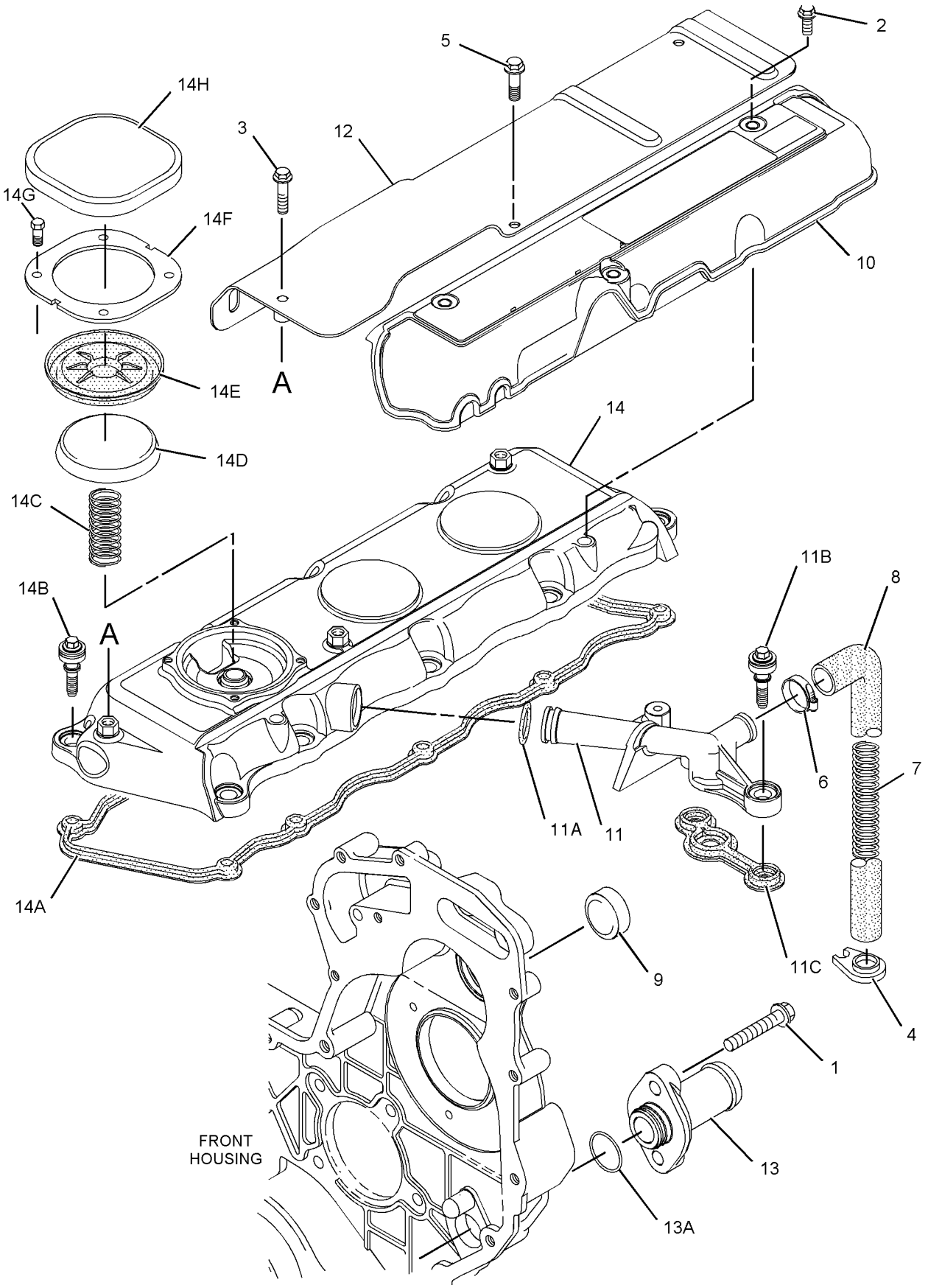

GRAPHIC #1

<END>

g01049443

246-2583 COVER GP-VALVE MECHANISM

S/N: CRS1-UP
PART OF 234-3058 ENGINE AR-PRIMARY
AN ATTACHMENT

SMCS-1107, 1120 **i02008891**

NOTE	REF NO	GRAPHIC REF	PART NUMBER	QTY	PART NAME 1 2 3 4 5 6 (PRODUCT LEVEL)	SEE PAGE
	1	1	**6I-0260**	2	BOLT (M8X1.25X25MM)	
	2	1	**6I-0846**	3	BOLT (M6X1.0X14MM)	
	3	1	**6I-0917**	1	BOLT (M6X1.0X25MM)	
	4	1	**100-4841**	2	BOLT (M6X1.0X10MM)	
	5	1	**225-6522**	1	PLUG-CUP	
	6	1	**230-9125**	1	CONNECTOR (BREATHER)	
	6A	1	**150-7732**	1	SEAL-O-RING (19.5MM ID)	
	6B	1	**225-6455**	2	BOLT (ISOLATOR)	
	6C	1	**225-6517**	1	GASKET	
	7	1	**230-9127**	1	COVER	
	8	1	**237-0026**	1	COVER AS (VALVE)	
	8A	1	**225-6451**	1	GASKET (VALVE COVER)	
	8B	1	**225-6455**	10	BOLT	
	8C	1	**225-6456**	1	SPRING	
	8D	1	**225-6461**	1	CAP	
	8E	1	**225-6464**	1	DIAPHRAGM	
	8F	1	**225-6477**	1	PLATE	
	8G	1	**225-6478**	4	SCREW-MACHINE	
	8H	1	**225-6479**	1	CAP	
	9	1	**237-0769**	1	SHIELD-HEAT	
	10	1	**246-1163**	1	FILLER AS-OIL	
	11	1	**229-4896**	1	SEAL-O-RING (021.8MM ID)	

246-2583 **COVER GP-VALVE MECHANISM** *(contd.)* **i02008891**

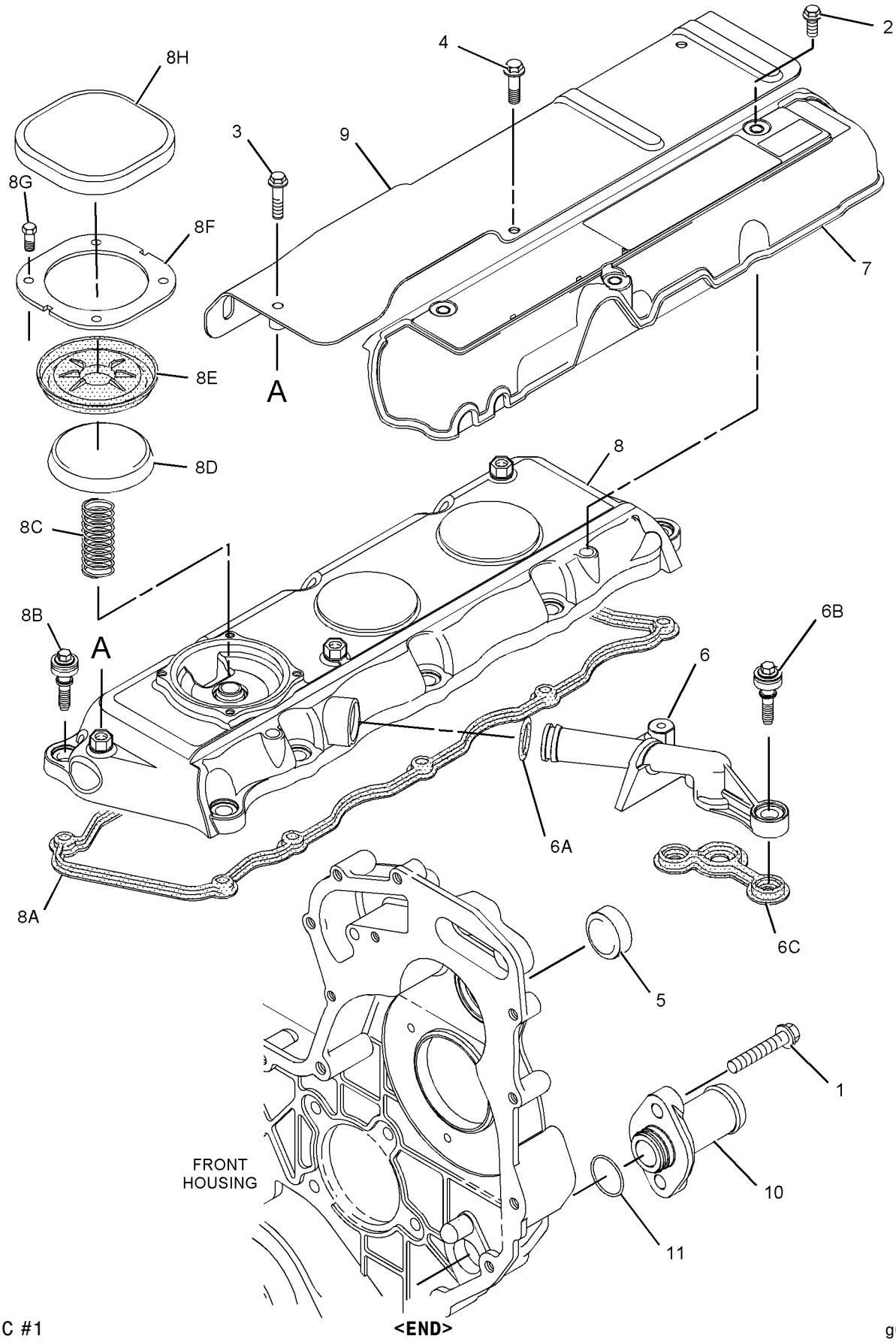

GRAPHIC #1

<END>

g01039759

BASIC ENGINE

232-7439 CRANKSHAFT GP

S/N: CRS1-UP
PART OF 234-3059 ENGINE AR-PRIMARY
AN ATTACHMENT

SMCS-1202, 1203, 1204, 1230, 1231, 1232 **i02053616**

NOTE	REF NO	GRAPHIC REF	PART NUMBER	QTY	PART NAME 1 2 3 4 5 6 (PRODUCT LEVEL)	SEE PAGE
	1	1	**1B-8736**	1	KEY-WOODRUFF	
	2	1	**216-8314**	1	GEAR-CRANKSHAFT (34-TEETH)	
	3	1	**232-7400**	1	CRANKSHAFT GP	
B	4	1	**225-7772**	1	BEARING SET-MAIN	
B		1	**233-3784**	1	KIT-CRANKSHAFT BEARING (0.25-MM US)	
B		1	**233-3785**	1	KIT-CRANKSHAFT BEARING (0.50-MM US)	
B		1	**233-3786**	1	KIT-CRANKSHAFT BEARING (0.76-MM US)	
B	5	1	**225-7781**	1	BEARING SET-ROD (STANDARD)	
B		1	**233-3788**	1	KIT-ROD BEARING (0.25-MM US)	
B		1	**233-3789**	1	KIT-ROD BEARING (0.50-MM US)	
B		1	**233-3790**	1	KIT-ROD BEARING (0.76-MM US)	
B	6	1	**032-9090**	2	WASHER-THRUST (STANDARD-UPPER)	
B		1	**067-6873**	2	WASHER-THRUST (0.18-MM OS) (UPPER)	
B	7	1	**032-9091**	2	WASHER-THRUST (STANDARD-LOWER)	
B		1	**067-6874**	2	WASHER-THRUST (0.18-MM OS) (LOWER)	

B-USE AS REQUIRED

232-7439 **CRANKSHAFT GP** ***(contd.)*** **i02053616**

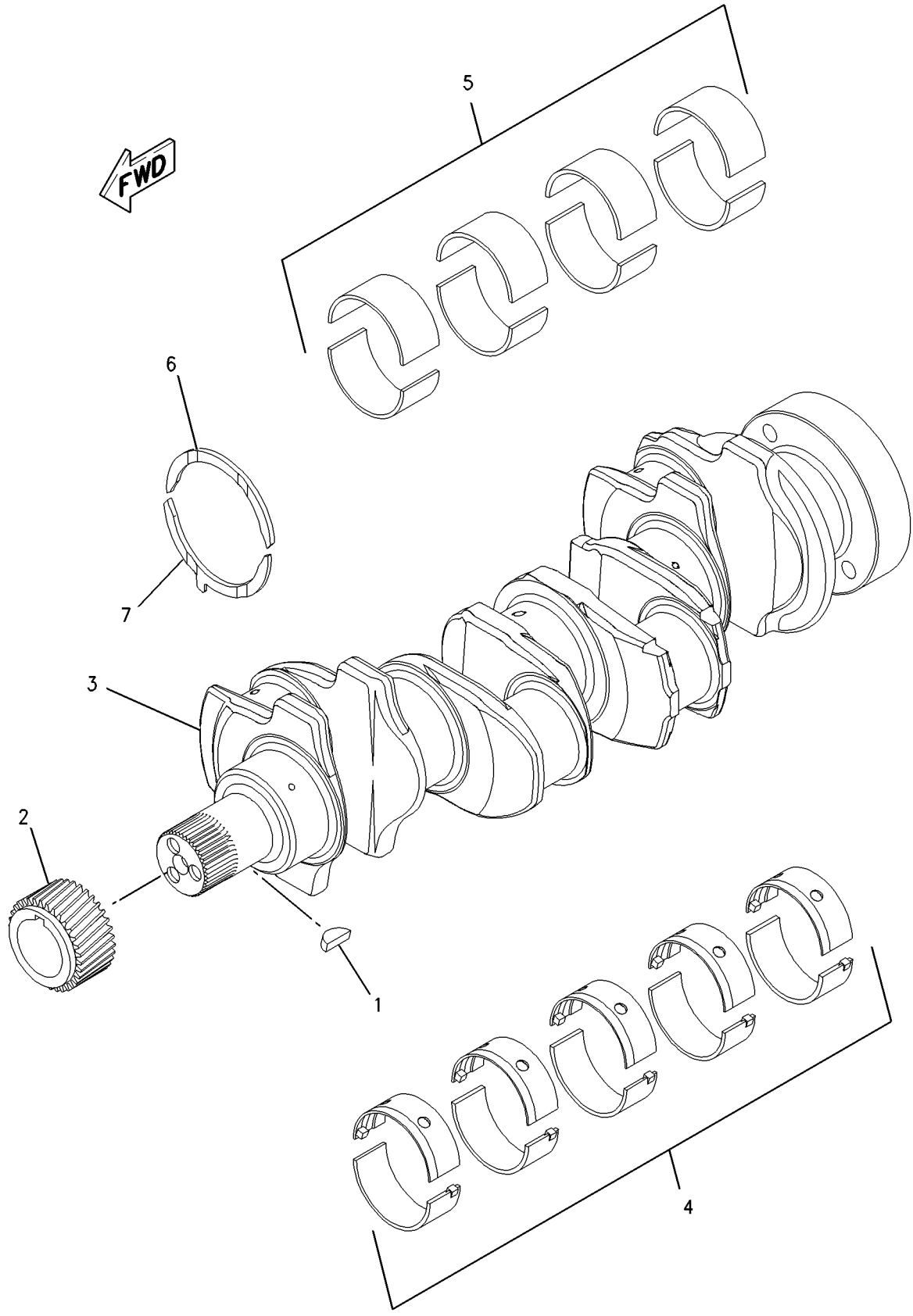

GRAPHIC #1 **<END>** g00950782

BASIC ENGINE

233-7027 CRANKSHAFT GP

S/N: CRS1-UP
PART OF 234-3058 ENGINE AR-PRIMARY
AN ATTACHMENT

SMCS-1202, 1203, 1204, 1230, 1231, 1232 **i02052229**

NOTE	REF NO	GRAPHIC REF	PART NUMBER	QTY	PART NAME 1 2 3 4 5 6 (PRODUCT LEVEL)	SEE PAGE
	1	1	**1B-8736**	1	KEY-WOODRUFF	
	2	1	**216-8314**	1	GEAR-CRANKSHAFT (34-TEETH)	
	3	1	**233-7009**	1	CRANKSHAFT GP	
B	4	1	**225-7772**	1	BEARING SET-MAIN	
B		1	**233-3784**	1	KIT-CRANKSHAFT BEARING (0.25-MM US)	
B		1	**233-3785**	1	KIT-CRANKSHAFT BEARING (0.50-MM US)	
B		1	**233-3786**	1	KIT-CRANKSHAFT BEARING (0.76-MM US)	
B	5	1	**225-7781**	1	BEARING SET-ROD (STANDARD)	
B		1	**233-3788**	1	KIT-ROD BEARING (0.25-MM US)	
B		1	**233-3789**	1	KIT-ROD BEARING (0.50-MM US)	
B		1	**233-3790**	1	KIT-ROD BEARING (0.76-MM US)	
B	6	1	**032-9090**	2	WASHER-THRUST (STANDARD-UPPER)	
B		1	**067-6873**	2	WASHER-THRUST (0.18-MM OS)	
B	7	1	**032-9091**	2	WASHER-THRUST (STANDARD-LOWER)	
B		1	**067-6874**	2	WASHER-THRUST (0.18-MM OS)	

B-USE AS REQUIRED

233-7027 **CRANKSHAFT GP** ***(contd.)*** **i02052229**

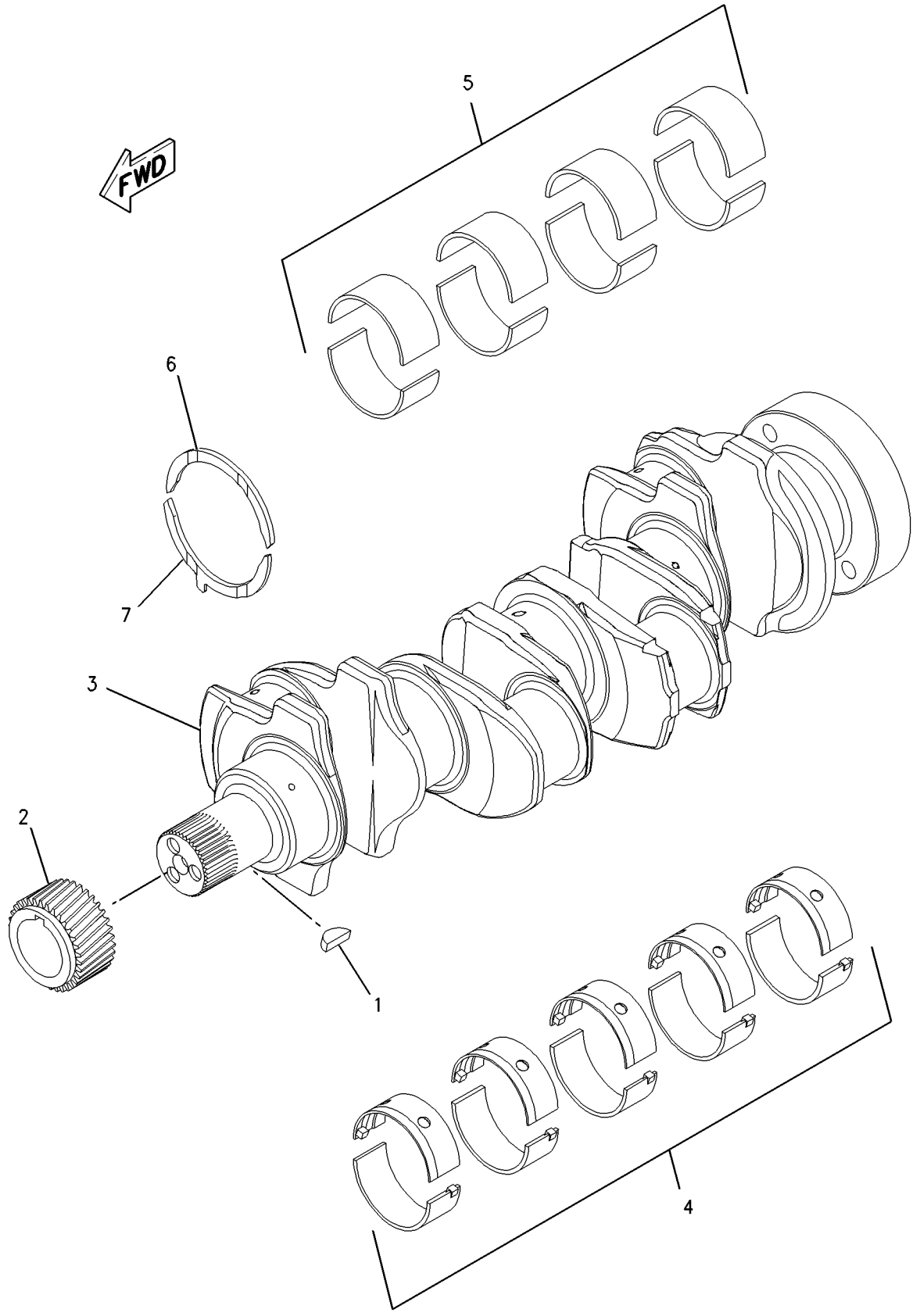

GRAPHIC #1 **<END>** g00950782

BASIC ENGINE

232-7604 CYLINDER BLOCK GP

S/N: CRS1-UP

PART OF 232-7606, 233-7007 CYLINDER BLOCK GP

AN ATTACHMENT

SMCS-1201 **i02052238**

NOTE	REF NO	GRAPHIC REF	PART NUMBER	QTY	PART NAME 1 2 3 4 5 6 (PRODUCT LEVEL)	SEE PAGE
	1	1	**6I-0572**	4	BOLT (M8X1.25X20-MM)	
	2	1	**035-8068**	10	BOLT (5/8-18X3.75-IN)	
	3	1	**067-6002**	10	DOWEL	
	4	1	**067-6006**	1	PLUG	
	5	1	**067-6043**	1	PLUG-SIDE	
	6	1	**100-4841**	4	BOLT (M6X1.0X10-MM)	
	7	1	**185-0884**	2	DOWEL	
	8	1	**225-7944**	1	GASKET	
	9	1	**225-8858**	2	PLUG	
	10	1	**232-3751**	1	PLATE	
	11	1	**232-7440**	1	BEARING	
	12	1	**232-7454**	4	JET AS-PISTON COOLING	
	13	1	**232-7596**	1	PLUG	
	14	1	**232-7597**	2	PLUG	
	15	1	**232-7599**	1	PLUG	
	16	1	**232-7600**	1	PLUG-CUP	
	17	1	**232-7603**	1	PLUG	

232-7604 **CYLINDER BLOCK GP** *(contd.)* **i02052238**

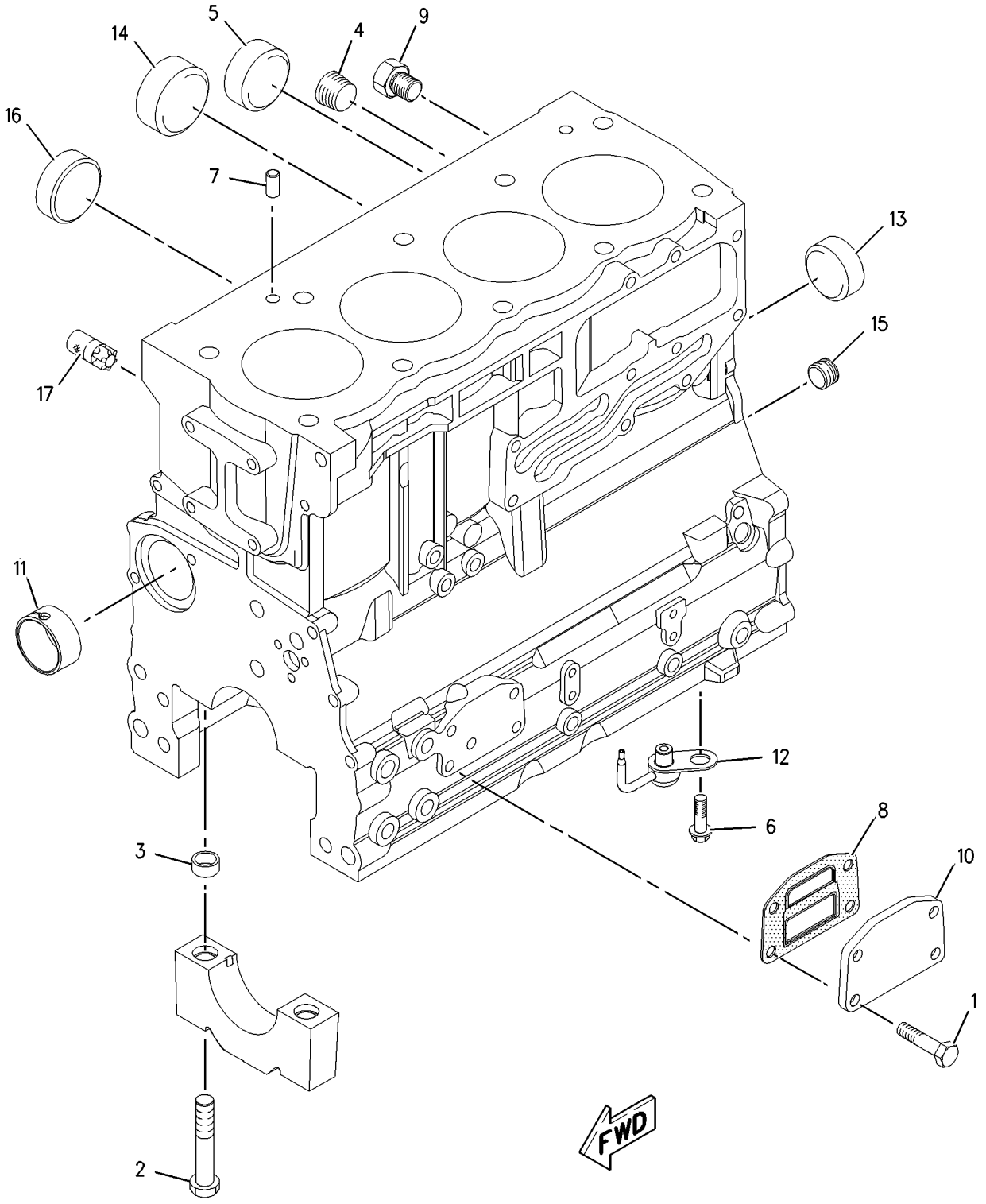

GRAPHIC #1 **<END>** g00951214

232-7606 CYLINDER BLOCK GP

S/N: CRS1-UP
PART OF 234-3059 ENGINE AR-PRIMARY
AN ATTACHMENT

SMCS-1201 **i02053612**

NOTE	REF NO	GRAPHIC REF	PART NUMBER	QTY	PART NAME 1 2 3 4 5 6 (PRODUCT LEVEL)	SEE PAGE
	1	1	**209-9219**	10	BOLT (M8X1.25X16-MM)	
	2	1	**232-7449**	1	HOUSING AS	
Y	3	1	**232-7604**	1	CYLINDER BLOCK GP	20

Y-SEPARATE ILLUSTRATION

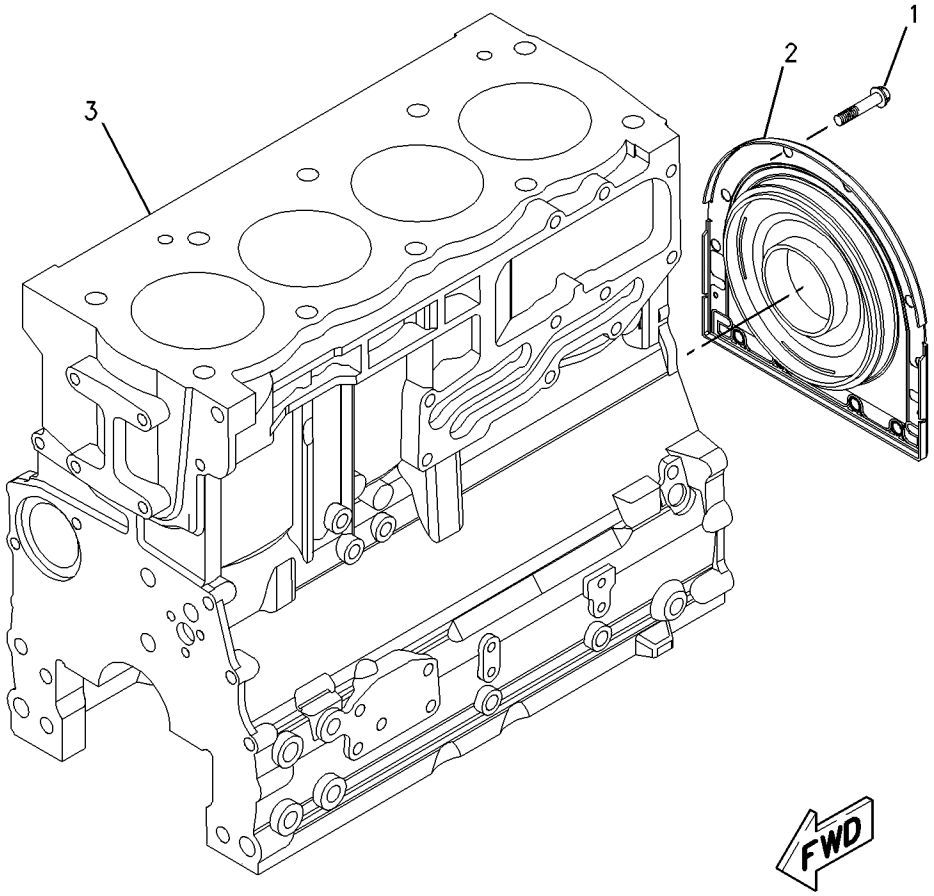

GRAPHIC #1 **<END>** g00952056

BASIC ENGINE

233-7007 CYLINDER BLOCK GP

S/N: CRS1-UP
PART OF 234-3058 ENGINE AR-PRIMARY
AN ATTACHMENT

SMCS-1201 **i02052230**

NOTE	REF NO	GRAPHIC REF	PART NUMBER	QTY	PART NAME 1 2 3 4 5 6 (PRODUCT LEVEL)	SEE PAGE
	1	1	**209-9219**	10	BOLT (M8X1.25X16-MM)	
	2	1	**232-7449**	1	HOUSING AS	
Y	3	1	**232-7604**	1	CYLINDER BLOCK GP	20

Y-SEPARATE ILLUSTRATION

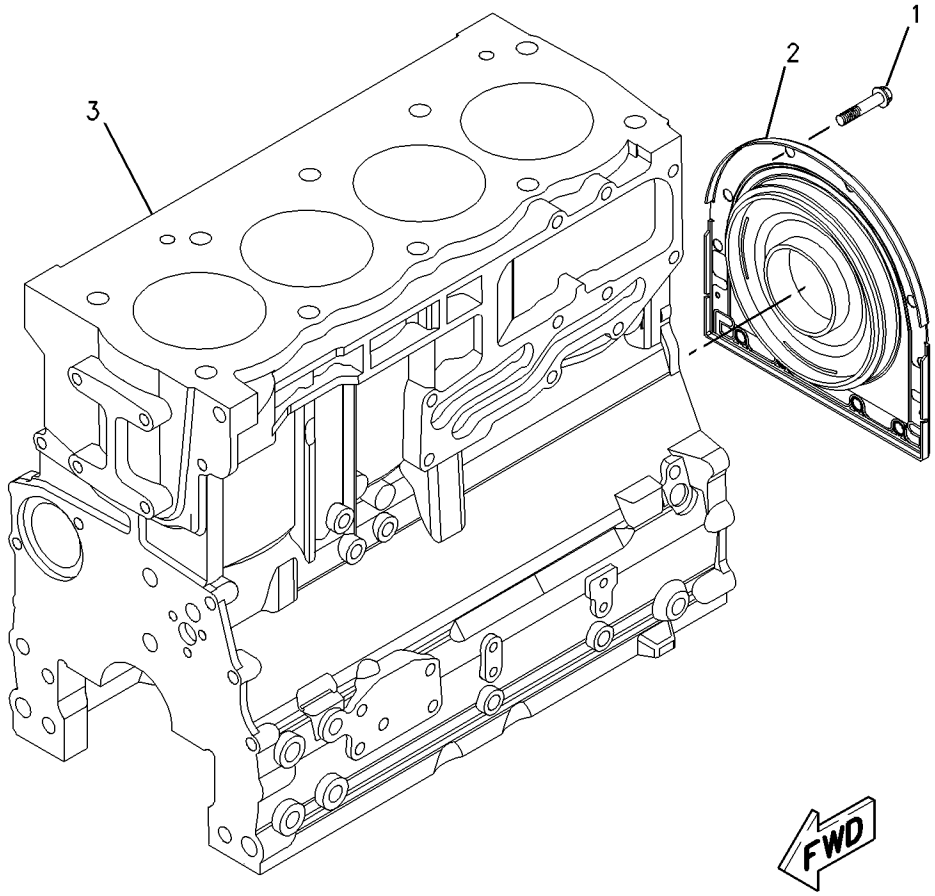

GRAPHIC #1 **<END>** g00952056

232-7519 CYLINDER HEAD GP

S/N: CRS1-UP

PART OF 232-7524, 233-7234 CYLINDER HEAD GP

AN ATTACHMENT

SMCS-1100, 1101, 1103, 1104, 1105, 1106, 1108, 1109, 1115, 1117, 1121, 1124, 1125

i02052241

NOTE	REF NO	GRAPHIC REF	PART NUMBER	QTY	PART NAME 1 2 3 4 5 6 (PRODUCT LEVEL)	SEE PAGE
	1	1	**2B-0858**	1	PLUG-PIPE	
	2	1	**9Y-5015**	2	PLUG-FREEZE	
	3	1	**067-6006**	4	PLUG	
	4	1	**147-1979**	16	RETAINER-VALVE SPRING	
	5	1	**185-0882**	8	GUIDE-VALVE (INTAKE)	
	6	1	**199-9751**	1	SEAL-O-RING	
	7	1	**225-5493**	4	INSERT-VALVE (INLET)	
	8	1	**225-5494**	4	INSERT-VALVE (EXHAUST)	
	9	1	**225-5495**	4	VALVE-INLET	
	10	1	**225-5496**	8	SPRING-VALVE	
	11	1	**225-5497**	8	SEAL-VALVE	
	12	1	**225-5498**	8	CAP	
	13	1	**225-5499**	4	VALVE-EXHAUST	
	14	1	**232-1322**	1	PLUG	

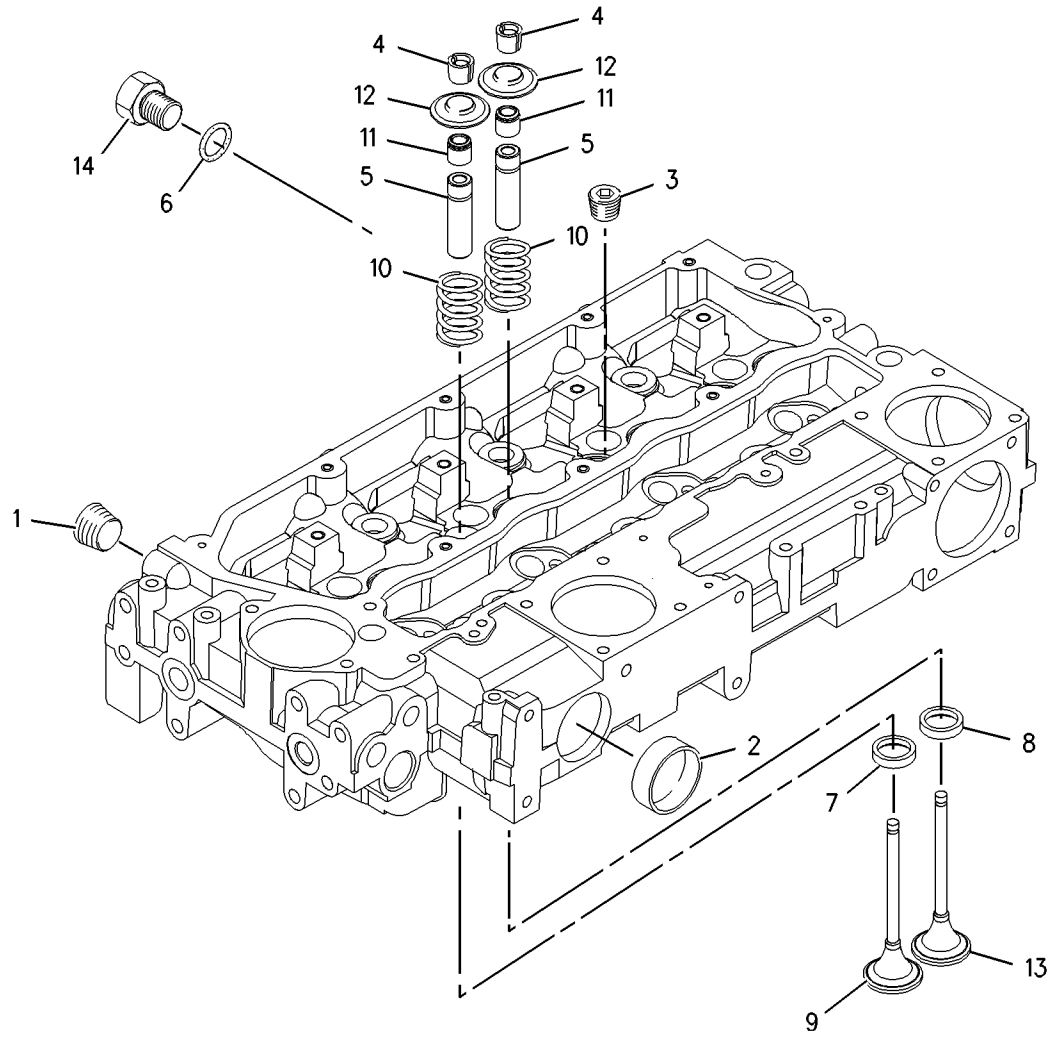

GRAPHIC #1

<END>

g00951196

232-7524 CYLINDER HEAD GP

S/N: CRS1-UP
PART OF 234-3059 ENGINE AR-PRIMARY
AN ATTACHMENT

SMCS-1100, 1101, 1103, 1104, 1105, 1106, 1108, 1109, 1115, 1117, 1121, 1124, 1125

i02053614

NOTE	REF NO	GRAPHIC REF	PART NUMBER	QTY	PART NAME 1 2 3 4 5 6 (PRODUCT LEVEL)	SEE PAGE
	1	1	**225-5501**	7	BOLT (M15X1.5X137-MM)	
	2	1	**225-5502**	3	BOLT (M15X1.5X162-MM)	
	3	1	**240-7194**	1	GASKET-HEAD	
Y	4	1	**232-7519**	1	CYLINDER HEAD GP	24

Y-SEPARATE ILLUSTRATION

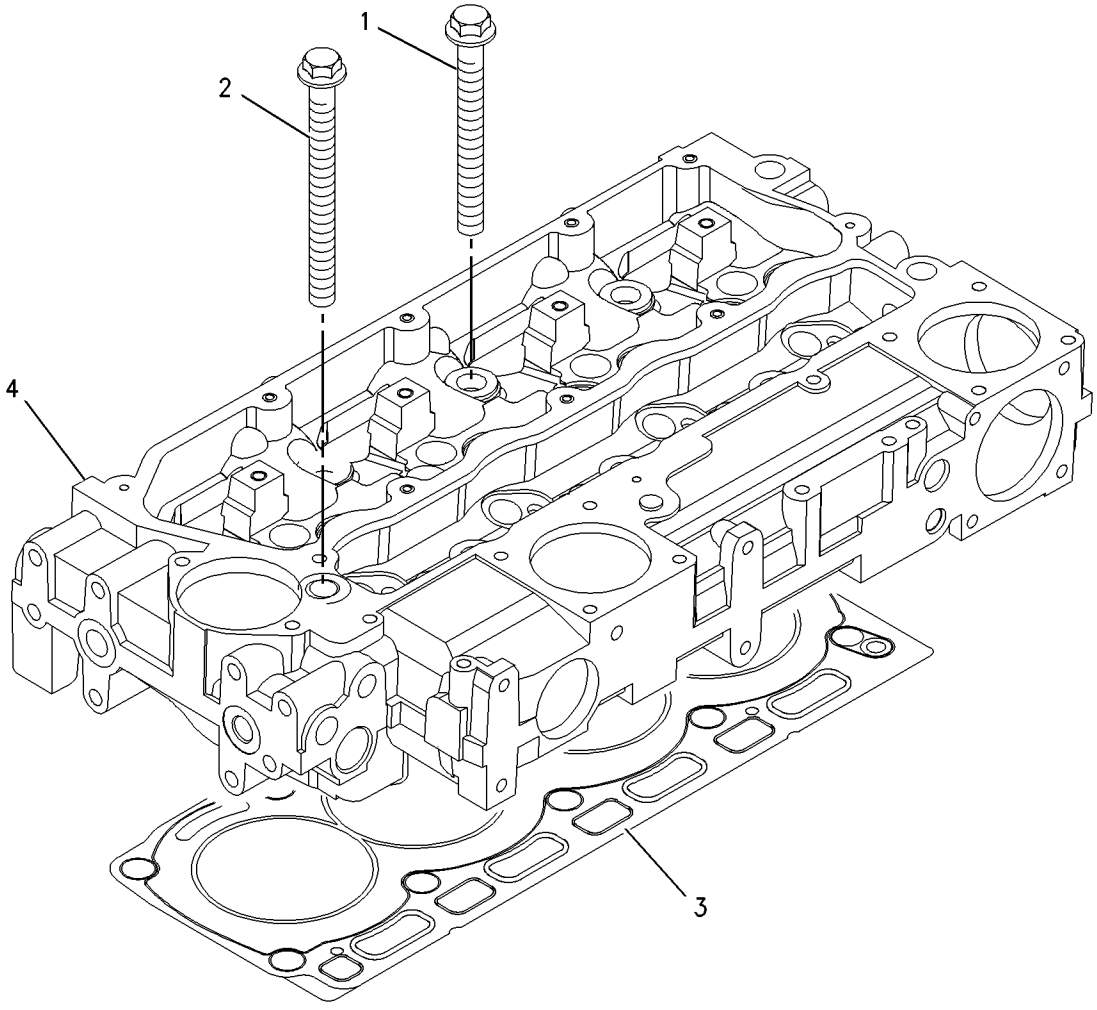

GRAPHIC #1

<END>

g00909291

233-7234 CYLINDER HEAD GP

S/N: CRS1-UP
PART OF 234-3058 ENGINE AR-PRIMARY
AN ATTACHMENT

SMCS-1100, 1101, 1103, 1104, 1105, 1106, 1108, 1109, 1115, 1117, 1121, 1124, 1125

i02052226

NOTE	REF NO	GRAPHIC REF	PART NUMBER	QTY	PART NAME 1 2 3 4 5 6 (PRODUCT LEVEL)	SEE PAGE
	1	1	**225-5501**	7	BOLT (M15X1.5X137-MM)	
	2	1	**225-5502**	3	BOLT (M15X1.5X162-MM)	
	3	1	**237-1911**	1	GASKET-CYLINDER HEAD	
Y	4	1	**232-7519**	1	CYLINDER HEAD GP	24

Y-SEPARATE ILLUSTRATION

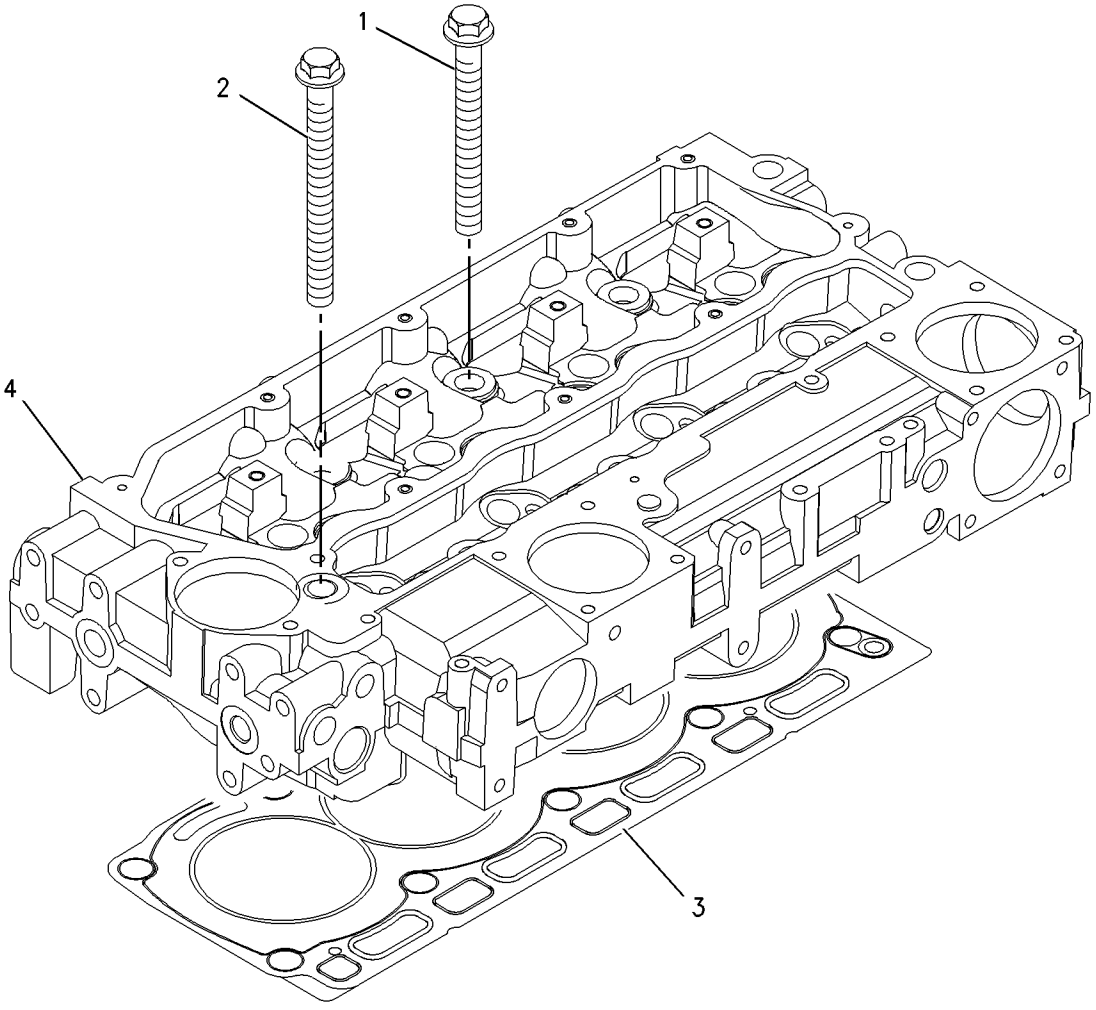

GRAPHIC #1

<END>

g00909291

236-8241 DRIVE GP-FAN

S/N: CRS1-UP
PART OF 234-3058, 234-3059 ENGINE AR-PRIMARY
AN ATTACHMENT

SMCS-1357, 1358, 1359, 1390 **i02052137**

NOTE	REF NO	GRAPHIC REF	PART NUMBER	QTY	PART NAME 1 2 3 4 5 6 (PRODUCT LEVEL)	SEE PAGE
	1	1	**111-0859**	4	BOLT (M10X1.5X35-MM)	
	2	1	**230-8065**	1	HOUSING AS	

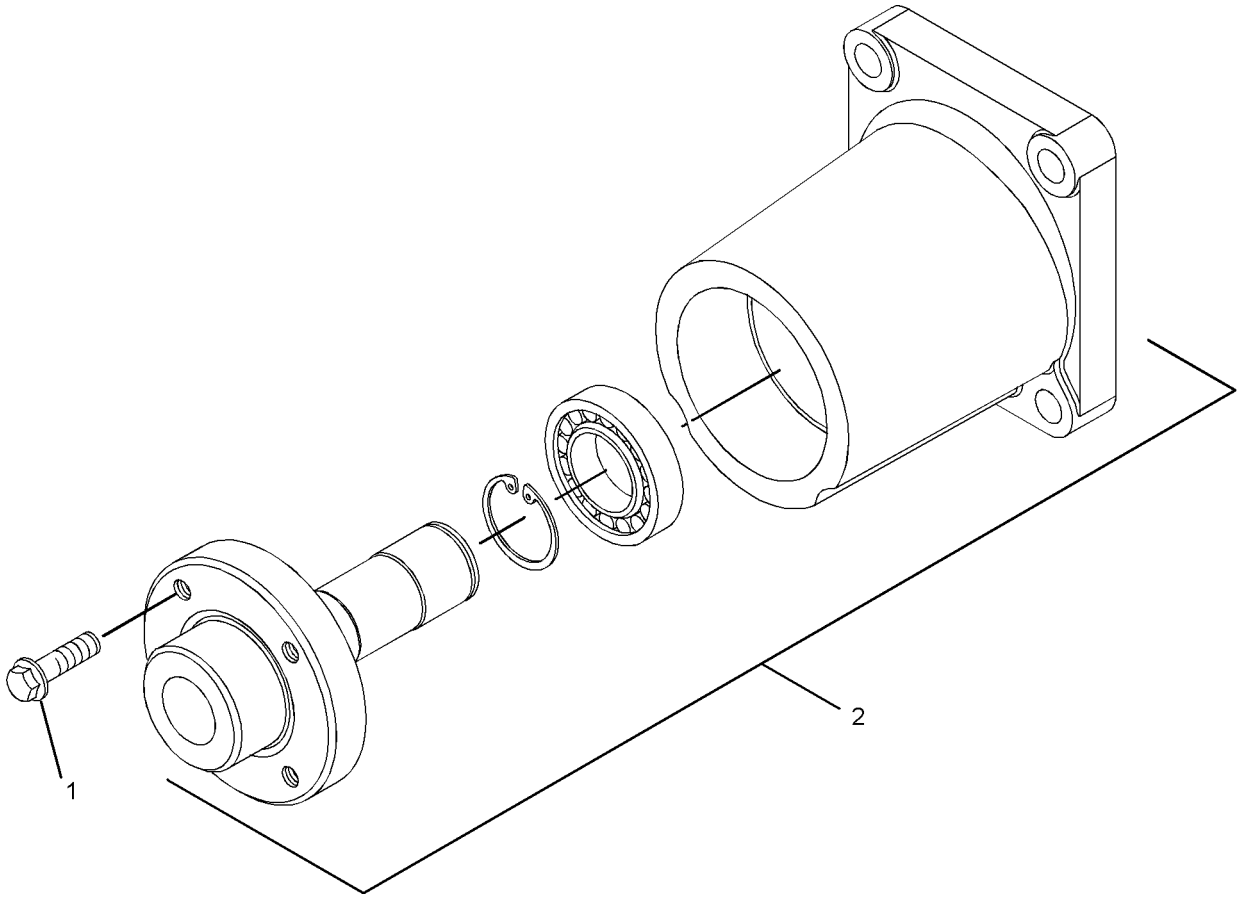

GRAPHIC #1 **<END>** g01022188

230-7300 FLYWHEEL GP

S/N: CRS1-UP
PART OF 234-3058, 234-3059 ENGINE AR-PRIMARY
AN ATTACHMENT

SMCS-1156, 1158 **i02052069**

NOTE	REF NO	GRAPHIC REF	PART NUMBER	QTY	PART NAME 1 2 3 4 5 6 (PRODUCT LEVEL)	SEE PAGE
	1	1	**0S-1603**	6	BOLT (1/2-20X1.5-IN)	
	2	1	**5P-8245**	6	WASHER-HARD (13.5X25.5X3-MM THK)	
	3	1	**245-9828**	1	FLYWHEEL AS	
	4	1	**033-7687**	1	RING (126-TEETH)	

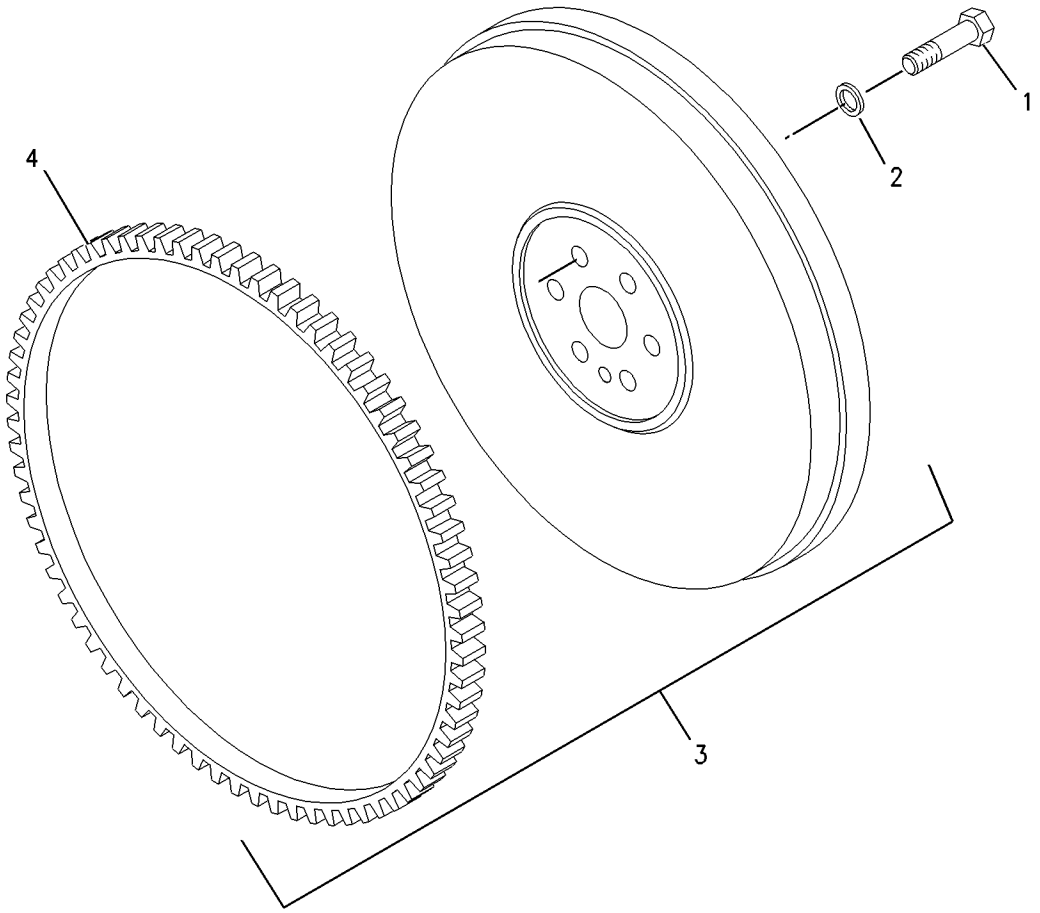

GRAPHIC #1 **<END>** g00955555

236-8238 HOUSING GP-FLYWHEEL

S/N: CRS1-UP
PART OF 234-3058, 234-3059 ENGINE AR-PRIMARY
AN ATTACHMENT

SMCS-1157 **i01925944**

NOTE	REF NO	GRAPHIC REF	PART NUMBER	QTY	PART NAME 1 2 3 4 5 6 (PRODUCT LEVEL)	SEE PAGE
	1	1	**6I-0423**	2	BOLT (M12X1.75X30MM)	
	2	1	**6I-0847**	1	PLUG	
	3	1	**7W-1176**	1	PLATE-COVER	
	4	1	**7W-4642**	1	SHIELD-DUST	
	5	1	**067-6123**	2	DOWEL	
	6	1	**114-4363**	2	BOLT (M8X1.25X12MM)	
	7	1	**101-3617**	3	PLUG	
	8	1	**121-0883**	6	BOLT (M10X1.5X30MM)	
	9	1	**220-8631**	1	HOUSING-FLYWHEEL	

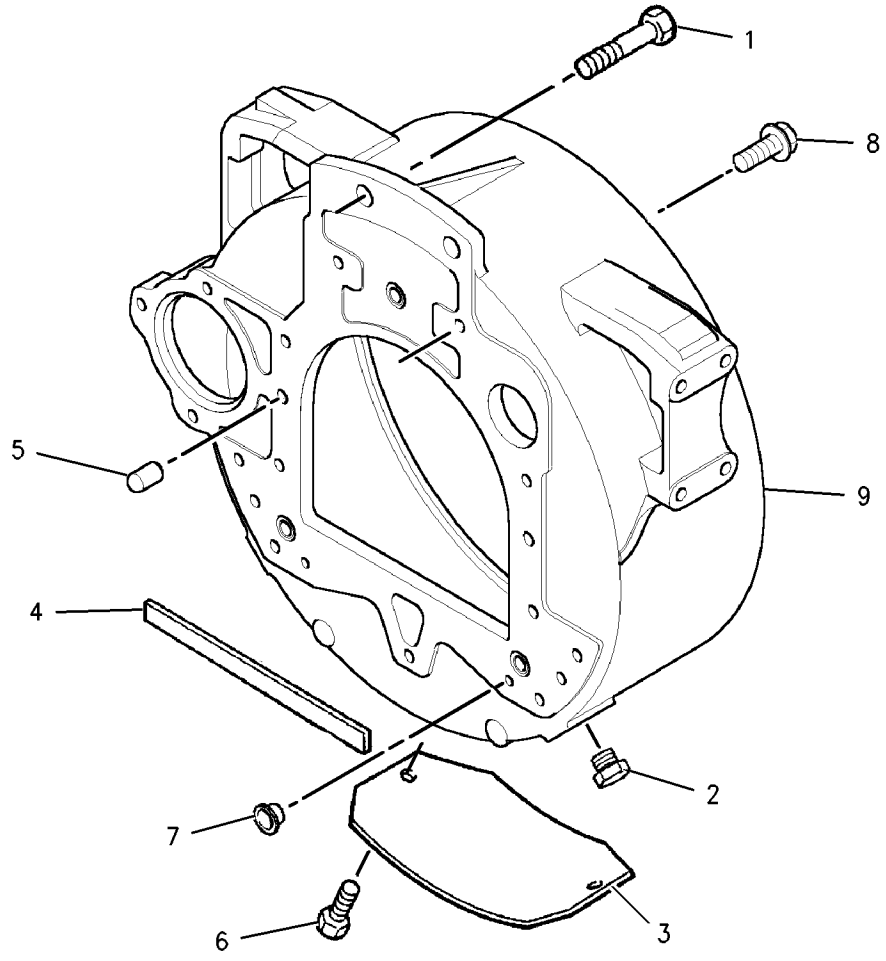

GRAPHIC #1 **<END>** g00902549

BASIC ENGINE

232-3670 HOUSING GP-FRONT

S/N: CRS1-UP

PART OF 234-3058, 234-3059 ENGINE AR-PRIMARY

AN ATTACHMENT

SMCS-1151, 1162, 1166 **i02052115**

NOTE	REF NO	GRAPHIC REF	PART NUMBER	QTY	PART NAME 1 2 3 4 5 6 (PRODUCT LEVEL)	SEE PAGE
	1	1	**1B-8736**	1	KEY-WOODRUFF	
	2	1	**6I-0217**	8	BOLT (M8X1.25X20-MM)	
	3	1	**6I-0645**	4	BOLT (M8X1.25X25-MM)	
	4	1	**6I-0789**	3	BOLT (M10X1.5X60-MM)	
	5	1	**7C-4616**	1	BOLT (M12X1.75X45-MM)	
	6	1	**067-6179**	1	DOWEL	
	7	1	**067-6897**	1	HUB-IDLER GEAR	
	8	1	**067-6900**	1	PLATE-RETAINING	
	9	1	**100-3751**	5	BOLT (M8X1.25X65-MM)	
	10	1	**124-3815**	10	BOLT (M8X16X1.25-MM)	
	11	1	**133-1011**	1	WASHER	
	12	1	**251-4336**	1	GEAR AS-IDLER	
	13	1	**216-8634**	1	GEAR-CAMSHAFT (68-TEETH)	
	14	1	**225-8278**	1	HOUSING-FRONT	
	15	1	**225-8280**	1	SEAL-CRANKSHAFT	
	16	1	**225-8281**	1	GASKET	
	17	1	**225-8282**	1	GASKET	
	18	1	**232-3657**	1	COVER AS-FRONT	
	19	1	**232-3666**	1	WASHER-THRUST	

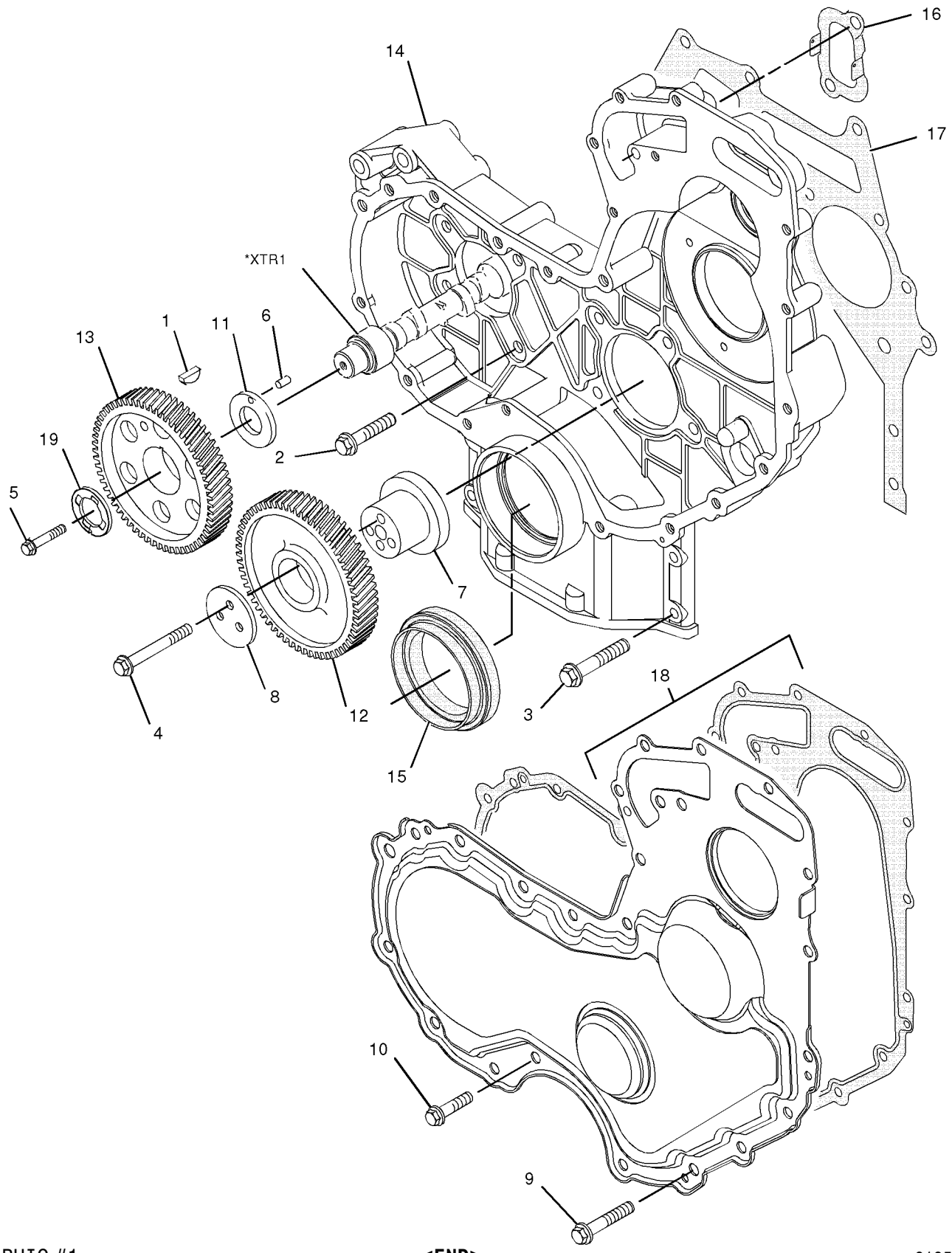

GRAPHIC #1 **<END>** g01052602

233-7432 LIFTING GP-ENGINE

S/N: CRS1-UP
PART OF 234-3058, 234-3059 ENGINE AR-PRIMARY
AN ATTACHMENT

SMCS-1122 **i02052220**

NOTE	REF NO	GRAPHIC REF	PART NUMBER	QTY	PART NAME 1 2 3 4 5 6 (PRODUCT LEVEL)	SEE PAGE
	1	1	**100-4830**	4	BOLT (M10X1.5X20-MM)	
	2	1	**225-8848**	2	PLATE	

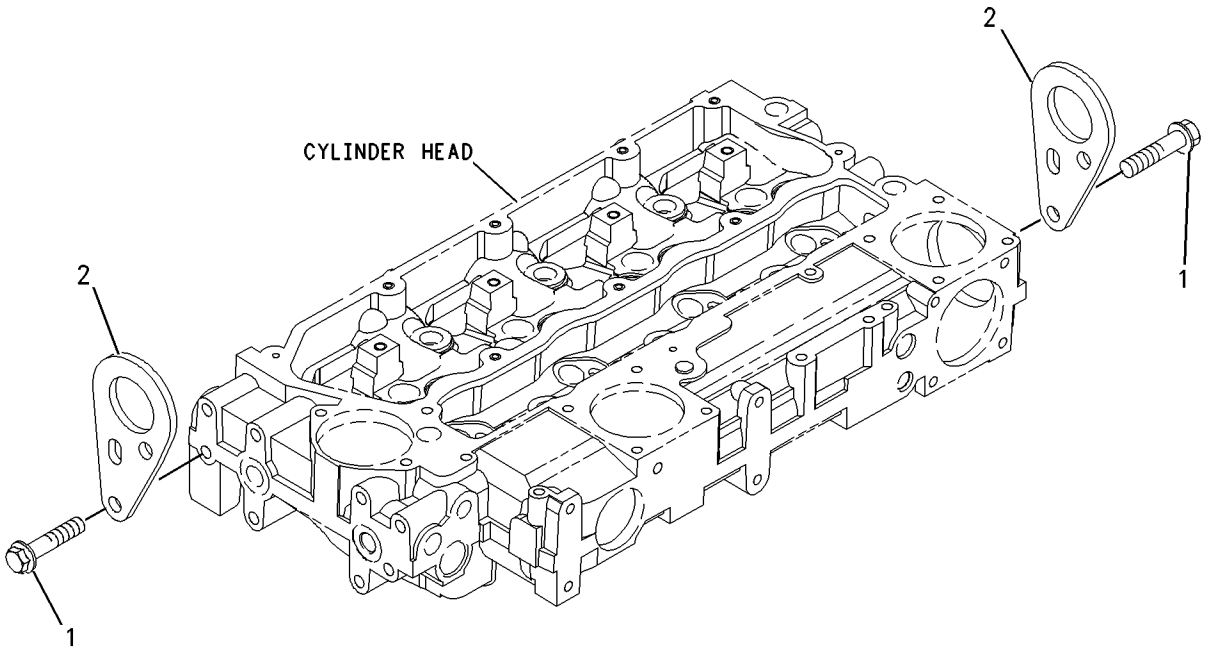

GRAPHIC #1 **<END>** g00955299

BASIC ENGINE

237-3658 MOUNTING GP-ENGINE

S/N: CRS1-UP

PART OF 234-3058, 234-3059 ENGINE AR-PRIMARY

AN ATTACHMENT

SMCS-1152, 1153, 1154 **i02052133**

NOTE	REF NO	GRAPHIC REF	PART NUMBER	QTY	PART NAME 1 2 3 4 5 6 (PRODUCT LEVEL)	SEE PAGE
	1	1	**101-2987**	6	PLUG	
	2	1	**6H-3616**	3	PLUG-PROTECTION	
	3	1	**195-2132**	1	SUPPORT-FRONT	
	4	1	**195-2134**	1	SUPPORT-FRONT	
	5	1	**195-2136**	8	STUD	
	6	1	**195-2221**	8	NUT	

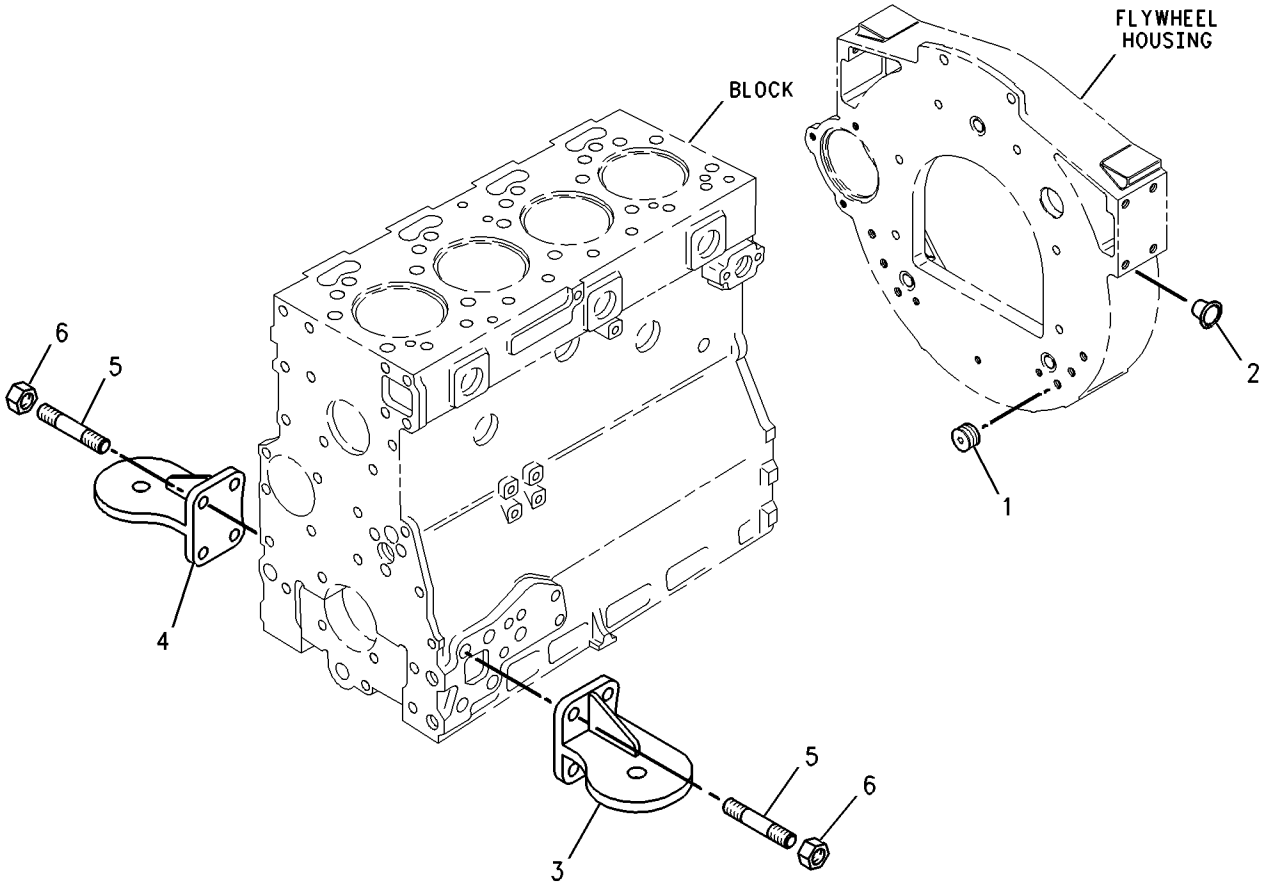

GRAPHIC #1 **<END>** g00738284

143-0782 MOUNTING GP-ENGINE & TMSN

S/N: B2D1-UP
STANDARD
PART OF 214-6955, 214-6956, 214-6958, 214-6959 POWER TRAIN AR
AN ATTACHMENT

SMCS-1152, 1153, 1154 **i01692610**

NOTE	REF NO	GRAPHIC REF	PART NUMBER	QTY	PART NAME 1 2 3 4 5 6 (PRODUCT LEVEL)	SEE PAGE
	1	1	**3E-4892**	4	WASHER	
	2	1	**3E-4924**	2	MOUNTING AS	
	3	1	**6Y-9915**	2	MOUNT AS	
	4	1	**9W-9953**	2	SLEEVE	
	5	1	**8T-4121**	12	WASHER-HARD (11X21X2.5MM THK)	
M	6	1	**8T-4132**	4	NUT (M16X2 THD)	
M	7	1	**8T-4174**	4	BOLT (M16X2.0X120MM)	
M	8	1	**8T-4196**	12	BOLT (M10X1.5X35MM)	
	9	1	**9X-8257**	8	WASHER (17.5X30X3.5MM THK)	

M-METRIC PART

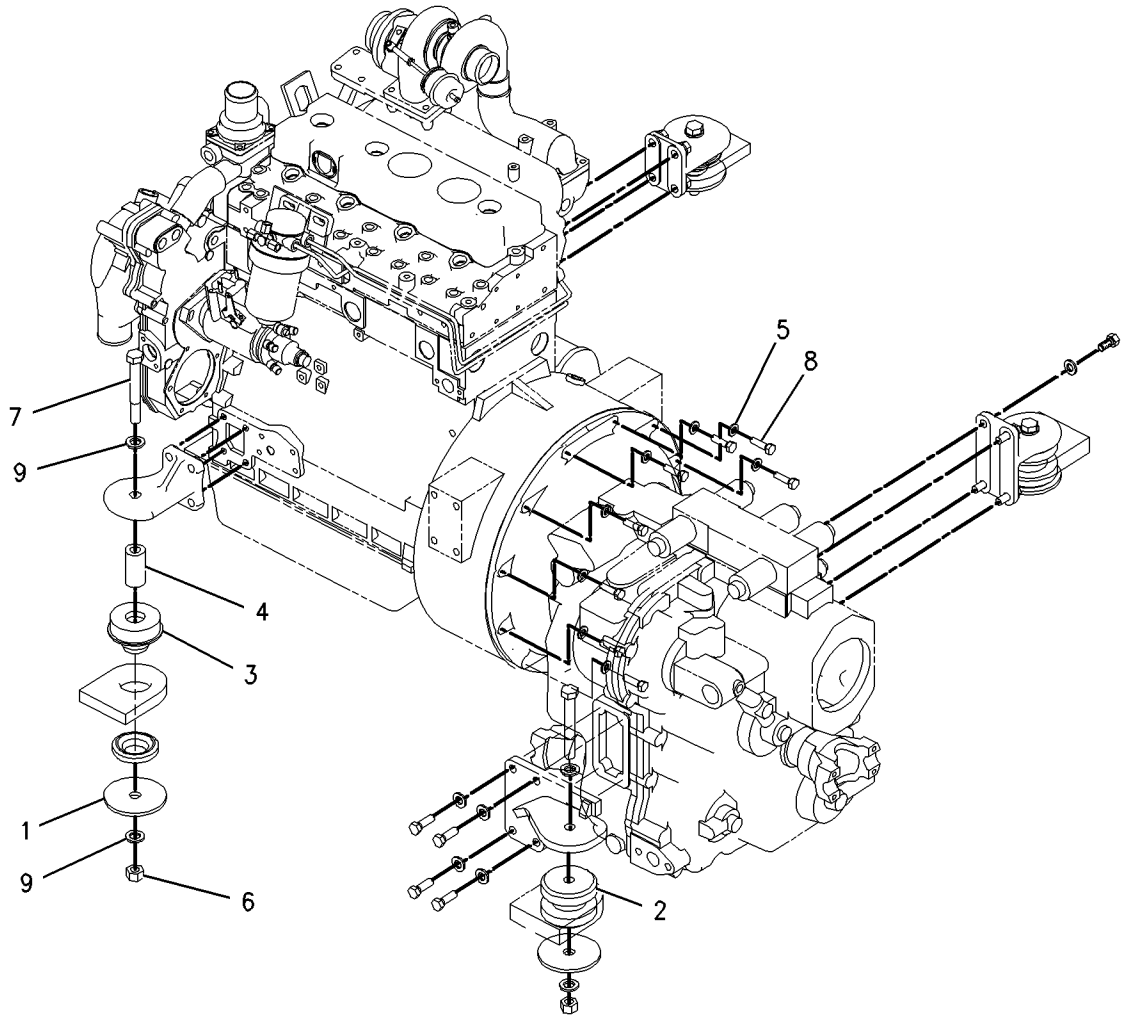

GRAPHIC #1 **<END>** g00871466

BASIC ENGINE

237-0025 PAN GP-OIL

S/N: CRS1-UP

PART OF 234-3058, 234-3059 ENGINE AR-PRIMARY

AN ATTACHMENT

SMCS-1302 **i02052136**

NOTE	REF NO	GRAPHIC REF	PART NUMBER	QTY	PART NAME 1 2 3 4 5 6 (PRODUCT LEVEL)	SEE PAGE
	1	1	**5P-6718**	2	SEAL-O-RING (ENGINE OIL DRAIN)	
	2	1	**6I-0217**	12	BOLT (M8X1.25X20-MM)	
	3	1	**6I-0260**	2	BOLT (M8X1.25X25-MM)	
	4	1	**6I-0289**	1	PLUG	
	5	1	**6I-0363**	2	BOLT (M6X1.0X20-MM)	
	6	1	**6I-0572**	2	BOLT (M8X1.25X20-MM)	
	7	1	**7C-0351**	2	PLUG-SUMP DRAIN	
	8	1	**067-6213**	1	GASKET	
	9	1	**101-3771**	6	BOLT	
	10	1	**225-6004**	1	PAN AS-OIL	
	10A	1	**7C-1224**	2	INSERT	
	11	1	**225-6005**	1	GASKET	
	12	1	**225-6041**	1	TUBE	
	13	1	**230-8094**	1	BRIDGE	

237-0025 **PAN GP-OIL** ***(contd.)*** **i02052136**

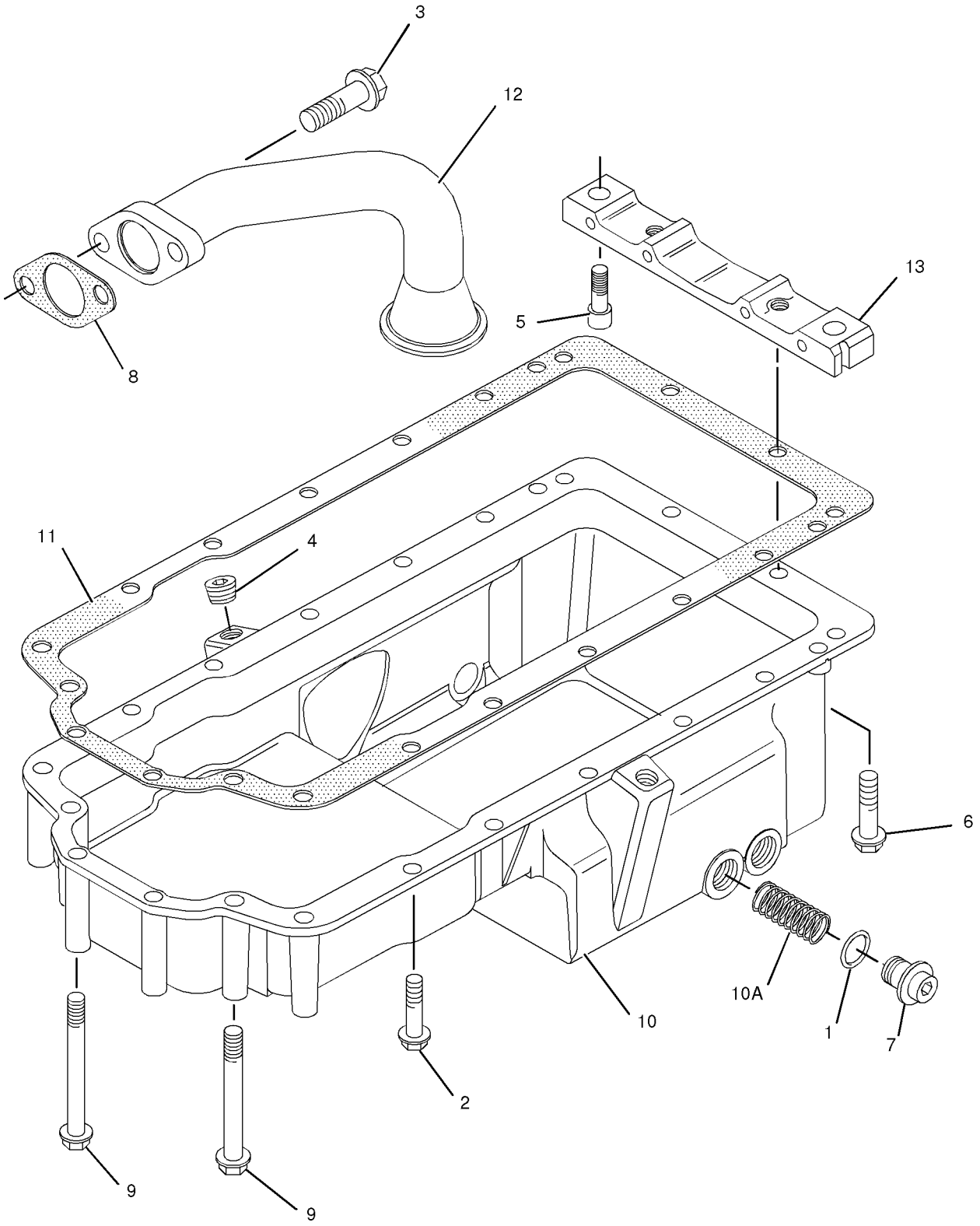

GRAPHIC #1 **<END>** g01036037

232-7442 PISTON & ROD GP

S/N: CRS1-UP
PART OF 234-3059 ENGINE AR-PRIMARY
AN ATTACHMENT

SMCS-1213, 1214, 1215, 1218, 1219, 1225, 1239 **i02053615**

NOTE	REF NO	GRAPHIC REF	PART NUMBER	QTY	PART NAME 1 2 3 4 5 6 (PRODUCT LEVEL)	SEE PAGE
	1	1	**225-5437**	4	PISTON AS	
					(EACH PISTON AS INCLUDES)	
	2	1	**124-3536**	2	RING-RETAINING	
	3	1	**225-5436**	1	KIT-PISTON RING	
J	4	1	**225-5441**	4	ROD AS (L)	
					—OR—	
J		1	**225-5451**	4	ROD AS (K)	
					—OR—	
J		1	**225-5453**	4	ROD AS (J)	
					—OR—	
J		1	**225-5454**	4	ROD AS (H)	
					—OR—	
J		1	**225-5458**	4	ROD AS (G)	
					—OR—	
J		1	**225-5459**	4	ROD AS (F)	
					(EACH ROD AS INCLUDES)	
	5	1	**225-5438**	1	BUSHING	
	6	1	**225-5439**	2	BOLT	

J-ENSURE THAT CORRECT ROD LENGTH IS FITTED

232-7442 **PISTON & ROD GP** *(contd.)* **i02053615**

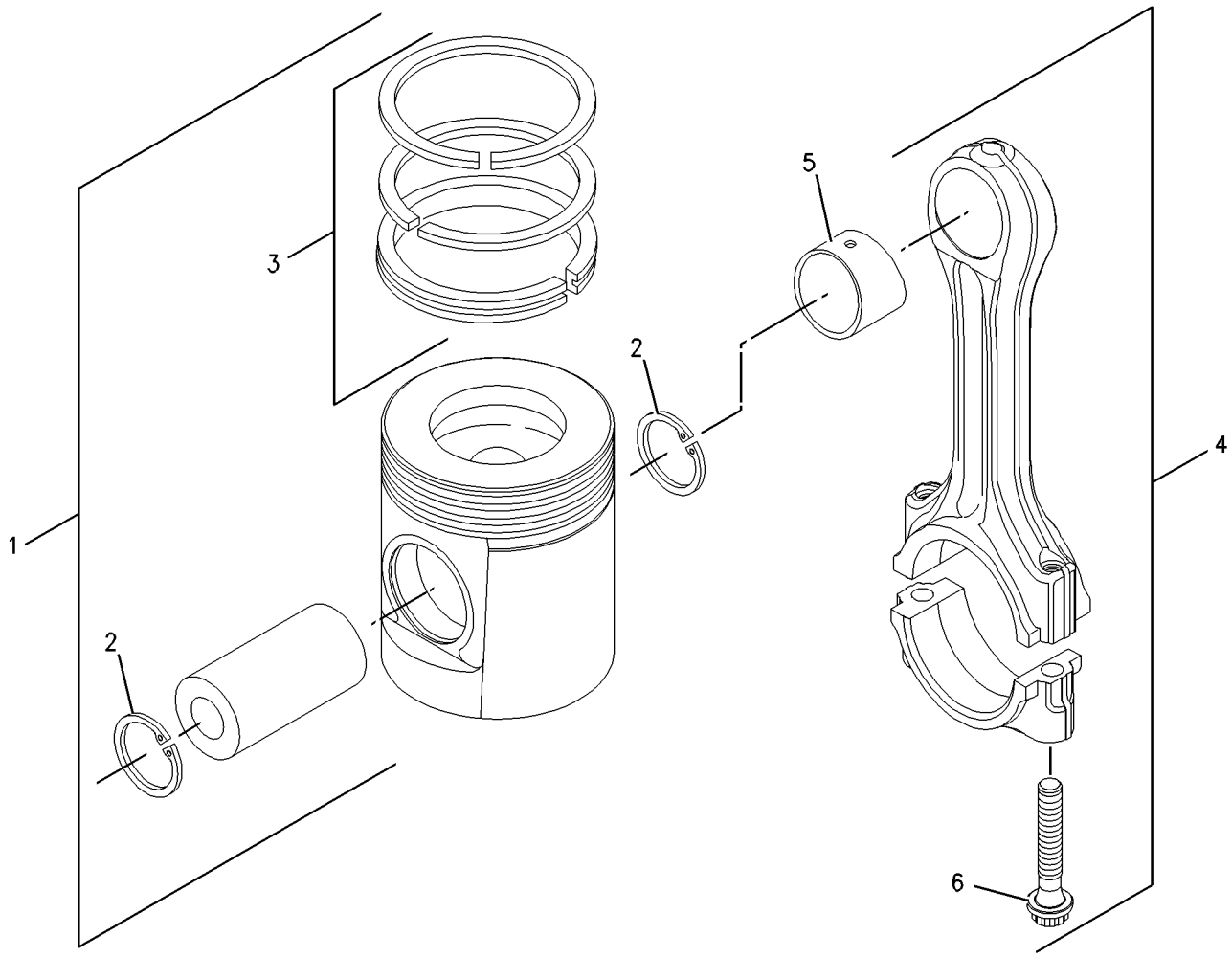

GRAPHIC #1 **<END>** g00909669

233-7233 PISTON & ROD GP

S/N: CRS1-UP
PART OF 234-3058 ENGINE AR-PRIMARY
AN ATTACHMENT

SMCS-1213, 1214, 1215, 1218, 1219, 1225, 1239 **i02052227**

NOTE	REF NO	GRAPHIC REF	PART NUMBER	QTY	PART NAME 1 2 3 4 5 6 (PRODUCT LEVEL)	SEE PAGE
	1	1	**233-7232**	4	PISTON AS	
					(EACH PISTON AS INCLUDES)	
	2	1	**124-3536**	2	RING-RETAINING	
	3	1	**225-5436**	1	KIT-PISTON RING	
J	4	1	**225-5441**	4	ROD AS (L)	
					—OR—	
J		1	**225-5451**	4	ROD AS (K)	
					—OR—	
J		1	**225-5453**	4	ROD AS (J)	
					—OR—	
J		1	**225-5454**	4	ROD AS (H)	
					—OR—	
J		1	**225-5458**	4	ROD AS (G)	
					—OR—	
J		1	**225-5459**	4	ROD AS (F)	
					(EACH ROD AS INCLUDES)	
	5	1	**225-5438**	1	BUSHING	
	6	1	**225-5439**	2	BOLT	

J-ENSURE THAT CORRECT ROD LENGTH IS FITTED

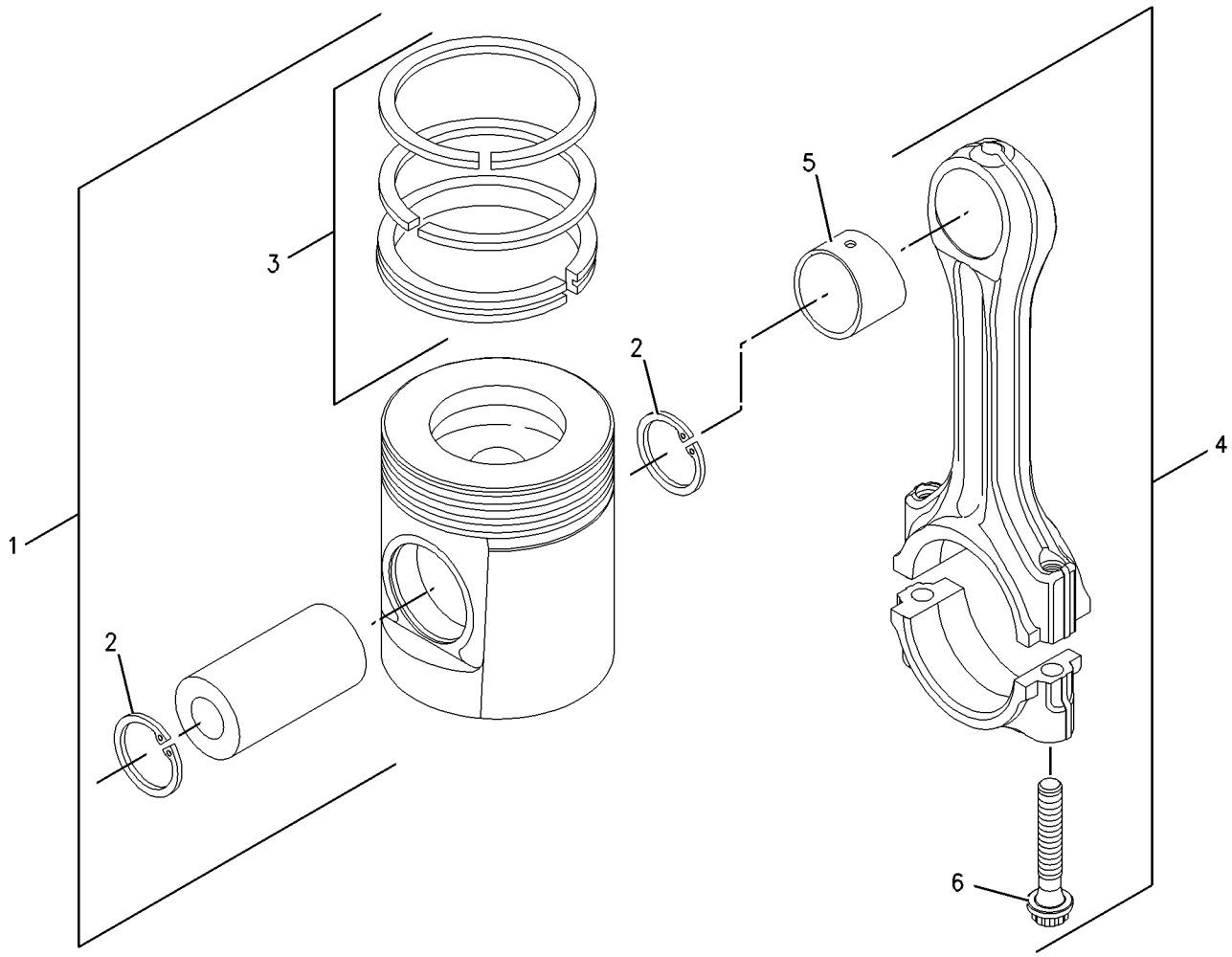

GRAPHIC #1 **<END>** g00909669

230-7569 PLUG GP-CYLINDER BLOCK

S/N: CRS1-UP
PART OF 234-3058, 234-3059 ENGINE AR-PRIMARY
AN ATTACHMENT

SMCS-1201, 1388 **i02052073**

NOTE	REF NO	GRAPHIC REF	PART NUMBER	QTY	PART NAME 1 2 3 4 5 6 (PRODUCT LEVEL)	SEE PAGE
	1	1	**231-0046**	1	PLUG	

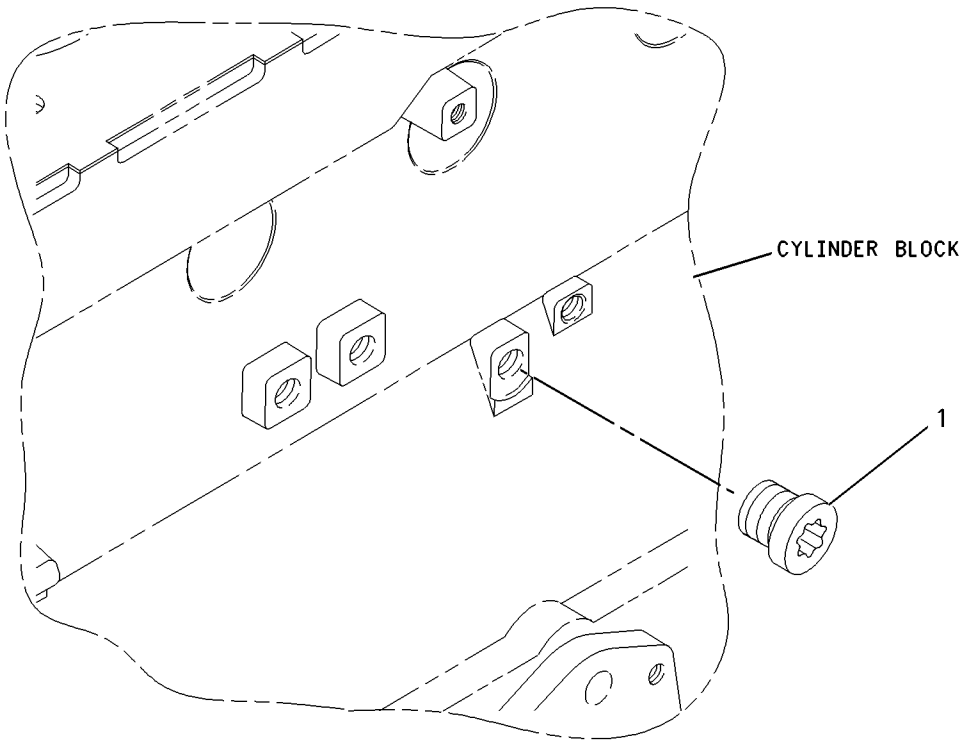

GRAPHIC #1 **<END>** g00911955

225-4317 PLUG GP-ENGINE

S/N: CRS1-UP
PART OF 234-3058, 234-3059 ENGINE AR-PRIMARY
AN ATTACHMENT

SMCS-1000 **i02052065**

NOTE	REF NO	GRAPHIC REF	PART NUMBER	QTY	PART NAME 1 2 3 4 5 6 (PRODUCT LEVEL)	SEE PAGE
	1	1	**2B-0858**	3	PLUG-PIPE	

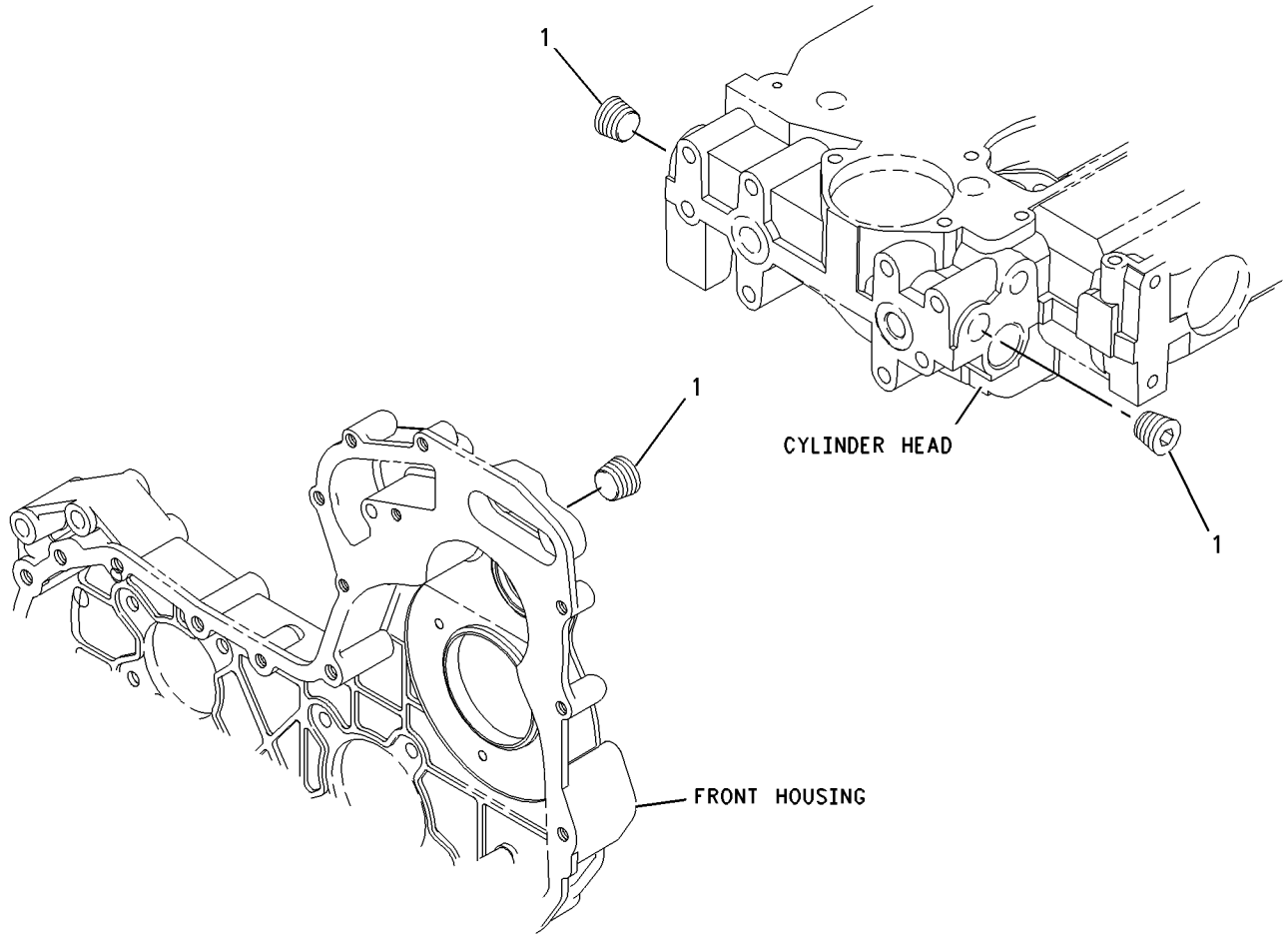

GRAPHIC #1 **<END>** g00911937

230-7353 PULLEY GP-CRANKSHAFT

S/N: CRS1-UP
PART OF 234-3058, 234-3059 ENGINE AR-PRIMARY
AN ATTACHMENT

SMCS-1205 **i02053125**

NOTE	REF NO	GRAPHIC REF	PART NUMBER	QTY	PART NAME 1 2 3 4 5 6 (PRODUCT LEVEL)	SEE PAGE
	1	1	**6I-0501**	1	BLOCK	
	2	1	**6I-0502**	1	PULLEY	
	3	1	**7W-4634**	3	BOLT (7/16-20X1.5-IN)	

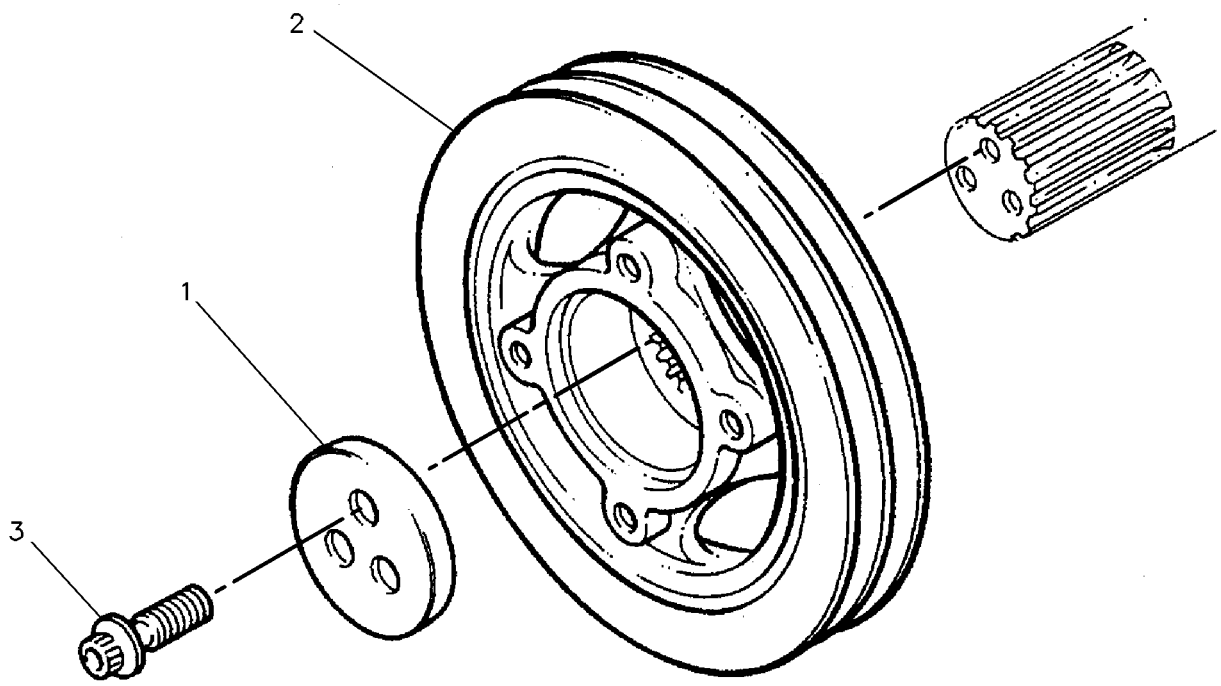

GRAPHIC #1 **<END>** g00130941

232-7526 VALVE MECHANISM GP

S/N: CRS1-UP
PART OF 234-3059 ENGINE AR-PRIMARY
AN ATTACHMENT

SMCS-1102, 1112, 1121, 1123, 1208, 1209 **i02053613**

NOTE	REF NO	GRAPHIC REF	PART NUMBER	QTY	PART NAME 1 2 3 4 5 6 (PRODUCT LEVEL)	SEE PAGE
	1	1	**067-6095**	8	ROD	
	2	1	**138-2053**	8	TAPPET	
	3	1	**225-5963**	1	ROCKER ARM AS	
	4	1	**225-5625**	4	LEVER AS	
					(EACH INCLUDES)	
	5	1	**5B-9079**	1	NUT-JAM (3/8-24-THD)	
	6	1	**185-1546**	1	SCREW	
	7	1	**225-5634**	1	SHAFT AS	
	8	1	**225-5629**	2	PLUG	
	9	1	**225-5638**	3	SPRING	
	10	1	**225-5640**	4	LEVER AS	
					(EACH INCLUDES)	
	11	1	**5B-9079**	1	NUT-JAM (3/8-24-THD)	
	12	1	**185-1546**	1	SCREW	
	13	1	**225-5959**	2	CLIP	
	14	1	**225-5960**	1	BOLT	
	15	1	**225-5961**	2	WASHER	
	16	1	**225-5962**	3	BOLT (M8X1.25X30-MM)	

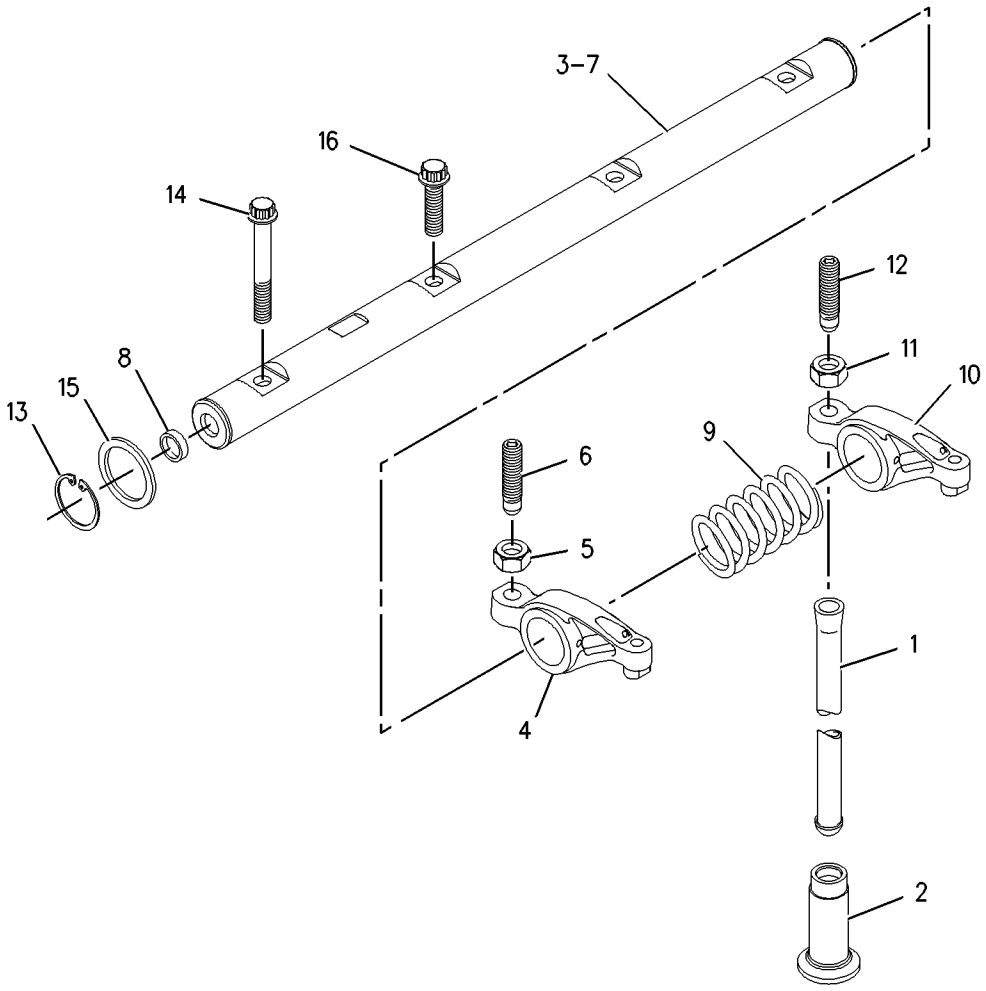

GRAPHIC #1 **<END>** g00910253

233-7235 VALVE MECHANISM GP

S/N: CRS1-UP

PART OF 234-3058 ENGINE AR-PRIMARY

AN ATTACHMENT

SMCS-1102, 1112, 1121, 1123, 1208, 1209 **i02052224**

NOTE	REF NO	GRAPHIC REF	PART NUMBER	QTY	PART NAME 1 2 3 4 5 6 (PRODUCT LEVEL)	SEE PAGE
	1	1	**067-6095**	8	ROD	
	2	1	**138-2053**	8	TAPPET	
	3	1	**225-5963**	1	ROCKER ARM AS	
	4	1	**225-5625**	4	LEVER AS	
					(EACH INCLUDES)	
	5	1	**5B-9079**	1	NUT-JAM (3/8-24-THD)	
	6	1	**185-1546**	1	SCREW	
	7	1	**225-5634**	1	SHAFT AS	
	8	1	**225-5629**	2	PLUG	
	9	1	**225-5638**	3	SPRING	
	10	1	**225-5640**	4	LEVER AS	
					(EACH INCLUDES)	
	11	1	**5B-9079**	1	NUT-JAM (3/8-24-THD)	
	12	1	**185-1546**	1	SCREW	
	13	1	**225-5959**	2	CLIP	
	14	1	**225-5960**	1	BOLT	
	15	1	**225-5961**	2	WASHER	
	16	1	**225-5962**	3	BOLT (M8X1.25X30-MM)	

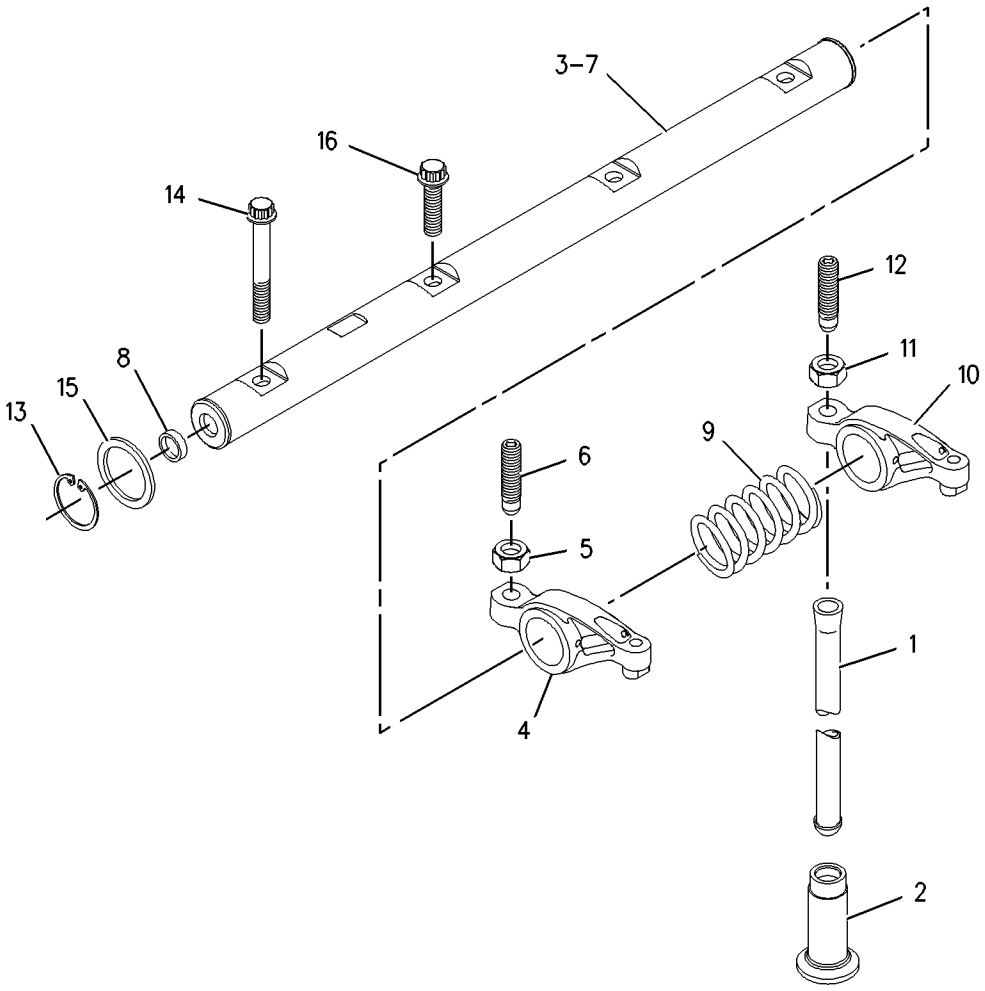

GRAPHIC #1 **<END>** g00910253

LUBRICATION SYSTEM

239-5760 BREATHER GP

S/N: B2D1-UP
PART OF 242-9946 BREATHER GP
AN ATTACHMENT

SMCS-1317 **i02046962**

NOTE	REF NO	GRAPHIC REF	PART NUMBER	QTY	PART NAME 1 2 3 4 5 6 (PRODUCT LEVEL)	SEE PAGE
	1	1	**6I-1497**	1	SEAL	
	2	1	**6S-8620**	2	CLAMP-HOSE	
	3	1	**7K-1181**	2	STRAP-CABLE	
	4	1	**8T-9402**	3	CLAMP-HOSE	
	5	1	**165-4021**	1	CANISTER AS-BREATHER	
		1	**185-6643**	1	SEAL (BREATHER)	
	6	1	**202-5909**	1	TUBE AS-OIL	
	7	1	**239-5765**	1	HOSE	
	8	1	**239-7421**	1	PLATE AS	
M		1	**6V-9632**	2	NUT-WELD (M6X1-THD)	
	9	1	**132-5789**	2	CLIP	
	10	1	**6D-4246**	1	CLIP	
	11	1	**7X-0613**	2	WASHER-HARD (8.8X25.5X5-MM THK)	
M	12	1	**8C-3798**	2	BOLT-LOCKING (M6X1X30)	
	13	1	**8T-4121**	1	WASHER-HARD (11X21X2.5-MM THK)	
M	14	1	**8T-4137**	1	BOLT (M10X1.5X20-MM)	
	15	1	**8T-4205**	2	WASHER-HARD (7.2X14.5X2-MM THK)	
M	16	1	**8T-4908**	2	BOLT (M8X1.25X25-MM)	
E	17	1	**5P-1505**		HOSE (97CM)	
E	18	1	**136-1955**		HOSE (110CM)	

E-ORDER BY THE CENTIMETER
M-METRIC PART

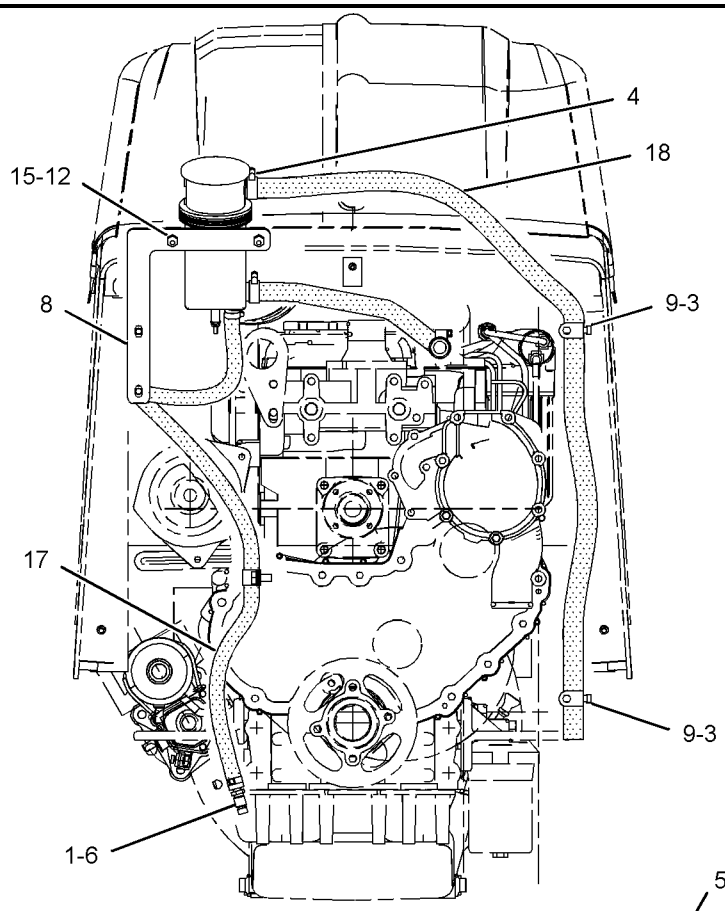

FRONT VIEW

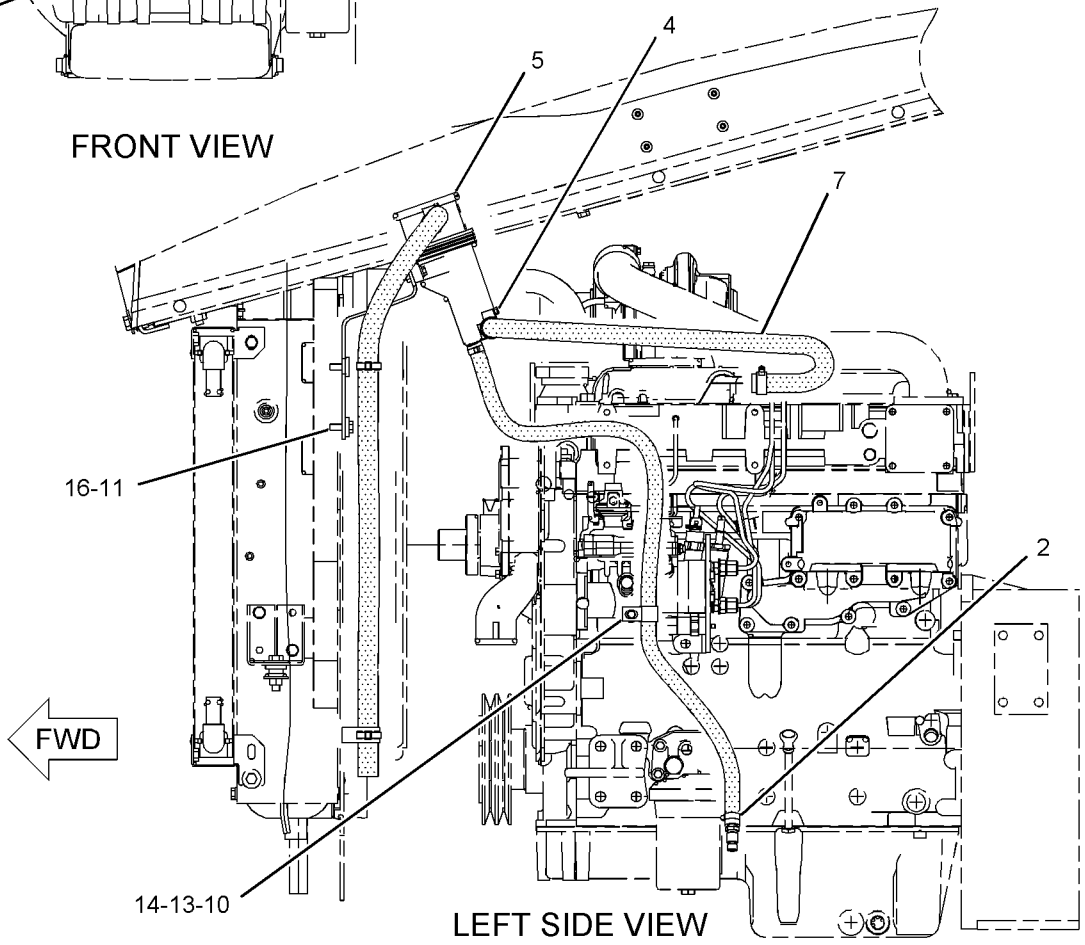

LEFT SIDE VIEW

GRAPHIC #1 **<END>** g01038235

LUBRICATION SYSTEM

242-9946 BREATHER GP

S/N: B2D1-UP

FIELD INSTALLATION

SMCS-1317 **i02047158**

NOTE	PART NUMBER	QTY	PART NAME 1 2 3 4 5 6 (PRODUCT LEVEL)	SEE PAGE
Y	*239-5760*	1	BREATHER GP	46

Y-SEPARATE ILLUSTRATION

<END>

LUBRICATION SYSTEM

234-7510 FILLER GP-ENGINE OIL

S/N: B2D1-UP
PART OF 214-6890, 214-6891 ENGINE AR
AN ATTACHMENT

SMCS-1316 **i01991954**

NOTE	REF NO	GRAPHIC REF	PART NUMBER	QTY	PART NAME 1 2 3 4 5 6 (PRODUCT LEVEL)	SEE PAGE
	1	1	**6I-1497**	1	SEAL	
	2	1	**7W-2326**	1	FILTER AS-ENGINE OIL	
	3	1	**9M-7958**	1	CLAMP-HOSE	
	4	1	**127-4471**	1	CLAMP-HOSE	
	5	1	**234-7509**	1	TUBE AS	
		1	**6I-4079**	1	NUT	
	6	1	**234-7954**	1	HOSE (OIL FILLER)	
	7	1	**234-8815**	1	TUBE AS	
	8	1	**235-2491**	1	BRACKET AS	
M		1	**8T-3490**	1	NUT-WELD (M10X1.5-THD)	
	9	1	**236-6651**	1	CAP AS (ENGINE OIL FILLER)	
	10	1	**236-6652**	1	GAUGE-OIL LEVEL (DIPSTICK)	
	11	1	**239-3683**	1	SUPPORT	
	12	1	**147-0385**	2	CLIP	
	13	1	**7D-7233**	1	CLIP	
	14	1	**7X-7729**	7	WASHER (11X25X3-MM THK)	
M	15	1	**8T-4133**	1	NUT (M10X1.5-THD)	
M	16	1	**8T-4136**	4	BOLT (M10X1.5X25-MM)	
M	17	1	**8T-4195**	2	BOLT (M10X1.5X30-MM)	

M-METRIC PART

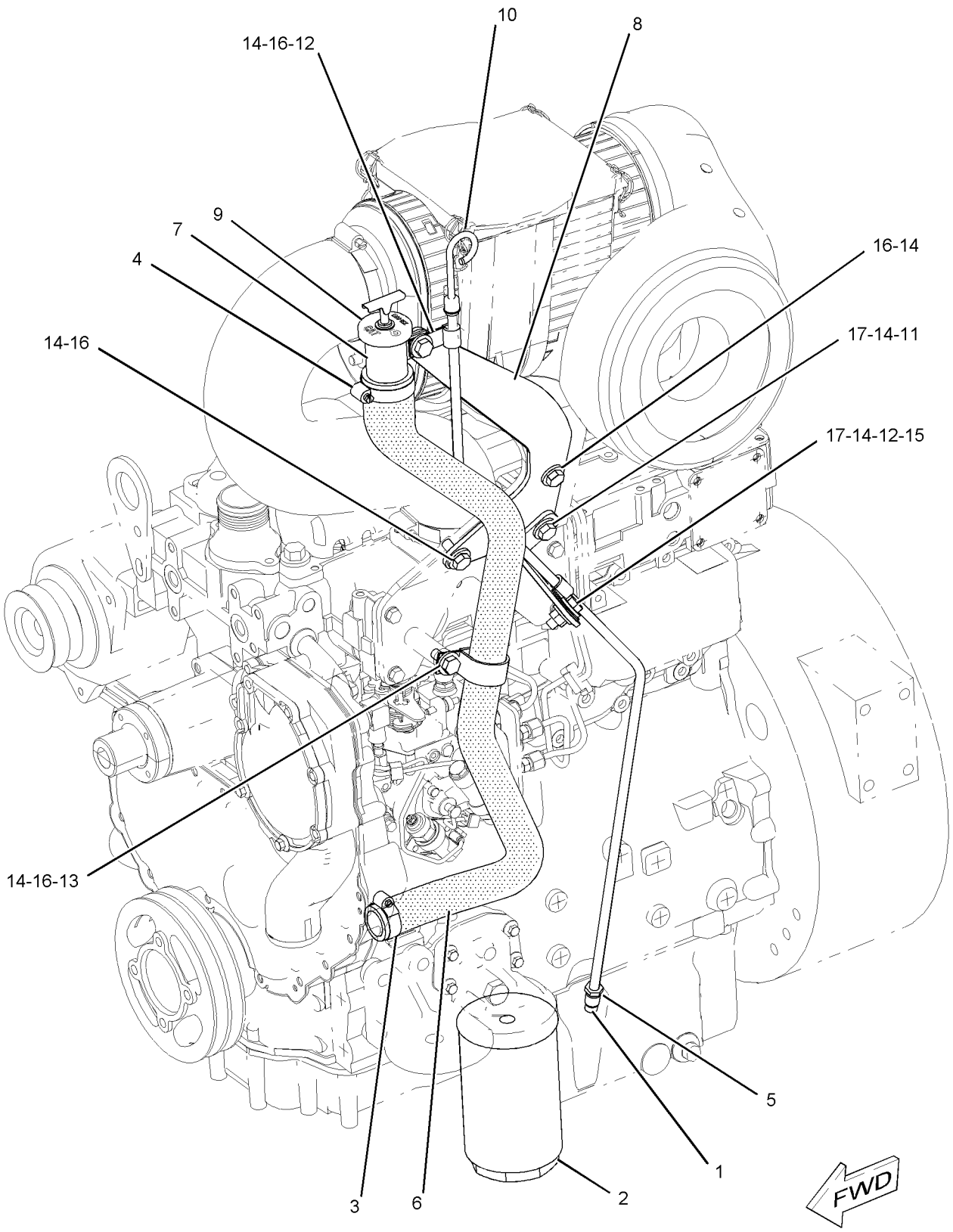

GRAPHIC #1

<END>

g01042658

230-7578 PUMP GP-ENGINE OIL

S/N: CRS1-UP
PART OF 234-3058, 234-3059 ENGINE AR-PRIMARY
AN ATTACHMENT

SMCS-1304, 1315 **i02052081**

NOTE	REF NO	GRAPHIC REF	PART NUMBER	QTY	PART NAME 1 2 3 4 5 6 (PRODUCT LEVEL)	SEE PAGE
	1	1	**100-4461**	5	BOLT (M10X50-MM)	
	2	1	**225-8329**	1	PUMP AS-ENGINE OIL	

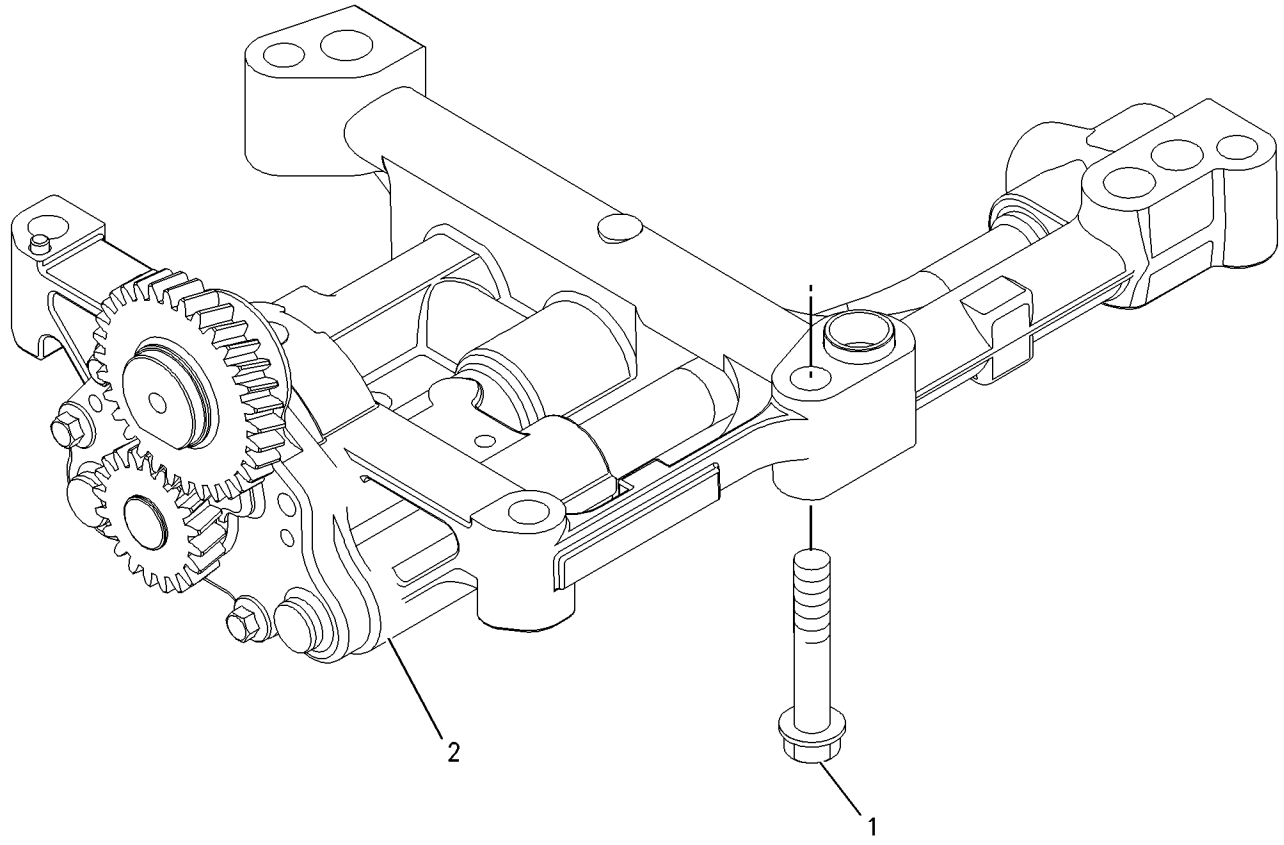

GRAPHIC #1 **<END>** g00911993

231-0033 CONNECTION GP-WATER

S/N: CRS1-UP
PART OF 234-3058, 234-3059 ENGINE AR-PRIMARY
AN ATTACHMENT

SMCS-1380 **i02052082**

NOTE	REF NO	GRAPHIC REF	PART NUMBER	QTY	PART NAME 1 2 3 4 5 6 (PRODUCT LEVEL)	SEE PAGE
	1	1	**6I-0260**	2	BOLT (M8X1.25X25-MM)	
	2	1	**231-0030**	1	CONNECTION AS	
	2A	1	**225-6908**	1	REGULATOR-WATER TEMPERATURE	
	2B	1	**225-6909**	1	SEAL-O-RING (WATER TEMPERATURE REGULATOR)	

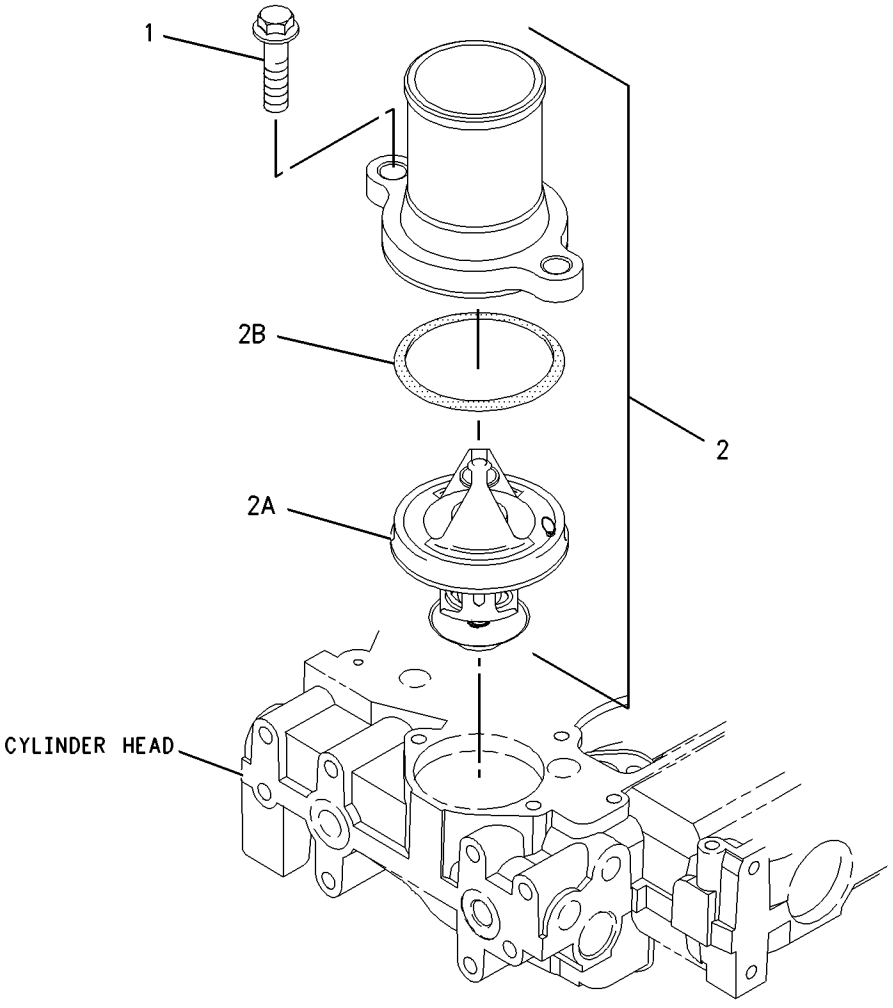

GRAPHIC #1 **<END>** g00950832

232-6177 COOLER GP-FLTR BASE & ENG OIL

S/N: CRS1-UP
PART OF 234-3059 ENGINE AR-PRIMARY
AN ATTACHMENT

SMCS-1306, 1378 **i02053603**

NOTE	REF NO	GRAPHIC REF	PART NUMBER	QTY	PART NAME 1 2 3 4 5 6 (PRODUCT LEVEL)	SEE PAGE
	1	1	**6I-0572**	4	BOLT (M8X1.25X20-MM)	
	2	1	**6I-0645**	4	BOLT (M8X1.25X25-MM)	
	3	1	**199-9267**	1	SEAL-O-RING	
	4	1	**225-7941**	1	PLUG (ENGINE OIL FILTER LINES)	
	5	1	**225-7944**	2	GASKET	
	6	1	**230-8279**	1	HEAD AS-OIL FILTER	
	6A	1	**118-9145**	1	CONNECTOR	
	7	1	**232-3722**	1	COOLER GP-ENGINE OIL	
	7A	1	**6I-0260**	10	BOLT (M8X1.25X25-MM)	
	7B	1	**6I-4374**	3	BOLT	
M	7C	1	**101-3895**	4	BOLT (M8X1.25X35-MM)	
	7D	1	**225-6817**	1	COOLER-OIL	
	7E	1	**225-6818**	2	SEAL	
	7F	1	**225-6820**	1	GASKET	
	8	1	**232-3751**	1	PLATE	
	9	1	**232-3861**	1	PLUG	
	10	1	**8T-7876**	1	SEAL-O-RING	

M-METRIC PART

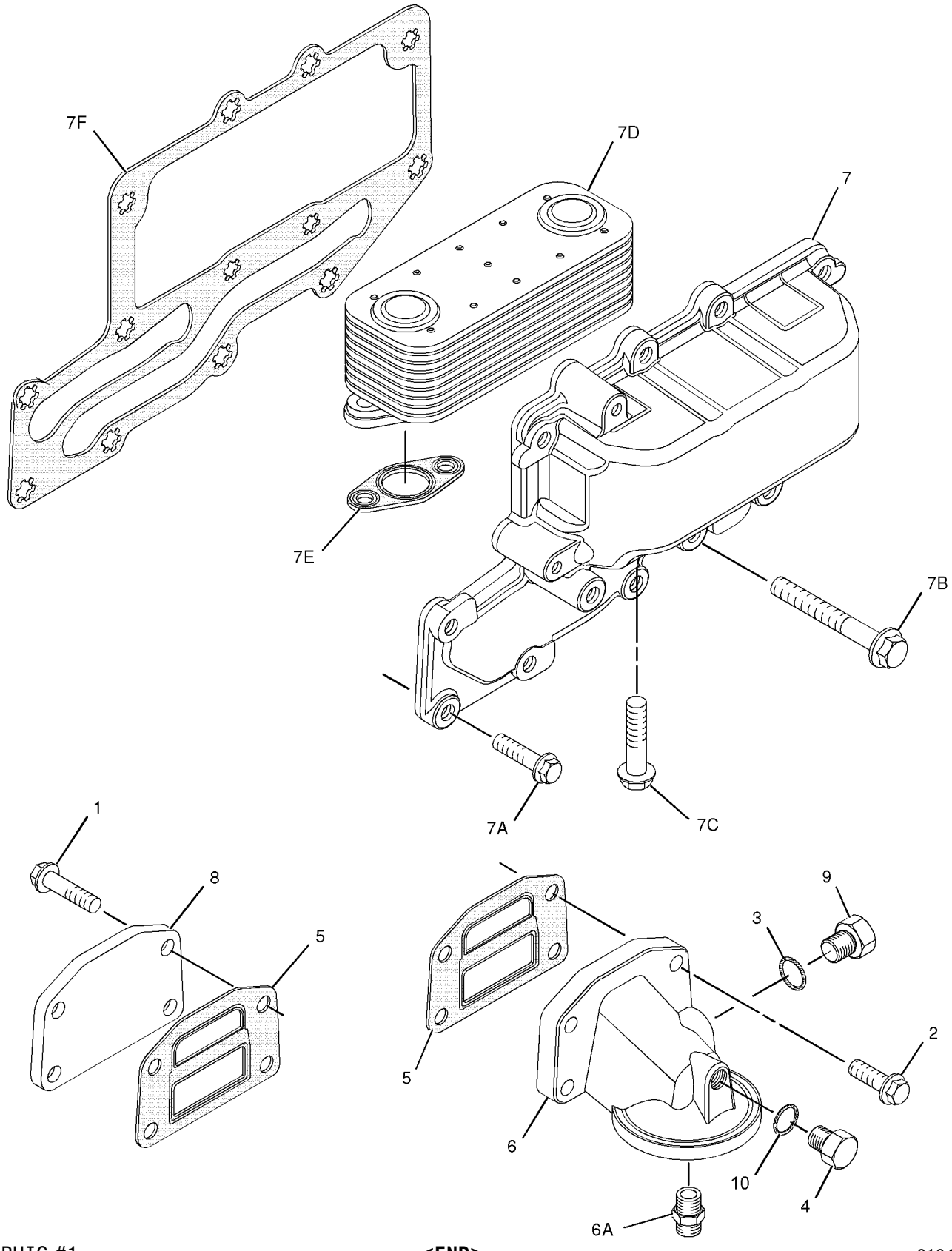

GRAPHIC #1 **<END>** g01042316

233-7229 COOLER GP-FLTR BASE & ENG OIL

S/N: CRS1-UP
PART OF 234-3058 ENGINE AR-PRIMARY
AN ATTACHMENT

SMCS-1306, 1378 **i02052228**

NOTE	REF NO	GRAPHIC REF	PART NUMBER	QTY	PART NAME 1 2 3 4 5 6 (PRODUCT LEVEL)	SEE PAGE
	1	1	**6I-0572**	4	BOLT (M8X1.25X20-MM)	
	2	1	**6I-0645**	4	BOLT (M8X1.25X25-MM)	
	3	1	**199-9267**	1	SEAL-O-RING	
	4	1	**225-7941**	1	PLUG	
	5	1	**225-7944**	2	GASKET	
	6	1	**230-8279**	1	HEAD AS-OIL FILTER	
	6A	1	**118-9145**	1	CONNECTOR	
	7	1	**233-7223**	1	COOLER AS-OIL	
	7A	1	**6I-0260**	10	BOLT (M8X1.25X25-MM)	
	7B	1	**6I-4374**	3	BOLT	
M	7C	1	**101-3895**	4	BOLT (M8X1.25X35-MM)	
	7D	1	**233-7222**	1	COOLER-OIL	
	7E	1	**225-6818**	2	SEAL	
	7F	1	**225-6820**	1	GASKET	
	8	1	**232-3751**	1	PLATE	
	9	1	**232-3861**	1	PLUG	
	10	1	**8T-7876**	1	SEAL-O-RING	

M-METRIC PART

233-7229 **COOLER GP-FLTR BASE & ENG OIL** *(contd.)* **i02052228**

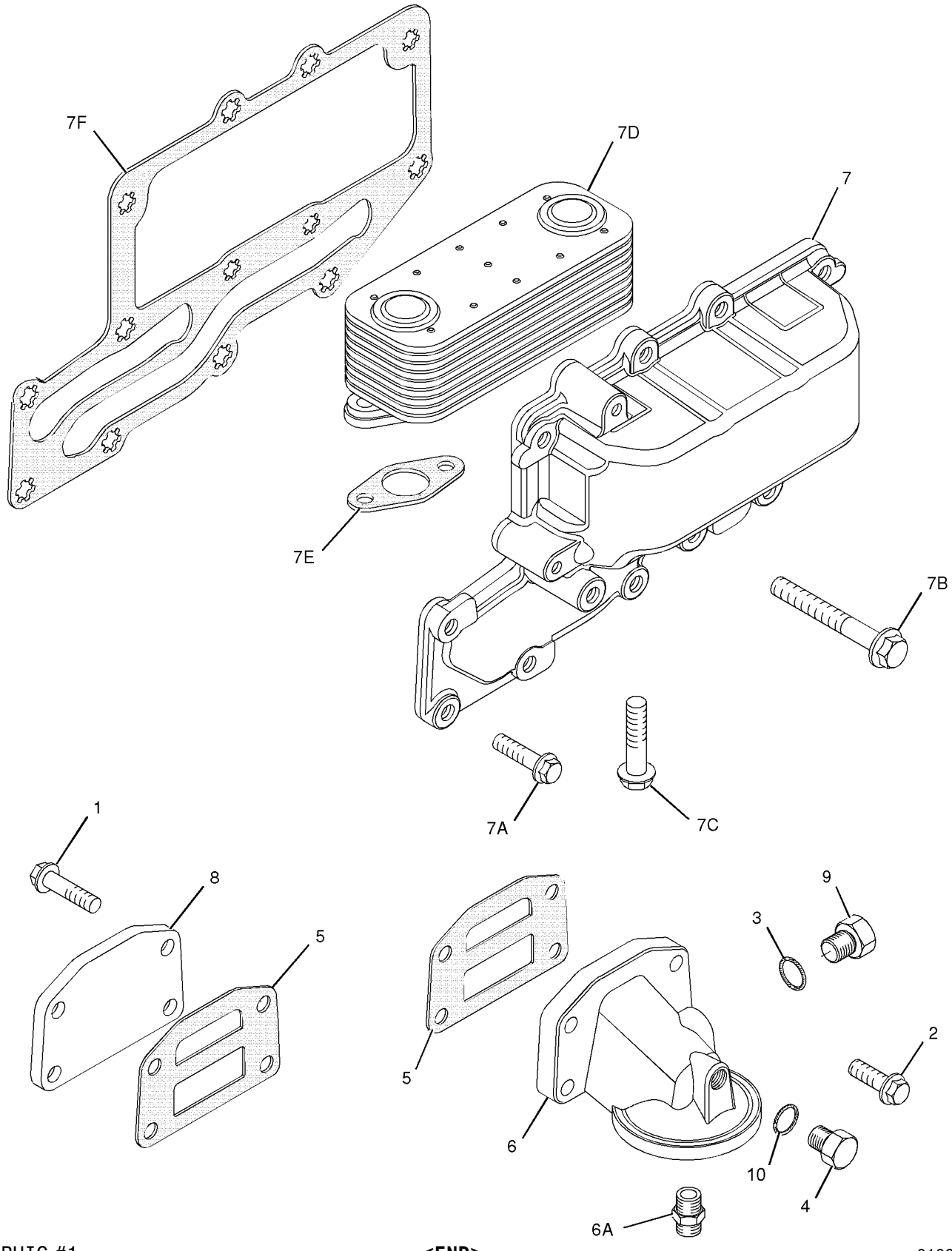

GRAPHIC #1 **<END>** g01039027

COOLING SYSTEM

145-6713 FAN GP-SUCTION

S/N: B2D1-UP

PART OF 239-5560 CAB AR, 239-5558, 239-5559 CANOPY AR

AN ATTACHMENT

SMCS-1356, 1360 **i01974307**

NOTE	REF NO	GRAPHIC REF	PART NUMBER	QTY	PART NAME 1 2 3 4 5 6 (PRODUCT LEVEL)	SEE PAGE
	1	1	**5P-4116**	4	WASHER-HARD (8.8X20.5X2MM THK)	
M	2	1	**8T-4908**	6	BOLT (M8X1.25X25MM)	
	3	1	**127-6980**	2	GUARD AS-FAN	
					(EACH INCLUDES)	
M		1	**8T-3612**	1	NUT-WELD (M8X1.25 THD)	
	4	1	**130-3880**	1	PULLEY-FAN DRIVE	
	5	1	**142-3388**	1	SPACER	
	6	1	**142-3391**	1	SPIDER AS (9 BLADES)	
M	7	1	**153-3061**	4	BOLT (M8X1.25X130MM)	
	8	1	**8T-4224**	6	WASHER-HARD (8.8X16X2MM THK)	

M-METRIC PART

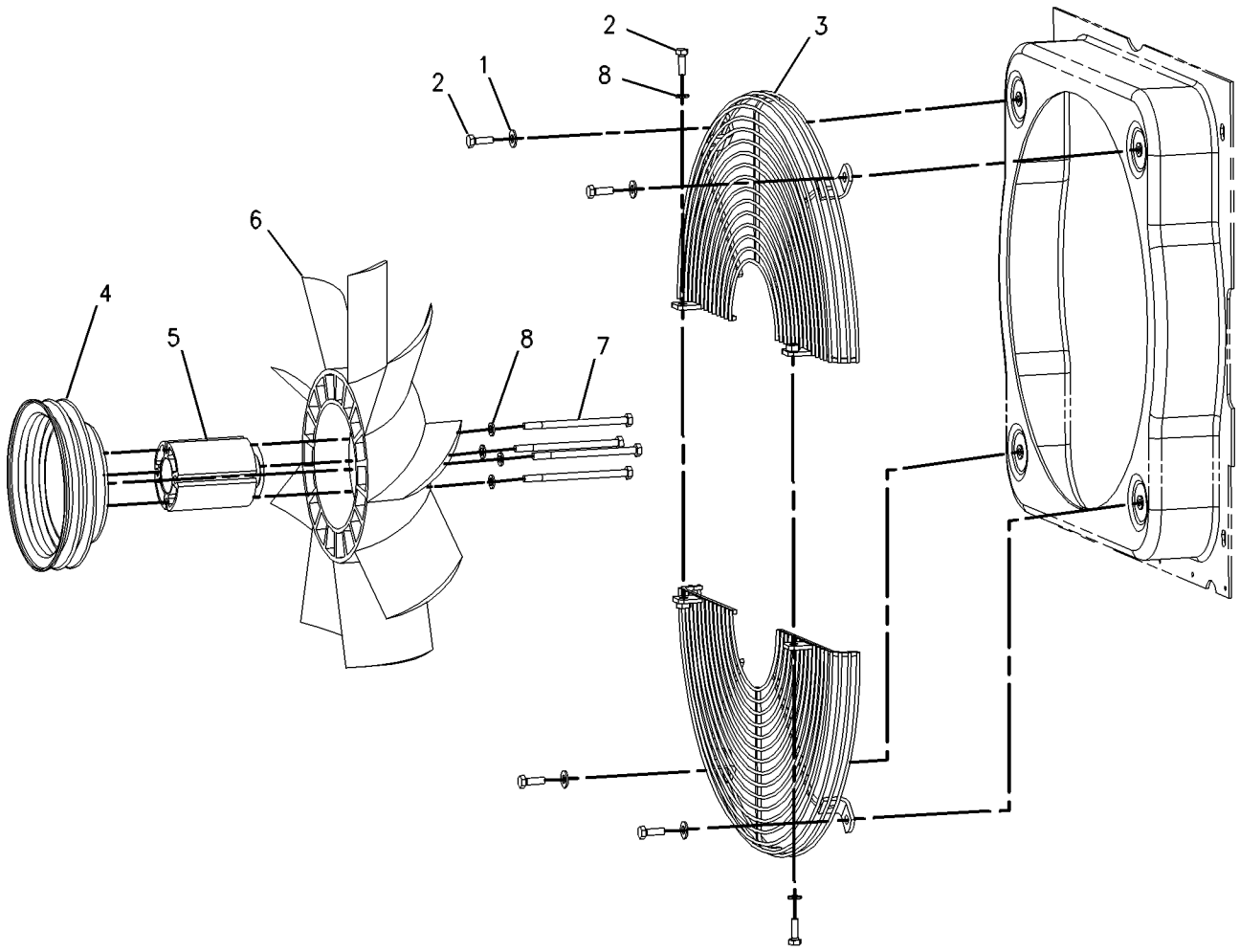

GRAPHIC #1 **<END>** g00367570

COOLING SYSTEM

147-1559 FAN GP-SUCTION

S/N: B2D1-UP
PART OF 239-5562 CAB AR
AN ATTACHMENT

SMCS-1356, 1360 **i01974308**

NOTE	REF NO	GRAPHIC REF	PART NUMBER	QTY	PART NAME 1 2 3 4 5 6 (PRODUCT LEVEL)	SEE PAGE
	1	1	**5P-4116**	4	WASHER-HARD (8.8X20.5X2MM THK)	
M	2	1	**8T-4908**	6	BOLT (M8X1.25X25MM)	
	3	1	**127-6980**	2	GUARD AS-FAN	
					(EACH INCLUDES)	
M		1	**8T-3612**	1	NUT-WELD (M8X1.25 THD)	
	4	1	**130-3879**	1	PULLEY-FAN DRIVE	
	5	1	**142-3388**	1	SPACER	
	6	1	**142-3391**	1	SPIDER AS (9 BLADES)	
M	7	1	**153-3061**	4	BOLT (M8X1.25X130MM)	
	8	1	**8T-4224**	6	WASHER-HARD (8.8X16X2MM THK)	

M-METRIC PART

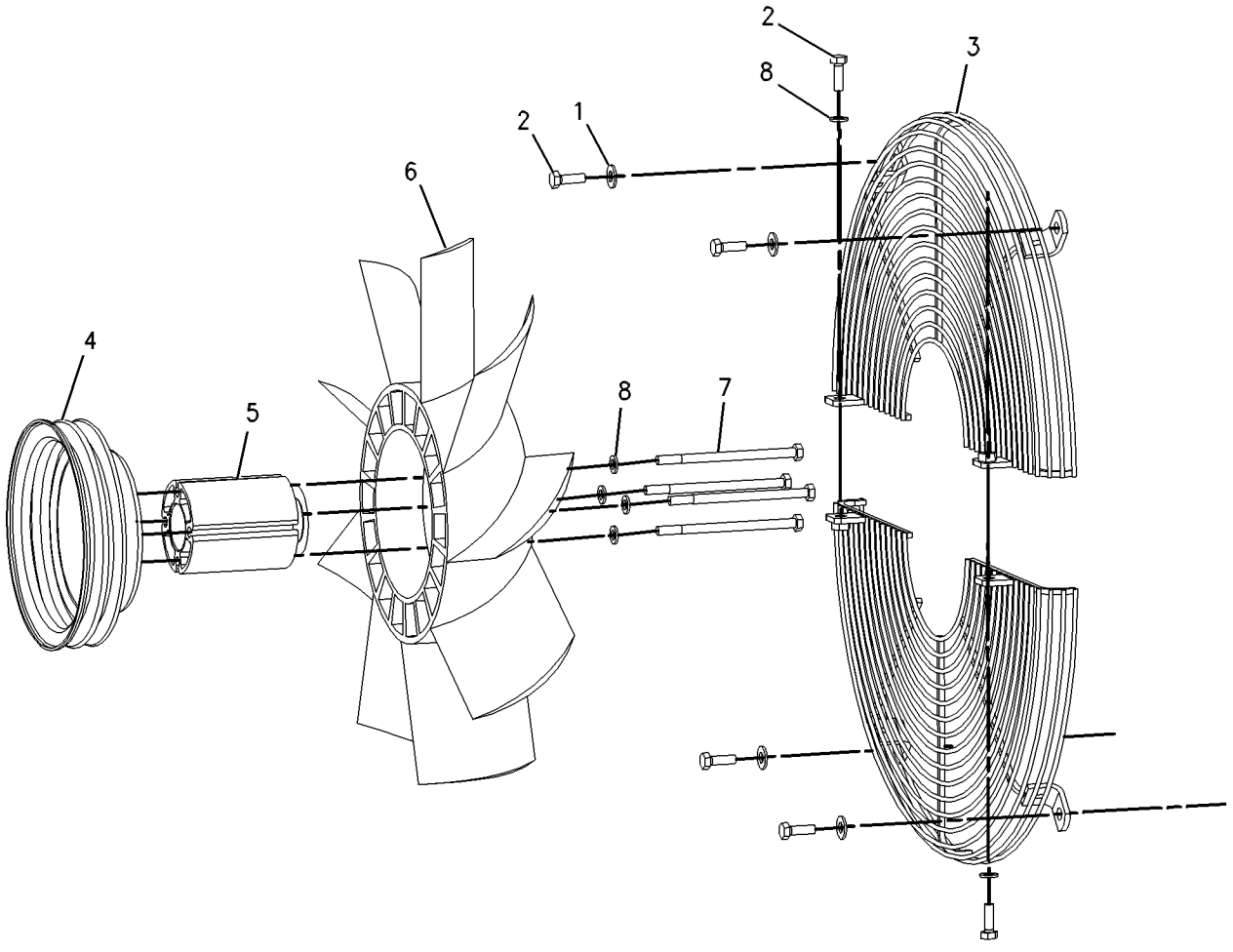

GRAPHIC #1 **<END>** g00448372

COOLING SYSTEM

240-9929 FAN GP-SUCTION

S/N: B2D1-UP
PART OF 241-9377 CAB AR
AN ATTACHMENT

SMCS-1356, 1360 **i02043546**

NOTE	REF NO	GRAPHIC REF	PART NUMBER	QTY	PART NAME 1 2 3 4 5 6 (PRODUCT LEVEL)	SEE PAGE
	1	1	**126-5975**	1	SPIDER AS-FAN (7 BLADES)	
	2	1	**127-6980**	2	GUARD AS-FAN	
M		1	**8T-3612**	1	NUT-WELD (M8X1.25-THD)	
	3	1	**130-3880**	1	PULLEY-FAN DRIVE	
	4	1	**130-7880**	1	SPACER	
	5	1	**5P-4116**	4	WASHER-HARD (8.8X20.5X2-MM THK)	
M	6	1	**7X-2538**	4	BOLT (M8X1.25X100-MM)	
	7	1	**8T-4224**	6	WASHER-HARD (8.8X16X2-MM THK)	
M	8	1	**8T-4908**	6	BOLT (M8X1.25X25-MM)	

M-METRIC PART

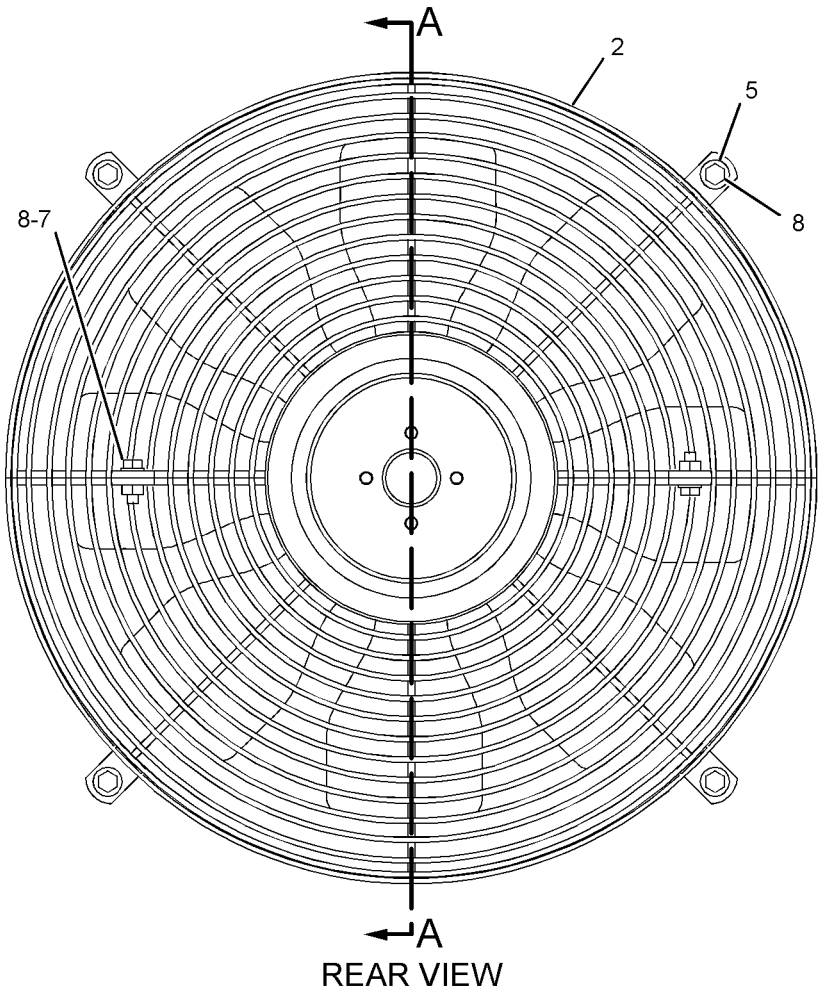

REAR VIEW

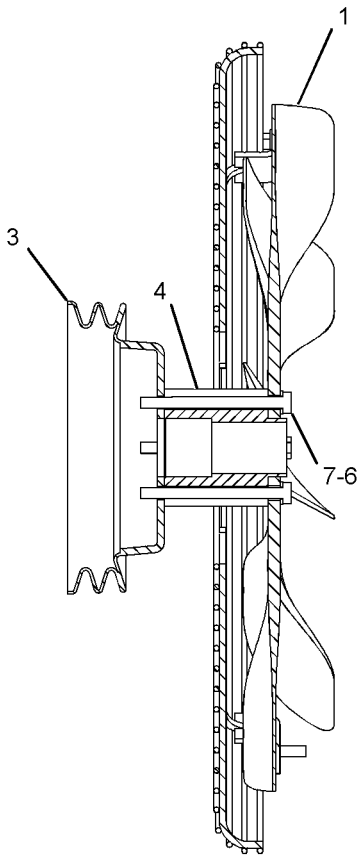

SECTION A-A

GRAPHIC #1 **<END>** g01051687

198-9723 FITTING GP-HEATER & AIR COND

S/N: B2D1-UP
PART OF 239-5560 CAB AR
AN ATTACHMENT

SMCS-7309 **i01519194**

NOTE	REF NO	GRAPHIC REF	PART NUMBER	QTY	PART NAME 1 2 3 4 5 6 (PRODUCT LEVEL)	SEE PAGE
	1	1	**6B-4661**	1	BUSHING-REDUCER	
	2	1	**8F-8151**	1	VALVE-SHUTOFF	
	3	1	**004-6557**	1	BUSHING-REDUCER	
	4	1	**004-6810**	1	ELBOW	

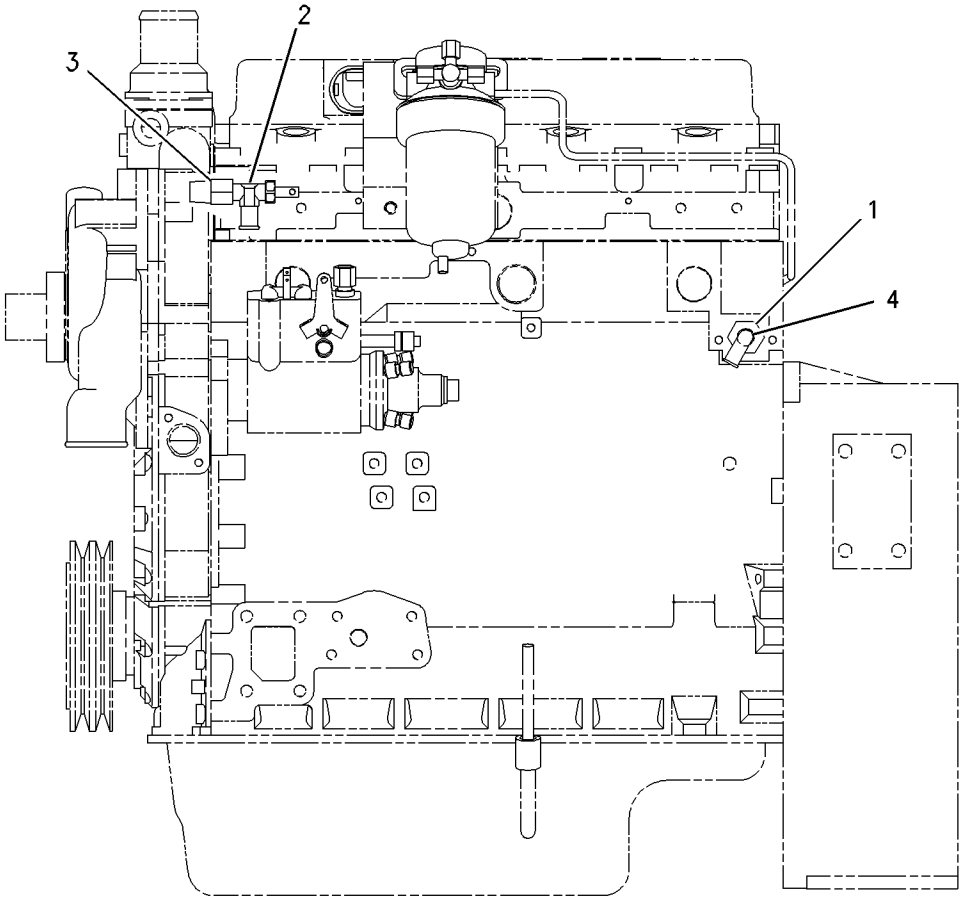

GRAPHIC #1 **<END>** g00772489

143-0786 LINES GP-POWER TRAIN COOLER

S/N: B2D1-UP
STANDARD
PART OF 214-6955, 214-6956, 214-6958, 214-6959 POWER TRAIN AR
AN ATTACHMENT

SMCS-1375, 3016 **i01445659**

NOTE	REF NO	GRAPHIC REF	PART NUMBER	QTY	PART NAME 1 2 3 4 5 6 (PRODUCT LEVEL)	SEE PAGE
B	1	1	**7K-1181**	2	STRAP-CABLE	
	2	1	**118-7286**	1	BRACKET AS	
	3	1	**130-9984**	2	CLIP (SLOT)	
	4	1	**138-6904**	1	HOSE AS	
	5	1	**138-6913**	1	HOSE AS	
	6	1	**159-0186**	2	CLAMP	
	7	1	*148-8339*	1	CONNECTOR GP	
		1	**6V-8716**	1	CONNECTOR	
		1	**6V-9746**	1	SEAL-O-RING (18.94MM ID)	
		1	**7M-8485**	1	SEAL-O-RING (29.74MM ID)	
	8	1	*148-8360*	1	ELBOW GP	
		1	**6V-9182**	1	ELBOW	
		1	**6V-9746**	1	SEAL-O-RING (18.94MM ID)	
		1	**7M-8485**	1	SEAL-O-RING (29.74MM ID)	
	9	1	**5P-4116**	2	WASHER-HARD (8.8X20.5X2MM THK)	
	10	1	**8T-4121**	2	WASHER-HARD (11X21X2.5MM THK)	
M	11	1	**8T-4136**	1	BOLT (M10X1.5X25MM)	
M	12	1	**8T-4137**	1	BOLT (M10X1.5X20MM)	
M	13	1	**8T-4189**	2	BOLT (M8X1.25X20MM)	
M	14	1	**8T-4192**	2	BOLT (M12X1.75X25MM)	
	15	1	**8T-4223**	2	WASHER-HARD (13.5X25.5X3MM THK)	
	16	1	**8T-7529**	3	CLIP (SLOT)	

B-USE AS REQUIRED
M-METRIC PART

143-0786 **LINES GP-POWER TRAIN COOLER** *(contd.)* **i01445659**

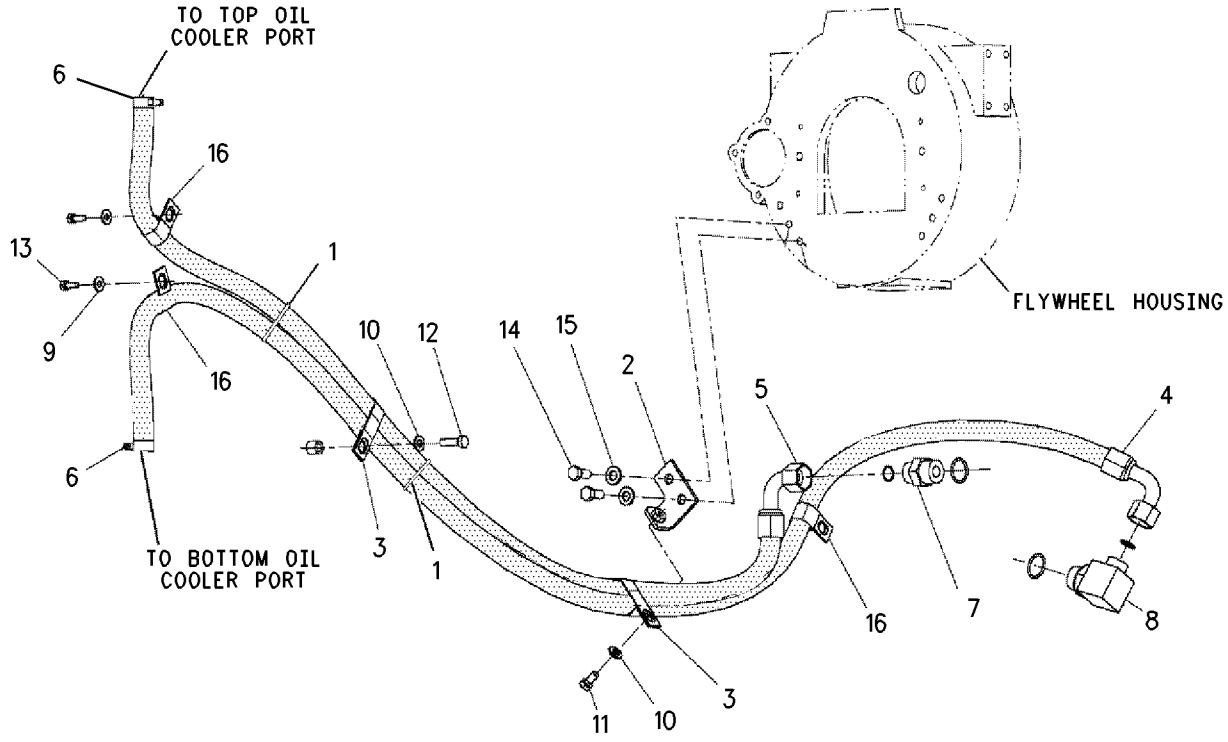

GRAPHIC #1 **<END>** g00751473

230-7355 PUMP GP-WATER

S/N: CRS1-UP

PART OF 234-3058, 234-3059 ENGINE AR-PRIMARY

AN ATTACHMENT

SMCS-1361 **i02052070**

NOTE	REF NO	GRAPHIC REF	PART NUMBER	QTY	PART NAME 1 2 3 4 5 6 (PRODUCT LEVEL)	SEE PAGE
	1	1	**6I-0217**	2	BOLT (M8X1.25X20-MM)	
	2	1	**6I-0254**	2	BOLT (M8X1.25X30-MM)	
	3	1	**100-3751**	5	BOLT (M8X1.25X65-MM)	
	4	1	**113-8129**	2	BOLT (M8X75-MM)	
	5	1	**225-7741**	1	CONNECTION AS	
	6	1	**225-7738**	1	SEAL-O-RING	
	7	1	**225-7739**	1	SEAL-O-RING	
	8	1	**225-8016**	1	PUMP GP-WATER	
	9	1	**225-8019**	1	GASKET	

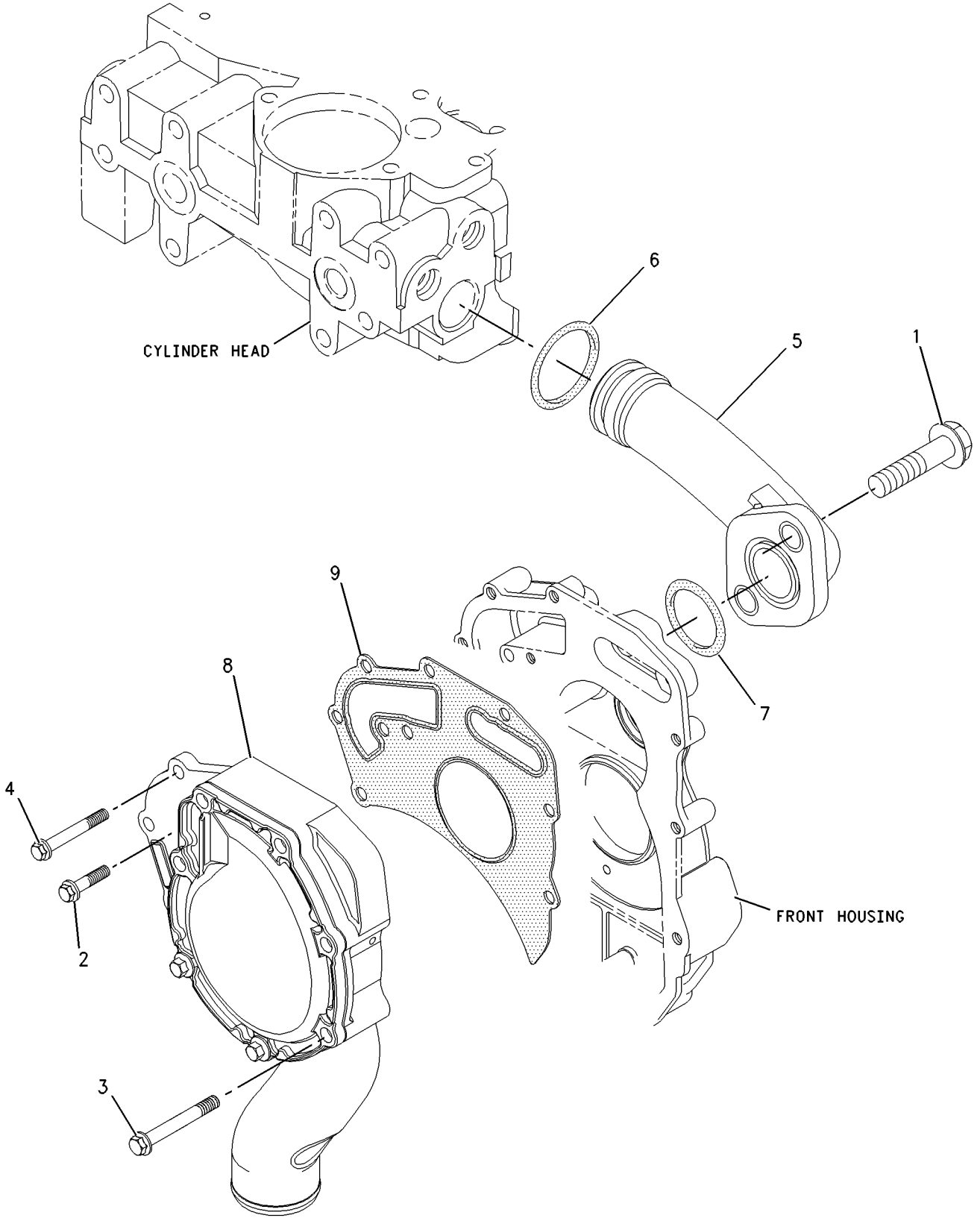

GRAPHIC #1 **<END>** g00912411

234-7834 RADIATOR & FAN GP

S/N: B2D1-UP

PART OF 234-7836 RADIATOR & HYD OIL COOLER GP

AN ATTACHMENT

SMCS-1353, 1356 **i02030311**

NOTE	REF NO	GRAPHIC REF	PART NUMBER	QTY	PART NAME 1 2 3 4 5 6 (PRODUCT LEVEL)	SEE PAGE
	1	1	**123-4065**	6	RIVET-POP	
	2	1	**141-7512**	1	BAFFLE	
	3	1	**180-2441**	1	SHROUD AS	
Y	4	1	**235-1974**	1	RADIATOR & HYD OIL COOLER GP	68
	5	1	**7X-0579**	4	WASHER-HARD (8.8X25.5X2-MM THK)	
M	6	1	**8T-4200**	4	BOLT (M8X1.25X16-MM)	

M-METRIC PART
Y-SEPARATE ILLUSTRATION

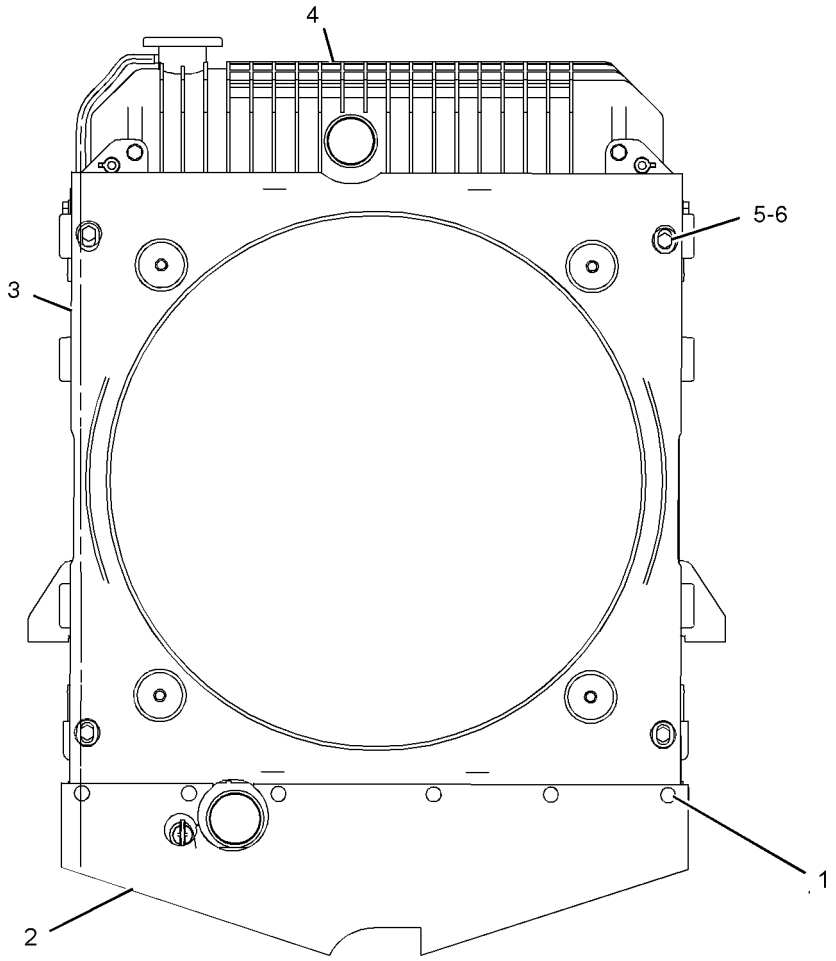

GRAPHIC #1 **<END>** g01030668

COOLING SYSTEM

236-5808 RADIATOR & FAN GP

S/N: B2D1-UP
PART OF 236-5807 RADIATOR & HYD OIL COOLER GP
AN ATTACHMENT

SMCS-1353, 1356 **i02043602**

NOTE	REF NO	GRAPHIC REF	PART NUMBER	QTY	PART NAME 1 2 3 4 5 6 (PRODUCT LEVEL)	SEE PAGE
	1	1	**123-4065**	6	RIVET-POP	
	2	1	**141-7512**	1	BAFFLE	
	3	1	**180-2441**	1	SHROUD AS	
		1	**214-3520**	4	NUT-SHOULDER	
Y	4	1	**236-5809**	1	RADIATOR & HYD OIL COOLER GP	70
	5	1	**7X-0579**	4	WASHER-HARD (8.8X25.5X2-MM THK)	
M	6	1	**8T-4200**	4	BOLT (M8X1.25X16-MM)	

M-METRIC PART
Y-SEPARATE ILLUSTRATION

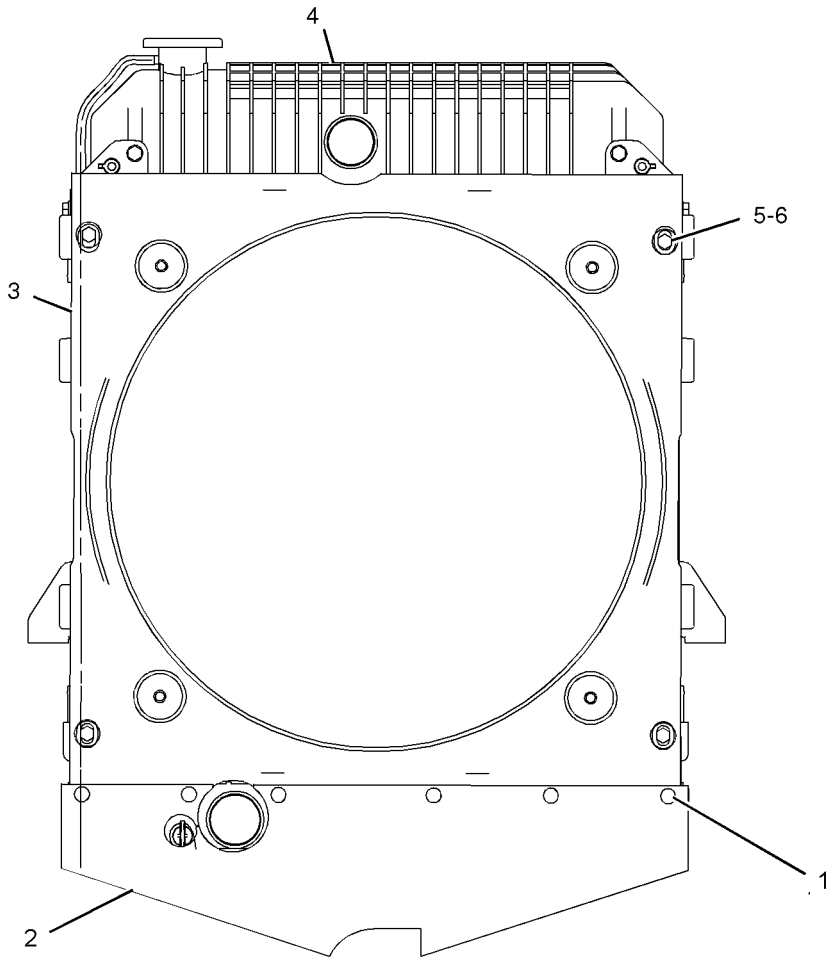

GRAPHIC #1 **<END>** g01030773

234-7836 RADIATOR & HYD OIL COOLER GP

S/N: B2D1-UP
AN ATTACHMENT

SMCS-1353, 1374 **i02047006**

NOTE	REF NO	GRAPHIC REF	PART NUMBER	QTY	PART NAME 1 2 3 4 5 6 (PRODUCT LEVEL)	SEE PAGE
D	1	1	**5P-6129**		TUBE (.1 METER)	
	2	1	**2W-9710**	2	MOUNT AS	
	3	1	**6N-6984**	2	MOUNT	
	4	1	**140-3640**	2	PLATE	
	5	1	**214-7457**	2	CLAMP-T'BOLT	
	6	1	**214-7458**	2	CLAMP-T'BOLT	
Y	7	1	*234-7834*	1	RADIATOR & FAN GP	65
	8	1	**235-1966**	1	HOSE	
	9	1	**235-1967**	1	HOSE	
	10	1	**7X-0603**	2	WASHER-HARD (9.9X35X2.5-MM THK)	
M	11	1	**8T-4133**	2	NUT (M10X1.5-THD)	
M	12	1	**8T-4186**	2	BOLT (M10X1.5X40-MM)	
	13	1	**8T-4222**	4	WASHER-PLATED (11X32X2.5-MM THK)	
M	14	1	**8T-4908**	2	BOLT (M8X1.25X25-MM)	

D-ORDER BY THE METER
M-METRIC PART
Y-SEPARATE ILLUSTRATION

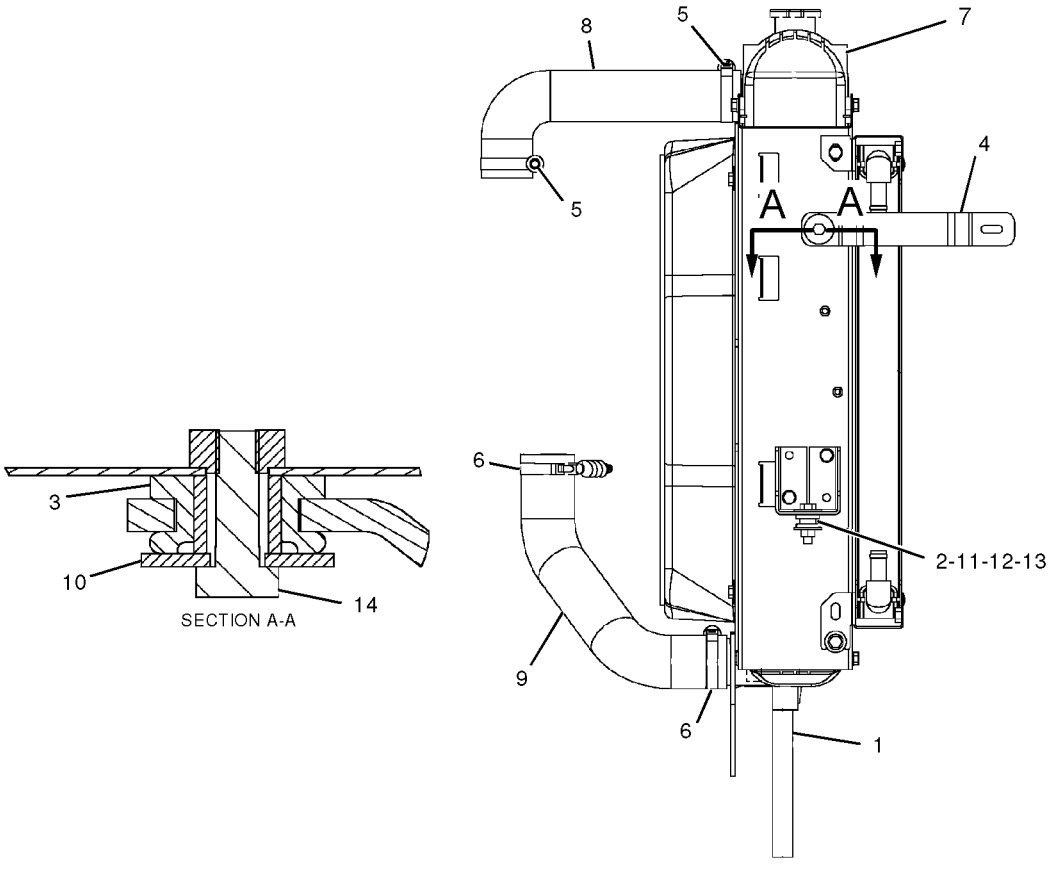

GRAPHIC #1 **<END>** g01022265

235-1974 RADIATOR & HYD OIL COOLER GP

S/N: B2D1-UP
PART OF 234-7834 RADIATOR & FAN GP
AN ATTACHMENT

SMCS-1353, 1374 **i02030310**

NOTE	REF NO	GRAPHIC REF	PART NUMBER	QTY	PART NAME 1 2 3 4 5 6 (PRODUCT LEVEL)	SEE PAGE
	1	1	**8C-0572**	2	WASHER (8.8X25.5X2-MM THK)	
	2	1	**140-3634**	1	RADIATOR AS	
		1	**140-2358**	1	PLUG AS	
		1	**2D-6392**	1	SEAL-O-RING	
		1	**5F-9144**	1	SEAL-O-RING	
		1	**145-6005**	2	GASKET	
	3	1	**142-0724**	1	COOLER AS-OIL	
		1	**123-4065**	16	RIVET-POP	
		1	**140-3635**	1	CORE AS (13 PLATE)	
		1	**140-3639**	1	CORE AS (15 PLATE)	
	4	1	**151-8752**	2	BUSHING	
	5	1	**227-4376**	1	CAP AS (RADIATOR)	
M	6	1	**8T-4200**	4	BOLT (M8X1.25X16-MM)	
M	7	1	**8T-4224**	2	WASHER-HARD (8.8X16X2-MM THK)	

M-METRIC PART

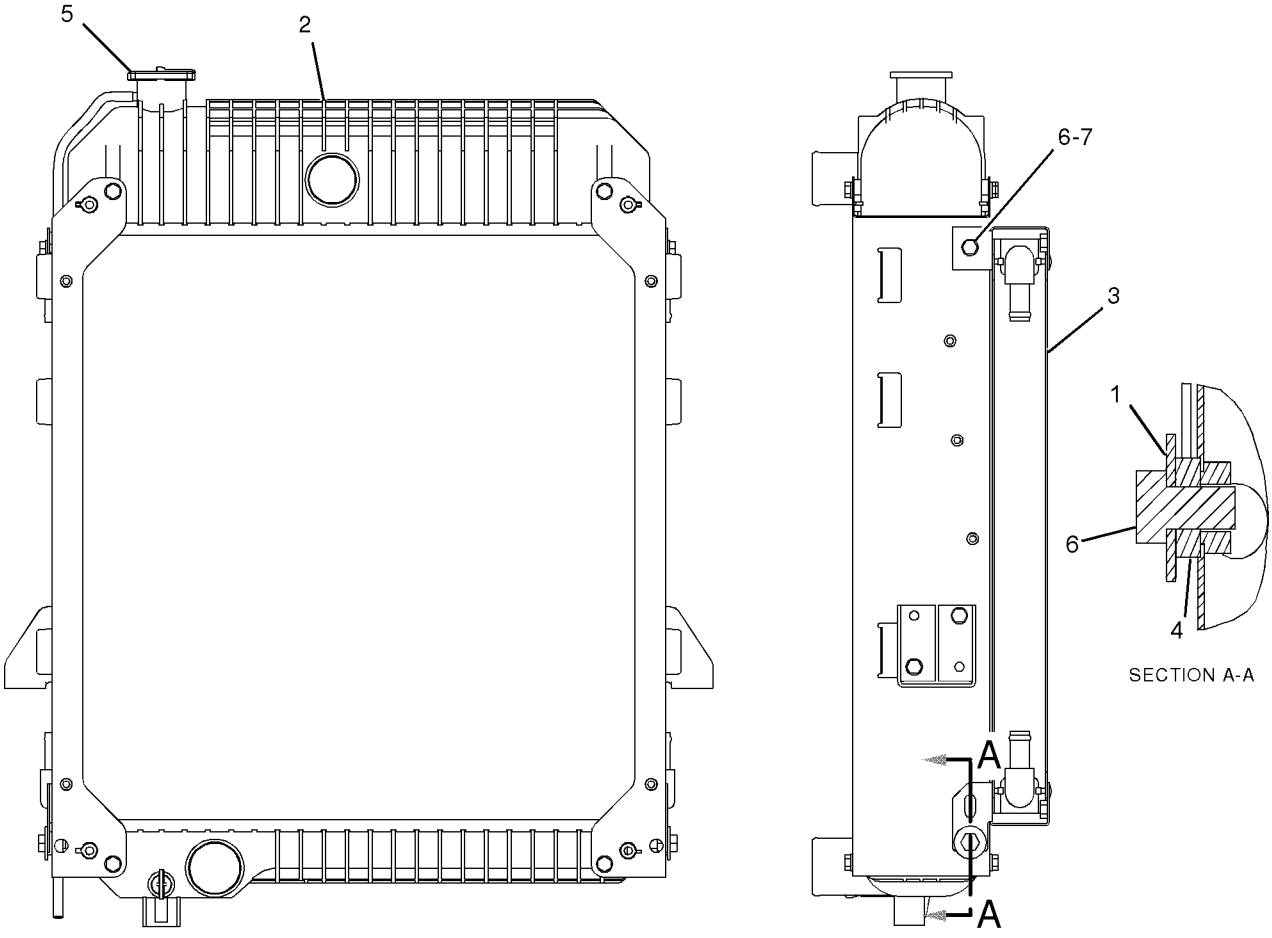

GRAPHIC #1 **<END>** g01047154

236-5807 RADIATOR & HYD OIL COOLER GP

S/N: B2D1-UP
AN ATTACHMENT

SMCS-1353, 1374 **i02030043**

NOTE	REF NO	GRAPHIC REF	PART NUMBER	QTY	PART NAME 1 2 3 4 5 6 (PRODUCT LEVEL)	SEE PAGE
	1	1	**5P-4829**	1	TUBE	
	2	1	**2W-9710**	2	MOUNT AS	
	3	1	**6N-6984**	2	MOUNT	
	4	1	**140-3640**	2	PLATE	
	5	1	**214-7457**	2	CLAMP-T'BOLT	
	6	1	**214-7458**	2	CLAMP-T'BOLT	
	7	1	**235-1966**	1	HOSE	
	8	1	**235-1967**	1	HOSE	
Y	9	1	**236-5808**	1	RADIATOR & FAN GP	66
	10	1	**7X-0603**	2	WASHER-HARD (9.9X35X2.5-MM THK)	
M	11	1	**8T-4133**	2	NUT (M10X1.5-THD)	
M	12	1	**8T-4186**	2	BOLT (M10X1.5X40-MM)	
	13	1	**8T-4222**	4	WASHER-PLATED (11X32X2.5-MM THK)	
M	14	1	**8T-4908**	2	BOLT (M8X1.25X25-MM)	

M-METRIC PART
Y-SEPARATE ILLUSTRATION

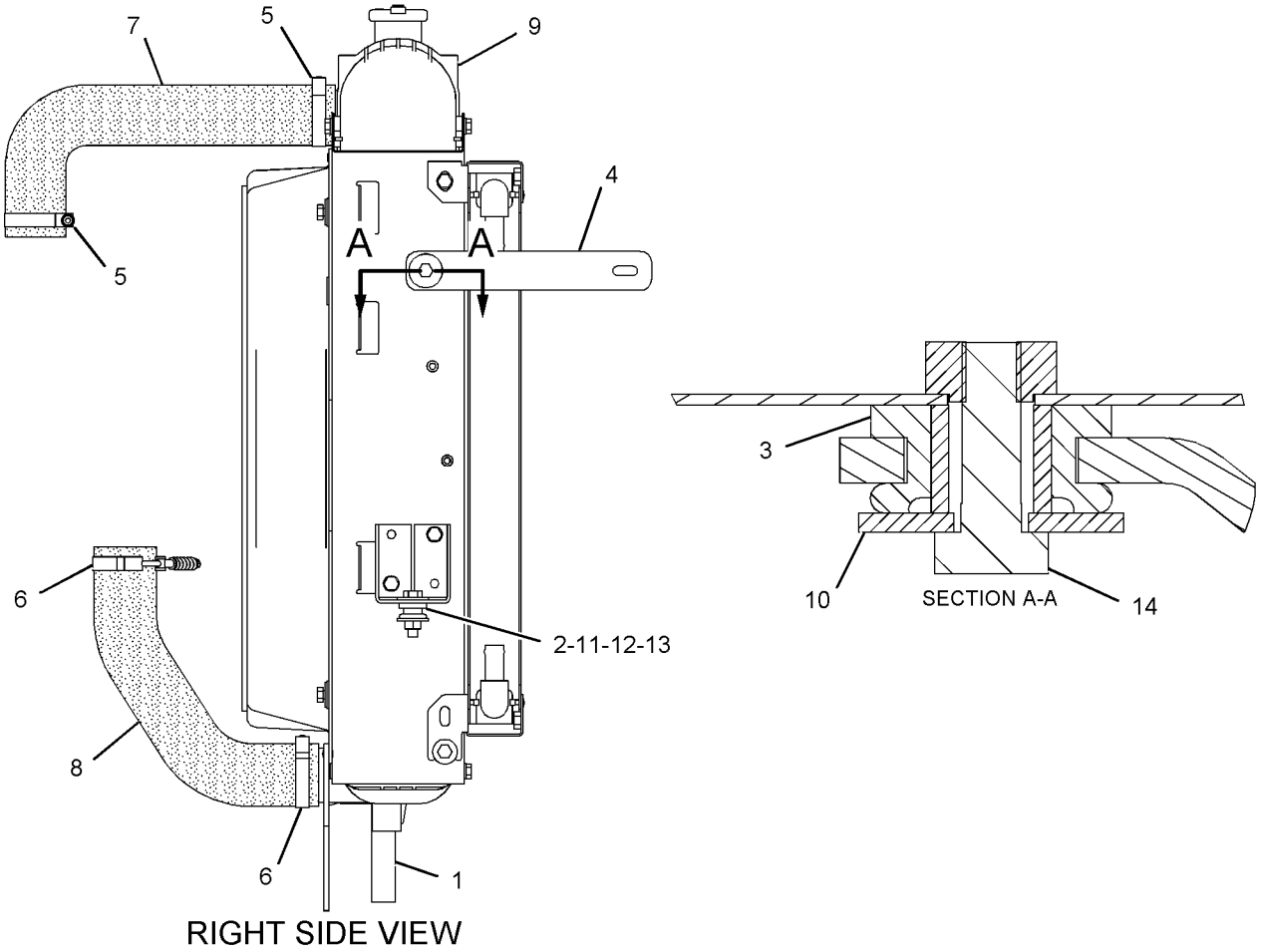

GRAPHIC #1 **<END>** g01047477

236-5809 RADIATOR & HYD OIL COOLER GP

S/N: B2D1-UP
PART OF 236-5808 RADIATOR & FAN GP
AN ATTACHMENT

SMCS-1353, 1374 **i02030061**

NOTE	REF NO	GRAPHIC REF	PART NUMBER	QTY	PART NAME 1 2 3 4 5 6 (PRODUCT LEVEL)	SEE PAGE
	1	1	**8C-0572**	2	WASHER (8.8X25.5X2-MM THK)	
	2	1	**140-3634**	1	RADIATOR AS	
		1	**140-2358**	1	PLUG AS	
		1	**2D-6392**	1	SEAL-O-RING	
		1	**5F-9144**	1	SEAL-O-RING	
		1	**145-6005**	2	GASKET	
	3	1	**151-8752**	2	BUSHING	
	4	1	**227-4376**	1	CAP AS (RADIATOR)	
	5	1	**235-1975**	1	COOLER AS-OIL	
		1	**123-4065**	16	RIVET-POP	
M	6	1	**8T-4200**	4	BOLT (M8X1.25X16-MM)	
M	7	1	**8T-4224**	2	WASHER-HARD (8.8X16X2-MM THK)	

M-METRIC PART

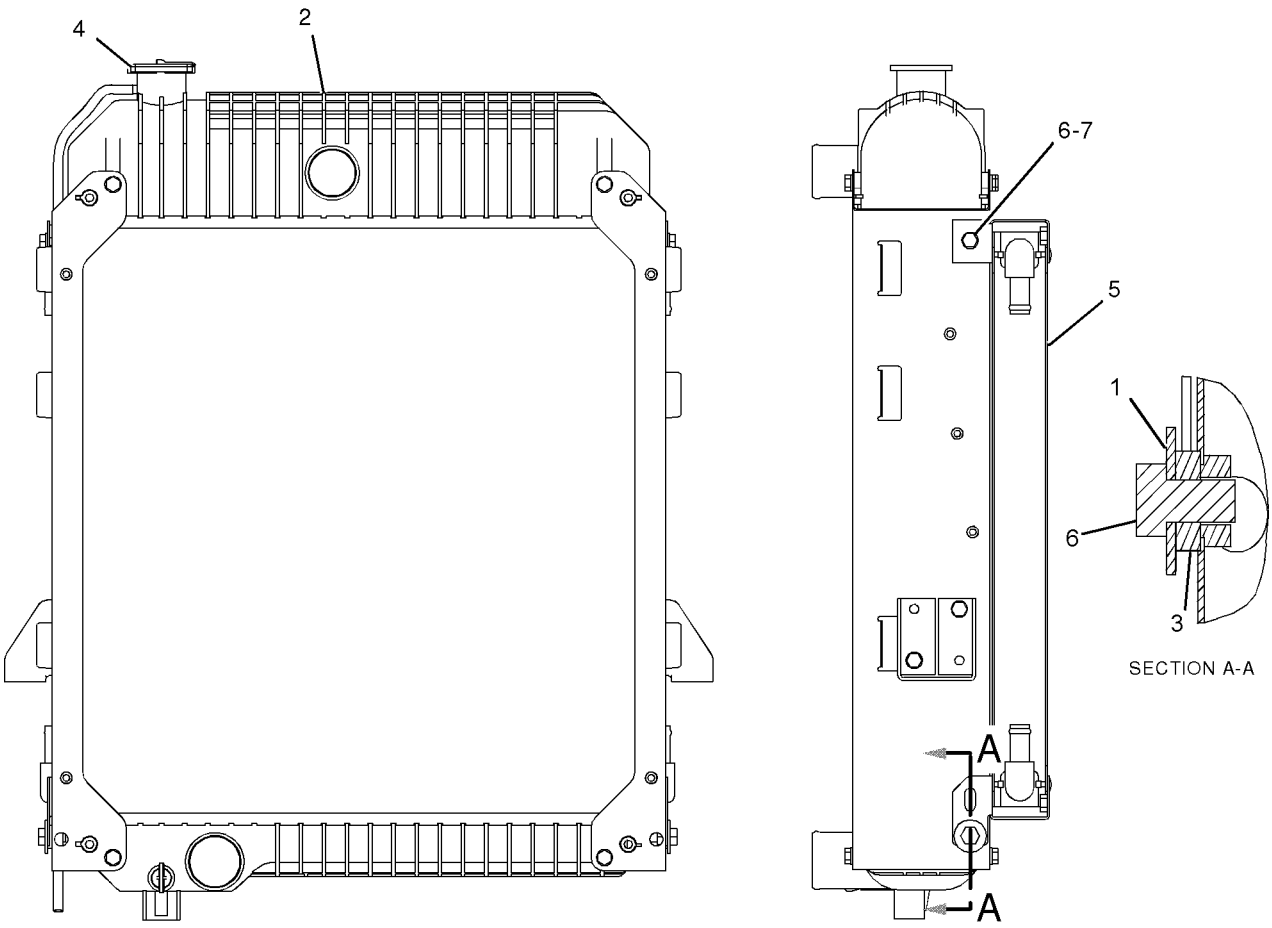

GRAPHIC #1 **<END>** g01032227

AIR INLET AND EXHAUST SYSTEM

234-1979 AIR CLEANER GP

S/N: B2D1-UP
PART OF 214-6891 ENGINE AR
AN ATTACHMENT

SMCS-1051, 1054 **i02052198**

NOTE	REF NO	GRAPHIC REF	PART NUMBER	QTY	PART NAME 1 2 3 4 5 6 (PRODUCT LEVEL)	SEE PAGE
D	1	1	**8T-2563**		SEAL (0.7M)	
	2	1	**5P-0600**	1	CLAMP-HOSE	
	3	1	**5P-4868**	1	CLAMP-HOSE	
	4	1	**6V-3582**	1	CLAMP-HOSE	
	5	1	**110-2445**	1	CLAMP-HOSE	
	6	1	**127-4471**	1	CLAMP-HOSE	
Y	7	1	**234-1981**	1	AIR CLEANER GP	74
	8	1	**234-2622**	1	HOSE-AIR	
	9	1	**234-5121**	1	HOSE-AIR	
	10	1	**238-9192**	1	PLATE AS	
	11	1	**242-1920**	1	DUCT AS (AIR INTAKE)	
M	12	1	**8T-4189**	2	BOLT (M8X1.25X20-MM)	
	13	1	**8T-4224**	6	WASHER-HARD (8.8X16X2-MM THK)	
M	14	1	**8T-7547**	4	BOLT (M8X1.25X30-MM)	

D-ORDER BY THE METER
M-METRIC PART
Y-SEPARATE ILLUSTRATION

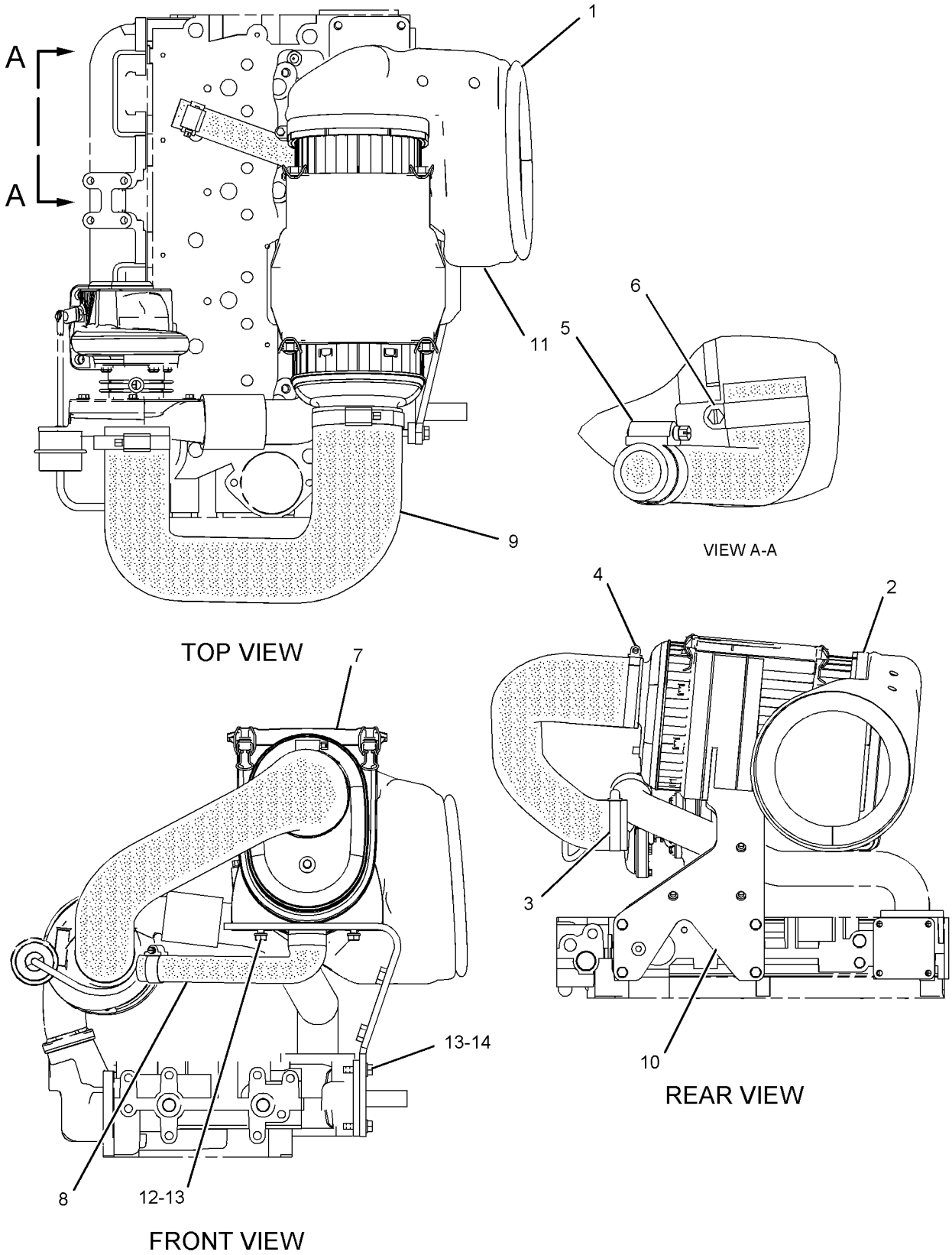

GRAPHIC #1 **<END>** g01035153

234-1980 AIR CLEANER GP

S/N: B2D1-UP
PART OF 214-6890 ENGINE AR
AN ATTACHMENT

SMCS-1051, 1054 **i01991947**

NOTE	REF NO	GRAPHIC REF	PART NUMBER	QTY	PART NAME 1 2 3 4 5 6 (PRODUCT LEVEL)	SEE PAGE
	1	1	**8T-2563**	7	SEAL	
	2	1	**5P-0600**	1	CLAMP-HOSE	
	3	1	**6V-3582**	1	CLAMP-HOSE	
	4	1	**110-2445**	1	CLAMP-HOSE	
	5	1	**127-4471**	1	CLAMP-HOSE	
Y	6	1	**234-1981**	1	AIR CLEANER GP	74
	7	1	**234-2622**	1	HOSE-AIR	
	8	1	**234-2628**	1	HOSE-AIR	
	9	1	**238-9192**	1	PLATE AS	
	10	1	**240-8459**	1	FOAM (INLET)	
	11	1	**242-1920**	1	DUCT AS (INTAKE)	
M	12	1	**8T-4189**	2	BOLT (M8X1.25X20MM)	
	13	1	**8T-4224**	6	WASHER-HARD (8.8X16X2MM THK)	
M	14	1	**8T-7547**	4	BOLT (M8X1.25X30MM)	

M-METRIC PART
Y-SEPARATE ILLUSTRATION

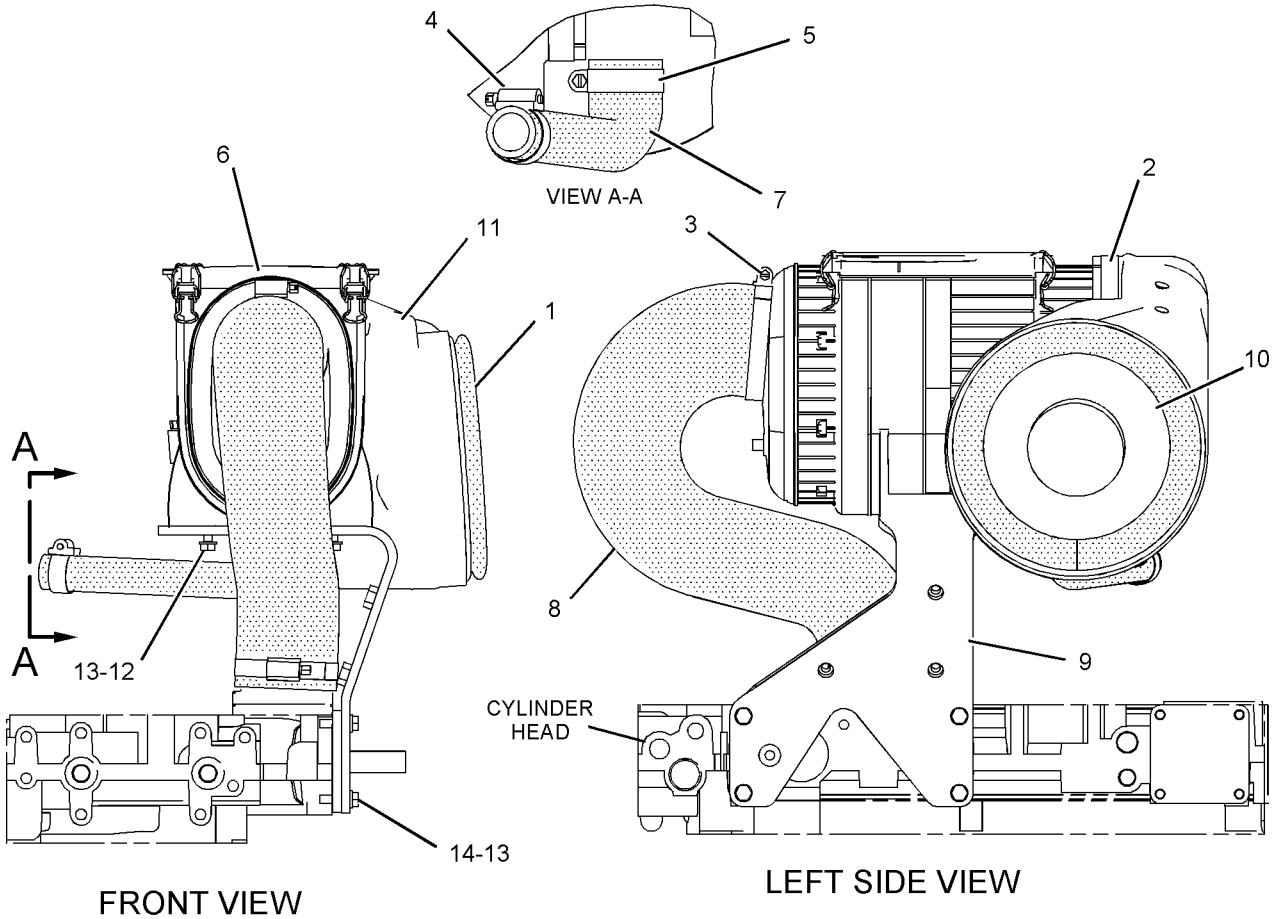

GRAPHIC #1 **<END>** g01039948

AIR INLET AND EXHAUST SYSTEM

234-1981 AIR CLEANER GP

S/N: B2D1-UP
PART OF 234-1979, 234-1980 AIR CLEANER GP
AN ATTACHMENT

SMCS-1051, 1054 **i02050404**

NOTE	REF NO	GRAPHIC REF	PART NUMBER	QTY	PART NAME 1 2 3 4 5 6 (PRODUCT LEVEL)	SEE PAGE
	1	1	**227-7447**	1	FRAME	
	2	1	**227-7448**	1	ELEMENT-PRIMARY	
	3	1	**227-7449**	1	FILTER ELEMENT AS-AIR (SECONDARY)	
	4	1	**237-4157**	1	COVER	

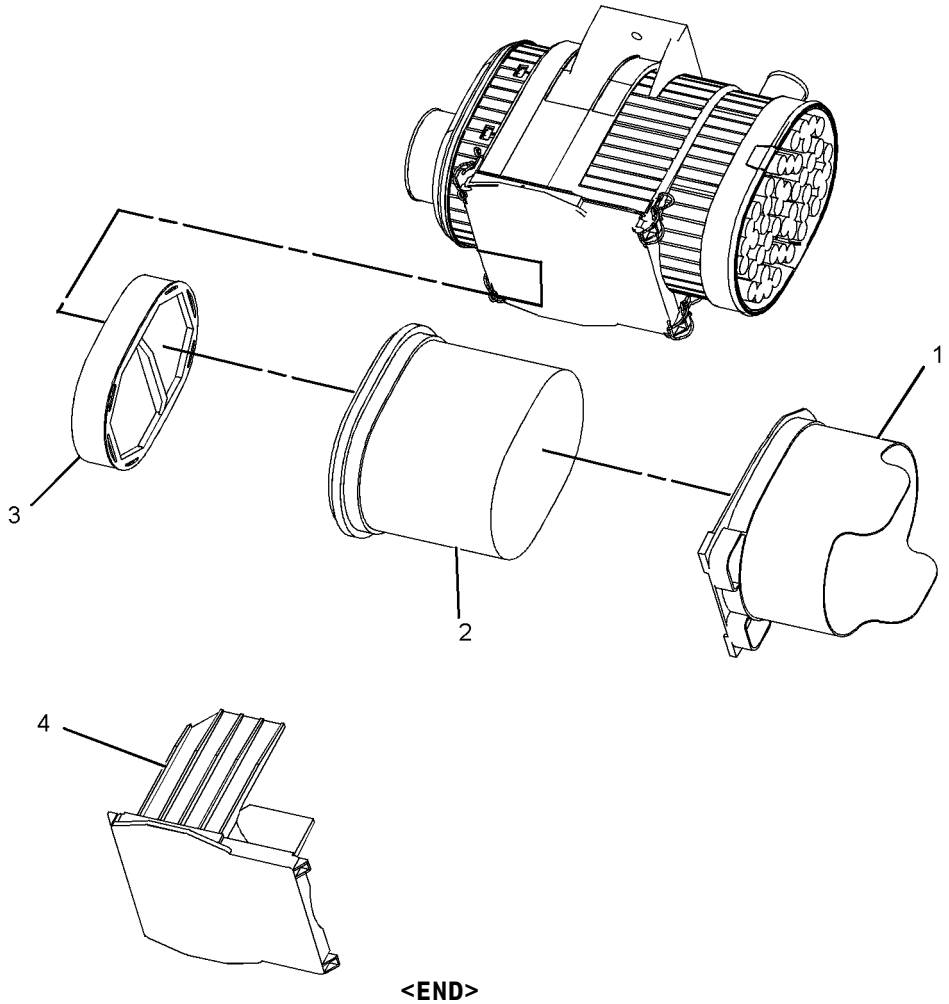

GRAPHIC #1 **<END>** g01035095

AIR INLET AND EXHAUST SYSTEM

235-2489 ELBOW GP-AIR INLET

S/N: CRS1-UP
PART OF 234-3058 ENGINE AR-PRIMARY
AN ATTACHMENT

SMCS-1058, 1087 **i02052138**

NOTE	REF NO	GRAPHIC REF	PART NUMBER	QTY	PART NAME 1 2 3 4 5 6 (PRODUCT LEVEL)	SEE PAGE
	1	1	**6I-0572**	12	BOLT (M8X1.25X20-MM)	
	2	1	**100-8451**	2	BOLT	
	3	1	**114-2579**	5	GASKET	
	4	1	**115-1162**	3	PLATE	
	5	1	**233-7490**	1	ELBOW	
	6	1	**235-2451**	2	BOLT	
	7	1	**235-2488**	1	SPACER	

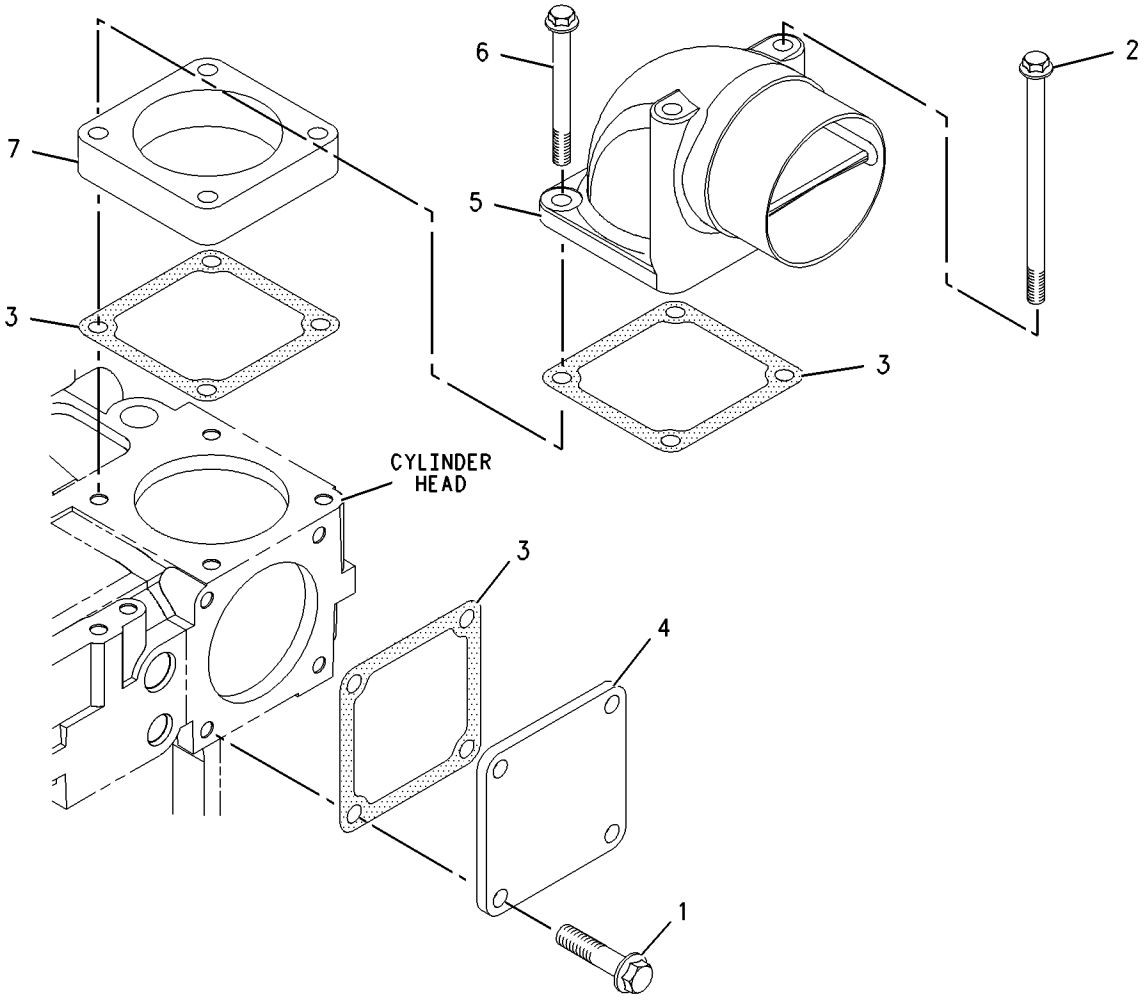

GRAPHIC #1 **<END>** g00975132

236-2486 EXTENSION GP-EXHAUST

S/N: B2D1-UP
PART OF 214-6890, 214-6891 ENGINE AR
AN ATTACHMENT

SMCS-1061 **i01991963**

NOTE	REF NO	GRAPHIC REF	PART NUMBER	QTY	PART NAME 1 2 3 4 5 6 (PRODUCT LEVEL)	SEE PAGE
	1	1	**7E-3870**	1	CLAMP	
	2	1	**236-5860**	1	PLATE AS	
	3	1	**239-2270**	1	PIPE-EXTENSION	
	4	1	**8T-4121**	3	WASHER-HARD (11X21X2.5MM THK)	
M	5	1	**8T-4136**	3	BOLT (M10X1.5X25MM)	

M-METRIC PART

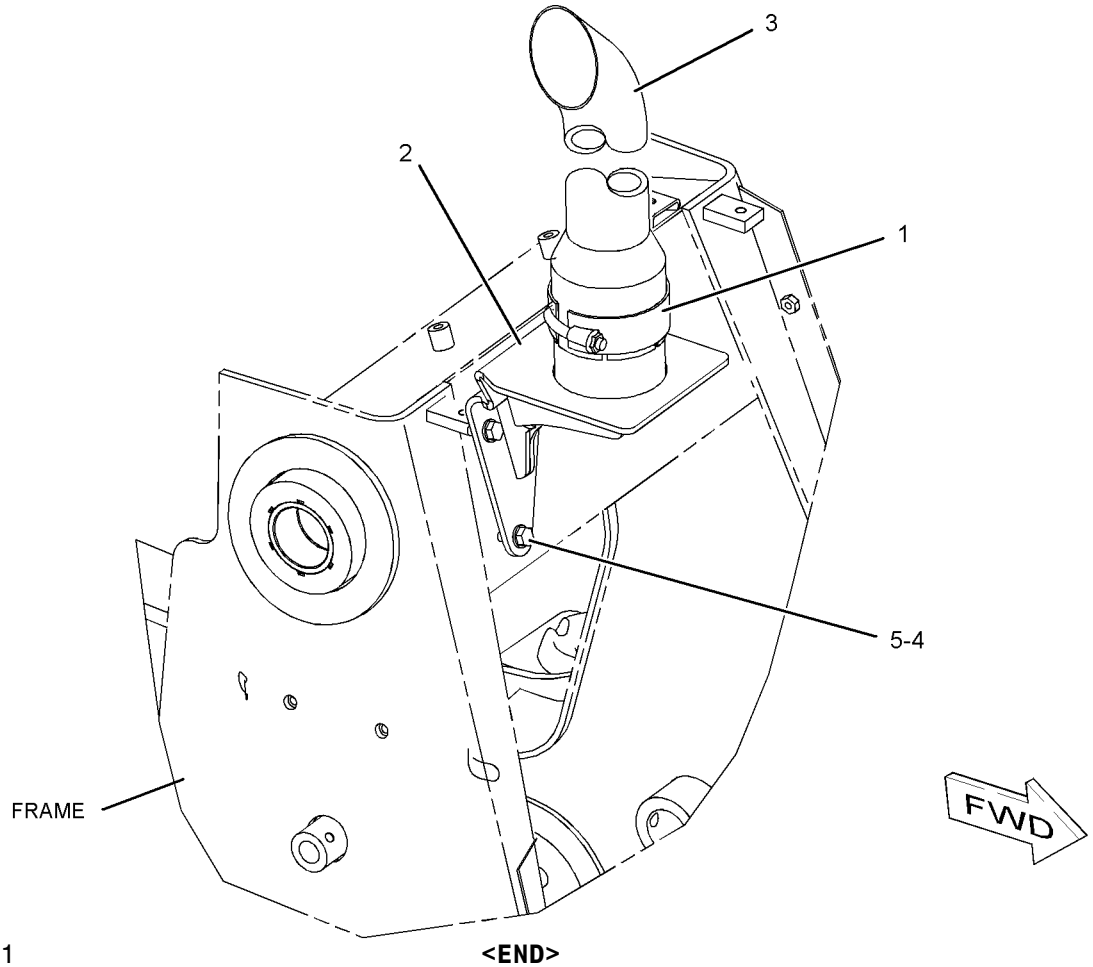

GRAPHIC #1 **<END>** g01040352

AIR INLET AND EXHAUST SYSTEM

238-9827 INDICATOR GP-AIR FILTER CHANGE

S/N: B2D1-UP
PART OF 214-6890 ENGINE AR
AN ATTACHMENT

SMCS-7452 **i02023514**

NOTE	REF NO	GRAPHIC REF	PART NUMBER	QTY	PART NAME 1 2 3 4 5 6 (PRODUCT LEVEL)	SEE PAGE
	1	1	**5W-9411**	1	SEAL-O-RING	
	2	1	**7W-7417**	1	INDICATOR-AIR FILTER CHANGE	

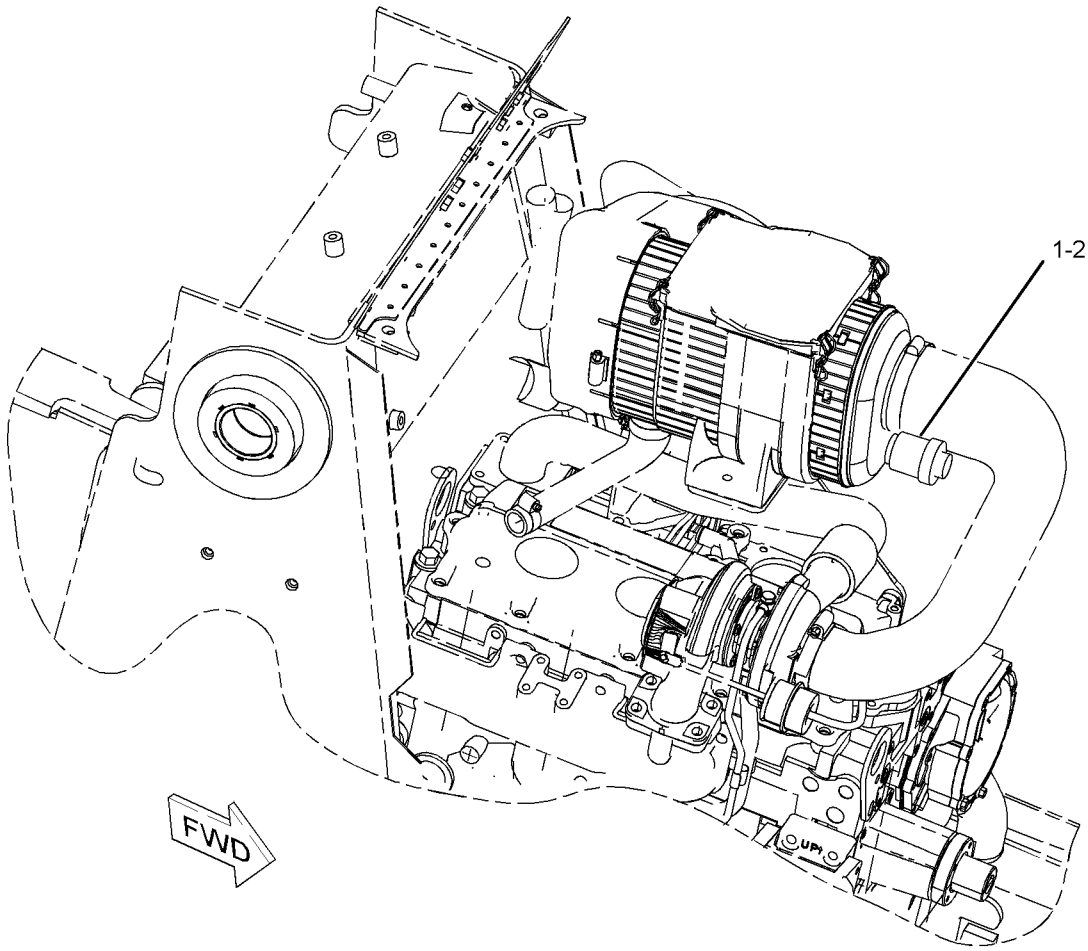

GRAPHIC #1 **<END>** g01040487

AIR INLET AND EXHAUST SYSTEM

238-9828 INDICATOR GP-AIR FILTER CHANGE

S/N: B2D1-UP
PART OF 214-6891 ENGINE AR
AN ATTACHMENT

SMCS-7452 **i02022960**

NOTE	REF NO	GRAPHIC REF	PART NUMBER	QTY	PART NAME 1 2 3 4 5 6 (PRODUCT LEVEL)	SEE PAGE
	1	1	**5W-9411**	1	SEAL-O-RING	
	2	1	**8N-2694**	1	INDICATOR GP-AIR FILTER CHANGE	

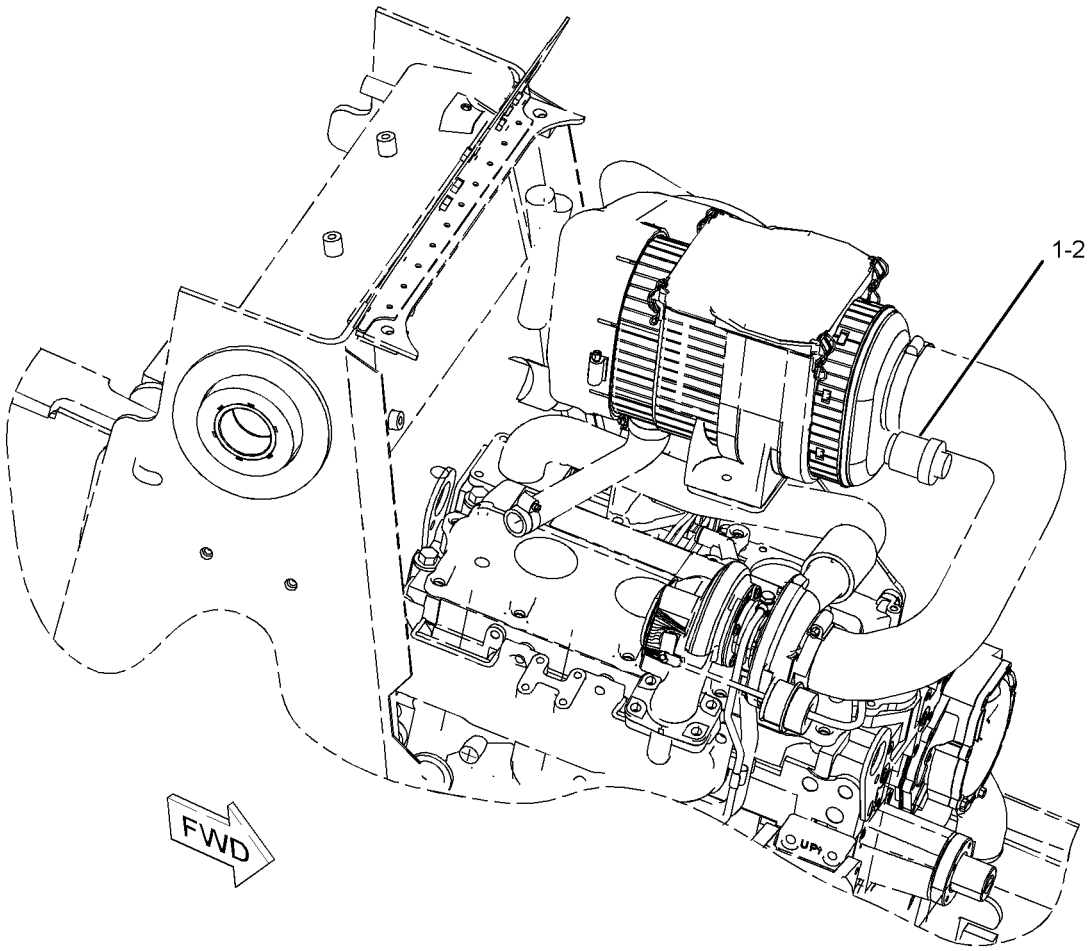

GRAPHIC #1 **<END>** g01040385

AIR INLET AND EXHAUST SYSTEM

237-5408 MANIFOLD GP-EXHAUST

S/N: CRS1-UP
PART OF 234-3058 ENGINE AR-PRIMARY
AN ATTACHMENT

SMCS-1059 **i01979257**

NOTE	REF NO	GRAPHIC REF	PART NUMBER	QTY	PART NAME 1 2 3 4 5 6 (PRODUCT LEVEL)	SEE PAGE
	1	1	**174-9638**	1	BOLT	
	2	1	**225-8536**	1	GASKET	
	3	1	**237-5405**	1	MANIFOLD-EXHAUST	

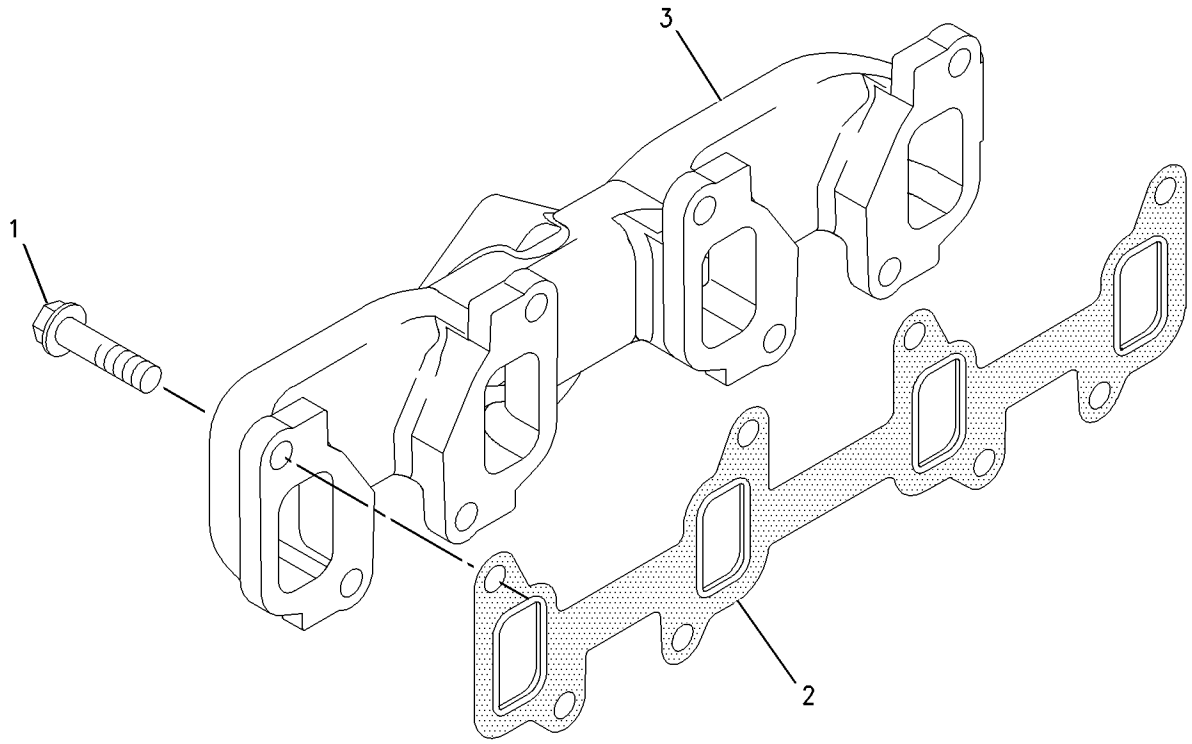

GRAPHIC #1 **<END>** g00955635

AIR INLET AND EXHAUST SYSTEM

235-3420 MUFFLER GP

S/N: B2D1-UP
PART OF 214-6891 ENGINE AR
AN ATTACHMENT

SMCS-1062 **i02053610**

NOTE	REF NO	GRAPHIC REF	PART NUMBER	QTY	PART NAME 1 2 3 4 5 6 (PRODUCT LEVEL)	SEE PAGE
	1	1	**6I-0563**	3	NUT (M10)	
	2	1	**147-5553**	3	STUD	
	3	1	**235-5363**	1	MUFFLER AS (TURBO)	
	4	1	**236-2507**	2	CLAMP AS (MUFFLER)	
	5	1	**237-0975**	1	PLATE AS	
M	5A	1	**8T-3490**	4	NUT-WELD (M10X1.5-THD)	
	6	1	**237-0976**	1	PLATE AS	
M	6A	1	**8T-3490**	1	NUT-WELD (M10X1.5-THD)	
	7	1	**8T-4121**	19	WASHER-HARD (11X21X2.5-MM THK)	
M	8	1	**8T-4133**	4	NUT (M10X1.5-THD)	
M	9	1	**8T-4136**	4	BOLT (M10X1.5X25-MM)	
M	10	1	**8T-4195**	8	BOLT (M10X1.5X30-MM)	

M-METRIC PART

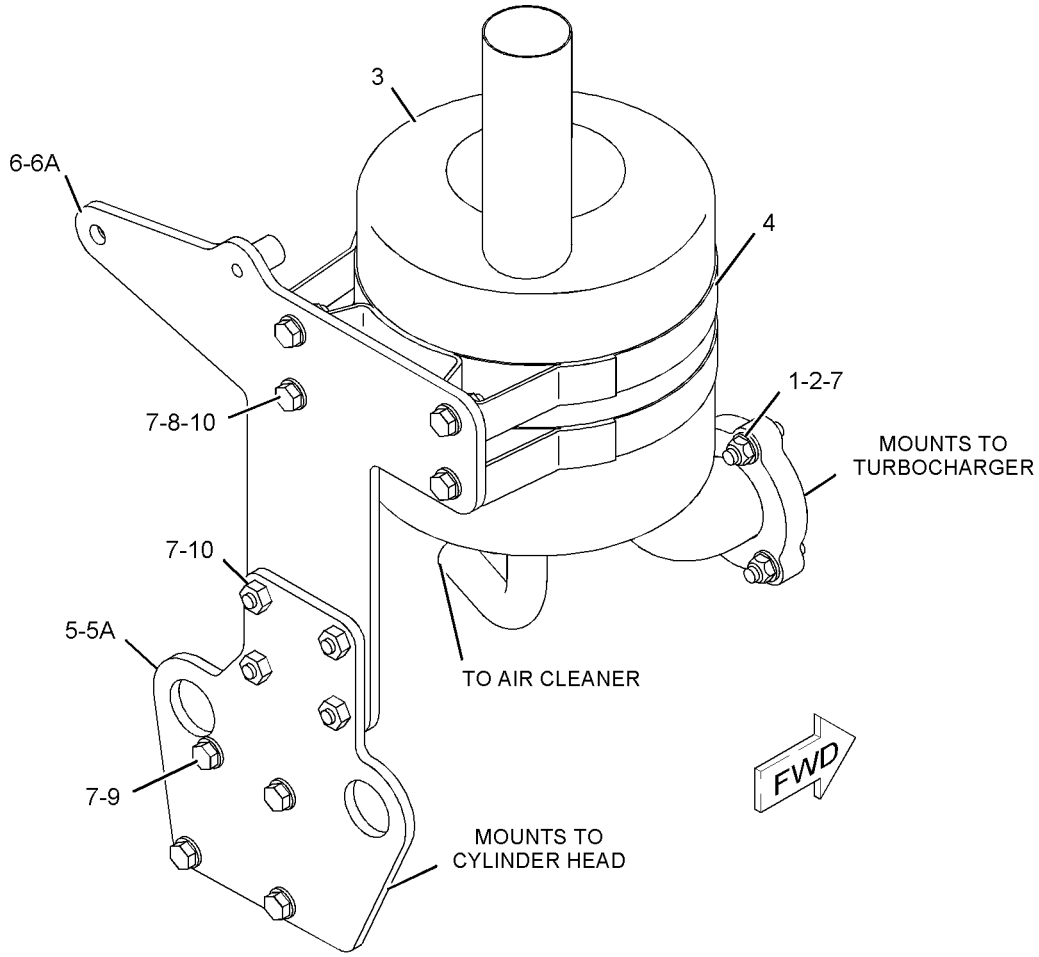

GRAPHIC #1 **<END>** g01036144

AIR INLET AND EXHAUST SYSTEM

236-2485 MUFFLER GP

S/N: B2D1-UP
PART OF 214-6890 ENGINE AR
AN ATTACHMENT

SMCS-1062 **i01991959**

NOTE	REF NO	GRAPHIC REF	PART NUMBER	QTY	PART NAME 1 2 3 4 5 6 (PRODUCT LEVEL)	SEE PAGE
	1	1	**6I-0563**	3	NUT (M10)	
	2	1	**6I-4039**	1	GASKET	
	3	1	**6I-0364**	3	STUD (M10X1.5X30-MM)	
	4	1	**235-5364**	1	MUFFLER AS	
	5	1	**236-2507**	2	CLAMP AS	
	6	1	**237-0975**	1	PLATE AS	
M	6A	1	**8T-3490**	4	NUT-WELD (M10X1.5-THD)	
	7	1	**237-0976**	1	PLATE AS	
M		1	**8T-3490**	1	NUT-WELD (M10X1.5-THD)	
	8	1	**8T-4121**	16	WASHER-HARD (11X21X2.5-MM THK)	
M	9	1	**8T-4133**	4	NUT (M10X1.5-THD)	
M	10	1	**8T-4136**	4	BOLT (M10X1.5X25-MM)	
M	11	1	**8T-4195**	8	BOLT (M10X1.5X30-MM)	

M-METRIC PART

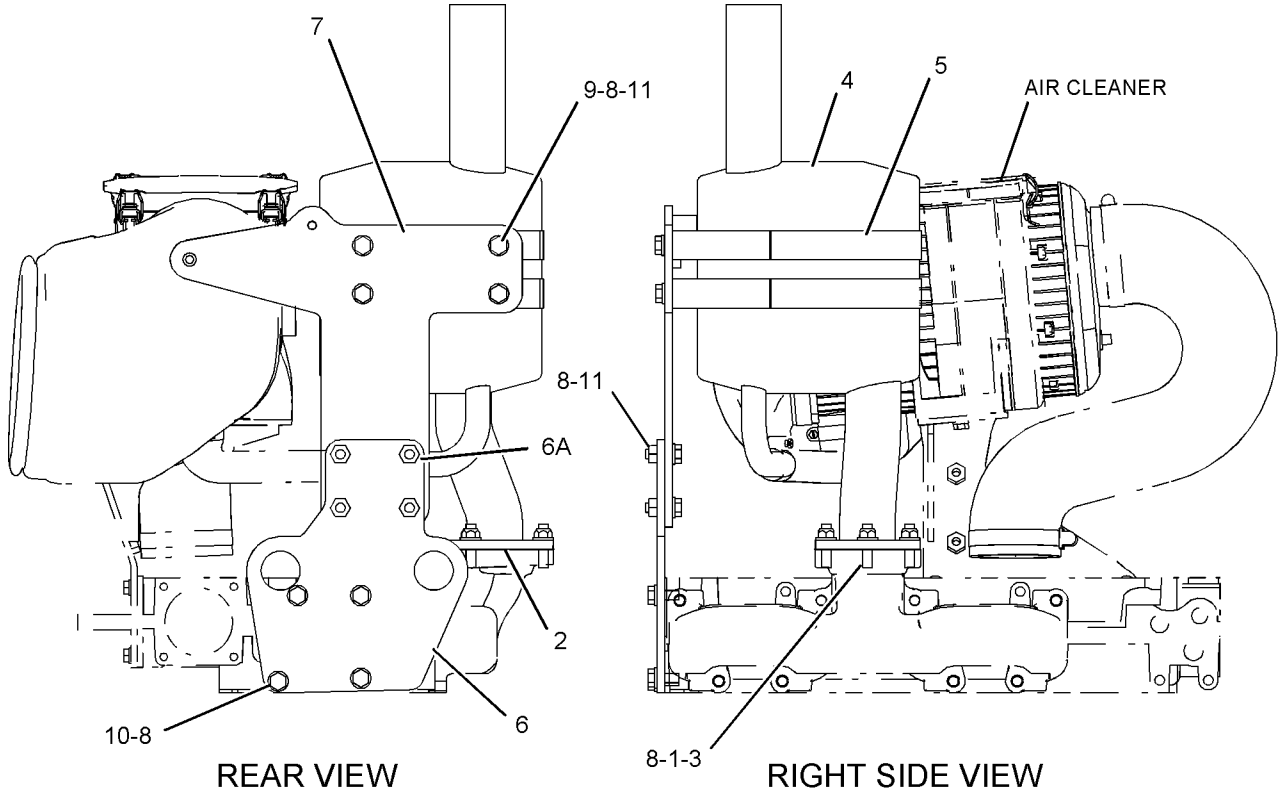

GRAPHIC #1 **<END>** g01042672

AIR INLET AND EXHAUST SYSTEM

237-3924 TURBOCHARGER GP

S/N: CRS1-UP
PART OF 234-3059 ENGINE AR-PRIMARY
AN ATTACHMENT

SMCS-1052, 1053 **i02053620**

NOTE	REF NO	GRAPHIC REF	PART NUMBER	QTY	PART NAME 1 2 3 4 5 6 (PRODUCT LEVEL)	SEE PAGE
	1	1	**6I-0217**	2	BOLT (M8X1.25X20-MM)	
	2	1	**6I-0563**	4	NUT (M10)	
	3	1	**6I-0572**	4	BOLT (M8X1.25X20-MM)	
	4	1	**106-8916**	2	BOLT (M6X16-MM)	
	5	1	**141-1667**	2	CLAMP-HOSE	
	6	1	**149-4236**	4	STUD	
	7	1	**174-9638**	8	BOLT	
	8	1	**194-5390**	1	GASKET-MANIFOLD	
	9	1	**225-8530**	1	GASKET	
	10	1	**225-8533**	1	GASKET	
	11	1	**225-8534**	1	GASKET	
	12	1	**225-8536**	1	GASKET	
	13	1	**234-3029**	1	HOSE	
	14	1	**234-3030**	1	GASKET	
	15	1	**237-2799**	1	TUBE AS	
	15A	1	**225-8524**	3	BOLT	
	15B	1	**225-8526**	7	WASHER	
	16	1	**237-3786**	1	TURBOCHARGER GP	
	17	1	**237-3791**	1	TUBE AS	
	18	1	**237-3794**	1	BOLT	
	19	1	**237-3921**	1	CLIP	
	20	1	**237-3922**	1	PIPE-EXHAUST	
	21	1	**237-3923**	1	MANIFOLD-EXHAUST	

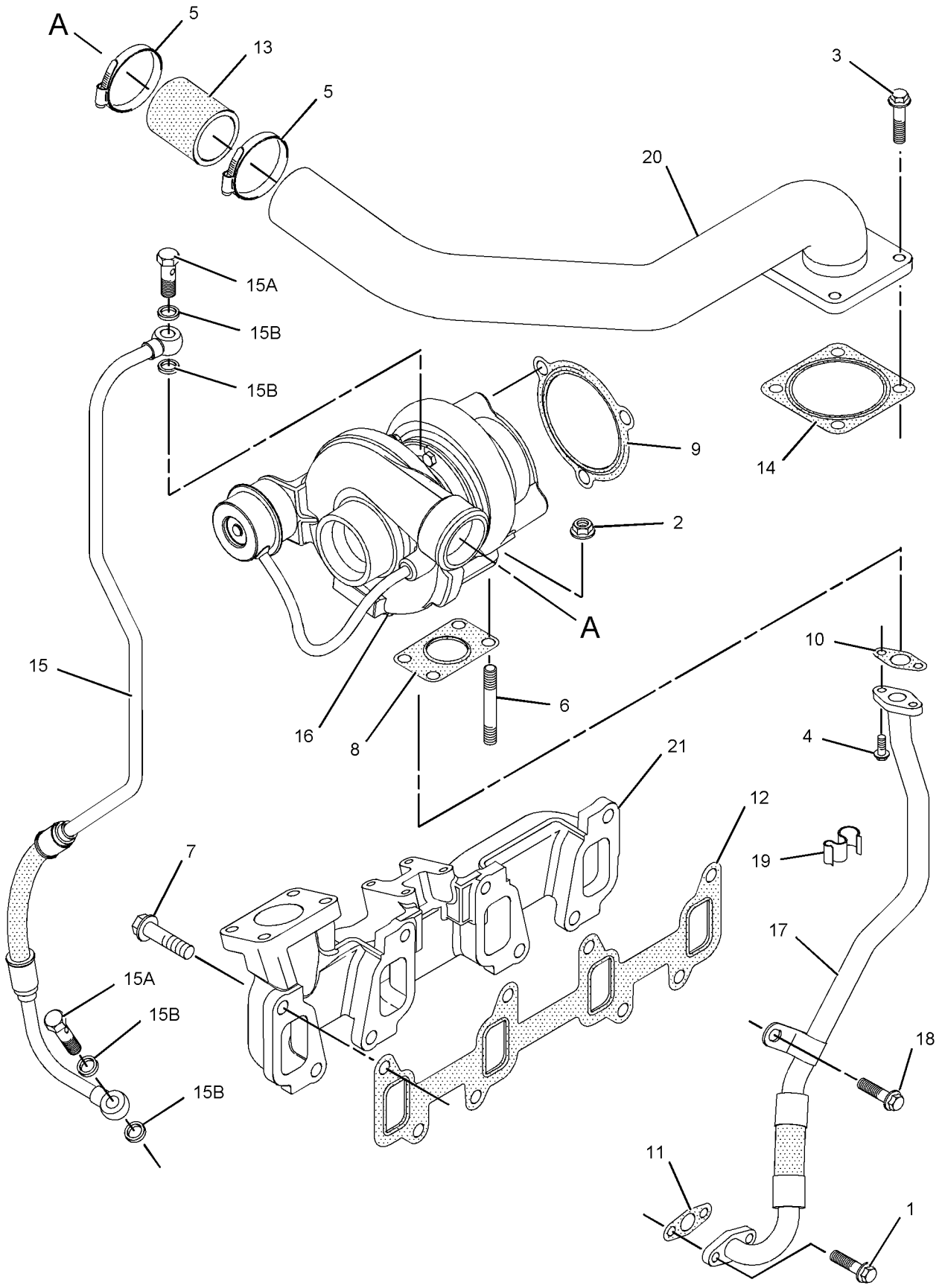

GRAPHIC #1 **<END>** g01031810

FUEL SYSTEM

234-8892 CONTROL GP-GOV & ACCELERATOR

S/N: B2D1-UP

PART OF 214-6950 CHASSIS AR

SMCS-1265, 1276 **i02031717**

NOTE	REF NO	GRAPHIC REF	PART NUMBER	QTY	PART NAME 1 2 3 4 5 6 (PRODUCT LEVEL)	SEE PAGE
	1	1	**7K-1181**	3	STRAP-CABLE	
M	2	1	**9X-2044**	7	SCREW-TRUSS HEAD (M6X1X16-MM)	
	3	1	**164-1077**	1	PANEL AS	
M		1	**6V-9632**	4	NUT-WELD (M6X1-THD)	
Y	4	1	**243-0059**	1	PEDAL GP-GOVERNOR	552
Y	5	1	**183-3887**	1	LEVER GP-GOVERNOR CONTROL	538
	6	1	**190-5139**	1	FILM (VARIABLE SPEED)	
	7	1	**202-6113**	1	BRACKET AS	
M		1	**6V-9632**	3	NUT-WELD (M6X1-THD)	
	8	1	**235-0128**	1	CABLE AS	
M		1	**5C-2890**	1	NUT (M6X1-THD)	
		1	**8T-4742**	2	END-YOKE ROD	
		1	**8T-4744**	2	PIN AS-SPRING	
		1	**222-2690**	1	CLIP	
	9	1	**239-1434**	1	PLATE	
	10	1	**239-1435**	1	BRACKET AS	
M		1	**8T-3612**	2	NUT-WELD (M8X1.25-THD)	
M	11	1	**119-5025**	4	SCREW-FLAT HEAD (M6X1X25-MM)	
	12	1	**151-4841**	3	BLOCK	
	13	1	**164-1395**	1	KNOB	
	14	1	**3S-2093**	1	STRAP-CABLE	
M	15	1	**8T-4138**	3	BOLT (M6X1X20-MM)	
	16	1	**8T-4205**	3	WASHER-HARD (7.2X14.5X2-MM THK)	
	17	1	**8T-4224**	4	WASHER-HARD (8.8X16X2-MM THK)	
M	18	1	**8T-4908**	4	BOLT (M8X1.25X25-MM)	

M-METRIC PART
Y-SEPARATE ILLUSTRATION

234-8892 **CONTROL GP-GOV & ACCELERATOR** ***(contd.)*** **i02031717**

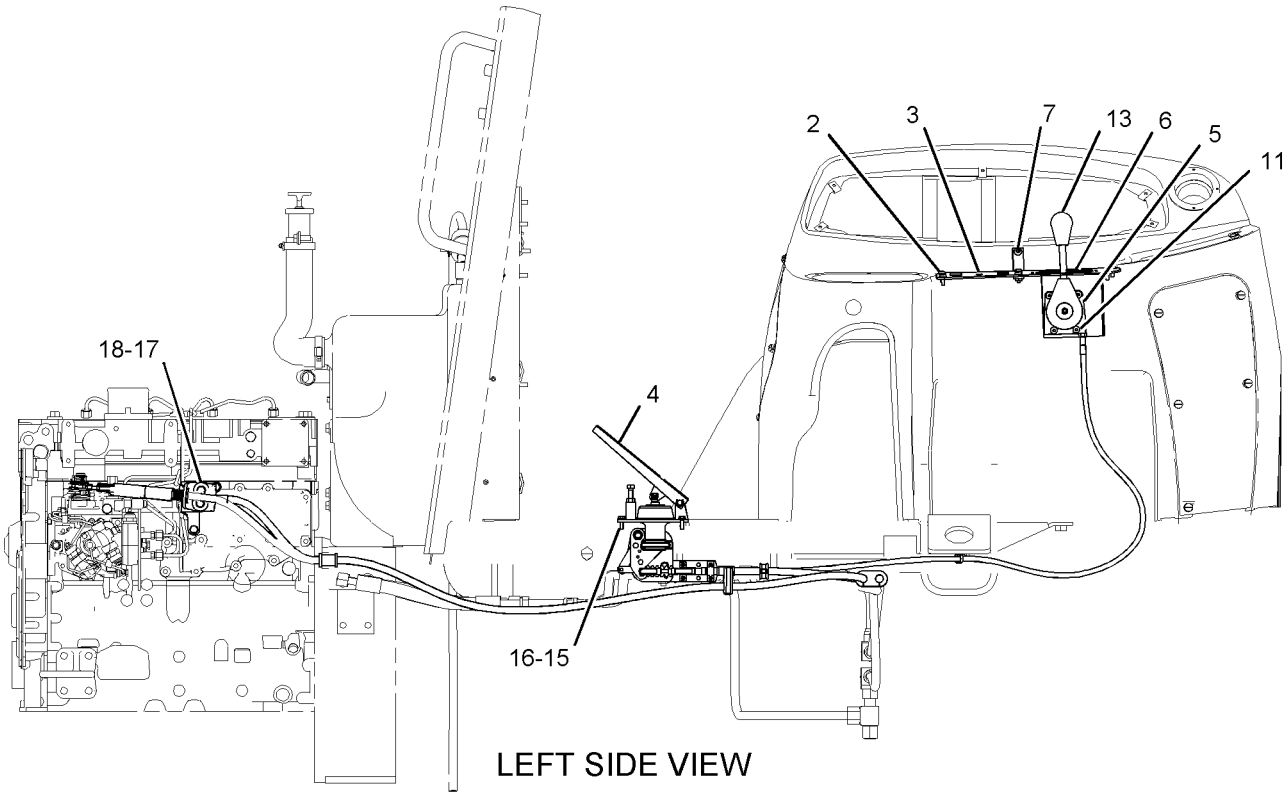

LEFT SIDE VIEW

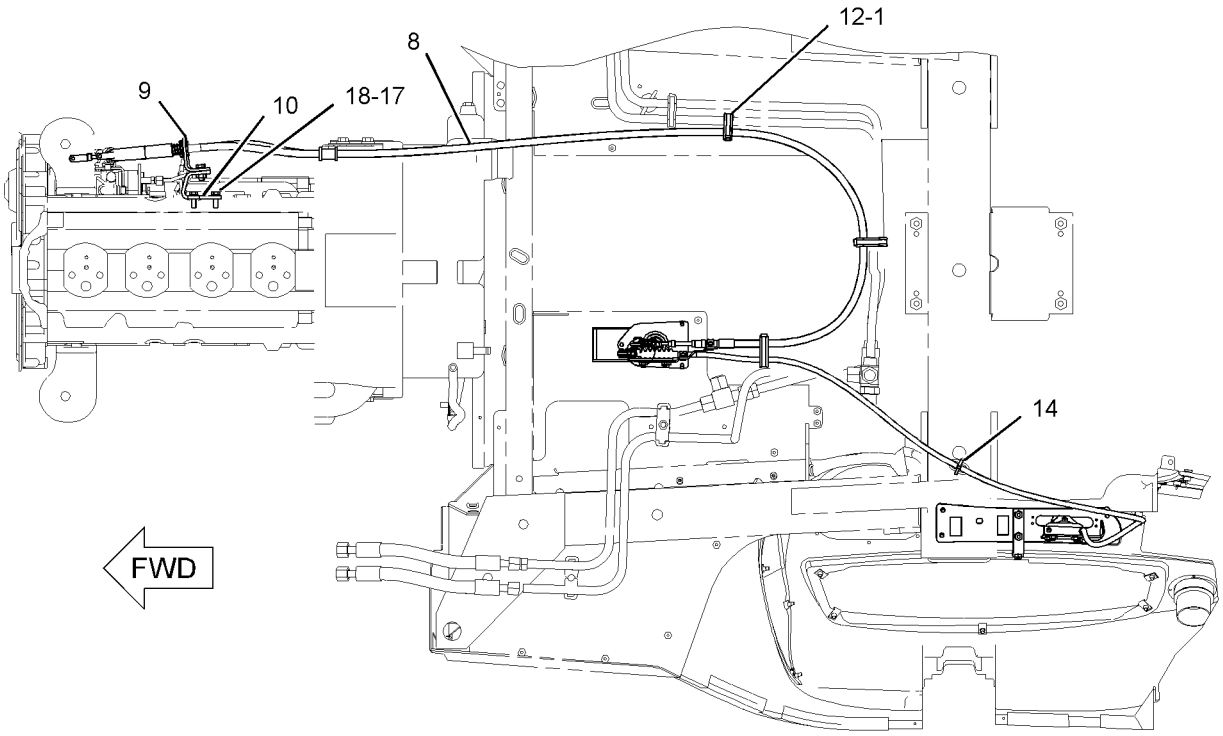

BOTTOM VIEW

GRAPHIC #1

<END>

g01046995

FUEL SYSTEM

235-2972 LINES GP-FUEL

S/N: B2D1-UP
PART OF 214-6891 ENGINE AR
AN ATTACHMENT

SMCS-1274 **i02053611**

NOTE	REF NO	GRAPHIC REF	PART NUMBER	QTY	PART NAME 1 2 3 4 5 6 (PRODUCT LEVEL)	SEE PAGE
	1	1	**1P-4278**	9	CLAMP-HOSE	
	2	1	**8B-6127**	1	CLIP	
	3	1	**190-9838**	1	TUBE AS	
E	3A	1	**5P-0078**		TUBE (34CM)	
	3B	1	**6V-8553**	1	NUT (11/16X16-THD)	
	3C	1	**6V-8560**	1	SLEEVE	
	4	1	**215-9513**	1	CONNECTOR	
	5	1	**238-1830**	1	TUBE AS	
	5A	1	**6V-8553**	1	NUT (11/16X16-THD)	
	6	1	**241-0022**	1	LINE AS-FUEL	
	6A	1	**1P-4278**	1	CLAMP-HOSE	
E	6B	1	**5P-1420**		HOSE (59CM)	
	7	1	**241-4275**	1	TEE-SPECIAL	
	8	1	**0S-0550**	1	CLIP	
	9	1	**1P-7009**	1	CLIP	
	10	1	**6D-7573**	1	CLIP	
	11	1	**6K-8178**	1	CLIP	
M	12	1	**8T-1159**	1	BOLT-SOCKET HEAD (M10X1.5X25-MM)	
	13	1	**8T-4121**	3	WASHER-HARD (11X21X2.5-MM THK)	
M	14	1	**8T-4179**	1	BOLT (M12X1.75X20-MM)	
	15	1	**8T-4223**	1	WASHER-HARD (13.5X25.5X3-MM THK)	
E	16	1	**5P-1442**		HOSE (81CM)	
E	17	1	**5P-1420**		HOSE (122CM)	

E-ORDER BY THE CENTIMETER
M-METRIC PART

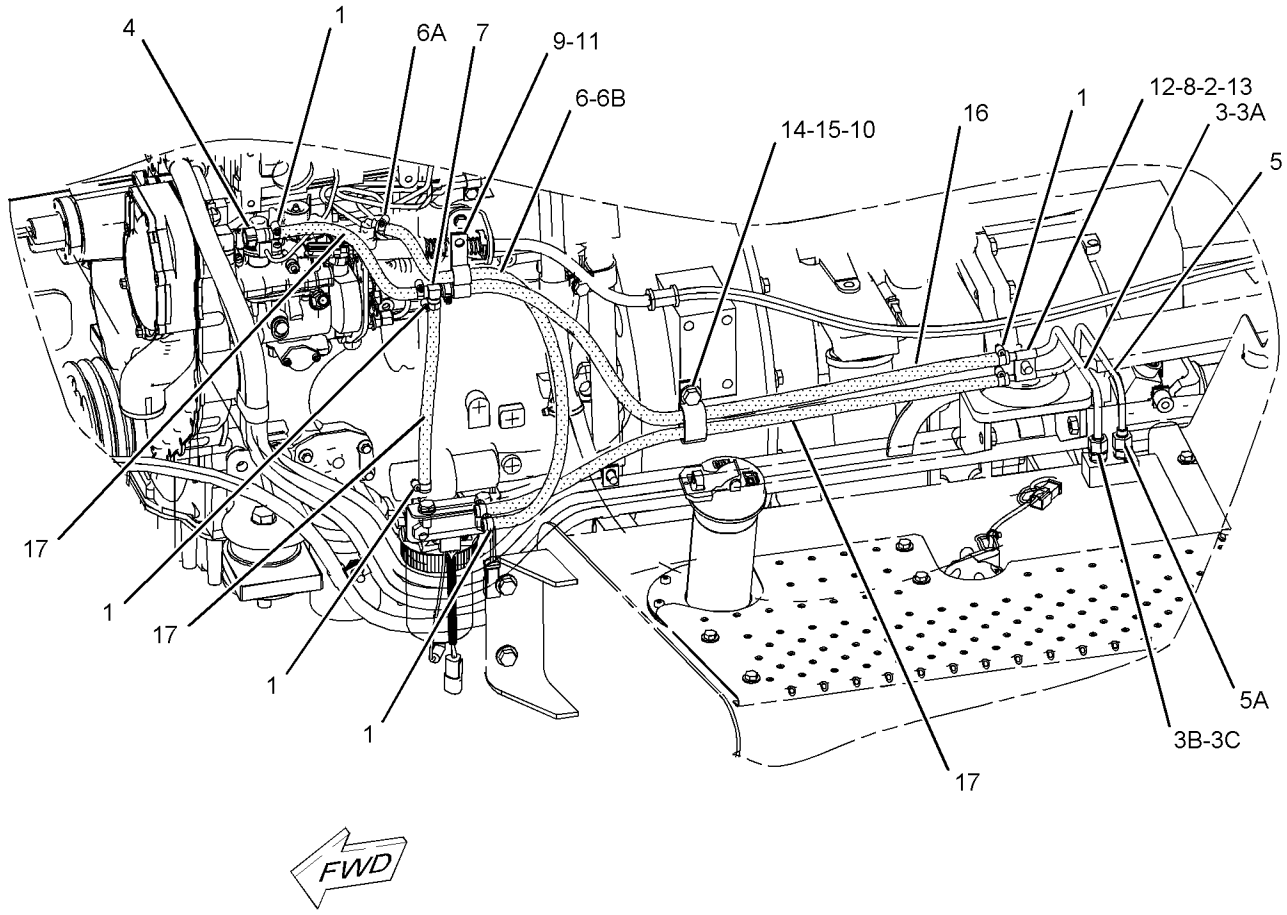

GRAPHIC #1 **<END>** g01035314

FUEL SYSTEM

240-9743 LINES GP-FUEL

S/N: B2D1-UP
PART OF 214-6890 ENGINE AR
AN ATTACHMENT

SMCS-1274 **i01991964**

NOTE	REF NO	GRAPHIC REF	PART NUMBER	QTY	PART NAME 1 2 3 4 5 6 (PRODUCT LEVEL)	SEE PAGE
	1	1	**1P-4278**	9	CLAMP-HOSE	
	2	1	**8B-6127**	1	CLIP	
	3	1	**190-9838**	1	TUBE AS	
E		1	**5P-0078**		TUBE (34CM)	
		1	**6V-8553**	1	NUT (11/16X16-THD)	
		1	**6V-8560**	1	SLEEVE	
	4	1	**215-9513**	1	CONNECTOR	
	5	1	**238-1830**	1	TUBE AS	
		1	**6V-8553**	1	NUT (11/16X16-THD)	
	6	1	**241-0023**	1	LINE AS-FUEL	
E		1	**5P-1420**		HOSE (73CM)	
		1	**1P-4278**	1	CLAMP-HOSE	
		1	**215-9515**	1	CONNECTOR	
	7	1	**241-4275**	1	TEE-SPECIAL	
	8	1	**0S-0550**	1	CLIP	
	9	1	**4K-8864**	1	CLIP	
	10	1	**6D-7573**	1	CLIP	
M	11	1	**8T-1159**	1	BOLT-SOCKET HEAD (M10X1.5X25-MM)	
	12	1	**8T-4121**	1	WASHER-HARD (11X21X2.5-MM THK)	
M	13	1	**8T-4179**	1	BOLT (M12X1.75X20-MM)	
M	14	1	**8T-4189**	1	BOLT (M8X1.25X20-MM)	
	15	1	**8T-4223**	1	WASHER-HARD (13.5X25.5X3-MM THK)	
	16	1	**9M-8406**	1	CLIP	
E	17	1	**5P-1442**		HOSE (77CM)	
E	18	1	**5P-1420**		HOSE (67CM)	
	18A	1	**5P-1420**		HOSE (17CM)	
	18B	1	**5P-1420**		HOSE (38CM)	

E-ORDER BY THE CENTIMETER
M-METRIC PART

240-9743 **LINES GP-FUEL** ***(contd.)*** **i01991964**

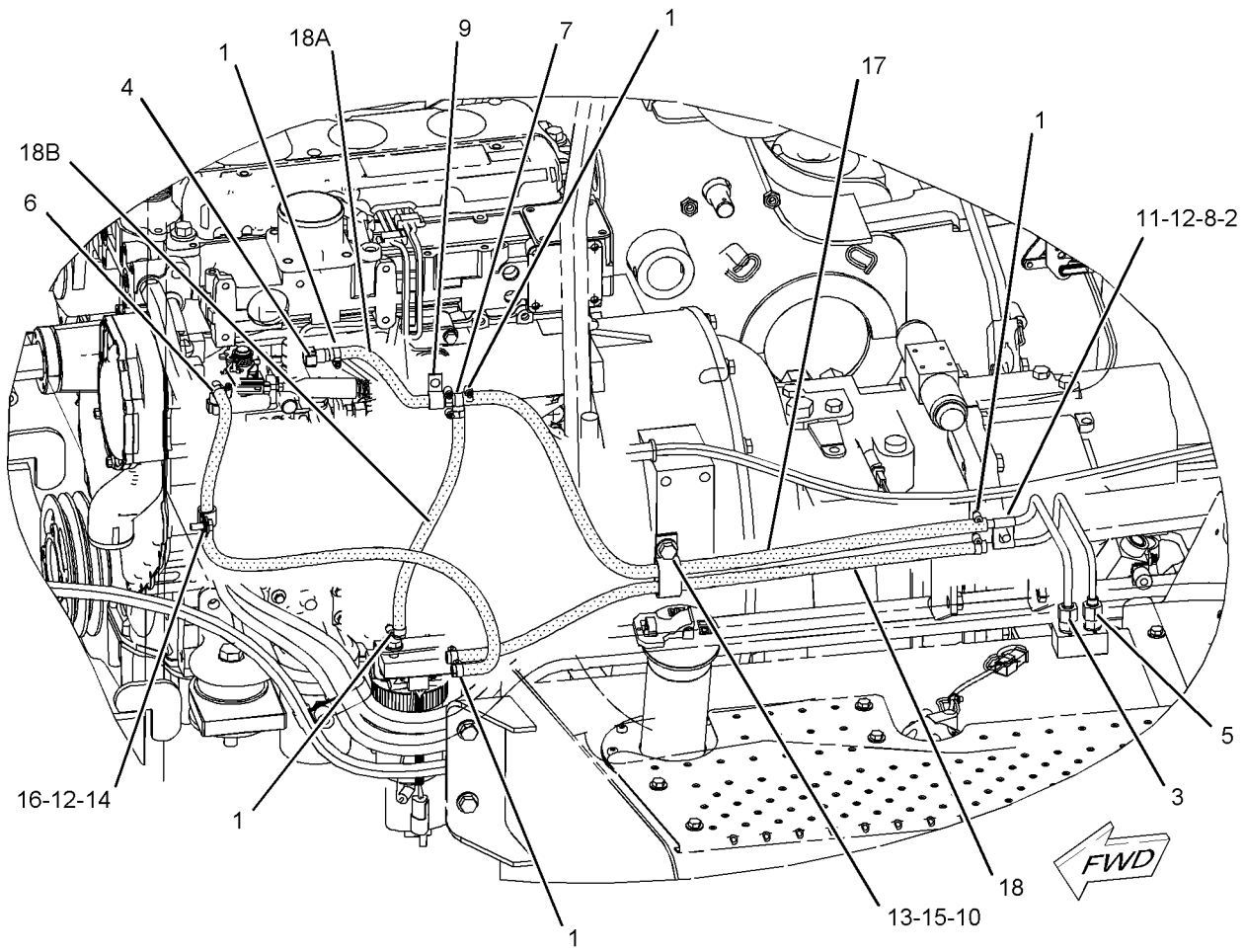

GRAPHIC #1 **<END>** g01040584

237-2528 PUMP GP-FUEL INJECTION

S/N: CRS1-UP
PART OF 234-3059 ENGINE AR-PRIMARY
AN ATTACHMENT

SMCS-1251, 1290 **i01967129**

NOTE	REF NO	GRAPHIC REF	PART NUMBER	QTY	PART NAME 1 2 3 4 5 6 (PRODUCT LEVEL)	SEE PAGE
	1	1	**6I-0217**	1	BOLT (M8X1.25X20MM)	
	2	1	**6I-0260**	3	BOLT (M8X1.25X25MM)	
	3	1	**6I-0291**	1	NUT (M8X1.25)	
	4	1	**9F-2247**	1	PLUG-PIPE	
	5	1	**100-4830**	1	BOLT (M10X1.5X20MM)	
	6	1	**111-3422**	1	NUT	
	7	1	**111-3423**	1	WASHER	
	8	1	**124-3815**	1	BOLT (M8X16X1.25MM)	
	9	1	**140-8714**	1	CLIP	
	10	1	**230-8989**	1	GEAR-FUEL PUMP	
	11	1	**230-8995**	1	TUBE AS (CYL NO.1)	
	12	1	**230-8996**	1	TUBE AS (CYL NO.2)	
	13	1	**230-8997**	1	TUBE AS (CYL NO.3)	
	14	1	**230-8998**	1	TUBE AS (CYL NO.4)	
	15	1	**240-5571**	1	BRACKET	
	16	1	**232-3126**	1	CLIP	
	17	1	**232-1323**	1	PLUG-CUP	
	18	1	**232-1328**	1	CAP	
	19	1	**232-1793**	1	CABLE	
	20	1	**232-1794**	3	HOSE	
	21	1	**232-2725**	2	CLIP	
	22	1	**232-2726**	1	CLIP	
	23	1	**232-3149**	3	WASHER	
	24	1	**232-3157**	1	BRACKET	
	25	1	**238-8671**	1	CLAMP-INJECTOR	
	26	1	**232-3274**	4	BOLT	
	27	1	**235-1790**	1	SWITCH (TEMPERATURE)	
	28	1	**236-1674**	4	INJECTOR AS-FUEL	
	28A	1	**140-8718**	1	WASHER	
	28B	1	**236-1673**	1	NOZZLE	
	29	1	**237-2527**	1	PUMP GP-FUEL INJECTION	

237-2528 **PUMP GP-FUEL INJECTION** *(contd.)* **i01967129**

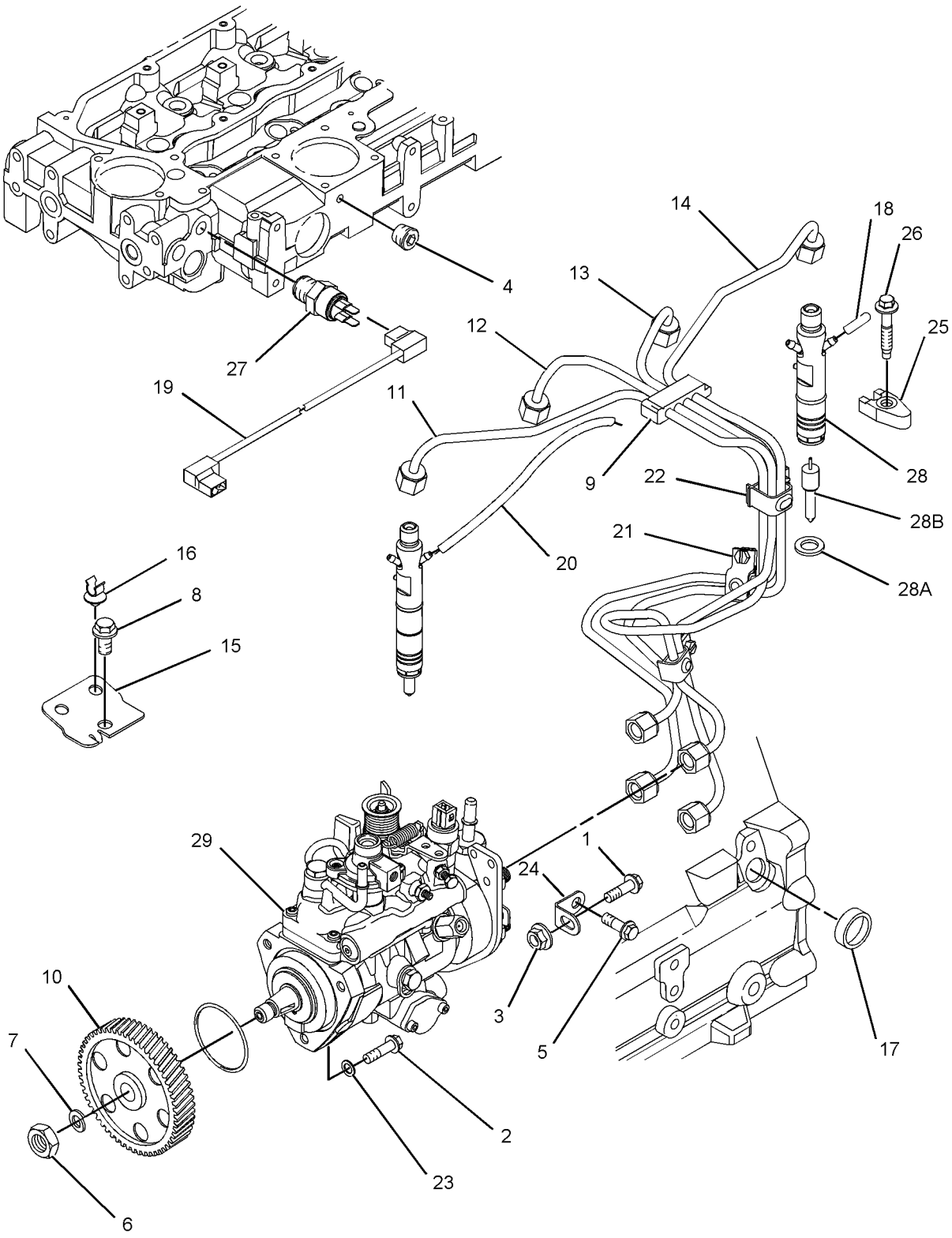

GRAPHIC #1 **<END>** g01021883

237-5394 PUMP GP-FUEL INJECTION

S/N: CRS1-UP
PART OF 234-3058 ENGINE AR-PRIMARY
AN ATTACHMENT

SMCS-1251, 1290 **i02010410**

NOTE	REF NO	GRAPHIC REF	PART NUMBER	QTY	PART NAME 1 2 3 4 5 6 (PRODUCT LEVEL)	SEE PAGE
	1	1	**6I-0217**	1	BOLT (M8X1.25X20MM)	
	2	1	**232-3149**	3	WASHER	
	3	1	**6I-0291**	1	NUT (M8X1.25)	
	4	1	**100-4830**	1	BOLT (M10X1.5X20MM)	
	5	1	**124-3815**	1	BOLT (M8X16X1.25MM)	
	6	1	**140-8714**	1	CLIP	
	7	1	**145-8327**	1	SEAL-O-RING	
	8	1	**155-8804**	1	CAP	
	10	2	**199-9252**	1	SEAL-O-RING	
	11	2	**199-9751**	1	SEAL-O-RING	
	12	1	**230-9527**	1	BRACKET	
	13	1	**232-1117**	1	CLIP-PIPE	
	14	2	**232-1295**	1	PLUG	
	15	2	**232-1322**	1	PLUG	
	16	2	**232-1323**	1	PLUG-CUP	
	17	1	**232-2720**	1	TUBE AS	
	18	1	**232-2721**	1	TUBE AS	
	19	1	**232-2722**	1	TUBE AS	
	20	1	**232-2723**	1	TUBE AS	
	21	1	**232-2725**	2	CLIP	
	22	1	**232-2726**	1	CLIP	
	23	1	**6I-0260**	3	BOLT (M8X1.25X25MM)	
	24	1	**232-3157**	1	BRACKET	
	25	1	**232-3158**	4	CLAMP-INJECTOR	
	27	1	**232-3274**	4	BOLT	
	28	1	**237-5393**	1	PUMP GP-FUEL INJECTION	
	29	1	**233-7104**	1	GEAR-PUMP	
	30	2	**233-7214**	1	CABLE	
	31	1	**233-7972**	4	INJECTOR AS-FUEL	
					(EACH INCLUDES)	
	32	1	**140-8718**	1	WASHER	
	33	1	**234-0387**	1	NOZZLE	
F			**232-3263**	1	CLIP-PIPE	

F-NOT SHOWN

237-5394 **PUMP GP-FUEL INJECTION** *(contd.)* **i02010410**

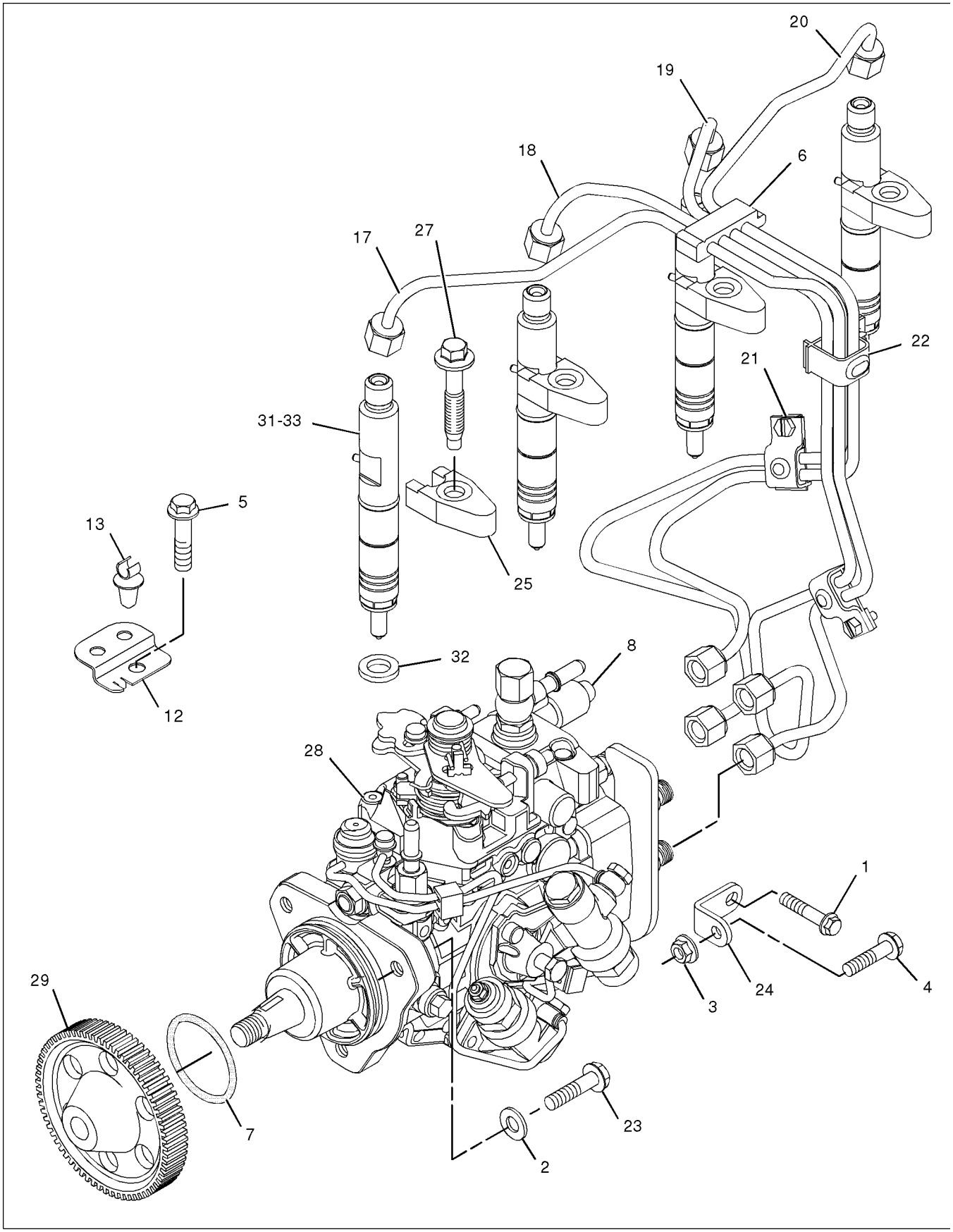

GRAPHIC #1 g01039638

237-5394 **PUMP GP-FUEL INJECTION** *(contd.)* **i02010410**

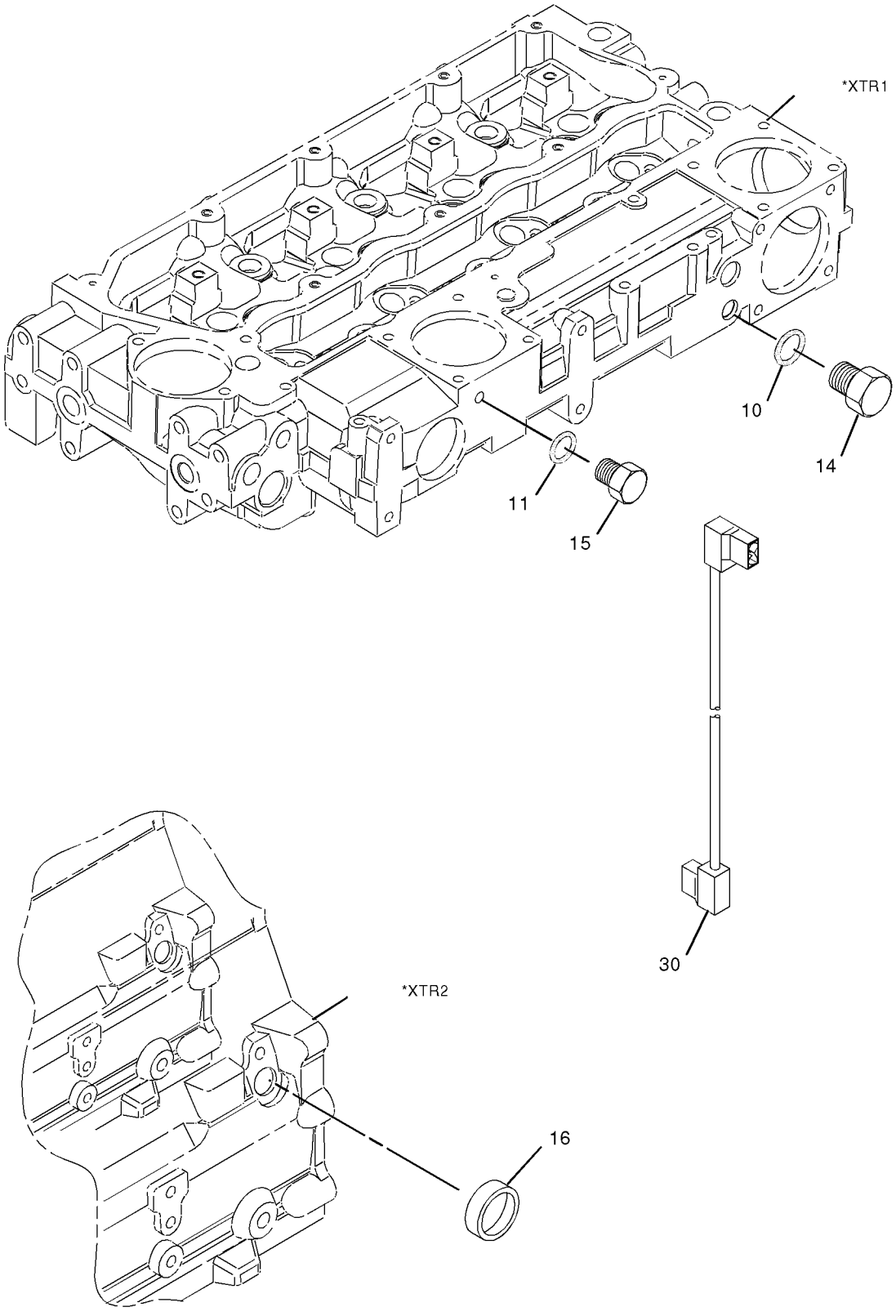

GRAPHIC #2 **<END>** g01039639

228-9129 PUMP GP-FUEL PRIMING

S/N: B2D1-UP
PART OF 235-3170 SEPARATOR GP-WATER
AN ATTACHMENT

SMCS-1258 **i02053329**

NOTE	REF NO	GRAPHIC REF	PART NUMBER	QTY	PART NAME 1 2 3 4 5 6 (PRODUCT LEVEL)	SEE PAGE
	1	1	**118-8118**	1	RING-RETAINING	
	2	1	**228-9130**	1	ELEMENT-FILTER (FUEL)	
	3	1	**228-9132**	1	FITTING (FUEL PUMP)	
F			**149-9954**	1	DRAIN AS (SENSOR)	
	4	1	**193-0618**	1	SENSOR GP-MOISTURE (WATER SEPARATOR)	
		1	**192-7877**	1	RETAINER	

F-NOT SHOWN

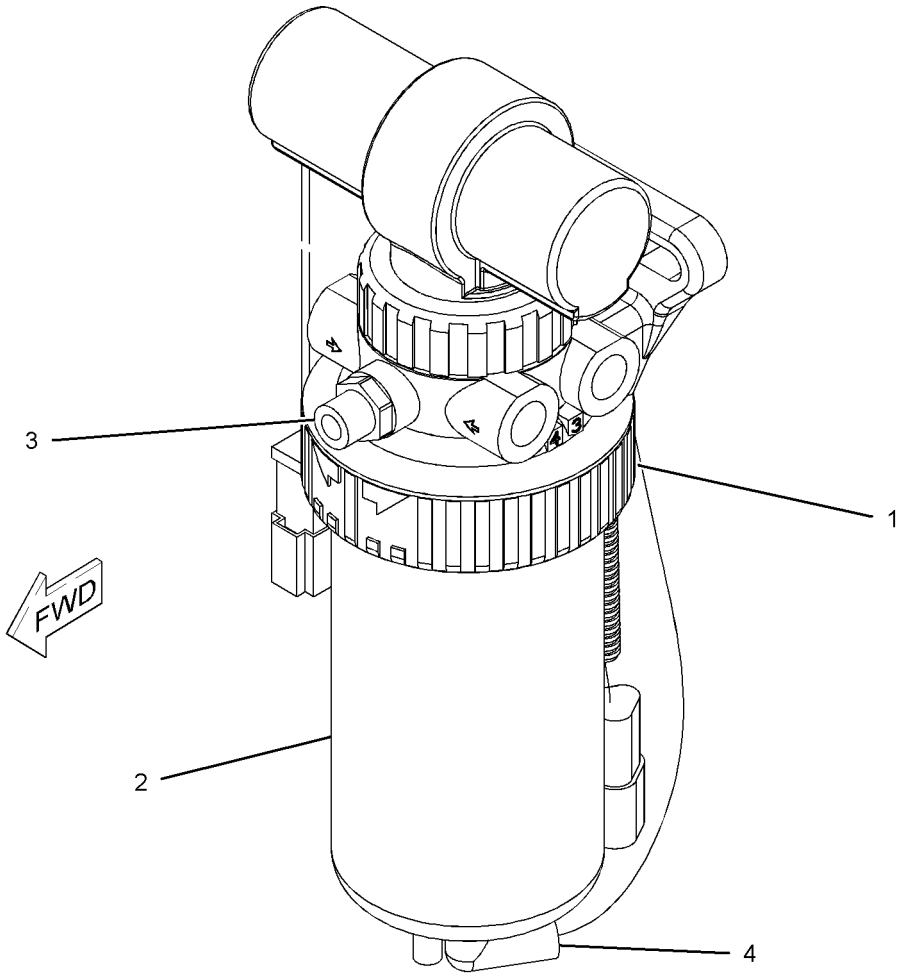

GRAPHIC #1

<END>

g01039647

235-3170 SEPARATOR GP-WATER

S/N: B2D1-UP
PART OF 214-6890, 214-6891 ENGINE AR
AN ATTACHMENT

SMCS-1263 **i01991955**

NOTE	REF NO	GRAPHIC REF	PART NUMBER	QTY	PART NAME 1 2 3 4 5 6 (PRODUCT LEVEL)	SEE PAGE
	1	1	**3S-2093**	1	STRAP-CABLE	
	2	1	**069-4080**	1	FITTING-COUPLING	
	3	1	*165-7951*	2	CONNECTOR AS	
		1	**3J-1907**	1	SEAL-O-RING	
		1	**157-1669**	1	CONNECTOR	
Y	4	1	**228-9129**	1	PUMP GP-FUEL PRIMING	95
	5	1	**237-2197**	1	BRACKET AS	
	6	1	**3J-1907**	2	SEAL-O-RING	
	7	1	**8T-4121**	4	WASHER-HARD (11X21X2.5MM THK)	
M	8	1	**8T-4136**	2	BOLT (M10X1.5X25MM)	
M	9	1	**8T-4196**	2	BOLT (M10X1.5X35MM)	
	10	1	**9S-4191**	2	PLUG	

M-METRIC PART
Y-SEPARATE ILLUSTRATION

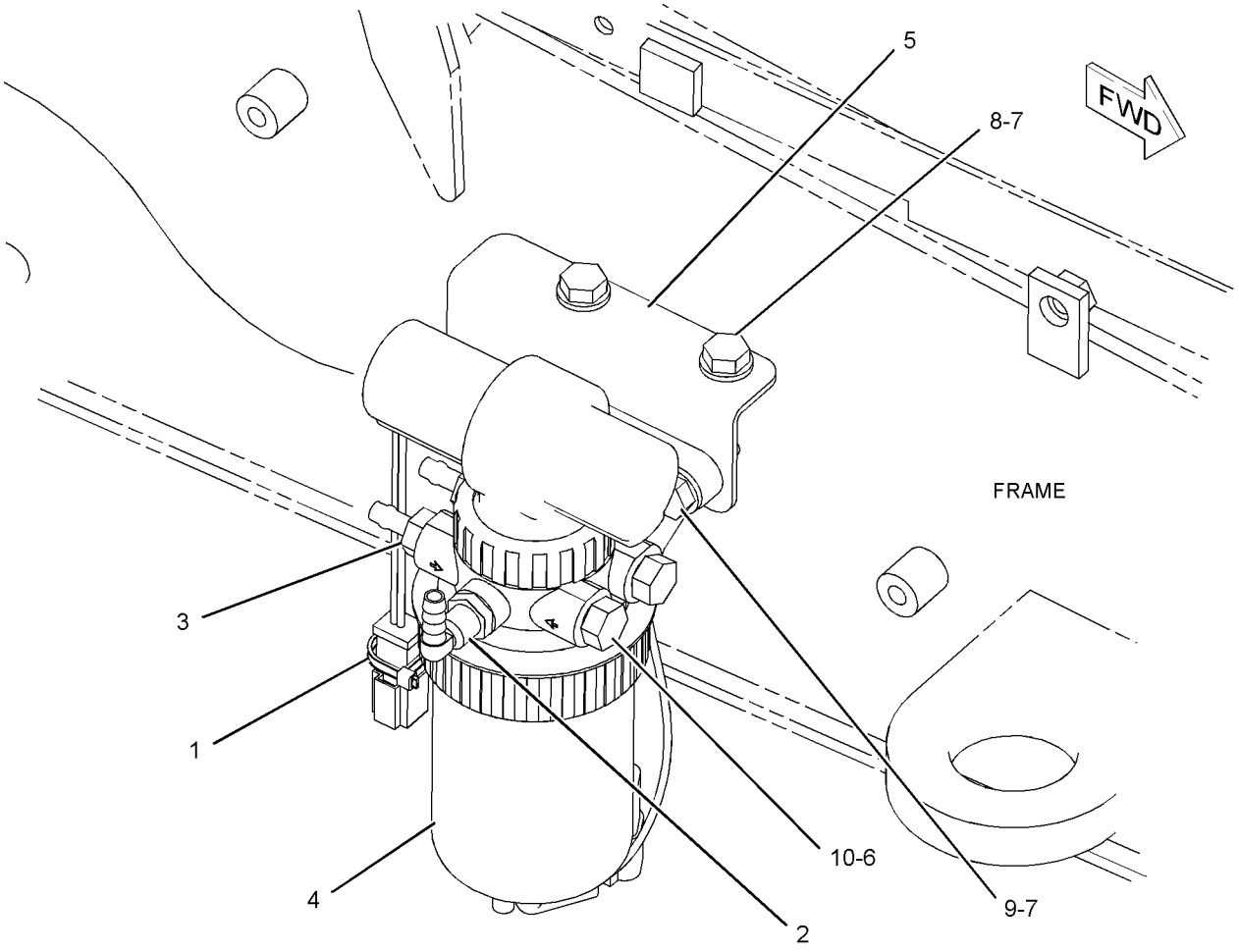

GRAPHIC #1 **<END>** g01040336

FUEL SYSTEM

214-6908 TANK & MTG GP-FUEL

S/N: B2D1-UP

PART OF 214-6950 CHASSIS AR

SMCS-1273 **i02047073**

NOTE	REF NO	GRAPHIC REF	PART NUMBER	QTY	PART NAME 1 2 3 4 5 6 (PRODUCT LEVEL)	SEE PAGE
	1	1	**164-3876**	1	STEP AS	
M		1	**8T-3612**	4	NUT-WELD (M8X1.25-THD)	
	2	1	**190-5123**	1	PLATE AS	
M		1	**8T-3612**	3	NUT-WELD (M8X1.25-THD)	
	3	1	**201-1837**	1	TREAD	
Y	4	1	**214-6949**	1	TANK GP-FUEL	98
	5	1	**5P-4116**	7	WASHER-HARD (8.8X20.5X2-MM THK)	
M	6	1	**8T-4183**	4	BOLT (M12X1.75X40-MM)	
M	7	1	**8T-4189**	7	BOLT (M8X1.25X20-MM)	
M	8	1	**8T-4200**	4	BOLT (M8X1.25X16-MM)	
	9	1	**8T-4223**	4	WASHER-HARD (13.5X25.5X3-MM THK)	
	10	1	**8T-4224**	4	WASHER-HARD (8.8X16X2-MM THK)	

M-METRIC PART
Y-SEPARATE ILLUSTRATION

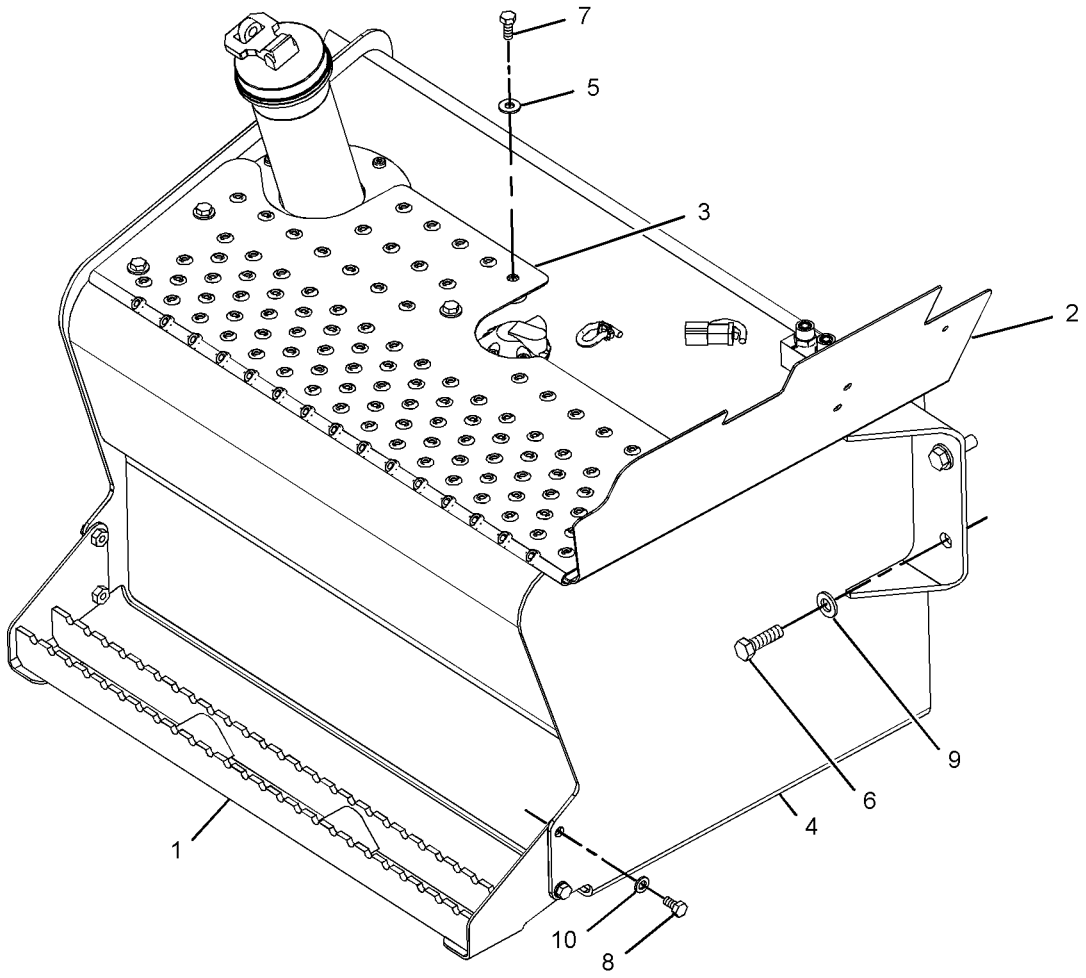

GRAPHIC #1 **<END>** g01022364

FUEL SYSTEM

214-6949 TANK GP-FUEL

S/N: B2D1-UP

PART OF 214-6908 TANK & MTG GP-FUEL

SMCS-1273 **i02047071**

NOTE	REF NO	GRAPHIC REF	PART NUMBER	QTY	PART NAME 1 2 3 4 5 6 (PRODUCT LEVEL)	SEE PAGE
	1	1	**8L-8413**	1	STRAP-CABLE (PLASTIC)	
	2	1	**9R-7240**	1	GASKET	
	3	1	**131-0232**	1	COVER	
	4	1	**187-8936**	1	SENDER AS-FUEL LEVEL	
		1	**3E-3365**	1	WEDGE-RECEPTACLE LOCK (2-PIN)	
		1	**102-8802**	1	KIT-RECEPTACLE (2-PIN)	
		1	**186-3735**	2	PIN-CONNECTOR	
Y	5	1	**244-2603**	1	TANK GP-FUEL	99
M	6	1	**123-4950**	5	SCREW-PAN HEAD (M6X1X16-MM)	

M-METRIC PART
Y-SEPARATE ILLUSTRATION

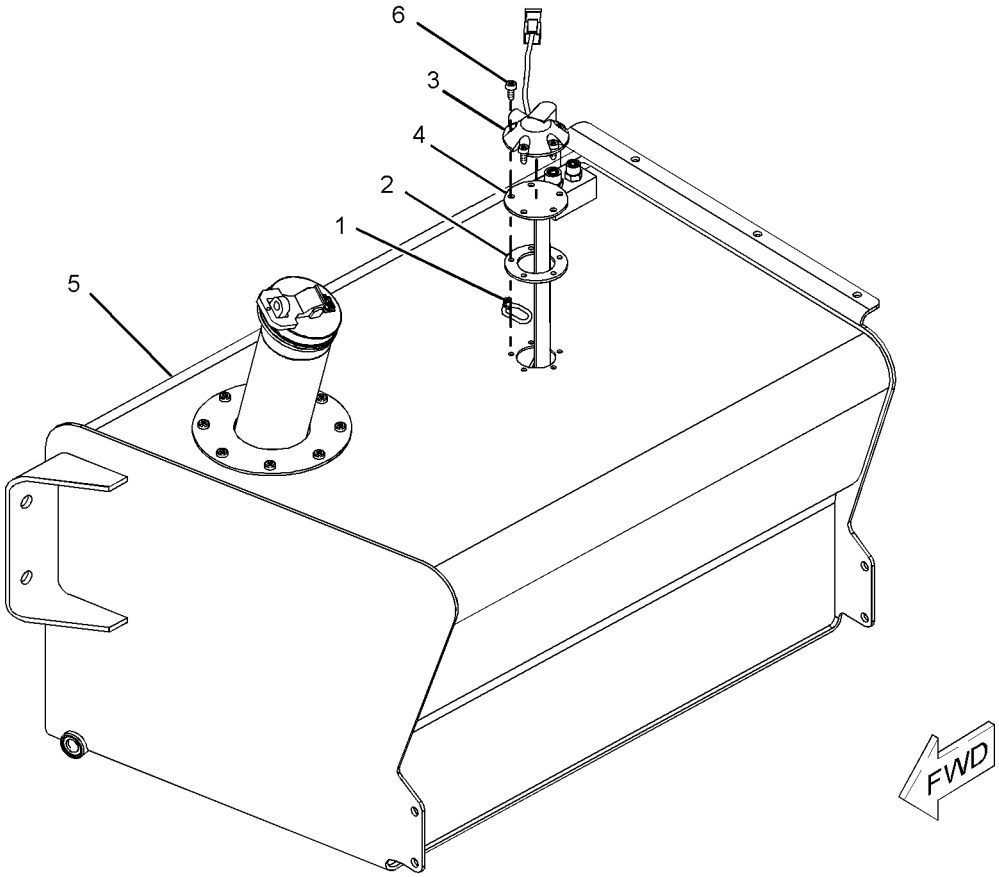

GRAPHIC #1 **<END>** g01042635

FUEL SYSTEM

244-2603 TANK GP-FUEL

S/N: B2D1-UP

PART OF 214-6949 TANK GP-FUEL

SMCS-1273 **i02022928**

NOTE	REF NO	GRAPHIC REF	PART NUMBER	QTY	PART NAME 1 2 3 4 5 6 (PRODUCT LEVEL)	SEE PAGE
	1	1	**201-0330**	1	CAP-FUEL	
	2	1	**201-1835**	1	TUBE AS	
	3	1	**214-6948**	1	TANK AS-FUEL	
	4	1	**106-8020**	1	GASKET	
M	5	1	**123-4950**	8	SCREW-PAN HEAD (M6X1X16-MM)	
	6	1	*148-8326*	2	CONNECTOR GP	
			3J-7354	1	SEAL-O-RING	
			6V-8397	1	SEAL-O-RING	
			6V-9872	1	CONNECTOR	
	7	1	*148-8407*	1	PLUG GP	
			3J-1907	1	SEAL-O-RING	
			9S-4191	1	PLUG (STO)	
F		1	**180-3730**	1	FILTER AS-FUEL (FILLER NECK SCREEN)	

F-NOT SHOWN
M-METRIC PART

244-2603 **TANK GP-FUEL** *(contd.)* **i02022928**

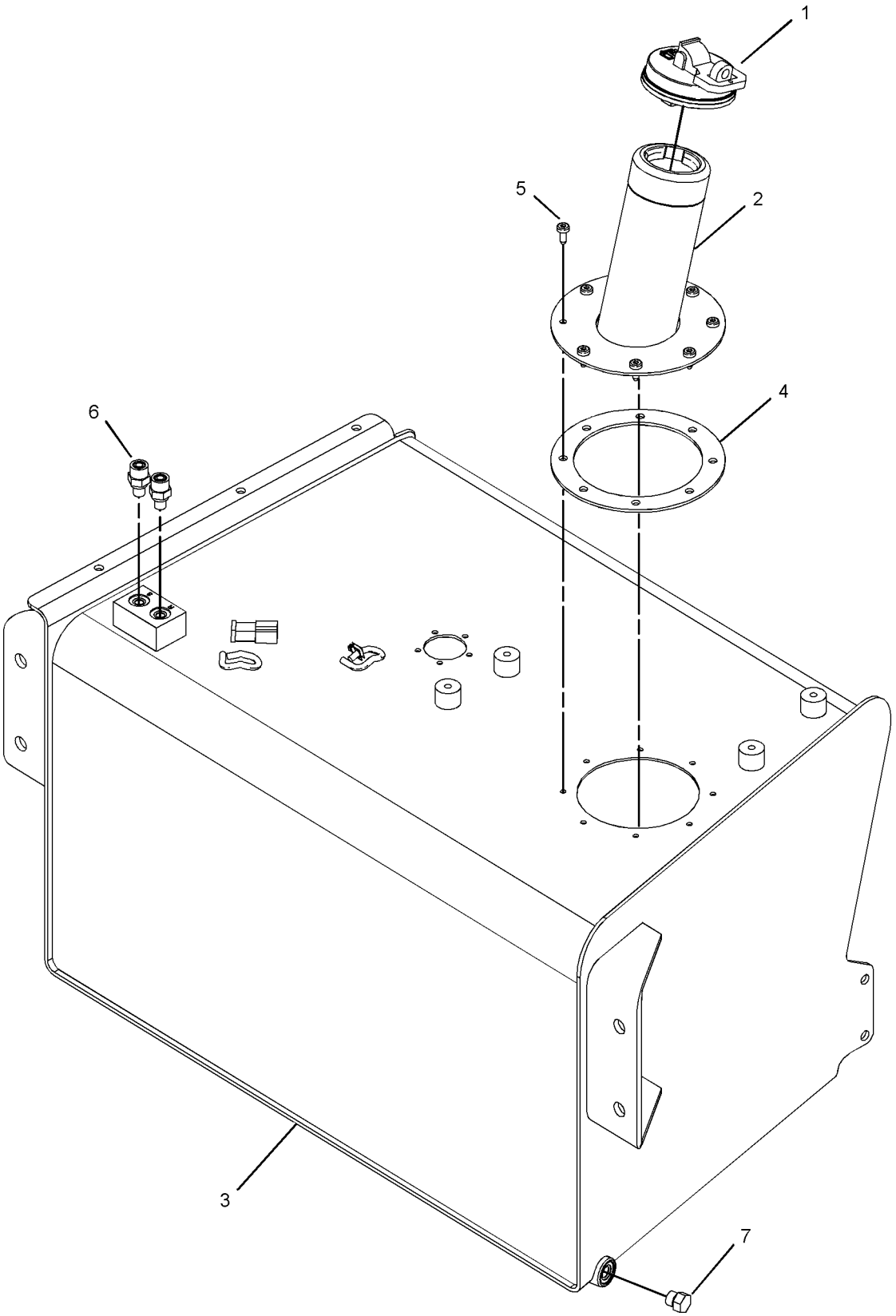

GRAPHIC #1 **<END>** g01042809

237-0027 ALTERNATOR GP-CHARGING

S/N: CRS1-UP

PART OF 234-3058, 234-3059 ENGINE AR-PRIMARY

AN ATTACHMENT

SMCS-1405 **i01991984**

NOTE	REF NO	GRAPHIC REF	PART NUMBER	QTY	PART NAME 1 2 3 4 5 6 (PRODUCT LEVEL)	SEE PAGE
	1	1	**6B-0933**	1	SPACER (10.31X19.05X6.35MM THK)	
	2	1	**6I-0260**	1	BOLT (M8X1.25X25MM)	
	3	1	**6I-0454**	1	BOLT (M10X1.5X70MM)	
	4	1	**6I-0594**	1	NUT (M10X1.5)	
	5	1	**7W-2632**	1	WASHER (8.5X16.8X1.6MM THK)	
	6	1	**067-6366**	1	WASHER (M8)	
	7	1	**100-8451**	1	BOLT	
	8	1	**113-6349**	1	NUT	
	9	1	**140-8783**	2	BOLT (M10X45MM)	
	10	1	**225-3145**	1	ALTERNATOR GP-CHARGING	
	11	1	**233-9530**	1	BRACKET	
	12	1	**233-9531**	1	LEVER-ADJUSTING	
	13	1	**233-9532**	1	PULLEY-ALTERNATOR	

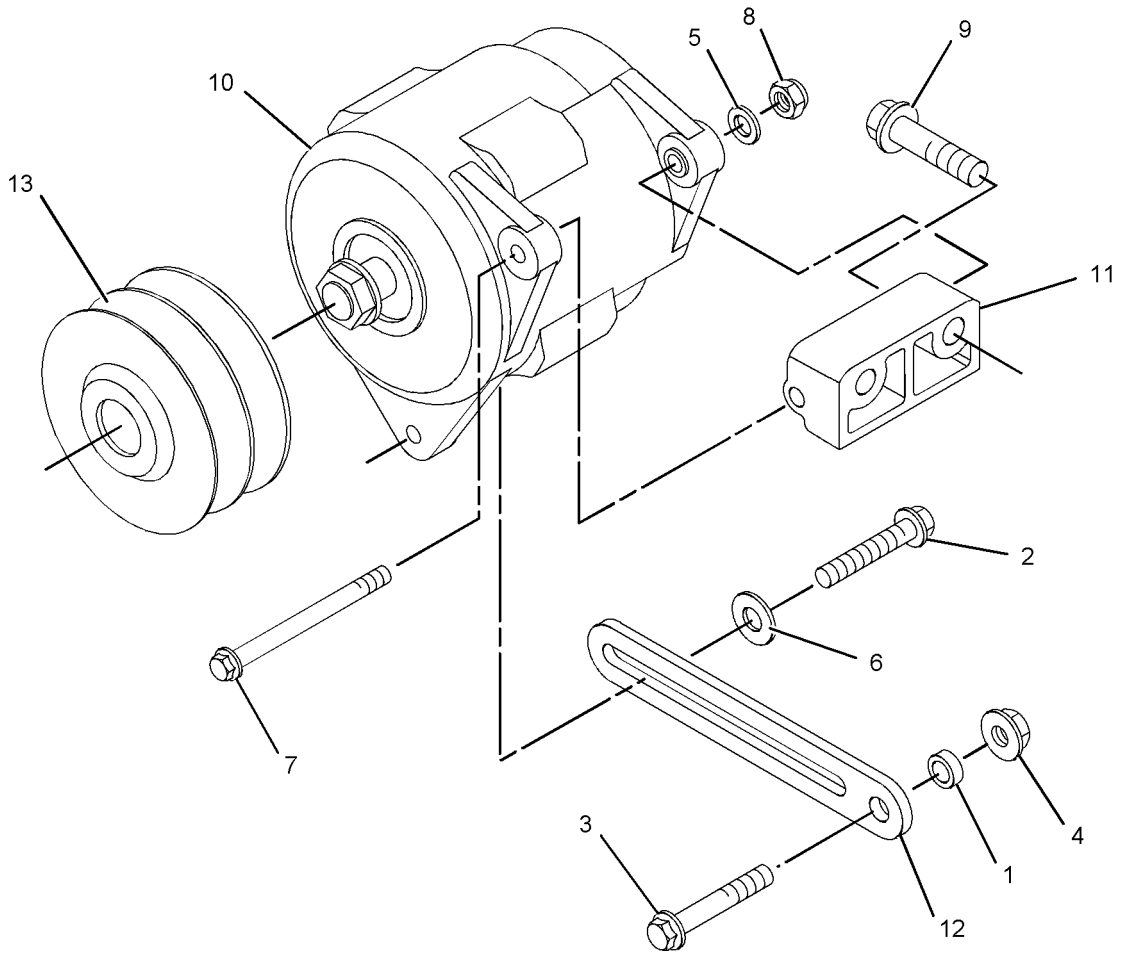

GRAPHIC #1 **<END>** g01039667

235-2853 BATTERY GP

S/N: B2D1-UP

AN ATTACHMENT

SMCS-1401 **i02012901**

NOTE	REF NO	GRAPHIC REF	PART NUMBER	QTY	PART NAME 1 2 3 4 5 6 (PRODUCT LEVEL)	SEE PAGE
	1	1	**7K-1181**	2	STRAP-CABLE	
	2	1	**038-9317**	1	TREAD	
	3	1	**240-4639**	1	BRACKET AS	
	4	1	**213-6088**	1	CABLE AS-BATTERY (NEGATIVE)	
		1	**1S-7251**	1	TERMINAL-RING (FOR 1/2IN BOLT)	
E		1	**5P-0747**		CABLE (00GA)(BLACK) (61CM)	
		1	**1M-6119**	1	BOLT (5/16-18X1.375 IN)	
		1	**1M-6120**	2	NUT (5/16-18 THD)	
	5	1	**230-6368**	1	BATTERY (12 VOLT, HEAVY DUTY)	
	6	1	**235-5776**	1	CABLE AS (POSITIVE)	
		1	**1S-7251**	1	TERMINAL-RING (FOR 1/2IN BOLT)	
		1	**5P-0761**		CABLE (00GA)(RED) (95CM)	
		1	**8L-8413**	1	STRAP-CABLE	
		1	**1M-6119**	1	BOLT (5/16-18X1.375 IN)	
		1	**1M-6120**	1	NUT (5/16-18 THD)	
		1	**6V-8801**	2	NUT (3/8-16 THD)	
	7	1	**4H-2558**	1	GROMMET	
	8	1	**7X-7729**	2	WASHER (11X25X3MM THK)	
M	9	1	**8T-4133**	1	NUT (M10X1.5 THD)	
M	10	1	**8T-4137**	1	BOLT (M10X1.5X20MM)	
M	11	1	**8T-5005**	1	BOLT (M10X1.50X70MM)	

E-ORDER BY THE CENTIMETER
M-METRIC PART

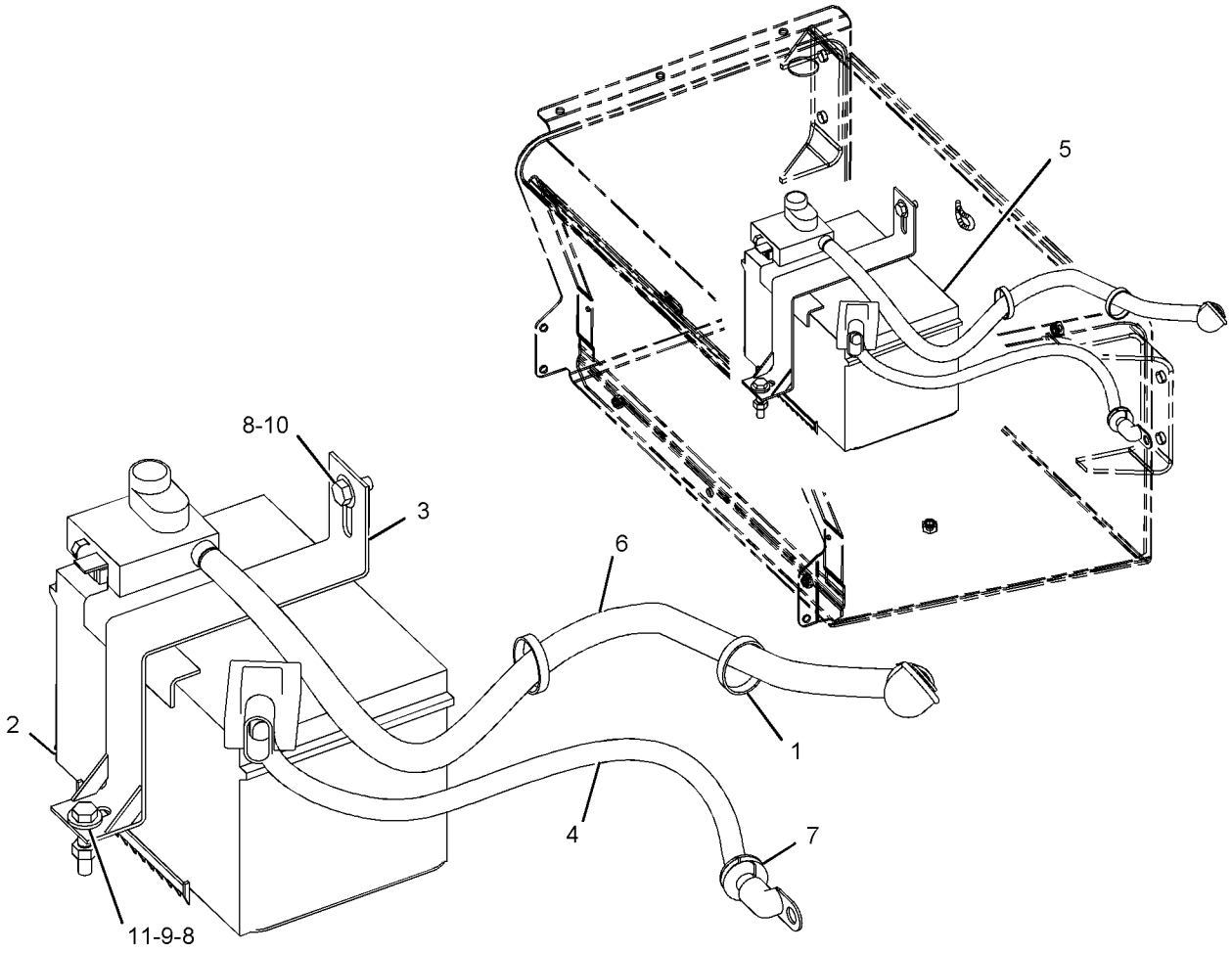

GRAPHIC #1 **<END>** g01034109

ELECTRICAL AND STARTING SYSTEM

235-2854 BATTERY GP

S/N: B2D1-UP
AN ATTACHMENT

SMCS-1401 **i02046442**

NOTE	REF NO	GRAPHIC REF	PART NUMBER	QTY	PART NAME 1 2 3 4 5 6 (PRODUCT LEVEL)	SEE PAGE
	1	1	**038-9317**	1	TREAD	
	2	1	**213-6091**	1	CABLE AS-BATTERY (POSITIVE)	
E	2A	1	**5P-0761**		CABLE (00-GA, RED) (35CM)	
	2B	1	**7T-9987**	1	COVER-TERMINAL	
		1	**8L-8413**	1	STRAP-CABLE (PLASTIC)	
		1	**8L-8413**	2	STRAP-CABLE (PLASTIC)	
		1	**8N-0869**	1	COVER-TERMINAL (RED)	
		1	**8S-3020**	1	TERMINAL-CABLE	
E	2C	1	**8Y-8081**		TUBE (35CM)	
	2D	1	**3S-6049**	1	TERMINAL AS-BATTERY (POSITIVE)	
		1	**1M-6119**	1	BOLT (5/16-18X1.375-IN)	
		1	**1M-6120**	1	NUT (5/16-18-THD)	
	3	1	**213-6092**	1	CABLE AS-BATTERY (NEGATIVE)	
	3A	1	**1S-7252**	1	TERMINAL-RING (FOR 3/8-IN BOLT)	
E	3B	1	**5P-0747**		CABLE (00-GA, BLACK) (47CM)	
	3C	1	**7N-5274**	1	COVER-TERMINAL (BLACK)	
		1	**8L-8413**	1	STRAP-CABLE (PLASTIC)	
		1	**8L-8413**	2	STRAP-CABLE (PLASTIC)	
		1	**9G-8909**	1	COVER-TERMINAL (BLACK)	
	3D	1	**3S-6050**	1	TERMINAL AS-BATTERY (NEGATIVE)	
		1	**1M-6119**	1	BOLT (5/16-18X1.375-IN)	
		1	**1M-6120**	1	NUT (5/16-18-THD)	
	4	1	**230-6368**	1	BATTERY (12-VOLT, HEAVY DUTY)	
	5	1	**240-4639**	1	BRACKET AS	
	6	1	**7X-7729**	2	WASHER (11X25X3-MM THK)	
M	7	1	**8T-4133**	1	NUT (M10X1.5-THD)	
M	8	1	**8T-4137**	1	BOLT (M10X1.5X20-MM)	
M	9	1	**8T-4185**	1	BOLT (M10X1.5X50-MM)	

E-ORDER BY THE CENTIMETER
M-METRIC PART

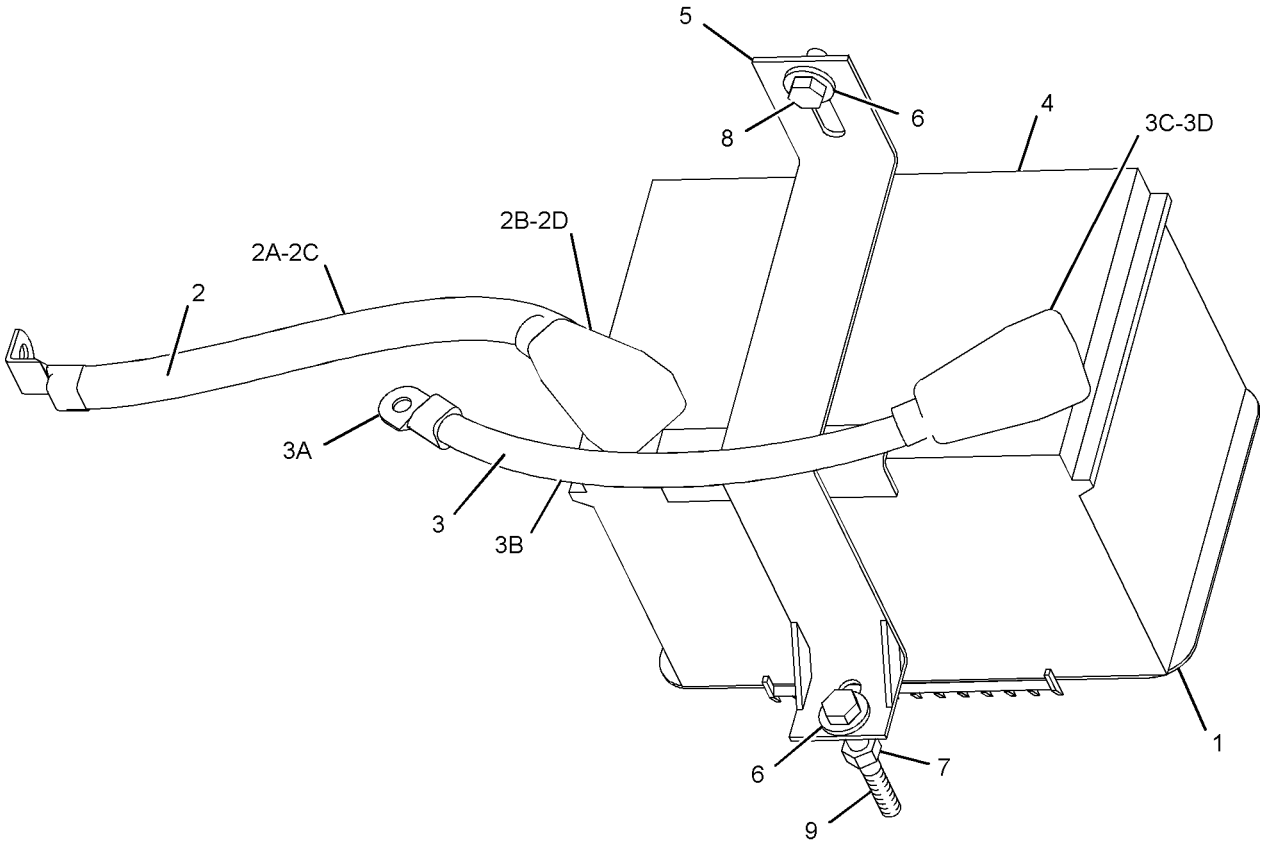

GRAPHIC #1 **<END>** g01050462

241-8495 BATTERY GP

S/N: B2D1-UP
AN ATTACHMENT

SMCS-1401 **i02050595**

NOTE	REF NO	GRAPHIC REF	PART NUMBER	QTY	PART NAME 1 2 3 4 5 6 (PRODUCT LEVEL)	SEE PAGE
	1	1	**7K-1181**	2	STRAP-CABLE	
	2	1	**038-9317**	1	TREAD	
	3	1	**178-9242**	1	BRACKET AS	
	4	1	**213-6088**	1	CABLE AS-BATTERY (NEGATIVE)	
		1	**1S-7251**	1	TERMINAL-RING (FOR 1/2-IN BOLT)	
E		1	**5P-0747**		CABLE (00-GA, BLACK) (61CM)	
		1	*229-9855*	1	TERMINAL AS-BATTERY (NEGATIVE)	
		1	**1M-6119**	1	BOLT (5/16-18X1.375-IN)	
		1	**1M-6120**	2	NUT (5/16-18-THD)	
	5	1	**235-5776**	1	CABLE AS-BATTERY (POSITIVE)	
		1	**1S-7251**	1	TERMINAL-RING (FOR 1/2-IN BOLT)	
E		1	**5P-0761**		CABLE (00-GA, RED) (86CM)	
		1	**8L-8413**	1	STRAP-CABLE	
		1	**8N-0869**	1	COVER-TERMINAL (RED)	
E		1	**8Y-8081**		TUBE (86CM)	
		1	*235-8634*	1	TERMINAL AS-BATTERY (POSITIVE)	
		1	**1M-6119**	1	BOLT (5/16-18X1.375-IN)	
		1	**1M-6120**	1	NUT (5/16-18-THD)	
		1	**6V-8801**	2	NUT (3/8-16-THD)	
	6	1	**3T-5760**	1	BATTERY (12-VOLT, 750-AMPERE) (MAINTENANCE FREE)	
	7	1	**4H-2558**	1	GROMMET	
	8	1	**7X-7729**	2	WASHER (11X25X3-MM THK)	
M	9	1	**8T-4133**	1	NUT (M10X1.5-THD)	
M	10	1	**8T-4137**	1	BOLT (M10X1.5X20-MM)	
M	11	1	**8T-5005**	1	BOLT (M10X1.50X70-MM)	

E-ORDER BY THE CENTIMETER
M-METRIC PART

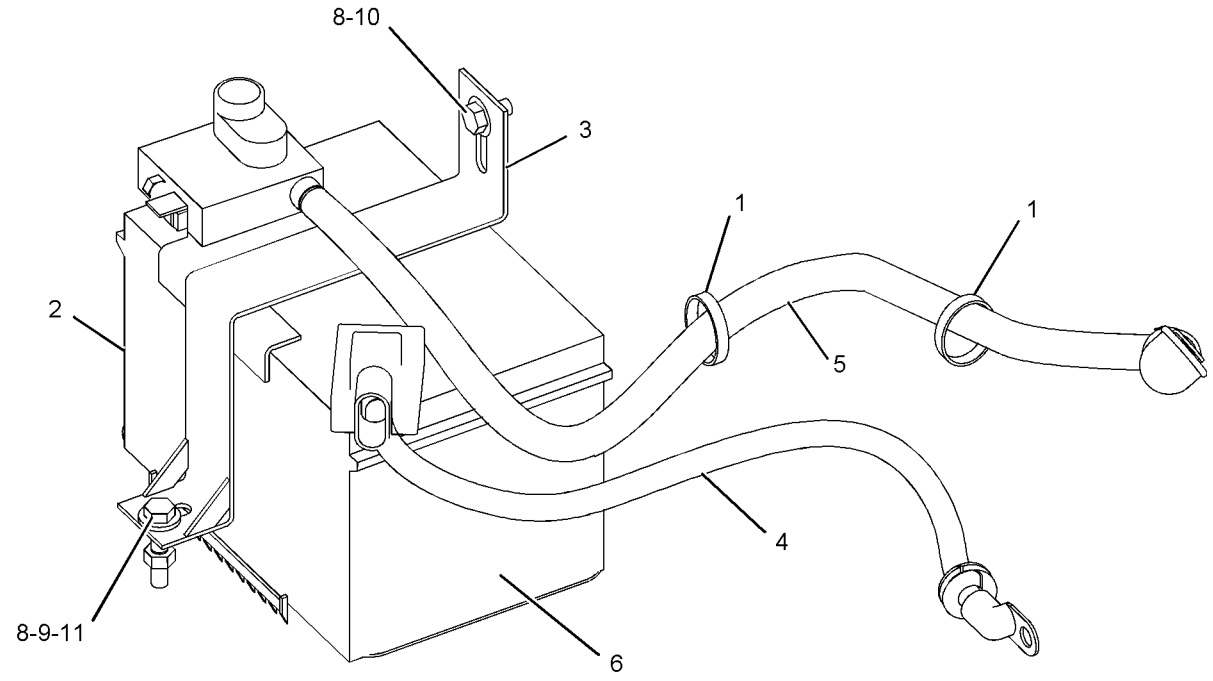

GRAPHIC #1 **<END>** g01046348

241-8496 BATTERY GP

S/N: B2D1-UP

AN ATTACHMENT

SMCS-1401 **i02047206**

NOTE	REF NO	GRAPHIC REF	PART NUMBER	QTY	PART NAME 1 2 3 4 5 6 (PRODUCT LEVEL)	SEE PAGE
	1	1	**038-9317**	1	TREAD	
	2	1	**178-9242**	1	BRACKET AS	
	3	1	**213-6091**	1	CABLE AS-BATTERY	
		1	**5P-0761**		CABLE (00-GA, RED) (35 CM)	
		1	**7T-9987**	1	COVER-TERMINAL	
		1	**8L-8413**	2	STRAP-CABLE (PLASTIC)	
		1	**8N-0869**	1	COVER-TERMINAL (RED)	
		1	**8S-3020**	1	TERMINAL-CABLE	
		1	**8Y-8081**		TUBE (35 CM)	
	4	1	**213-6092**	1	CABLE AS-BATTERY	
		1	**1S-7252**		TERMINAL-RING (FOR 3/8-IN BOLT)	
		1	**5P-0747**		CABLE (00-GA, BLACK) (47 CM)	
		1	**7N-5274**	1	COVER-TERMINAL (BLACK)	
		1	**8L-8413**	2	STRAP-CABLE (PLASTIC)	
		1	**9G-8909**	1	COVER-TERMINAL (BLACK)	
	5	1	**3T-5760**	1	BATTERY (12-VOLT, 750-AMPERE)	
	6	1	**7X-7729**	2	WASHER (11X25X3-MM THK)	
M	7	1	**8T-4133**	1	NUT (M10X1.5-THD)	
M	8	1	**8T-4137**	1	BOLT (M10X1.5X20-MM)	
M	9	1	**8T-5005**	1	BOLT (M10X1.50X70-MM)	

M-METRIC PART

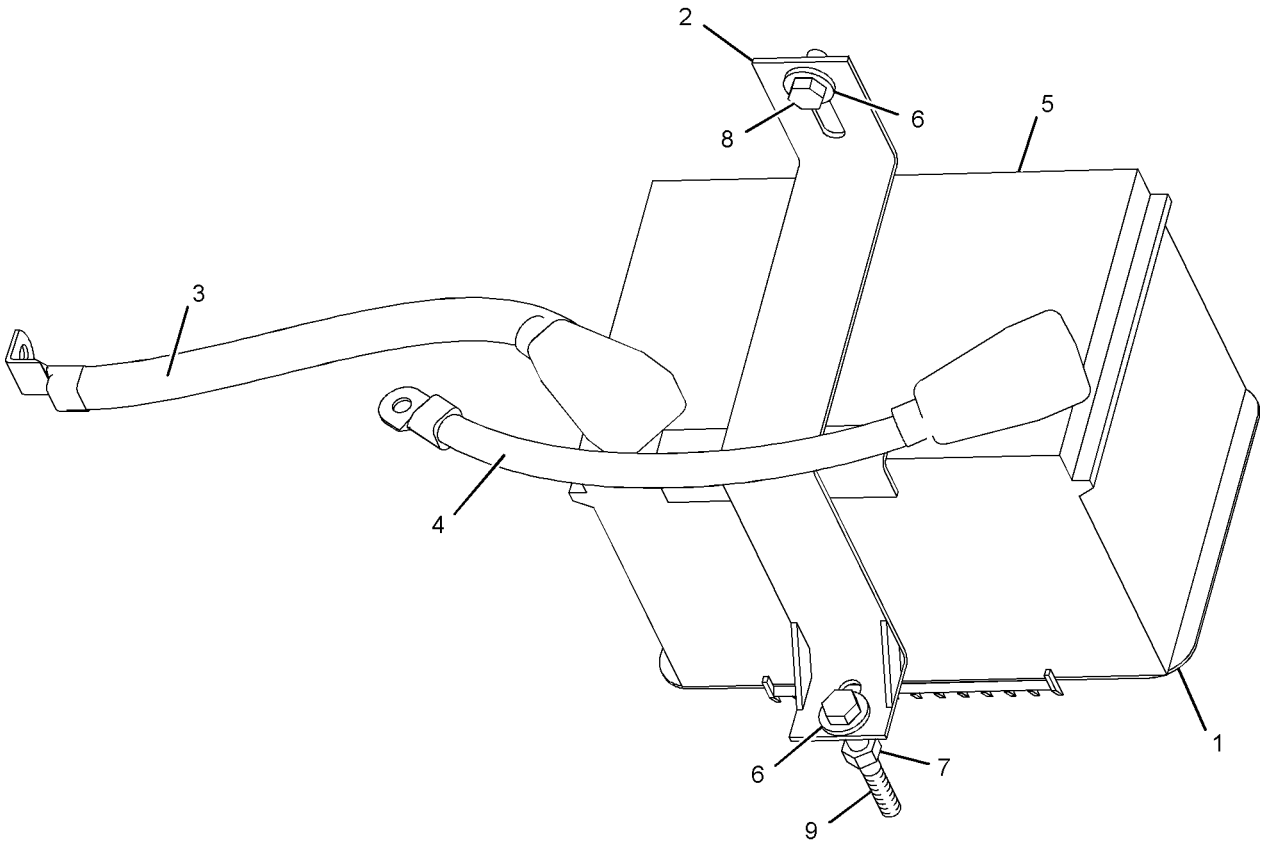

GRAPHIC #1 **<END>** g01051391

232-6661 GLOW PLUG GP

S/N: CRS1-UP
PART OF 234-3058, 234-3059 ENGINE AR-PRIMARY
AN ATTACHMENT

SMCS-1412 **i02052231**

NOTE	REF NO	GRAPHIC REF	PART NUMBER	QTY	PART NAME 1 2 3 4 5 6 (PRODUCT LEVEL)	SEE PAGE
	1	1	**232-7399**	1	SUPPORT-PLUG	
	2	1	**232-6662**	4	GLOW PLUG	

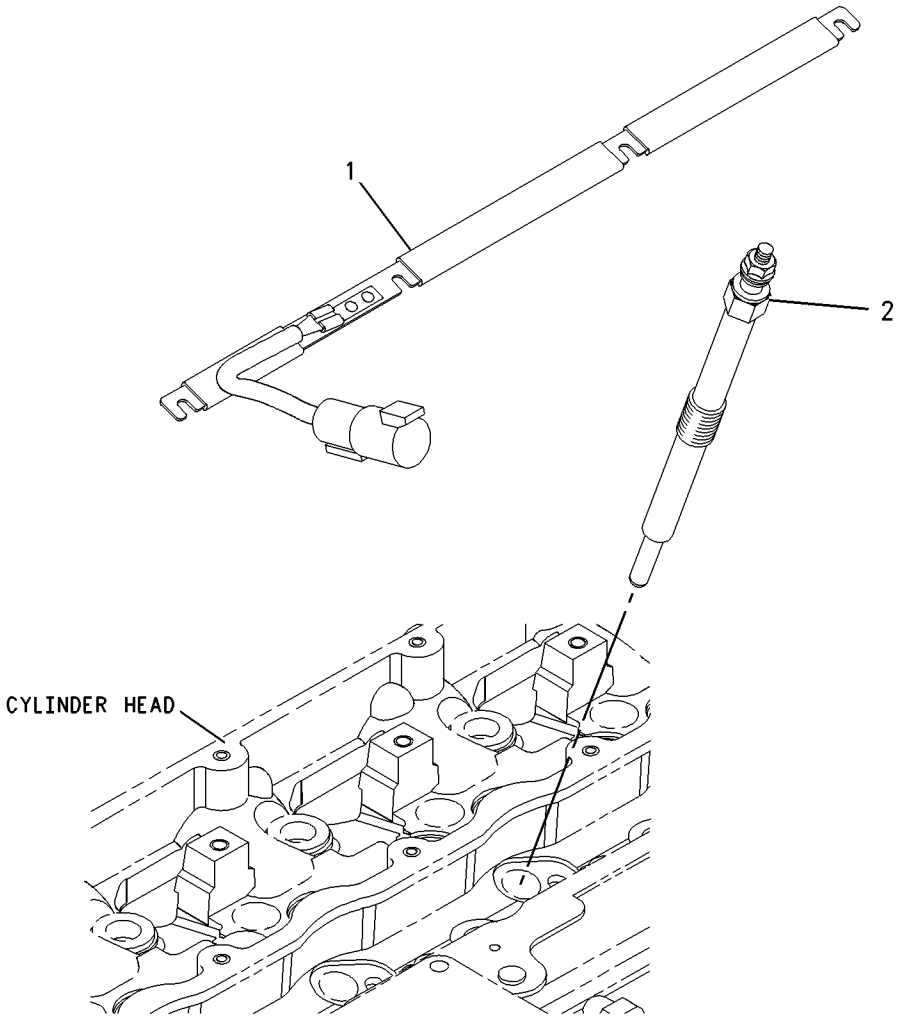

GRAPHIC #1 **<END>** g00950927

234-1711 HEATER GP-JACKET WATER

S/N: B2D1-UP
AN ATTACHMENT

SMCS-1383 **i02046149**

NOTE	REF NO	GRAPHIC REF	PART NUMBER	QTY	PART NAME 1 2 3 4 5 6 (PRODUCT LEVEL)	SEE PAGE
	1	1	*231-3054*	1	HEATER GP-JACKET WATER	
		1	**219-3273**	1	ELEMENT AS-JACKET WATER HEATER (120-VOLT, 1000-WATT)	
		1	**133-6517**	1	CAP AS-DUST	
		1	**133-3413**	1	KIT-SEAL	
					(KIT INCLUDES SEAL, SPACER, & RINGS.)	
		1	**231-3052**	1	CORD AS	
	2	1	**130-0165**	1	RECEPTACLE AS	
		1	**1M-1230**	2	NUT & LOCK AS	
		1	**168-4511**	2	SCREW-PAN HEAD (NO 10X25.4-MM)	
	3	1	**165-8357**	1	BRACKET AS	
M		1	**8T-3612**	2	NUT-WELD (M8X1.25-THD)	
	4	1	**3S-2093**	3	STRAP-CABLE	
M	5	1	**8T-4189**	2	BOLT (M8X1.25X20-MM)	
	6	1	**8T-4224**	2	WASHER-HARD (8.8X16X2-MM THK)	

M-METRIC PART

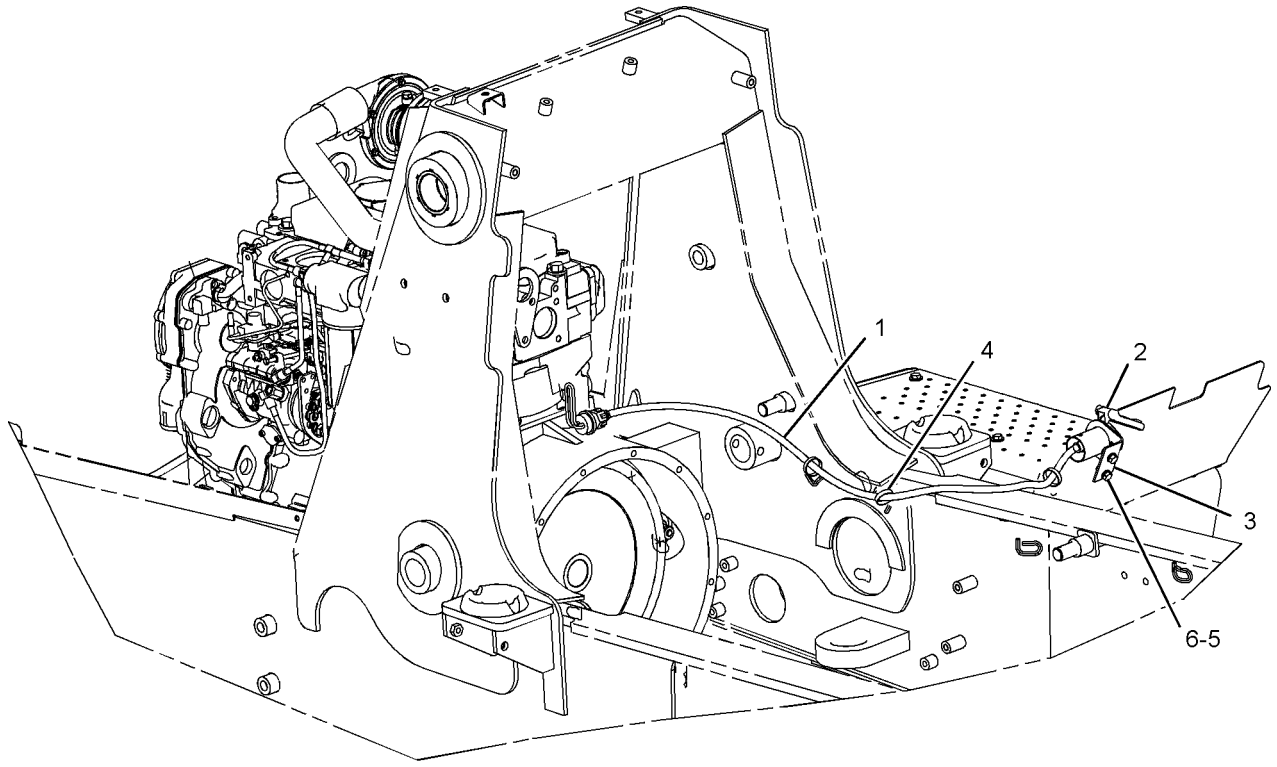

GRAPHIC #1 **<END>** g01042021

234-4328 LAMP GP-FLOOD–REAR

S/N: B2D1-UP

PART OF 241-0097 LIGHTING GP-FLOOD, 241-0098 LIGHTING GP-FLOOD & SIGNAL

AN ATTACHMENT

SMCS-1429, 1434 **i02025071**

NOTE	REF NO	GRAPHIC REF	PART NUMBER	QTY	PART NAME 1 2 3 4 5 6 (PRODUCT LEVEL)	SEE PAGE
	1	1	**9W-0607**	1	LAMP (12-VOLT, 55-WATT)	
M	2	1	**8T-4133**	1	NUT (M10X1.5-THD)	
	3	1	**9X-4244**	2	SCREW	
	4	1	**202-6614**	1	LENS AS (FLOODLIGHT) (FLOOD)	
	5	1	**234-7730**	1	BODY AS	
	6	1	**164-7556**	1	CLIP	
	7	1	**234-7731**	1	BRACKET AS	

M-METRIC PART

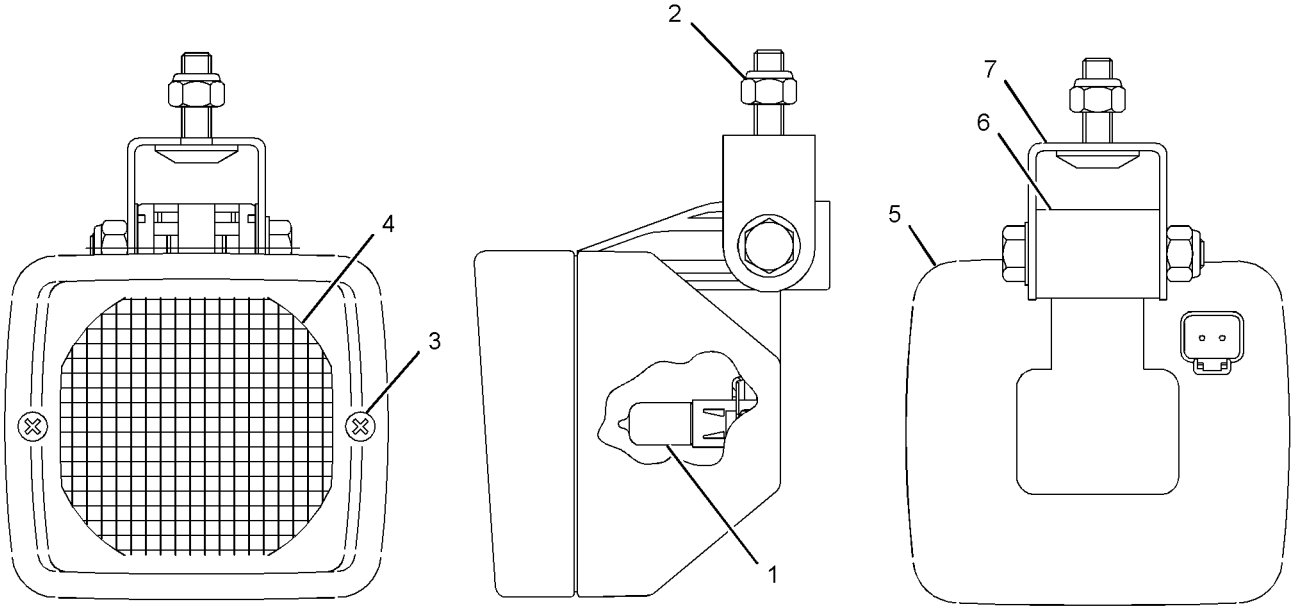

FRONT VIEW LEFT SIDE VIEW REAR VIEW

GRAPHIC #1

<END>

g01022763

234-4329 LAMP GP-FLOOD–REAR

S/N: B2D1-UP
PART OF 241-0098 LIGHTING GP-FLOOD & SIGNAL
AN ATTACHMENT

SMCS-1429, 1434 **i02024979**

NOTE	REF NO	GRAPHIC REF	PART NUMBER	QTY	PART NAME 1 2 3 4 5 6 (PRODUCT LEVEL)	SEE PAGE
	1	1	**9W-0607**	1	LAMP (12-VOLT, 55-WATT)	
M	2	1	**8T-4133**	1	NUT (M10X1.5-THD)	
	3	1	**9X-4244**	2	SCREW	
	4	1	**202-6611**	1	LENS AS (FLOOD)	
	5	1	**234-7730**	1	BODY AS	
	6	1	**164-7556**	1	CLIP	
	7	1	**234-7731**	1	BRACKET AS	

M-METRIC PART

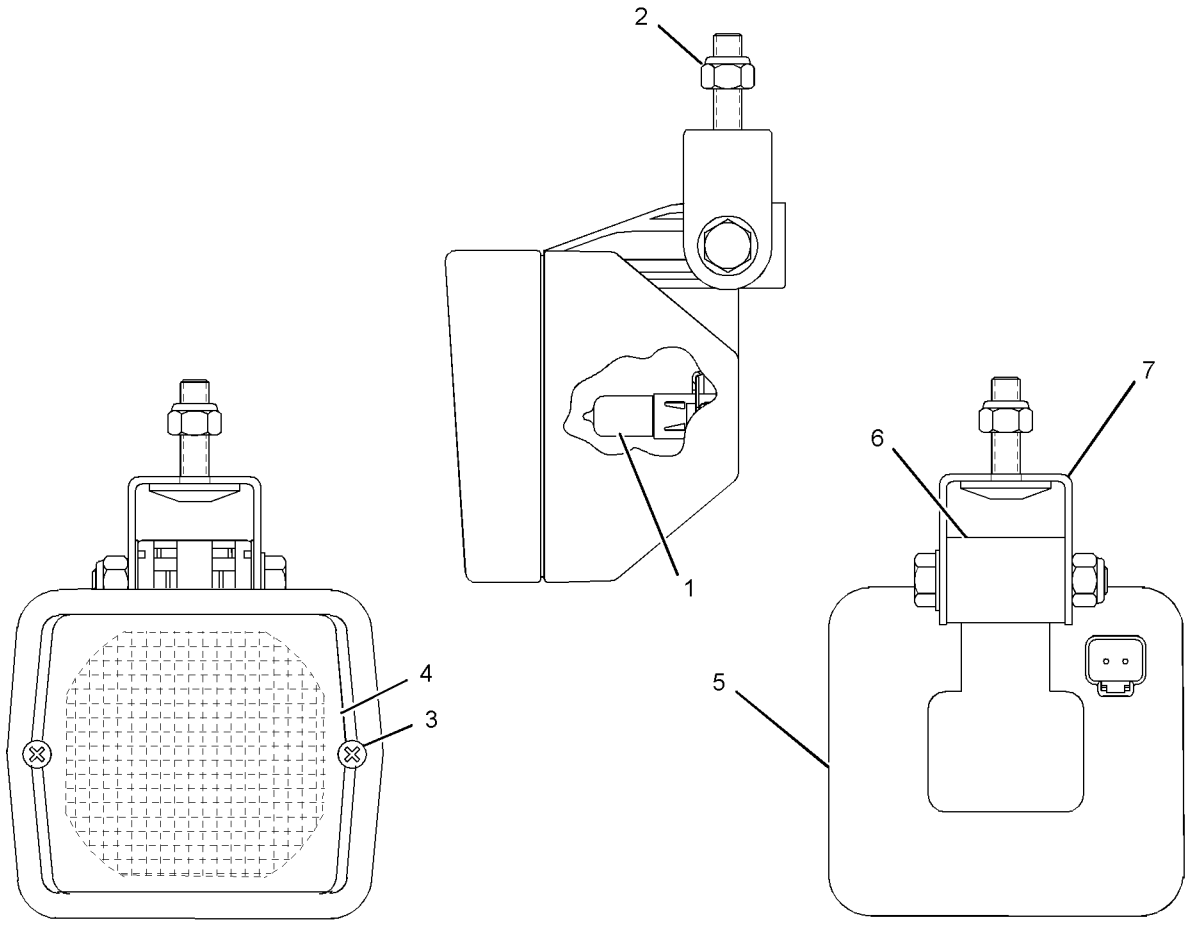

GRAPHIC #1 **<END>** g01026923

115-1716 LAMP GP-SIGNAL

S/N: B2D1-UP

PART OF 241-0097 LIGHTING GP-FLOOD, 241-0098 LIGHTING GP-FLOOD & SIGNAL

AN ATTACHMENT

SMCS-1429, 1430, 1432 **i02043861**

NOTE	REF NO	GRAPHIC REF	PART NUMBER	QTY	PART NAME 1 2 3 4 5 6 (PRODUCT LEVEL)	SEE PAGE
	1	1	**9W-3326**	1	LAMP (12-VOLT, 24-WATT)	
	2	1	**102-8802**	1	KIT-RECEPTACLE (2-PIN)	
					(KIT INCLUDES RECEPTACLE AS. & WEDGE)	
M	3	1	**173-2685**	2	SCREW-FLAT HEAD (M5X.8X50-MM)	
	4	1	**173-8340**	2	SCREW-PAN HEAD	
	5	1	**174-8957**	1	LENS (AMBER)	

M-METRIC PART

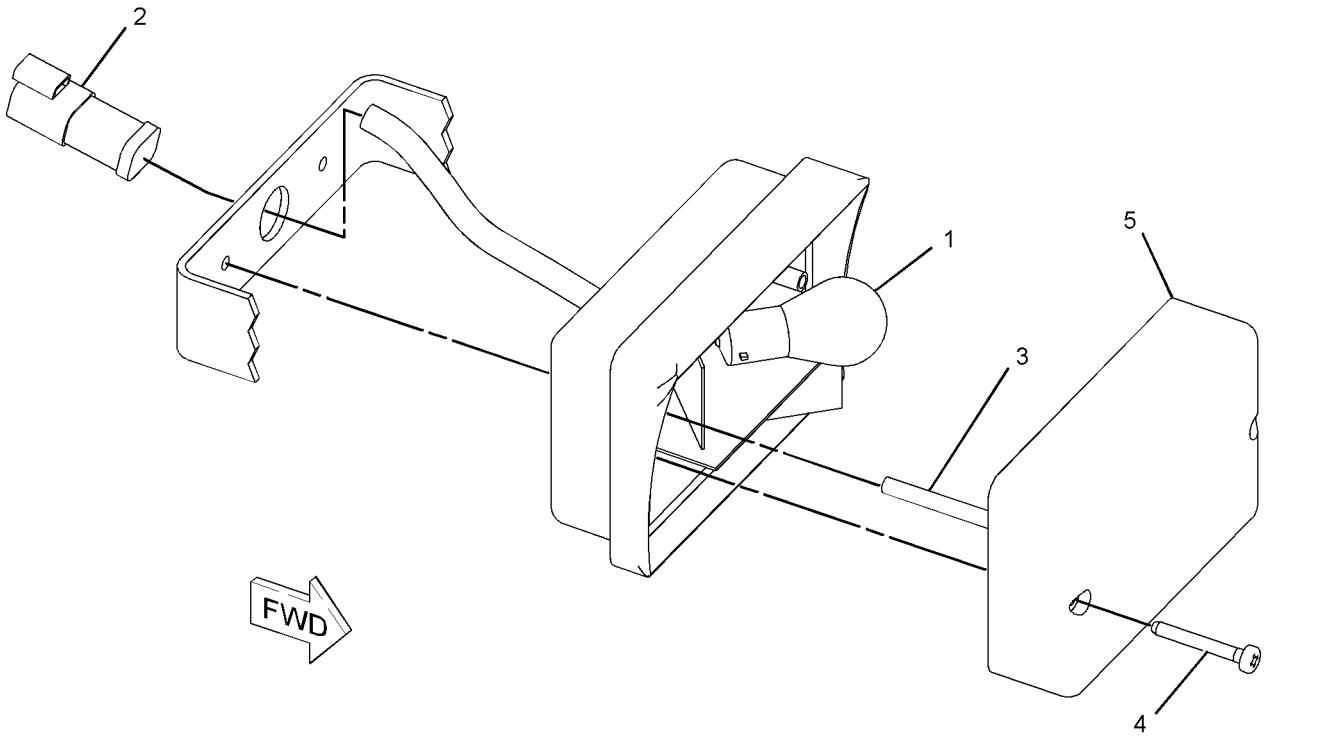

GRAPHIC #1 **<END>** g01038265

115-1715 LAMP GP-STOP & TAIL

S/N: B2D1-UP

PART OF 241-0097 LIGHTING GP-FLOOD, 241-0098 LIGHTING GP-FLOOD & SIGNAL

AN ATTACHMENT

SMCS-1432 **i02031782**

NOTE	REF NO	GRAPHIC REF	PART NUMBER	QTY	PART NAME 1 2 3 4 5 6 (PRODUCT LEVEL)	SEE PAGE
	1	1	**3C-6516**	1	LAMP (12-VOLT, 21/5-WATT)	
	2	1	**9W-3326**	1	LAMP (12-VOLT, 24-WATT)	
	3	1	**102-8804**	1	KIT-RECEPTACLE (4-PIN)	
M	4	1	**173-2685**	2	SCREW-FLAT HEAD (M5X.8X50-MM)	
	5	1	**173-8340**	2	SCREW-PAN HEAD	
	6	1	**174-8958**	1	LENS (RED, AMBER)	
	7	1	**186-3735**	4	PIN-CONNECTOR	

M-METRIC PART

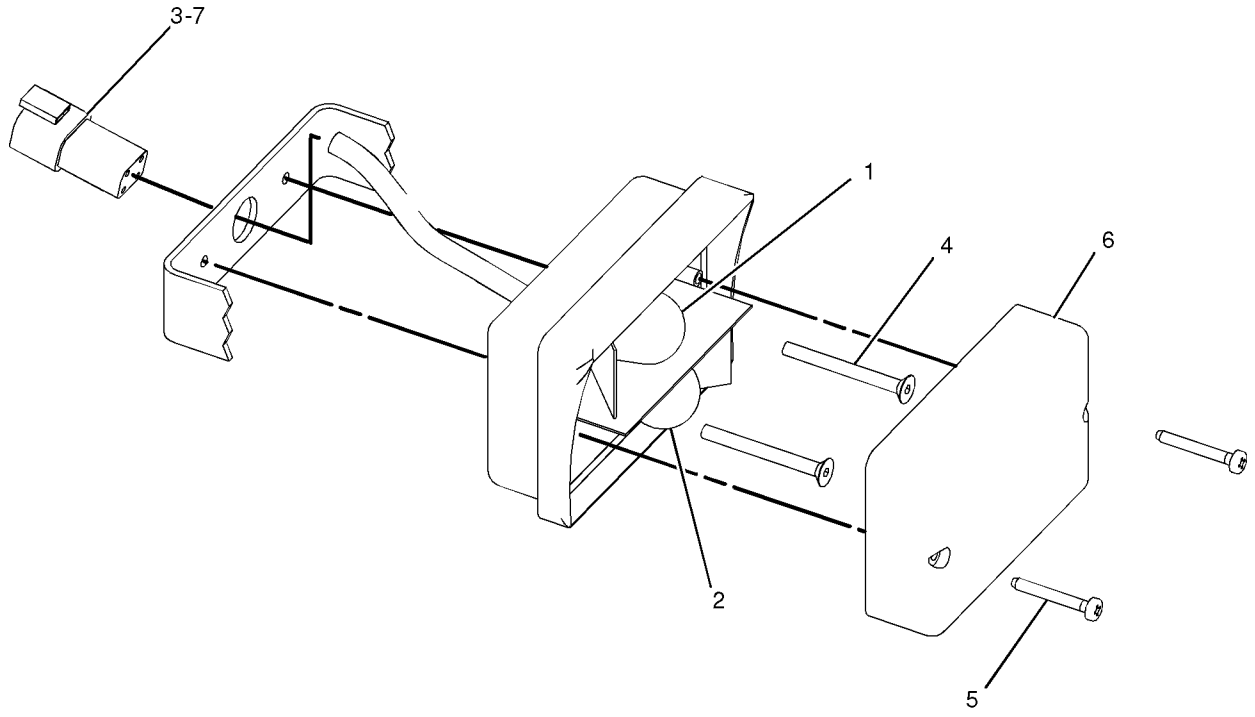

GRAPHIC #1 **<END>** g01047828

180-3663 LAMP GP-WARNING BEACON

S/N: B2D1-UP
PART OF 141-8292 LIGHTING GP-WARNING BEACON
AN ATTACHMENT

SMCS-1431 **i02050598**

NOTE	REF NO	GRAPHIC REF	PART NUMBER	QTY	PART NAME 1 2 3 4 5 6 (PRODUCT LEVEL)	SEE PAGE
	1	1	**185-7015**	1	LAMP GP-WARNING BEACON (FIXED MOUNT)	
M		1	**5C-2890**	3	NUT (M6X1-THD)	
		1	**8T-4205**	3	WASHER-HARD (7.2X14.5X2-MM THK)	
		1	**9X-8118**	1	LAMP (12-VOLT, 55-WATT)	
		1	**9X-8121**	1	LENS (AMBER, WARNING BEACON)	
		1	**9X-8139**	1	BELT-DRIVE (WARNING BEACON)	
	2	1	**179-5434**	1	PLUG AS	
		1	**3K-8782**	1	FUSE (10-AMPERE)	
	3	1	**9X-8121**	1	LENS (AMBER, WARNING BEACON)	
	4	1	**9X-8118**	1	LAMP (12-VOLT, 55-WATT)	
	5	1	**9X-8139**	1	BELT-DRIVE (WARNING BEACON)	
M	6	1	**5C-2890**	3	NUT (M6X1-THD)	
	7	1	**8T-4205**	3	WASHER-HARD (7.2X14.5X2-MM THK)	
	8	1	**3K-8782**	1	FUSE (10-AMPERE)	

M-METRIC PART

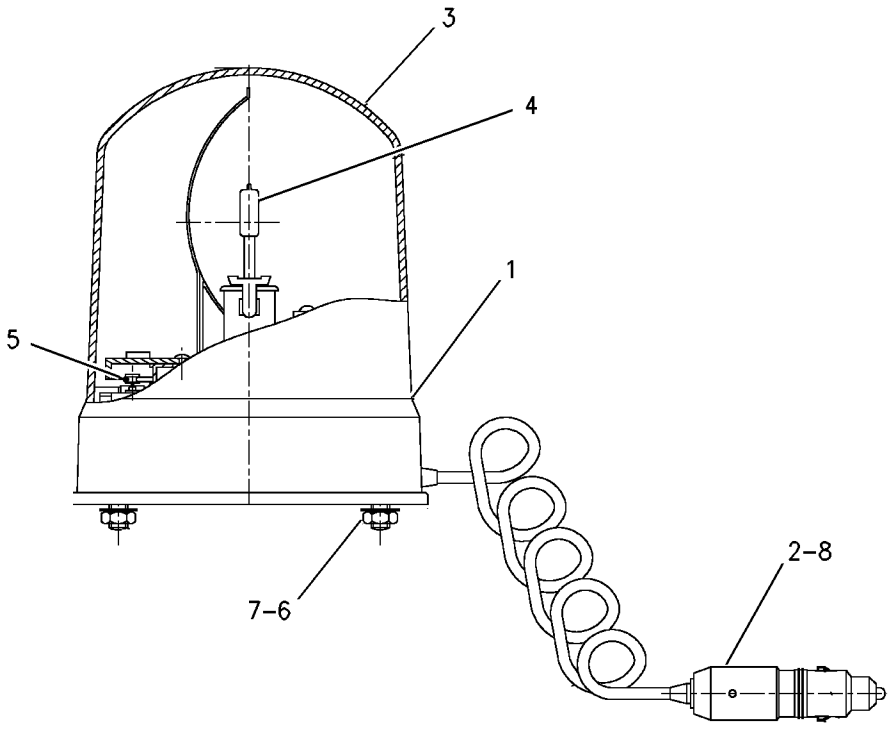

GRAPHIC #1 **<END>** g00665317

180-3664 LAMP GP-WARNING BEACON

S/N: B2D1-UP
PART OF 104-9502 LIGHTING GP-WARNING BEACON
AN ATTACHMENT

SMCS-1431 **i01655589**

NOTE	REF NO	GRAPHIC REF	PART NUMBER	QTY	PART NAME 1 2 3 4 5 6 (PRODUCT LEVEL)	SEE PAGE
	1	1	**185-7016**	1	LAMP AS	
	2	1	**9X-8139**	1	BELT-DRIVE	
	3	1	**9X-8121**	1	LENS-AMBER	
	4	1	**9X-8118**	1	LAMP (12 VOLT)	
	5	1	**179-5434**	1	PLUG AS	
	6	1	**3K-8782**	1	FUSE (10 AMP)	

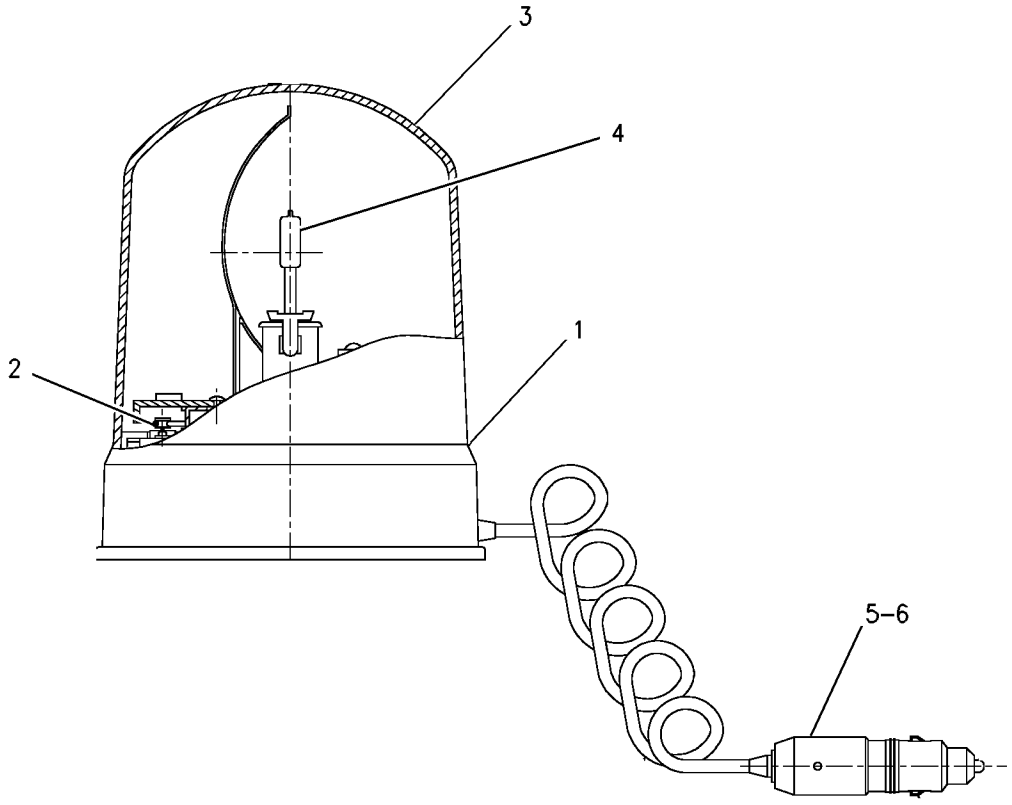

GRAPHIC #1 **<END>** g00855036

241-0097 LIGHTING GP-FLOOD–ROCK

S/N: B2D1-UP
AN ATTACHMENT

SMCS-1434 **i02046978**

NOTE	REF NO	GRAPHIC REF	PART NUMBER	QTY	PART NAME 1 2 3 4 5 6 (PRODUCT LEVEL)	SEE PAGE
	1	1	**9R-1499**	2	REFLECTOR	
	2	2	**104-3912**	1	ROOF	
	3	1	**105-8069**	2	LAMP GP-FLOOD (FRONT)	
					(EACH INCLUDES)	
		1	**9W-0607**	1	LAMP (12-VOLT, 55-WATT)	
		1	**142-5789**	4	SCREW	
	4	1	**113-8491**	2	FUSE (15-AMPERE)	
Y	5	2	**115-1715**	2	LAMP GP-STOP & TAIL	113
Y	6	1	**115-1716**	2	LAMP GP-SIGNAL	112
	7	1	**146-9439**	2	RELAY AS (12-VOLT)	
	8	2	**155-6457**	2	MOUNT	
	9	1	**169-0590**	1	SWITCH AS (REAR FLOOD)	
		1	**111-7899**	1	GASKET	
	10	1	**169-0592**	1	SWITCH AS (FRONT FLOOD)	
		1	**111-7899**	1	GASKET	
Y	11	2	**234-4328**	2	LAMP GP-FLOOD (REAR)	110
	12	2	**156-0283**	7	WASHER-HARD (8.4X35X2.5-MM THK)	
	13	2	**241-0094**	1	HARNESS AS-LIGHTING (ROOF)	
		2	**102-8805**	1	KIT-RECEPTACLE (6-PIN)	
					(KIT INCLUDES RECEPTACLE AS. & WEDGE)	
		2	**155-2270**	1	KIT-CONNECTING PLUG (2-PIN)	
					(KIT INCLUDES PLUG AS., WEDGE & INTERFACE SEAL)	
		2	**155-2271**	1	KIT-CONNECTING PLUG (4-PIN)	
					(KIT INCLUDES PLUG AS., WEDGE & INTERFACE SEAL)	
		2	**155-2274**	1	KIT-CONNECTING PLUG (6-PIN)	
					(KIT INCLUDES PLUG AS., WEDGE & INTERFACE SEAL)	
	14	1,2	**3S-2093**	17	STRAP-CABLE	
M	15	2	**8T-5093**	7	BOLT-LOCKING (M8X1.25X25-MM)	
D	16	2	**141-0924**		SEAL (.6M)	

D-ORDER BY THE METER
M-METRIC PART
Y-SEPARATE ILLUSTRATION

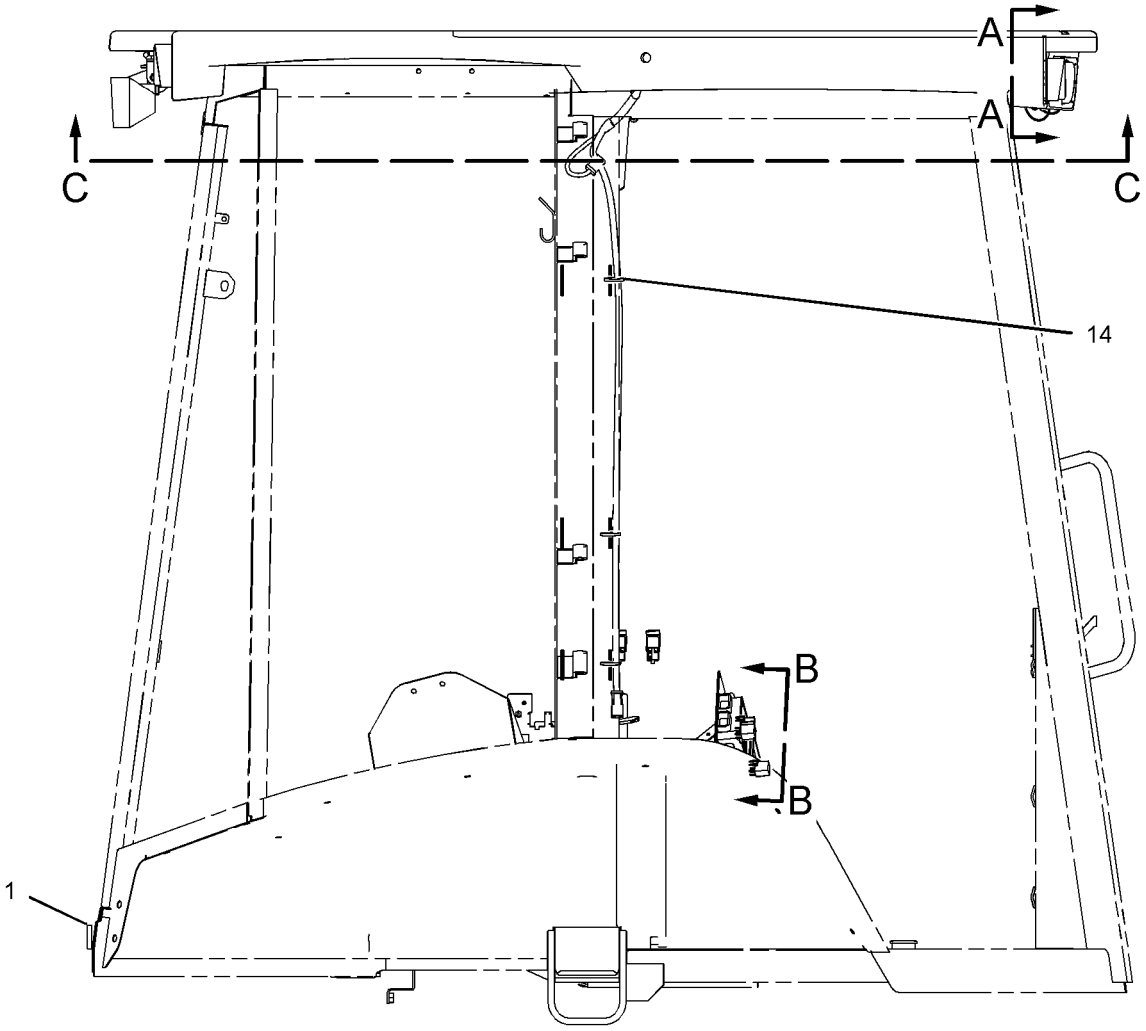

RIGHT SIDE VIEW

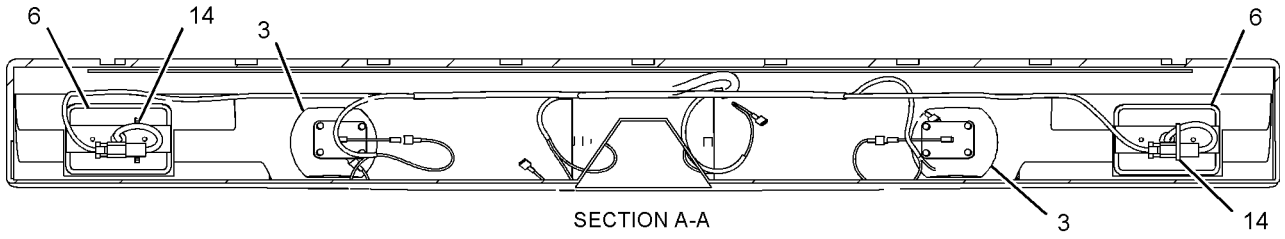

SECTION A-A

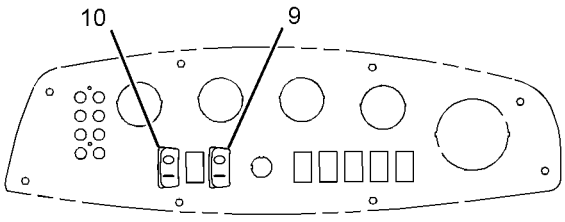

VIEW OF CONSOLE PANEL
FROM INSIDE OF CAB

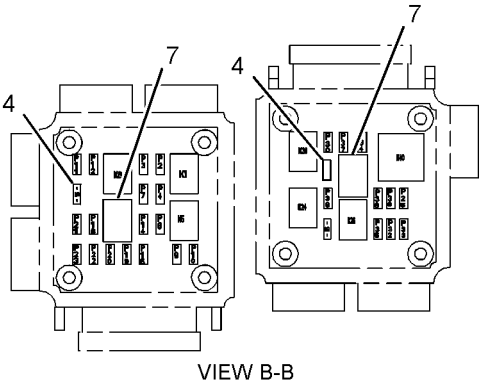

VIEW B-B

GRAPHIC #1

g01038709

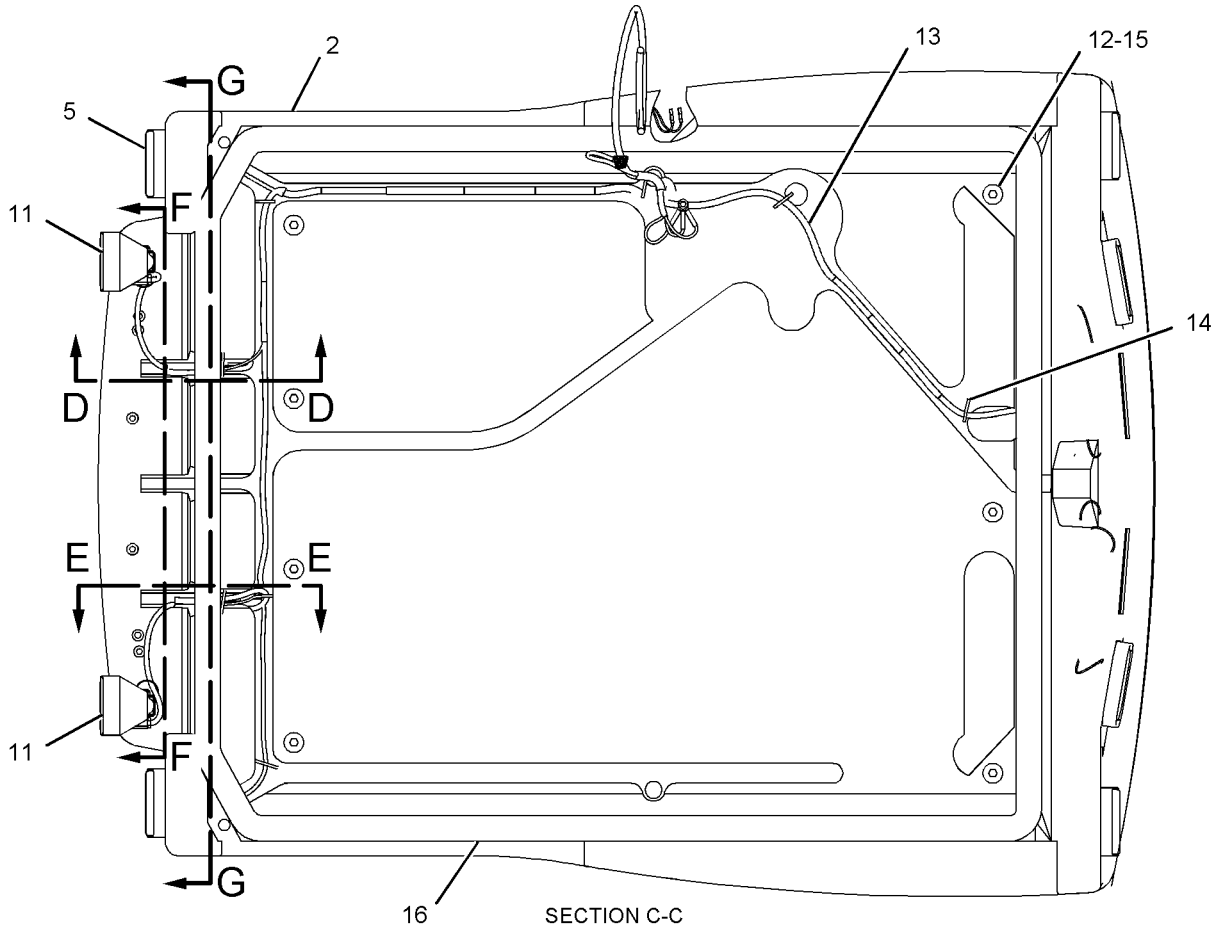

SECTION C-C

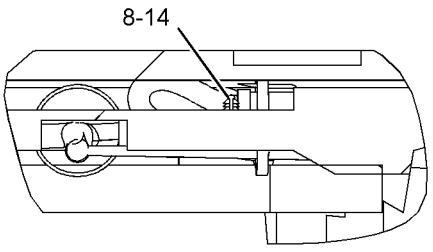

SECTION D-D

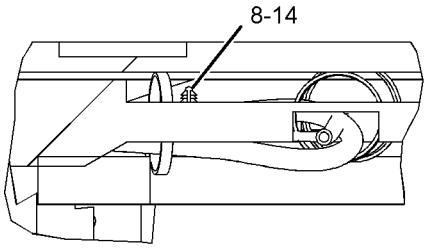

SECTION E-E

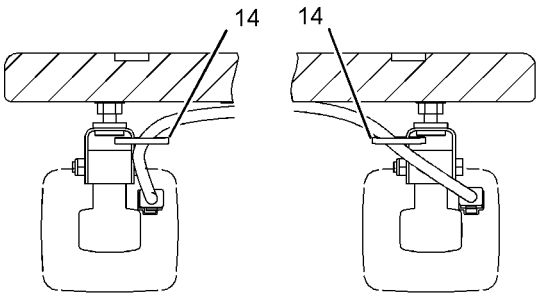

SECTION F-F

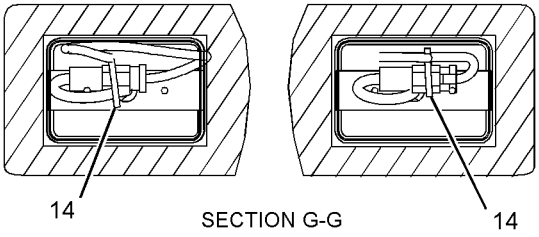

SECTION G-G

GRAPHIC #2 **<END>** g01038710

241-0098 LIGHTING GP-FLOOD & SIGNAL

S/N: B2D1-UP
AN ATTACHMENT

SMCS-1429, 1430, 1432, 1434 **i02050632**

NOTE	REF NO	GRAPHIC REF	PART NUMBER	QTY	PART NAME 1 2 3 4 5 6 (PRODUCT LEVEL)	SEE PAGE
	1	1	**9R-1499**	2	REFLECTOR	
	2	2	**105-8069**	4	LAMP GP-FLOOD	
					(EACH INCLUDES)	
		2	**9W-0607**	1	LAMP (12-VOLT, 55-WATT)	
		2	**142-5789**	4	SCREW	
	3	2	**113-8490**	2	FUSE (10-AMPERE)	
	4	2	**113-8491**	2	FUSE (15-AMPERE)	
Y	5	2	**115-1715**	2	LAMP GP-STOP & TAIL	113
Y	6	2	**115-1716**	2	LAMP GP-SIGNAL	112
	7	2	**146-9439**	3	RELAY AS (12-VOLT)	
	8	2	**155-6457**	2	MOUNT	
	9	2	**169-0591**	1	SWITCH AS-ROCKER (REAR FLOOD)	
		2	**111-7899**	1	GASKET	
	10	2	**169-0593**	1	SWITCH AS-ROCKER (FRONT FLOOD)	
		2	**111-7899**	1	GASKET	
Y	11	2	**234-4328**	2	LAMP GP-FLOOD (REAR)	110
	12	2	**241-0094**	1	HARNESS AS-LIGHTING	
		2	**102-8805**	1	KIT-RECEPTACLE (6-PIN)	
					(KIT INCLUDES RECEPTACLE AS. & WEDGE.)	
		2	**155-2270**	6	KIT-CONNECTING PLUG (2-PIN)	
					(EACH KIT INCLUDES PLUG AS., INTERFACE SEAL, & WEDGE.)	
		2	**155-2271**	2	KIT-CONNECTING PLUG (4-PIN)	
					(EACH KIT INCLUDES PLUG AS., INTERFACE SEAL, & WEDGE.)	
		2	**155-2274**	1	KIT-CONNECTING PLUG (6-PIN)	
					(KIT INCLUDES PLUG AS., INTERFACE SEAL, & WEDGE.)	
	13	2	**122-9356**	1	ROOF	
		2	**104-3912**	1	ROOF	
	14	2	**156-0283**	7	WASHER-HARD (8.4X35X2.5-MM THK)	
Y	15	2	**234-4329**	2	LAMP GP-FLOOD (REAR)	111
	16	1,2	**3S-2093**	20	STRAP-CABLE	
M	17	2	**8T-5093**	7	BOLT-LOCKING (M8X1.25X25-MM)	
D	18	2	**141-0924**		SEAL (.6M)	

D-ORDER BY THE METER
M-METRIC PART
Y-SEPARATE ILLUSTRATION

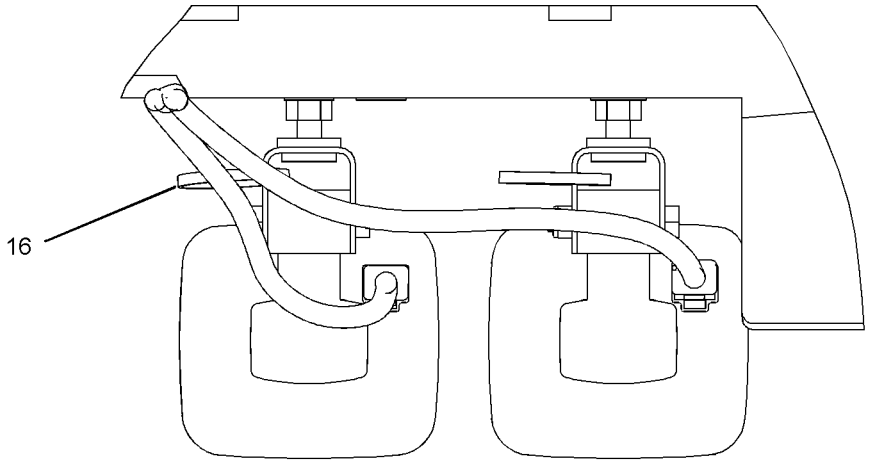

SECTION B-B

REFER TO ALL ILLUSTRATIONS OF
THIS GROUP FOR AUXILIARY VIEWS

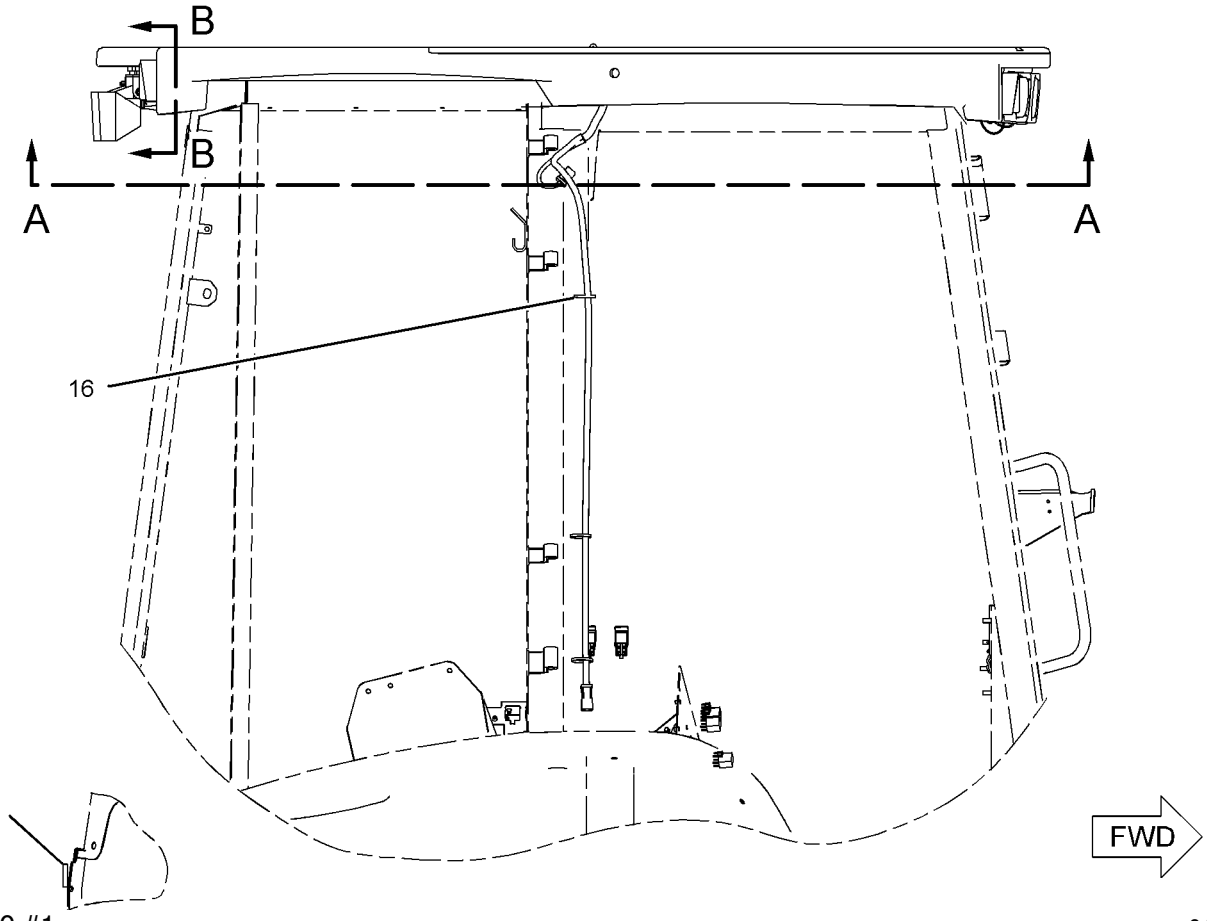

GRAPHIC #1

g01039561

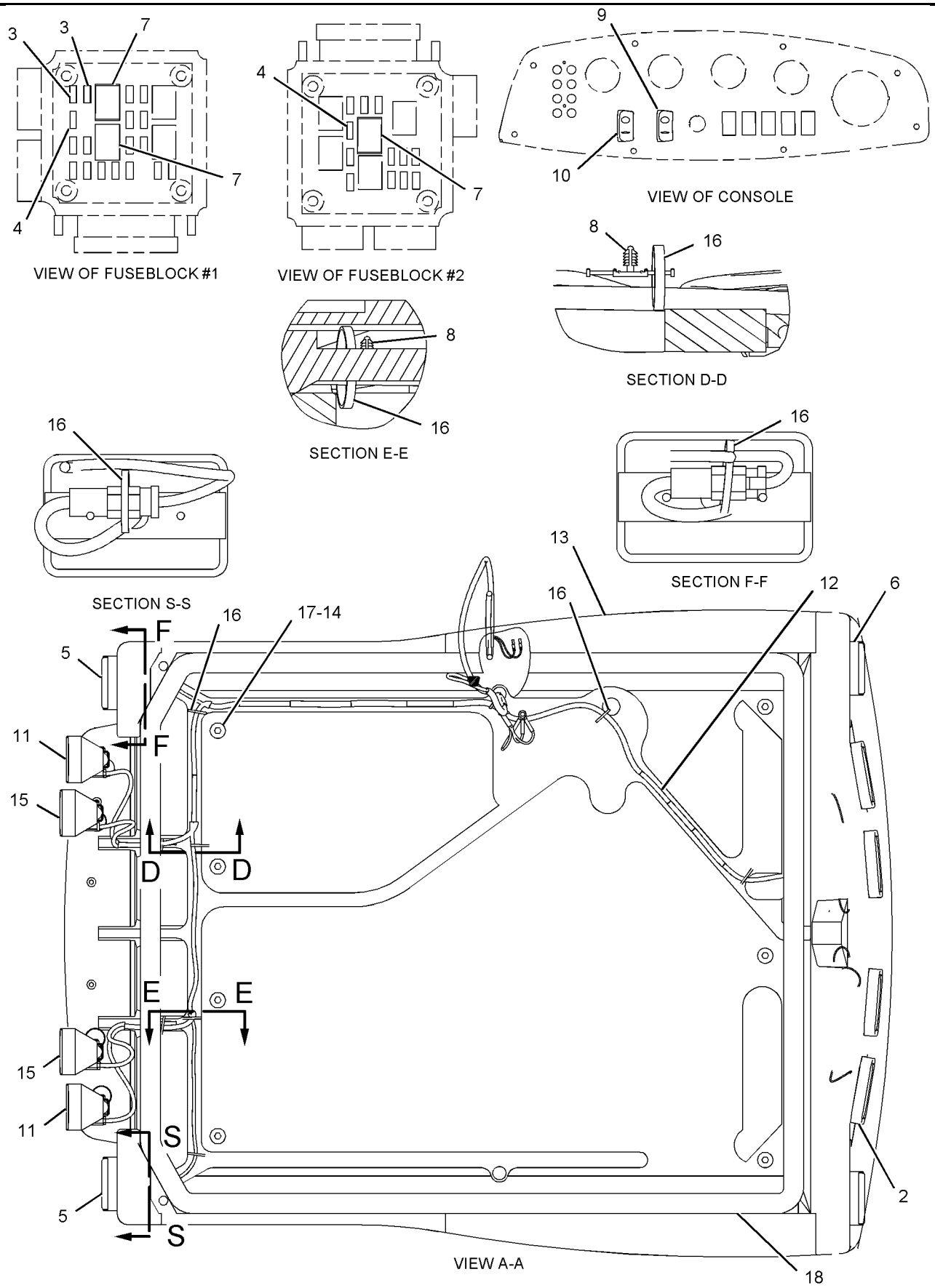

GRAPHIC #2 **<END>** g01039562

104-9502 LIGHTING GP-WARNING BEACON

S/N: B2D1-UP
MAGNETIC
AN ATTACHMENT

SMCS-1431 **i01456875**

NOTE	REF NO	GRAPHIC REF	PART NUMBER	QTY	PART NAME 1 2 3 4 5 6 (PRODUCT LEVEL)	SEE PAGE
Y	1	1	**180-3664**	1	LAMP GP-WARNING BEACON	115
	2	1	**104-9504**	1	PLATE	
M	3	1	**135-7242**	3	SCREW-PAN HEAD	

M-METRIC PART
Y-SEPARATE ILLUSTRATION

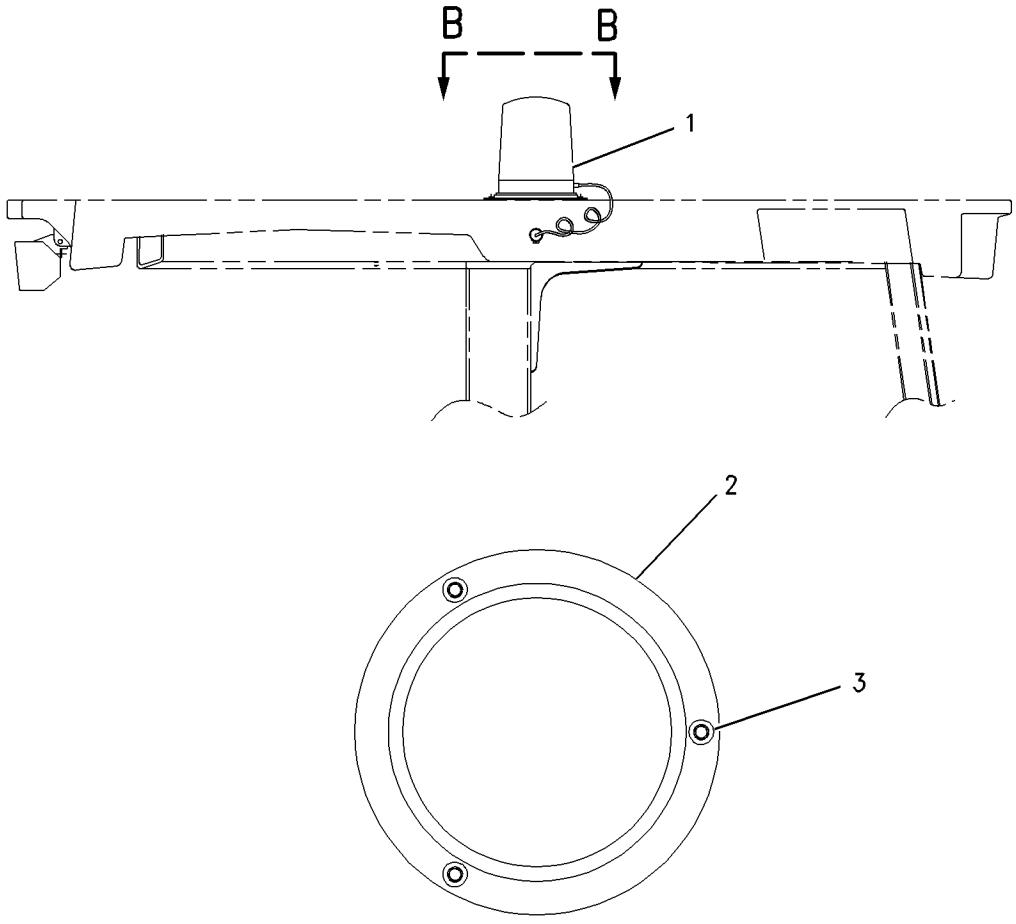

VIEW B-B

GRAPHIC #1 **<END>** g00673018

141-8292 LIGHTING GP-WARNING BEACON

S/N: B2D1-UP
FIXED MOUNT
AN ATTACHMENT

SMCS-1431 **i01956609**

NOTE	REF NO	GRAPHIC REF	PART NUMBER	QTY	PART NAME 1 2 3 4 5 6 (PRODUCT LEVEL)	SEE PAGE
Y	1	1	**180-3663**	1	LAMP GP-WARNING BEACON	114
	2	1	**114-4916**	1	BRACKET AS-RH	
	3	1	**146-0218**	3	NUT (M6X1.0 THD)	
M	4	1	**132-0111**	3	SCREW (M6X1.0X35MM)	
	5	1	**8T-4205**	3	WASHER-HARD (7.2X14.5X2MM THK)	

M-METRIC PART
Y-SEPARATE ILLUSTRATION

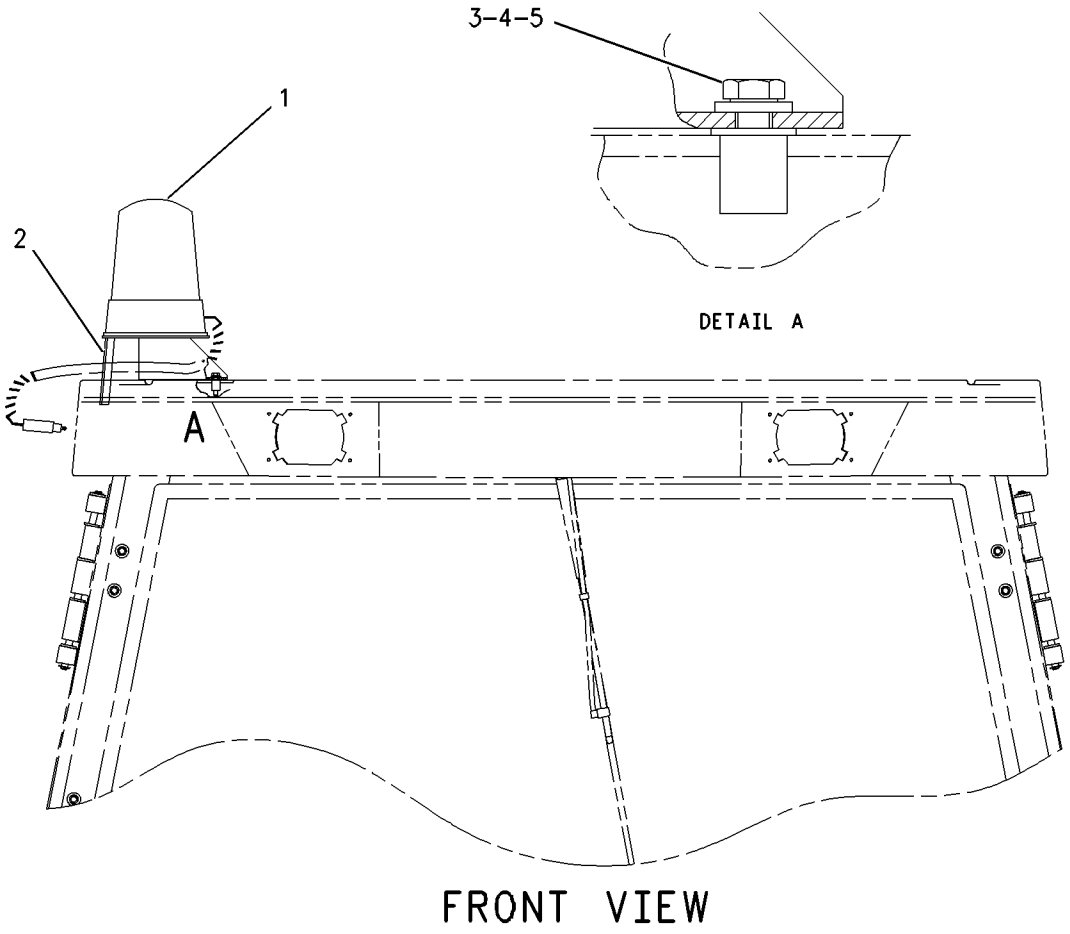

GRAPHIC #1 **<END>** g00672105

143-0539 STARTING MOTOR GP-ELECTRIC*R

S/N: CRS1-UP
PART OF 237-0024 STARTING MOTOR GP-ELECTRIC
AN ATTACHMENT

SMCS-1453 **i01955581**

NOTE	REF NO	GRAPHIC REF	PART NUMBER	QTY	PART NAME 1 2 3 4 5 6 (PRODUCT LEVEL)	SEE PAGE
	1	1	**8C-9778**	1	PLUNGER AS	
	2	1	**8C-9783**	1	GASKET	
	3	1	**2P-8104**	1	BEARING	
	4	1	**7T-6092**	1	HOLDER AS-BRUSH	
M	5	1	**8T-4133**	2	NUT (M10X1.5 THD)	
	6	1	**7T-6088**	1	BEARING AS	
	7	1	**7T-6087**	1	WASHER	
	8	1	**7T-6093**	1	CLUTCH AS	
	9	1	**8J-4455**	1	BALL	
	10	1	**7T-6090**	1	SPRING	
	11	1	**8T-4121**	2	WASHER-HARD (11X21X2.5MM THK)	
	12	1	**3E-5153**	1	COVER-STARTING MOTOR	
M	13	1	**9X-2036**	1	SCREW-PAN HEAD	
	14	1	**8F-1434**	1	LOCKWASHER	
	15	1	**100-4113**	1	SWITCH AS (STARTER - 12V)	
	16	1	**100-4119**	1	ARMATURE AS	
	17	1	**100-4118**	1	CASE AS-STARTING MOTOR	
	18	1	**100-4115**	1	HOUSING-STARTING MOTOR	
	19	1	**143-1344**	1	FRAME-STARTER	
	20	1	**100-3685**	1	CAP	
	21	1	**3E-5154**	1	BUSHING-STARTING MOTOR	
					AVAILABLE REPAIR KIT(S):	
			7T-6099	1	KIT-GEAR (STARTING MOTOR)	
					(INCLUDES RETAINER, PINION & ROLLERS)	
			146-6729	1	KIT-HARDWARE (STARTING MOTOR)	
					(INCLUDES BOLTS, SCREWS, SCREW ASSEMBLIES & PLATE)	
			100-4112	1	KIT-CONTACT (STARTING MOTOR)	
					(INCLUDES NUT, WASHERS, SEAL, BUSHINGS, PLATE & BOLT)	

M-METRIC PART

143-0539 STARTING MOTOR GP-ELECTRIC *(contd.)* **i01955581**

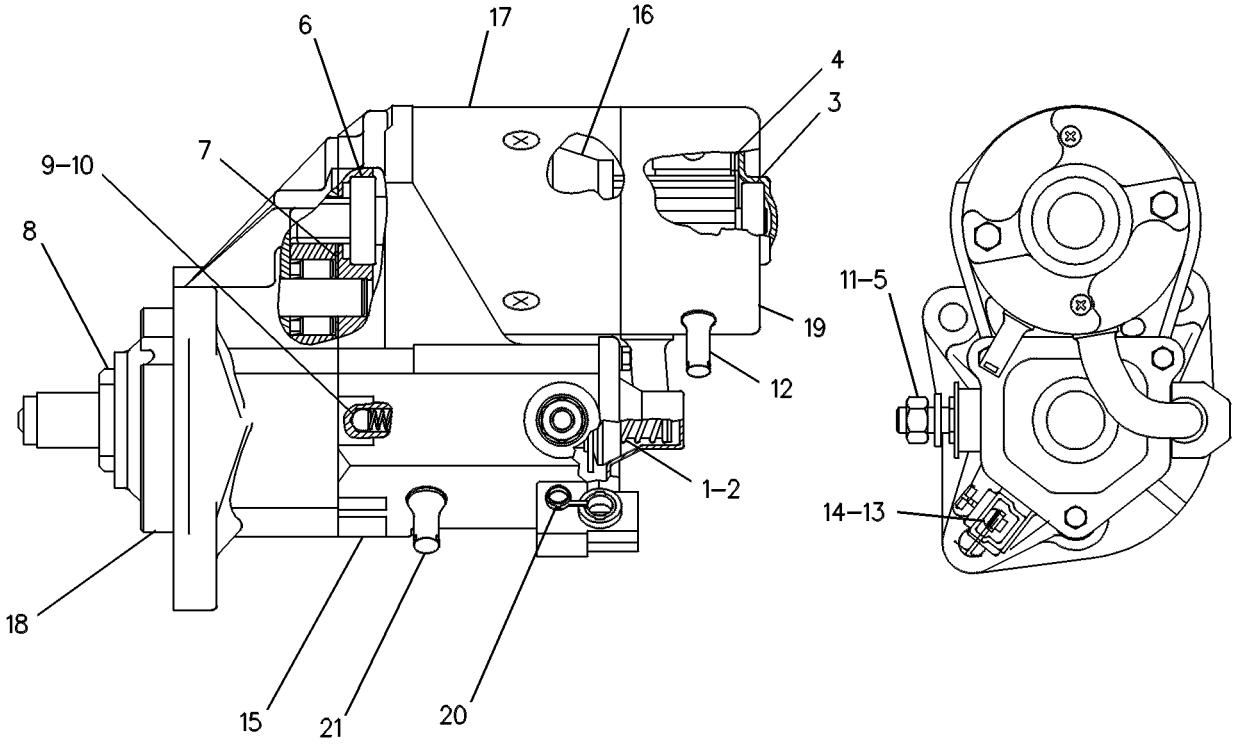

GRAPHIC #1 **<END>** g00131126

237-0024 STARTING MOTOR GP-ELECTRIC

S/N: CRS1-UP
PART OF 234-3058, 234-3059 ENGINE AR-PRIMARY
AN ATTACHMENT

SMCS-1453 **i01991976**

NOTE	REF NO	GRAPHIC REF	PART NUMBER	QTY	PART NAME 1 2 3 4 5 6 (PRODUCT LEVEL)	SEE PAGE
	1	1	**6I-0364**	3	STUD (M10X1.5X30MM)	
	2	1	**6I-0594**	3	NUT (M10X1.5)	
YR	3	1	**143-0539**	1	STARTING MOTOR GP-ELECTRIC	124

R-REMFG PART MAY BE AVAILABLE
Y-SEPARATE ILLUSTRATION

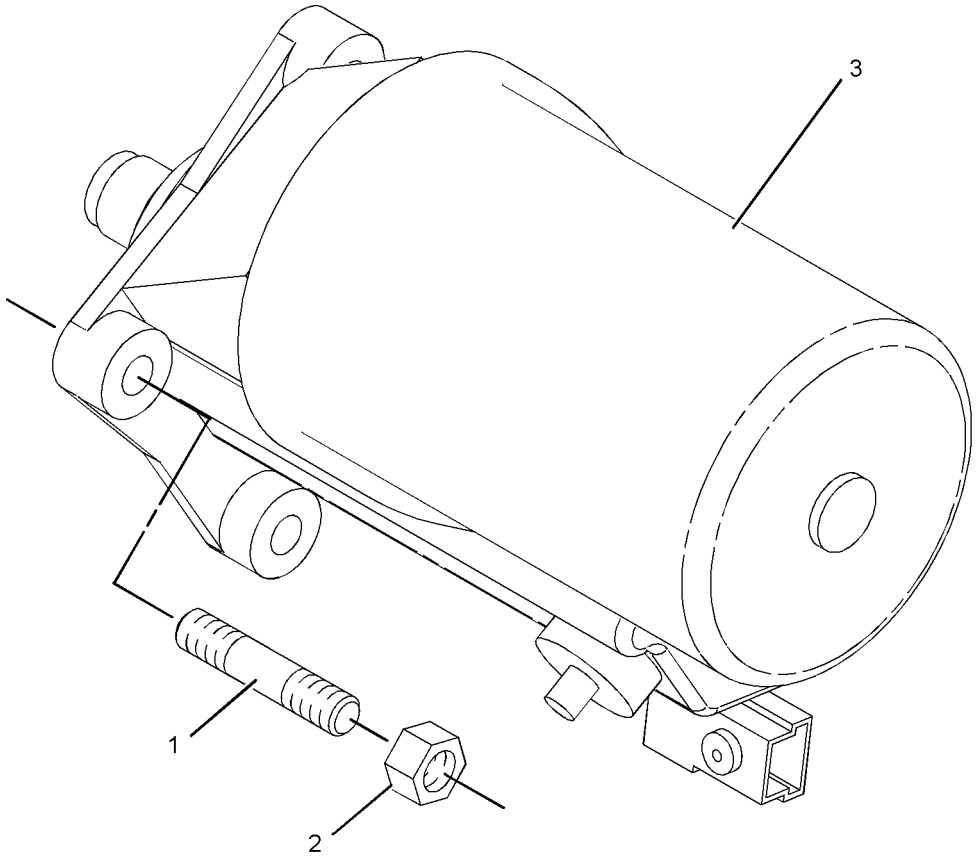

GRAPHIC #1 **<END>** g01039910

237-4896 SWITCH GP-PRESSURE

S/N: CRS1-UP

PART OF 234-3058, 234-3059 ENGINE AR-PRIMARY

AN ATTACHMENT

SMCS-1435 **i01991987**

NOTE	REF NO	GRAPHIC REF	PART NUMBER	QTY	PART NAME 1 2 3 4 5 6 (PRODUCT LEVEL)	SEE PAGE
	1	1	**237-4894**	1	SWITCH-OIL PRESS (ENGINE)	

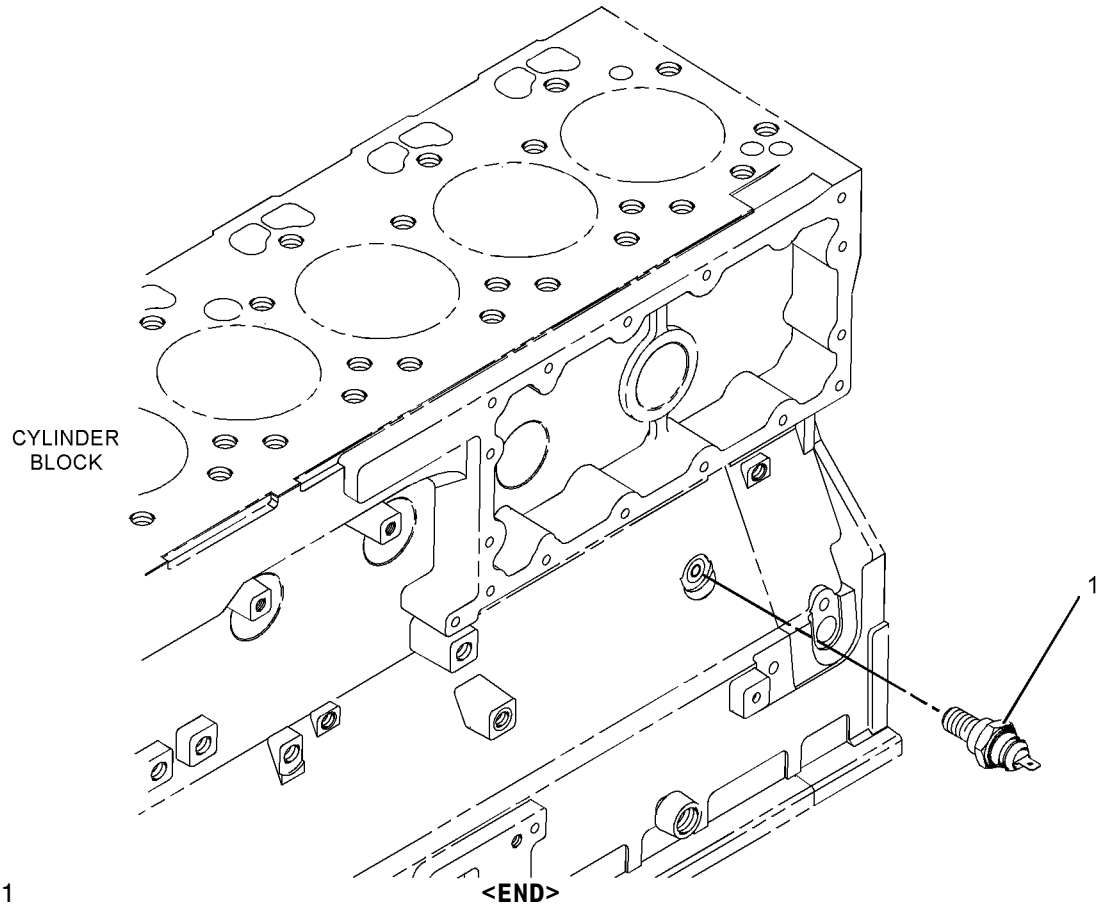

GRAPHIC #1 g01039594

<END>

235-8749 SWITCH GP-TEMPERATURE

S/N: CRS1-UP
PART OF 234-3058, 234-3059 ENGINE AR-PRIMARY
AN ATTACHMENT

SMCS-7400, 7417 **i02053328**

NOTE	REF NO	GRAPHIC REF	PART NUMBER	QTY	PART NAME 1 2 3 4 5 6 (PRODUCT LEVEL)	SEE PAGE
	1	1	**199-9751**	1	SEAL-O-RING	
	2	1	**235-8747**	1	SWITCH-TEMPERATURE	

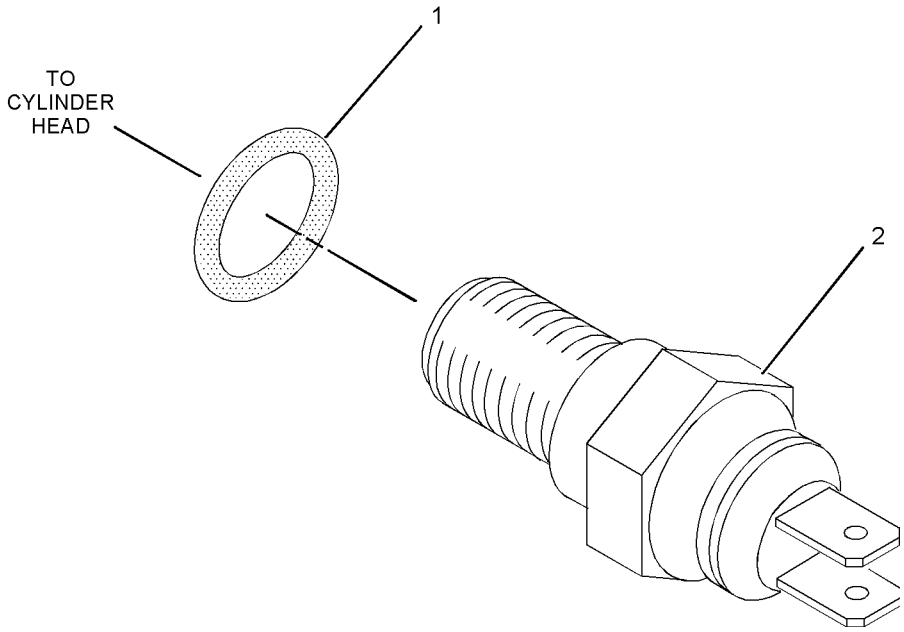

GRAPHIC #1 **<END>** g01036068

238-1811 WIRING GP-AIR CONDITIONER

S/N: B2D1-UP
PART OF 239-5562 CAB AR
AN ATTACHMENT

SMCS-1408, 7320 **i02050656**

NOTE	REF NO	GRAPHIC REF	PART NUMBER	QTY	PART NAME 1 2 3 4 5 6 (PRODUCT LEVEL)	SEE PAGE
	1	1	**3E-9362**	1	RELAY AS (12-VOLT) (HIGH SPEED)	
	2	1	**8Y-7833**	1	WIRE AS	
	3	2	**106-8704**	1	SUPPRESSOR AS-ARC	
		2	**102-8802**	1	KIT-RECEPTACLE (2-PIN)	
					(INCLUDES RECEPTACLE AND WEDGE)	
		2	**186-3735**	2	PIN-CONNECTOR	
	4	2	**113-8490**	1	FUSE (10-AMPERE)	
	5	2	**131-3201**	2	BOOT	
	6	2	**169-0605**	1	SWITCH AS-ROCKER (BLOWER FAN SPEED) (HEATER FAN SPEED)	
		2	**111-7899**	1	GASKET	
	7	2	**169-0606**	1	SWITCH AS-ROCKER (HEATER, AIR CONDITIONER) (HEAT/AC)	
		2	**111-7899**	1	GASKET	
	8	2	**170-2237**	1	RELAY AS (12-VOLT)	
	9	1	**229-8377**	1	CIRCUIT BREAKER AS (35-AMPERE)	
		1	**6V-8378**	2	NUT (10-32-THD)	
		1	**8F-1434**	2	LOCKWASHER (INTERNAL TOOTH)	
		1	**8T-0328**	2	WASHER-HARD (5.5X10X1-MM THK)	
	10	1	**229-8413**	1	HARNESS AS-HEATER & AIR COND (CAB)	
		1	**102-8802**	1	KIT-RECEPTACLE (2-PIN)	
					(INCLUDES RECEPTACLE AND WEDGE)	
		1	**102-8804**	1	KIT-RECEPTACLE (4-PIN)	
					(INCLUDES RECEPTACLE AND WEDGE)	
		1	**155-2270**	1	KIT-CONNECTING PLUG (2-PIN)	
					(INCLUDES PLUG AND WEDGE)	
		1	**177-9645**	1	KIT-RECEPTACLE (2-PIN)	
					(INCLUDES RECEPTACLE AND WEDGE)	
		1	**177-9648**	1	KIT-CONNECTING PLUG (2-PIN)	
					(INCLUDES PLUG AND WEDGE)	
	11	2	**236-6923**	1	SWITCH AS-PRESSURE (HIGH - LOW)	
	12	2	**238-7492**	1	HARNESS AS-HEATER & AIR COND	
		2	**102-8802**	1	KIT-RECEPTACLE (2-PIN)	
					(INCLUDES RECEPTACLE AND WEDGE)	
		2	**155-2270**	2	KIT-CONNECTING PLUG (2-PIN)	
					(INCLUDES PLUG AND WEDGE)	
M	13	1	**138-8454**	1	SCREW-TRUSS HEAD (M4X0.7X10-MM)	
	14	1	**213-7315**	2	SCREW-TRUSS HEAD (M4X0.7X25-MM)	
	15	1,2	**3S-2093**	3	STRAP-CABLE	
	16	1	**4B-4863**	1	WASHER (4.7X11X1.2-MM THK)	
	17	2	**4P-8134**	1	CLIP	
	18	2	**8T-4121**	2	WASHER-HARD (11X21X2.5-MM THK)	
M	19	2	**8T-4133**	1	NUT (M10X1.5-THD)	
M	20	2	**8T-4195**	1	BOLT (M10X1.5X30-MM)	

M-METRIC PART

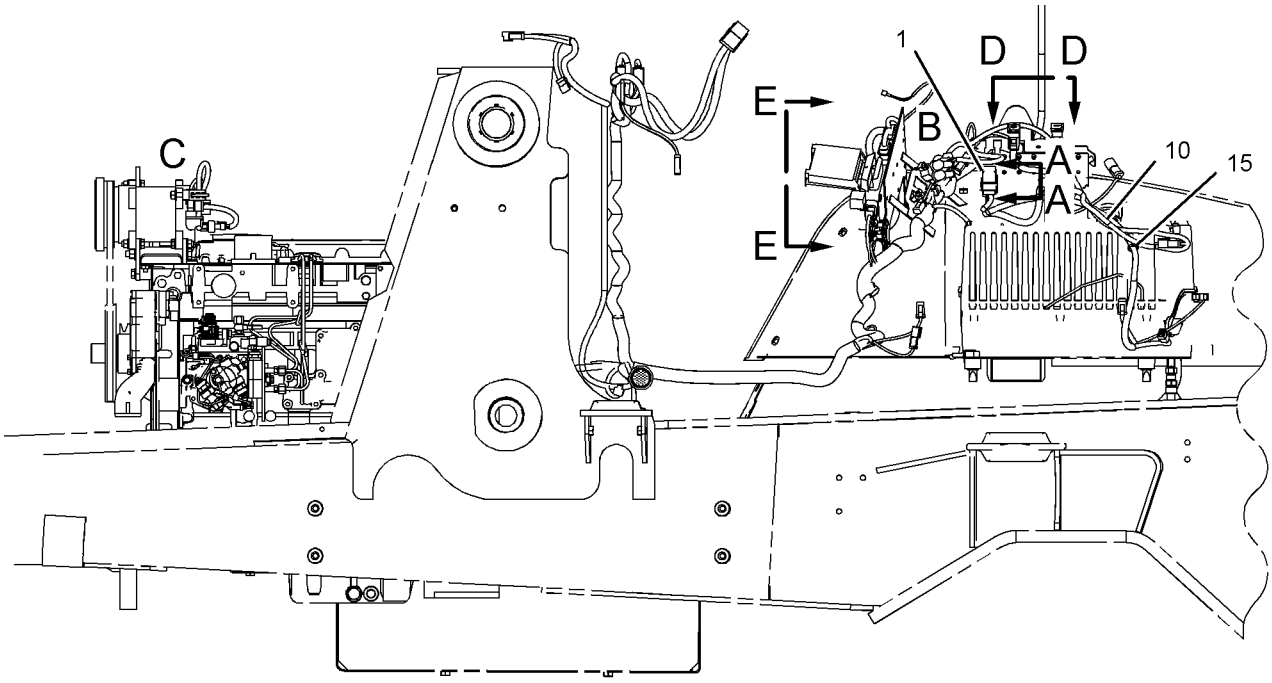

LEFT SIDE VIEW

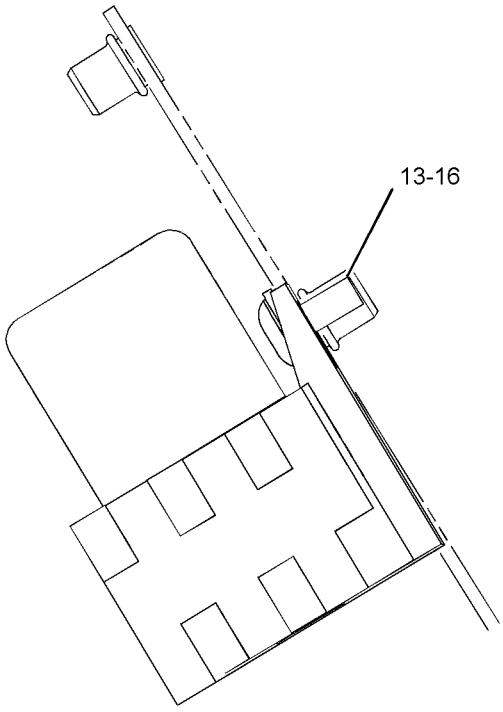

VIEW A-A

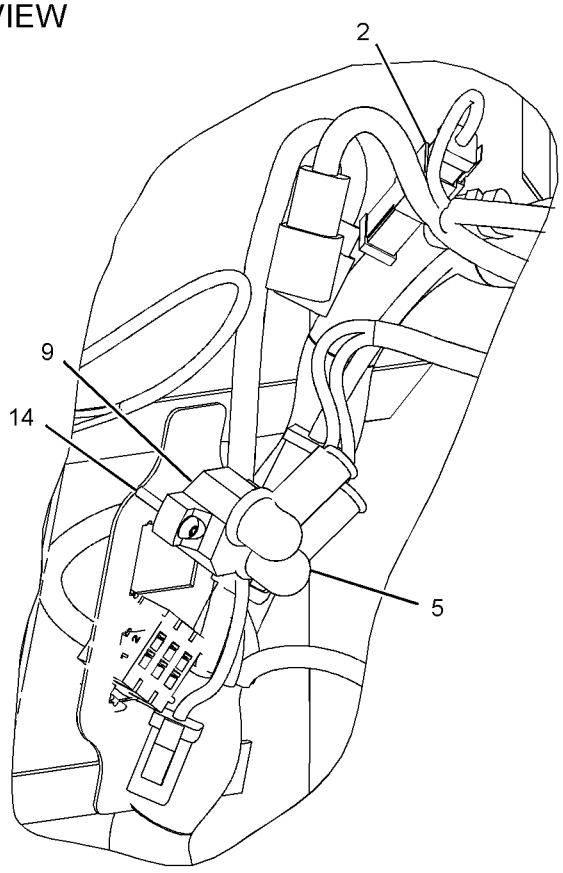

VIEW OF AREA B

GRAPHIC #1

g01032689

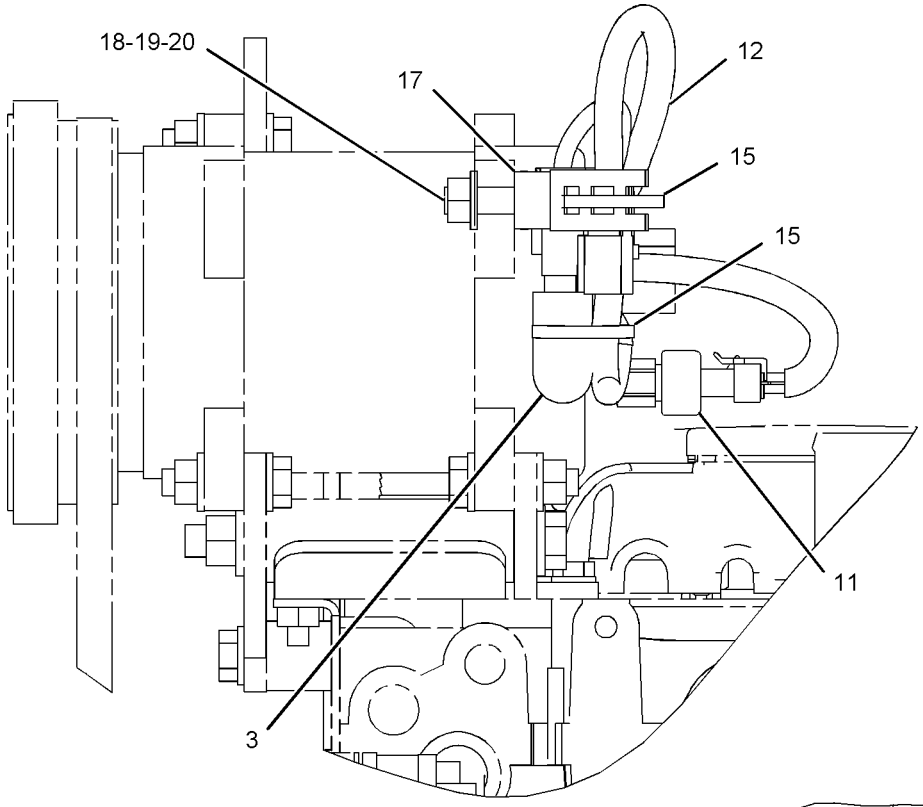

VIEW OF AREA C

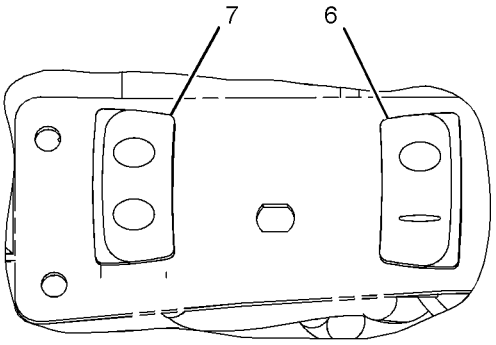

VIEW D-D

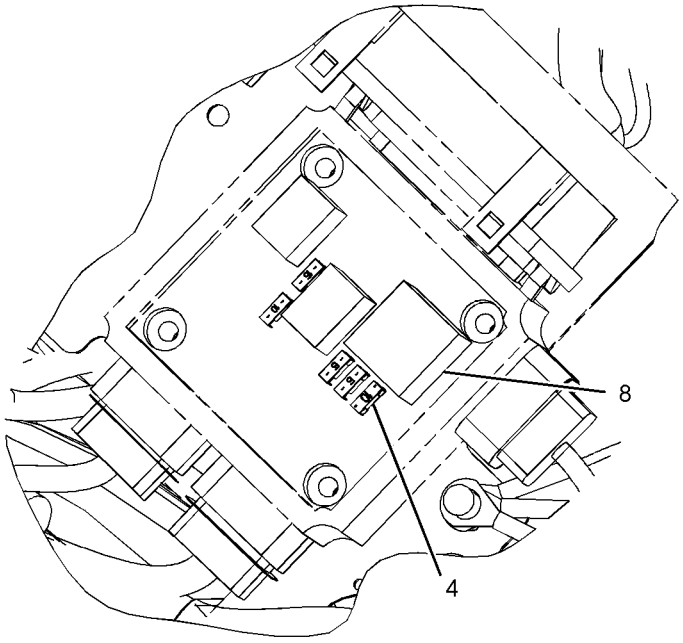

VIEW E-E

GRAPHIC #2 **<END>** g01032690

185-8801 WIRING GP-CAB

S/N: B2D1-UP
STANDARD
PART OF 239-5562 CAB AR
AN ATTACHMENT

SMCS-1408, 7301 **i02029727**

NOTE	REF NO	GRAPHIC REF	PART NUMBER	QTY	PART NAME 1 2 3 4 5 6 (PRODUCT LEVEL)	SEE PAGE
	1	1	**3S-2093**	6	STRAP-CABLE	
	2	1	**8E-1118**	1	ANTENNA AS	
	3	1	**8R-6111**	1	CABLE AS-COAXIAL	
	4	1	**113-8492**	2	FUSE (20-AMPERE)	
	5	1	**141-2759**	1	FUSE (5-AMPERE)	
	6	1	**146-9439**	1	RELAY AS (12-VOLT)	
	7	1	**169-0596**	1	SWITCH AS (REAR WASHER, WIPER)	
		1	**111-7899**	1	GASKET	
	8	1	**179-1215**	1	HARNESS AS-CAB (UPPER CAB CONTROLS)	
		1	**102-8806**	1	KIT-RECEPTACLE (8-PIN)	
		1	**155-2260**	1	KIT-CONNECTING PLUG (3-PIN)	
		1	**155-2271**	1	KIT-CONNECTING PLUG (4-PIN)	
		1	**155-2274**	1	KIT-CONNECTING PLUG (6-PIN)	
		1	**155-2265**	1	KIT-CONNECTING PLUG (8-PIN)	
	9	1	**235-4752**	1	WIRE AS	
	10	1	**238-7448**	1	SWITCH GP-MULTIFUNCTION (HD LIGHT, TURN SIG, WDO WIPER)	
	11	1	**4P-8134**	1	CLIP	
M	12	1	**8T-0352**	2	BOLT (M5X0.8X45-MM)	
	13	1	**8T-4121**	2	WASHER-HARD (11X21X2.5-MM THK)	
M	14	1	**8T-4133**	2	NUT (M10X1.5-THD)	

M-METRIC PART

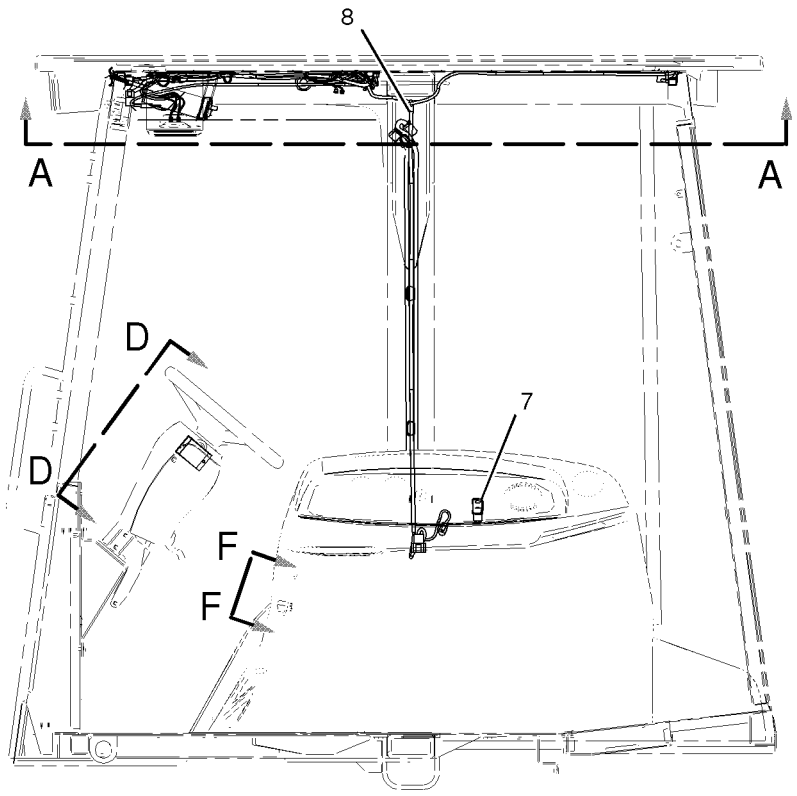

LEFT SIDE VIEW

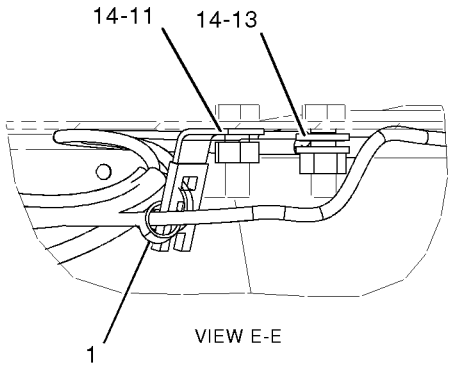

VIEW E-E

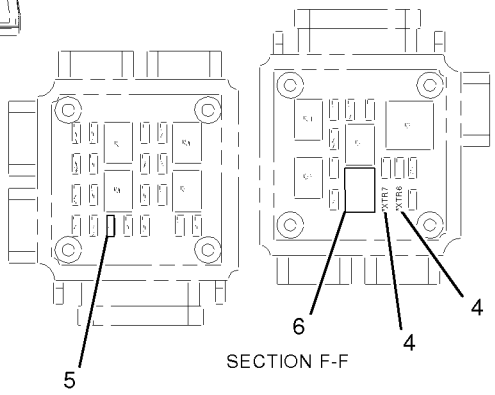

SECTION F-F

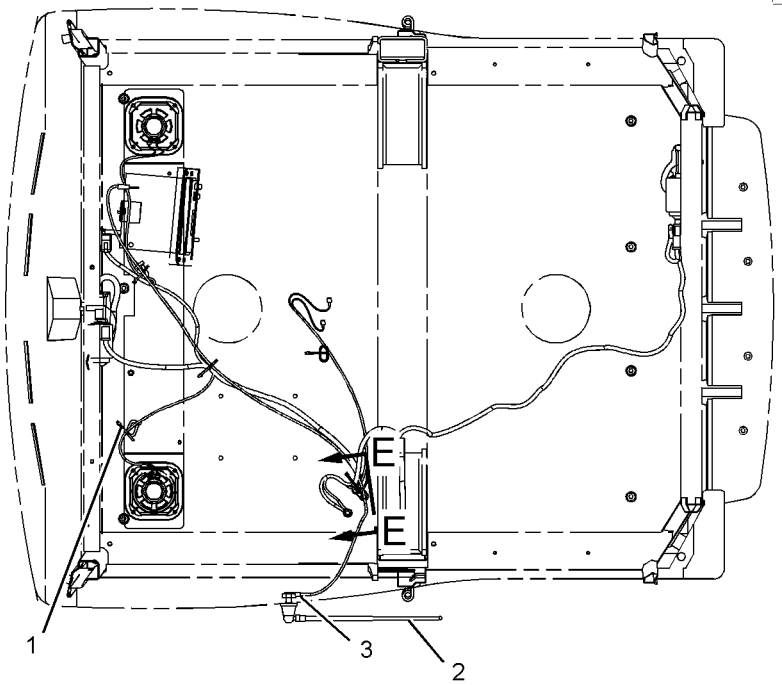

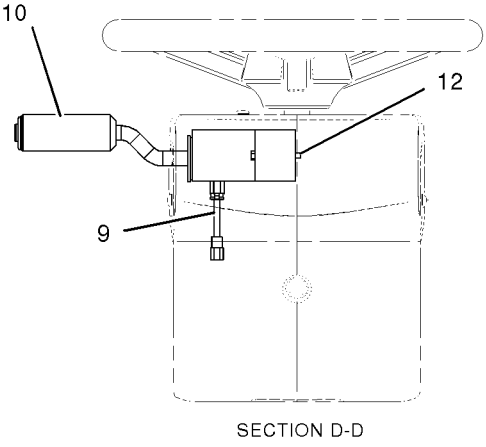

SECTION D-D

GRAPHIC #1 **<END>** g01046490

185-8802 WIRING GP-CAB–CANOPY

S/N: B2D1-UP
PART OF 239-5558 CANOPY AR
AN ATTACHMENT

SMCS-1408, 7301 **i01956638**

NOTE	REF NO	GRAPHIC REF	PART NUMBER	QTY	PART NAME 1 2 3 4 5 6 (PRODUCT LEVEL)	SEE PAGE
	1	1	**138-4894**	1	SWITCH AS (TURN SIGNAL)	
		1	**111-7899**	1	GASKET	
	2	1	**164-1601**	1	BRACKET	
	3	1	**183-4492**	1	HARNESS AS (TURN SIGNAL)	
		1	**102-8801**	1	KIT-RECEPTACLE (12 PIN)	
		1	**8T-8737**	9	PLUG-SEAL	
M	4	1	**125-3298**	3	BOLT-SOCKET HEAD	

M-METRIC PART

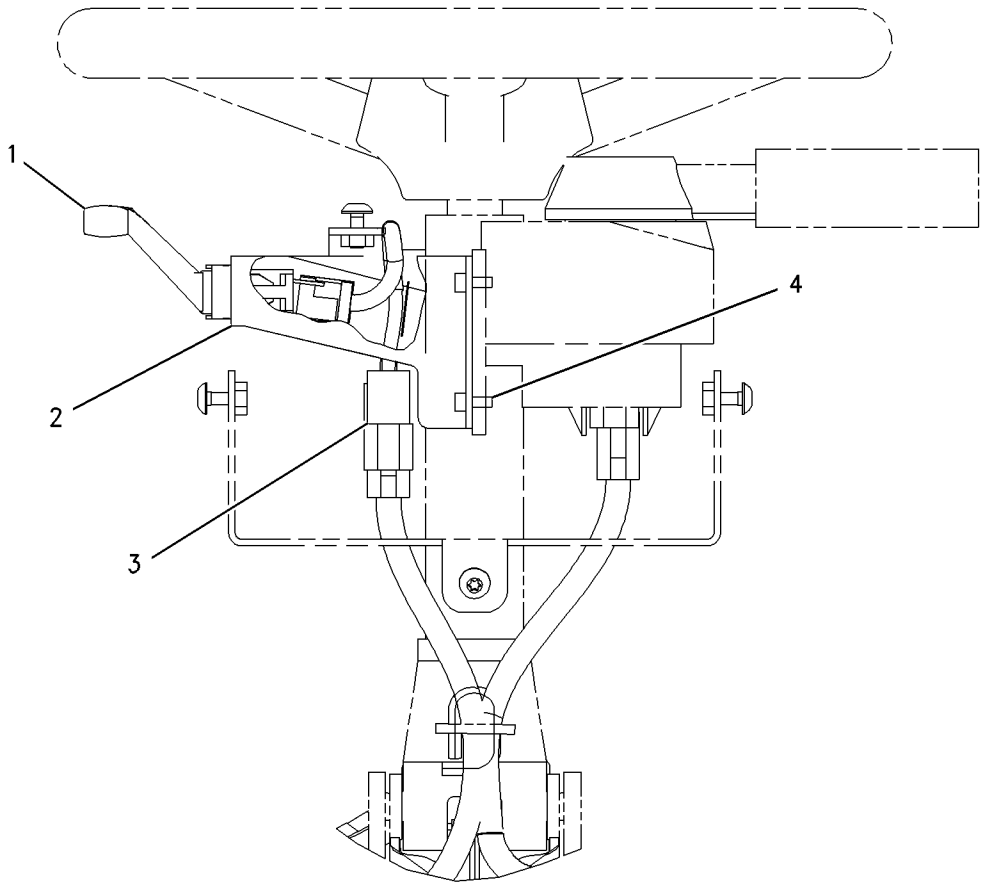

GRAPHIC #1 **<END>** g00746428

186-0303 WIRING GP-CAB—UTILITY

S/N: B2D1-UP
PART OF 239-5560 CAB AR
AN ATTACHMENT

SMCS-1408, 7301 **i02038857**

NOTE	REF NO	GRAPHIC REF	PART NUMBER	QTY	PART NAME 1 2 3 4 5 6 (PRODUCT LEVEL)	SEE PAGE
C	1	2	**113-8492**	2	FUSE (20-AMPERE)	
	2	2	**146-9439**	1	RELAY AS (12-VOLT)	
	3	1	**167-3704**	1	HARNESS AS-CAB (UPPER CAB CONTROLS)	
		1	**102-8806**	1	KIT-RECEPTACLE (8-PIN)	
		1	**155-2260**	1	KIT-CONNECTING PLUG (3-PIN)	
		1	**155-2271**	1	KIT-CONNECTING PLUG (4-PIN)	
		1	**155-2274**	1	KIT-CONNECTING PLUG (6-PIN)	
	4	1	**169-0596**	1	SWITCH AS-ROCKER (REAR WASHER, WIPER)	
		1	**111-7899**	1	GASKET	
	5	2	**238-7448**	1	SWITCH GP-MULTIFUNCTION (HD LIGHT, TURN SIG, WDO WIPER)	
	6	1,2	**3S-2093**	13	STRAP-CABLE	
M	7	2	**8T-0352**	2	BOLT (M5X0.8X45-MM)	
	8	2	**8T-4121**	2	WASHER-HARD (11X21X2.5-MM THK)	
M	9	2	**8T-4133**	1	NUT (M10X1.5-THD)	
	10	2	**235-4752**	1	WIRE AS	

C-CHANGE FROM PREVIOUS TYPE
M-METRIC PART

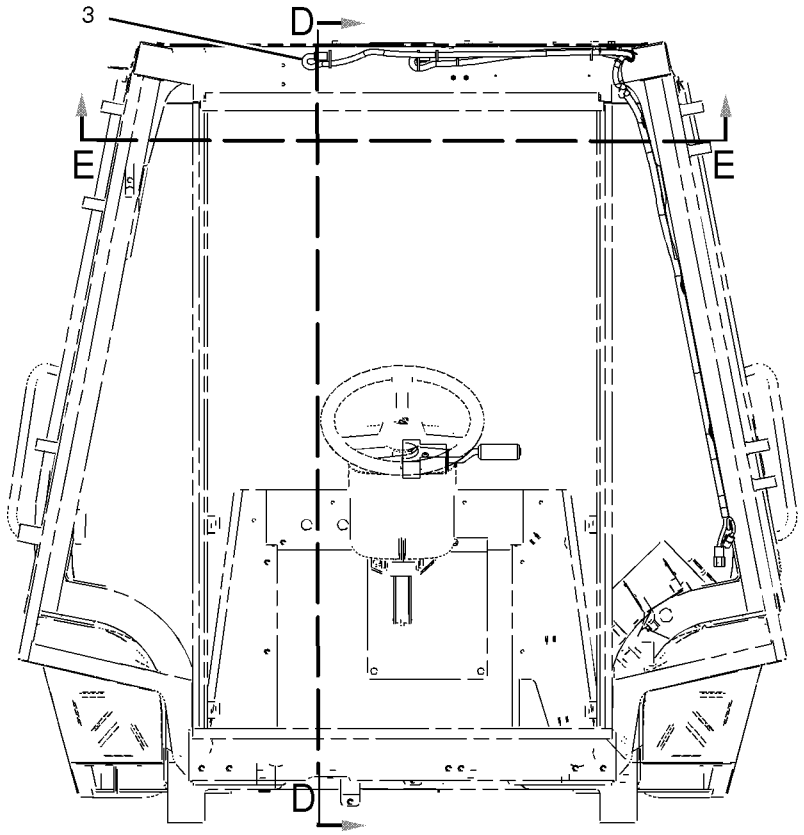

REAR VIEW

REFER TO ALL ILLUSTRATIONS IN THIS GROUP FOR AUXILIARY VIEWS

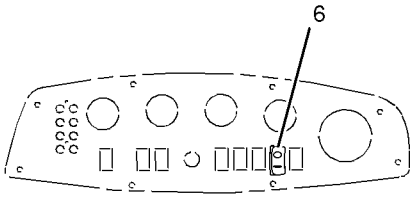

VIEW OF RH SIDE CONSOLE PANEL

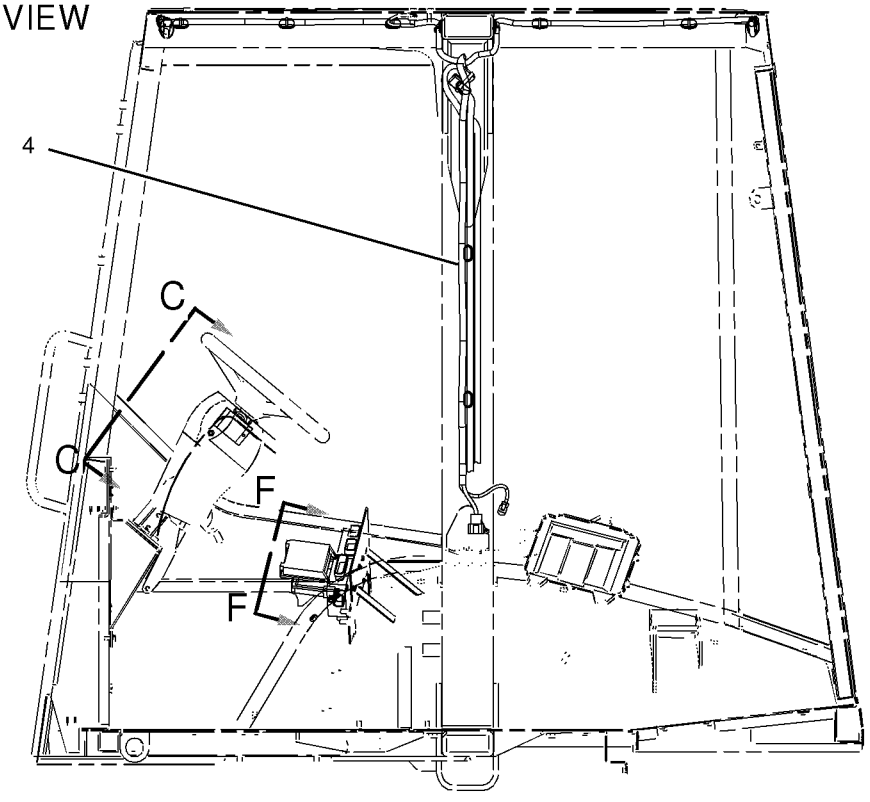

SECTION D-D

GRAPHIC #1

g01048547

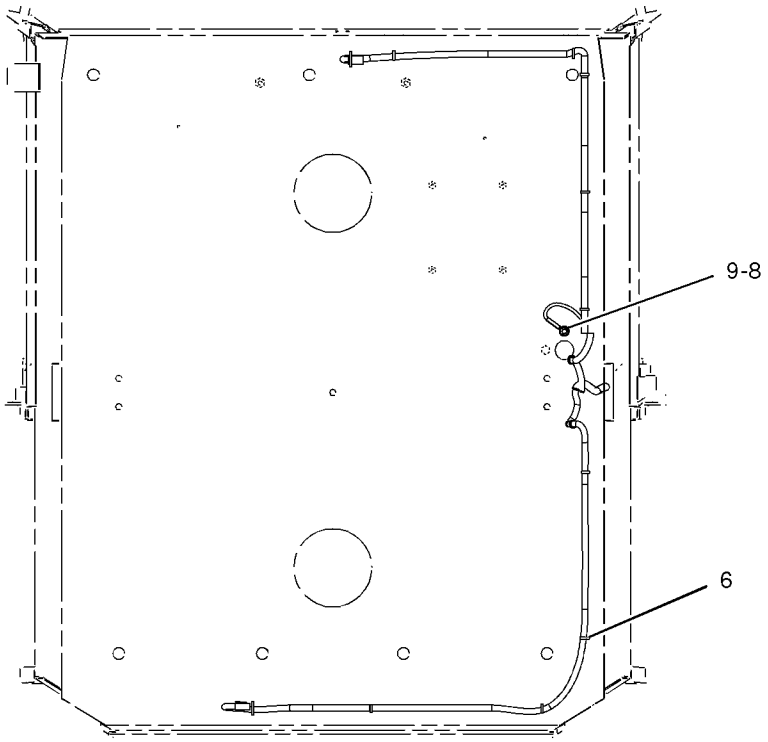

SECTIONE-E

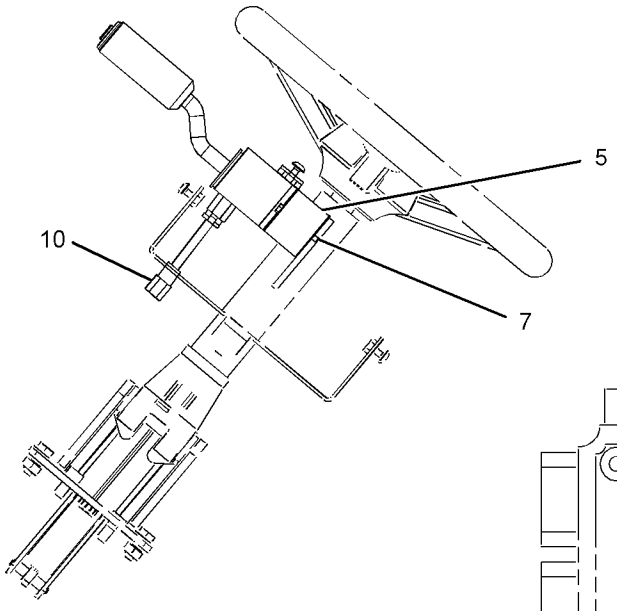

SECTION C-C

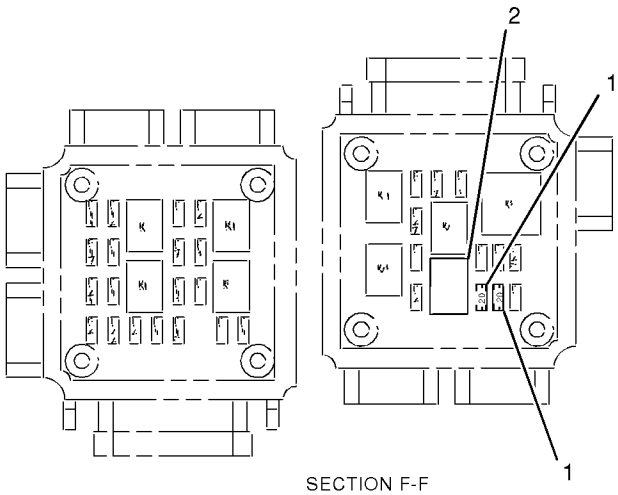

SECTION F-F

GRAPHIC #2

<END>

g01048546

186-0306 WIRING GP-CAB

S/N: B2D1-UP
BEACON READY
PART OF 239-5560, 239-5562, 241-9377 CAB AR, 239-5558, 239-5559 CANOPY AR
AN ATTACHMENT

SMCS-1408, 7301 **i01866522**

NOTE	REF NO	GRAPHIC REF	PART NUMBER	QTY	PART NAME 1 2 3 4 5 6 (PRODUCT LEVEL)	SEE PAGE
	1	1	**113-8491**	1	FUSE (15 AMP)	
B	2	1	**146-9439**	1	RELAY AS (12 VOLT)	
	3	1	**169-0595**	1	SWITCH AS (BEACON)	
		1	**111-7899**	1	GASKET	
	4	1	**178-7539**	1	RECEPTACLE AS	
	5	1	**179-5435**	1	FLANGE	
	6	1	**3E-6922**	2	SCREW-RECESS FLAT HEAD (NO. 6-19X12.7MM)	

B-USE AS REQUIRED

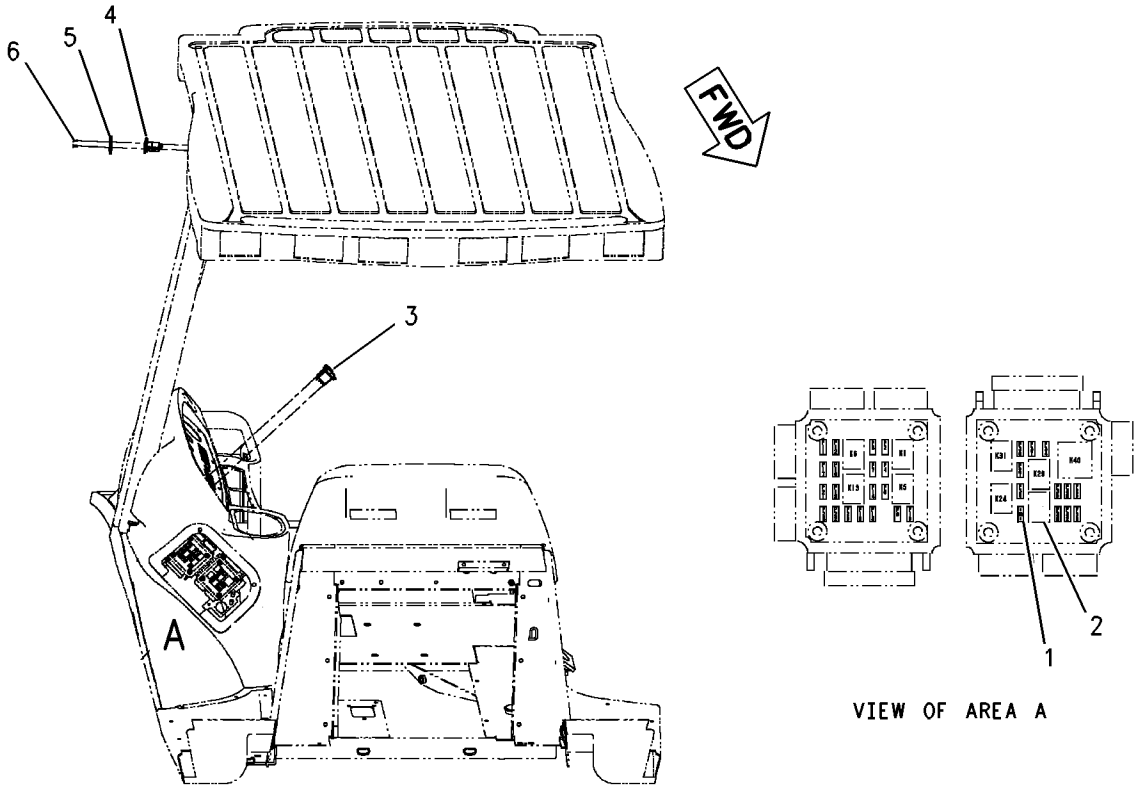

GRAPHIC #1 **<END>** g00786429

207-6050 WIRING GP-CAB

S/N: B2D1-UP
PART OF 241-9377 CAB AR, 239-5559 CANOPY AR
AN ATTACHMENT

SMCS-1408, 7301 **i02038750**

NOTE	REF NO	GRAPHIC REF	PART NUMBER	QTY	PART NAME 1 2 3 4 5 6 (PRODUCT LEVEL)	SEE PAGE
	1	2	**113-8491**	1	FUSE (15-AMPERE)	
	2	2	**146-9439**	1	RELAY AS (12-VOLT)	
	3	1	**167-3704**	1	HARNESS AS-CAB (UPPER CAB CONTROLS)	
		1	**102-8806**	1	KIT-RECEPTACLE (8-PIN)	
		1	**155-2260**	1	KIT-CONNECTING PLUG (3-PIN)	
		1	**155-2271**	1	KIT-CONNECTING PLUG (4-PIN)	
		1	**155-2274**	1	KIT-CONNECTING PLUG (6-PIN)	
	4	2	**238-7448**	1	SWITCH GP-MULTIFUNCTION (HD LIGHT, TURN SIG, WDO WIPER)	
	5	2	**3S-2093**	4	STRAP-CABLE	
M	6	2	**8T-0352**	2	BOLT (M5X0.8X45-MM)	
	7	2	**8T-4121**	2	WASHER-HARD (11X21X2.5-MM THK)	
M	8	2	**8T-4133**	1	NUT (M10X1.5-THD)	
	9	2	**235-4752**	1	WIRE AS	
FM			**125-3298**	3	BOLT-SOCKET HEAD (M5X.8X12-MM)	
F			**6V-3265**	2	CLIP	

F-NOT SHOWN
M-METRIC PART

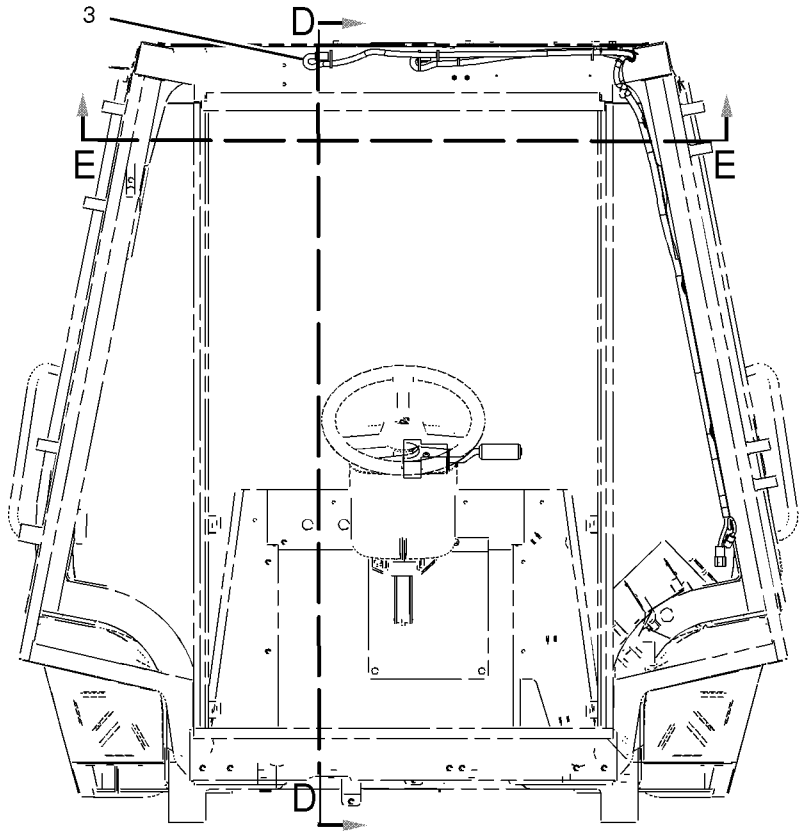

REFER TO ALL ILLUSTRATIONS IN THIS GROUP FOR

REAR VIEW

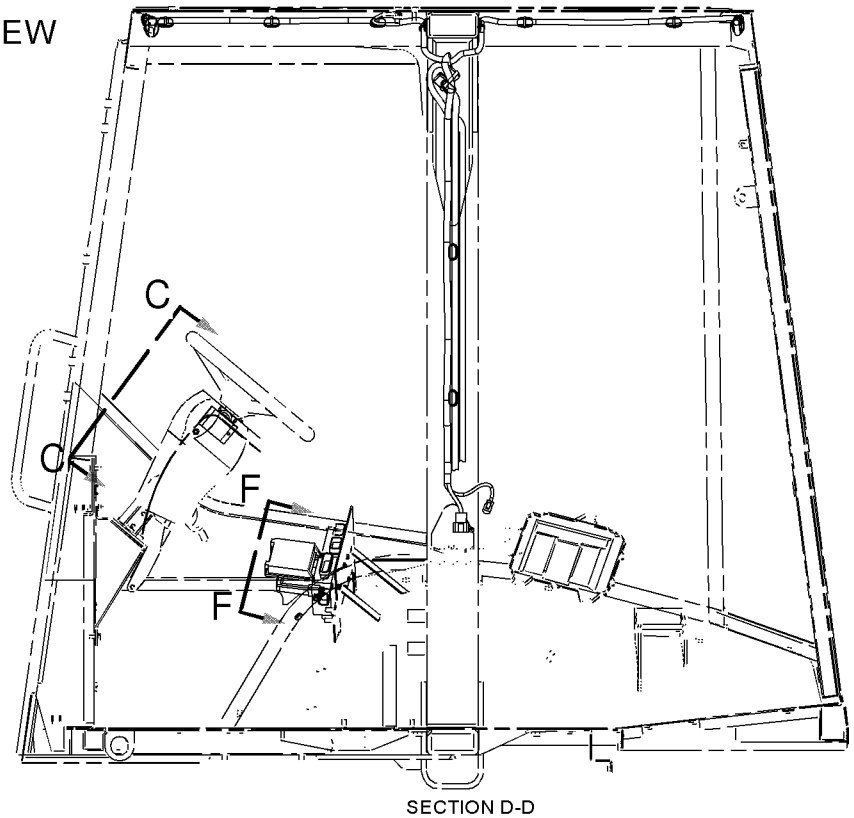

SECTION D-D

GRAPHIC #1

g01048664

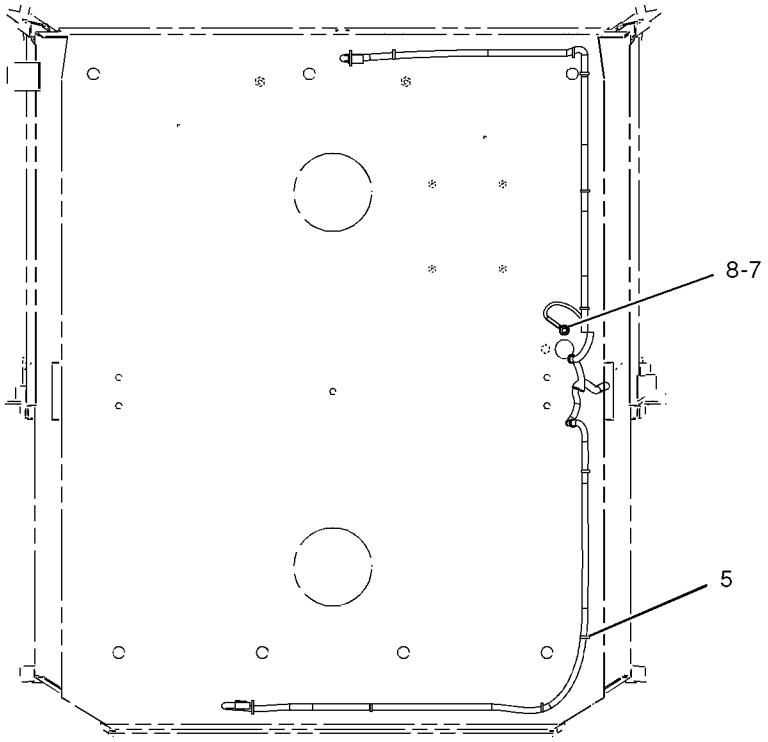

SECTION E-E

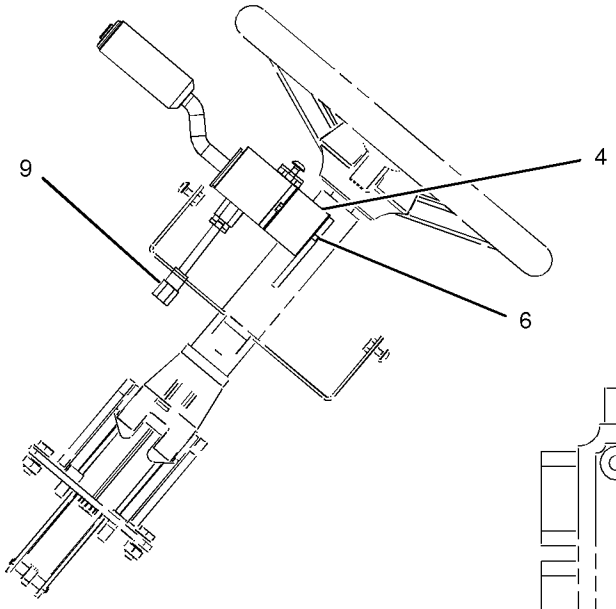

SECTION C-C

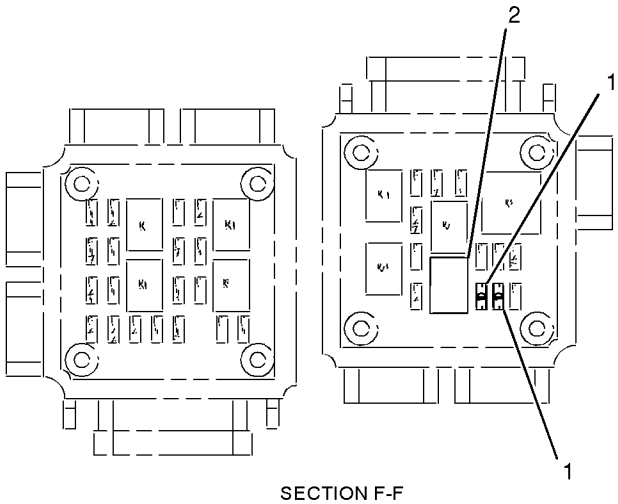

SECTION F-F

GRAPHIC #2 **<END>** g01048665

186-0309 WIRING GP-CONSOLE

S/N: B2D1-UP
ALL WHEEL DRIVE
PART OF 237-6459 DRIVE AR-BACKHOE LOADER
AN ATTACHMENT

SMCS-1408 **i01959410**

NOTE	REF NO	GRAPHIC REF	PART NUMBER	QTY	PART NAME 1 2 3 4 5 6 (PRODUCT LEVEL)	SEE PAGE
	1	1	**3S-2093**	1	STRAP-CABLE	
	2	1	**106-8704**	1	SUPPRESSOR AS-ARC	
		1	**102-8802**	1	KIT-RECEPTACLE (2 PIN)	
		1	**186-3735**	2	PIN-CONNECTOR	
	3	1	**141-2759**	1	FUSE (5 AMP)	
	4	1	**146-9439**	1	RELAY AS (12 VOLT)	
	5	1	**169-0598**	1	SWITCH AS (ALL WHEEL DRIVE)	
		1	**111-7899**	1	GASKET	

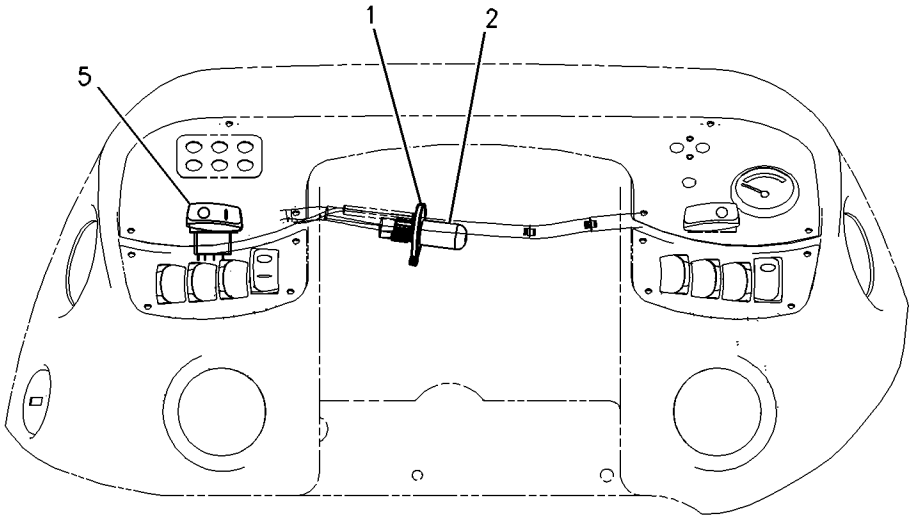

FRONT VIEW

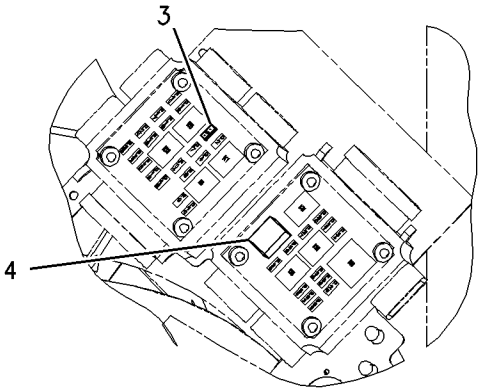

FUSE PANEL

GRAPHIC #1 **<END>** g00732887

238-1165 WIRING GP-CONSOLE–FRONT

S/N: B2D1-UP

PART OF 214-6950 CHASSIS AR

SMCS-1408 **i02054443**

NOTE	REF NO	GRAPHIC REF	PART NUMBER	QTY	PART NAME 1 2 3 4 5 6 (PRODUCT LEVEL)	SEE PAGE
Y	1	2	**144-9931**	1	MODULE GP-WARNING INDICATOR (WITHOUT ALARM)	545
	2	2	**157-1997**	2	SPACER (4.34X15.88X6.34-MM THK)	
	3	2	**167-3701**	1	HARNESS AS-CONSOLE (FRONT)	
		2	**102-8805**	1	KIT-RECEPTACLE (6-PIN)	
					(INCLUDES RECEPTACLE AND WEDGE)	
		2	**155-2255**	1	KIT-CONNECTING PLUG (12-PIN)	
					(INCLUDES PLUG AND WEDGE)	
		2	**155-2265**	1	KIT-CONNECTING PLUG (8-PIN)	
					(INCLUDES PLUG AND WEDGE)	
		2	**155-2270**	1	KIT-CONNECTING PLUG (2-PIN)	
					(INCLUDES PLUG AND WEDGE)	
	4	2	**169-0587**	1	SWITCH AS-ROCKER (HORN) (HORN)	
		2	**111-7899**	1	GASKET	
	5	2	**169-0588**	1	SWITCH AS-ROCKER (NEUTRAL LOCK)	
		2	**111-7899**	1	GASKET	
	6	2	**187-1644**	7	PLUG	
	7	2	**205-7700**	1	KIT-SERVICE METER	
					INCLUDES FILM	
	8	2	**229-8182**	1	SWITCH AS-ROCKER (HAZARD WARNING LIGHTS)	
		2	**111-7899**	1	GASKET	
M	9	2	**095-0741**	2	SCREW-MACHINE (M6X1-THD)	
M	10	2	**099-0492**	2	LOCKNUT (M6X1-THD)	
	11	2	**116-7491**	2	ANCHOR	
	12	2	**188-0863**	1	FILM-INDICATOR	
	13	2	**3S-2093**	6	STRAP-CABLE	
M	14	2	**8T-2659**	2	LOCKNUT (M4X0.7-THD)	

M-METRIC PART
Y-SEPARATE ILLUSTRATION

REFER TO ALL ILLUSTRATIONS IN THIS GROUP FOR AUXILIARY VIEWS

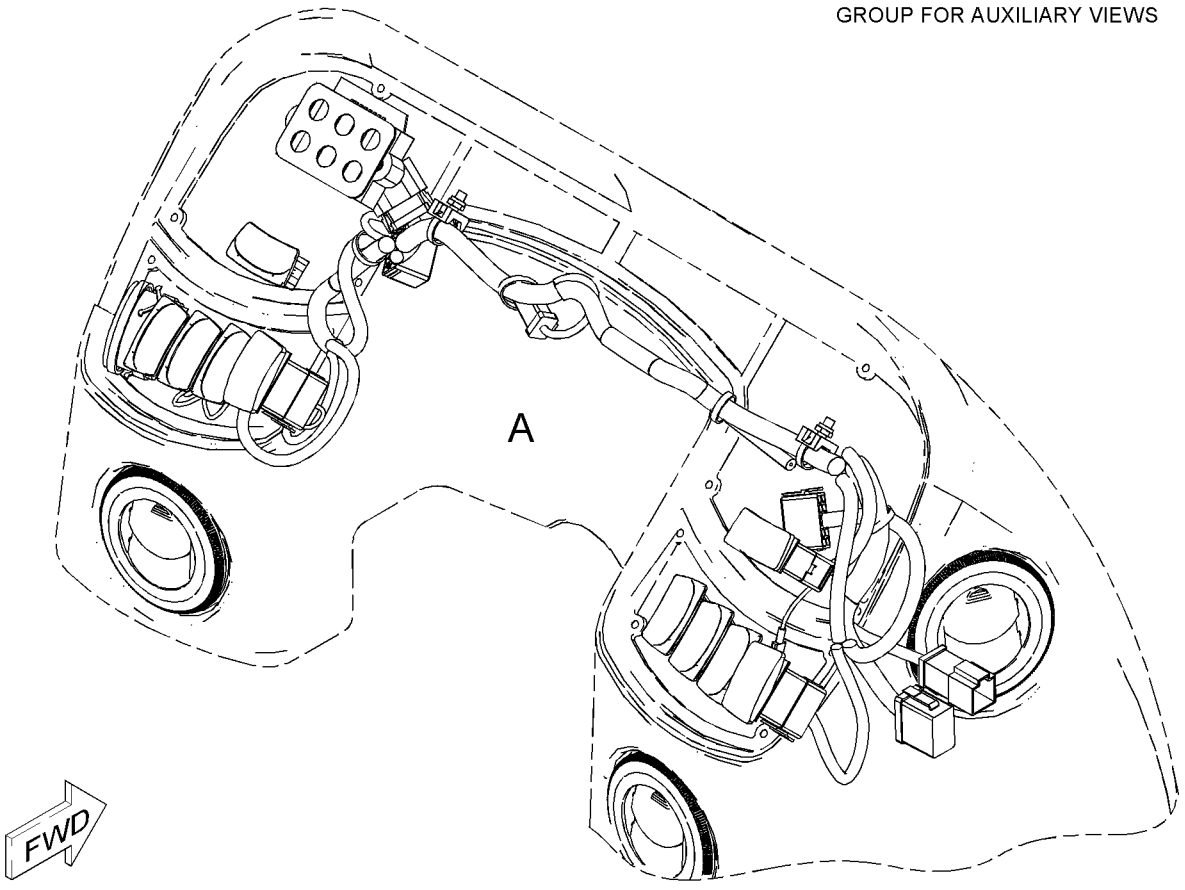

GRAPHIC #1

g01051985

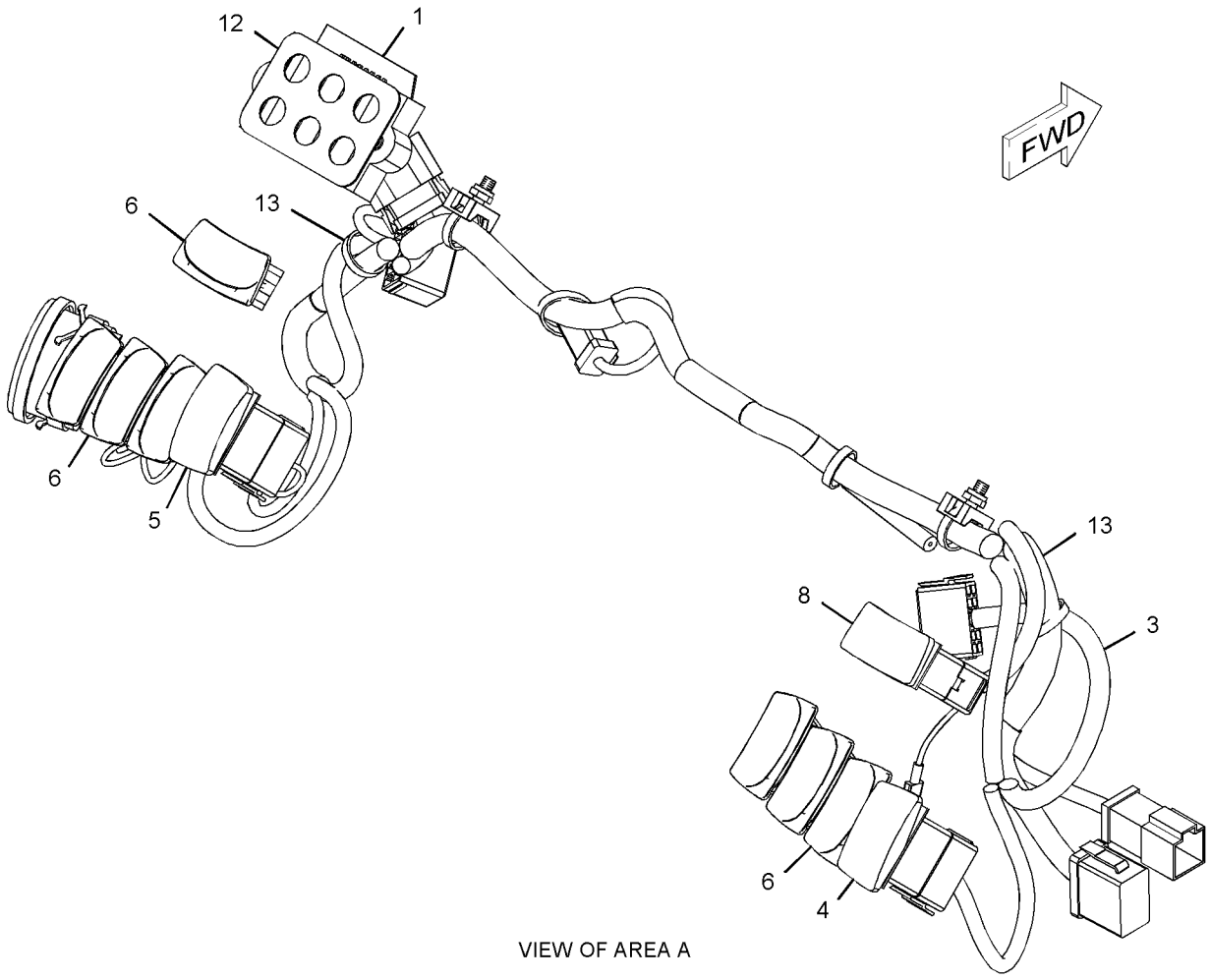

VIEW OF AREA A

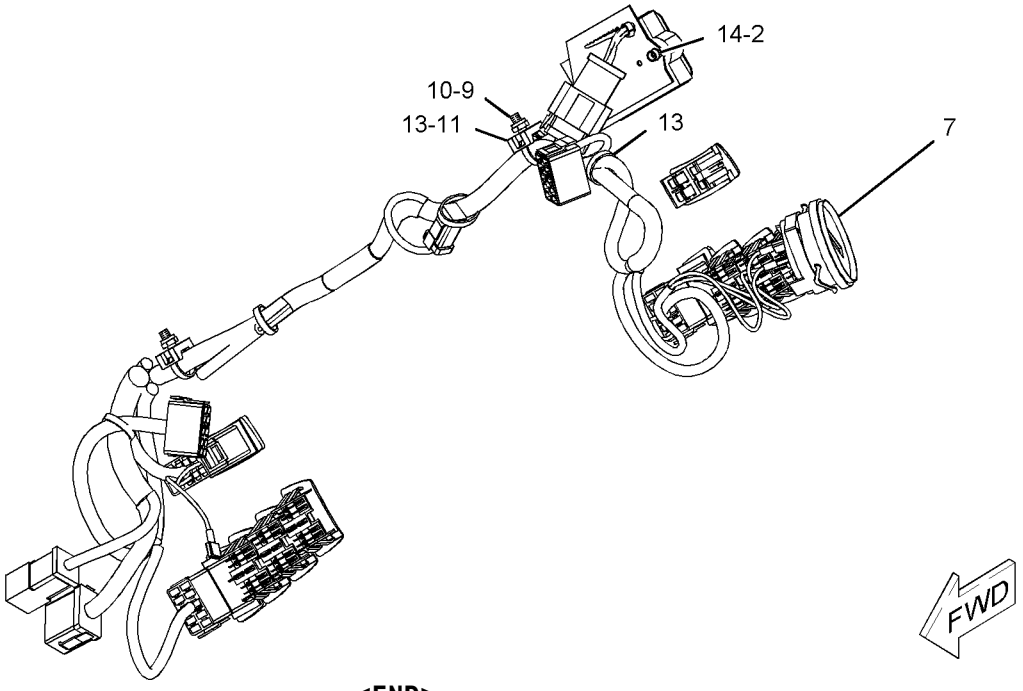

GRAPHIC #2 **<END>** g01034860

238-1166 WIRING GP-CONSOLE—SIDE

S/N: B2D1-UP

PART OF 239-5560, 239-5562, 241-9377 CAB AR, 239-5558, 239-5559 CANOPY AR AN ATTACHMENT

SMCS-1408 **i02050931**

NOTE	REF NO	GRAPHIC REF	PART NUMBER	QTY	PART NAME 1 2 3 4 5 6 (PRODUCT LEVEL)	SEE PAGE
	1	1	**6K-0806**	4	STRAP-CABLE	
	2	1	**7K-1181**	3	STRAP-CABLE	
	3	1	**157-1997**	2	SPACER (4.34X15.88X6.34-MM THK)	
	4	1	**169-0586**	1	SWITCH AS-ROCKER (STARTING AID)	
		1	**111-7899**	1	GASKET	
	5	1	**172-9200**	1	SUPPRESSOR-ARC	
	6	1	**184-5293**	1	PLUG	
	7	1	**187-1644**	6	PLUG	
	8	1	**205-4286**	1	HARNESS AS-INSTRUMENT PANEL (SIDE)	
		1	**102-8803**	1	KIT-RECEPTACLE (3-PIN)	
					(INCLUDES RECEPTACLE AND WEDGE)	
		1	**102-8804**	1	KIT-RECEPTACLE (4-PIN)	
					(INCLUDES RECEPTACLE AND WEDGE)	
		1	**155-2255**	1	KIT-CONNECTING PLUG (12-PIN)	
					(INCLUDES PLUG AND WEDGE)	
		1	**155-2260**	1	KIT-CONNECTING PLUG (3-PIN)	
					(INCLUDES PLUG AND WEDGE)	
		1	**155-2270**	1	KIT-CONNECTING PLUG (2-PIN)	
					(INCLUDES PLUG AND WEDGE)	
		1	**155-2271**	2	KIT-CONNECTING PLUG (4-PIN)	
					(EACH INCLUDES PLUG AND WEDGE)	
		1	**155-2274**	2	KIT-CONNECTING PLUG (6-PIN)	
					(EACH INCLUDES PLUG AND WEDGE)	
	9	1	**222-5794**	1	FILM-INDICATOR	
	10	1	*223-6539*	1	MODULE GP-WARNING INDICATOR	
		1	**102-8801**	1	KIT-RECEPTACLE (12-PIN)	
		1	**186-3735**	9	PIN-CONNECTOR	
		1	**232-4706**	1	GASKET	
	11	1	**226-7164**	1	GAUGE GP-COOLANT TEMPERATURE	
		1	**4B-2043**	3	NUT (8-32-THD)	
		1	**7X-9065**	1	LAMP (12-VOLT)	
		1	**9B-7233**	3	LOCKWASHER	
M	12	1	**095-0741**	1	SCREW-MACHINE (M6X1-THD)	
	13	1	**116-7491**	1	ANCHOR	
	14	1	**134-2305**	3	SEAL	
	15	1	**170-6305**	1	GAUGE GP-FUEL LEVEL	
		1	**4B-2043**	3	NUT (8-32-THD)	
		1	**7X-9065**	1	LAMP (12-VOLT)	
		1	**9B-7233**	3	LOCKWASHER	
	16	1	**170-6542**	1	GAUGE GP-OIL TEMPERATURE (TORQUE CONVERTER)	
		1	**4B-2043**	3	NUT (8-32-THD)	
		1	**7X-9065**	1	LAMP (12-VOLT)	
		1	**9B-7233**	3	LOCKWASHER	
	17	1	**196-2966**	1	PLUG	
	18	1	**3S-2093**	11	STRAP-CABLE	
	19	1	**4P-8134**	3	CLIP	
M	20	1	**8T-2659**	2	LOCKNUT (M4X0.7-THD)	
M	21	1	**8T-4133**	3	NUT (M10X1.5-THD)	
M	22	1	**8T-4191**	3	BOLT (M10X1.5X16-MM)	

M-METRIC PART

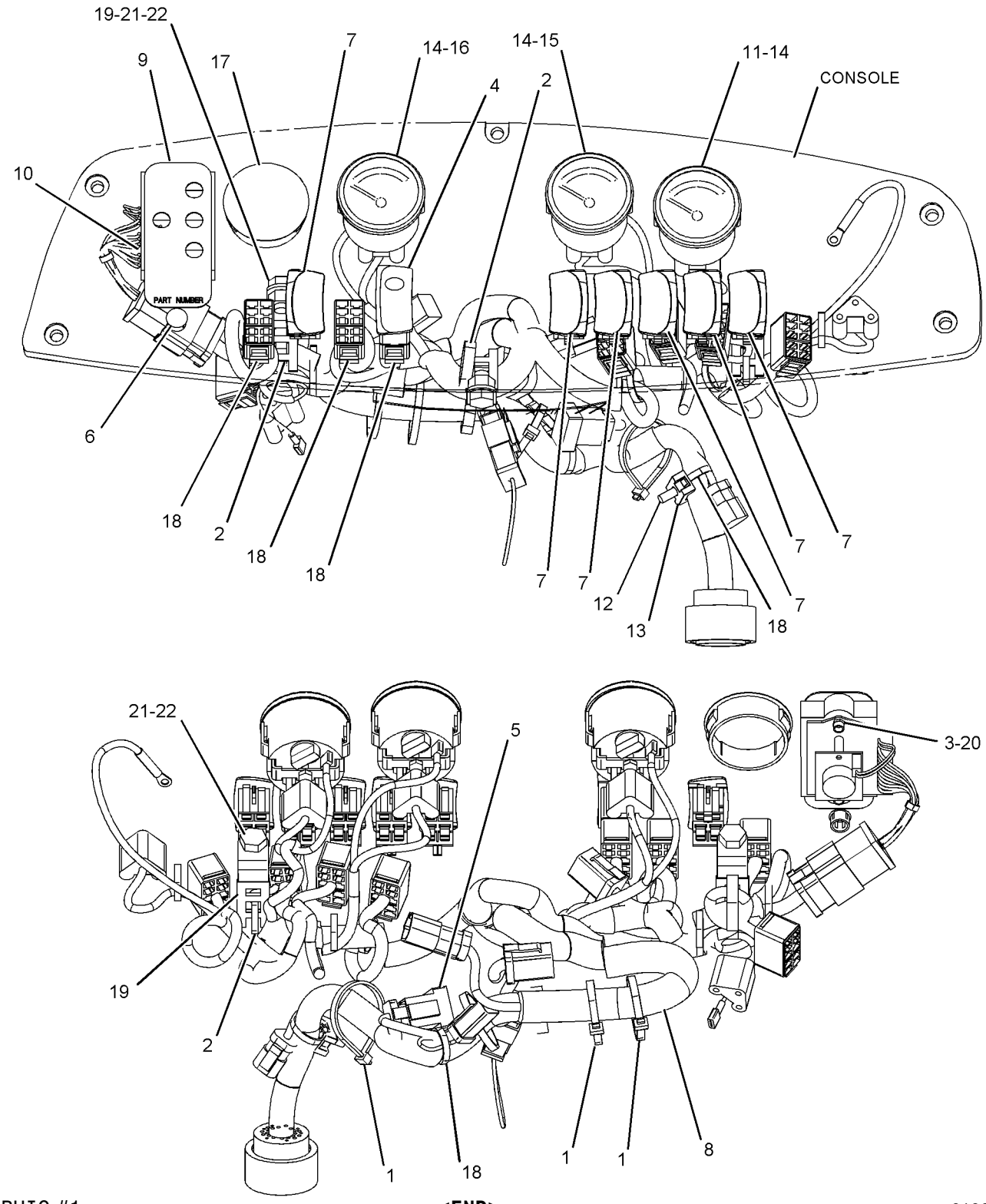

GRAPHIC #1 **<END>** g01026150

234-1991 WIRING GP-ENGINE

S/N: B2D1-UP
PART OF 214-6890, 214-6891 ENGINE AR
AN ATTACHMENT

SMCS-1408 **i01991949**

NOTE	REF NO	GRAPHIC REF	PART NUMBER	QTY	PART NAME 1 2 3 4 5 6 (PRODUCT LEVEL)	SEE PAGE
	1	1	**4W-9972**	1	SENDER-TEMPERATURE	
		1	**4B-2049**	1	NUT (10-32 THD)	
		1	**8F-1434**	1	LOCKWASHER (INTERNAL TOOTH)	
		1	**8T-0328**	1	WASHER-HARD (5.5X10X1MM THK)	
	2	1,2	**7K-1181**	2	STRAP-CABLE	
B	3	1	**8T-8737**	7	PLUG-SEAL	
	4	1,2	**115-1615**	2	RELAY AS (12-VOLT)	
	5	1	**155-8522**	1	MOUNT	
	6	2	**164-9425**	1	HORN AS (LOW TONE)	
	7	2	**178-8465**	1	HARNESS AS (WIRE)	
		2	**102-8802**	1	KIT-RECEPTACLE (2-PIN)	
					(INCLUDES RECEPTACLE AS AND WEDGE)	
		2	**100-3320**	1	PLUG AS-CONNECTOR (2 PIN)	
	8	2	**213-6094**	1	CABLE AS	
E		2	**8C-3056**		CABLE (2 GA) (85CM)	
		2	**8T-8799**	1	BOOT	
E		2	**119-3662**		TUBE-HEAT SHRINK (7CM)	
	9	2	**234-1992**	1	HARNESS AS-ENGINE	
		2	**102-8802**	1	KIT-RECEPTACLE (2-PIN)	
					(INCLUDES RECEPTACLE AS AND WEDGE)	
		2	**9X-1054**	2	PLUG AS-CONNECTOR (4 PIN)	
		2	**155-2260**	3	KIT-CONNECTING PLUG (3-PIN)	
					(INCLUDES PLUG AS AND WEDGE)	
		2	**155-2270**	12	KIT-CONNECTING PLUG (2-PIN)	
		2	**167-3693**	1	PLUG AS	
		2	**177-9645**	1	KIT-RECEPTACLE (2-PIN)	
					(INCLUDES RECEPTACLE AS AND WEDGE)	
	10	1	**238-9397**	1	RESISTOR AS	
	11	2	**243-5027**	1	NUT AS	
	12	2	**244-3106**	1	SENDER AS-TEMPERATURE	
		2	**102-8802**	1	KIT-RECEPTACLE (2-PIN)	
					(INCLUDES RECEPTACLE AS AND WEDGE)	
		2	**186-3735**	2	PIN-CONNECTOR	
	13	1	**155-2270**	1	KIT-CONNECTING PLUG (2-PIN)	
					(INCLUDES PLUG AS AND WEDGE)	
	14	1	**102-8802**	1	KIT-RECEPTACLE (2-PIN)	
	15	1	**102-8803**	1	KIT-RECEPTACLE (3-PIN)	
					(BOTH INCLUDE RECEPTACLE AS AND WEDGE)	
	16	1	**3J-1907**	1	SEAL-O-RING	
	17	1,2	**3S-2093**	32	STRAP-CABLE	
	18	2	**4P-7581**	8	CLIP	
	19	2	**4P-8134**	5	CLIP	
M	20	2	**5C-2874**	2	NUT (M5X.8 THD)	
M	21	1	**5C-2890**	1	NUT (M6X1 THD)	
	22	1	**6K-0806**	3	STRAP-CABLE	
M	23	1	**6V-7357**	1	BOLT (M6X1.0X25MM)	
	24	2	**8F-1434**	2	LOCKWASHER (INTERNAL TOOTH)	
	25	2	**8T-0328**	2	WASHER-HARD (5.5X10X1MM THK)	
	26	2	**8T-4121**	9	WASHER-HARD (11X21X2.5MM THK)	
M	27	2	**8T-4136**	1	BOLT (M10X1.5X25MM)	
M	28	2	**8T-4137**	8	BOLT (M10X1.5X20MM)	
M	29	2	**8T-4138**	1	BOLT (M6X1X20MM)	
M	30	2	**8T-4189**	1	BOLT (M8X1.25X20MM)	
	31	1,2	**8T-4205**	3	WASHER-HARD (7.2X14.5X2MM THK)	
	32	2	**8T-4224**	1	WASHER-HARD (8.8X16X2MM THK)	

B-USE AS REQUIRED
E-ORDER BY THE CENTIMETER
M-METRIC PART

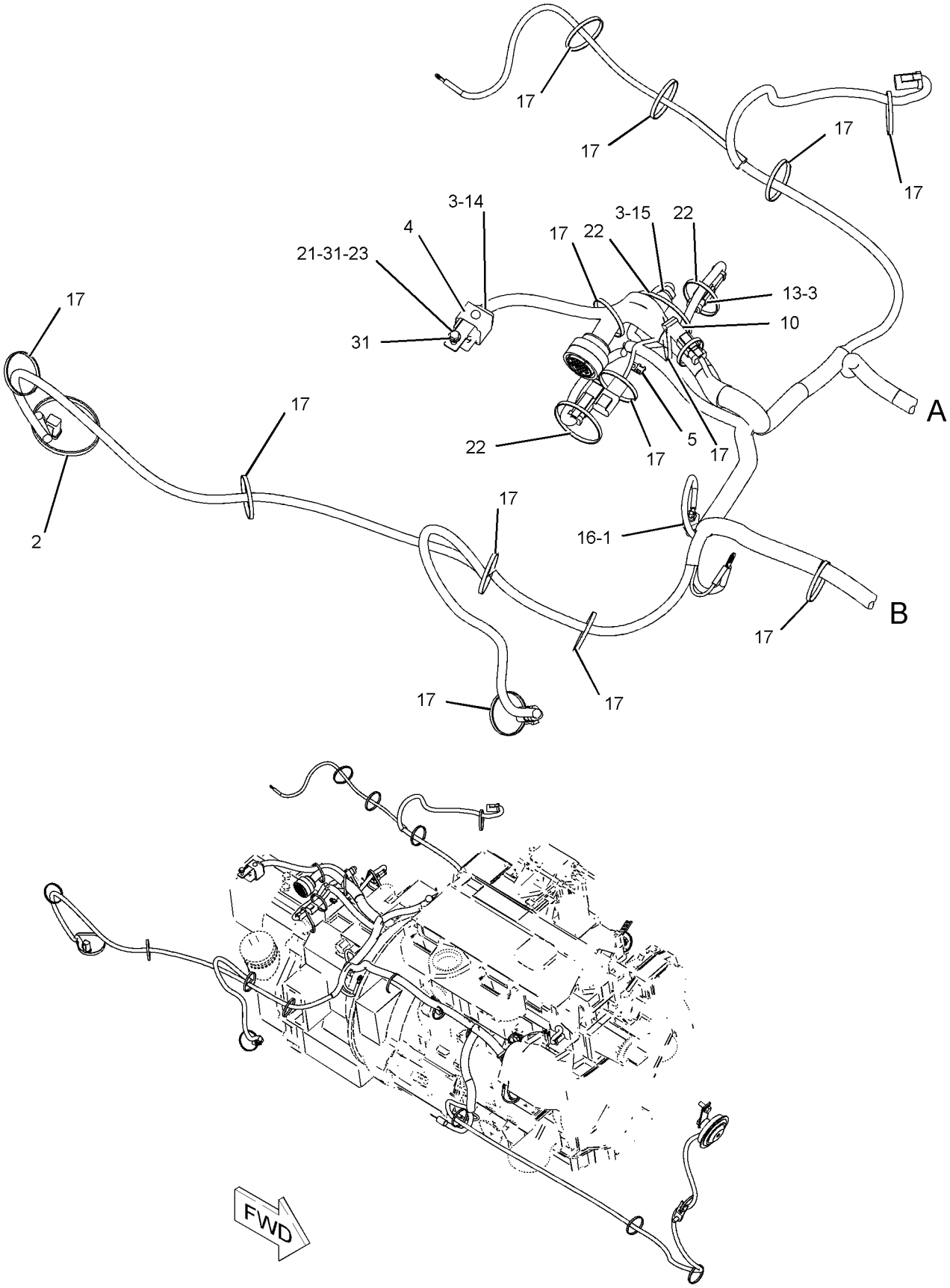

GRAPHIC #1 g01039490

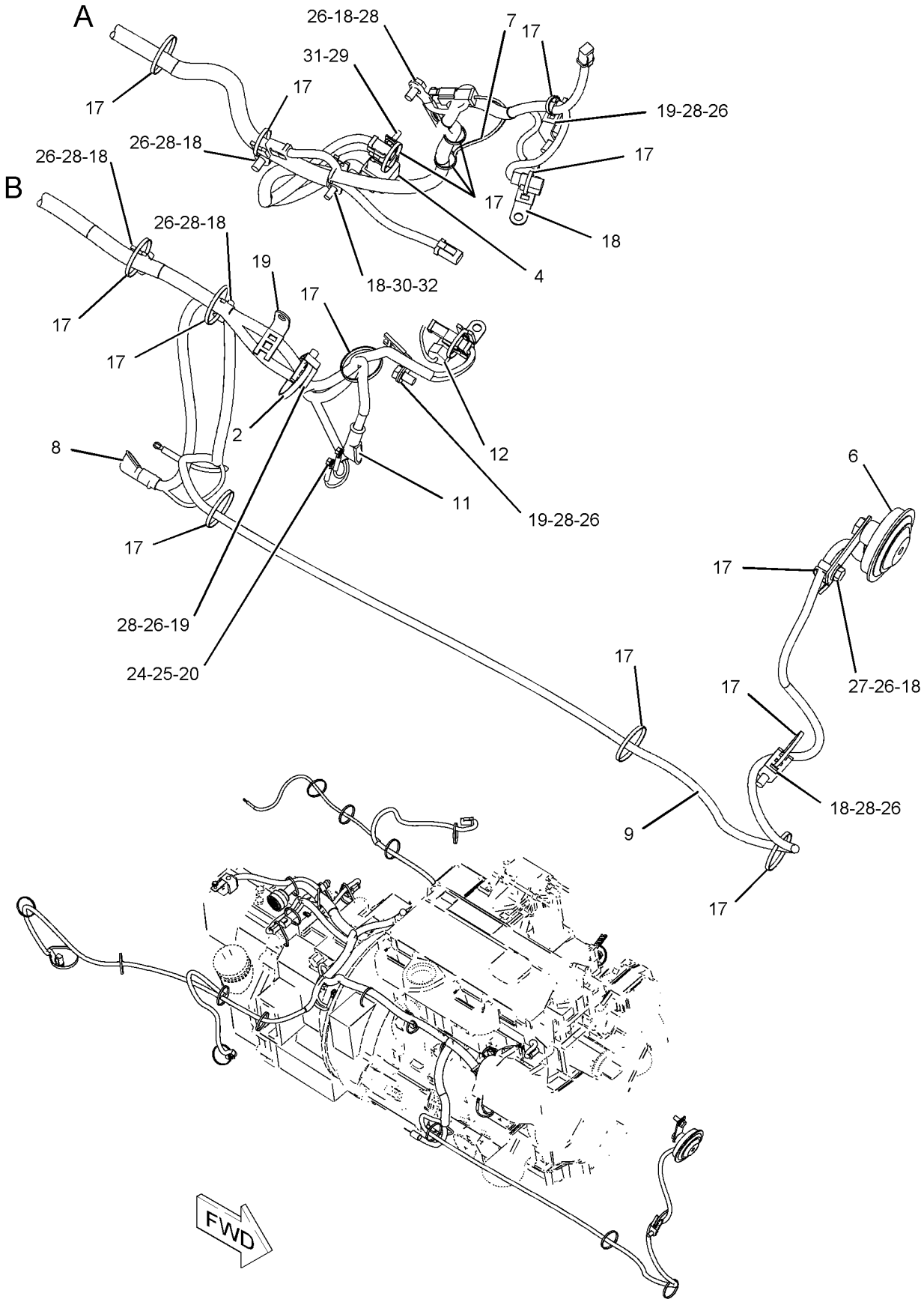

GRAPHIC #2 **<END>** g01039491

186-2731 WIRING GP-HEATER

S/N: B2D1-UP
PART OF 239-5560 CAB AR
AN ATTACHMENT

SMCS-1408, 7304 **i01942477**

NOTE	REF NO	GRAPHIC REF	PART NUMBER	QTY	PART NAME 1 2 3 4 5 6 (PRODUCT LEVEL)	SEE PAGE
	1	1	**3E-9362**	1	RELAY AS (12 VOLT)	
	2	1	**3S-2093**	3	STRAP-CABLE	
	3	1	**131-3201**	2	BOOT	
	4	1	**169-0605**	1	SWITCH AS-ROCKER (HEATER FAN SPEED)	
		1	**111-7899**	1	GASKET	
	5	1	**170-2237**	1	RELAY AS (12 VOLT)	
	6	1	**184-2422**	1	SWITCH AS (HEATER)	
		1	**111-7899**	1	GASKET	
	7	1	**229-8377**	1	CIRCUIT BREAKER AS (35AMP)	
		1	**6V-8378**	2	NUT (10-32 THD)	
		1	**8F-1434**	2	LOCKWASHER	
		1	**8T-0328**	2	WASHER-HARD (5.5X10X1MM THK)	
	8	1	**229-8413**	1	HARNESS AS-HEATER & AIR COND (HVAC)	
		1	**102-8802**	1	KIT-RECEPTACLE (2 PIN)	
		1	**102-8804**	1	KIT-RECEPTACLE (4 PIN)	
		1	**155-2270**	1	KIT-CONNECTING PLUG (2 PIN)	
		1	**177-9645**	1	KIT-RECEPTACLE (2 PIN)	
		1	**177-9648**	1	KIT-CONNECTING PLUG (2 PIN)	
M	9	1	**138-8454**	1	SCREW-TRUSS HEAD (M4X0.7X10MM)	
	10	1	**213-7315**	2	SCREW-TRUSS HEAD (M4X0.7X25MM)	
	11	1	**4B-4863**	1	WASHER (4.7X11X1.2MM THK)	

M-METRIC PART

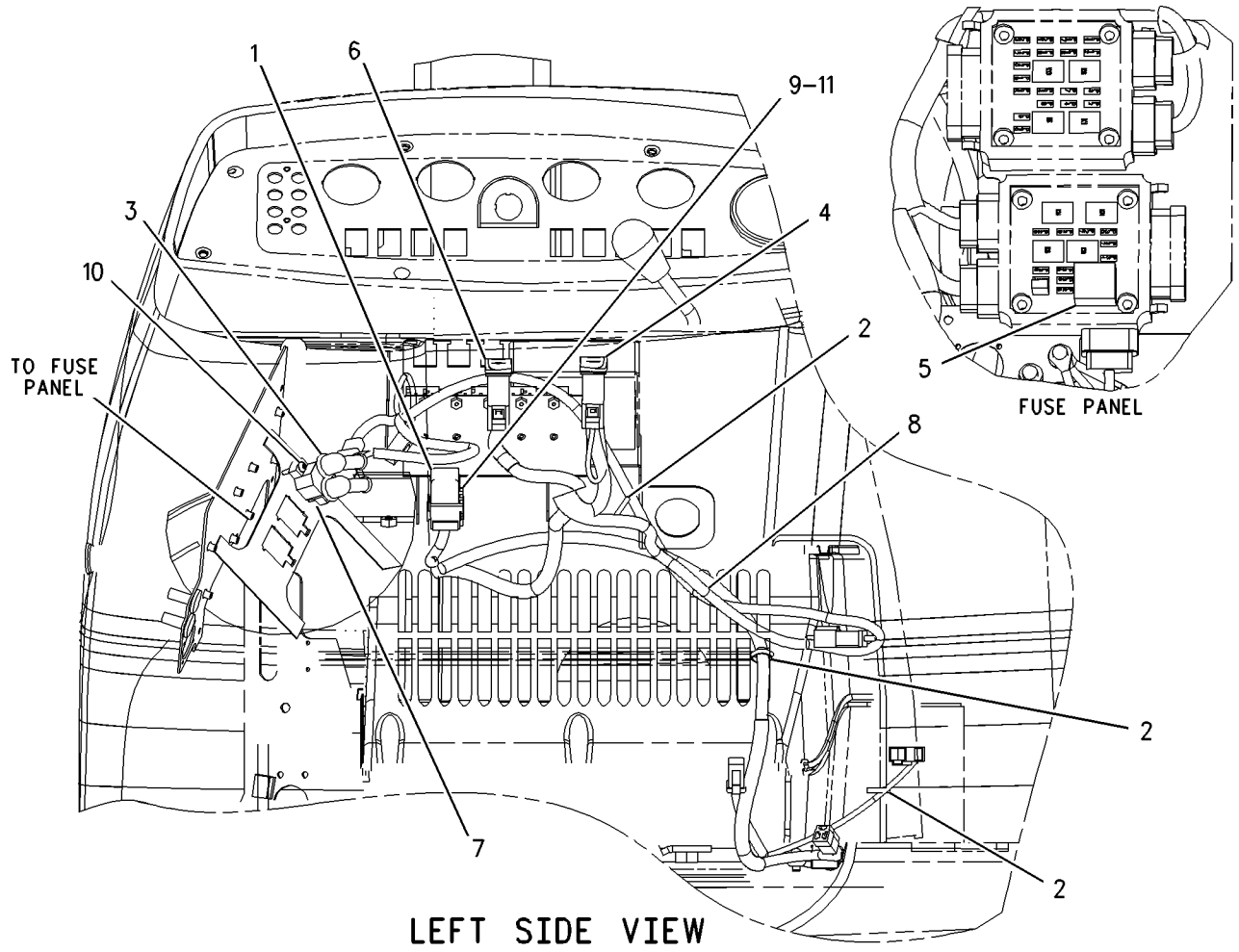

GRAPHIC #1 **<END>** g00996660

238-1821 WIRING GP-PLATFORM

S/N: B2D1-UP

PART OF 214-6950 CHASSIS AR

SMCS-1408 **i02054444**

NOTE	REF NO	GRAPHIC REF	PART NUMBER	QTY	PART NAME 1 2 3 4 5 6 (PRODUCT LEVEL)	SEE PAGE
BD	1	1	**5P-5923**		SEAL (.035M)	
BD	2	1	**5P-7657**		SEAL (.032M EACH)	
	3	2	**6K-0806**	8	STRAP-CABLE	
	4	1	**7G-1060**	1	STRAP AS-GROUND	
	5	2	**7T-4848**	1	FLASHER AS	
	6	1	**7Y-3883**	1	CABLE AS	
		1	**1S-7251**	2	TERMINAL-RING (FOR 1/2-IN BOLT)	
		1	**5P-0747**	40	CABLE (00-GA, BLACK)	
B	7	1,2	**8T-8737**	15	PLUG-SEAL	
	8	1,2	**128-4249**	2	LOCKWASHER	
	9	2	**164-1056**	1	CHANNEL	
	10	2	**167-3700**	1	HARNESS AS-PLATFORM	
		2	**102-8802**	1	KIT-RECEPTACLE (2-PIN)	
					(INCLUDES RECEPTACLE AND WEDGE)	
		2	**102-8803**	1	KIT-RECEPTACLE (3-PIN)	
					(INCLUDES RECEPTACLE AND WEDGE)	
		2	**102-8804**	1	KIT-RECEPTACLE (4-PIN)	
					(INCLUDES RECEPTACLE AND WEDGE)	
		2	**102-8805**	1	KIT-RECEPTACLE (6-PIN)	
					(INCLUDES RECEPTACLE AND WEDGE)	
		2	**102-8806**	1	KIT-RECEPTACLE (8-PIN)	
					(INCLUDES RECEPTACLE AND WEDGE)	
		2	**102-8801**	1	KIT-RECEPTACLE (12-PIN)	
					(INCLUDES RECEPTACLE AND WEDGE)	
		2	**155-2255**	2	KIT-CONNECTING PLUG (12-PIN)	
					(EACH INCLUDES PLUG AND WEDGE)	
		2	**155-2265**	2	KIT-CONNECTING PLUG (8-PIN)	
					(EACH INCLUDES PLUG AND WEDGE)	
		2	**155-2260**	3	KIT-CONNECTING PLUG (3-PIN)	
					(EACH INCLUDES PLUG AND WEDGE)	
		2	**155-2270**	6	KIT-CONNECTING PLUG (2-PIN)	
					(EACH INCLUDES PLUG AND WEDGE)	
		2	**155-2271**	3	KIT-CONNECTING PLUG (4-PIN)	
					(EACH INCLUDES PLUG AND WEDGE)	
		2	**155-2274**	1	KIT-CONNECTING PLUG (6-PIN)	
					(INCLUDES PLUG AND WEDGE)	
		2	**196-2383**	2	KIT-PLUG (8-PIN)	
					(EACH INCLUDES PLUG AND WEDGE)	
		2	**196-2384**	2	KIT-PLUG (8-PIN)	
					(EACH INCLUDES PLUG AND WEDGE)	
		2	**177-9648**	2	KIT-CONNECTING PLUG (2-PIN)	
					(EACH INCLUDES PLUG AND WEDGE)	
		2	**196-2385**	2	KIT-PLUG (8-PIN)	
					(EACH INCLUDES PLUG AND WEDGE)	
		2	**196-2386**	1	KIT-PLUG	
					(INCLUDES PLUG AND WEDGE)	
	11	2	**184-6430**	1	COVER	
	12	1,2	**211-0052**	2	NUT (11/16-18-THD)	
	13	1	**237-0224**		HARNESS AS (POWER)	
	14	1	**240-0541**	1	BLOCK AS (FUSE)	
	15	1	**240-0542**	1	BLOCK AS (FUSE)	
M	16	2	**095-0733**	8	SCREW-MACHINE	
M	17	2	**138-8454**	3	SCREW-TRUSS HEAD (M4X0.7X10-MM)	
B	18	1,2	**102-8802**	4	KIT-RECEPTACLE (2-PIN)	
					(EACH INCLUDES RECEPTACLE AND WEDGE)	

238-1821 **WIRING GP-PLATFORM** ***(contd.)*** **i02054444**

NOTE	REF NO	GRAPHIC REF	PART NUMBER	QTY	PART NAME 1 2 3 4 5 6 (PRODUCT LEVEL)	SEE PAGE
B	19	2	**102-8803**	1	KIT-RECEPTACLE (3-PIN)	
					(INCLUDES RECEPTACLE AND WEDGE)	
B	20	2	**102-8804**	1	KIT-RECEPTACLE (4-PIN)	
					(INCLUDES RECEPTACLE AND WEDGE)	
	21	1,2	**3S-2093**	32	STRAP-CABLE	
	22	2	**4B-4863**	11	WASHER (4.7X11X1.2-MM THK)	
	23	1	**7X-7729**	2	WASHER (11X25X3-MM THK)	
	24	1,2	**8T-4121**	6	WASHER-HARD (11X21X2.5-MM THK)	
M	25	2	**8T-4133**	2	NUT (M10X1.5-THD)	
M	26	1	**8T-4136**	3	BOLT (M10X1.5X25-MM)	
M	27	2	**8T-4171**	2	BOLT (M6X1X12-MM)	
M	28	1	**8T-4179**	1	BOLT (M12X1.75X20-MM)	
	29	2	**8T-4205**	2	WASHER-HARD (7.2X14.5X2-MM THK)	
	30	1	**8T-4223**	1	WASHER-HARD (13.5X25.5X3-MM THK)	

B-USE AS REQUIRED
D-ORDER BY THE METER
M-METRIC PART

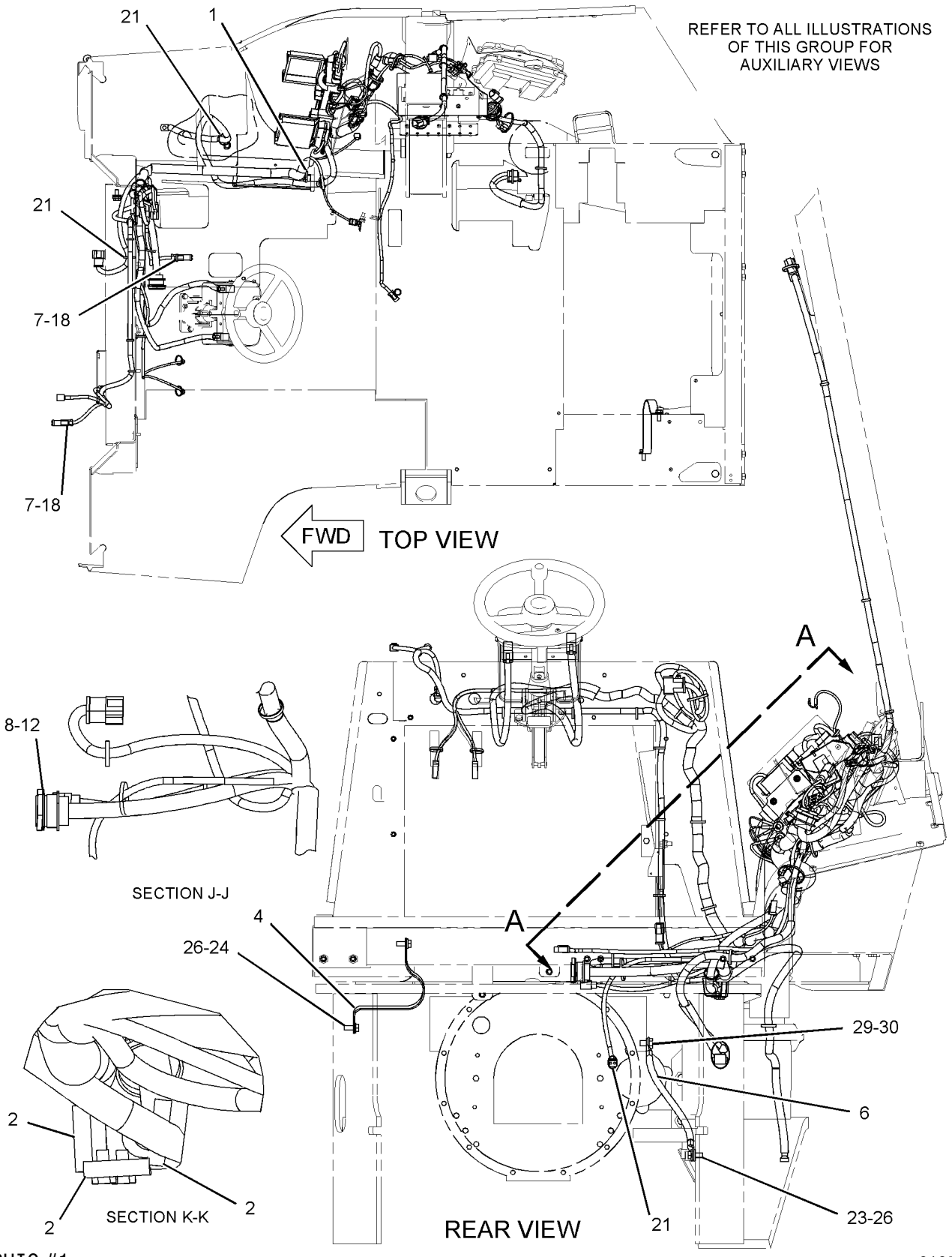

GRAPHIC #1

g01051221

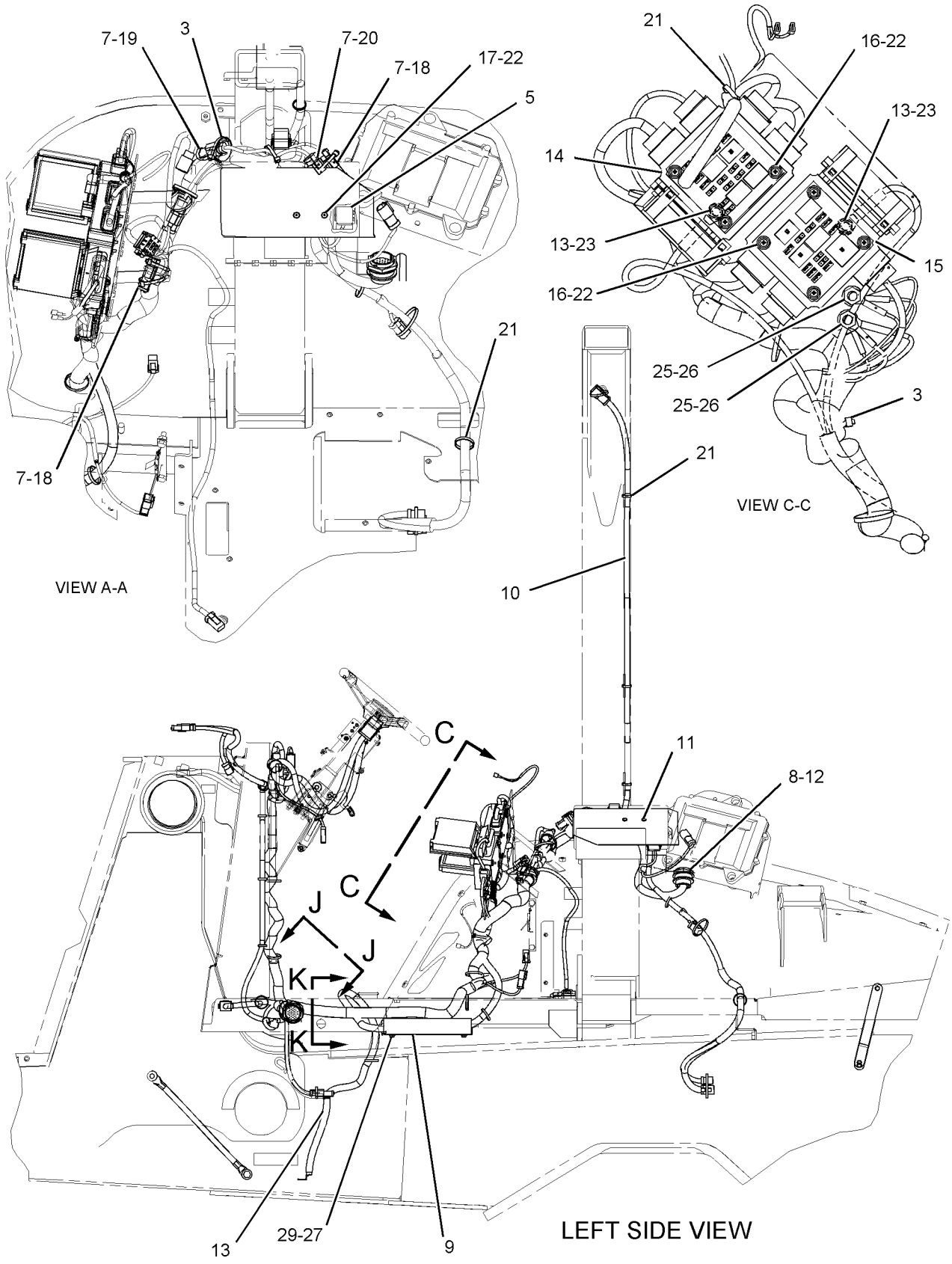

GRAPHIC #2

<END>

g01051222

190-7557 WIRING GP-POWER RECEPTACLE

S/N: B2D1-UP
PART OF 239-5562 CAB AR
AN ATTACHMENT

SMCS-1408, 7301 **i01714191**

NOTE	REF NO	GRAPHIC REF	PART NUMBER	QTY	PART NAME 1 2 3 4 5 6 (PRODUCT LEVEL)	SEE PAGE
	1	1	**113-8490**	1	FUSE (10 AMP)	
	2	1	**178-7539**	1	RECEPTACLE AS	
	3	1	**3S-2093**	1	STRAP-CABLE	

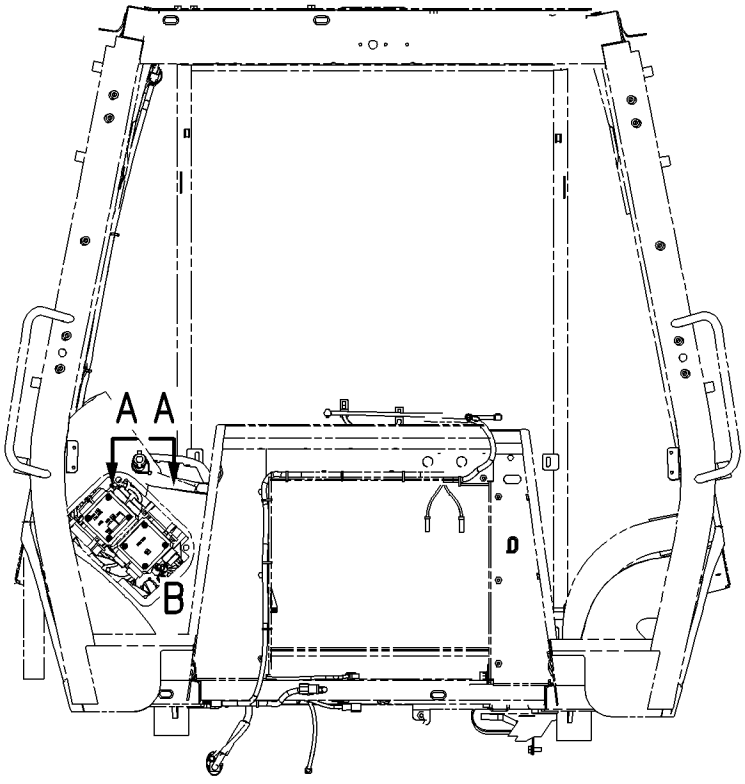

FRONT VIEW

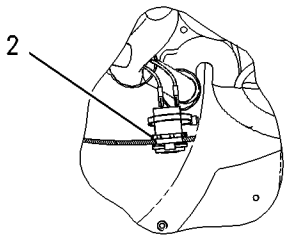

SECTION A-A

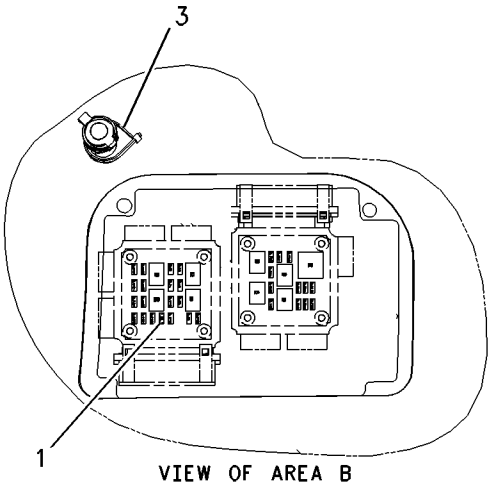

VIEW OF AREA B

GRAPHIC #1 **<END>** g00878859

185-8808 WIRING GP-REAR

S/N: B2D1-UP
CENTER PIVOT
PART OF 237-6458, 237-6459 DRIVE AR-BACKHOE LOADER
AN ATTACHMENT

SMCS-1408 **i02054447**

NOTE	REF NO	GRAPHIC REF	PART NUMBER	QTY	PART NAME 1 2 3 4 5 6 (PRODUCT LEVEL)	SEE PAGE
	1	1	**7K-1181**	1	STRAP-CABLE	
B	2	1,2	**8T-8737**	4	PLUG-SEAL	
	3	2	**9U-2277**	1	CLIP AS	
		2	**8C-3334**	1	RIVET-TUBULAR	
	4	2	**154-5428**	1	ALARM AS-BACKUP	
		2	**102-8802**	1	KIT-RECEPTACLE (2-PIN)	
	5	1	**167-3708**	1	HARNESS AS-REAR	
		1	**102-8803**	1	KIT-RECEPTACLE (3-PIN)	
		1	**102-8806**	1	KIT-RECEPTACLE (8-PIN)	
		1	**155-2270**	1	KIT-CONNECTING PLUG (2-PIN)	
M	6	2	**111-4627**	2	SCREW-MACHINE (M6X1.0X30-MM)	
	7	2	**132-5789**	1	CLIP	
B	8	1,2	**102-8802**	2	KIT-RECEPTACLE (2-PIN)	
	9	1	**3S-2093**	5	STRAP-CABLE	
M	10	2	**8T-4134**	1	NUT (M6X1-THD)	
BM	11	2	**8T-4136**	1	BOLT (M10X1.5X25-MM)	
	12	2	**9X-6165**	1	WASHER (6.5X22X2.5-MM THK)	

B-USE AS REQUIRED
M-METRIC PART

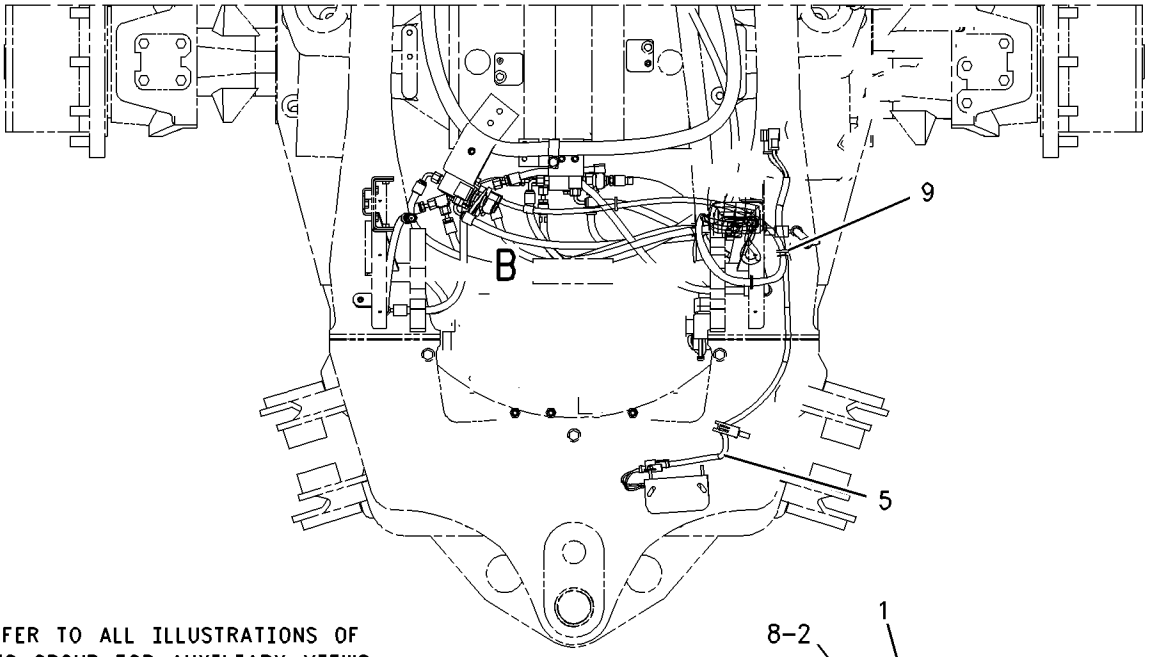

REFER TO ALL ILLUSTRATIONS OF THIS GROUP FOR AUXILIARY VIEWS

TOP VIEW

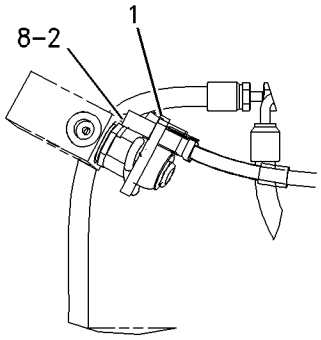

VIEW OF AREA B

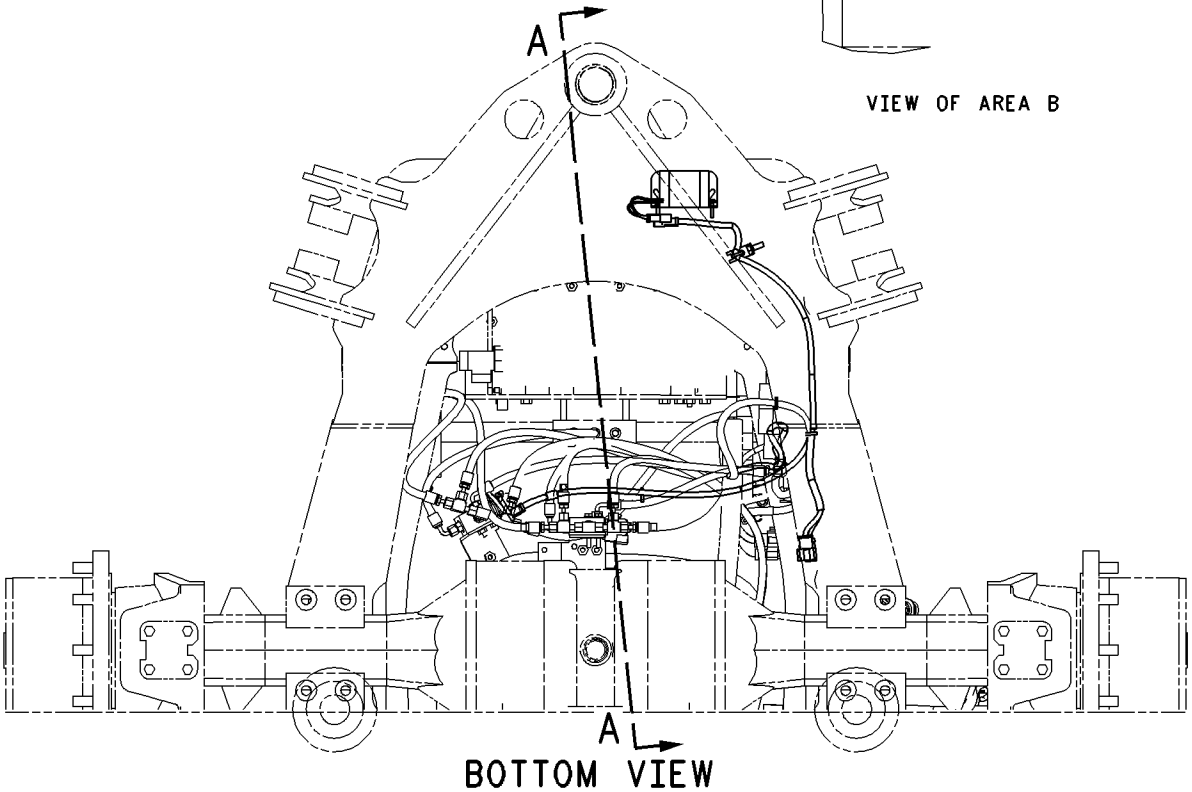

BOTTOM VIEW

GRAPHIC #1 g00904558

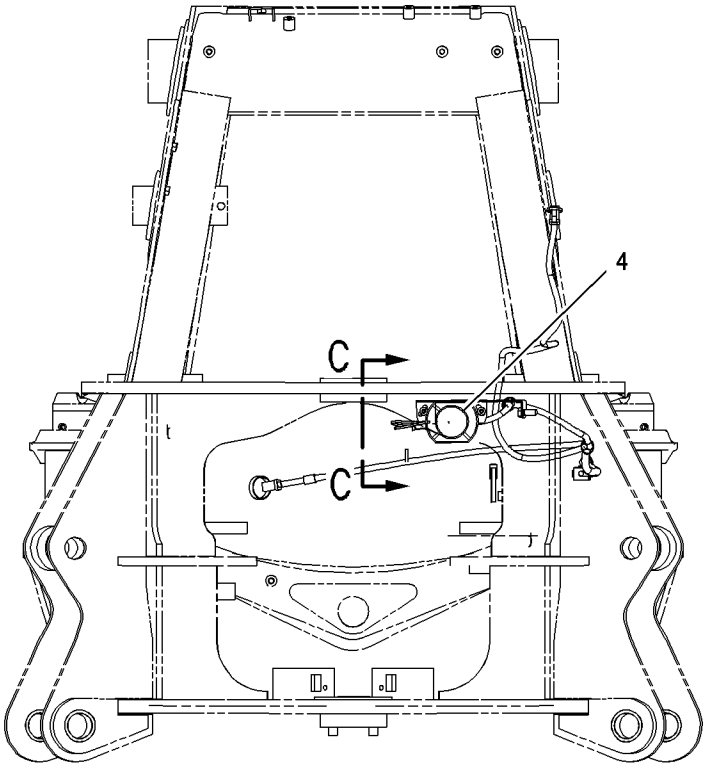

REAR VIEW

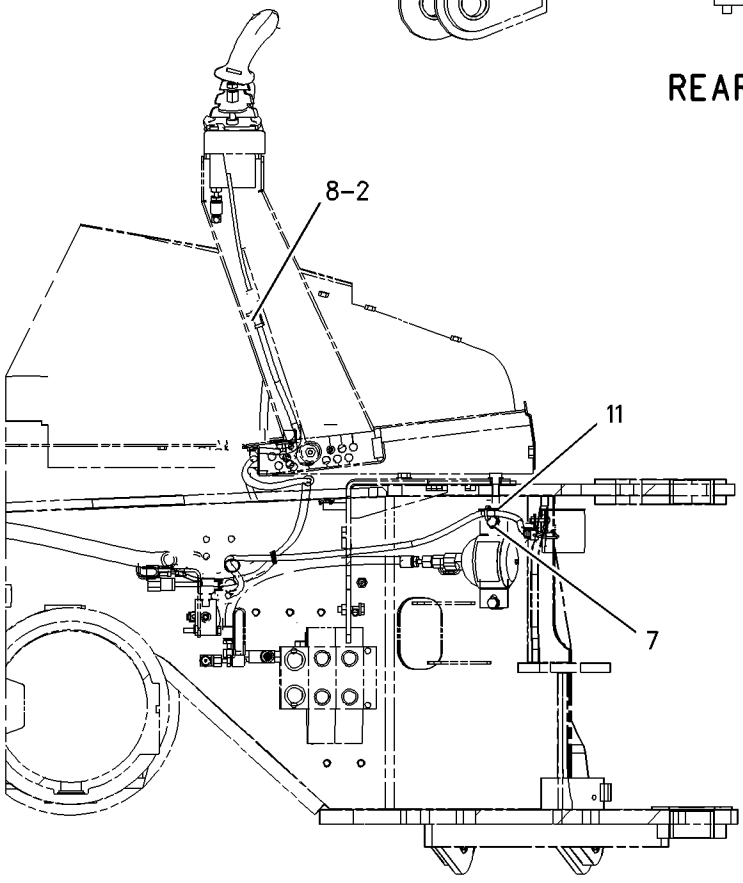

SECTION A-A

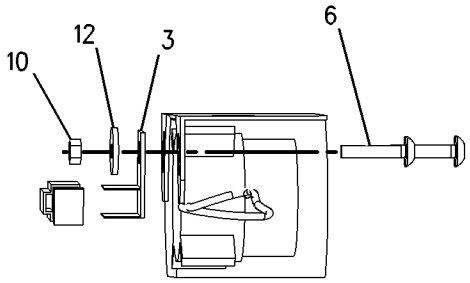

SECTION C-C

GRAPHIC #2 **<END>** g00905164

122-1645 WIRING GP-SENSOR

S/N: B2D1-UP

PART OF 107-3313 LOADER AR

SMCS-1408 **i01959409**

NOTE	REF NO	GRAPHIC REF	PART NUMBER	QTY	PART NAME 1 2 3 4 5 6 (PRODUCT LEVEL)	SEE PAGE
B	1	1	**3S-2093**	38	STRAP-CABLE	
	2	1	**118-7790**	1	BRACKET AS	
M	3	1	**8T-4138**	2	BOLT (M6X1X20MM)	
	4	1	**8T-4205**	2	WASHER-HARD (7.2X14.5X2MM THK)	
	5	1	**107-5605**	1	HARNESS AS-WORK TOOL	
		1	**102-8803**	1	KIT-RECEPTACLE (3 PIN)	
	6	1	**206-1486**	1	SWITCH AS-ROLLER (KICKOUT)	
		1	**2H-3922**	1	LOCKWASHER	
		1	**6V-8363**	2	SCREW (10-32X0.312 IN)	
		1	**6V-8370**	1	NUT-HEX (3/4-32 THD)	
		1	**8F-1434**	2	LOCKWASHER	
		1	**9X-0199**	1	BOOT-SWITCH	

B-USE AS REQUIRED
M-METRIC PART

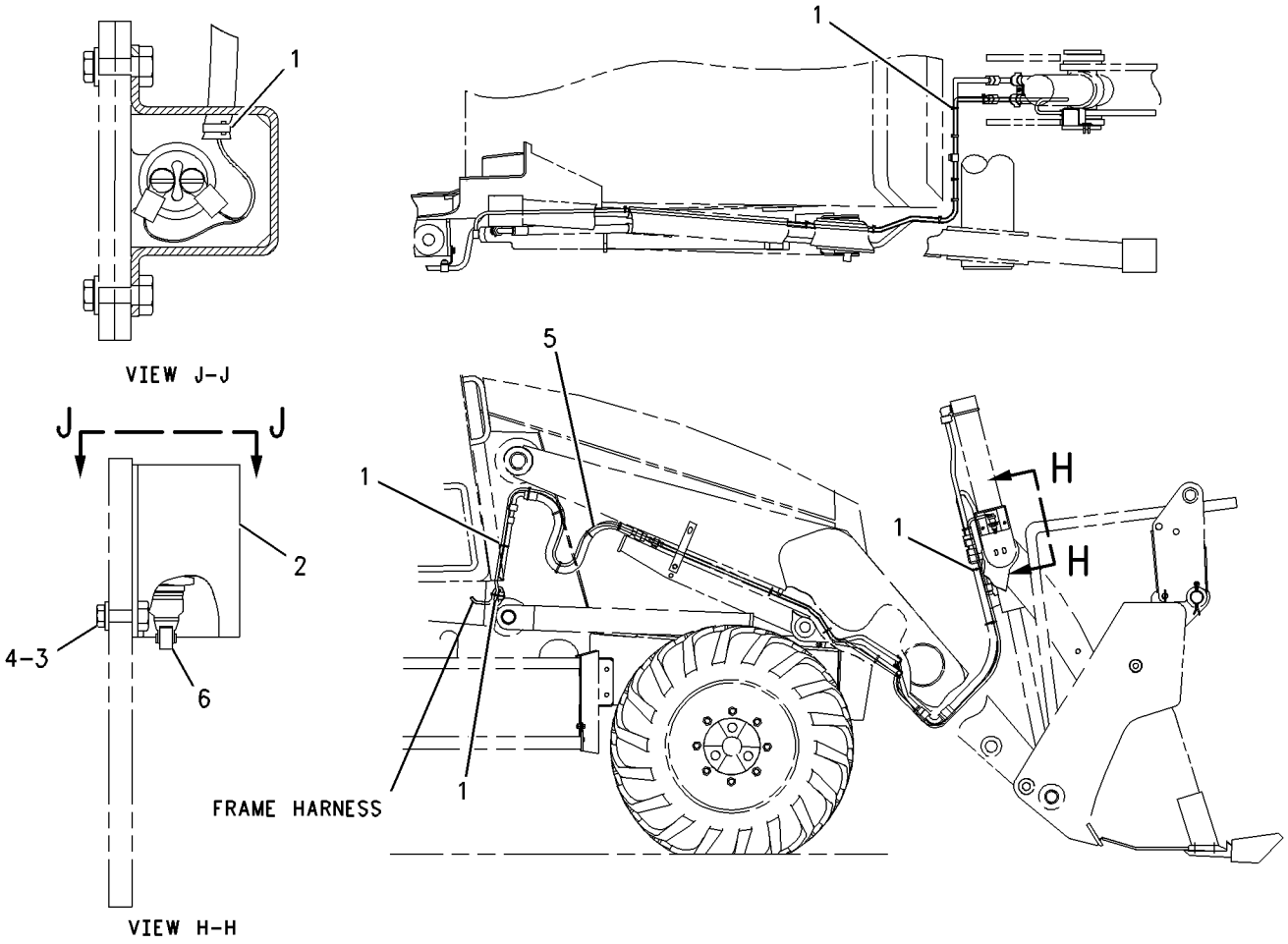

GRAPHIC #1 **<END>** g00656223

107-3716 AXLE & MTG GP-REAR

S/N: B2D1-UP
PART OF 237-6458 DRIVE AR-BACKHOE LOADER
AN ATTACHMENT

SMCS-3259, 3260, 3278 **i01909516**

NOTE	REF NO	GRAPHIC REF	PART NUMBER	QTY	PART NAME 1 2 3 4 5 6 (PRODUCT LEVEL)	SEE PAGE
	1	1	**5F-5434**	1	VALVE AS-RELIEF (AIR VENT)	
Y	2	1	**156-2853**	1	AXLE GP-REAR	168
M	3	1	**7X-2570**	8	BOLT (M20X2.5X220MM)	
M	4	1	**8T-4131**	8	NUT (M20X2.5 THD)	
	5	1	**8T-5439**	16	WASHER (21.5X45X6MM THK)	

M-METRIC PART
Y-SEPARATE ILLUSTRATION

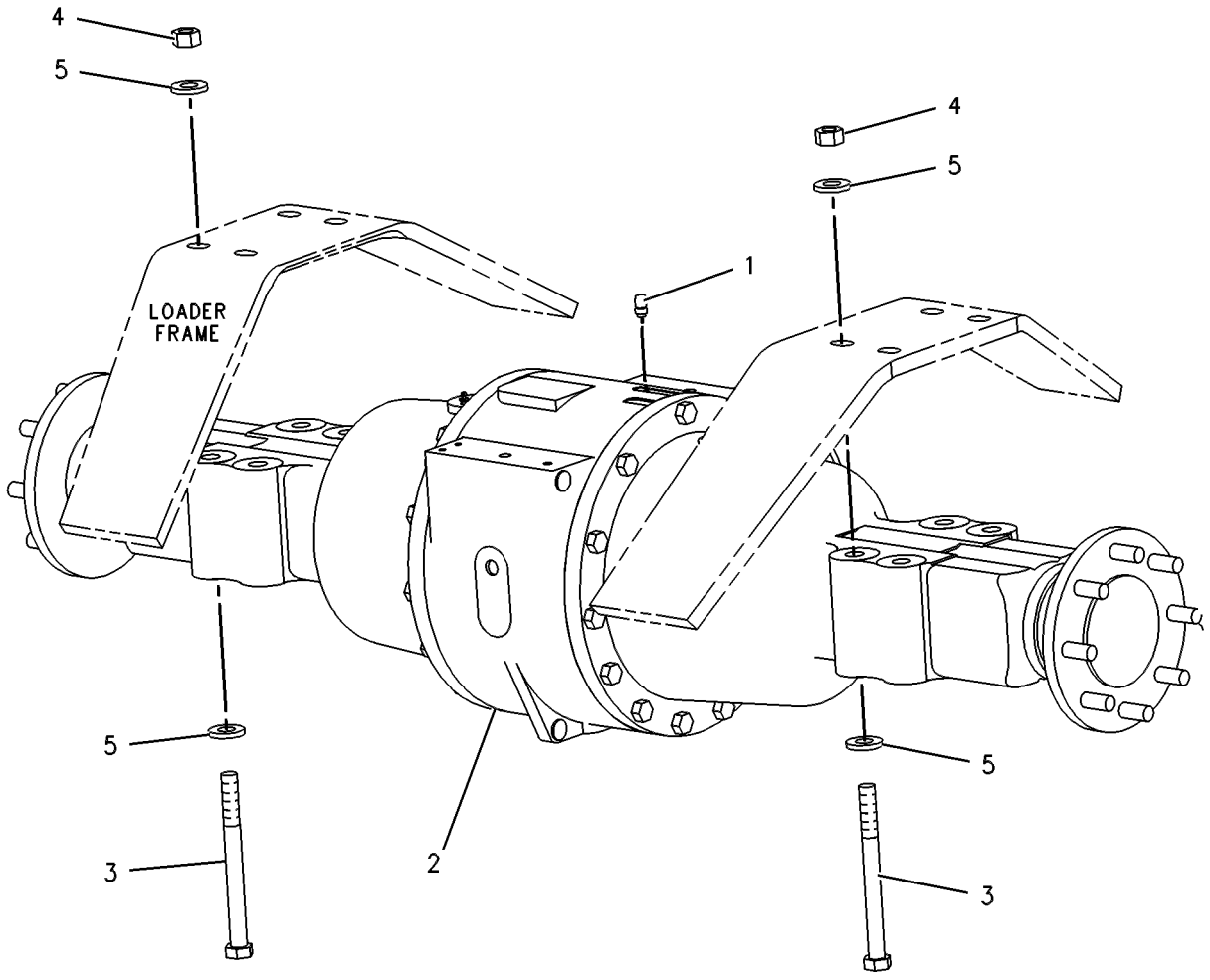

GRAPHIC #1 **<END>** g00363841

202-6195 AXLE & MTG GP-REAR

S/N: B2D1-UP
PART OF 237-6459 DRIVE AR-BACKHOE LOADER
AN ATTACHMENT

SMCS-3259, 3260, 3278 **i01934786**

NOTE	REF NO	GRAPHIC REF	PART NUMBER	QTY	PART NAME 1 2 3 4 5 6 (PRODUCT LEVEL)	SEE PAGE
	1	1	**5F-5434**	1	VALVE AS-RELIEF (AIR VENT)	
Y	2	1	**156-2853**	1	AXLE GP-REAR	168
	3	1	**194-2847**	2	PLATE	
M	4	1	**089-7990**	8	BOLT (M20X2.50X250)	
M	5	1	**8T-4131**	8	NUT (M20X2.5 THD)	
	6	1	**8T-5439**	16	WASHER (21.5X45X6MM THK)	

M-METRIC PART
Y-SEPARATE ILLUSTRATION

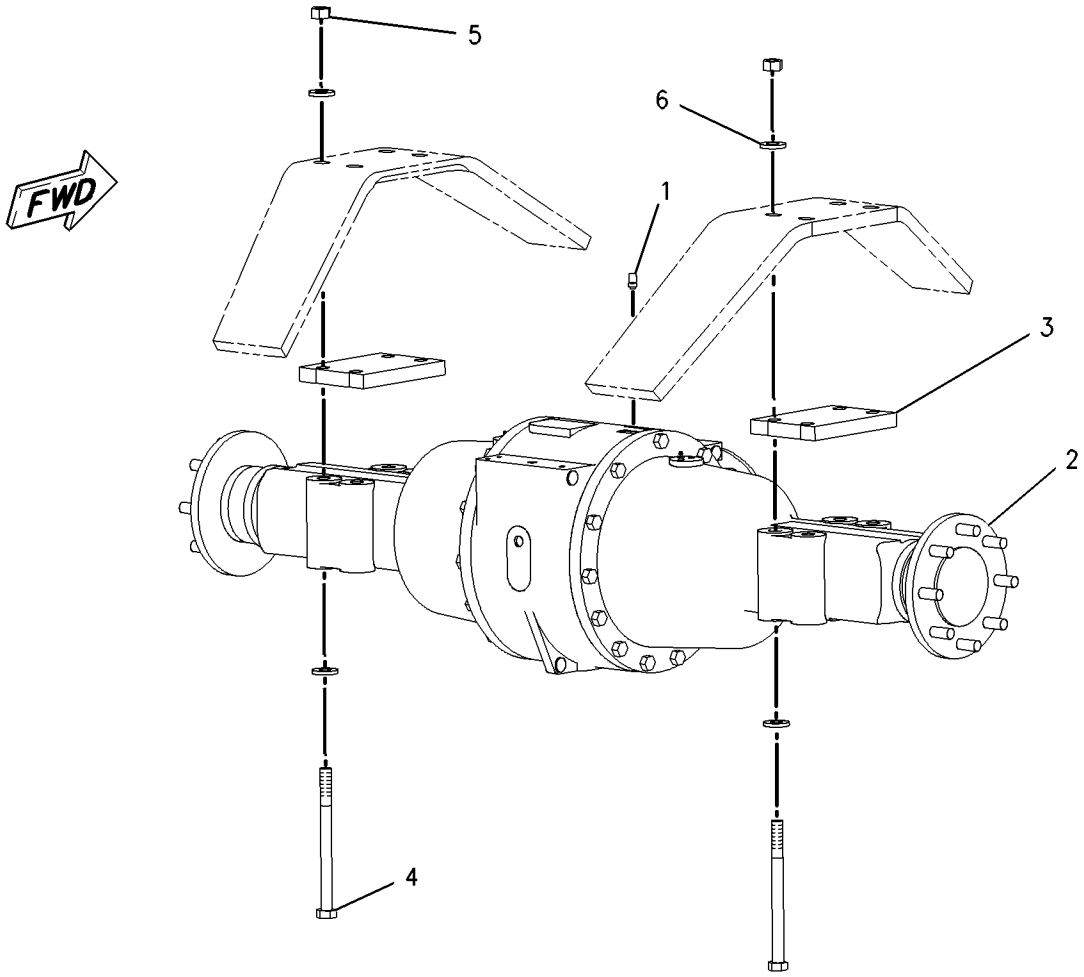

GRAPHIC #1 **<END>** g00997540

168-7446 AXLE GP-DRIVE & STEERING

S/N: B2D1-UP

PART OF 202-6196 AXLE GP-DRIVE & STEERING

AN ATTACHMENT

SMCS-3020, 3250, 3258, 3259, 3260, 3264, 3278, 4050, 4313 **i02039726**

NOTE	REF NO	GRAPHIC REF	PART NUMBER	QTY	PART NAME 1 2 3 4 5 6 (PRODUCT LEVEL)	SEE PAGE
	1	1	**154-5404**	2	BEARING	
	2	1	**199-0639**	4	SCREW (WHEEL HUB)	
	3	1	**207-4254**	6	BOLT	
	4	1	**207-4258**	2	NUT	
	5	1	**219-8798**	2	SEAL-LIP TYPE	
	6	1	**209-9875**	2	DOWEL	
	7	1	**197-9155**	1	BREATHER (AXLE)	
	8	1	**209-7456**	2	BUSHING	
	9	1	**211-6735**	2	SEAL-O-RING	
	10	1	**214-5097**	1	CYLINDER GP-STEERING	
		1	**215-2023**	1	KIT-SEAL	
	11	1	**152-6144**	3	PLUG AS-MAGNETIC	
	12	1	**208-0321**	11	BOLT-FLANGE HEAD (M12X1.75X33-MM)	
	13	1	**209-7464**	2	SEAL	
M	14	1	**199-0683**	16	BOLT (M16X2X38-MM)	
	15	1	**210-5937**	2	WASHER (46X66X3-MM THK)	
Y	16	1	**209-9885**	1	HOUSING & FLANGE GP-AXLE (LH)	185
	17	1	**069-4707**	1	SEALANT (GASKET)	
	18	1	**198-7812**	1	ADAPTER-BREATHER	
Y	19	1	**209-9882**	1	DIFFERENTIAL & BEVEL GEAR GP	176
	20	1	**210-5942**	2	RING	
	21	1	**209-9883**	1	HOUSING	
	22	1	**210-5946**	2	SHAFT GP-AXLE	
					(EACH INCLUDES)	
		1	**174-4643**	4	KIT-SPIDER	
		1	**174-4671**	1	YOKE	
	23	1	**209-9886**	2	TIE ROD GP	
					(EACH INCLUDES)	
	23A	1	**217-2883**	1	TIE ROD	
	23B	1	**217-2884**	1	BALL JOINT	
	23C	1	**217-2885**	1	NUT	
	24	1	**209-9887**	1	BUSHING	
	25	1	**210-5947**	2	WASHER-THRUST (44.6X58X7-MM THK)	
	26	1	**216-7473**	4	PIN GP-AXLE	
					(EACH INCLUDES)	
	26A	1	**198-7823**	1	BEARING AS	
	26B	1	**198-7825**	1	SEAL	
	26C	1	**198-7838**	1	PIN	
Y	27	1	**210-5924**	2	PLANETARY GP-FINAL DRIVE	187
Y	28	1	**209-9884**	1	HOUSING & FLANGE GP-AXLE (RH)	183

M-METRIC PART
Y-SEPARATE ILLUSTRATION

168-7446 AXLE GP-DRIVE & STEERING *(contd.)* i02039726

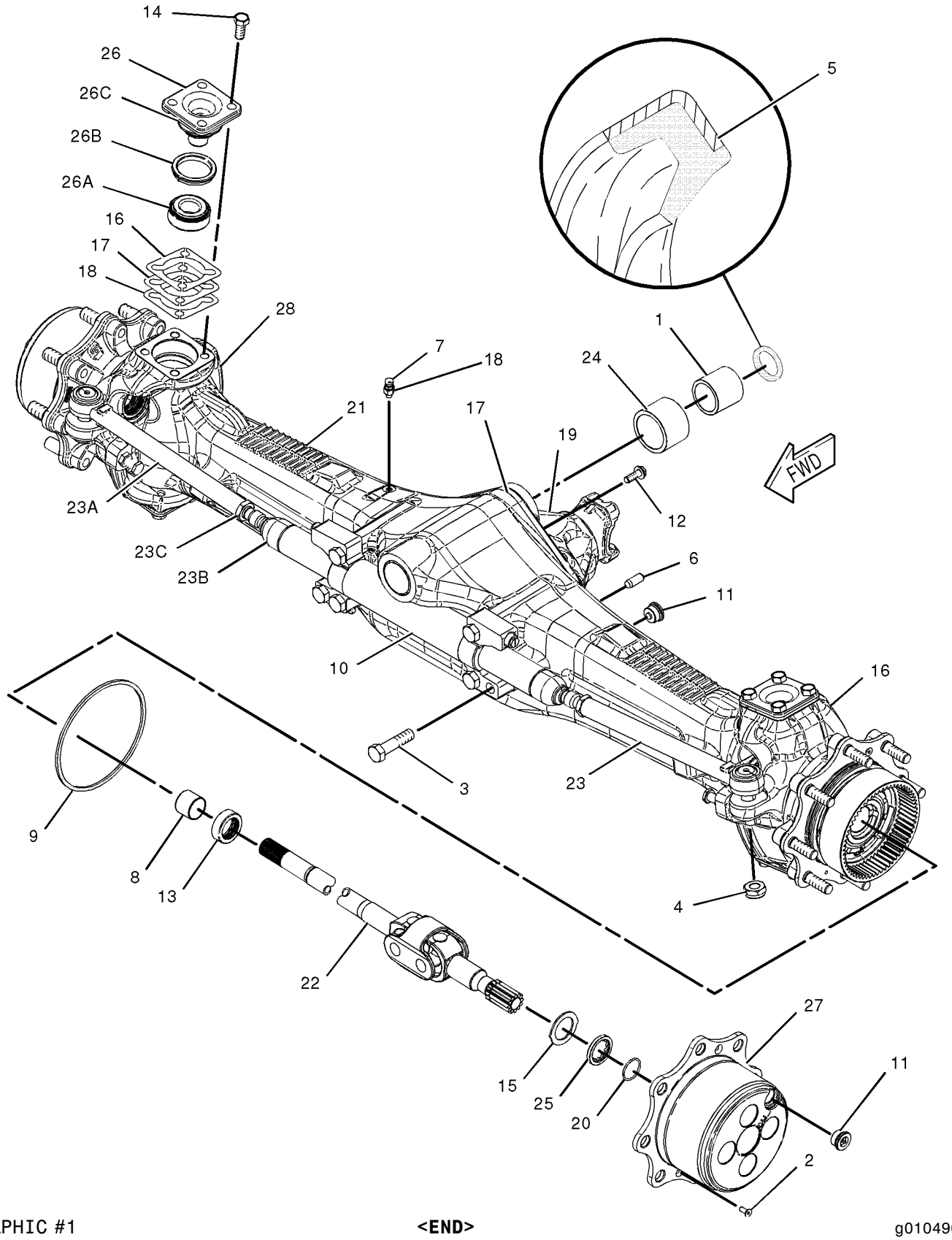

GRAPHIC #1 **<END>** g01049040

202-6196 AXLE GP-DRIVE & STEERING

S/N: B2D1-UP
PART OF 237-6459 DRIVE AR-BACKHOE LOADER
AN ATTACHMENT

SMCS-3020, 3250, 3258, 3259, 3260, 3264, 3278, 4050, 4313 **i01959411**

NOTE	REF NO	GRAPHIC REF	PART NUMBER	QTY	PART NAME 1 2 3 4 5 6 (PRODUCT LEVEL)	SEE PAGE
	1	1	**1K-7082**	1	WASHER (2X4X1/32 IN THK)	
	2	1	**9R-9702**	2	WASHER (56X100X1.6MM THK)	
	3	1	**112-9629**	1	PIN	
	4	1	**165-8996**	2	WASHER-THRUST (55.5X100.5X5MM THK)	
Y	5	1	**168-7446**	1	AXLE GP-DRIVE & STEERING	165
M	6	1	**8T-5041**	1	BOLT (M12X1.75X120MM)	
M	7	1	**8T-8549**	1	LOCKNUT (M12X1.75 THD)	

M-METRIC PART
Y-SEPARATE ILLUSTRATION

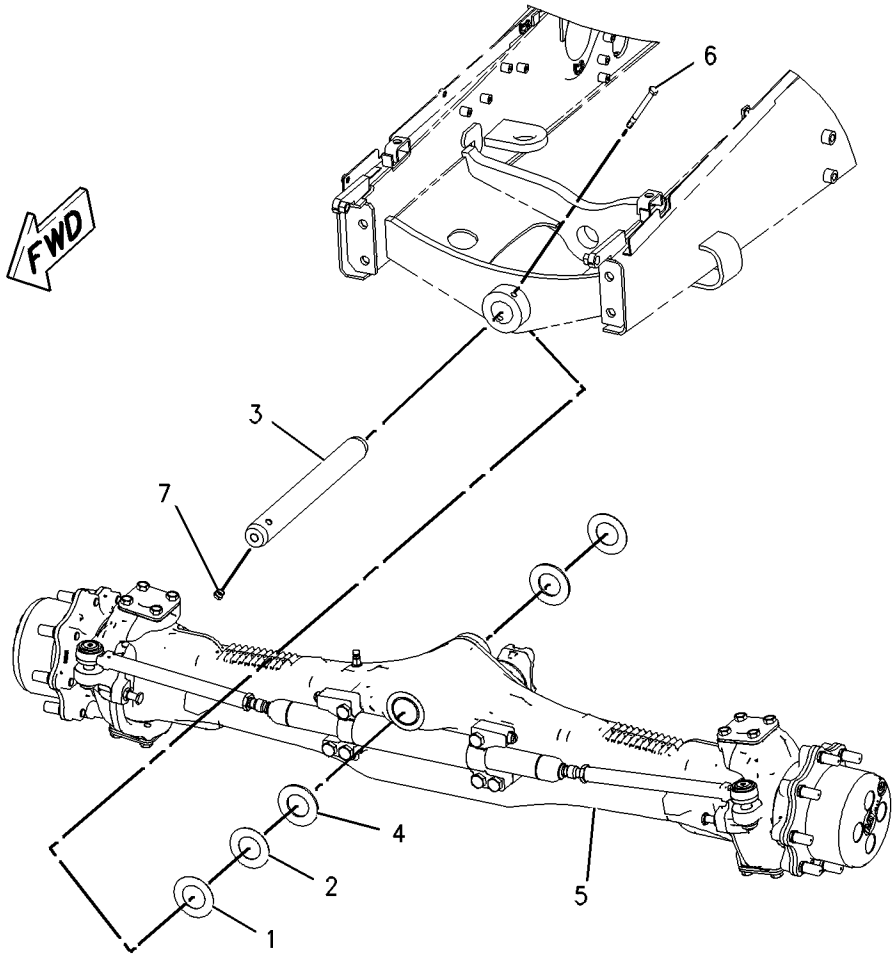

GRAPHIC #1 **<END>** g00997560

POWER TRAIN

156-2853 AXLE GP-REAR

S/N: B2D1-UP
RATIO 18.5
PART OF 107-3716, 202-6195 AXLE & MTG GP-REAR
AN ATTACHMENT

SMCS-3278, 3282 **i01960812**

NOTE	REF NO	GRAPHIC REF	PART NUMBER	QTY	PART NAME 1 2 3 4 5 6 (PRODUCT LEVEL)	SEE PAGE
	1	1	**118-5837**	2	SHAFT AS	
					(EACH INCLUDES)	
		1	**9R-5219**	8	BOLT-SPECIAL	
	2	2	**9R-2407**	1	RETAINER AS	
	2A	2	**3N-6408**	1	CUP-BEARING (TAPERED ROLLER BEARING)	
	2B	2	**4K-5843**	1	CUP-BEARING (TAPERED ROLLER BEARING)	
	3	1	**156-1928**	1	HOUSING AS-LH	
		1	**6Y-7652**	1	CUP-BEARING (TAPERED ROLLER BEARING)	
		1	**8S-9151**	1	CUP-BEARING (TAPERED ROLLER BEARING)	
		1	**156-1929**	2	STUD	
		1	**156-1930**	1	GEAR-PLANET RING (56 TEETH)	
	4	1	**156-2571**	1	HOUSING AS-RH	
		1	**6Y-7652**	1	CUP-BEARING (TAPERED ROLLER BEARING)	
		1	**8S-9151**	1	CUP-BEARING (TAPERED ROLLER BEARING)	
		1	**156-1929**	2	STUD	
		1	**156-1930**	1	GEAR-PLANET RING (56 TEETH)	
	5	1	**186-4117**	2	CARRIER AS	
					(EACH INCLUDES)	
		1	**7T-6652**	1	CONE-BEARING (TAPERED ROLLER BEARING)	
		1	**9R-2417**	3	WASHER (33.07X48.38X1.06MM THK)	
		1	**9R-2418**	6	WASHER (32.94X57.21X.78MM THK)	
		1	**9R-2419**	3	KIT-BEARING	
		1	**9R-2420**	1	RETAINER	
		1	**9R-2421**	3	SHAFT	
		1	**186-4118**	3	GEAR-PLANET (20 TEETH)	
	6	1	**9F-2167**	2	SCREW-PURGE	
	7	1	**9R-0883**	1	PIN	
	8	1	**9R-0823**	1	LEVER AS	
	9	1	**156-1929**	4	STUD	
B	10	1	**9R-2427**	1	SHIM (0.965MM THK)	
B		1	**9R-2428**	1	SHIM (1.118MM THK)	
B		1	**9R-2429**	1	SHIM (1.270MM THK)	
B		1	**9R-2430**	1	SHIM (1.422MM THK)	
B		1	**9R-2431**	1	SHIM (1.575MM THK)	
B		1	**9R-2432**	1	SHIM (1.727MM THK)	
B		1	**9R-2433**	1	SHIM (1.880MM THK)	
B		1	**9R-2434**	1	SHIM (2.032MM THK)	
	11	1	**156-2572**	1	HOUSING-REAR BRAKE (RH)	
	12	1	**9R-9410**	2	SEAL-REAR BRAKE	
	13	1	**9R-9409**	2	SEAL-REAR BRAKE	
	14	1	**9R-9408**	2	PISTON-REAR BRAKE	
B	15	2	**9R-2446**	1	SPACER (45.86X50.98X31.858MM THK)	
B		2	**9R-2447**	1	SPACER (45.86X50.98X31.908MM THK)	
B		2	**9R-2448**	1	SPACER (45.86X50.98X31.959MM THK)	
B		2	**9R-2449**	1	SPACER (45.86X50.98X32.010MM THK)	
B		2	**9R-2450**	1	SPACER (45.86X50.98X32.061MM THK)	
B		2	**9R-2451**	1	SPACER (45.86X50.98X32.112MM THK)	
B		2	**9R-2452**	1	SPACER (45.86X50.98X32.162MM THK)	
B		2	**9R-2453**	1	SPACER (45.86X50.98X32.213MM THK)	
B		2	**9R-2454**	1	SPACER (45.86X50.98X32.264MM THK)	
B		2	**9R-2455**	1	SPACER (45.86X50.98X32.315MM THK)	
B		2	**9R-2456**	1	SPACER (45.86X50.98X32.366MM THK)	
B		2	**9R-2457**	1	SPACER (45.86X50.98X32.416MM THK)	
B		2	**9R-2458**	1	SPACER (45.86X50.98X32.467MM THK)	

156-2853 AXLE GP-REAR *(contd.)* i01960812

NOTE	REF NO	GRAPHIC REF	PART NUMBER	QTY	PART NAME 1 2 3 4 5 6 (PRODUCT LEVEL)	SEE PAGE
B		2	**9R-2459**	1	SPACER (45.86X50.98X32.518MM THK)	
B		2	**9R-2460**	1	SPACER (45.86X50.98X32.569MM THK)	
	16	1	**230-4017**	8	DISC-BRAKE	
	17	1	**9R-2474**	2	PIN	
	18	1	**9R-9401**	8	PLATE	
	19	1	**8S-4740**	12	BOLT (9/16-12X5 IN)	
	20	1	**9R-9398**	2	MANIFOLD-BRAKE TUBE	
	21	1	**8H-1607**	2	SEAL-O-RING	
	22	1	**9R-2424**	2	GEAR (16 TEETH)	
	23	1	**8M-8157**	4	SEAL-O-RING	
	24	2	**2A-4576**	1	CUP-BEARING (TAPERED ROLLER BEARING)	
	25	2	**5L-9656**	1	CONE-BEARING (TAPERED ROLLER BEARING)	
	26	1	**9X-8880**	25	BOLT (5/8-11X2 IN)	
	27	2	**9R-2508**	1	HOUSING	
	28	2	**113-1147**	1	FLANGE	
	29	2	**9R-2497**	1	SEAL	
	30	2	**9R-2501**	1	WASHER (32.5X60.5X5.6MM THK)	
	31	2	**9R-2502**	1	NUT (1 1/4-18 THD)	
	32	2	**3B-5302**	1	PIN-COTTER	
	33	2	**9R-2498**	1	RETAINER	
	34	2	**3B-4509**	6	LOCKWASHER	
	35	2	**3K-3379**	6	BOLT (9/16-12X1IN)	
	36	1	**9X-8883**	1	BOLT (5/8-11X2.75 IN)	
	37	1	**5L-9018**	4	BOLT-SOCKET HEAD (1/4X20X1.75 IN)	
	38	1	**8T-6760**	2	PLUG-PIPE	
	39	2	**9R-2499**	1	SEAL AS	
	40	2	**9R-2496**	1	SEAL	
	41	2	**7T-6653**	1	CONE-BEARING (TAPERED ROLLER BEARING)	
	42	1	**118-5839**	2	SEAL-REAR AXLE	
	43	2	**9R-2512**	1	SEAL	
	44	1	**030-1957**	2	CONE-BEARING (TAPERED ROLLER BEARING)	
	45	2	**7T-6654**	1	CONE-BEARING (TAPERED ROLLER BEARING)	
	46	1	**9R-2505**	1	SEAL	
	47	1	**9R-2504**	1	SHAFT	
M	48	1	**9R-2507**	1	SCREW-SPECIAL	
	49	2	**7T-7621**	1	BEARING AS	
	50	2	**9R-2494**	1	RING	
	51	2	**9R-2480**	1	CASE AS	
	52	2	**2S-0480**	1	CUP-BEARING (TAPERED ROLLER BEARING)	
	53	2	**2S-0479**	1	CONE-BEARING (TAPERED ROLLER BEARING)	
	54	1	**9R-2506**	1	FORK	
	55	2	**9R-2492**	1	WASHER (64.389X78.74X3.124MM THK)	
	56	2	**9R-2493**	1	RING	
	57	2	**9R-2488**	1	GEAR (16 TEETH)	
	58	2	**9R-2482**	1	COUPLING	
	59	1	**156-1934**	1	HOUSING-BRAKE	
	60	2	**9R-2486**	1	SPRING	
	61	2	**9R-2483**	1	ADAPTER	
	62	2	**9R-2484**	2	BUSHING-TERMINAL	
	63	2	**9R-2490**	2	WASHER (76.2X101.6X1.5MM THK)	
	64	2	**9R-2491**	1	SPIDER	
	65	2	**9R-9403**	4	PINION	
	66	2	**9R-2489**	4	WASHER-SPRING	
	67	2	**9R-2485**	8	BOLT (1/2-13X1.85IN)	
	68	1	**9R-2495**	2	SEAL	
	69	2	**9R-5241**	1	GEAR SET	
M	70	2	**9R-6671**	12	BOLT (1/2-20X1.62IN)	
	71	2	**2M-2570**	12	LOCKNUT	
	72	2	**9R-2503**	1	BLOCK	

156-2853 AXLE GP-REAR *(contd.)* i01960812

NOTE	REF NO	GRAPHIC REF	PART NUMBER	QTY	PART NAME 1 2 3 4 5 6 (PRODUCT LEVEL)	SEE PAGE
	73	1	**2L-6267**	1	LOCKNUT	
	74	2	**0T-0318**	2	BOLT (7/16-14X1 IN)	
	75	2	**9R-2487**	1	GEAR (16 TEETH)	
B	76	1	**9R-2435**	2	SPACER (22.86X53.85X1.25MM THK)	
B		1	**9R-2436**	2	SPACER (22.86X53.85X1.35MM THK)	
B		1	**9R-2437**	2	SPACER (22.86X53.85X1.45MM THK)	
B		1	**9R-2438**	2	SPACER (22.86X53.85X1.55MM THK)	
B		1	**9R-2439**	2	SPACER (22.86X53.85X1.65MM THK)	
B		1	**9R-2440**	2	SPACER (22.86X53.85X1.75MM THK)	
B		1	**9R-2441**	2	SPACER (22.86X53.85X1.85MM THK)	
B		1	**9R-2442**	2	SPACER (22.86X53.85X1.96MM THK)	
B		1	**9R-2443**	2	SPACER (22.86X53.85X2.06MM THK)	
B		1	**9R-2444**	2	SPACER (22.86X53.85X2.16MM THK)	
B		1	**9R-2445**	2	SPACER (22.86X53.85X2.26MM THK)	
	77	2	**9R-6602**	2	PLUG-MAGNETIC	
	78	1	**5P-0540**	4	NUT-HEX FULL (9/16-18 THD)	
	79	1	**156-2573**	1	HOUSING-BRAKE	
	80	1	**156-1933**	1	HOUSING-REAR BRAKE (LH)	
	81	1	**9R-2426**	2	LOCK	
M	82	1	**9R-2466**	2	BOLT (7/8-14X1.625IN)	
	83	1	**9R-2425**	2	WASHER (23.088X69.6X9.52MM THK)	

B-USE AS REQUIRED
M-METRIC PART

156-2853 AXLE GP-REAR *(contd.)*

i01960812

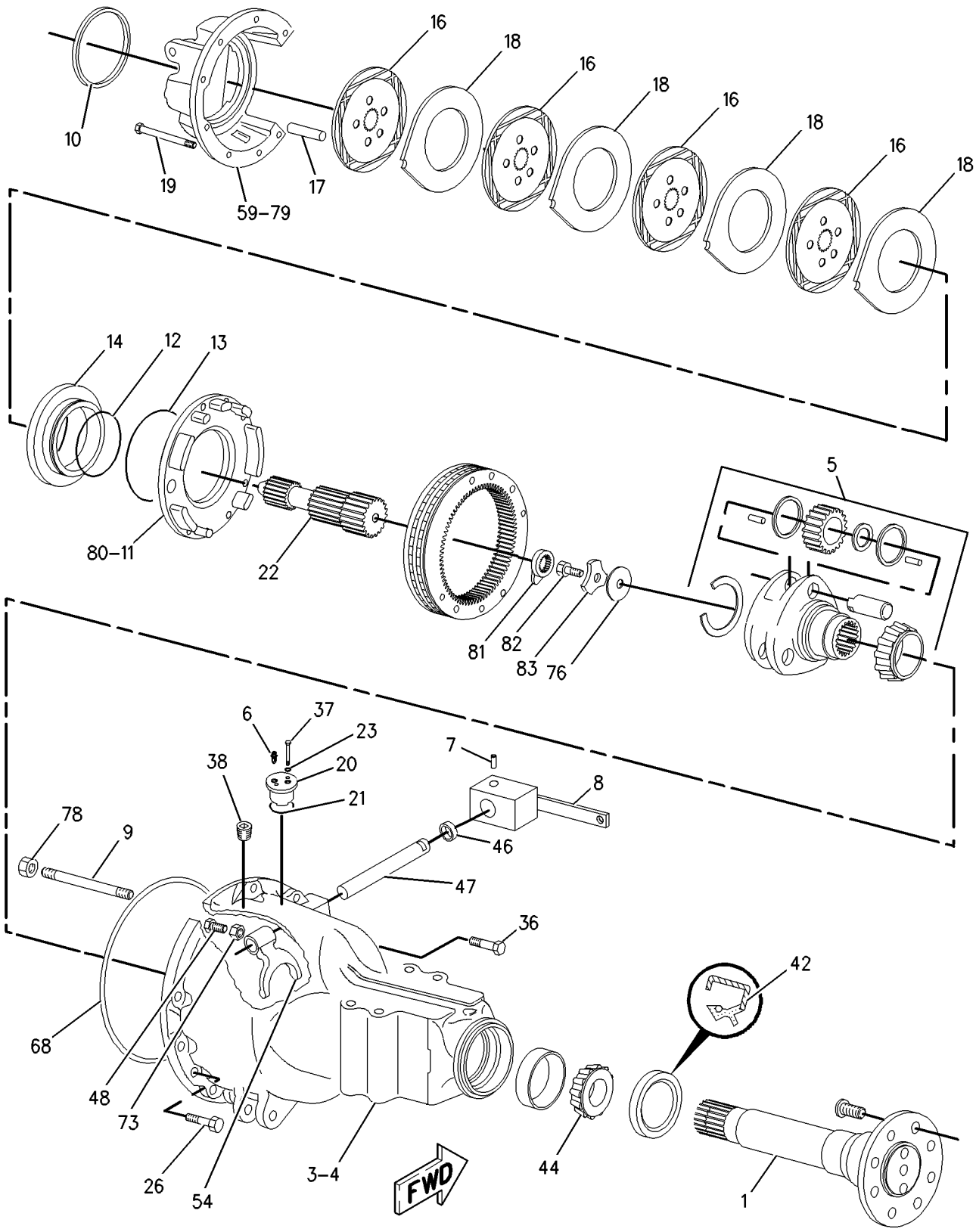

GRAPHIC #1

g00814870

156-2853 AXLE GP-REAR *(contd.)* **i01960812**

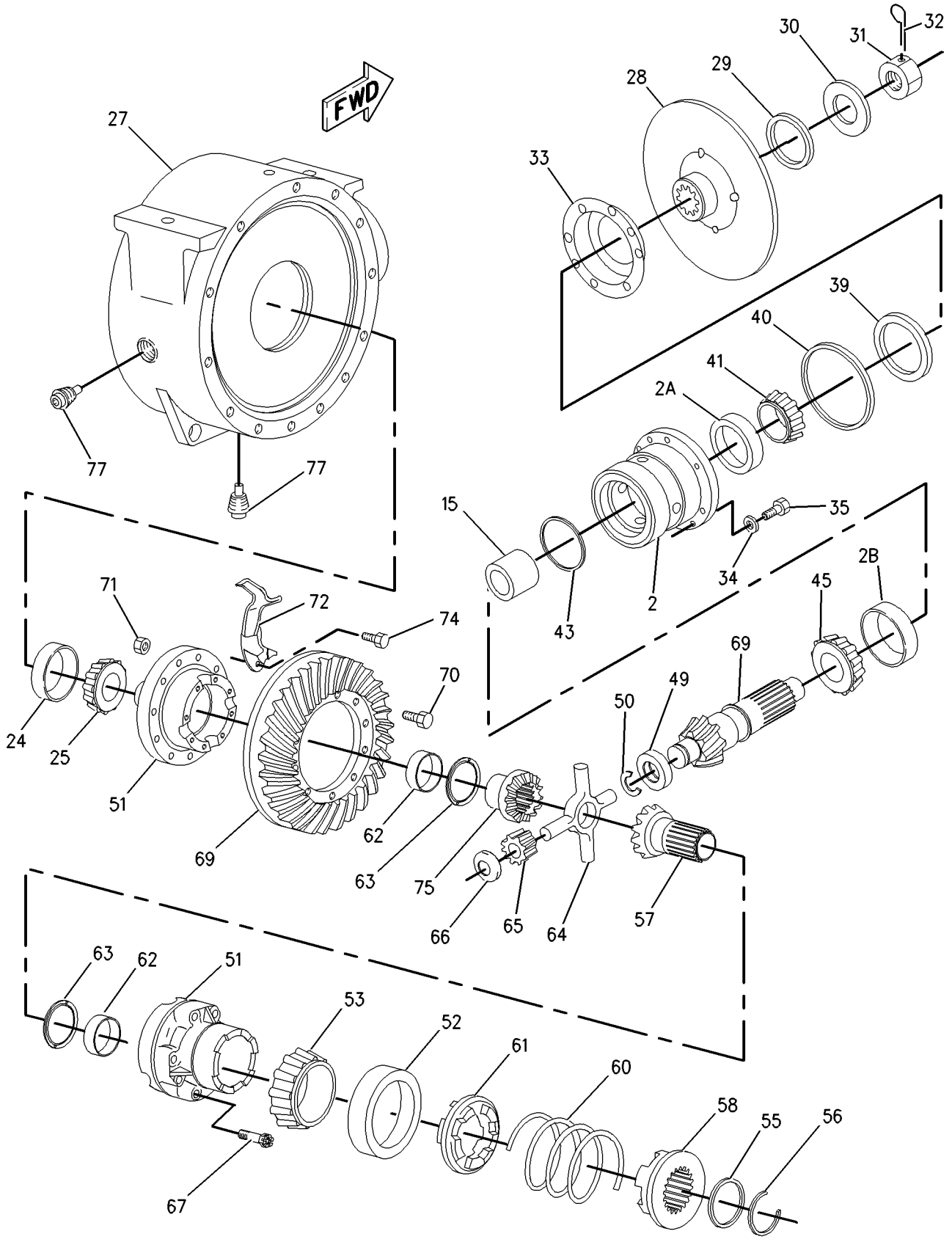

GRAPHIC #2 **<END>** g00925241

POWER TRAIN

191-9114 CONTROL GP-DIFFERENTIAL LOCK

S/N: B2D1-UP

PART OF 184-7970 POWER TRAIN AR

SMCS-3264, 3272, 3273 **i01938603**

NOTE	REF NO	GRAPHIC REF	PART NUMBER	QTY	PART NAME 1 2 3 4 5 6 (PRODUCT LEVEL)	SEE PAGE
	1	1	**9R-5567**	1	PLATE AS	
M	2	1	**8T-4244**	1	NUT (M12X1.75 THD)	
	3	1	**5P-0372**	2	LOCK PIN	
	4	1	**8B-1419**	1	PIN-CLEVIS	
	5	1	**191-9113**	1	ROD AS	
C	6	1	**8T-4815**	1	ROD END	
	7	1	**8C-4987**	1	PIN-CLEVIS	
M	8	1	**8T-4133**	1	NUT (M10X1.5 THD)	
	9	1	**9R-3051**	1	ROD	
	10	1	**9R-2806**	1	PIN	
	11	1	**9R-2807**	1	CLIP	
	12	1	**103-4867**	1	SPRING	
	13	1	**9R-1581**	1	BOOT	
	14	1	**8T-5063**	1	ROD END	

C-CHANGE FROM PREVIOUS TYPE
M-METRIC PART

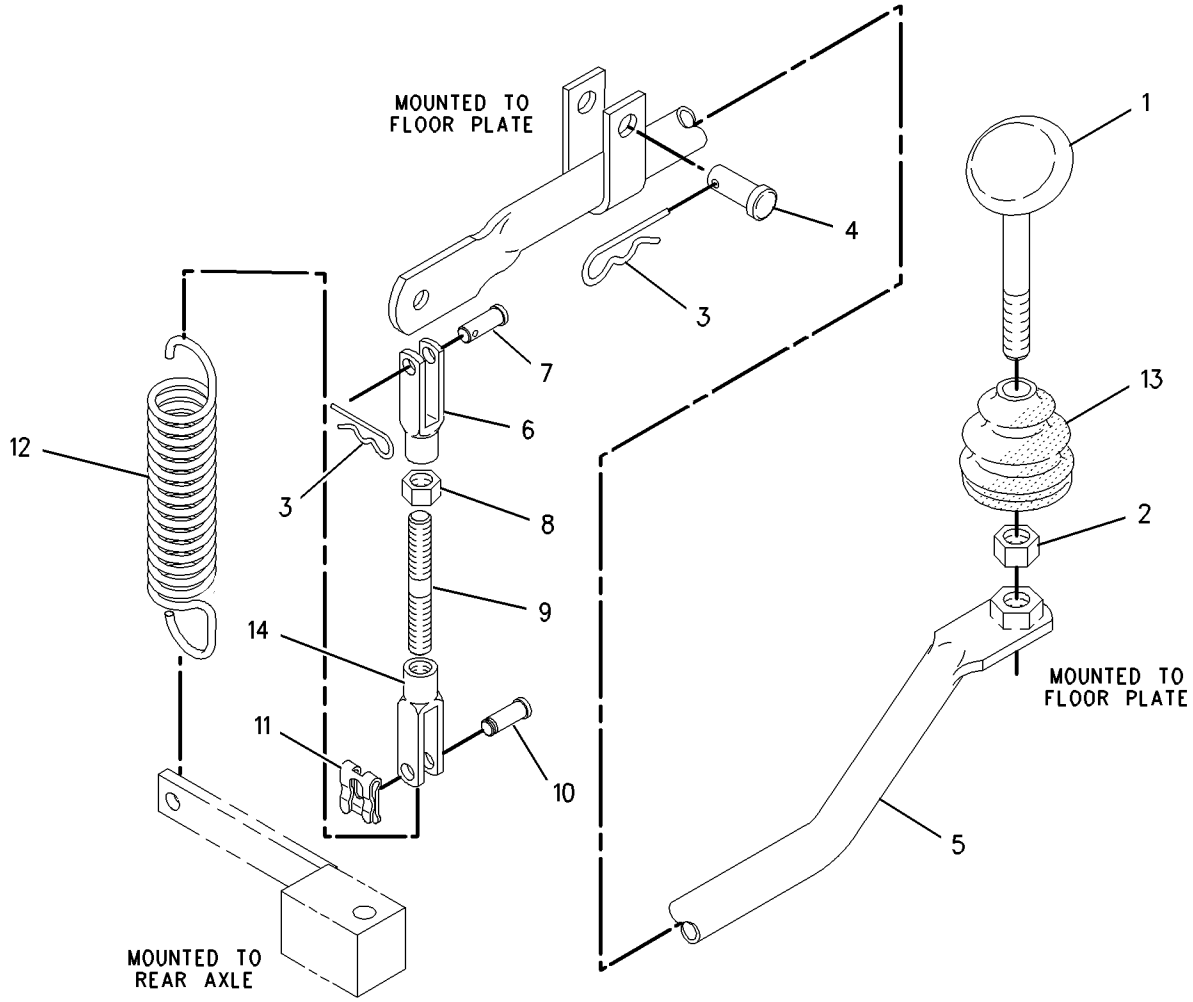

GRAPHIC #1 **<END>** g00995446

164-1130 CONTROL GP-TRANSMISSION

S/N: B2D1-UP

PART OF 214-6955, 214-6956, 214-6958, 214-6959 POWER TRAIN AR

AN ATTACHMENT

SMCS-3065 **i02028413**

NOTE	REF NO	GRAPHIC REF	PART NUMBER	QTY	PART NAME 1 2 3 4 5 6 (PRODUCT LEVEL)	SEE PAGE
	1	1	**102-8802**	1	KIT-RECEPTACLE (2-PIN)	
					(KIT SERVICES RECEPTACLE AS. AND WEDGE)	
	2	1	**3E-3365**	1	WEDGE-RECEPTACLE LOCK (2-PIN)	
	3	1	**9R-1766**	1	KNOB	
	4	1	**9R-1767**	1	BOOT	
	5	1	**9R-9868**	1	SWITCH AS-PUSH BUTTON	
		1	**186-3735**	2	PIN-CONNECTOR	
	6	1	**107-5591**	1	NUT-JAM (3/4-16-THD)	
	7	1	**164-1113**	1	PLATE	
	8	1	**164-1153**	1	KNOB	
	9	1	**164-1197**	1	ROD AS	
	10	1	**164-1365**	1	BOOT	
	11	1	**164-1368**	4	CLIP	
	12	1	**174-6640**	1	CONTROL GP-TRANSMISSION (DIRECTIONAL SHIFTER)	
M	13	1	**192-4522**	4	SCREW-FLAT HEAD	
	14	1	**8T-4223**	1	WASHER-HARD (13.5X25.5X3-MM THK)	
M	15	1	**8T-4956**	1	BOLT (M12X1.75X35-MM)	
	16	1	**8T-9501**	2	SCREW (10-16X.75-IN)	

M-METRIC PART

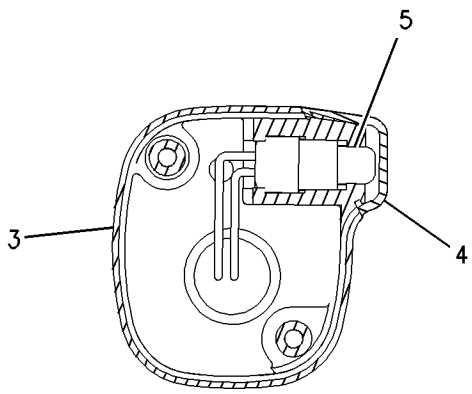

SECTION A-A

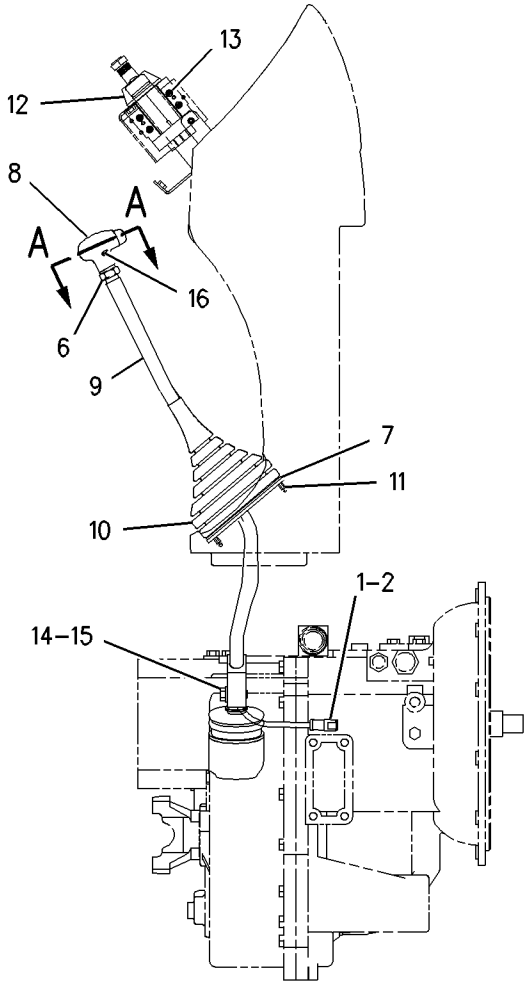

GRAPHIC #1 **<END>** g00739090

209-9882 DIFFERENTIAL & BEVEL GEAR GP

S/N: B2D1-UP

PART OF 168-7446 AXLE GP-DRIVE & STEERING

AN ATTACHMENT

SMCS-3256, 3258, 3281, 3283, 3284 **i02039938**

NOTE	REF NO	GRAPHIC REF	PART NUMBER	QTY	PART NAME 1 2 3 4 5 6 (PRODUCT LEVEL)	SEE PAGE
	1	1	**4J-0520**	1	SEAL-O-RING	
	2	1	**216-4457**	1	SEAL	
	3	1	**216-4458**	2	BEARING	
	4	1	**136-7808**	1	BEARING AS-TAPERED ROLLER	
	5	1	**216-4461**	1	BEARING	
	6	1	**209-7454**	2	NUT (M94X2-THD)	
	7	1	**152-6144**	1	PLUG AS-MAGNETIC	
	8	1	**209-7462**	2	WASHER (40X50X.06-MM THK)	
	9	1	**209-7463**	1	SLEEVE (COLLAPSIBLE)	
M	10	1	**199-0695**	2	BOLT (M6X1X14-MM)	
	11	1	**209-7472**	1	NUT (M24X1.5-THD)	
	12	1	**216-4465**	1	WASHER (24.5X52X10-MM THK)	
	13	1	**216-4464**	1	YOKE	
	14	1	**199-0858**	2	RETAINER	
Y	15	1	**216-9498**	1	DIFFERENTIAL GP	178
	16	1	**217-2868**	1	GEAR GP-BEVEL & PINION	
		1	**216-4466**	1	GEAR GP-BEVEL & PINION (KIT) (INCLUDES GEARS,WASHERS,SPACERS,NUT AND O-RING)	
	17	1	**216-5515**	1	HOUSING GP-DIFFERENTIAL	
	17A	1	**217-2880**	4	DOWEL	
	17B	1	**208-0322**	4	BOLT-FLANGE HEAD	
B	18	1	**209-7473**	1	SHIM (2.5-MM THK)	
B			**219-8751**	1	SHIM (2.6-MM THK)	
B			**219-8752**	1	SHIM (2.7-MM THK)	
B			**219-8753**	1	SHIM (2.8-MM THK)	
B			**219-8754**	1	SHIM (2.9-MM THK)	
B			**219-8755**	1	SHIM (3.0-MM THK)	
B			**219-8756**	1	SHIM (3.1-MM THK)	
B			**219-8757**	1	SHIM (3.2-MM THK)	
B			**219-8758**	1	SHIM (3.3-MM THK)	
B			**219-8759**	1	SHIM (3.4-MM THK)	

B-USE AS REQUIRED
M-METRIC PART
Y-SEPARATE ILLUSTRATION

209-9882 DIFFERENTIAL & BEVEL GEAR GP *(contd.)* i02039938

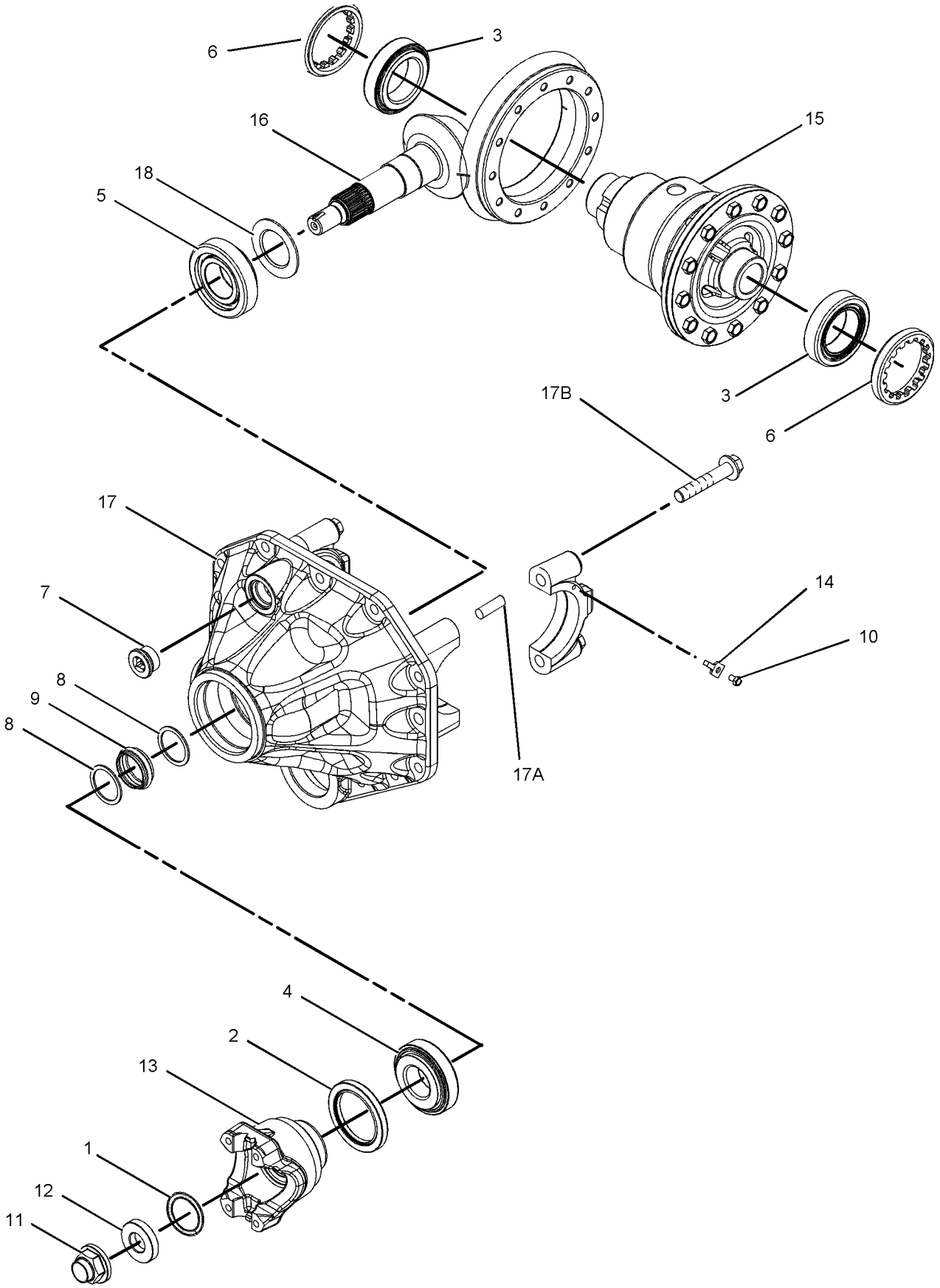

GRAPHIC #1 **<END>** g01050882

216-9498 DIFFERENTIAL GP

S/N: B2D1-UP

PART OF 209-9882 DIFFERENTIAL & BEVEL GEAR GP

AN ATTACHMENT

SMCS-3258 **i02037380**

NOTE	REF NO	GRAPHIC REF	PART NUMBER	QTY	PART NAME 1 2 3 4 5 6 (PRODUCT LEVEL)	SEE PAGE
	1	1	**216-8687**	1	COVER	
	2	1	**216-8689**	1	HOUSING-DIFFERENTIAL	
	3	1	**229-5093**	2	WASHER-THRUST (49X72X1.5-MM THK)	
M	4	1	**144-6734**	12	BOLT (M10X1.5X30-MM)	
	5	1	**211-0092**	2	WASHER-THRUST (22X42X2-MM THK)	
	6	1	**209-7455**	1	PIN	
	7	1	**216-8691**	1	RETAINER	
	8	1	**216-9497**	1	GEAR GP-DIFFERENTIAL & BEVEL	
					AVAILABLE REPAIR KIT(S):	
			216-8700		GEAR GP-BEVEL (KIT)	
					(INCLUDES PIN,WASHERS,PIN,DISC AND GEARS)	

M-METRIC PART

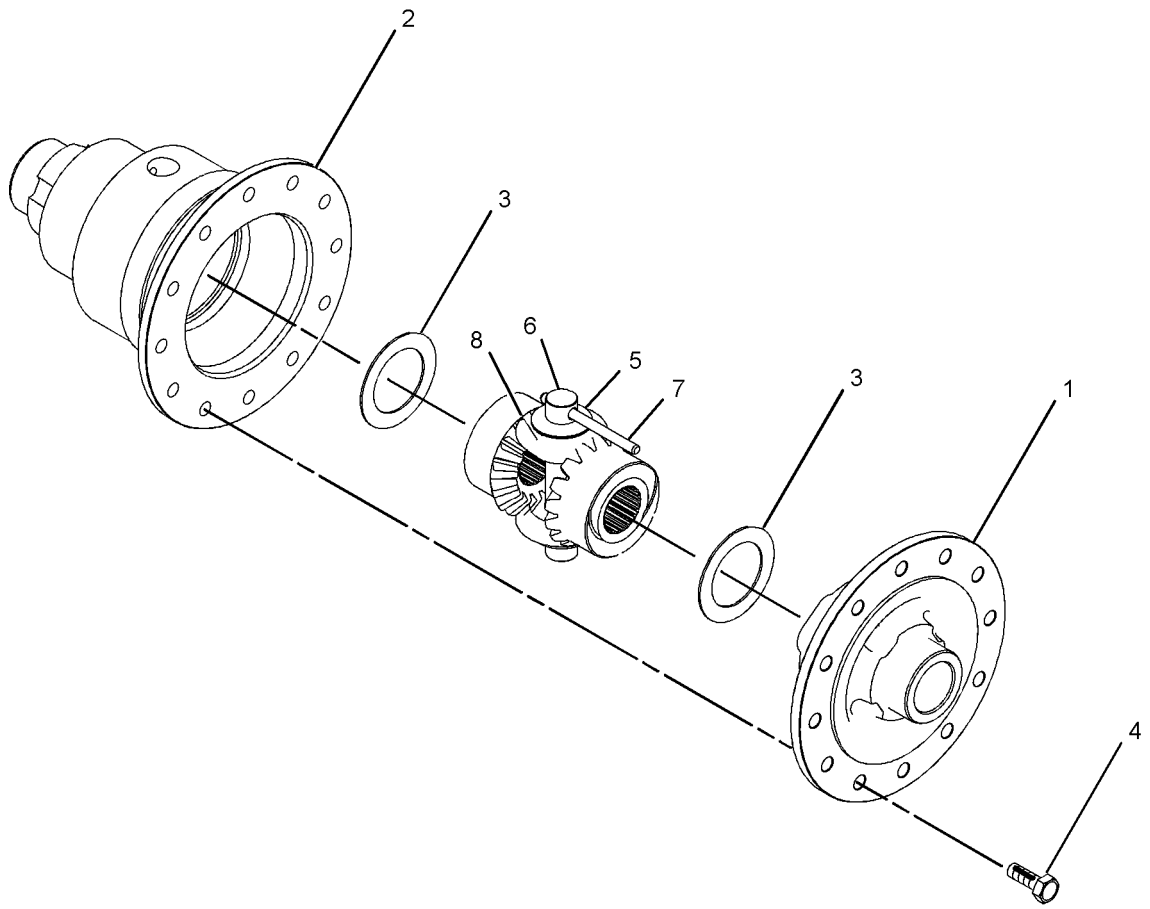

GRAPHIC #1 **<END>** g01043312

237-6458 DRIVE AR-BACKHOE LOADER–
2-WHEEL DRIVE, 2-WHEEL STEER
S/N: B2D1-UP
PART OF 214-6955, 214-6958 POWER TRAIN AR
AN ATTACHMENT

SMCS-3278, 4313 **i02023854**

NOTE	PART NUMBER	QTY	PART NAME 1 2 3 4 5 6 (PRODUCT LEVEL)	SEE PAGE
Y	*107-3716*	1	AXLE & MTG GP-REAR	163
Y	*202-6198*	1	AXLE GP-FRONT	230
Y	*190-8954*	1	LINES GP-PUMP	348
Y	*185-3413*	1	LINES GP-STABILIZER	356
Y	*202-5712*	1	LINES GP-STEERING	236
Y	*185-9784*	1	VALVE & MTG GP-BANK (STABILIZER)	376
Y	*185-8808*	1	WIRING GP-REAR	159
	202-5710	1	FILM-IDENTIFICATION (FUSE PANEL)	
	231-9352	1	FILM-IDENTIFICATION (FUSE PANEL)	
	238-8550	1	PUMP GP-METERING	
	227-4709	1	KIT-SEAL (STEERING METERING PUMP)	

Y-SEPARATE ILLUSTRATION

<END>

237-6459 DRIVE AR-BACKHOE LOADER–
ALL WHEEL DRIVE, 2-WHEEL STEER
S/N: B2D1-UP
PART OF 214-6956, 214-6959 POWER TRAIN AR
AN ATTACHMENT

SMCS-3278, 4313 **i02023725**

NOTE	PART NUMBER	QTY	PART NAME 1 2 3 4 5 6 (PRODUCT LEVEL)	SEE PAGE
Y	*202-6195*	1	AXLE & MTG GP-REAR	164
Y	*202-6196*	1	AXLE GP-DRIVE & STEERING	167
Y	*9R-1233*	1	GUARD GP-DRIVE SHAFT	256
Y	*190-8954*	1	LINES GP-PUMP	348
Y	*185-3413*	1	LINES GP-STABILIZER	356
Y	*202-5711*	1	LINES GP-STEERING	233
Y	*185-9784*	1	VALVE & MTG GP-BANK (STABILIZER)	376
Y	*185-8808*	1	WIRING GP-REAR	159
Y	*186-0309*	1	WIRING GP-CONSOLE (AWD)	142
	202-5710	1	FILM-IDENTIFICATION (FUSE PANEL)	
	231-9352	1	FILM-IDENTIFICATION (FUSE PANEL)	
	238-8550	1	PUMP GP-METERING	
	227-4709	1	KIT-SEAL (STEERING METERING PUMP)	

Y-SEPARATE ILLUSTRATION

<END>

111-7907 DRIVE GP-FLEXIBLE COUPLING

S/N: B2D1-UP

PART OF 185-7585, 185-7586 TRANSMISSION AR-DIRECT DRIVE

AN ATTACHMENT

SMCS-3252 **i01500856**

NOTE	REF NO	GRAPHIC REF	PART NUMBER	QTY	PART NAME 1 2 3 4 5 6 (PRODUCT LEVEL)	SEE PAGE
M	1	1	**8T-4200**	8	BOLT (M8X1.25X16MM)	
M	2	1	**6V-8455**	6	BOLT (M10X1.5X16MM)	
	3	1	**117-9713**	1	PLATE-CONVERTER REINFORCEMENT	
	4	1	**8T-4224**	8	WASHER-HARD (8.8X16X2MM THK)	
	5	1	**111-7906**	1	PLATE-CONVERTER DRIVE	

M-METRIC PART

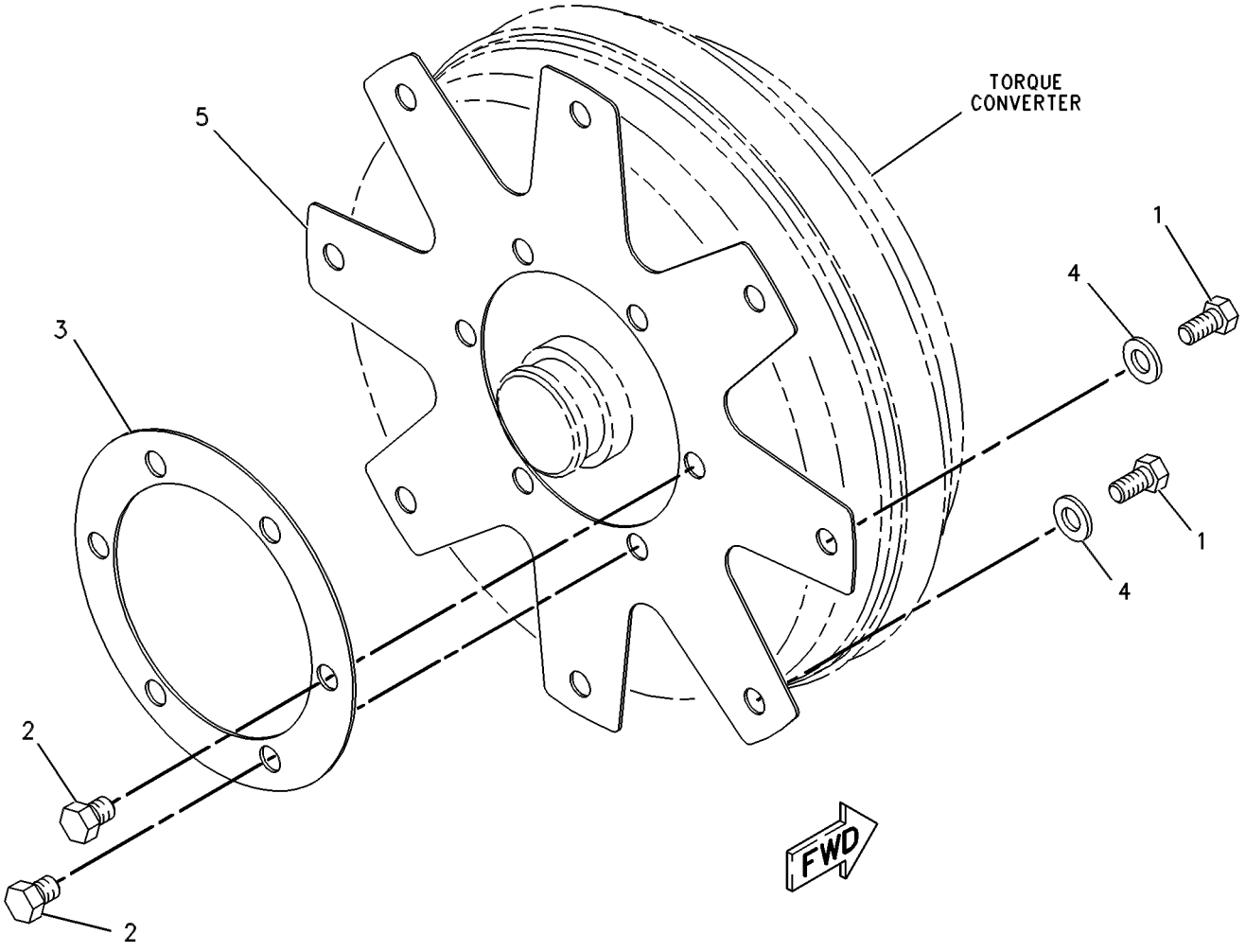

GRAPHIC #1 **<END>** g00131506

234-3387 FILLER GP-POWER TRAIN OIL

S/N: B2D1-UP

PART OF 214-6955, 214-6958 POWER TRAIN AR

AN ATTACHMENT

SMCS-3005, 3081 **i02025114**

NOTE	REF NO	GRAPHIC REF	PART NUMBER	QTY	PART NAME 1 2 3 4 5 6 (PRODUCT LEVEL)	SEE PAGE
	1	1	**9P-1872**	1	SPACER (14.27X22.22X53-MM THK)	
	2	1	**136-3112**	1	SPACER	
	3	1	**234-9613**	1	TUBE AS	
	4	1	**236-7295**	1	GAUGE GP-OIL LEVEL (DIPSTICK)	
	5	1	**4J-0522**	2	SEAL-O-RING	
	6	1	**8D-9947**	1	CLIP	
	7	1	**8S-0023**	1	CLIP (SLOT)	
	8	1	**8S-0024**	1	CLIP (TAB)	
	9	1	**8T-4121**	1	WASHER-HARD (11X21X2.5-MM THK)	
M	10	1	**8T-4136**	1	BOLT (M10X1.5X25-MM)	
M	11	1	**8T-4194**	2	BOLT (M12X1.75X50-MM)	
	12	1	**8T-4223**	3	WASHER-HARD (13.5X25.5X3-MM THK)	
M	13	1	**8T-6868**	1	BOLT (M12X1.75X80-MM)	

M-METRIC PART

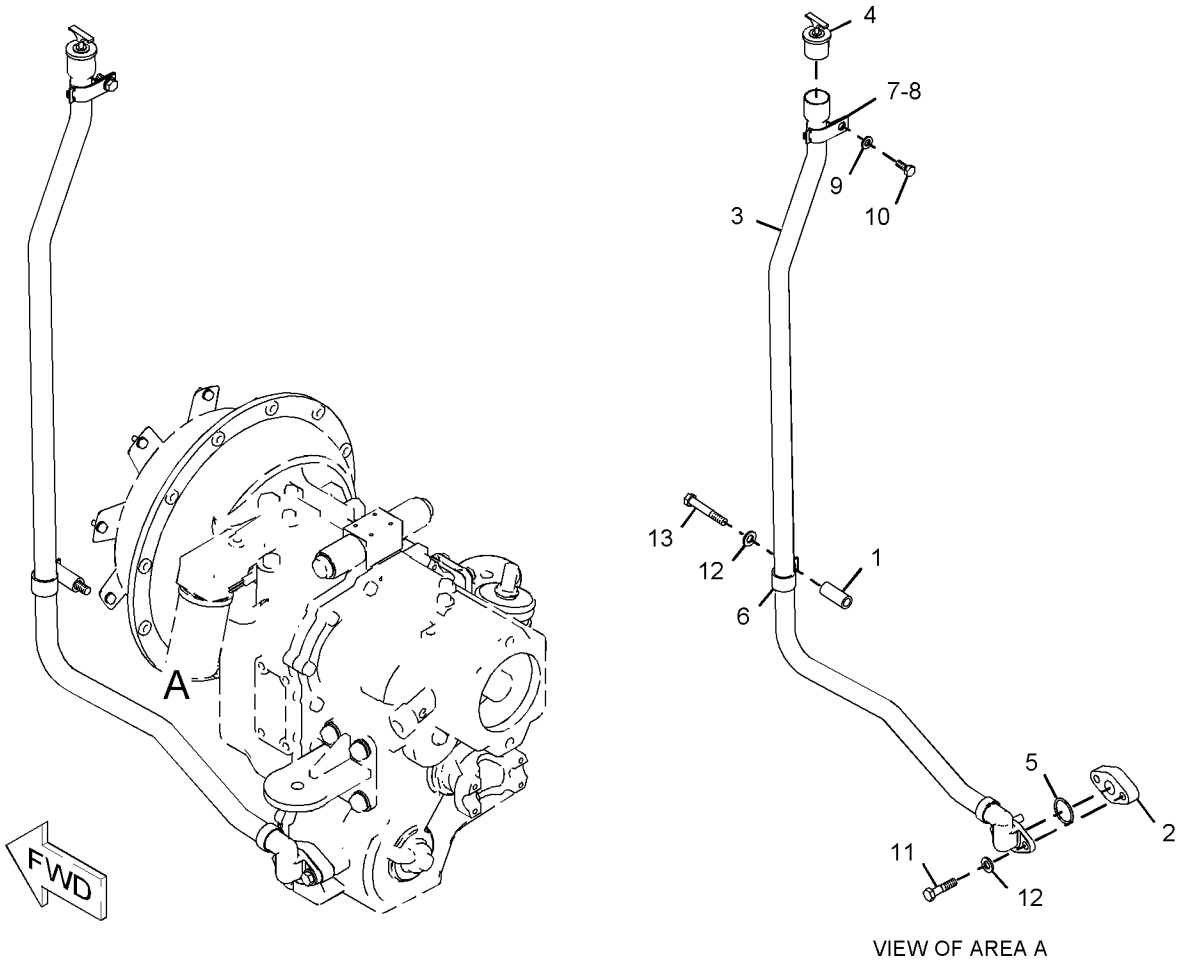

VIEW OF AREA A

GRAPHIC #1 **<END>** g01035251

234-7527 FILLER GP-POWER TRAIN OIL

S/N: B2D1-UP
PART OF 214-6956, 214-6959 POWER TRAIN AR
AN ATTACHMENT

SMCS-3005, 3081 **i02024974**

NOTE	REF NO	GRAPHIC REF	PART NUMBER	QTY	PART NAME 1 2 3 4 5 6 (PRODUCT LEVEL)	SEE PAGE
	1	1	**9P-1872**	1	SPACER (14.27X22.22X53-MM THK)	
	2	1	**234-9613**	1	TUBE AS	
	3	1	**236-7295**	1	GAUGE GP-OIL LEVEL (DIPSTICK)	
	4	1	**4J-0522**	1	SEAL-O-RING	
	5	1	**8D-9947**	1	CLIP	
	6	1	**8S-0023**	1	CLIP (SLOT)	
	7	1	**8S-0024**	1	CLIP (TAB)	
	8	1	**8T-4121**	1	WASHER-HARD (11X21X2.5-MM THK)	
M	9	1	**8T-4136**	1	BOLT (M10X1.5X25-MM)	
	10	1	**8T-4223**	3	WASHER-HARD (13.5X25.5X3-MM THK)	
M	11	1	**8T-4956**	2	BOLT (M12X1.75X35-MM)	
M	12	1	**8T-6868**	1	BOLT (M12X1.75X80-MM)	

M-METRIC PART

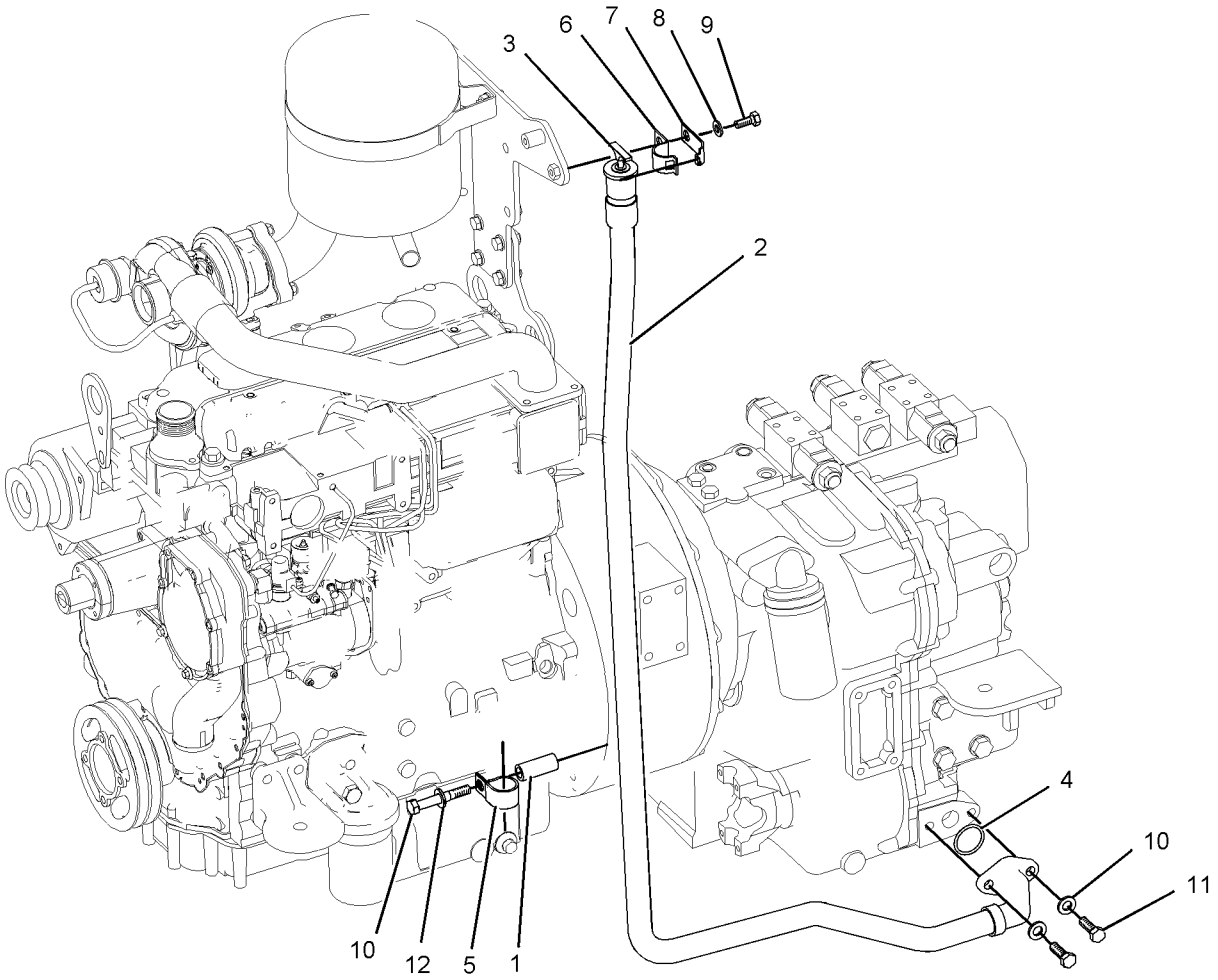

GRAPHIC #1 **<END>** g01042510

209-9884 HOUSING & FLANGE GP-AXLE—RH

S/N: B2D1-UP
PART OF 168-7446 AXLE GP-DRIVE & STEERING
AN ATTACHMENT

SMCS-4057, 4234 **i02054448**

NOTE	REF NO	GRAPHIC REF	PART NUMBER	QTY	PART NAME 1 2 3 4 5 6 (PRODUCT LEVEL)	SEE PAGE
	1	1	**217-2877**	1	HOUSING GP-AXLE (RH)	
	1A	1	**199-0648**	1	NUT-JAM	
	1B	1	**198-7814**	1	BOLT (M16X100-MM)	
	1C	1	**209-7460**	1	BUSHING	
	1D	1	**209-7465**	1	SEAL	
	1E	1	**231-0700**	1	HOUSING	
J	2	1	*231-0703*	1	FLANGE AS	
	2A	1	**2S-0480**	2	CUP-BEARING (TAPERED ROLLER BEARING)	
	2B	1	**178-8608**	2	CONE	
	2C	1	**226-4346**	8	STUD	
	2D	1	**229-5092**	1	SEAL	
C	3	1	**226-4366**	1	NUT-SPANNER	
C	4	1	**226-4370**	1	BOLT-LOCKING	
	5	1	**229-5085**	1	SPACER (110X123X18.36-MM THK)	
C	6	1	**217-2879**	1	GEAR GP-RING	
C	7	1	**226-4365**	1	WASHER-TAB	
					AVAILABLE REPAIR KIT(S):	
J			**231-0676**	1	KIT-FLANGE	
					(INCLUDES STUDS)	

C-CHANGE FROM PREVIOUS TYPE
J-KIT MARKED J SERVICES PART MARKED J

209-9884 HOUSING & FLANGE GP-AXLE *(contd.)* **i02054448**

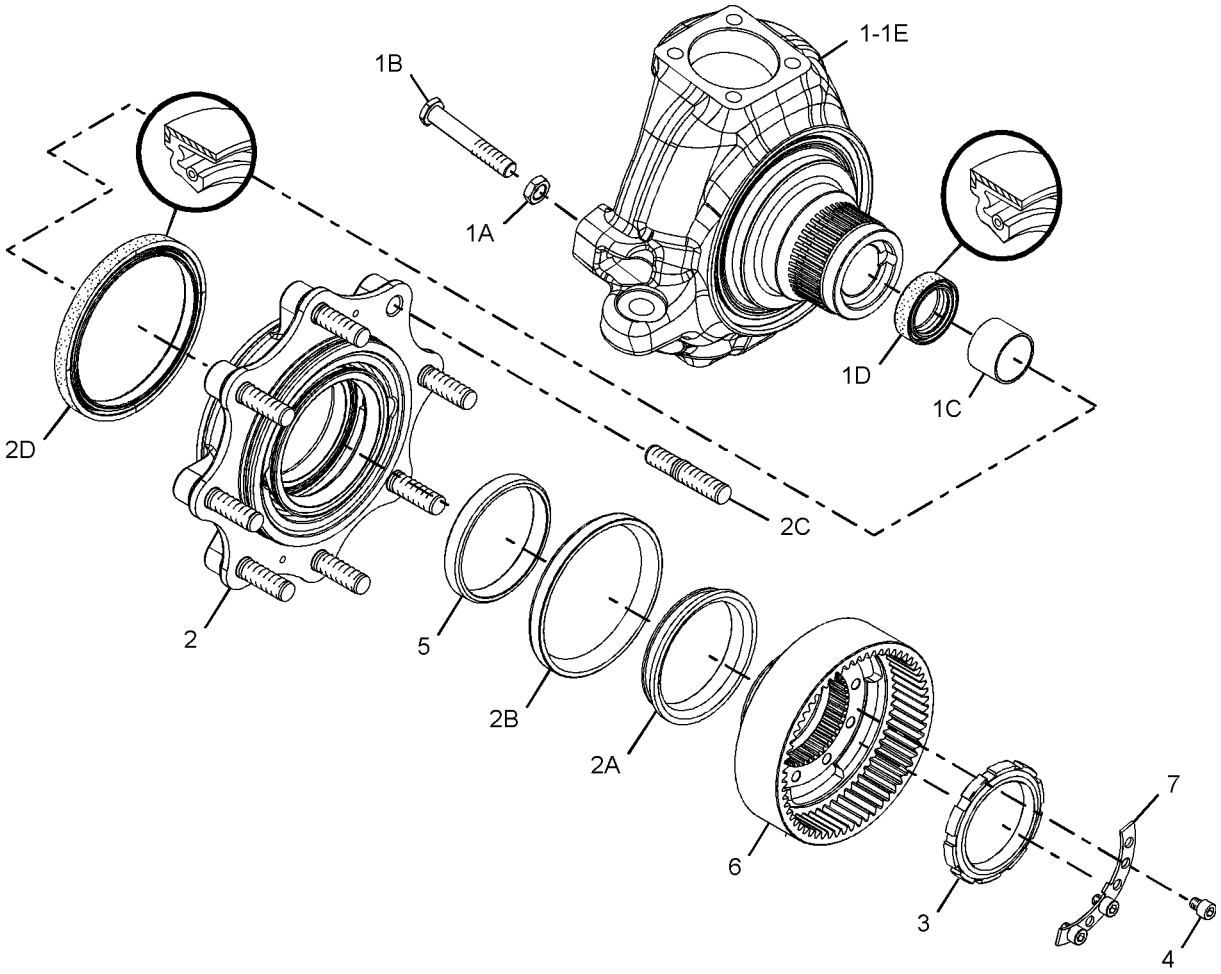

GRAPHIC #1 **<END>** g01047640

209-9885 HOUSING & FLANGE GP-AXLE—LH

S/N: B2D1-UP

PART OF 168-7446 AXLE GP-DRIVE & STEERING

AN ATTACHMENT

SMCS-4057, 4234 **i02054449**

NOTE	REF NO	GRAPHIC REF	PART NUMBER	QTY	PART NAME 1 2 3 4 5 6 (PRODUCT LEVEL)	SEE PAGE
	1	1	**217-2878**	1	HOUSING GP-AXLE (LH)	
	1A	1	**198-7814**	1	BOLT (M16X100-MM)	
	1B	1	**199-0648**	1	NUT-JAM	
	1C	1	**209-7460**	1	BUSHING	
	1D	1	**209-7465**	1	SEAL	
	1E	1	**231-0701**	1	HOUSING	
J	2	1	*231-0703*	1	FLANGE AS	
	2A	1	**2S-0480**	2	CUP-BEARING (TAPERED ROLLER BEARING)	
	2B	1	**178-8608**	2	CONE	
	2C	1	**226-4346**	8	STUD	
	2D	1	**229-5092**	1	SEAL	
	3	1	**229-5080**	1	NUT-SPANNER	
	4	1	**229-5083**	1	PIN	
	5	1	**229-5085**	1	SPACER (110X123X18.36-MM THK)	
	6	1	**229-5088**	1	GEAR GP-RING (60-TEETH)	
	7	1	**3E-4363**	1	RING-RETAINING	
					AVAILABLE REPAIR KIT(S):	
J			**231-0676**	1	KIT-FLANGE	
					(INCLUDES STUD)	

J-KIT MARKED J SERVICES PART MARKED J

209-9885 **HOUSING & FLANGE GP-AXLE** *(contd.)* **i02054449**

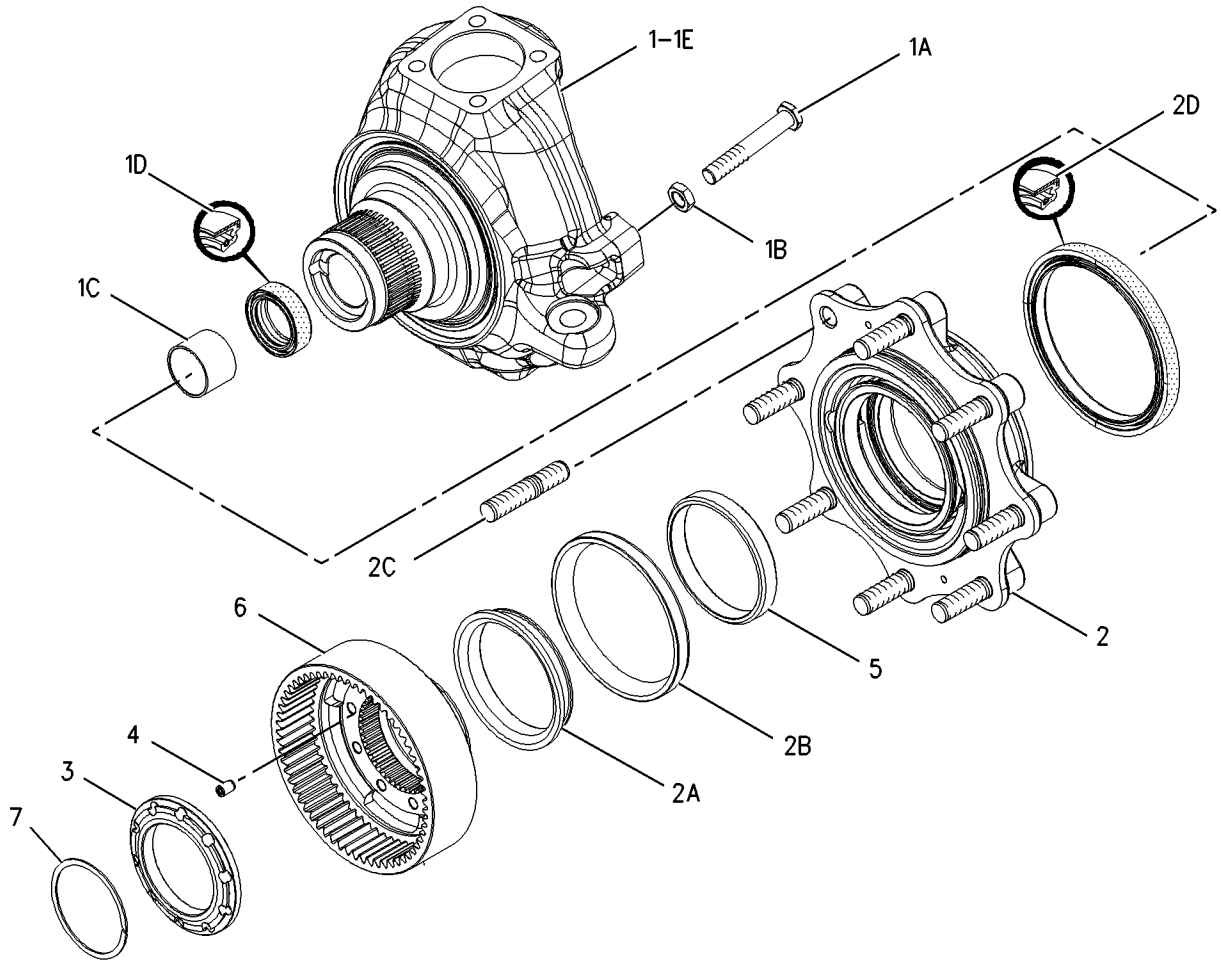

GRAPHIC #1 **<END>** g00998962

210-5924 PLANETARY GP-FINAL DRIVE

S/N: B2D1-UP
PART OF 168-7446 AXLE GP-DRIVE & STEERING
AN ATTACHMENT

SMCS-4050 **i01963824**

NOTE	REF NO	GRAPHIC REF	PART NUMBER	QTY	PART NAME 1 2 3 4 5 6 (PRODUCT LEVEL)	SEE PAGE
	1	1	**210-5931**	4	RETAINER	
	2	1	**210-5934**	4	GEAR-PLANET	
	3	1	**095-0924**	4	RING-RETAINING	
	4	1	**209-7466**	1	KIT-PLANETARY CARRIER	
					(INCLUDES PLUG AND SHAFTS)	
	5	1	**219-8783**	23	KIT-ROLLER BEARING	
					(INCLUDES NEEDLES)	

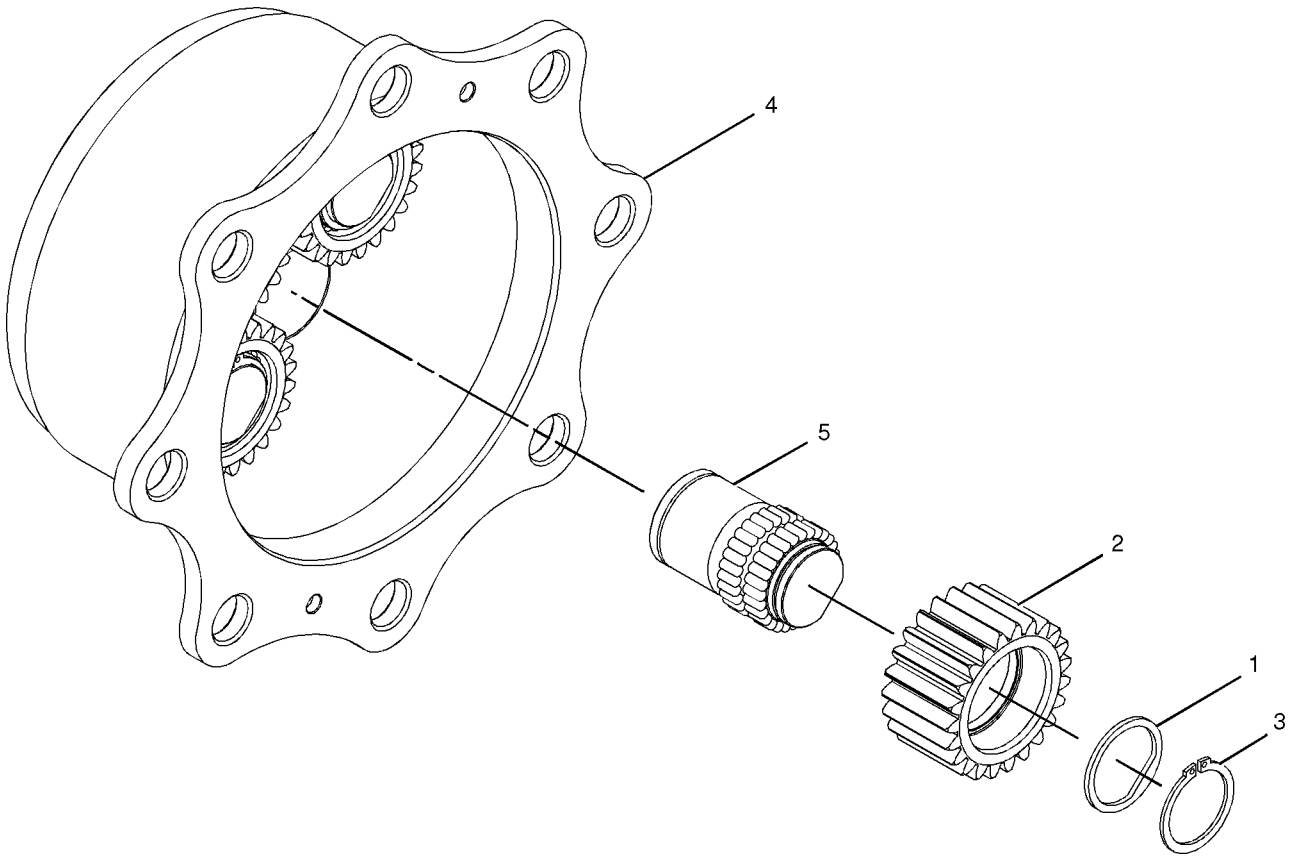

GRAPHIC #1 **<END>** g01013213

184-7970 POWER TRAIN AR

S/N: B2D1-UP
TWO WHEEL STEER
PART OF 214-6885 COMMON AR

SMCS-3000, 4000 **i01512415**

NOTE	PART NUMBER	QTY	PART NAME 1 2 3 4 5 6 (PRODUCT LEVEL)	SEE PAGE
Y	*191-9114*	1	CONTROL GP-DIFFERENTIAL LOCK	173
Y	*184-6570*	1	CONTROL GP-PARKING BRAKE	222
Y	*165-6918*	1	CONTROL GP-SERVICE BRAKE	223
Y	*184-7898*	1	MOUNTING GP-INSTRUMENT PANEL	547
Y	*113-1151*	1	SHAFT GP-DRIVE	191

Y-SEPARATE ILLUSTRATION

<END>

214-6955 POWER TRAIN AR—2-WHEEL DRIVE, STANDARD SHIFT

S/N: B2D1-UP
AN ATTACHMENT

SMCS-3000, 4000 **i02031721**

NOTE	PART NUMBER	QTY	PART NAME 1 2 3 4 5 6 (PRODUCT LEVEL)	SEE PAGE
Y	*237-6415*	1	BOX GP-BATTERY	240
Y	*164-1130*	1	CONTROL GP-TRANSMISSION	174
Y	*237-6458*	1	DRIVE AR-BACKHOE LOADER (2-WHEEL DRIVE, 2-WHEEL STEER)	179
Y	*234-3387*	1	FILLER GP-POWER TRAIN OIL	181
Y	*143-0786*	1	LINES GP-POWER TRAIN COOLER	61
Y	*143-0782*	1	MOUNTING GP-ENGINE & TMSN	34
Y	*185-3525*	1	MOUNTING GP-INSTRUMENT PANEL	548
Y	*209-4172*	1	STABILIZER AR	373
Y	*185-7585*	1	TRANSMISSION AR-DIRECT DRIVE	195
	164-1105	1	CONSOLE-FRONT	

Y-SEPARATE ILLUSTRATION

<END>

214-6956 POWER TRAIN AR—ALL WHEEL DRIVE, STANDARD SHIFT

S/N: B2D1-UP
AN ATTACHMENT

SMCS-3000, 4000 **i02031720**

NOTE	PART NUMBER	QTY	PART NAME 1 2 3 4 5 6 (PRODUCT LEVEL)	SEE PAGE
Y	*237-6415*	1	BOX GP-BATTERY	240
Y	*164-1130*	1	CONTROL GP-TRANSMISSION	174
Y	*237-6459*	1	DRIVE AR-BACKHOE LOADER (ALL WHEEL DRIVE, 2-WHEEL STEER)	179
Y	*234-7527*	1	FILLER GP-POWER TRAIN OIL	182
Y	*143-0786*	1	LINES GP-POWER TRAIN COOLER	61
Y	*143-0782*	1	MOUNTING GP-ENGINE & TMSN	34
Y	*185-3525*	1	MOUNTING GP-INSTRUMENT PANEL	548
Y	*202-5733*	1	SHAFT GP-DRIVE	192
Y	*209-4172*	1	STABILIZER AR	373
Y	*185-7586*	1	TRANSMISSION AR-DIRECT DRIVE	195
	164-1105	1	CONSOLE-FRONT	

Y-SEPARATE ILLUSTRATION

<END>

214-6958 POWER TRAIN AR—2-WHEEL DRIVE, STANDARD SHIFT

S/N: B2D1-UP
AN ATTACHMENT

SMCS-3000, 4000 **i02026378**

NOTE	PART NUMBER	QTY	PART NAME 1 2 3 4 5 6 (PRODUCT LEVEL)	SEE PAGE
Y	*237-6415*	1	BOX GP-BATTERY	240
Y	*183-4995*	1	CONSOLE GP-FRONT	509
Y	*164-1130*	1	CONTROL GP-TRANSMISSION	174
Y	*237-6458*	1	DRIVE AR-BACKHOE LOADER (2-WHEEL DRIVE, 2-WHEEL STEER)	179
Y	*164-1141*	1	DUCT GP-AIR	526
Y	*234-3387*	1	FILLER GP-POWER TRAIN OIL	181
Y	*143-0786*	1	LINES GP-POWER TRAIN COOLER	61
Y	*143-0782*	1	MOUNTING GP-ENGINE & TMSN	34
Y	*185-3525*	1	MOUNTING GP-INSTRUMENT PANEL	548
Y	*209-4172*	1	STABILIZER AR	373
Y	*185-7585*	1	TRANSMISSION AR-DIRECT DRIVE	195

Y-SEPARATE ILLUSTRATION

<END>

214-6959 POWER TRAIN AR–ALL WHEEL DRIVE, STANDARD SHIFT

S/N: B2D1-UP

AN ATTACHMENT

SMCS-3000, 4000 **i02026217**

NOTE	PART NUMBER	QTY	PART NAME 1 2 3 4 5 6 (PRODUCT LEVEL)	SEE PAGE
Y	*237-6415*	1	BOX GP-BATTERY	240
Y	*183-4995*	1	CONSOLE GP-FRONT	509
Y	*164-1130*	1	CONTROL GP-TRANSMISSION	174
Y	*237-6459*	1	DRIVE AR-BACKHOE LOADER (ALL WHEEL DRIVE, 2-WHEEL STEER)	179
Y	*164-1141*	1	DUCT GP-AIR	526
Y	*234-7527*	1	FILLER GP-POWER TRAIN OIL	182
Y	*143-0786*	1	LINES GP-POWER TRAIN COOLER	61
Y	*143-0782*	1	MOUNTING GP-ENGINE & TMSN	34
Y	*185-3525*	1	MOUNTING GP-INSTRUMENT PANEL	548
Y	*202-5733*	1	SHAFT GP-DRIVE	192
Y	*209-4172*	1	STABILIZER AR	373
Y	*185-7586*	1	TRANSMISSION AR-DIRECT DRIVE	195

Y-SEPARATE ILLUSTRATION

<END>

113-1151 SHAFT GP-DRIVE–REAR

S/N: B2D1-UP

PART OF 184-7970 POWER TRAIN AR

SMCS-3253 **i01512658**

NOTE	REF NO	GRAPHIC REF	PART NUMBER	QTY	PART NAME 1 2 3 4 5 6 (PRODUCT LEVEL)	SEE PAGE
	1	1	**8T-0799**	4	BOLT (1/2-20X1-1/2)	
	2	1	**5V-2545**	2	STRAP	
	3	1	**107-6826**	4	BOLT (M24X19.1MM)	
	4	1	**113-1150**	1	SHAFT AS-MAIN	
		1	**117-9887**	2	KIT-SPIDER & BEARING	
	5	1	**8T-4223**	4	WASHER-HARD (13.5X25.5X3MM THK)	

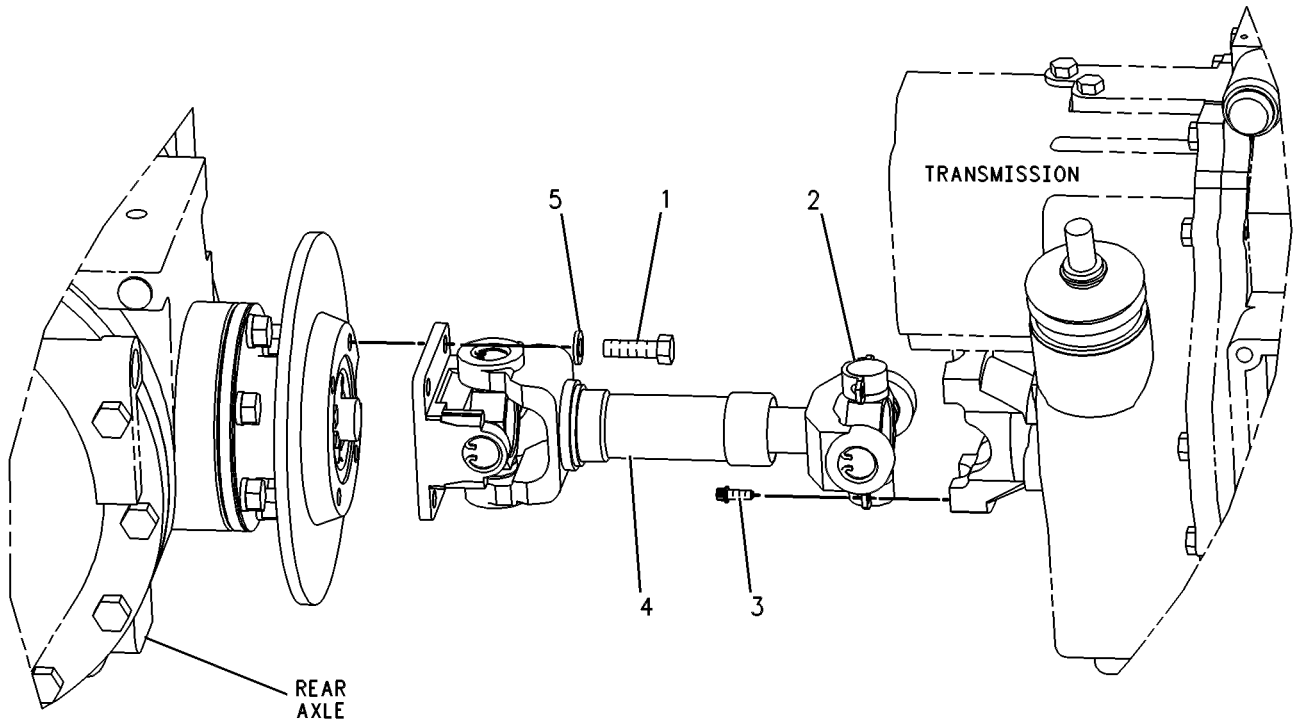

GRAPHIC #1 **<END>** g00131518

202-5733 SHAFT GP-DRIVE–FRONT

S/N: B2D1-UP
STANDARD
PART OF 214-6956, 214-6959 POWER TRAIN AR
AN ATTACHMENT

SMCS-3253 **i01952513**

NOTE	REF NO	GRAPHIC REF	PART NUMBER	QTY	PART NAME 1 2 3 4 5 6 (PRODUCT LEVEL)	SEE PAGE
	1	1	**5V-2545**	4	STRAP	
M	2	1	**107-6826**	8	BOLT (M24X19.1MM)	
	3	1	**202-7874**	1	SHAFT AS (FRONT)	
		1	**117-9887**	2	KIT-SPIDER & BEARING	

M-METRIC PART

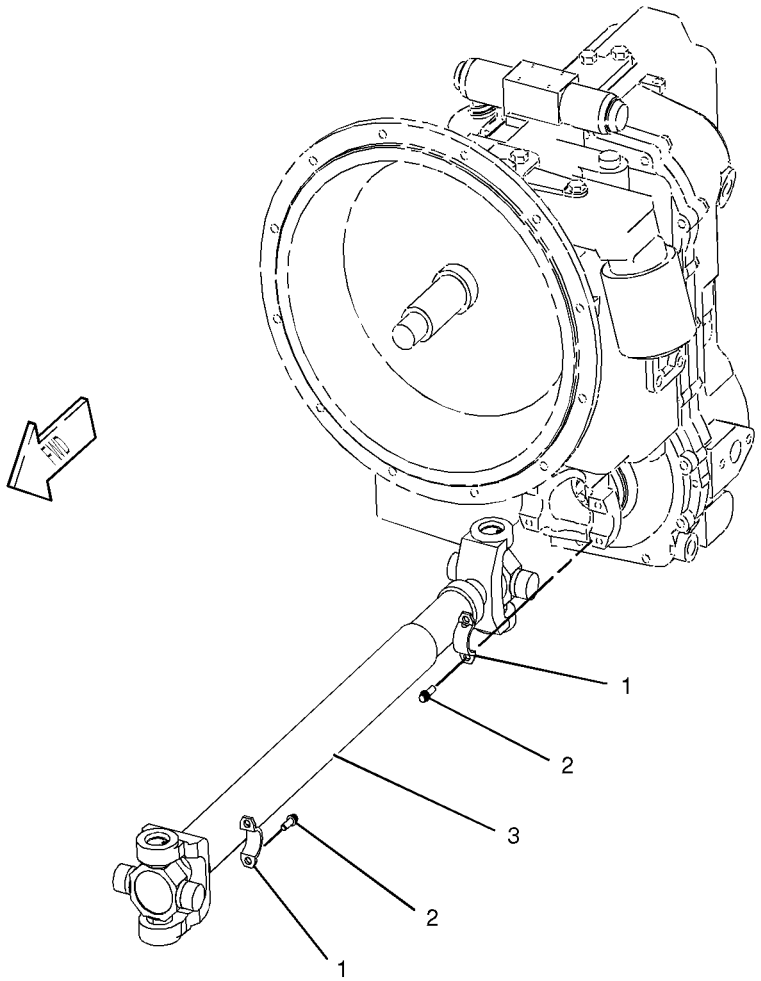

GRAPHIC #1 **<END>** g01015782

202-6007 TRANSMISSION & MOUNTING GP—TWO WHEEL DRIVE

S/N: B2D1-UP
PART OF 185-7585 TRANSMISSION AR-DIRECT DRIVE
AN ATTACHMENT

SMCS-3030 **i01940966**

NOTE	REF NO	GRAPHIC REF	PART NUMBER	QTY	PART NAME 1 2 3 4 5 6 (PRODUCT LEVEL)	SEE PAGE
	1	1	**113-9221**	1	SUPPORT-REAR	
	2	1	**138-7137**	1	SUPPORT AS	
Y	3	1	**201-8561**	1	TRANSMISSION GP-DIRECT DRIVE	196
M	4	1	**7X-2553**	4	BOLT (M16X2X40MM)	
	5	1	**8T-4223**	4	WASHER-HARD (13.5X25.5X3MM THK)	
M	6	1	**8T-4956**	4	BOLT (M12X1.75X35MM)	
	7	1	**9X-8257**	4	WASHER (17.5X30X3.5MM THK)	

M-METRIC PART
Y-SEPARATE ILLUSTRATION

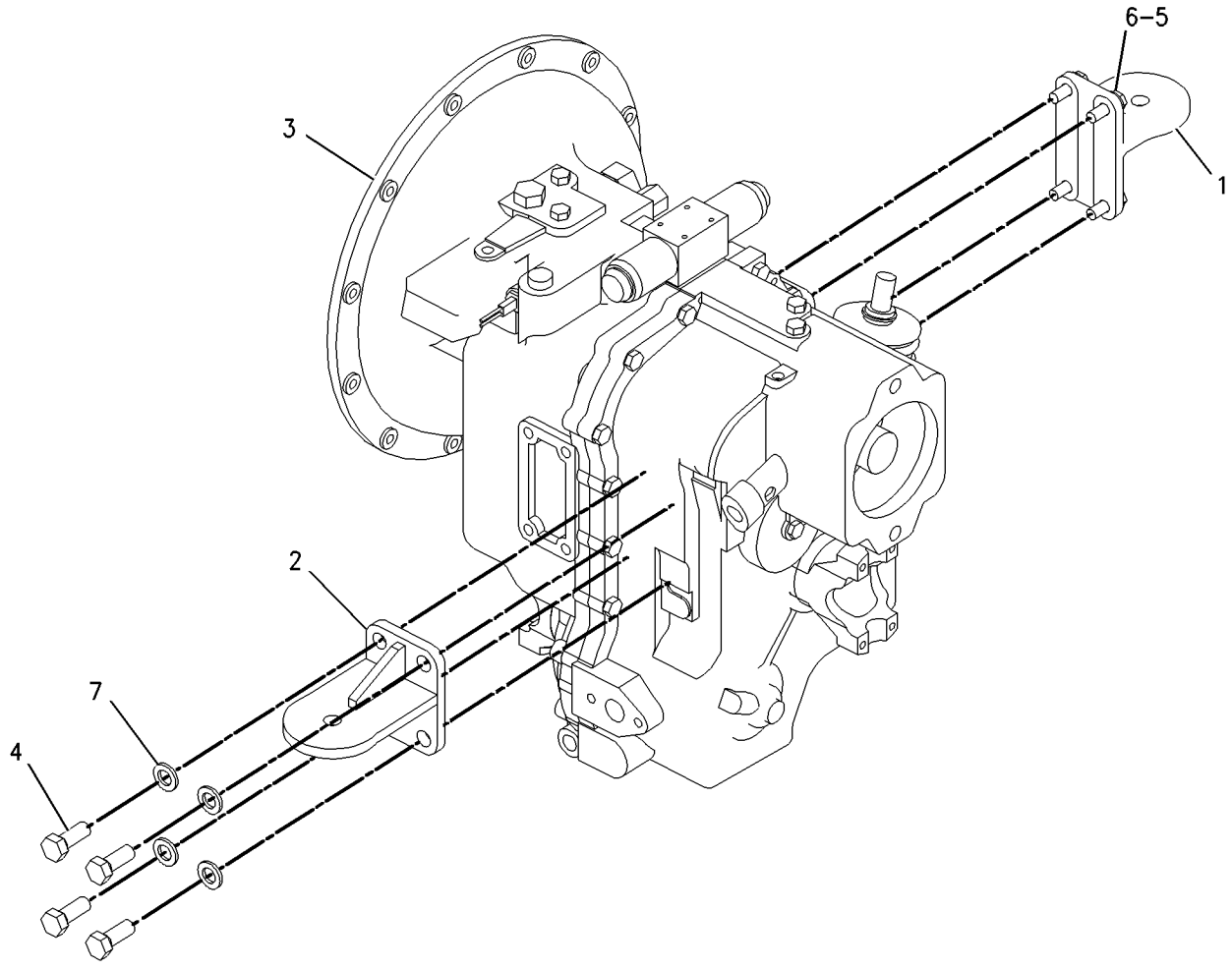

GRAPHIC #1 **<END>** g00869087

202-6008 TRANSMISSION & MOUNTING GP–ALL WHEEL DRIVE

S/N: B2D1-UP
PART OF 185-7586 TRANSMISSION AR-DIRECT DRIVE
AN ATTACHMENT

SMCS-3030 **i01938558**

NOTE	REF NO	GRAPHIC REF	PART NUMBER	QTY	PART NAME 1 2 3 4 5 6 (PRODUCT LEVEL)	SEE PAGE
	1	1	**113-9221**	1	SUPPORT-REAR	
	2	1	**138-7137**	1	SUPPORT AS	
Y	3	1	**201-8562**	1	TRANSMISSION GP-DIRECT DRIVE	202
M	4	1	**7X-2553**	4	BOLT (M16X2X40MM)	
	5	1	**8T-4223**	4	WASHER-HARD (13.5X25.5X3MM THK)	
M	6	1	**8T-4956**	4	BOLT (M12X1.75X35MM)	
	7	1	**9X-8257**	4	WASHER (17.5X30X3.5MM THK)	

M-METRIC PART
Y-SEPARATE ILLUSTRATION

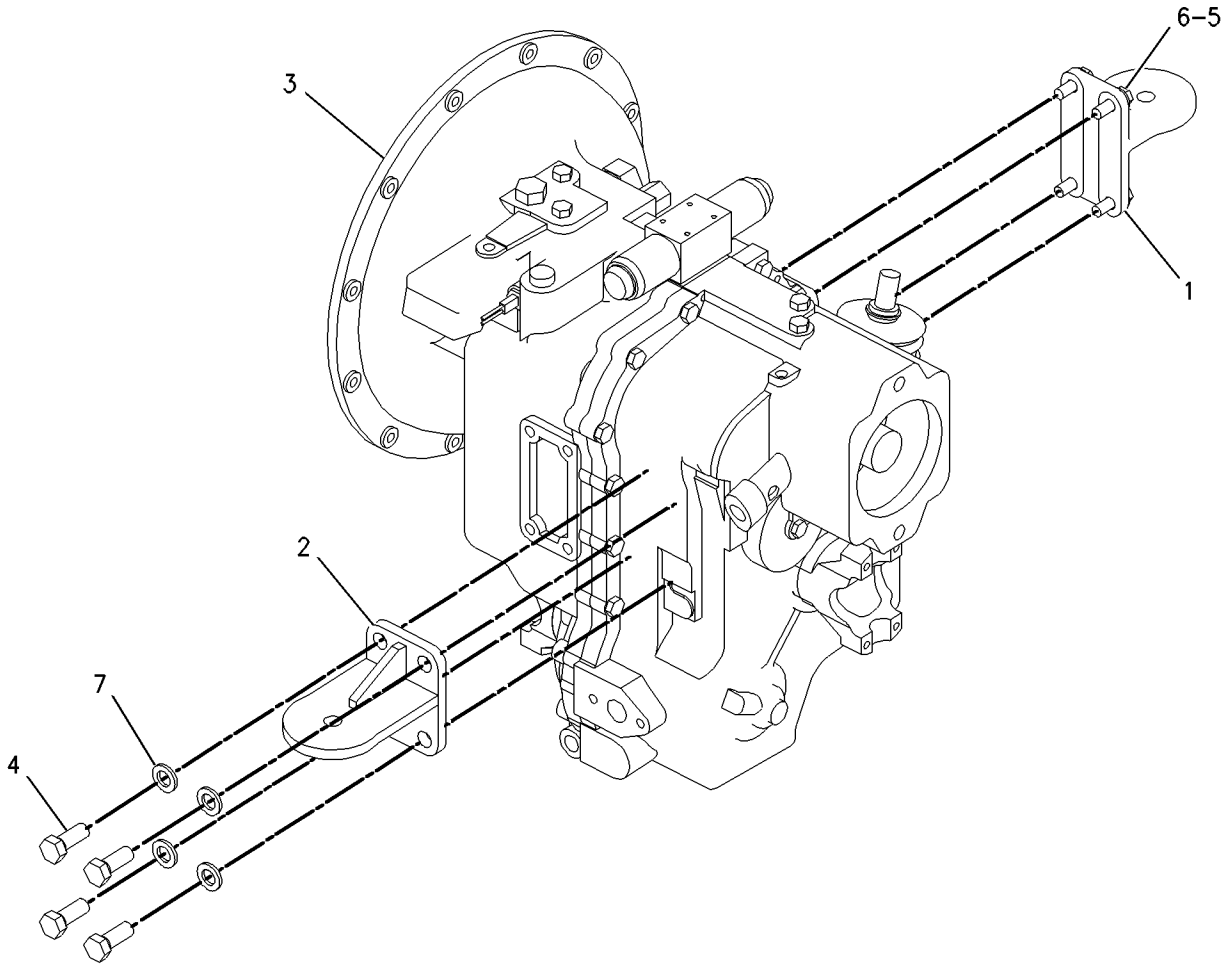

GRAPHIC #1 **<END>** g00869096

185-7585 TRANSMISSION AR-DIRECT DRIVE

S/N: B2D1-UP
TWO WHEEL DRIVE
PART OF 214-6955, 214-6958 POWER TRAIN AR
AN ATTACHMENT

SMCS-3030 **i01937470**

NOTE	PART NUMBER	QTY	PART NAME 1 2 3 4 5 6 (PRODUCT LEVEL)	SEE PAGE
Y	*111-7907*	1	DRIVE GP-FLEXIBLE COUPLING	180
Y	**202-6007**	1	TRANSMISSION & MOUNTING GP	193
	119-4740	1	FILTER AS-OIL (HYDRAULIC)	
	140-7393	1	TORQUE CONVERTER AS	
			—OR—	
	212-6215	1	TORQUE CONVERTER AS	
Y-SEPARATE ILLUSTRATION				

<END>

185-7586 TRANSMISSION AR-DIRECT DRIVE

S/N: B2D1-UP
ALL WHEEL DRIVE
PART OF 214-6956, 214-6959 POWER TRAIN AR
AN ATTACHMENT

SMCS-3030 **i01937569**

NOTE	PART NUMBER	QTY	PART NAME 1 2 3 4 5 6 (PRODUCT LEVEL)	SEE PAGE
Y	*111-7907*	1	DRIVE GP-FLEXIBLE COUPLING	180
Y	*202-6008*	1	TRANSMISSION & MOUNTING GP	194
	119-4740	1	FILTER AS-OIL (HYDRAULIC)	
	140-7393	1	TORQUE CONVERTER AS	
			—OR—	
	212-6215	1	TORQUE CONVERTER AS	
Y-SEPARATE ILLUSTRATION				

<END>

201-8561 TRANSMISSION GP-DIRECT DRIVE—TWO WHEEL DRIVE

S/N: B2D1-UP

PART OF 202-6007 TRANSMISSION & MOUNTING GP

AN ATTACHMENT

SMCS-3030 **i02030097**

NOTE	REF NO	GRAPHIC REF	PART NUMBER	QTY	PART NAME 1 2 3 4 5 6 (PRODUCT LEVEL)	SEE PAGE
	1	2	**178-8133**	2	GUIDE-SPRING	
	2	3	**174-9711**	1	GASKET	
	3	3	**175-0054**	1	SEAL-O-RING	
	4	3	**9M-1974**	3	WASHER-HARD (8.8X16X2-MM THK)	
	5	2	**122-3649**	2	RING-RETAINING	
	6	3	**122-3652**	2	PLUG	
	7	3	**121-7405**	1	VALVE GP-RELIEF	
	7A	3	**6V-9178**	1	SEAL-O-RING	
	7B	3	**7X-4744**	1	SEAL-O-RING	
	7C	3	**106-9586**	1	SEAL-O-RING	
	8	3	**121-7396**	1	VALVE GP-RELIEF	
	8A	3	**6V-4589**	1	SEAL-O-RING	
	8B	3	**8L-2746**	1	SEAL-O-RING	
	9	2	**192-0843**	1	CASE AS	
	10	2	**156-9276**	1	CASE-TRANSMISSION	
	11	1,3	**9S-4191**	10	PLUG (9/16-18-2A THD)	
	12	1,3	**3J-1907**	11	SEAL-O-RING	
M	13	1	**6V-8335**	17	BOLT-SELF LOCKING (M10X1.5X40-MM)	
	14	2	**7T-3022**	2	SLEEVE	
	15	2	**123-8906**	1	CUP-TAPERED ROLLER	
	16	2	**123-8905**	1	CONE	
	17	2	**9U-8886**	4	RING-SEAL (44.95-MM ID)	
	18	2	**7T-3021**	2	SYNCHRONIZER GP	
	19	2	**211-6758**	1	GEAR (19-TEETH)	
	20	2	**121-1251**	1	GEAR (28-TEETH)	
	21	2	**117-4650**	1	GEAR (37-TEETH)	
	22	2	**6T-9160**	1	GEAR (43-TEETH)	
	23	2	**6V-8500**	2	BEARING	
	24	2	**7T-3017**	1	SPACER (52.5X59X9.6-MM THK)	
	25	2	**7T-3018**	1	SLEEVE	
	26	2	**6Y-2326**	1	RING	
	27	2	**121-2062**	1	WASHER-THRUST (35X55X4-MM THK)	
	28	2	**7T-3034**	1	SHIM (2.02-MM THK)	
B	29	2	**6T-9144**	1	SHIM (0.051-MM THK)	
B		2	**6T-9147**	1	SHIM (0.076-MM THK)	
B		2	**6T-9146**	1	SHIM (0.127-MM THK)	
B		2	**6T-9145**	1	SHIM (0.178-MM THK)	
B		2	**6T-9143**	1	SHIM (0.381-MM THK)	
B		2	**6T-9142**	1	SHIM (0.508-MM THK)	
M	30	1,3	**8C-5748**	7	BOLT (M8X1.25X55-MM)	
	31	1	**9P-9150**	4	WASHER (8.25X18X.84-MM THK)	
M	32	3	**6V-7731**	2	BOLT (M10X1.5X70-MM)	
	33	3	**6Y-2035**	1	GASKET	
	34	3	**7T-3119**	1	HOUSING	
	35	2	**005-0469**	2	CUP-BEARING	
	36	2	**005-0471**	2	CONE-BEARING	
	37	2	**211-6759**	1	SHAFT (OUTPUT)	
	38	2	**123-8910**	1	CUP-TAPERED ROLLER	
	39	2	**123-8909**	1	CONE-BEARING	
	40	2	**7T-2646**	2	SPACER (66X79.5X2.02-MM THK)	
B	41	2	**6T-9166**	2	SHIM (0.051-MM THK)	
B		2	**6T-9165**	2	SHIM (0.076-MM THK)	
B		2	**6T-9164**	2	SHIM (0.178-MM THK)	
B		2	**6T-9163**	2	SHIM (0.599-MM THK)	
	42	2	**6Y-2936**	1	SPACER (60X72X32-MM THK)	

201-8561 TRANSMISSION GP-DIRECT DRIVE *(contd.)* i02030097

NOTE	REF NO	GRAPHIC REF	PART NUMBER	QTY	PART NAME 1 2 3 4 5 6 (PRODUCT LEVEL)	SEE PAGE
	43	1	**122-6785**	1	PLUG AS	
	44	3	**1H-9721**	1	PLUG-EXPANSION	
	45	2	**7T-3051**	1	PLUG	
	46	2	**8T-1580**	1	CUP	
	47	2	**8T-1581**	1	CONE	
	48	2	**6Y-2737**	1	CUP-BEARING	
	49	2	**6Y-2736**	1	CONE-BEARING	
	50	2	**121-2500**	3	WASHER-THRUST (50X70X4-MM THK)	
	51	2	**121-2511**	1	SHAFT	
	52	2	**121-2537**	1	SHAFT-REVERSE	
	53	2	**121-2545**	1	SHAFT AS-INPUT	
		2	**123-0714**	1	BEARING	
		2	**123-2920**	3	PLUG	
	54	2	**121-2603**	1	GEAR (40-TEETH)	
	55	2	**121-2604**	1	GEAR (27-TEETH)	
	56	2	**121-0694**	1	WASHER-THRUST (40X70X4-MM THK)	
	57	2	**122-1882**	2	PLATE-END	
	58	2	**122-1881**	12	PLATE-CLUTCH	
	59	2	**122-1880**	12	DISC	
	60	2	**6V-8757**	3	RING	
	61	2	**178-8200**	2	RETAINER-SPRING	
	62	2	**178-8134**	2	SPRING	
	63	2	**178-8132**	2	SEAL	
	64	2	**122-6787**	1	YOKE AS	
		2	**123-1377**	1	GUARD	
	65	2	**122-1885**	2	SPACER (51X55X4-MM THK)	
	66	2	**123-8913**	4	BEARING-ROLLER	
	67	2	**172-5317**	2	BEARING-SPECIAL	
	68	2	**7T-3195**	1	WASHER (12.3X47X6.35-MM THK)	
M	69	2	**6V-8097**	1	BOLT (M12X1.75X30-MM)	
	70	2	**5P-8066**	1	SEAL-O-RING	
	71	2	**121-7385**	1	PUMP GP-TRANSMISSION	
		1	**124-6612**	1	SEAL-LIP TYPE	
	72	2	**7X-4741**	1	SEAL (140-MM ID)	
	73	2	**122-1886**	1	RING-SEAL	
	74	1	**014-5645**	3	BALL	
	75	1	**6Y-1341**	2	SPRING	
	76	1	**121-7403**	1	FORK-SHIFT	
	77	1	**121-7389**	1	ROD AS-GEARSHIFT	
	78	1	**121-7390**	1	ROD AS-GEARSHIFT	
	79	1	**7T-3249**	2	SCREW (3/8-24X0.75-IN)	
	80	2	**123-8907**	2	CONE-BEARING	
	81	2	**123-8908**	2	CUP-TAPERED ROLLER	
	82	3	**127-3017**	1	SEAT AS	
	83	3	**7T-3109**	1	PIN	
	84	1	**121-7404**	1	FORK-SHIFT	
	85	3	**3S-2093**	1	STRAP-CABLE	
	86	2	**1U-8846**	1	SEALANT-GASKET	
	87	1	**6Y-1896**	1	PLUG AS	
		1	**5P-6718**	1	SEAL-O-RING	
	88	2	**121-7398**	1	SPACER (70X79.5X2-MM THK)	
B	89	2	**121-7399**	1	SHIM (0.05-MM THK)	
B		2	**121-7400**	1	SHIM (0.08-MM THK)	
B		2	**121-7401**	1	SHIM (0.18-MM THK)	
B		2	**121-7402**	1	SHIM (0.60-MM THK)	
	90	3	**6K-0806**	1	STRAP-CABLE	
	91	3	**7T-3111**	1	COVER	
	92	1	**120-9762**	3	SEAL-O-RING	
M	93	1	**9X-6615**	4	BOLT (M5X.8X30-MM)	

201-8561 **TRANSMISSION GP-DIRECT DRIVE** ***(contd.)*** **i02030097**

NOTE	REF NO	GRAPHIC REF	PART NUMBER	QTY	PART NAME 1 2 3 4 5 6 (PRODUCT LEVEL)	SEE PAGE
Y	94	3	**223-8181**	1	VALVE GP-SOLENOID	209
	95	1	**3G-6927**	1	ADAPTER	
	96	1	**7T-3253**	2	DOWEL	
	97	2	**216-2267**	1	SEAL-LIP TYPE	
	98	1	**7T-2651**	1	STRAINER	
	99	1	**4F-7952**	1	SEAL-O-RING	
	100	1	**9W-5460**	1	RING	
	101	1	**106-9861**	1	PLATE-COVER	
M	102	1	**6V-8210**	2	BOLT (M8X1.25X16-MM)	
	103	3	**7T-3251**	1	BREATHER (TRANSMISSION)	
	104	3	**121-7391**	1	LEVER	

B-USE AS REQUIRED
M-METRIC PART
Y-SEPARATE ILLUSTRATION

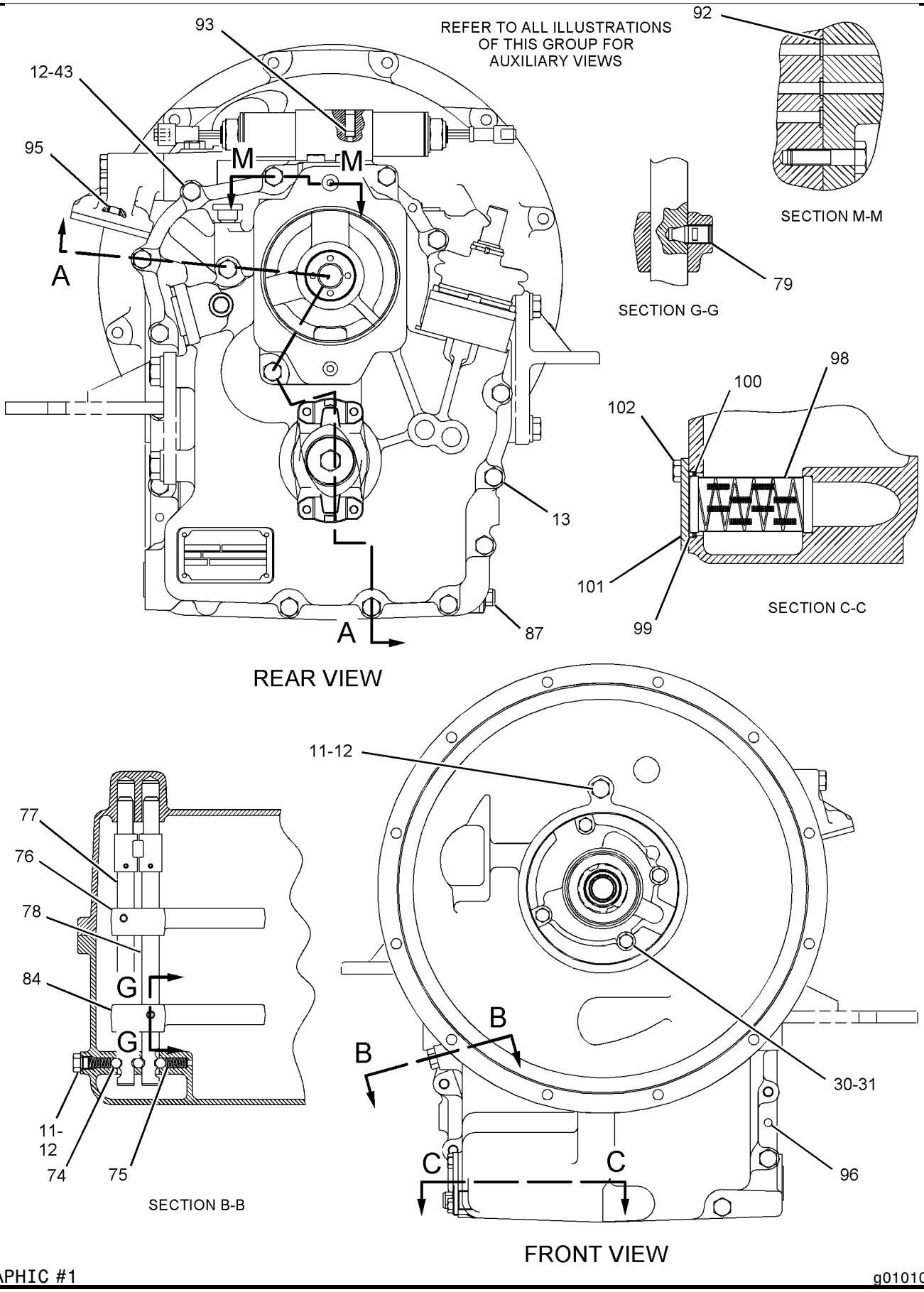

GRAPHIC #1 g01010544

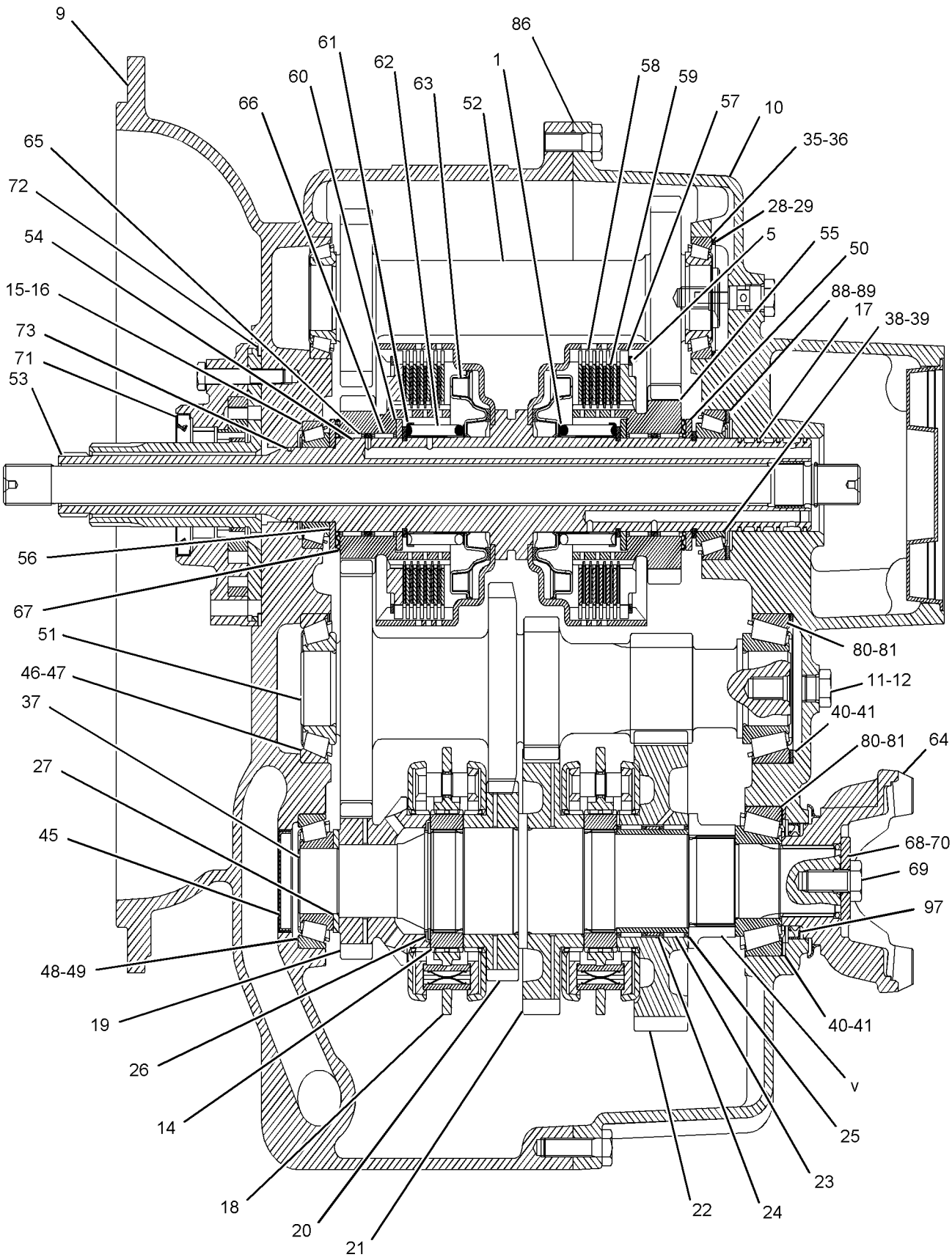

SECTION A-A

GRAPHIC #2

g01010546

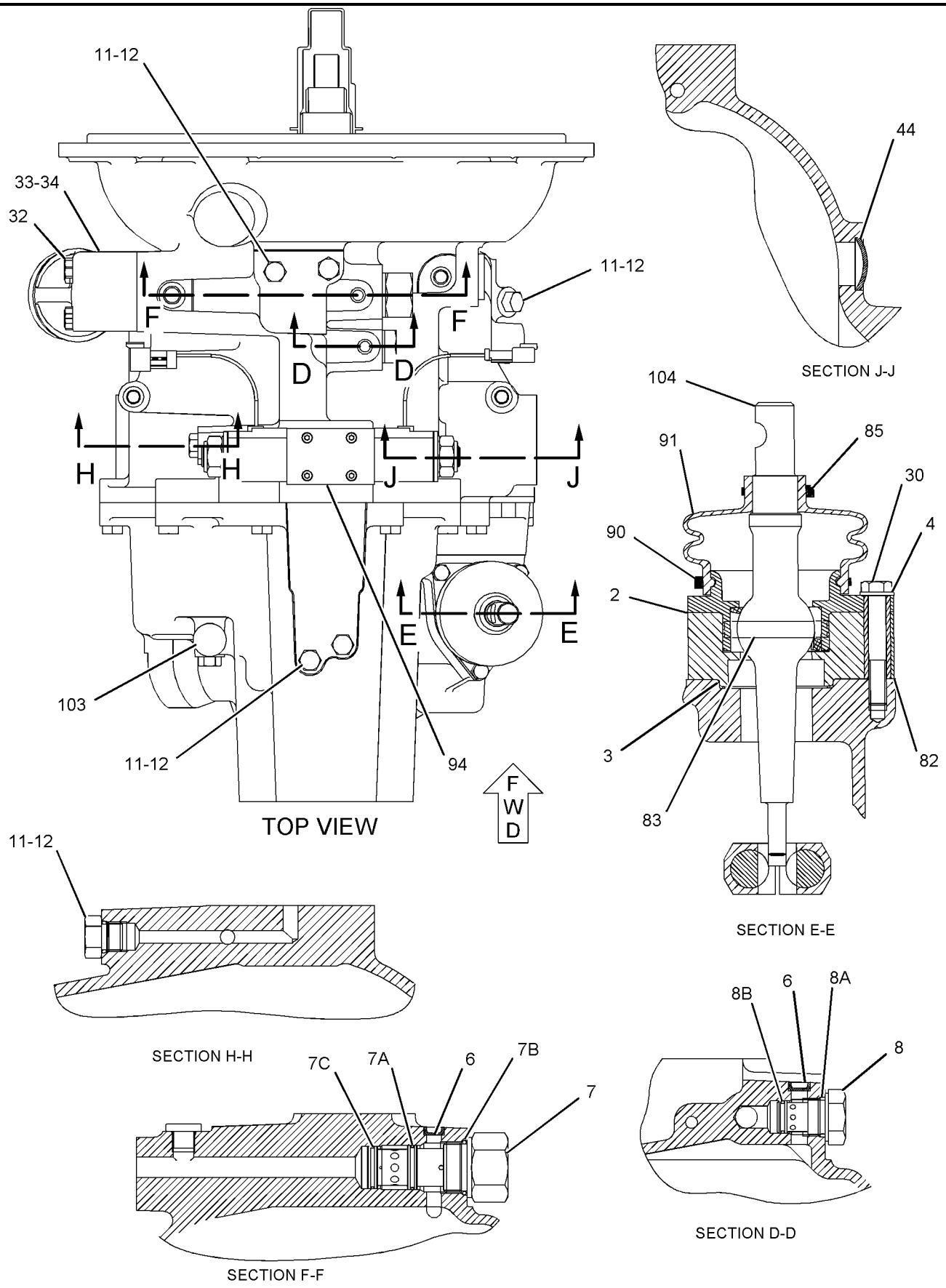

GRAPHIC #3 **<END>** g01010547

201-8562 TRANSMISSION GP-DIRECT DRIVE—ALL WHEEL DRIVE

S/N: B2D1-UP

PART OF 202-6008 TRANSMISSION & MOUNTING GP

AN ATTACHMENT

SMCS-3030 **i01952090**

NOTE	REF NO	GRAPHIC REF	PART NUMBER	QTY	PART NAME 1 2 3 4 5 6 (PRODUCT LEVEL)	SEE PAGE
	1	3	**174-9711**	1	GASKET	
	2	3	**175-0054**	1	SEAL-O-RING	
	3	3	**9M-1974**	3	WASHER-HARD (8.8X16X2MM THK)	
	4	3	**122-3652**	2	PLUG	
	5	3	**121-7405**	1	VALVE GP-RELIEF	
	5A	3	**6V-9178**	1	SEAL-O-RING	
	5B	3	**7X-4744**	1	SEAL-O-RING	
	5C	3	**106-9586**	1	SEAL-O-RING	
	6	3	**121-7396**	1	VALVE GP-RELIEF	
	6A	3	**6V-4589**	1	SEAL-O-RING	
	6B	3	**8L-2746**	1	SEAL-O-RING	
M	7	1,3	**8C-5748**	7	BOLT (M8X1.25X55MM)	
	8	1	**9P-9150**	4	WASHER (8.25X18X.84MM THK)	
	9	2	**192-0845**	1	CASE AS	
	10	2	**156-9275**	1	CASE-TRANSMISSION	
	11	1,2,3	**9S-4191**	10	PLUG	
	12	1,2,3	**3J-1907**	11	SEAL-O-RING	
M	13	1	**6V-8335**	14	BOLT-SELF LOCKING (M10X1.5X40MM)	
	14	2	**7T-3022**	2	SLEEVE	
	15	2	**123-8906**	3	CUP-TAPERED ROLLER	
	16	2	**123-8905**	3	CONE	
	17	2	**9U-8886**	4	RING-SEAL (44.95MM ID)	
	18	2	**7T-3021**	2	SYNCHRONIZER GP	
	19	2	**161-3249**	1	RING-RETAINING	
	20	2	**8E-5707**	1	PLATE-END	
	21	2	**121-0697**	1	WASHER-THRUST	
	22	2	**172-6050**	2	BEARING-SPECIAL	
	23	2	**095-0927**	1	RING-RETAINING	
	24	2	**121-0714**	1	PISTON	
	25	2	**178-9566**	1	SPRING-PISTON	
	26	2	**121-0885**	1	RETAINER	
	27	2	**6T-9196**	1	SEAL	
	28	2	**6T-9194**	8	PLATE	
	29	2	**6Y-7957**	8	DISC-FRICTION	
	30	2	**190-9767**	1	SHAFT AS	
	31	2	**121-0904**	1	GEAR AS	
	32	2	**123-8912**	2	BEARING-ROLLER	
	33	2	**122-1877**	1	WASHER-THRUST (40X65X4MM THK)	
	34	2	**211-6758**	1	GEAR (19 TEETH)	
	35	2	**121-1251**	1	GEAR (28 TEETH)	
	36	2	**117-4650**	1	GEAR (37 TEETH)	
	37	2	**6T-9160**	1	GEAR (43 TEETH)	
	38	2	**121-1253**	1	GEAR (37 TEETH)	
	39	2	**6V-8500**	2	BEARING	
	40	2	**7T-3017**	1	SPACER (52.5X59X9.6MM THK)	
	41	2	**7T-3018**	1	SLEEVE	
	42	2	**6Y-2326**	1	RING	
	43	2	**122-1878**	1	RING-SEAL	
	44	2	**122-1879**	1	SPACER (58X67.5X2MM THK)	
B	45	2	**104-3288**	1	SHIM (0.05MM THK)	
B		2	**121-2059**	1	SHIM (0.08MM THK)	
B		2	**121-2060**	1	SHIM (0.18MM THK)	
B		2	**121-2061**	1	SHIM (0.6MM THK)	
M	46	3	**6V-7731**	2	BOLT (M10X1.5X70MM)	
	47	3	**6Y-2035**	1	GASKET	

201-8562 TRANSMISSION GP-DIRECT DRIVE *(contd.)* i01952090

NOTE	REF NO	GRAPHIC REF	PART NUMBER	QTY	PART NAME 1 2 3 4 5 6 (PRODUCT LEVEL)	SEE PAGE
	48	3	**7T-3119**	1	HOUSING	
	49	2	**121-2062**	1	WASHER-THRUST (35X55X4MM THK)	
	50	2	**7T-3034**		SHIM (2.02MM THK)	
B	51	2	**6T-9144**	1	SHIM (.051MM THK)	
B		2	**6T-9147**	1	SHIM (.076MM THK)	
B		2	**6T-9146**	1	SHIM (.127MM THK)	
B		2	**6T-9145**	1	SHIM (.178MM THK)	
B		2	**6T-9143**	1	SHIM (.381MM THK)	
B		2	**6T-9142**	1	SHIM (.508MM THK)	
	52	3	**1H-9721**	1	PLUG-EXPANSION	
	53	3	**6K-0806**	1	STRAP-CABLE	
	54	3	**7T-3111**	1	COVER	
	55	1	**120-9762**	4	SEAL-O-RING	
	56	3	**121-7391**	1	LEVER	
	57	2	**005-0469**	2	CUP-BEARING	
	58	2	**005-0471**	2	CONE-BEARING	
	59	2	**211-6759**	1	SHAFT (OUTPUT)	
	60	2	**123-8910**	1	CUP-TAPERED ROLLER	
	61	2	**123-8909**	1	CONE-BEARING	
	62	2	**7T-2646**	2	SPACER (66X79.5X2.02MM THK)	
B	63	2	**6T-9166**	2	SHIM (0.051MM THK)	
B		2	**6T-9165**	2	SHIM (0.076MM THK)	
B		2	**6T-9164**	2	SHIM (0.178MM THK)	
B		2	**6T-9163**	2	SHIM (0.599MM THK)	
	64	3	**7T-3251**	1	BREATHER (TRANSMISSION)	
M	65	1	**6V-8210**	2	BOLT (M8X1.25X16 MM)	
	66	1	**106-9861**	1	PLATE-COVER	
	67	2	**7T-3051**	1	PLUG	
	68	2	**8T-1580**	1	CUP	
	69	2	**8T-1581**	1	CONE	
	70	2	**6Y-2737**	1	CUP-BEARING	
	71	2	**6Y-2736**	1	CONE-BEARING	
	72	2	**121-2500**	3	WASHER-THRUST (50X70X4MM THK)	
	73	2	**121-2511**	1	SHAFT	
	74	2	**121-2537**	1	SHAFT-REVERSE	
	75	2	**121-2545**	1	SHAFT AS-INPUT	
		2	**123-0714**	1	BEARING	
		2	**123-2920**	3	PLUG	
	76	2	**121-2603**	1	GEAR (40 TEETH)	
	77	2	**121-2604**	1	GEAR (27 TEETH)	
	78	2	**121-0694**	1	WASHER-THRUST (40X70X4MM THK)	
	79	2	**122-1882**	2	PLATE-END	
	80	2	**122-1881**	12	PLATE-CLUTCH	
	81	2	**122-1880**	12	DISC	
	82	2	**6V-8757**	3	RING	
	83	2	**178-8200**	2	RETAINER-SPRING	
	84	2	**178-8134**	2	SPRING	
	85	2	**178-8132**	2	SEAL	
M	86	1	**121-9875**	4	BOLT	
	87	2	**122-6787**	2	YOKE AS	
		2	**123-1377**	1	GUARD	
	88	2	**122-1883**	1	SPACER (38X45X5MM THK)	
	89	2	**122-1885**	2	SPACER (51X55X4MM THK)	
	90	2	**123-8913**	4	BEARING-ROLLER	
	91	2	**172-5317**	2	BEARING-SPECIAL	
	92	2	**122-3649**	2	RING-RETAINING	
	93	2	**7T-3195**	2	WASHER (12.3X47X6.35MM THK)	
	94	3	**123-2920**	1	PLUG	
M	95	2	**6V-8097**	2	BOLT (M12X1.75X30MM)	

201-8562 TRANSMISSION GP-DIRECT DRIVE *(contd.)* i01952090

NOTE	REF NO	GRAPHIC REF	PART NUMBER	QTY	PART NAME 1 2 3 4 5 6 (PRODUCT LEVEL)	SEE PAGE
	96	2	**5P-8066**	2	SEAL-O-RING	
	97	2	**122-1884**	1	SPACER (45X49X8MM THK)	
	98	2	**121-7385**	1	PUMP GP-TRANSMISSION	
	99	2	**7X-4741**	1	SEAL (140MM ID)	
	100	2	**122-1886**	1	RING-SEAL	
	101	1	**014-5645**	3	BALL	
	102	1	**6Y-1341**	2	SPRING	
	103	1	**121-7403**	1	FORK-SHIFT	
	104	1	**121-7389**	1	ROD AS-GEARSHIFT	
	105	1	**121-7390**	1	ROD AS-GEARSHIFT	
	106	1	**7T-3249**	2	SCREW (3/8-24X0.75 IN)	
	107	2	**123-8907**	2	CONE-BEARING	
	108	2	**123-8908**	2	CUP-TAPERED ROLLER	
	109	3	**7T-3109**	1	PIN	
	110	1	**121-7404**	1	FORK-SHIFT	
	111	3	**127-3017**	1	SEAT AS	
	112	2	**6V-5100**	1	SEAL-O-RING	
	113	3	**3S-2093**	1	STRAP-CABLE	
	114	2	**1U-8846**	1	SEALANT-GASKET	
	115	1	**123-2919**	2	NUT (M11X1 THD)	
	116	1	**122-1876**	1	TUBE	
	117	1	**6Y-1896**	1	PLUG AS	
		1	**5P-6718**	1	SEAL-O-RING	
	118	1	**123-2918**	1	SLEEVE	
	119	2	**121-7398**	1	SPACER (70X79.5X2MM THK)	
B	120	2	**121-7399**	1	SHIM (0.05MM THK)	
B		2	**121-7400**	1	SHIM (0.08MM THK)	
B		2	**121-7401**	1	SHIM (0.18MM THK)	
B		2	**121-7402**	1	SHIM (0.6MM THK)	
	121	1	**9W-5460**	1	RING	
	122	1	**4F-7952**	1	SEAL-O-RING	
	123	1	**7T-2651**	1	STRAINER	
	124	2	**178-8133**	2	GUIDE-SPRING	
M	125	1	**9X-6615**	4	BOLT (M5X.8X30MM)	
Y	126	3	**121-4036**	1	VALVE GP-SOLENOID	208
Y	127	3	**223-8181**	1	VALVE GP-SOLENOID	209
	128	1	**3G-6927**	1	ADAPTER	
	129	1	**7T-3253**	2	DOWEL	
	130	2	**216-2267**	2	SEAL-LIP TYPE	
	131	1	**122-6785**	1	PLUG AS	

B-USE AS REQUIRED
M-METRIC PART
Y-SEPARATE ILLUSTRATION

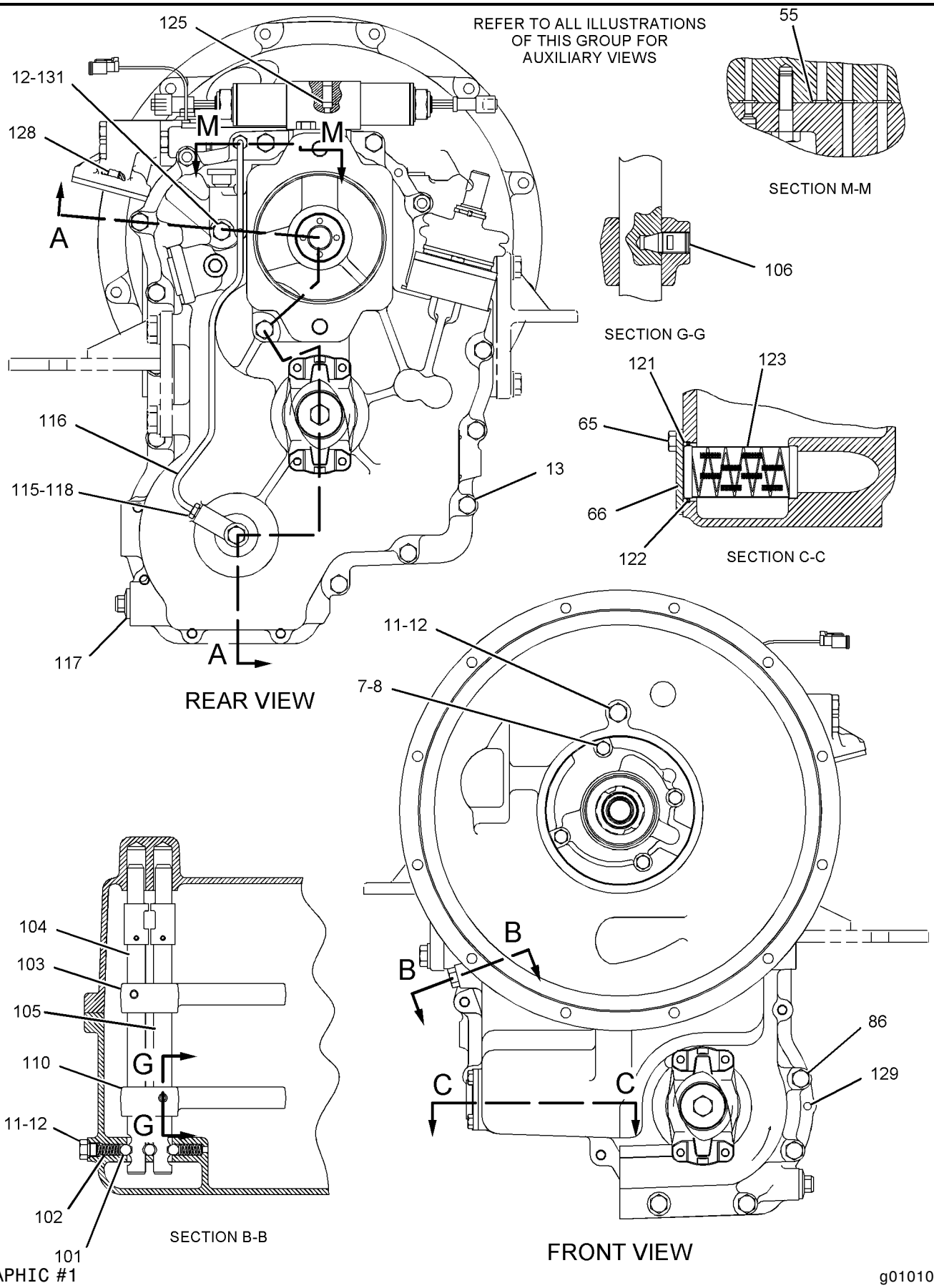

GRAPHIC #1

g01010746

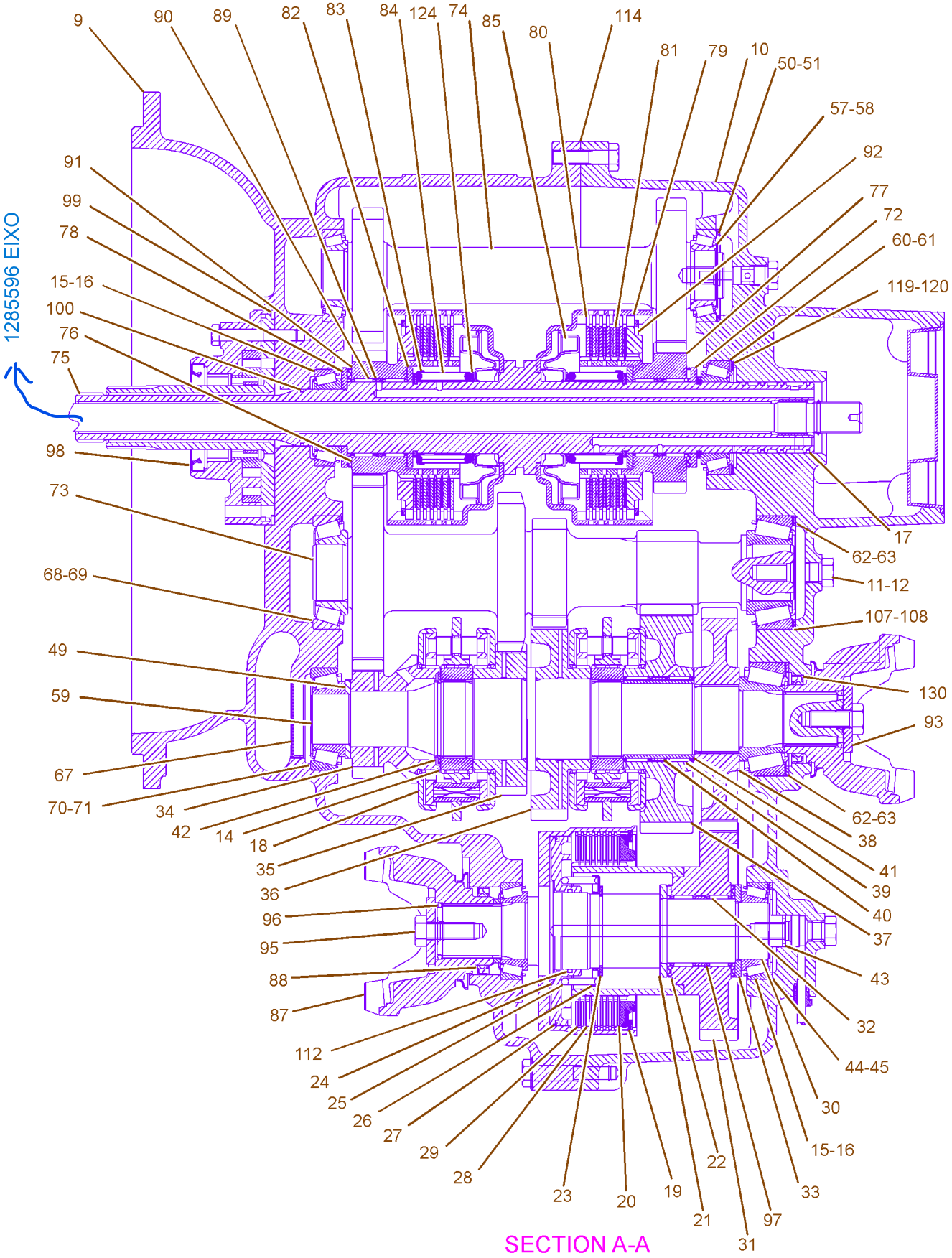

GRAPHIC #2 g01010748

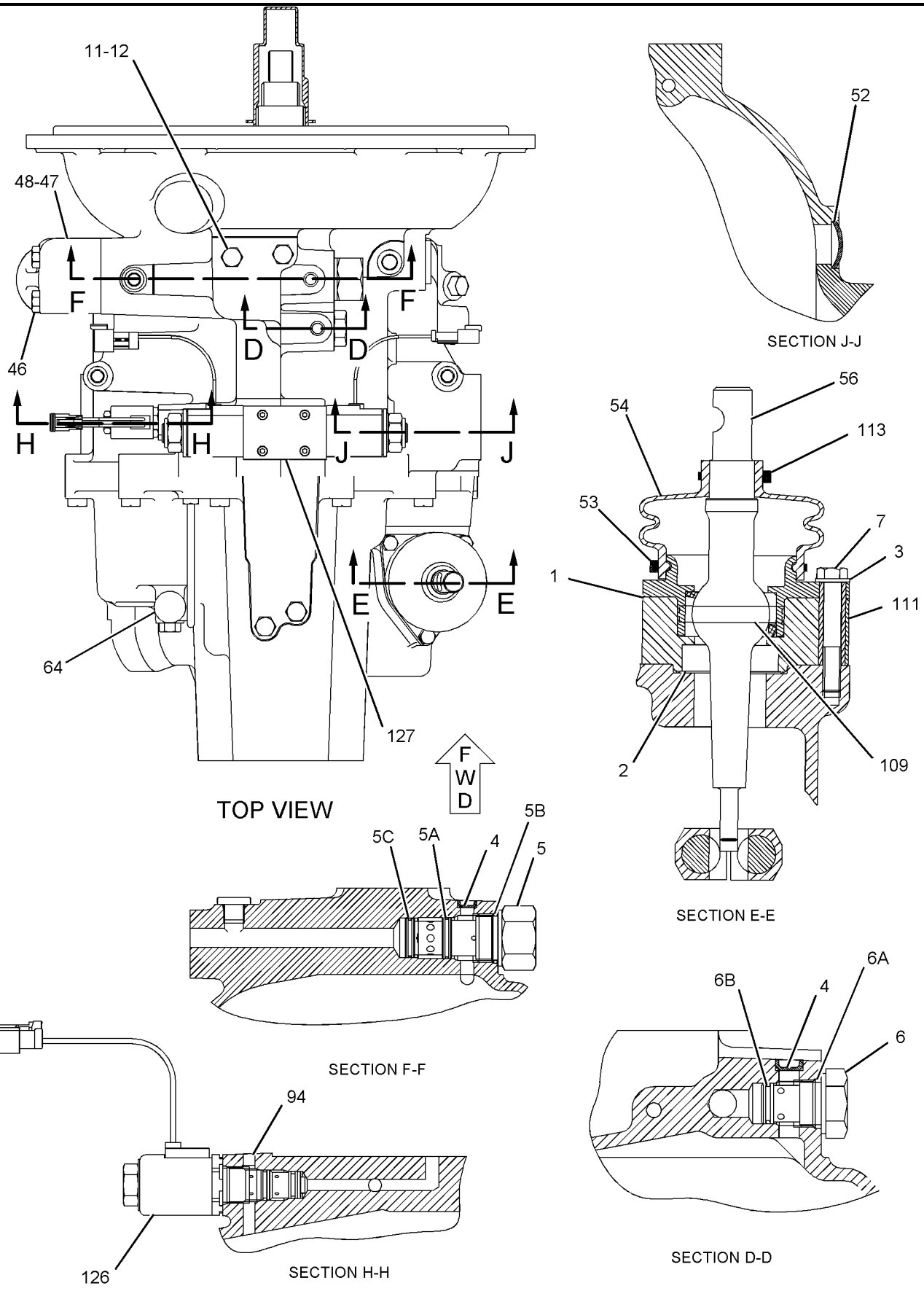

GRAPHIC #3 **<END>** g01010751

121-4036 VALVE GP-SOLENOID–TRANSMISSION

S/N: B2D1-UP

PART OF 201-8562 TRANSMISSION GP-DIRECT DRIVE

AN ATTACHMENT

SMCS-3174 **i01523308**

NOTE	REF NO	GRAPHIC REF	PART NUMBER	QTY	PART NAME 1 2 3 4 5 6 (PRODUCT LEVEL)	SEE PAGE
	1	1	**3J-9196**	1	NUT-JAM (1/2-20 THD)	
	2	1	**122-1672**	1	CARTRIDGE AS	
	3	1	**130-0013**	1	COIL AS	
	4	1	**1S-9593**	2	STRAP-CABLE	
	5	1	**3E-3362**	1	WEDGE-PLUG LOCK (2 PIN)	
	6	1	**186-3736**	2	SOCKET-CONNECTOR	
	7	1	**155-2270**	1	KIT-CONNECTING PLUG (2 PIN)	
					AVAILABLE REPAIR KIT(S):	
			122-1135		KIT-SEAL	

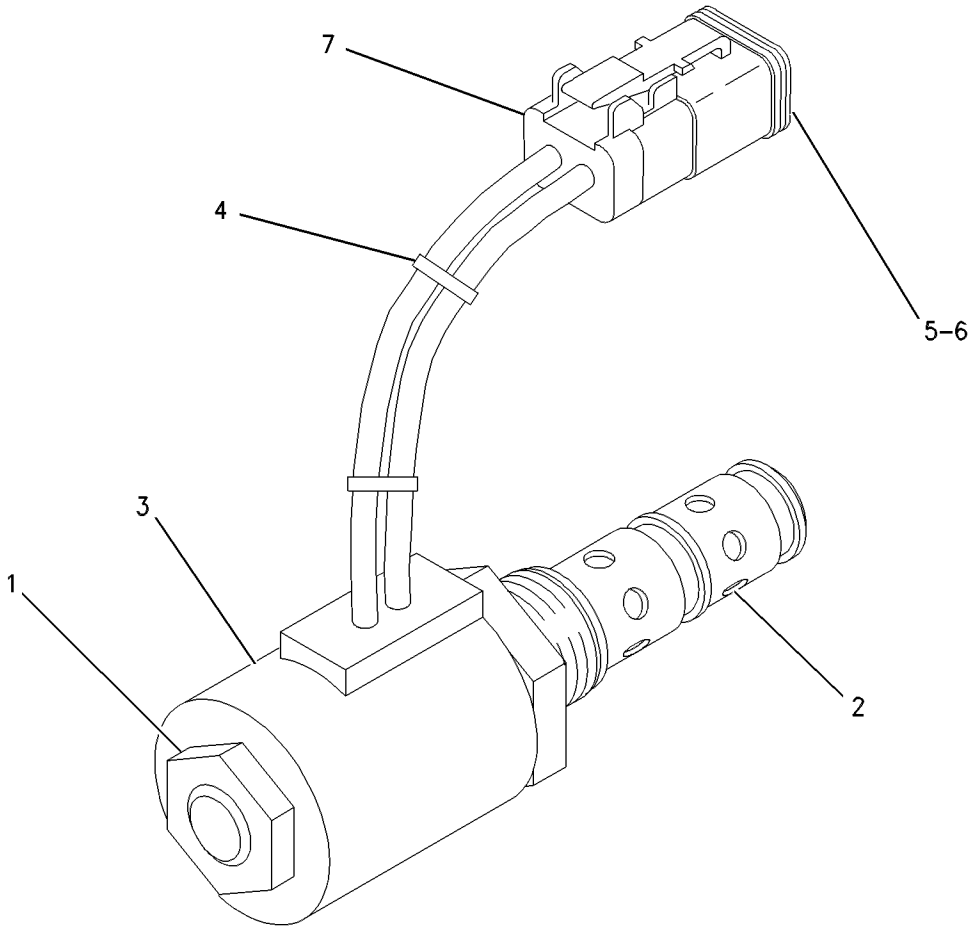

GRAPHIC #1 **<END>** g00582971

223-8181 VALVE GP-SOLENOID–TRANSMISSION

S/N: B2D1-UP

PART OF 201-8561, 201-8562 TRANSMISSION GP-DIRECT DRIVE AN ATTACHMENT

SMCS-3174 **i01952615**

NOTE	REF NO	GRAPHIC REF	PART NUMBER	QTY	PART NAME 1 2 3 4 5 6 (PRODUCT LEVEL)	SEE PAGE
	1	1	**117-2911**	1	COIL AS	
		1	**1S-9593**	2	STRAP-CABLE	
		1	**102-8802**	1	KIT-RECEPTACLE (2 PIN)	
		1	**3E-3365**	1	WEDGE-RECEPTACLE LOCK (2 PIN)	
		1	**186-3735**	2	PIN-CONNECTOR	
	2	1	**130-0912**	1	COIL AS	
		1	**1S-9593**	2	STRAP-CABLE	
		1	**102-8803**	1	KIT-RECEPTACLE (3 PIN)	
		1	**3E-3371**	1	WEDGE-RECEPTACLE LOCK (3 PIN)	
		1	**186-3735**	2	PIN-CONNECTOR	
		1	**8T-8737**	1	PLUG-SEAL	
	3	1	**143-6227**	1	PLUG-ORIFICE	
	4	1	**202-0040**	2	NUT-LOCKING	
	5	1	**061-8639**	2	SEAL-O-RING	
	6	1	**143-4655**	2	WASHER (M18.4X24.8X0.8MM THK)	
	7	1	**8L-2779**	4	SEAL-O-RING	

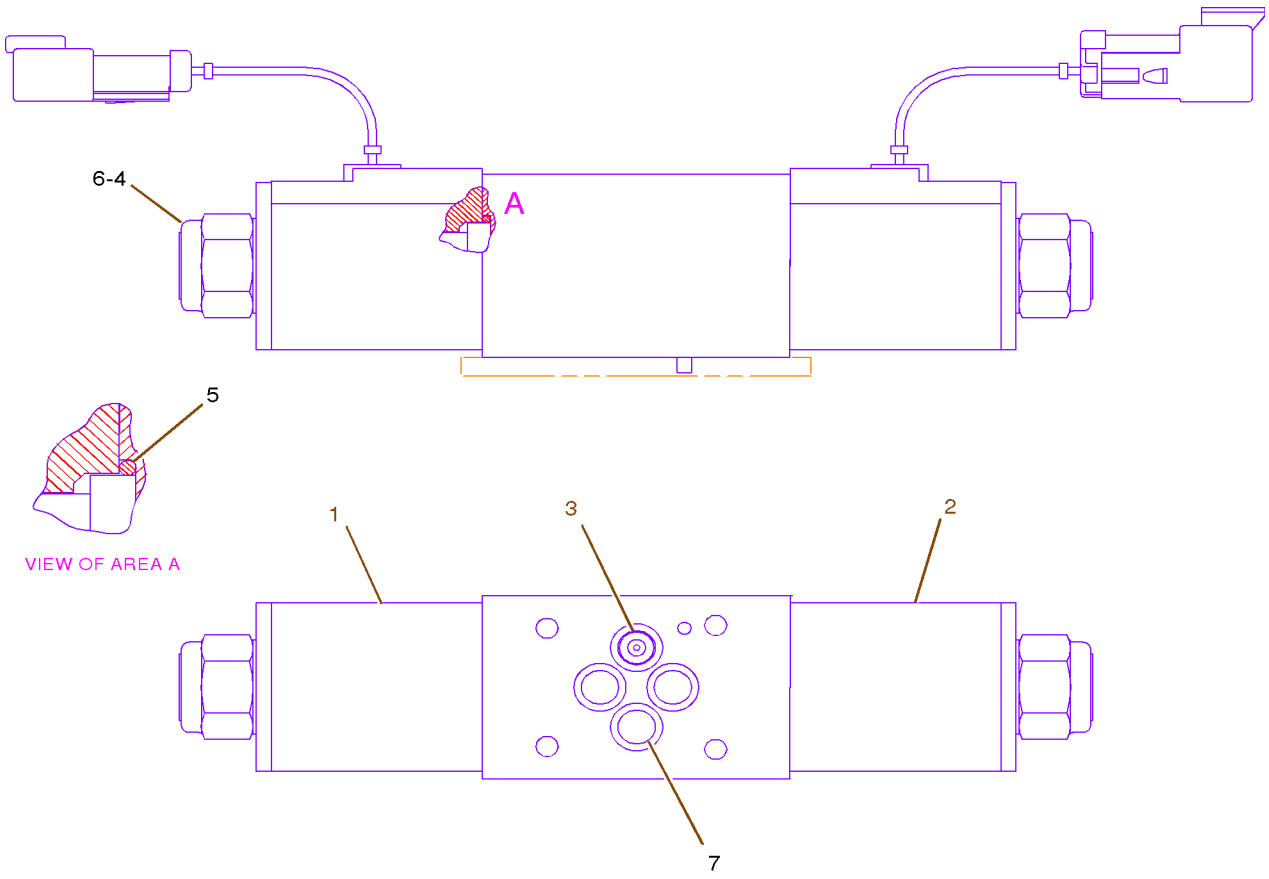

GRAPHIC #1 **<END>** g01015742

6D-0337 VALVE GP-TIRE

S/N: B2D1-UP

PART OF 201-1920 VALVE GP-TIRE, 112-9332, 112-9334, 119-7762, 119-7763, 127-4289, 127-4290, 231-4184 WHEEL & TIRE GP

AN ATTACHMENT

SMCS-4203 **i01683950**

NOTE	REF NO	GRAPHIC REF	PART NUMBER	QTY	PART NAME 1 2 3 4 5 6 (PRODUCT LEVEL)	SEE PAGE
	1	1	**6D-0443**	1	HOUSING AS-CORE	
	2	1	**2D-2628**	1	CORE-VALVE	
	3	1	**2D-2633**	1	CAP	
	4	1	**8D-2707**	1	SPUD AS	
	5	1	**2D-2629**	1	GROMMET	
	6	1	**2D-2630**	1	WASHER	
	7	1	**2D-2631**	1	NUT (.482-26 THD)	

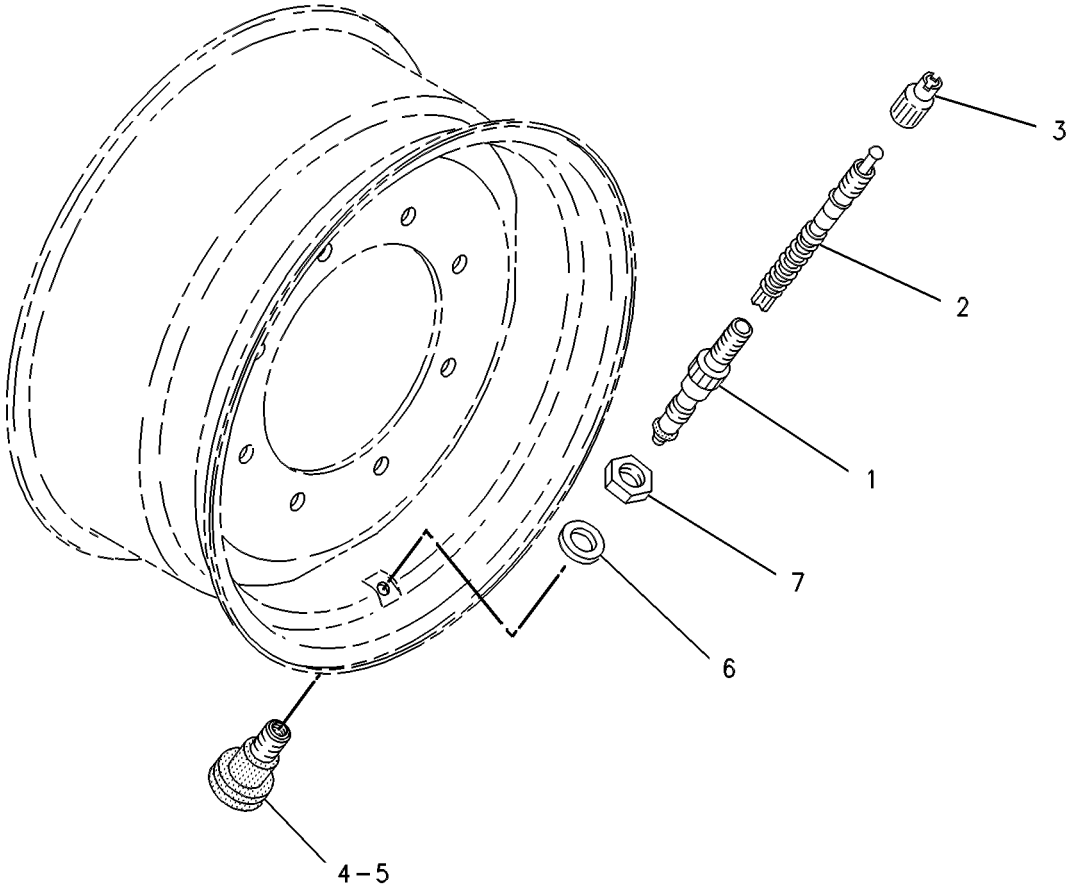

GRAPHIC #1 **<END>** g00121904

201-1920 VALVE GP-TIRE

S/N: B2D1-UP

PART OF 201-1863, 201-1864, 201-1875, 201-1876, 201-1878 WHEEL & TIRE GP

AN ATTACHMENT

SMCS-4203 **i01954499**

NOTE	PART NUMBER	QTY	PART NAME 1 2 3 4 5 6 (PRODUCT LEVEL)	SEE PAGE
Y	**6D-0337**	1	VALVE GP-TIRE	210

Y-SEPARATE ILLUSTRATION

<END>

194-6792 WHEEL & TIRE AR–2WD

S/N: B2D1-UP

AN ATTACHMENT

SMCS-4201, 4202, 4203, 4208, 4209 **i01941289**

NOTE	PART NUMBER	QTY	PART NAME 1 2 3 4 5 6 (PRODUCT LEVEL)	SEE PAGE
Y	*112-9328*	1	WHEEL & TIRE GP (REAR)	213
Y	*201-1877*	1	WHEEL & TIRE GP (FRONT)	218

Y-SEPARATE ILLUSTRATION

<END>

231-4182 WHEEL & TIRE AR–2WD

S/N: B2D1-UP

AN ATTACHMENT

SMCS-4201, 4202, 4203, 4208, 4209 **i01941394**

NOTE	PART NUMBER	QTY	PART NAME 1 2 3 4 5 6 (PRODUCT LEVEL)	SEE PAGE
Y	*201-1877*	1	WHEEL & TIRE GP (FRONT)	218
Y	*231-4183*	1	WHEEL & TIRE GP (REAR)	218

Y-SEPARATE ILLUSTRATION

<END>

233-6098 WHEEL & TIRE AR–2WD

S/N: B2D1-UP

AN ATTACHMENT

SMCS-4201, 4202, 4203, 4208, 4209 **i01941404**

NOTE	PART NUMBER	QTY	PART NAME 1 2 3 4 5 6 (PRODUCT LEVEL)	SEE PAGE
Y	*201-1874*	1	WHEEL & TIRE GP (FRONT)	217
Y	*231-4183*	1	WHEEL & TIRE GP (REAR)	218

Y-SEPARATE ILLUSTRATION

<END>

238-0297 WHEEL & TIRE AR–2WD

S/N: B2D1-UP
AN ATTACHMENT

SMCS-4201, 4202, 4203, 4208, 4209 **i01929201**

NOTE	PART NUMBER	QTY	PART NAME 1 2 3 4 5 6 (PRODUCT LEVEL)	SEE PAGE
Y	*112-9331*	1	WHEEL & TIRE GP (REAR)	213
Y	*201-1877*	1	WHEEL & TIRE GP (FRONT)	218

Y-SEPARATE ILLUSTRATION

<END>

238-0298 WHEEL & TIRE AR–AWD

S/N: B2D1-UP
AN ATTACHMENT

SMCS-4201, 4202, 4203, 4208, 4209 **i01929696**

NOTE	PART NUMBER	QTY	PART NAME 1 2 3 4 5 6 (PRODUCT LEVEL)	SEE PAGE
Y	*112-9331*	1	WHEEL & TIRE GP (REAR)	213
Y	*201-1874*	1	WHEEL & TIRE GP (FRONT)	217

Y-SEPARATE ILLUSTRATION

<END>

238-0299 WHEEL & TIRE AR–AWD

S/N: B2D1-UP
AN ATTACHMENT

SMCS-4201, 4202, 4203, 4208, 4209 **i01967637**

NOTE	PART NUMBER	QTY	PART NAME 1 2 3 4 5 6 (PRODUCT LEVEL)	SEE PAGE
Y	*201-1862*	1	WHEEL & TIRE GP (FRONT)	216
Y	*127-4285*	1	WHEEL & TIRE GP (REAR)	215

Y-SEPARATE ILLUSTRATION

<END>

238-0300 WHEEL & TIRE AR–AWD

S/N: B2D1-UP
AN ATTACHMENT

SMCS-4201, 4202, 4203, 4208, 4209 **i01929701**

NOTE	PART NUMBER	QTY	PART NAME 1 2 3 4 5 6 (PRODUCT LEVEL)	SEE PAGE
Y	*112-9331*	1	WHEEL & TIRE GP (REAR)	213
Y	*201-1862*	1	WHEEL & TIRE GP (FRONT)	216

Y-SEPARATE ILLUSTRATION

<END>

112-9328 WHEEL & TIRE GP–RH

S/N: B2D1-UP
PART OF 194-6792 WHEEL & TIRE AR
AN ATTACHMENT

SMCS-4201, 4202, 4203, 4208, 4209 **i02051725**

NOTE	PART NUMBER	QTY	PART NAME 1 2 3 4 5 6 (PRODUCT LEVEL)	SEE PAGE
	141-7221	16	NUT-HEX FLANGE (3/4-16-THD)	
Y	*119-7763*	1	WHEEL & TIRE GP (RH)	214
Y	*119-7762*	1	WHEEL & TIRE GP (LH)	214

Y-SEPARATE ILLUSTRATION

<END>

112-9331 WHEEL & TIRE GP–REAR

S/N: B2D1-UP
PART OF 238-0297, 238-0298, 238-0300 WHEEL & TIRE AR
AN ATTACHMENT

SMCS-4201, 4202, 4203, 4208, 4209 **i01959525**

NOTE	PART NUMBER	QTY	PART NAME 1 2 3 4 5 6 (PRODUCT LEVEL)	SEE PAGE
	141-7221	16	NUT-HEX FLANGE (3/4-16 THD)	
Y	*112-9334*	1	WHEEL & TIRE GP (RH)	214
Y	*112-9332*	1	WHEEL & TIRE GP (LH)	213

Y-SEPARATE ILLUSTRATION

<END>

112-9332 WHEEL & TIRE GP–LH

S/N: B2D1-UP
PART OF 112-9331 WHEEL & TIRE GP
AN ATTACHMENT

SMCS-4201, 4202, 4203, 4208, 4209 **i01959531**

NOTE	PART NUMBER	QTY	PART NAME 1 2 3 4 5 6 (PRODUCT LEVEL)	SEE PAGE
	9R-1882	1	TIRE (19.5LX24-10PLY)	
Y	**6D-0337**	1	VALVE GP-TIRE	210
	112-4411	1	WHEEL AS (REAR)	

Y-SEPARATE ILLUSTRATION

<END>

112-9334 WHEEL & TIRE GP–RH

S/N: B2D1-UP
PART OF 112-9331 WHEEL & TIRE GP
AN ATTACHMENT

SMCS-4201, 4202, 4203, 4208, 4209 **i01959539**

NOTE	PART NUMBER	QTY	PART NAME 1 2 3 4 5 6 (PRODUCT LEVEL)	SEE PAGE
	9R-1882	1	TIRE (19.5LX24-10PLY)	
Y	**6D-0337**	1	VALVE GP-TIRE	210
	112-4411	1	WHEEL AS (REAR)	

Y-SEPARATE ILLUSTRATION

<END>

119-7762 WHEEL & TIRE GP–LH

S/N: B2D1-UP
PART OF 112-9328 WHEEL & TIRE GP
AN ATTACHMENT

SMCS-4201, 4202, 4203, 4208, 4209 **i01959550**

NOTE	PART NUMBER	QTY	PART NAME 1 2 3 4 5 6 (PRODUCT LEVEL)	SEE PAGE
	9R-0601	1	TIRE (16.9X24-10PLY)	
Y	**6D-0337**	1	VALVE GP-TIRE	210
	112-4410	1	WHEEL AS	

Y-SEPARATE ILLUSTRATION

<END>

119-7763 WHEEL & TIRE GP–RH

S/N: B2D1-UP
PART OF 112-9328 WHEEL & TIRE GP
AN ATTACHMENT

SMCS-4201, 4202, 4203, 4208, 4209 **i01959551**

NOTE	PART NUMBER	QTY	PART NAME 1 2 3 4 5 6 (PRODUCT LEVEL)	SEE PAGE
	9R-0601	1	TIRE (16.9X24-10PLY)	
Y	**6D-0337**	1	VALVE GP-TIRE	210
	112-4410	1	WHEEL AS	

Y-SEPARATE ILLUSTRATION

<END>

127-4285 WHEEL & TIRE GP–REAR

S/N: B2D1-UP
PART OF 238-0299 WHEEL & TIRE AR
AN ATTACHMENT

SMCS-4201, 4202, 4203, 4208, 4209 **i01959555**

NOTE	PART NUMBER	QTY	PART NAME 1 2 3 4 5 6 (PRODUCT LEVEL)	SEE PAGE
	141-7221	16	NUT-HEX FLANGE (3/4-16 THD)	
Y	*127-4290*	1	WHEEL & TIRE GP (RH)	215
Y	*127-4289*	1	WHEEL & TIRE GP (LH)	215

Y-SEPARATE ILLUSTRATION

<END>

127-4289 WHEEL & TIRE GP–LH

S/N: B2D1-UP
PART OF 127-4285 WHEEL & TIRE GP
AN ATTACHMENT

SMCS-4201, 4202, 4203, 4208, 4209 **i01959561**

NOTE	PART NUMBER	QTY	PART NAME 1 2 3 4 5 6 (PRODUCT LEVEL)	SEE PAGE
	127-4293	1	TIRE (19.5LR-24)	
Y	**6D-0337**	1	VALVE GP-TIRE	210
	112-4411	1	WHEEL AS (REAR)	

Y-SEPARATE ILLUSTRATION

<END>

127-4290 WHEEL & TIRE GP–RH

S/N: B2D1-UP
PART OF 127-4285 WHEEL & TIRE GP
AN ATTACHMENT

SMCS-4201, 4202, 4203, 4208, 4209 **i01959563**

NOTE	PART NUMBER	QTY	PART NAME 1 2 3 4 5 6 (PRODUCT LEVEL)	SEE PAGE
	127-4293	1	TIRE (19.5LR-24)	
Y	**6D-0337**	1	VALVE GP-TIRE	210
	112-4411	1	WHEEL AS (REAR)	

Y-SEPARATE ILLUSTRATION

<END>

201-1862 WHEEL & TIRE GP—FRONT

S/N: B2D1-UP
PART OF 238-0299, 238-0300 WHEEL & TIRE AR
AN ATTACHMENT

SMCS-4201, 4202, 4203, 4208, 4209 **i01934701**

NOTE	PART NUMBER	QTY	PART NAME 1 2 3 4 5 6 (PRODUCT LEVEL)	SEE PAGE
	201-1915	1	MOUNTING GP-WHEEL (FRONT)	
	8T-5439	16	WASHER (21.5X45X6MM THK)	
	201-1919	16	NUT (M20X1.5 THD)	
Y	*201-1863*	1	WHEEL & TIRE GP (LH)	216
Y	*201-1864*	1	WHEEL & TIRE GP (RH)	216

Y-SEPARATE ILLUSTRATION

<END>

201-1863 WHEEL & TIRE GP—LH

S/N: B2D1-UP
PART OF 201-1862 WHEEL & TIRE GP
AN ATTACHMENT

SMCS-4201, 4202, 4203, 4208, 4209 **i02051736**

NOTE	PART NUMBER	QTY	PART NAME 1 2 3 4 5 6 (PRODUCT LEVEL)	SEE PAGE
	112-9338	1	TIRE (340/80R18)	
Y	*201-1920*	1	VALVE GP-TIRE	211
	202-6186	1	WHEEL AS (FRONT)	

Y-SEPARATE ILLUSTRATION

<END>

201-1864 WHEEL & TIRE GP—RH

S/N: B2D1-UP
PART OF 201-1862 WHEEL & TIRE GP
AN ATTACHMENT

SMCS-4201, 4202, 4203, 4208, 4209 **i02051737**

NOTE	PART NUMBER	QTY	PART NAME 1 2 3 4 5 6 (PRODUCT LEVEL)	SEE PAGE
	112-9338	1	TIRE (340/80R18)	
Y	*201-1920*	1	VALVE GP-TIRE	211
	195-6339	1	WHEEL AS (FRONT)	

Y-SEPARATE ILLUSTRATION

<END>

201-1874 WHEEL & TIRE GP–FRONT

S/N: B2D1-UP
PART OF 233-6098, 238-0298 WHEEL & TIRE AR
AN ATTACHMENT

SMCS-4201, 4202, 4203, 4208, 4209 **i01934726**

NOTE	PART NUMBER	QTY	PART NAME 1 2 3 4 5 6 (PRODUCT LEVEL)	SEE PAGE
	201-1915	1	MOUNTING GP-WHEEL (FRONT)	
	8T-5439	16	WASHER (21.5X45X6MM THK)	
	201-1919	16	NUT (M20X1.5 THD)	
Y	*201-1875*	1	WHEEL & TIRE GP (LH)	217
Y	*201-1876*	1	WHEEL & TIRE GP (RH)	217
Y-SEPARATE ILLUSTRATION				

<END>

201-1875 WHEEL & TIRE GP–LH

S/N: B2D1-UP
PART OF 201-1874 WHEEL & TIRE GP
AN ATTACHMENT

SMCS-4201, 4202, 4203, 4208, 4209 **i01954545**

NOTE	PART NUMBER	QTY	PART NAME 1 2 3 4 5 6 (PRODUCT LEVEL)	SEE PAGE
	9R-6481	1	TIRE (12.5X18-10PLY)	
Y	*201-1920*	1	VALVE GP-TIRE	211
	202-6186	1	WHEEL AS (FRONT)	
Y-SEPARATE ILLUSTRATION				

<END>

201-1876 WHEEL & TIRE GP–RH

S/N: B2D1-UP
PART OF 201-1874 WHEEL & TIRE GP
AN ATTACHMENT

SMCS-4201, 4202, 4203, 4208, 4209 **i01954538**

NOTE	PART NUMBER	QTY	PART NAME 1 2 3 4 5 6 (PRODUCT LEVEL)	SEE PAGE
	9R-6481	1	TIRE (12.5X18-10PLY)	
Y	*201-1920*	1	VALVE GP-TIRE	211
	202-6186	1	WHEEL AS (FRONT)	
Y-SEPARATE ILLUSTRATION				

<END>

201-1877 WHEEL & TIRE GP—FRONT

S/N: B2D1-UP
PART OF 194-6792, 231-4182, 238-0297 WHEEL & TIRE AR
AN ATTACHMENT

SMCS-4201, 4202, 4203, 4208, 4209 **i01940988**

NOTE	PART NUMBER	QTY	PART NAME 1 2 3 4 5 6 (PRODUCT LEVEL)	SEE PAGE
	201-1915	1	MOUNTING GP-WHEEL (FRONT)	
	201-1919	16	NUT (M20X1.5 THD)	
	8T-5439	16	WASHER (21.5X45X6MM THK)	
Y	*201-1878*	2	WHEEL & TIRE GP (FRONT)	218

Y-SEPARATE ILLUSTRATION

<END>

201-1878 WHEEL & TIRE GP—FRONT

S/N: B2D1-UP
PART OF 201-1877 WHEEL & TIRE GP
AN ATTACHMENT

SMCS-4201, 4202, 4203, 4208, 4209 **i01940994**

NOTE	PART NUMBER	QTY	PART NAME 1 2 3 4 5 6 (PRODUCT LEVEL)	SEE PAGE
	9R-1956	1	TIRE (11L-16)	
Y	*201-1920*	1	VALVE GP-TIRE	211
	195-6341	1	WHEEL AS (FRONT)	

Y-SEPARATE ILLUSTRATION

<END>

231-4183 WHEEL & TIRE GP—REAR

S/N: B2D1-UP
PART OF 231-4182, 233-6098 WHEEL & TIRE AR
AN ATTACHMENT

SMCS-4201, 4202, 4203, 4208, 4209 **i01941185**

NOTE	PART NUMBER	QTY	PART NAME 1 2 3 4 5 6 (PRODUCT LEVEL)	SEE PAGE
	141-7221	16	NUT-HEX FLANGE (3/4-16 THD)	
Y	*231-4184*	2	WHEEL & TIRE GP (REAR)	219

Y-SEPARATE ILLUSTRATION

<END>

231-4184 WHEEL & TIRE GP–REAR

S/N: B2D1-UP

PART OF 231-4183 WHEEL & TIRE GP

AN ATTACHMENT

SMCS-4201, 4202, 4203, 4208, 4209 **i01942286**

NOTE	PART NUMBER	QTY	PART NAME 1 2 3 4 5 6 (PRODUCT LEVEL)	SEE PAGE
	201-1902	1	TIRE (19.5L-24)	
Y	**6D-0337**	1	VALVE GP-TIRE	210
	112-4411	1	WHEEL AS (REAR)	

Y-SEPARATE ILLUSTRATION

<END>

129-0138 BRAKE GP-PARKING

S/N: B2D1-UP

PART OF 184-6570 CONTROL GP-PARKING BRAKE

SMCS-3275, 3276, 3277, 4267 **i01523415**

NOTE	REF NO	GRAPHIC REF	PART NUMBER	QTY	PART NAME 1 2 3 4 5 6 (PRODUCT LEVEL)	SEE PAGE
	1	1	*124-9462*	1	BRAKE GP	
		1	**127-1665**	1	KIT-LINING	
		1	**127-1666**	1	KIT-LINING REBUILD	
		1	**166-9413**	1	KIT-BRAKE CALIPER	
	2	1	*124-9464*	1	BRACKET	
	3	1	*130-7282*	1	BRACKET	

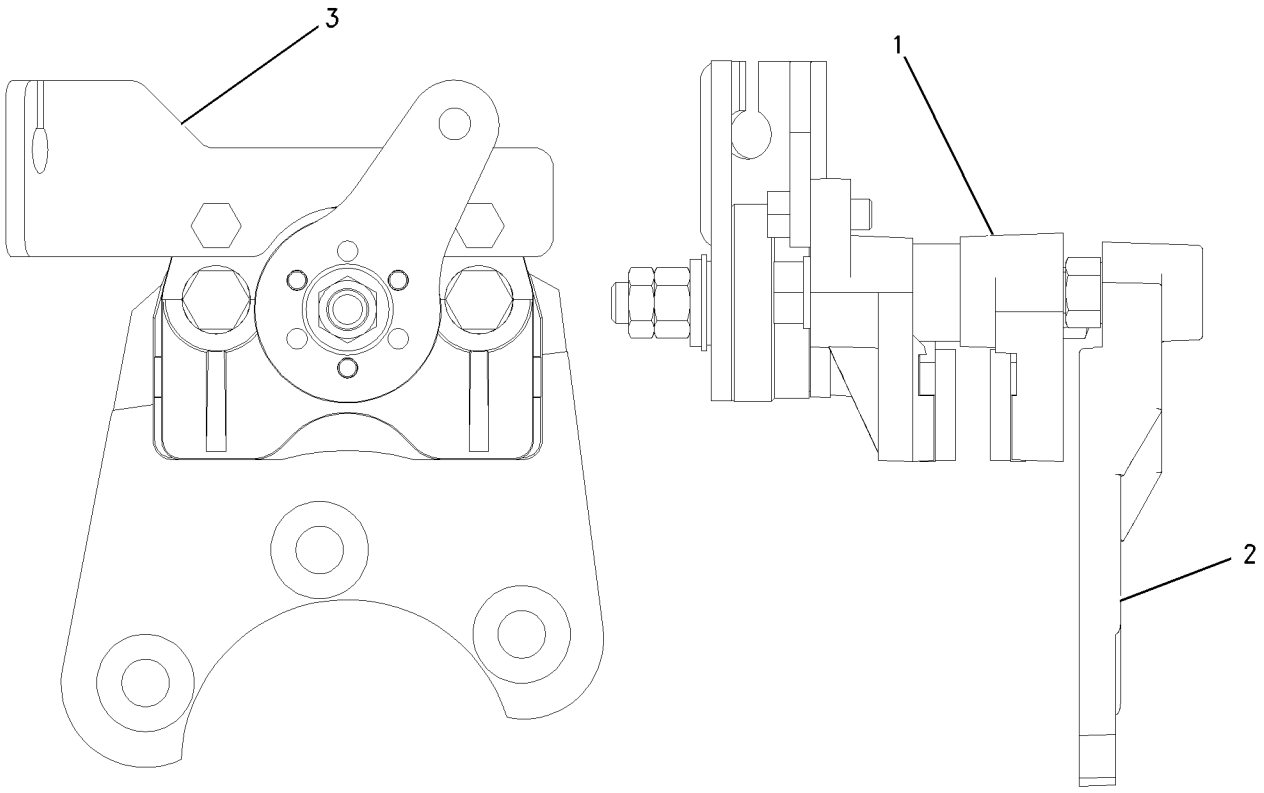

GRAPHIC #1 **<END>** g00729467

163-0754 CONTROL GP-PARKING BRAKE

S/N: B2D1-UP

PART OF 184-6570 CONTROL GP-PARKING BRAKE

SMCS-4282, 4284 **i01524544**

NOTE	REF NO	GRAPHIC REF	PART NUMBER	QTY	PART NAME 1 2 3 4 5 6 (PRODUCT LEVEL)	SEE PAGE
Y	1	1	**163-0753**	1	LEVER GP-HAND CONTROL	226
	2	1	**163-0755**	1	CABLE GP	
		1	**6V-8759**	1	RING-RETAINING	

Y-SEPARATE ILLUSTRATION

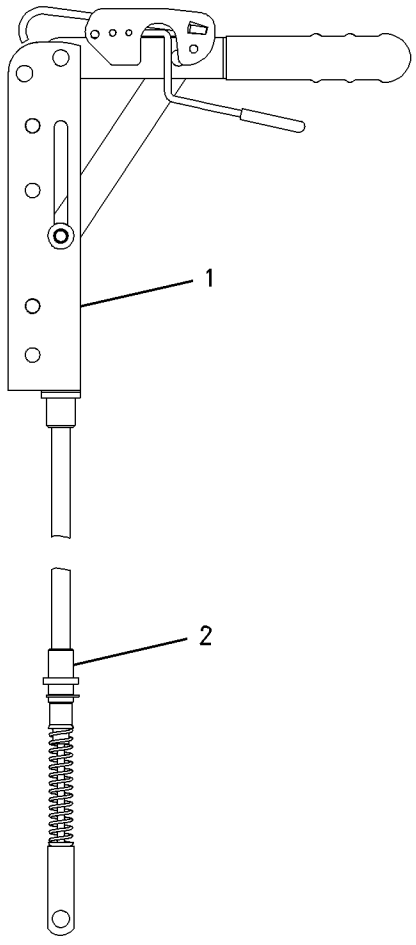

GRAPHIC #1 **<END>** g00729449

184-6570 CONTROL GP-PARKING BRAKE

S/N: B2D1-UP

PART OF 184-7970 POWER TRAIN AR

SMCS-4282, 4284 **i01959574**

NOTE	REF NO	GRAPHIC REF	PART NUMBER	QTY	PART NAME 1 2 3 4 5 6 (PRODUCT LEVEL)	SEE PAGE
Y	1	1	**129-0138**	1	BRAKE GP-PARKING	220
	2	1	**154-5416**	1	SWITCH AS (PARKING BRAKE ALARM)	
		1	**155-2270**	1	KIT-CONNECTING PLUG (2 PIN)	
Y	3	1	**163-0754**	1	CONTROL GP-PARKING BRAKE	221
	4	1	**180-7245**	1	BRACKET AS	
M	5	1	**6V-9189**	2	LOCKNUT	
	6	1	**7M-0242**	3	WASHER (5MM THK)	
	7	1	**8S-4734**	3	BOLT (9/16-12X2 IN)	
M	8	1	**8T-0276**	2	BOLT (M8X1.25X45MM)	
	9	1	**8T-4224**	2	WASHER-HARD (8.8X16X2MM THK)	
	10	1	**9R-2806**	1	PIN	
	11	1	**9R-2807**	1	CLIP	
M	12	1	**9X-2043**	4	SCREW-TRUSS HEAD (M6X1X14MM)	

M-METRIC PART
Y-SEPARATE ILLUSTRATION

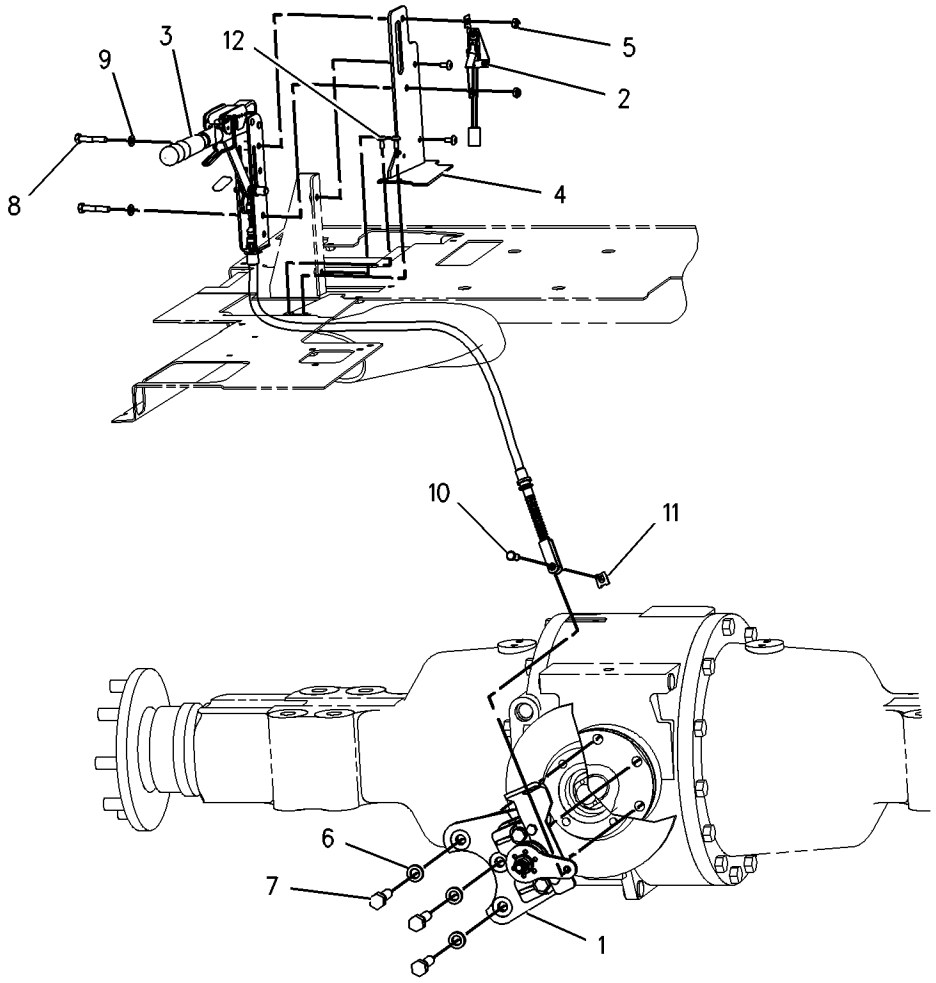

GRAPHIC #1 **<END>** g00725936

BRAKING SYSTEM

165-6918 CONTROL GP-SERVICE BRAKE

S/N: B2D1-UP

PART OF 184-7970 POWER TRAIN AR

SMCS-4269 **i01958901**

NOTE	REF NO	GRAPHIC REF	PART NUMBER	QTY	PART NAME 1 2 3 4 5 6 (PRODUCT LEVEL)	SEE PAGE
Y	1	1	**4E-8619**	1	RESERVOIR GP-BRAKE	227
	2	1	**5G-8108**	1	CLAMP	
	3	1	**6S-8620**	4	CLAMP-HOSE	
	4	1	**9R-8189**	2	PUSHROD	
	5	1	**9R-9334**	1	BRACKET AS	
	6	1	**105-8034**	2	SWITCH AS-LIMIT	
I	7	1	**155-8154**	2	HOSE AS	
	8	1	**165-6595**	1	PIN AS	
	9	1	**165-6599**	2	ROD END (YOKE)	
	10	1	**165-6601**	2	SPACER (20.75X45X35MMTHK)	
	11	1	**165-6602**	2	SPRING	
	12	1	**165-6603**	1	PLATE	
	13	1	**167-8160**	1	PLATE AS	
	14	1	*167-8161*	1	CYLINDER AS	
		1	**201-2157**	1	KIT-SERVICE	
		1	**113-5049**	1	TUBE AS	
I	15	1	**167-8164**	2	HOSE AS	
	16	1	**171-8623**	1	GROMMET	
	17	1	**174-7820**	2	TUBE AS	
	18	1	*184-6581*	2	CONNECTOR AS	
					(EACH INCLUDES)	
		1	**3J-1907**	1	SEAL-O-RING	
		1	**195-5830**	1	CONNECTOR	
C	19	1	**205-3759**	1	BRACKET AS	
M		1	**8T-7547**	4	BOLT (M8X1.25X30MM)	
C	20	1	**205-3760**	1	PEDAL AS-LH	
		1	**165-6585**	1	BEARING-SLEEVE	
C	21	1	**205-3761**	1	PEDAL AS-RH	
		1	**165-6585**	1	BEARING-SLEEVE	
	22	1	**212-3518**	1	PLATE AS	
	23	1	*148-8325*	2	CONNECTOR GP	
					(EACH INCLUDES)	
		1	**3J-1907**	1	SEAL-O-RING	
		1	**4J-5477**	1	SEAL-O-RING	
		1	**6V-8641**	1	CONNECTOR	
	24	1	*148-8368*	2	ELBOW GP	
					(EACH INCLUDES)	
		1	**3J-1907**	1	SEAL-O-RING	
		1	**4J-5477**	1	SEAL-O-RING	
		1	**6V-8627**	1	ELBOW	
	25	1	**1A-0621**	2	GROMMET	
	26	1	**1A-5350**	2	CLIP	
	27	1	**1H-1200**	1	PIN-SPRING	
	28	1	**2P-1279**	2	LOCKNUT	
	29	1	**3S-2093**	1	STRAP-CABLE	
	30	1	**4J-5477**	4	SEAL-O-RING	
M	31	1	**5C-7261**	9	NUT (M8X1.25 THD)	
M	32	1	**8T-4133**	2	NUT (M10X1.5 THD)	
M	33	1	**8T-4138**	6	BOLT (M6X1X20MM)	
M	34	1	**8T-4189**	4	BOLT (M8X1.25X20MM)	
M	35	1	**8T-4200**	1	BOLT (M8X1.25X16MM)	
	36	1	**8T-4205**	6	WASHER-HARD (7.2X14.5X2MM THK)	
	37	1	**8T-4224**	14	WASHER-HARD (8.8X16X2MM THK)	
	38	1	**9R-2807**	2	CLIP	
	39	1	**9R-7138**	2	PIN-CLEVIS	
M	40	1	**9X-2042**	7	SCREW-TRUSS HEAD (M6X1X12MM)	

165-6918 **CONTROL GP-SERVICE BRAKE** *(contd.)* **i01958901**

NOTE	REF NO	GRAPHIC REF	PART NUMBER	QTY	PART NAME 1 2 3 4 5 6 (PRODUCT LEVEL)	SEE PAGE
E	41	1	**5P-1442**	2	HOSE (23.6CM)	

C-CHANGE FROM PREVIOUS TYPE
E-ORDER BY THE CENTIMETER
I-SEE HOSE FABRICATION GUIDE
M-METRIC PART
Y-SEPARATE ILLUSTRATION

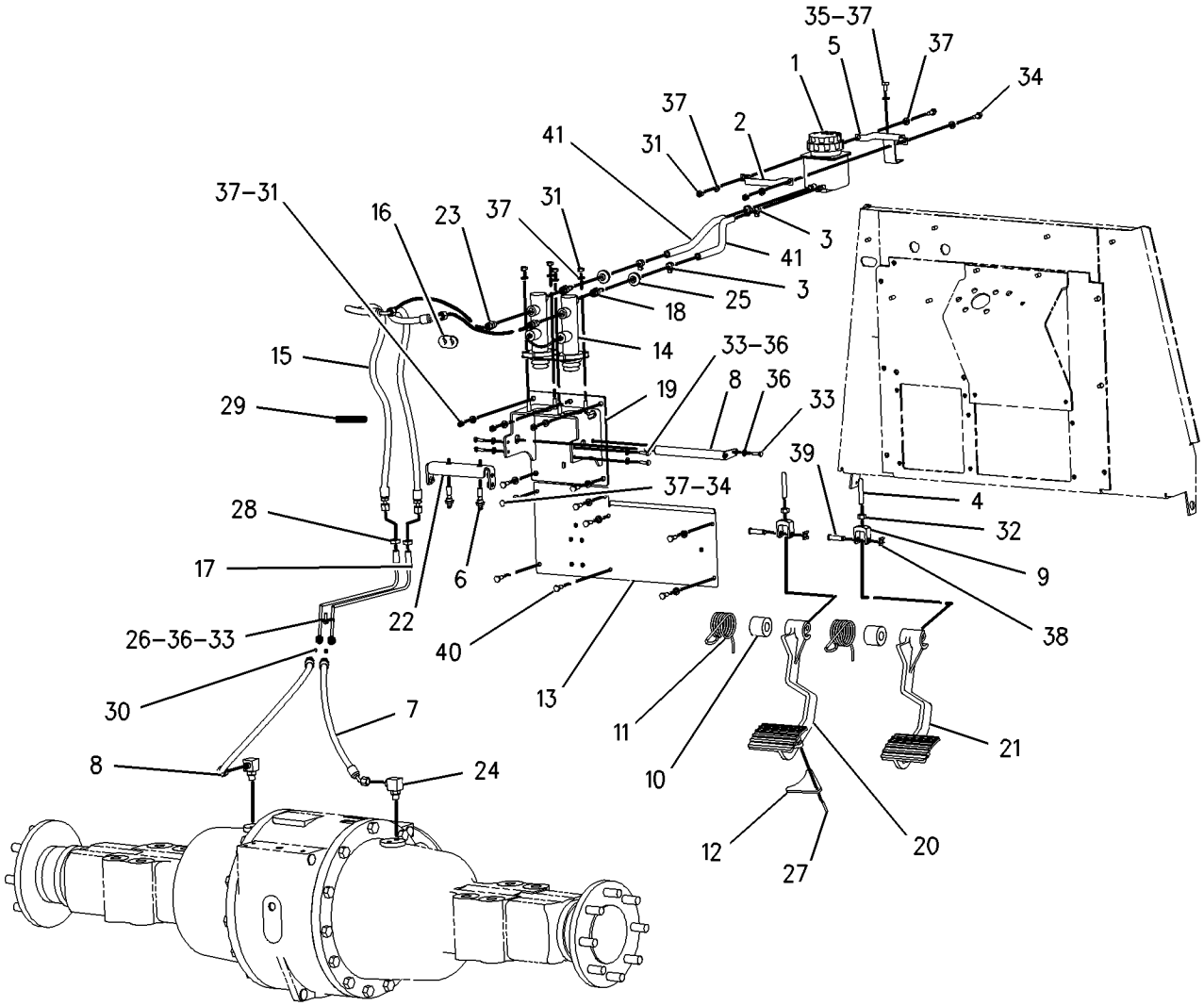

GRAPHIC #1 **<END>** g00864649

163-0753 LEVER GP-HAND CONTROL

S/N: B2D1-UP

PART OF 163-0754 CONTROL GP-PARKING BRAKE

SMCS-4284 **i01524602**

NOTE	REF NO	GRAPHIC REF	PART NUMBER	QTY	PART NAME 1 2 3 4 5 6 (PRODUCT LEVEL)	SEE PAGE
	1	1	**7R-8239**	2	SPACER	
	2	1	**039-9133**	1	PIN (38.86 MM LG)	
	3	1	**164-9598**	1	GRIP	
	4	1	**164-9599**	1	COVER	
	5	1	**3B-4610**	1	COTTER	
	6	1	**8T-4224**	2	WASHER-HARD (8.8X16X2MM THK)	

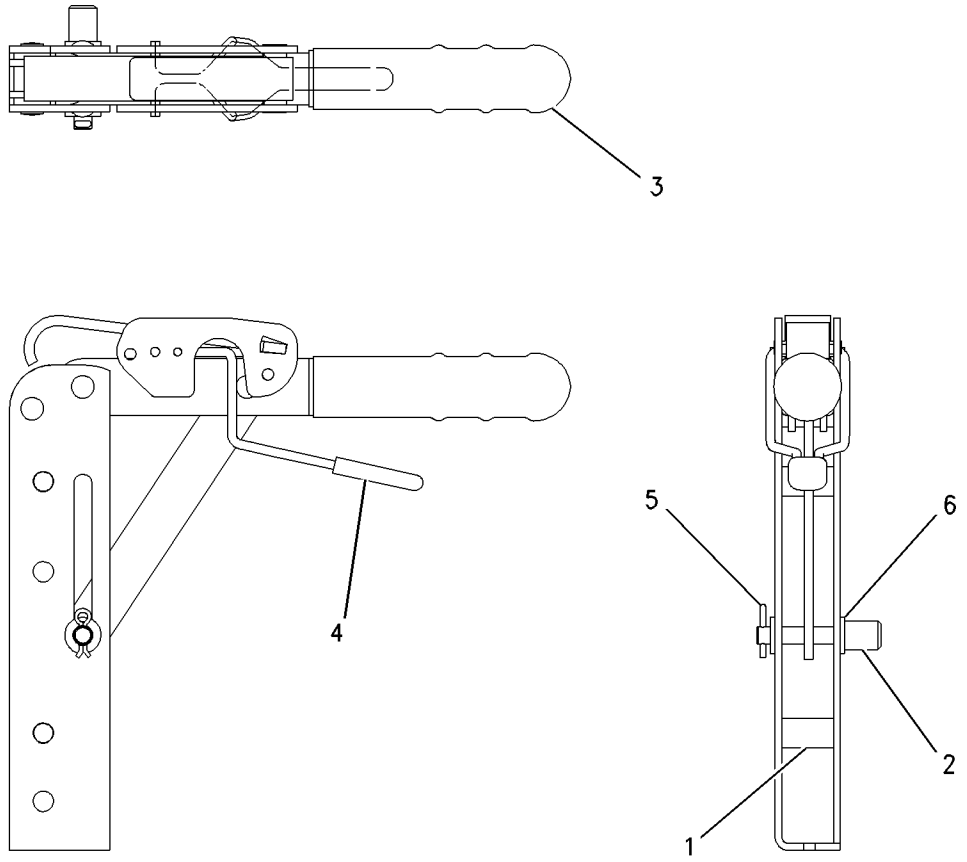

GRAPHIC #1 **<END>** g00729504

4E-8619 RESERVOIR GP-BRAKE

S/N: B2D1-UP

PART OF 165-6918 CONTROL GP-SERVICE BRAKE

SMCS-4291 **i01959583**

NOTE	REF NO	GRAPHIC REF	PART NUMBER	QTY	PART NAME 1 2 3 4 5 6 (PRODUCT LEVEL)	SEE PAGE
	1	1	**7N-7779**	1	SOCKET-CONNECTOR	
	2	1	**7N-9737**	1	HOUSING-PLUG	
	3	1	**7N-7780**	1	PIN-CONNECTOR	
F			**8R-6263**		INDICATOR AS	
					AVAILABLE REPAIR KIT(S):	
			159-7907	1	KIT-BRAKE RESERVOIR	

F-NOT SHOWN

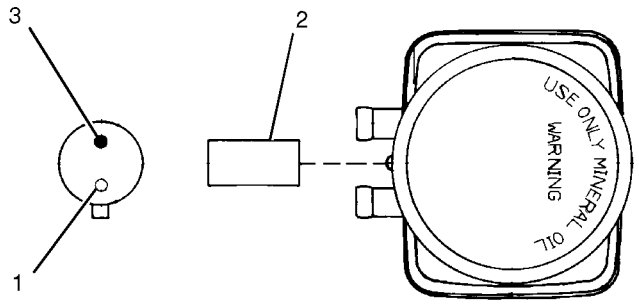

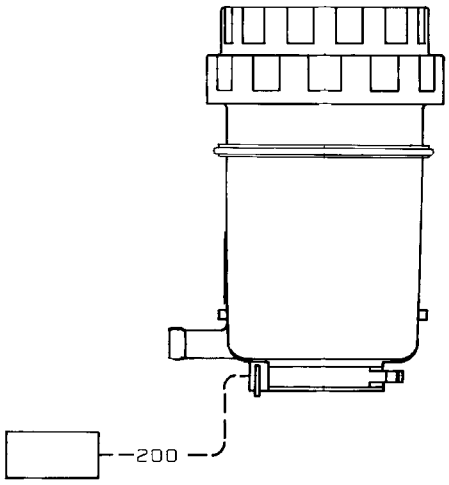

GRAPHIC #1

<END>

g01018423

STEERING SYSTEM

189-1834 AXLE GP-FRONT

S/N: B2D1-UP
PART OF 202-6198 AXLE GP-FRONT
AN ATTACHMENT

SMCS-3282 **i02024410**

NOTE	REF NO	GRAPHIC REF	PART NUMBER	QTY	PART NAME 1 2 3 4 5 6 (PRODUCT LEVEL)	SEE PAGE
	1	1	**154-5404**	2	BEARING	
	2	1	**198-7823**	4	BEARING AS	
	3	1	**198-7825**	4	SEAL	
	4	1	**198-7838**	4	PIN	
B	5	1	**198-7841**	4	SHIM (.15-MM THK)	
B	6	1	**198-7842**	4	SHIM (.2-MM THK)	
B	7	1	**198-7843**	4	SHIM (.5-MM THK)	
M	8	1	**199-0683**	16	BOLT (M16X2X38-MM)	
	9	1	**207-4254**	6	BOLT (STEER CYLINDER)	
	10	1	**207-4255**	2	PLUG	
	11	1	**207-4258**	2	NUT	
	12	1	**207-4260**	2	PLATE	
	13	1	**207-4262**	2	STOP	
	14	1	**207-4266**	2	RETAINER	
	15	1	**207-4268**	1	BEAM	
	16	1	**207-4271**	2	COVER	
	17	1	**207-4272**	2	TIE ROD GP	
					(EACH INCLUDES)	
		1	**204-3080**	1	BALL JOINT	
		1	**216-4459**	1	TIE ROD	
		1	**217-2885**	1	NUT	
	18	1	**214-5097**	1	CYLINDER GP-STEERING	
		1	**215-2023**	1	KIT-SEAL	
	19	1	**219-8798**	2	SEAL-LIP TYPE	
	20	1	**231-0683**	2	FLANGE GP-WHEEL	
					(EACH INCLUDES)	
		1	**207-4263**	1	BEARING AS (INNER)	
		1	**207-4267**	1	BEARING AS (OUTER)	
		1	**231-0688**	1	SEAL	
		1	**238-5228**	1	HUB GP-WHEEL	
		1	**231-0686**	1	HUB-WHEEL	
		1	**231-0687**	8	STUD	
	21	1	**231-0684**	1	KNUCKLE (RH)	
	22	1	**231-0685**	1	KNUCKLE (LH)	
	23	1	**199-0648**	2	NUT-JAM	
M	24	1	**8T-4139**	6	BOLT (M12X1.75X30-MM)	
	25	1	**129-1938**	1	CARTRIDGE-GREASE	

B-USE AS REQUIRED
M-METRIC PART

189-1834 AXLE GP-FRONT *(contd.)* **i02024410**

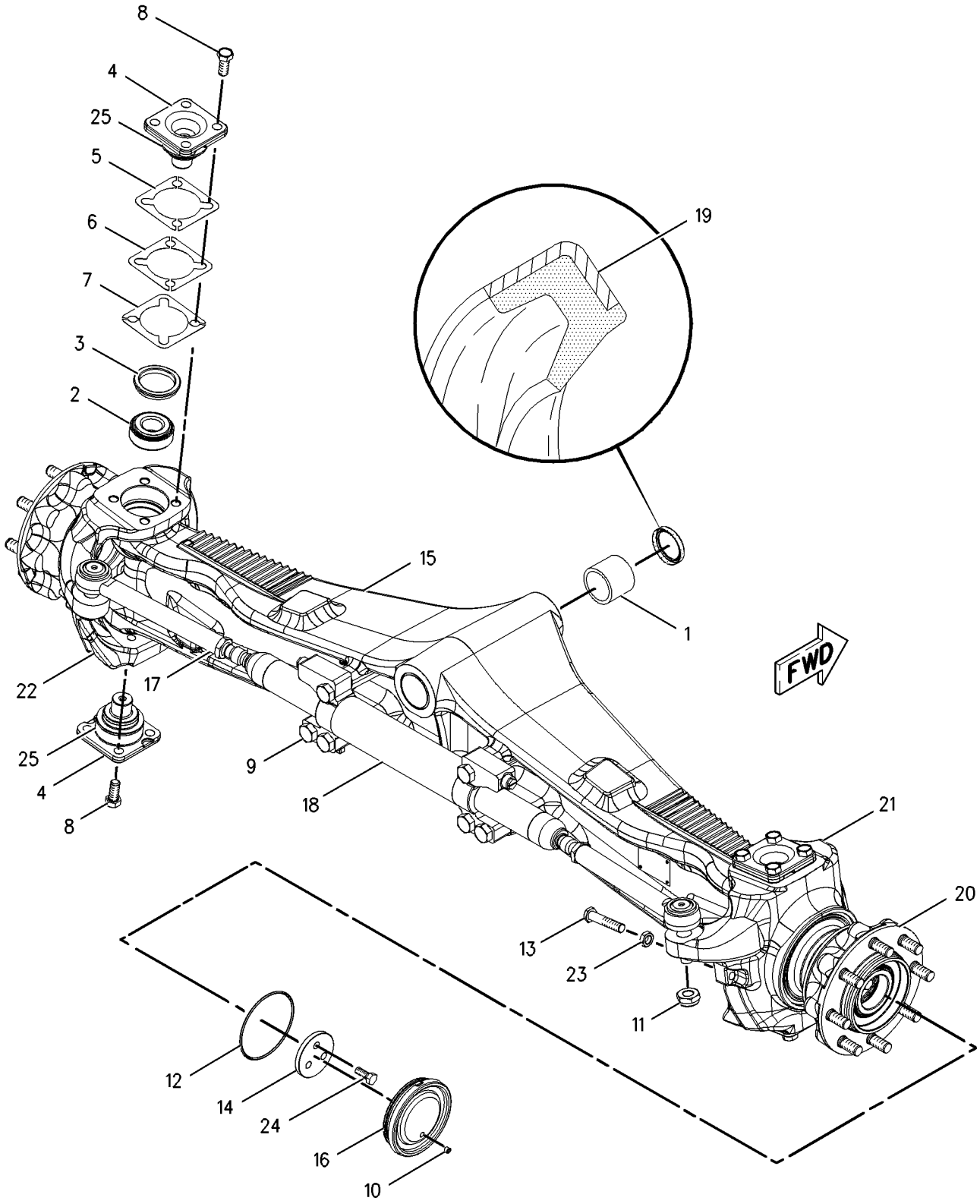

GRAPHIC #1 **<END>** g00997558

STEERING SYSTEM

202-6198 AXLE GP-FRONT

S/N: B2D1-UP
PART OF 237-6458 DRIVE AR-BACKHOE LOADER
AN ATTACHMENT

SMCS-3282 **i01959619**

NOTE	REF NO	GRAPHIC REF	PART NUMBER	QTY	PART NAME 1 2 3 4 5 6 (PRODUCT LEVEL)	SEE PAGE
B	1	1	**1K-7082**	1	WASHER (2X4X1/32 IN THK)	
B	2	1	**9R-9702**	2	WASHER (56X100X1.6MM THK)	
	3	1	**112-9629**	1	PIN	
	4	1	**165-8996**	2	WASHER-THRUST (55.5X100.5X5MM THK)	
Y	5	1	**189-1834**	1	AXLE GP-FRONT	228
M	6	1	**8T-5041**	1	BOLT (M12X1.75X120MM)	
M	7	1	**8T-8549**	1	LOCKNUT (M12X1.75 THD)	

B-USE AS REQUIRED
M-METRIC PART
Y-SEPARATE ILLUSTRATION

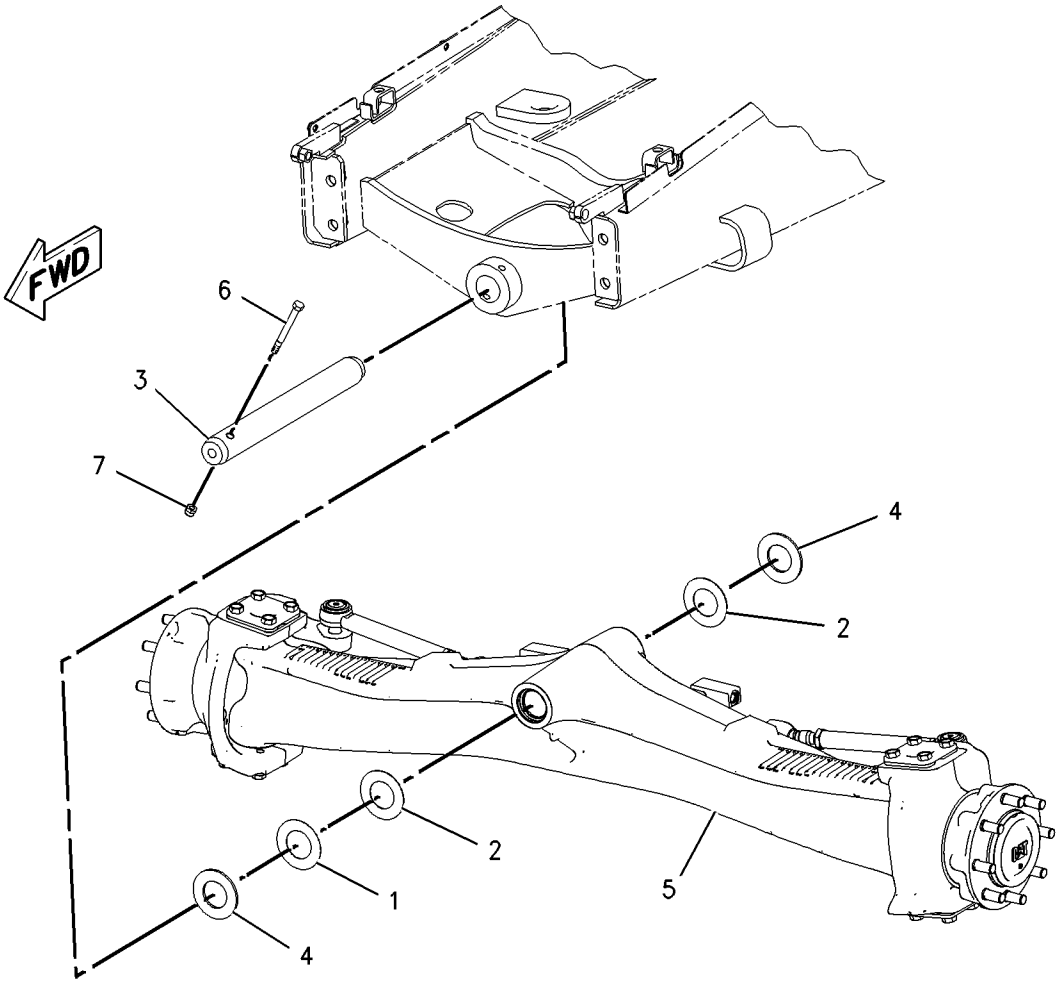

GRAPHIC #1 **<END>** g00997563

183-4897 CONTROL GP-STEERING

S/N: B2D1-UP
PART OF 239-5562 CAB AR
AN ATTACHMENT

SMCS-4309, 4310, 4322, 4338, 4343 **i01866535**

NOTE	REF NO	GRAPHIC REF	PART NUMBER	QTY	PART NAME 1 2 3 4 5 6 (PRODUCT LEVEL)	SEE PAGE
	1	1	**163-7940**	1	PANEL AS	
	2	1	**185-3529**	1	CONSOLE AS	
	3	1	**206-6974**	1	STEERING COLUMN AS	
Y	4	1	*153-9580*	1	STEERING WHEEL GP	238
M	5	1	**5C-7261**	2	NUT (M8X1.25 THD)	
	6	1	**8T-4121**	2	WASHER-HARD (11X21X2.5MM THK)	
M	7	1	**8T-4136**	2	BOLT (M10X1.5X25MM)	
M	8	1	**8T-4189**	2	BOLT (M8X1.25X20MM)	
	9	1	**8T-4224**	4	WASHER-HARD (8.8X16X2MM THK)	
M	10	1	**8T-8894**	4	BOLT-SOCKET HEAD (M10X1.5X20MM)	
M	11	1	**9X-2044**	6	SCREW-TRUSS HEAD (M6X1X16MM)	

M-METRIC PART
Y-SEPARATE ILLUSTRATION

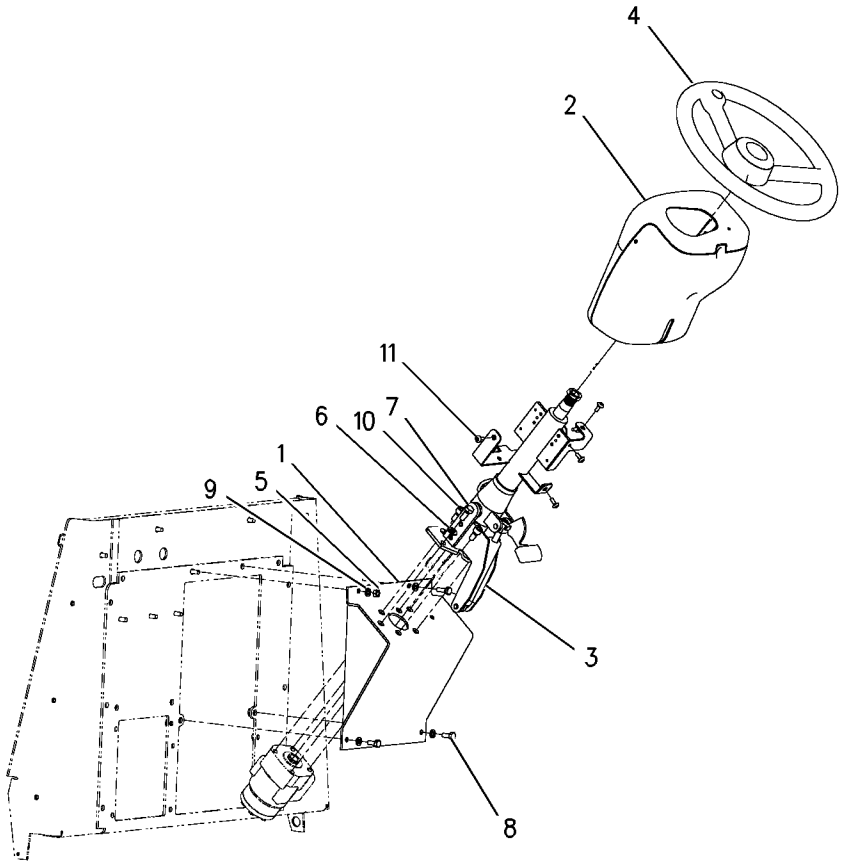

GRAPHIC #1 **<END>** g00951476

STEERING SYSTEM

183-4898 CONTROL GP-STEERING

S/N: B2D1-UP

PART OF 239-5560, 241-9377 CAB AR, 239-5558, 239-5559 CANOPY AR

AN ATTACHMENT

SMCS-4309, 4310, 4322, 4338, 4343 **i01692621**

NOTE	REF NO	GRAPHIC REF	PART NUMBER	QTY	PART NAME 1 2 3 4 5 6 (PRODUCT LEVEL)	SEE PAGE
	1	1	**1V-9385**	1	COVER-EMBLEM	
	2	1	**163-7940**	1	PANEL AS	
	3	1	**180-8170**	1	COLUMN AS-STEER	
M		1	**6V-8227**	1	NUT (M18X1.5-6 THD)	
M		1	**6V-9632**	5	NUT-WELD (M6X1 THD)	
		1	**7T-1099**	1	LINK	
	4	1	**185-3529**	1	CONSOLE AS	
	5	1	**032-1557**	1	STEERING WHEEL	
M	6	1	**5C-7261**	2	NUT (M8X1.25 THD)	
	7	1	**8T-4121**	2	WASHER-HARD (11X21X2.5MM THK)	
M	8	1	**8T-4136**	2	BOLT (M10X1.5X25MM)	
M	9	1	**8T-4189**	2	BOLT (M8X1.25X20MM)	
	10	1	**8T-4224**	4	WASHER-HARD (8.8X16X2MM THK)	
M	11	1	**8T-8894**	4	BOLT-SOCKET HEAD (M10X1.5X20MM)	
	12	1	**9K-5635**	3	SCREW-TAPPING (8-18X1.0 IN)	
M	13	1	**9X-2044**	6	SCREW-TRUSS HEAD (M6X1X16MM)	

M-METRIC PART

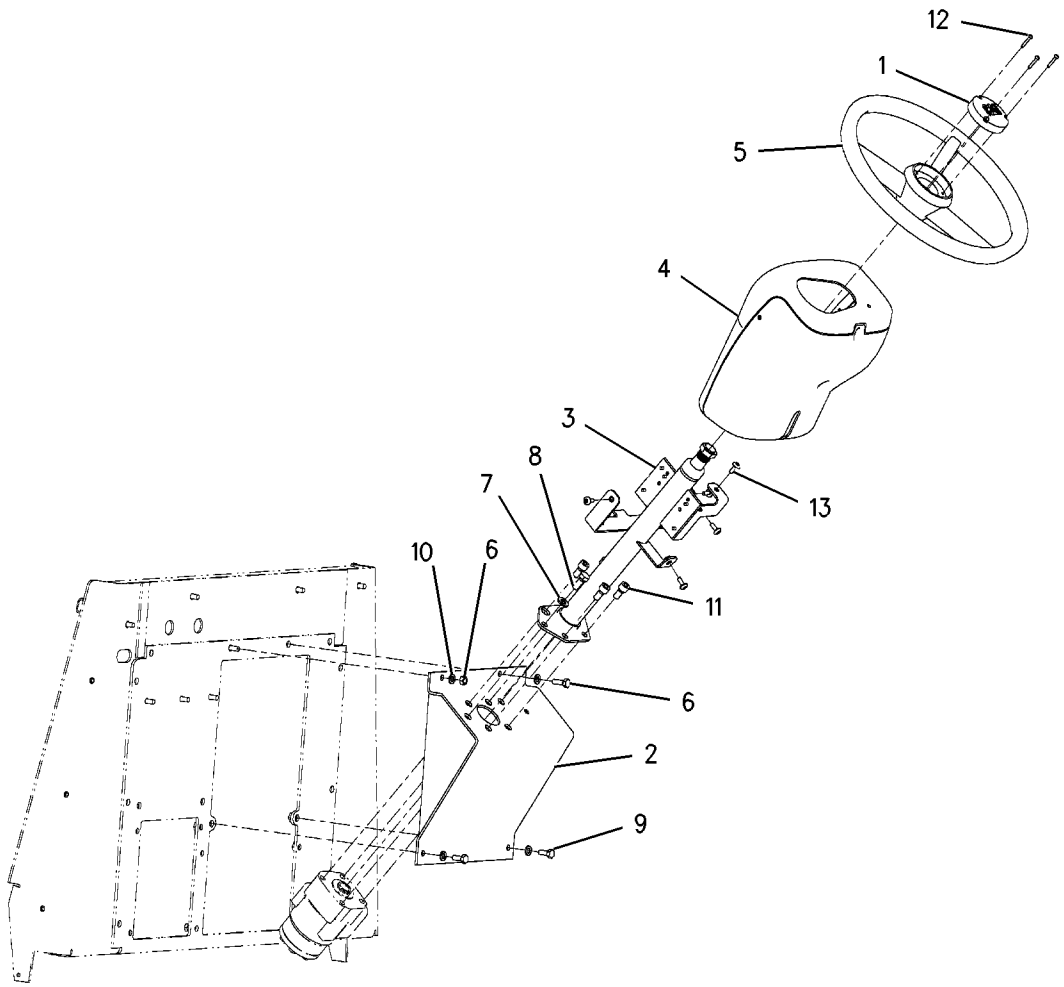

GRAPHIC #1 **<END>** g00823722

STEERING SYSTEM

202-5711 LINES GP-STEERING

S/N: B2D1-UP
TWO WHEEL STEER, ALL WHEEL DRIVE
PART OF 237-6459 DRIVE AR-BACKHOE LOADER
AN ATTACHMENT

SMCS-4304 **i01926790**

NOTE	REF NO	GRAPHIC REF	PART NUMBER	QTY	PART NAME 1 2 3 4 5 6 (PRODUCT LEVEL)	SEE PAGE
E	1	1	**160-2248**		SLEEVE-ABRASION (20CM)	
	2	1	**5D-1026**	2	CLAMP-HOSE	
	3	1	**7K-1181**	5	STRAP-CABLE	
I	4	1	**117-3242**	1	HOSE AS	
	5	1	*195-2037*	1	FITTING AS	
		1	**3K-0360**	1	SEAL-O-RING	
		1	**034-3679**	1	FITTING	
	6	1	**204-0317**	1	CONNECTOR AS	
		1	**3K-0360**	1	SEAL-O-RING	
		1	**6V-8397**	1	SEAL-O-RING	
		1	**092-3635**	1	CONNECTOR	
	7	1	**210-7465**	1	HOSE AS	
	8	1	**210-7466**	1	HOSE AS	
I	9	1	**214-3159**	1	HOSE AS	
	10	1	*148-8316*	1	CONNECTOR AS	
		1	**3J-7354**	1	SEAL-O-RING	
		1	**4J-5477**	1	SEAL-O-RING	
		1	**6V-8647**	1	CONNECTOR	
	11	1	*148-8318*	2	CONNECTOR GP	
					(EACH INCLUDES)	
		1	**3K-0360**	1	SEAL-O-RING	
		1	**6V-8397**	1	SEAL-O-RING	
		1	**6V-8634**	1	CONNECTOR	
	12	1	*148-8346*	1	ELBOW GP	
		1	**3K-0360**	1	SEAL-O-RING	
		1	**6V-8398**	1	SEAL-O-RING	
		1	**8T-1686**	1	ELBOW	
	13	1	*148-8367*	1	ELBOW GP	
		1	**6V-8397**	1	SEAL-O-RING	
		1	**6V-9850**	1	ELBOW (SWIVEL)	
	14	1	*148-8369*	1	ELBOW GP	
		1	**3J-7354**	1	SEAL-O-RING	
		1	**4J-5477**	1	SEAL-O-RING	
		1	**6V-8628**	1	ELBOW	
	15	1	*148-8383*	2	ELBOW AS	
					(EACH INCLUDES)	
		1	**3K-0360**	1	SEAL-O-RING	
		1	**6V-8397**	1	SEAL-O-RING	
		1	**8T-1683**	1	ELBOW	
	16	1	*164-5544*	2	ELBOW GP	
					(EACH INCLUDES)	
		1	**3E-2333**	1	ELBOW	
		1	**6V-8398**	1	SEAL-O-RING	
	17	1	**5K-5338**	1	CLIP	
	18	1	**5P-4295**	1	CLIP	
	19	1	**5P-7462**	1	CLIP (SLOT)	
	20	1	**5P-7463**	1	CLIP (TAB)	
	21	1	**6D-4246**	1	CLIP	
	22	1	**6V-0683**	1	GROMMET	
	23	1	**8T-4121**	4	WASHER-HARD (11X21X2.5MM THK)	
M	24	1	**8T-4136**	4	BOLT (M10X1.5X25MM)	
	25	1	**9M-8406**	1	CLIP	
E	26	1	**5P-1505**		HOSE (53CM)	

E-ORDER BY THE CENTIMETER
I-SEE HOSE FABRICATION GUIDE
M-METRIC PART

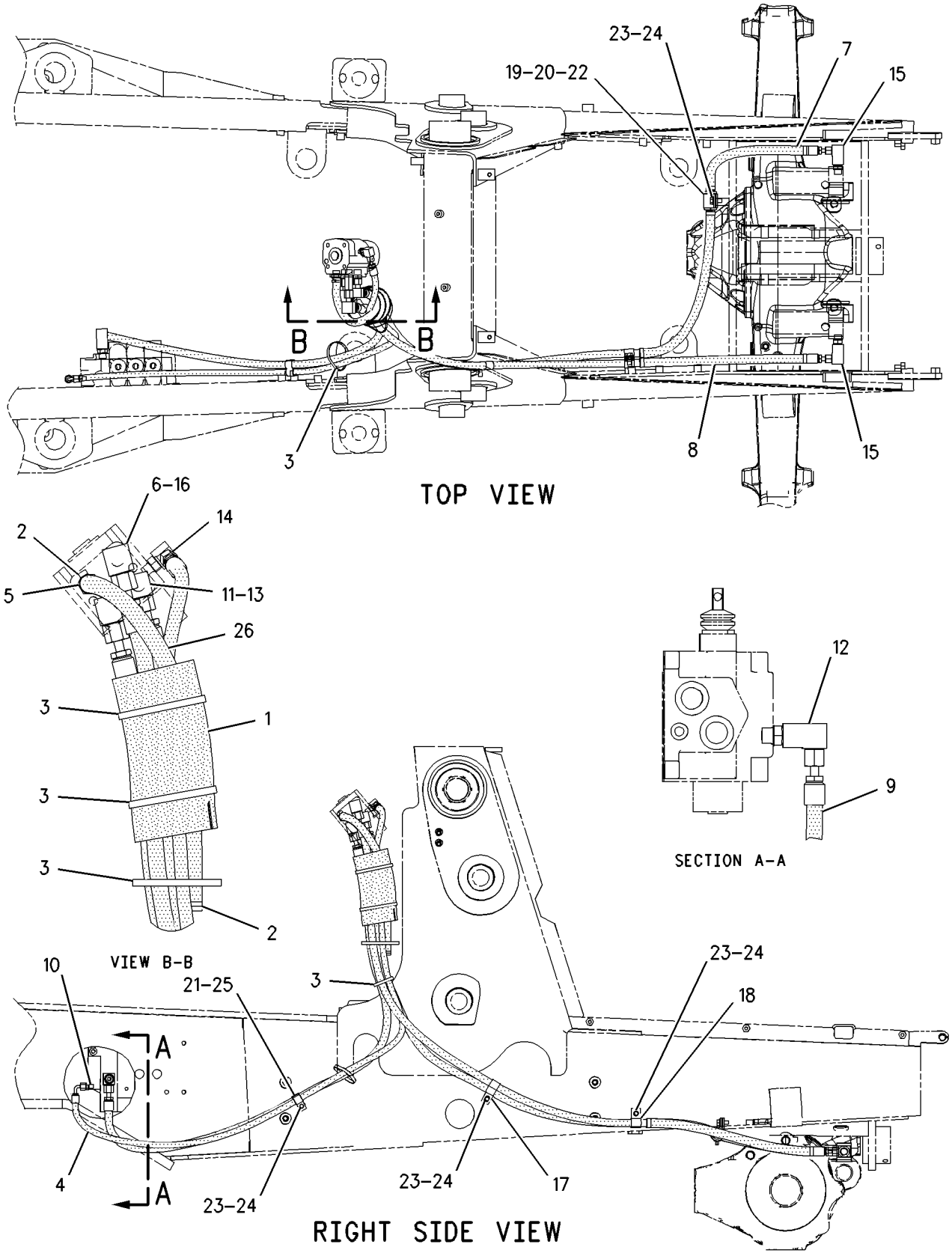

GRAPHIC #1 **<END>** g00995068

STEERING SYSTEM

202-5712 LINES GP-STEERING

S/N: B2D1-UP
TWO WHEEL DRIVE
PART OF 237-6458 DRIVE AR-BACKHOE LOADER
AN ATTACHMENT

SMCS-4304 **i01942273**

NOTE	REF NO	GRAPHIC REF	PART NUMBER	QTY	PART NAME 1 2 3 4 5 6 (PRODUCT LEVEL)	SEE PAGE
G	1	1	**160-2248**		SLEEVE-ABRASION (8IN)	
	2	1	**5D-1026**	2	CLAMP-HOSE	
	3	1	**7K-1181**	5	STRAP-CABLE	
I	4	1	**117-3242**	1	HOSE AS	
	5	1	*195-2037*	1	FITTING AS	
		1	**3K-0360**	1	SEAL-O-RING	
		1	**034-3679**	1	FITTING	
I	6	1	**201-3398**	1	HOSE AS	
I	7	1	**202-1009**	1	HOSE AS	
	8	1	*204-0317*	1	CONNECTOR AS	
		1	**3K-0360**	1	SEAL-O-RING	
		1	**6V-8397**	1	SEAL-O-RING	
		1	**092-3635**	1	CONNECTOR	
I	9	1	**214-3159**	1	HOSE AS	
	10	1	*148-8316*	1	CONNECTOR AS	
		1	**3J-7354**	1	SEAL-O-RING	
		1	**4J-5477**	1	SEAL-O-RING	
		1	**6V-8647**	1	CONNECTOR	
	11	1	*148-8318*	2	CONNECTOR GP	
					(EACH INCLUDES)	
		1	**3K-0360**	1	SEAL-O-RING	
		1	**6V-8397**	1	SEAL-O-RING	
		1	**6V-8634**	1	CONNECTOR	
	12	1	*148-8346*	1	ELBOW GP	
		1	**3K-0360**	1	SEAL-O-RING	
		1	**6V-8398**	1	SEAL-O-RING	
		1	**8T-1686**	1	ELBOW	
	13	1	*148-8367*	1	ELBOW GP	
		1	**6V-8397**	1	SEAL-O-RING	
		1	**6V-9850**	1	ELBOW (SWIVEL)	
	14	1	*148-8369*	1	ELBOW GP	
		1	**3J-7354**	1	SEAL-O-RING	
		1	**4J-5477**	1	SEAL-O-RING	
		1	**6V-8628**	1	ELBOW	
	15	1	*148-8374*	2	ELBOW GP	
					(EACH INCLUDES)	
		1	**3K-0360**	1	SEAL-O-RING	
		1	**6V-8397**	1	SEAL-O-RING	
		1	**6V-8723**	1	ELBOW	
	16	1	*164-5544*	2	ELBOW GP	
					(EACH INCLUDES)	
		1	**3E-2333**	1	ELBOW	
		1	**6V-8398**	1	SEAL-O-RING	
	17	1	**5K-5338**	1	CLIP	
	18	1	**5P-4295**	2	CLIP	
	19	1	**6D-4246**	1	CLIP	
	20	1	**8T-4121**	3	WASHER-HARD (11X21X2.5MM THK)	
M	21	1	**8T-4136**	3	BOLT (M10X1.5X25MM)	
	22	1	**9M-8406**	1	CLIP	
E	23	1	**5P-1505**		HOSE (53CM)	

E-ORDER BY THE CENTIMETER
G-ORDER BY THE INCH
I-REFER TO HYDRAULIC INFORMATION SYSTEM
M-METRIC PART

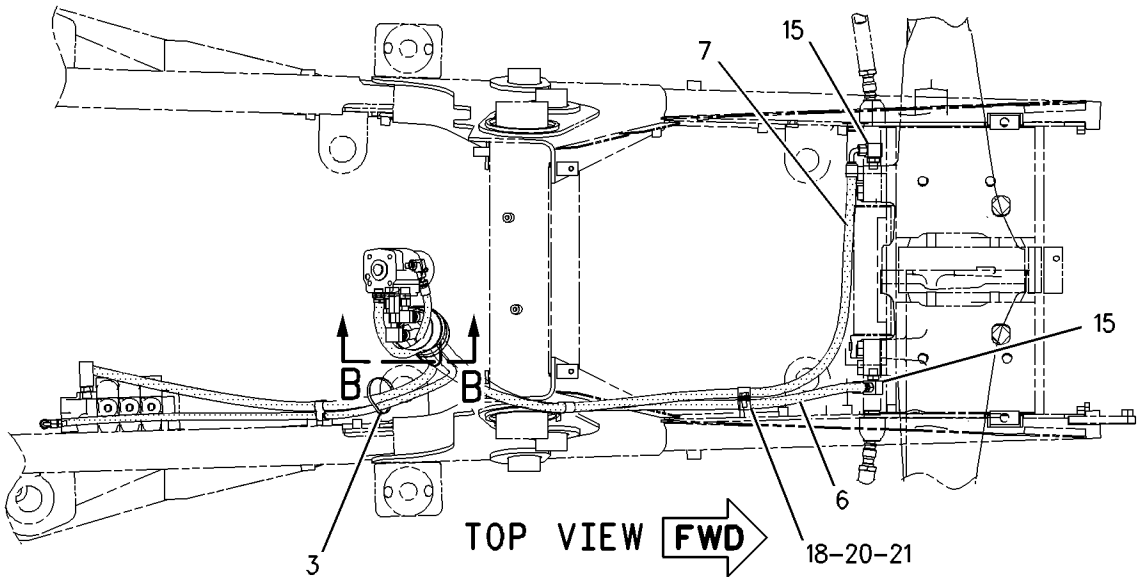

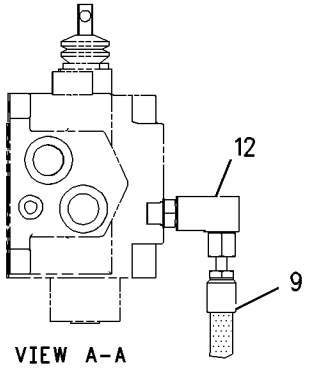

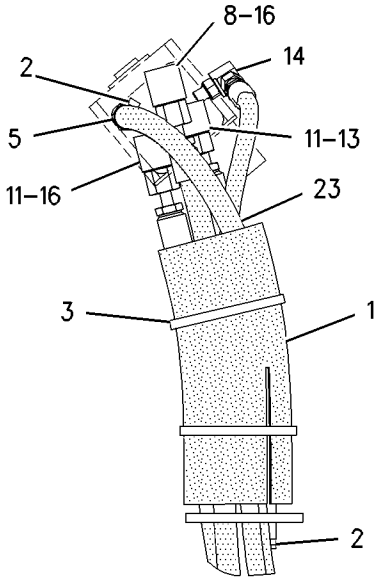

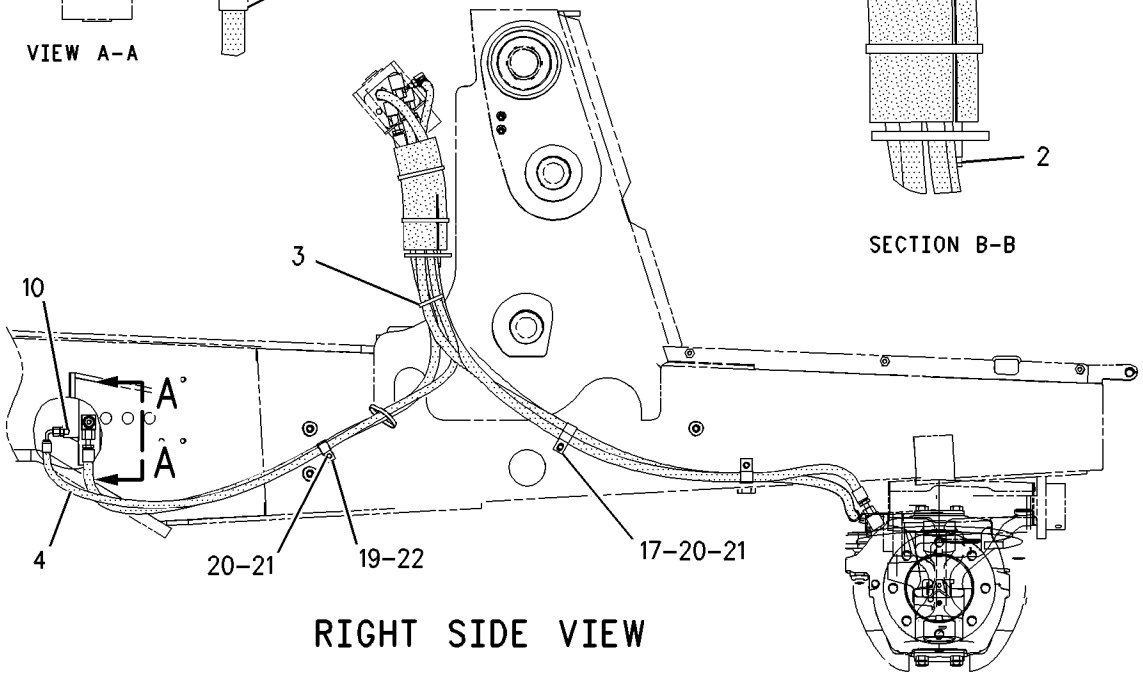

GRAPHIC #1 **<END>** g00995495

STEERING SYSTEM

153-9580 STEERING WHEEL GP

S/N: B2D1-UP
PART OF 183-4897 CONTROL GP-STEERING
AN ATTACHMENT

SMCS-4309 **i01445669**

NOTE	REF NO	GRAPHIC REF	PART NUMBER	QTY	PART NAME 1 2 3 4 5 6 (PRODUCT LEVEL)	SEE PAGE
	1	1	**8R-2916**	1	BUTTON AS	
	2	1	**145-9291**	1	STEERING WHEEL AS	
	3	1	**153-7368**	1	PLUG	

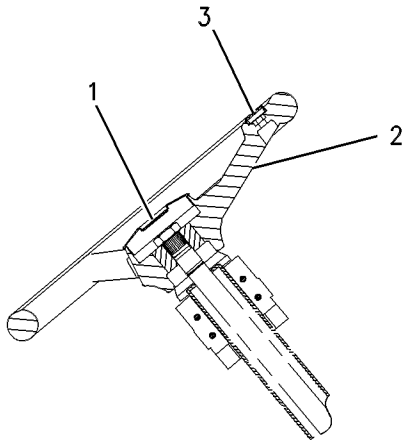

SECTION A–A

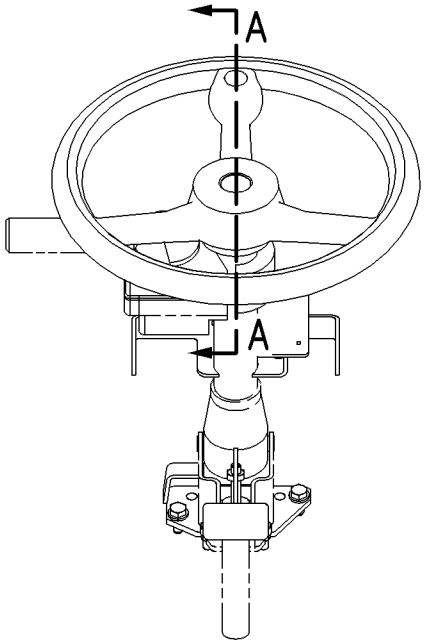

GRAPHIC #1 **<END>** g00586606

188-7471 VALVE GP-PRIORITY–STEERING

S/N: B2D1-UP

PART OF 185-5906 VALVE GP-BANK 2, 185-5907 VALVE GP-BANK 3

AN ATTACHMENT

SMCS-4320, 5137 **i01528483**

NOTE	REF NO	GRAPHIC REF	PART NUMBER	QTY	PART NAME 1 2 3 4 5 6 (PRODUCT LEVEL)	SEE PAGE
Y	1	1	**191-4484**	1	VALVE GP-CONTROL	403
	2	1	**9S-8006**	1	PLUG	
	3	1	**103-4754**	1	SPRING	
	4	1	**9T-0655**	1	VALVE GP-RELIEF	
	4A	1	**1S-8947**	1	SEAL-O-RING	
	4B	1	**3D-2824**	1	SEAL-O-RING	
	4C	1	**9T-0656**	1	RING	
	5	1	**5B-9318**	1	BALL	
	6	1	**180-9157**	1	SEAT AS	
	6A	1	**4T-7807**	1	RING-BACKUP	
	6B	1	**7J-0204**	1	SEAL-O-RING	
	6C	1	**8T-2360**	1	SEAL-O-RING	
	7	1	**197-1742**	1	PLUG	
	8	1	**9S-9334**	1	PLUG	
	9	1	**7M-8485**	1	SEAL-O-RING	

Y-SEPARATE ILLUSTRATION

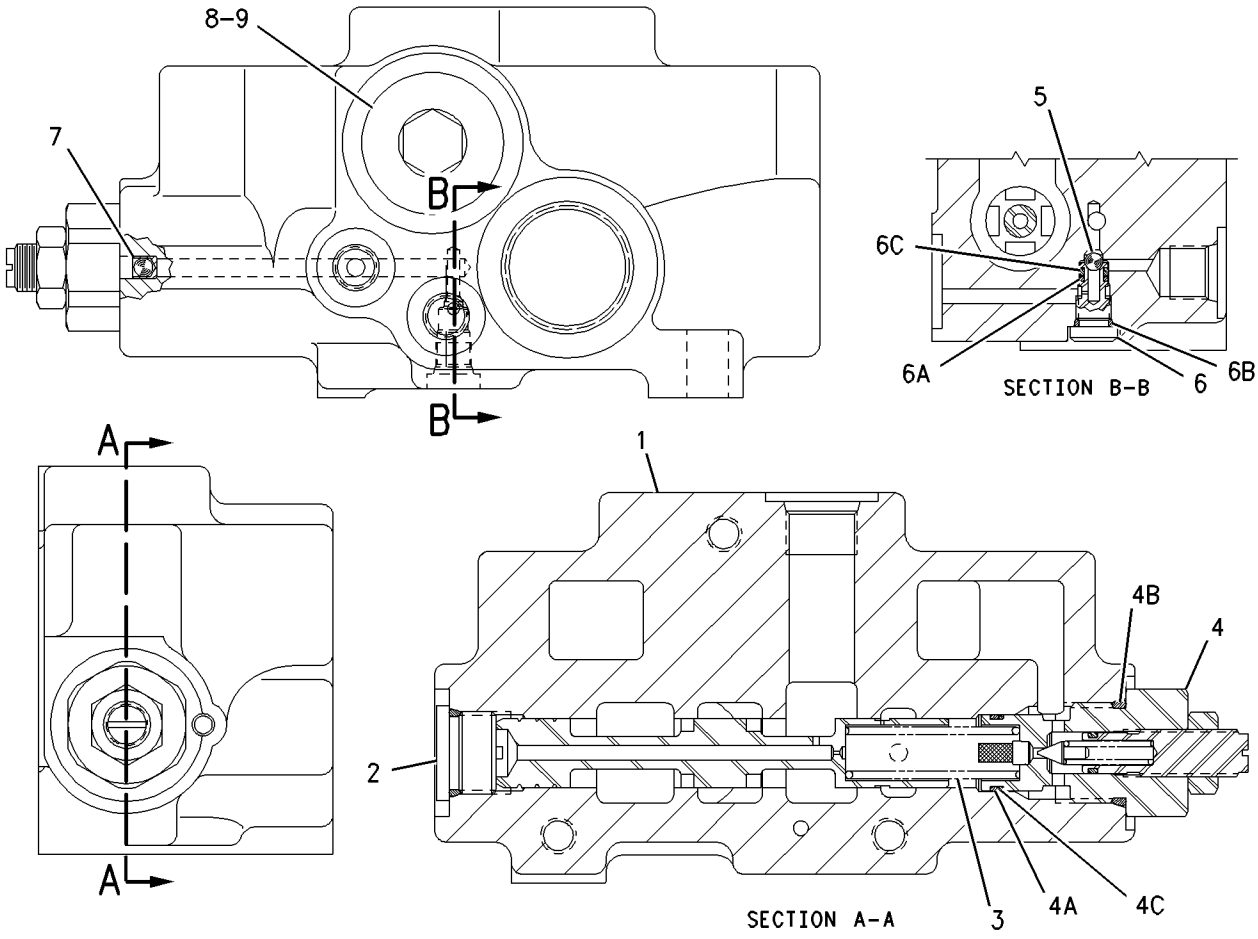

GRAPHIC #1 **<END>** g00769954

237-6415 BOX GP-BATTERY

S/N: B2D1-UP
PART OF 214-6955, 214-6956, 214-6958, 214-6959 POWER TRAIN AR
AN ATTACHMENT

SMCS-7257 **i02024952**

NOTE	REF NO	GRAPHIC REF	PART NUMBER	QTY	PART NAME 1 2 3 4 5 6 (PRODUCT LEVEL)	SEE PAGE
	1	1	**7T-8895**	1	GROMMET	
Y	2	1	**118-6842**	1	DOOR GP-BATTERY	247
	3	1	**118-6854**	1	TREAD	
	4	1	**164-3876**	1	STEP AS	
	5	1	**190-5122**	1	PLATE AS	
		1	**7T-1099**	1	LINK	
	6	1	**237-6412**	1	BOX AS-BATTERY	
		1	**7T-1099**	1	LINK	
	7	1	**5P-4116**	6	WASHER-HARD (8.8X20.5X2-MM THK)	
M	8	1	**8T-4183**	4	BOLT (M12X1.75X40-MM)	
M	9	1	**8T-4189**	6	BOLT (M8X1.25X20-MM)	
M	10	1	**8T-4200**	7	BOLT (M8X1.25X16-MM)	
	11	1	**8T-4223**	4	WASHER-HARD (13.5X25.5X3-MM THK)	
	12	1	**8T-4224**	7	WASHER-HARD (8.8X16X2-MM THK)	
M	13	1	**8T-7963**	1	LOCKNUT (M8X1.25-THD)	

M-METRIC PART
Y-SEPARATE ILLUSTRATION

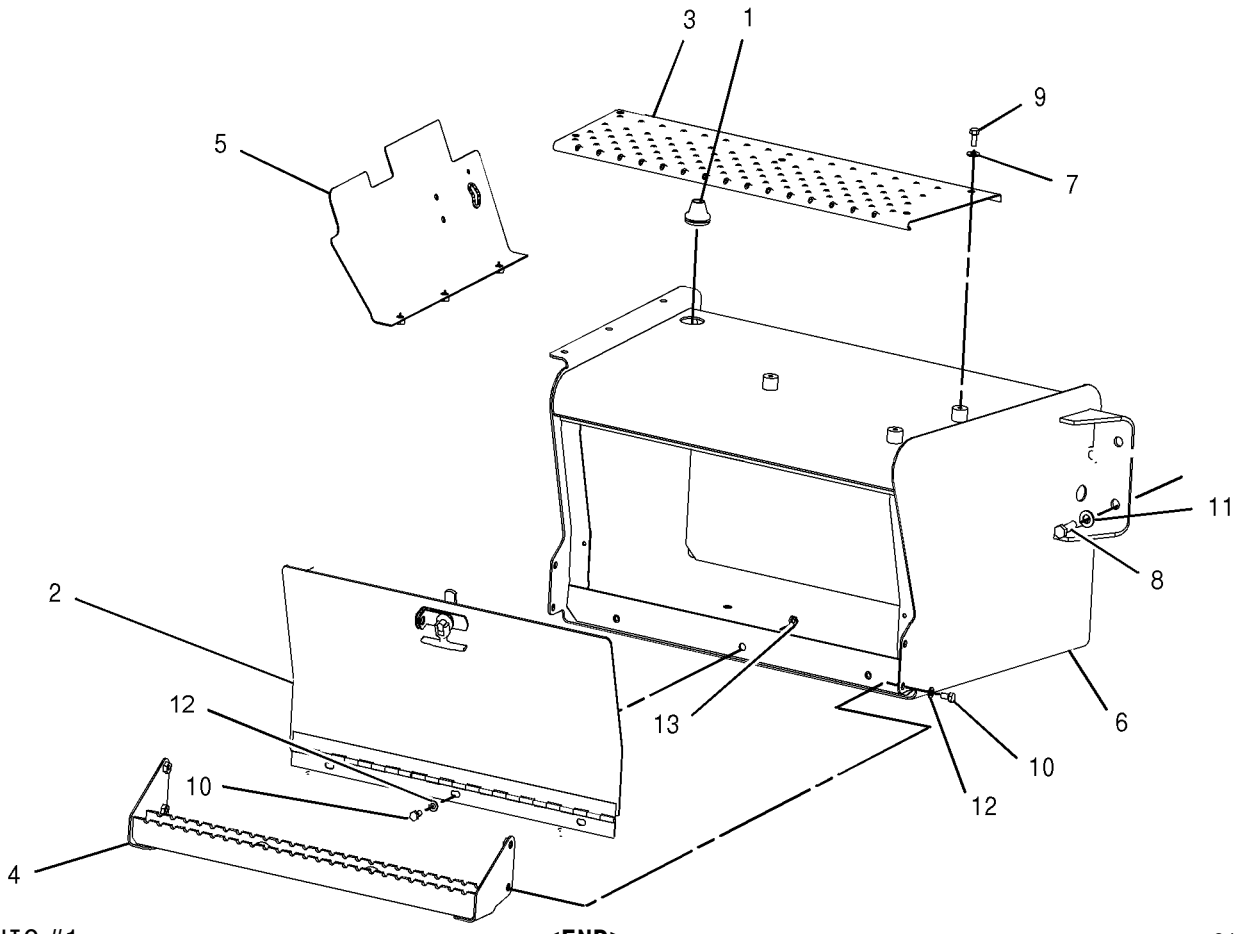

GRAPHIC #1 **<END>** g01023151

FRAME AND BODY

112-1809 BUMPER GP-FRONT

S/N: B2D1-UP
AN ATTACHMENT

SMCS-7156 **i01445681**

NOTE	REF NO	GRAPHIC REF	PART NUMBER	QTY	PART NAME 1 2 3 4 5 6 (PRODUCT LEVEL)	SEE PAGE
	1	1	**7X-0572**	4	WASHER-HARD (24X44.5X6MM THK)	
	2	1	**113-4495**	1	BUMPER AS	
M	3	1	**7X-2568**	4	BOLT (M20X2.5X180MM)	

M-METRIC PART

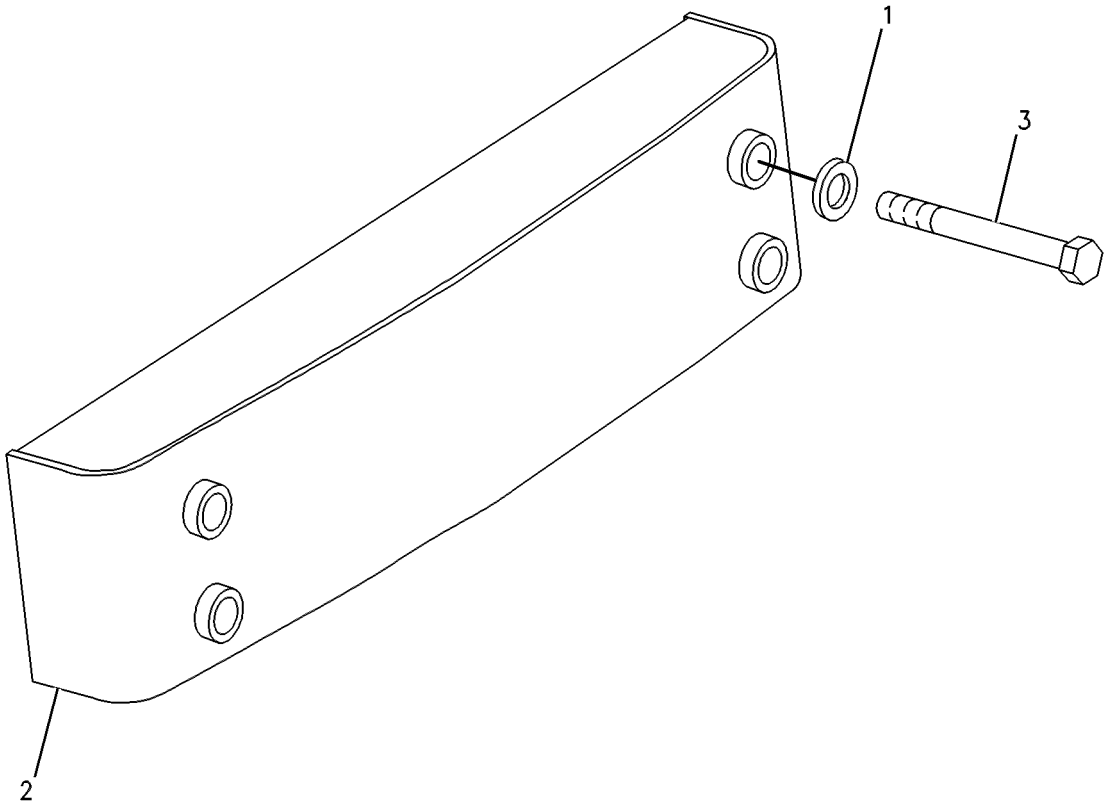

GRAPHIC #1 **<END>** g00257015

106-5878 COUNTERWEIGHT GP

S/N: B2D1-UP
145KG (320 LBS)
AN ATTACHMENT

SMCS-7056 **i01959751**

NOTE	REF NO	GRAPHIC REF	PART NUMBER	QTY	PART NAME 1 2 3 4 5 6 (PRODUCT LEVEL)	SEE PAGE
	1	1	**112-4417**	1	COUNTERWEIGHT (144KG)	
M	2	1	**8C-8478**	4	BOLT (M20X2.5X140MM)	
	3	1	**8T-4123**	4	WASHER-PLATED (22X35X3.5MM THK)	

M-METRIC PART

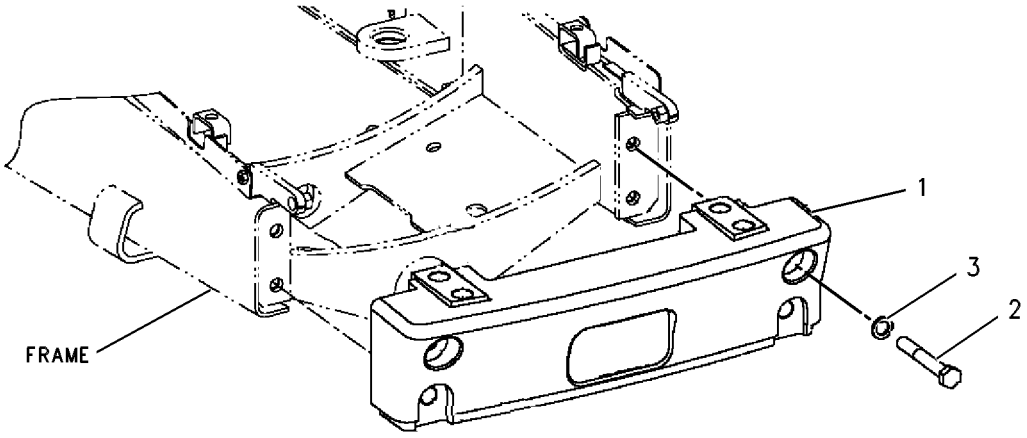

GRAPHIC #1 **<END>** g00131763

106-5879 COUNTERWEIGHT GP

S/N: B2D1-UP
249KG (550 LBS)
AN ATTACHMENT

SMCS-7056 **i01959754**

NOTE	REF NO	GRAPHIC REF	PART NUMBER	QTY	PART NAME 1 2 3 4 5 6 (PRODUCT LEVEL)	SEE PAGE
	1	1	**112-4417**	1	COUNTERWEIGHT (144KG)	
	2	1	**112-4418**	1	COUNTERWEIGHT (101.6KG)	
	3	1	**113-7906**	2	U-BOLT	
M	4	1	**8C-8478**	4	BOLT (M20X2.5X140MM)	
M	5	1	**8T-4001**	4	NUT (M24X3 THD)	
	6	1	**8T-4123**	4	WASHER-PLATED (22X35X3.5MM THK)	
	7	1	**8T-4167**	4	WASHER-HARD (26X44X4MM THK)	

M-METRIC PART

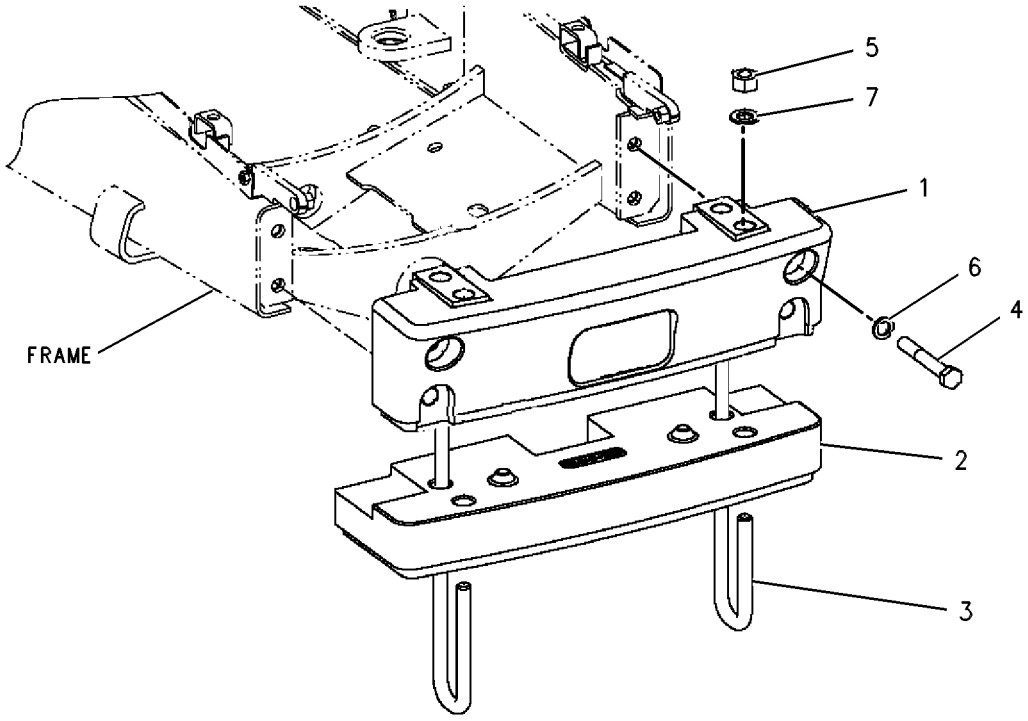

GRAPHIC #1 **<END>** g00131521

FRAME AND BODY

106-5880 COUNTERWEIGHT GP

S/N: B2D1-UP
347KG (763 LBS)
AN ATTACHMENT

SMCS-7056 **i01959755**

NOTE	REF NO	GRAPHIC REF	PART NUMBER	QTY	PART NAME 1 2 3 4 5 6 (PRODUCT LEVEL)	SEE PAGE
	1	1	**112-4417**	1	COUNTERWEIGHT (144KG)	
	2	1	**112-4418**	2	COUNTERWEIGHT (101.6KG)	
	3	1	**113-7905**	2	U-BOLT	
M	4	1	**8C-8478**	4	BOLT (M20X2.5X140MM)	
M	5	1	**8T-4001**	4	NUT (M24X3 THD)	
	6	1	**8T-4123**	4	WASHER-PLATED (22X35X3.5MM THK)	
	7	1	**8T-4167**	4	WASHER-HARD (26X44X4MM THK)	

M-METRIC PART

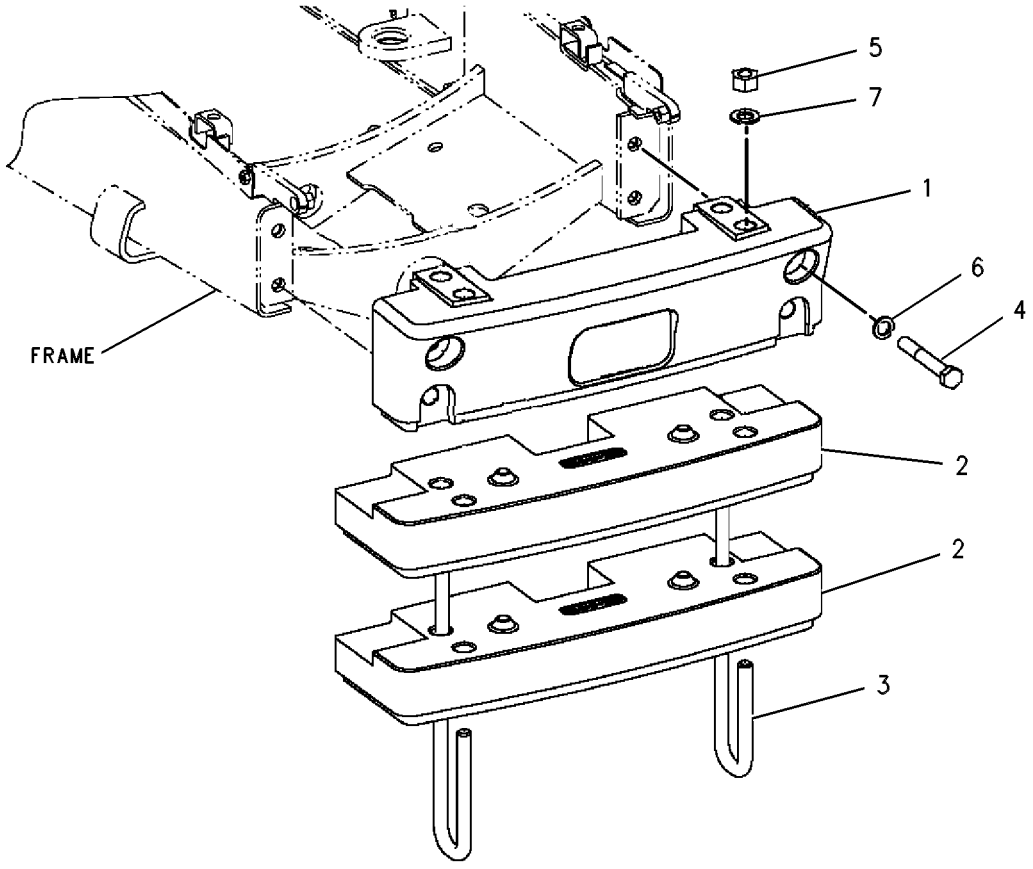

GRAPHIC #1 **<END>** g00131522

FRAME AND BODY

106-5881 COUNTERWEIGHT GP

S/N: B2D1-UP
459KG (1010 LBS)
AN ATTACHMENT

SMCS-7056 **i01959757**

NOTE	REF NO	GRAPHIC REF	PART NUMBER	QTY	PART NAME 1 2 3 4 5 6 (PRODUCT LEVEL)	SEE PAGE
	1	1	**112-4417**	1	COUNTERWEIGHT (144KG)	
	2	1	**112-4418**	3	COUNTERWEIGHT (101.6KG)	
	3	1	**113-2662**	2	U-BOLT	
M	4	1	**8C-8478**	4	BOLT (M20X2.5X140MM)	
M	5	1	**8T-4001**	4	NUT (M24X3 THD)	
	6	1	**8T-4123**	4	WASHER-PLATED (22X35X3.5MM THK)	
	7	1	**8T-4167**	4	WASHER-HARD (26X44X4MM THK)	

M-METRIC PART

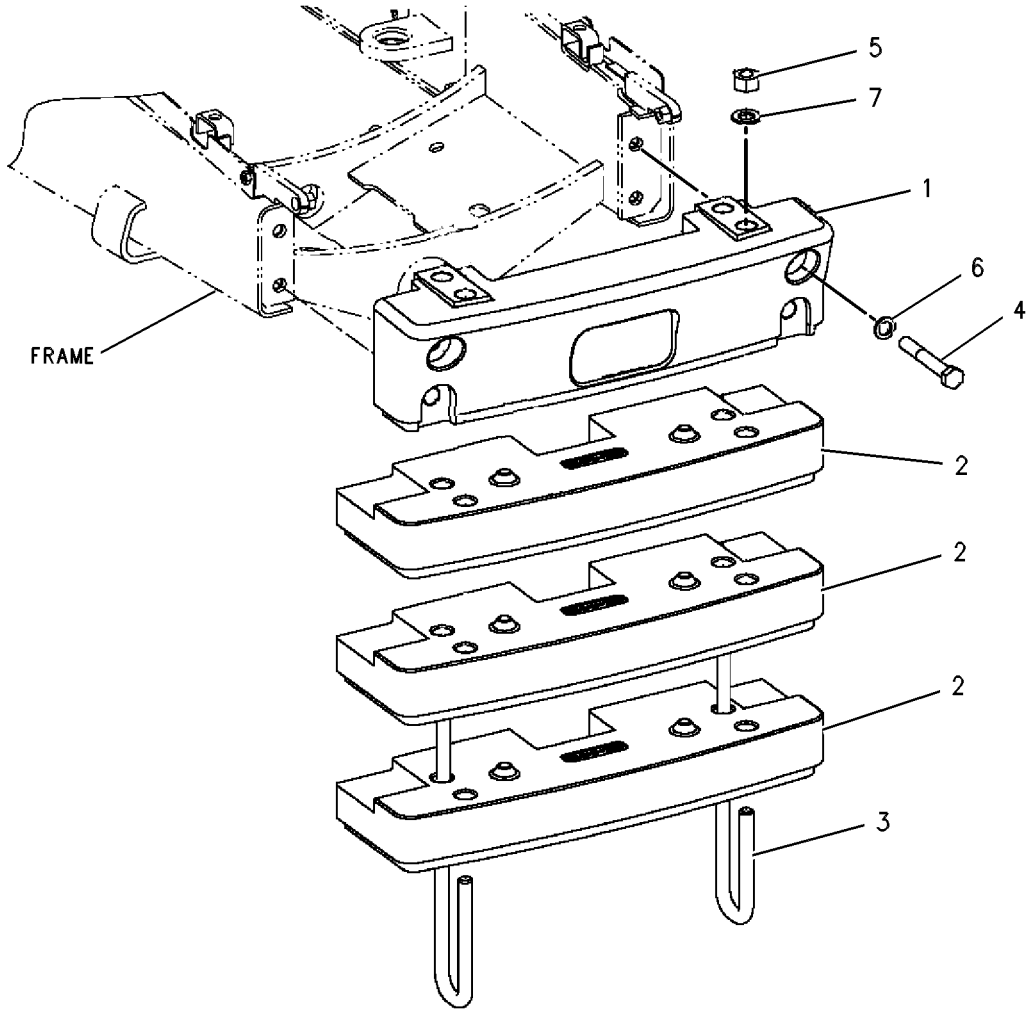

GRAPHIC #1 **<END>** g00131523

FRAME AND BODY

120-8482 COUNTERWEIGHT GP

S/N: B2D1-UP
510KG (1260 LB)
AN ATTACHMENT

SMCS-7056 **i01959759**

NOTE	REF NO	GRAPHIC REF	PART NUMBER	QTY	PART NAME 1 2 3 4 5 6 (PRODUCT LEVEL)	SEE PAGE
	1	1	**112-4417**	1	COUNTERWEIGHT (144KG)	
	2	1	**112-4418**	1	COUNTERWEIGHT (101.6KG)	
	3	1	**113-2662**	2	U-BOLT	
	4	1	**201-0190**	1	COUNTERWEIGHT AS	
M	5	1	**8C-8478**	4	BOLT (M20X2.5X140MM)	
M	6	1	**8T-4001**	4	NUT (M24X3 THD)	
	7	1	**8T-4123**	4	WASHER-PLATED (22X35X3.5MM THK)	
	8	1	**8T-4167**	4	WASHER-HARD (26X44X4MM THK)	

M-METRIC PART

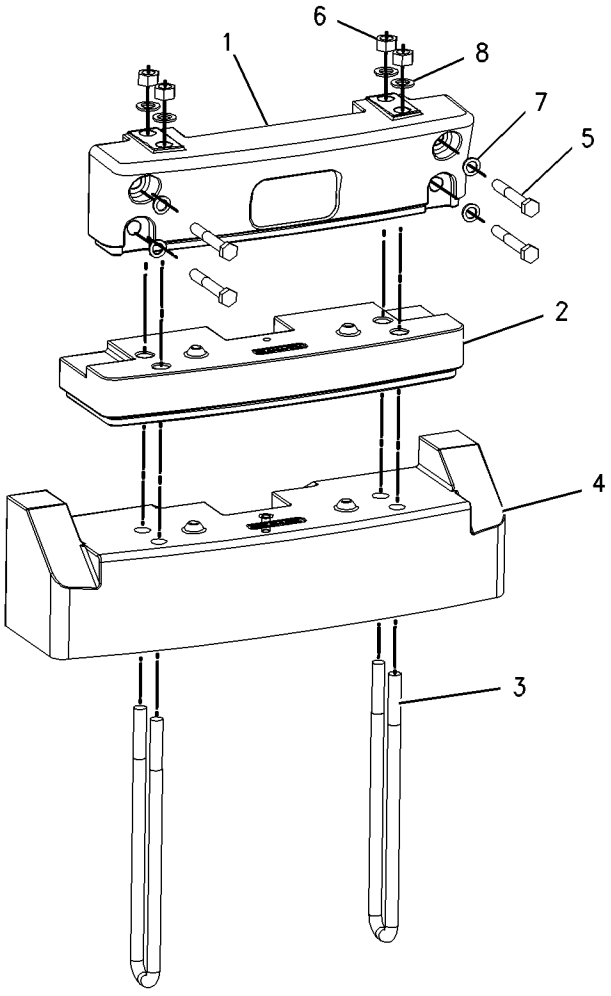

GRAPHIC #1 **<END>** g00811139

118-6842 DOOR GP-BATTERY

S/N: B2D1-UP
PART OF 237-6415 BOX GP-BATTERY
AN ATTACHMENT

SMCS-7273 **i01500854**

NOTE	REF NO	GRAPHIC REF	PART NUMBER	QTY	PART NAME 1 2 3 4 5 6 (PRODUCT LEVEL)	SEE PAGE
	1	1	**8C-8522**	1	PAWL-LATCH	
	2	1	**129-4741**	1	LATCH AS-T-BAR	
	3	1	**151-2963**	1	DOOR AS	
M	4	1	**6V-7743**	2	LOCKNUT (M6X1 THD)	
M	5	1	**8T-4133**	2	NUT (M10X1.5 THD)	
	6	1	**8T-4205**	2	WASHER-HARD (7.2X14.5X2MM THK)	

M-METRIC PART

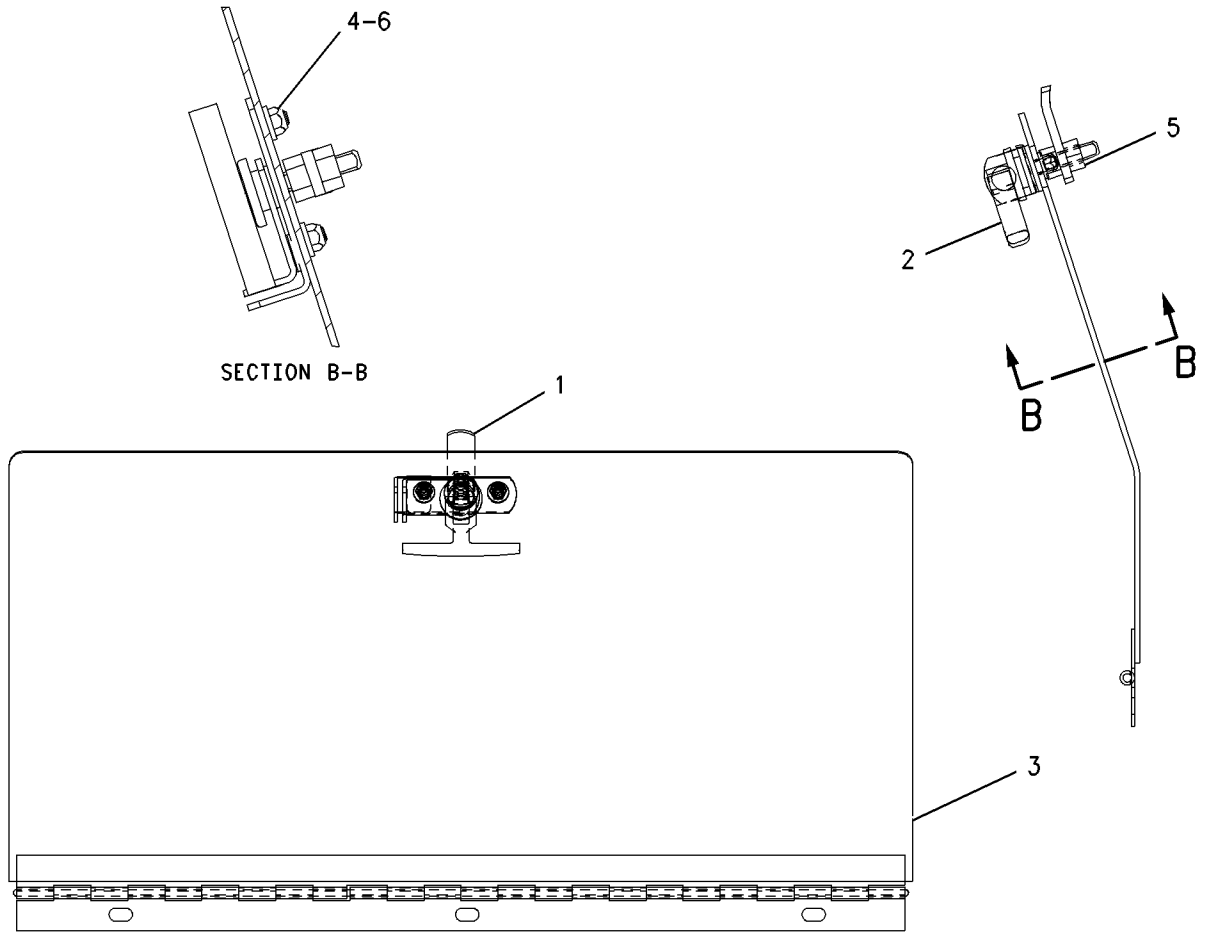

GRAPHIC #1 **<END>** g00739059

164-1148 FENDER GP-REAR

S/N: B2D1-UP
PART OF 239-5562 CAB AR
AN ATTACHMENT

SMCS-7252 **i01484624**

NOTE	REF NO	GRAPHIC REF	PART NUMBER	QTY	PART NAME 1 2 3 4 5 6 (PRODUCT LEVEL)	SEE PAGE
	1	1	**156-0283**	14	WASHER-HARD (2.5MM THK)	
	2	1	**167-8253**	1	FENDER-RH	
	3	1	**167-8254**	1	FENDER-LH	
M	4	1	**8T-4189**	14	BOLT (M8X1.25X20MM)	

M-METRIC PART

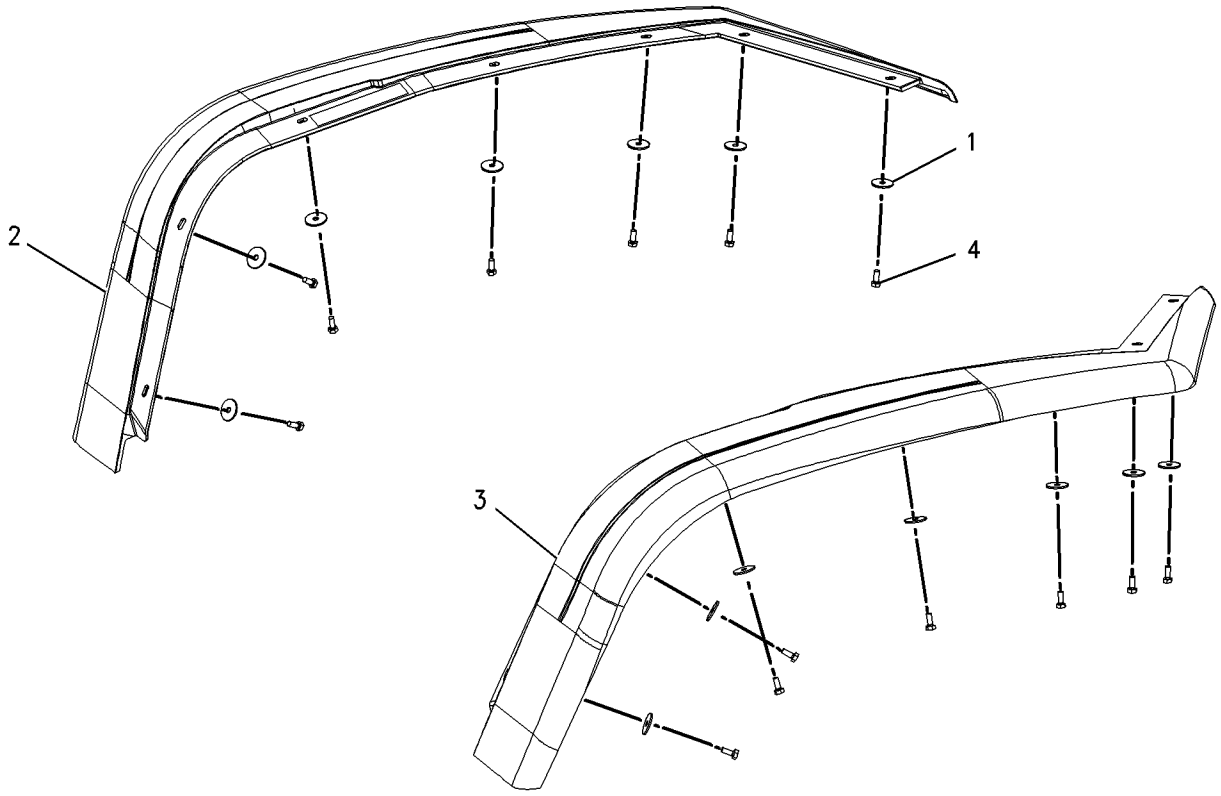

GRAPHIC #1 **<END>** g00713968

FRAME AND BODY

195-3898 FENDER GP-REAR

S/N: B2D1-UP
CANOPY
PART OF 239-5560, 241-9377 CAB AR, 239-5558, 239-5559 CANOPY AR
AN ATTACHMENT

SMCS-7252 **i01974460**

NOTE	REF NO	GRAPHIC REF	PART NUMBER	QTY	PART NAME 1 2 3 4 5 6 (PRODUCT LEVEL)	SEE PAGE
	1	1	**156-0283**	14	WASHER-HARD (8.4X35X2.5MM THK)	
	2	1	**167-8253**	1	FENDER-RH	
	3	1	**167-8254**	1	FENDER-LH	
	4	1	**195-3699**	7	NUT (M8X1.25 THD)	
M	5	1	**8T-4189**	7	BOLT (M8X1.25X20MM)	
M	6	1	**8T-4908**	7	BOLT (M8X1.25X25MM)	

M-METRIC PART

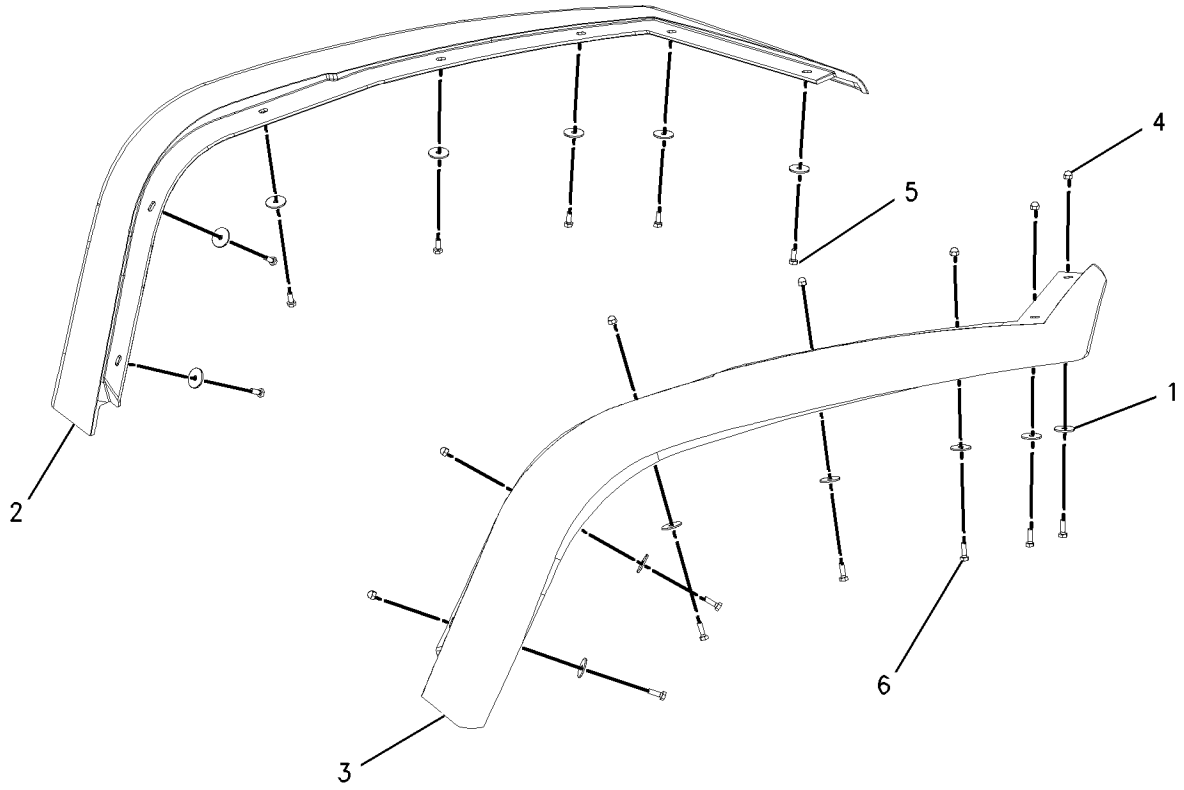

GRAPHIC #1 **<END>** g00727879

FRAME AND BODY

185-0080 FLOORPLATE GP

S/N: B2D1-UP

PART OF 214-6950 CHASSIS AR

SMCS-7265 **i01757190**

NOTE	REF NO	GRAPHIC REF	PART NUMBER	QTY	PART NAME 1 2 3 4 5 6 (PRODUCT LEVEL)	SEE PAGE
B	1	1	**9R-0393**	6	SHIM (1.6 MM THK)	
	2	1	**9R-0394**	2	MOUNT AS	
	3	1	**118-2990**	2	MOUNT AS	
	4	1	**164-1102**	1	PLATE AS	
	5	1	**164-1103**	1	PLATE	
	6	1	**184-6436**	1	PLATE	
	7	1	**201-4822**	1	PLATE AS	
	8	1	**1L-6377**	2	BUTTON-PLUG	
	9	1	**8C-3291**	4	WASHER (M17X90X10MM THK)	
	10	1	**8M-2770**	1	CLIP	
M	11	1	**8T-4001**	2	NUT (M24X3 THD)	
	12	1	**8T-4121**	1	WASHER-HARD (11X21X2.5MM THK)	
	13	1	**8T-4122**	2	WASHER-HARD (17X32X3.5MM THK)	
M	14	1	**8T-4132**	2	NUT (M16X2 THD)	
M	15	1	**8T-4137**	1	BOLT (M10X1.5X20MM)	
	16	1	**8T-4167**	2	WASHER-HARD (26X44X4MM THK)	
M	17	1	**8T-4174**	2	BOLT (M16X2.0X120MM)	
M	18	1	**8T-4649**	2	BOLT (M24X3X140MM)	
	19	1	**9R-9869**	4	WASHER-HARD (M26X120X10MM THK)	
M	20	1	**9X-2042**	11	SCREW-TRUSS HEAD (M6X1X12MM)	

B-USE AS REQUIRED
M-METRIC PART

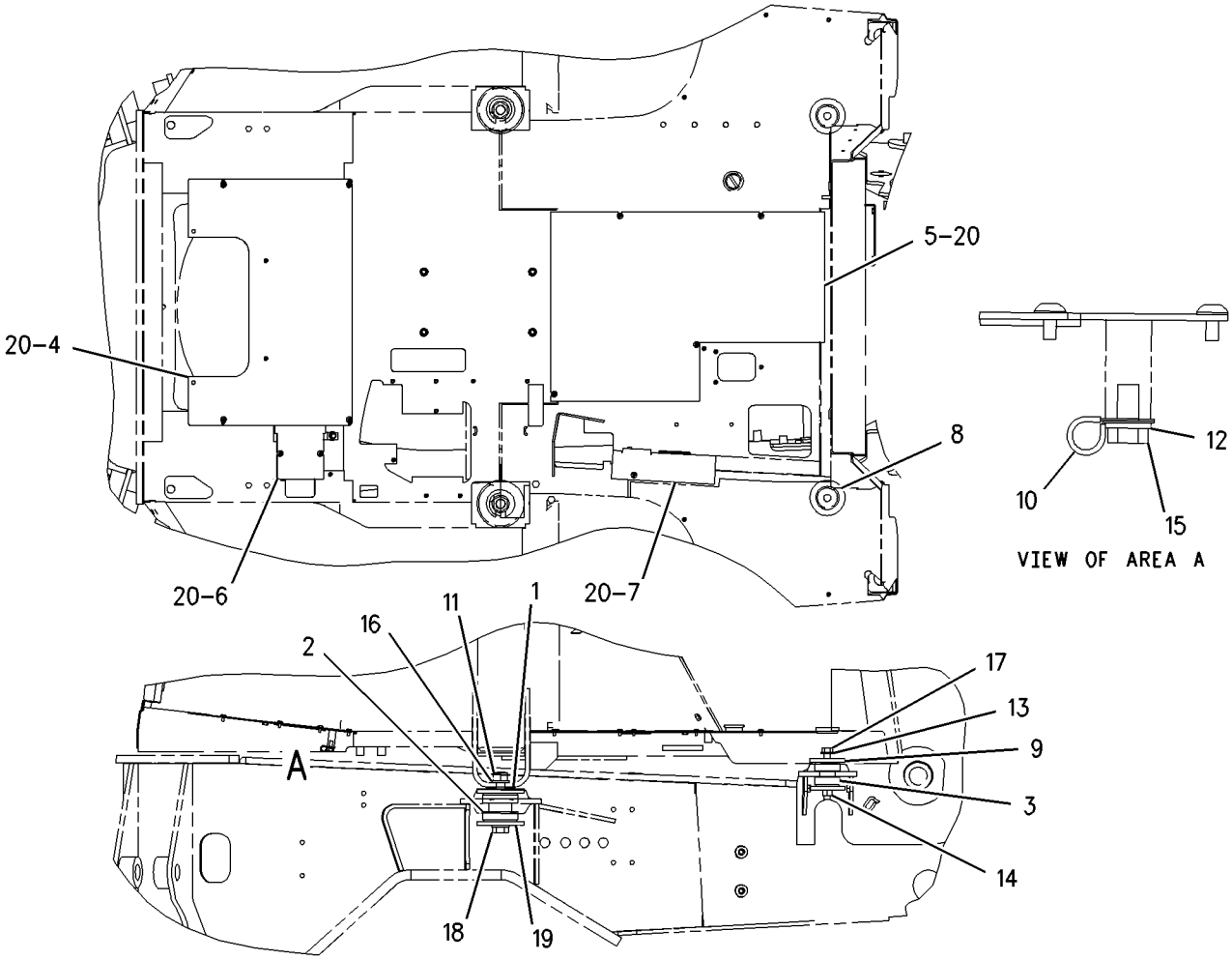

GRAPHIC #1 **<END>** g00809282

201-9732 FLOORPLATE GP

S/N: B2D1-UP
PART OF 239-5560 CAB AR
AN ATTACHMENT

SMCS-7265 **i01520201**

NOTE	PART NUMBER	QTY	PART NAME 1 2 3 4 5 6 (PRODUCT LEVEL)	SEE PAGE
	201-9733	1	COVER	
M	**9X-2042**	1	SCREW-TRUSS HEAD (M6X1X12MM)	

M-METRIC PART

<END>

FRAME AND BODY

214-6944 FRAME GP-LOADER

S/N: B2D1-UP

PART OF 214-6950 CHASSIS AR

SMCS-7054 **i02046933**

NOTE	REF NO	GRAPHIC REF	PART NUMBER	QTY	PART NAME 1 2 3 4 5 6 (PRODUCT LEVEL)	SEE PAGE
	1		**9R-0481**	2	WASHER (71X110X4-MM THK)	
	2		**9R-7701**	1	CAP AS	
			9R-4110	2	BEARING-SLEEVE	
M	3		**114-6099**	6	BOLT (M24X3X80-MM)	
	4		**214-6946**	1	FRAME AS	
	5		**3B-8488**	2	FITTING-GREASE	
	6		**3B-8489**	2	FITTING-GREASE	
M	7		**8T-4001**	6	NUT (M24X3-THD)	
	8		**8T-4167**	12	WASHER-HARD (26X44X4-MM THK)	

M-METRIC PART

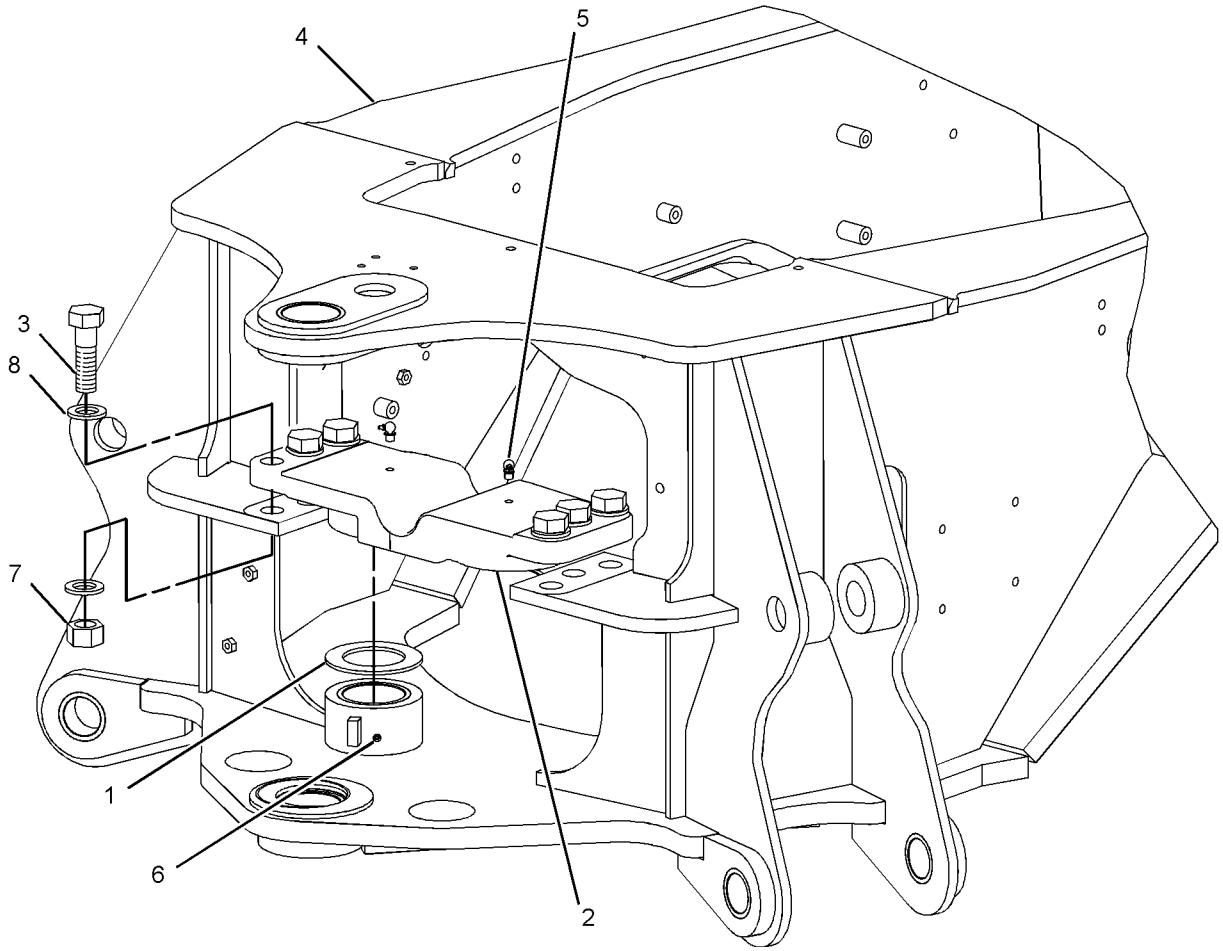

GRAPHIC #1 **<END>** g01025227

183-6056 FRAME GP-SWING

S/N: B2D1-UP

PART OF 214-6950 CHASSIS AR

SMCS-6506 **i01971740**

NOTE	REF NO	GRAPHIC REF	PART NUMBER	QTY	PART NAME 1 2 3 4 5 6 (PRODUCT LEVEL)	SEE PAGE
	1	1	**5P-7958**	1	SLEEVE-CABLE SPLICE	
	2	1	**8T-4837**	1	WASHER (48X85X6MM THK)	
	3	1	**8Y-7203**	1	WEDGE	
	4	1	**8Y-7204**	1	WEDGE	
	5	1	**130-0484**	1	PIN	
B	6	1	**9R-5429**	2	SPACER (67.5X120X3MM THK)	
B	7	1	**9R-5437**	4	WASHER (56X90X.5MM THK)	
C	8	1	**236-6954**	1	FRAME AS	
		1	**9R-0366**	1	WASHER (80X140X5MM THK)	
	9	1	**9R-7882**	2	SPACER (14X25X7MM THK)	
B	10	1	**9R-8291**	2	SPACER (66X125X1MM THK)	
	11	1	**9R-8594**	1	PIN AS	
	12	1	**9R-8599**	1	PLATE	
	13	1	**9R-8760**	2	PLATE	
	14	1	**101-4015**	1	BRACKET	
	15	1	**101-4016**	1	PLATE AS	
	16	1	**101-4020**	1	PIN AS	
	17	1	**159-0960**	1	PIN AS	
	18	1	**102-1940**	1	STOP	
C	19	1	**237-5330**	2	PIN	
	20	1	**131-8775**	1	BRACKET AS	
	21	1	**134-0143**	1	CABLE	
	22	1	*142-6132*	1	ROD AS	
M		1	**6V-7687**	1	LOCKNUT (M12X1.75THD)	
		1	**123-7034**	1	ROD	
C	23	1	**237-0803**	1	SPRING	
B	24	1	**210-1706**	1	SHIM (0.5MM THK)	
B	25	1	**210-1707**	1	SHIM (1MM THK)	
	26	1	**222-0844**	1	CABLE AS	
	27	1	**3B-8489**	6	FITTING-GREASE (1/8-27 THD)	
	28	1	**4D-7794**	1	CLIP	
M	29	1	**6V-7687**	3	LOCKNUT (M12X1.75THD)	
	30	1	**7X-7729**	2	WASHER (11X25X3MM THK)	
M	31	1	**8T-3652**	1	NUT (M42X25THD)	
	32	1	**8T-4121**	6	WASHER-HARD (11X21X2.5MM THK)	
M	33	1	**8T-4136**	5	BOLT (M10X1.5X25MM)	
M	34	1	**8T-4139**	2	BOLT (M12X1.75X30MM)	
M	35	1	**8T-4195**	2	BOLT (M10X1.5X30MM)	
	36	1	**8T-4224**	4	WASHER-HARD (8.8X16X2MM THK)	
	37	1	**8T-4821**	2	WASHER (13.5X40X3MM THK)	
M	38	1	**8T-4908**	4	BOLT (M8X1.25X25MM)	
CM	39	1	**8T-5092**	2	BOLT (M12X1.75X150MM)	
M	40	1	**8T-8894**	1	BOLT-SOCKET HEAD (M10X1.5X20MM)	
C	41	1	**236-8182**	2	PIN	

B-USE AS REQUIRED
C-CHANGE FROM PREVIOUS TYPE
M-METRIC PART

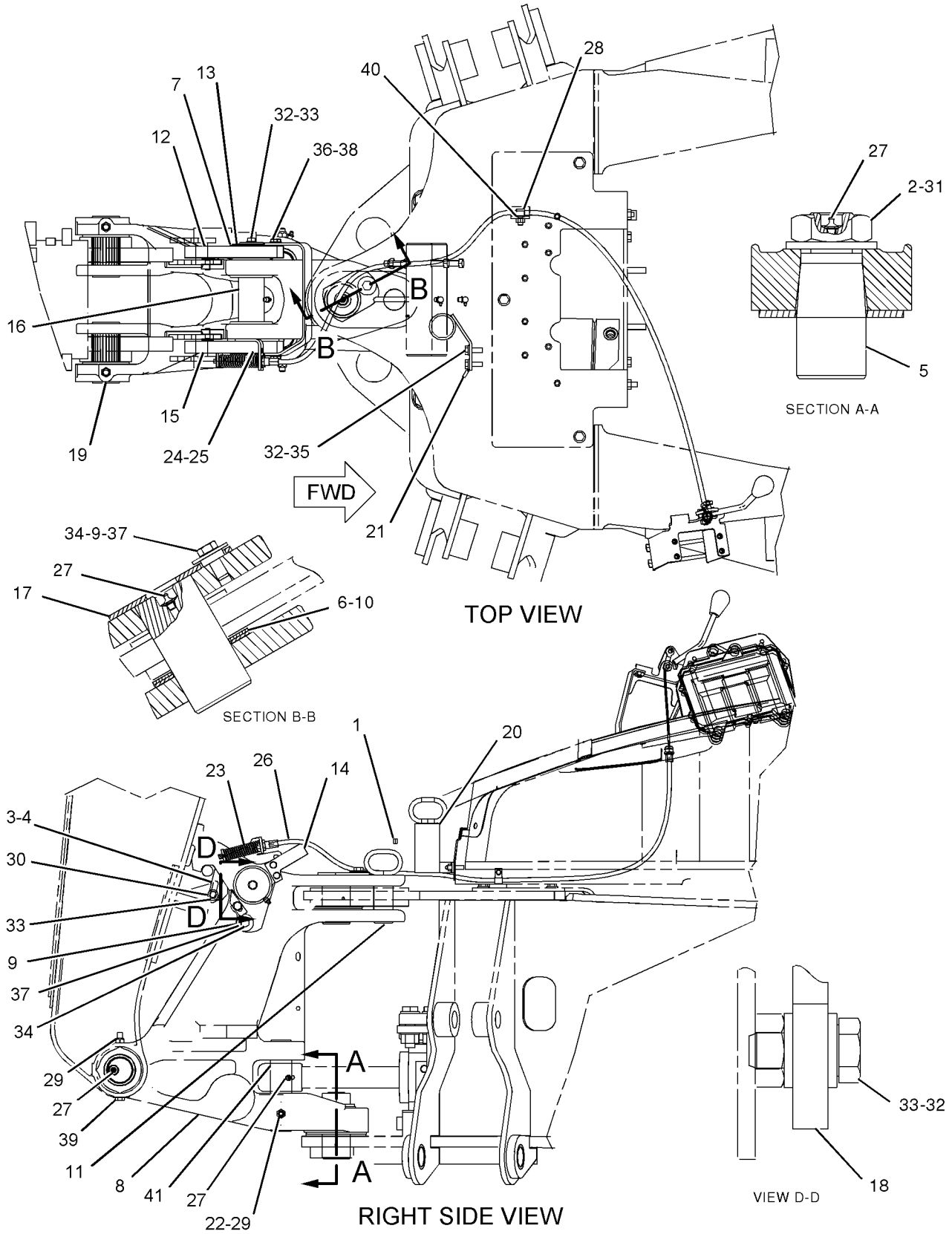

GRAPHIC #1

<END>

g01022586

9R-1233 GUARD GP-DRIVE SHAFT

S/N: B2D1-UP
PART OF 237-6459 DRIVE AR-BACKHOE LOADER
AN ATTACHMENT

SMCS-7153 **i02051738**

NOTE	REF NO	GRAPHIC REF	PART NUMBER	QTY	PART NAME 1 2 3 4 5 6 (PRODUCT LEVEL)	SEE PAGE
	1	1	**213-8481**	1	GUARD AS	
M	2	1	**8T-4183**	4	BOLT (M12X1.75X40-MM)	
	3	1	**8T-4223**	4	WASHER-HARD (13.5X25.5X3-MM THK)	

M-METRIC PART

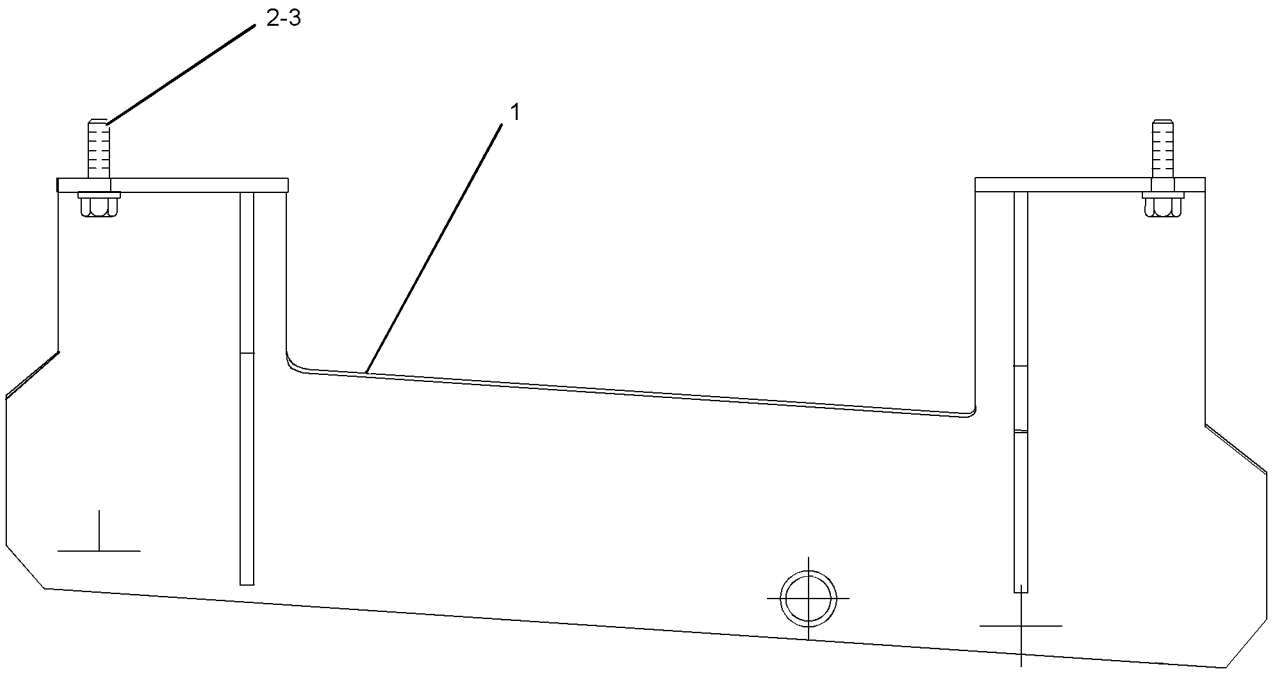

GRAPHIC #1 **<END>** g01052357

FRAME AND BODY

234-9065 HOOD & GUARD GP

S/N: B2D1-UP

PART OF 214-6950 CHASSIS AR

SMCS-7150, 7251 **i02037714**

NOTE	REF NO	GRAPHIC REF	PART NUMBER	QTY	PART NAME 1 2 3 4 5 6 (PRODUCT LEVEL)	SEE PAGE
E	1	1	**3E-6600**		SEAL (83 CM)	
	2	1	**9R-2620**	1	PLUG	
	3	1	**112-4415**	2	BUMPER AS	
	4	1	**112-4416**	1	GUARD AS	
M		1	**6V-9632**	1	NUT-WELD (M6X1-THD)	
M		1	**8T-3490**	1	NUT-WELD (M10X1.5-THD)	
M		1	**8T-3612**	6	NUT-WELD (M8X1.25-THD)	
	5	1	**123-0428**	2	BAR	
	6	1	**123-4065**	6	RIVET-POP	
	7	1	**135-9886**	1	SPRING	
	8	1	**141-7514**	2	BAFFLE	
	9	1	**145-4476**	1	ENCLOSURE GP (RH)	
E	10	1	**179-5571**		SEAL (61 CM)	
	11	1	**188-0862**	1	GRILL AS	
	12	1	**188-0865**	1	BAFFLE	
	13	1	**198-8341**	1	CABLE AS	
	14	1	**234-9066**	1	ENCLOSURE GP-ENGINE	
Y	15	1	*234-9522*	1	HOOD GP-ENGINE	259
	16	1	**3S-2093**	4	STRAP-CABLE	
	17	1	**5P-4115**	1	WASHER-HARD (7.2X19X2-MM THK)	
	18	1	**6P-6590**	1	GROMMET	
M	19	1	**7X-2554**	2	BOLT (M16X2X70-MM)	
	20	1	**7X-7729**	3	WASHER (11X25X3-MM THK)	
	21	1	**8T-4121**	8	WASHER-HARD (11X21X2.5-MM THK)	
M	22	1	**8T-4133**	1	NUT (M10X1.5-THD)	
M	23	1	**8T-4136**	2	BOLT (M10X1.5X25-MM)	
M	24	1	**8T-4137**	6	BOLT (M10X1.5X20-MM)	
M	25	1	**8T-4138**	1	BOLT (M6X1X20-MM)	
M	26	1	**8T-4182**	2	BOLT (M10X1.5X45-MM)	
M	27	1	**8T-4191**	3	BOLT (M10X1.5X16-MM)	
M	28	1	**8T-4196**	2	BOLT (M10X1.5X35-MM)	
	29	1	**8T-4222**	5	WASHER-PLATED (11X32X2.5-MM THK)	
	30	1	**8T-4224**	6	WASHER-HARD (8.8X16X2-MM THK)	
M	31	1	**8T-7547**	6	BOLT (M8X1.25X30-MM)	
	32	1	**9X-8257**	2	WASHER (17.5X30X3.5-MM THK)	

E-ORDER BY THE CENTIMETER
M-METRIC PART
Y-SEPARATE ILLUSTRATION

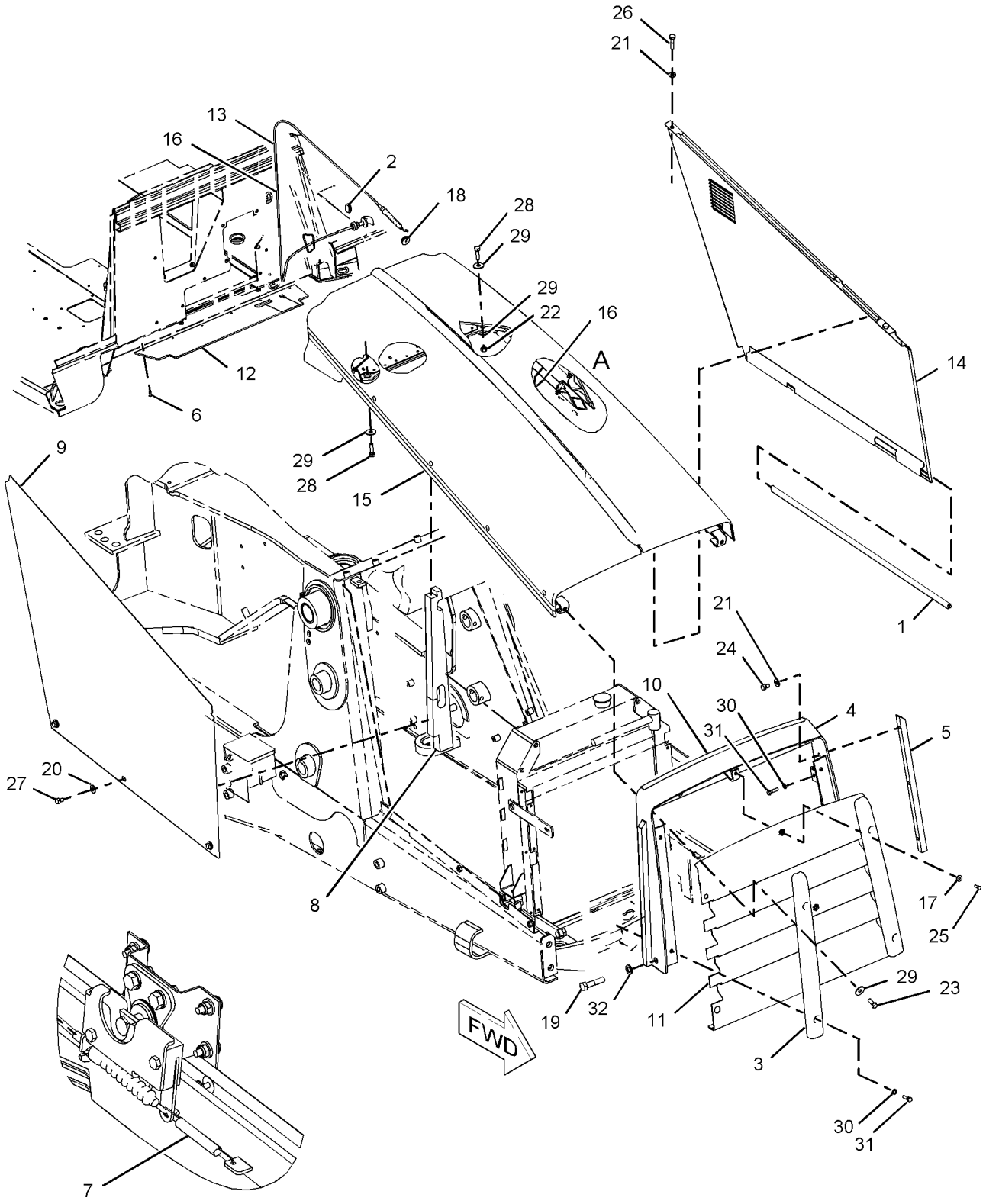

VIEW OF AREA A

GRAPHIC #1 **<END>** g01030238

FRAME AND BODY

234-9522 HOOD GP-ENGINE

S/N: B2D1-UP

PART OF 234-9065 HOOD & GUARD GP

SMCS-7251 **i02051742**

NOTE	REF NO	GRAPHIC REF	PART NUMBER	QTY	PART NAME 1 2 3 4 5 6 (PRODUCT LEVEL)	SEE PAGE
	1	1	**3E-8211**		FILM-STRIPE (278-CM)	
	2	1	**126-8472**		SEAL (144-CM)	
	3	1	**4V-5091**	2	GROMMET	
	4	2	**5D-4822**	4	RING-RETAINING	
	5	1	**5V-8309**	1	STRIKER AS	
	6	2	**8T-0318**	3	SHIM (0.8-MM THK)	
	7	1	**8T-2444**	4	STUD-BALL	
	8	1	**8Y-6998**	1	LATCH AS-ROTARY	
	9	1	**9R-4784**	1	PLATE AS	
M		1	**8T-3612**	2	NUT-WELD (M8X1.25-THD)	
	10	2	**114-8861**	2	SPRING AS-GAS	
	11	2	**114-8972**	2	HINGE AS	
	12	1	**114-8973**	2	HINGE AS	
	13	1	**115-5219**	1	PLATE AS	
		1	**1F-0750**	1	NUT-WELD (3/8-16-THD)	
	14	1	**115-5220**	1	PLATE	
	15	1	**122-5923**	1	BAFFLE	
	16	1	**123-4065**	11	RIVET-POP	
	17	1	**131-0827**	1	PLATE-LH	
	18	1	**131-0828**	1	PLATE-RH	
	19	1	**141-7515**	1	BAFFLE	
	20	2	**191-9109**	1	HOOD AS (LH)	
		2	**8T-9501**	6	SCREW (10-16X.75-IN)	
	21	2	**191-9110**	1	HOOD AS (RH)	
	22	2	**224-8945**	1	FILM-WARNING (ETHER)	
	23	1	**234-9523**	1	SUPPORT AS	
		1	**7T-0525**	2	SHIM (3-MM THK)	
M		1	**8T-3490**	5	NUT-WELD (M10X1.5-THD)	
M		1	**6V-9632**	2	NUT-WELD (M6X1-THD)	
M		1	**8T-3612**	3	NUT-WELD (M8X1.25-THD)	
M		1	**6V-9632**	2	NUT-WELD (M6X1-THD)	
M		1	**8T-3612**	3	NUT-WELD (M8X1.25-THD)	
	24	2	**238-4441**	1	FILM (LUBRICANTS)	
M	25	1	**129-3178**	4	LOCKNUT (M6X1-THD)	
	26	1	**139-3785**	9	RIVET-POP	
	27	2	**4B-4274**	9	WASHER (5.5X13X1.2-MM THK)	
M	28	1	**5C-7261**	6	NUT (M8X1.25-THD)	
	29	1	**7X-0579**	4	WASHER-HARD (8.8X25.5X2-MM THK)	
M	30	1	**8T-4181**	2	BOLT (M6X1X20-MM)	
M	31	2	**8T-4189**	12	BOLT (M8X1.25X20-MM)	
M	32	1	**8T-4197**	3	BOLT (M8X1.25X40-MM)	
	33	1	**8T-4205**	4	WASHER-HARD (7.2X14.5X2-MM THK)	
	34	2	**8T-4224**	19	WASHER-HARD (8.8X16X2-MM THK)	
M	35	2	**8T-5091**	2	BOLT (M8X1.25X20-MM)	
M	36	1	**9X-2045**	4	SCREW-TRUSS HEAD (M6X1X20-MM)	
	37	2	**191-9111**	1	FILM-CAT (HOOD)	

M-METRIC PART

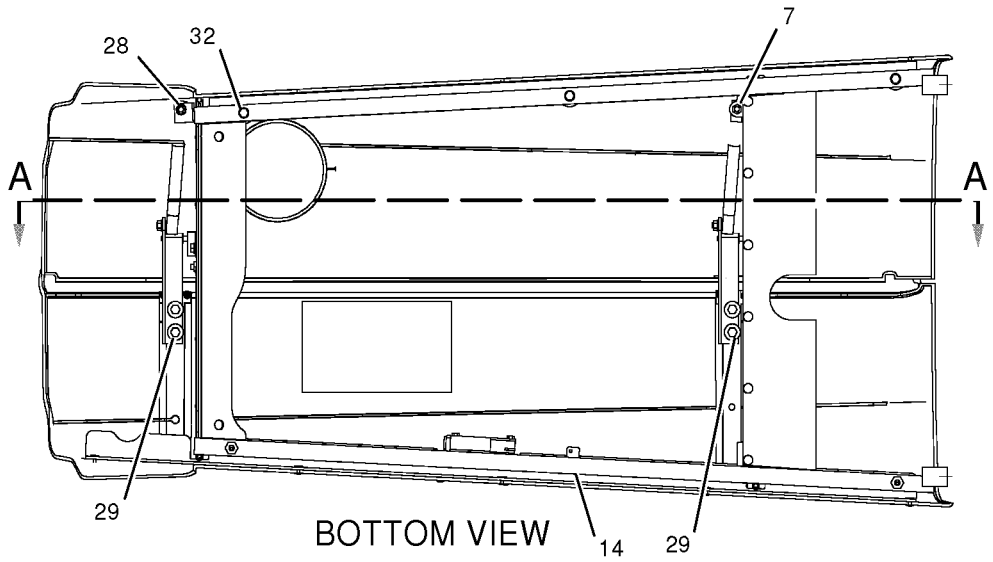

BOTTOM VIEW

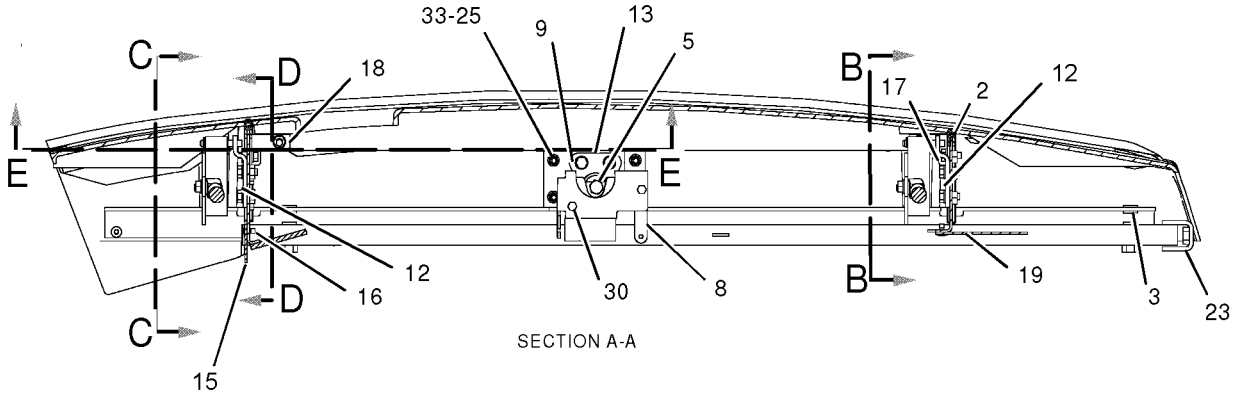

SECTION A-A

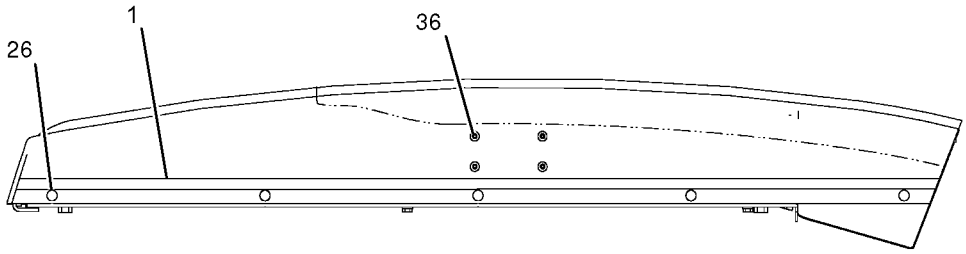

RIGHT SIDE VIEW

REFER TO ALL ILLUSTRATIONS IN THIS GROUP FOR AUXILIARY VIEWS

GRAPHIC #1 g01023309

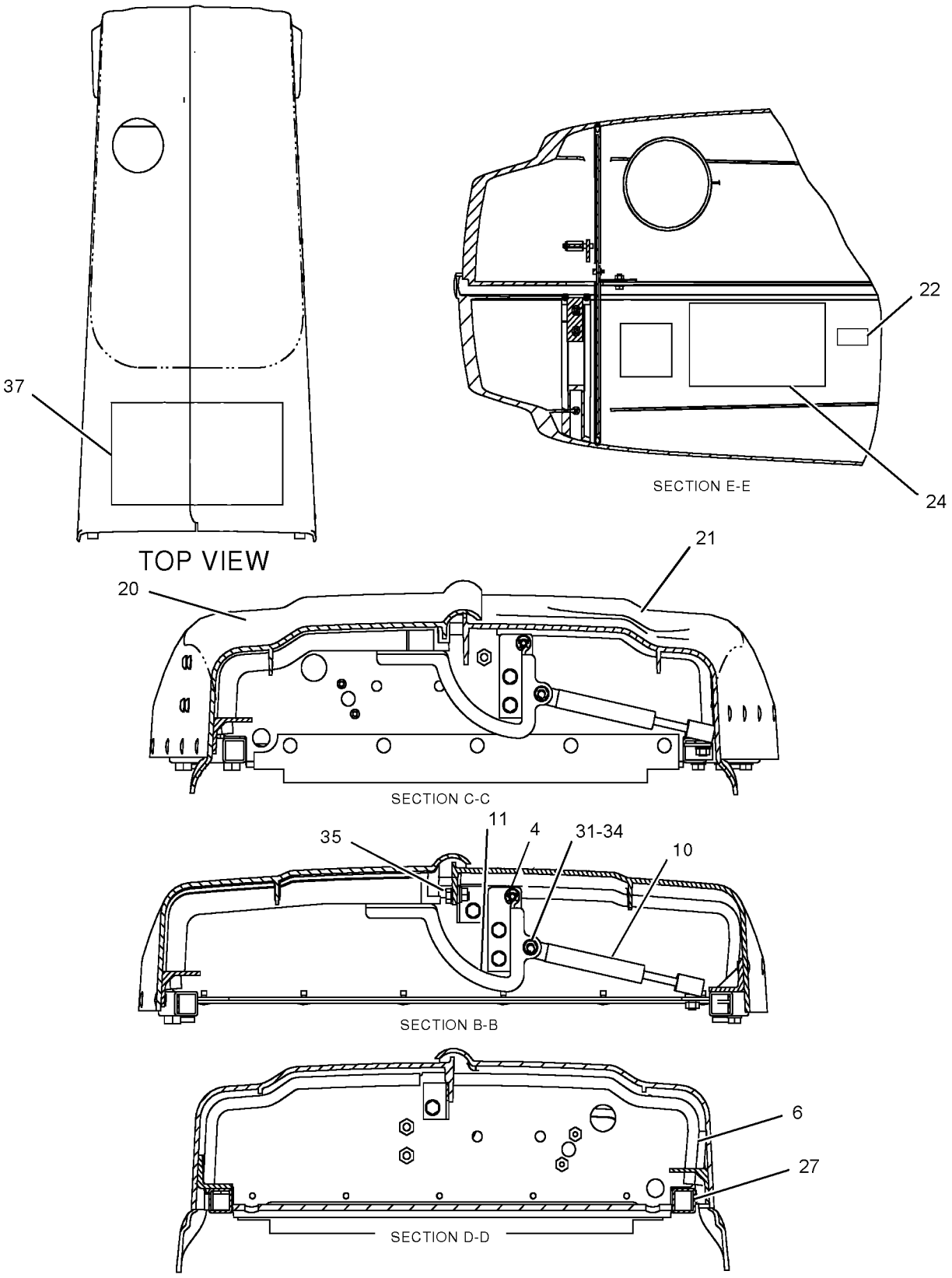

GRAPHIC #2 **<END>** g01023308

170-0606 CONNECTOR GP-VALVE

S/N: B2D1-UP

PART OF 214-6980 HYDRAULIC AR

SMCS-5079, 5137, 7553 **i01759720**

NOTE	REF NO	GRAPHIC REF	PART NUMBER	QTY	PART NAME 1 2 3 4 5 6 (PRODUCT LEVEL)	SEE PAGE
	1	1	*215-4424*	1	TEE AS	
		1	**5K-9090**	1	SEAL-O-RING	
		1	**6V-9746**	1	SEAL-O-RING	
		1	**7M-8485**	1	SEAL-O-RING	
	2	1	*148-8327*	2	CONNECTOR GP	
					(EACH INCLUDES)	
		1	**3D-2824**	1	SEAL-O-RING	
		1	**6V-8637**	1	CONNECTOR-SEAL	
		1	**6V-9746**	1	SEAL-O-RING	
	3	1	*148-8328*	2	CONNECTOR GP	
					(EACH INCLUDES)	
		1	**3D-2824**	1	SEAL-O-RING	
		1	**6V-8398**	1	SEAL-O-RING	
		1	**6V-8633**	1	CONNECTOR	
	4	1	*148-8340*	1	CONNECTOR GP	
		1	**3K-0360**	1	SEAL-O-RING	
		1	**6V-8398**	1	SEAL-O-RING	
		1	**6V-8639**	1	CONNECTOR	
	5	1	*148-8341*	2	CONNECTOR GP	
					(EACH INCLUDES)	
		1	**3D-2824**	1	SEAL-O-RING	
		1	**6V-8713**	1	CONNECTOR	
		1	**7J-9108**	1	SEAL-O-RING	
	6	1	*148-8364*	1	ELBOW GP	
		1	**3K-0360**	1	SEAL-O-RING	
		1	**6V-8398**	1	SEAL-O-RING	
		1	**6V-8625**	1	ELBOW	
	7	1	*148-8370*	1	ELBOW GP	
		1	**6V-8398**	1	SEAL-O-RING	
		1	**6V-9851**	1	ELBOW	

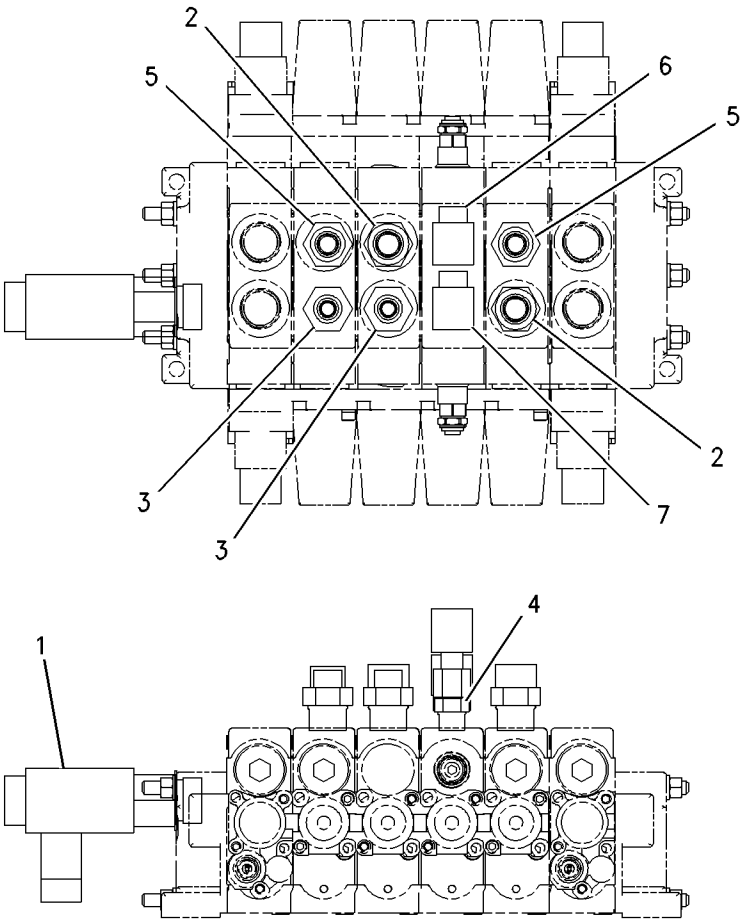

GRAPHIC #1 **<END>** g00876097

HYDRAULIC SYSTEM

202-6139 CONNECTOR GP-VALVE

S/N: B2D1-UP

PART OF 214-6980 HYDRAULIC AR

SMCS-5079, 5137, 7553 **i02040067**

NOTE	REF NO	GRAPHIC REF	PART NUMBER	QTY	PART NAME 1 2 3 4 5 6 (PRODUCT LEVEL)	SEE PAGE
	1	1	**6V-0852**	1	CAP-DUST	
	2	1	*150-3062*	1	TEE AS	
		1	**3J-7354**	1	SEAL-O-RING	
		1	**4J-5477**	1	SEAL-O-RING	
		1	**101-1787**	1	TEE AS	
	3	1	*164-5567*	1	FITTING AS	
		1	**3J-1907**	1	SEAL-O-RING	
		1	**6V-3965**	1	FITTING (QUICK DISCONNECT)	
I	4	1	**190-8957**	1	HOSE AS	
	5	1	*200-3947*		ADAPTER AS	
		1	**3J-1907**	1	SEAL-O-RING	
		1	**4J-5477**	1	SEAL-O-RING	
		1	**200-3946**	1	ADAPTER	
	6	1	*148-8316*	1	CONNECTOR AS	
		1	**3J-7354**	1	SEAL-O-RING	
		1	**4J-5477**	1	SEAL-O-RING	
		1	**6V-8647**	1	CONNECTOR	

I-REFER TO HYDRAULIC INFORMATION SYSTEM

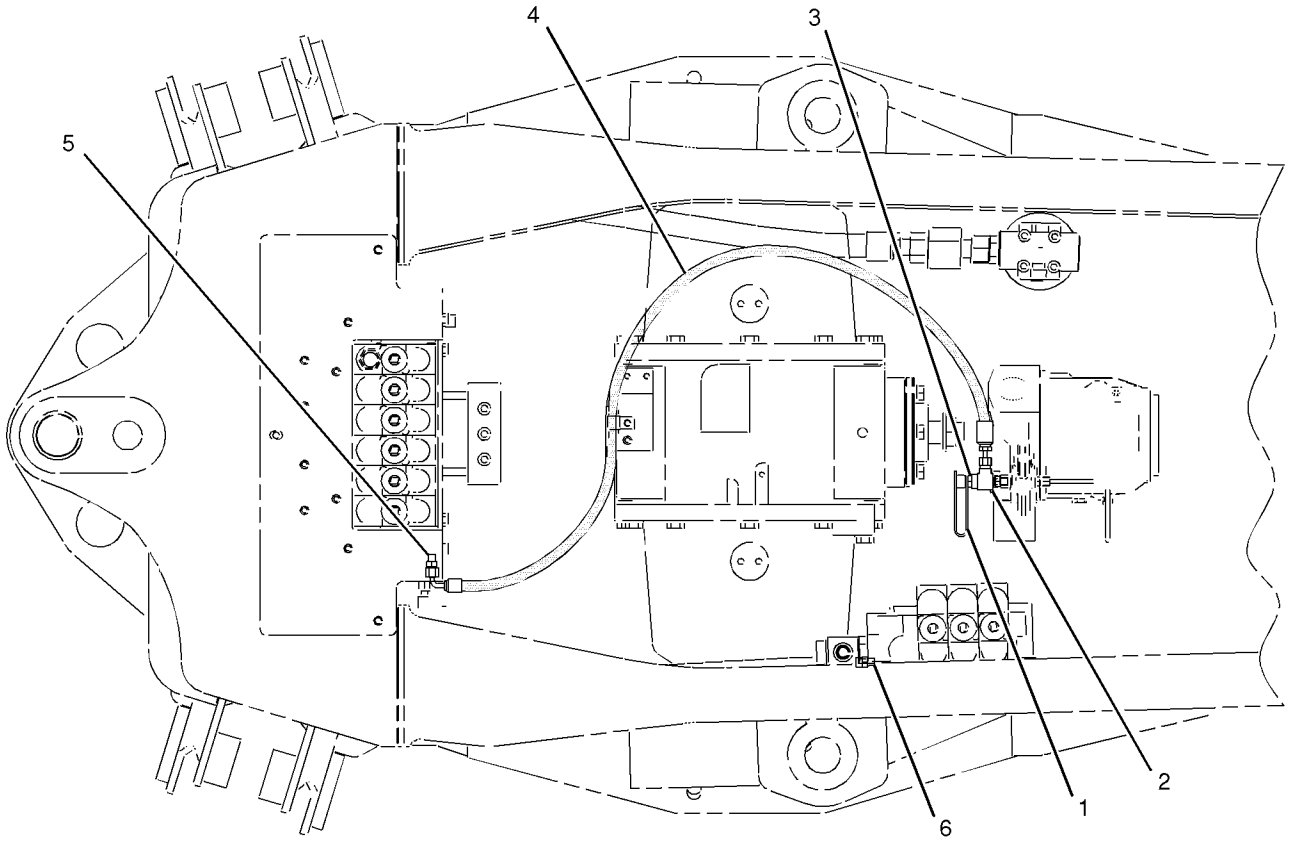

TOP VIEW

GRAPHIC #1 **<END>** g01049118

164-1400 CONTROL GP-HYDRAULIC HAND

S/N: B2D1-UP
STANDARD
PART OF 164-1410 CONVERSION GP-HYD HAND CONTROL
AN ATTACHMENT

SMCS-5063 **i01958689**

NOTE	REF NO	GRAPHIC REF	PART NUMBER	QTY	PART NAME 1 2 3 4 5 6 (PRODUCT LEVEL)	SEE PAGE
	1	1	**8T-4773**	4	BALL JOINT	
	2	1	**8T-4815**	4	ROD END	
	3	1	**9R-9901**	6	FASTENER (CLIP)	
	4	1	**164-1361**	2	BOOT	
	5	1	**164-1371**	1	PLATE	
	6	1	**164-1399**	2	KNOB	
	7	1	**164-1402**	2	SLEEVE	
	8	1	**164-1404**	2	SPACER (23MM THK)	
	9	1	**164-1406**	4	ROD	
	10	1	**164-1409**	1	LEVER AS (RH)	
	11	1	**164-1411**	1	LEVER AS (LH)	
	12	1	**164-1435**	2	PLATE	
	13	1	**164-1560**	1	TOWER AS	
	14	1	**167-8248**	1	CONSOLE-REAR	
	15	1	**170-6312**	4	BEARING	
	16	1	**179-8235**	4	LOCK PIN	
	17	1	**190-5130**	1	FILM-INSTRUCTION (BUCKET CONTROL)	
M	18	1	**6V-7744**	8	LOCKNUT (M10X1.5 THD)	
	19	1	**7X-7729**	8	WASHER (11X25X3MM THK)	
	20	1	**8C-4987**	4	PIN-CLEVIS	
	21	1	**8T-4121**	8	WASHER-HARD (11X21X2.5MM THK)	
M	22	1	**8T-4133**	8	NUT (M10X1.5 THD)	
M	23	1	**8T-4138**	6	BOLT (M6X1X20MM)	
M	24	1	**8T-4172**	2	BOLT (M10X1.50X80MM)	
M	25	1	**8T-4195**	2	BOLT (M10X1.5X30MM)	
M	26	1	**8T-6466**	2	BOLT (M10X1.50X60MM)	
	27	1	**9X-2038**	4	WASHER (7X19X2MM THK)	
M	28	1	**9X-2045**	4	SCREW-TRUSS HEAD (M6X1X20MM)	
	29	1	**9X-8256**	6	WASHER (6.6X12X2MM THK)	

M-METRIC PART

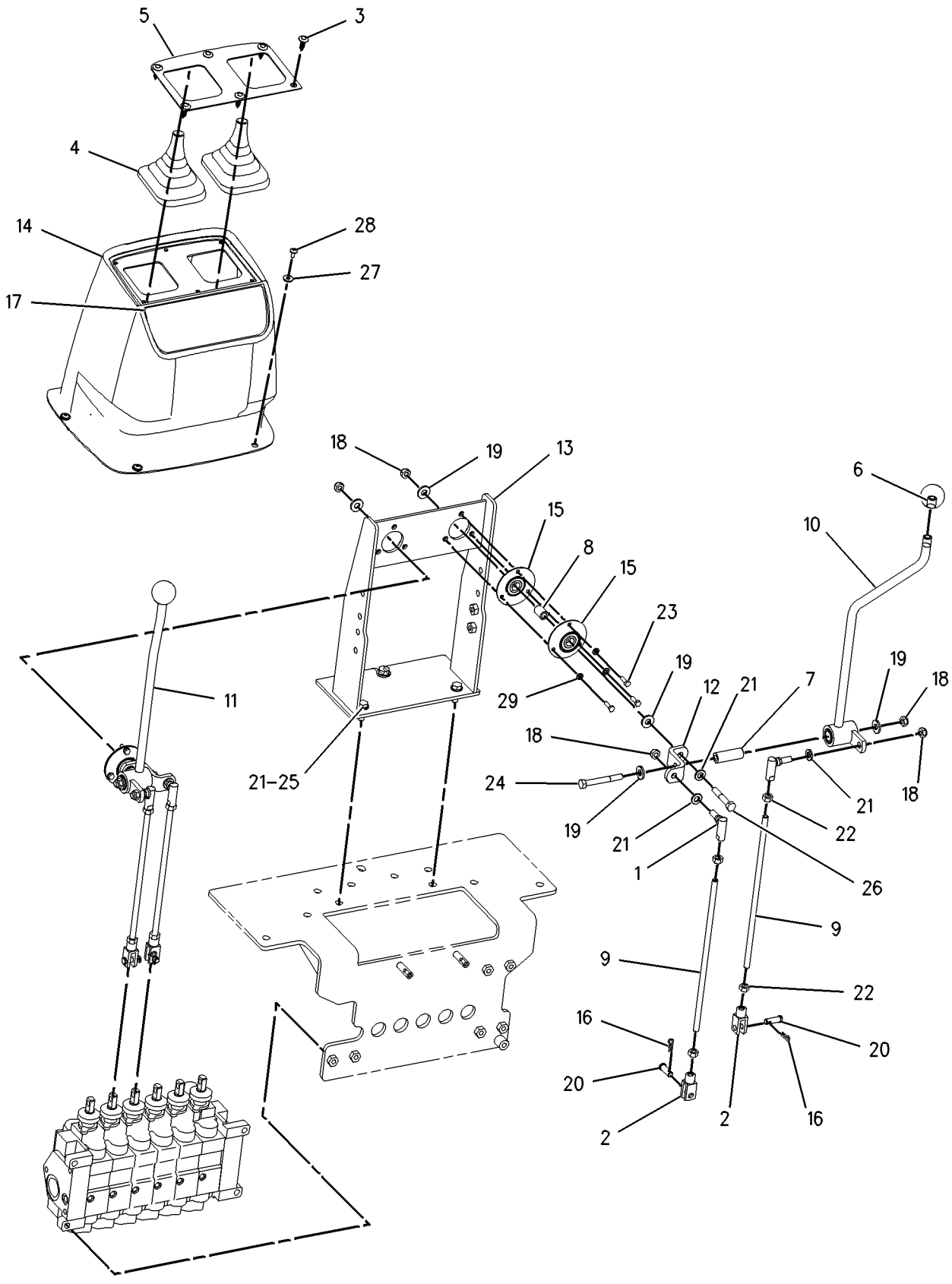

GRAPHIC #1 **<END>** g00739022

164-1420 CONTROL GP-HYDRAULIC HAND

S/N: B2D1-UP
EXCAVATOR
PART OF 164-1430 CONVERSION GP-HYD HAND CONTROL
AN ATTACHMENT

SMCS-5063 **i01958694**

NOTE	REF NO	GRAPHIC REF	PART NUMBER	QTY	PART NAME 1 2 3 4 5 6 (PRODUCT LEVEL)	SEE PAGE
	1	1	**9X-8256**	6	WASHER (6.6X12X2MM THK)	
	2	1	**8T-4773**	10	BALL JOINT	
	3	1	**8T-4815**	2	ROD END	
	4	1	**9R-9901**	6	FASTENER (CLIP)	
	5	1	**142-7405**	2	COLLAR	
	6	1	**164-1361**	2	BOOT	
	7	1	**164-1371**	1	PLATE	
	8	1	**164-1399**	2	KNOB	
	9	1	**164-1402**	2	SLEEVE	
	10	1	**164-1404**	2	SPACER (23MM THK)	
	11	1	**164-1409**	1	LEVER AS (RH)	
	12	1	**164-1411**	1	LEVER AS (LH)	
	13	1	**164-1421**	1	PLATE	
	14	1	**164-1422**	1	SHAFT AS	
	15	1	**164-1425**	1	COUPLER AS	
	16	1	**164-1427**	2	ROD	
	17	1	**164-1429**	1	COUPLER AS	
	18	1	**164-1435**	2	PLATE	
	19	1	**164-1438**	2	ROD	
	20	1	**164-1441**	2	ROD	
	21	1	**164-1560**	1	TOWER AS	
	22	1	**167-8248**	1	CONSOLE-REAR	
	23	1	**170-6312**	4	BEARING	
	24	1	**9R-2807**	2	CLIP	
	25	1	**190-5128**	1	FILM (BUCKET CONTROL)	
M	26	1	**6V-7744**	14	LOCKNUT (M10X1.5 THD)	
M	27	1	**6V-8932**	2	SETSCREW-SOCKET (M6X1X10MM)	
	28	1	**7X-7729**	8	WASHER (11X25X3MM THK)	
	29	1	**9R-2806**	2	PIN	
	30	1	**8T-4121**	20	WASHER-HARD (11X21X2.5MM THK)	
M	31	1	**8T-4133**	16	NUT (M10X1.5 THD)	
M	32	1	**8T-4138**	6	BOLT (M6X1X20MM)	
M	33	1	**8T-4172**	2	BOLT (M10X1.50X80MM)	
M	34	1	**8T-4195**	6	BOLT (M10X1.5X30MM)	
M	35	1	**8T-6466**	2	BOLT (M10X1.50X60MM)	
	36	1	**9X-2038**	4	WASHER (7X19X2MM THK)	
M	37	1	**9X-2045**	4	SCREW-TRUSS HEAD (M6X1X20MM)	

M-METRIC PART

164-1420 **CONTROL GP-HYDRAULIC HAND** *(contd.)* **i01958694**

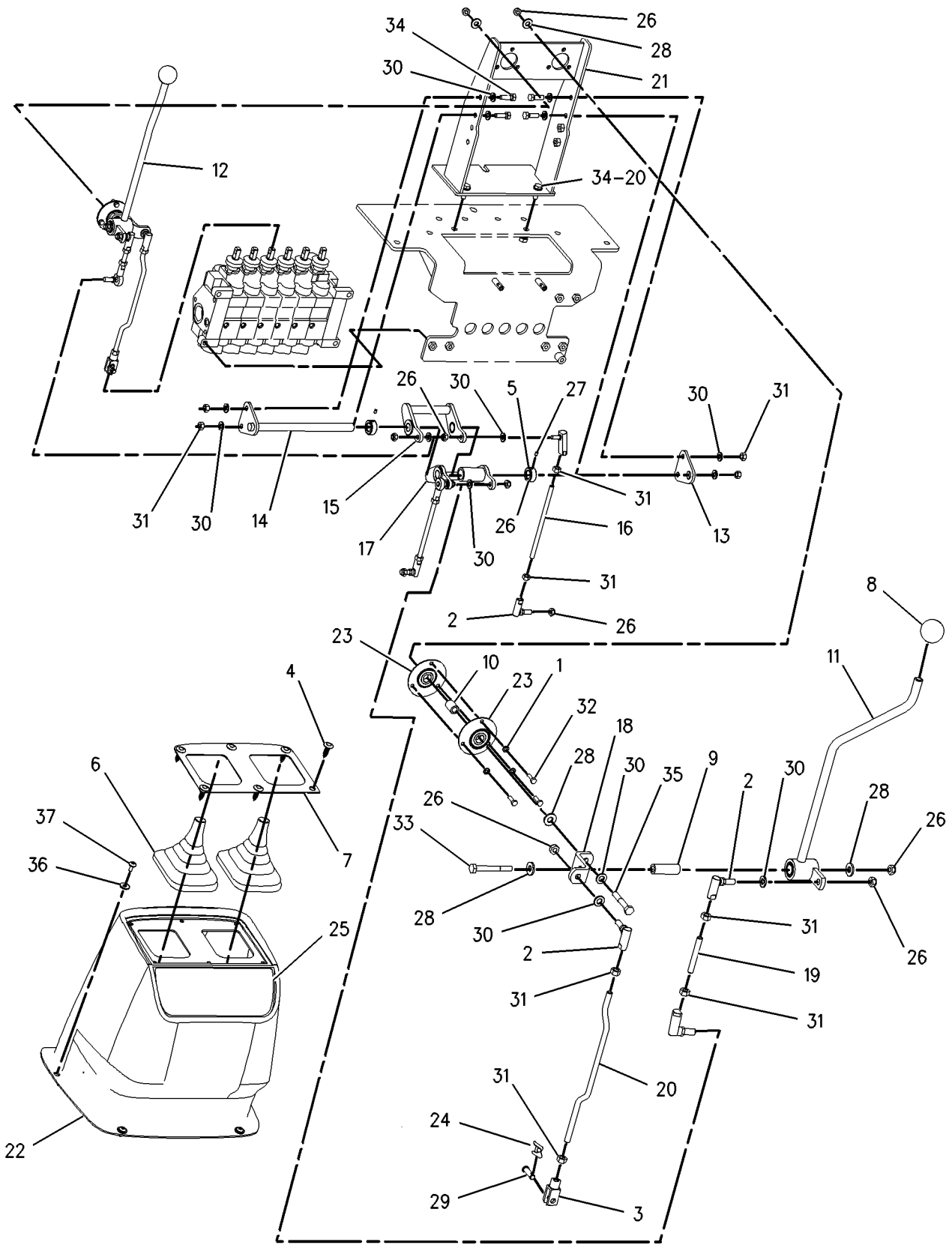

GRAPHIC #1 **<END>** g00795676

HYDRAULIC SYSTEM

164-1500 CONTROL GP-HYDRAULIC HAND

S/N: B2D1-UP
THREE LEVER FOOT SWING
PART OF 164-1510 CONVERSION GP-HYD HAND CONTROL
AN ATTACHMENT

SMCS-5063 **i01958761**

NOTE	REF NO	GRAPHIC REF	PART NUMBER	QTY	PART NAME 1 2 3 4 5 6 (PRODUCT LEVEL)	SEE PAGE
	1	1	**8F-7702**	4	SEAL-LIP	
	2	1	**8T-4773**	4	BALL JOINT	
	3	1	**8T-4815**	5	ROD END	
	4	1	**8T-6431**	2	ROD END	
	5	1	**9R-9901**	6	FASTENER (CLIP)	
	6	1	**117-5672**	3	BOOT	
B	7	1	**136-7439**	2	SPACER (3MM THK)	
B	8	1	**136-7440**	2	SHIM (1MM THK)	
	9	1	**142-7405**	2	COLLAR	
	10	1	**164-1373**	1	PLATE	
	11	1	**164-1397**	3	KNOB	
	12	1	**164-1427**	1	ROD	
	13	1	**164-1441**	1	ROD	
	14	1	**164-1501**	1	LEVER AS-BUCKET	
	15	1	**164-1502**	1	LEVER AS-STICK	
	16	1	**164-1503**	1	LEVER AS-BOOM	
	17	1	**164-1514**	2	ROD	
	18	1	**164-1515**	2	SUPPORT AS	
		1	**5V-4410**	2	BEARING-SLEEVE	
	19	1	**164-1517**	2	SHAFT AS-PEDAL	
	20	1	**164-1519**	1	SHAFT-LEVER	
	21	1	**164-1521**	1	SHAFT AS	
	22	1	**164-1523**	2	BEARING	
	23	1	**164-1525**	1	ROD	
	24	1	**164-1526**	1	GASKET	
	25	1	**164-1527**	2	SEAL	
	26	1	**164-1541**	1	PEDAL AS-RH	
	27	1	**164-1551**	1	PEDAL AS-LH	
	28	1	**164-1570**	1	TOWER AS	
	29	1	**179-8235**	4	LOCK PIN	
	30	1	**183-4994**	1	CONSOLE-REAR	
	31	1	**186-1583**	1	ROD END AS	
	32	1	**190-5129**	1	FILM (BUCKET CONTROL)	
M	33	1	**6V-7744**	6	LOCKNUT (M10X1.5 THD)	
M	34	1	**6V-8335**	2	BOLT-SELF LOCKING (M10X1.5X40MM)	
M	35	1	**6V-8932**	2	SETSCREW-SOCKET (M6X1X10MM)	
	36	1	**8C-4987**	4	PIN-CLEVIS	
	37	1	**8M-3175**	2	WASHER-HARD (10.2X16X3MM THK)	
	38	1	**8T-4121**	13	WASHER-HARD (11X21X2.5MM THK)	
M	39	1	**8T-4133**	11	NUT (M10X1.5 THD)	
M	40	1	**8T-4186**	2	BOLT (M10X1.5X40MM)	
M	41	1	**8T-4195**	6	BOLT (M10X1.5X30MM)	
	42	1	**8T-4224**	6	WASHER-HARD (8.8X16X2MM THK)	
M	43	1	**8T-4908**	4	BOLT (M8X1.25X25MM)	
M	44	1	**8T-7547**	2	BOLT (M8X1.25X30MM)	
	45	1	**9R-2806**	2	PIN	
	46	1	**9R-2807**	2	CLIP	
	47	1	**9X-2038**	4	WASHER (7X19X2MM THK)	
M	48	1	**9X-2045**	4	SCREW-TRUSS HEAD (M6X1X20MM)	

B-USE AS REQUIRED
M-METRIC PART

164-1500 **CONTROL GP-HYDRAULIC HAND** *(contd.)* **i01958761**

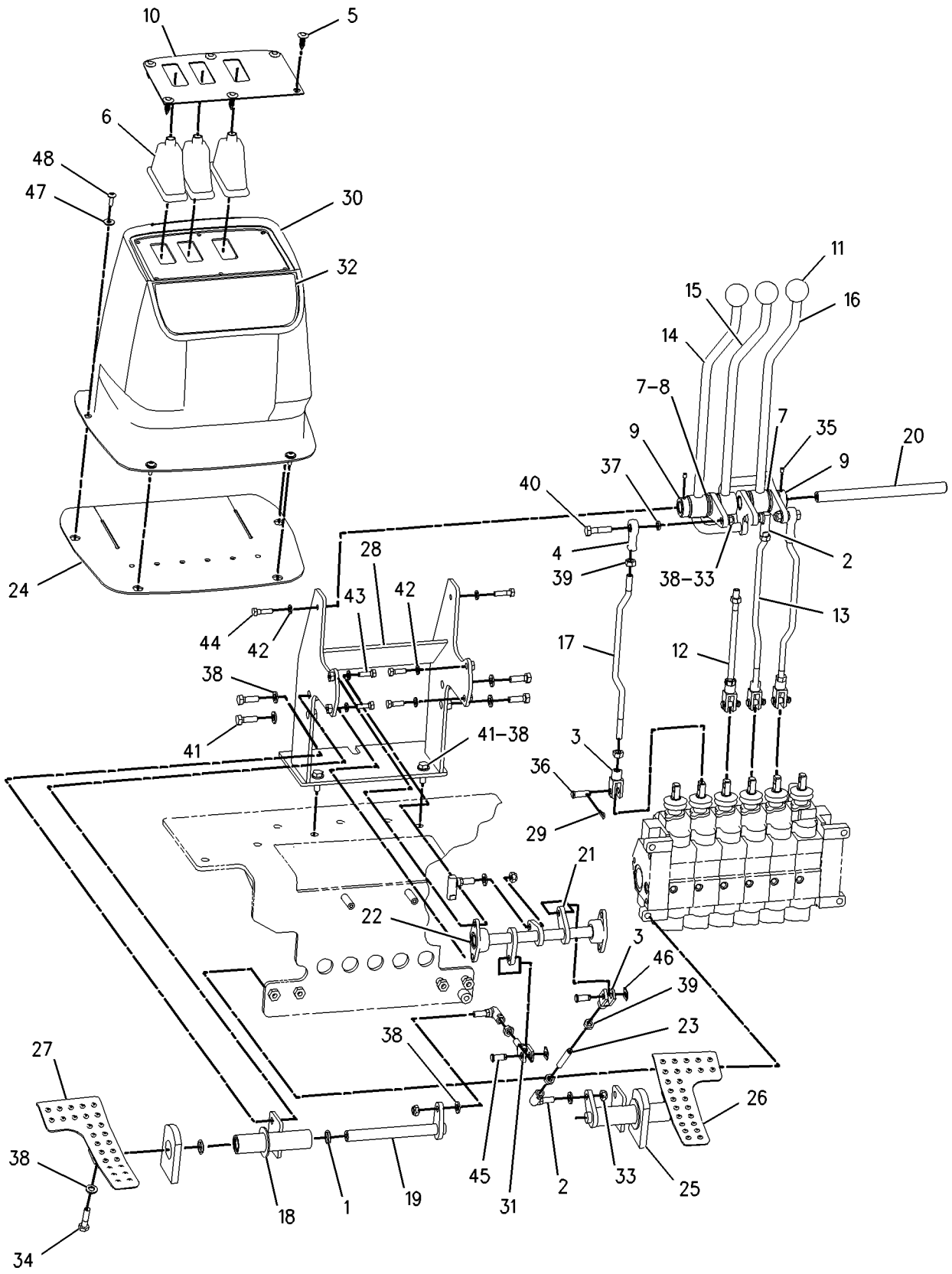

GRAPHIC #1 **<END>** g00795751

HYDRAULIC SYSTEM

164-1520 CONTROL GP-HYDRAULIC HAND

S/N: B2D1-UP
FOUR LEVER FOOT SWING
PART OF 164-1530 CONVERSION GP-HYD HAND CONTROL
AN ATTACHMENT

SMCS-5063 **i01958760**

NOTE	REF NO	GRAPHIC REF	PART NUMBER	QTY	PART NAME 1 2 3 4 5 6 (PRODUCT LEVEL)	SEE PAGE
	1	1	**8F-7702**	4	SEAL-LIP	
	2	1	**8T-4773**	4	BALL JOINT	
	3	1	**8T-4815**	6	ROD END	
	4	1	**8T-6431**	3	ROD END	
	5	1	**9R-9901**	6	FASTENER (CLIP)	
	6	1	**101-2788**	1	FILM-INSTRUCTION	
	7	1	**164-1527**	2	SEAL	
	8	1	**117-5672**	4	BOOT	
B	9	1	**136-7439**	5	SPACER (3MM THK)	
B	10	1	**136-7440**	1	SHIM (1MM THK)	
	11	1	**142-7405**	1	COLLAR	
	12	1	**164-1372**	1	PLATE	
	13	1	**164-1397**	4	KNOB	
	14	1	**164-1441**	1	ROD	
	15	1	**164-1427**	1	ROD	
	16	1	**164-1501**	1	LEVER AS-BUCKET	
	17	1	**164-1502**	1	LEVER AS-STICK	
	18	1	**164-1503**	1	LEVER AS-BOOM	
	19	1	**186-1583**	1	ROD END AS	
	20	1	**164-1511**	1	LEVER AS (ESTICK)	
	21	1	**164-1514**	3	ROD	
	22	1	**164-1515**	2	SUPPORT AS	
		1	**5V-4410**	2	BEARING-SLEEVE	
	23	1	**164-1517**	2	SHAFT AS-PEDAL	
	24	1	**164-1519**	1	SHAFT-LEVER	
	25	1	**164-1521**	1	SHAFT AS	
	26	1	**164-1523**	2	BEARING	
	27	1	**164-1525**	1	ROD	
	28	1	**164-1541**	1	PEDAL AS-RH	
	29	1	**164-1551**	1	PEDAL AS-LH	
	30	1	**164-1570**	1	TOWER AS	
	31	1	**179-8235**	5	LOCK PIN	
	32	1	**183-4999**	1	CONSOLE-REAR	
	33	1	**190-5129**	1	FILM (BUCKET CONTROL)	
	34	1	**164-1526**	1	GASKET	
M	35	1	**6V-7744**	7	LOCKNUT (M10X1.5 THD)	
M	36	1	**6V-8335**	2	BOLT-SELF LOCKING (M10X1.5X40MM)	
M	37	1	**6V-8932**	1	SETSCREW-SOCKET (M6X1X10MM)	
	38	1	**8C-4987**	5	PIN-CLEVIS	
	39	1	**8M-3175**	3	WASHER-HARD (10.2X16X3MM THK)	
	40	1	**8T-4121**	14	WASHER-HARD (11X21X2.5MM THK)	
M	41	1	**8T-4133**	13	NUT (M10X1.5 THD)	
M	42	1	**8T-4186**	3	BOLT (M10X1.5X40MM)	
M	43	1	**8T-4195**	6	BOLT (M10X1.5X30MM)	
	44	1	**8T-4224**	6	WASHER-HARD (8.8X16X2MM THK)	
M	45	1	**8T-4908**	4	BOLT (M8X1.25X25MM)	
M	46	1	**8T-7547**	2	BOLT (M8X1.25X30MM)	
	47	1	**9R-2806**	2	PIN	
	48	1	**9R-2807**	2	CLIP	
	49	1	**9X-2038**	4	WASHER (7X19X2MM THK)	
M	50	1	**9X-2045**	4	SCREW-TRUSS HEAD (M6X1X20MM)	

B-USE AS REQUIRED
M-METRIC PART

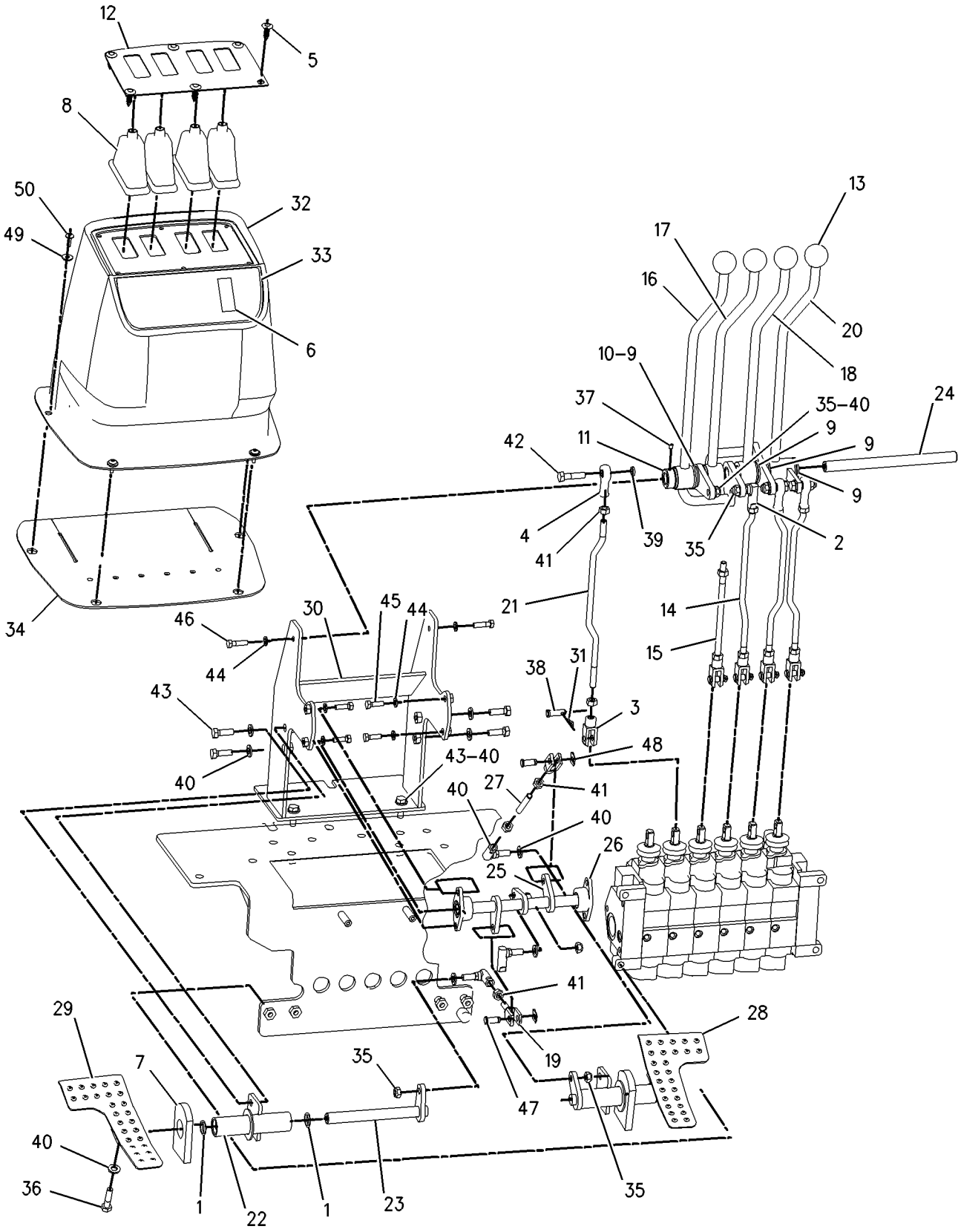

GRAPHIC #1 **<END>** g00783734

HYDRAULIC SYSTEM

183-3120 CONTROL GP-HYDRAULIC HAND

S/N: B2D1-UP
SINGLE TILT
PART OF 214-6950 CHASSIS AR

SMCS-5063 **i01714172**

NOTE	REF NO	GRAPHIC REF	PART NUMBER	QTY	PART NAME 1 2 3 4 5 6 (PRODUCT LEVEL)	SEE PAGE
B	1	1	**1K-0502**	7	WASHER (25.4X16.3X1.2MM THK)	
	2	1	**2R-0364**	3	RING-RETAINING	
	3	1	**3E-3365**	1	WEDGE-RECEPTACLE LOCK (2 PIN)	
	4	1	**5H-3193**	1	PIN-SPRING	
	5	1	**8T-4766**	1	ROD END	
	6	1	**8T-4773**	1	BALL JOINT	
	7	1	**8T-4815**	2	ROD END	
	8	1	**9R-1765**	1	KNOB	
	9	1	**9R-1766**	1	KNOB	
	10	1	**9R-1767**	1	BOOT	
	11	1	**9R-9868**	1	SWITCH AS-PUSH BUTTON	
		1	**186-3735**	2	PIN-CONNECTOR	
	12	1	**107-5591**	1	NUT-JAM (3/4-16 THD)	
M	13	1	**134-0453**	2	TURN BUCKLE	
	14	1	**140-6021**	1	PLATE	
	15	1	**164-1368**	8	CLIP	
	16	1	**164-1369**	1	PLATE	
	17	1	**179-8235**	1	LOCK PIN	
	18	1	**183-3121**	1	BRACKET AS	
	19	1	**183-3122**	1	LEVER AS	
	20	1	**183-3131**	1	DAMPER AS	
		1	**095-9230**	1	PIN-SPRING	
		1	**183-3132**	1	CYLINDER	
	21	1	**183-3135**	1	JOINT AS	
		1	**183-3136**	1	BEARING	
	22	1	**183-3137**	1	PIN	
	23	1	**183-3153**	1	ROD	
	24	1	**183-3155**	1	ROD	
	25	1	**183-3156**	1	ROD	
	26	1	**201-8069**	1	SEAL	
	27	1	**102-8802**	1	KIT-RECEPTACLE (2 PIN)	
					(KIT SERVICES RECEPTACLE AS. AND WEDGE)	
	28	1	**3S-2093**	1	STRAP-CABLE	
M	29	1	**6V-7744**	2	LOCKNUT (M10X1.5 THD)	
	30	1	**8C-4987**	1	PIN-CLEVIS	
	31	1	**8T-4121**	4	WASHER-HARD (11X21X2.5MM THK)	
M	32	1	**8T-4133**	8	NUT (M10X1.5 THD)	
M	33	1	**8T-4136**	2	BOLT (M10X1.5X25MM)	
M	34	1	**8T-4195**	2	BOLT (M10X1.5X30MM)	
	35	1	**8T-4223**	4	WASHER-HARD (13.5X25.5X3MM THK)	
	36	1	**8T-9501**	2	SCREW (10-16X.75 IN)	
	37	1	**9R-2807**	1	CLIP	
	38	1	**9R-3067**	1	PIN	
M	39	1	**9X-2065**	2	NUT	

B-USE AS REQUIRED
M-METRIC PART

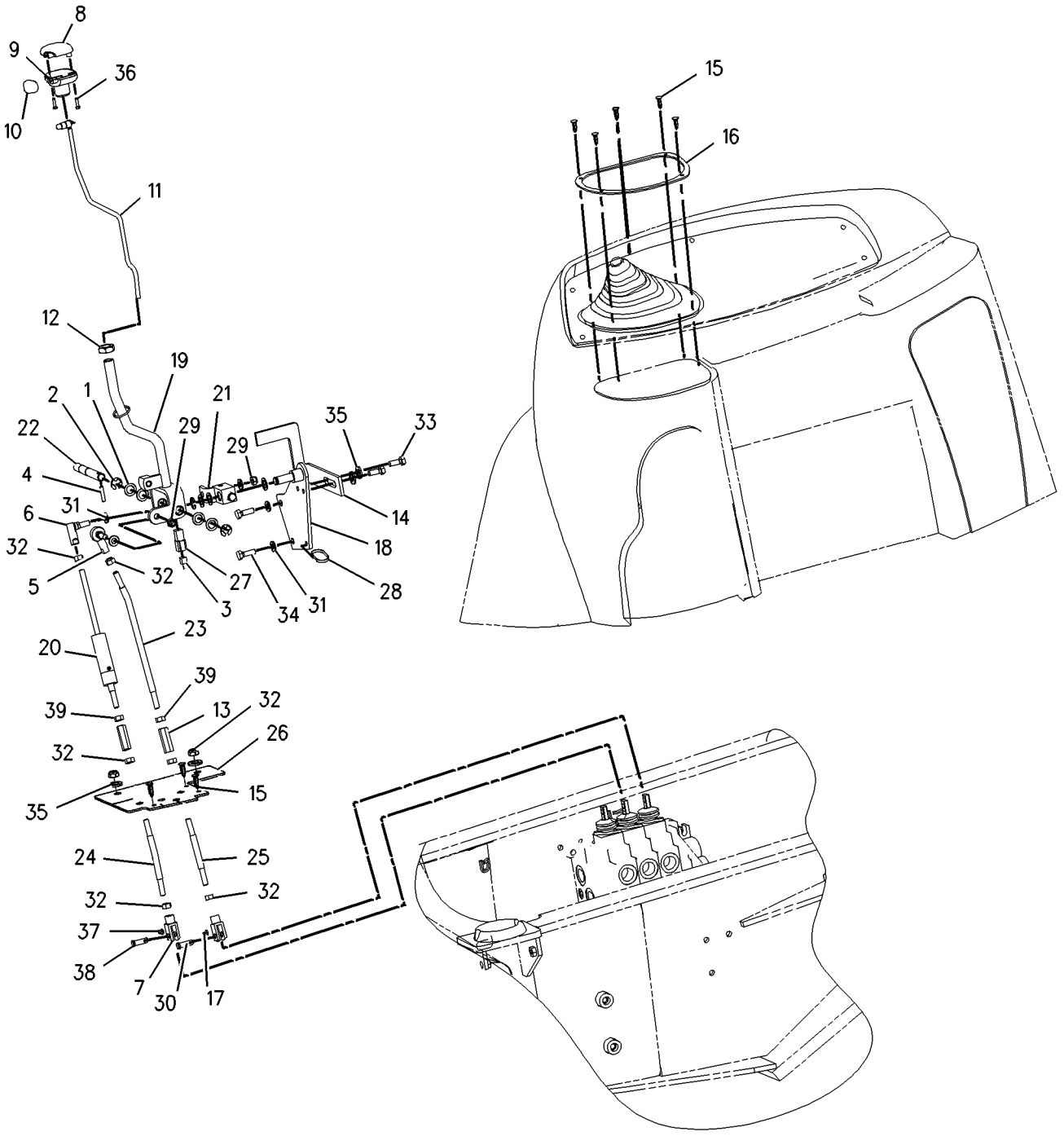

GRAPHIC #1 **<END>** g00861982

183-3150 CONTROL GP-HYDRAULIC HAND

S/N: B2D1-UP
PART OF 186-5333 HYDRAULIC AR
AN ATTACHMENT

SMCS-5063 **i01692611**

NOTE	REF NO	GRAPHIC REF	PART NUMBER	QTY	PART NAME 1 2 3 4 5 6 (PRODUCT LEVEL)	SEE PAGE
	1	1	**1K-0502**	3	WASHER (25.4X16.3X1.2MM THK)	
	2	1	**2R-0364**	1	RING-RETAINING	
	3	1	**8T-4773**	1	BALL JOINT	
	4	1	**8T-4815**	1	ROD END	
M	5	1	**134-0453**	1	TURN BUCKLE	
	6	1	**164-1395**	1	KNOB	
	7	1	**179-8235**	1	LOCK PIN	
	8	1	**183-3151**	1	LEVER AS	
		1	**183-3136**	1	BEARING	
	9	1	**183-3153**	1	ROD	
	10	1	**183-3156**	1	ROD	
	11	1	**8C-4987**	1	PIN-CLEVIS	
	12	1	**8T-4121**	1	WASHER-HARD (11X21X2.5MM THK)	
M	13	1	**8T-4133**	3	NUT (M10X1.5 THD)	
M	14	1	**9X-2065**	1	NUT	

M-METRIC PART

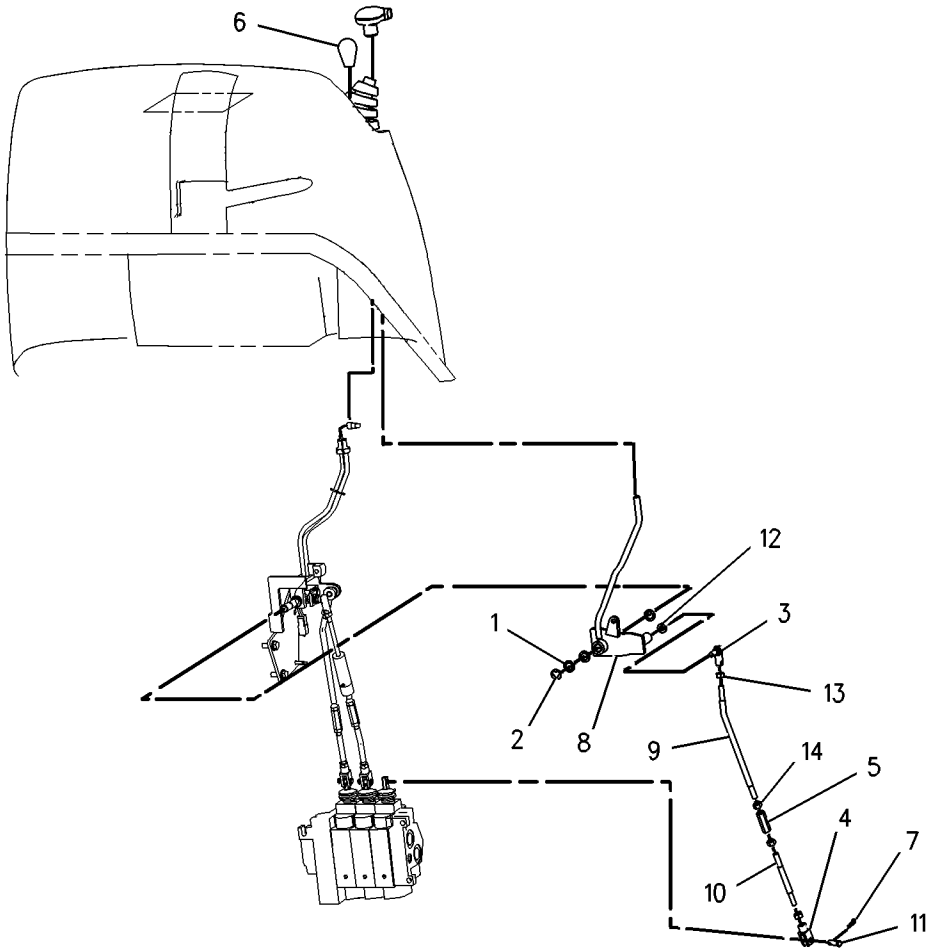

GRAPHIC #1 **<END>** g00738135

164-1540 CONTROL GP-HYDRAULIC PEDAL

S/N: B2D1-UP
EXTENDED STICK
PART OF 196-8860, 196-8862, 198-6681 HYDRAULIC AR, 214-7001 VALVE AR-BANK 5, 214-7003 VALVE AR-BANK 6
AN ATTACHMENT

SMCS-5063 **i01750423**

NOTE	REF NO	GRAPHIC REF	PART NUMBER	QTY	PART NAME 1 2 3 4 5 6 (PRODUCT LEVEL)	SEE PAGE
M	1	1	**6V-8335**	1	BOLT-SELF LOCKING (M10X1.5X40MM)	
	2	1	**8T-4815**	1	ROD END	
	3	1	**8T-6431**	1	ROD END	
	4	1	**109-0533**	1	SEAL	
B	5	1	**133-8916**	1	FILM-INSTRUCTION (E-STICK)	
	6	1	**164-1541**	1	PEDAL AS-RH	
	7	1	**164-1544**	1	SUPPORT AS	
	8	1	**164-1547**	1	SHAFT AS	
	9	1	**164-1549**	1	ROD	
	10	1	**179-8235**	1	LOCK PIN	
B	11	1	**198-0098**	1	FILM (STANDARD STICK)	
M	12	1	**6V-7744**	1	LOCKNUT (M10X1.5 THD)	
	13	1	**8C-4987**	1	PIN-CLEVIS	
	14	1	**8M-3175**	1	WASHER-HARD (10.2X16X3MM THK)	
	15	1	**8T-4121**	4	WASHER-HARD (11X21X2.5MM THK)	
M	16	1	**8T-4133**	2	NUT (M10X1.5 THD)	
M	17	1	**8T-4186**	1	BOLT (M10X1.5X40MM)	
M	18	1	**8T-4195**	2	BOLT (M10X1.5X30MM)	

B-USE AS REQUIRED
M-METRIC PART

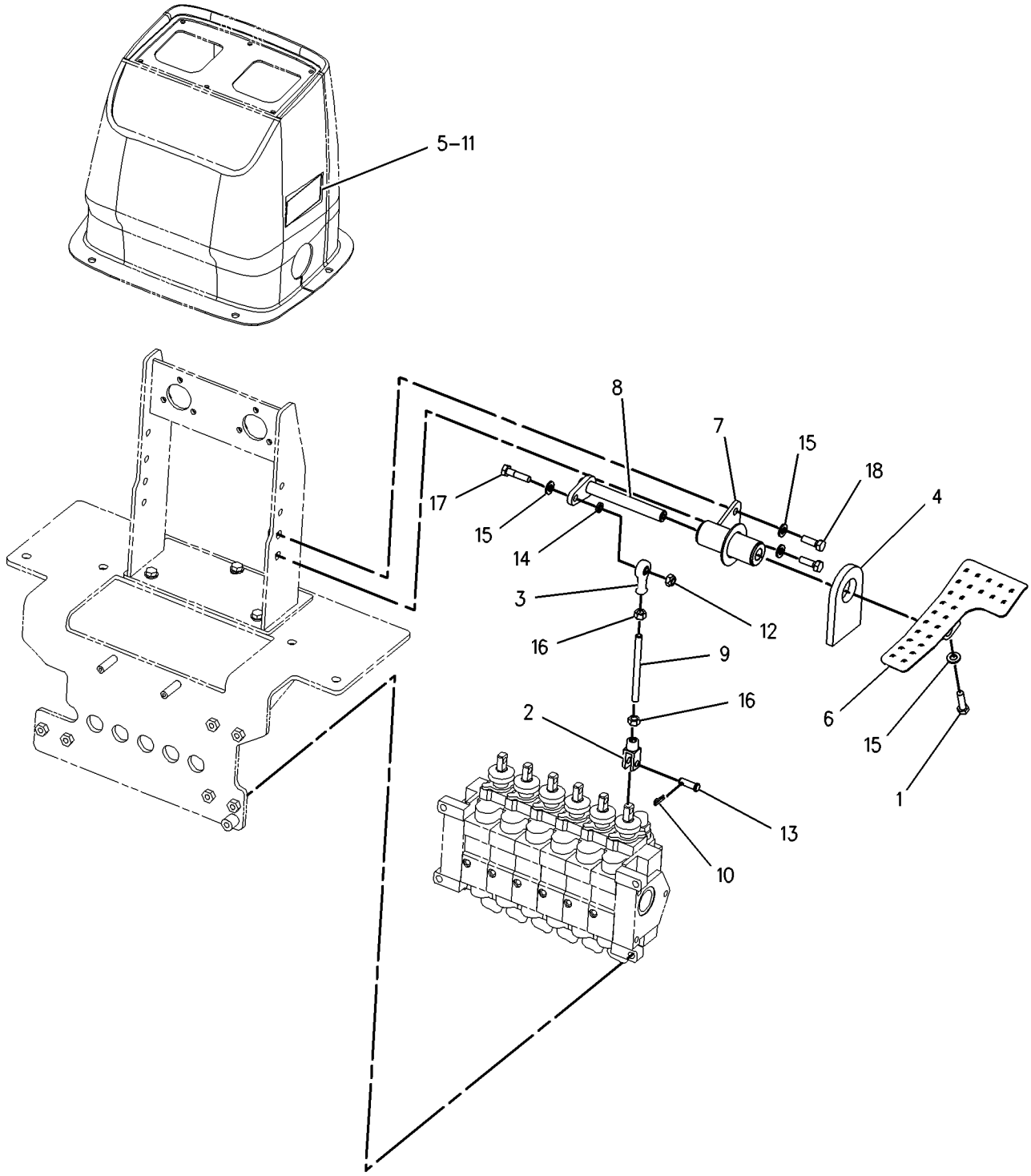

GRAPHIC #1 **<END>** g00813303

164-1550 CONTROL GP-HYDRAULIC PEDAL

S/N: B2D1-UP
AUXILIARY
PART OF 214-7003 VALVE AR-BANK 6
AN ATTACHMENT

SMCS-5063 **i01494868**

NOTE	REF NO	GRAPHIC REF	PART NUMBER	QTY	PART NAME 1 2 3 4 5 6 (PRODUCT LEVEL)	SEE PAGE
M	1	1	**6V-8335**	1	BOLT-SELF LOCKING (M10X1.5X40MM)	
	2	1	**8T-4815**	1	ROD END	
	3	1	**8T-6431**	1	ROD END (M10X1.50 THD)	
	4	1	**109-0533**	1	SEAL	
	5	1	**164-1544**	1	SUPPORT AS	
	6	1	**164-1547**	1	SHAFT AS	
	7	1	**164-1549**	1	ROD	
	8	1	**164-1551**	1	PEDAL AS-LH	
	9	1	**179-8235**	1	LOCKPIN	
M	10	1	**6V-7744**	1	LOCKNUT (M10X1.5 THD)	
	11	1	**8C-4987**	1	PIN-CLEVIS	
	12	1	**8M-3175**	1	WASHER-HARD (10.2X16X3MM THK)	
	13	1	**8T-4121**	6	WASHER-HARD (11X21X2.5MM THK)	
M	14	1	**8T-4133**	4	NUT (M10X1.5 THD)	
M	15	1	**8T-4186**	1	BOLT (M10X1.5X40MM)	
M	16	1	**8T-4195**	2	BOLT (M10X1.5X30MM)	

M-METRIC PART

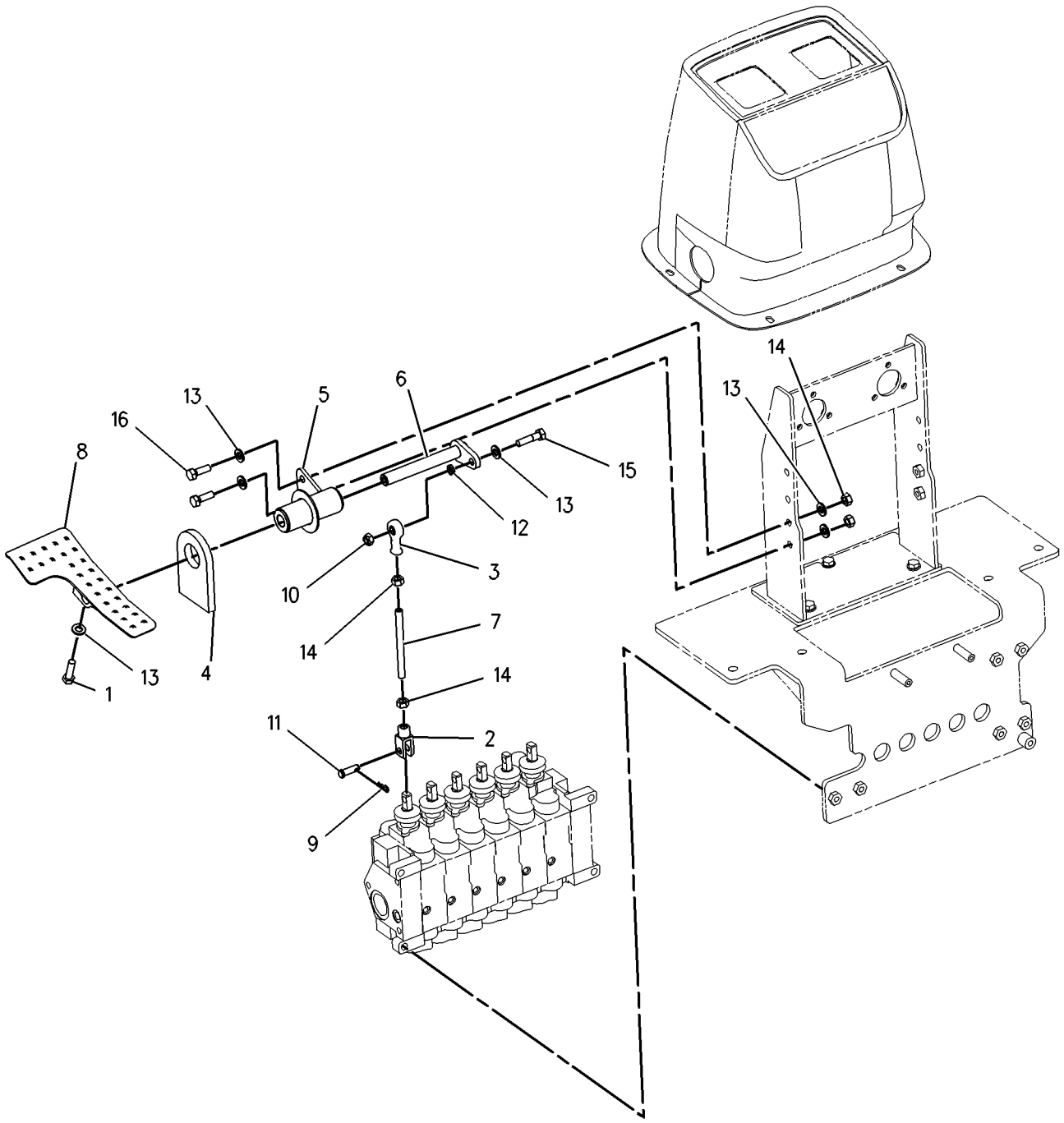

GRAPHIC #1 **<END>** g00745736

HYDRAULIC SYSTEM

202-6126 CONVERSION AR-CUSHION SWING

S/N: B2D1-UP
CENTER PIVOT, NON LOW LEAK BACKHOE
AN ATTACHMENT

SMCS-5057, 5105, 5454 **i01823516**

NOTE	REF NO	GRAPHIC REF	PART NUMBER	QTY	PART NAME 1 2 3 4 5 6 (PRODUCT LEVEL)	SEE PAGE
	1	1	**206-3685**	1	VALVE GP-CROSSOVER RELIEF	
		1	**7I-8084**	2	PLUG	
I	2	1	**208-3600**	1	HOSE AS	
	3	1	*214-4253*	1	TEE AS	
		1	**4J-5477**	1	SEAL-O-RING	
		1	**6V-8398**	1	SEAL-O-RING	
		1	**214-4252**	1	TEE	
I	4	1	**217-1387**	1	HOSE AS	
	5	1	**226-5634**	2	CONNECTOR AS	
					(EACH INCLUDES)	
		1	**3J-1907**	1	SEAL-O-RING	
		1	**4J-5477**	1	SEAL-O-RING	
		1	**167-0566**	1	CARTRIDGE	
		1	**226-5633**	1	CONNECTOR	
	6	1	*148-8351*	2	ELBOW GP	
					(EACH INCLUDES)	
		1	**4J-5477**	1	SEAL-O-RING	
		1	**6V-9849**	1	ELBOW-SWIVEL	
	7	1	*148-8428*	1	TEE GP	
		1	**3K-0360**	1	SEAL-O-RING	
		1	**6V-8398**	2	SEAL-O-RING	
		1	**6V-8782**	1	TEE-FACE SEAL	
	8	1	*164-8908*	1	CONNECTOR GP	
		1	**3K-0360**	1	SEAL-O-RING	
		1	**6V-8398**	1	SEAL-O-RING	
		1	**8T-0077**	1	CONNECTOR	
M	9	1	**8T-3612**	2	NUT-WELD (M8X1.25 THD)	
	10	1	**8T-4224**	2	WASHER-HARD (8.8X16X2MM THK)	
M	11	1	**8T-6870**	2	BOLT (M8X1.25X70MM)	
I	12	1	**208-3601**	1	HOSE AS	

I-SEE HOSE FABRICATION GUIDE
M-METRIC PART

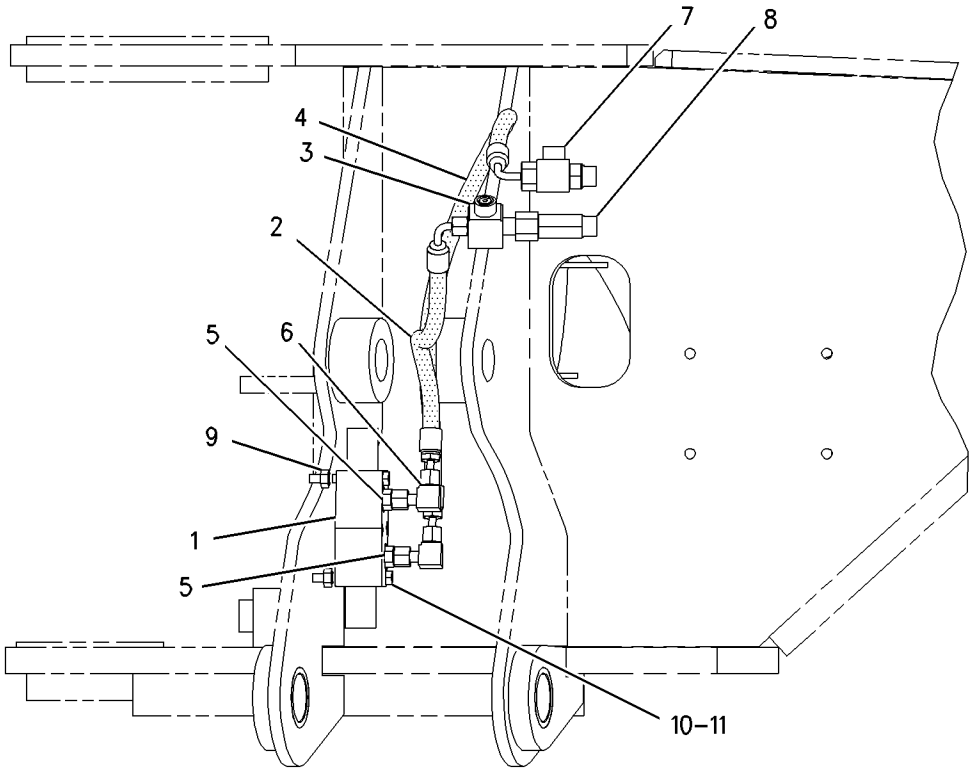

RIGHT SIDE VIEW
WITHOUT ANTI-DRIFT VALVE

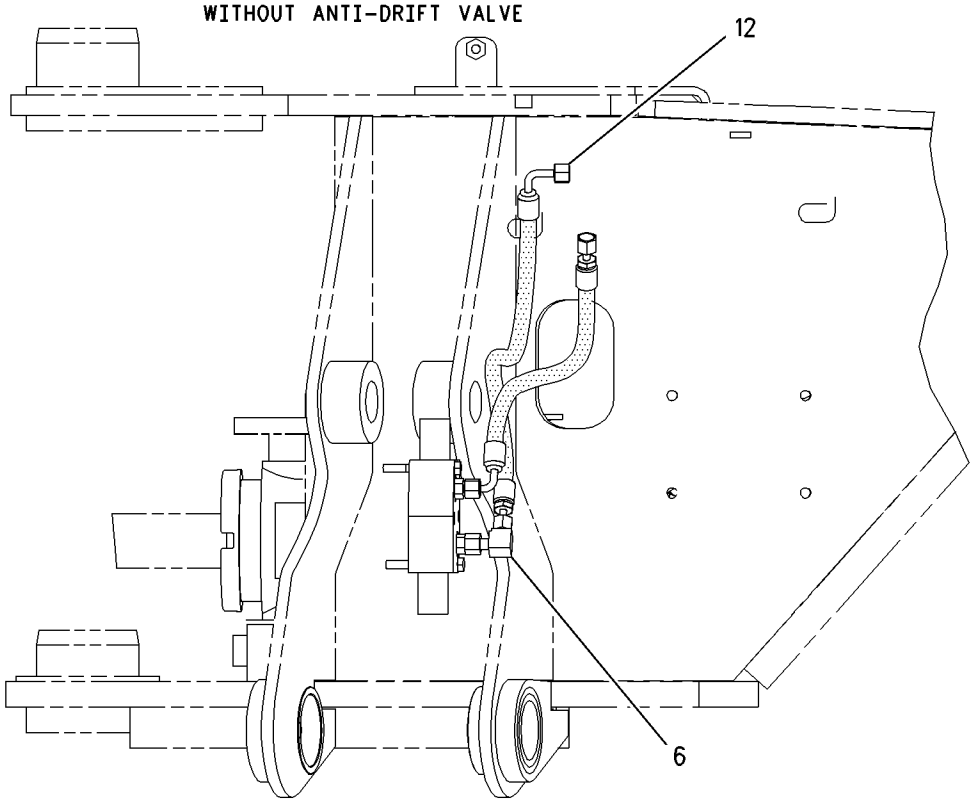

RIGHT SIDE VIEW
WITH ANTI-DRIFT VALVE

GRAPHIC #1 **<END>** g00930149

HYDRAULIC SYSTEM

198-7412 CONVERSION GP-CONTROL VALVE

S/N: B2D1-UP

FOUR BANK TO FIVE BANK CONVERSION

PART OF 196-8860, 198-6681 HYDRAULIC AR

SMCS-5051 **i01528985**

NOTE	PART NUMBER	QTY	PART NAME 1 2 3 4 5 6 (PRODUCT LEVEL)	SEE PAGE
	9S-8752	6	NUT-FULL (3/8-16 THD)	
	4D-9986	2	SEAL-O-RING	
	4J-5140	1	SEAL-O-RING	
	4J-5267	1	SEAL-O-RING	
	4T-2723	3	SHIM (0.076MM THK)	
	107-8117	3	STUD	
Y	**190-3450**	1	VALVE GP-CONTROL	401
	5M-2894	6	WASHER-HARD (10.2X18.5X2.5MM THK)	

Y-SEPARATE ILLUSTRATION

<END>

HYDRAULIC SYSTEM

164-1410 CONVERSION GP-HYD HAND CONTROL

S/N: B2D1-UP
AN ATTACHMENT

SMCS-5063 **i01533056**

NOTE	REF NO	GRAPHIC REF	PART NUMBER	QTY	PART NAME 1 2 3 4 5 6 (PRODUCT LEVEL)	SEE PAGE
Y	1	1	*164-1400*	1	CONTROL GP-HYDRAULIC HAND	265
Y-SEPARATE ILLUSTRATION						

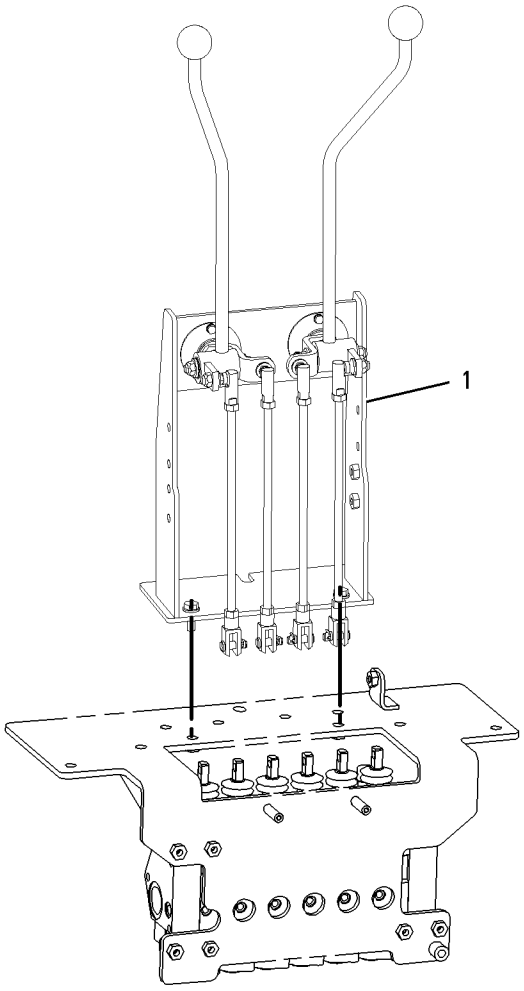

GRAPHIC #1 **<END>** g00770741

164-1430 CONVERSION GP-HYD HAND CONTROL

S/N: B2D1-UP
AN ATTACHMENT

SMCS-5063 **i01532778**

NOTE	REF NO	GRAPHIC REF	PART NUMBER	QTY	PART NAME 1 2 3 4 5 6 (PRODUCT LEVEL)	SEE PAGE
Y	1	1	*164-1420*	1	CONTROL GP-HYDRAULIC HAND	267

Y-SEPARATE ILLUSTRATION

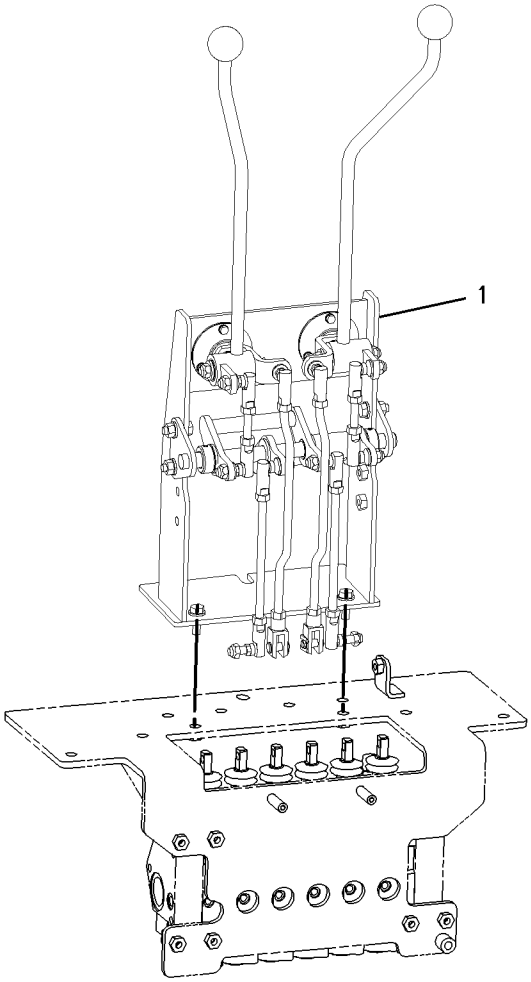

GRAPHIC #1 **<END>** g00770742

164-1510 CONVERSION GP-HYD HAND CONTROL

S/N: B2D1-UP

KIT-HYDRAULIC HAND CONTROL-CASE THREE LEVER AND FOOT AN ATTACHMENT

SMCS-5063 **i01532783**

NOTE	REF NO	GRAPHIC REF	PART NUMBER	QTY	PART NAME 1 2 3 4 5 6 (PRODUCT LEVEL)	SEE PAGE
Y	1	1	*164-1500*	1	CONTROL GP-HYDRAULIC HAND	269

Y-SEPARATE ILLUSTRATION

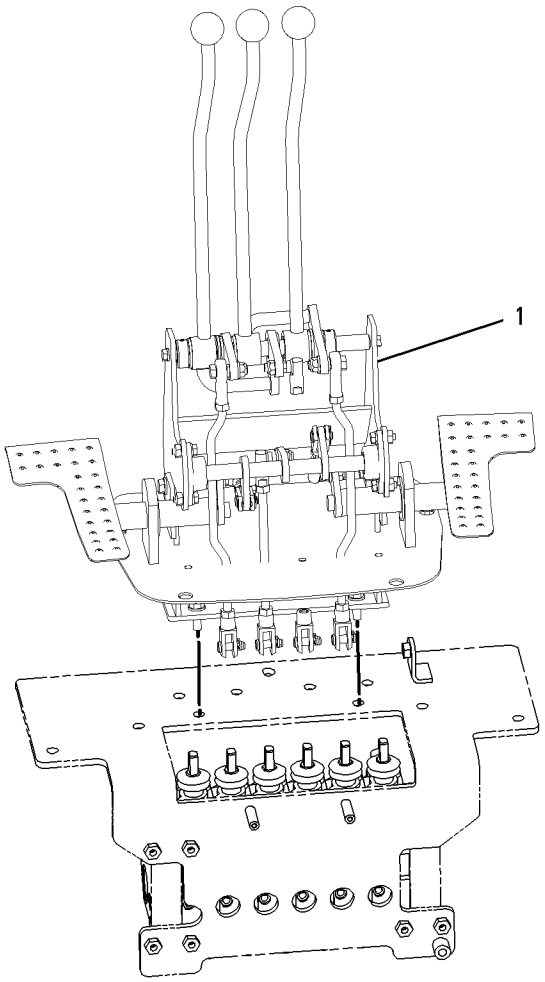

GRAPHIC #1 **<END>** g00770744

164-1530 CONVERSION GP-HYD HAND CONTROL

S/N: B2D1-UP

KIT-HYDRAULIC HAND CONTROL-CASE FOUR LEVER AND FOOT

AN ATTACHMENT

SMCS-5063 **i01532777**

NOTE	REF NO	GRAPHIC REF	PART NUMBER	QTY	PART NAME 1 2 3 4 5 6 (PRODUCT LEVEL)	SEE PAGE
Y	1	1	*164-1520*	1	CONTROL GP-HYDRAULIC HAND	271

Y-SEPARATE ILLUSTRATION

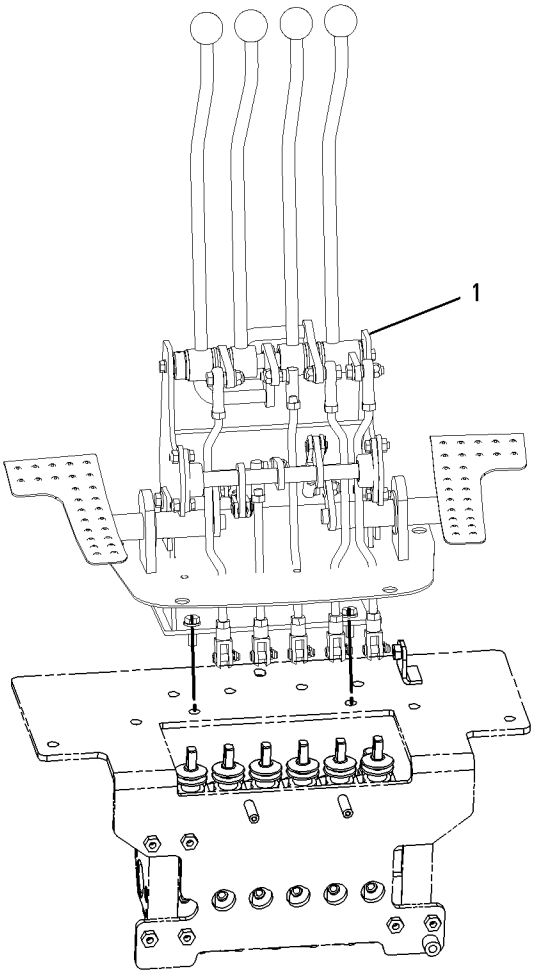

GRAPHIC #1 **<END>** g00770854

HYDRAULIC SYSTEM

132-8769 COUPLING GP

S/N: B2D1-UP
AN ATTACHMENT

SMCS-5057 **i01456598**

NOTE	REF NO	GRAPHIC REF	PART NUMBER	QTY	PART NAME 1 2 3 4 5 6 (PRODUCT LEVEL)	SEE PAGE
	1	1	**106-0406**	1	COUPLING	
	2	1	**106-0401**	1	COUPLING	

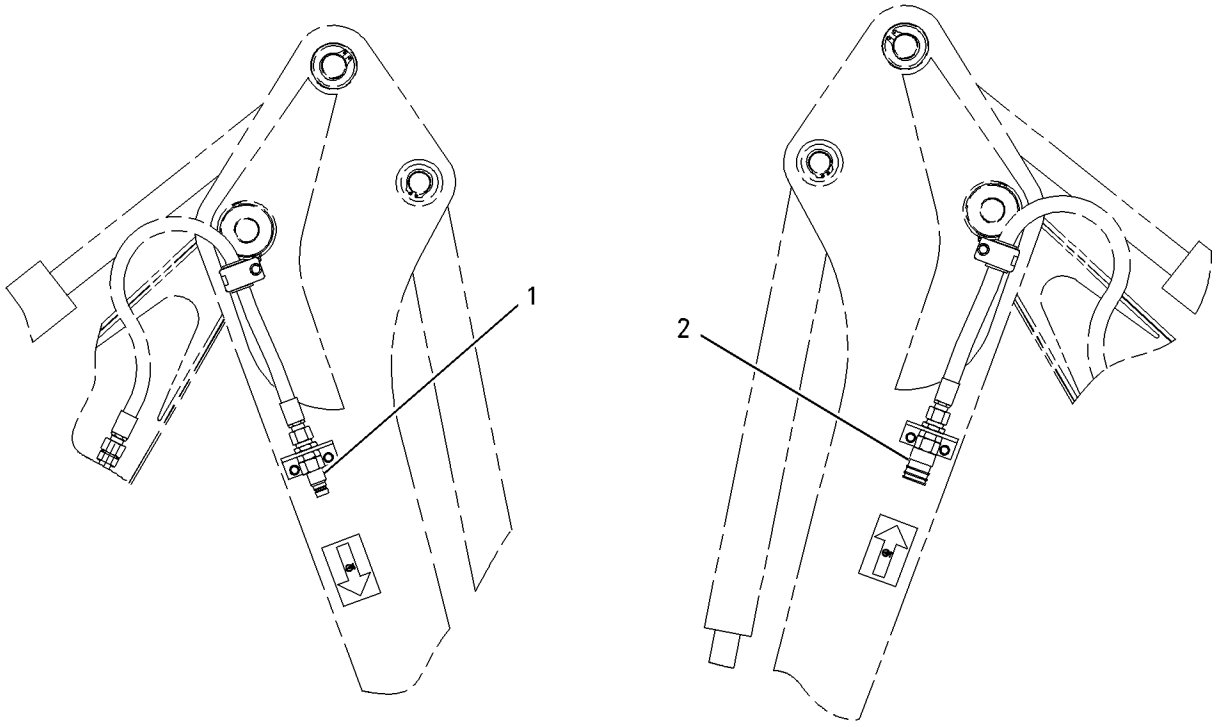

LEFT SIDE VIEW RIGHT SIDE VIEW

GRAPHIC #1 **<END>** g00759123

206-0514 CYLINDER GP-BACKHOE BUCKET

S/N: B2D1-UP
88.9MM BORE X 854MM STROKE
PART OF 238-4780, 238-4781, 238-4782 BACKHOE AR-STANDARD STICK
AN ATTACHMENT

SMCS-5457 **i01958703**

NOTE	REF NO	GRAPHIC REF	PART NUMBER	QTY	PART NAME 1 2 3 4 5 6 (PRODUCT LEVEL)	SEE PAGE
	1	1	**180-6603**	1	PISTON	
	2	1	**187-3510**	1	HEAD	
	3	1	**206-0513**	1	CYLINDER AS	
		1	**6V-8398**	1	SEAL-O-RING	
	3A	1	**9R-7960**	2	BEARING-SLEEVE	
	4	1	**209-9241**	1	ROD AS	
	4A	1	**9R-0162**	2	BEARING	
	5	1	**106-1251**	1	WASHER (36.7X66X6MM THK)	
	6	1	**167-2201**	1	SEAL AS-BUFFER	
	7	1	**167-2312**	1	SEAL-U-CUP	
	8	1	**2H-3931**	1	SEAL-O-RING	
	9	1	**2H-4145**	1	SEAL-O-RING	
	10	1	**4J-9224**	1	RING-BACKUP	
	11	1	**4T-8054**	1	SEAL AS	
	12	1	**5J-8156**	1	WIPER-ROD	
	13	1	**7J-9885**	1	RING-WEAR	
	14	1	**8T-0785**	1	RING-WEAR	
M	15	1	**8T-1605**	1	BOLT (M36X4X100MM)	

M-METRIC PART

206-0514 CYLINDER GP-BACKHOE BUCKET *(contd.)* i01958703

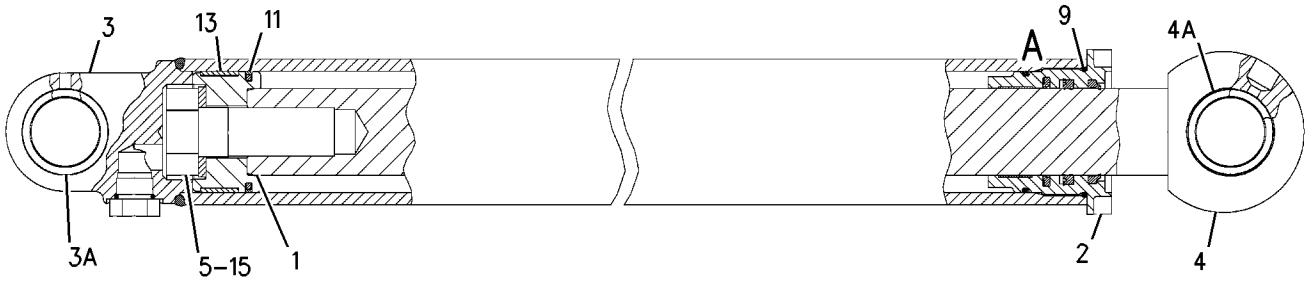

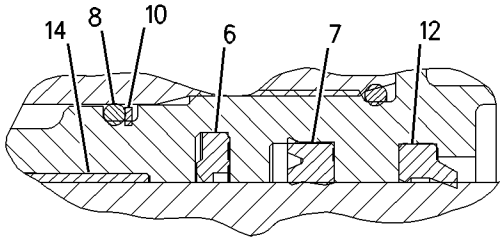

VIEW OF AREA A

GRAPHIC #1 **<END>** g00850067

206-0518 CYLINDER GP-BACKHOE BUCKET

S/N: B2D1-UP
88.9MM BORE X 854MM STROKE
PART OF 238-4783, 238-4784 BACKHOE AR-EXTENDABLE STICK
AN ATTACHMENT

SMCS-5457 **i01958757**

NOTE	REF NO	GRAPHIC REF	PART NUMBER	QTY	PART NAME 1 2 3 4 5 6 (PRODUCT LEVEL)	SEE PAGE
	1	1	**180-6111**	1	ROD AS	
	1A	1	**9R-0162**	2	BEARING	
	2	1	**180-6603**	1	PISTON	
	3	1	**187-3510**	1	HEAD	
	4	1	**206-0517**	1	CYLINDER AS	
		1	**6V-8398**	1	SEAL-O-RING	
		1	**180-6110**	1	CAP	
	5	1	**106-1251**	1	WASHER (36.7X66X6MM THK)	
	6	1	**167-2201**	1	SEAL AS-BUFFER	
	7	1	**167-2312**	1	SEAL-U-CUP	
	8	1	**2H-3931**	1	SEAL-O-RING	
	9	1	**2H-4145**	1	SEAL-O-RING	
	10	1	**4J-9224**	1	RING-BACKUP	
	11	1	**4T-8054**	1	SEAL AS	
	12	1	**5J-8156**	1	WIPER-ROD	
	13	1	**7J-9885**	1	RING-WEAR	
	14	1	**8T-0785**	1	RING-WEAR	
M	15	1	**8T-1605**	1	BOLT (M36X4X100MM)	

M-METRIC PART

206-0518 CYLINDER GP-BACKHOE BUCKET *(contd.)* i01958757

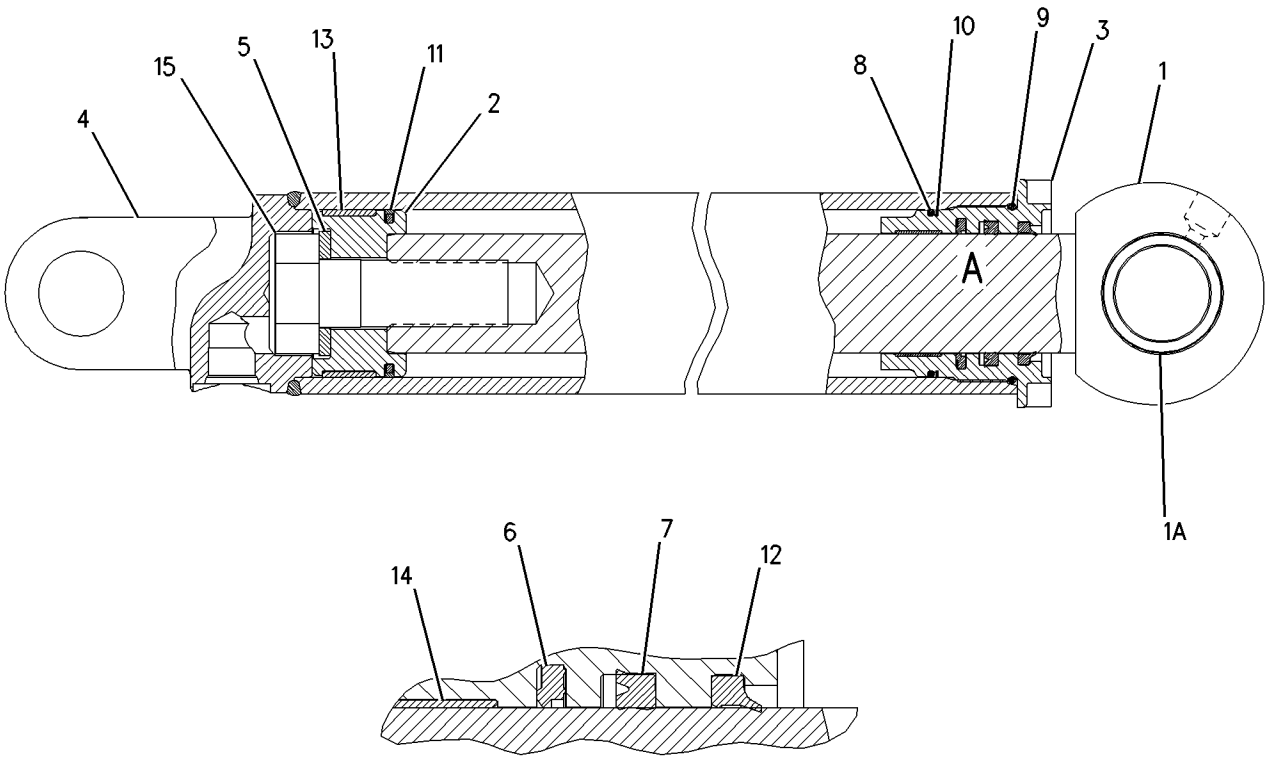

VIEW OF AREA A

GRAPHIC #1 **<END>** g00822004

HYDRAULIC SYSTEM

206-3628 CYLINDER GP-BOOM

S/N: B2D1-UP
114.3MM BORE X 1000MM STROKE
PART OF 214-6980 HYDRAULIC AR

SMCS-5456 **i02039721**

NOTE	REF NO	GRAPHIC REF	PART NUMBER	QTY	PART NAME 1 2 3 4 5 6 (PRODUCT LEVEL)	SEE PAGE
	1	1	**206-3627**	1	CYLINDER AS	
	1A	1	**6V-9746**	1	SEAL-O-RING	
	1B	1	**9R-0139**	2	BEARING-SLEEVE	
	2	1	**170-9066**	1	BOLT (1 1/2-12X101.6-MM)	
	3	1	**3S-6162**	1	WASHER-HARD (40.5X67X6-MM THK)	
	4	1	**4J-3745**	1	RING-WEAR	
	5	1	**5J-4986**	1	SEAL AS	
	6	1	**9X-7260**	1	RING-WEAR	
	7	1	**167-2202**	1	SEAL AS-BUFFER	
	8	1	**167-2310**	1	SEAL-U-CUP	
	9	1	**4M-0189**	1	SEAL-O-RING	
	10	1	**231-3540**	1	SEAL-WIPER	
	11	1	**175-7902**	1	SEAL-O-RING	
	12	1	**4J-9220**	1	RING-BACKUP	
R	13	1	**6E-1522**	1	ROD AS	
	13A	1	**9R-0139**	2	BEARING-SLEEVE	
	14	1	**6E-0276**	1	PISTON	
	15	1	**9T-5444**	1	PLUNGER	
	16	1	**6L-6208**	1	SPRING	

R-REMFG PART MAY BE AVAILABLE

206-3628 CYLINDER GP-BOOM *(contd.)* **i02039721**

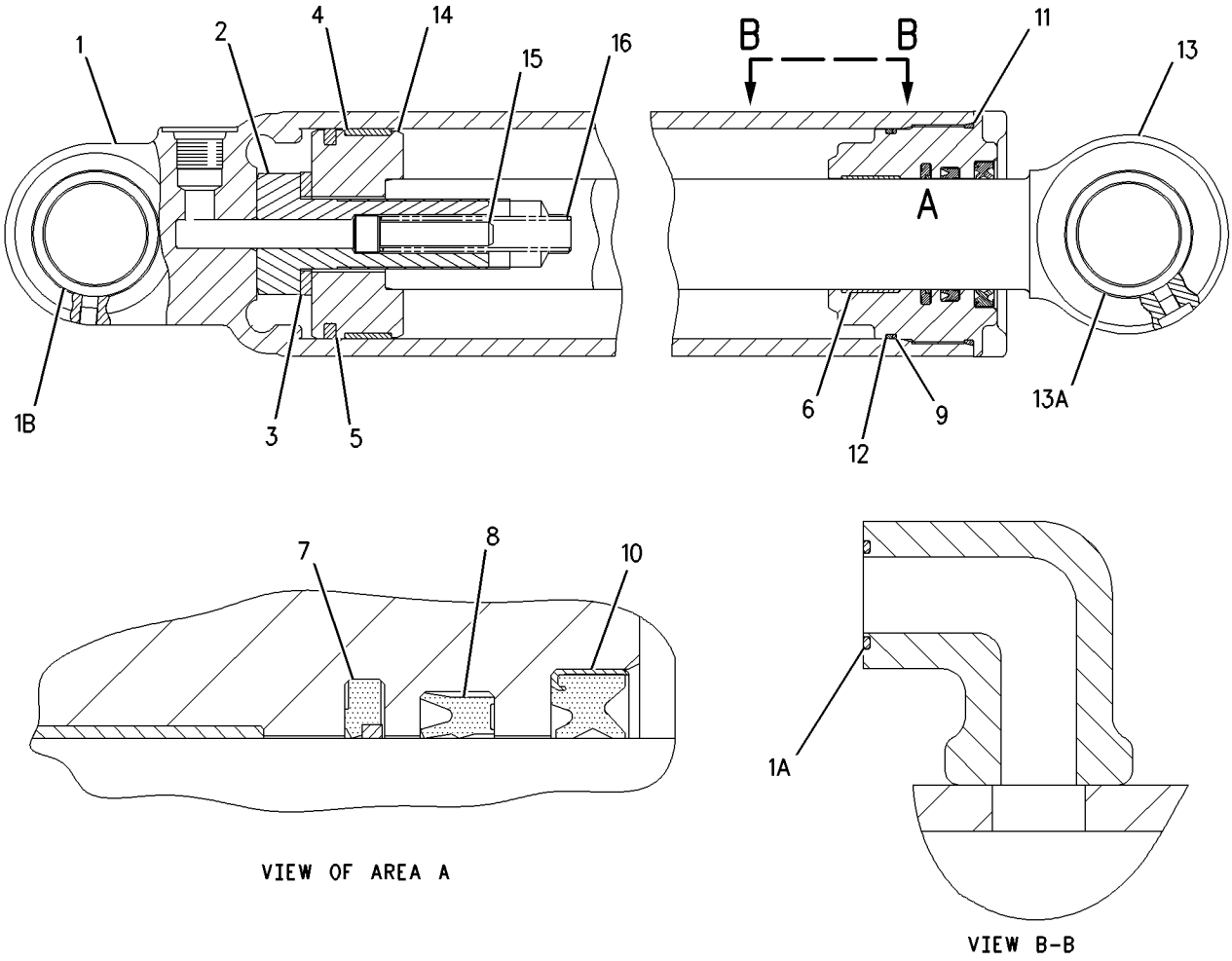

GRAPHIC #1 **<END>** g01007327

155-6586 CYLINDER GP-EXTENDABLE STICK

S/N: B2D1-UP
EXTENSION
PART OF 197-2733 STICK GP-EXTENDABLE
AN ATTACHMENT

SMCS-5486 **i01445752**

NOTE	PART NUMBER	QTY	PART NAME 1 2 3 4 5 6 (PRODUCT LEVEL)	SEE PAGE
Y	**164-7174**	1	CYLINDER GP-EXTENDABLE STICK	295
Y	*162-2351*	1	LINES GP-EXTENDABLE STICK	335

Y-SEPARATE ILLUSTRATION

<END>

164-7174 CYLINDER GP-EXTENDABLE STICK

S/N: B2D1-UP
76.2MM BORE X 1067MM STROKE
PART OF 155-6586 CYLINDER GP-EXTENDABLE STICK
AN ATTACHMENT

SMCS-5486 **i01539016**

NOTE	REF NO	GRAPHIC REF	PART NUMBER	QTY	PART NAME 1 2 3 4 5 6 (PRODUCT LEVEL)	SEE PAGE
	1	1	**6E-0122**	1	HEAD	
	2	1	**9T-2212**	1	PISTON	
	3	1	**164-7175**	1	CYLINDER AS	
	3A	1	**9T-2969**	1	BOSS	
	4	1	**164-7176**	1	ROD AS	
J	5	1	**167-2186**	1	SEAL AS-BUFFER	
J	6	1	**167-2294**	1	SEAL-U-CUP	
J	7	1	**167-2450**	1	SEAL-WIPER	
M	8	1	**173-9779**	1	BOLT-HEX HEAD (M24X3.0X80MM)	
J	9	1	**175-7896**	1	SEAL-O-RING	
J	10	1	**4T-6780**	1	RING-WEAR	
J	11	1	**6J-5731**	1	RING-BACKUP	
J	12	1	**6J-5733**	1	RING-WEAR	
	13	1	**6V-8237**	1	WASHER (26X44X4MM THK)	
	14	1	**9X-7337**	1	SEAL AS	
					AVAILABLE REPAIR KIT(S):	
J			**185-6583**	1	KIT-SEAL	
					(KIT INCLUDES RINGS AND SEALS)	

J-KIT MARKED J SERVICES PARTS MARKED J
M-METRIC PART

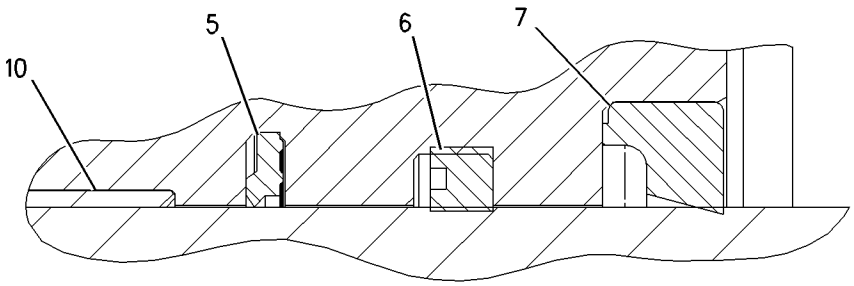

VIEW OF AREA A

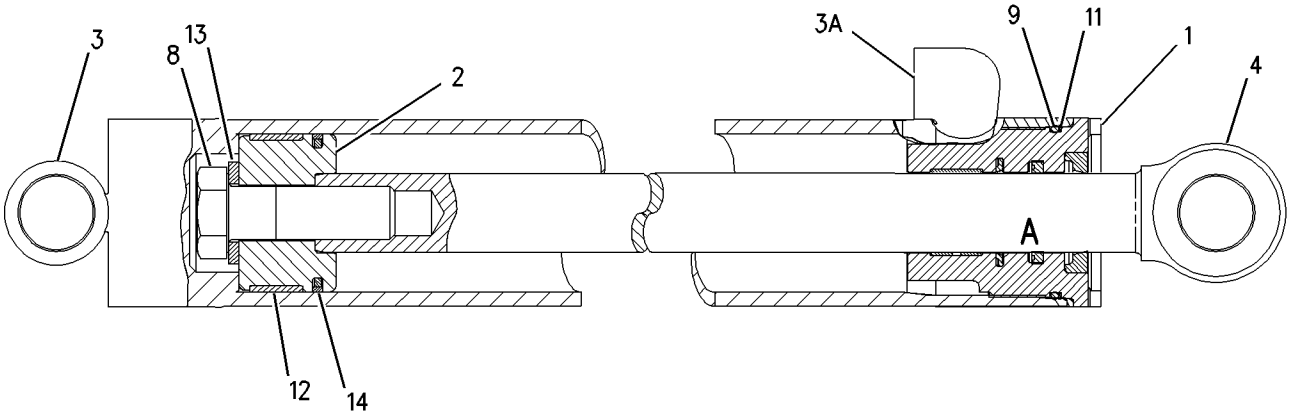

GRAPHIC #1 **<END>** g00793288

230-0979 CYLINDER GP-LIFT

S/N: B2D1-UP
82.55MM BORE X 705MM STROKE
PART OF 214-6980 HYDRAULIC AR

SMCS-5102 **i02043628**

NOTE	REF NO	GRAPHIC REF	PART NUMBER	QTY	PART NAME 1 2 3 4 5 6 (PRODUCT LEVEL)	SEE PAGE
J	1	1	**8J-6371**	1	RING-WEAR	
J	2	1	**227-1143**	1	SEAL-WIPER	
	3	1	**233-2568**	1	ROD AS	
	4	1	**233-2578**	1	PISTON	
	5	1	**233-2590**	1	HEAD AS	
J	6	1	**233-2597**	1	SEAL-O-RING	
J	7	1	**233-2599**	1	RING-BACKUP	
J	8	1	**233-2601**	1	SEAL-O-RING	
J	9	1	**233-2609**	1	SEAL-U-CUP	
	10	1	**233-2617**	1	CYLINDER AS	
J	11	1	**244-3839**	1	SEAL-PISTON	
	12	1	**3B-8489**	2	FITTING-GREASE	
	13	1	**9R-0153**	2	BEARING-SLEEVE	
	14	1	**9R-0321**	2	BEARING-SLEEVE	
JM	15	1	**9X-6611**	1	SETSCREW-SOCKET	
					AVAILABLE REPAIR KIT(S):	
J			**233-2628**	1	KIT-SEAL	

J-KIT MARKED J INCLUDES PARTS MARKED J
M-METRIC PART

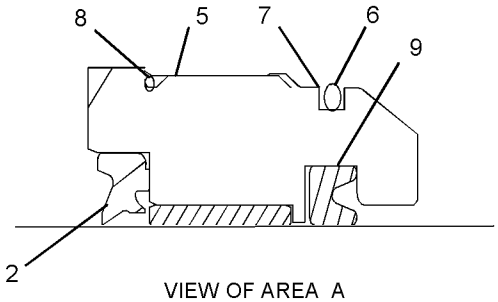

VIEW OF AREA A

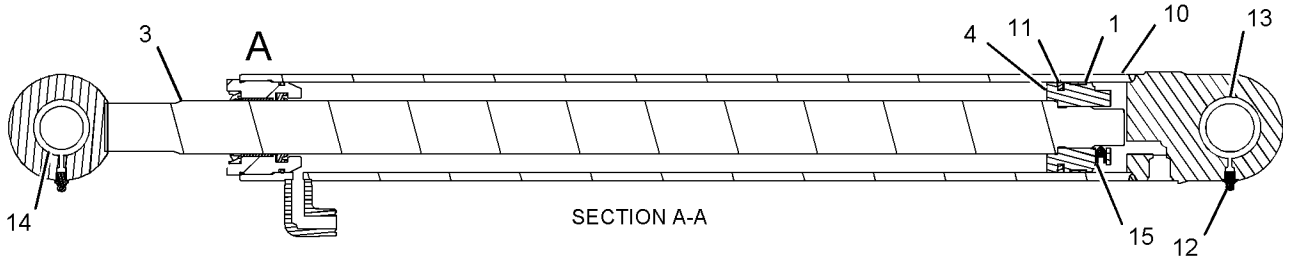

SECTION A-A

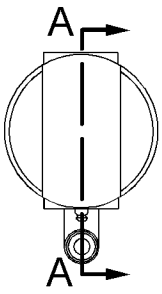

LEFT SIDE VIEW

GRAPHIC #1

<END>

g01043685

185-1839 CYLINDER GP-MULTIPURPOSE BUKT

S/N: B2D1-UP
76.2MM BORE X 260MM STROKE
PART OF 112-0938, 112-0939 BUCKET AR-MULTIPURPOSE
AN ATTACHMENT

SMCS-5457 **i02051795**

NOTE	REF NO	GRAPHIC REF	PART NUMBER	QTY	PART NAME 1 2 3 4 5 6 (PRODUCT LEVEL)	SEE PAGE
	1	1	**6E-0122**	1	HEAD	
	2	1	**9T-2212**	1	PISTON	
R	3	1	**9T-4008**	1	ROD AS	
	3A	1	**9T-4007**	2	BEARING	
R	4	1	**9T-4009**	1	CYLINDER AS	
	5	1	**167-2186**	1	SEAL AS-BUFFER	
	6	1	**167-2294**	1	SEAL-U-CUP	
	7	1	**167-2450**	1	SEAL-WIPER	
	8	1	**1H-7339**	1	SEAL-O-RING	
	9	1	**4T-6780**	1	RING-WEAR	
	10	1	**5P-8250**	1	WASHER (28X49X5-MM THK)	
	11	1	**6F-7037**	1	BOLT (1-14X3.25-IN)	
	12	1	**6J-5733**	1	RING-WEAR	
	13	1	**8J-2574**	1	RING-BACKUP	
	14	1	**9X-7337**	1	SEAL AS	

R-REMFG PART MAY BE AVAILABLE

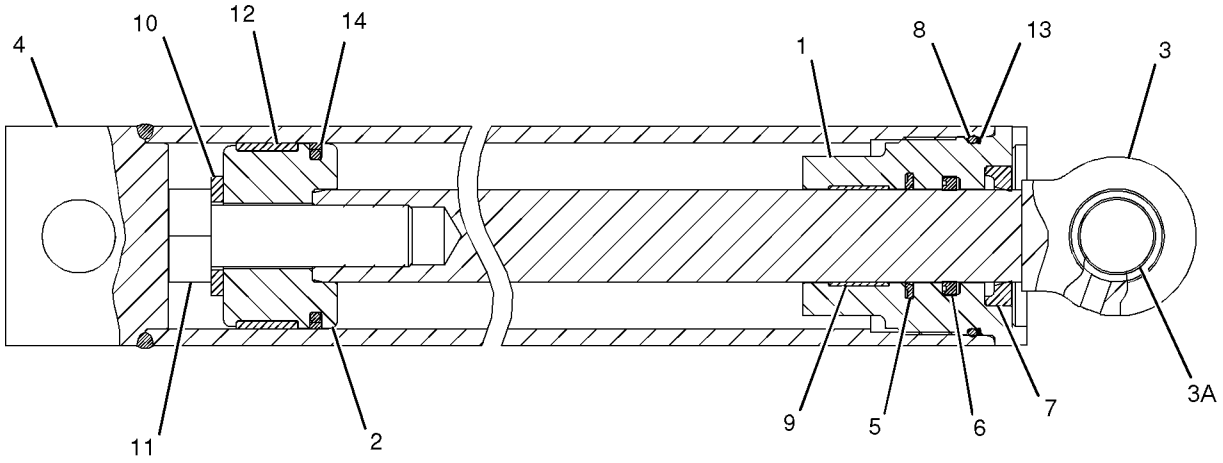

GRAPHIC #1 **<END>** g01052430

206-0520 CYLINDER GP-STABILIZER

S/N: B2D1-UP
102MM BORE X 541MM STROKE
PART OF 214-6980 HYDRAULIC AR

SMCS-5468 **i01930705**

NOTE	REF NO	GRAPHIC REF	PART NUMBER	QTY	PART NAME 1 2 3 4 5 6 (PRODUCT LEVEL)	SEE PAGE
	1	1	**189-5629**	1	HEAD	
	2	1	**206-0519**	1	CYLINDER AS	
	2A	1	**9R-0321**	2	BEARING-SLEEVE	
	2B	1	**6V-8398**	1	SEAL-O-RING	
	3	1	**167-2197**	1	SEAL AS-BUFFER	
	4	1	**167-2305**	1	SEAL-U-CUP	
	5	1	**227-1145**	1	SEAL-WIPER	
	6	1	**172-2353**	1	PISTON	
	7	1	**172-2354**	1	ROD AS	
	7A	1	**9R-0321**	2	BEARING-SLEEVE	
	8	1	**2K-6830**	1	RING-BACKUP	
	9	1	**3S-7023**	1	WASHER (34X57X6MM THK)	
	10	1	**4T-6128**	1	RING	
	11	1	**5J-5402**	1	SEAL AS	
	12	1	**6J-2797**	1	RING-WEAR	
	13	1	**7F-6112**	1	BOLT (1 1/4-12X3 IN)	
	14	1	**8H-7521**	1	SEAL-O-RING	
	15	1	**9X-4611**	1	SEAL-O-RING	

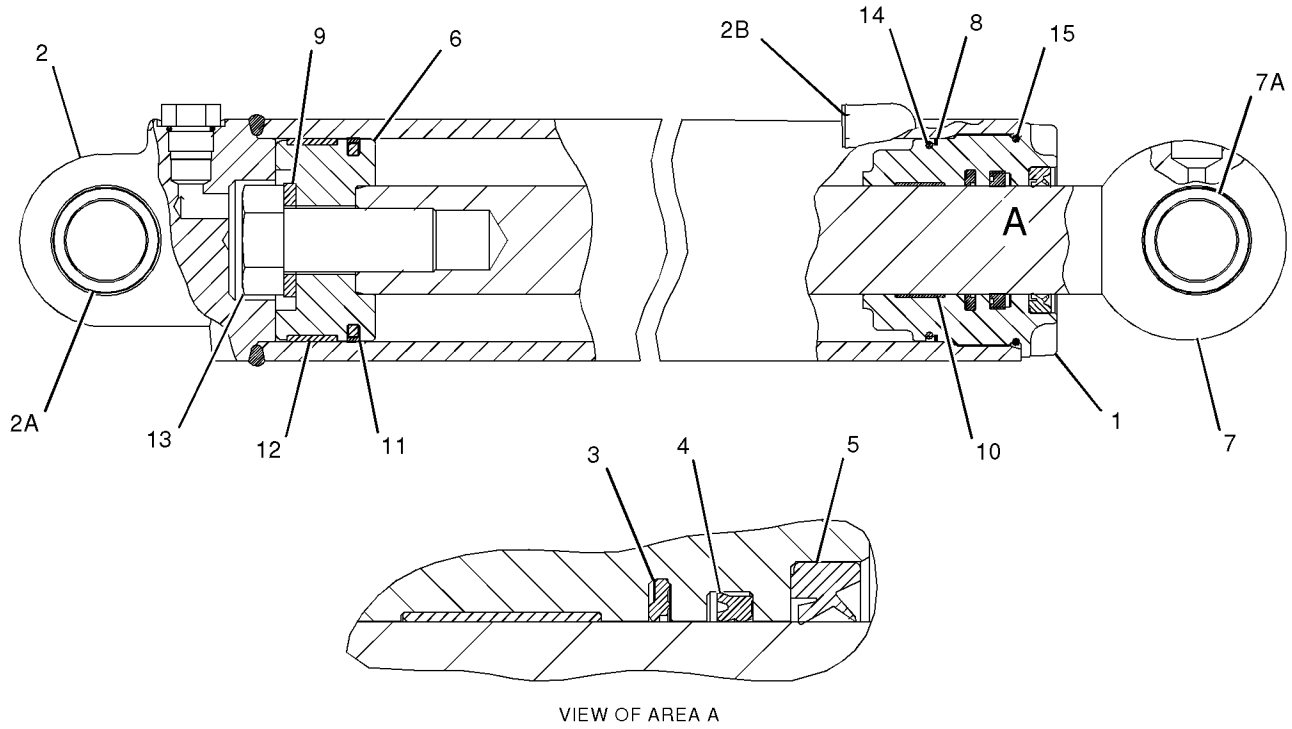

VIEW OF AREA A

GRAPHIC #1 **<END>** g01004968

HYDRAULIC SYSTEM

206-0522 CYLINDER GP-STABILIZER

S/N: B2D1-UP
102MM BORE X 541MM STROKE
PART OF 214-6980 HYDRAULIC AR

SMCS-5468 **i01930421**

NOTE	REF NO	GRAPHIC REF	PART NUMBER	QTY	PART NAME 1 2 3 4 5 6 (PRODUCT LEVEL)	SEE PAGE
	1	1	**189-5629**	1	HEAD	
	2	1	**206-0521**	1	CYLINDER AS	
	2A	1	**9R-0321**	2	BEARING-SLEEVE	
	2B	1	**6V-8398**	1	SEAL-O-RING	
	3	1	**167-2197**	1	SEAL AS-BUFFER	
	4	1	**167-2305**	1	SEAL-U-CUP	
	5	1	**227-1145**	1	SEAL-WIPER	
	6	1	**172-2353**	1	PISTON	
	7	1	**172-2354**	1	ROD AS	
	7A	1	**9R-0321**	2	BEARING-SLEEVE	
	8	1	**2K-6830**	1	RING-BACKUP	
	9	1	**3S-7023**	1	WASHER (34X57X6MM THK)	
	10	1	**4T-6128**	1	RING	
	11	1	**5J-5402**	1	SEAL AS	
	12	1	**6J-2797**	1	RING-WEAR	
	13	1	**7F-6112**	1	BOLT (1 1/4-12X3 IN)	
	14	1	**8H-7521**	1	SEAL-O-RING	
	15	1	**9X-4611**	1	SEAL-O-RING	

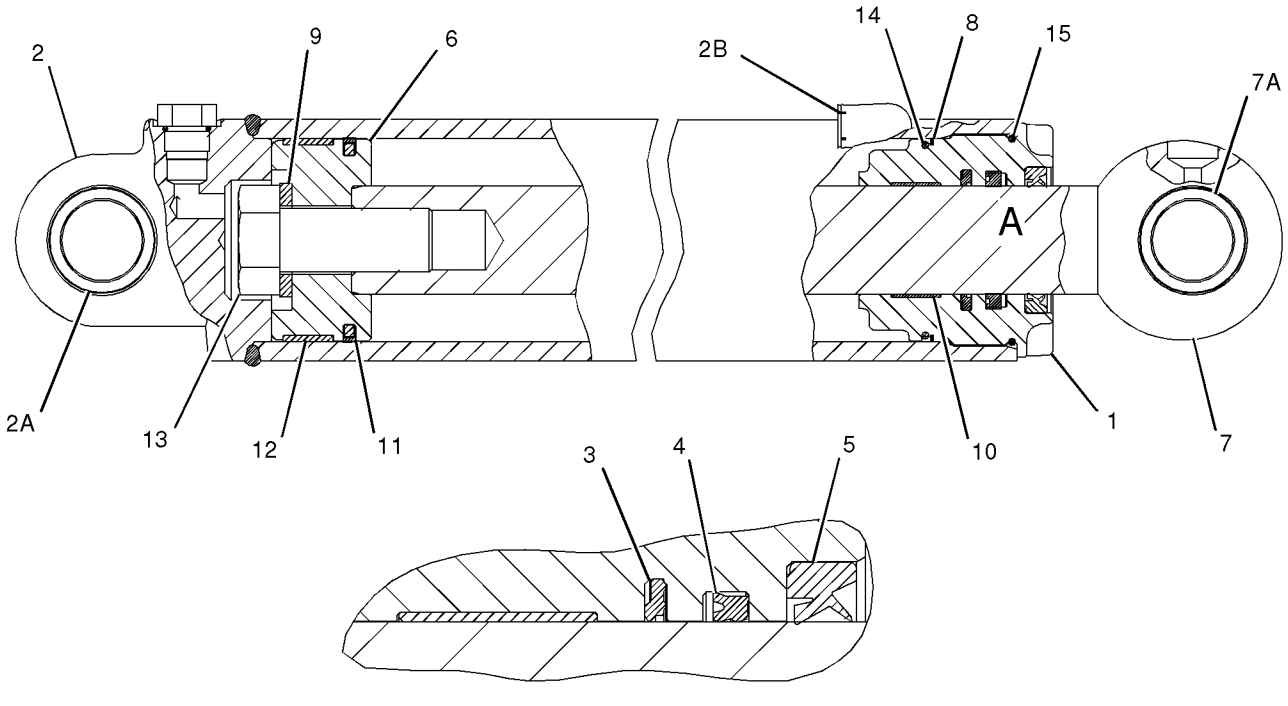

VIEW OF AREA A

GRAPHIC #1 **<END>** g01004493

235-9829 CYLINDER GP-STICK

S/N: B2D1-UP
114.3MM BORE X 695MM STROKE
PART OF 214-6980 HYDRAULIC AR

SMCS-5458 **i02052042**

NOTE	REF NO	GRAPHIC REF	PART NUMBER	QTY	PART NAME 1 2 3 4 5 6 (PRODUCT LEVEL)	SEE PAGE
	1	1	**206-0502**	1	CYLINDER AS	
	1A	1	**6V-8398**	1	SEAL-O-RING	
	1B	1	**9R-0139**	2	BEARING-SLEEVE	
	2	1	**235-9832**	1	HEAD	
	3	1	**235-9833**	1	PISTON	
	4	1	**235-9835**	1	ROD AS	
	4A	1	**9R-0139**	2	BEARING-SLEEVE	
	5	1	**167-2201**	1	SEAL AS-BUFFER	
	6	1	**167-2312**	1	SEAL-U-CUP	
	7	1	**175-7902**	1	SEAL-O-RING	
	8	1	**225-3281**	1	SEAL-WIPER	
	9	1	**4J-3745**	1	RING-WEAR	
	10	1	**4J-9220**	1	RING-BACKUP	
	11	1	**4M-0189**	1	SEAL-O-RING	
	12	1	**5J-4986**	1	SEAL AS	
	13	1	**5J-7878**	1	NUT-SELF LOCKING	
	14	1	**8T-0785**	1	RING-WEAR	

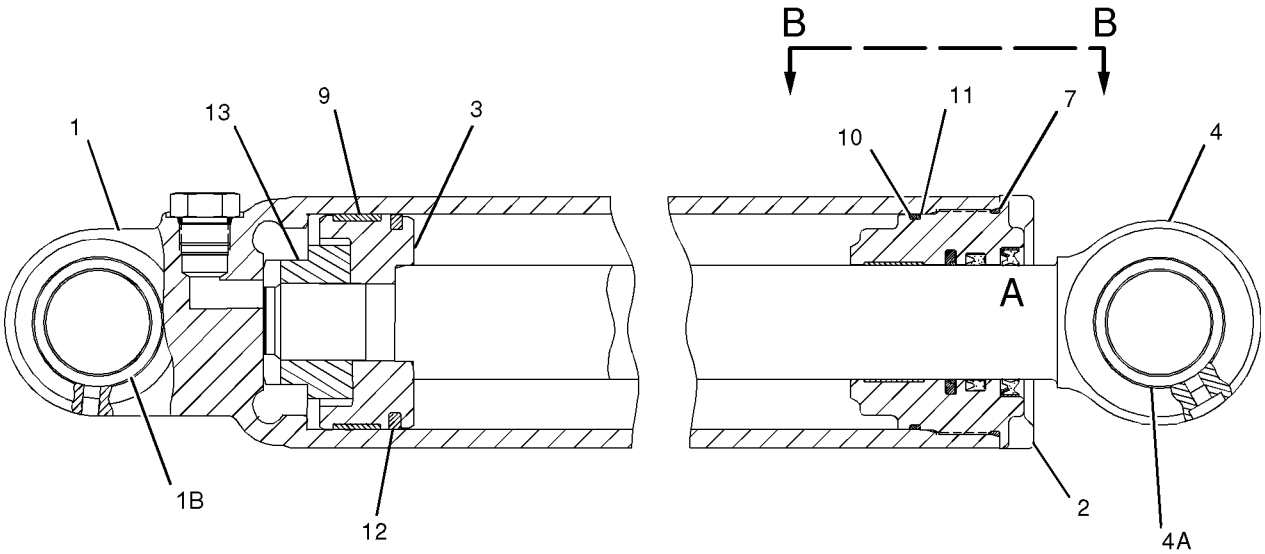

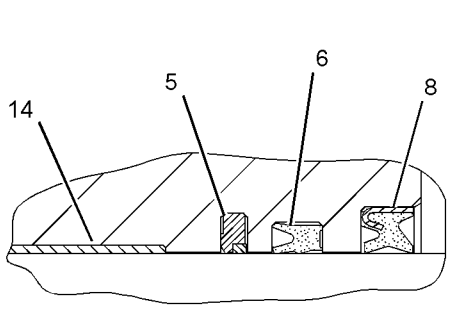

VIEW OF AREA A

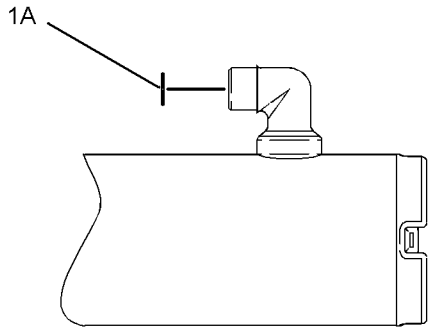

VIEW B-B

GRAPHIC #1 **<END>** g01022146

HYDRAULIC SYSTEM

191-8161 CYLINDER GP-SWING

S/N: B2D1-UP
101.6MM BORE X 249.0MM STROKE
PART OF 214-6980 HYDRAULIC AR

SMCS-5105 **i01938659**

NOTE	REF NO	GRAPHIC REF	PART NUMBER	QTY	PART NAME 1 2 3 4 5 6 (PRODUCT LEVEL)	SEE PAGE
	1	1	**191-7738**	1	CYLINDER AS	
		1	**9T-2883**	2	BEARING	
	2	1	**169-6947**	1	NUT (1 1/2 X 12 THD)	
	3	1	**6J-2797**	1	RING-WEAR	
	4	1	**5J-5402**	1	SEAL AS	
	5	1	**112-1773**	1	PISTON	
	6	1	**9X-4611**	1	SEAL-O-RING	
	7	1	**2K-6830**	1	RING-BACKUP	
	8	1	**191-6577**	1	HEAD-CYLINDER	
R	9	1	**125-7894**	1	ROD AS	
	9A	1	**6E-1478**	1	PLUNGER	
	9B	1	**2Y-5821**	1	RING	
	9C	1	**102-3582**	1	WASHER (2.5MM THK)	
	9D	1	**3N-5739**	1	SPRING	
	9E	1	**9R-9505**	2	BEARING-SLEEVE	
	10	1	**229-9382**	1	SEAL-WIPER	
	11	1	**167-2304**	1	SEAL-U-CUP	
	12	1	**167-2195**	1	SEAL AS-BUFFER	
	13	1	**4T-5613**	1	RING-WEAR	
	14	1	**8H-7521**	1	SEAL-O-RING	

R-REMFG PART MAY BE AVAILABLE

191-8161 CYLINDER GP-SWING *(contd.)* **i01938659**

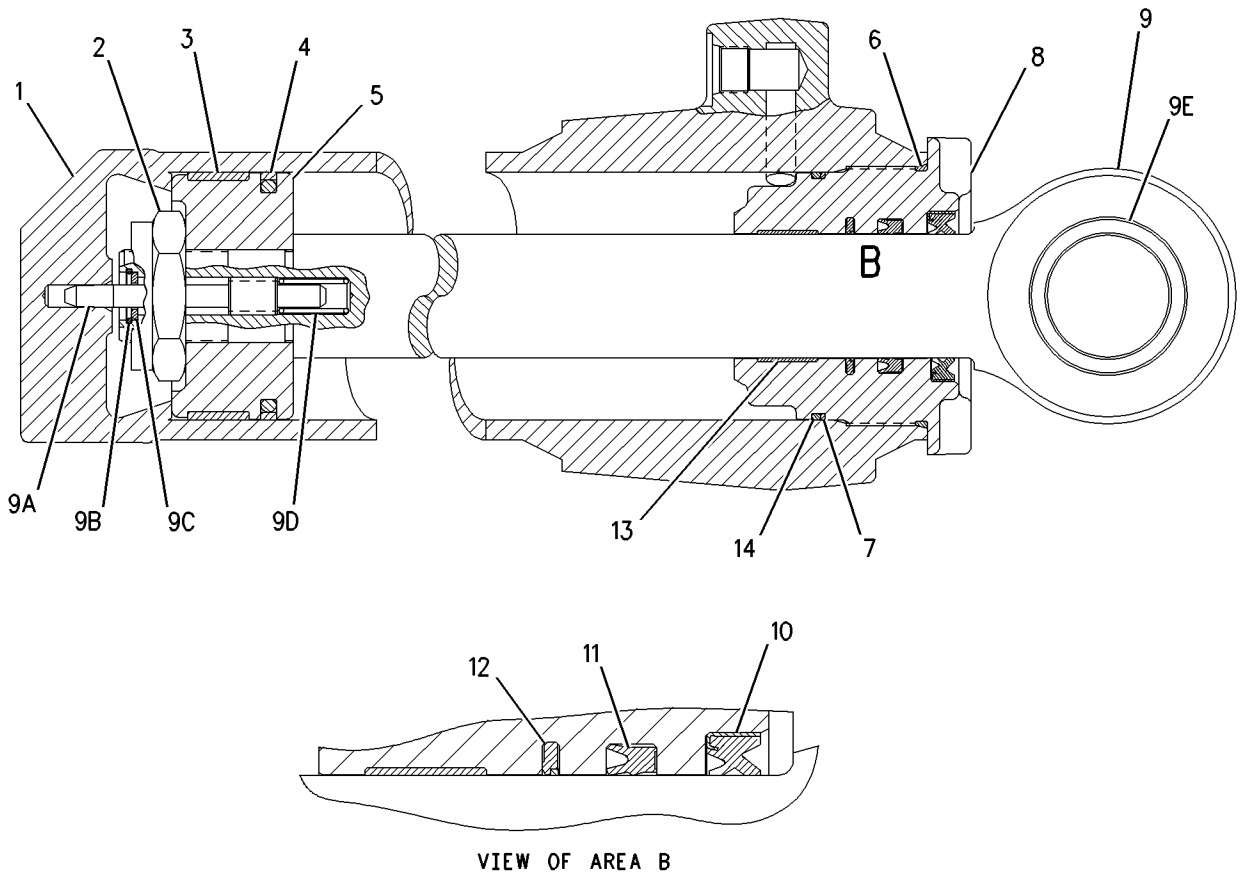

VIEW OF AREA B

GRAPHIC #1 **<END>** g00960273

HYDRAULIC SYSTEM

206-3553 CYLINDER GP-TILT

S/N: B2D1-UP
82.55MM BORE X 642.1MM STROKE
PART OF 214-6980 HYDRAULIC AR

SMCS-5104 **i01930850**

NOTE	REF NO	GRAPHIC REF	PART NUMBER	QTY	PART NAME 1 2 3 4 5 6 (PRODUCT LEVEL)	SEE PAGE
	1	1	**4T-7010**	1	PISTON	
R	2	1	**9T-3948**	1	ROD AS	
	2A	1	**9R-0320**	2	BEARING	
	3	1	**206-3552**	1	CYLINDER AS	
	3A	1	**7J-9108**	2	SEAL-O-RING	
	3B	1	**9T-0766**	1	BEARING	
	4	1	**167-2192**	1	SEAL AS-BUFFER	
	5	1	**167-2302**	1	SEAL-U-CUP	
	6	1	**227-1143**	1	SEAL-WIPER	
	7	1	**191-6112**	1	HEAD	
	8	1	**1H-7339**	1	SEAL-O-RING	
	9	1	**2H-3931**	1	SEAL-O-RING	
	10	1	**4T-6779**	1	RING	
	11	1	**5P-8250**	1	WASHER (28X49X5MM THK)	
	12	1	**6J-0793**	1	SEAL AS	
	13	1	**7J-5639**	1	BOLT-LOCKING (1-14X2.5 IN)	
	14	1	**8J-2574**	1	RING-BACKUP	
	15	1	**8J-6371**	1	RING-WEAR	

R-REMFG PART MAY BE AVAILABLE

206-3553 CYLINDER GP-TILT ***(contd.)*** **i01930850**

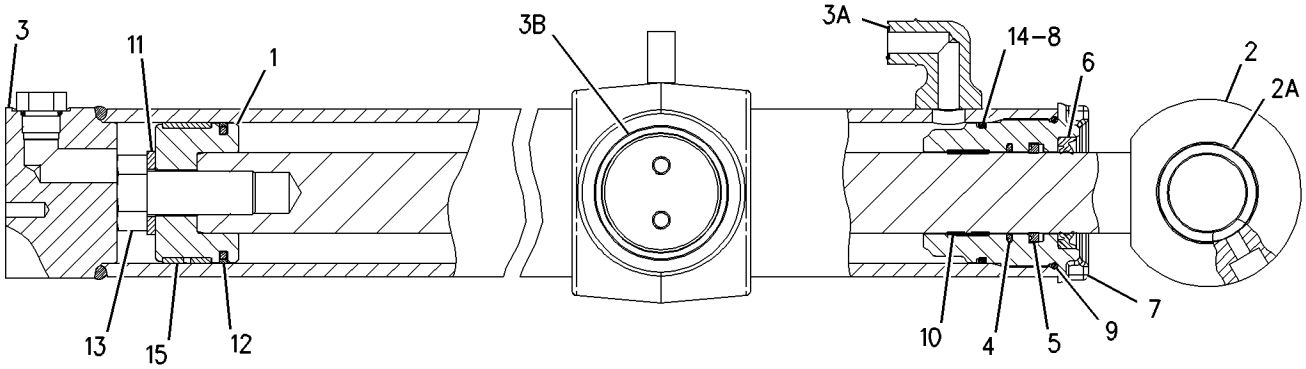

GRAPHIC #1 **<END>** g01004786

HYDRAULIC SYSTEM

133-3361 GUARD GP-STABILIZER CYLINDER

S/N: B2D1-UP
AN ATTACHMENT

SMCS-5468, 7150 **i01536103**

NOTE	REF NO	GRAPHIC REF	PART NUMBER	QTY	PART NAME 1 2 3 4 5 6 (PRODUCT LEVEL)	SEE PAGE
	1	1	**8T-4986**	4	CLAMP-HOSE	
	2	1	**130-1638**	2	PIN	
	3	1	**130-1640**	2	GUARD AS	
	4	1	**188-3953**	2	PAD	
	5	1	**201-5810**	2	PLATE	
	6	1	**201-5812**	2	PLATE AS	
	7	1	**5P-4116**	2	WASHER-HARD (8.8X20.5X2MM THK)	
	8	1	**6V-8144**	4	RING	
M	9	1	**7X-2537**	2	BOLT (M8X1.25X35MM)	
B	10	1	**9R-0109**	12	WASHER (3MM THK)	

B-USE AS REQUIRED
M-METRIC PART

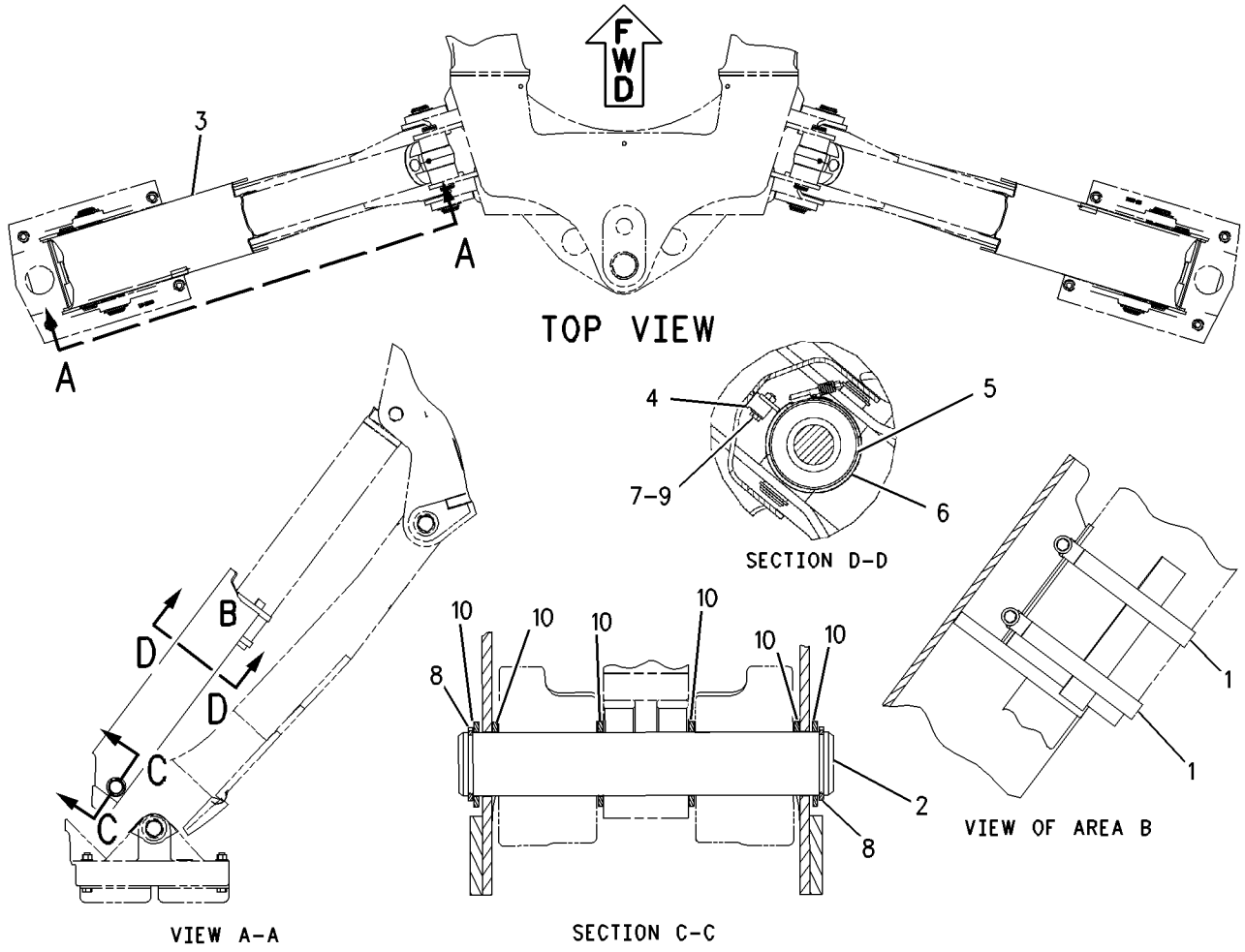

GRAPHIC #1 **<END>** g00797810

135-4744 GUARD GP-STABILIZER CYLINDER

S/N: B2D1-UP
AN ATTACHMENT

SMCS-5468, 7150 **i01692592**

NOTE	REF NO	GRAPHIC REF	PART NUMBER	QTY	PART NAME 1 2 3 4 5 6 (PRODUCT LEVEL)	SEE PAGE
	1	1	**8T-4986**	4	CLAMP-HOSE	
	2	1	**130-1640**	2	GUARD AS	
	3	1	**146-1589**	4	LATCH	
	4	1	**146-1590**	4	LATCH	
	5	1	**188-3953**	2	PAD	
	6	1	**201-5810**	2	PLATE	
	7	1	**201-5812**	2	PLATE AS	
	8	1	**5P-4116**	2	WASHER-HARD (8.8X20.5X2MM THK)	
	9	1	**6V-5729**	4	LOCKNUT	
	10	1	**7X-0310**	4	BOLT (7/16-14X2 IN)	
M	11	1	**7X-2537**	2	BOLT (M8X1.25X35MM)	
	12	1	**8T-5360**	8	WASHER (12X22.5X2.5MM THK)	
B	13	1	**9R-0109**	12	WASHER (3MM THK)	

B-USE AS REQUIRED
M-METRIC PART

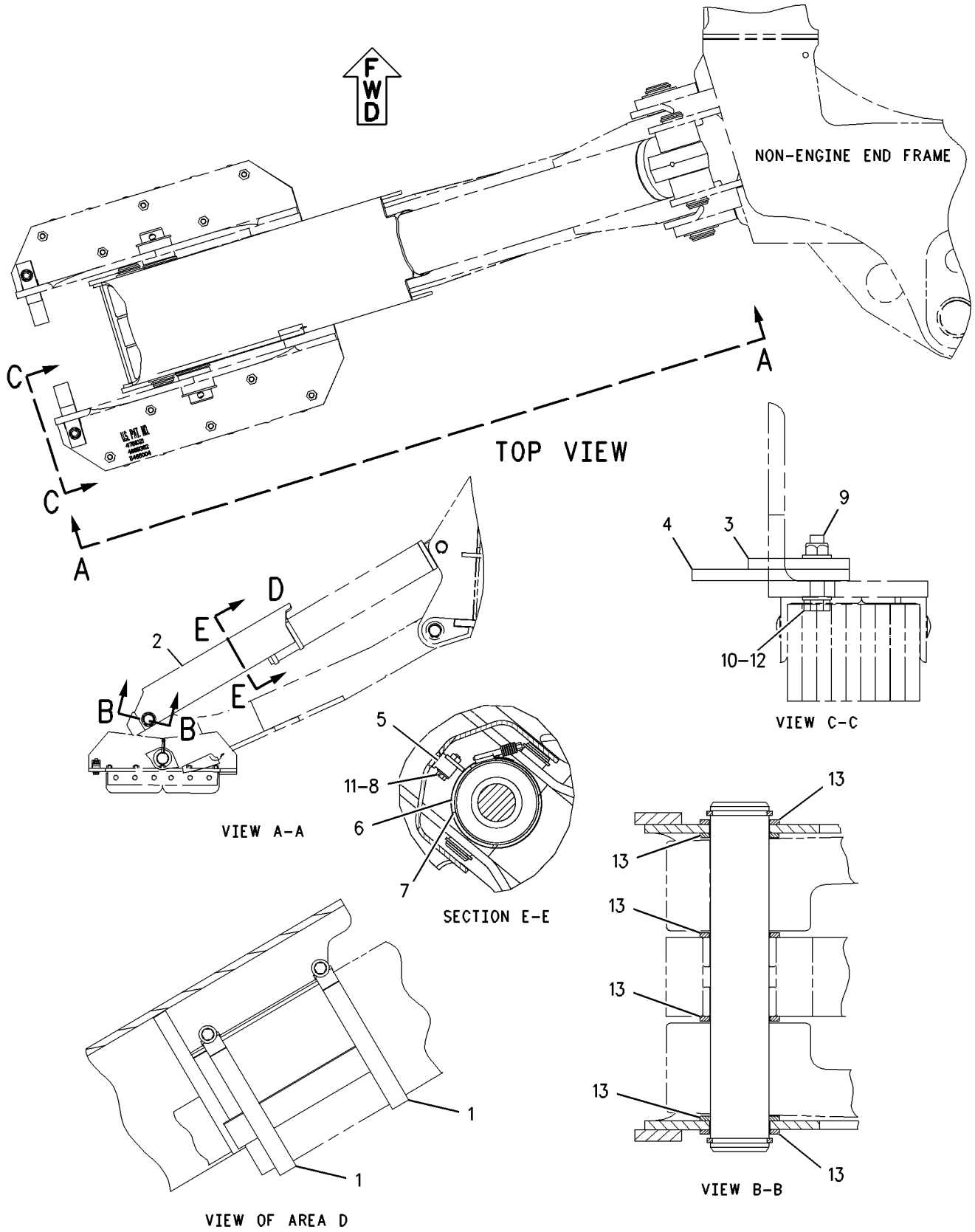

GRAPHIC #1 **<END>** g00795712

HYDRAULIC SYSTEM

186-5331 HYDRAULIC AR

S/N: B2D1-UP
TWO BANK, SINGLE TILT, GENERAL PURPOSE BUCKET
AN ATTACHMENT

SMCS-5050 **i01938117**

NOTE	PART NUMBER	QTY	PART NAME 1 2 3 4 5 6 (PRODUCT LEVEL)	SEE PAGE
	164-1363	1	BOOT	
	186-5298	1	FILM-INSTRUCTION (BUCKET CONTROL)	
Y	*144-6253*	1	LINES GP-LIFT CYLINDER	338
Y	*163-9371*	1	LINES GP-LIFT CYLINDER	339
Y	*189-0555*	1	LINES GP-TILT CYLINDER	360
Y	*185-1598*	1	MOUNTING GP-BANK VALVE	363
Y	**185-5906**	1	VALVE GP-BANK 2	381
Y-SEPARATE ILLUSTRATION				

<END>

186-5333 HYDRAULIC AR

S/N: B2D1-UP
THREE BANK, SINGLE TILT, MULTI-PURPOSE BUCKET
AN ATTACHMENT

SMCS-5050 **i01938120**

NOTE	PART NUMBER	QTY	PART NAME 1 2 3 4 5 6 (PRODUCT LEVEL)	SEE PAGE
	164-1364	1	BOOT	
Y	*183-3150*	1	CONTROL GP-HYDRAULIC HAND	275
	198-0102	1	FILM (MULTIPURPOSE BUCKET)	
	186-5298	1	FILM-INSTRUCTION (BUCKET CONTROL)	
Y	*144-6253*	1	LINES GP-LIFT CYLINDER	338
Y	*163-9371*	1	LINES GP-LIFT CYLINDER	339
Y	*106-5876*	1	LINES GP-LOADER AUXILIARY	341
Y	*189-0555*	1	LINES GP-TILT CYLINDER	360
Y	*185-1598*	1	MOUNTING GP-BANK VALVE	363
Y	**185-5907**	1	VALVE GP-BANK 3	382
Y-SEPARATE ILLUSTRATION				

<END>

196-8860 HYDRAULIC AR–KIT

S/N: B2D1-UP
ONE-WAY FLOW(FOR FOUR BANK AND MECHANICAL CONTROLS), STANDARD STICK
FIELD INSTALLATION

SMCS-5050 **i02050029**

NOTE	PART NUMBER	QTY	PART NAME 1 2 3 4 5 6 (PRODUCT LEVEL)	SEE PAGE
Y	*164-1540*	1	CONTROL GP-HYDRAULIC PEDAL	276
Y	*198-7412*	1	CONVERSION GP-CONTROL VALVE	282
Y	*196-8861*	1	LINES GP-BACKHOE AUXILIARY	320
Y-SEPARATE ILLUSTRATION				

<END>

HYDRAULIC SYSTEM

196-8862 HYDRAULIC AR–KIT

S/N: B2D1-UP

ONE-WAY FLOW(FOR 5 BANK AND MECHANICAL CONTROLS), STANDARD STICK

FIELD INSTALLATION

SMCS-5050 **i01532785**

NOTE	PART NUMBER	QTY	PART NAME 1 2 3 4 5 6 (PRODUCT LEVEL)	SEE PAGE
Y	*164-1540*	1	CONTROL GP-HYDRAULIC PEDAL	276
Y	*196-8861*	1	LINES GP-BACKHOE AUXILIARY	320

Y-SEPARATE ILLUSTRATION

<END>

196-8995 HYDRAULIC AR–KIT

S/N: B2D1-UP

ONE-WAY FLOW(FOR 5 BANK AND MECHANICAL CONTROLS), EXTENDABLE STICK

AN ATTACHMENT

SMCS-5050 **i01532670**

NOTE	PART NUMBER	QTY	PART NAME 1 2 3 4 5 6 (PRODUCT LEVEL)	SEE PAGE
Y	*194-1978*	1	LINES GP-BACKHOE AUXILIARY	316

Y-SEPARATE ILLUSTRATION

<END>

198-6681 HYDRAULIC AR–KIT

S/N: B2D1-UP

TWO-WAY FLOW(FOR 4 BANK AND MECHANICAL CONTROLS), STANDARD STICK

FIELD INSTALLATION

SMCS-5050 **i01683716**

NOTE	PART NUMBER	QTY	PART NAME 1 2 3 4 5 6 (PRODUCT LEVEL)	SEE PAGE
Y	*164-1540*	1	CONTROL GP-HYDRAULIC PEDAL	276
Y	*198-7412*	1	CONVERSION GP-CONTROL VALVE	282
Y	*171-2427*	1	LINES GP-BACKHOE AUXILIARY	314

Y-SEPARATE ILLUSTRATION

<END>

HYDRAULIC SYSTEM

214-6980 HYDRAULIC AR

S/N: B2D1-UP

PART OF 214-6885 COMMON AR

SMCS-5050 **i02025791**

NOTE	PART NUMBER	QTY	PART NAME 1 2 3 4 5 6 (PRODUCT LEVEL)	SEE PAGE
Y	*170-0606*	1	CONNECTOR GP-VALVE (BACKHOE)	262
Y	*202-6139*	1	CONNECTOR GP-VALVE (PILOT LINE)	264
Y	**206-3628**	1	CYLINDER GP-BOOM	292
Y	**230-0979**	2	CYLINDER GP-LIFT	297
Y	**206-0520**	1	CYLINDER GP-STABILIZER (LH)	299
Y	**206-0522**	1	CYLINDER GP-STABILIZER (RH)	300
Y	**235-9829**	1	CYLINDER GP-STICK	301
Y	**191-8161**	2	CYLINDER GP-SWING	302
Y	**206-3553**	1	CYLINDER GP-TILT	304
Y	*202-5928*	1	LINES GP-PILOT (STABILIZER)	346
Y	*235-4549*	1	LINES GP-PUMP	350
Y	*235-4788*	1	LINES GP-RETURN	355
Y	*167-8264*	1	LINES GP-SWING	359
Y	*185-3165*	1	MOUNTING GP-BANK VALVE	364
Y	*112-1826*	1	MOUNTING GP-HYDRAULIC PUMP	367
Y	**245-8998**	1	PUMP GP-PISTON	370
Y	*234-6926*	1	TANK GP-HYDRAULIC	374
	210-6243	1	FILTER GP-OIL (HYDRAULIC)	
	126-1817		FILTER AS-OIL (CLEANOUT, HIGH EFFICIENCY)	
			—OR—	
	134-3014		FILTER AS-OIL (HYDRAULIC) (FLAME RESISTANT)	

Y-SEPARATE ILLUSTRATION

<END>

HYDRAULIC SYSTEM

106-9046 KICKOUT & POSITIONER GP

S/N: B2D1-UP

PART OF 107-3313 LOADER AR

SMCS-5109, 5112 **i01449121**

NOTE	REF NO	GRAPHIC REF	PART NUMBER	QTY	PART NAME 1 2 3 4 5 6 (PRODUCT LEVEL)	SEE PAGE
	1	1	**9R-7797**	1	PLATE	
	2	1	**9R-3255**	1	LEVER	
	3	1	**128-7902**	1	SPACER	
	4	1	**9R-5301**	2	PIN-COTTER	
	5	1	**135-9420**	1	PIVOT	
	6	1	**140-6009**	1	LEVER AS	
	7	1	**9R-9146**	1	PIPE AS	
	8	1	**128-7905**	3	SPACER (1MM THK)	
	9	1	**128-7903**	3	SPACER (3MM THK)	
	10	1	**1B-0676**	1	PIN	
	11	1	**5P-0372**	1	LOCKPIN	
	12	1	**3B-8489**	2	FITTING-GREASE	
	13	1	**8T-0706**	1	RING-RETAINING (18 X 1.2)	
	14	1	**141-6343**	1	SPRING	
	15	1	**9R-2806**	2	PIN	
	16	1	**9R-2807**	4	CLIP	
	17	1	**8T-5063**	1	ROD END	
M	18	1	**8T-4133**	2	NUT (M10X1.5 THD)	
	19	1	**8C-6955**	1	END-YOKE ROD	
M	20	1	**8T-4182**	1	BOLT (M10X1.5X45MM)	
	21	1	**130-5774**	1	LINK AS	
	22	1	**130-7952**	1	PLATE	
	23	1	**8T-4123**	4	WASHER-PLATED (22X35X3.5MM THK)	
	24	1	**1B-8736**	1	KEY-WOODRUFF	
	25	1	**112-5494**	1	LEVER AS	
		1	**7Y-0336**	1	SPACER	
	26	1	**9R-2614**	1	BEARING	
	27	1	**106-7301**	1	ROD AS	
M	28	1	**2Y-5829**	1	NUT (M10X1.5 THD)	
	29	1	**130-5891**	1	LEVER AS	
		1	**7Y-0336**	1	SPACER	
	30	1	**9R-3135**	1	PIN	
	31	1	**9R-2614**	1	BEARING	
	32	1	**8C-3274**	1	FILM-BUCKET INDICATOR	

M-METRIC PART

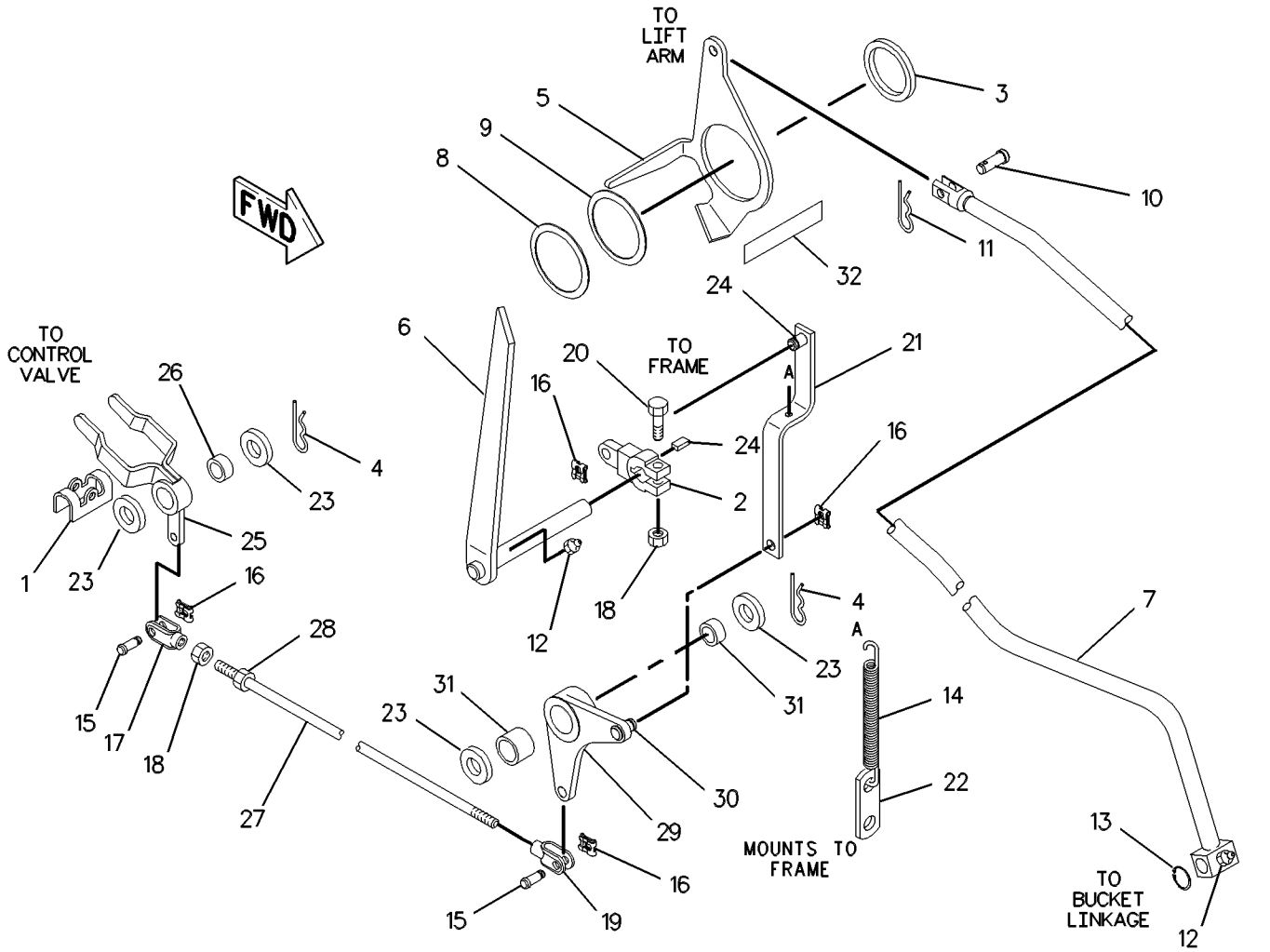

GRAPHIC #1 **<END>** g00277804

HYDRAULIC SYSTEM

171-2427 LINES GP-BACKHOE AUXILIARY

S/N: B2D1-UP

PART OF 238-4782 BACKHOE AR-STANDARD STICK, 198-6681 HYDRAULIC AR AN ATTACHMENT

SMCS-5057 **i01660743**

NOTE	REF NO	GRAPHIC REF	PART NUMBER	QTY	PART NAME 1 2 3 4 5 6 (PRODUCT LEVEL)	SEE PAGE
	1	1	**2M-6102**	2	PIPE	
	2	1	**9R-9253**	1	PLATE	
I	3	1	**169-2935**	2	HOSE AS	
	4	1	**177-0856**	1	TUBE AS	
	5	1	**177-2171**	1	TUBE AS	
	6	1	*148-8328*	2	CONNECTOR GP	
					(EACH INCLUDES)	
		1	**3D-2824**	1	SEAL-O-RING	
		1	**6V-8398**	1	SEAL-O-RING	
		1	**6V-8633**	1	CONNECTOR	
	7	1	**6V-8398**	4	SEAL-O-RING	
	8	1	**6V-9830**	2	CAP AS	
	9	1	**8T-4121**	4	WASHER-HARD (11X21X2.5MM THK)	
M	10	1	**8T-4136**	2	BOLT (M10X1.5X25MM)	
M	11	1	**8T-4185**	2	BOLT (M10X1.5X50MM)	
	12	1	**9R-1004**	2	CLIP (TAB)	
	13	1	**9R-1005**	2	CLIP (SLOT)	

I-SEE HOSE FABRICATION GUIDE
M-METRIC PART

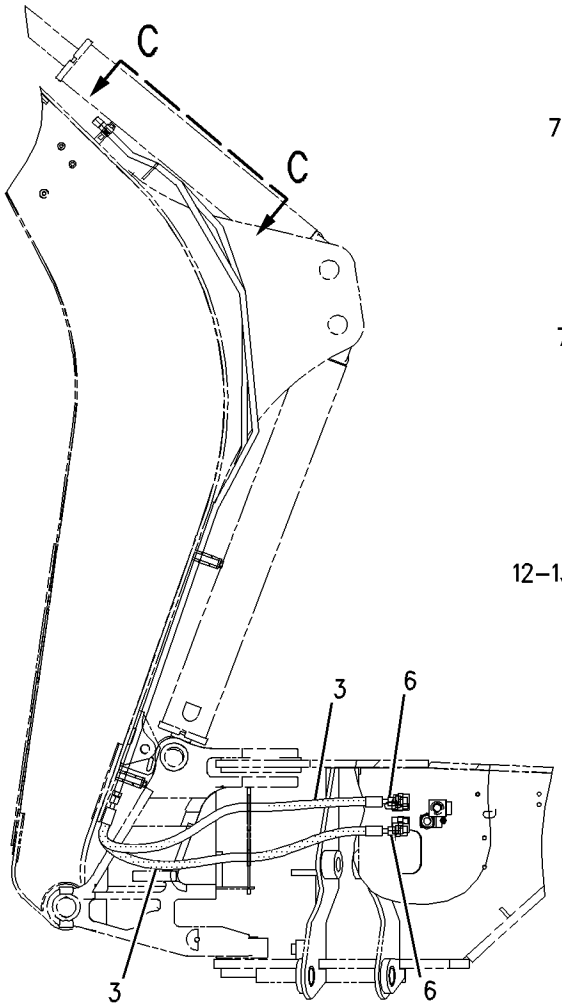

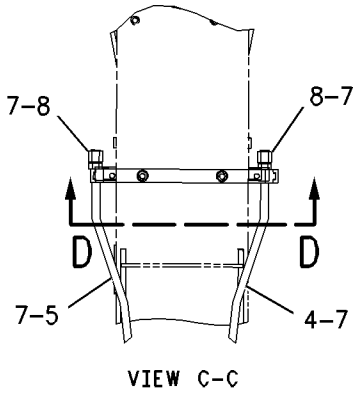

VIEW C-C

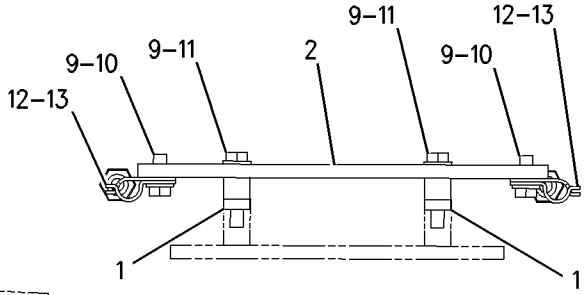

SECTION D-D

GRAPHIC #1 **<END>** g00702314

HYDRAULIC SYSTEM

194-1978 LINES GP-BACKHOE AUXILIARY

S/N: B2D1-UP
HYDRAULIC
PART OF 196-8995 HYDRAULIC AR
AN ATTACHMENT

SMCS-5057 **i02040771**

NOTE	REF NO	GRAPHIC REF	PART NUMBER	QTY	PART NAME 1 2 3 4 5 6 (PRODUCT LEVEL)	SEE PAGE
	1	1	**101-0863**	2	FILM-INSTRUCTION (RETURN FLOW)	
I	2	1	**106-0409**	1	HOSE AS	
	3	1	**106-0425**	1	PLATE AS (TOOL)	
	4	1	**107-6708**	1	BRACKET	
	5	1	**109-1260**	1	BRACKET	
	6	1	**110-7709**	1	TUBE AS	
	7	1	**110-7710**	1	TUBE AS	
	8	1	**110-7713**	1	TUBE AS	
	9	1	**123-7637**	2	CAP	
	10	1	**124-2528**	1	SPACER (11X20X10-MM THK)	
	11	1	*148-8450*	1	TEE AS	
		1	**3E-7443**	1	TEE-UNION	
		1	**5K-9090**	1	SEAL-O-RING	
		1	**6V-9746**	2	SEAL-O-RING	
I	12	1	**168-8493**	1	HOSE AS	
I	13	1	**172-2252**	1	HOSE AS	
	14	1	**177-7148**	2	BLOCK	
	15	1	**177-7149**	2	BLOCK	
	16	1	**191-4850**	1	BLOCK	
	17	1	**191-4851**	1	BLOCK	
	18	1	**193-6355**	2	BLOCK	
	19	1	**205-8845**	1	HOSE AS	
BH	20	1	**205-9014**	1	TUBE AS	
BJ	21	2	**236-5901**	1	TUBE AS	
BJI	22	2	**236-9900**	1	HOSE AS	
B	23	1,2	*148-8327*	1	CONNECTOR AS	
		1,2	**3D-2824**	1	SEAL-O-RING	
		1,2	**6V-8637**	1	CONNECTOR	
		1,2	**6V-9746**	1	SEAL-O-RING	
BJ	24	2	**148-8335**	1	CONNECTOR AS	
	25	1	*148-8352*	1	ELBOW GP	
		1	**5K-9090**	1	SEAL-O-RING	
		1	**6V-9854**	1	ELBOW (SWIVEL)	
	26	1	*148-8386*	1	ELBOW AS	
		1	**3E-7426**	1	ELBOW	
		1	**5K-9090**	1	SEAL-O-RING	
		1	**6V-8400**	1	SEAL-O-RING	
	27	1	*148-8387*	1	ELBOW GP	
		1	**6V-8400**	1	SEAL-O-RING	
		1	**6V-9855**	1	ELBOW	
	28	1	*148-8392*	1	ELBOW GP	
		1	**6V-9746**	1	SEAL-O-RING	
		1	**6V-9853**	1	ELBOW	
	29	1	*150-3052*	1	CONNECTOR AS	
		1	**5K-9090**	1	SEAL-O-RING	
		1	**7M-8485**	1	SEAL-O-RING	
		1	**107-6709**	1	CONNECTOR	
	30	1	*150-3053*	1	CONNECTOR AS	
		1	**6V-9746**	1	SEAL-O-RING	
		1	**7M-8485**	1	SEAL-O-RING	
		1	**108-3872**	1	CONNECTOR	
	31	1	**2P-1293**	2	LOCKNUT (1 3/16-12-THD)	
B	32	1	**5K-9090**	1	SEAL-O-RING	
	33	1	**5P-7466**	1	CLIP (SLOT)	

194-1978 LINES GP-BACKHOE AUXILIARY *(contd.)* i02040771

NOTE	REF NO	GRAPHIC REF	PART NUMBER	QTY	PART NAME 1 2 3 4 5 6 (PRODUCT LEVEL)	SEE PAGE
	34	1	**5P-7467**	1	CLIP (TAB)	
	35	1	**5P-7468**	1	CLIP (SLOT)	
	36	1	**5P-7469**	1	CLIP (TAB)	
	37	1	**5P-8112**	1	GROMMET	
	38	1	**5P-8444**	1	GROMMET	
	39	1	**6V-8398**	1	SEAL-O-RING	
	40	1	**6V-9172**	2	NUT (1 7/16-12-THD)	
M	41	1	**6V-9189**	2	LOCKNUT (M8X1.25-THD)	
	42	1	**6V-9746**	1	SEAL-O-RING	
	43	1	**7S-3916**	1	CLIP (TAB)	
	44	1	**7S-3919**	1	CLIP (SLOT)	
	45	1	**8S-0023**	1	CLIP (SLOT)	
	46	1	**8S-0024**	1	CLIP (TAB)	
B	47	1	**8T-1889**	1	CLIP (SLOT)	
B	48	1	**8T-1890**	1	CLIP (TAB)	
B	49	1	**8T-4121**	5	WASHER-HARD (11X21X2.5-MM THK)	
BM	50	1	**8T-4136**	5	BOLT (M10X1.5X25-MM)	
M	51	1	**8T-4184**	2	BOLT (M12X1.75X45-MM)	
M	52	1	**8T-4192**	2	BOLT (M12X1.75X25-MM)	
	53	1	**8T-4223**	4	WASHER-HARD (13.5X25.5X3-MM THK)	
H	54	1	**148-8352**	1	ELBOW GP	
		1	**5K-9090**	1	SEAL-O-RING	
		1	**6V-9854**	1	ELBOW (SWIVEL)	
H	55	1	**5K-9090**	1	SEAL-O-RING	
J	56	2	**5K-9090**	1	SEAL-O-RING	
J	57	2	**8T-1889**	1	CLIP (SLOT)	
J	58	2	**8T-1890**	1	CLIP (TAB)	
J	59	2	**8T-4121**	1	WASHER-HARD (11X21X2.5-MM THK)	
JM	60	2	**8T-4136**	1	BOLT (M10X1.5X25-MM)	

B-USE AS REQUIRED
H-USE THESE PARTS FOR MACHINES SERIAL #BFP12890 AND BELOW
I-REFER TO HYDRAULIC INFORMATION SYSTEM
J-USE THESE PARTS FOR MACHINES SERIAL #BFP12900 AND ABOVE
M-METRIC PART

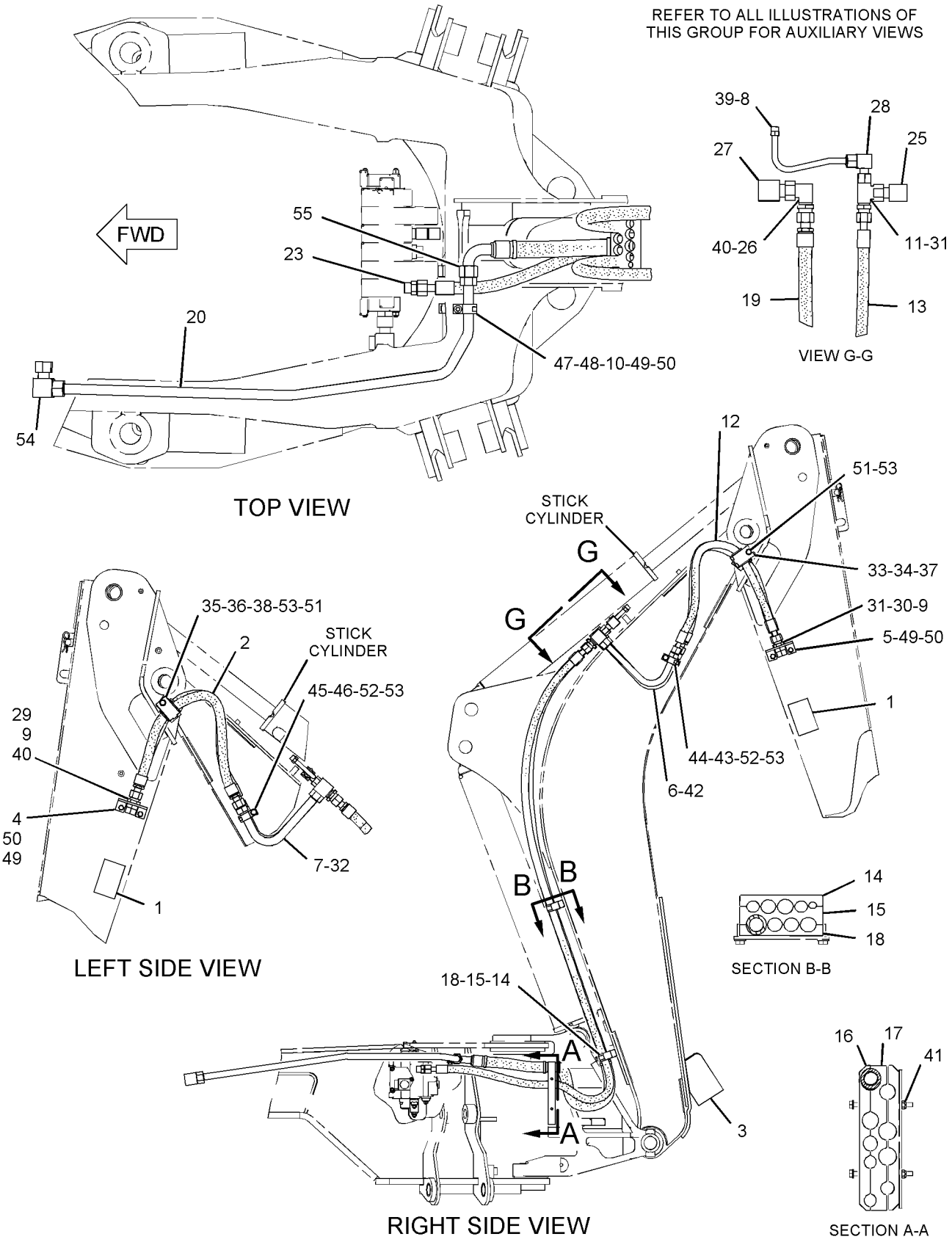

GRAPHIC #1

g01049316

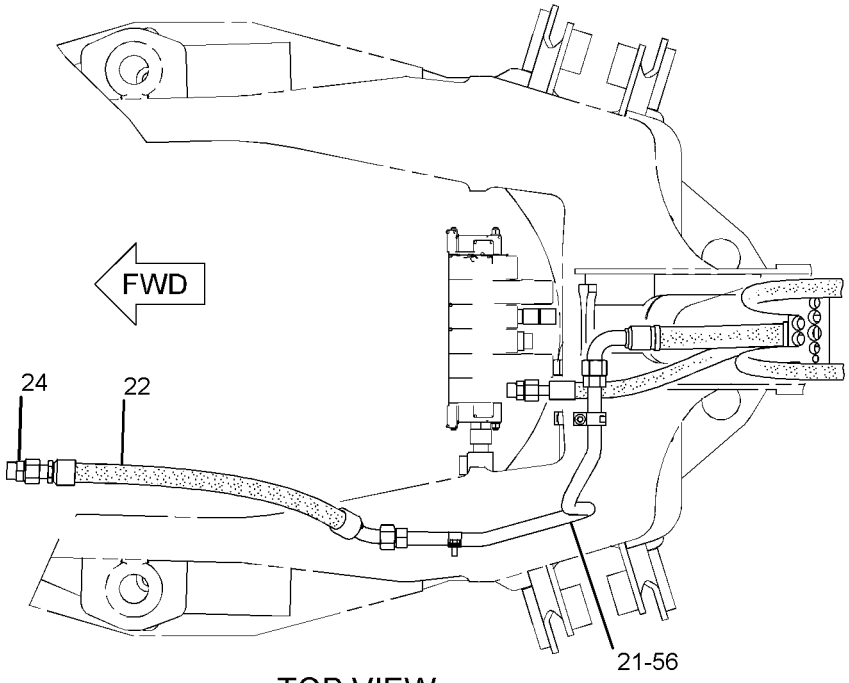

TOP VIEW
(ALTERNATE VIEW)

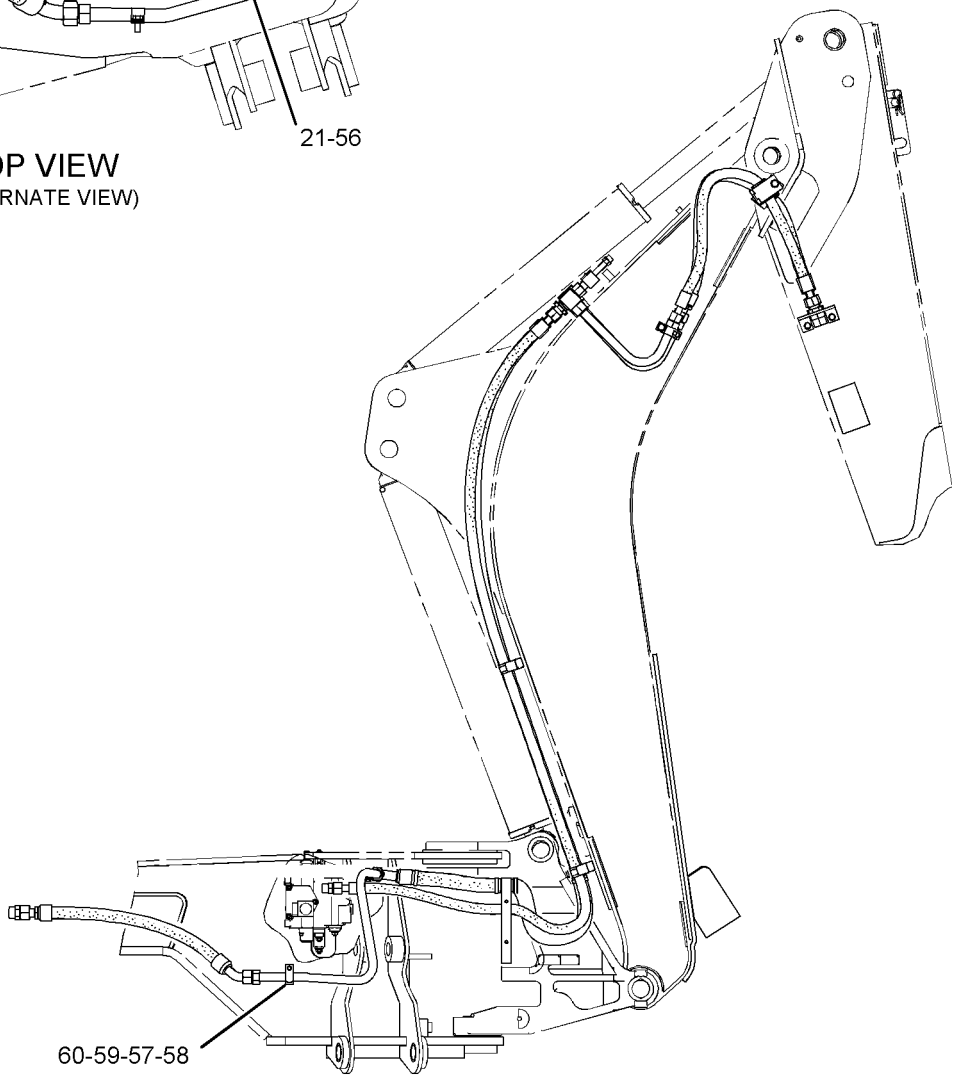

RIGHT SIDE VIEW
(ALTERNATE VIEW)

GRAPHIC #2

<END>

g01049319

HYDRAULIC SYSTEM

196-8861 LINES GP-BACKHOE AUXILIARY

S/N: B2D1-UP
HYDRAULIC
PART OF 196-8860, 196-8862 HYDRAULIC AR

SMCS-5057 **i02047767**

NOTE	REF NO	GRAPHIC REF	PART NUMBER	QTY	PART NAME 1 2 3 4 5 6 (PRODUCT LEVEL)	SEE PAGE
	1	1,3	**101-0863**	2	FILM-INSTRUCTION (RETURN FLOW)	
I	2	3	**106-0409**	1	HOSE AS	
	3	3	**106-0425**	1	PLATE AS (TOOL)	
	4	3	**107-6708**	1	BRACKET	
	5	1	**109-1260**	1	BRACKET	
	6	1	**110-7709**	1	TUBE AS	
	7	1,3	**110-7710**	1	TUBE AS	
	8	1,3	**123-7637**	2	CAP	
	9	1	**124-2528**	1	SPACER (11X20X10-MM THK)	
	10	1	*148-8450*	1	TEE AS	
		1	**3E-7443**	1	TEE-UNION	
		1	**5K-9090**	1	SEAL-O-RING	
		1	**6V-9746**	2	SEAL-O-RING	
I	11	1	**168-8493**	1	HOSE AS	
I	12	1	**169-2944**	1	HOSE AS	
I	13	1	**172-2252**	1	HOSE AS	
	14	1	**177-7148**	2	BLOCK	
	15	1	**177-7149**	2	BLOCK	
Y	16	1	*178-7481*	1	VALVE GP-CHECK	386
	17	1	**191-4850**	1	BLOCK	
	18	1	**191-4851**	1	BLOCK	
	19	1	**193-6355**	2	BLOCK	
	20	1	**205-8845**	1	HOSE AS	
	21	1	**205-9014**	1	TUBE AS	
	22	2	**236-5901**	1	TUBE AS	
I	23	2	**236-9900**	1	HOSE AS	
	24	1	*148-8327*	1	CONNECTOR AS	
		1	**3D-2824**	1	SEAL-O-RING	
		1	**6V-8637**	1	CONNECTOR	
		1	**6V-9746**	1	SEAL-O-RING	
	25	2	*148-8335*	1	CONNECTOR AS	
		2	**5K-9090**	1	SEAL-O-RING	
		2	**6V-8635**	1	CONNECTOR	
		2	**7M-8485**	1	SEAL-O-RING	
	26	1	*148-8352*	2	ELBOW GP	
					(EACH INCLUDES)	
		1	**5K-9090**	1	SEAL-O-RING	
		1	**6V-9854**	1	ELBOW (SWIVEL)	
	27	1	*148-8386*	1	ELBOW AS	
		1	**3E-7426**	1	ELBOW	
		1	**5K-9090**	1	SEAL-O-RING	
		1	**6V-8400**	1	SEAL-O-RING	
	28	1	*148-8387*	1	ELBOW GP	
		1	**6V-8400**	1	SEAL-O-RING	
		1	**6V-9855**	1	ELBOW	
	29	1	*148-8408*	1	PLUG AS	
		1	**3D-2824**	1	SEAL-O-RING	
		1	**9S-4183**	1	PLUG	
	30	1,3	*150-3052*	1	CONNECTOR AS	
		1,3	**5K-9090**	1	SEAL-O-RING	
		1,3	**7M-8485**	1	SEAL-O-RING	
		1,3	**107-6709**	1	CONNECTOR	
	31	1	*150-3053*	1	CONNECTOR AS	
		1	**6V-9746**	1	SEAL-O-RING	
		1	**7M-8485**	1	SEAL-O-RING	

196-8861 LINES GP-BACKHOE AUXILIARY *(contd.)* i02047767

NOTE	REF NO	GRAPHIC REF	PART NUMBER	QTY	PART NAME 1 2 3 4 5 6 (PRODUCT LEVEL)	SEE PAGE
		1	**108-3872**	1	CONNECTOR	
	32	1,2	**2P-1293**	2	LOCKNUT (1 3/16-12-THD)	
	33	2,3	**5K-9090**	2	SEAL-O-RING	
	34	1	**5P-7466**	1	CLIP (SLOT)	
	35	1	**5P-7467**	1	CLIP (TAB)	
	36	3	**5P-7468**	1	CLIP (SLOT)	
	37	3	**5P-7469**	1	CLIP (TAB)	
	38	1	**5P-8112**	1	GROMMET	
	39	3	**5P-8444**	1	GROMMET	
	40	1,3	**6V-9172**	2	NUT (1 7/16-12-THD)	
M	41	1	**6V-9189**	2	LOCKNUT (M8X1.25-THD)	
	42	1	**6V-9746**	1	SEAL-O-RING	
	43	1	**6V-9832**	1	CAP AS	
	44	1	**7S-3916**	1	CLIP (TAB)	
	45	1	**7S-3919**	1	CLIP (SLOT)	
	46	3	**8S-0023**	1	CLIP (SLOT)	
	47	3	**8S-0024**	1	CLIP (TAB)	
	48	1,2	**8T-1889**	2	CLIP (SLOT)	
	49	1,2	**8T-1890**	2	CLIP (TAB)	
	50	1,2,3	**8T-4121**	6	WASHER-HARD (11X21X2.5-MM THK)	
M	51	1,2,3	**8T-4136**	6	BOLT (M10X1.5X25-MM)	
M	52	3	**8T-4139**	2	BOLT (M12X1.75X30-MM)	
M	53	1,3	**8T-4192**	2	BOLT (M12X1.75X25-MM)	
	54	1,3	**8T-4223**	4	WASHER-HARD (13.5X25.5X3-MM THK)	

I-REFER TO HYDRAULIC INFORMATION SYSTEM
M-METRIC PART
Y-SEPARATE ILLUSTRATION

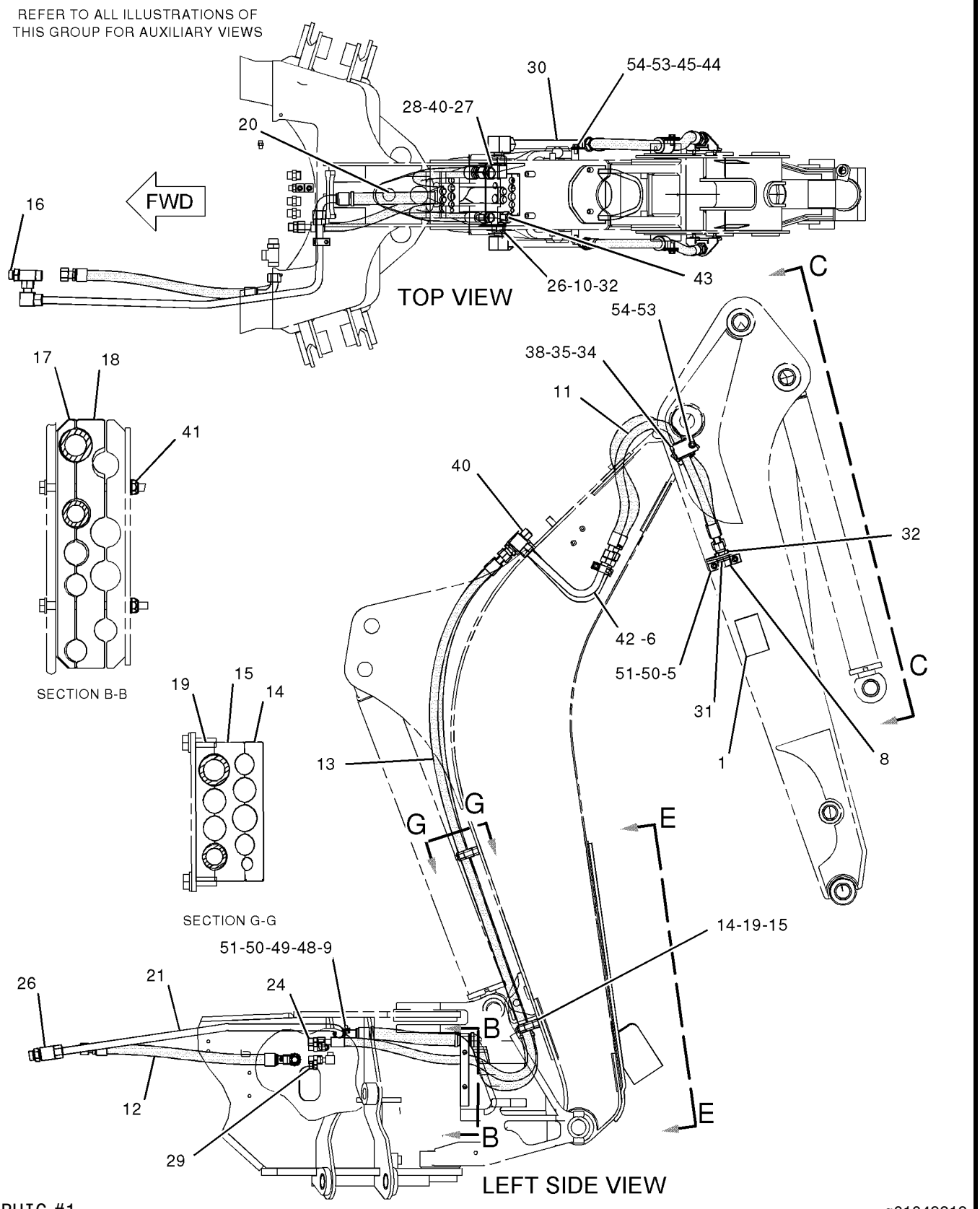

GRAPHIC #1

g01049219

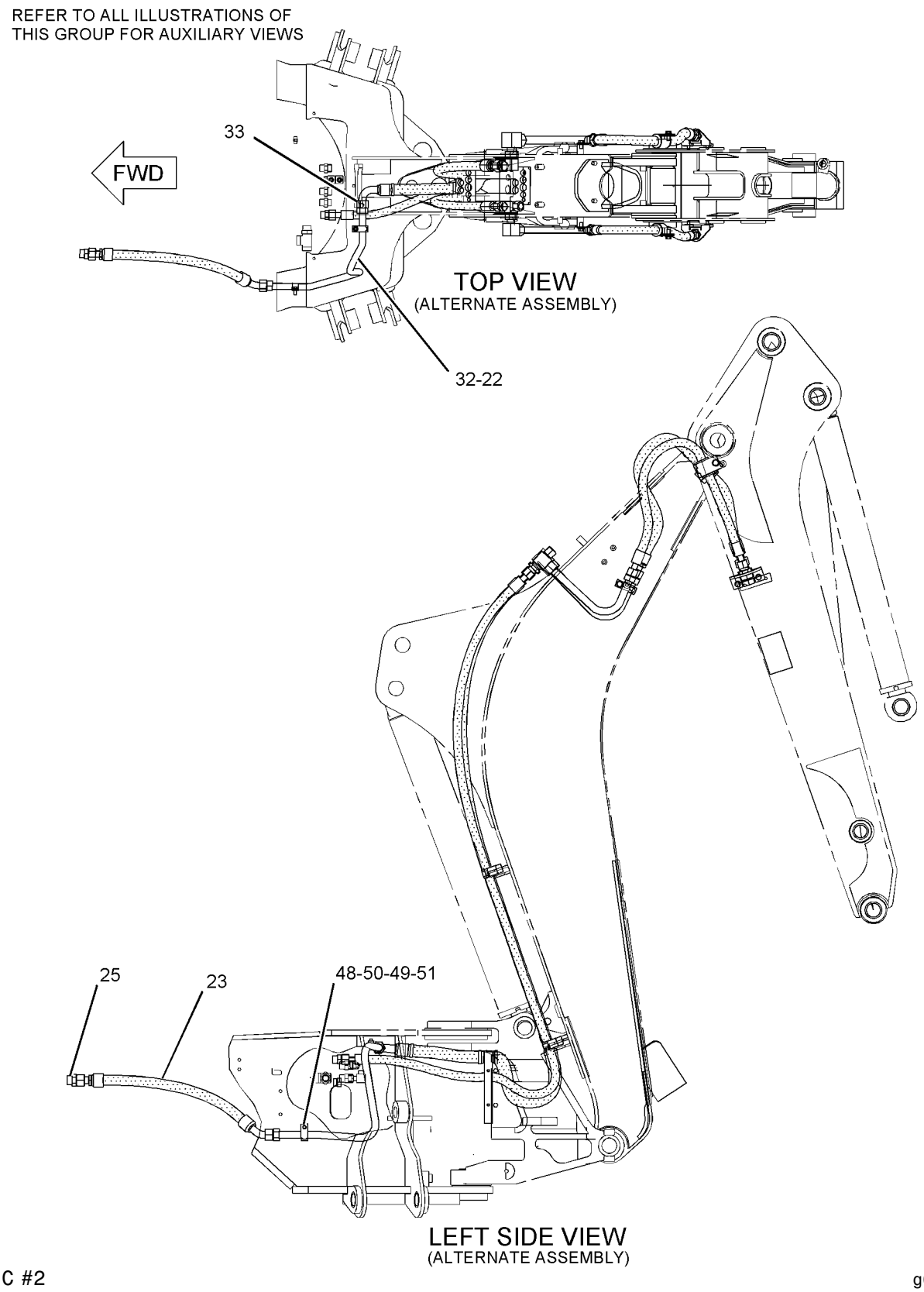

GRAPHIC #2

g01049275

REFER TO ALL ILLUSTRATIONS OF
THIS GROUP FOR AUXILIARY VIEWS

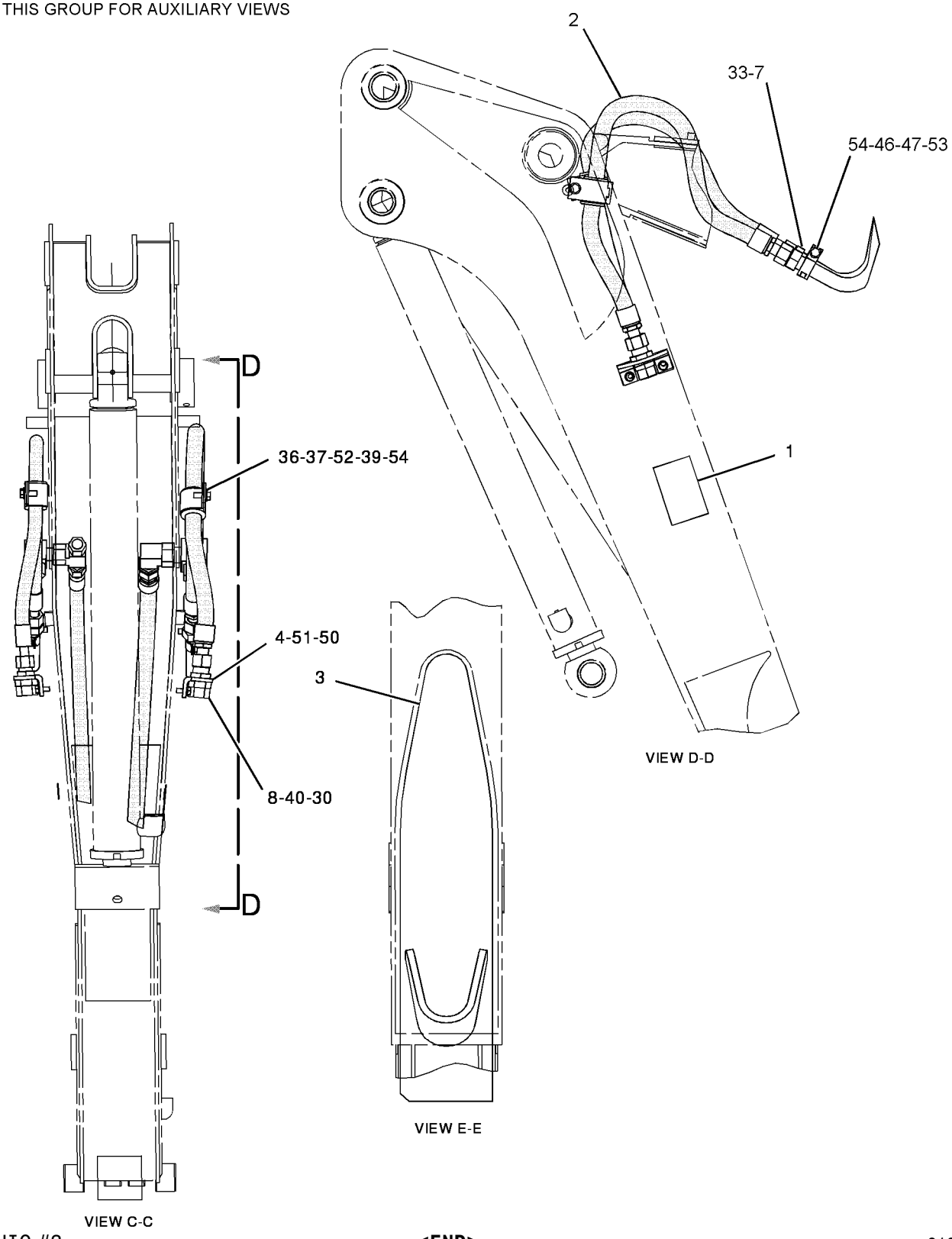

GRAPHIC #3 **<END>** g01049218

HYDRAULIC SYSTEM

235-5848 LINES GP-BACKHOE AUXILIARY

S/N: B2D1-UP

PART OF 238-4781 BACKHOE AR-STANDARD STICK

AN ATTACHMENT

SMCS-5057 **i02024966**

NOTE	REF NO	GRAPHIC REF	PART NUMBER	QTY	PART NAME 1 2 3 4 5 6 (PRODUCT LEVEL)	SEE PAGE
	1	1	**101-0863**	2	FILM-INSTRUCTION (RETURN FLOW)	
I	2	1	**106-0409**	1	HOSE AS	
	3	1	**107-6708**	1	BRACKET	
	4	1	**109-1260**	1	BRACKET	
	5	1	**110-7709**	1	TUBE AS	
	6	1	**110-7710**	1	TUBE AS	
	7	1	**123-7637**	2	CAP	
	8	1	**124-2528**	1	SPACER (11X20X10-MM THK)	
	9	1	*148-8450*	1	TEE AS	
		1	**3E-7443**	1	TEE-UNION	
		1	**5K-9090**	1	SEAL-O-RING	
		1	**6V-9746**	2	SEAL-O-RING	
I	10	1	**168-8493**	1	HOSE AS	
I	11	1	**172-2252**	1	HOSE AS	
	12	1	**205-8845**	1	HOSE AS	
	13	1	**236-5901**	1	TUBE AS	
I	14	1	**236-9900**	1	HOSE AS	
	15	1	**241-8448**	4	FILM-WARNING (HYDRAULIC PRESSURE)	
	16	1	*148-8327*	1	CONNECTOR AS	
		1	**3D-2824**	1	SEAL-O-RING	
		1	**6V-8637**	1	CONNECTOR	
		1	**6V-9746**	1	SEAL-O-RING	
	17	1	*148-8335*	1	CONNECTOR AS	
		1	**5K-9090**	1	SEAL-O-RING	
		1	**6V-8635**	1	CONNECTOR	
		1	**7M-8485**	1	SEAL-O-RING	
	18	1	*148-8352*	1	ELBOW GP	
		1	**5K-9090**	1	SEAL-O-RING	
		1	**6V-9854**	1	ELBOW (SWIVEL)	
	19	1	*148-8386*	1	ELBOW AS	
		1	**3E-7426**	1	ELBOW	
		1	**5K-9090**	1	SEAL-O-RING	
		1	**6V-8400**	1	SEAL-O-RING	
	20	1	*148-8387*	1	ELBOW GP	
		1	**6V-8400**	1	SEAL-O-RING	
		1	**6V-9855**	1	ELBOW	
	21	1	*148-8408*	1	PLUG AS	
		1	**3D-2824**	1	SEAL-O-RING	
		1	**9S-4183**	1	PLUG	
	22	1	*150-3052*	1	CONNECTOR AS	
		1	**5K-9090**	1	SEAL-O-RING	
		1	**7M-8485**	1	SEAL-O-RING	
		1	**107-6709**	1	CONNECTOR	
	23	1	*150-3053*	1	CONNECTOR AS	
		1	**6V-9746**	1	SEAL-O-RING	
		1	**7M-8485**	1	SEAL-O-RING	
		1	**108-3872**	1	CONNECTOR	
	24	1	**2P-1293**	2	LOCKNUT (1 3/16-12-THD)	
	25	1	**5K-9090**	3	SEAL-O-RING	
	26	1	**5P-7466**	1	CLIP (SLOT)	
	27	1	**5P-7467**	1	CLIP (TAB)	
	28	1	**5P-7468**	1	CLIP (SLOT)	
	29	1	**5P-7469**	1	CLIP (TAB)	
	30	1	**5P-8112**	1	GROMMET	
	31	1	**5P-8444**	1	GROMMET	

235-5848 LINES GP-BACKHOE AUXILIARY *(contd.)* i02024966

NOTE	REF NO	GRAPHIC REF	PART NUMBER	QTY	PART NAME 1 2 3 4 5 6 (PRODUCT LEVEL)	SEE PAGE
	32	1	**6V-9172**	2	NUT (1 7/16-12-THD)	
	33	1	**6V-9746**	1	SEAL-O-RING	
	34	1	**6V-9832**	1	CAP AS	
	35	1	**7S-3916**	1	CLIP (TAB)	
	36	1	**7S-3919**	1	CLIP (SLOT)	
	37	1	**8S-0023**	1	CLIP (SLOT)	
	38	1	**8S-0024**	1	CLIP (TAB)	
	39	1	**8T-1889**	2	CLIP (SLOT)	
	40	1	**8T-1890**	2	CLIP (TAB)	
	41	1	**8T-4121**	6	WASHER-HARD (11X21X2.5-MM THK)	
M	42	1	**8T-4136**	5	BOLT (M10X1.5X25-MM)	
M	43	1	**8T-4139**	2	BOLT (M12X1.75X30-MM)	
M	44	1	**8T-4192**	2	BOLT (M12X1.75X25-MM)	
M	45	1	**8T-4195**	1	BOLT (M10X1.5X30-MM)	
	46	1	**8T-4223**	4	WASHER-HARD (13.5X25.5X3-MM THK)	

I-REFER TO HYDRAULIC INFORMATION SYSTEM
M-METRIC PART

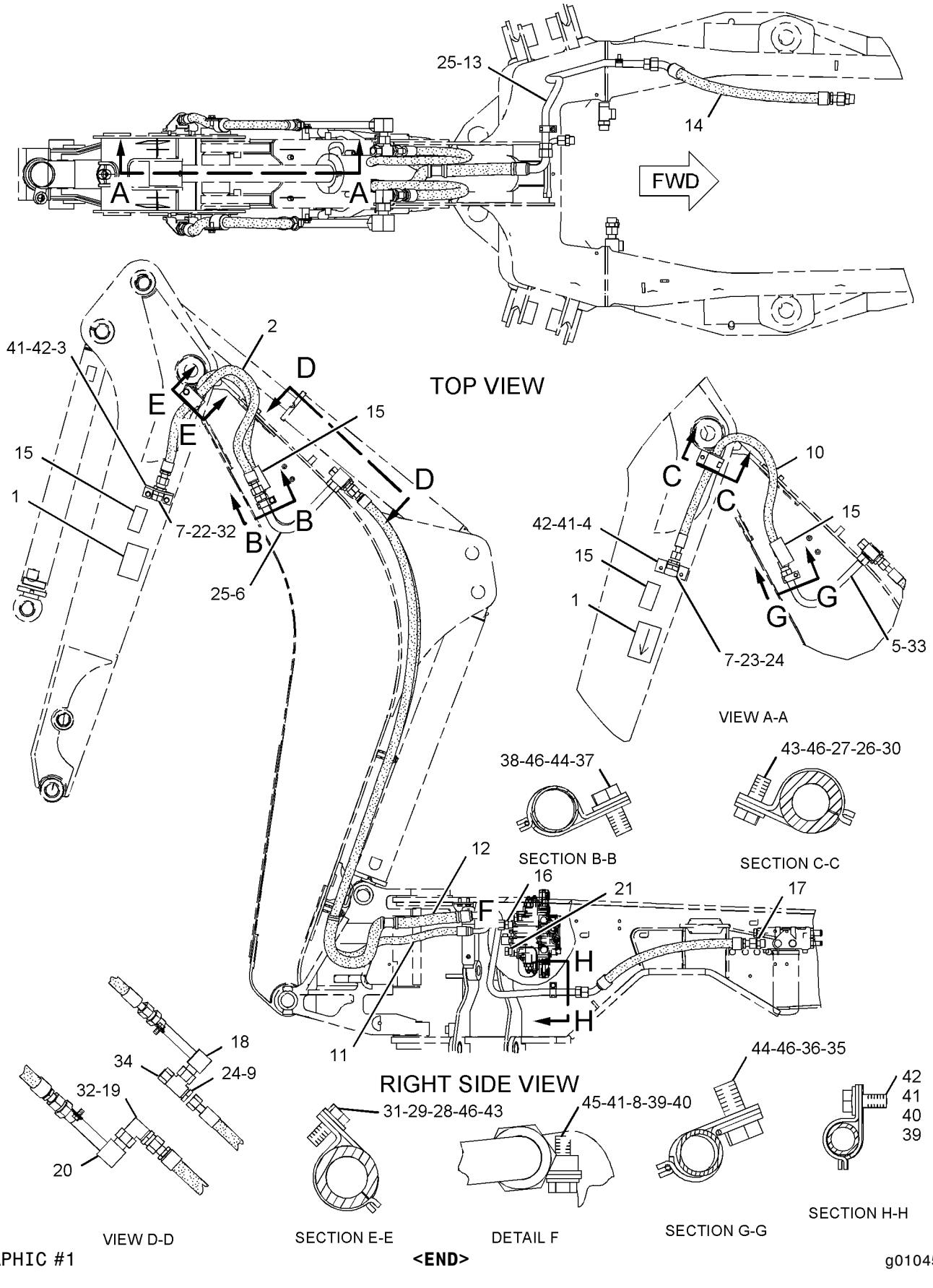

GRAPHIC #1 **<END>** g01045915

HYDRAULIC SYSTEM

235-5849 LINES GP-BACKHOE AUXILIARY—EXTENDABLE STICK

S/N: B2D1-UP

PART OF 238-4784 BACKHOE AR-EXTENDABLE STICK

AN ATTACHMENT

SMCS-5057 **i02024965**

NOTE	REF NO	GRAPHIC REF	PART NUMBER	QTY	PART NAME 1 2 3 4 5 6 (PRODUCT LEVEL)	SEE PAGE
	1	1	**5P-0599**	1	CLAMP	
	2	1	**9R-5948**	1	BLOCK	
	3	2	**9R-9253**	1	PLATE	
	4	1,2	**101-0862**	2	PLATE-WARNING (E-STICK)	
	5	1,2	**101-0863**	2	FILM-INSTRUCTION (RETURN FLOW)	
I	6	1	**106-0409**	1	HOSE AS	
	7	1	**107-6708**	1	BRACKET	
	8	2	**109-1260**	1	BRACKET	
	9	2	**110-7709**	1	TUBE AS	
	10	1	**110-7710**	1	TUBE AS	
	11	2	**110-7713**	1	TUBE AS	
	12	1,2	**123-7637**	2	CAP	
	13	1	**124-2528**	1	SPACER (11X20X10-MM THK)	
	14	2	*148-8450*	1	TEE AS	
		2	**3E-7443**	1	TEE-UNION	
		2	**5K-9090**	1	SEAL-O-RING	
		2	**6V-9746**	2	SEAL-O-RING	
I	15	1	**160-6026**	1	HOSE AS	
	16	2	**162-2356**	2	TUBE AS	
I	17	1,2	**167-3896**	2	HOSE AS	
I	18	2	**168-8493**	1	HOSE AS	
I	19	2	**168-8497**	1	HOSE AS	
I	20	1	**168-8644**	1	HOSE AS	
I	21	1	**169-2935**	1	HOSE AS	
I	22	1	**169-2983**	1	HOSE AS	
I	23	1	**172-2252**	1	HOSE AS	
	24	2	**177-0856**	1	TUBE AS	
	25	2	**187-4333**	1	TUBE AS	
	26	2	**187-4344**	1	TUBE AS	
	27	1	**205-8845**	1	HOSE AS	
	28	1	**236-5901**	1	TUBE AS	
I	29	1	**236-9900**	1	HOSE AS	
	30	1,2	**241-8450**	4	FILM-WARNING (HYDROLIC PRESSURE)	
	31	1	*148-8327*	1	CONNECTOR AS	
		1	**3D-2824**	1	SEAL-O-RING	
		1	**6V-8637**	1	CONNECTOR	
		1	**6V-9746**	1	SEAL-O-RING	
	32	1	*148-8328*	1	CONNECTOR GP	
		1	**3D-2824**	1	SEAL-O-RING	
		1	**6V-8398**	1	SEAL-O-RING	
		1	**6V-8633**	1	CONNECTOR	
	33	1	*148-8335*	1	CONNECTOR AS	
		1	**5K-9090**	1	SEAL-O-RING	
		1	**6V-8635**	1	CONNECTOR	
		1	**7M-8485**	1	SEAL-O-RING	
	34	1,2	*148-8347*	1	ELBOW GP	
		1,2	**3D-2824**	1	SEAL-O-RING	
		1,2	**6V-9007**	1	ELBOW	
		1,2	**6V-9746**	1	SEAL-O-RING	
	35	2	*148-8352*	1	ELBOW GP	
		2	**5K-9090**	1	SEAL-O-RING	
		2	**6V-9854**	1	ELBOW (SWIVEL)	
	36	2	*148-8386*	1	ELBOW AS	
		2	**3E-7426**	1	ELBOW	
		2	**5K-9090**	1	SEAL-O-RING	

235-5849 LINES GP-BACKHOE AUXILIARY *(contd.)* i02024965

NOTE	REF NO	GRAPHIC REF	PART NUMBER	QTY	PART NAME 1 2 3 4 5 6 (PRODUCT LEVEL)	SEE PAGE
		2	**6V-8400**	1	SEAL-O-RING	
	37	2	*148-8387*	1	ELBOW GP	
		2	**6V-8400**	1	SEAL-O-RING	
		2	**6V-9855**	1	ELBOW	
	38	2	*148-8392*	1	ELBOW GP	
		2	**6V-9746**	1	SEAL-O-RING	
		2	**6V-9853**	1	ELBOW	
	39	1	*150-3052*	1	CONNECTOR AS	
		1	**5K-9090**	1	SEAL-O-RING	
		1	**7M-8485**	1	SEAL-O-RING	
		1	**107-6709**	1	CONNECTOR	
	40	2	*150-3053*	1	CONNECTOR AS	
		2	**6V-9746**	1	SEAL-O-RING	
		2	**7M-8485**	1	SEAL-O-RING	
		2	**108-3872**	1	CONNECTOR	
	41	2	**2P-1293**	3	LOCKNUT (1 3/16-12-THD)	
	42	1	**5K-9090**	3	SEAL-O-RING	
	43	1,2	**5P-7464**	5	CLIP (SLOT)	
	44	1,2	**5P-7465**	5	CLIP (TAB)	
	45	2	**5P-7466**	3	CLIP (SLOT)	
	46	2	**5P-7467**	3	CLIP (TAB)	
	47	1,2	**5P-7468**	2	CLIP (SLOT)	
	48	1,2	**5P-7469**	2	CLIP (TAB)	
	49	2	**5P-8112**	3	GROMMET	
	50	1	**5P-8444**	1	GROMMET	
	51	1,2	**6V-1249**	5	GROMMET	
	52	1,2	**6V-8398**	7	SEAL-O-RING	
	53	2	**6V-9169**	1	NUT-BULKHEAD (13/16-16-THD)	
	54	1,2	**6V-9172**	2	NUT (1 7/16-12-THD)	
	55	2	**6V-9746**	3	SEAL-O-RING	
	56	1,2	**7J-9108**	2	SEAL-O-RING	
	57	2	**7S-3916**	1	CLIP (TAB)	
	58	2	**7S-3919**	1	CLIP (SLOT)	
	59	1	**8S-0023**	1	CLIP (SLOT)	
	60	1	**8S-0024**	1	CLIP (TAB)	
	61	1,2	**8T-1889**	3	CLIP (SLOT)	
	62	1,2	**8T-1890**	3	CLIP (TAB)	
	63	1,2	**8T-4121**	14	WASHER-HARD (11X21X2.5-MM THK)	
M	64	1,2	**8T-4136**	10	BOLT (M10X1.5X25-MM)	
M	65	1,2	**8T-4139**	4	BOLT (M12X1.75X30-MM)	
M	66	1,2	**8T-4184**	4	BOLT (M12X1.75X45-MM)	
M	67	1,2	**8T-4192**	2	BOLT (M12X1.75X25-MM)	
M	68	1,2	**8T-4195**	4	BOLT (M10X1.5X30-MM)	
	69	1,2	**8T-4223**	10	WASHER-HARD (13.5X25.5X3-MM THK)	
	70	2	**8T-7087**	1	GROMMET	
	71	1,2	**9R-1004**	5	CLIP (TAB)	
	72	1,2	**9R-1005**	5	CLIP (SLOT)	

I-REFER TO HYDRAULIC INFORMATION SYSTEM
M-METRIC PART

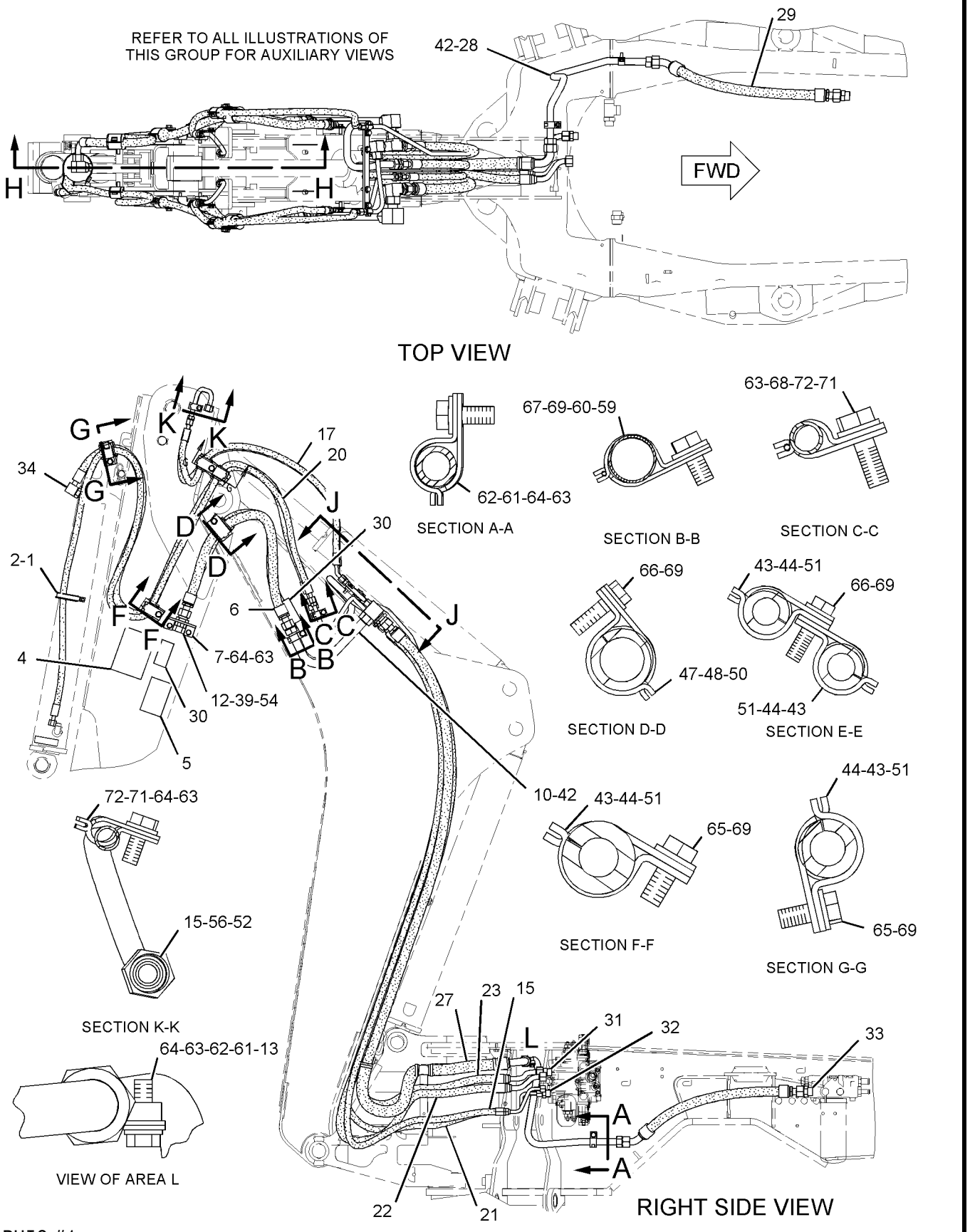

GRAPHIC #1

g01045956

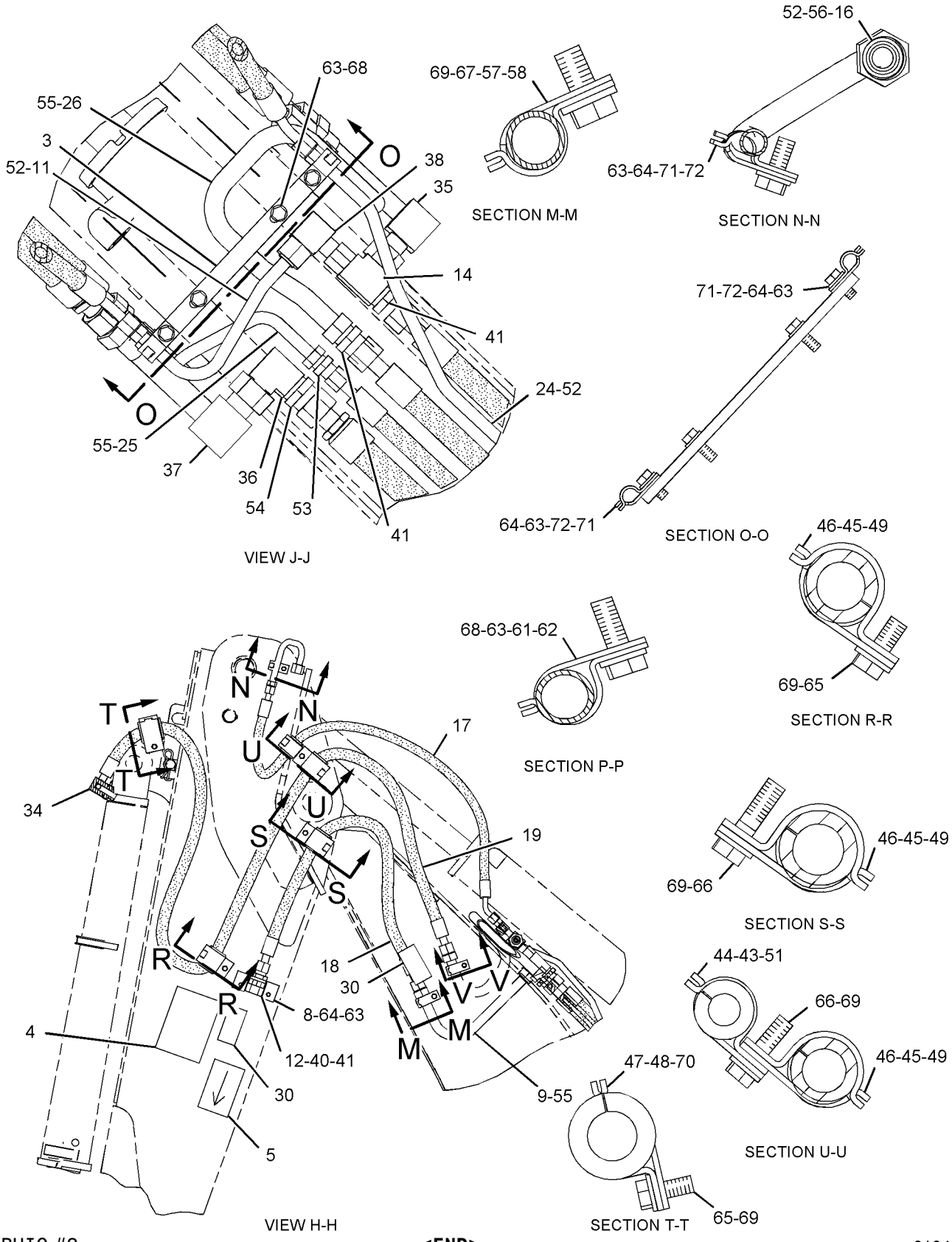

GRAPHIC #2 **<END>** g01045957

HYDRAULIC SYSTEM

167-8270 LINES GP-BOOM

S/N: B2D1-UP
CYLINDER
PART OF 238-4783, 238-4784 BACKHOE AR-EXTENDABLE STICK, 238-4780, 238-4781, 238-4782 BACKHOE AR-STANDARD STICK
AN ATTACHMENT

SMCS-5057, 5456 **i01660708**

NOTE	REF NO	GRAPHIC REF	PART NUMBER	QTY	PART NAME 1 2 3 4 5 6 (PRODUCT LEVEL)	SEE PAGE
	1	1	**5P-0599**	1	CLAMP	
	2	1	**9R-4619**	1	SUPPORT AS	
I	3	1	**169-2978**	1	HOSE AS	
I	4	1	**172-3820**	1	HOSE AS	
	5	1	**207-5477**	1	TUBE AS	
	6	1	*148-8327*	1	CONNECTOR GP	
		1	**3D-2824**	1	SEAL-O-RING	
		1	**6V-8637**	1	CONNECTOR-SEAL	
		1	**6V-9746**	1	SEAL-O-RING	
	7	1	**7J-9108**	1	SEAL-O-RING	
	8	1	**8T-1887**	1	CLIP (SLOT)	
	9	1	**8T-1888**	1	CLIP (TAB)	
	10	1	**8T-4121**	1	WASHER-HARD (11X21X2.5MM THK)	
M	11	1	**8T-4137**	1	BOLT (M10X1.5X20MM)	

I-SEE HOSE FABRICATION GUIDE
M-METRIC PART

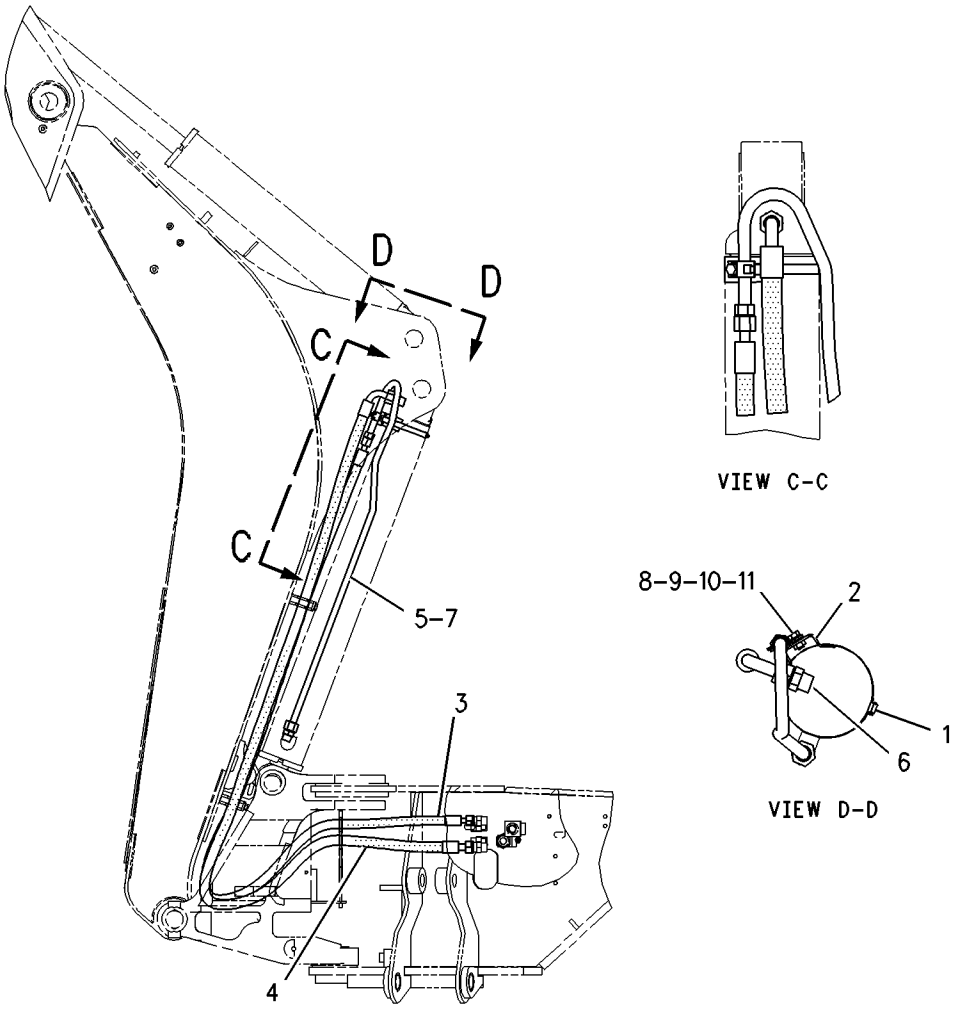

GRAPHIC #1 **<END>** g00857177

HYDRAULIC SYSTEM

167-8275 LINES GP-BUCKET CYLINDER

S/N: B2D1-UP

PART OF 238-4780, 238-4781, 238-4782 BACKHOE AR-STANDARD STICK AN ATTACHMENT

SMCS-5057, 5457 **i01759749**

NOTE	REF NO	GRAPHIC REF	PART NUMBER	QTY	PART NAME 1 2 3 4 5 6 (PRODUCT LEVEL)	SEE PAGE
	1	1	**5P-0599**	2	CLAMP	
	2	1	**9R-5948**	1	BLOCK	
I	3	1	**160-6026**	1	HOSE AS	
I	4	1	**169-2983**	1	HOSE AS	
	5	1	**187-4343**	1	TUBE AS	
	6	1	**195-0268**	1	BRACKET AS	
I	7	1	**197-0573**	1	HOSE AS	
CI	8	1	**212-9338**	1	HOSE AS	
	9	1	*148-8362*	1	ELBOW GP	
		1	**3D-2824**	1	SEAL-O-RING	
		1	**5K-9090**	1	SEAL-O-RING	
		1	**8T-6684**	1	ELBOW	
	10	1	*148-8455*	1	UNION GP	
		1	**6V-8997**	1	UNION	
		1	**6V-9746**	2	SEAL-O-RING	
	11	1	*148-8457*	1	UNION GP	
		1	**6V-8398**	2	SEAL-O-RING	
		1	**6V-8995**	1	UNION-BULKHEAD	
	12	1	**2P-1293**	1	LOCKNUT-BULKHEAD (1 3/16-12 THD)	
	13	1	**5P-7464**	1	CLIP (SLOT)	
	14	1	**5P-7465**	1	CLIP (TAB)	
	15	1	**5P-7466**	1	CLIP (SLOT)	
	16	1	**5P-7467**	1	CLIP (TAB)	
	17	1	**5P-8112**	1	GROMMET	
	18	1	**6V-1249**	1	GROMMET	
	19	1	**6V-9169**	1	NUT-BULKHEAD (13/16-16 THD)	
	20	1	**6V-9746**	1	SEAL-O-RING	
	21	1	**8T-1889**	1	CLIP (SLOT)	
	22	1	**8T-1890**	1	CLIP (TAB)	
	23	1	**8T-4121**	1	WASHER-HARD (11X21X2.5MM THK)	
M	24	1	**8T-4137**	1	BOLT (M10X1.5X20MM)	
M	25	1	**8T-4139**	2	BOLT (M12X1.75X30MM)	
	26	1	**8T-4223**	2	WASHER-HARD (13.5X25.5X3MM THK)	

C-CHANGE FROM PREVIOUS TYPE
I-SEE HOSE FABRICATION GUIDE
M-METRIC PART

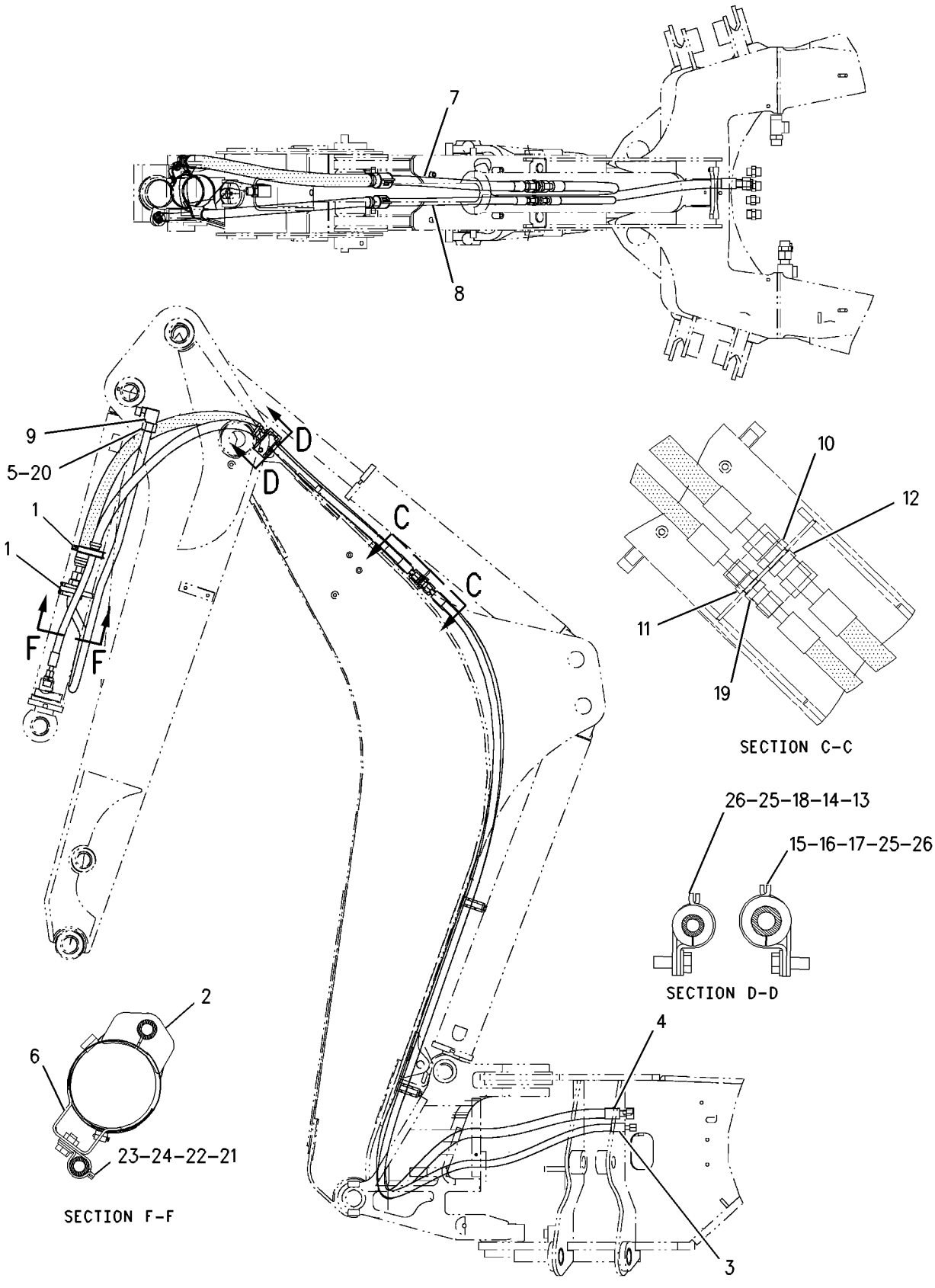

GRAPHIC #1 **<END>** g00907820

162-2351 LINES GP-EXTENDABLE STICK

S/N: B2D1-UP
PART OF 155-6586 CYLINDER GP-EXTENDABLE STICK
AN ATTACHMENT

SMCS-5057 **i01524469**

NOTE	REF NO	GRAPHIC REF	PART NUMBER	QTY	PART NAME 1 2 3 4 5 6 (PRODUCT LEVEL)	SEE PAGE
	1	1	**5P-0599**	1	CLAMP	
	2	1	**9R-2004**	1	BLOCK	
	3	1	**162-2353**	1	TUBE AS	
	4	1	**162-2354**	1	TUBE AS	
	5	1	*148-8315*	1	CONNECTOR GP	
		1	**2M-9780**	1	SEAL-O-RING	
		1	**6V-8642**	1	CONNECTOR	
		1	**7J-9108**	1	SEAL-O-RING	
	6	1	*148-8390*	1	ELBOW GP	
		1	**2M-9780**	1	SEAL-O-RING	
		1	**6V-8626**	1	ELBOW	
		1	**7J-9108**	1	SEAL-O-RING	

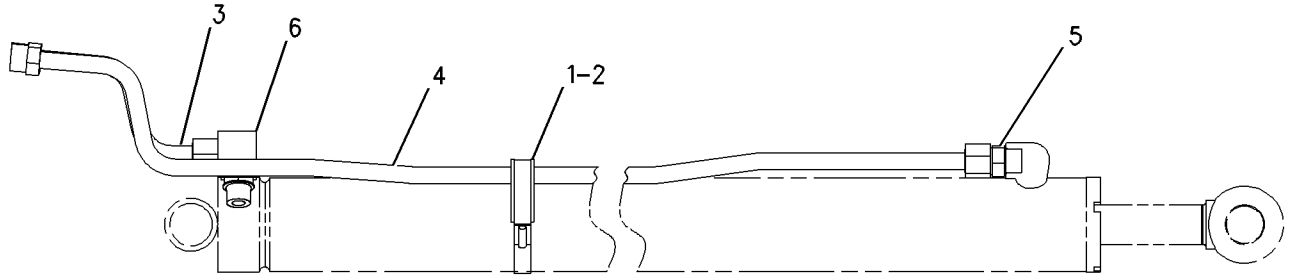

GRAPHIC #1 **<END>** g00787335

HYDRAULIC SYSTEM

167-8276 LINES GP-EXTENDABLE STICK

S/N: B2D1-UP

PART OF 238-4783 BACKHOE AR-EXTENDABLE STICK

AN ATTACHMENT

SMCS-5057 **i02040030**

NOTE	REF NO	GRAPHIC REF	PART NUMBER	QTY	PART NAME 1 2 3 4 5 6 (PRODUCT LEVEL)	SEE PAGE
	1	1	**5P-0599**	1	CLAMP	
	2	1	**9R-5948**	1	BLOCK	
	3	1	**9R-9253**	1	PLATE	
	4	1	**101-0862**	2	PLATE-WARNING (E-STICK)	
I	5	1	**160-6026**	1	HOSE AS	
	6	1	**162-2356**	2	TUBE AS	
I	7	1	**167-3896**	2	HOSE AS	
I	8	1	**169-2935**	2	HOSE AS	
I	9	1	**169-2983**	1	HOSE AS	
I	10	1	**168-8497**	1	HOSE AS	
	11	1	**177-0856**	1	TUBE AS	
	12	1	**177-2171**	1	TUBE AS	
	13	1	**187-4333**	1	TUBE AS	
	14	1	**187-4344**	1	TUBE AS	
I	15	1	**168-8644**	1	HOSE AS	
	16	1	*148-8328*	2	CONNECTOR GP	
					(EACH INCLUDES)	
		1	**3D-2824**	1	SEAL-O-RING	
		1	**6V-8398**	1	SEAL-O-RING	
		1	**6V-8633**	1	CONNECTOR	
	17	1	*148-8347*	1	ELBOW GP	
		1	**3D-2824**	1	SEAL-O-RING	
		1	**6V-9007**	1	ELBOW	
		1	**6V-9746**	1	SEAL-O-RING	
	18	1	**2P-1293**	1	LOCKNUT (1 3/16-12-THD)	
	19	1	**5P-7464**	5	CLIP (SLOT)	
	20	1	**5P-7465**	5	CLIP (TAB)	
	21	1	**5P-7466**	2	CLIP (SLOT)	
	22	1	**5P-7467**	2	CLIP (TAB)	
	23	1	**5P-7468**	1	CLIP (SLOT)	
	24	1	**5P-7469**	1	CLIP (TAB)	
	25	1	**5P-8112**	2	GROMMET	
	26	1	**6V-1249**	5	GROMMET	
	27	1	**6V-8398**	8	SEAL-O-RING	
	28	1	**6V-9169**	1	NUT-BULKHEAD (13/16-16-THD)	
	29	1	**6V-9746**	2	SEAL-O-RING	
	30	1	**7J-9108**	2	SEAL-O-RING	
	31	1	**8T-1889**	1	CLIP (SLOT)	
	32	1	**8T-1890**	1	CLIP (TAB)	
	33	1	**8T-4121**	8	WASHER-HARD (11X21X2.5-MM THK)	
M	34	1	**8T-4136**	4	BOLT (M10X1.5X25-MM)	
M	35	1	**8T-4139**	4	BOLT (M12X1.75X30-MM)	
M	36	1	**8T-4184**	2	BOLT (M12X1.75X45-MM)	
M	37	1	**8T-4195**	4	BOLT (M10X1.5X30-MM)	
	38	1	**8T-4223**	6	WASHER-HARD (13.5X25.5X3-MM THK)	
	39	1	**8T-7087**	1	GROMMET	
	40	1	**9R-1004**	5	CLIP (TAB)	
	41	1	**9R-1005**	5	CLIP (SLOT)	

I-REFER TO HYDRAULIC INFORMATION SYSTEM
M-METRIC PART

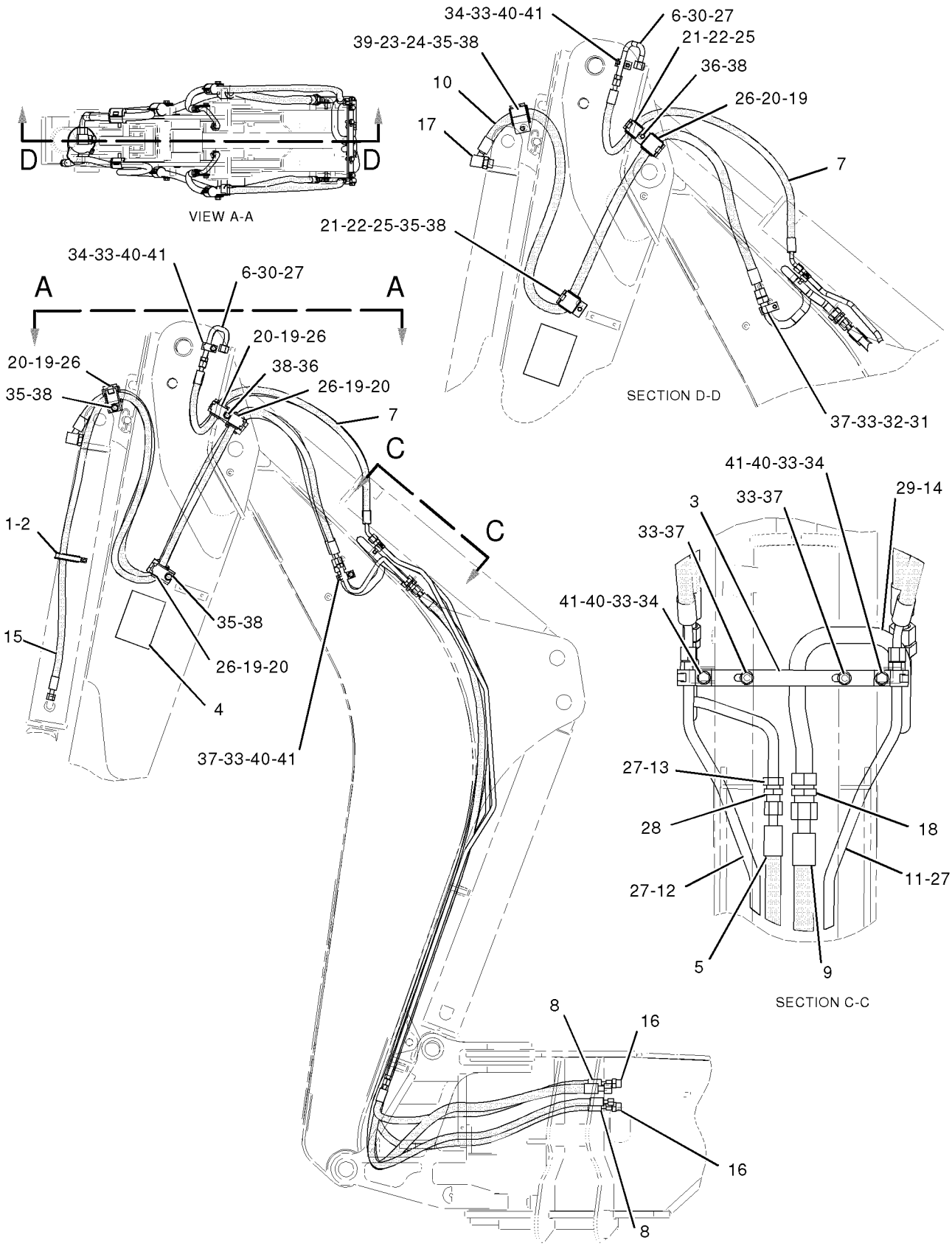

GRAPHIC #1 **<END>** g01049085

HYDRAULIC SYSTEM

144-6253 LINES GP-LIFT CYLINDER

S/N: B2D1-UP

PART OF 186-5331, 186-5333 HYDRAULIC AR

AN ATTACHMENT

SMCS-5057, 5102 **i02052176**

NOTE	REF NO	GRAPHIC REF	PART NUMBER	QTY	PART NAME 1 2 3 4 5 6 (PRODUCT LEVEL)	SEE PAGE
	1	1	**8T-6726**	4	CLAMP-HOSE	
	2	1	**9R-7070**	1	PLATE AS	
	3	1	**9R-7071**	1	PLATE AS	
	4	1	**144-6256**	1	TUBE AS	
	5	1	**144-6258**	1	TUBE AS	
	6	1	**158-3412**	4	CLIP (SLOT)	
	7	1	**207-5479**	1	TUBE AS	
	8	1	**207-5480**	1	TUBE AS	
	9	1	*148-8390*	2	ELBOW GP	
					(EACH INCLUDES)	
		1	**2M-9780**	1	SEAL-O-RING	
		1	**6V-8626**	1	ELBOW	
		1	**7J-9108**	1	SEAL-O-RING	
	10	1	**6V-8398**	4	SEAL-O-RING	
	11	1	**8T-4121**	2	WASHER-HARD (11X21X2.5-MM THK)	
M	12	1	**8T-4136**	2	BOLT (M10X1.5X25-MM)	
	13	1	**9R-7803**	2	CLIP (TAB)	

M-METRIC PART

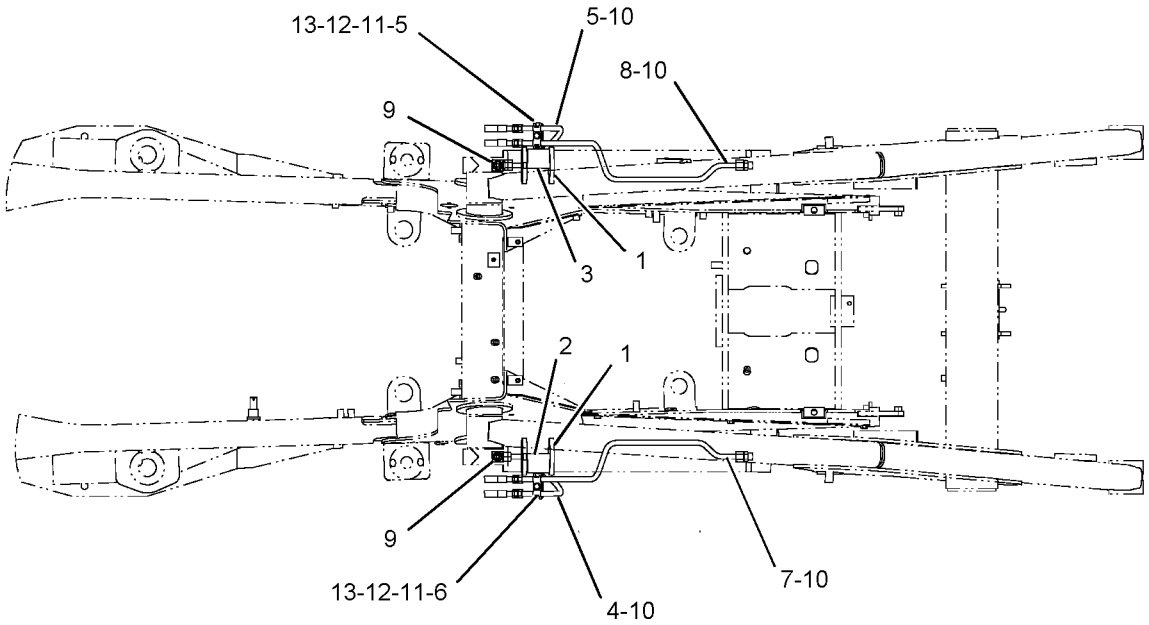

GRAPHIC #1 **<END>** g01052655

HYDRAULIC SYSTEM

163-9371 LINES GP-LIFT CYLINDER

S/N: B2D1-UP
PART OF 186-5331, 186-5333 HYDRAULIC AR
AN ATTACHMENT

SMCS-5057, 5102 **i01922441**

NOTE	REF NO	GRAPHIC REF	PART NUMBER	QTY	PART NAME 1 2 3 4 5 6 (PRODUCT LEVEL)	SEE PAGE
	1	1	**7K-1181**	1	STRAP-CABLE	
C	2	1	**112-5823**	1	TUBE AS	
C	3	1	**112-5827**	1	TUBE AS	
I	4	1	**120-1324**	4	HOSE AS	
	5	1	**122-4872**	1	BRACKET AS	
	6	1	**122-4873**	1	BRACKET AS	
	7	1	**158-3412**	6	CLIP (SLOT)	
C	8	1	**230-7649**	1	TUBE AS	
C	9	1	**230-7651**	1	TUBE AS	
	10	1	*148-8341*	1	CONNECTOR GP	
		1	**3D-2824**	1	SEAL-O-RING	
		1	**6V-8713**	1	CONNECTOR	
		1	**7J-9108**	1	SEAL-O-RING	
	11	1	*148-8446*	3	TEE GP-SWIVEL	
					(EACH INCLUDES)	
		1	**6V-9838**	1	TEE-SWIVEL	
		1	**7J-9108**	2	SEAL-O-RING	
	12	1	*150-3063*	1	TEE AS	
		1	**3D-2824**	1	SEAL-O-RING	
		1	**7J-9108**	2	SEAL-O-RING	
		1	**120-9809**	1	TEE	
	13	1	**151-4841**	1	BLOCK	
C	14	1	**230-7650**	1	TUBE AS	
	15	1	**6V-8398**	4	SEAL-O-RING	
	16	1	**6V-9831**	2	CAP AS	
	17	1	**7J-9108**	1	SEAL-O-RING	
	18	1	**8T-4121**	5	WASHER-HARD (11X21X2.5MM THK)	
CM	19	1	**8T-4133**	1	NUT (M10X1.5 THD)	
M	20	1	**8T-4136**	4	BOLT (M10X1.5X25MM)	
CM	21	1	**8T-4137**	1	BOLT (M10X1.5X20MM)	
	22	1	**9R-7803**	3	CLIP (TAB)	

C-CHANGE FROM PREVIOUS TYPE
I-SEE HOSE FABRICATION GUIDE
M-METRIC PART

163-9371 **LINES GP-LIFT CYLINDER** ***(contd.)*** **i01922441**

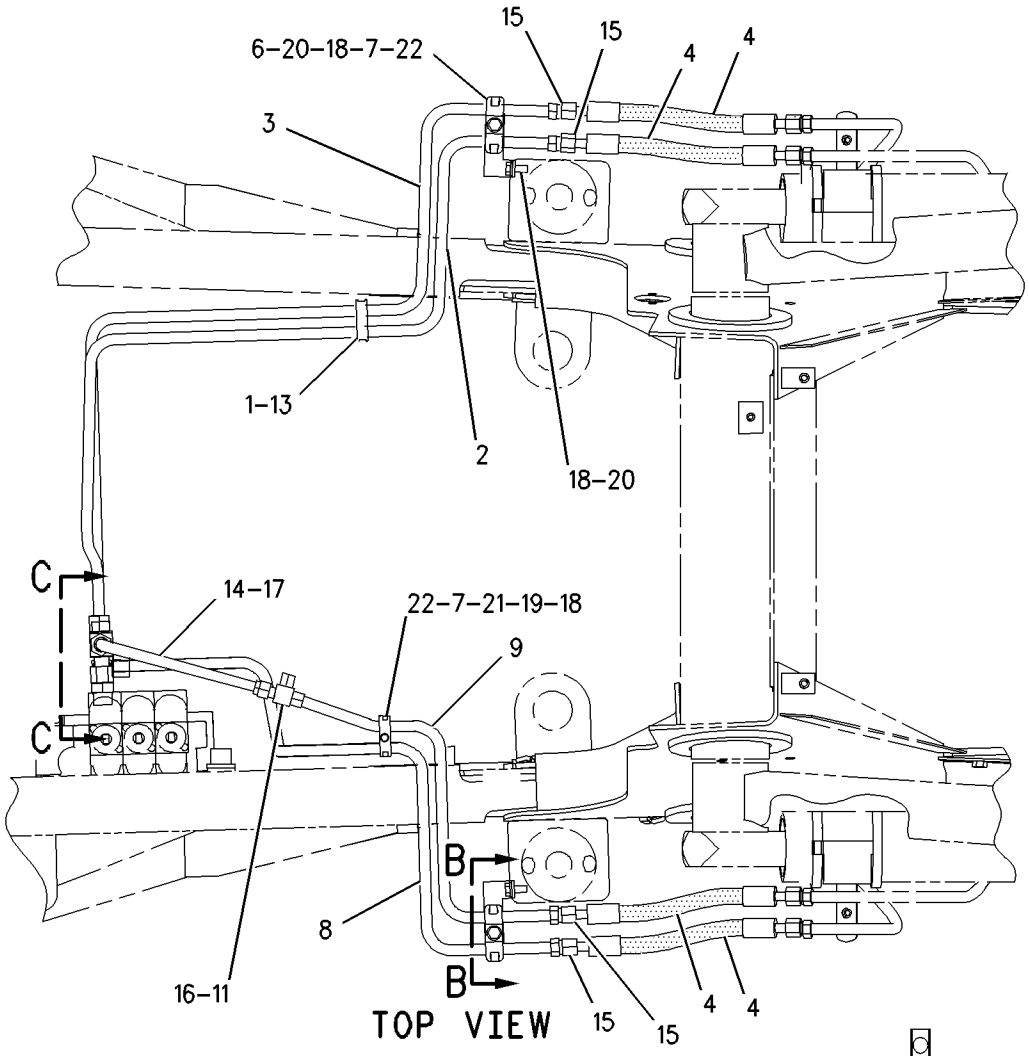

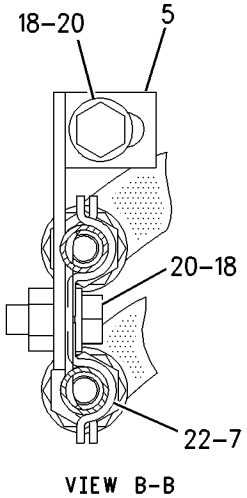

VIEW B-B

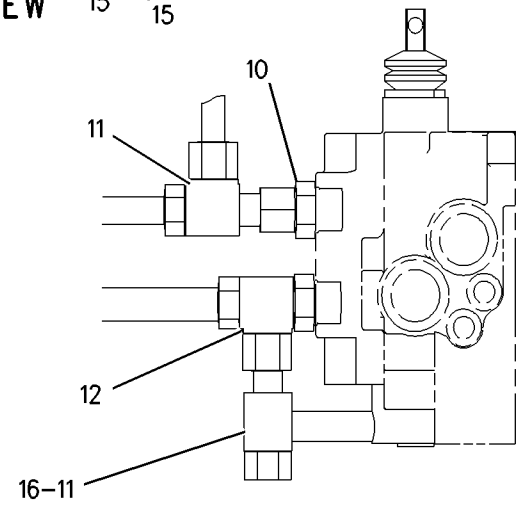

VIEW C-C

GRAPHIC #1 **<END>** g00995757

HYDRAULIC SYSTEM

106-5876 LINES GP-LOADER AUXILIARY

S/N: B2D1-UP
PART OF 186-5333 HYDRAULIC AR
AN ATTACHMENT

SMCS-5057 **i01986464**

NOTE	REF NO	GRAPHIC REF	PART NUMBER	QTY	PART NAME 1 2 3 4 5 6 (PRODUCT LEVEL)	SEE PAGE
	1	1	**6V-9830**	2	CAP AS	
I	2	1	**9R-9198**	2	HOSE AS	
	3	1	**9R-9319**	1	BRACKET AS	
M		1	**8T-3490**	1	NUT-WELD (M10X1.5 THD)	
	4	1	**116-4616**	1	TUBE AS	
	5	1	**116-4617**	1	TUBE AS	
	6	1	**122-5823**	1	BRACKET AS	
M		1	**8T-3490**	1	NUT-WELD (M10X1.5 THD)	
	7	1	**151-4841**	1	BLOCK	
	8	1	**133-7332**	1	TUBE AS	
	9	1	**133-7333**	1	TUBE AS	
	10	1	**9R-7803**	4	CLIP (TAB)	
	11	1	**6V-8398**	6	SEAL-O-RING	
	12	1	*148-8341*	2	CONNECTOR GP	
					(EACH INCLUDES)	
		1	**3D-2824**	1	SEAL-O-RING	
		1	**6V-8713**	1	CONNECTOR	
		1	**7J-9108**	1	SEAL-O-RING	
M	13	1	**8T-4137**	1	BOLT (M10X1.5X20MM)	
	14	1	**8T-4121**	8	WASHER-HARD (11X21X2.5MM THK)	
	15	1	**7K-1181**	1	STRAP-CABLE	
M	16	1	**8T-4136**	3	BOLT (M10X1.5X25MM)	
M	17	1	**8T-4195**	3	BOLT (M10X1.5X30MM)	
	18	1	**158-3412**	8	CLIP (SLOT)	

I-REFER TO HYDRAULIC INFORMATION SYSTEM
M-METRIC PART

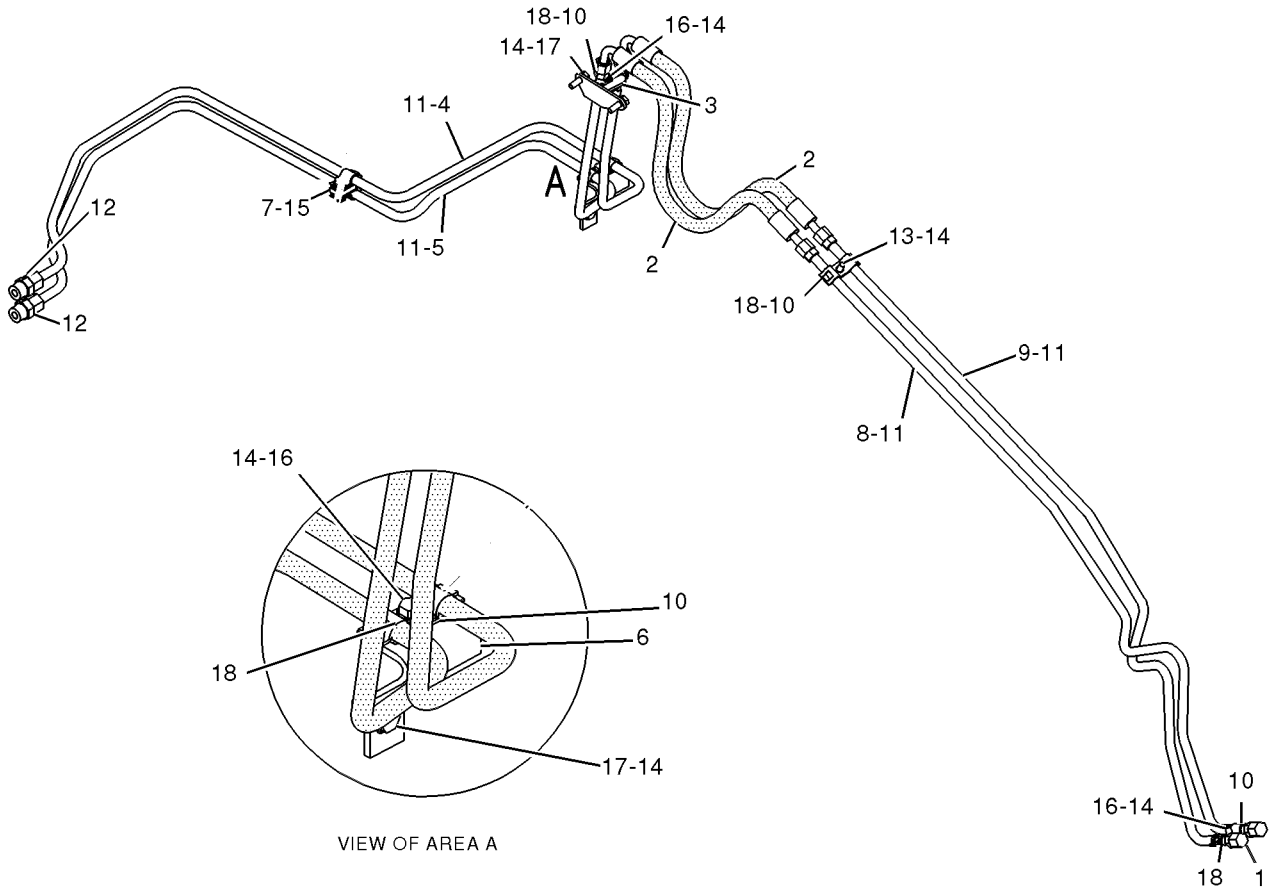

VIEW OF AREA A

GRAPHIC #1 **<END>** g01029236

HYDRAULIC SYSTEM

9R-3712 LINES GP-MULTIPURPOSE BUCKET

S/N: B2D1-UP

PART OF 112-0938, 112-0939 BUCKET AR-MULTIPURPOSE

AN ATTACHMENT

SMCS-5057 **i01515344**

NOTE	REF NO	GRAPHIC REF	PART NUMBER	QTY	PART NAME 1 2 3 4 5 6 (PRODUCT LEVEL)	SEE PAGE
	1	1	**6V-1249**	2	GROMMET	
I	2	1	**8E-3081**	1	HOSE AS	
I	3	1	**9R-0418**	2	HOSE AS	
I	4	1	**9R-5971**	1	HOSE AS	
I	5	1	**100-7442**	1	HOSE AS	
I	6	1	**117-7520**	1	HOSE AS	
	7	1	*148-8336*	4	CONNECTOR GP	
					(EACH INCLUDES)	
		1	**3J-1907**	1	SEAL-O-RING	
		1	**6V-8397**	1	SEAL-O-RING	
		1	**6V-8636**	1	CONNECTOR	
	8	1	*150-3060*	2	TEE AS	
					(EACH INCLUDES)	
		1	**6V-8397**	2	SEAL-O-RING	
		1	**6V-8398**	1	SEAL-O-RING	
		1	**8T-3444**	1	TEE-UNION ORIFICE	
	9	1	**5P-7464**	2	CLIP (SLOT)	
	10	1	**5P-7465**	2	CLIP (TAB)	
	11	1	**8T-1891**	4	CLIP (SLOT)	
	12	1	**8T-1892**	4	CLIP (TAB)	
	13	1	**8T-4121**	2	WASHER-HARD (11X21X2.5MM THK)	
M	14	1	**8T-4136**	2	BOLT (M10X1.5X25MM)	
M	15	1	**8T-4192**	2	BOLT (M12X1.75X25MM)	
	16	1	**8T-4223**	2	WASHER-HARD (13.5X25.5X3MM THK)	

I-SEE HOSE FABRICATION GUIDE
M-METRIC PART

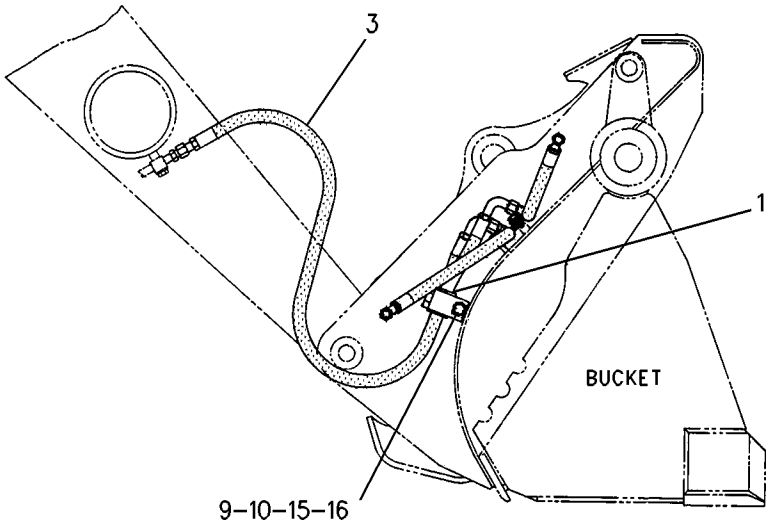

RIGHT SIDE VIEW

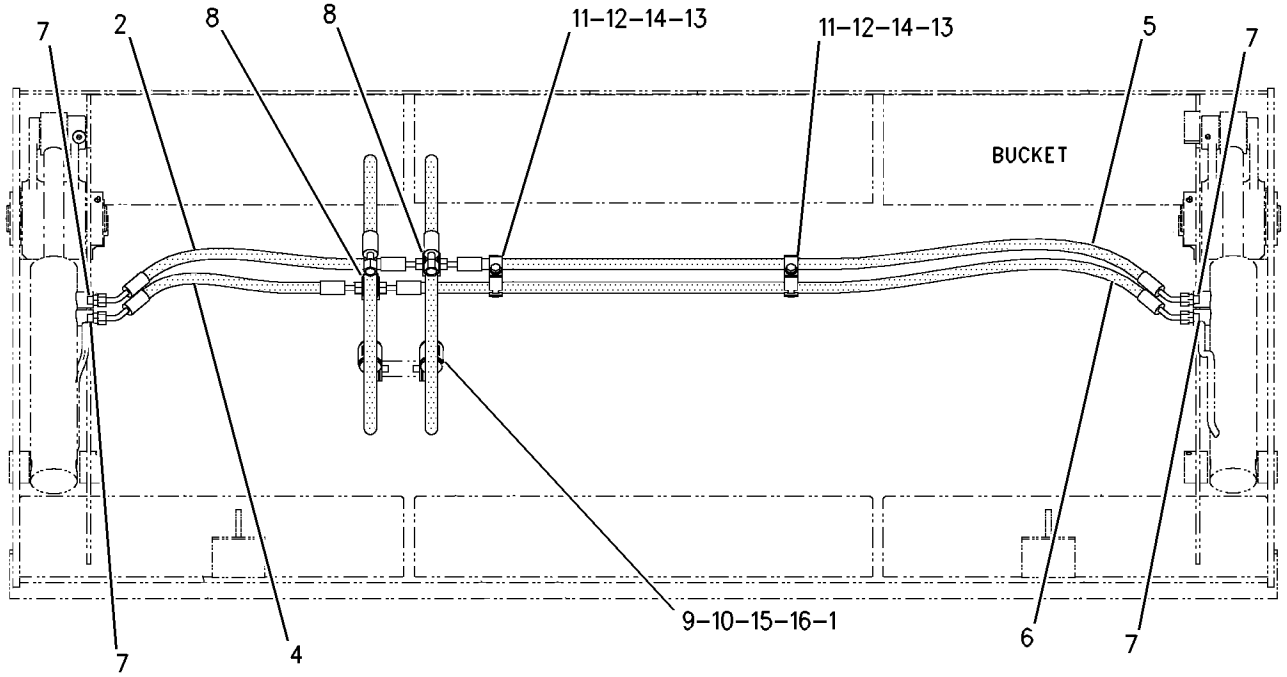

REAR VIEW

GRAPHIC #1 **<END>** g00786342

HYDRAULIC SYSTEM

188-9097 LINES GP-PILOT

S/N: B2D1-UP
PRESSURE
PART OF 214-6950 CHASSIS AR

SMCS-5057, 5059 **i01693922**

NOTE	REF NO	GRAPHIC REF	PART NUMBER	QTY	PART NAME 1 2 3 4 5 6 (PRODUCT LEVEL)	SEE PAGE
	1	1	**6V-0852**	1	CAP-DUST	
	2	1	**133-5813**	2	BAND-HOSE (P-GRAY)	
	3	1	*164-5567*	1	FITTING GP (QUICK DISCONNECT)	
		1	**3J-1907**	1	SEAL-O-RING	
		1	**6V-3965**	1	FITTING AS	
	4	1	*166-2033*	1	TEE GP	
		1	**4J-5477**	1	SEAL-O-RING	
		1	**7X-2444**	1	TEE-SWIVEL	
	5	1	**202-5923**	1	BLOCK	
	6	1	**205-3126**	1	HOSE AS	
	7	1	*148-8325*	2	CONNECTOR GP	
					(EACH INCLUDES)	
		1	**3J-1907**	1	SEAL-O-RING	
		1	**4J-5477**	1	SEAL-O-RING	
		1	**6V-8641**	1	CONNECTOR	
	8	1	**6V-9828**	1	CAP AS	

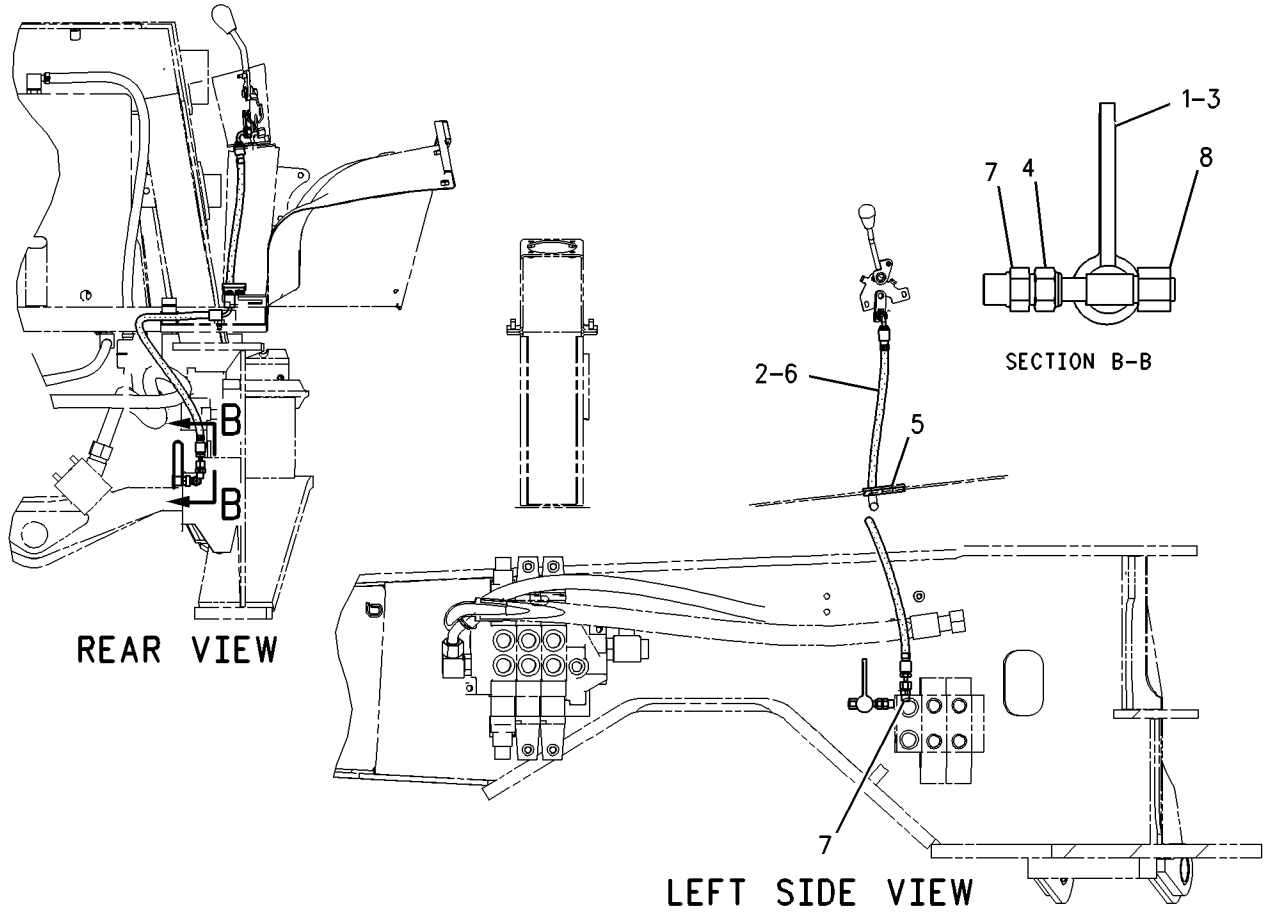

GRAPHIC #1 **<END>** g00837301

HYDRAULIC SYSTEM

202-5928 LINES GP-PILOT

S/N: B2D1-UP

PART OF 214-6980 HYDRAULIC AR

SMCS-5057, 5059 **i02037020**

NOTE	REF NO	GRAPHIC REF	PART NUMBER	QTY	PART NAME 1 2 3 4 5 6 (PRODUCT LEVEL)	SEE PAGE
E	1	1	**5P-1505**		HOSE (220CM)	
	2	1	**5D-1026**	2	CLAMP-HOSE	
	3	1	**143-3158**	1	CONNECTOR	
B	4	1	*155-3624*	7	PLUG GP	
					(EACH INCLUDES)	
		1	**3J-7354**	1	SEAL-O-RING	
		1	**9S-4182**	1	PLUG	
	5	1	*174-6740*	1	TEE AS	
		1	**2M-9780**	1	SEAL-O-RING	
		1	**122-1113**	1	TEE-O-RING (12.7-MM ID)	
	6	1	**186-3629**	1	MANIFOLD	
I	7	1	**188-8715**	1	HOSE AS	
	8	1	**195-0260**	2	BAND-HOSE	
	9	1	**195-0261**	2	BAND-HOSE	
	10	1	**195-0262**	2	BAND-HOSE	
	11	1	**195-0263**	2	BAND-HOSE	
	12	1	**205-6373**	1	HOSE AS	
	13	1	**205-6374**	1	HOSE AS	
	14	1	**205-6375**	1	HOSE AS	
	15	1	**205-6376**	1	HOSE AS	
	16	1	**205-6377**	1	HOSE AS	
	17	1	*148-8325*	9	CONNECTOR GP	
					(EACH INCLUDES)	
		1	**3J-1907**	1	SEAL-O-RING	
		1	**4J-5477**	1	SEAL-O-RING	
		1	**6V-8641**	1	CONNECTOR	
	18	1	*148-8369*	2	ELBOW GP	
					(EACH INCLUDES)	
		1	**3J-7354**	1	SEAL-O-RING	
		1	**4J-5477**	1	SEAL-O-RING	
		1	**6V-8628**	1	ELBOW	
	19	1	*150-3033*	2	CONNECTOR GP	
					(EACH INCLUDES)	
		1	**3J-1907**	1	SEAL-O-RING	
		1	**4J-5477**	1	SEAL-O-RING	
		1	**8T-0164**	1	ELBOW	
	20	1	**2M-9780**	1	SEAL-O-RING	
	21	1	**6D-4246**	4	CLIP	
	22	1	**9M-8406**	1	CLIP	
	23	1	**7D-7233**	1	CLIP	
M	24	1	**8T-3844**	2	BOLT (M6X1X70-MM)	
	25	1	**8T-4121**	4	WASHER-HARD (11X21X2.5-MM THK)	
M	26	1	**8T-4133**	2	NUT (M10X1.5-THD)	
M	27	1	**8T-4195**	2	BOLT (M10X1.5X30-MM)	
	28	1	**8T-4205**	2	WASHER-HARD (7.2X14.5X2-MM THK)	
	29	1	*187-2120*	2	ELBOW AS	
					(EACH INCLUDES)	
		1	**4J-5477**	1	SEAL-O-RING	
		1	**8C-8408**	1	ELBOW	
	30	1	**7K-1181**	1	STRAP-CABLE	

B-USE AS REQUIRED
E-ORDER BY THE CENTIMETER
I-REFER TO HYDRAULIC INFORMATION SYSTEM
M-METRIC PART

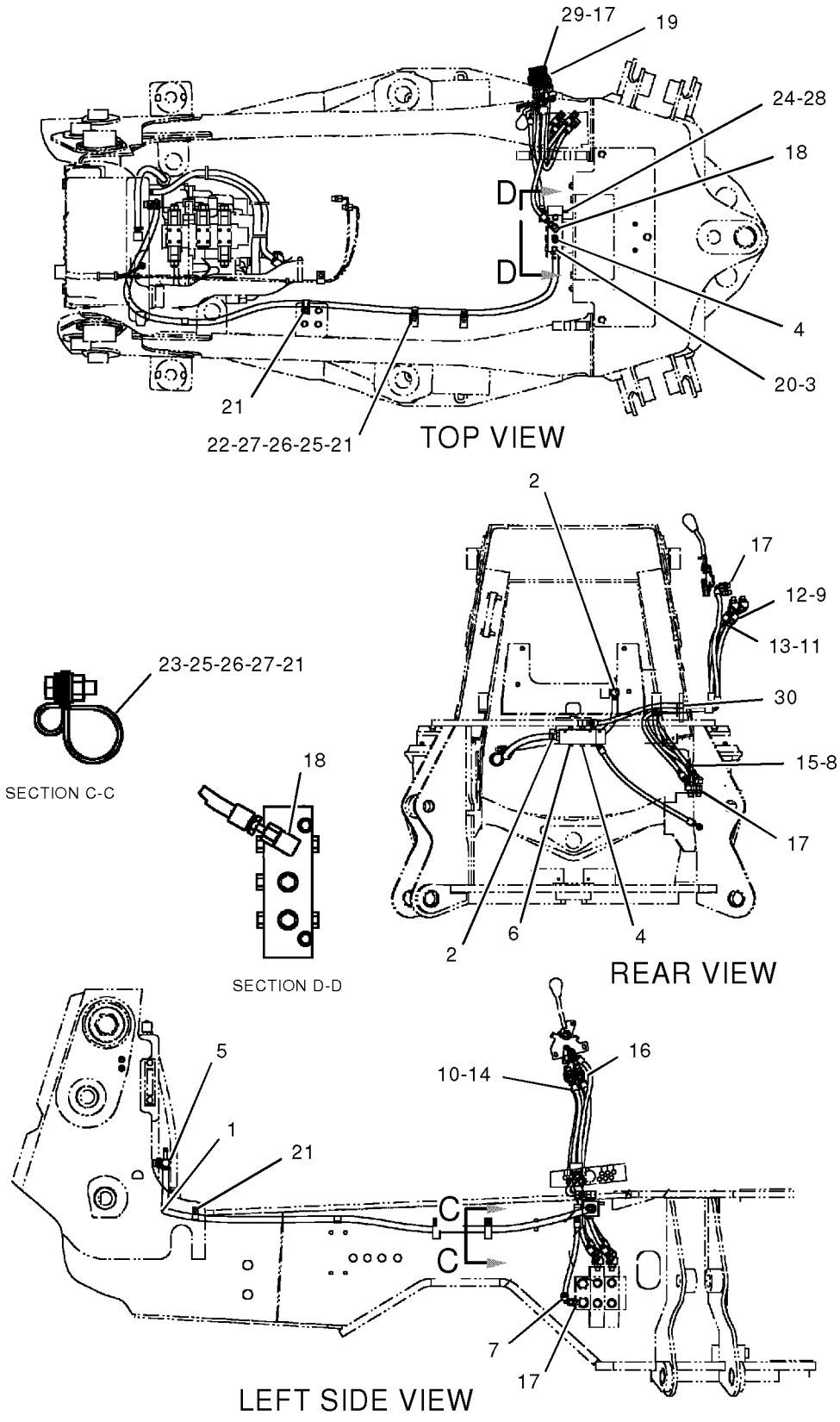

GRAPHIC #1 **<END>** g01047952

HYDRAULIC SYSTEM

190-8954 LINES GP-PUMP

S/N: B2D1-UP
PART OF 237-6458, 237-6459 DRIVE AR-BACKHOE LOADER
AN ATTACHMENT

SMCS-5057 **i01843878**

NOTE	REF NO	GRAPHIC REF	PART NUMBER	QTY	PART NAME 1 2 3 4 5 6 (PRODUCT LEVEL)	SEE PAGE
I	1	1	**120-4604**	1	HOSE AS	
I	2	1	**190-8956**	1	HOSE AS	
	3	1	**220-0248**	1	PLATE AS	
	4	1	*148-8316*	2	CONNECTOR AS	
					(EACH INCLUDES)	
		1	**3J-7354**	1	SEAL-O-RING	
		1	**4J-5477**	1	SEAL-O-RING	
		1	**6V-8647**	1	CONNECTOR	
	5	1	*148-8351*	1	ELBOW GP	
		1	**4J-5477**	1	SEAL-O-RING	
		1	**6V-9849**	1	ELBOW (SWIVEL)	
	6	1	*148-8369*	1	ELBOW GP	
		1	**3J-7354**	1	SEAL-O-RING	
		1	**4J-5477**	1	SEAL-O-RING	
		1	**6V-8628**	1	ELBOW	
	7	1	**5K-0906**	2	BOLT (5/16-18X0.63 IN)	
	8	1	**6K-8178**	1	CLIP	
	9	1	**8T-4121**	1	WASHER-HARD (11X21X2.5MM THK)	
M	10	1	**8T-4137**	1	BOLT (M10X1.5X20MM)	
	11	1	**8T-4224**	2	WASHER-HARD (8.8X16X2MM THK)	
	12	1	**9M-8406**	1	CLIP	

I-SEE HOSE FABRICATION GUIDE
M-METRIC PART

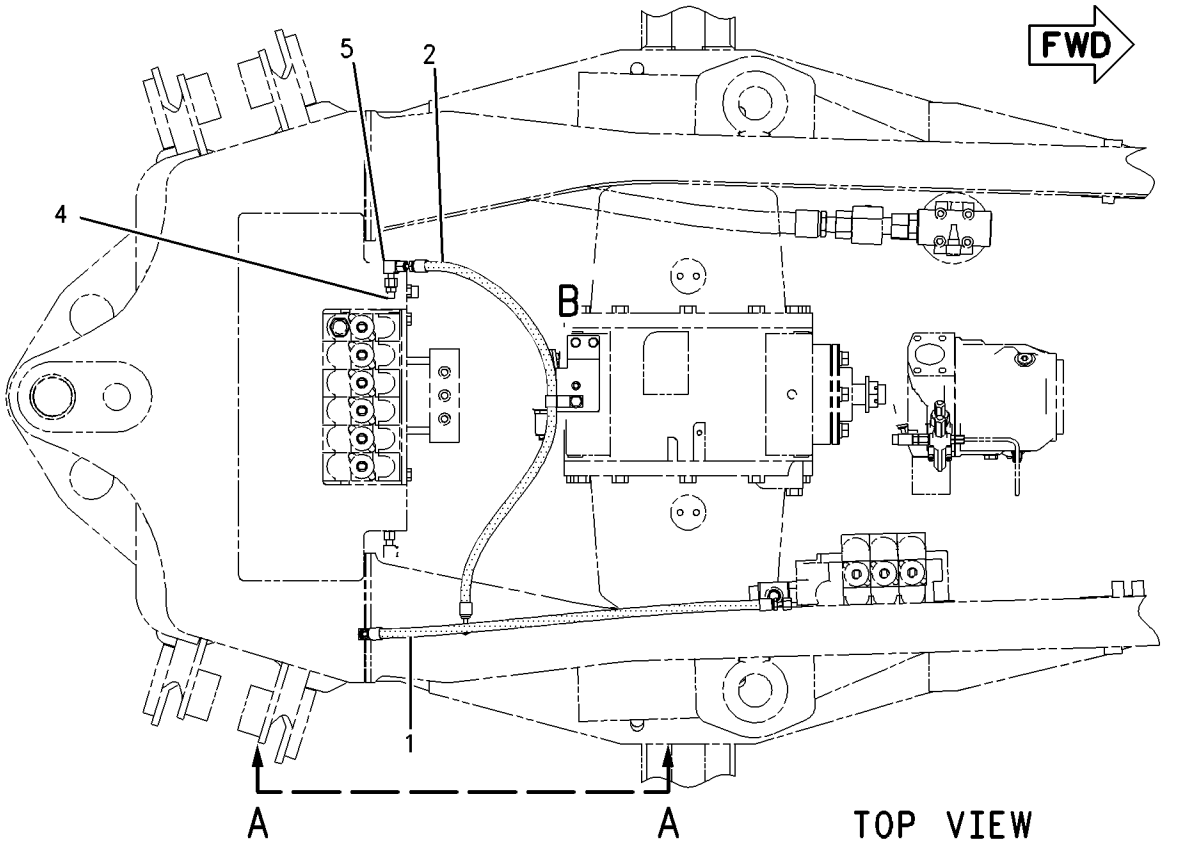

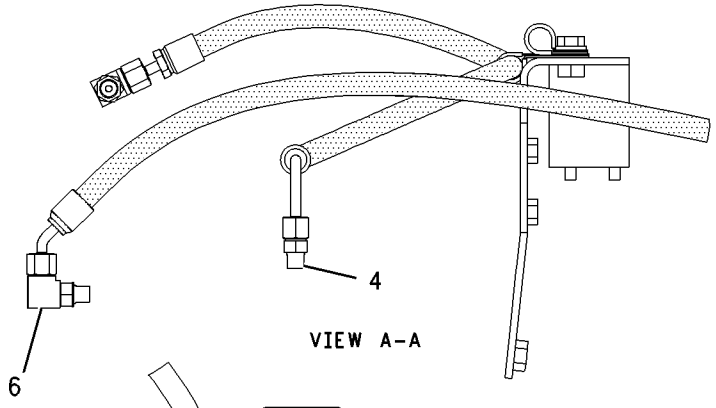

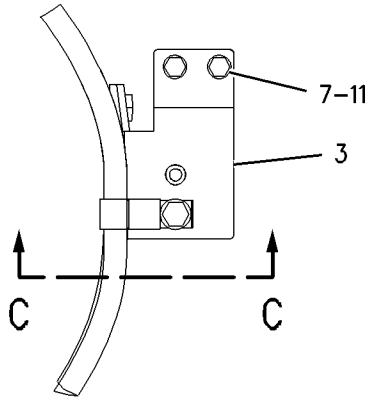

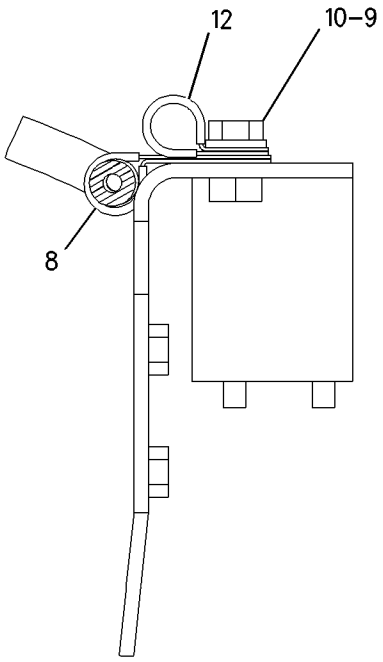

GRAPHIC #1 **<END>** g00996912

HYDRAULIC SYSTEM

235-4549 LINES GP-PUMP

S/N: B2D1-UP

PART OF 214-6980 HYDRAULIC AR

SMCS-5057 **i02024968**

NOTE	REF NO	GRAPHIC REF	PART NUMBER	QTY	PART NAME 1 2 3 4 5 6 (PRODUCT LEVEL)	SEE PAGE
	1	1	**5D-1026**	2	CLAMP-HOSE	
	2	1	**5P-4868**	2	CLAMP-HOSE	
	3	1	**6V-0852**	1	CAP-DUST	
	4	1	**7K-1181**	5	STRAP-CABLE	
	5	1	**8T-0154**	1	CLAMP-HOSE	
	6	1	**110-2445**	4	CLAMP-HOSE	
	7	1	**130-9984**	1	CLIP	
	8	1	**144-0367**	1	CLAMP-HOSE	
	9	1	**159-0186**	4	CLAMP	
	10	1	*165-2273*	1	VALVE GP-SHUTOFF	
		1	**3K-0360**	1	SEAL-O-RING	
		1	**6V-7238**	1	VALVE-SHUTOFF	
	11	1	*166-2033*	1	TEE GP	
		1	**4J-5477**	1	SEAL-O-RING	
		1	**7X-2444**	1	TEE-SWIVEL	
	12	1	**211-4348**	1	ELBOW	
	13	1	**215-9632**	1	SPACER (12X20X20-MM THK)	
	14	1	**232-0252**	1	TEE	
	15	1	**235-4553**	1	BRACKET AS	
M		1	**8T-3490**	3	NUT-WELD (M10X1.5-THD)	
I	16	1	**235-5306**	1	HOSE AS	
	17	1	**235-7091**	1	HOSE	
	18	1	**235-8528**	1	HOSE	
	19	1	**148-8325**	1	CONNECTOR GP	
	20	1	*148-8352*	1	ELBOW GP	
		1	**5K-9090**	1	SEAL-O-RING	
		1	**6V-9854**	1	ELBOW (SWIVEL)	
	21	1	*148-8357*	1	ELBOW GP	
		1	**5K-9090**	1	SEAL-O-RING	
		1	**6V-9008**	1	ELBOW	
		1	**7M-8485**	1	SEAL-O-RING	
	22	1	*148-8362*	1	ELBOW GP	
		1	**3D-2824**	1	SEAL-O-RING	
		1	**5K-9090**	1	SEAL-O-RING	
		1	**8T-6684**	1	ELBOW	
	23	1	*148-8422*	1	TEE AS	
		1	**5K-9090**	1	SEAL-O-RING	
		1	**6V-9746**	1	SEAL-O-RING	
		1	**7M-8485**	1	SEAL-O-RING	
		1	**8T-6356**	1	TEE-O-RING PORT	
	24	1	*150-3027*	1	ELBOW AS	
		1	**2M-9780**	1	SEAL-O-RING	
		1	**6V-5653**	1	ELBOW (7/8-14-THD)	
	25	1	*164-5567*	1	FITTING AS	
		1	**3J-1907**	1	SEAL-O-RING	
		1	**6V-3965**	1	FITTING (QUICK DISCONNECT)	
	26	1	**1P-4584**	2	FLANGE-HALF	
	27	1	**5P-4116**	2	WASHER-HARD (8.8X20.5X2-MM THK)	
	28	1	**6J-2680**	1	SEAL-O-RING	
	29	1	**6V-9828**	1	CAP AS	
	30	1	**7D-7233**	3	CLIP	
	31	1	**8T-4121**	11	WASHER-HARD (11X21X2.5-MM THK)	
M	32	1	**8T-4136**	5	BOLT (M10X1.5X25-MM)	
M	33	1	**8T-4137**	2	BOLT (M10X1.5X20-MM)	
M	34	1	**8T-4182**	1	BOLT (M10X1.5X45-MM)	
M	35	1	**8T-4183**	4	BOLT (M12X1.75X40-MM)	

235-4549 **LINES GP-PUMP** ***(contd.)*** **i02024968**

NOTE	REF NO	GRAPHIC REF	PART NUMBER	QTY	PART NAME 1 2 3 4 5 6 (PRODUCT LEVEL)	SEE PAGE
M	36	1	**8T-4189**	2	BOLT (M8X1.25X20-MM)	
M	37	1	**8T-4195**	3	BOLT (M10X1.5X30-MM)	
	38	1	**8T-4223**	4	WASHER-HARD (13.5X25.5X3-MM THK)	
	39	1	**8T-7529**	3	CLIP	
E	40	1	**5P-0743**		HOSE (35-CM)	
E	41	1	**5P-1505**		HOSE (72-CM)	
E	42	1	**5P-1506**		HOSE (88-CM)	
E	43	1	**136-1955**		HOSE (107-CM)	
E	44	1	**136-1955**		HOSE (201-CM)	

E-ORDER BY THE CENTIMETER
I-REFER TO HYDRAULIC INFORMATION SYSTEM
M-METRIC PART

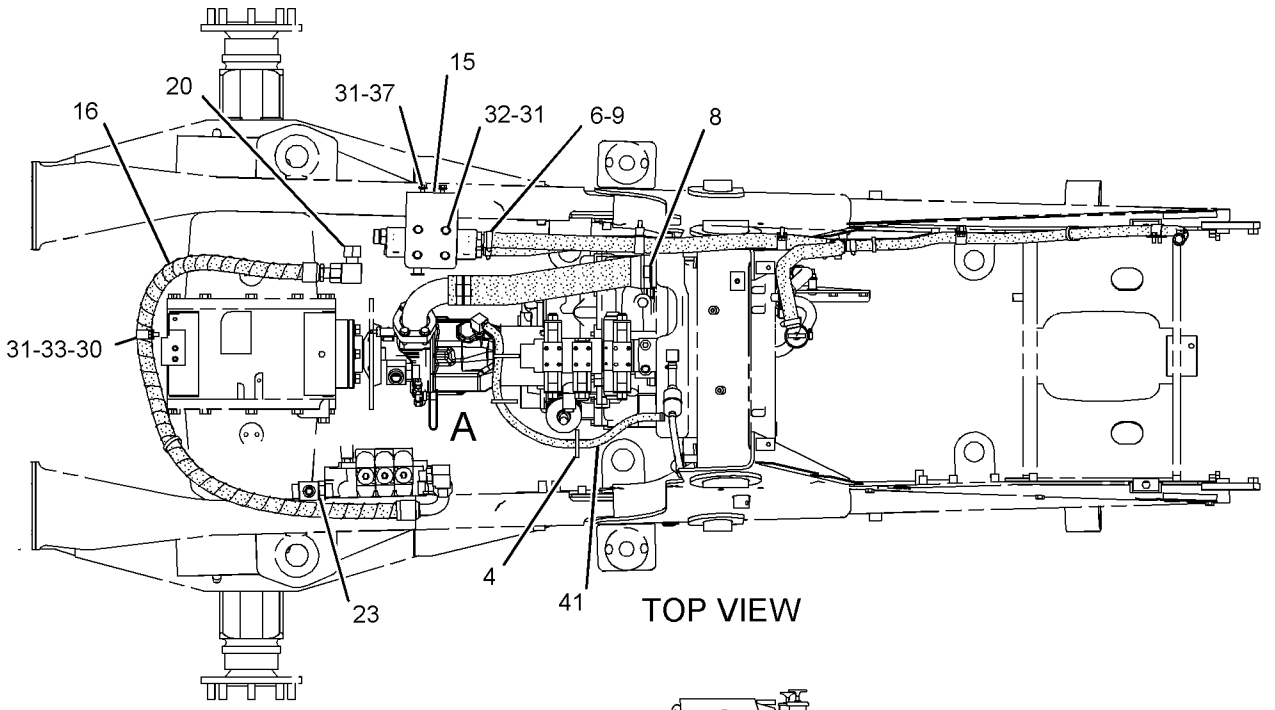

TOP VIEW

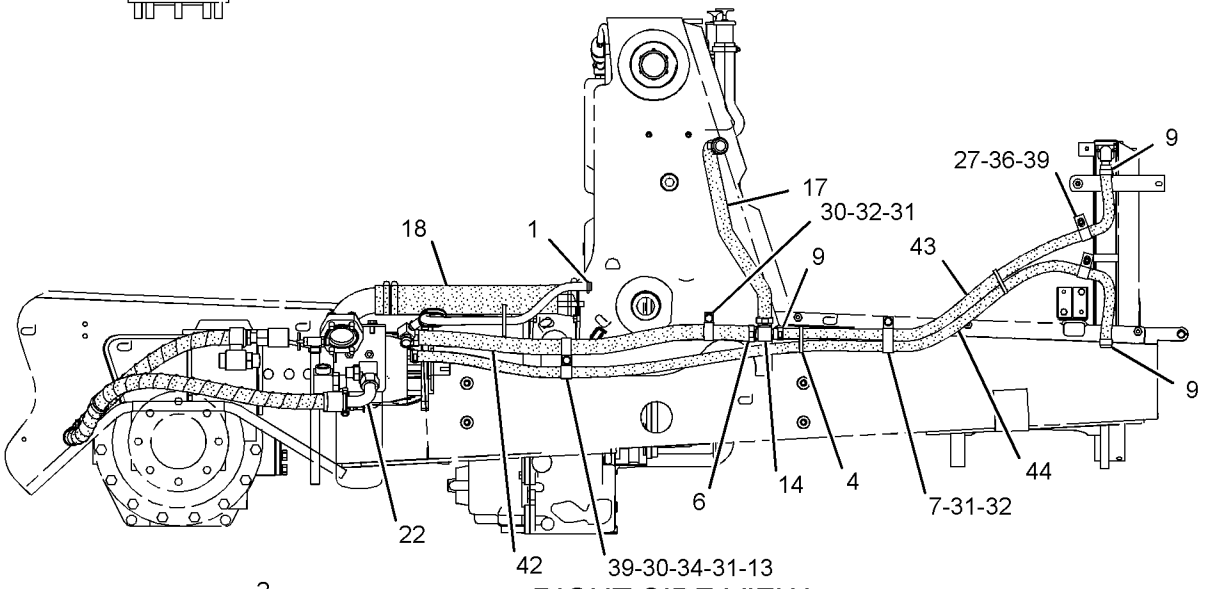

RIGHT SIDE VIEW

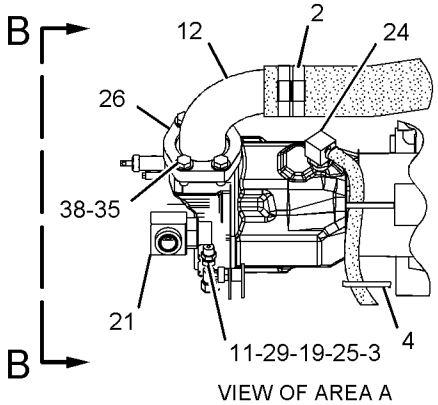

VIEW OF AREA A

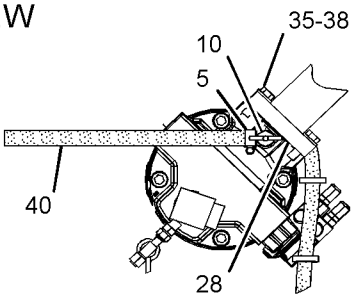

VIEW B-B

GRAPHIC #1 **<END>** g01043415

235-5854 LINES GP-PUMP

S/N: B2D1-UP

PART OF 214-7000 VALVE AR-BANK 4, 214-7001, 214-7002 VALVE AR-BANK 5

AN ATTACHMENT

SMCS-5057 **i02024963**

NOTE	REF NO	GRAPHIC REF	PART NUMBER	QTY	PART NAME 1 2 3 4 5 6 (PRODUCT LEVEL)	SEE PAGE
I	1	1	**214-0706**	1	HOSE AS	
I	2	1	**239-1162**	1	HOSE AS	
	3	1	*148-8335*	1	CONNECTOR AS	
		1	**5K-9090**	1	SEAL-O-RING	
		1	**6V-8635**	1	CONNECTOR	
		1	**7M-8485**	1	SEAL-O-RING	
	4	1	*148-8352*	1	ELBOW GP	
		1	**5K-9090**	1	SEAL-O-RING	
		1	**6V-9840**	1	TEE-SWIVEL	
	5	1	*148-8429*	1	TEE AS	
		1	**5K-9090**	1	SEAL-O-RING	
		1	**6V-9840**	1	TEE-SWIVEL	

I-REFER TO HYDRAULIC INFORMATION SYSTEM

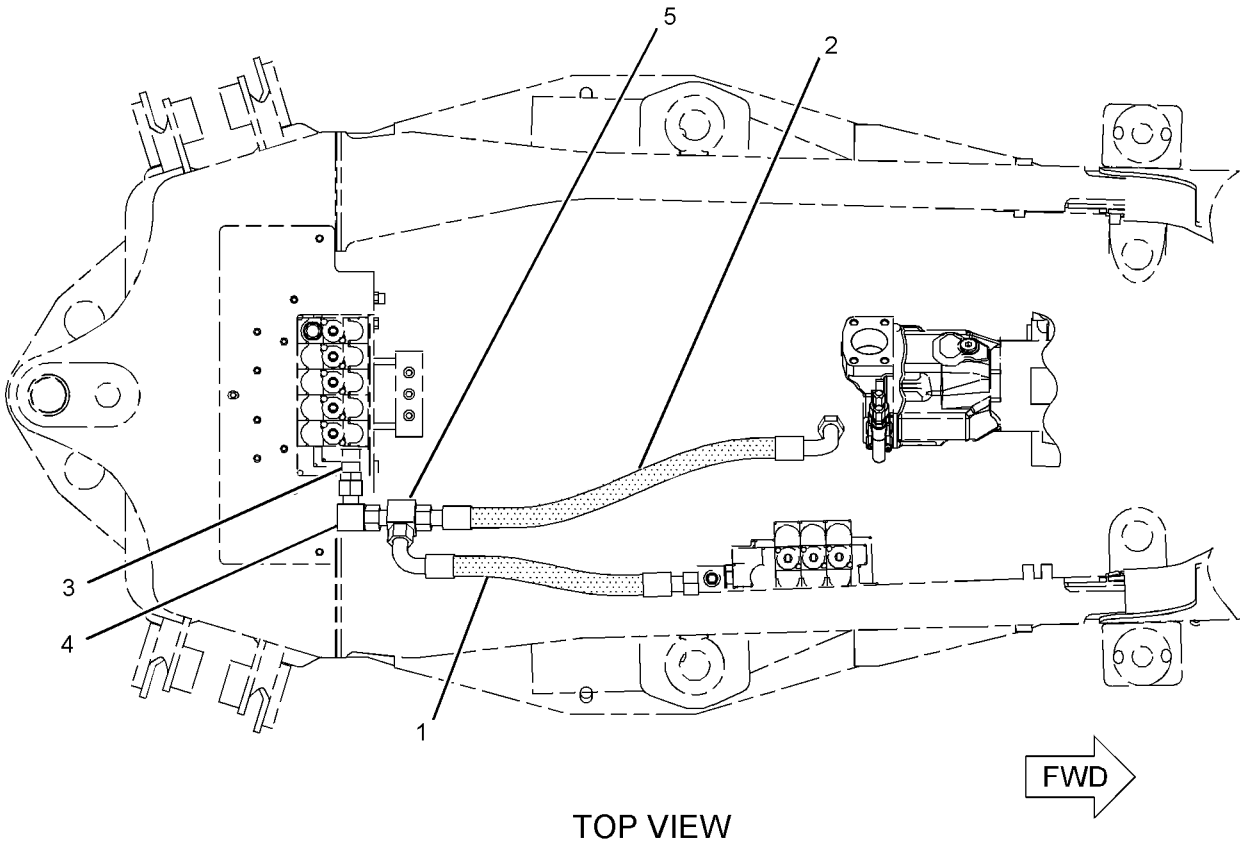

TOP VIEW

GRAPHIC #1 **<END>** g01037856

HYDRAULIC SYSTEM

235-5856 LINES GP-PUMP

S/N: B2D1-UP
PART OF 214-7003 VALVE AR-BANK 6
AN ATTACHMENT

SMCS-5057 **i02024960**

NOTE	REF NO	GRAPHIC REF	PART NUMBER	QTY	PART NAME 1 2 3 4 5 6 (PRODUCT LEVEL)	SEE PAGE
I	1	1	**214-0706**	1	HOSE AS	
I	2	1	**239-1162**	1	HOSE AS	
	3	1	**148-8357**	1	ELBOW GP	
		1	**5K-9090**	1	SEAL-O-RING	
		1	**6V-9008**	1	ELBOW	
		1	**7M-8485**	1	SEAL-O-RING	
	4	1	*148-8429*	1	TEE AS	
		1	**5K-9090**	2	SEAL-O-RING	
		1	**6V-9840**	1	TEE-SWIVEL	

I-REFER TO HYDRAULIC INFORMATION SYSTEM

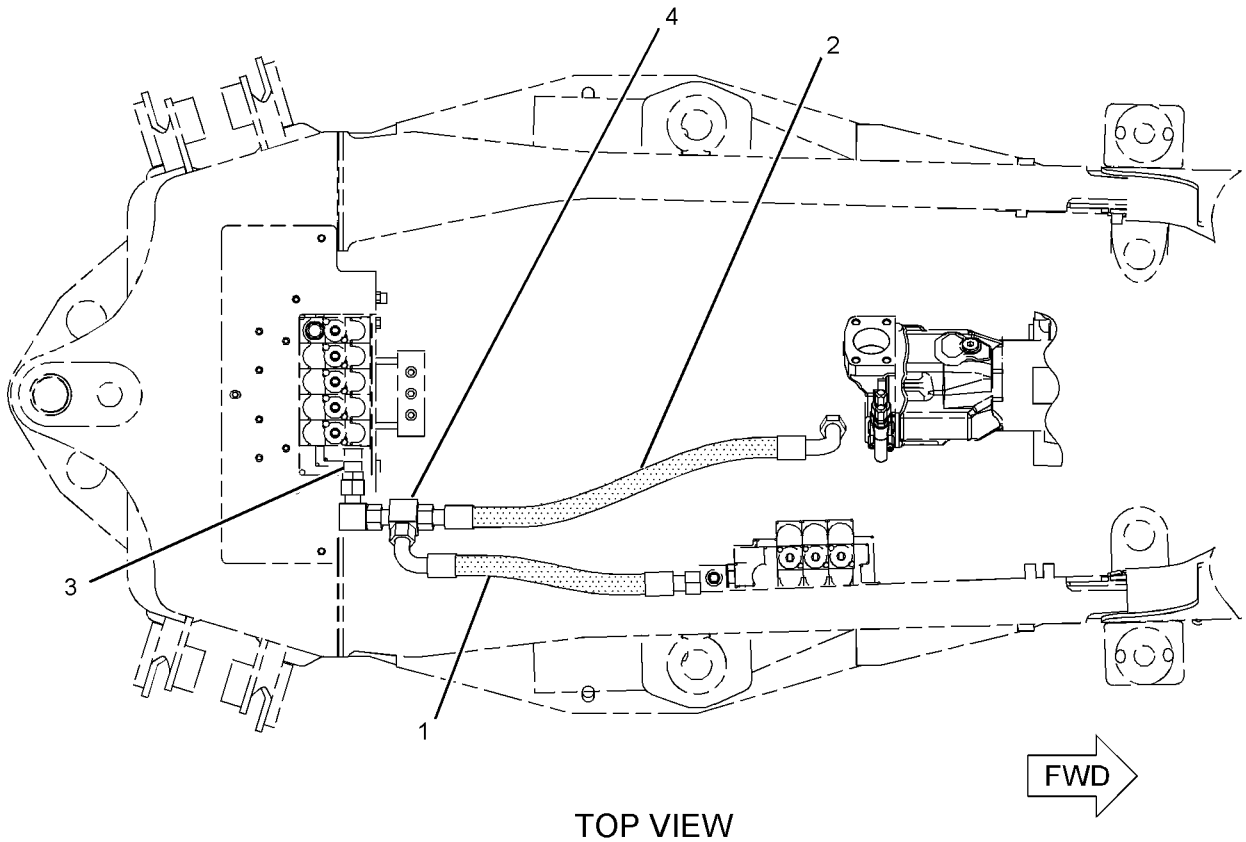

TOP VIEW

GRAPHIC #1 **<END>** g01037861

HYDRAULIC SYSTEM

235-4788 LINES GP-RETURN

S/N: B2D1-UP

PART OF 214-6980 HYDRAULIC AR

SMCS-5057 **i02026215**

NOTE	REF NO	GRAPHIC REF	PART NUMBER	QTY	PART NAME 1 2 3 4 5 6 (PRODUCT LEVEL)	SEE PAGE
I	1	1	**6R-3299**	1	HOSE AS	
	2	1	**148-8429**	1	TEE AS	
		1	**5K-9090**	2	SEAL-O-RING	

I-REFER TO HYDRAULIC INFORMATION SYSTEM

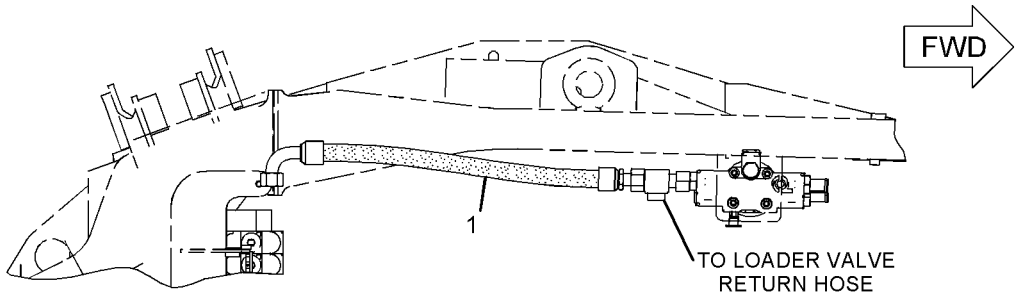

TOP VIEW

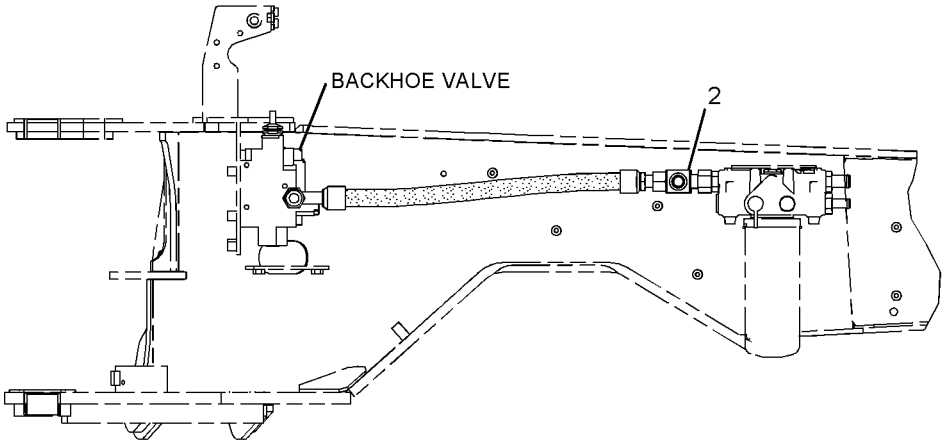

RIGHT SIDE VIEW

GRAPHIC #1

<END>

g01034089

HYDRAULIC SYSTEM

185-3413 LINES GP-STABILIZER

S/N: B2D1-UP

PART OF 237-6458, 237-6459 DRIVE AR-BACKHOE LOADER

AN ATTACHMENT

SMCS-5057, 5468 **i01759759**

NOTE	REF NO	GRAPHIC REF	PART NUMBER	QTY	PART NAME 1 2 3 4 5 6 (PRODUCT LEVEL)	SEE PAGE
	1	1	**5P-0599**	4	CLAMP	
	2	1	**9R-2052**	2	BLOCK	
	3	1	**9R-2053**	2	BLOCK	
	4	1	**134-7323**	1	TUBE AS	
	5	1	**134-7324**	1	TUBE AS	
I	6	1	**174-4306**	1	HOSE AS	
I	7	1	**174-5699**	1	HOSE AS	
I	8	1	**174-5700**	1	HOSE AS	
I	9	1	**174-5701**	1	HOSE AS	
I	10	1	**174-5702**	1	HOSE AS	
I	11	1	**177-7094**	1	HOSE AS	
	12	1	*148-8327*	1	CONNECTOR GP	
		1	**3D-2824**	1	SEAL-O-RING	
		1	**6V-8637**	1	CONNECTOR-SEAL	
		1	**6V-9746**	1	SEAL-O-RING	
	13	1	*148-8345*	4	CONNECTOR GP	
					(EACH INCLUDES)	
		1	**2M-9780**	1	SEAL-O-RING	
		1	**6V-8398**	1	SEAL-O-RING	
		1	**6V-8638**	1	CONNECTOR-SEAL	
	14	1	*148-8347*	1	ELBOW GP	
		1	**3D-2824**	1	SEAL-O-RING	
		1	**6V-9007**	1	ELBOW	
		1	**6V-9746**	1	SEAL-O-RING	
	15	1	*148-8372*	2	ELBOW GP	
					(EACH INCLUDES)	
		1	**2M-9780**	1	SEAL-O-RING	
		1	**6V-8398**	1	SEAL-O-RING	
		1	**6V-8721**	1	ELBOW	
	16	1	**5P-7462**	6	CLIP (SLOT)	
	17	1	**5P-7463**	6	CLIP (TAB)	
	18	1	**6V-0683**	6	GROMMET	
	19	1	**8T-4121**	9	WASHER-HARD (11X21X2.5MM THK)	
M	20	1	**8T-4133**	4	NUT (M10X1.5 THD)	
M	21	1	**8T-4186**	4	BOLT (M10X1.5X40MM)	
M	22	1	**8T-4196**	1	BOLT (M10X1.5X35MM)	

I-SEE HOSE FABRICATION GUIDE
M-METRIC PART

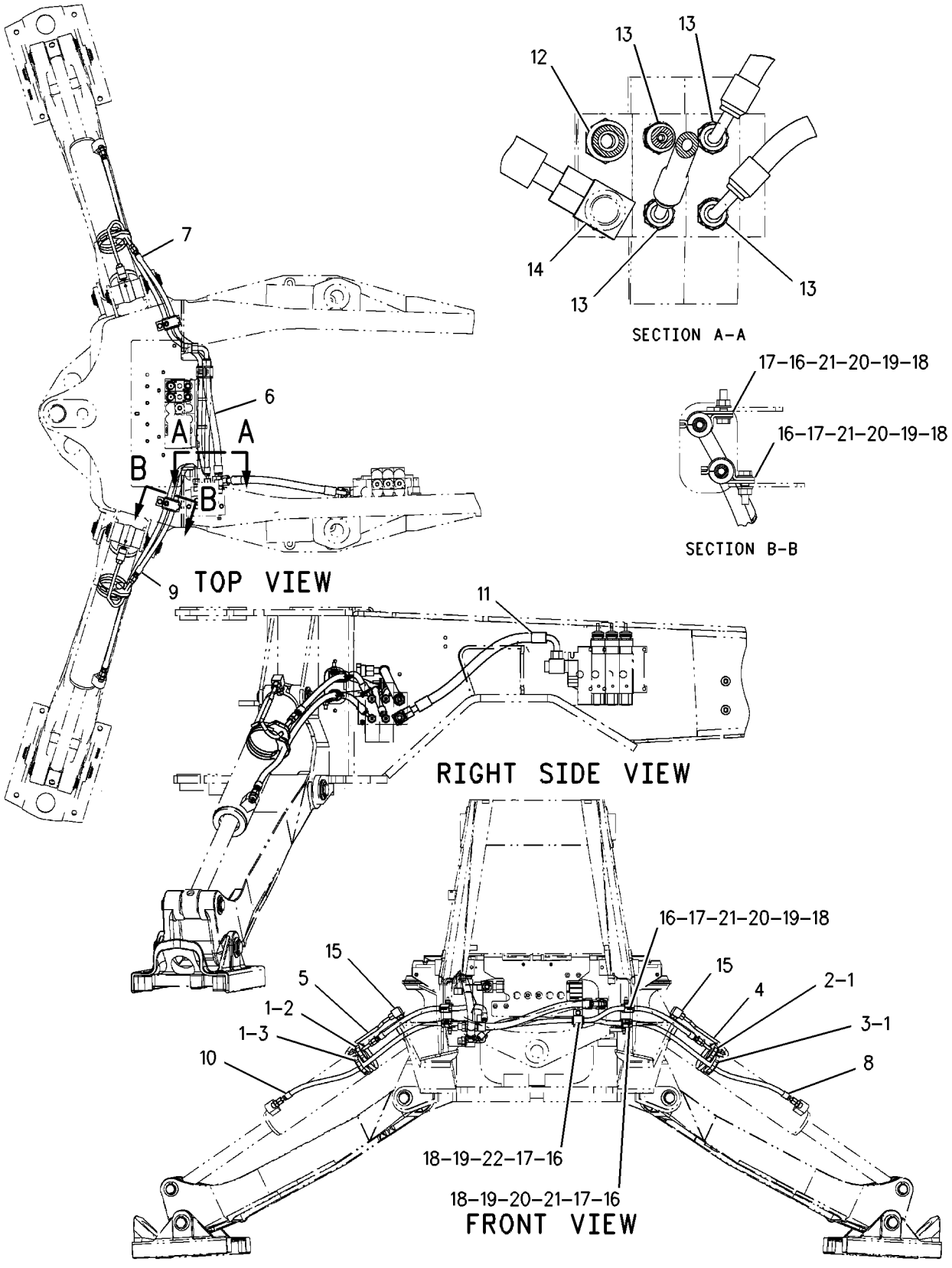

GRAPHIC #1 **<END>** g00889567

HYDRAULIC SYSTEM

167-8273 LINES GP-STICK

S/N: B2D1-UP

PART OF 238-4783, 238-4784 BACKHOE AR-EXTENDABLE STICK, 238-4780, 238-4781, 238-4782 BACKHOE AR-STANDARD STICK AN ATTACHMENT

SMCS-5057, 5458 **i01942121**

NOTE	REF NO	GRAPHIC REF	PART NUMBER	QTY	PART NAME 1 2 3 4 5 6 (PRODUCT LEVEL)	SEE PAGE
	1	1	**5P-3860**	1	CLAMP-HOSE	
I	2	1	**169-2980**	1	HOSE AS	
I	3	1	**172-3821**	1	HOSE AS	
	4	1	**9R-5948**	1	BLOCK	
	5	1	*148-8341*	1	CONNECTOR GP	
		1	**3D-2824**	1	SEAL-O-RING	
		1	**6V-8713**	1	CONNECTOR	
		1	**7J-9108**	1	SEAL-O-RING	

I-REFER TO HYDRAULIC INFORMATION SYSTEM

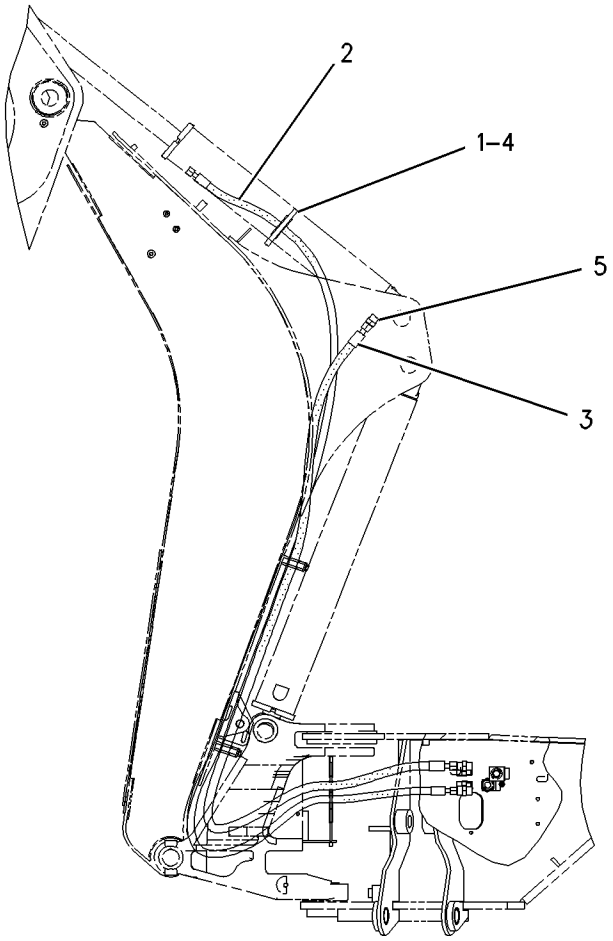

RIGHT SIDE VIEW

GRAPHIC #1 **<END>** g01003298

167-8264 LINES GP-SWING

S/N: B2D1-UP

PART OF 214-6980 HYDRAULIC AR

SMCS-5057, 5105 **i01762081**

NOTE	REF NO	GRAPHIC REF	PART NUMBER	QTY	PART NAME 1 2 3 4 5 6 (PRODUCT LEVEL)	SEE PAGE
	1	1	**5P-0599**	2	CLAMP	
	2	1	**9R-2053**	2	BLOCK	
I	3	1	**9R-9005**	2	HOSE AS	
I	4	1	**176-7228**	1	HOSE AS	
I	5	1	**178-1123**	1	HOSE AS	
	6	1	*148-8340*	4	CONNECTOR GP	
					(EACH INCLUDES)	
		1	**3K-0360**	1	SEAL-O-RING	
		1	**6V-8398**	1	SEAL-O-RING	
		1	**6V-8639**	1	CONNECTOR	
	7	1	*148-8364*	2	ELBOW GP	
					(EACH INCLUDES)	
		1	**3K-0360**	1	SEAL-O-RING	
		1	**6V-8398**	1	SEAL-O-RING	
		1	**6V-8625**	1	ELBOW	

I-SEE HOSE FABRICATION GUIDE

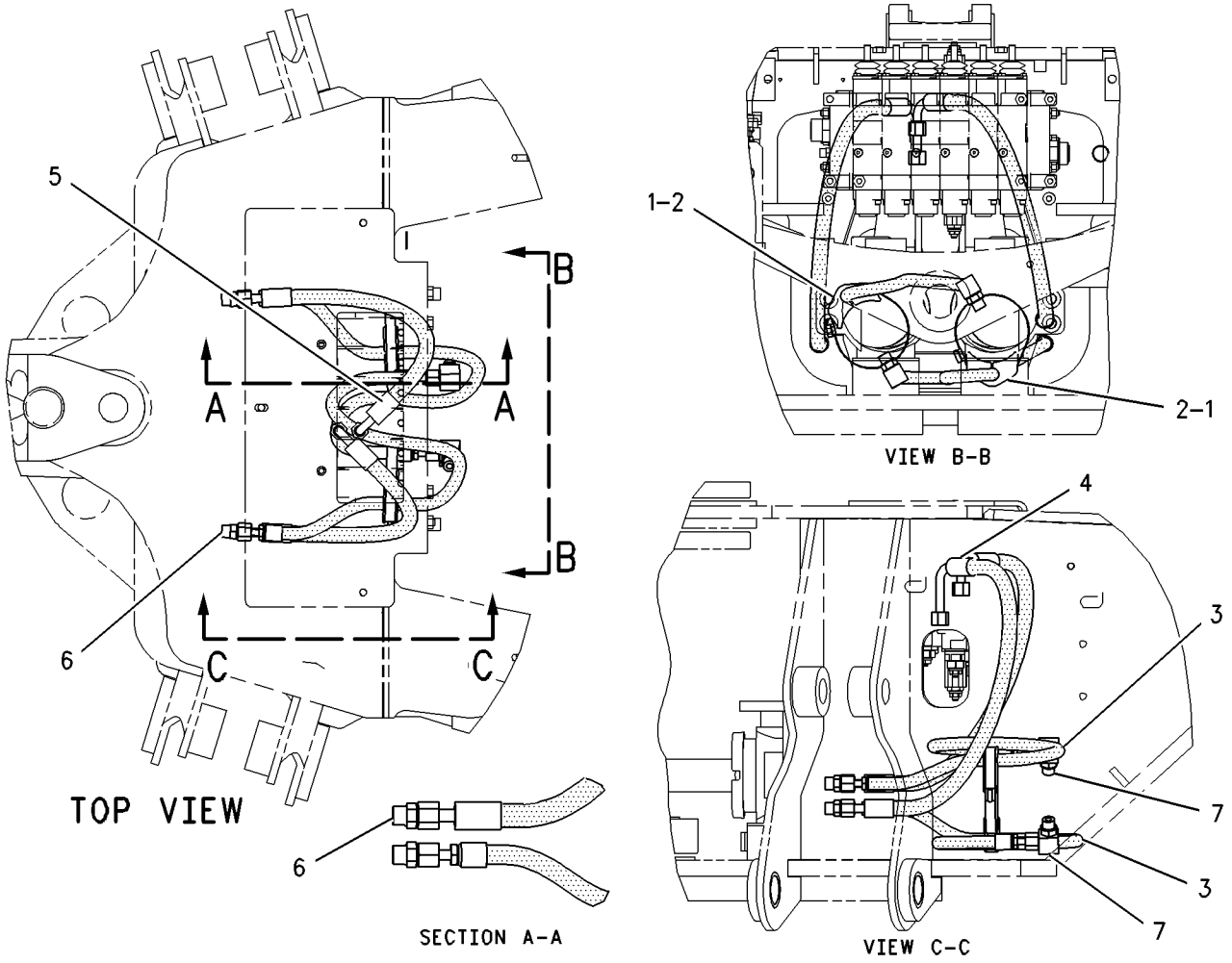

GRAPHIC #1 **<END>** g00726021

HYDRAULIC SYSTEM

189-0555 LINES GP-TILT CYLINDER

S/N: B2D1-UP

PART OF 186-5331, 186-5333 HYDRAULIC AR

AN ATTACHMENT

SMCS-5057, 5104 **i01960690**

NOTE	REF NO	GRAPHIC REF	PART NUMBER	QTY	PART NAME 1 2 3 4 5 6 (PRODUCT LEVEL)	SEE PAGE
	1	1	**7K-1181**	1	STRAP-CABLE	
I	2	1	**9R-1034**	2	HOSE AS	
I	3	1	**9R-9198**	2	HOSE AS	
	4	1	**9R-9316**	1	BRACKET AS	
	5	1	**122-5822**	1	BRACKET AS	
	6	1	**151-4841**	1	BLOCK	
	7	1	**156-3837**	4	CLIP (SLOT)	
	8	1	**156-3838**	2	CLIP (TAB)	
	9	1	**158-3412**	8	CLIP (SLOT)	
	10	1	**187-3162**	1	TUBE AS	
	11	1	**187-3163**	1	TUBE AS	
	12	1	**187-3164**	1	TUBE AS	
	13	1	**187-3166**	1	TUBE AS	
	14	1	**207-7581**	1	TUBE AS	
	15	1	**187-4329**	1	TUBE AS	
	16	1	**9R-7803**	4	CLIP (TAB)	
	17	1	*148-8341*	2	CONNECTOR GP	
					(EACH INCLUDES)	
		1	**3D-2824**	1	SEAL-O-RING	
		1	**6V-8713**	1	CONNECTOR	
		1	**7J-9108**	1	SEAL-O-RING	
	18	1	*148-8390*	1	ELBOW GP	
		1	**2M-9780**	1	SEAL-O-RING	
		1	**6V-8626**	1	ELBOW	
		1	**7J-9108**	1	SEAL-O-RING	
	19	1	*148-8393*	2	ELBOW GP	
					(EACH INCLUDES)	
		1	**6V-9852**	1	ELBOW (SWIVEL)	
		1	**7J-9108**	1	SEAL-O-RING	
	20	1	**6V-8398**	8	SEAL-O-RING	
	21	1	**8T-4121**	10	WASHER-HARD (11X21X2.5MM THK)	
M	22	1	**8T-4136**	5	BOLT (M10X1.5X25MM)	
M	23	1	**8T-4137**	2	BOLT (M10X1.5X20MM)	
M	24	1	**8T-4195**	2	BOLT (M10X1.5X30MM)	

I-REFER TO HYDRAULIC INFORMATION SYSTEM
M-METRIC PART

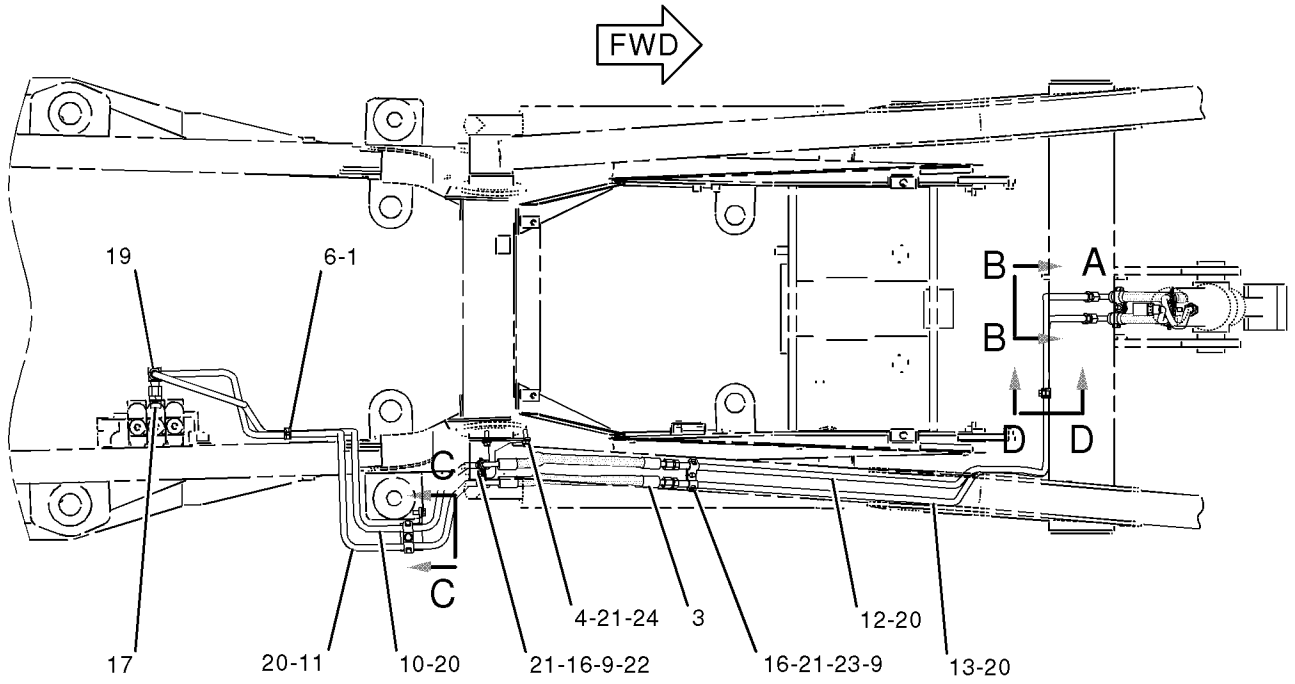

TOP VIEW

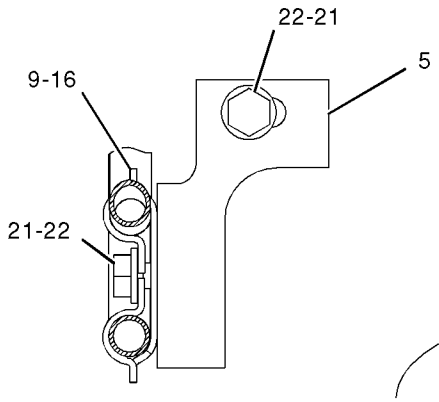

SECTION C-C

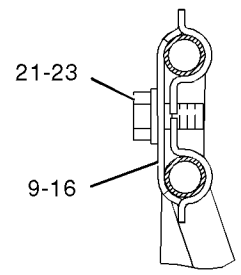

SECTION D-D

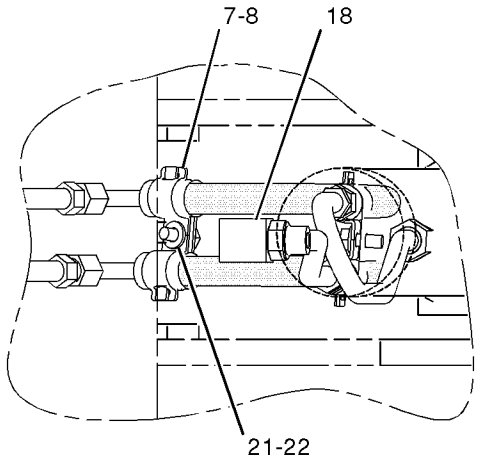

VIEW OF AREA A

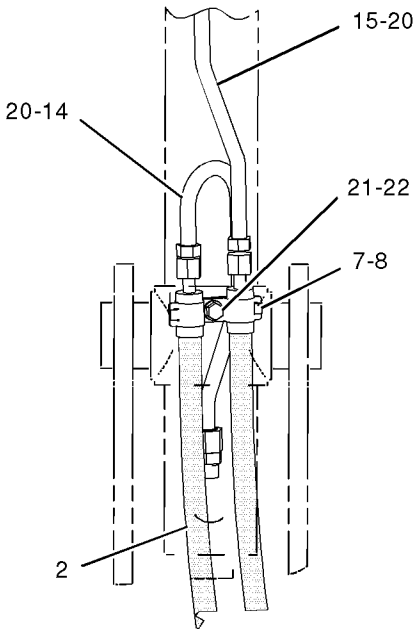

VIEW B-B

GRAPHIC #1 **<END>** g01018608

106-2404 LOCK GP-HYDRAULIC HAND CONTROL

S/N: B2D1-UP
AN ATTACHMENT

SMCS-5001 **i01692596**

NOTE	REF NO	GRAPHIC REF	PART NUMBER	QTY	PART NAME 1 2 3 4 5 6 (PRODUCT LEVEL)	SEE PAGE
	1	1	**106-2405**	1	PLATE AS	
		1	**140-6021**	1	PLATE	
	2	1	**106-2409**	1	PIN	
M	3	1	**8T-4136**	2	BOLT (M10X1.5X25MM)	
	4	1	**8T-4223**	2	WASHER-HARD (13.5X25.5X3MM THK)	

M-METRIC PART

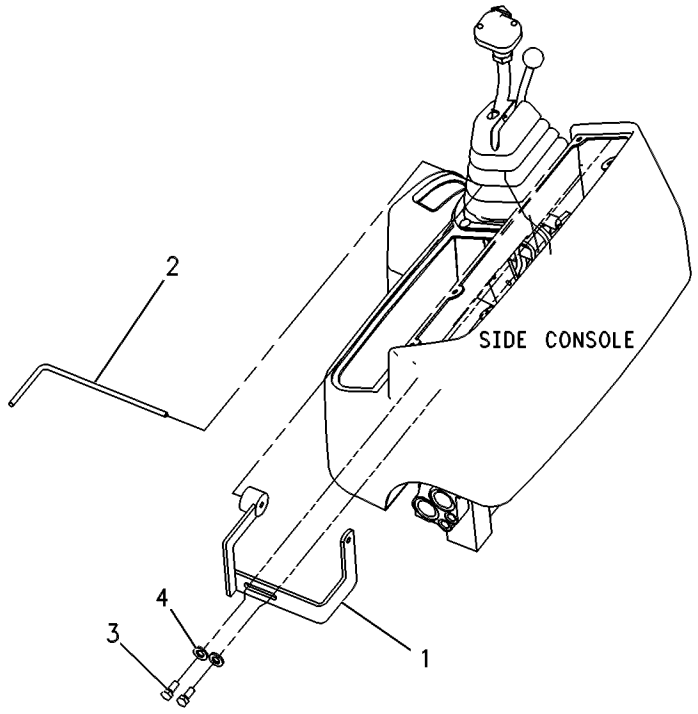

GRAPHIC #1 **<END>** g00131793

HYDRAULIC SYSTEM

185-1598 MOUNTING GP-BANK VALVE

S/N: B2D1-UP
MECHANICAL
PART OF 186-5331, 186-5333 HYDRAULIC AR
AN ATTACHMENT

SMCS-5051 **i01527435**

NOTE	REF NO	GRAPHIC REF	PART NUMBER	QTY	PART NAME 1 2 3 4 5 6 (PRODUCT LEVEL)	SEE PAGE
	1	1	**199-7854**	2	SPACER (11.8X20X45MM THK) (45MM THK)	
M	2	1	**8T-0389**	2	LOCKNUT (M10X1.5 THD)	
	3	1	**8T-4121**	5	WASHER-HARD (11X21X2.5MM THK)	
M	4	1	**8T-4186**	1	BOLT (M10X1.5X40MM)	
M	5	1	**8T-4198**	2	BOLT (M10X1.5X100MM)	

M-METRIC PART

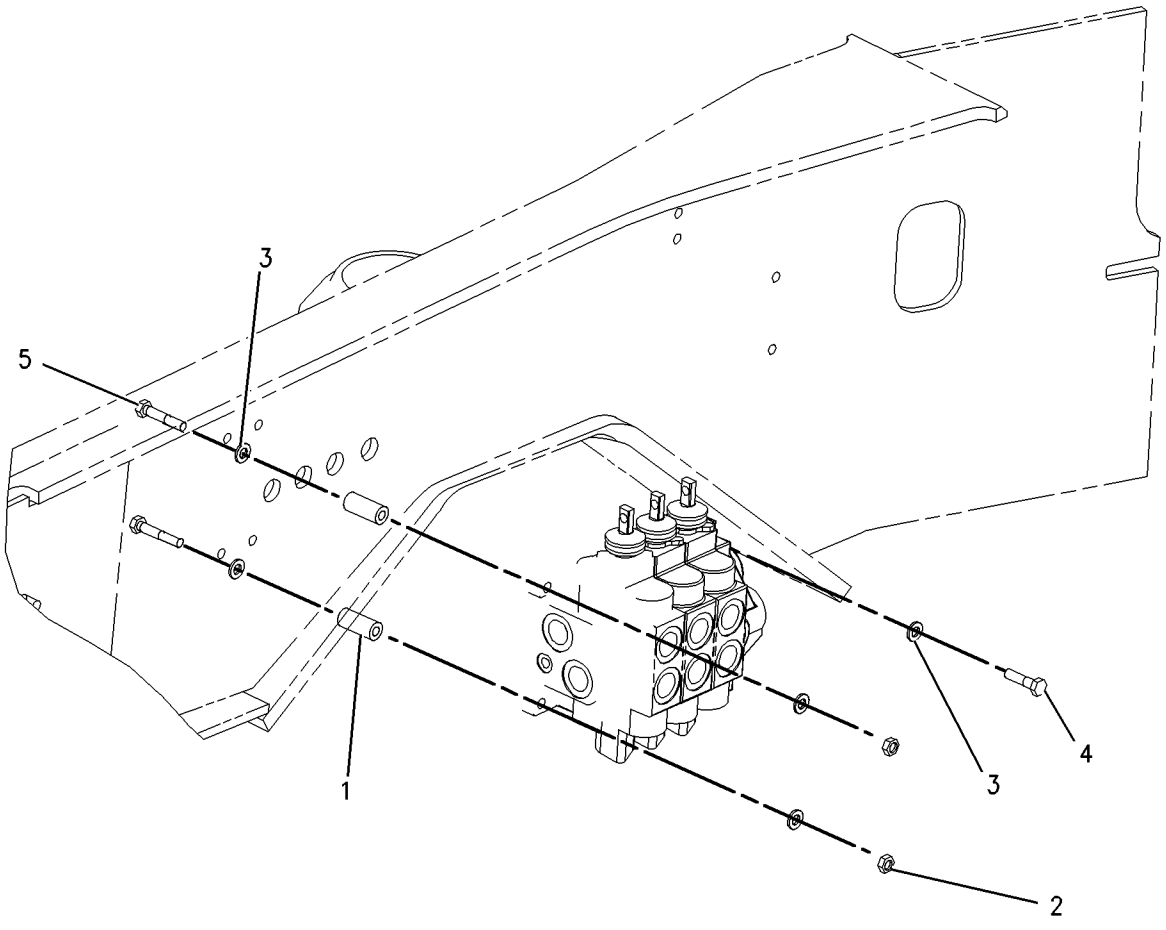

GRAPHIC #1 **<END>** g00793063

185-3165 MOUNTING GP-BANK VALVE

S/N: B2D1-UP
BACKHOE CENTER PIVOT
PART OF 214-6980 HYDRAULIC AR

SMCS-5051 **i01519109**

NOTE	REF NO	GRAPHIC REF	PART NUMBER	QTY	PART NAME 1 2 3 4 5 6 (PRODUCT LEVEL)	SEE PAGE
	1	1	**164-1481**	1	BRACKET AS	
M	2	1	**165-7019**	1	BOLT-HEX HEAD	
	3	1	**8T-4121**	5	WASHER-HARD (11X21X2.5MM THK)	
M	4	1	**8T-4183**	2	BOLT (M12X1.75X40 MM)	
M	5	1	**8T-4185**	1	BOLT (M10X1.5X50MM)	
M	6	1	**8T-4186**	2	BOLT (M10X1.5X40MM)	
	7	1	**8T-4223**	3	WASHER-HARD (13.5X25.5X3MM THK)	

M-METRIC PART

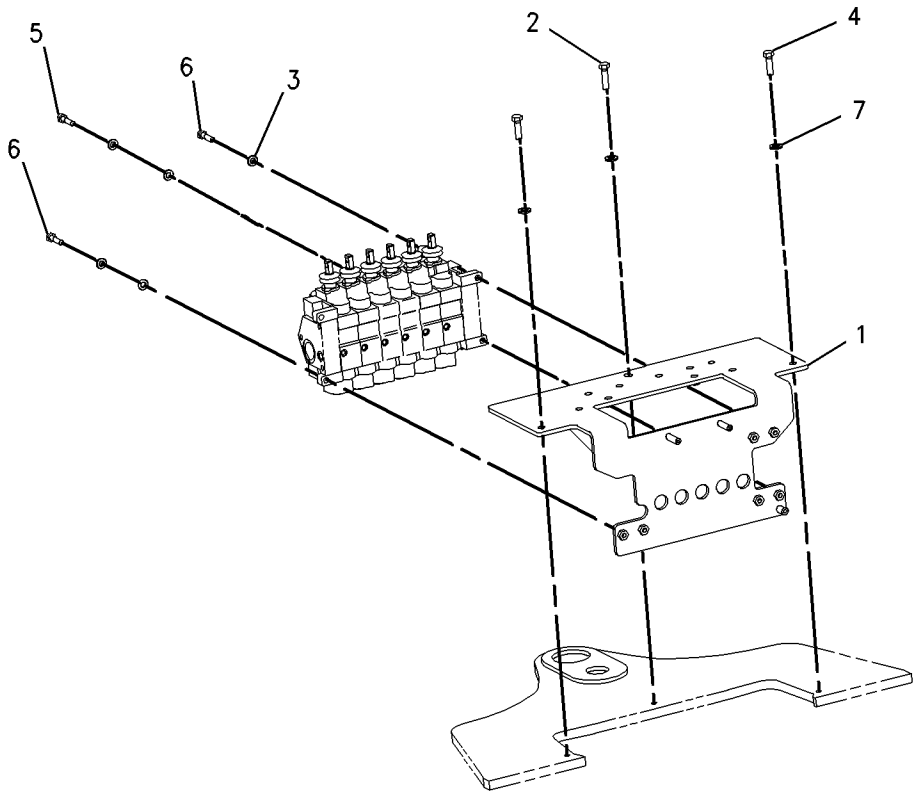

GRAPHIC #1 **<END>** g00771410

9R-4668 MOUNTING GP-CYLINDER

S/N: B2D1-UP
PART OF 112-0938, 112-0939 BUCKET AR-MULTIPURPOSE
AN ATTACHMENT

SMCS-5102, 6068, 7562 **i01513986**

NOTE	REF NO	GRAPHIC REF	PART NUMBER	QTY	PART NAME 1 2 3 4 5 6 (PRODUCT LEVEL)	SEE PAGE
	1	1	**9R-4677**	2	PIN	
	2	1	**3B-5317**	4	COTTER	
	3	1	**9R-4678**	2	PIN	
	4	1	**3B-8489**	4	FITTING-GREASE	

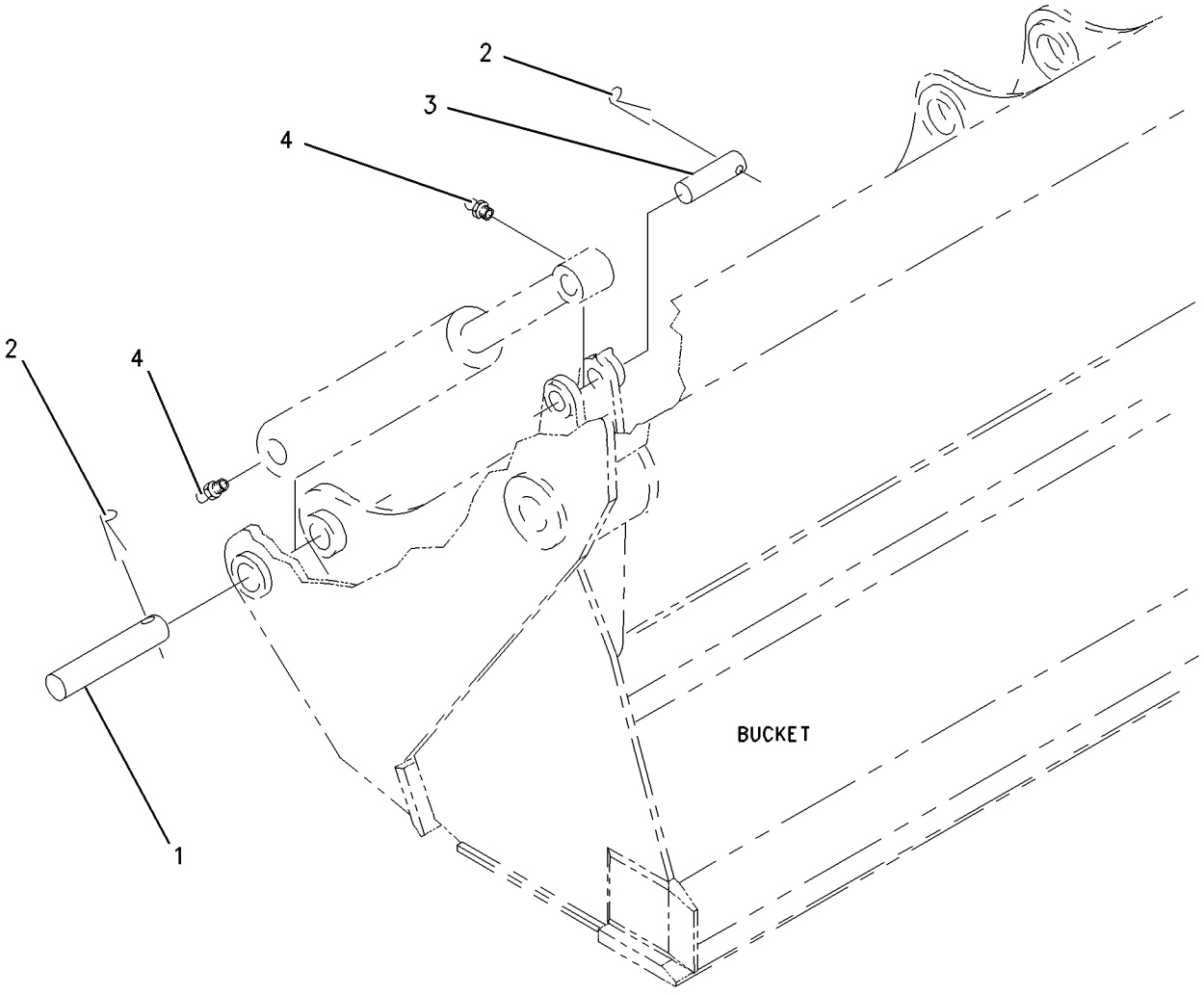

GRAPHIC #1 **<END>** g00759178

183-6078 MOUNTING GP-HYDRAULIC CONTROL

S/N: B2D1-UP
PART OF 209-4172 STABILIZER AR
AN ATTACHMENT

SMCS-5063 **i01734759**

NOTE	REF NO	GRAPHIC REF	PART NUMBER	QTY	PART NAME 1 2 3 4 5 6 (PRODUCT LEVEL)	SEE PAGE
	1	1	**164-1398**	2	KNOB	
	2	1	**190-5136**	1	FILM	
	3	1	**205-5798**	1	PLATE	
M	4	1	**8T-4189**	4	BOLT (M8X1.25X20MM)	
	5	1	**8T-4224**	4	WASHER-HARD (8.8X16X2MM THK)	
M	6	1	**9X-2043**	3	SCREW-TRUSS HEAD (M6X1X14MM)	

M-METRIC PART

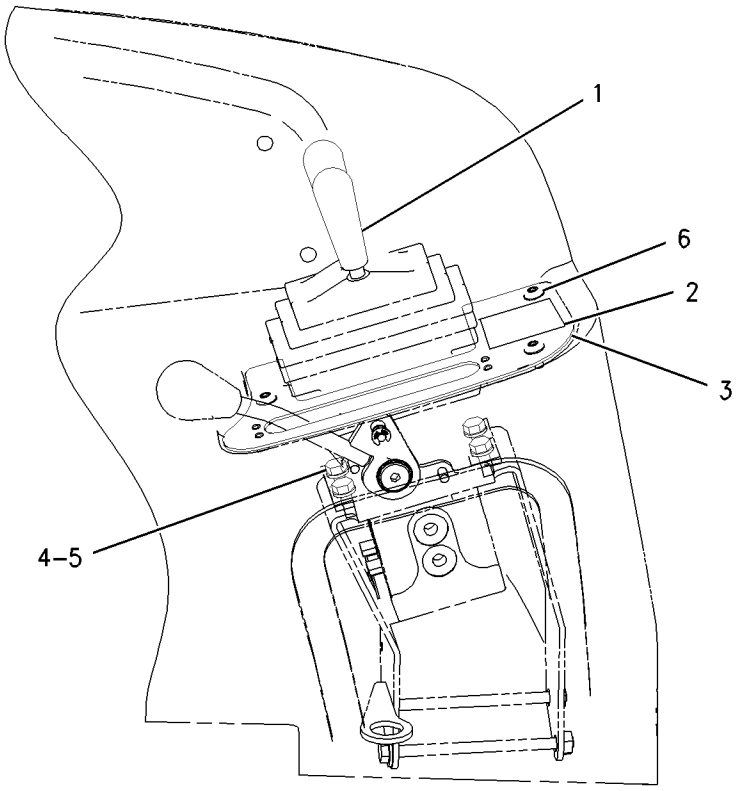

GRAPHIC #1 **<END>** g00882860

112-1826 MOUNTING GP-HYDRAULIC PUMP

S/N: B2D1-UP

PART OF 214-6980 HYDRAULIC AR

SMCS-5070 **i01524104**

NOTE	REF NO	GRAPHIC REF	PART NUMBER	QTY	PART NAME 1 2 3 4 5 6 (PRODUCT LEVEL)	SEE PAGE
M	1	1	**8T-9405**	4	BOLT-SOCKET HEAD (M4X0.7X16MM)	
	2	1	**9U-8886**	1	RING-SEAL (44.95MM ID)	
	3	1	**115-1918**	1	PLATE	
	4	1	**117-3534**	1	ADAPTER	
	5	1	**117-3535**	1	HUB	
	6	1	**128-5596**	1	SHAFT GP-POWER TAKE-OFF	
	6A	1	**130-8150**	1	RING-RETAINING	
	7	1	**5F-3106**	1	SEAL-O-RING	
	8	1	**8T-4122**	2	WASHER-HARD (17X32X3.5MM THK)	
M	9	1	**8T-7338**	2	BOLT (M16X2.0X45MM)	

M-METRIC PART

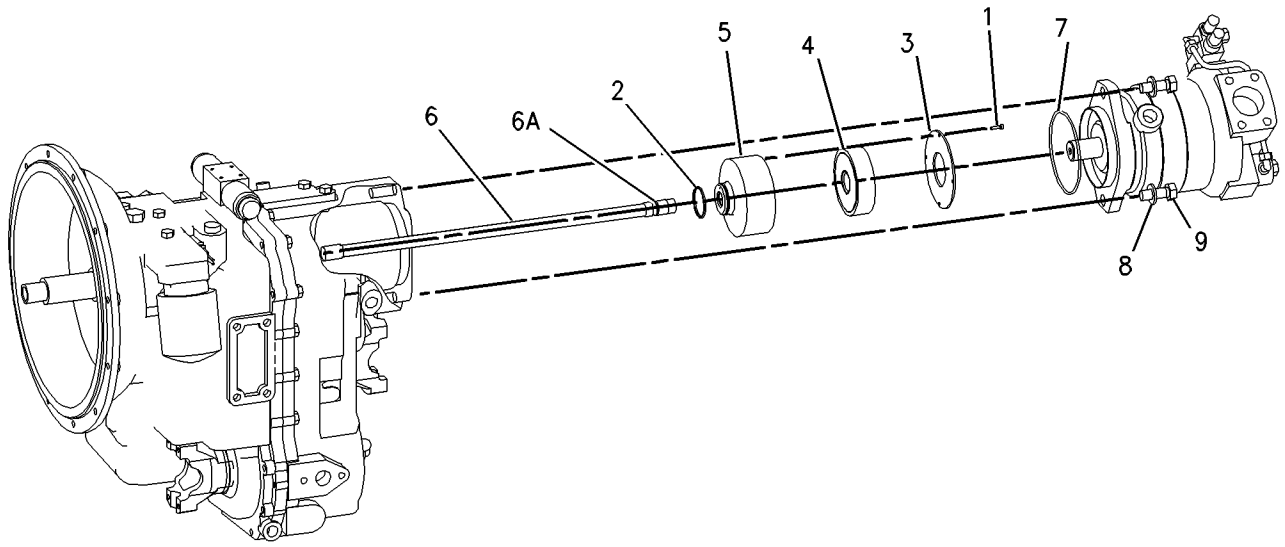

GRAPHIC #1 **<END>** g00791719

HYDRAULIC SYSTEM

171-2101 MOUNTING GP-LINES

S/N: B2D1-UP

PART OF 238-4783 BACKHOE AR-EXTENDABLE STICK, 238-4780, 238-4782 BACKHOE AR-STANDARD STICK AN ATTACHMENT

SMCS-5057, 5456 **i01518991**

NOTE	REF NO	GRAPHIC REF	PART NUMBER	QTY	PART NAME 1 2 3 4 5 6 (PRODUCT LEVEL)	SEE PAGE
	1	1	**9R-8874**	2	PLATE	
	2	1	**201-1034**	2	BLOCK	
	3	1	**172-2363**	2	BLOCK	
M	4	1	**6V-9189**	2	LOCKNUT (M8X1.25 THD)	
	5	1	**193-6353**	1	BLOCK	
	6	1	**201-1035**	2	BLOCK	
	7	1	**193-6352**	1	BLOCK	
	8	1	**8T-4121**	4	WASHER-HARD (11X21X2.5MM THK)	
M	9	1	**8T-4136**	4	BOLT (M10X1.5X25MM)	
	10	1	**8T-4224**	4	WASHER-HARD (8.8X16X2MM THK)	
	11	1	**191-4852**	1	BLOCK	
	12	1	**120-4397**	1	PLATE	
M	13	1	**7X-2539**	2	BOLT (M8X1.25X110MM)	

M-METRIC PART

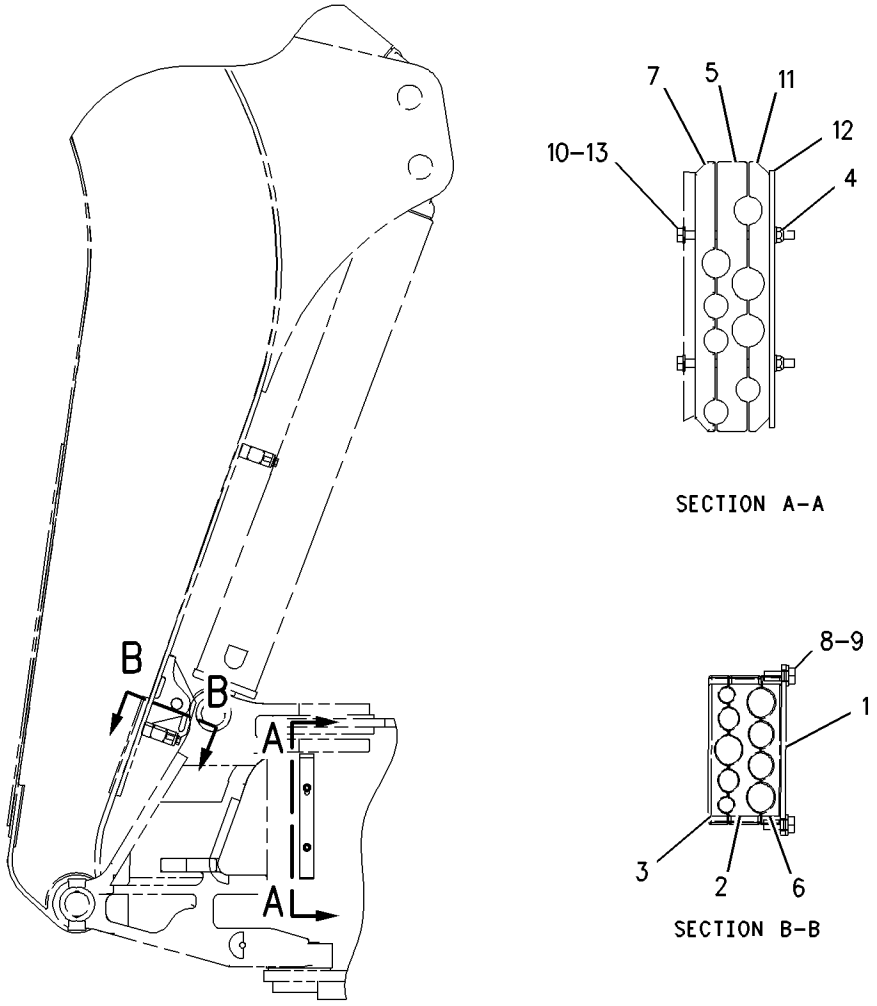

GRAPHIC #1 **<END>** g00788495

172-3190 MOUNTING GP-LINES

S/N: B2D1-UP

PART OF 238-4784 BACKHOE AR-EXTENDABLE STICK, 238-4781 BACKHOE AR-STANDARD STICK AN ATTACHMENT

SMCS-5057, 5456 **i01520680**

NOTE	REF NO	GRAPHIC REF	PART NUMBER	QTY	PART NAME 1 2 3 4 5 6 (PRODUCT LEVEL)	SEE PAGE
	1	1	**120-4397**	1	PLATE	
	2	1	**177-7148**	2	BLOCK	
	3	1	**177-7149**	2	BLOCK	
	4	1	**191-4850**	1	BLOCK	
	5	1	**191-4851**	1	BLOCK	
	6	1	**191-4852**	1	BLOCK	
	7	1	**193-6355**	2	BLOCK	
M	8	1	**6V-9189**	2	LOCKNUT (M8X1.25 THD)	
M	9	1	**7X-2539**	2	BOLT (M8X1.25X110MM)	
	10	1	**8T-4121**	4	WASHER-HARD (11X21X2.5MM THK)	
M	11	1	**8T-4136**	4	BOLT (M10X1.5X25MM)	
	12	1	**8T-4224**	4	WASHER-HARD (8.8X16X2MM THK)	
	13	1	**9R-8874**	2	PLATE	

M-METRIC PART

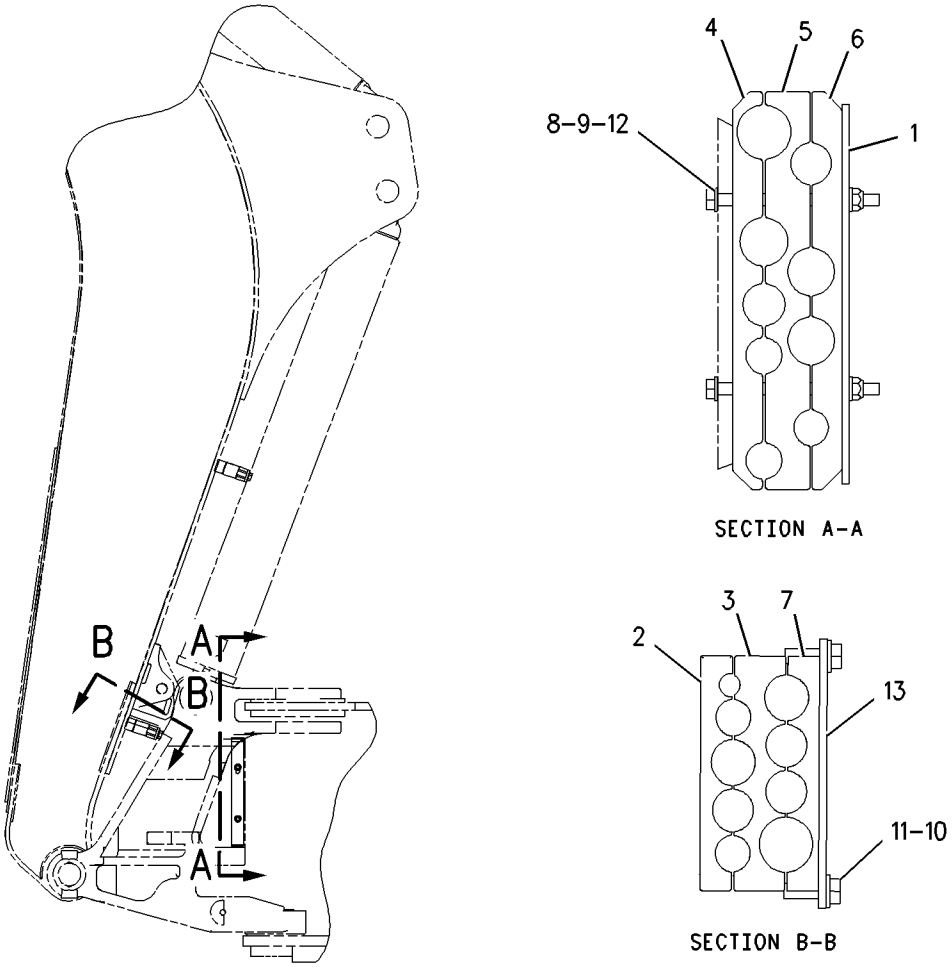

GRAPHIC #1 **<END>** g00789790

HYDRAULIC SYSTEM

245-8998 PUMP GP-PISTON

S/N: B2D1-UP

PART OF 214-6980 HYDRAULIC AR

SMCS-5070 **i02022490**

NOTE	REF NO	GRAPHIC REF	PART NUMBER	QTY	PART NAME 1 2 3 4 5 6 (PRODUCT LEVEL)	SEE PAGE
	1	1	**180-6213**	1	RING-RETAINING	
	2	1	**6E-4003**	2	BEARING	
	3	1	**173-0637**	1	HOUSING-PUMP	
Y	4	1	**120-5726**	1	ROTATING GP-PUMP	372
	5	1	**3E-6769**	4	SEAL-O-RING	
M	6	1	**095-9805**	4	BOLT-SOCKET HEAD (M14X2X40-MM)	
	7	1	**1P-6872**	1	CUP-BEARING	
	8	1	**8C-7110**	1	CONE-BEARING	
	9	1	**103-5520**	1	CARRIER-PIN	
	10	1	**6E-4000**	1	SPACER (25.5X35X3-MM THK)	
	11	1	**3E-6770**	1	SEAL-O-RING	
	12	1	**6E-6175**	1	CYLINDER	
	13	1	**6E-6176**	1	SPRING	
	14	1	**6E-6174**	1	PLUNGER	
	15	1	**9S-8006**	1	PLUG	
	16	1	**2M-9780**	1	SEAL-O-RING	
	17	1	**162-1604**	1	SHAFT-PUMP	
	18	1	**6V-2323**	1	CONE-BEARING	
	19	1	**3B-5790**	1	CUP-BEARING	
	20	1	**6E-4004**	2	SEAL-SHAFT	
	21	1	**173-0639**	1	SWASHPLATE AS	
	22	1	**120-5727**	1	PISTON-CONTROL	
	23	1	**120-5729**	1	GUIDE-PISTON	
	24	1	**136-8423**	1	PLUG-BREAK OFF	
	25	1	**083-4419**	1	PIN	
	26	1	**173-0641**	1	PLUG-FILTER	
	27	1	**173-0638**	1	HEAD-PUMP	
	28	1	**215-9219**	1	ADAPTER AS	
		1	**3J-7354**	1	SEAL-O-RING	
	29	1	**3J-7352**	2	CONNECTOR	
	30	1	**3J-7354**	3	SEAL-O-RING	
	31	1	**193-8648**	1	TUBE AS	
Y	32	1	**103-5519**	1	VALVE GP-PUMP CONTROL (POWER COMPENSATOR)	410
M	33	1	**6V-5683**	1	BOLT (M6X1X16-MM)	
	34	1	**3C-8388**	1	PIN-ROLL	
Y	35	1	**173-0640**	1	VALVE GP-PUMP CONTROL (PRESSURE, FLOW COMPENSATOR)	411
	36	1	**194-6196**	1	SPACER (28X34X3.5-MM THK)	
	37	1	**9X-7680**	3	SEAL-O-RING	

M-METRIC PART
Y-SEPARATE ILLUSTRATION

245-8998 PUMP GP-PISTON *(contd.)* **i02022490**

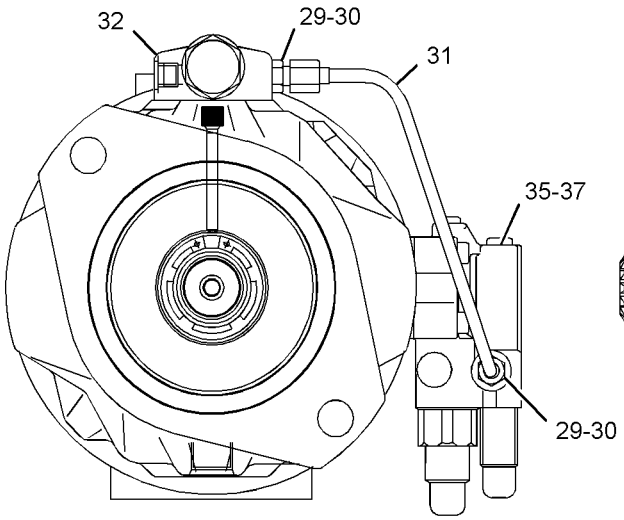

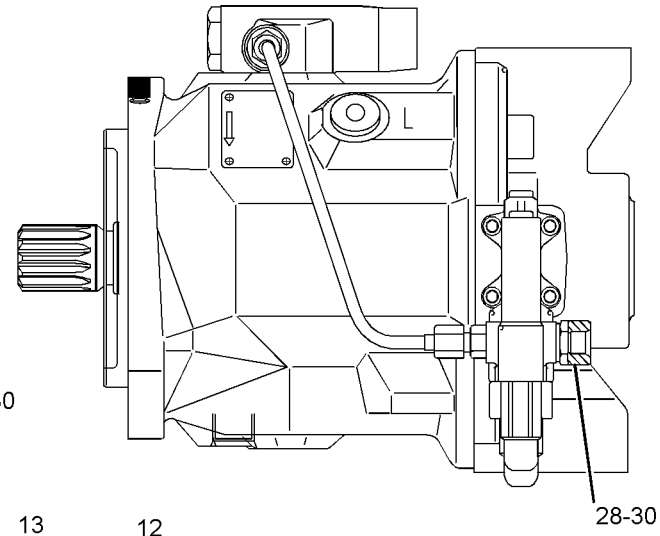

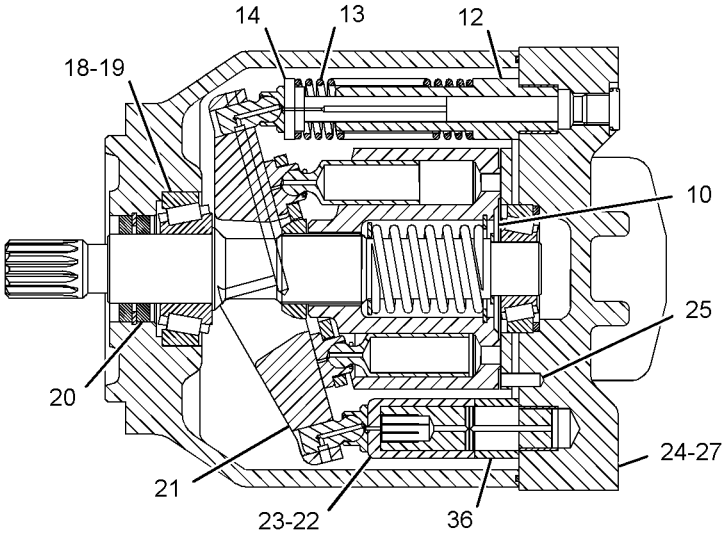

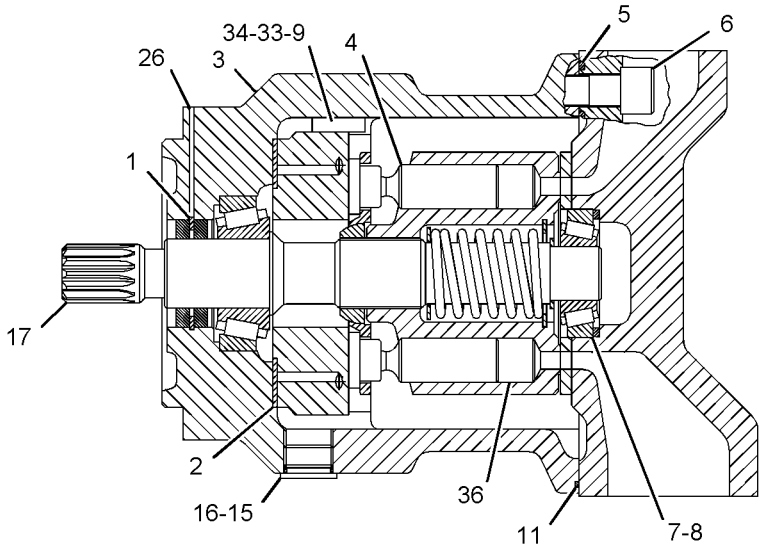

GRAPHIC #1 **<END>** g01042227

HYDRAULIC SYSTEM

120-5726 ROTATING GP-PUMP

S/N: B2D1-UP

PART OF 245-8998 PUMP GP-PISTON

SMCS-5070 **i01518758**

NOTE	REF NO	GRAPHIC REF	PART NUMBER	QTY	PART NAME 1 2 3 4 5 6 (PRODUCT LEVEL)	SEE PAGE
	1	1	**6E-6151**	9	PISTON AS	
	2	1	**6E-6154**	1	PLATE-RETRACTION	
	3	1	**6E-6155**	1	BEARING	
	4	1	**6E-4007**	1	BARREL	
	5	1	**6E-3341**	1	SEAT-SPRING	
	6	1	**6E-4009**	1	SPRING	
	7	1	**6E-6158**	1	RING	
	8	1	**120-5724**	1	PLATE-VALVE	
	9	1	**6E-6157**	3	PIN	

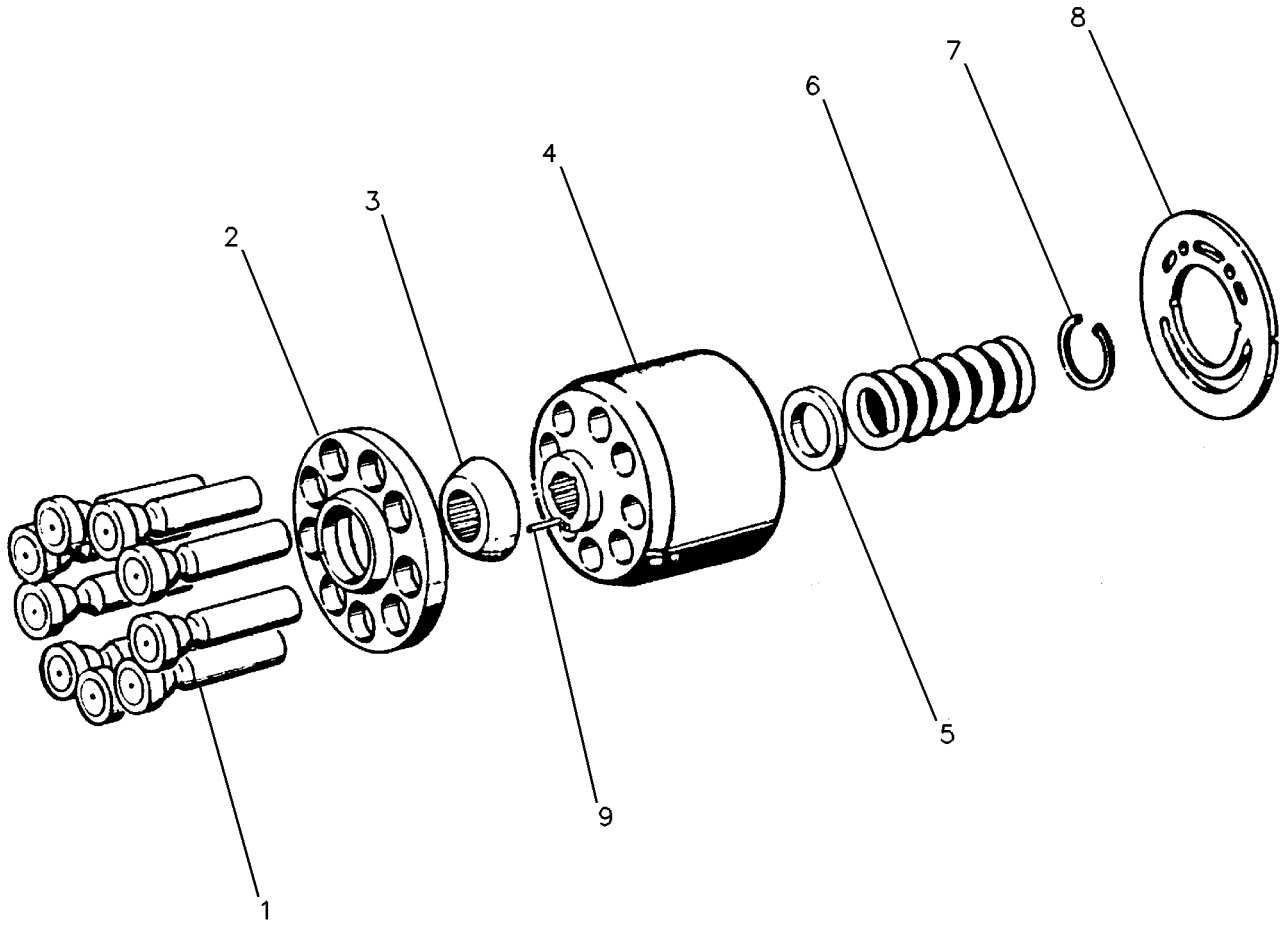

GRAPHIC #1 **<END>** g00119332

HYDRAULIC SYSTEM

209-4172 STABILIZER AR

S/N: B2D1-UP

STANDARD

PART OF 214-6955, 214-6956, 214-6958, 214-6959 POWER TRAIN AR

AN ATTACHMENT

SMCS-1408, 5059, 7222 **i01757199**

NOTE	PART NUMBER	QTY	PART NAME 1 2 3 4 5 6 (PRODUCT LEVEL)	SEE PAGE
Y	*183-6078*	1	MOUNTING GP-HYDRAULIC CONTROL	366
Y	**185-5902**	1	VALVE GP-PILOT	407

Y-SEPARATE ILLUSTRATION

<END>

HYDRAULIC SYSTEM

234-6926 TANK GP-HYDRAULIC

S/N: B2D1-UP

PART OF 214-6980 HYDRAULIC AR

SMCS-5056 **i02024977**

NOTE	REF NO	GRAPHIC REF	PART NUMBER	QTY	PART NAME 1 2 3 4 5 6 (PRODUCT LEVEL)	SEE PAGE
	1	1	**1P-4278**	1	CLAMP-HOSE	
	2	1	**5D-1026**	2	CLAMP-HOSE	
	3	1	**9M-0164**	1	CLAMP-HOSE	
	4	1	**9R-9925**	1	FILTER (HYDRAULIC TANK BREATHER)	
	5	1	**127-4471**	1	CLAMP-HOSE	
	6	1	**132-3056**	1	SEAL-O-RING	
	7	1	**222-4067**	6	BOLT-SOCKET HEAD (M5X.8X14-MM)	
	8	1	**234-6927**	1	HOSE	
	9	1	**234-8815**	1	TUBE AS	
	10	1	**235-5843**	1	DIFFUSER AS	
	11	1	**237-3797**	1	CAP-FILL (HYDRAULIC OIL)	
	12	1	**240-9671**	1	BRACKET AS	
		1	**7T-1099**	3	LINK	
			9G-9155	1	CLIP	
	13	1	**240-9721**	1	TANK GP-HYDRAULIC	
		1	**240-9716**	1	TANK AS-HYDRAULIC	
		1	**170-1644**	1	GAUGE-SIGHT (HYDRAULIC OIL LEVEL)	
	14	1	*150-3027*	2	ELBOW AS	
		1	**2M-9780**	1	SEAL-O-RING	
		1	**6V-5653**	1	ELBOW (7/8-14-THD)	
	15	1	**6D-3479**	1	CLIP	
	16	1	**8T-4121**	6	WASHER-HARD (11X21X2.5-MM THK)	
M	17	1	**8T-4136**	1	BOLT (M10X1.5X25-MM)	
M	18	1	**8T-4137**	1	BOLT (M10X1.5X20-MM)	
M	19	1	**8T-4139**	1	BOLT (M12X1.75X30-MM)	
M	20	1	**8T-4179**	3	BOLT (M12X1.75X20-MM)	
M	21	1	**8T-4191**	4	BOLT (M10X1.5X16-MM)	
	22	1	**8T-4223**	4	WASHER-HARD (13.5X25.5X3-MM THK)	
E	23	1	**5P-1505**		HOSE (8CM)	
E	24	1	**5P-1442**		HOSE (124CM)	

E-ORDER BY THE CENTIMETER
M-METRIC PART

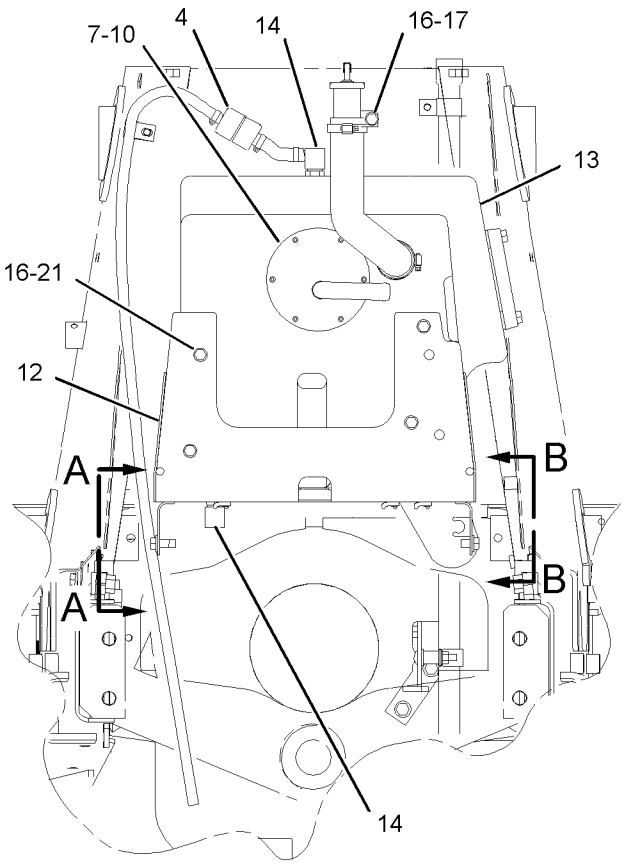

FRONT VIEW

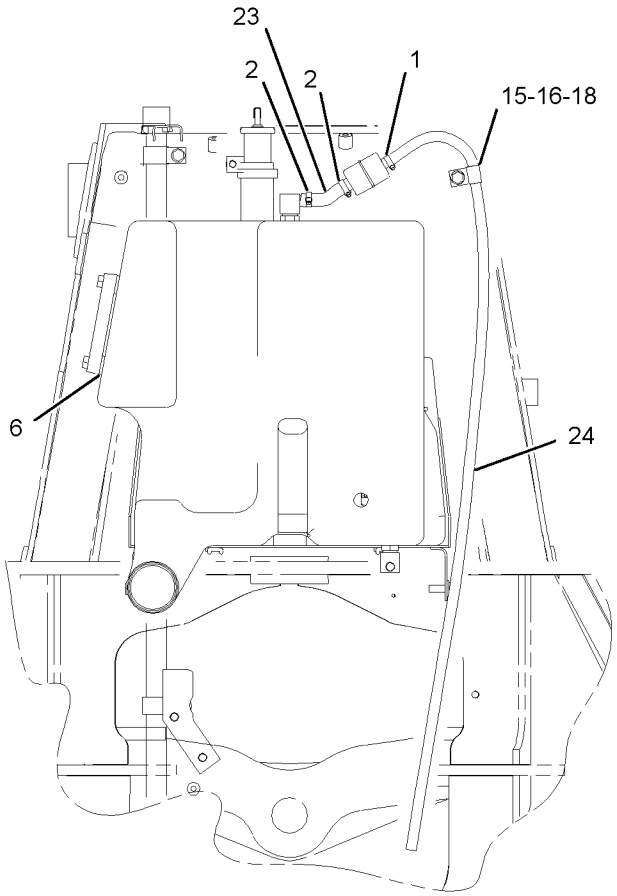

REAR VIEW

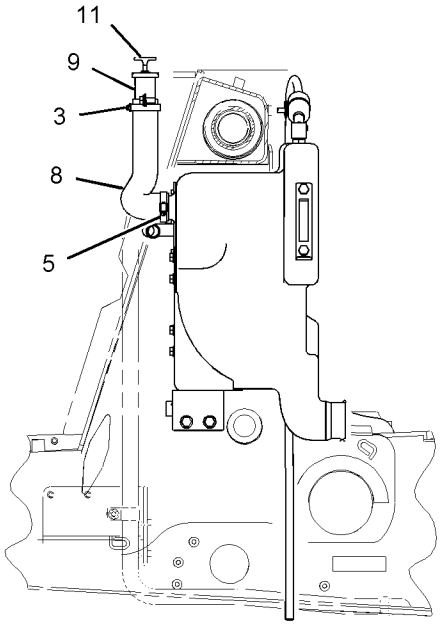

LEFT SIDE VIEW

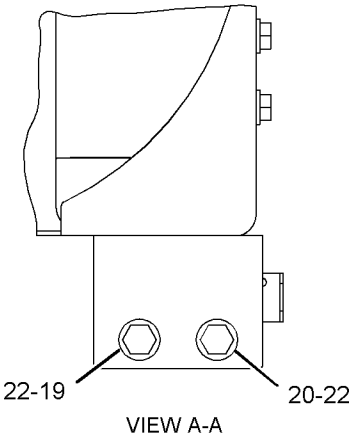

VIEW A-A

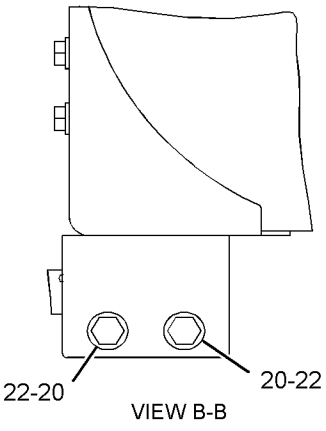

VIEW B-B

GRAPHIC #1 **<END>** g01046629

HYDRAULIC SYSTEM

185-9784 VALVE & MTG GP-BANK

S/N: B2D1-UP
PART OF 237-6458, 237-6459 DRIVE AR-BACKHOE LOADER
AN ATTACHMENT

SMCS-5051, 5057, 7265 **i02039259**

NOTE	REF NO	GRAPHIC REF	PART NUMBER	QTY	PART NAME 1 2 3 4 5 6 (PRODUCT LEVEL)	SEE PAGE
Y	1	1	**185-5898**	1	VALVE GP-BANK 2	379
	2	1	**232-5849**	4	STUD-TAPERLOCK	
M	3	1	**5C-7261**	4	NUT (M8X1.25-THD)	
M	4	1	**8T-4224**	4	WASHER-HARD (8.8X16X2-MM THK)	

M-METRIC PART
Y-SEPARATE ILLUSTRATION

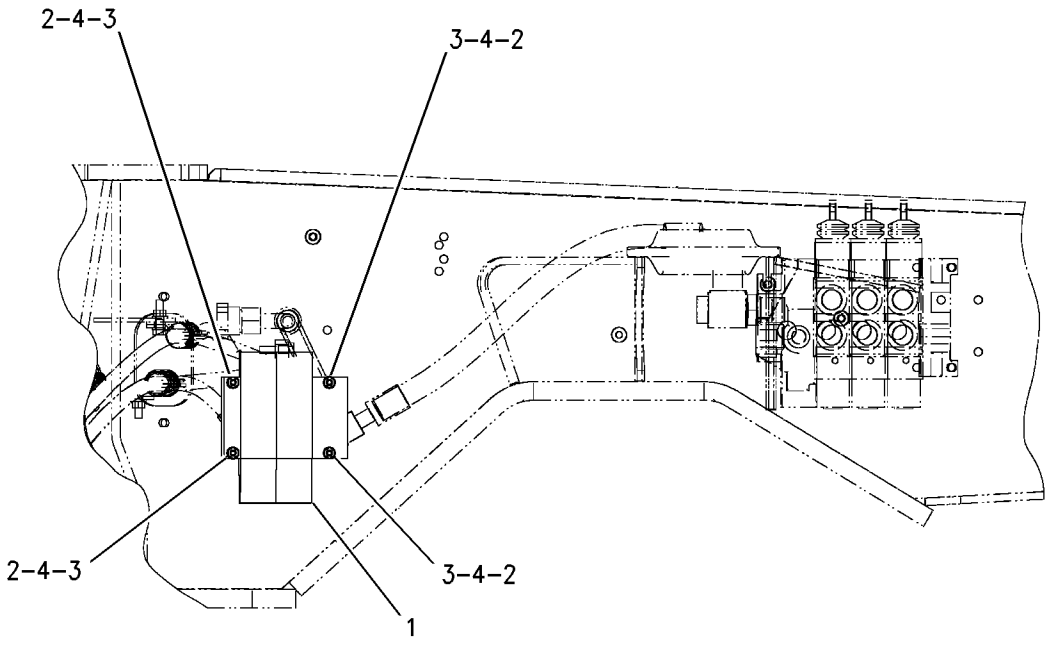

GRAPHIC #1 **<END>** g00723571

HYDRAULIC SYSTEM

214-7000 VALVE AR-BANK 4

S/N: B2D1-UP
AN ATTACHMENT

SMCS-5051 **i02047079**

NOTE	PART NUMBER	QTY	PART NAME 1 2 3 4 5 6 (PRODUCT LEVEL)	SEE PAGE
Y	*235-5854*	1	LINES GP-PUMP	353
Y	**180-8592**	1	VALVE GP-BANK 4	383
Y-SEPARATE ILLUSTRATION				

<END>

214-7001 VALVE AR-BANK 5

S/N: B2D1-UP
AN ATTACHMENT

SMCS-5051 **i02052166**

NOTE	PART NUMBER	QTY	PART NAME 1 2 3 4 5 6 (PRODUCT LEVEL)	SEE PAGE
Y	*164-1540*	1	CONTROL GP-HYDRAULIC PEDAL (EXTENDABLE STICK)	276
Y	*235-5854*	1	LINES GP-PUMP	353
Y	**180-8593**	1	VALVE GP-BANK 5	384
	148-8408	2	PLUG AS	
			(EACH INCLUDES)	
	3D-2824	1	SEAL-O-RING	
	9S-4183	1	PLUG	
Y-SEPARATE ILLUSTRATION				

<END>

214-7002 VALVE AR-BANK 5

S/N: B2D1-UP
AN ATTACHMENT

SMCS-5051 **i02025781**

NOTE	PART NUMBER	QTY	PART NAME 1 2 3 4 5 6 (PRODUCT LEVEL)	SEE PAGE
Y	*235-5854*	1	LINES GP-PUMP	353
Y	**180-8593**	1	VALVE GP-BANK 5	384
	148-8408	2	PLUG AS	
			(EACH INCLUDES)	
	3D-2824	1	SEAL-O-RING	
	9S-4183	1	PLUG	
Y-SEPARATE ILLUSTRATION				

<END>

HYDRAULIC SYSTEM

214-7003 VALVE AR-BANK 6

S/N: B2D1-UP
AN ATTACHMENT

SMCS-5051 **i02025774**

NOTE	PART NUMBER	QTY	PART NAME 1 2 3 4 5 6 (PRODUCT LEVEL)	SEE PAGE
Y	*164-1540*	1	CONTROL GP-HYDRAULIC PEDAL (EXTENDABLE STICK)	276
Y	*164-1550*	1	CONTROL GP-HYDRAULIC PEDAL (AUXILIARY)	278
Y	*235-5856*	1	LINES GP-PUMP	354
Y	**180-8594**	1	VALVE GP-BANK 6	385
	148-8408	2	PLUG AS	
	3D-2824	1	SEAL-O-RING	
	9S-4183	1	PLUG	

Y-SEPARATE ILLUSTRATION

<END>

185-5898 VALVE GP-BANK 2–STABILIZER

S/N: B2D1-UP
PART OF 185-9784 VALVE & MTG GP-BANK
AN ATTACHMENT

SMCS-5051 **i02052168**

NOTE	REF NO	GRAPHIC REF	PART NUMBER	QTY	PART NAME 1 2 3 4 5 6 (PRODUCT LEVEL)	SEE PAGE
	1	1	**192-4489**	3	STUD	
M	2	1	**5C-7261**	6	NUT (M8X1.25-THD)	
	3	1	**8T-4205**	6	WASHER-HARD (7.2X14.5X2-MM THK)	
	4	1	**192-7506**	20	SEAL-O-RING	
	5	1	**192-7511**	1	SEAL	
	6	1	**192-7508**	10	SEAL-O-RING	
	7	1	**192-7509**	2	SEAL-O-RING	
	8	1	**239-2226**	1	COVER GP-CONTROL VALVE	
		1	**7J-9108**	1	SEAL-O-RING	
		1	**192-2075**	1	VALVE GP-CHECK	
		1	**192-2080**	1	SPRING	
		1	**192-7512**	1	SEAL-O-RING	
		1	**192-7863**	1	PLUG	
	9	1	**192-0826**	1	COVER-END	
Y	10	1	**192-0827**	2	VALVE GP-CONTROL	405
	11	1	**192-2060**	2	COVER AS	
					(EACH INCLUDES)	
		1	**192-7506**	2	SEAL-O-RING	
		1	**192-7516**	1	SEAL	
	12	1	**192-7516**	2	SEAL	
	13	1	**192-7505**	2	SEAL-O-RING	
M	14	1	**149-4311**	16	BOLT-SOCKET HEAD (M6X1X16-MM)	
	15	1	**192-7507**	2	SEAL-O-RING	
	16	1	**192-7864**	2	PLUG	
	17	1	**192-4491**	2	DISC	
	18	1	**192-4492**	2	BALL	
	19	1	**192-0828**	2	VALVE GP-COMPENSATING	
					(EACH INCLUDES)	
		1	**192-4488**	1	RING	
		1	**192-7512**	1	SEAL-O-RING	
		1	**192-7515**	1	SEAL-O-RING	
	20	1	**192-2061**	2	COVER AS	
					(EACH INCLUDES)	
		1	**192-7505**	1	SEAL-O-RING	
		1	**192-7506**	4	SEAL-O-RING	
	21	1	**220-0407**	2	VALVE GP-CONTROL	
					(EACH INCLUDES)	
		1	**192-7506**	2	SEAL-O-RING	
		1	**192-7507**	1	SEAL-O-RING	

M-METRIC PART
Y-SEPARATE ILLUSTRATION

185-5898 VALVE GP-BANK 2 *(contd.)* i02052168

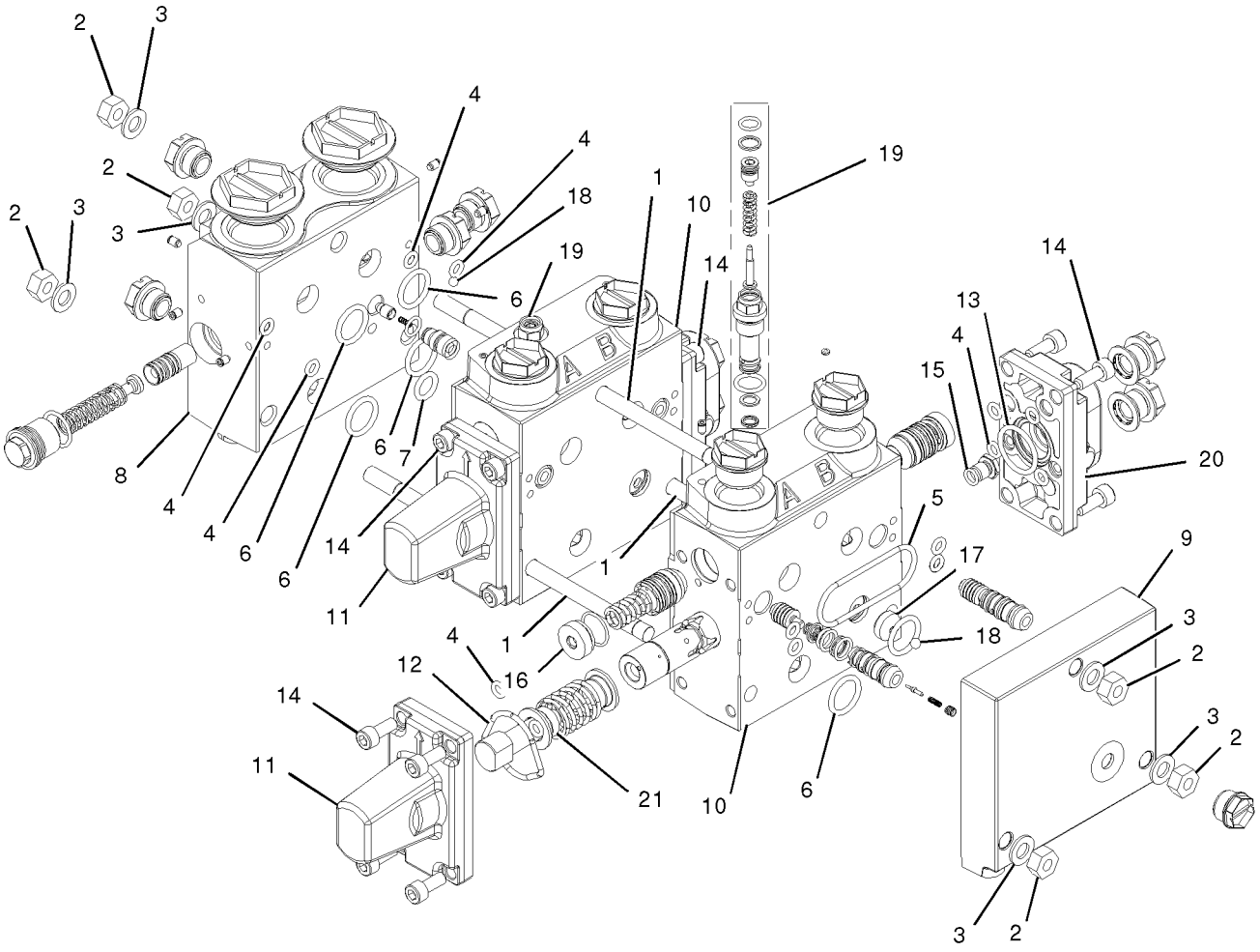

GRAPHIC #1 **<END>** g01052650

185-5906 VALVE GP-BANK 2–LOADER

S/N: B2D1-UP
PART OF 186-5331 HYDRAULIC AR
AN ATTACHMENT

SMCS-5051 **i01928492**

NOTE	REF NO	GRAPHIC REF	PART NUMBER	QTY	PART NAME 1 2 3 4 5 6 (PRODUCT LEVEL)	SEE PAGE
Y	1	1	**188-7471**	1	VALVE GP-PRIORITY (STEERING)	239
	2	1	**191-4010**	1	COVER GP	
Y	3	1	**130-6520**	1	VALVE GP-CONTROL (LIFT)	389
Y	4	1	**168-0361**	1	VALVE GP-CONTROL (TILT)	393
	5	1	**5M-2894**	3	WASHER-HARD (10.2X18.5X2.5MM THK)	
	6	1	**9S-8752**	3	NUT-FULL (3/8-16 THD)	
	7	1	**4T-4538**	3	STUD	
	8	1	**4D-9986**	6	SEAL-O-RING	
	9	1	**4J-5140**	3	SEAL-O-RING	
	10	1	**4J-5267**	3	SEAL-O-RING	
	11	1	**4T-2723**	9	SHIM (0.076MM THK)	

Y-SEPARATE ILLUSTRATION

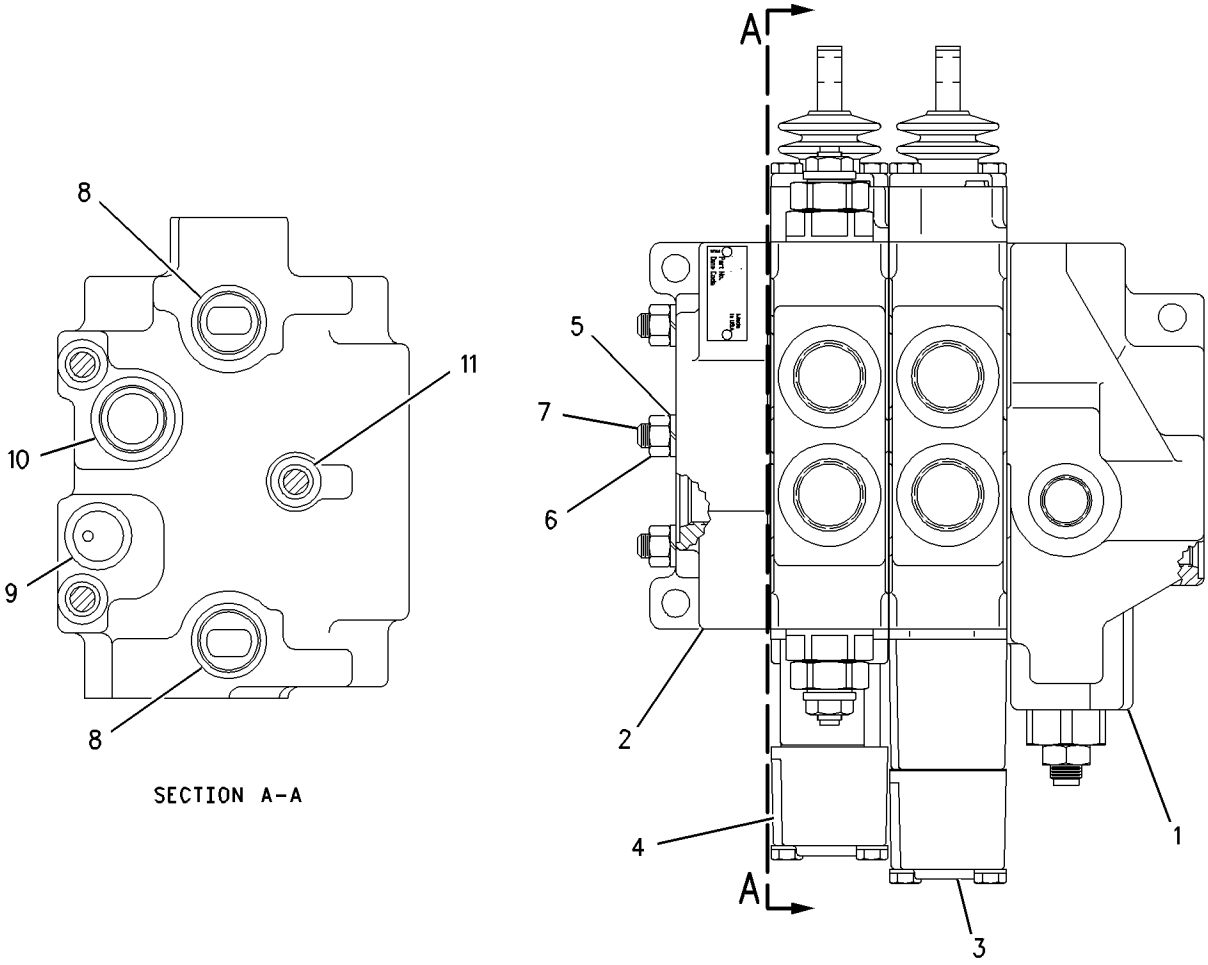

SECTION A-A

GRAPHIC #1 **<END>** g00746353

HYDRAULIC SYSTEM

185-5907 VALVE GP-BANK 3–LOADER

S/N: B2D1-UP
PART OF 186-5333 HYDRAULIC AR
AN ATTACHMENT

SMCS-5051 **i01928491**

NOTE	REF NO	GRAPHIC REF	PART NUMBER	QTY	PART NAME 1 2 3 4 5 6 (PRODUCT LEVEL)	SEE PAGE
Y	1	1	**188-7471**	1	VALVE GP-PRIORITY (STEERING)	239
	2	1	**191-4010**	1	COVER GP	
Y	3	1	**130-6520**	1	VALVE GP-CONTROL (LIFT)	389
Y	4	1	**168-0361**	1	VALVE GP-CONTROL (TILT)	393
Y	5	1	**124-8818**	1	VALVE GP-CONTROL (AUXILIARY)	387
	6	1	**5M-2894**	3	WASHER-HARD (10.2X18.5X2.5MM THK)	
	7	1	**9S-8752**	3	NUT-FULL (3/8-16 THD)	
	8	1	**4T-4518**	3	STUD	
	9	1	**4D-9986**	8	SEAL-O-RING	
	10	1	**4J-5140**	4	SEAL-O-RING	
	11	1	**4J-5267**	4	SEAL-O-RING	
	12	1	**4T-2723**	12	SHIM (0.076MM THK)	

Y-SEPARATE ILLUSTRATION

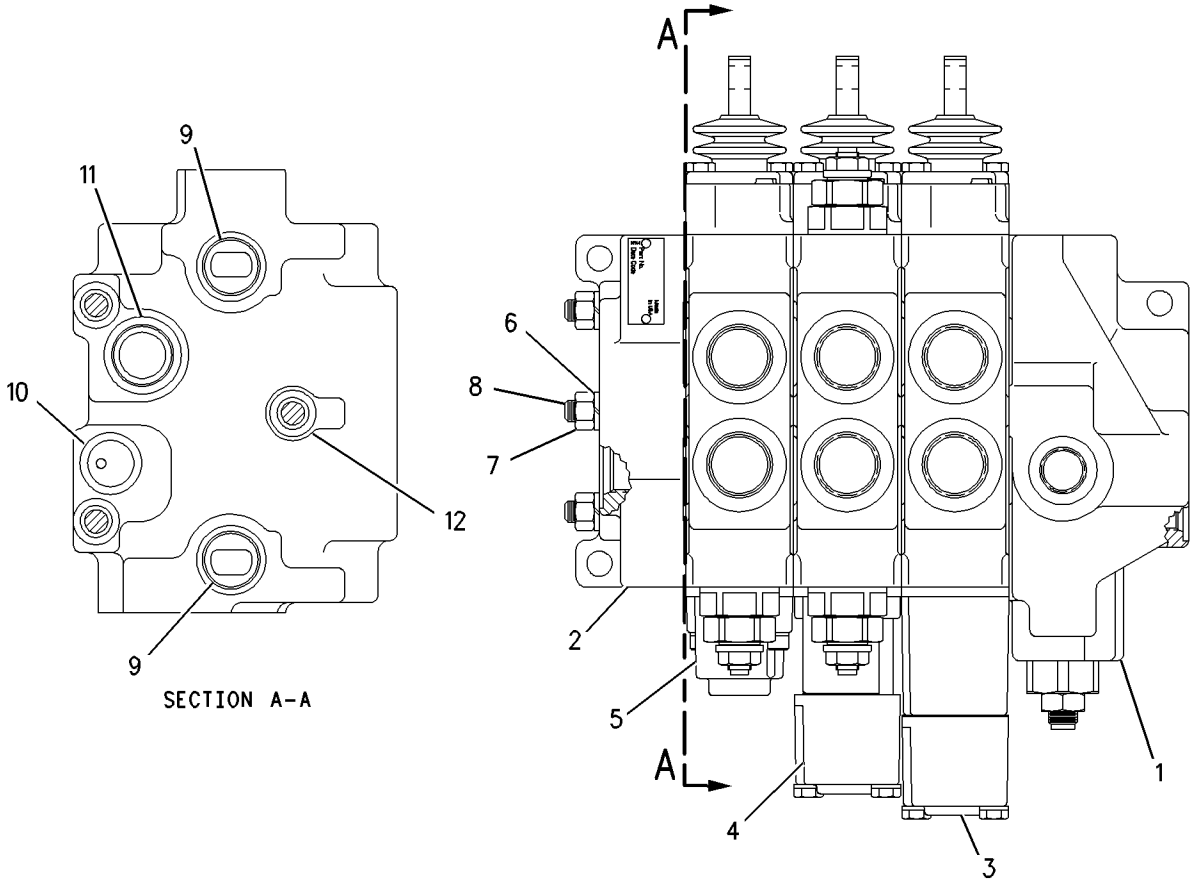

GRAPHIC #1 **<END>** g00746383

180-8592 VALVE GP-BANK 4–BACKHOE

S/N: B2D1-UP
PART OF 214-7000 VALVE AR-BANK 4
AN ATTACHMENT

SMCS-5051 **i01494261**

NOTE	REF NO	GRAPHIC REF	PART NUMBER	QTY	PART NAME 1 2 3 4 5 6 (PRODUCT LEVEL)	SEE PAGE
	1	1	**200-0161**	1	COVER (END)	
	2	1	**6E-4158**	1	COVER (END)	
Y	3	1	**190-3397**	1	VALVE GP-CONTROL (BOOM)	395
Y	4	1	**166-7950**	1	VALVE GP-CONTROL (SWING)	391
Y	5	1	**190-3400**	1	VALVE GP-CONTROL (BUCKET)	397
Y	6	1	**190-3402**	1	VALVE GP-CONTROL (STICK)	399
	7	1	**5M-2894**	6	WASHER-HARD (10.2X18.5X2.5MM THK)	
	8	1	**9S-8752**	6	NUT-FULL (3/8-16 THD)	
	9	1	**4T-4218**	3	STUD	
	10	1	**4D-9986**	10	SEAL-O-RING	
	11	1	**4J-5140**	5	SEAL-O-RING	
	12	1	**4J-5267**	5	SEAL-O-RING	
	13	1	**4T-2723**	15	SHIM (0.076MM THK)	

Y-SEPARATE ILLUSTRATION

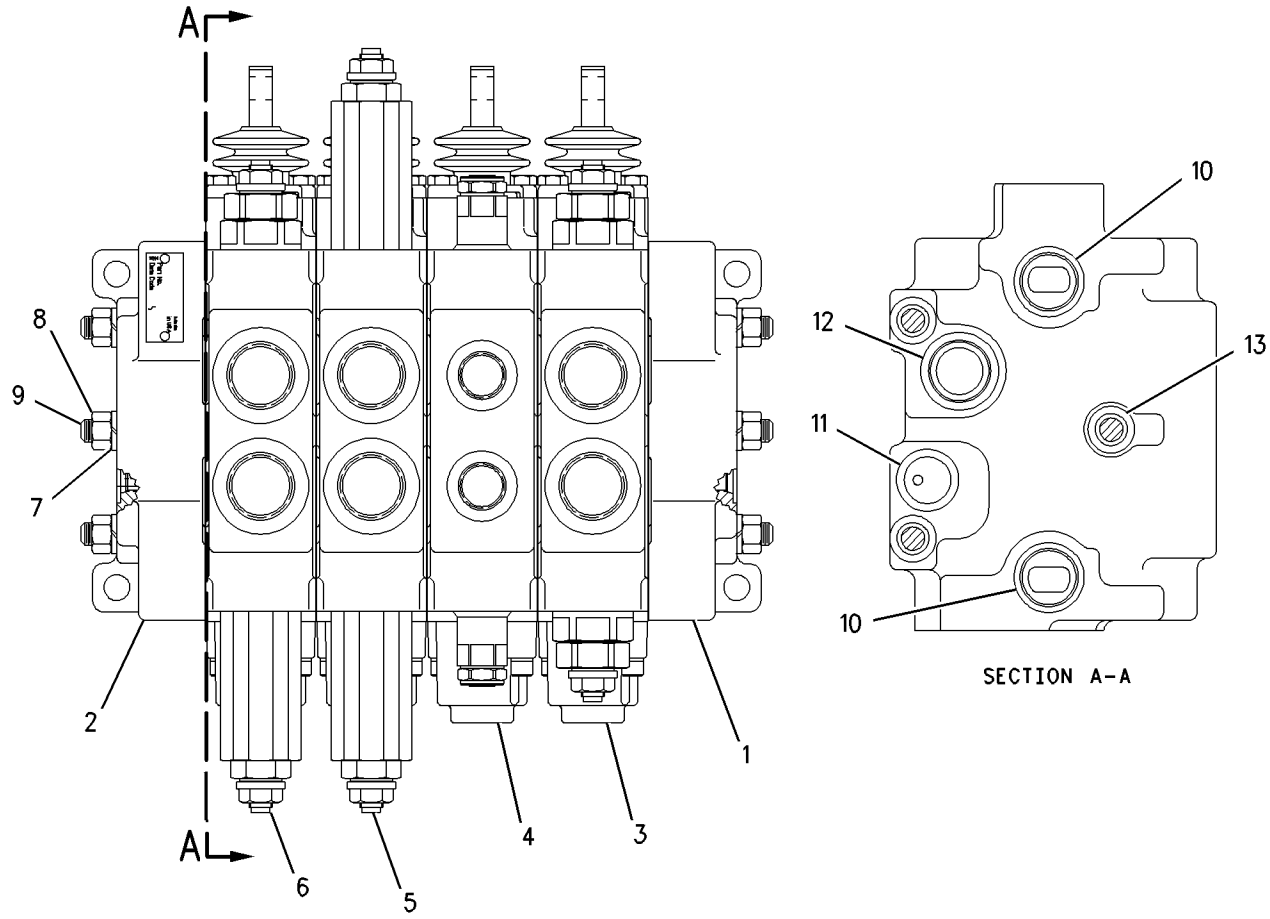

GRAPHIC #1 **<END>** g00745797

180-8593 VALVE GP-BANK 5–BACKHOE

S/N: B2D1-UP
4-LEVER
PART OF 214-7001, 214-7002 VALVE AR-BANK 5
AN ATTACHMENT

SMCS-5051 **i01494845**

NOTE	REF NO	GRAPHIC REF	PART NUMBER	QTY	PART NAME 1 2 3 4 5 6 (PRODUCT LEVEL)	SEE PAGE
	1	1	**200-0161**	1	COVER (END)	
	2	1	**6E-4158**	1	COVER (END)	
Y	3	1	**190-3397**	1	VALVE GP-CONTROL (BOOM)	395
Y	4	1	**166-7950**	1	VALVE GP-CONTROL (SWING)	391
Y	5	1	**190-3400**	1	VALVE GP-CONTROL (BUCKET)	397
Y	6	1	**190-3402**	1	VALVE GP-CONTROL (STICK)	399
Y	7	1	**190-3450**	1	VALVE GP-CONTROL (EXTENDABLE STICK)	401
	8	1	**5M-2894**	6	WASHER-HARD (10.2X18.5X2.5MM THK)	
	9	1	**9S-8752**	6	NUT-FULL (3/8-16 THD)	
	10	1	**107-8117**	3	STUD	
	11	1	**4D-9986**	12	SEAL-O-RING	
	12	1	**4J-5140**	6	SEAL-O-RING	
	13	1	**4J-5267**	6	SEAL-O-RING	
	14	1	**4T-2723**	18	SHIM (0.076MM THK)	

Y-SEPARATE ILLUSTRATION

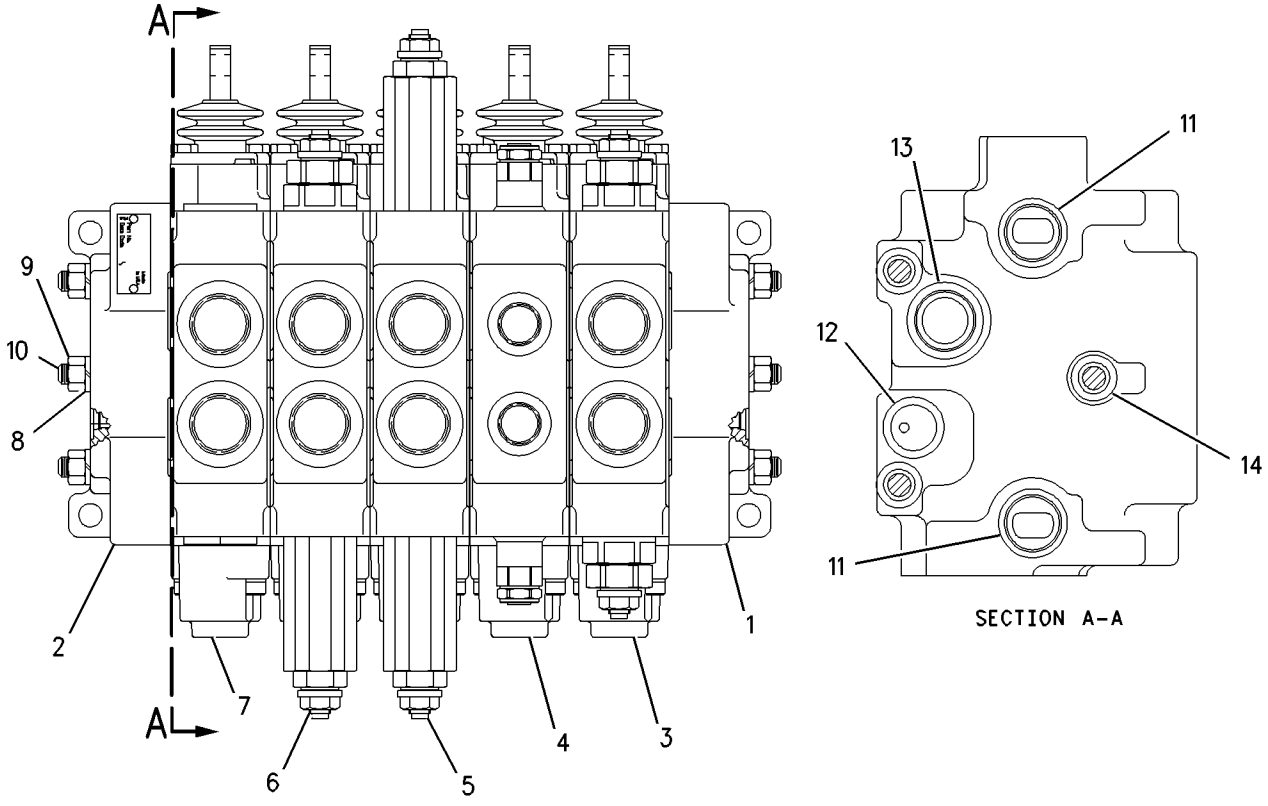

GRAPHIC #1 **<END>** g00745808

180-8594 VALVE GP-BANK 6–BACKHOE

S/N: B2D1-UP
PART OF 214-7003 VALVE AR-BANK 6
AN ATTACHMENT

SMCS-5051 **i01532078**

NOTE	REF NO	GRAPHIC REF	PART NUMBER	QTY	PART NAME 1 2 3 4 5 6 (PRODUCT LEVEL)	SEE PAGE
	1	1	**200-0161**	1	COVER (END)	
	2	1	**6E-4158**	1	COVER (END)	
Y	3	1	**190-3450**	2	VALVE GP-CONTROL (EXTENDABLE STICK)	401
Y	4	1	**190-3397**	1	VALVE GP-CONTROL (BOOM)	395
Y	5	1	**166-7950**	1	VALVE GP-CONTROL (SWING)	391
Y	6	1	**190-3400**	1	VALVE GP-CONTROL (BUCKET)	397
Y	7	1	**190-3402**	1	VALVE GP-CONTROL (STICK)	399
	8	1	**5M-2894**	6	WASHER-HARD (10.2X18.5X2.5MM THK)	
	9	1	**9S-8752**	6	NUT-FULL (3/8-16 THD)	
	10	1	**116-1316**	3	STUD	
	11	1	**4D-9986**	14	SEAL-O-RING	
	12	1	**4J-5140**	7	SEAL-O-RING	
	13	1	**4J-5267**	7	SEAL-O-RING	
	14	1	**4T-2723**	21	SHIM (0.076MM THK)	

Y-SEPARATE ILLUSTRATION

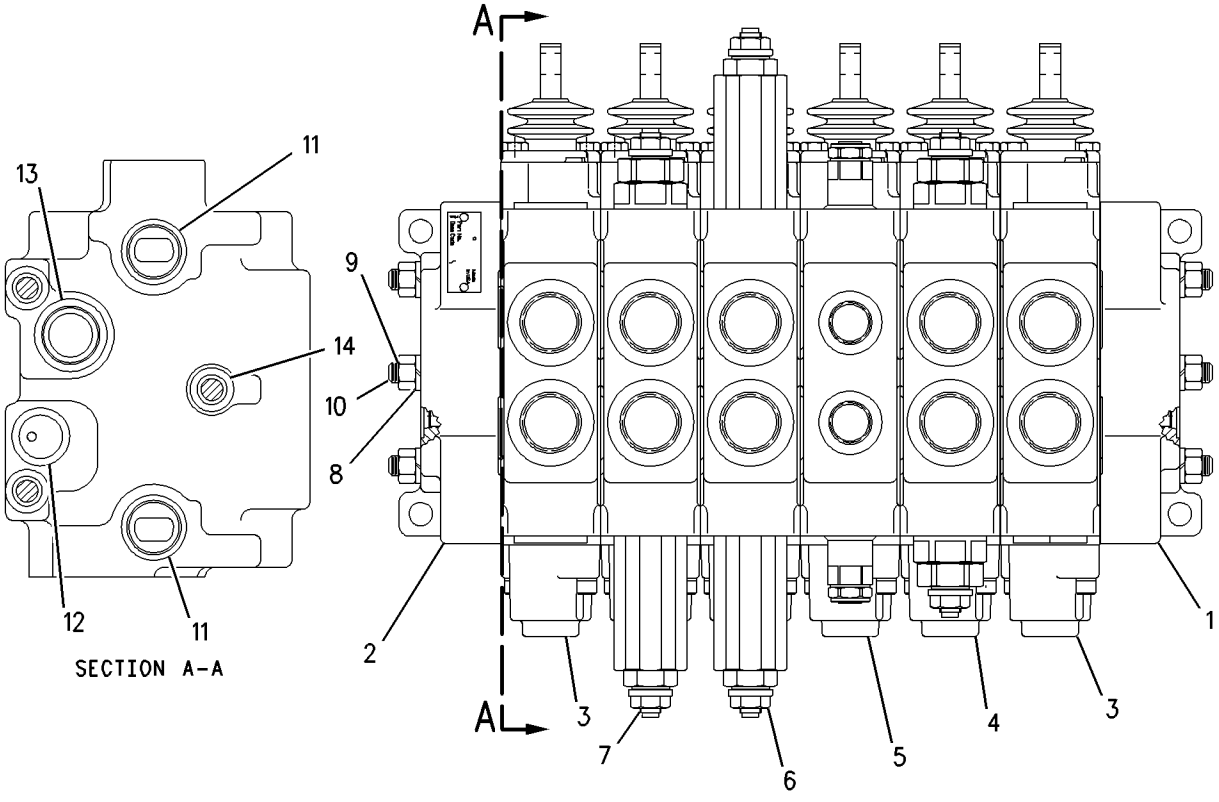

GRAPHIC #1 **<END>** g00745364

178-7481 VALVE GP-CHECK–BACK PRESSURE

S/N: B2D1-UP

PRE-INSTALLED O-RINGS

PART OF 196-8861 LINES GP-BACKHOE AUXILIARY

SMCS-5067 **i01501538**

NOTE	REF NO	GRAPHIC REF	PART NUMBER	QTY	PART NAME 1 2 3 4 5 6 (PRODUCT LEVEL)	SEE PAGE
	1	1	**5K-9090**	2	SEAL-O-RING	
	2	1	**7M-8485**	1	SEAL-O-RING	

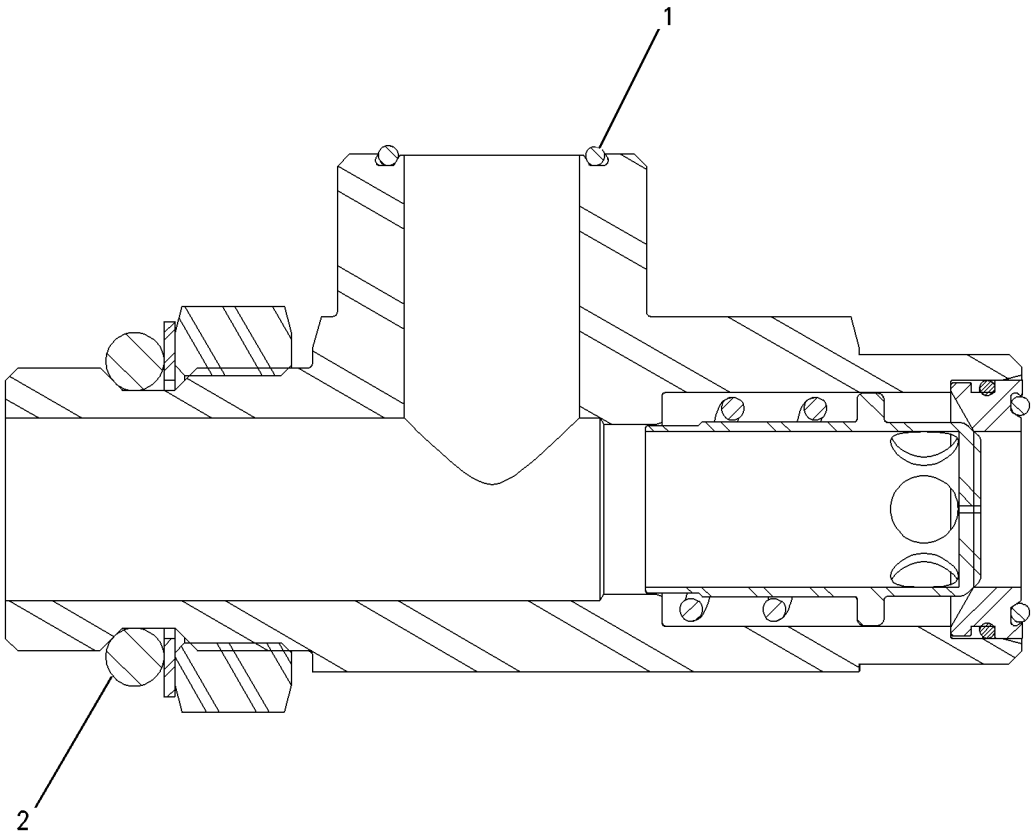

GRAPHIC #1 **<END>** g00774246

HYDRAULIC SYSTEM

124-8818 VALVE GP-CONTROL–CLAM

S/N: B2D1-UP
LOADER
PART OF 185-5907 VALVE GP-BANK 3
AN ATTACHMENT

SMCS-5051 **i01539040**

NOTE	REF NO	GRAPHIC REF	PART NUMBER	QTY	PART NAME 1 2 3 4 5 6 (PRODUCT LEVEL)	SEE PAGE
	1	1	**4T-4524**	1	GUARD-DUST	
	2	1	**031-0214**	2	BOLT-LOCKING (1/4-20X0.5 IN)	
	3	1	**4T-4516**	1	SPRING	
	4	1	**031-5085**	1	BOLT-LOCKING (1/4-20X1.00 IN)	
	5	1	**167-6768**	1	HOUSING	
	6	1	**4T-4521**	2	RETAINER	
	7	1	**4T-4533**	1	SPACER	
	8	1	**195-2139**	2	SEAL-O-RING	
	9	1	**6E-4317**	1	SPRING	
	10	1	**2M-9780**	1	SEAL-O-RING	
	11	1	**9S-8006**	1	PLUG	
	12	1	**4T-4520**	1	FILTER	
	13	1	**4T-4528**	1	RETAINER	
	14	1	**126-5476**	1	SEAT AS-SHUTTLE	
	14A	1	**4T-7807**	1	RING-BACKUP	
	14B	1	**7J-0204**	1	SEAL-O-RING	
	14C	1	**8T-2360**	1	SEAL-O-RING	
	15	1	**5B-9318**	1	BALL	
	16	1	**155-9836**	1	HOUSING AS	
	16A	1	**1P-7363**	1	SEAL-O-RING	
	16B	1	**3J-7354**	1	SEAL-O-RING	
	16C	1	**8T-2361**	1	SEAL-O-RING	
	16D	1	**126-5984**	1	RING-BACKUP	
	16E	1	**126-5985**	1	RING-BACKUP	
	17	1	**8H-0707**	2	BOLT (1/4-20X1 IN)	
	18	1	**9T-0704**	1	VALVE GP-RELIEF	
	18A	1	**4K-1388**	1	SEAL-O-RING	
	18B	1	**6E-0358**	1	RING-BACKUP	
	18C	1	**5K-9090**	1	SEAL-O-RING	

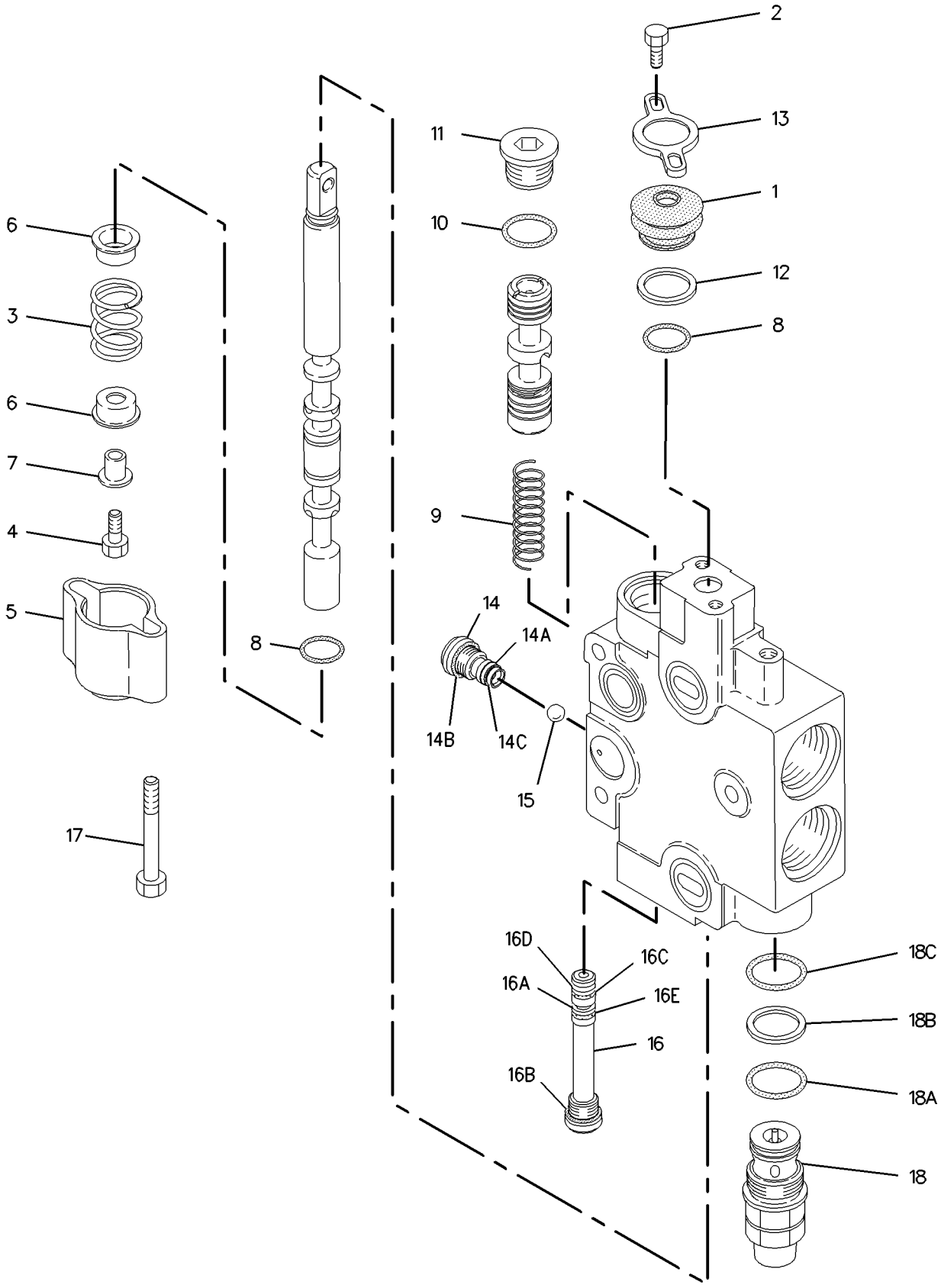

GRAPHIC #1 **<END>** g00799329

HYDRAULIC SYSTEM

130-6520 VALVE GP-CONTROL–LIFT

S/N: B2D1-UP

PART OF 185-5906 VALVE GP-BANK 2, 185-5907 VALVE GP-BANK 3

AN ATTACHMENT

SMCS-5051 **i01524197**

NOTE	REF NO	GRAPHIC REF	PART NUMBER	QTY	PART NAME 1 2 3 4 5 6 (PRODUCT LEVEL)	SEE PAGE
	1	1	**4T-4524**	1	GUARD-DUST	
	2	1	**031-0214**	2	BOLT-LOCKING (1/4-20X0.5 IN)	
	3	1	**197-1742**	1	PLUG	
	4	1	**4T-4513**	1	SPRING	
	5	1	**100-3567**	1	HOUSING-DETENT	
	6	1	**100-3566**	1	PISTON-DETENT	
	7	1	**4B-9782**	1	BALL	
	8	1	**4T-4532**	1	HOUSING	
	9	1	**144-4277**	1	SHAFT AS-DETENT	
	10	1	**8S-4710**	2	BOLT (1/4-20X4 IN)	
	11	1	**5P-0537**	2	WASHER-HARD (7.2X14.5X2MM THK)	
	12	1	**100-3564**	1	SPRING	
	13	1	**4T-4521**	2	RETAINER	
	14	1	**100-3563**	1	SPACER-DETENT	
	15	1	**8F-0212**	1	SEAL-O-RING	
	16	1	**6E-4317**	1	SPRING	
	17	1	**2M-9780**	1	SEAL-O-RING	
	18	1	**9S-8006**	1	PLUG	
	19	1	**4T-4520**	1	FILTER	
	20	1	**4T-4528**	1	RETAINER	
	21	1	**126-5476**	1	SEAT AS-SHUTTLE	
	21A	1	**4T-7807**	1	RING-BACKUP	
	21B	1	**7J-0204**	1	SEAL-O-RING	
	21C	1	**8T-2360**	1	SEAL-O-RING	
	22	1	**5B-9318**	7	BALL	
	23	1	**155-9836**	1	HOUSING AS	
	23A	1	**1P-7363**	1	SEAL-O-RING	
	23B	1	**3J-7354**	1	SEAL-O-RING	
	23C	1	**8T-2361**	1	SEAL-O-RING	
	23D	1	**126-5984**	1	RING-BACKUP	
	23E	1	**126-5985**	1	RING-BACKUP	
	24	1	**4K-1388**	1	SEAL-O-RING	
	25	1	**6E-0358**	1	RING-BACKUP	
	26	1	**5K-9090**	1	SEAL-O-RING	
	27	1	**128-2776**	1	GASKET	
	28	1	**197-3698**	2	SEAL-O-RING	

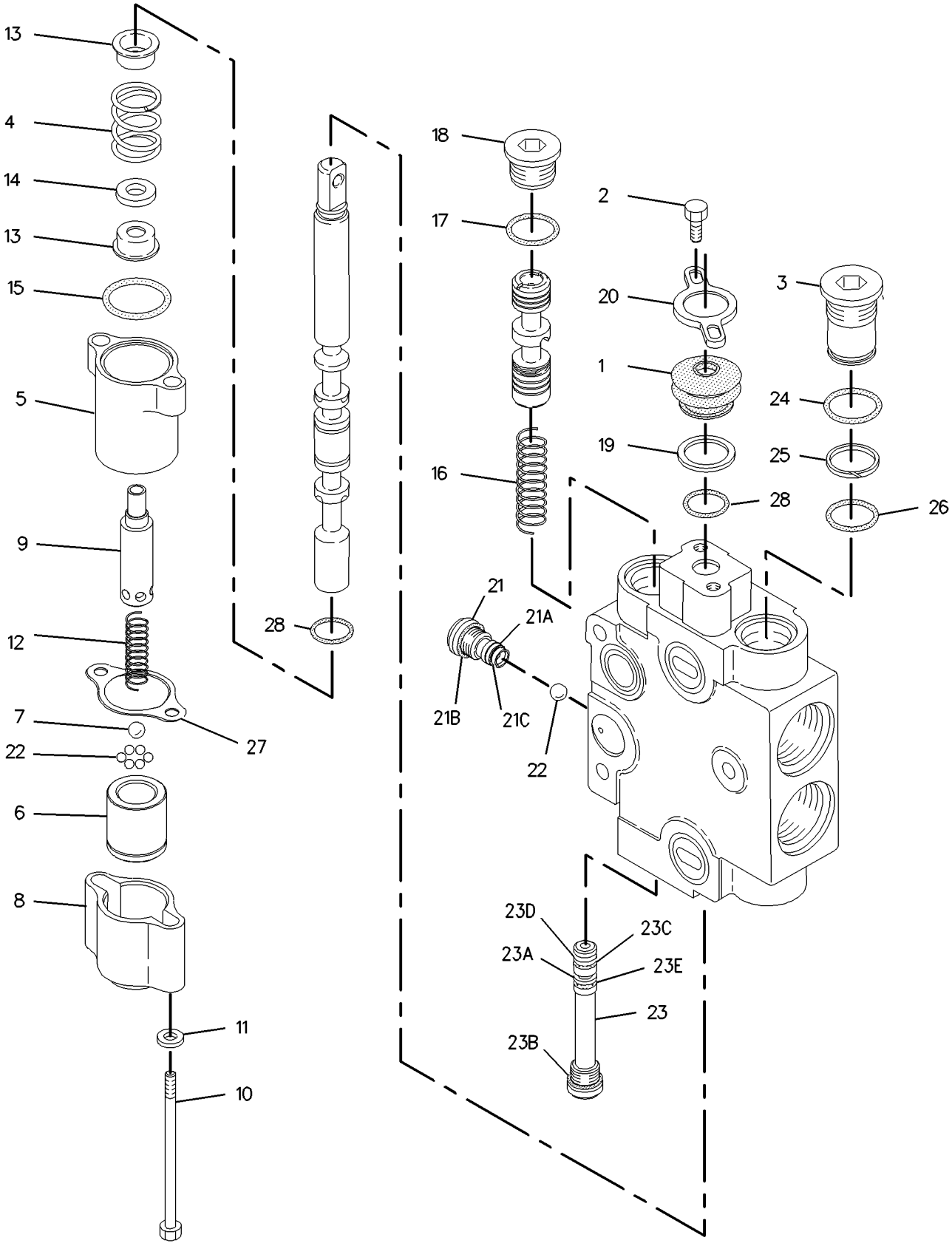

GRAPHIC #1 **<END>** g00791825

166-7950 VALVE GP-CONTROL—SWING

S/N: B2D1-UP

PART OF 180-8592 VALVE GP-BANK 4, 180-8593 VALVE GP-BANK 5, 180-8594 VALVE GP-BANK 6

AN ATTACHMENT

SMCS-5051 **i01528404**

NOTE	REF NO	GRAPHIC REF	PART NUMBER	QTY	PART NAME 1 2 3 4 5 6 (PRODUCT LEVEL)	SEE PAGE
	1	1	**4T-4524**	1	GUARD-DUST	
	2	1	**031-0214**	2	BOLT-LOCKING (1/4-20X0.5 IN)	
	3	1	**137-9466**	2	VALVE GP-RELIEF	
					(EACH INCLUDES)	
		1	**147-1659**	1	KIT-SEAL	
	4	1	**195-2406**	1	SPRING	
	5	1	**0S-1614**	1	BOLT (1/4-20X0.5 IN)	
	6	1	**167-6768**	1	HOUSING	
	7	1	**4T-4521**	2	RETAINER	
	8	1	**9X-2027**	1	WASHER (11X18X2MM THK)	
	9	1	**195-2139**	2	SEAL-O-RING	
	10	1	**6E-4317**	1	SPRING	
	11	1	**126-5796**	1	HOUSING GP	
	11A	1	**1P-7363**	1	SEAL-O-RING	
	11B	1	**3J-7354**	1	SEAL-O-RING	
	11C	1	**8T-2361**	1	SEAL-O-RING	
	11D	1	**126-5984**	1	RING-BACKUP	
	11E	1	**126-5985**	1	RING-BACKUP	
	12	1	**2M-9780**	1	SEAL-O-RING	
	13	1	**9S-8006**	1	PLUG	
	14	1	**4T-4520**	1	FILTER	
	15	1	**4T-4528**	1	RETAINER	
	16	1	**126-5476**	1	SEAT AS-SHUTTLE	
	16A	1	**4T-7807**	1	RING-BACKUP	
	16B	1	**7J-0204**	1	SEAL-O-RING	
	16C	1	**8T-2360**	1	SEAL-O-RING	
	17	1	**5B-9318**	1	BALL	
	18	1	**8H-0707**	2	BOLT (1/4-20X1 IN)	
	19	1	**5P-0537**	1	WASHER-HARD (7.2X14.5X2MM THK)	
	20	1	**197-1742**	1	PLUG	

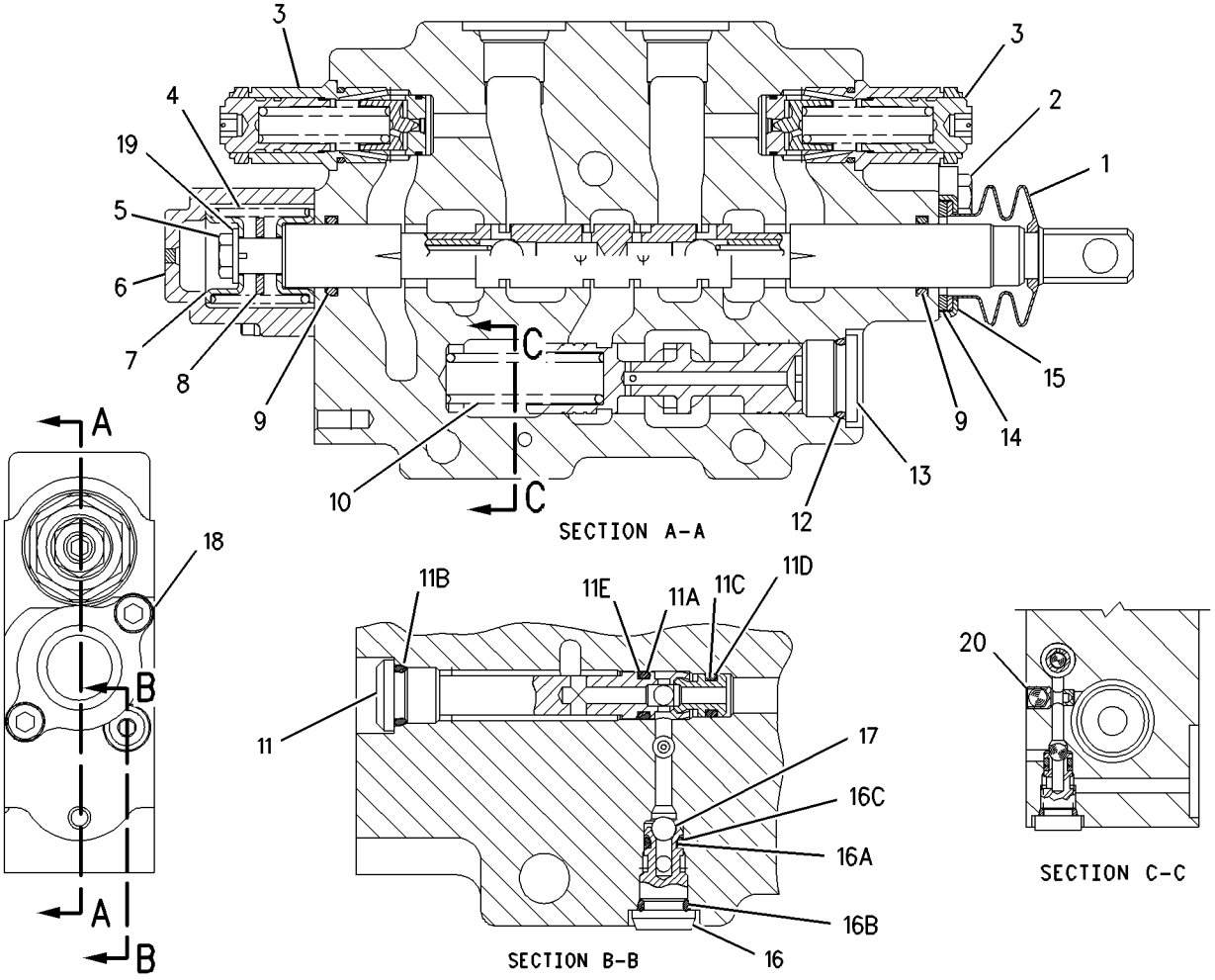

GRAPHIC #1 **<END>** g00793418

HYDRAULIC SYSTEM

168-0361 VALVE GP-CONTROL–TILT

S/N: B2D1-UP

PART OF 185-5906 VALVE GP-BANK 2, 185-5907 VALVE GP-BANK 3

AN ATTACHMENT

SMCS-5051 **i02054562**

NOTE	REF NO	GRAPHIC REF	PART NUMBER	QTY	PART NAME 1 2 3 4 5 6 (PRODUCT LEVEL)	SEE PAGE
	1	1	**4T-4524**	1	GUARD-DUST	
	2	1	**031-0214**	2	BOLT-LOCKING (1/4-20X0.5-IN)	
	3	1	**9T-0704**	2	VALVE GP-RELIEF	
					(EACH INCLUDES)	
	3A	1	**4K-1388**	1	SEAL-O-RING	
	3B	1	**6E-0358**	1	RING-BACKUP	
	3C	1	**5K-9090**	1	SEAL-O-RING	
	4	1	**4J-7533**	1	SEAL-O-RING	
	5	1	**4T-4521**	2	RETAINER	
	6	1	**128-2776**	1	GASKET	
	7	1	**9T-0642**	1	COUPLING	
	8	1	**5L-9023**	1	RING-RETAINING	
	9	1	**4T-4532**	1	HOUSING	
	10	1	**9T-0644**	1	SPRING	
	11	1	**9T-7309**	1	PLATE	
	12	1	**3E-8620**	1	COIL AS-SOLENOID	
		1	**1S-9593**	2	STRAP-CABLE	
		1	**102-8802**	1	KIT-RECEPTACLE (2-PIN)	
					(KIT SERVICES RECEPTACLE AS AND WEDGE)	
		1	**3E-3365**	1	WEDGE-RECEPTACLE LOCK (2-PIN)	
		1	**8T-8729**	2	PIN-CONNECTOR	
	13	1	**4T-4516**	1	SPRING	
	14	1	**197-3698**	1	SEAL-O-RING	
	15	1	**195-2139**	2	SEAL-O-RING	
	16	1	**6E-4317**	1	SPRING	
	17	1	**2M-9780**	1	SEAL-O-RING	
	18	1	**9S-8006**	1	PLUG (7/8-14-2A THD)	
	19	1	**4T-4520**	1	FILTER	
	20	1	**4T-4528**	1	RETAINER	
	21	1	**126-5476**	1	SEAT AS-SHUTTLE	
	21A	1	**4T-7807**	1	RING-BACKUP	
	21B	1	**7J-0204**	1	SEAL-O-RING	
	21C	1	**8T-2360**	1	SEAL-O-RING	
	22	1	**5B-9318**	1	BALL	
	23	1	**155-9836**	1	VALVE GP-CHECK	
	23A	1	**1P-7363**	1	SEAL-O-RING	
	23B	1	**3J-7354**	1	SEAL-O-RING	
	23C	1	**8T-2361**	1	SEAL-O-RING	
	23D	1	**126-5984**	1	RING-BACKUP	
	23E	1	**126-5985**	1	RING-BACKUP	
	24	1	**8F-6302**	2	BOLT (1/4-20X3.75-IN)	
	25	1	**5P-0537**	2	WASHER-HARD (7.2X14.5X2-MM THK)	
	26	1	**197-3121**	1	RING-GUIDE	

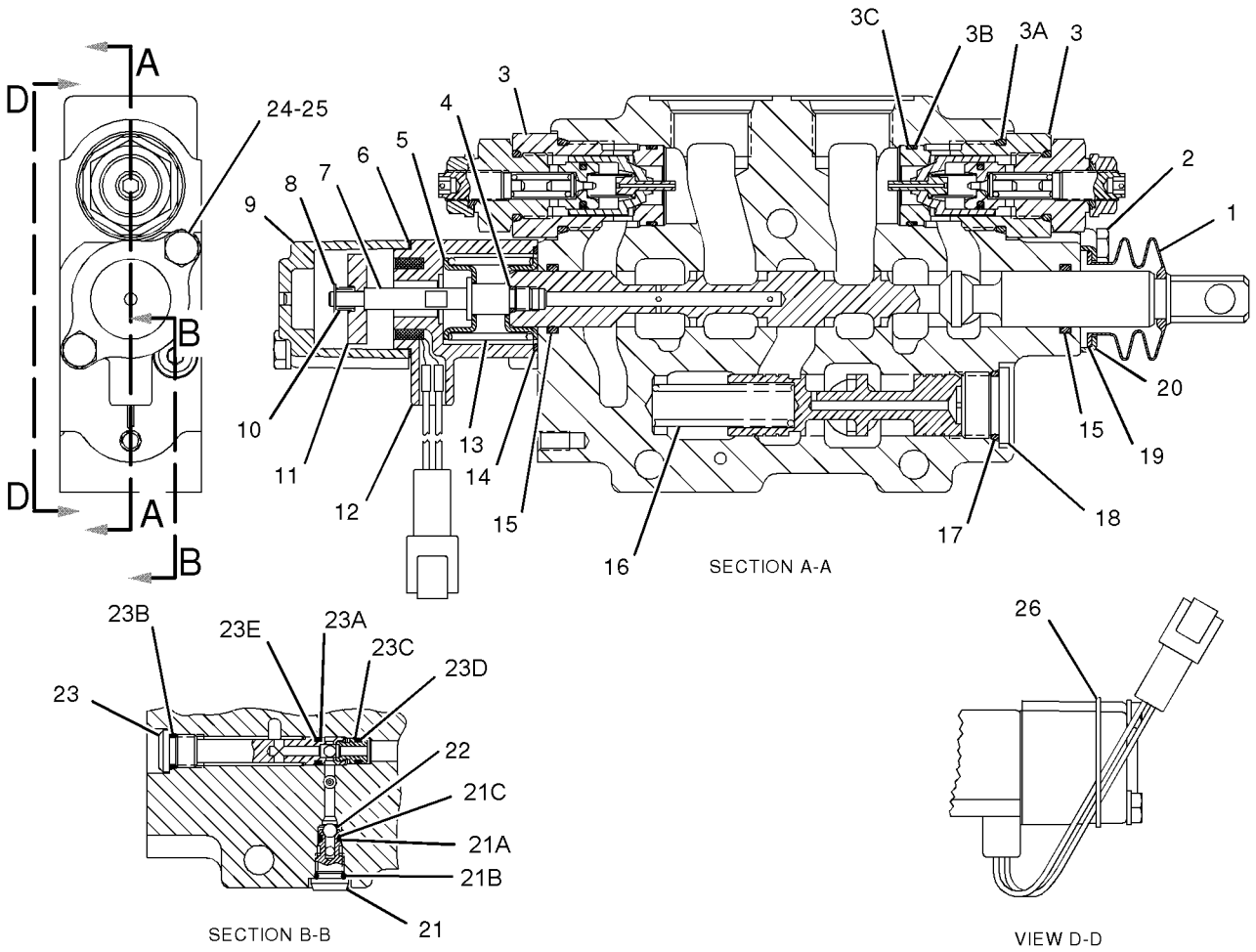

GRAPHIC #1 **<END>** g01052188

190-3397 VALVE GP-CONTROL–BOOM

S/N: B2D1-UP

PART OF 180-8592 VALVE GP-BANK 4, 180-8593 VALVE GP-BANK 5, 180-8594 VALVE GP-BANK 6

AN ATTACHMENT

SMCS-5051 **i01958748**

NOTE	REF NO	GRAPHIC REF	PART NUMBER	QTY	PART NAME 1 2 3 4 5 6 (PRODUCT LEVEL)	SEE PAGE
	1	1	**195-2139**	2	SEAL-O-RING	
	2	1	**9S-8006**	1	PLUG	
	3	1	**197-2709**	1	SPRING	
	4	1	**126-5796**	1	HOUSING GP	
	4A	1	**1P-7363**	1	SEAL-O-RING	
	4B	1	**3J-7354**	1	SEAL-O-RING	
	4C	1	**8T-2361**	1	SEAL-O-RING	
	4D	1	**126-5984**	1	RING-BACKUP	
	4E	1	**126-5985**	1	RING-BACKUP	
	5	1	**5B-9318**	1	BALL	
	6	1	**126-5476**	1	SEAT AS-SHUTTLE	
	6A	1	**4T-7807**	1	RING-BACKUP	
	6B	1	**7J-0204**	1	SEAL-O-RING	
	6C	1	**8T-2360**	1	SEAL-O-RING	
	7	1	**109-9685**	1	SEAL-O-RING	
	8	1	**8H-0707**	2	BOLT (1/4-20X1 IN)	
	9	1	**195-2406**	1	SPRING	
	10	1	**167-6768**	1	HOUSING	
	11	1	**9T-0650**	1	SPACER	
	12	1	**4T-4521**	2	RETAINER	
	13	1	**197-2714**	1	SPACER (11.13X22.23X1.65MM THK)	
	14	1	**6E-6284**	1	VALVE GP-MAKEUP & RELIEF	
	14A	1	**4K-1388**	1	SEAL-O-RING	
	14B	1	**5K-9090**	1	SEAL-O-RING	
	14C	1	**6E-0358**	1	RING-BACKUP	
	15	1	**6E-6285**	1	VALVE GP-RELIEF	
	15A	1	**4K-1388**	1	SEAL-O-RING	
	15B	1	**5K-9090**	1	SEAL-O-RING	
	15C	1	**6E-0358**	1	RING-BACKUP	
	16	1	**031-0214**	2	BOLT-LOCKING (1/4-20X0.5 IN)	
	17	1	**4T-4524**	1	GUARD-DUST	
	18	1	**4T-4528**	1	RETAINER	
	19	1	**4T-4520**	1	FILTER	
	20	1	**2M-9780**	1	SEAL-O-RING	

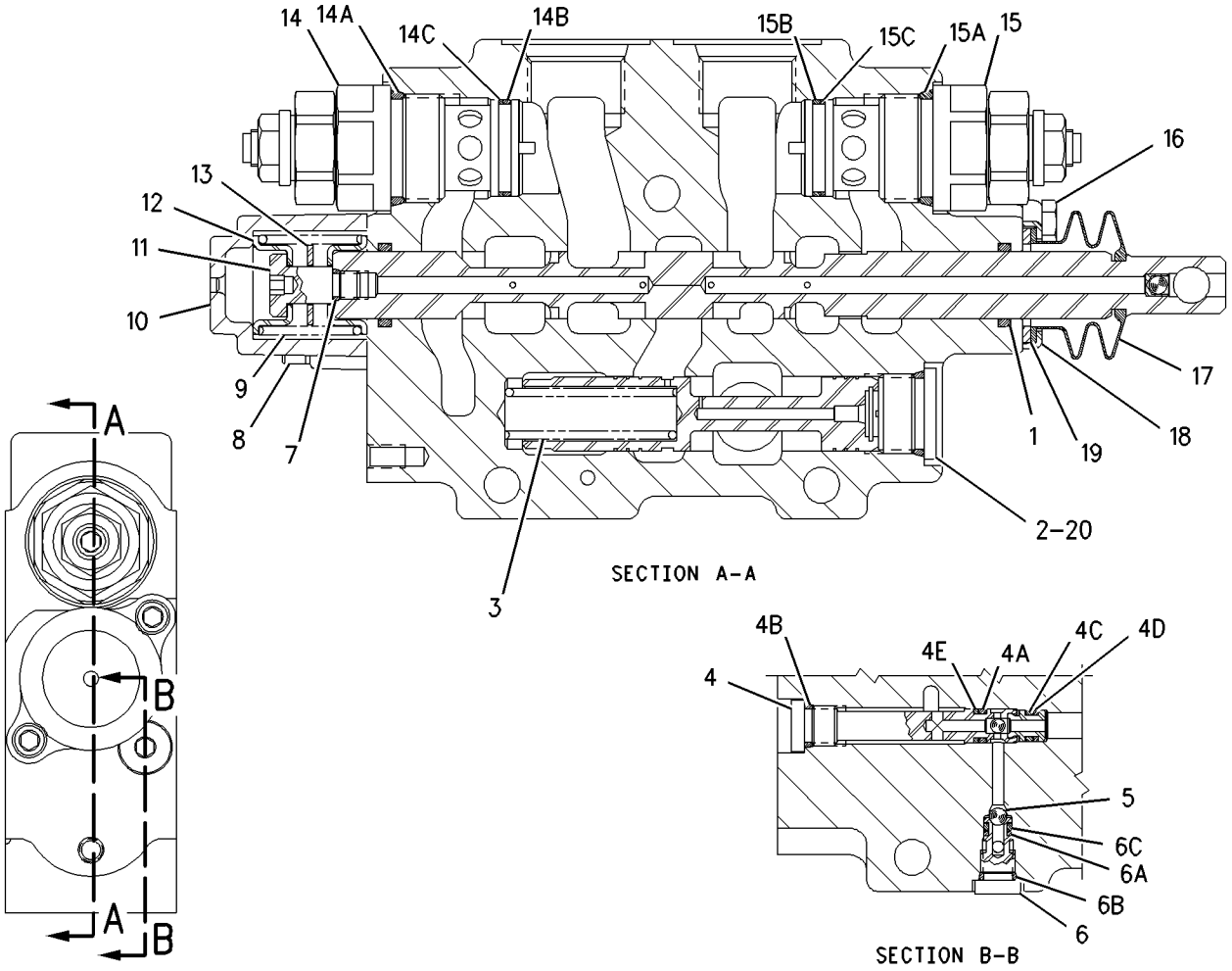

GRAPHIC #1 **<END>** g00794864

190-3400 VALVE GP-CONTROL—BUCKET

S/N: B2D1-UP

PART OF 180-8592 VALVE GP-BANK 4, 180-8593 VALVE GP-BANK 5, 180-8594 VALVE GP-BANK 6

AN ATTACHMENT

SMCS-5051 **i02051482**

NOTE	REF NO	GRAPHIC REF	PART NUMBER	QTY	PART NAME 1 2 3 4 5 6 (PRODUCT LEVEL)	SEE PAGE
	1	1	**195-2139**	2	SEAL-O-RING	
	2	1	**9S-8006**	1	PLUG (7/8-14-2A THD)	
	3	1	**197-2709**	1	SPRING	
	4	1	**126-5796**	1	VALVE GP-CHECK	
	4A	1	**1P-7363**	1	SEAL-O-RING	
	4B	1	**3J-7354**	1	SEAL-O-RING	
	4C	1	**8T-2361**	1	SEAL-O-RING	
	4D	1	**126-5984**	1	RING-BACKUP	
	4E	1	**126-5985**	1	RING-BACKUP	
	5	1	**5B-9318**	1	BALL	
	6	1	**126-5476**	1	SEAT AS-SHUTTLE	
	6A	1	**4T-7807**	1	RING-BACKUP	
	6B	1	**7J-0204**	1	SEAL-O-RING	
	6C	1	**8T-2360**	1	SEAL-O-RING	
	7	1	**195-2406**	1	SPRING	
	8	1	**8H-0707**	2	BOLT (1/4-20X1-IN)	
	9	1	**4T-4533**	1	SPACER (7.1X17.3X1.5-MM THK)	
	10	1	**4T-4521**	2	RETAINER	
	11	1	**167-6768**	1	HOUSING	
	12	1	**031-5085**	1	BOLT-LOCKING (1/4-20X1.00-IN)	
	13	1	**197-2714**	1	SPACER (11.13X22.23X1.65-MM THK)	
	14	1	**187-0527**	1	VALVE GP-RELIEF	
		1	**3K-0360**	1	SEAL-O-RING	
		1	**4K-1388**	1	SEAL-O-RING	
		1	**5K-9090**	1	SEAL-O-RING	
		1	**6E-0358**	1	RING-BACKUP	
	15	1	**187-0524**	1	VALVE GP-RELIEF	
		1	**3K-0360**	1	SEAL-O-RING	
		1	**4K-1388**	1	SEAL-O-RING	
		1	**5K-9090**	1	SEAL-O-RING	
		1	**6E-0358**	1	RING-BACKUP	
	16	1	**031-0214**	2	BOLT-LOCKING (1/4-20X0.5-IN)	
	17	1	**4T-4524**	1	GUARD-DUST	
	18	1	**4T-4528**	1	RETAINER	
	19	1	**4T-4520**	1	FILTER	
	20	1	**2M-9780**	1	SEAL-O-RING	

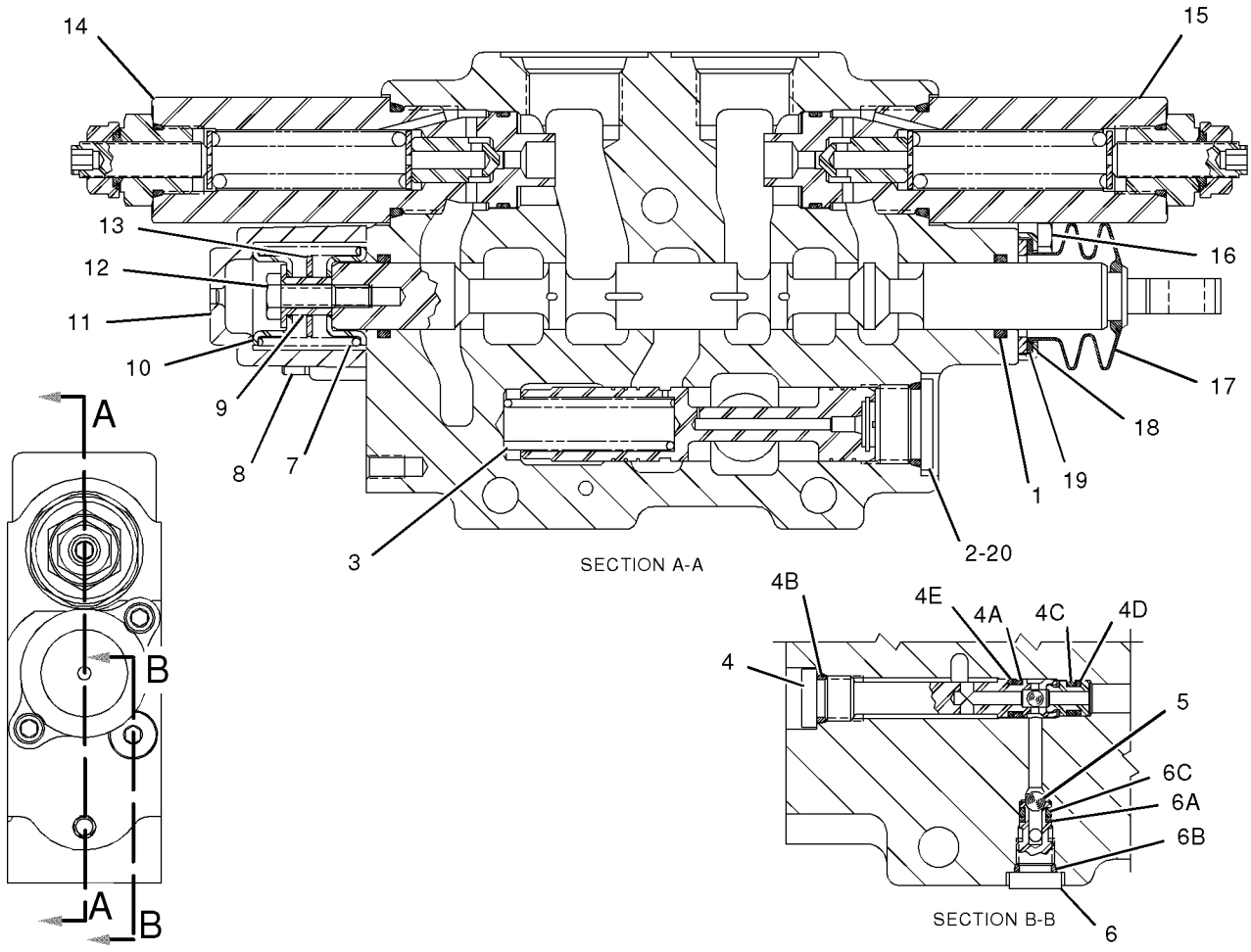

GRAPHIC #1

<END>

g01052213

HYDRAULIC SYSTEM

190-3402 VALVE GP-CONTROL—STICK

S/N: B2D1-UP

PART OF 180-8592 VALVE GP-BANK 4, 180-8593 VALVE GP-BANK 5, 180-8594 VALVE GP-BANK 6

AN ATTACHMENT

SMCS-5051 **i01528534**

NOTE	REF NO	GRAPHIC REF	PART NUMBER	QTY	PART NAME 1 2 3 4 5 6 (PRODUCT LEVEL)	SEE PAGE
	1	1	**195-2139**	2	SEAL-O-RING	
	2	1	**9S-8006**	1	PLUG	
	3	1	**197-2709**	1	SPRING	
	4	1	**126-5796**	1	HOUSING GP	
	4A	1	**1P-7363**	1	SEAL-O-RING	
	4B	1	**3J-7354**	1	SEAL-O-RING	
	4C	1	**8T-2361**	1	SEAL-O-RING	
	4D	1	**126-5984**	1	RING-BACKUP	
	4E	1	**126-5985**	1	RING-BACKUP	
	5	1	**5B-9318**	1	BALL	
	6	1	**126-5476**	1	SEAT AS-SHUTTLE	
	6A	1	**4T-7807**	1	RING-BACKUP	
	6B	1	**7J-0204**	1	SEAL-O-RING	
	6C	1	**8T-2360**	1	SEAL-O-RING	
	7	1	**109-9685**	1	SEAL-O-RING	
	8	1	**197-2714**	1	SPACER	
	9	1	**8H-0707**	2	BOLT (1/4-20X1 IN)	
	10	1	**195-2406**	1	SPRING	
	11	1	**4T-4521**	2	RETAINER	
	12	1	**167-6768**	1	HOUSING	
	13	1	**9T-0650**	1	SPACER	
	14	1	**6E-6281**	1	VALVE GP-RELIEF	
	14A	1	**3K-0360**	1	SEAL-O-RING	
	14B	1	**4K-1388**	1	SEAL-O-RING	
	14C	1	**5K-9090**	1	SEAL-O-RING	
	14D	1	**6E-0358**	1	RING-BACKUP	
	15	1	**6E-6286**	1	VALVE GP-RELIEF	
	15A	1	**4K-1388**	1	SEAL-O-RING	
	15B	1	**5K-9090**	1	SEAL-O-RING	
	15C	1	**6E-0358**	1	RING-BACKUP	
	16	1	**031-0214**	2	BOLT-LOCKING (1/4-20X0.5 IN)	
	17	1	**4T-4524**	1	GUARD-DUST	
	18	1	**4T-4528**	1	RETAINER	
	19	1	**4T-4520**	1	FILTER	
	20	1	**2M-9780**	1	SEAL-O-RING	

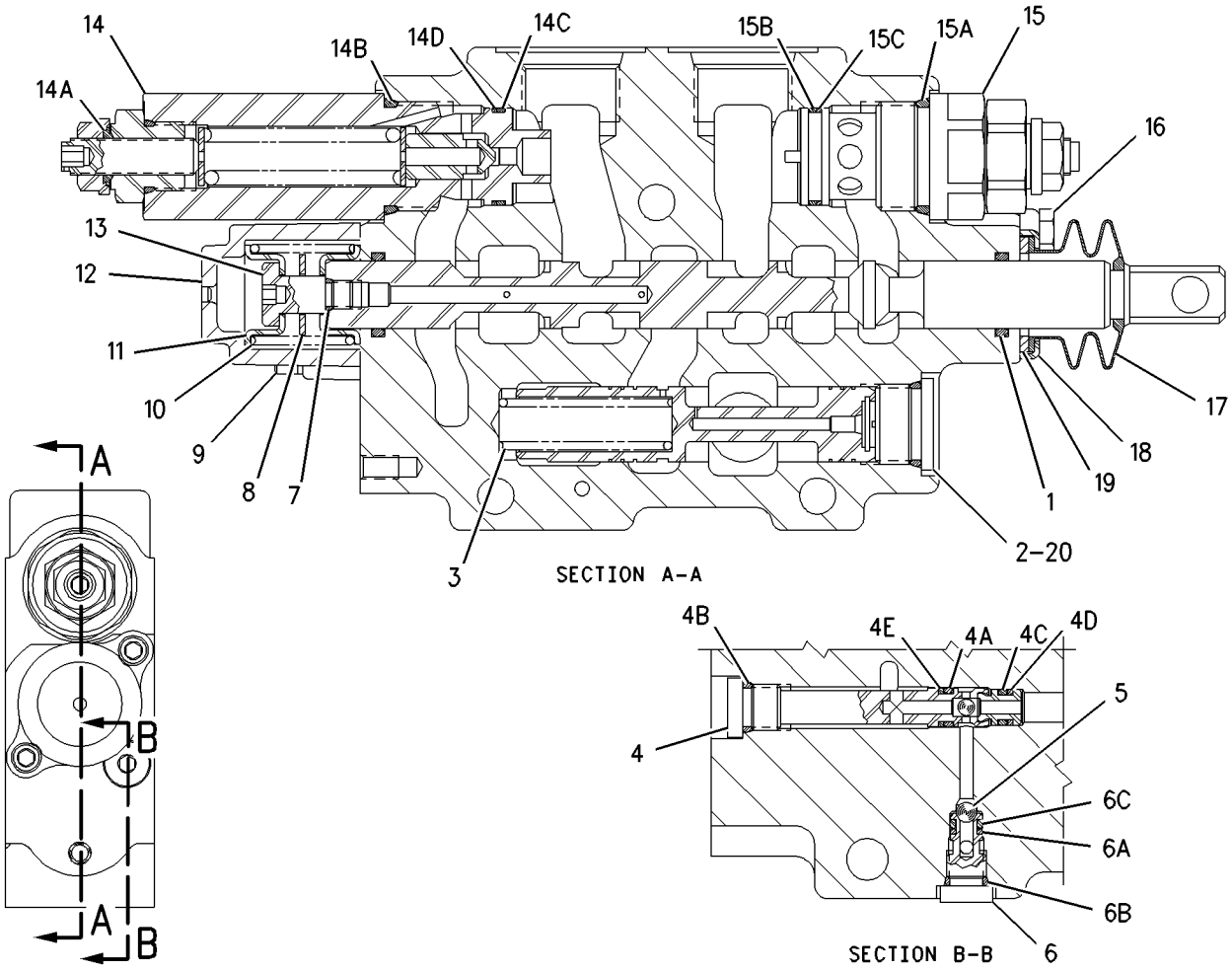

GRAPHIC #1 **<END>** g00794879

190-3450 VALVE GP-CONTROL—EXTENDABLE STICK;AUXILIARY

S/N: B2D1-UP

PART OF 198-7412 CONVERSION GP-CONTROL VALVE, 180-8593 VALVE GP-BANK 5, 180-8594 VALVE GP-BANK 6

AN ATTACHMENT

SMCS-5051 **i01523995**

NOTE	REF NO	GRAPHIC REF	PART NUMBER	QTY	PART NAME 1 2 3 4 5 6 (PRODUCT LEVEL)	SEE PAGE
	1	1	**195-2139**	2	SEAL-O-RING	
	2	1	**9S-8009**	1	PLUG-O-RING	
	3	1	**197-2709**	1	SPRING	
	4	1	**155-9836**	1	HOUSING AS	
	4A	1	**1P-7363**	1	SEAL-O-RING	
	4B	1	**3J-7354**	1	SEAL-O-RING	
	4C	1	**8T-2361**	1	SEAL-O-RING	
	4D	1	**126-5984**	1	RING-BACKUP	
	4E	1	**126-5985**	1	RING-BACKUP	
	5	1	**5B-9318**	1	BALL	
	6	1	**126-5476**	1	SEAT AS-SHUTTLE	
	6A	1	**4T-7807**	1	RING-BACKUP	
	6B	1	**7J-0204**	1	SEAL-O-RING	
	6C	1	**8T-2360**	1	SEAL-O-RING	
	7	1	**197-1742**	1	PLUG	
	8	1	**4T-4516**	1	SPRING	
	9	1	**8H-0707**	2	BOLT (1/4-20X1 IN)	
	10	1	**4T-4533**	1	SPACER (7.1X10.2X17.3MM DIA)	
	11	1	**167-6768**	1	HOUSING	
	12	1	**031-5085**	1	BOLT-LOCKING (1/4-20X1.00 IN)	
	13	1	**4T-4521**	2	RETAINER	
	14	1	**6E-0131**	2	WASHER	
	15	1	**4T-4531**	2	PLUG	
	16	1	**031-0214**	2	BOLT-LOCKING (1/4-20X0.5 IN)	
	17	1	**4T-4524**	1	GUARD-DUST	
	18	1	**4T-4528**	1	RETAINER	
	19	1	**4T-4520**	1	FILTER	
	20	1	**2M-9780**	1	SEAL-O-RING	
	21	1	**4K-1388**	2	SEAL-O-RING	
	22	1	**5K-9090**	2	SEAL-O-RING	
	23	1	**6E-0358**	2	RING-BACKUP	

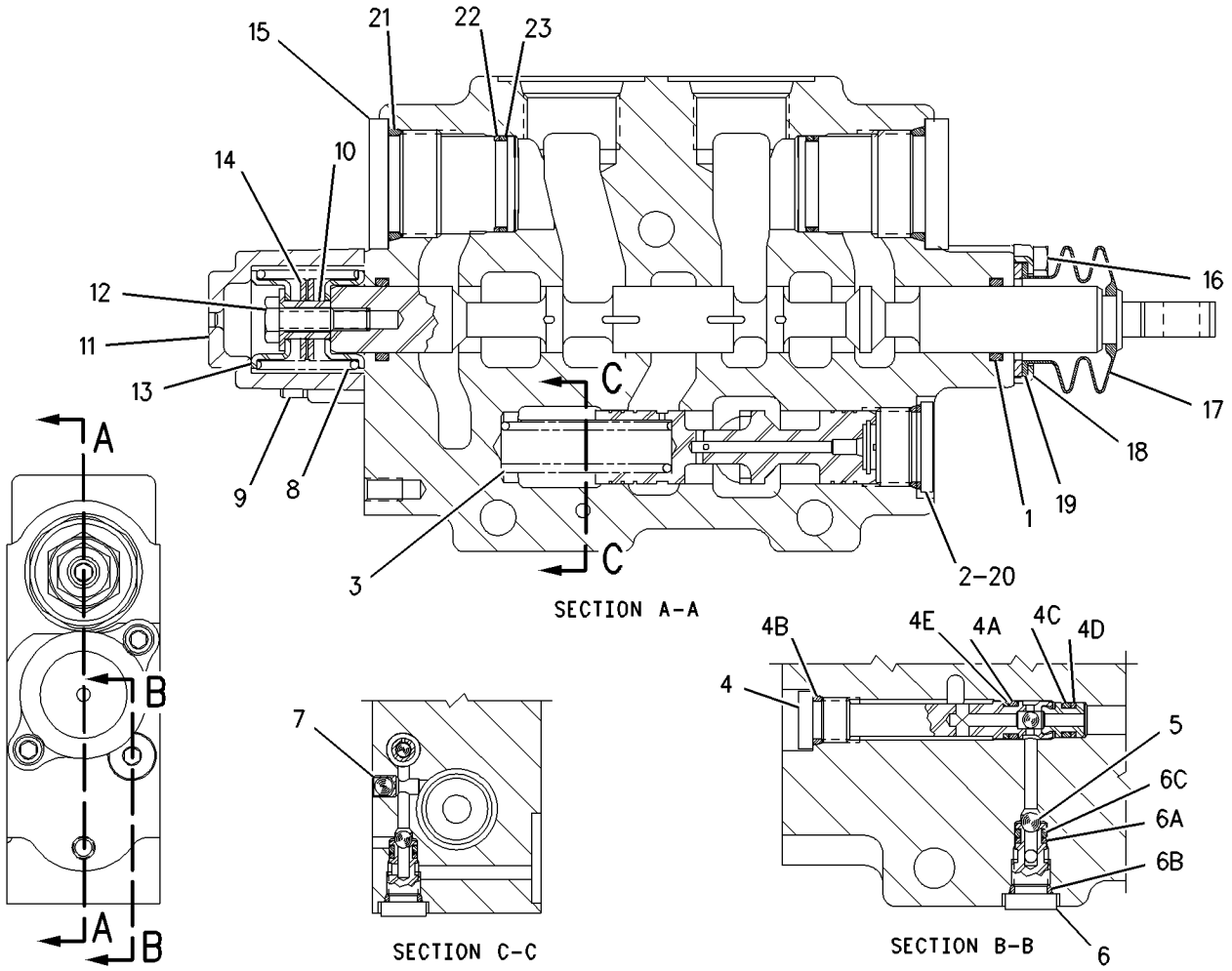

GRAPHIC #1 **<END>** g00776830

HYDRAULIC SYSTEM

191-4484 VALVE GP-CONTROL

S/N: B2D1-UP
PART OF 188-7471 VALVE GP-PRIORITY
AN ATTACHMENT

SMCS-5051 **i01533534**

NOTE	REF NO	GRAPHIC REF	PART NUMBER	QTY	PART NAME 1 2 3 4 5 6 (PRODUCT LEVEL)	SEE PAGE
	1	1	**4D-9986**	2	SEAL-O-RING	
	2	1	**9S-8009**	1	PLUG-O-RING	
	3	1	**197-2709**	1	SPRING	
	4	1	**126-5796**	1	HOUSING GP	
	4A	1	**1P-7363**	1	SEAL-O-RING	
	4B	1	**3J-7354**	1	SEAL-O-RING	
	4C	1	**8T-2361**	1	SEAL-O-RING	
	4D	1	**126-5984**	1	RING-BACKUP	
	4E	1	**126-5985**	1	RING-BACKUP	
	5	1	**5B-9318**	1	BALL	
	6	1	**126-5476**	1	SEAT AS-SHUTTLE	
	6A	1	**4T-7807**	1	RING-BACKUP	
	6B	1	**7J-0204**	1	SEAL-O-RING	
	6C	1	**8T-2360**	1	SEAL-O-RING	
	7	1	**114-1973**	1	COUPLING	
	8	1	**197-3222**	2	HOUSING	
	9	1	**156-1267**	2	RETAINER	
	10	1	**114-3906**	2	RETAINER	
	11	1	**200-6382**	2	SPRING	
	12	1	**114-1972**	1	COUPLING	
	13	1	**5S-0003**	2	NUT (5/16-18 THD)	
	14	1	**156-4321**	4	WASHER	
	15	1	**187-0527**	1	VALVE GP-RELIEF	
		1	**3K-0360**	1	SEAL-O-RING	
		1	**4K-1388**	1	SEAL-O-RING	
		1	**5K-9090**	1	SEAL-O-RING	
		1	**6E-0358**	1	RING-BACKUP	
	16	1	**187-0530**	1	VALVE GP-RELIEF	
	17	1	**2M-9780**	1	SEAL-O-RING	
	18	1	**8H-0707**	4	BOLT (1/4-20X1 IN)	

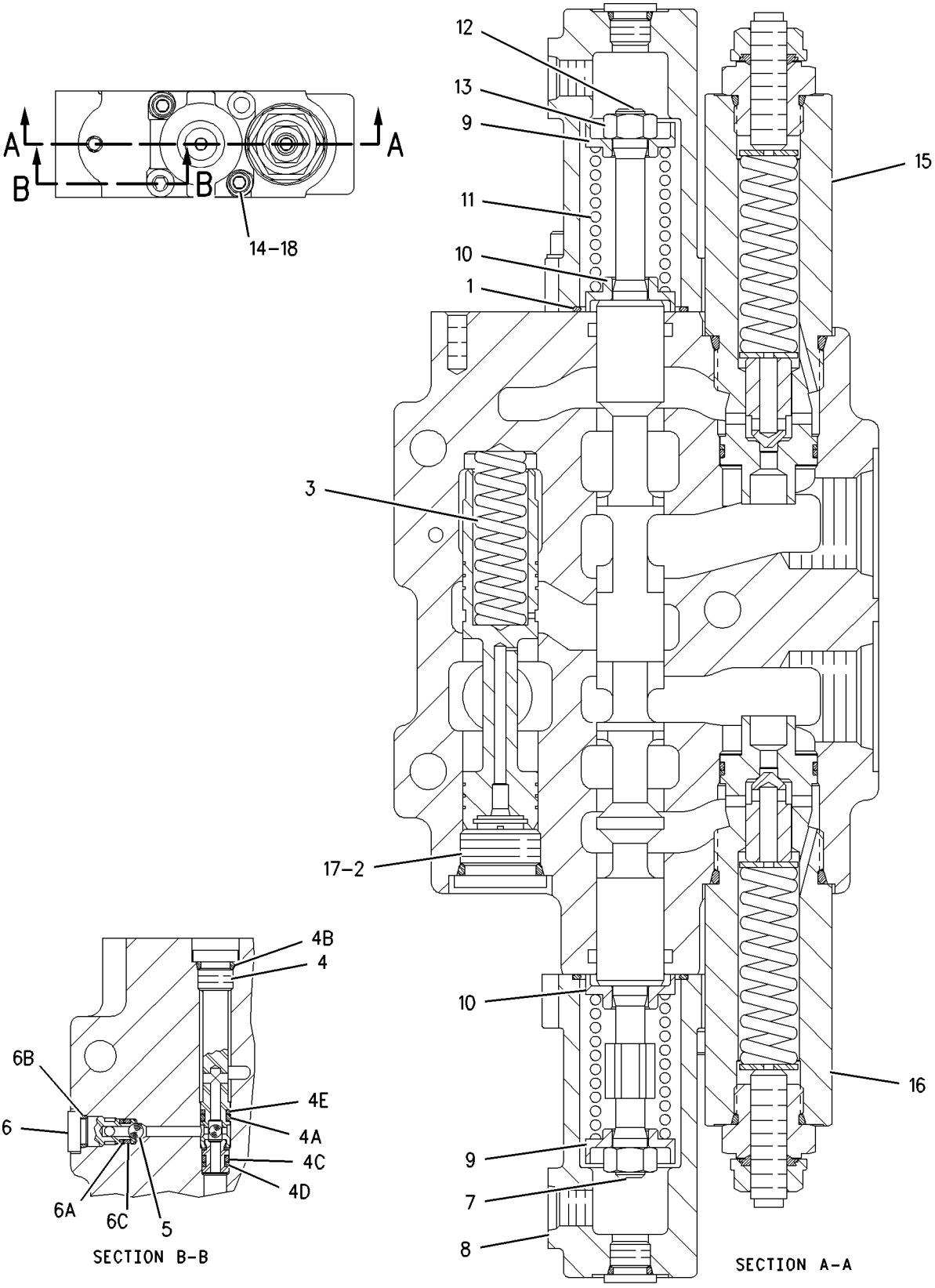

GRAPHIC #1 **<END>** g00769989

HYDRAULIC SYSTEM

192-0827 VALVE GP-CONTROL

S/N: B2D1-UP
PART OF 185-5898 VALVE GP-BANK 2
AN ATTACHMENT

SMCS-5051 **i01539127**

NOTE	REF NO	GRAPHIC REF	PART NUMBER	QTY	PART NAME 1 2 3 4 5 6 (PRODUCT LEVEL)	SEE PAGE
	1	1	**192-7512**	4	SEAL-O-RING	
	2	1	**192-2060**	1	COVER AS	
		1	**192-7506**	2	SEAL-O-RING	
		1	**192-7516**	1	SEAL	
	3	1	**192-7864**	2	PLUG	
	4	1	**192-7510**	2	SEAL-O-RING	
	5	1	**192-2081**	2	SPRING	
	6	1	**192-4490**	2	VALVE GP-CHECK	
	7	1	**192-2082**	2	SPRING	
	8	1	**192-7513**	2	SEAL-O-RING	
	9	1	**192-4488**	2	RING	
	10	1	**192-4487**	2	RING	
	11	1	**192-7514**	2	SEAL-O-RING	
	12	1	**192-4491**	1	DISC	
	13	1	**192-4492**	1	BALL	
	14	1	**192-0828**	1	VALVE GP-COMPENSATING	
		1	**192-4488**	1	RING	
		1	**192-7512**	1	SEAL-O-RING	
		1	**192-7515**	1	SEAL-O-RING	

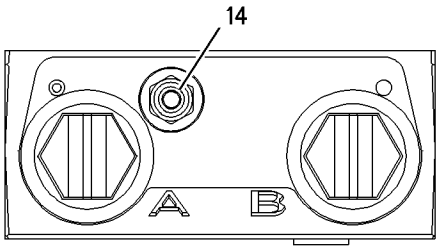

TOP VIEW

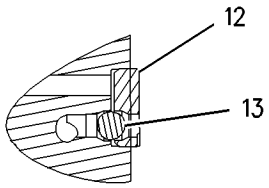

SECTION E-E

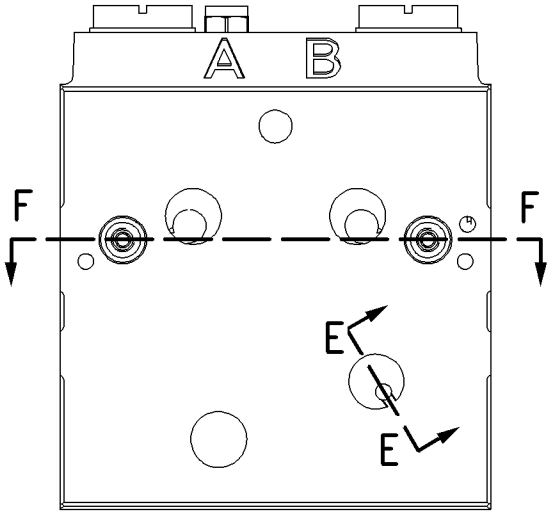

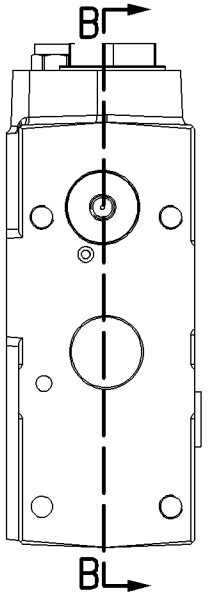

RIGHT SIDE VIEW

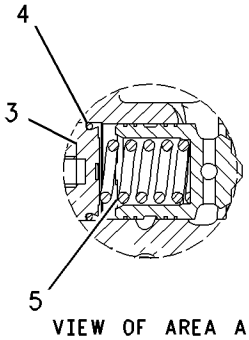

VIEW OF AREA A

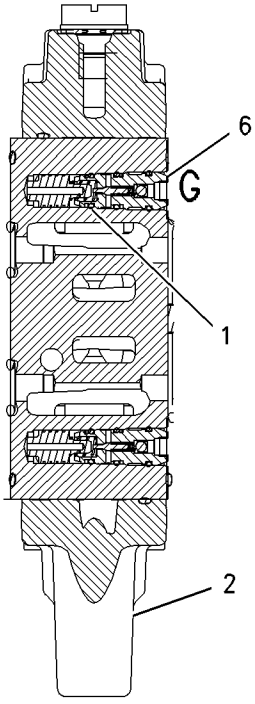

SECTION F-F

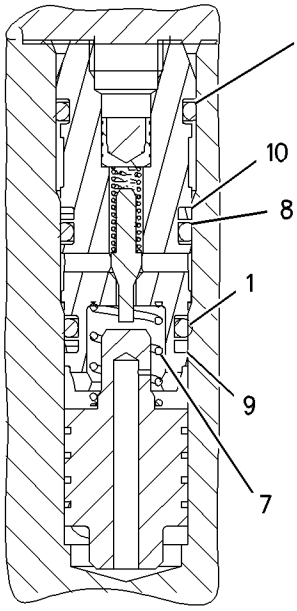

VIEW OF AREA G

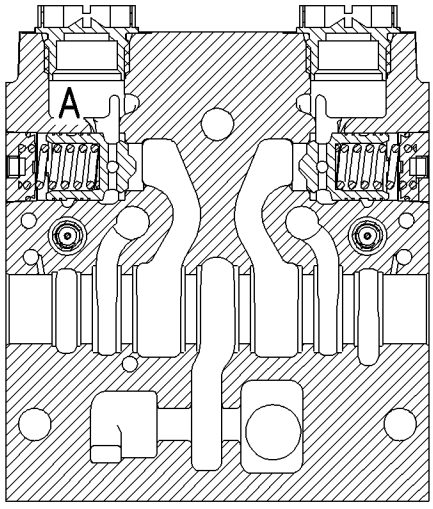

SECTION B-B

GRAPHIC #1 **<END>** g00799626

185-5902 VALVE GP-PILOT

S/N: B2D1-UP
PART OF 209-4172 STABILIZER AR
AN ATTACHMENT

SMCS-5059 **i01503069**

NOTE	REF NO	GRAPHIC REF	PART NUMBER	QTY	PART NAME 1 2 3 4 5 6 (PRODUCT LEVEL)	SEE PAGE
Y	1	1	*200-1726*	1	VALVE GP-PILOT	408
Y	2	1	*200-1728*	1	VALVE GP-PILOT	409
	3	1	**198-6515**	1	KIT-SEAL	
M	4	1	**7I-8935**	2	BOLT-SOCKET HEAD (M8X1.25X75MM)	
M	5	1	**176-8541**	2	NUT	

M-METRIC PART
Y-SEPARATE ILLUSTRATION

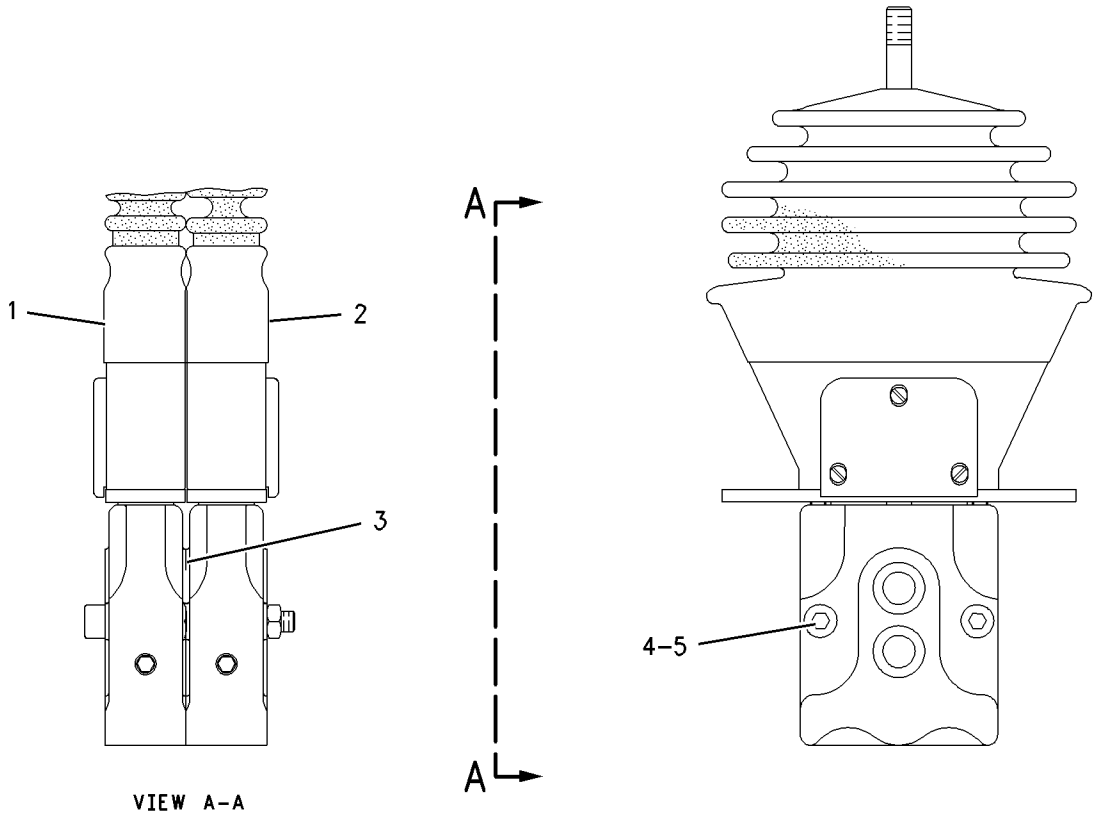

GRAPHIC #1 **<END>** g00754474

HYDRAULIC SYSTEM

200-1726 VALVE GP-PILOT—STABILIZER

S/N: B2D1-UP
PART OF 185-5902 VALVE GP-PILOT
AN ATTACHMENT

SMCS-5059 **i01525833**

NOTE	REF NO	GRAPHIC REF	PART NUMBER	QTY	PART NAME 1 2 3 4 5 6 (PRODUCT LEVEL)	SEE PAGE
	1	1	**198-6498**	1	BOOT	
	2	1	**200-4023**	1	KIT-LEVER	
	3	1	**200-4025**	1	VALVE GP-PILOT	
	3A	1	**200-4019**	2	KIT-PLUNGER	
	3B	1	**198-6511**	2	KIT-REGULATOR	
	3C	1	**198-6513**	2	KIT-SPRING	
	4	1	**198-6517**	1	PLATE	
	5	1	**202-3263**	1	SEAL	

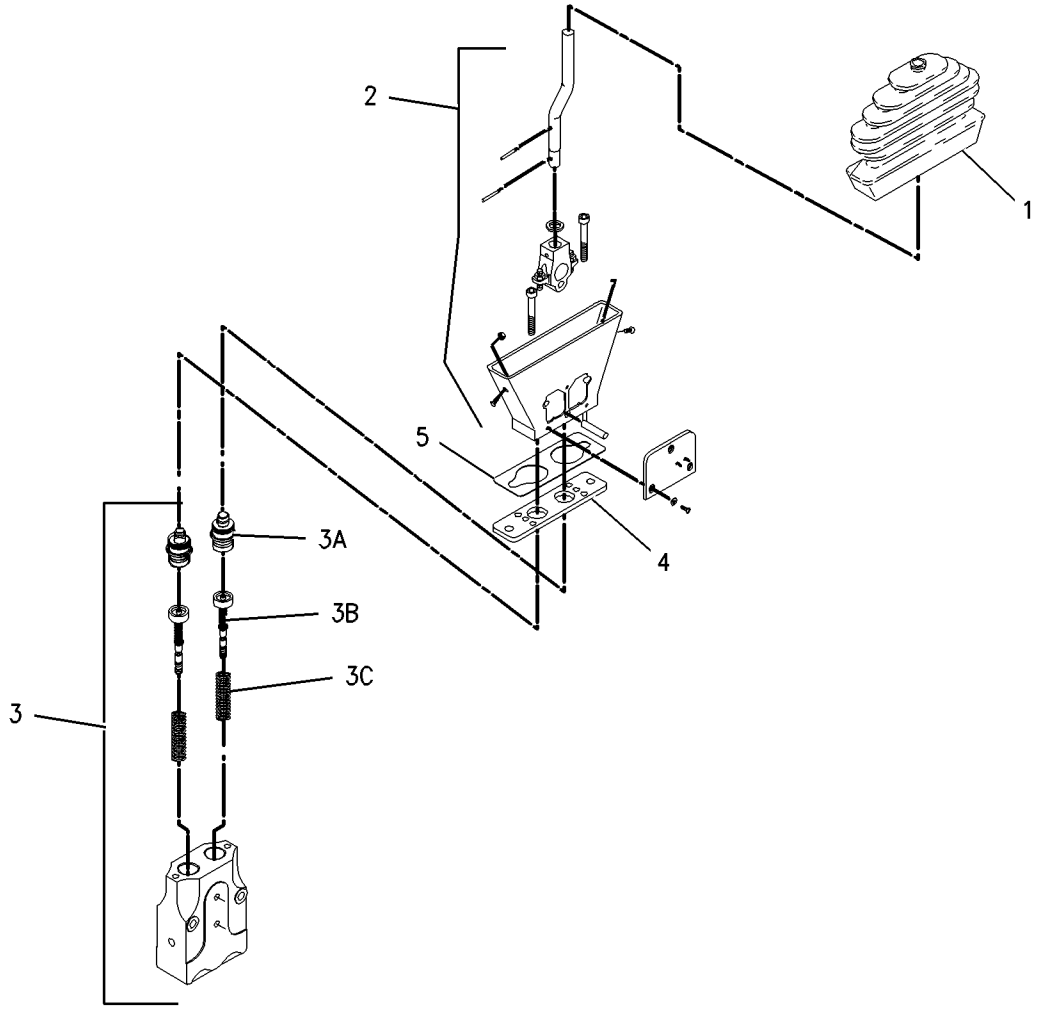

GRAPHIC #1 **<END>** g00778213

200-1728 VALVE GP-PILOT–STABILIZER

S/N: B2D1-UP
PART OF 185-5902 VALVE GP-PILOT
AN ATTACHMENT

SMCS-5059 **i01525905**

NOTE	REF NO	GRAPHIC REF	PART NUMBER	QTY	PART NAME 1 2 3 4 5 6 (PRODUCT LEVEL)	SEE PAGE
	1	1	**198-6498**	1	BOOT	
	2	1	**200-4022**	1	KIT-LEVER	
	3	1	**200-4024**	1	VALVE GP-PILOT	
	3A	1	**198-6511**	2	KIT-REGULATOR	
	3B	1	**198-6513**	2	KIT-SPRING	
	3C	1	**200-4019**	2	KIT-PLUNGER	
	4	1	**198-6517**	1	PLATE	
	5	1	**202-3263**	1	SEAL	

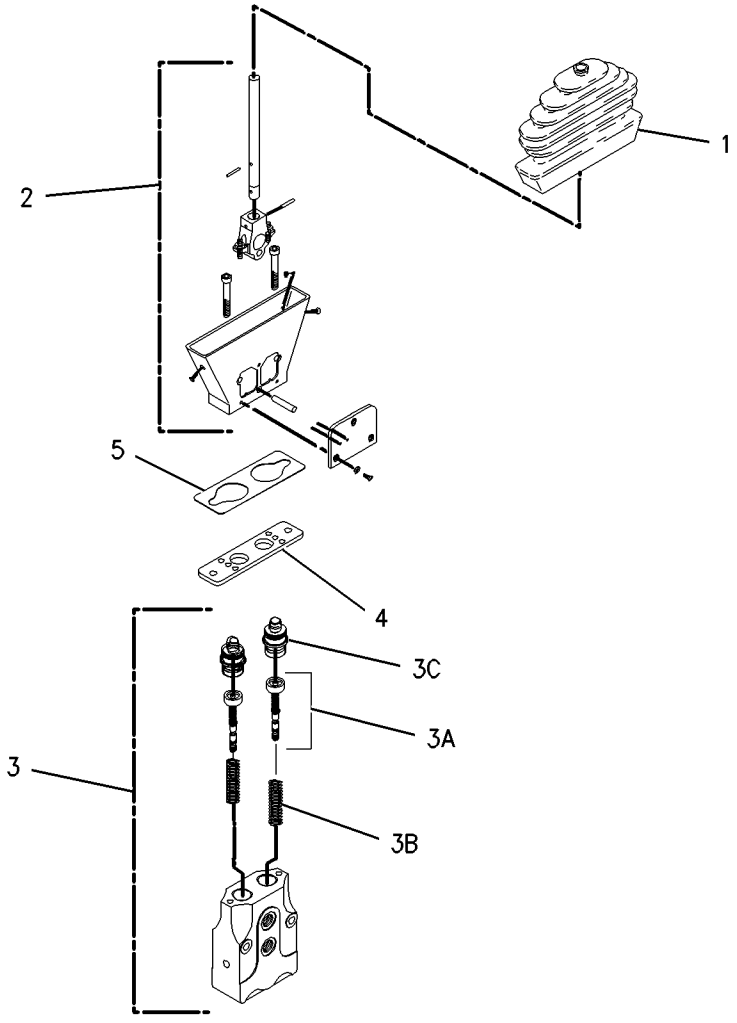

GRAPHIC #1 **<END>** g00794911

HYDRAULIC SYSTEM

103-5519 VALVE GP-PUMP CONTROL

S/N: B2D1-UP

PART OF 245-8998 PUMP GP-PISTON

SMCS-5455 **i01523195**

NOTE	REF NO	GRAPHIC REF	PART NUMBER	QTY	PART NAME 1 2 3 4 5 6 (PRODUCT LEVEL)	SEE PAGE
	1	1	**105-1434**	1	PLUG	
	2	1	**5P-5599**	1	SEAL-O-RING	
	3	1	**105-1435**	1	SPRING	
	4	1	**105-1436**	1	RETAINER-SPRING	
	5	1	**105-1442**	1	LOCKNUT	
	6	1	**6V-8236**	1	PIN-SPRING	
	7	1	**8C-0563**	1	SEAL-O-RING	
M	8	1	**3T-0849**	2	BOLT-SOCKET HEAD (M6X1X25MM)	
	9	1	**105-1437**	1	RETAINER-SPRING	
	10	1	**105-1438**	1	SPRING	
	11	1	**033-6044**	1	SEAL-O-RING	
	12	1	**105-1439**	1	ADJUSTER	
	13	1	**105-1440**	1	CAP	
	14	1	**105-1441**	1	PLUG	
	15	1	**6E-6528**	1	SEAL (9.3MM ID)	

M-METRIC PART

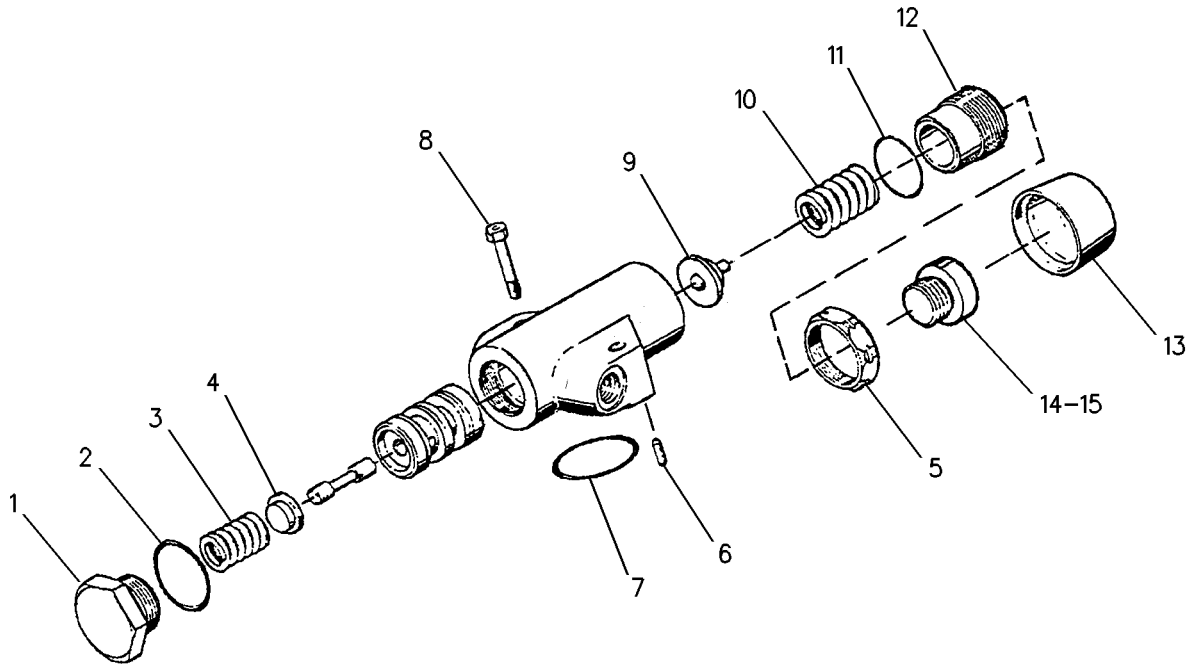

GRAPHIC #1 **<END>** g00131044

HYDRAULIC SYSTEM

173-0640 VALVE GP-PUMP CONTROL

S/N: B2D1-UP

PART OF 245-8998 PUMP GP-PISTON

SMCS-5455 **i01525760**

NOTE	REF NO	GRAPHIC REF	PART NUMBER	QTY	PART NAME 1 2 3 4 5 6 (PRODUCT LEVEL)	SEE PAGE
	1	1	**6E-3268**	1	RETAINER-SPRING	
	2	1	**6E-3269**	1	RETAINER-SPRING	
	3	1	**200-5359**	1	HOUSING	
	4	1	**200-5360**	1	HOUSING	
	5	1	**6E-3272**	1	SEAT	
	6	1	**6E-3273**	1	SEAT	
	7	1	**6E-3274**	1	SPRING	
	8	1	**6E-3275**	1	SPRING	
	9	1	**6E-3276**	1	SPRING	
	10	1	**105-2145**	1	VALVE-ORIFICE	
	11	1	**202-7503**	2	RETAINER	
	12	1	**6E-6527**	2	PLUG	
	13	1	**193-1036**	1	SPRING	
	14	1	**033-6043**	1	SEAL-O-RING	
	15	1	**6V-8352**	1	SEAL-O-RING	
	16	1	**6E-6528**	2	SEAL (9.3MM ID)	
	17	1	**5P-9262**	1	SEAL-O-RING	
	18	1	**200-5361**	2	NUT	
	19	1	**200-5362**	2	SEAL-O-RING	
	20	1	**200-5363**	2	RING-THRUST	
	21	1	**200-5364**	2	CAP	

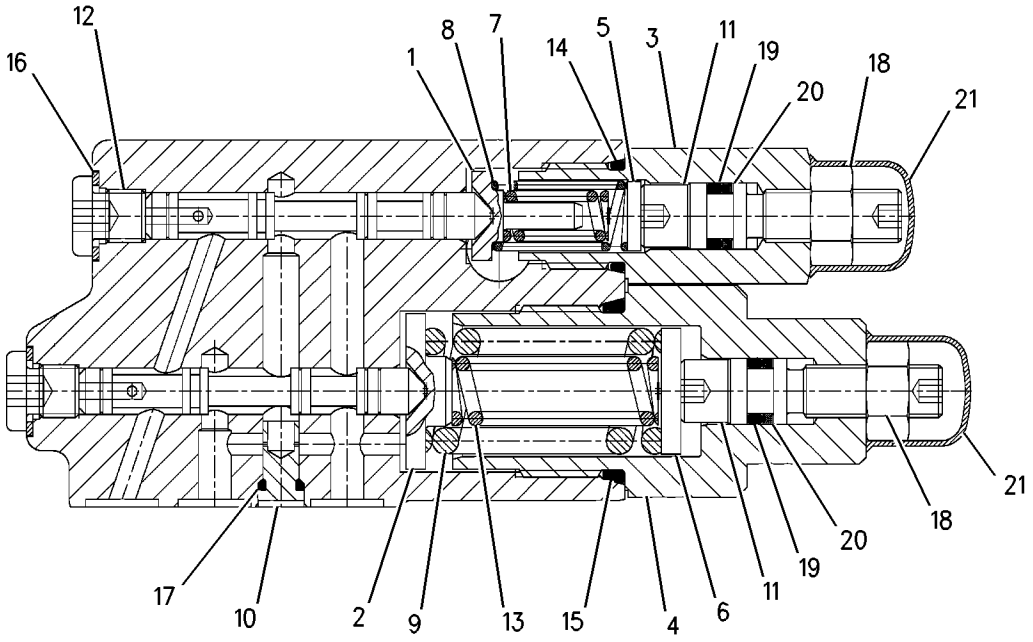

GRAPHIC #1 **<END>** g00791680

129-9121 ARM GP-LIFT

S/N: B2D1-UP

PART OF 107-3313 LOADER AR

SMCS-6118, 6119 **i01959099**

NOTE	REF NO	GRAPHIC REF	PART NUMBER	QTY	PART NAME 1 2 3 4 5 6 (PRODUCT LEVEL)	SEE PAGE
M	1	1	**8T-4176**	2	BOLT (M12X1.75X90MM)	
M	2	1	**6V-7687**	2	LOCKNUT	
	3	1	**9R-0158**	2	WASHER (46X69X3MM THK)	
	4	1	**6V-3213**	2	RING-RETAINING	
	5	1	**130-5451**	2	PIN	
	6	1	**6V-8144**	6	RING	
	7	1	**9R-0109**	4	WASHER (41X64X3MM THK)	
	8	1	**9R-3182**	2	PIN	
B	9	1	**9R-0109**	4	WASHER (41X64X3MM THK)	
	10	1	**3B-8488**	4	FITTING-GREASE (1/8-27 THD)	
	11	1	**9R-9373**	1	PIN AS	
		1	**9R-1099**	1	PLATE	
	12	1	**127-8987**	2	RING-RETAINING	
B	13	1	**9R-8390**	2	SPACER (61X98X1MM THK)	
	14	1	**128-5010**	1	PIN	
	15	1	**3B-8489**	5	FITTING-GREASE	
	16	1	**132-6496**	1	PIN AS	
B	17	1	**9R-4066**	2	WASHER (61X98X4MM THK)	
	18	1	**129-9120**	1	ARM AS-LIFT	
	20	1	**9R-0111**	4	BEARING-SLEEVE	
	21	1	**9R-0119**	2	BOSS	
	22	1	**9R-6690**	4	BEARING-SLEEVE	
	23	1	**112-4498**	1	BOSS	

B-USE AS REQUIRED
M-METRIC PART

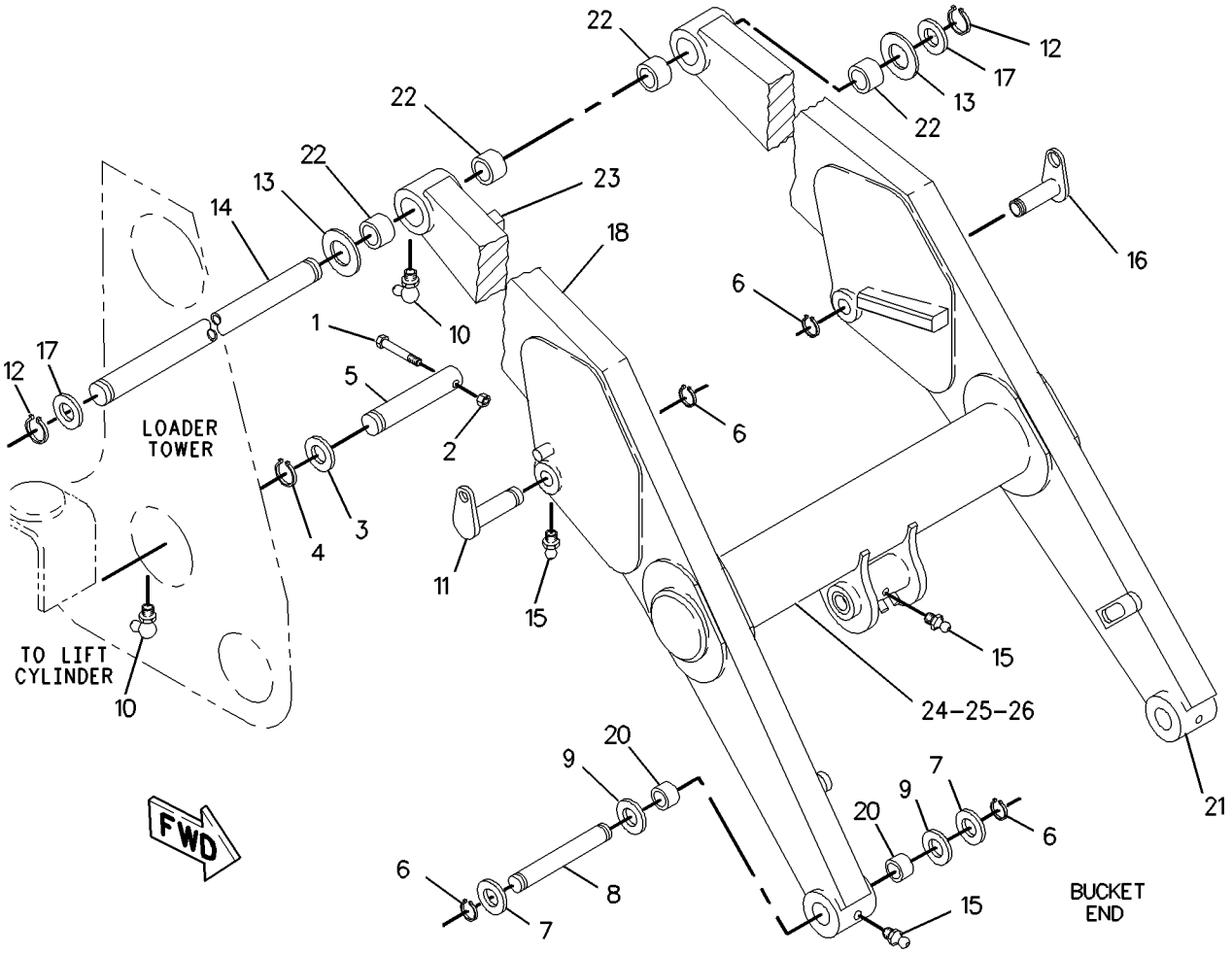

GRAPHIC #1 **<END>** g00752561

159-2798 BOOM GP

S/N: B2D1-UP

PART OF 238-4783 BACKHOE AR-EXTENDABLE STICK, 238-4780, 238-4782 BACKHOE AR-STANDARD STICK AN ATTACHMENT

SMCS-6501 **i02054462**

NOTE	REF NO	GRAPHIC REF	PART NUMBER	QTY	PART NAME 1 2 3 4 5 6 (PRODUCT LEVEL)	SEE PAGE
	1	1	**152-7728**	1	BOOM AS	
	1A	1	**8Y-4489**	4	BOSS (M10X35-MM)	
	1B	1	**9R-8523**	2	PIN	
	1C	1	**9R-9475**	2	BEARING-SLEEVE	
	1D	1	**106-0421**	2	BOSS	
	1E	1	**106-0424**	1	PLATE	
	1F	1	**111-0483**	2	BOSS (M 10X1.5-MM)	
	1G	1	**174-6812**	2	BOSS	
	1H	1	**9R-0170**	2	BEARING	
	2	1	**3B-8488**	3	FITTING-GREASE	
	3	1	**9R-9812**	2	PIN	
M	4	1	**8T-5001**	2	BOLT (M12X1.75X130-MM)	
M	5	1	**6V-7687**	2	LOCKNUT (M12X1.75-THD)	
	6	1	**3B-8489**	1	FITTING-GREASE	
	7	1	**179-9961**	1	PLUG-PROTECTIVE	

M-METRIC PART

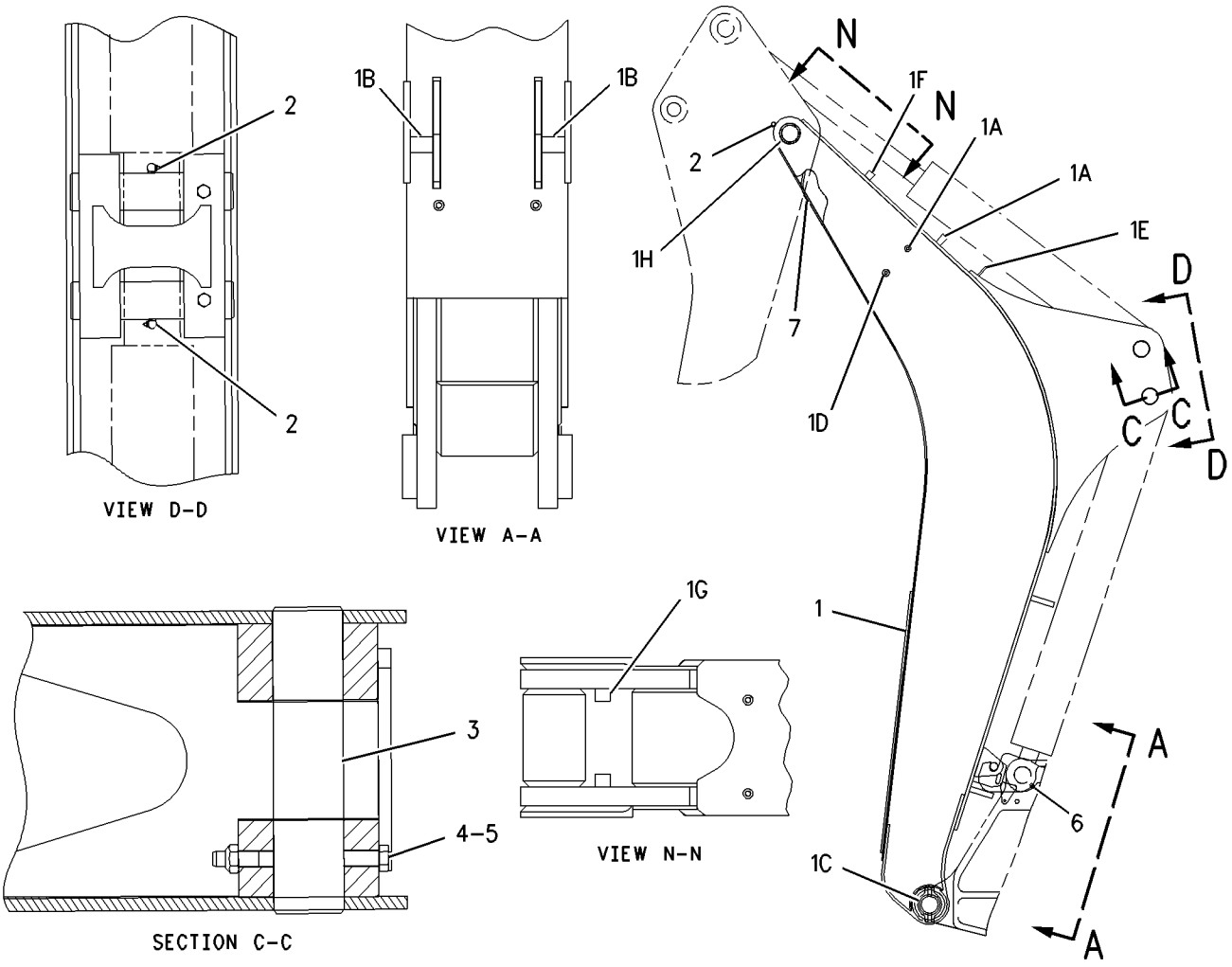

GRAPHIC #1 **<END>** g00789196

159-2799 BOOM GP

S/N: B2D1-UP

PART OF 238-4784 BACKHOE AR-EXTENDABLE STICK, 238-4781 BACKHOE AR-STANDARD STICK AN ATTACHMENT

SMCS-6501 **i02030034**

NOTE	REF NO	GRAPHIC REF	PART NUMBER	QTY	PART NAME 1 2 3 4 5 6 (PRODUCT LEVEL)	SEE PAGE
	1	1	**3B-8488**	3	FITTING-GREASE	
	2	1	**3B-8489**	1	FITTING-GREASE	
M	3	1	**6V-7687**	2	LOCKNUT (M12X1.75-THD)	
M	4	1	**8T-5001**	2	BOLT (M12X1.75X130-MM)	
	5	1	**9R-9812**	2	PIN	
	6	1	**237-3853**	1	BOOM AS	
	6A	1	**8Y-4489**	4	BOSS (M10X35-MM)	
	6B	1	**9R-8523**	2	PIN	
	6C	1	**106-0421**	2	BOSS	
	6D	1	**106-0424**	1	PLATE	
	6E	1	**106-0425**	1	PLATE AS (TOOL)	
	6F	1	**111-0483**	2	BOSS (M 10X1.5-MM)	
	6G	1	**9R-0170**	2	BEARING	
	6H	1	**174-6812**	2	BOSS	
	6I	1	**237-2252**	2	BEARING-SLEEVE	
	7	1	**179-9961**	1	PLUG-PROTECTIVE	

M-METRIC PART

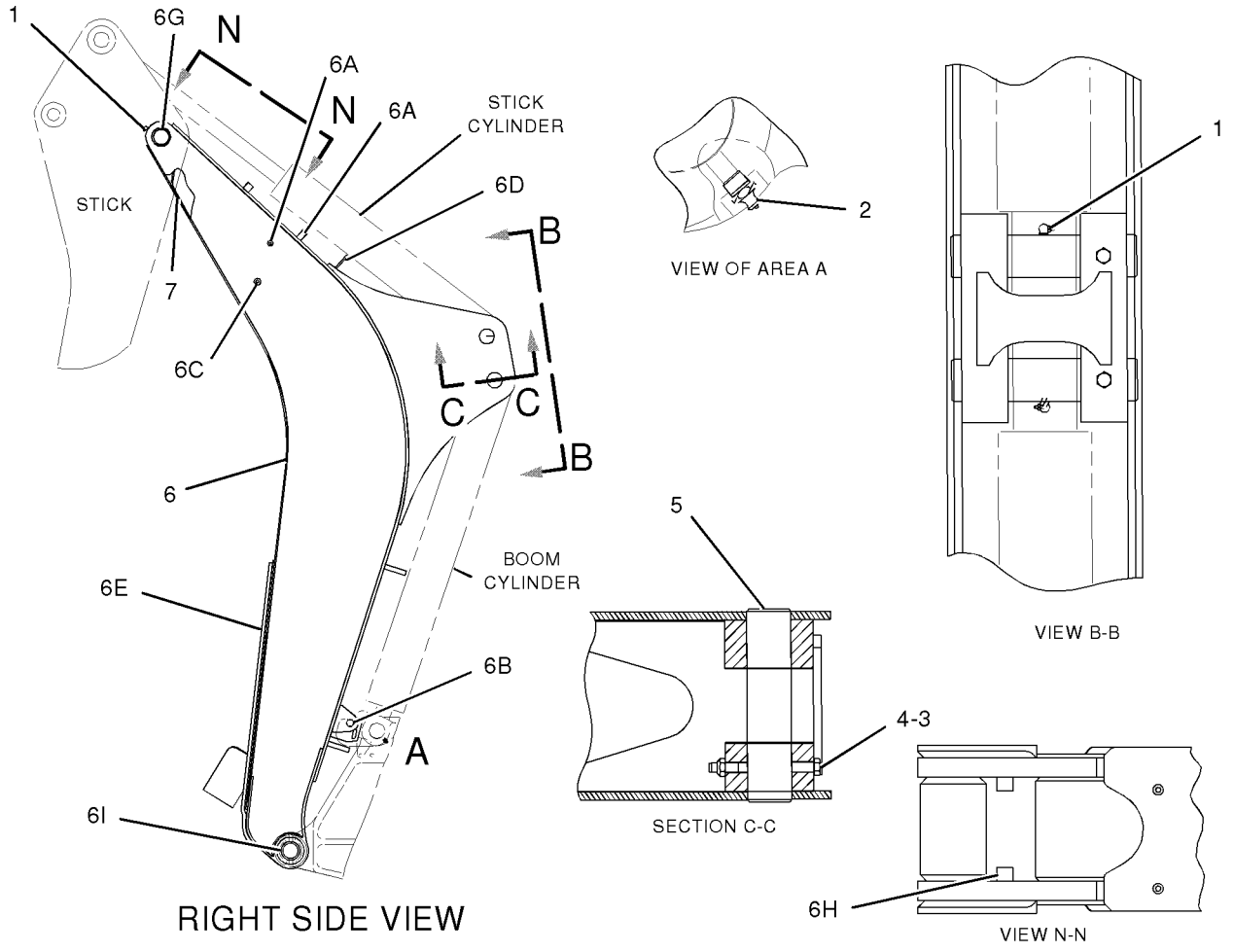

GRAPHIC #1 **<END>** g01047877

9R-0036 BRACE GP-LIFT CYLINDER

S/N: B2D1-UP

PART OF 107-3313 LOADER AR

SMCS-7507 **i01959100**

NOTE	REF NO	GRAPHIC REF	PART NUMBER	QTY	PART NAME 1 2 3 4 5 6 (PRODUCT LEVEL)	SEE PAGE
	1	1	**9R-0189**	1	PIN	
	2	1	**132-6497**	1	BRACE AS	
	3	1	**9R-5301**	1	PIN-COTTER	
	4	1	**8C-4447**	1	FILM-INDICATOR (RED)	

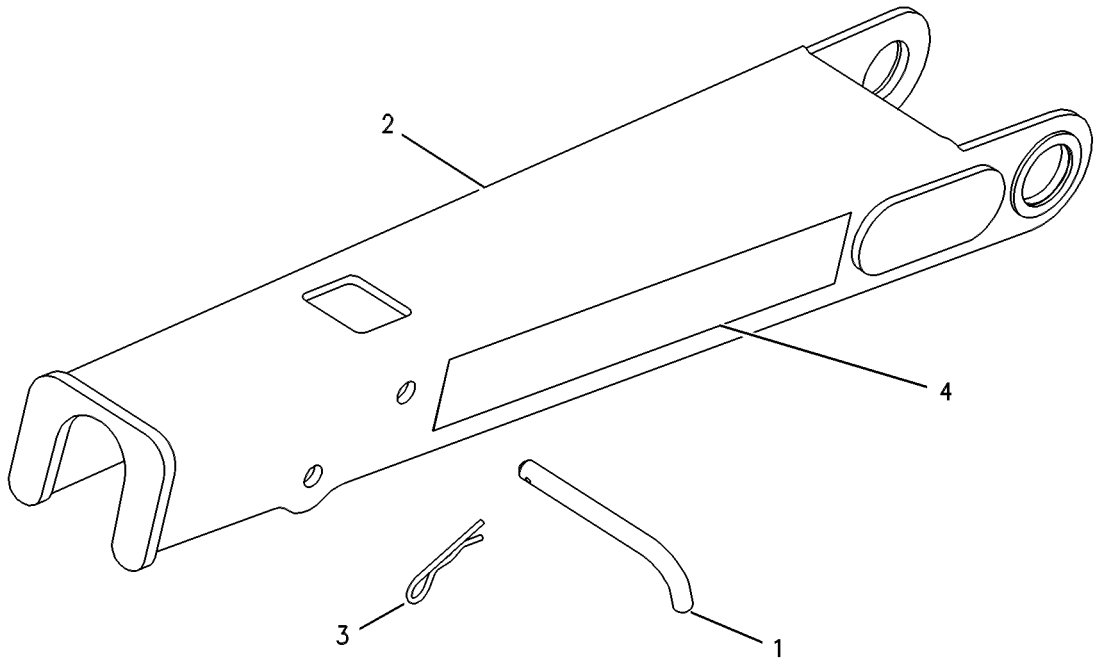

GRAPHIC #1 **<END>** g00131910

151-7928 LINKAGE GP-BACKHOE BUCKET

S/N: B2D1-UP
BACKHOE
PART OF 238-4783, 238-4784 BACKHOE AR-EXTENDABLE STICK, 238-4780, 238-4781, 238-4782 BACKHOE AR-STANDARD STICK
AN ATTACHMENT

SMCS-6513 **i02029887**

NOTE	REF NO	GRAPHIC REF	PART NUMBER	QTY	PART NAME 1 2 3 4 5 6 (PRODUCT LEVEL)	SEE PAGE
	1	1	**9R-0158**	10	WASHER (46X69X3-MM THK)	
	2	1	**9R-1510**	13	WASHER (51X82X4-MM THK)	
	3	1	**6V-4364**	4	RING-RETAINING	
	4	1	**145-8337**	1	GUIDE AS-RH	
		1	**9R-0162**	1	BEARING	
		1	**9R-0411**	1	BEARING-SLEEVE	
	5	1	**145-8344**	1	GUIDE AS-LH	
		1	**9R-0162**	2	BEARING	
		1	**9R-0411**	1	BEARING-SLEEVE	
	6	1	**154-5265**	1	LINK AS	
		1	**9R-3092**	2	BEARING-SLEEVE	
		1	**9R-0147**	2	BEARING	
	7	1	**154-5277**	1	PIN	
	8	1	**154-5278**	2	PIN	
	9	1	**154-5279**	1	PIN	
	10	1	**154-5280**	1	PIN	
	11	1	**239-9435**	1	FILM-INSTRUCTION (LINK)	
	12	1	**3B-5319**	4	PIN-COTTER	
	13	1	**3B-8489**	5	FITTING-GREASE (1/8-27-THD)	
	14	1	**6V-3213**	2	RING-RETAINING	

151-7928 **LINKAGE GP-BACKHOE BUCKET** ***(contd.)*** **i02029887**

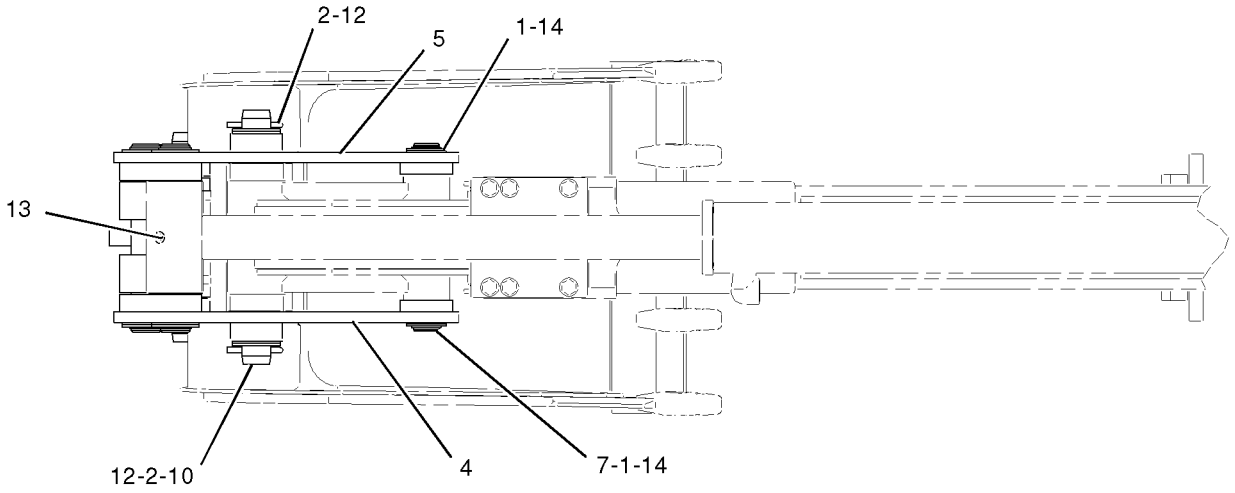

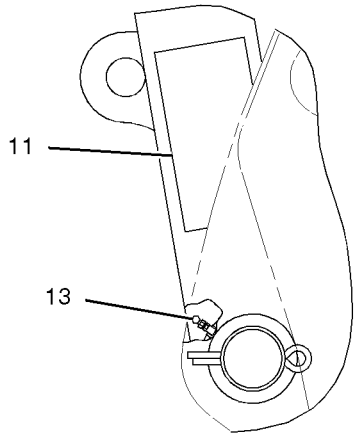

VIEW OF AREA A

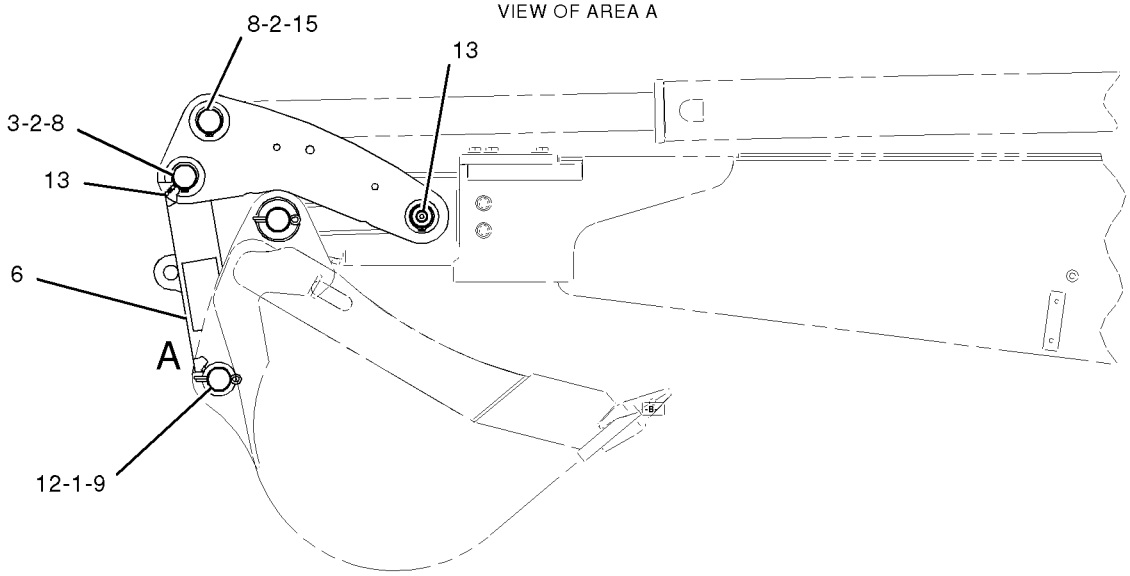

GRAPHIC #1 **<END>** g01046625

9R-9140 LINKAGE GP-LOADER BUCKET

S/N: B2D1-UP

FRONT

PART OF 107-3313 LOADER AR

SMCS-6513 **i01539041**

NOTE	REF NO	GRAPHIC REF	PART NUMBER	QTY	PART NAME 1 2 3 4 5 6 (PRODUCT LEVEL)	SEE PAGE
M	1	1	**8T-4137**	4	BOLT (M10X1.5X20MM)	
	2	1	**8T-4121**	4	WASHER-HARD (11X21X2.5MM THK)	
	3	1	**101-0117**	1	PLATE	
	4	1	**9R-5834**	1	LINK AS-RH	
	5	1	**9R-1107**	1	BEARING	
	6	1	**9R-5828**	1	BEARING-SLEEVE	
	7	1	**9R-5835**	1	LINK AS-LH	
	8	1	**9R-1107**	1	BEARING	
	9	1	**9R-5828**	1	BEARING-SLEEVE	
	10	1	**3B-8489**	7	FITTING-GREASE	
	11	1	**118-7789**	1	PLATE	
	12	1	**9R-4494**	3	PIN AS	
B	13	1	**9R-0158**	8	WASHER (46X69X3MM THK)	
	14	1	**6V-3213**	3	RING-RETAINING	
	15	1	**9R-4482**	1	SPACER (100MM THK)	
	16	1	**9R-5063**	1	GUIDE AS	
	17	1	**9R-1104**	1	BEARING	
	18	1	**9R-9152**	1	GUIDE AS-RH	
	19	1	**9R-1104**	1	BEARING	
	20	1	**9R-3933**	1	PIN	
	21	1	**9R-9153**	1	GUIDE	
B	22	1	**111-4337**	10	WASHER (1MM THK)	

B-USE AS REQUIRED
M-METRIC PART

9R-9140 **LINKAGE GP-LOADER BUCKET** *(contd.)* **i01539041**

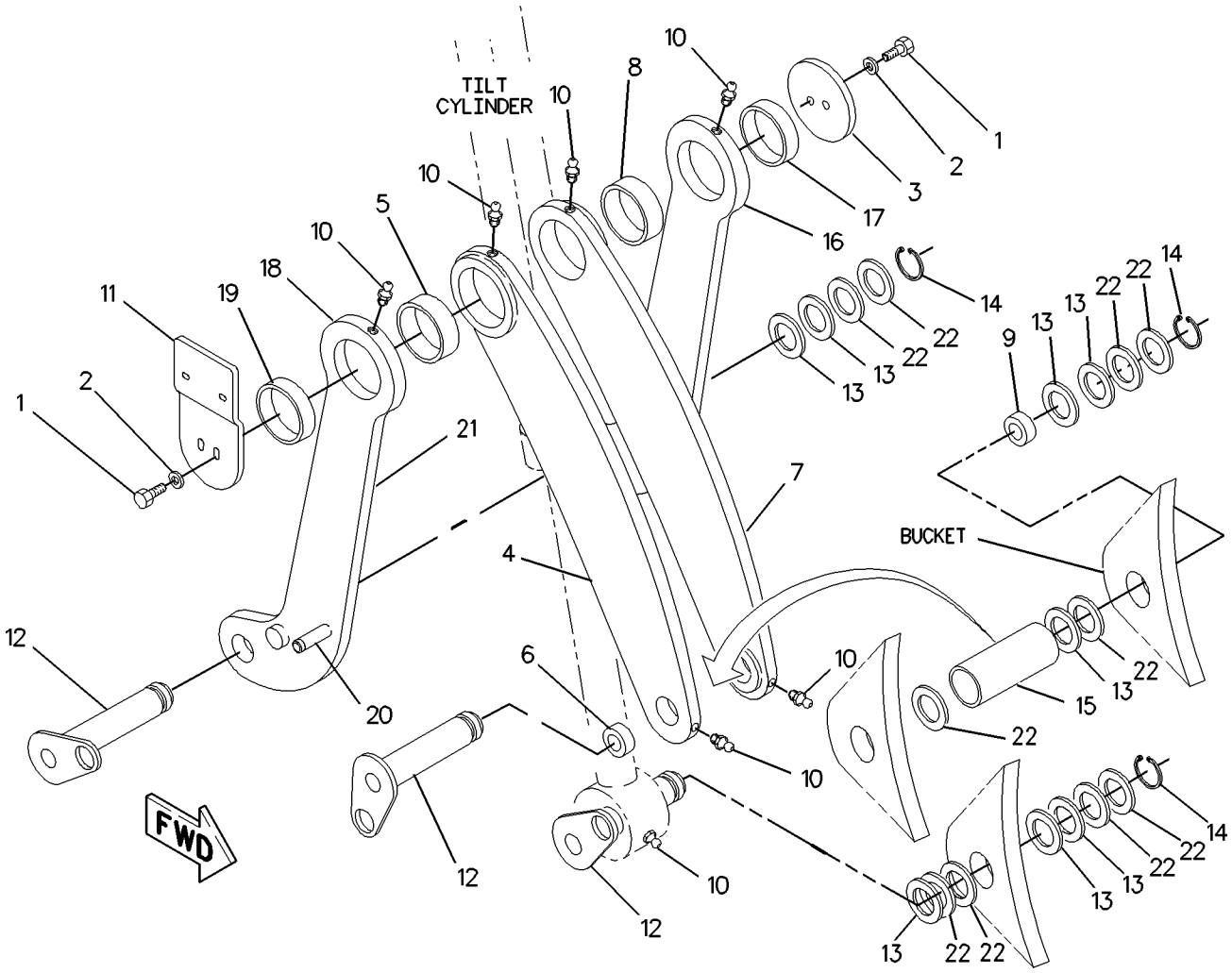

GRAPHIC #1 **<END>** g00799330

IMPLEMENTS

107-3313 LOADER AR

S/N: B2D1-UP

PART OF 214-6885 COMMON AR

SMCS-6100 **i01515883**

NOTE	PART NUMBER	QTY	PART NAME 1 2 3 4 5 6 (PRODUCT LEVEL)	SEE PAGE
Y	*129-9121*	1	ARM GP-LIFT	413
Y	*9R-0036*	1	BRACE GP-LIFT CYLINDER	417
Y	*106-9046*	1	KICKOUT & POSITIONER GP	312
Y	*9R-9140*	1	LINKAGE GP-LOADER BUCKET	420
Y	*122-1645*	1	WIRING GP-SENSOR	162

Y-SEPARATE ILLUSTRATION

<END>

122-8037 LOCK GP-TRANSPORT

S/N: B2D1-UP
AN ATTACHMENT

SMCS-7505 **i01536099**

NOTE	REF NO	GRAPHIC REF	PART NUMBER	QTY	PART NAME 1 2 3 4 5 6 (PRODUCT LEVEL)	SEE PAGE
	1	1	**122-8032**	1	BRACE AS	
	2	1	**113-9090**	1	PIN AS	
	3	1	**9R-5301**	1	PIN-COTTER	
	4	1	**9R-6140**	1	LINK	
	5	1	**9S-1315**	2	PIN-CLEVIS	
	6	1	**6S-6646**	2	PIN	

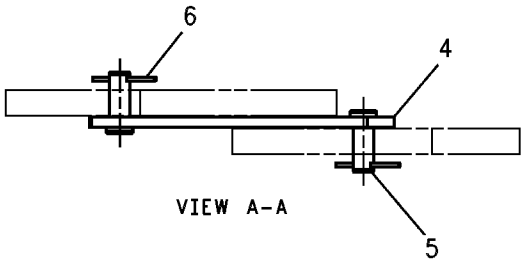

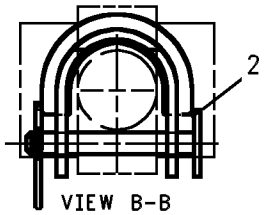

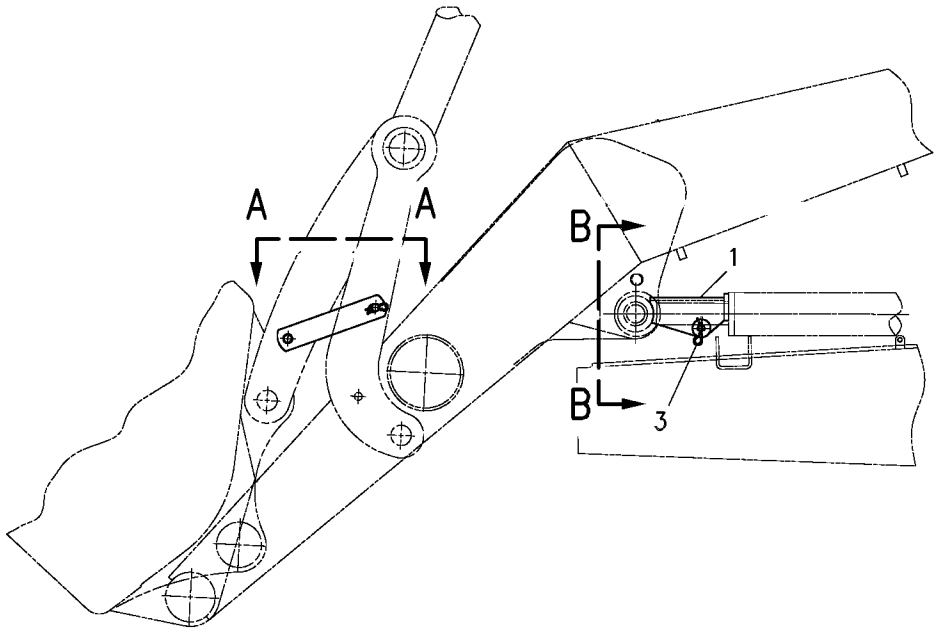

GRAPHIC #1 **<END>** g00511968

177-4726 LOCK GP-TRANSPORT

S/N: B2D1-UP
EXTENDABLE STICK
AN ATTACHMENT

SMCS-7505 **i01683477**

NOTE	REF NO	GRAPHIC REF	PART NUMBER	QTY	PART NAME 1 2 3 4 5 6 (PRODUCT LEVEL)	SEE PAGE
	1	1	**177-4729**	1	CABLE AS	
	2	1	**9R-5301**	2	PIN-COTTER	
	3	1	**9R-9028**	1	PIN	

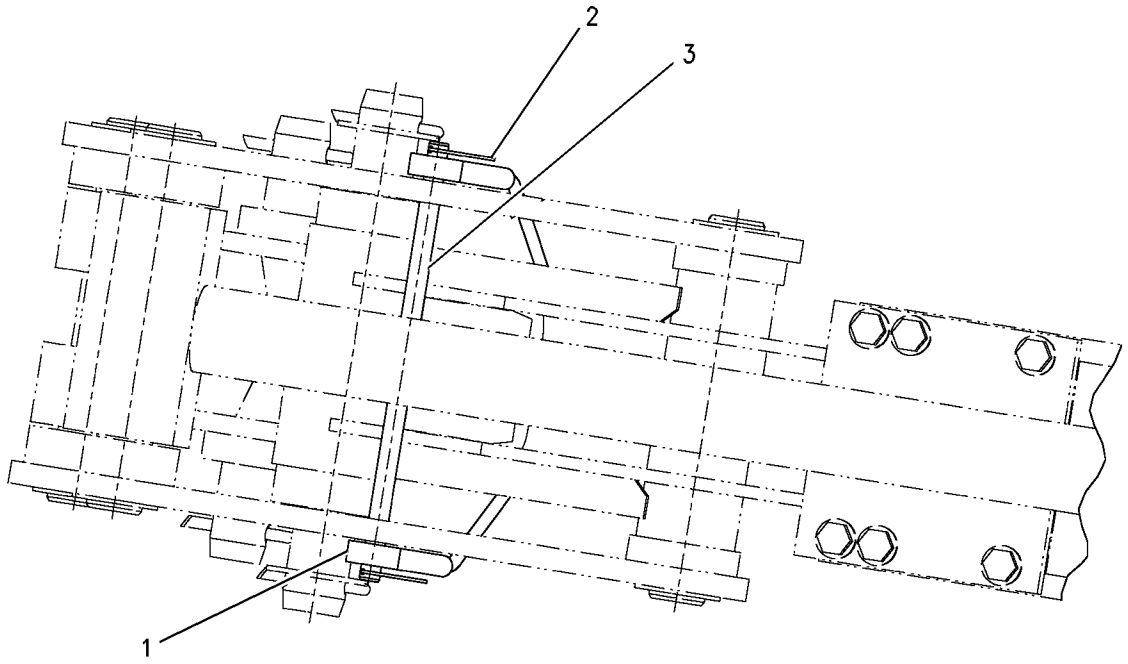

GRAPHIC #1 **<END>** g00855152

IMPLEMENTS

177-4727 LOCK GP-TRANSPORT

S/N: B2D1-UP
STANDARD STICK
AN ATTACHMENT

SMCS-7505 **i01683483**

NOTE	REF NO	GRAPHIC REF	PART NUMBER	QTY	PART NAME 1 2 3 4 5 6 (PRODUCT LEVEL)	SEE PAGE
	1	1	**177-4733**	1	CABLE AS	
	2	1	**9R-5301**	2	PIN-COTTER	
	3	1	**9R-9028**	1	PIN	

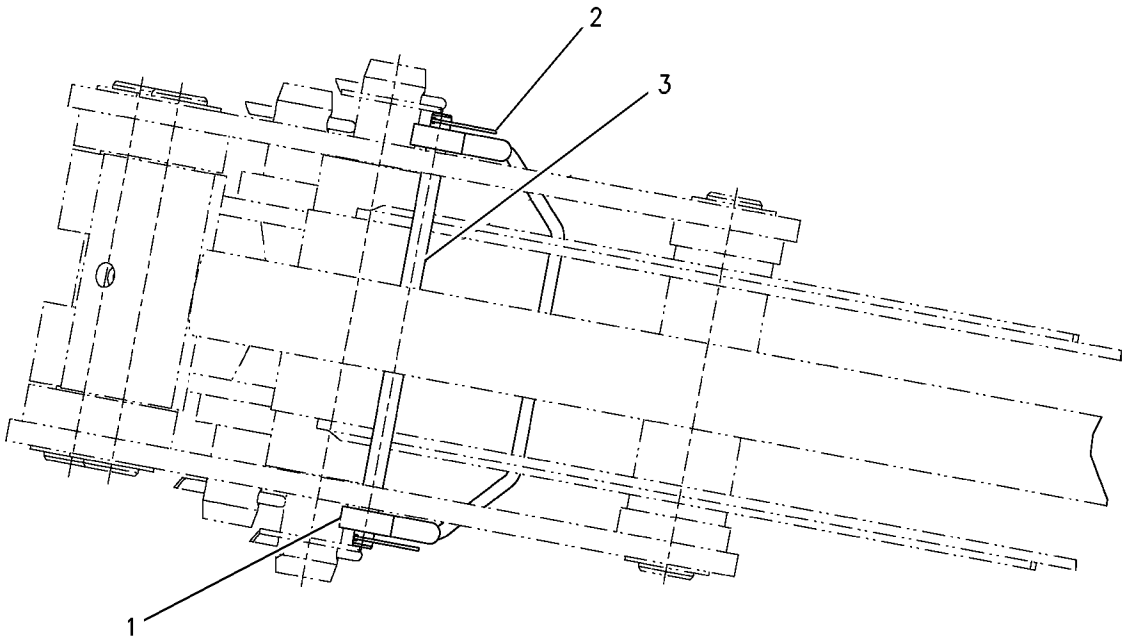

GRAPHIC #1 **<END>** g00855154

183-6076 LOCK GP-TRANSPORT

S/N: B2D1-UP

PART OF 214-6950 CHASSIS AR

SMCS-7505 **i01959098**

NOTE	REF NO	GRAPHIC REF	PART NUMBER	QTY	PART NAME 1 2 3 4 5 6 (PRODUCT LEVEL)	SEE PAGE
	1	1	**8D-5294**	1	RING	
M	2	1	**108-2989**	2	BOLT (M8X1.25X130MM)	
	3	1	**164-1395**	1	KNOB	
	4	1	**183-6051**	1	BRACKET AS	
	5	1	**183-6075**	1	LEVER AS	
	6	1	**183-6081**	1	BOLT	
	7	1	**183-6084**	1	BEARING	
	8	1	**183-6085**	2	BEARING	
	9	1	**5P-4116**	2	WASHER-HARD (8.8X20.5X2MM THK)	

M-METRIC PART

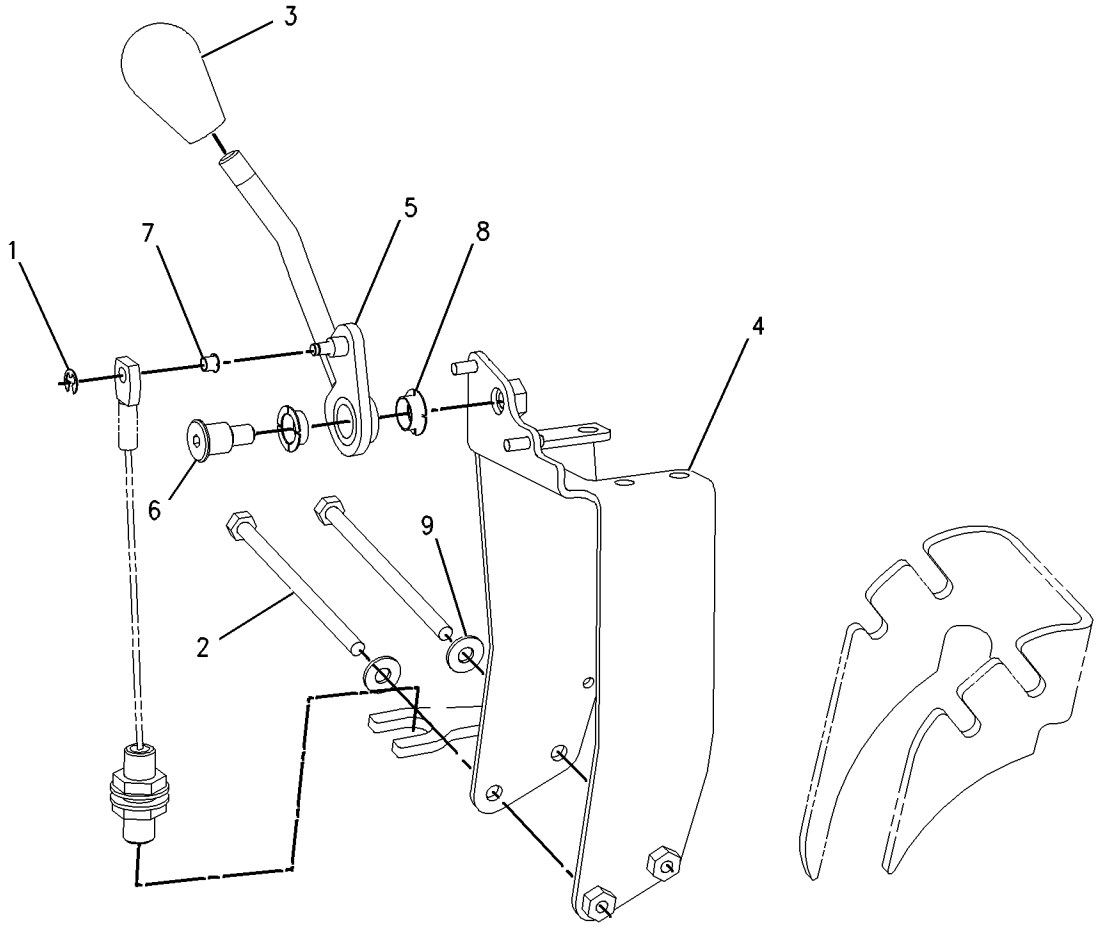

GRAPHIC #1 **<END>** g00713388

152-9736 MOUNTING GP-STICK

S/N: B2D1-UP
PART OF 238-4783, 238-4784 BACKHOE AR-EXTENDABLE STICK
AN ATTACHMENT

SMCS-6502 **i01489473**

NOTE	REF NO	GRAPHIC REF	PART NUMBER	QTY	PART NAME 1 2 3 4 5 6 (PRODUCT LEVEL)	SEE PAGE
B	1	1	**9R-1502**	4	WASHER (4MM THK)	
	2	1	**9R-6163**	1	PIN	
	3	1	**159-0961**	1	PIN	
B	4	1	**124-0360**	3	WASHER-THRUST	
	5	1	**152-9735**	1	PIN	
	6	1	**2K-3549**	1	PIN-SPRING	
	7	1	**3B-8489**	2	FITTING-GREASE	
M	8	1	**6V-7687**	1	LOCKNUT (M12X1.75 THD)	
	9	1	**6V-8344**	2	RING	
M	10	1	**8T-5001**	1	BOLT (M12X1.75X130MM)	

B-USE AS REQUIRED
M-METRIC PART

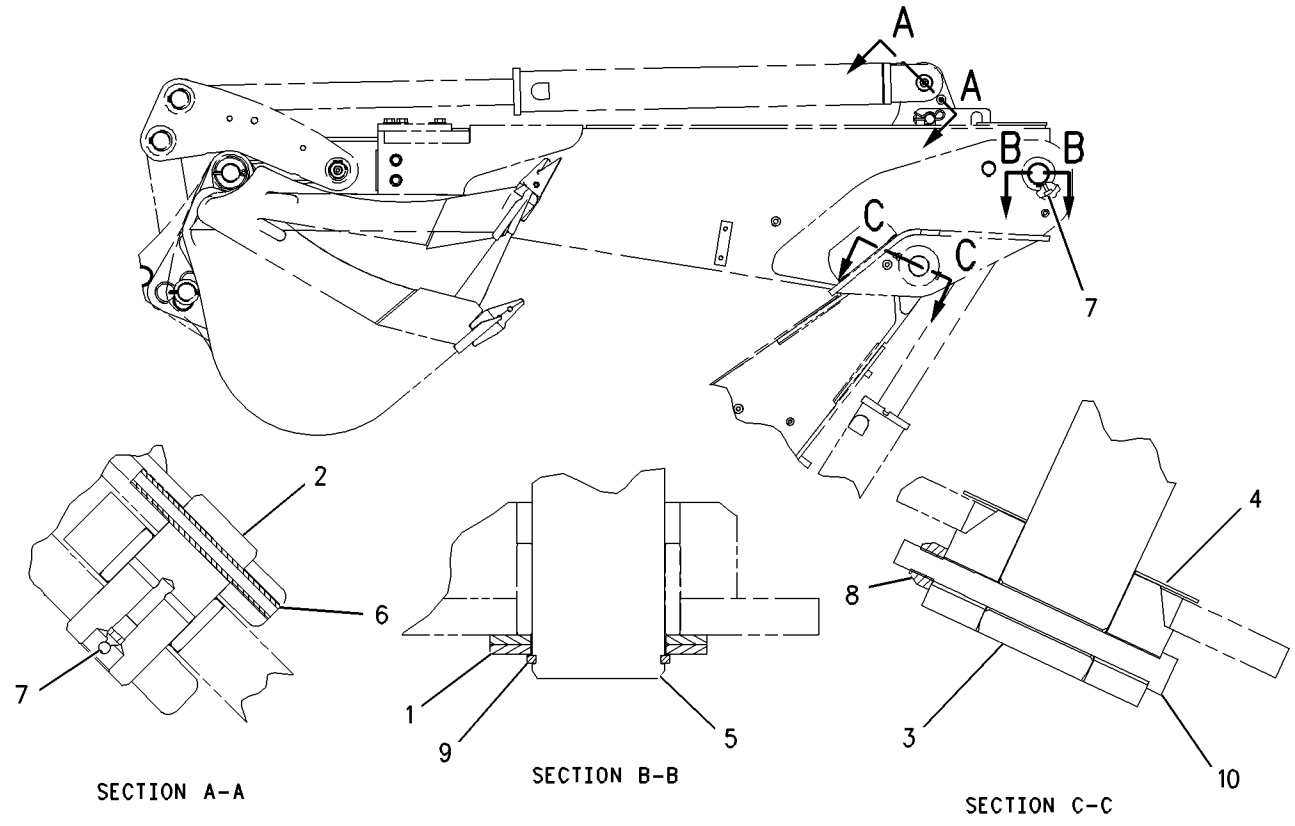

GRAPHIC #1 **<END>** g00765997

133-3362 PAD & GUARD GP-STABILIZER–STREET

S/N: B2D1-UP
AN ATTACHMENT

SMCS-7222 **i01754470**

NOTE	REF NO	GRAPHIC REF	PART NUMBER	QTY	PART NAME 1 2 3 4 5 6 (PRODUCT LEVEL)	SEE PAGE
	1	1	**3B-5322**	4	PIN-COTTER	
	2	1	**8T-4986**	4	CLAMP-HOSE	
	3	1	**130-1637**	2	SHAFT	
	4	1	**130-1638**	2	PIN	
	5	1	**130-1640**	2	GUARD AS	
Y	6	1	*135-2876*	2	PAD GP-STABILIZER	435
	7	1	**188-3953**	2	PAD	
	8	1	**201-5810**	2	PLATE	
	9	1	**201-5812**	2	PLATE AS	
	10	1	**5P-4116**	2	WASHER-HARD (8.8X20.5X2MM THK)	
	11	1	**6V-8144**	4	RING	
M	12	1	**7X-2537**	2	BOLT (M8X1.25X35MM)	
B	13	1	**9R-0109**	12	WASHER (3MM THK)	
B	14	1	**9R-0158**	8	WASHER (46X69X3MM THK)	

B-USE AS REQUIRED
M-METRIC PART
Y-SEPARATE ILLUSTRATION

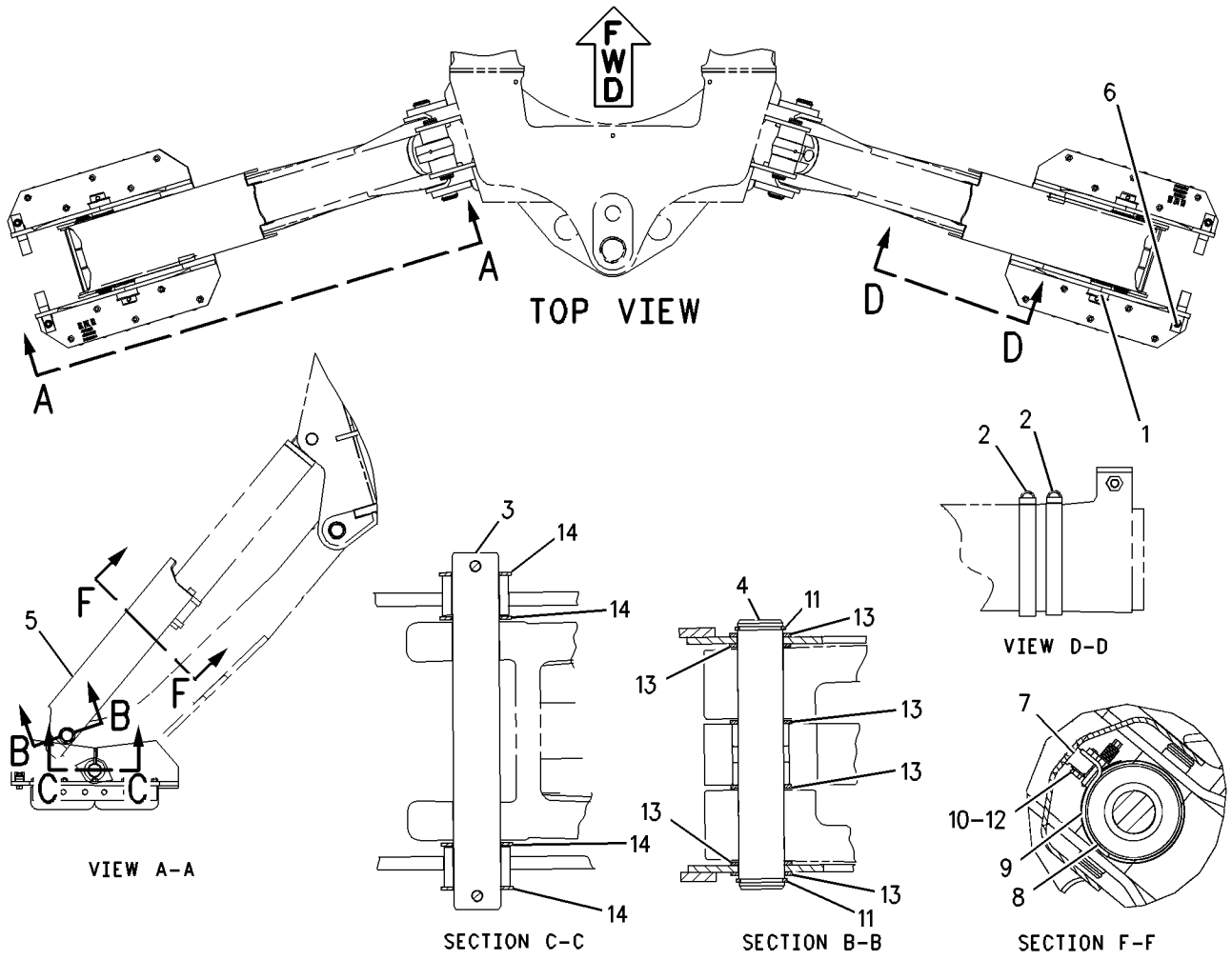

GRAPHIC #1 **<END>** g00829705

133-3363 PAD & GUARD GP-STABILIZER

S/N: B2D1-UP
AN ATTACHMENT

SMCS-7222 **i01754878**

NOTE	REF NO	GRAPHIC REF	PART NUMBER	QTY	PART NAME 1 2 3 4 5 6 (PRODUCT LEVEL)	SEE PAGE
	1	1	**8T-4986**	4	CLAMP-HOSE	
	2	1	**9R-0424**	2	PIN	
	3	1	**130-1638**	2	PIN	
	4	1	**130-1640**	2	GUARD AS	
	5	1	**141-6208**	2	PAD-STABILIZER	
	6	1	**188-3953**	2	PAD	
	7	1	**201-5810**	2	PLATE	
	8	1	**201-5812**	2	PLATE AS	
	9	1	**5P-4116**	2	WASHER-HARD (8.8X20.5X2MM THK)	
	10	1	**6V-3213**	4	RING-RETAINING	
	11	1	**6V-8144**	4	RING	
M	12	1	**7X-2537**	2	BOLT (M8X1.25X35MM)	
	13	1	**9R-0109**	12	WASHER (3MM THK)	
	14	1	**9R-0158**	8	WASHER (46X69X3MM THK)	

M-METRIC PART

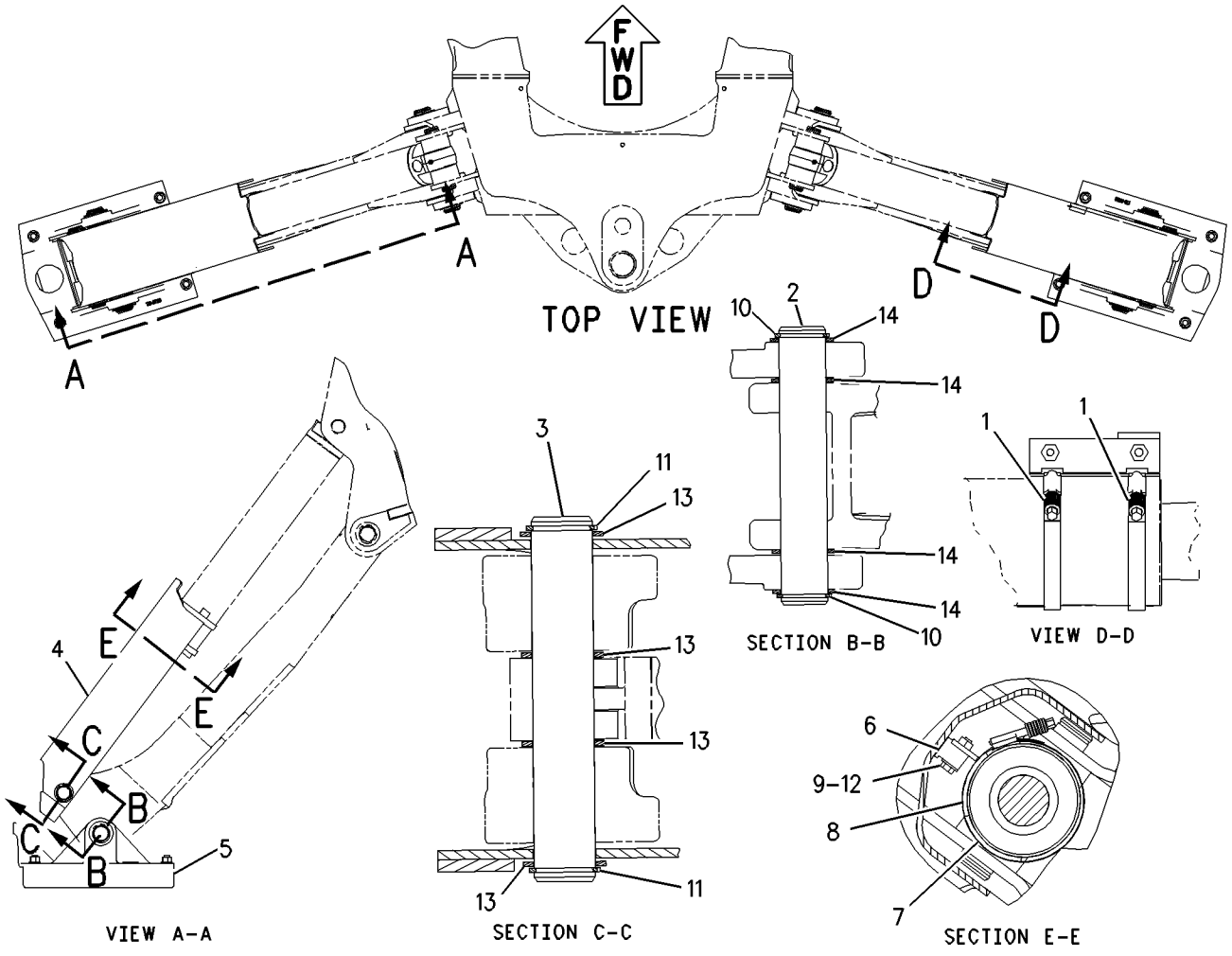

GRAPHIC #1 **<END>** g00832076

IMPLEMENTS

133-3366 PAD & GUARD GP-STABILIZER–STREET

S/N: B2D1-UP
AN ATTACHMENT

SMCS-7222 **i01753274**

NOTE	REF NO	GRAPHIC REF	PART NUMBER	QTY	PART NAME 1 2 3 4 5 6 (PRODUCT LEVEL)	SEE PAGE
	1	1	**8T-4986**	4	CLAMP-HOSE	
	2	1	**9R-0424**	2	PIN	
	3	1	**130-1638**	2	PIN	
	4	1	**130-1640**	2	GUARD AS	
	5	1	**141-5150**	4	PAD AS	
	6	1	**141-6208**	2	PAD-STABILIZER	
	7	1	**188-3953**	2	PAD	
	8	1	**201-5810**	2	PLATE	
	9	1	**201-5812**	2	PLATE AS	
	10	1	**5P-4116**	2	WASHER-HARD (8.8X20.5X2MM THK)	
	11	1	**6V-3213**	4	RING-RETAINING	
	12	1	**6V-8144**	4	RING	
M	13	1	**7X-2537**	2	BOLT (M8X1.25X35MM)	
	14	1	**8T-4122**	12	WASHER-HARD (17X32X3.5MM THK)	
M	15	1	**8T-4132**	12	NUT (M16X2 THD)	
B	16	1	**9R-0109**	12	WASHER (3MM THK)	
B	17	1	**9R-0158**	8	WASHER (46X69X3MM THK)	

B-USE AS REQUIRED
M-METRIC PART

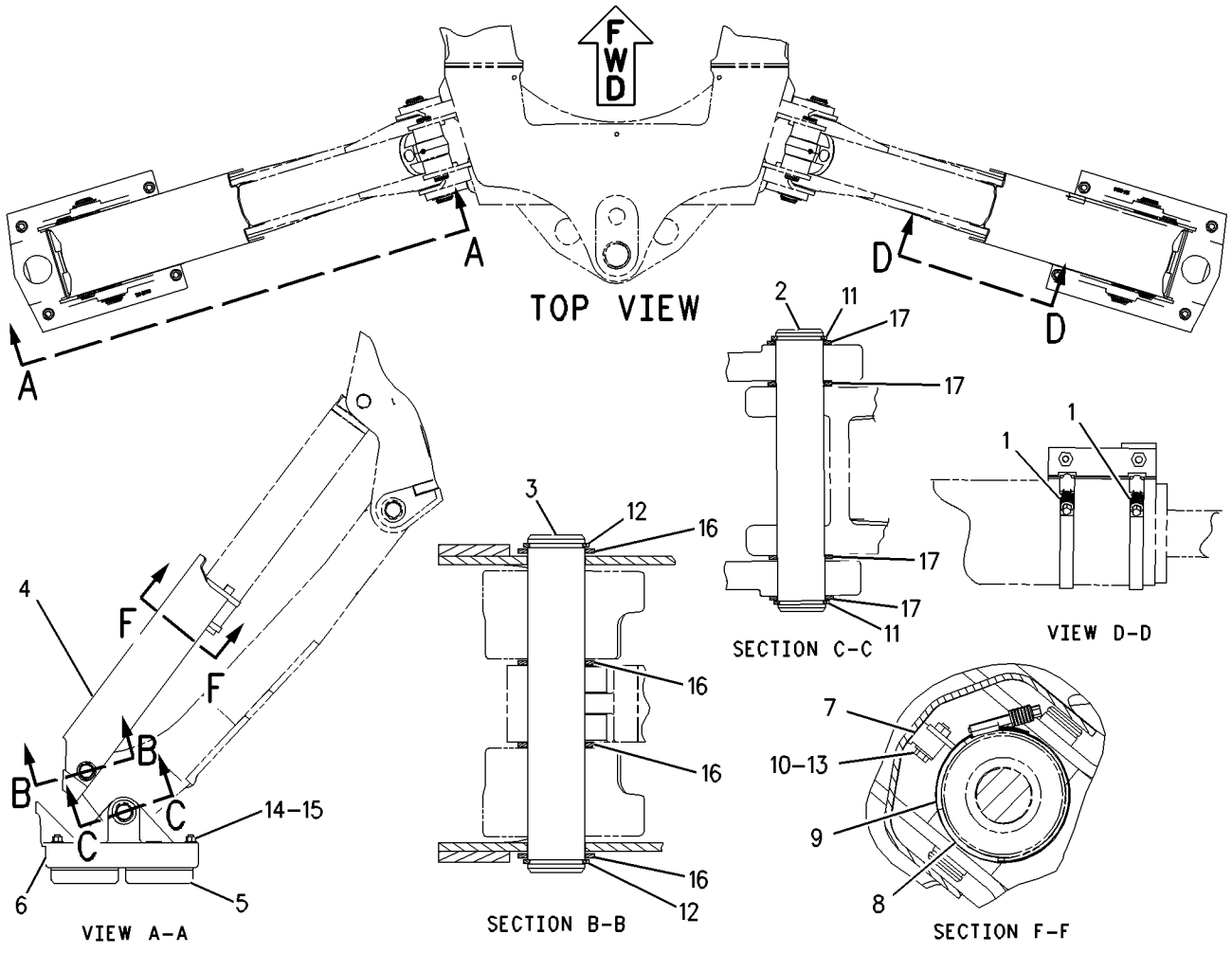

GRAPHIC #1 **<END>** g00832114

9R-1085 PAD & MTG GP-STABILIZER–STREET

S/N: B2D1-UP
AN ATTACHMENT

SMCS-7222 **i01853552**

NOTE	REF NO	GRAPHIC REF	PART NUMBER	QTY	PART NAME 1 2 3 4 5 6 (PRODUCT LEVEL)	SEE PAGE
B	1	1	**9R-0109**	8	WASHER (3MM THK)	
B	2	1	**9R-0158**	8	WASHER (46X69X3MM THK)	
	3	1	**9R-0422**	2	PIN	
	4	1	**9R-0424**	2	PIN	
	5	1	**141-5150**	4	PAD AS	
	6	1	**141-6208**	2	PAD-STABILIZER	
	7	1	**6V-3213**	4	RING-RETAINING	
	8	1	**6V-8144**	4	RING	
	9	1	**8T-4122**	12	WASHER-HARD (17X32X3.5MM THK)	
M	10	1	**8T-4132**	12	NUT (M16X2 THD)	

B-USE AS REQUIRED
M-METRIC PART

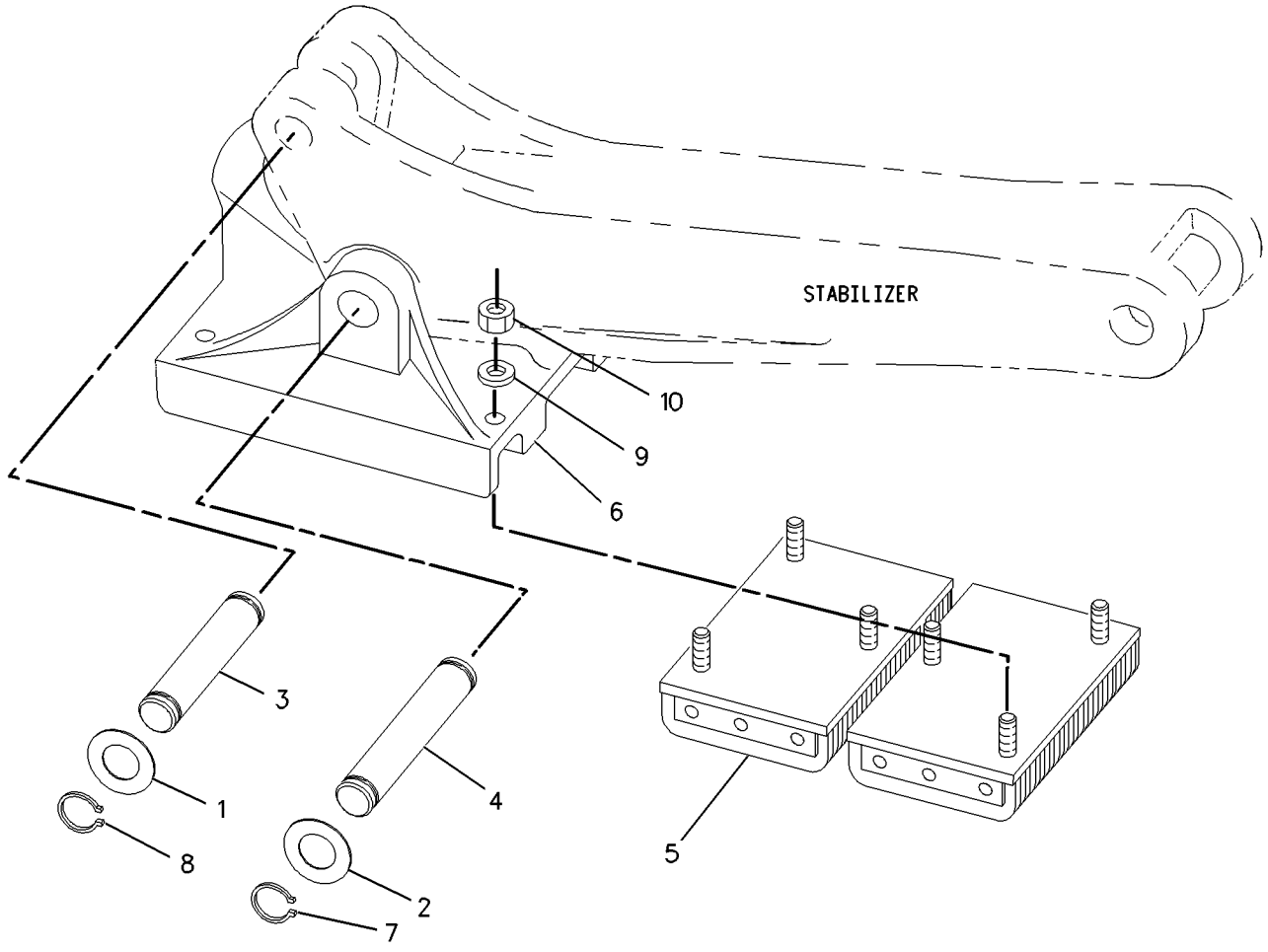

GRAPHIC #1 **<END>** g00783376

9R-6007 PAD & MTG GP-STABILIZER–STREET

S/N: B2D1-UP
AN ATTACHMENT

SMCS-7222 **i01854158**

NOTE	REF NO	GRAPHIC REF	PART NUMBER	QTY	PART NAME 1 2 3 4 5 6 (PRODUCT LEVEL)	SEE PAGE
B	1	1	**9R-0109**	14	WASHER (3MM THK)	
B	2	1	**9R-0158**	8	WASHER (46X69X3MM THK)	
Y	3	1	*9R-6062*	2	PAD GP-STABILIZER	434
	4	1	**130-1638**	2	PIN	
	5	1	**188-5004**	2	CABLE AS	
	6	1	**130-1637**	2	SHAFT	
	7	1	**3B-5322**	4	PIN-COTTER	
	8	1	**6V-8144**	4	RING	

B-USE AS REQUIRED
Y-SEPARATE ILLUSTRATION

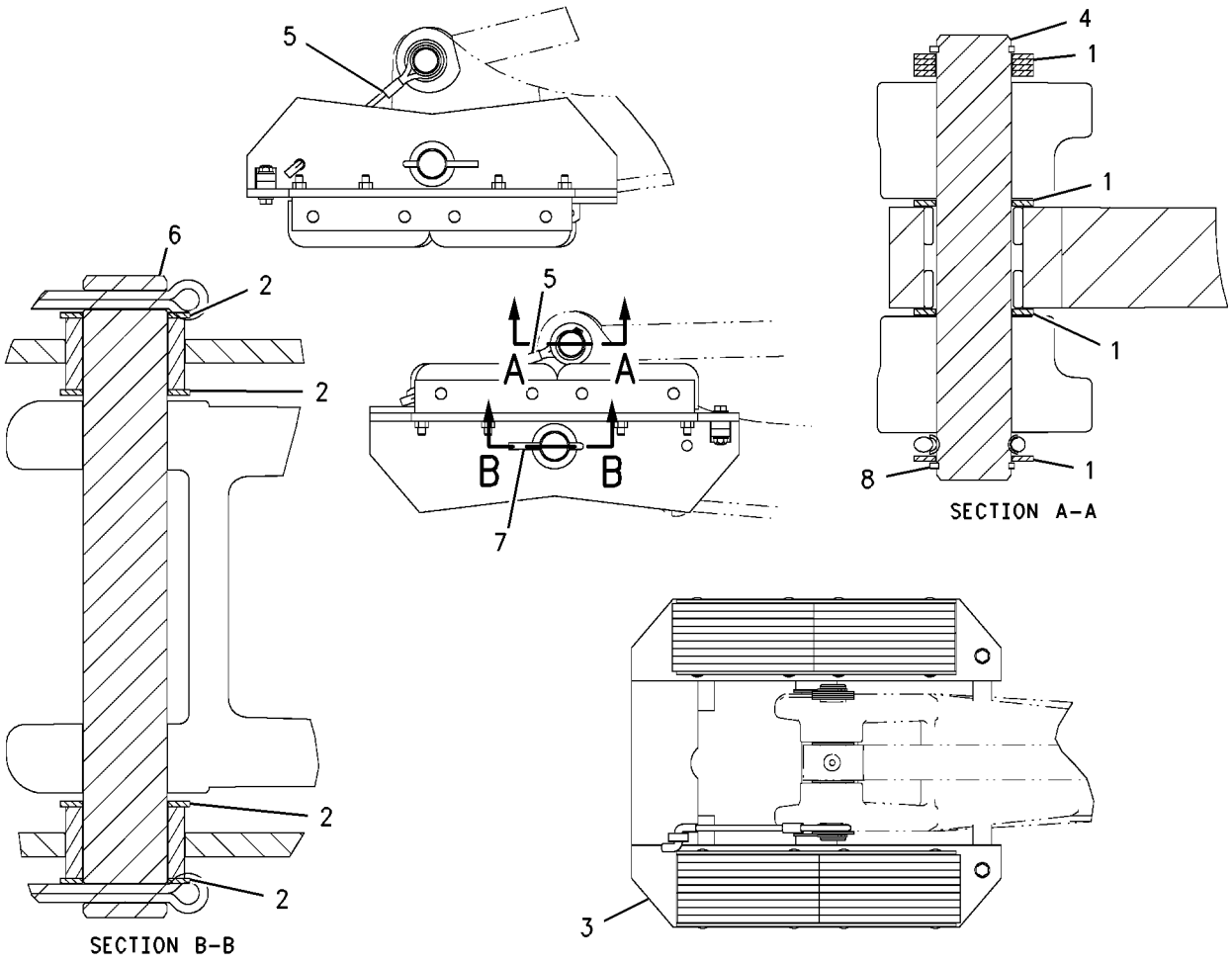

GRAPHIC #1 **<END>** g00945230

116-4942 PAD & MTG GP-STABILIZER

S/N: B2D1-UP
AN ATTACHMENT

SMCS-7222 **i01758963**

NOTE	REF NO	GRAPHIC REF	PART NUMBER	QTY	PART NAME 1 2 3 4 5 6 (PRODUCT LEVEL)	SEE PAGE
BC	1	1	**9R-0109**	12	WASHER (3MM THK)	
BC	2	1	**9R-0158**	14	WASHER (46X69X3MM THK)	
	3	1	**9R-0422**	2	PIN	
	4	1	**9R-0424**	2	PIN	
C	5	1	**141-6208**	2	PAD-STABILIZER	
	6	1	**6V-3213**	4	RING-RETAINING	
	7	1	**6V-8144**	4	RING	

B-USE AS REQUIRED
C-CHANGE FROM PREVIOUS TYPE

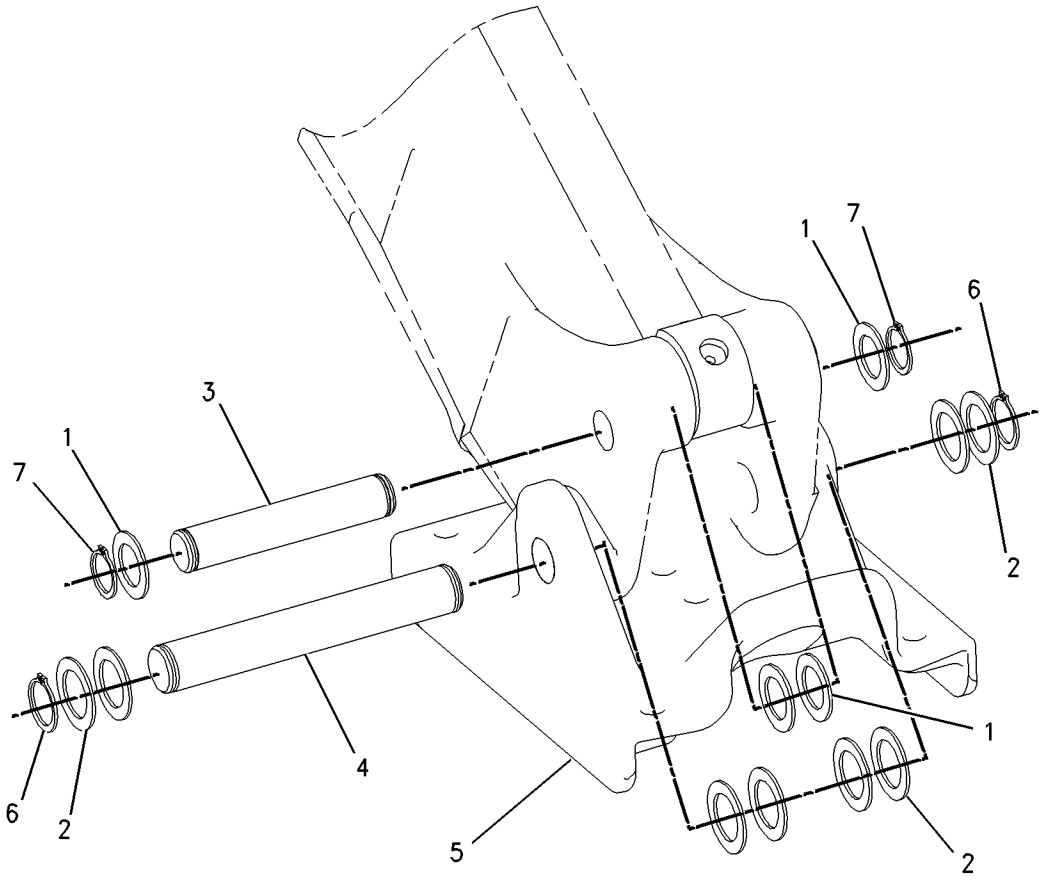

GRAPHIC #1 **<END>** g00801165

9R-6062 PAD GP-STABILIZER–STREET

S/N: B2D1-UP

PART OF 9R-6007 PAD & MTG GP-STABILIZER

AN ATTACHMENT

SMCS-7222 **i02051610**

NOTE	REF NO	GRAPHIC REF	PART NUMBER	QTY	PART NAME 1 2 3 4 5 6 (PRODUCT LEVEL)	SEE PAGE
	1	1	**9R-5555**	2	PAD AS-STABILIZER (STREET)	
	2	1	**130-1642**	1	PAD AS-STABILIZER	
	3	1	**146-1591**	2	LATCH	
	4	1	**7X-0447**	8	NUT (7/16-14-THD)	
	5	1	**6V-5729**	2	LOCKNUT	
	6	1	**7X-0310**	2	BOLT (7/16-14X2-IN)	
	7	1	**8T-5360**	4	WASHER (12X22.5X2.5-MM THK)	

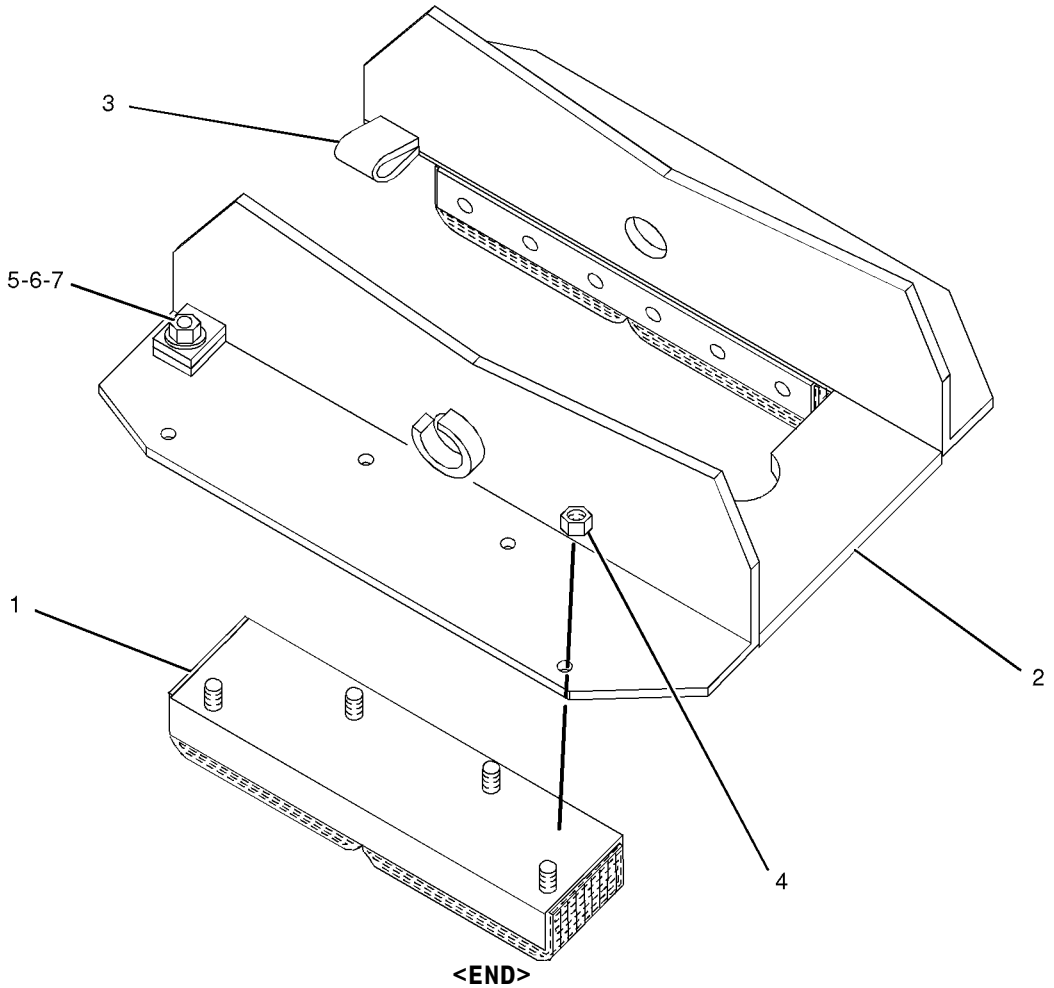

GRAPHIC #1 **<END>** g01052259

135-2876 PAD GP-STABILIZER–STREET

S/N: B2D1-UP

PART OF 133-3362 PAD & GUARD GP-STABILIZER

AN ATTACHMENT

SMCS-7222 **i01753277**

NOTE	REF NO	GRAPHIC REF	PART NUMBER	QTY	PART NAME 1 2 3 4 5 6 (PRODUCT LEVEL)	SEE PAGE
	1	1	**9R-5555**	2	PAD AS	
	2	1	**130-1642**	1	PAD AS	
	3	1	**146-1589**	2	LATCH	
	4	1	**146-1590**	2	LATCH	
	5	1	**6V-5729**	2	LOCKNUT	
	6	1	**7X-0310**	2	BOLT (7/16-14X2 IN)	
	7	1	**7X-0447**	8	NUT (7/16-14 THD)	
	8	1	**8T-5360**	4	WASHER (12X22.5X2.5MM THK)	

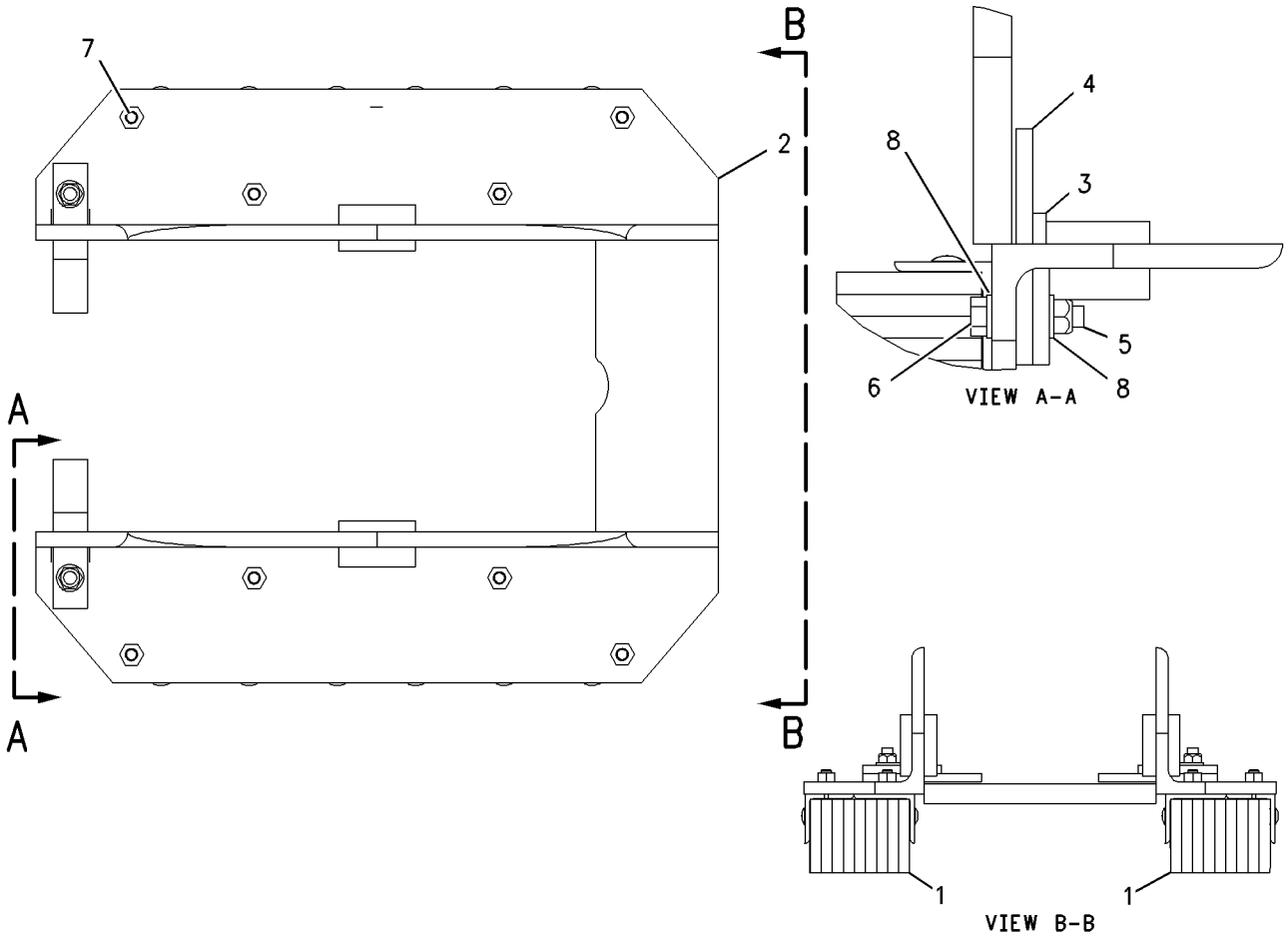

GRAPHIC #1 **<END>** g00845450

9R-0041 STABILIZER GP-BACKHOE

S/N: B2D1-UP

PART OF 214-6950 CHASSIS AR

SMCS-7222 **i01866631**

NOTE	REF NO	GRAPHIC REF	PART NUMBER	QTY	PART NAME 1 2 3 4 5 6 (PRODUCT LEVEL)	SEE PAGE
B	1	1	**9R-0109**	8	WASHER (41X64X3MM THK)	
B	2	1	**9R-0158**	12	WASHER (46X69X3MM THK)	
	3	1	**9R-0423**	2	PIN	
	4	1	**9R-0424**	2	PIN	
C	5	1	**111-4337**	2	WASHER (46X70X1MM THK)	
C	6	1	**119-4594**	2	WASHER (41X64X1MM THK)	
	7	1	**130-0777**	2	STABILIZER AS	
					(EACH INCLUDES)	
	7A	1	**9R-0411**	2	BEARING-SLEEVE	
	8	1	**3B-8489**	4	FITTING-GREASE	
	9	1	**6V-3213**	4	RING-RETAINING	
	10	1	**6V-8144**	4	RING	

B-USE AS REQUIRED
C-CHANGE FROM PREVIOUS TYPE

9R-0041 **STABILIZER GP-BACKHOE** *(contd.)* **i01866631**

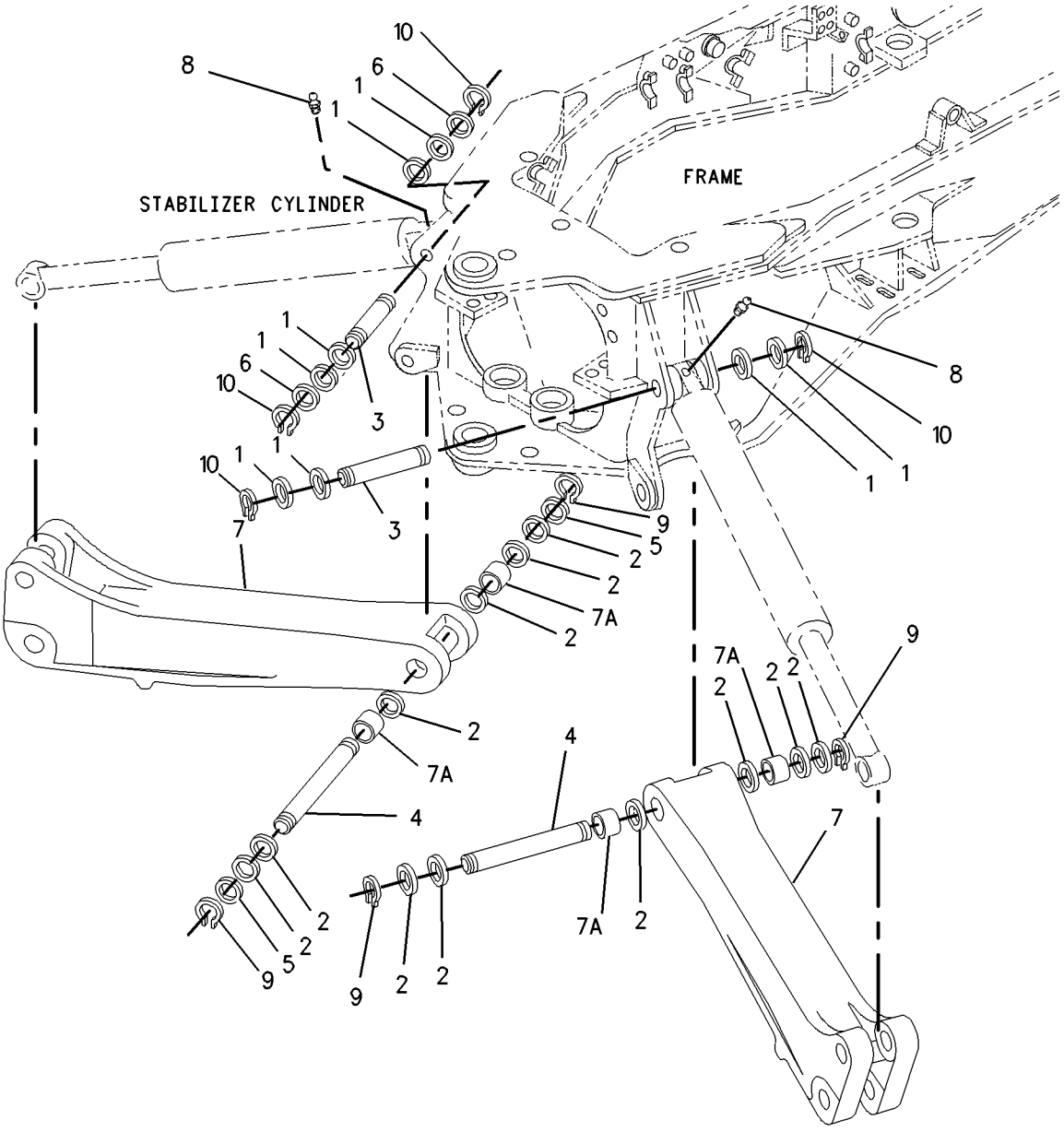

GRAPHIC #1 **<END>** g00952075

IMPLEMENTS

197-2733 STICK GP-EXTENDABLE

S/N: B2D1-UP

PART OF 238-4783, 238-4784 BACKHOE AR-EXTENDABLE STICK

AN ATTACHMENT

SMCS-6533 **i01959101**

NOTE	REF NO	GRAPHIC REF	PART NUMBER	QTY	PART NAME 1 2 3 4 5 6 (PRODUCT LEVEL)	SEE PAGE
	1	1	**9R-2958**	1	PIN	
	2	1	**9R-2959**	2	CLIP	
B	3	1	**117-0754**	4	SHIM (1MM THK)	
Y	4	1	*155-6586*	1	CYLINDER GP-EXTENDABLE STICK	294
B	5	1	**187-3834**	6	SHIM (1MM THK)	
B	6	1	**187-3832**	12	SHIM (1MM THK)	
B	7	1	**187-3835**	4	SHIM (0.5MM THK)	
B	8	1	**187-3833**	4	SHIM (0.5MM THK)	
	9	1	**159-4930**	1	PLATE	
	10	1	**173-2769**	1	PIN	
	11	1	**173-7757**	1	PIN	
B	12	1	**187-3836**	3	SHIM (1MM THK)	
B	13	1	**187-3837**	2	SHIM (0.5MM THK)	
	14	1	**184-6785**	1	EXTENSION AS	
	14A	1	**9R-0162**	2	BEARING	
	14B	1	**9R-0411**	3	BEARING-SLEEVE	
	14C	1	**9R-9254**	2	BOSS	
	15	1	**187-3825**	1	PAD AS	
	16	1	**187-3826**	4	PAD AS	
	17	1	**187-3827**	2	PAD AS	
	18	1	**187-3828**	1	PAD AS	
B	19	1	**198-0014**	3	SHIM (1MM THK)	
B	20	1	**198-0015**	2	SHIM (0.5MM THK)	
	21	1	**197-2734**	1	HOUSING AS	
	21A	1	**8Y-4489**	5	BOSS (M10X35MM)	
	21B	1	**9R-0139**	2	BEARING-SLEEVE	
	21C	1	**9R-9254**	2	BOSS	
	21D	1	**107-6711**	2	BLOCK	
	21E	1	**158-8778**	2	BOSS	
	21F	1	**188-9954**	2	STOP	
	21G	1	**172-9992**	2	BOSS	
	22	1	**1J-6474**	2	RING-RETAINING	
	23	1	**1L-3768**	2	RING-RETAINING	
	24	1	**3B-8489**	1	FITTING-GREASE	
	25	1	**8T-4122**	6	WASHER-HARD (17X32X3.5MM THK)	
M	26	1	**8T-4179**	4	BOLT (M12X1.75X20MM)	
M	27	1	**8T-4184**	2	BOLT (M12X1.75X45MM)	
M	28	1	**8T-4192**	10	BOLT (M12X1.75X25MM)	
	29	1	**8T-4223**	6	WASHER-HARD (13.5X25.5X3MM THK)	
M	30	1	**8T-7338**	6	BOLT (M16X2.0X45MM)	
	31	1	**8T-7971**	8	WASHER-HARD (13.5X25.5X5MM THK)	

B-USE AS REQUIRED
M-METRIC PART
Y-SEPARATE ILLUSTRATION

197-2733 **STICK GP-EXTENDABLE** *(contd.)* **i01959101**

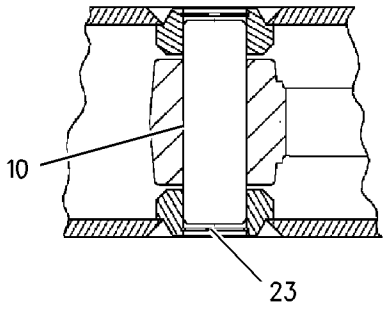

SECTION A-A

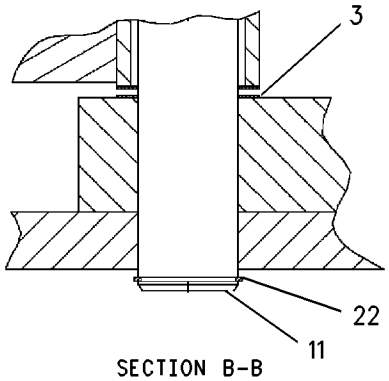

SECTION B-B

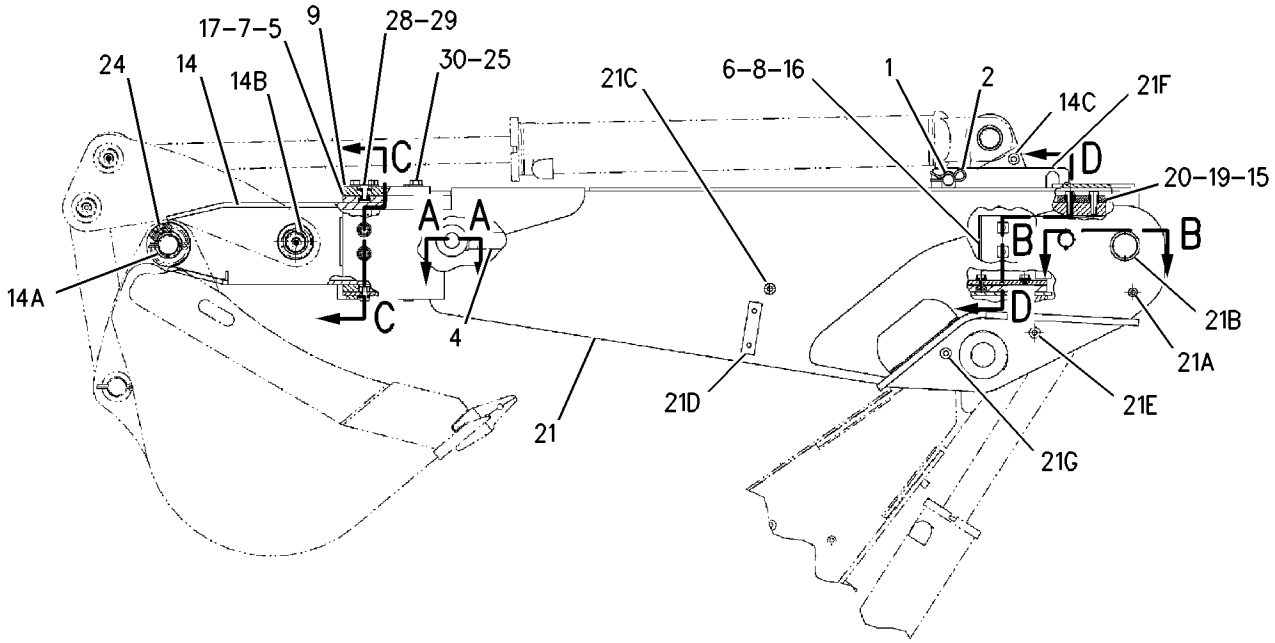

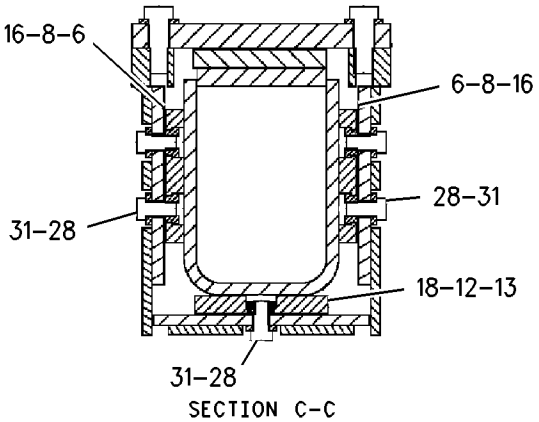

SECTION C-C

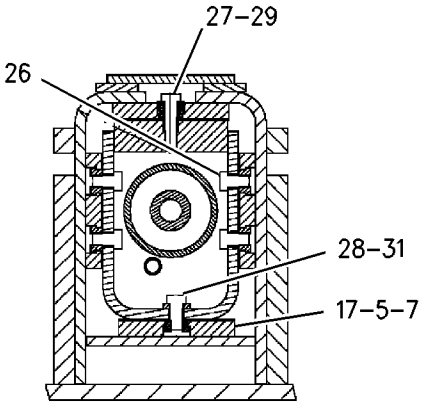

SECTION D-D

GRAPHIC #1 **<END>** g00790971

IMPLEMENTS

151-7316 STICK GP-HOE

S/N: B2D1-UP

PART OF 238-4780, 238-4781, 238-4782 BACKHOE AR-STANDARD STICK

AN ATTACHMENT

SMCS-6502 **i01489465**

NOTE	REF NO	GRAPHIC REF	PART NUMBER	QTY	PART NAME 1 2 3 4 5 6 (PRODUCT LEVEL)	SEE PAGE
	1	1	**3B-8488**	1	FITTING-HYDRAULIC	
	2	1	**9R-1502**	4	WASHER (4MM THK)	
	3	1	**9R-1510**	4	WASHER (4MM THK)	
	4	1	**9R-8663**	1	PIN	
	5	1	**144-3528**	1	STICK AS	
	5A	1	**9R-0139**	2	BEARING-SLEEVE	
	5B	1	**9R-0411**	2	BEARING-SLEEVE	
	5C	1	**9R-0162**	4	BEARING	
	5D	1	**172-9992**	2	BOSS	
	5E	1	**107-6711**	2	BLOCK	
	6	1	**179-9961**	1	PLUG-PROTECTIVE	
	7	1	**174-5696**	1	PIN	
	8	1	**3B-8489**	2	FITTING-GREASE	
	9	1	**6V-4364**	2	RING-RETAINING	
M	10	1	**6V-7687**	1	LOCKNUT (M12X1.75 THD)	
	11	1	**6V-8344**	2	RING	
M	12	1	**8T-5001**	1	BOLT (M12X1.75X130MM)	
	13	1	**159-0961**	1	PIN	
B	14	1	**124-0360**	3	WASHER-THRUST	

B-USE AS REQUIRED
M-METRIC PART

151-7316 **STICK GP-HOE** *(contd.)* **i01489465**

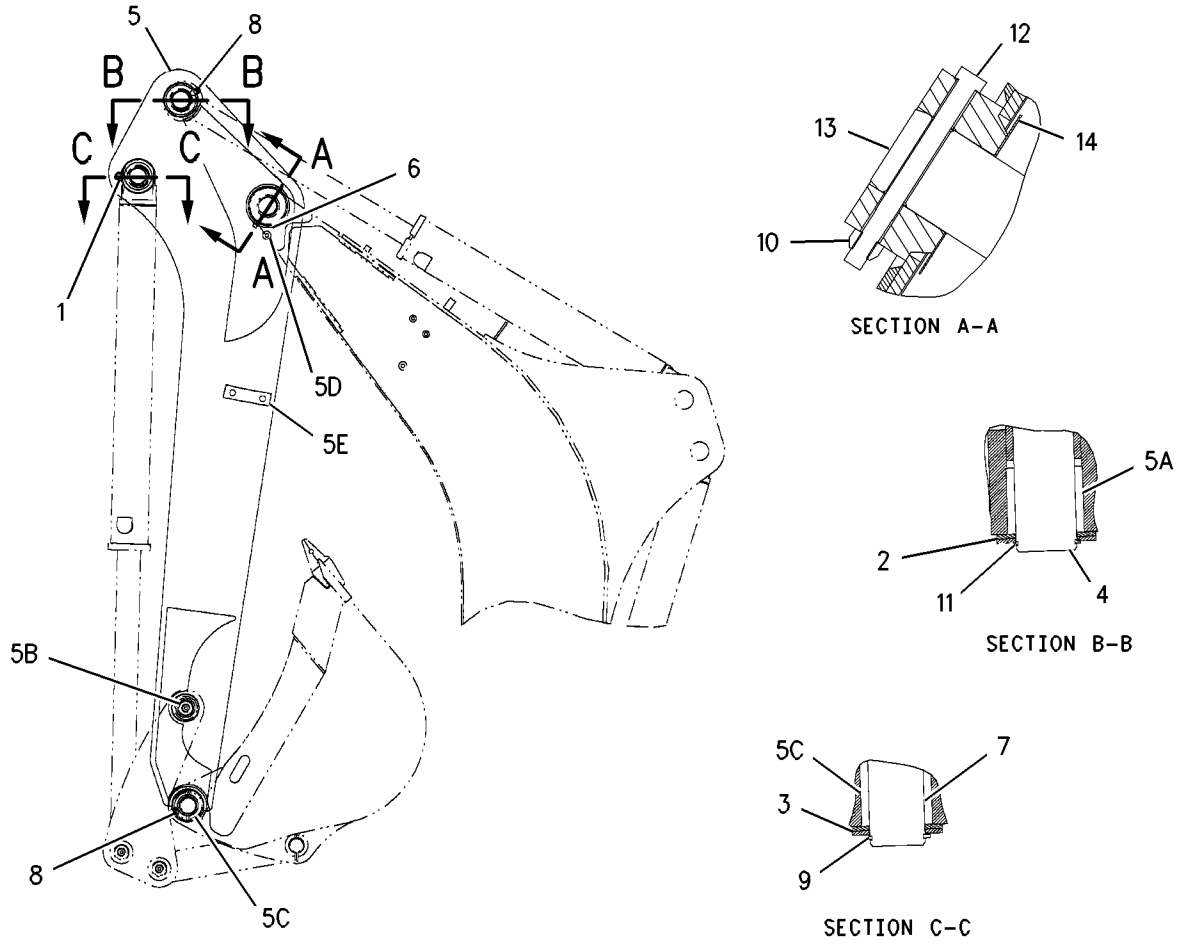

GRAPHIC #1 **<END>** g00766374

112-0938 BUCKET AR-MULTIPURPOSE

S/N: B2D1-UP
1.25 CU YD
PART OF 112-0940 BUCKET AR-MULTIPURPOSE
AN ATTACHMENT

SMCS-6104 **i01525762**

NOTE	PART NUMBER	QTY	PART NAME 1 2 3 4 5 6 (PRODUCT LEVEL)	SEE PAGE
Y	**108-3036**	1	BUCKET GP-MULTIPURPOSE	469
Y	**185-1839**	2	CYLINDER GP-MULTIPURPOSE BUKT	298
Y	*9R-3712*	1	LINES GP-MULTIPURPOSE BUCKET	343
Y	*9R-4668*	1	MOUNTING GP-CYLINDER	365

Y-SEPARATE ILLUSTRATION

<END>

112-0939 BUCKET AR-MULTIPURPOSE

S/N: B2D1-UP
1.25 CU YD W/ FORKS
PART OF 112-0941 BUCKET AR-MULTIPURPOSE
AN ATTACHMENT

SMCS-6104 **i01525713**

NOTE	PART NUMBER	QTY	PART NAME 1 2 3 4 5 6 (PRODUCT LEVEL)	SEE PAGE
Y	**112-1778**	1	BUCKET GP-MULTIPURPOSE	470
Y	**185-1839**	2	CYLINDER GP-MULTIPURPOSE BUKT	298
Y	*104-6310*	1	FORK GP	478
Y	*9R-3712*	1	LINES GP-MULTIPURPOSE BUCKET	343
Y	*9R-4668*	1	MOUNTING GP-CYLINDER	365

Y-SEPARATE ILLUSTRATION

<END>

112-0940 BUCKET AR-MULTIPURPOSE

S/N: B2D1-UP
0.95 CU M (1.25 CU YD)
AN ATTACHMENT

SMCS-6104 **i01692599**

NOTE	PART NUMBER	QTY	PART NAME 1 2 3 4 5 6 (PRODUCT LEVEL)	SEE PAGE
Y	**112-0938**	1	BUCKET AR-MULTIPURPOSE	442
	106-9387	1	FILM-INDICATOR (BUCKET)	

Y-SEPARATE ILLUSTRATION

<END>

WORK TOOLS

112-0941 BUCKET AR-MULTIPURPOSE

S/N: B2D1-UP
0.95 CU M (1.25 CU YD), WITH FORKS
AN ATTACHMENT

SMCS-6104 **i01692601**

NOTE	PART NUMBER	QTY	PART NAME 1 2 3 4 5 6 (PRODUCT LEVEL)	SEE PAGE
Y	**112-0939**	1	BUCKET AR-MULTIPURPOSE	442
	106-9387	1	FILM-INDICATOR (BUCKET)	

Y-SEPARATE ILLUSTRATION

<END>

WORK TOOLS

9R-5201 BUCKET AS-GENERAL PURPOSE

S/N: B2D1-UP
0.76 CU M(1.0 CU YD)
AN ATTACHMENT

SMCS-6101 **i01692594**

NOTE	REF NO	GRAPHIC REF	PART NUMBER	QTY	PART NAME 1 2 3 4 5 6 (PRODUCT LEVEL)	SEE PAGE
	1	1	*190-7595*	1	BUCKET AS	
	2	1	**9R-0347**	2	EDGE	
	3	1	**9R-4672**	1	EDGE	
	4	1	**9R-0111**	4	BEARING-SLEEVE	
	5	1	**9R-4485**	2	BOSS	
	6	1	**9R-4486**	2	BOSS	
	7	1	**9R-5205**	1	EDGE-LH	
	8	1	**9R-5206**	1	EDGE-RH	

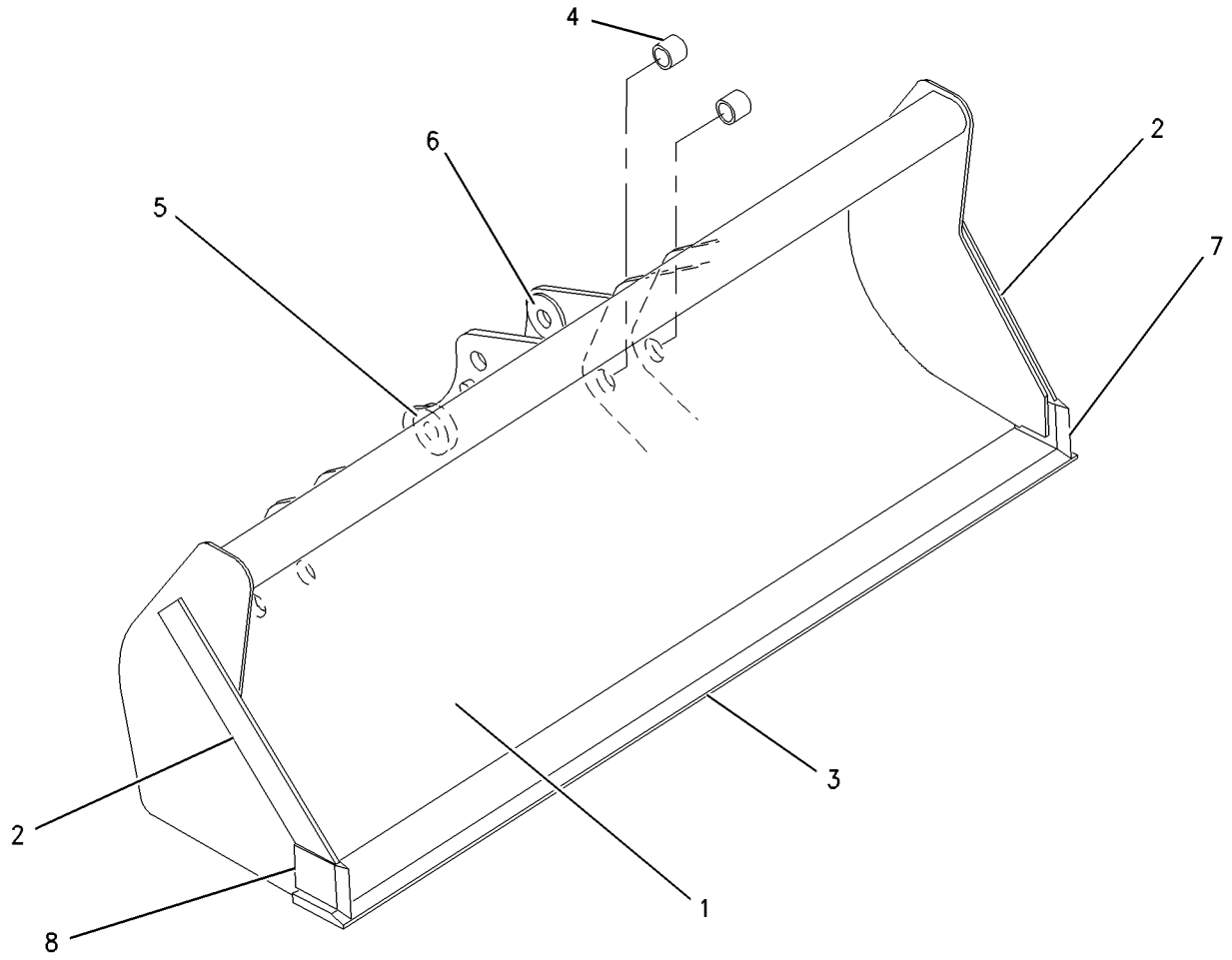

GRAPHIC #1 **<END>** g00871857

9R-5989 BUCKET AS-GENERAL PURPOSE

S/N: B2D1-UP
0.95 CU M (1.25 CU YD)
AN ATTACHMENT

SMCS-6101 **i01516030**

NOTE	REF NO	GRAPHIC REF	PART NUMBER	QTY	PART NAME 1 2 3 4 5 6 (PRODUCT LEVEL)	SEE PAGE
	1	1	*190-7598*	1	BUCKET AS	
	2	1	**9R-0376**	2	EDGE	
	3	1	**9R-4672**	1	EDGE	
	4	1	**9R-0111**	4	BEARING-SLEEVE	
	5	1	**9R-4485**	2	BOSS	
	6	1	**9R-4486**	2	BOSS	
	7	1	**9R-5205**	1	EDGE-LH	
	8	1	**9R-5206**	1	EDGE-RH	

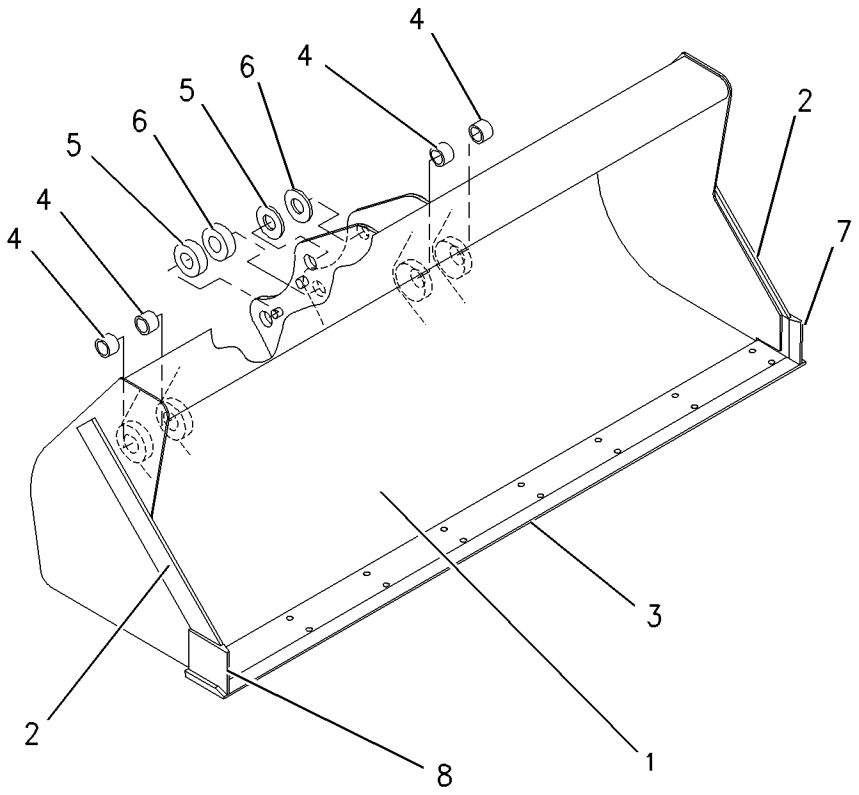

GRAPHIC #1 **<END>** g00786909

219-3379 BUCKET GP-HOE–STANDARD DUTY

S/N: B2D1-UP
305MM (12IN)
PART OF 219-3410 BUCKET GP-HOE
AN ATTACHMENT

SMCS-6503 **i01938808**

NOTE	REF NO	GRAPHIC REF	PART NUMBER	QTY	PART NAME 1 2 3 4 5 6 (PRODUCT LEVEL)	SEE PAGE
	1	1	*208-5245*	3	TIP GP-PENETRATION	
					(EACH INCLUDES)	
	1A	1	**201-1238**	1	PIN	
	1B	1	**201-1239**	1	RETAINER AS	
	1C	1	**208-5235**	1	TIP-PENETRATION	
	2	1	*151-7929*	1	BRACKET AS-LH	
	2A	1	**9R-0320**	1	BEARING	
	2B	1	**154-5257**	1	BEARING	
	3	1	*151-7930*	1	BRACKET AS-RH	
	3A	1	**9R-0320**	1	BEARING	
	3B	1	**154-5257**	1	BEARING	

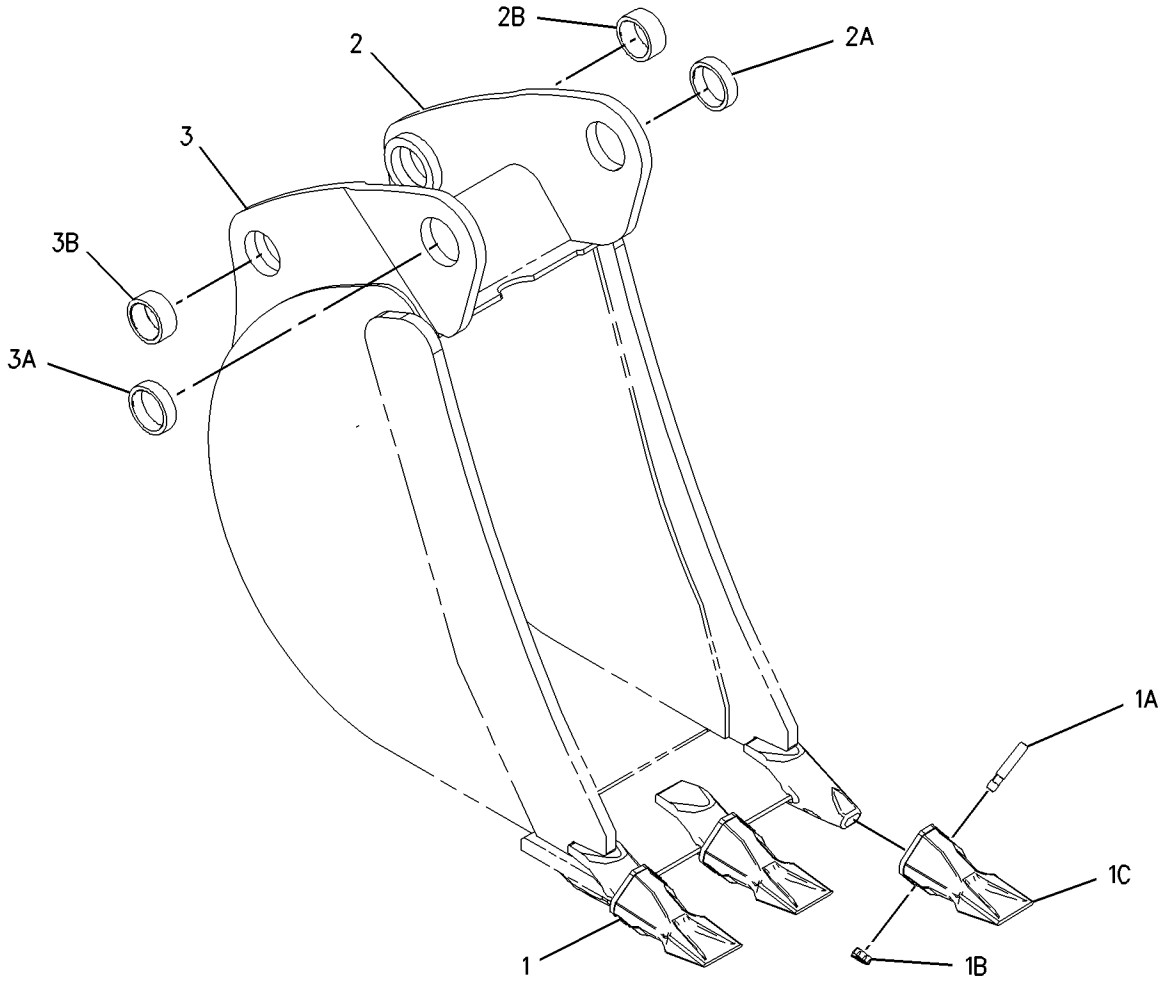

GRAPHIC #1 **<END>** g01001647

WORK TOOLS

219-3380 BUCKET GP-HOE–STANDARD DUTY

S/N: B2D1-UP
458MM (18IN)
AN ATTACHMENT

SMCS-6503 **i01938807**

NOTE	REF NO	GRAPHIC REF	PART NUMBER	QTY	PART NAME 1 2 3 4 5 6 (PRODUCT LEVEL)	SEE PAGE
	1	1	*208-5245*	4	TIP GP-PENETRATION	
					(EACH INCLUDES)	
	1A	1	**201-1238**	1	PIN	
	1B	1	**201-1239**	1	RETAINER AS	
	1C	1	**208-5235**	1	TIP-PENETRATION	
	2	1	*151-7902*	1	BRACKET AS-LH	
	2A	1	**9R-0162**	1	BEARING	
	2B	1	**168-0480**	1	BEARING-SLEEVE	
	3	1	*151-7903*	1	BRACKET AS-RH	
	3A	1	**9R-0162**	1	BEARING	
	3B	1	**168-0480**	1	BEARING-SLEEVE	

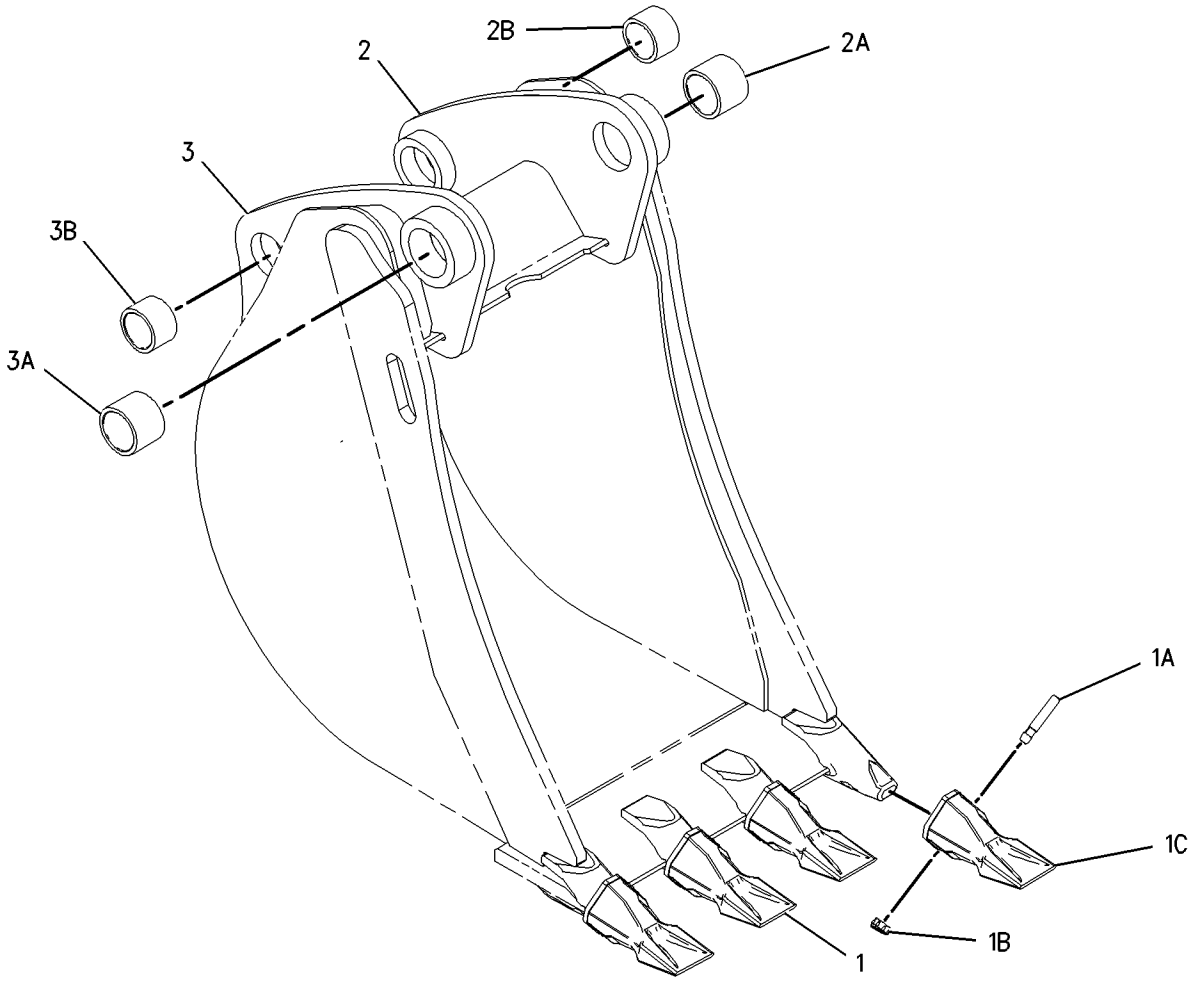

GRAPHIC #1 **<END>** g01001636

WORK TOOLS

219-3381 BUCKET GP-H0E–STANDARD DUTY

S/N: B2D1-UP
610MM (24 IN)
AN ATTACHMENT

SMCS-6503 **i01938806**

NOTE	REF NO	GRAPHIC REF	PART NUMBER	QTY	PART NAME 1 2 3 4 5 6 (PRODUCT LEVEL)	SEE PAGE
	1	1	*208-5245*	5	TIP GP-PENETRATION	
					(EACH INCLUDES)	
	1A	1	**201-1238**	1	PIN	
	1B	1	**201-1239**	1	RETAINER AS	
	1C	1	**208-5235**	1	TIP-PENETRATION	
	2	1	*151-7902*	1	BRACKET AS-LH	
	2A	1	**9R-0162**	1	BEARING	
	2B	1	**168-0480**	1	BEARING-SLEEVE	
	3	1	*151-7903*	1	BRACKET AS-RH	
	3A	1	**9R-0162**	1	BEARING	
	3B	1	**168-0480**	1	BEARING-SLEEVE	
	4	1	**219-9488**	1	EDGE	
	5	1	**201-1235**	5	ADAPTER	

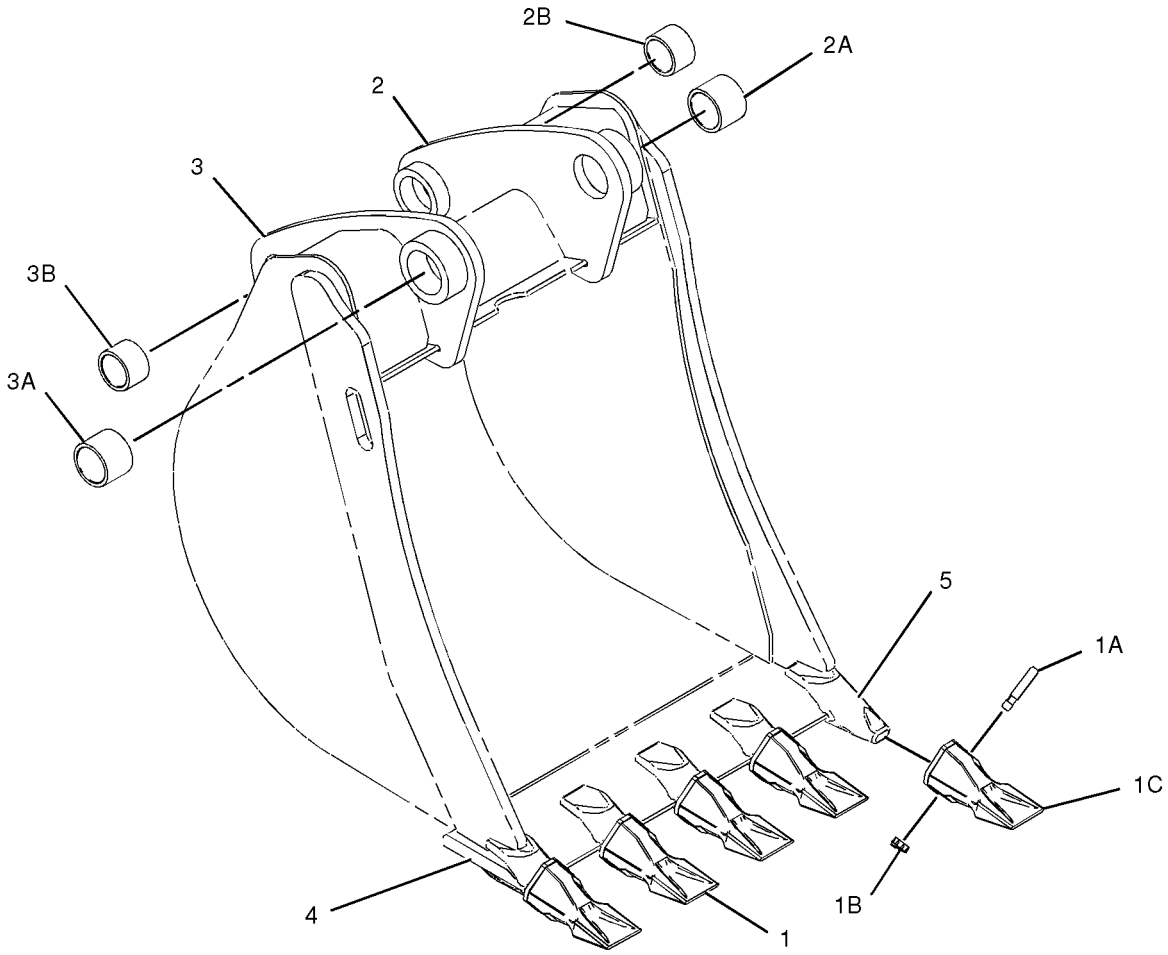

GRAPHIC #1 **<END>** g01013634

219-3382 BUCKET GP-HOE–STANDARD DUTY

S/N: B2D1-UP
762MM (30IN)
AN ATTACHMENT

SMCS-6503 **i01938804**

NOTE	REF NO	GRAPHIC REF	PART NUMBER	QTY	PART NAME 1 2 3 4 5 6 (PRODUCT LEVEL)	SEE PAGE
	1	1	*208-5245*	5	TIP GP-PENETRATION	
					(EACH INCLUDES)	
	1A	1	**201-1238**	1	PIN	
	1B	1	**201-1239**	1	RETAINER AS	
	1C	1	**208-5235**	1	TIP-PENETRATION	
	2	1	*151-7902*	1	BRACKET AS-LH	
	2A	1	**9R-0162**	1	BEARING	
	2B	1	**168-0480**	1	BEARING-SLEEVE	
	3	1	*151-7903*	1	BRACKET AS-RH	
	3A	1	**9R-0162**	1	BEARING	
	3B	1	**168-0480**	1	BEARING-SLEEVE	
	4	1	**219-9489**	1	EDGE	
	5	1	**201-1235**	5	ADAPTER	

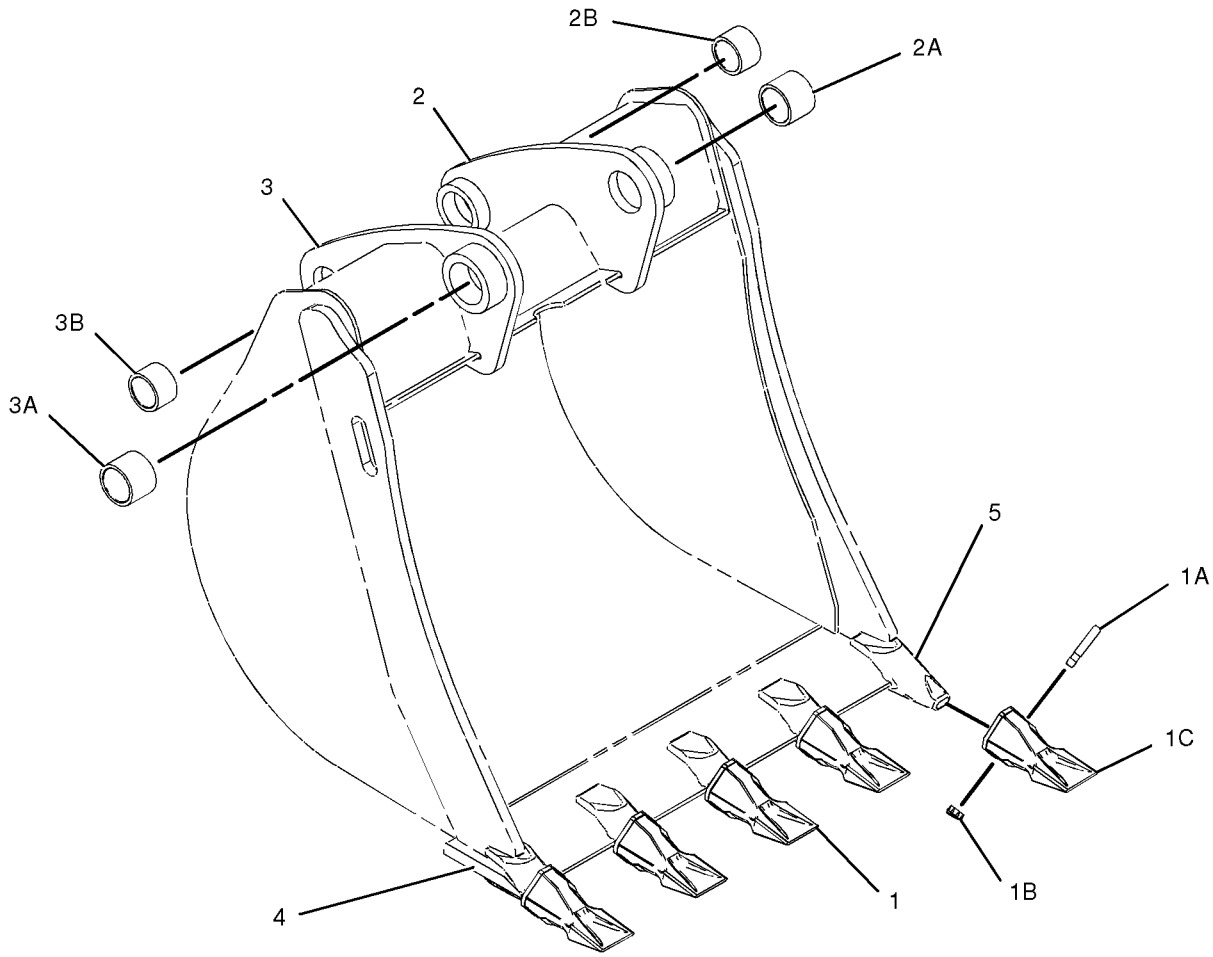

GRAPHIC #1 **<END>** g01013641

WORK TOOLS

219-3383 BUCKET GP-H0E–STANDARD DUTY

S/N: B2D1-UP
914MM (36IN)
AN ATTACHMENT

SMCS-6503 **i01938803**

NOTE	REF NO	GRAPHIC REF	PART NUMBER	QTY	PART NAME 1 2 3 4 5 6 (PRODUCT LEVEL)	SEE PAGE
	1	1	*208-5245*	6	TIP GP-PENETRATION	
					(EACH INCLUDES)	
	1A	1	**201-1238**	1	PIN	
	1B	1	**201-1239**	1	RETAINER AS	
	1C	1	**208-5235**	1	TIP-PENETRATION	
	2	1	*151-7902*	1	BRACKET AS-LH	
	2A	1	**9R-0162**	1	BEARING	
	2B	1	**168-0480**	1	BEARING-SLEEVE	
	3	1	*151-7903*	1	BRACKET AS-RH	
	3A	1	**9R-0162**	1	BEARING	
	3B	1	**168-0480**	1	BEARING-SLEEVE	
	4	1	**219-9490**	1	EDGE	
	5	1	**201-1235**	6	ADAPTER	

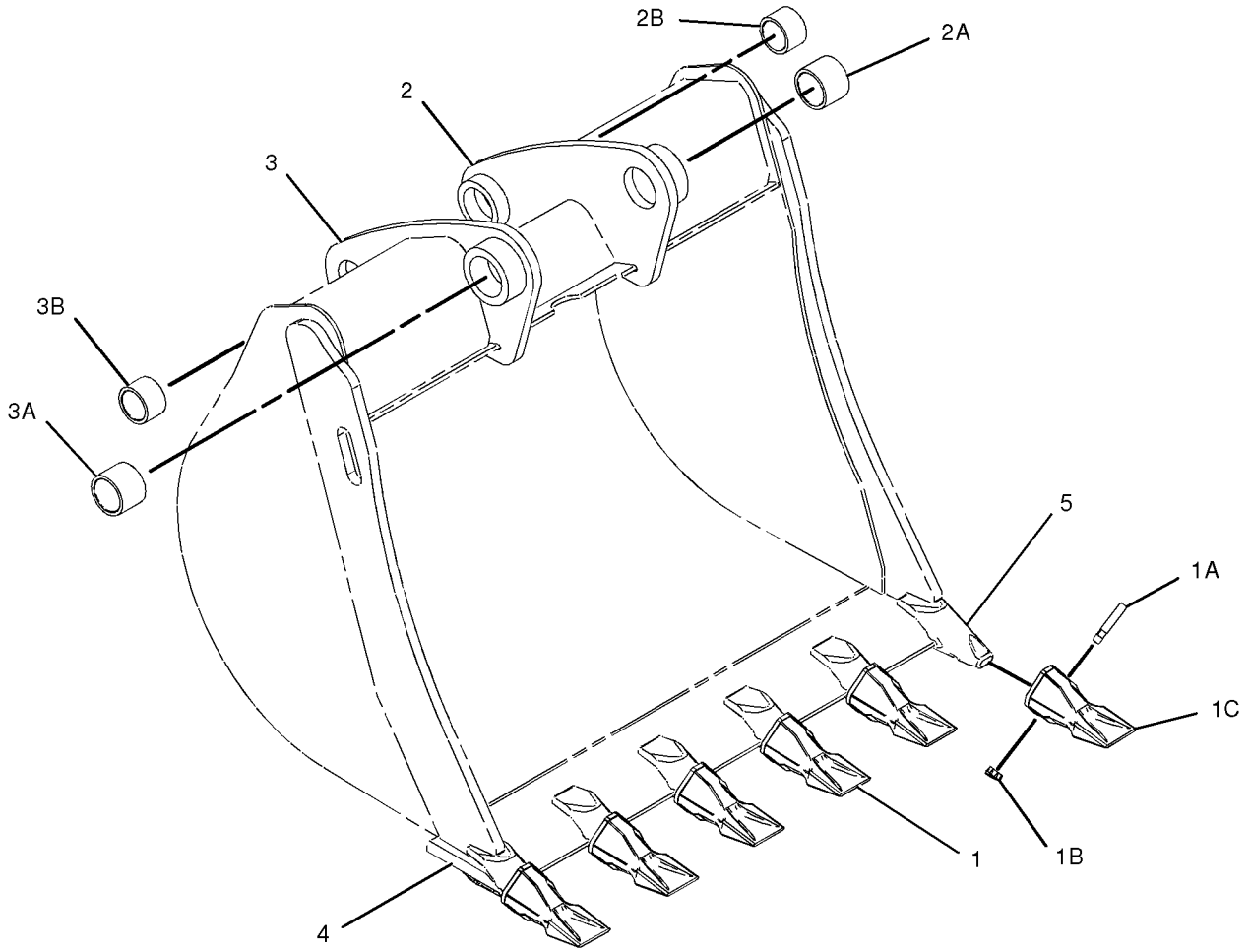

GRAPHIC #1

<END>

g01013697

WORK TOOLS

219-3384 BUCKET GP-H0E

S/N: B2D1-UP
305MM (12IN)
PART OF 219-3411 BUCKET GP-H0E
AN ATTACHMENT

SMCS-6503 **i01946874**

NOTE	REF NO	GRAPHIC REF	PART NUMBER	QTY	PART NAME 1 2 3 4 5 6 (PRODUCT LEVEL)	SEE PAGE
	1	1	*208-5245*	3	TIP GP-PENETRATION	
					(EACH INCLUDES)	
	1A	1	**201-1238**	1	PIN	
	1B	1	**201-1239**	1	RETAINER AS	
	1C	1	**208-5235**	1	TIP-PENETRATION	
	2	1	*151-7929*	1	BRACKET AS-LH	
	2A	1	**9R-0320**	1	BEARING	
	2B	1	**154-5257**	1	BEARING	
	3	1	*151-7930*	1	BRACKET AS-RH	
	3A	1	**9R-0320**	1	BEARING	
	3B	1	**154-5257**	1	BEARING	
	4	1	**134-5884**	1	EDGE-LH	
	5	1	**134-5885**	1	EDGE-RH	
	6	1	**151-7927**	2	PLATE	
	7	1	**219-9482**	1	EDGE	
	8	1	**201-1234**	3	ADAPTER	

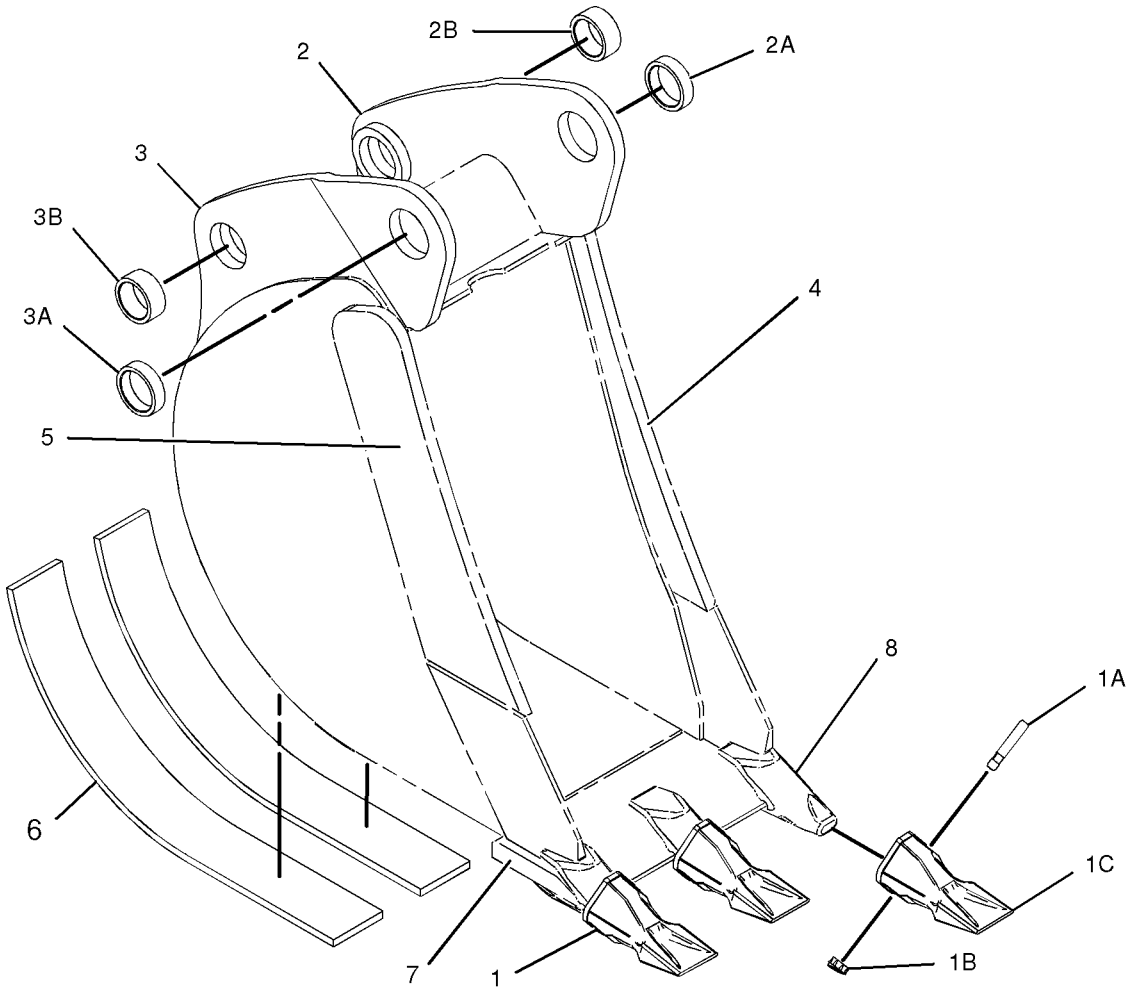

GRAPHIC #1 **<END>** g01013714

WORK TOOLS

219-3385 BUCKET GP-HOE–HEAVY DUTY

S/N: B2D1-UP
407MM (16IN)
AN ATTACHMENT

SMCS-6503 **i01938800**

NOTE	REF NO	GRAPHIC REF	PART NUMBER	QTY	PART NAME 1 2 3 4 5 6 (PRODUCT LEVEL)	SEE PAGE
	1	1	*208-5245*	3	TIP GP-PENETRATION	
					(EACH INCLUDES)	
	1A	1	**201-1238**	1	PIN	
	1B	1	**201-1239**	1	RETAINER AS	
	1C	1	**208-5235**	1	TIP-PENETRATION	
	2	1	*151-7902*	1	BRACKET AS-LH	
	2A	1	**9R-0162**	1	BEARING	
	2B	1	**168-0480**	1	BEARING-SLEEVE	
	3	1	*151-7903*	1	BRACKET AS-RH	
	3A	1	**9R-0162**	1	BEARING	
	3B	1	**168-0480**	1	BEARING-SLEEVE	
	4	1	**219-9482**	1	EDGE	

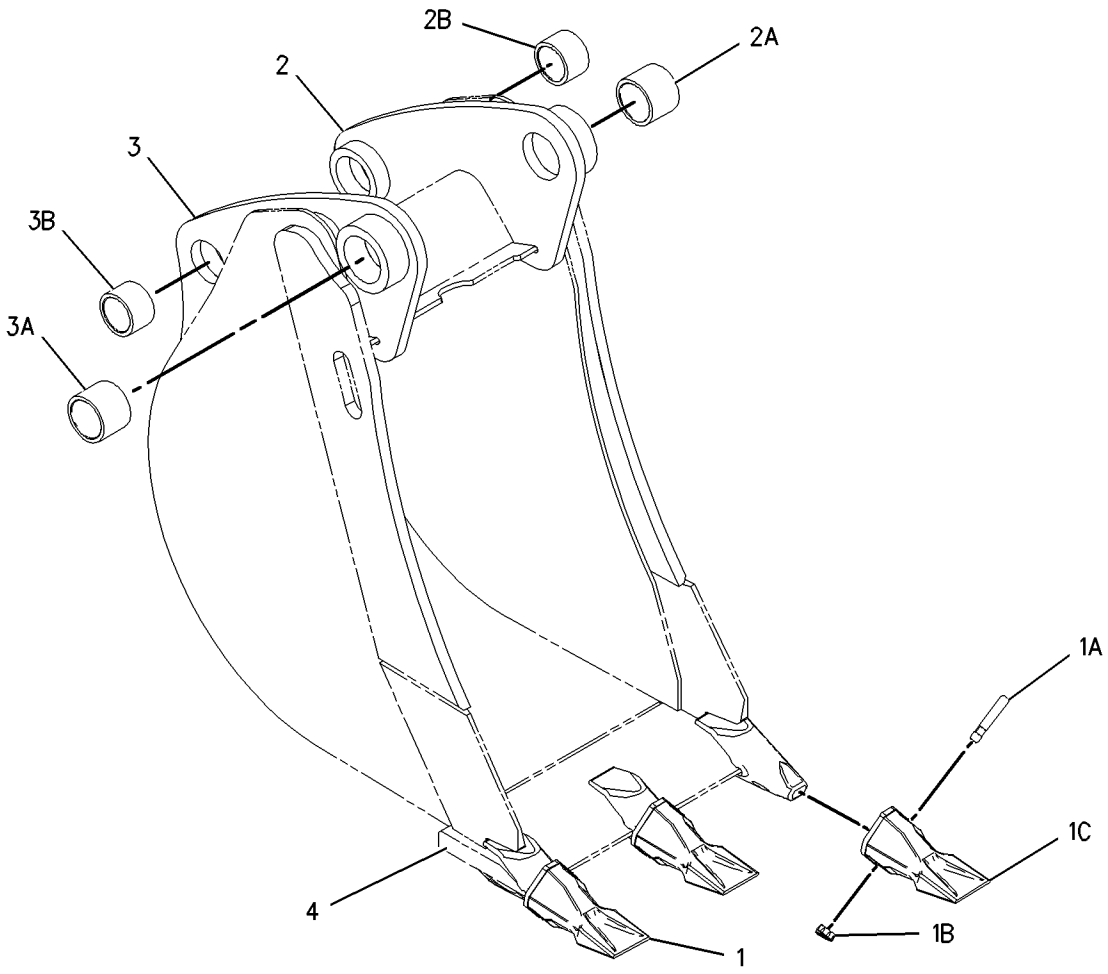

GRAPHIC #1 **<END>** g01001972

WORK TOOLS

219-3386 BUCKET GP-HOE–HEAVY DUTY

S/N: B2D1-UP
458MM (18IN)
AN ATTACHMENT

SMCS-6503 **i01938796**

NOTE	REF NO	GRAPHIC REF	PART NUMBER	QTY	PART NAME 1 2 3 4 5 6 (PRODUCT LEVEL)	SEE PAGE
	1	1	*208-5245*	4	TIP GP-PENETRATION	
					(EACH INCLUDES)	
	1A	1	**201-1238**	1	PIN	
	1B	1	**201-1239**	1	RETAINER AS	
	1C	1	**208-5235**	1	TIP-PENETRATION	
	2	1	*151-7902*	1	BRACKET AS-LH	
	2A	1	**9R-0162**	1	BEARING	
	2B	1	**168-0480**	1	BEARING-SLEEVE	
	3	1	*151-7903*	1	BRACKET AS-RH	
	3A	1	**9R-0162**	1	BEARING	
	3B	1	**168-0480**	1	BEARING-SLEEVE	
	4	1	**219-9483**	1	EDGE	

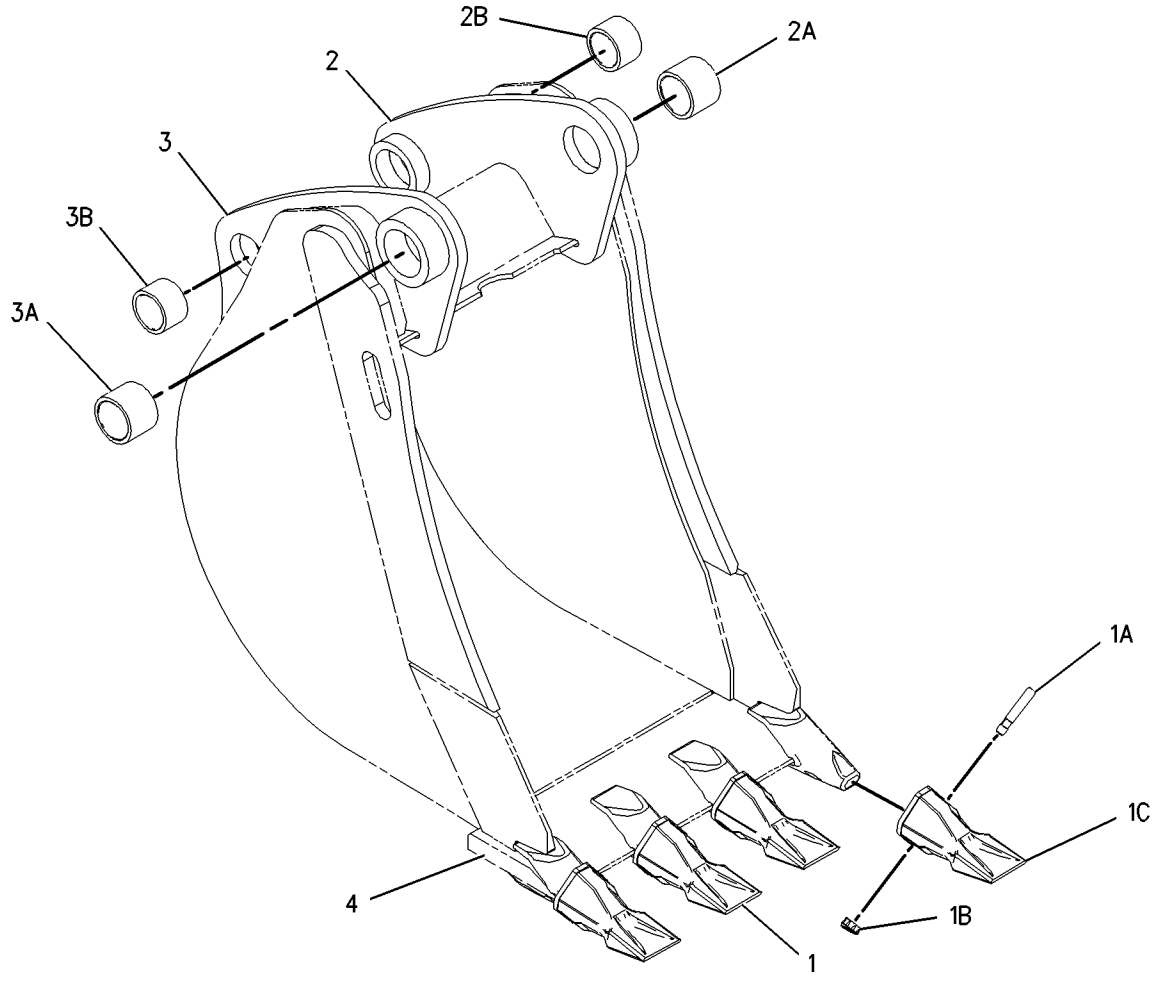

GRAPHIC #1 **<END>** g01001988

WORK TOOLS

219-3387 BUCKET GP-HOE–HEAVY DUTY

S/N: B2D1-UP
610MM (24IN)
AN ATTACHMENT

SMCS-6503 **i01938784**

NOTE	REF NO	GRAPHIC REF	PART NUMBER	QTY	PART NAME 1 2 3 4 5 6 (PRODUCT LEVEL)	SEE PAGE
	1	1	*208-5245*	5	TIP GP-PENETRATION	
					(EACH INCLUDES)	
	1A	1	**201-1238**	1	PIN	
	1B	1	**201-1239**	1	RETAINER AS	
	1C	1	**208-5235**	1	TIP-PENETRATION	
	2	1	*151-7902*	1	BRACKET AS-LH	
	2A	1	**9R-0162**	1	BEARING	
	2B	1	**168-0480**	1	BEARING-SLEEVE	
	3	1	*151-7903*	1	BRACKET AS-RH	
	3A	1	**9R-0162**	1	BEARING	
	3B	1	**168-0480**	1	BEARING-SLEEVE	
	4	1	**219-9484**	1	EDGE	

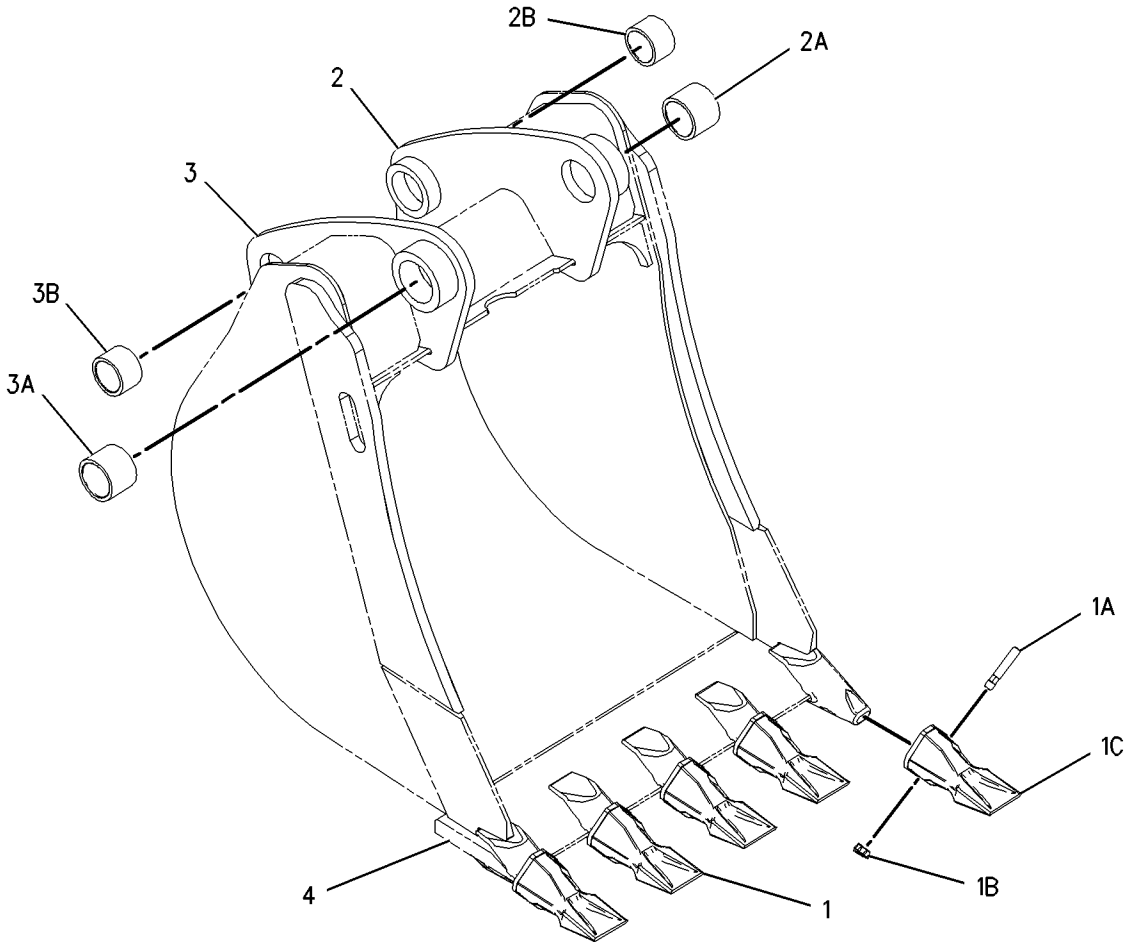

GRAPHIC #1 **<END>** g01002004

WORK TOOLS

219-3388 BUCKET GP-HOE–HEAVY DUTY

S/N: B2D1-UP
762MM (30IN)
AN ATTACHMENT

SMCS-6503 **i01938783**

NOTE	REF NO	GRAPHIC REF	PART NUMBER	QTY	PART NAME 1 2 3 4 5 6 (PRODUCT LEVEL)	SEE PAGE
	1	1	*208-5245*	5	TIP GP-PENETRATION	
					(EACH INCLUDES)	
	1A	1	**201-1238**	1	PIN	
	1B	1	**201-1239**	1	RETAINER AS	
	1C	1	**208-5235**	1	TIP-PENETRATION	
	2	1	*151-7902*	1	BRACKET AS-LH	
	2A	1	**9R-0162**	1	BEARING	
	2B	1	**168-0480**	1	BEARING-SLEEVE	
	3	1	*151-7903*	1	BRACKET AS-RH	
	3A	1	**9R-0162**	1	BEARING	
	3B	1	**168-0480**	1	BEARING-SLEEVE	
	4	1	**219-9485**	1	EDGE	

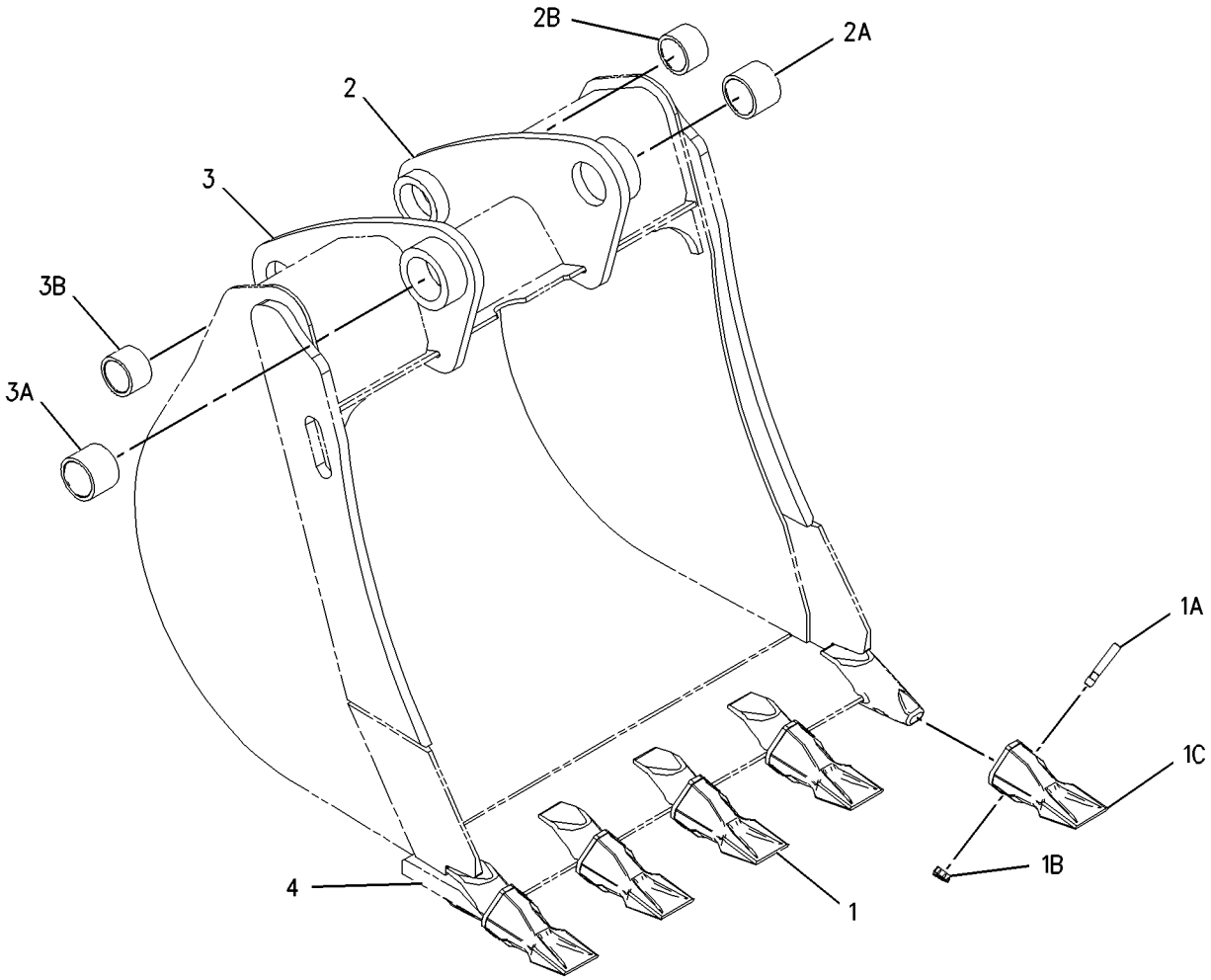

GRAPHIC #1 **<END>** g01002018

WORK TOOLS

219-3389 BUCKET GP-HOE–HEAVY DUTY

S/N: B2D1-UP
914MM (36IN)
AN ATTACHMENT

SMCS-6503 **i01938779**

NOTE	REF NO	GRAPHIC REF	PART NUMBER	QTY	PART NAME 1 2 3 4 5 6 (PRODUCT LEVEL)	SEE PAGE
	1	1	*208-5245*	6	TIP GP-PENETRATION	
					(EACH INCLUDES)	
	1A	1	**201-1238**	1	PIN	
	1B	1	**201-1239**	1	RETAINER AS	
	1C	1	**208-5235**	1	TIP-PENETRATION	
	2	1	*151-7902*	1	BRACKET AS-LH	
	2A	1	**9R-0162**	1	BEARING	
	2B	1	**168-0480**	1	BEARING-SLEEVE	
	3	1	*151-7903*	1	BRACKET AS-RH	
	3A	1	**9R-0162**	1	BEARING	
	3B	1	**168-0480**	1	BEARING-SLEEVE	
	4	1	**219-9486**	1	EDGE	

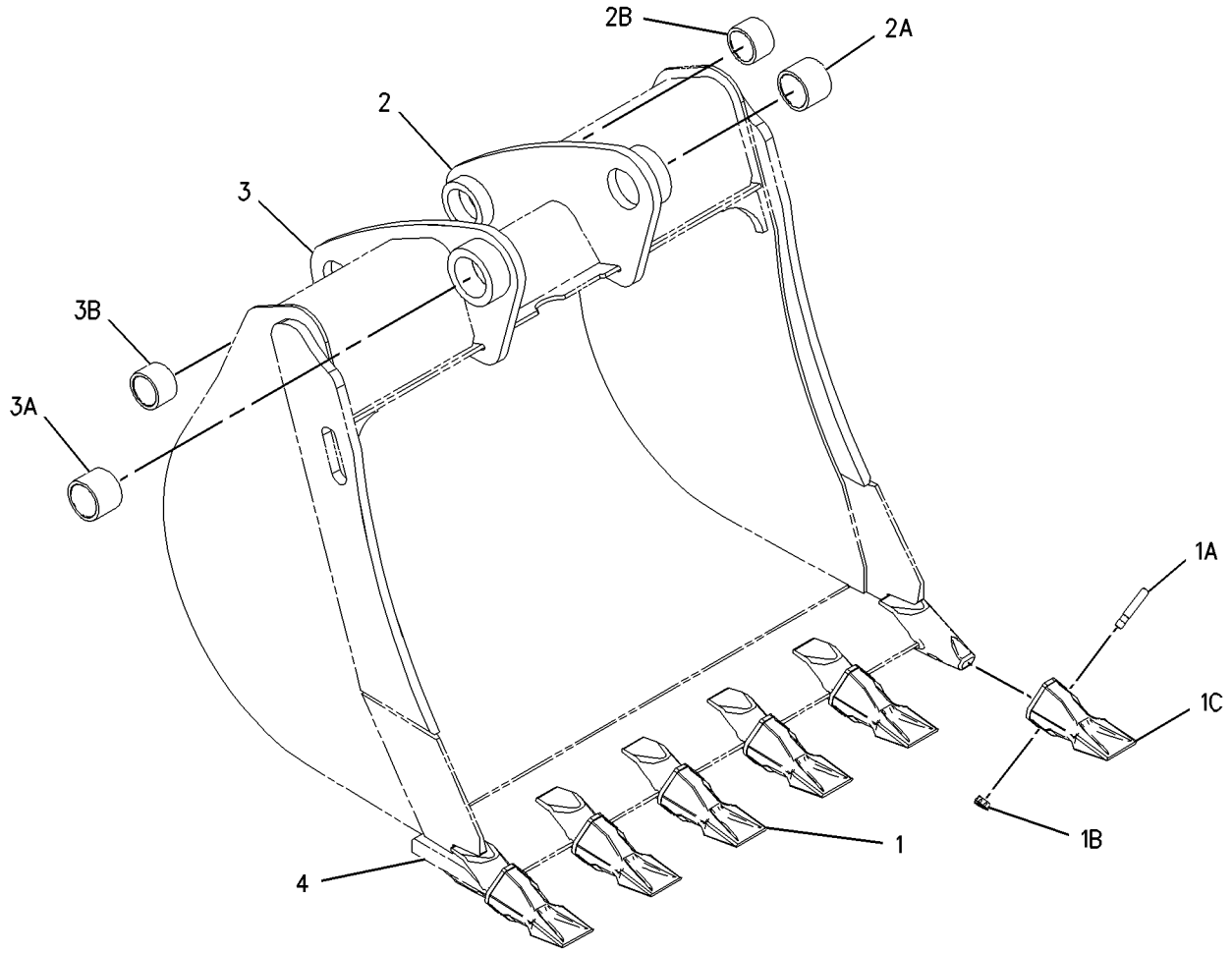

GRAPHIC #1 **<END>** g01002037

WORK TOOLS

219-3390 BUCKET GP-HOE—HIGH CAPACITY

S/N: B2D1-UP
458MM (18IN)
AN ATTACHMENT

SMCS-6503 **i01938778**

NOTE	REF NO	GRAPHIC REF	PART NUMBER	QTY	PART NAME 1 2 3 4 5 6 (PRODUCT LEVEL)	SEE PAGE
	1	1	*208-5245*	4	TIP GP-PENETRATION	
					(EACH INCLUDES)	
	1A	1	**201-1238**	1	PIN	
	1B	1	**201-1239**	1	RETAINER AS	
	1C	1	**208-5235**	1	TIP-PENETRATION	
	2	1	*151-7902*	1	BRACKET AS-LH	
	2A	1	**9R-0162**	1	BEARING	
	2B	1	**168-0480**	1	BEARING-SLEEVE	
	3	1	*151-7903*	1	BRACKET AS-RH	
	3A	1	**9R-0162**	1	BEARING	
	3B	1	**168-0480**	1	BEARING-SLEEVE	
	4	1	**219-9483**	1	EDGE	

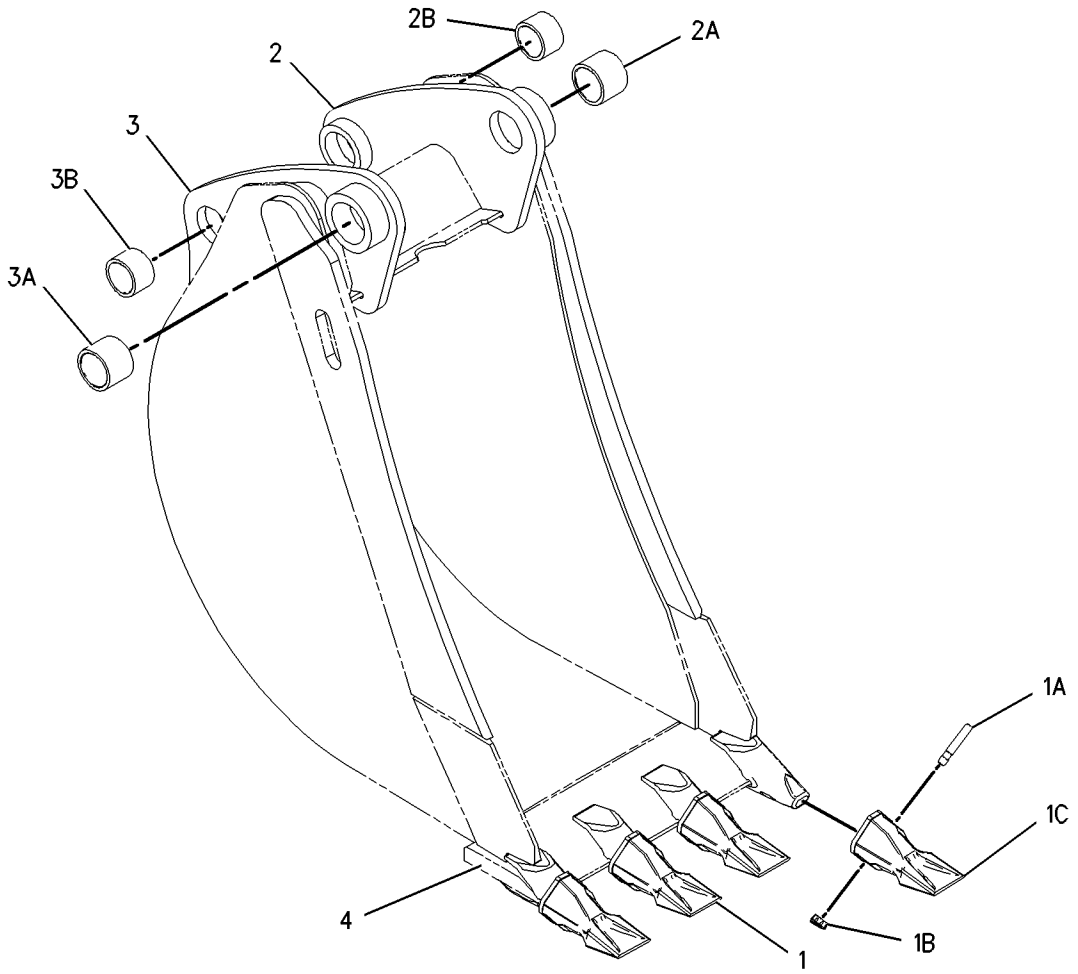

GRAPHIC #1 **<END>** g01002001

219-3391 BUCKET GP-HOE—HIGH CAPACITY

S/N: B2D1-UP
610MM (24IN)
AN ATTACHMENT

SMCS-6503 **i01938775**

NOTE	REF NO	GRAPHIC REF	PART NUMBER	QTY	PART NAME 1 2 3 4 5 6 (PRODUCT LEVEL)	SEE PAGE
	1	1	*208-5245*	5	TIP GP-PENETRATION	
					(EACH INCLUDES)	
	1A	1	**201-1238**	1	PIN	
	1B	1	**201-1239**	1	RETAINER AS	
	1C	1	**208-5235**	1	TIP-PENETRATION	
	2	1	*151-7902*	1	BRACKET AS-LH	
	2A	1	**9R-0162**	1	BEARING	
	2B	1	**168-0480**	1	BEARING-SLEEVE	
	3	1	**151-7903**	1	BRACKET AS-RH	
	3A	1	**9R-0162**	1	BEARING	
	3B	1	**168-0480**	1	BEARING-SLEEVE	
	4	1	**219-9484**	1	EDGE	

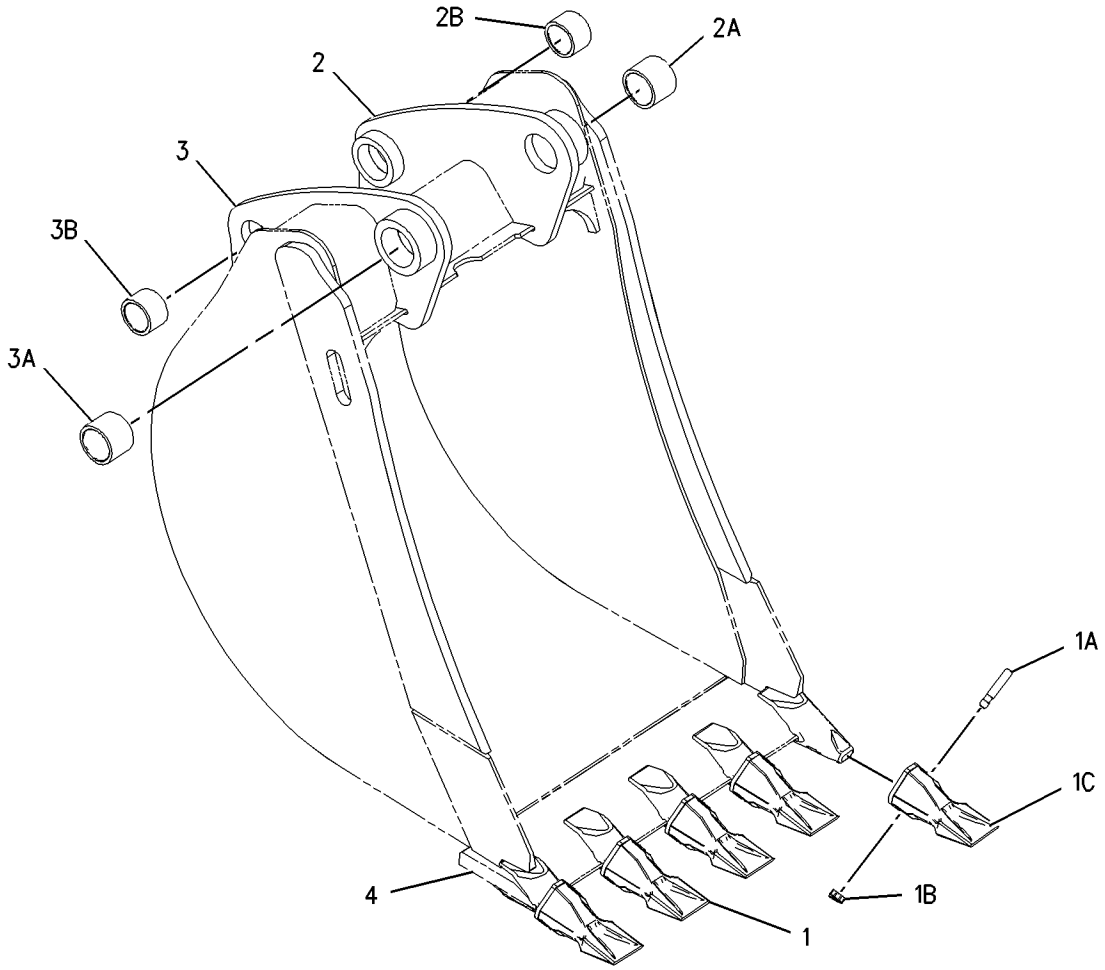

GRAPHIC #1 **<END>** g01002058

219-3392 BUCKET GP-HOE—HIGH CAPACITY

S/N: B2D1-UP
762MM (30IN)
AN ATTACHMENT

SMCS-6503 **i01938773**

NOTE	REF NO	GRAPHIC REF	PART NUMBER	QTY	PART NAME 1 2 3 4 5 6 (PRODUCT LEVEL)	SEE PAGE
	1	1	*208-5245*	5	TIP GP-PENETRATION	
					(EACH INCLUDES)	
	1A	1	**201-1238**	1	PIN	
	1B	1	**201-1239**	1	RETAINER AS	
	1C	1	**208-5235**	1	TIP-PENETRATION	
	2	1	*151-7902*	1	BRACKET AS-LH	
	2A	1	**9R-0162**	1	BEARING	
	2B	1	**168-0480**	1	BEARING-SLEEVE	
	3	1	*151-7903*	1	BRACKET AS-RH	
	3A	1	**9R-0162**	1	BEARING	
	3B	1	**168-0480**	1	BEARING-SLEEVE	
	4	1	**219-9485**	1	EDGE	

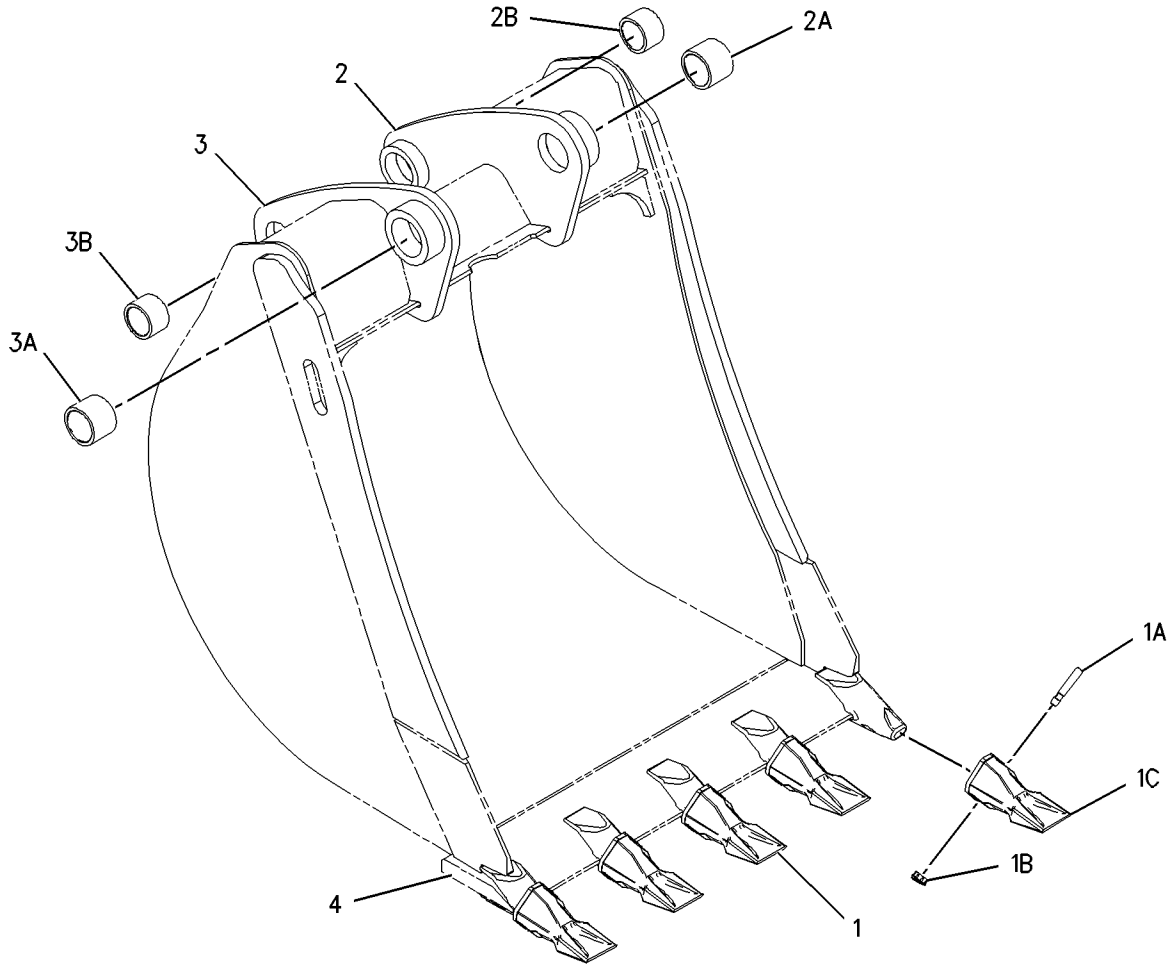

GRAPHIC #1 **<END>** g01002066

WORK TOOLS

219-3393 BUCKET GP-HOE—HIGH CAPACITY

S/N: B2D1-UP
914MM (36IN)
AN ATTACHMENT

SMCS-6503 **i01938772**

NOTE	REF NO	GRAPHIC REF	PART NUMBER	QTY	PART NAME 1 2 3 4 5 6 (PRODUCT LEVEL)	SEE PAGE
	1	1	*208-5245*	6	TIP GP-PENETRATION	
					(EACH INCLUDES)	
	1A	1	**201-1238**	1	PIN	
	1B	1	**201-1239**	1	RETAINER AS	
	1C	1	**208-5235**	1	TIP-PENETRATION	
	2	1	*151-7902*	1	BRACKET AS-LH	
	2A	1	**9R-0162**	1	BEARING	
	2B	1	**168-0480**	1	BEARING-SLEEVE	
	3	1	*151-7903*	1	BRACKET AS-RH	
	3A	1	**9R-0162**	1	BEARING	
	3B	1	**168-0480**	1	BEARING-SLEEVE	
	4	1	**219-9486**	1	EDGE	

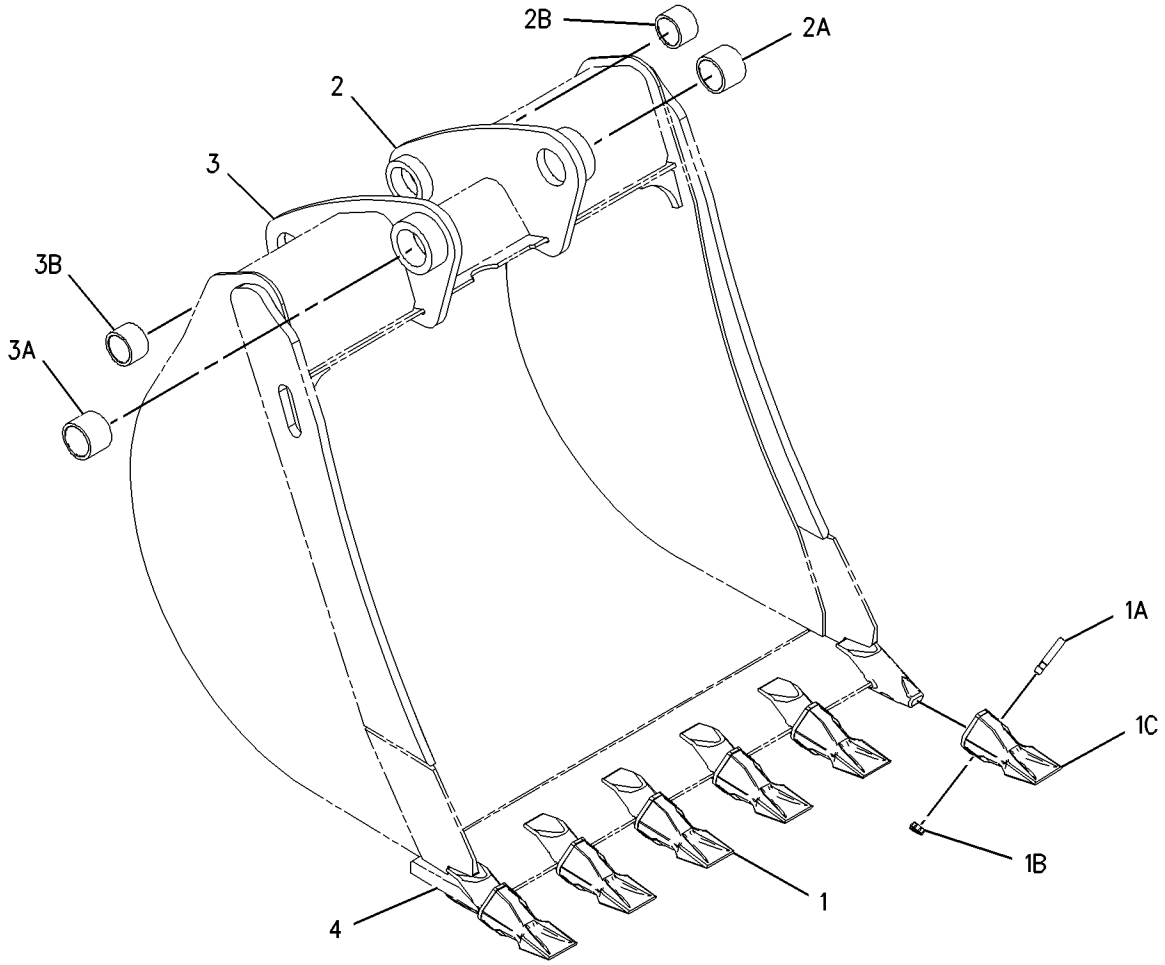

GRAPHIC #1 **<END>** g01002085

WORK TOOLS

219-3394 BUCKET GP-HOE–ROCK

S/N: B2D1-UP
305MM (12IN)
PART OF 219-3412 BUCKET GP-HOE
AN ATTACHMENT

SMCS-6503 **i01948219**

NOTE	REF NO	GRAPHIC REF	PART NUMBER	QTY	PART NAME 1 2 3 4 5 6 (PRODUCT LEVEL)	SEE PAGE
	1	1	*208-5245*	3	TIP GP-PENETRATION	
					(EACH INCLUDES)	
	1A	1	**201-1238**	1	PIN	
	1B	1	**201-1239**	1	RETAINER AS	
	1C	1	**208-5235**	1	TIP-PENETRATION	
	2	1	*151-7929*	1	BRACKET AS-LH	
	2A	1	**9R-0320**	1	BEARING	
	2B	1	**154-5257**	1	BEARING	
	3	1	*151-7930*	1	BRACKET AS-RH	
	3A	1	**9R-0320**	1	BEARING	
	3B	1	**154-5257**	1	BEARING	
	4	1	**197-6258**	1	EDGE-RH	
	5	1	**197-6259**	1	EDGE-LH	
	6	1	**201-1234**	3	ADAPTER	
	7	1	**219-9493**	1	EDGE	

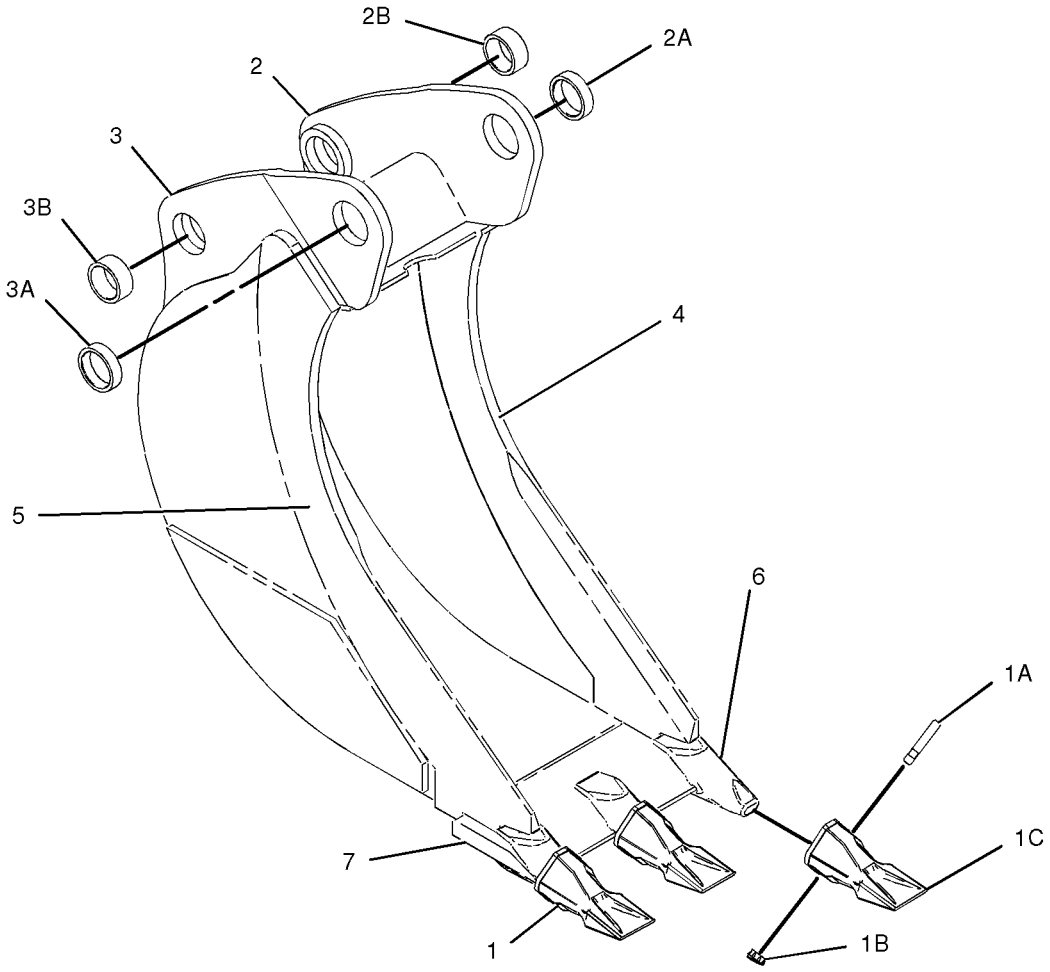

GRAPHIC #1 **<END>** g01014563

WORK TOOLS

219-3395 BUCKET GP-HOE–ROCK

S/N: B2D1-UP
458MM (18IN)
AN ATTACHMENT

SMCS-6503 **i01938776**

NOTE	REF NO	GRAPHIC REF	PART NUMBER	QTY	PART NAME 1 2 3 4 5 6 (PRODUCT LEVEL)	SEE PAGE
	1	1	*208-5245*	4	TIP GP-PENETRATION	
					(EACH INCLUDES)	
	1A	1	**201-1238**	1	PIN	
	1B	1	**201-1239**	1	RETAINER AS	
	1C	1	**208-5235**	1	TIP-PENETRATION	
	2	1	*151-7902*	1	BRACKET AS-LH	
	2A	1	**9R-0162**	1	BEARING	
	2B	1	**168-0480**	1	BEARING-SLEEVE	
	3	1	*151-7903*	1	BRACKET AS-RH	
	3A	1	**9R-0162**	1	BEARING	
	3B	1	**168-0480**	1	BEARING-SLEEVE	
	4	1	**219-9483**	1	EDGE	

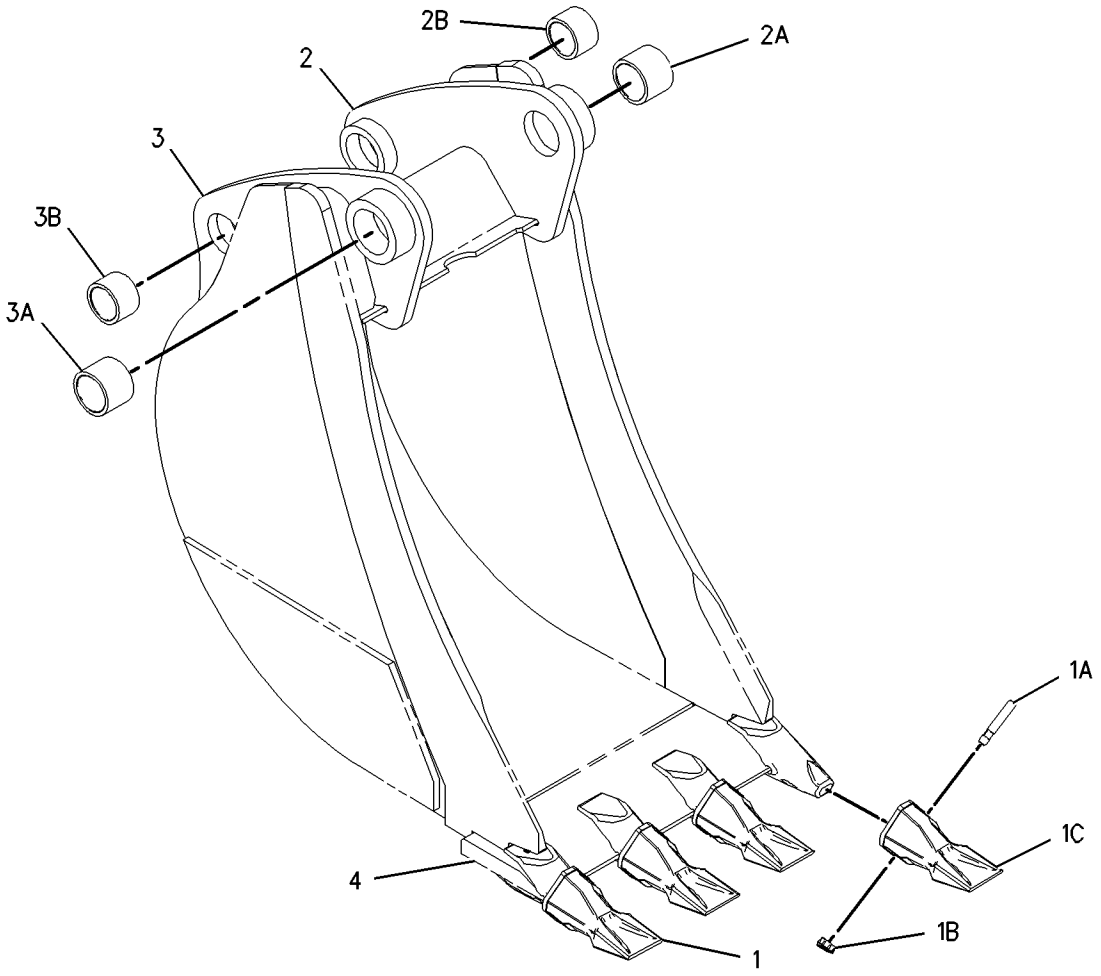

GRAPHIC #1 **<END>** g01001940

WORK TOOLS

219-3396 BUCKET GP-HOE–ROCK

S/N: B2D1-UP
610MM (24IN)
AN ATTACHMENT

SMCS-6503 **i01938770**

NOTE	REF NO	GRAPHIC REF	PART NUMBER	QTY	PART NAME 1 2 3 4 5 6 (PRODUCT LEVEL)	SEE PAGE
	1	1	*208-5245*	5	TIP GP-PENETRATION	
					(EACH INCLUDES)	
	1A	1	**201-1238**	1	PIN	
	1B	1	**201-1239**	1	RETAINER AS	
	1C	1	**208-5235**	1	TIP-PENETRATION	
	2	1	*151-7902*	1	BRACKET AS-LH	
	2A	1	**9R-0162**	1	BEARING	
	2B	1	**168-0480**	1	BEARING-SLEEVE	
	3	1	*151-7903*	1	BRACKET AS-RH	
	3A	1	**9R-0162**	1	BEARING	
	3B	1	**168-0480**	1	BEARING-SLEEVE	
	4	1	**219-9484**	1	EDGE	

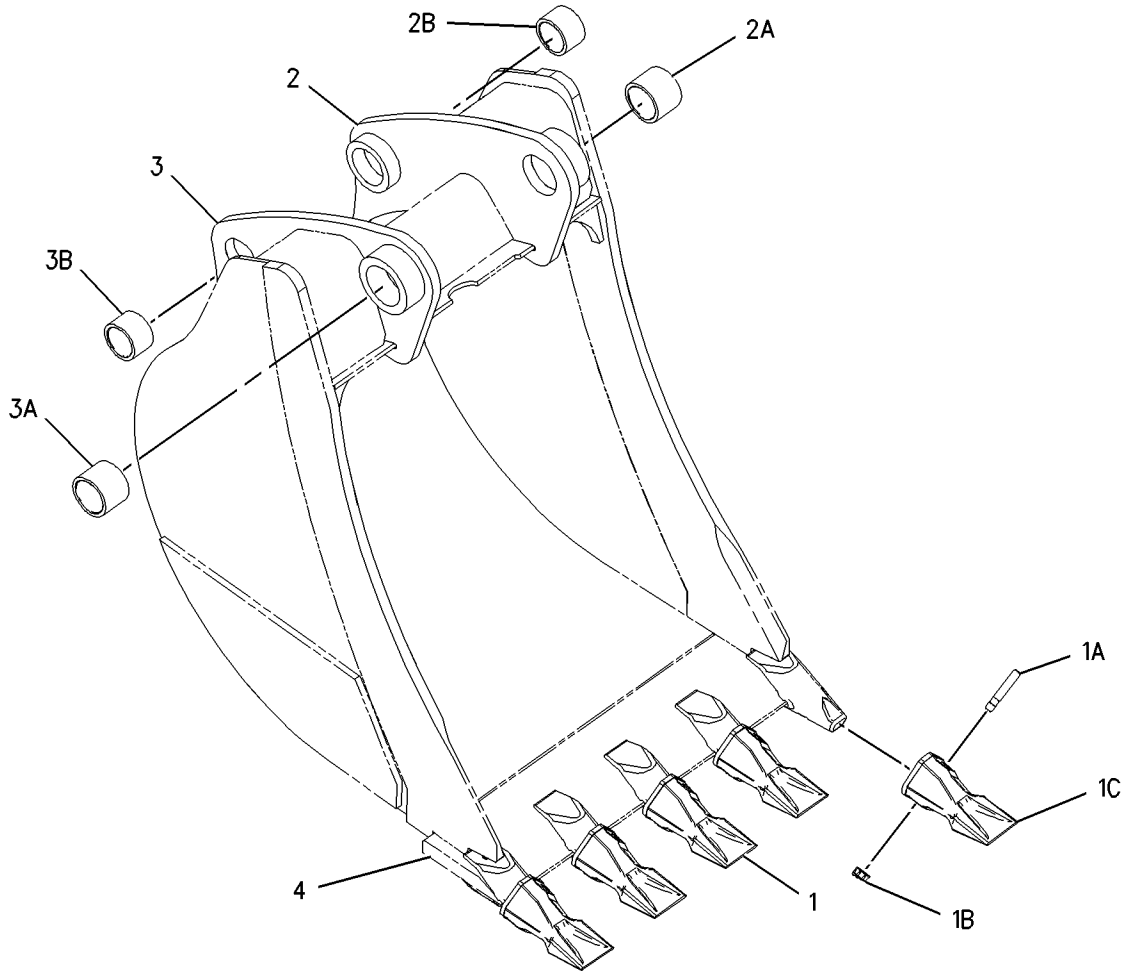

GRAPHIC #1 **<END>** g01002082

WORK TOOLS

219-3397 BUCKET GP-HOE–ROCK

S/N: B2D1-UP
762MM (30IN)
AN ATTACHMENT

SMCS-6503 **i01938766**

NOTE	REF NO	GRAPHIC REF	PART NUMBER	QTY	PART NAME 1 2 3 4 5 6 (PRODUCT LEVEL)	SEE PAGE
	1	1	*208-5245*	5	TIP GP-PENETRATION	
					(EACH INCLUDES)	
	1A	1	**201-1238**	1	PIN	
	1B	1	**201-1239**	1	RETAINER AS	
	1C	1	**208-5235**	1	TIP-PENETRATION	
	2	1	*151-7902*	1	BRACKET AS-LH	
	2A	1	**9R-0162**	1	BEARING	
	2B	1	**168-0480**	1	BEARING-SLEEVE	
	3	1	*151-7903*	1	BRACKET AS-RH	
	3A	1	**9R-0162**	1	BEARING	
	3B	1	**168-0480**	1	BEARING-SLEEVE	
	4	1	**219-9485**	1	EDGE	

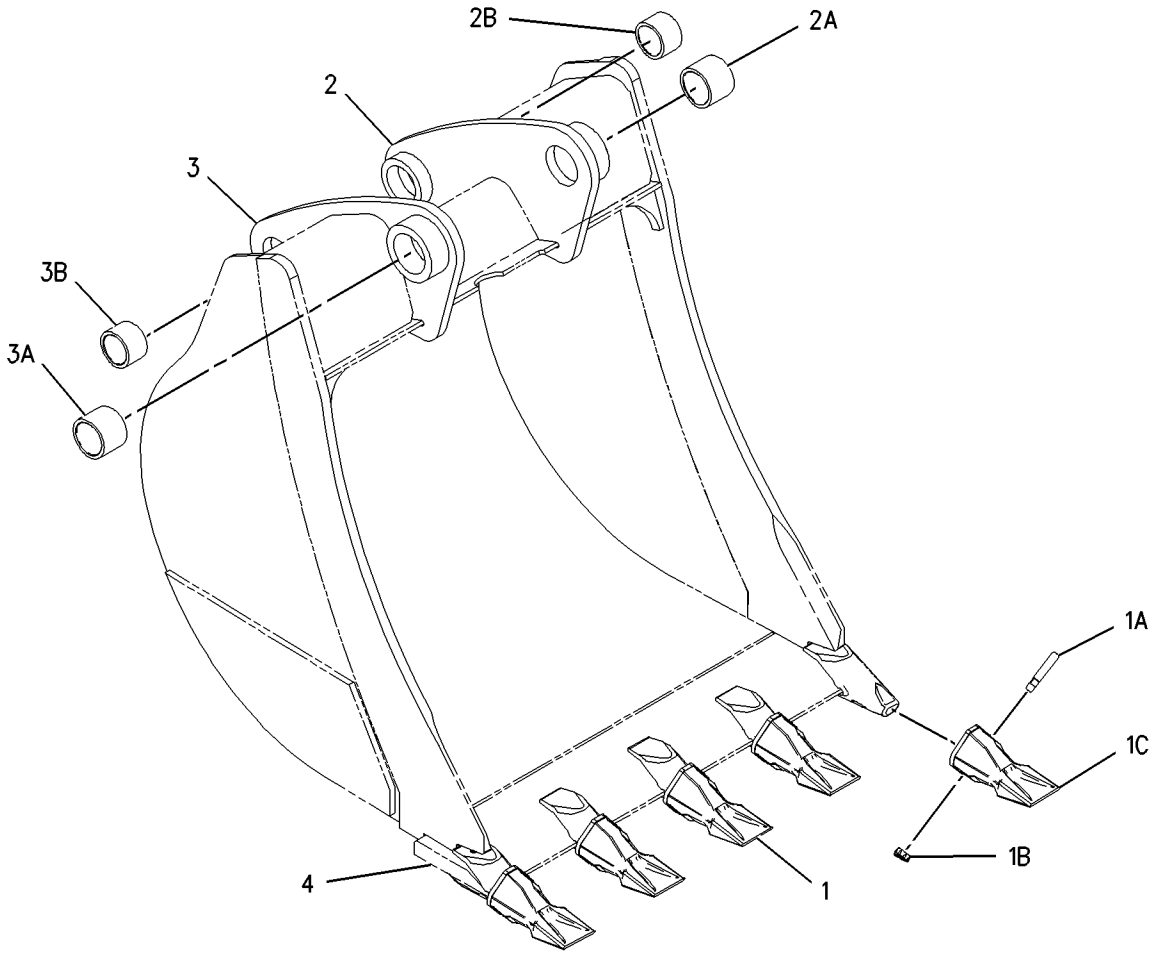

GRAPHIC #1 **<END>** g01002078

WORK TOOLS

219-3398 BUCKET GP-HOE–ROCK

S/N: B2D1-UP
914MM (36IN)
AN ATTACHMENT

SMCS-6503 **i01938765**

NOTE	REF NO	GRAPHIC REF	PART NUMBER	QTY	PART NAME 1 2 3 4 5 6 (PRODUCT LEVEL)	SEE PAGE
	1	1	*208-5245*	6	TIP GP-PENETRATION	
					(EACH INCLUDES)	
	1A	1	**201-1238**	1	PIN	
	1B	1	**201-1239**	1	RETAINER AS	
	1C	1	**208-5235**	1	TIP-PENETRATION	
	2	1	*151-7902*	1	BRACKET AS-LH	
	2A	1	**9R-7902**	1	COVER AS	
	2B	1	**168-0480**	1	BEARING-SLEEVE	
	3	1	*151-7903*	1	BRACKET AS-RH	
	3A	1	**9R-0162**	1	BEARING	
	3B	1	**168-0480**	1	BEARING-SLEEVE	
	4	1	**219-9486**	1	EDGE	

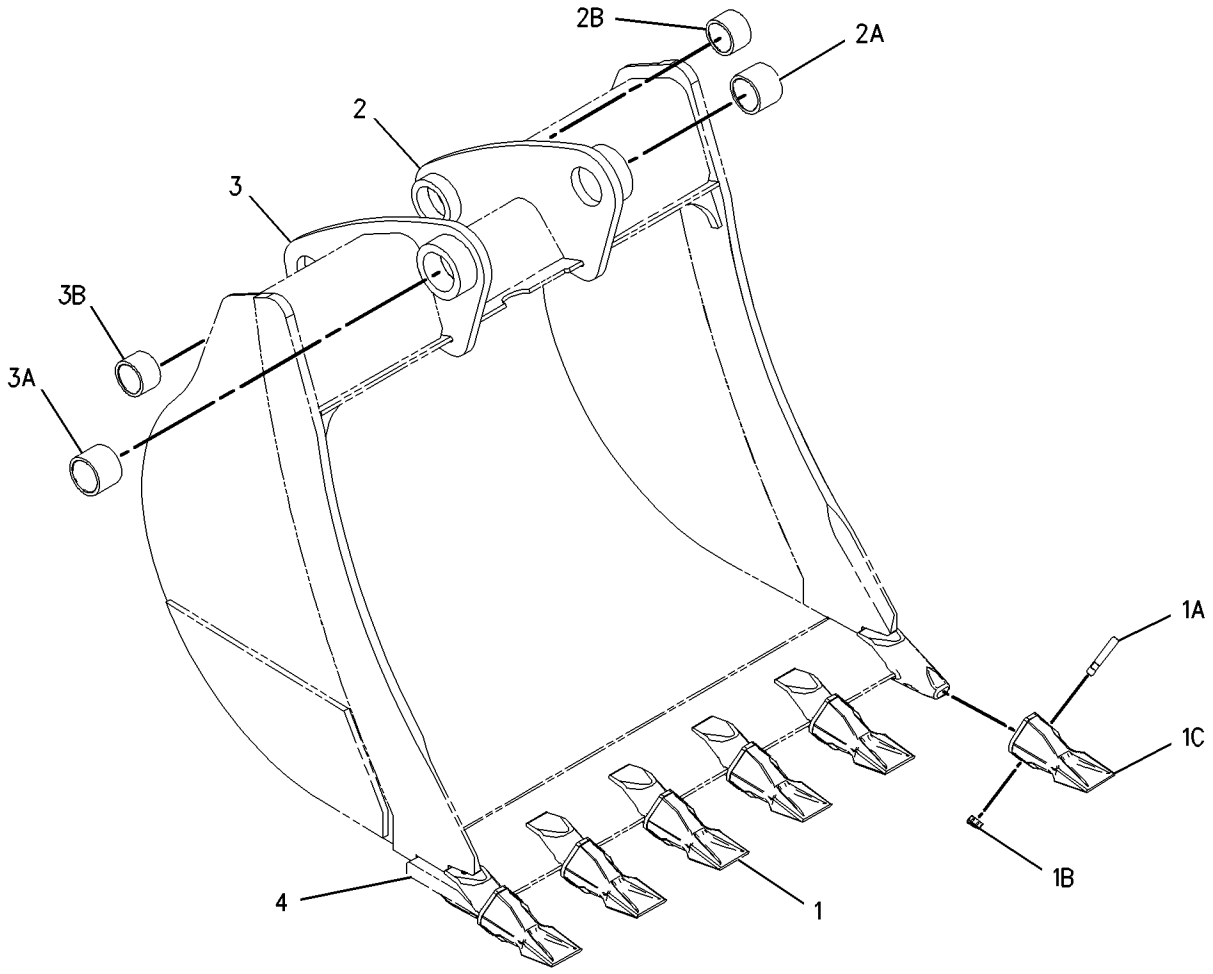

GRAPHIC #1 **<END>** g01002088

219-3410 BUCKET GP-HOE–STANDARD DUTY

S/N: B2D1-UP
305MM (12IN)
AN ATTACHMENT

SMCS-6503 **i01938761**

NOTE	REF NO	GRAPHIC REF	PART NUMBER	QTY	PART NAME 1 2 3 4 5 6 (PRODUCT LEVEL)	SEE PAGE
	1	1	**6V-3213**	2	RING-RETAINING	
	2	1	**6V-4364**	2	RING-RETAINING	
	3	1	**9R-0158**	5	WASHER (46X69X3MM THK)	
	4	1	**9R-1510**	3	WASHER (51X82X4MM THK)	
	5	1	**168-0443**	1	PIN	
	6	1	**168-0444**	1	PIN	
Y	7	1	**219-3379**	1	BUCKET GP-HOE	446

Y-SEPARATE ILLUSTRATION

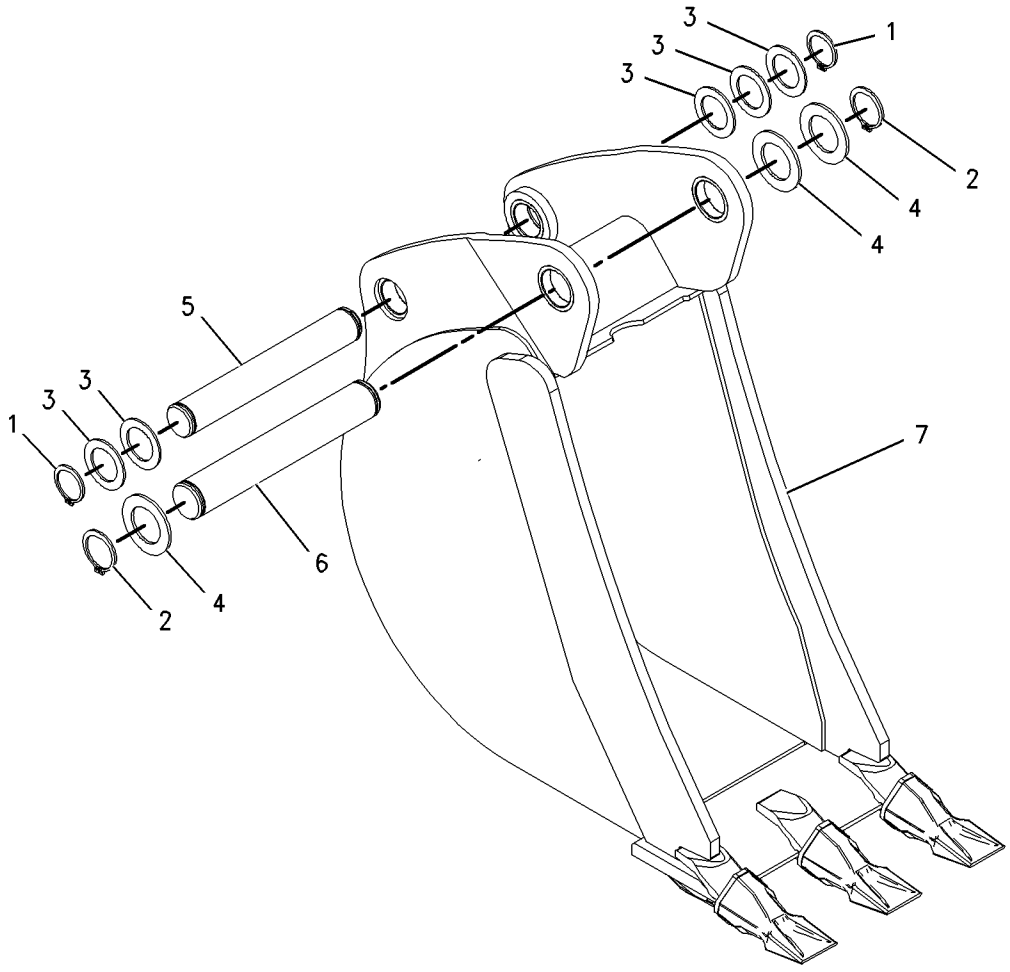

GRAPHIC #1 **<END>** g01001892

WORK TOOLS

219-3411 BUCKET GP-HOE–HEAVY DUTY

S/N: B2D1-UP
305MM (12IN)
AN ATTACHMENT

SMCS-6503 **i01938759**

NOTE	REF NO	GRAPHIC REF	PART NUMBER	QTY	PART NAME 1 2 3 4 5 6 (PRODUCT LEVEL)	SEE PAGE
	1	1	**6V-3213**	2	RING-RETAINING	
	2	1	**6V-4364**	2	RING-RETAINING	
	3	1	**9R-0158**	5	WASHER (46X69X3MM THK)	
	4	1	**9R-1510**	3	WASHER (51X82X4MM THK)	
	5	1	**168-0443**	1	PIN	
	6	1	**168-0444**	1	PIN	
Y	7	1	**219-3384**	1	BUCKET GP-HOE	451

Y-SEPARATE ILLUSTRATION

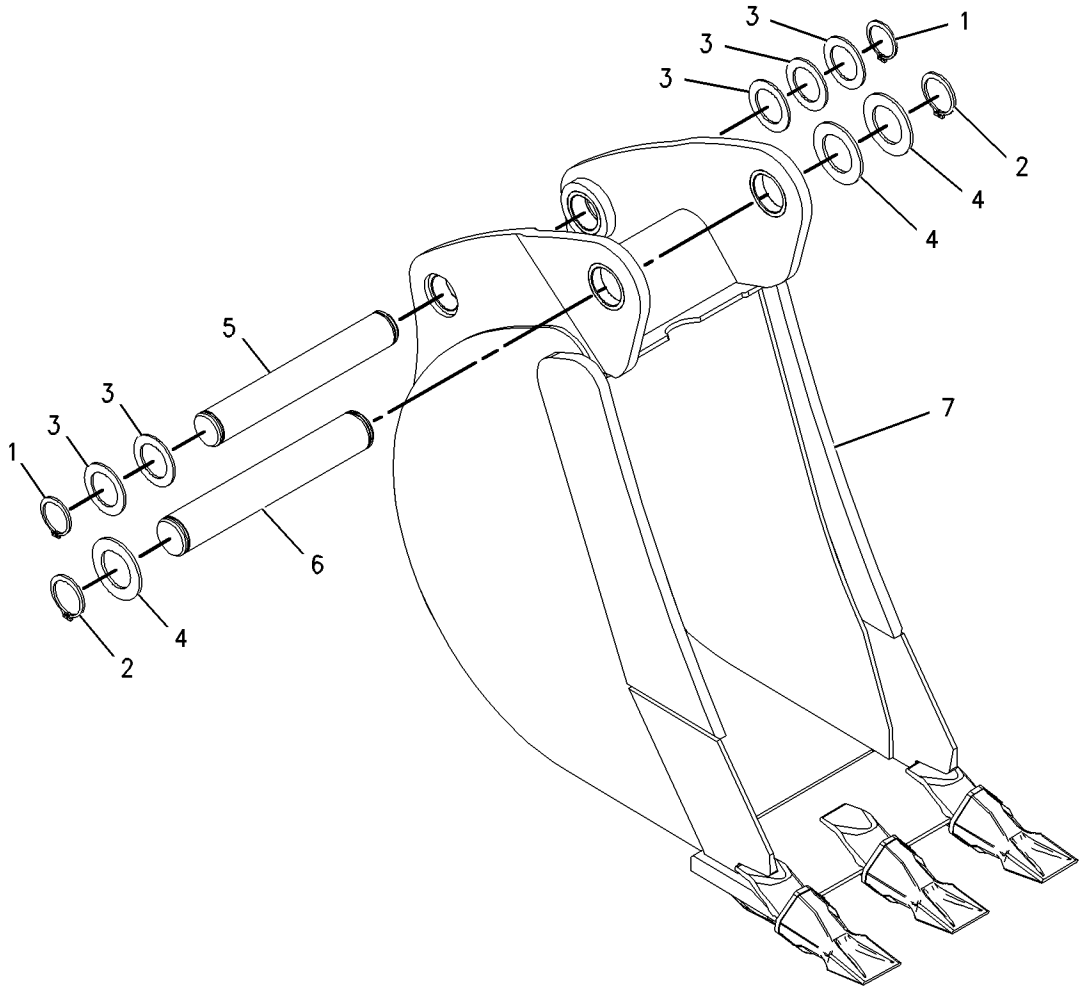

GRAPHIC #1 **<END>** g01001906

219-3412 BUCKET GP-HOE–ROCK

S/N: B2D1-UP
305MM (12IN)
AN ATTACHMENT

SMCS-6503 **i01938756**

NOTE	REF NO	GRAPHIC REF	PART NUMBER	QTY	PART NAME 1 2 3 4 5 6 (PRODUCT LEVEL)	SEE PAGE
	1	1	**6V-3213**	2	RING-RETAINING	
	2	1	**6V-4364**	2	RING-RETAINING	
	3	1	**9R-0158**	4	WASHER (46X69X3MM THK)	
	4	1	**9R-1510**	3	WASHER (51X82X4MM THK)	
	5	1	**168-0443**	1	PIN	
	6	1	**168-0444**	1	PIN	
Y	7	1	**219-3394**	1	BUCKET GP-HOE	461

Y-SEPARATE ILLUSTRATION

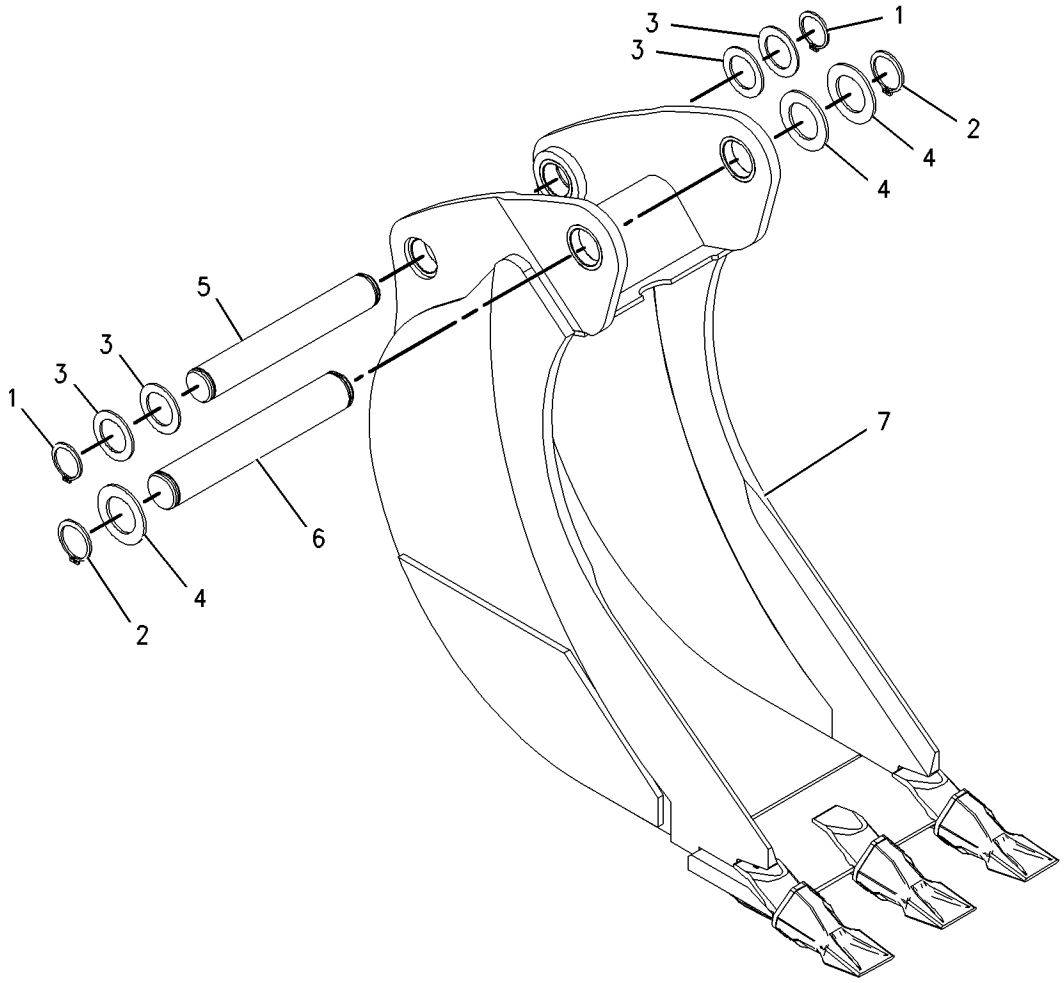

GRAPHIC #1 **<END>** g01001913

108-3036 BUCKET GP-MULTIPURPOSE

S/N: B2D1-UP
0.95 CU M(1.25 CU YD)
PART OF 112-0938 BUCKET AR-MULTIPURPOSE
AN ATTACHMENT

SMCS-6104 **i01525842**

NOTE	REF NO	GRAPHIC REF	PART NUMBER	QTY	PART NAME 1 2 3 4 5 6 (PRODUCT LEVEL)	SEE PAGE
	1	1	**108-3037**	1	BULLDOZER AS	
	2	1	**9R-4670**	1	EDGE	
	3	1	**9R-0111**	2	BEARING-SLEEVE	
	4	1	**126-4224**	1	CLAM AS	
	5	1	**9R-4675**	2	BUSHING-TERMINAL	
	6	1	**9R-4672**	1	EDGE	
	7	1	**9R-5294**	2	HINGE	
	8	1	**125-7116**	2	EDGE	
	9	1	**4J-1888**	2	COTTER	
	10	1	**3B-8489**	2	FITTING-GREASE	
	11	1	**9R-4676**	2	PIN	

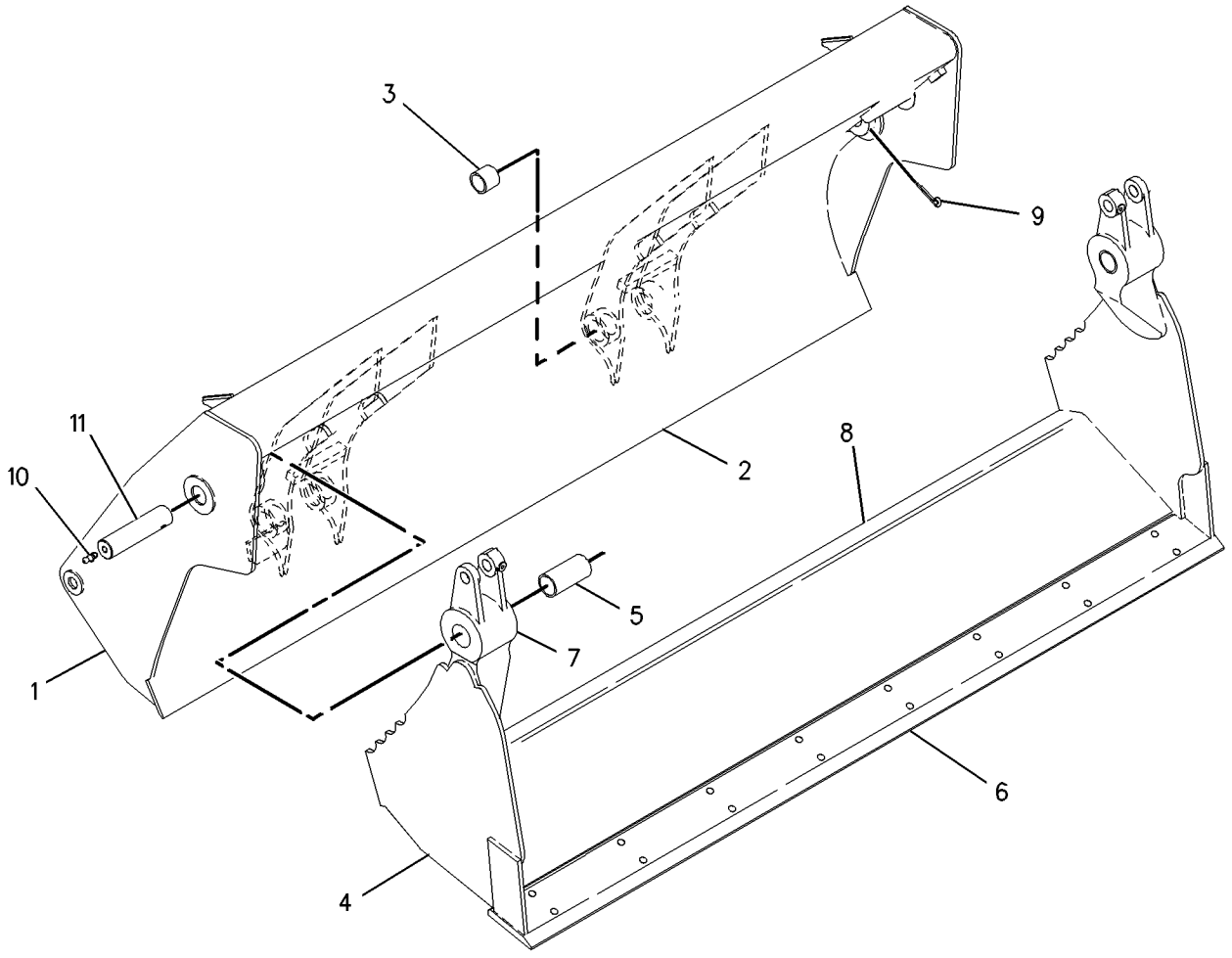

GRAPHIC #1 **<END>** g00795072

WORK TOOLS

112-1778 BUCKET GP-MULTIPURPOSE

S/N: B2D1-UP
0.95 CU M(1.25 CU YD)
PART OF 112-0939 BUCKET AR-MULTIPURPOSE
AN ATTACHMENT

SMCS-6104 **i01518488**

NOTE	REF NO	GRAPHIC REF	PART NUMBER	QTY	PART NAME 1 2 3 4 5 6 (PRODUCT LEVEL)	SEE PAGE
	1	1	**112-1777**	1	BULLDOZER AS	
	2	1	**104-6314**	2	BRACKET	
	3	1	**104-6313**	1	BRACKET AS	
	4	1	**106-9388**	2	BRACKET	
	5	1	**110-2861**	4	BRACKET	
	7	1	**9R-0111**	2	BEARING-SLEEVE	
	8	1	**9R-4670**	1	EDGE	
F		1	**9R-5271**	2	BOSS (M10X1.5X25MM)	
	9	1	**112-1775**	2	PLATE AS	
	10	1	**126-4224**	1	CLAM AS	
	11	1	**9R-4672**	1	EDGE	
	12	1	**125-7116**	1	EDGE	
	13	1	**9R-4675**	2	BUSHING-TERMINAL	
	14	1	**9R-5294**	2	HINGE	
	15	1	**3B-8489**	2	FITTING-GREASE	
	16	1	**4J-1888**	2	COTTER	
	17	1	**9R-4676**	2	PIN	

F-NOT SHOWN

112-1778 BUCKET GP-MULTIPURPOSE *(contd.)* i01518488

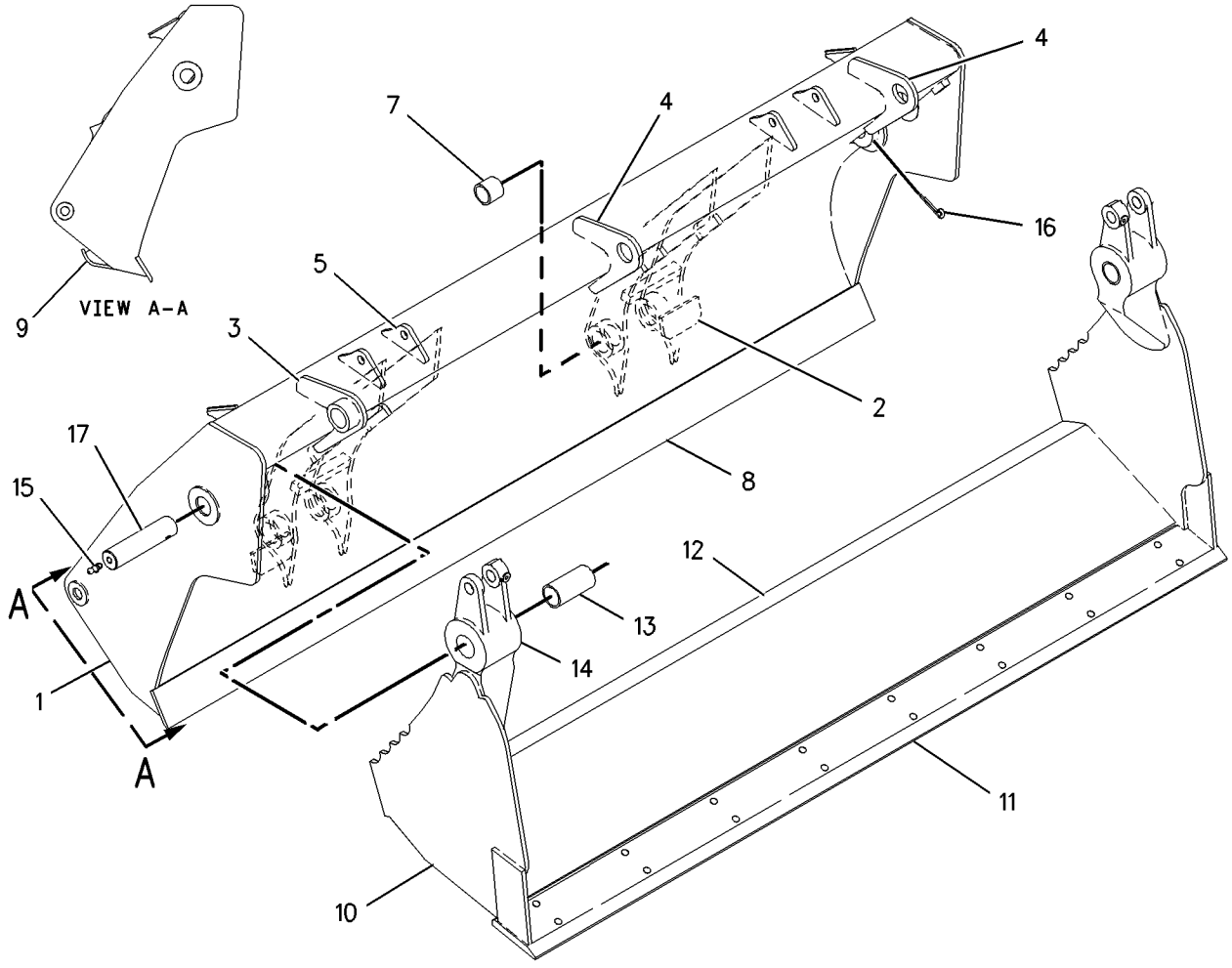

GRAPHIC #1 **<END>** g00788040

176-6247 COUPLER GP-QUICK

S/N: B2D1-UP
PART OF 178-8849 COUPLER GP-QUICK
AN ATTACHMENT

SMCS-6129 **i01941800**

NOTE	REF NO	GRAPHIC REF	PART NUMBER	QTY	PART NAME 1 2 3 4 5 6 (PRODUCT LEVEL)	SEE PAGE
	1	1	**176-6248**	1	COUPLER	
	2	1	**200-5921**	1	HOOK	
	3	1	**132-3725**	1	SPRING	
	4	1	**132-3721**	1	PIN AS (HOOK)	
	5	1	**132-3723**	1	LOCK PIN	
C	6	1	**091-5928**	1	FITTING	
	7	1	**8T-0144**	1	PIN-SPRING	
F		1	**132-3821**	1	LEVER-ACTUATING	

C-CHANGE FROM PREVIOUS TYPE
F-NOT SHOWN

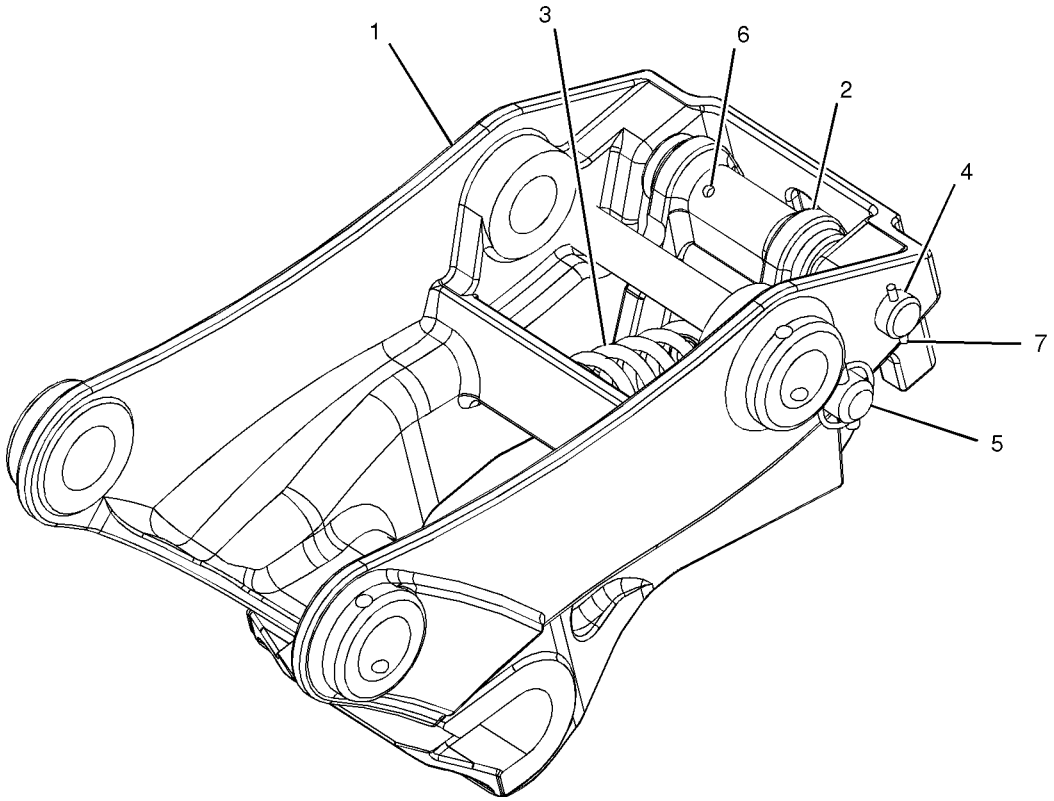

GRAPHIC #1

<END>

g01010512

178-8849 COUPLER GP-QUICK

S/N: B2D1-UP
HOE
AN ATTACHMENT

SMCS-6129 **i01674460**

NOTE	REF NO	GRAPHIC REF	PART NUMBER	QTY	PART NAME 1 2 3 4 5 6 (PRODUCT LEVEL)	SEE PAGE
	1	1	**4J-1888**	2	PIN-COTTER	
	2	1	**132-3777**	1	PIN	
	3	1	**132-3778**	1	PIN	
Y	4	1	**176-6247**	1	COUPLER GP-QUICK	472

Y-SEPARATE ILLUSTRATION

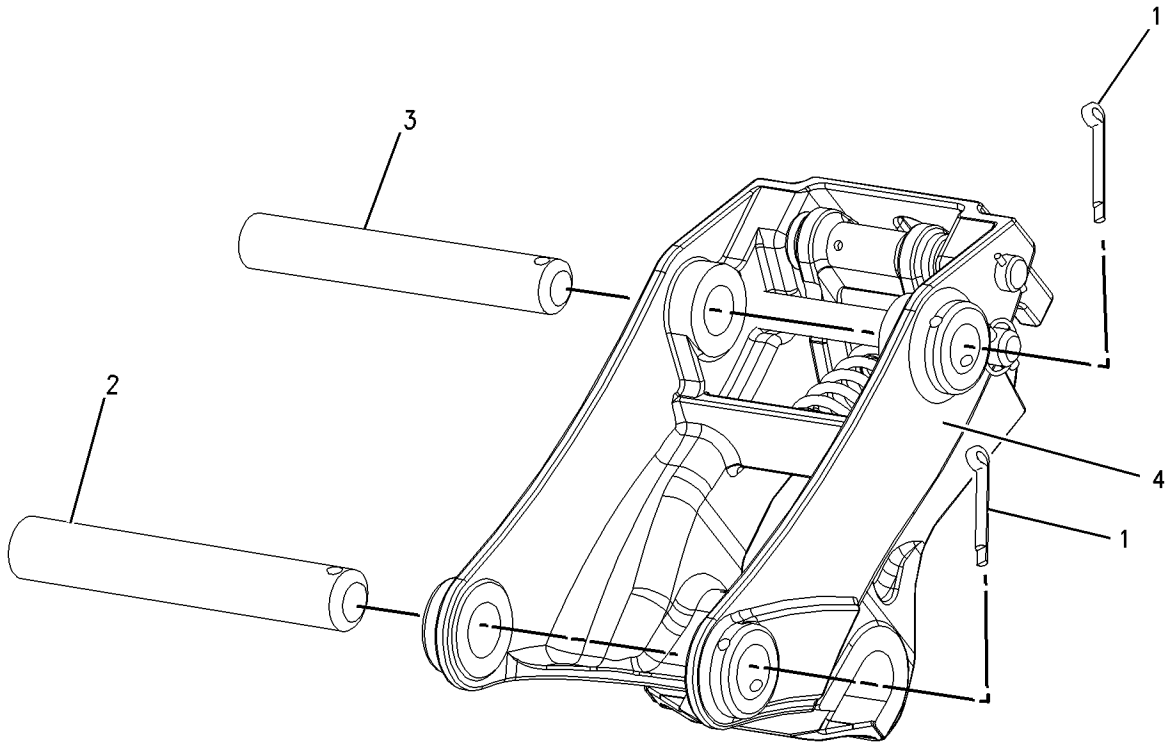

GRAPHIC #1 **<END>** g00864958

WORK TOOLS

178-8850 COUPLER GP-QUICK

S/N: B2D1-UP
HOE
AN ATTACHMENT

SMCS-6129 **i01510198**

NOTE	REF NO	GRAPHIC REF	PART NUMBER	QTY	PART NAME 1 2 3 4 5 6 (PRODUCT LEVEL)	SEE PAGE
	1	1	**4J-1888**	2	COTTER	
	2	1	**132-3777**	1	PIN	
	3	1	**132-3778**	1	PIN	
	4	1	**176-6251**	1	COUPLER AS	
	5	1	**132-3811**	1	PIN	
	6	1	**132-3725**	1	SPRING	
	7	1	**132-3721**	1	PIN AS-HOOK	
	8	1	**132-3812**	1	PIN-LYNCH	
F		1	**132-3821**	1	LEVER-ACTUATING	
	9	1	**176-6252**	1	COUPLER	
	10	1	**200-5921**	1	HOOK	

F-NOT SHOWN

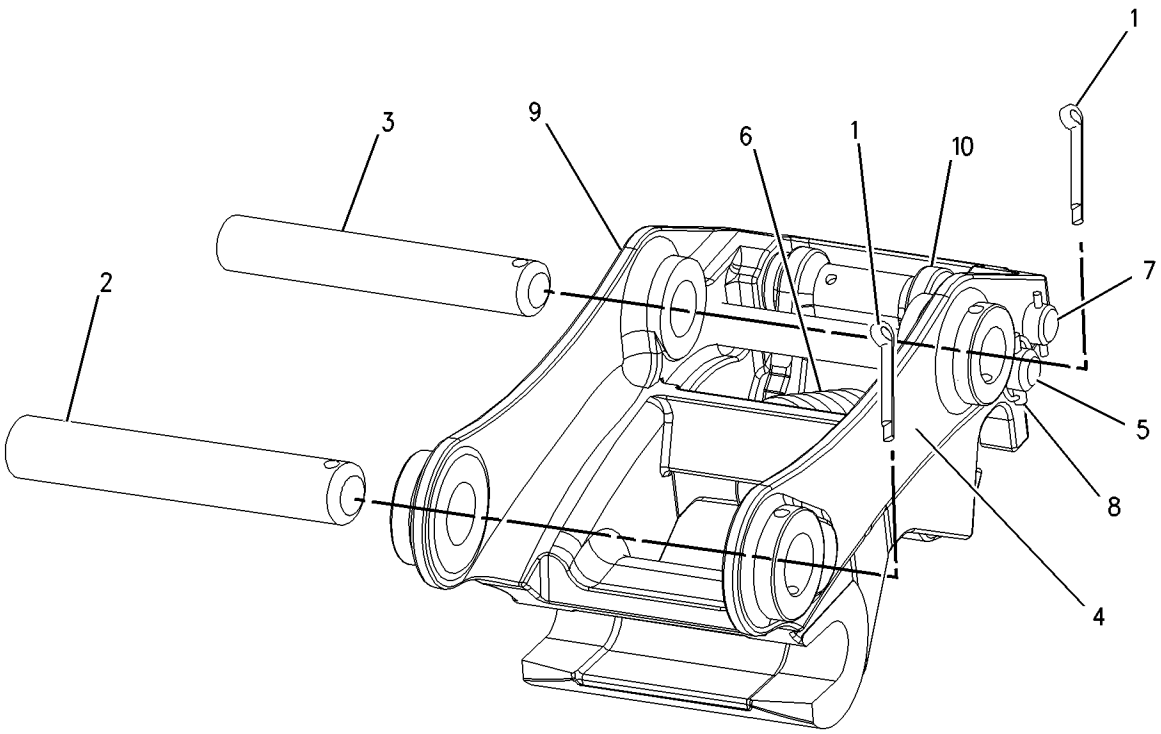

GRAPHIC #1 **<END>** g00785105

WORK TOOLS

229-7226 COUPLER GP-QUICK

S/N: B2D1-UP
AN ATTACHMENT

SMCS-6129 **i02051392**

NOTE	REF NO	GRAPHIC REF	PART NUMBER	QTY	PART NAME 1 2 3 4 5 6 (PRODUCT LEVEL)	SEE PAGE
B	1	1	**9R-0158**	15	WASHER (46X69X3-MM THK)	
	2	1	**145-8348**	1	PIN AS	
	3	1	**168-0425**	1	PIN	
	4	1	**168-0446**	1	PIN	
	5	1	**168-0475**	1	PIN AS	
B	6	1	**188-9592**	7	WASHER-THRUST	
	7	1	**229-5535**	1	COUPLER AS	
	8	1	**096-1820**	1	PIN-COTTER	
	9	1	**3B-5319**	2	PIN-COTTER	
	10	1	**6V-3213**	2	RING-RETAINING	

B-USE AS REQUIRED

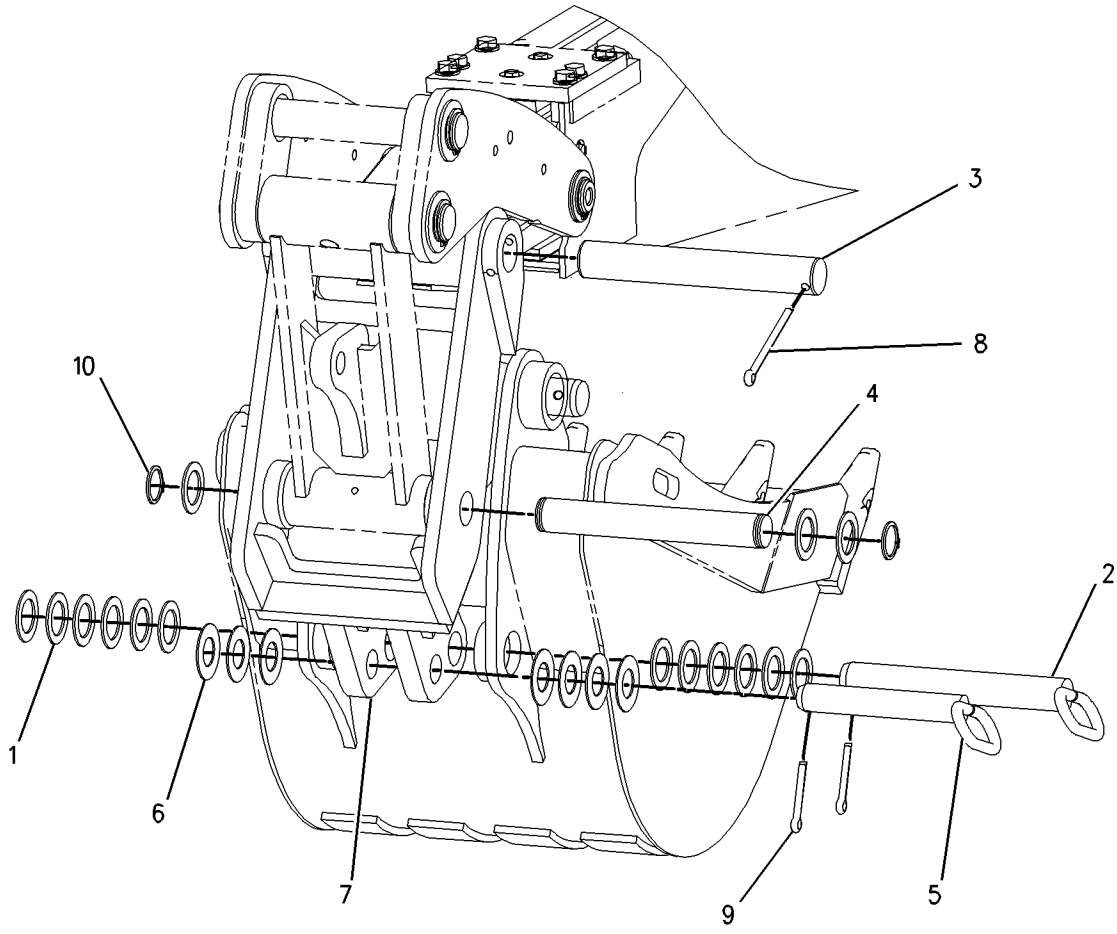

GRAPHIC #1 **<END>** g00981049

WORK TOOLS

229-7227 COUPLER GP-QUICK

S/N: B2D1-UP
AN ATTACHMENT

SMCS-6129 **i02051377**

NOTE	REF NO	GRAPHIC REF	PART NUMBER	QTY	PART NAME 1 2 3 4 5 6 (PRODUCT LEVEL)	SEE PAGE
B	1	1	**9R-0158**	15	WASHER (46X69X3-MM THK)	
B	2	1	**9R-1510**	4	WASHER (51X82X4-MM THK)	
	3	1	**145-8348**	1	PIN AS	
	4	1	**168-0425**	1	PIN	
	5	1	**168-0445**	1	PIN AS	
	6	1	**168-0446**	1	PIN	
	7	1	**229-8253**	1	COUPLER AS	
	8	1	**096-1820**	1	PIN-COTTER	
	9	1	**3B-5319**	2	PIN-COTTER	
	10	1	**6V-3213**	2	RING-RETAINING	

B-USE AS REQUIRED

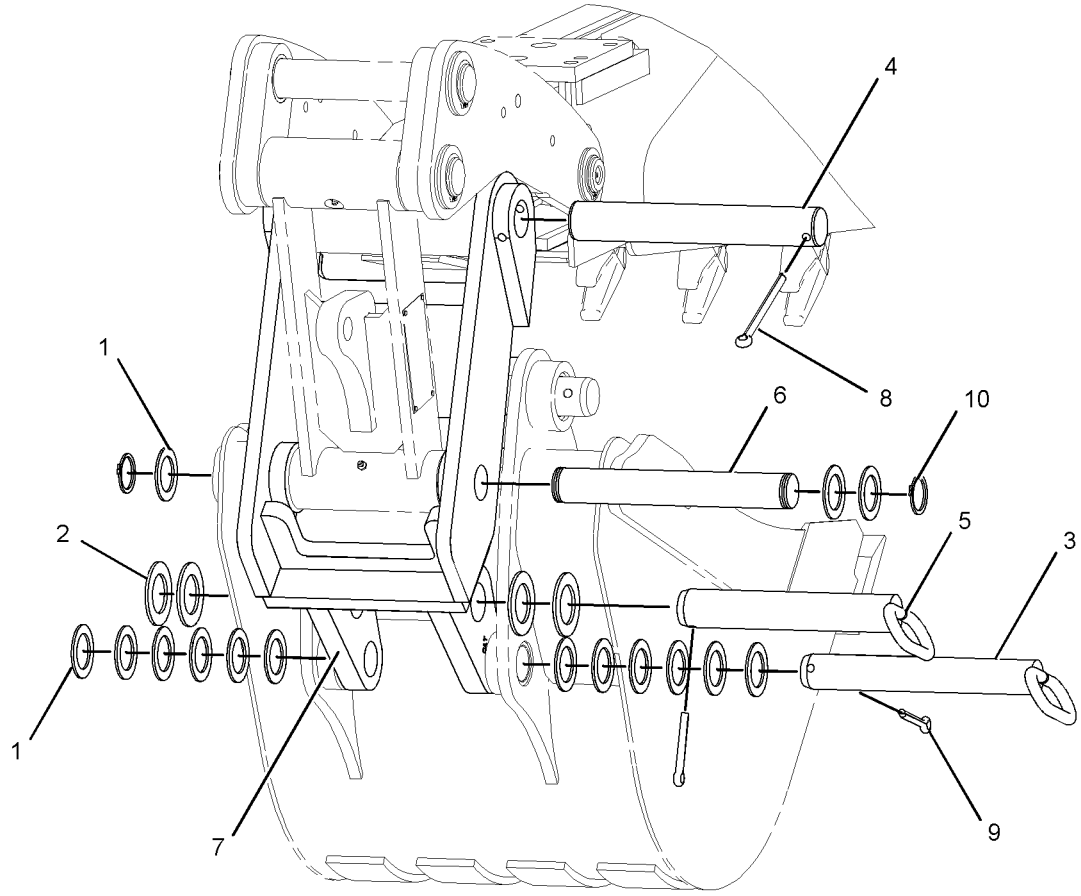

GRAPHIC #1 **<END>** g01052147

WORK TOOLS

9R-5321 EDGE GP-CUTTING

S/N: B2D1-UP
AN ATTACHMENT

SMCS-6801 **i01450695**

NOTE	REF NO	GRAPHIC REF	PART NUMBER	QTY	PART NAME 1 2 3 4 5 6 (PRODUCT LEVEL)	SEE PAGE
	1	1	**9W-8215**	2	EDGE-CUTTING	
	2	1	**3F-5108**	8	BOLT-PLOW (5/8-11 X 2 1/4 IN)	
	3	1	**4K-0367**	8	NUT-FULL (5/8-11 THD)	
	4	1	**8T-4122**	8	WASHER-HARD (17X32X3.5MM THK)	

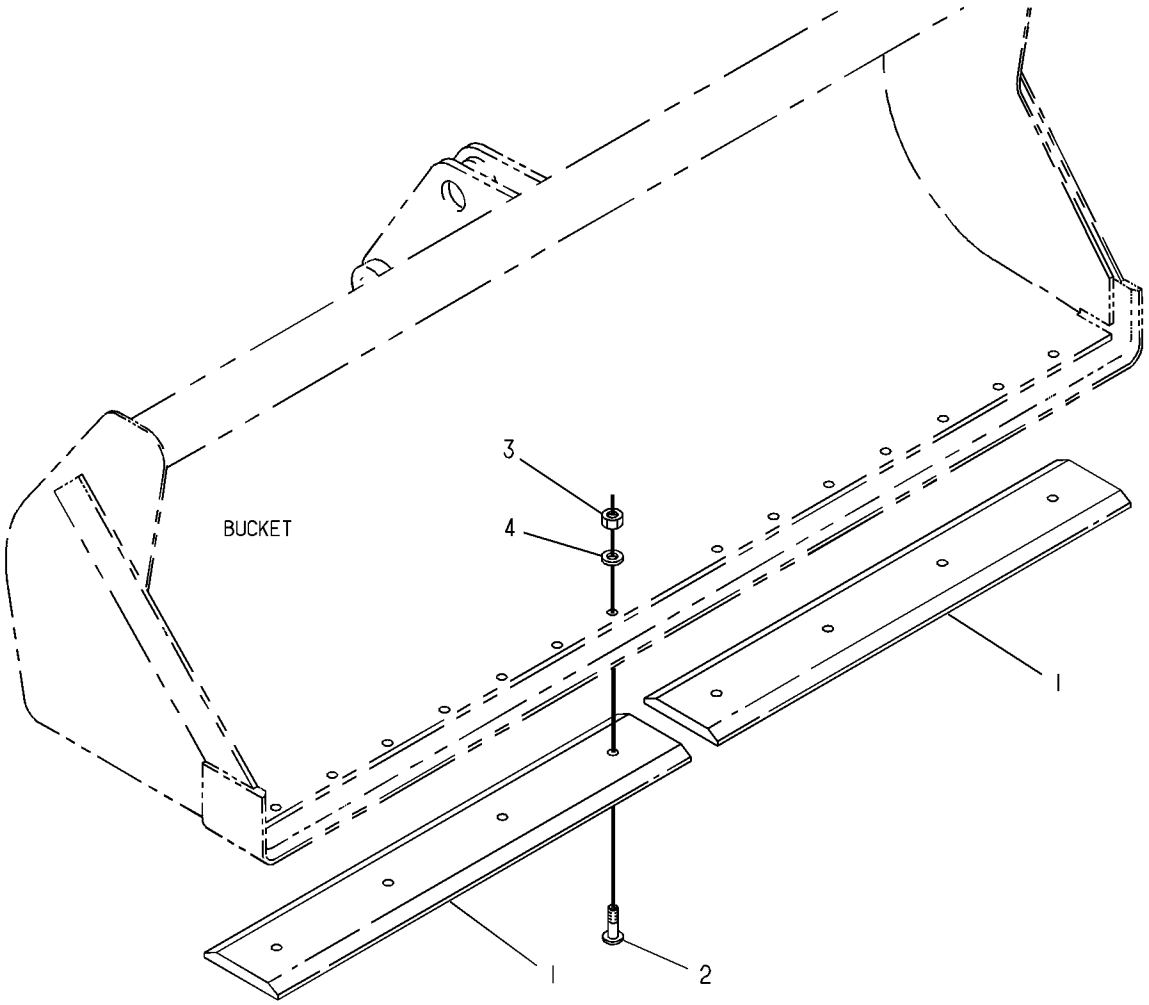

GRAPHIC #1 **<END>** g00130834

WORK TOOLS

104-6310 FORK GP

S/N: B2D1-UP
PART OF 112-0939 BUCKET AR-MULTIPURPOSE
AN ATTACHMENT

SMCS-6405 **i01526339**

NOTE	REF NO	GRAPHIC REF	PART NUMBER	QTY	PART NAME 1 2 3 4 5 6 (PRODUCT LEVEL)	SEE PAGE
	1	1	**104-6311**	2	BRACKET AS	
	2	1	**104-6312**	2	FORK AS	
	3	1	**104-6316**	1	PIN	
	4	1	**104-6317**	2	PIN	
	5	1	**4J-1888**	1	COTTER	
	6	1	**9R-0109**	4	WASHER (3MM THK)	
	7	1	**112-1776**	2	PIN AS	
	8	1	**6V-8144**	4	RING	
	9	1	**5D-8159**	2	PIN AS	

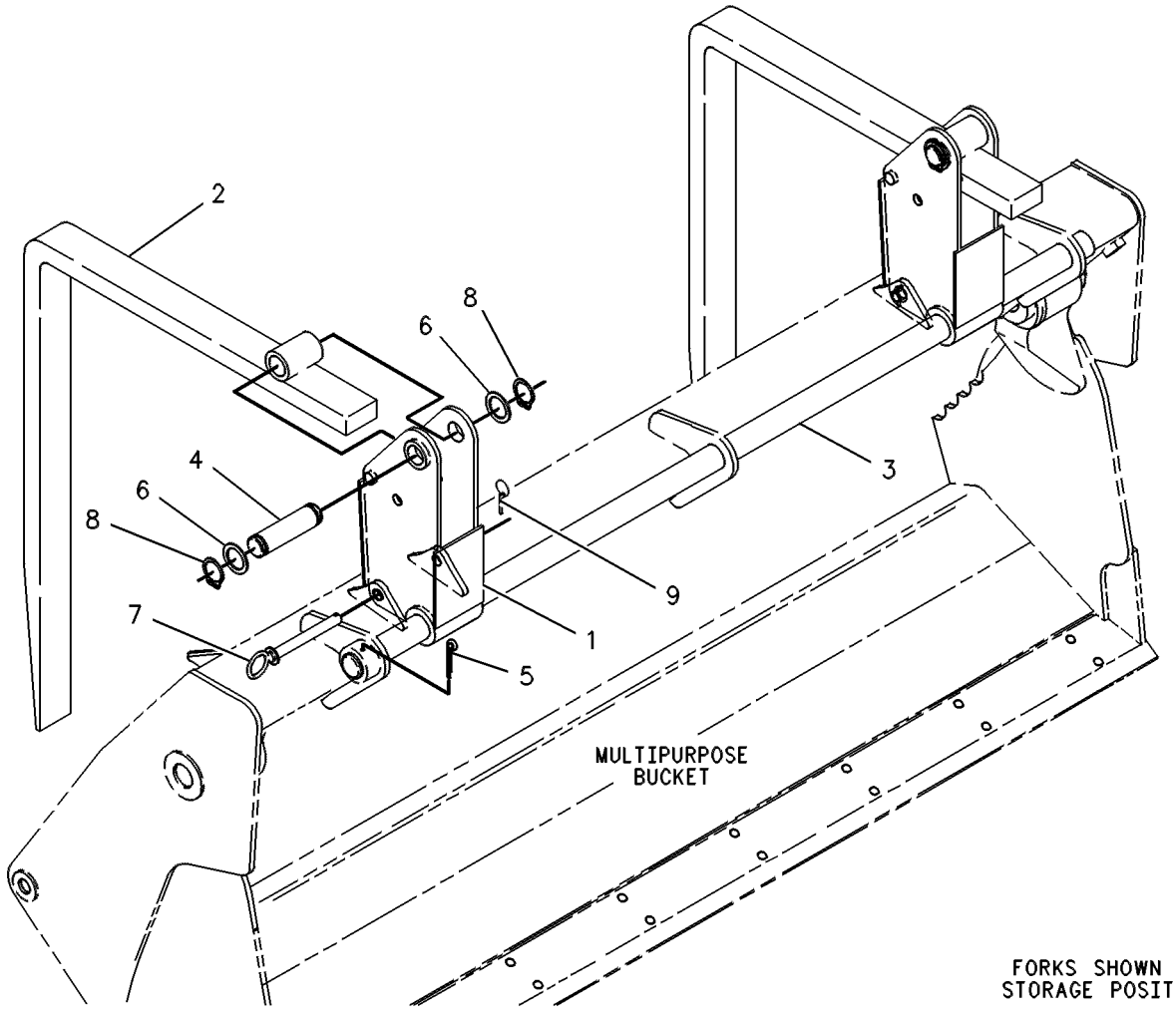

GRAPHIC #1 **<END>** g00131084

137-3848 MOUNTING GP-BUCKET

S/N: B2D1-UP
AN ATTACHMENT

SMCS-6101 **i01456946**

NOTE	REF NO	GRAPHIC REF	PART NUMBER	QTY	PART NAME 1 2 3 4 5 6 (PRODUCT LEVEL)	SEE PAGE
	1	1	**9R-0158**	5	WASHER (3MM THK)	
	2	1	**3B-5319**	4	COTTER	
	3	1	**9R-6162**	1	PIN	
	4	1	**9R-1510**	2	WASHER (4MM THK)	
	5	1	**154-5279**	1	PIN	

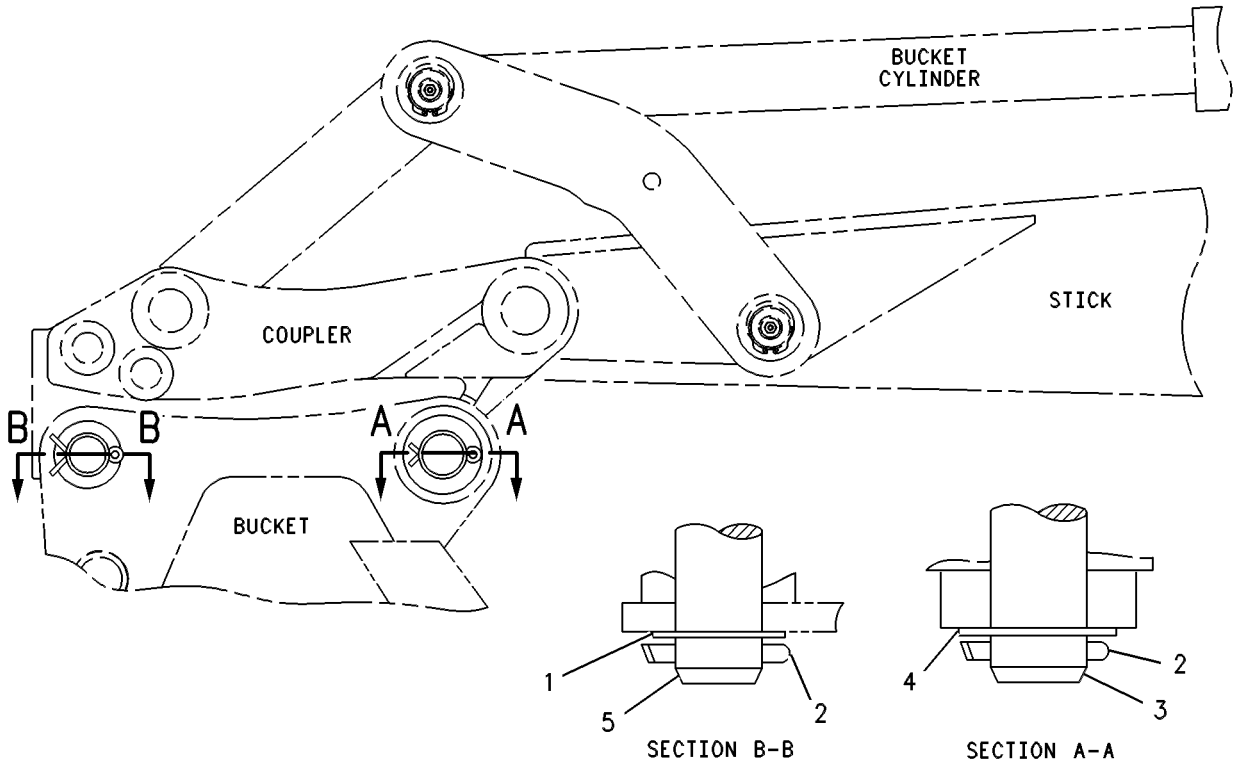

GRAPHIC #1 **<END>** g00131819

WORK TOOLS

178-3593 MOUNTING GP-BUCKET

S/N: B2D1-UP
BACKHOE, QUICK COUPLER
AN ATTACHMENT

SMCS-6101 **i01456949**

NOTE	PART NUMBER	QTY	PART NAME 1 2 3 4 5 6 (PRODUCT LEVEL)	SEE PAGE
	3B-5319	4	COTTER	
	154-5279	1	PIN	
	154-5280	1	PIN	
B	**9R-0158**	5	WASHER (3MM THK)	
B	**9R-1510**	5	WASHER (4MM THK)	

B-USE AS REQUIRED

<END>

WORK TOOLS

177-4903 STOP GP-BUCKET

S/N: B2D1-UP

AN ATTACHMENT

SMCS-6001 **i02051614**

NOTE	REF NO	GRAPHIC REF	PART NUMBER	QTY	PART NAME 1 2 3 4 5 6 (PRODUCT LEVEL)	SEE PAGE
	1	1	**178-4200**	1	STOP AS	
	2	1	**180-3773**	1	STOP AS	
	3	1	**7X-7729**	4	WASHER (11X25X3-MM THK)	
M	4	1	**8T-0389**	4	LOCKNUT (M10X1.5-THD)	
M	5	1	**8T-4182**	4	BOLT (M10X1.5X45-MM)	

M-METRIC PART

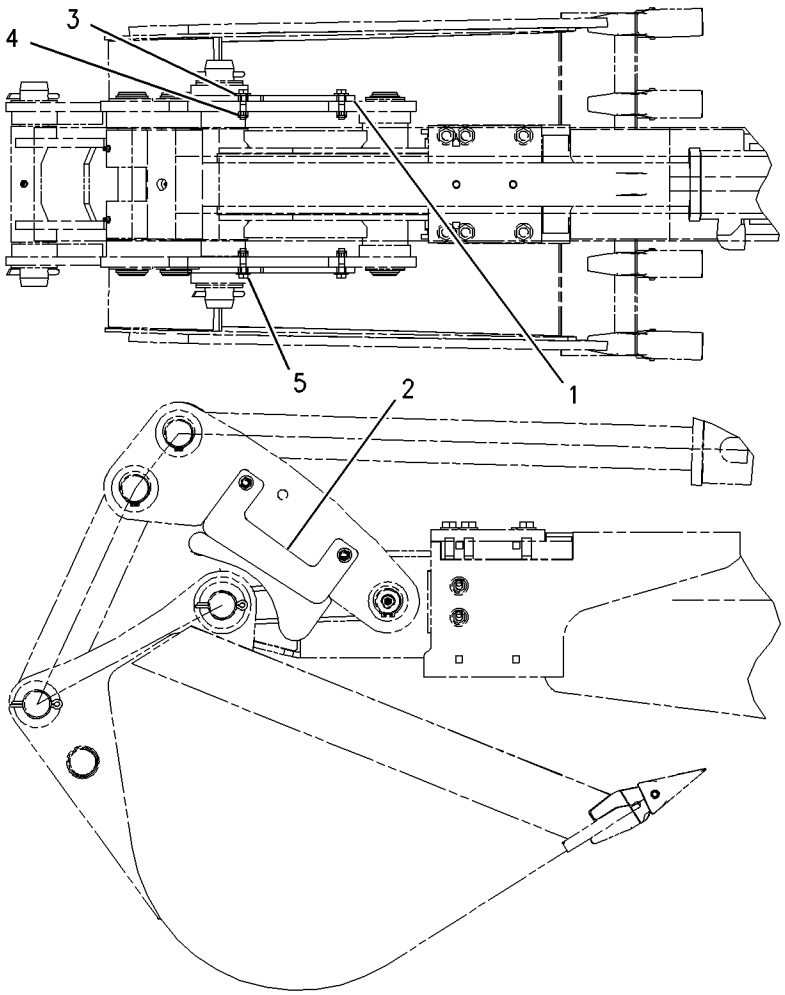

GRAPHIC #1 **<END>** g00954944

WORK TOOLS

9R-5866 TOOTH GP-UNI

S/N: B2D1-UP

AN ATTACHMENT

SMCS-6822 **i01854583**

NOTE	REF NO	GRAPHIC REF	PART NUMBER	QTY	PART NAME 1 2 3 4 5 6 (PRODUCT LEVEL)	SEE PAGE
	1	1	**135-8203**	8	TOOTH-UNI	
	2	1	**4F-3657**	16	BOLT-PLOW (5/8-11X2.75 IN)	
	3	1	**4K-0367**	16	NUT-FULL (5/8-11 THD)	

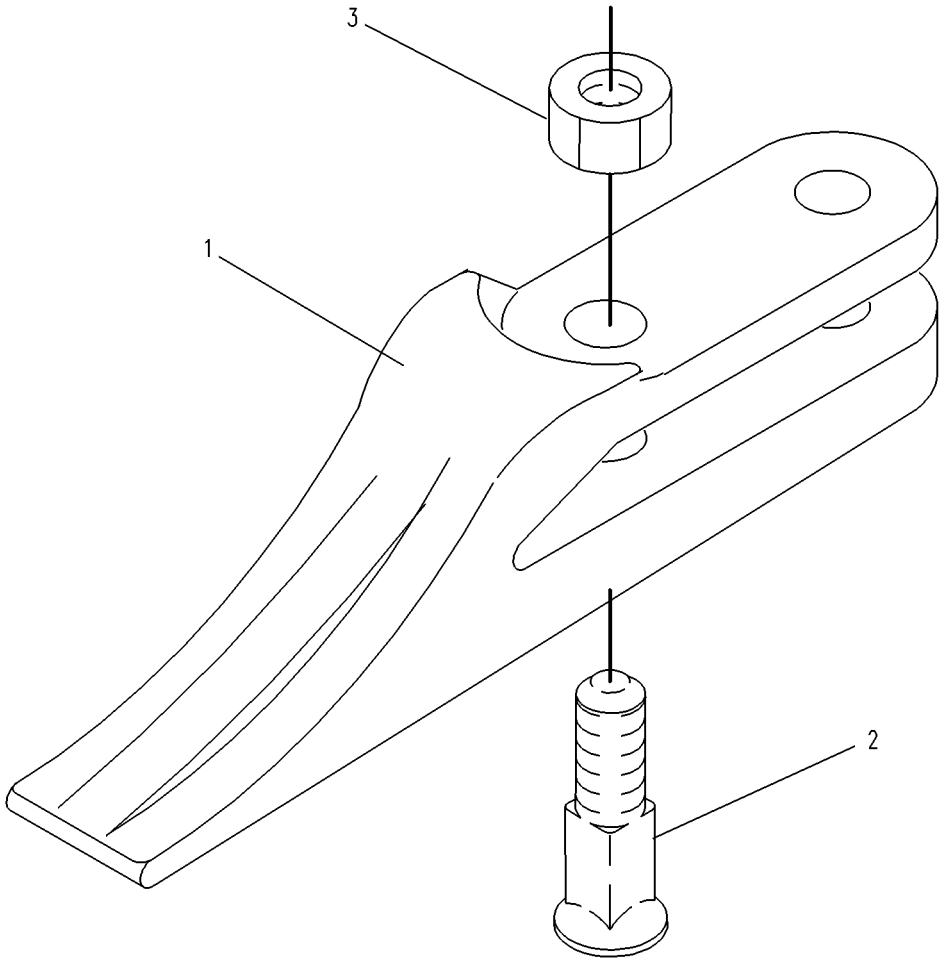

GRAPHIC #1 **<END>** g00130909

OPERATOR STATION

164-1278 ADJUSTER GP-SEAT

S/N: B2D1-UP
PART OF 164-1205 SEAT GP-STATIC
AN ATTACHMENT

SMCS-7321 **i01525310**

NOTE	REF NO	GRAPHIC REF	PART NUMBER	QTY	PART NAME 1 2 3 4 5 6 (PRODUCT LEVEL)	SEE PAGE
	1	1	**9X-2027**	4	WASHER (11X18X2MM THK)	
	2	1	**164-1279**	1	BASE AS	
	3	1	**164-1281**	1	ROD	
	4	1	**164-1282**	1	HANDLE	
	5	1	**164-1287**	1	BRACKET AS	
	6	1	**164-1288**	1	BRACKET AS	
	7	1	**164-1290**	2	SPRING-TORSION	
	8	1	**164-1291**	4	BOLT-SHOULDER	
	9	1	**2K-4973**	8	LOCKNUT (3/8-16 THD)	
	10	1	**164-1283**	1	KIT-LATCH	
	11	1	**164-1286**	2	PLATE	
	12	1	**164-1289**	2	PLATE AS	
J	13	1	**7X-0605**	4	WASHER-HARD (13X28X1.6MM THK)	
J	14	1	**1K-6872**	2	LOCKNUT (1/2-13 THD)	
J	15	1	**0S-1621**	2	BOLT (1/2-13X1 IN)	
J	16	1	**164-1280**	1	KIT-TETHER	

J-KIT MARKED J INCLUDES PARTS MARKED J

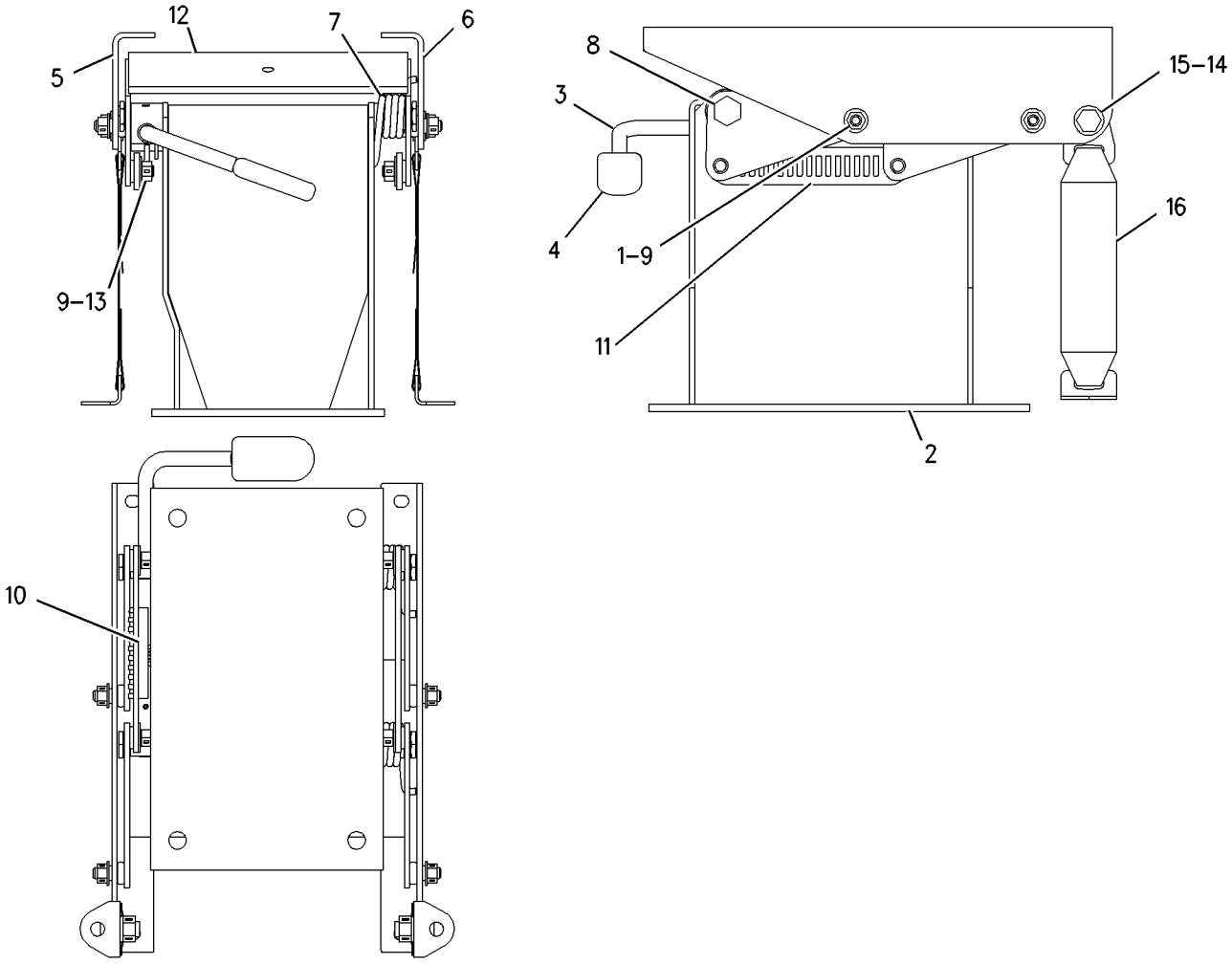

GRAPHIC #1 **<END>** g00744116

OPERATOR STATION

236-6966 AIR CONDITIONER & MOUNTING GP

S/N: B2D1-UP
PART OF 239-5562 CAB AR
AN ATTACHMENT

SMCS-7320 **i02043589**

NOTE	REF NO	GRAPHIC REF	PART NUMBER	QTY	PART NAME 1 2 3 4 5 6 (PRODUCT LEVEL)	SEE PAGE
E	1	1	**6V-6813**		HOSE (40CM)	
	2	1	**6L-4725**	2	CLAMP-HOSE	
	3	1	**8Y-5737**	1	CLAMP	
	4	1	**8Y-6967**	1	LOUVER AS	
	5	1	**9M-7959**	1	CLAMP-HOSE	
	6	1	**9P-6571**	2	PLUG	
	7	1	**110-6109**	1	KNOB-CONTROL	
	8	1	**130-4832**	2	SCREW (8-18X.39-IN)	
	9	1	**164-1042**	1	DUCT-OUTLET	
	10	1	**164-1196**	1	CABLE AS	
		1	**143-8874**	1	BOOT	
Y	11	1	**170-0075**	1	AIR CONDITIONER GP	486
	12	1	**184-6560**	1	BRACKET	
	13	1	**184-6561**	1	HOSE-AIR	
	14	1	**184-6564**	1	GASKET	
	15	1	**190-5132**	1	FILM-CONTROL (AIR CONDITIONER)	
	16	1	**194-5622**	1	VALVE AS (WATER)	
		1	**6V-6717**	1	SCREW-WASHER HEAD (8-32X.375-IN)	
		1	**124-0312**	2	SCREW-PAN HEAD (8-16X.32-IN)	
	17	1	**206-7512**	1	COVER	
	18	1	**206-7513**	2	BRACKET	
	19	1	**206-7514**	1	FILTER (AIR CONDITIONER)	
	20	1	**228-0297**	1	PLATE AS	
M		1	**6V-9632**	1	NUT-WELD (M6X1-THD)	
	21	1	**228-0298**	1	DUCT-AIR	
	22	1	**228-0560**	1	SEAL	
	23	1	**232-4666**	1	DUCT-AIR	
	24	1	**232-4874**	1	DUCT GP-AIR	
		1	**164-8473**	2	LOUVER AS	
		1	**104-2091**	8	SCREW-FLAT HEAD (6-20X0.5-IN)	
	25	1	**236-6985**	1	GASKET	
	26	1	**2H-3920**	1	LOCKWASHER	
	27	1	**5P-4115**	1	WASHER-HARD (7.2X19X2-MM THK)	
	28	1	**9R-9901**	5	FASTENER (CLIP)	
	29	1	**9X-2038**	2	WASHER (7X19X2-MM THK)	
M	30	1	**9X-2042**	3	SCREW-TRUSS HEAD (M6X1X12-MM)	
M	31	1	**9X-2044**	2	SCREW-TRUSS HEAD (M6X1X16-MM)	
M	32	1	**9X-2045**	4	SCREW-TRUSS HEAD (M6X1X20-MM)	
E	33	1	**5P-3915**		HOSE (30CM)	

E-ORDER BY THE CENTIMETER
M-METRIC PART
Y-SEPARATE ILLUSTRATION

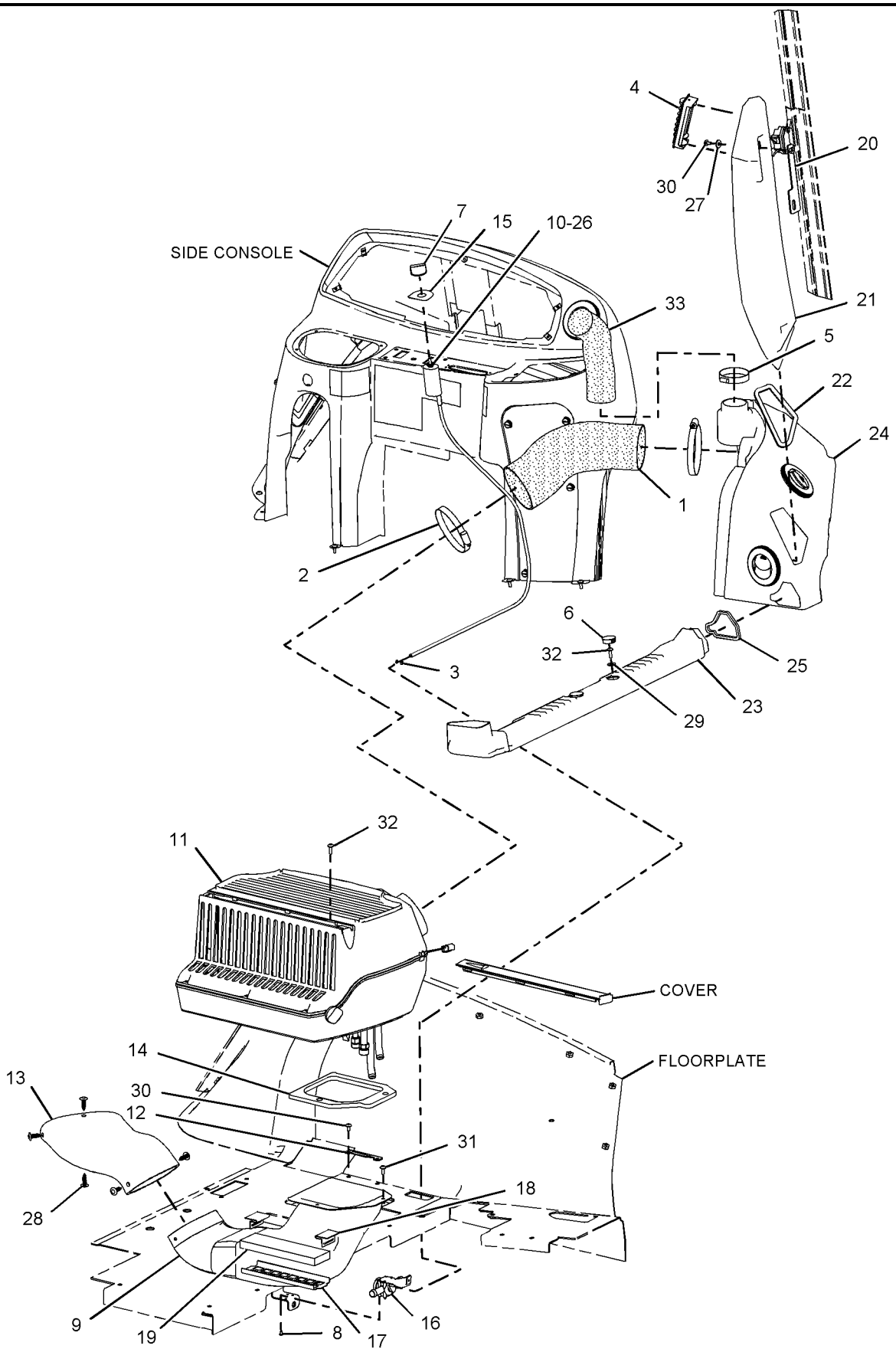

GRAPHIC #1 **<END>** g01027732

OPERATOR STATION

170-0075 AIR CONDITIONER GP

S/N: B2D1-UP
BASIC
PART OF 236-6966 AIR CONDITIONER & MOUNTING GP
AN ATTACHMENT

SMCS-7320 **i01964184**

NOTE	REF NO	GRAPHIC REF	PART NUMBER	QTY	PART NAME 1 2 3 4 5 6 (PRODUCT LEVEL)	SEE PAGE
	1	1	**119-9631**	1	SWITCH-TEMPERATURE (AIR CONDITIONER)	
	2	1	**164-4139**	1	COIL AS	
		1	**7X-2049**	1	TUBE AS-REFRIGERANT ORIFICE	
		1	**201-1635**	1	GASKET	
		1	**201-1636**	1	GASKET	
	3	1	**168-2313**	1	FAN AS	
		1	**177-9645**	1	KIT-RECEPTACLE (2 PIN)	
		1	**7T-0093**	2	PIN-CONNECTOR	
	4	1	**170-7269**	1	COVER	
	5	1	**170-7270**	1	CASE AS	
		1	**6C-3680**	4	RIVET-POP	
M		1	**129-3178**	4	LOCKNUT (M6X1 THD)	
		1	**188-2711**	1	GUARD AS	
	6	1	**170-7271**	1	COVER	
	7	1	**170-7272**	1	FILTER-AIR (AIR CONDITIONER)	
	8	1	**170-7274**	1	HARNESS AS-HEATER & AIR COND	
		1	**155-2270**	1	KIT-CONNECTING PLUG (2-PIN)	
	9	1	**170-7281**	1	GASKET	
	10	1	**170-7282**	1	GASKET	
	11	1	**185-4015**	4	CLIP	
	12	1	**188-2706**	2	GASKET	
	13	1	**188-2708**	1	GASKET	
	14	1	**188-2709**	1	GASKET	
	15	1	**188-2710**	1	GASKET	
	16	1	**188-2712**	2	VALVE-DRAIN	
	17	1	**191-6034**	1	GROMMET	
	18	1	**199-3729**	1	DOOR AS	
		1	**191-6033**	1	CONTROL AS	
		1	**191-6035**	1	RETAINER	
		1	**201-1634**	1	LINK	
	19	1	**204-9921**	1	RESISTOR AS	
	20	1	**206-7398**	1	KNOB-CONTROL	
	21	1	**213-9270**	1	FILM (AIR RECIRCULATION)	
	22	1	**2S-3745**	6	SCREW-TAPPING (10-16X.5 IN)	
	23	1	**5P-7921**	3	SCREW-WASHER HEAD (1/4-20X3/4 IN)	
	24	1	**6V-6717**	2	SCREW-WASHER HEAD (8-32X.375 IN)	
M	25	1	**6V-7357**	4	BOLT (M6X1.0X25MM)	
	26	1	**8T-4205**	4	WASHER-HARD (7.2X14.5X2MM THK)	
D	27	1	**5P-6011**		TUBE (0.0381M)	

D-ORDER BY THE METER
M-METRIC PART

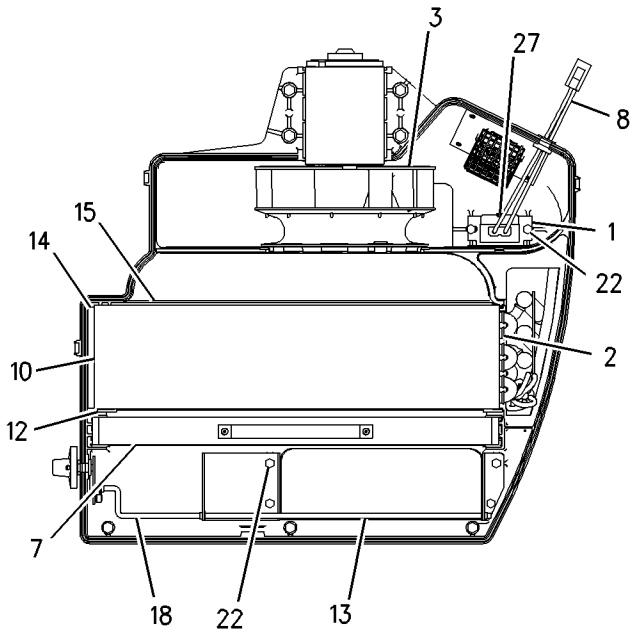

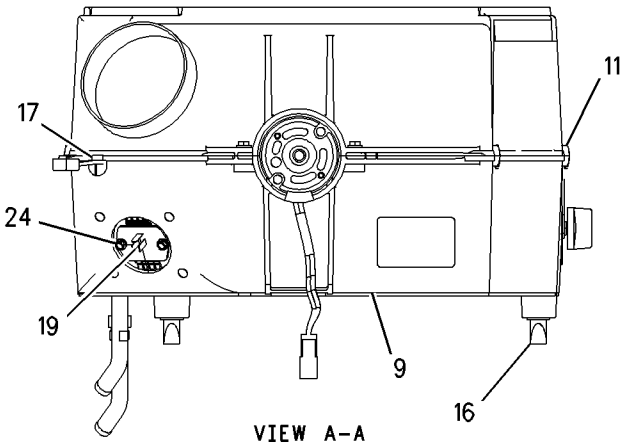

VIEW A-A

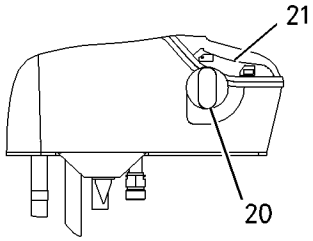

VIEW D-D

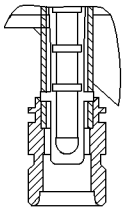

VIEW OF AREA C

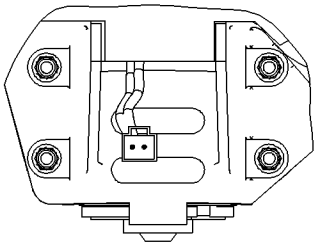

VIEW B-B

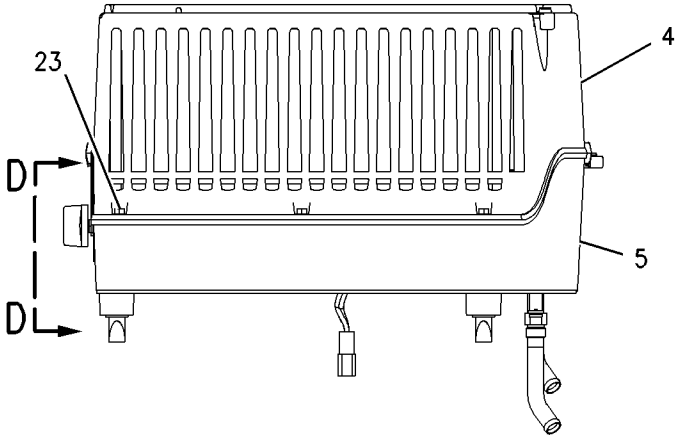

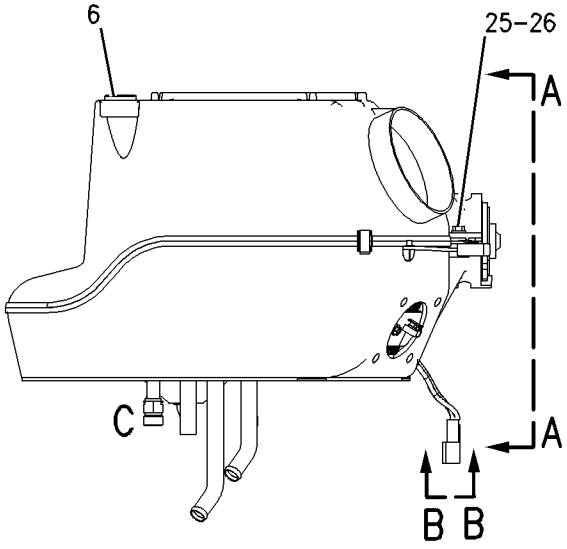

GRAPHIC #1 **<END>** g00952723

OPERATOR STATION

8Y-5904 ARMREST GP

S/N: B2D1-UP
PART OF 164-1209, 164-1210 SEAT GP
AN ATTACHMENT

SMCS-7307, 7312 **i01539068**

NOTE	REF NO	GRAPHIC REF	PART NUMBER	QTY	PART NAME 1 2 3 4 5 6 (PRODUCT LEVEL)	SEE PAGE
	1	1	**8Y-5906**	1	BASE-ARMREST	
L	2	1	**8S-7803**	1	RING-RETAINING	
J	3	1	**6V-2687**	4	SCREW-PAN HEAD (10-24X1IN)	
L	4	1	**8T-8641**	1	WASHER (M9.8X16.0X0.8MM THK)	
L	5	1	**3E-4312**	1	NUT-SQUARE	
	6	1	**8Y-5914**	1	SPRING	
					AVAILABLE REPAIR KIT(S):	
J			**8Y-5988**	1	KIT-CUSHION	
L			**8Y-6028**	1	KIT-ADJUSTER	

J-KIT MARKED J SERVICES PART MARKED J
L-KIT MARKED L SERVICES PARTS MARKED L

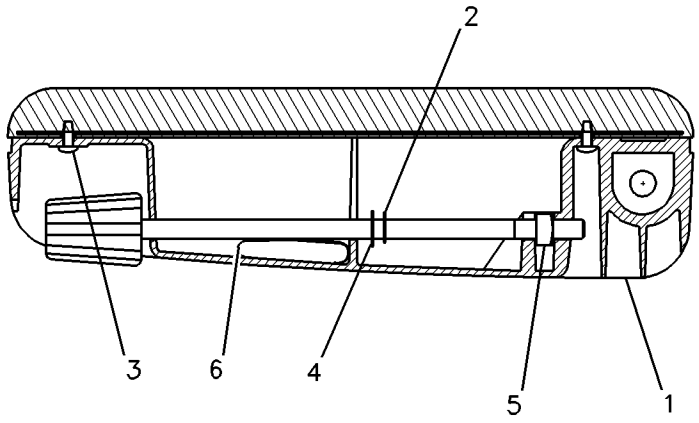

GRAPHIC #1 **<END>** g00799356

OPERATOR STATION

239-5560 CAB AR

S/N: B2D1-UP

AN ATTACHMENT

SMCS-7301 **i02023037**

NOTE	PART NUMBER	QTY	PART NAME 1 2 3 4 5 6 (PRODUCT LEVEL)	SEE PAGE
Y	**164-1125**	1	CAB GP	495
Y	*194-4183*	1	COMPARTMENT GP-LITERATURE	504
Y	*185-3524*	1	CONSOLE GP-OPERATOR	510
Y	*183-4898*	1	CONTROL GP-STEERING	232
Y	*186-0252*	1	COVER GP-FIREWALL (LOWER)	517
Y	*185-3527*	1	COVER GP-PARKING BRAKE	519
Y	**198-1289**	1	COVER GP-POST (RH)	521
Y	*145-6713*	1	FAN GP-SUCTION	57
Y	*195-3898*	1	FENDER GP-REAR	249
Y	*198-9723*	1	FITTING GP-HEATER & AIR COND	60
Y	*180-5764*	1	FLOOR MAT GP	530
Y	*201-9732*	1	FLOORPLATE GP	252
Y	*164-1045*	1	HEATER GP-CAB	531
Y	*236-6657*	1	LINES GP-HEATER	539
Y	*164-1155*	1	MIRROR GP-REAR VIEW	544
Y	*180-5770*	1	SEAT GP-SUSPENSION	567
Y	**239-1081**	1	TACHOMETER GP-ELECTRIC	576
Y	*167-8187*	1	WASHER GP-WINDOW	578
Y	*174-2024*	1	WIPER GP-WINDOW	592
Y	*186-0303*	1	WIRING GP-CAB	135
Y	*186-0306*	1	WIRING GP-CAB (WARNING BEACON)	138
Y	*238-1166*	1	WIRING GP-CONSOLE	146
Y	*186-2731*	1	WIRING GP-HEATER	152
	110-0037	1	FILM (CATERPILLAR)	
E	**3E-8211**		FILM-STRIPE (399CM)	
	5L-3308	1	V-BELT SET (INCLUDES 2 BELTS)	

E-ORDER BY THE CENTIMETER
Y-SEPARATE ILLUSTRATION

<END>

OPERATOR STATION

239-5562 CAB AR

S/N: B2D1-UP
AN ATTACHMENT

SMCS-7301 **i02022997**

NOTE	PART NUMBER	QTY	PART NAME 1 2 3 4 5 6 (PRODUCT LEVEL)	SEE PAGE
Y	*236-6966*	1	AIR CONDITIONER & MOUNTING GP	484
Y	*164-1140*	1	CAB GP	497
Y	*200-2676*	1	COMPARTMENT GP-LITERATURE	505
Y	*234-8601*	1	COMPRESSOR GP-REFRIGERANT	507
Y	*144-2222*	1	CONDENSER & MTG GP-REFRIGERANT	508
Y	*185-3524*	1	CONSOLE GP-OPERATOR	510
Y	*164-1388*	1	CONSOLE GP-SIDE (LH)	512
Y	*183-4897*	1	CONTROL GP-STEERING	231
Y	*186-0252*	1	COVER GP-FIREWALL (LOWER)	517
Y	*147-1559*	1	FAN GP-SUCTION	58
Y	*164-1148*	1	FENDER GP-REAR	248
Y	*180-5760*	1	FLOOR MAT GP	529
Y	*234-2617*	1	LINES GP-HEATER & AIR COND	541
Y	*164-1155*	1	MIRROR GP-REAR VIEW	544
Y	*180-5770*	1	SEAT GP-SUSPENSION	567
Y	*164-1165*	1	SUPPRESSION GP-SOUND	568
Y	**239-1080**	1	TACHOMETER GP-ELECTRIC	575
Y	*164-1370*	1	TRIM GP-CAB	577
Y	*167-8187*	1	WASHER GP-WINDOW	578
Y	*174-2024*	1	WIPER GP-WINDOW	592
Y	*238-1811*	1	WIRING GP-AIR CONDITIONER	129
Y	*185-8801*	1	WIRING GP-CAB	132
Y	*186-0306*	1	WIRING GP-CAB (WARNING BEACON)	138
Y	*238-1166*	1	WIRING GP-CONSOLE	146
Y	*190-7557*	1	WIRING GP-POWER RECEPTACLE	158
	110-0037	1	FILM (CATERPILLAR)	
E	**3E-8211**		FILM-STRIPE (399CM)	
	3N-1491	1	V-BELT SET (INCLUDES 2 BELTS)	

E-ORDER BY THE CENTIMETER
Y-SEPARATE ILLUSTRATION

<END>

OPERATOR STATION

241-9377 CAB AR

S/N: B2D1-UP

AN ATTACHMENT

SMCS-7301 **i02022968**

NOTE	PART NUMBER	QTY	PART NAME 1 2 3 4 5 6 (PRODUCT LEVEL)	SEE PAGE
Y	*164-1350*	1	CANOPY GP-OPEN ROPS	503
Y	*194-4183*	1	COMPARTMENT GP-LITERATURE	504
Y	*185-3530*	1	CONSOLE GP-SIDE	515
Y	*183-4898*	1	CONTROL GP-STEERING	232
Y	*186-0252*	1	COVER GP-FIREWALL (LOWER)	517
Y	*185-3527*	1	COVER GP-PARKING BRAKE	519
Y	**197-7564**	1	COVER GP-POST (RH)	520
Y	*240-9929*	1	FAN GP-SUCTION	59
Y	*195-3898*	1	FENDER GP-REAR	249
Y	*180-5764*	1	FLOOR MAT GP	530
Y	*164-1155*	1	MIRROR GP-REAR VIEW	544
Y	*180-5771*	1	SEAT GP-SUSPENSION	567
Y	**239-1081**	1	TACHOMETER GP-ELECTRIC	576
Y	*207-6052*	1	WASHER GP-WINDOW	580
Y	*207-6051*	1	WIPER GP-WINDOW	594
Y	*186-0306*	1	WIRING GP-CAB (WARNING BEACON)	138
Y	*207-6050*	1	WIRING GP-CAB	139
Y	*238-1166*	1	WIRING GP-CONSOLE	146
	110-7524	11	BUTTON	
	206-4703	1	COVER	
	110-0037	1	FILM (CATERPILLAR)	
	164-1070	1	GLASS (FRONT)	
	203-4158	1	PLUG GP	
	9J-1874	1	PLUG	
	187-1644	2	PLUG	
M	**9X-2041**	2	SCREW-TRUSS HEAD (M10X1.5X20-MM)	
	5L-3308	1	V-BELT SET (INCLUDES 2 BELTS)	

M-METRIC PART
Y-SEPARATE ILLUSTRATION

<END>

OPERATOR STATION

164-1150 CAB AS

S/N: B2D1-UP
PART OF 164-1140 CAB GP
AN ATTACHMENT

SMCS-7301 **i01524989**

NOTE	REF NO	GRAPHIC REF	PART NUMBER	QTY	PART NAME 1 2 3 4 5 6 (PRODUCT LEVEL)	SEE PAGE
	1	1	**7T-1099**	1	LINK	
	2	1	**8Y-7311**	2	HINGE	
	3	1	**9R-2589**	1	BOSS	
	4	1	**113-5973**	6	HINGE	
Y	5	1	*164-1050*	1	CANOPY AS	502
M	6	1	**8T-4967**	2	STUD (M10X1.5X23MM)	

M-METRIC PART
Y-SEPARATE ILLUSTRATION

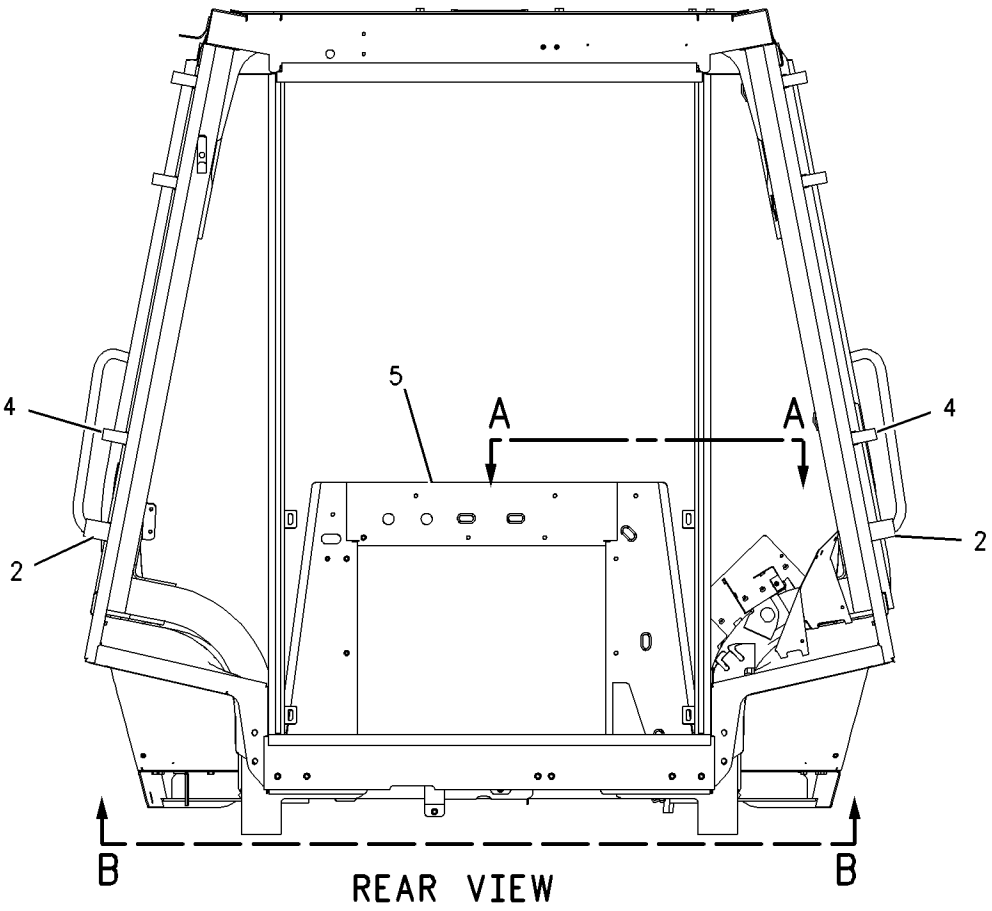

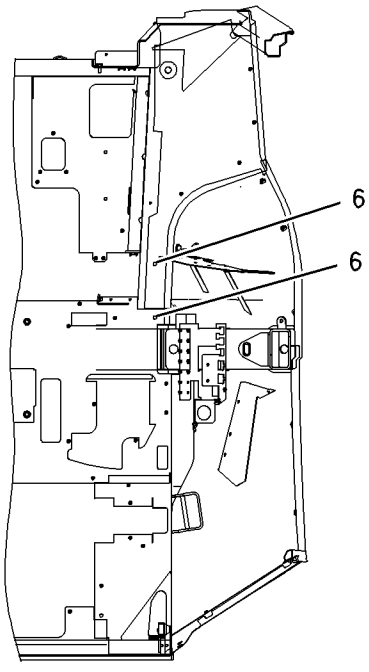

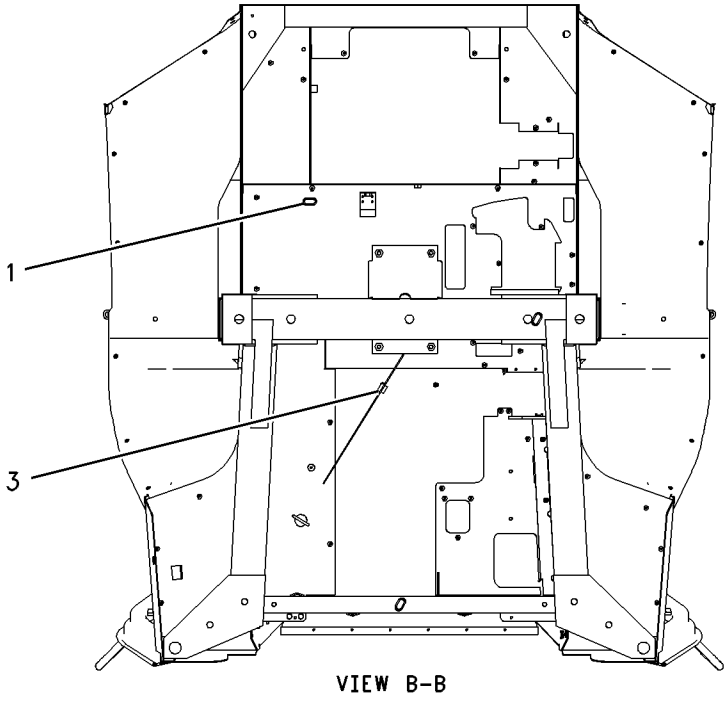

GRAPHIC #1 **<END>** g00785826

OPERATOR STATION

164-1375 CAB AS

S/N: B2D1-UP
PART OF 164-1125 CAB GP
AN ATTACHMENT

SMCS-7301 **i01525675**

NOTE	REF NO	GRAPHIC REF	PART NUMBER	QTY	PART NAME 1 2 3 4 5 6 (PRODUCT LEVEL)	SEE PAGE
	1	1	**7T-1099**	9	LINK	
	2	1	**8Y-7311**	1	HINGE	
	3	1	**9R-2589**	1	BOSS	
	4	1	**113-5973**	7	HINGE	
M	5	1	**8T-4967**	2	STUD (M10X1.5X23MM)	
Y	6	1	*164-1050*	1	CANOPY AS	502

M-METRIC PART
Y-SEPARATE ILLUSTRATION

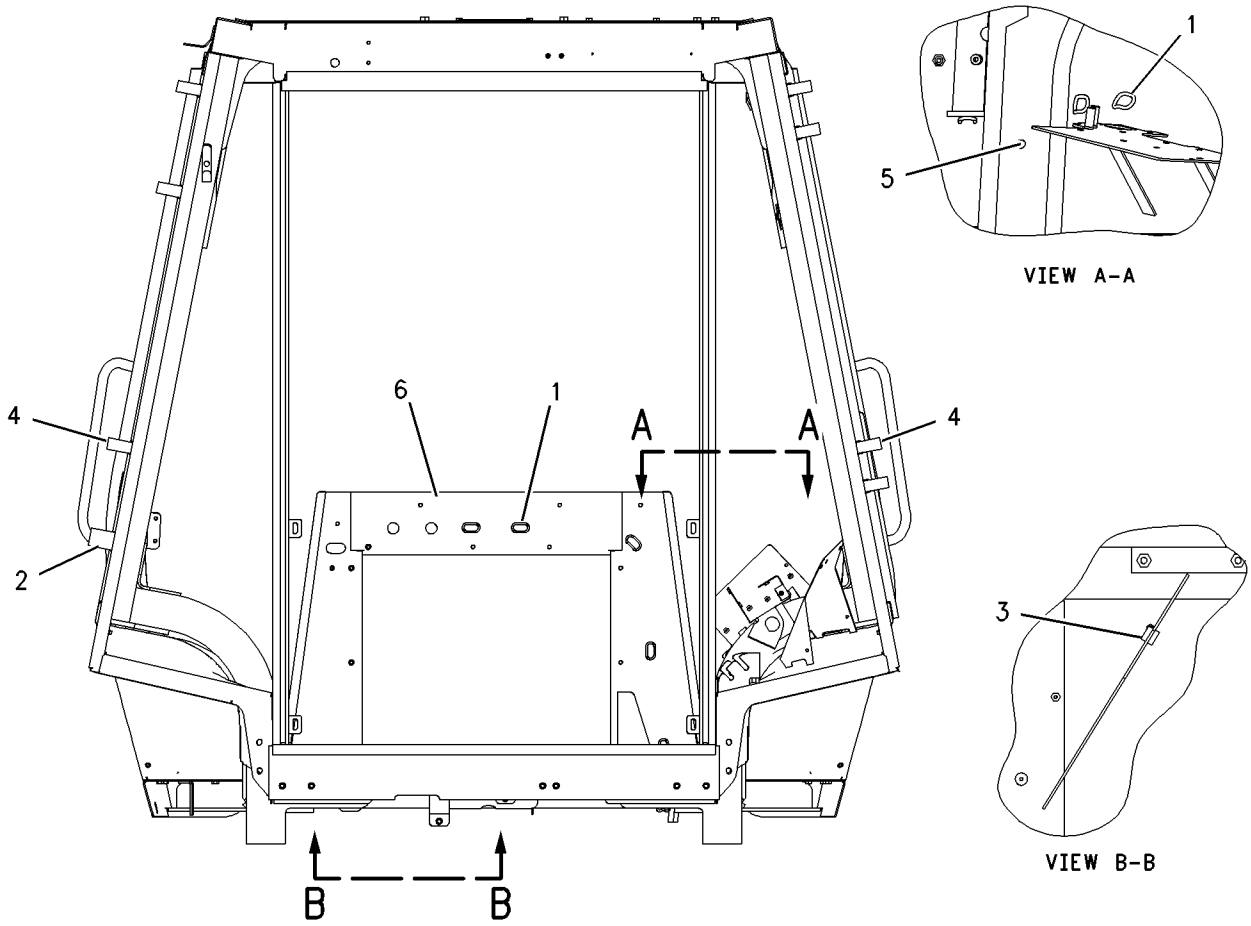

GRAPHIC #1 **<END>** g00792530

OPERATOR STATION

164-1125 CAB GP

S/N: B2D1-UP
UTILITY, CENTER PIVOT
PART OF 239-5560 CAB AR
AN ATTACHMENT

SMCS-7301 **i01692559**

NOTE	REF NO	GRAPHIC REF	PART NUMBER	QTY	PART NAME 1 2 3 4 5 6 (PRODUCT LEVEL)	SEE PAGE
	1	1	**8S-7803**	8	RING-RETAINING	
	2	1	**8Y-7444**	1	PIN	
	3	1	**117-7414**	1	PIN	
	4	1	**129-5256**	8	BUSHING	
	5	1	**129-5257**	8	BUSHING	
	6	1	**134-3059**	1	GUARD-STRIKER	
	7	1	**134-3060**	1	PLATE	
	8	1	**134-3062**	1	STRIKER	
	9	1	**143-2830**	1	LATCH AS	
M		1	**6V-7743**	2	LOCKNUT (M6X1 THD)	
M		1	**9X-2045**	2	SCREW-TRUSS HEAD (M6X1X20MM)	
		1	**143-2827**	1	SPRING	
	10	1	**159-4945**	2	KEEPER-REAR (LH)	
	11	1	**159-4946**	2	KEEPER-REAR (RH)	
	12	1	**163-7939**	1	PLATE AS	
M		1	**6V-9632**	7	NUT-WELD (M6X1 THD)	
		1	**7T-1099**	1	LINK	
M		1	**8T-3612**	4	NUT-WELD (M8X1.25 THD)	
M		1	**8T-4189**	3	BOLT (M8X1.25X20MM)	
Y	13	1	*164-1059*	1	WINDOW GP-CAB (RH)	582
Y	14	1	*164-1060*	1	WINDOW GP-CAB (LH)	584
Y	15	1	*164-1062*	1	DOOR GP-LH	522
J	16	1	**164-1068**	1	GLASS-RH	
J	17	1	**164-1069**	1	GLASS-LH	
J	18	1	**164-1070**	1	GLASS (FRONT)	
J	19	1	**164-1071**	1	GLASS-RH	
J	20	1	**164-1072**	1	GLASS-LH	
Y	21	1	*164-1325*	1	WINDOW GP-CAB (REAR)	586
Y	22	1	**164-1375**	1	CAB AS	494
B	23	1	**177-4877**	2	SHIM	
J	24	1	**180-7218**	1	GLASS-UPPER	
J	25	1	**180-7219**	1	GLASS-LOWER	
	26	1	**180-7232**	1	PIN	
	27	1	**180-7233**	1	PIN	
	28	1	**108-4311**	1	SCREW-MACHINE	
M	29	1	**131-3987**	8	SCREW (M4X0.7X12MM)	
	30	1	**3S-2093**	5	STRAP-CABLE	
M	31	1	**5C-7261**	2	NUT (M8X1.25 THD)	
	32	1	**5P-4116**	9	WASHER-HARD (8.8X20.5X2MM THK)	
	33	1	**8T-4121**	4	WASHER-HARD (11X21X2.5MM THK)	
M	34	1	**8T-4137**	4	BOLT (M10X1.5X20MM)	
M	35	1	**8T-4189**	5	BOLT (M8X1.25X20MM)	
M	36	1	**8T-4200**	2	BOLT (M8X1.25X16MM)	
	37	1	**9R-5616**	4	PLUG	
E	38	1	**144-0195**	2	HOSE (410CM)	

B-USE AS REQUIRED
E-ORDER BY THE CENTIMETER
J-USE ADHESIVE AS REQUIRED
M-METRIC PART
Y-SEPARATE ILLUSTRATION

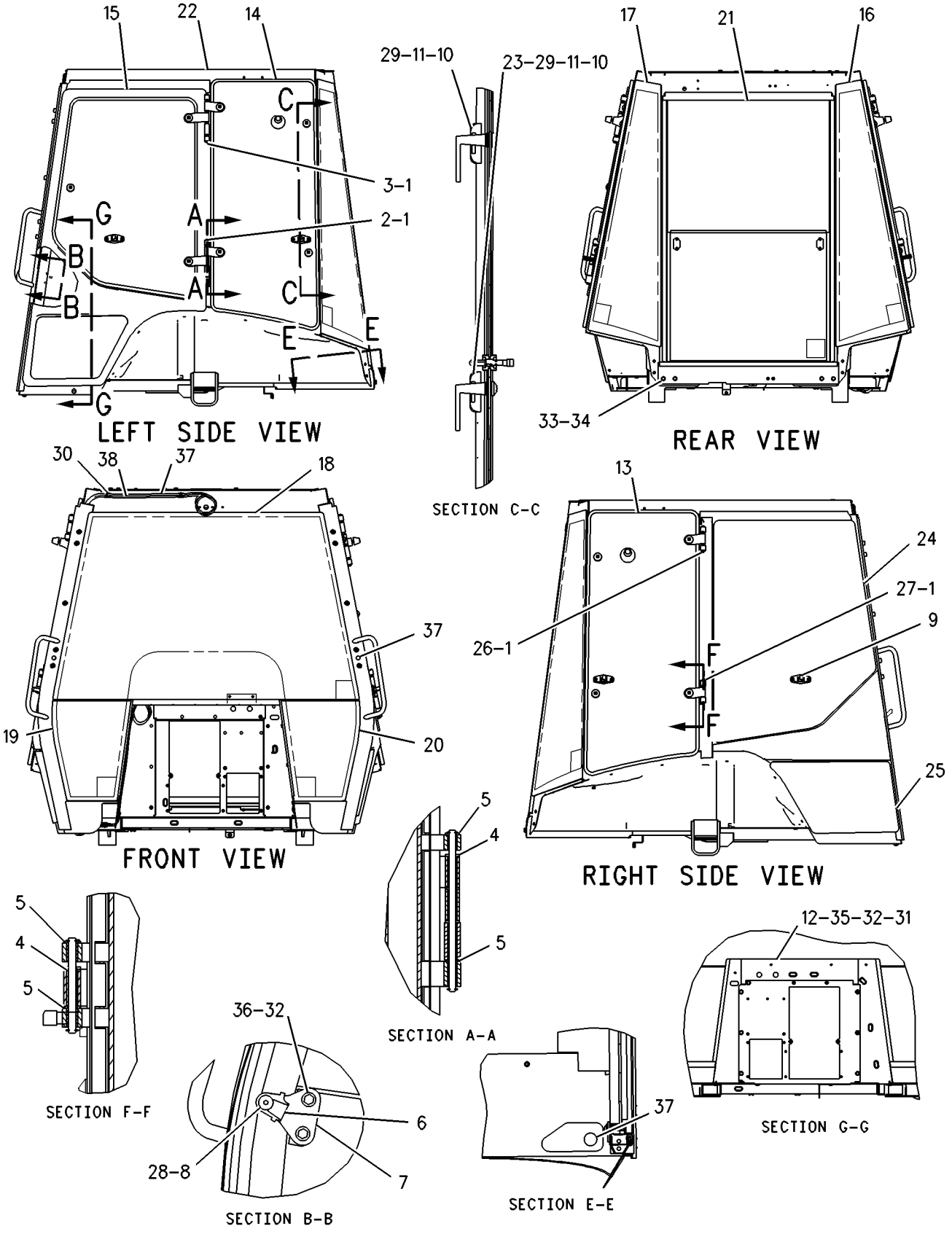

GRAPHIC #1 **<END>** g00827445

OPERATOR STATION

164-1140 CAB GP

S/N: B2D1-UP
CENTER PIVOT
PART OF 239-5562 CAB AR
AN ATTACHMENT

SMCS-7301 **i01693722**

NOTE	REF NO	GRAPHIC REF	PART NUMBER	QTY	PART NAME 1 2 3 4 5 6 (PRODUCT LEVEL)	SEE PAGE
	1	1	**8S-7803**	8	RING-RETAINING	
	2	1	**8Y-7444**	2	PIN	
	3	1	**117-7414**	2	PIN	
	4	1	**129-5256**	12	BUSHING	
	5	1	**129-5257**	8	BUSHING	
	6	1	**134-3059**	1	GUARD-STRIKER	
	7	1	**134-3060**	1	PLATE	
	8	1	**134-3061**	1	PLATE	
	9	1	**134-3062**	2	STRIKER	
	10	1	**134-3503**	1	GUARD-STRIKER	
	11	1	**159-4945**	2	KEEPER-REAR (LH)	
	12	1	**159-4946**	2	KEEPER-REAR (RH)	
	13	1	**163-7939**	1	PLATE AS	
M		1	**6V-9632**	7	NUT-WELD (M6X1 THD)	
		1	**7T-1099**	1	LINK	
M		1	**8T-3612**	4	NUT-WELD (M8X1.25 THD)	
M		1	**8T-4189**	3	BOLT (M8X1.25X20MM)	
Y	14	1	*164-1059*	1	WINDOW GP-CAB (RH)	582
Y	15	1	*164-1060*	1	WINDOW GP-CAB (LH)	584
Y	16	1	**164-1061**	1	DOOR GP-RH	524
Y	17	1	*164-1062*	1	DOOR GP-LH	522
J	18	1	**164-1068**	1	GLASS-RH	
J	19	1	**164-1069**	1	GLASS-LH	
J	20	1	**164-1070**	1	GLASS (FRONT)	
J	21	1	**164-1071**	1	GLASS-RH	
J	22	1	**164-1072**	1	GLASS-LH	
Y	23	1	**164-1150**	1	CAB AS	492
Y	24	1	*164-1325*	1	WINDOW GP-CAB (REAR)	586
B	25	1	**177-4877**	2	SHIM	
	26	1	**108-4311**	2	SCREW-MACHINE	
M	27	1	**131-3987**	8	SCREW (M4X0.7X12MM)	
	28	1	**3S-2093**	5	STRAP-CABLE	
M	29	1	**5C-7261**	2	NUT (M8X1.25 THD)	
	30	1	**5P-4116**	11	WASHER-HARD (8.8X20.5X2MM THK)	
	31	1	**8T-4121**	4	WASHER-HARD (11X21X2.5MM THK)	
M	32	1	**8T-4137**	4	BOLT (M10X1.5X20MM)	
M	33	1	**8T-4189**	5	BOLT (M8X1.25X20MM)	
M	34	1	**8T-4200**	4	BOLT (M8X1.25X16MM)	
	35	1	**9R-5616**	4	PLUG	
E	36	1	**144-0195**	2	HOSE (410CM)	

B-USE AS REQUIRED
E-ORDER BY THE CENTIMETER
J-USE ADHESIVE AS REQUIRED
M-METRIC PART
Y-SEPARATE ILLUSTRATION

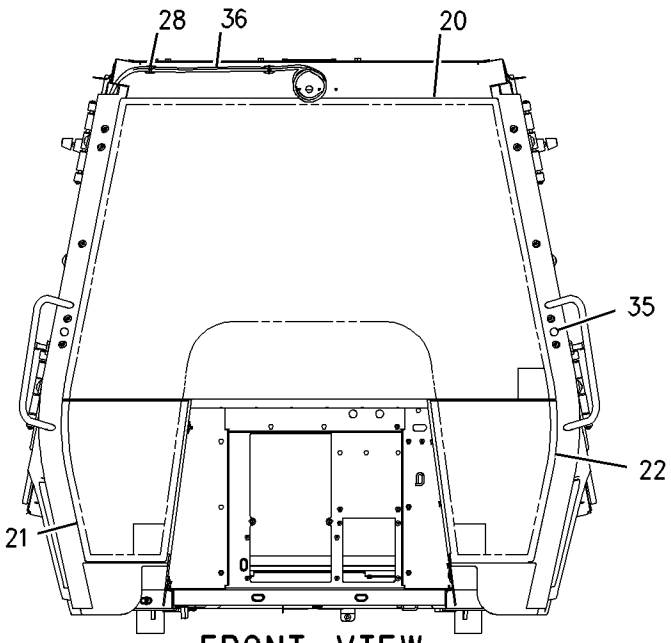

FRONT VIEW

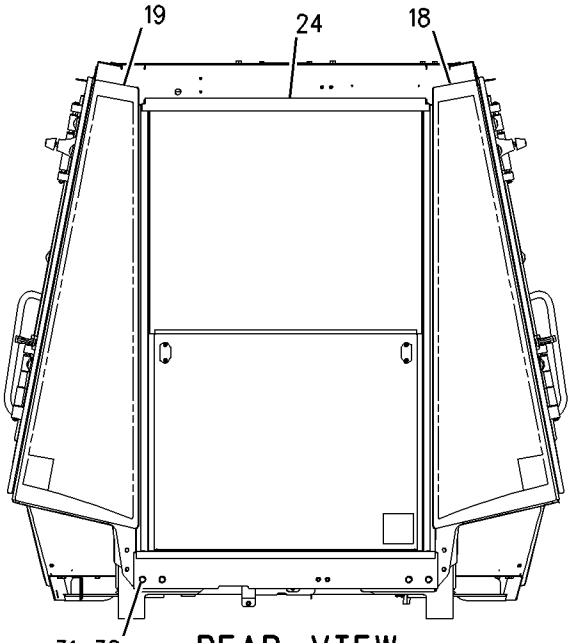

REAR VIEW

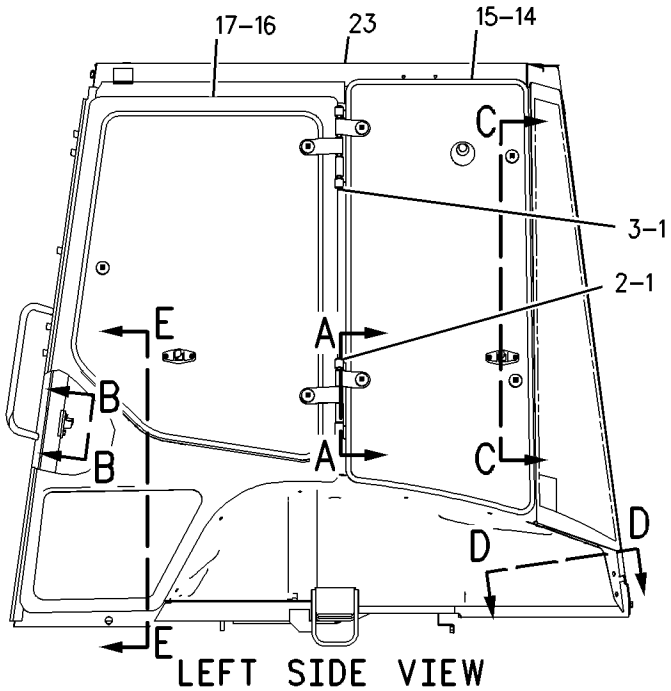

LEFT SIDE VIEW

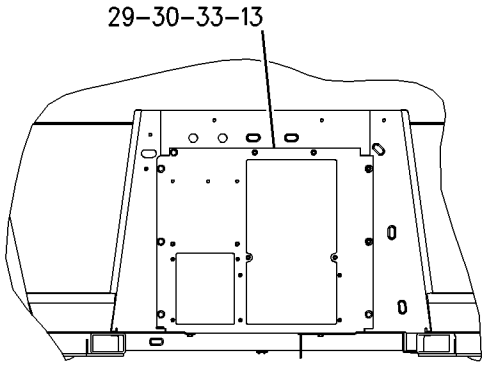

SECTION E-E

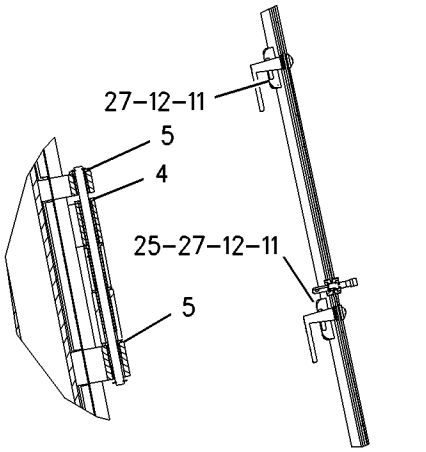

SECTION A-A

SECTION C-C

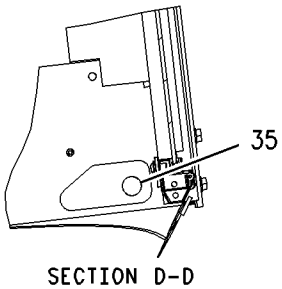

SECTION D-D

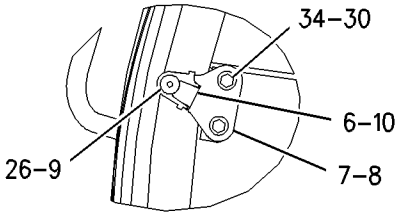

SECTION B-B

GRAPHIC #1 **<END>** g00827455

OPERATOR STATION

239-5558 CANOPY AR

S/N: B2D1-UP

AN ATTACHMENT

SMCS-7302 **i02023069**

NOTE	PART NUMBER	QTY	PART NAME 1 2 3 4 5 6 (PRODUCT LEVEL)	SEE PAGE
Y	*164-1350*	1	CANOPY GP-OPEN ROPS	503
Y	*194-4183*	1	COMPARTMENT GP-LITERATURE	504
Y	*185-3530*	1	CONSOLE GP-SIDE	515
Y	*183-4898*	1	CONTROL GP-STEERING	232
Y	*186-0252*	1	COVER GP-FIREWALL (LOWER)	517
Y	*198-0104*	1	COVER GP-FIREWALL (UPPER)	518
Y	*185-3527*	1	COVER GP-PARKING BRAKE	519
Y	**197-7564**	1	COVER GP-POST (RH)	520
Y	*145-6713*	1	FAN GP-SUCTION	57
Y	*195-3898*	1	FENDER GP-REAR	249
Y	*180-5764*	1	FLOOR MAT GP	530
Y	*164-1155*	1	MIRROR GP-REAR VIEW	544
Y	*180-5771*	1	SEAT GP-SUSPENSION	567
Y	**239-1081**	1	TACHOMETER GP-ELECTRIC	576
Y	*185-8802*	1	WIRING GP-CAB	134
Y	*186-0306*	1	WIRING GP-CAB (WARNING BEACON)	138
Y	*238-1166*	1	WIRING GP-CONSOLE	146
	203-4158	1	PLUG GP	
	9J-1874	1	PLUG	
	187-1644	2	PLUG	
	5L-3308	1	V-BELT SET (INCLUDES 2 BELTS)	

Y-SEPARATE ILLUSTRATION

<END>

OPERATOR STATION

239-5559 CANOPY AR

S/N: B2D1-UP
AN ATTACHMENT

SMCS-7302 **i02023045**

NOTE	PART NUMBER	QTY	PART NAME 1 2 3 4 5 6 (PRODUCT LEVEL)	SEE PAGE
Y	*164-1350*	1	CANOPY GP-OPEN ROPS	503
Y	*194-4183*	1	COMPARTMENT GP-LITERATURE	504
Y	*185-3530*	1	CONSOLE GP-SIDE	515
Y	*183-4898*	1	CONTROL GP-STEERING	232
Y	*186-0252*	1	COVER GP-FIREWALL (LOWER)	517
Y	*185-3527*	1	COVER GP-PARKING BRAKE	519
Y	**197-7564**	1	COVER GP-POST (RH)	520
Y	*145-6713*	1	FAN GP-SUCTION	57
Y	*195-3898*	1	FENDER GP-REAR	249
Y	*180-5764*	1	FLOOR MAT GP	530
Y	*164-1155*	1	MIRROR GP-REAR VIEW	544
Y	*180-5771*	1	SEAT GP-SUSPENSION	567
Y	**239-1081**	1	TACHOMETER GP-ELECTRIC	576
Y	*207-6052*	1	WASHER GP-WINDOW	580
Y	*207-6051*	1	WIPER GP-WINDOW	594
Y	*186-0306*	1	WIRING GP-CAB (WARNING BEACON)	138
Y	*207-6050*	1	WIRING GP-CAB	139
Y	*238-1166*	1	WIRING GP-CONSOLE	146
	110-7524	11	BUTTON	
	206-4703	1	COVER	
	110-0037	1	FILM (CATERPILLAR)	
	164-1070	1	GLASS (FRONT)	
	203-4158	1	PLUG GP	
	9J-1874	1	PLUG	
	187-1644	2	PLUG	
M	**9X-2041**	2	SCREW-TRUSS HEAD (M10X1.5X20-MM)	
	5L-3308	1	V-BELT SET (INCLUDES 2 BELTS)	

M-METRIC PART
Y-SEPARATE ILLUSTRATION

<END>

OPERATOR STATION

164-1025 CANOPY AS

S/N: B2D1-UP
PART OF 164-1350 CANOPY GP-OPEN ROPS
AN ATTACHMENT

SMCS-7302 **i01673079**

NOTE	REF NO	GRAPHIC REF	PART NUMBER	QTY	PART NAME 1 2 3 4 5 6 (PRODUCT LEVEL)	SEE PAGE
	1	1	**7T-1099**	27	LINK	
	2	1	**8Y-7292**	2	HANDHOLD (RH)	
	3	1	**9R-2589**	1	BOSS	
	4	1	**140-2959**	2	HANDHOLD (LH)	
	5	1	**5D-9629**	2	ROD	
M	6	1	**8T-4967**	2	STUD-WELD (M10X1.5X23MM OAL)	

M-METRIC PART

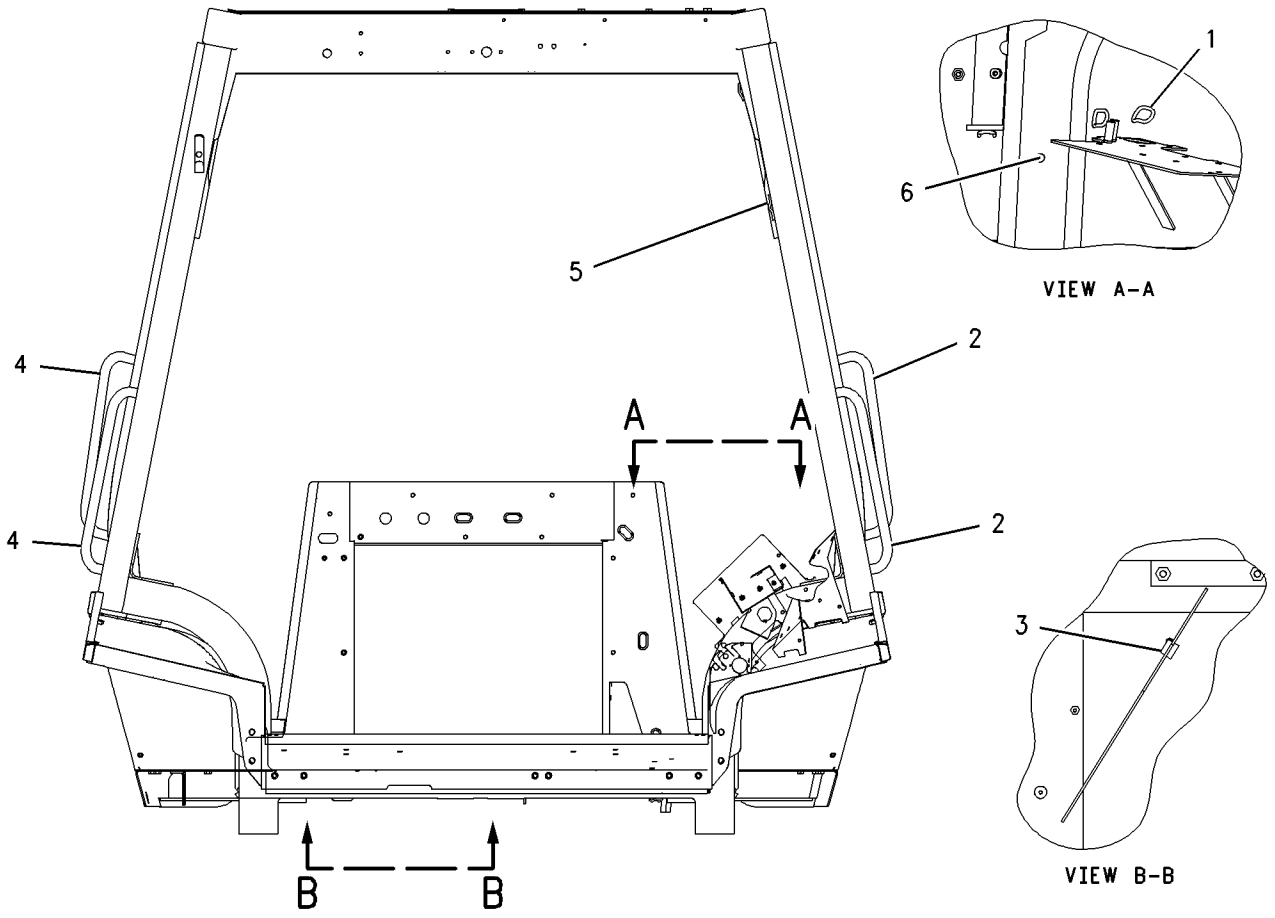

GRAPHIC #1 **<END>** g00786390

OPERATOR STATION

164-1050 CANOPY AS

S/N: B2D1-UP
PART OF 164-1150, 164-1375 CAB AS
AN ATTACHMENT

SMCS-7302 **i01524786**

NOTE	REF NO	GRAPHIC REF	PART NUMBER	QTY	PART NAME 1 2 3 4 5 6 (PRODUCT LEVEL)	SEE PAGE
	1	1	**7T-1099**	25	LINK	
	2	1	*163-7938*	1	PLATE AS	
M		1	**6V-9632**	4	NUT-WELD (M6X1 THD)	
		1	**7T-1099**	1	LINK	
M		1	**8T-3612**	5	NUT-WELD (M8X1.25 THD)	
M		1	**8T-4189**	6	BOLT (M8X1.25X20MM)	
M		1	**8T-4908**	2	BOLT (M8X1.25X25MM)	
M	3	1	**6V-9632**	2	NUT-WELD (M6X1 THD)	
	4	1	**5D-9629**	2	ROD	
	5	1	*164-1660*	1	PLATE	
M		1	**6V-9632**	6	NUT-WELD (M6X1 THD)	
		1	**7T-1099**	1	LINK	
M		1	**8T-3490**	2	NUT-WELD (M10X1.5 THD)	
M		1	**8T-4195**	2	BOLT (M10X1.5X30MM)	

M-METRIC PART

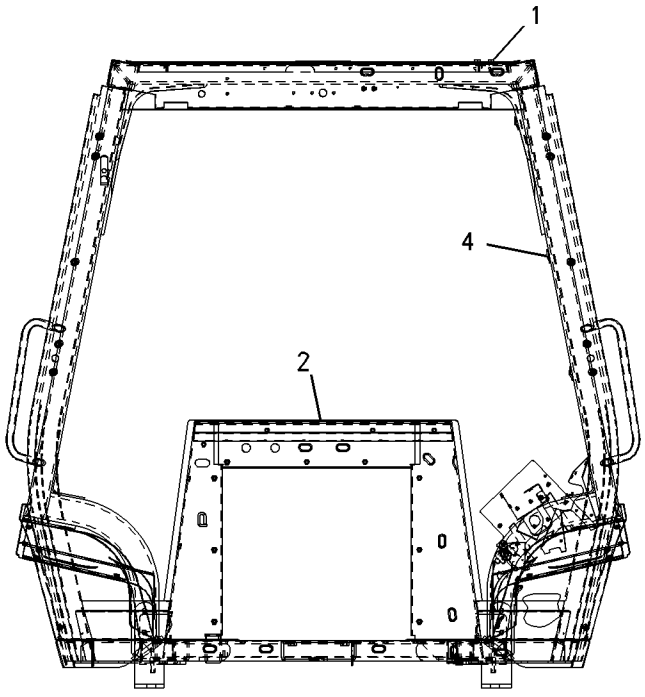

REAR VIEW

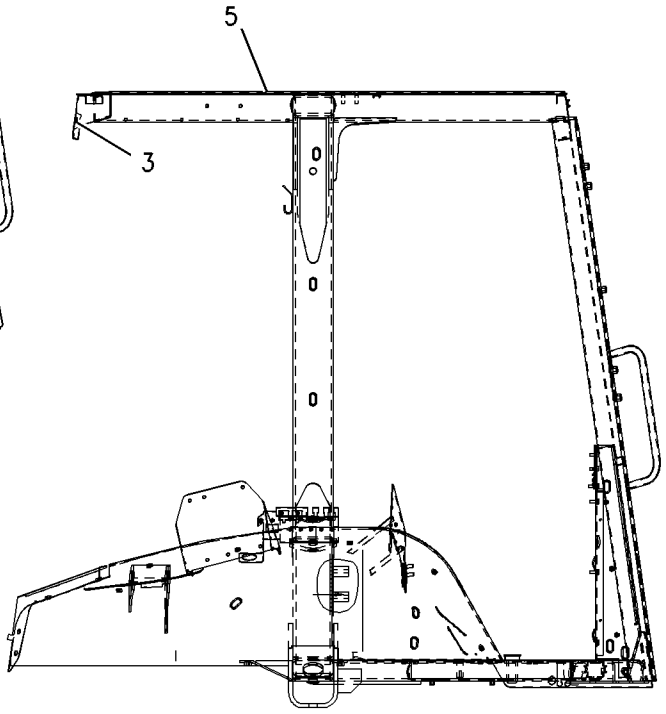

RIGHT SIDE VIEW

GRAPHIC #1 **<END>** g00792116

OPERATOR STATION

164-1350 CANOPY GP-OPEN ROPS

S/N: B2D1-UP
MECHANICAL BACKHOE CONTROLS
PART OF 241-9377 CAB AR, 239-5558, 239-5559 CANOPY AR
AN ATTACHMENT

SMCS-7302, 7323 **i01694478**

NOTE	REF NO	GRAPHIC REF	PART NUMBER	QTY	PART NAME 1 2 3 4 5 6 (PRODUCT LEVEL)	SEE PAGE
	1	1	**9R-5616**	2	PLUG	
	2	1	**163-7939**	1	PLATE AS	
Y	3	1	**164-1025**	1	CANOPY AS	501
	4	1	**164-1071**	1	GLASS-RH	
	5	1	**164-1072**	1	GLASS-LH	
M	6	1	**5C-7261**	2	NUT (M8X1.25 THD)	
	7	1	**5P-4116**	7	WASHER-HARD (8.8X20.5X2MM THK)	
M	8	1	**8T-4189**	5	BOLT (M8X1.25X20MM)	
E	9	1	**9X-2092**	2	STRIP-EDGE (40CM)	

E-ORDER BY THE CENTIMETER
M-METRIC PART
Y-SEPARATE ILLUSTRATION

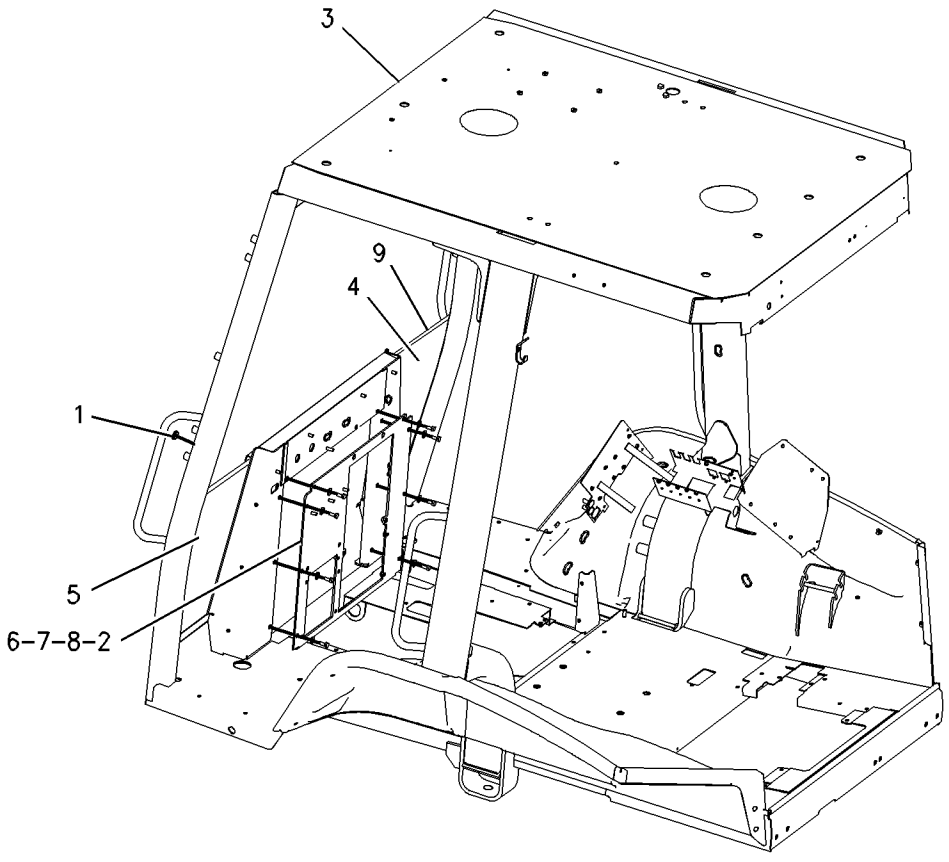

GRAPHIC #1 **<END>** g00827125

OPERATOR STATION

194-4183 COMPARTMENT GP-LITERATURE

S/N: B2D1-UP

PART OF 239-5560, 241-9377 CAB AR, 239-5558, 239-5559 CANOPY AR

AN ATTACHMENT

SMCS-7268 **i02037370**

NOTE	REF NO	GRAPHIC REF	PART NUMBER	QTY	PART NAME 1 2 3 4 5 6 (PRODUCT LEVEL)	SEE PAGE
	1	1	**5P-7957**	1	LANYARD	
	2	1	**5P-7958**	1	SLEEVE-CABLE SPLICE	
	3	1	**5P-8500**	1	KEY	
	4	1	**7F-3400**	1	BAG-POLYETHYLENE	
B	5	1	**7F-3400**	1	BAG-POLYETHYLENE	
	6	1	**194-4184**	1	COMPARTMENT AS	
	7	1	**9X-2038**	4	WASHER (7X19X2-MM THK)	
M	8	1	**9X-2044**	4	SCREW-TRUSS HEAD (M6X1X16-MM)	

B-USE AS REQUIRED
M-METRIC PART

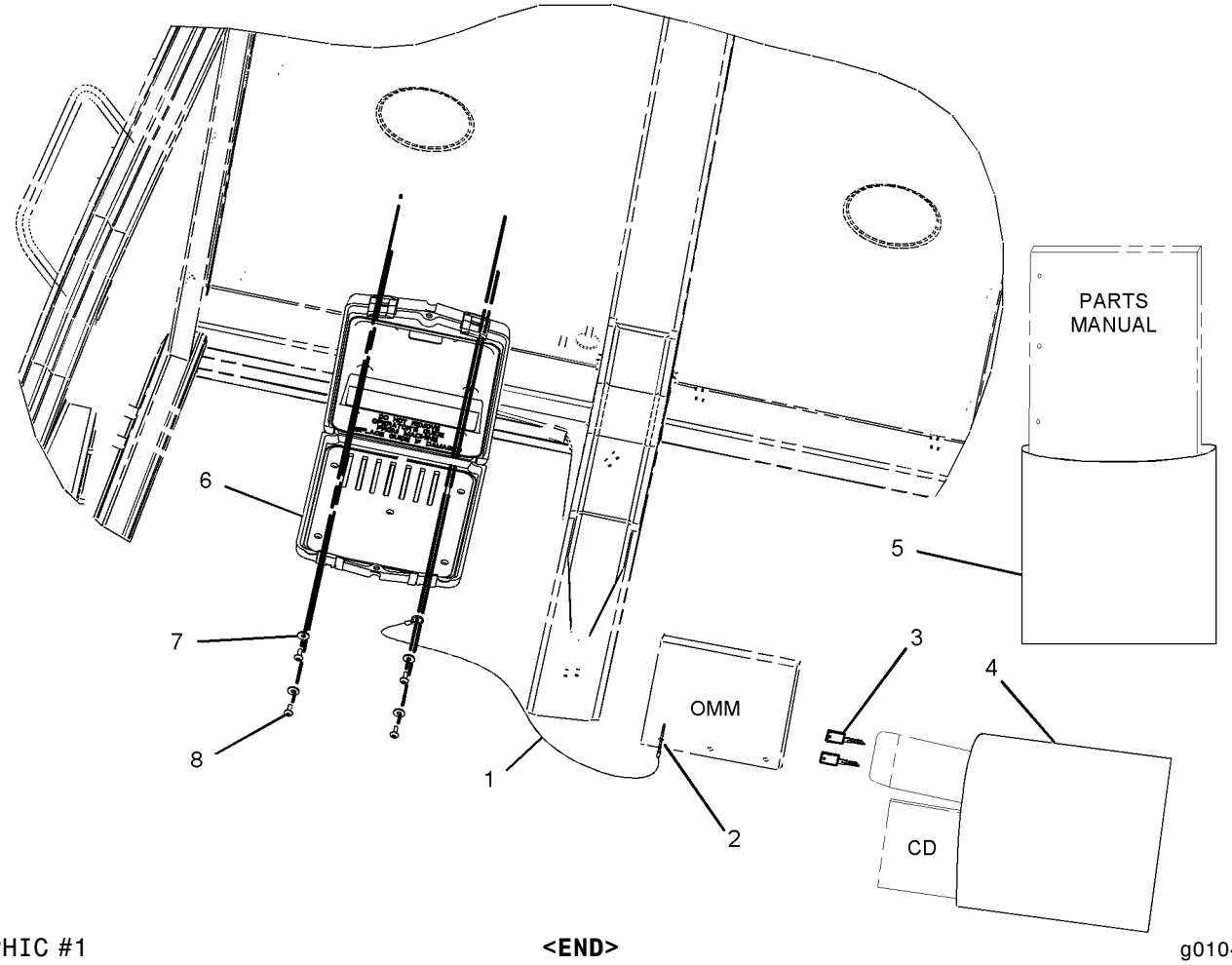

GRAPHIC #1 **<END>** g01048277

OPERATOR STATION

200-2676 COMPARTMENT GP-LITERATURE

S/N: B2D1-UP
PART OF 239-5562 CAB AR
AN ATTACHMENT

SMCS-7268 **i02043828**

NOTE	REF NO	GRAPHIC REF	PART NUMBER	QTY	PART NAME 1 2 3 4 5 6 (PRODUCT LEVEL)	SEE PAGE
	1	1	**5P-7957**	1	LANYARD	
	2	1	**5P-7958**	1	SLEEVE-CABLE SPLICE	
	3	1	**5P-8500**	2	KEY	
B	4	1	**7F-3400**	2	BAG-POLYETHYLENE	

B-USE AS REQUIRED

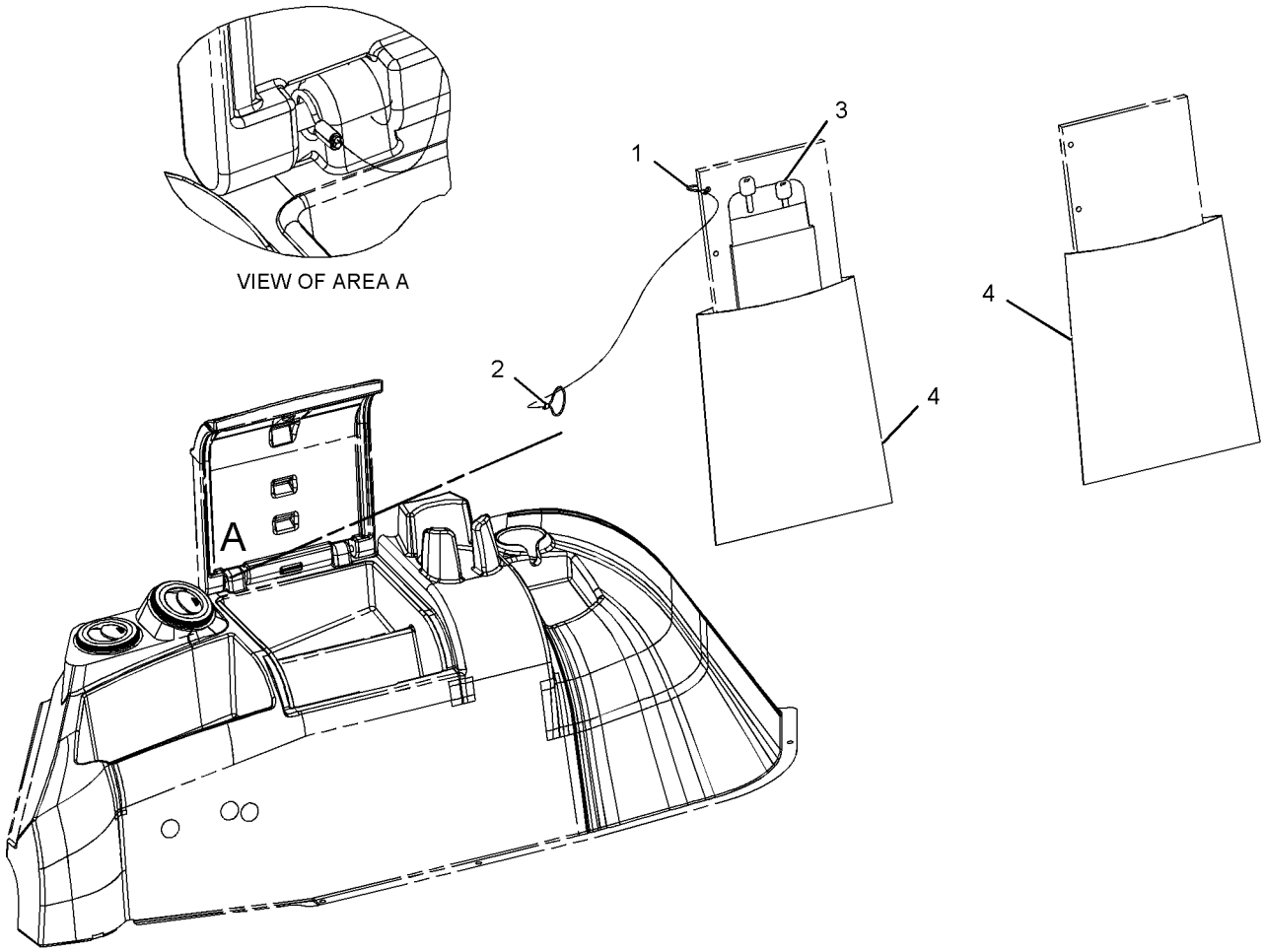

GRAPHIC #1 **<END>** g01035823

OPERATOR STATION

3E-1908 COMPRESSOR GP-REFRIGERANT

S/N: B2D1-UP

PART OF 234-8601 COMPRESSOR GP-REFRIGERANT

AN ATTACHMENT

SMCS-1802 **i01526036**

NOTE	REF NO	GRAPHIC REF	PART NUMBER	QTY	PART NAME 1 2 3 4 5 6 (PRODUCT LEVEL)	SEE PAGE
	1	1	*3E-3658*	1	COMPRESSOR AS	
	2	1	**7T-4532**	1	PLUG AS	
	3	1	**9X-7385**	2	SEAL-O-RING	

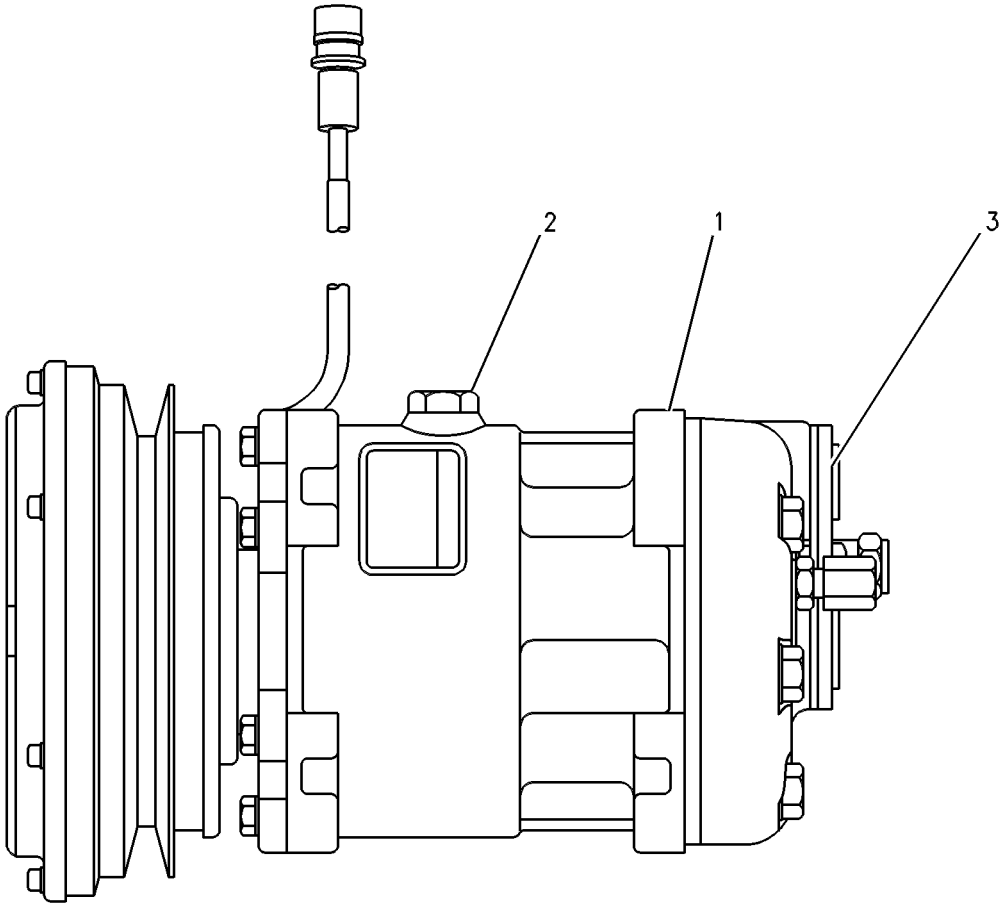

GRAPHIC #1 **<END>** g00273235

OPERATOR STATION

234-8601 COMPRESSOR GP-REFRIGERANT

S/N: B2D1-UP
PART OF 239-5562 CAB AR
AN ATTACHMENT

SMCS-1802 **i02038432**

NOTE	REF NO	GRAPHIC REF	PART NUMBER	QTY	PART NAME 1 2 3 4 5 6 (PRODUCT LEVEL)	SEE PAGE
	1	1	**1W-2934**	1	V-BELT (AIR CONDITIONER)	
Y	2	1	**3E-1908**	1	COMPRESSOR GP-REFRIGERANT	506
	3	1	**124-6524**	1	SPACER (11X25X10.5-MM THK)	
	4	1	**130-3881**	1	PULLEY-FAN	
	5	1	**234-9430**	1	PLATE AS	
	6	1	**234-9554**	1	PLATE	
	7	1	**235-1056**	1	PLATE	
	8	1	**239-0602**	1	PLATE	
	9	1	**244-2104**	1	PLATE	
	10	1	**8T-4121**	12	WASHER-HARD (11X21X2.5-MM THK)	
M	11	1	**8T-4133**	5	NUT (M10X1.5-THD)	
M	12	1	**8T-4185**	1	BOLT (M10X1.5X50-MM)	
M	13	1	**8T-4186**	5	BOLT (M10X1.5X40-MM)	
M	14		**8T-4195**	1	BOLT (M10X1.5X30-MM)	
	15	1	**8T-4223**	2	WASHER-HARD (13.5X25.5X3-MM THK)	
	16	1	**8T-4224**	4	WASHER-HARD (8.8X16X2-MM THK)	
M	17	1	**8T-4244**	1	NUT (M12X1.75-THD)	
M	18	1	**8T-4908**	4	BOLT (M8X1.25X25-MM)	
M	19	1	**8T-5001**	1	BOLT (M12X1.75X130-MM)	

M-METRIC PART
Y-SEPARATE ILLUSTRATION

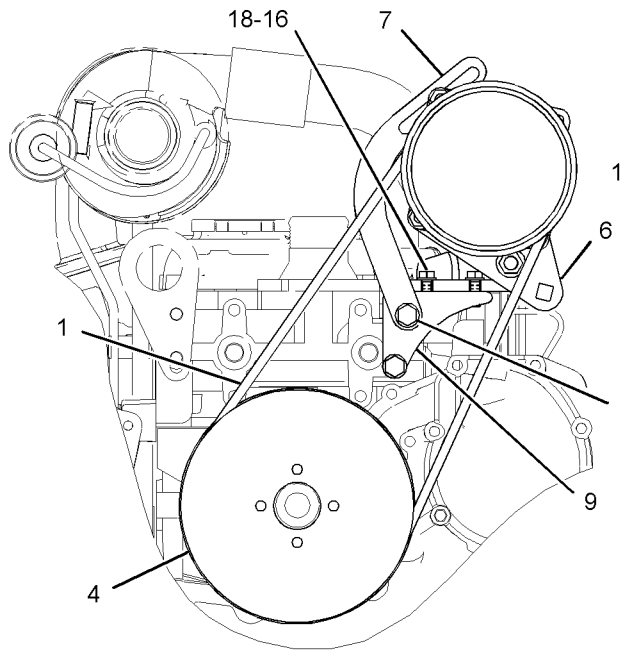

FRONT VIEW

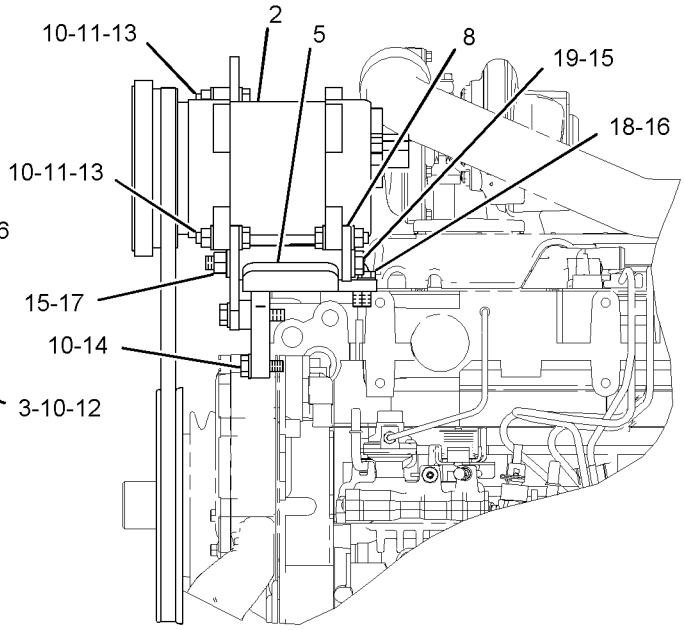

LEFT SIDE VIEW

GRAPHIC #1 **<END>** g01043205

OPERATOR STATION

144-2222 CONDENSER & MTG GP-REFRIGERANT

S/N: B2D1-UP
PART OF 239-5562 CAB AR
AN ATTACHMENT

SMCS-1805 **i02039985**

NOTE	REF NO	GRAPHIC REF	PART NUMBER	QTY	PART NAME 1 2 3 4 5 6 (PRODUCT LEVEL)	SEE PAGE
	1	1	**7X-0579**	7	WASHER-HARD (8.8X25.5X2-MM THK)	
	2	1	**166-2861**	1	CORE AS	
	3	1	**240-2614**	2	SPACER (10X19.5X60-MM THK)	
M	4	1	**153-3061**	1	BOLT (M8X1.25X130-MM)	
M	5	1	**8T-3647**	1	BOLT (M8X1.25X80-MM)	
M	6	1	**8T-4200**	4	BOLT (M8X1.25X16-MM)	

M-METRIC PART

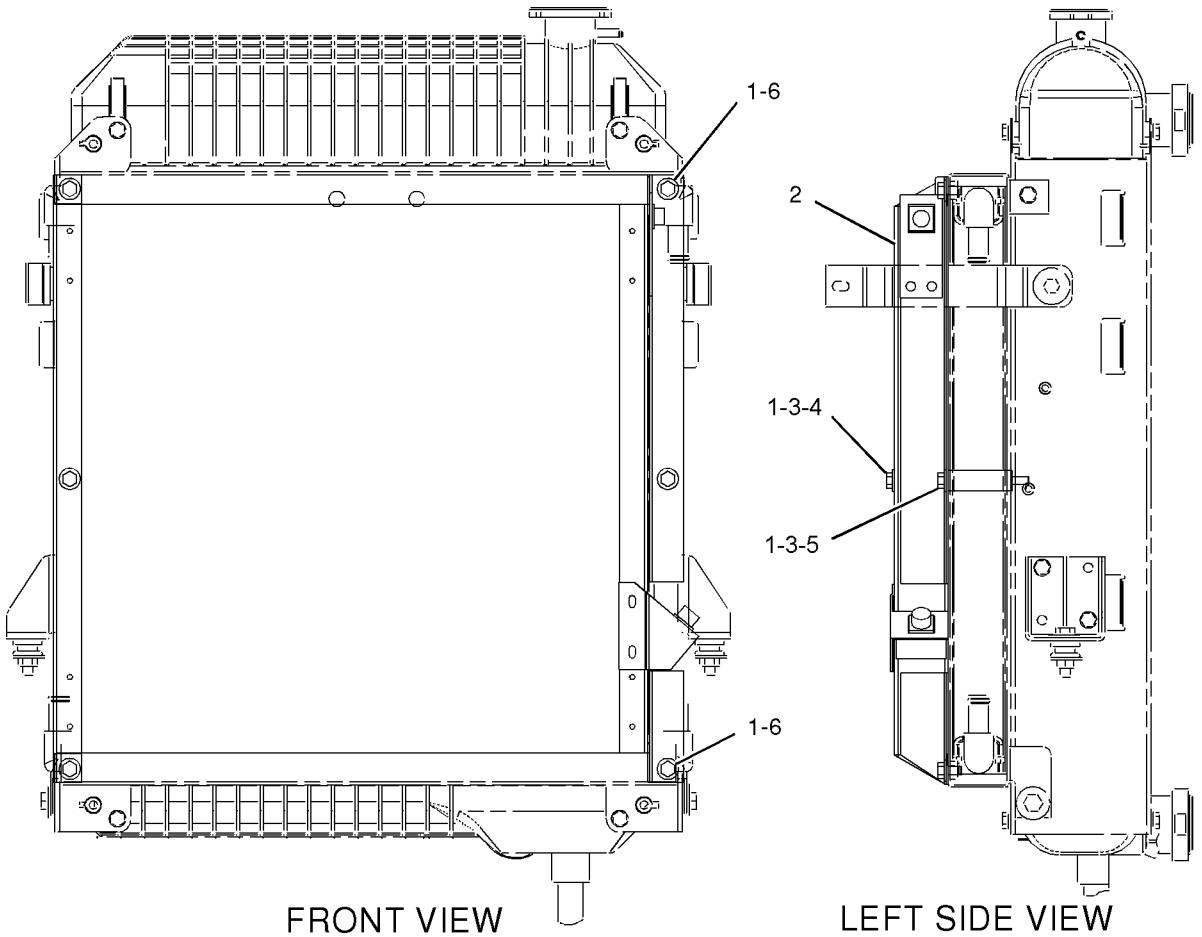

GRAPHIC #1 **<END>** g01029258

OPERATOR STATION

183-4995 CONSOLE GP-FRONT

S/N: B2D1-UP
PART OF 214-6958, 214-6959 POWER TRAIN AR
AN ATTACHMENT

SMCS-5258 **i01501508**

NOTE	REF NO	GRAPHIC REF	PART NUMBER	QTY	PART NAME 1 2 3 4 5 6 (PRODUCT LEVEL)	SEE PAGE
	1	1	**8Y-6388**	1	LOUVER AS	
	2	1	**151-5715**	2	LOUVER AS	
	3	1	**164-8473**	5	LOUVER AS	
	4	1	**167-8246**	1	CONSOLE AS-FRONT	
	5	1	**104-2091**	22	SCREW-FLAT HEAD (6-20X0.5 IN)	
	6	1	**148-3626**	4	SCREW-FLAT HEAD	

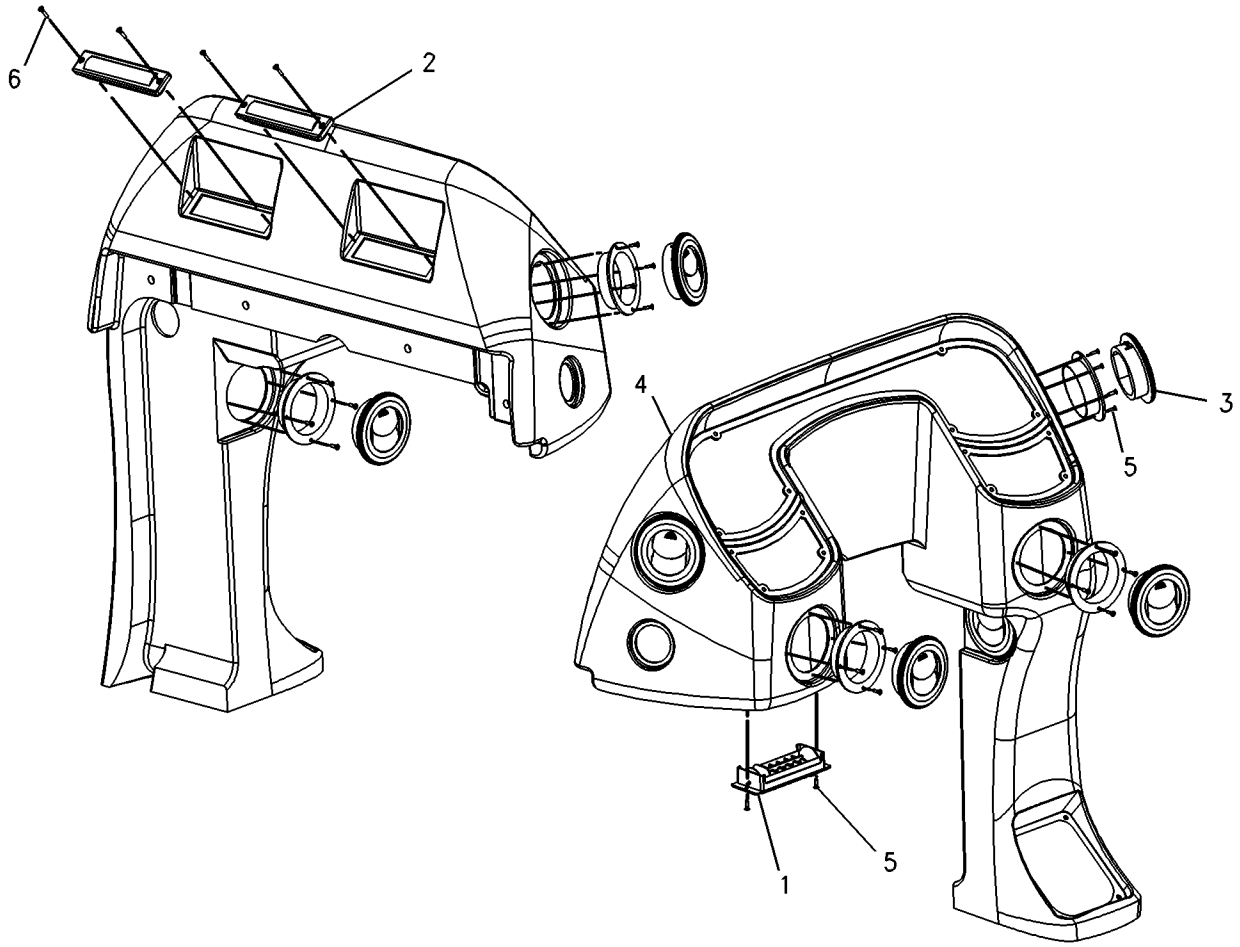

GRAPHIC #1 **<END>** g00743525

OPERATOR STATION

185-3524 CONSOLE GP-OPERATOR

S/N: B2D1-UP
PART OF 239-5560, 239-5562 CAB AR
AN ATTACHMENT

SMCS-5258, 7451 **i01703835**

NOTE	REF NO	GRAPHIC REF	PART NUMBER	QTY	PART NAME 1 2 3 4 5 6 (PRODUCT LEVEL)	SEE PAGE
BC	1	1	**9P-6571**	1	PLUG	
M	2	1	**178-9983**	4	LOCKNUT	
Y	3	1	*183-4998*	1	CONSOLE GP-SIDE (RH)	514
	4	1	**205-9980**	4	SCREW-TRUSS HEAD	
CM	5	1	**8T-3998**	4	BOLT (M4X0.7X12MM)	
M	6	1	**9X-2044**	5	SCREW-TRUSS HEAD (M6X1X16MM)	

B-USE AS REQUIRED
C-CHANGE FROM PREVIOUS TYPE
M-METRIC PART
Y-SEPARATE ILLUSTRATION

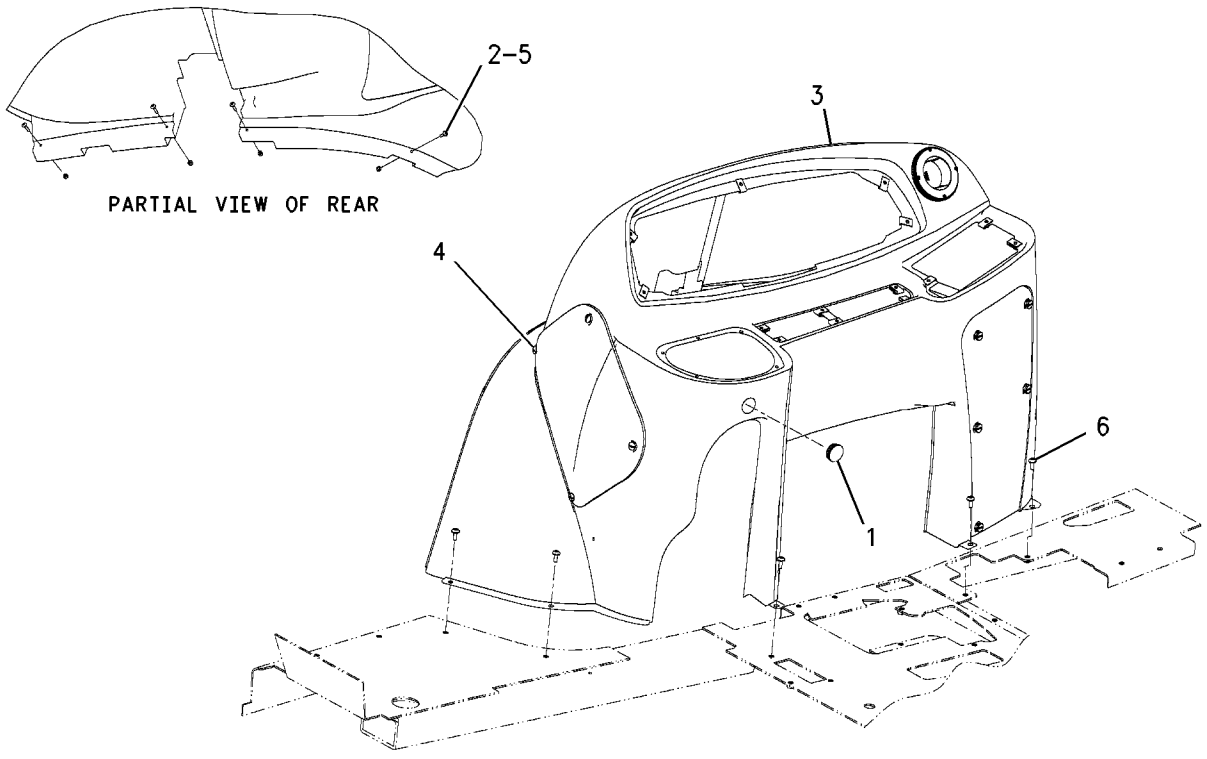

GRAPHIC #1 **<END>** g00808569

OPERATOR STATION

164-1131 CONSOLE GP-SIDE

S/N: B2D1-UP
A/C
PART OF 164-1388 CONSOLE GP-SIDE
AN ATTACHMENT

SMCS-7451 **i01941767**

NOTE	REF NO	GRAPHIC REF	PART NUMBER	QTY	PART NAME 1 2 3 4 5 6 (PRODUCT LEVEL)	SEE PAGE
J	1	1	**5P-9000**	1	LOCK AS-CYLINDER	
	2	1	**118-5503**	2	LOUVER AS	
	3	1	**164-1133**	1	COVER	
	4	1	**164-1134**	1	PIN	
	5	1	**167-8252**	1	CONSOLE-LH	
	6	1	**188-7760**	1	PLATE	
	7	1	**104-2091**	8	SCREW-FLAT HEAD (6-20X0.5 IN)	
	8	1	**200-2673**	1	PLATE	

J-REQUIRES 5P8500 KEY

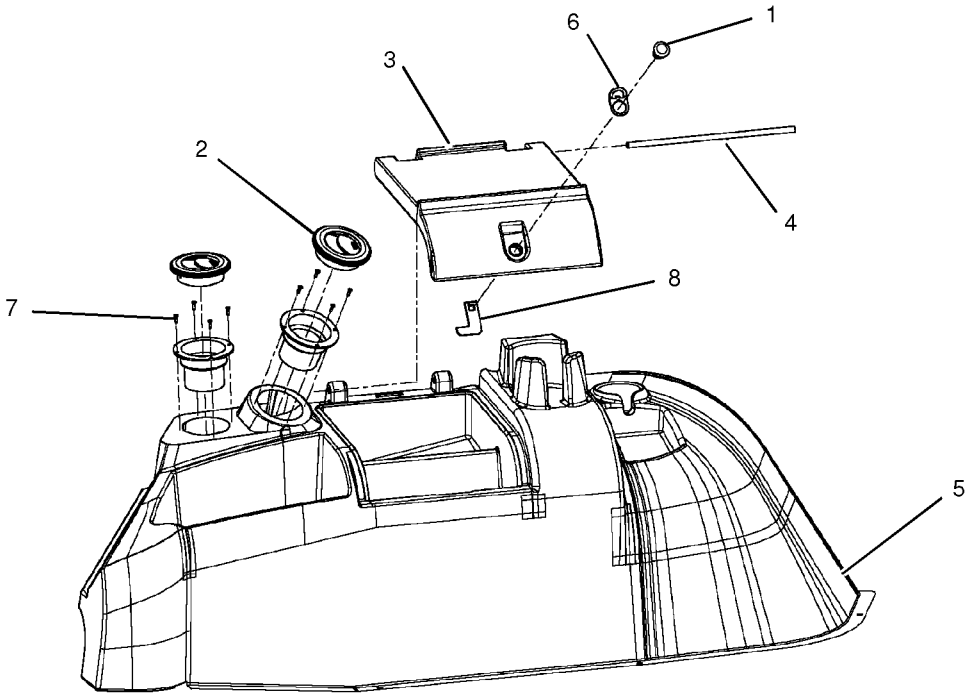

EXPLODED VIEW

GRAPHIC #1 **<END>** g01010457

OPERATOR STATION

164-1388 CONSOLE GP-SIDE

S/N: B2D1-UP
WITH A/C
PART OF 239-5562 CAB AR
AN ATTACHMENT

SMCS-7451 **i01714143**

NOTE	REF NO	GRAPHIC REF	PART NUMBER	QTY	PART NAME 1 2 3 4 5 6 (PRODUCT LEVEL)	SEE PAGE
B	1	1	**9P-6571**	3	PLUG	
Y	2	1	*164-1131*	1	CONSOLE GP-SIDE	511
M	3	1	**178-9983**	3	LOCKNUT	
	4	1	**184-6558**	1	HOSE	
	5	1	**184-6566**	1	GASKET	
	6	1	**198-6886**	1	PLATE	
M	7	1	**8T-3998**	3	BOLT (M4X0.7X12MM)	
	8	1	**9X-2038**	3	WASHER (7X19X2MM THK)	
M	9	1	**9X-2044**	4	SCREW-TRUSS HEAD (M6X1X16MM)	

B-USE AS REQUIRED
M-METRIC PART
Y-SEPARATE ILLUSTRATION

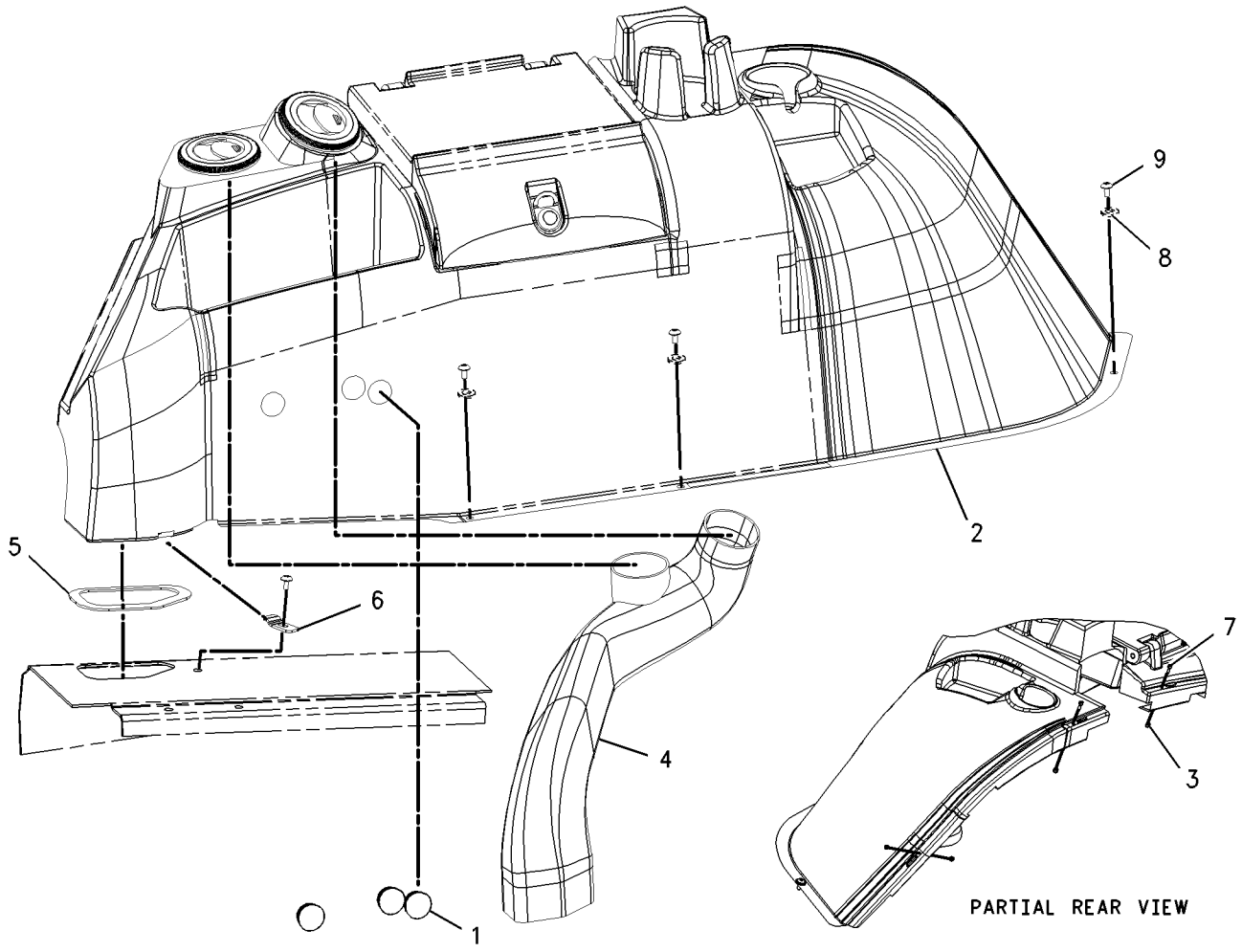

GRAPHIC #1 **<END>** g00860220

OPERATOR STATION

183-4997 CONSOLE GP-SIDE

S/N: B2D1-UP
PART OF 185-3530 CONSOLE GP-SIDE
AN ATTACHMENT

SMCS-7451 **i01695071**

NOTE	REF NO	GRAPHIC REF	PART NUMBER	QTY	PART NAME 1 2 3 4 5 6 (PRODUCT LEVEL)	SEE PAGE
	1	1	**164-1178**	5	CLIP	
	2	1	**172-8591**	16	NUT-SPRING	
Y	3	1	*183-4991*	1	COVER GP-CONSOLE	516
	4	1	**202-6141**	1	CONSOLE	
	5	1	**204-7341**	1	COVER-FUSE	

Y-SEPARATE ILLUSTRATION

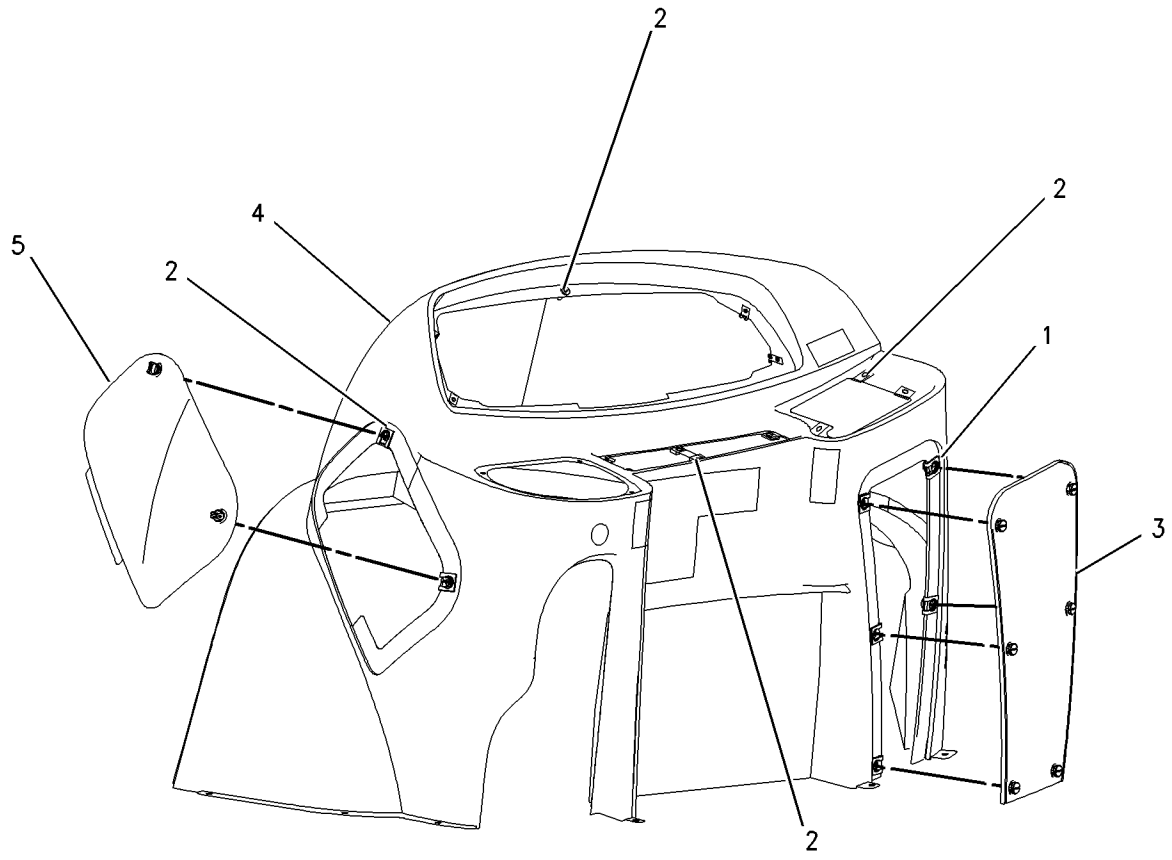

GRAPHIC #1 **<END>** g00857012

OPERATOR STATION

183-4998 CONSOLE GP-SIDE

S/N: B2D1-UP
PART OF 185-3524 CONSOLE GP-OPERATOR
AN ATTACHMENT

SMCS-7451 **i01695072**

NOTE	REF NO	GRAPHIC REF	PART NUMBER	QTY	PART NAME 1 2 3 4 5 6 (PRODUCT LEVEL)	SEE PAGE
	1	1	**118-5503**	1	LOUVER AS	
C	2	1	**164-1178**	5	CLIP	
C	3	1	**172-8591**	16	NUT-SPRING	
Y	4	1	*183-4991*	1	COVER GP-CONSOLE	516
C	5	1	**202-6142**	1	CONSOLE-SIDE	
	6	1	**204-7341**	1	COVER-FUSE	
	7	1	**104-2091**	4	SCREW-FLAT HEAD (6-20X0.5 IN)	

C-CHANGE FROM PREVIOUS TYPE
Y-SEPARATE ILLUSTRATION

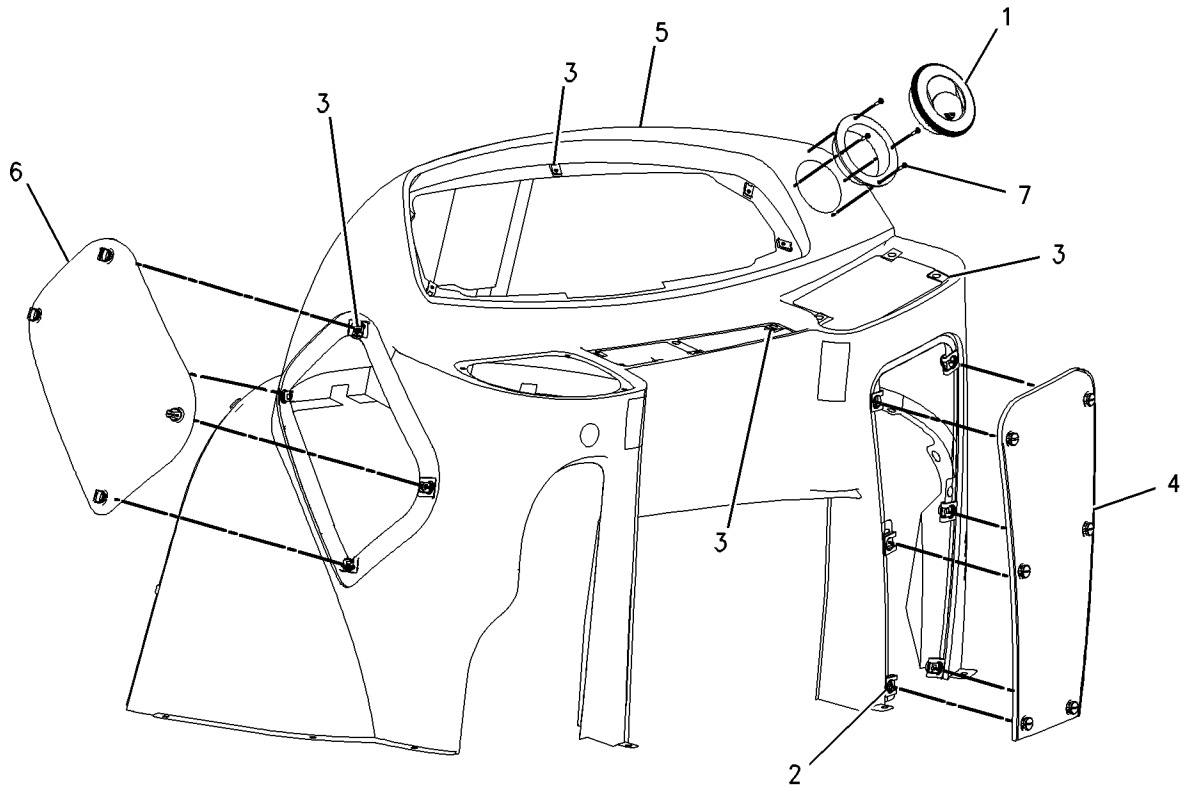

GRAPHIC #1 **<END>** g00859080

OPERATOR STATION

185-3530 CONSOLE GP-SIDE

S/N: B2D1-UP

PART OF 241-9377 CAB AR, 239-5558, 239-5559 CANOPY AR

AN ATTACHMENT

SMCS-7451 **i02039257**

NOTE	REF NO	GRAPHIC REF	PART NUMBER	QTY	PART NAME 1 2 3 4 5 6 (PRODUCT LEVEL)	SEE PAGE
B	1	1	**9P-6571**	1	PLUG	
	2	1	**164-1107**	1	CONSOLE-STORAGE	
M	3	1	**178-9983**	4	LOCKNUT (M4X0.7-THD)	
Y	4	1	*183-4997*	1	CONSOLE GP-SIDE	513
	5	1	**184-6557**	1	CONSOLE	
	6	1	**205-9980**	4	SCREW-TRUSS HEAD (M6X1X20-MM)	
M	7	1	**8T-3998**	4	BOLT (M4X0.7X12-MM)	
	8	1	**9X-2038**	2	WASHER (7X19X2-MM THK)	
M	9	1	**9X-2044**	5	SCREW-TRUSS HEAD (M6X1X16-MM)	
M	10	1	**121-9870**	2	SCREW-MACHINE (M6X1X40-MM)	

B-USE AS REQUIRED
M-METRIC PART
Y-SEPARATE ILLUSTRATION

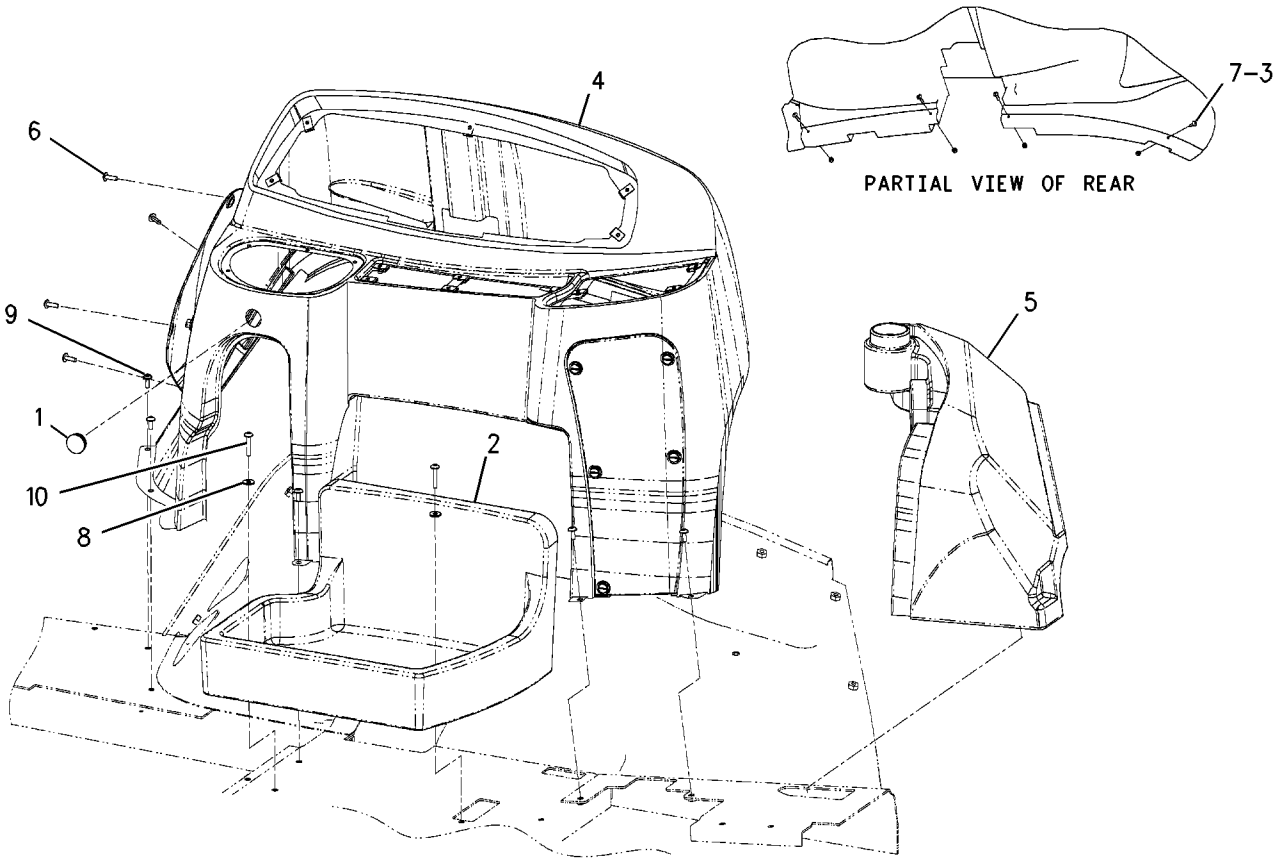

GRAPHIC #1 **<END>** g00808588

OPERATOR STATION

183-4991 COVER GP-CONSOLE

S/N: B2D1-UP
BOOM LOCK
PART OF 183-4997, 183-4998 CONSOLE GP-SIDE
AN ATTACHMENT

SMCS-5258 **i01479471**

NOTE	REF NO	GRAPHIC REF	PART NUMBER	QTY	PART NAME 1 2 3 4 5 6 (PRODUCT LEVEL)	SEE PAGE
	1	1	**117-3789**	5	RETAINER-STUD	
	2	1	**164-1108**	1	COVER	
	3	1	**167-8251**	5	STUD	

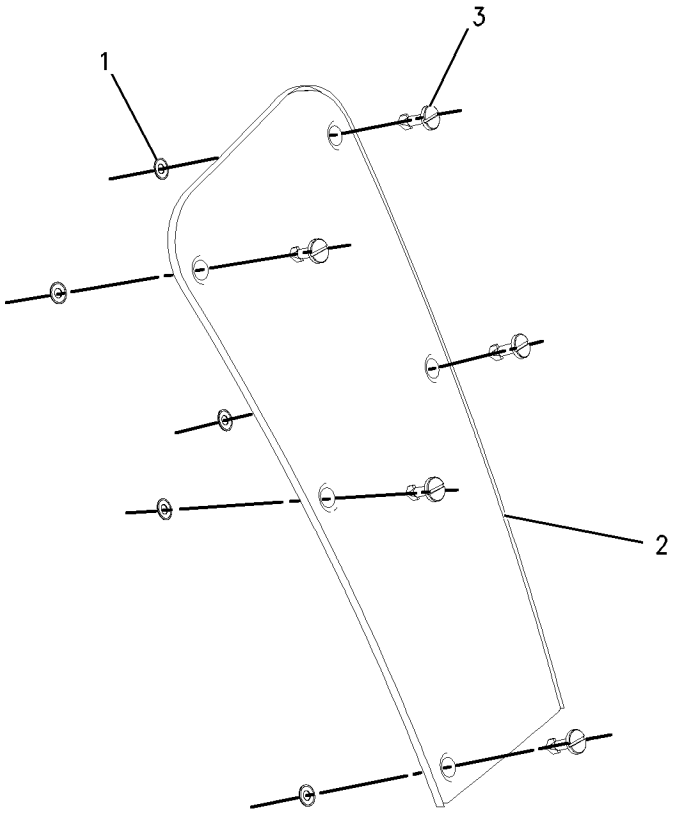

GRAPHIC #1 **<END>** g00744971

OPERATOR STATION

186-0252 COVER GP-FIREWALL

S/N: B2D1-UP

PART OF 239-5560, 239-5562, 241-9377 CAB AR, 239-5558, 239-5559 CANOPY AR

AN ATTACHMENT

SMCS-7262 **i01693888**

NOTE	REF NO	GRAPHIC REF	PART NUMBER	QTY	PART NAME 1 2 3 4 5 6 (PRODUCT LEVEL)	SEE PAGE
	1	1	**164-1137**	1	COVER-FIREWALL	
	2	1	**9X-2038**	12	WASHER (7X19X2MM THK)	
M	3	1	**9X-2045**	12	SCREW-TRUSS HEAD (M6X1X20MM)	

M-METRIC PART

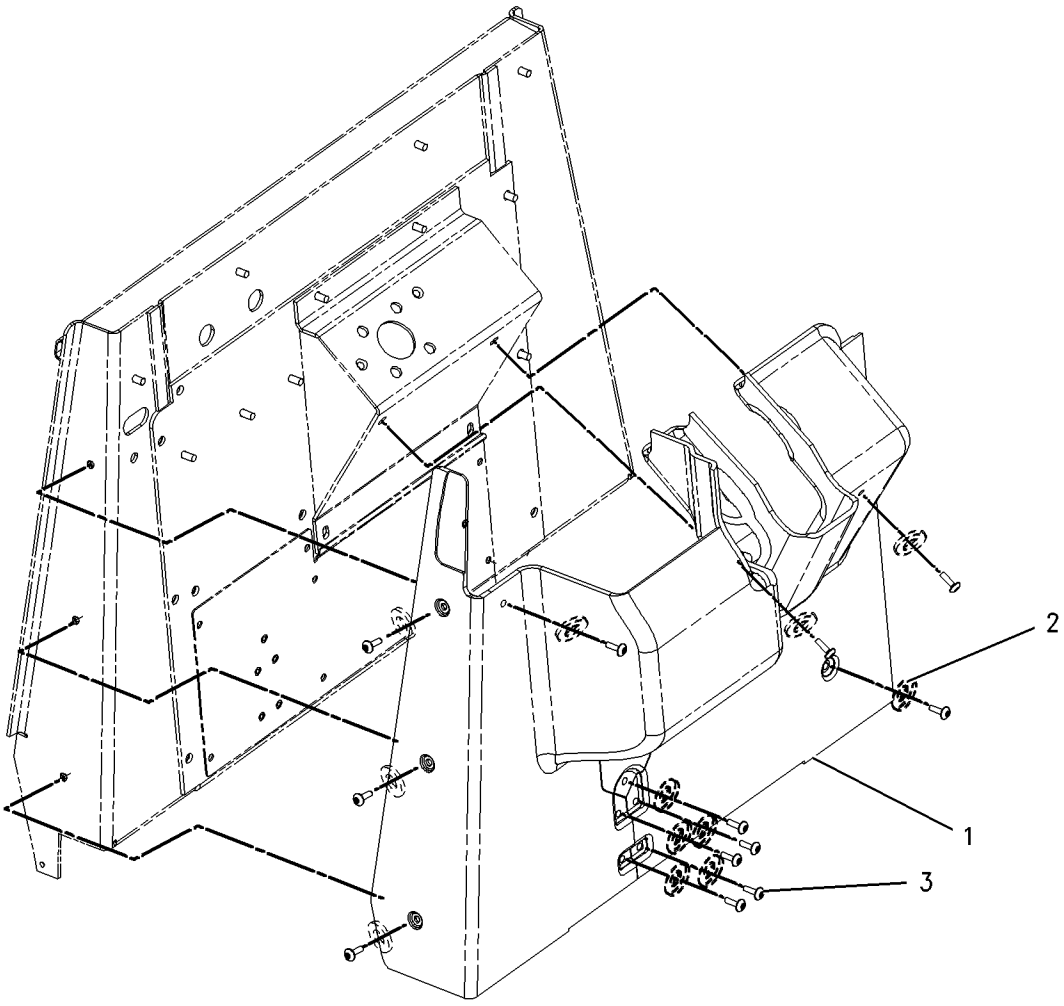

GRAPHIC #1 **<END>** g00861665

OPERATOR STATION

198-0104 COVER GP-FIREWALL

S/N: B2D1-UP
PART OF 239-5558 CANOPY AR
AN ATTACHMENT

SMCS-7262 **i01532089**

NOTE	REF NO	GRAPHIC REF	PART NUMBER	QTY	PART NAME 1 2 3 4 5 6 (PRODUCT LEVEL)	SEE PAGE
E	1	1	**126-8472**		SEAL (84CM)	
	2	1	**198-0103**	1	PLATE	
	3	1	**8T-4121**	1	WASHER-HARD (11X21X2.5MM THK)	
M	4	1	**8T-4137**	1	BOLT (M10X1.5X20MM)	

E-ORDER BY THE CENTIMETER
M-METRIC PART

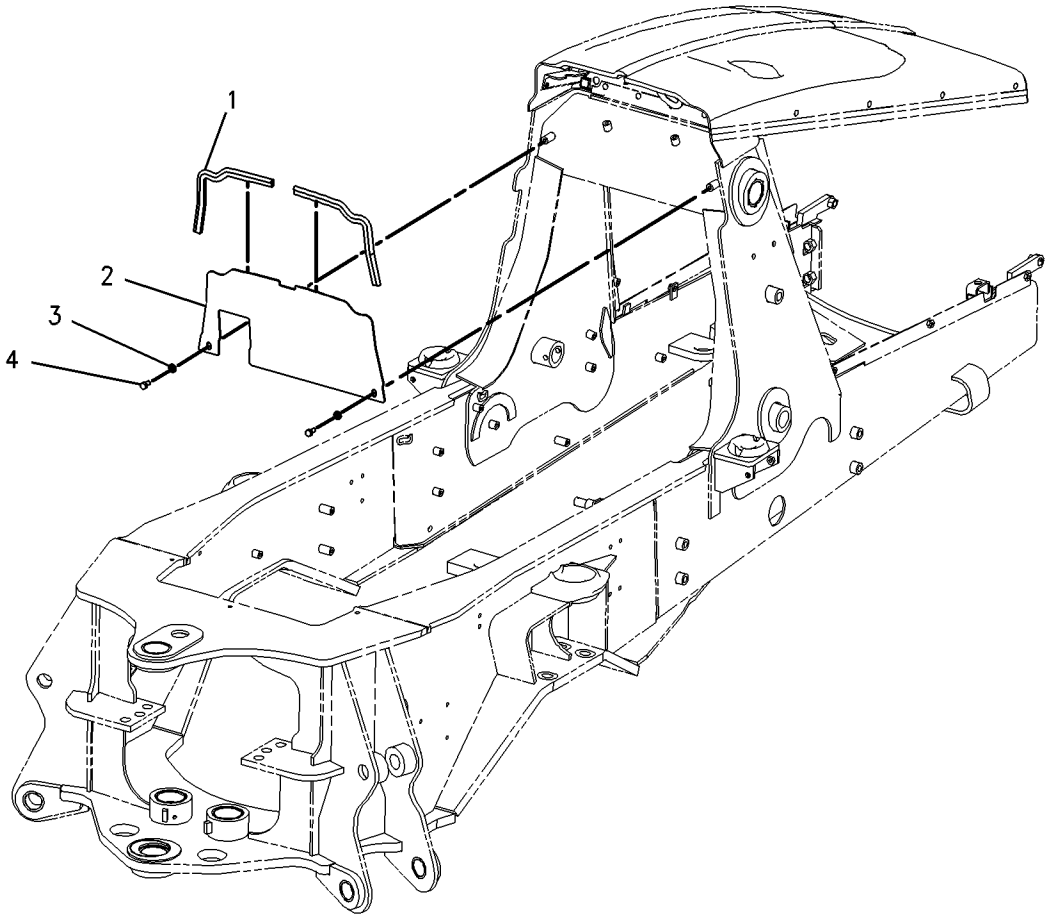

GRAPHIC #1 **<END>** g00753350

OPERATOR STATION

185-3527 COVER GP-PARKING BRAKE

S/N: B2D1-UP
PARK BRAKE COVER
PART OF 239-5560, 241-9377 CAB AR, 239-5558, 239-5559 CANOPY AR
AN ATTACHMENT

SMCS-4284 **i01481491**

NOTE	REF NO	GRAPHIC REF	PART NUMBER	QTY	PART NAME 1 2 3 4 5 6 (PRODUCT LEVEL)	SEE PAGE
	1	1	**164-1110**	1	COVER	
M	2	1	**9X-2044**	2	SCREW-TRUSS HEAD (M6X1X16MM)	

M-METRIC PART

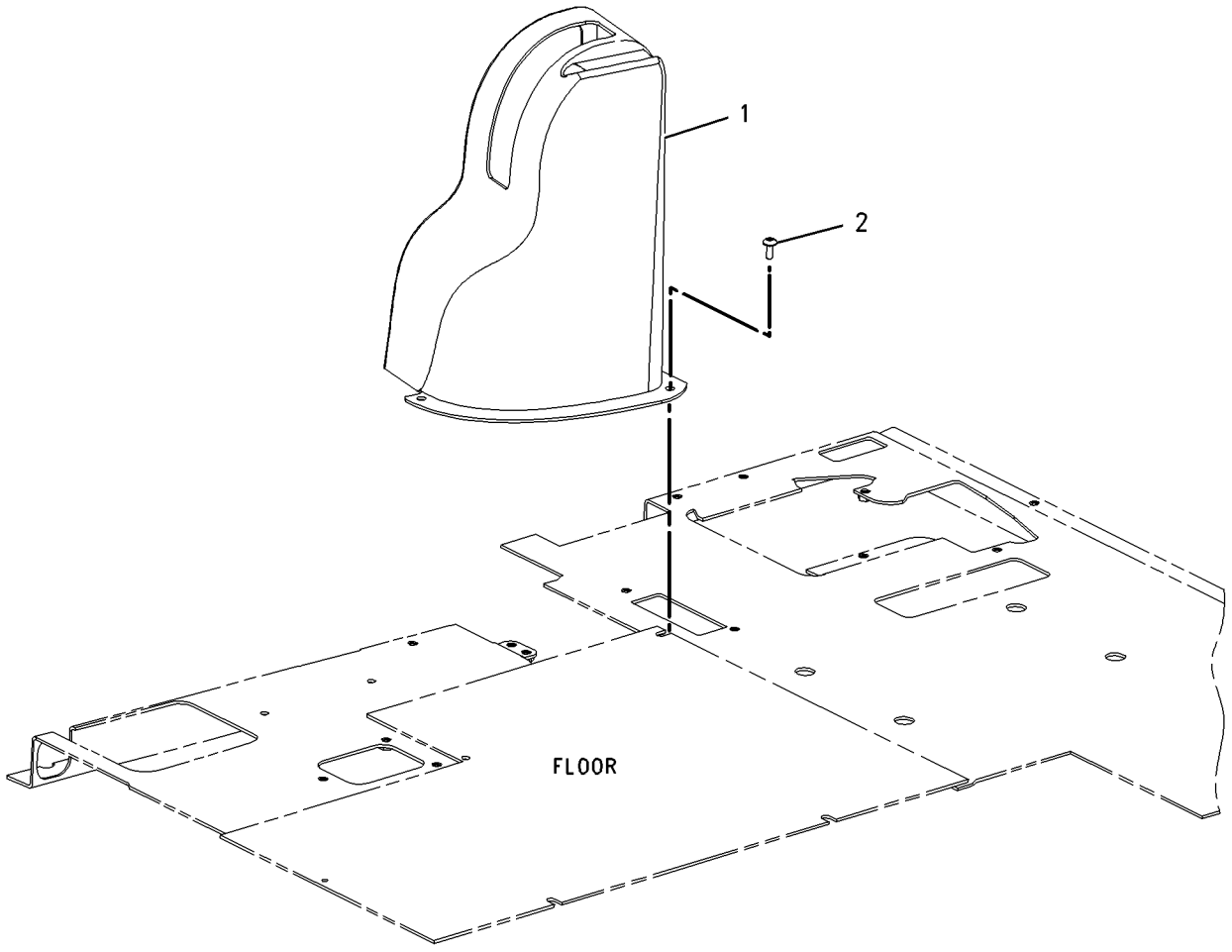

GRAPHIC #1 **<END>** g00753168

OPERATOR STATION

197-7564 COVER GP-POST–RH

S/N: B2D1-UP
PART OF 241-9377 CAB AR, 239-5558, 239-5559 CANOPY AR
AN ATTACHMENT

SMCS-7329 **i02037655**

NOTE	REF NO	GRAPHIC REF	PART NUMBER	QTY	PART NAME 1 2 3 4 5 6 (PRODUCT LEVEL)	SEE PAGE
	1	1	**129-1854**		FASTENER-LOOP (10CM EACH)	
	2	1	**129-1855**		FASTENER-HOOK (10CM EACH)	
	3	1	**129-1854**		FASTENER-LOOP (8CM EACH)	
	4	1	**129-1855**		FASTENER-HOOK (8CM EACH)	
	5	1	**129-1854**		FASTENER-LOOP (18CM EACH)	
	6	1	**129-1855**		FASTENER-HOOK (18CM EACH)	
	7	1	**197-7230**	1	COVER-POST (RH)	
	8	1	**9X-2038**	2	WASHER (7X19X2-MM THK)	
M	9	1	**9X-2042**	2	SCREW-TRUSS HEAD (M6X1X12-MM)	

M-METRIC PART

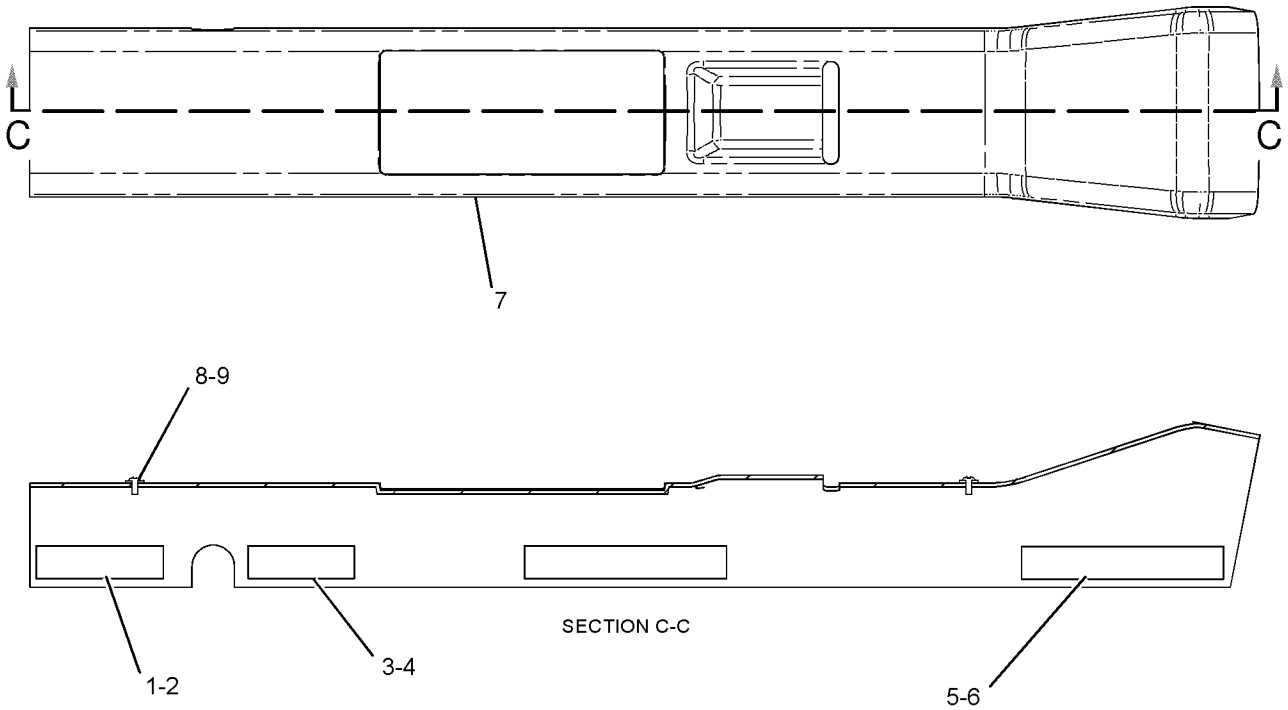

GRAPHIC #1 **<END>** g01048055

OPERATOR STATION

198-1289 COVER GP-POST

S/N: B2D1-UP
RH
PART OF 239-5560 CAB AR
AN ATTACHMENT

SMCS-7329 **i01958777**

NOTE	REF NO	GRAPHIC REF	PART NUMBER	QTY	PART NAME 1 2 3 4 5 6 (PRODUCT LEVEL)	SEE PAGE
	1	1	**164-1156**	1	COVER (POST-RH)	
	2	1	**206-4703**	1	COVER (WIPER-FRONT)	
M	3	1	**9X-2041**	2	SCREW-TRUSS HEAD (M10X1.5X20MM)	
E	4	1	**129-1854**	6	FASTENER-LOOP (18CM)	
E	5	1	**129-1855**	6	FASTENER-HOOK (18CM)	

E-ORDER BY THE CENTIMETER
M-METRIC PART

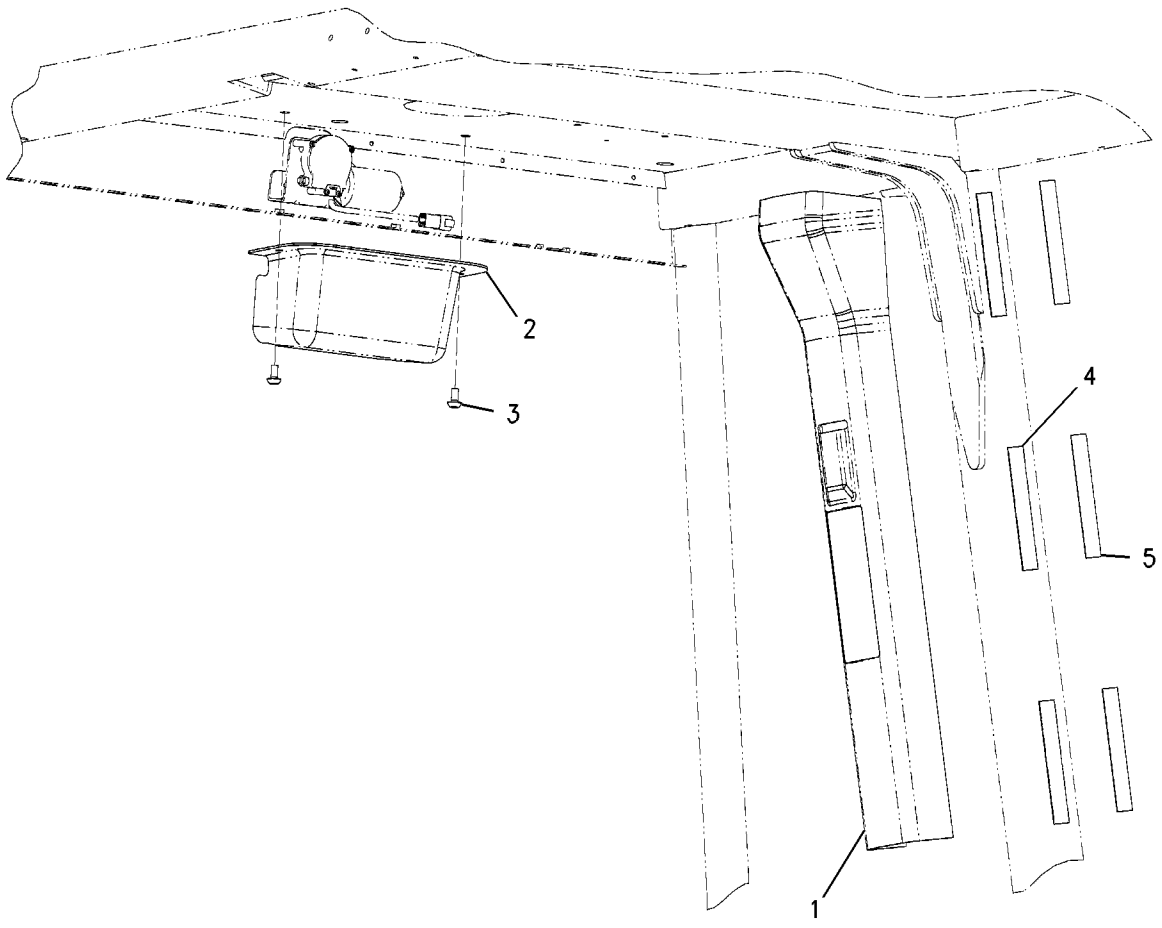

GRAPHIC #1 **<END>** g00840758

OPERATOR STATION

164-1062 DOOR GP-LH

S/N: B2D1-UP
PART OF 164-1125, 164-1140 CAB GP
AN ATTACHMENT

SMCS-7308 **i01497771**

NOTE	REF NO	GRAPHIC REF	PART NUMBER	QTY	PART NAME 1 2 3 4 5 6 (PRODUCT LEVEL)	SEE PAGE
J	1	1	**159-4269**	1	SPRING AS-GAS	
E	2	1	**148-5355**		SEAL (500CM)	
	3	1	**5P-4116**	2	WASHER-HARD (8.8X20.5X2MM THK)	
M	4	1	**8T-4171**	1	BOLT (M6X1X12MM)	
	5	1	**7X-2497**	1	HANDLE-DOOR	
	6	1	**159-4953**	1	DOOR AS-LH	
M		1	**8T-3612**	1	NUT-WELD (M8X1.25 THD)	
		1	**8Y-7310**	2	HINGE AS-LH	
		1	**154-5406**	1	PLATE	
Y	7	1	*164-1074*	1	WINDOW GP-DOOR (LH)	590
L	8	1	**8Y-7264**	1	GLASS	
M	9	1	**8T-4180**	4	SCREW-MACHINE (M5X0.8X20MM)	
	10	1	**8Y-6386**	1	SEAL-HANDLE	
	11	1	**148-7319**	1	HANDLE AS-PADDLE	
	12	1	**147-3019**	2	BRACKET	
	13	1	**8Y-7306**	1	COVER	
M	14	1	**131-3987**	6	SCREW (M4X0.7X12MM)	
	15	1	**148-7311**	1	LATCH AS-ROTARY	
M	16	1	**8T-4181**	4	BOLT (M6X1X20MM)	
	17	1	**159-4946**	1	KEEPER-REAR (RH)	
					AVAILABLE REPAIR KIT(S):	
J			**161-9044**	1	KIT-FITTING (INCLUDES FITTING AND NUT)	

E-ORDER BY THE CENTIMETER
J-KIT MARKED J SERVICES PART MARKED J
L-MAY REQUIRE ADHESIVE
M-METRIC PART
Y-SEPARATE ILLUSTRATION

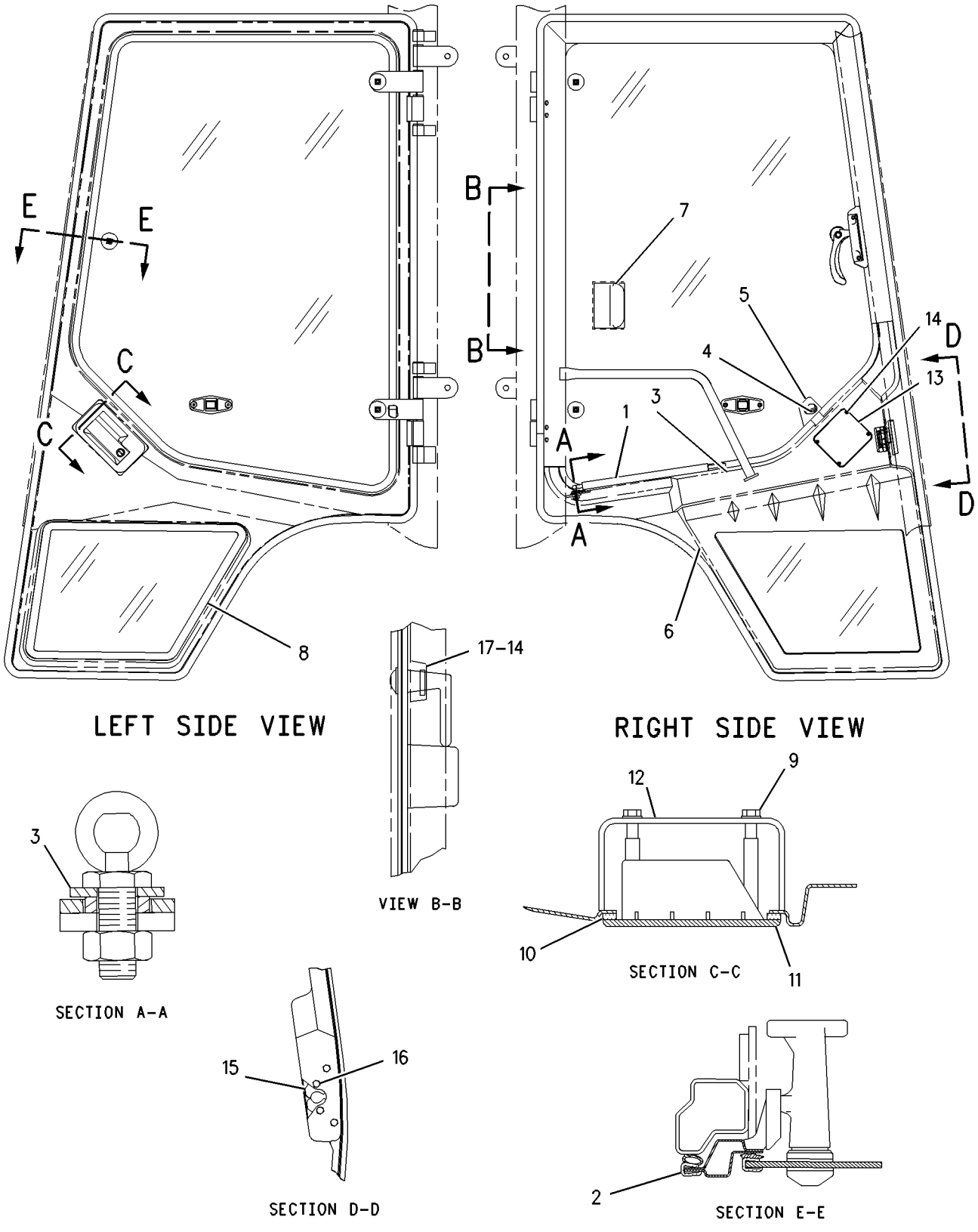

GRAPHIC #1 **<END>** g00755606

OPERATOR STATION

164-1061 DOOR GP-RH

S/N: B2D1-UP
PART OF 164-1140 CAB GP
AN ATTACHMENT

SMCS-7308 **i01524904**

NOTE	REF NO	GRAPHIC REF	PART NUMBER	QTY	PART NAME 1 2 3 4 5 6 (PRODUCT LEVEL)	SEE PAGE
J	1	1	**159-4269**	1	SPRING AS-GAS	
E	2	1	**148-5355**		SEAL (478CM)	
	3	1	**5P-4116**	2	WASHER-HARD (8.8X20.5X2MM THK)	
M	4	1	**8T-4171**	1	BOLT (M6X1X12MM)	
	5	1	**7X-2497**	1	HANDLE-DOOR	
	6	1	**159-4954**	1	DOOR AS-RH	
M		1	**8T-3612**	1	NUT-WELD (M8X1.25 THD)	
		1	**8Y-7310**	2	HINGE AS-LH	
Y	7	1	**164-1073**	1	WINDOW GP-DOOR	588
X	8	1	**8Y-7263**	1	GLASS	
M	9	1	**8T-4180**	4	SCREW-MACHINE (M5X0.8X20MM)	
	10	1	**8Y-6386**	1	SEAL-HANDLE	
L	11	1	**148-7318**	1	HANDLE AS-PADDLE	
	12	1	**147-3019**	2	BRACKET	
	13	1	**8Y-7306**	1	COVER	
M	14	1	**131-3987**	6	SCREW (M4X0.7X12MM)	
	15	1	**148-7310**	1	LATCH AS-ROTARY	
M	16	1	**8T-4181**	4	BOLT (M6X1X20MM)	
	17	1	**159-4945**	1	KEEPER-REAR (LH)	
					AVAILABLE REPAIR KIT(S):	
J			**161-9044**	1	KIT-FITTING	

E-ORDER BY THE CENTIMETER
J-REPAIR KIT MARKED J AVAILABLE FOR PART MARKED J
L-REQUIRES A 5P-8500 KEY
M-METRIC PART
X-USE ADHESIVE AS REQUIRED
Y-SEPARATE ILLUSTRATION

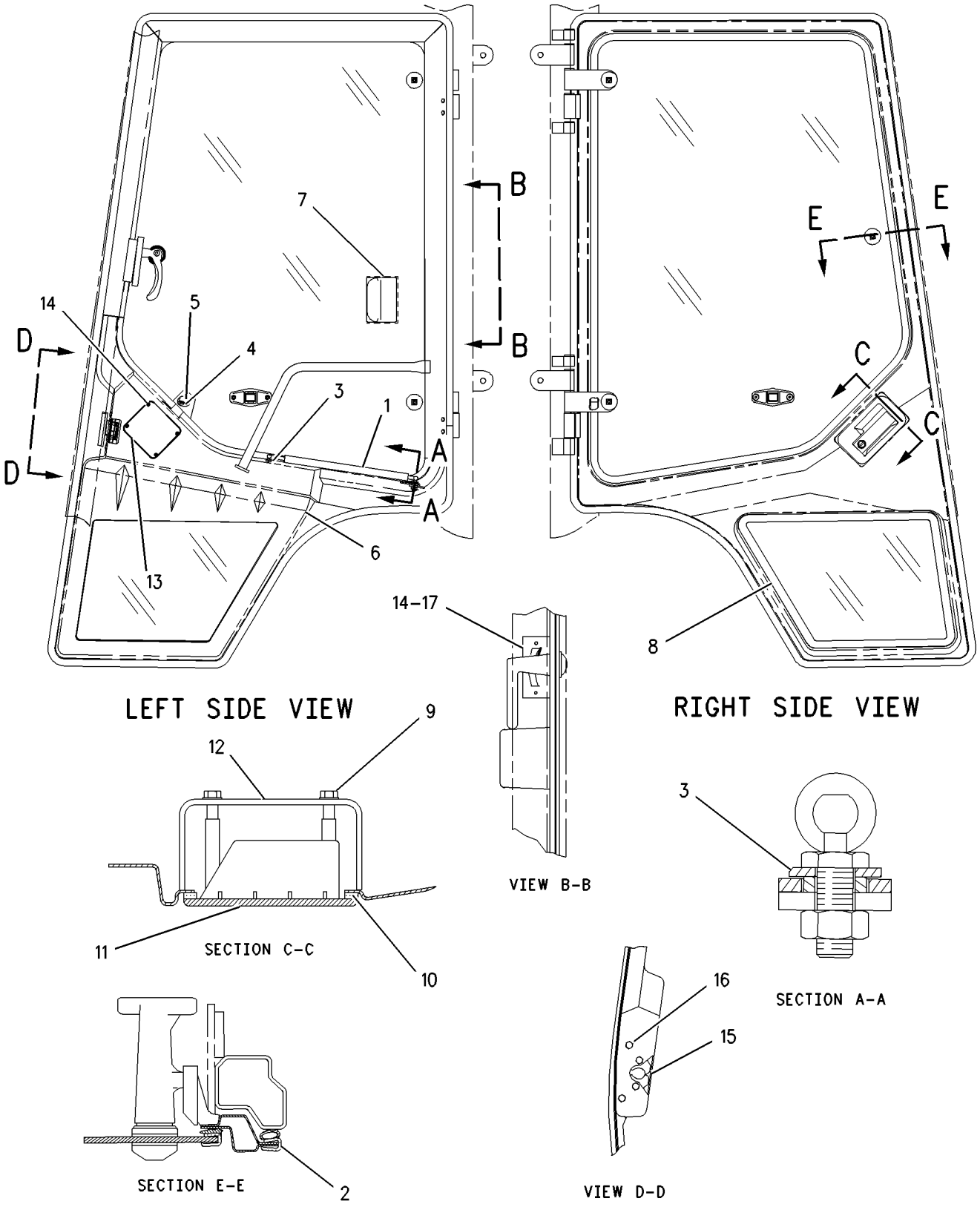

GRAPHIC #1 **<END>** g00728856

OPERATOR STATION

164-1141 DUCT GP-AIR

S/N: B2D1-UP
BASIC, STANDARD SHIFT
PART OF 214-6958, 214-6959 POWER TRAIN AR
AN ATTACHMENT

SMCS-734D **i01503044**

NOTE	REF NO	GRAPHIC REF	PART NUMBER	QTY	PART NAME 1 2 3 4 5 6 (PRODUCT LEVEL)	SEE PAGE
	1	1	**164-1043**	1	DUCT AS-FRONT	
	2	1	**164-1198**	1	BOOT	
	3	1	**164-1368**	4	CLIP	
	4	1	**184-6562**	1	PLATE	
	5	1	**184-6563**	1	GASKET	
	6	1	**185-3528**	1	SEAL	
M	7	1	**9X-2042**	2	SCREW-TRUSS HEAD (M6X1X12MM)	

M-METRIC PART

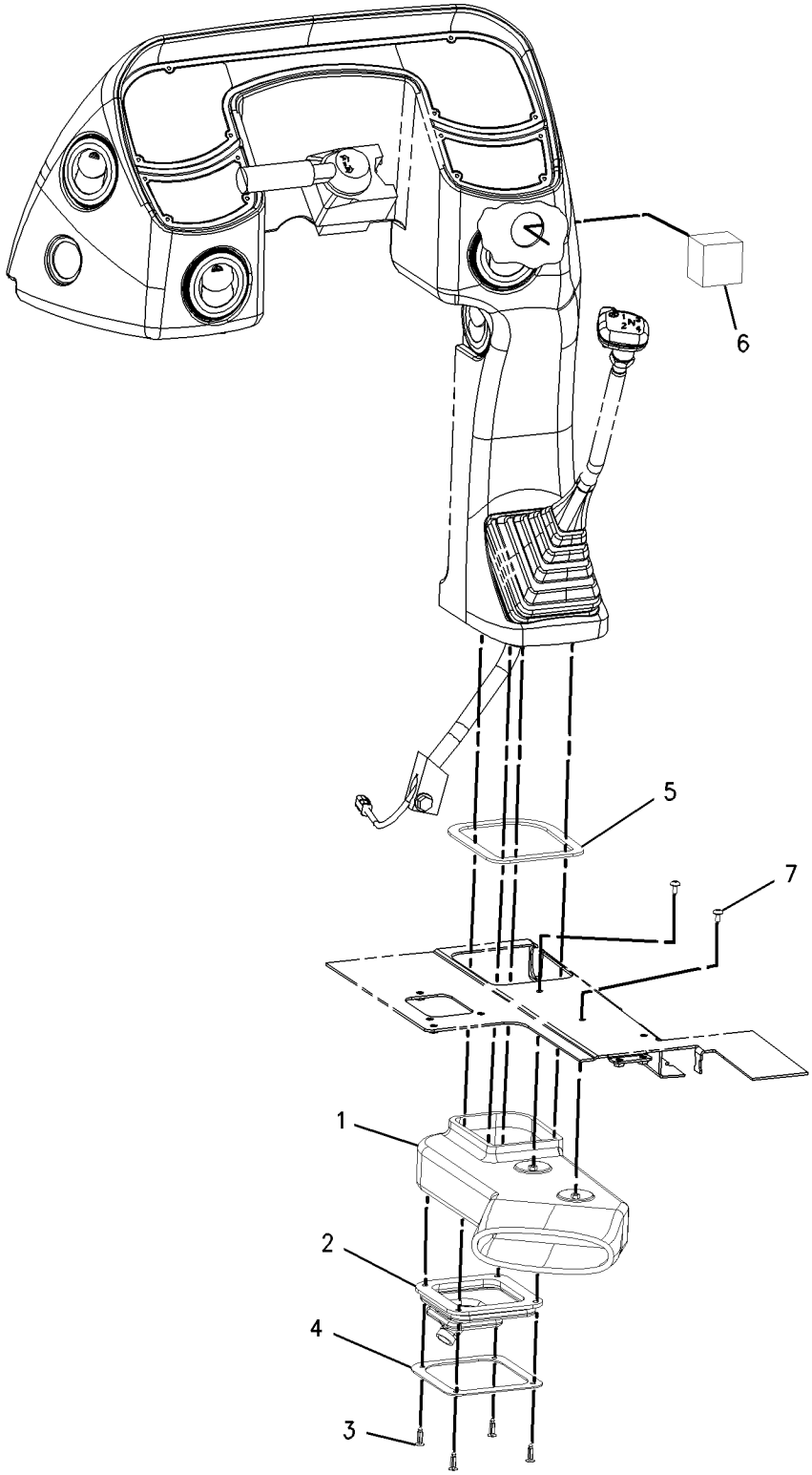

GRAPHIC #1 **<END>** g00739067

OPERATOR STATION

184-6577 DUCT GP-AIR

S/N: B2D1-UP
HEATER
PART OF 164-1045 HEATER GP-CAB
AN ATTACHMENT

SMCS-734D **i01485832**

NOTE	REF NO	GRAPHIC REF	PART NUMBER	QTY	PART NAME 1 2 3 4 5 6 (PRODUCT LEVEL)	SEE PAGE
	1	1	**151-5715**	1	LOUVER AS	
	2	1	**164-8473**	2	LOUVER AS	
	3	1	**184-6559**	1	DUCT-AIR	
	4	1	**104-2091**	8	SCREW-FLAT HEAD (6-20X0.5 IN)	
	5	1	**148-3626**	2	SCREW-FLAT HEAD	

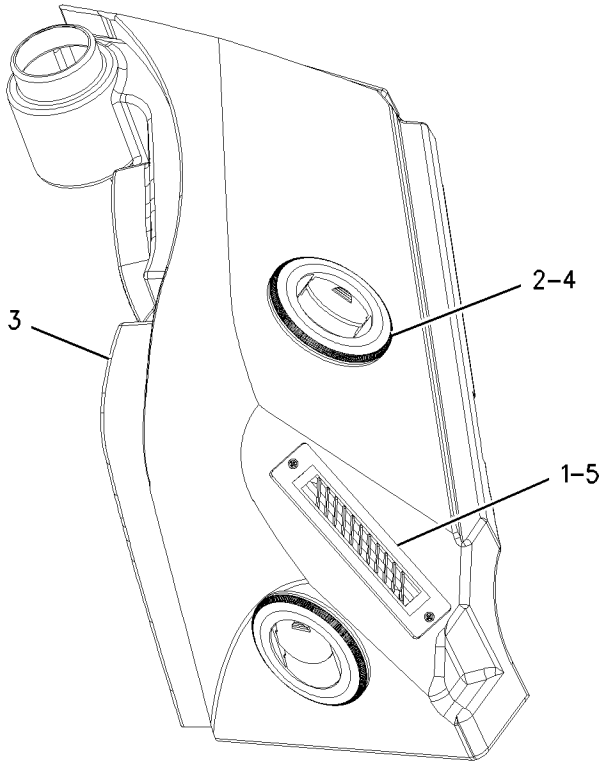

GRAPHIC #1 **<END>** g00734534

OPERATOR STATION

180-5760 FLOOR MAT GP

S/N: B2D1-UP
PART OF 239-5562 CAB AR
AN ATTACHMENT

SMCS-7265 **i01488071**

NOTE	REF NO	GRAPHIC REF	PART NUMBER	QTY	PART NAME 1 2 3 4 5 6 (PRODUCT LEVEL)	SEE PAGE
	1	1	**180-5750**	1	FLOOR MAT	
	2	1	**180-5754**	2	PLATE	
	3	1	**1H-3244**	4	LOCKWASHER	
M	4	1	**9X-2045**	4	SCREW-TRUSS HEAD (M6X1X20MM)	

M-METRIC PART

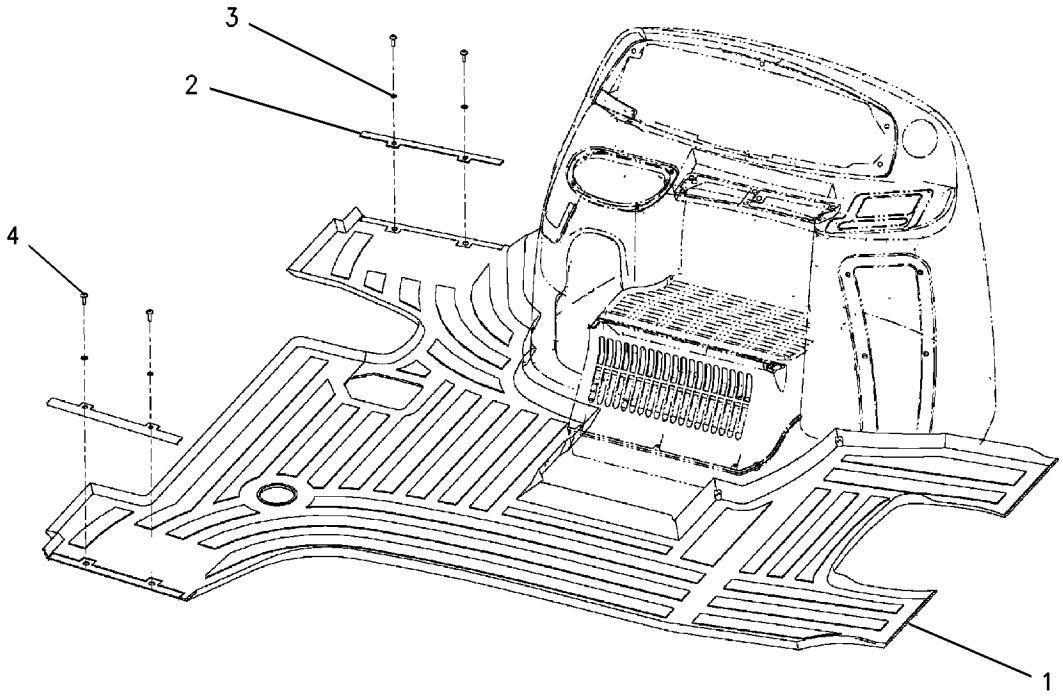

GRAPHIC #1 **<END>** g00727772

OPERATOR STATION

180-5764 FLOOR MAT GP

S/N: B2D1-UP

PART OF 239-5560, 241-9377 CAB AR, 239-5558, 239-5559 CANOPY AR

AN ATTACHMENT

SMCS-7265 **i01479449**

NOTE	REF NO	GRAPHIC REF	PART NUMBER	QTY	PART NAME 1 2 3 4 5 6 (PRODUCT LEVEL)	SEE PAGE
	1	1	**180-5754**	2	PLATE	
	2	1	**180-5758**	1	FLOOR MAT	
	3	1	**1H-3244**	4	LOCKWASHER	
M	4	1	**9X-2045**	4	SCREW-TRUSS HEAD (M6X1X20MM)	

M-METRIC PART

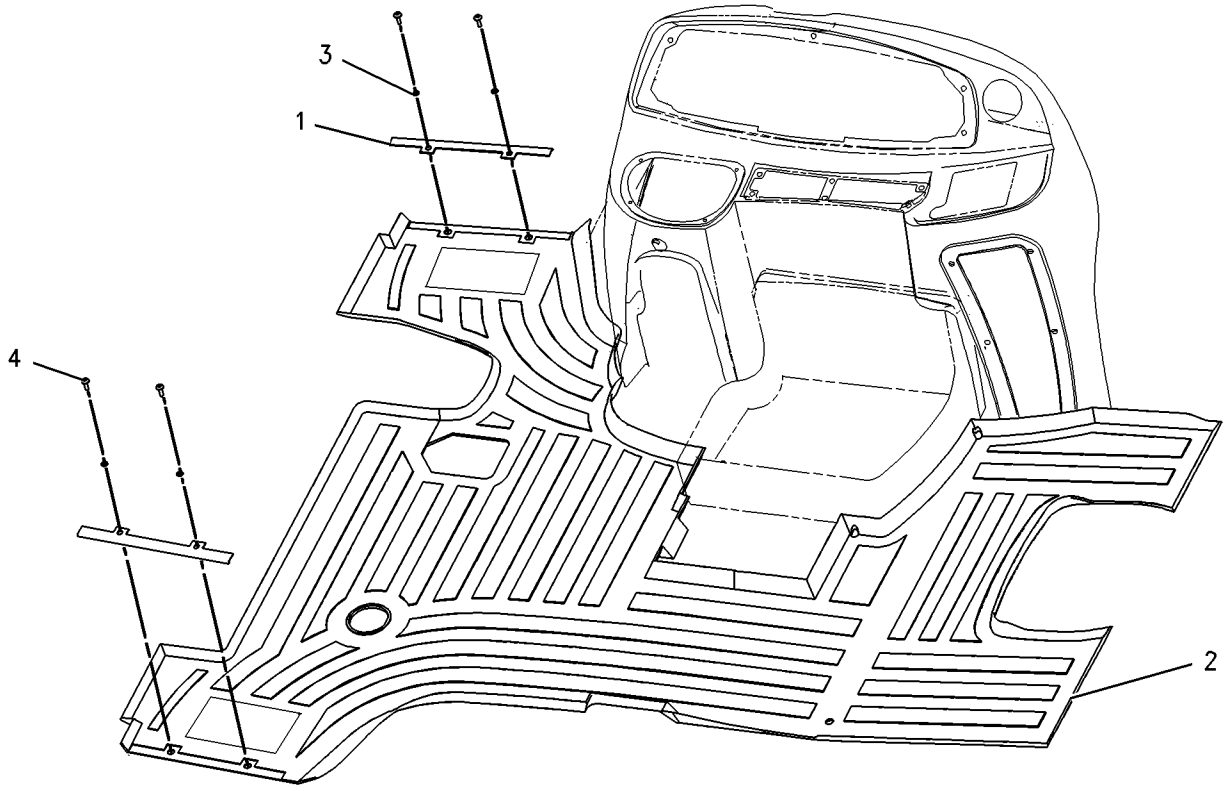

GRAPHIC #1 **<END>** g00728663

OPERATOR STATION

164-1045 HEATER GP-CAB

S/N: B2D1-UP
PART OF 239-5560 CAB AR
AN ATTACHMENT

SMCS-7304 **i01928698**

NOTE	REF NO	GRAPHIC REF	PART NUMBER	QTY	PART NAME 1 2 3 4 5 6 (PRODUCT LEVEL)	SEE PAGE
	1	1	**6L-4725**	2	CLAMP-HOSE	
	2	1	**8Y-5737**	1	CLAMP	
	3	1	**9M-7959**	1	CLAMP (HOSE)	
	4	1	**9R-9901**	5	FASTENER (CLIP)	
	5	1	**110-6109**	1	KNOB-CONTROL	
	6	1	**130-4832**	2	SCREW (8-18X.39 IN)	
	7	1	**164-1037**	1	DUCT	
	8	1	**164-1196**	1	CABLE AS	
		1	**143-8874**	1	BOOT	
Y	9	1	**170-0076**	1	HEATER GP-CAB	533
E	10	1	**6V-6813**		HOSE (40CM)	
	11	1	**184-6560**	1	BRACKET	
	12	1	**184-6561**	1	HOSE-AIR	
	13	1	**184-6564**	1	GASKET	
Y	14	1	*184-6577*	1	DUCT GP-AIR	528
	15	1	**190-5132**	1	FILM-CONTROL (AIR CONDITIONER)	
	16	1	**194-5622**	1	VALVE AS (WATER)	
		1	**6V-6717**	1	SCREW-WASHER HEAD (8-32X.375 IN)	
		1	**124-0312**	2	SCREW-PAN HEAD (8-16X.32 IN)	
	17	1	**206-7512**	1	COVER	
	18	1	**206-7513**	2	BRACKET	
	19	1	**206-7514**	1	FILTER (HEATER)	
	20	1	**2H-3920**	1	LOCKWASHER	
M	21	1	**9X-2042**	2	SCREW-TRUSS HEAD (M6X1X12MM)	
M	22	1	**9X-2044**	2	SCREW-TRUSS HEAD (M6X1X16MM)	
M	23	1	**9X-2045**	2	SCREW-TRUSS HEAD (M6X1X20MM)	
E	24	1	**5P-3915**		HOSE (30CM)	

E-ORDER BY THE CENTIMETER
M-METRIC PART
Y-SEPARATE ILLUSTRATION

164-1045 **HEATER GP-CAB** ***(contd.)*** **i01928698**

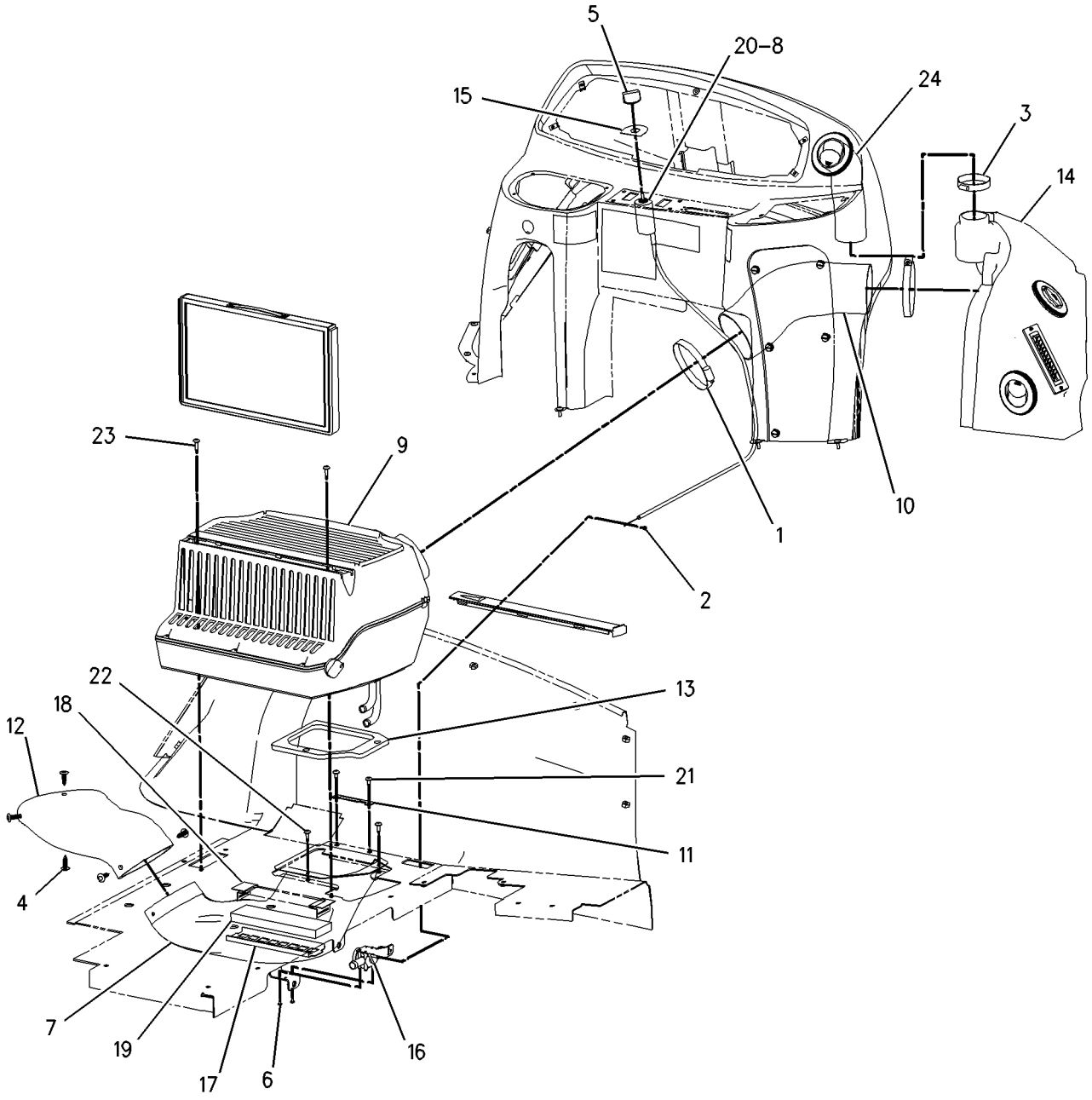

GRAPHIC #1 **<END>** g01003231

OPERATOR STATION

170-0076 HEATER GP-CAB

S/N: B2D1-UP
PART OF 164-1045 HEATER GP-CAB
AN ATTACHMENT

SMCS-7304 **i01958774**

NOTE	REF NO	GRAPHIC REF	PART NUMBER	QTY	PART NAME 1 2 3 4 5 6 (PRODUCT LEVEL)	SEE PAGE
	1	1	**164-6613**	1	COIL AS-HEATER	
		1	**201-1637**	1	GASKET	
		1	**201-1638**	1	GASKET	
	2	1	**168-2313**	1	FAN AS	
		1	**7T-0093**	2	PIN-CONNECTOR	
	3	1	**170-7269**	1	COVER	
	4	1	**170-7270**	1	CASE AS	
		1	**6C-3680**	4	RIVET-POP	
M		1	**129-3178**	4	LOCKNUT	
		1	**188-2711**	1	GUARD AS	
	5	1	**170-7271**	1	COVER	
	6	1	**170-7281**	1	GASKET	
	7	1	**170-7282**	1	GASKET	
C	8	1	**185-4015**	4	CLIP	
	9	1	**188-2704**	1	GASKET	
	10	1	**188-2706**	4	GASKET	
	11	1	**188-2708**	1	GASKET	
	12	1	**188-2715**	1	BRACKET	
	13	1	**199-3729**	1	DOOR AS	
		1	**191-6033**	1	CONTROL AS	
		1	**191-6035**	1	RETAINER	
		1	**201-1634**	1	LINK	
C	14	1	**204-9921**	1	RESISTOR AS	
C	15	1	**206-7398**	1	KNOB-CONTROL	
	16	1	**213-9270**	1	FILM (AIR RECIRCULATION)	
	17	1	**2S-3745**	4	SCREW-TAPPING (10-16X.5 IN)	
	18	1	**5P-7921**	3	SCREW-WASHER HEAD (1/4-20X3/4 IN)	
	19	1	**6V-6717**	2	SCREW-WASHER HEAD (8-32X.375 IN)	
M	20	1	**6V-7357**	4	BOLT (M6X1.0X25MM)	
	21	1	**8T-4205**	4	WASHER-HARD (7.2X14.5X2MM THK)	
	22	1	**170-7272**	1	FILTER-AIR (HEATER)	

C-CHANGE FROM PREVIOUS TYPE
M-METRIC PART

170-0076 HEATER GP-CAB *(contd.)*

i01958774

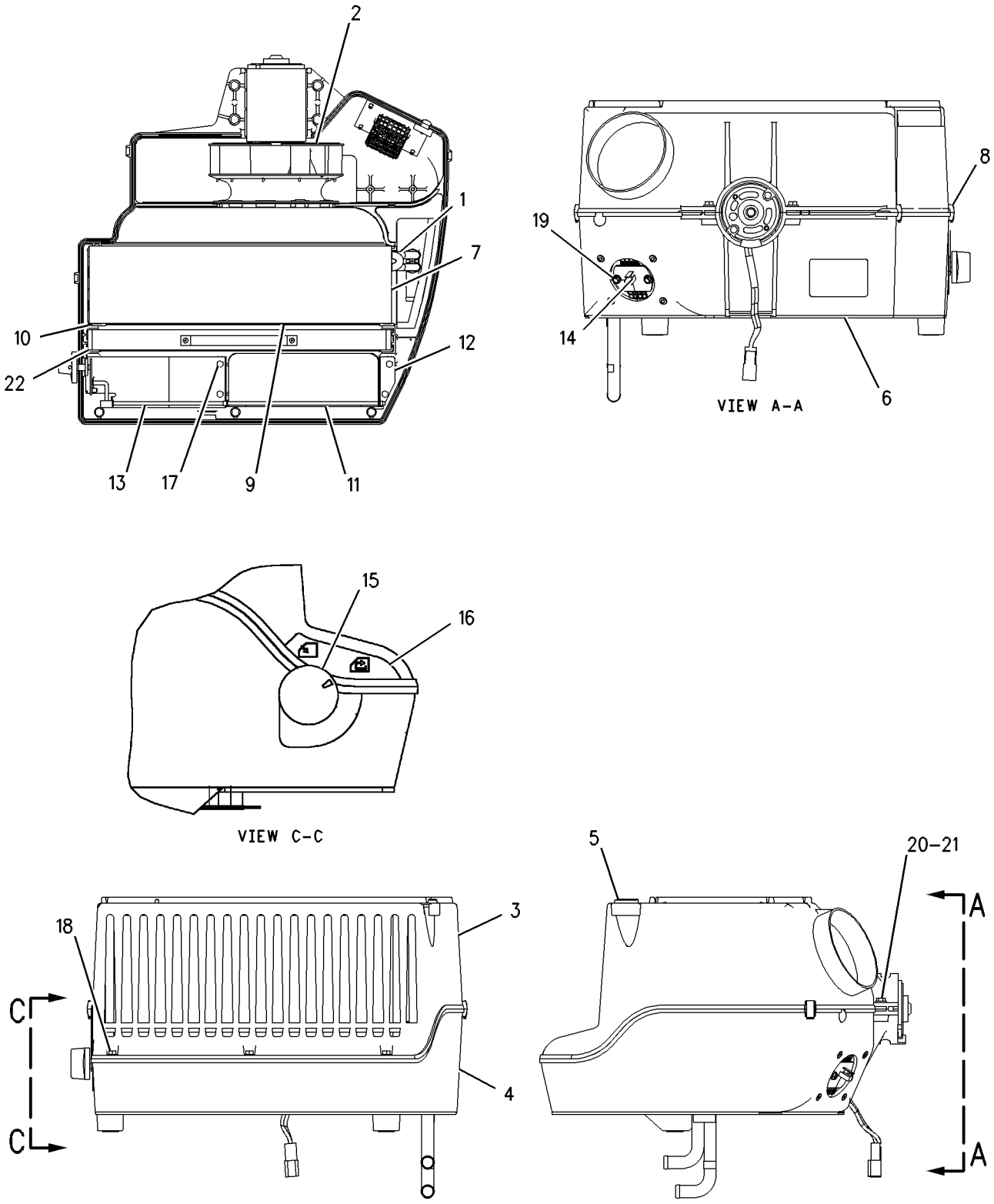

GRAPHIC #1

<END>

g01003237

OPERATOR STATION

193-2342 HORN GP-ELECTRIC

S/N: B2D1-UP
REAR
AN ATTACHMENT

SMCS-7402 **i01683703**

NOTE	REF NO	GRAPHIC REF	PART NUMBER	QTY	PART NAME 1 2 3 4 5 6 (PRODUCT LEVEL)	SEE PAGE
B	1	1	**3S-2093**	1	STRAP-CABLE	
	2	1	**164-9425**	1	HORN AS	
	3	1	**169-0587**	1	SWITCH AS (HORN)	
		1	**111-7899**	1	GASKET	
	4	1	**096-4415**	1	LOCKWASHER	
B	5	1	**4P-8134**	1	CLIP	
M	6	1	**8T-4133**	1	NUT (M10X1.5 THD)	
M	7	1	**8T-4195**	1	BOLT (M10X1.5X30MM)	

B-USE AS REQUIRED
M-METRIC PART

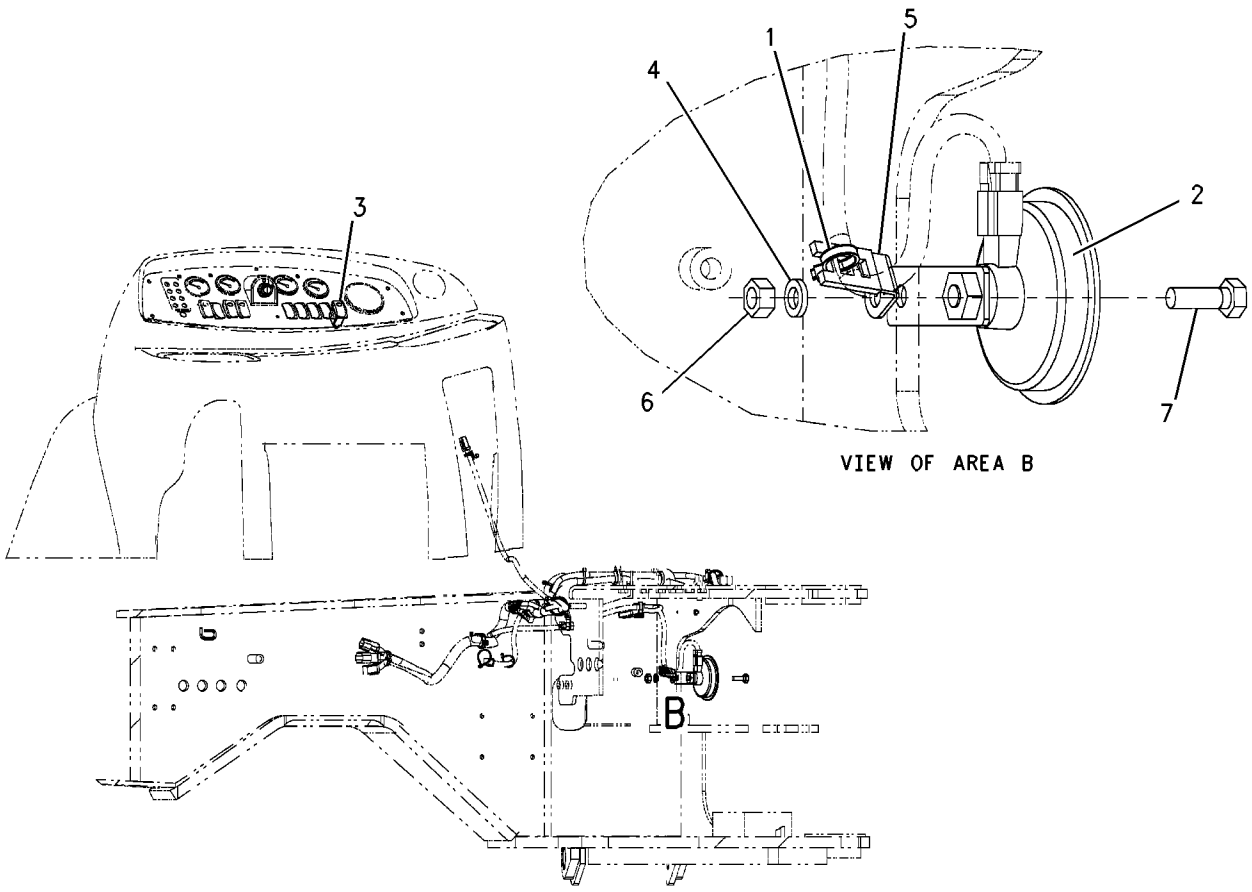

GRAPHIC #1 **<END>** g00823261

OPERATOR STATION

166-5206 KIT-SEAT—SWIVEL

S/N: B2D1-UP

AN ATTACHMENT

SMCS-7312 **i01958771**

NOTE	REF NO	GRAPHIC REF	PART NUMBER	QTY	PART NAME 1 2 3 4 5 6 (PRODUCT LEVEL)	SEE PAGE
	1	1	**3B-4505**	1	LOCKWASHER	
	2	1	**8Y-6064**	1	ROLLER-SLIDER	
	3	1	**009-3681**	1	RING-RETAINING	
	4	1	**095-0878**	1	PIN-SPRING	
	5	1	**123-6077**	1	SHAFT-PIVOT	
	6	1	**132-9240**	1	LATCH AS	
	7	1	**134-5484**	2	CAP	
	8	1	**154-8278**	1	SPRING-RETURN	
	9	1	**154-8280**	1	SPRING-RETURN	
	10	1	**154-8284**	1	TUBE	
	11	1	**155-4707**	1	LEVER AS (SLIDE)	
	12	1	**155-4753**	1	LEVER AS-SWIVEL	
	13	1	**161-4458**	1	SWIVEL AS-SEAT	
	14	1	**161-4518**	1	PLATE AS-SLIDE	
	15	1	**161-9289**	2	BLOCK-SLIDER	
	16	1	**161-9290**	1	WASHER (11.9X20.7X2.3MM THK)	
	17	1	**161-9291**	1	BRACKET-STOP	
	18	1	**031-4155**	1	LOCKNUT	
	19	1	**035-2017**	4	SCREW-BUTTON HEAD (3/8-16X1 IN)	
	20	1	**1D-4677**	2	BOLT-ROUND HEAD (3/8-16X1 IN)	
	21	1	**2K-4973**	2	LOCKNUT (3/8-16 THD)	
	22	1	**4M-0061**	3	BOLT (5/16-18X.750 IN)	
	23	1	**5M-3062**	2	BOLT (3/8-16X0.75 IN)	
	24	1	**5P-1075**	4	WASHER-HARD (10.2X22.5X3MM THK)	
	25	1	**8S-7803**	2	RING-RETAINING	
	26	1	**135-1706**	1	SPRING	
	27	1	**173-5787**	2	SETSCREW (1/4-20 THD)	

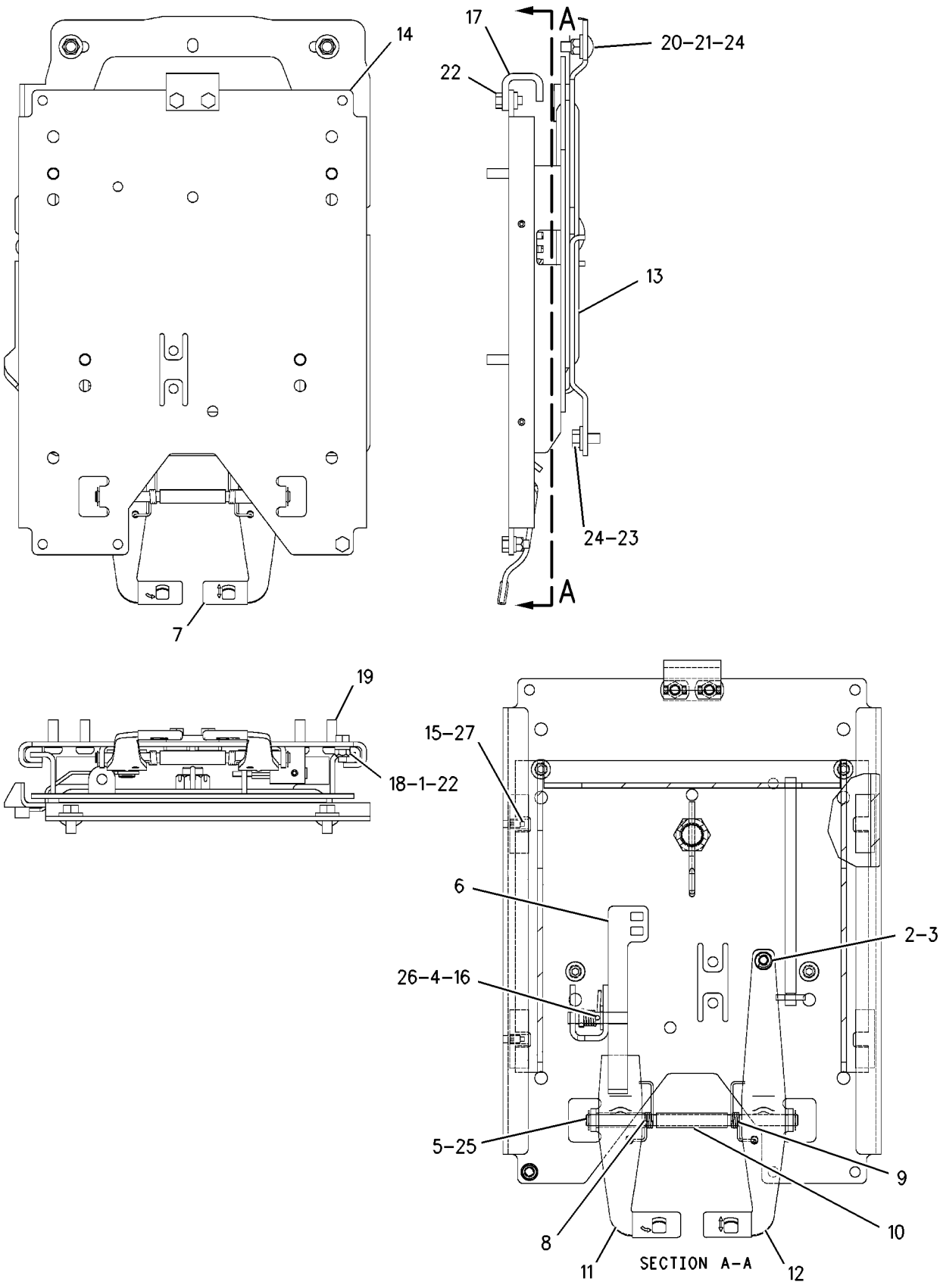

GRAPHIC #1 **<END>** g00868133

OPERATOR STATION

183-3887 LEVER GP-GOVERNOR CONTROL

S/N: B2D1-UP

BASIC , GOVERNOR

PART OF 234-8892 CONTROL GP-GOV & ACCELERATOR

SMCS-1265 **i01524033**

NOTE	REF NO	GRAPHIC REF	PART NUMBER	QTY	PART NAME 1 2 3 4 5 6 (PRODUCT LEVEL)	SEE PAGE
	1	1	**8T-4742**	1	END-YOKE ROD	
	2	1	**8T-4744**	1	PIN AS-SPRING	
	3	1	**164-1079**	1	CABLE AS	
	4	1	**164-1083**	1	LEVER AS	
M	5	1	**8T-4971**	1	BOLT (M6X1X30MM)	
M	6	1	**129-3178**	1	LOCKNUT (M6X1 THD)	

M-METRIC PART

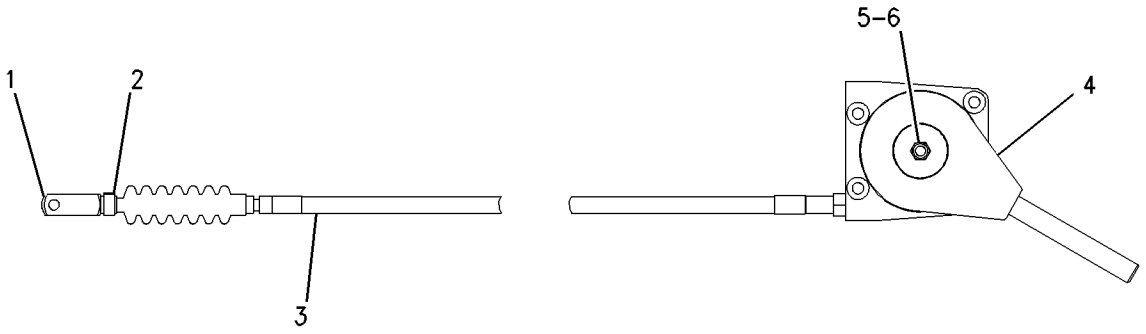

GRAPHIC #1 **<END>** g00743371

OPERATOR STATION

236-6657 LINES GP-HEATER

S/N: B2D1-UP
PART OF 239-5560 CAB AR
AN ATTACHMENT

SMCS-7304 **i02024956**

NOTE	REF NO	GRAPHIC REF	PART NUMBER	QTY	PART NAME 1 2 3 4 5 6 (PRODUCT LEVEL)	SEE PAGE
	1	1	**5D-1026**	8	CLAMP-HOSE	
	2	1	**9M-8406**	1	CLIP	
	3	1	**6P-8855**	1	SPACER (.56X.625X3-MM THK)	
	4	1	**9M-4814**	1	CONNECTOR-HOSE	
	5	1	**3E-4321**	5	CLIP	
	6	1	**8T-4121**	6	WASHER-HARD (11X21X2.5-MM THK)	
M	7	1	**8T-4137**	5	BOLT (M10X1.5X20-MM)	
M	8	1	**8T-4189**	1	BOLT (M8X1.25X20-MM)	
	9	1	**5P-0767**		HOSE (275CM)	
	10	1	**5P-0767**		HOSE (295CM)	
	11	1	**5P-0767**		HOSE (42.5CM EACH)	
	12	1	**134-3856**	1	ELBOW	

M-METRIC PART

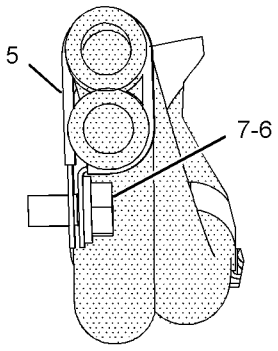

SECTION E-E

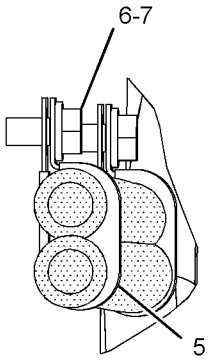

SECTION C-C

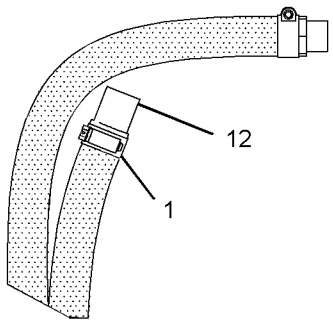

VIEW G-G

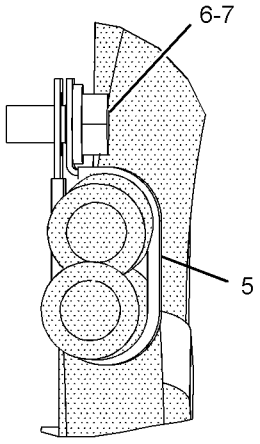

SECTION D-D

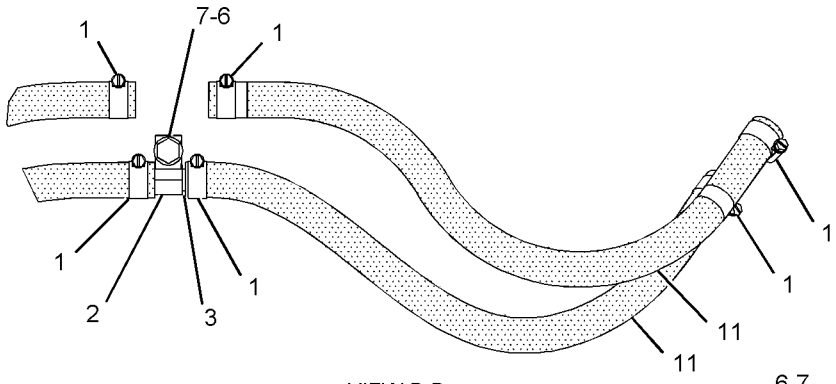

VIEW B-B

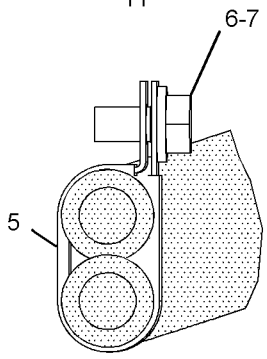

SECTION A-A

LEFT SIDE VIEW

GRAPHIC #1

<END>

g01036311

OPERATOR STATION

234-2617 LINES GP-HEATER & AIR COND

S/N: B2D1-UP
PART OF 239-5562 CAB AR
AN ATTACHMENT

SMCS-1380, 1808, 7304 **i02054454**

NOTE	REF NO	GRAPHIC REF	PART NUMBER	QTY	PART NAME 1 2 3 4 5 6 (PRODUCT LEVEL)	SEE PAGE
	1	1	**3S-2093**	3	STRAP-CABLE	
	2	1	**5D-1026**	8	CLAMP-HOSE	
E	3	1	**5P-0767**		HOSE (295-CM)	
	4	1	**6P-8855**	1	SPACER (0.56X.625X3-MM THK)	
E	5	1	**160-2245**		SLEEVE-ABRASION (28-CM)	
	6	1	**9M-4814**	1	CONNECTOR-HOSE	
	7	1	**105-9411**	1	SUPPORT	
I	8	1	**125-3416**	1	HOSE AS	
	9	1	**152-8417**	1	STRAP	
I	10	1	**164-1040**	1	HOSE AS	
I	11	1	**164-1041**	1	HOSE AS	
	12	1	**184-6565**	1	BRACKET AS	
M		1	**8T-3490**	3	NUT-WELD (M10X1.5-THD)	
	13	1	**176-3900**	1	ACCUMULATOR GP-REFRIGERANT	
	14	1	**199-6243**	1	PLATE (INSTRUCTION)	
	15	1	**234-2484**	1	HOSE AS	
	16	1	**234-2485**	1	HOSE AS	
	17	1	**3E-4321**	5	CLIP	
	18	1	**5P-7854**	1	CLIP	
	19	1	**6D-4246**	1	CLIP	
	20	1	**7F-6998**	1	LOCKWASHER	
	21	1	**8T-4121**	18	WASHER-HARD (11X21X2.5-MM THK)	
M	22	1	**8T-4133**	1	NUT (M10X1.5-THD)	
M	23	1	**8T-4136**	5	BOLT (M10X1.5X25-MM)	
M	24	1	**8T-4137**	8	BOLT (M10X1.5X20-MM)	
M	25	1	**8T-4189**	1	BOLT (M8X1.25X20-MM)	
M	26	1	**8T-4195**	3	BOLT (M10X1.5X30-MM)	
	27	1	**9M-4972**	5	CLIP	
	28	1	**9M-8406**	6	CLIP	
	29	1	**9X-7380**	2	SEAL-O-RING	
	30	1	**9X-7381**	2	SEAL-O-RING	
	31	1	**9X-7382**	1	SEAL-O-RING	
	32	1	**9X-7383**	2	SEAL-O-RING	
D	33	1	**5P-5924**		SEAL (.3M)	
E	34	1	**5P-0767**		HOSE (275-CM)	
E	35	1	**5P-0767**		HOSE (42.5-CM)	
	36	1	**134-3856**	1	ELBOW	

D-ORDER BY THE METER
E-ORDER BY THE CENTIMETER
I-REFER TO HYDRAULIC INFORMATION SYSTEM
M-METRIC PART

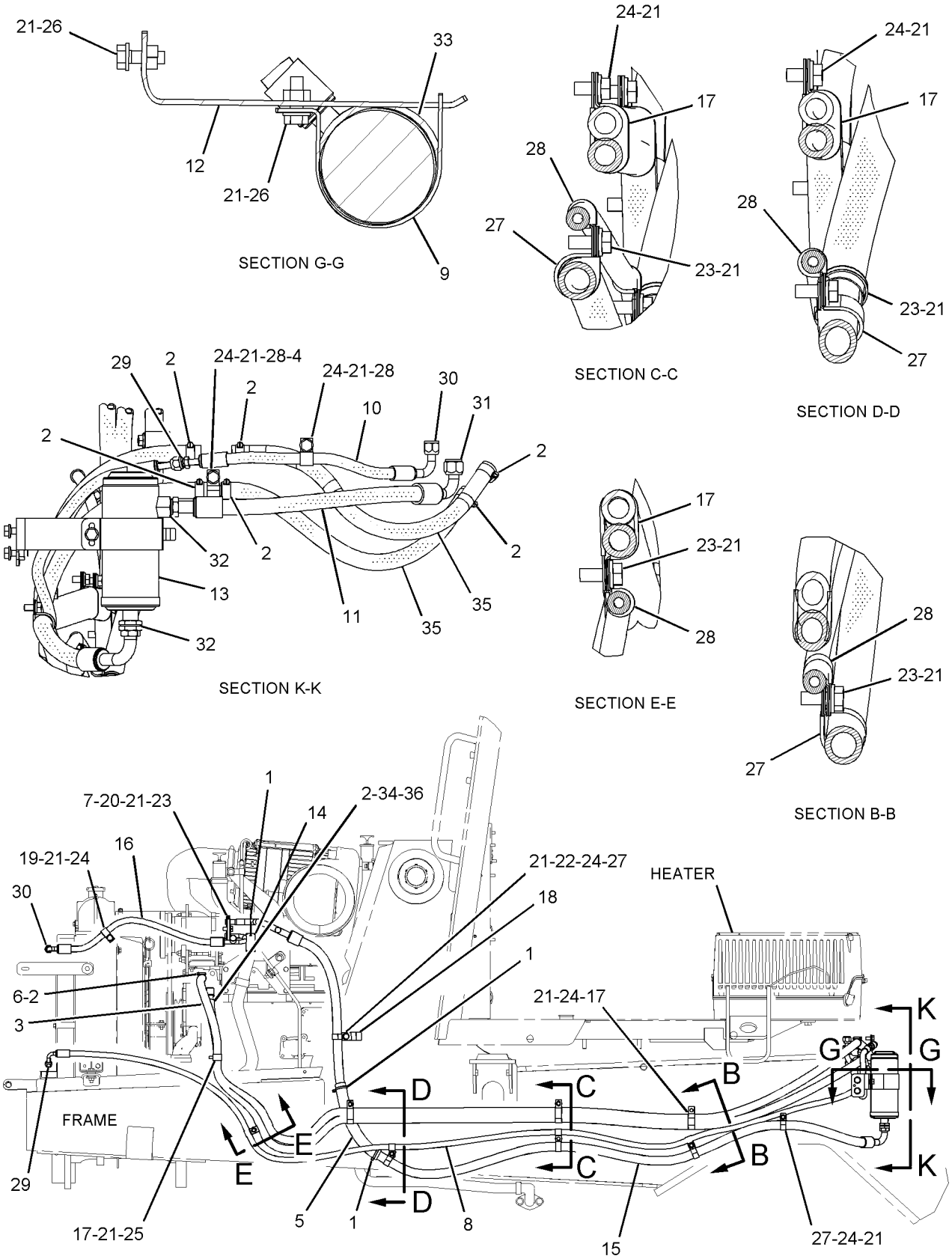

RIGHT SIDE VIEW

GRAPHIC #1

<END>

g01042921

OPERATOR STATION

122-2054 MIRROR GP-REAR VIEW

S/N: B2D1-UP
AN ATTACHMENT

SMCS-7319 **i01456931**

NOTE	REF NO	GRAPHIC REF	PART NUMBER	QTY	PART NAME 1 2 3 4 5 6 (PRODUCT LEVEL)	SEE PAGE
	1	1	**122-2051**	2	BRACKET	
	2	1	**122-2053**	1	MIRROR AS (LH)	
	3	1	**122-2052**	1	MIRROR AS (RH)	
M	4	1	**8T-4137**	4	BOLT (M10X1.5X20MM)	
	5	1	**8T-4121**	4	WASHER-HARD (11X21X2.5MM THK)	

M-METRIC PART

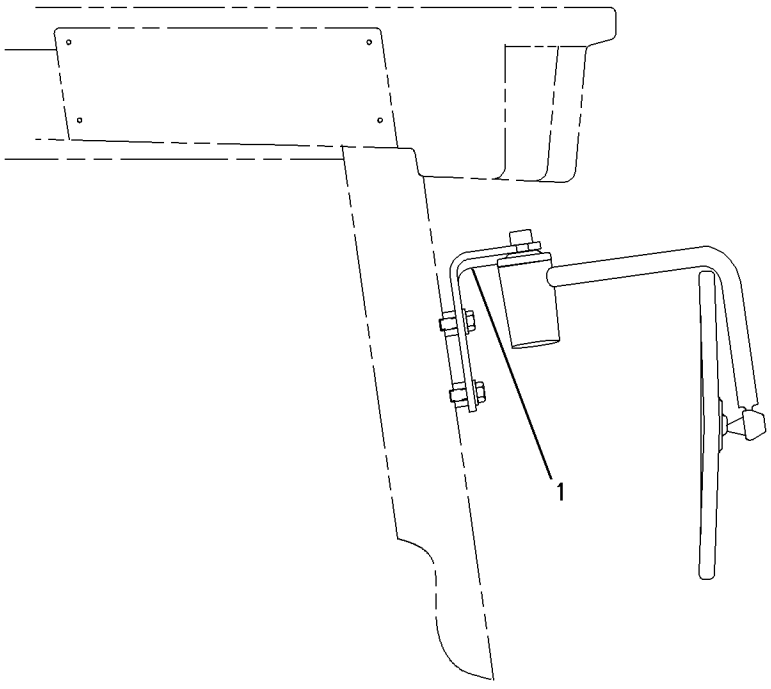

RIGHT SIDE VIEW

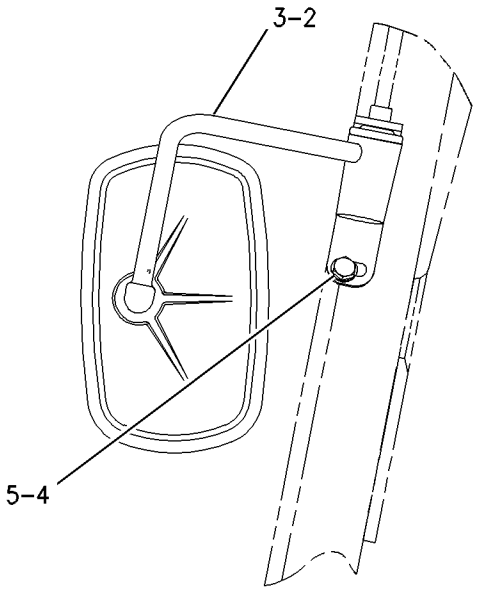

FRONT VIEW

GRAPHIC #1 **<END>** g00710492

OPERATOR STATION

164-1155 MIRROR GP-REAR VIEW

S/N: B2D1-UP

PART OF 239-5560, 239-5562, 241-9377 CAB AR, 239-5558, 239-5559 CANOPY AR

AN ATTACHMENT

SMCS-7319 **i01753361**

NOTE	REF NO	GRAPHIC REF	PART NUMBER	QTY	PART NAME 1 2 3 4 5 6 (PRODUCT LEVEL)	SEE PAGE
M	1	1	**8C-4982**	2	BOLT-SOCKET HEAD (M4X0.7X20 MM)	
	2	1	**199-0929**	1	MIRROR AS	
	3	1	**205-7047**	2	INSERT-THREADED	
	4	1	**096-6166**	2	WASHER-HARD (4.5X9X1MM THK)	

M-METRIC PART

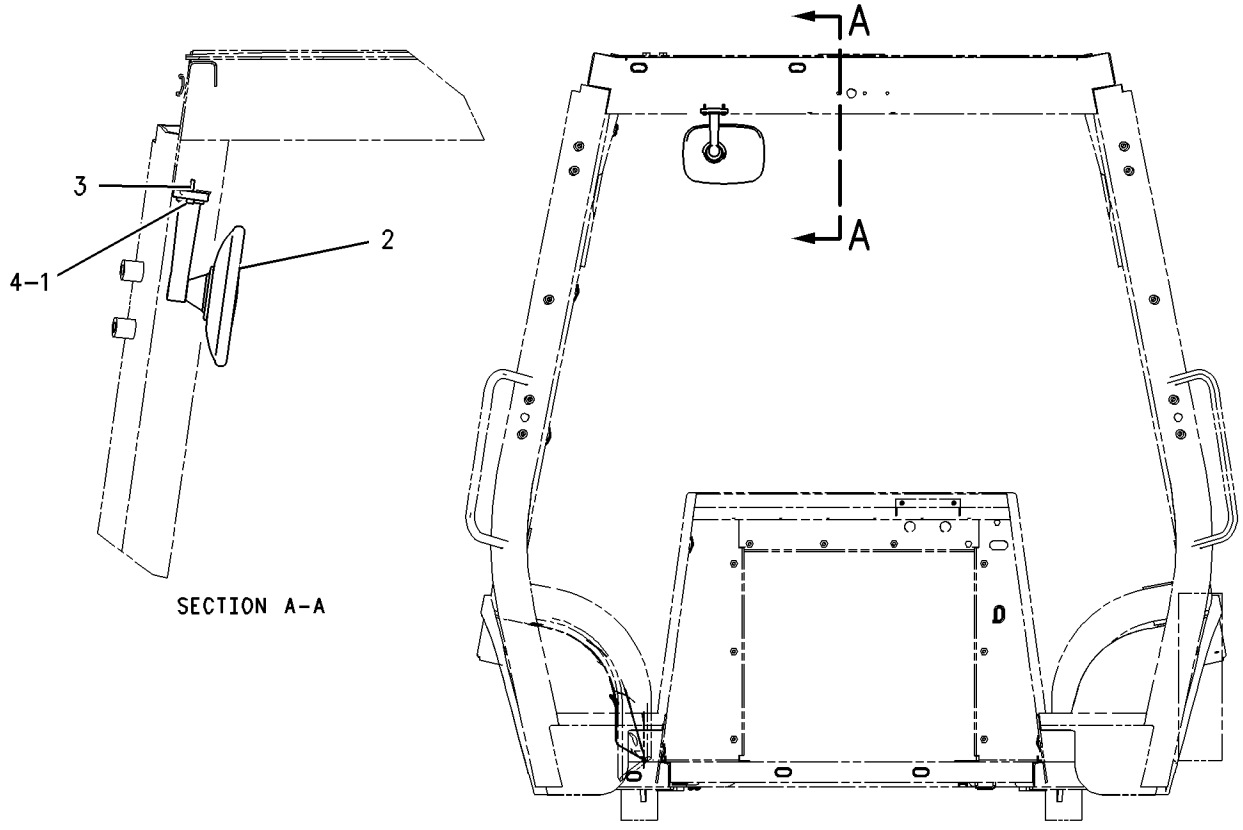

SECTION A-A

GRAPHIC #1 **<END>** g00883594

OPERATOR STATION

144-9931 MODULE GP-WARNING INDICATOR

S/N: B2D1-UP

PART OF 238-1165 WIRING GP-CONSOLE

SMCS-7407, 7431 **i01958770**

NOTE	REF NO	GRAPHIC REF	PART NUMBER	QTY	PART NAME 1 2 3 4 5 6 (PRODUCT LEVEL)	SEE PAGE
	1	1	**102-8806**	1	KIT-RECEPTACLE (8 PIN)	
	2	1	**144-9934**	1	GASKET	
	3	1	**189-3610**	1	LAMP (12 VOLT)	

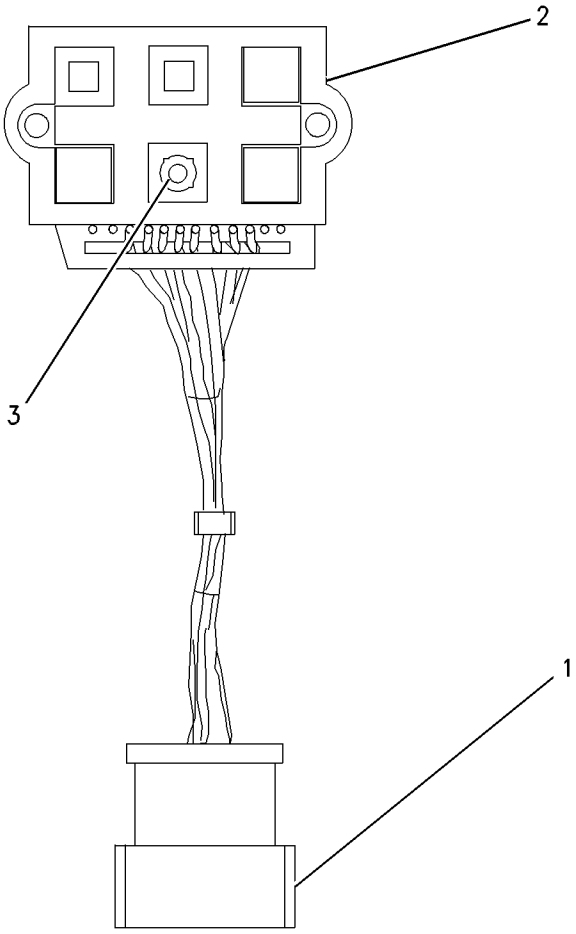

GRAPHIC #1 **<END>** g00742850

186-2589 MOTOR GP-WINDOW WIPER

S/N: B2D1-UP
12 VOLT
PART OF 174-2024, 207-6051 WIPER GP-WINDOW
AN ATTACHMENT

SMCS-7305 **i01504087**

NOTE	REF NO	GRAPHIC REF	PART NUMBER	QTY	PART NAME 1 2 3 4 5 6 (PRODUCT LEVEL)	SEE PAGE
M	1	1	**5C-7261**	1	NUT (M8X1.25 THD)	
	2	1	**3F-9556**	1	LOCKWASHER	
	3	1	**102-8805**	1	KIT-RECEPTACLE (6 PIN)	
					(INCLUDES RECEPTACLE AS AND WEDGE)	
	4	1	**9G-3695**	1	PLUG (GROMMET SEALING)	
	5	1	**186-3735**	5	PIN-CONNECTOR	

M-METRIC PART

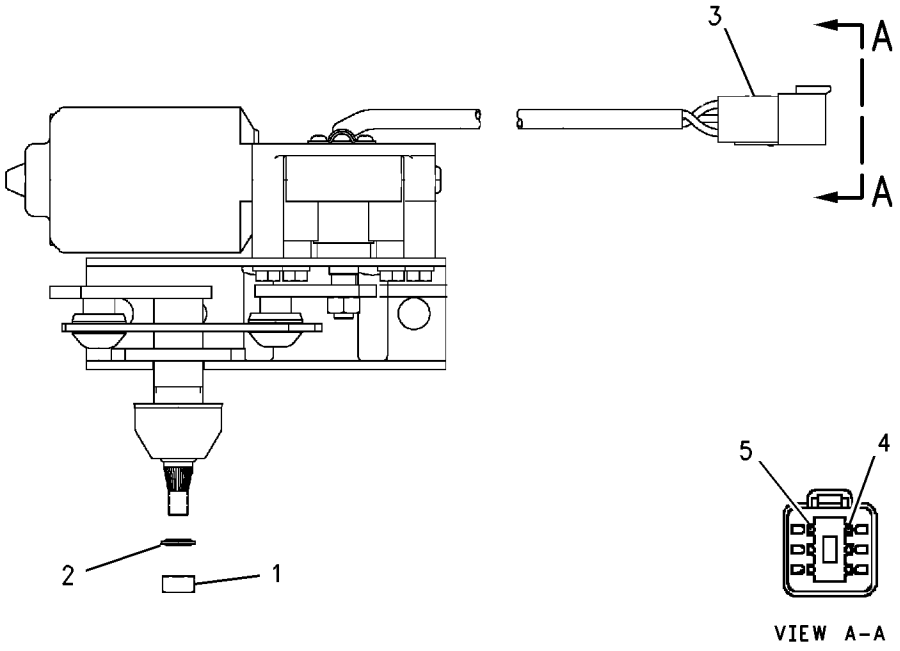

GRAPHIC #1 **<END>** g00726430

OPERATOR STATION

184-7898 MOUNTING GP-INSTRUMENT PANEL

S/N: B2D1-UP
TWO WHEEL STEER, FRONT CONSOLE
PART OF 184-7970 POWER TRAIN AR

SMCS-7451 **i01512696**

NOTE	REF NO	GRAPHIC REF	PART NUMBER	QTY	PART NAME 1 2 3 4 5 6 (PRODUCT LEVEL)	SEE PAGE
	1	1	**167-8278**	2	PLATE	
	2	1	**167-8279**	1	PANEL AS	
M	3	1	**9X-1046**	14	SCREW (M4X0.7X18MM)	

M-METRIC PART

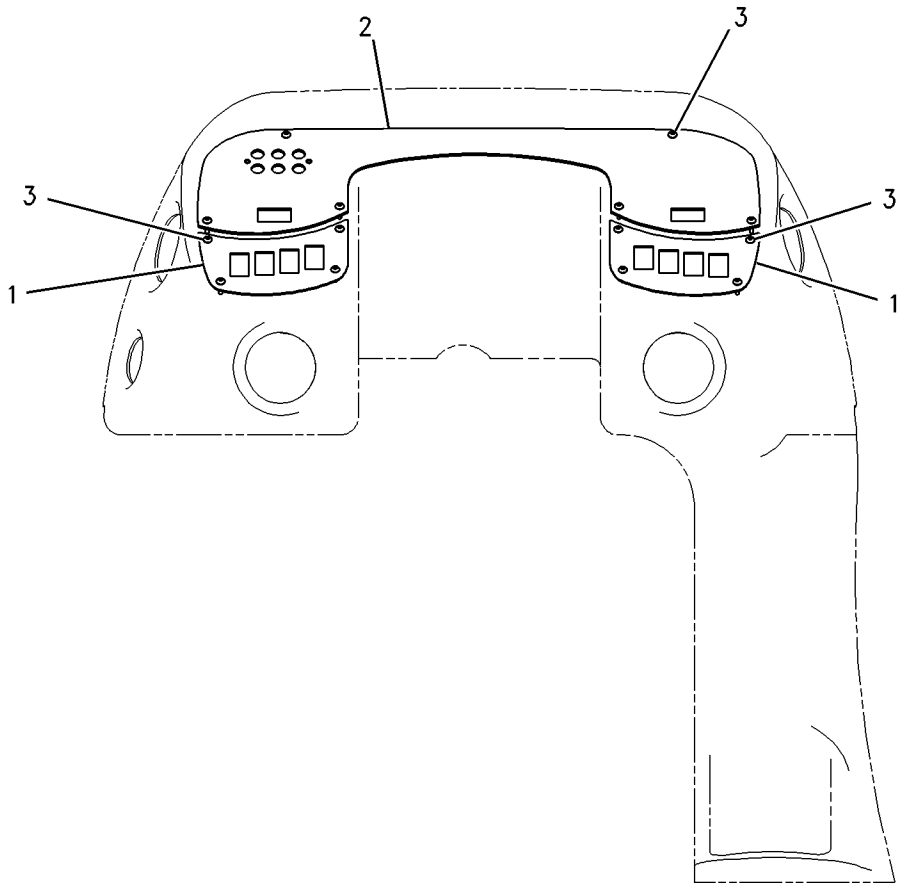

GRAPHIC #1 **<END>** g00754349

OPERATOR STATION

185-3525 MOUNTING GP-INSTRUMENT PANEL

S/N: B2D1-UP
CONSOLE
PART OF 214-6955, 214-6956, 214-6958, 214-6959 POWER TRAIN AR
AN ATTACHMENT

SMCS-7451 **i01503060**

NOTE	REF NO	GRAPHIC REF	PART NUMBER	QTY	PART NAME 1 2 3 4 5 6 (PRODUCT LEVEL)	SEE PAGE
	1	1	**5P-4116**	4	WASHER-HARD (8.8X20.5X2MM THK)	
M	2	1	**6V-9189**	4	LOCKNUT (M8X1.25 THD)	

M-METRIC PART

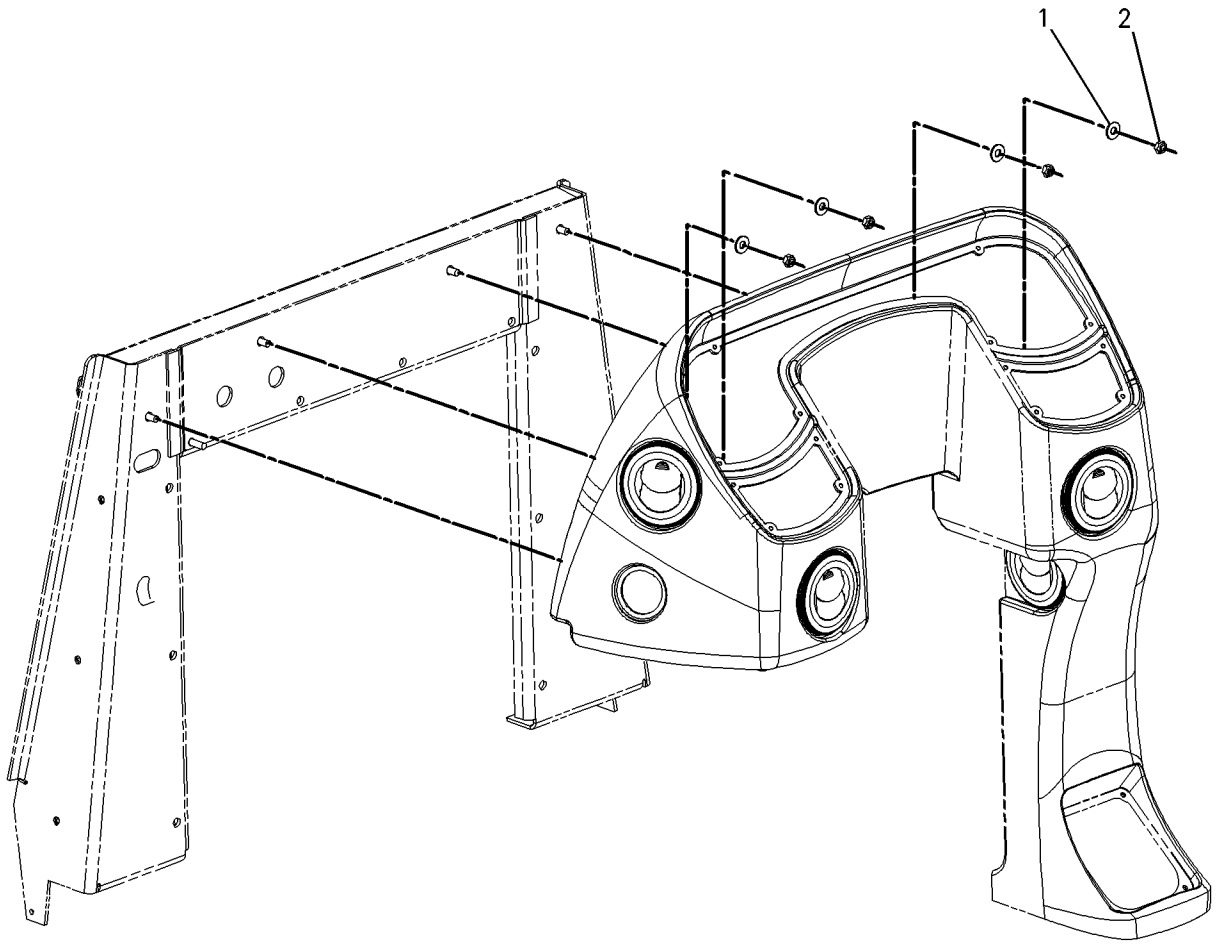

GRAPHIC #1 **<END>** g00756122

OPERATOR STATION

202-5724 MOUNTING GP-INSTRUMENT PANEL

S/N: B2D1-UP
ROTATING VANDAL GUARD
AN ATTACHMENT

SMCS-7451 **i01961859**

NOTE	REF NO	GRAPHIC REF	PART NUMBER	QTY	PART NAME 1 2 3 4 5 6 (PRODUCT LEVEL)	SEE PAGE
J	1	1	**5P-9000**	1	LOCK AS-CYLINDER	
	2	1	**164-1122**	1	BODY	
	3	1	**164-1123**	1	BEZEL	
	4	1	**164-1177**	2	CAP-END	
	5	1	**168-4609**	1	SWITCH AS-START	
		1	**7T-6799**	1	NUT-MOUNTING (1-32 THD)	
	6	1	**185-9777**	1	PLATE	
	7	1	**191-5104**	4	MOUNT	
	8	1	**192-7355**	2	PLATE	
	9	1	**194-4250**	2	PIN	
	10	1	**197-7499**	2	BOLT (M4X.7X25MM)	
	11	1	**202-5979**	1	HANDLE	
	12	1	**202-6063**	1	FILM (START SWITCH)	
M	13	1	**131-3540**	2	LOCKNUT (M8X1.25 THD)	
	15	1	**214-9035**	8	BOLT (M4X0.7X16MM)	
	16	1	**4B-4863**	2	WASHER (4.7X11X1.2MM THK)	
M	17	1	**8T-2659**	8	LOCKNUT (M4X6H THD)	
	18	1	**8T-4224**	4	WASHER-HARD (8.8X16X2MM THK)	
M	19	1	**8T-4908**	2	BOLT (M8X1.25X25MM)	
M	20	1	**9X-2045**	5	SCREW-TRUSS HEAD (M6X1X20MM)	

J-REQUIRES 5P8500 KEY
M-METRIC PART

202-5724 **MOUNTING GP-INSTRUMENT PANEL** ***(contd.)*** **i01961859**

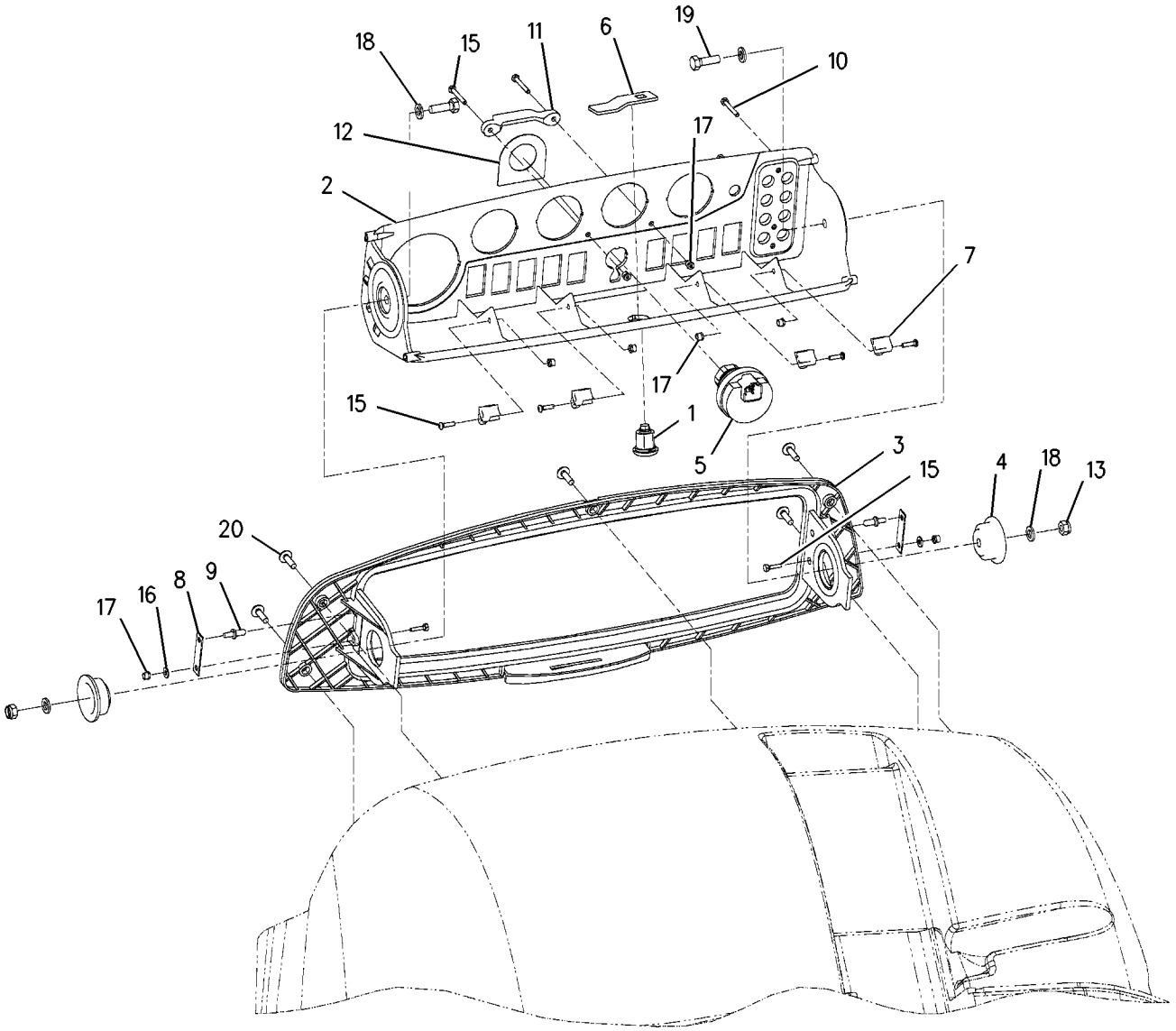

GRAPHIC #1 **<END>** g00864598

OPERATOR STATION

202-5812 PANEL GP-INSTRUMENT

S/N: B2D1-UP
FLAT GAGE PANEL
AN ATTACHMENT

SMCS-1435, 7450, 7451, 7453, 7462, 7463, 7477, 7481 **i01692600**

NOTE	REF NO	GRAPHIC REF	PART NUMBER	QTY	PART NAME 1 2 3 4 5 6 (PRODUCT LEVEL)	SEE PAGE
J	1	1	**142-8858**	1	SWITCH AS-KEY START	
	2	1	**167-8283**	1	PANEL AS-INSTRUMENT	
	3	1	**193-1509**	1	WIRE AS	
		1	**102-8805**	1	KIT-RECEPTACLE (6 PIN)	
		1	**3E-3383**	1	WEDGE-RECEPTACLE LOCK	
		1	**8T-8737**	4	PLUG-SEAL	
		1	**9X-3402**	3	SOCKET-CONNECTOR	
		1	**144-1636**	3	PIN-CONNECTOR	
		1	**155-2262**	1	WEDGE-PLUG LOCK (4 PIN)	
	4	1	**191-9104**	1	FILM (START SWITCH)	
M	5	1	**9X-2045**	10	SCREW-TRUSS HEAD (M6X1X20MM)	

J-REQUIRES 5P8500 KEY
M-METRIC PART

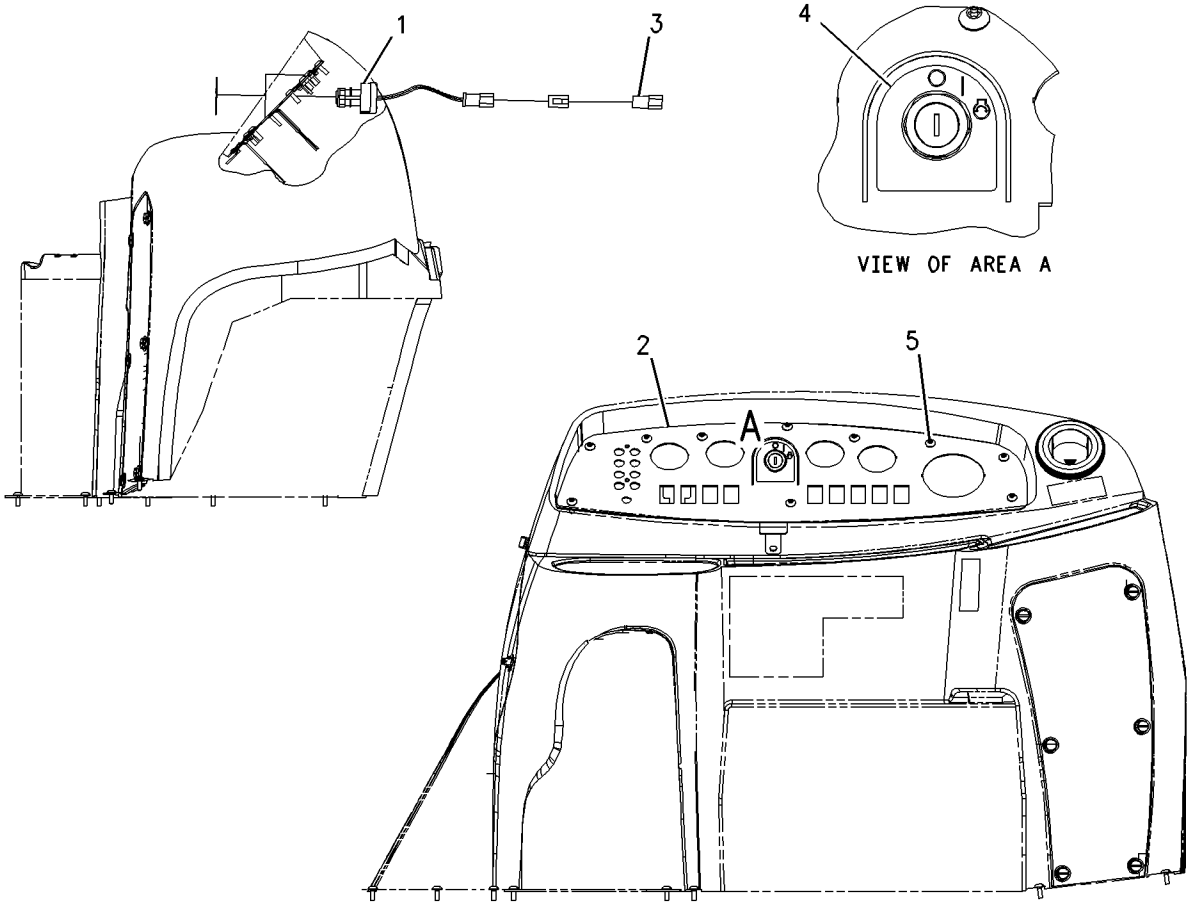

GRAPHIC #1 **<END>** g00844991

OPERATOR STATION

243-0059 PEDAL GP-GOVERNOR

S/N: B2D1-UP

PART OF 234-8892 CONTROL GP-GOV & ACCELERATOR

SMCS-1265 **i02022931**

NOTE	REF NO	GRAPHIC REF	PART NUMBER	QTY	PART NAME 1 2 3 4 5 6 (PRODUCT LEVEL)	SEE PAGE
M	1	1	**129-3178**	1	LOCKNUT (M6X1-THD)	
M	2	1	**5C-7261**	1	NUT (M8X1.25-THD)	
M	3	1	**5C-9553**	1	BOLT (M6X1X16-MM)	
	4	1	**8T-4205**	1	WASHER-HARD (7.2X14.5X2-MM THK)	
	5	1	**8T-6902**	3	CLIP	
	6	1	**3F-9556**	2	LOCKWASHER	
M	7	1	**095-0641**	4	BOLT-SOCKET HEAD (M4X0.7X10-MM)	
	8	1	**6V-8186**	2	NUT-FULL (5/16-24-THD)	
M	9	1	**9X-2842**	1	BOLT (M8X1.25-THD)	
	10	1	**243-0063**	1	BOOT	
					AVAILABLE REPAIR KIT(S):	
			164-1154		KIT-SERVICE	
					KIT INCLUDES CABLE CLAMPS AND SCREWS.	
			243-0062		KIT-REPAIR (GOVERNOR PEDAL)	
					KIT INCLUDES CABLE CLAMPS AND SCREWS.	

M-METRIC PART

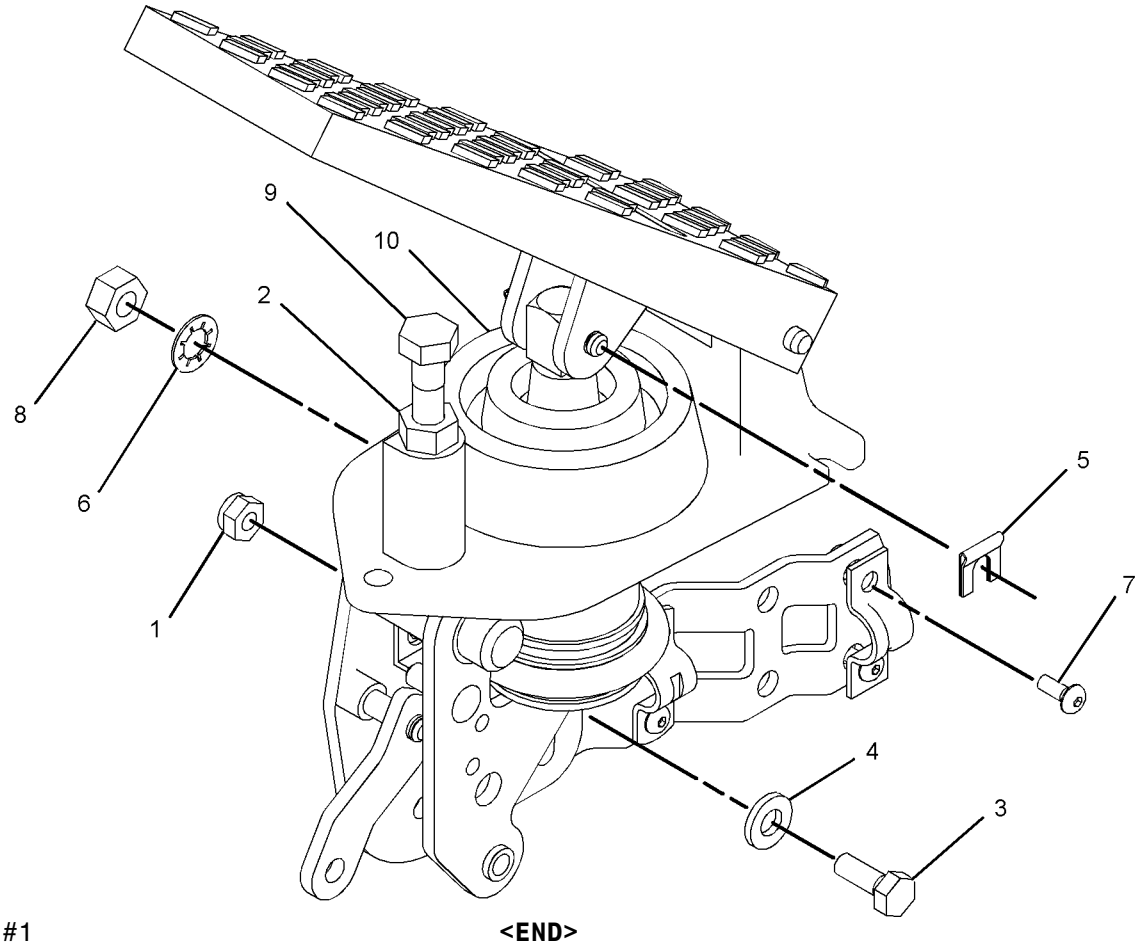

GRAPHIC #1 **<END>** g01040438

OPERATOR STATION

190-8918 SEAT BELT GP

S/N: B2D1-UP
TWO INCH RETRACTABLE
AN ATTACHMENT

SMCS-7327 **i01532090**

NOTE	REF NO	GRAPHIC REF	PART NUMBER	QTY	PART NAME 1 2 3 4 5 6 (PRODUCT LEVEL)	SEE PAGE
M	1	1	**3E-8004**	1	BOLT (M12X1.75X45MM) (M12X1.75)	
M	2	1	**8C-8992**	1	BOLT-LOCKING (M12X1.75X30MM)	
	3	1	**7X-0546**	3	WASHER-HARD (2MM THK)	
	4	1	**194-9625**	1	WASHER-HARD (4MM THK)	

M-METRIC PART

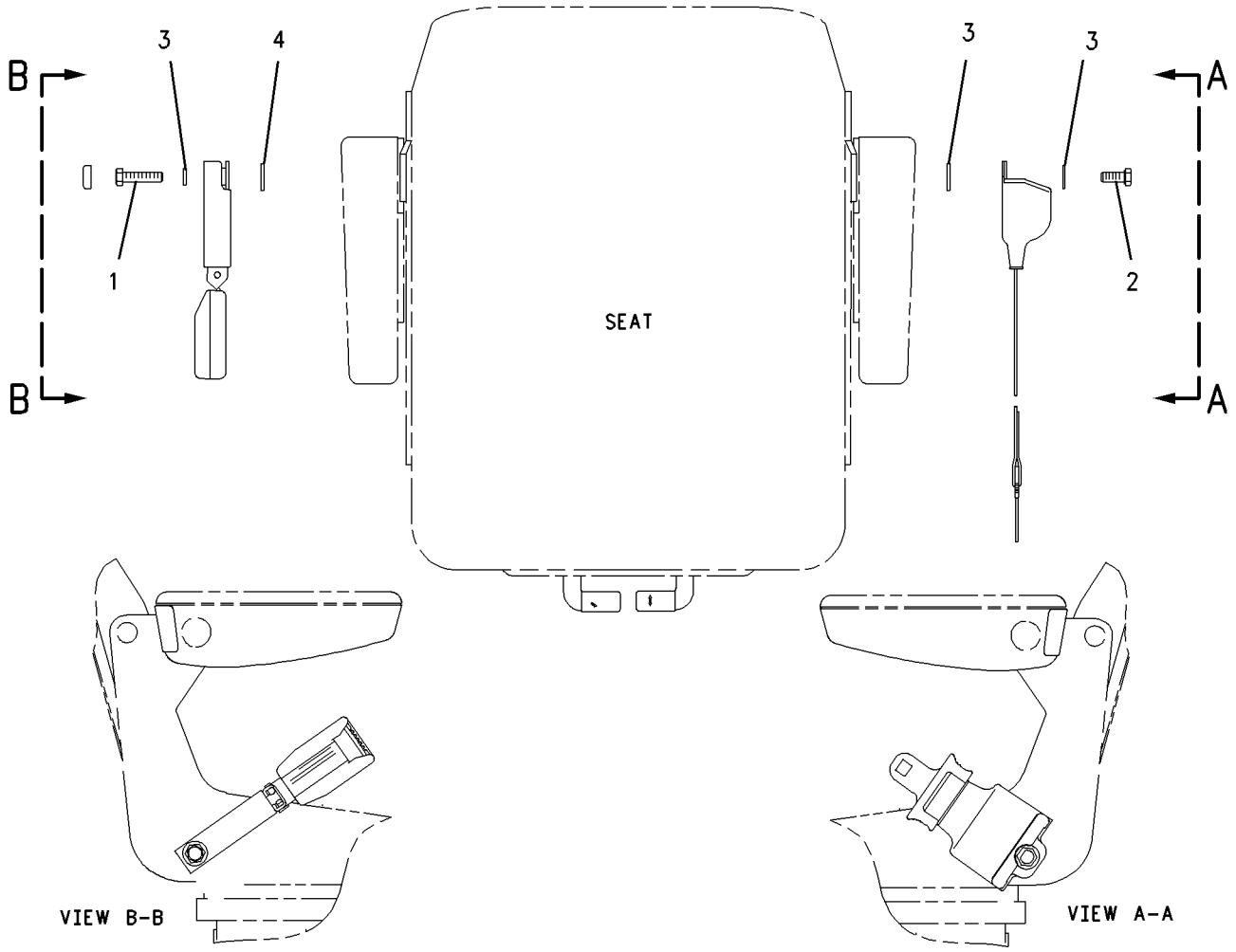

GRAPHIC #1 **<END>** g00795544

OPERATOR STATION

164-1209 SEAT GP

S/N: B2D1-UP
FABRIC
PART OF 164-1201 SEAT GP-SUSPENSION
AN ATTACHMENT

SMCS-7312, 7321, 7324, 7336 **i01958830**

NOTE	REF NO	GRAPHIC REF	PART NUMBER	QTY	PART NAME 1 2 3 4 5 6 (PRODUCT LEVEL)	SEE PAGE
Y	1	1	**8Y-5904**	2	ARMREST GP	488
M	2	1	**105-3481**	2	BOLT-HEX SOCKET (M8X1.25X20MM)	
	3	1	**164-1214**	4	KNOB	
	4	1	**164-1244**	1	CUSHION AS	
	5	1	**164-1247**	1	BRACKET AS	
	6	1	**164-1248**	1	PAN	
	7	1	**164-1249**	1	LEVER AS	
	8	1	**164-1250**	1	HANDLE	
	9	1	**164-1251**	1	SPRING	
	10	1	**164-1252**	1	SPRING	
	11	1	**164-1256**	2	SPACER (19.0X25.4X12.5MM THK)	
	12	1	**164-1258**	1	BRACKET AS	
	13	1	**164-1259**	1	BRACKET AS	
	14	1	**164-1261**	1	BRACKET AS	
	15	1	**164-1265**	4	BOLT (3/8-16X1.10IN)	
	16	1	**180-5796**	1	CUSHION AS-SEAT	
	17	1	**180-5797**	1	PAN AS	
	18	1	**195-9223**	2	SCREW-PAN HEAD	
M	19	1	**129-3180**	2	LOCKNUT	
M	20	1	**131-3540**	8	LOCKNUT (M8X1.25 THD)	
	21	1	**1K-6872**	2	LOCKNUT	
	22	1	**4B-5271**	4	WASHER (25.5X11.2X2MM THK)	
	23	1	**5P-8245**	4	WASHER-HARD (13.5X25.5X3MM THK)	
M	24	1	**8T-4200**	2	BOLT (M8X1.25X16MM)	
	25	1	**8T-9501**	2	SCREW (10-16X.75 IN)	
	26	1	**9X-8873**	2	BOLT (1/2-13X2.25 IN)	

M-METRIC PART
Y-SEPARATE ILLUSTRATION

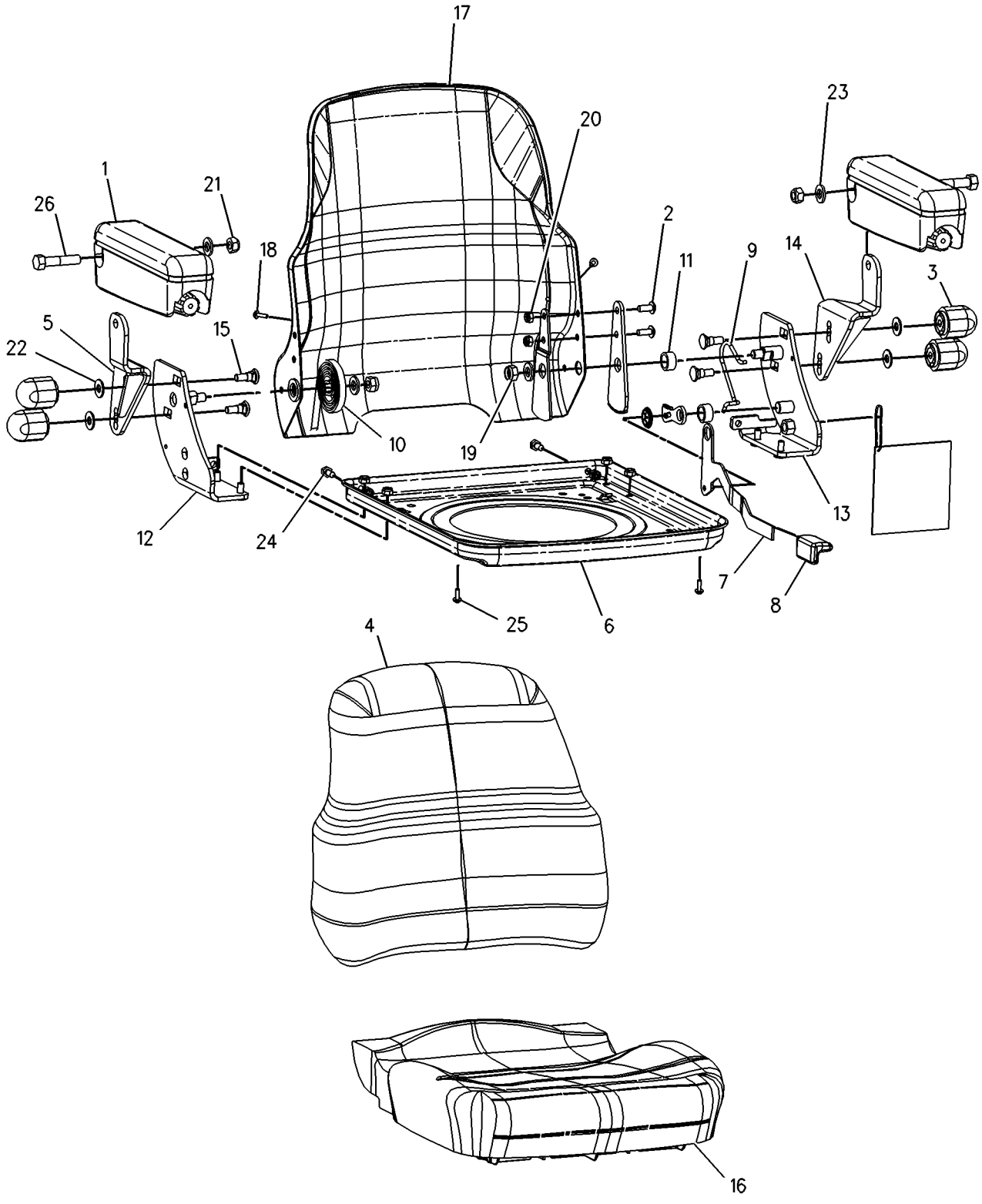

GRAPHIC #1 **<END>** g00786821

OPERATOR STATION

164-1210 SEAT GP

S/N: B2D1-UP
VINYL
PART OF 164-1202 SEAT GP-SUSPENSION
AN ATTACHMENT

SMCS-7312, 7321, 7324, 7336 **i01958842**

NOTE	REF NO	GRAPHIC REF	PART NUMBER	QTY	PART NAME 1 2 3 4 5 6 (PRODUCT LEVEL)	SEE PAGE
Y	1	1	**8Y-5904**	2	ARMREST GP	488
M	2	1	**105-3481**	2	BOLT-HEX SOCKET (M8X1.25X20MM)	
	3	1	**164-1214**	4	KNOB	
	4	1	**164-1247**	1	BRACKET AS	
	5	1	**164-1248**	1	PAN	
	6	1	**164-1249**	1	LEVER AS	
	7	1	**164-1250**	1	HANDLE	
	8	1	**164-1251**	1	SPRING	
	9	1	**164-1252**	1	SPRING	
	10	1	**1K-6872**	2	LOCKNUT	
	11	1	**4B-5271**	4	WASHER (25.5X11.2X2MM THK)	
	12	1	**5P-8245**	4	WASHER-HARD (13.5X25.5X3MM THK)	
	13	1	**164-1256**	2	SPACER (19.0X25.4X12.5MM THK)	
	14	1	**8T-9501**	2	SCREW (10-16X.75 IN)	
	15	1	**164-1258**	1	BRACKET AS	
	16	1	**164-1259**	1	BRACKET AS	
	17	1	**180-5797**	1	PAN AS	
	18	1	**164-1261**	1	BRACKET AS	
	19	1	**164-1265**	4	BOLT (3/8-16X1.10IN)	
	20	1	**164-1266**	1	CUSHION AS-BACK	
	21	1	**180-5795**	1	CUSHION AS-SEAT	
M	22	1	**8T-4200**	2	BOLT (M8X1.25X16MM)	
	23	1	**9X-8873**	2	BOLT (1/2-13X2.25 IN)	
	24	1	**195-9223**	2	SCREW-PAN HEAD	
M	25	1	**129-3180**	2	LOCKNUT	
M	26	1	**131-3540**	8	LOCKNUT (M8X1.25 THD)	

M-METRIC PART
Y-SEPARATE ILLUSTRATION

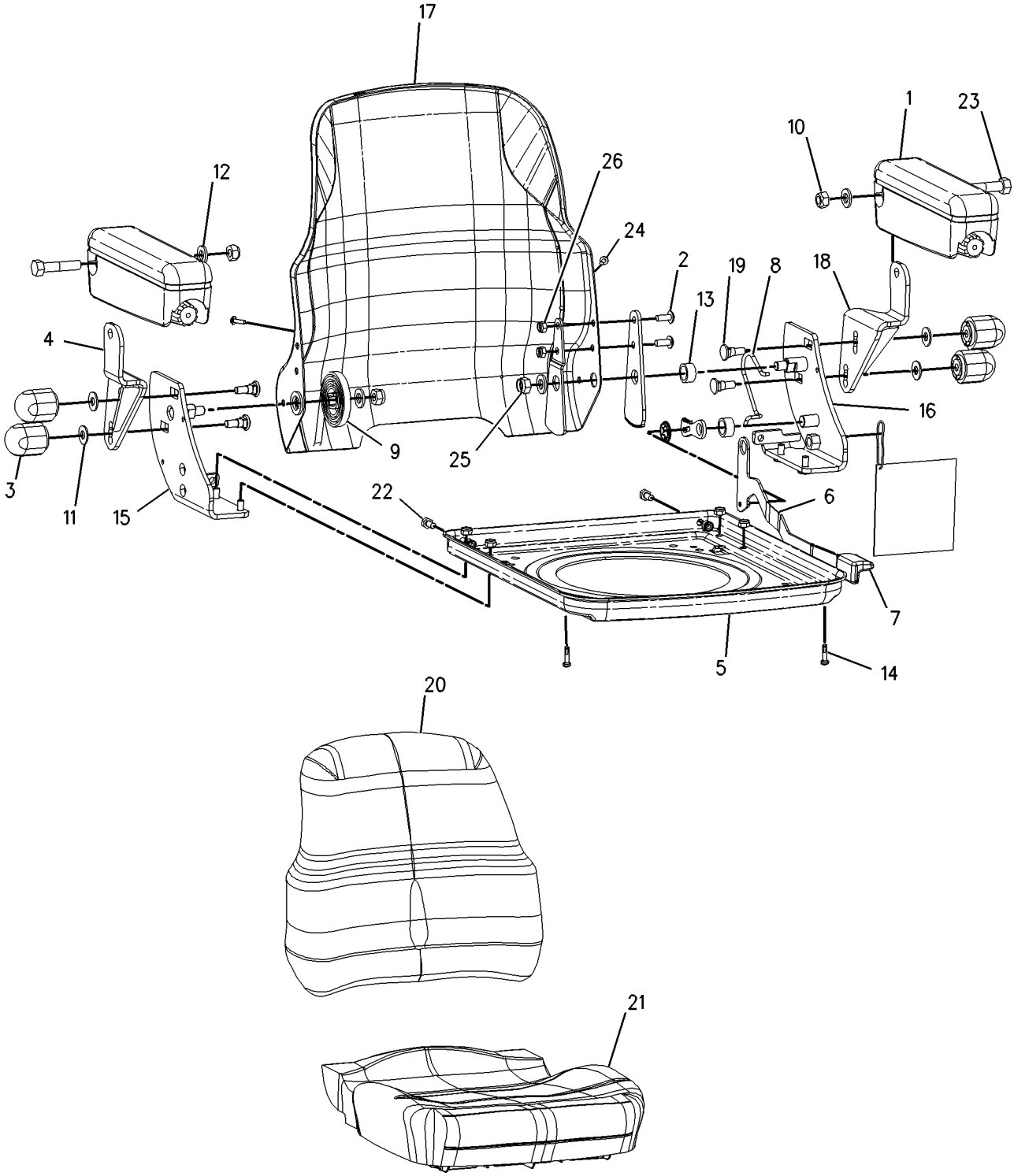

GRAPHIC #1 **<END>** g00792317

OPERATOR STATION

164-1296 SEAT GP

S/N: B2D1-UP
STATIC
PART OF 164-1205 SEAT GP-STATIC
AN ATTACHMENT

SMCS-7312, 7321, 7324, 7336 **i01528214**

NOTE	REF NO	GRAPHIC REF	PART NUMBER	QTY	PART NAME 1 2 3 4 5 6 (PRODUCT LEVEL)	SEE PAGE
	1	1	**7X-0622**	2	WASHER (13X24X2.5MM THK)	
M	2	1	**7X-2537**	2	BOLT (M8X1.25X35MM)	
M	3	1	**8T-4200**	2	BOLT (M8X1.25X16MM)	
	4	1	**9M-1974**	2	WASHER-HARD (8.8X16X2MM THK)	
M	5	1	**129-3180**	2	LOCKNUT (M12X1.75 THD)	
M	6	1	**131-3540**	8	LOCKNUT (M8X1.25 THD)	
	7	1	**164-1248**	1	PAN	
	8	1	**164-1260**	1	PAN-BACK	
	9	1	**164-1266**	1	CUSHION AS-BACK	
	10	1	**164-1297**	1	BRACKET AS	
	11	1	**164-1298**	1	BRACKET AS	
	12	1	**164-1299**	2	BLOCK	
	13	1	**180-5795**	1	CUSHION AS-SEAT	
	14	1	**195-7056**	2	SPACER (19.8X26.2X9MM THK)	
	15	1	**195-9223**	2	SCREW-PAN HEAD	
	16	1	**8T-9501**	2	SCREW (10-16X.75 IN)	

M-METRIC PART

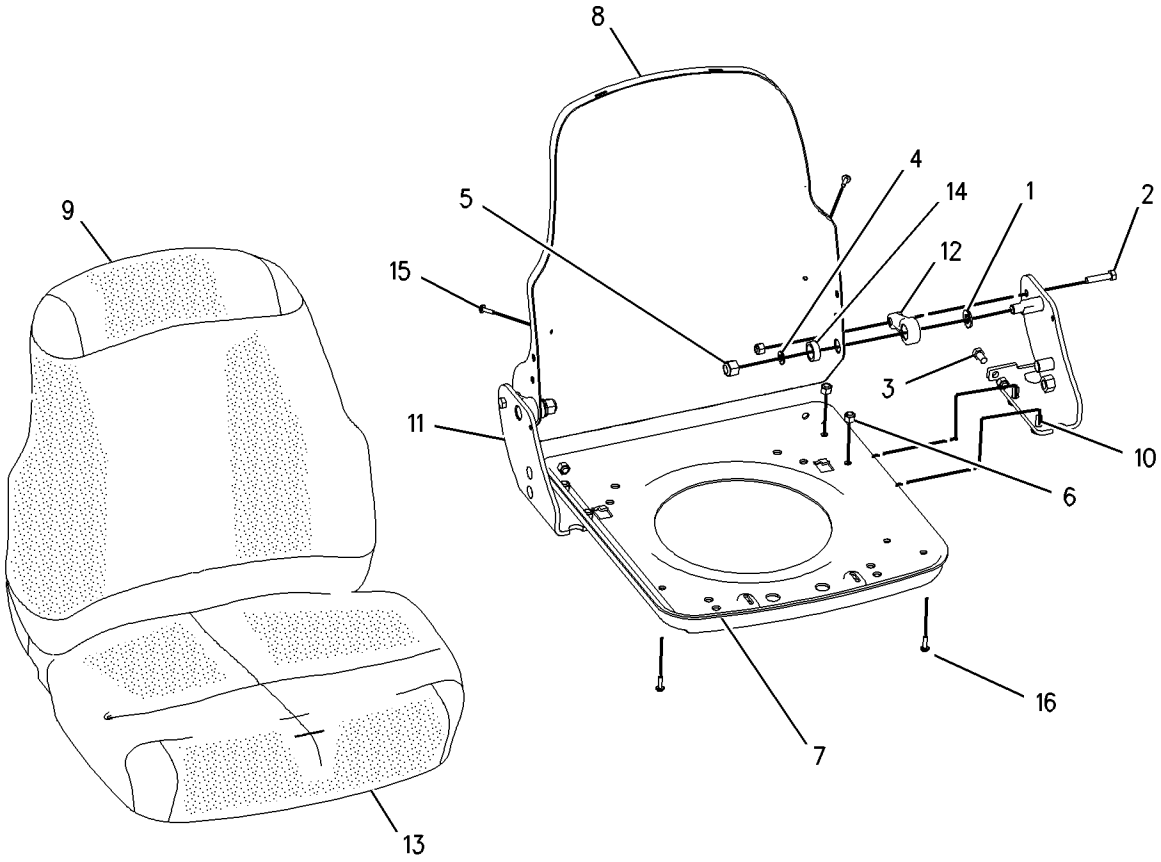

GRAPHIC #1 **<END>** g00793187

OPERATOR STATION

249-5167 SEAT GP

S/N: B2D1-UP

FOR USE WITH 239-5558—PAGE 499, 239-5559—PAGE 500, 241-9377—PAGE 491

AN ATTACHMENT

SMCS-7312, 7321, 7324, 7336 **i02048181**

NOTE	PART NUMBER	QTY	PART NAME 1 2 3 4 5 6 (PRODUCT LEVEL)	SEE PAGE
Y	*180-5774*	1	SEAT GP-STATIC	562

Y-SEPARATE ILLUSTRATION

<END>

164-1205 SEAT GP-STATIC

S/N: B2D1-UP
SWIVEL - VINYL
PART OF 180-5774 SEAT GP-STATIC
AN ATTACHMENT

SMCS-7312 **i01510365**

NOTE	REF NO	GRAPHIC REF	PART NUMBER	QTY	PART NAME 1 2 3 4 5 6 (PRODUCT LEVEL)	SEE PAGE
	1	1	**4L-6454**	8	BOLT (3/8-16X1 IN)	
	2	1	**2K-4973**	8	LOCKNUT (3/8-16 THD)	
	3	1	**5P-1075**	4	WASHER-HARD (10.2X22.5X3MM THK)	
Y	4	1	**164-1296**	1	SEAT GP	558
Y	5	1	**164-1292**	1	SWIVEL & SLIDE GP-SEAT	572
Y	6	1	**164-1278**	1	ADJUSTER GP-SEAT	483
	7	1	**195-7055**	4	WASHER-HARD (3.2MM THK)	

Y-SEPARATE ILLUSTRATION

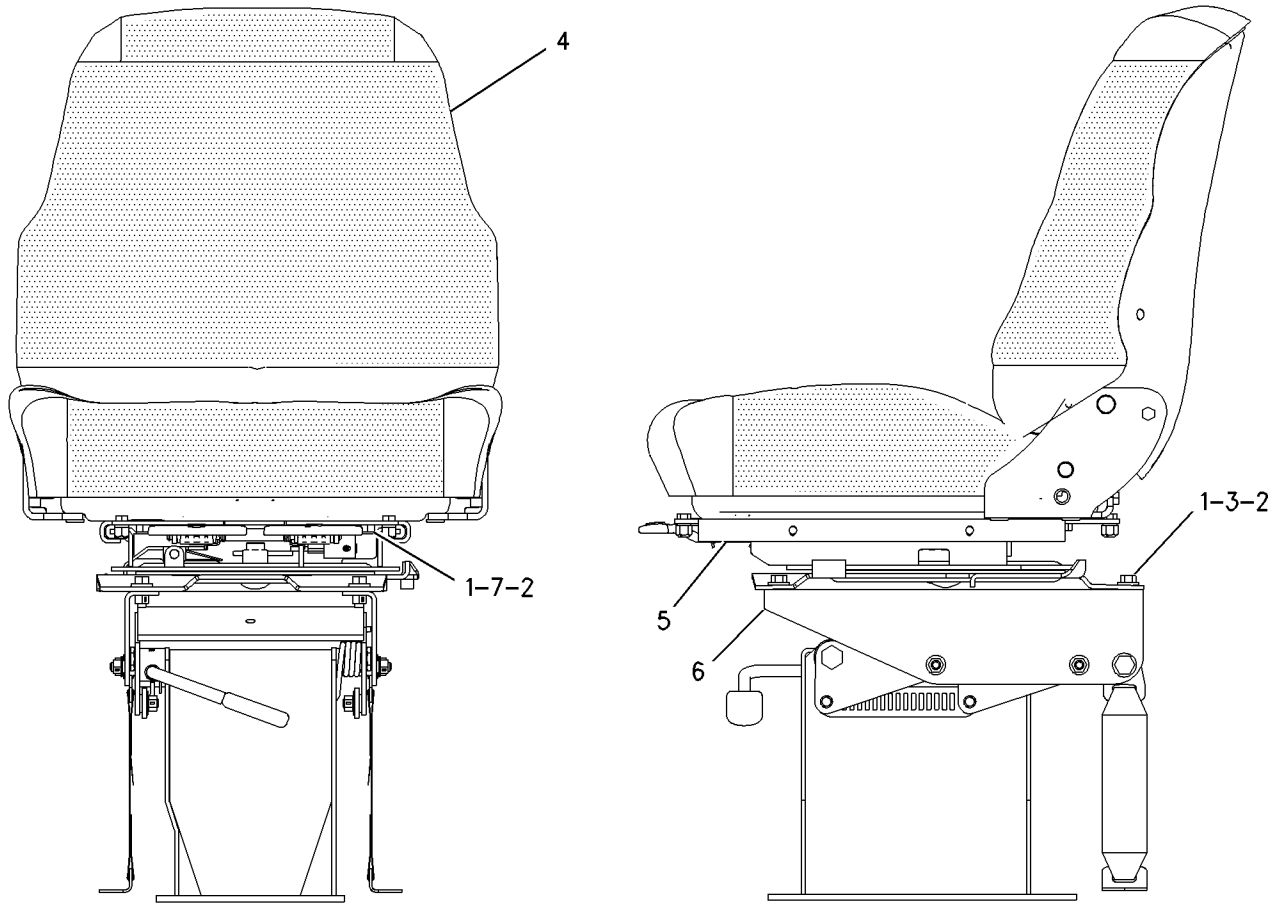

GRAPHIC #1 **<END>** g00744096

180-5774 SEAT GP-STATIC

S/N: B2D1-UP
VINYL, UTILITY
PART OF 249-5167 SEAT GP
AN ATTACHMENT

SMCS-7312 **i01456905**

NOTE	PART NUMBER	QTY	PART NAME 1 2 3 4 5 6 (PRODUCT LEVEL)	SEE PAGE
M	**8T-4139**	4	BOLT (M12X1.75X30MM)	
Y	**164-1205**	1	SEAT GP-STATIC	561
	8T-4223	4	WASHER-HARD (13.5X25.5X3MM THK)	

M-METRIC PART
Y-SEPARATE ILLUSTRATION

<END>

OPERATOR STATION

164-1201 SEAT GP-SUSPENSION

S/N: B2D1-UP
FABRIC
PART OF 180-5770 SEAT GP-SUSPENSION
AN ATTACHMENT

SMCS-7324, 7336 **i01958846**

NOTE	REF NO	GRAPHIC REF	PART NUMBER	QTY	PART NAME 1 2 3 4 5 6 (PRODUCT LEVEL)	SEE PAGE
	1	1	**8S-7803**	2	RING-RETAINING	
	2	1	**095-0878**	2	PIN-SPRING	
	3	1	**123-6077**	1	SHAFT-PIVOT	
	4	1	**132-9240**	1	LATCH AS	
	5	1	**135-1706**	1	SPRING	
	6	1	**149-4745**	2	KIT-SLIDER BLOCK	
					(EACH INCLUDES SLIDER BLOCKS AND BOLT)	
	7	1	**154-8278**	1	SPRING-RETURN	
	8	1	**154-8280**	1	SPRING-RETURN	
	9	1	**154-8284**	1	TUBE	
J	10	1	**161-9289**	2	BLOCK-SLIDER	
	11	1	**161-9290**	1	WASHER (11.9X20.7X2.3MM THK)	
Y	12	1	**164-1207**	1	SUSPENSION GP-SEAT	570
Y	13	1	**164-1209**	1	SEAT GP	554
	14	1	**164-1211**	1	LEVER (SLIDE)	
	15	1	**164-1212**	1	LEVER (SWIVEL)	
	16	1	**164-1295**	1	PLATE AS-SLIDE	
J	17	1	**173-5787**	2	SETSCREW (1/4-20 THD)	
	18	1	**195-7055**	4	WASHER-HARD (9.9X28.5X3.2MM THK)	
	19	1	**031-4155**	4	LOCKNUT	
	20	1	**2K-4973**	4	LOCKNUT (3/8-16 THD)	
	21	1	**3B-4505**	4	LOCKWASHER	
	22	1	**4L-6454**	4	BOLT (3/8-16X1 IN)	
	23	1	**4M-0061**	4	BOLT (5/16-18X.750 IN)	
					AVAILABLE REPAIR KIT(S):	
J			**161-9744**	1	KIT-SLIDER BLOCK	

J-KIT MARKED J INCLUDES PART MARKED J
Y-SEPARATE ILLUSTRATION

164-1201 SEAT GP-SUSPENSION *(contd.)* i01958846

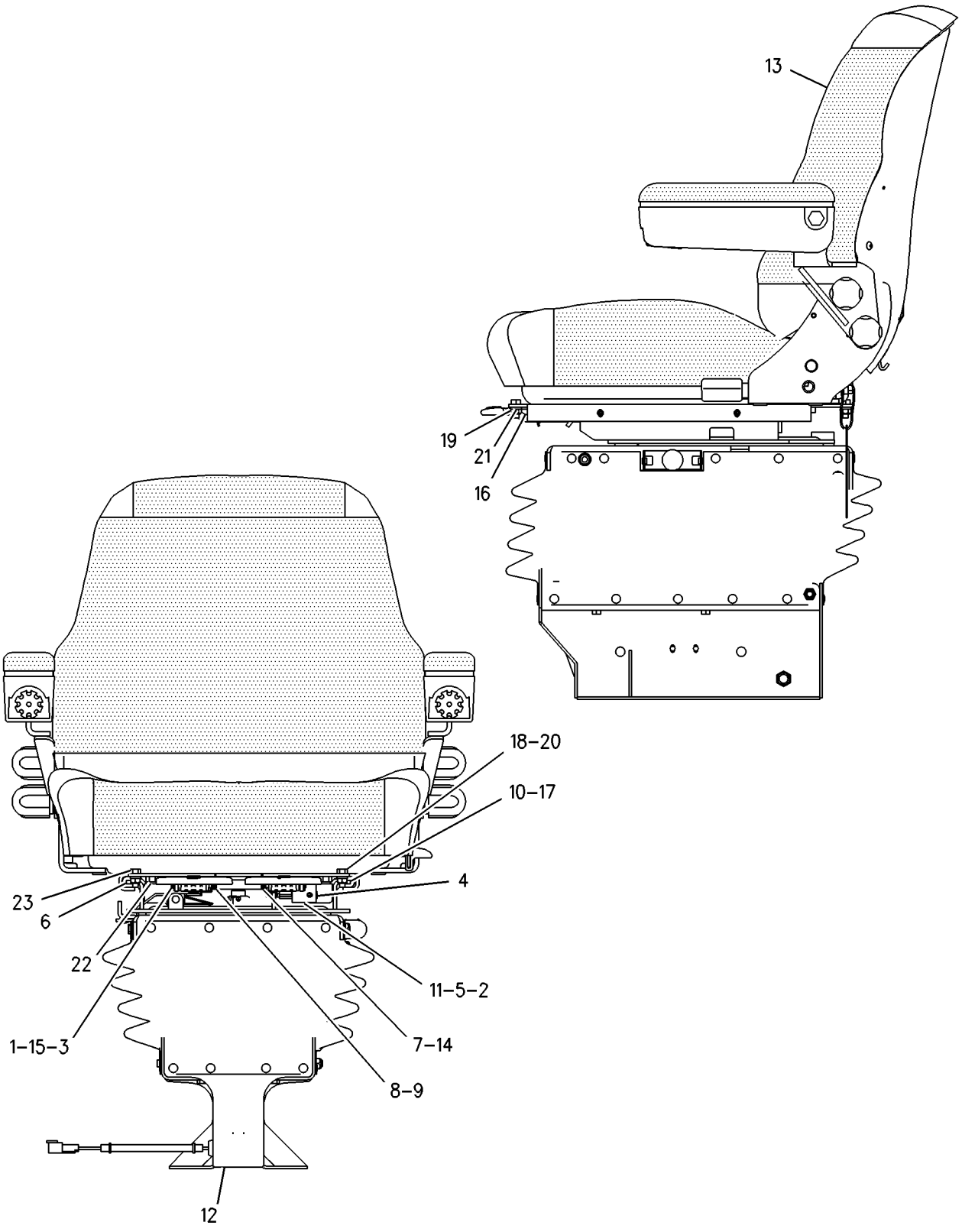

GRAPHIC #1 **<END>** g00786451

OPERATOR STATION

164-1202 SEAT GP-SUSPENSION

S/N: B2D1-UP
VINYL
PART OF 180-5771 SEAT GP-SUSPENSION
AN ATTACHMENT

SMCS-7324, 7336 **i01958845**

NOTE	REF NO	GRAPHIC REF	PART NUMBER	QTY	PART NAME 1 2 3 4 5 6 (PRODUCT LEVEL)	SEE PAGE
	1	1	**8S-7803**	2	RING-RETAINING	
	2	1	**123-6077**	1	SHAFT-PIVOT	
	3	1	**132-9240**	1	LATCH AS	
	4	1	**135-1706**	1	SPRING	
	5	1	**149-4745**	2	KIT-SLIDER BLOCK	
					(EACH INCLUDES SLIDER BLOCKS AND BOLT)	
	6	1	**154-8278**	1	SPRING-RETURN	
	7	1	**154-8280**	1	SPRING-RETURN	
	8	1	**154-8284**	1	TUBE	
J	9	1	**161-9289**	2	BLOCK-SLIDER	
	10	1	**161-9290**	1	WASHER (11.9X20.7X2.3MM THK)	
Y	11	1	**164-1207**	1	SUSPENSION GP-SEAT	570
Y	12	1	**164-1210**	1	SEAT GP	556
	13	1	**164-1211**	1	LEVER (SLIDE)	
	14	1	**164-1212**	1	LEVER (SWIVEL)	
	15	1	**164-1295**	1	PLATE AS-SLIDE	
J	16	1	**173-5787**	2	SETSCREW (1/4-20 THD)	
	17	1	**195-7055**	4	WASHER-HARD (9.9X28.5X3.2MM THK)	
	18	1	**031-4155**	4	LOCKNUT	
	19	1	**095-0878**	2	PIN-SPRING	
	20	1	**2K-4973**	4	LOCKNUT (3/8-16 THD)	
	21	1	**3B-4505**	4	LOCKWASHER	
	22	1	**4L-6454**	4	BOLT (3/8-16X1 IN)	
	23	1	**4M-0061**	4	BOLT (5/16-18X.750 IN)	
					AVAILABLE REPAIR KIT(S):	
J			**161-9744**	1	KIT-SLIDER BLOCK	

J-KIT MARKED J INCLUDES PART MARKED J
Y-SEPARATE ILLUSTRATION

164-1202 SEAT GP-SUSPENSION *(contd.)* i01958845

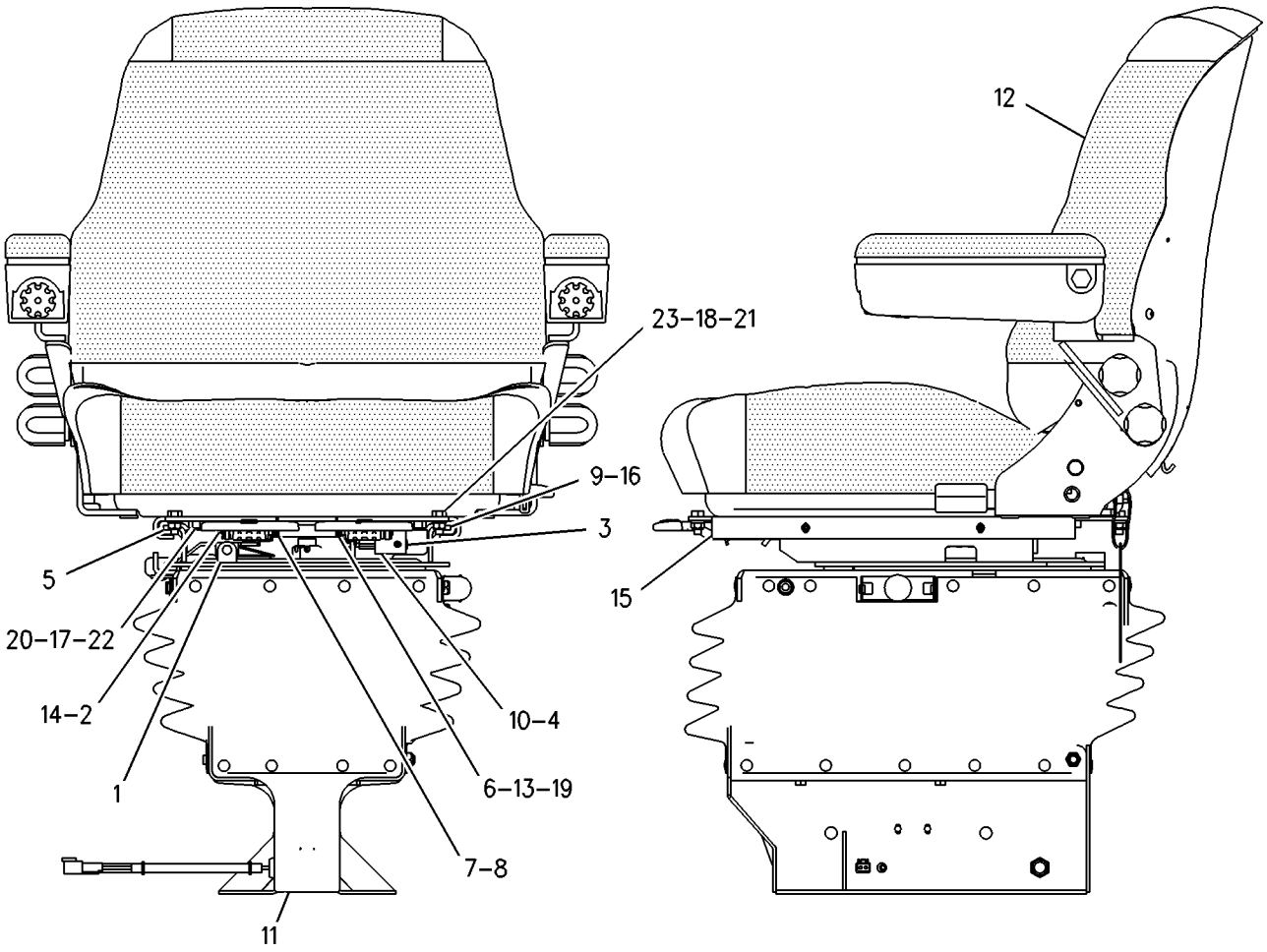

GRAPHIC #1 **<END>** g00759725

OPERATOR STATION

180-5770 SEAT GP-SUSPENSION

S/N: B2D1-UP
FABRIC, STANDARD
PART OF 239-5560, 239-5562 CAB AR
AN ATTACHMENT

SMCS-7324, 7336 **i01456943**

NOTE	PART NUMBER	QTY	PART NAME 1 2 3 4 5 6 (PRODUCT LEVEL)	SEE PAGE
M	**8T-4139**	4	BOLT (M12X1.75X30MM)	
Y	**164-1201**	1	SEAT GP-SUSPENSION	563
	3S-2093	1	STRAP-CABLE	
	8T-4223	4	WASHER-HARD (13.5X25.5X3MM THK)	

M-METRIC PART
Y-SEPARATE ILLUSTRATION

<END>

180-5771 SEAT GP-SUSPENSION

S/N: B2D1-UP
VINYL, STANDARD
PART OF 241-9377 CAB AR, 239-5558, 239-5559 CANOPY AR
AN ATTACHMENT

SMCS-7324, 7336 **i01456945**

NOTE	PART NUMBER	QTY	PART NAME 1 2 3 4 5 6 (PRODUCT LEVEL)	SEE PAGE
M	**8T-4139**	4	BOLT (M12X1.75X30MM)	
Y	**164-1202**	1	SEAT GP-SUSPENSION	565
	3S-2093	1	STRAP-CABLE	
	8T-4223	4	WASHER-HARD (13.5X25.5X3MM THK)	

M-METRIC PART
Y-SEPARATE ILLUSTRATION

<END>

OPERATOR STATION

164-1165 SUPPRESSION GP-SOUND

S/N: B2D1-UP
PART OF 239-5562 CAB AR
AN ATTACHMENT

SMCS-7329, 7330 **i02051713**

NOTE	REF NO	GRAPHIC REF	PART NUMBER	QTY	PART NAME 1 2 3 4 5 6 (PRODUCT LEVEL)	SEE PAGE
	1	1	**229-6051**	8	SPACER (4.5X8X10-MM THK)	
	2	1	**4V-2264**	8	NUT-PUSH	
	3	1	**9U-8263**	1	COVER	
	4	1	**084-4277**	1	LAMP GP-DOME	
		1	**6R-7490**	1	LAMP (12-VOLT, 10-WATT)	
M	5	1	**113-0920**	8	BOLT-HEX SOCKET (M4X0.7X35-MM)	
	6	1	**130-8432**	1	PLATE-FACE	
	7	1	**164-1152**	1	BRACKET AS	
		1	**7T-1099**	2	LINK	
	8	1	**164-1156**	1	COVER (POST-RH)	
	9	1	**164-1157**	1	COVER (POST-LH)	
	10	1	**164-1166**	1	LINER-CAB	
	11	1	**169-7290**	2	SPEAKER	
	12	1	**169-7291**	2	COVER-SPEAKER	
	13	1	**197-8973**	6	FASTENER-PANEL	
	14	1	**200-5356**	1	PLATE AS	
	15	1	**229-6052**	6	SPACER (9.7X12.7X7.5-MM THK)	
M	16	1	**131-3985**	2	SCREW (M6X1-THD)	
	17	1	**200-3004**	2	SCREW-TRUSS HEAD (M6X1X45-MM)	
	18	1	**6V-2410**	8	SCREW-WASHER HEAD	
	19	1	**8T-4121**	2	WASHER-HARD (11X21X2.5-MM THK)	
M	20	1	**8T-4137**	2	BOLT (M10X1.5X20-MM)	
	21	1	**8T-4205**	2	WASHER-HARD (7.2X14.5X2-MM THK)	
M	22	1	**9X-2041**	4	SCREW-TRUSS HEAD (M10X1.5X20-MM)	
M	23	1	**9X-2045**	4	SCREW-TRUSS HEAD (M6X1X20-MM)	
E	24	1	**129-1855**	11	FASTENER-HOOK (18CM)	
E	25	1	**129-1854**	11	FASTENER-LOOP (18CM)	
E	26	1	**129-1855**		FASTENER-HOOK (16CM)	
E	27	1	**129-1854**		FASTENER-LOOP (16CM)	

E-ORDER BY THE CENTIMETER
M-METRIC PART

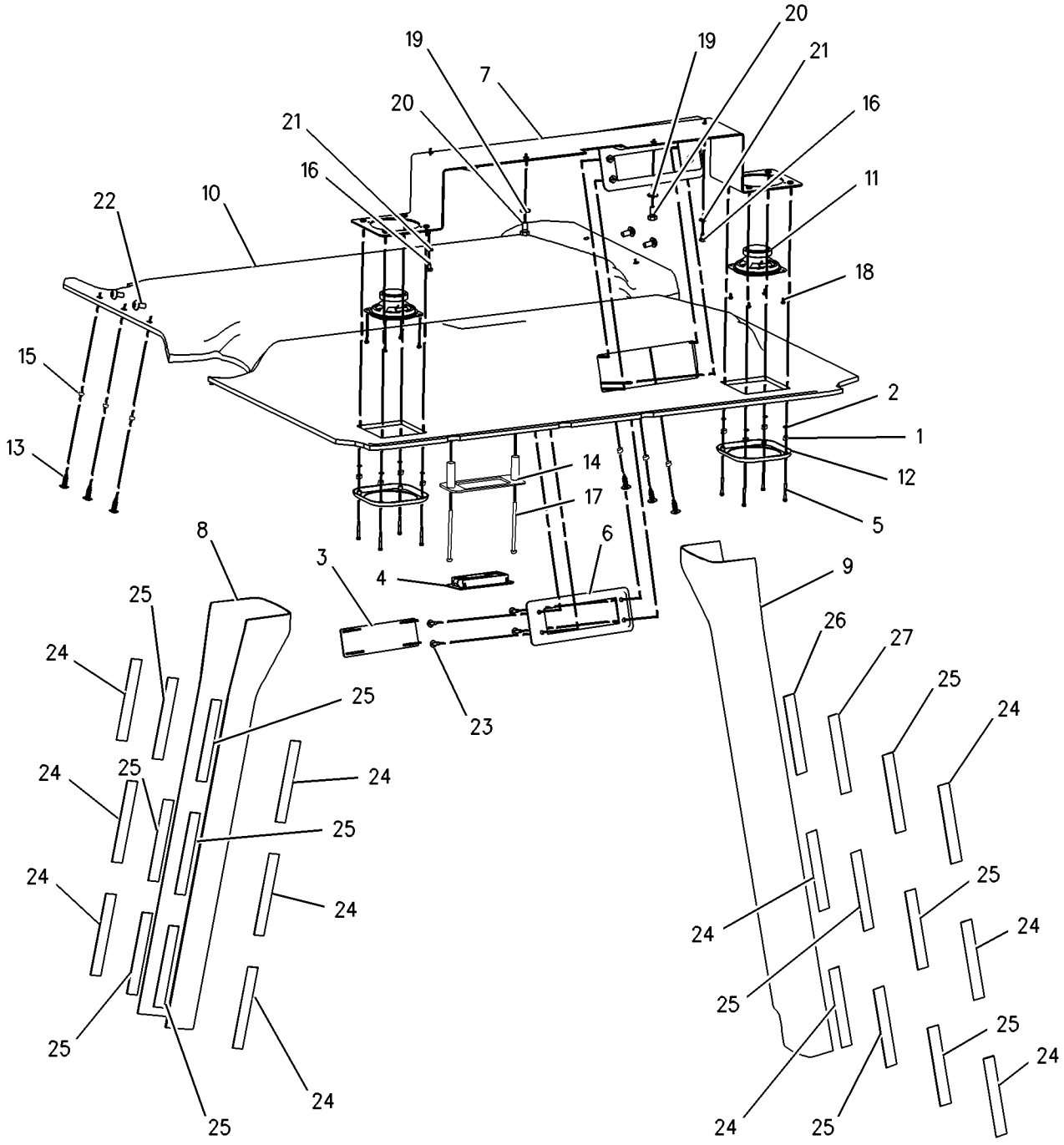

GRAPHIC #1 **<END>** g00892547

OPERATOR STATION

164-1207 SUSPENSION GP-SEAT

S/N: B2D1-UP
AIR, SWIVEL
PART OF 164-1201, 164-1202 SEAT GP-SUSPENSION
AN ATTACHMENT

SMCS-7312, 7324 **i01958859**

NOTE	REF NO	GRAPHIC REF	PART NUMBER	QTY	PART NAME 1 2 3 4 5 6 (PRODUCT LEVEL)	SEE PAGE
	1	1	**111-5042**	34	FASTENER	
M	2	1	**129-3180**	1	LOCKNUT	
	3	1	**130-8343**	1	SCREW-BUTTON HEAD	
	4	1	**161-9282**	1	BOLT (3/4-10 X1.5)	
	5	1	**161-9283**	1	WASHER (1.6MM THK)	
	6	1	**161-9285**	1	NUT (3/4-10 THD)	
	7	1	**163-1135**	1	SPRING	
	8	1	**163-1139**	1	BRACKET	
	9	1	**3B-4631**	1	PIN-COTTER	
	10	1	**164-1215**	1	ABSORBER AS-SHOCK	
	11	1	**164-1216**	1	BASE AS	
	12	1	**164-1217**	1	ARM AS-SUSPENSION (INNER)	
	13	1	**164-1218**	2	ARM AS-SUSPENSION (OUTER)	
	14	1	**164-1219**	1	BRACKET AS (FRONT)	
	15	1	**164-1220**	1	BRACKET AS (REAR)	
	16	1	**164-1221**	1	AIR COMPRESSOR GP	
	17	1	**164-1224**	2	SHAFT AS	
	18	1	**164-1225**	2	SHAFT AS	
	19	1	**164-1226**	2	SHAFT	
	20	1	**164-1228**	1	HARNESS AS-RIDE CONTROL	
	21	1	**164-1229**	4	BUMPER	
	22	1	**164-1230**	12	BEARING	
	23	1	**164-1231**	2	BEARING	
	24	1	**164-1232**	1	PLATE	
	25	1	**164-1233**	2	SPACER (13X25.4X20.5MM THK)	
	26	1	**164-1234**	1	PLATE	
	27	1	**164-1237**	1	BUSHING	
	28	1	**164-1238**	1	SPACER (12.8X22.2X3.1MM THK)	
	29	1	**164-1239**	2	SPACER (13.5X19X61.9MM THK)	
	30	1	**164-1240**	1	BOOT	
	31	1	**185-3890**	2	SCREW-PAN HEAD	
	32	1	**175-5050**	1	VALVE AS	
	33	1	**180-5793**	1	RING	
	34	1	**197-6657**	1	BOLT-ROUND HEAD	
	35	1	**1K-6872**	1	LOCKNUT	
	36	1	**2K-4973**	8	LOCKNUT (3/8-16 THD)	
	37	1	**3S-2093**	2	STRAP-CABLE	
	38	1	**4B-9784**	8	BALL	
	39	1	**4K-0499**	2	LOCKWASHER	
	40	1	**5M-3062**	1	BOLT (3/8-16X0.75 IN)	
	41	1	**6V-8185**	8	NUT (1/4-20 THD)	
	42	1	**7X-0481**	1	BOLT (203.2MM)	
	43	1	**7X-0622**	2	WASHER (13X24X2.5MM THK)	
	44	1	**8T-9364**	4	BOLT (1/4-20X0.625 IN)	
	45	1	**1H-3337**	2	BOLT (1/4-20X0.875 IN)	
	46	1	**164-1236**	2	PLATE AS	
	47	1	**180-5794**	1	PLATE	
	48	1	**197-6658**	2	WASHER	
	49	1	**164-1208**	1	PLATE AS	
	50	1	**8S-7803**	1	RING-RETAINING	
	51	1	**161-9286**	1	SPRING-LATCH	
	52	1	**161-9288**	1	SHAFT-PIVOT	
	53	1	**164-1294**	1	LATCH GP-SEAT SWIVEL	

M-METRIC PART

164-1207 SUSPENSION GP-SEAT *(contd.)*

i01958859

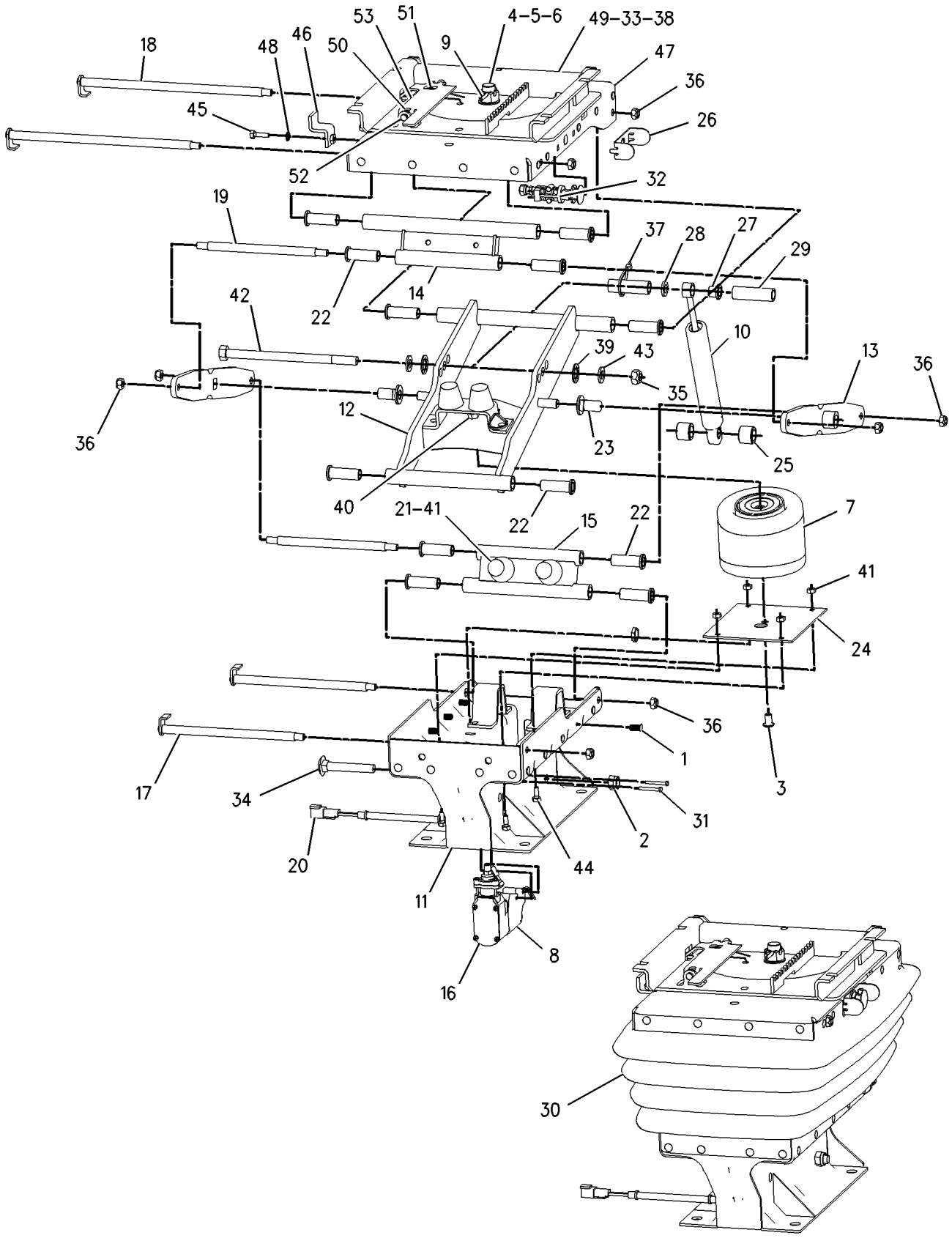

GRAPHIC #1

<END>

g00786754

OPERATOR STATION

164-1292 SWIVEL & SLIDE GP-SEAT

S/N: B2D1-UP
PART OF 164-1205 SEAT GP-STATIC
AN ATTACHMENT

SMCS-7312, 7321 **i01959007**

NOTE	REF NO	GRAPHIC REF	PART NUMBER	QTY	PART NAME 1 2 3 4 5 6 (PRODUCT LEVEL)	SEE PAGE
Y	1	1	**164-1293**	1	SWIVEL GP-SEAT	574
	2	1	**095-0878**	2	PIN-SPRING	
	3	1	**031-4155**	4	LOCKNUT	
	4	1	**123-6077**	1	SHAFT-PIVOT	
	5	1	**132-9240**	1	LATCH AS	
	6	1	**135-1706**	1	SPRING	
	7	1	**154-8278**	1	SPRING-RETURN	
	8	1	**154-8280**	1	SPRING-RETURN	
	9	1	**154-8284**	1	TUBE	
	10	1	**161-9744**	1	KIT-SLIDER BLOCK	
		1	**161-9289**	2	BLOCK-SLIDER	
		1	**173-5787**	2	SETSCREW (1/4-20 THD)	
	11	1	**164-1211**	1	LEVER (SLIDE)	
	12	1	**164-1212**	1	LEVER (SWIVEL)	
	13	1	**164-1295**	1	PLATE AS-SLIDE	
	14	1	**3B-4505**	4	LOCKWASHER	
	15	1	**4M-0061**	4	BOLT (5/16-18X.750 IN)	
	16	1	**8S-7803**	2	RING-RETAINING	
	17	1	**161-9290**	1	WASHER (11.9X20.7X2.3MM THK)	

Y-SEPARATE ILLUSTRATION

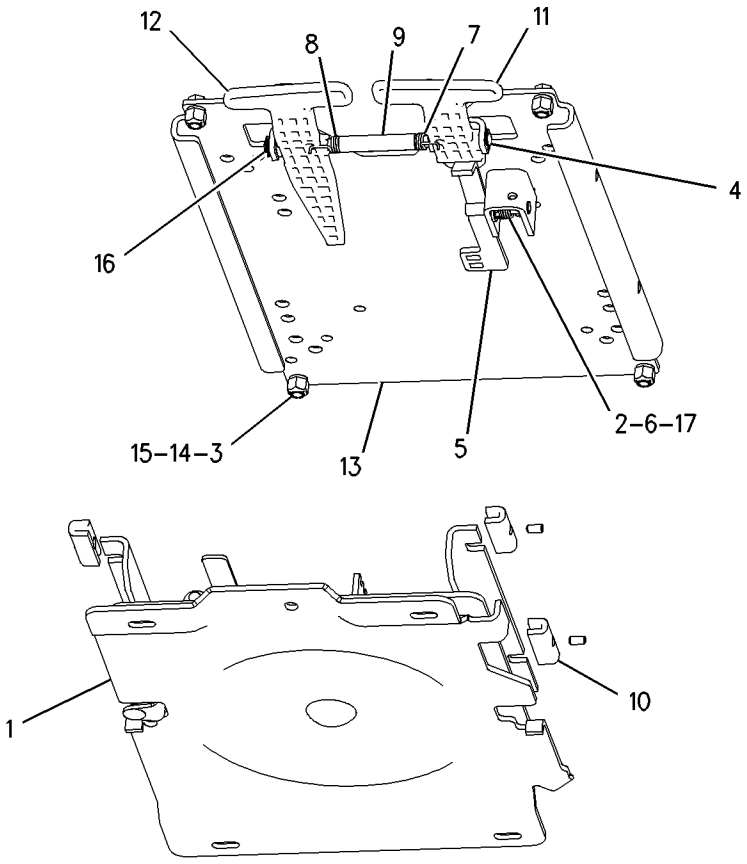

GRAPHIC #1 **<END>** g00739102

OPERATOR STATION

164-1293 SWIVEL GP-SEAT

S/N: B2D1-UP
PART OF 164-1292 SWIVEL & SLIDE GP-SEAT
AN ATTACHMENT

SMCS-7312, 7321 **i01525450**

NOTE	REF NO	GRAPHIC REF	PART NUMBER	QTY	PART NAME 1 2 3 4 5 6 (PRODUCT LEVEL)	SEE PAGE
	1	1	**8S-7803**	1	RING-RETAINING	
	2	1	**161-9282**	1	BOLT (3/4-10 X1.5)	
	3	1	**161-9283**	1	WASHER (1.6MM THK)	
	4	1	**161-9285**	1	NUT (3/4-10 THD)	
	5	1	**161-9286**	1	SPRING-LATCH	
	6	1	**161-9288**	1	SHAFT-PIVOT	
	7	1	**164-1294**	1	LATCH GP-SEAT SWIVEL	
		1	**9C-4457**	1	FASTENER	
	8	1	**3B-4631**	1	COTTER	

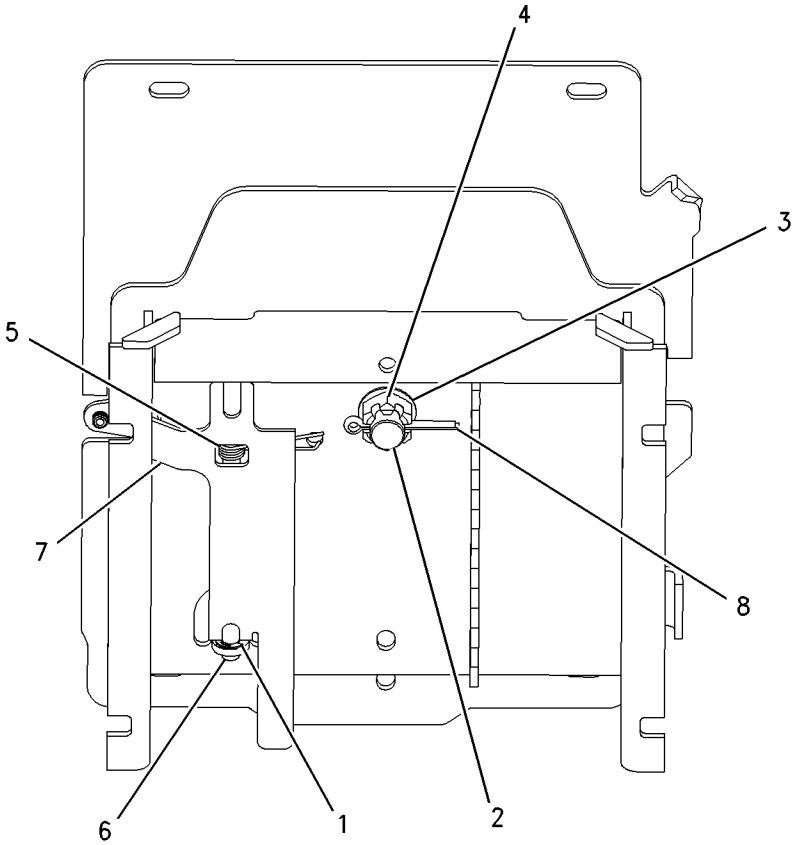

GRAPHIC #1 **<END>** g00737841

OPERATOR STATION

239-1080 TACHOMETER GP-ELECTRIC

S/N: B2D1-UP
PART OF 239-5562 CAB AR
AN ATTACHMENT

SMCS-7462 **i02022948**

NOTE	REF NO	GRAPHIC REF	PART NUMBER	QTY	PART NAME 1 2 3 4 5 6 (PRODUCT LEVEL)	SEE PAGE
	1	1	**4B-2043**	7	NUT (8-32-THD)	
	2	1	**9B-7233**	7	LOCKWASHER (4.4X8.4X0.5-MM THK)	
	3	1	**122-7137**	1	LAMP (12-VOLT)	
	4	1	**131-1424**	1	SEAL	

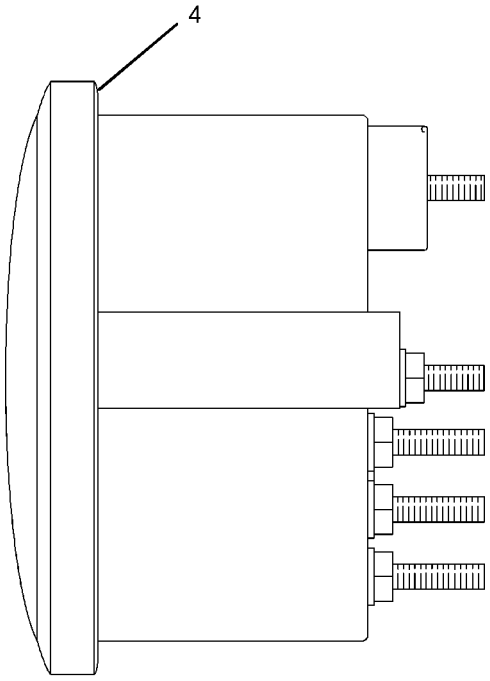

LEFT SIDE VIEW

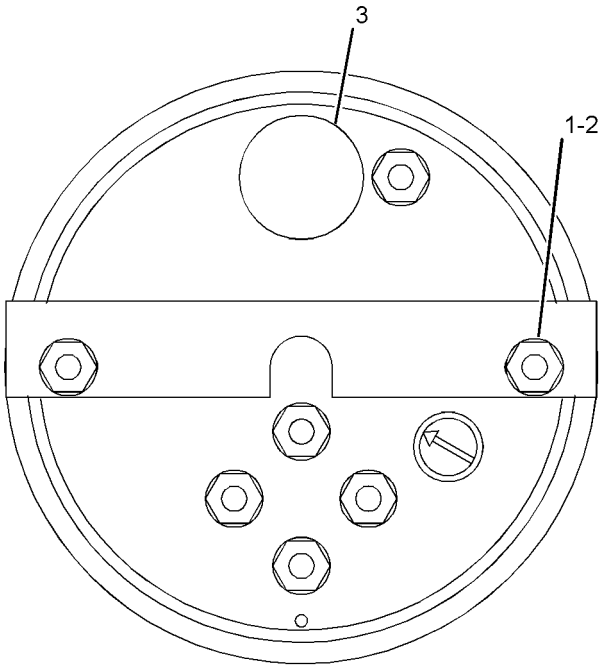

REAR VIEW

GRAPHIC #1 **<END>** g01030658

OPERATOR STATION

239-1081 TACHOMETER GP-ELECTRIC

S/N: B2D1-UP

PART OF 239-5560, 241-9377 CAB AR, 239-5558, 239-5559 CANOPY AR

AN ATTACHMENT

SMCS-7462 **i02043559**

NOTE	REF NO	GRAPHIC REF	PART NUMBER	QTY	PART NAME 1 2 3 4 5 6 (PRODUCT LEVEL)	SEE PAGE
	1	1	**4B-2043**	6	NUT (8-32-THD)	
	2	1	**9B-7233**	6	LOCKWASHER	
	3	1	**122-7137**	1	LAMP (12-VOLT)	
	4	1	**131-1424**	1	SEAL	

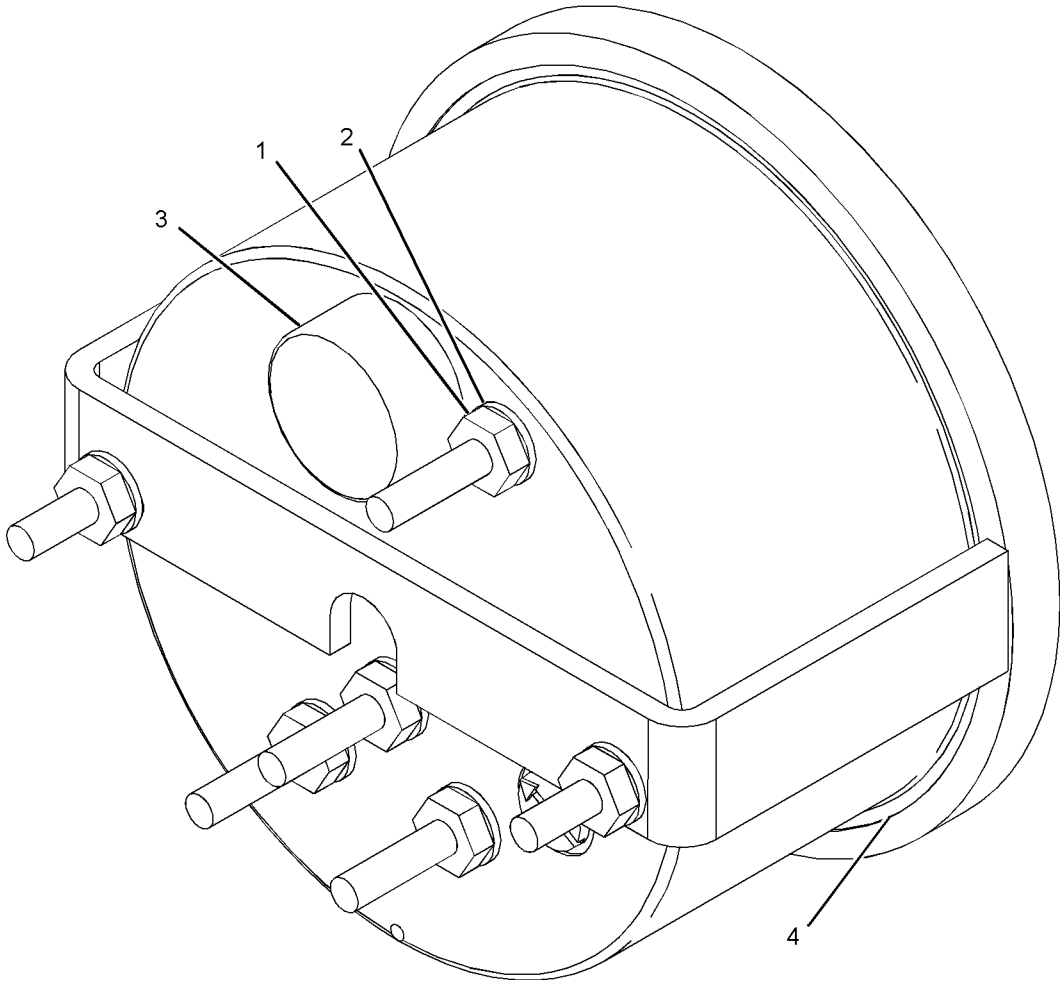

GRAPHIC #1

<END>

g01029988

OPERATOR STATION

164-1370 TRIM GP-CAB

S/N: B2D1-UP
PART OF 239-5562 CAB AR
AN ATTACHMENT

SMCS-7329, 7451 **i01532097**

NOTE	REF NO	GRAPHIC REF	PART NUMBER	QTY	PART NAME 1 2 3 4 5 6 (PRODUCT LEVEL)	SEE PAGE
	1	1	**9R-1948**	8	RIVET	
	2	1	**164-1366**	1	BRUSH AS	
	3	1	**164-1374**	1	BRUSH AS	
	4	1	**164-1110**	1	COVER	
M	5	1	**9X-2044**	2	SCREW-TRUSS HEAD (M6X1X16MM)	

M-METRIC PART

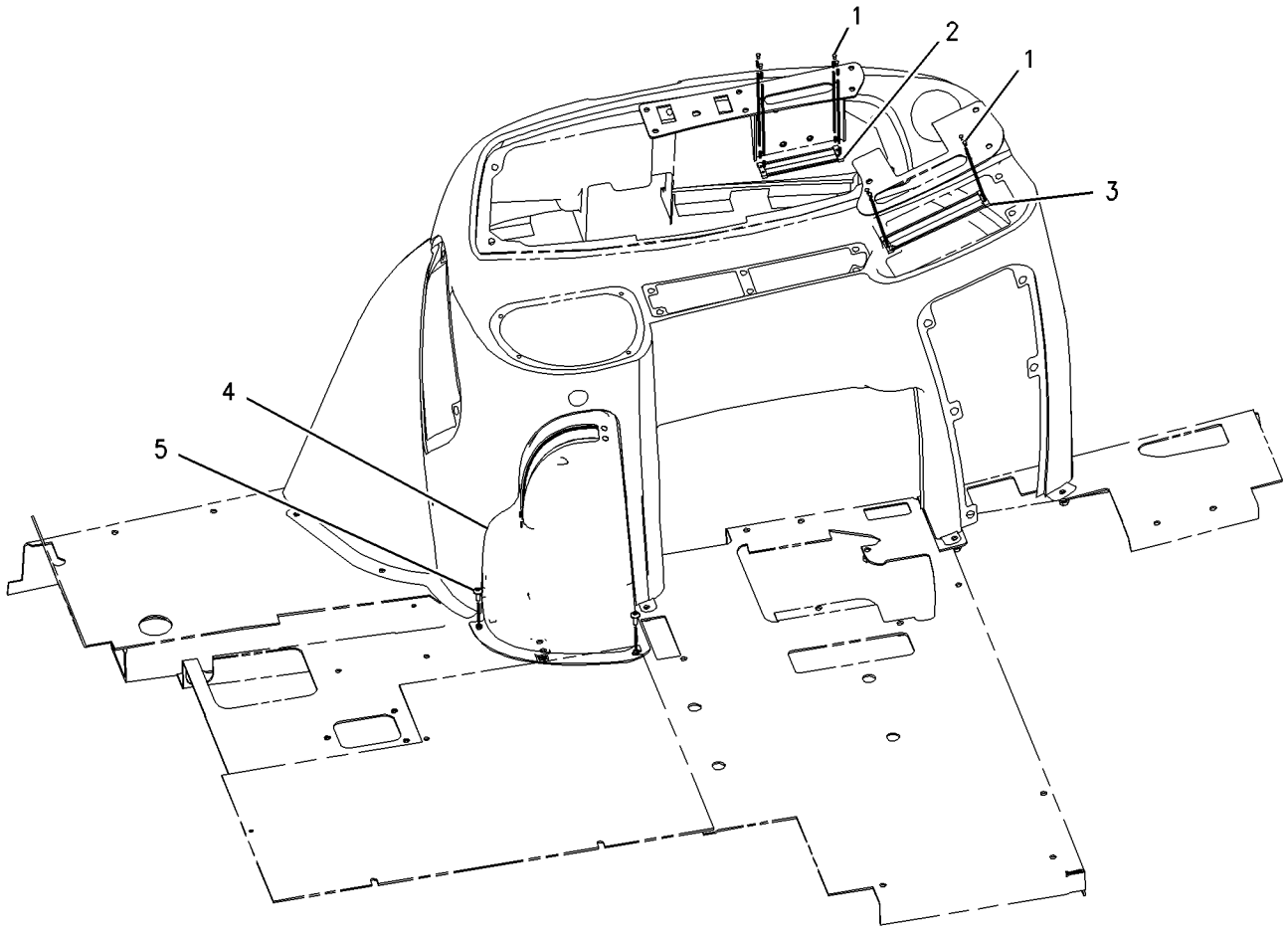

GRAPHIC #1 **<END>** g00795360

OPERATOR STATION

167-8187 WASHER GP-WINDOW

S/N: B2D1-UP
WINDSHIELD
PART OF 239-5560, 239-5562 CAB AR
AN ATTACHMENT

SMCS-7306 **i01959009**

NOTE	REF NO	GRAPHIC REF	PART NUMBER	QTY	PART NAME 1 2 3 4 5 6 (PRODUCT LEVEL)	SEE PAGE
	1	1	**3S-2093**	2	STRAP-CABLE	
	2	1	**8T-0789**	1	CLIP-HOSE	
	3	1	**8T-1118**	1	NOZZLE AS	
	4	1	**9R-3469**	2	DIAPHRAGM	
	5	1	**112-9450**	1	PLATE	
	6	1	**121-6936**	2	CONNECTOR	
	7	1	**123-8670**	1	TANK AS	
		1	**117-2823**	1	CAP	
		1	**117-2824**	2	GROMMET	
		1	**117-2826**	2	PUMP AS-WASHER	
		1	**123-8669**	1	TANK	
	8	1	**131-1368**	1	HARNESS AS (WIPER)	
		1	**3S-2093**	2	STRAP-CABLE	
		1	**102-8803**	1	KIT-RECEPTACLE (3 PIN)	
	9	1	**168-9906**	1	BRACKET	
	10	1	**186-0817**	1	WASHER-HARD (7X19X2MM THK)	
M	11	1	**129-3178**	1	LOCKNUT	
	12	1	**7X-7729**	1	WASHER (11X25X3MM THK)	
B	13	1	**8T-4121**	2	WASHER-HARD (11X21X2.5MM THK)	
M	14	1	**8T-4201**	2	BOLT-LOCKING (M10X1.5X20MM)	
	15	1	**8T-4205**	1	WASHER-HARD (7.2X14.5X2MM THK)	
M	16	1	**8T-4971**	1	BOLT (M6X1X30MM)	
E	17	1	**144-0195**		HOSE (15CM EACH)	
E	18	1	**144-0195**		HOSE (226CM)	

B-USE AS REQUIRED
E-ORDER BY THE CENTIMETER
M-METRIC PART

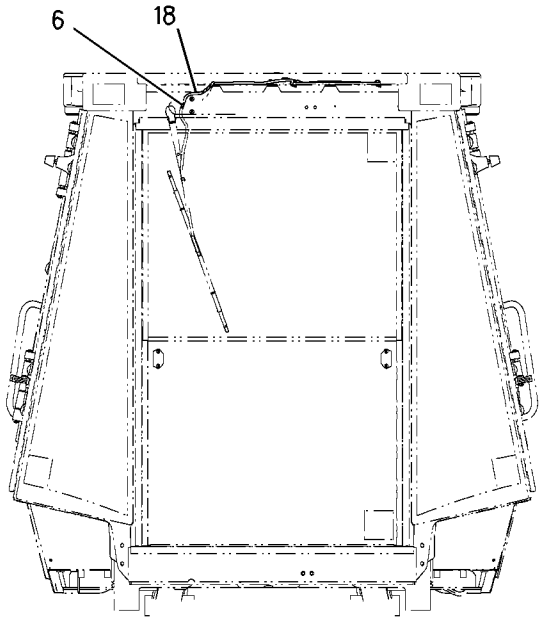

REAR VIEW

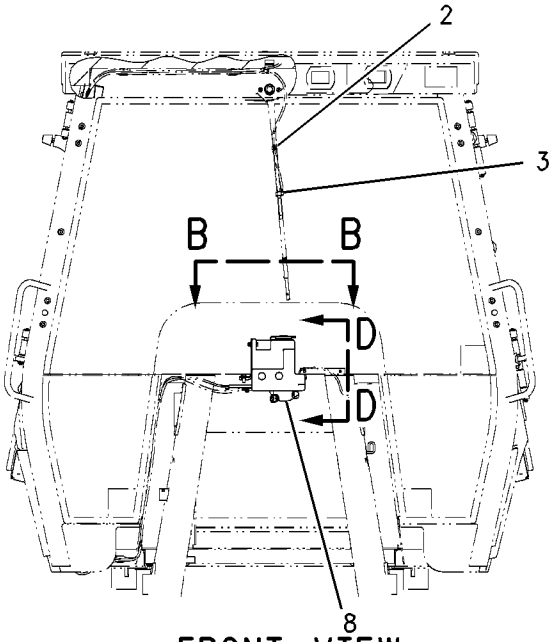

FRONT VIEW

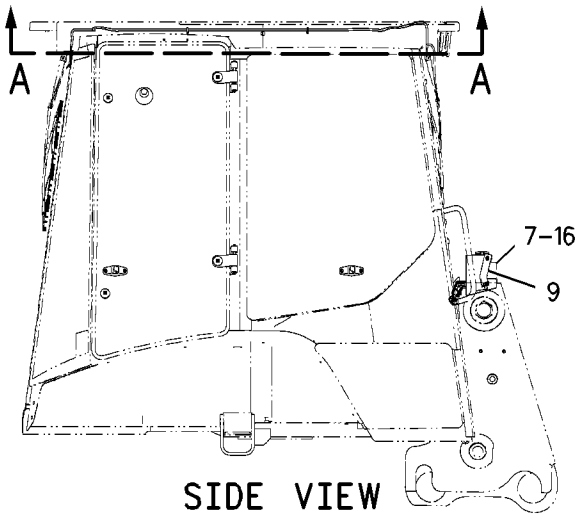

SIDE VIEW

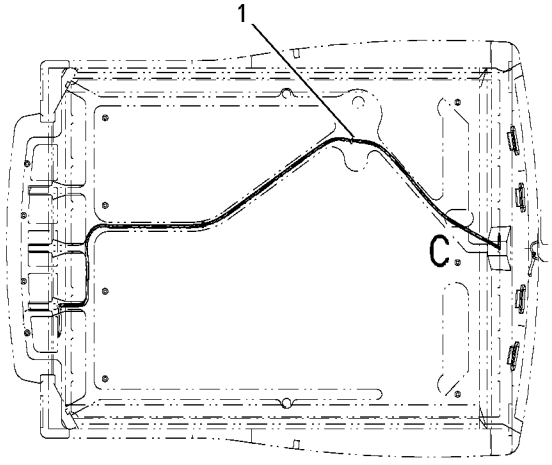

SECTION A-A

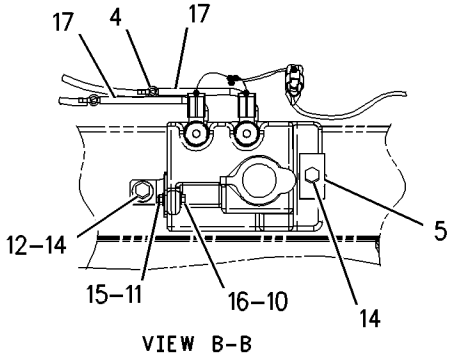

VIEW B-B

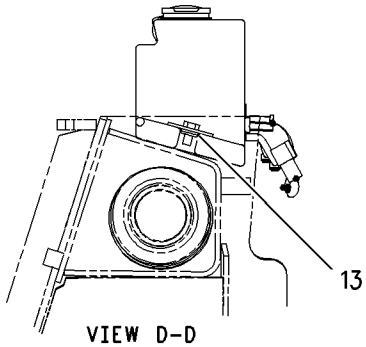

VIEW D-D

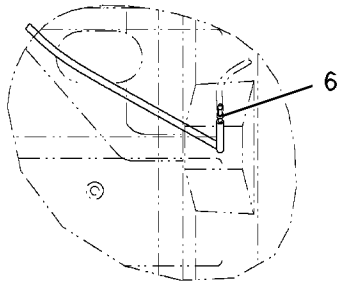

DETAIL C

GRAPHIC #1 **<END>** g00787101

OPERATOR STATION

207-6052 WASHER GP-WINDOW

S/N: B2D1-UP
PART OF 241-9377 CAB AR, 239-5559 CANOPY AR
AN ATTACHMENT

SMCS-7306 **i01959012**

NOTE	REF NO	GRAPHIC REF	PART NUMBER	QTY	PART NAME 1 2 3 4 5 6 (PRODUCT LEVEL)	SEE PAGE
	1	1	**3S-2093**	2	STRAP-CABLE	
	2	1	**8T-0789**	1	CLIP-HOSE	
	3	1	**8T-1118**	1	NOZZLE AS	
	4	1	**9R-3469**	2	DIAPHRAGM	
	5	1	**112-9450**	1	PLATE	
	6	1	**6K-9632**	1	TEE	
	7	1	**123-8670**	1	TANK AS	
		1	**117-2823**	1	CAP	
		1	**117-2824**	2	GROMMET	
		1	**117-2826**	2	PUMP AS-WASHER	
		1	**123-8669**	1	TANK	
	8	1	**131-1368**	1	HARNESS AS (WIPER)	
		1	**102-8803**	1	KIT-RECEPTACLE (3 PIN)	
		1	**3S-2093**	2	STRAP-CABLE	
	9	1	**168-9906**	1	BRACKET	
	10	1	**186-0817**	1	WASHER-HARD (7X19X2MM THK)	
M	11	1	**129-3178**	1	LOCKNUT	
	12	1	**7X-7729**	1	WASHER (11X25X3MM THK)	
B	13	1	**8T-4121**	2	WASHER-HARD (11X21X2.5MM THK)	
M	14	1	**8T-4201**	2	BOLT-LOCKING (M10X1.5X20MM)	
	15	1	**8T-4205**	1	WASHER-HARD (7.2X14.5X2MM THK)	
M	16	1	**8T-4971**	1	BOLT (M6X1X30MM)	
E	17	1	**144-0195**		HOSE (450CM)	
E	18	1	**144-0195**		HOSE (450CM)	

B-USE AS REQUIRED
E-ORDER BY THE CENTIMETER
M-METRIC PART

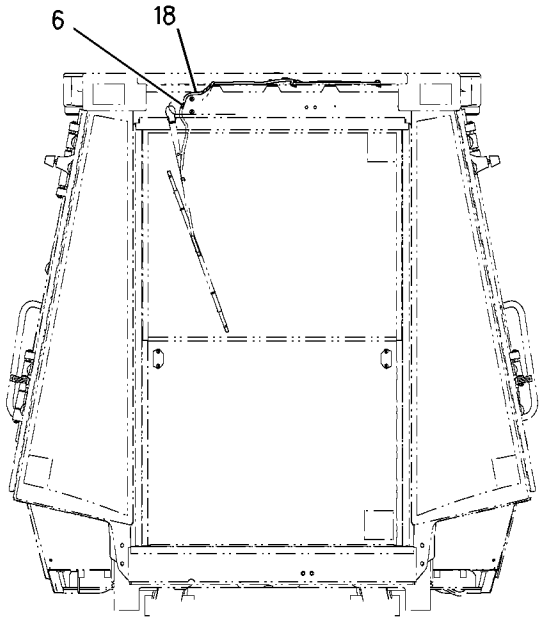

REAR VIEW

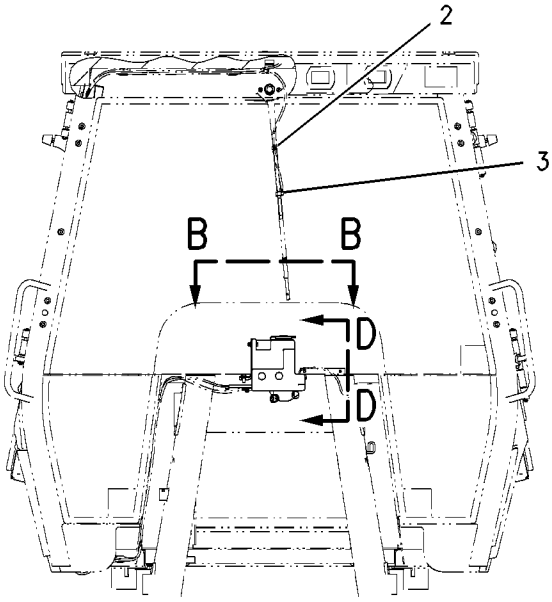

FRONT VIEW

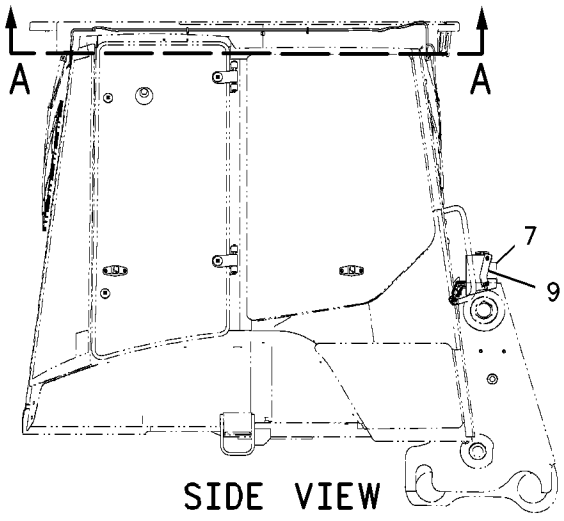

SIDE VIEW

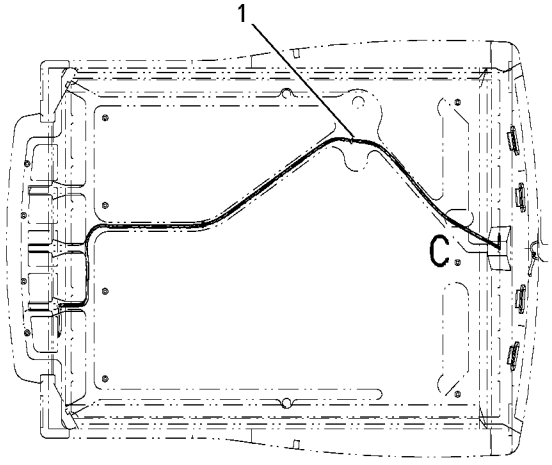

SECTION A-A

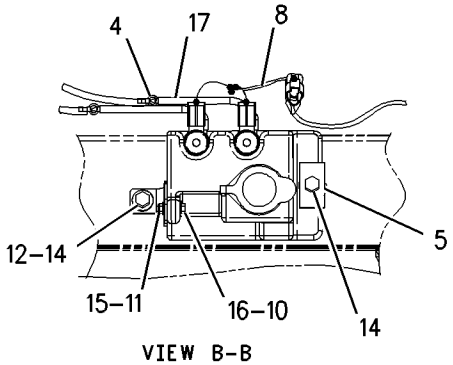

VIEW B-B

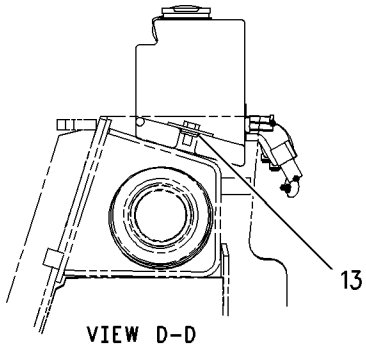

VIEW D-D

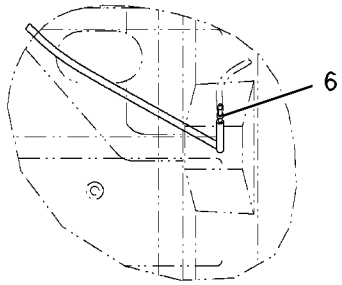

DETAIL C

GRAPHIC #1 **<END>** g00909894

OPERATOR STATION

164-1059 WINDOW GP-CAB

S/N: B2D1-UP
RH
PART OF 164-1125, 164-1140 CAB GP
AN ATTACHMENT

SMCS-7310 **i01959030**

NOTE	REF NO	GRAPHIC REF	PART NUMBER	QTY	PART NAME 1 2 3 4 5 6 (PRODUCT LEVEL)	SEE PAGE
	1	1	**7X-2393**	1	BUMPER-CONICAL	
	2	1	**8Y-7309**	1	RETAINER	
	3	1	**100-7608**	1	HANDLE	
	4	1	**129-8542**	6	RETAINER	
	5	1	**129-8545**	8	WASHER (3MM THK)	
M	6	1	**136-4192**	4	BOLT (M6X1.0X35MM)	
	7	1	**143-2830**	1	LATCH AS	
M		1	**6V-7743**	2	LOCKNUT	
M		1	**9X-2045**	2	SCREW-TRUSS HEAD (M6X1X20MM)	
		1	**143-2827**	1	SPRING	
	8	1	**154-5423**	2	SPACER (.6X12.7X17MM THK)	
	9	1	**154-5424**	2	HINGE	
	10	1	**159-4951**	2	LATCH AS	
					(EACH INCLUDES)	
M		1	**5C-2874**	1	NUT (M5X.8 THD)	
M		1	**161-6984**	1	SCREW-TRUSS HEAD (M5X0.8X20MM)	
		1	**161-6987**	1	WASHER-HARD	
		1	**161-9294**	1	SPRING-FLAT WIRE	
M		1	**162-6556**	1	LOCKNUT	
	11	1	**164-1064**	1	GLASS-RH	
M	12	1	**5C-7261**	1	NUT (M8X1.25 THD)	
M	13	1	**6V-7743**	2	LOCKNUT	
E	14	1	**148-5353**		SEAL (378CM)	

E-ORDER BY THE CENTIMETER
M-METRIC PART

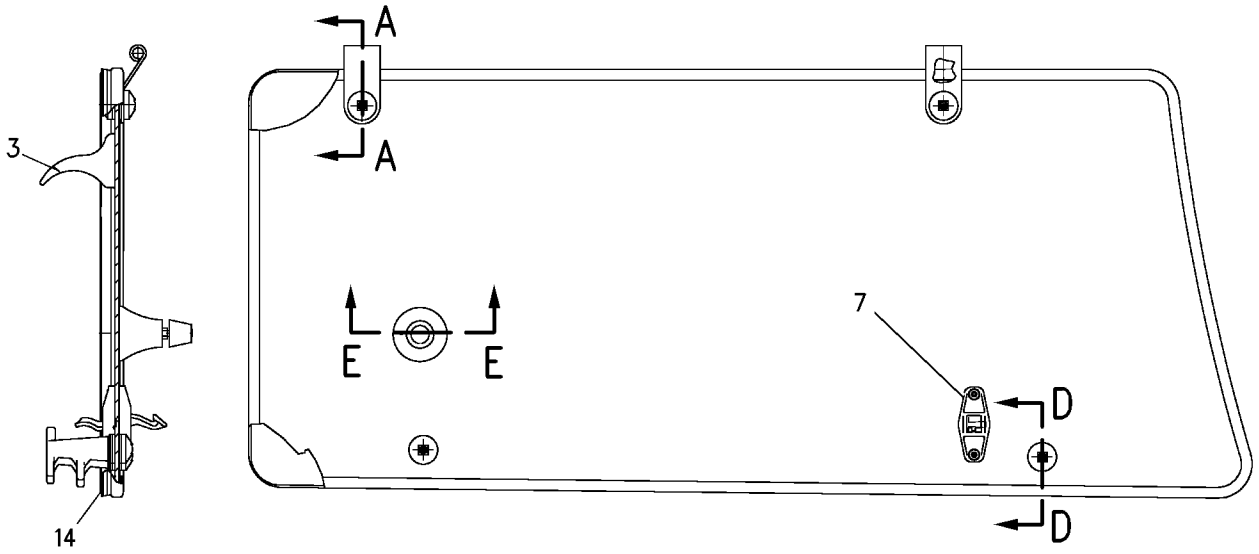

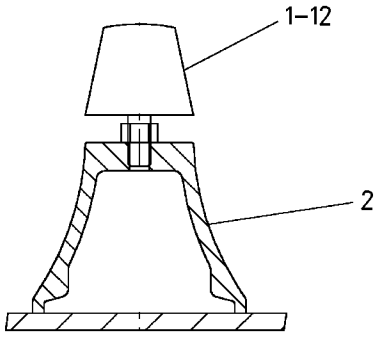

SECTION E-E

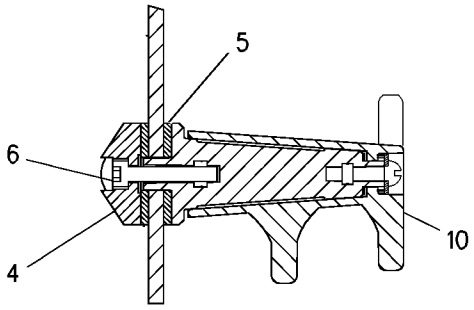

SECTION D-D

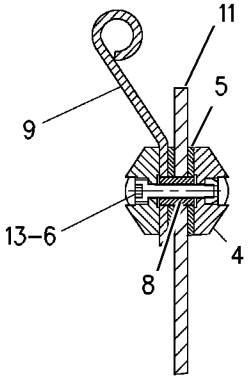

SECTION A-A

GRAPHIC #1 **<END>** g00788920

OPERATOR STATION

164-1060 WINDOW GP-CAB

S/N: B2D1-UP
LH
PART OF 164-1125, 164-1140 CAB GP
AN ATTACHMENT

SMCS-7310 **i01497231**

NOTE	REF NO	GRAPHIC REF	PART NUMBER	QTY	PART NAME 1 2 3 4 5 6 (PRODUCT LEVEL)	SEE PAGE
	1	1	**7X-2393**	1	BUMPER-CONICAL	
	2	1	**8Y-7309**	1	RETAINER	
	3	1	**100-7608**	1	HANDLE	
	4	1	**129-8542**	6	RETAINER	
	5	1	**129-8545**	8	WASHER (3MM THK)	
M	6	1	**136-4192**	4	BOLT (M6X1.0X35MM)	
	7	1	**143-2830**	1	LATCH AS	
M		1	**6V-7743**	2	LOCKNUT (M6X1 THD)	
M		1	**9X-2045**	2	SCREW-TRUSS HEAD (M6X1X20MM)	
		1	**143-2827**	1	SPRING	
	8	1	**154-5423**	2	SPACER (.6X12.7X17MM THK)	
	9	1	**154-5424**	2	HINGE	
	10	1	**159-4950**	2	LATCH AS	
					(EACH INCLUDES)	
M		1	**5C-2874**	1	NUT (M5X.8 THD)	
M		1	**161-6984**	1	SCREW-TRUSS HEAD (M5X0.8X20MM)	
		1	**161-6987**	1	WASHER-HARD (1.5MM THK)	
		1	**161-9294**	1	SPRING-FLAT WIRE	
M		1	**162-6556**	1	LOCKNUT	
	11	1	**164-1065**	1	GLASS-LH	
M	12	1	**5C-7261**	1	NUT (M8X1.25 THD)	
M	13	1	**6V-7743**	2	LOCKNUT (M6X1 THD)	
E	14	1	**148-5353**		SEAL (378CM)	

E-ORDER BY THE CENTIMETER
M-METRIC PART

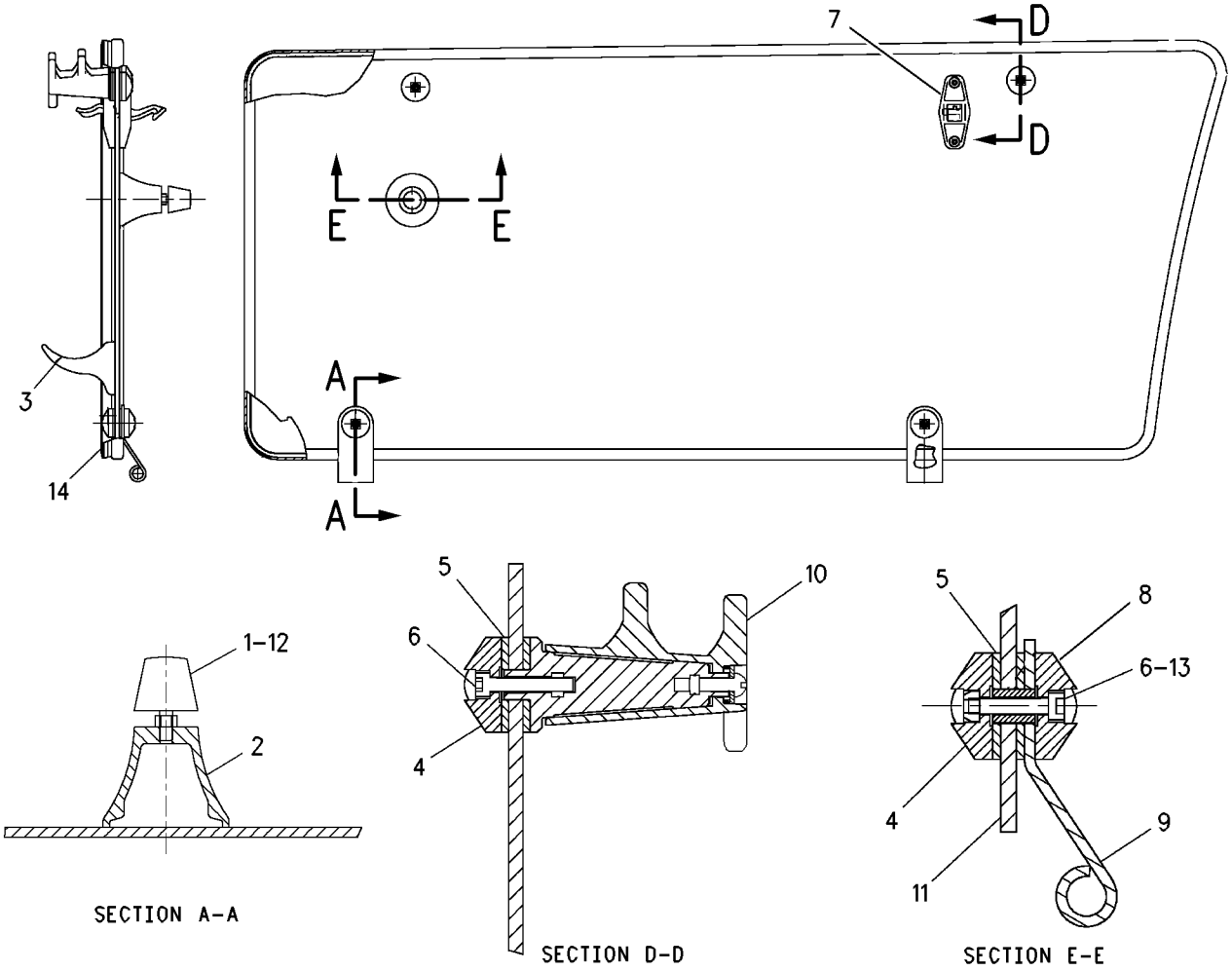

GRAPHIC #1 **<END>** g00725887

OPERATOR STATION

164-1325 WINDOW GP-CAB

S/N: B2D1-UP
REAR
PART OF 164-1125, 164-1140 CAB GP
AN ATTACHMENT

SMCS-7310 **i01958411**

NOTE	REF NO	GRAPHIC REF	PART NUMBER	QTY	PART NAME 1 2 3 4 5 6 (PRODUCT LEVEL)	SEE PAGE
	1	1	**110-5602**	2	KNOB	
M	2	1	**131-8203**	4	SCREW-FLAT HEAD	
	3	1	**140-9921**	2	INSERT-THREADED	
	4	1	**146-7744**	1	KIT-LATCH (LH)	
	5	1	**146-7745**	1	KIT-LATCH (RH)	
	6	1	**150-8015**	2	GASKET	
	7	1	**164-1308**	2	ROLLER	
	8	1	**164-1311**	1	LINKAGE AS	
	9	1	**164-1327**	1	GLASS	
	10	1	**164-1328**	2	SPRING AS-GAS	
	11	1	**164-1331**	1	FRAME AS	
		1	**140-9921**	4	INSERT-THREADED	
	12	1	**164-1342**	4	BOLT-SPECIAL	
	13	1	**164-1343**	4	WASHER-THRUST	
	14	1	**164-1344**	4	WASHER-THRUST	
	15	1	**164-1345**	4	BEARING	
	16	1	**164-1346**	4	STRIKER	
	17	1	**164-1347**	1	WINDOW AS	
		1	**164-1326**	1	GLASS	
	18	1	**164-1351**	2	PIN	
	19	1	**164-1352**	1	LATCH AS (RH)	
	20	1	**164-1353**	1	LATCH AS (LH)	
	21	1	**167-8182**	2	BUMPER	
	22	1	**171-2870**	2	SPACER (7X10X5.4MM THK)	
BC	23	1	**201-9465**	4	SHIM (1MM THK)	
C	24	1	**205-7536**	1	BRACKET AS (LH)	
C	25	1	**205-7538**	1	BRACKET AS (RH)	
	26	1	**119-8349**	2	CAP	
	27	1	**121-9743**	1	SEAL	
CM	28	1	**129-3180**	4	LOCKNUT	
	29	1	**5P-4115**	6	WASHER-HARD (7.2X19X2MM THK)	
	30	1	**5P-4116**	4	WASHER-HARD (8.8X20.5X2MM THK)	
M	31	1	**8T-4138**	2	BOLT (M6X1X20MM)	
M	32	1	**8T-4200**	4	BOLT (M8X1.25X16MM)	
	33	1	**8T-4223**	4	WASHER-HARD (13.5X25.5X3MM THK)	
M	34	1	**9X-2044**	4	SCREW-TRUSS HEAD (M6X1X16MM)	
	35	1	**9X-2132**	4	RETAINER	
E	36	1	**164-1354**		CHANNEL-WINDOW (86.6CM)	
D	37	1	**5P-5637**		SEAL (0.85M)	
E	38	1	**9X-6383**		SEAL (85CM)	
E	39	1	**164-1314**		SEAL-LAMP (148.5CM EACH)	
E	40	1	**164-1354**		CHANNEL-WINDOW (72.5CM EACH)	
E	41	1	**164-1354**		CHANNEL-WINDOW (73.8CM EACH)	

B-USE AS REQUIRED
C-CHANGE FROM PREVIOUS TYPE
D-ORDER BY THE METER
E-ORDER BY THE CENTIMETER
M-METRIC PART

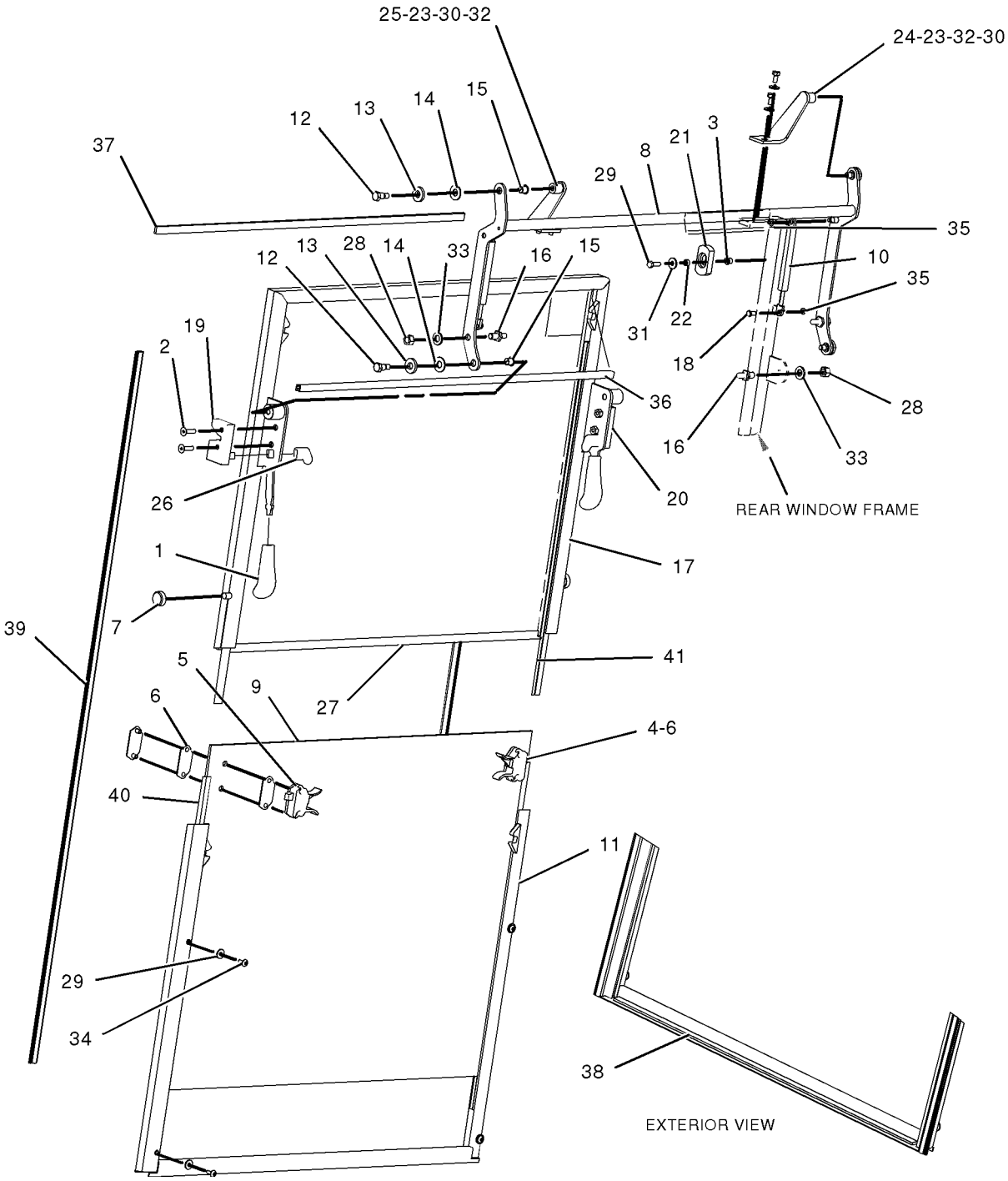

GRAPHIC #1 **<END>** g01018539

OPERATOR STATION

164-1073 WINDOW GP-DOOR

S/N: B2D1-UP
RIGHT HAND
PART OF 164-1061 DOOR GP-RH
AN ATTACHMENT

SMCS-7308, 7310 **i01524929**

NOTE	REF NO	GRAPHIC REF	PART NUMBER	QTY	PART NAME 1 2 3 4 5 6 (PRODUCT LEVEL)	SEE PAGE
	1	1	**8Y-7287**	2	HINGE	
	2	1	**100-7608**	1	HANDLE	
	3	1	**129-8542**	5	RETAINER	
	4	1	**129-8543**	2	SPACER (16MM THK)	
	5	1	**129-8545**	6	WASHER (3MM THK)	
M	6	1	**136-1613**	2	BOLT-SOCKET HEAD	
M	7	1	**136-4192**	1	BOLT (M6X1.0X35MM)	
	8	1	**143-2830**	1	LATCH AS	
M		1	**6V-7743**	2	LOCKNUT (M6X1 THD)	
M		1	**9X-2045**	2	SCREW-TRUSS HEAD (M6X1X20MM)	
		1	**143-2827**	1	SPRING	
	9	1	**159-4950**	1	LATCH AS	
M		1	**5C-2874**	1	NUT (M5X.8 THD)	
M		1	**161-6984**	1	SCREW-TRUSS HEAD (M5X0.8X20MM)	
		1	**161-6987**	1	WASHER-HARD (1.5MM THK)	
		1	**161-9294**	1	SPRING-FLAT WIRE	
M		1	**162-6556**	1	LOCKNUT	
	10	1	**164-1066**	1	GLASS	
M	11	1	**6V-7743**	2	LOCKNUT (M6X1 THD)	
E	12	1	**148-5353**		SEAL (342CM)	

E-ORDER BY THE CENTIMETER
M-METRIC PART

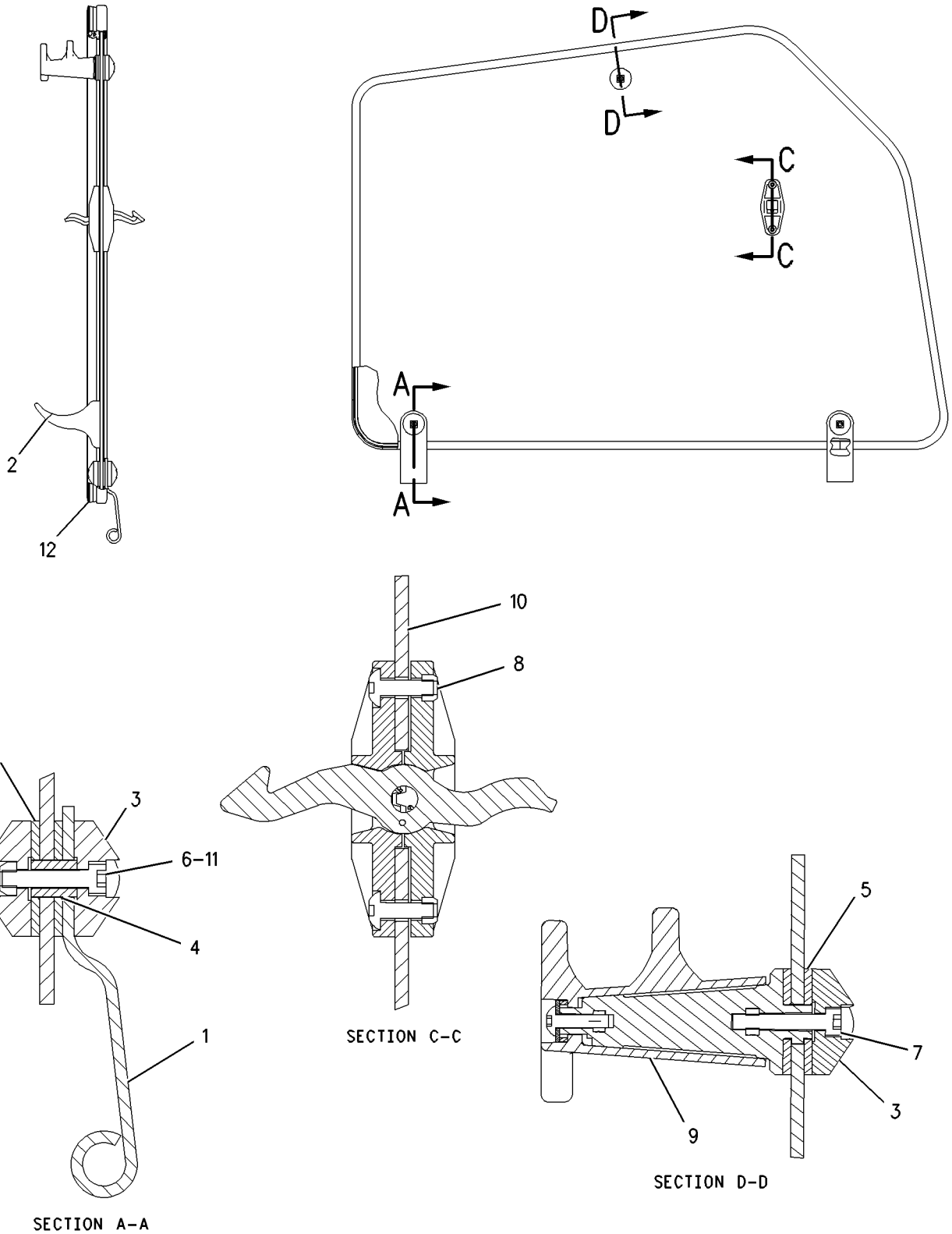

GRAPHIC #1 **<END>** g00729742

OPERATOR STATION

164-1074 WINDOW GP-DOOR

S/N: B2D1-UP
LH
PART OF 164-1062 DOOR GP-LH
AN ATTACHMENT

SMCS-7308, 7310 **i01497997**

NOTE	REF NO	GRAPHIC REF	PART NUMBER	QTY	PART NAME 1 2 3 4 5 6 (PRODUCT LEVEL)	SEE PAGE
	1	1	**8Y-7287**	2	HINGE	
	2	1	**100-7608**	1	HANDLE	
	3	1	**129-8542**	5	RETAINER	
	4	1	**129-8543**	2	SPACER (16MM THK)	
	5	1	**129-8545**	6	WASHER (3MM THK)	
M	6	1	**136-1613**	2	BOLT-SOCKET HEAD	
M	7	1	**136-4192**	1	BOLT (M6X1.0X35MM)	
	8	1	**143-2830**	1	LATCH AS	
M		1	**6V-7743**	2	LOCKNUT (M6X1 THD)	
M		1	**9X-2045**	2	SCREW-TRUSS HEAD (M6X1X20MM)	
		1	**143-2827**	1	SPRING	
	9	1	**159-4951**	1	LATCH AS	
M		1	**5C-2874**	1	NUT (M5X.8 THD)	
M		1	**161-6984**	1	SCREW-TRUSS HEAD (M5X0.8X20MM)	
		1	**161-6987**	1	WASHER-HARD (1.5MM THK)	
		1	**161-9294**	1	SPRING-FLAT WIRE	
M		1	**162-6556**	1	LOCKNUT	
	10	1	**164-1067**	1	GLASS	
M	11	1	**6V-7743**	2	LOCKNUT (M6X1 THD)	
E	12	1	**148-5353**		SEAL (342CM)	

E-ORDER BY THE CENTIMETER
M-METRIC PART

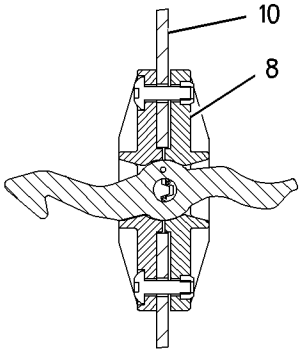

SECTION C-C

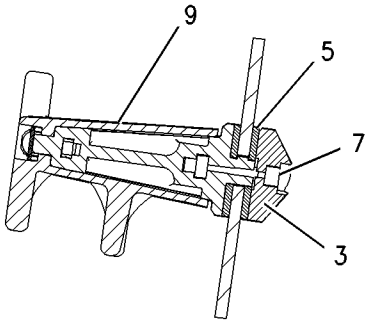

SECTION D-D

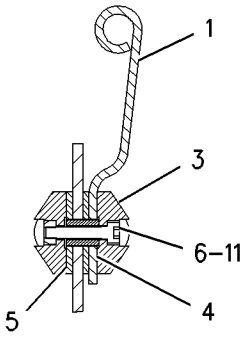

SECTION A-A

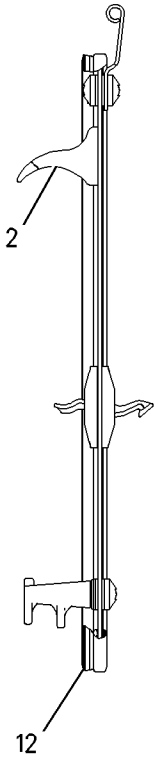

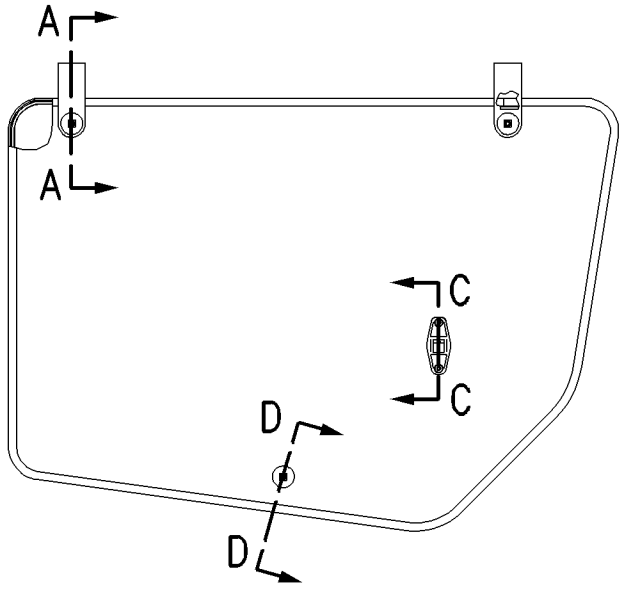

GRAPHIC #1 **<END>** g00759208

OPERATOR STATION

174-2024 WIPER GP-WINDOW

S/N: B2D1-UP
PART OF 239-5560, 239-5562 CAB AR
AN ATTACHMENT

SMCS-7305 **i01959031**

NOTE	REF NO	GRAPHIC REF	PART NUMBER	QTY	PART NAME 1 2 3 4 5 6 (PRODUCT LEVEL)	SEE PAGE
	1	1	**6K-0806**	1	STRAP-CABLE	
M	2	1	**8T-4970**	5	BOLT (M6X1X14MM)	
	3	1	**102-2940**	2	BLADE AS	
	4	1	**132-2249**	2	SPACER (7.4X12.7X24MM THK)	
	5	1	**132-2250**	1	SPACER (21X35X10MM THK)	
	6	1	**154-5410**	1	ARM AS-WIPER	
	7	1	**174-2025**	1	MOTOR GP-WINDOW WIPER	
		1	**102-8805**	1	KIT-RECEPTACLE (6 PIN)	
		1	**186-3735**	4	PIN-CONNECTOR	
J	8	1	**174-2026**	1	ARM AS	
E		1	**194-5171**		HOSE (33CM)	
	9	1	**174-5456**	1	PLATE	
Y	10	1	**186-2589**	1	MOTOR GP-WINDOW WIPER	546
M	11	1	**8C-8451**	2	BOLT (M6X1X40MM)	
	12	1	**8T-4205**	7	WASHER-HARD (7.2X14.5X2MM THK)	
					AVAILABLE REPAIR KIT(S):	
J			**163-4759**	1	KIT-REPAIR	

E-ORDER BY THE CENTIMETER
J-REPAIR KIT MARKED J AVAILABLE FOR PART MARKED J
M-METRIC PART
Y-SEPARATE ILLUSTRATION

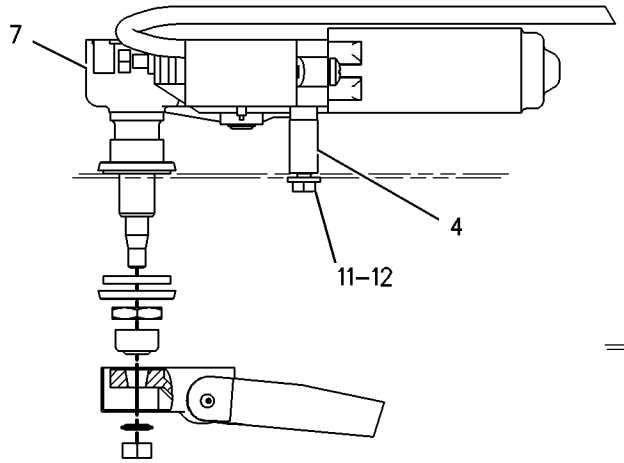

VIEW A–A

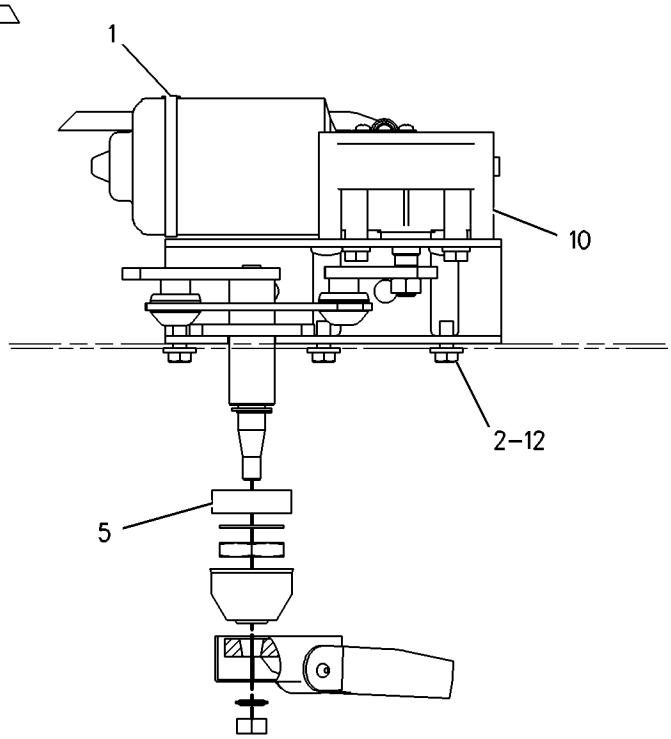

VIEW B–B

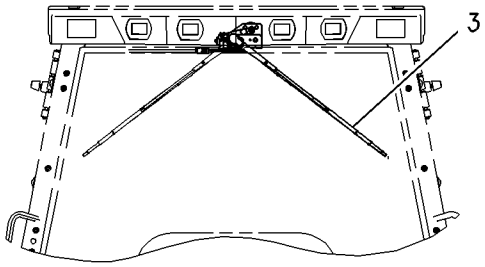

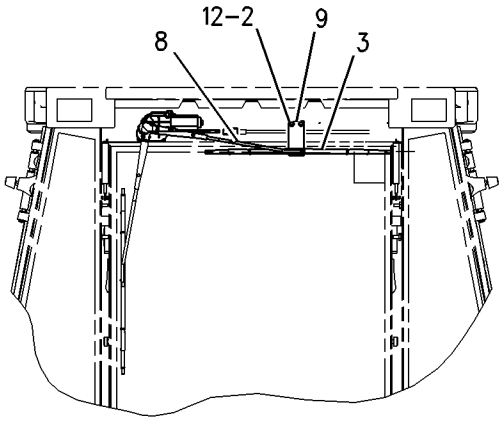

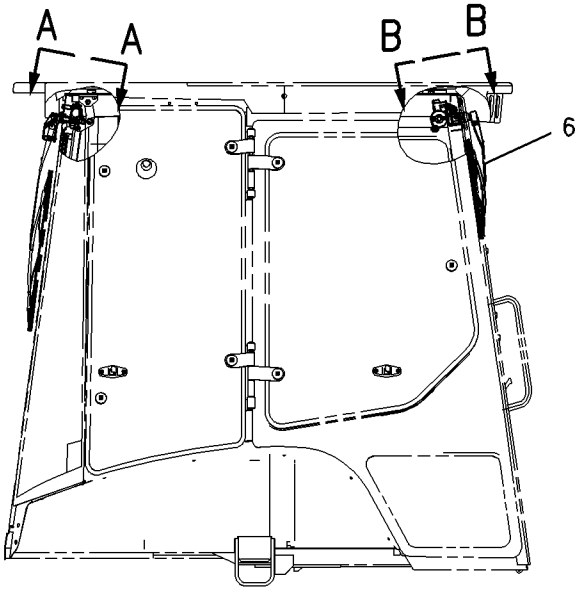

GRAPHIC #1 **<END>** g00726930

OPERATOR STATION

207-6051 WIPER GP-WINDOW

S/N: B2D1-UP
PART OF 241-9377 CAB AR, 239-5559 CANOPY AR
AN ATTACHMENT

SMCS-7305 **i01959077**

NOTE	REF NO	GRAPHIC REF	PART NUMBER	QTY	PART NAME 1 2 3 4 5 6 (PRODUCT LEVEL)	SEE PAGE
	1	1	**6K-0806**	1	STRAP-CABLE	
M	2	1	**8T-4970**	3	BOLT (M6X1X14MM)	
	3	1	**101-0745**	1	BLADE	
	4	1	**132-2250**	1	SPACER (21X35X10MM THK)	
	5	1	**154-5410**	1	ARM AS-WIPER	
Y	6	1	**186-2589**	1	MOTOR GP-WINDOW WIPER	546
	7	1	**8T-4205**	3	WASHER-HARD (7.2X14.5X2MM THK)	

M-METRIC PART
Y-SEPARATE ILLUSTRATION

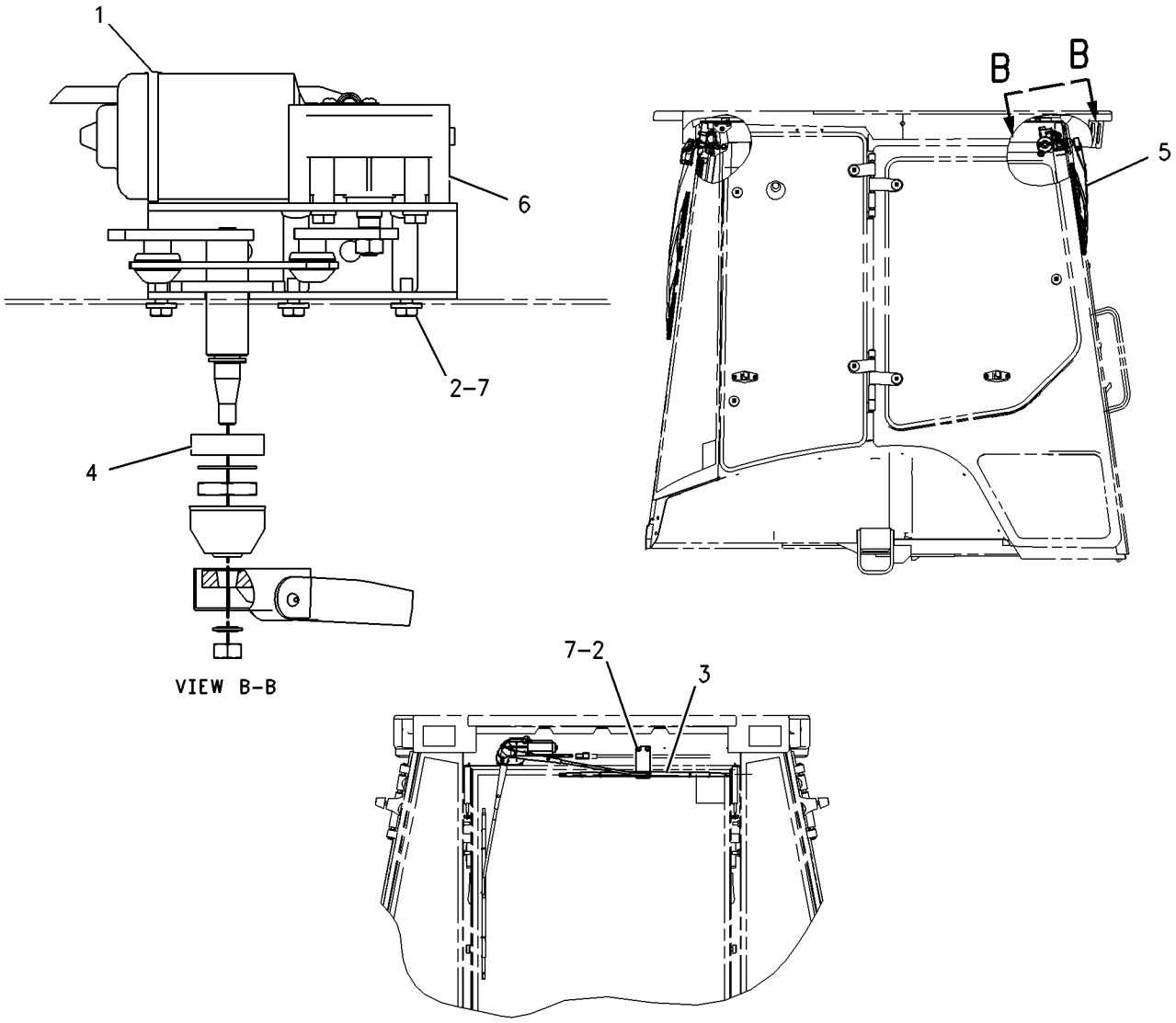

GRAPHIC #1 **<END>** g00909746

SERVICE EQUIPMENT AND SUPPLIES

186-5286 FILM GP

S/N: B2D1-UP

PART OF 185-7736 PLATE & FILM GP

SMCS-7405, 7557 **i01692561**

NOTE	REF NO	GRAPHIC REF	PART NUMBER	QTY	PART NAME 1 2 3 4 5 6 (PRODUCT LEVEL)	SEE PAGE
	1	1	**186-5265**	1	FILM (416D) (RH)	
	2	1	**101-0003**	8	FASTENER	
	3	1	**3E-8123**	1	FILM-STRIPE (RH SIDE)	
	4	1	**3E-8124**	1	FILM-STRIPE (LH SIDE)	
	5	1	**186-5266**	1	FILM (416D) (LH)	

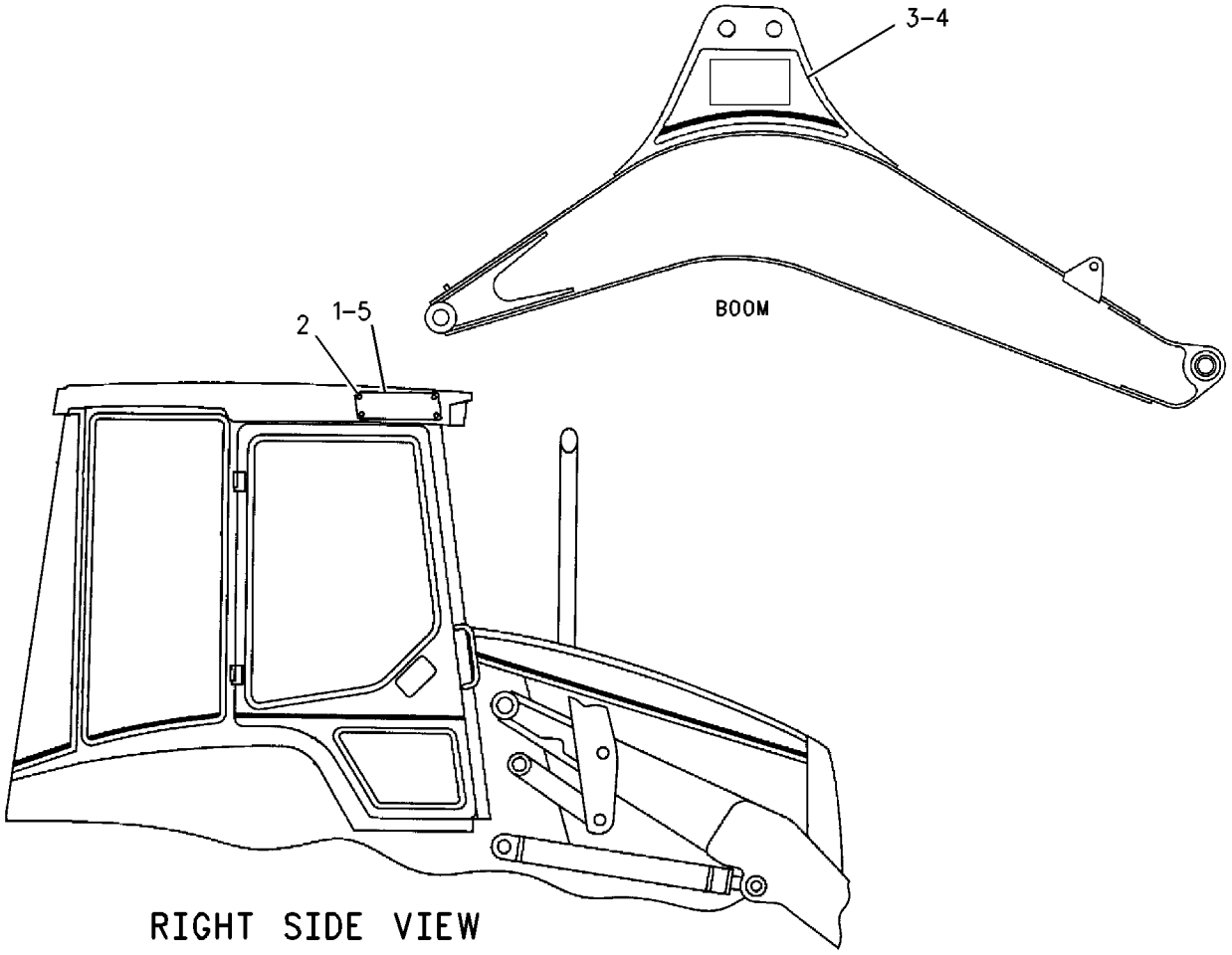

GRAPHIC #1 **<END>** g00769626

SERVICE EQUIPMENT AND SUPPLIES

113-0018 INSTALLATION AR-WHEEL CHOCK

S/N: B2D1-UP

AN ATTACHMENT

SMCS-7000 **i01533050**

NOTE	REF NO	GRAPHIC REF	PART NUMBER	QTY	PART NAME 1 2 3 4 5 6 (PRODUCT LEVEL)	SEE PAGE
	1	1	**114-9342**	2	CHOCK GP-WHEEL	
	2	1	**130-7452**	2	PLATE	

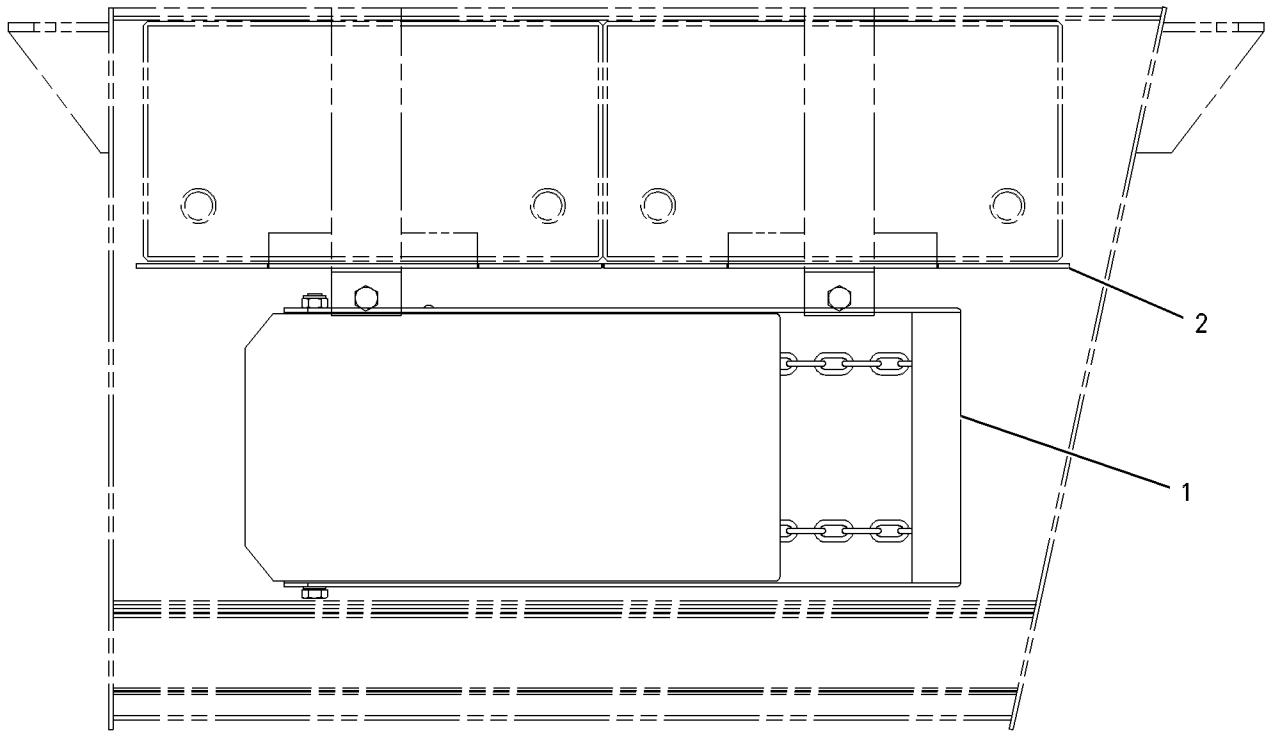

GRAPHIC #1 **<END>** g00307295

SERVICE EQUIPMENT AND SUPPLIES

134-8204 LOCK GP-VANDALISM

S/N: B2D1-UP
SINGLE TILT
AN ATTACHMENT

SMCS-7315 **i01456652**

NOTE	REF NO	GRAPHIC REF	PART NUMBER	QTY	PART NAME 1 2 3 4 5 6 (PRODUCT LEVEL)	SEE PAGE
	1	1	**5P-8502**	2	PADLOCK GP	
					(EACH INCLUDES)	
		1	**5P-8500**	1	KEY	
		1	**8Y-6364**	1	SLEEVE	
	2	1	**125-2086**	1	LOCK AS-CYLINDER	
		1	**7F-9223**	1	LOCKWASHER	
		1	**8T-5004**	1	SCREW-MACHINE (1/4-28X0.375 IN)	

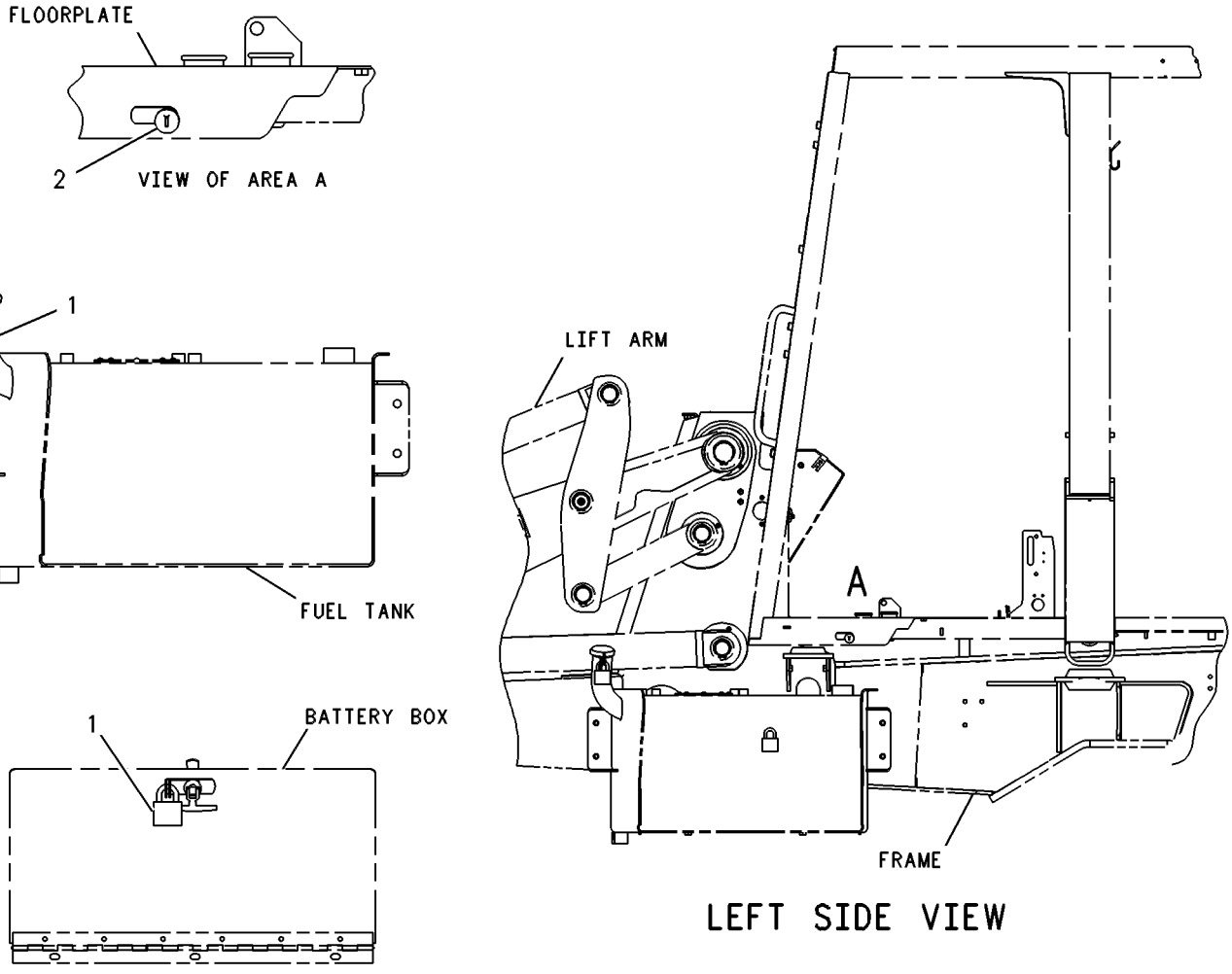

LEFT SIDE VIEW

GRAPHIC #1 **<END>** g00131833

SERVICE EQUIPMENT AND SUPPLIES

185-7736 PLATE & FILM GP

S/N: B2D1-UP
SINGLE TILT, TWO WHEEL STEER, BACKHOE
PART OF 214-6950 CHASSIS AR

SMCS-7405 **i01449190**

NOTE	PART NUMBER	QTY	PART NAME 1 2 3 4 5 6 (PRODUCT LEVEL)	SEE PAGE
Y	*186-5286*	1	FILM GP	596
	1P-2807	4	FILM (LIFT EYE LOCATION)	
			(LOCATE 2 ON FRONT SIDE OF FRONT AXLE AND 1 ON BOTH LH AND RH STABILIZER PADS)	
	186-5296	1	FILM-NOTICE	
			(LOCATE ON BACK SURFACE OF RH CONSOLE)	
	7X-7644	4	FILM-TIE DOWN	
			(LOCATE 2 ON FRONT AXLE AND 2 AT REAR OF FRAME)	
	130-5582	1	FILM-WARNING	
			(LOCATE ON LH LOADER ARM)	

Y-SEPARATE ILLUSTRATION

<END>

238-6700 PLATE & FILM GP

S/N: B2D1-UP
PART OF 214-6950 CHASSIS AR

SMCS-7405 **i02022785**

NOTE	PART NUMBER	QTY	PART NAME 1 2 3 4 5 6 (PRODUCT LEVEL)	SEE PAGE
	1P-2807	4	FILM (LIFT EYE LOCATION)	
			ON THE FRONT SIDE OF THE FRONT AXLE BETWEEN CHASSIS & WHEEL AS. ON LH & RH SIDE OF MACHINE.	
	7X-7644	4	FILM (TIE-DOWN)	
			ON EACH SIDE OF THE MACHINE ON THE MAIN FRAME NEAR FRONT AXIL SUPPORT NEXT TO THE TIE DOWN HOLES.	
	199-6245	1	FILM (SEPARATOR)	
			ON SIDE OF FUEL TANK.	
	224-9855	1	FILM (STARTING AID)	
			ON RIGHT HAND B-POST.	
	101-0333	1	FILM-IDENTIFICATION (HYDRAULIC OIL)	
			ON BRAKE FLUID RESERVOIR CAP.	
	159-8033	1	FILM-IDENTIFICATION (12-VOLT)	
			ON INSIDE OF BATTERY BOX DOOR.	
	124-2456	1	FILM-INSTRUCTION (NO STEP)	
			INSIDE OF BATTERY BOX DOOR.	
	7X-3229	2	FILM-LIFT & TIE DOWN	
			ON TIE DOWN / SLING EYE BRACKET ON OUTSIDE OF EACH STABILIZER LEG.	
	219-0305	1	FILM-WARNING (NO WELD, NO DRILL)	
			ON THE UPPER REAR SHEET METAL PANEL OF CAB STRUCTURE.	
	225-0312	1	FILM-WARNING (JUMP START)	
			INSIDE OF BATTERY BOX DOOR.	
	226-1240	1	FILM-WARNING (STAY BACK)	
			ON BOOM.	
	239-9430	1	FILM-WARNING (ARM BRACE)	
			FOR SINGLE TILT MACHINES, ON LH SIDE OF MACHINE CENTERED ABOVE LIFT ARM SAFTY BRACE.	
			FOR PARALLEL LIFT MACHINES, ON LH SIDE OF THE MACHINE ON LIFT ARM.	
	240-7095	2	FILM-WARNING (NO ENTRANCE, EXIT)	
			FOR CENTER PIVOT MACHINES, ON THE CAB STRUCTURE IN THE REAR.	

NOTE	PART NUMBER	QTY	PART NAME 1 2 3 4 5 6 (PRODUCT LEVEL)	SEE PAGE
			FOR SIDESHIFT MACHINES, ON EACH POST ON THE SLIDEFRAME.	
	221-8045	1	FILM-WARNING (SEAT BELT)	
			ON RIGHT HAND B-POST.	
	240-7957	1	FILM-WARNING (UNIVERSAL)	
			ON RIGHT HAND B-POST.	
	225-4257	2	FILM-WARNING (HOT FLUID)	
			ON BOTH SIDES, OF FRONT LH SIDE BAFFLE PLATE.	
	225-4150	1	PLATE (SERVICE INFORMATION)	
			CENTERED ON UPPER LH SIDE FRAME RAIL.	
	239-6989	1	PLATE (PIN)	
			CENTERED ON UPPER RH SIDE FRAME RAIL.	
B	**193-5914**	16	PLUG	
B	**193-5915**	6	PLUG	
B	**193-5916**	4	PLUG	
A	**190-5134**	1	FILM (STD CROSS PATTERN)	
			ON REAR CONSOLE.	
A	**190-5136**	1	FILM (CENTER PIVOT, BOOM LOCK)	
			PLACE NEXT TO STABILIZER CONTROLES.	
A	**190-5137**	1	FILM (SIDESHIFT, BOOM LOCK)	
			ON THE RIGHT SIDE CONSOLE NEXT TO STABILIZER CONTROLE LEVERS.	
A	**191-9104**	1	FILM (START SWITCH)	
			AROUND KEY SWITCH.	
A	**190-5139**	1	FILM (VARIABLE SPEED)	
			IN CONTROL GP - GOV.	
A	**190-5128**	1	FILM (BUCKET CONTROL)	
			ON REAR CONSOLE.	
A	**186-5300**	1	FILM (CONTROL PLATE)	
			ON B-POST CENTERED ABOVE RIGHT HAND CONSOLE.	
A	**190-5129**	1	FILM (BUCKET CONTROL)	
			ON REAR CONSOLE.	
A	**188-0861**	1	FILM-INSTRUCTION (MULTIPURPOSE BUCKET)	
			ON LOADER CONTROL.	
A	**198-0102**	1	FILM (MULTIPURPOSE BUCKET)	
			ON HYD AR WHICH ARE MECHANICAL LOADER CONTROLS.	
AD	**9X-2334**		FILM (BULK) (.095M)	
			ON UPPER RH LOADER ARM BOSS.	
A	**190-5133**	1	FILM (ALL WHEEL STEER)	
			ON LOADER CONTROL FILM NEXT TO FRONT VIEW OF LOADER HANDLE.	
A	**191-9107**	1	FILM (ALL WHEEL STEER)	
			IN WIRING GP.	
A	**238-4441**	1	FILM (LUBRICANTS)	
			IN HOOD GP.	
A	**238-6847**	1	FILM (STABILIZER CONTROL)	
			ON THE RIGHT SIDE CONSOLE NEXT TO STABILIZER CONTROLE LEVERS.	
A	**130-6662**	1	FILM-AWS	
			IN WIRING GP.	
A	**190-5132**	1	FILM-CONTROL (AIR CONDITIONER)	
			ON THE RH CONSOLE AROUND THE TEMPERATURE CONTROL KNOB.	
A	**202-5710**	1	FILM-IDENTIFICATION (FUSE PANEL)	
			INSIDE RH CONSOLE ACCESS PANEL.	
A	**231-9352**	1	FILM-IDENTIFICATION (FUSE PANEL)	
			INSIDE RH CONSOLE ACCESS PANEL.	
A	**8C-4447**	1	FILM-INDICATOR	
			IN BRACE GP.	

238-6700 **PLATE & FILM GP** ***(contd.)*** **i02022785**

NOTE	PART NUMBER	QTY	PART NAME 1 2 3 4 5 6 (PRODUCT LEVEL)	SEE PAGE
A	**172-6224**	1	FILM-INDICATOR	
			IN WIRING GP.	
A	**188-0863**	1	FILM-INDICATOR	
			ON RH CONSOLE.	
A	**222-5794**	1	FILM-INDICATOR	
			IN WIRING GP - STANDARD.	
A	**239-9438**	1	FILM-INFORMATION (CONTROL PATTERN)	
			ON THE LH B-POST.	
A	**190-5130**	1	FILM-INSTRUCTION	
			ON REAR CONSOLE.	
A	**101-0863**	1	FILM-INSTRUCTION (RETURN FLOW)	
			IN LINES GP - AUX HYD.	
A	**239-9435**	1	FILM-INSTRUCTION (LINK)	
			IN LINKAGE GP BUCKET.	
A	**101-2788**	1	FILM-INSTRUCTION (EXTENDABLE STICK)	
			IN CONTROL GP - VALVE.	
A	**133-8916**	1	FILM-INSTRUCTION (EXTENDABLE STICK)	
			ON HORIZONTAL SMOOTH SPOT ON RH SIDE OF REAR CONSOLE.	
A	**186-5298**	1	FILM-INSTRUCTION (BUCKET CONTROL)	
			ON B-POST CENTERED ABOVE RH CONSOLE.	
A	**239-9427**	1	FILM-NOTICE (STICK)	
			ON THE STICK.	
A	**224-8946**	1	FILM-WARNING (ETHER)	
			IN HOOD GP - ENG.	
A	**224-0672**	1	FILM-WARNING (HIGH PRESSURE CYLINDER)	
			IN LINES GP - RIDE CONTROL.	
A	**199-6243**	1	PLATE (INSTRUCTION)	
			IN A/C LINES GP.	
A	**239-9434**	1	PLATE-WARNING (QUICK COUPLER)	
			ON RIGHT HAND B-POST.	
A	**239-9436**	1	PLATE-WARNING (ALTERNATE CONTROL PATTERN)	
			ON REAR CONSOLE.	
A	**4P-6236**	1	PLATE-SERIAL NUMBER (ENGINE)	
			ON MOUNTING PAD ON LH SIDE OF ENGINE BLOCK.	
A	**4P-6396**	1	PLATE-CAT	
			ON TOP OF VALVE COVER.	
AB	**8T-6656**	1	FILM-IDENTIFICATION (OIL FILTER)	
			ON SPIN ON OIL FILTER.	
A	**4P-6422**	1	FILM-WARNING (NO ETHER SPRAY/AIR INTAKE)	
			ON SIDE OF VALVE COVER.	
A	**4P-6423**	1	PLATE-IDENTIFICATION	
			ON LOWER LH SIDE OF BLOCK TOWARDS REAR OF ENGINE MOUNTING PAD.	
			PLATE MAY BE INSTALLED ON RH SIDE IF OBSCURED BY STARTER.	

A-NOT PART OF THIS GROUP
B-USE AS REQUIRED
D-ORDER BY THE METER

<END>

MEMORANDA

PART NUMBER INDEX

Part	Page
0	
0S-0550	86
	88
0S-1603	28
0S-1614	391
0S-1621	483
0T-0318	170
1	
1A-0621	223
1A-5350	223
1B-0676	312
1B-8736	9
	10
	16
	18
	30
	312
1D-4677	536
1F-0750	259
1H-1200	223
1H-3244	529
	530
1H-3337	570
1H-7339	298
	304
1H-9721	197
	203
1J-6474	438
1K-0502	273
	275
1K-6872	483
	554
	556
	570
1K-7082	167
	230
1L-3768	438
1L-6377	250
1M-1230	109
1M-6119	102
	104
	106
1M-6120	102
	104
	106
1P-2807	599
1P-4278	86
	88
	374
1P-4584	350
1P-6872	370
1P-7009	86
1P-7363	387
	389
	391
	393
	395
	397
	399
	401
	403
1S-7251	102
	106
	154
1S-7252	104
	107
1S-8947	239
1S-9593	208
	209
	393
1U-8846	197
	204
1V-9385	232
1W-2934	507
2	
2A-4576	169
2B-0858	24
	42
2D-2628	210
2D-2629	210
2D-2630	210
2D-2631	210
2D-2633	210
2D-6392	68
	70
2H-3920	484
	531
2H-3922	162
2H-3931	288
	290
	304
2H-4145	288
	290
2K-3549	427
2K-4973	483
	536
	561
	563
	565
	570
2K-6830	299
	300
	302
2L-6267	170
2M-2570	169
2M-6102	314
2M-9780	335
	338
	346
	350
	356
	360
	370
	374
	387
	389
	391
	393
	395
	397
	399
	401
	403
2P-1279	223
2P-1293	316
	321
	325
	329
	333
	336
2P-8104	124
2R-0364	273
	275
2S-0479	169
2S-0480	169
	183
	185
2S-3745	486
	533
2W-9710	67
	69
2Y-5821	302
2Y-5829	312
3	
3B-4505	536
	563
	565
	572
3B-4509	169
3B-4610	226
3B-4631	570
	574
3B-5302	169
3B-5317	365
3B-5319	418
	475
	476
	479
	480
3B-5322	428
	432
3B-5790	370
3B-8488	253
	413
	415
	416
	440
3B-8489	253
	254
	297
	312
	365
	413
	415
	416
	418
	420
	427
	436
	438
	440
	469
	470
3C-6516	113
3C-8388	370
3D-2824	239
	262
	314
	316
	320
	325
	328
	332
	333
	336
	339
	341
	350
	356
	358
	360
	377
	378
3E-1908	►506
	507
3E-2333	233
	236
3E-3362	208
3E-3365	98
	174
	209
	273
	393
3E-3371	209
3E-3383	551
3E-3658	506
3E-4312	488
3E-4321	539
	541
3E-4363	185
3E-4892	34
3E-4924	34
3E-5153	124
3E-5154	124
3E-6600	257
3E-6769	370
3E-6770	370
3E-6922	138
3E-7426	316
	320
	325
	328
3E-7443	316
	320
	325
	328
3E-8004	553
3E-8123	596
3E-8124	596
3E-8211	259
	489
	490
3E-8620	393
3E-9362	129
	152
3F-5108	477
3F-9556	546
	552
3G-6927	198
	204

► **PRIMARY REFERENCE**

PART NUMBER INDEX

Part	Page
3J-1907	96
	99
	148
	196
	202
	223
	264
	280
	343
	345
	346
	350
3J-7352	370
3J-7354	99
	233
	236
	264
	346
	348
	370
	387
	389
	391
	393
	395
	397
	399
	401
	403
3J-9196	208
3K-0360	233
	236
	262
	280
	350
	359
	397
	399
	403
3K-3379	169
3K-8782	114
	115
3N-1491	490
3N-5739	302
3N-6408	168
3S-2093	84
	96
	109
	116
	119
	129
	132
	135
	139
	142
	143
	146
	148
	152
	155
	158
	159
	162
	197
	204
	223
	257
	273
	495
	497
	535
	541
	567
	570
	578
	580
3S-6049	104
3S-6050	104
3S-6162	292
3S-7023	299
	300
3T-0849	410
3T-5760	106
	107

4

Part	Page
4B-2043	146
	575
	576
4B-2049	148
4B-4274	259
4B-4863	129
	152
	155
	549
4B-5271	554
	556
4B-9782	389
4B-9784	570
4D-7794	254
4D-9986	282
	381
	382
	383
	384
	385
	403
4E-8619	223
	▶227
4F-3657	482
4F-7952	198
	204
4H-2558	102
	106
4J-0520	176
4J-0522	181
	182
4J-1888	469
	470
	473
	474
	478
4J-3745	292
	301
4J-5140	282
	381
	382
	383
	384
	385
4J-5267	282
	381
	382
	383
	384
	385
4J-5477	223
	233
	236
	264
	280
	345
	346
	348
	350
4J-7533	393
4J-9220	292
	301
4J-9224	288
	290
4K-0367	477
	482
4K-0499	570
4K-1388	387
	389
	393
	395
	397
	399
	401
	403
4K-5843	168
4K-8864	88
4L-6454	561
	563
	565
4M-0061	536
	563
	565
	572
4M-0189	292
	301
4P-6236	601
4P-6396	601
4P-6422	601
4P-6423	601
4P-7581	148
4P-8134	129
	132
	146
	148
	535
4T-2723	282
	381
	382
	383
	384
	385
4T-4218	383
4T-4513	389
4T-4516	387
	393
	401
4T-4518	382
4T-4520	387
	389
	391
	393
	395
	397
	399
	401
4T-4521	387
	389
	391
	393
	395
	397
	399
	401
4T-4524	387
	389
	391
	393
	395
	397
	399
	401
4T-4528	387
	389
	391
	393
	395
	397
	399
	401
4T-4531	401
4T-4532	389
	393
4T-4533	387
	397
	401
4T-4538	381
4T-5613	302
4T-6128	299
	300
4T-6779	304
4T-6780	295
	298
4T-7010	304
4T-7807	239
	387
	389
	391
	393
	395
	397
	399
	401
	403
4T-8054	288
	290
4V-2264	568
4V-5091	259
4W-9972	148

▶ **PRIMARY REFERENCE**

PART NUMBER INDEX

Part	Page
5	
5B-9079	44
	45
5B-9318	239
	387
	389
	391
	393
	395
	397
	399
	401
	403
5C-2874	148
	582
	584
	588
	590
5C-2890	84
	114
	148
5C-7261	223
	231
	232
	259
	376
	379
	495
	497
	503
	546
	552
	582
	584
5C-9553	552
5D-1026	12
	233
	236
	346
	350
	374
	539
	541
5D-4822	259
5D-8159	478
5D-9629	501
	502
5F-3106	367
5F-5434	163
	164
5F-9144	68
	70
5G-8108	223
5H-3193	273
5J-4986	292
	301
5J-5402	299
	300
	302
5J-7878	301
5J-8156	288
	290
5K-0906	348
5K-5338	233
	236
5K-9090	262
	316
	317
	320
	321
	325
	328
	329
	333
	350
	353
	354
	355
	386
	387
	389
	393
	395
	397
	399
	401
	403
5L-3308	489
	491
	499
	500
5L-9018	169
5L-9023	393
5L-9656	169
5M-2894	282
	381
	382
	383
	384
	385
5M-3062	536
	570
5P-0078	86
	88
5P-0372	173
	312
5P-0537	389
	391
	393
5P-0540	170
5P-0599	328
	332
	333
	335
	336
	356
	359
5P-0600	71
	73
5P-0743	351
5P-0747	102
	104
	106
	107
	154
5P-0761	102
	104
	106
	107
5P-0767	539
	541
5P-1075	536
	561
5P-1420	86
	88
5P-1442	86
	88
	224
	374
5P-1505	46
	233
	236
	346
	351
	374
5P-1506	351
5P-3860	358
5P-3915	484
	531
5P-4115	257
	484
	586
5P-4116	57
	58
	59
	61
	97
	240
	306
	307
	350
	426
	428
	429
	430
	495
	497
	503
	522
	524
	548
	586
5P-4295	233
	236
5P-4829	69
5P-4868	71
	350
5P-5599	410
5P-5637	586
5P-5923	154
5P-5924	541
5P-6011	486
5P-6129	67
5P-6718	35
	197
	204
5P-7462	233
	356
5P-7463	233
	356
5P-7464	329
	333
	336
	343
5P-7465	329
	333
	336
	343
5P-7466	316
	321
	325
	329
	333
	336
5P-7467	317
	321
	325
	329
	333
	336
5P-7468	317
	321
	325
	329
	336
5P-7469	317
	321
	325
	329
	336
5P-7657	154
5P-7854	541
5P-7921	486
	533
5P-7957	504
	505
5P-7958	254
	504
	505
5P-8066	197
	204
5P-8112	317
	321
	325
	329
	333
	336
5P-8245	28
	554
	556
5P-8250	298
	304
5P-8444	317
	321
	325
	329
5P-8500	504
	505
	598
5P-8502	598
5P-9000	511
	549
5P-9262	411
5S-0003	403
5V-2545	191
	192
5V-4410	269
	271
5V-8309	259

► **PRIMARY REFERENCE**

PART NUMBER INDEX

Part	Page
5W-9411	77
	78
6	
6B-0933	101
6B-4661	60
6C-3680	486
	533
6D-0337	▶210
	211
	213
	214
	215
	219
6D-0443	210
6D-3479	374
6D-4246	46
	233
	236
	346
	541
6D-7573	86
	88
6E-0122	295
	298
6E-0131	401
6E-0276	292
6E-0358	387
	389
	393
	395
	397
	399
	401
	403
6E-1478	302
6E-1522	292
6E-3268	411
6E-3269	411
6E-3272	411
6E-3273	411
6E-3274	411
6E-3275	411
6E-3276	411
6E-3341	372
6E-4000	370
6E-4003	370
6E-4004	370
6E-4007	372
6E-4009	372
6E-4158	383
	384
	385
6E-4317	387
	389
	391
	393
6E-6151	372
6E-6154	372
6E-6155	372
6E-6157	372
6E-6158	372
6E-6174	370
6E-6175	370
6E-6176	370
6E-6281	399
6E-6284	395
6E-6285	395
6E-6286	399
6E-6527	411
6E-6528	410
	411
6F-7037	298
6H-3616	33
6I-0217	30
	35
	63
	82
	90
	92
6I-0254	63
6I-0260	12
	14
	35
	52
	53
	55
	90
	92
	101
6I-0289	35
6I-0291	90
	92
6I-0363	35
6I-0364	81
	126
6I-0423	29
6I-0454	101
6I-0501	43
6I-0502	43
6I-0563	80
	81
	82
6I-0572	11
	20
	35
	53
	55
	75
	82
6I-0594	101
	126
6I-0645	30
	53
	55
6I-0789	30
6I-0846	12
	14
6I-0847	29
6I-0917	12
	14
6I-1497	46
	49
6I-4039	81
6I-4079	49
6I-4374	53
	55
6J-0793	304
6J-2680	350
6J-2797	299
	300
	302
6J-5731	295
6J-5733	295
	298
6K-0806	146
	148
	154
	197
	203
	592
	594
6K-8178	86
	348
6K-9632	580
6L-4725	484
	531
6L-6208	292
6N-6984	67
	69
6P-6590	257
6P-8855	539
	541
6R-3299	355
6R-7490	568
6S-6646	423
6S-8620	46
	223
6T-9142	196
	203
6T-9143	196
	203
6T-9144	196
	203
6T-9145	196
	203
6T-9146	196
	203
6T-9147	196
	203
6T-9160	196
	202
6T-9163	196
	203
6T-9164	196
	203
6T-9165	196
	203
6T-9166	196
	203
6T-9194	202
6T-9196	202
6V-0683	233
	356
6V-0852	264
	345
	350
6V-1249	329
	333
	336
	343
6V-2323	370
6V-2410	568
6V-2687	488
6V-3213	413
	418
	420
	429
	430
	431
	433
	436
	466
	467
	468
	475
	476
6V-3265	139
6V-3582	71
	73
6V-3965	264
	345
	350
6V-4364	418
	440
	466
	467
	468
6V-4589	196
	202
6V-5100	204
6V-5653	350
	374
6V-5683	370
6V-5729	307
	434
	435
6V-6717	484
	486
	531
	533
6V-6813	484
	531
6V-7238	350
6V-7357	148
	486
	533
6V-7687	254
	413
	415
	416
	427
	440
6V-7731	196
	202
6V-7743	247
	495
	582
	584
	588
	590
6V-7744	265
	267
	269
	271
	273
	276
	278

▶ **PRIMARY REFERENCE**

PART NUMBER INDEX

Part	Page
6V-8097	197
	203
6V-8144	306
	413
	428
	429
	430
	431
	432
	433
	436
	478
6V-8185	570
6V-8186	552
6V-8210	198
	203
6V-8227	232
6V-8236	410
6V-8237	295
6V-8335	196
	202
	269
	271
	276
	278
6V-8344	427
	440
6V-8352	411
6V-8363	162
6V-8370	162
6V-8378	129
	152
6V-8397	99
	233
	236
	343
6V-8398	233
	236
	262
	280
	288
	290
	299
	300
	301
	314
	317
	328
	329
	333
	336
	338
	339
	341
	343
	356
	359
	360
6V-8400	316
	320
	325
	329
6V-8455	180
6V-8500	196
	202
6V-8553	86
	88
6V-8560	86
	88
6V-8625	262
	359
6V-8626	335
	338
	360
6V-8627	223
6V-8628	233
	236
	346
	348
6V-8633	262
	314
	328
	336
6V-8634	233
	236
6V-8635	320
	325
	328
	353
6V-8636	343
6V-8637	262
	316
	320
	325
	328
	332
	356
6V-8638	356
6V-8639	262
	359
6V-8641	223
	345
	346
6V-8642	335
6V-8647	233
	236
	264
	348
6V-8713	262
	339
	341
	358
	360
6V-8716	61
6V-8721	356
6V-8723	236
6V-8757	197
	203
6V-8759	221
6V-8782	280
6V-8801	102
	106
6V-8932	267
	269
	271
6V-8995	333
6V-8997	333
6V-9007	328
	336
	356
6V-9008	350
	354
6V-9169	329
	333
	336
6V-9172	317
	321
	326
	329
6V-9178	196
	202
6V-9182	61
6V-9189	222
	317
	321
	368
	369
	548
6V-9632	46
	84
	232
	257
	259
	484
	495
	497
	502
6V-9746	61
	262
	292
	316
	317
	320
	321
	325
	326
	328
	329
	332
	333
	336
	350
	356
6V-9828	345
	350
6V-9830	314
	341
6V-9831	339
6V-9832	321
	326
6V-9838	339
6V-9840	353
	354
6V-9849	280
	348
6V-9850	233
	236
6V-9851	262
6V-9852	360
6V-9853	316
	329
6V-9854	316
	317
	320
	325
	328
	350
6V-9855	316
	320
	325
	329
6V-9872	99
6Y-1341	197
	204
6Y-1896	197
	204
6Y-2035	196
	202
6Y-2326	196
	202
6Y-2736	197
	203
6Y-2737	197
	203
6Y-2936	196
6Y-7652	168
6Y-7957	202
6Y-9915	34
7	
7C-0351	35
7C-1224	35
7C-1281	12
7C-4616	30
7D-7233	49
	346
	350
7E-3870	76
7F-3400	504
	505
7F-6112	299
	300
7F-6998	541
7F-9223	598
7G-1060	154
7I-8084	280
7I-8935	407
7J-0204	239
	387
	389
	391
	393
	395
	397
	399
	401
	403
7J-5639	304
7J-9108	262
	304
	329
	332
	335
	336
	338
	339
	341
	358

► **PRIMARY REFERENCE**

PART NUMBER INDEX

Part	Page
	360
	379
7J-9885	288
	290
7K-1181	46
	61
	84
	102
	106
	146
	148
	159
	233
	236
	339
	341
	346
	350
	360
7M-0242	222
7M-8485	61
	239
	262
	316
	320
	325
	328
	329
	350
	353
	354
	386
7N-5274	104
	107
7N-7779	227
7N-7780	227
7N-9737	227
7R-8239	226
7S-3916	317
	321
	326
	329
7S-3919	317
	321
	326
	329
7T-0093	486
	533
7T-0525	259
7T-1099	232
	240
	374
	492
	494
	495
	497
	501
	502
	568
7T-2646	196
	203
7T-2651	198
	204
7T-3017	196
	202
7T-3018	196
	202
7T-3021	196
	202
7T-3022	196
	202
7T-3034	196
	203
7T-3051	197
	203
7T-3109	197
	204
7T-3111	197
	203
7T-3119	196
	203
7T-3195	197
	203
7T-3249	197
	204
7T-3251	198
	203
7T-3253	198
	204
7T-4532	506
7T-4848	154
7T-6087	124
7T-6088	124
7T-6090	124
7T-6092	124
7T-6093	124
7T-6099	124
7T-6652	168
7T-6653	169
7T-6654	169
7T-6799	549
7T-7621	169
7T-8895	240
7T-9987	104
	107
7W-1176	29
7W-2326	49
7W-2632	101
7W-4634	43
7W-4642	29
7W-7417	77
7X-0310	307
	434
	435
7X-0447	434
	435
7X-0481	570
7X-0546	553
7X-0572	241
7X-0579	65
	66
	259
	508
7X-0603	67
	69
7X-0605	483
7X-0613	46
7X-0622	558
	570
7X-2049	486
7X-2393	582
	584
7X-2444	345
	350
7X-2497	522
	524
7X-2537	306
	307
	428
	429
	430
	558
7X-2538	59
7X-2539	368
	369
7X-2553	193
	194
7X-2554	257
7X-2568	241
7X-2570	163
7X-3229	599
7X-4741	197
	204
7X-4744	196
	202
7X-7644	599
7X-7729	49
	102
	104
	106
	107
	155
	254
	257
	265
	267
	481
	578
	580
7X-9065	146
7Y-0336	312
7Y-3883	154

8

Part	Page
8B-1419	173
8B-6127	86
	88
8C-0563	410
8C-0572	68
	70
8C-3056	148
8C-3274	312
8C-3291	250
8C-3334	159
8C-3798	46
8C-4447	417
	600
8C-4982	544
8C-4987	173
	265
	269
	271
	273
	275
	276
	278
8C-5748	196
	202
8C-6955	312
8C-7110	370
8C-8408	346
8C-8451	592
8C-8478	242
	243
	244
	245
	246
8C-8522	247
8C-8992	553
8C-9778	124
8C-9783	124
8D-2707	210
8D-5294	426
8D-9947	181
	182
8E-1118	132
8E-3081	343
8E-5707	202
8F-0212	389
8F-1434	124
	129
	148
	152
	162
8F-6302	393
8F-7702	269
	271
8F-8151	60
8H-0707	387
	391
	395
	397
	399
	401
	403
8H-1607	169
8H-7521	299
	300
	302
8J-2574	298
	304
8J-4455	124
8J-6371	297
	304
8L-2746	196
	202
8L-2779	209
8L-8413	98
	102
	104
	106
	107
8M-2770	250
8M-3175	269
	271
	276
	278
8M-8157	169

PART NUMBER INDEX

Part	Page	Part	Page	Part	Page	Part	Page
8N-0869	104	8T-1683	233		502		363
	106	8T-1686	233		522		364
	107		236		524		368
8N-2694	78	8T-1887	332	8T-3647	508		369
8R-2916	238	8T-1888	332	8T-3652	254		374
8R-6111	132	8T-1889	317	8T-3844	346		420
8R-6263	227		321	8T-3998	510		495
8S-0023	181		326		512		497
	182		329		515		507
	317		333	8T-4001	243		518
	321		336		244		539
	326	8T-1890	317		245		541
	329		321		246		543
8S-0024	181		326		250		568
	182		329		253		578
	317		333	8T-4121	34		580
	321		336		46	8T-4122	250
	326	8T-1891	343		61		367
	329	8T-1892	343		76		430
8S-3020	104	8T-2360	239		80		431
	107		387		81		438
8S-4710	389		389		86		477
8S-4734	222		391		88	8T-4123	242
8S-4740	169		393		96		243
8S-7803	488		395		124		244
	495		397		129		245
	497		399		132		246
	536		401		135		312
	563		403		139	8T-4131	163
	565	8T-2361	387		148		164
	570		389		155	8T-4132	34
	572		391		181		250
	574		393		182		430
8S-9151	168		395		231		431
8T-0077	280		397		232	8T-4133	49
8T-0144	472		399		233		67
8T-0154	350		401		236		69
8T-0164	346		403		250		80
8T-0276	222	8T-2444	259		254		81
8T-0318	259	8T-2563	71		257		102
8T-0328	129		73		265		104
	148	8T-2659	143		267		106
	152		146		269		107
8T-0352	132		549		271		110
	135	8T-3444	343		273		111
	139	8T-3490	49		275		124
8T-0389	363		80		276		129
	481		81		278		132
8T-0706	312		257		314		135
8T-0785	288		259		317		139
	290		341		321		146
	301		350		326		155
8T-0789	578		502		329		173
	580		541		332		223
8T-0799	191	8T-3612	57		333		247
8T-1118	578		58		336		257
	580		59		338		265
8T-1159	86		84		339		267
	88		97		341		269
8T-1580	197		109		343		271
	203		257		346		273
8T-1581	197		259		348		275
	203		280		350		276
8T-1605	288		495		356		278
	290		497		360		312

► **PRIMARY REFERENCE**

PART NUMBER INDEX

Part	Page
	339
	346
	356
	507
	535
	541
8T-4134	159
8T-4136	49
	61
	76
	80
	81
	96
	148
	155
	159
	181
	182
	231
	232
	233
	236
	254
	257
	273
	314
	317
	321
	326
	329
	336
	338
	339
	341
	343
	350
	360
	362
	368
	369
	374
	541
8T-4137	46
	61
	102
	104
	106
	107
	148
	250
	257
	332
	333
	339
	341
	348
	350
	360
	374
	420
	495
	497
	518
	539
	541
	543
	568
8T-4138	84
	148
	162
	223
	257
	265
	267
	586
8T-4139	228
	254
	321
	326
	329
	333
	336
	374
	562
	567
8T-4167	243
	244
	245
	246
	250
	253
8T-4171	155
	522
	524
8T-4172	265
	267
8T-4174	34
	250
8T-4176	413
8T-4179	86
	88
	155
	374
	438
8T-4180	522
	524
8T-4181	259
	522
	524
8T-4182	257
	312
	350
	481
8T-4183	97
	240
	256
	350
	364
8T-4184	317
	329
	336
	438
8T-4185	104
	314
	364
	507
8T-4186	67
	69
	269
	271
	276
	278
	356
	363
	364
	507
8T-4189	61
	71
	73
	88
	97
	109
	148
	223
	231
	232
	240
	248
	249
	259
	351
	366
	495
	497
	502
	503
	539
	541
8T-4191	146
	257
	374
8T-4192	61
	317
	321
	326
	329
	343
	438
8T-4194	181
8T-4195	49
	80
	81
	129
	254
	265
	267
	269
	271
	273
	276
	278
	326
	329
	336
	341
	346
	351
	360
	502
	507
	535
	541
8T-4196	34
	96
	257
	356
8T-4197	259
8T-4198	363
8T-4200	65
	66
	68
	70
	97
	180
	223
	240
	495
	497
	508
	554
	556
	558
	586
8T-4201	578
	580
8T-4205	46
	84
	114
	123
	148
	155
	162
	223
	247
	259
	346
	379
	486
	533
	552
	568
	578
	580
	592
	594
8T-4222	67
	69
	257
8T-4223	61
	86
	88
	97
	155
	174
	181
	182
	191
	193
	194
	240
	256
	273
	317
	321
	326
	329
	333
	336
	343
	351

► **PRIMARY REFERENCE**

PART NUMBER INDEX

Part	Page	Part	Page	Part	Page	Part	Page
	362		57	8T-6726	338	8Y-7204	254
	364		58	8T-6760	169	8Y-7263	524
	374		59	8T-6868	181	8Y-7264	522
	438		67		182	8Y-7287	588
	507		69	8T-6870	280		590
	562		84	8T-6902	552	8Y-7292	501
	567		249	8T-7087	329	8Y-7306	522
	586		254		336		524
8T-4224	57		269	8T-7338	367	8Y-7309	582
	58		271		438		584
	59		502	8T-7529	61	8Y-7310	522
	68		507		351		524
	70		549	8T-7547	71	8Y-7311	492
	71	8T-4956	174		73		494
	73		182		223	8Y-7444	495
	84		193		257		497
	97		194		269	8Y-7833	129
	109	8T-4967	492		271	8Y-8081	104
	148		494	8T-7876	53		106
	180		501		55		107
	222	8T-4970	592	8T-7963	240		
	223		594	8T-7971	438		
	226	8T-4971	538	8T-8549	167	**9**	
	231		578		230		
	232		580	8T-8641	488	9B-7233	146
	240	8T-4986	306	8T-8729	393		575
	254		307	8T-8737	134		576
	257		428		148	9C-4457	574
	259		429		154	9F-2167	168
	269		430		159	9F-2247	90
	271	8T-5001	415		209	9G-3695	546
	280		416		551	9G-8909	104
	348		427	8T-8799	148		107
	366		440	8T-8894	231	9G-9155	374
	368		507		232	9J-1874	491
	369	8T-5004	598		254		499
	376	8T-5005	102	8T-9364	570		500
	507		106	8T-9402	46	9K-5635	232
	549		107	8T-9405	367	9M-0164	374
8T-4244	173	8T-5041	167	8T-9501	174	9M-1974	196
	507		230		259		202
8T-4649	250	8T-5063	173		273		558
8T-4742	84		312		554	9M-4814	539
	538	8T-5091	259		556		541
8T-4744	84	8T-5092	254		558	9M-4972	541
	538	8T-5093	116	8Y-4489	415	9M-7958	49
8T-4766	273		119		416	9M-7959	484
8T-4773	265	8T-5360	307		438		531
	267		434	8Y-5737	484	9M-8406	88
	269		435		531		233
	271	8T-5439	163	8Y-5904	▶488		236
	273		164		554		346
	275		216		556		348
8T-4815	173		217	8Y-5906	488		539
	265		218	8Y-5914	488		541
	267	8T-6356	350	8Y-5988	488	9P-1872	181
	269	8T-6431	269	8Y-6028	488		182
	271		271	8Y-6064	536	9P-6571	484
	273		276	8Y-6364	598		510
	275		278	8Y-6386	522		512
	276	8T-6466	265		524		515
	278		267	8Y-6388	509	9P-9150	196
8T-4821	254	8T-6656	601	8Y-6967	484		202
8T-4837	254	8T-6684	333	8Y-6998	259	9R-0036	▶417
8T-4908	46		350	8Y-7203	254		422

▶ **PRIMARY REFERENCE**

PART NUMBER INDEX

Part	Page
9R-0041	3
	▶436
9R-0109	306
	307
	413
	428
	429
	430
	431
	432
	433
	436
	478
9R-0111	413
	444
	445
	469
	470
9R-0119	413
9R-0139	292
	301
	438
	440
9R-0147	418
9R-0153	297
9R-0158	413
	418
	420
	428
	429
	430
	431
	432
	433
	436
	466
	467
	468
	475
	476
	479
	480
9R-0162	288
	290
	418
	438
	440
	447
	448
	449
	450
	452
	453
	454
	455
	456
	457
	458
	459
	460
	462
	463
	464
	465
9R-0170	415
9R-0189	417
9R-0320	304
	446
	451
	461
9R-0321	297
	299
	300
9R-0347	444
9R-0366	254
9R-0376	445
9R-0393	250
9R-0394	250
9R-0411	418
	436
	438
	440
9R-0418	343
9R-0422	431
	433
9R-0423	436
9R-0424	429
	430
	431
	433
	436
	▶431
	413
	420
	420
9R-1233	179
	▶256
9R-1499	116
	119
9R-1502	427
	440
9R-1510	418
	440
	466
	467
	468
	476
	479
	480
9R-1581	173
9R-1765	273
9R-1766	174
	273
9R-1767	174
	273
9R-1882	213
	214
9R-1948	577
9R-1956	218
9R-2004	335
9R-2052	356
9R-2053	356
	359
9R-2407	168
9R-2417	168
9R-2418	168
9R-2419	168
9R-2420	168
9R-2421	168
9R-2424	169
9R-2425	170
9R-2426	170
9R-2427	168
9R-2428	168
9R-2429	168
9R-2430	168
9R-2431	168
9R-2432	168
9R-2433	168
9R-2434	168
9R-2435	170
9R-2436	170
9R-2437	170
9R-2438	170
9R-2439	170
9R-2440	170
9R-2441	170
9R-2442	170
9R-2443	170
9R-2444	170
9R-2445	170
9R-2446	168
9R-2447	168
9R-2448	168
9R-2449	168
9R-2450	168
9R-2451	168
9R-2452	168
9R-2453	168
9R-2454	168
9R-2455	168
9R-2456	168
9R-2457	168
9R-2458	168
9R-2459	169
9R-2460	169
9R-2466	170
9R-2474	169
9R-2480	169
9R-2482	169
9R-2483	169
9R-2484	169
9R-2485	169
9R-2486	169
9R-2487	170
9R-2488	169
9R-2489	169
9R-2490	169
9R-2491	169
9R-2492	169
9R-2493	169
9R-2494	169
9R-2495	169
9R-2496	169
9R-2497	169
9R-2498	169
9R-2499	169
9R-2501	169
9R-2502	169
9R-2503	169
9R-2504	169
9R-2505	169
9R-2506	169
9R-2507	169
9R-2508	169
9R-2512	169
9R-2589	492
	494
	501
9R-2614	312
9R-2620	257
9R-2806	173
	222
	267
	269
	271
	312
9R-2807	173
	222
	223
	267
	269
	271
	273
	312
9R-2958	438
9R-2959	438
9R-3051	173
9R-3067	273
9R-3092	418
9R-3135	312
9R-3182	413
9R-3255	312
9R-3469	578
	580
9R-3712	▶343
	442
9R-3933	420
9R-4066	413
9R-4110	253
9R-4482	420
9R-4485	444
	445
9R-4486	444
	445
9R-4494	420
9R-4619	332
9R-4668	▶365
	442
9R-4670	469
	470
9R-4672	444
	445
	469
	470
9R-4675	469
	470
9R-4676	469

▶ **PRIMARY REFERENCE**

PART NUMBER INDEX

Part	Page	Part	Page	Part	Page	Part	Page
	470	9R-8523	415		397	9X-2042	223
9R-4677	365		416		399		250
9R-4678	365	9R-8594	254	9S-8009	401		252
9R-4784	259	9R-8599	254		403		484
9R-5063	420	9R-8663	440	9S-8752	282		520
9R-5201	▶444	9R-8760	254		381		526
9R-5205	444	9R-8874	368		382		531
	445		369		383	9X-2043	222
9R-5206	444	9R-9005	359		384		366
	445	9R-9028	424		385	9X-2044	84
9R-5219	168		425	9S-9334	239		231
9R-5241	169	9R-9140	▶420	9T-0642	393		232
9R-5271	470		422	9T-0644	393		484
9R-5294	469	9R-9146	312	9T-0650	395		504
	470	9R-9152	420		399		510
9R-5301	312	9R-9153	420	9T-0655	239		512
	417	9R-9198	341	9T-0656	239		515
	423		360	9T-0704	387		519
	424	9R-9253	314		393		531
	425		328	9T-0766	304		577
9R-5321	▶477		336	9T-2212	295		586
9R-5429	254	9R-9254	438		298	9X-2045	259
9R-5437	254	9R-9316	360	9T-2883	302		265
9R-5555	434	9R-9319	341	9T-2969	295		267
	435	9R-9334	223	9T-3948	304		269
9R-5567	173	9R-9373	413	9T-4007	298		271
9R-5616	495	9R-9398	169	9T-4008	298		484
	497	9R-9401	169	9T-4009	298		495
	503	9R-9403	169	9T-5444	292		517
9R-5828	420	9R-9408	168	9T-7309	393		529
9R-5834	420	9R-9409	168	9U-2277	159		530
9R-5835	420	9R-9410	168	9U-8263	568		531
9R-5866	▶482	9R-9475	415	9U-8886	196		549
9R-5948	328	9R-9505	302		202		551
	333	9R-9702	167		367		568
	336		230	9W-0607	110		582
	358	9R-9812	415		111		584
9R-5971	343		416		116		588
9R-5989	▶445	9R-9868	174		119		590
9R-6007	▶432		273	9W-3326	112	9X-2065	273
9R-6062	432	9R-9869	250		113		275
	▶434	9R-9901	265	9W-5460	198	9X-2092	503
9R-6140	423		267		204	9X-2132	586
9R-6162	479		269	9W-8215	477	9X-2334	600
9R-6163	427		271	9W-9953	34	9X-2842	552
9R-6481	217		484	9X-0199	162	9X-3402	551
9R-6602	170		531	9X-1046	547	9X-4244	110
9R-6671	169	9R-9925	374	9X-1054	148		111
9R-6690	413	9S-1315	423	9X-2027	391	9X-4611	299
9R-7070	338	9S-4182	346		483		300
9R-7071	338	9S-4183	320	9X-2036	124		302
9R-7138	223		325	9X-2038	265	9X-6165	159
9R-7240	98		377		267	9X-6383	586
9R-7701	253		378		269	9X-6611	297
9R-7797	312	9S-4191	96		271	9X-6615	197
9R-7803	338		99		484		204
	339		196		504	9X-7260	292
	341		202		512	9X-7337	295
	360	9S-8006	239		515		298
9R-7882	254		370		517	9X-7380	541
9R-7902	465		387		520	9X-7381	541
9R-7960	288		389	9X-2041	491	9X-7382	541
9R-8189	223		391		500	9X-7383	541
9R-8291	254		393		521	9X-7385	506
9R-8390	413		395		568	9X-7680	370

▶ **PRIMARY REFERENCE**

PART NUMBER INDEX

Part	Page
9X-8118	114
	115
9X-8121	114
	115
9X-8139	114
	115
9X-8256	265
	267
9X-8257	34
	193
	194
	257
9X-8873	554
	556
9X-8880	169
9X-8883	169
9Y-5015	24
0	
004-6557	60
004-6810	60
005-0469	196
	203
005-0471	196
	203
009-3681	536
014-5645	197
	204
030-1957	169
031-0214	387
	389
	391
	393
	395
	397
	399
	401
031-4155	536
	563
	565
	572
031-5085	387
	397
	401
032-1557	232
032-9090	16
	18
032-9091	16
	18
033-6043	411
033-6044	410
033-7687	28
034-3679	233
	236
035-2017	536
035-8068	20
038-9317	102
	104
	106
	107
039-9133	226
061-8639	209
067-6002	20
067-6006	20
	24
067-6043	20
067-6095	44
	45
067-6123	29
067-6179	30
067-6213	35
067-6366	101
067-6873	16
	18
067-6874	16
	18
067-6897	30
067-6900	30
069-4080	96
069-4707	165
083-4419	370
084-4277	568
089-7990	164
091-5928	472
092-3635	233
	236
095-0641	552
095-0733	154
095-0741	143
	146
095-0878	536
	563
	565
	572
095-0924	187
095-0927	202
095-9230	273
095-9805	370
096-1820	475
	476
096-4415	535
096-6166	544
099-0492	143
1	
100-3320	148
100-3563	389
100-3564	389
100-3566	389
100-3567	389
100-3685	124
100-3751	30
	63
100-4112	124
100-4113	124
100-4115	124
100-4118	124
100-4119	124
100-4461	51
100-4830	32
	90
	92
100-4841	12
	14
	20
100-7442	343
100-7608	582
	584
	588
	590
100-8451	75
	101
101-0003	596
101-0117	420
101-0333	599
101-0745	594
101-0862	328
	336
101-0863	316
	320
	325
	328
	601
101-1787	264
101-2788	271
	601
101-2987	33
101-3617	29
101-3771	35
101-3895	53
	55
101-4015	254
101-4016	254
101-4020	254
102-1940	254
102-2940	592
102-3582	302
102-8801	134
	146
	154
102-8802	98
	112
	129
	142
	148
	152
	154
	159
	174
	209
	273
	393
102-8803	146
	148
	154
	155
	159
	162
	209
	578
	580
102-8804	113
	129
	146
	152
	154
	155
102-8805	116
	119
	143
	154
	546
	551
	592
102-8806	132
	135
	139
	154
	159
	545
103-4754	239
103-4867	173
103-5519	370
	▶410
103-5520	370
104-2091	484
	509
	511
	514
	528
104-3288	202
104-3912	116
	119
104-6310	442
	▶478
104-6311	478
104-6312	478
104-6313	470
104-6314	470
104-6316	478
104-6317	478
104-9502	▶122
104-9504	122
105-1434	410
105-1435	410
105-1436	410
105-1437	410
105-1438	410
105-1439	410
105-1440	410
105-1441	410
105-1442	410
105-2145	411
105-3481	554
	556
105-8034	223
105-8069	116
	119
105-9411	541
106-0401	287
106-0406	287
106-0409	316
	320
	325
	328
106-0421	415
	416
106-0424	415
	416
106-0425	316
	320
	416
106-1251	288
	290
106-2404	▶362
106-2405	362

▶ **PRIMARY REFERENCE**

PART NUMBER INDEX

Part	Page
106-2409	362
106-5876	309
	▶341
106-5878	▶242
106-5879	▶243
106-5880	▶244
106-5881	▶245
106-7301	312
106-8020	99
106-8704	129
	142
106-8916	82
106-9046	▶312
	422
106-9387	442
	443
106-9388	470
106-9586	196
	202
106-9861	198
	203
107-3313	4
	▶422
107-3716	▶163
	179
107-5591	174
	273
107-5605	162
107-6708	316
	320
	325
	328
107-6709	316
	320
	325
	329
107-6711	438
	440
107-6826	191
	192
107-8117	282
	384
108-2989	426
108-3036	442
	▶469
108-3037	469
108-3872	316
	321
	325
	329
108-4311	495
	497
109-0533	276
	278
109-1260	316
	320
	325
	328
109-9685	395
	399
110-0037	489
	490
	491
	500
110-2445	71
	73
	350
110-2861	470
110-5602	586
110-6109	484
	531
110-7524	491
	500
110-7709	316
	320
	325
	328
110-7710	316
	320
	325
	328
110-7713	316
	328
111-0483	415
	416
111-0859	27
111-3422	90
111-3423	90
111-4337	420
	436
111-4627	159
111-5042	570
111-7899	116
	119
	129
	132
	134
	135
	138
	142
	143
	146
	152
	535
111-7906	180
111-7907	▶180
	195
112-0938	▶442
112-0939	▶442
	443
112-0940	▶442
112-0941	▶443
112-1773	302
112-1775	470
112-1776	478
112-1777	470
112-1778	442
	▶470
112-1809	▶241
112-1826	311
	▶367
112-4410	214
112-4411	213
	214
	215
	219
112-4415	257
112-4416	257
112-4417	242
	243
	244
	245
	246
112-4418	243
	244
	245
	246
112-4498	413
112-5494	312
112-5823	339
112-5827	339
112-9328	211
	▶213
112-9331	212
	▶213
112-9332	▶213
112-9334	213
	▶214
112-9338	216
112-9450	578
	580
112-9629	167
	230
113-0018	▶597
113-0920	568
113-1147	169
113-1150	191
113-1151	188
	▶191
113-2662	245
	246
113-4495	241
113-5049	223
113-5973	492
	494
113-6349	101
113-7905	244
113-7906	243
113-8129	63
113-8490	119
	129
	158
113-8491	116
	119
	138
	139
113-8492	132
	135
113-9090	423
113-9221	193
	194
114-1972	403
114-1973	403
114-2579	11
	75
114-3906	403
114-4363	29
114-4916	123
114-6099	253
114-8861	259
114-8972	259
114-8973	259
114-9342	597
115-1162	11
	75
115-1615	148
115-1715	▶113
	116
	119
115-1716	▶112
	116
	119
115-1918	367
115-5219	259
115-5220	259
116-1316	385
116-4616	341
116-4617	341
116-4942	▶433
116-7491	143
	146
117-0754	438
117-2823	578
	580
117-2824	578
	580
117-2826	578
	580
117-2911	209
117-3242	233
	236
117-3534	367
117-3535	367
117-3789	516
117-4650	196
	202
117-5672	269
	271
117-7414	495
	497
117-7520	343
117-9713	180
117-9887	191
	192
118-2990	250
118-5503	511
	514
118-5837	168
118-5839	169
118-6842	240
	▶247
118-6854	240
118-7286	61
118-7789	420
118-7790	162
118-8118	95
118-9145	53
	55
119-3662	148
119-4594	436
119-4740	195
119-5025	84
119-7762	213
	▶214
119-7763	213
	▶214
119-8349	586
119-9631	486
120-1324	339
120-4397	368

▶ **PRIMARY REFERENCE**

PART NUMBER INDEX

Part	Page
	369
120-4604	348
120-5724	372
120-5726	370
	▶372
120-5727	370
120-5729	370
120-8482	▶246
120-9762	197
	203
120-9809	339
121-0694	197
	203
121-0697	202
121-0714	202
121-0883	29
121-0885	202
121-0904	202
121-1251	196
	202
121-1253	202
121-2059	202
121-2060	202
121-2061	202
121-2062	196
	203
121-2500	197
	203
121-2511	197
	203
121-2537	197
	203
121-2545	197
	203
121-2603	197
	203
121-2604	197
	203
121-4036	204
	▶208
121-6936	578
121-7385	197
	204
121-7389	197
	204
121-7390	197
	204
121-7391	198
	203
121-7396	196
	202
121-7398	197
	204
121-7399	197
	204
121-7400	197
	204
121-7401	197
	204
121-7402	197
	204
121-7403	197
	204
121-7404	197
	204
121-7405	196
	202
121-9743	586
121-9870	515
121-9875	203
122-1113	346
122-1135	208
122-1645	▶162
	422
122-1672	208
122-1876	204
122-1877	202
122-1878	202
122-1879	202
122-1880	197
	203
122-1881	197
	203
122-1882	197
	203
122-1883	203
122-1884	204
122-1885	197
	203
122-1886	197
	204
122-2051	543
122-2052	543
122-2053	543
122-2054	▶543
122-3649	196
	203
122-3652	196
	202
122-4872	339
122-4873	339
122-5822	360
122-5823	341
122-5923	259
122-6785	197
	204
122-6787	197
	203
122-7137	575
	576
122-8032	423
122-8037	▶423
122-9356	119
123-0428	257
123-0714	197
	203
123-1377	197
	203
123-2918	204
123-2919	204
123-2920	197
	203
123-4065	65
	66
	68
	70
	257
	259
123-4950	98
	99
123-6077	536
	563
	565
	572
123-7034	254
123-7637	316
	320
	325
	328
123-8669	578
	580
123-8670	578
	580
123-8905	196
	202
123-8906	196
	202
123-8907	197
	204
123-8908	197
	204
123-8909	196
	203
123-8910	196
	203
123-8912	202
123-8913	197
	203
124-0312	484
	531
124-0360	427
	440
124-2456	599
124-2528	316
	320
	325
	328
124-3536	37
	39
124-3815	30
	90
	92
124-6524	507
124-6612	197
124-8818	382
	▶387
124-9462	220
124-9464	220
125-2086	598
125-3298	134
	139
125-3416	541
125-7116	469
	470
125-7894	302
126-1817	311
126-4224	469
	470
126-5476	387
	389
	391
	393
	395
	397
	399
	401
	403
126-5796	391
	395
	397
	399
	403
126-5975	59
126-5984	387
	389
	391
	393
	395
	397
	399
	401
	403
126-5985	387
	389
	391
	393
	395
	397
	399
	401
	403
126-8472	259
	518
127-1665	220
127-1666	220
127-3017	197
	204
127-4285	212
	▶215
127-4289	215
127-4290	▶215
127-4293	215
127-4471	49
	71
	73
	374
127-6980	57
	58
	59
127-8987	413
128-2776	389
	393
128-4249	154
128-5010	413
128-5596	367
128-7902	312
128-7903	312
128-7905	312
129-0138	▶220
	222
129-1854	520
	521
	568
129-1855	520
	521
	568
129-1938	228
129-3178	259
	486
	533

▶ **PRIMARY REFERENCE**

PART NUMBER INDEX

Part	Page
	538
	552
	578
	580
129-3180	554
	556
	558
	570
	586
129-4741	247
129-5256	495
	497
129-5257	495
	497
129-8542	582
	584
	588
	590
129-8543	588
	590
129-8545	582
	584
	588
	590
129-9120	413
129-9121	▶413
	422
130-0013	208
130-0165	109
130-0484	254
130-0777	436
130-0912	209
130-1637	428
	432
130-1638	306
	428
	429
	430
	432
130-1640	306
	307
	428
	429
	430
130-1642	434
	435
130-3879	58
130-3880	57
	59
130-3881	507
130-4832	484
	531
130-5451	413
130-5582	599
130-5774	312
130-5891	312
130-6520	381
	382
	▶389
130-6662	600
130-7282	220
130-7452	597
130-7880	59
130-7952	312
130-8150	367
130-8343	570
130-8432	568
130-9984	61
	350
131-0232	98
131-0827	259
131-0828	259
131-1368	578
	580
131-1424	575
	576
131-3201	129
	152
131-3540	549
	554
	556
	558
131-3985	568
131-3987	495
	497
	522
	524
131-8203	586
131-8775	254
132-0111	123
132-2249	592
132-2250	592
	594
132-3056	374
132-3721	472
	474
132-3723	472
132-3725	472
	474
132-3777	473
	474
132-3778	473
	474
132-3811	474
132-3812	474
132-3821	472
	474
132-5789	46
	159
132-6496	413
132-6497	417
132-8769	▶287
132-9240	536
	563
	565
	572
133-1011	30
133-3361	▶306
133-3362	▶428
133-3363	▶429
133-3366	▶430
133-3413	109
133-5813	345
133-6517	109
133-7332	341
133-7333	341
133-8916	276
	601
134-0143	254
134-0453	273
	275
134-2305	146
134-3014	311
134-3059	495
	497
134-3060	495
	497
134-3061	497
134-3062	495
	497
134-3503	497
134-3856	539
	541
134-5484	536
134-5884	451
134-5885	451
134-7323	356
134-7324	356
134-8204	▶598
135-1706	536
	563
	565
	572
135-2876	428
	▶435
135-4744	▶307
135-7242	122
135-8203	482
135-9420	312
135-9886	257
136-1613	588
	590
136-1955	46
	351
136-3112	181
136-4192	582
	584
	588
	590
136-7439	269
	271
136-7440	269
	271
136-7808	176
136-8423	370
137-3848	▶479
137-9466	391
138-2053	44
	45
138-4894	134
138-6904	61
138-6913	61
138-7137	193
	194
138-8454	129
	152
	154
139-3785	259
140-2358	68
	70
140-2959	501
140-3634	68
	70
140-3635	68
140-3639	68
140-3640	67
	69
140-6009	312
140-6021	273
	362
140-7393	195
140-8714	90
	92
140-8718	90
	92
140-8783	101
140-9921	586
141-0924	116
	119
141-1667	82
141-2759	132
	142
141-5150	430
	431
141-6208	429
	430
	431
	433
141-6343	312
141-7221	213
	215
	218
141-7512	65
	66
141-7514	257
141-7515	259
141-8292	▶123
142-0724	68
142-3388	57
	58
142-3391	57
	58
142-5789	116
	119
142-6132	254
142-7405	267
	269
	271
142-8858	551
143-0539	▶124
	126
143-0782	▶34
	188
	189
	190
143-0786	▶61
	188
	189
	190
143-1344	124
143-2827	495
	582
	584
	588
	590
143-2830	495
	582
	584
	588
	590

▶ **PRIMARY REFERENCE**

PART NUMBER INDEX

Part	Page
143-3158	346
143-4655	209
143-6227	209
143-8874	484
	531
144-0195	495
	497
	578
	580
144-0367	350
144-1636	551
144-2222	490
	▶508
144-3528	440
144-4277	389
144-6253	309
	▶338
144-6256	338
144-6258	338
144-6734	178
144-9931	143
	▶545
144-9934	545
145-4476	257
145-6005	68
	70
145-6713	▶57
	489
	499
	500
145-8327	92
145-8337	418
145-8344	418
145-8348	475
	476
145-9291	238
146-0218	123
146-1589	307
	435
146-1590	307
	435
146-1591	434
146-6729	124
146-7744	586
146-7745	586
146-9439	116
	119
	132
	135
	138
	139
	142
147-0385	49
147-1559	▶58
	490
147-1659	391
147-1979	24
147-3019	522
	524
147-5553	80
148-3626	509
	528
148-5353	582
	584
	588
	590
148-5355	522
	524
148-7310	524
148-7311	522
148-7318	524
148-7319	522
148-8315	335
148-8316	233
	236
	264
	348
148-8318	233
	236
148-8325	223
	345
	346
	350
148-8326	99
148-8327	262
	316
	320
	325
	328
	332
	356
148-8328	262
	314
	328
	336
148-8335	316
	320
	325
	328
	353
148-8336	343
148-8339	61
148-8340	262
	359
148-8341	262
	339
	341
	358
	360
148-8345	356
148-8346	233
	236
148-8347	328
	336
	356
148-8351	280
	348
148-8352	316
	317
	320
	325
	328
	350
	353
148-8357	350
	354
148-8360	61
148-8362	333
	350
148-8364	262
	359
148-8367	233
	236
148-8368	223
148-8369	233
	236
	346
	348
148-8370	262
148-8372	356
148-8374	236
148-8383	233
148-8386	316
	320
	325
	328
148-8387	316
	320
	325
	329
148-8390	335
	338
	360
148-8392	316
	329
148-8393	360
148-8407	99
148-8408	320
	325
	377
	378
148-8422	350
148-8428	280
148-8429	353
	354
	355
148-8446	339
148-8450	316
	320
	325
	328
148-8455	333
148-8457	333
149-4236	82
149-4311	379
149-4745	563
	565
149-9954	95
150-3027	350
	374
150-3033	346
150-3052	316
	320
	325
	329
150-3053	316
	320
	325
	329
150-3060	343
150-3062	264
150-3063	339
150-7732	12
	14
150-8015	586
151-2963	247
151-4841	84
	339
	341
	360
151-5715	509
	528
151-7316	2
	3
	▶440
151-7902	447
	448
	449
	450
	452
	453
	454
	455
	456
	457
	458
	459
	460
	462
	463
	464
	465
151-7903	447
	448
	449
	450
	452
	453
	454
	455
	456
	457
	458
	459
	460
	462
	463
	464
	465
151-7927	451
151-7928	1
	2
	3
	▶418
151-7929	446
	451
	461
151-7930	446
	451
	461
151-8752	68
	70
152-6144	165
	176
152-7728	415
152-8417	541
152-9735	427
152-9736	1
	▶427
153-3061	57

▶ **PRIMARY REFERENCE**

PART NUMBER INDEX

Part	Page
	58
	508
153-7368	238
153-9580	231
	▶238
154-5257	446
	451
	461
154-5265	418
154-5277	418
154-5278	418
154-5279	418
	479
	480
154-5280	418
	480
154-5404	165
	228
154-5406	522
154-5410	592
	594
154-5416	222
154-5423	582
	584
154-5424	582
	584
154-5428	159
154-8278	536
	563
	565
	572
154-8280	536
	563
	565
	572
154-8284	536
	563
	565
	572
155-2255	143
	146
	154
155-2260	132
	135
	139
	146
	148
	154
155-2262	551
155-2265	132
	143
	154
155-2270	116
	119
	129
	143
	146
	148
	152
	154
	159
	208
	222
	486
155-2271	116
	119
	132
	135
	139
	146
	154
155-2274	116
	119
	132
	135
	139
	146
	154
155-3624	346
155-4707	536
155-4753	536
155-6457	116
	119
155-6586	▶294
	438
155-8154	223
155-8522	148
155-8804	92
155-9836	387
	389
	393
	401
156-0283	116
	119
	248
	249
156-1267	403
156-1928	168
156-1929	168
156-1930	168
156-1933	170
156-1934	169
156-2571	168
156-2572	168
156-2573	170
156-2853	163
	164
	▶168
156-3837	360
156-3838	360
156-4321	403
156-9275	202
156-9276	196
157-1669	96
157-1997	143
	146
158-3412	338
	339
	341
	360
158-8778	438
159-0186	61
	350
159-0960	254
159-0961	427
	440
159-2798	1
	2
	3
	▶415
159-2799	1
	2
	▶416
159-4269	522
	524
159-4930	438
159-4945	495
	497
	524
159-4946	495
	497
	522
159-4950	584
	588
159-4951	582
	590
159-4953	522
159-4954	524
159-7907	227
159-8033	599
160-2245	541
160-2248	233
	236
160-6026	328
	333
	336
161-3249	202
161-4458	536
161-4518	536
161-6984	582
	584
	588
	590
161-6987	582
	584
	588
	590
161-9044	522
	524
161-9282	570
	574
161-9283	570
	574
161-9285	570
	574
161-9286	570
	574
161-9288	570
	574
161-9289	536
	563
	565
	572
161-9290	536
	563
	565
	572
161-9291	536
161-9294	582
	584
	588
	590
161-9744	563
	565
	572
162-1565	12
162-1604	370
162-2351	294
	▶335
162-2353	335
162-2354	335
162-2356	328
	336
162-6556	582
	584
	588
	590
163-0753	221
	▶226
163-0754	▶221
	222
163-0755	221
163-1135	570
163-1139	570
163-4759	592
163-7938	502
163-7939	495
	497
	503
163-7940	231
	232
163-9371	309
	▶339
164-1025	▶501
	503
164-1037	531
164-1040	541
164-1041	541
164-1042	484
164-1043	526
164-1045	489
	▶531
164-1050	492
	494
	▶502
164-1056	154
164-1059	495
	497
	▶582
164-1060	495
	497
	▶584
164-1061	497
	▶524
164-1062	495
	497
	▶522
164-1064	582
164-1065	584
164-1066	588
164-1067	590
164-1068	495
	497
164-1069	495
	497
164-1070	491
	495
	497
	500
164-1071	495

▶ **PRIMARY REFERENCE**

PART NUMBER INDEX

Part	Page
	497
	503
164-1072	495
	497
	503
164-1073	524
	▶588
164-1074	522
	▶590
164-1077	84
164-1079	538
164-1083	538
164-1102	250
164-1103	250
164-1105	188
	189
164-1107	515
164-1108	516
164-1110	519
	577
164-1113	174
164-1122	549
164-1123	549
164-1125	489
	▶495
164-1130	▶174
	188
	189
	190
164-1131	▶511
	512
164-1133	511
164-1134	511
164-1137	517
164-1140	490
	▶497
164-1141	189
	190
	▶526
164-1148	▶248
	490
164-1150	▶492
	497
164-1152	568
164-1153	174
164-1154	552
164-1155	489
	490
	491
	499
	500
	▶544
164-1156	521
	568
164-1157	568
164-1165	490
	▶568
164-1166	568
164-1177	549
164-1178	513
	514
164-1196	484
	531
164-1197	174
164-1198	526
164-1201	▶563
	567
164-1202	▶565
	567
164-1205	▶561
	562
164-1207	563
	565
	▶570
164-1208	570
164-1209	▶554
	563
164-1210	▶556
	565
164-1211	563
	565
	572
164-1212	563
	565
	572
164-1214	554
	556
164-1215	570
164-1216	570
164-1217	570
164-1218	570
164-1219	570
164-1220	570
164-1221	570
164-1224	570
164-1225	570
164-1226	570
164-1228	570
164-1229	570
164-1230	570
164-1231	570
164-1232	570
164-1233	570
164-1234	570
164-1236	570
164-1237	570
164-1238	570
164-1239	570
164-1240	570
164-1244	554
164-1247	554
	556
164-1248	554
	556
	558
164-1249	554
	556
164-1250	554
	556
164-1251	554
	556
164-1252	554
	556
164-1256	554
	556
164-1258	554
	556
164-1259	554
	556
164-1260	558
164-1261	554
	556
164-1265	554
	556
164-1266	556
	558
164-1278	▶483
	561
164-1279	483
164-1280	483
164-1281	483
164-1282	483
164-1283	483
164-1286	483
164-1287	483
164-1288	483
164-1289	483
164-1290	483
164-1291	483
164-1292	561
	▶572
164-1293	572
	▶574
164-1294	570
	574
164-1295	563
	565
	572
164-1296	▶558
	561
164-1297	558
164-1298	558
164-1299	558
164-1308	586
164-1311	586
164-1314	586
164-1325	495
	497
	▶586
164-1326	586
164-1327	586
164-1328	586
164-1331	586
164-1342	586
164-1343	586
164-1344	586
164-1345	586
164-1346	586
164-1347	586
164-1350	491
	499
	500
	▶503
164-1351	586
164-1352	586
164-1353	586
164-1354	586
164-1361	265
	267
164-1363	309
164-1364	309
164-1365	174
164-1366	577
164-1368	174
	273
	526
164-1369	273
164-1370	490
	▶577
164-1371	265
	267
164-1372	271
164-1373	269
164-1374	577
164-1375	▶494
	495
164-1388	490
	▶512
164-1395	84
	275
	426
164-1397	269
	271
164-1398	366
164-1399	265
	267
164-1400	▶265
	283
164-1402	265
	267
164-1404	265
	267
164-1406	265
164-1409	265
	267
164-1410	▶283
164-1411	265
	267
164-1420	▶267
	284
164-1421	267
164-1422	267
164-1425	267
164-1427	267
	269
	271
164-1429	267
164-1430	▶284
164-1435	265
	267
164-1438	267
164-1441	267
	269
	271
164-1481	364
164-1500	▶269
	285
164-1501	269
	271
164-1502	269
	271
164-1503	269
	271
164-1510	▶285
164-1511	271
164-1514	269
	271
164-1515	269
	271
164-1517	269

▶ **PRIMARY REFERENCE**

PART NUMBER INDEX

Part	Page
	271
164-1519	269
	271
164-1520	▶271
	286
164-1521	269
	271
164-1523	269
	271
164-1525	269
	271
164-1526	269
	271
164-1527	269
	271
164-1530	▶286
164-1540	▶276
	309
	310
	377
	378
164-1541	269
	271
	276
164-1544	276
	278
164-1547	276
	278
164-1549	276
	278
164-1550	▶278
	378
164-1551	269
	271
	278
164-1560	265
	267
164-1570	269
	271
164-1601	134
164-1660	502
164-3876	97
	240
164-4139	486
164-5544	233
	236
164-5567	264
	345
	350
164-6613	533
164-7174	294
	▶295
164-7175	295
164-7176	295
164-7556	110
	111
164-8473	484
	509
	528
164-8908	280
164-9425	148
	535
164-9598	226
164-9599	226
165-2273	350
165-4021	46
165-6585	223
165-6595	223
165-6599	223
165-6601	223
165-6602	223
165-6603	223
165-6918	188
	▶223
165-7019	364
165-7951	96
165-8357	109
165-8996	167
	230
166-2033	345
	350
166-2861	508
166-5206	▶536
166-7950	383
	384
	385
	▶391
166-9413	220
167-0566	280
167-2186	295
	298
167-2192	304
167-2195	302
167-2197	299
	300
167-2201	288
	290
	301
167-2202	292
167-2294	295
	298
167-2302	304
167-2304	302
167-2305	299
	300
167-2310	292
167-2312	288
	290
	301
167-2450	295
	298
167-3693	148
167-3700	154
167-3701	143
167-3704	135
	139
167-3708	159
167-3896	328
	336
167-6768	387
	391
	395
	397
	399
	401
167-8160	223
167-8161	223
167-8164	223
167-8182	586
167-8187	489
	490
	▶578
167-8246	509
167-8248	265
	267
167-8251	516
167-8252	511
167-8253	248
	249
167-8254	248
	249
167-8264	311
	▶359
167-8270	1
	2
	3
	▶332
167-8273	1
	2
	3
	▶358
167-8275	2
	3
	▶333
167-8276	1
	▶336
167-8278	547
167-8279	547
167-8283	551
168-0361	381
	382
	▶393
168-0425	475
	476
168-0443	466
	467
	468
168-0444	466
	467
	468
168-0445	476
168-0446	475
	476
168-0475	475
168-0480	447
	448
	449
	450
	452
	453
	454
	455
	456
	457
	458
	459
	460
	462
	463
	464
	465
168-2313	486
	533
168-4511	109
168-4609	549
168-7446	▶165
	167
168-8493	316
	320
	325
	328
168-8497	328
	336
168-8644	328
	336
168-9906	578
	580
169-0586	146
169-0587	143
	535
169-0588	143
169-0590	116
169-0591	119
169-0592	116
169-0593	119
169-0595	138
169-0596	132
	135
169-0598	142
169-0605	129
	152
169-0606	129
169-2935	314
	328
	336
169-2944	320
169-2978	332
169-2980	358
169-2983	328
	333
	336
169-6947	302
169-7290	568
169-7291	568
170-0075	484
	▶486
170-0076	531
	▶533
170-0606	▶262
	311
170-1644	374
170-2237	129
	152
170-6305	146
170-6312	265
	267
170-6542	146
170-7269	486
	533
170-7270	486
	533
170-7271	486
	533
170-7272	486
	533
170-7274	486
170-7281	486
	533
170-7282	486
	533

▶ **PRIMARY REFERENCE**

PART NUMBER INDEX

Part	Page
170-9066	292
171-2101	1
	2
	3
	▶368
171-2427	3
	310
	▶314
171-2870	586
171-8623	223
172-2252	316
	320
	325
	328
172-2353	299
	300
172-2354	299
	300
172-2363	368
172-3190	1
	2
	▶369
172-3820	332
172-3821	358
172-5317	197
	203
172-6050	202
172-6224	601
172-8591	513
	514
172-9200	146
172-9992	438
	440
173-0637	370
173-0638	370
173-0639	370
173-0640	370
	▶411
173-0641	370
173-2685	112
	113
173-2769	438
173-5787	536
	563
	565
	572
173-7757	438
173-8340	112
	113
173-9779	295
174-2024	489
	490
	▶592
174-2025	592
174-2026	592
174-4306	356
174-4643	165
174-4671	165
174-5456	592
174-5696	440
174-5699	356
174-5700	356
174-5701	356
174-5702	356
174-6640	174
174-6740	346
174-6812	415
	416
174-7820	223
174-8957	112
174-8958	113
174-9638	79
	82
174-9711	196
	202
175-0054	196
	202
175-5050	570
175-7896	295
175-7902	292
	301
176-3900	541
176-6247	▶472
	473
176-6248	472
176-6251	474
176-6252	474
176-7228	359
176-8541	407
177-0856	314
	328
	336
177-2171	314
	336
177-4726	▶424
177-4727	▶425
177-4729	424
177-4733	425
177-4877	495
	497
177-4903	▶481
177-7094	356
177-7148	316
	320
	369
177-7149	316
	320
	369
177-9645	129
	148
	152
	486
177-9648	129
	152
	154
178-1123	359
178-3593	▶480
178-4200	481
178-7481	320
	▶386
178-7539	138
	158
178-8132	197
	203
178-8133	196
	204
178-8134	197
	203
178-8200	197
	203
178-8465	148
178-8608	183
	185
178-8849	▶473
178-8850	▶474
178-9242	106
	107
178-9566	202
178-9983	510
	512
	515
179-1215	132
179-5434	114
	115
179-5435	138
179-5571	257
179-8235	265
	269
	271
	273
	275
	276
	278
179-9961	415
	416
	440
180-2441	65
	66
180-3663	▶114
	123
180-3664	▶115
	122
180-3730	99
180-3773	481
180-5750	529
180-5754	529
	530
180-5758	530
180-5760	490
	▶529
180-5764	489
	491
	499
	500
	▶530
180-5770	489
	490
	▶567
180-5771	491
	499
	500
	▶567
180-5774	560
	▶562
180-5793	570
180-5794	570
180-5795	556
	558
180-5796	554
180-5797	554
	556
180-6110	290
180-6111	290
180-6213	370
180-6603	288
	290
180-7218	495
180-7219	495
180-7232	495
180-7233	495
180-7245	222
180-8170	232
180-8592	377
	▶383
180-8593	377
	▶384
180-8594	378
	▶385
180-9157	239
183-3120	3
	▶273
183-3121	273
183-3122	273
183-3131	273
183-3132	273
183-3135	273
183-3136	273
	275
183-3137	273
183-3150	▶275
	309
183-3151	275
183-3153	273
	275
183-3155	273
183-3156	273
	275
183-3887	84
	▶538
183-4492	134
183-4897	▶231
	490
183-4898	▶232
	489
	491
	499
	500
183-4991	513
	514
	▶516
183-4994	269
183-4995	189
	190
	▶509
183-4997	▶513
	515
183-4998	510
	▶514
183-4999	271
183-6051	426
183-6056	3
	▶254
183-6075	426
183-6076	3
	▶426
183-6078	▶366
	373
183-6081	426
183-6084	426
183-6085	426

▶ **PRIMARY REFERENCE**

PART NUMBER INDEX

Part	Page
184-2422	152
184-5293	146
184-6430	154
184-6436	250
184-6557	515
184-6558	512
184-6559	528
184-6560	484
	531
184-6561	484
	531
184-6562	526
184-6563	526
184-6564	484
	531
184-6565	541
184-6566	512
184-6570	188
	▶222
184-6577	▶528
	531
184-6581	223
184-6785	438
184-7898	188
	▶547
184-7970	4
	▶188
185-0080	3
	▶250
185-0882	24
185-0884	20
185-1546	44
	45
185-1598	309
	▶363
185-1839	▶298
	442
185-3165	311
	▶364
185-3413	179
	▶356
185-3524	489
	490
	▶510
185-3525	188
	189
	190
	▶548
185-3527	489
	491
	499
	500
	▶519
185-3528	526
185-3529	231
	232
185-3530	491
	499
	500
	▶515
185-3890	570
185-4015	486
	533
185-5898	376
	▶379
185-5902	373
	▶407
185-5906	309
	▶381
185-5907	309
	▶382
185-6583	295
185-6643	46
185-7015	114
185-7016	115
185-7585	188
	189
	▶195
185-7586	189
	190
	▶195
185-7736	3
	▶599
185-8801	▶132
	490
185-8802	▶134
	499
185-8808	▶159
	179
185-9777	549
185-9784	179
	▶376
186-0252	489
	490
	491
	499
	500
	▶517
186-0303	▶135
	489
186-0306	▶138
	489
	490
	491
	499
	500
186-0309	▶142
	179
186-0817	578
	580
186-1583	269
	271
186-2589	▶546
	592
	594
186-2731	▶152
	489
186-3629	346
186-3735	98
	113
	129
	142
	146
	148
	174
	209
	273
	546
	592
186-3736	208
186-4117	168
186-4118	168
186-5265	596
186-5266	596
186-5286	▶596
	599
186-5296	599
186-5298	309
	601
186-5300	600
186-5331	▶309
186-5333	▶309
187-0524	397
187-0527	397
	403
187-0530	403
187-1644	143
	146
	491
	499
	500
187-2120	346
187-3162	360
187-3163	360
187-3164	360
187-3166	360
187-3510	288
	290
187-3825	438
187-3826	438
187-3827	438
187-3828	438
187-3832	438
187-3833	438
187-3834	438
187-3835	438
187-3836	438
187-3837	438
187-4329	360
187-4333	328
	336
187-4343	333
187-4344	328
	336
187-8936	98
188-0861	600
188-0862	257
188-0863	143
	601
188-0865	257
188-2704	533
188-2706	486
	533
188-2708	486
	533
188-2709	486
188-2710	486
188-2711	486
	533
188-2712	486
188-2715	533
188-3953	306
	307
	428
	429
	430
188-5004	432
188-7471	▶239
	381
	382
188-7760	511
188-8715	346
188-9097	3
	▶345
188-9592	475
188-9954	438
189-0555	309
	▶360
189-1834	▶228
	230
189-3610	545
189-5629	299
	300
190-3397	383
	384
	385
	▶395
190-3400	383
	384
	385
	▶397
190-3402	383
	384
	385
	▶399
190-3450	282
	384
	385
	▶401
190-5122	240
190-5123	97
190-5128	267
	600
190-5129	269
	271
	600
190-5130	265
	601
190-5132	484
	531
	600
190-5133	600
190-5134	600
190-5136	366
	600
190-5137	600
190-5139	84
	600
190-7557	▶158
	490
190-7595	444
190-7598	445
190-8918	▶553
190-8954	179
	▶348
190-8956	348
190-8957	264
190-9767	202
190-9838	86
	88

▶ **PRIMARY REFERENCE**

PART NUMBER INDEX

Part	Page
191-4010	381
	382
191-4484	239
	▶403
191-4850	316
	320
	369
191-4851	316
	320
	369
191-4852	368
	369
191-5104	549
191-6033	486
	533
191-6034	486
191-6035	486
	533
191-6112	304
191-6577	302
191-7738	302
191-8161	▶302
	311
191-9104	551
	600
191-9107	600
191-9109	259
191-9110	259
191-9111	259
191-9113	173
191-9114	▶173
	188
192-0826	379
192-0827	379
	▶405
192-0828	379
	405
192-0843	196
192-0845	202
192-2060	379
	405
192-2061	379
192-2075	379
192-2080	379
192-2081	405
192-2082	405
192-4487	405
192-4488	379
	405
192-4489	379
192-4490	405
192-4491	379
	405
192-4492	379
	405
192-4522	174
192-7355	549
192-7505	379
192-7506	379
	405
192-7507	379
192-7508	379
192-7509	379
192-7510	405
192-7511	379
192-7512	379
	405
192-7513	405
192-7514	405
192-7515	379
	405
192-7516	379
	405
192-7863	379
192-7864	379
	405
192-7877	95
193-0618	95
193-1036	411
193-1509	551
193-2342	▶535
193-5914	600
193-5915	600
193-5916	600
193-6352	368
193-6353	368
193-6355	316
	320
	369
193-8648	370
194-1978	310
	▶316
194-2847	164
194-4183	489
	491
	499
	500
	▶504
194-4184	504
194-4250	549
194-5171	592
194-5390	82
194-5622	484
	531
194-6196	370
194-6792	▶211
194-9625	553
195-0260	346
195-0261	346
195-0262	346
195-0263	346
195-0268	333
195-2037	233
	236
195-2132	33
195-2134	33
195-2136	33
195-2139	387
	391
	393
	395
	397
	399
	401
195-2221	33
195-2406	391
	395
	397
	399
195-3699	249
195-3898	▶249
	489
	491
	499
	500
195-5830	223
195-6339	216
195-6341	218
195-7055	561
	563
	565
195-7056	558
195-9223	554
	556
	558
196-2383	154
196-2384	154
196-2385	154
196-2386	154
196-2966	146
196-8860	▶309
196-8861	309
	310
	▶320
196-8862	▶310
196-8995	▶310
197-0573	333
197-1742	239
	389
	391
	401
197-2709	395
	397
	399
	401
	403
197-2714	395
	397
	399
197-2733	1
	▶438
197-2734	438
197-3121	393
197-3222	403
197-3698	389
	393
197-6258	461
197-6259	461
197-6657	570
197-6658	570
197-7230	520
197-7499	549
197-7564	491
	499
	500
	▶520
197-8973	568
197-9155	165
198-0014	438
198-0015	438
198-0098	276
198-0102	309
	600
198-0103	518
198-0104	499
	▶518
198-1289	489
	▶521
198-6498	408
	409
198-6511	408
	409
198-6513	408
	409
198-6515	407
198-6517	408
	409
198-6681	▶310
198-6886	512
198-7412	▶282
	309
	310
198-7812	165
198-7814	183
	185
198-7823	165
	228
198-7825	165
	228
198-7838	165
	228
198-7841	228
198-7842	228
198-7843	228
198-8341	257
198-8645	12
198-9723	▶60
	489
199-0639	165
199-0648	183
	185
	228
199-0683	165
	228
199-0695	176
199-0858	176
199-0929	544
199-3729	486
	533
199-6243	541
	601
199-6245	599
199-7854	363
199-9252	92
199-9267	53
	55
199-9751	24
	92
	128
200-0161	383
	384
	385
200-1726	407
	▶408
200-1728	407
	▶409

2

▶ **PRIMARY REFERENCE**

PART NUMBER INDEX

Part	Page
200-2673	511
200-2676	490
	▶505
200-3004	568
200-3946	264
200-3947	264
200-4019	408
	409
200-4022	409
200-4023	408
200-4024	409
200-4025	408
200-5356	568
200-5359	411
200-5360	411
200-5361	411
200-5362	411
200-5363	411
200-5364	411
200-5921	472
	474
200-6382	403
201-0190	246
201-0330	99
201-1034	368
201-1035	368
201-1234	451
	461
201-1235	448
	449
	450
201-1238	446
	447
	448
	449
	450
	451
	452
	453
	454
	455
	456
	457
	458
	459
	460
	461
	462
	463
	464
	465
201-1634	486
	533
201-1635	486
201-1636	486
201-1637	533
201-1638	533
201-1835	99
201-1837	97
201-1862	212
	▶216
201-1863	216
201-1864	▶216
201-1874	211
	212
	▶217
201-1875	217
201-1876	▶217
201-1877	211
	212
	▶218
201-1878	▶218
201-1902	219
201-1915	216
	217
	218
201-1919	216
	217
	218
201-1920	▶211
	216
	217
	218
201-2157	223
201-3398	236
201-4822	250
201-5810	306
	307
	428
	429
	430
201-5812	306
	307
	428
	429
	430
201-8069	273
201-8561	193
	▶196
201-8562	194
	▶202
201-9465	586
201-9732	▶252
	489
201-9733	252
202-0040	209
202-1009	236
202-3263	408
	409
202-5710	179
	600
202-5711	179
	▶233
202-5712	179
	▶236
202-5724	▶549
202-5733	189
	190
	▶192
202-5812	▶551
202-5909	46
202-5923	345
202-5928	311
	▶346
202-5979	549
202-6007	▶193
	195
202-6008	▶194
	195
202-6063	549
202-6113	84
202-6126	▶280
202-6139	▶264
	311
202-6141	513
202-6142	514
202-6186	216
	217
202-6195	▶164
	179
202-6196	▶167
	179
202-6198	179
	▶230
202-6611	111
202-6614	110
202-7503	411
202-7874	192
203-4158	491
	499
	500
204-0317	233
	236
204-3080	228
204-7341	513
	514
204-9921	486
	533
205-3126	345
205-3759	223
205-3760	223
205-3761	223
205-4286	146
205-5798	366
205-6373	346
205-6374	346
205-6375	346
205-6376	346
205-6377	346
205-7047	544
205-7536	586
205-7538	586
205-7700	143
205-8845	316
	320
205-9014	316
	320
205-9980	510
	515
206-0502	301
206-0513	288
206-0514	2
	3
	▶288
206-0517	290
206-0518	1
	▶290
206-0519	299
206-0520	▶299
	311
206-0521	300
206-0522	▶300
	311
206-1486	162
206-3552	304
206-3553	▶304
	311
206-3627	292
206-3628	▶292
	311
206-3685	280
206-4703	491
	500
	521
206-6974	231
206-7398	486
	533
206-7512	484
	531
206-7513	484
	531
206-7514	484
	531
207-4254	165
	228
207-4255	228
207-4258	165
	228
207-4260	228
207-4262	228
207-4263	228
207-4266	228
207-4267	228
207-4268	228
207-4271	228
207-4272	228
207-5477	332
207-5479	338
207-5480	338
207-6050	▶139
	491
	500
207-6051	491
	500
	▶594
207-6052	491
	500
	▶580

▶ **PRIMARY REFERENCE**

PART NUMBER INDEX

Part	Page	Part	Page	Part	Page	Part	Page
207-7581	360	209-9875	165		▶98	219-3384	▶451
208-0321	165	209-9882	165	214-6950	▶3		467
208-0322	176		▶176		4	219-3385	▶452
208-3600	280	209-9883	165	214-6955	▶188	219-3386	▶453
208-3601	280	209-9884	165	214-6956	▶189	219-3387	▶454
208-5235	446		▶183	214-6958	▶189	219-3388	▶455
	447	209-9885	165	214-6959	▶190	219-3389	▶456
	448		▶185	214-6980	4	219-3390	▶457
	449	209-9886	165		▶311	219-3391	▶458
	450	209-9887	165	214-7000	▶377	219-3392	▶459
	451	210-1706	254	214-7001	▶377	219-3393	▶460
	452	210-1707	254	214-7002	▶377	219-3394	▶461
	453	210-5924	165	214-7003	▶378		468
	454		▶187	214-7457	67	219-3395	▶462
	455	210-5931	187		69	219-3396	▶463
	456	210-5934	187	214-7458	67	219-3397	▶464
	457	210-5937	165		69	219-3398	▶465
	458	210-5942	165	214-9035	549	219-3410	▶466
	459	210-5946	165	215-2023	165	219-3411	▶467
	460	210-5947	165		228	219-3412	▶468
	461	210-6243	311	215-4424	262	219-8751	176
	462	210-7465	233	215-9219	370	219-8752	176
	463	210-7466	233	215-9513	86	219-8753	176
	464	211-0052	154		88	219-8754	176
	465	211-0092	178	215-9515	88	219-8755	176
208-5245	446	211-4348	350	215-9632	350	219-8756	176
	447	211-6735	165	216-2267	198	219-8757	176
	448	211-6758	196		204	219-8758	176
	449		202	216-4457	176	219-8759	176
	450	211-6759	196	216-4458	176	219-8783	187
	451		203	216-4459	228	219-8798	165
	452	212-3518	223	216-4461	176		228
	453	212-6215	195	216-4464	176	219-9482	451
	454	212-9338	333	216-4465	176		452
	455	213-6088	102	216-4466	176	219-9483	453
	456		106	216-5515	176		457
	457	213-6091	104	216-7473	165		462
	458		107	216-8314	16	219-9484	454
	459	213-6092	104		18		458
	460		107	216-8634	30		463
	461	213-6094	148	216-8687	178	219-9485	455
	462	213-7315	129	216-8689	178		459
	463		152	216-8691	178		464
	464	213-8481	256	216-8700	178	219-9486	456
	465	213-9270	486	216-9497	178		460
209-4172	188		533	216-9498	176		465
	189	214-0706	353		▶178	219-9488	448
	190		354	217-1387	280	219-9489	449
	▶373	214-3159	233	217-2868	176	219-9490	450
209-7454	176		236	217-2877	183	219-9493	461
209-7455	178	214-3520	66	217-2878	185	220-0248	348
209-7456	165	214-4252	280	217-2879	183	220-0407	379
209-7460	183	214-4253	280	217-2880	176	220-8631	29
	185	214-5097	165	217-2883	165	221-8045	600
209-7462	176		228	217-2884	165	222-0844	254
209-7463	176	214-6885	▶4	217-2885	165	222-2690	84
209-7464	165	214-6890	▶5		228	222-4067	374
209-7465	183	214-6891	▶6	219-0305	599	222-5794	146
	185	214-6908	3	219-3273	109		601
209-7466	187		▶97	219-3379	▶446	223-6539	146
209-7472	176	214-6944	3		466	223-8181	198
209-7473	176		▶253	219-3380	▶447		204
209-9219	22	214-6946	253	219-3381	▶448		▶209
	23	214-6948	99	219-3382	▶449	224-0672	601
209-9241	288	214-6949	97	219-3383	▶450	224-8945	259

▶ **PRIMARY REFERENCE**

PART NUMBER INDEX

Part	Page	Part	Page	Part	Page	Part	Page
224-8946	601		14	227-1145	299	230-8989	90
224-9855	599	225-6455	12		300	230-8995	90
225-0312	599		14	227-4376	68	230-8996	90
225-3145	101	225-6456	12		70	230-8997	90
225-3281	301		14	227-4709	179	230-8998	90
225-4150	600	225-6461	12	227-7447	74	230-9125	14
225-4257	600		14	227-7448	74	230-9127	12
225-4317	7	225-6464	12	227-7449	74		14
	8		14	228-0297	484	230-9144	12
	▶42	225-6477	12	228-0298	484	230-9527	92
225-5436	37		14	228-0560	484	231-0030	52
	39	225-6478	12	228-9129	▶95	231-0033	7
225-5437	37		14		96		8
225-5438	37	225-6479	12	228-9130	95		▶52
	39		14	228-9132	95	231-0046	41
225-5439	37	225-6517	12	229-4896	12	231-0149	8
	39		14		14		▶11
225-5441	37	225-6522	12	229-5080	185	231-0676	183
	39		14	229-5083	185		185
225-5451	37	225-6817	53	229-5085	183	231-0683	228
	39	225-6818	53		185	231-0684	228
225-5453	37		55	229-5088	185	231-0685	228
	39	225-6820	53	229-5092	183	231-0686	228
225-5454	37		55		185	231-0687	228
	39	225-6908	52	229-5093	178	231-0688	228
225-5458	37	225-6909	52	229-5535	475	231-0700	183
	39	225-7738	63	229-6051	568	231-0701	185
225-5459	37	225-7739	63	229-6052	568	231-0703	183
	39	225-7741	63	229-7226	▶475		185
225-5493	24	225-7772	16	229-7227	▶476	231-3052	109
225-5494	24		18	229-8182	143	231-3054	109
225-5495	24	225-7781	16	229-8253	476	231-3540	292
225-5496	24		18	229-8377	129	231-4182	▶211
225-5497	24	225-7941	53		152	231-4183	211
225-5498	24		55	229-8413	129		▶218
225-5499	24	225-7944	20		152	231-4184	218
225-5501	25		53	229-9382	302		▶219
	26		55	229-9855	106	231-9352	179
225-5502	25	225-8016	63	230-0979	▶297		600
	26	225-8019	63		311	232-0252	350
225-5625	44	225-8278	30	230-4017	169	232-1117	92
	45	225-8280	30	230-6368	102	232-1295	92
225-5629	44	225-8281	30		104	232-1322	24
	45	225-8282	30	230-7300	7		92
225-5634	44	225-8329	51		8	232-1323	90
	45	225-8524	82		▶28		92
225-5638	44	225-8526	82	230-7353	7	232-1328	90
	45	225-8530	82		8	232-1793	90
225-5640	44	225-8533	82		▶43	232-1794	90
	45	225-8534	82	230-7355	7	232-2720	92
225-5959	44	225-8536	79		8	232-2721	92
	45		82		▶63	232-2722	92
225-5960	44	225-8848	32	230-7569	7	232-2723	92
	45	225-8858	20		8	232-2725	90
225-5961	44	226-1240	599		▶41		92
	45	226-4346	183	230-7578	7	232-2726	90
225-5962	44		185		8		92
	45	226-4365	183		▶51	232-3126	90
225-5963	44	226-4366	183	230-7649	339	232-3149	90
	45	226-4370	183	230-7650	339		92
225-5967	9	226-5633	280	230-7651	339	232-3157	90
225-6004	35	226-5634	280	230-8065	27		92
225-6005	35	226-7164	146	230-8094	35	232-3158	92
225-6041	35	227-1143	297	230-8279	53	232-3263	92
225-6451	12		304		55	232-3274	90

▶ **PRIMARY REFERENCE**

PART NUMBER INDEX

Part	Page
	92
232-3657	30
232-3666	30
232-3670	7
	8
	►30
232-3722	53
232-3751	20
	53
	55
232-3861	53
	55
232-4666	484
232-4706	146
232-4874	484
232-5849	376
232-6177	8
	►53
232-6661	7
	8
	►108
232-6662	108
232-7399	108
232-7400	16
232-7439	8
	►16
232-7440	20
232-7442	8
	►37
232-7449	22
	23
232-7454	20
232-7519	►24
	25
	26
232-7524	8
	►25
232-7526	8
	►44
232-7528	8
	►9
232-7596	20
232-7597	20
232-7599	20
232-7600	20
232-7603	20
232-7604	►20
	22
	23
232-7606	8
	►22
233-2568	297
233-2578	297
233-2590	297
233-2597	297
233-2599	297
233-2601	297
233-2609	297
233-2617	297
233-2628	297
233-3784	16
	18
233-3785	16
	18
233-3786	16
	18
233-3788	16
	18
233-3789	16
	18
233-3790	16
	18
233-6098	►211
233-7007	7
	►23
233-7009	18
233-7027	7
	►18
233-7104	92
233-7214	92
233-7222	55
233-7223	55
233-7229	7
	►55
233-7232	39
233-7233	7
	►39
233-7234	7
	►26
233-7235	7
	►45
233-7236	7
	►10
233-7244	10
233-7432	7
	8
	►32
233-7490	75
233-7972	92
233-9530	101
233-9531	101
233-9532	101
234-0387	92
234-1711	►109
234-1979	6
	►71
234-1980	5
	►73
234-1981	71
	73
	►74
234-1991	5
	6
	►148
234-1992	148
234-2484	541
234-2485	541
234-2617	490
	►541
234-2622	71
	73
234-2628	73
234-3029	82
234-3030	82
234-3058	5
	►7
234-3059	6
	►8
234-3387	►181
	188
	189
234-4328	►110
	116
	119
234-4329	►111
	119
234-5121	71
234-6926	311
	►374
234-6927	374
234-7509	49
234-7510	5
	6
	►49
234-7527	►182
	189
	190
234-7730	110
	111
234-7731	110
	111
234-7834	►65
	67
234-7836	►67
234-7954	49
234-8601	490
	►507
234-8815	49
	374
234-8892	3
	►84
234-9065	3
	►257
234-9066	257
234-9430	507
234-9522	257
	►259
234-9523	259
234-9554	507
234-9613	181
	182
235-0128	84
235-1056	507
235-1790	90
235-1966	67
	69
235-1967	67
	69
235-1974	65
	►68
235-1975	70
235-2451	75
235-2488	75
235-2489	7
	►75
235-2491	49
235-2853	►102
235-2854	►104
235-2972	6
	►86
235-3170	5
	6
	►96
235-3420	6
	►80
235-3556	7
	8
235-4549	311
	►350
235-4553	350
235-4752	132
	135
	139
235-4788	311
	►355
235-5306	350
235-5363	80
235-5364	81
235-5776	102
	106
235-5843	374
235-5848	2
	►325
235-5849	1
	►328
235-5854	►353
	377
235-5856	►354
	378
235-7091	350
235-8528	350
235-8634	106
235-8747	128
235-8749	7
	8
	►128
235-9829	►301
	311
235-9832	301
235-9833	301
235-9835	301
236-1673	90
236-1674	90
236-2485	5
	►81
236-2486	5
	6
	►76
236-2507	80
	81
236-5807	►69
236-5808	►66
	69
236-5809	66
	►70
236-5860	76
236-5901	316
	320
	325
	328
236-6651	49
236-6652	49
236-6657	489
	►539
236-6923	129
236-6954	254
236-6966	►484
	490
236-6985	484
236-7295	181

► **PRIMARY REFERENCE**

PART NUMBER INDEX

Part	Page
	182
236-8182	254
236-8238	7
	8
	▶29
236-8241	7
	8
	▶27
236-9900	316
	320
	325
	328
237-0024	7
	8
	▶126
237-0025	7
	8
	▶35
237-0026	14
237-0027	7
	8
	▶101
237-0224	154
237-0769	12
	14
237-0803	254
237-0975	80
	81
237-0976	80
	81
237-1911	26
237-2197	96
237-2252	416
237-2527	90
237-2528	8
	▶90
237-2799	82
237-3658	7
	8
	▶33
237-3786	82
237-3791	82
237-3794	82
237-3797	374
237-3853	416
237-3921	82
237-3922	82
237-3923	82
237-3924	8
	▶82
237-4157	74
237-4894	127
237-4896	7
	8
	▶127
237-5330	254
237-5393	92
237-5394	7
	▶92
237-5405	79
237-5408	7
	▶79
237-6412	240
237-6415	188
	189
237-6458	▶179
	188
	189
	190
237-6459	▶179
	189
	190
238-0297	▶212
238-0298	▶212
238-0299	▶212
238-0300	▶212
238-1165	3
	▶143
238-1166	▶146
	489
	490
	491
	499
	500
238-1811	▶129
	490
238-1821	3
	▶154
238-1830	86
	88
238-4441	259
	600
238-4780	▶2
238-4781	▶2
238-4782	▶3
238-4783	▶1
238-4784	▶1
238-5228	228
238-6700	3
	▶599
238-6847	600
238-7448	132
	135
	139
238-7492	129
238-8550	179
238-8671	90
238-9192	71
	73
238-9397	148
238-9827	5
	▶77
238-9828	6
	▶78
239-0602	507
239-1080	490
	▶575
239-1081	489
	491
	499
	500
	▶576
239-1162	353
	354
239-1434	84
239-1435	84
239-2226	379
239-2270	76
239-3683	49
239-5558	▶499
239-5559	▶500
239-5560	▶489
239-5562	▶490
239-5760	▶46
	48
239-5765	46
239-6989	600
239-7421	46
239-9427	601
239-9430	599
239-9434	601
239-9435	418
	601
239-9436	601
239-9438	601
239-9897	7
	8
240-0541	154
240-0542	154
240-2614	508
240-4639	102
	104
240-5571	90
240-7095	599
240-7194	25
240-7957	600
240-8459	73
240-9671	374
240-9716	374
240-9721	374
240-9743	5
	▶88
240-9929	▶59
	491
241-0022	86
241-0023	88
241-0094	116
	119
241-0097	▶116
241-0098	▶119
241-4275	86
	88
241-8448	325
241-8450	328
241-8495	▶106
241-8496	▶107
241-9377	▶491
242-1920	71
	73
242-9946	▶48
243-0059	84
	▶552
243-0062	552
243-0063	552
243-5027	148
244-2104	507
244-2603	98
	▶99
244-3106	148
244-3839	297
245-8998	311
	▶370
245-9828	28
246-0568	5
246-1163	12
	14
246-2582	8
	▶12
246-2583	7
	▶14
247-7798	12
249-5167	▶560
251-4336	30

▶ **PRIMARY REFERENCE**

MEMORANDA



© 2004 Caterpillar
All Rights Reserved

Printed in U.S.A.