CATERPILLAR®

SEBP3701-09
July 2007

RUTHZIL TRATOR COMERCIAL DE PEÇAS LTDA 11 97083-6812 ROLANDO

Parts Manual

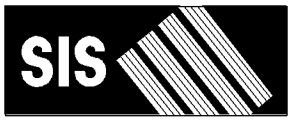

See "General Information" for New Parts Manual Features.

416E Backhoe Loader
Single Tilt, Center Pivot

CST1-Up (Machine)
SHA1-Up (Machine)
CRS1-Up (Engine)
G4D1-Up (Engine)

Powered By 3054C Engine
This Parts Manual is also available in .PDF Format on Compact Disc (CD-ROM) - Caterpillar Form No. SERP3701.

Product and Dealer Information

Note: For product identification plate locations, see the section “Product Identification Information” in the Operation and Maintenance Manual.

Delivery Date: _____

Product Information

Model: _____

Product Identification Number: _____

Engine Serial Number: _____

Transmission Serial Number: _____

Generator Serial Number: _____

Attachment Serial Numbers: _____

Attachment Information: _____

Customer Equipment Number: _____

Dealer Equipment Number: _____

Dealer Information

Name: _____ Branch: _____

Address: _____

_____

_____

	Dealer Contact	Phone Number	Hours
Sales:	_____	_____	_____
Parts:	_____	_____	_____
Service:	_____	_____	_____

Informations produit et concessionnaire

Nota: Voir l'emplacement de la plaque signalétique du produit au chapitre "Informations produit" du guide d'utilisation et d'entretien.

Date de livraison: _____

Informations produit

Modèle: _____

Numéro d'identification produit: _____

Numéro de série du moteur: _____

Numéro de série de la boîte de vitesses: _____

Numéro de série de l'alternateur: _____

Numéros de série d'équipement: _____

Informations sur l'équipement: _____

Numéro matériel client: _____

Numéro matériel concessionnaire: _____

Informations concessionnaire

Nom: _____ Agence: _____

Adresse: _____

_____

_____

	Contact concessionnaire	Numéro de téléphone	Heures
Ventes:			
Pièces:			
Service:			

Información del Producto/Distribuidor

Nota: Para saber la ubicación de las placas de identificación del producto, ver la sección “Información sobre identificación del producto” en el Manual de Operación y Mantenimiento.

Fecha de entrega: _____

Información del producto

Modelo: _____

Número de identificación del producto: _____

Número de serie del motor: _____

Número de serie de la transmisión: _____

Número de serie del generador: _____

Números de serie de los accesorios: _____

Información sobre los accesorios: _____

Número del equipo del cliente: _____

Número del equipo del distribuidor: _____

Información del distribuidor

Nombre: _____ Sucursal: _____

Dirección: _____

_____

_____

Comunicación con el distribuidor	Número de teléfono	Horas
Ventas: _____	_____	_____
Piezas: _____	_____	_____
Servicio: _____	_____	_____

Informações Sobre Produto e Revendedor

Nota: Para localizações da placa de identificação do produto, consulte a seção, “Informações Sobre Identificação do Produto” no Manual de Operação e Manutenção.

Data de Entrega: _____

Informações Sobre o Produto

Modelo: _____

Número de Identificação do Produto: _____

Número de Série do Motor: _____

Número de Série da Transmissão: _____

Número de Série do Gerador: _____

Números de Série de Acessórios: _____

Informações Sobre Acessórios: _____

Número do Equipamento do Cliente: _____

Número do Equipamento do Revendedor: _____

Informações Sobre o Revendedor

Nome: _____ Filial: _____

Endereço: _____

_____

_____

	Contato do Revendedor	Telefone	Horas
Vendas:	_____	_____	_____
Peças:	_____	_____	_____
Serviço:	_____	_____	_____

Produkt- und Händlerinformation

Anmerkung: Für die Lage der Produkt-Identnummer und Seriennummern siehe Abschnitt “Produkt-Identinformation” im Betriebs- und Wartungshandbuch.

Lieferdatum: _____

Produkt-Identinformation

Modell: _____

Produkt-Identnummer: _____

Seriennummer des Motors: _____

Seriennummer des Getriebes: _____

Seriennummer des Generators: _____

Seriennummern der Arbeitsgeräte: _____

Arbeitsgeräteinformation: _____

Kundennummer: _____

Händlernummer: _____

Händlerinformation

Name: _____ Niederlassung: _____

Adresse: _____

_____

_____

	Kontaktperson beim Händler	Telefon	Dienststunden
Verkauf:	_____	_____	_____
Ersatzteile:	_____	_____	_____
Service:	_____	_____	_____

MEMORANDA

TABLE OF CONTENTS

Name	Page
GENERAL INFORMATION	A20
REPAIR ALTERNATIVES	A39
SUPPLEMENTAL COOLANT ADDITIVES	A44
MAINTENANCE PARTS	A49
INDEX	A67
MACHINE ARRANGEMENT	1
BACKHOE AR-EXTENDABLE STICK	1
BACKHOE AR-STANDARD STICK	3
CHASSIS AR	5
COMMON AR	6
LOADER AR	6
ENGINE ARRANGEMENT	7
ENGINE AR	7
ENGINE AR-PRIMARY	10
BASIC ENGINE	11
CAMSHAFT GP	11
COVER GP-CYLINDER HEAD	12
COVER GP-VALVE MECHANISM	13
CRANKSHAFT GP	21
CYLINDER BLOCK GP	25
CYLINDER HEAD GP	29
DRIVE GP-FAN	32
FLYWHEEL GP	33
HOUSING GP-FLYWHEEL	34
HOUSING GP-FRONT	35
LIFTING GP-ENGINE	39
MOUNTING GP-ENGINE	40
MOUNTING GP-ENGINE & TMSN	41
PAN GP-OIL	42
PISTON & ROD GP	44
PLUG GP-ENGINE	47
PULLEY GP-CRANKSHAFT	50
ROCKER ARM GP	51
VALVE MECHANISM GP	52
LUBRICATION SYSTEM	55
BREATHER GP	55
FILTER GP-ENGINE OIL	57
GAUGE GP-OIL LEVEL & FILLER	58
PUMP GP-ENGINE OIL	59
COOLING SYSTEM	60
CONNECTION GP-WATER	60
COOLER GP-ENGINE OIL	61
COOLER GP-FLTR BASE & ENG OIL	62
FAN GP-SUCTION	67
LINES GP-TRANSMISSION COOLER	70
MOUNTING & LINES GP-RADIATOR	72
MOUNTING GP-RAD & OIL COOLER	73
PUMP GP-WATER	75
RADIATOR & OIL COOLER GP	77
TANK GP-EXPANSION	80
AIR INLET AND EXHAUST SYSTEM	81
AIR CLEANER GP	81
CONNECTION GP-INLET	86
INDICATOR GP-AIR FILTER CHANGE	87
MANIFOLD GP-EXHAUST	89
MUFFLER GP	90
TURBOCHARGER GP	92
FUEL SYSTEM	94
CONTROL GP-GOVERNOR	94
FILTER GP-WATER SEP & FUEL	100
LINES GP-FUEL	101
LINES GP-FUEL FILTER	106
PUMP GP-FUEL INJECTION	107
PUMP GP-FUEL PRM & PRIM FILTER	118
TANK & MTG GP-FUEL	120
TANK GP-FUEL	121
ELECTRICAL AND STARTING SYSTEM	123
ALTERNATOR GP-CHARGING	123
BATTERY & WIRING GP	125
ELECTRONICS GP-MACHINE	130
ELECTRONICS GP-MONITOR	130
GLOW PLUG GP	131
GRADE CONTROL AR-LASER	133
HEATER GP-JACKET WATER	135
LAMP GP-FLOOD	136
LAMP GP-WARNING BEACON	139
LIGHTING GP-FLOOD & SIGNAL	140
LIGHTING GP-WARNING BEACON	146
MOUNTING GP-SENSOR	147
PANEL GP-FUSE	148
RELAY GP	149
STARTING MOTOR GP-ELECTRIC	152
SWITCH GP-ALL WHEEL DRIVE	155
SWITCH GP-DIFFERENTIAL LOCK	156
SWITCH GP-DISCONNECT	157
SWITCH GP-PRESSURE	158
WIRING GP-AIR CONDITIONER	159
WIRING GP-CONSOLE	162
WIRING GP-ENGINE	167
WIRING GP-EXTENDABLE STICK	170
WIRING GP-GRADE CONTROL	171
WIRING GP-HEATER	173
WIRING GP-KICKOUT & POSITIONER	175
WIRING GP-PLATFORM	181
WIRING GP-REAR	189
WIRING GP-RIDE CONTROL	190

TABLE OF CONTENTS

Name	Page
POWER TRAIN	192
AXLE GP-DRIVE & STEERING	192
AXLE GP-REAR	194
CASE AS-TRANSMISSION	197
CASE GP-TRANSMISSION	202
DIFFERENTIAL & BEVEL GEAR GP	205
DIFFERENTIAL GP	207
DRIVE AR-BACKHOE LOADER	209
DRIVE GP-FLEXIBLE COUPLING	210
FILLER GP-POWER TRAIN OIL	211
FLANGE GP-WHEEL	215
HOUSING & FLANGE GP-AXLE	217
HOUSING GP-AXLE	219
LINES GP-POWER TRAIN OIL	223
MOUNTING GP-AXLE	224
MOUNTING GP-TRANSMISSION	225
PLANETARY GP-FINAL DRIVE	226
POWER TRAIN AR	228
SHAFT GP-DRIVE	230
SHAFT GP-INPUT	231
SHAFT GP-OUTPUT	233
TRANSMISSION & MOUNTING GP	236
TRANSMISSION AR-DIRECT DRIVE	238
TRANSMISSION GP-DIRECT DRIVE	239
VALVE GP-RELIEF	254
VALVE GP-TIRE	255
WHEEL & TIRE AR	256
WHEEL & TIRE GP	259
BRAKING SYSTEM	271
CONTROL GP-PARKING BRAKE	271
CONTROL GP-SERVICE BRAKE	273
CYLINDER GP-BRAKE	276
LEVER GP-HAND CONTROL	278
RESERVOIR GP-BRAKE	279
STEERING SYSTEM	281
AXLE GP-FRONT	281
CONTROL GP-STEERING	283
KNOB GP-STEERING	286
LINES GP-STEERING	287
PUMP GP-METERING	291
FRAME AND BODY	292
BOX GP-BATTERY	292
COUNTERWEIGHT GP	293
DOOR GP-BATTERY	296
EXTENSION GP-FENDER	297
FENDER GP-FRONT	298
FENDER GP-REAR	299
FLOORPLATE GP	301
FRAME GP-LOADER	303
FRAME GP-SWING	305
GUARD GP-DRIVE SHAFT	307
GUARD GP-RADIATOR	308
HOOD & GUARD GP	309
HOOD GP-ENGINE	311
HYDRAULIC SYSTEM	313
ACCUMULATOR GP-RIDE CONTROL	313
CONTROL AR-RIDE	314
CYLINDER & LINES GP-THUMB	315
CYLINDER GP-BACKHOE BUCKET	318
CYLINDER GP-BOOM	321
CYLINDER GP-EXTENDABLE STICK	325
CYLINDER GP-LIFT	327
CYLINDER GP-MULTIPURPOSE BUKT	328
CYLINDER GP-STABILIZER	329
CYLINDER GP-STICK	333
CYLINDER GP-SWING	337
CYLINDER GP-THUMB	339
CYLINDER GP-TILT	340
DRIVE & MTG GP-PUMP	341
FASTENER GP-VALVE	342
FITTING GP-HYDRAULIC	343
HYDRAULIC AR	344
KICKOUT & POSITIONER GP	345
LINES GP-BACKHOE AUXILIARY	347
LINES GP-BOOM	355
LINES GP-BUCKET	357
LINES GP-DRAIN	362
LINES GP-EXTENDABLE STICK	363
LINES GP-HYDRAULIC OIL COOLER	365
LINES GP-LIFT CYLINDER	367
LINES GP-LOADER AUXILIARY	369
LINES GP-MULTIPURPOSE BUCKET	371
LINES GP-PILOT	375
LINES GP-PUMP	377
LINES GP-RIDE CONTROL	379
LINES GP-STABILIZER	383
LINES GP-STICK	387
LINES GP-SWING	388
LINES GP-TILT CYLINDER	389
MANIFOLD GP-CONTROL	391
MANIFOLD GP-RIDE CONTROL	393
MOUNTING GP-BANK VALVE	394
MOUNTING GP-CYLINDER	396
MOUNTING GP-LINES	399
PUMP GP-PISTON	401
SHAFT GP-PUMP DRIVE	405
TANK & MTG GP-HYDRAULIC	406
VALVE AR-BANK 2	410
VALVE AR-BANK 3	410
VALVE AR-BANK 6	410
VALVE AR-BANK 7	411
VALVE AR-BANK 8	411
VALVE GP-BANK 2	412
VALVE GP-BANK 3	413
VALVE GP-BANK 6	414

TABLE OF CONTENTS

Name	Page
VALVE GP-BANK 7	416
VALVE GP-BANK 8	418
VALVE GP-CONTROL	420
VALVE GP-SHUTTLE	434
IMPLEMENTS	435
ARM GP-LIFT	435
BOOM GP	437
BRACE GP-LIFT CYLINDER	438
GUARD GP-BOOM	439
LINK GP-THUMB	440
LINKAGE GP-BACKHOE BUCKET	441
LINKAGE GP-LOADER BUCKET	443
LOCK GP-TRANSPORT	445
MOUNTING GP-STICK	448
PAD & GUARD GP-STABILIZER	449
PAD & MTG GP-STABILIZER	455
PAD GP-STABILIZER	458
STABILIZER GP-BACKHOE	460
STICK AS	461
STICK GP	462
STICK GP-EXTENDABLE	464
STICK GP-HOE	466
WORK TOOLS	468
BUCKET AR-GENERAL PURPOSE	468
BUCKET AR-MULTIPURPOSE	468
BUCKET AS-GENERAL PURPOSE	471
BUCKET AS-HOE	479
BUCKET GP-GENERAL PURPOSE	511
BUCKET GP-HOE	518
BUCKET GP-MULTIPURPOSE	562
BULLDOZER AS	566
CLAM AS-MULTIPURPOSE BUCKET	570
COUPLER AR-QUICK	572
COUPLER GP-QUICK	573
EDGE GP-CUTTING	578
FORK GP	580
GUARD GP-WORK TOOL	581
MOUNTING GP-BUCKET	582
MOUNTING GP-MAST	583
PIN GP-COUPLER	584
THUMB AR	586
THUMB GP	636
TOOTH GP-UNI	638
OPERATOR STATION	639
AIR CONDITIONER & MOUNTING GP	639
AIR CONDITIONER GP	642
BRACKET GP-MOUNTING	644
CAB AR-ENCLOSED ROPS	645
CAB AS	648
CAB GP-ENCLOSED ROPS	649
CANOPY AR-OPEN ROPS	656
CANOPY GP-OPEN ROPS	658
COMPARTMENT GP-LITERATURE	661
COMPRESSOR & MTG GP-REFRIG	662
COMPRESSOR GP-REFRIGERANT	664
CONDENSER & MTG GP-REFRIGERANT	665
CONSOLE GP-OPERATOR	666
CONTROL & MTG GP-STABILIZER	672
CONTROL GP-HYDRAULIC HAND	674
CONTROL GP-HYDRAULIC PEDAL	684
CONTROL GP-TRANSMISSION	686
COVER GP-WIPER MOTOR	688
DOOR GP-CAB	689
FLOOR MAT GP	693
HEATER GP-CAB	695
INSTALLATION GP-MONITOR	699
LATCH GP-CAB DOOR & WINDOW	701
LEVER GP-GOVERNOR	703
LINER GP-CAB	704
LINES GP-HEATER	708
LINES GP-HEATER & AIR COND	709
MIRROR GP-REAR VIEW	711
MOTOR GP-WINDOW WIPER	713
MOUNTING GP-CAB	714
MOUNTING GP-MONITOR	715
PEDAL GP-GOVERNOR	716
ROOF GP-CAB	718
SEAT BELT GP	721
SEAT GP	723
SEAT GP-SUSPENSION	727
SUSPENSION GP-SEAT	729
TACHOMETER GP-ELECTRIC	736
TRIM GP-CAB	737
WASHER GP-WINDOW	739
WINDOW GP-CAB	741
WINDOW GP-DOOR	750
WIPER & WASHER GP-WINDOW	752
WIPER GP-WINDOW	754
SERVICE EQUIPMENT AND SUPPLIES	756
BRACKET GP-TRANSPORT	756
FILM GP	757
LINK GP-SHIPPING	758
LOCK GP-VANDALISM	758
PLATE & FILM GP	758
PROTECTION GP-VANDALISM	762
SHIPPING AR-BUCKET	763
PART NUMBER INDEX	B1

TABLE DES MATIÈRES

Désignation	Page
GÉNÉRALITÉS	A23
OPTIONS DE RÉPARATION	A40
ADDITIFS POUR LIQUIDE DE REFROIDISSEMENT	A45
PIÈCES DE RECHANGE	A52
INDEX	A80
VERSION DE MACHINE	1
PELLE RÉTRO - BRAS TÉLESCOPIQUE (VERSION)	1
PELLE RÉTRO - BRAS NORMAL (VERSION)	3
VERSION DE CHASSIS	5
VERSION NORMALE	6
CHARGEUSE (VERSION)	6
VERSION DE MOTEUR	7
MOTEUR (VERSION)	7
MOTEUR (VERSION PRINCIPALE)	10
MOTEUR STANDARD	11
ARBRE A CAMES (ASS)	11
COUVERCLE DE CULASSE (ASS)	12
CACHE-SOUPAPES (ASS)	13
VILEBREQUIN (ASS)	21
BLOC-CYLINDRES (ASS)	25
CULASSE (ASS)	29
ENTRAÎNEMENT DE VENTILATEUR (ASS)	32
VOLANT MOTEUR (ASS)	33
CARTER DE VOLANT (ASS)	34
CARTER AV (ASS)	35
OEILLETONS DE LEVAGE MOTEUR (ASS)	39
MONTAGE DE MOTEUR (ASS)	40
MONTAGE DE MOTEUR ET BOÎTE (ASS)	41
HUILE MOTEUR - CARTER (ASS)	42
PISTON ET BIELLE (ASS)	44
BOUCHON DE MOTEUR (ASS)	47
VILEBREQUIN - POULIE (ASS)	50
AXE DE CULBUTEUR (ASS)	51
CULBUTERIE (ASS)	52
CIRCUIT DE GRAISSAGE	55
RENIFLARD (ASS)	55
FILTRE À HUILE MOTEUR (ASS)	57
INSTRUMENT - NIVEAU D'HUILE ET GOUL. DE REMPLIS.	58
POMPE A HUILE MOTEUR (ASS)	59
CIRCUIT DE REFROIDISSEMENT	60
RACCORD D'EAU (ASS)	60
REFROIDISSEUR D'HUILE MOTEUR (ASS)	61
SUPPORT DE FILTRE ET REFROIDISSEUR D'HUILE MOTEUR	62
VENTILATEUR ASPIRANT (ASS)	67
CANALISATIONS DE REFROIDISSEUR DE TRANSMISSION (ASS)	70
*MOUNTING & LINES GP-RADIATOR	72
MONTAGE DE RADIATEUR ET REFROIDISSEUR D'HUILE (ASS)	73
POMPE A EAU (ASS)	75
RADIATEUR ET REFROIDISSEUR D'HUILE (ASS)	77
RESERVOIR D'EXPANSION (ASS)	80
CIRCUIT D'ADMISSION D'AIR ET D'ÉCHAPPEMENT	81
FILTRE A AIR (ASS)	81
RACCORD D'ADMISSION (ASS)	86
INDICATEUR DE COLMATAGE DE FILTRE À AIR (ASS)	87
COLLECTEUR D'ÉCHAPPEMENT (ASS)	89
SILENCIEUX (ASS)	90
TURBOCOMPRESSEUR (ASS)	92
CIRCUIT DE CARBURANT	94
COMMANDE DE RÉGULATEUR (ASS)	94
FILTRE DE SÉPARATEUR D'EAU ET DE CARBURANT (ASS)	100
CANALISATIONS DE CARBURANT (ASS)	101
CANALISATIONS DU FILTRE A CARBURANT (ASS)	106
POMPE D'INJECTION DE CARBURANT (ASS)	107
POMPE D'AMORÇAGE DE CARBURANT ET FILTRE PRINCIPAL	118
RÉSERVOIR DE CARBURANT ET MONTAGE (ASS)	120
RÉSERVOIR DE CARBURANT (ASS)	121
CIRCUIT ÉLECTRIQUE ET DE DÉMARRAGE	123
ALTERNATEUR DE CHARGE (ASS)	123
BATTERIE ET CÂBLAGE	125
ÉLECTRONIQUE - MACHINE (ENS)	130
ÉLECTRONIQUE-MONITEUR (ASS)	130
BOUGIE DE PRÉCHAUFFAGE (ASS)	131

* TRADUCTION NON DISPONIBLE AU MOMENT DE LA PUBLICATION

TABLE DES MATIÈRES

Désignation	Page
VERSION DE COMMANDE DE PENTE-LASER	133
EAU DES CHEMISES - RECHAUFFEUR (ASS)	135
LAMPE - PHARE (ASS)	136
LAMPE - GYROPHARE (ASS)	139
ÉCLAIRAGE - PROJECTEURS ET CLIGNOTANTS (ASS)	140
ÉCLAIRAGE - GYROPHARE (ASS)	146
MONTAGE - CAPTEUR (ASS)	147
PANNEAU - FUSIBLES (ASS)	148
RELAIS (ASS)	149
DÉMARREUR ÉLECTRIQUE (ASS)	152
CONTACTEUR DE TRACTION INTÉGRALE (ASS)	155
CONTACTEUR DE VERROUILLAGE DE DIFFÉRENTIEL (ASS)	156
ROBINET DE BATTERIE (ASS)	157
MANOCONTACT	158
CABLAGE - CLIMATISEUR (ASS)	159
CABLAGE DE CONSOLE (ASS)	162
CABLAGE DE MOTEUR (ASS)	167
CÂBLAGE DE BRAS TÉLESCOPIQUE (ASS)	170
AVERTISSEMENT DE PROFIL LONGITUDINAL (ASS)	171
CABLAGE DU CHAUFFAGE DE CABINE (ASS)	173
CÂBLAGE DE PRISE DE FORCE ET LIMITEUR (ASS)	175
CABLAGE - PLATE-FORME (ASS)	181
CABLAGE AR (ASS)	189
CÂBLAGE DE COMMANDE DE TRANSLATION (ASS)	190
TRANSMISSION	192
ESSIEU MOTEUR ET DIRECTION (ASS)	192
ESSIEU AR (ASS)	194
CARTER DE BOÎTE DE VITESSES (ENS)	197
CARTER DE BOITE	202
COURONNE ET DIFFERENTIEL (ASS)	205
DIFFERENTIEL (ASS)	207
VERSION D'ENTRAÎNEMENT DE CHARGEUSE-PELLETEUSE	209
ENTRAÎNEMENT D'ACCOUPLEMENT FLEXIBLE (ASS)	210
GOULOTTE DE REMPLISSAGE D'HUILE DE TRANSMISSION	211
BOUDIN DE ROUE (ASS)	215
CARTER ET BRIDE D'ESSIEU (ASS)	217
BOÎTIER D'ESSIEU (ASS)	219
CANALISATIONS D'HUILE DE TRANSMISSION (ASS)	223
MONTAGE D'ESSIEU (ASS)	224
REDUCTEUR MARIN - MONTAGE (ASS)	225
TRAINS PLANÉTAIRES-RÉDUCTEURS (ASS)	226
TRANSMISSION (VERSION)	228
ARBRE D'ENTRAÎNEMENT (ASS)	230
ARBRE D'ENTRÉE (ASS)	231
ARBRE DE SORTIE (ASS)	233
BOITE DE VITESSES ET MONTAGE (ASS)	236
BOITE MECANIQUE (VERSION)	238
BOÎTE MÉCANIQUE (ASS)	239
CLAPET DE DECHARGE (ASS)	254
PNEU - GROUPE DE VALVE	255
ROUE ET PNEU (VERSION)	256
ROUE ET PNEU (ASS)	259
CIRCUIT DE FREINAGE	271
COMMANDE DE FREIN DE STATIONNEMENT (ASS)	271
FREIN DE MANOEUVRE - COMMANDE (ASS)	273
FREIN - MAITRE-CYLINDRE (ASS)	276
LEVIER DE COMMANDE MANUELLE	278
RÉSERVOIR-FREIN (ASS)	279
CIRCUIT DE DIRECTION	281
ESSIEU AV (ASS)	281
COMMANDE DE DIRECTION (ASS)	283
BOUTON DE DIRECTION (ASS)	286
CANALISATIONS DE DIRECTION (ASS)	287
POMPE DE REGULARISATION DE DEBIT (ASS)	291
CHÂSSIS ET BENNE	292
COMPARTIMENT DE BATTERIE (ASS)	292
CONTREPOIDS (ASS)	293
PORTE DE BATTERIE (ASS)	296
RALLONGE DE GARDE-BOUE	297
GARDE-BOUE AV (ASS)	298
GARDE-BOUE AR (ASS)	299
TÔLE DE PLANCHER (ASS)	301
BATI - CHARGEUSE (ASS)	303
BÂTI D'ORIENTATION (ASS)	305
BLINDAGE D'ARBRE DE TRANSMISSION (ASS)	307
PROTÈGE-RADIATEUR (ASS)	308
CAPOT ET PROTECTION (ASS)	309
CAPOT DU MOTEUR (ASS)	311

* TRADUCTION NON DISPONIBLE AU MOMENT DE LA PUBLICATION

TABLE DES MATIÈRES

Désignation	Page
CIRCUIT HYDRAULIQUE	313
ACCUMULATEUR - COMMANDE DE TRANSLATION (ASS)	313
COMMANDE DE TRANSLATION (VERSION)	314
VÉRIN ET CANALISATIONS DE SERRE-JOINT (ASS)	315
VÉRIN DE GODET RÉTRO (ASS)	318
VERIN DE FLECHE (ASS)	321
VÉRIN DU BRAS TELESCOPIQUE (ASS)	325
VÉRIN DE LEVAGE (ASS)	327
VÉRIN - GODET TOUS-TRAVAUX (ASS)	328
VERIN DE STABILISATEUR (ASS)	329
VERIN DE BRAS (ASS)	333
VÉRIN D'ORIENTATION (ASS)	337
VÉRIN DE SERRE-JOINT (ASS)	339
VÉRIN D'INCLINAISON (ASS)	340
ENTRAÎNEMENT ET MONTAGE DE POMPE (ASS)	341
BOULONNERIE DE SOUPAPE (ASS)	342
GRAISSEUR HYDRAULIQUE (ASS)	343
VERSION HYDRAULIQUE	344
LIMITEUR DE LEVAGE ET RETOUR À L'ANGLE DE CAVAGE	345
CANALISATIONS SECONDAIRES DE PELLE RÉTRO (ASS)	347
FLECHE - CANALISATIONS	355
ECLAIRAGE DE GODET (ASS)	357
CANALISATIONS DE VIDANGE (ASS)	362
CANALISATIONS DU BRAS TELESCOPIQUE (ASS)	363
CANALISATIONS DE REFROIDISSEUR D'HUILE HYDR. (ASS)	365
CANALISATIONS DE VÉRIN DE LEVAGE (ASS)	367
CANALISATIONS-CHARGEUSE AUXILIAIRE (ASS)	369
CANALISATIONS - GODET TOUS-TRAVAUX (ASS)	371
CANALISATIONS A COMMANDE PILOTE (ASS)	375
CANALISATIONS DE POMPE (ASS)	377
CANALISATIONS DE COMMANDE DE MARCHE	379
CANALISATIONS DE STABILISATEUR (ASS)	383
CANALISATIONS DE BRAS (ASS)	387
CANALISATIONS D'ORIENTATION (ASS)	388
CANALISATIONS DU VÉRIN D'INCLINAISON (ASS)	389
COLLECTEUR - COMMANDE (ASS)	391
COLLECTEUR DE COMMANDE ANTITANGAGE (ASS)	393
MONTAGE-DISTRIBUTEUR (ASS)	394
MONTAGE DE VÉRIN (ASS)	396
MONTAGE DE CANALISATIONS (ASS)	399
POMPE A PISTONS (ASS)	401
*SHAFT GP-PUMP DRIVE	405
RÉSERVOIR HYDRAULIQUE ET MONTAGE (ASS)	406
VERSION DE RANGÉE DE DISTRIBUTEURS 2	410
VERSION DE RANGÉE DE DISTRIBUTEURS 3	410
DISTRIBUTEUR 6 ÉLÉMENTS (VERSION)	410
VERSION DE RANGÉE DE DISTRIBUTEURS 7	411
DISTRIBUTEUR 8 ÉLÉMENTS (VERSION)	411
DISTRIBUTEUR DOUBLE ÉLÉMENT (ASS)	412
DISTRIBUTEUR TRIPLE ÉLÉMENT (ASS)	413
DISTRIBUTEUR 6 ÉLÉMENTS (ASS)	414
DISTRIBUTEUR 7 ÉLÉMENTS (ASS)	416
DISTRIBUTEUR 8 ÉLÉMENTS (ASS)	418
DISTRIBUTEUR (ASS)	420
VANNE PILOTE (ASS)	434
ÉQUIPEMENTS	435
BRAS DE LEVAGE (ASS)	435
FLECHE (ASS)	437
TIRANT DE VÉRIN DE LEVAGE (ASS)	438
PROTECTION DE FLÈCHE (ASS)	439
BIELLETTE DE SERRE-JOINT (ASS)	440
TIMONERIE DE GODET RÉTRO (ASS)	441
TIMONERIE DE GODET DE CHARGEUSE (ASS)	443
VERROUILLAGE POUR L'EXPÉDITION (ASS)	445
MONTAGE DE BRAS (ASS)	448
SEMELLE ET PROTECTION DE STABILISATEUR (ASS)	449
SEMELLE ET MONTAGE DE STABILISATEUR	455
SEMELLE DE STABILISATEUR	458
PELLE RÉTRO - STABILISATEUR (ASS)	460
BRAS (ENS)	461
BRAS (ASS)	462
BRAS TÉLESCOPIQUE (ASS)	464
BRAS DE PELLE RETRO (ASS)	466

* TRADUCTION NON DISPONIBLE AU MOMENT DE LA PUBLICATION

TABLE DES MATIÈRES

Désignation	Page
OUTILS DE TRAVAIL	468
GODET NORMAL (VERSION)	468
GODET TOUS-TRAVAUX (VERSION)	468
GODET NORMAL (ENS)	471
GODET RETRO (ENS)	479
GODET NORMAL (ASS)	511
GODET RETRO (ASS)	518
GODET TOUS-TRAVAUX (ASS)	562
LAME POUR LE REFOULEMENT (ENS)	566
BENNE PRENEUSE TOUS-TRAVAUX (ENS)	570
COUPLEUR EXPRESS (VERSION)	572
COUPLEUR EXPRESS (ASS)	573
LAME DE COUPE (ASS)	578
FOURCHE (ASS)	580
PROTECTION D'OUTIL DE TRAVAIL (ASS)	581
GODET - MONTAGE (ASS)	582
MONTAGE DU MAT (ASS)	583
AXE DU COUPLER (ASS)	584
VERSION DE SERRE-JOINT	586
SERRE-JOINT (ASS)	636
DENT MONOBLOC (ASS)	638
POSTE DE CONDUITE	639
CLIMATISEUR ET MONTAGE (ASS)	639
CLIMATISEUR (ASS)	642
SUPPORT - MONTAGE (ASS)	644
CABINE ROPS FERMÉE (VERSION)	645
CABINE (ENS)	648
FILTRE - ELECTRONIQUE (ASS)	649
VERSION DE TOIT - ROPS OUVERT	656
TOIT-ROPS OUVERT (ASS)	658
POCHE A DOCUMENTS (ASS)	661
COMPRESSEUR ET MONTAGE - RÉFRIGÉRANT (ASS)	662
COMPRESSEUR DE REFRIGERANT (ASS)	664
CONDENSATEUR ET MONTAGE (RÉFRIGÉRANT)	665
CONSOLE DE CONDUITE (ASS)	666
COMMANDE DE STABILISATEUR (ASS) ET MONTAGE	672
COMMANDE HYDRAULIQUE MANUELLE (ASS)	674
COMMANDE HYDRAULIQUE DE PÉDALE (ASS)	684
COMMANDE DE BOITE DE VITESSES (ASS)	686
COUVERCLE DE MOTEUR D'ESSUIE-GLACE (ASS)	688
PORTIÈRE DE CABINE (ASS)	689
TAPIS DU PLANCHER (ASS)	693
CHAUFFAGE DE CABINE (ASS)	695
MONTAGE DE MONITEUR (ASS)	699
LOQUET - PORTE DE CABINE ET GLACE	701
LEVIER DE RÉGULATEUR (ASS)	703
CABINE - REVÊTEMENT (ASS)	704
CANALISATIONS DE CHAUFFAGE (ASS)	708
CANALISATIONS-RÉCHAUFFEUR ET CLIMATISEUR (ASS)	709
RÉTROVISEUR (ASS)	711
MOTEUR D'ESSUIE-GLACE (ASS)	713
MONTAGE DE CABINE (ASS)	714
MONTAGE DE MONITEUR (ASS)	715
RÉGULATEUR - PÉDALE (ASS)	716
TOIT - CABINE (ASS)	718
CEINTURE DE SECURITE (ASS)	721
SIÈGE (ASS)	723
SIÈGE AVEC SUSPENSION (ASS)	727
COMPTE-TOURS ÉLECTRIQUE (ASS)	736
GARNITURE POUR CABINE (ASS)	737
LAVE-GLACE - VITRE (ASS)	739
VITRE DE CABINE (ASS)	741
GLACE DE PORTIÈRE (ASS)	750
ESSUIE-GLACE ET LAVE-GLACE	752
ESSUIE-GLACE (ASS)	754
MATÉRIEL ET FOURNITURES D'ENTRETIEN	756
SUPPORT D'EXPÉDITION (ASS)	756
PLAQUE SIGNALÉTIQUE (ASS)	757
LIAISON-EXPÉDITION (ASS)	758
VERROUILLAGE ANTI-VANDALISME (ASS)	758
PLAQUES SIGNALETIQUES ET AUTOCOLLANTS (ASS)	758
PROTECTION ANTIVANDALISME (ASS)	762
GODET - VERSION D'EXPÉDITION	763
INDEX DE NUMÉROS DE PIÈCES	B1

* TRADUCTION NON DISPONIBLE AU MOMENT DE LA PUBLICATION

CONTENIDO

Nombre	Página
INFORMACIÓN GENERAL	A27
ALTERNATIVAS DE REPARACIÓN	A41
ADITIVOS DE REFRIGERANTE SUPLEMENTARIOS	A46
PIEZAS DE MANTENIMIENTO	A56
INDICE	A94
CONFIGURACIÓN DE MÁQUINA	1
BRAZO EXTENDIBLE DE RETROEXCAVADOR (CONFIG)	1
BRAZO ESTÁNDAR DE RETROEXCAVADOR (CONFIG)	3
CHASIS (CONFIG)	5
CONFIGURACIÓN COMÚN	6
CONFIGURACIÓN DE CARGADOR	6
CONFIGURACIÓN DE MOTOR	7
CONFIGURACIÓN DE MOTORES	7
MOTOR PRIMARIO (CONFIG)	10
MOTOR BÁSICO	11
ÁRBOL DE LEVAS (GR)	11
TAPA DE LA CULATA DE CILINDROS (GR)	12
TAPA DEL MECANISMO DE VÁLVULAS (GR)	13
CIGÜEÑAL (GR)	21
BLOQUE MOTOR (GR)	25
CULATA DE CILINDROS (GR)	29
IMPULSOR DE VENTILADOR (GR)	32
VOLANTE (GR)	33
VOLANTE - CAJA DE (GR)	34
CAJA DELANTERA (GR)	35
CÁNCAMOS DE LEVANTAMIENTO DEL MOTOR (GR)	39
MONTAJE DEL MOTOR (GR)	40
MONTAJE DEL MOTOR Y LA TRANSMISIÓN (GR)	41
CÁRTER - COLECTOR DEL (GR)	42
PISTÓN Y BIELA (GR)	44
TAPÓN DEL MOTOR (GR)	47
CIGÜEÑAL - POLEA DE (GR)	50
BALANCÍN (GR)	51
MECANISMO DE VÁLVULAS (GR)	52
SISTEMA DE LUBRICACIÓN	55
RESPIRADERO (GR)	55
FILTRO DE ACEITE DEL MOTOR (GR)	57
INDICADOR DE NIVEL DE ACEITE Y TUBO DE LLENADO	58
BOMBA DE ACEITE DEL MOTOR (GR)	59
SISTEMA DE ENFRIAMIENTO	60
AGUA - CONEXIÓN DE (GR)	60
ENFRIADOR DE ACEITE DEL MOTOR (GR)	61
ENFRIADOR DE ACEITE DEL MOTOR Y BASE DEL FILTRO	62
SUCCIÓN - VENTILADOR DE (GR)	67
GRUPO DE TUBERIAS-ENFRIADOR DE TRANSMISION	70
*MOUNTING & LINES GP-RADIATOR	72
GRUPO DEMONTAJE DE RADIADOR Y ENFRIAMIENTO DE ACEITE	73
BOMBA DE AGUA (GR)	75
RADIADOR Y ENFRIADOR DE ACEITE (GR)	77
TANQUE DE EXPANSIÓN (GR)	80
SISTEMA DE ADMISIÓN Y ESCAPE	81
FILTRO DE AIRE (GR)	81
CONEXION DE ENTRADA	86
INDICADOR DE CAMBIO DE FILTRO DE ACEITE (GR)	87
MÚLTIPLE DE ESCAPE (GR)	89
SILENCIADOR (GR)	90
TURBOCOMPRESOR (GR)	92
SISTEMA DE COMBUSTIBLE	94
CONTROL DE REGULADOR (GR)	94
FILTRO DE COMBUSTIBLE Y SEPARADOR DE AGUA (GR)	100
TUBERÍAS DE COMBUSTIBLE (GR)	101
TUBERÍAS DEL FILTRO DE COMBUSTIBLE	106
BOMBA DE INYECCIÓN DE COMBUSTIBLE (GR)	107
BOMBA DE CEBADO Y FILTRO PRIMARIO DE COMBUSTIBLE (GR)	118
TANQUE DE COMBUSTIBLE Y GRUPO DE MONTAJE	120
COMBUSTIBLE - TANQUE DE (GR)	121
SISTEMA ELÉCTRICO Y DE ARRANQUE	123
CARGA - ALTERNADOR DE (GR)	123
BATERÍA Y CABLES (GR)	125
ELECTRÓNICA DE LA MÁQUINA (GR)	130
ELECTRONICA DE MONITOR (GR)	130
BUJÍA INCANDESCENTE (GR)	131
*GRADE CONTROL AR-LASER	133

* NO HAY TRADUCCION DISPONIBLE EN EL MOMENTO DE LA IMPRESION

CONTENIDO

Nombre	Página
AGUA DE LAS CAMISAS - CALENTADOR DEL (GR)	135
REFLECTOR (GR)	136
LÁMPARA DE BALIZA DE ADVERTENCIA (GR)	139
LUCES DE REFLECTOR Y CAMBIO DE DIRECCION (GR)	140
LUZ DE BALIZA (GR)	146
MONTAJE DEL SENSOR (GR)	147
PANEL DE FUSIBLES (GR)	148
RELÉ (GR)	149
MOTOR DE ARRANQUE ELÉCTRICO (GR)	152
GRUPO DE INTERRUPTOR-TRACCIÓN EN TODAS LAS RUEDAS	155
GRUPO DE INTERRUPTOR, TRABA DEL DIFERENCIAL	156
DISYUNTOR (GR)	157
INTERRUPTOR DE PRESIÓN (GR)	158
CABLES DEL ACONDICIONADOR DE AIRE (GR)	159
CABLES DE LA CONSOLA (GR)	162
CABLES DEL MOTOR (GR)	167
*WIRING GP-EXTENDABLE STICK	170
CABLE GR-GRADO DE CONTROL	171
CABLES DE CALEFACCIÓN (GR)	173
CABLES DEL POSICIONADOR Y DE DESCONEXIÓN (GR)	175
CABLES DE LA PLATAFORMA (GR)	181
CABLES POSTERIORES (GR)	189
CABLES DE CONTROL DE AMORTIGUACIÓN (GR)	190
TREN DE FUERZA	192
EJE DE IMPULSIÓN Y DE DIRECCIÓN (GR)	192
EJE TRASERO (GR)	194
CAJA DE LA TRANSMISIÓN (CONJ)	197
CAJA DE LA TRANSMISIÓN (GR)	202
DIFERENCIAL Y CORONA (GR)	205
DIFERENCIAL (GR)	207
CONFIG. DEL MANDO, CARGADOR RETROEXCAVADORA	209
ACOPLAMIENTO FLEXIBLE - MANDO DE (GR)	210
TUBO DE LLENADO DE ACEITE DE LA TRANSMISIÓN (GR)	211
GRUPO DE PESTAÑA, RUEDA	215
GRUPO DE PESTAÑA Y RESINTO, EJE	217
CAJA DEL EJE (GRUPO)	219
TUBERÍAS DE ACEITE DEL TREN DE FUERZA (GR)	223
EJE - GRUPO DE MONTAJE	224
MONTAJE DE LA TRANSMISIÓN (GR)	225
PLANETARIO DEL MANDO FINAL (GR)	226
TREN DE FUERZA (CONFIG)	228
EJE DE MANDO (GR)	230
EJE DE ENTRADA (GR)	231
EJE DE SALIDA (GR)	233
MONTAJE Y TRANSMISIÓN(GR)	236
TRANSMISION DIRECTA (CONFIG)	238
TRANSMISION DIRECTA (GR)	239
VÁLVULA DE ALIVIO (GR)	254
VÁLVULA DEL NEUMÁTICO (GR)	255
RUEDA Y LLANTA (CONFIG)	256
RUEDA Y NEUMÁTICO (GR)	259
SISTEMA DE FRENOS	271
CONTROL DEL FRENO DE ESTACIONAMIENTO	271
FRENO DE SERVICIO - CONTROL (GR)	273
FRENO DEL CILINDRO (GR)	276
CONTROL MANUAL DE PALANCA (GR)	278
TANQUE DEL SISTEMA DE FRENOS (GR)	279
SISTEMA DE DIRECCIÓN	281
EJE DELANTERO (GR)	281
CONTROL DE DIRECCIÓN (GR)	283
GRUPO PERILLA, DIRECCIÓN	286
TUBERÍAS DE DIRECCIÓN (GR)	287
DOSIFICACIÓN - BOMBA DE (GR)	291
BASTIDOR Y CAJA	292
CAJA DE BATERÍA	292
CONTRAPESO (GR)	293
TAPA DE LA BATERÍA (GR)	296
EXTENSIÓN DEL GUARDABARROS (GR)	297
GUARDABARROS DELANTERO (GR)	298
GUARDABARROS TRASERO (GR)	299
PLANCHA DEL PISO (GR)	301
BASTIDOR DEL CARGADOR (GR)	303
BASTIDOR DE ROTACIÓN (GR)	305
PROTECTOR DEL EJE IMPULSOR (GR)	307
PROTECTOR DEL RADIADOR (GR)	308
CAPO Y PROTECTOR (GR)	309
CAPÓ DEL MOTOR (GR)	311

* NO HAY TRADUCCION DISPONIBLE EN EL MOMENTO DE LA IMPRESION

CONTENIDO

Nombre	Página
SISTEMA HIDRÁULICO	313
ACUMULADOR DE CONTROL DE AMORTIGUACION (GR)	313
CONTROL DE AMORTIGUACIÓN (CONFIG)	314
CILINDRO Y TUBERIAS GR - PULGAR	315
CILINDRO DE CUCHARÓN RETROEXCAVADOR (GR)	318
CILINDRO DE LA PLUMA (GR)	321
CILINDRO DEL BRAZO EXTENSIBLE (GR)	325
CILINDRO DE LEVANTAMIENTO (GR)	327
CILINDRO DE CUCHARÓN DE USO MÚLTIPLE (GR)	328
CILINDRO ESTABILIZADOR (GR)	329
CILINDRO DEL BRAZO (GR)	333
CILINDRO DE ROTACIÓN (GR)	337
CILINDRO GR - PULGAR	339
INCLINACIÓN HORIZONTAL - CILINDRO DE (GR)	340
MANDO DE LA BOMBA Y MONTAJE (GR)	341
GRUPO DE AJUSTADOR, VÁLVULA	342
CONEXION HIDRAULICA (GR)	343
HIDRÁULICA (CONFIG)	344
POSICIONADOR DEL CUCHARÓN Y DESCONEXIÓN (GR)	345
TUBERIAS AUXILIARES-RETROEXCAVADORA (GR)	347
TUBERÍAS DE LA PLUMA (GR)	355
TUBERÍAS DEL CUCHARÓN (GR)	357
TUBERÍAS DE DRENAJE (GR)	362
TUBERÍAS DE LA PALANCA EXTENDIBLE (GR)	363
TUBERÍAS DEL ENFRIADOR DE ACEITE HIDRÁULICO (GR)	365
CILINDRO DE LEVANTAMIENTO - TUBERÍAS DEL (GR)	367
TUBERIAS DE AUXILIAR DE CARGADOR (GR)	369
TUBERÍAS DEL CUCHARÓN DE USO MÚLTIPLE	371
TUBERÍAS CON SERVOMANDO (GR)	375
BOMBA - TUBERÍAS DE (GR)	377
TUBERIAS DE CONTROL DE LA SUSPENSIÓN (GR)	379
TUBERÍAS DEL ESTABILIZADOR (GR)	383
TUBERÍAS DEL BRAZO (GR)	387
TUBERÍAS DE GIRO (GR)	388
TUBERÍAS DEL CILINDRO DE INCLINACIÓN (GR)	389
CONTROL DEL MULTIPLE (GR)	391
*MANIFOLD GP-RIDE CONTROL	393
MONTAJE DE BANCADA DE VALVULA (GR)	394
MONTAJE DE CILINDRO (GR)	396
MONTAJE DE TUBERIAS (GR)	399
BOMBA DE PISTONES (GR)	401
*SHAFT GP-PUMP DRIVE	405
TANQUE HIDRÁULICO Y MONTAJE (GR)	406
VÁVULA CONFIG.-BANCO 2	410
VÁVULA CONFIG.-BANCO 3	410
GRUPO DE 6 VALVULAS (CONFIG)	410
VÁLVULA CONFIG.-BANCO 7	411
BANCADA DE VALVULAS DE 8 (CONFIG)	411
VÁLVULAS HIDRÁULICAS - GRUPO DE 2	412
GRUPO DE 3 VÁLVULAS HIDRÁULICAS	413
VÁLVULAS HIDRÁULICAS - GRUPO DE 6	414
VÁLVULAS HIDRÁULICAS - GRUPO DE 7	416
VÁLVULAS HIDRÁULICAS - GRUPO DE 8	418
VÁLVULA DE CONTROL (GR)	420
VÁLVULA DE LANZADERA (GR)	434
IMPLEMENTOS	435
GRUPO DE BRAZO DE LEVANTAMIENTO	435
PLUMA (GR)	437
SOPORTE DEL CILINDRO DE LEVANTAMIENTO (GR)	438
PROTECTOR DE LA PLUMA (GR)	439
VARILLAJE GR-PULGAR	440
VARILLAJE DEL CUCHARÓN RETROEXCAVADOR (GR)	441
VARILLAJE DE CUCHARÓN CARGADOR (GR)	443
TRABA DE TRANSPORTE DE LA MÁQUINA (GR)	445
MONTAJE DEL BRAZO (GR)	448
ZAPATA Y PROTECTOR DEL ESTABILIZADOR	449
ALMOHADILLA Y MONTAJE DEL ESTABILIZADOR (GR)	455
ZAPATA DE ESTABILIZADOR (GR)	458
RETROEXCAVADOR - ESTABILIZADOR DEL (GR)	460
BRAZO (CONJ	461
GRUPO ACCESORIO DE BRAZO	462
BRAZO EXTENSIBLE (GR)	464
BRAZO DE RETROEXCAVADOR (GR)	466

* NO HAY TRADUCCION DISPONIBLE EN EL MOMENTO DE LA IMPRESION

CONTENIDO

Nombre	Página
HERRAMIENTAS	468
CUCHARÓN DE USO GENERAL (CONFIG)	468
CUCHARÓN DE USO MÚLTIPLE (CONFIG)	468
CUCHARÓN DE USO GENERAL (CONJ)	471
CUCHARÓN EXCAVADOR (CONJ)	479
CUCHARÓN DE USO GENERAL (GR)	511
CUCHARÓN RETROEXCAVADOR (GR)	518
CUCHARÓN DE USO MÚLTIPLE (GR)	562
HOJA TOPADORA (CONJ)	566
ABRAZADERA CONJ.-CUCHARÓN MULTIPROPÓSITO	570
ACOPLADOR RÁPIDO (CONFIG)	572
ACOPLADOR RÁPIDO (GR)	573
CUCHILLA (GR)	578
HORQUILLA (GR)	580
*GUARD GP-WORK TOOL	581
MONTAJE DEL CUCHARÓN (GR)	582
MASTIL - MONTAJE DEL (GR)	583
PASADOR DE ACOPLADOR (GR)	584
PULGAR CONFIG.	586
PULGAR GR	636
DIENTE DE UNA PIEZA (UNI-TOOTH) (GR)	638
PUESTO DEL OPERADOR	639
ACONDICIONADOR DE AIRE Y MONTAJE (GR)	639
ACONDICIONADOR DE AIRE (GR)	642
SOPORTE DE MONTAJE (GR)	644
SISTEMA ROPS DE CABINA CERRADA (CONFIG)	645
CABINA (CONJ)	648
CABINA INCLUYE ROPS (GR)	649
TECHO ROPS ABIERTO (CONFIG)	656
TECHO ROPS ABIERTO (GR)	658
COMPARTIMIENTO DE LITERATURA DE SERVICIO (GR)	661
COMPRESOR DE REFRIGERANTE Y GRUPO DE MONTAJE	662
COMPRESOR DE REFRIGERANTE (GR)	664
CONDENSADOR DEL REFRIGERANTE Y MONTAJE (GR)	665
CONSOLA DEL OPERADOR (GR)	666
GRUPO DE CONTROL Y MONTAJE-ESTABILIZADOR	672
CONTROL HIDRÁULICO MANUAL (GR)	674
GRUPO DE CONTROL DE PEDAL HIDRÁULICO	684
CONTROL DE LA TRANSMISIÓN (GR)	686
CUBIERTA DEL MOTOR DE LIMPIAPARABRISAS (GR)	688
PUERTA DE CABINA	689
ALFOMBRILLA DEL PISO (GR)	693
CALEFACCIÓN DE LA CABINA (GR)	695
*INSTALLATION GP-MONITOR	699
PESTILLO DE PUERTA Y VENTANA DE LA CABINA (GR)	701
GRUPO DE PALANCA-REGULADOR	703
REVESTIMIENTO DE LA CABINA (GR)	704
TUBERÍAS DE LA CALEFACCIÓN (GR)	708
TUBERIAS DE CALENTEDOR Y ACONDICIONADOR DE AIRE (GR)	709
RETROVISOR (GR)	711
MOTOR-LIMPIAPARABRISAS (GR)	713
GRUPO DE MONTAJE DE LA CABINA	714
MONTAJE GR-MONITOR	715
REGULADOR - PEDAL DEL (GR)	716
TECHO DE LA CABINA (GR)	718
CINTURÓN DE SEGURIDAD (GR)	721
ASIENTO (GR)	723
SUSPENSIÓN - ASIENTO CON (GR)	727
ASIENTO CON SUSPENSIÓN (GR)	729
TACÓMETRO ELÉCTRICO (GR)	736
GUARNICIONES DE LA CABINA (GR)	737
LAVAPARABRISAS DE LA VENTANA (GR)	739
VENTANA DE LA CABINA (GR)	741
VENTANA DE LA PUERTA (GR)	750
LIMPIA Y LAVAPARABRISAS (GR)	752
LIMPIAPARABRISAS DE LA VENTANA (GR)	754
EQUIPOS Y SUMINISTRO DE SERVICIOS	756
SOPORTE PARA EL TRANSPORTE	756
ETIQUETA DE ADVERTENCIA (GR)	757
TIRANTE DE EMBARQUE (GR)	758
TRABA CONTRA EL VANDALISMO (GR)	758
CALCOMANÍAS Y PLACAS DE IDENTIFICACIÓN (GR)	758
GRUPO DE PROTECCIÓN CONTRA EL VANDALISMO	762
CUCHARÓN DE EMBARQUE (CONFIG)	763
INDICE DE NUMEROS DE PIEZA	B1

* NO HAY TRADUCCION DISPONIBLE EN EL MOMENTO DE LA IMPRESION

ÍNDICE

Designação	Página
INFORMAÇÃO GERAL	A31
ALTERNATIVAS DE REPARO	A42
ADITIVOS SUPLEMENTARES DO LÍQUIDO ARREFECEDOR	A47
PEÇAS DE MANUTENÇÃO	A60
ÍNDICE	A108
ARRANJO DA MÁQUINA	1
RETROESCAVADEIRA - BRAÇO ESTENDÍVEL	1
RETROESCAVADEIRA - BRAÇO PADRÃO	3
CHASSI	5
ARRANJO BÁSICO	6
CAÇAMBA DIANTEIRA	6
ARRANJO DO MOTOR	7
MOTOR	7
MOTOR PRIMÁRIO	10
MOTOR BÁSICO	11
EIXO-COMANDO DE VÁLVULA	11
TAMPA - CABEÇA DO CILINDRO	12
TAMPA - MECANISMO DAS VÁLVULAS	13
VIRABREQUIM	21
BLOCO DO MOTOR	25
CABEÇOTE DO MOTOR	29
COMANDO DO VENTILADOR	32
VOLANTE DO MOTOR	33
CAIXA DO VOLANTE DO MOTOR	34
CAIXA DIANTEIRA	35
LEVANTAMENTO DO MOTOR	39
MONTAGEM - MOTOR	40
MONTAGEM - MOTOR E TRANSMISSÃO	41
CÁRTER DO ÓLEO DO MOTOR	42
PISTÃO E BIELA	44
BUJÃO DO MOTOR	47
POLIA DO VIRABREQUIM	50
BALANCIM	51
MECANISMO DAS VÁLVULAS	52
SISTEMA DE LUBRIFICAÇÃO	55
RESPIRO	55
FILTRO - ÓLEO DO MOTOR	57
VARETA DE NÍVEL E BOCAL DE ENCHIMENTO DO ÓLEO	58
BOMBA DE ÓLEO - MOTOR	59
SISTEMA DE ARREFECIMENTO	60
CONEXÃO - TUBO D'ÁGUA	60
ARREFECEDOR - ÓLEO DO MOTOR	61
ARREFECEDOR DE ÓLEO DO MOTOR E BASE DO FILTRO	62
VENTILADOR DE SUCÇÃO	67
TUBULAÇÕES-ARREFECEDOR DA TRANSMISSÃO	70
*MOUNTING & LINES GP-RADIATOR	72
SUPORTE - ARREFECEDR DE ÓLEO E RADIADOR	73
BOMBA DE ÁGUA	75
RADIADOR E ARREFECEDOR DE ÓLEO	77
TANQUE DE EXPANSÃO	80
SISTEMA DE ADMISSÃO E ESCAPE DE AR	81
PURIFICADOR DE AR	81
CONEXÃO - ADMISSÃO DE AR	86
INDICADOR - TROCA DO FILTRO DE AR	87
COLETOR DE ESCAPE	89
SILENCIADOR	90
TURBOALIMENTADOR	92
SISTEMA DO COMBUSTÍVEL	94
CONTROLE DO GOVERNADOR	94
FILTRO DE COMBUSTÍVEL E SEPARADOR DE ÁGUA	100
TUBOS - COMBUSTÍVEL	101
TUBOS - FILTRO DO COMBUSTÍVEL	106
BOMBA DE INJEÇÃO DO COMBUSTÍVEL	107
BOMBA DE ESCORVA DO COMBUSTÍVEL E DO FILTRO PRIMÁRIO	118
TANQUE DE COMBUSTÍVEL E MONTAGEM	120
TANQUE DE COMBUSTÍVEL	121
SISTEMA ELÉTRICO DE PARTIDA	123
ALTERNADOR DE CORRENTE	123
BATERIA E CABOS / FIOS ELÉTRICOS	125
SISTEMA ELETRÔNICO - MÁQUINA	130
SISTEMA ELETRÔNICO - MONITOR	130
VELA DE AQUECIMENTO; VELA INCANDESCENTE	131
CONTROLE DE INCLINAÇÃO - LASER	133
AQUECEDOR DA ÁGUA DO MOTOR	135
LÂMPADA - FAROL	136
LUZ GIRATÓRIA DE ALARME	139
SISTEMA DE ILUMINAÇÃO - FARÓIS E SINAL	140

* TRADUÇÃO NÃO DISPONÍVEL NO MOMENTO DA IMPRESSÃO

ÍNDICE

Designação	Página
SIST. DE ILUMINAÇÃO - PISCA-PISCA GIRATÓRIO DE ADVERTÊNCIA	146
MONTAGEM - SENSOR	147
PAINEL DE FUSÍVEIS	148
RELÉ	149
MOTOR ELÉTRICO DE PARTIDA	152
INTERRUPTOR-TRAÇÃO EM TODAS AS RODAS	155
INTERRUPTOR - TRAVA DO DIFERENCIAL	156
CHAVE GERAL	157
INTERRUPTOR - PRESSÃO	158
CABOS/FIOS ELÉTRICOS - AR CONDICIONADO	159
CABOS/FIOS ELÉTRICOS DO CONSOLE	162
CABOS/FIOS ELÉTRICOS - MOTOR	167
FIAÇÃO-BRAÇO ALONGÁVEL	170
FIACAO - CONTROLE DO NIVEL	171
CABOS/FIOS ELÉTRICOS - AQUECEDOR	173
CABOS/FIOS ELÉTRICOS - POSICIONADOR E DESENGATE AUTOMÁTICO	175
CABOS/FIOS ELÉTRICOS - PLATAFORMA	181
CABOS/FIOS ELÉTRICOS - TRASEIROS	189
CABOS/FIOS ELÉTRICOS - ABSORÇÃO DE IMPACTOS	190
TREM DE FORÇA	192
EIXO DE PROPULSÃO E DIREÇÃO	192
SEMI-EIXO TRASEIRO	194
CAIXA DA TRANSMISSÃO	197
CARCAÇA DA TRANSMISSÃO	202
DIFERENCIAL E COROA	205
DIFERENCIAL	207
COMANDO - RETROESCAVADEIRA	209
COMANDO - ACOPLAMENTO FLEXÍVEL	210
BOCAL DE ENCHIMENTO DE ÓLEO DO TREM DE FORÇA	211
FLANGE - RODA	215
ALOJAMENTO E FLANGE - EIXO	217
CAIXA DO SEMI-EIXO	219
TUBOS - ÓLEO DA TRANSMISSÃO	223
MONTAGEM DO EIXO	224
MONTAGEM - TRANSMISSÃO	225
GR. PLANETÁRIO - COMANDO FINAL	226
TREM DE FORÇA	228
EIXO DE TRANSMISSÃO	230
EIXO DE ENTRADA	231
EIXO - SAÍDA	233
TRANSMISSÃO E MONTAGEM	236
TRANSMISSÃO DIRETA	238
VÁLVULA DE ALÍVIO	254
VÁLVULA DE PNEU	255
RODA E PNEU	256
SISTEMA DE FREIOS	271
CONTROLE DO FREIO DE ESTACIONAMENTO	271
CONTROLE DO FREIO DE SERVIÇO	273
CILINDRO DO FREIO	276
ALAVANCA DE CONTROLE MANUAL	278
TANQUE DO FREIO	279
SISTEMA DE DIREÇÃO	281
EIXO DIANTEIRO	281
CONTROLE DE DIREÇÃO	283
BOTÃO - DIREÇÃO	286
TUBOS - DIREÇÃO	287
BOMBA REGULADORA	291
CHASSI E CARCAÇA	292
CAIXA - BATERIA	292
CONTRAPESO	293
TAMPA - ACESSO À BATERIA	296
PÁRA-LAMA-EXTENSÃO	297
PÁRA-LAMA DIANTEIRO	298
PÁRA-LAMA TRASEIRO	299
CHAPA DO PISO	301
CHASSI DIANTEIRO	303
ARMAÇÃO OSCILANTE	305
PROTETOR - EIXO DE TRANSMISSÃO	307
PROTETOR - RADIADOR	308
CAPÔ E PROTETOR	309
CAPÔ DO MOTOR	311
SISTEMA HIDRÁULICO	313
ACUMULADOR DO SISTEMA DE ABSORÇÃO DE IMPACTOS	313
SISTEMA DE ABSORÇÃO DE IMPACTOS	314
CILINDRO E TUBULAÇÕES-POLEGAR	315
CILINDRO DA CAÇAMBA RETROESCAVADEIRA	318
CILINDRO DA LANÇA	321
CILINDRO DO BRAÇO ESTENDÍVEL	325
CILINDRO DE LEVANTAMENTO	327
CILINDRO - CAÇAMBA DE MÚLTIPLAS APLICAÇÕES	328
CILINDRO DO ESTABILIZADOR	329
CILINDRO DO BRAÇO	333

* TRADUÇÃO NÃO DISPONÍVEL NO MOMENTO DA IMPRESSÃO

ÍNDICE

Designação	Página
CILINDRO DE GIRO	337
CILINDRO - POLEGAR	339
CILINDRO DE INCLINAÇÃO	340
COMANDO DA BOMBA E MONTAGEM	341
FIXADOR - VÁLVULA	342
CONEXÃO - HIDRÁULICA	343
COMANDO HIDRÁULICO	344
DESENGATE E POSICIONADOR DA CAÇAMBA	345
TUBOS AUXILIARES - RETROESCAVADEIRA	347
TUBOS - LANÇA	355
TUBOS - CAÇAMBA	357
TUBOS - DRENAGEM	362
TUBOS - BRAÇO COM EXTENSÃO	363
TUBOS - ARREFECEDOR DE ÓLEO HIDRÁULICO	365
TUBOS - CILINDRO DE LEVANTAMENTO	367
TUBOS AUXILIARES	369
TUBOS - CAÇAMBA DE MÚLTIPLAS APLICAÇÕES	371
TUBOS - CIRCUITO PILOTO	375
TUBOS - BOMBA	377
TUBOS - ABSORÇÃO DE IMPACTOS	379
TUBOS - ESTABILIZADOR	383
TUBOS - BRAÇO	387
TUBOS - GIRO	388
TUBOS - CILINDRO DE INCLINAÇÃO	389
COLETOR - CONTROLE	391
COLETOR-CONTROLE DE PERCURSO	393
MONTAGEM - BANCO DE VÁLVULAS	394
MONTAGEM - CILINDRO	396
MONTAGEM - TUBOS	399
BOMBA DE PISTÃO	401
*SHAFT GP-PUMP DRIVE	405
TANQUE DE ÓLEO HIDRÁULICO E MONTAGEM	406
GRUPO DE VÁLVULA DE CONTROLE - 2	410
VÁLVULA-CONTROLE 3	410
GRUPO DE VÁLVULAS - SEIS	410
VÁLVULA-CONTROLE 7	411
VÁLVULAS DE CONTROLE - OITO	411
GRUPO DE VÁLVULAS DE CONTROLE - DUPLO	412
GRUPO DE VÁLVULAS DE CONTROLE - TRIPLO	413
GRUPO DE VÁLVULAS DE CONTROLE - SEIS	414
GRUPO DE VÁLVULAS DE CONTROLE - SETE	416
GRUPO DE VÁLVULAS DE CONTROLE - OITO	418
VÁLVULA DE CONTROLE	420
VÁLVULA DE SEPARAÇÃO	434
ACESSÓRIOS	435
BRAÇO DE LEVANTAMENTO	435
LANÇA	437
TIRANTE DO CILINDRO DE LEVANTAMENTO	438
PROTETOR DA LANÇA	439
ELO - POLEGAR	440
ARTICULAÇÃO DA CAÇAMBA DA RETROESCAVADEIRA	441
ARTICULAÇÃO DAS CAÇAMBAS DAS CARREGADEIRAS	443
TRAVA - TRANSPORTE	445
MONTAGEM - BRAÇO	448
COXIM E PROTETOR DO ESTABILIZADOR	449
CALÇO DO ESTABILIZADOR E MONTAGEM	455
CALÇO DO ESTABILIZADOR	458
ESTABILIZADOR - RETROESCAVADEIRA	460
BRAÇO	461
BRAÇO ESTENDÍVEL	464
BRAÇO - CAÇAMBA RETRO-ESCAVADORA	466
FERRAMENTAS DE TRABALHO	468
CAÇAMBA - PARA APLICAÇAO GERAL	468
CAÇAMBA DE MÚLTIPLAS APLICAÇÕES	468
CAÇAMBA PARA APLICAÇÃO GERAL	471
CAÇAMBA - RETRO-ESCAVADORA	479
CAÇAMBA PARA APLICAÇÃO GERAL	511
CAÇAMBA RETROESCAVADORA	518
CAÇAMBA DE MÚLTIPLAS APLICAÇÕES	562
LÂMINA	566
BRAÇADEIRA-CAÇAMBA DE MÚLTIPLAS APLICAÇÕES	570
ACOPLADOR RÁPIDO	572
BORDA CORTANTE	578
GARFO	580
PROTETOR-FERRAMENTA DE TRABALHO	581
MONTAGEM - CAÇAMBA	582
MONTAGEM - MASTRO	583
PINO-ACOPLADOR	584
POLEGAR	586

* TRADUÇÃO NÃO DISPONÍVEL NO MOMENTO DA IMPRESSÃO

ÍNDICE

Designação	Página
UNI-DENTE	638
POSTO DO OPERADOR	639
CONDICIONADOR DE AR E MONTAGEM	639
CONDICIONADOR DE AR	642
SUPORTE - MONTAGEM	644
CABINE - ESTRUTURA ROPS COBERTA	645
CABINE	648
CABINE - ESTRUTURA DE PROTEÇÃO CONTRA CAPOTAMENTO	649
TOLDO - ROPS ABERTA	656
TOLDO - ESTRUTURA ROPS ABERTA	658
COMPARTIMENTO PARA LITERATURA	661
COMPRESSOR DE REFRIGERANTE E MONTAGEM	662
COMPRESSOR DE REFRIGERANTE	664
CONDENSADOR DO REFRIGERANTE E MONTAGEM	665
CONSOLE DO OPERADOR	666
CONTROLE E MONTAGEM-ESTABILIZADOR	672
CONTROLE HIDRÁULICO MANUAL	674
CONTROLE - PEDAL HIDRÁULICO	684
CONTROLE DA TRANSMISSÃO	686
TAMPA - MOTOR DO LIMPADOR DE PÁRA-BRISA	688
PORTA DA CABINE	689
TAPETE	693
AQUECEDOR DA CABINE	695
INSTALAÇÃO-MONITOR	699
TRINCO - PORTA DA CABINA E JANELA	701
ALAVANCA - GOVERNADOR	703
REVESTIMENTO DA CABINE	704
TUBOS - AQUECEDOR	708
TUBULAÇÕES - AQUECEDOR E AR CONDICIONADO	709
ESPELHO RETROVISOR	711
MOTOR - LIMPADOR DO VIDRO	713
MONTAGEM - CABINE	714
MONTAGEM - MONITOR	715
PEDAL DO GOVERNADOR	716
TETO - CABINE	718
CINTO DE SEGURANÇA	721
ASSENTO	723
ASSENTO COM SUSPENSÃO	727
SUSPENSÃO - ASSENTO	729
TACÔMETRO - ELÉTRICO	736
LISTRA DA CABINE	737
LAVADOR DO VIDRO	739
JANELA DA CABINE	741
VIDRO DA PORTA	750
LIMPADOR E LAVADOR - JANELA	752
LIMPADOR DO VIDRO	754
EQUIPAMENTOS DE SERVIÇO E SUPRIMENTOS	756
SUPORTE PARA TRANSPORTE	756
DECALQUE	757
ELO - EMBARQUE	758
CADEADO CONTRA VANDALISMO	758
PLACA E DECALQUE	758
PROTEÇÃO CONTRA VANDALISMO	762
AR. DE EMBARQUE DA CAÇAMBA	763
ÍNDICE DE NÚMERO DE PEÇA	B1

* TRADUÇÃO NÃO DISPONÍVEL NO MOMENTO DA IMPRESSÃO

INHALTSVERZEICHNIS

Bezeichnung	Seite
ALLGEMEINE HINWEISE	A35
REPARATURALTERNATIVEN	A43
KÜHLMITTELZUSATZ	A48
WARTUNGSTEILE	A64
STICHWORTVERZEICHNIS	A121
MASCHINE	1
HECKBAGGER-TELESKOPSTIEL	1
STANDARDHECKBAGGERSTIEL	3
FAHRWERK	5
GRUNDAUSFÜHRUNG	6
LADESCHAUFEL	6
MOTOR	7
MOTORAUSFÜHRUNG	7
MOTOR (GRUNDAUSFÜHRUNG)	11
NOCKENWELLE	11
ZYLINDERKOPFDECKEL	12
VENTILDECKEL	13
KURBELWELLE	21
MOTORBLOCK	25
ZYLINDERKOPF	29
LÜFTERANTRIEB	32
SCHWUNGRAD	33
SCHWUNGRADGEHÄUSE	34
STIRNRADGEHÄUSE	35
MOTORHUBÖSE	39
MOTORAUFLAGER	40
MOTOR- UND GETRIEBEAUFLAGER	41
ÖLWANNE	42
PLEUELSTANGE UND KOLBEN	44
MOTORSTOPFEN	47
KURBELWELLEN-RIEMENSCHEIBE	50
VENTILKIPPHEBEL	51
VENTILSTEUERUNG	52
SCHMIERSYSTEM	55
ENTLÜFTER	55
ÖLFILTER	57
ÖLMESSSTAB U. EINFÜLLSTUTZEN	58
SCHMIERPUMPE	59
KÜHLSYSTEM	60
KÜHLWASSERANSCHLUSS	60
MOTORÖLKÜHLER	61
MOTORÖLKÜHLER UND FILTER-SOCKEL	62
SAUGLÜFTER	67
GETRIEBEKÜHLERLEITUNGEN	70
*MOUNTING & LINES GP-RADIATOR	72
KÜHLER U. ÖLKÜHLER - BEFESTIGUNG	73
KÜHLWASSERPUMPE	75
KÜHLERNETZ UND ÖLKÜHLER	77
AUSGLEICHSBEHÄLTER	80
LUFTANSAUG- UND ABGASSYSTEM	81
LUFTREINIGER	81
EINLASSANSCHLUSS	86
LUFTFILTERWARTUNGSANZEIGE	87
AUSPUFFKRÜMMER	89
SCHALLDÄMPFER	90
TURBOLADER	92
KRAFTSTOFFSYSTEM	94
REGLERSTEUERUNG	94
WASSERABSCHEIDER- U. KRAFTSTOFFILTER	100
KRAFTSTOFFLEITUNGEN	101
KRAFTSTOFFILTERLEITUNGEN	106
KRAFTSTOFFEINSPRITZPUMPE	107
KRAFTSTOFFENTLÜFTUNGSPUMPE UND -HAUPTFILTER	118
KRAFTSTOFFTANK U. BEFESTIGUNG	120
KRAFTSTOFFTANK	121
ELEKTRISCHE ANLAGE UND STARTSYSTEM	123
DREHSTROMGENERATOR	123
BATTERIE UND VERDRAHTUNG	125
ELEKTRONIK - MASCHINE	130
ELEKTRONIK - MONITOR	130
GLÜHKERZE	131
*GRADE CONTROL AR-LASER	133
UMLAUFKÜHLWASSERHEIZUNG	135
ARBEITSLEUCHTEN	136
RUNDUM-KENNLEUCHTE	139
ARBEITS- U. SIGNALLEUCHTE	140
RUNDUM-KENNLEUCHTE	146
SENSORBEFESTIGUNG	147
INSTRUMENTENTAFEL-SICHERUNG	148
RELAIS	149
STARTERMOTOR	152
SCHALTER - ALLRADANTRIEB	155
DIFFERENZIALSPERRENSCHALTER	156
TRENNSCHALTER	157
DRUCKSCHALTER	158
KLIMAANLAGENVERDRAHTUNG	159
KONSOLENVERDRAHTUNG	162
MOTORVERDRAHTUNG	167

* ÜBERSETZUNG ZUM ZEITPUNKT DER DRUCKLEGUNG NICHT VORHANDEN

INHALTSVERZEICHNIS

Bezeichnung	Seite
VERDRAHTUNG - AUSFAHRBARER STIL	170
NIEGUNGSSTEUER VERDRAHTUNG	171
HEIZUNGSVERDRAHTUNG	173
VERDRAHTUNG - SCHAUFELAUSSCHALTER U. EINSTELLER	175
FAHRERPLATTFORMVERDRAHTUNG	181
VERDRAHTUNG, HINTEN	189
SCHWINGUNGSDÄMPFUNGSVERDRAHTUNG	190
KRAFTÜBERTRAGUNG	192
ANTRIEBS- UND LENKACHSE	192
HINTERACHSE	194
GETRIEBEGEHÄUSE	197
DIFFERENTIAL UND TELLERRAD	205
DIFFERENTIAL	207
ANTRIEB - BAGGERLADER	209
KUPPLUNGSANTRIEB, ELAST.	210
GETRIEBEÖLFÜLLSTUTZEN	211
RADFLANSCH	215
ACHSGEHÄUSEFLANSCH	217
ACHSGEHÄUSE	219
ÖLLEITUNGEN - KRAFTÜBERTRAGUNG	223
ACHSENANBAUSATZ	224
GETRIEBEAUFLAGER	225
SEITENANTRIEB - PLANETENGETRIEBE	226
KRAFTÜBERTRAGUNG	228
ANTRIEBSWELLE	230
ABTRIEBSWELLE	233
GETRIEBE U. BEFESTIGUNG	236
MECHANISCHES GETRIEBE	238
WECHSELGETRIEBE	239
ÜBERDRUCKVENTIL	254
REIFENVENTIL	255
RAD UND REIFEN	256
BREMSSYSTEM	271
FESTSTELLBREMSGESTÄNGE	271
BREMSGESTÄNGE	273
BREMSZYLINDER	276
HANDSTEUERHEBEL	278
BREMSTANK	279
LENKSYSTEM	281
VORDERACHSE	281
LENKBETÄTIGUNG	283
LENKKNOPF	286
LENKÖLLEITUNGEN	287
ZUMESSPUMPE	291

Bezeichnung	Seite
RAHMEN UND FAHRGESTELL	292
BATTERIEKASTEN	292
GEGENGEWICHT	293
BATTERIEDECKEL	296
SCHUTZBLECHVERLÄNGERUNG	297
SCHUTZBLECHE, VORNE	298
SCHUTZBLECHE, HINTEN	299
BODENBLECH	301
LADERRAHMEN	303
SCHWENKRAHMEN	305
ANTRIEBSWELLENVERKLEIDUNG	307
KÜHLERSCHUTZ	308
MOTORHAUBE UND VERKLEIDUNG	309
MOTORHAUBE	311
HYDRAULIKSYSTEM	313
DRUCKSPEICHER, HYDRAULISCHE SCHWINGUNGSDÄMPFUNG	313
HYDRAULISCHE SCHWINGUNGSDÄMPFUNG	314
DAUMEN - ZYLINDER U. LEITUNGEN	315
HECKBAGGERLÖFFELZYLINDER	318
AUSLEGERZYLINDER	321
TELESKOPSTIELZYLINDER	325
HUBZYLINDER	327
KOMBISCHAUFELZYLINDER	328
SEITENSTÜTZENZYLINDER	329
STIELZYLINDER	333
SCHWENKZYLINDER	337
DAUMENZYLINDER	339
KIPPZYLINDER	340
PUMPENANTRIEB U. BEFESTIGUNGSTEILE	341
VENTILBEFESTIGUNG	342
HYDRAULIKFITTING	343
HYDRAULIKSYSTEM	344
SCHAUFELAUSSCHALTER UND -EINSTELLER	345
TIEFLÖFFEL-HYDRAULIKNOTLEITUNGEN	347
AUSLEGERLEITUNGEN	355
SCHAUFELLEITUNGEN	357
ABLASSLEITUNGEN	362
TELESKOPSTIELLEITUNGEN	363
HYDRAULIKÖLKÜHLERLEITUNGEN	365
HUBZYLINDERLEITUNGEN	367
LADERZUSATZLEITUNGEN	369
KOMBISCHAUFELLEITUNGEN	371
VORSTEUERLEITUNGEN	375
HYDRAULIKPUMPE UND LEITUNGEN	377
SCHWINGUNGSDÄMPFUNGSLEITUNGEN	379
SEITENSTÜTZENLEITUNGEN	383

* ÜBERSETZUNG ZUM ZEITPUNKT DER DRUCKLEGUNG NICHT VORHANDEN

INHALTSVERZEICHNIS

Bezeichnung	Seite
*LINES GP-STICK	387
SCHWENKLEITUNGEN	388
NEIGEZYLINDERLEITUNGEN	389
STEUERKRÜMMER	391
*MANIFOLD GP-RIDE CONTROL	393
VENTILANORDNUNGS-BEFESTIGUNGS-SATZ	394
ZYLINDERAUFHÄNGUNG	396
LEITUNGS-BEFESTIGUNGSTEILE	399
KOLBENPUMPE	401
*SHAFT GP-PUMP DRIVE	405
HYDRAULIKTANK UND BEFESTIGUNGS-TEILE	406
VENTILBLOCK 2	410
VENTILBLOCK 3	410
6-FACH-VENTILBLOCK	410
VENTILBLOCK 7	411
8-BLOCK-VENTILSATZ	411
VENTILSATZ (2-VENTIL)	412
VENTILSATZ (3-VENTIL)	413
VENTILSATZ (6-VENTIL)	414
VENTILSATZ (7-VENTIL)	416
VENTILSATZ (8-VENTIL)	418
STEUERVENTIL	420
PENDELVENTIL	434
ARBEITSGERÄTE	435
HUBARM	435
AUSLEGER	437
HUBZYLINDER-HALTERUNG	438
AUSLEGER - SCHUTZVERKLEIDUNG	439
DAUMENGESTÄNGE	440
HECKBAGGERLÖFFELGESTÄNGE	441
SCHAUFELGESTÄNGE	443
TRANSPORTSPERRE	445
STIELAUFHÄNGUNG	448
SEITENSTÜTZENPLATTEN UND SCHUTZABDECKUNG	449
STÜTZPLATTEN U. BEFESTIGUNG	455
SEITENSTÜTZENPLATTEN	458
SEITENSTÜTZEN	460
STIEL	461
TELESKOPSTIEL	464
LÖFFELSTIEL	466
ARBEITSGERÄTE	468
*BUCKET AR-GENERAL PURPOSE	468
KOMBISCHAUFEL	468
UNIVERSALSCHAUFEL	471
HECKBAGGERLÖFFEL	479
UNIVERSALSCHAUFEL	511
HECKBAGGERLÖFFEL	518
KOMBISCHAUFEL	562
PLANIERSCHILD	566
SCHÜRZE, KOMBISCHAUFEL	570
SCHNELLWECHSELVORRICHTUNG	572
SCHNELLWECHSELEINRICHTUNG	573
SCHNEIDMESSER	578
PALETTENGABEL	580
SCHUTZ - ARBEITSGERÄT	581
SCHAUFELAUFHÄNGUNG	582
HUBMASTBEFESTIGUNG	583
KUPPLUNGSBOLZEN	584
DAUMEN	586
UNIVERSAL-ZAHNSPITZE	638
FAHRERHAUS	639
KLIMAANLAGE UND AUFHÄNGUNG	639
KLIMAANLAGE	642
BEFESTIGUNGSHALTERUNG	644
FAHRERHAUS MIT ÜBERROLL-SCHUTZ	645
FAHRERHAUS	648
FAHRERHAUS MIT ÜBERROLL-SCHUTZ	649
OFFENES FAHRERHAUS MIT ÜBERROLLSCHUTZ	656
FAHRERHAUS M. OFFENEM ÜBERROLLSCHUTZ	658
LITERATURABLAGE	661
KÄLTEMITTELKOMPRESSOR U. BEFESTIGUNG	662
KÄLTEMITTELKOMPRESSOR	664
KÄLTEMITTELKONDENSATOR U. BEFESTIGUNGSTEILE	665
STEUERKONSOLE	666
STEUERUNG U. BEFESTIGUNG - ABSTÜTZUNG	672
HYDRAULIKHANDSTEUERUNG	674
HYDRAULIKPEDALSTEUERUNG	684
GETRIEBESTEUERUNG	686
WISCHERMOTORABDECKUNG	688
FAHRERHAUSTÜR	689
FUSSMATTE	693
FAHRERHAUSHEIZUNG	695
EINBAUSATZ - MONITOR	699
FAHRERHAUSTÜR- U. FENSTERVERRIE-GELUNG	701
REGELERHEBEL	703
FAHRERHAUSAUSKLEIDUNG	704
HEIZUNGSLEITUNGEN	708
HEIZUNGS- U. KLIMAANLAGENLEITUN-GEN	709
RÜCKSPIEGEL	711
SCHEIBENWISCHERMOTOR	713
FAHRERHAUSANBAUSATZ	714

* ÜBERSETZUNG ZUM ZEITPUNKT DER DRUCKLEGUNG NICHT VORHANDEN

INHALTSVERZEICHNIS

Bezeichnung	Seite
MONITORBEFESTIGUNG	715
GASPEDAL	716
FAHRERHAUSDACH	718
SICHERHEITSGURT	721
FAHRERSITZ	723
SCHWINGSITZ	727
FAHRERSITZFEDERUNG	729
DREHZAHLMESSER, ELEKTR.	736
FAHRERHAUS - HALTETEILE	737
SCHEIBENWASCHANLAGE	739
FAHRERHAUSFENSTER	741
TÜRFENSTER	750
SCHEIBENWISCHER UND -WASCHANLAGE	752
SCHEIBENWISCHER	754
WARTUNGSAUSRÜSTUNG UND -ZUBEHÖR	756
TRANSPORTHALTERUNG	756
AUFKLEBER	757
TRANSPORTSPERRE	758
VORHÄNGESCHLOSS	758
SCHILD UND AUFKLEBER	758
SCHUTZABDECKUNG	762
SCHAUFELTRANSPORTAUSFÜHRUNG	763
ERSATZTEILNUMMERNINDEX	B1

* ÜBERSETZUNG ZUM ZEITPUNKT DER DRUCKLEGUNG NICHT VORHANDEN

GENERAL INFORMATION

1. MACHINE IDENTIFICATION

Caterpillar machines are identified by Product Identification Numbers (PIN). Some components included in a machine may be identified by Serial Numbers (S/N). Typical components that will be serialized include engines, transmissions, bulldozers, and rippers. The machine and engine are further identified by arrangement numbers and in some cases modification numbers. These numbers are shown on the product identification plate(s) and on the master plate in the operator's compartment.

Caterpillar dealers need all of these numbers to determine accurate parts identification.

SIS ***New Feature***

Effective First Quarter 2001 the Caterpillar Product Identification Number (PIN) changed from 8 to 17 characters. In an effort to provide uniform equipment identification, Caterpillar and other construction equipment manufacturers are moving to comply with the latest version of the product identification numbering standard. Non-road machine PINs are defined by ISO 10261. The new PIN format will apply to all Caterpillar machines and generator sets. The PIN plates and frame marking will display the 17 character PIN. The new format will look like the following:

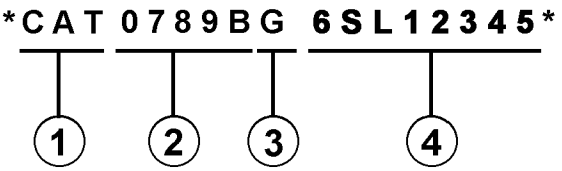

Where:

1. Caterpillar's World Manufacturing Code (characters 1-3)

2. Machine Descriptor (characters 4-8)

3. Check Character (character 9)

4. Machine Indicator Section (MIS) or Product Sequence Number (characters 10-17). These were previously referred to as the Serial Number.

Machines and generator sets produced before First Quarter 2001 will maintain their 8 character PIN format.

Components such as engines, transmissions, axles, etc. and work tools will continue to use an 8 character Serial Number (S/N).

2. ORDERING PARTS

⚠ WARNING

When replacement parts are required for this product Caterpillar recommends using Caterpillar replacement parts or parts with equivalent specifications including, but not limited to, physical dimensions, type, strength and material.

Failure to heed this warning can lead to premature failures, product damage, personal injury or death.

Quality Caterpillar replacement parts are available from Caterpillar dealers throughout the world. Their parts inventories are up to date and include all parts normally required to protect your investment in Caterpillar machines. Dealers may offer repair kits or remanufactured parts to allow selection of the most effective repair alternative for a particular situation. When ordering parts, your order should specify the quantity, part number, part name, and the serial number/product identification number of the machine for which the parts are needed.

3. PARTS MANUAL ORGANIZATION

Product information in this manual is presented as "information elements" that represent all of the components for the specific model. Engine Arrangement and Seat Group are examples of information elements. The information elements are organized alphabetically by part name and secondarily by part number within each major section of the manual.

4. TABLE OF CONTENTS

A table of contents (TOC) is found at the beginning of the manual. The TOC lists each section of the manual with a complete list of all information elements organized as they appear in the manual. Page numbers are provided for quick reference to detailed parts identification illustrations and serviceable consist lists.

5. MAINTENANCE PARTS INDEX

The Maintenance Parts Index, located near the beginning of the manual, references most frequently used maintenance part numbers, providing description, quantity, usage and page number. This information is organized alphabetically by part description.

6. INDEX

The index located near the front of the manual is an alphabetical listing of all information elements included in the manual. Page numbers are provided for quick reference to detailed parts identification illustrations and serviceable consist lists.

7. PART NUMBER INDEX

A numerical index listing all part numbers and the corresponding page number(s) appears at the back of the manual.

8. CAPTIONS

Captions located at the beginning of each information element identify the part number and part name along with additional descriptive information. PIN and S/N information found in each caption should be used to select correct information for a specific machine. Field replacement options, identification of optional attachment components, and where used ("part of") information is also provided.

The first line of a caption is shown in larger type font to indicate the beginning of an information element. Captions for additional pages that may be required to illustrate an information element will be shown in standard type font and will include the term *(contd.)* .

9. NON-SERVICED PARTS

In some instances it is necessary to display non-serviced parts that are a link to a lower level serviceable consist lists. These non-serviced part numbers are shown in *italic* type indicating that they are not available.

10. PARTS LIST REFERENCE NUMBERS

Numbers shown in the Ref No column correspond to numbers used in the associated graphic(s). An alphabetic suffix may be added to a reference number to identify lower level consist items. Numbers shown in the Graphic Ref column refer to the graphic number identifier displayed in the lower left corner of each illustration. The Graphic Ref number may be used in combination with the item Ref No to determine the correct part number. There may be intentional omission of a Ref No in a consist list as information is updated to reflect the latest serviceable part numbers.

11. INDENTED PART NAMES

When a part name is indented in a parts list, it is part of (included in) the group or assembly under which it is indented.

12. ILLUSTRATION REFERENCE LETTERS

When necessary, illustrations contain reference letters (A, B, C etc.) that are intended to track lines and harnesses from one point to another. They are also used to show where to reconnect illustrations that have been separated.

13. ABBREVIATIONS AND SYMBOLS

O.D. – Outside Diameter
I.D. – Inside Diameter
A – Not Part Of This Group
B – Use As Required
C – Change From Previous Type
D – Order By The Meter
E – Order By The Centimeter
F – Not Shown
G – Order By The Inch
I – Refer To Hydraulic Information System
M – Metric Part
R – Remfg Part May Be Available
Y – Separate Illustration
Z – Not Serviced Separately

SIS *New Feature*

14. DESCRIPTION OF TYPE CHANGES

Type - A type is defined as any configuration change that requires an additional Information Element for an Arrangement, Group, or Assembly. If serial number breaks for types are not available, a type # (Type 1, Type 2, etc.) will be displayed in the caption. These "type" changes are identified with a "C" note (change from previous type) in the Parts List. Only the "types" that apply to this Parts Manual will be included. Additional types may exist causing "C" notes to appear on an Information Element when no other types are shown.

15.<END>

This symbol indicates the end of an information element.

NOTE:

Continuing improvement and advancement of product design may cause changes to your machine which may not be included in this publication. Whenever a question arises regarding your caterpillar product or this publication, please consult your caterpillar dealer for the latest available information.

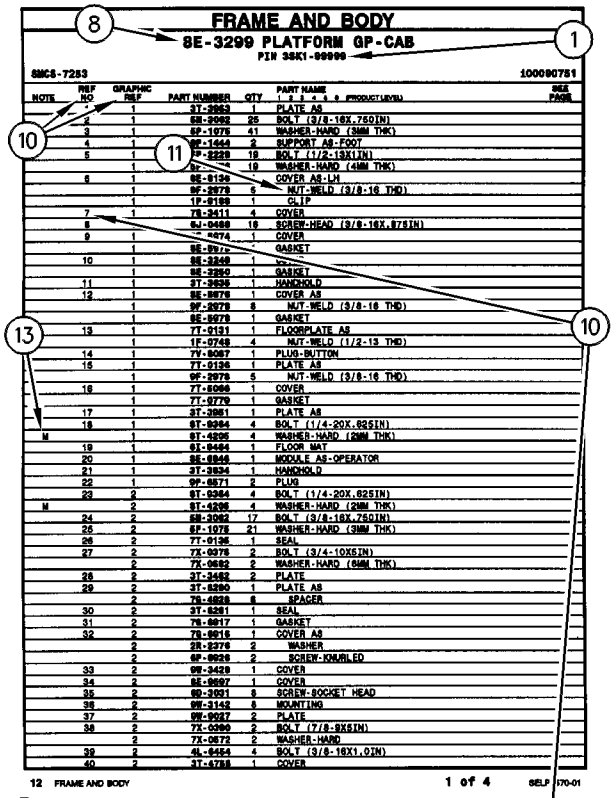

FRAME AND BODY

8E-3299 PLATFORM GP-CAB

PIN 3SK1-99999

SMCS-7283 100090751

NOTE	REF NO	GRAPHIC REF	PART NUMBER	QTY	PART NAME 1 2 3 4 5 6 (PRODUCT LEVEL)	SEE PAGE
	*	1	3T-3963	1	PLATE AS	
	2	1	5M-2062	25	BOLT (3/8-16X.750IN)	
	3	1	6P-1075	41	WASHER-HARD (3MM THK)	
	4	1	9E-1443	2	SUPPORT AS-FOOT	
	5	1	9P-2229	19	BOLT (1/2-13X1IN)	
		1	6P-[illegible]	19	WASHER-HARD (4MM THK)	
	6	1	9E-9136	*	COVER AS-LH	
		1	9F-2979	6	NUT-WELD (3/8-16 THD)	
		1	1P-0189	1	CLIP	
	7	1	7X-3411	4	COVER	
	8	1	6J-0468	18	SCREW-HEAD (3/8-16X.87SIN)	
	9	1	[illegible]074	1	COVER	
		1	9E-9[illegible]	*	GASKET	
	10	1	9E-3248	1	[illegible]	
		1	9E-3250	1	GASKET	
	11	1	3T-3636	1	HANDHOLD	
	12	1	9E-9076	1	COVER AS	
		1	9F-2979	8	NUT-WELD (3/8-16 THD)	
		1	9E-9078	1	GASKET	
	13	1	7T-9131	1	FLOORPLATE AS	
		1	1F-0748	4	NUT-WELD (1/2-13 THD)	
	14	1	7V-8067	1	PLUG-BUTTON	
	15	1	7T-9136	1	PLATE AS	
		1	9F-2979	5	NUT-WELD (3/8-16 THD)	
	16	1	7T-5066	1	COVER	
		1	7T-9779	1	GASKET	
	17	1	3T-3951	1	PLATE AS	
	18	1	9T-0264	4	BOLT (1/4-20X.62SIN)	
M		1	9T-4295	4	WASHER-HARD (2MM THK)	
	19	1	6I-9454	1	FLOOR MAT	
	20	1	9E-6946	1	MODULE AS-OPERATOR	
	21	1	3T-3934	1	HANDHOLD	
	22	1	9P-0671	2	PLUG	
	23	2	9T-0264	4	BOLT (1/4-20X.62SIN)	
M		2	9T-4295	4	WASHER-HARD (2MM THK)	
	24	2	5M-2062	17	BOLT (3/8-16X.75QIN)	
	25	2	6P-1075	21	WASHER-HARD (3MM THK)	
	26	2	7T-9136	1	SEAL	
	27	2	7X-0078	2	BOLT (3/4-10X5IN)	
		2	7X-0682	2	WASHER-HARD (6MM THK)	
	28	2	3T-3482	2	PLATE	
	29	2	3T-5290	1	PLATE AS	
		2	7S-4828	6	SPACER	
	30	2	3T-5291	1	SEAL	
	31	2	7S-8817	1	GASKET	
	32	2	7S-8818	1	COVER AS	
		2	5R-2276	2	WASHER	
		2	9P-9026	2	SCREW-KNURLED	
	33	2	9W-3429	1	COVER	
	34	2	8E-9697	1	COVER	
	35	2	9D-3031	8	SCREW-SOCKET HEAD	
	36	2	9W-3143	8	MOUNTING	
	37	2	9W-9027	2	PLATE	
	38	2	7X-0360	2	BOLT (7/8-9X5IN)	
		2	7X-0672	2	WASHER-HARD	
	39	2	4L-6454	4	BOLT (3/8-16X1.0IN)	
	40	2	3T-4788	1	COVER	

12 FRAME AND BODY 1 of 4 SELP4570-01

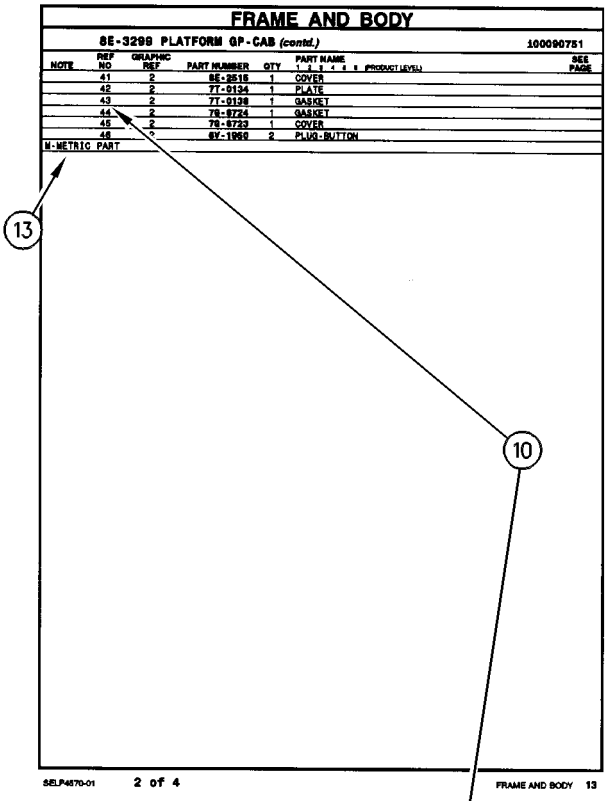

FRAME AND BODY

8E-3299 PLATFORM GP-CAB (contd.) 100090751

NOTE	REF NO	GRAPHIC REF	PART NUMBER	QTY	PART NAME 1 2 3 4 5 6 (PRODUCT LEVEL)	SEE PAGE
	41	2	8E-2515	1	COVER	
	42	2	7T-9134	1	PLATE	
	43	2	7T-9138	1	GASKET	
	44	2	7S-8724	1	GASKET	
	45	2	7S-8723	1	COVER	
	46	*	8Y-1950	2	PLUG-BUTTON	

M-METRIC PART

SELP4570-01 2 of 4 FRAME AND BODY 13

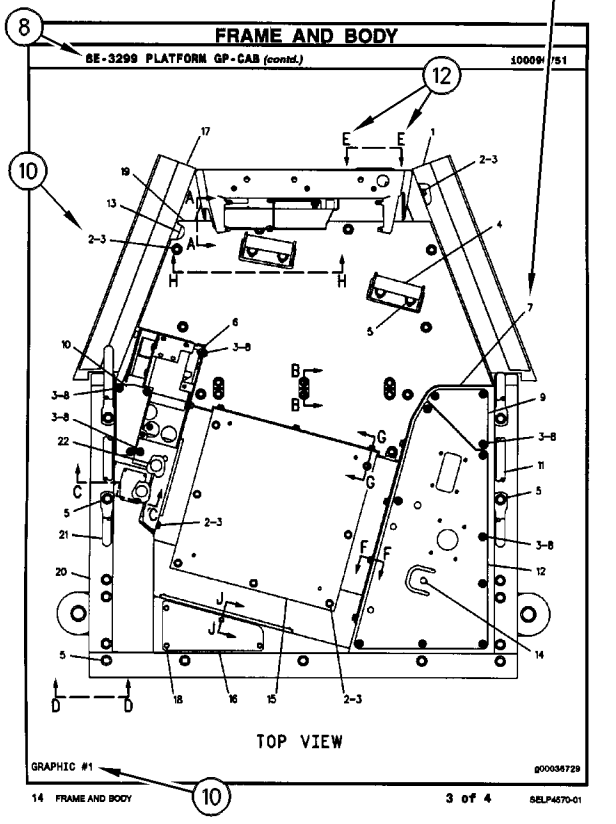

FRAME AND BODY

8E-3299 PLATFORM GP-CAB (contd.) 100090751

TOP VIEW

GRAPHIC #1 g00036729

14 FRAME AND BODY 3 of 4 SELP4570-01

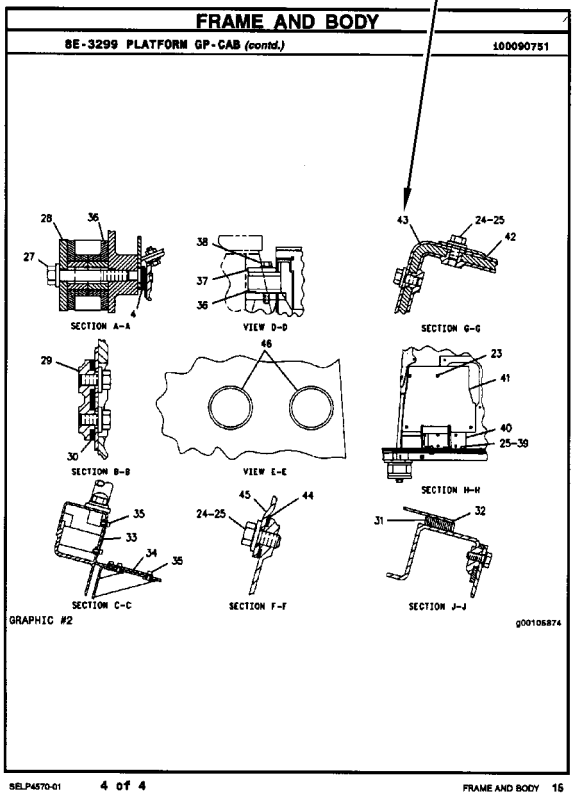

FRAME AND BODY

8E-3299 PLATFORM GP-CAB (contd.) 100090751

SECTION A-A VIEW D-D SECTION G-G

SECTION B-B VIEW E-E SECTION H-H

SECTION C-C SECTION F-F SECTION J-J

GRAPHIC #2 g00105874

SELP4570-01 4 of 4 FRAME AND BODY 15

1. IDENTIFICATION DE LA MACHINE

Toutes les machines Caterpillar portent un numéro d'identification (PIN). Certains composants des machines peuvent porter des numéros de série (S/N). En général, parmi les composants qui portent des numéros de série il y a les moteurs, les transmissions, les bulldozers et les rippers. En plus, la machine et le moteur peuvent recevoir des numéros de version, et dans certains cas, de modification. Ces numéros figurent sur les plaques de numéro de série et sur la plaque signalétique principale qui se trouve dans le poste de conduite.

Les concessionnaires Caterpillar doivent connaître tous ces numéros pour identifier correctement les pièces.

SIS *Nouvelle Caractéristique*

À partir du premier trimestre 2001, le numéro d'identification produit (PIN) Caterpillar passe de 8 à 17 caractères. Afin de permettre une identification uniforme des matériels, Caterpillar et d'autres constructeurs de machines de travaux publics s'efforcent de se conformer à la norme la plus récente portant sur les numéros d'identification des produits. Les numéros d'identification (PIN) de machines de chantier sont définis par la norme ISO 10261. Le nouveau format du numéro d'identification est valable pour toutes les machines et tous les groupes électrogènes Caterpillar. Le numéro d'identification produit (PIN) figurant sur la plaque et sur le châssis se composera de 17 caractères. Le nouveau format ressemblera à ceci:

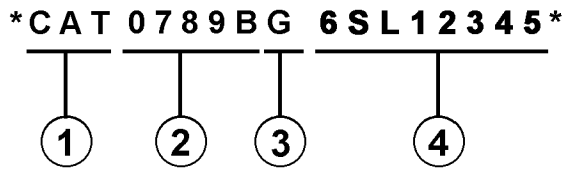

Il se décomposera de la façon suivante:

1. Code international de fabrication de Caterpillar (caractères 1 à 3)

2. Descriptif de la machine (caractères 4 à 8)

3. Contrôle (caractère 9)

4. Indicateur machine (MIS) ou numéro de séquence produit (caractères 10 à 17). Ceux-ci étaient auparavant désignés sous le terme de numéro de série.

Les machines et les groupes électrogènes construits avant le premier trimestre 2001 garderont le format à 8 caractères du numéro d'identification produit (PIN).

Les organes tels que les moteurs, les boîtes de vitesses, les essieux, etc., continueront d'être désignés par un numéro de série (S/N) à 8 caractères.

2. COMMANDE DE PIÈCES

⚠ DANGER

Lorsqu'il faut remplacer des pièces de rechange pour ce produit Caterpillar recommande d'utiliser les pièces de rechange Caterpillar ou les pièces qui ont des spécifications équivalentes dont les dimensions physiques, le type, la force et le matériau. Ces équivalences ne se limitent pas à l'énoncé précédent.

L'inobservation de cette mise en garde peut entraîner des défaillances prématurées, des dommages au produit, des blessures ou même la mort.

Les concessionnaires Caterpillar fournissent dans le monde entier des pièces de rechange de qualité Caterpillar. Leurs stocks de pièces sont constamment réapprovisionnés et comptent toutes les pièces nécessaires pour assurer la bonne marche de vos machines Caterpillar. Certains concessionnaires proposent également des kits de réparation ou des pièces rénovées, ce qui permet de choisir la solution la plus économique dans une situation donnée. Lors des commandes de pièces, mentionner la quantité, le numéro et la désignation des pièces ainsi que le numéro de série ou le numéro d'identification (PIN) de la machine pour laquelle ces pièces sont requises.

3. ORGANISATION DU CATALOGUE DE PIÈCES

Les renseignements sur les produits sont présentés sous forme de "Information element" (élément d'information) représentant tous les composants d'un modèle donné. "Engine Arrangement" (version de moteur) et "Seat Group" (assemblage de siège)" sont des exemples d'éléments d'information. Les éléments d'information sont classés par ordre alphabétique par la désignation standard des pièces et par numéros de pièces dans chaque partie importante du manuel.

4. TABLE DES MATIÈRES

SIS *Nouvelle Caractéristique*

La table des matières se trouve au début du manuel. La table des matières fournit la liste de tous les chapitres du manuel avec une liste complète de tous les éléments d'information classés par ordre d'apparition dans le manuel. Les numéros de page sont fournis afin que l'utilisateur puisse trouver rapidement les illustrations détaillées concernant l'identification des pièces et les listes des pièces d'entretien.

5. INDEX DES PIÈCES D'ENTRETIEN

La rubrique "Index des pièces d'entretien" qui se trouve au début du manuel renvoie aux pièces d'entretien les plus fréquemment utilisées en précisant la désignation, la quantité, là où la pièce est utilisée et le numéro de page. Ces pièces sont classés par ordre alphabétique.

6. INDEX

L'index qui se trouve vers le début du manuel est une liste alphabétique de tous les éléments d'information du manuel. Les numéros de page sont fournis afin que l'utilisateur puisse trouver rapidement les illustrations détaillées concernant l'identification des pièces et les listes des pièces d'entretien.

7. INDEX DES NUMÉROS DE PIÈCES

Une liste numérique de tous les numéros de pièces et des pages correspondantes se trouve à la fin du manuel.

8. LÉGENDES

Les légendes qui se trouvent en haut de chaque page de chaque élément d'information fournissent le numéro de pièce, la désignation ainsi que des renseignements supplémentaires sur les pièces. Les renseignements concernant les numéros de série (S/N) qui se trouvent dans chaque légende doivent être utilisés pour sélectionner les informations correctes pour un moteur donné. Les informations concernant les options de remplacement sur le chantier, l'identification des composants des équipements offerts en option et les lieux d'application sont aussi fournies.

SIS *Nouvelle Caractéristique*

Les lettres de la première ligne d'une légende sont présentées en police plus grande afin d'indiquer le début d'une unité d'information. Les légendes qui pourraient être requises pour des pages supplémentaires afin d'illustrer une unité d'information seront présentées en police standard et comprendront le terme (à suivre).

9. PIÈCES NON FOURNIES

SIS *Nouvelle Caractéristique*

Dans certains cas, il est nécessaire d'indiquer les pièces non fournies qui sont en aval de la liste des pièces d'entretien. Les numéros des pièces non fournies dans la liste des pièces et les légendes seront en italique pour signaler qu'ils ne sont pas disponibles.

10. NUMÉROS DE RÉFÉRENCE DE LA LISTE DES PIÈCES

SIS *Nouvelle Caractéristique*

Les numéros indiqués dans la colonne des numéros de références correspondent aux numéros utilisés dans les illustrations auxquelles ils sont associés. Un suffixe alphabétique peut être ajouté à un numéro de référence pour identifier la liste des articles en aval. Les numéros indiqués dans la colonne de référence de l'illustration renvoient à l'identification du numéro affiché dans le coin inférieur gauche de chaque illustration. Le numéro de référence de l'illustration pourrait être utilisé avec le numéro de référence de l'article pour déterminer le numéro de pièce correct. Il peut y avoir une omission intentionnelle d'un numéro de référence dans une liste de pièces suite à la mise à jour des informations en vue de refléter les numéros de pièces les plus récentes.

11. DÉSIGNATIONS DE PIÈCES EN RETRAIT

Lorsqu'une désignation de pièce est en retrait, cela veut dire que l'article en regard fait partie de l'ensemble sous lequel il figure.

12. LETTRES DE RÉFÉRENCE DES ILLUSTRATIONS

Quand cela est nécessaire, les illustrations comportent des lettres de référence (A, B, C, etc.) pour montrer le trajet des canalisations et faisceaux de câbles d'un point à l'autre. Elles sont utilisées également pour indiquer où relier les illustrations séparées auparavant.

13. ABRÉVIATIONS ET SYMBOLES

O.D. – Diamètre extérieur
I.D. – Diamètre intérieur
A – Ne fait pas partie de ce groupe
B – Utiliser selon besoin
C – Modification
D – Commander par mètre
E – Commander par centimètre
F – Non représenté
G – Commander par pouce
I – Voir "Hydraulic Information System"
M – Pièce métrique
R – Pièce rénovée éventuellement disponible
Y – Illustration séparée
Z – Non fourni séparément

NOTA:

En raison du progrès technique et des améliorations continuelles apportées au matériel, votre machine comporte peut-être des modifications qui n'apparaissent pas dans la présente publication. En cas de doute sur un détail de votre machine Caterpillar ou sur le texte de la présente publication, adressez-vous à votre concessionnaire Caterpillar.

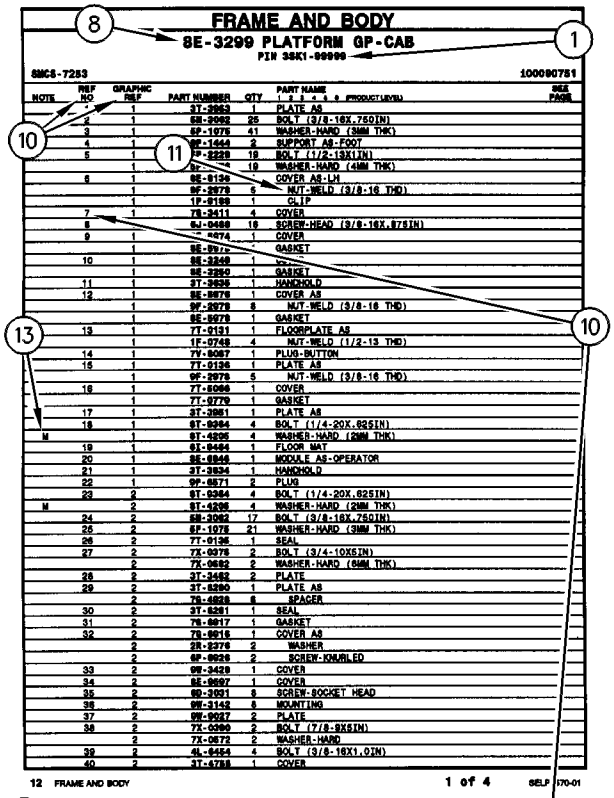

FRAME AND BODY

8E-3299 PLATFORM GP-CAB

PIN 3SK1-99999

SMCS-7283 100090751

NOTE	REF NO	GRAPHIC REF	PART NUMBER	QTY	PART NAME 1 2 3 4 5 6 (PRODUCT LEVEL)	SEE PAGE
	*	1	3T-3963	1	PLATE AS	
	2	1	5M-2062	25	BOLT (3/8-16X.750IN)	
	3	1	6P-1075	41	WASHER-HARD (3MM THK)	
	4	1	8E-1443	2	SUPPORT AS-FOOT	
	5	1	9P-2229	19	BOLT (1/2-13X1IN)	
		1	9P-[illegible]	19	WASHER-HARD (4MM THK)	
	6	1	8E-9136	*	COVER AS-LH	
		1	9F-2979	6	NUT-WELD (3/8-16 THD)	
		1	1P-0189	1	CLIP	
	7	1	7X-3411	4	COVER	
	8	1	9J-0468	18	SCREW-HEAD (3/8-16X.87SIN)	
	9	1	[illegible]-0274	1	COVER	
		1	8E-9[illegible]	*	GASKET	
	10	1	8E-3248	1	[illegible]	
		1	8E-3250	1	GASKET	
	11	1	3T-3636	1	HANDHOLD	
	12	1	8E-9076	1	COVER AS	
		1	9F-2979	8	NUT-WELD (3/8-16 THD)	
		1	8E-9078	1	GASKET	
	13	1	7T-9131	1	FLOORPLATE AS	
		1	1F-0748	4	NUT-WELD (1/2-13 THD)	
	14	1	7V-8067	1	PLUG-BUTTON	
	15	1	7T-9126	1	PLATE AS	
		1	9F-2979	5	NUT-WELD (3/8-16 THD)	
	16	1	7T-8066	1	COVER	
		1	7T-9779	1	GASKET	
	17	1	3T-3951	1	PLATE AS	
	18	1	9T-0264	4	BOLT (1/4-20X.62SIN)	
M		1	9T-4295	4	WASHER-HARD (2MM THK)	
	19	1	6I-8454	1	FLOOR MAT	
	20	1	8E-8848	1	MODULE AS-OPERATOR	
	21	1	3T-3934	1	HANDHOLD	
	22	1	9P-0871	2	PLUG	
	23	2	9T-0264	4	BOLT (1/4-20X.62SIN)	
M		2	9T-4295	4	WASHER-HARD (2MM THK)	
	24	2	5M-2062	17	BOLT (3/8-16X.750IN)	
	25	2	6P-1075	21	WASHER-HARD (3MM THK)	
	26	2	7T-9136	1	SEAL	
	27	2	7X-0078	2	BOLT (3/4-10X5IN)	
		2	7X-0682	2	WASHER-HARD (6MM THK)	
	28	2	3T-3482	2	PLATE	
	29	2	3T-8290	1	PLATE AS	
		2	7S-4828	6	SPACER	
	30	2	3T-8281	1	SEAL	
	31	2	7S-8817	1	GASKET	
	32	2	7S-8816	1	COVER AS	
		2	5R-2276	2	WASHER	
		2	9P-0026	2	SCREW-KNURLED	
	33	2	9W-3429	1	COVER	
	34	2	8E-9697	1	COVER	
	35	2	9D-3031	8	SCREW-SOCKET HEAD	
	36	2	9W-3143	8	MOUNTING	
	37	2	9W-9037	2	PLATE	
	38	2	7X-0360	2	BOLT (7/8-9X5IN)	
		2	7X-0672	2	WASHER-HARD	
	39	2	4L-8454	4	BOLT (3/8-16X1.0IN)	
	40	2	3T-4788	1	COVER	

12 FRAME AND BODY 1 of 4 SELP4570-01

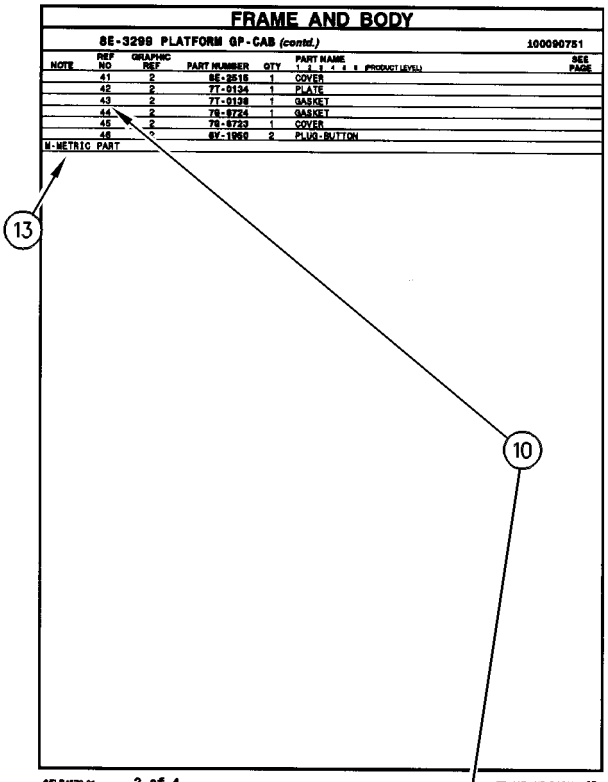

FRAME AND BODY

8E-3299 PLATFORM GP-CAB *(contd.)* 100090751

NOTE	REF NO	GRAPHIC REF	PART NUMBER	QTY	PART NAME 1 2 3 4 5 6 (PRODUCT LEVEL)	SEE PAGE
	41	2	8E-2515	1	COVER	
	42	2	7T-9134	1	PLATE	
	43	2	7T-9138	1	GASKET	
	44	2	7S-8724	1	GASKET	
	45	2	7S-8723	1	COVER	
	46	*	8Y-1950	2	PLUG-BUTTON	

M-METRIC PART

SELP4570-01 2 of 4 FRAME AND BODY 13

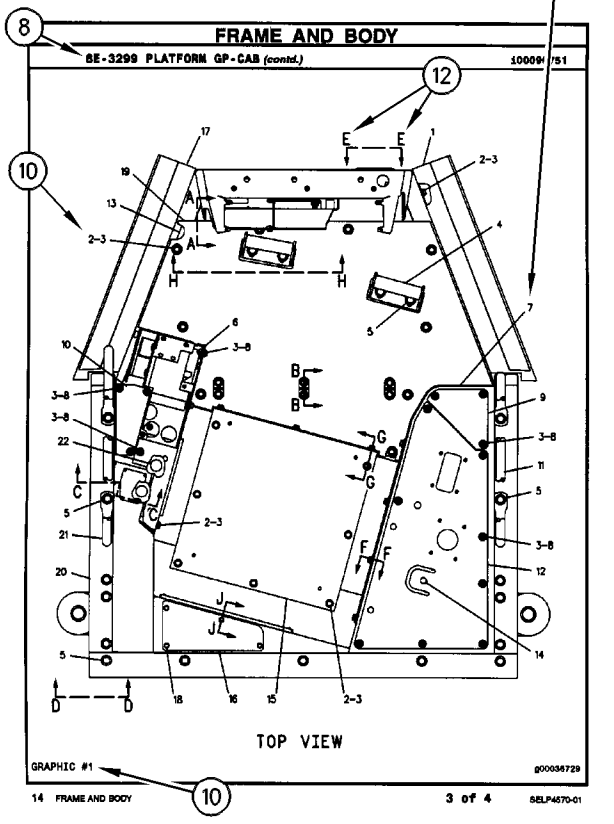

FRAME AND BODY

8E-3299 PLATFORM GP-CAB *(contd.)* 100090751

TOP VIEW

GRAPHIC #1 g00036729

14 FRAME AND BODY 3 of 4 SELP4570-01

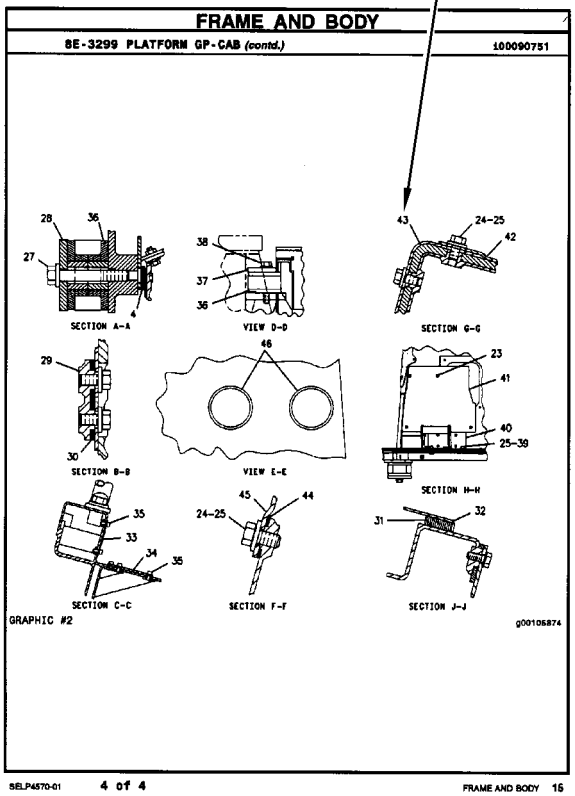

FRAME AND BODY

8E-3299 PLATFORM GP-CAB *(contd.)* 100090751

SECTION A-A VIEW D-D SECTION G-G

SECTION B-B VIEW E-E SECTION H-H

SECTION C-C SECTION F-F SECTION J-J

GRAPHIC #2 g00105874

SELP4570-01 4 of 4 FRAME AND BODY 15

INFORMACIÓN GENERAL

1. MÁQUINAS

Las máquinas Caterpillar se identifican con Números de Identificación del Producto (PIN). Algunos componentes incluídos en la máquina pueden estar identificados con Números de Serie (N/S). Los componentes que tienen típicamente esta identificación incluyen motores, transmisiones, hojas topadoras y desgarradores. La máquina y el motor se identifican además con Números de Configuración y en algunos casos, Números de Modificación. Estos números están en las placas de identificación del producto o en la placa principal en la cabina del operador.

Los distribuidores Caterpillar necesitan estos números para identificar con exactitud los números de piezas de repuesto.

SIS *Nueva Característica*

A partir del primer trimestre del 2001, el Número de Identificación de Producto (PIN) de Caterpillar cambió de 8 a 17 caracteres. Para hacer más uniforme el método de identificación de equipos, Caterpillar y otros fabricantes de equipo de construcción han tomado medidas para cumplir con la versión más reciente de la norma de numeración de identificación de productos. Los Números de Identificación de Producto para máquinas que no se operan en carreteras son definidos por la norma ISO 10261. El nuevo formato PIN corresponderá a todas las máquinas y grupos electrógenos Caterpillar. Las placas y los caracteres PIN estampados en el bastidor mostrarán el PIN de 17 caracteres. El nuevo formato tendrá la apariencia siguiente:

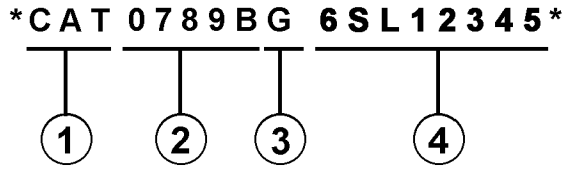

Significado de los caracteres:

1. Código de Fabricación Mundial de Caterpillar (caracteres 1-3)

2. Sección Descriptor de la Máquina (caracteres 4-8)

3. Carácter de Verificación (carácter 9)

4. Sección Indicador de la Máquina (MIS) o Número de Secuencia de Producto (caracteres 10-17). Anteriormente, estos caracteres constituían el Número de Serie.

Las máquinas y grupos electrógenos producidos antes del primer semestre del 2001 mantendrán su formato PIN de 8 caracteres.

Los componentes como motores, transmisiones, ejes, herramientas de trabajo, etc., continuarán usando un Número de Serie (S/N) de 8 caracteres.

2. COMO PEDIR REPUESTOS

⚠ ADVERTENCIA

Cuando se necesiten piezas de repuesto para este producto, Caterpillar recomienda usar piezas de repuesto Caterpillar o piezas que tengan especificaciones equivalentes incluyendo, pero sin estar limitadas a, dimensiones físicas, tipo, fortaleza y material.

El no hacer caso de esta advertencia puede llevar a fallas prematuras, daños al producto y lesiones graves o mortales.

Las piezas de repuesto Caterpillar de calidad están a la disposición de los distribuidores Caterpillar en todo el mundo. Sus existencias actualizadas incluyen todas las piezas normalmente requeridas para proteger su inversión en máquinas Caterpillar. Los distribuidores pueden tener juegos de reparación o piezas remanufacturadas para permitir la selección de la mejor alternativa de reparación en un caso en particular. Al pedir piezas de repuesto, especifique en su pedido la cantidad, el número de pieza, el nombre de la pieza y el número de serie/número de identificación del producto, de la máquina para la cual se necesitan estas piezas.

3. ORGANIZACION DEL MANUAL DE PIEZAS

La información sobre el producto, se presenta en este manual, como "elementos de información" que representan todos los componentes de un modelo específico. Las configuraciones de motores y los grupos de asientos son ejemplos de elementos de información. Los elementos de información están organizados primeramente por nombres de piezas en orden alfabético y en segundo lugar, por el número de pieza dentro de cada sección principal del manual.

4. CONTENIDO

La página de Contenido se encuentra al principio del manual. El Contenido indica cada sección del manual con una lista completa de todos los elementos de información organizados en el orden que aparecen en el manual. Los números de página proporcionan una referencia rápida a las ilustraciones detalladas de identificación de piezas y a las listas de componentes de repuesto de dichas piezas.

5. ÍNDICE DE PIEZAS DE MANTENIMIENTO

Al principio de este catálogo se encuentra un índice de los números de piezas utilizadas más frecuentemente para el mantenimiento, que incluye descripción, cantidad necesaria, lugar de utilización y número de página. Esta información está organizada alfabéticamente, por descripción de la pieza.

6. ÍNDICE

El Índice, ubicado cerca del principio del manual, es una lista en orden alfabético de todos los elementos de información incluídos en el manual. Los números de página proporcionan una referencia rápida a las ilustraciones detalladas de identificación de piezas y a las listas de componentes de repuesto de dichas piezas.

7. INDICE NUMÉRICO DE PIEZAS

Un índice numérico de piezas con el correspondiente número de página aparece al final de este catálogo.

8. TÍTULOS

Los títulos ubicados al principio de cada elemento de información identifican el número y el nombre de la pieza junto con información descriptiva. Se debe usar información sobre los Números de Identificación de Pieza (PIN) y los números de serie (S/N) para seleccionar la información que corresponda a una máquina en particular. También se suministra información sobre las opciones de reparación en el campo, la identificación de componentes de accesorios optativos y el lugar de ubicación de la pieza ("es parte de").

La primera línea del título se muestra con un tipo de letra más grande para indicar el comienzo de un elemento de información. Si se requieren páginas adicionales para ilustrar un elemento de información, los títulos se muestran con un tipo de letra normal y la continuación se indica entre paréntesis.

9. PIEZAS QUE NO SE SUMINISTRAN COMO REPUESTO

En algunos casos es necesario indicar piezas que no se suministran como repuesto pero que pueden estar conectadas a listas de componentes de otras piezas de repuesto. En tal caso, dichas piezas se muestran en cursiva para indicar que no son piezas disponibles.

10. NÚMEROS DE REFERENCIA

Los números en la columna de No. de Referencia corresponden a los números indicados en la ilustración que pertenece a ese número de pieza. Los números que tienen un sufijo alfabético identifican artículos de las listas de componentes de piezas. Los números en la columna de Referencia de la ilustración se identifican en la esquina inferior izquierda de cada ilustración. Para determinar el número de pieza correcto se puede utilizar tanto el No. de Referencia de la ilustración como el No. de Referencia del artículo. A medida que se actualiza la información para indicar los más recientes números de piezas de repuesto, puede omitirse intencionalmente un No. de Referencia en una lista de componentes de piezas.

11. NOMBRES DE PIEZA SANGRADOS

Cuando el nombre de una pieza está sangrado en una lista, significa que esta pieza forma parte del grupo o conjunto del renglón inmediatamente superior.

12. LETRAS DE REFERENCIA DE ILUSTRACIONES

Las ilustraciones contienen algunas veces letras de referencia (A, B, C etc.) cuyo propósito es seguir el trayecto de líneas y mazos de cables de un punto a otro. También se utilizan para mostrar dónde volver a unir ilustraciones que se habían separado.

13. ABREVIATURAS Y SIMBOLOS

O.D. – Diámetro exterior
I.D. – Diámetro interior
A – No es pieza de este grupo
B – Utilizado según la demanda
C – Indica cambio
D – Se pide por metro
E – Se pide por centímetro
F – No se muestra
G – Se pide por pulgada
I – Consulte el sistema de información hidráulica
M – Pieza métrica
R – Puede estar disponible como pieza remanufacturada
Y – Ilustración separada
Z – No se suministra por separado

SIS *Nueva Característica*

14. DESCRIPCIÓN DE LOS CAMBIOS DE TIPO

Tipo – Un tipo se define como cualquier cambio de configuración que requiere un Elemento de información adicional de una Configuración, Grupo o Conjunto. Si el número de serie se clasifica por tipos que no están disponibles, se mostrará un número de tipo (Tipo 1,Tipo 2,etc.) en el comentario de la fotografía. Estos cambios de "tipo" se identifican con una nota "C" (cambio con respecto al tipo anterior) en la Lista de Piezas. Se incluirían sólo los "tipos" que aplican a este Manual de Piezas. Es posible que haya tipos adicionales que causen la aparición de notas "C" en el Elemento de Información cuando no se muestran otros tipos."

15.<END>

Este símbolo indica el final de un elemento de información.

NOTA:

Las contínuas mejoras y adelantos en diseño podrían originar cambios a su máquina que no se incluyen en esta publicación. Cuando tenga alguna pregunta acerca de su producto Caterpillar o de esta publicación, consulte al distribuidor Caterpillar para obtener la información más reciente.

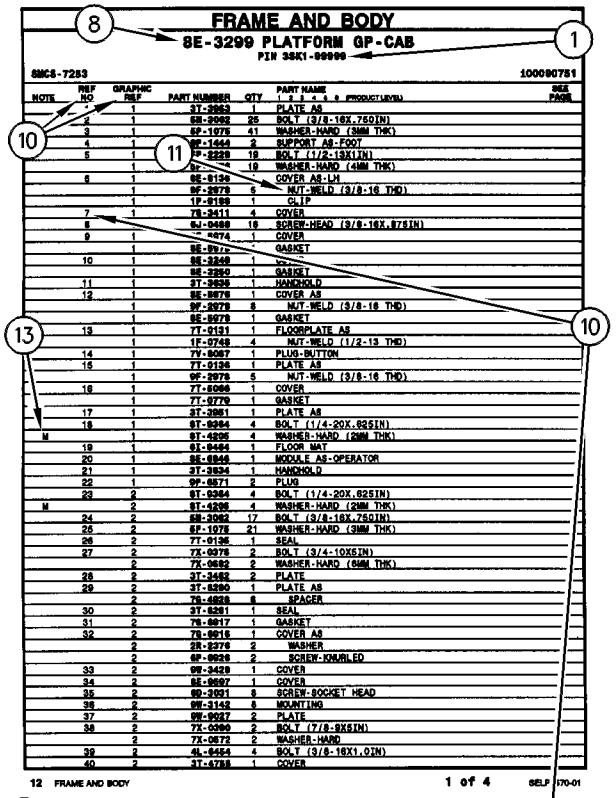

FRAME AND BODY

8E-3299 PLATFORM GP-CAB

PIN 3SK1-99999

SMCS-7283 100090751

NOTE	REF NO	GRAPHIC REF	PART NUMBER	QTY	PART NAME 1 2 3 4 5 6 (PRODUCT LEVEL)	SEE PAGE
	*	1	3T-3963	1	PLATE AS	
	2	1	5M-2062	25	BOLT (3/8-16X.750IN)	
	3	1	6P-1075	41	WASHER-HARD (3MM THK)	
	4	1	9E-1443	2	SUPPORT AS-FOOT	
	5	1	9P-2229	19	BOLT (1/2-13X1IN)	
		1	6P-[illegible]	19	WASHER-HARD (4MM THK)	
	6	1	9E-9136	*	COVER AS-LH	
		1	9F-2979	6	NUT-WELD (3/8-16 THD)	
		1	1P-0189	1	CLIP	
	7	1	7X-3411	4	COVER	
	8	1	6J-0468	18	SCREW-HEAD (3/8-16X.87SIN)	
	9	1	[illegible]-0274	1	COVER	
		1	9E-9[illegible]	*	GASKET	
	10	1	9E-3248	1	[illegible]	
		1	9E-3250	1	GASKET	
	11	1	3T-3636	1	HANDHOLD	
	12	1	9E-9076	1	COVER AS	
		1	9F-2979	8	NUT-WELD (3/8-16 THD)	
		1	9E-9078	1	GASKET	
	13	1	7T-9131	1	FLOORPLATE AS	
		1	1F-0748	4	NUT-WELD (1/2-13 THD)	
	14	1	7V-8067	1	PLUG-BUTTON	
	15	1	7T-9136	1	PLATE AS	
		1	9F-2979	5	NUT-WELD (3/8-16 THD)	
	16	1	7T-5066	1	COVER	
		1	7T-9779	1	GASKET	
	17	1	3T-3951	1	PLATE AS	
	18	1	9T-0264	4	BOLT (1/4-20X.88SIN)	
M		1	9T-4295	4	WASHER-HARD (2MM THK)	
	19	1	6I-9454	1	FLOOR MAT	
	20	1	9E-6946	1	MODULE AS-OPERATOR	
	21	1	3T-3934	1	HANDHOLD	
	22	1	9P-0671	2	PLUG	
	23	2	9T-0264	4	BOLT (1/4-20X.88SIN)	
M		2	9T-4295	4	WASHER-HARD (2MM THK)	
	24	2	5M-2062	17	BOLT (3/8-16X.750IN)	
	25	2	6P-1075	21	WASHER-HARD (3MM THK)	
	26	2	7T-9136	1	SEAL	
	27	2	7X-0078	2	BOLT (3/4-10X5IN)	
		2	7X-0682	2	WASHER-HARD (6MM THK)	
	28	2	3T-3482	2	PLATE	
	29	2	3T-5290	1	PLATE AS	
		2	7S-4828	6	SPACER	
	30	2	3T-5291	1	SEAL	
	31	2	7S-8817	1	GASKET	
	32	2	7S-8818	1	COVER AS	
		2	5R-2276	2	WASHER	
		2	9F-9026	2	SCREW-KNURLED	
	33	2	9W-3429	1	COVER	
	34	2	8E-9697	1	COVER	
	35	2	9D-3031	8	SCREW-SOCKET HEAD	
	36	2	9W-3143	8	MOUNTING	
	37	2	9W-9037	2	PLATE	
	38	2	7X-0360	2	BOLT (7/8-9X5IN)	
		2	7X-0672	2	WASHER-HARD	
	39	2	4L-9454	4	BOLT (3/8-16X1.0IN)	
	40	2	3T-4788	1	COVER	

12 FRAME AND BODY 1 of 4 SELP4570-01

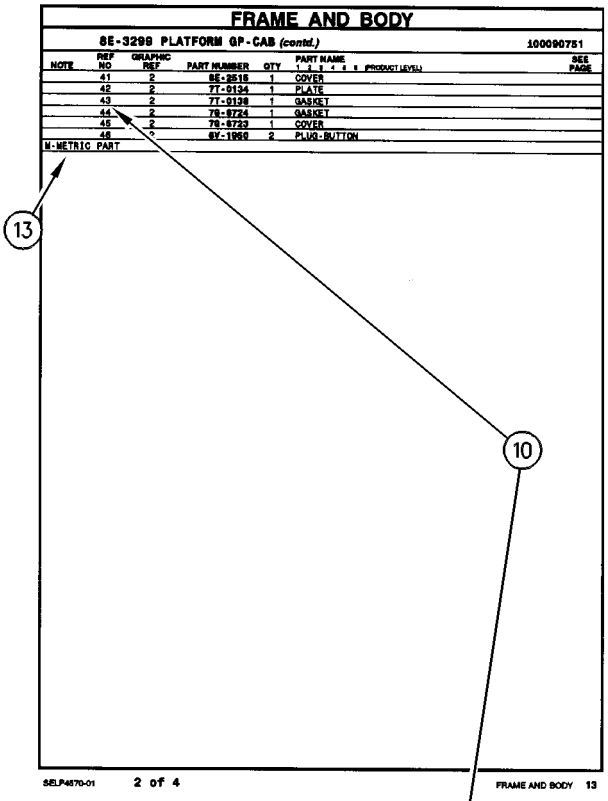

FRAME AND BODY

8E-3299 PLATFORM GP-CAB (contd.) 100090751

NOTE	REF NO	GRAPHIC REF	PART NUMBER	QTY	PART NAME 1 2 3 4 5 6 (PRODUCT LEVEL)	SEE PAGE
	41	2	8E-2515	1	COVER	
	42	2	7T-9134	1	PLATE	
	43	2	7T-9138	1	GASKET	
	44	2	7S-8724	1	GASKET	
	45	2	7S-8723	1	COVER	
	46	*	8Y-1950	2	PLUG-BUTTON	

M-METRIC PART

SELP4570-01 2 of 4 FRAME AND BODY 13

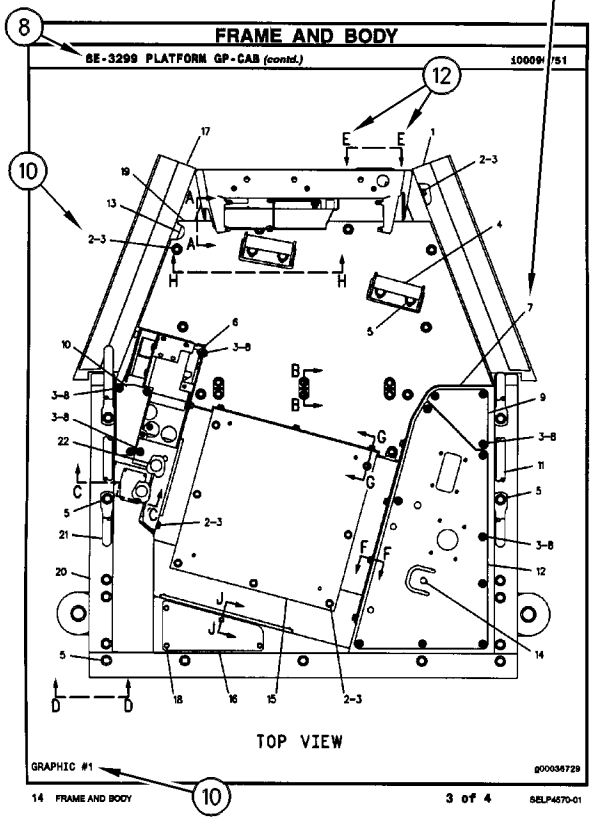

FRAME AND BODY

8E-3299 PLATFORM GP-CAB (contd.) 100090751

TOP VIEW

GRAPHIC #1 g00036729

14 FRAME AND BODY 3 of 4 SELP4570-01

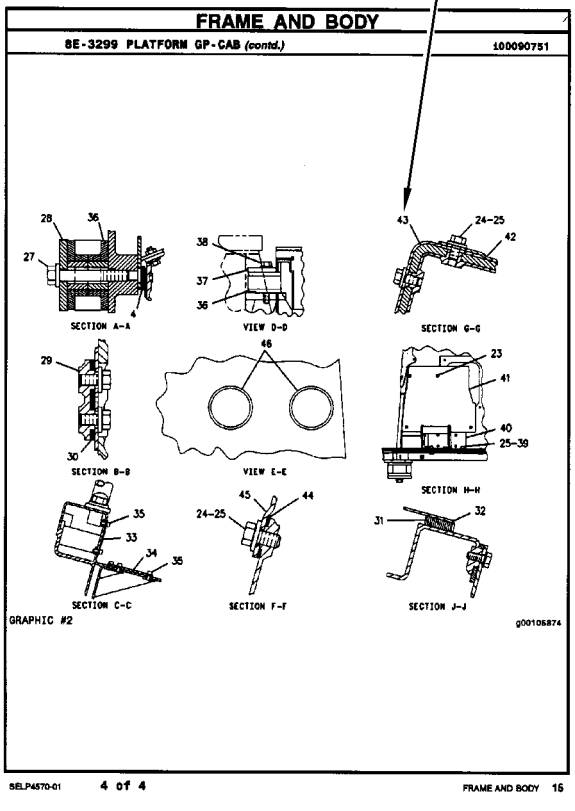

FRAME AND BODY

8E-3299 PLATFORM GP-CAB (contd.) 100090751

SECTION A-A VIEW D-D SECTION G-G

SECTION B-B VIEW E-E SECTION H-H

SECTION C-C SECTION F-F SECTION J-J

GRAPHIC #2 g00105874

SELP4570-01 4 of 4 FRAME AND BODY 15

INFORMAÇÃO GERAL

1. IDENTIFICAÇÃO DA MÁQUINA

As máquinas Caterpillar são identificadas pelos Números de Informação do Produto (PIN). Alguns componentes incluídos numa máquina podem ser identificados por Números de Série (S/N). Componentes típicos que serão enumerados com números de série incluem motores, transmissões, lâminas e ríperes. Além do número de série, a máquina e o motor são ainda identificados por números de arranjo e, em alguns casos, números de modificações. Tais números encontram-se na(s) placa(s) de identificação do produto e na placa mestre no compartimento do operador.

SIS *Novidades*

A partir do primeiro trimestre de 2001 o Número de Identificação de Produto da Caterpillar (PIN) precisa ser mudado de 8 para 17 caracteres. Esforçando-se para fornecer uma identificação uniforme de equipamentos, a Caterpillar e outros fabricantes de equipamento de construção estão mudando para atender a versão mais atualizada do padrão de identificação de produtos. Os números de PIN para produtos de aplicações não rodoviárias são definidos pela ISO 10261. O novo formato de número PIN será adotado em todas as máquinas e grupos geradores Caterpillar. As placas e as marcações do chassi mostrarão os 17 dígitos de PIN. O novo formato terá a seguinte disposição:

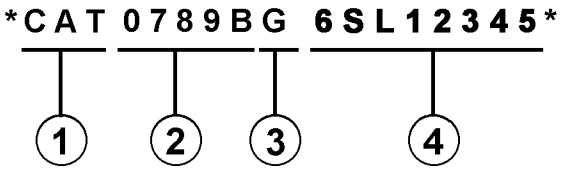

Onde:

1. Código de Fabricação Mundial da Caterpillar (dígitos 1-3)

2. Descrição da Máquina (dígitos 4-8)

3. Dígito de Verificação (dígito 9)

4. Seção de Indicador da Máquina (MIS) ou Número de Seqüência de Produto (dígitos 10-17). Estes eram anteriormente chamados de Número de Série.

Máquinas e grupos geradores produzidos antes do primeiro trimestre de 2001 manterão o formato de 8 caracteres de PIN.

Componentes como motores, transmissões, eixos, ferramentas de trabalho, etc. continuarão a usar Número de Série (S/N) com oito caracteres.

2. COMO OBTER PEÇAS

⚠ CUIDADO

Quando peças de substituição são exigidas para este produto, a Caterpillar recomenda a utilização de peças de substituição Caterpillar ou peças com as especificações equivalentes incluindo, mas não limitadas, à dimensões físicas, tipos, resistência e materiais.

A inobservância desta advertência poderá resultar em falhas prematuras, danos ao produto, ferimentos ou morte.

As Peças de Reposição de Qualidade Caterpillar encontram-se disponíveis nos revendedores Caterpillar no mundo inteiro. Seus estoques de peças são atualizados e incluem todas as peças normalmente necessárias para proteger seu investimento em máquinas Caterpillar. Alguns revendedores podem oferecer jogos de reparo ou peças de troca/remanufaturadas disponíveis como uma opção da alternativa de reparo mais eficaz para uma situação específica. Ao encomendar peças, seu pedido deve especificar a quantidade, o número e o nome da peça e o número de série/número de identificação do produto referentes à máquina para a qual as peças se destinam.

3. ORGANIZAÇÃO DO MANUAL DE PEÇAS

A informação do produto neste manual é apresentada em forma de "elementos de informação" que representam todos os componentes para o modelo específico. Arranjo de Motor e Grupo de Assento são exemplos de elementos de informação. Os elementos de informação são organizados em ordem alfabética por nome de peça ou secundariamente, por número de peça incluído em cada seção principal do manual.

4. LISTA DE CONTEÚDOS

A Lista de Conteúdos (TOC) se encontra no princípio do manual. A Lista de Conteúdos (TOC) relaciona em cada seção do manual uma lista completa com todos os elementos de informação organizados conforme aparecem no manual. Números de página são fornecidos para que se tenha referência rápida de ilustrações de peças detalhadas e listas de conteúdos que podem receber serviço de manutenção.

5. ÍNDICE DE PEÇAS DE MANUTENÇÃO

O Índice de Peças de Manutenção, localizado perto do princípio do manual, faz referência aos números de peça de manutenção usados com maior frequência, fornecendo uma descrição, a quantidade, o uso e o número de página. Esta informação é organizada com a descrição da peça em ordem alfabética.

6. ÍNDICE

O Índice localizado perto do princípio do manual, consiste de uma lista em ordem alfabética de todos os elementos de informação incluídos no manual. Números de página são fornecidos para que se tenha referência rápida de ilustrações de peças detalhadas e listas de conteúdos que podem receber serviço de manutenção.

7. ÍNDICE DE NÚMERO DE PEÇA

Um índice numérico relacionando todos os números de peça e a(s) página(s) correspondentes, aparece no final do manual.

8. LEGENDAS

As legendas localizadas no início de cada elemento de informação identificam o número e o nome de peça, juntamente com informação descritiva adicional. Informações sobre o Número de Informação do Produto (PIN) e o Número de Série (S/N) encontradas em cada legenda devem ser usadas para selecionar a informação correta sobre uma máquina específica. Opções de substituição no campo, identificação de componentes de acessórios opcionais e informações sobre onde são utilizados ("parte de") são também fornecidas.

A primeira linha de uma legenda é indicada em tipo maior para indicar o princípio de um elemento de informação. Legendas para páginas adicionais que podem ser necessárias para ilustrar um elemento de informação serão apresentadas em tipo padrão e incluirão o termo *(continua)* .

9. NÃO DISPONÍVEL SEPARADAMENTE

Em alguns casos, é necessário mostrar peças não disponíveis separadamente que têm uma ligação com listas de conteúdos de nível inferior que podem receber serviço de manutenção. Os números de peça destes componentes não disponíveis aparecerão em *itálico* , a fim de indicar que não estão disponíveis.

10. NÙMEROS DE REFERÊNCIA À LISTA DE PEÇAS

Os números indicados na coluna Ref No (No. de Referência) correspondem-se aos números usados no(s) gráfico(s) correspondente(s). Um sufixo com letras pode ser acrescentado a um número de referência para identificar itens de conteúdo de nível inferior. Os números indicados na coluna Graphic Ref (Referência de Gráfico) referem-se ao identificador de número de gráfico presente no canto esquerdo inferior de cada ilustração. O número de Referência de Gráfico pode ser usado em combinação com o item Ref No para determinar-se o número de peça correto. Poderá haver omissão intencional de um número de referência (Ref No) de uma lista de conteúdos uma vez que as informações são atualizadas para refletir os números de peça mais recentes que podem receber serviço de manutenção.

11. NOMES DE PEÇAS DESALINHADOS

Quando um nome de peça encontra-se desalinhado numa lista de peças, significa que tal item faz parte do (está incluído no) grupo ou conjunto sob o qual está relacionado.

12. LETRAS DE REFERÊNCIA NAS ILUSTRAÇÕES

Quando necessário, as ilustrações contêm letras de referência (A, B, C, etc.) que são utilizadas para seguir tubulações e cabos elétricos de um ponto a outro. Também foram utilizadas para indicar onde se pode reconectar as ilustrações que foram separadas.

13. ABREVIAÇÕES E SÍMBOLOS

O.D. – "Outside Diameter" (Diâmetro Externo)
I.D. – "Inside Diameter" (Diâmetro Interno)
A – Não faz parte deste grupo
B – Use conforme necessário
C – Indica modificação
D – Vendido por metro
E – Vendido por centímetro
F – Não ilustrado
G – Vendido por polegada
I – Consultar o Sistema de Informações Hidráulicas
M – Peça métrica
R – Peça remanufaturada pode estar disponível; consulte o seu revendedor Cat
Y – Ilustração separada
Z – Não disponível separadamente

SIS *Novidades*

14. <END>

Este símbolo indica o final de um elemento de informação.

NOTA:

Os contínuos aperfeiçoamentos e avanços no projeto do produto podem ocasionar modificações em sua máquina que talvez ainda não estejam incluídas nesta publicação. Sempre que surgirem dúvidas quanto a um produto Caterpillar ou quanto à presente publicação, consulte o seu revendedor Caterpillar para obter as informações mais recentes disponíveis.

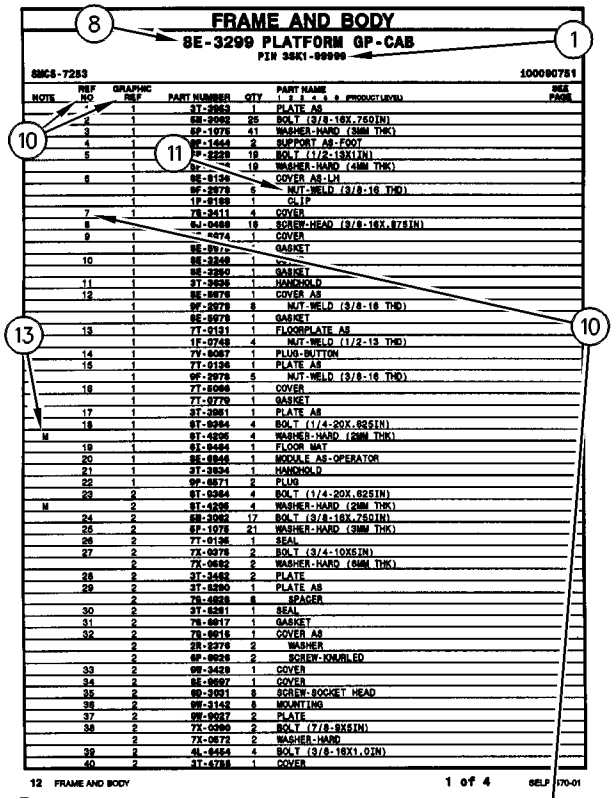

FRAME AND BODY

8E-3299 PLATFORM GP-CAB

PIN 3SK1-99999

SMCS-7283 100090751

NOTE	REF NO	GRAPHIC REF	PART NUMBER	QTY	PART NAME 1 2 3 4 5 6 (PRODUCT LEVEL)	SEE PAGE
	*	1	3T-3963	1	PLATE AS	
	2	1	5M-2062	25	BOLT (3/8-16X.750IN)	
	3	1	6P-1075	41	WASHER-HARD (3MM THK)	
	4	1	9E-1443	2	SUPPORT AS-FOOT	
	5	1	9P-2229	19	BOLT (1/2-13X1IN)	
		1	9P-[illegible]	19	WASHER-HARD (4MM THK)	
	6	1	9E-9136	*	COVER AS-LH	
		1	9F-2979	6	NUT-WELD (3/8-16 THD)	
		1	1F-0189	1	CLIP	
	7	1	7S-2411	4	COVER	
	8	1	6J-0468	18	SCREW-HEAD (3/8-16X.87SIN)	
	9	1	[illegible]074	1	COVER	
		1	9E-9[illegible]	*	GASKET	
	10	1	9E-3248	1	[illegible]	
		1	9E-2250	1	GASKET	
	11	1	3T-3636	1	HANDHOLD	
	12	1	9E-9076	1	COVER AS	
		1	9F-2979	8	NUT-WELD (3/8-16 THD)	
		1	9E-9078	1	GASKET	
	13	1	7T-9131	1	FLOORPLATE AS	
		1	1F-0748	4	NUT-WELD (1/2-13 THD)	
	14	1	7V-8067	1	PLUG-BUTTON	
	15	1	7T-9136	1	PLATE AS	
		1	9F-2979	5	NUT-WELD (3/8-16 THD)	
	16	1	7T-5066	1	COVER	
		1	7T-9779	1	GASKET	
	17	1	3T-3951	1	PLATE AS	
	18	1	9T-0264	4	BOLT (1/4-20X.62SIN)	
M		1	9T-4296	4	WASHER-HARD (2MM THK)	
	19	1	9I-9454	1	FLOOR MAT	
	20	1	9E-6946	1	MODULE AS-OPERATOR	
	21	1	3T-3934	1	HANDHOLD	
	22	1	9P-0671	2	PLUG	
	23	2	9T-0264	4	BOLT (1/4-20X.62SIN)	
M		2	9T-4296	4	WASHER-HARD (2MM THK)	
	24	2	5M-2062	17	BOLT (3/8-16X.750IN)	
	25	2	6P-1075	21	WASHER-HARD (3MM THK)	
	26	2	7T-9136	1	SEAL	
	27	2	7X-0078	2	BOLT (3/4-10X5IN)	
		2	7X-0682	2	WASHER-HARD (6MM THK)	
	28	2	3T-3482	2	PLATE	
	29	2	3T-5290	1	PLATE AS	
		2	7S-4828	6	SPACER	
	30	2	3T-5291	1	SEAL	
	31	2	7S-8817	1	GASKET	
	32	2	7S-8816	1	COVER AS	
		2	5R-2276	2	WASHER	
		2	9F-9026	2	SCREW-KNURLED	
	33	2	9W-3429	1	COVER	
	34	2	8E-9697	1	COVER	
	35	2	9D-3031	8	SCREW-SOCKET HEAD	
	36	2	9W-3143	8	MOUNTING	
	37	2	9W-9037	2	PLATE	
	38	2	7X-0360	2	BOLT (7/8-9X5IN)	
		2	7X-0672	2	WASHER-HARD	
	39	2	4L-6454	4	BOLT (3/8-16X1.0IN)	
	40	2	3T-4788	1	COVER	

12 FRAME AND BODY 1 of 4 SELP4570-01

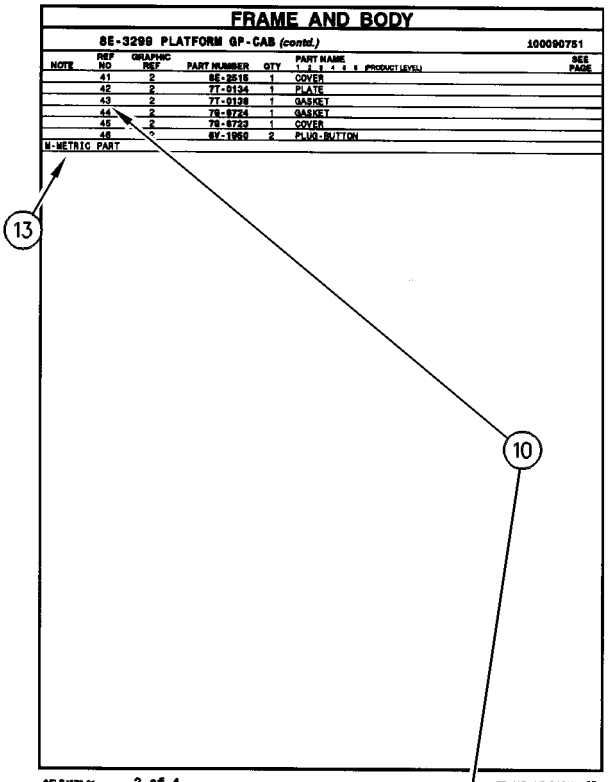

FRAME AND BODY

8E-3299 PLATFORM GP-CAB (contd.) 100090751

NOTE	REF NO	GRAPHIC REF	PART NUMBER	QTY	PART NAME 1 2 3 4 5 6 (PRODUCT LEVEL)	SEE PAGE
	41	2	8E-2515	1	COVER	
	42	2	7T-9134	1	PLATE	
	43	2	7T-9138	1	GASKET	
	44	2	7S-8724	1	GASKET	
	45	2	7S-8723	1	COVER	
	46	*	8Y-1950	2	PLUG-BUTTON	

M-METRIC PART

SELP4570-01 2 of 4 FRAME AND BODY 13

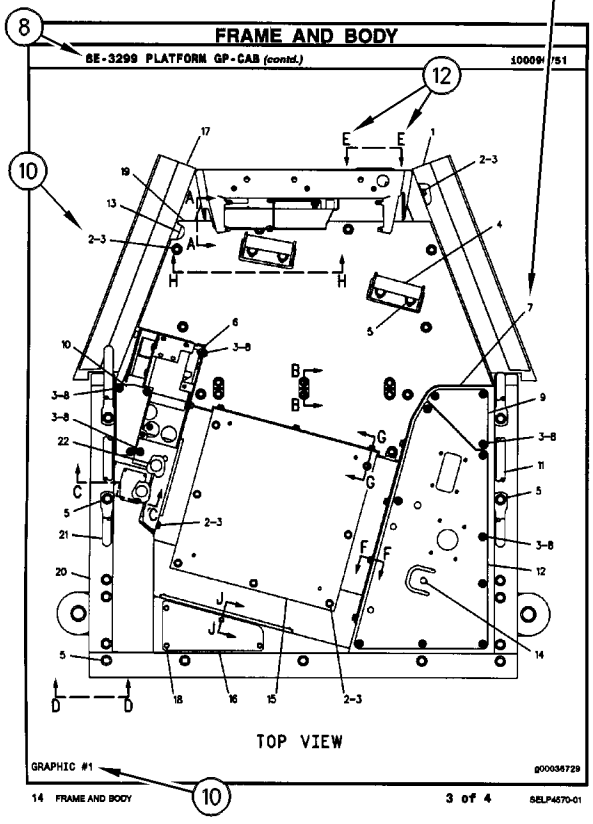

FRAME AND BODY

8E-3299 PLATFORM GP-CAB (contd.) 100090751

TOP VIEW

GRAPHIC #1 g00036729

14 FRAME AND BODY 3 of 4 SELP4570-01

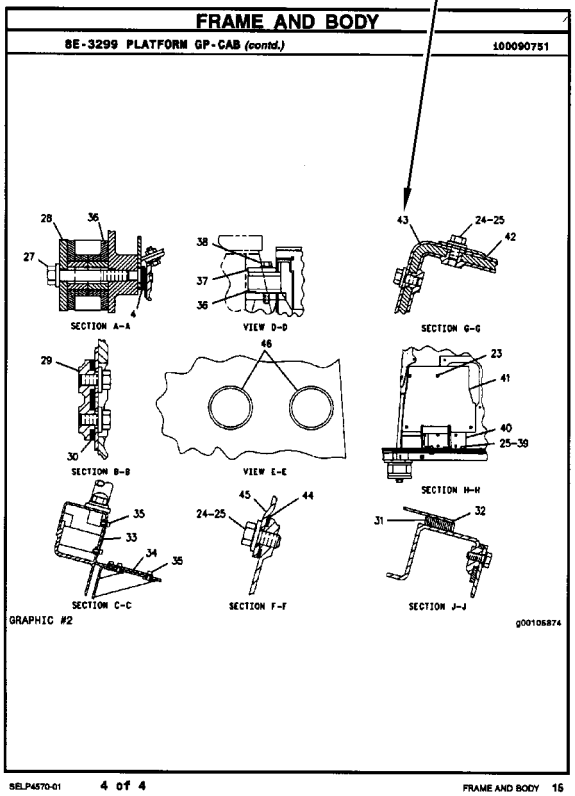

FRAME AND BODY

8E-3299 PLATFORM GP-CAB (contd.) 100090751

SECTION A-A

VIEW D-D

SECTION G-G

SECTION B-B

VIEW E-E

SECTION H-H

SECTION C-C

SECTION F-F

SECTION J-J

GRAPHIC #2 g00105874

SELP4570-01 4 of 4 FRAME AND BODY 15

ALLGEMEINE HINWEISE

1. MASCHINENKENNZEICHNUNG

Caterpillar-Maschinen sind mit PRODUCT IDENTIFICATION NUMBERS (PIN) (Produkt-Identnummern) gekennzeichnet. Einige Baugruppen, z.B. Motoren, Getriebe, Planierschilde und Aufreißer, sind mit SERIAL NUMBERS (S/N) (Seriennummern) gekennzeichnet. An der Maschine und am Motor befinden sich außerdem ARRANGEMENT NUMBERS (Ausrüstungsnummern) sowie in einigen Fällen MODIFICATION NUMBERS (Änderungsnummern). Sie befinden sich auf den PIN-Schildern und auf dem Typenschild im Fahrerhaus.

Bei Ersatzteilbestellungen müssen dem Händler alle diese Nummern zur Verfügung gestellt werden.

SIS *Neu im Parts Manual*

Vom ersten Quartal 2001 ab wurde die Caterpillar Produkt-Identnummer (PIN) von 8 auf 17 Zeichen geändert. Um zur Standardisierung der Produkt-Identnummer beizutragen, sind Caterpillar und andere Baumaschinenhersteller bestrebt, die aktuellste Norm zur Produkt-Identnummerierung einzuführen. Produkt-Identnummern für Baumaschinen sind durch ISO 10261 definiert. Das neue Format der Produkt-Identnummern gilt für alle Caterpillar-Maschinen und -Stromaggregate. Die Produkt-Identschilder und -Identrahmenmarkierung enthalten die aus 17 Zeichen bestehende Identnummer. Das neue Format hat folgende Abschnitte:

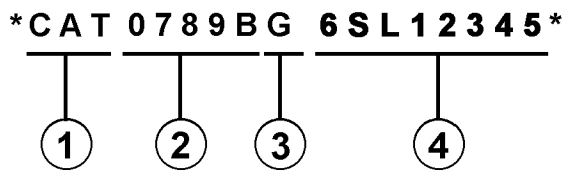

Abschnitte:

1. Caterpillars weltweiter Herstellungscode (Zeichen 1-3)

2. Modell (Zeichen 4-8)

3. Kontrollzeichen (Zeichen 9)

4. Maschinenspezifische Kennung (MIS) oder Produktsequenznummer (Zeichen 10-17). Diese wurde früher als Seriennummer bezeichnet.

Für vor dem ersten Quartal 2001 hergestellte Maschinen und Stromaggregate wird das aus 8 Zeichen bestehende PIN-Format beibehalten.

Bauteile wie z.B. Motoren, Getriebe, Achsen sowie Arbeitsgeräte werden weiterhin eine aus 8 Zeichen bestehende Seriennummer (S/N) aufweisen.

2. BESTELLEN VON ERSATZTEILEN

⚠ WARNUNG

Wenn für diese Maschine Ersatzteile benötigt werden, empfiehlt Caterpillar, ausschließlich Caterpillar-Ersatzteile oder solche zu verwenden, die die gleichen technischen Merkmale hinsichtlich Typ, Festigkeit, Werkzeugeigenschaften und die gleichen Maße aufweisen.

Bei Nichtbeachtung dieser Warnung besteht Verletzungs- oder sogar Lebensgefahr! Ferner kann Nichtbeachtung vorzeitige Ausfälle der Teile und Beschädigung der Maschine zur Folge haben.

Original Caterpillar-Ersatzteile können weltweit bei jedem Caterpillar-Händlern bestellt werden. Die umfangreichen Händlerlager enthalten normalerweise alle Teile, die Sie für Ihre Caterpillar-Maschine benötigen. Einige Händler bieten Reparatursätze, Austausch- oder werküberholte Teile an, so daß Sie eine Auswahl unter verschiedenen Reparaturmöglichkeiten treffen können. Ihre Bestellung muß folgende Angaben enthalten: Anzahl der benötigten Teile, Bestellnummer, Bezeichnung des Teils, Serien-Nr./Produkt-Ident-Nr., Ausrüstungs-Nr. und Änderungs-Nr. der Maschine, für die diese Teile benötigt werden.

3. AUFBAU DES PARTS MANUAL

Die Produktinformationen für alle Komponenten eines bestimmten Modells sind in INFORMATION ELEMENTS (Informationseinheiten) gegliedert. ENGINE ARRANGEMENT (Motorausführung) und SEAT GROUP (Fahrersitz) sind Beispiele für solche Informationseinheiten. Sie sind innerhalb jeder Gruppe alphabetisch, entsprechend der Ersatzteilbezeichnung, und zusätzlich numerisch, entsprechend der Ersatzteilnummer, geordnet.

4. INHALTSVERZEICHNIS

Das Inhaltsverzeichnis befindet sich am Anfang des Buches. Im Inhaltsverzeichnis werden die einzelnen Abschnitte des Buches aufgeführt. Die Abschnitte enthalten eine vollständige Aufstellung aller Informationseinheiten. Diese sind entsprechend ihrem Erscheinen im Buch geordnet. Das Inhaltsverzeichnis enthält Seitenangaben für Schnellverweise auf detaillierte Abbildungen und Teillisten.

ALLGEMEINE HINWEISE

5. INDEX FÜR WARTUNGSTEILE

Der Index für Wartungsteile vorn im Buch enthält die Bestellnummern, Seitenangaben, Mengenangaben und Informationen über den Einsatzbereich für die am häufigsten benötigten Ersatzteile. Die Angaben sind alphabetisch entsprechend der Teilebezeichnung geordnet.

6. INDEX

Der Index vorn im Buch enthält eine alphabetische Liste aller Informationseinheiten. Er enthält Seitenangaben für Schnellverweise auf detaillierte Abbildungen und Teillisten.

7. INDEX FÜR BESTELLNUMMERN

Hinten im Buch befindet sich ein numerischer Index, mit allen Bestellnummern und dem Hinweis auf die Seite, auf der sich die betreffende Abbildung befindet.

8. ÜBERSCHRIFTEN

Die Überschriften, die sich am Anfang jeder der Informationseinheiten befinden, enthalten Bestellnummern, Ersatzteilbezeichnungen und zusätzliche beschreibende Informationen. Produkt-Ident- und Seriennummern in den Überschriften sollten zur Auswahl der richtigen Informationen für die betreffende Maschine verwendet werden. Die Überschriften enthalten außerdem Informationen über möglichen Außendienstersatz, mögliche Baugerätekomponenten und die Baugruppe, zu der das Teil gehört.

Die erste Zeile einer Überschrift erscheint in einer größeren Schriftart, um den Anfang einer Informationseinheit zu kennzeichnen. Überschriften für zusätzliche Seiten, die zur Erläuterung einer Informationseinheit notwendig sind, erscheinen in normaler Schriftart und enthalten den Begriff "(contd.)".

9. NICHT EINZELN LIEFERBARE TEILE

In einigen Fällen ist es notwendig nicht lieferbare Teile, die selbst mit einer eigenen Teilliste im Buch vertreten sind, aufzuführen. Die Bestellnummern dieser nicht einzeln lieferbaren Teile erscheinen kursiv, wodurch angezeigt wird, daß sie nur in Verbindung mit anderen Teilen lieferbar sind.

10. REFERENZNUMMER FÜR ERSATZTEILE

Die Zahlen, die in der Spalte "Ref No" aufgeführt sind, stimmen mit den Zahlen in den beigefügten Abbildungen überein. Ein Buchstaben-Suffix kann zu einer Referenznummer hinzugefügt werden, um zu kennzeichnen, daß das Teil mit einer eigenen Teilliste im Buch aufgeführt ist. Die in der Spalte "Graphic Ref" angeführten Zahlen verweisen auf die Identifikationsnummer der Abbildung, die sich in der linken unteren Ecke der Abbildung befindet. Diese Nummer kann zusammen mit der Referenznummer des Teils angegeben werden, um die richtige Ersatzteilnummer zu ermitteln. Referenznummern können absichtlich weggelassen werden, da die Nummern der lieferbaren Ersatzteile ständig aktualisiert werden.

11. EINGERÜCKTE BEZEICHNUNGEN

Wenn eine Bezeichnung eingerückt ist, wird dadurch angezeigt, daß das Teil zu einer Baugruppe gehört, unter deren Bezeichnung es eingerückt ist.

12. REFERENZBUCHSTABEN

Falls erforderlich sind in den Abbildungen Referenzbuchstaben enthalten (z.B. A, B, C, usw.), die Leitungen und Kabelbäume von einem Punkt zum anderen verfolgen. Außerdem geben sie die Stelle an, an der getrennte Abbildungen fortgesetzt werden.

13. ABKÜRZUNGEN UND SYMBOLE

O.D. – Außendurchmesser
I.D. – Innendurchmesser
A – kein Teil dieser Gruppe
B – nach Bedarf verwenden
C – Hinweis auf eine Änderung
D – in Meter-Länge bestellen
E – in Zentimeter-Länge bestellen
F – nicht gezeigt
G – in Zoll-Länge bestellen
I – siehe Hydraulikinformationssystem
M – metrisches Teil
R – werküberholtes Teil unter Umständen lieferbar
Y – separate Abbildung
Z – nicht einzeln lieferbar

Neu im Parts Manual

14. BESCHREIBUNG DER TYPENÄNDERUNGEN

Typ-A bezieht sich auf alle Konfigurationsänderungen, die ein zusätzliches Informationselement für Ausführung, Gruppe oder Einheit benötigen. Wenn kein Seriennummernumbruch für Typen erhältlich ist, wird in der Überschrift eine Typennummer (Typ 1, Typ 2, etc.) angegeben. Diese "Typenänderungen" sind in der Teileliste mit der Anmerkung "C" (Änderung des vorherigen Typs) versehen. Es werden nur die für dieses Ersatzteilhandbuch relevanten "Typen" angegeben. Es können zusätzliche Typen vorhanden sein, was zu "C" Anmerkungen zu einem Informationselement führen kann, wenn keine anderen Typen angegeben werden.

15. <END>

Dieses Symbol zeigt das Ende eines Informationselements an.

ANMERKUNG:

Ständig vorgenommene Verbesserungen und Weiterentwicklungen an Ihrer Maschine können Änderungen verursachen, die in der vorliegenden Ausgabe noch nicht berücksichtigt sind. Fragen zu Ihrer Caterpillar-Maschine oder diesem Ersatzteilbuch beantwortet Ihr Caterpillar-Händler.

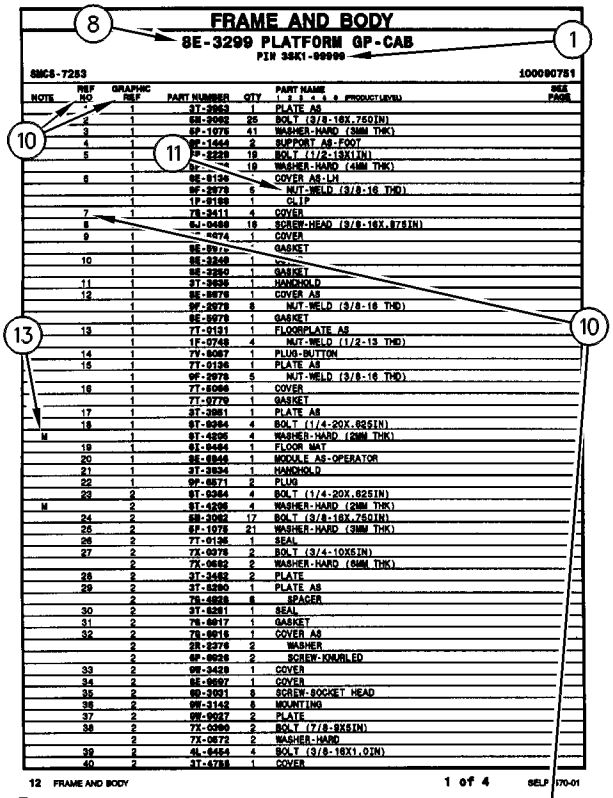

FRAME AND BODY

8E-3299 PLATFORM GP-CAB

PIN 3SK1-99999

SMCS-7283 100090751

NOTE	REF NO	GRAPHIC REF	PART NUMBER	QTY	PART NAME 1 2 3 4 5 6 (PRODUCT LEVEL)	SEE PAGE
	*	1	3T-3963	1	PLATE AS	
	2	1	5M-2062	25	BOLT (3/8-16X.750IN)	
	3	1	6P-1075	41	WASHER-HARD (3MM THK)	
	4	1	9E-1444	2	SUPPORT AS-FOOT	
	5	1	9P-2229	19	BOLT (1/2-13X1IN)	
		1	9P-[illegible]	19	WASHER-HARD (4MM THK)	
	6	1	9E-9136	*	COVER AS-LH	
		1	9F-2979	6	NUT-WELD (3/8-16 THD)	
		1	1F-0189	1	CLIP	
	7	1	7S-2411	4	COVER	
	8	1	6J-0468	18	SCREW-HEAD (3/8-16X.87SIN)	
	9	1	[illegible]074	1	COVER	
		1	9E-9[illegible]	*	GASKET	
	10	1	9E-3248	1	[illegible]	
		1	9E-2950	1	GASKET	
	11	1	3T-3936	1	HANDHOLD	
	12	1	9E-9976	1	COVER AS	
		1	9F-2979	8	NUT-WELD (3/8-16 THD)	
		1	9E-9978	1	GASKET	
	13	1	7T-9131	1	FLOORPLATE AS	
		1	1F-0748	4	NUT-WELD (1/2-13 THD)	
	14	1	7V-9067	1	PLUG-BUTTON	
	15	1	7T-9136	1	PLATE AS	
		1	9F-2979	5	NUT-WELD (3/8-16 THD)	
	16	1	7T-5066	1	COVER	
		1	7T-9779	1	GASKET	
	17	1	3T-3951	1	PLATE AS	
	18	1	9T-0264	4	BOLT (1/4-20X.62SIN)	
M		1	9T-4296	4	WASHER-HARD (2MM THK)	
	19	1	9I-9464	1	FLOOR MAT	
	20	1	9E-6946	1	MODULE AS-OPERATOR	
	21	1	3T-3934	1	HANDHOLD	
	22	1	9P-0671	2	PLUG	
	23	2	9T-0264	4	BOLT (1/4-20X.62SIN)	
M		2	9T-4296	4	WASHER-HARD (2MM THK)	
	24	2	5M-2062	17	BOLT (3/8-16X.750IN)	
	25	2	6P-1075	21	WASHER-HARD (3MM THK)	
	26	2	7T-9136	1	SEAL	
	27	2	7X-0078	2	BOLT (3/4-10X5IN)	
		2	7X-0682	2	WASHER-HARD (6MM THK)	
	28	2	3T-3482	2	PLATE	
	29	2	3T-5290	1	PLATE AS	
		2	7S-4828	6	SPACER	
	30	2	3T-5291	1	SEAL	
	31	2	7S-9817	1	GASKET	
	32	2	7S-9816	1	COVER AS	
		2	5R-2276	2	WASHER	
		2	9F-9928	2	SCREW-KNURLED	
	33	2	9W-3429	1	COVER	
	34	2	8E-9697	1	COVER	
	35	2	9D-3931	8	SCREW-SOCKET HEAD	
	36	2	9W-3143	8	MOUNTING	
	37	2	9W-9937	2	PLATE	
	38	2	7X-0360	2	BOLT (7/8-9X5IN)	
		2	7X-0672	2	WASHER-HARD	
	39	2	4L-9454	4	BOLT (3/8-16X1.0IN)	
	40	2	3T-4788	1	COVER	

12 FRAME AND BODY 1 of 4 SELP4570-01

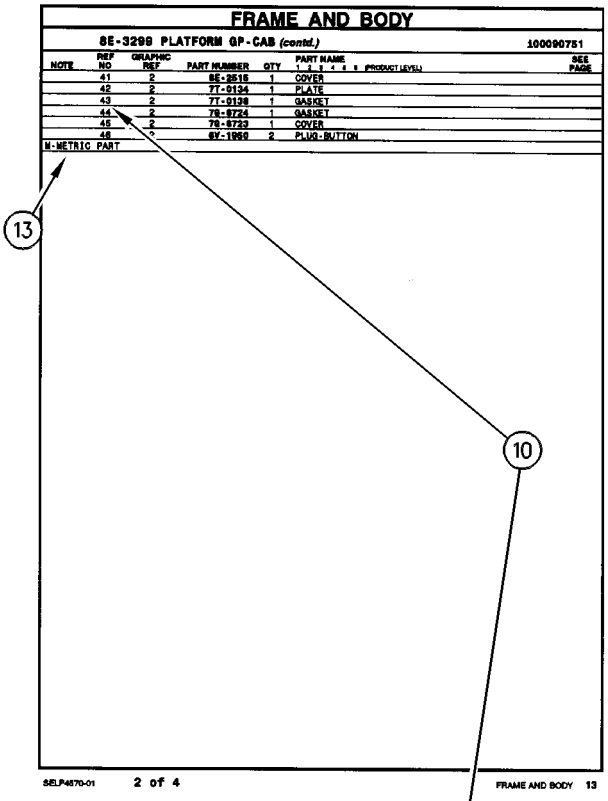

FRAME AND BODY

8E-3299 PLATFORM GP-CAB (contd.) 100090751

NOTE	REF NO	GRAPHIC REF	PART NUMBER	QTY	PART NAME 1 2 3 4 5 6 (PRODUCT LEVEL)	SEE PAGE
	41	2	8E-2515	1	COVER	
	42	2	7T-9134	1	PLATE	
	43	2	7T-9138	1	GASKET	
	44	2	7S-9724	1	GASKET	
	45	2	7S-9723	1	COVER	
	46	*	8Y-1950	2	PLUG-BUTTON	

M-METRIC PART

SELP4570-01 2 of 4 FRAME AND BODY 13

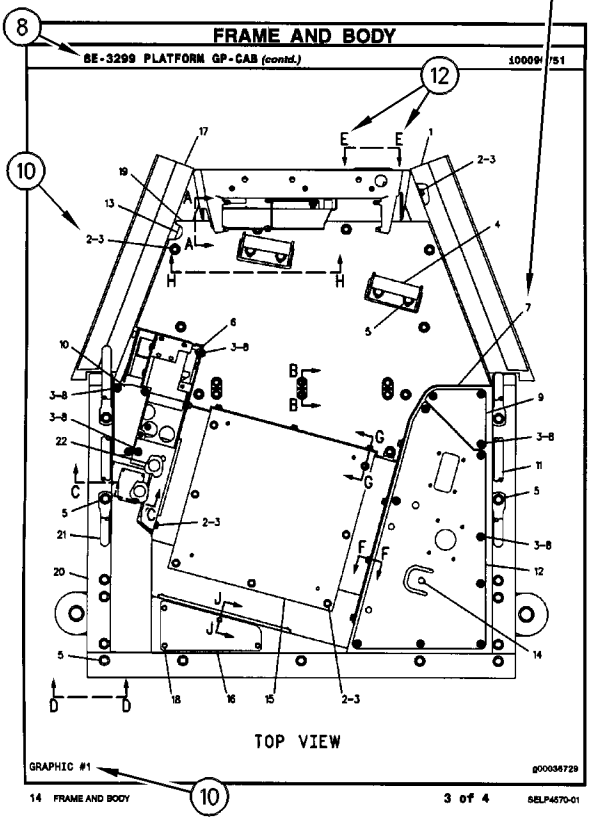

FRAME AND BODY

8E-3299 PLATFORM GP-CAB (contd.) 100090751

GRAPHIC #1 g00036729

TOP VIEW

14 FRAME AND BODY 3 of 4 SELP4570-01

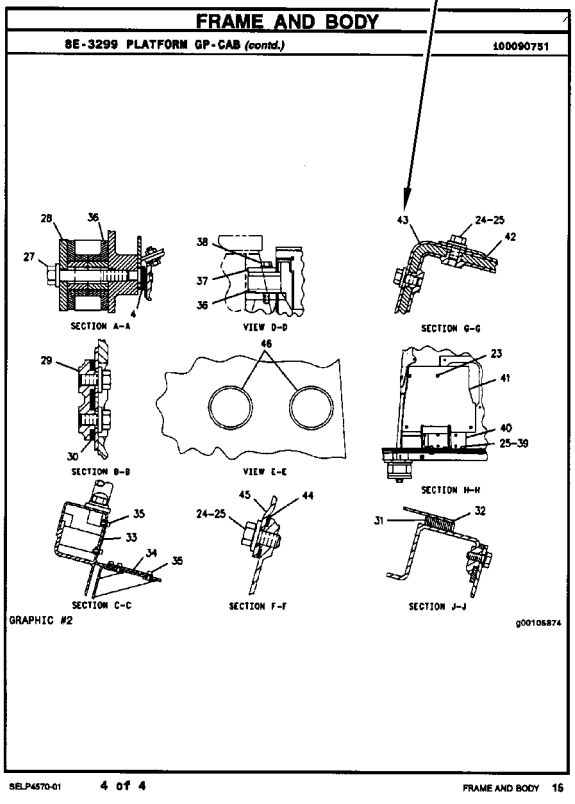

FRAME AND BODY

8E-3299 PLATFORM GP-CAB (contd.) 100090751

SECTION A-A

VIEW D-D

SECTION G-G

SECTION B-B

VIEW E-E

SECTION H-H

SECTION C-C

SECTION F-F

SECTION J-J

GRAPHIC #2 g00105874

SELP4570-01 4 of 4 FRAME AND BODY 15

REMANUFACTURED COMPONENTS

As an option when making repairs consider Caterpillar Remanufactured Components. Components that are available through the Caterpillar Remanufactured Program are identified three ways in the parts book:

- with the letter R in the note field of the parts list
- with an R* at the beginning of the first line of the caption
- with an *R at the end of the first line of the caption

Typical components included in the Remanufacturing Program include:

ALTERNATORS
CONNECTING RODS
CRANKSHAFTS - UNDERSIZE
CRANKSHAFTS - UPGRADE TO NEW
CYLINDER HEADS
ELECTRONIC CONTROL MODULES (ECM)
ELECTRONIC SENSORS
FUEL INJECTORS
FUEL NOZZLES
FUEL PUMPS
GOVERNORS
OIL PUMPS
PISTONS
SHORT BLOCKS
STARTERS
TURBOCHARGERS - COMPLETE
TURBOCHARGER CARTRIDGES
WATER PUMPS

Caterpillar Remanufactured engines for many engine arrangements are also available.

OPTIONS DE RÉPARATION

COMPOSANTS RÉNOVÉS

Comme option de réparation, considérer les composants rénovés Caterpillar. Les composants disponibles dans le cadre du programme Caterpillar de composants rénovés sont identifiés de trois façons dans le catalogue de pièces:

- avec la lettre "R" dans l'espace note de la liste des pièces
- avec R* au début de la première ligne des légendes
- avec *R à la fin de la première ligne des légendes

Les composants suivants figurent parmi les composants typiques du programme de rénovation:

ALTERNATEURS
BIELLES
VILEBREQUINS - SOUS-DIMENSIONNÉS
VILEBREQUINS - REMIS À NEUF
CULASSES
MODULES DE COMMANDE ÉLECTRONIQUE (ECM)
CAPTEURS ÉLECTRONIQUES
INJECTEURS
TÊTES D'INJECTEURS
POMPES À CARBURANT
RÉGULATEURS
POMPES À HUILE
PISTONS
BLOCS EMBIELLÉS
DÉMARREURS
TURBOCOMPRESSEURS - COMPLETS
CARTOUCHES DE TURBOCOMPRESSEUR
POMPES À EAU

Des moteurs rénovés sont aussi disponibles pour plusieurs versions de moteur.

ALTERNATIVAS DE REPARACIÓN

COMPONENTES REMANUFACTURADOS

Al hacer reparaciones, tenga en cuenta la opción de Componentes Remanufacturados Caterpillar. Los componentes que están disponibles por medio del programa de Productos Remanufacturados Caterpillar se identifican de tres maneras en el manual de piezas:

- con la letra R en el espacio de Nota de la lista de piezas
- con una R* al comienzo de la primera línea de la leyenda
- con una *R al final de la primera línea de la leyenda

Los componentes que se incluyen típicamente en el Programa de Productos Remanufacturados son:

ALTERNADORES
BIELAS
CIGÜEÑALES - BAJOMEDIDA
CIGÜEÑALES - REMANUFACTURADOS A NUEVO
CULATAS
MÓDULOS DE CONTROL ELECTRÓNICO (ECM)
SENSORES ELECTRONICOS
INYECTORES
BOQUILLAS
BOMBAS DE COMBUSTIBLE
REGULADORES
BOMBAS DE ACEITE
PISTONES
MONOBLOQUES
MOTORES DE ARRANQUE
TURBOCOMPRESORES - COMPLETOS
NÚCLEOS DE TURBOCOMPRESOR
BOMBAS DE AGUA

También hay disponibles motores Remanufacturados Caterpillar para muchas de las configuraciones de motores.

ALTERNATIVAS DE REPARO

COMPONENTES REMANUFATURADOS

Considere o uso de Componentes Remanufaturados Caterpillar ao efetuar reparos. Os componentes disponíveis através do Programa de Remanufatura Caterpillar são identificados de três formas no manual de peças:

- com um R na área da nota da lista de peças
- com um R* no princípio da primeira linha da legenda
- com um *R no final da primeira linha da legenda

Os componentes típicos que constam no Programa de Remanufatura incluem:

ALTERNADORES
BIELAS
VIRABREQUINS - SUBMEDIDAS
VIRABREQUINS - ATUALIZAÇÃO
CABEÇOTES
MÓDULOS DE CONTROLE ELETRÔNICO (ECM)
SENSORES ELETRÔNICOS
INJETORES DE COMBUSTÍVEL
BICOS DE ABASTECIMENTO DE COMBUSTÍVEL
BOMBAS DE COMBUSTÍVEL
GOVERNADORES
BOMBAS DE ÓLEO
PISTÕES
BLOCOS BÁSICOS DO MOTOR
MOTORES DE PARTIDA
TURBOALIMENTADORES - COMPLETOS
CARTUCHOS DE TURBOALIMENTADORES
BOMBAS D'ÁGUA

Motores Remanufaturados Caterpillar também encontram-se disponíveis para diversos arranjos de motor.

REPARATURALTERNATIVEN

WERKÜBERHOLTE AT-PRODUKTE

Bei Reparaturen sollten werküberholte AT-Produkte von Caterpillar in Betracht gezogen werden. Die durch das AT-Programm von Caterpillar erhältlichen Teile sind im Parts Book auf drei verschiedene Arten gekennzeichnet:

- mit dem Buchstaben R in der Spalte NOTE der Ersatzteilliste
- mit einem R* am Anfang der ersten Zeile der Überschrift
- mit einem *R am Ende der ersten Zeile der Überschrift

Das AT-Programm umfaßt u.a. folgende Produkte:

DREHSTROMGENERATOREN
PLEUELSTANGEN
KURBELWELLEN - MIT UNTERMASS
KURBELWELLEN - MIT ORIGINALMASS
ZYLINDERKÖPFE
ELEKTRONISCHE STEUEREINHEITEN (EMC)
ELEKTRONISCHE SENSOREN
PUMPENDÜSEN
EINSPRITZDÜSEN
KRAFTSTOFFPUMPEN
DREHZAHLREGLER
ÖLPUMPEN
KOLBEN
TEILMOTOREN
ANLASSER
TURBOLADER - KOMPLETT
TURBOLADERLAUFZEUGE
KÜHLWASSERPUMPEN

Viele Motoren können durch werküberholte AT-Motoren von Caterpillar ersetzt werden.

SUPPLEMENTAL COOLANT ADDITIVES

CUSTOMER BENEFITS:

Protects against cavitation, foam, erosion, corrosion, and scale buildup in cooling systems.

- Provides measured coolant conditioner.

DESCRIPTION:

Additives deplete from the coolant with normal operation. For this reason, Supplemental Coolant Additives (SCA) must be added to all heavy duty coolants at regular intervals. In addition, when not using a fully formulated, pre-charged antifreeze, like Caterpillar's DEAC, an initial charge of SCA must be added to the cooling system. The amount of SCA added to the system is dependent on the capacity of the system.

The SCA for initial fill is provided as a liquid. SCA's for maintenance intervals are available in liquid form and as a spin-on element. (No Spin-on available for 3600 Family of Engines)

NOTE:

The amount of SCA added at initial fill is not the same as the amount added at maintenance intervals.

The coolant additive elements can be used with any ethylene or propylene glycol type antifreeze which meets ASTM D4985 or ASTM D5345 Specifications.

NOTE:

For use with standard heavy duty coolant only, not for use with Extended Life Coolant.

PARTS NEEDED:

Cooling System Capacity		Liquid SCA at Initial Fill	Liquid SCA at Maintenance*	Spin-on SCA Maintenance Element*
Liters	Gallons			
22-30	(6-8)	3P-2044 (1)	6V-3542 (1)	111-2370 (1)
30-38	(8-10)	3P-2044 (1) 6V-3542 (1)	111-2372 (1)	111-2369 (1)
38-49	(10-13)	3P-2044 (1) 8T-1589 (1)	111-2372 (1)	111-2369 (1)
49-64	(13-17)	3P-2044 (2)	8T-1589 (1)	9N-3368 (1)
64-83	(17-22)	3P-2044 (2) 8T-1589 (1)	111-2372 (1) 6V-3542 (1)	111-2371 (1)
83-114	(22-30)	3P-2044 (3) 8T-1589 (1)	3P-2044 (1)	9N-3718 (1)
114-163	(30-43)	3P-2044 (5)	3P-2044 (1) 6V-3542 (1)	111-2371 (2)
163-242	(43-64)	3P-2044 (8)	3P-2044 (2)	9N-3718 (2)

** Normal maintenance period is 250 hrs. See your Operation and Maintenance Manual for complete coolant maintenance instructions.*

( ) Indicates quantity required.

ADDITIFS POUR LIQUIDE DE REFROIDISSEMENT

AVANTAGES POUR LE CLIENT

L'additif protège contre la cavitation, la mousse, l'érosion, la corrosion et l'accumulation de dépôts dans le circuit de refroidissement.

- L'additif complémentaire fournit une quantité mesurée d'additif.

DESCRIPTION:

Les additifs s'épuisent pendant l'utilisation du moteur. C'est pourquoi l'on doit ajouter de l'additif au liquide de refroidissement/antigel pour moteurs diesel à intervalles réguliers. En plus, si l'on n'utilise pas de l'antigel entièrement formulé et pré-chargé comme le liquide de refroidissement/antigel Caterpillar pour moteurs diesel, une quantité initiale d'additif doit être ajoutée au circuit de refroidissement. La quantité d'additif à ajouter au circuit dépend de la contenance du circuit.

L'additif pour le remplissage initial est fourni sous forme liquide. L'additif pour l'entretien ultérieur est disponible sous forme liquide et sous forme d'élément à visser. (Il n'y a pas d'élément à visser pour les moteurs de la famille 3600).

NOTA:

La quantité d'additif à ajouter au remplissage initial diffère de la quantité à ajouter aux intervalles d'entretien.

Les éléments d'additif peuvent être utilisés avec tout antigel de type éthylène ou propylène-glycol conforme à la norme ASTM D4985 ou ASTM D5345.

NOTA:

A utiliser uniquement avec du liquide de refroidissement pour moteurs diesel et non avec le liquide de refroidissement longue durée.

PIÈCES NÉCESSAIRES:

Contenance du circuit de refroidissement		Additif liquide au remplissage initial	Additif liquide aux intervalles d'entretien*	Elément d'additif à visser aux intervalles d'entretien*
Litres	Gallons U.S.			
22-30	(6-8)	3P-2044 (1)	6V-3542 (1)	111-2370 (1)
30-38	(8-10)	3P-2044 (1) 6V-3542 (1)	111-2372 (1)	111-2369 (1)
38-49	(10-13)	3P-2044 (1) 8T-1589 (1)	111-2372 (1)	111-2369 (1)
49-64	(13-17)	3P-2044 (2)	8T-1589 (1)	9N-3368 (1)
64-83	(17-22)	3P-2044 (2) 8T-1589 (1)	111-2372 (1) 6V-3542 (1)	111-2371 (1)
83-114	(22-30)	3P-2044 (3) 8T-1589 (1)	3P-2044 (1)	9N-3718 (1)
114-163	(30-43)	3P-2044 (5)	3P-2044 (1) 6V-3542 (1)	111-2371 (2)
163-242	(43-64)	3P-2044 (8)	3P-2044 (2)	9N-3718 (2)

** L'intervalle d'entretien normal est de 250 heures-service. Voir le Guide d'utilisation et d'entretien pour de plus amples renseignements concernant l'entretien du circuit de refroidissement.*

( ) Indique la quantité exigée.

ADITIVOS DE REFRIGERANTE SUPLEMENTARIOS

VENTAJAS PARA EL USUARIO:

Protegen contra la cavitación, la formación de espuma, la corrosión y la acumulación de escamas en los sistemas de enfriamiento.

- Suministra un acondicionador dosificado de refrigerante.

DESCRIPCIÓN:

Los aditivos en el refrigerante se agotan con la operación normal. Por esta razón, se debe agregar Aditivo de refrigerante suplementario (SCA) a todos los refrigerantes para servicio pesado, a intervalos regulares. Además, cuando no se usa un anticongelante de precarga completo, tal como el DEAC de Caterpillar, es necesario agregar una cantidad de aditivo de refrigerante suplementario inicial al sistema de enfriamiento. La cantidad de aditivo que se debe agregar depende de la capacidad del sistema.

El SCA de llenado inicial es líquido. El que se usa para el mantenimiento está disponible tanto en líquido como en un elemento enroscable. (No hay elemento enroscable disponible para la Familia de Motores 3600).

NOTA:

La cantidad de aditivo de llenado inicial no es la misma que se agrega en los intervalos de mantenimiento.

Los elementos de aditivo de refrigerante se pueden usar con cualquier anticongelante de tipo glicol etilénico o propílico que esté de acuerdo con las especificaciones de las normas ASTM D4985 o ASTM D5345.

NOTA:

Se debe utilizar únicamente con refrigerante estándar para servicio pesado; no se debe usar con Refrigerante de Larga Duración.

PIEZAS NECESARIAS:

Capacidad del Sistema de Enfriamiento		SCA líquido de llenado inicial	SCA líquido de mantenimiento*	Elemento de mantenimiento enroscable*
litros	gal EE.UU.			
22-30	6-8	3P-2044 (1)	6V-3542 (1)	111-2370 (1)
30-38	8-10	3P-2044 (1) 6V-3542 (1)	111-2372 (1)	111-2369 (1)
38-49	10-13	3P-2044 (1) 8T-1589 (1)	111-2372 (1)	111-2369 (1)
49-64	13-17	3P-2044 (2)	8T-1589 (1)	9N-3368 (1)
64-83	17-22	3P-2044 (2) 8T-1589 (1)	111-2372 (1) 6V-3542 (1)	111-2371 (1)
83-114	22-30	3P-2044 (3) 8T-1589 (1)	3P-2044 (1)	9N-3718 (1)
114-163	30-43	3P-2044 (5)	3P-2044 (1) 6V-3542 (1)	111-2371 (2)
163-242	43-64	3P-2044 (8)	3P-2044 (2)	9N-3718 (2)

** El período normal de mantenimiento es de 250 horas. Para ver las instrucciones completas sobre el mantenimiento del refrigerante, consulte el Manual de Operación y Mantenimiento.*

( ) Indica la cantidad necesaria.

ADITIVOS SUPLEMENTARES DO LÍQUIDO ARREFECEDOR

BENEFÍCIOS PARA O CLIENTE:

Protege contra cavitação, espuma, erosão, corrosão e acúmulo de crostas nos sistemas de arrefecimento.

- Fornece uma quantidade pré-determinada de condicionador de arrefecimento.

DESCRIÇÃO:

Com a operação normal, os aditivos se esgotam do líquido arrefecedor. Por isso, Aditivos Suplementares do Líquido Arrefecedor (SCA) devem ser acrescentados a todos os líquidos arrefecedores para serviço pesado em intervalos regulares. Além disso, quando um anticongelante pré-carregado, totalmente formulado não for usado, como o DEAC Caterpillar, uma carga inicial de SCA deve ser acrescentada ao sistema de arrefecimento. A quantidade de SCA acrescentada ao sistema depende da capacidade do sistema.

O SCA para abastecimento inicial é fornecido em forma de líquido. Os aditivos suplementares (SCA) para intervalos de manutenção estão à disposição em forma líquida e como um elemento com roscas. (Exceto os Motores da Família 3600)

NOTA:

A quantidade de SCA adicionada no abastecimento inicial não é a mesma que a acrescentada nos intervalos de manutenção.

Os elementos do aditivo do líquido arrefecedor podem ser usados com qualquer tipo de anticongelante etileno ou propileno que satisfaz as Especificações ASTM D4985 ou ASTM D5345.

NOTA:

Para uso apenas com líquido arrefecedor para serviço pesado padrão, não deve ser usado com Líquido Arrefecedor de Vida Longa.

PEÇAS NECESSÁRIAS:

Capacidade do Sistema de Arrefecimento		Líquido SCA Durante Abastecimento Inicial	Líquido SCA Durante Manutenção*	Elemento de Manutenção de SCA com Roscas*
Litros	Galões			
22-30	6-8	3P-2044 (1)	6V-3542 (1)	111-2370 (1)
30-38	8-10	3P-2044 (1) 6V-3542 (1)	111-2372 (1)	111-2369 (1)
38-49	10-13	3P-2044 (1) 8T-1589 (1)	111-2372 (1)	111-2369 (1)
49-64	13-17	3P-2044 (2)	8T-1589 (1)	9N-3368 (1)
64-83	17-22	3P-2044 (2) 8T-1589 (1)	111-2372 (1) 6V-3542 (1)	111-2371 (1)
83-114	22-30	3P-2044 (3) 8T-1589 (1)	3P-2044 (1)	9N-3718 (1)
114-163	30-43	3P-2044 (5)	3P-2044 (1) 6V-3542 (1)	111-2371 (2)
163-242	43-64	3P-2044 (8)	3P-2044 (2)	9N-3718 (2)

** O período normal de manutenção é de 250 horas. Consulte o Manual de Operação e Manutenção para obter instruções completas quanto à manutenção do líquido arrefecedor.*

( ) Indica a quantidade exigida.

KÜHLMITTELZUSATZ

VORTEILE FÜR DEN KUNDEN:

Schutz gegen Kavitation, Schaumbildung, Erosion, Korrosion und Kesselsteinbildung in Kühlsystemen.

- Richtig dosierter Kühlmittelzusatz

BESCHREIBUNG:

Additive erschöpfen sich während des Motorbetriebs. Deshalb muß allen HD-Kühlmitteln regelmäßig Kühlmittelzusatz beigefügt werden. Wenn bei Erstfüllung kein vollwertiges Fertigkühlmittel, wie das Frostschutz- und Kühlmittel für Dieselmotoren von Caterpiller (DEAC), verwendet wird, muß bei Erstfüllung Kühlmittelzusatz beigefügt werden. Wieviel Kühlmittelzusatz beigefügt werden muß, hängt vom Inhalt des Kühlsystems ab.

Für Erstfüllung ist Kühlmittelzusatz nur in flüssiger Form erhältlich. Für Wartungsintervalle ist Kühlmittelzusatz in flüssiger Form und als Zusatzelement erhältlich. (Für die Motorbaureihe 3600 sind keine Zusatzelemente erhältlich.)

ANMERKUNG:

Die Kühlmittelmenge bei Erstfüllung ist nicht die gleiche Menge, die bei Wartungsintervallen beigefügt werden muß.

Die Kühlmittelzusatzelemente können mit allen Frostschutzmitteln auf Ethylen- oder Propylenglykolbasis verwendet werden, die den Standards nach ASTM D4985 oder ASTM D5345 entsprechen.

ANMERKUNG:

Den Kühlmittelzusatz nicht mit Langzeitkühlmittel (ELC) von Caterpillar verwenden. Der Kühlmittelzusatz ist nur für HD-Kühlmittel bestimmt.

TEILEBEZEICHNUNG:

Kühlsysteminhalt		Kühlmittelzusatz bei Erstfüllung	Flüssiger Kühlmittelzusatz bei Wartung*	Kühlmittelzusatzelement bei Wartung*
Liter	US-Gall.			
22-30	(6-8)	3P-2044 (1)	6V-3542 (1)	111-2370 (1)
30-38	(8-10)	3P-2044 (1) 6V-3542 (1)	111-2372 (1)	111-2369 (1)
38-49	(10-13)	3P-2044 (1) 8T-1589 (1)	111-2372 (1)	111-2369 (1)
49-64	(13-17)	3P-2044 (2)	8T-1589 (1)	9N-3368 (1)
64-83	(17-22)	3P-2044 (2) 8T-1589 (1)	111-2372 (1) 6V-3542 (1)	111-2371 (1)
83-114	(22-30)	3P-2044 (3) 8T-1589 (1)	3P-2044 (1)	9N-3718 (1)
114-163	(30-43)	3P-2044 (5)	3P-2044 (1) 6V-3542 (1)	111-2371 (2)
163-242	(43-64)	3P-2044 (8)	3P-2044 (2)	9N-3718 (2)

** Der normale Wartungsintervall beträgt 250 Betriebsstunden. Für vollständige Anweisungen zur Wartung des Kühlsystems, siehe Betriebs- und Wartungshandbuch.*

( ) Erforderliche Anzahl

MAINTENANCE PARTS

DESCRIPTION	PART NUMBER	QTY	WHERE USED	PAGE
AIR INLET AND EXHAUST SYSTEM				
FILTER ELEMENT-AIR (PRIMARY)	293-4053	1	AIR CLEANER GP	85
FILTER ELEMENT-AIR (SECONDARY)	227-7449	1	AIR CLEANER GP	84
		1	AIR CLEANER GP	85
FILTER ELEMENT AS-AIR (PRIMARY)	227-7448	1	AIR CLEANER GP	84
BASIC ENGINE				
CAP (BREATHER VALVE)	225-6461	1	COVER GP-VALVE MECHANISM	15
CAP (BREATHER VAVLE)	225-6461	1	COVER GP-VALVE MECHANISM	19
GASKET (VALVE COVER)	225-6451	1	COVER GP-VALVE MECHANISM	13
		1	COVER GP-VALVE MECHANISM	15
		1	COVER GP-VALVE MECHANISM	17
		1	COVER GP-VALVE MECHANISM	19
HOSE (CRANKCASE BREATHER)	198-8645	1	COVER GP-VALVE MECHANISM	13
PLUG-DRAIN (ENGINE OIL)	7C-0351	2	PAN GP-OIL	42
COOLING SYSTEM				
CAP AS-COOLANT TANK	251-3227	1	TANK GP-EXPANSION	80
HOSE-RADIATOR (LOWER)	210-6139	1	MOUNTING GP-RAD & OIL COOLER	73
HOSE-RADIATOR (UPPER)	210-6141	1	MOUNTING GP-RAD & OIL COOLER	73
REGULATOR GP-TEMPERATURE (WATER)	254-2267	1	CONNECTION GP-WATER	60
V-BELT (AIR CONDITIONER)	3P-0130	1	FAN GP-SUCTION	68
V-BELT SET (INCLUDES 2-BELTS) (ALTERNATOR)	130-3216	1	FAN GP-SUCTION	67
		1	FAN GP-SUCTION	68

MAINTENANCE PARTS

DESCRIPTION	PART NUMBER	QTY	WHERE USED	PAGE
ELECTRICAL AND STARTING SYSTEM				
BATTERY (12-VOLT, MAINTENANCE FREE)	230-6368	1	BATTERY & WIRING GP	125
		1	BATTERY & WIRING GP	127
		1	BATTERY & WIRING GP	128
BELT-DRIVE	9X-8139	1	LAMP GP-WARNING BEACON	139
ELEMENT AS-JACKET WATER HEATER (120-VOLT, 1000-WATT)	219-3273	1	HEATER GP-JACKET WATER	135
FLASHER AS (12-VOLT)	7T-4848	1	WIRING GP-PLATFORM	181
		1	WIRING GP-PLATFORM	185
FUSE (10-AMPERE)	3K-8782	1	LAMP GP-WARNING BEACON	139
	113-8490	11	PANEL GP-FUSE	148
FUSE (15-AMPERE)	113-8491	13	PANEL GP-FUSE	148
FUSE (20-AMPERE)	113-8492	10	PANEL GP-FUSE	148
FUSE (40-AMPERE)	278-6377	1	RELAY GP	149
FUSE (60-AMPERE)	267-2701	2	RELAY GP	150
		1	RELAY GP	151
		1	WIRING GP-PLATFORM	182
		1	WIRING GP-PLATFORM	186
GLOW PLUG (12-VOLT)	232-6662	4	GLOW PLUG GP	131
		4	GLOW PLUG GP	132
KEY (BATTERY DISCONNECT)	8H-5306	1	SWITCH GP-DISCONNECT	157
LAMP (12-VOLT)	7X-9065	1	WIRING GP-CONSOLE	162
LAMP (12-VOLT, 21-WATT)	3C-4883	1	LIGHTING GP-FLOOD & SIGNAL	142
		1	LIGHTING GP-FLOOD & SIGNAL	144
	9W-3326	1	LIGHTING GP-FLOOD & SIGNAL	142
		1	LIGHTING GP-FLOOD & SIGNAL	144
LAMP (12-VOLT, 5-WATT)	084-4348	1	LIGHTING GP-FLOOD & SIGNAL	142
		1	LIGHTING GP-FLOOD & SIGNAL	144
LAMP (12-VOLT, 55-WATT)	9W-0607	1	LAMP GP-FLOOD	136
		1	LAMP GP-FLOOD	137
		1	LAMP GP-FLOOD	138
LAMP (12-VOLT, 55-WATT, HID)	9X-8118	1	LAMP GP-WARNING BEACON	139
ENGINE ARRANGEMENT				
FILTER AS-ENGINE OIL	7W-2326	1	ENGINE AR-PRIMARY	10
FUEL SYSTEM				
CAP GP-FUEL FILLER (VENTED, LOCKABLE)	201-0330	1	TANK GP-FUEL	122
FILTER AS-FUEL (FILLER NECK SCREEN)	180-3730	1	TANK GP-FUEL	122
FILTER AS-WATER SEP & FUEL	228-9130	1	PUMP GP-FUEL PRM & PRIM FILTER	118
FILTER ELEMENT-FUEL	156-1200	1	FILTER GP-WATER SEP & FUEL	100
GASKET	9R-7240	1	TANK GP-FUEL	121

MAINTENANCE PARTS

DESCRIPTION	PART NUMBER	QTY	WHERE USED	PAGE
HYDRAULIC SYSTEM				
CAP-FILL (HYDRAULIC OIL)	237-3797	1	TANK & MTG GP-HYDRAULIC	406
		1	TANK & MTG GP-HYDRAULIC	408
FILTER AS-OIL (FIRE RESISTANT FLUID) (OIL FILTER BYPASS)	134-3014	1	HYDRAULIC AR	344
FILTER AS-OIL (ULTRA HIGH EFFICIENCY) (OIL FILTER BYPASS)	126-1817	1	HYDRAULIC AR	344
FILTER-BREATHER (HYDRAULIC TANK)	9R-9925	1	TANK & MTG GP-HYDRAULIC	406
		1	TANK & MTG GP-HYDRAULIC	408
LUBRICATION SYSTEM				
CANISTER AS-BREATHER (CRANKCASE)	165-4021	1	BREATHER GP	55
CAP AS (ENGINE OIL FILLER)	236-6651	1	GAUGE GP-OIL LEVEL & FILLER	58
FILTER AS-ENGINE OIL	7W-2326	1	GAUGE GP-OIL LEVEL & FILLER	58
OPERATOR STATION				
ACCUMULATOR-REFRIGERANT	170-0235	1	LINES GP-HEATER & AIR COND	709
BLADE AS-WIPER (500-MM) (REAR)	5C-8811	1	WIPER GP-WINDOW	754
BLADE AS-WIPER (600-MM) (FRONT)	101-0745	1	WIPER & WASHER GP-WINDOW	752
		1	WIPER GP-WINDOW	754
DRYER AS-AIR	283-4237	1	LINES GP-HEATER & AIR COND	709
FILTER AS-AIR (RECIRCULATION)	211-2660	1	AIR CONDITIONER GP	642
		1	HEATER GP-CAB	697
FILTER ELEMENT AS-AIR (CAB HEATER, AIR CONDITIONER)	211-2661	1	AIR CONDITIONER & MOUNTING GP	639
		1	HEATER GP-CAB	695
LAMP (12-VOLT)	122-7137	1	TACHOMETER GP-ELECTRIC	736
	210-8754	1	LINER GP-CAB	704
		1	LINER GP-CAB	706
POWER TRAIN				
BREATHER AS (TRANSMISSION)	293-2147	1	TRANSMISSION GP-DIRECT DRIVE	249
	294-9822	1	TRANSMISSION GP-DIRECT DRIVE	244
BREATHER (AXLE)	197-9155	1	AXLE GP-REAR	194
BREATHER (FRONT AXLE)	253-5024	1	AXLE GP-DRIVE & STEERING	192
BREATHER (TRANSMISSION)	7T-3251	1	TRANSMISSION GP-DIRECT DRIVE	239
		1	TRANSMISSION GP-DIRECT DRIVE	244
		1	TRANSMISSION GP-DIRECT DRIVE	250
FILTER AS-OIL (STANDARD EFFICIENCY)	119-4740	1	POWER TRAIN AR	228
		1	POWER TRAIN AR	229
PLUG AS	6Y-1896	1	TRANSMISSION GP-DIRECT DRIVE	250
PLUG AS-DRAIN (MAGNETIC)	152-6144	4	AXLE GP-DRIVE & STEERING	192
		1	DIFFERENTIAL & BEVEL GEAR GP	205
		4	AXLE GP-REAR	194
PLUG AS (TRANSMISSION DRAIN)	6Y-1896	1	TRANSMISSION GP-DIRECT DRIVE	239
		1	TRANSMISSION GP-DIRECT DRIVE	244
STRAINER (SUCTION)	7T-2651	1	CASE AS-TRANSMISSION	199
		1	CASE GP-TRANSMISSION	203
STRAINER (SUCTION) (SUCTION)	7T-2651	1	CASE GP-TRANSMISSION	202

PIÈCES DE RECHANGE

DESCRIPTION	NUMÉRO DE PIECÈS	QTÉ	DOMAINE D'APPLICATION	PAGE
CIRCUIT D'ADMISSION D'AIR ET D'ÉCHAPPEMENT				
ÉLÉMENT DE FILTRE À AIR (ENS) (PRINCIPAL)	227-7448	1	FILTRE A AIR (ASS)	84
ÉLÉMENT DE FILTRE À AIR (PRINCIPAL)	293-4053	1	FILTRE A AIR (ASS)	85
ÉLÉMENT DE FILTRE À AIR (SECONDAIRE)	227-7449	1	FILTRE A AIR (ASS)	84
		1	FILTRE A AIR (ASS)	85
CIRCUIT DE CARBURANT				
BOUCHON DE GOULOTTE DE CARBURANT (ASS) (AÉRÉ, VERROUILLABLE)	201-0330	1	RÉSERVOIR DE CARBURANT (ASS)	122
ÉLÉMENT DE FILTRE À CARBURANT	156-1200	1	FILTRE DE SÉPARATEUR D'EAU ET DE CARBURANT (ASS)	100
FILTRE - SÉPARATEUR D'EAU ET DE CARBURANT (ENS)	228-9130	1	POMPE D'AMORÇAGE DE CARBURANT ET FILTRE PRINCIPAL	118
FILTRE A CARBURANT (ENS) (TAMIS DE GOULOTTE DE REMPLISSAGE)	180-3730	1	RÉSERVOIR DE CARBURANT (ASS)	122
JOINT PLAT	9R-7240	1	RÉSERVOIR DE CARBURANT (ASS)	121
CIRCUIT DE GRAISSAGE				
BOÎTIER-RENIFLARD (VILEBREQUIN)	165-4021	1	RENIFLARD (ASS)	55
CHAPEAU (ENS) (GOULOTTE DE REMPLISSAGE D'HUILE MOTEUR)	236-6651	1	INSTRUMENT - NIVEAU D'HUILE ET GOUL. DE REMPLIS.	58
FILTRE A HUILE MOTEUR (ENS)	7W-2326	1	INSTRUMENT - NIVEAU D'HUILE ET GOUL. DE REMPLIS.	58
CIRCUIT DE REFROIDISSEMENT				
BOUCHON DE RÉSERVOIR DE LIQUIDE DE REFROIDISSEMENT (ENS)	251-3227	1	RESERVOIR D'EXPANSION (ASS)	80
COURROIE TRAPEZOIDALE (CLIMATISEUR)	3P-0130	1	VENTILATEUR ASPIRANT (ASS)	68
FLEXIBLE DE RADIATEUR (INFÉRIEUR)	210-6139	1	MONTAGE DE RADIATEUR ET REFROIDISSEUR D'HUILE (ASS)	73
FLEXIBLE DE RADIATEUR (SUPÉRIEUR)	210-6141	1	MONTAGE DE RADIATEUR ET REFROIDISSEUR D'HUILE (ASS)	73
JEU DE COURROIES TRAPEZOIDALES (COMPREND 2 COURROIES) (ALTERNATEUR)	130-3216	1	VENTILATEUR ASPIRANT (ASS)	67
		1	VENTILATEUR ASPIRANT (ASS)	68
RÉGULATEUR DE TEMPÉRATURE (ASS) (EAU)	254-2267	1	RACCORD D'EAU (ASS)	60

* TRADUCTION NON DISPONIBLE AU MOMENT DE LA PUBLICATION

PIÈCES DE RECHANGE

DESCRIPTION	NUMÉRO DE PIECÈS	QTÉ	DOMAINE D'APPLICATION	PAGE
CIRCUIT ÉLECTRIQUE ET DE DÉMARRAGE				
AMPOULE (PROJECTEUR AU XÉNON 12V, 55W)	9X-8118	1	LAMPE - GYROPHARE (ASS)	139
AMPOULE (12-V, 5-W)	084-4348	1	ÉCLAIRAGE - PROJECTEURS ET CLIGNOTANTS (ASS)	142
		1	ÉCLAIRAGE - PROJECTEURS ET CLIGNOTANTS (ASS)	144
AMPOULE (12 VOLTS)	7X-9065	1	CABLAGE DE CONSOLE (ASS)	162
AMPOULE (12V, 21W)	3C-4883	1	ÉCLAIRAGE - PROJECTEURS ET CLIGNOTANTS (ASS)	142
	9W-3326	1	ÉCLAIRAGE - PROJECTEURS ET CLIGNOTANTS (ASS)	142
	3C-4883	1	ÉCLAIRAGE - PROJECTEURS ET CLIGNOTANTS (ASS)	144
	9W-3326	1	ÉCLAIRAGE - PROJECTEURS ET CLIGNOTANTS (ASS)	144
AMPOULE (12V, 55W)	9W-0607	1	LAMPE - PHARE (ASS)	136
		1	LAMPE - PHARE (ASS)	137
		1	LAMPE - PHARE (ASS)	138
BATTERIE (12V, SANS ENTRETIEN)	230-6368	1	BATTERIE ET CÂBLAGE	125
		1	BATTERIE ET CÂBLAGE	127
		1	BATTERIE ET CÂBLAGE	128
BOUGIE DE PRECHAUFFAGE (12V)	232-6662	4	BOUGIE DE PRÉCHAUFFAGE (ASS)	131
		4	BOUGIE DE PRÉCHAUFFAGE (ASS)	132
CLÉ (COUPE-BATTERIE)	8H-5306	1	ROBINET DE BATTERIE (ASS)	157
CLIGNOTANT (ENS) (12 VOLTS)	7T-4848	1	CABLAGE - PLATE-FORME (ASS)	181
		1	CABLAGE - PLATE-FORME (ASS)	185
ÉLÉMENT DU RÉCHAUFFEUR D'EAU DES CHEMISES (ENS) (120-VOLT, 1000-WATT)	219-3273	1	EAU DES CHEMISES - RECHAUFFEUR (ASS)	135
ENTRAÎNEMENT POUR COURROIE	9X-8139	1	LAMPE - GYROPHARE (ASS)	139
FUSIBLE (10A)	3K-8782	1	LAMPE - GYROPHARE (ASS)	139
	113-8490	11	PANNEAU - FUSIBLES (ASS)	148
FUSIBLE (15A)	113-8491	13	PANNEAU - FUSIBLES (ASS)	148
FUSIBLE (20A)	113-8492	10	PANNEAU - FUSIBLES (ASS)	148
FUSIBLE (40A)	278-6377	1	RELAIS (ASS)	149
FUSIBLE (60A)	267-2701	1	CABLAGE - PLATE-FORME (ASS)	182
		1	CABLAGE - PLATE-FORME (ASS)	186
		2	RELAIS (ASS)	150
		1	RELAIS (ASS)	151

* TRADUCTION NON DISPONIBLE AU MOMENT DE LA PUBLICATION

PIÈCES DE RECHANGE

DESCRIPTION	NUMÉRO DE PIECÈS	QTÉ	DOMAINE D'APPLICATION	PAGE
CIRCUIT HYDRAULIQUE				
BOUCHON DE REMPLISSAGE (HUILE HYDRAULIQUE)	237-3797	1	RÉSERVOIR HYDRAULIQUE ET MONTAGE (ASS)	406
		1	RÉSERVOIR HYDRAULIQUE ET MONTAGE (ASS)	408
FILTRE - RENIFLARD (RÉSERVOIR HYDRAULIQUE)	9R-9925	1	RÉSERVOIR HYDRAULIQUE ET MONTAGE (ASS)	408
		1	RÉSERVOIR HYDRAULIQUE ET MONTAGE (ASS)	406
FILTRE À HUILE (ENS) (LIQUIDE RÉSISTANT AU FEU) (DÉRIVATION DU FILTRE À HUILE)	134-3014	1	VERSION HYDRAULIQUE	344
FILTRE À HUILE (ENS) (ULTRA-GRANDE EFFICACITÉ) (DÉRIVATION DU FILTRE À HUILE)	126-1817	1	VERSION HYDRAULIQUE	344
MOTEUR STANDARD				
BOUCHON DE VIDANGE (HUILE MOTEUR)	7C-0351	2	HUILE MOTEUR - CARTER (ASS)	42
CHAPEAU (*BREATHER VAVLE)	225-6461	1	CACHE-SOUPAPES (ASS)	19
CHAPEAU (SOUPAPE DE RENIFLARD)	225-6461	1	CACHE-SOUPAPES (ASS)	15
FLEXIBLE (RENIFLARD DE CARTER MOTEUR)	198-8645	1	CACHE-SOUPAPES (ASS)	13
JOINT PLAT (CACHE-SOUPAPES)	225-6451	1	CACHE-SOUPAPES (ASS)	13
		1	CACHE-SOUPAPES (ASS)	15
		1	CACHE-SOUPAPES (ASS)	17
		1	CACHE-SOUPAPES (ASS)	19
POSTE DE CONDUITE				
ACCUMULATEUR - RÉFRIGÉRANT	170-0235	1	CANALISATIONS-RÉCHAUFFEUR ET CLIMATISEUR (ASS)	709
AMPOULE (12 VOLTS)	122-7137	1	COMPTE-TOURS ÉLECTRIQUE (ASS)	736
	210-8754	1	CABINE - REVÊTEMENT (ASS)	704
		1	CABINE - REVÊTEMENT (ASS)	706
BALAI D'ESSUIE-GLACE (ENS) (500-MM) (ARRIÈRE)	5C-8811	1	ESSUIE-GLACE (ASS)	754
BALAI D'ESSUIE-GLACE (ENS) (*600-MM) (AVANT)	101-0745	1	ESSUIE-GLACE (ASS)	754
		1	ESSUIE-GLACE ET LAVE-GLACE	752
*DRYER AS-AIR	283-4237	1	CANALISATIONS-RÉCHAUFFEUR ET CLIMATISEUR (ASS)	709
ÉLÉMENT DE FILTRE À AIR (ENS) (CLIMATISATION, CHAUFFAGE DE CABINE)	211-2661	1	CHAUFFAGE DE CABINE (ASS)	695
		1	CLIMATISEUR ET MONTAGE (ASS)	639
FILTRE A HUILE (ENS) (RECIRCULATION)	211-2660	1	CHAUFFAGE DE CABINE (ASS)	697
		1	CLIMATISEUR (ASS)	642

* TRADUCTION NON DISPONIBLE AU MOMENT DE LA PUBLICATION

PIÈCES DE RECHANGE

DESCRIPTION	NUMÉRO DE PIECÈS	QTÉ	DOMAINE D'APPLICATION	PAGE
TRANSMISSION				
BOUCHON DE VIDANGE (ENS) (MAGNÉTIQUE)	152-6144	4	ESSIEU AR (ASS)	194
		1	COURONNE ET DIFFERENTIEL (ASS)	205
		4	ESSIEU MOTEUR ET DIRECTION (ASS)	192
CREPINE (ASPIRATION)	7T-2651	1	CARTER DE BOITE	203
		1	CARTER DE BOÎTE DE VITESSES (ENS)	199
CREPINE (ASPIRATION) (ASPIRATION)	7T-2651	1	CARTER DE BOITE	202
FILTRE À HUILE (ENS) (EFFICACITÉ STANDARD)	119-4740	1	TRANSMISSION (VERSION)	228
		1	TRANSMISSION (VERSION)	229
PRISE (ENS)	6Y-1896	1	BOÎTE MÉCANIQUE (ASS)	250
PRISE (ENS) (VIDANGE DE BOÎTE DE VITESSES)	6Y-1896	1	BOÎTE MÉCANIQUE (ASS)	239
		1	BOÎTE MÉCANIQUE (ASS)	244
RENIFLARD (BOîTE DE VITESSES)	7T-3251	1	BOÎTE MÉCANIQUE (ASS)	239
		1	BOÎTE MÉCANIQUE (ASS)	244
		1	BOÎTE MÉCANIQUE (ASS)	250
RENIFLARD (ENS) (BOîTE DE VITESSES)	293-2147	1	BOÎTE MÉCANIQUE (ASS)	249
	294-9822	1	BOÎTE MÉCANIQUE (ASS)	244
RENIFLARD (ESSIEU)	197-9155	1	ESSIEU AR (ASS)	194
RENIFLARD (ESSIEU AVANT)	253-5024	1	ESSIEU MOTEUR ET DIRECTION (ASS)	192
VERSION DE MOTEUR				
FILTRE A HUILE MOTEUR (ENS)	7W-2326	1	MOTEUR (VERSION PRINCIPALE)	10

* TRADUCTION NON DISPONIBLE AU MOMENT DE LA PUBLICATION

PIEZAS DE MANTENIMIENTO

DESCRIPCION	NUMERO DE PIEZA	CANT	SE UTILIZA EN	PAGINA
CONFIGURACIÓN DE MOTOR				
FILTRO DE ACEITE DEL MOTOR (CONJ)	7W-2326	1	MOTOR PRIMARIO (CONFIG)	10
MOTOR BÁSICO				
EMPAQUETADURA (TAPA DE VÁLVULA)	225-6451	1	TAPA DEL MECANISMO DE VÁLVULAS (GR)	13
		1	TAPA DEL MECANISMO DE VÁLVULAS (GR)	15
		1	TAPA DEL MECANISMO DE VÁLVULAS (GR)	17
		1	TAPA DEL MECANISMO DE VÁLVULAS (GR)	19
MANGUERA (RESPIRADERO DE CARTER)	198-8645	1	TAPA DEL MECANISMO DE VÁLVULAS (GR)	13
TAPA (*BREATHER VAVLE)	225-6461	1	TAPA DEL MECANISMO DE VÁLVULAS (GR)	19
TAPA (VÁLVULA DE RESPIRADERO)	225-6461	1	TAPA DEL MECANISMO DE VÁLVULAS (GR)	15
TAPÓN DE DRENAJE (ACEITE DE MOTOR)	7C-0351	2	CÁRTER - COLECTOR DEL (GR)	42
PUESTO DEL OPERADOR				
ACUMULADOR DE REFRIGERANTE	170-0235	1	TUBERIAS DE CALENTEDOR Y ACONDICIONADOR DE AIRE (GR)	709
*DRYER AS-AIR	283-4237	1	TUBERIAS DE CALENTEDOR Y ACONDICIONADOR DE AIRE (GR)	709
ELEMENTO DEL FILTRO DE AIRE (CONJ) (CALEFACCION DE CABINA, ACONDICIONADOR DE AIRE)	211-2661	1	ACONDICIONADOR DE AIRE Y MONTAJE (GR)	639
		1	CALEFACCIÓN DE LA CABINA (GR)	695
FILTRO DE AIRE (CONJ) (RECIRCULACIÓN)	211-2660	1	ACONDICIONADOR DE AIRE (GR)	642
		1	CALEFACCIÓN DE LA CABINA (GR)	697
HOJA DE LIMPIAPARABRISAS (CONJ) (*500-MM) (PARTE TRASERA)	5C-8811	1	LIMPIAPARABRISAS DE LA VENTANA (GR)	754
HOJA DE LIMPIAPARABRISAS (CONJ) (*600-MM) (DELANTERO)	101-0745	1	LIMPIA Y LAVAPARABRISAS (GR)	752
		1	LIMPIAPARABRISAS DE LA VENTANA (GR)	754
LÁMPARA (12 VOLTIOS)	122-7137	1	TACÓMETRO ELÉCTRICO (GR)	736
	210-8754	1	REVESTIMIENTO DE LA CABINA (GR)	704
		1	REVESTIMIENTO DE LA CABINA (GR)	706
SISTEMA DE ADMISIÓN Y ESCAPE				
ELEMENTO DE FILTRO DE AIRE (PRIMARIO)	293-4053	1	FILTRO DE AIRE (GR)	85
ELEMENTO DE FILTRO DE AIRE (SECUNDARIO)	227-7449	1	FILTRO DE AIRE (GR)	84
		1	FILTRO DE AIRE (GR)	85
ELEMENTO DEL FILTRO DE AIRE (CONJ) (PRIMARIO)	227-7448	1	FILTRO DE AIRE (GR)	84

* NO HAY TRADUCCION DISPONIBLE EN EL MOMENTO DE LA IMPRESION

PIEZAS DE MANTENIMIENTO

DESCRIPCION	NUMERO DE PIEZA	CANT	SE UTILIZA EN	PAGINA
SISTEMA DE COMBUSTIBLE				
ELEMENTO DE FILTRO DE COMBUSTIBLE	156-1200	1	FILTRO DE COMBUSTIBLE Y SEPARADOR DE AGUA (GR)	100
EMPAQUETADURA	9R-7240	1	COMBUSTIBLE - TANQUE DE (GR)	121
FILTRO DE COMBUSTIBLE (CONJ) (REJILLA DE TUBO DE LLENADO)	180-3730	1	COMBUSTIBLE - TANQUE DE (GR)	122
FILTRO DE COMBUSTIBLE Y SEPARADOR DE AGUA (CONJ)	228-9130	1	BOMBA DE CEBADO Y FILTRO PRIMARIO DE COMBUSTIBLE (GR)	118
TAPA DEL TUBO DE LLENADO DE COMBUSTIBLE (GR) (VENTILACION, TRABABLE)	201-0330	1	COMBUSTIBLE - TANQUE DE (GR)	122
SISTEMA DE ENFRIAMIENTO				
*CAP AS-COOLANT TANK	251-3227	1	TANQUE DE EXPANSIÓN (GR)	80
CORREA TRAPEZOIDAL (AIRE ACONDICIONADO)	3P-0130	1	SUCCIÓN - VENTILADOR DE (GR)	68
JUEGO DE CORREAS TRAPEZOIDALES (INCLUYE 2-CORREAS) (ALTERNADOR)	130-3216	1	SUCCIÓN - VENTILADOR DE (GR)	67
		1	SUCCIÓN - VENTILADOR DE (GR)	68
MANGUERA DE RADIADOR (INFERIOR)	210-6139	1	GRUPO DEMONTAJE DE RADIADOR Y ENFRIAMIENTO DE ACEITE	73
MANGUERA DE RADIADOR (SUPERIOR)	210-6141	1	GRUPO DEMONTAJE DE RADIADOR Y ENFRIAMIENTO DE ACEITE	73
TEMPERATURA - REGULADOR DE (GR) (AGUA)	254-2267	1	AGUA - CONEXIÓN DE (GR)	60
SISTEMA DE LUBRICACIÓN				
FILTRO DE ACEITE DEL MOTOR (CONJ)	7W-2326	1	INDICADOR DE NIVEL DE ACEITE Y TUBO DE LLENADO	58
LATA DE RESPIRADERO (CONJ) (CÁRTER DEL MOTOR)	165-4021	1	RESPIRADERO (GR)	55
TAPÓN (CONJ) (LLENADO DE ACEITE DE MOTOR)	236-6651	1	INDICADOR DE NIVEL DE ACEITE Y TUBO DE LLENADO	58

* NO HAY TRADUCCION DISPONIBLE EN EL MOMENTO DE LA IMPRESION

PIEZAS DE MANTENIMIENTO

DESCRIPCION	NUMERO DE PIEZA	CANT	SE UTILIZA EN	PAGINA
SISTEMA ELÉCTRICO Y DE ARRANQUE				
BATERÍA (12-VOLTIOS, LIBRE DE MANTENIMIENTO)	230-6368	1	BATERÍA Y CABLES (GR)	125
		1	BATERÍA Y CABLES (GR)	127
		1	BATERÍA Y CABLES (GR)	128
BUJÍA INCANDESCENTE (12 VOLTIOS)	232-6662	4	BUJÍA INCANDESCENTE (GR)	131
		4	BUJÍA INCANDESCENTE (GR)	132
CONJUNTO DE DESTELLADOR (12 VOLTIOS)	7T-4848	1	CABLES DE LA PLATAFORMA (GR)	181
		1	CABLES DE LA PLATAFORMA (GR)	185
ELEMENTO DEL CALENTADOR DEL AGUA DE LAS CAMISAS (120 VOLTIOS, 1000 VATIOS)	219-3273	1	AGUA DE LAS CAMISAS - CALENTADOR DEL (GR)	135
FUSIBLE (10-AMPERIOS)	3K-8782	1	LÁMPARA DE BALIZA DE ADVERTENCIA (GR)	139
	113-8490	11	PANEL DE FUSIBLES (GR)	148
FUSIBLE (15 AMPERIOS)	113-8491	13	PANEL DE FUSIBLES (GR)	148
FUSIBLE (20-AMPERIOS)	113-8492	10	PANEL DE FUSIBLES (GR)	148
FUSIBLE (40 AMP)	278-6377	1	RELÉ (GR)	149
FUSIBLE (60 AMPERIOS)	267-2701	1	CABLES DE LA PLATAFORMA (GR)	182
		1	CABLES DE LA PLATAFORMA (GR)	186
		2	RELÉ (GR)	150
		1	RELÉ (GR)	151
LÁMPARA (12 VLOTIOS, 5 VATIOS)	084-4348	1	LUCES DE REFLECTOR Y CAMBIO DE DIRECCION (GR)	142
		1	LUCES DE REFLECTOR Y CAMBIO DE DIRECCION (GR)	144
LÁMPARA (12 VOLTIOS)	7X-9065	1	CABLES DE LA CONSOLA (GR)	162
LÁMPARA (12 VOLTIOS, 21 VATIOS)	3C-4883	1	LUCES DE REFLECTOR Y CAMBIO DE DIRECCION (GR)	142
		1	LUCES DE REFLECTOR Y CAMBIO DE DIRECCION (GR)	144
	9W-3326	1	LUCES DE REFLECTOR Y CAMBIO DE DIRECCION (GR)	142
		1	LUCES DE REFLECTOR Y CAMBIO DE DIRECCION (GR)	144
LÁMPARA (12 VOLTIOS, 55 VATIOS)	9W-0607	1	REFLECTOR (GR)	136
		1	REFLECTOR (GR)	137
		1	REFLECTOR (GR)	138
LÁMPARA (12 VOLTIOS, 55 VATIOS, HID)	9X-8118	1	LÁMPARA DE BALIZA DE ADVERTENCIA (GR)	139
LLAVE (INTERRUPTOR GENERAL)	8H-5306	1	DISYUNTOR (GR)	157
MANDO DE CORREA	9X-8139	1	LÁMPARA DE BALIZA DE ADVERTENCIA (GR)	139

* NO HAY TRADUCCION DISPONIBLE EN EL MOMENTO DE LA IMPRESION

PIEZAS DE MANTENIMIENTO

DESCRIPCION	NUMERO DE PIEZA	CANT	SE UTILIZA EN	PAGINA
SISTEMA HIDRÁULICO				
FILTRO - RESPIRADERO (TANQUE HIDRÁULICO)	9R-9925	1	TANQUE HIDRÁULICO Y MONTAJE (GR)	406
		1	TANQUE HIDRÁULICO Y MONTAJE (GR)	408
FILTRO DE ACEITE (CONJ) (EFICIENCIA ULTRA ALTA) (DERIVACIÓN DEL FILTRO DE ACEITE)	126-1817	1	HIDRÁULICA (CONFIG)	344
FILTRO DE ACEITE (CONJ) (FLUÍDO RESISTENTE AL FUEGO) (DERIVACIÓN DEL FILTRO DE ACEITE)	134-3014	1	HIDRÁULICA (CONFIG)	344
TAPA, LLENADO (ACEITE HIDRAULICO)	237-3797	1	TANQUE HIDRÁULICO Y MONTAJE (GR)	406
		1	TANQUE HIDRÁULICO Y MONTAJE (GR)	408
TREN DE FUERZA				
COLADOR (SUCCIÓN)	7T-2651	1	CAJA DE LA TRANSMISIÓN (CONJ)	199
COLADOR (*SUCTION)	7T-2651	1	CAJA DE LA TRANSMISIÓN (GR)	203
COLADOR (*SUCTION) (SUCCIÓN)	7T-2651	1	CAJA DE LA TRANSMISIÓN (GR)	202
CONJUNTO DE TAPON, DRENAJE (MAGNÉTICO)	152-6144	4	EJE DE IMPULSIÓN Y DE DIRECCIÓN (GR)	192
		4	EJE TRASERO (GR)	194
		1	DIFERENCIAL Y CORONA (GR)	205
ENCHUFE (CONJ)	6Y-1896	1	TRANSMISION DIRECTA (GR)	250
ENCHUFE (CONJ) (DRENAJE DE LA TRANSMISION)	6Y-1896	1	TRANSMISION DIRECTA (GR)	239
		1	TRANSMISION DIRECTA (GR)	244
FILTRO DE ACEITE (CONJ) (GRUPO DE LAMPARA-TABLERO)	119-4740	1	TREN DE FUERZA (CONFIG)	228
		1	TREN DE FUERZA (CONFIG)	229
RESPIRADERO (CONJ) (TRANSMISION)	293-2147	1	TRANSMISION DIRECTA (GR)	249
	294-9822	1	TRANSMISION DIRECTA (GR)	244
RESPIRADERO (EJE)	197-9155	1	EJE TRASERO (GR)	194
RESPIRADERO (EJE DELANTERO)	253-5024	1	EJE DE IMPULSIÓN Y DE DIRECCIÓN (GR)	192
RESPIRADERO (TRANSMISION)	7T-3251	1	TRANSMISION DIRECTA (GR)	244
		1	TRANSMISION DIRECTA (GR)	250
		1	TRANSMISION DIRECTA (GR)	239

* NO HAY TRADUCCION DISPONIBLE EN EL MOMENTO DE LA IMPRESION

PEÇAS DE MANUTENÇÃO

DESCRIÇÃO	NÚMERO DE PEÇA	QUANT	UTILIZADA EM	PÁGINA
ARRANJO DO MOTOR				
FILTRO - ÓLEO DO MOTOR	7W-2326	1	MOTOR PRIMÁRIO	10
MOTOR BÁSICO				
BUJÃO DO DRENO (ÓLEO DO MOTOR)	7C-0351	2	CÁRTER DO ÓLEO DO MOTOR	42
JUNTA (TAMPA DA VÁLVULA)	225-6451	1	TAMPA - MECANISMO DAS VÁLVULAS	13
		1	TAMPA - MECANISMO DAS VÁLVULAS	15
		1	TAMPA - MECANISMO DAS VÁLVULAS	17
		1	TAMPA - MECANISMO DAS VÁLVULAS	19
MANGUEIRA (RESPIRO DO CÁRTER)	198-8645	1	TAMPA - MECANISMO DAS VÁLVULAS	13
TAMPA (VÃLVULA DE RESPIRO)	225-6461	1	TAMPA - MECANISMO DAS VÁLVULAS	15
TAMPA (VÁLVULA DO RESPIRO)	225-6461	1	TAMPA - MECANISMO DAS VÁLVULAS	19
POSTO DO OPERADOR				
ACUMULADOR - REFRIGERANTE	170-0235	1	TUBULAÇÕES - AQUECEDOR E AR CONDICIONADO	709
ELEMENTO DO FILTRO DE AR (AQUECEDOR, CONDICIONADOR DE AR DA CABINE)	211-2661	1	CONDICIONADOR DE AR E MONTAGEM	639
		1	AQUECEDOR DA CABINE	695
FILTRO - AR (RECIRCULAÇÃO)	211-2660	1	AQUECEDOR DA CABINE	697
		1	CONDICIONADOR DE AR	642
LÂMINA DO LIMPADOR DE PÁRA-BRISA (500 MM) (TRASEIRO)	5C-8811	1	LIMPADOR DO VIDRO	754
LÂMINA DO LIMPADOR DE PÁRA-BRISA (600 MM) (DIANTEIRO)	101-0745	1	LIMPADOR DO VIDRO	754
		1	LIMPADOR E LAVADOR - JANELA	752
LÂMPADA (12-VOLTS)	122-7137	1	TACÔMETRO - ELÉTRICO	736
	210-8754	1	REVESTIMENTO DA CABINE	704
		1	REVESTIMENTO DA CABINE	706
SECADOR-AR	283-4237	1	TUBULAÇÕES - AQUECEDOR E AR CONDICIONADO	709
SISTEMA DE ADMISSÃO E ESCAPE DE AR				
ELEMENTO DO FILTRO DE AR (PRIMÁRIO)	227-7448	1	PURIFICADOR DE AR	84
ELEMENTO FILTRANTE - AR (PRIMÁRIO)	293-4053	1	PURIFICADOR DE AR	85
ELEMENTO FILTRANTE - AR (SECUNDÁRIO)	227-7449	1	PURIFICADOR DE AR	84
		1	PURIFICADOR DE AR	85
SISTEMA DE ARREFECIMENTO				
CORREIA EM V (AR CONDICIONADO)	3P-0130	1	VENTILADOR DE SUCÇÃO	68
JOGO DE CORREIAS EM V (INCLUI 2 CORREIAS) (ALTERNADOR)	130-3216	1	VENTILADOR DE SUCÇÃO	67
		1	VENTILADOR DE SUCÇÃO	68
MANGUEIRA - RADIADOR (INFERIOR)	210-6139	1	SUPORTE - ARREFECEDR DE ÓLEO E RADIADOR	73
MANGUEIRA - RADIADOR (SUPERIOR)	210-6141	1	SUPORTE - ARREFECEDR DE ÓLEO E RADIADOR	73
TAMPA-TANQUE DO LÍQUIDO ARREFECEDOR	251-3227	1	TANQUE DE EXPANSÃO	80
TERMOSTATO (ÁGUA)	254-2267	1	CONEXÃO - TUBO D'ÁGUA	60

PEÇAS DE MANUTENÇÃO

DESCRIÇÃO	NÚMERO DE PEÇA	QUANT	UTILIZADA EM	PÁGINA
SISTEMA DE LUBRIFICAÇÃO				
FILTRO - ÓLEO DO MOTOR	7W-2326	1	VARETA DE NÍVEL E BOCAL DE ENCHIMENTO DO ÓLEO	58
LATA - RESPIRO (CÁRTER)	165-4021	1	RESPIRO	55
TAMPA (BOCAL DE ENCHIMENTO DO OLEO DO MOTOR)	236-6651	1	VARETA DE NÍVEL E BOCAL DE ENCHIMENTO DO ÓLEO	58
SISTEMA DO COMBUSTÍVEL				
ELEMENTO DO FILTRO DE COMBUSTÍVEL	156-1200	1	FILTRO DE COMBUSTÍVEL E SEPARADOR DE ÁGUA	100
FILTRO - COMBUSTÍVEL (TELA DO BOCAL DE ENCHIMENTO)	180-3730	1	TANQUE DE COMBUSTÍVEL	122
FILTRO - SEPARADOR DE ÁGUA E COMBUSTÍVEL	228-9130	1	BOMBA DE ESCORVA DO COMBUSTÍVEL E DO FILTRO PRIMÁRIO	118
JUNTA	9R-7240	1	TANQUE DE COMBUSTÍVEL	121
TAMPA - BOCAL DE ENCHIMENTO DE COMBUSTÍVEL (COM RESPIRO, TRAVÁVEL)	201-0330	1	TANQUE DE COMBUSTÍVEL	122

PEÇAS DE MANUTENÇÃO

DESCRIÇÃO	NÚMERO DE PEÇA	QUANT	UTILIZADA EM	PÁGINA
SISTEMA ELÉTRICO DE PARTIDA				
BATERIA (12 VOLTS, ISENTO DE MANUTENÇÃO)	230-6368	1	BATERIA E CABOS / FIOS ELÉTRICOS	125
		1	BATERIA E CABOS / FIOS ELÉTRICOS	127
		1	BATERIA E CABOS / FIOS ELÉTRICOS	128
CHAVE (DESCONEXÃO DA BATERIA)	8H-5306	1	CHAVE GERAL	157
CORREIA DE COMANDO	9X-8139	1	LUZ GIRATÓRIA DE ALARME	139
ELEMENTO - AQUECEDOR DE ÁGUA DA CAMISA (120 VOLTS, 1.000 WATTS)	219-3273	1	AQUECEDOR DA ÁGUA DO MOTOR	135
FUSÍVEL (10 AMPERES)	3K-8782	1	LUZ GIRATÓRIA DE ALARME	139
	113-8490	11	PAINEL DE FUSÍVEIS	148
FUSÍVEL (15 AMPERES)	113-8491	13	PAINEL DE FUSÍVEIS	148
FUSÍVEL (20-AMPERES)	113-8492	10	PAINEL DE FUSÍVEIS	148
FUSÍVEL (40 AMPÈRES)	278-6377	1	RELÉ	149
FUSÍVEL (60 AMPERES)	267-2701	1	CABOS/FIOS ELÉTRICOS - PLATAFORMA	182
		1	CABOS/FIOS ELÉTRICOS - PLATAFORMA	186
		2	RELÉ	150
		1	RELÉ	151
LÂMPADA (12-VOLTS)	7X-9065	1	CABOS/FIOS ELÉTRICOS DO CONSOLE	162
LÂMPADA (12-VOLTS, 21-WATTS)	3C-4883	1	SISTEMA DE ILUMINAÇÃO - FARÓIS E SINAL	142
		1	SISTEMA DE ILUMINAÇÃO - FARÓIS E SINAL	144
	9W-3326	1	SISTEMA DE ILUMINAÇÃO - FARÓIS E SINAL	142
		1	SISTEMA DE ILUMINAÇÃO - FARÓIS E SINAL	144
LÂMPADA (12 VOLTS, 5 WATTS)	084-4348	1	SISTEMA DE ILUMINAÇÃO - FARÓIS E SINAL	142
		1	SISTEMA DE ILUMINAÇÃO - FARÓIS E SINAL	144
LÂMPADA (12-VOLTS, 55-WATTS)	9W-0607	1	LÂMPADA - FAROL	136
		1	LÂMPADA - FAROL	137
		1	LÂMPADA - FAROL	138
LÂMPADA (12 VOLTS, 55 WATTS, HID)	9X-8118	1	LUZ GIRATÓRIA DE ALARME	139
LUZ INTERMITENTE (12-VOLTS)	7T-4848	1	CABOS/FIOS ELÉTRICOS - PLATAFORMA	185
		1	CABOS/FIOS ELÉTRICOS - PLATAFORMA	181
VELA DE AQUECIMENTO; VELA INCANDESCENTE (12 VOLTS)	232-6662	4	VELA DE AQUECIMENTO; VELA INCANDESCENTE	131
		4	VELA DE AQUECIMENTO; VELA INCANDESCENTE	132

PEÇAS DE MANUTENÇÃO

DESCRIÇÃO	NÚMERO DE PEÇA	QUANT	UTILIZADA EM	PÁGINA
SISTEMA HIDRÁULICO				
FILTRO - ÓLEO (EXTREMA EFICIÊNCIA) (DERIVAÇÃO DO FILTRO DE ÓLEO)	126-1817	1	COMANDO HIDRÁULICO	344
FILTRO - ÓLEO (FLUIDO À PROVA DE FOGO) (DERIVAÇÃO DO FILTRO DE ÓLEO)	134-3014	1	COMANDO HIDRÁULICO	344
FILTRO - RESPIRO (TANQUE HIDRÁULICO)	9R-9925	1	TANQUE DE ÓLEO HIDRÁULICO E MONTAGEM	406
		1	TANQUE DE ÓLEO HIDRÁULICO E MONTAGEM	408
TAMPA - ENCHIMENTO (ÓLEO HIDRÁULICO)	237-3797	1	TANQUE DE ÓLEO HIDRÁULICO E MONTAGEM	406
		1	TANQUE DE ÓLEO HIDRÁULICO E MONTAGEM	408
TREM DE FORÇA				
BUJÃO	6Y-1896	1	TRANSMISSÃO DIRETA	250
BUJÃO-DRENAGEM (MAGNÉTICO)	152-6144	1	DIFERENCIAL E COROA	205
		4	EIXO DE PROPULSÃO E DIREÇÃO	192
		4	SEMI-EIXO TRASEIRO	194
BUJÃO (DRENO DA TRANSMISSÃO)	6Y-1896	1	TRANSMISSÃO DIRETA	239
		1	TRANSMISSÃO DIRETA	244
FILTRO - ÓLEO (EFICIÊNCIA PADRÃO)	119-4740	1	TREM DE FORÇA	228
		1	TREM DE FORÇA	229
RESPIRO (EIXO)	197-9155	1	SEMI-EIXO TRASEIRO	194
RESPIRO (EIXO DIANTEIRO)	253-5024	1	EIXO DE PROPULSÃO E DIREÇÃO	192
RESPIRO (TRANSMISSÃO)	7T-3251	1	TRANSMISSÃO DIRETA	239
		1	TRANSMISSÃO DIRETA	244
		1	TRANSMISSÃO DIRETA	250
	293-2147	1	TRANSMISSÃO DIRETA	249
	294-9822	1	TRANSMISSÃO DIRETA	244
TELA FILTRANTE (SUCÇÃO)	7T-2651	1	CAIXA DA TRANSMISSÃO	199
		1	CARCAÇA DA TRANSMISSÃO	203
TELA FILTRANTE (SUCÇÃO) (SUCÇÃO)	7T-2651	1	CARCAÇA DA TRANSMISSÃO	202

WARTUNGSTEILE

BESCHREIBUNG	ERSATZTEIL-NUMMER	MENGE	VERWENDET IN	SEITE
ELEKTRISCHE ANLAGE UND STARTSYSTEM				
BATTERIE (12 V, WARTUNGSFREI)	230-6368	1	BATTERIE UND VERDRAHTUNG	125
		1	BATTERIE UND VERDRAHTUNG	127
		1	BATTERIE UND VERDRAHTUNG	128
BLINKER (12 V)	7T-4848	1	FAHRERPLATTFORMVERDRAHTUNG	181
		1	FAHRERPLATTFORMVERDRAHTUNG	185
GLÜHKERZE (12 V)	232-6662	4	GLÜHKERZE	131
		4	GLÜHKERZE	132
LAUFBAND UND ANTRIEB	9X-8139	1	RUNDUM-KENNLEUCHTE	139
LEUCHTE (12 V)	7X-9065	1	KONSOLENVERDRAHTUNG	162
LEUCHTE (12 V, 21 W)	3C-4883	1	ARBEITS- U. SIGNALLEUCHTE	142
		1	ARBEITS- U. SIGNALLEUCHTE	144
	9W-3326	1	ARBEITS- U. SIGNALLEUCHTE	142
		1	ARBEITS- U. SIGNALLEUCHTE	144
LEUCHTE (12 V, 5 W)	084-4348	1	ARBEITS- U. SIGNALLEUCHTE	142
		1	ARBEITS- U. SIGNALLEUCHTE	144
LEUCHTE (12 V, 55 W)	9W-0607	1	ARBEITSLEUCHTEN	136
		1	ARBEITSLEUCHTEN	137
		1	ARBEITSLEUCHTEN	138
LEUCHTE (*12-VOLT, 55-WATT, HID)	9X-8118	1	RUNDUM-KENNLEUCHTE	139
SCHLÜSSEL (ELEKTRISCHER HAUPTSCHALTER)	8H-5306	1	TRENNSCHALTER	157
SICHERUNG (10 A)	3K-8782	1	RUNDUM-KENNLEUCHTE	139
	113-8490	11	INSTRUMENTENTAFEL-SICHERUNG	148
SICHERUNG (15 A)	113-8491	13	INSTRUMENTENTAFEL-SICHERUNG	148
SICHERUNG (20 A)	113-8492	10	INSTRUMENTENTAFEL-SICHERUNG	148
SICHERUNG (40 A)	278-6377	1	RELAIS	149
SICHERUNG (60 A)	267-2701	1	FAHRERPLATTFORMVERDRAHTUNG	182
		1	FAHRERPLATTFORMVERDRAHTUNG	186
		2	RELAIS	150
		1	RELAIS	151
UMLAUFKÜHLWASSERHEIZUNGS-ELEMENT (120 V, 1000 W)	219-3273	1	UMLAUFKÜHLWASSERHEIZUNG	135
FAHRERHAUS				
*DRYER AS-AIR	283-4237	1	HEIZUNGS- U. KLIMAANLAGENLEITUNGEN	709
KÄLTEMITTEL-DRUCKSPEICHER	170-0235	1	HEIZUNGS- U. KLIMAANLAGENLEITUNGEN	709
LEUCHTE (12 V)	122-7137	1	DREHZAHLMESSER, ELEKTR.	736
	210-8754	1	FAHRERHAUSAUSKLEIDUNG	704
		1	FAHRERHAUSAUSKLEIDUNG	706
LUFTFILTER (FAHRERHAUSHEIZUNG, KLIMAANLAGE)	211-2661	1	FAHRERHAUSHEIZUNG	695
		1	KLIMAANLAGE UND AUFHÄNGUNG	639
LUFTFILTER (UMLAUFLUFT)	211-2660	1	FAHRERHAUSHEIZUNG	697
		1	KLIMAANLAGE	642
SCHEIBENWISCHERBLATT (*500-MM) (HINTEN)	5C-8811	1	SCHEIBENWISCHER	754
SCHEIBENWISCHERBLATT (*600-MM) (VORNE)	101-0745	1	SCHEIBENWISCHER UND -WASCHANLAGE	752
		1	SCHEIBENWISCHER	754

* ÜBERSETZUNG ZUM ZEITPUNKT DER DRUCKLEGUNG NICHT VORHANDEN

WARTUNGSTEILE

BESCHREIBUNG	ERSATZTEIL-NUMMER	MENGE	VERWENDET IN	SEITE
HYDRAULIKSYSTEM				
EINFÜLLKAPPE (HYDRAULIKÖL)	237-3797	1	HYDRAULIKTANK UND BEFESTIGUNGSTEILE	406
		1	HYDRAULIKTANK UND BEFESTIGUNGSTEILE	408
ENTLÜFTERFILTER (HYDRAULIKTANK)	9R-9925	1	HYDRAULIKTANK UND BEFESTIGUNGSTEILE	406
		1	HYDRAULIKTANK UND BEFESTIGUNGSTEILE	408
ÖLFILTER (FEINSTFILTER) (ÖLFILTERUMGEHUNG)	126-1817	1	HYDRAULIKSYSTEM	344
ÖLFILTER (NICHT BRENNBARE FLÜSSIGKEIT) (ÖLFILTERUMGEHUNG)	134-3014	1	HYDRAULIKSYSTEM	344
KRAFTSTOFFSYSTEM				
DICHTUNG	9R-7240	1	KRAFTSTOFFTANK	121
KRAFTSTOFFFILTERKAPPE (BELÜFTET, SPERRBAR)	201-0330	1	KRAFTSTOFFTANK	122
KRAFTSTOFFILTER (EINFÜLLSTURZENSIEB)	180-3730	1	KRAFTSTOFFTANK	122
KRAFTSTOFFILTERELEMENT	156-1200	1	WASSERABSCHEIDER- U. KRAFTSTOFFILTER	100
WASSERABSCHEIDER UND KRAFTSTOFFILTER	228-9130	1	KRAFTSTOFFENTLÜFTUNGSPUMPE UND -HAUPTFILTER	118
KRAFTÜBERTRAGUNG				
ABLASSSCHRAUBE (MAGNETISCH)	152-6144	4	HINTERACHSE	194
		4	ANTRIEBS- UND LENKACHSE	192
		1	DIFFERENTIAL UND TELLERRAD	205
ENTLÜFTER (ACHSE)	197-9155	1	HINTERACHSE	194
ENTLÜFTER (GETRIEBE)	7T-3251	1	WECHSELGETRIEBE	239
		1	WECHSELGETRIEBE	244
		1	WECHSELGETRIEBE	250
	293-2147	1	WECHSELGETRIEBE	249
	294-9822	1	WECHSELGETRIEBE	244
ENTLÜFTER (VORDERACHSE)	253-5024	1	ANTRIEBS- UND LENKACHSE	192
ÖLFILTER (STANDRAD EFFIZIENZ)	119-4740	1	KRAFTÜBERTRAGUNG	228
		1	KRAFTÜBERTRAGUNG	229
SIEB (ANSAUG)	7T-2651	1	GETRIEBEGEHÄUSE	199
SIEB (ANSAUGUNG)	7T-2651	1	GETRIEBEGEHÄUSE	203
SIEB (ANSAUGUNG) (ANSAUG)	7T-2651	1	GETRIEBEGEHÄUSE	202
STOPFEN	6Y-1896	1	WECHSELGETRIEBE	250
STOPFEN (GETRIEBEABLASS)	6Y-1896	1	WECHSELGETRIEBE	239
		1	WECHSELGETRIEBE	244

* ÜBERSETZUNG ZUM ZEITPUNKT DER DRUCKLEGUNG NICHT VORHANDEN

WARTUNGSTEILE

BESCHREIBUNG	ERSATZTEIL-NUMMER	MENGE	VERWENDET IN	SEITE
KÜHLSYSTEM				
*CAP AS-COOLANT TANK	251-3227	1	AUSGLEICHSBEHÄLTER	80
KEILRIEMEN (KLIMAANLAGE)	3P-0130	1	SAUGLÜFTER	68
KEILRIEMENSATZ (EINSCHL. 2 RIEMEN) (DREHSTROMGENERATOR)	130-3216	1	SAUGLÜFTER	67
		1	SAUGLÜFTER	68
KÜHLERSCHLAUCH (OBEN)	210-6141	1	KÜHLER U. ÖLKÜHLER - BEFESTIGUNG	73
KÜHLERSCHLAUCH (UNTEN)	210-6139	1	KÜHLER U. ÖLKÜHLER - BEFESTIGUNG	73
TEMPERATURREGLER (WASSER)	254-2267	1	KÜHLWASSERANSCHLUSS	60
LUFTANSAUG- UND ABGASSYSTEM				
LUFTFILTER (HAUPTELEMENT)	227-7448	1	LUFTREINIGER	84
LUFTTFILTERELEMENT (HAUPTELEMENT)	293-4053	1	LUFTREINIGER	85
LUFTTFILTERELEMENT (HILFSELEMENT)	227-7449	1	LUFTREINIGER	84
		1	LUFTREINIGER	85
MOTOR				
ÖLFILTER	7W-2326	1	MOTORAUSFÜHRUNG	10
MOTOR (GRUNDAUSFÜHRUNG)				
ABLASSSTOPFEN (MOTORÖL)	7C-0351	2	ÖLWANNE	42
DICHTUNG (VENTILDECKEL)	225-6451	1	VENTILDECKEL	13
		1	VENTILDECKEL	15
		1	VENTILDECKEL	17
		1	VENTILDECKEL	19
KAPPE (*BREATHER VAVLE)	225-6461	1	VENTILDECKEL	19
KAPPE (ENTLÜFTUNGSVENTIL)	225-6461	1	VENTILDECKEL	15
SCHLAUCHLEITUNG (KURBELGEHÄUSEENTLÜFTER)	198-8645	1	VENTILDECKEL	13
SCHMIERSYSTEM				
ENTLÜFTERPATRONE (KURBELGEHÄUSE)	165-4021	1	ENTLÜFTER	55
KAPPE (MOTORÖLEINFÜLLUNG)	236-6651	1	ÖLMESSSTAB U. EINFÜLLSTUTZEN	58
ÖLFILTER	7W-2326	1	ÖLMESSSTAB U. EINFÜLLSTUTZEN	58

* ÜBERSETZUNG ZUM ZEITPUNKT DER DRUCKLEGUNG NICHT VORHANDEN

INDEX

Name	Page
A	
ACCUMULATOR GP-RIDE CONTROL–CHARGED	313
ACCUMULATOR GP-RIDE CONTROL–UNCHARGED	314
ACCUMULATOR-REFRIGERANT	709
AIR CLEANER GP	81
	82
	84
	85
AIR COMPRESSOR GP (SUSPENSION SEAT)	729
	732
AIR CONDITIONER & MOUNTING GP	639
AIR CONDITIONER GP	642
ALTERNATOR GP-CHARGING–100-AMPERE, WITH MOUNTING	124
ALTERNATOR GP-CHARGING–120-AMPERE, WITH MOUNTING	123
ALTERNATOR GP-CHARGING (100-AMPERE)	124
ALTERNATOR GP-CHARGING (100-AMPERE, WITH MOUNTING)	10
ARM GP-LIFT	435
ARMREST AS (LH)	727
	728
ARMREST AS (RH)	727
	728
AXLE GP-DRIVE & STEERING	192
AXLE GP-FRONT	281
AXLE GP-REAR	194
B	
BACKHOE AR-EXTENDABLE STICK	1
BACKHOE AR-EXTENDABLE STICK–ACCUGRADE	2
	3
BACKHOE AR-STANDARD STICK	3
BACKHOE AR-STANDARD STICK–ACCUGRADE	4
	5
BATTERY & WIRING GP	127
	128
BATTERY & WIRING GP–STANDARD	125
BATTERY (12-VOLT, MAINTENANCE FREE)	125
	127
BATTERY (12-VOLT, MAINTENANCE FREE)	128
BELT-DRIVE	139
BLADE AS-WIPER (500-MM) (REAR)	754
BLADE AS-WIPER (600-MM) (FRONT)	752
	754
BOOM GP	437
BOX GP-BATTERY	292
BRACE GP-LIFT CYLINDER	438
BRACKET AS	312
BRACKET GP-MOUNTING–MONITOR	644
BRACKET GP-TRANSPORT	756
BRAKE GP-HYDRAULIC CALIPER	194
BREATHER AS (TRANSMISSION)	249
BREATHER AS (TRANSMISSION)	244
BREATHER (AXLE)	194
BREATHER (FRONT AXLE)	192
BREATHER GP	55
BREATHER (TRANSMISSION)	239
	244
	250
BUCKET AR-GENERAL PURPOSE	468
BUCKET AR-MULTIPURPOSE	468
	469
	470
BUCKET AS-GENERAL PURPOSE	471
	473
	474
	476
	478
BUCKET AS-HOE	479
	480
	481
	482
	483
BUCKET AS-HOE–CORAL	499
	500
	501
	502
BUCKET AS-HOE–HEAVY-DUTY	484
	485
	486
	487
	488
	489
BUCKET AS-HOE–HIGH CAPACITY	490
	491
	492
	493
BUCKET AS-HOE–HIGH CAPACITY, PIN-LOCK	503
	504
	505
	506
	507
	508
	509
	510
BUCKET AS-HOE–ROCK	494
	495
	496
	497
	498

INDEX

Name	Page
BUCKET GP-GENERAL PURPOSE	511
	512
	513
	514
	515
	516
	517
BUCKET GP-HOE	518
	519
	520
	521
	522
	523
	524
	525
	526
	527
	528
	529
	530
	531
	532
	533
	534
	535
	536
	537
	538
	539
	540
	541
	542
	559
	560
	561
BUCKET GP-HOE–CORAL	545
BUCKET GP-HOE–HEAVY DUTY	543
BUCKET GP-HOE–HEAVY-DUTY, PIN-LOCK	546
	547
	548
	549
	550
	551
BUCKET GP-HOE–HIGH CAPACITY	558
BUCKET GP-HOE–HIGH CAPACITY, PIN-LOCK	552
	553
	554
	555
	556
	557
BUCKET GP-HOE–ROCK	544
BUCKET GP-MULTIPURPOSE	562
	563
	564
	565
BULLDOZER AS	566
	567
	568
	569

C

Name	Page
CAB AR-ENCLOSED ROPS–DOUBLE DOOR, WITH A/C	647
CAB AR-ENCLOSED ROPS–DOUBLE DOOR, WITHOUT A/C	646
CAB AR-ENCLOSED ROPS–SINGLE DOOR, WITHOUT A/C	645
CAB AS	648
CAB GP-ENCLOSED ROPS	653
CAB GP-ENCLOSED ROPS–SINGLE DOOR	649
	651
CAMSHAFT GP	11
CANISTER AS-BREATHER (CRANKCASE)	55
CANOPY AR-OPEN ROPS–WITH FRONT WINDOW	657
CANOPY AR-OPEN ROPS–WITHOUT FRONT WINDOW	656
CANOPY GP-OPEN ROPS–WITH FRONT WINDOW	660
CANOPY GP-OPEN ROPS–WITHOUT FRONT WINDOW	658
CAP AS-COOLANT TANK	80
CAP AS (ENGINE OIL FILLER)	58
CAP (BREATHER VALVE)	15
CAP (BREATHER VAVLE)	19
CAP-FILL (HYDRAULIC OIL)	406
	408
CAP GP-FUEL FILLER (VENTED, LOCKABLE)	122
CASE AS-TRANSMISSION–FRONT	199
CASE AS-TRANSMISSION–REAR	197
	200
CASE GP-TRANSMISSION	203
CASE GP-TRANSMISSION–FRONT	202
CHASSIS AR	5
CLAM AS-MULTIPURPOSE BUCKET	570
	571
COMMON AR	6
COMPARTMENT GP-LITERATURE	661
COMPRESSOR & MTG GP-REFRIG	662
COMPRESSOR GP-REFRIGERANT	664
CONDENSER & MTG GP-REFRIGERANT	665
CONNECTION GP-INLET–AIR	86
CONNECTION GP-WATER	60
CONSOLE GP-OPERATOR–FRONT	670
CONSOLE GP-OPERATOR–LH	668
CONSOLE GP-OPERATOR–RH	666
CONTROL & MTG GP-STABILIZER	672

INDEX

Name	Page
CONTROL AR-RIDE	314
CONTROL GP-GOVERNOR	94
	95
	96
	98
CONTROL GP-HANDLE	686
CONTROL GP-HYDRAULIC GENERATOR	2
CONTROL GP-HYDRAULIC HAND	672
CONTROL GP-HYDRAULIC HAND–BACKHOE	679
CONTROL GP-HYDRAULIC HAND–LOADER	674
	676
CONTROL GP-HYDRAULIC HAND–STABILIZER	683
CONTROL GP-HYDRAULIC HAND–4-FUNCTION, EXCAVATOR	681
CONTROL GP-HYDRAULIC PEDAL–SINGLE FUNCTION, LH	684
CONTROL GP-HYDRAULIC PEDAL–SINGLE FUNCTION, RH	685
CONTROL GP-PARKING BRAKE	271
	272
CONTROL GP-SERVICE BRAKE	273
CONTROL GP-STEERING	283
CONTROL GP-STEERING–TILT	284
CONTROL GP-TRANSMISSION	686
CONTROL GP-UNPROGRAMMED (MACHINE)	130
CONTROL GP-UNPROGRAMMED (MONITOR)	130
COOLANT HEATER LINES	708
	709
COOLER AS-OIL (ENGINE)	63
COOLER GP-ENGINE OIL	61
	62
COOLER GP-FLTR BASE & ENG OIL	62
	63
	65
COOLER-OIL (ENGINE)	61
	63
CORE AS-OIL COOLER (HYDRAULIC)	77
CORE AS-OIL COOLER (TRANSMISSION)	77
CORE AS-OIL COOLER (TRANSMISSION, 9-ROW)	79
COUNTERWEIGHT GP	293
	294
	295
COUPLER AR-QUICK–PIN-LOCK	572
COUPLER GP-QUICK–BACKHOE	573
	574
COUPLER GP-QUICK–CAT, CASE	576
COUPLER GP-QUICK–CAT, DEERE	577
COUPLER GP-QUICK–PIN-LOCK	575
COVER GP-CYLINDER HEAD	12
COVER GP-VALVE MECHANISM	13
	15
	17
	19
COVER GP-WIPER MOTOR	688
CRANKSHAFT GP	21
	23
	24
CYLINDER & LINES GP-THUMB	315
	316
CYLINDER BLOCK GP	25
	27
	28
CYLINDER GP-BACKHOE BUCKET	318
	320
CYLINDER GP-BOOM	321
CYLINDER GP-BOOM–ACCUGRADE	323
CYLINDER GP-BRAKE–LH	276
CYLINDER GP-BRAKE–RH	277
CYLINDER GP-EXTENDABLE STICK	325
	464
CYLINDER GP-LIFT	6
	327
CYLINDER GP-MULTIPURPOSE BUKT	328
CYLINDER GP-STABILIZER	329
	331
CYLINDER GP-STEERING	192
	281
CYLINDER GP-STICK	335
	336
CYLINDER GP-STICK–ACCUGRADE	333
CYLINDER GP-SWING	337
CYLINDER GP-THUMB	339
CYLINDER GP-TILT	340
CYLINDER HEAD GP	29
	30
	31

D

Name	Page
DIAPHRAGM (CRANKCASE PRESSURE CONTACTOR)	13
	15
	17
	19
DIFFERENTIAL & BEVEL GEAR GP	205
DIFFERENTIAL GP	207
	208
DOOR GP-BATTERY	296
DOOR GP-CAB–LH	689
DOOR GP-CAB–RH	691
DRIVE & MTG GP-PUMP	341
DRIVE AR-BACKHOE LOADER–ALL WHEEL DRIVE, 2-WHEEL STEER	209
DRIVE AR-BACKHOE LOADER–2-WHEEL DRIVE, 2-WHEEL STEER	209

INDEX

Name	Page
DRIVE GP-FAN	32
DRIVE GP-FLEXIBLE COUPLING	210
DRYER AS-AIR	709
E	
EDGE GP-CUTTING	578
	579
ELECTRONICS GP-MACHINE	130
ELECTRONICS GP-MONITOR	130
ELEMENT AS-JACKET WATER HEATER (120-VOLT, 1000-WATT)	135
ENGINE AR	7
	8
ENGINE AR–PRIMARY	9
ENGINE AR-PRIMARY	10
EXTENSION GP-EXHAUST	7
	8
EXTENSION GP-FENDER	297
F	
FAN AS (HEATER)	642
	697
FAN GP-SUCTION–WITH AIR CONDITIONER	68
FAN GP-SUCTION–WITHOUT AIR CONDITIONER	67
FASTENER GP-VALVE–BANK	342
FASTENER GP-VALVE (BANK)	410
FENDER GP-FRONT	298
FENDER GP-REAR	299
FILLER GP-POWER TRAIN OIL–ALL WHEEL DRIVE, STANDARD SHIFT	211
FILLER GP-POWER TRAIN OIL–2-WHEEL DRIVE, STANDARD SHIFT	213
FILM (BUCKET CONTROL)	681
FILM GP	757
FILM-IDENTIFICATION (CAT)	312
FILM-IDENTIFICATION (CATERPILLAR, FRONT)	647
	657
FILM-IDENTIFICATION (CATERPILLAR, FRONT)	645
	646
FILM-IDENTIFICATION (CATERPILLAR, REAR)	656
FILM-IDENTIFICATION (GROUP NUMBER)	642
FILM-IDENTIFICATION (GROUP NUMBER)	697
FILM-IDENTIFICATION (HYDRAULIC OIL)	273
FILM-IDENTIFICATION (STABILIZER CONTROL)	647
	656
FILM-IDENTIFICATION (STABILIZER CONTROL)	645
	646
	657
FILM-INDENTIFICATION	162
FILM-INDENTIFICATION (BUCKET LEVEL)	345
FILM-INSTRUCTION	679
FILM-INSTRUCTION (AUXILIARY)	684
	685
FILM-INSTRUCTION (BUCKET CONTROL)	410
FILM-INSTRUCTION (EXTENDABLE STICK)	685
FILM-INSTRUCTION (EXTENDABLE STICK PIN, READ OMM)	1
	2
	3
FILM-INSTRUCTION (LINK)	441
FILM-INSTRUCTION (NO STEP)	759
FILM-INSTRUCTION (OIL FLOW DIRECTION)	347
FILM-INSTRUCTION (WASHER FILL)	739
	752
FILM (START SWITCH, READ OMM)	760
FILM-STRIPE (YELLOW)	309
	312
FILM (TEMPERATURE CONTROL)	639
	695
FILM-WARNING (ACCUM, HIGH PRESS, READ OMM)	313
FILM-WARNING (HIGH PRESS CYLINDER, READ OMM)	379
	381
FILM-WARNING (HIGH PRESSURE, READ OMM)	313
FILM-WARNING (HOT FLUID UND PRESS, READ OMM)	760
FILM-WARNING (HYD PRESS, READ OMM, U.S.)	349
	352
FILM-WARNING (HYD PRESS, READ OMM, U.S.)	347
FILM-WARNING (JUMP START, READ OMM, U.S.)	759
FILTER AS-AIR (RECIRCULATION)	642
	697
FILTER AS-ENGINE OIL	10
	58
FILTER AS-FUEL (FILLER NECK SCREEN)	122
FILTER AS-OIL (FIRE RESISTANT FLUID) (OIL FILTER BYPASS)	344
FILTER AS-OIL (STANDARD EFFICIENCY)	228
	229
FILTER AS-OIL (ULTRA HIGH EFFICIENCY) (OIL FILTER BYPASS)	344
FILTER AS-WATER SEP & FUEL	118
FILTER BASE & ENG OIL COOLER	62
	63
	65
FILTER-BREATHER (HYDRAULIC TANK)	406
	408

INDEX

Name	Page
FILTER ELEMENT-AIR (PRIMARY)	85
FILTER ELEMENT-AIR (SECONDARY)	84
	85
FILTER ELEMENT AS-AIR (CAB HEATER, AIR CONDITIONER)	639
FILTER ELEMENT AS-AIR (CAB HEATER, AIR CONDITIONER)	695
FILTER ELEMENT AS-AIR (PRIMARY)	84
FILTER ELEMENT-FUEL	100
FILTER GP-ENGINE OIL	10
	57
FILTER GP-FUEL	100
FILTER GP-OIL (HYDRAULIC)	344
FILTER GP-WATER SEP & FUEL	100
FITTING GP-HYDRAULIC	343
FLANGE GP-WHEEL	194
	215
	216
	281
FLASHER AS (12-VOLT)	181
	185
FLOOR MAT	693
	694
FLOOR MAT GP	693
	694
FLOORPLATE GP–CAB	302
FLOORPLATE GP–CANOPY	301
FLYWHEEL GP	33
FORK GP	580
FRAME GP-LOADER–SINGLE TILT	303
FRAME GP-SWING	305
FUSE (10-AMPERE)	139
	148
FUSE (15-AMPERE)	148
FUSE (20-AMPERE)	148
FUSE (40-AMPERE)	149
FUSE (60-AMPERE)	150
	151
	182
	186

G

GASKET	121
GASKET-COVER (HOUSING)	37
GASKET (VALVE COVER)	13
	15
	17
	19
GAUGE GP-COOLANT TEMPERATURE	162
GAUGE GP-FUEL LEVEL	162
GAUGE GP-OIL LEVEL & FILLER–ENGINE	58
GAUGE GP-OIL TEMPERATURE (TORQUE CONVERTER)	162
GAUGE-OIL LEVEL (DIPSTICK)	211
	213
GAUGE-OIL LEVEL (ENGINE DIPSTICK)	58
GAUGE-SIGHT	406
	408
GEAR GP-BEVEL & PINION	205
GEAR GP-DIFFERENTIAL & BEVEL	207
GEAR GP-RING	194
	217
	218
GLOW PLUG GP	131
	132
GLOW PLUG (12-VOLT)	131
	132
GRADE CONTROL AR-LASER–ACCUGRADE, MAST	133
GUARD GP-BOOM	439
GUARD GP-DRIVE SHAFT	307
GUARD GP-RADIATOR	308
GUARD GP-WORK TOOL	581

H

HARNESS AS-CAB	739
	752
HARNESS AS-CHASSIS (ECM)	171
HARNESS AS-CONSOLE	165
HARNESS AS-CONSOLE (SIDE CONSOLE)	162
HARNESS AS-CONTROL	699
HARNESS AS-ENGINE	167
HARNESS AS-FUEL TANK (FUEL SHUTOFF)	8
HARNESS AS-HEATER	697
HARNESS AS-HEATER & AIR COND	159
	173
	642
HARNESS AS-HEATER & AIR COND (COMPRESSOR)	159
HARNESS AS-HEATER & AIR COND (POWER)	159
HARNESS AS-LIGHTING (ROOF)	140
	142
	144
HARNESS AS-PLATFORM	181
	185
HARNESS AS-PLATFORM (DISPLAY)	171
HARNESS AS-POWER	182
	186
HARNESS AS-REAR	189
HARNESS AS-RIDE CONTROL	190
	729
	732
HARNESS AS-SENSOR	2
	3
	4
HARNESS AS-SENSOR (ACCUGRADE)	5

INDEX

Name	Page
HARNESS AS-SENSOR (BOOM, STICK, BUCKET)	171
HARNESS AS-SENSOR (EXTENDABLE STICK)	170
HARNESS AS-SENSOR (SWING)	171
HARNESS AS-WIRING	179
HARNESS AS-WIRING (DIFFERENTIAL LOCK)	156
HARNESS AS-WIRING (KICKOUT, POSITIONER)	175
	177
	179
HARNESS AS-WIRING (RESISTOR)	171
HEATER GP-CAB	695
	697
HEATER GP-JACKET WATER	135
HOOD & GUARD GP	309
HOOD GP-ENGINE	311
	312
HOSE (CRANKCASE BREATHER)	13
HOSE-RADIATOR (LOWER)	73
HOSE-RADIATOR (UPPER)	73
HOUSING & FLANGE GP-AXLE–LH	218
HOUSING & FLANGE GP-AXLE–RH	217
HOUSING AS-DIFFERENTIAL	205
HOUSING GP-AXLE	221
HOUSING GP-AXLE–LH	220
HOUSING GP-AXLE–RH	219
HOUSING GP-FLYWHEEL	34
HOUSING GP-FRONT	35
	37
HYDRAULIC AR	344

I

Name	Page
INDICATOR-AIR FILTER SERVICE	87
INDICATOR AS-AIR FILTER CHANGE	88
INDICATOR AS (HIGH BEAM, TURN SIGNAL RH)	181
	185
INDICATOR AS (TURN SIGNAL LH, PARKING BRAKE)	181
	185
INDICATOR GP-AIR FILTER CHANGE	7
	87
	88
INDICATOR GP-FILTER CHANGE (AIR)	87
INSTALLATION GP-MONITOR–ADVISOR	699

K

Name	Page
KEY (BATTERY DISCONNECT)	157
KICKOUT & POSITIONER GP	345
KIT-BRAKE RESERVOIR	279
KIT-CONNECTING PLUG (2-PIN)	165
	189
KIT-PIVOT	284
KIT-PLANETARY CARRIER	226
KIT-REPAIR (GOVERNOR PEDAL)	716
	717
KIT-ROLLER BEARING	226
KIT-SEAL	135
	393
KIT-SEAL (ACCUMULATOR)	313
KIT-SEAL (METERING PUMP, STEERING)	291
KIT-SERVICE	716
	717
KIT-SPIDER	192
KIT-SPIDER & BEARING (DRIVE SHAFT)	230
KIT-TILT PEDAL	284
KNOB GP-STEERING	286

L

Name	Page
LAMP GP	162
LAMP GP-DOME	704
LAMP GP-DOME (12-VOLT)	706
LAMP GP-FLOOD	138
LAMP GP-FLOOD–SUSPENDED MOUNT	137
LAMP GP-FLOOD–12-VOLT	136
LAMP GP-HEAD & SIGNAL	140
	142
	144
LAMP GP-SIGNAL	142
	144
LAMP GP-SIGNAL (STOP, TAIL, TURN)	140
LAMP GP-WARNING BEACON–MAGNETIC MOUNT	139
LAMP (12-VOLT)	162
	704
	706
	736
LAMP (12-VOLT, 21-WATT)	142
	144
LAMP (12-VOLT, 5-WATT)	142
	144
LAMP (12-VOLT, 55-WATT)	136
	137
	138
LAMP (12-VOLT, 55-WATT, HID)	139
LATCH GP-CAB DOOR & WINDOW	701
	702
LEVER GP-CONTROL VALVE (STABILIZER)	414
	416
	418
LEVER GP-GOVERNOR	94
	95
	96
	98
	703

INDEX

Name	Page
LEVER GP-HAND CONTROL	278
LIFTING GP-ENGINE	39
LIGHTING GP-FLOOD & SIGNAL–NACD, OPTIONAL	142
	144
LIGHTING GP-FLOOD & SIGNAL–NACD, 4-LAMP, CAB	140
LIGHTING GP-WARNING BEACON	146
LINER GP-CAB	704
	706
LINES GP-BACKHOE AUXILIARY	347
	349
	352
LINES GP-BOOM	355
LINES GP-BUCKET–EXTENDABLE STICK	359
LINES GP-BUCKET–STANDARD STICK	357
LINES GP-DRAIN	362
LINES GP-EXTENDABLE STICK	363
LINES GP-FUEL	101
	103
	105
LINES GP-FUEL FILTER	106
LINES GP-HEATER	708
LINES GP-HEATER & AIR COND	709
LINES GP-HYDRAULIC OIL COOLER	365
LINES GP-LIFT CYLINDER	367
LINES GP-LOADER AUXILIARY	369
LINES GP-MULTIPURPOSE BUCKET	371
	373
LINES GP-PILOT	375
LINES GP-POWER TRAIN OIL–DIFFERENTIAL LOCK	223
LINES GP-PUMP	377
LINES GP-RIDE CONTROL	379
	381
LINES GP-STABILIZER	383
	385
LINES GP-STEERING–ALL WHEEL DRIVE	289
LINES GP-STEERING–2-WHEEL DRIVE	287
LINES GP-STICK	387
LINES GP-SWING	388
LINES GP-TILT CYLINDER	389
LINES GP-TRANSMISSION COOLER	70
LINK GP-SHIPPING	758
LINK GP-THUMB	596
	597
	599
	622
	623
	624
	625
	626
	627
	628
	630
	631
	632
	635
LINK GP-THUMB–ADJUSTABLE	440
LINKAGE GP-BACKHOE BUCKET	441
LINKAGE GP-LOADER BUCKET	443
LOADER AR	6
LOCK GP-TRANSPORT	447
LOCK GP-TRANSPORT–BOOM	445
LOCK GP-VANDALISM	758

M

Name	Page
MANIFOLD GP-CONTROL	391
	392
MANIFOLD GP-EXHAUST	89
MANIFOLD GP-RIDE CONTROL	393
MIRROR GP-REAR VIEW–INSIDE	711
	712
MIRROR GP-REAR VIEW (INSIDE)	645
	656
	657
MODULE AS-POWER SUPPLY	133
MOTOR GP-WINDOW WIPER	713
MOTOR GP-WINDOW WIPER–FRONT	713
MOTOR GP-WINDOW WIPER (REAR)	754
MOUNTING & LINES GP-RADIATOR	72
MOUNTING GP-AXLE	224
MOUNTING GP-BANK VALVE	394
	395
MOUNTING GP-BUCKET	582
MOUNTING GP-CAB	714
MOUNTING GP-CYLINDER–THUMB	396
	398
MOUNTING GP-ENGINE	40
MOUNTING GP-ENGINE & TMSN	41
MOUNTING GP-LINES–BACKHOE	399
MOUNTING GP-MAST–ACCUGRADE	583
MOUNTING GP-MONITOR–ACCUGRADE	715
MOUNTING GP-RAD & OIL COOLER–TRANSMISSION, HYDRAULIC OIL	73
MOUNTING GP-SENSOR–ANGLE	147
MOUNTING GP-STICK	448
MOUNTING GP-TRANSMISSION	225
MOUNTING GP-WHEEL	262
	263
	265
	269
	270
MOUNTING GP-WHEEL (FRONT)	259
	260
	261
	264
	266
	268

INDEX

Name	Page
MUFFLER GP	90 91
P	
PAD & GUARD GP-STABILIZER	451
PAD & GUARD GP-STABILIZER–STREET	449 453
PAD & MTG GP-STABILIZER	457
PAD & MTG GP-STABILIZER–STREET	455 456
PAD GP-STABILIZER–STREET	458 459
PADLOCK GP (VANDALISM GUARD)	758
PAN GP-OIL	42
PANEL GP-FUSE	148
PEDAL GP-GOVERNOR	716 717
PIN AS (UPPER)	192
PIN GP-COUPLER–MACHINE	584
PIN GP-COUPLER–PIN-LOCK	585
PISTON & ROD GP	44 46
PLANETARY GP-FINAL DRIVE	194 226 227
PLATE	488 492
PLATE & FILM GP	758 761
PLATE-IDENTIFICATION (CAT)	497 499 500 501 502 508
PLATE-IDENTIFICATION (WORK TOOL)	512 514 518 519 520 521 522 523 524 525 526 527 528 529 530 531 532 533 534 535 536 537 538 539 540 541 553 558 559 560 561 562 563 564 565
PLATE-INSTRUCTION (BATTERY) (DISCONNECT SWITCH)	128
PLUG AS	250
PLUG AS-DRAIN (MAGNETIC)	192 205
PLUG AS-DRAIN (MAGNETIC)	194
PLUG AS (TRANSMISSION DRAIN)	239 244
PLUG-DRAIN (ENGINE OIL)	42
PLUG GP-ENGINE	47 48 49
POWER TRAIN AR– ALL WHEEL DRIVE, STANDARD SHIFT	229
POWER TRAIN AR– ALL WHEEL DRIVE, STD SHIFT	228
POWER TRAIN AR– 2-WHEEL DRIVE, STANDARD SHIFT	228
POWER TRAIN AR–2-WHEEL DRIVE, 2-WHEEL STEER, STD SHIFT	229
PROTECTION GP-VANDALISM	762
PULLEY GP-CRANKSHAFT	50
PUMP GP-ENGINE OIL	59
PUMP GP-FUEL INJECTION	107 108 111 114 115
PUMP GP-FUEL PRM & PRIM FILTER– WITH MOUNTING	119
PUMP GP-FUEL PRM & PRIM FILTER– WITH WATER SEPARATOR	118
PUMP GP-METERING	291
PUMP GP-METERING (HMU)	344
PUMP GP-PISTON	401 403
PUMP GP-TRANSMISSION	239 244 249

INDEX

Name	Page
PUMP GP-WATER	75

R

Name	Page
RADIATOR & OIL COOLER GP–HYDRAULIC, TRANSMISSION	77, 78
RADIATOR & OIL COOLER GP–TRANSMISSION, HYDRAULIC	79
RADIATOR GP	77, 79
RECEIVER GP-LASER (LR21)	133
REGULATOR GP-TEMPERATURE (WATER)	60
RELAY AS (12-VOLT)	155, 159, 173, 181, 190
RELAY AS (12-VOLT) (ACCUGRADE, MAST)	133
RELAY AS (12-VOLT) (BACKUP ALARM)	185
RELAY AS (12-VOLT) (DIFFERENTIAL LOCK)	185
RELAY AS (12-VOLT) (HORN)	185
RELAY AS (12-VOLT) (IMPLEMENT DISABLE)	185
RELAY AS (12-VOLT) (POSITION LAMP)	185
RELAY AS (12-VOLT) (STARTING AID)	167
RELAY GP	149
RELAY GP–12-VOLT	150, 151
RELAY GP (12-VOLT)	159, 173
RESERVOIR GP-BRAKE	279, 280
RING GP-PISTON	44
ROCKER ARM GP	51
ROOF GP-CAB	718, 720

S

Name	Page
SEAT BELT GP–RETRACTABLE, 2-IN	721
SEAT BELT GP–RETRACTABLE, 3-IN	722
SEAT GP	723
SEAT GP–CLOTH	725
SEAT GP-SUSPENSION–CLOTH	728, 729
SEAT GP-SUSPENSION–VINYL	727, 729
SENDER AS-FUEL LEVEL	121
SENDER AS-TEMPERATURE (ENGINE COOLANT)	167
SENDER AS-TEMPERATURE (12-VOLT)	239, 245, 250
SENSOR AS-POSITION (ANGLE)	699
SENSOR AS-POSITION (BOOM SWING)	699
SENSOR GP-MOISTURE (WATER SEPARATOR)	118
SENSOR GP-POSITION	318, 323, 325
SENSOR GP-POSITION (LINEAR)	333
SHAFT GP-AXLE	192
SHAFT GP-COUNTER (TRANSMISSION)	239, 244, 249
SHAFT GP-DRIVE–FRONT	230
SHAFT GP-DRIVE–REAR	230
SHAFT GP-IDLER (TRANSMISSION)	239, 244, 249
SHAFT GP-INPUT	231
SHAFT GP-OUTPUT–FRONT	234
SHAFT GP-OUTPUT–REAR	233, 235
SHAFT GP-PUMP DRIVE	405
SHIPPING AR-BUCKET	763
SOFTWARE GP-MACHINE	130
SOFTWARE GP (MAST)	133
SOFTWARE (RECEIVER)	133
SPRING AS-GAS	746, 748
STABILIZER GP-BACKHOE	460
STARTING MOTOR GP-ELECTRIC	154
STARTING MOTOR GP-ELECTRIC–12-VOLT	152
STICK AS	461
STICK GP	462
STICK GP-EXTENDABLE	464
STICK GP-HOE	466
STRAINER (SUCTION)	199, 203
STRAINER (SUCTION) (SUCTION)	202
SUSPENSION GP-SEAT	729, 732
SWITCH AS	271
SWITCH AS-COLUMN (HD LIGHT, TURN SIG, WDO WIPER)	181, 185
SWITCH AS-FOOT	156
SWITCH AS-LIMIT (SERVICE BRAKE)	273
SWITCH AS-LIMIT (SUSPENSION SEAT)	729
SWITCH AS-PRESSURE (ENGINE OIL)	158
SWITCH AS-PRESSURE (REFRIGERANT)	159
SWITCH AS-PRESSURE (RIDE CONTROL)	190
SWITCH AS-ROCKER (AIR CONDITIONER, HEATER)	159
SWITCH AS-ROCKER (ALL WHEEL DRIVE)	155
SWITCH AS-ROCKER (BLOWER FAN SPEED)	173
SWITCH AS-ROCKER (BLOWER FAN SPEED)	159

INDEX

Name	Page
SWITCH AS-ROCKER (FLOODLIGHTS, FRONT)	140, 142, 144
SWITCH AS-ROCKER (FLOODLIGHTS, REAR)	140, 142, 144
SWITCH AS-ROCKER (HAZARD WARNING LIGHTS)	185
SWITCH AS-ROCKER (HAZARD WARNING LIGHTS)	181
SWITCH AS-ROCKER (HEATER)	173
SWITCH AS-ROCKER (HORN)	283
SWITCH AS-ROCKER (STARTING AID)	162
SWITCH AS-ROCKER (TRANSMISSION NEUTRAL LOCK)	165
SWITCH AS-ROCKER (WARNING BEACON)	162
SWITCH AS-ROCKER (WIPER, WASHER, REAR)	754
SWITCH AS-ROLLER (KICKOUT, POSITIONER)	175
SWITCH AS-ROLLER (KICKOUT, POSITIONER)	177, 179
SWITCH AS-START (KEY)	162
SWITCH AS (STARTING MOTOR)(12-VOLT)	152
SWITCH GP-ALL WHEEL DRIVE–INCLUDES RELAY	155
SWITCH GP-DIFFERENTIAL LOCK–CENTER PIVOT	156
SWITCH GP-DISCONNECT–BATTERY	157
SWITCH GP-PRESSURE–ENGINE OIL	158
SWITCH GP-PUSH BUTTON (NEUTRALIZER, DOWNSHIFT)	674, 676, 686
SWITCH-TEMPERATURE	167
SWITCH-TEMPERATURE (AIR CONDITIONER)	642
SWITCH-TEMPERATURE (ENGINE COOLANT)	167
SWITCH-TEMPERATURE (FUEL)	115
SYNCHRONIZER GP	233, 235

T

Name	Page
TACHOMETER GP-ELECTRIC	736
TACHOMETER GP-ELECTRIC (12-VOLT)	162
TANK & MTG GP-FUEL–INCLUDES STEP	120
TANK & MTG GP-HYDRAULIC	406, 408
TANK GP-COOLANT	80
TANK GP-EXPANSION–COOLANT	80
TANK GP-FUEL	121, 122
TANK GP-WINDOW WASHER	739, 752
THUMB AR–BACKHOE	586
THUMB AR–BACKHOE, HYDRAULIC COMMON	633, 634
THUMB AR–BACKHOE, MANUAL COMMON	635
THUMB AR–24-IN, HYD, HEAVY-DUTY	588, 589
THUMB AR–24-IN, HYD, HEAVY-DUTY, WITH COUPLER	590, 591
THUMB AR–24-IN, HYD, ROCK	592, 593
THUMB AR–24-IN, HYD, WITH COUPLER	600, 601
THUMB AR–24-IN, MAN, HEAVY-DUTY	596
THUMB AR–24-IN, MAN, HEAVY-DUTY, WITH COUPLER	597
THUMB AR–24-IN, MAN, ROCK	598
THUMB AR–24-IN, MAN, ROCK, WITH COUPLER	594, 595, 599
THUMB AR–24-IN, MANUAL	586
THUMB AR–24-IN, MANUAL, WITH COUPLER	586, 622
THUMB AR–24-IN, ROCK, MANUAL	586
THUMB AR–24-IN, ROCK, MANUAL, WITH COUPLER	587
THUMB AR–30-IN, HYD, HEAVY-DUTY	606, 607
THUMB AR–30-IN, HYD, HEAVY-DUTY, WITH COUPLER	608, 609
THUMB AR–30-IN, HYD, ROCK	610, 611
THUMB AR–30-IN, HYD, ROCK, WITH COUPLER	612, 613
THUMB AR–30-IN, HYD, WITH COUPLER	602, 603
THUMB AR–30-IN, MAN, HEAVY-DUTY, WITH COUPLER	625
THUMB AR–30-IN, MAN, ROCK, WITH COUPLER	626
THUMB AR–30-IN, MAN, WITH COUPLER	627
THUMB AR–30-IN, MANUAL, HEAVY-DUTY	623
THUMB AR–30-IN, MANUAL, ROCK	624
THUMB AR–36-IN, HYD, HEAVY-DUTY	614, 615

INDEX

Name	Page
THUMB AR–36-IN, HYD, HEAVY-DUTY, WITH COUPLER	616
	617
THUMB AR–36-IN, HYD, ROCK	618
	619
THUMB AR–36-IN, HYD, ROCK, WITH COUPLER	620
	621
THUMB AR–36-IN, HYD, WITH COUPLER	604
	605
THUMB AR–36-IN, MAN, HEAVY-DUTY	628
THUMB AR–36-IN, MAN, HEAVY-DUTY, WITH COUPLER	630
THUMB AR–36-IN, MAN, ROCK	629
THUMB AR–36-IN, MAN, ROCK, WITH COUPLER	631
THUMB AR–36-IN, MAN, WITH COUPLER	632
THUMB GP–BACKHOE	636
THUMB GP–BACKHOE, COMMON	637
TIE ROD GP	192
	281
TIP GP-BUCKET (SOIL)	558
	559
	560
	561
TIP GP-CHISEL	538
	539
	540
	541
TIP GP-PENETRATION	518
	519
	520
	521
	522
	523
	524
	525
	526
	527
	528
	529
	530
	531
	532
	533
	534
	535
	536
	537
	546
	547
	548
	549
	550
	551
	552
	553
	554
	555
	556
	557
TOOTH GP-UNI	638
TRANSMISSION & MOUNTING GP	236
	237
TRANSMISSION AR-DIRECT DRIVE–ALL WHEEL DRIVE	238
TRANSMISSION AR-DIRECT DRIVE–2-WHEEL DRIVE	238
TRANSMISSION GP-DIRECT DRIVE–ALL WHEEL DRIVE, STANDARD SHIFT	249
TRANSMISSION GP-DIRECT DRIVE–2-WHEEL DRIVE, STANDARD SHIFT	239
	244
TRIM GP-CAB	737
TURBOCHARGER GP	92

V

V-BELT (AIR CONDITIONER)	68
V-BELT SET (INCLUDES 2-BELTS) (ALTERNATOR)	67
	68
VALVE AR-BANK 2	410
VALVE AR-BANK 3	410
VALVE AR-BANK 6	410
VALVE AR-BANK 7	411
VALVE AR-BANK 8	411
VALVE AS-MANUAL (DIRECTIONAL FLOW)	349
VALVE AS-MANUAL (DIRECTIONAL FLOW)	352
VALVE AS-RELIEF	664
VALVE AS-WATER	639
	695
VALVE GP-BANK 2	412
VALVE GP-BANK 3	413
VALVE GP-BANK 6	414
VALVE GP-BANK 7	416
VALVE GP-BANK 8	418
VALVE GP-BRAKE CONTROL	273
VALVE GP-CONTROL–AUXILIARY	420
	424
VALVE GP-CONTROL–BOOM	432
VALVE GP-CONTROL–BUCKET	429
VALVE GP-CONTROL–EXTENDABLE STICK	425
	426
VALVE GP-CONTROL–LIFT	423
VALVE GP-CONTROL–STICK	427
	428
VALVE GP-CONTROL–SWING	430
VALVE GP-CONTROL–TILT	421
	422

INDEX

Name	Page
VALVE GP-CONTROL (STABILIZER)	416
	418
VALVE GP-CONTROL (STABILIZER)	414
VALVE GP-PILOT RELIEF	425
VALVE GP-RELIEF	239
	244
	254
	391
	392
	420
	422
	424
	425
	426
	427
	428
	429
	430
	432
VALVE GP-RELIEF (TILT CYLINDER HEAD END)	421
VALVE GP-RELIEF (TILT CYLINDER ROD END)	421
VALVE GP-RELIEF (TORQUE CONVERTER INLET)	249
VALVE GP-SHUTTLE	434
VALVE GP-SOLENOID	239
	244
VALVE GP-SOLENOID (ACCUMULATOR)	393
VALVE GP-SOLENOID (ALL WHEEL DRIVE, CLUTCH ONE)	249
VALVE GP-SOLENOID (FORWARD)	239
	244
VALVE GP-SOLENOID (FORWARD, REVERSE)	249
VALVE GP-SOLENOID (RIDE CONTROL, SWITCH)	393
VALVE GP-SOLENOID (12-VOLT)	107
	114
VALVE GP-TIRE	255
	256
VALVE MECHANISM GP	52
	53
VALVE-SHUTOFF	77
	79

W

Name	Page
WASHER GP-WINDOW	739
WHEEL & TIRE AR	256
	257
	258
WHEEL & TIRE AR–ALL WHEEL DRIVE, BIAS	259
WHEEL & TIRE AR–2-WHEEL DRIVE, BIAS	258
WHEEL & TIRE GP	263
	264
WHEEL & TIRE GP–FRONT	259
	260
	261
	266
WHEEL & TIRE GP–LH	259
	260
	262
	264
	266
	267
	268
	269
	270
WHEEL & TIRE GP–REAR	262
	263
	265
	267
	268
	269
	270
WHEEL & TIRE GP–REAR, LH	265
WHEEL & TIRE GP–REAR, RH	265
WHEEL & TIRE GP–RH	260
	261
	262
	264
	266
	267
	268
	269
	270
WINDOW GP-CAB–REAR	746
	748
WINDOW GP-CAB–RH	741
WINDOW GP-CAB–UPPER, LH	742
WINDOW GP-CAB–UPPER, RH	744
WINDOW GP-DOOR–LH	750
WINDOW GP-DOOR–RH	751
WIPER & WASHER GP-WINDOW	752
WIPER GP-WINDOW	754
WIRE AS	7
WIRING GP-AIR CONDITIONER	159
WIRING GP-CONSOLE–FRONT	165
WIRING GP-CONSOLE–SIDE	162
WIRING GP-ENGINE	167
WIRING GP-EXTENDABLE STICK	170
	464
WIRING GP-GRADE CONTROL–ACCUGRADE	171
WIRING GP-HEATER	173
WIRING GP-KICKOUT & POSITIONER	175
	177
	179
WIRING GP-PLATFORM	181

INDEX

Name	Page	Name	Page
	185		
WIRING GP-REAR–BACKUP ALARM	189		
WIRING GP-RIDE CONTROL	190		

INDEX

Désignation — Page

A

ACCOUDOIR (ENS) (DROITE) 727, 728
ACCOUDOIR (ENS) (GAUCHE) 727, 728
ACCUMULATEUR - COMMANDE DE TRANSLATION (ASS) 314
ACCUMULATEUR - COMMANDE DE TRANSLATION (ASS) 313
ACCUMULATEUR - RÉFRIGÉRANT 709
ALTERNATEUR DE CHARGE (ASS) 123, 124
ALTERNATEUR DE CHARGE (ASS) (100A) 124
ALTERNATEUR DE CHARGE (ASS) (100A, AVEC MONTAGE) 10
AMPOULE (PROJECTEUR AU XÉNON 12V, 55W) 139
AMPOULE (12-V, 5-W) 142, 144
AMPOULE (12 VOLTS) 162, 704, 736
AMPOULE (12 VOLTS) 706
AMPOULE (12V, 21W) 142, 144
AMPOULE (12V, 55W) 136, 137, 138
ARBRE A CAMES (ASS) 11
ARBRE DE RENVOI (ASS) (BOÎTE DE VITESSES) 239
ARBRE DE RENVOI (ASS) (BOÎTE DE VITESSES) 244, 249
ARBRE DE SORTIE (ASS) 233, 234, 235
ARBRE D'ENTRAÎNEMENT (ASS) 230
ARBRE D'ENTRAÎNEMENT (ASS) 230
ARBRE D'ENTRÉE (ASS) 231
ARBRE D'ESSIEU (ASS) 192
ARBRE INTERMÉDIAIRE (ASS) (BOÎTE DE VITESSES) 239, 244, 249
AUTOCOLLANT (COMMANDE DE GODET) 681
AUTOCOLLANT (COMMANDE DE TEMPÉRATURE) 639, 695
AUTOCOLLANT (CONTACTEUR DE DÉMARRAGE, LIRE LE GUIDE D'UTILISATION ET D'ENTRETIEN) 760
AUTOCOLLANT DE MISE EN GARDE (ACCUM, HAUTE PRESSION, LIRE LE GUIDE D'UTILISATION ET D'ENTRETIEN) 313
AUTOCOLLANT DE MISE EN GARDE (DÉMARRAGE CABLE VOLANT, LIRE LE GUIDE D'UTILISATION ET D'ENTRETIEN, ÉTATS-UNIS) 759
AUTOCOLLANT DE MISE EN GARDE (HAUTE PRESSION, LIRE LE GUIDE D'UTILISATION ET D'ENTRETIEN) 313
AUTOCOLLANT DE MISE EN GARDE (LIQUIDE CHAUD SOUS PRESSION, LIRE LE GUIDE D'UTILISATION ET D'ENTRETIEN) . . . 760
AUTOCOLLANT DE MISE EN GARDE (PRESSION HYDRAULIQUE, LIRE LE GUIDE D'UTILISATION ET D'ENTRETIEN, ÉTATS-UNIS) 349, 352
AUTOCOLLANT DE MISE EN GARDE (PRESSION HYDRAULIQUE, LIRE LE GUIDE D'UTILISATION ET D'ENTRETIEN, ÉTATS-UNIS) 347
AUTOCOLLANT DE MISE EN GARDE (VÉRIN HAUTE PRESSION, LIRE LE GUIDE D'UTILISATION ET D'ENTRETIEN) 379, 381
AUTOCOLLANT D'IDENTIFICATION (CAT) 312
AUTOCOLLANT D'IDENTIFICATION (CATERPILLAR, ARRIÈRE) 656
AUTOCOLLANT D'IDENTIFICATION (CATERPILLAR, AVANT) 646, 647, 657
AUTOCOLLANT D'IDENTIFICATION (CATERPILLAR, AVANT) 645
AUTOCOLLANT D'IDENTIFICATION (COMMANDE DE STABILISATEUR) 645, 646, 647, 656, 657
AUTOCOLLANT D'IDENTIFICATION (HUILE HYDRAULIQUE) 273
AUTOCOLLANT D'IDENTIFICATION (NUMÉRO D'ASSEMBLAGE) 642, 697
AVERTISSEMENT DE PROFIL LONGITUDINAL (ASS) 171
AXE DE CULBUTEUR (ASS) 51
AXE DU COUPLER (ASS) 584, 585
AXE (ENS) (SUPÉRIEUR) 192

* TRADUCTION NON DISPONIBLE AU MOMENT DE LA PUBLICATION

INDEX

Désignation	Page

B

BAÏONNETTE- NIVEAU DE CARBURANT (ASS) 162
BALAI D'ESSUIE-GLACE (ENS) (500-MM) (ARRIÈRE) 754
BALAI D'ESSUIE-GLACE (ENS) (*600-MM) (AVANT) 754
BALAI D'ESSUIE-GLACE (ENS) (*600-MM) (AVANT) 752
BANDE AUTOCOLLANTE (JAUNE) 312
BANDE AUTOCOLLANTE (JAUNE) 309
BARRE D'ACCOUPLEMENT (ASS) 192
281
BATI - CHARGEUSE (ASS) 303
BÂTI D'ORIENTATION (ASS) 305
BATTERIE ET CÂBLAGE 125
127
128
BATTERIE (12V, SANS ENTRETIEN) 125
127
128
BENNE PRENEUSE TOUS-TRAVAUX (ENS) 570
571
BIELLETTE DE SERRE-JOINT (ASS) 596
597
599
622
623
624
625
626
627
628
630
631
632
635
BIELLETTE DE SERRE-JOINT (ASS) 440
BLINDAGE D'ARBRE DE TRANSMISSION (ASS) 307
BLOC-CYLINDRES (ASS) 25
27
28
BOITE DE VITESSES ET MONTAGE (ASS) 236
237
BOÎTE MÉCANIQUE (ASS) 239
244
249
BOITE MECANIQUE (VERSION) 238
BOÎTIER D'ESSIEU (ASS) 219
220
221
BOÎTIER-RENIFLARD (VILEBREQUIN) 55
BOUCHON DE GOULOTTE DE CARBURANT (ASS) (AÉRÉ, VERROUILLABLE) 122
BOUCHON DE MOTEUR (ASS) 47
48
49
BOUCHON DE REMPLISSAGE (HUILE HYDRAULIQUE) 406
408
BOUCHON DE RÉSERVOIR DE LIQUIDE DE REFROIDISSEMENT (ENS) 80
BOUCHON DE VIDANGE (ENS) (MAGNÉTIQUE) 192
194
BOUCHON DE VIDANGE (ENS) (MAGNÉTIQUE) 205
BOUCHON DE VIDANGE (HUILE MOTEUR) 42
BOUDIN DE ROUE (ASS) 194
215
216
BOUDIN DE ROUE (ASS) 281
BOUGIE DE PRÉCHAUFFAGE (ASS) 131
132
BOUGIE DE PRECHAUFFAGE (12V) 131
132
BOULONNERIE DE SOUPAPE (ASS) 342
BOULONNERIE DE SOUPAPE (ASS) (RANGÉE) 410
BOUTON DE DIRECTION (ASS) 286
BRAS (ASS) 462
BRAS DE LEVAGE (ASS) 435
BRAS DE PELLE RETRO (ASS) 466
BRAS (ENS) 461
BRAS TÉLESCOPIQUE (ASS) 464

C

CABINE - REVÊTEMENT (ASS) 704
706
CABINE (ENS) 648
CABINE-FAISCEAU DE CÂBLES (ENS) 739
CABINE-FAISCEAU DE CÂBLES (ENS) 752
CABINE ROPS FERMÉE (VERSION) 645
646
647
CABLAGE - CLIMATISEUR (ASS) 159
CABLAGE - PLATE-FORME (ASS) 181
185
CABLAGE AR (ASS) 189
CÂBLAGE DE BRAS TÉLESCOPIQUE (ASS) . . . 170
464
CÂBLAGE DE COMMANDE DE TRANSLATION (ASS) 190
CABLAGE DE CONSOLE (ASS) 165

* TRADUCTION NON DISPONIBLE AU MOMENT DE LA PUBLICATION

INDEX

Désignation	Page
CABLAGE DE CONSOLE (ASS)	162
CABLAGE DE MOTEUR (ASS)	167
CÂBLAGE DE PRISE DE FORCE ET LIMITEUR (ASS)	177
	179
CÂBLAGE DE PRISE DE FORCE ET LIMITEUR (ASS)	175
CABLAGE DU CHAUFFAGE DE CABINE (ASS)	173
CABLAGE MOTEUR (ENS)	167
CACHE-SOUPAPES (ASS)	15
	17
	19
CACHE-SOUPAPES (ASS)	13
CADENAS (ASS) (PROTECTION ANTIVANDALISME)	758
CANALISATIONS - GODET TOUS-TRAVAUX (ASS)	371
	373
CANALISATIONS A COMMANDE PILOTE (ASS)	375
CANALISATIONS-CHARGEUSE AUXILIAIRE (ASS)	369
CANALISATIONS DE BRAS (ASS)	387
CANALISATIONS DE CARBURANT (ASS)	101
	103
	105
CANALISATIONS DE CHAUFFAGE (ASS)	708
CANALISATIONS DE COMMANDE DE MARCHE	379
	381
CANALISATIONS DE DIRECTION (ASS)	287
	289
CANALISATIONS DE POMPE (ASS)	377
CANALISATIONS DE RÉCHAUFFEUR DE LIQUIDE DE REFROIDISSEMENT	708
	709
CANALISATIONS DE REFROIDISSEUR DE TRANSMISSION (ASS)	70
CANALISATIONS DE REFROIDISSEUR D'HUILE HYDR. (ASS)	365
CANALISATIONS DE STABILISATEUR (ASS)	383
	385
CANALISATIONS DE VÉRIN DE LEVAGE (ASS)	367
CANALISATIONS DE VIDANGE (ASS)	362
CANALISATIONS D'HUILE DE TRANSMISSION (ASS)	223
CANALISATIONS D'ORIENTATION (ASS)	388
CANALISATIONS DU BRAS TELESCOPIQUE (ASS)	363
CANALISATIONS DU FILTRE A CARBURANT (ASS)	106
CANALISATIONS DU VÉRIN D'INCLINAISON (ASS)	389
CANALISATIONS-RÉCHAUFFEUR ET CLIMATISEUR (ASS)	709
CANALISATIONS SECONDAIRES DE PELLE RÉTRO (ASS)	347
	349
	352
CAPOT DU MOTEUR (ASS)	311
	312
CAPOT ET PROTECTION (ASS)	309
CAPTEUR DE POSITION (ENS) (ANGLE)	699
CAPTEUR DE POSITION (ENS) (PIVOTEMENT DE FLÈCHE)	699
CAPTEUR DE TEMPÉRATURE (ENS) (LIQUIDE DE REFROIDISSEMENT DU MOTEUR)	167
CAPTEUR DE TEMPÉRATURE (ENS) (12 VOLTS)	239
	245
	250
CAPTEUR D'HUMIDITÉ (ASS) (SÉPARATEUR D'EAU)	118
CARTER AV (ASS)	35
	37
CARTER DE BOITE	202
	203
CARTER DE BOÎTE DE VITESSES (ENS)	197
	199
	200
CARTER DE DIFFÉRENTIEL (ENS)	205
CARTER DE VOLANT (ASS)	34
CARTER ET BRIDE D'ESSIEU (ASS)	217
	218
CEINTURE DE SECURITE (ASS)	721
	722
CHAPEAU (*BREATHER VAVLE)	19
CHAPEAU (ENS) (GOULOTTE DE REMPLISSAGE D'HUILE MOTEUR)	58
CHAPEAU (SOUPAPE DE RENIFLARD)	15
CHARGEUSE (VERSION)	6
CHAUFFAGE DE CABINE (ASS)	695
	697
CLAPET DE DECHARGE	664
CLAPET DE DECHARGE (ASS)	254
	391
	392
	420
	422
	424
	425
	426
	427
	428

* TRADUCTION NON DISPONIBLE AU MOMENT DE LA PUBLICATION

INDEX

Désignation	Page
	429
	430
	432
CLAPET DE DECHARGE (ASS)	239
	244
CLAPET DE DECHARGE (ASS) (CÔTÉ TÊTE DU VÉRIN D'INCLINAISON)	421
CLAPET DE DECHARGE (ASS) (CÔTÉ TIGE DU VÉRIN D'INCLINAISON)	421
CLAPET DE DECHARGE (ASS) (ENTRÉE DU CONVERTISSEUR DE COUPLE)	249
CLAPET DE DÉCHARGE PILOTE (ASS)	425
CLÉ (COUPE-BATTERIE)	157
CLIGNOTANT (ENS) (12 VOLTS)	181
	185
CLIMATISEUR (ASS)	642
CLIMATISEUR ET MONTAGE (ASS)	639
COLLECTEUR - COMMANDE (ASS)	391
	392
COLLECTEUR DE COMMANDE ANTITANGAGE (ASS)	393
COLLECTEUR D'ÉCHAPPEMENT (ASS)	89
COMMANDE D'ALTERNATEUR HYDRAULIQUE (ASS)	2
COMMANDE DE BOITE DE VITESSES (ASS)	686
COMMANDE DE DIRECTION (ASS)	283
COMMANDE DE DIRECTION (ASS)	284
COMMANDE DE FAISCEAU (ENS)	699
COMMANDE DE FREIN DE STATIONNEMENT (ASS)	271
	272
COMMANDE DE POIGNÉE (ASS)	686
COMMANDE DE RÉGULATEUR (ASS)	94
	95
	96
	98
COMMANDE DE STABILISATEUR (ASS) ET MONTAGE	672
COMMANDE DE TRANSLATION (VERSION)	314
COMMANDE HYDRAULIQUE DE PÉDALE (ASS)	684
	685
COMMANDE HYDRAULIQUE MANUELLE (ASS)	681
COMMANDE HYDRAULIQUE MANUELLE (ASS)	672
	674
	676
	679
	683
COMMANDE NON PROGRAMMEE (ASS) (MACHINE)	130
COMMANDE NON PROGRAMMEE (ASS) (MONITEUR)	130
COMPARTIMENT DE BATTERIE (ASS)	292
COMPRESSEUR D'AIR (ASS) (SIEGE A SUSPENSION)	729
	732
COMPRESSEUR DE REFRIGERANT (ASS)	664
COMPRESSEUR ET MONTAGE - RÉFRIGÉRANT (ASS)	662
COMPTE-TOURS ÉLECTRIQUE (ASS)	736
COMPTE-TOURS ÉLECTRIQUE (ASS) (12V)	162
CONDENSATEUR ET MONTAGE (RÉFRIGÉRANT)	665
CONSOLE DE CONDUITE (ASS)	666
	668
	670
CONSOLE DE FAISCEAU (ENS)	165
CONSOLE DE FAISCEAU (ENS) (CONSOLE LATÉRALE)	162
CONTACTEUR DE BOUTON-POUSSOIR (ASS) (NEUTRALISATION DE RÉTROGRADATION)	686
CONTACTEUR DE BOUTON-POUSSOIR (ASS) (NEUTRALISATION DE RÉTROGRADATION)	674
	676
CONTACTEUR DE COLONNE (ENS) (PHARE AVANT, CLIGNOTANT, ESSUIE-GLACE)	181
	185
CONTACTEUR DE TRACTION INTÉGRALE (ASS)	155
CONTACTEUR DE VERROUILLAGE DE DIFFÉRENTIEL (ASS)	156
CONTACTEUR (ENS)	271
CONTACTEUR (ENS) (MOTEUR DE DÉMARRAGE)(12-VOLTS)	152
CONTREPOIDS (ASS)	293
	294
	295
COUPLE CONIQUE ET DIFFÉRENTIEL	207
COUPLEUR EXPRESS (ASS)	573
	574
	575
	576
	577
COUPLEUR EXPRESS (VERSION)	572
COURONNE CONIQUE ET PIGNON	205
COURONNE DENTEE	194
	217
	218
COURONNE ET DIFFERENTIEL (ASS)	205
COURROIE TRAPEZOIDALE (CLIMATISEUR)	68
COUVERCLE DE CULASSE (ASS)	12

* TRADUCTION NON DISPONIBLE AU MOMENT DE LA PUBLICATION

INDEX

Désignation	Page
COUVERCLE DE MOTEUR D'ESSUIE-GLACE (ASS)	688
CREPINE (ASPIRATION)	199
	203
CREPINE (ASPIRATION) (ASPIRATION)	202
CULASSE (ASS)	29
	30
	31
CULBUTERIE (ASS)	52
	53

D

DÉMARREUR ÉLECTRIQUE (ASS)	154
DÉMARREUR ÉLECTRIQUE (ASS)	152
DENT MONOBLOC (ASS)	638
DIAPHRAGME (CONTACTEUR DE PRESSION DE VILEBREQUIN)	13
	15
	17
	19
DIFFERENTIEL (ASS)	207
	208
DISJONCTEUR DE SECURITE (ENS) (FREIN DE MANOEUVRE)	273
DISJONCTEUR DE SECURITE (ENS) (SIEGE A SUSPENSION)	729
DISTRIBUTEUR (ASS)	420
	426
DISTRIBUTEUR (ASS)	421
	422
	423
	424
	425
	427
	428
	429
	430
	432
DISTRIBUTEUR (ASS) (STABILISATEUR)	414
	416
	418
DISTRIBUTEUR DE FREIN (ASS)	273
DISTRIBUTEUR DOUBLE ÉLÉMENT (ASS)	412
DISTRIBUTEUR TRIPLE ÉLÉMENT (ASS)	413
DISTRIBUTEUR 6 ÉLÉMENTS (ASS)	414
DISTRIBUTEUR 6 ÉLÉMENTS (VERSION)	410
DISTRIBUTEUR 7 ÉLÉMENTS (ASS)	416
DISTRIBUTEUR 8 ÉLÉMENTS (ASS)	418
DISTRIBUTEUR 8 ÉLÉMENTS (VERSION)	411
*DRYER AS-AIR	709

E

EAU DES CHEMISES - RECHAUFFEUR (ASS)	135
ÉCLAIRAGE - GYROPHARE (ASS)	146
ÉCLAIRAGE - PROJECTEURS ET CLIGNOTANTS (ASS)	140
	144
ÉCLAIRAGE - PROJECTEURS ET CLIGNOTANTS (ASS)	142
ECLAIRAGE DE GODET (ASS)	357
	359
ÉLECTRONIQUE - MACHINE (ENS)	130
ÉLECTRONIQUE-MONITEUR (ASS)	130
ÉLÉMENT DE FILTRE À AIR (ENS) (CLIMATISATION, CHAUFFAGE DE CABINE)	639
ÉLÉMENT DE FILTRE À AIR (ENS) (CLIMATISATION, CHAUFFAGE DE CABINE)	695
ÉLÉMENT DE FILTRE À AIR (ENS) (PRINCIPAL)	84
ÉLÉMENT DE FILTRE À AIR (PRINCIPAL)	85
ÉLÉMENT DE FILTRE À AIR (SECONDAIRE)	84
	85
ÉLÉMENT DE FILTRE À CARBURANT	100
ÉLÉMENT DU RÉCHAUFFEUR D'EAU DES CHEMISES (ENS) (120-VOLT, 1000-WATT)	135
ENTRAÎNEMENT D'ACCOUPLEMENT FLEXIBLE (ASS)	210
ENTRAÎNEMENT DE VENTILATEUR (ASS)	32
ENTRAÎNEMENT ET MONTAGE DE POMPE (ASS)	341
ENTRAÎNEMENT POUR COURROIE	139
ESSIEU AR (ASS)	194
ESSIEU AV (ASS)	281
ESSIEU MOTEUR ET DIRECTION (ASS)	192
ESSUIE-GLACE (ASS)	754
ESSUIE-GLACE ET LAVE-GLACE	752
ÉTRIER DE FREIN HYDRAULIQUE (ASS)	194

F

FAISCEAU ARRIÈRE (ENS)	189
FAISCEAU DE CABLES - CAPTEUR (ENS)	2
	3
FAISCEAU DE CABLES - CAPTEUR (ENS)	4
FAISCEAU DE CABLES - CAPTEUR (ENS) (ACCUGRADE)	5
FAISCEAU DE CABLES - CAPTEUR (ENS) (*BOOM, STICK, BUCKET)	171
FAISCEAU DE CABLES - CAPTEUR (ENS) (BRAS TÉLESCOPIQUE)	170

* TRADUCTION NON DISPONIBLE AU MOMENT DE LA PUBLICATION

INDEX

Désignation	Page
FAISCEAU DE CABLES - CAPTEUR (ENS) (ORIENTATION)	171
FAISCEAU DE CABLES DE LA PLATE-FORME	181, 185
FAISCEAU DE CABLES DE LA PLATE-FORME (AFFICHAGE)	171
FAISCEAU DE CABLES (ENS)	179
FAISCEAU DE CABLES (ENS) (POSITIONNEUR DE LIMITEUR)	175, 177, 179
FAISCEAU DE CABLES (ENS) (RÉSISTANCE)	171
FAISCEAU DE CABLES (ENS) (VERROUILLAGE DE DIFFÉRENTIEL)	156
FAISCEAU DE CHÂSSIS (ENS) (ECM)	171
FAISCEAU DE CHAUFFAGE ET CLIMATISATION	159, 173, 642
FAISCEAU DE CHAUFFAGE ET CLIMATISATION (COMPRESSEUR)	159
FAISCEAU DE CHAUFFAGE ET CLIMATISATION (PUISSANCE)	159
FAISCEAU DE COMMANDE ANTITANGAGE (ENS)	190, 729, 732
FAISCEAU DE RÉSERVOIR DE CARBURANT (ENS) (COUPURE D'ALIMENTATION)	8
FAISCEAU D'ÉCLAIRAGE (ENS) (TOIT)	140, 142, 144
FAISCEAU DU REFROIDISSEUR D'HUILE (ENS) (BOITE DE VITESSE)	77
FAISCEAU DU REFROIDISSEUR D'HUILE (ENS) (HYDRAULIQUE)	77
FAISCEAU DU REFROIDISSEUR D'HUILE (ENS) (*TRANSMISSION, 9-ROW)	79
FIL (ENS)	7
FILTRE - ELECTRONIQUE (ASS)	649, 651, 653
FILTRE - RENIFLARD (RÉSERVOIR HYDRAULIQUE)	406, 408
FILTRE - SÉPARATEUR D'EAU ET DE CARBURANT (ENS)	118
FILTRE A AIR (ASS)	81, 82, 84, 85
FILTRE A CARBURANT (ASS)	100
FILTRE A CARBURANT (ENS) (TAMIS DE GOULOTTE DE REMPLISSAGE)	122
FILTRE A HUILE (ASS) (HYDRAULIQUE)	344
FILTRE À HUILE (ENS) (EFFICACITÉ STANDARD)	228, 229
FILTRE À HUILE (ENS) (LIQUIDE RÉSISTANT AU FEU) (DÉRIVATION DU FILTRE À HUILE)	344
FILTRE A HUILE (ENS) (RECIRCULATION)	642, 697
FILTRE À HUILE (ENS) (ULTRA-GRANDE EFFICACITÉ) (DÉRIVATION DU FILTRE À HUILE)	344
FILTRE À HUILE MOTEUR (ASS)	10, 57
FILTRE A HUILE MOTEUR (ENS)	10, 58
FILTRE DE SÉPARATEUR D'EAU ET DE CARBURANT (ASS)	100
FLECHE - CANALISATIONS	355
FLECHE (ASS)	437
FLEXIBLE DE RADIATEUR (INFÉRIEUR)	73
FLEXIBLE DE RADIATEUR (SUPÉRIEUR)	73
FLEXIBLE (RENIFLARD DE CARTER MOTEUR)	13
FOURCHE (ASS)	580
FREIN - MAITRE-CYLINDRE (ASS)	276, 277
FREIN DE MANOEUVRE - COMMANDE (ASS)	273
FUSIBLE (10A)	139, 148
FUSIBLE (15A)	148
FUSIBLE (20A)	148
FUSIBLE (40A)	149
FUSIBLE (60A)	150, 151, 182, 186

G

GARDE-BOUE AR (ASS)	299
GARDE-BOUE AV (ASS)	298
GARNITURE POUR CABINE (ASS)	737
GLACE DE PORTIÈRE (ASS)	750, 751
GODET - MONTAGE (ASS)	582
GODET - VERSION D'EXPÉDITION	763
GODET NORMAL (ASS)	511, 512, 513

* TRADUCTION NON DISPONIBLE AU MOMENT DE LA PUBLICATION

INDEX

Désignation	Page
	514
	515
	516
	517
GODET NORMAL (ENS)	471
	473
	474
	476
	478
GODET NORMAL (VERSION)	468
GODET RETRO (ASS)	519
	520
	521
	522
	523
	524
	525
	526
	527
	528
	529
	530
	531
	532
	533
	534
	535
	536
	537
	538
	539
	540
	541
	542
	543
	544
	545
	546
	547
	548
	549
	550
	551
	552
	553
	554
	555
	556
	557
	558
	559
	560
	561
GODET RETRO (ASS)	518
GODET RETRO (ENS)	498
	499
	500
	501
	502
	503
	504
	505
	506
	507
	508
	509
	510
GODET RETRO (ENS)	479
	480
	481
	482
	483
	484
	485
	486
	487
	488
	489
	490
	491
	492
	493
	494
	495
	496
	497
GODET TOUS-TRAVAUX (ASS)	562
	563
	564
	565
GODET TOUS-TRAVAUX (VERSION)	468
	469
	470
GOULOTTE DE REMPLISSAGE D'HUILE DE TRANSMISSION	211
	213
GRAISSEUR HYDRAULIQUE (ASS)	343

H

HUILE MOTEUR - CARTER (ASS)	42

I

INDICATEUR DE COLMATAGE (ASS) (AIR)	87

* TRADUCTION NON DISPONIBLE AU MOMENT DE LA PUBLICATION

INDEX

Désignation	Page
INDICATEUR DE COLMATAGE DE FILTRE A AIR	87
INDICATEUR DE COLMATAGE DE FILTRE À AIR (ASS)	7 87 88
INDICATEUR DE REMPLACEMENT DE FILTRE À AIR (ENS)	88
INDICATEUR (ENS) (*HIGH BEAM, TURN SIGNAL RH)	181 185
INDICATEUR (ENS) (*TURN SIGNAL LH, PARKING BRAKE)	181 185
INSTRUMENT - NIVEAU D'HUILE ET GOUL. DE REMPLIS.	58
INSTRUMENT DE TEMPÉRATURE DE LIQUIDE DE REFROIDISSEMENT (ASS)	162
INSTRUMENT DE TEMPÉRATURE D'HUILE (ASS) (CONVERTISSEUR DE COUPLE)	162
INTERRUPTEUR A PEDALE (ENS)	156
INTERRUPTEUR BALANCIER (ENS) (AUXILIAIRE DE DÉMARRAGE)	162
INTERRUPTEUR BALANCIER (ENS) (CLIMATISATION, CHAUFFAGE)	159
INTERRUPTEUR BALANCIER (ENS) (DIRECTION INTÉGRALE)	155
INTERRUPTEUR BALANCIER (ENS) (FEUX DE DÉTRESSE)	181 185
INTERRUPTEUR BALANCIER (ENS) (GYROPHARE)	162
INTERRUPTEUR BALANCIER (ENS) (KLAXON)	283
INTERRUPTEUR BALANCIER (ENS) (PROJECTEURS ARRIÈRE)	140 142 144
INTERRUPTEUR BALANCIER (ENS) (PROJECTEURS AVANT)	142 144
INTERRUPTEUR BALANCIER (ENS) (PROJECTEURS AVANT)	140
INTERRUPTEUR BALANCIER (ENS) (RECHAUFFEUR)	173
INTERRUPTEUR BALANCIER (ENS) (VERROUILLAGE DE LA TRANSMISSION AU POINT MORT)	165
INTERRUPTEUR BALANCIER (ENS) (VITESSE DU VENTILATEUR DE SOUFFLANTE)	159 173
INTERRUPTEUR BALANCIER (ENS) (*WIPER, WASHER, REAR)	754
INTERRUPTEUR DE DEMARRAGE (ENS) (CLAVETTE)	162
INTERRUPTEUR ROTATIF (LIMITEUR DE LEVAGE)	175 177 179

J

Désignation	Page
JAUGE DE NIVEAU D'HUILE (JAUGE BAÏONNETTE)	211 213
JAUGE DE NIVEAU D'HUILE (JAUGE BAÏONNETTE DE MOTEUR)	58
JEU DE COURROIES TRAPEZOIDALES (COMPREND 2 COURROIES) (ALTERNATEUR)	67 68
JOINT DE COUVERCLE (BOÎTIER)	37
JOINT PLAT	121
JOINT PLAT (CACHE-SOUPAPES)	13 15 17 19

K

Désignation	Page
KIT D'ARTICULATION	284
KIT DE BOUGIE (2 BROCHES)	165 189
KIT DE CROISILLON	192
KIT DE CROISILLON ET ROULEMENT (ARBRE DE TRANSMISSION)	230
KIT DE JOINTS	135 393
KIT DE JOINTS (ACCUMULATEUR)	313
KIT DE JOINTS (POMPE RÉGULATRICE, DIRECTION)	291
KIT DE PÉDALE D'INCLINAISON	284
KIT DE PORTEUR PLANÉTAIRE	226
KIT DE RÉPARATION (PÉDALE DE RÉGULATEUR)	716 717
KIT DE RÉSERVOIR DE FREIN	279
KIT DE ROULEMENT À GALETS	226
KIT D'ENTRETIEN	716 717

L

Désignation	Page
LAME DE COUPE (ASS)	578 579
LAME POUR LE REFOULEMENT (ENS)	566

* TRADUCTION NON DISPONIBLE AU MOMENT DE LA PUBLICATION

INDEX

Désignation	Page
	567
	568
	569
LAMPE - CLIGNOTANT DE DIRECTION (ASS)	142
	144
LAMPE - CLIGNOTANT DE DIRECTION (ASS) (STOP, ARRIÈRE, CLIGNOTANT)	140
LAMPE - GYROPHARE (ASS)	139
LAMPE - PHARE (ASS)	136
	137
	138
LAMPE - PHARE ET CLIGNOTANT	140
	142
	144
LAVE-GLACE - VITRE (ASS)	739
LEVIER DE COMMANDE MANUELLE	278
LEVIER DE DISTRIBUTEUR (ASS) (STABILISATEUR)	414
	416
	418
LEVIER DE RÉGULATEUR (ASS)	94
	95
	96
	98
	703
LIAISON-EXPÉDITION (ASS)	758
LIMITEUR DE LEVAGE ET RETOUR À L'ANGLE DE CAVAGE	345
LOGICIEL - MACHINE (ENS)	130
LOGICIEL (ASS) (MÂT)	133
LOGICIEL (RÉCEPTEUR)	133
LOQUET - PORTE DE CABINE ET GLACE	701
	702

M

MANOCONTACT	158
MANOCONTACT (ENS) (COMMANDE DE TRANSLATION)	190
MANOCONTACT (ENS) (HUILE MOTEUR)	158
MANOCONTACT (ENS) (RÉFRIGÉRANT)	159
MODULE D'ALIMENTATION (ENS)	133
MONTAGE - CAPTEUR (ASS)	147
MONTAGE DE BRAS (ASS)	448
MONTAGE DE CABINE (ASS)	714
MONTAGE DE CANALISATIONS (ASS)	399
MONTAGE DE MONITEUR (ASS)	699
	715
MONTAGE DE MOTEUR (ASS)	40
MONTAGE DE MOTEUR ET BOÎTE (ASS)	41
MONTAGE DE RADIATEUR ET REFROIDISSEUR D'HUILE (ASS)	73
MONTAGE DE VÉRIN (ASS)	396
	398
MONTAGE D'ESSIEU (ASS)	224
MONTAGE-DISTRIBUTEUR (ASS)	394
	395
MONTAGE DU MAT (ASS)	583
MOTEUR D'ESSUIE-GLACE (ASS)	713
MOTEUR D'ESSUIE-GLACE (ASS) (ARRIÈRE)	754
MOTEUR (VERSION)	7
	8
	9
MOTEUR (VERSION PRINCIPALE)	10
*MOUNTING & LINES GP-RADIATOR	72

O

OEILLETONS DE LEVAGE MOTEUR (ASS)	39

P

PANNEAU - FUSIBLES (ASS)	148
PELLE RÉTRO - BRAS NORMAL (VERSION)	3
	4
	5
PELLE RÉTRO - BRAS TÉLESCOPIQUE (VERSION)	1
	2
	3
PELLE RÉTRO - STABILISATEUR (ASS)	460
PISTON ET BIELLE (ASS)	44
PISTON ET BIELLE (ASS)	46
PLAFONNIER (ASS)	704
PLAFONNIER (ASS) (12 VOLTS)	706
PLAQUE	488
	492
PLAQUE D'INSTRUCTIONS (BATTERIE) (INTERRUPTEUR DE DÉCONNECTION)	128
PLAQUE (IDENTIFICATION) (CAT)	497
	499
	500
	501
	502
	508
PLAQUE (IDENTIFICATION) (OUTIL DE TRAVAIL)	512
	514
	518
	519
	520
	521
	522
	523
	524

* TRADUCTION NON DISPONIBLE AU MOMENT DE LA PUBLICATION

INDEX

Désignation	Page
	525
	526
	527
	528
	529
	530
	531
	532
	533
	534
	535
	536
	537
	538
	539
	540
	541
	553
	558
PLAQUE (IDENTIFICATION) (OUTIL DE TRAVAIL)	559
	560
	561
PLAQUE (IDENTIFICATION) (OUTIL DE TRAVAIL)	562
	563
	564
	565
PLAQUE SIGNALETIQUE	162
PLAQUE SIGNALÉTIQUE (ASS)	757
PLAQUE SIGNALETIQUE (NIVEAU DU GODET)	345
PLAQUES SIGNALETIQUES ET AUTOCOLLANTS (ASS)	758
	761
PNEU - GROUPE DE VALVE	255
	256
POCHE A DOCUMENTS (ASS)	661
POINTE DE BURIN (ASS)	538
	539
	540
	541
POINTE DE GODET (ASS) (SOL)	558
	559
	560
	561
POINTE PENETRATION	518
	519
	520
	521
	522
	523
	524
	525
	526
	527
	528
	529
	530
	531
	532
	533
	534
	535
	536
	537
	546
	547
	548
	549
	550
	551
	552
	553
	554
	555
	556
	557
POMPE A EAU (ASS)	75
POMPE A HUILE MOTEUR (ASS)	59
POMPE A PISTONS (ASS)	401
	403
POMPE D'AMORÇAGE DE CARBURANT ET FILTRE PRINCIPAL	118
	119
POMPE DE BOÎTE DE VITESSES (ASS)	239
POMPE DE BOÎTE DE VITESSES (ASS)	244
	249
POMPE DE REGULARISATION DE DEBIT (ASS)	291
POMPE DE REGULARISATION DE DEBIT (ASS) (MODULE DE RÉGULATION)	344
POMPE D'INJECTION DE CARBURANT (ASS)	107
POMPE D'INJECTION DE CARBURANT (ASS)	108
	111
	114
	115
PORTE DE BATTERIE (ASS)	296
PORTIÈRE DE CABINE (ASS)	689
	691
PRISE (ENS)	250
PRISE (ENS) (VIDANGE DE BOÎTE DE VITESSES)	239
	244

* TRADUCTION NON DISPONIBLE AU MOMENT DE LA PUBLICATION

INDEX

Désignation	Page
PROTECTION ANTIVANDALISME (ASS)	762
PROTECTION DE FLÈCHE (ASS)	439
PROTECTION D'OUTIL DE TRAVAIL (ASS)	581
PROTÈGE-RADIATEUR (ASS)	308
PUISSANCE DE FAISCEAU (ENS)	182
	186

R

RACCORD D'ADMISSION (ASS)	86
RACCORD D'EAU (ASS)	60
RADIATEUR (ASS)	77
	79
RADIATEUR ET REFROIDISSEUR D'HUILE (ASS)	77
	78
	79
RALLONGE DE GARDE-BOUE	297
RALLONGE D'ÉCHAPPEMENT (ASS)	7
	8
RÉCEPTEUR LASER (ASS) (LR21)	133
RÉCHAUFFEUR DE FAISCEAU (ENS)	697
REDUCTEUR MARIN - MONTAGE (ASS)	225
REFROIDISSEUR D'HUILE (ENS) (MOTEUR)	63
REFROIDISSEUR D'HUILE (MOTEUR)	61
	63
REFROIDISSEUR D'HUILE MOTEUR (ASS)	62
REFROIDISSEUR D'HUILE MOTEUR (ASS)	61
REFROIDISSEUR HUILE MOTEUR ET SUPPORT DE FILTRE	62
	63
	65
REGARD DE NIVEAU	406
	408
RÉGULATEUR - PÉDALE (ASS)	716
	717
RÉGULATEUR DE TEMPÉRATURE (ASS) (EAU)	60
RELAIS (ASS)	149
	150
	151
RELAIS (ASS) (12 VOLTS)	159
	173
RELAIS (ENS) (12 VOLTS)	155
	159
	173
	190
RELAIS (ENS) (12 VOLTS)	181
RELAIS (ENS) (12 VOLTS) (ACCUGRADE, MÂT)	133
RELAIS (ENS) (12 VOLTS) (AUXILIAIRE DE DÉMARRAGE)	167
RELAIS (ENS) (12 VOLTS) (AVERTISSEUR DE RECUL)	185
RELAIS (ENS) (12 VOLTS) (DÉSACTIVATION DE L'ÉQUIPEMENT)	185
RELAIS (ENS) (12 VOLTS) (KLAXON)	185
RELAIS (ENS) (12 VOLTS) (LAMPE DE POSITION)	185
RELAIS (ENS) (12 VOLTS) (VERROUILLAGE DE DIFFÉRENTIEL)	185
RENIFLARD (ASS)	55
RENIFLARD (BOÎTE DE VITESSES)	239
	244
	250
RENIFLARD (ENS) (BOÎTE DE VITESSES)	244
	249
RENIFLARD (ESSIEU)	194
RENIFLARD (ESSIEU AVANT)	192
RÉSERVOIR - LAVE-GLACE (ASS)	739
	752
RÉSERVOIR DE CARBURANT (ASS)	121
	122
RÉSERVOIR DE CARBURANT ET MONTAGE (ASS)	120
RESERVOIR D'EXPANSION (ASS)	80
RÉSERVOIR DU LIQUIDE DE REFROIDISSEMENT (ASS)	80
RÉSERVOIR-FREIN (ASS)	279
	280
RÉSERVOIR HYDRAULIQUE ET MONTAGE (ASS)	406
	408
RÉTROVISEUR (ASS)	711
	712
RÉTROVISEUR (ASS) (INTÉRIEUR)	645
	656
	657
ROBINET DE BATTERIE (ASS)	157
ROTATION DE LA ROUE DU VENTILATEUR SOUFFLANT	679
ROTATION DE LA ROUE DU VENTILATEUR SOUFFLANT (AUXILIAIRE)	684
	685
ROTATION DE LA ROUE DU VENTILATEUR SOUFFLANT (AXE DE BRAS TÉLESCOPIQUE)	1
	2
	3
ROTATION DE LA ROUE DU VENTILATEUR SOUFFLANT (BIELLETTE)	441
ROTATION DE LA ROUE DU VENTILATEUR SOUFFLANT (BRAS TÉLESCOPIQUE)	685
ROTATION DE LA ROUE DU VENTILATEUR SOUFFLANT (COMMANDE DE GODET)	410

* TRADUCTION NON DISPONIBLE AU MOMENT DE LA PUBLICATION

INDEX

Désignation	Page
ROTATION DE LA ROUE DU VENTILATEUR SOUFFLANT (N. D'ÉTAPE)	759
ROTATION DE LA ROUE DU VENTILATEUR SOUFFLANT (REMPLISSAGE DU RÉSERVOIR DE LAVE-GLACE)	739 752
ROTATION DE LA ROUE DU VENTILATEUR SOUFFLANT (SENS DU DÉBIT D'HUILE)	347
ROUE - GROUPE DE MONTAGE	262 263 265 269 270
ROUE - GROUPE DE MONTAGE (AVANT)	259 260 261 264 266 268
ROUE ET PNEU (ASS)	259 260 261 262 263 264 265 266 267 268 269 270
ROUE ET PNEU (VERSION)	256 257 258 259
SEGMENT DE PISTON (ASS)	44
SEMELLE DE STABILISATEUR	458 459
SEMELLE ET MONTAGE DE STABILISATEUR	455 456 457
SEMELLE ET PROTECTION DE STABILISATEUR (ASS)	449 451 453
SERRE-JOINT (ASS)	636 637
*SHAFT GP-PUMP DRIVE	405
SIÈGE (ASS)	723 725
SIÈGE AVEC SUSPENSION (ASS)	727 728 729 732
SILENCIEUX (ASS)	90 91
SONDE - CIRCUIT DE CARBURANT	318 323 325
SONDE - CIRCUIT DE CARBURANT (LINÉAIRE)	333
SONDE - NIVEAU DE CARBURANT (ENS)	121
SOUPAPE - EAU	639 695
SOUPAPE - SOLÉNOÏDE (ASS)	239 244
SOUPAPE - SOLÉNOÏDE (ASS) (ACCUMULATEUR)	393
SOUPAPE - SOLÉNOÏDE (ASS) (CONTACTEUR DE COMMANDE ANTITANGAGE)	393
SOUPAPE - SOLÉNOÏDE (ASS) (MARCHE AV)	239 244
SOUPAPE - SOLÉNOÏDE (ASS) (MARCHE AVANT, ARRIÈRE)	249
SOUPAPE - SOLÉNOÏDE (ASS) (TRACTION INTÉGRALE, EMBRAYAGE UN)	249
SOUPAPE - SOLÉNOÏDE (ASS) (12 VOLTS)	107 114
SOUPAPE D'ARRÊT	77 79
SOUPAPE MANUELLE (ENS) (DÉBIT DIRECTIONNEL)	349 352
SUPPORT - MONTAGE (ASS)	644
SUPPORT DE FILTRE ET REFROIDISSEUR D'HUILE MOTEUR	62 63 65
SUPPORT D'EXPÉDITION (ASS)	756
SUPPORT (ENS)	312
SYNCHRONISEUR (ASS)	233 235
TAPIS DE PLANCHER	693 694
TAPIS DU PLANCHER (ASS)	693 694
TEMOINS (ASS)	162
THERMOCONTACT	167
THERMOCONTACT (CARBURANT)	115

S

T

* TRADUCTION NON DISPONIBLE AU MOMENT DE LA PUBLICATION

INDEX

Désignation	Page
THERMOCONTACT (CLIMATISEUR)	642
THERMOCONTACT (LIQUIDE DE REFROIDISSEMENT DU MOTEUR)	167
TIMONERIE DE GODET DE CHARGEUSE (ASS)	443
TIMONERIE DE GODET RÉTRO (ASS)	441
TIRANT DE VÉRIN DE LEVAGE (ASS)	438
TOIT - CABINE (ASS)	718
	720
TOIT-ROPS OUVERT (ASS)	658
	660
TÔLE DE PLANCHER (ASS)	301
	302
TRAINS PLANÉTAIRES-RÉDUCTEURS (ASS)	194
TRAINS PLANÉTAIRES-RÉDUCTEURS (ASS)	226
	227
TRANSMISSION (VERSION)	228
TRANSMISSION (VERSION)	228
	229
TURBOCOMPRESSEUR (ASS)	92

V

Désignation	Page
VANNE PILOTE (ASS)	434
VENTILATEUR ASPIRANT (ASS)	67
	68
VENTILATEUR (ENS) (RÉCHAUFFEUR)	642
VENTILATEUR (ENS) (RÉCHAUFFEUR)	697
VÉRIN - GODET TOUS-TRAVAUX (ASS)	328
VERIN DE BRAS (ASS)	333
	335
	336
VERIN DE DIRECTION (ASS)	192
	281
VERIN DE FLECHE (ASS)	321
	323
VÉRIN DE GODET RÉTRO (ASS)	318
	320
VÉRIN DE LEVAGE (ASS)	6
	327
VÉRIN DE SERRE-JOINT (ASS)	339
VERIN DE STABILISATEUR (ASS)	329
	331
VÉRIN D'INCLINAISON (ASS)	340
VÉRIN D'ORIENTATION (ASS)	337
VÉRIN DU BRAS TELESCOPIQUE (ASS)	325
VÉRIN DU BRAS TELESCOPIQUE (ASS)	464
VÉRIN ET CANALISATIONS DE SERRE-JOINT (ASS)	315
	316
VERIN-GAZ (ENS)	746
	748
VERROUILLAGE ANTI-VANDALISME (ASS)	758
VERROUILLAGE POUR L'EXPÉDITION (ASS)	445
	447
VERSION DE CHASSIS	5
VERSION DE COMMANDE DE PENTE-LASER	133
VERSION DE RANGÉE DE DISTRIBUTEURS 2	410
VERSION DE RANGÉE DE DISTRIBUTEURS 3	410
VERSION DE RANGÉE DE DISTRIBUTEURS 7	411
VERSION DE SERRE-JOINT	586
	587
	588
	589
	590
	591
	592
	593
	594
	595
	596
	597
	598
	599
	600
	601
	602
	603
	604
	605
	606
	607
	608
	609
	610
	611
	612
	613
	614
	615
	616
	617
	618
	619
	620
	621
	622
	623
	624
	625

* TRADUCTION NON DISPONIBLE AU MOMENT DE LA PUBLICATION

INDEX

Désignation	Page	Désignation	Page
	626		
	627		
	628		
	629		
	630		
	631		
	632		
	633		
	634		
	635		
VERSION DE TOIT - ROPS OUVERT	656		
	657		
VERSION D'ENTRAÎNEMENT DE CHARGEUSE-PELLETEUSE	209		
VERSION HYDRAULIQUE	344		
VERSION NORMALE	6		
VILEBREQUIN - POULIE (ASS)	50		
VILEBREQUIN (ASS)	21		
	23		
	24		
VITRE DE CABINE (ASS)	741		
	742		
	744		
	746		
	748		
VOLANT MOTEUR (ASS)	33		

* TRADUCTION NON DISPONIBLE AU MOMENT DE LA PUBLICATION

INDICE

Nombre	Página

A

ABRAZADERA CONJ.-CUCHARÓN MULTIPROPÓSITO 570, 571
ACONDICIONADOR DE AIRE (GR) 642
ACONDICIONADOR DE AIRE Y MONTAJE (GR) 639
ACOPLADOR RÁPIDO (CONFIG) 572
ACOPLADOR RÁPIDO (GR) 573, 574, 575, 576, 577
ACOPLAMIENTO FLEXIBLE - MANDO DE (GR) 210
ACUMULADOR DE CONTROL DE AMORTIGUACION (GR) 313, 314
ACUMULADOR DE REFRIGERANTE 709
AGUA - CONEXIÓN DE (GR) 60
AGUA DE LAS CAMISAS - CALENTADOR DEL (GR) 135
ALFOMBRILLA DEL PISO 693, 694
ALFOMBRILLA DEL PISO (GR) 693, 694
ALMOHADILLA Y MONTAJE DEL ESTABILIZADOR (GR) 455, 456, 457
ANILLO DE PISTÓN (GR) 44
ÁRBOL DE LEVAS (GR) 11
*ARMREST AS (IZQUIERDO) 727, 728
*ARMREST AS (LADO DERECHO) 727, 728
ASIENTO CON SUSPENSIÓN (GR) 729
ASIENTO CON SUSPENSIÓN (GR) 732
ASIENTO (GR) 723, 725

B

BALANCÍN (GR) 51
BANCADA DE VALVULAS DE 8 (CONFIG) 411
BASE DEL FILTRO Y ACEITE REFRIGERANTE DE MOTOR 62, 63, 65
BASTIDOR DE ROTACIÓN (GR) 305
BASTIDOR DEL CARGADOR (GR) 303
BATERÍA Y CABLES (GR) 127, 128
BATERÍA Y CABLES (GR) 125
BATERÍA (12-VOLTIOS, LIBRE DE MANTENIMIENTO) 128
BATERÍA (12-VOLTIOS, LIBRE DE MANTENIMIENTO) 125, 127
BLOQUE MOTOR (GR) 25, 27, 28
BOMBA - TUBERÍAS DE (GR) 377
BOMBA DE ACEITE DEL MOTOR (GR) 59
BOMBA DE AGUA (GR) 75
BOMBA DE CEBADO Y FILTRO PRIMARIO DE COMBUSTIBLE (GR) 118, 119
BOMBA DE INYECCIÓN DE COMBUSTIBLE (GR) 107, 108, 111, 114, 115
BOMBA DE LA TRANSMISIÓN (GR) 239, 244, 249
BOMBA DE PISTONES (GR) 401, 403
BRAZO (CONJ 461
BRAZO DE RETROEXCAVADOR (GR) 466
BRAZO ESTÁNDAR DE RETROEXCAVADOR (CONFIG) 3, 4, 5
BRAZO EXTENDIBLE DE RETROEXCAVADOR (CONFIG) 1, 2, 3
BRAZO EXTENSIBLE (GR) 464
BUJÍA INCANDESCENTE (GR) 131, 132
BUJÍA INCANDESCENTE (12 VOLTIOS) 131, 132

C

CABINA - MAZO DE CABLES DE LA 739, 752
CABINA (CONJ) 648
CABINA INCLUYE ROPS (GR) 649, 651, 653
CABLE GR-GRADO DE CONTROL 171
CABLES (CONJ) 7

* NO HAY TRADUCCION DISPONIBLE EN EL MOMENTO DE LA IMPRESION

INDICE

Nombre	Página
CABLES CONJ. - TANQUE DE COMBUSTIBLE (DESCONEXIÓN DE COMBUSTIBLE)	8
CABLES DE CALEFACCIÓN (GR)	173
CABLES DE CONTROL DE AMORTIGUACIÓN (GR)	190
CABLES DE LA CONSOLA (GR)	165
CABLES DE LA CONSOLA (GR)	162
CABLES DE LA PLATAFORMA (GR)	181
	185
CABLES DEL ACONDICIONADOR DE AIRE (GR)	159
CABLES DEL MOTOR (GR)	167
CABLES DEL POSICIONADOR Y DE DESCONEXIÓN (GR)	177
	179
CABLES DEL POSICIONADOR Y DE DESCONEXIÓN (GR)	175
CABLES POSTERIORES (GR)	189
CAJA DE BATERÍA	292
CAJA DE LA TRANSMISIÓN (CONJ)	197
	199
	200
CAJA DE LA TRANSMISIÓN (GR)	202
	203
CAJA DEL EJE (GRUPO)	219
	220
	221
CAJA DELANTERA (GR)	35
	37
CALCOMANÍA (CONTROL DE CUCHARÓN)	681
CALCOMANÍA (CONTROL DE TEMPERATURA)	639
	695
CALCOMANÍA DE ADVERTENCIA	679
CALCOMANÍA DE ADVERTENCIA (*ACCUM, HIGH PRESS, READ OMM)	313
CALCOMANÍA DE ADVERTENCIA (AUXILIAR)	684
	685
CALCOMANÍA DE ADVERTENCIA (CONTROL DE CUCHARÓN)	410
CALCOMANÍA DE ADVERTENCIA (*EXTENDABLE STICK PIN, READ OMM)	1
	2
	3
CALCOMANÍA DE ADVERTENCIA (*HIGH PRESS CYLINDER, READ OMM)	379
	381
CALCOMANÍA DE ADVERTENCIA (*HOT FLUID UND PRESS, READ OMM)	760
CALCOMANÍA DE ADVERTENCIA (*HYD PRESS, READ OMM, U.S.)	347
CALCOMANÍA DE ADVERTENCIA (*HYD PRESS, READ OMM, U.S.)	349
	352
CALCOMANÍA DE ADVERTENCIA (*JUMP START, READ OMM, U.S.)	759
CALCOMANÍA DE ADVERTENCIA (*LINK)	441
CALCOMANÍA DE ADVERTENCIA (LLENADO DEL DEPÓSITO DEL LAVAPARABRISAS)	739
	752
CALCOMANÍA DE ADVERTENCIA (NO PISAR)	759
CALCOMANÍA DE ADVERTENCIA (*OIL FLOW DIRECTION)	347
CALCOMANÍA DE ADVERTENCIA (PRESIÓN ALTA, LEA EL OMM)	313
CALCOMANÍA DE ADVERTENCIA (VARILLA RETRACTIL)	685
CALCOMANÍA DE IDENTIFICACIÓN (ACEITE HIDRAULICO)	273
CALCOMANÍA DE IDENTIFICACIÓN (CAT)	312
CALCOMANÍA DE IDENTIFICACIÓN (*CATERPILLAR, FRONT)	645
	646
	647
	657
CALCOMANÍA DE IDENTIFICACIÓN (CATERPILLAR, TRASERO)	656
CALCOMANÍA DE IDENTIFICACIÓN (NOMBRE DE GRUPO)	642
	697
CALCOMANÍA DE IDENTIFICACIÓN (*STABILIZER CONTROL)	656
CALCOMANÍA DE IDENTIFICACIÓN (*STABILIZER CONTROL)	645
	646
	647
	657
CALCOMANÍA DE RAYAS (AMARILLO)	312
CALCOMANÍA DE RAYAS (AMARILLO)	309
CALCOMANÍA (*START SWITCH, READ OMM)	760
CALCOMANÍAS Y PLACAS DE IDENTIFICACIÓN (GR)	758
	761
CALEFACCIÓN DE LA CABINA (GR)	695
	697
CÁNCAMOS DE LEVANTAMIENTO DEL MOTOR (GR)	39
CANDADO (GR) (PROTECCIÓN CONTRA BANDALISMO)	758
*CAP AS-COOLANT TANK	80
CAPÓ DEL MOTOR (GR)	311
	312

* NO HAY TRADUCCION DISPONIBLE EN EL MOMENTO DE LA IMPRESION

INDICE

Nombre	Página
CAPO Y PROTECTOR (GR)	309
CAPTADOR DE TEMPERATURA (REFRIGERANTE DEL MOTOR)	167
CAPTADOR DE TEMPERATURA (12 VOLTIOS)	239
	245
	250
CARGA - ALTERNADOR DE (GR)	123
	124
CARGA - ALTERNADOR DE (GR) (*100-AMPERE, WITH MOUNTING)	10
CARGA - ALTERNADOR DE (GR) (100-AMPERIOS)	124
CÁRTER - COLECTOR DEL (GR)	42
CHASIS (CONFIG)	5
CIGÜEÑAL - POLEA DE (GR)	50
CIGÜEÑAL (GR)	21
	23
	24
CILINDRO DE CUCHARÓN DE USO MÚLTIPLE (GR)	328
CILINDRO DE CUCHARÓN RETROEXCAVADOR (GR)	318
CILINDRO DE CUCHARÓN RETROEXCAVADOR (GR)	320
CILINDRO DE DIRECCIÓN (GR)	192
	281
CILINDRO DE LA PLUMA (GR)	321
	323
CILINDRO DE LEVANTAMIENTO - TUBERÍAS DEL (GR)	367
CILINDRO DE LEVANTAMIENTO (GR)	327
CILINDRO DE LEVANTAMIENTO (GR)	6
CILINDRO DE ROTACIÓN (GR)	337
CILINDRO DEL BRAZO EXTENSIBLE (GR)	325
CILINDRO DEL BRAZO EXTENSIBLE (GR)	464
CILINDRO DEL BRAZO (GR)	333
	335
	336
CILINDRO ESTABILIZADOR (GR)	329
	331
CILINDRO GR - PULGAR	339
CILINDRO Y TUBERIAS GR - PULGAR	315
	316
CINTURÓN DE SEGURIDAD (GR)	721
	722
COLADOR (SUCCIÓN)	199
COLADOR (*SUCTION)	203
COLADOR (*SUCTION) (SUCCIÓN)	202
COMBUSTIBLE - TANQUE DE (GR)	121
	122
COMPARTIMIENTO DE LITERATURA DE SERVICIO (GR)	661
COMPRESOR DE AIRE (GR) (ASIENTO DE SUSPENSION)	732
COMPRESOR DE AIRE (GR) (ASIENTO DE SUSPENSION)	729
COMPRESOR DE REFRIGERANTE (GR)	664
COMPRESOR DE REFRIGERANTE Y GRUPO DE MONTAJE	662
CONDENSADOR DEL REFRIGERANTE Y MONTAJE (GR)	665
CONEXION DE ENTRADA	86
CONEXION HIDRAULICA (GR)	343
CONFIG. DEL MANDO, CARGADOR RETROEXCAVADORA	209
CONFIGURACIÓN COMÚN	6
CONFIGURACIÓN DE CABLERIA, CALENTADOR Y ACONDICIONADOR DE AIRE	642
CONFIGURACIÓN DE CABLERIA, CALENTADOR Y ACONDICIONADOR DE AIRE	159
	173
CONFIGURACIÓN DE CABLERIA, CALENTADOR Y ACONDICIONADOR DE AIRE (COMPRESOR)	159
CONFIGURACIÓN DE CABLERIA, CALENTADOR Y ACONDICIONADOR DE AIRE (POTENCIA)	159
CONFIGURACIÓN DE CARGADOR	6
CONFIGURACIÓN DE MOTORES	7
	8
	9
CONJUNTO DE CABLES-CALENTADOR	697
CONJUNTO DE DESTELLADOR (12 VOLTIOS)	185
CONJUNTO DE DESTELLADOR (12 VOLTIOS)	181
CONJUNTO DE MAZO DE CABLES DE LA CONSOLA	165
CONJUNTO DE MAZO DE CABLES DE LA CONSOLA (CONSOLA LATERAL)	162
CONJUNTO DE MAZO DE CABLES DEL CONTROL DE AMORTIGUACIÓN	190
	729
	732
CONJUNTO DE PASADOR (SUPERIOR)	192
CONJUNTO DE RECINTO-DIFERENCIAL	205
CONJUNTO DE TAPON, DRENAJE (MAGNÉTICO)	192
	194
CONJUNTO DE TAPON, DRENAJE (MAGNÉTICO)	205
CONJUNTO DE VÁLVULA MANUAL (*DIRECTIONAL FLOW)	352

* NO HAY TRADUCCION DISPONIBLE EN EL MOMENTO DE LA IMPRESION

INDICE

Nombre	Página
CONJUNTO DE VÁLVULA MANUAL (*DIRECTIONAL FLOW)	349
CONJUNTO REFRIGERANTE, ACEITE (MOTOR)	63
CONSOLA DEL OPERADOR (GR)	666
	668
	670
CONTRAPESO (GR)	293
	294
	295
CONTROL DE AMORTIGUACIÓN (CONFIG)	314
CONTROL DE DIRECCIÓN (GR)	284
CONTROL DE DIRECCIÓN (GR)	283
CONTROL DE LA TRANSMISIÓN (GR)	686
CONTROL DE MANIJA (GR)	686
CONTROL DE REGULADOR (GR)	94
	95
	96
	98
CONTROL DEL FRENO DE ESTACIONAMIENTO	271
	272
CONTROL DEL GENERADOR HIDRAULICO (GR)	2
CONTROL DEL MULTIPLE (GR)	391
CONTROL DEL MULTIPLE (GR)	392
CONTROL HIDRÁULICO MANUAL (GR)	672
	674
	676
	679
	681
	683
CONTROL MANUAL DE PALANCA (GR)	278
CONTROL NO PROGRAMADO (GR) (MAQUINA)	130
CONTROL NO PROGRAMADO (GR) (MONITOR)	130
CORONA (GR)	194
	217
	218
CORONA Y DIFERENCIAL (GR)	207
CORREA TRAPEZOIDAL (AIRE ACONDICIONADO)	68
CUBIERTA DEL MOTOR DE LIMPIAPARABRISAS (GR)	688
CUCHARÓN DE EMBARQUE (CONFIG)	763
CUCHARÓN DE USO GENERAL (CONFIG)	468
CUCHARÓN DE USO GENERAL (CONJ)	471
	473
	474
	476
	478
CUCHARÓN DE USO GENERAL (GR)	513
	514
	515
	516
	517
CUCHARÓN DE USO GENERAL (GR)	511
	512
CUCHARÓN DE USO MÚLTIPLE (CONFIG)	468
	469
	470
CUCHARÓN DE USO MÚLTIPLE (GR)	562
	563
	564
	565
CUCHARÓN EXCAVADOR (CONJ)	479
	480
	481
	482
	483
	484
	485
	486
	487
	488
	489
	490
	491
	492
	493
	494
	495
	496
	497
	498
	499
	500
	501
	502
	503
	504
	505
	506
	507
	508
	509
	510
CUCHARÓN RETROEXCAVADOR (GR)	519
	520
	521
	522
	523
	524
	525
	526

* NO HAY TRADUCCION DISPONIBLE EN EL MOMENTO DE LA IMPRESION

INDICE

Nombre	Página
	527
	528
	529
	530
	531
	532
	533
	534
	535
	536
	537
	538
	539
	540
	541
	542
	543
	544
	545
	546
	547
	548
	549
	550
	551
	552
	553
	554
	555
	556
	557
	558
CUCHARÓN RETROEXCAVADOR (GR)	518
	559
	560
	561
CUCHILLA (GR)	578
	579
CULATA DE CILINDROS (GR)	29
	30
	31

D

DETECTOR DE HUMEDAD (GR) (SEPARADOR DE AGUA)	118
DETECTOR DE NIVEL DEL COMBUSTIBLE	121
DETECTOR DE POSICIÓN (SISTEMA DE COMBUST.) (GR)	318
	323
	325
DETECTOR DE POSICIÓN (SISTEMA DE COMBUST.) (GR) (*LINEAR)	333
DIAFRAGMA (CONTACTOR DE PRESIÓN DEL CÁRTER)	13
	15
	17
	19
DIENTE DE UNA PIEZA (UNI-TOOTH) (GR)	638
DIFERENCIAL (GR)	207
	208
DIFERENCIAL Y CORONA (GR)	205
DISYUNTOR (GR)	157
DOSIFICACIÓN - BOMBA DE (GR)	291
DOSIFICACIÓN - BOMBA DE (GR) (HMU)	344
*DRYER AS-AIR	709

E

EJE - GRUPO DE MONTAJE	224
EJE DE ENTRADA (GR)	231
EJE DE IMPULSIÓN Y DE DIRECCIÓN (GR)	192
EJE DE MANDO (GR)	230
EJE DE SALIDA (GR)	233
	234
	235
EJE DELANTERO (GR)	281
EJE GR-CONTRARIO (TRANSMISION)	239
	244
	249
EJE GR-RUEDA GUIA (TRANSMISION)	239
	244
	249
EJE TRASERO (GR)	194
ELECTRÓNICA DE LA MÁQUINA (GR)	130
ELECTRONICA DE MONITOR (GR)	130
ELEMENTO DE FILTRO DE AIRE (PRIMARIO)	85
ELEMENTO DE FILTRO DE AIRE (SECUNDARIO)	84
	85
ELEMENTO DE FILTRO DE COMBUSTIBLE	100
ELEMENTO DEL CALENTADOR DEL AGUA DE LAS CAMISAS (120 VOLTIOS, 1000 VATIOS)	135
ELEMENTO DEL FILTRO DE AIRE (CONJ) (CALEFACCION DE CABINA, ACONDICIONADOR DE AIRE)	639
ELEMENTO DEL FILTRO DE AIRE (CONJ) (CALEFACCION DE CABINA, ACONDICIONADOR DE AIRE)	695
ELEMENTO DEL FILTRO DE AIRE (CONJ) (PRIMARIO)	84
EMPAQUETADURA	121
EMPAQUETADURA (TAPA DE VÁLVULA)	15
	17
	19

* NO HAY TRADUCCION DISPONIBLE EN EL MOMENTO DE LA IMPRESION

INDICE

Nombre	Página
EMPAQUETADURA (TAPA DE VÁLVULA)	13
ENCHUFE (CONJ)	250
ENCHUFE (CONJ) (DRENAJE DE LA TRANSMISION)	239
	244
ENFRIADOR DE ACEITE DEL MOTOR (GR)	62
ENFRIADOR DE ACEITE DEL MOTOR (GR)	61
ENFRIADOR DE ACEITE DEL MOTOR Y BASE DEL FILTRO	62
	63
	65
ENFRIADOR DE ACEITE (MOTOR)	61
ENFRIADOR DE ACEITE (MOTOR)	63
ENGRANAJE DE CORONA Y PIÑÓN (GR)	205
ETIQUETA DE ADVERTENCIA (GR)	757
EXTENSIÓN DEL ESCAPE (GR)	7
	8
EXTENSIÓN DEL GUARDABARROS (GR)	297

F

FILTRO - RESPIRADERO (TANQUE HIDRÁULICO)	406
	408
FILTRO DE ACEITE (CONJ) (EFICIENCIA ULTRA ALTA) (DERIVACIÓN DEL FILTRO DE ACEITE)	344
FILTRO DE ACEITE (CONJ) (FLUÍDO RESISTENTE AL FUEGO) (DERIVACIÓN DEL FILTRO DE ACEITE)	344
FILTRO DE ACEITE (CONJ) (GRUPO DE LAMPARA-TABLERO)	228
	229
FILTRO DE ACEITE DEL MOTOR (CONJ)	10
	58
FILTRO DE ACEITE DEL MOTOR (GR)	10
	57
FILTRO DE ACEITE (GR) (HIDRAULICO)	344
FILTRO DE AIRE (CONJ) (RECIRCULACIÓN)	642
	697
FILTRO DE AIRE (GR)	81
	82
	84
	85
FILTRO DE COMBUSTIBLE (CONJ) (REJILLA DE TUBO DE LLENADO)	122
FILTRO DE COMBUSTIBLE (GR)	100
FILTRO DE COMBUSTIBLE Y SEPARADOR DE AGUA (CONJ)	118
FILTRO DE COMBUSTIBLE Y SEPARADOR DE AGUA (GR)	100
FRENO DE SERVICIO - CONTROL (GR)	273
FRENO DEL CILINDRO (GR)	276
	277
FUSIBLE (10-AMPERIOS)	139
FUSIBLE (10-AMPERIOS)	148
FUSIBLE (15 AMPERIOS)	148
FUSIBLE (20-AMPERIOS)	148
FUSIBLE (40 AMP)	149
FUSIBLE (60 AMPERIOS)	182
	186
FUSIBLE (60 AMPERIOS)	150
	151

G

*GRADE CONTROL AR-LASER	133
GRUPO ACCESORIO DE BRAZO	462
GRUPO DE AJUSTADOR, VÁLVULA	342
GRUPO DE AJUSTADOR, VÁLVULA (BANCO)	410
GRUPO DE BRAZO DE LEVANTAMIENTO	435
GRUPO DE CONTROL DE PEDAL HIDRÁULICO	684
	685
GRUPO DE CONTROL Y MONTAJE-ESTABILIZADOR	672
GRUPO DE EJE	192
GRUPO DE FRENO-HORQUILLA HIDRÁULICA	194
GRUPO DE INTERRUPTOR-BOTON PULSADOR (NEUTRALIZADOR, REDUCCIÓN)	674
	676
	686
GRUPO DE INTERRUPTOR, TRABA DEL DIFERENCIAL	156
GRUPO DE INTERRUPTOR-TRACCIÓN EN TODAS LAS RUEDAS	155
GRUPO DE MONTAJE DE LA CABINA	714
GRUPO DE PALANCA-REGULADOR	94
	95
	96
	98
	703
GRUPO DE PESTAÑA, RUEDA	215
	216
	281
GRUPO DE PESTAÑA, RUEDA	194
GRUPO DE PESTAÑA Y RESINTO, EJE	217
	218
GRUPO DE PROTECCIÓN CONTRA EL VANDALISMO	762
GRUPO DE TUBERIAS-ENFRIADOR DE TRANSMISION	70
GRUPO DE 3 VÁLVULAS HIDRÁULICAS	413
GRUPO DE 6 VALVULAS (CONFIG)	410

* NO HAY TRADUCCION DISPONIBLE EN EL MOMENTO DE LA IMPRESION

INDICE

Nombre	Página
GRUPO DEMONTAJE DE RADIADOR Y ENFRIAMIENTO DE ACEITE	73
GRUPO PERILLA, DIRECCIÓN	286
*GUARD GP-WORK TOOL	581
GUARDABARROS DELANTERO (GR)	298
GUARDABARROS TRASERO (GR)	299
GUARNICIONES DE LA CABINA (GR)	737

H

*HARNESS AS-PLATFORM	181 185
*HARNESS AS-PLATFORM (PANTALLA)	171
HIDRÁULICA (CONFIG)	344
HOJA DE LIMPIAPARABRISAS (CONJ) (*500-MM) (PARTE TRASERA)	754
HOJA DE LIMPIAPARABRISAS (CONJ) (*600-MM) (DELANTERO)	752
HOJA DE LIMPIAPARABRISAS (CONJ) (*600-MM) (DELANTERO)	754
HOJA TOPADORA (CONJ)	566 567 568 569
HORQUILLA (GR)	580

I

IMPULSOR DE VENTILADOR (GR)	32
INCLINACIÓN HORIZONTAL - CILINDRO DE (GR)	340
INDICADOR CONJ. -CAMBIO DE FILTRO DE AIRE	88
INDICADOR (CONJ) (*HIGH BEAM, TURN SIGNAL RH)	181 185
INDICADOR (CONJ) (*TURN SIGNAL LH, PARKING BRAKE)	181 185
INDICADOR DE CAMBIO DE FILTRO DE ACEITE (GR)	87 88
INDICADOR DE CAMBIO DE FILTRO DE ACEITE (GR)	7
INDICADOR DE NIVEL DE ACEITE Y TUBO DE LLENADO	58
INDICADOR DE SERVICIO DEL FILTRO DE AIRE	87
INDICADOR DE SERVICIO DEL FILTRO (GR) (AIRE)	87
INDICADOR DE TEMPERATURA DEL REFRIGERANTE (GR)	162
INDICADOR DEL NIVEL DE ACEITE (GR)	162
*INSTALLATION GP-MONITOR	699
INTERRUPTOR (CONJ)	271
INTERRUPTOR (CONJ) (*STARTING MOTOR)(12-VOLT)	152
INTERRUPTOR DE ARRANQUE (CONJ) (LLAVE)	162
INTERRUPTOR DE COLUMNA (CONJ) (LUZ DERECHA, SEÑAL DE GIRO, LIMPIAPARABRISAS)	181 185
INTERRUPTOR DE LÍMITE (CONJ) (ASIENTO DE SUSPENSION)	729
INTERRUPTOR DE LÍMITE (CONJ) (FRENO DE SERVICIO)	273
INTERRUPTOR DE PEDAL (CONFIG)	156
INTERRUPTOR DE PRESIÓN (CONJ) (ACEITE DE MOTOR)	158
INTERRUPTOR DE PRESIÓN (CONJ) (CONTROL DE AMORT.)	190
INTERRUPTOR DE PRESIÓN (CONJ) (REFRIGERANTE)	159
INTERRUPTOR DE PRESIÓN (GR)	158
INTERRUPTOR DE RODILLO (CONJ) (DESCONEXIÓN, POSICIONADOR)	177 179
INTERRUPTOR DE RODILLO (CONJ) (DESCONEXIÓN, POSICIONADOR)	175
INTERRUPTOR DE TEMPERATURA	167
INTERRUPTOR DE TEMPERATURA (AIRE ACONDICIONADO)	642
INTERRUPTOR DE TEMPERATURA (COMBUSTIBLE)	115
INTERRUPTOR DE TEMPERATURA (REFRIGERANTE DEL MOTOR)	167
INTERRUPTOR DE VOLQUETE (CONJ) (ACONDICIONADOR DE AIRE, CALENTADOR)	159
INTERRUPTOR DE VOLQUETE (CONJ) (AUXILIAR DE ARRANQUE)	162
INTERRUPTOR DE VOLQUETE (CONJ) (BALIZA DE ADVERTENCIA)	162
INTERRUPTOR DE VOLQUETE (CONJ) (BOCINA)	283
INTERRUPTOR DE VOLQUETE (CONJ) (CALEFACCIÓN)	173
INTERRUPTOR DE VOLQUETE (CONJ) (*FLOODLIGHTS, FRONT)	140 142 144
INTERRUPTOR DE VOLQUETE (CONJ) (*FLOODLIGHTS, REAR)	140 142 144

* NO HAY TRADUCCION DISPONIBLE EN EL MOMENTO DE LA IMPRESION

INDICE

Nombre	Página
INTERRUPTOR DE VOLQUETE (CONJ) (LUCES DE ADVERTENCIA DE PELIGRO)	181, 185
INTERRUPTOR DE VOLQUETE (CONJ) (MANDO EN TODAS LAS RUEDAS)	155
INTERRUPTOR DE VOLQUETE (CONJ) (*TRANSMISSION NEUTRAL LOCK)	165
INTERRUPTOR DE VOLQUETE (CONJ) (VELOCIDAD DEL VENTILADOR)	159, 173
INTERRUPTOR DE VOLQUETE (CONJ) (*WIPER, WASHER, REAR)	754

J

JUEGO DE COJINETE DE RODILLOS	226
JUEGO DE CORREAS TRAPEZOIDALES (INCLUYE 2-CORREAS) (ALTERNADOR)	67, 68
JUEGO DE CRUCETA	192
JUEGO DE CRUCETA Y COJINETE (EJE MOTRIZ)	230
JUEGO DE DEPÓSITO DE FRENO	279
JUEGO DE ENCHUFE (2 CLAVIJAS)	165, 189
JUEGO DE REPARACIÓN (TUBERÍAS DEL FRENO) (PEDAL REGULADOR)	716, 717
JUEGO DE SELLOS	135, 393
JUEGO DE SELLOS (ACUMULADOR)	313
JUEGO DE SELLOS (BOMBA DOSIFICADORA, DIRECCIÓN)	291
JUEGO DE SERVICIO	716, 717
JUEGO-PEDAL DE INCLINACIÓN	284
JUEGO-PIVOTE	284
JUEGO-PORTA PLANETARIO	226
JUNTA DE LA TAPA DE VÁLVULAS (RECINTO)	37

L

LÁMPARA DE BALIZA DE ADVERTENCIA (GR)	139
LÁMPARA DE LUZ DELANTERA Y DE SEÑAL (GR)	140, 142, 144
LÁMPARA DEL TECHO (GR)	704
LÁMPARA DEL TECHO (GR) (12 VOLTIOS)	706
LÁMPARA (12 VLOTIOS, 5 VATIOS)	142, 144
LÁMPARA (12 VOLTIOS)	162, 704, 706, 736
LÁMPARA (12 VOLTIOS)	162
LÁMPARA (12 VOLTIOS, 21 VATIOS)	142, 144
LÁMPARA (12 VOLTIOS, 21 VATIOS)	142, 144
LÁMPARA (12 VOLTIOS, 55 VATIOS)	136, 137, 138
LÁMPARA (12 VOLTIOS, 55 VATIOS, HID)	139
LÁMPARAS (GR)	162
LATA DE RESPIRADERO (CONJ) (CÁRTER DEL MOTOR)	55
LAVAPARABRISAS DE LA VENTANA (GR)	739
LIMPIA Y LAVAPARABRISAS (GR)	752
LIMPIAPARABRISAS DE LA VENTANA (GR)	754
LLAVE (INTERRUPTOR GENERAL)	157
LUCES DE REFLECTOR Y CAMBIO DE DIRECCION (GR)	140, 142
LUCES DE REFLECTOR Y CAMBIO DE DIRECCION (GR)	144
LUZ DE BALIZA (GR)	146
LUZ DE SEÑAL DE GIRO (GR)	142, 144
LUZ DE SEÑAL DE GIRO (GR) (PARADA, COLA, GIRO)	140

M

MANDO DE CORREA	139
MANDO DE LA BOMBA Y MONTAJE (GR)	341
MANGUERA DE RADIADOR (INFERIOR)	73
MANGUERA DE RADIADOR (SUPERIOR)	73
MANGUERA (RESPIRADERO DE CARTER)	13
*MANIFOLD GP-RIDE CONTROL	393
MASTIL - MONTAJE DEL (GR)	583
MAZO DE CABLES (CONJ)	179
MAZO DE CABLES (CONJ) (DESCONEXIÓN, POSICIONADOR)	175, 177, 179
MAZO DE CABLES (CONJ) (*RESISTOR)	171
MAZO DE CABLES (CONJ) (TRABA DE DIFERENCIAL)	156
MAZO DE CABLES DE CONTROL (CONJ)	699
MAZO DE CABLES DE POTENCIA (CONJ)	182, 186
MAZO DE CABLES DE SENSOR (CONJ)	2, 4

* NO HAY TRADUCCION DISPONIBLE EN EL MOMENTO DE LA IMPRESION

INDICE

Nombre	Página
MAZO DE CABLES DE SENSOR (CONJ)	3
MAZO DE CABLES DE SENSOR (CONJ) (*ACCUGRADE)	5
MAZO DE CABLES DE SENSOR (CONJ) (*BOOM, STICK, BUCKET)	171
MAZO DE CABLES DE SENSOR (CONJ) (ROTACIÓN)	171
MAZO DE CABLES DE SENSOR (CONJ) (VARILLA RETRACTIL)	170
MAZO DE CABLES DEL CHASIS (CONJ) (MÓDULO DE CONTROL ELECTRÓNICO)	171
MAZO DE CABLES DEL MOTOR (CONJ)	167
MAZO DE CABLES, LUCES (*ROOF)	140 142 144
MAZO DE CABLES TRASERO (CONJ)	189
MECANISMO DE VÁLVULAS (GR)	52 53
MEDIDOR DE NIVEL DE ACEITE (VARILLA)	211 213
MEDIDOR DE NIVEL DE ACEITE (VARILLA INDICADORA DE MOTOR)	58
MIRILLA	406 408
*MODULE AS-POWER SUPPLY	133
MONTAJE DE BANCADA DE VALVULA (GR)	394 395
MONTAJE DE CILINDRO (GR)	396 398
MONTAJE DE LA TRANSMISIÓN (GR)	225
MONTAJE DE RUEDA (GR)	262 263 265 269 270
MONTAJE DE RUEDA (GR) (DELANTERO)	259 260 261 264 266 268
MONTAJE DE TUBERIAS (GR)	399
MONTAJE DEL BRAZO (GR)	448
MONTAJE DEL CUCHARÓN (GR)	582
MONTAJE DEL MOTOR (GR)	40
MONTAJE DEL MOTOR Y LA TRANSMISIÓN (GR)	41
MONTAJE DEL SENSOR (GR)	147
MONTAJE GR-MONITOR	715
MONTAJE Y TRANSMISIÓN(GR)	236 237
MOTOR DE ARRANQUE ELÉCTRICO (GR)	152 154
MOTOR-LIMPIAPARABRISAS (GR)	713
MOTOR-LIMPIAPARABRISAS (GR) (SELECTOR DE MARCHAS AUTOMÁTICO/MANUAL)	754
MOTOR PRIMARIO (CONFIG)	10
*MOUNTING & LINES GP-RADIATOR	72
MUELLE DE GAS (CONJ)	746 748
MÚLTIPLE DE ESCAPE (GR)	89

N

NÚCLEO DEL ENFRIADOR DE ACEITE (CONJ) (HIDRAULICO)	77
NÚCLEO DEL ENFRIADOR DE ACEITE (CONJ) (TRANSMISION)	77
NÚCLEO DEL ENFRIADOR DE ACEITE (CONJ) (*TRANSMISSION, 9-ROW)	79

P

PALANCA DE VÁLVULA DE CONTROL (GR) (ESTABILIZADOR)	414 416 418
PANEL DE FUSIBLES (GR)	148
PASADOR DE ACOPLADOR (GR)	584 585
PESTILLO DE PUERTA Y VENTANA DE LA CABINA (GR)	701 702
PISTÓN Y BIELA (GR)	44 46
PLACA	488 492
PLACA DE IDENTIFICACION (CAT)	497 499 500 501 502 508
PLACA DE IDENTIFICACION (HERRAMIENTA)	519 520 521 522 523 524 525 526 527 528 529 530

* NO HAY TRADUCCION DISPONIBLE EN EL MOMENTO DE LA IMPRESION

INDICE

Nombre	Página
	531
	532
	533
	534
	535
	536
	537
	538
	539
	540
	541
	553
	558
PLACA DE IDENTIFICACION (HERRAMIENTA)	562
	563
	564
	565
PLACA DE IDENTIFICACION (HERRAMIENTA)	512
	514
	518
	559
	560
	561
PLACA DE INSTRUCCIONES (BATERÍA) (INTERRUPTOR DE DESCONEXION)	128
PLACA INDICADORA	162
PLACA INDICADORA (NIVEL DEL CUCHARON)	345
PLANCHA DEL PISO (GR)	301
	302
PLANETARIO DEL MANDO FINAL (GR)	226
	227
PLANETARIO DEL MANDO FINAL (GR)	194
PLUMA (GR)	437
POSICIÓN DEL SENSOR (CONJ) (ÁNGULO)	699
POSICIÓN DEL SENSOR (CONJ) (*BOOM SWING)	699
POSICIONADOR DEL CUCHARÓN Y DESCONEXIÓN (GR)	345
PROTECTOR DE LA PLUMA (GR)	439
PROTECTOR DEL EJE IMPULSOR (GR)	307
PROTECTOR DEL RADIADOR (GR)	308
PUERTA DE CABINA	689
	691
PULGAR CONFIG.	586
	587
	588
	589
	590
	591
	592
	593
	594
	595
	596
	597
	598
	599
	600
	601
	602
	603
	604
	605
	606
	607
	608
	609
	610
	611
	612
	613
	614
	615
	616
	617
	618
	619
	620
	621
	622
	623
	624
	625
	626
	627
	628
	629
	630
	631
	632
	633
	634
	635
PULGAR GR	636
	637
PUNTA GR-CUCHARÓN (SUELO)	558
	559
	560
	561
PUNTA GR-FORMON	538
	539
	540
	541

* NO HAY TRADUCCION DISPONIBLE EN EL MOMENTO DE LA IMPRESION

INDICE

Nombre	Página
PUNTA PARA PENETRACIÓN (GR)	518
	519
	520
	521
	522
	523
	524
	525
	526
	527
	528
	529
	530
	531
	532
	533
	534
	535
	536
	537
	553
PUNTA PARA PENETRACIÓN (GR)	546
	547
	548
	549
	550
	551
	552
	554
	555
	556
	557

R

RADIADOR (GR)	77
	79
RADIADOR Y ENFRIADOR DE ACEITE (GR)	77
	78
	79
*RECEIVER GP-LASER (*LR21)	133
REFLECTOR (GR)	136
	137
	138
REGULADOR - PEDAL DEL (GR)	716
	717
RELÉ (CONJ) (12 VOLTIOS)	155
	159
	181
	190
RELÉ (CONJ) (12 VOLTIOS)	159
	173
RELÉ (CONJ) (12 VOLTIOS) (*ACCUGRADE, MAST)	133
RELÉ (CONJ) (12 VOLTIOS) (ALARMA DE RETROCESO)	185
RELÉ (CONJ) (12 VOLTIOS) (AUXILIAR DE ARRANQUE)	167
RELÉ (CONJ) (12 VOLTIOS) (BOCINA)	185
RELÉ (CONJ) (12 VOLTIOS) (IMPLEMENTO DESACTIVADO)	185
RELÉ (CONJ) (12 VOLTIOS) (*POSITION LAMP)	185
RELÉ (CONJ) (12 VOLTIOS) (TRABA DE DIFERENCIAL)	185
RELÉ (GR)	149
	150
	151
RELÉ (GR) (12 VOLTIOS)	159
	173
RESPIRADERO (CONJ) (TRANSMISION)	244
	249
RESPIRADERO (EJE)	194
RESPIRADERO (EJE DELANTERO)	192
RESPIRADERO (GR)	55
RESPIRADERO (TRANSMISION)	239
	244
	250
RETROEXCAVADOR - ESTABILIZADOR DEL (GR)	460
RETROVISOR (GR)	711
	712
RETROVISOR (GR) (INTERIROR)	645
RETROVISOR (GR) (INTERIROR)	656
	657
REVESTIMIENTO DE LA CABINA (GR)	704
	706
RUEDA Y LLANTA (CONFIG)	256
	257
	258
	259
RUEDA Y NEUMÁTICO (GR)	259
	260
	261
	262
	263
	264
	265
	266
	267
	268
	269
	270
RUEDA Y NEUMÁTICO (GR)	259

* NO HAY TRADUCCION DISPONIBLE EN EL MOMENTO DE LA IMPRESION

INDICE

Nombre	Página

S

*SHAFT GP-PUMP DRIVE	405
SILENCIADOR (GR)	90
	91
SINCRONIZADOR (GR)	233
	235
SISTEMA ROPS DE CABINA CERRADA (CONFIG)	645
	646
	647
SOFTWARE (GR) (MÁSTIL)	133
SOFTWARE PARA LA MAQUINA (GR)	130
SOFTWARE (RECEPTOR)	133
SOPORTE (CONJ)	312
SOPORTE DE MONTAJE (GR)	644
SOPORTE DEL CILINDRO DE LEVANTAMIENTO (GR)	438
SOPORTE PARA EL TRANSPORTE	756
SUCCIÓN - VENTILADOR DE (GR)	67
	68
SUSPENSIÓN - ASIENTO CON (GR)	727
	728
	729

T

TACÓMETRO ELÉCTRICO (GR)	736
TACÓMETRO ELÉCTRICO (GR) (12 VOLTIOS)	162
TANQUE DE COMBUSTIBLE Y GRUPO DE MONTAJE	120
TANQUE DE EXPANSIÓN (GR)	80
TANQUE DE REFRIGERANTE (GR)	80
TANQUE DEL LAVAPARABRISAS (GR)	739
TANQUE DEL LAVAPARABRISAS (GR)	752
TANQUE DEL SISTEMA DE FRENOS (GR)	279
	280
TANQUE HIDRÁULICO Y MONTAJE (GR)	406
	408
TAPA (*BREATHER VAVLE)	19
TAPA DE LA BATERÍA (GR)	296
TAPA DE LA CULATA DE CILINDROS (GR)	12
TAPA DEL MECANISMO DE VÁLVULAS (GR)	13
	15
	17
	19
TAPA DEL TUBO DE LLENADO DE COMBUSTIBLE (GR) (VENTILACION, TRABABLE)	122
TAPA, LLENADO (ACEITE HIDRAULICO)	406
	408
TAPA (VÁLVULA DE RESPIRADERO)	15
TAPÓN (CONJ) (LLENADO DE ACEITE DE MOTOR)	58
TAPÓN DE DRENAJE (ACEITE DE MOTOR)	42
TAPÓN DEL MOTOR (GR)	47
	48
	49
TECHO DE LA CABINA (GR)	718
	720
TECHO ROPS ABIERTO (CONFIG)	657
TECHO ROPS ABIERTO (CONFIG)	656
TECHO ROPS ABIERTO (GR)	658
	660
TEMPERATURA - REGULADOR DE (GR) (AGUA)	60
TERMÓMETRO DE ACEITE (GR) (CONVERTIDOR DE PAR)	162
TIRANTE DE EMBARQUE (GR)	758
TIRANTE (GR)	192
	281
TRABA CONTRA EL VANDALISMO (GR)	758
TRABA DE TRANSPORTE DE LA MÁQUINA (GR)	445
	447
TRANSMISION DIRECTA (CONFIG)	238
TRANSMISION DIRECTA (GR)	244
	249
TRANSMISION DIRECTA (GR)	239
TREN DE FUERZA (CONFIG)	228
	229
TUBERIAS AUXILIARES-RETROEXCAVADORA (GR)	349
TUBERIAS AUXILIARES-RETROEXCAVADORA (GR)	347
TUBERIAS AUXILIARES-RETROEXCAVADORA (GR)	352
TUBERÍAS CON SERVOMANDO (GR)	375
TUBERÍAS DE ACEITE DEL TREN DE FUERZA (GR)	223
TUBERIAS DE AUXILIAR DE CARGADOR (GR)	369
TUBERIAS DE CALEFACCION	708
	709
TUBERIAS DE CALENTEDOR Y ACONDICIONADOR DE AIRE (GR)	709
TUBERÍAS DE COMBUSTIBLE (GR)	101
	103
	105
TUBERIAS DE CONTROL DE LA SUSPENSIÓN (GR)	379
	381
TUBERÍAS DE DIRECCIÓN (GR)	287
	289
TUBERÍAS DE DRENAJE (GR)	362

* NO HAY TRADUCCION DISPONIBLE EN EL MOMENTO DE LA IMPRESION

INDICE

Nombre	Página
TUBERÍAS DE GIRO (GR)	388
TUBERÍAS DE LA CALEFACCIÓN (GR)	708
TUBERÍAS DE LA PALANCA EXTENDIBLE (GR)	363
TUBERÍAS DE LA PLUMA (GR)	355
TUBERÍAS DEL BRAZO (GR)	387
TUBERÍAS DEL CILINDRO DE INCLINACIÓN (GR)	389
TUBERÍAS DEL CUCHARÓN DE USO MÚLTIPLE	371
	373
TUBERÍAS DEL CUCHARÓN (GR)	357
	359
TUBERÍAS DEL ENFRIADOR DE ACEITE HIDRÁULICO (GR)	365
TUBERÍAS DEL ESTABILIZADOR (GR)	383
	385
TUBERÍAS DEL FILTRO DE COMBUSTIBLE	106
TUBO DE LLENADO DE ACEITE DE LA TRANSMISIÓN (GR)	211
	213
TURBOCOMPRESOR (GR)	92

V

Nombre	Página
VALVULA	664
VÁLVULA CONFIG.-BANCO 7	411
VÁLVULA DE AGUA (CONJ)	639
	695
VÁLVULA DE ALIVIO (GR)	239
	244
	254
	391
	392
VÁLVULA DE ALIVIO (GR)	420
	422
	424
	425
	426
	427
	428
	429
	430
	432
VÁLVULA DE ALIVIO (GR) (ENTRADA DEL CONVERTIDOR DE PAR)	249
VÁLVULA DE ALIVIO (GR) (*TILT CYLINDER HEAD END)	421
VÁLVULA DE ALIVIO (GR) (*TILT CYLINDER ROD END)	421
VÁLVULA DE CONTROL DEL FRENO (GR)	273
VÁLVULA DE CONTROL (GR)	420
	421
	422
	423
	424
	425
	426
	427
	428
	429
	430
	432
VÁLVULA DE CONTROL (GR) (ESTABILIZADOR)	414
	416
	418
VÁLVULA DE CORTE	77
	79
VÁLVULA DE LANZADERA (GR)	434
VÁLVULA DE SOLENOIDE (GR)	239
	244
VÁLVULA DE SOLENOIDE (GR) (ACUMULADOR)	393
VÁLVULA DE SOLENOIDE (GR) (*ALL WHEEL DRIVE, CLUTCH ONE)	249
VÁLVULA DE SOLENOIDE (GR) (AVANCE)	239
	244
VÁLVULA DE SOLENOIDE (GR) (CONTROL DE AMORTIGUADOR, INTERRUPTOR)	393
VÁLVULA DE SOLENOIDE (GR) (HACIA ADELANTE, RETROCESO)	249
VÁLVULA DE SOLENOIDE (GR) (12 VOLTIOS)	107
	114
VÁLVULA DEL NEUMÁTICO (GR)	255
	256
VÁLVULA PILOTO DE ALIVIO (GR)	425
VÁLVULAS HIDRÁULICAS - GRUPO DE 2	412
VÁLVULAS HIDRÁULICAS - GRUPO DE 6	414
VÁLVULAS HIDRÁULICAS - GRUPO DE 7	416
VÁLVULAS HIDRÁULICAS - GRUPO DE 8	418
VARILLAJE DE CUCHARÓN CARGADOR (GR)	443
VARILLAJE DEL CUCHARÓN RETROEXCAVADOR (GR)	441
VARILLAJE GR-PULGAR	440
	596
	597
	599
	622
	623
	624
	625
	626
	627

* NO HAY TRADUCCION DISPONIBLE EN EL MOMENTO DE LA IMPRESION

INDICE

Nombre	Página	Nombre	Página
	628		
	630		
	631		
	632		
	635		
VÁVULA CONFIG.-BANCO 2	410		
VÁVULA CONFIG.-BANCO 3	410		
VENTANA DE LA CABINA (GR)	741		
	742		
	744		
	746		
	748		
VENTANA DE LA PUERTA (GR)	750		
	751		
VENTILADOR (CONJ) (CALEFACTOR)	642		
	697		
VOLANTE - CAJA DE (GR)	34		
VOLANTE (GR)	33		

W

*WIRING GP-EXTENDABLE STICK	170		
	464		

Z

ZAPATA DE ESTABILIZADOR (GR)	458		
	459		
ZAPATA Y PROTECTOR DEL ESTABILIZADOR	449		
	451		
	453		

* NO HAY TRADUCCION DISPONIBLE EN EL MOMENTO DE LA IMPRESION

ÍNDICE

Designação	Página

A

ACOPLADOR RÁPIDO 572
573
574
575
576
577
ACUMULADOR - REFRIGERANTE 709
ACUMULADOR DO SISTEMA DE ABSORÇÃO DE IMPACTOS 313
314
ALAVANCA - GOVERNADOR 94
95
96
98
703
ALAVANCA - VÁLVULA DE CONTROLE (ESTABILIZADOR) 414
416
418
ALAVANCA DE CONTROLE MANUAL 278
ALOJAMENTO - DIFERENCIAL 205
ALOJAMENTO E FLANGE - EIXO 217
218
ALTERNADOR DE CORRENTE 123
124
ALTERNADOR DE CORRENTE (100 AMPÈRES) 124
ALTERNADOR DE CORRENTE (100 AMPÈRES, SEM MONTAGEM) 10
ANEL DE PISTÃO 44
AQUECEDOR DA ÁGUA DO MOTOR 135
AQUECEDOR DA CABINE 695
697
AR. DE EMBARQUE DA CAÇAMBA 763
ARMAÇÃO OSCILANTE 305
ARRANJO BÁSICO 6
ARREFECEDOR - ÓLEO DO MOTOR 61
62
ARREFECEDOR - ÓLEO (MOTOR) 63
ARREFECEDOR DE ÓLEO DO MOTOR E BASE DO FILTRO 62
63
65
ARREFECEDOR DE ÓLEO (MOTOR) 61
63
ARTICULAÇÃO DA CAÇAMBA DA RETROESCAVADEIRA 441
ARTICULAÇÃO DAS CAÇAMBAS DAS CARREGADEIRAS 443
ASSENTO 723
725
ASSENTO COM SUSPENSÃO 727
728
729

B

BALANCIM 51
BARRA DE DIREÇÃO 192
281
BATERIA E CABOS / FIOS ELÉTRICOS 125
127
128
BATERIA (12 VOLTS, ISENTO DE MANUTENÇÃO) 125
127
BATERIA (12 VOLTS, ISENTO DE MANUTENÇÃO) 128
BLOCO DO MOTOR 25
27
28
BOCAL DE ENCHIMENTO DE ÓLEO DO TREM DE FORÇA 211
213
BOMBA DA TRANSMISSÃO 239
244
249
BOMBA DE ÁGUA 75
BOMBA DE ESCORVA DO COMBUSTÍVEL E DO FILTRO PRIMÁRIO 118
119
BOMBA DE INJEÇÃO DO COMBUSTÍVEL 107
108
111
114
115
BOMBA DE ÓLEO - MOTOR 59
BOMBA DE PISTÃO 401
403
BOMBA REGULADORA 291
BOMBA REGULADORA (HMU) 344
BORDA CORTANTE 578
579
BOTÃO - DIREÇÃO 286
BRAÇADEIRA-CAÇAMBA DE MÚLTIPLAS APLICAÇÕES 570
571
BRAÇO 461
462
BRAÇO - CAÇAMBA RETRO-ESCAVADORA . . . 466
BRAÇO DE LEVANTAMENTO 435
BRAÇO ESTENDÍVEL 464
BUJÃO 250
BUJÃO DO DRENO (ÓLEO DO MOTOR) 42
BUJÃO DO MOTOR 47

* TRADUÇÃO NÃO DISPONÍVEL NO MOMENTO DA IMPRESSÃO

ÍNDICE

Designação	Página
	48
	49
BUJÃO-DRENAGEM (MAGNÉTICO)	192
	194
	205
BUJÃO (DRENO DA TRANSMISSÃO)	239
	244

C

CABEÇOTE DO MOTOR	29
	30
	31
CABINE	648
CABINE - ESTRUTURA DE PROTEÇÃO CONTRA CAPOTAMENTO	649
	651
	653
CABINE - ESTRUTURA ROPS COBERTA	645
	646
	647
CABOS/FIOS ELÉTRICOS	7
CABOS/FIOS ELÉTRICOS - ABSORÇÃO DE IMPACTOS	190
CABOS/FIOS ELÉTRICOS - AQUECEDOR	173
CABOS/FIOS ELÉTRICOS - AR CONDICIONADO	159
CABOS/FIOS ELÉTRICOS - MOTOR	167
CABOS/FIOS ELÉTRICOS - PLATAFORMA	181
	185
CABOS/FIOS ELÉTRICOS - POSICIONADOR E DESENGATE AUTOMÁTICO	175
	177
	179
CABOS/FIOS ELÉTRICOS - TRASEIROS	189
CABOS/FIOS ELÉTRICOS DO CONSOLE	162
	165
CAÇAMBA - PARA APLICAÇAO GERAL	468
CAÇAMBA - RETRO-ESCAVADORA	479
	480
	481
	482
	483
	484
	485
	486
	487
	488
	489
	490
	491
	492
	493
	494
	495
	496
	497
	498
	499
	500
	501
	502
	503
	504
	505
	506
	507
	508
	509
	510
CAÇAMBA DE MÚLTIPLAS APLICAÇÕES	468
	469
	470
	562
	563
	564
	565
CAÇAMBA DIANTEIRA	6
CAÇAMBA PARA APLICAÇÃO GERAL	471
	473
	474
	476
	478
	511
	512
	513
	514
	515
	516
	517
CAÇAMBA RETROESCAVADORA	518
	519
	520
	521
	522
	523
	524
	525
	526
	527
	528
	529
	530
	531
	532
	533

* TRADUÇÃO NÃO DISPONÍVEL NO MOMENTO DA IMPRESSÃO

ÍNDICE

Designação	Página
	534
	535
	536
	537
	538
	539
	540
	541
	542
	543
	544
	545
	546
	547
	548
	549
	550
	551
	552
	553
	554
	555
	556
	557
	558
	559
	560
	561
CADEADO CONTRA VANDALISMO	758
CADEADO (PROTETOR CONTRA VANDALISMO)	758
CAIXA - BATERIA	292
CAIXA DA TRANSMISSÃO	197
	199
	200
CAIXA DIANTEIRA	35
	37
CAIXA DO SEMI-EIXO	219
	220
	221
CAIXA DO VOLANTE DO MOTOR	34
CALÇO DO ESTABILIZADOR	458
	459
CALÇO DO ESTABILIZADOR E MONTAGEM	455
	456
	457
CAPÔ DO MOTOR	311
	312
CAPÔ E PROTETOR	309
CARCAÇA DA TRANSMISSÃO	202
	203
CÁRTER DO ÓLEO DO MOTOR	42
CHAPA DO PISO	301
	302
CHASSI	5
CHASSI DIANTEIRO	303
CHAVE (DESCONEXÃO DA BATERIA)	157
CHAVE GERAL	157
CHICOTE - CABINE	739
	752
CHICOTE - CABOS ELÉTRICOS	179
CHICOTE - CABOS ELÉTRICOS (PARTIDA, POSICIONADOR)	175
	177
	179
CHICOTE - CABOS ELÉTRICOS (RESISTOR)	171
CHICOTE - CABOS ELÉTRICOS (TRAVA DE DIFERENCIAL)	156
CHICOTE - CHASSI (ECM)	171
CHICOTE - CONSOLO	165
CHICOTE - CONSOLO (CONSOLE LATERAL)	162
CHICOTE - ILUMINAÇÃO (TETO)	140
	142
	144
CHICOTE - MOTOR	167
CHICOTE - PLATAFORMA	181
	185
CHICOTE - PLATAFORMA (MONITOR)	171
CHICOTE - SENSOR	2
	3
	4
CHICOTE - SENSOR (ACCUGRADE)	5
CHICOTE - SENSOR (BRAÇO EXTENSÍVEL)	170
CHICOTE - SENSOR (GIRO)	171
CHICOTE - SENSOR (LANÇA, BRAÇO, CAÇAMBA)	171
CHICOTE - TRASEIRO	189
CILINDRO - CAÇAMBA DE MÚLTIPLAS APLICAÇÕES	328
CILINDRO - POLEGAR	339
CILINDRO DA CAÇAMBA RETROESCAVADEIRA	318
	320
CILINDRO DA DIREÇÃO	192
	281
CILINDRO DA LANÇA	321
	323
CILINDRO DE GIRO	337
CILINDRO DE INCLINAÇÃO	340
CILINDRO DE LEVANTAMENTO	6
	327
CILINDRO DO BRAÇO	333
	335
	336
CILINDRO DO BRAÇO ESTENDÍVEL	325
	464

* TRADUÇÃO NÃO DISPONÍVEL NO MOMENTO DA IMPRESSÃO

ÍNDICE

Designação	Página
CILINDRO DO ESTABILIZADOR	329, 331
CILINDRO DO FREIO	276, 277
CILINDRO E TUBULAÇÕES-POLEGAR	315, 316
CINTO DE SEGURANÇA	721, 722
COLETOR - CONTROLE	391, 392
COLETOR-CONTROLE DE PERCURSO	393
COLETOR DE ESCAPE	89
COLMÉIA - ARREFECEDOR DE ÓLEO (HIDRÁULICO)	77
COLMÉIA - ARREFECEDOR DE ÓLEO (TRANSMISSÃO)	77
COLMÉIA - ARREFECEDOR DE ÓLEO (*TRANSMISSION, 9-ROW)	79
COMANDO - ACOPLAMENTO FLEXÍVEL	210
COMANDO - RETROESCAVADEIRA	209
COMANDO DA BOMBA E MONTAGEM	341
COMANDO DO VENTILADOR	32
COMANDO HIDRÁULICO	344
COMPARTIMENTO PARA LITERATURA	661
COMPRESSOR DE AR (ASSENTO DA SUSPENSÃO)	729, 732
COMPRESSOR DE REFRIGERANTE	664
COMPRESSOR DE REFRIGERANTE E MONTAGEM	662
CONDENSADOR DO REFRIGERANTE E MONTAGEM	665
CONDICIONADOR DE AR	642
CONDICIONADOR DE AR E MONTAGEM	639
CONEXÃO - ADMISSÃO DE AR	86
CONEXÃO - HIDRÁULICA	343
CONEXÃO - TUBO D'ÁGUA	60
CONSOLE DO OPERADOR	666, 668, 670
CONTRAPESO	293, 294, 295
CONTROLE - NÃO PROGRAMADO (MÁQUINA)	130
CONTROLE - NÃO PROGRAMADO (MONITOR)	130
CONTROLE - PEDAL HIDRÁULICO	684, 685
CONTROLE-CABO	686
CONTROLE DA TRANSMISSÃO	686
CONTROLE DE DIREÇÃO	283, 284
CONTROLE DE INCLINAÇÃO - LASER	133
CONTROLE DO FREIO DE ESTACIONAMENTO	271, 272
CONTROLE DO FREIO DE SERVIÇO	273
CONTROLE DO GERADOR HIDRÁULICO	2
CONTROLE DO GOVERNADOR	94, 95, 96, 98
CONTROLE E MONTAGEM-ESTABILIZADOR	672
CONTROLE HIDRÁULICO MANUAL	672, 674, 676, 679, 681, 683
CORREIA DE COMANDO	139
CORREIA EM V (AR CONDICIONADO)	68
COXIM E PROTETOR DO ESTABILIZADOR	449, 451, 453

D

DECALQUE	757
DECALQUE - ADVERTÊNCIA (ACUMULADOR, ALTA PRESSºAO, CONSULTAR OMM)	313
DECALQUE - ADVERTÊNCIA (ALTA PRESSÃO, CONSULTAR OMM)	313
DECALQUE - ADVERTÊNCIA (CILINDRO DE ALTA PRESSÃO, CONSULTAR OMM)	379, 381
DECALQUE - ADVERTÊNCIA (FLUIDO QUENTE SOB PRESSÃO, CONSULTAR OMM)	760
DECALQUE - ADVERTÊNCIA (PARTIDA COM CABO AUXILIAR DE PARTIDA, CONSULTAR OMM, EUA)	759
DECALQUE - ADVERTÊNCIA (PRESSÃO HIDRÁULICA, CONSULTAR OMM, EUA)	347, 349, 352
DECALQUE - IDENTIFICAÇÃO (CATERPILLAR)	312
DECALQUE - IDENTIFICAÇÃO (CATERPILLAR, DIANTEIRO)	645, 646, 647, 657
DECALQUE - IDENTIFICAÇÃO (CATERPILLAR, TRASEIRO)	656
DECALQUE - IDENTIFICAÇÃO (CONTROLE DO ESTABILIZADOR)	645

* TRADUÇÃO NÃO DISPONÍVEL NO MOMENTO DA IMPRESSÃO

ÍNDICE

Designação	Página
	646
	647
	656
	657
DECALQUE - IDENTIFICAÇÃO (NÚMERO DE GRUPO)	642
	697
DECALQUE - IDENTIFICAÇÃO (ÓLEO HIDRÁULICO)	273
DECALQUE - INDICADOR	162
DECALQUE - INDICADOR (NÍVEL DA CAÇAMBA)	345
DECALQUE - INSTRUÇÃO	679
DECALQUE - INSTRUÇÃO (AUXILIAR)	684
	685
DECALQUE - INSTRUÇÃO (BRAÇO EXTENSÍVEL)	685
DECALQUE - INSTRUÇÃO (CONTROLE DA CAÇAMBA)	410
DECALQUE - INSTRUÇÃO (ELO)	441
DECALQUE - INSTRUÇÃO (ENCHIMENTO DO LAVADOR DE PÁRA-BRISA)	739
	752
DECALQUE - INSTRUÇÃO (PINO DO BRAÇO ALONGÁVEL, CONSULTAR OMM)	1
	2
	3
DECALQUE - INSTRUÇÃO (SEM DEGRAUS)	759
DECALQUE - INSTRUÇÃO (SENTIDO DO FLUXO DO ÓLEO)	347
DECALQUE - TIRA (AMARELO)	309
	312
DECALQUE (CONTROLE DA CAÇAMBA)	681
DECALQUE (CONTROLE DE TEMPERATURA)	639
	695
DECALQUE (INTERRUPTOR DE PARTIDA, CONSULTAR OMM)	760
DESCANSO DO BRAÇO (LADO DIREITO)	727
DESCANSO DO BRAÇO (LADO DIREITO)	728
DESCANSO DO BRAÇO (LADO ESQUERDO)	727
	728
DESENGATE E POSICIONADOR DA CAÇAMBA	345
DIAFRAGMA (CONTACTOR DE PRESSÃO DO CÁRTER)	13
	15
	17
	19
DIFERENCIAL	207
	208
DIFERENCIAL E COROA	205

Designação	Página
E	
EIXO - SAÍDA	233
	234
	235
EIXO-COMANDO DE VÁLVULA	11
EIXO-CONTADOR (TRANSMISSÃO)	239
	244
	249
EIXO DA TRANSMISSÃO	192
EIXO DE ENTRADA	231
EIXO DE PROPULSÃO E DIREÇÃO	192
EIXO DE TRANSMISSÃO	230
EIXO DIANTEIRO	281
EIXO-RODA-GUIA (TRANSMISSÃO)	239
	244
	249
ELEMENTO - AQUECEDOR DE ÁGUA DA CAMISA (120 VOLTS, 1.000 WATTS)	135
ELEMENTO DO FILTRO DE AR (AQUECEDOR, CONDICIONADOR DE AR DA CABINE)	639
	695
ELEMENTO DO FILTRO DE AR (PRIMÁRIO)	84
ELEMENTO DO FILTRO DE COMBUSTÍVEL	100
ELEMENTO FILTRANTE - AR (PRIMÁRIO)	85
ELEMENTO FILTRANTE - AR (SECUNDÁRIO)	84
	85
ELO - EMBARQUE	758
ELO - POLEGAR	440
	596
	597
	599
	622
	623
	624
	625
	626
	627
	628
	630
	631
	632
	635
EMISSOR - NÍVEL DO COMBUSTÍVEL	121
EMISSOR - POSIÇÃO	318
	323
	325
EMISSOR - POSIÇÃO (LINEAR)	333
EMISSOR DE TEMPERATURA (LÍQUIDO ARREFECEDOR DO MOTOR)	167
EMISSOR DE TEMPERATURA (12-VOLTS)	239
	245
	250
ENGRENAGEM ANELAR	194

* TRADUÇÃO NÃO DISPONÍVEL NO MOMENTO DA IMPRESSÃO

ÍNDICE

Designação	Página
	217
	218
ENGRENAGEM-COROA E PINHÃO	205
ENGRENAGEM DO DIFERENCIAL E DA COROA	207
ESPELHO RETROVISOR	711
	712
ESPELHO RETROVISOR (INTERIOR)	645
	656
	657
ESTABILIZADOR - RETROESCAVADEIRA	460
EXTENSÃO DO TUBO DE ESCAPE	7
	8

F

FIAÇÃO - AQUECEDOR E AR CONDICIONADO	159
	173
	642
FIAÇÃO - AQUECEDOR E AR CONDICIONADO (COMPRESSOR)	159
FIAÇÃO - AQUECEDOR E AR CONDICIONADO (FORÇA)	159
FIAÇÃO - CONTROLE	699
FIAÇÃO - CONTROLE DE PERCURSO	190
	729
	732
FIACAO - CONTROLE DO NIVEL	171
FIAÇÃO-BRAÇO ALONGÁVEL	170
	464
FIAÇÃO ELÉTRICA	182
	186
FIAÇÃO ELÉTRICA-AQUECEDOR	697
FIAÇÃO-TANQUE DE COMBUSTÍVEL (CORTE DO COMBUSTÍVEL)	8
FILTRO - AR (RECIRCULAÇÃO)	642
	697
FILTRO - COMBUSTÍVEL	100
FILTRO - COMBUSTÍVEL (TELA DO BOCAL DE ENCHIMENTO)	122
FILTRO - ÓLEO DO MOTOR	10
	57
	58
FILTRO - ÓLEO (EFICIÊNCIA PADRÃO)	228
	229
FILTRO - ÓLEO (EXTREMA EFICIÊNCIA) (DERIVAÇÃO DO FILTRO DE ÓLEO)	344
FILTRO - ÓLEO (FLUIDO À PROVA DE FOGO) (DERIVAÇÃO DO FILTRO DE ÓLEO)	344
FILTRO - ÓLEO (HIDRÁULICO)	344
FILTRO - RESPIRO (TANQUE HIDRÁULICO)	406
	408
FILTRO - SEPARADOR DE ÁGUA E COMBUSTÍVEL	118
FILTRO DE COMBUSTÍVEL E SEPARADOR DE ÁGUA	100
FIXADOR - VÁLVULA	342
FIXADOR - VÁLVULA (FILA)	410
FLANGE - RODA	194
	215
	216
	281
FREIO - CALIBRE HIDRÁULICO	194
FUSÍVEL (10 AMPERES)	139
	148
FUSÍVEL (15 AMPERES)	148
FUSÍVEL (20-AMPERES)	148
FUSÍVEL (40 AMPÈRES)	149
FUSÍVEL (60 AMPERES)	150
	151
FUSÍVEL (60 AMPERES)	182
	186

G

GARFO	580
GR. PLANETÁRIO - COMANDO FINAL	194
	226
	227
GRUPO DE VÁLVULA DE CONTROLE - 2	410
GRUPO DE VÁLVULAS - SEIS	410
GRUPO DE VÁLVULAS DE CONTROLE - DUPLO	412
GRUPO DE VÁLVULAS DE CONTROLE - OITO	418
GRUPO DE VÁLVULAS DE CONTROLE - SEIS	414
GRUPO DE VÁLVULAS DE CONTROLE - SETE	416
GRUPO DE VÁLVULAS DE CONTROLE - TRIPLO	413

I

INDICADOR - LIMPEZA DO FILTRO (AR)	87
INDICADOR - LIMPEZA DO FILTRO DE AR	87
INDICADOR - NÍVEL DE ÓLEO (VARETA DE NÍVEL)	211
	213
INDICADOR - NÍVEL DE ÓLEO (VARETA DE NÍVEL DO MOTOR)	58
INDICADOR - TEMPERATURA DO ÓLEO (CONVERSOR DE TORQUE)	162
INDICADOR - TROCA DO FILTRO DE AR	7
	87

* TRADUÇÃO NÃO DISPONÍVEL NO MOMENTO DA IMPRESSÃO

ÍNDICE

Designação	Página
	88
INDICADOR (FACHO ALTO, SETA DE DIREÇÃO DIREITA)	181 185
INDICADOR (SETA DE DIREÇÃO ESQUERDA, FREIO DE ESTACIONAMENTO)	181 185
INSTALAÇÃO-MONITOR	699
INTERRUPTOR	271
INTERRUPTOR - BALANCIM (AQUECEDOR)	173
INTERRUPTOR - BALANCIM (AUXILIAR DE PARTIDA)	162
INTERRUPTOR - BALANCIM (BUZINA)	283
INTERRUPTOR - BALANCIM (CONDICIONADOR DE AR, AQUECEDOR)	159
INTERRUPTOR - BALANCIM (HOLOFOTES, DIANTEIROS)	140 142 144
INTERRUPTOR - BALANCIM (HOLOFOTES, TRASEIROS)	140 142 144
INTERRUPTOR - BALANCIM (LIMPADOR,. LAVADOR, TRASEIRO)	754
INTERRUPTOR - BALANCIM (LUZES DE ADVERTÊNCIA CONTRA PERIGO)	181 185
INTERRUPTOR - BALANCIM (PISCA-ALERTA)	162
INTERRUPTOR - BALANCIM (TRAÇÃO EM TODAS AS RODAS)	155
INTERRUPTOR - BALANCIM (TRAVA DO NEUTRO DA TRANSMISSÃO)	165
INTERRUPTOR - BALANCIM (VELOCIDADE DO VENTILADOR)	159 173
INTERRUPTOR - COLUNA (FAROL, SETA DE DIREÇÃO, LIMPADOR DE VIDROS)	181 185
INTERRUPTOR - LIMITADOR (ASSENTO DA SUSPENSÃO)	729
INTERRUPTOR - LIMITADOR (FREIO DE SERVIÇO)	273
INTERRUPTOR - PARTIDA (CHAVE)	162
INTERRUPTOR - PEDAL	156
INTERRUPTOR - PRESSÃO	158
INTERRUPTOR - PRESSÃO (ÓLEO DO MOTOR)	158
INTERRUPTOR - PRESSÃO (REFRIGERANTE)	159
INTERRUPTOR - PRESSÃO (SISTEMA DE ABSORÇÃO DE IMPACTOS)	190
INTERRUPTOR - ROLETAS (DESENGATE AUTOMÁTICO, ASSENTADOR)	175 177 179
INTERRUPTOR - TEMPERATURA	167
INTERRUPTOR - TEMPERATURA (AR CONDICIONADO)	642
INTERRUPTOR - TEMPERATURA (COMBUSTÍVEL)	115
INTERRUPTOR - TEMPERATURA (LÍQUIDO ARREFECEDOR DO MOTOR)	167
INTERRUPTOR - TRAVA DO DIFERENCIAL	156
INTERRUPTOR-BOTÃO (NEUTRIZADOR, REDUÇÃO DE MARCHA)	674 676 686
INTERRUPTOR (MOTOR DE PARTIDA)(12-VOLT)	152
INTERRUPTOR-TRAÇÃO EM TODAS AS RODAS	155

J

Designação	Página
JANELA DA CABINE	741 742 744 746 748
JOGO - PORTA SISTEMA PLANETÁRIO	226
JOGO-ARTICULAÇÃO	284
JOGO DE CORREIAS EM V (INCLUI 2 CORREIAS) (ALTERNADOR)	67 68
JOGO DE CRUZETA	192
JOGO DE CRUZETA E MANCAL (EIXO DA TRANSMISSÃO)	230
JOGO DE MANUTENÇÃO	716 717
JOGO DE REPARO (PEDAL DO GOVERNADOR)	716 717
JOGO DE RETENTOR	135 393
JOGO DE RETENTOR (ACUMULADOR)	313
JOGO DE RETENTOR (BOMBA DE MEDIÇÃO, DIREÇÃO)	291
JOGO DE ROLAMENTO DOS ROLETES	226
JOGO DE TOMADA DE CONEXÃO (2 PINOS)	165 189
JOGO-PEDAL DE INCLINAÇÃO	284
JOGO-RESERVATÓRIO DO FREIO	279
JUNTA	121
JUNTA - TAMPA (ALOJAMENTO)	37

* TRADUÇÃO NÃO DISPONÍVEL NO MOMENTO DA IMPRESSÃO

ÍNDICE

Designação	Página
JUNTA (TAMPA DA VÁLVULA)	13, 15, 17, 19

L

LÂMINA	566, 567, 568, 569
LÂMINA DO LIMPADOR DE PÁRA-BRISA (500 MM) (TRASEIRO)	754
LÂMINA DO LIMPADOR DE PÁRA-BRISA (600 MM) (DIANTEIRO)	752, 754
LÂMPADA	162
LÂMPADA - FAROL	136, 137, 138
LÂMPADA - SINALIZAÇÃO	142, 144
LÂMPADA - SINALIZAÇÃO (LUZ DO FREIO, TRASEIRA, SETA DE DIREÇÃO)	140
LÂMPADA - TETO	704
LÂMPADA - TETO (12-VOLTS)	706
LÂMPADA DIANTEIRA E DE SINAL	140, 142, 144
LÂMPADA (12-VOLTS)	162, 704, 706, 736
LÂMPADA (12-VOLTS, 21-WATTS)	142, 144
LÂMPADA (12 VOLTS, 5 WATTS)	142, 144
LÂMPADA (12-VOLTS, 55-WATTS)	136, 137, 138
LÂMPADA (12 VOLTS, 55 WATTS, HID)	139
LANÇA	437
LATA - RESPIRO (CÁRTER)	55
LAVADOR DO VIDRO	739
LEVANTAMENTO DO MOTOR	39
LIMPADOR DO VIDRO	754
LIMPADOR E LAVADOR - JANELA	752
LISTRA DA CABINE	737
LUZ GIRATÓRIA DE ALARME	139
LUZ INTERMITENTE (12-VOLTS)	181, 185

M

MANGUEIRA - RADIADOR (INFERIOR)	73
MANGUEIRA - RADIADOR (SUPERIOR)	73
MANGUEIRA (RESPIRO DO CÁRTER)	13
MECANISMO DAS VÁLVULAS	52, 53
MEDIDOR - NÍVEL DE COMBUSTÍVEL	162
MEDIDOR DE TEMPERATURA DO LÍQUIDO ARREFECEDOR	162
MÓDULO-SUPRIMENTO DE FORÇA	133
MOLA ACIONADA A GAS	746, 748
MONTAGEM - BANCO DE VÁLVULAS	394, 395
MONTAGEM - BRAÇO	448
MONTAGEM - CABINE	714
MONTAGEM - CAÇAMBA	582
MONTAGEM - CILINDRO	396, 398
MONTAGEM - MASTRO	583
MONTAGEM - MONITOR	715
MONTAGEM - MOTOR	40
MONTAGEM - MOTOR E TRANSMISSÃO	41
MONTAGEM - RODA	262, 263, 265, 269, 270
MONTAGEM - RODA (DIANTEIRO)	259, 260, 261, 264, 266, 268
MONTAGEM - SENSOR	147
MONTAGEM - TRANSMISSÃO	225
MONTAGEM - TUBOS	399
MONTAGEM DO EIXO	224
MOTOR	7, 8, 9
MOTOR - LIMPADOR DO VIDRO	713
MOTOR - LIMPADOR DO VIDRO (PARTE TRASEIRA)	754
MOTOR ELÉTRICO DE PARTIDA	152, 154
MOTOR PRIMÁRIO	10
*MOUNTING & LINES GP-RADIATOR	72

P

PAINEL DE FUSÍVEIS	148
PÁRA-LAMA DIANTEIRO	298

* TRADUÇÃO NÃO DISPONÍVEL NO MOMENTO DA IMPRESSÃO

ÍNDICE

Designação	Página
PÁRA-LAMA-EXTENSÃO	297
PÁRA-LAMA TRASEIRO	299
PEDAL DO GOVERNADOR	716
	717
PINO-ACOPLADOR	584
	585
PINO (SUPERIOR)	192
PISTÃO E BIELA	44
	46
PLACA DE IDENTIFICAÇÃO (CATERPILLAR)	497
	499
	500
	501
	502
	508
PLACA DE IDENTIFICAÇÃO (FERRAMENTA DE TRABALHO)	512
	514
	518
	519
	520
	521
	522
	523
	524
	525
	526
	527
	528
	529
	530
	531
	532
	533
	534
	535
	536
	537
	538
	539
	540
	541
	553
	558
	559
	560
	561
	562
	563
	564
	565
PLACA DE INSTRUÇÃO (BATERIA) (CHAVE GERAL)	128
PLACA E DECALQUE	758
	761
PLACA/CHAPA	488
	492
POLEGAR	586
	587
	588
	589
	590
	591
	592
	593
	594
	595
	596
	597
	598
	599
	600
	601
	602
	603
	604
	605
	606
	607
	608
	609
	610
	611
	612
	613
	614
	615
	616
	617
	618
	619
	620
	621
	622
	623
	624
	625
	626
	627
	628
	629
	630
	631
	632
	633
	634

* TRADUÇÃO NÃO DISPONÍVEL NO MOMENTO DA IMPRESSÃO

ÍNDICE

Designação	Página
	635
	636
	637
POLIA DO VIRABREQUIM	50
PONTA - PENETRAÇÃO	518
	519
	520
	521
	522
	523
	524
	525
	526
	527
	528
	529
	530
	531
	532
	533
	534
	535
	536
	537
	546
	547
	548
	549
	550
	551
	552
	553
	554
	555
	556
	557
PONTA-CAÇAMBA (SOLO)	558
	559
	560
	561
PONTA-TALHADEIRA	538
	539
	540
	541
PORTA DA CABINE	689
	691
POSIÇÃO DO SENSOR (ÂNGULO)	699
POSIÇÃO DO SENSOR (GIRO DA LANÇA)	699
PROTEÇÃO CONTRA VANDALISMO	762
PROTETOR - EIXO DE TRANSMISSÃO	307
PROTETOR - RADIADOR	308
PROTETOR DA LANÇA	439
PROTETOR-FERRAMENTA DE TRABALHO	581
PURIFICADOR DE AR	81
	82
	84
	85

R

RADIADOR	77
	79
RADIADOR E ARREFECEDOR DE ÓLEO	77
	78
	79
RECEPTOR-LASER (LR21)	133
RELÉ	149
	150
	151
RELÉ (CONJ) (12-VOLTS)	155
	159
	181
	190
RELÉ (CONJ) (12-VOLTS)	159
	173
RELÉ (CONJ) (12-VOLTS) (ACCUGRADE, MASTRO)	133
RELÉ (CONJ) (12-VOLTS) (ALARME DE MARCHA-À-RÉ)	185
RELÉ (CONJ) (12-VOLTS) (AUXILIAR DE PARTIDA)	167
RELÉ (CONJ) (12-VOLTS) (BUZINA)	185
RELÉ (CONJ) (12-VOLTS) (DESATIVAÇÃO DO IMPLEMENTO)	185
RELÉ (CONJ) (12-VOLTS) (LÂMPADA DE POSIÇÃO)	185
RELÉ (CONJ) (12-VOLTS) (TRAVA DO DIFERENCIAL)	185
RELÉ (12-VOLTS)	159
	173
RESPIRO	55
RESPIRO (EIXO)	194
RESPIRO (EIXO DIANTEIRO)	192
RESPIRO (TRANSMISSÃO)	239
	244
	249
	250
RETROESCAVADEIRA - BRAÇO ESTENDÍVEL	1
	2
	3
RETROESCAVADEIRA - BRAÇO PADRÃO	3
	4
	5
REVESTIMENTO DA CABINE	704
	706

* TRADUÇÃO NÃO DISPONÍVEL NO MOMENTO DA IMPRESSÃO

ÍNDICE

Designação	Página
RODA E PNEU	256 257 258 259 260 261 262 263 264 265 266 267 268 269 270

S

Designação	Página
SECADOR-AR	709
SEMI-EIXO TRASEIRO	194
SENSOR DE UMIDADE (SEPARADOR DE ÁGUA)	118
*SHAFT GP-PUMP DRIVE	405
SILENCIADOR	90 91
SINCRONIZADOR	233 235
SIST. DE ILUMINAÇÃO - PISCA-PISCA GIRATÓRIO DE ADVERTÊNCIA	146
SISTEMA DE ABSORÇÃO DE IMPACTOS	314
SISTEMA DE ILUMINAÇÃO - FARÓIS E SINAL	140 142 144
SISTEMA ELETRÔNICO - MÁQUINA	130
SISTEMA ELETRÔNICO - MONITOR	130
SOFTWARE - MÁQUINA	130
SOFTWARE (MASTRO)	133
SOFTWARE (RECEPTOR)	133
SUPORTE	312
SUPORTE - ARREFECEDR DE ÓLEO E RADIADOR	73
SUPORTE - MONTAGEM	644
SUPORTE PARA TRANSPORTE	756
SUSPENSÃO - ASSENTO	729 732

T

Designação	Página
TACÔMETRO - ELÉTRICO	736
TACÔMETRO - ELÉTRICO (12 VOLTS)	162
TAMPA - ACESSO À BATERIA	296
TAMPA - BOCAL DE ENCHIMENTO DE COMBUSTÍVEL (COM RESPIRO, TRAVÁVEL)	122
TAMPA - CABEÇA DO CILINDRO	12
TAMPA - ENCHIMENTO (ÓLEO HIDRÁULICO)	406 408
TAMPA - MECANISMO DAS VÁLVULAS	13 15 17 19
TAMPA - MOTOR DO LIMPADOR DE PÁRA-BRISA	688
TAMPA (BOCAL DE ENCHIMENTO DO OLEO DO MOTOR)	58
TAMPA-TANQUE DO LÍQUIDO ARREFECEDOR	80
TAMPA (VÃLVULA DE RESPIRO)	15
TAMPA (VÁLVULA DO RESPIRO)	19
TANQUE - LAVADOR DE JANELA	739 752
TANQUE - LÍQUIDO ARREFECEDOR	80
TANQUE DE COMBUSTÍVEL	121 122
TANQUE DE COMBUSTÍVEL E MONTAGEM	120
TANQUE DE EXPANSÃO	80
TANQUE DE ÓLEO HIDRÁULICO E MONTAGEM	406 408
TANQUE DO FREIO	279 280
TAPETE	693 694
TELA FILTRANTE (SUCÇÃO)	199 203
TELA FILTRANTE (SUCÇÃO) (SUCÇÃO)	202
TERMOSTATO (ÁGUA)	60
TETO - CABINE	718 720
TIRANTE DO CILINDRO DE LEVANTAMENTO	438
TOLDO - ESTRUTURA ROPS ABERTA	658 660
TOLDO - ROPS ABERTA	656 657
TRANSMISSÃO DIRETA	238 239 244 249
TRANSMISSÃO E MONTAGEM	236 237
TRAVA - TRANSPORTE	445 447
TREM DE FORÇA	228 229

* TRADUÇÃO NÃO DISPONÍVEL NO MOMENTO DA IMPRESSÃO

ÍNDICE

Designação	Página
TRINCO - PORTA DA CABINA E JANELA	701
	702
TUBOS - ABSORÇÃO DE IMPACTOS	379
	381
TUBOS - AQUECEDOR	708
TUBOS - ARREFECEDOR DE ÓLEO HIDRÁULICO	365
TUBOS - BOMBA	377
TUBOS - BRAÇO	387
TUBOS - BRAÇO COM EXTENSÃO	363
TUBOS - CAÇAMBA	357
	359
TUBOS - CAÇAMBA DE MÚLTIPLAS APLICAÇÕES	371
	373
TUBOS - CILINDRO DE INCLINAÇÃO	389
TUBOS - CILINDRO DE LEVANTAMENTO	367
TUBOS - CIRCUITO PILOTO	375
TUBOS - COMBUSTÍVEL	101
	103
	105
TUBOS - DIREÇÃO	287
	289
TUBOS - DRENAGEM	362
TUBOS - ESTABILIZADOR	383
	385
TUBOS - FILTRO DO COMBUSTÍVEL	106
TUBOS - GIRO	388
TUBOS - LANÇA	355
TUBOS - ÓLEO DA TRANSMISSÃO	223
TUBOS AUXILIARES	369
TUBOS AUXILIARES - RETROESCAVADEIRA	347
	349
	352
TUBOS DO AQUECEDOR	708
	709
TUBULAÇÕES - AQUECEDOR E AR CONDICIONADO	709
TUBULAÇÕES-ARREFECEDOR DA TRANSMISSÃO	70
TURBOALIMENTADOR	92

U

UNI-DENTE	638

V

VÁLVULA-CONTROLE 3	410
VÁLVULA-CONTROLE 7	411
VÁLVULA DE ÁGUA	639
	695
VÁLVULA DE ALÍVIO	239
	244
	254
	391
	392
	420
	422
	424
	425
	426
	427
	428
	429
	430
	432
	664
VÁLVULA DE ALÍVIO (ENTRADA DO CONVERSOR DE TORQUE)	249
VÁLVULA DE ALÍVIO (EXTREMIDADE DA HASTE DO CILINDRO DE INCLINAÇÃO)	421
VÁLVULA DE ALÍVIO (EXTREMIDADE DO CABEÇOTE DO CILINDRO DE INCLINAÇÃO)	421
VÁLVULA DE CONTROLE	420
	421
	422
	423
	424
	425
	426
	427
	428
	429
	430
	432
VÁLVULA DE CONTROLE DOS FREIOS	273
VÁLVULA DE CONTROLE (ESTABILIZADOR)	414
	416
	418
VÁLVULA DE PARADA	77
	79
VÁLVULA DE PNEU	255
	256
VÁLVULA DE SEPARAÇÃO	434
VÁLVULA-MANUAL (FLUXO DIRECIONAL)	349
	352
VÁLVULA PILOTO DE ALÍVIO	425
VÁLVULA SOLENÓIDE	239
	244
VÁLVULA SOLENÓIDE (ACUMULADOR)	393
VÁLVULA SOLENÓIDE (AVANTE)	239
	244
VÁLVULA SOLENÓIDE (AVANTE, RÉ)	249

* TRADUÇÃO NÃO DISPONÍVEL NO MOMENTO DA IMPRESSÃO

ÍNDICE

Designação	Página
VÁLVULA SOLENÓIDE (CONTROLE DE PERCURSO, INTERRUPTOR)	393
VÁLVULA SOLENÓIDE (TRAÇÃO EM TODAS AS RODAS, EMBREAGEM UM)	249
VÁLVULA SOLENÓIDE (12-VOLTS)	107
	114
VÁLVULAS DE CONTROLE - OITO	411
VARETA DE NÍVEL E BOCAL DE ENCHIMENTO DO ÓLEO	58
VELA DE AQUECIMENTO; VELA INCANDESCENTE	131
	132
VELA DE AQUECIMENTO; VELA INCANDESCENTE (12 VOLTS)	131
	132
VENTILADOR (AQUECEDOR)	642
	697
VENTILADOR DE SUCÇÃO	67
	68
VIDRO DA PORTA	750
	751
VIGIA	406
	408
VIRABREQUIM	21
	23
	24
VOLANTE DO MOTOR	33

* TRADUÇÃO NÃO DISPONÍVEL NO MOMENTO DA IMPRESSÃO

STICHWORTVERZEICHNIS

Bezeichnung	Seite
A	
ABLASSLEITUNGEN	362
ABLASSSCHRAUBE (MAGNETISCH)	192, 194, 205
ABLASSSTOPFEN (MOTORÖL)	42
ABSPERRVENTIL	77, 79
ABTRIEBSWELLE	233, 234, 235
ACHSENANBAUSATZ	224
ACHSGEHÄUSE	219, 220, 221
ACHSGEHÄUSEFLANSCH	217, 218
ACHSWELLE	192
ANTRIEB - BAGGERLADER	209
ANTRIEBS- UND LENKACHSE	192
ANTRIEBSWELLE	230, 231
ANTRIEBSWELLENVERKLEIDUNG	307
ANZEIGE (*HIGH BEAM, TURN SIGNAL RH)	181, 185
ANZEIGE (*TURN SIGNAL LH, PARKING BRAKE)	181, 185
ARBEITS- U. SIGNALLEUCHTE	140, 142, 144
ARBEITSLEUCHTEN	136, 137, 138
ARMLEHNE (LINKS)	727, 728
ARMLEHNE (RECHTS)	727, 728
AUFKLEBER	757
AUFKLEBER - ANZEIGE	162
AUFKLEBER - ANZEIGE (SCHAUFELHÖHE)	345
AUFKLEBER (GELB)	309, 312
AUFKLEBER (SCHAUFELSTEUERUNG)	681
AUFKLEBER (STARTSCHALTER, HANDBUCH LESEN)	760
AUFKLEBER (TEMPERATURREGELUNG)	639, 695
AUSGLEICHSBEHÄLTER	80
AUSLEGER	437
AUSLEGER - SCHUTZVERKLEIDUNG	439
AUSLEGERLEITUNGEN	355
AUSLEGERZYLINDER	321, 323
AUSPUFFKRÜMMER	89
AUSPUFFROHRVERLÄNGERUNG	7, 8
B	
BATTERIE UND VERDRAHTUNG	125, 127, 128
BATTERIE (12 V, WARTUNGSFREI)	125, 127
BATTERIE (12 V, WARTUNGSFREI)	128
BATTERIEDECKEL	296
BATTERIEKASTEN	292
BEFESTIGUNGSHALTERUNG	644
BELEUCHTUNGSKABELSTRANG (DACH)	140, 142, 144
BLINKER (12 V)	181, 185
BLINKLEUCHTE	142, 144
BLINKLEUCHTE (BREMSLICHT, HECKLEUCHTE, RICHTUNGSBLINKER)	140
BODENBLECH	301, 302
BOLZEN (OBEN)	192
BREMSBEHÄLTERSATZ	279
BREMSGESTÄNGE	273
BREMSSTEUERVENTIL	273
BREMSTANK	279, 280
BREMSZYLINDER	276, 277
*BUCKET AR-GENERAL PURPOSE	468
C	
*CAP AS-COOLANT TANK	80
D	
DAUMEN	586, 587, 588, 589, 590, 591, 592, 593, 594, 595

* ÜBERSETZUNG ZUM ZEITPUNKT DER DRUCKLEGUNG NICHT VORHANDEN

STICHWORTVERZEICHNIS

Bezeichnung	Seite
	596
	597
	598
	599
	600
	601
	602
	603
	604
	605
	606
	607
	608
	609
	610
	611
	612
	613
	614
	615
	616
	617
	618
	619
	620
	621
	622
	623
	624
	625
	626
	627
	628
	629
	630
	631
	632
DAUMEN - ZYLINDER U. LEITUNGEN	315
	316
DAUMENGESTÄNGE	440
	596
	597
	599
	622
	623
	624
	625
	626
	627
	628
	630
	631
	632
	635
DAUMENZYLINDER	339
DICHTUNG	121
DICHTUNG (VENTILDECKEL)	13
	15
	17
	19
DICHTUNGSSATZ	135
	393
DICHTUNGSSATZ (DRUCKSPEICHER)	313
DICHTUNGSSATZ (ZUMESSPUMPE, LENKUNG)	291
DIFFERENTIAL	207
	208
DIFFERENTIAL UND TELLERRAD	205
DIFFERENTIALGETRIEBE U. TELLERRAD	207
DIFFERENZIALGEHÄUSE	205
DIFFERENZIALSPERRENSCHALTER	156
DREHSTROMGENERATOR	123
	124
DREHSTROMGENERATOR (100 A)	124
DREHSTROMGENERATOR (100 A, MIT BEFESTIGUNG)	10
DREHZAHLMESSER, ELEKTR.	736
DREHZAHLMESSER, ELEKTR. (12 V)	162
DRUCKBEGRENZUNGSVENTIL	664
DRUCKKOPFSCHALTER (NEUTRALISATOR, HERUNTERSCHALTEN)	674
	676
	686
DRUCKSCHALTER	158
DRUCKSCHALTER (KÜHLMITTEL)	159
DRUCKSCHALTER (MOTORÖL)	158
DRUCKSCHALTER (SCHWINGUNGSDÄMP-FUNG)	190
DRUCKSPEICHER, HYDRAULISCHE SCHWINGUNGSDÄMPFUNG	313
DRUCKSPEICHER, HYDRAULISCHE SCHWINGUNGSDÄMPFUNG	314
*DRYER AS-AIR	709

E

EINBAUSATZ - MONITOR	699
EINFÜLLKAPPE (HYDRAULIKÖL)	406
	408
EINLASSANSCHLUSS	86
ELEKTRONIK - MASCHINE	130

* ÜBERSETZUNG ZUM ZEITPUNKT DER DRUCKLEGUNG NICHT VORHANDEN

STICHWORTVERZEICHNIS

Bezeichnung	Seite
ELEKTRONIK - MONITOR	130
EMPFÄNGER, LASER (LR21)	133
ENDSCHALTER (BETRIEBSBREMSE)	273
ENDSCHALTER (SCHWINGSITZ)	729
ENTLÜFTER	55
ENTLÜFTER (ACHSE)	194
ENTLÜFTER (GETRIEBE)	239
	244
	249
	250
ENTLÜFTER (VORDERACHSE)	192
ENTLÜFTERFILTER (HYDRAULIKTANK)	406
	408
ENTLÜFTERPATRONE (KURBELGEHÄUSE)	55

F

FAHRERHAUS	648
FAHRERHAUS - HALTETEILE	737
FAHRERHAUS-KABELBAUM	739
	752
FAHRERHAUS M. OFFENEM ÜBERROLLSCHUTZ	658
	660
FAHRERHAUS MIT ÜBERROLLSCHUTZ	645
	646
	647
	649
	651
	653
FAHRERHAUSANBAUSATZ	714
FAHRERHAUSAUSKLEIDUNG	704
	706
FAHRERHAUSBELEUCHTUNG	704
FAHRERHAUSBELEUCHTUNG (12 V)	706
FAHRERHAUSDACH	718
	720
FAHRERHAUSFENSTER	741
	742
	744
	746
	748
FAHRERHAUSHEIZUNG	695
	697
FAHRERHAUSTÜR	689
	691
FAHRERHAUSTÜR- U. FENSTERVERRIEGELUNG	701
	702
FAHRERPLATTFORM-KABELSTRANG	181
	185
FAHRERPLATTFORM-KABELSTRANG (ANZEIGE)	171
FAHRERPLATTFORMVERDRAHTUNG	181
	185
FAHRERSITZ	723
	725
FAHRERSITZFEDERUNG	729
	732
FAHRWERK	5
FAHRWERK-KABELBAUM (ECM)	171
FESTSTELLBREMSGESTÄNGE	271
	272
FEUCHTIGKEITSSENSOR (WASSERABSCHEIDER)	118
FILTERSOCKEL U. MOTORÖLKÜHLER	62
	63
	65
FILTERWECHSELANZEIGE	88
FUSSMATTE	693
	694

G

GASFEDER	746
	748
GASPEDAL	716
	717
GEGENGEWICHT	293
	294
	295
GEGENWELLE (GETRIEBE)	239
	244
	249
GETRIEBE U. BEFESTIGUNG	236
	237
GETRIEBEAUFLAGER	225
GETRIEBEGEHÄUSE	197
	199
	200
	202
	203
GETRIEBEKÜHLERLEITUNGEN	70
GETRIEBEÖLFÜLLSTUTZEN	211
	213
GETRIEBEPUMPE	239
	244
	249
GETRIEBESTEUERUNG	686
GETRIEBESYNCHRONISIERSATZ	233
	235
GLÜHKERZE	131
	132
GLÜHKERZE (12 V)	131
	132
*GRADE CONTROL AR-LASER	133

* ÜBERSETZUNG ZUM ZEITPUNKT DER DRUCKLEGUNG NICHT VORHANDEN

STICHWORTVERZEICHNIS

Bezeichnung	Seite
GRUNDAUSFÜHRUNG	6

H

HALTERUNG	312
HANDSTEUERHEBEL	278
HANDVENTIL (RICHTUNG, FLUSS)	349
	352
HECKBAGGER-TELESKOPSTIEL	1
	2
	3
HECKBAGGERLÖFFEL	479
	480
	481
	482
	483
	484
	485
	486
	487
	488
	489
	490
	491
	492
	493
	494
	495
	496
	497
	498
	499
	500
	501
	502
	503
	504
	505
	506
	507
	508
	509
	510
	518
	519
	520
	521
	522
	523
	524
	525
	526
	527
	528
	529
	530
	531
	532
	533
	534
	535
	536
	537
	538
	539
	540
	541
	542
	543
	544
	545
	546
	547
	548
	549
	550
	551
	552
	553
	554
	555
	556
	557
	558
	559
	560
	561
HECKBAGGERLÖFFELGESTÄNGE	441
HECKBAGGERLÖFFELZYLINDER	318
	320
HEIZUNGS- U. KLIMAANLAGENLEITUNGEN	709
HEIZUNGSKABELSTRANG	697
HEIZUNGSLEITUNGEN	708
	709
HEIZUNGSVERDRAHTUNG	173
HINTERACHSE	194
HINTERER KABELSTRANG	189
HOHLRAD	194
	217
	218
HUBARM	435
HUBMASTBEFESTIGUNG	583
HUBZYLINDER	6
	327
HUBZYLINDER-HALTERUNG	438
HUBZYLINDERLEITUNGEN	367

* ÜBERSETZUNG ZUM ZEITPUNKT DER DRUCKLEGUNG NICHT VORHANDEN

STICHWORTVERZEICHNIS

Bezeichnung	Seite
HYDRAULIKFITTING	343
HYDRAULIKGENERATORSTEUERUNG	2
HYDRAULIKHANDSTEUERUNG	672
	674
	676
	679
	681
	683
HYDRAULIKÖLKÜHLERLEITUNGEN	365
HYDRAULIKPEDALSTEUERUNG	684
	685
HYDRAULIKPUMPE UND LEITUNGEN	377
HYDRAULIKSYSTEM	344
HYDRAULIKTANK UND BEFESTIGUNGSTEILE	406
	408
HYDRAULISCHE SCHWINGUNGSDÄMPFUNG	314
HYDRAULISCHER BREMSSATTEL - BREMSE	194

I

IDENTIFIKATIONSSCHILD (ARBEITSGERÄT)	512
	514
	518
	519
	520
	521
	522
	523
	524
	525
	526
	527
	528
	529
	530
	531
	532
	533
	534
	535
	536
	537
	538
	539
	540
	541
	553
	558
	559
	560
	561
	562
	563
	564
	565
IDENTIFIKATIONSSCHILD (CAT)	497
	499
	500
	501
	502
	508
IDENTIFIZIERUNGS-AUFKLEBER (ARBSÜTZUNGSSTEUERUNG)	645
	646
	647
	656
	657
IDENTIFIZIERUNGS-AUFKLEBER (CAT)	312
IDENTIFIZIERUNGS-AUFKLEBER (CATERPILLAR, HINTEN)	656
IDENTIFIZIERUNGS-AUFKLEBER (CATERPILLAR, VORN)	645
	646
	647
	657
IDENTIFIZIERUNGS-AUFKLEBER (GRUPPENNUMMER)	642
	697
IDENTIFIZIERUNGS-AUFKLEBER (HYDRAULIKÖL)	273
INSTRUKTIONS-AUFKLEBER	679
INSTRUKTIONS-AUFKLEBER (AUSFAHRBARER STIEL)	685
INSTRUKTIONS-AUFKLEBER (AUSFAHRBARER STIL - BOLZEN, HANDBUCH LESEN)	1
	2
	3
INSTRUKTIONS-AUFKLEBER (*LINK)	441
INSTRUKTIONS-AUFKLEBER (NICHT BETRETEN)	759
INSTRUKTIONS-AUFKLEBER (ÖLFLUSSRICHTUNG)	347
INSTRUKTIONS-AUFKLEBER (SCHAUFELSTEUERUNG)	410
INSTRUKTIONS-AUFKLEBER (SCHEIBENWASCHMITTEL)	739
	752
INSTRUKTIONS-AUFKLEBER (ZUSATZ)	684
	685
INSTRUKTONSSCHILD (BATTERIE) (HAUPTSCHALTER)	128
INSTRUMENTENTAFEL-SICHERUNG	148

* ÜBERSETZUNG ZUM ZEITPUNKT DER DRUCKLEGUNG NICHT VORHANDEN

STICHWORTVERZEICHNIS

Bezeichnung	Seite
K	
KABELSTRANG	182, 186
KABELSTRANG - HEIZUNG U. KLIMAANLAGE	159, 173, 642
KABELSTRANG - HEIZUNG U. KLIMAANLAGE (KOMPRESSOR)	159
KABELSTRANG - HEIZUNG U. KLIMAANLAGE (STROM)	159
KÄLTEMITTEL-DRUCKSPEICHER	709
KÄLTEMITTELKOMPRESSOR	664
KÄLTEMITTELKOMPRESSOR U. BEFESTIGUNG	662
KÄLTEMITTELKONDENSATOR U. BEFESTIGUNGSTEILE	665
KAPPE (*BREATHER VAVLE)	19
KAPPE (ENTLÜFTUNGSVENTIL)	15
KAPPE (MOTORÖLEINFÜLLUNG)	58
KEILRIEMEN (KLIMAANLAGE)	68
KEILRIEMENSATZ (EINSCHL. 2 RIEMEN) (DREHSTROMGENERATOR)	67, 68
KIPPPEDAL	284
KIPPSCHALTER (ALLRADANTRIEB)	155
KIPPSCHALTER (ARBEITSSCHEINWERFER, HINTEN)	140, 142, 144
KIPPSCHALTER (ARBEITSSCHEINWERFER, VORN)	140, 142, 144
KIPPSCHALTER (GEBLÄSEGESCHWINDIGKEIT)	173
KIPPSCHALTER (GEBLÄSEGESCHWINDIGKEIT)	159
KIPPSCHALTER (GETRIEBENEUTRALSPERRE)	165
KIPPSCHALTER (HEIZUNG)	173
KIPPSCHALTER (KLIMAANLAGE, HEIZUNG)	159
KIPPSCHALTER (RUNDUM-KENNLEUCHTE)	162
KIPPSCHALTER (STARTHILFE)	162
KIPPSCHALTER (WARNHORN)	283
KIPPSCHALTER (WARNLEUCHTEN)	181, 185
KIPPSCHALTER (*WIPER, WASHER, REAR)	754
KIPPZYLINDER	340
KLIMAANLAGE	642
KLIMAANLAGE UND AUFHÄNGUNG	639
KLIMAANLAGENVERDRAHTUNG	159
KOLBENPUMPE	401, 403
KOLBENRING	44
KOMBISCHAUFEL	468, 469, 470, 562, 563, 564, 565
KOMBISCHAUFELLEITUNGEN	371, 373
KOMBISCHAUFELZYLINDER	328
KONSOLEN-VERDRAHTUNG	165
KONSOLEN-VERDRAHTUNG (SEITENKONSOLE)	162
KONSOLENVERDRAHTUNG	162, 165
KRAFTSTOFFEINSPRITZPUMPE	107, 108, 111, 114, 115
KRAFTSTOFFENTLÜFTUNGSPUMPE UND -HAUPTFILTER	118, 119
KRAFTSTOFFFILTERKAPPE (BELÜFTET, SPERRBAR)	122
KRAFTSTOFFILTER	100
KRAFTSTOFFILTER (EINFÜLLSTURZENSIEB)	122
KRAFTSTOFFILTERELEMENT	100
KRAFTSTOFFILTERLEITUNGEN	106
KRAFTSTOFFLEITUNGEN	101, 103, 105
KRAFTSTOFFSTANDANZEIGE	162
KRAFTSTOFFSTANDGEBER	121
KRAFTSTOFFTANK	121, 122
KRAFTSTOFFTANK-KABELSTRANG (KRAFTSTOFFABSPERRUNG)	8
KRAFTSTOFFTANK U. BEFESTIGUNG	120
KRAFTÜBERTRAGUNG	228, 229
KREUZGELENK-EINBAUSATZ	192
KREUZGELENKLAGER-EINBAUSATZ (ANTRIEBSWELLE)	230
KÜHLER	77, 79
KÜHLER U. ÖLKÜHLER - BEFESTIGUNG	73
KÜHLERNETZ UND ÖLKÜHLER	77, 78, 79

* ÜBERSETZUNG ZUM ZEITPUNKT DER DRUCKLEGUNG NICHT VORHANDEN

STICHWORTVERZEICHNIS

Bezeichnung	Seite
KÜHLERSCHLAUCH (OBEN)	73
KÜHLERSCHLAUCH (UNTEN)	73
KÜHLERSCHUTZ	308
KÜHLMITTELBEHÄLTER	80
KÜHLMITTELTEMPERATURANZEIGE	162
KÜHLWASSERANSCHLUSS	60
KÜHLWASSERPUMPE	75
KUPPLUNGSANTRIEB, ELAST.	210
KUPPLUNGSBOLZEN	584
	585
KURBELWELLE	21
	23
	24
KURBELWELLEN-RIEMENSCHEIBE	50

L

LADERRAHMEN	303
LADERZUSATZLEITUNGEN	369
LADESCHAUFEL	6
LAUFBAND UND ANTRIEB	139
LAUFROLLENSCHALTER (AUSSCHALTER, STELLUNGSEINSTELLUNG)	175
	177
	179
LEITUNGS-BEFESTIGUNGSTEILE	399
LENKBETÄTIGUNG	283
	284
LENKKNOPF	286
LENKÖLLEITUNGEN	287
	289
LENKSÄULENSCHALTER (HD SCHEINWERFER, RICHTUNGSBLINKER, WDO WISCHER)	181
	185
LENKZYLINDER	192
	281
LEUCHTE	162
LEUCHTE (12 V)	162
	704
	706
LEUCHTE (12 V)	736
LEUCHTE (12 V, 21 W)	142
	144
LEUCHTE (12 V, 5 W)	142
	144
LEUCHTE (12 V, 55 W)	136
	137
	138
LEUCHTE (*12-VOLT, 55-WATT, HID)	139
*LINES GP-STICK	387
LITERATURABLAGE	661
LÖFFELSTIEL	466
LÖFFELZAHNSPITZE (ERDREICH)	558
	559
	560
	561
LÜFTER (HEIZUNG)	642
	697
LÜFTERANTRIEB	32
LUFTFILTER (FAHRERHAUSHEIZUNG, KLIMAANLAGE)	639
	695
LUFTFILTER (HAUPTELEMENT)	84
LUFTFILTER (UMLAUFLUFT)	642
	697
LUFTFILTER-WARTUNGSANZEIGE	87
LUFTFILTER-WARTUNGSANZEIGE (LUFTFILTER)	87
LUFTFILTERWARTUNGSANZEIGE	7
	87
	88
LUFTKOMPRESSOR (SCHWINGSITZ)	729
	732
LUFTREINIGER	81
	82
	84
	85
LUFTTFILTERELEMENT (HAUPTELEMENT)	85
LUFTTFILTERELEMENT (HILFSELEMENT)	84
	85

M

MAGNETVENTIL	239
	244
MAGNETVENTIL (ALLRADANTRIEB, KUPPLUNG EINS)	249
MAGNETVENTIL (DRUCKSPEICHER)	393
MAGNETVENTIL (SCHWINGUNGSDÄMPFUNGSSCHALTER)	393
MAGNETVENTIL (VORWÄRTS)	239
	244
MAGNETVENTIL (VORWÄRTS, RÜCKWÄRTS)	249
MAGNETVENTIL (12 V)	107
	114
*MANIFOLD GP-RIDE CONTROL	393
MECHANISCHES GETRIEBE	238
MEMBRAN (KURBELGEHÄUSEDRUCKSCHALTER)	15
	19
MEMBRAN (KURBELGEHÄUSEDRUCKSCHALTER)	13
	17
*MODULE AS-POWER SUPPLY	133

* ÜBERSETZUNG ZUM ZEITPUNKT DER DRUCKLEGUNG NICHT VORHANDEN

STICHWORTVERZEICHNIS

Bezeichnung	Seite
MONITORBEFESTIGUNG	715
MOTOR- UND GETRIEBEAUFLAGER	41
MOTORAUFLAGER	40
MOTORAUSFÜHRUNG	7
	8
	9
	10
MOTORBLOCK	25
	27
	28
MOTORHAUBE	311
	312
MOTORHAUBE UND VERKLEIDUNG	309
MOTORHUBÖSE	39
MOTORKABELSTRANG	167
MOTORÖLKÜHLER	61
	62
MOTORÖLKÜHLER UND FILTERSOCKEL	62
	63
	65
MOTORSTOPFEN	47
	48
	49
MOTORVERDRAHTUNG	167
*MOUNTING & LINES GP-RADIATOR	72

N

NEIGEZYLINDERLEITUNGEN	389
NIEGUNGSSTEUER VERDRAHTUNG	171
NOCKENWELLE	11

O

OFFENES FAHRERHAUS MIT ÜBERROLL-SCHUTZ	656
	657
ÖLFILTER	10
	57
	58
ÖLFILTER (FEINSTFILTER) (ÖLFILTERUMGE-HUNG)	344
ÖLFILTER (HYDRAULISCH)	344
ÖLFILTER (NICHT BRENNBARE FLÜSSIGKEIT) (ÖLFILTERUMGEHUNG)	344
ÖLFILTER (STANDRAD EFFIZIENZ)	228
	229
ÖLKÜHLER (MOTOR)	63
ÖLKÜHLER (MOTOR)	61
ÖLKÜHLERBLOCK (GETRIEBE)	77
ÖLKÜHLERBLOCK (HYDRAULISCH)	77
ÖLKÜHLERBLOCK (*TRANSMISSION, 9-ROW)	79
ÖLLEITUNGEN - KRAFTÜBERTRAGUNG	223
ÖLMESSSTAB U. EINFÜLLSTUTZEN	58
ÖLSTANDANZEIGE (MOTORÖLMESSSTAB)	58
ÖLSTANDANZEIGE (ÖLMESSSTAB)	211
	213
ÖLTEMPERATURANZEIGE (DREHZAHLWAND-LER)	162
ÖLWANNE	42

P

PALETTENGABEL	580
PANETENTRÄGERSATZ	226
PENDELVENTIL	434
PLANIERSCHILD	566
	567
	568
	569
PLATTE	488
	492
PLEUELSTANGE UND KOLBEN	44
	46
PUMPENANTRIEB U. BEFESTIGUNGSTEILE	341

R

RAD UND REIFEN	256
	257
	258
	259
	260
	261
	262
	263
	264
	265
	266
	267
	268
	269
	270
RADAUFHAENGUNG	262
	263
	265
	269
	270
RADAUFHAENGUNG (VORN)	259
	260
	261
	264
	266
	268
RADFLANSCH	194

* ÜBERSETZUNG ZUM ZEITPUNKT DER DRUCKLEGUNG NICHT VORHANDEN

STICHWORTVERZEICHNIS

Bezeichnung	Seite
	215
	216
	281
REGELERHEBEL	94
	95
	96
	98
	703
REGLERSTEUERUNG	94
	95
	96
	98
REIFENVENTIL	255
	256
RELAIS	149
	150
	151
RELAIS (12 V)	155
	159
	173
	190
RELAIS (12 V)	181
RELAIS (12 V) (ARBEITSGERÄT DEAKTIVIEREN)	185
RELAIS (12 V) (DIFFERENTIALSPERRE)	185
RELAIS (12 V) (HUPE)	185
RELAIS (12 V) (MAST, ACCUGRADE)	133
RELAIS (12 V) (RÜCKFAHRALARM)	185
RELAIS (12 V) (STARTHILFE)	167
RELAIS (12 V) (STELLUNGSLEUCHTE)	185
REPARATURSATZ (DREHZAHLREGLERPEDAL)	716
	717
ROLLENLAGER-EINBAUSATZ	226
RÜCKSPIEGEL	711
	712
RÜCKSPIEGEL (INNEN)	645
	656
	657
RUNDUM-KENNLEUCHTE	139
	146

S

Bezeichnung	Seite
SAUGLÜFTER	67
	68
SCHALLDÄMPFER	90
	91
SCHALTER	271
SCHALTER - ALLRADANTRIEB	155
SCHALTER, FUSSBETÄTIGT	156
SCHALTER (STARTERMOTOR)(12 V)	152
SCHAUFELAUFHÄNGUNG	582
SCHAUFELAUSSCHALTER UND -EINSTELLER	345
SCHAUFELGESTÄNGE	443
SCHAUFELLEITUNGEN	357
	359
SCHAUFELTRANSPORTAUSFÜHRUNG	763
SCHAUGLAS	406
	408
SCHEIBENWASCHANLAGE	739
SCHEIBENWASCHMITTELBEHÄLTER	739
	752
SCHEIBENWISCHER	754
SCHEIBENWISCHER UND -WASCHANLAGE	752
SCHEIBENWISCHERBLATT (*500-MM) (HINTEN)	754
SCHEIBENWISCHERBLATT (*600-MM) (VORNE)	752
SCHEIBENWISCHERBLATT (*600-MM) (VORNE)	754
SCHEIBENWISCHERMOTOR	713
SCHEIBENWISCHERMOTOR (HINTEN)	754
SCHEINWERFER U. RICHTUNGSLEUCHTE	140
	142
	144
SCHILD UND AUFKLEBER	758
	761
SCHLAUCHLEITUNG (KURBELGEHÄUSEENTLÜFTER)	13
SCHLÜSSEL (ELEKTRISCHER HAUPTSCHALTER)	157
SCHMIERPUMPE	59
SCHNEIDMESSER	578
	579
SCHNELLWECHSELEINRICHTUNG	573
	574
	575
	576
	577
SCHNELLWECHSELVORRICHTUNG	572
SCHÜRZE, KOMBISCHAUFEL	570
	571
SCHUTZ - ARBEITSGERÄT	581
SCHUTZABDECKUNG	762
SCHUTZBLECHE, HINTEN	299
SCHUTZBLECHE, VORNE	298
SCHUTZBLECHVERLÄNGERUNG	297
SCHWENKLEITUNGEN	388
SCHWENKRAHMEN	305
SCHWENKZYLINDER	337
SCHWINGSITZ	727
	728
	729

* ÜBERSETZUNG ZUM ZEITPUNKT DER DRUCKLEGUNG NICHT VORHANDEN

STICHWORTVERZEICHNIS

Bezeichnung	Seite
SCHWINGUNGSDÄMPFUNG - KABELSTRANG	190, 729, 732
SCHWINGUNGSDÄMPFUNGSLEITUNGEN	379, 381
SCHWINGUNGSDÄMPFUNGSVERDRAHTUNG	190
SCHWUNGRAD	33
SCHWUNGRADGEHÄUSE	34
SEITENANTRIEB - PLANETENGETRIEBE	194, 226, 227
SEITENSTÜTZEN	460
SEITENSTÜTZENLEITUNGEN	383, 385
SEITENSTÜTZENPLATTEN	458, 459
SEITENSTÜTZENPLATTEN UND SCHUTZABDECKUNG	449, 451, 453
SEITENSTÜTZENZYLINDER	329, 331
SENSOR, KABELSTRANG	2, 3, 4
SENSOR, KABELSTRANG (ACCUGRADE)	5
SENSOR, KABELSTRANG (AUSFAHRBARER STIEL)	170
SENSOR, KABELSTRANG (*BOOM, STICK, BUCKET)	171
SENSOR, KABELSTRANG (DREHUNG)	171
SENSORANSCHLUSSSATZ (2POLIG)	165, 189
SENSORBEFESTIGUNG	147
*SHAFT GP-PUMP DRIVE	405
SICHERHEITSGURT	721, 722
SICHERUNG (10 A)	139, 148
SICHERUNG (15 A)	148
SICHERUNG (20 A)	148
SICHERUNG (40 A)	149
SICHERUNG (60 A)	150, 151, 182, 186
SIEB (ANSAUG)	199
SIEB (ANSAUGUNG)	203
SIEB (ANSAUGUNG) (ANSAUG)	202
SOFTWARE - MASCHINE	130
SOFTWARE (EMPFÄNGER)	133
SOFTWARE (MAST)	133
SPURSTANGE	192, 281
STANDARDHECKBAGGERSTIEL	3, 4, 5
STARTERMOTOR	152, 154
STARTSCHALTER (TASTE)	162
STELLUNGSSENSOR	318, 323, 325
STELLUNGSSENSOR (AUSLEGER SCHWENKEN)	699
STELLUNGSSENSOR (LINEAR)	333
STELLUNGSSENSOR (WINKEL)	699
STEUERHEBEL	686
STEUERKONSOLE	666, 668, 670
STEUERKRÜMMER	391, 392
STEUERUNG - NICHT PROGRAMMIERT (MASCHINE)	130
STEUERUNG - NICHT PROGRAMMIERT (ÜBERWACHUNGSTAFEL)	130
STEUERUNG U. BEFESTIGUNG - ABSTÜTZUNG	672
STEUERUNGS-KABELSTRANG	699
STEUERVENTIL	420, 421, 422, 423, 424, 425, 426, 427, 428, 429, 430, 432
STEUERVENTIL (ABSTÜTZUNG)	414, 416, 418
STEUERVENTILHEBEL (ABSTÜTZUNG)	414, 416, 418
STIEL	461, 462
STIELAUFHÄNGUNG	448
STIELZYLINDER	333, 335, 336

* ÜBERSETZUNG ZUM ZEITPUNKT DER DRUCKLEGUNG NICHT VORHANDEN

STICHWORTVERZEICHNIS

Bezeichnung	Seite
STIRNRADGEHÄUSE	35
	37
STOPFEN	250
STOPFEN (GETRIEBEABLASS)	239
	244
STÜTZPLATTEN U. BEFESTIGUNG	455
	456
	457

T

TELESKOPSTIEL	464
TELESKOPSTIELLEITUNGEN	363
TELESKOPSTIELZYLINDER	325
	464
TELLER- UND KEGELRAD	205
TEMPERATURGEBER (MOTORKÜHLMITTEL)	167
TEMPERATURGEBER (12 V)	239
	245
	250
TEMPERATURREGLER (WASSER)	60
TEMPERATURSCHALTER	167
TEMPERATURSCHALTER (KLIMAANLAGE)	642
TEMPERATURSCHALTER (KRAFTSTOFF)	115
TEMPERATURSCHALTER (MOTORKÜHLMITTEL)	167
TIEFLÖFFEL-HYDRAULIKNOTLEITUNGEN	347
	349
	352
*TIP GP-CHISEL	538
	539
	540
	541
TRANSPORTHALTERUNG	756
TRANSPORTSPERRE	445
	447
	758
TRENNSCHALTER	157
TURBOLADER	92
TÜRFENSTER	750
	751

U

ÜBERDRUCKVENTIL	239
	244
	254
	391
	392
	420
	422
	424
	425
	426
	427
	428
	429
	430
	432
ÜBERDRUCKVENTIL (DREHMOMENTWANDLEREINLASS)	249
ÜBERDRUCKVENTIL (NEIGEZYLIMDER - STANGENSEITE)	421
ÜBERDRUCKVENTIL (NEIGEZYLINDER - BODENSEITE)	421
UMLAUFKÜHLWASSERHEIZUNG	135
UMLAUFKÜHLWASSERHEIZUNGS-ELEMENT (120 V, 1000 W)	135
UNIVERSAL-ZAHNSPITZE	638
UNIVERSALSCHAUFEL	471
	473
	474
	476
	478
	511
	512
	513
	514
	515
	516
	517

V

VENTILANORDNUNGS-BEFESTIGUNGS-SATZ	394
	395
VENTILBEFESTIGUNG	342
VENTILBEFESTIGUNG (BLOCK)	410
VENTILBEFESTIGUNG (BLOCK)	410
VENTILBLOCK 2	410
VENTILBLOCK 3	410
VENTILBLOCK 7	411
VENTILDECKEL	13
	15
	17
	19
VENTILDECKELDICHTUNG (GEHÄUSE)	37
VENTILKIPPHEBEL	51
VENTILSATZ (2-VENTIL)	412
VENTILSATZ (3-VENTIL)	413
VENTILSATZ (6-VENTIL)	414
VENTILSATZ (7-VENTIL)	416
VENTILSATZ (8-VENTIL)	418
VENTILSTEUERUNG	52

* ÜBERSETZUNG ZUM ZEITPUNKT DER DRUCKLEGUNG NICHT VORHANDEN

STICHWORTVERZEICHNIS

Bezeichnung	Seite
	53
VERDRAHTUNG	7
VERDRAHTUNG - AUSFAHRBARER STIL	170
	464
VERDRAHTUNG - SCHAUFELAUSSCHALTER U. EINSTELLER	175
	177
	179
VERDRAHTUNG, HINTEN	189
VERDRAHTUNGSKABELBAUM	179
VERDRAHTUNGSKABELBAUM (AUSSCHALTER, STELLUNGSREGELUNG)	175
	177
	179
VERDRAHTUNGSKABELBAUM (DIFFERENTIALSPERRE)	156
VERDRAHTUNGSKABELBAUM (WIDERSTAND)	171
VORDERACHSE	281
VORHÄNGESCHLOSS	758
VORHÄNGESCHLOSS (VANDALISMUSSCHUTZ)	758
VORSTEUERLEITUNGEN	375
VORSTEUERÜBERDRUCKVENTIL	425
VORSTEUERUNGSSATZ	284

W

WARNAUFKLEBER (DRUCKSAMMLER, HOCHDRUCK, HANDBUCH LESEN)	313
WARNAUFKLEBER (FREMDSTART, HANDBUCH LESEN, US)	759
WARNAUFKLEBER (*HIGH PRESS CYLINDER, READ OMM)	379
	381
WARNAUFKLEBER (HOCHDRUCK, HANDBUCH LESEN)	313
WARNAUFKLEBER (*HOT FLUID UND PRESS, READ OMM)	760
WARNAUFKLEBER (*HYD PRESS, READ OMM, U.S.)	347
	349
	352
WARTUNGSSATZ	716
	717
WASSERABSCHEIDER- U. KRAFTSTOFFILTER	100
WASSERABSCHEIDER UND KRAFTSTOFFILTER	118
WASSERVENTIL	639
	695
WECHSELGETRIEBE	239
	244
	249
WISCHERMOTORABDECKUNG	688

Z

ZAHNSPITZE, SCHARF	518
	519
	520
	521
	522
	523
	524
	525
	526
	527
	528
	529
	530
	531
	532
	533
	534
	535
	536
	537
	546
	547
	548
	549
	550
	551
	552
	553
	554
	555
	556
	557
ZUMESSPUMPE	291
ZUMESSPUMPE (HMU)	344
ZWISCHENRADWELLE (GETRIEBE)	239
	244
	249
ZYLINDERAUFHÄNGUNG	396
	398
ZYLINDERKOPF	29
	30
	31
ZYLINDERKOPFDECKEL	12

6

6-FACH-VENTILBLOCK	410

* ÜBERSETZUNG ZUM ZEITPUNKT DER DRUCKLEGUNG NICHT VORHANDEN

STICHWORTVERZEICHNIS

Bezeichnung	Seite	Bezeichnung	Seite
8			
8-BLOCK-VENTILSATZ	411		

* ÜBERSETZUNG ZUM ZEITPUNKT DER DRUCKLEGUNG NICHT VORHANDEN

MEMORANDA

MACHINE ARRANGEMENT

209-9929 BACKHOE AR-EXTENDABLE STICK

S/N: SHA1-UP
AN ATTACHMENT

SMCS-6504, 6533 **i02355208**

NOTE	PART NUMBER	QTY	PART NAME 1 2 3 4 5 6 (PRODUCT LEVEL)	SEE PAGE
Y	*209-9928*	1	BOOM GP	437
Y	**210-7086**	1	CYLINDER GP-BACKHOE BUCKET	320
Y	**210-7074**	1	CYLINDER GP-BOOM	321
Y	**210-7078**	1	CYLINDER GP-STICK	335
Y	*211-7601*	1	LINES GP-BOOM	355
Y	*246-9318*	1	LINES GP-BUCKET	359
Y	*211-7564*	1	LINES GP-STICK	387
Y	*213-6692*	1	LINKAGE GP-BACKHOE BUCKET	441
Y	*246-9309*	1	MOUNTING GP-LINES (BACKHOE)	399
Y	*209-9938*	1	MOUNTING GP-STICK	448
Y	*271-1404*	1	STICK GP	462
	259-1802	2	FILM-INSTRUCTION (EXTENDABLE STICK PIN, READ OMM)	
			(ON THE RH & LH SIDE OF THE MACHINE E-STICK. ALIGN THE EDGE OF THE DECAL WITH THE E-STICK PIN HOLE)	

Y-SEPARATE ILLUSTRATION

<END>

MACHINE ARRANGEMENT

213-9293 BACKHOE AR-EXTENDABLE STICK–ACCUGRADE

S/N: SHA1-UP

AN ATTACHMENT

SMCS-6504, 6533 **i02441245**

NOTE	PART NUMBER	QTY	PART NAME 1 2 3 4 5 6 (PRODUCT LEVEL)	SEE PAGE
Y	*209-9928*	1	BOOM GP	437
Y	*210-7085*	1	CYLINDER GP-BACKHOE BUCKET	318
Y	*246-9885*	1	CYLINDER GP-BOOM	323
Y	*210-7077*	1	CYLINDER GP-STICK (GRADE CONTROL)	333
Y	*227-7373*	1	ELECTRONICS GP-MACHINE	130
Y	*231-3513*	1	WIRING GP-GRADE CONTROL	171
Y	*211-7601*	1	LINES GP-BOOM	355
Y	*246-9318*	1	LINES GP-BUCKET	359
Y	*211-7564*	1	LINES GP-STICK	387
Y	*213-6692*	1	LINKAGE GP-BACKHOE BUCKET	441
Y	*246-9309*	1	MOUNTING GP-LINES (BACKHOE)	399
Y	*209-9938*	1	MOUNTING GP-STICK	448
Y	*271-1401*	1	STICK GP-EXTENDABLE	464
	216-6069	1	CONTROL GP-HYDRAULIC GENERATOR	
	221-2375	1	CONTROL AS	
	213-6069	1	HARNESS AS-SENSOR	
	155-2271	4	KIT-CONNECTING PLUG (4-PIN)	
			(EACH INCLUDES PLUG AS, WEDGE & INTERFACE SEAL)	
	102-8805	1	KIT-RECEPTACLE (6-PIN)	
			(INCLUDES RECEPTACLE AS & WEDGE)	
E	**5P-0767**		HOSE (247-CM)	
H	**6V-2721**		TUBE-HEAT SHRINK (25.4-MM DIA) (3-DM)	
	6V-8523		HOSE (481-CM)	
E	**119-3662**		TUBE-HEAT SHRINK (10.85-MM DIA) (12-CM)	
	259-1802	2	FILM-INSTRUCTION (EXTENDABLE STICK PIN, READ OMM)	
			(ON EXTENDABLE STICK)	

E-ORDER BY THE CENTIMETER
H-ORDER BY THE DECIMETER
Y-SEPARATE ILLUSTRATION

<END>

MACHINE ARRANGEMENT

291-9203 BACKHOE AR-EXTENDABLE STICK–ACCUGRADE

S/N: SHA1-UP
AN ATTACHMENT

SMCS-6504, 6533 **i02605418**

NOTE	PART NUMBER	QTY	PART NAME 1 2 3 4 5 6 (PRODUCT LEVEL)	SEE PAGE
Y	*209-9928*	1	BOOM GP	437
Y	**210-7085**	1	CYLINDER GP-BACKHOE BUCKET	318
Y	**246-9885**	1	CYLINDER GP-BOOM	323
Y	*210-7077*	1	CYLINDER GP-STICK (GRADE CONTROL)	333
Y	*227-7373*	1	ELECTRONICS GP-MACHINE	130
Y	*231-3513*	1	WIRING GP-GRADE CONTROL	171
Y	*211-4253*	1	INSTALLATION GP-MONITOR (ADVISOR)	699
Y	*211-7601*	1	LINES GP-BOOM	355
Y	*246-9318*	1	LINES GP-BUCKET	359
Y	*211-7564*	1	LINES GP-STICK	387
Y	*213-6692*	1	LINKAGE GP-BACKHOE BUCKET	441
Y	*246-9309*	1	MOUNTING GP-LINES (BACKHOE)	399
Y	*209-9938*	1	MOUNTING GP-STICK	448
Y	*271-1401*	1	STICK GP-EXTENDABLE	464
	259-1802	2	FILM-INSTRUCTION (EXTENDABLE STICK PIN, READ OMM)	
			(ON THE RH & LH SIDE OF THE EXTENDABLE STICK)	
	290-6809	1	HARNESS AS-SENSOR	
	102-8804	1	KIT-RECEPTACLE (4-PIN)	
			(INCLUDES RECEPTACLE AS & WEDGE)	
D	**6V-2722**		TUBE-HEAT SHRINK (25.4-MM DIA) (1-M)	
E	**6V-8523**		HOSE (340-CM)	
	155-2272	1	PLUG AS-CONNECTOR (4-PIN)	
			(INCLUDES PLUG AS, WEDGE, & INTERFACE SEAL)	

D-ORDER BY THE METER
E-ORDER BY THE CENTIMETER
Y-SEPARATE ILLUSTRATION

<END>

209-9924 BACKHOE AR-STANDARD STICK

S/N: SHA1-UP
AN ATTACHMENT

SMCS-6502, 6504 **i02357032**

NOTE	PART NUMBER	QTY	PART NAME 1 2 3 4 5 6 (PRODUCT LEVEL)	SEE PAGE
Y	*209-9928*	1	BOOM GP	437
Y	**210-7086**	1	CYLINDER GP-BACKHOE BUCKET	320
Y	**210-7074**	1	CYLINDER GP-BOOM	321
Y	**210-7078**	1	CYLINDER GP-STICK	335
Y	*211-7601*	1	LINES GP-BOOM	355
Y	*246-9311*	1	LINES GP-BUCKET	357
Y	*211-7564*	1	LINES GP-STICK	387
Y	*213-6692*	1	LINKAGE GP-BACKHOE BUCKET	441
Y	*246-9309*	1	MOUNTING GP-LINES (BACKHOE)	399
Y	*271-8666*	1	STICK GP-HOE	466

Y-SEPARATE ILLUSTRATION

<END>

MACHINE ARRANGEMENT

213-9290 BACKHOE AR-STANDARD STICK–ACCUGRADE

S/N: SHA1-UP

AN ATTACHMENT

SMCS-6502, 6504 **i02441230**

NOTE	PART NUMBER	QTY	PART NAME 1 2 3 4 5 6 (PRODUCT LEVEL)	SEE PAGE
Y	*209-9928*	1	BOOM GP	437
Y	**210-7085**	1	CYLINDER GP-BACKHOE BUCKET	318
Y	**246-9885**	1	CYLINDER GP-BOOM	323
Y	*210-7077*	1	CYLINDER GP-STICK (GRADE CONTROL)	333
Y	*227-7373*	1	ELECTRONICS GP-MACHINE	130
Y	*231-3513*	1	WIRING GP-GRADE CONTROL	171
Y	*211-7601*	1	LINES GP-BOOM	355
Y	*246-9311*	1	LINES GP-BUCKET	357
Y	*211-7564*	1	LINES GP-STICK	387
Y	*213-6692*	1	LINKAGE GP-BACKHOE BUCKET	441
Y	*246-9309*	1	MOUNTING GP-LINES (BACKHOE)	399
Y	*271-8666*	1	STICK GP-HOE	466
	213-6069	1	HARNESS AS-SENSOR	
	102-8805	1	KIT-RECEPTACLE (6-PIN)	
			(INCLUDES RECEPTACLE AS & WEDGE)	
E	**5P-0767**		HOSE (247-CM)	
D	**6V-2722**		TUBE-HEAT SHRINK (25.4-MM DIA) (0.3-M)	
E	**6V-8523**		HOSE (481-CM)	
E	**119-3662**		TUBE-HEAT SHRINK (10.85-MM DIA) (13-CM)	
	155-2271	4	KIT-CONNECTING PLUG (4-PIN)	
			(EACH INCLUDES PLUG AS, WEDGE & INTERFACE SEAL)	

D-ORDER BY THE METER
E-ORDER BY THE CENTIMETER
Y-SEPARATE ILLUSTRATION

<END>

MACHINE ARRANGEMENT

291-9202 BACKHOE AR-STANDARD STICK–ACCUGRADE

S/N: SHA1-UP
AN ATTACHMENT

SMCS-6502, 6504 **i02605411**

NOTE	PART NUMBER	QTY	PART NAME 1 2 3 4 5 6 (PRODUCT LEVEL)	SEE PAGE
Y	*209-9928*	1	BOOM GP	437
Y	**210-7085**	1	CYLINDER GP-BACKHOE BUCKET	318
Y	**246-9885**	1	CYLINDER GP-BOOM	323
Y	*210-7077*	1	CYLINDER GP-STICK (GRADE CONTROL)	333
Y	*227-7373*	1	ELECTRONICS GP-MACHINE	130
Y	*231-3513*	1	WIRING GP-GRADE CONTROL	171
Y	*211-4253*	1	INSTALLATION GP-MONITOR (ADVISOR)	699
Y	*211-7601*	1	LINES GP-BOOM	355
Y	*246-9311*	1	LINES GP-BUCKET	357
Y	*211-7564*	1	LINES GP-STICK	387
Y	*213-6692*	1	LINKAGE GP-BACKHOE BUCKET	441
Y	*246-9309*	1	MOUNTING GP-LINES (BACKHOE)	399
Y	*271-8666*	1	STICK GP-HOE	466
	290-6808	1	HARNESS AS-SENSOR (ACCUGRADE)	
	102-8804	1	KIT-RECEPTACLE (4-PIN)	
			(INCLUDES RECEPTACLE AS & WEDGE)	
	6V-2722	1	TUBE-HEAT SHRINK (25.4-MM DIA)	
E	**6V-8523**		HOSE (270-CM)	
	155-2271	1	KIT-CONNECTING PLUG (4-PIN)	
			(INCLUDES PLUG AS,WEDGE & INTERFACE SEAL)	

E-ORDER BY THE CENTIMETER
Y-SEPARATE ILLUSTRATION

<END>

213-9284 CHASSIS AR

S/N: SHA1-UP
PART OF 213-9271 COMMON AR

SMCS-7000 **i02780233**

NOTE	PART NUMBER	QTY	PART NAME 1 2 3 4 5 6 (PRODUCT LEVEL)	SEE PAGE
Y	*211-4285*	1	BATTERY & WIRING GP (STANDARD)	125
			–OR–	
Y	*290-6790*	1	BATTERY & WIRING GP	128
Y	*253-0784*	1	BOX GP-BATTERY	292
Y	*250-7914*	1	FILM GP	757
Y	*214-2000*	1	FRAME GP-LOADER (SINGLE TILT)	303
Y	*251-4519*	1	FRAME GP-SWING	305
Y	*211-3546*	1	HOOD & GUARD GP (STABILIZER)	309
Y	*211-5182*	1	LOCK GP-TRANSPORT (BOOM)	445
Y	*248-5711*	1	PLATE & FILM GP	758
Y	*266-5834*	1	STABILIZER GP-BACKHOE	460
Y	*245-6098*	1	TANK & MTG GP-FUEL (INCLUDES STEP)	120
Y	*211-4283*	1	WIRING GP-REAR (BACKUP ALARM)	189

Y-SEPARATE ILLUSTRATION

<END>

MACHINE ARRANGEMENT

213-9271 COMMON AR

S/N: SHA1-UP

SMCS-7000 **i02451309**

NOTE	PART NUMBER	QTY	PART NAME 1 2 3 4 5 6 (PRODUCT LEVEL)	SEE PAGE
Y	*213-9284*	1	CHASSIS AR	5
Y	*214-2202*	1	MOUNTING & LINES GP-RADIATOR (TRANSMISSION, HYDRAULIC OIL)	72
Y	*214-2198*	1	HYDRAULIC AR	344
Y	*213-9298*	1	LOADER AR	6
Y	*235-0336*	1	WIRING GP-ENGINE	167

Y-SEPARATE ILLUSTRATION

<END>

276-7464 COMMON AR

S/N: CST1-UP

SMCS-7000 **i02466498**

NOTE	PART NUMBER	QTY	PART NAME 1 2 3 4 5 6 (PRODUCT LEVEL)	SEE PAGE
			NO BREAKDOWN OF SERVICEABLE PARTS AVAILABLE AT TIME OF PUBLICATION	

<END>

213-9298 LOADER AR

S/N: SHA1-UP

PART OF 213-9271 COMMON AR

SMCS-6100 **i02680979**

NOTE	PART NUMBER	QTY	PART NAME 1 2 3 4 5 6 (PRODUCT LEVEL)	SEE PAGE
Y	*227-8378*	1	ARM GP-LIFT	435
Y	*218-0745*	1	BRACE GP-LIFT CYLINDER	438
Y	**228-3508**	2	CYLINDER GP-LIFT	327
Y	**206-3553**	1	CYLINDER GP-TILT	340
Y	*220-5973*	1	KICKOUT & POSITIONER GP	345
Y	*246-5293*	1	LINES GP-LIFT CYLINDER	367
Y	*246-5292*	1	LINES GP-TILT CYLINDER	389
Y	*9R-9140*	1	LINKAGE GP-LOADER BUCKET	443
Y	*211-4262*	1	WIRING GP-KICKOUT & POSITIONER	175

Y-SEPARATE ILLUSTRATION

<END>

ENGINE ARRANGEMENT

252-4640 ENGINE AR

S/N: SHA1-UP

PART OF 214-6910, 214-6911 POWER TRAIN AR

AN ATTACHMENT

SMCS-1000 **i02532780**

NOTE	PART NUMBER	QTY	PART NAME 1 2 3 4 5 6 (PRODUCT LEVEL)	SEE PAGE
Y	*210-6803*	1	AIR CLEANER GP	81
Y	*251-3802*	1	CONTROL GP-GOVERNOR	96
Y	**245-6841**	1	ENGINE AR-PRIMARY	10
Y	*285-3605*	1	FILTER GP-WATER SEP & FUEL	100
Y	*222-7091*	1	GAUGE GP-OIL LEVEL & FILLER (WITH FILTER)	58
Y	*261-2320*	1	INDICATOR GP-AIR FILTER CHANGE	88
Y	*247-5360*	1	LINES GP-FUEL	101
Y	*214-0973*	1	MOUNTING GP-ENGINE & TMSN	41
Y	*210-6813*	1	MUFFLER GP	90
Y	*253-0352*	1	PUMP GP-FUEL PRM & PRIM FILTER (WITH MOUNTING)	119
	210-6807	1	EXTENSION GP-EXHAUST	
	7E-3870	1	CLAMP-MUFFLER	
	239-2270	1	PIPE-EXTENSION	
	246-0568	1	WIRE AS	
	102-8802	1	KIT-RECEPTACLE (2-PIN)	
			(INCLUDES RECEPTACLE AS & WEDGE)	

Y-SEPARATE ILLUSTRATION

ENGINE ARRANGEMENT

252-4641 ENGINE AR

S/N: SHA1-UP

PART OF 214-6912, 214-6913 POWER TRAIN AR

AN ATTACHMENT

SMCS-1000 **i02532783**

NOTE	PART NUMBER	QTY	PART NAME 1 2 3 4 5 6 (PRODUCT LEVEL)	SEE PAGE
Y	*224-9473*	1	AIR CLEANER GP	82
Y	*206-1640*	1	CONTROL GP-GOVERNOR	94
Y	**273-3610**	1	ENGINE AR	9
Y	*285-3605*	1	FILTER GP-WATER SEP & FUEL	100
Y	*222-7091*	1	GAUGE GP-OIL LEVEL & FILLER (WITH FILTER)	58
Y	*255-2279*	1	INDICATOR GP-AIR FILTER CHANGE	87
Y	*247-5361*	1	LINES GP-FUEL	103
Y	*214-0973*	1	MOUNTING GP-ENGINE & TMSN	41
Y	*223-4960*	1	MUFFLER GP	91
Y	*253-0352*	1	PUMP GP-FUEL PRM & PRIM FILTER (WITH MOUNTING)	119
	210-6807	1	EXTENSION GP-EXHAUST	
	7E-3870	1	CLAMP-MUFFLER	
	239-2270	1	PIPE-EXTENSION	
	178-8465	1	HARNESS AS-FUEL TANK (FUEL SHUTOFF)	
	102-8802	1	KIT-RECEPTACLE (2-PIN)	
			(INCLUDES RECEPTACLE AS & WEDGE)	
	176-1477	1	PLUG AS	
	176-1522	2	SEAL	

Y-SEPARATE ILLUSTRATION

ENGINE ARRANGEMENT

273-3610 ENGINE AR–PRIMARY

S/N: G4D1-UP; CRS1-UP
68 BRAKE KW (91 BHP) AT 2200 RPM
PART OF 252-4641 ENGINE AR
AN ATTACHMENT

SMCS-1000 **i02771908**

NOTE	PART NUMBER	QTY	PART NAME 1 2 3 4 5 6 (PRODUCT LEVEL)	SEE PAGE
Y	*252-6256*	1	ALTERNATOR GP-CHARGING (120-AMPERE, WITH MOUNTING)	123
Y	*231-0033*	1	CONNECTION GP-WATER	60
Y	*238-2799*	1	COOLER GP-FLTR BASE & ENG OIL	62
Y	*231-0149*	1	COVER GP-CYLINDER HEAD	12
Y	*246-2582*	1	COVER GP-VALVE MECHANISM	13
Y	*308-4729*	1	CRANKSHAFT GP	24
Y	*308-4728*	1	CYLINDER BLOCK GP	28
Y	*308-4731*	1	CYLINDER HEAD GP	31
Y	*251-2432*	1	DRIVE GP-FAN	32
Y	*230-7300*	1	FLYWHEEL GP	33
Y	*232-6661*	1	GLOW PLUG GP	131
Y	*236-8238*	1	HOUSING GP-FLYWHEEL	34
Y	*313-1380*	1	HOUSING GP-FRONT	37
Y	*233-7432*	1	LIFTING GP-ENGINE	39
Y	*247-4885*	1	LINES GP-FUEL FILTER	106
Y	*237-3658*	1	MOUNTING GP-ENGINE	40
Y	*237-0025*	1	PAN GP-OIL	42
Y	*308-4730*	1	PISTON & ROD GP	46
Y	*225-4317*	1	PLUG GP-ENGINE (FRONT HOUSING, CYLINDER HEAD)	47
Y	*230-7569*	1	PLUG GP-ENGINE (OIL FILL)	48
Y	*232-6204*	1	PLUG GP-ENGINE (CYLINDER HEAD)	49
Y	*230-7353*	1	PULLEY GP-CRANKSHAFT	50
Y	*230-7578*	1	PUMP GP-ENGINE OIL	59
Y	*313-1375*	1	PUMP GP-FUEL INJECTION	115
Y	*230-7355*	1	PUMP GP-WATER	75
Y	*237-0024*	1	STARTING MOTOR GP-ELECTRIC	154
Y	*237-4896*	1	SWITCH GP-PRESSURE (ENGINE OIL)	158
Y	*285-0438*	1	TURBOCHARGER GP	92
Y	*308-4732*	1	VALVE MECHANISM GP	53
	268-0867	1	CYLINDER BLOCK GP-SHORT	
			AVAILABLE REPAIR KIT(S):	
	272-2232	1	KIT-GASKET (BOTTOM)	
	277-5156	1	KIT-GASKET (TOP) (TOP)	

Y-SEPARATE ILLUSTRATION

ENGINE ARRANGEMENT

245-6841 ENGINE AR-PRIMARY

S/N: G4D1-UP; CRS1-UP
PART OF 252-4640 ENGINE AR
AN ATTACHMENT

SMCS-1000 **i02647232**

NOTE	PART NUMBER	QTY	PART NAME 1 2 3 4 5 6 (PRODUCT LEVEL)	SEE PAGE
Y	*256-7736*	1	ALTERNATOR GP-CHARGING (100-AMPERE, WITH MOUNTING)	124
Y	*233-7236*	1	CAMSHAFT GP	11
Y	*238-8290*	1	CONNECTION GP-INLET	86
Y	*231-0033*	1	CONNECTION GP-WATER	60
Y	*253-2472*	1	COOLER GP-FLTR BASE & ENG OIL	63
Y	*246-2583*	1	COVER GP-VALVE MECHANISM	17
Y	*233-7027*	1	CRANKSHAFT GP	23
Y	*233-7007*	1	CYLINDER BLOCK GP	27
Y	*233-7234*	1	CYLINDER HEAD GP	30
Y	*251-2432*	1	DRIVE GP-FAN	32
Y	*234-3035*	1	FILTER GP-ENGINE OIL	57
Y	*230-7300*	1	FLYWHEEL GP	33
Y	*232-6661*	1	GLOW PLUG GP	131
Y	*236-8238*	1	HOUSING GP-FLYWHEEL	34
Y	*232-3670*	1	HOUSING GP-FRONT	35
Y	*233-7432*	1	LIFTING GP-ENGINE	39
Y	*267-7069*	1	LINES GP-FUEL	105
Y	*237-5408*	1	MANIFOLD GP-EXHAUST	89
Y	*237-3658*	1	MOUNTING GP-ENGINE	40
Y	*237-0025*	1	PAN GP-OIL	42
Y	*233-7233*	1	PISTON & ROD GP	44
Y	*225-4317*	1	PLUG GP-ENGINE	47
Y	*230-7569*	1	PLUG GP-ENGINE	48
Y	*232-6204*	1	PLUG GP-ENGINE	49
Y	*230-7353*	1	PULLEY GP-CRANKSHAFT	50
Y	*230-7578*	1	PUMP GP-ENGINE OIL	59
Y	*237-5394*	1	PUMP GP-FUEL INJECTION	108
Y	*230-7355*	1	PUMP GP-WATER	75
Y	*237-0024*	1	STARTING MOTOR GP-ELECTRIC	154
Y	*237-4896*	1	SWITCH GP-PRESSURE	158
Y	*233-7235*	1	VALVE MECHANISM GP	52
	7W-2326	1	FILTER AS-ENGINE OIL	
			AVAILABLE GASKET KIT(S):	
	276-3420	1	KIT-GASKET (TOP)	
	272-2232	1	KIT-GASKET (BOTTOM)	

Y-SEPARATE ILLUSTRATION

BASIC ENGINE

233-7236 CAMSHAFT GP

S/N: G4D1-UP; CRS1-UP
PART OF 245-6841 ENGINE AR-PRIMARY
AN ATTACHMENT

SMCS-1210, 1211, 1212 **i01872193**

NOTE	REF NO	GRAPHIC REF	PART NUMBER	QTY	PART NAME 1 2 3 4 5 6 (PRODUCT LEVEL)	SEE PAGE
	1	1	**1B-8736**	1	KEY-WOODRUFF	
	2	1	**233-7244**	1	CAMSHAFT	

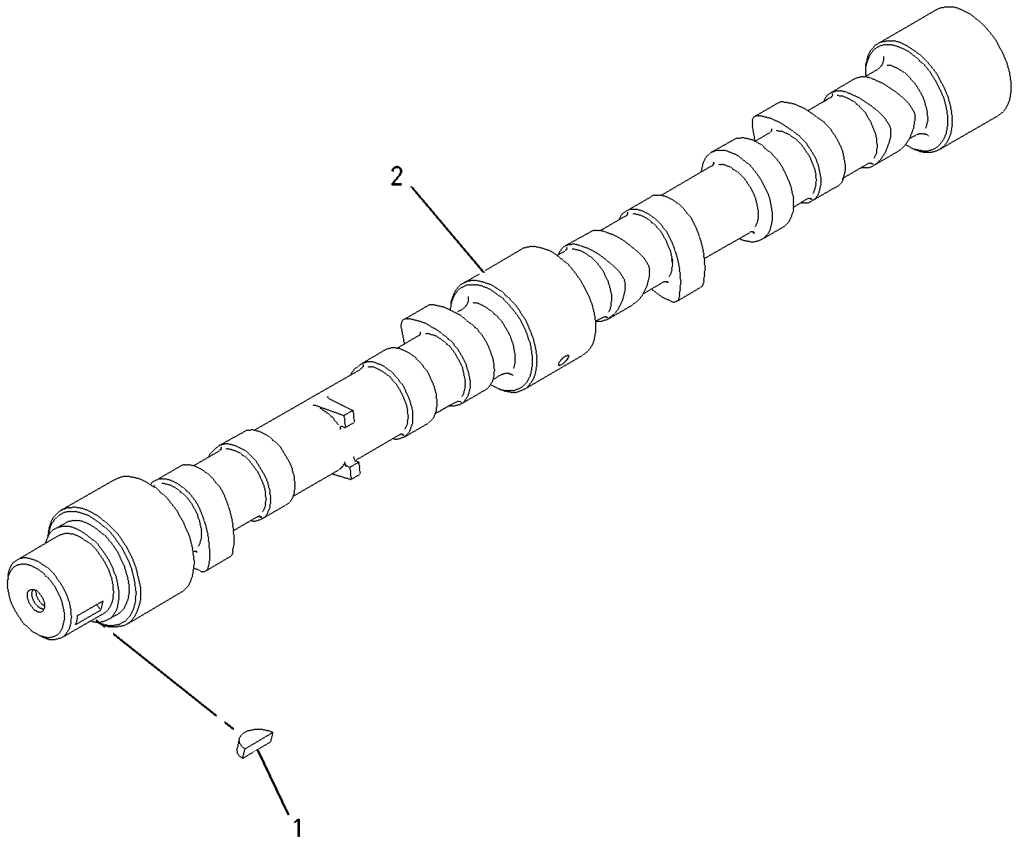

GRAPHIC #1 **<END>** g00911297

BASIC ENGINE

231-0149 COVER GP-CYLINDER HEAD

S/N: G4D1-UP; CRS1-UP
PART OF 273-3610 ENGINE AR
AN ATTACHMENT

SMCS-1100 **i02358991**

NOTE	REF NO	GRAPHIC REF	PART NUMBER	QTY	PART NAME 1 2 3 4 5 6 (PRODUCT LEVEL)	SEE PAGE
	1	1	**6I-0572**	12	BOLT (M8X1.25X20-MM)	
	2	1	**114-2579**	3	GASKET	
	3	1	**115-1162**	3	PLATE	

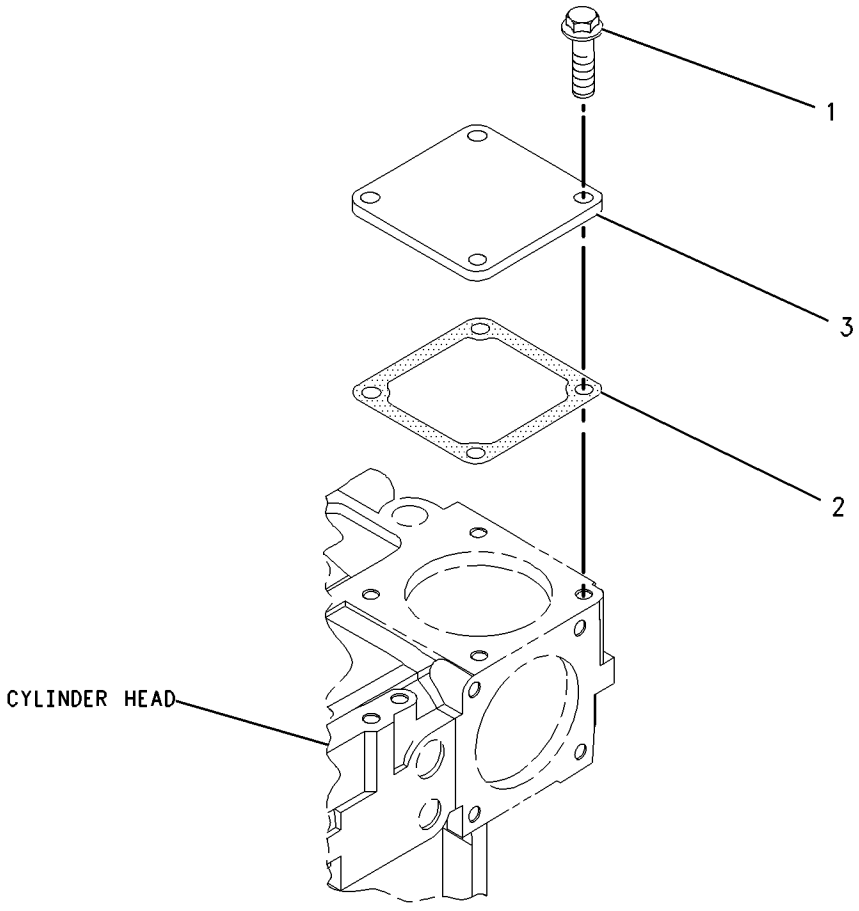

GRAPHIC #1 **<END>** g00986217

246-2582 COVER GP-VALVE MECHANISM

S/N: G4D1-UP; CRS1-UP
PART OF 273-3610 ENGINE AR
AN ATTACHMENT
TYPE 1

SMCS-1107, 1120 **i02593772**

NOTE	REF NO	GRAPHIC REF	PART NUMBER	QTY	PART NAME 1 2 3 4 5 6 (PRODUCT LEVEL)	SEE PAGE
M	1	1	**6I-0260**	2	BOLT (M8X1.25X25-MM)	
	2	1	**6I-0846**	3	BOLT (M6X1X14-MM)	
	3	1	**6I-0917**	1	BOLT (M6X1X25-MM)	
	4	1	**7C-1281**	1	BRACKET	
M	5	1	**100-4841**	2	BOLT (M6X1X10-MM)	
	6	1	**5D-1026**	1	CLAMP-HOSE	
	7	1	**162-1565**	1	SPRING (CRANKCASE BREATHER HOSE)	
	8	1	**198-8645**	1	HOSE (CRANKCASE BREATHER)	
	9	1	**225-6522**	1	PLUG-CUP	
	10	1	**230-9127**	1	COVER (INJECTOR)	
C	11	1	**287-8573**	1	PIPE-BREATHER (BREATHER)	
	12	1	**237-0769**	1	SHIELD-HEAT	
	13	1	**246-1163**	1	FILLER AS-OIL	
	13A	1	**229-4896**	1	SEAL-O-RING	
	14	1	**247-7798**	1	COVER AS	
	14A	1	**225-6451**	1	GASKET (VALVE COVER)	
	14B	1	**225-6455**	10	BOLT (ISOLATOR)	
	14C	1	**225-6456**	1	SPRING (BREATHER VALVE)	
	14D	1	**225-6461**	1	CAP (BREATHER VALVE)	
	14E	1	**225-6464**	1	DIAPHRAGM (CRANKCASE PRESSURE CONTACTOR)	
	14F	1	**225-6477**	1	PLATE	
	14G	1	**225-6478**	4	SCREW-MACHINE	
	14H	1	**225-6479**	1	CAP (BREATHER VALVE)	
C	15	1	**100-4838**	2	BOLT (M6X20-MM)	
F			**237-0022**	1	PLATE	

C-CHANGE FROM PREVIOUS TYPE
F-NOT SHOWN
M-METRIC PART

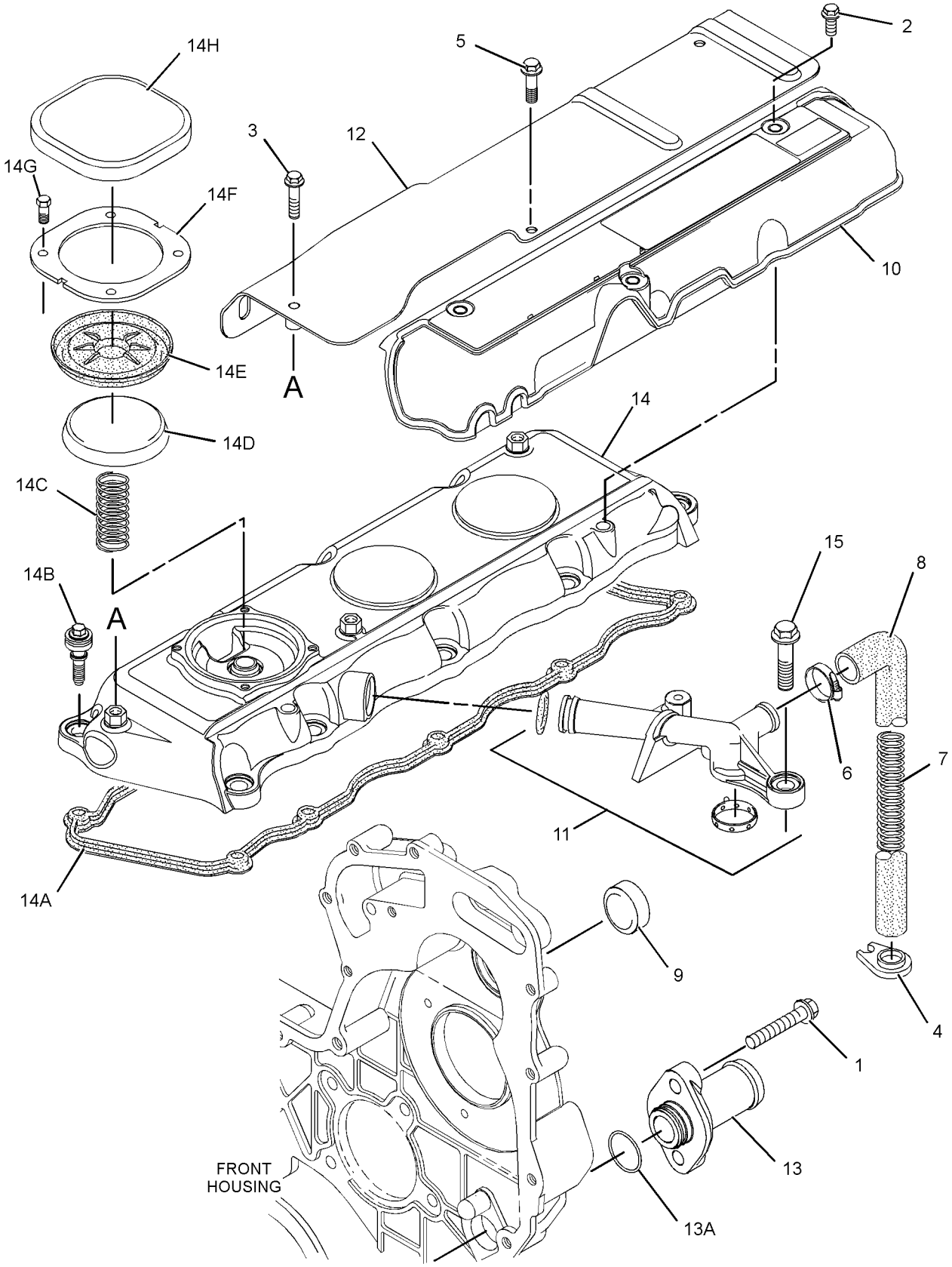

GRAPHIC #1

<END>

g01265857

246-2582 COVER GP-VALVE MECHANISM

S/N: G4D1-UP; CRS1-UP
PART OF 273-3610 ENGINE AR
AN ATTACHMENT
TYPE 2

SMCS-1107, 1120 **i02702300**

NOTE	REF NO	GRAPHIC REF	PART NUMBER	QTY	PART NAME 1 2 3 4 5 6 (PRODUCT LEVEL)	SEE PAGE
M	1	1	**6I-0260**	2	BOLT (M8X1.25X25-MM)	
	2	1	**6I-0846**	3	BOLT (M6X1X14-MM)	
	3	1	**6I-0917**	1	BOLT (M6X1X25-MM)	
	4	1	**7C-1281**	1	BRACKET	
M	5	1	**100-4841**	2	BOLT (M6X1X10-MM)	
	6	1	**5D-1026**	1	CLAMP-HOSE	
	7	1	**162-1565**	1	SPRING (CRANKCASE BREATHER HOSE)	
	8	1	**198-8645**	1	HOSE (CRANKCASE BREATHER)	
	9	1	**225-6522**	1	PLUG-CUP	
	10	1	**230-9127**	1	COVER (INJECTOR)	
	11	1	**287-8573**	1	PIPE-BREATHER (BREATHER)	
	12	1	**237-0769**	1	SHIELD-HEAT	
	13	1	**246-1163**	1	FILLER AS-OIL (ENGINE)	
	13A	1	**229-4896**	1	SEAL-O-RING	
C	14	1	**308-1792**	1	COVER AS-CYLINDER	
	14A	1	**225-6451**	1	GASKET (VALVE COVER)	
	14B	1	**225-6456**	1	SPRING (BREATHER VALVE)	
	14C	1	**225-6461**	1	CAP (BREATHER VALVE)	
	14D	1	**225-6464**	1	DIAPHRAGM (CRANKCASE PRESSURE CONTACTOR)	
	14E	1	**225-6477**	1	PLATE	
	14F	1	**225-6478**	4	SCREW-MACHINE	
	14G	1	**225-6479**	1	CAP (BREATHER VALVE)	
	15	1	**100-4838**	2	BOLT (M6X20-MM)	
F			**237-0022**	1	PLATE	

C-CHANGE FROM PREVIOUS TYPE
F-NOT SHOWN
M-METRIC PART

246-2582 **COVER GP-VALVE MECHANISM** *(contd.)* **i02702300**

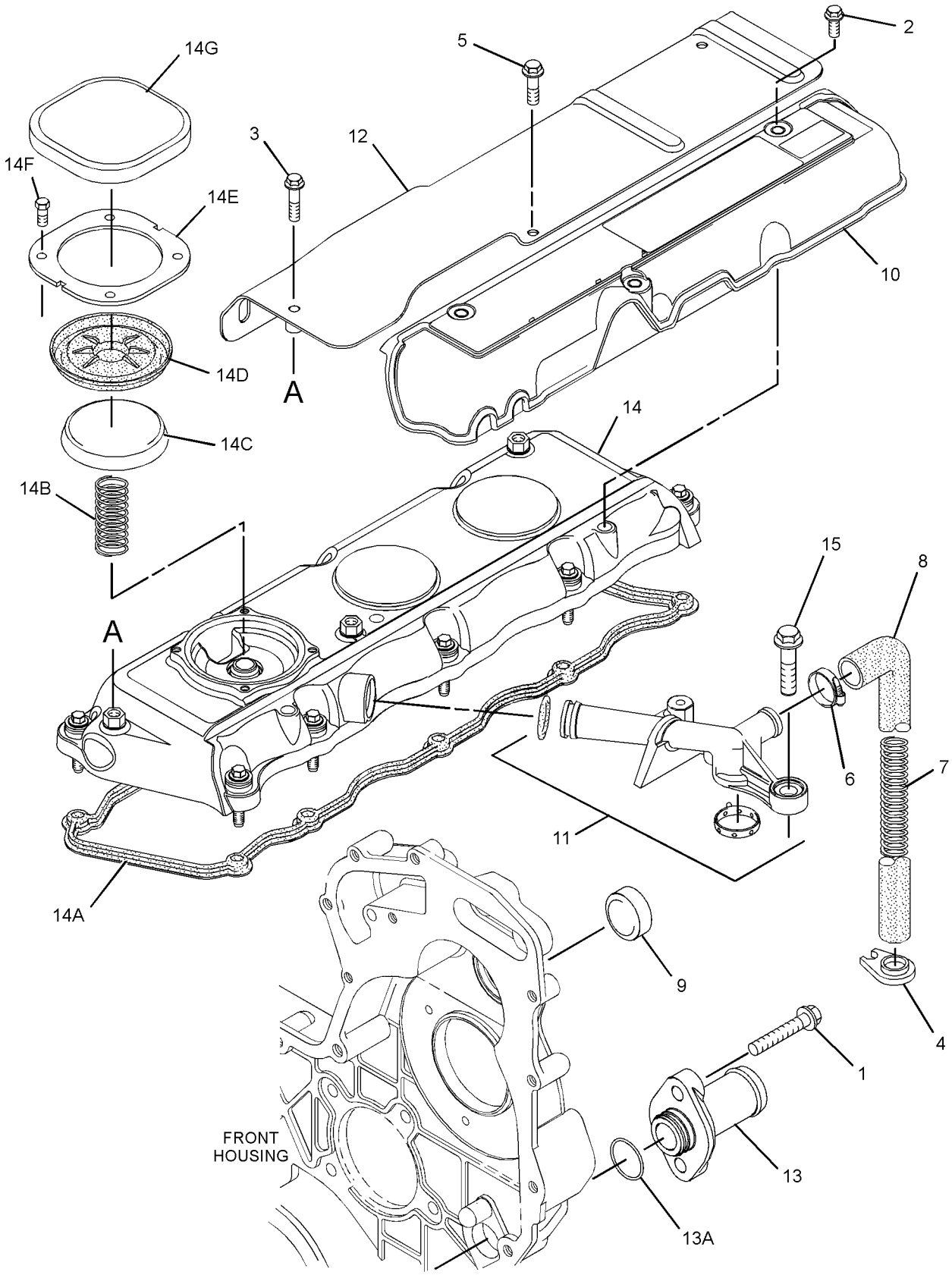

GRAPHIC #1

<END>

g01397742

246-2583 COVER GP-VALVE MECHANISM

S/N: G4D1-UP; CRS1-UP
PART OF 245-6841 ENGINE AR-PRIMARY
AN ATTACHMENT
TYPE 1

SMCS-1107, 1120 **i02527162**

NOTE	REF NO	GRAPHIC REF	PART NUMBER	QTY	PART NAME 1 2 3 4 5 6 (PRODUCT LEVEL)	SEE PAGE
M	1	1	**6I-0260**	2	BOLT (M8X1.25X25-MM)	
	2	1	**6I-0846**	3	BOLT (M6X1X14-MM)	
	3	1	**6I-0917**	1	BOLT (M6X1X25-MM)	
M	4	1	**100-4841**	2	BOLT (M6X1X10-MM)	
	5	1	**225-6522**	1	PLUG-CUP	
C	6	1	**286-3029**	1	PIPE-BREATHER (CONNECTOR)	
	6A	1	**150-7732**	1	SEAL-O-RING (19.5MM ID)	
	6B	1	**286-3030**	1	RING-SEAL (ISOLATOR)	
	7	1	**230-9127**	1	COVER (INJECTOR)	
C	8	1	**247-7798**	1	COVER AS (VALVE)	
	8A	1	**225-6451**	1	GASKET (VALVE COVER)	
	8B	1	**225-6455**	10	BOLT	
	8C	1	**225-6456**	1	SPRING	
	8D	1	**225-6461**	1	CAP	
	8E	1	**225-6464**	1	DIAPHRAGM (CRANKCASE PRESSURE CONTACTOR)	
	8F	1	**225-6477**	1	PLATE	
	8G	1	**225-6478**	4	SCREW-MACHINE	
	8H	1	**225-6479**	1	CAP	
	9	1	**237-0769**	1	SHIELD-HEAT	
	10	1	**246-1163**	1	FILLER AS-OIL	
	10A	1	**229-4896**	1	SEAL-O-RING (O21.8MM ID)	
C	11	1	**100-4838**	2	BOLT (M6X20-MM)	

C-CHANGE FROM PREVIOUS TYPE
M-METRIC PART

246-2583 **COVER GP-VALVE MECHANISM** *(contd.)* **i02527162**

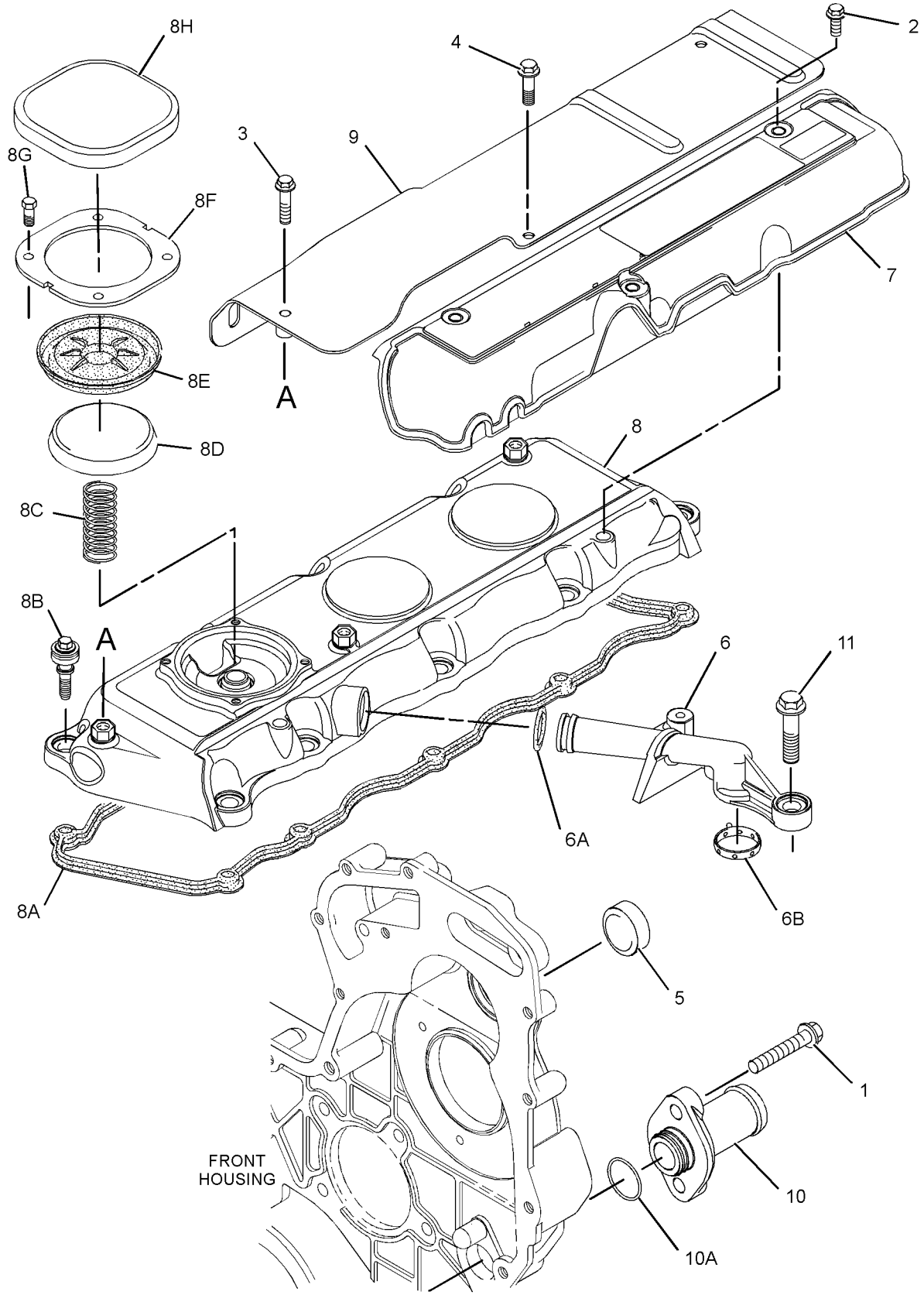

GRAPHIC #1

<END>

g01265769

246-2583 COVER GP-VALVE MECHANISM

S/N: G4D1-UP; CRS1-UP
PART OF 245-6841 ENGINE AR-PRIMARY
AN ATTACHMENT
TYPE 2

SMCS-1107, 1120 **i02702297**

NOTE	REF NO	GRAPHIC REF	PART NUMBER	QTY	PART NAME 1 2 3 4 5 6 (PRODUCT LEVEL)	SEE PAGE
M	1	1	**6I-0260**	2	BOLT (M8X1.25X25-MM)	
	2	1	**6I-0846**	3	BOLT (M6X1X14-MM)	
	3	1	**6I-0917**	1	BOLT (M6X1X25-MM)	
M	4	1	**100-4841**	2	BOLT (M6X1X10-MM)	
	5	1	**225-6522**	1	PLUG-CUP	
	6	1	**286-3029**	1	PIPE-BREATHER (CONNECTOR)	
	6A	1	**150-7732**	1	SEAL-O-RING (19.5MM ID)	
	6B	1	**286-3030**	1	RING-SEAL (ISOLATOR)	
	7	1	**230-9127**	1	COVER (INJECTOR)	
C	8	1	**308-1792**	1	COVER AS-CYLINDER	
	8A	1	**225-6451**	1	GASKET (VALVE COVER)	
	8B	1	**225-6456**	1	SPRING (BREATHER VALVE)	
	8C	1	**225-6461**	1	CAP (BREATHER VAVLE)	
	8D	1	**225-6464**	1	DIAPHRAGM (CRANKCASE PRESSURE CONTACTOR)	
	8E	1	**225-6477**	1	PLATE	
	8F	1	**225-6478**	4	SCREW-MACHINE	
	8G	1	**225-6479**	1	CAP (BREATHER VALVE)	
	9	1	**237-0769**	1	SHIELD-HEAT	
	10	1	**246-1163**	1	FILLER AS-OIL (ENGINE)	
	10A	1	**229-4896**	1	SEAL-O-RING (021.8MM ID)	
	11	1	**100-4838**	2	BOLT (M6X20-MM)	

C-CHANGE FROM PREVIOUS TYPE
M-METRIC PART

246-2583 **COVER GP-VALVE MECHANISM** *(contd.)* **i02702297**

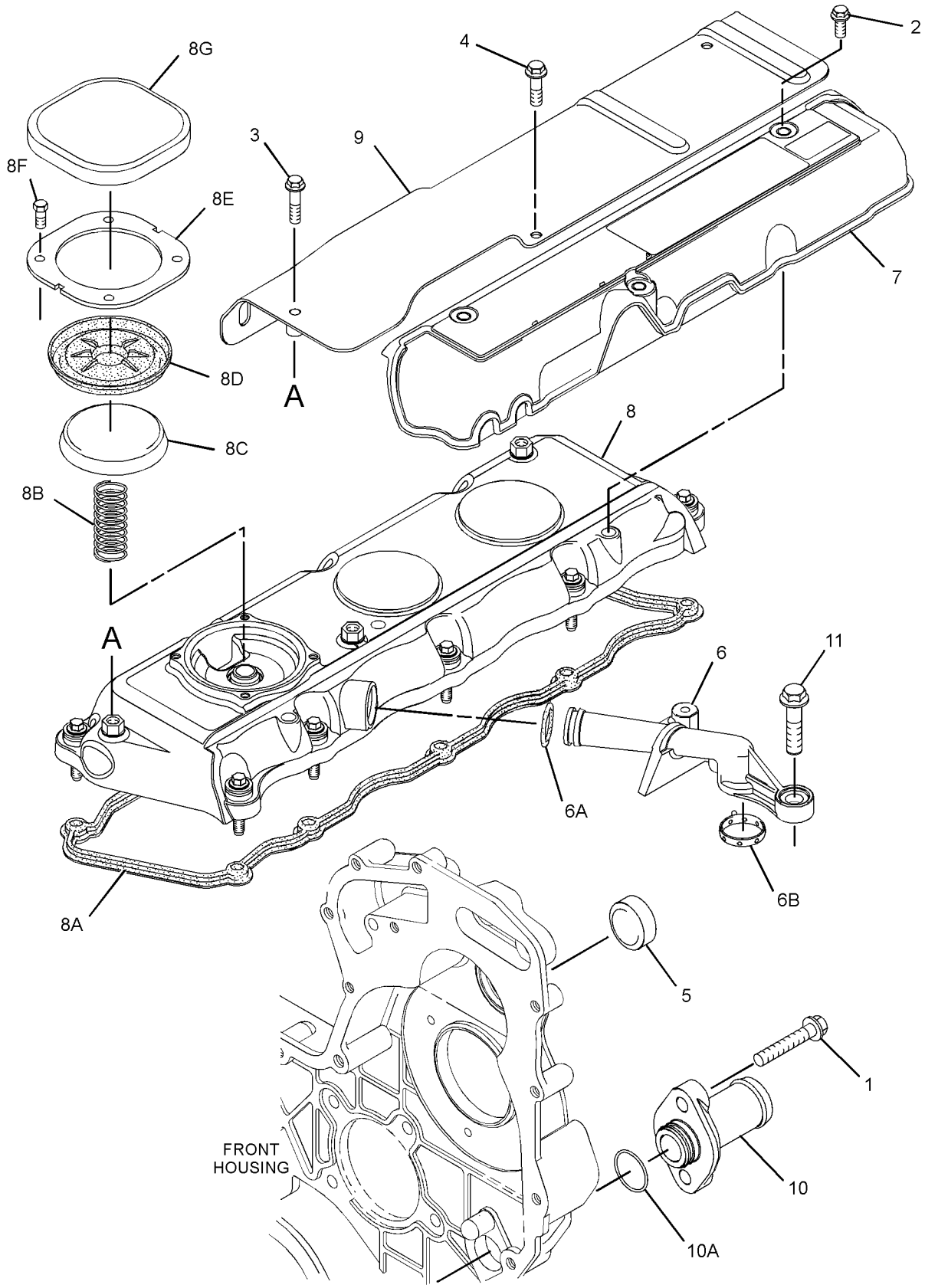

GRAPHIC #1

<END>

g01397789

232-7400 CRANKSHAFT GP

S/N: G4D1-UP; CRS1-UP
PART OF 233-7027, 308-4729 CRANKSHAFT GP
AN ATTACHMENT

SMCS-1202, 1203, 1204, 1230, 1231, 1232 **i02747638**

NOTE	REF NO	GRAPHIC REF	PART NUMBER	QTY	PART NAME 1 2 3 4 5 6 (PRODUCT LEVEL)	SEE PAGE
	1	1	**1B-8736**	1	KEY-WOODRUFF	
	2	1	**225-7772**	1	BEARING SET-MAIN (STANDARD)	
AB		1	**233-3785**		KIT-CRANKSHAFT BEARING (0.5-MM OS)	
AB		1	**233-3784**		KIT-CRANKSHAFT BEARING (0.25-MM OS)	
AB		1	**233-3786**		KIT-CRANKSHAFT BEARING (0.76-MM OS)	
	3	1	**032-9090**	2	WASHER-THRUST (STANDARD-UPPER)	
AB		1	**067-6873**		WASHER-THRUST (0.18-MM OS)	
	4	1	**032-9091**	2	WASHER-THRUST (STANDARD-LOWER)	
AB		1	**067-6874**		WASHER-THRUST (0.18-MM OS)	
	5	1	**225-7781**	1	BEARING SET-ROD	
AB		1	**233-3788**		KIT-ROD BEARING (0.25-MM OS)	
AB		1	**233-3789**		KIT-ROD BEARING (0.51-MM OS)	
AB		1	**233-3790**		KIT-ROD BEARING (0.76-MM OS)	

A-NOT PART OF THIS GROUP
B-USE AS REQUIRED

232-7400 **CRANKSHAFT GP** *(contd.)* **i02747638**

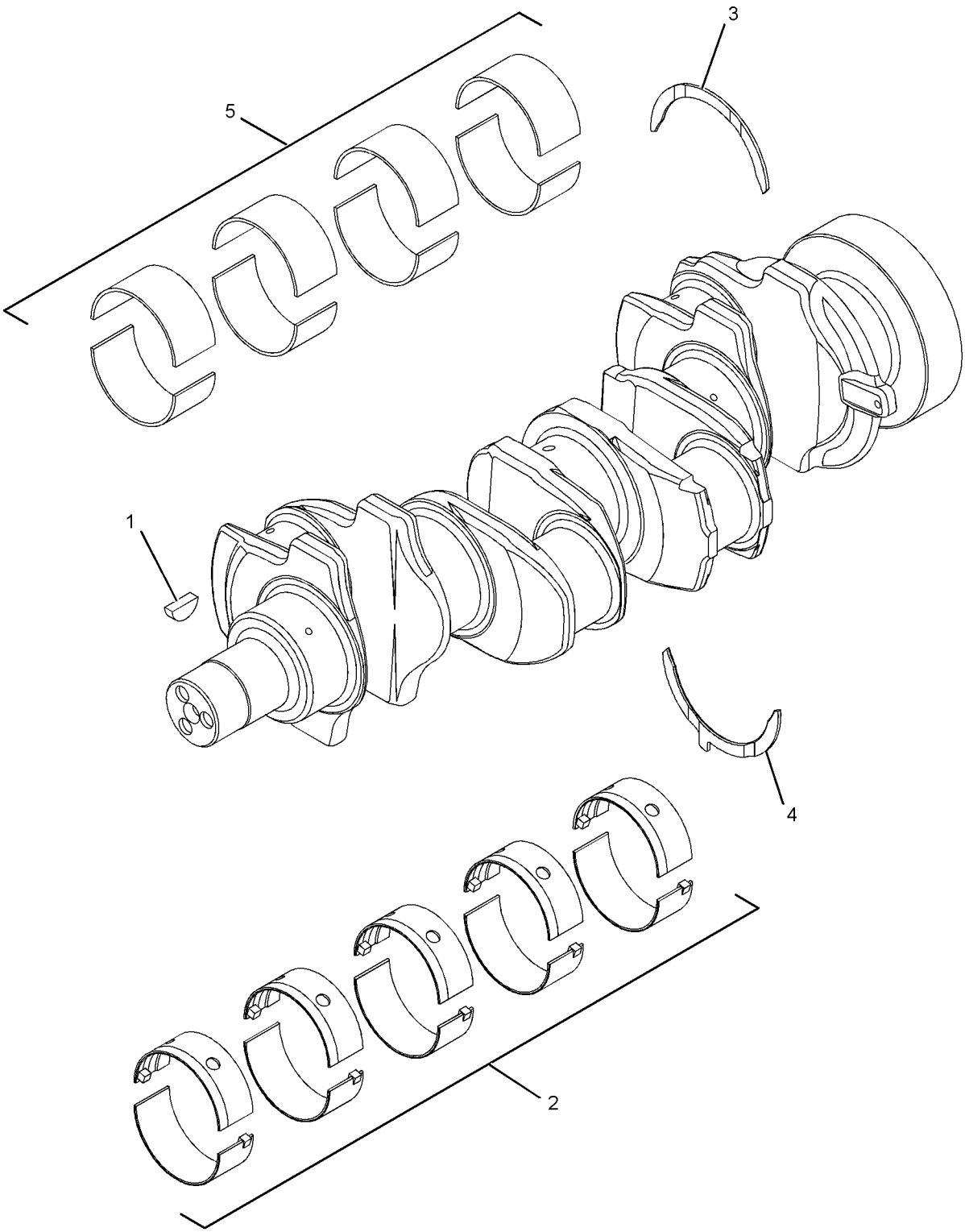

GRAPHIC #1 **<END>** g01369317

233-7027 CRANKSHAFT GP

S/N: G4D1-UP; CRS1-UP
PART OF 245-6841 ENGINE AR-PRIMARY
AN ATTACHMENT

SMCS-1202, 1203, 1204, 1230, 1231, 1232 **i02656142**

NOTE	REF NO	GRAPHIC REF	PART NUMBER	QTY	PART NAME 1 2 3 4 5 6 (PRODUCT LEVEL)	SEE PAGE
	1	1	**1B-8736**	1	KEY-WOODRUFF	
	2	1	**216-8314**	1	GEAR-CRANKSHAFT (34-TEETH)	
Y	3	1	**232-7400**	1	CRANKSHAFT GP	21

Y-SEPARATE ILLUSTRATION

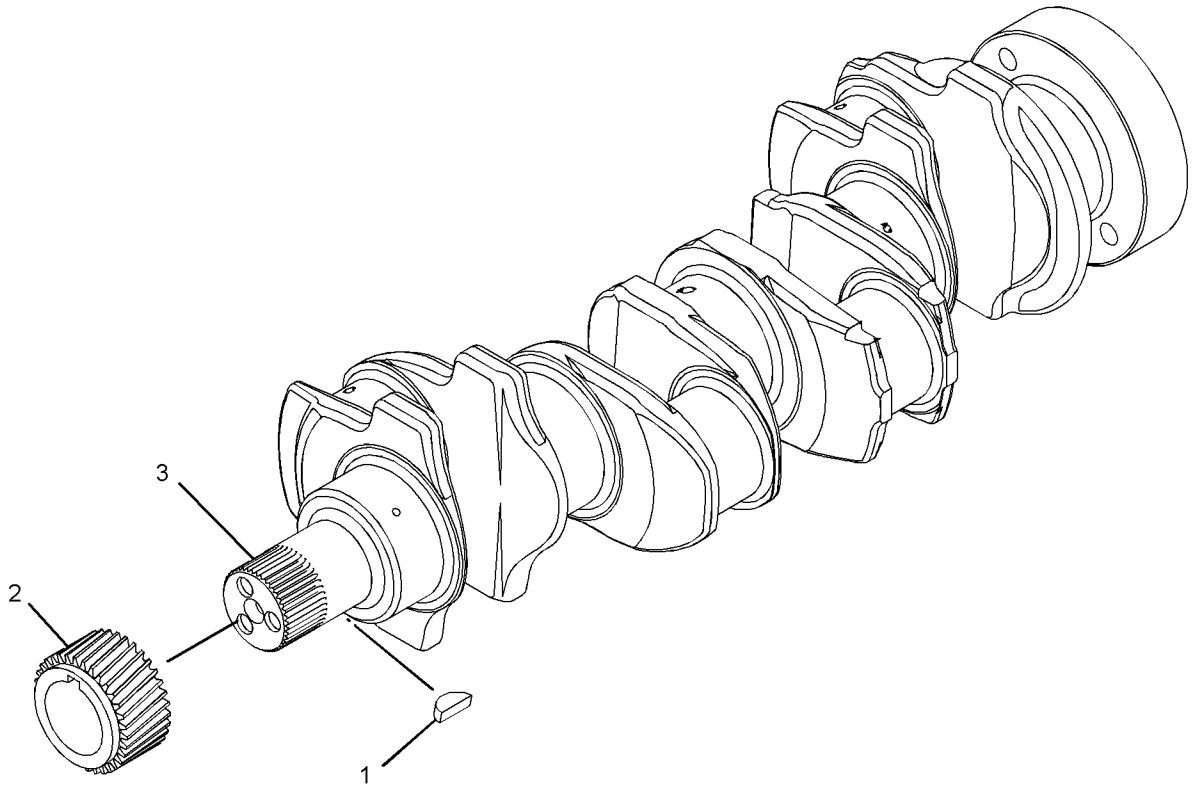

GRAPHIC #1 **<END>** g01382432

BASIC ENGINE

308-4729 CRANKSHAFT GP

S/N: G4D1-UP; CRS1-UP
PART OF 273-3610 ENGINE AR
AN ATTACHMENT

SMCS-1202, 1203, 1204, 1230, 1231, 1232 **i02747293**

NOTE	REF NO	GRAPHIC REF	PART NUMBER	QTY	PART NAME 1 2 3 4 5 6 (PRODUCT LEVEL)	SEE PAGE
	1	1	**216-8314**	1	GEAR-CRANKSHAFT (34-TEETH)	
Y	2	1	**232-7400**	1	CRANKSHAFT GP	21

Y-SEPARATE ILLUSTRATION

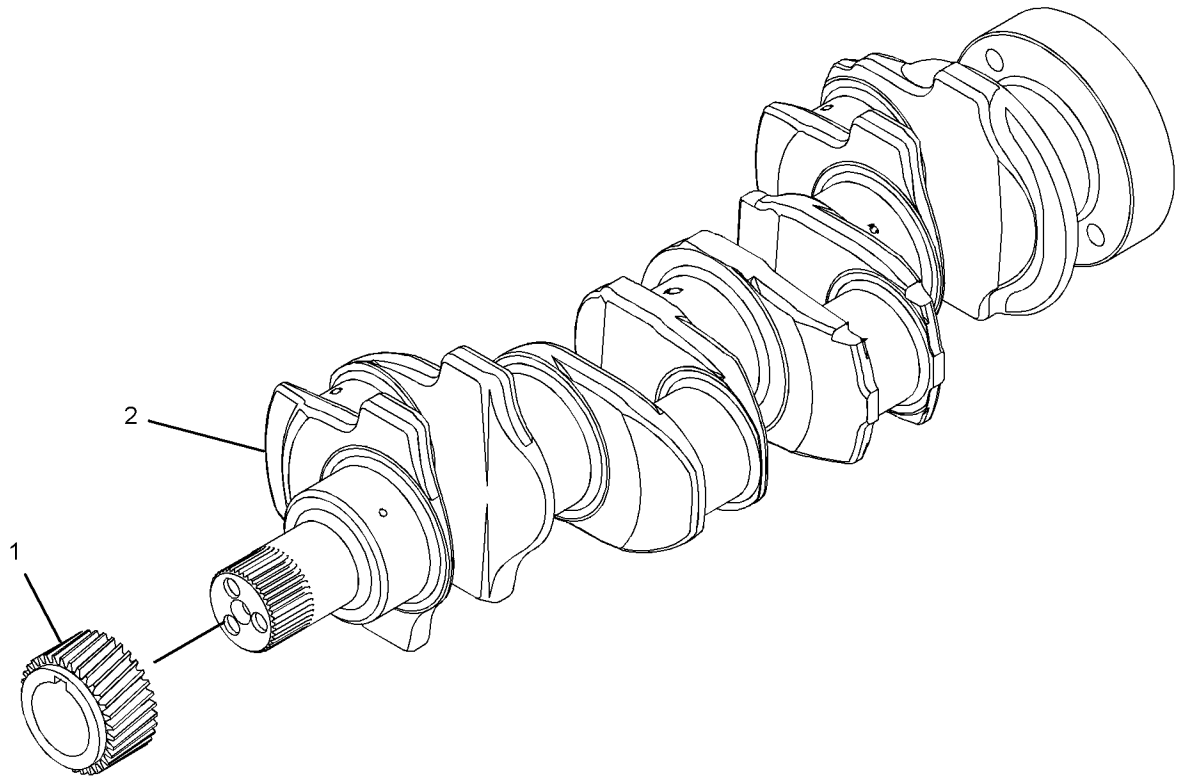

GRAPHIC #1 **<END>** g01376252

232-7604 CYLINDER BLOCK GP

S/N: G4D1-UP; CRS1-UP
PART OF 233-7007, 308-4728 CYLINDER BLOCK GP
AN ATTACHMENT

SMCS-1201 **i02535614**

NOTE	REF NO	GRAPHIC REF	PART NUMBER	QTY	PART NAME 1 2 3 4 5 6 (PRODUCT LEVEL)	SEE PAGE
	1	1	**6I-0572**	4	BOLT (M8X1.25X20-MM)	
	2	1	**035-8068**	10	BOLT (5/8-18X3.75-IN)	
	3	1	**067-6002**	10	DOWEL	
	4	1	**067-6006**	1	PLUG	
	5	1	**067-6043**	1	PLUG-SIDE	
M	6	1	**100-4841**	4	BOLT (M6X1X10-MM)	
	7	1	**185-0884**	2	DOWEL	
	8	1	**225-7944**	1	GASKET (ENGINE OIL FILTER BASE)	
	9	1	**225-8858**	2	PLUG	
	10	1	**232-3751**	1	PLATE	
	11	1	**232-7440**	1	BEARING	
	12	1	**276-5605**	4	JET AS-PISTON COOLING	
	13	1	**232-7596**	1	PLUG	
	14	1	**232-7597**	2	PLUG	
	15	1	**232-7599**	1	PLUG	
	16	1	**232-7600**	1	PLUG-CUP	
	17	1	**232-7603**	1	PLUG	

M-METRIC PART

232-7604 CYLINDER BLOCK GP *(contd.)* **i02535614**

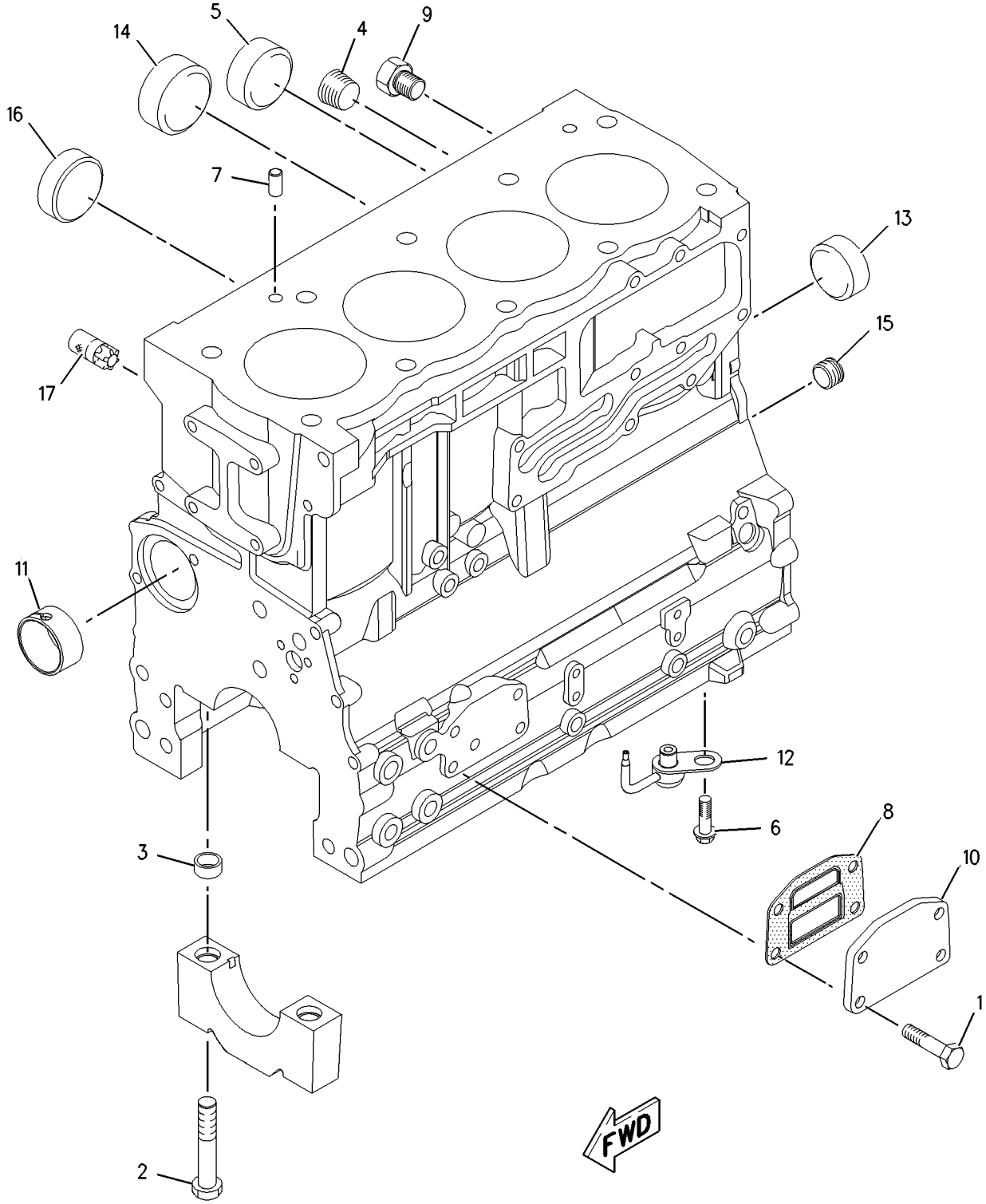

GRAPHIC #1 **<END>** g00951214

233-7007 CYLINDER BLOCK GP

S/N: G4D1-UP; CRS1-UP
PART OF 245-6841 ENGINE AR-PRIMARY
AN ATTACHMENT

SMCS-1201 **i01872353**

NOTE	REF NO	GRAPHIC REF	PART NUMBER	QTY	PART NAME 1 2 3 4 5 6 (PRODUCT LEVEL)	SEE PAGE
M	1	1	**209-9219**	10	BOLT (M8X1.25X16-MM)	
	2	1	**232-7449**	1	HOUSING AS	
Y	3	1	**232-7604**	1	CYLINDER BLOCK GP	25

M-METRIC PART
Y-SEPARATE ILLUSTRATION

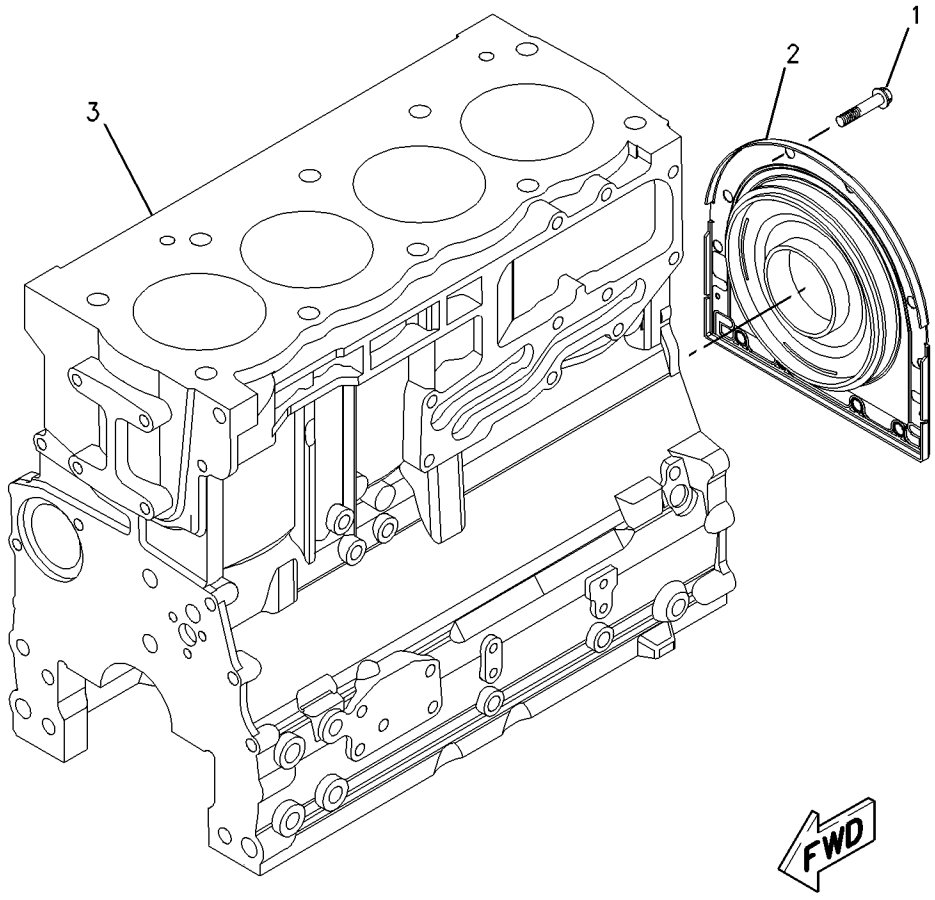

GRAPHIC #1 **<END>** g00952056

BASIC ENGINE

308-4728 CYLINDER BLOCK GP

S/N: G4D1-UP; CRS1-UP
PART OF 273-3610 ENGINE AR
AN ATTACHMENT

SMCS-1201 **i02719089**

NOTE	REF NO	GRAPHIC REF	PART NUMBER	QTY	PART NAME 1 2 3 4 5 6 (PRODUCT LEVEL)	SEE PAGE
M	1	1	**209-9219**	10	BOLT (M8X1.25X16-MM)	
	2	1	**232-7449**	1	HOUSING AS	
Y	3	1	**232-7604**	1	CYLINDER BLOCK GP	25

M-METRIC PART
Y-SEPARATE ILLUSTRATION

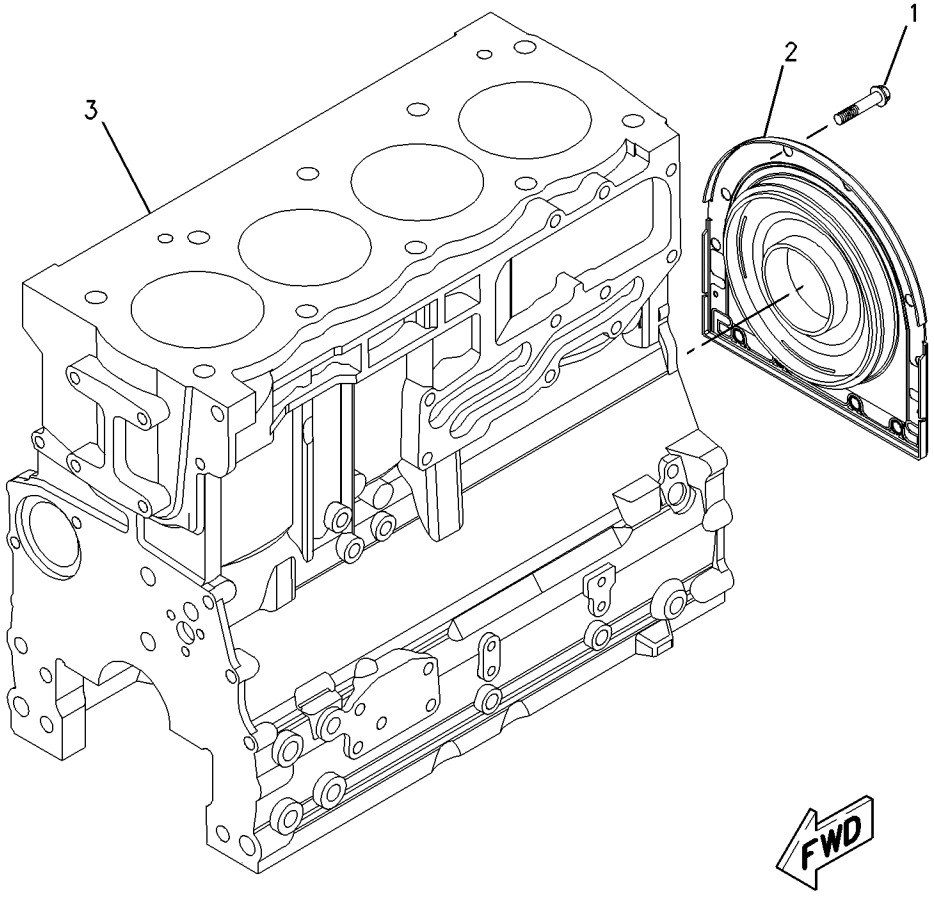

GRAPHIC #1 **<END>** g00952056

232-7519 CYLINDER HEAD GP

S/N: G4D1-UP; CRS1-UP
PART OF 233-7234, 308-4731 CYLINDER HEAD GP
AN ATTACHMENT

SMCS-1100, 1101, 1103, 1104, 1105, 1106, 1108, 1109, 1115, 1117, 1121, 1124, 1125

i02159632

NOTE	REF NO	GRAPHIC REF	PART NUMBER	QTY	PART NAME 1 2 3 4 5 6 (PRODUCT LEVEL)	SEE PAGE
	1	1	**2B-0858**	1	PLUG-PIPE	
	2	1	**9Y-5015**	2	PLUG-FREEZE	
	3	1	**067-6006**	4	PLUG	
	4	1	**147-1979**	16	RETAINER-VALVE SPRING	
	5	1	**185-0882**	8	GUIDE-VALVE (INTAKE)	
	6	1	**199-9751**	1	SEAL-O-RING	
	7	1	**225-5493**	4	INSERT-VALVE (INLET)	
	8	1	**225-5494**	4	INSERT-VALVE (EXHAUST)	
	9	1	**225-5495**	4	VALVE-INLET	
	10	1	**225-5496**	8	SPRING-VALVE	
	11	1	**252-6438**	4	SEAL-INLET VALVE	
	12	1	**225-5498**	8	CAP	
	13	1	**225-5499**	4	VALVE-EXHAUST	
	14	1	**232-1322**	1	PLUG	
	15	1	**254-3954**	4	SEAL-EXHAUST VALVE	

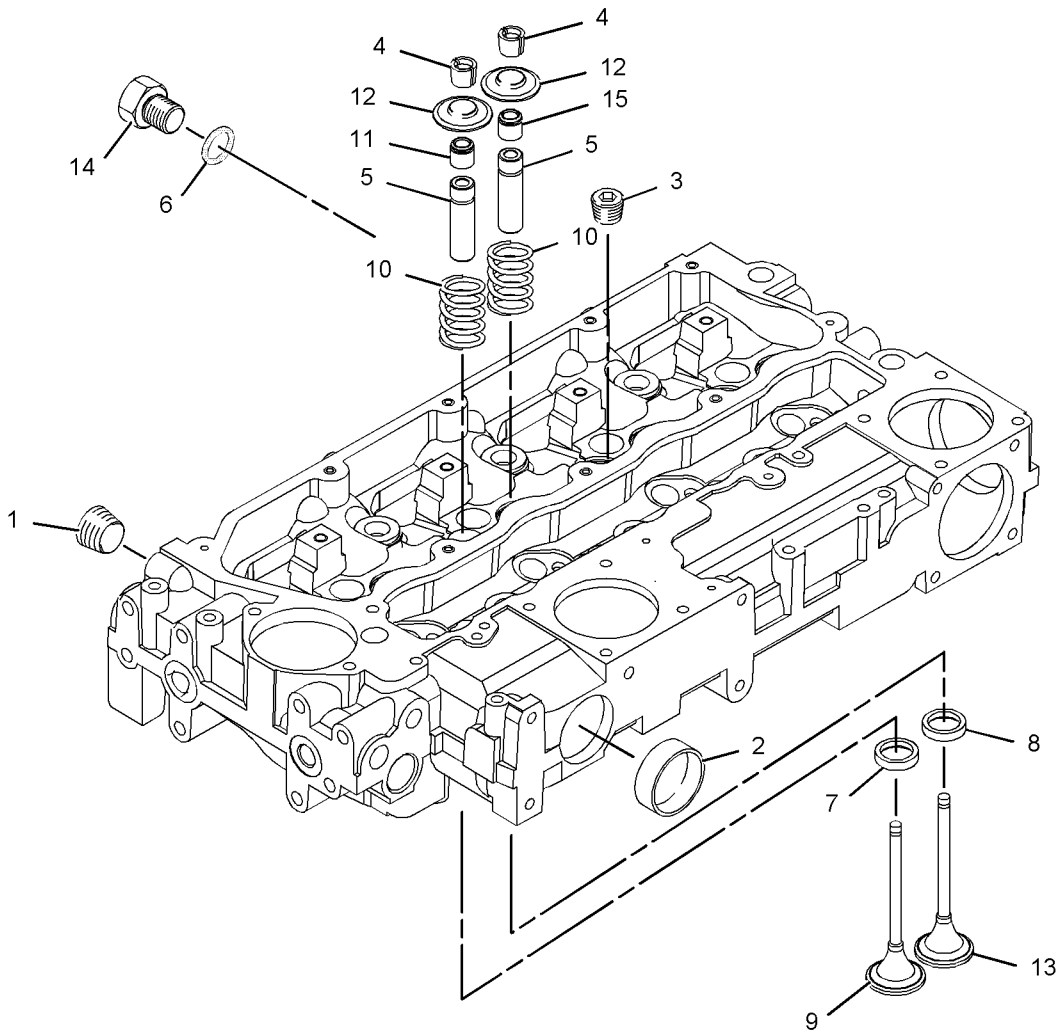

GRAPHIC #1

<END>

g01095382

233-7234 CYLINDER HEAD GP

S/N: G4D1-UP; CRS1-UP
PART OF 245-6841 ENGINE AR-PRIMARY
AN ATTACHMENT

SMCS-1100, 1101, 1103, 1104, 1105, 1106, 1108, 1109, 1115, 1117, 1121, 1124, 1125

i02471848

NOTE	REF NO	GRAPHIC REF	PART NUMBER	QTY	PART NAME 1 2 3 4 5 6 (PRODUCT LEVEL)	SEE PAGE
	1	1	**225-5501**	7	BOLT (M15X1.5X137-MM)	
	2	1	**225-5502**	3	BOLT (M15X1.5X162-MM)	
	3	1	**258-4946**	1	GASKET-HEAD	
Y	4	1	**232-7519**	1	CYLINDER HEAD GP	29

Y-SEPARATE ILLUSTRATION

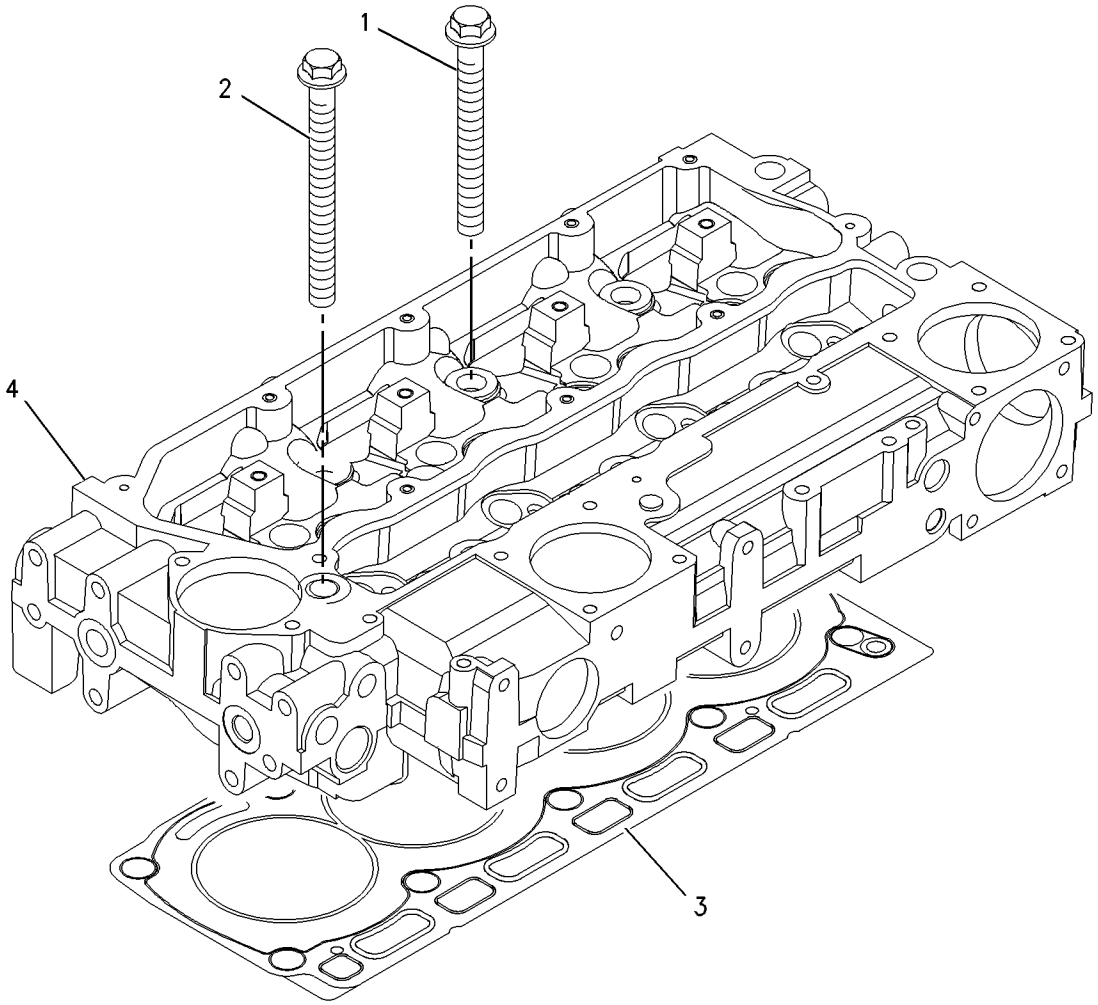

GRAPHIC #1

<END>

g00909291

308-4731 CYLINDER HEAD GP

S/N: G4D1-UP; CRS1-UP
PART OF 273-3610 ENGINE AR
AN ATTACHMENT

SMCS-1100, 1101, 1103, 1104, 1105, 1106, 1108, 1109, 1115, 1117, 1121, 1124, 1125

i02719202

NOTE	REF NO	GRAPHIC REF	PART NUMBER	QTY	PART NAME 1 2 3 4 5 6 (PRODUCT LEVEL)	SEE PAGE
	1	1	**225-5501**	7	BOLT (M15X1.5X137-MM)	
	2	1	**225-5502**	3	BOLT (M15X1.5X162-MM)	
Y	3	1	**232-7519**	1	CYLINDER HEAD GP	29
	4	1	**258-4946**	1	GASKET-HEAD	

Y-SEPARATE ILLUSTRATION

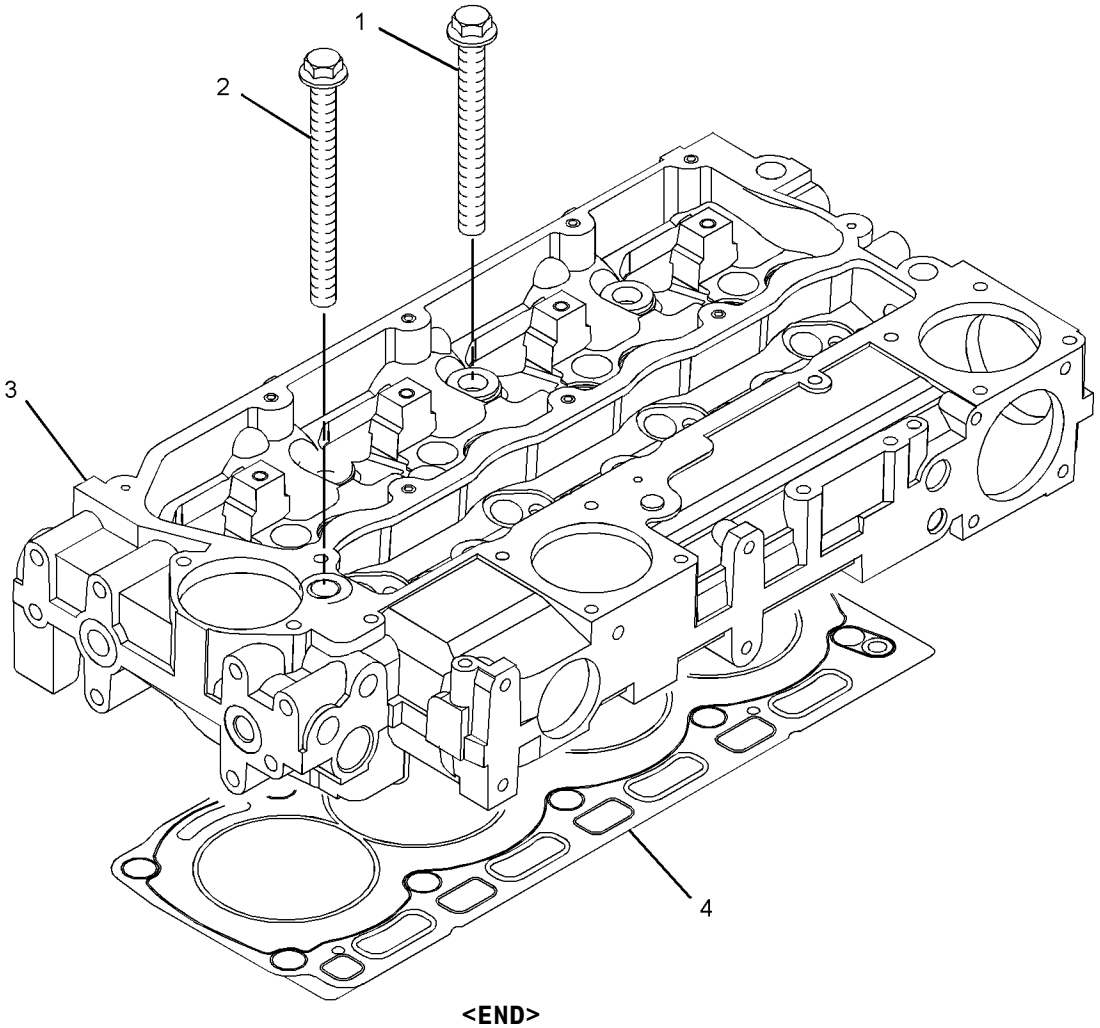

GRAPHIC #1

<END>

g01367488

BASIC ENGINE

251-2432 DRIVE GP-FAN

S/N: G4D1-UP; CRS1-UP
PART OF 273-3610 ENGINE AR, 245-6841 ENGINE AR-PRIMARY
AN ATTACHMENT

SMCS-1357, 1358, 1359, 1390 **i02100116**

NOTE	REF NO	GRAPHIC REF	PART NUMBER	QTY	PART NAME 1 2 3 4 5 6 (PRODUCT LEVEL)	SEE PAGE
	1	1	**111-0859**	1	BOLT (M10X1.5X35-MM)	
	2	1	**123-2899**	4	BOLT (M10X1.5X40-MM)	
	3	1	**251-2436**	1	HOUSING AS	
	3A	1	**225-5959**	1	CLIP	
	4	1	**251-2437**	1	PLATE	

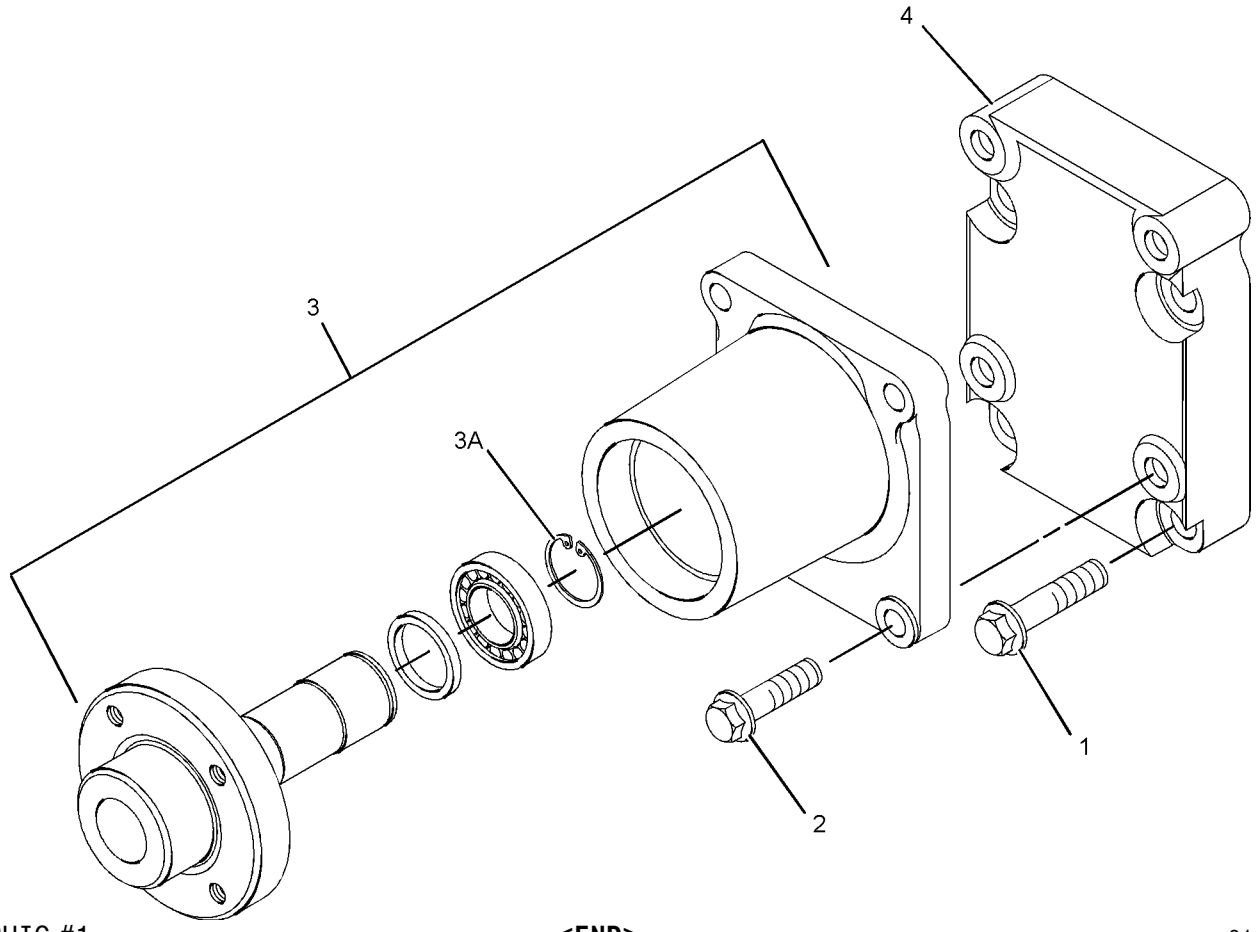

GRAPHIC #1 **<END>** g01085998

BASIC ENGINE

230-7300 FLYWHEEL GP

S/N: G4D1-UP; CRS1-UP
PART OF 273-3610 ENGINE AR, 245-6841 ENGINE AR-PRIMARY
AN ATTACHMENT

SMCS-1156, 1158 **i02004993**

NOTE	REF NO	GRAPHIC REF	PART NUMBER	QTY	PART NAME 1 2 3 4 5 6 (PRODUCT LEVEL)	SEE PAGE
	1	1	**0S-1603**	6	BOLT (1/2-20X1.5-IN)	
	2	1	**5P-8245**	6	WASHER-HARD (13.5X25.5X3-MM THK)	
	3	1	**245-9828**	1	FLYWHEEL AS	
	4	1	**033-7687**	1	RING-STARTING MOTOR (126-TEETH)	

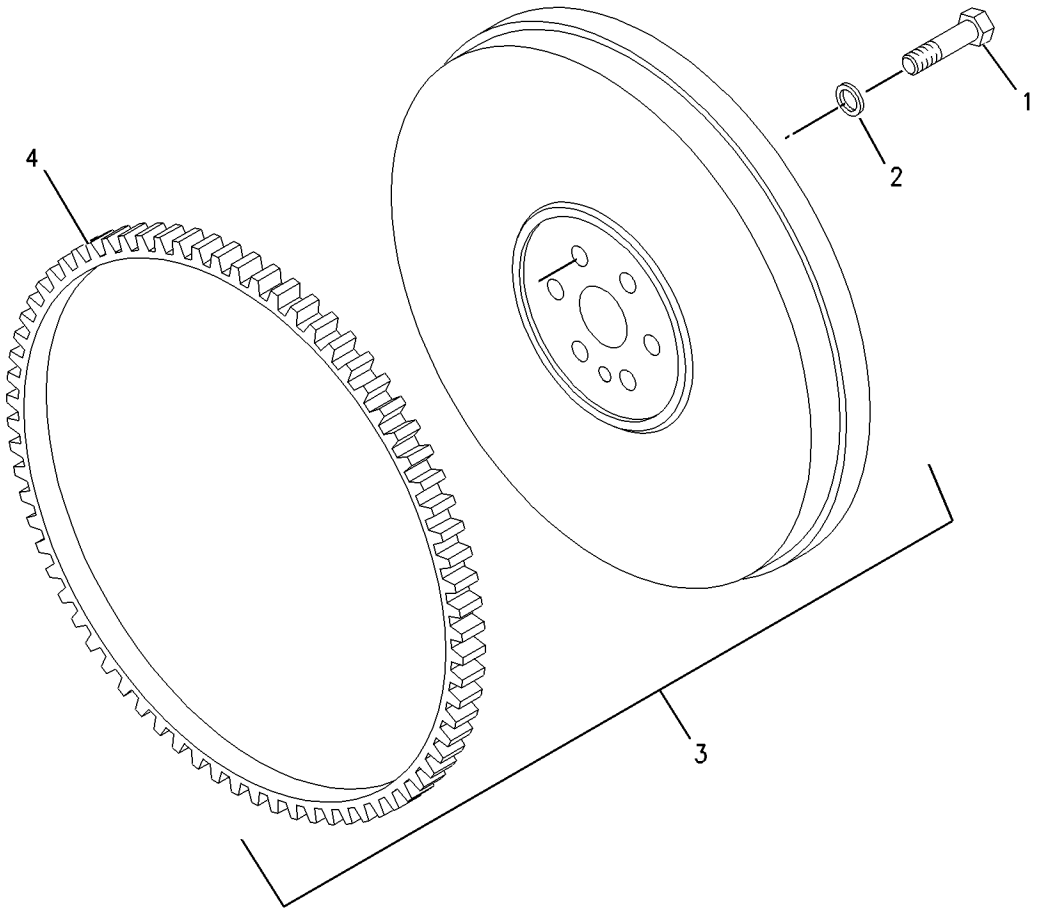

GRAPHIC #1 **<END>** g00955555

236-8238 HOUSING GP-FLYWHEEL

S/N: G4D1-UP; CRS1-UP
PART OF 273-3610 ENGINE AR, 245-6841 ENGINE AR-PRIMARY
AN ATTACHMENT

SMCS-1157 **i02527254**

NOTE	REF NO	GRAPHIC REF	PART NUMBER	QTY	PART NAME 1 2 3 4 5 6 (PRODUCT LEVEL)	SEE PAGE
M	1	1	**6I-0423**	2	BOLT (M12X1.75X30-MM)	
	2	1	**6I-0847**	2	PLUG	
	3	1	**7W-1176**	1	PLATE-COVER	
	4	1	**7W-4642**	1	SHIELD-DUST	
	5	1	**287-8597**	2	DOWEL	
	6	1	**114-4363**	2	BOLT (M8X1.25X12-MM)	
	7	1	**101-3617**	3	PLUG	
M	8	1	**121-0883**	6	BOLT (M10X1.5X30-MM)	
	9	1	**220-8631**	1	HOUSING-FLYWHEEL	

M-METRIC PART

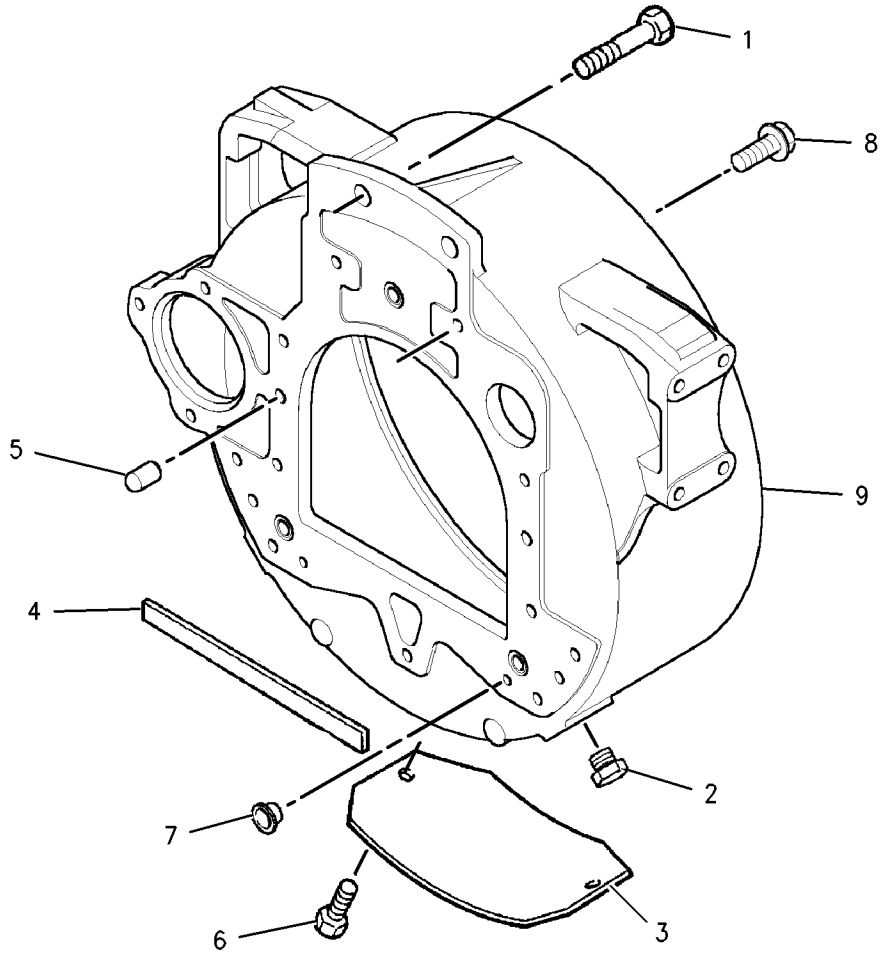

GRAPHIC #1 **<END>** g00902549

232-3670 HOUSING GP-FRONT

S/N: G4D1-UP; CRS1-UP
PART OF 245-6841 ENGINE AR-PRIMARY
AN ATTACHMENT

SMCS-1151, 1162, 1166, 1206 **i02561611**

NOTE	REF NO	GRAPHIC REF	PART NUMBER	QTY	PART NAME 1 2 3 4 5 6 (PRODUCT LEVEL)	SEE PAGE
	1	1	**1B-8736**	1	KEY-WOODRUFF	
M	2	1	**6I-0217**	8	BOLT (M8X1.25X20-MM)	
M	3	1	**6I-0645**	4	BOLT (M8X1.25X25-MM)	
M	4	1	**6I-0650**	3	BOLT (M10X1.5X65-MM)	
	5	1	**7C-4616**	1	BOLT (M12X1.75X45-MM)	
	6	1	**067-6179**	1	DOWEL	
	7	1	**282-9861**	1	HUB-IDLER GEAR	
	8	1	**295-1711**	1	PLATE-RETAINING	
M	9	1	**100-3751**	5	BOLT (M8X1.25X65-MM)	
M	10	1	**124-3815**	10	BOLT (M8X16X1.25-MM)	
	11	1	**232-3666**	1	WASHER-THRUST	
	12	1	**251-4336**	1	GEAR AS-IDLER (73-TEETH)	
	13	1	**216-8634**	1	GEAR-CAMSHAFT (68-TEETH)	
	14	1	**294-0288**	1	HOUSING-FRONT	
	15	1	**288-0422**	1	SEAL-OIL (FRONT)	
	16	1	**277-3012**	1	GASKET-COVER	
	18	1	**232-3657**	1	COVER AS-FRONT	
	18A	1	**225-8287**	1	GASKET	
	19	1	**133-1011**	1	WASHER	

M-METRIC PART

232-3670 **HOUSING GP-FRONT** *(contd.)* **i02561611**

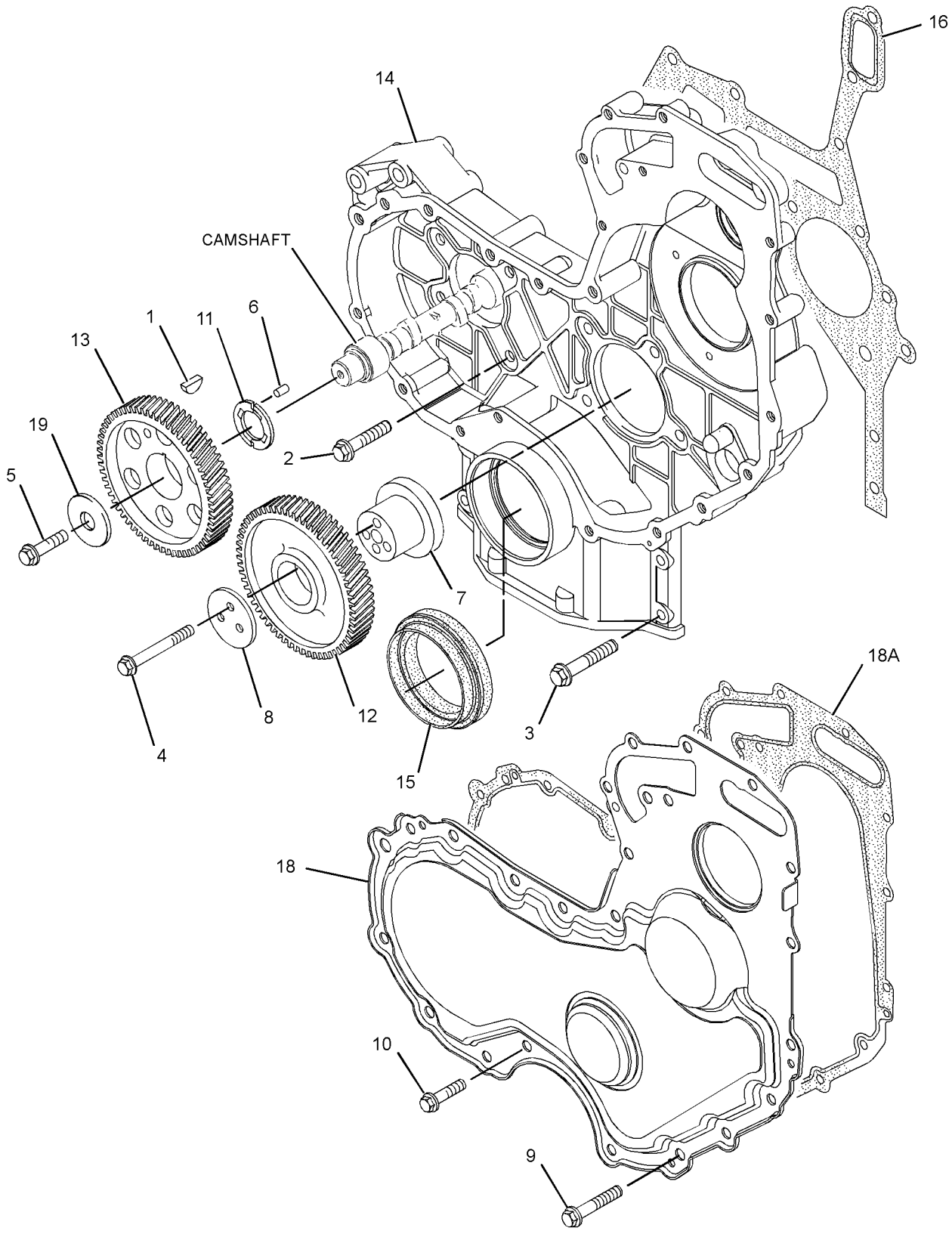

GRAPHIC #1 **<END>** g01290493

313-1380 HOUSING GP-FRONT

S/N: G4D1-UP; CRS1-UP
PART OF 273-3610 ENGINE AR
AN ATTACHMENT

SMCS-1151, 1162, 1166, 1206 **i02781760**

NOTE	REF NO	GRAPHIC REF	PART NUMBER	QTY	PART NAME 1 2 3 4 5 6 (PRODUCT LEVEL)	SEE PAGE
	1	1	**1B-8736**	1	KEY-WOODRUFF	
M	2	1	**6I-0217**	8	BOLT (M8X1.25X20-MM)	
M	3	1	**6I-0645**	4	BOLT (M8X1.25X25-MM)	
M	4	1	**6I-0650**	3	BOLT (M10X1.5X65-MM)	
	5	1	**7C-4616**	1	BOLT (M12X1.75X45-MM)	
	6	1	**067-6179**	1	DOWEL	
M	7	1	**100-3751**	5	BOLT (M8X1.25X65-MM)	
M	8	1	**124-3815**	10	BOLT (M8X16X1.25-MM)	
	9	1	**133-1011**	1	WASHER	
	10	1	**216-8634**	1	GEAR-CAMSHAFT (68-TEETH)	
	11	1	**232-3657**	1	COVER AS-FRONT	
	11A	1	**225-8287**	1	GASKET	
	12	1	**232-3666**	1	WASHER-THRUST	
	13	1	**251-4336**	1	GEAR AS-IDLER (73-TEETH)	
	14	1	**277-3012**	1	GASKET-COVER (HOUSING)	
	15	1	**282-9861**	1	HUB-IDLER GEAR	
	16	1	**288-0422**	1	SEAL-OIL	
	17	1	**294-0288**	1	HOUSING-FRONT	
	18	1	**295-1711**	1	PLATE-RETAINING	

M-METRIC PART

313-1380 **HOUSING GP-FRONT** *(contd.)* **i02781760**

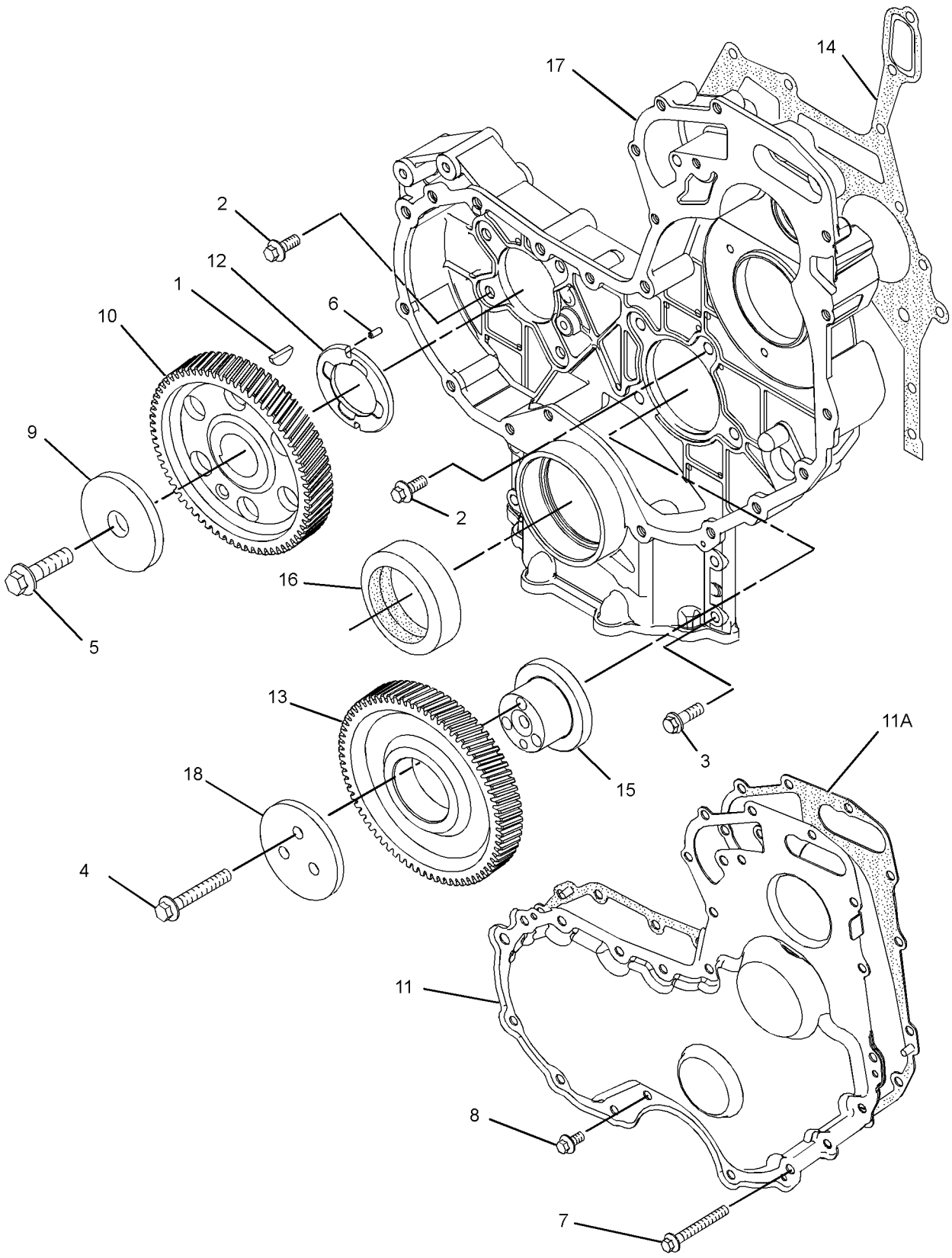

GRAPHIC #1 **<END>** g01394373

233-7432 LIFTING GP-ENGINE

S/N: G4D1-UP; CRS1-UP
PART OF 273-3610 ENGINE AR, 245-6841 ENGINE AR-PRIMARY
AN ATTACHMENT

SMCS-1122 **i01876830**

NOTE	REF NO	GRAPHIC REF	PART NUMBER	QTY	PART NAME 1 2 3 4 5 6 (PRODUCT LEVEL)	SEE PAGE
M	1	1	**100-4830**	4	BOLT (M10X1.5X20-MM)	
	2	1	**225-8848**	2	PLATE-LIFTING	

M-METRIC PART

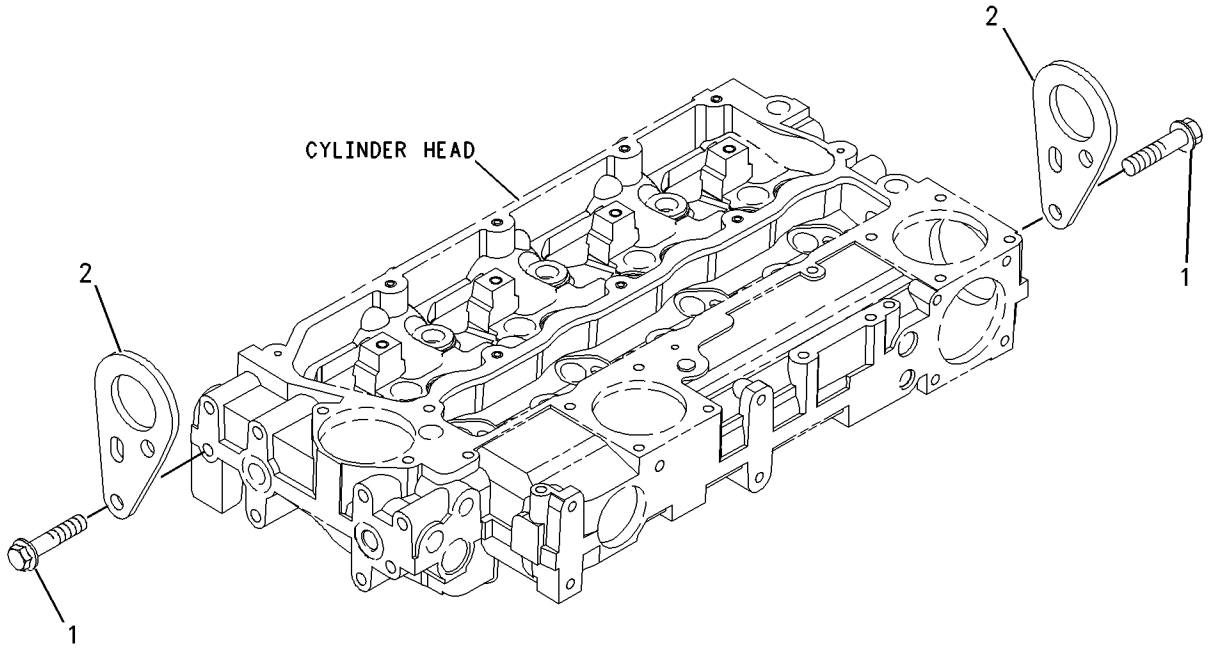

GRAPHIC #1 **<END>** g00955299

237-3658 MOUNTING GP-ENGINE

S/N: G4D1-UP; CRS1-UP
PART OF 273-3610 ENGINE AR, 245-6841 ENGINE AR-PRIMARY
AN ATTACHMENT

SMCS-1152, 1153, 1154 **i01925958**

NOTE	REF NO	GRAPHIC REF	PART NUMBER	QTY	PART NAME 1 2 3 4 5 6 (PRODUCT LEVEL)	SEE PAGE
	1	1	**101-2987**	6	PLUG	
	2	1	**6H-3616**	3	PLUG-PROTECTION	
	3	1	**195-2132**	1	SUPPORT-FRONT	
	4	1	**195-2134**	1	SUPPORT-FRONT	
	5	1	**195-2136**	8	STUD	
	6	1	**195-2221**	8	NUT	

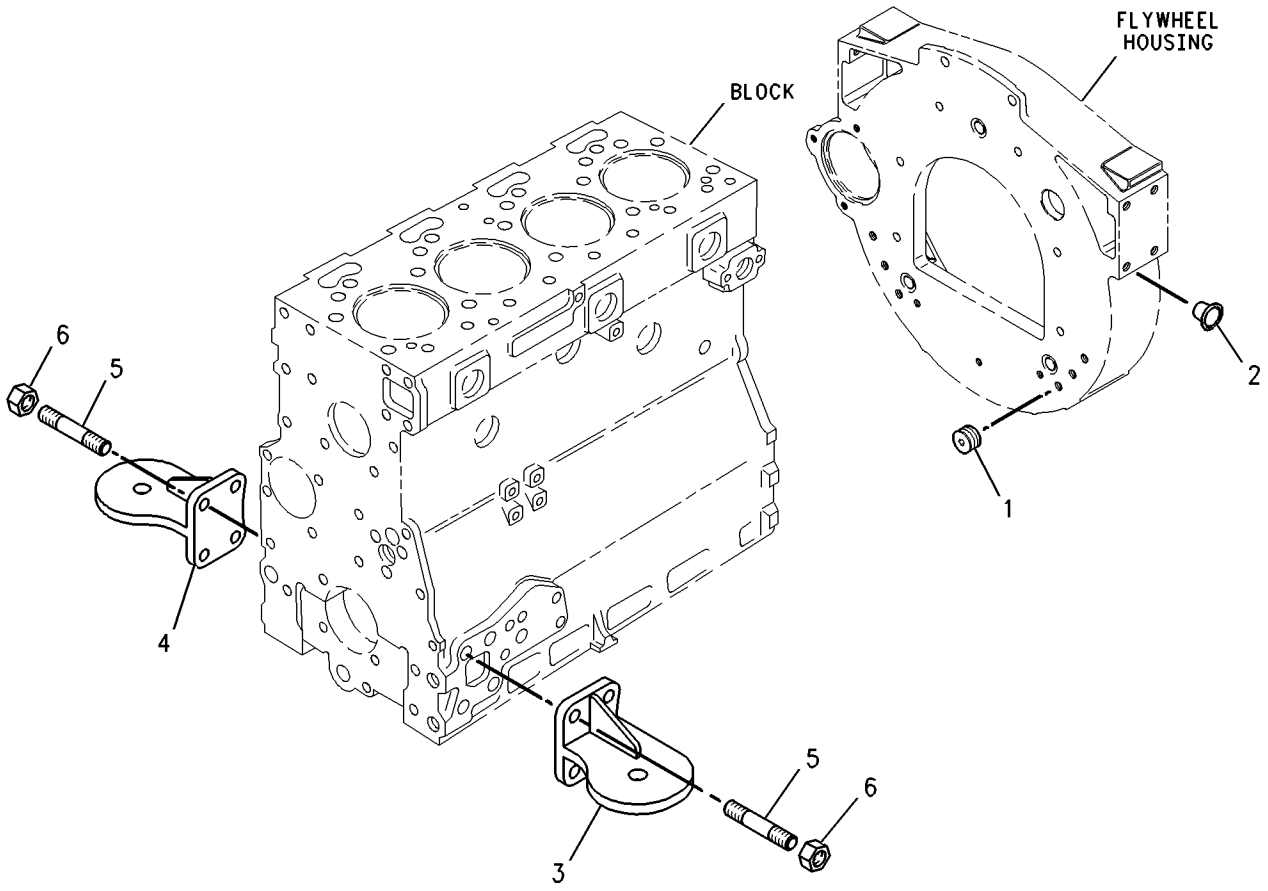

GRAPHIC #1 **<END>** g00738284

214-0973 MOUNTING GP-ENGINE & TMSN

S/N: SHA1-UP
PART OF 252-4640, 252-4641 ENGINE AR
AN ATTACHMENT

SMCS-1152, 1153, 1154 **i02116930**

NOTE	REF NO	GRAPHIC REF	PART NUMBER	QTY	PART NAME 1 2 3 4 5 6 (PRODUCT LEVEL)	SEE PAGE
	1	1	**9W-9910**	2	MOUNT AS	
	2	1	**9W-9915**	2	MOUNT AS	
	3	1	**9W-9953**	4	SLEEVE	
	4	1	**8T-4121**	12	WASHER-HARD (11X21X2.5-MM THK)	
	5	1	**8T-4122**	8	WASHER-HARD (17X32X3.5-MM THK)	
M	6	1	**8T-4132**	4	NUT (M16X2-THD)	
M	7	1	**8T-4174**	4	BOLT (M16X2X120-MM)	
M	8	1	**8T-4196**	12	BOLT (M10X1.5X35-MM)	
	9	1	**9W-9952**	4	WASHER (16.75X86X8-MM THK)	

M-METRIC PART

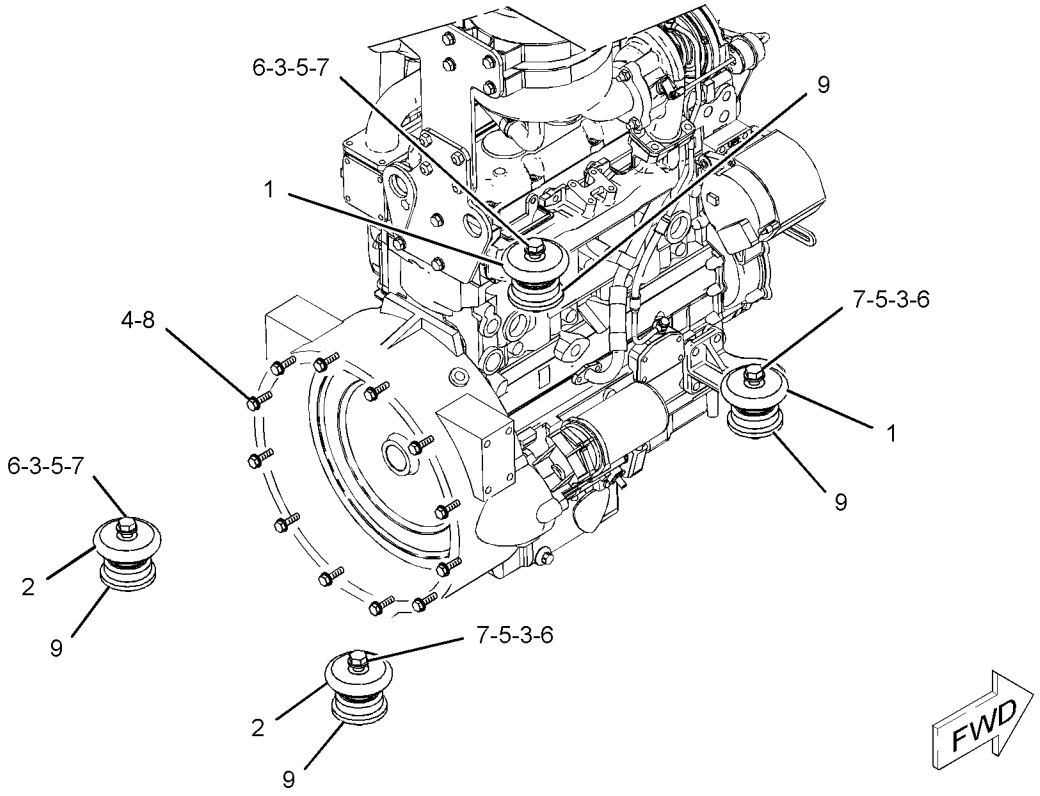

GRAPHIC #1 **<END>** g01079533

BASIC ENGINE

237-0025 PAN GP-OIL

S/N: G4D1-UP; CRS1-UP
PART OF 273-3610 ENGINE AR, 245-6841 ENGINE AR-PRIMARY
AN ATTACHMENT

SMCS-1302 **i02668913**

NOTE	REF NO	GRAPHIC REF	PART NUMBER	QTY	PART NAME 1 2 3 4 5 6 (PRODUCT LEVEL)	SEE PAGE
	1	1	**275-9883**	2	SEAL (ENGINE OIL DRAIN)	
M	2	1	**6I-0217**	12	BOLT (M8X1.25X20-MM)	
M	3	1	**6I-0260**	2	BOLT (M8X1.25X25-MM)	
	4	1	**6I-0289**	1	PLUG	
M	5	1	**6I-0363**	2	BOLT (M6X1X20-MM)	
	6	1	**6I-0572**	2	BOLT (M8X1.25X20-MM)	
	7	1	**7C-0351**	2	PLUG-DRAIN (ENGINE OIL)	
	8	1	**067-6213**	1	GASKET	
	9	1	**101-3771**	6	BOLT	
	10	1	**304-8764**	1	PAN AS-OIL (ENGINE)	
	10A	1	**7C-1224**	2	INSERT	
	11	1	**225-6005**	1	GASKET	
	12	1	**225-6041**	1	TUBE	
	13	1	**230-8094**	1	BRIDGE	

M-METRIC PART

237-0025 **PAN GP-OIL** *(contd.)* **i02668913**

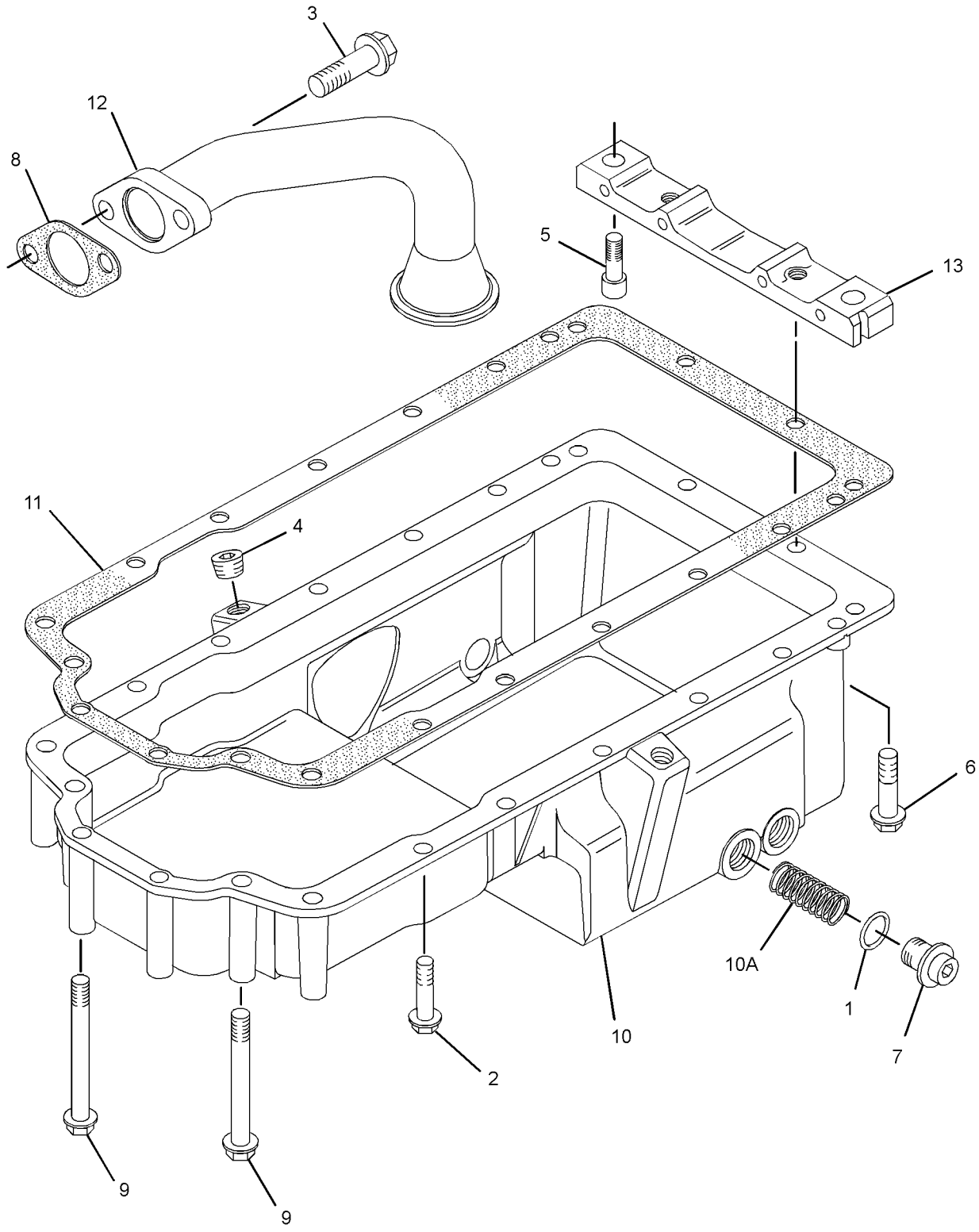

GRAPHIC #1 **<END>** g01382092

BASIC ENGINE

233-7233 PISTON & ROD GP

S/N: G4D1-UP; CRS1-UP
PART OF 245-6841 ENGINE AR-PRIMARY
AN ATTACHMENT

SMCS-1213, 1214, 1215, 1218, 1219, 1225, 1239 **i02728525**

NOTE	REF NO	GRAPHIC REF	PART NUMBER	QTY	PART NAME 1 2 3 4 5 6 (PRODUCT LEVEL)	SEE PAGE
	1	1	**233-7232**	4	PISTON AS	
					(EACH PISTON AS INCLUDES)	
	2	1	**124-3536**	2	RING-RETAINING	
	3	1	**233-7231**	1	RING GP-PISTON	
B		1	**288-9942**	1	PISTON AS (0.5-MM OS)	
B		1	**288-9943**	1	PISTON AS (1.0-MM OS)	
BJ	4	1	**225-5441**	4	ROD AS-CONNECTING (LENGTH L)	
					—OR—	
BJ		1	**225-5451**	4	ROD AS-CONNECTING (LENGTH K)	
					—OR—	
BJ		1	**225-5453**	4	ROD AS-CONNECTING (LENGTH J)	
					—OR—	
BJ		1	**225-5454**	4	ROD AS-CONNECTING (LENGTH H)	
					—OR—	
BJ		1	**225-5458**	4	ROD AS-CONNECTING (LENGTH G)	
					—OR—	
BJ		1	**225-5459**	4	ROD AS-CONNECTING (LENGTH F)	
					(EACH ROD AS INCLUDES)	
	5	1	**225-5438**	1	BUSHING	
	6	1	**225-5439**	2	BOLT	

B-USE AS REQUIRED
J-ENSURE THAT CORRECT ROD LENGTH IS FITTED

233-7233 **PISTON & ROD GP** *(contd.)* **i02728525**

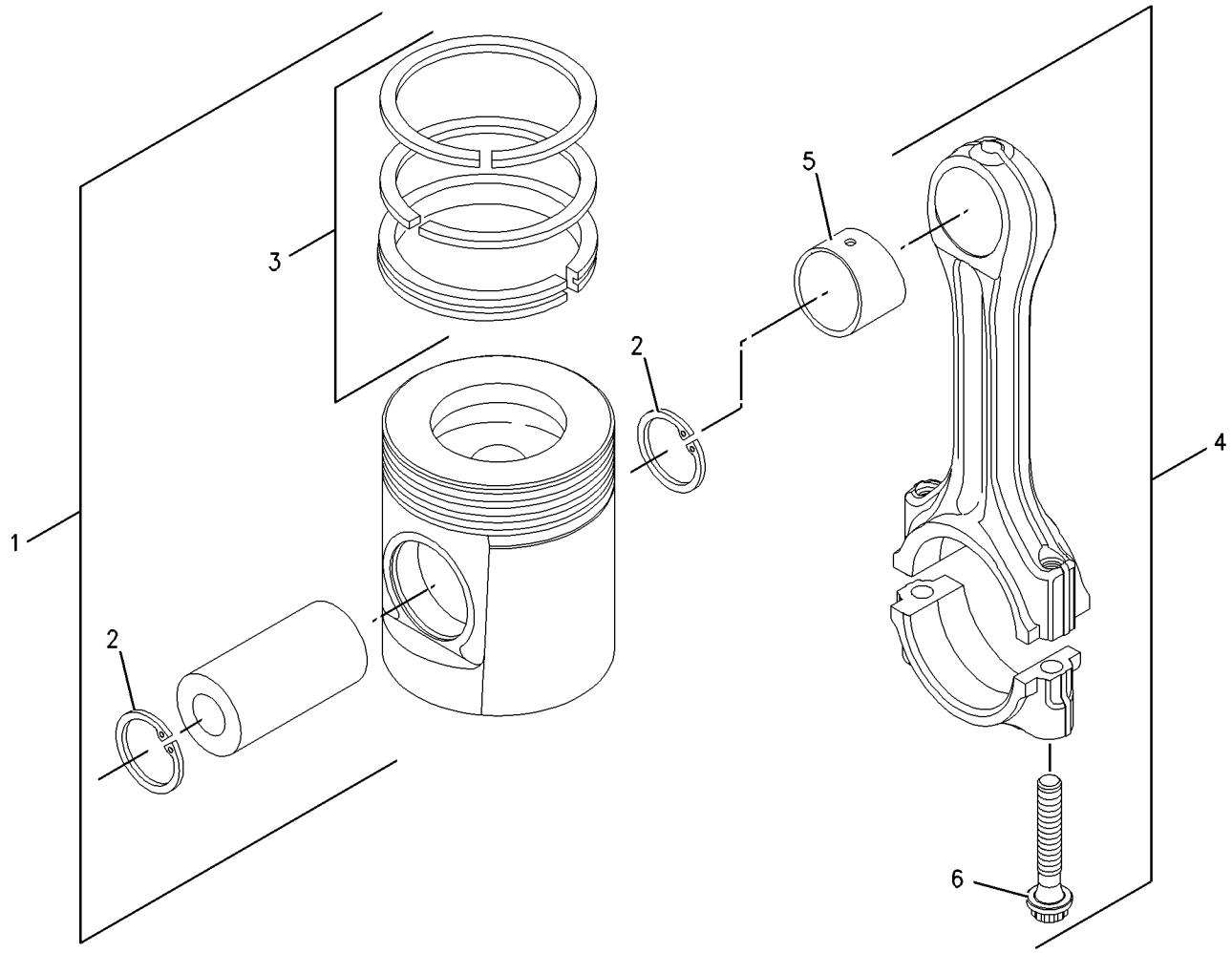

GRAPHIC #1 **<END>** g00909669

308-4730 PISTON & ROD GP

S/N: G4D1-UP; CRS1-UP
PART OF 273-3610 ENGINE AR
AN ATTACHMENT

SMCS-1213, 1214, 1215, 1218, 1219, 1225, 1239 **i02719129**

NOTE	REF NO	GRAPHIC REF	PART NUMBER	QTY	PART NAME 1 2 3 4 5 6 (PRODUCT LEVEL)	SEE PAGE
	1	1	**225-5437**	4	PISTON AS	
					(EACH PISTON AS INCLUDES)	
	1A	1	**124-3536**	2	RING-RETAINING	
	1B	1	**225-5436**	1	KIT-PISTON RING	
BJ	2	1	**225-5441**	4	ROD AS-CONNECTING (LENGTH L)	
					—OR—	
BJ		1	**225-5451**	4	ROD AS-CONNECTING (LENGTH K)	
					—OR—	
BJ		1	**225-5453**	4	ROD AS-CONNECTING (LENGTH J)	
					—OR—	
BJ		1	**225-5454**	4	ROD AS-CONNECTING (LENGTH H)	
					—OR—	
BJ		1	**225-5458**	4	ROD AS-CONNECTING (LENGTH G)	
					—OR—	
BJ		1	**225-5459**	4	ROD AS-CONNECTING (LENGTH F)	
					(EACH ROD AS INCLUDES)	
	2A	1	**225-5438**	1	BUSHING	
	2B	1	**225-5439**	2	BOLT	

B-USE AS REQUIRED
J-ENSURE THAT CORRECT ROD LENGTH IS FITTED

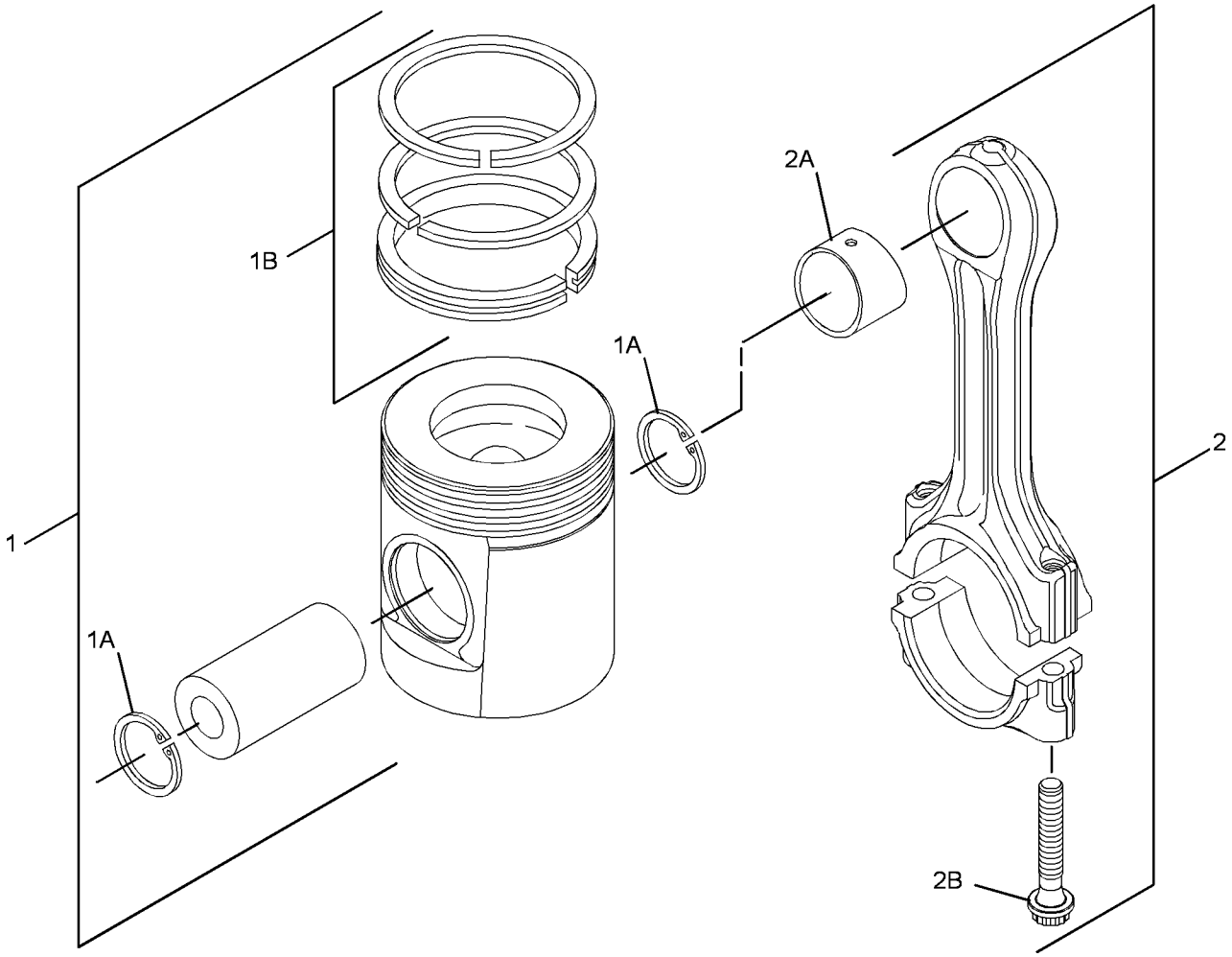

GRAPHIC #1 **<END>** g01374535

225-4317 PLUG GP-ENGINE

S/N: G4D1-UP; CRS1-UP
FRONT HOUSING,CYLINDER HEAD
PART OF 273-3610 ENGINE AR, 245-6841 ENGINE AR-PRIMARY
AN ATTACHMENT

SMCS-1000 **i01862406**

NOTE	REF NO	GRAPHIC REF	PART NUMBER	QTY	PART NAME 1 2 3 4 5 6 (PRODUCT LEVEL)	SEE PAGE
	1	1	**2B-0858**	3	PLUG-PIPE	

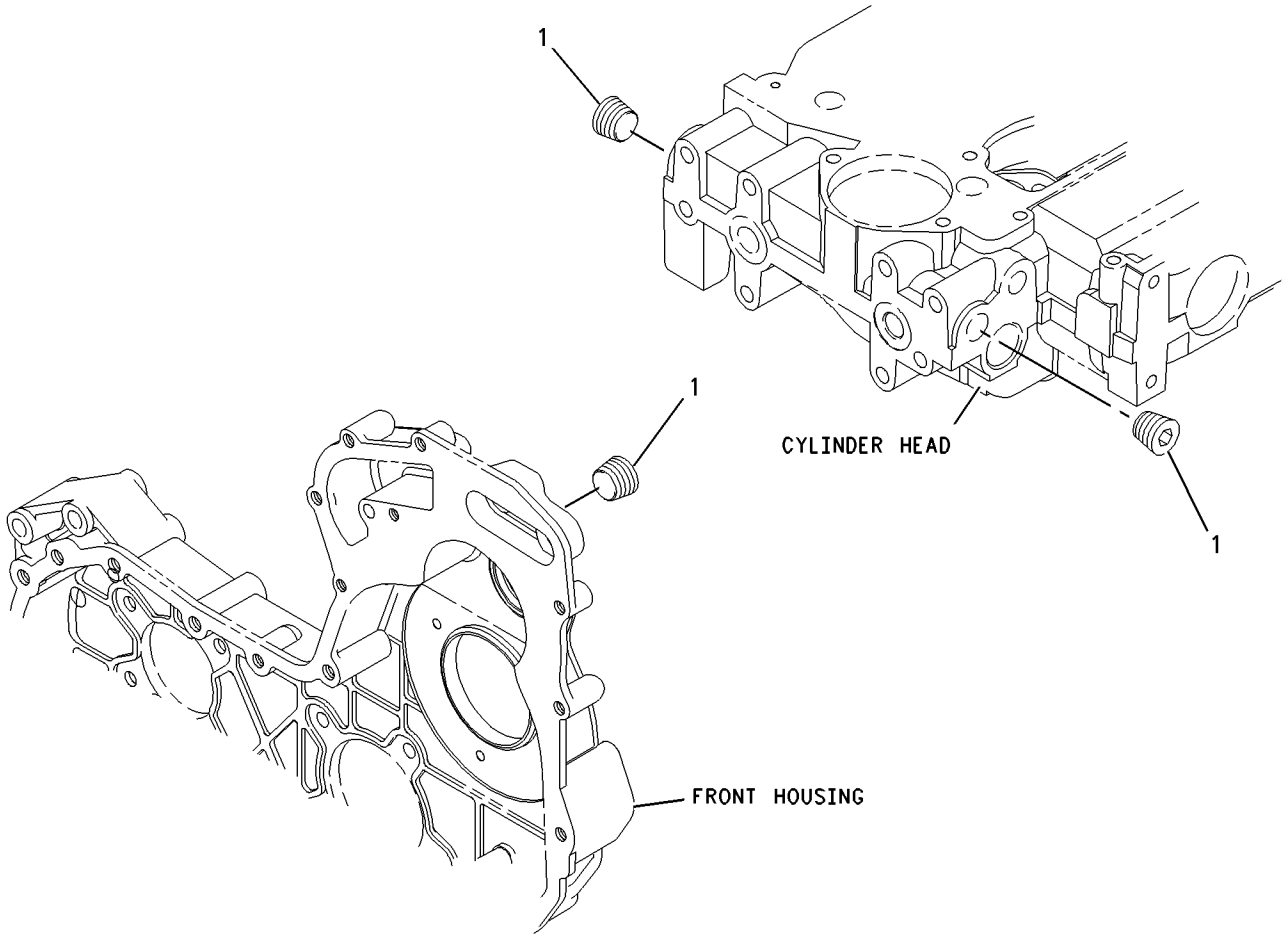

GRAPHIC #1 **<END>** g00911937

230-7569 PLUG GP-ENGINE

S/N: G4D1-UP; CRS1-UP
PART OF 273-3610 ENGINE AR, 245-6841 ENGINE AR-PRIMARY
AN ATTACHMENT

SMCS-1000 **i01876806**

NOTE	REF NO	GRAPHIC REF	PART NUMBER	QTY	PART NAME 1 2 3 4 5 6 (PRODUCT LEVEL)	SEE PAGE
	1	1	**231-0046**	1	PLUG	

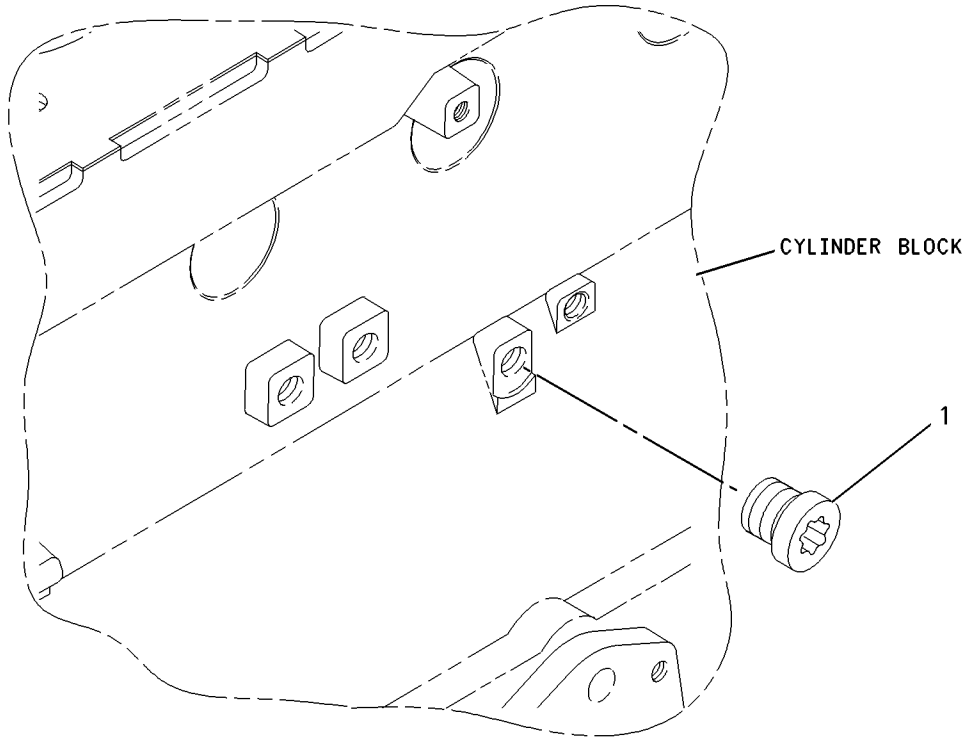

GRAPHIC #1 **<END>** g00911955

232-6204 PLUG GP-ENGINE

S/N: G4D1-UP; CRS1-UP
CYLINDER HEAD
PART OF 273-3610 ENGINE AR, 245-6841 ENGINE AR-PRIMARY
AN ATTACHMENT

SMCS-1000 **i01863022**

NOTE	REF NO	GRAPHIC REF	PART NUMBER	QTY	PART NAME 1 2 3 4 5 6 (PRODUCT LEVEL)	SEE PAGE
	1	1	**199-9751**	1	SEAL-O-RING	
	2	1	**232-1322**	1	PLUG	

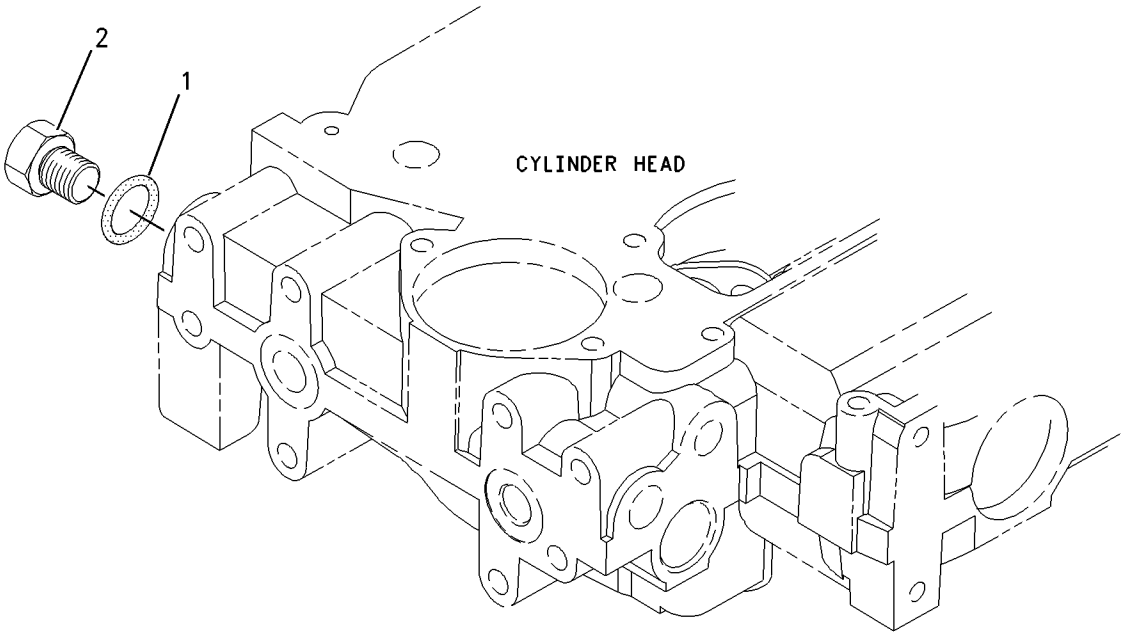

GRAPHIC #1 **<END>** g00950934

BASIC ENGINE

230-7353 PULLEY GP-CRANKSHAFT

S/N: G4D1-UP; CRS1-UP
PART OF 273-3610 ENGINE AR, 245-6841 ENGINE AR-PRIMARY
AN ATTACHMENT

SMCS-1205 **i02009617**

NOTE	REF NO	GRAPHIC REF	PART NUMBER	QTY	PART NAME 1 2 3 4 5 6 (PRODUCT LEVEL)	SEE PAGE
	1	1	**6I-0501**	1	BLOCK	
	2	1	**6I-0502**	1	PULLEY	
	3	1	**7W-4634**	3	BOLT (7/16-20X1.5 IN)	

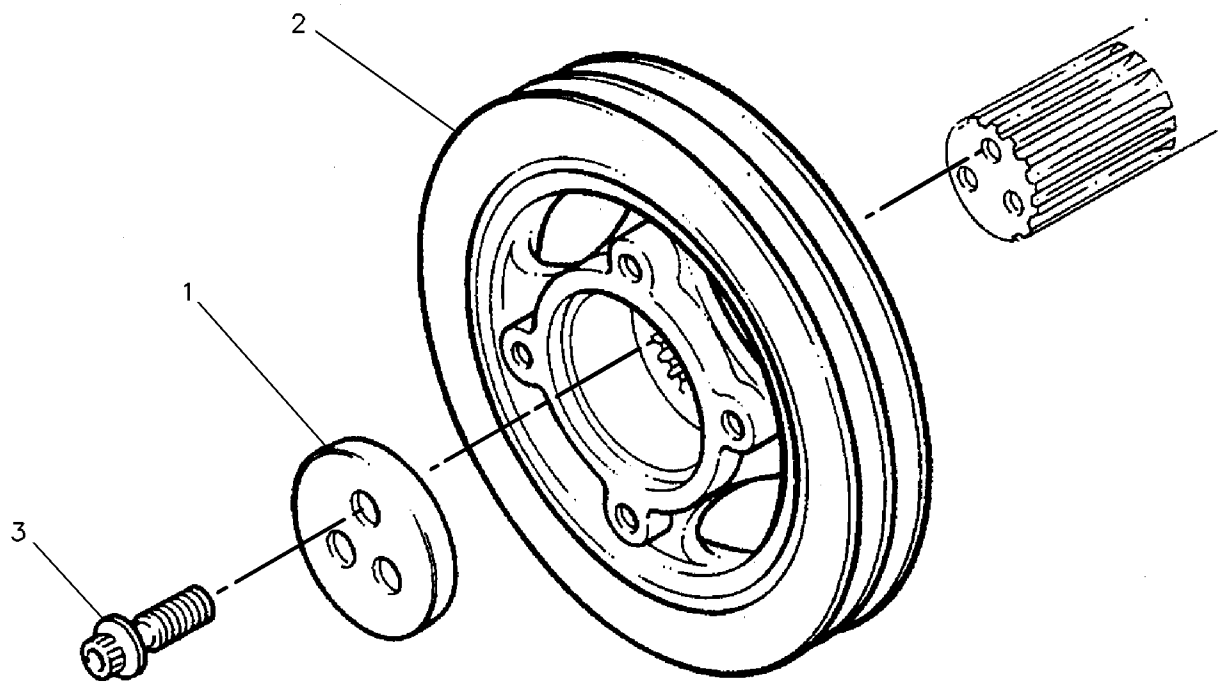

GRAPHIC #1 **<END>** g00130941

225-5963 ROCKER ARM GP

S/N: G4D1-UP; CRS1-UP
PART OF 308-4732 VALVE MECHANISM GP
AN ATTACHMENT

SMCS-1102, 1123 **i02720065**

NOTE	REF NO	GRAPHIC REF	PART NUMBER	QTY	PART NAME 1 2 3 4 5 6 (PRODUCT LEVEL)	SEE PAGE
	1	1	**225-5625**	4	LEVER AS	
	1A	1	**5B-9079**	1	NUT-JAM (3/8-24-THD)	
	1B	1	**185-1546**	1	SCREW	
	2	1	**225-5634**	1	SHAFT AS	
	2A	1	**225-5629**	2	PLUG	
	3	1	**225-5638**	3	SPRING	
	4	1	**225-5640**	4	LEVER AS	
	4A	1	**5B-9079**	1	NUT-JAM (3/8-24-THD)	
	4B	1	**185-1546**	1	SCREW	
	5	1	**225-5959**	2	CLIP	
	6	1	**225-5960**	1	BOLT (M8X1.25X60-MM)	
	7	1	**225-5961**	2	WASHER (26.7X34.32X0.38-MM THK)	
	8	1	**225-5962**	3	BOLT (M8X1.25X30-MM)	

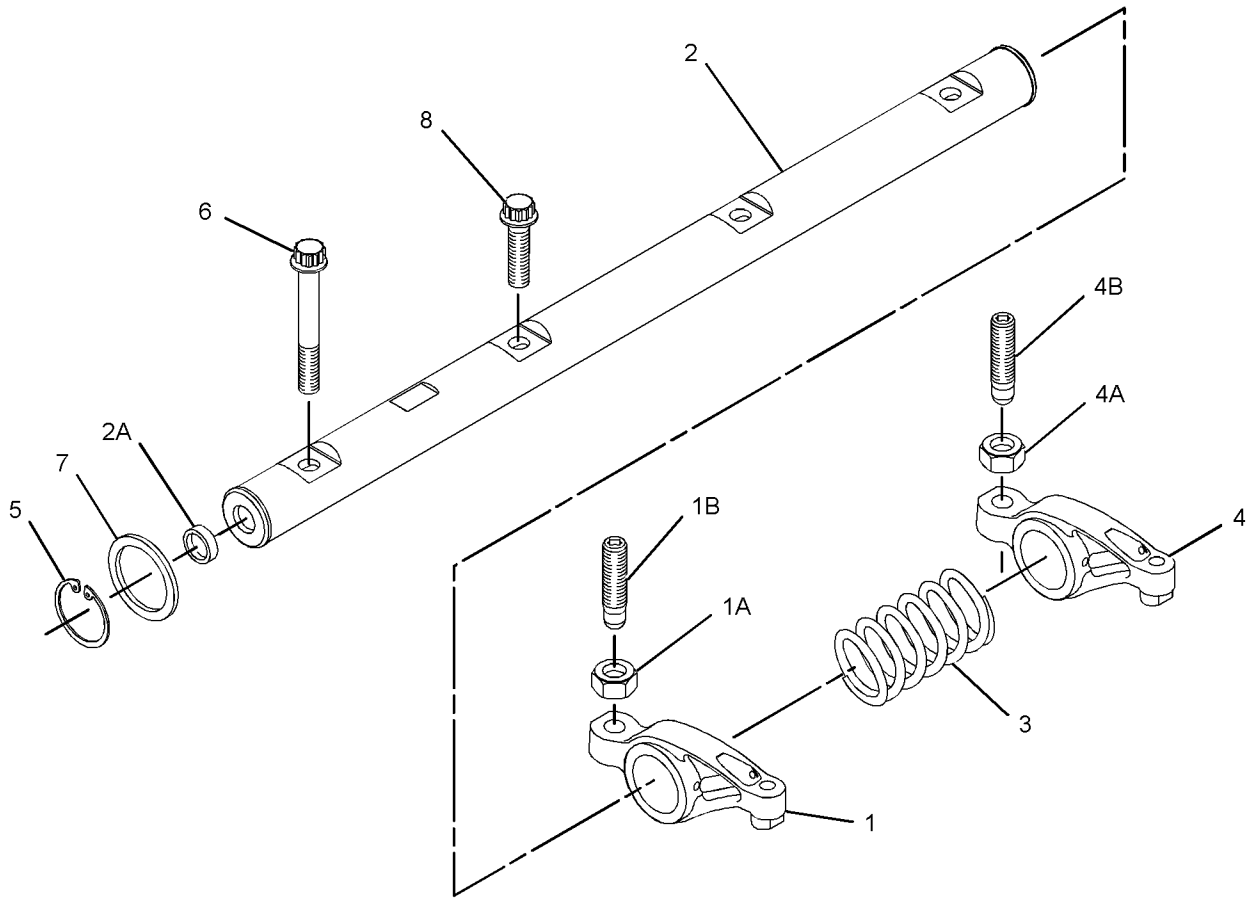

GRAPHIC #1 **<END>** g01368510

233-7235 VALVE MECHANISM GP

S/N: G4D1-UP; CRS1-UP
PART OF 245-6841 ENGINE AR-PRIMARY
AN ATTACHMENT

SMCS-1102, 1112, 1121, 1123, 1208, 1209 **i02014678**

NOTE	REF NO	GRAPHIC REF	PART NUMBER	QTY	PART NAME 1 2 3 4 5 6 (PRODUCT LEVEL)	SEE PAGE
	1	1	**067-6095**	8	ROD	
	2	1	**138-2053**	8	TAPPET	
	3	1	**225-5963**	1	ROCKER ARM GP	
	4	1	**225-5625**	4	LEVER AS	
					(EACH INCLUDES)	
	5	1	**5B-9079**	1	NUT-JAM (3/8-24-THD)	
	6	1	**185-1546**	1	SCREW	
	7	1	**225-5634**	1	SHAFT AS	
	8	1	**225-5629**	2	PLUG	
	9	1	**225-5638**	3	SPRING	
	10	1	**225-5640**	4	LEVER AS	
					(EACH INCLUDES)	
	11	1	**5B-9079**	1	NUT-JAM (3/8-24-THD)	
	12	1	**185-1546**	1	SCREW	
	13	1	**225-5959**	2	CLIP	
	14	1	**225-5960**	1	BOLT (M8X1.25X60-MM)	
	15	1	**225-5961**	2	WASHER (26.7X34.32X0.38-MM THK)	
	16	1	**225-5962**	3	BOLT (M8X1.25X30-MM)	

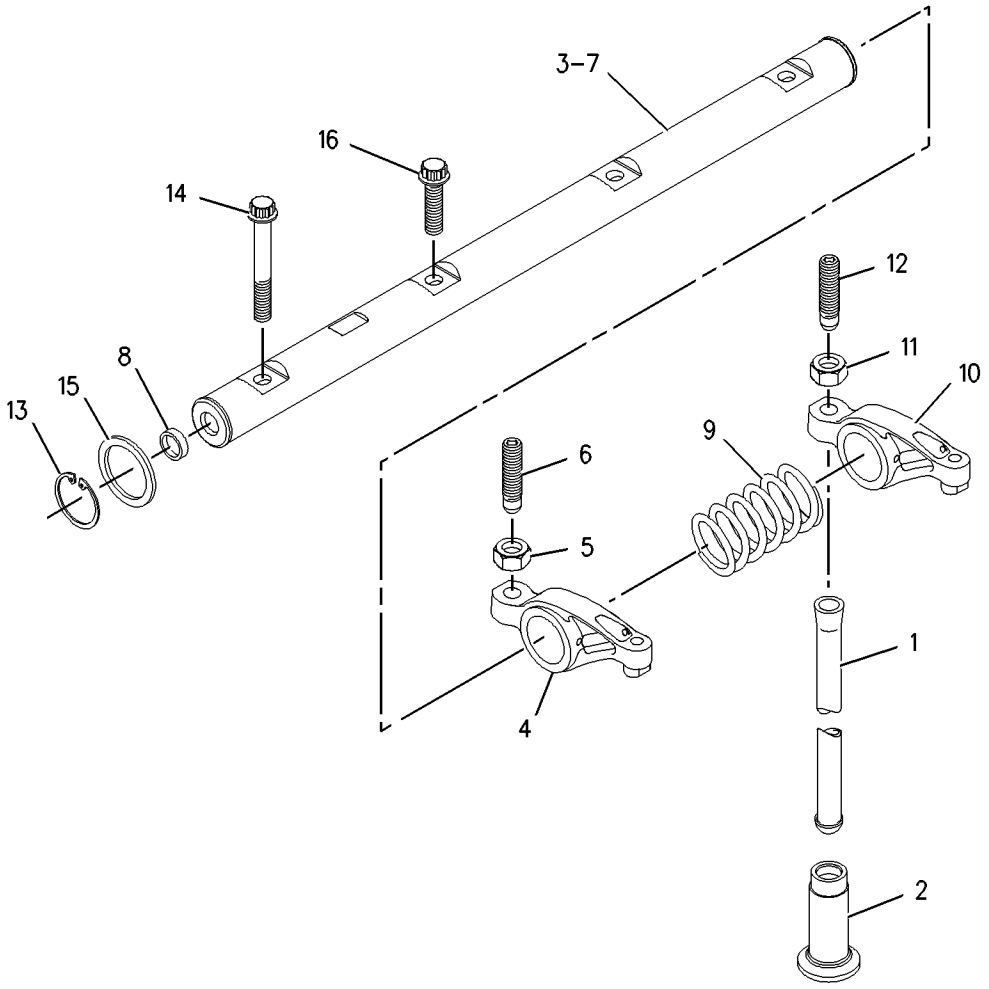

GRAPHIC #1 **<END>** g00910253

308-4732 VALVE MECHANISM GP

S/N: G4D1-UP; CRS1-UP
PART OF 273-3610 ENGINE AR
AN ATTACHMENT

SMCS-1102, 1112, 1121, 1123, 1208, 1209 **i02719187**

NOTE	REF NO	GRAPHIC REF	PART NUMBER	QTY	PART NAME 1 2 3 4 5 6 (PRODUCT LEVEL)	SEE PAGE
	1	1	**067-6095**	8	ROD	
	2	1	**138-2053**	8	TAPPET	
Y	3	1	**225-5963**	1	ROCKER ARM GP	51
	4	1	**225-5967**	1	CAMSHAFT	

Y-SEPARATE ILLUSTRATION

308-4732 **VALVE MECHANISM GP** *(contd.)* **i02719187**

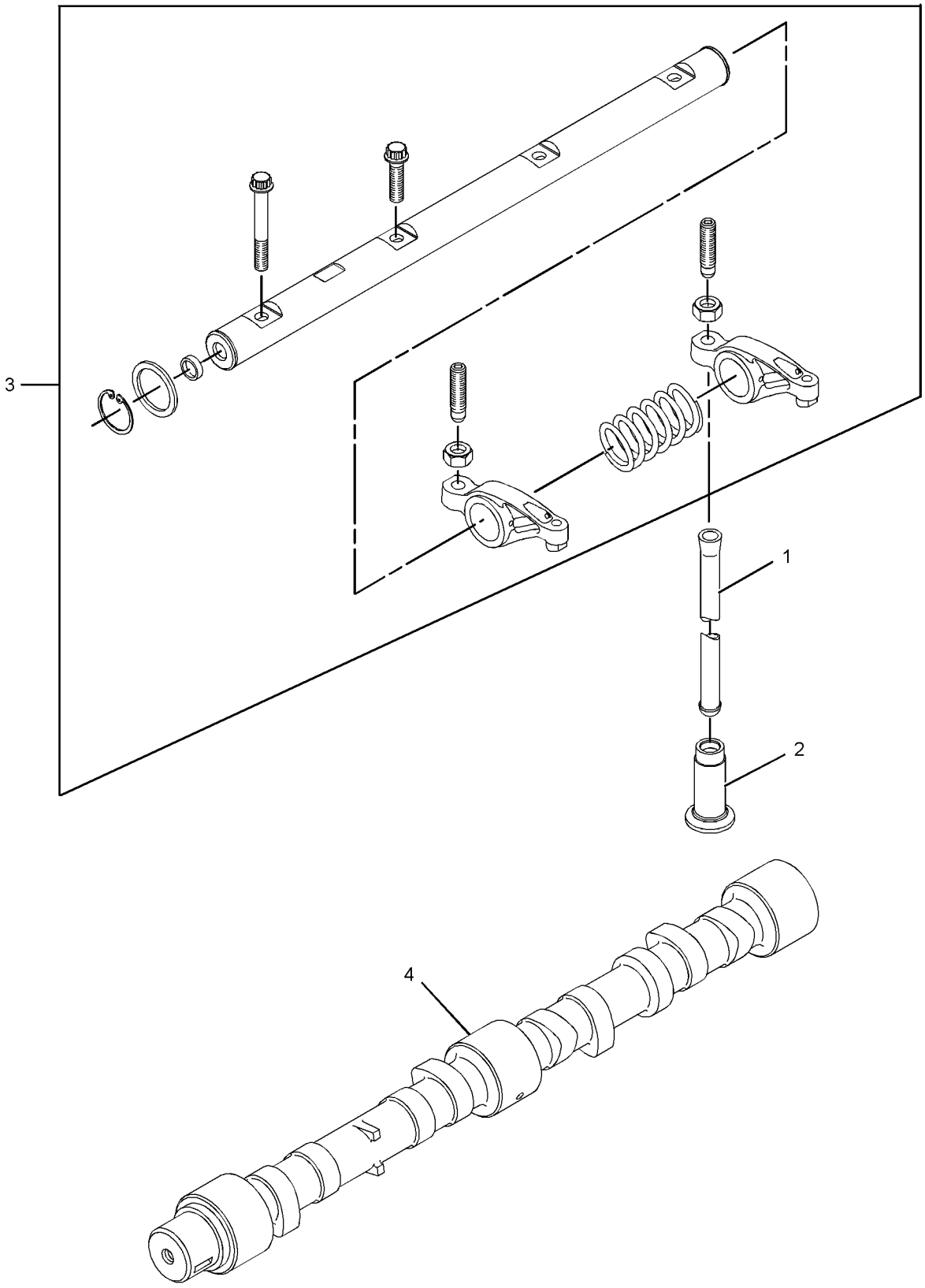

GRAPHIC #1 **<END>** g01368563

250-7963 BREATHER GP

S/N: SHA1-UP
AN ATTACHMENT

SMCS-1317 **i02502677**

NOTE	REF NO	GRAPHIC REF	PART NUMBER	QTY	PART NAME 1 2 3 4 5 6 (PRODUCT LEVEL)	SEE PAGE
	1	1	**6G-2263**	1	SPACER (10.5X19X28.5-MM THK)	
	2	1	**6I-1497**	1	SEAL	
	3	1	**6S-8620**	2	CLAMP-HOSE	
	4	1	**8T-9402**	3	CLAMP-HOSE	
	5	1	**165-4021**	1	CANISTER AS-BREATHER (CRANKCASE)	
		1	**185-6643**	1	SEAL (BREATHER)	
	6	1	**202-5909**	1	TUBE AS-OIL	
	7	1	**254-4418**	1	HOSE	
	8	1	**254-4419**	1	PLATE AS	
M		1	**6V-9632**	4	NUT-WELD (M6X1-THD)	
	9	1	**5P-4116**	2	WASHER-HARD (8.8X20.5X2-MM THK)	
	10	1	**6D-4246**	1	CLIP	
M	11	1	**8C-3798**	2	BOLT-LOCKING (M6X1X30)	
	12	1	**8T-4121**	1	WASHER-HARD (11X21X2.5-MM THK)	
M	13	1	**8T-4138**	2	BOLT (M6X1X20-MM)	
M	14	1	**8T-4185**	1	BOLT (M10X1.5X50-MM)	
M	15	1	**8T-4189**	2	BOLT (M8X1.25X20-MM)	
	16	1	**8T-4205**	4	WASHER-HARD (7.2X14.5X2-MM THK)	
	17	1	**8T-7529**	2	CLIP	
E	18	1	**136-1955**		HOSE (82-CM)	
E	19	1	**5P-1505**		HOSE (77-CM)	

E-ORDER BY THE CENTIMETER
M-METRIC PART

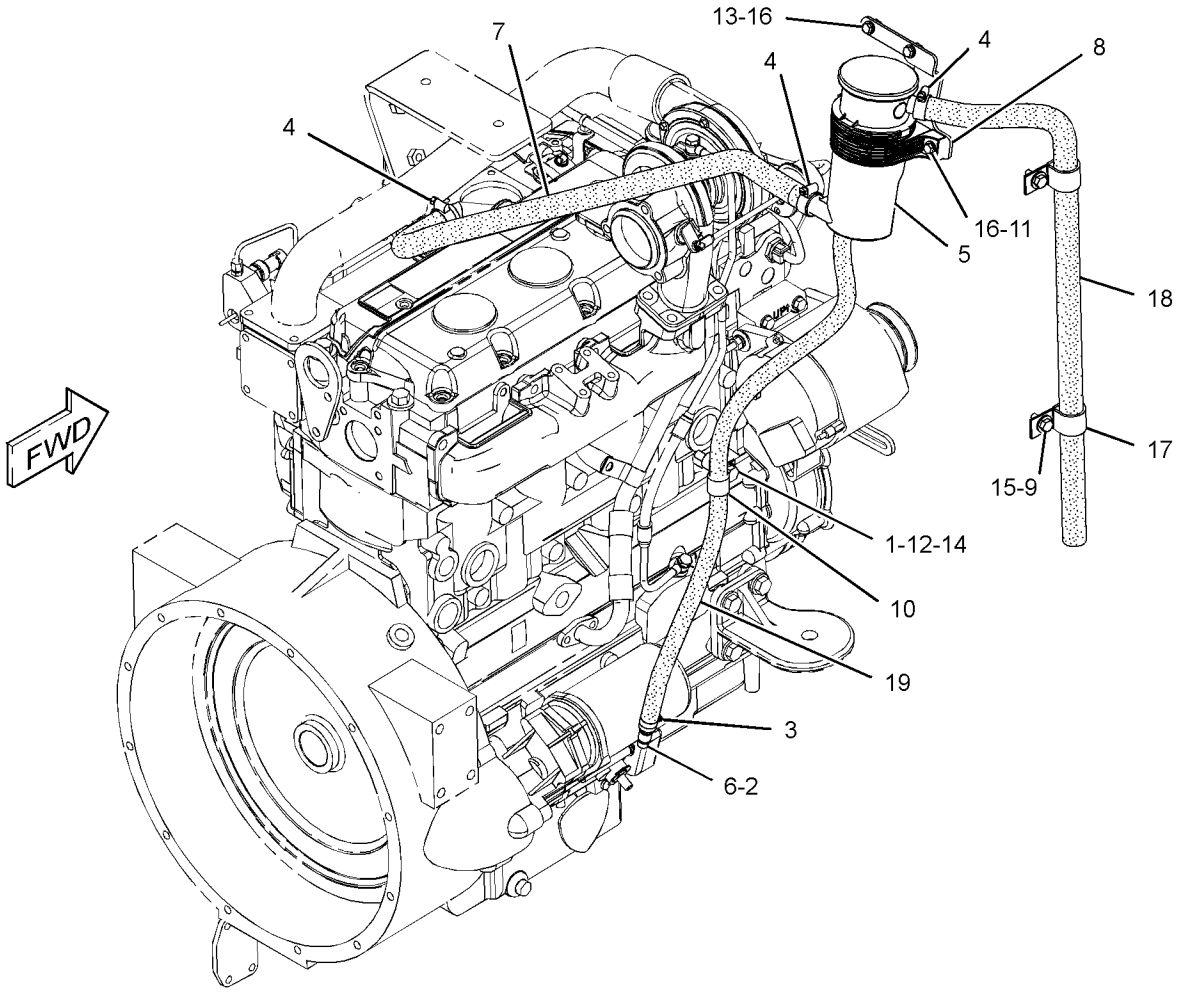

GRAPHIC #1 **<END>** g01231422

LUBRICATION SYSTEM

234-3035 FILTER GP-ENGINE OIL

S/N: CRS1-UP

PART OF 245-6841 ENGINE AR-PRIMARY

AN ATTACHMENT

SMCS-1306, 1308 **i01917686**

NOTE	PART NUMBER	QTY	PART NAME 1 2 3 4 5 6 (PRODUCT LEVEL)	SEE PAGE
			(NO SERVICED PARTS)	

<END>

222-7091 GAUGE GP-OIL LEVEL & FILLER–ENGINE

S/N: SHA1-UP
PART OF 252-4640, 252-4641 ENGINE AR
AN ATTACHMENT

SMCS-1316, 1326 **i02492172**

NOTE	REF NO	GRAPHIC REF	PART NUMBER	QTY	PART NAME 1 2 3 4 5 6 (PRODUCT LEVEL)	SEE PAGE
	1	1	**6I-1497**	1	SEAL	
	2	1	**7W-2326**	1	FILTER AS-ENGINE OIL	
	3	1	**9M-7958**	1	CLAMP-HOSE	
	4	1	**127-4471**	1	CLAMP-HOSE	
	5	1	**236-6651**	1	CAP AS (ENGINE OIL FILLER)	
	6	1	**249-5046**	1	TUBE AS	
	7	1	**249-5295**	1	HOSE	
	8	1	**249-5297**	1	BRACKET AS	
M	9	1	**8T-4195**	2	BOLT (M10X1.5X30-MM)	
	10	1	**256-0143**	1	TUBE AS	
	11	1	**261-3572**	1	GAUGE-OIL LEVEL (ENGINE DIPSTICK)	
	12	1	**033-8248**	2	CLIP	
	13	1	**7D-7233**	1	CLIP	
	14	1	**7X-7729**	3	WASHER (11X25X3-MM THK)	
	15	1	**8T-4121**	5	WASHER-HARD (11X21X2.5-MM THK)	
M	16	1	**8T-4133**	2	NUT (M10X1.5-THD)	
M	17	1	**8T-4136**	1	BOLT (M10X1.5X25-MM)	
M	18	1	**8T-4196**	3	BOLT (M10X1.5X35-MM)	

M-METRIC PART

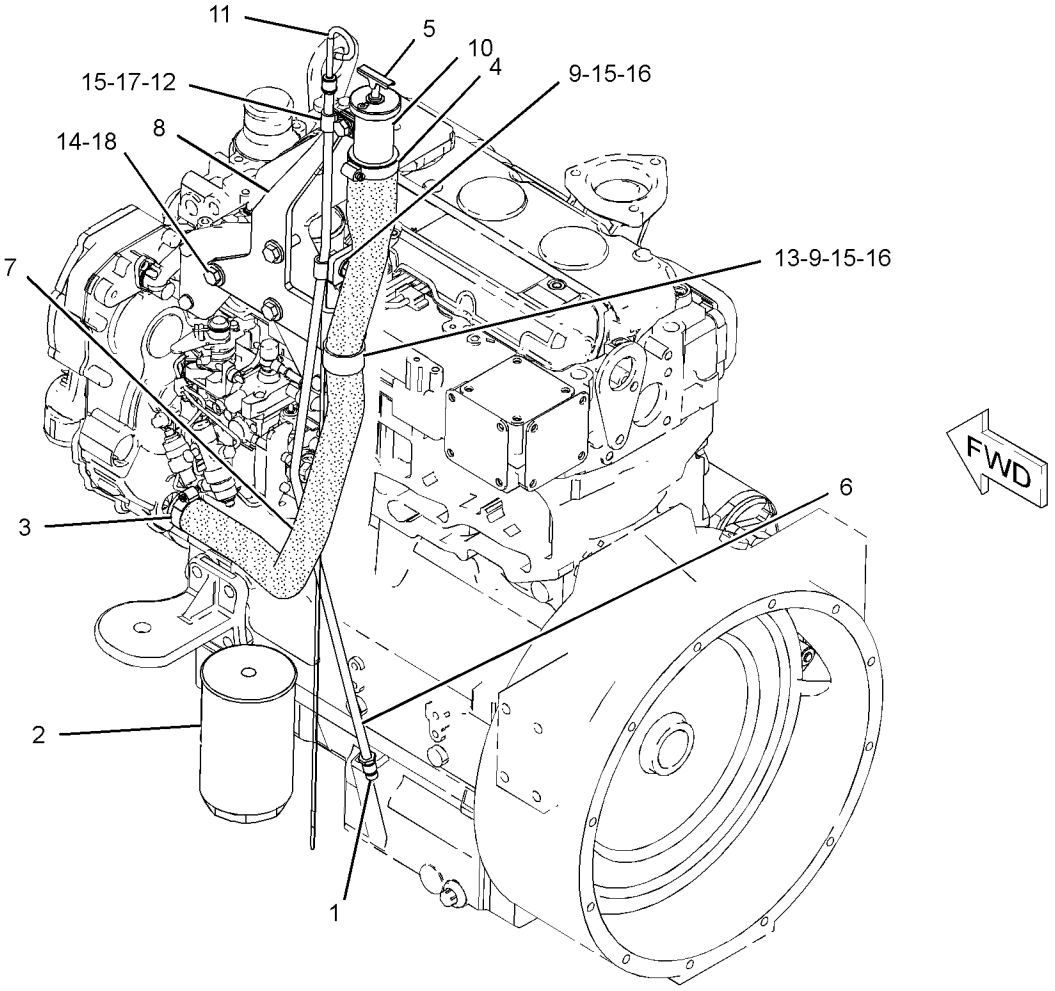

GRAPHIC #1 **<END>** g01231281

230-7578 PUMP GP-ENGINE OIL

S/N: G4D1-UP; CRS1-UP
PART OF 273-3610 ENGINE AR, 245-6841 ENGINE AR-PRIMARY
AN ATTACHMENT

SMCS-1304, 1315 **i01862499**

NOTE	REF NO	GRAPHIC REF	PART NUMBER	QTY	PART NAME 1 2 3 4 5 6 (PRODUCT LEVEL)	SEE PAGE
M	1	1	**100-4461**	5	BOLT (M10X1.50X50-MM)	
	2	1	**225-8329**	1	PUMP AS-ENGINE OIL	

M-METRIC PART

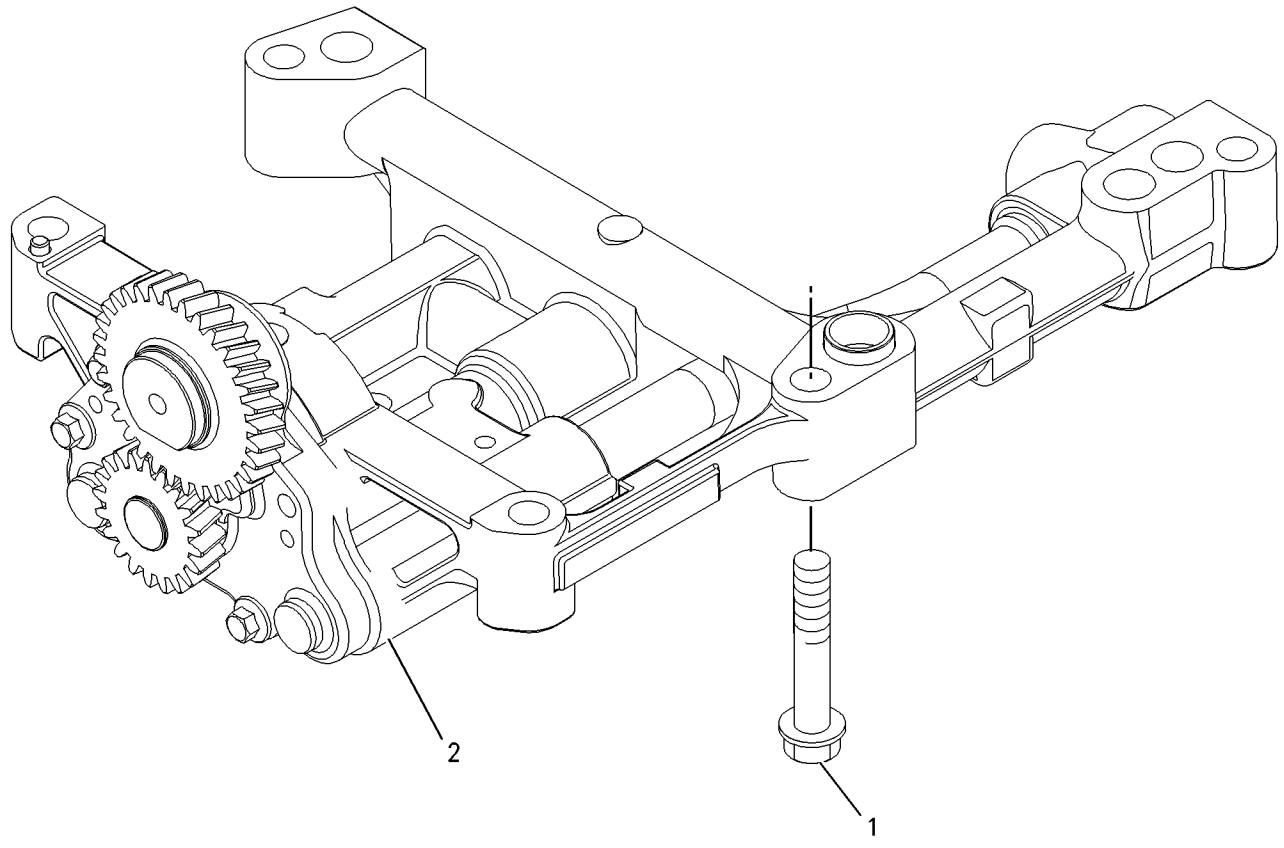

GRAPHIC #1 **<END>** g00911993

231-0033 CONNECTION GP-WATER

S/N: G4D1-UP; CRS1-UP
PART OF 273-3610 ENGINE AR, 245-6841 ENGINE AR-PRIMARY
AN ATTACHMENT

SMCS-1380 **i02597614**

NOTE	REF NO	GRAPHIC REF	PART NUMBER	QTY	PART NAME 1 2 3 4 5 6 (PRODUCT LEVEL)	SEE PAGE
M	1	1	**6I-0260**	2	BOLT (M8X1.25X25-MM)	
	2	1	**254-2267**	1	REGULATOR GP-TEMPERATURE (WATER)	
	2A	1	**254-2270**	1	SEAL-O-RING (WATER TEMPERATURE REGULATOR)	

M-METRIC PART

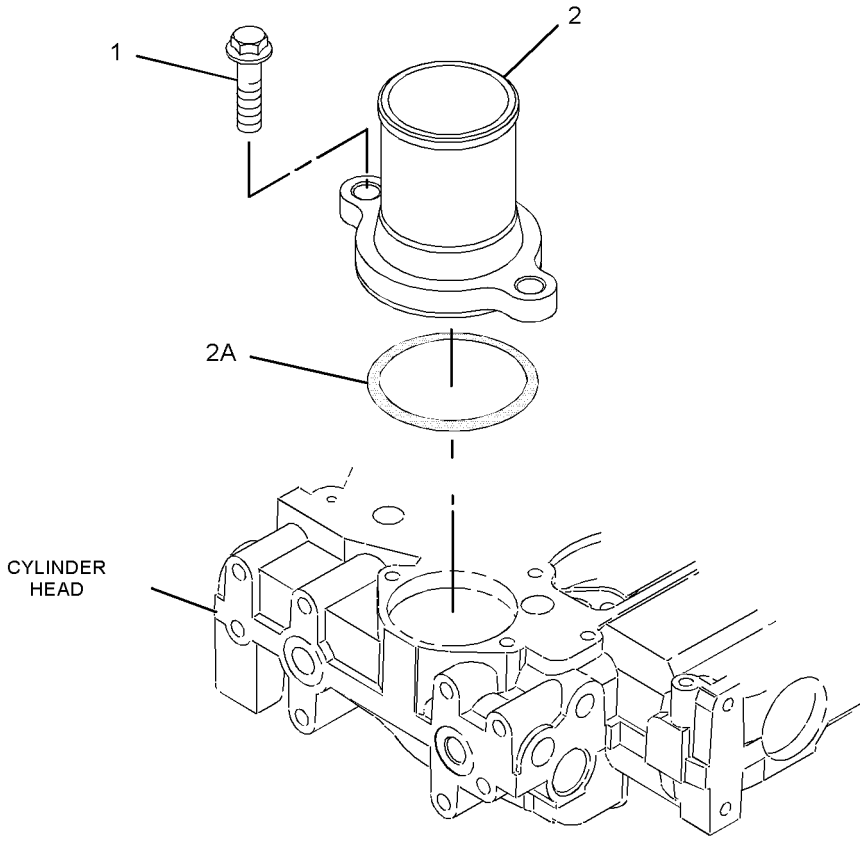

GRAPHIC #1 **<END>** g01081626

232-3722 COOLER GP-ENGINE OIL

S/N: G4D1-UP; CRS1-UP
PART OF 238-2799 COOLER GP-FLTR BASE & ENG OIL
AN ATTACHMENT

SMCS-1378 **i02525143**

NOTE	REF NO	GRAPHIC REF	PART NUMBER	QTY	PART NAME 1 2 3 4 5 6 (PRODUCT LEVEL)	SEE PAGE
M	1	1	**6I-0260**	10	BOLT (M8X1.25X25-MM)	
	2	1	**6I-4374**	3	BOLT	
M	3	1	**101-3895**	4	BOLT (M8X1.25X35-MM)	
	4	1	**225-6817**	1	COOLER-OIL (ENGINE)	
	5	1	**225-6818**	2	SEAL	
	6	1	**272-2265**	1	SEAL	

M-METRIC PART

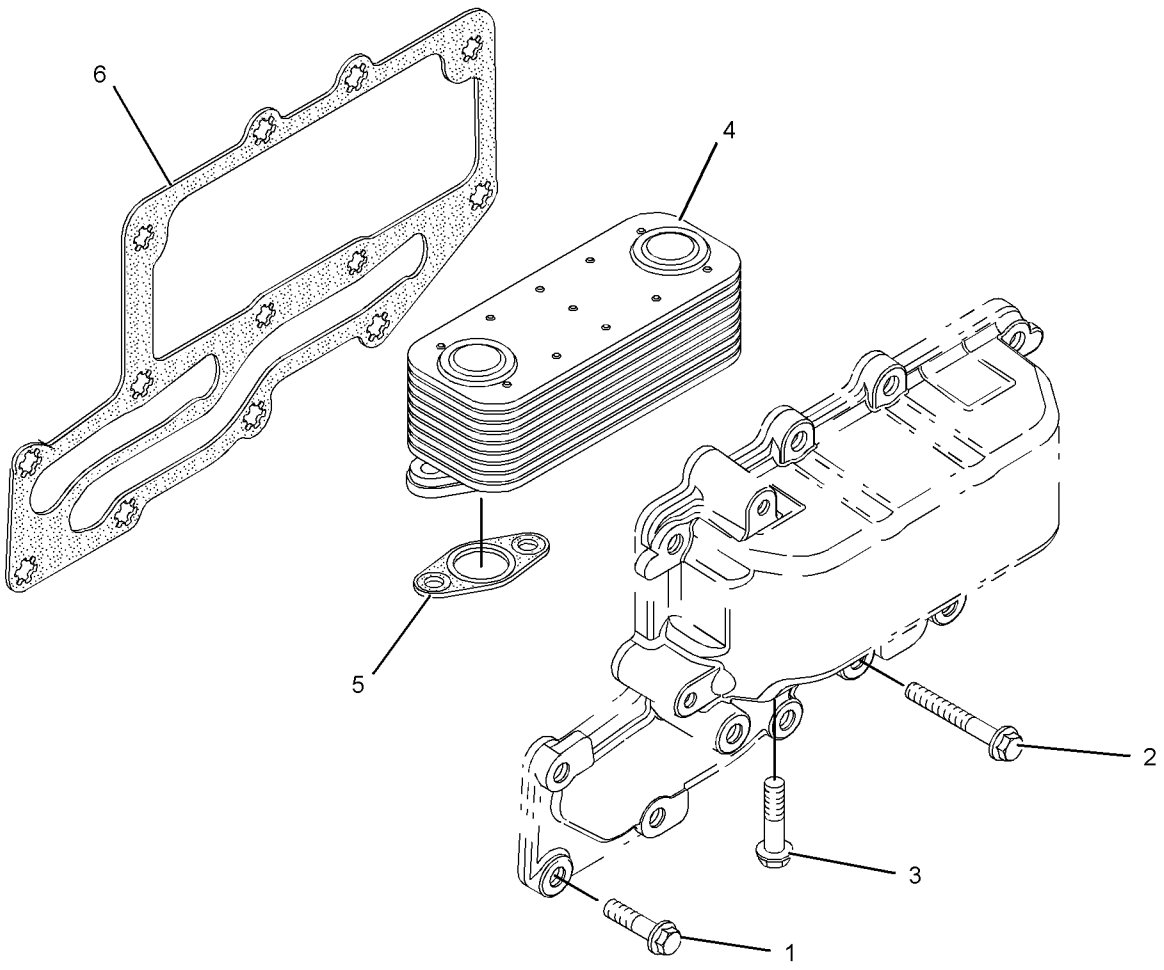

GRAPHIC #1 **<END>** g01111678

238-2799 COOLER GP-FLTR BASE & ENG OIL

S/N: G4D1-UP; CRS1-UP
PART OF 273-3610 ENGINE AR
AN ATTACHMENT

SMCS-1306, 1378 **i02574011**

NOTE	REF NO	GRAPHIC REF	PART NUMBER	QTY	PART NAME 1 2 3 4 5 6 (PRODUCT LEVEL)	SEE PAGE
	1	1	**6I-0572**	4	BOLT (M8X1.25X20-MM)	
M	2	1	**6I-0645**	4	BOLT (M8X1.25X25-MM)	
	3	1	**8T-7876**	1	SEAL-O-RING	
	4	1	**225-7941**	1	PLUG	
	5	1	**225-7944**	2	GASKET	
	6	1	**249-0974**	1	HEAD AS-OIL FILTER	
Y	7	1	**232-3722**	1	COOLER GP-ENGINE OIL	61
	8	1	**232-3751**	1	PLATE	

M-METRIC PART
Y-SEPARATE ILLUSTRATION

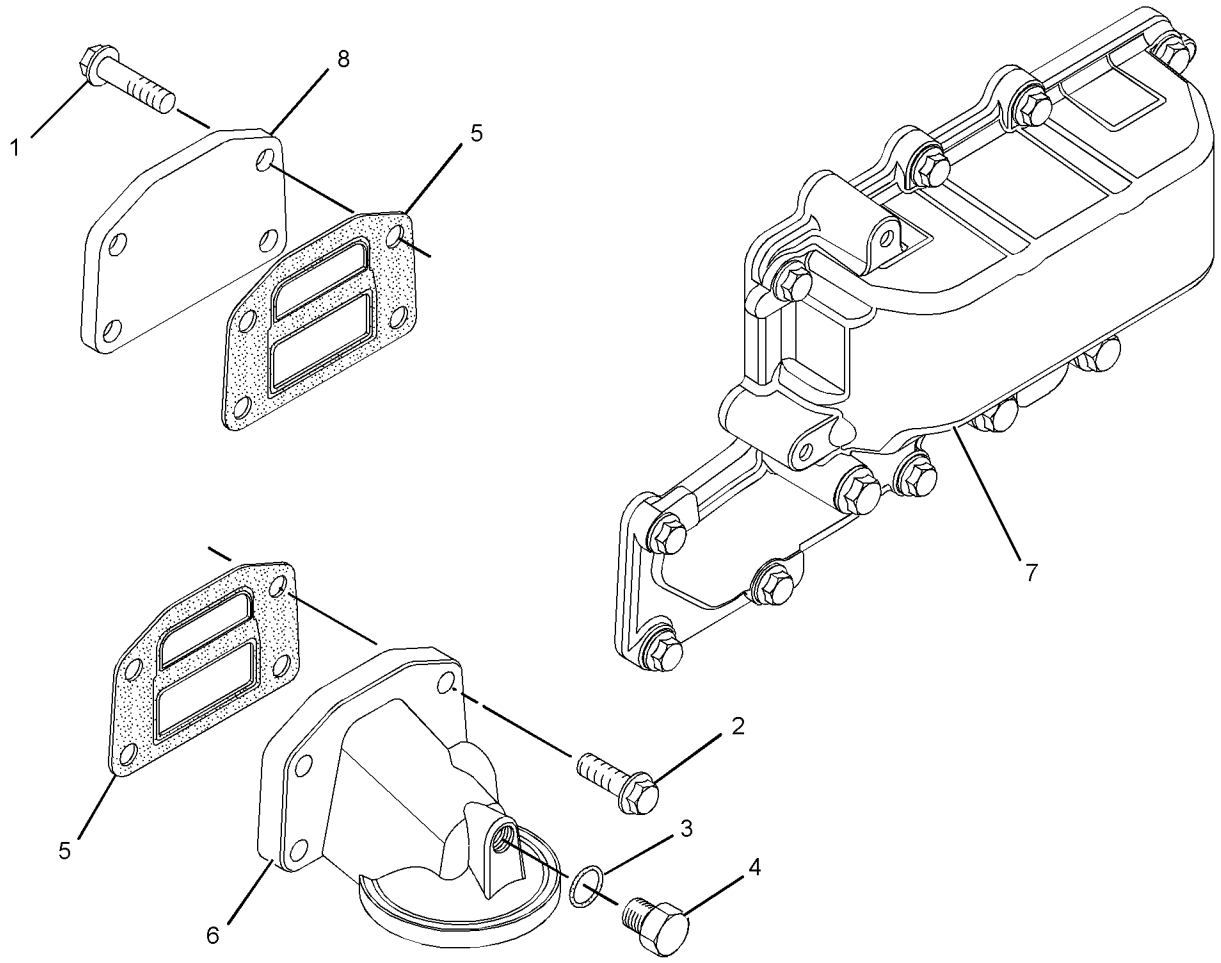

GRAPHIC #1 **<END>** g01289551

253-2472 COOLER GP-FLTR BASE & ENG OIL

S/N: G4D1-UP; CRS1-UP
PART OF 245-6841 ENGINE AR-PRIMARY
AN ATTACHMENT
TYPE 1

SMCS-1306, 1378 **i02578008**

NOTE	REF NO	GRAPHIC REF	PART NUMBER	QTY	PART NAME 1 2 3 4 5 6 (PRODUCT LEVEL)	SEE PAGE
	1	1	**6I-0572**	4	BOLT (M8X1.25X20-MM)	
M	2	1	**6I-0645**	4	BOLT (M8X1.25X25-MM)	
	3	1	**8T-7876**	1	SEAL-O-RING	
	4	1	**225-7941**	1	PLUG	
	5	1	**225-7944**	2	GASKET	
	6	1	**249-0974**	1	HEAD AS-OIL FILTER (ENGINE)	
	7	1	**232-3751**	1	PLATE	
	8	1	**233-7223**	1	COOLER AS-OIL (ENGINE)	
M	8A	1	**6I-0260**	10	BOLT (M8X1.25X25-MM)	
	8B	1	**6I-4374**	3	BOLT	
M	8C	1	**101-3895**	4	BOLT (M8X1.25X35-MM)	
	8D	1	**225-6818**	2	SEAL	
	8E	1	**225-6820**	1	GASKET	
	8F	1	**233-7222**	1	COOLER-OIL (ENGINE)	

M-METRIC PART

253-2472 **COOLER GP-FLTR BASE & ENG OIL** *(contd.)* **i02578008**

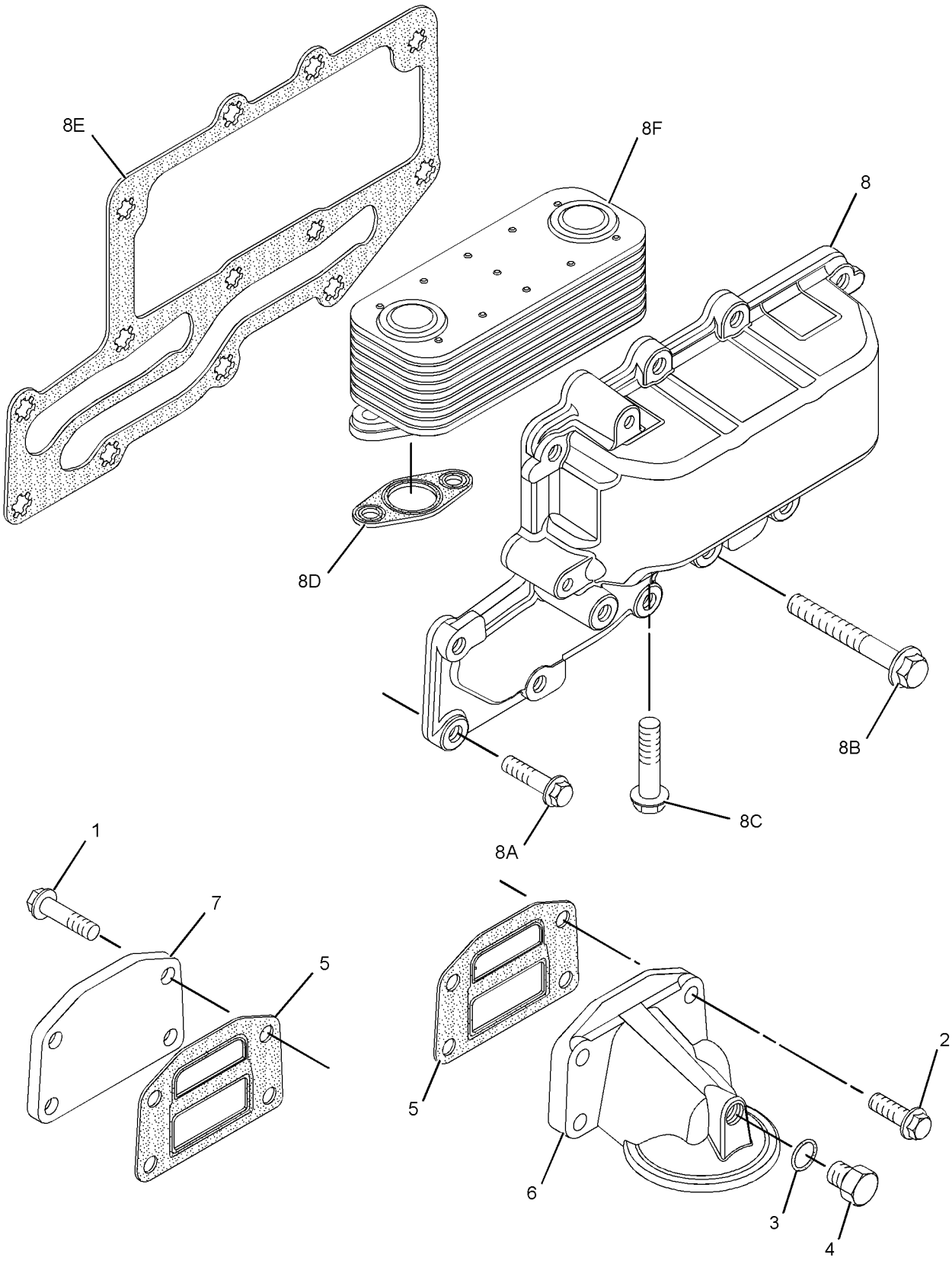

GRAPHIC #1 **<END>** g01300525

253-2472 COOLER GP-FLTR BASE & ENG OIL

S/N: G4D1-UP; CRS1-UP
PART OF 245-6841 ENGINE AR-PRIMARY
AN ATTACHMENT
TYPE 2

SMCS-1306, 1378 **i02625283**

NOTE	REF NO	GRAPHIC REF	PART NUMBER	QTY	PART NAME 1 2 3 4 5 6 (PRODUCT LEVEL)	SEE PAGE
	1	1	**6I-0572**	4	BOLT (M8X1.25X20-MM)	
M	2	1	**6I-0645**	4	BOLT (M8X1.25X25-MM)	
	3	1	**8T-7876**	1	SEAL-O-RING	
	4	1	**225-7941**	1	PLUG	
	5	1	**225-7944**	2	GASKET	
	6	1	**249-0974**	1	HEAD AS-OIL FILTER	
	7	1	**232-3751**	1	PLATE	
C	8	1	*296-5615*	1	COOLER AS-OIL (ENGINE)	
	8A	1	**6I-0218**	2	BOLT (M8X1.25X25-MM)	
M	8B	1	**6I-0260**	8	BOLT (M8X1.25X25-MM)	
	8C	1	**6I-4374**	3	BOLT	
M	8D	1	**101-3895**	4	BOLT (M8X1.25X35-MM)	
	8E	1	**225-6818**	2	SEAL	
	8F	1	**233-7222**	1	COOLER-OIL (ENGINE)	
	8G	1	**272-2265**	1	SEAL	

C-CHANGE FROM PREVIOUS TYPE
M-METRIC PART

253-2472 **COOLER GP-FLTR BASE & ENG OIL** *(contd.)* **i02625283**

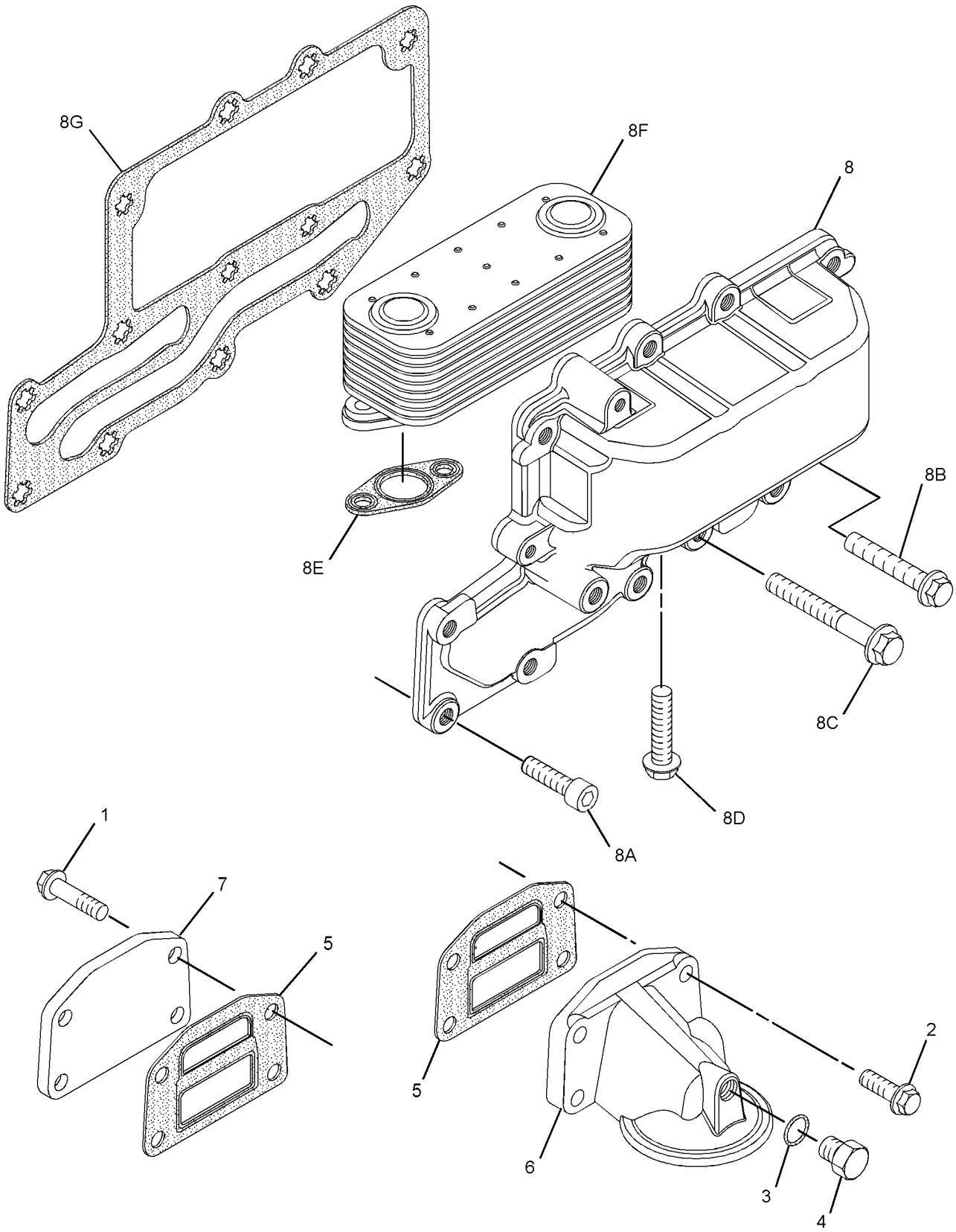

GRAPHIC #1 **<END>** g01318913

213-9311 FAN GP-SUCTION—WITHOUT AIR CONDITIONER

S/N: SHA1-UP

PART OF 204-4161, 204-4162 CAB AR-ENCLOSED ROPS, 204-4160, 204-4164 CANOPY AR-OPEN ROPS AN ATTACHMENT

SMCS-1356, 1360 **i02485644**

NOTE	REF NO	GRAPHIC REF	PART NUMBER	QTY	PART NAME 1 2 3 4 5 6 (PRODUCT LEVEL)	SEE PAGE
	1	1	**130-3216**	1	V-BELT SET (INCLUDES 2-BELTS) (ALTERNATOR)	
	2	1	**130-3880**	1	PULLEY-FAN DRIVE	
	3	1	**142-3388**	1	SPACER-FAN	
	4	1	**142-3391**	1	SPIDER AS (9-BLADE)	
	5	1	**242-9751**	1	GUARD AS	
M	6	1	**153-3061**	4	BOLT (M8X1.25X130-MM)	
	7	1	**5P-4116**	4	WASHER-HARD (8.8X20.5X2-MM THK)	
	8	1	**8T-4224**	4	WASHER-HARD (8.8X16X2-MM THK)	
M	9	1	**8T-4908**	4	BOLT (M8X1.25X25-MM)	

M-METRIC PART

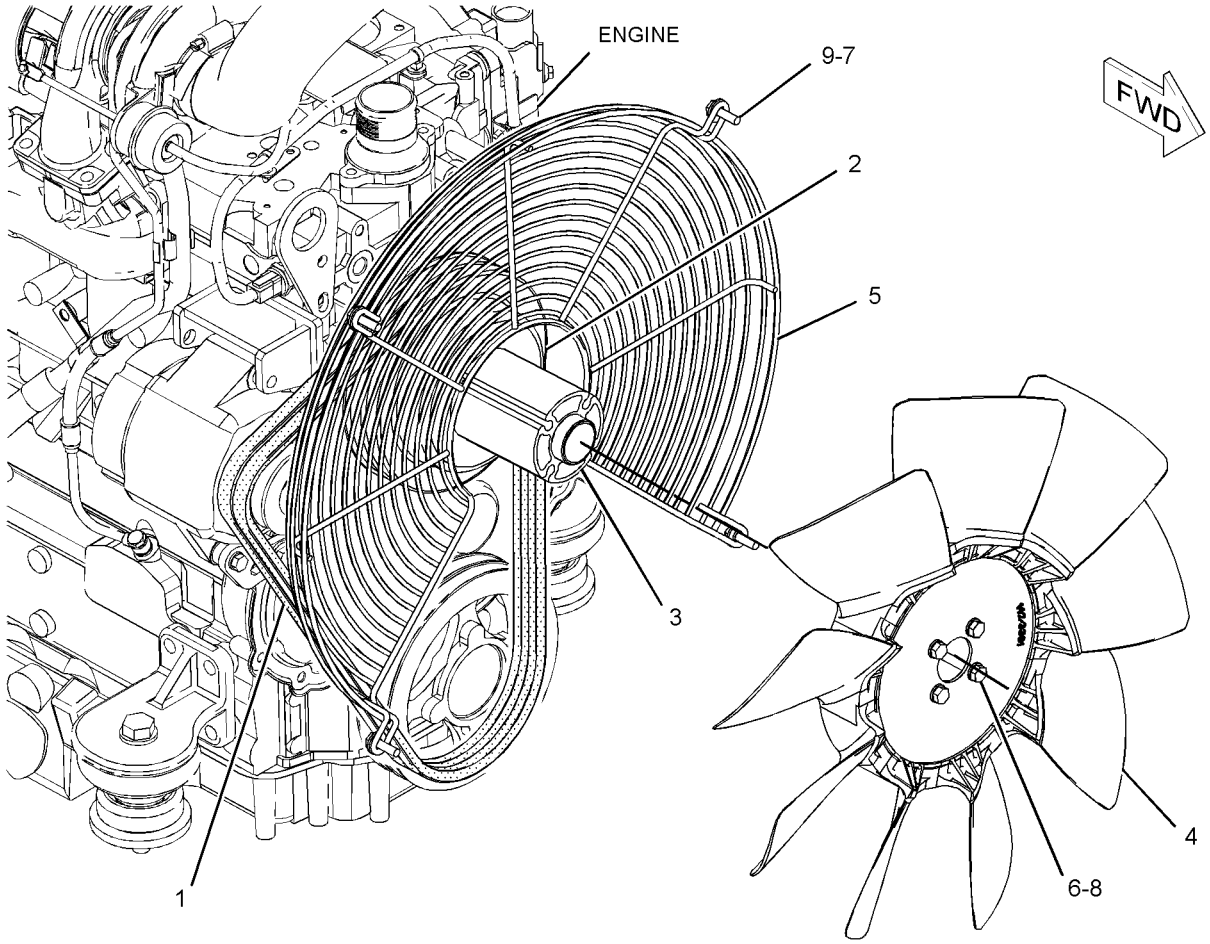

GRAPHIC #1 **<END>** g01078693

266-2234 FAN GP-SUCTION—WITH AIR CONDITIONER

S/N: SHA1-UP

PART OF 228-4602 CAB AR-ENCLOSED ROPS

AN ATTACHMENT

SMCS-1356, 1360 **i02485606**

NOTE	REF NO	GRAPHIC REF	PART NUMBER	QTY	PART NAME 1 2 3 4 5 6 (PRODUCT LEVEL)	SEE PAGE
	1	1	**3P-0130**	1	V-BELT (AIR CONDITIONER)	
	2	1	**130-3216**	1	V-BELT SET (INCLUDES 2-BELTS) (ALTERNATOR)	
	3	1	**142-3388**	1	SPACER-FAN	
	4	1	**142-3391**	1	SPIDER AS (9-BLADE)	
	5	1	**242-9751**	1	GUARD AS	
	6	1	**266-2235**	1	PULLEY-FAN	
M	7	1	**153-3061**	4	BOLT (M8X1.25X130-MM)	
	8	1	**5P-4116**	4	WASHER-HARD (8.8X20.5X2-MM THK)	
	9	1	**8T-4224**	4	WASHER-HARD (8.8X16X2-MM THK)	
M	10	1	**8T-4908**	4	BOLT (M8X1.25X25-MM)	

M-METRIC PART

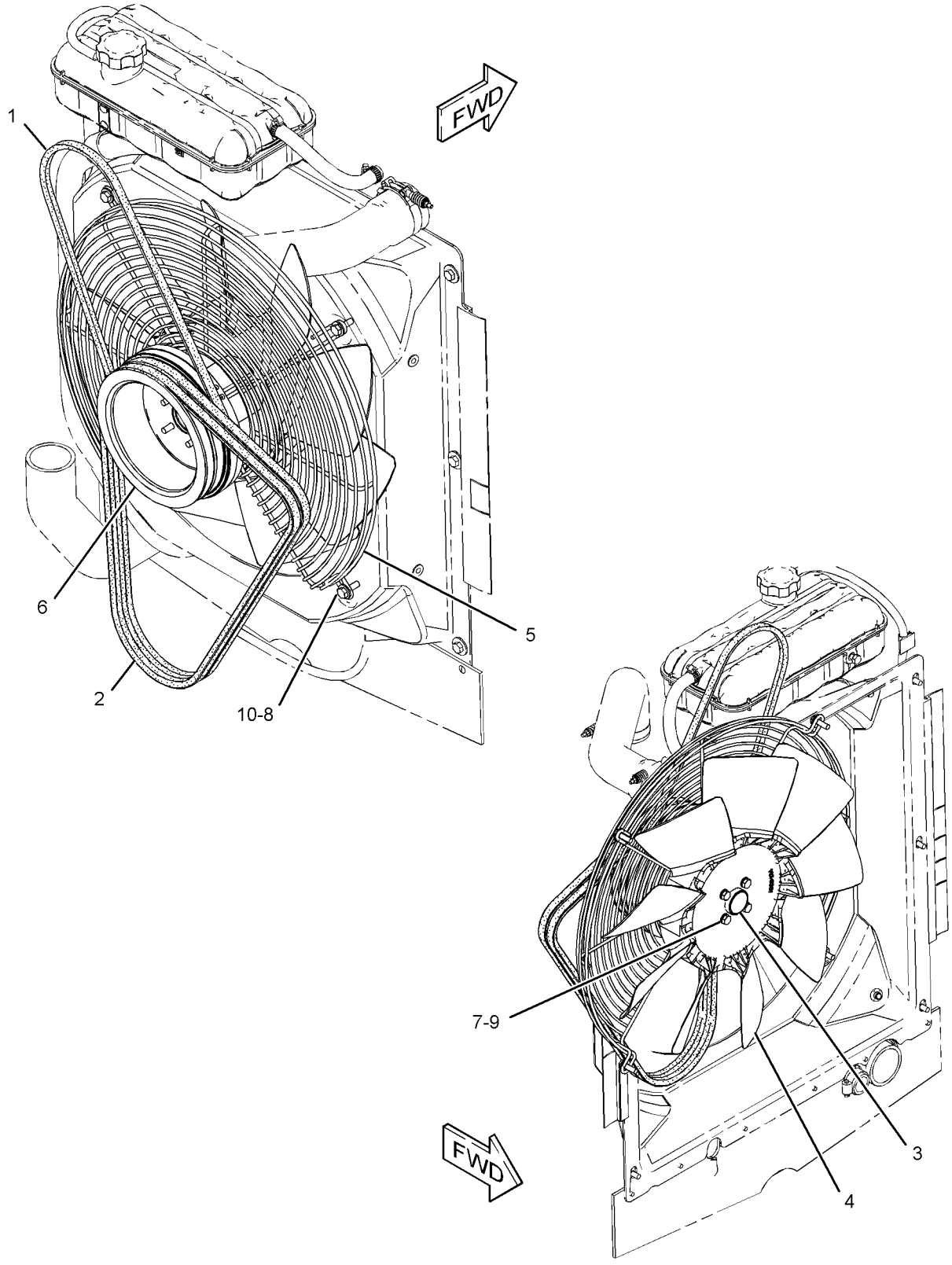

GRAPHIC #1 **<END>** g01198502

214-3751 LINES GP-TRANSMISSION COOLER

S/N: SHA1-UP

PART OF 214-2202 MOUNTING & LINES GP-RADIATOR

SMCS-1375 **i02673258**

NOTE	REF NO	GRAPHIC REF	PART NUMBER	QTY	PART NAME 1 2 3 4 5 6 (PRODUCT LEVEL)	SEE PAGE
	1	1	**118-7286**	1	BRACKET AS	
	2	1	**130-9984**	2	CLIP	
	3	1	**159-1503**	2	CLAMP-HOSE	
I	4	1	**214-3753**	1	HOSE AS	
	5	1	**250-4337**	1	HOSE AS	
	6	1	*148-8339*	1	CONNECTOR AS	
		1	**6V-8716**	1	CONNECTOR	
		1	**6V-9746**	1	SEAL-O-RING	
		1	**7M-8485**	1	SEAL-O-RING	
	7	1	*148-8360*	1	ELBOW AS	
		1	**6V-9182**	1	ELBOW (FACE SEAL)	
		1	**6V-9746**	1	SEAL-O-RING	
		1	**7M-8485**	1	SEAL-O-RING	
	8	1	**5P-4116**	2	WASHER-HARD (8.8X20.5X2-MM THK)	
	9	1	**8T-4121**	2	WASHER-HARD (11X21X2.5-MM THK)	
M	10	1	**8T-4136**	2	BOLT (M10X1.5X25-MM)	
M	11	1	**8T-4189**	2	BOLT (M8X1.25X20-MM)	
M	12	1	**8T-4192**	2	BOLT (M12X1.75X25-MM)	
	13	1	**8T-4223**	2	WASHER-HARD (13.5X25.5X3-MM THK)	
	14	1	**8T-7529**	3	CLIP	
G	15	1	**160-2246**		SLEEVE-ABRASION (10-IN)	

G-ORDER BY THE INCH
I-REFER TO HYDRAULIC INFORMATION SYSTEM
M-METRIC PART

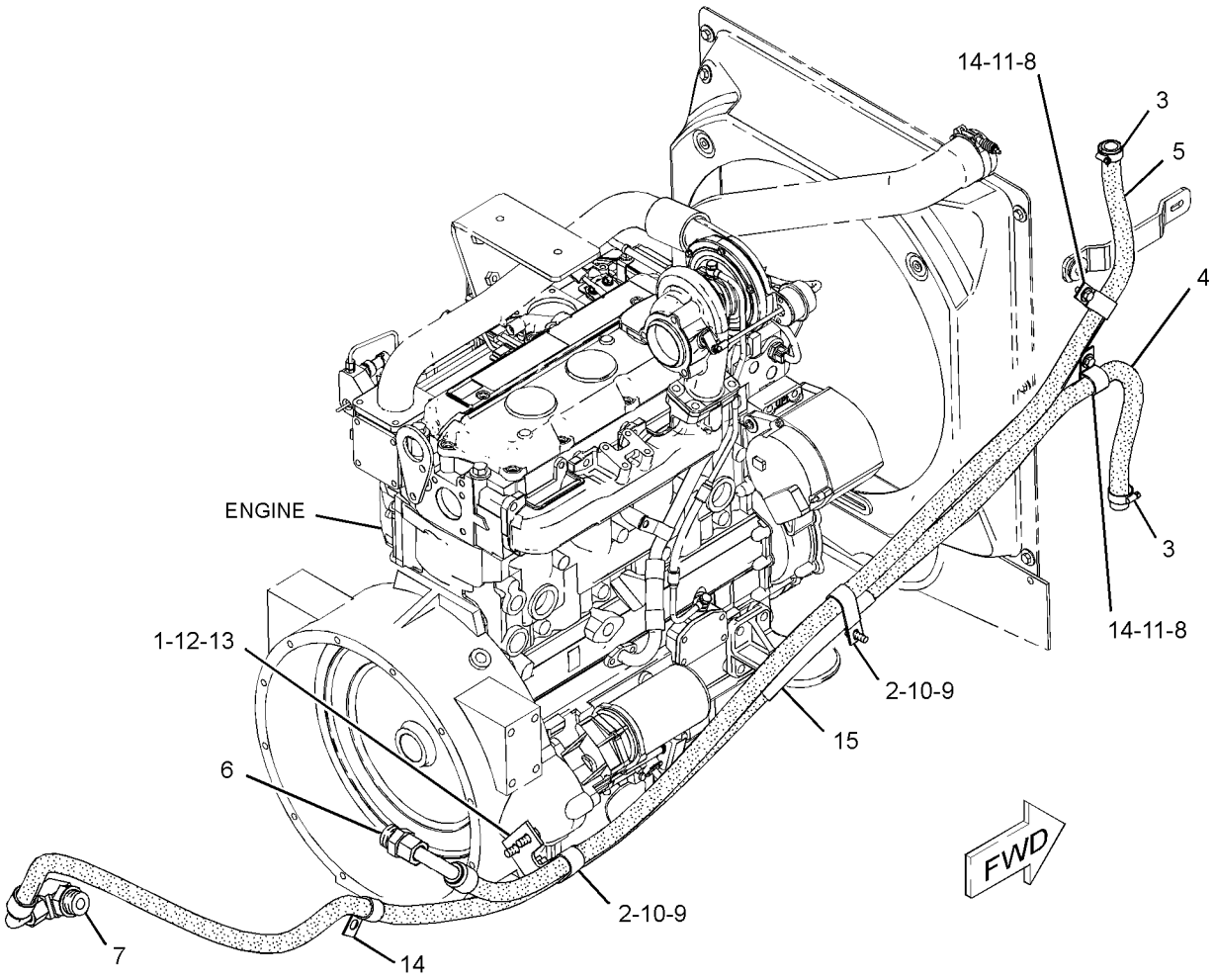

GRAPHIC #1 **<END>** g01343993

COOLING SYSTEM

214-2202 MOUNTING & LINES GP-RADIATOR

S/N: SHA1-UP
PART OF 213-9271 COMMON AR
FOR USE WITH AIR CONDITIONER

SMCS-1353, 1354, 1375 **i02274657**

NOTE	PART NUMBER	QTY	PART NAME 1 2 3 4 5 6 (PRODUCT LEVEL)	SEE PAGE
Y	*214-3751*	1	LINES GP-TRANSMISSION COOLER	70
Y	*210-5951*	1	MOUNTING GP-RAD & OIL COOLER (TRANSMISSION, HYDRAULIC OIL)	73

Y-SEPARATE ILLUSTRATION

<END>

210-5951 MOUNTING GP-RAD & OIL COOLER–
TRANSMISSION, HYDRAULIC OIL
S/N: SHA1-UP
PART OF 214-2202 MOUNTING & LINES GP-RADIATOR

SMCS-1353, 1374 **i02366621**

NOTE	REF NO	GRAPHIC REF	PART NUMBER	QTY	PART NAME 1 2 3 4 5 6 (PRODUCT LEVEL)	SEE PAGE
	1	1	**2W-9710**	4	MOUNT AS	
	2	1	**6N-6984**	2	MOUNT-RUBBER	
	3	1	**123-4065**	6	RIVET-POP	
	4	1	**140-3640**	2	PLATE	
	5	1	**210-6139**	1	HOSE-RADIATOR (LOWER)	
	6	1	**210-6141**	1	HOSE-RADIATOR (UPPER)	
	7	1	**214-3647**	1	BAFFLE	
Y	8	1	*214-7407*	1	TANK GP-EXPANSION (COOLANT)	80
	9	1	**214-7457**	1	CLAMP	
	10	1	**214-7458**	1	CLAMP-HOSE	
	11	1	**216-6945**	2	CLAMP	
	12	1	**217-2308**	1	SHROUD AS	
	13	1	**7X-0579**	14	WASHER-HARD (8.8X25.5X2-MM THK)	
	14	1	**7X-0603**	4	WASHER-HARD (9.9X35X2.5-MM THK)	
M	15	1	**8T-4133**	4	NUT (M10X1.5-THD)	
M	16	1	**8T-4182**	4	BOLT (M10X1.5X45-MM)	
M	17	1	**8T-4189**	4	BOLT (M8X1.25X20-MM)	
M	18	1	**8T-4200**	10	BOLT (M8X1.25X16-MM)	
	19	1	**8T-4222**	8	WASHER-PLATED (11X32X2.5-MM THK)	
M	20	1	**8T-4908**	4	BOLT (M8X1.25X25-MM)	
E	21	1	**8C-3681**		HOSE (36-CM)	
J	22	1	**136-7728**		SEAL-COMPOSITE (4.45-DM EACH)	

E-ORDER BY THE CENTIMETER
J-ORDER BY THE DECIMETER
M-METRIC PART
Y-SEPARATE ILLUSTRATION

210-5951 **MOUNTING GP-RAD & OIL COOLER** *(contd.)* **i02366621**

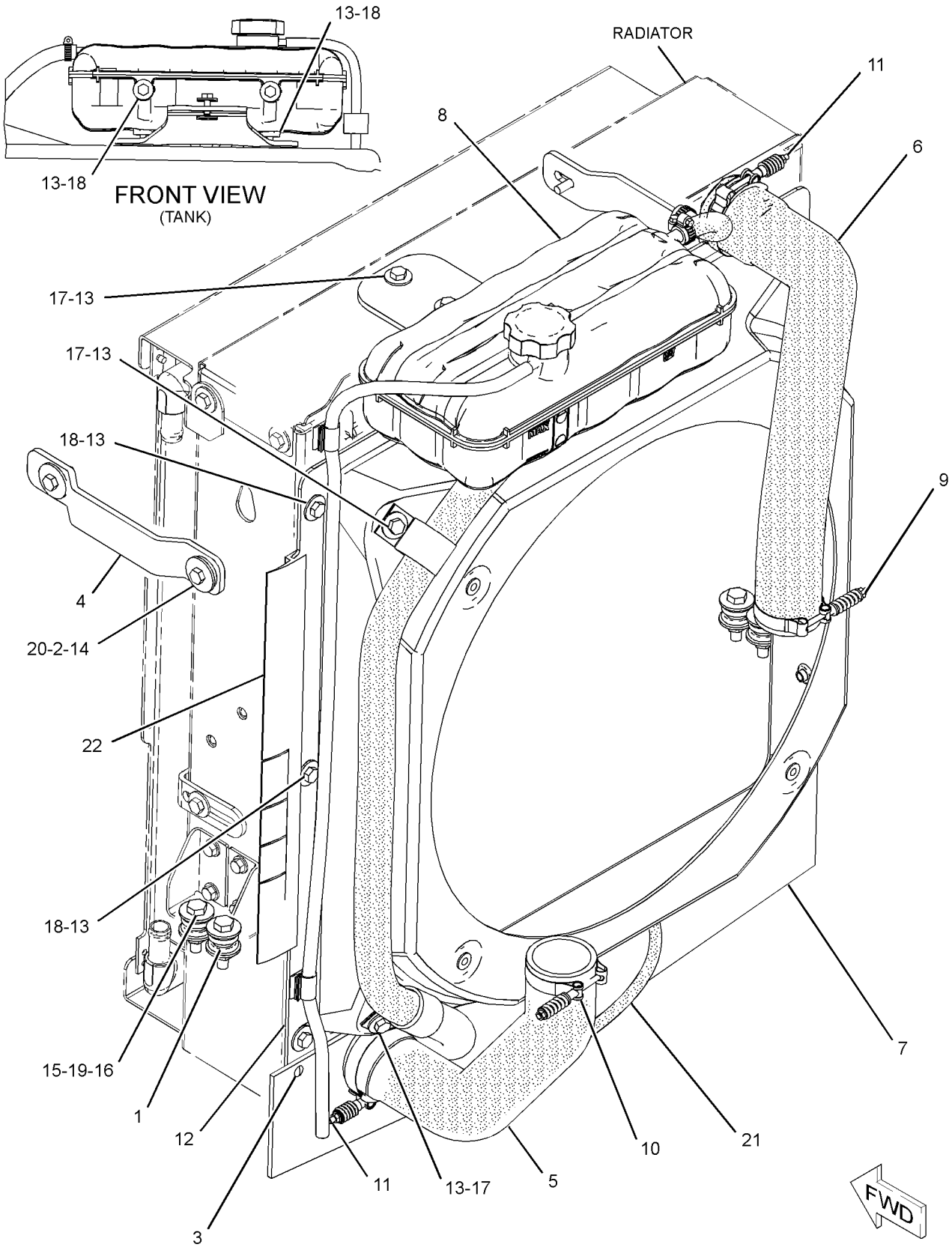

GRAPHIC #1 **<END>** g01183008

COOLING SYSTEM

230-7355 PUMP GP-WATER

S/N: G4D1-UP; CRS1-UP
PART OF 273-3610 ENGINE AR, 245-6841 ENGINE AR-PRIMARY
AN ATTACHMENT

SMCS-1361 **i02782844**

NOTE	REF NO	GRAPHIC REF	PART NUMBER	QTY	PART NAME 1 2 3 4 5 6 (PRODUCT LEVEL)	SEE PAGE
M	1	1	**6I-0217**	2	BOLT (M8X1.25X20-MM)	
M	2	1	**6I-0254**	2	BOLT (M8X1.25X30-MM)	
M	3	1	**100-3751**	5	BOLT (M8X1.25X65-MM)	
	4	1	**113-8129**	2	BOLT (M8X75-MM)	
	5	1	**225-7741**	1	CONNECTION AS	
	6	1	**225-7738**	1	SEAL-O-RING	
	7	1	**225-7739**	1	SEAL-O-RING	
	8	1	**225-8016**	1	PUMP GP-WATER	
		1	**286-3592**	1	PUMP-GEAR	
	9	1	**225-8019**	1	GASKET	
					AVAILABLE REPAIR KIT(S):	
			247-0144	1	KIT-WATER PUMP	
					(INLCUDES 2 DIFFERENT GASKETS)	

M-METRIC PART

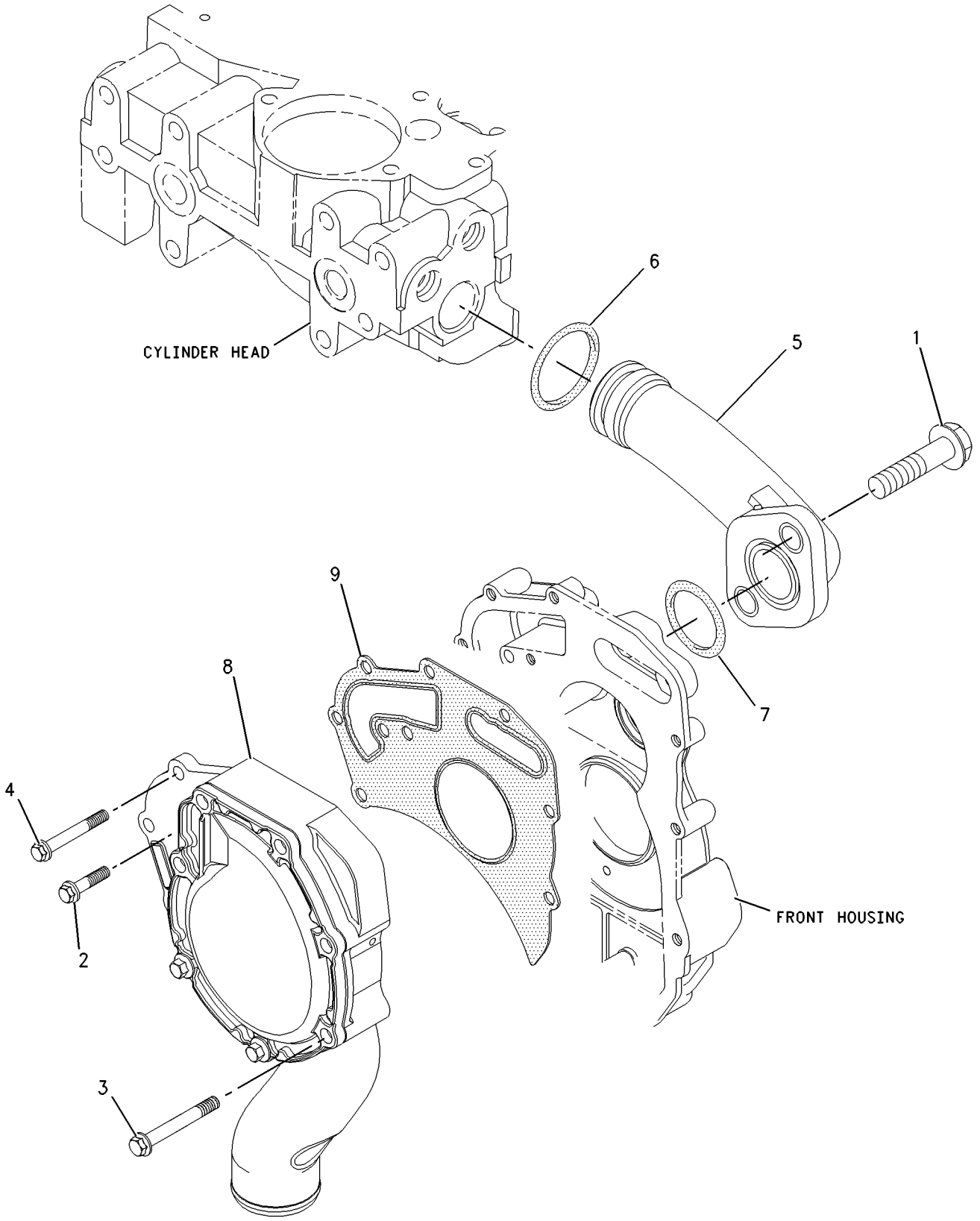

GRAPHIC #1 **<END>** g00912411

210-5949 RADIATOR & OIL COOLER GP–

HYDRAULIC, TRANSMISSION

S/N: SHA1-UP

PART OF 211-1018 RADIATOR & OIL COOLER GP

AN ATTACHMENT

SMCS-1351 **i02784392**

NOTE	REF NO	GRAPHIC REF	PART NUMBER	QTY	PART NAME 1 2 3 4 5 6 (PRODUCT LEVEL)	SEE PAGE
	1	1	**210-5948**	1	RADIATOR GP	
		1	**1V-6585**	1	VALVE-SHUTOFF	
	2	1	**210-5953**	1	COOLER AS-OIL (HYDRAULIC, TRANSMISSION)	
	2A	1	**210-5955**	1	CORE AS-OIL COOLER (HYDRAULIC)	
	2B	1	**210-5954**	1	CORE AS-OIL COOLER (TRANSMISSION)	
	3	1	**8C-0572**	2	WASHER (8.8X25.5X2-MM THK)	
M	4	1	**8T-4200**	2	BOLT (M8X1.25X16-MM)	

M-METRIC PART

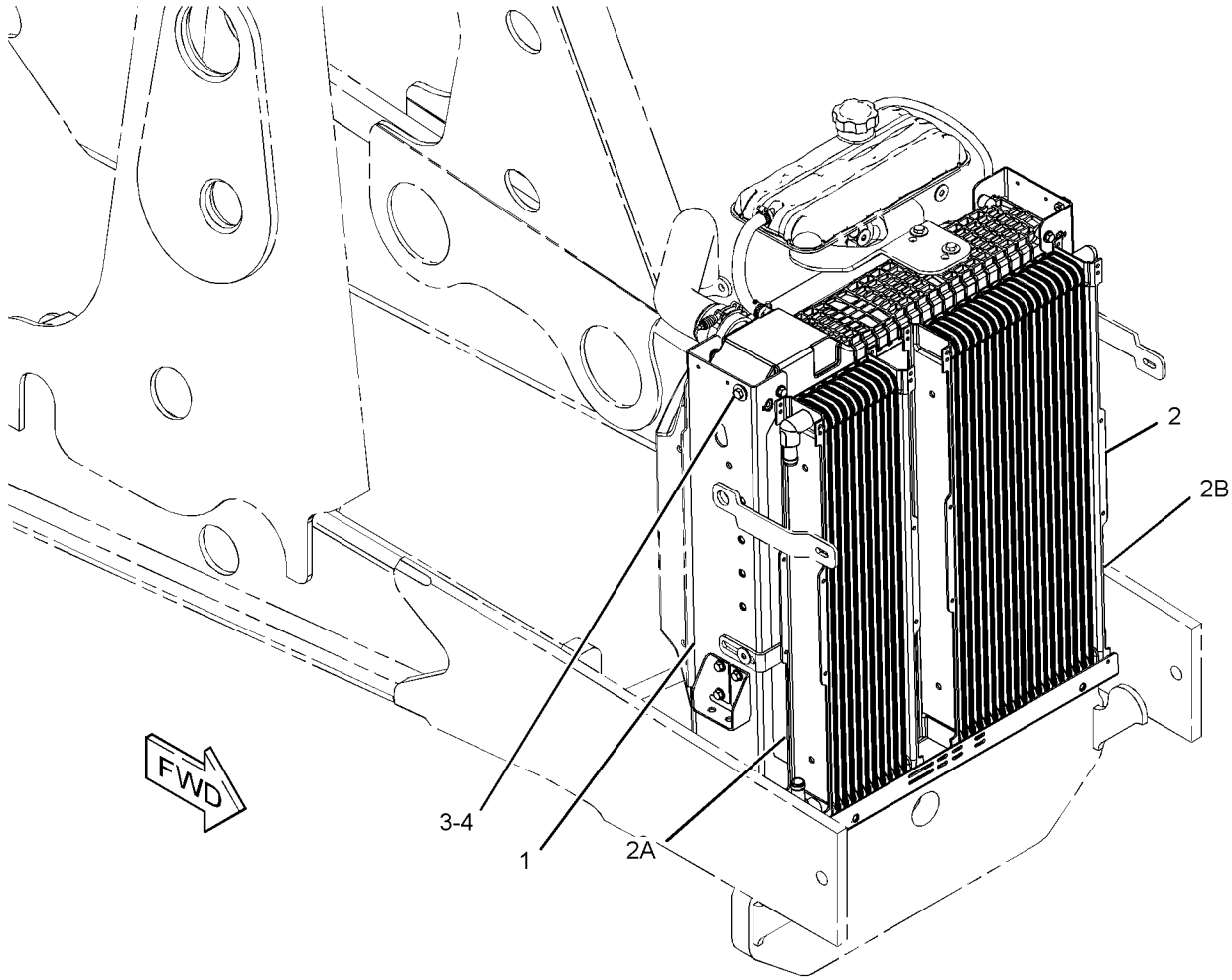

GRAPHIC #1 **<END>** g01341095

COOLING SYSTEM

211-1018 RADIATOR & OIL COOLER GP–

HYDRAULIC, TRANSMISSION

S/N: SHA1-UP

AN ATTACHMENT

SMCS-1351 **i02274320**

NOTE	PART NUMBER	QTY	PART NAME 1 2 3 4 5 6 (PRODUCT LEVEL)	SEE PAGE
Y	*210-5949*	1	RADIATOR & OIL COOLER GP	77

Y-SEPARATE ILLUSTRATION

<END>

211-1019 RADIATOR & OIL COOLER GP–

TRANSMISSION, HYDRAULIC

S/N: SHA1-UP

AN ATTACHMENT

SMCS-1351 **i02354429**

NOTE	REF NO	GRAPHIC REF	PART NUMBER	QTY	PART NAME 1 2 3 4 5 6 (PRODUCT LEVEL)	SEE PAGE
	1	1	**210-5948**	1	RADIATOR GP	
		1	**1V-6585**	1	VALVE-SHUTOFF	
	2	1	**211-3461**	1	COOLER AS-OIL (HYDRAULIC, TRANSMISSION)	
		1	**211-3462**	1	CORE AS-OIL COOLER (HYDRAULIC, 15-ROW)	
		1	**211-3463**	1	CORE AS-OIL COOLER (TRANSMISSION, 9-ROW)	
	3	1	**8C-0572**	2	WASHER (8.8X25.5X2-MM THK)	
M	4	1	**8T-4200**	2	BOLT (M8X1.25X16-MM)	

M-METRIC PART

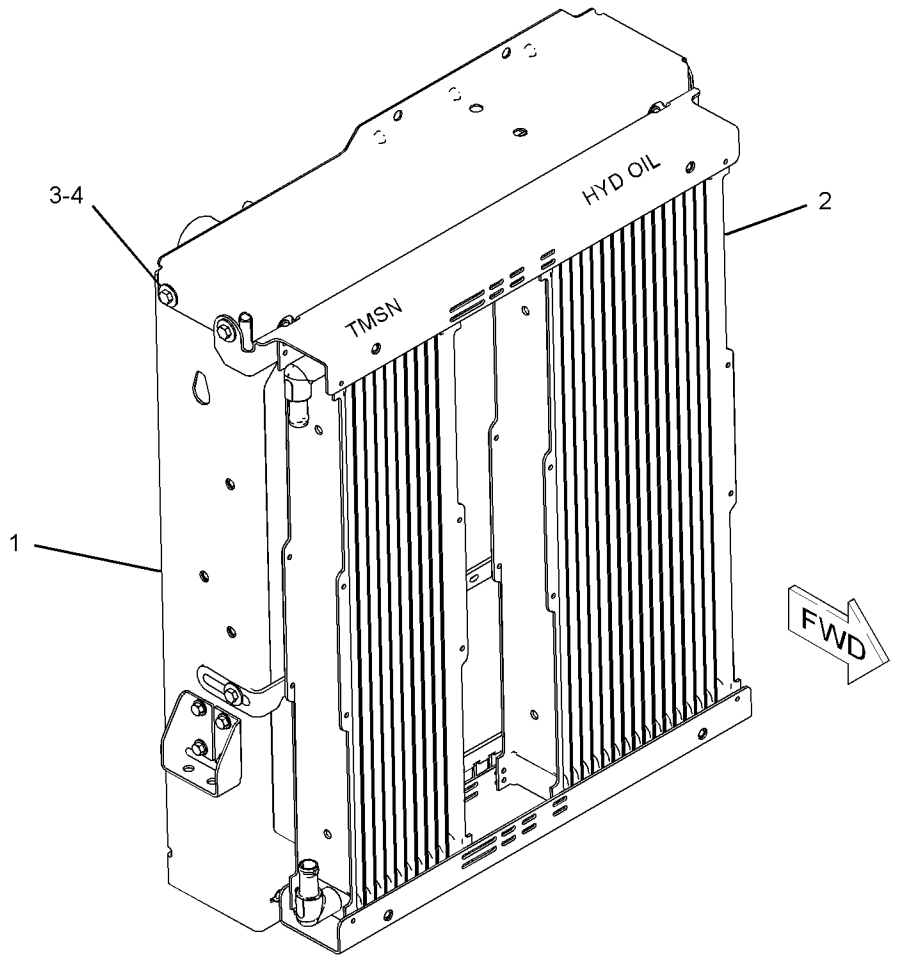

GRAPHIC #1 **<END>** g01177176

214-7407 TANK GP-EXPANSION–COOLANT

S/N: SHA1-UP

PART OF 210-5951 MOUNTING GP-RAD & OIL COOLER

SMCS-1354 **i02658756**

NOTE	REF NO	GRAPHIC REF	PART NUMBER	QTY	PART NAME 1 2 3 4 5 6 (PRODUCT LEVEL)	SEE PAGE
	1	1	**6S-8620**	2	CLAMP-HOSE	
	2	1	**9M-7958**	2	CLAMP-HOSE	
	3	1	**031-5644**	1	CLIP	
	4	1	**247-1385**	1	TANK GP-COOLANT	
		1	**251-3227**	1	CAP AS-COOLANT TANK	
	5	1	**250-2314**	1	BRACKET AS	
M		1	**8T-3612**	2	NUT-WELD (M8X1.25-THD)	
	6	1	**4D-7388**	2	CLIP	
E	7	1	**9X-2133**		HOSE (23-CM)	
E	8	1	**8C-3681**		HOSE (96-CM)	
	9	1	**259-8417**	1	HOSE	
	10	1	**4B-0418**	1	CLIP	

E-ORDER BY THE CENTIMETER
M-METRIC PART

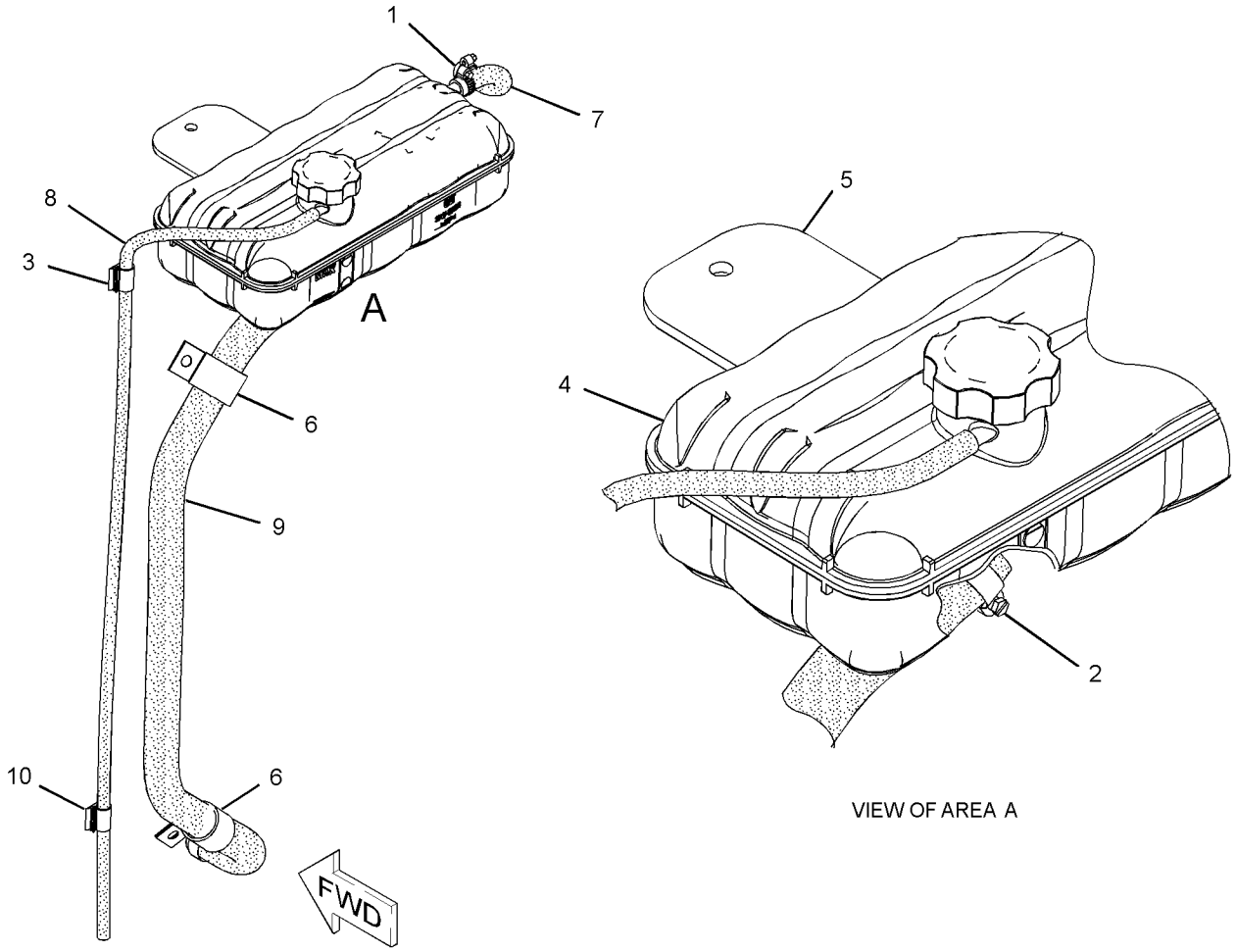

GRAPHIC #1 **<END>** g01340033

AIR INLET AND EXHAUST SYSTEM

210-6803 AIR CLEANER GP

S/N: SHA1-UP
PART OF 252-4640 ENGINE AR
AN ATTACHMENT

SMCS-1051, 1054 **i02414272**

NOTE	REF NO	GRAPHIC REF	PART NUMBER	QTY	PART NAME 1 2 3 4 5 6 (PRODUCT LEVEL)	SEE PAGE
	1	1	**6V-3582**	1	CLAMP-HOSE	
M	2	1	**129-3178**	1	LOCKNUT (M6X1-THD)	
	3	1	**8T-6726**	1	CLAMP-HOSE	
	4	1	**110-2445**	1	CLAMP-HOSE	
	5	1	**127-4471**	1	CLAMP-HOSE	
Y	6	1	**234-1981**	1	AIR CLEANER GP	84
	7	1	**234-2622**	1	HOSE-AIR	
	8	1	**248-3231**	1	DUCT-AIR	
	9	1	**249-5512**	1	SEAL	
	10	1	**252-0315**	1	HOSE-AIR	
	11	1	**253-4137**	1	SEAL	
	12	1	**253-4138**	1	STUD	
	13	1	**7X-0586**	2	WASHER-HARD (M7.2X32X2-MM THK)	
M	14	1	**8T-4189**	2	BOLT (M8X1.25X20-MM)	
	15	1	**8T-4224**	6	WASHER-HARD (8.8X16X2-MM THK)	
	16	1	**238-9192**	1	PLATE AS	
M	17	1	**096-5866**	4	BOLT (M8X1.25X75-MM)	

M-METRIC PART
Y-SEPARATE ILLUSTRATION

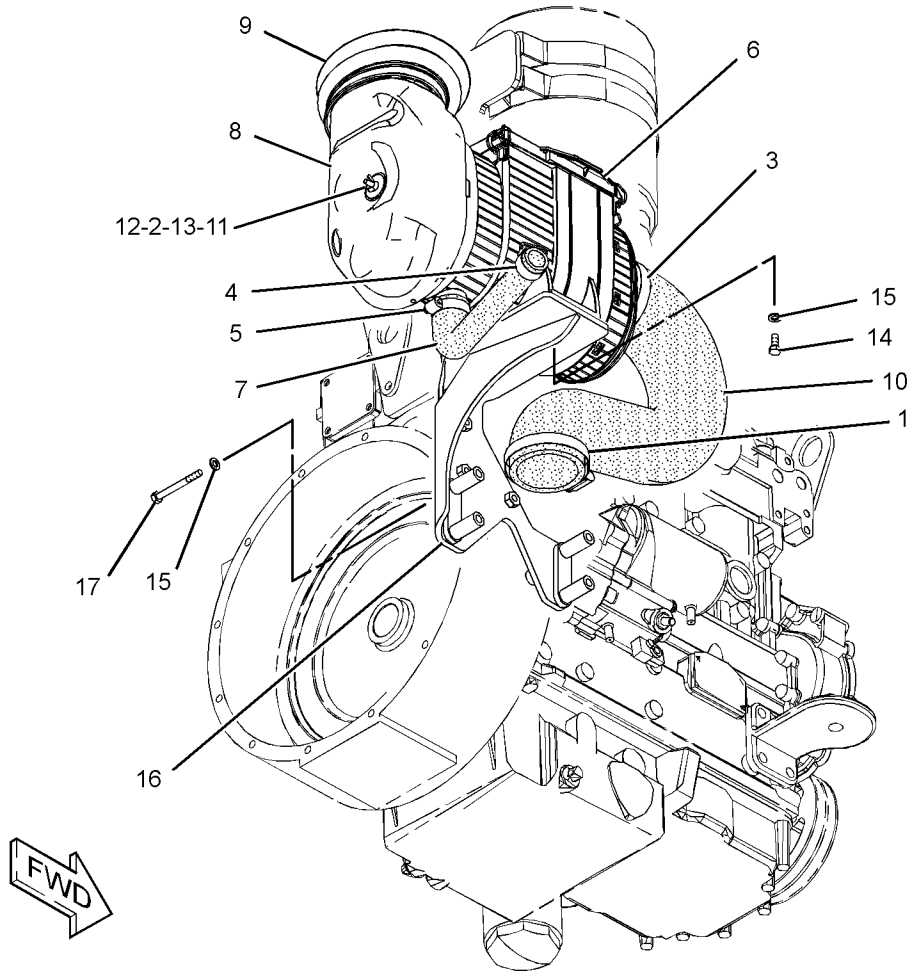

GRAPHIC #1 **<END>** g01232391

AIR INLET AND EXHAUST SYSTEM

224-9473 AIR CLEANER GP

S/N: SHA1-UP
PART OF 252-4641 ENGINE AR
AN ATTACHMENT

SMCS-1051, 1054 **i02532640**

NOTE	REF NO	GRAPHIC REF	PART NUMBER	QTY	PART NAME 1 2 3 4 5 6 (PRODUCT LEVEL)	SEE PAGE
	1	1	**8T-6726**	1	CLAMP-HOSE (BAND)	
	2	1	**110-2445**	1	CLAMP-HOSE	
	3	1	**127-4471**	1	CLAMP-HOSE	
	4	1	**223-8995**	1	HOSE	
Y	5	1	**234-1981**	1	AIR CLEANER GP	84
	6	1	**234-2622**	1	HOSE-AIR	
	7	1	**248-3231**	1	DUCT-AIR	
	8	1	**249-5512**	1	SEAL	
	9	1	**253-4137**	1	SEAL	
	10	1	**253-4138**	1	STUD	
	11	1	**288-6954**	1	PLATE AS	
M		1	**8T-3490**	3	NUT-WELD (M10X1.5-THD)	
		1	**9M-9224**	4	SPACER (0.406X0.75X1.688-IN THK)	
M		1	**9R-2672**	1	BOSS-THREADED (M10X1.5-THD)	
M	12	1	**096-5866**	4	BOLT (M8X1.25X75-MM)	
M	13	1	**129-3178**	1	LOCKNUT (M6X1-THD)	
	14	1	**226-0449**	1	CLAMP-HOSE	
	15	1	**7X-0586**	2	WASHER-HARD (M7.2X32X2-MM THK)	
M	16	1	**8T-4189**	2	BOLT (M8X1.25X20-MM)	
	17	1	**8T-4224**	6	WASHER-HARD (8.8X16X2-MM THK)	

M-METRIC PART
Y-SEPARATE ILLUSTRATION

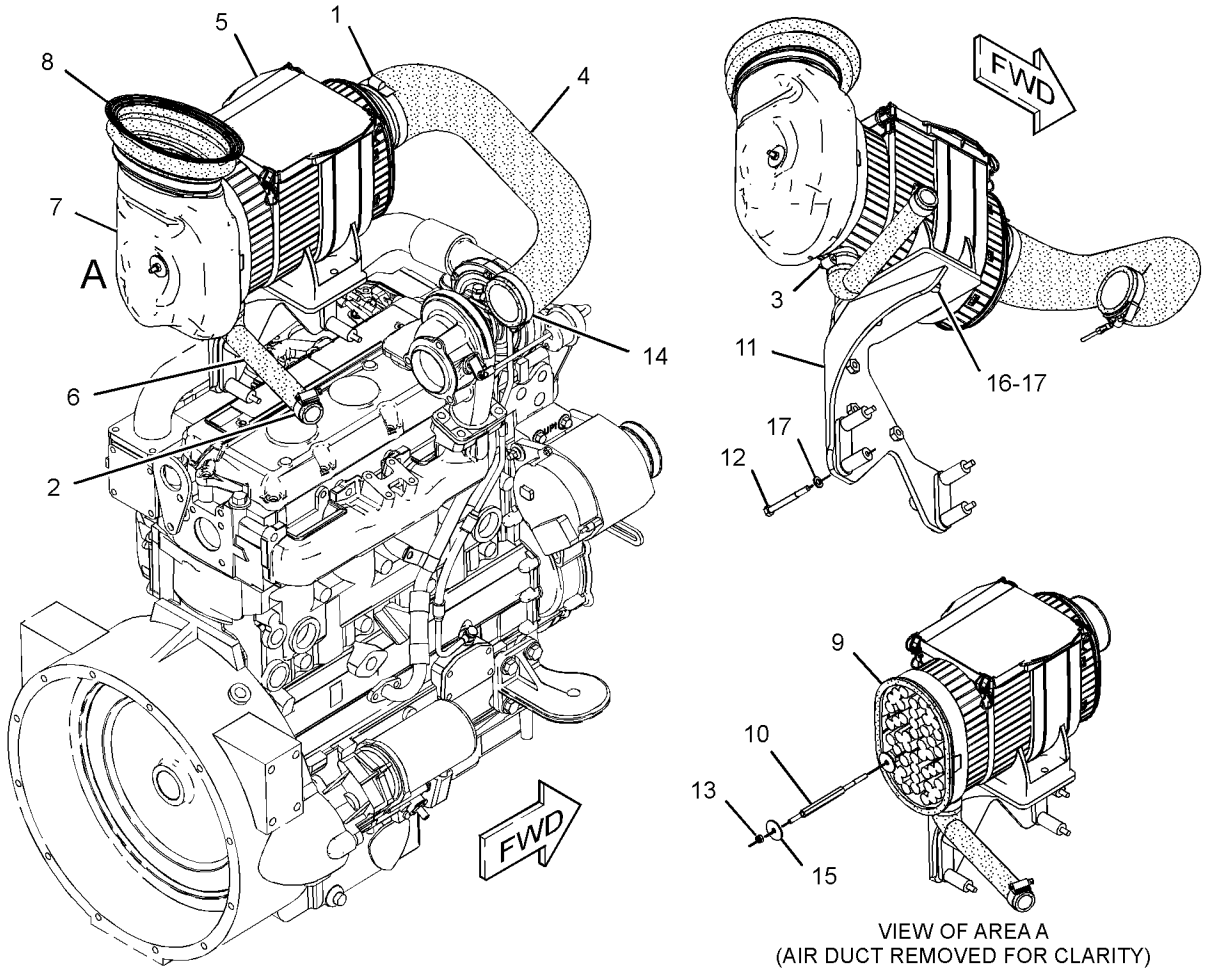

GRAPHIC #1 **<END>** g01310441

AIR INLET AND EXHAUST SYSTEM

234-1981 AIR CLEANER GP

S/N: SHA1-UP
PART OF 210-6803, 224-9473 AIR CLEANER GP
AN ATTACHMENT
TYPE 1

SMCS-1051, 1054 **i02249485**

NOTE	REF NO	GRAPHIC REF	PART NUMBER	QTY	PART NAME 1 2 3 4 5 6 (PRODUCT LEVEL)	SEE PAGE
	1	1	**262-9786**	1	FRAME	
	2	1	**227-7448**	1	FILTER ELEMENT AS-AIR (PRIMARY)	
	3	1	**227-7449**	1	FILTER ELEMENT-AIR (SECONDARY)	
	4	1	**237-4157**	1	COVER	

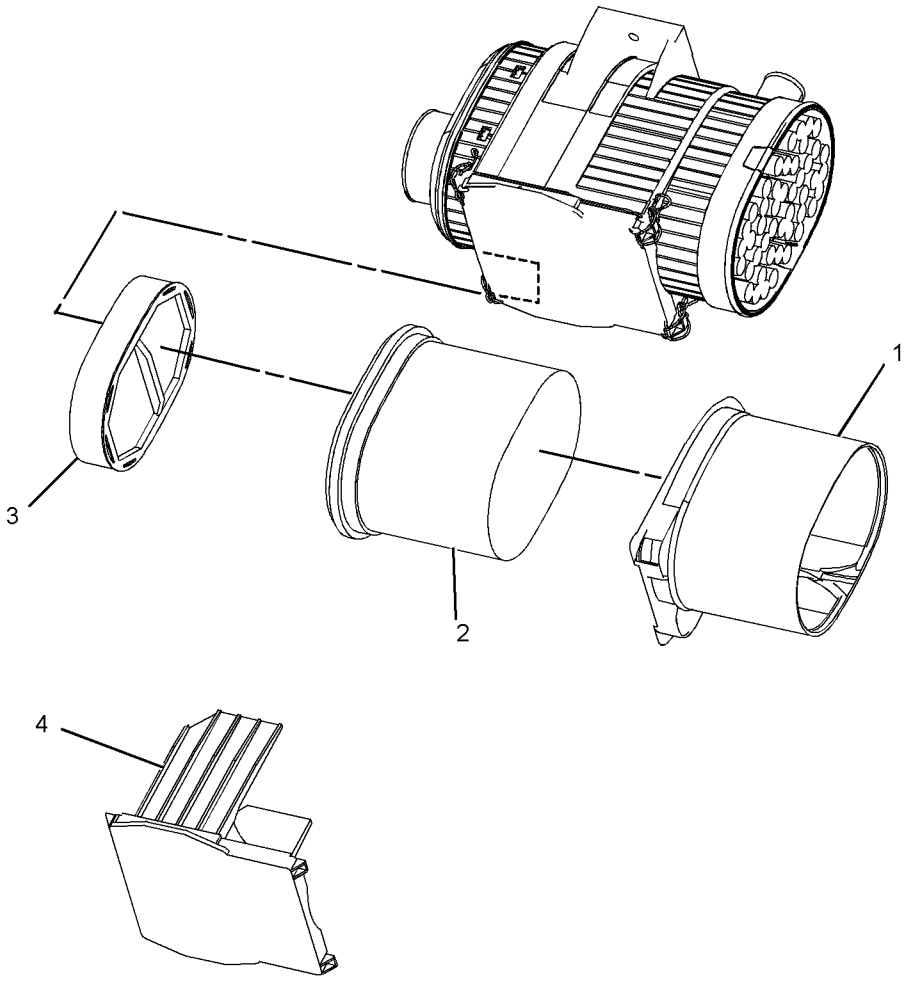

GRAPHIC #1 **<END>** g01134691

234-1981 AIR CLEANER GP

S/N: SHA1-UP
PART OF 210-6803, 224-9473 AIR CLEANER GP
AN ATTACHMENT
TYPE 2

SMCS-1051, 1054 **i02717830**

NOTE	REF NO	GRAPHIC REF	PART NUMBER	QTY	PART NAME 1 2 3 4 5 6 (PRODUCT LEVEL)	SEE PAGE
	1	1	**262-9786**	1	FRAME	
C	2	1	**293-4053**	1	FILTER ELEMENT-AIR (PRIMARY)	
	3	1	**227-7449**	1	FILTER ELEMENT-AIR (SECONDARY)	
	4	1	**237-4157**	1	COVER	

C-CHANGE FROM PREVIOUS TYPE

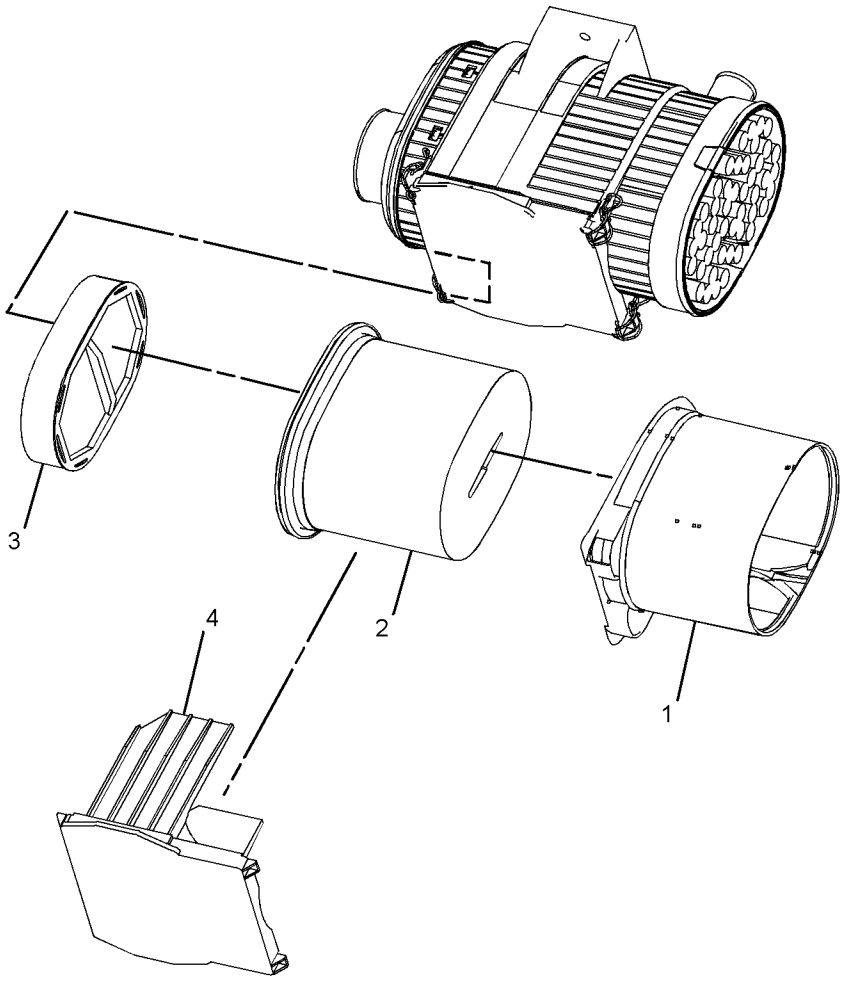

GRAPHIC #1 **<END>** g01376131

238-8290 CONNECTION GP-INLET–AIR

S/N: G4D1-UP; CRS1-UP
PART OF 245-6841 ENGINE AR-PRIMARY
AN ATTACHMENT

SMCS-1087 **i01917605**

NOTE	REF NO	GRAPHIC REF	PART NUMBER	QTY	PART NAME 1 2 3 4 5 6 (PRODUCT LEVEL)	SEE PAGE
	1	1	**6I-0572**	12	BOLT (M8X1.25X20-MM)	
M	2	1	**6I-0645**	4	BOLT (M8X1.25X25-MM)	
	3	1	**114-2579**	3	GASKET	
	4	1	**115-1162**	3	PLATE	
	5	1	**238-8289**	1	PIPE AS	
	5A	1	**238-8288**	1	GASKET-INLET	

M-METRIC PART

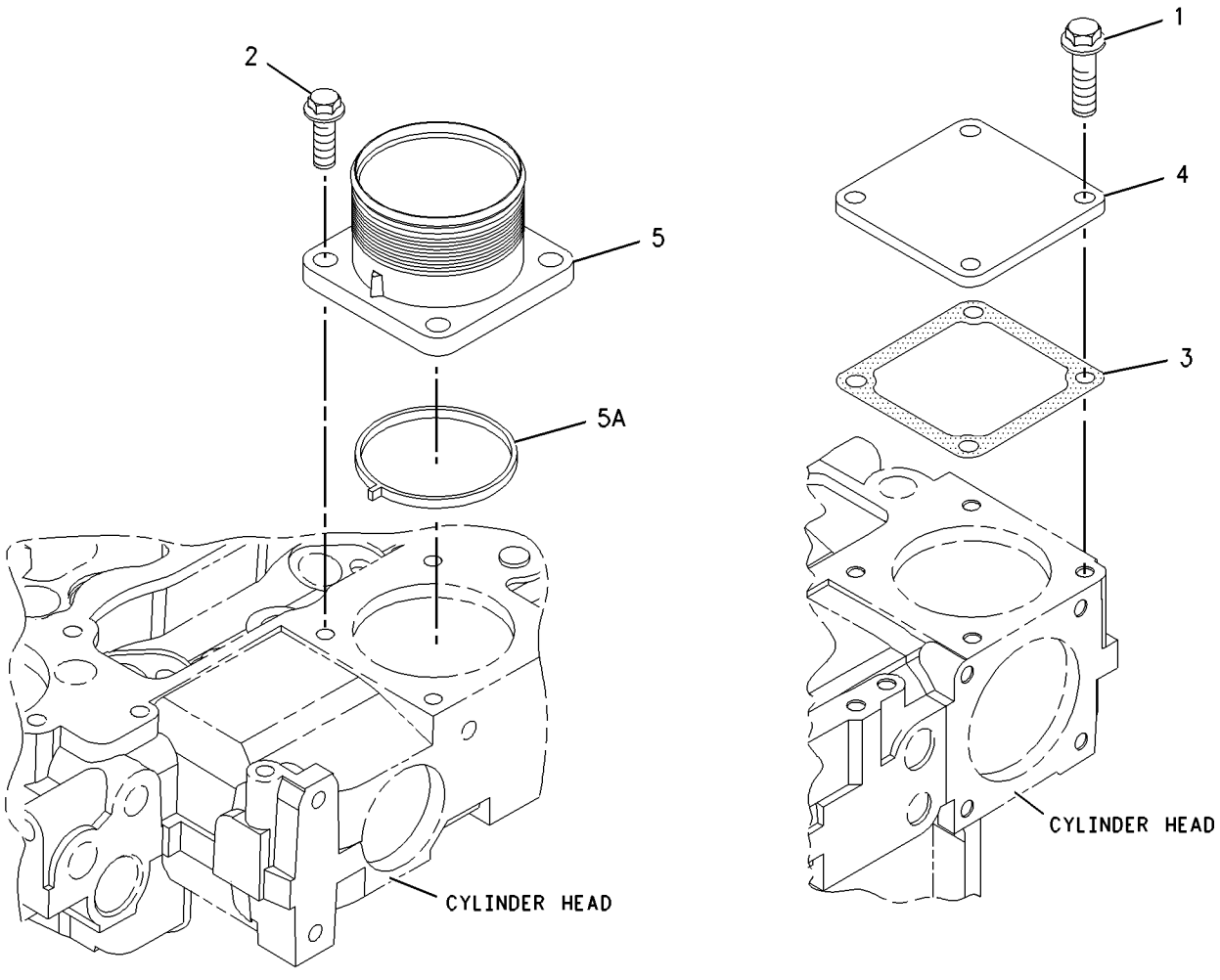

GRAPHIC #1 **<END>** g00999221

255-2279 INDICATOR GP-AIR FILTER CHANGE

S/N: SHA1-UP
PART OF 252-4641 ENGINE AR
AN ATTACHMENT

SMCS-7452 **i02492180**

NOTE	REF NO	GRAPHIC REF	PART NUMBER	QTY	PART NAME 1 2 3 4 5 6 (PRODUCT LEVEL)	SEE PAGE
	1	1	**255-4692**	1	FITTING-HOSE	
	2	1	**260-1336**	1	INDICATOR GP-FILTER CHANGE (AIR)	
		1	**205-1627**	1	BRACKET	
		1	**260-3122**	1	INDICATOR-AIR FILTER SERVICE	
	3	1	**4B-4863**	4	WASHER (4.7X11X1.2-MM THK)	
M	4	1	**5C-8312**	2	NUT (M4X0.7-THD)	
M	5	1	**8T-9405**	2	BOLT-SOCKET HEAD (M4X0.7X16-MM)	
D	6	1	**6V-1363**		HOSE (0.3-M)	

D-ORDER BY THE METER
M-METRIC PART

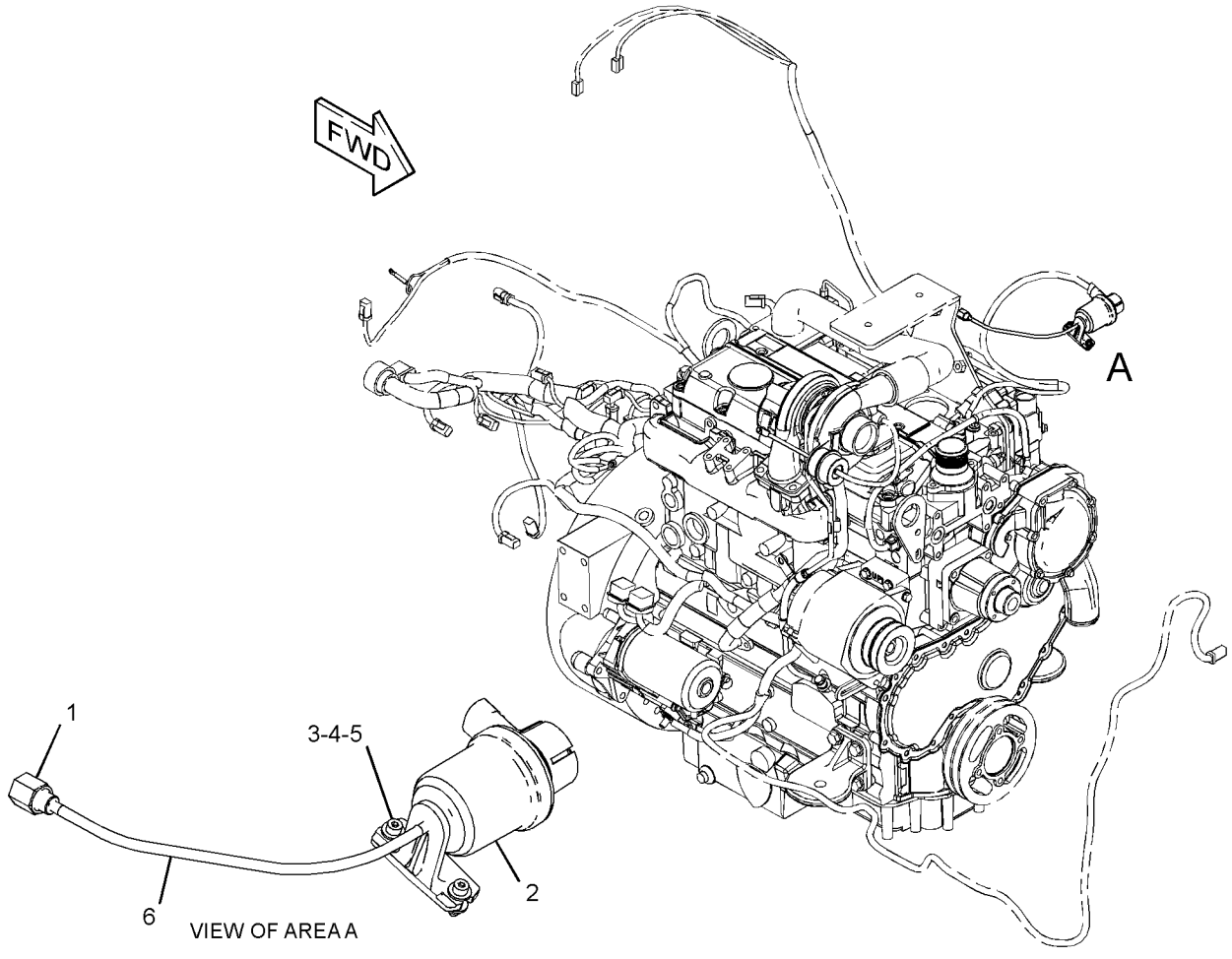

GRAPHIC #1 **<END>** g01233668

AIR INLET AND EXHAUST SYSTEM

261-2320 INDICATOR GP-AIR FILTER CHANGE

S/N: SHA1-UP
PART OF 252-4640 ENGINE AR
AN ATTACHMENT

SMCS-7452 **i02634529**

NOTE	REF NO	GRAPHIC REF	PART NUMBER	QTY	PART NAME 1 2 3 4 5 6 (PRODUCT LEVEL)	SEE PAGE
	1	1	**187-2866**	1	INDICATOR AS-AIR FILTER CHANGE	
		1	**102-8802**	1	KIT-RECEPTACLE (2-PIN)	
					(INCLUDES RECEPTACLE AS & WEDGE)	
		1	**186-3735**	2	PIN-CONNECTOR (16-GA TO 18-GA)	
	2	1	**255-4692**	1	FITTING-HOSE	
	3	1	**4B-4863**	4	WASHER (4.7X11X1.2-MM THK)	
M	4	1	**5C-8312**	2	NUT (M4X0.7-THD)	
M	5	1	**8T-9405**	2	BOLT-SOCKET HEAD (M4X0.7X16-MM)	
D	6	1	**6V-1363**		HOSE (0.3-M)	

D-ORDER BY THE METER
M-METRIC PART

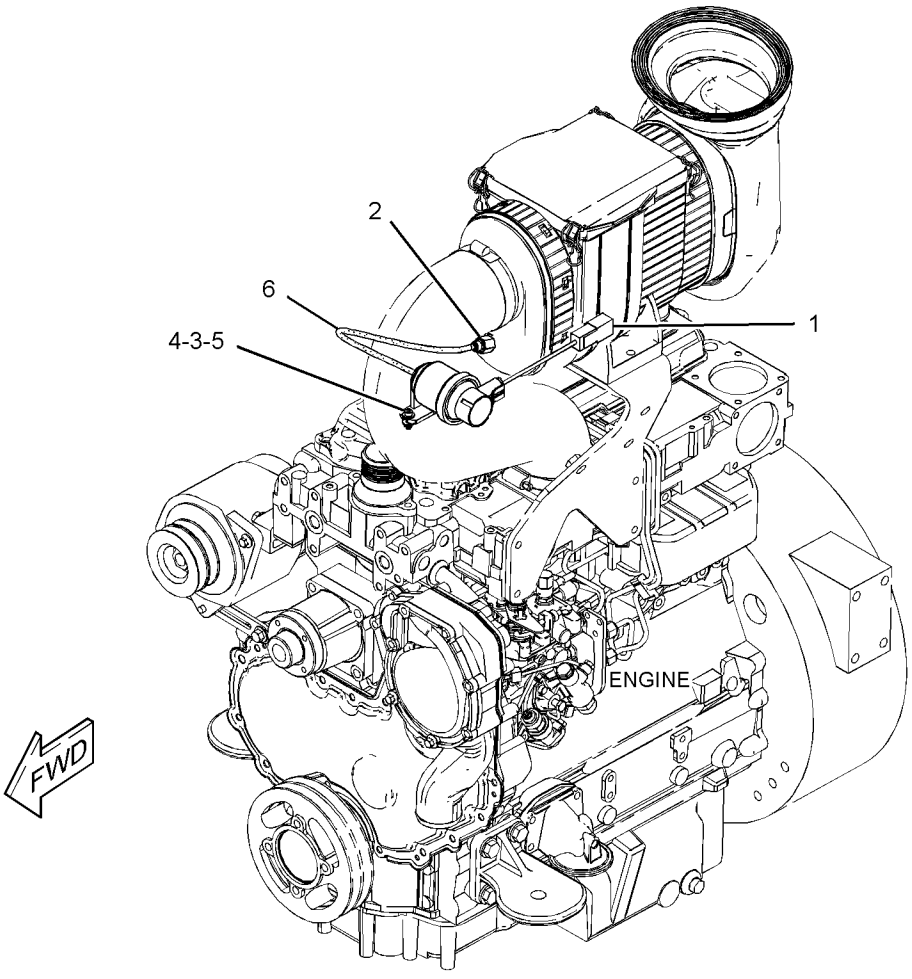

GRAPHIC #1 **<END>** g01321786

AIR INLET AND EXHAUST SYSTEM

237-5408 MANIFOLD GP-EXHAUST

S/N: G4D1-UP; CRS1-UP
PART OF 245-6841 ENGINE AR-PRIMARY
AN ATTACHMENT

SMCS-1059 **i02089746**

NOTE	REF NO	GRAPHIC REF	PART NUMBER	QTY	PART NAME 1 2 3 4 5 6 (PRODUCT LEVEL)	SEE PAGE
	1	1	**174-9638**	1	BOLT	
	2	1	**225-8536**	1	GASKET (MANIFOLD)	
	3	1	**252-9612**	1	MANIFOLD-EXHAUST	

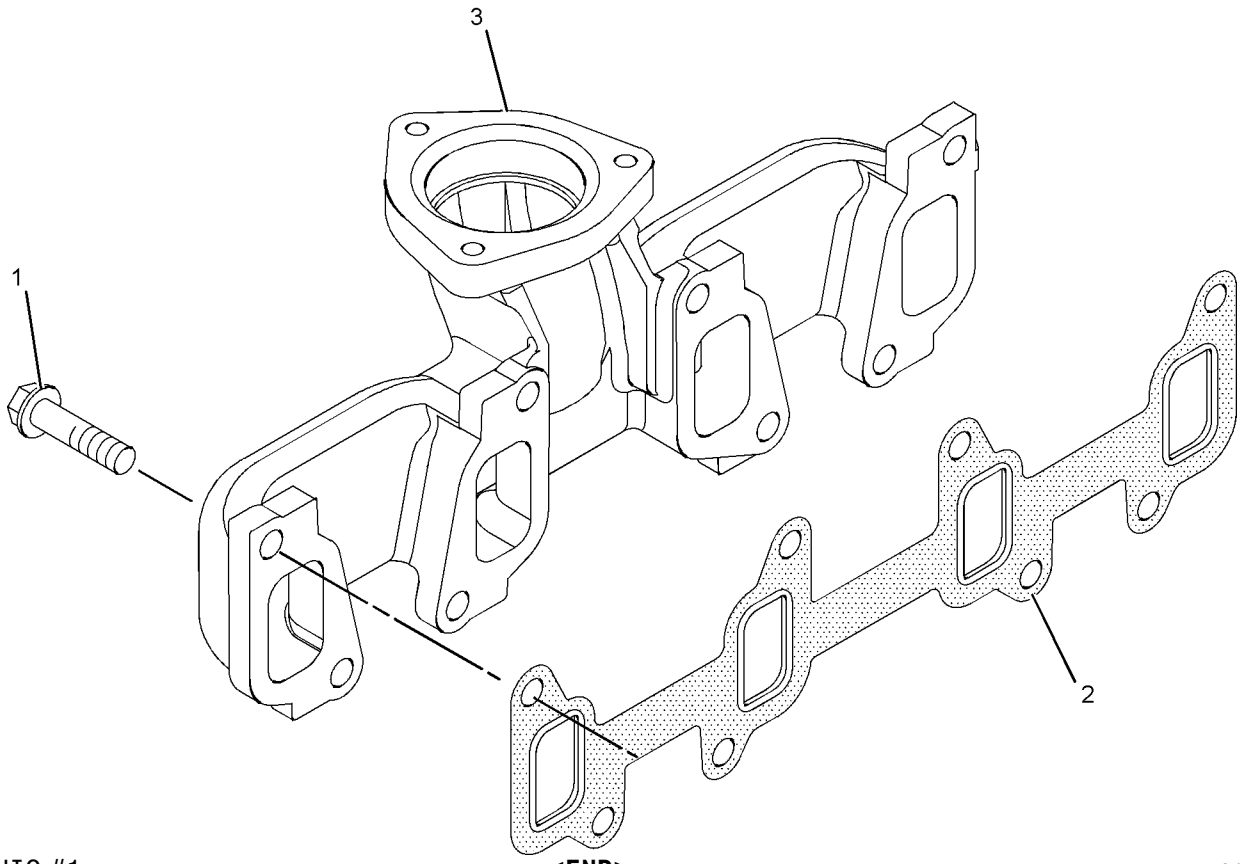

GRAPHIC #1 **<END>** g01084131

AIR INLET AND EXHAUST SYSTEM

210-6813 MUFFLER GP

S/N: SHA1-UP
PART OF 252-4640 ENGINE AR
AN ATTACHMENT

SMCS-1062 **i02122085**

NOTE	REF NO	GRAPHIC REF	PART NUMBER	QTY	PART NAME 1 2 3 4 5 6 (PRODUCT LEVEL)	SEE PAGE
	1	1	**6I-0364**	3	STUD (M10X1.5X30-MM)	
	2	1	**6I-0563**	3	NUT (M10X1.15-THD)	
	3	1	**6I-4039**	1	GASKET	
	4	1	**235-5364**	1	MUFFLER AS	
	5	1	**237-0975**	1	PLATE AS	
M		1	**8T-3490**	4	NUT-WELD (M10X1.5-THD)	
	6	1	**247-4001**	1	PLATE AS	
	7	1	**254-2187**	2	CLAMP AS	
	8	1	**8T-4121**	16	WASHER-HARD (11X21X2.5-MM THK)	
M	9	1	**8T-4133**	4	NUT (M10X1.5-THD)	
M	10	1	**8T-4136**	4	BOLT (M10X1.5X25-MM)	
M	11	1	**8T-4195**	8	BOLT (M10X1.5X30-MM)	

M-METRIC PART

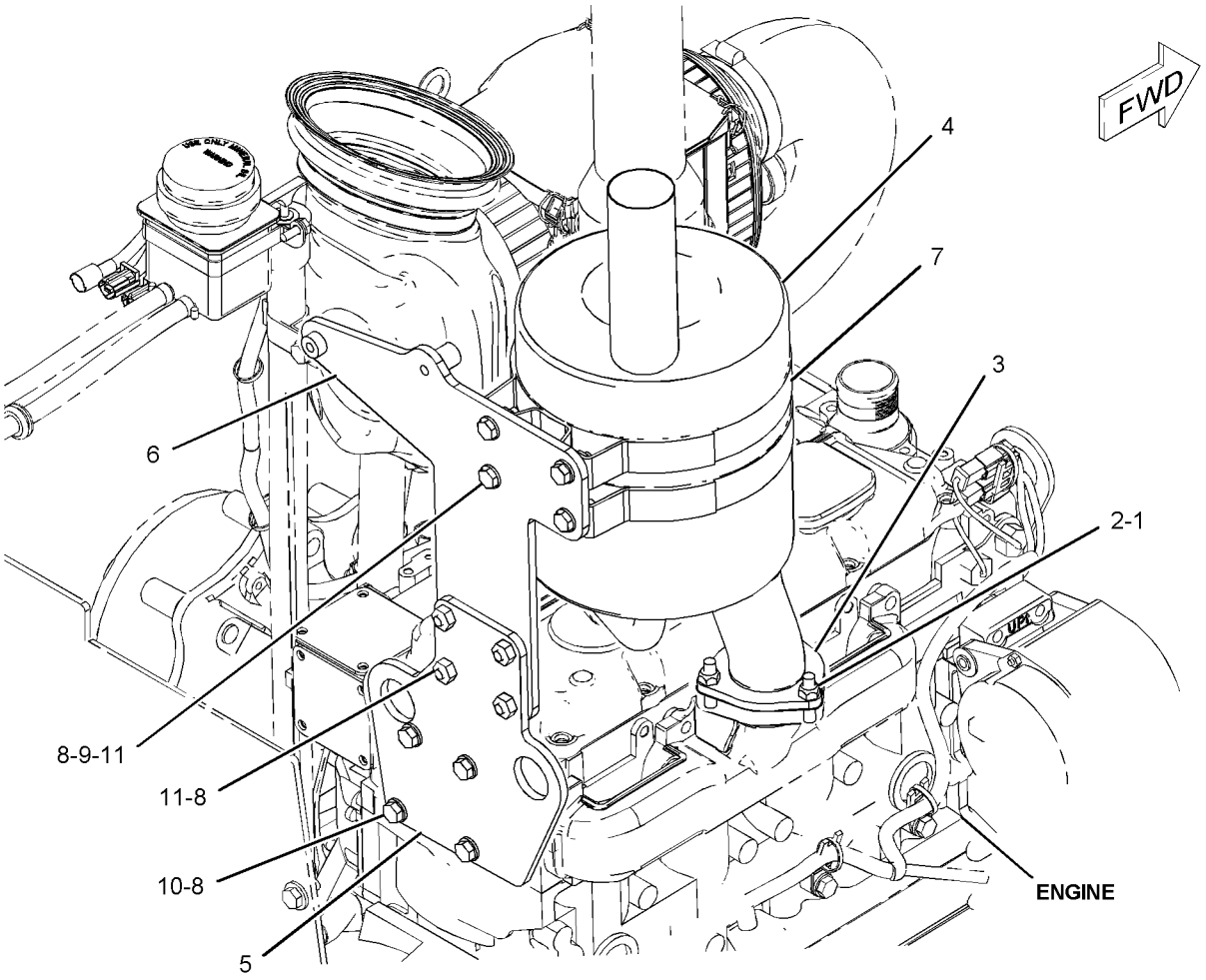

GRAPHIC #1 **<END>** g01081261

AIR INLET AND EXHAUST SYSTEM

223-4960 MUFFLER GP

S/N: SHA1-UP
PART OF 252-4641 ENGINE AR
AN ATTACHMENT

SMCS-1062 **i02510878**

NOTE	REF NO	GRAPHIC REF	PART NUMBER	QTY	PART NAME 1 2 3 4 5 6 (PRODUCT LEVEL)	SEE PAGE
	1	1	**6I-0364**	3	STUD (M10X1.5X30-MM)	
	2	1	**6I-0563**	3	NUT (M10X1.15-THD)	
	3	1	**235-5363**	1	MUFFLER AS (TURBOCHARGED)	
	4	1	**237-0975**	1	PLATE AS	
M		1	**8T-3490**	4	NUT-WELD (M10X1.5-THD)	
	5	1	**247-4001**	1	PLATE AS	
	6	1	**254-2187**	2	CLAMP AS	
	7	1	**8T-4121**	16	WASHER-HARD (11X21X2.5-MM THK)	
M	8	1	**8T-4133**	4	NUT (M10X1.5-THD)	
M	9	1	**8T-4136**	4	BOLT (M10X1.5X25-MM)	
M	10	1	**8T-4195**	8	BOLT (M10X1.5X30-MM)	

M-METRIC PART

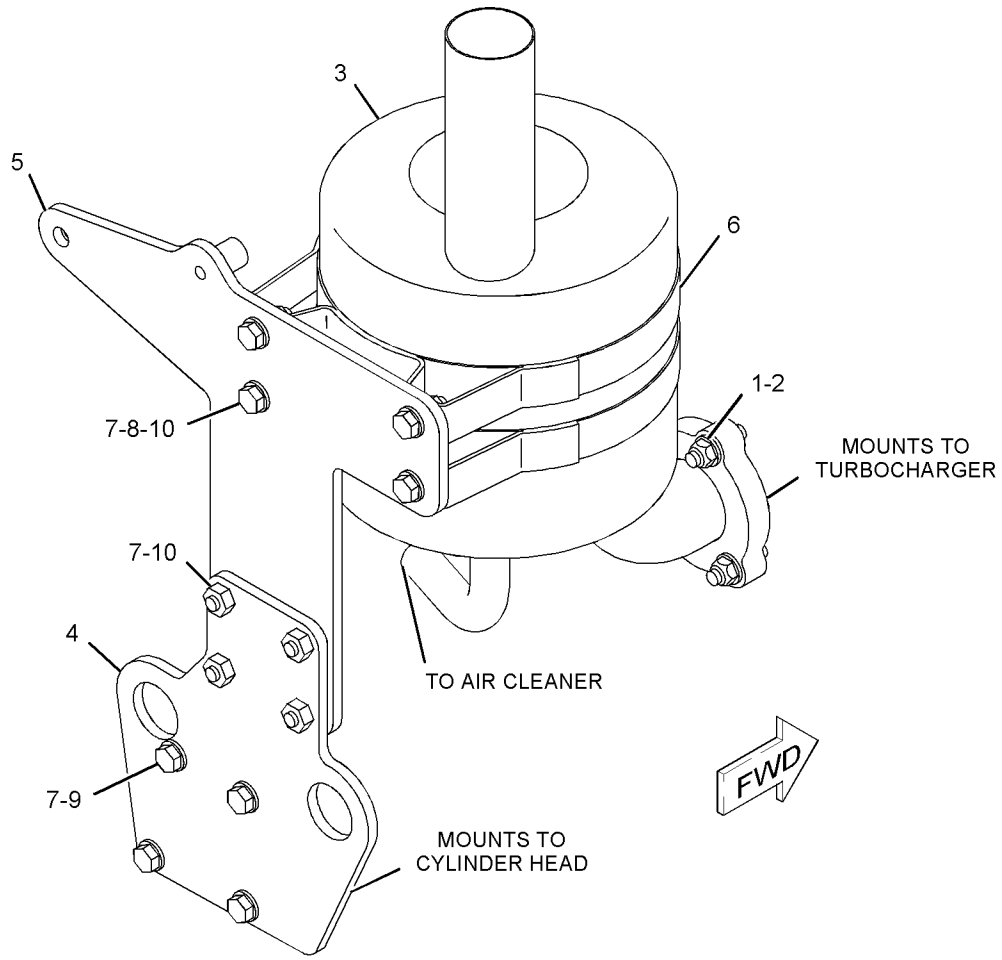

GRAPHIC #1 **<END>** g01078673

AIR INLET AND EXHAUST SYSTEM

285-0438 TURBOCHARGER GP

S/N: G4D1-UP; CRS1-UP
PART OF 273-3610 ENGINE AR
AN ATTACHMENT

SMCS-1052, 1053 **i02439110**

NOTE	REF NO	GRAPHIC REF	PART NUMBER	QTY	PART NAME 1 2 3 4 5 6 (PRODUCT LEVEL)	SEE PAGE
M	1	1	**6I-0217**	2	BOLT (M8X1.25X20-MM)	
M	2	1	**6I-0254**	4	BOLT (M8X1.25X30-MM)	
	3	1	**6I-0563**	4	NUT (M10X1.15-THD)	
	4	1	**6I-0572**	4	BOLT (M8X1.25X20-MM)	
	5	1	**106-8916**	2	BOLT (M6X16-MM)	
	6	1	**141-1667**	2	CLAMP-HOSE	
	7	1	**147-5553**	4	STUD	
	8	1	**174-9638**	8	BOLT	
	9	1	**194-5390**	1	GASKET-MANIFOLD	
	10	1	**225-8533**	1	GASKET	
	11	1	**225-8534**	1	GASKET	
	12	1	**225-8536**	1	GASKET	
	13	1	**285-0432**	1	BRACKET-SUPPORT	
	14	1	**234-3030**	1	GASKET	
	15	1	**237-2799**	1	TUBE AS	
	15A	1	**225-8524**	2	BOLT (M10X1X23-MM)	
	15B	1	**225-8526**	4	WASHER (10.4X13.75X1.37-MM THK)	
	16	1	**237-3786**	1	TURBOCHARGER GP	
	17	1	**237-3791**	1	TUBE AS	
	18	1	**237-3794**	1	BOLT	
	19	1	**237-3921**	1	CLIP	
	20	1	**237-3922**	1	TUBE	
	21	1	**255-3447**	1	MANIFOLD-EXHAUST	
	22	1	**263-5376**	1	HOSE	

M-METRIC PART

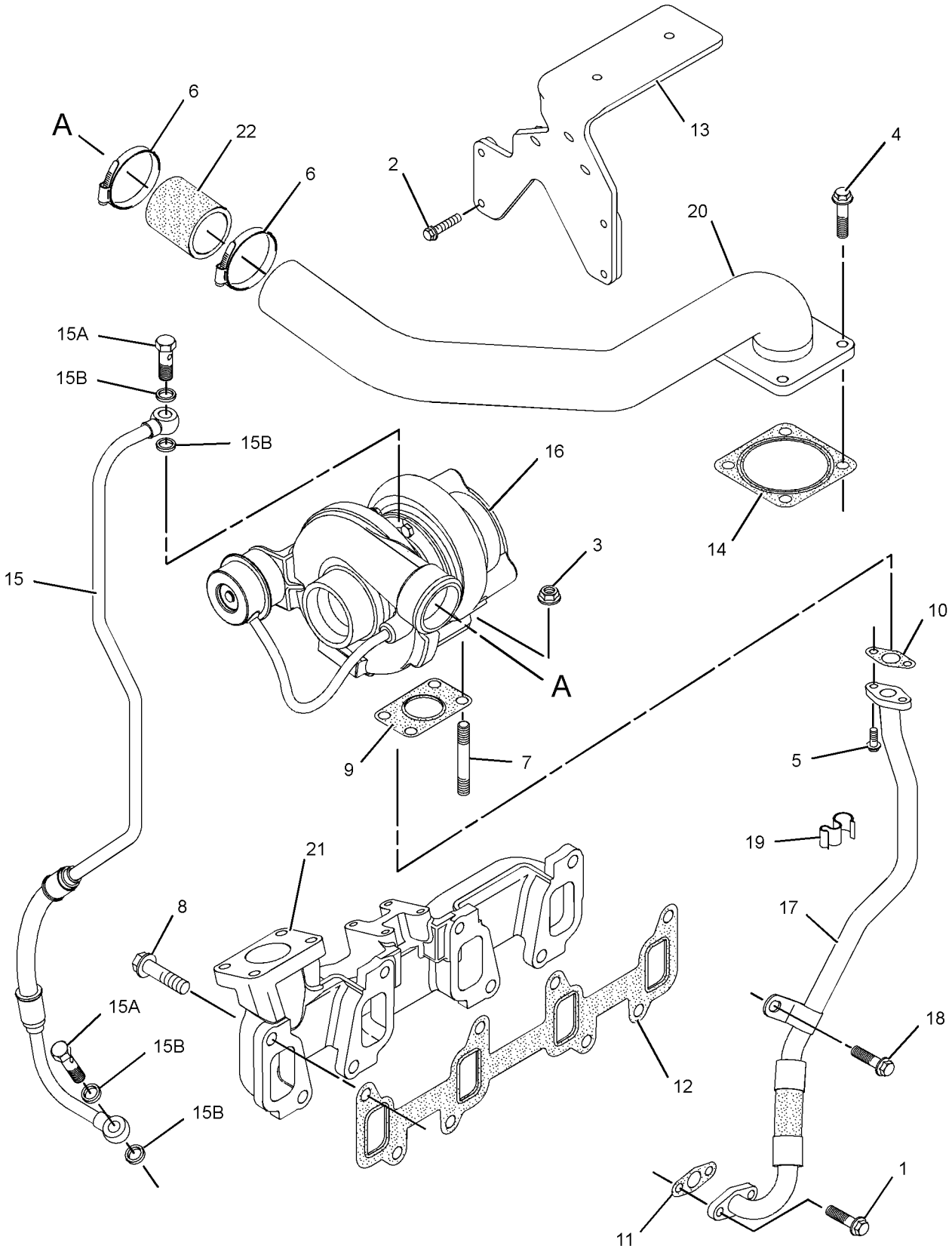

GRAPHIC #1 **<END>** g01221080

206-1640 CONTROL GP-GOVERNOR

S/N: SHA1-UP
PART OF 252-4641 ENGINE AR
AN ATTACHMENT
TYPE 1

SMCS-1265 **i02369708**

NOTE	REF NO	GRAPHIC REF	PART NUMBER	QTY	PART NAME 1 2 3 4 5 6 (PRODUCT LEVEL)	SEE PAGE
	1	1	**151-4841**	3	BLOCK	
Y	2	1	**209-3378**	1	PEDAL GP-GOVERNOR	716
	3	1	**235-0128**	1	CABLE AS	
	4	1	**239-1434**	1	PLATE	
	5	1	**239-1435**	1	BRACKET AS	
	6	1	**248-2707**	1	GROMMET	
M	7	1	**119-5025**	3	SCREW-FLAT HEAD (M6X1X25-MM)	
	8	1	**164-1395**	1	KNOB	
Y	9	1	**209-3367**	1	LEVER GP-GOVERNOR	703
	10	1	**3S-2093**	1	STRAP-CABLE	
	11	1	**7K-1181**	3	STRAP-CABLE	
M	12	1	**8T-4138**	3	BOLT (M6X1X20-MM)	
	13	1	**8T-4205**	3	WASHER-HARD (7.2X14.5X2-MM THK)	
	14	1	**8T-4224**	4	WASHER-HARD (8.8X16X2-MM THK)	
M	15	1	**8T-4908**	4	BOLT (M8X1.25X25-MM)	

M-METRIC PART
Y-SEPARATE ILLUSTRATION

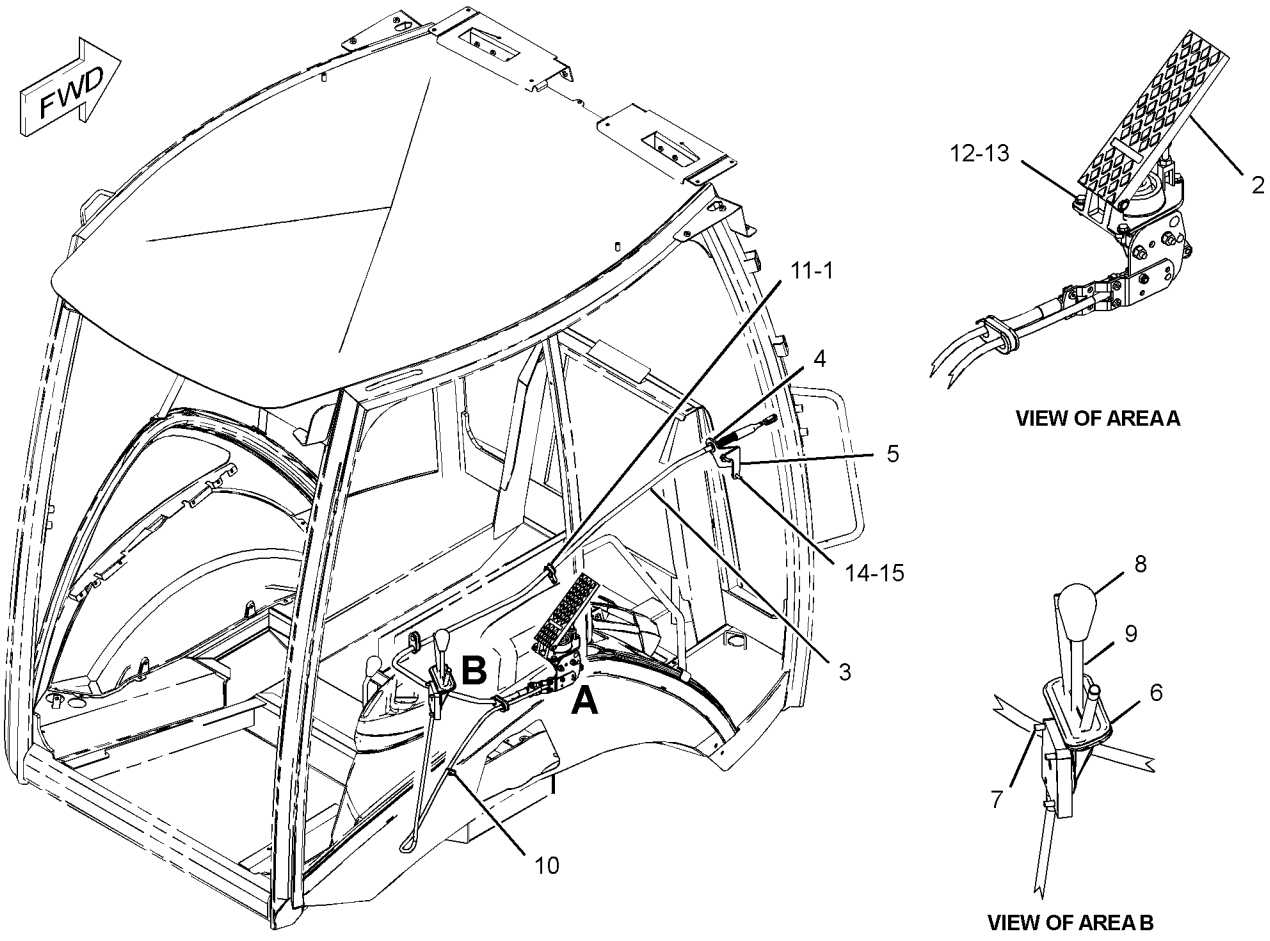

GRAPHIC #1 **<END>** g01183916

206-1640 CONTROL GP-GOVERNOR

S/N: SHA1-UP
PART OF 252-4641 ENGINE AR
AN ATTACHMENT
TYPE 2

SMCS-1265 **i02675865**

NOTE	REF NO	GRAPHIC REF	PART NUMBER	QTY	PART NAME 1 2 3 4 5 6 (PRODUCT LEVEL)	SEE PAGE
	1	1	**151-4841**	3	BLOCK	
Y	2	1	**209-3378**	1	PEDAL GP-GOVERNOR	716
	3	1	**235-0128**	1	CABLE AS	
	4	1	**239-1434**	1	PLATE	
C	5	1	**300-1702**	1	BRACKET AS	
	6	1	**248-2707**	1	GROMMET	
M	7	1	**119-5025**	3	SCREW-FLAT HEAD (M6X1X25-MM)	
	8	1	**164-1395**	1	KNOB	
Y	9	1	**209-3367**	1	LEVER GP-GOVERNOR	703
C	11	1	**7K-1181**	4	STRAP-CABLE	
M	12	1	**8T-4138**	3	BOLT (M6X1X20-MM)	
	13	1	**8T-4205**	3	WASHER-HARD (7.2X14.5X2-MM THK)	
	14	1	**8T-4224**	4	WASHER-HARD (8.8X16X2-MM THK)	
CM	15	1	**8T-4908**	3	BOLT (M8X1.25X25-MM)	
CM	16	1	**7X-0818**	1	BOLT (M8X1.25X45-MM)	

C-CHANGE FROM PREVIOUS TYPE
M-METRIC PART
Y-SEPARATE ILLUSTRATION

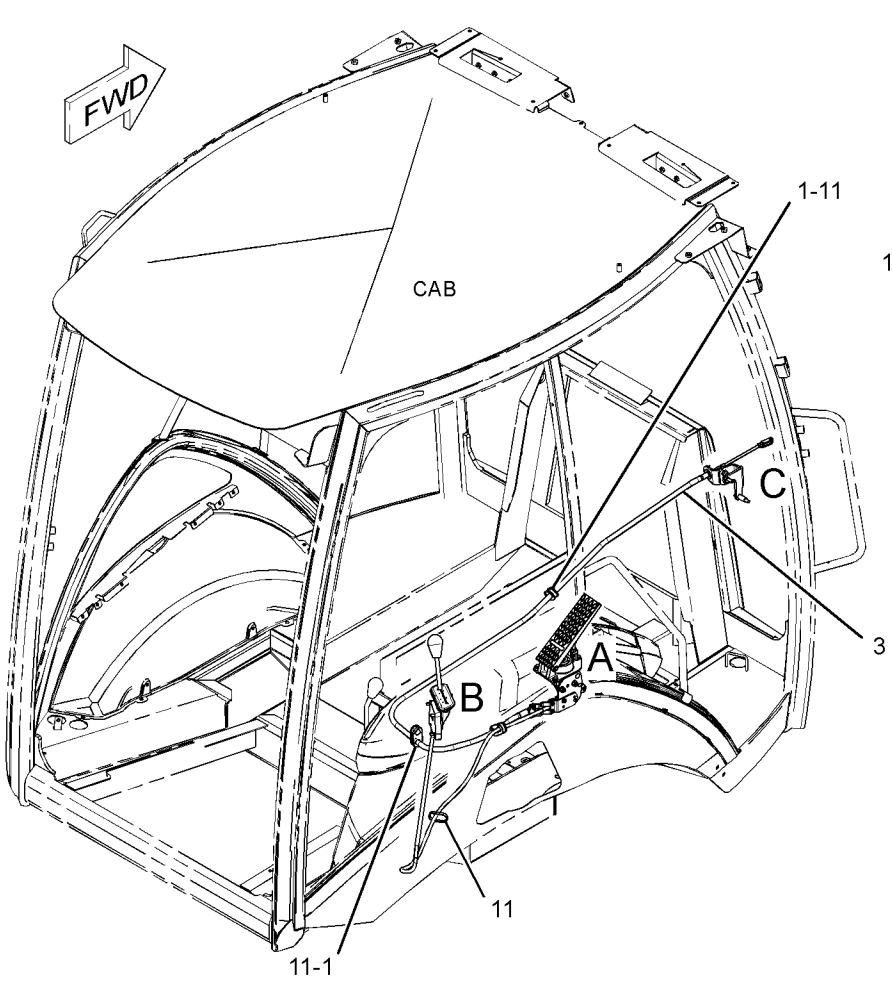

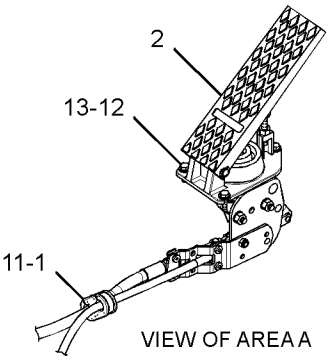

VIEW OF AREA A

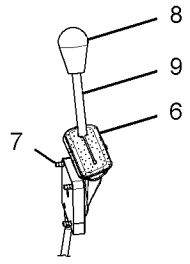

VIEW OF AREA B

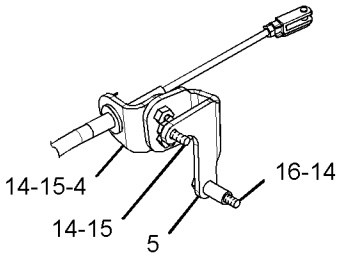

VIEW OF AREA C

GRAPHIC #1 **<END>** g01347506

251-3802 CONTROL GP-GOVERNOR

S/N: SHA1-UP
PART OF 252-4640 ENGINE AR
AN ATTACHMENT
TYPE 1

SMCS-1265 **i02395196**

NOTE	REF NO	GRAPHIC REF	PART NUMBER	QTY	PART NAME 1 2 3 4 5 6 (PRODUCT LEVEL)	SEE PAGE
	1	1	**151-4841**	3	BLOCK	
	2	1	**239-1435**	1	BRACKET AS	
	3	1	**235-0128**	1	CABLE AS	
Y	4	1	**243-0059**	1	PEDAL GP-GOVERNOR	717
	5	1	**248-2707**	1	GROMMET	
	6	1	**249-0403**	1	PLATE	
M	7	1	**119-5025**	3	SCREW-FLAT HEAD (M6X1X25-MM)	
	8	1	**164-1395**	1	KNOB	
Y	9	1	**209-3367**	1	LEVER GP-GOVERNOR	703
	10	1	**3S-2093**	1	STRAP-CABLE	
	11	1	**7K-1181**	3	STRAP-CABLE	
M	12	1	**8T-4138**	3	BOLT (M6X1X20-MM)	
	13	1	**8T-4205**	3	WASHER-HARD (7.2X14.5X2-MM THK)	
	14	1	**8T-4224**	4	WASHER-HARD (8.8X16X2-MM THK)	
M	15	1	**8T-4908**	4	BOLT (M8X1.25X25-MM)	

M-METRIC PART
Y-SEPARATE ILLUSTRATION

251-3802 **CONTROL GP-GOVERNOR** *(contd.)* **i02395196**

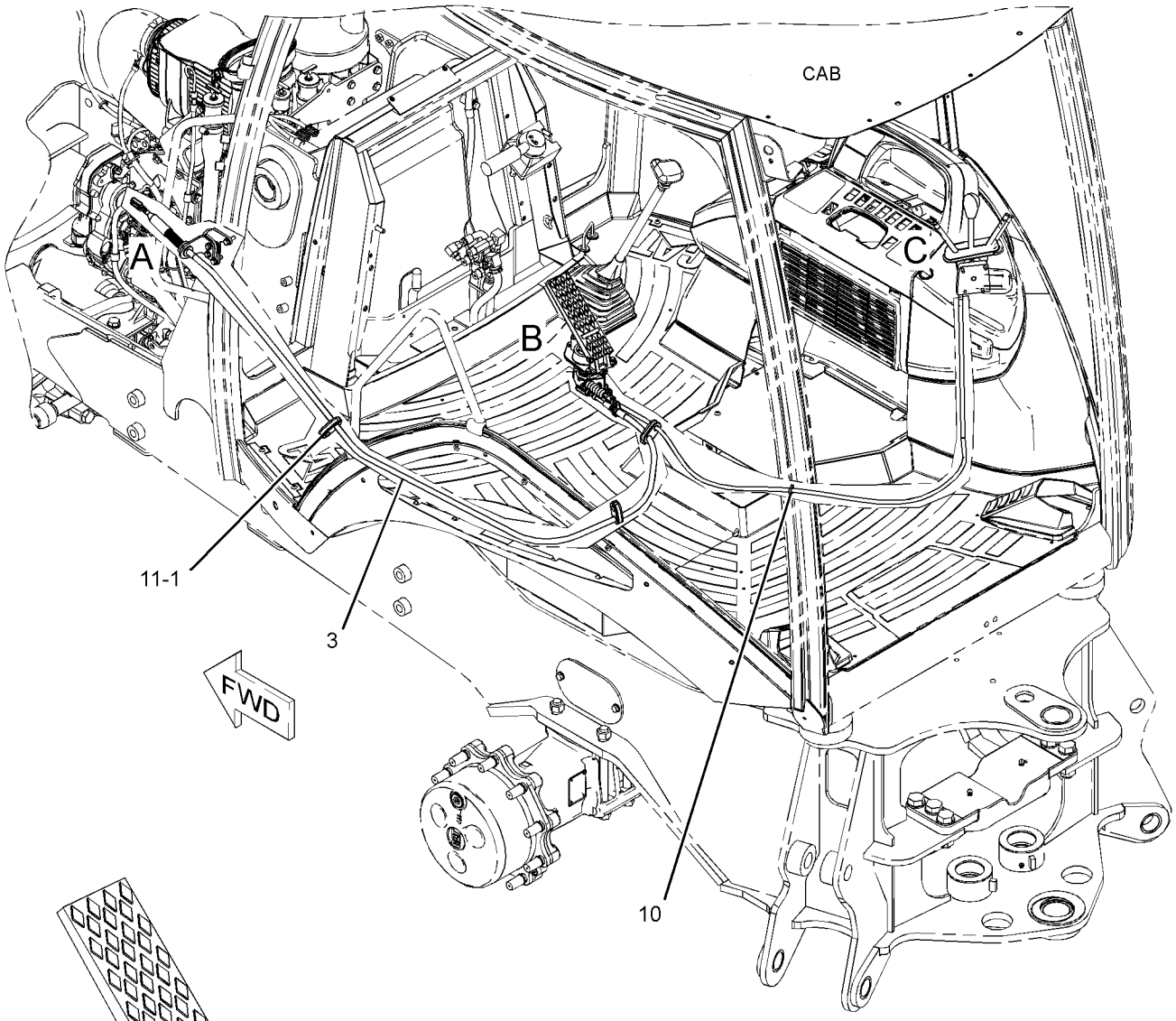

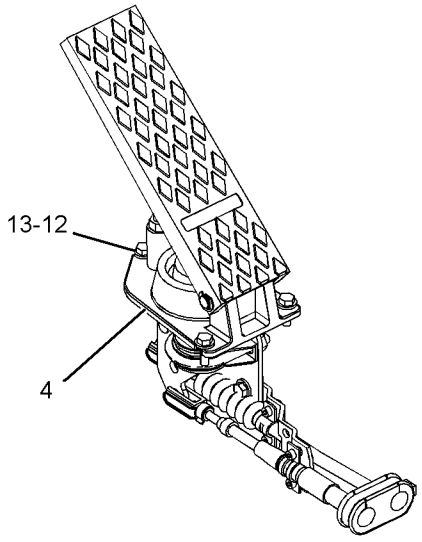

VIEW OF AREA B

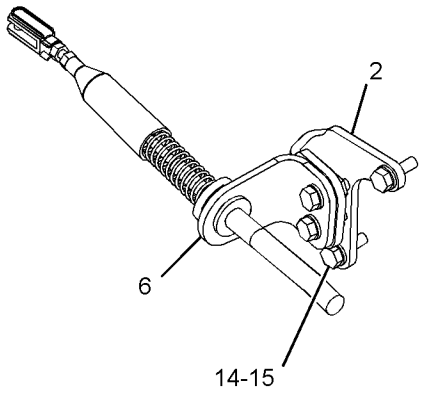

VIEW OF AREA A

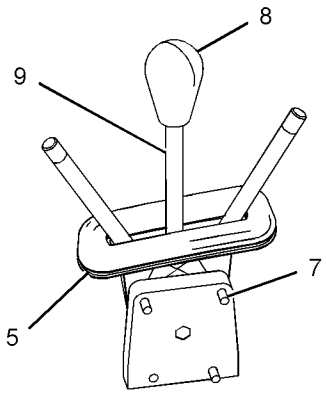

VIEW OF AREA C

GRAPHIC #1 **<END>** g01233662

251-3802 CONTROL GP-GOVERNOR

S/N: SHA1-UP
PART OF 252-4640 ENGINE AR
AN ATTACHMENT
TYPE 2

SMCS-1265 **i02658780**

NOTE	REF NO	GRAPHIC REF	PART NUMBER	QTY	PART NAME 1 2 3 4 5 6 (PRODUCT LEVEL)	SEE PAGE
	1	1	**151-4841**	3	BLOCK	
C	2	1	**300-1702**	1	BRACKET AS	
	3	1	**235-0128**	1	CABLE AS	
Y	4	1	**243-0059**	1	PEDAL GP-GOVERNOR	717
	5	1	**248-2707**	1	GROMMET	
	6	1	**249-0403**	1	PLATE	
M	7	1	**119-5025**	3	SCREW-FLAT HEAD (M6X1X25-MM)	
	8	1	**164-1395**	1	KNOB	
Y	9	1	**209-3367**	1	LEVER GP-GOVERNOR	703
C	11	1	**7K-1181**	4	STRAP-CABLE	
M	12	1	**8T-4138**	3	BOLT (M6X1X20-MM)	
	13	1	**8T-4205**	3	WASHER-HARD (7.2X14.5X2-MM THK)	
	14	1	**8T-4224**	4	WASHER-HARD (8.8X16X2-MM THK)	
CM	15	1	**8T-4908**	3	BOLT (M8X1.25X25-MM)	
CM	16	1	**7X-0818**	1	BOLT (M8X1.25X45-MM)	

C-CHANGE FROM PREVIOUS TYPE
M-METRIC PART
Y-SEPARATE ILLUSTRATION

251-3802 **CONTROL GP-GOVERNOR** *(contd.)* **i02658780**

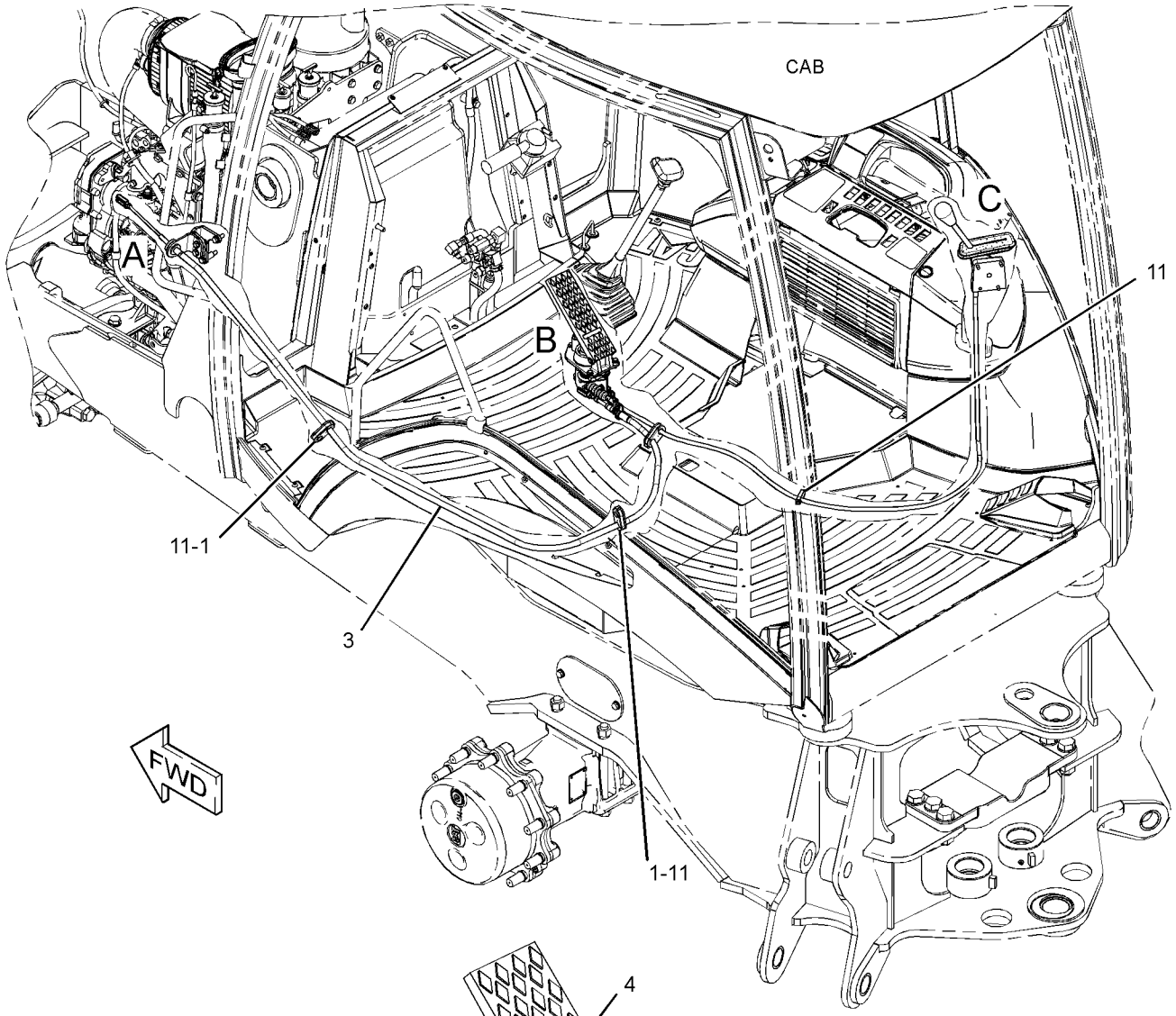

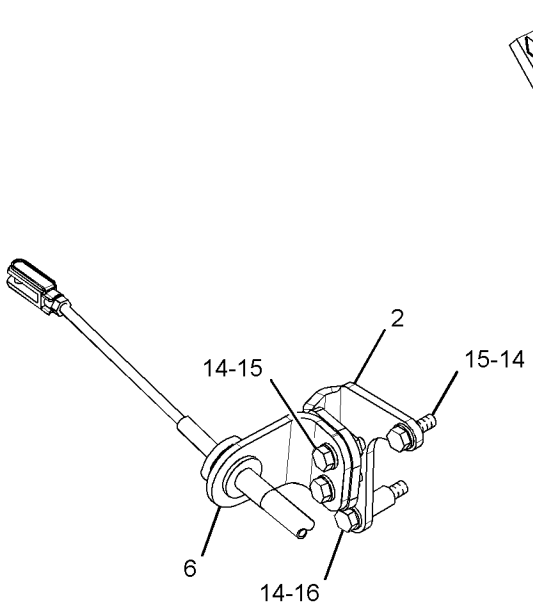

VIEW OF AREA A

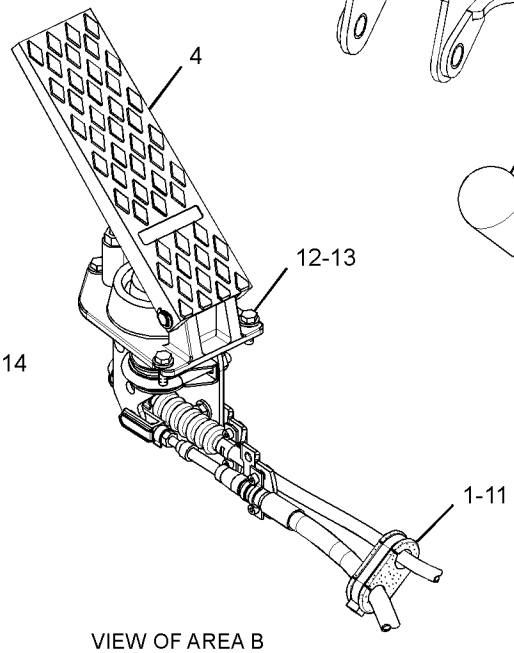

VIEW OF AREA B

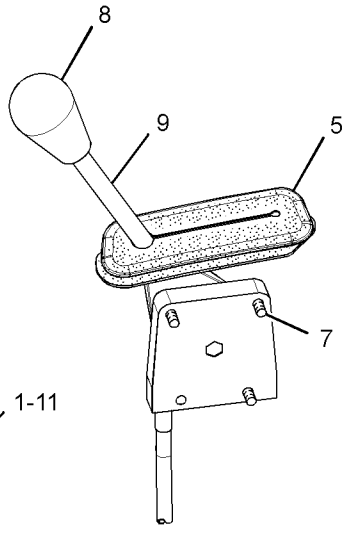

VIEW OF AREA C

GRAPHIC #1 **<END>** g01341689

FUEL SYSTEM

285-3605 FILTER GP-WATER SEP & FUEL

S/N: SHA1-UP
PART OF 252-4640, 252-4641 ENGINE AR
AN ATTACHMENT

SMCS-1261, 1263 **i02520613**

NOTE	REF NO	GRAPHIC REF	PART NUMBER	QTY	PART NAME 1 2 3 4 5 6 (PRODUCT LEVEL)	SEE PAGE
	1	1	**151-1975**	2	CONNECTOR	
	2	1	**285-5098**	1	FILTER GP-FUEL	
		1	**118-8118**	1	RING-RETAINING	
		1	**118-8119**	1	NUT	
		1	**149-3516**	1	BASE AS	
		1	**156-1200**	1	FILTER ELEMENT-FUEL	
	3	1	*169-5861*	2	PLUG AS	
					(EACH INCLUDES)	
		1	**3K-8460**	1	PLUG	
		1	**5P-7814**	1	SEAL-O-RING	
	4	1	**5P-7814**	2	SEAL-O-RING	
	5	1	**8T-4121**	2	WASHER-HARD (11X21X2.5-MM THK)	
M	6	1	**8T-4195**	2	BOLT (M10X1.5X30-MM)	

M-METRIC PART

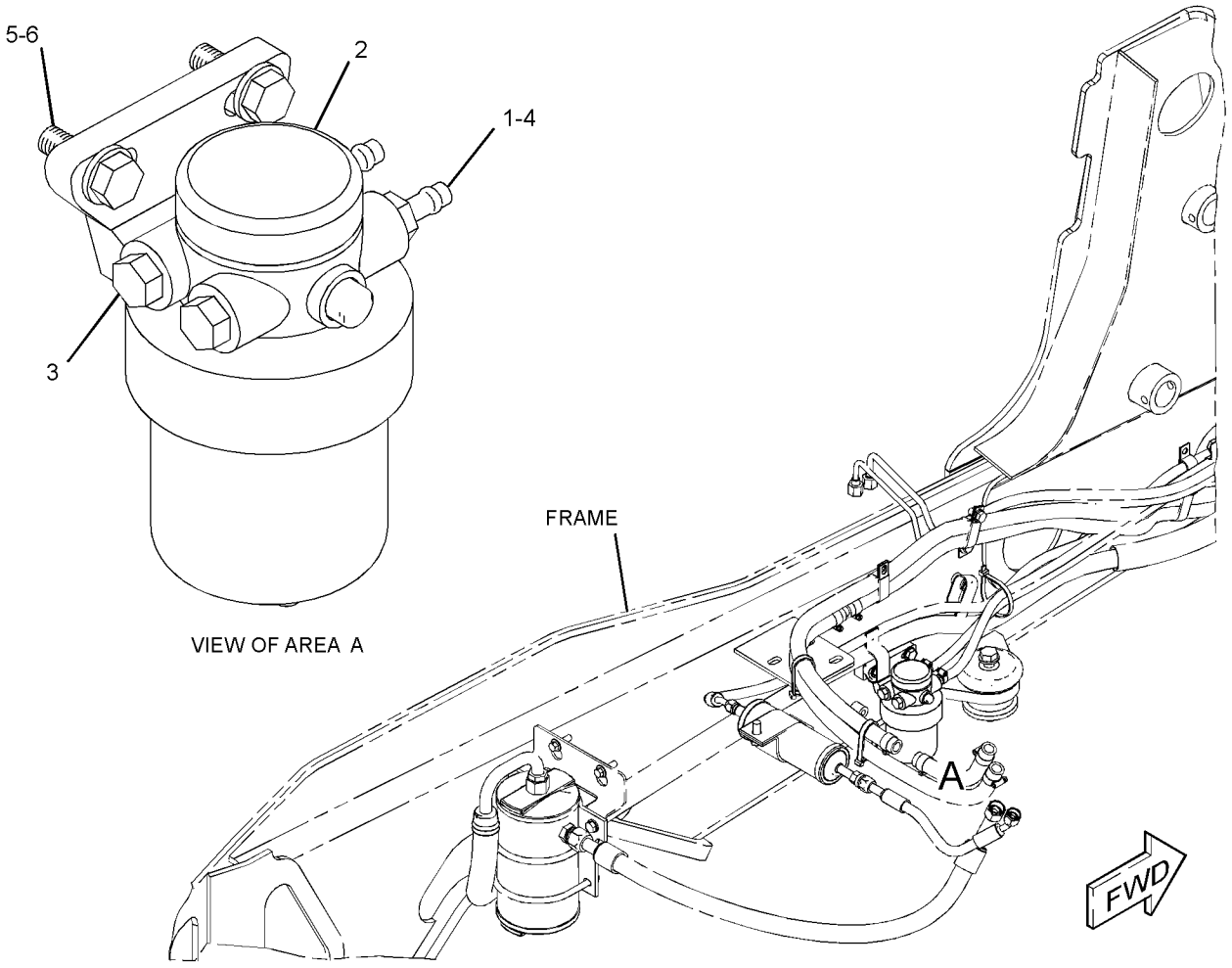

GRAPHIC #1 **<END>** g01262187

247-5360 LINES GP-FUEL

S/N: SHA1-UP
PART OF 252-4640 ENGINE AR
AN ATTACHMENT

SMCS-1274 **i02559915**

NOTE	REF NO	GRAPHIC REF	PART NUMBER	QTY	PART NAME 1 2 3 4 5 6 (PRODUCT LEVEL)	SEE PAGE
	1	1	**1P-4278**	12	CLAMP-HOSE	
	2	1	**7S-1912**	2	CLIP	
	3	1	**215-9515**	1	CONNECTOR-HOSE (QUICK DISCONNECT)	
	4	1	**216-6891**	1	TUBE AS	
	5	1	**216-6892**	1	TUBE AS	
	6	1	**241-4275**	1	TEE-SPECIAL	
	7	1	**259-6918**	1	CONNECTOR-HOSE (QUICK DISCONNECT)	
	8	1	**1P-7009**	1	CLIP	
	9	1	**5P-9085**	1	CLIP	
	10	1	**7N-3718**	1	CLIP	
	11	1	**7X-7729**	1	WASHER (11X25X3-MM THK)	
M	12	1	**8T-4136**	1	BOLT (M10X1.5X25-MM)	
M	13	1	**8T-4192**	1	BOLT (M12X1.75X25-MM)	
M	14	1	**8T-4189**	1	BOLT (M8X1.25X20-MM)	
	15	1	**8T-4223**	1	WASHER-HARD (13.5X25.5X3-MM THK)	
	16	1	**8T-4224**	1	WASHER-HARD (8.8X16X2-MM THK)	
	17	1	**9M-8406**	1	CLIP	
E	18	1	**5P-1442**		HOSE (87-CM)	
E	19	1	**5P-1420**		HOSE (77-CM)	
E	20	1	**5P-1420**		HOSE (146-CM)	
E	21	1	**5P-1420**		HOSE (29-CM)	
E	22	1	**5P-1420**		HOSE (13-CM)	
	23	1	**5P-1420**		HOSE (91-CM)	
	24	1	**7K-1181**	1	STRAP-CABLE	

E-ORDER BY THE CENTIMETER
M-METRIC PART

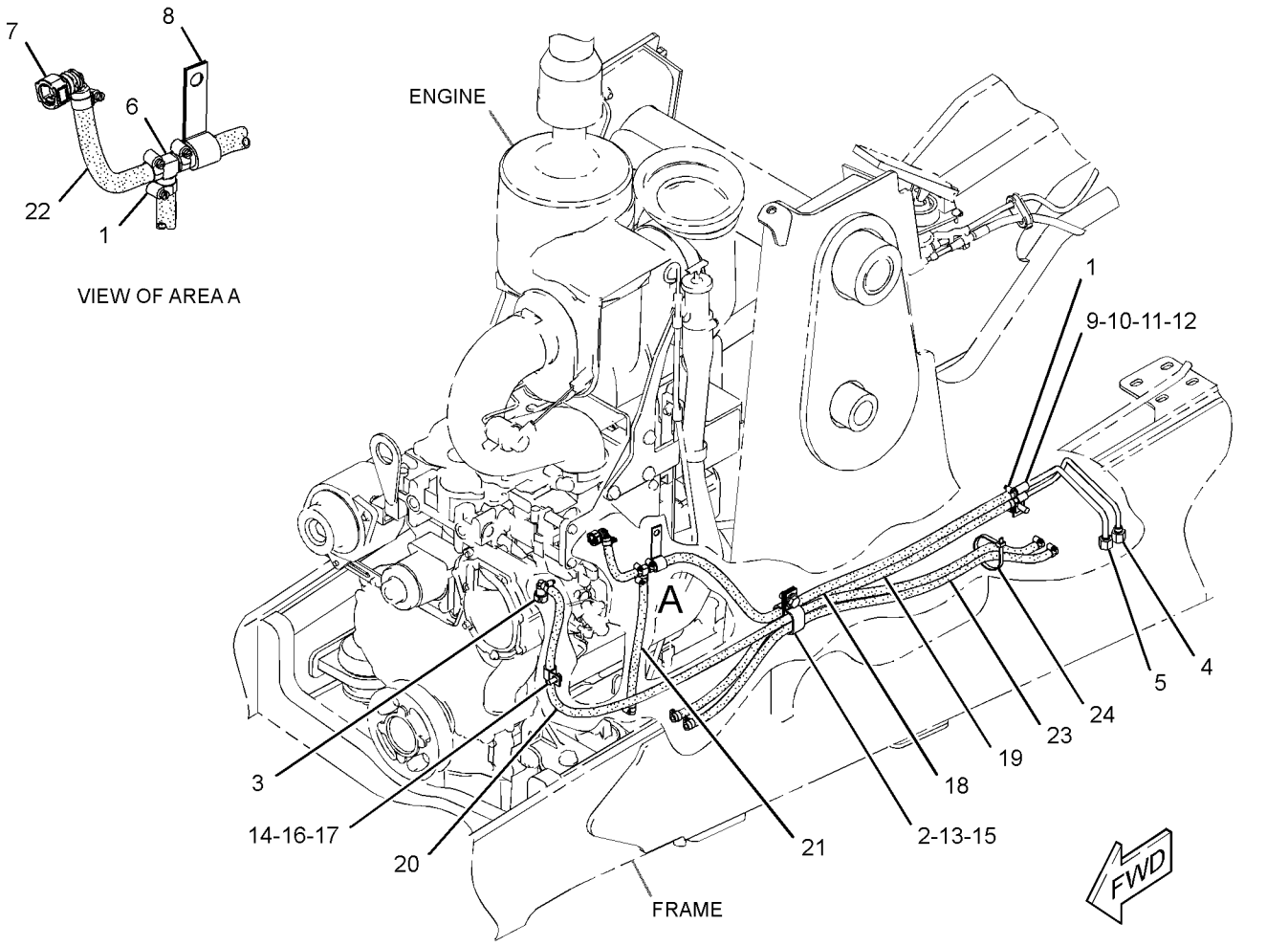

GRAPHIC #1 **<END>** g01284015

247-5361 LINES GP-FUEL

S/N: SHA1-UP
PART OF 252-4641 ENGINE AR
AN ATTACHMENT

SMCS-1274 **i02559925**

NOTE	REF NO	GRAPHIC REF	PART NUMBER	QTY	PART NAME 1 2 3 4 5 6 (PRODUCT LEVEL)	SEE PAGE
	1	1	**1P-4278**	12	CLAMP-HOSE	
	2	1	**7S-1912**	2	CLIP	
	3	1	**215-9515**	1	CONNECTOR-HOSE (QUICK DISCONNECT)	
	4	1	**216-6891**	1	TUBE AS	
	5	1	**216-6892**	1	TUBE AS	
	6	1	**224-5917**	1	CONNECTOR-SPECIAL	
	7	1	**241-4275**	1	TEE-SPECIAL	
	8	1	**5P-9085**	1	CLIP	
	9	1	**6K-8178**	1	CLIP	
	10	1	**7C-4354**	1	CLIP	
	11	1	**7N-3718**	1	CLIP	
	12	1	**7X-7729**	1	WASHER (11X25X3-MM THK)	
	13	1	**8M-2773**	1	CLIP	
	14	1	**8T-4121**	2	WASHER-HARD (11X21X2.5-MM THK)	
M	15	1	**8T-4133**	1	NUT (M10X1.5-THD)	
M	16	1	**8T-4136**	2	BOLT (M10X1.5X25-MM)	
M	17	1	**8T-4192**	1	BOLT (M12X1.75X25-MM)	
M	18	1	**8T-4189**	1	BOLT (M8X1.25X20-MM)	
	19	1	**8T-4223**	1	WASHER-HARD (13.5X25.5X3-MM THK)	
	20	1	**8T-4224**	1	WASHER-HARD (8.8X16X2-MM THK)	
	21	1	**9M-8406**	1	CLIP	
E	22	1	**5P-1442**		HOSE (76-CM)	
E	23	1	**5P-1420**		HOSE (55-CM)	
E	24	1	**5P-1420**		HOSE (12-CM)	
E	25	1	**5P-1420**		HOSE (114-CM)	
E	26	1	**5P-1420**		HOSE (91-CM)	
E	27	1	**5P-1420**		HOSE (76-CM)	
	28	1	**7K-1181**	1	STRAP-CABLE	

E-ORDER BY THE CENTIMETER
M-METRIC PART

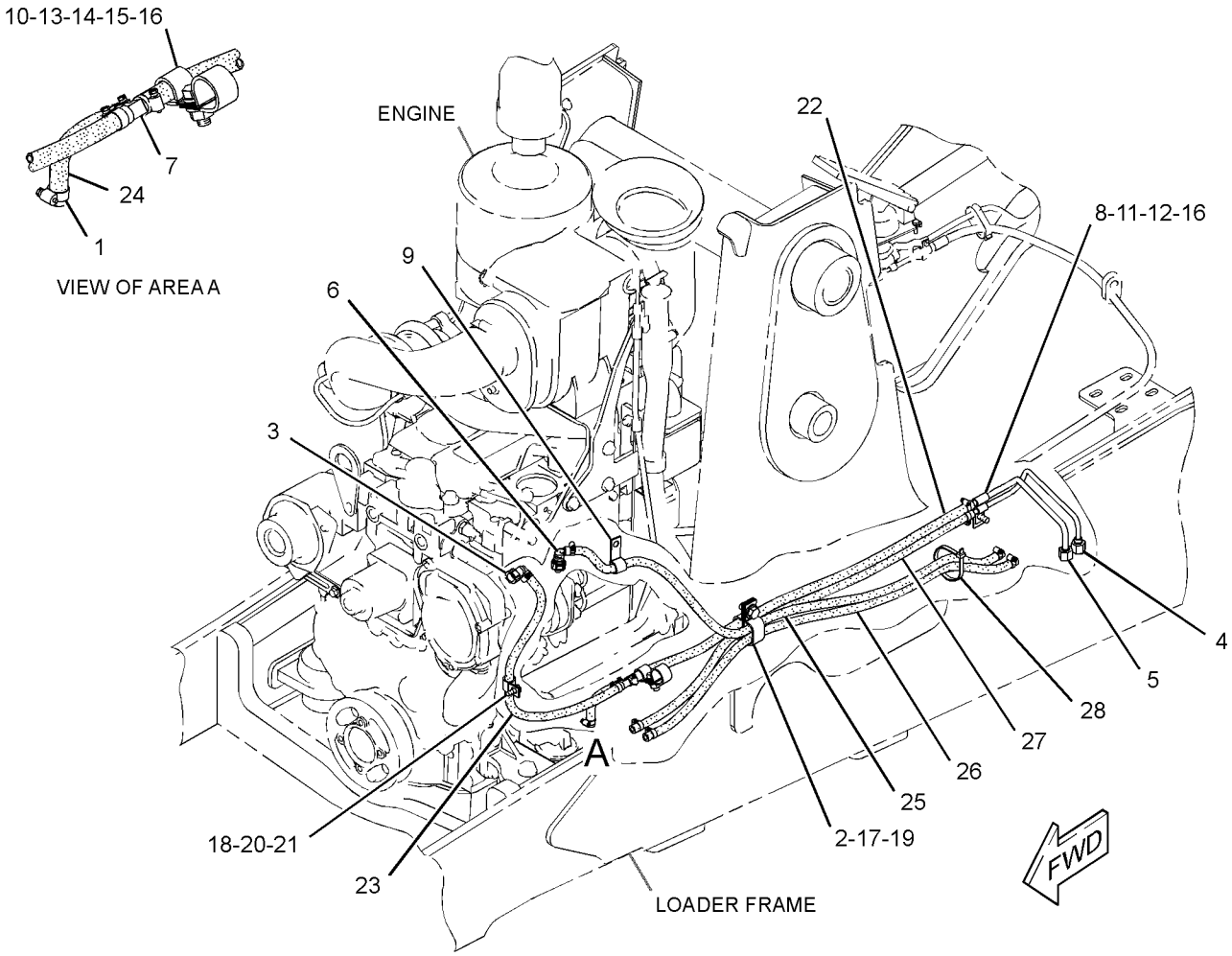

GRAPHIC #1 **<END>** g01283804

267-7069 LINES GP-FUEL

S/N: G4D1-UP; CRS1-UP
PART OF 245-6841 ENGINE AR-PRIMARY
FOR USE WITH REMOTE FUEL FILTER
AN ATTACHMENT

SMCS-1274 **i02336352**

NOTE	REF NO	GRAPHIC REF	PART NUMBER	QTY	PART NAME 1 2 3 4 5 6 (PRODUCT LEVEL)	SEE PAGE
	1	1	**235-6281**	1	TIE-CABLE	
	2	1	**267-7065**	1	TUBE	

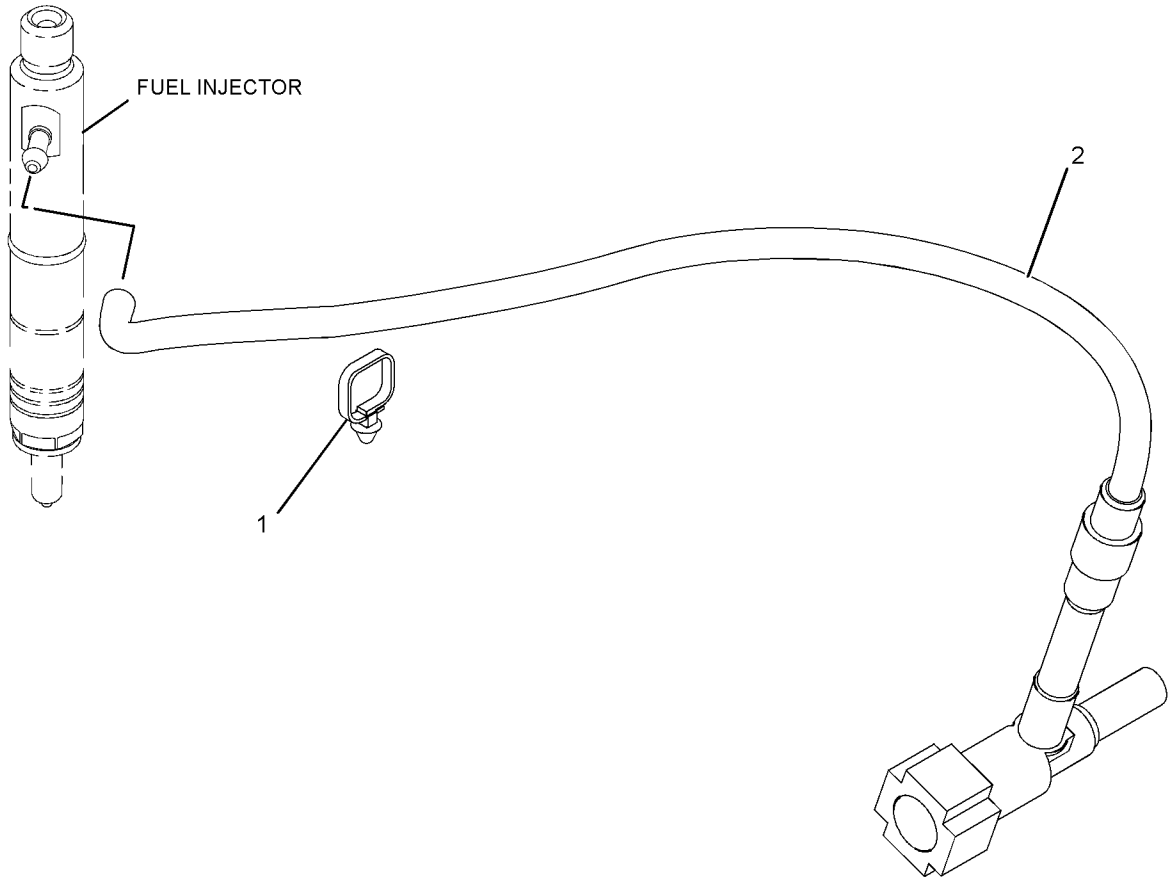

GRAPHIC #1 **<END>** g01160595

FUEL SYSTEM

247-4885 LINES GP-FUEL FILTER

S/N: G4D1-UP; CRS1-UP
PART OF 273-3610 ENGINE AR
AN ATTACHMENT

SMCS-1261, 1274 **i02225715**

NOTE	REF NO	GRAPHIC REF	PART NUMBER	QTY	PART NAME 1 2 3 4 5 6 (PRODUCT LEVEL)	SEE PAGE
	1	1	**247-4884**	1	TUBE AS	
	2	1	**232-3126**	1	CLIP	

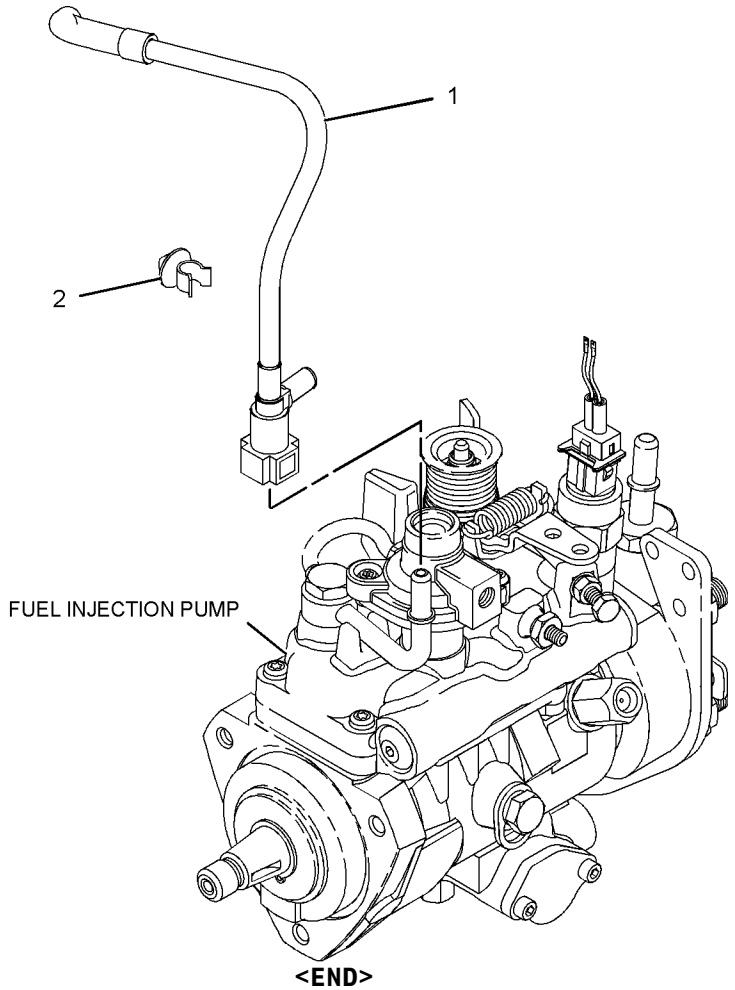

GRAPHIC #1

<END>

g01123693

237-5393 PUMP GP-FUEL INJECTION

S/N: CRS1-6334
PART OF 237-5394 PUMP GP-FUEL INJECTION
FIELD REPLACEMENT ORDER 247-6313—PAGE 114
AN ATTACHMENT

SMCS-1251, 1290 **i02071698**

NOTE	REF NO	GRAPHIC REF	PART NUMBER	QTY	PART NAME 1 2 3 4 5 6 (PRODUCT LEVEL)	SEE PAGE
	1	1	**208-5029**	1	VALVE GP-SOLENOID (12-VOLT)	

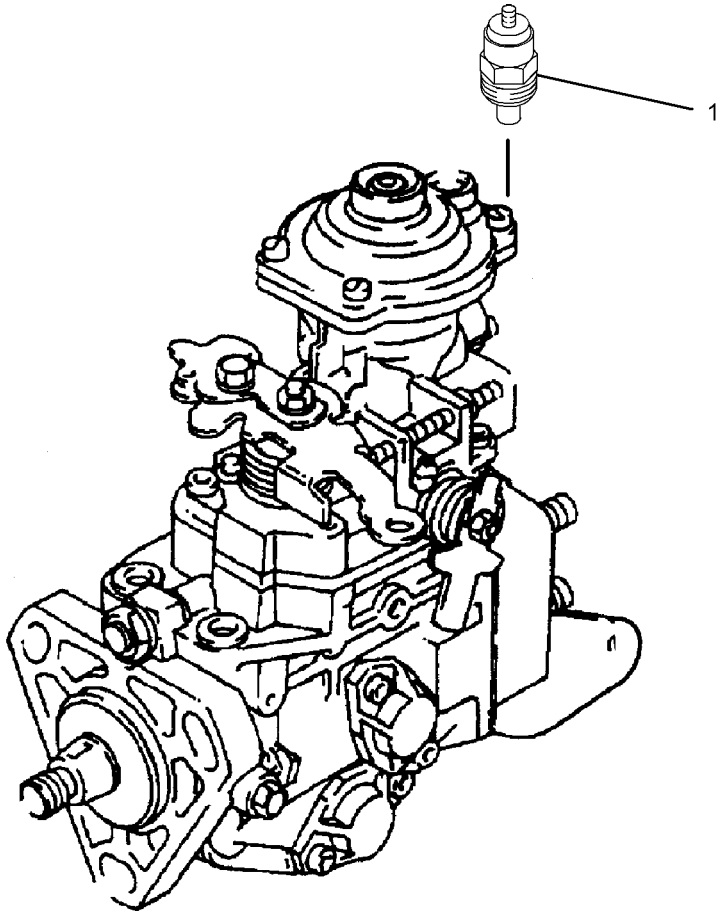

GRAPHIC #1 **<END>** g01017948

237-5394 PUMP GP-FUEL INJECTION

S/N: CRS1-6334
PART OF 245-6841 ENGINE AR-PRIMARY
AN ATTACHMENT

SMCS-1251, 1290 **i02145883**

NOTE	REF NO	GRAPHIC REF	PART NUMBER	QTY	PART NAME 1 2 3 4 5 6 (PRODUCT LEVEL)	SEE PAGE
M	1	1	**6I-0217**	1	BOLT (M8X1.25X20-MM)	
	2	1	**232-3149**	3	WASHER (8.35X16.85X1.55-MM THK)	
	3	1	**6I-0291**	1	NUT (M8X1.25-THD)	
M	4	1	**100-4830**	1	BOLT (M10X1.5X20-MM)	
M	5	1	**124-3815**	1	BOLT (M8X16X1.25-MM)	
	6	1	**140-8714**	1	CLIP	
	7	1	**145-8327**	1	SEAL-O-RING	
	8	1	**155-8804**	1	CAP	
	10	2	**199-9252**	1	SEAL-O-RING	
	11	2	**199-9751**	1	SEAL-O-RING	
	12	1	**230-9527**	1	BRACKET	
	13	1	**232-1117**	1	CLIP-PIPE	
	14	2	**232-1295**	1	PLUG	
	15	2	**232-1322**	1	PLUG	
	16	2	**232-1323**	1	PLUG-CUP	
	17	1	**232-2720**	1	TUBE AS	
	18	1	**232-2721**	1	TUBE AS	
	19	1	**232-2722**	1	TUBE AS	
	20	1	**232-2723**	1	TUBE AS	
	21	1	**232-2725**	2	CLIP	
	22	1	**232-2726**	1	CLIP	
M	23	1	**6I-0260**	3	BOLT (M8X1.25X25-MM)	
	24	1	**232-3157**	1	BRACKET	
	25	1	**232-3158**	4	CLAMP-INJECTOR	
	27	1	**232-3274**	4	BOLT (M8X1.25X48.1-MM)	
Y	28	1	**237-5393**	1	PUMP GP-FUEL INJECTION	107
	29	1	**233-7104**	1	GEAR-PUMP	
	30	2	**233-7214**	1	CABLE (TIMING ADVANCE SWITCH)	
	31	1	**233-7972**	4	INJECTOR AS-FUEL	
					(EACH INCLUDES)	
	32	1	**140-8718**	1	WASHER	
	33	1	**234-0387**	1	NOZZLE	
F			**232-3263**	1	CLIP-PIPE	

F-NOT SHOWN
M-METRIC PART
Y-SEPARATE ILLUSTRATION

237-5394 **PUMP GP-FUEL INJECTION** *(contd.)* **i02145883**

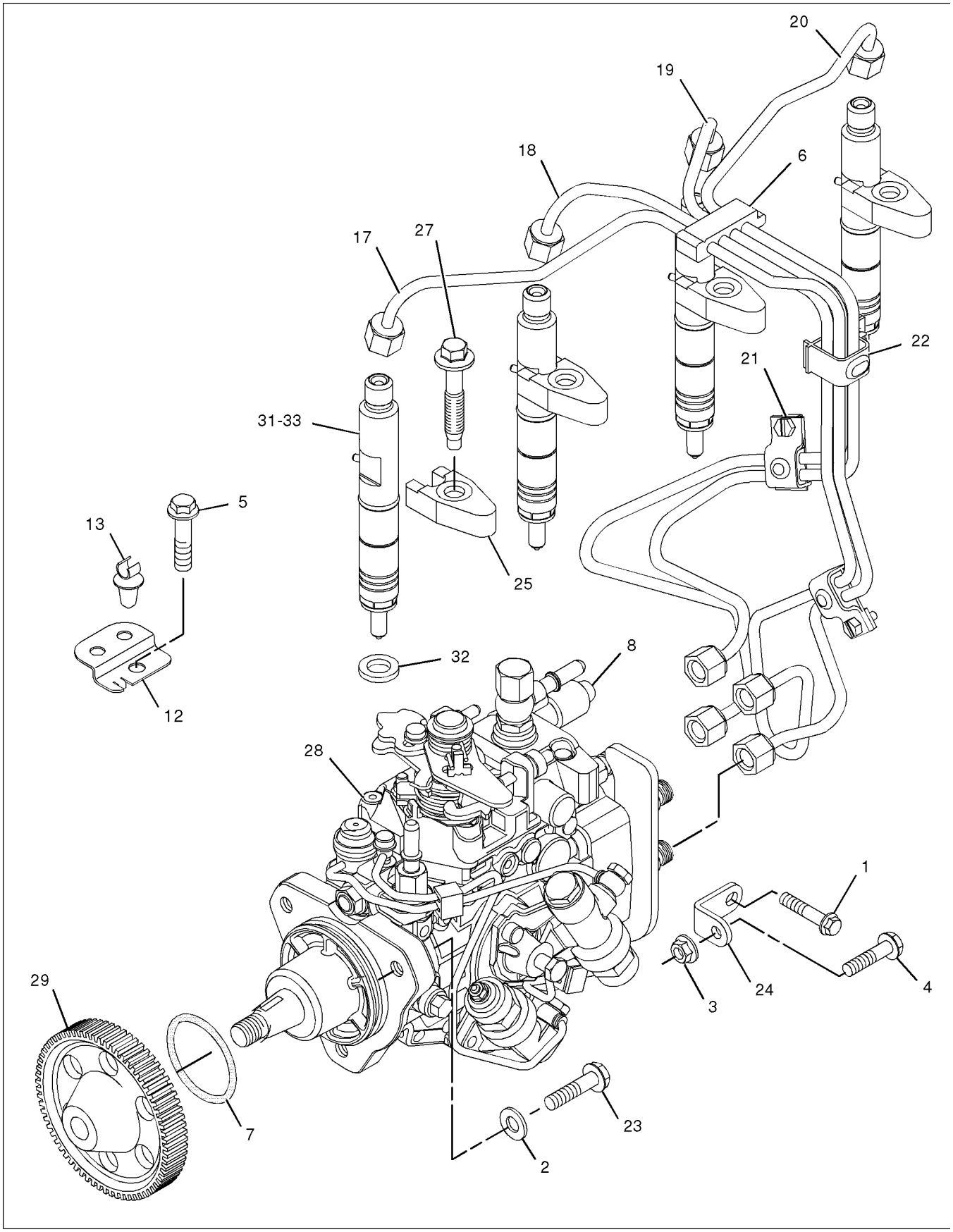

GRAPHIC #1 g01039638

237-5394 **PUMP GP-FUEL INJECTION** *(contd.)* **i02145883**

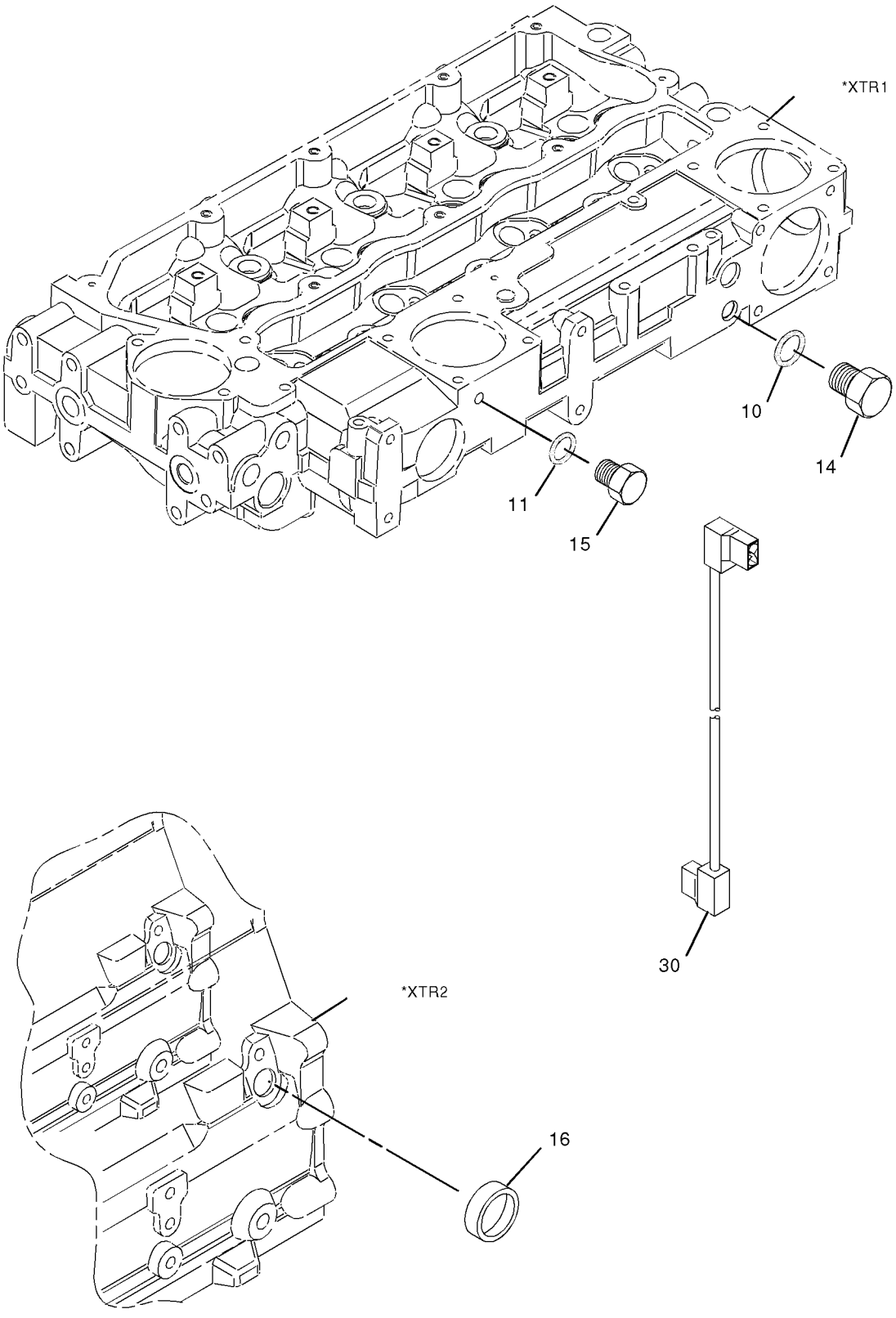

GRAPHIC #2 **<END>** g01039639

237-5394 PUMP GP-FUEL INJECTION

S/N: G4D1-UP; CRS6335-UP
PART OF 245-6841 ENGINE AR-PRIMARY
AN ATTACHMENT

SMCS-1251, 1290 **i02366420**

NOTE	REF NO	GRAPHIC REF	PART NUMBER	QTY	PART NAME 1 2 3 4 5 6 (PRODUCT LEVEL)	SEE PAGE
M	1	1	**6I-0217**	1	BOLT (M8X1.25X20-MM)	
	2	1	**232-3149**	3	WASHER (8.35X16.85X1.55-MM THK)	
	3	1	**6I-0291**	1	NUT (M8X1.25-THD)	
M	4	1	**100-4830**	1	BOLT (M10X1.5X20-MM)	
M	5	1	**124-3815**	1	BOLT (M8X16X1.25-MM)	
	6	1	**140-8714**	1	CLIP	
	7	1	**145-8327**	1	SEAL-O-RING	
	8	1	**155-8804**	1	CAP	
	10	2	**199-9252**	1	SEAL-O-RING	
	11	2	**199-9751**	1	SEAL-O-RING	
	12	1	**230-9527**	1	BRACKET	
	13	1	**232-1117**	1	CLIP-PIPE	
	14	2	**232-1295**	1	PLUG	
	15	2	**232-1322**	1	PLUG	
	16	2	**232-1323**	1	PLUG-CUP	
	17	1	**232-2720**	1	TUBE AS	
	18	1	**232-2721**	1	TUBE AS	
	19	1	**232-2722**	1	TUBE AS	
	20	1	**232-2723**	1	TUBE AS	
	21	1	**232-2725**	2	CLIP	
	22	1	**232-2726**	1	CLIP	
M	23	1	**6I-0260**	3	BOLT (M8X1.25X25-MM)	
	24	1	**232-3157**	1	BRACKET	
	25	1	**238-8671**	4	CLAMP-INJECTOR	
	27	1	**232-3274**	4	BOLT (M8X1.25X48.1-MM)	
C	28	1	**266-3712**	1	PUMP GP-FUEL INJECTION	
	29	1	**233-7104**	1	GEAR-PUMP	
	30	2	**233-7214**	1	CABLE (TIMING ADVANCE SWITCH)	
C	31	1	**266-6830**	4	INJECTOR AS-FUEL	
					(EACH INCLUDES)	
C	32	1	**140-8718**	1	WASHER	
C	33	1	**234-0387**	1	NOZZLE	
C	34	1	**275-1038**	1	SEAL-O-RING	
C	35	1	**232-1794**	3	HOSE	
C	36	1	**232-1328**	1	CAP	
CF			**266-2994**	1	KIT-INJECTOR	
F			**232-3263**	1	CLIP-PIPE	

C-CHANGE FROM PREVIOUS TYPE
F-NOT SHOWN
M-METRIC PART

237-5394 **PUMP GP-FUEL INJECTION** *(contd.)* **i02366420**

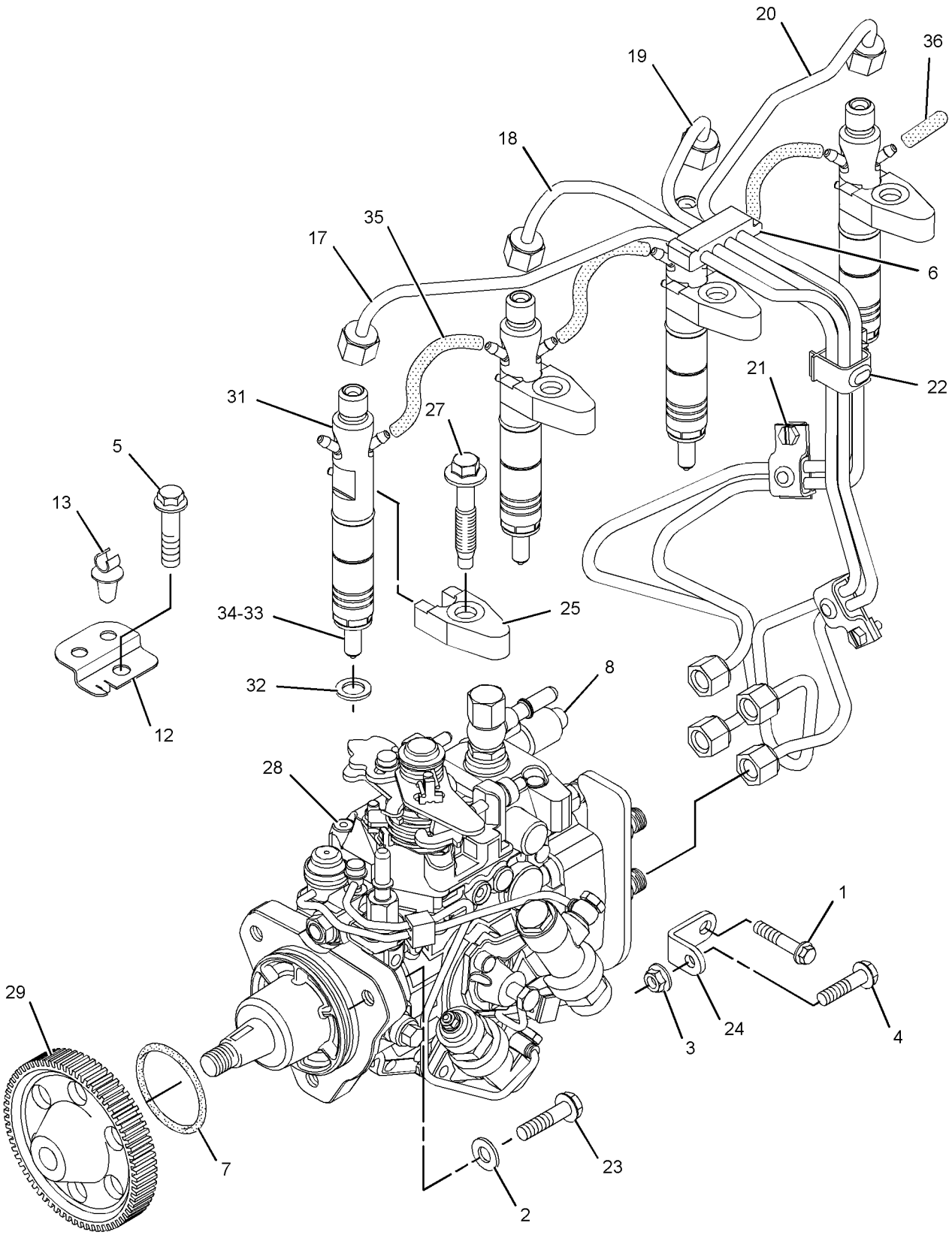

GRAPHIC #1 g01190520

237-5394 **PUMP GP-FUEL INJECTION** *(contd.)* **i02366420**

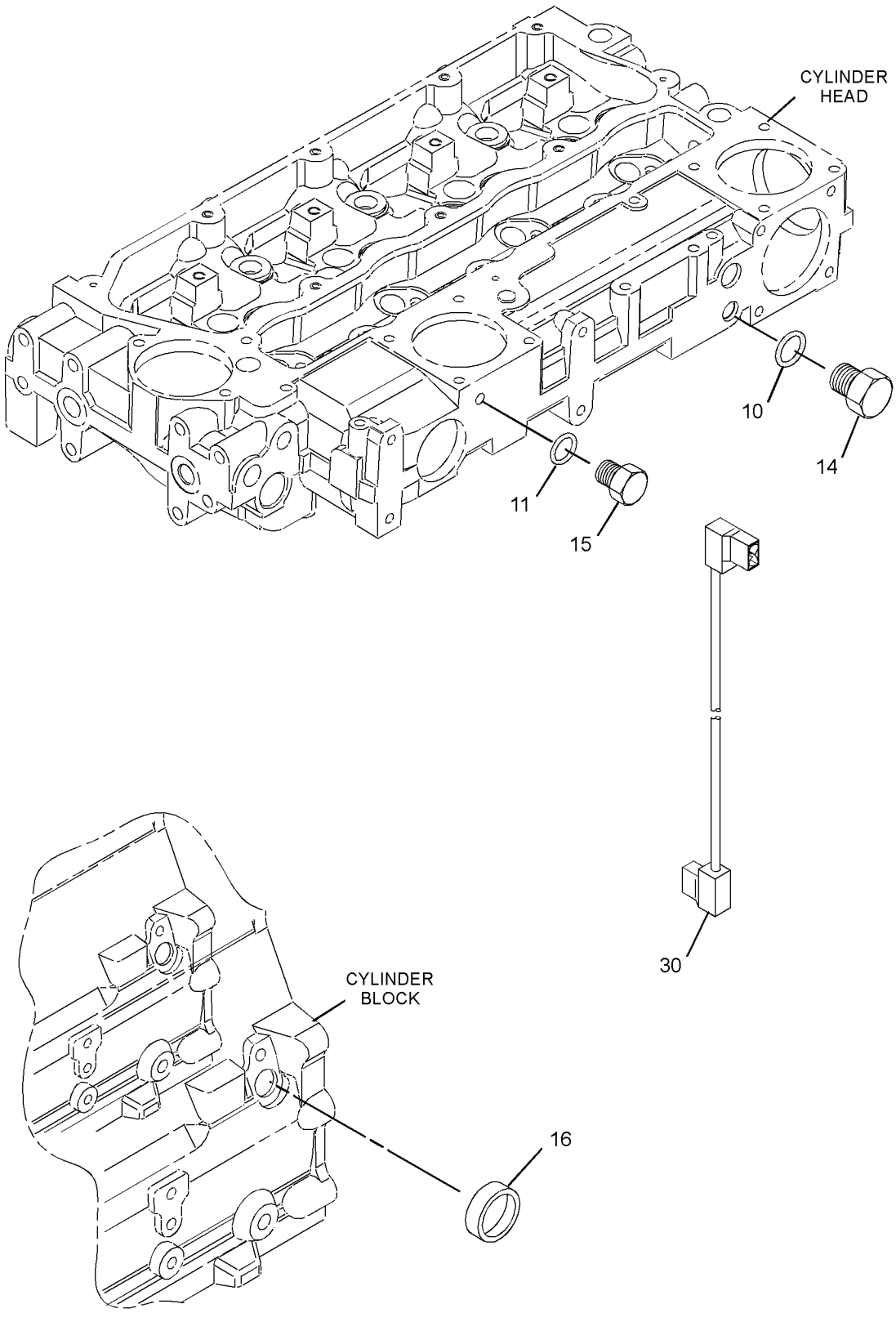

GRAPHIC #2 **<END>** g01190521

FUEL SYSTEM

247-6313 PUMP GP-FUEL INJECTION

S/N: CRS1-UP

FIELD REPLACEMENT FOR 237-5393—PAGE 107. FOR USE WITH 2200 RPM PUMP

SMCS-1251, 1290 **i02093092**

NOTE	REF NO	GRAPHIC REF	PART NUMBER	QTY	PART NAME 1 2 3 4 5 6 (PRODUCT LEVEL)	SEE PAGE
	1	1	**208-5029**	1	VALVE GP-SOLENOID (12-VOLT)	

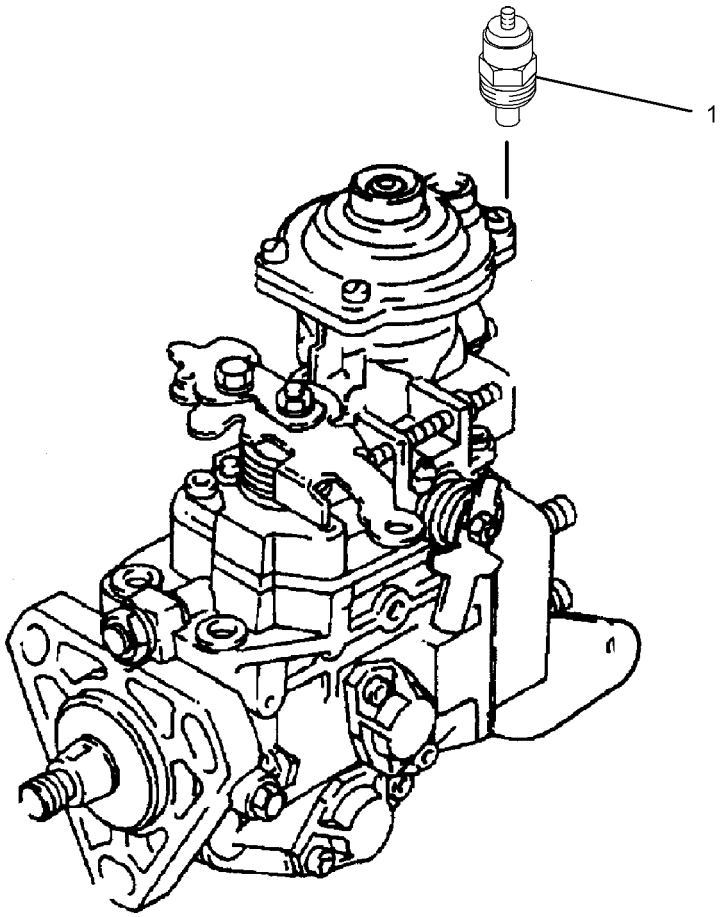

GRAPHIC #1 **<END>** g01017948

313-1375 PUMP GP-FUEL INJECTION

S/N: G4D1-UP; CRS1-UP
PART OF 273-3610 ENGINE AR
AN ATTACHMENT

SMCS-1251, 1290 **i02781691**

NOTE	REF NO	GRAPHIC REF	PART NUMBER	QTY	PART NAME 1 2 3 4 5 6 (PRODUCT LEVEL)	SEE PAGE
M	1	1	**6I-0217**	1	BOLT (M8X1.25X20-MM)	
M	2	1	**6I-0260**	3	BOLT (M8X1.25X25-MM)	
	3	1	**6I-0291**	1	NUT (M8X1.25-THD)	
M	4	1	**100-4830**	1	BOLT (M10X1.5X20-MM)	
M	5	1	**124-3815**	1	BOLT (M8X16X1.25-MM)	
	6	1	**140-8714**	1	CLIP	
	7	1	**230-8989**	1	GEAR-FUEL PUMP (68-TEETH)	
	8	1	**230-8995**	1	TUBE AS (CYL NO.1)	
	9	1	**230-8996**	1	TUBE AS (CYL NO.2)	
	10	1	**230-8997**	1	TUBE AS (CYL NO.3)	
	11	1	**230-8998**	1	TUBE AS (CYL NO.4)	
	12	2	**232-1323**	1	PLUG-CUP	
	13	1	**232-1328**	1	CAP	
	14	2	**232-1793**	1	CABLE	
	15	1	**232-1794**	3	HOSE	
	16	1	**232-2725**	2	CLIP	
	17	1	**232-2726**	1	CLIP	
	18	1	**232-3149**	3	WASHER (8.35X16.85X1.55-MM THK)	
	19	1	**232-3157**	1	BRACKET	
	20	1	**232-3274**	4	BOLT (M8X1.25X48.1-MM)	
	21	2	**235-1790**	1	SWITCH-TEMPERATURE (FUEL)	
	22	1	**236-1674**	1	INJECTOR AS-FUEL	
		1	**236-1673**	1	NOZZLE	
		1	**275-1038**	1	SEAL-O-RING	
	22A	1	**140-8718**	1	WASHER	
	23	1	**238-8671**	4	CLAMP-INJECTOR	
	24	1	**240-5571**	1	BRACKET	
	25	1	**274-4962**	1	PUMP GP-FUEL INJECTION	
		1	**9F-2247**	1	PLUG-PIPE	

M-METRIC PART

313-1375 **PUMP GP-FUEL INJECTION** *(contd.)* **i02781691**

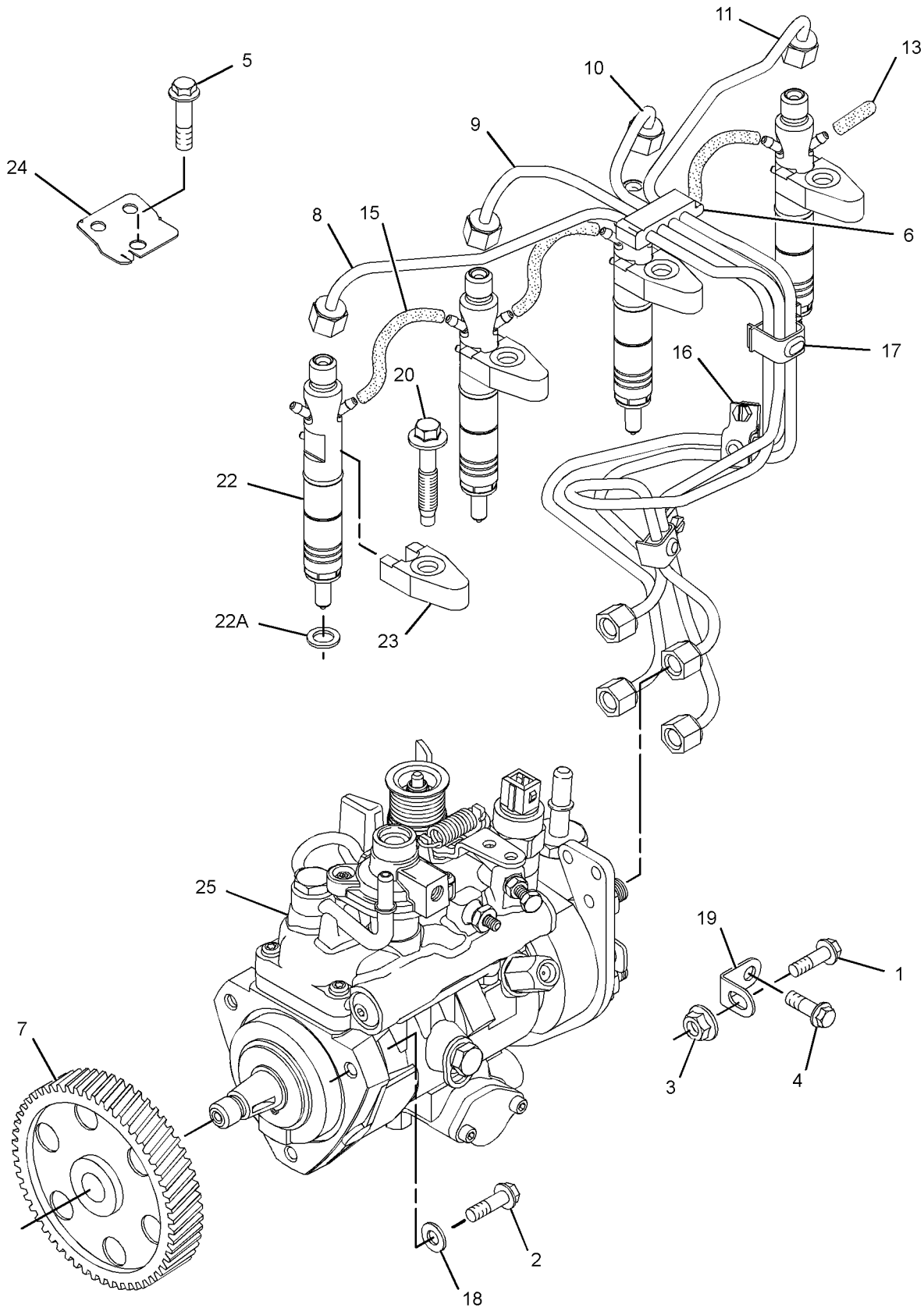

GRAPHIC #1 g01394437

313-1375 **PUMP GP-FUEL INJECTION** *(contd.)* **i02781691**

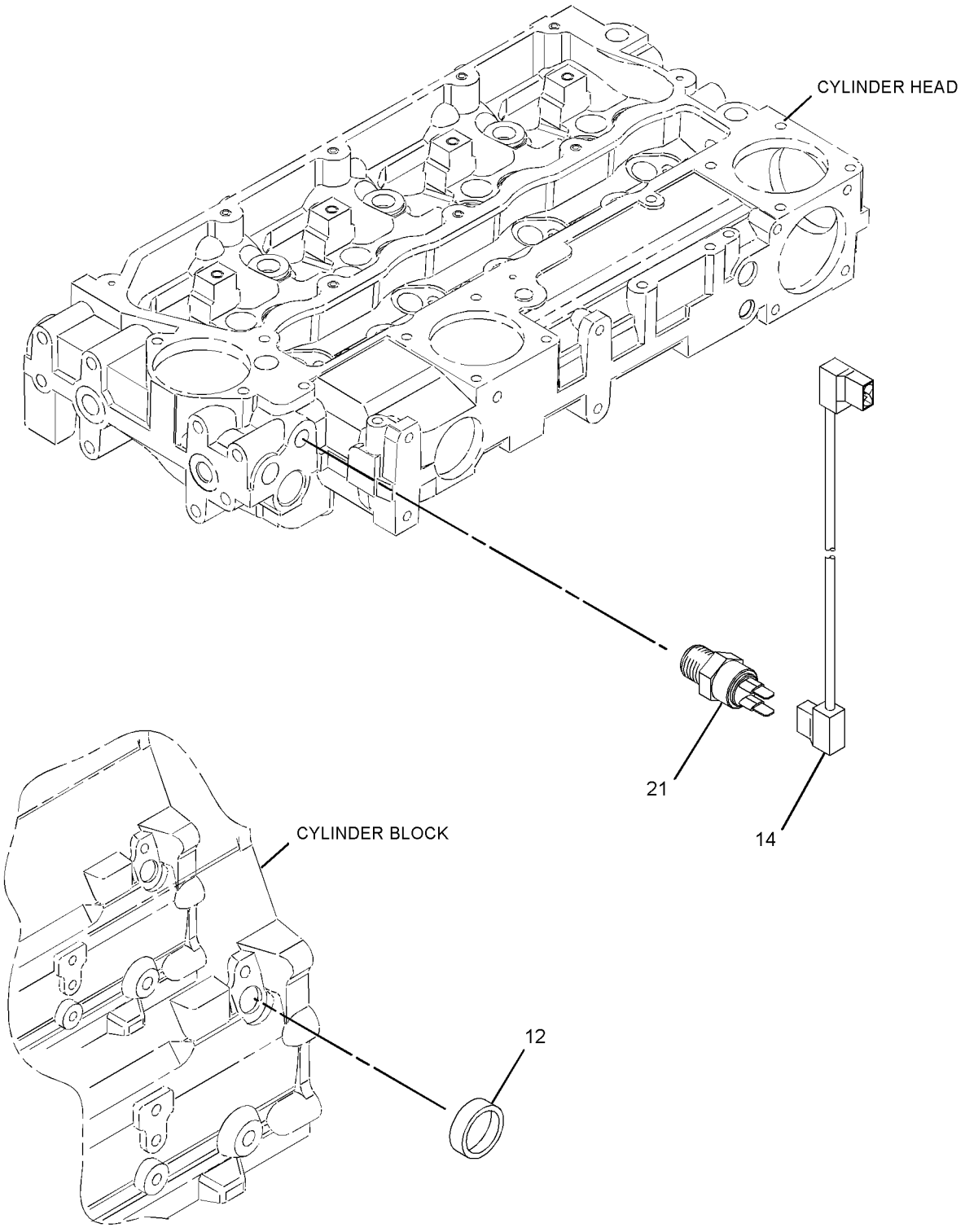

GRAPHIC #2 **<END>** g01394438

228-9129 PUMP GP-FUEL PRM & PRIM FILTER–
WITH WATER SEPARATOR
S/N: SHA1-UP
PART OF 253-0352 PUMP GP-FUEL PRM & PRIM FILTER
AN ATTACHMENT

SMCS-1258, 1260, 1261 **i02249241**

NOTE	REF NO	GRAPHIC REF	PART NUMBER	QTY	PART NAME 1 2 3 4 5 6 (PRODUCT LEVEL)	SEE PAGE
	1	1	**118-8118**	1	RING-RETAINING	
	2	1	**228-9130**	1	FILTER AS-WATER SEP & FUEL	
	3	1	**228-9132**	1	FITTING	
	4	1	**193-0618**	1	SENSOR GP-MOISTURE (WATER SEPARATOR)	
	5	1	**149-9954**	1	DRAIN AS (WATER SEPARATOR)	

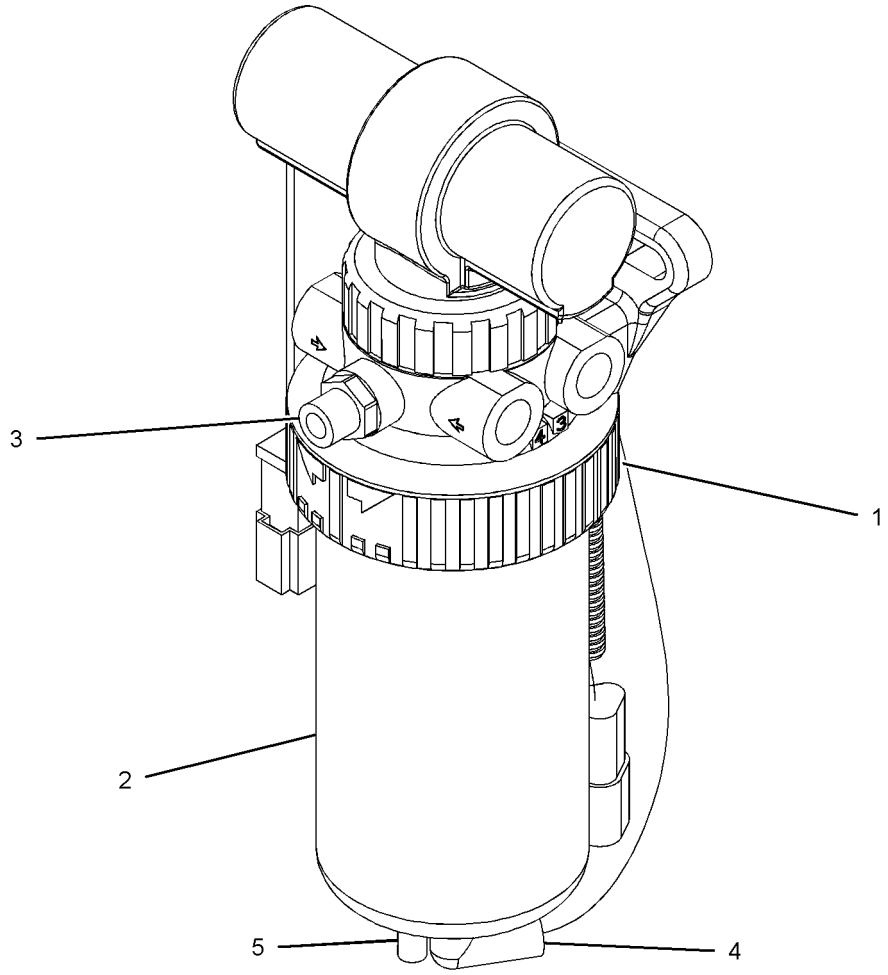

GRAPHIC #1 **<END>** g01093427

253-0352 PUMP GP-FUEL PRM & PRIM FILTER–WITH MOUNTING

S/N: SHA1-UP
PART OF 252-4640, 252-4641 ENGINE AR
AN ATTACHMENT

SMCS-1258, 1260, 1261 **i02513514**

NOTE	REF NO	GRAPHIC REF	PART NUMBER	QTY	PART NAME 1 2 3 4 5 6 (PRODUCT LEVEL)	SEE PAGE
	1	1	**3S-2093**	1	STRAP-CABLE	
	2	1	**069-4080**	1	FITTING	
	3	1	*165-7951*	2	CONNECTOR AS	
					(EACH INCLUDES)	
		1	**3J-1907**	1	SEAL-O-RING	
		1	**157-1669**	1	CONNECTOR	
Y	4	1	**228-9129**	1	PUMP GP-FUEL PRM & PRIM FILTER (WITH WATER SEPARATOR)	118
	5	1	**253-0354**	1	BRACKET AS	
	6	1	**3J-1907**	2	SEAL-O-RING	
	7	1	**8T-4121**	4	WASHER-HARD (11X21X2.5-MM THK)	
M	8	1	**8T-4196**	2	BOLT (M10X1.5X35-MM)	
M	9	1	**8T-8894**	2	BOLT-SOCKET HEAD (M10X1.5X20-MM)	
	10	1	**9S-4191**	2	PLUG-O-RING	

M-METRIC PART
Y-SEPARATE ILLUSTRATION

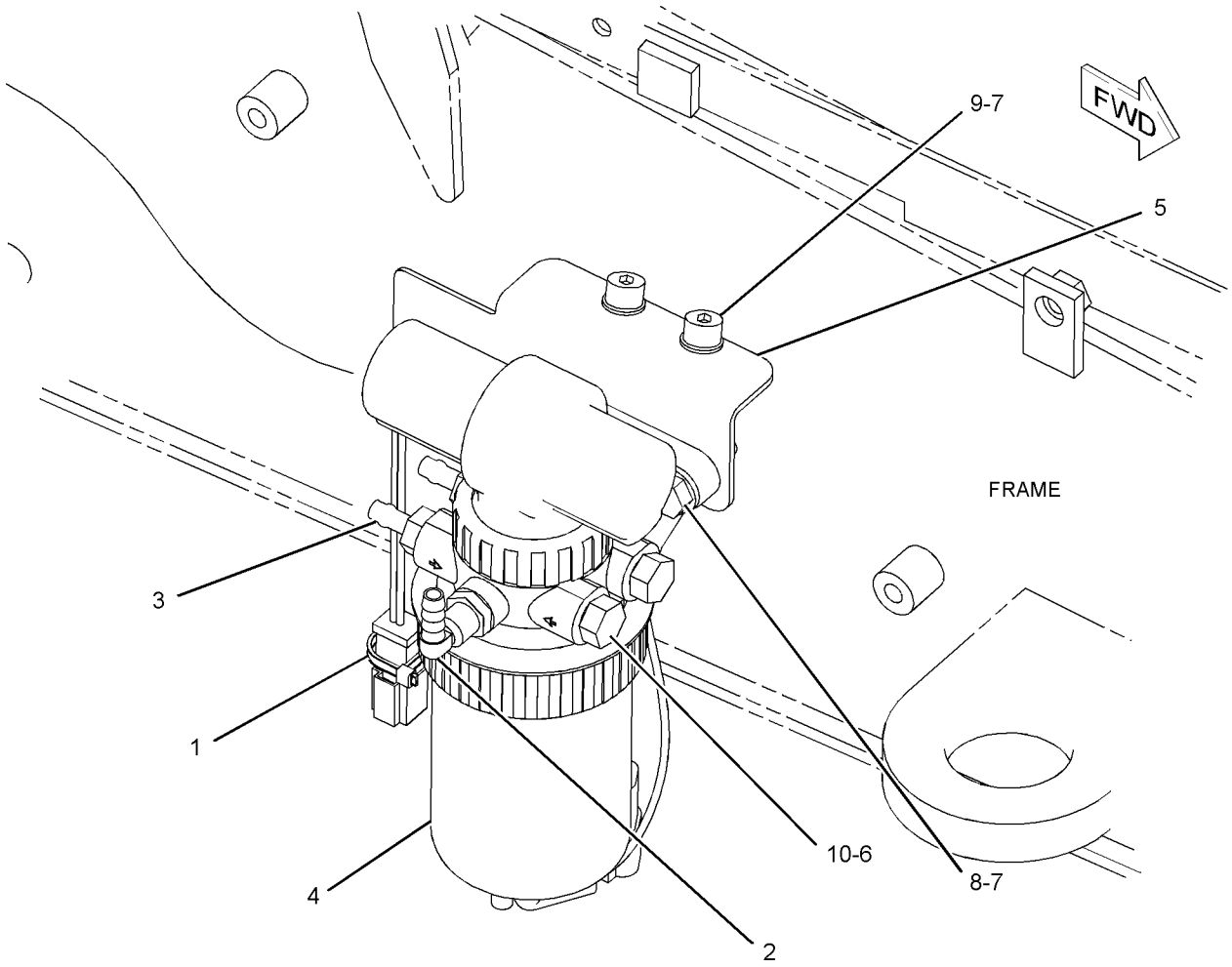

GRAPHIC #1 **<END>** g01078481

FUEL SYSTEM

245-6098 TANK & MTG GP-FUEL—INCLUDES STEP

S/N: SHA1-UP

PART OF 213-9284 CHASSIS AR

SMCS-1273 **i02431123**

NOTE	REF NO	GRAPHIC REF	PART NUMBER	QTY	PART NAME 1 2 3 4 5 6 (PRODUCT LEVEL)	SEE PAGE
	1	1	**245-6101**	1	TREAD	
	2	1	**245-6103**	1	STEP AS	
Y	3	1	*245-6104*	1	TANK GP-FUEL	121
	4	1	**245-6108**	1	PLATE AS	
	5	1	**5P-4116**	7	WASHER-HARD (8.8X20.5X2-MM THK)	
M	6	1	**8T-4193**	4	BOLT (M16X2X50-MM)	
	7	1	**8T-4122**	4	WASHER-HARD (17X32X3.5-MM THK)	
M	8	1	**8T-4189**	7	BOLT (M8X1.25X20-MM)	
M	9	1	**8T-4200**	4	BOLT (M8X1.25X16-MM)	
	10	1	**8T-4224**	4	WASHER-HARD (8.8X16X2-MM THK)	

M-METRIC PART
Y-SEPARATE ILLUSTRATION

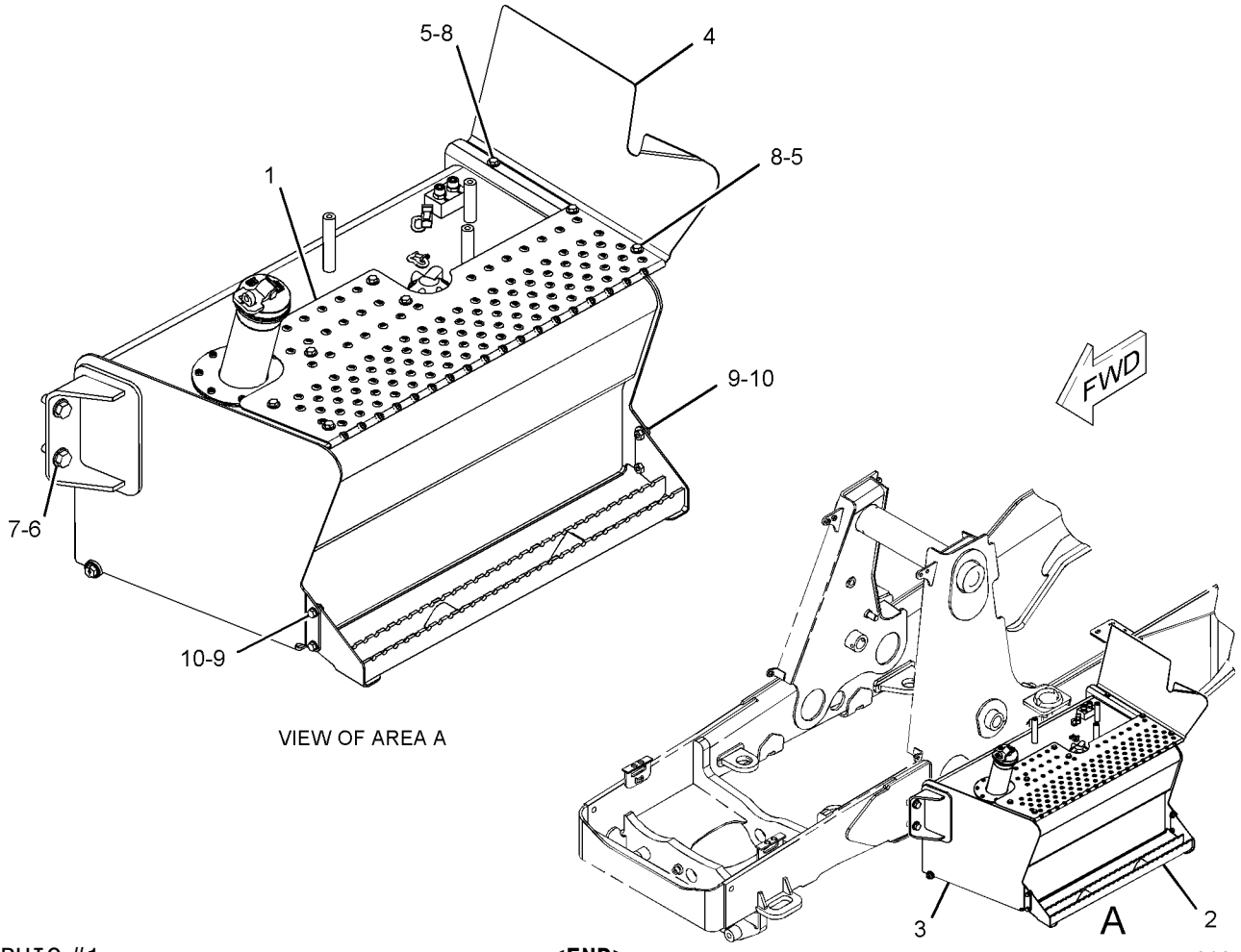

VIEW OF AREA A

GRAPHIC #1 **<END>** g01077507

FUEL SYSTEM

245-6104 TANK GP-FUEL

S/N: SHA1-UP

PART OF 245-6098 TANK & MTG GP-FUEL

SMCS-1273 **i02364817**

NOTE	REF NO	GRAPHIC REF	PART NUMBER	QTY	PART NAME 1 2 3 4 5 6 (PRODUCT LEVEL)	SEE PAGE
	1	1	**8L-8413**	1	STRAP-CABLE	
	2	1	**9R-7240**	1	GASKET	
	3	1	**131-0232**	1	COVER	
	4	1	**251-3231**	1	SENDER AS-FUEL LEVEL	
		1	**186-3735**	2	PIN-CONNECTOR (16-GA TO 18-GA)	
		1	**102-8802**	1	KIT-RECEPTACLE (2-PIN)	
					(INCLUDES RECEPTACLE AS & WEDGE)	
Y	5	1	**245-6105**	1	TANK GP-FUEL	122
M	6	1	**123-4950**	5	SCREW-PAN HEAD (M6X1X16-MM)	

M-METRIC PART
Y-SEPARATE ILLUSTRATION

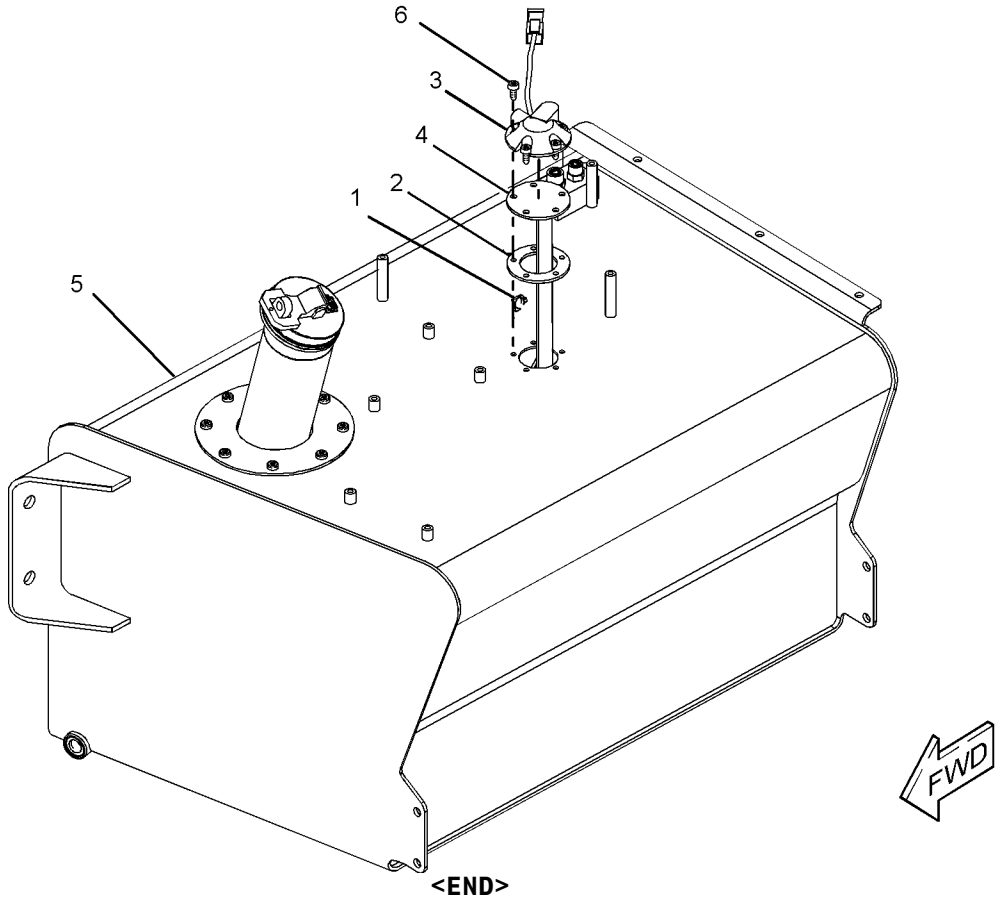

GRAPHIC #1 **<END>** g01089650

FUEL SYSTEM

245-6105 TANK GP-FUEL

S/N: SHA1-UP

PART OF 245-6104 TANK GP-FUEL

SMCS-1273 **i02600516**

NOTE	REF NO	GRAPHIC REF	PART NUMBER	QTY	PART NAME 1 2 3 4 5 6 (PRODUCT LEVEL)	SEE PAGE
	1	1	**201-0330**	1	CAP GP-FUEL FILLER (VENTED, LOCKABLE)	
	2	1	**201-1835**	1	TUBE AS	
	3	1	**272-0537**	1	PLUG AS	
		1	**3J-1907**	1	SEAL-O-RING	
	4	1	**245-6107**	1	TANK AS-FUEL	
	5	1	**106-8020**	1	GASKET	
M	6	1	**123-4950**	8	SCREW-PAN HEAD (M6X1X16-MM)	
	7	1	*148-8326*	2	CONNECTOR AS	
					(EACH INCLUDES)	
		1	**3J-7354**	1	SEAL-O-RING	
		1	**6V-8397**	1	SEAL-O-RING	
		1	**6V-9872**	1	CONNECTOR	
F			**180-3730**	1	FILTER AS-FUEL (FILLER NECK SCREEN)	

F-NOT SHOWN
M-METRIC PART

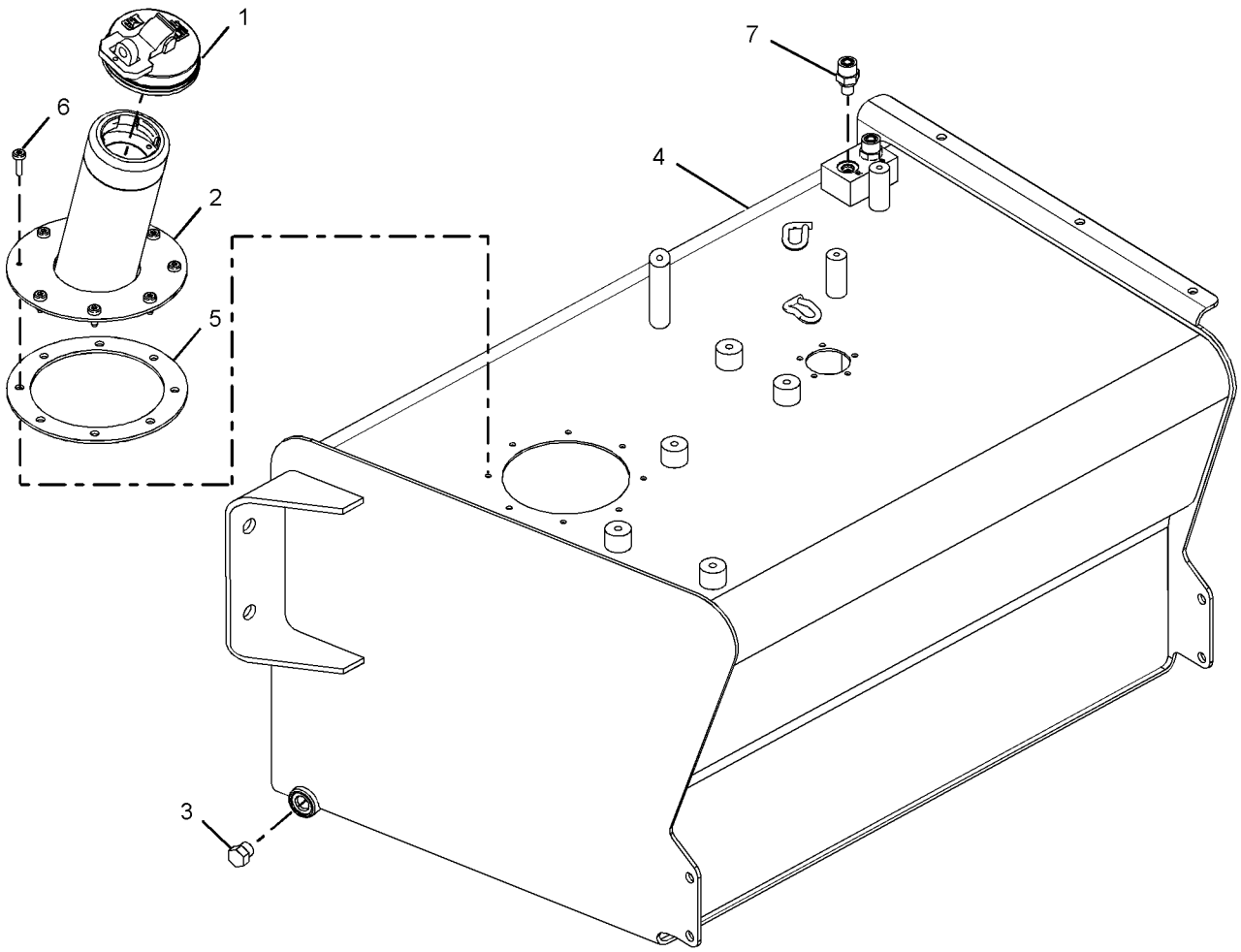

GRAPHIC #1 **<END>** g01086993

252-6256 ALTERNATOR GP-CHARGING–

120-AMPERE, WITH MOUNTING

S/N: G4D1-UP; CRS1-UP

PART OF 273-3610 ENGINE AR

AN ATTACHMENT

SMCS-1405, 1425 **i02212711**

NOTE	REF NO	GRAPHIC REF	PART NUMBER	QTY	PART NAME 1 2 3 4 5 6 (PRODUCT LEVEL)	SEE PAGE
	1	1	**6B-0933**	1	SPACER (10.31X19.05X6.35-MM THK)	
M	2	1	**6I-0260**	1	BOLT (M8X1.25X25-MM)	
M	3	1	**6I-0454**	1	BOLT (M10X1.5X70-MM)	
	4	1	**6I-0594**	1	NUT (M10X1.15-THD)	
	5	1	**7W-2632**	1	WASHER (8.5X16.8X1.6-MM THK)	
	6	1	**067-6366**	1	WASHER (M8)	
	7	1	**100-8451**	1	BOLT	
	8	1	**113-6349**	1	NUT (M12-1.75X93-MM-THD)	
M	9	1	**140-8783**	2	BOLT (M10X45-MM)	
	10	1	**225-3145**	1	ALTERNATOR GP-CHARGING (120-AMPERE)	
	11	1	**233-9530**	1	BRACKET	
	12	1	**233-9531**	1	LEVER-ADJUSTING	
	13	1	**233-9532**	1	PULLEY-ALTERNATOR	

M-METRIC PART

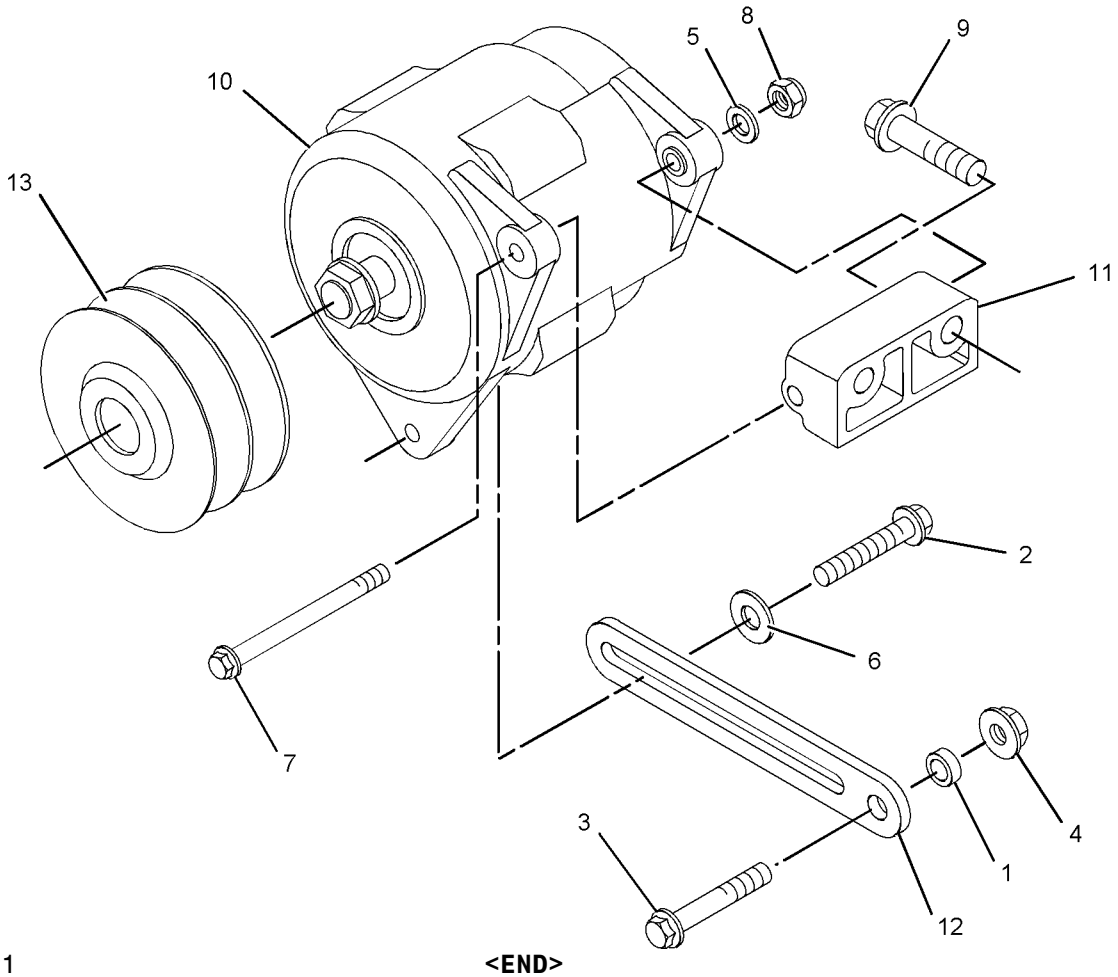

GRAPHIC #1 **<END>** g01039667

256-7736 ALTERNATOR GP-CHARGING–

100-AMPERE, WITH MOUNTING

S/N: G4D1-UP; CRS1-UP

PART OF 245-6841 ENGINE AR-PRIMARY

AN ATTACHMENT

SMCS-1405, 1425 **i02196531**

NOTE	REF NO	GRAPHIC REF	PART NUMBER	QTY	PART NAME 1 2 3 4 5 6 (PRODUCT LEVEL)	SEE PAGE
	1	1	**6B-0933**	1	SPACER (10.31X19.05X6.35-MM THK)	
M	2	1	**6I-0260**	1	BOLT (M8X1.25X25-MM)	
M	3	1	**6I-0454**	1	BOLT (M10X1.5X70-MM)	
	4	1	**6I-0594**	1	NUT (M10X1.15-THD)	
	5	1	**7W-2632**	1	WASHER (8.5X16.8X1.6-MM THK)	
	6	1	**067-6366**	1	WASHER (M8)	
	7	1	**100-8451**	1	BOLT	
	8	1	**113-6349**	1	NUT (M12-1.75X93-MM-THD)	
M	9	1	**140-8783**	2	BOLT (M10X45-MM)	
	10	1	**225-3144**	1	ALTERNATOR GP-CHARGING (100-AMPERE)	
	11	1	**228-7391**	1	PULLEY-ALTERNATOR	
	12	1	**233-9530**	1	BRACKET	
	13	1	**233-9531**	1	LEVER-ADJUSTING	

M-METRIC PART

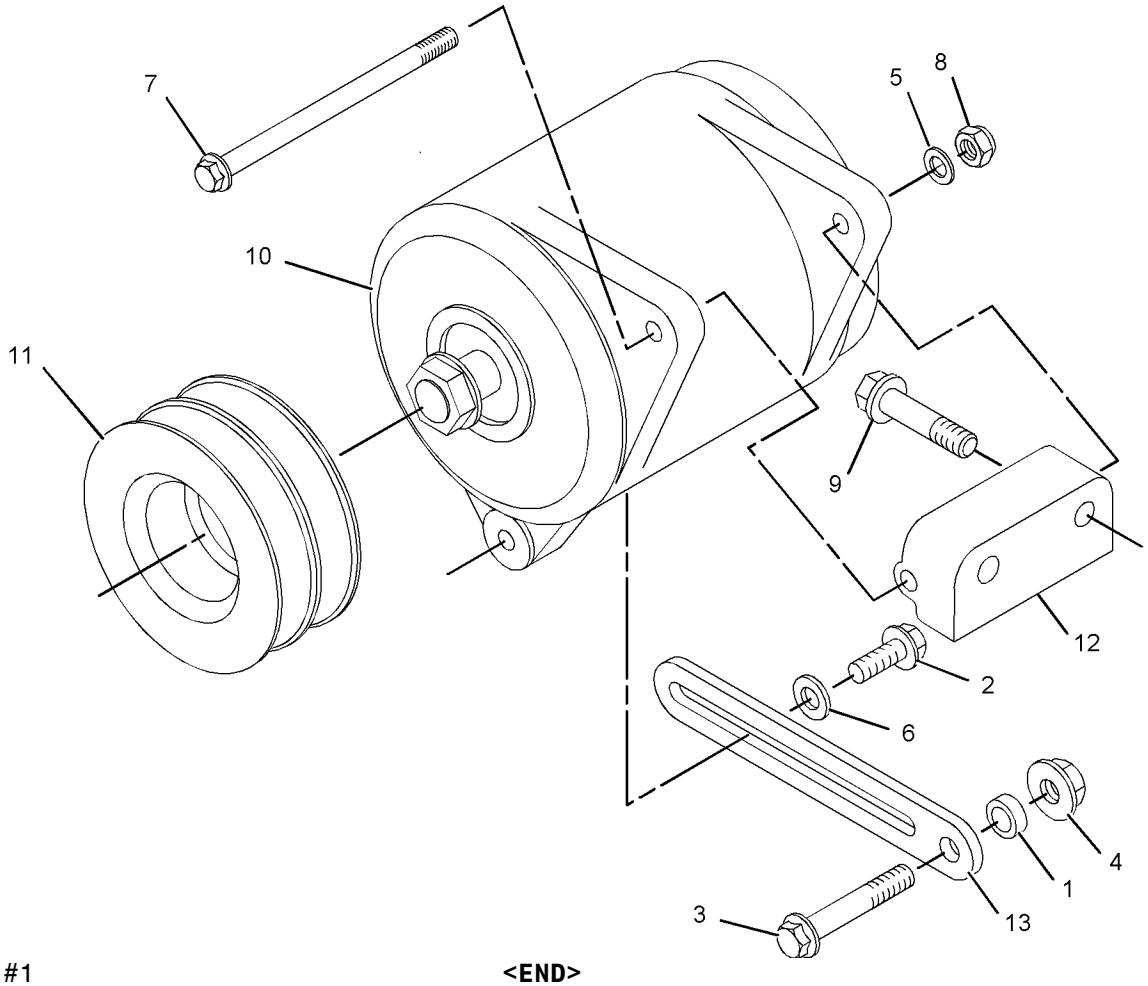

GRAPHIC #1 **<END>** g01082206

211-4285 BATTERY & WIRING GP–STANDARD

S/N: SHA1-UP

PART OF 213-9284 CHASSIS AR

SMCS-1401, 1402, 1408 **i02700005**

NOTE	REF NO	GRAPHIC REF	PART NUMBER	QTY	PART NAME 1 2 3 4 5 6 (PRODUCT LEVEL)	SEE PAGE
	1	1	**6T-0465**	1	COVER-TERMINAL (BLACK)	
	2	1	**7K-1181**	7	STRAP-CABLE	
	3	1	**038-9317**	1	TREAD-NONSKID	
	4	1	**178-1781**	1	CLIP	
	5	1	**213-6088**	1	CABLE AS-BATTERY (NEGATIVE)	
		1	**1S-7251**	1	TERMINAL-RING (FOR 1/2-IN BOLT)	
E		1	**5P-0747**		CABLE (00-GA, BLACK) (61-CM)	
	6	1	**213-6089**	1	CABLE AS-POWER	
	7	1	**213-6094**	1	CABLE AS	
	8	1	**230-6368**	1	BATTERY (12-VOLT, MAINTENANCE FREE)	
	9	1	**240-4639**	1	BRACKET AS	
	10	1	**246-8053**	1	CABLE AS-BATTERY (POSITIVE)	
		1	**3S-2093**	2	STRAP-CABLE	
	11	1	**243-5027**	1	NUT AS (M6X1-THD)	
	12	1	**156-6175**	2	CLIP	
	13	1	**4D-6466**	2	CLIP	
	14	1	**8T-4224**	1	WASHER-HARD (8.8X16X2-MM THK)	
	15	1	**4P-7581**	1	CLIP	
M	16	1	**5C-2890**	2	NUT (M6X1-THD)	
M	17	1	**5C-7261**	1	NUT (M8X1.25-THD)	
	18	1	**7X-7729**	2	WASHER (11X25X3-MM THK)	
	19	1	**8T-4121**	3	WASHER-HARD (11X21X2.5-MM THK)	
M	20	1	**8T-4133**	1	NUT (M10X1.5-THD)	
M	21	1	**8T-4137**	4	BOLT (M10X1.5X20-MM)	
M	22	1	**5C-9553**	2	BOLT (M6X1X16-MM)	
M	23	1	**8T-4185**	1	BOLT (M10X1.5X50-MM)	
	24	1	**8T-4205**	4	WASHER-HARD (7.2X14.5X2-MM THK)	
	25	1	**9G-4191**	1	GROMMET	
	26	1	**4P-8134**	1	CLIP	

E-ORDER BY THE CENTIMETER
M-METRIC PART

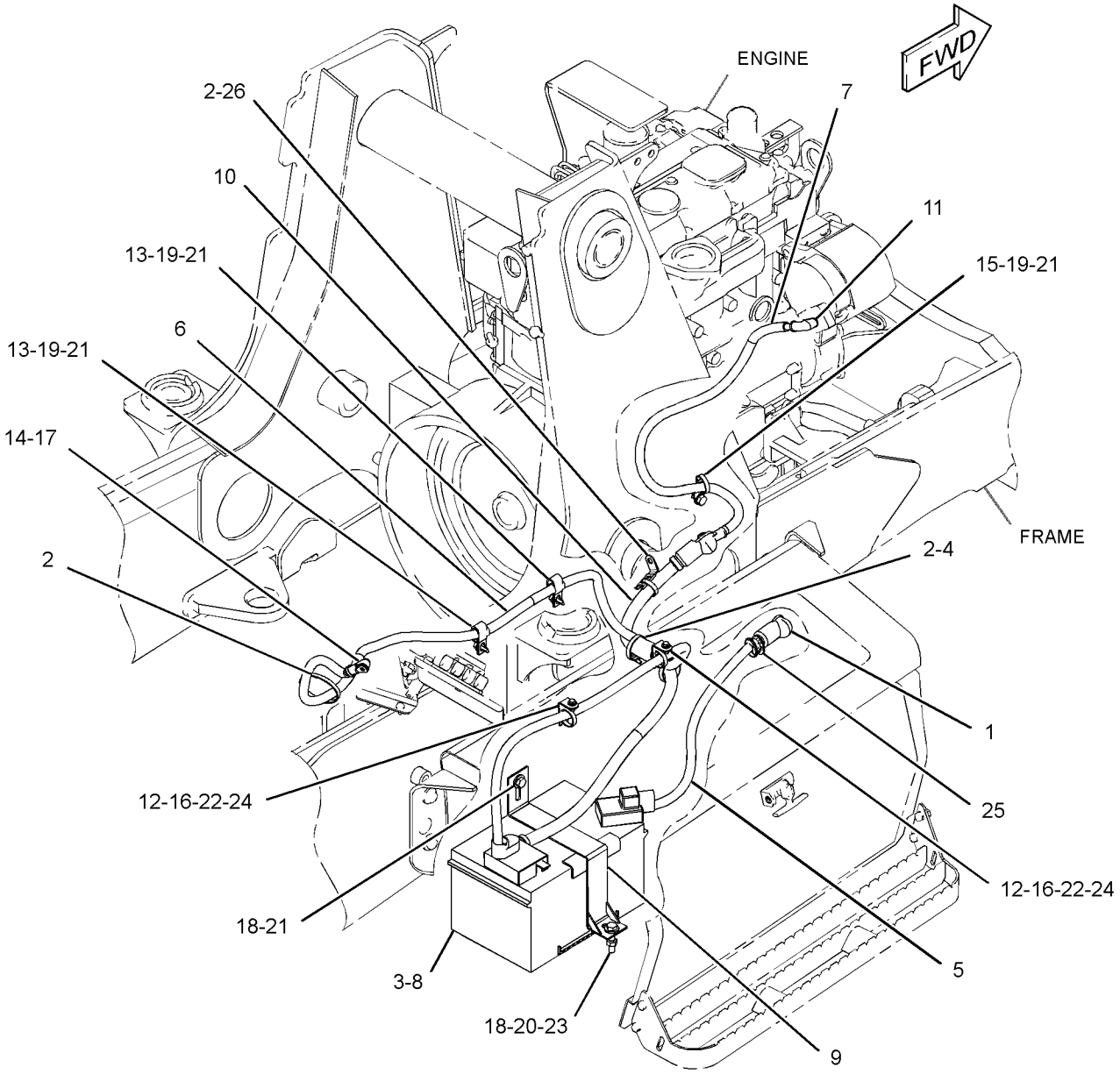

GRAPHIC #1 **<END>** g01386954

211-4286 BATTERY & WIRING GP

S/N: SHA1-UP
AN ATTACHMENT

SMCS-1401, 1402, 1408 **i02484878**

NOTE	REF NO	GRAPHIC REF	PART NUMBER	QTY	PART NAME 1 2 3 4 5 6 (PRODUCT LEVEL)	SEE PAGE
	1	1	**038-9317**	1	TREAD-NONSKID	
	2	1	**213-6091**	1	CABLE AS-BATTERY (POSITIVE)	
E		1	**5P-0761**		CABLE (00-GA, RED) (35-CM)	
		1	**7T-9987**	1	COVER-TERMINAL (RED)	
		1	**8L-8413**	2	STRAP-CABLE	
		1	**8N-0869**	1	COVER-TERMINAL (RED)	
		1	**8S-3020**	1	TERMINAL-CABLE	
BE		1	**8Y-8081**		TUBE-CONVOLUTED	
	3	1	**213-6092**	1	CABLE AS-BATTERY (NEGATIVE)	
		1	**1S-7252**	1	TERMINAL-RING (FOR 3/8-IN BOLT)	
E		1	**5P-0747**		CABLE (00-GA, BLACK) (43-CM)	
		1	**7N-5274**	1	COVER-TERMINAL (BLACK)	
		1	**8L-8413**	1	STRAP-CABLE	
	4	1	**230-6368**	1	BATTERY (12-VOLT, MAINTENANCE FREE)	
	5	1	**240-4639**	1	BRACKET AS	
	6	1	**7X-7729**	2	WASHER (11X25X3-MM THK)	
M	7	1	**8T-4133**	1	NUT (M10X1.5-THD)	
M	8	1	**8T-4137**	1	BOLT (M10X1.5X20-MM)	
M	9	1	**8T-4185**	1	BOLT (M10X1.5X50-MM)	

B-USE AS REQUIRED
E-ORDER BY THE CENTIMETER
M-METRIC PART

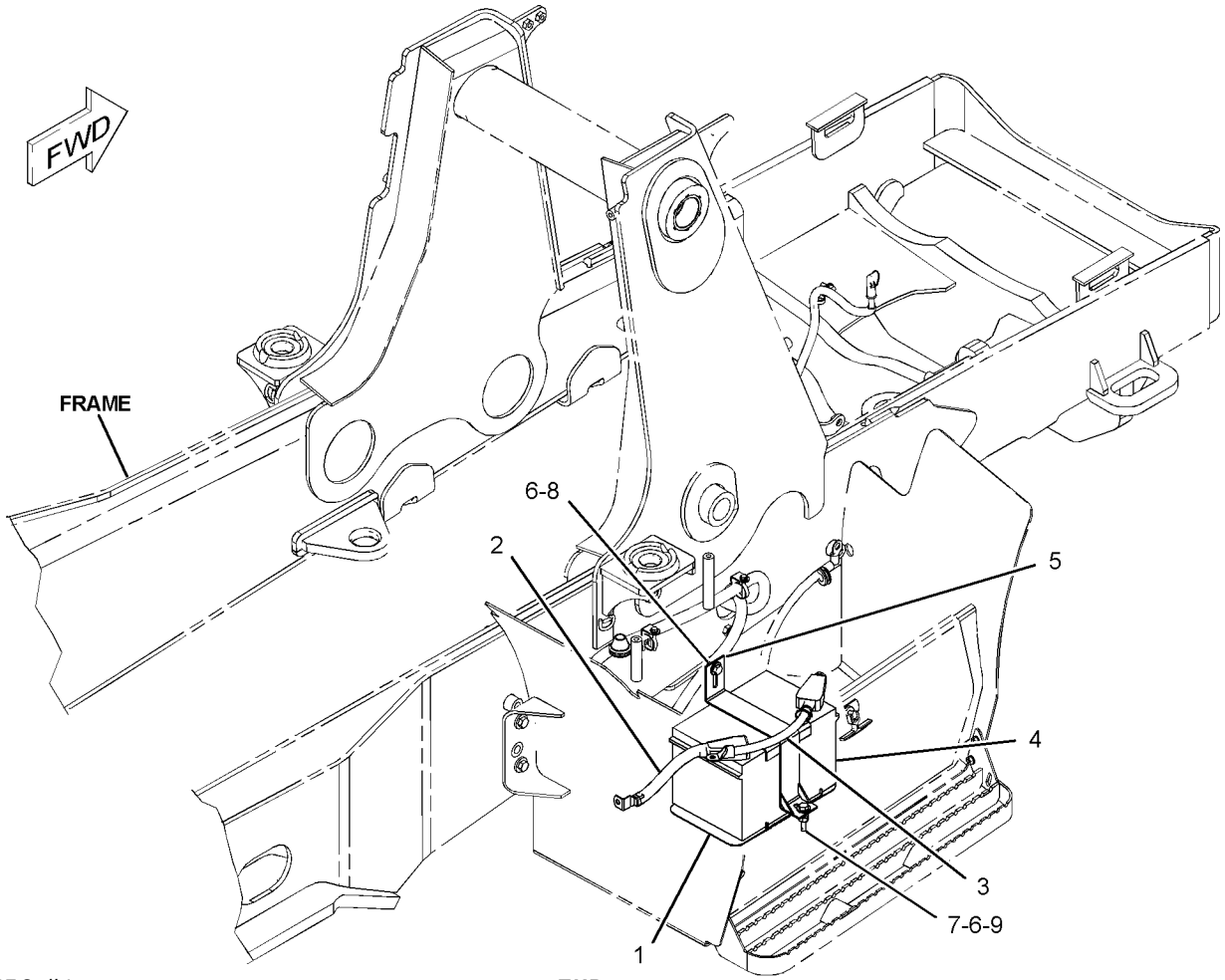

GRAPHIC #1 **<END>** g01082047

ELECTRICAL AND STARTING SYSTEM

290-6790 BATTERY & WIRING GP

S/N: SHA1-UP

PART OF 213-9284 CHASSIS AR

SMCS-1401, 1402, 1408 **i02780249**

NOTE	REF NO	GRAPHIC REF	PART NUMBER	QTY	PART NAME 1 2 3 4 5 6 (PRODUCT LEVEL)	SEE PAGE
	1	1	**3E-8320**	1	PLATE-INSTRUCTION (BATTERY) (DISCONNECT SWITCH)	
M	2	1	**5C-9553**	2	BOLT (M6X1X16-MM)	
	3	1	**6T-0465**	1	COVER-TERMINAL (BLACK)	
	4	1	**7K-1181**	6	STRAP-CABLE	
Y	5	1	**7N-0718**	1	SWITCH GP-DISCONNECT (BATTERY) (GROUND LEVEL)	157
	6	1	**038-9317**	1	TREAD-NONSKID	
	7	1	**178-1781**	1	CLIP	
	8	1	**213-6089**	1	CABLE AS-POWER	
E		1	**8C-3056**		CABLE (02-GA, RED) (230-CM)	
E		1	**8Y-8080**		TUBE-CONVOLUTED (225-CM)	
E		1	**1P-0810**		TAPE-ELECTRICAL (42-CM)	
	9	1	**213-6094**	1	CABLE AS	
	10	1	**230-6368**	1	BATTERY (12-VOLT, MAINTENANCE FREE)	
	11	1	**240-4639**	1	BRACKET AS	
	12	1	**243-5027**	1	NUT AS (M6X1-THD)	
	13	1	**246-8053**	1	CABLE AS-BATTERY (POSITIVE)	
		1	**3S-2093**	2	STRAP-CABLE	
	14	1	**290-6791**	1	CABLE AS	
		1	**8S-3020**	1	TERMINAL-CABLE	
E		1	**159-8050**		CABLE (00-GA, BLACK) (44-CM)	
	15	1	**290-6792**	1	CABLE AS	
		1	**1S-7251**	1	TERMINAL-RING (FOR 1/2-IN BOLT)	
		1	**8S-3020**	1	TERMINAL-CABLE	
E		1	**159-8050**		CABLE (00-GA, BLACK) (6-CM)	
	16	1	**156-6175**	2	CLIP	
	17	1	**4D-6466**	2	CLIP	
	18	1	**4P-7581**	1	CLIP	
M	19	1	**5C-2890**	2	NUT (M6X1-THD)	
	20	1	**7X-7729**	2	WASHER (11X25X3-MM THK)	
	21	1	**8T-4121**	5	WASHER-HARD (11X21X2.5-MM THK)	
M	22	1	**8T-4133**	1	NUT (M10X1.5-THD)	
M	23	1	**8T-4137**	4	BOLT (M10X1.5X20-MM)	
M	24	1	**8T-4185**	1	BOLT (M10X1.5X50-MM)	
	25	1	**8T-4205**	4	WASHER-HARD (7.2X14.5X2-MM THK)	
	26	1	**9G-4191**	1	GROMMET	
E	27	1	**3E-8299**		SEAL (2-CM)	
E	27A	1	**3E-8299**		SEAL (11-CM)	
E	27B	1	**3E-8299**		SEAL (7-CM)	

E-ORDER BY THE CENTIMETER
M-METRIC PART
Y-SEPARATE ILLUSTRATION

290-6790 **BATTERY & WIRING GP** *(contd.)* **i02780249**

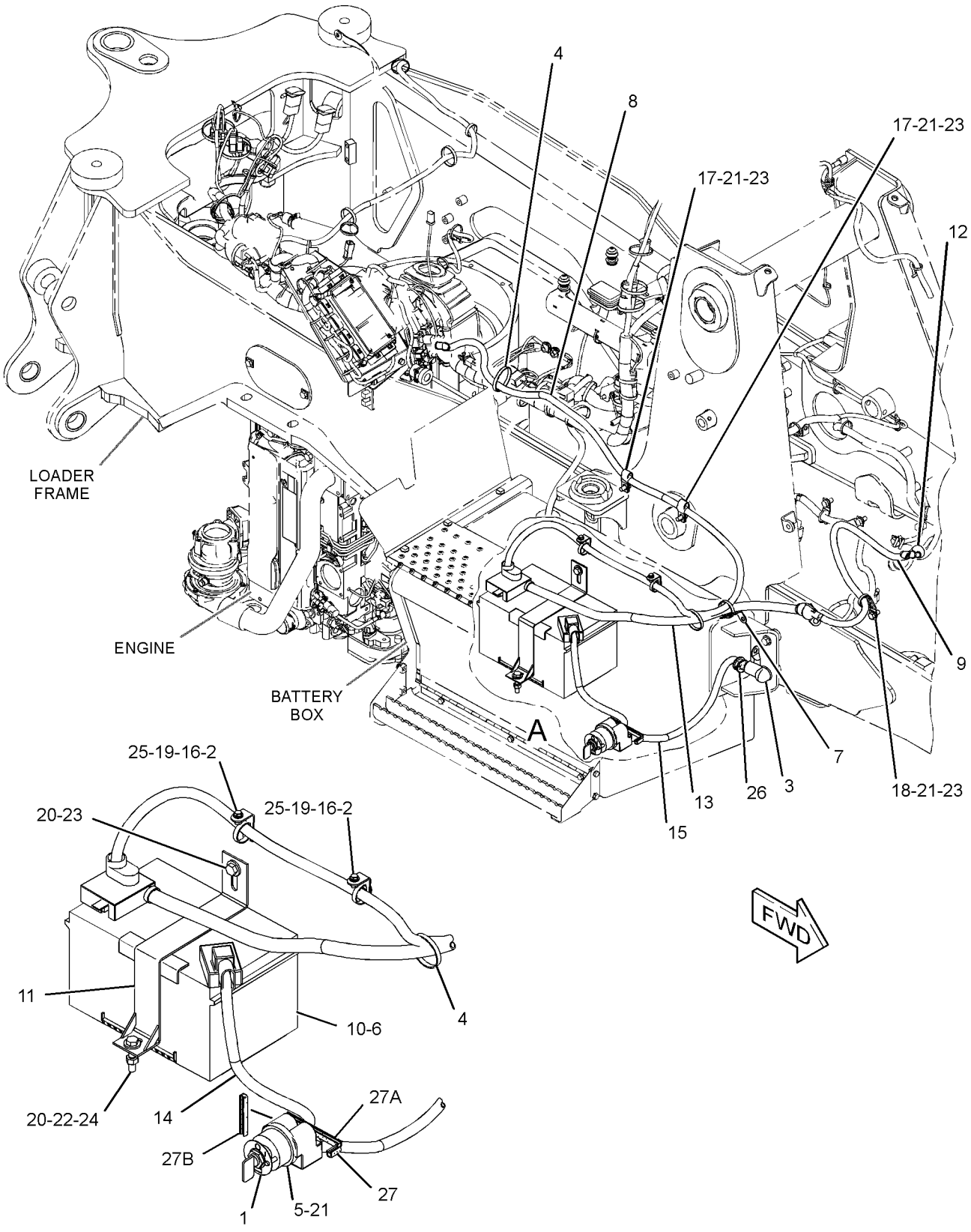

VIEW OF AREA A

GRAPHIC #1 **<END>** g01389707

ELECTRICAL AND STARTING SYSTEM

227-7373 ELECTRONICS GP-MACHINE

S/N: SHA1-UP

PART OF 213-9293, 291-9203 BACKHOE AR-EXTENDABLE STICK, 213-9290, 291-9202 BACKHOE AR-STANDARD STICK

AN ATTACHMENT

SMCS-7610, 7620 **i02708053**

NOTE	PART NUMBER	QTY	PART NAME 1 2 3 4 5 6 (PRODUCT LEVEL)	SEE PAGE
R	**262-1408**	1	CONTROL GP-UNPROGRAMMED (MACHINE)	
			-OR-	
	294-9118	1	SOFTWARE GP-MACHINE	
			-OR-	
	294-9119	1	SERVICE GP-MACHINE	
			(OPTIONAL SERVICE REPLACEMENT)	
			(INCLUDES CONTROL GP & SOFTWARE)	
R-REMFG PART MAY BE AVAILABLE				

<END>

227-7374 ELECTRONICS GP-MONITOR

S/N: SHA1-UP

PART OF 211-4253 INSTALLATION GP-MONITOR

AN ATTACHMENT

SMCS-7490, 7610, 7620 **i02673259**

NOTE	PART NUMBER	QTY	PART NAME 1 2 3 4 5 6 (PRODUCT LEVEL)	SEE PAGE
	284-8905	1	CONTROL GP-UNPROGRAMMED (MONITOR)	
			—OR—	
	302-6388	1	SOFTWARE GP-MONITOR	
			(SOFTWARE ONLY)	
			-OR-	
			(OPTIONAL SERVICE REPLACEMENT)	
	302-6389	1	SERVICE GP-POWER TRAIN	
			(INCLUDES DISPLAY GP & SOFTWARE)	

<END>

232-6661 GLOW PLUG GP

S/N: CRS1-242
PART OF 245-6841 ENGINE AR-PRIMARY
AN ATTACHMENT

SMCS-1412 **i02757556**

NOTE	REF NO	GRAPHIC REF	PART NUMBER	QTY	PART NAME 1 2 3 4 5 6 (PRODUCT LEVEL)	SEE PAGE
	1	1	**232-7399**	1	SUPPORT-PLUG	
	2	1	**232-6662**	4	GLOW PLUG (12-VOLT)	
	3	1	**232-3126**	1	CLIP	

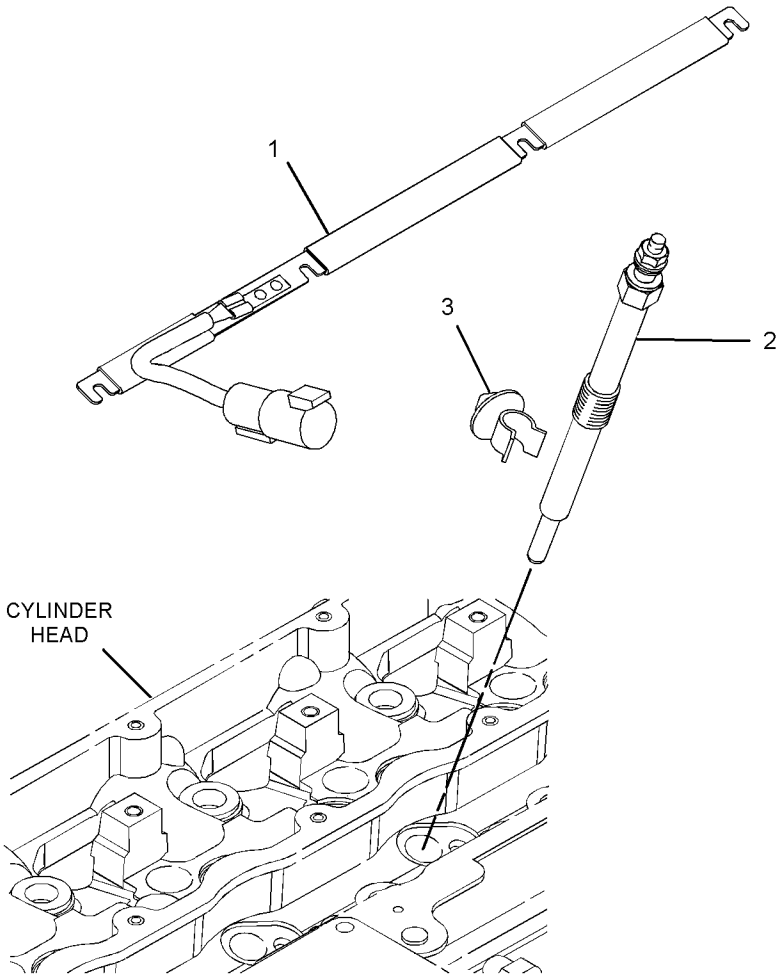

GRAPHIC #1 **<END>** g01392976

232-6661 GLOW PLUG GP

S/N: G4D1-UP; CRS1-UP
PART OF 273-3610 ENGINE AR, 245-6841 ENGINE AR-PRIMARY
AN ATTACHMENT

SMCS-1412 **i02757150**

NOTE	REF NO	GRAPHIC REF	PART NUMBER	QTY	PART NAME 1 2 3 4 5 6 (PRODUCT LEVEL)	SEE PAGE
	1	1	**286-4880**	1	BAR	
	2	1	**232-6662**	4	GLOW PLUG (12-VOLT)	
	3	1	**232-3126**	1	CLIP	

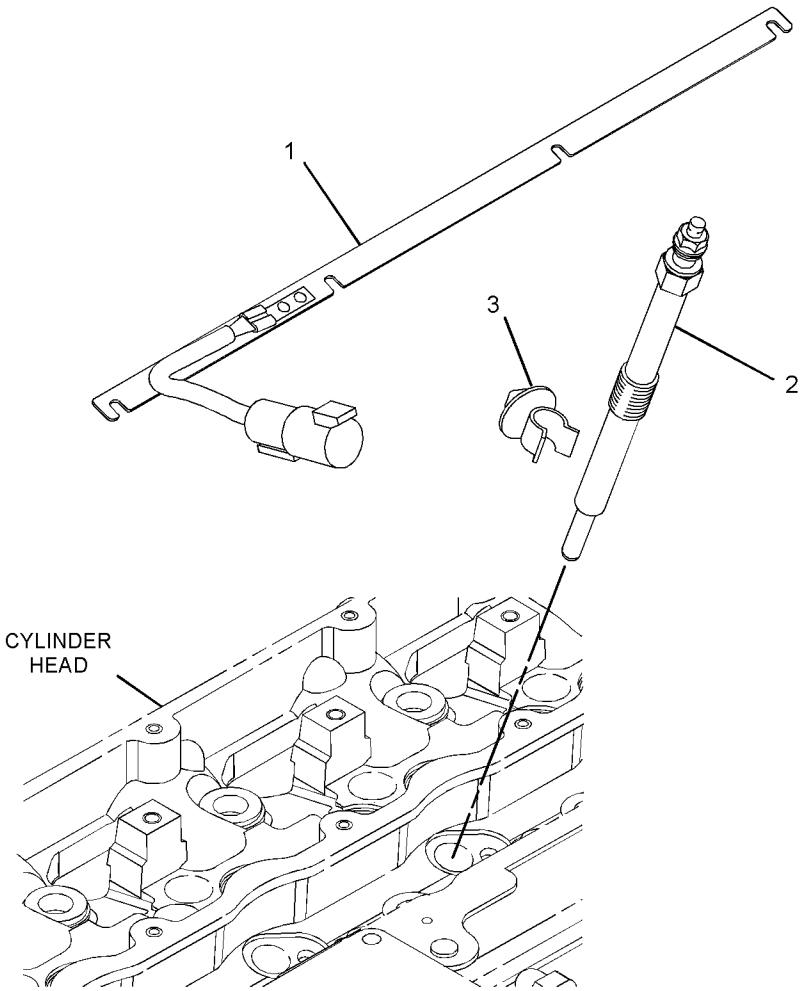

GRAPHIC #1 **<END>** g01392990

246-8045 GRADE CONTROL AR-LASER–ACCUGRADE, MAST

S/N: SHA1-UP

AN ATTACHMENT

SMCS-7220 **i02445997**

NOTE	REF NO	GRAPHIC REF	PART NUMBER	QTY	PART NAME 1 2 3 4 5 6 (PRODUCT LEVEL)	SEE PAGE
	1	1	**115-1615**	1	RELAY AS (12-VOLT) (ACCUGRADE, MAST)	
Y	2	1	*211-4253*	1	INSTALLATION GP-MONITOR (ADVISOR)	699
Y	3	1	*225-4323*	1	MOUNTING GP-MAST (GRADE CONTROL)	583
	4	1	**226-2333**	1	MAST AS	
		1	**239-9271**	1	SOFTWARE GP (MAST)	
	5	1	**226-2334**	1	RECEIVER GP-LASER (LR21)	
		1	**239-9272**	1	SOFTWARE (RECEIVER)	
	6	1	**226-9167**	1	ADAPTER (RECEIVER)	
	7	1	**226-9169**	1	MODULE AS-POWER SUPPLY	
	8	1	**226-9270**	1	CABLE-COILED (RECEIVER)	
	9	1	**246-8044**	1	HARNESS AS-WIRING (MAST)	
		1	**102-8803**	1	KIT-RECEPTACLE (3-PIN)	
		1	**102-8806**	1	KIT-RECEPTACLE (8-PIN)	
					(EACH RECEPTACLE KIT INCLUDES RECEPTACLE AS & WEDGE)	
		1	**155-2265**	1	KIT-CONNECTING PLUG (8-PIN)	
		1	**174-0503**	1	KIT-CONNECTING PLUG (3-PIN)	
					(EACH PLUG KIT INCLUDES PLUG AS, WEDGE & INTERFACE SEAL)	
		1	**155-2260**	1	KIT-CONNECTING PLUG (3-PIN)	
					(INCLUDES PLUG AS, WEDGES & INTERFACE SEAL)	
	10	1	**3S-2093**	15	STRAP-CABLE	
M	11	1	**8T-4138**	1	BOLT (M6X1X20-MM)	
	12	1	**8T-4205**	1	WASHER-HARD (7.2X14.5X2-MM THK)	

M-METRIC PART
Y-SEPARATE ILLUSTRATION

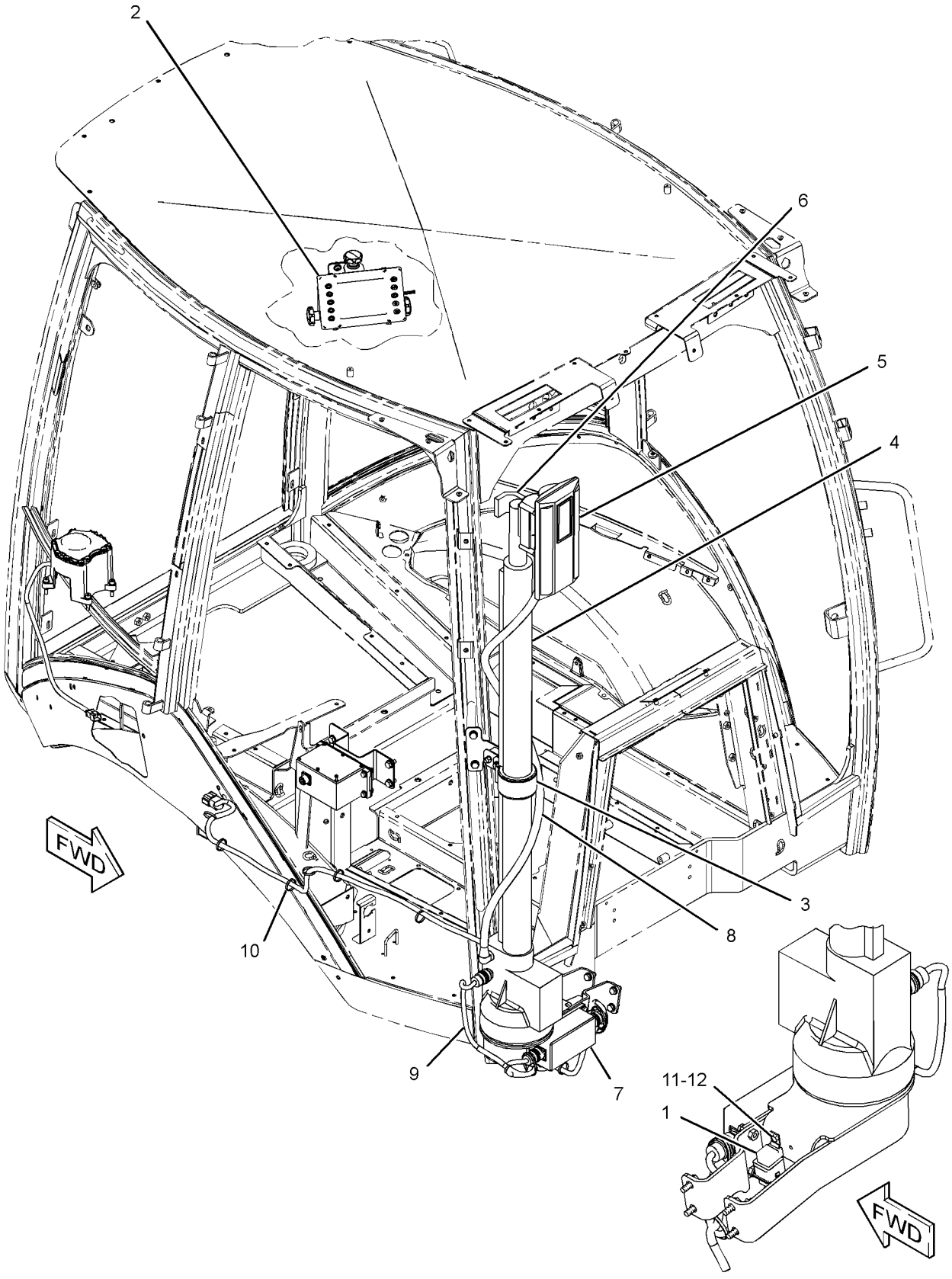

GRAPHIC #1 **<END>** g01233594

248-2214 HEATER GP-JACKET WATER

S/N: SHA1-UP
AN ATTACHMENT

SMCS-1383 **i02200665**

NOTE	REF NO	GRAPHIC REF	PART NUMBER	QTY	PART NAME 1 2 3 4 5 6 (PRODUCT LEVEL)	SEE PAGE
	1	1	**3S-2093**	2	STRAP-CABLE	
	2	1	**130-0165**	1	RECEPTACLE AS	
		1	**1M-1230**	2	NUT & LOCK AS (10-32-THD)	
		1	**168-4511**	2	SCREW-PAN HEAD (10-32X1-IN)	
	3	1	**165-8357**	1	BRACKET AS	
M		1	**8T-3612**	2	NUT-WELD (M8X1.25-THD)	
	4	1	*231-3054*	1	HEATER GP-JACKET WATER	
J		1	**219-3273**	1	ELEMENT AS-JACKET WATER HEATER (120-VOLT, 1000-WATT)	
		1	**133-6517**		CAP AS-DUST	
		1	**231-3052**	1	CORD AS	
M	5	1	**8T-4189**	2	BOLT (M8X1.25X20-MM)	
	6	1	**8T-4224**	2	WASHER-HARD (8.8X16X2-MM THK)	
					AVAILABLE REPAIR KIT(S):	
J			**133-3413**	1	KIT-SEAL	
					(INCLUDES SEAL, SPACER & RINGS)	

J-KIT MARKED J AVAILABLE FOR PART MARKED J
M-METRIC PART

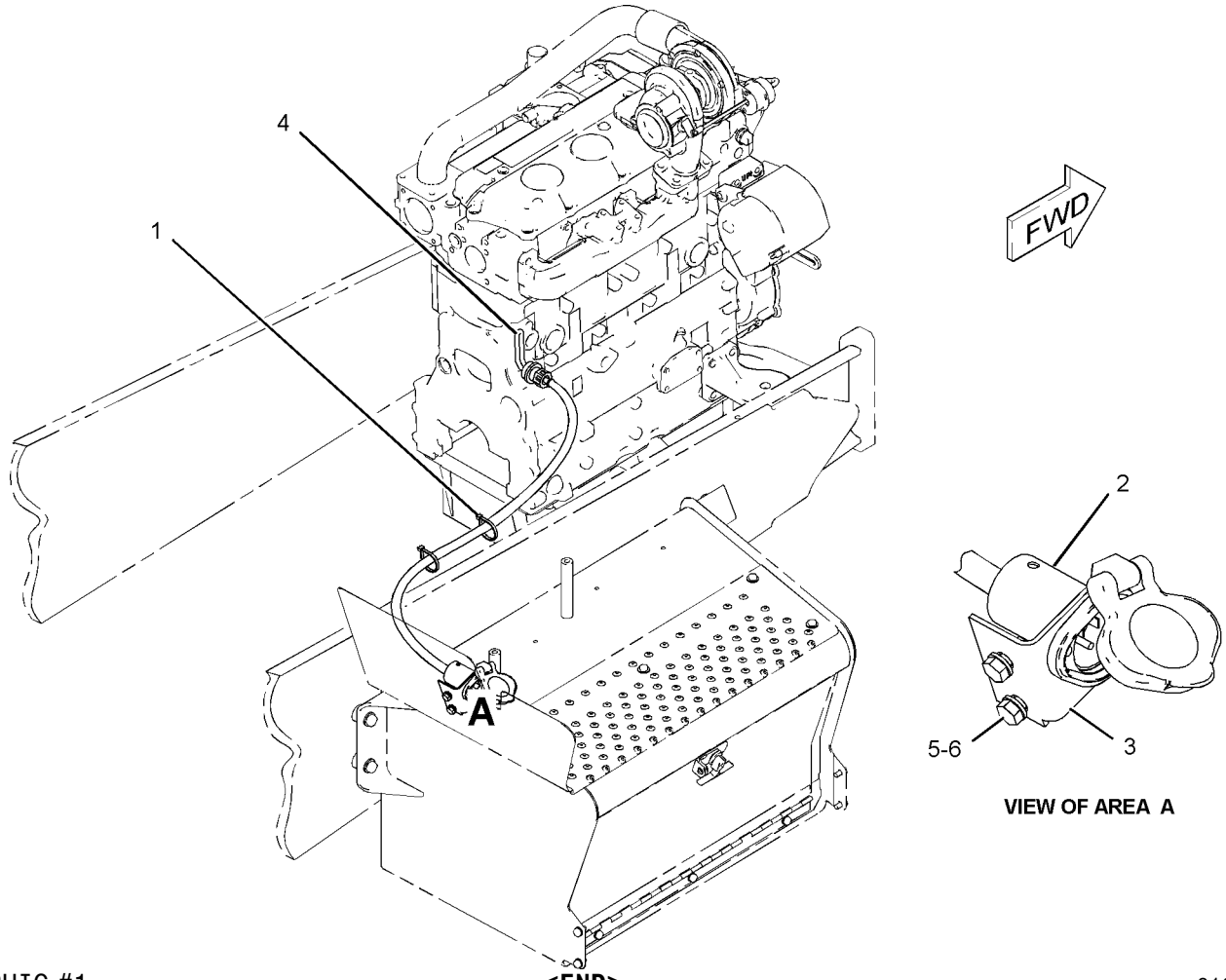

GRAPHIC #1 **<END>** g01083542

234-4328 LAMP GP-FLOOD–12-VOLT

S/N: SHA1-UP

PART OF 211-4276, 211-4277 LIGHTING GP-FLOOD & SIGNAL

AN ATTACHMENT

SMCS-1429, 1434 **i02532634**

NOTE	REF NO	GRAPHIC REF	PART NUMBER	QTY	PART NAME 1 2 3 4 5 6 (PRODUCT LEVEL)	SEE PAGE
	1	1	**9W-0607**	1	LAMP (12-VOLT, 55-WATT)	
M	2	1	**8T-0389**	1	LOCKNUT (M10X1.15-THD)	
	3	1	**9X-4244**	2	SCREW-SPECIAL	
	4	1	**202-6614**	1	LENS AS (FLOODLIGHT)	
	5	1	**234-7730**	1	BODY AS	
	6	1	**164-7556**	1	CLIP (LAMP RETAINING)	
	7	1	**234-7731**	1	BRACKET AS	
	8	1	**8T-4121**	1	WASHER-HARD (11X21X2.5-MM THK)	

M-METRIC PART

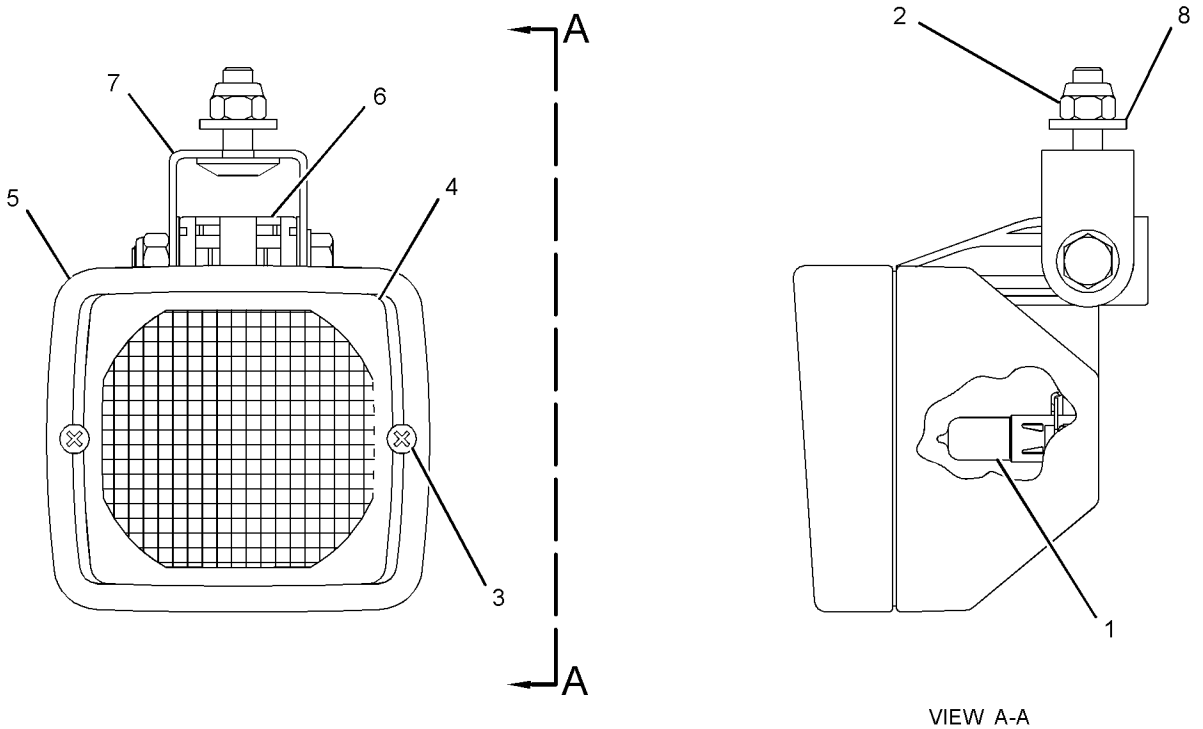

VIEW A-A

GRAPHIC #1 **<END>** g01283627

234-4329 LAMP GP-FLOOD–SUSPENDED MOUNT

S/N: SHA1-UP

PART OF 211-4277 LIGHTING GP-FLOOD & SIGNAL

AN ATTACHMENT

SMCS-1429, 1434 **i02532633**

NOTE	REF NO	GRAPHIC REF	PART NUMBER	QTY	PART NAME 1 2 3 4 5 6 (PRODUCT LEVEL)	SEE PAGE
	1	1	**9W-0607**	1	LAMP (12-VOLT, 55-WATT)	
M	2	1	**8T-0389**	1	LOCKNUT (M10X1.15-THD)	
	3	1	**9X-4244**	2	SCREW-SPECIAL	
	4	1	**202-6611**	1	LENS AS (FLOODLIGHT)	
	5	1	**234-7730**	1	BODY AS	
	6	1	**164-7556**	1	CLIP (LAMP RETAINING)	
	7	1	**234-7731**	1	BRACKET AS	
	8	1	**8T-4121**	1	WASHER-HARD (11X21X2.5-MM THK)	

M-METRIC PART

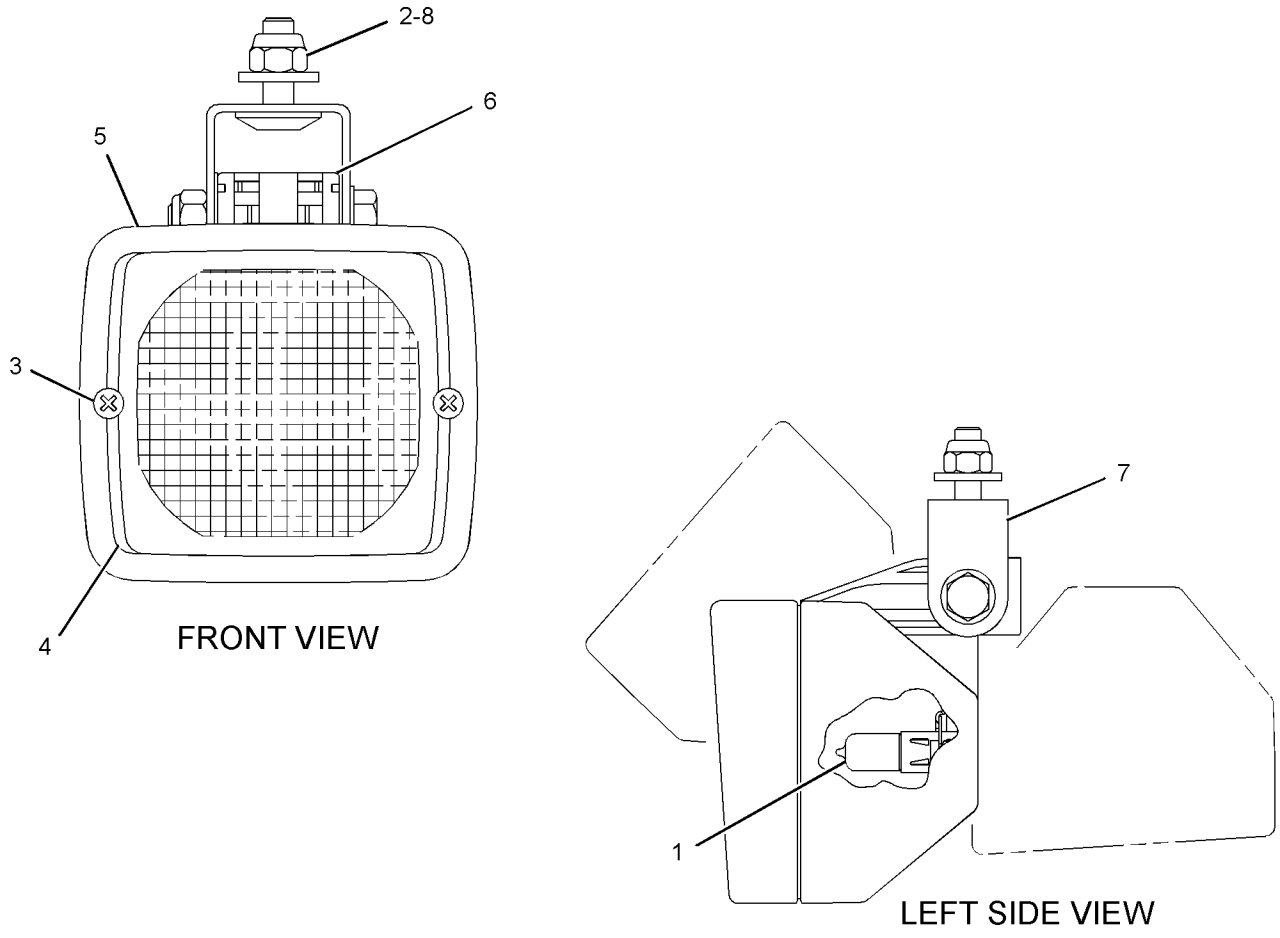

GRAPHIC #1 **<END>** g01254669

290-5760 LAMP GP-FLOOD

S/N: SHA1245-UP

PART OF 211-4277 LIGHTING GP-FLOOD & SIGNAL

AN ATTACHMENT

SMCS-1429, 1434 **i02614630**

NOTE	REF NO	GRAPHIC REF	PART NUMBER	QTY	PART NAME 1 2 3 4 5 6 (PRODUCT LEVEL)	SEE PAGE
	1	1	**9W-0607**	1	LAMP (12-VOLT, 55-WATT)	
	2	1	**9X-4244**	2	SCREW-SPECIAL	
	3	1	**202-6611**	1	LENS AS (FLOODLIGHT)	
	4	1	**234-7730**	1	BODY AS (FLOODLIGHT)	
	5	1	**164-7556**	1	CLIP (LAMP RETAINING)	
M	6	1	**8T-0389**	1	LOCKNUT (M10X1.15-THD)	
	7	1	**234-7731**	1	BRACKET AS	
	8	1	**8T-4121**	1	WASHER-HARD (11X21X2.5-MM THK)	

M-METRIC PART

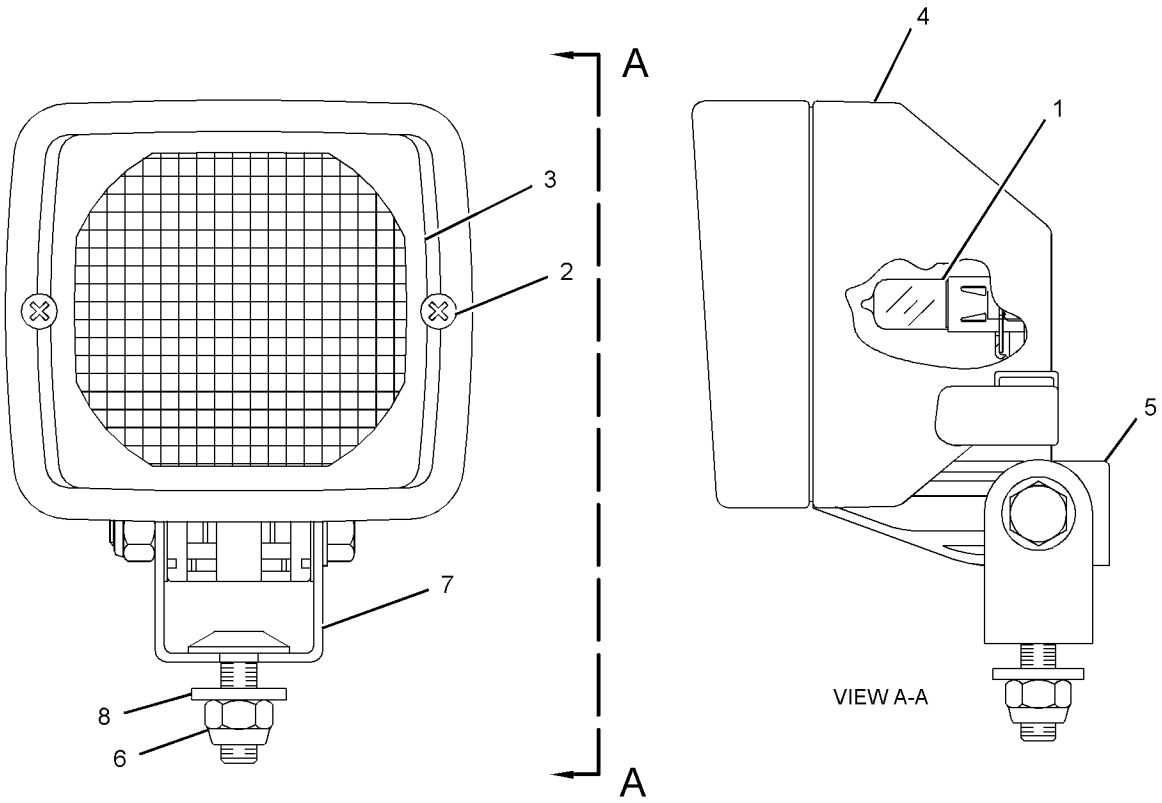

GRAPHIC #1 **<END>** g01349258

180-3664 LAMP GP-WARNING BEACON–MAGNETIC MOUNT

S/N: SHA1-UP

PART OF 211-4292 LIGHTING GP-WARNING BEACON

AN ATTACHMENT

SMCS-1431 **i02593780**

NOTE	REF NO	GRAPHIC REF	PART NUMBER	QTY	PART NAME 1 2 3 4 5 6 (PRODUCT LEVEL)	SEE PAGE
	1	1	**272-9800**	1	LENS (AMBER, WARNING BEACON)	
	2	1	**179-5434**	1	PLUG AS	
		1	**3K-8782**	1	FUSE (10-AMPERE)	
	3	1	**9X-8118**	1	LAMP (12-VOLT, 55-WATT, HID)	
	4	1	**9X-8139**	1	BELT-DRIVE	
	5	1	**3K-8782**	1	FUSE (10-AMPERE)	

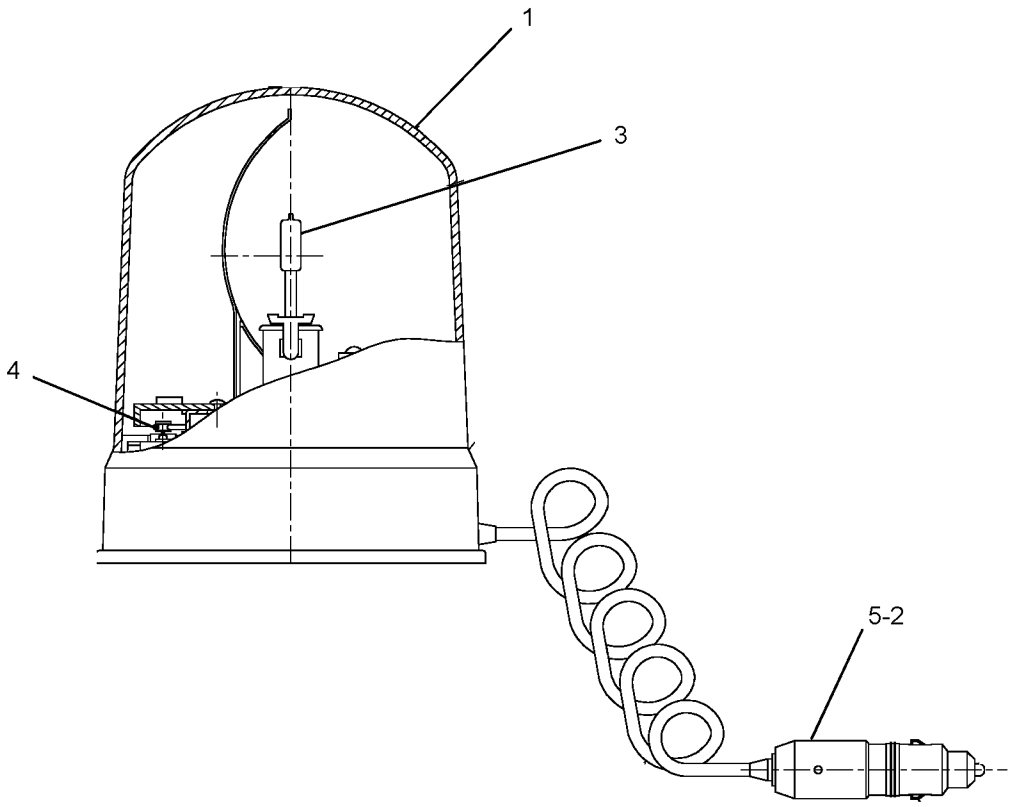

GRAPHIC #1 **<END>** g01230468

211-4276 LIGHTING GP-FLOOD & SIGNAL—NACD, 4-LAMP, CAB

S/N: SHA1-UP

PART OF 204-4161 CAB AR-ENCLOSED ROPS, 204-4160 CANOPY AR-OPEN ROPS AN ATTACHMENT

SMCS-1429, 1430, 1432, 1434 **i02595946**

NOTE	REF NO	GRAPHIC REF	PART NUMBER	QTY	PART NAME 1 2 3 4 5 6 (PRODUCT LEVEL)	SEE PAGE
	1	1	**9R-1499**	2	REFLECTOR	
	2	1	**178-7539**	1	RECEPTACLE AS (POWER SUPPLY)	
	3	1	**282-7835**	1	PLATE	
	4	1	**213-6049**	1	HARNESS AS-LIGHTING (ROOF)	
		1	**8L-8413**	19	STRAP-CABLE	
E		1	**125-7874**		TUBE-HEAT SHRINK (5.72-MM DIA) (35-CM)	
E		1	**125-7875**		TUBE-HEAT SHRINK (7.44-MM DIA) (15-CM)	
		1	**102-8805**	1	KIT-RECEPTACLE (6-PIN)	
		1	**102-8806**	1	KIT-RECEPTACLE (8-PIN)	
					(EACH RECEPTACLE KIT INCLUDES RECEPTACLE AS & WEDGE)	
		1	**155-2270**	10	KIT-CONNECTING PLUG (2-PIN)	
		1	**155-2271**	2	KIT-CONNECTING PLUG (4-PIN)	
					(EACH PLUG KIT INCLUDES PLUG AS, WEDGE & INTERFACE SEAL)	
		1	**2L-8069**	3	TERMINAL (2-GA TO 10-GA)	
		1	**5P-4571**	2	TERMINAL-BLADE (14-GA)	
	5	1	**214-4697**	1	SWITCH AS-ROCKER (FLOODLIGHTS, FRONT)	
	6	1	**214-4699**	1	SWITCH AS-ROCKER (FLOODLIGHTS, REAR)	
Y	7	1	**234-4328**	4	LAMP GP-FLOOD (12-VOLT) (FRONT, REAR, WIDE RANGE)	136
	8	1	**282-7833**	1	GROMMET	
	9	1	**172-6489**	2	LAMP GP-HEAD & SIGNAL	
	10	1	**172-6490**	2	LAMP GP-SIGNAL (STOP, TAIL, TURN)	
M	11	1	**8C-3798**	2	BOLT-LOCKING (M6X1X30)	
	12	1	**3S-2093**	21	STRAP-CABLE	
	13	1	**8T-4121**	6	WASHER-HARD (11X21X2.5-MM THK)	
M	14	1	**8T-4133**	5	NUT (M10X1.5-THD)	
	15	1	**9X-8256**	2	WASHER (6.6X12X2-MM THK)	
	16	1	**8F-3590**	1	LOCKWASHER	

E-ORDER BY THE CENTIMETER
M-METRIC PART
Y-SEPARATE ILLUSTRATION

211-4276 **LIGHTING GP-FLOOD & SIGNAL** *(contd.)* **i02595946**

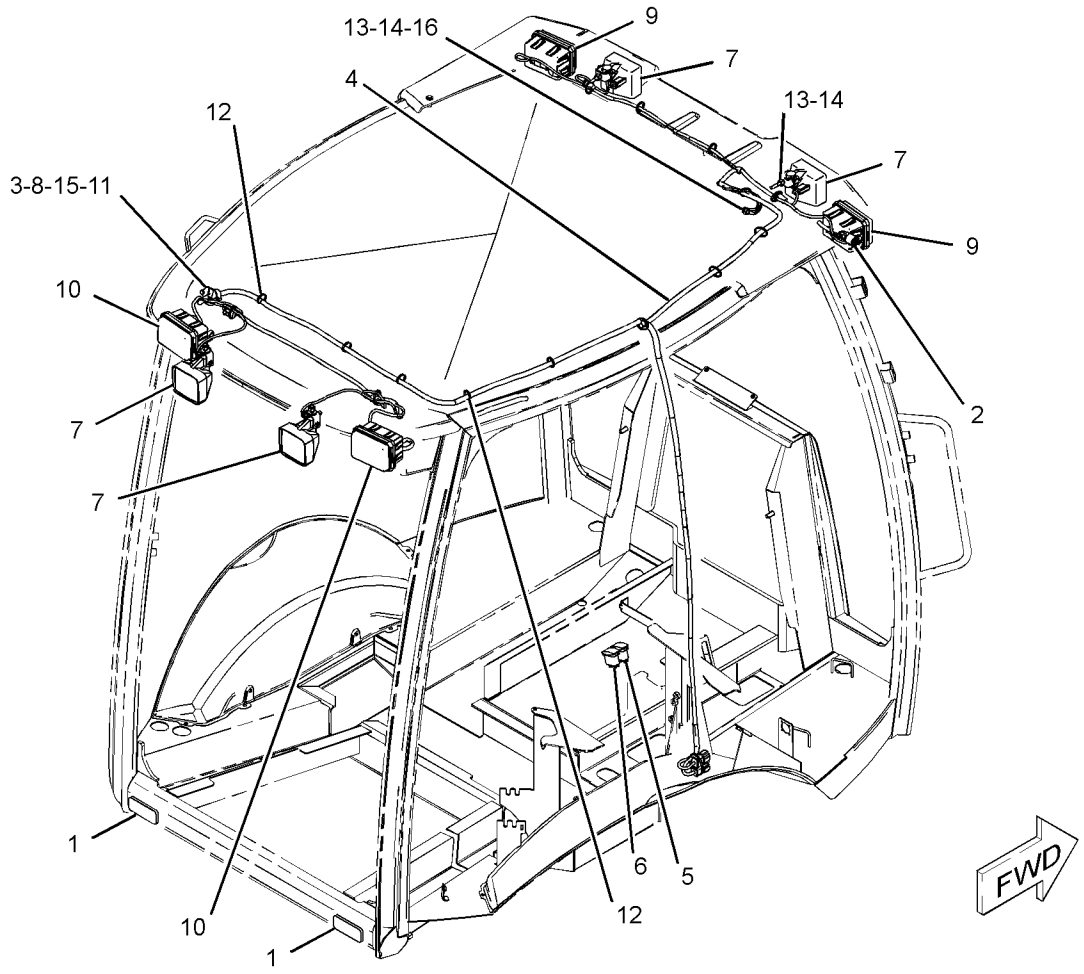

GRAPHIC #1 **<END>** g01309638

211-4277 LIGHTING GP-FLOOD & SIGNAL—NACD, OPTIONAL

S/N: SHA1-1244

PART OF 204-4162, 228-4602 CAB AR-ENCLOSED ROPS, 204-4164 CANOPY AR-OPEN ROPS AN ATTACHMENT

SMCS-1429, 1430, 1432, 1434 **i02763532**

NOTE	REF NO	GRAPHIC REF	PART NUMBER	QTY	PART NAME 1 2 3 4 5 6 (PRODUCT LEVEL)	SEE PAGE
	1	1	**9R-1499**	2	REFLECTOR	
	2	1	**178-7539**	1	RECEPTACLE AS (POWER SUPPLY)	
	3	1	**213-6049**	1	HARNESS AS-LIGHTING (ROOF)	
		1	**8L-8413**	19	STRAP-CABLE	
E		1	**125-7874**		TUBE-HEAT SHRINK (5.72-MM DIA) (35-CM)	
E		1	**125-7875**		TUBE-HEAT SHRINK (7.44-MM DIA) (15-CM)	
		1	**155-2271**	2	KIT-CONNECTING PLUG (4-PIN)	
		1	**155-2270**	10	KIT-CONNECTING PLUG (2-PIN)	
					(EACH PLUG KIT INCLUDES PLUG AS, WEDGE & INTERFACE SEAL)	
		1	**102-8805**	1	KIT-RECEPTACLE (6-PIN)	
		1	**102-8806**	1	KIT-RECEPTACLE (8-PIN)	
					(EACH RECEPTACLE KIT INCLUDES RECEPTACLE AS & WEDGE)	
	4	1	**214-4698**	1	SWITCH AS-ROCKER (FLOODLIGHTS, FRONT)	
	5	1	**214-4700**	1	SWITCH AS-ROCKER (FLOODLIGHTS, REAR)	
Y	6	1	**234-4328**	4	LAMP GP-FLOOD (12-VOLT) (FRONT, REAR, WIDE RANGE)	136
Y	7	1	**234-4329**	4	LAMP GP-FLOOD (12-VOLT) (FRONT, SIDE, LONG RANGE)	137
	8	1	**282-7833**	1	GROMMET	
	9	1	**282-7835**	1	PLATE	
	10	1	**172-6489**	2	LAMP GP-HEAD & SIGNAL	
		1	**3C-4883**	1	LAMP (12-VOLT, 21-WATT)	
		1	**176-0348**	1	LENS	
	11	1	**172-6490**	2	LAMP GP-SIGNAL	
		1	**9W-3326**	1	LAMP (12-VOLT, 21-WATT)	
		1	**084-4348**	1	LAMP (12-VOLT, 5-WATT)	
		1	**186-3735**	4	PIN-CONNECTOR (16-GA TO 18-GA)	
		1	**267-2809**	1	LENS	
	12	1	**3S-2093**	25	STRAP-CABLE	
	13	1	**8T-4121**	10	WASHER-HARD (11X21X2.5-MM THK)	
M	14	1	**8T-4133**	9	NUT (M10X1.5-THD)	
M	15	1	**8T-4181**	2	BOLT (M6X1X20-MM)	
	16	1	**9X-8256**	2	WASHER (6.6X12X2-MM THK)	

E-ORDER BY THE CENTIMETER
M-METRIC PART
Y-SEPARATE ILLUSTRATION

211-4277 **LIGHTING GP-FLOOD & SIGNAL** *(contd.)* **i02763532**

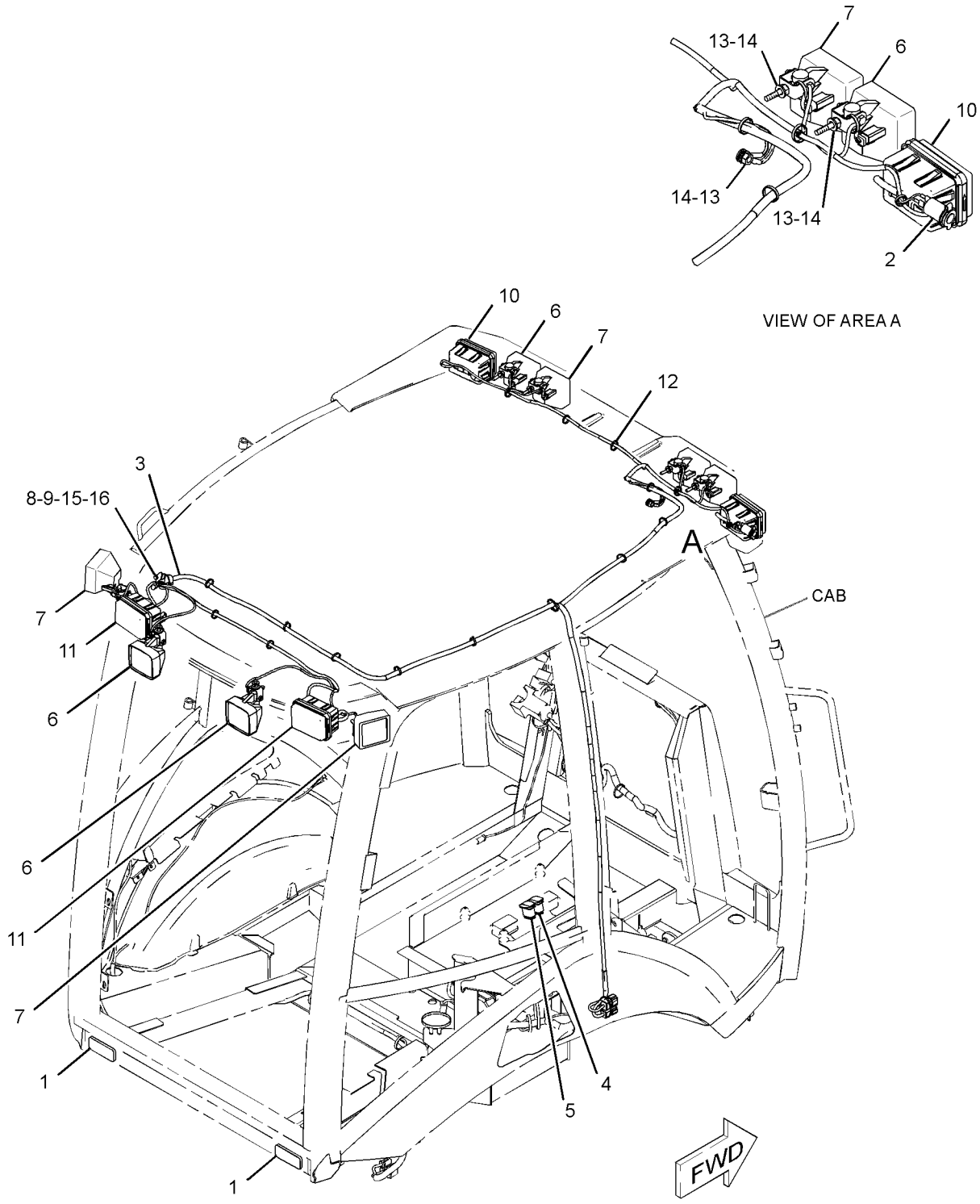

GRAPHIC #1 **<END>** g01273073

211-4277 LIGHTING GP-FLOOD & SIGNAL—NACD, OPTIONAL

S/N: SHA1245-UP

PART OF 204-4162, 228-4602 CAB AR-ENCLOSED ROPS, 204-4164 CANOPY AR-OPEN ROPS AN ATTACHMENT

SMCS-1429, 1430, 1432, 1434 **i02763533**

NOTE	REF NO	GRAPHIC REF	PART NUMBER	QTY	PART NAME 1 2 3 4 5 6 (PRODUCT LEVEL)	SEE PAGE
	1	1	**9R-1499**	2	REFLECTOR	
	2	1	**178-7539**	1	RECEPTACLE AS (POWER SUPPLY)	
	3	1	**213-6049**	1	HARNESS AS-LIGHTING (ROOF)	
		1	**8L-8413**	19	STRAP-CABLE	
E		1	**125-7874**		TUBE-HEAT SHRINK (5.72-MM DIA) (35-CM)	
E		1	**125-7875**		TUBE-HEAT SHRINK (7.44-MM DIA) (15-CM)	
		1	**155-2271**	2	KIT-CONNECTING PLUG (4-PIN)	
		1	**155-2270**	10	KIT-CONNECTING PLUG (2-PIN)	
					(EACH PLUG KIT INCLUDES PLUG AS, WEDGE & INTERFACE SEAL)	
		1	**102-8805**	1	KIT-RECEPTACLE (6-PIN)	
		1	**102-8806**	1	KIT-RECEPTACLE (8-PIN)	
					(EACH RECEPTACLE KIT INCLUDES RECEPTACLE AS & WEDGE)	
	4	1	**214-4698**	1	SWITCH AS-ROCKER (FLOODLIGHTS, FRONT)	
	5	1	**214-4700**	1	SWITCH AS-ROCKER (FLOODLIGHTS, REAR)	
Y	6	1	**234-4328**	4	LAMP GP-FLOOD (12-VOLT) (FRONT OUTER, REAR CENTER)	136
CY	7	1	**234-4329**	2	LAMP GP-FLOOD (12-VOLT) (FRONT CENTER)	137
	8	1	**282-7833**	1	GROMMET	
	9	1	**282-7835**	1	PLATE	
J	10	1	**172-6489**	2	LAMP GP-HEAD & SIGNAL	
		1	**3C-4883**	1	LAMP (12-VOLT, 21-WATT)	
		1	**176-0348**	1	LENS	
H	11	1	**172-6490**	2	LAMP GP-SIGNAL	
		1	**9W-3326**	1	LAMP (12-VOLT, 21-WATT)	
		1	**084-4348**	1	LAMP (12-VOLT, 5-WATT)	
		1	**186-3735**	4	PIN-CONNECTOR (16-GA TO 18-GA)	
		1	**267-2809**	1	LENS	
	12	1	**3S-2093**	25	STRAP-CABLE	
	13	1	**8T-4121**	10	WASHER-HARD (11X21X2.5-MM THK)	
M	14	1	**8T-4133**	9	NUT (M10X1.5-THD)	
CM	15	1	**8C-3798**	2	BOLT-LOCKING (M6X1X30)	
	16	1	**9X-8256**	2	WASHER (6.6X12X2-MM THK)	
CY	17	1	**290-5760**	2	LAMP GP-FLOOD (12-VOLT) (REAR OUTER)	138
C	18	1	**8F-3590**	1	LOCKWASHER	
					AVAILABLE REPAIR KIT(S):	
J			**102-8802**	1	KIT-RECEPTACLE (2-PIN)	
					(INCLUDES RECEPTACLE AS & WEDGE)	
H			**102-8804**	1	KIT-RECEPTACLE (4-PIN)	
					(INCLUDES RECEPTACLE AS & WEDGE)	

C-CHANGE FROM PREVIOUS TYPE
E-ORDER BY THE CENTIMETER
H-KIT MARKED H SERVICES PARTS MARKED H
J-KIT MARKED J SERVICES PARTS MARKED J
M-METRIC PART
Y-SEPARATE ILLUSTRATION

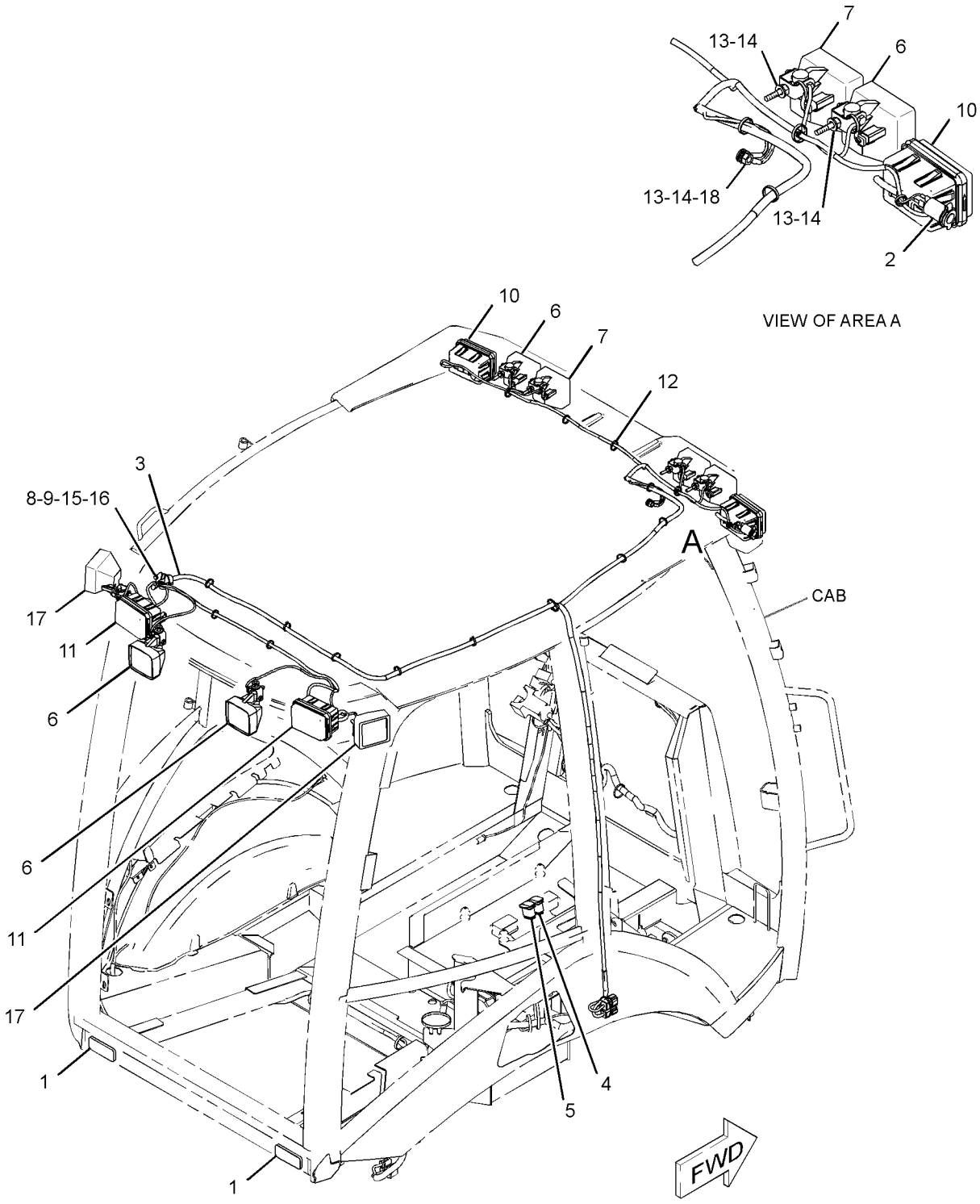

GRAPHIC #1 **<END>** g01341115

211-4292 LIGHTING GP-WARNING BEACON

S/N: SHA1-UP

AN ATTACHMENT

SMCS-1431 **i02467098**

NOTE	REF NO	GRAPHIC REF	PART NUMBER	QTY	PART NAME 1 2 3 4 5 6 (PRODUCT LEVEL)	SEE PAGE
	1	1	**031-5644**	1	CLIP	
Y	2	1	**180-3664**	1	LAMP GP-WARNING BEACON (12-VOLT, AMBER)	139

Y-SEPARATE ILLUSTRATION

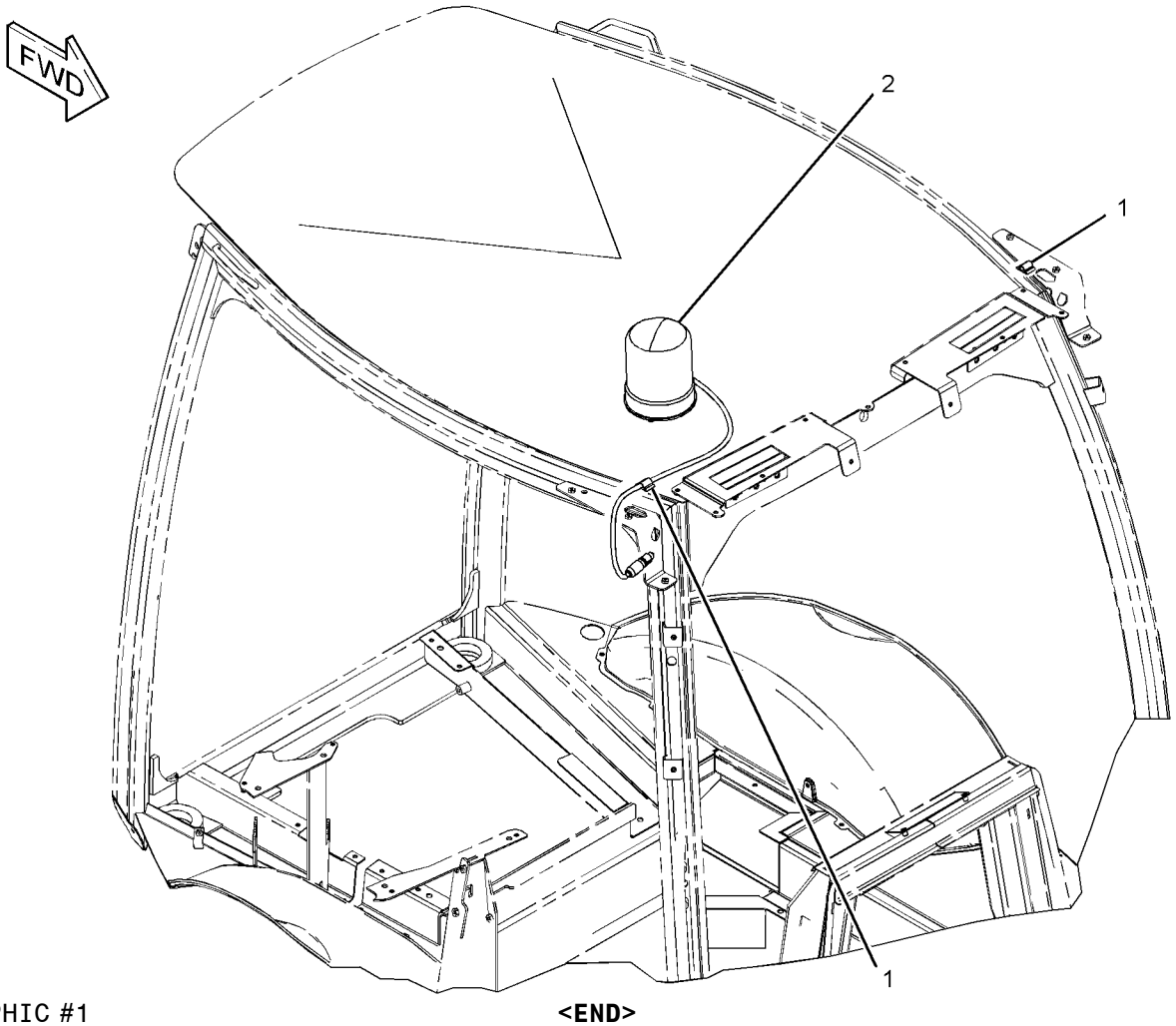

GRAPHIC #1 **<END>** g01233454

251-3200 MOUNTING GP-SENSOR–ANGLE

S/N: SHA1-UP
PART OF 211-4253 INSTALLATION GP-MONITOR
AN ATTACHMENT

SMCS-5736 **i02440898**

NOTE	REF NO	GRAPHIC REF	PART NUMBER	QTY	PART NAME 1 2 3 4 5 6 (PRODUCT LEVEL)	SEE PAGE
	1	1	**264-3756**	1	PLATE AS	
	4	1	**8T-4121**	3	WASHER-HARD (11X21X2.5-MM THK)	
M	5	1	**8T-4137**	3	BOLT (M10X1.5X20-MM)	
	6	1	**8T-4224**	4	WASHER-HARD (8.8X16X2-MM THK)	
M	7	1	**8T-7547**	4	BOLT (M8X1.25X30-MM)	

M-METRIC PART

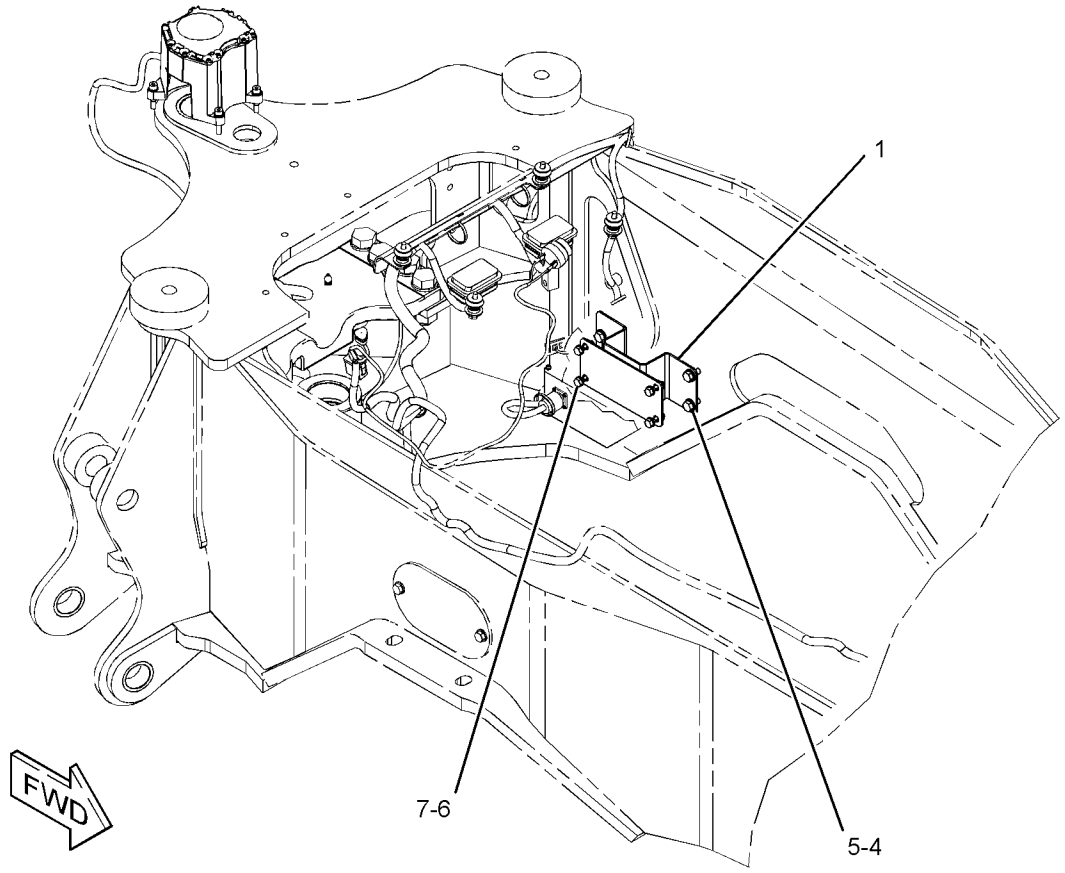

GRAPHIC #1 **<END>** g01205531

247-8199 PANEL GP-FUSE

S/N: SHA1-UP

PART OF 211-4242 WIRING GP-PLATFORM

AN ATTACHMENT

SMCS-1417, 1422 **i02650179**

NOTE	REF NO	GRAPHIC REF	PART NUMBER	QTY	PART NAME 1 2 3 4 5 6 (PRODUCT LEVEL)	SEE PAGE
	1	1	**113-8490**	11	FUSE (10-AMPERE)	
	2	1	**113-8491**	13	FUSE (15-AMPERE)	
	3	1	**113-8492**	10	FUSE (20-AMPERE)	
	4	1	**265-8182**	1	COVER-FUSE BLOCK	
M	6	1	**5C-7261**	4	NUT (M8X1.25-THD)	
	7	1	**9F-5644**	4	LOCKWASHER	
	8	1	**7X-0608**	4	WASHER-HARD (10.2X16X2-MM THK)	

M-METRIC PART

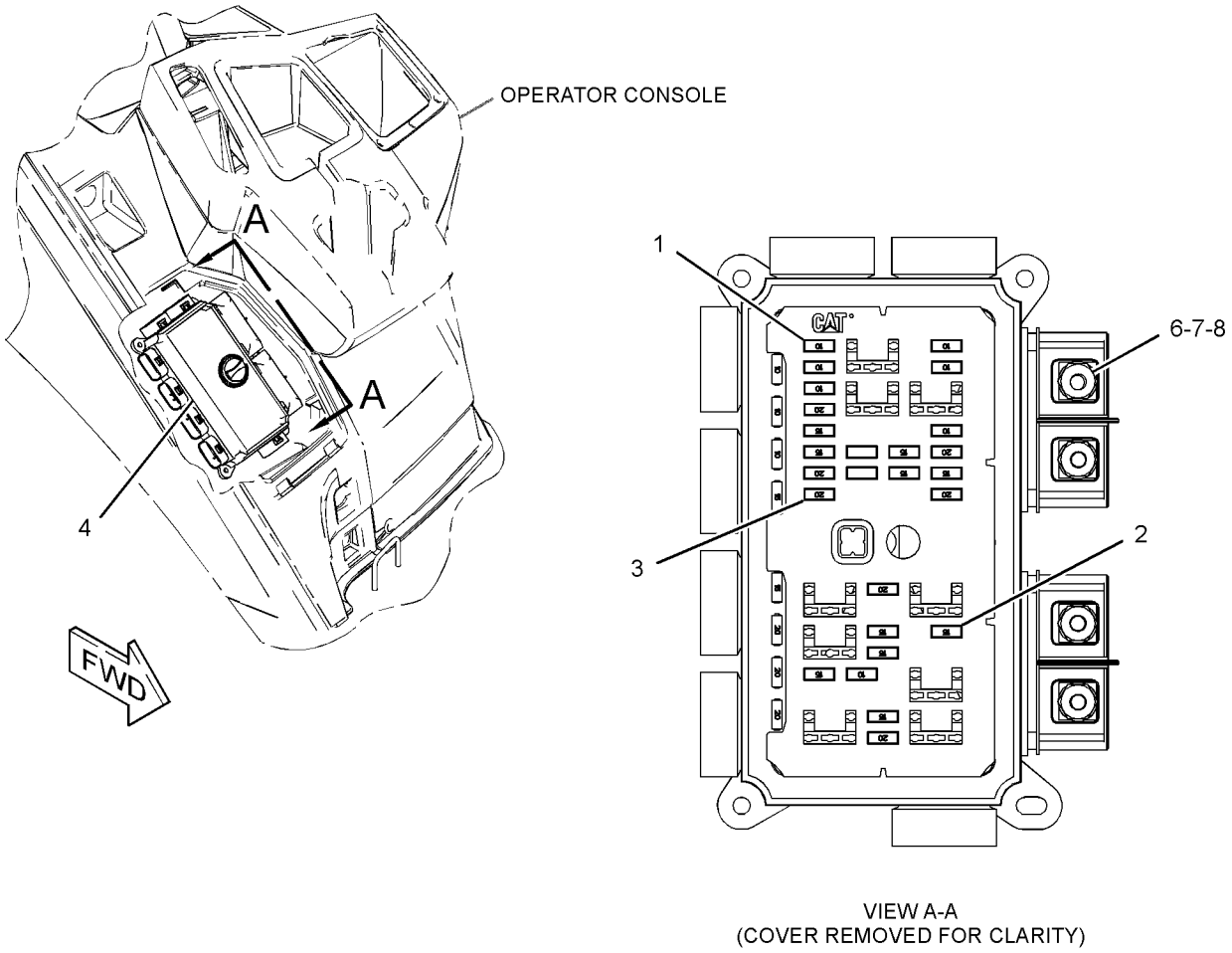

VIEW A-A
(COVER REMOVED FOR CLARITY)

GRAPHIC #1 **<END>** g01331615

276-7287 RELAY GP

S/N: SHA1-UP

PART OF 211-4268 WIRING GP-AIR CONDITIONER, 211-4269 WIRING GP-HEATER AN ATTACHMENT

SMCS-1422, 4493 **i02532899**

NOTE	REF NO	GRAPHIC REF	PART NUMBER	QTY	PART NAME 1 2 3 4 5 6 (PRODUCT LEVEL)	SEE PAGE
M	1	1	**5C-2890**	2	NUT (M6X1-THD)	
	2	1	**8T-4205**	2	WASHER-HARD (7.2X14.5X2-MM THK)	
	3	1	**1H-3244**	2	LOCKWASHER	
M	4	1	**5C-7261**	1	NUT (M8X1.25-THD)	
	5	1	**8T-4224**	1	WASHER-HARD (8.8X16X2-MM THK)	
	6	1	**267-5213**	1	COVER	
	7	1	**267-5211**	1	SEAL	
	8	1	**278-6377**	1	FUSE (40-AMPERE)	

M-METRIC PART

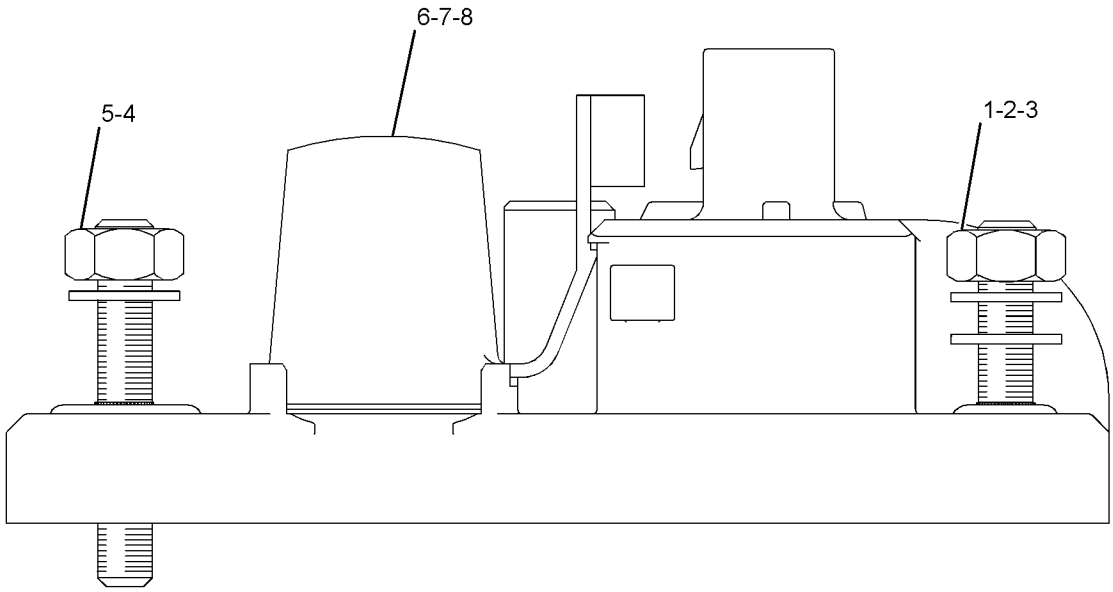

GRAPHIC #1 **<END>** g01290616

276-7290 RELAY GP–12-VOLT

S/N: SHA1-UP
PART OF 211-4242 WIRING GP-PLATFORM
AN ATTACHMENT

SMCS-1422, 4493 **i02532900**

NOTE	REF NO	GRAPHIC REF	PART NUMBER	QTY	PART NAME 1 2 3 4 5 6 (PRODUCT LEVEL)	SEE PAGE
M	1	1	**5C-2890**	2	NUT (M6X1-THD)	
	2	1	**8T-4205**	2	WASHER-HARD (7.2X14.5X2-MM THK)	
	3	1	**1H-3244**	2	LOCKWASHER	
M	4	1	**5C-7261**	1	NUT (M8X1.25-THD)	
	5	1	**8T-4224**	1	WASHER-HARD (8.8X16X2-MM THK)	
	6	1	**267-5213**	1	COVER	
	7	1	**267-5211**	1	SEAL	
	8	1	**267-2701**	2	FUSE (60-AMPERE)	

M-METRIC PART

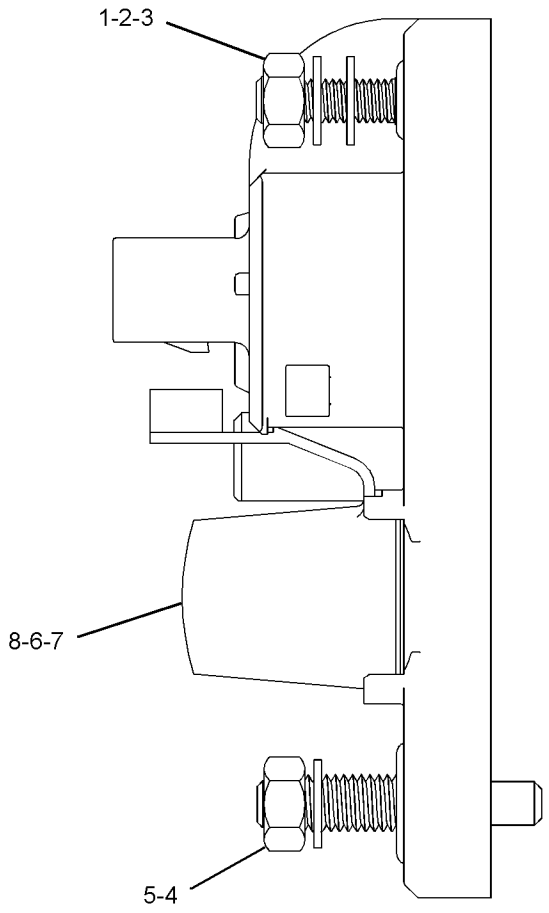

GRAPHIC #1 **<END>** g01278211

276-7291 RELAY GP–12-VOLT

S/N: SHA1-UP
PART OF 211-4242 WIRING GP-PLATFORM
AN ATTACHMENT

SMCS-1422, 4493 **i02532901**

NOTE	REF NO	GRAPHIC REF	PART NUMBER	QTY	PART NAME 1 2 3 4 5 6 (PRODUCT LEVEL)	SEE PAGE
M	1	1	**5C-2890**	2	NUT (M6X1-THD)	
	2	1	**8T-4205**	2	WASHER-HARD (7.2X14.5X2-MM THK)	
	3	1	**1H-3244**	2	LOCKWASHER	
M	4	1	**5C-7261**	1	NUT (M8X1.25-THD)	
	5	1	**8T-4224**	1	WASHER-HARD (8.8X16X2-MM THK)	
	6	1	**267-5213**	1	COVER	
	7	1	**267-5211**	1	SEAL	
	8	1	**267-2701**	1	FUSE (60-AMPERE)	

M-METRIC PART

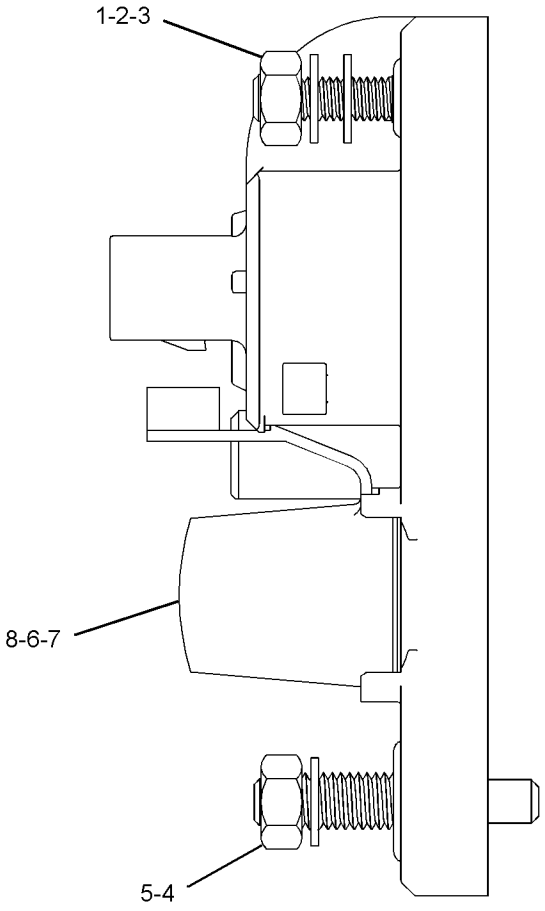

GRAPHIC #1 **<END>** g01278256

143-0539 STARTING MOTOR GP-ELECTRIC–12-VOLT*R

S/N: G4D1-UP; CRS1-UP

PART OF 237-0024 STARTING MOTOR GP-ELECTRIC

AN ATTACHMENT

SMCS-1453 **i02712964**

NOTE	REF NO	GRAPHIC REF	PART NUMBER	QTY	PART NAME 1 2 3 4 5 6 (PRODUCT LEVEL)	SEE PAGE
	1	1	**8C-9778**	1	PLUNGER AS	
	2	1	**8C-9783**	1	GASKET	
	3	1	**2P-8104**	1	BEARING	
	4	1	**7T-6092**	1	HOLDER AS-BRUSH	
M	5	1	**8T-4133**	2	NUT (M10X1.5-THD)	
	6	1	**7T-6088**	1	BEARING AS	
	7	1	**7T-6087**	1	WASHER	
	8	1	**7T-6093**	1	CLUTCH AS	
	9	1	**8J-4455**	1	BALL	
	10	1	**7T-6090**	1	SPRING	
	11	1	**8T-4121**	2	WASHER-HARD (11X21X2.5-MM THK)	
	12	1	**3E-5153**	1	COVER-STARTING MOTOR	
M	13	1	**9X-2036**	1	SCREW-PAN HEAD	
	14	1	**8F-1434**	1	LOCKWASHER	
	15	1	**100-4113**	1	SWITCH AS (STARTING MOTOR)(12-VOLT)	
	16	1	**100-4119**	1	ARMATURE AS	
	17	1	**100-4118**	1	CASE AS-STARTING MOTOR	
	18	1	**100-4115**	1	HOUSING-STARTING MOTOR	
	19	1	**143-1344**	1	FRAME-STARTER	
	20	1	**100-3685**	1	CAP	
	21	1	**3E-5154**	1	BUSHING-STARTING MOTOR	
					AVAILABLE REPAIR KIT(S):	
			7T-6099	1	KIT-GEAR (STARTING MOTOR)	
					(INCLUDES RETAINER, PINION & ROLLERS)	
			146-6729	1	KIT-HARDWARE (STARTING MOTOR)	
					(INCLUDES BOLTS, SCREWS, SCREW ASSEMBLIES & PLATE)	
			100-4112	1	KIT-CONTACT (STARTING MOTOR)	
					(INCLUDES NUT, WASHERS, SEAL, BUSHINGS, PLATE & BOLT)	

M-METRIC PART

143-0539 **STARTING MOTOR GP-ELECTRIC** *(contd.)* **i02712964**

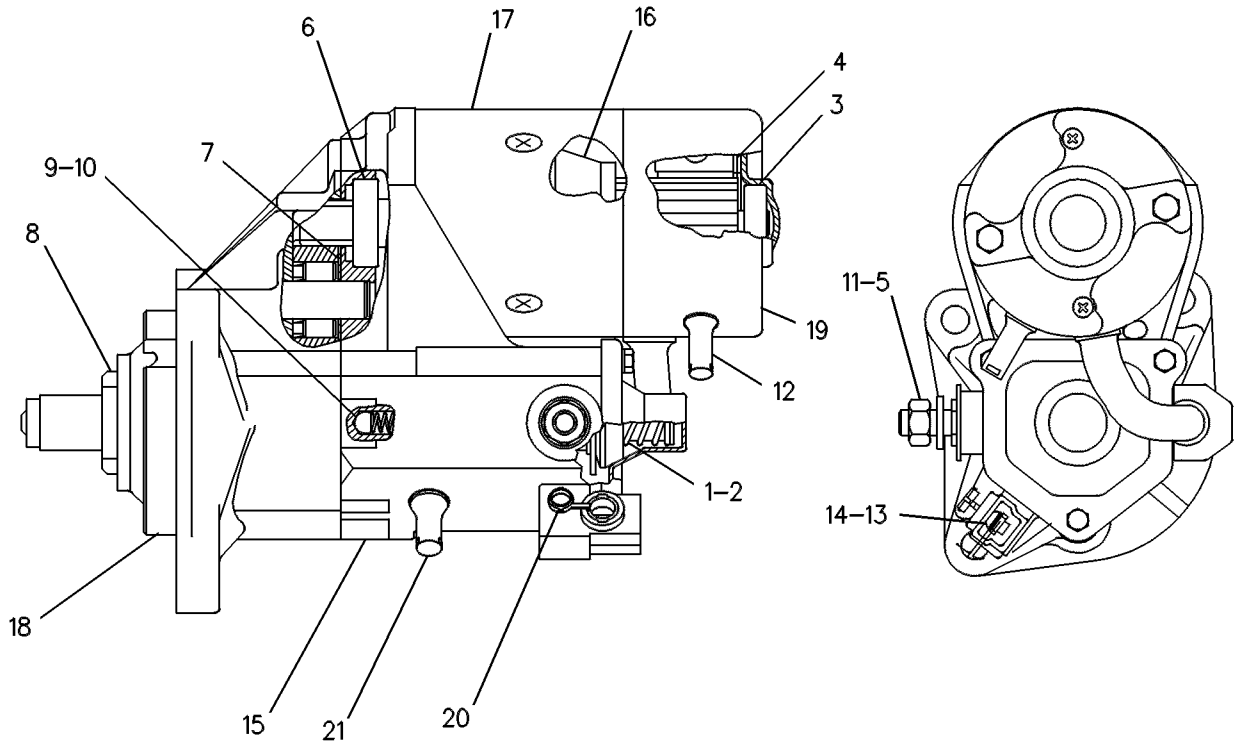

GRAPHIC #1 **<END>** g00131126

237-0024 STARTING MOTOR GP-ELECTRIC

S/N: G4D1-UP; CRS1-UP
PART OF 273-3610 ENGINE AR, 245-6841 ENGINE AR-PRIMARY
AN ATTACHMENT

SMCS-1453 **i01991979**

NOTE	REF NO	GRAPHIC REF	PART NUMBER	QTY	PART NAME 1 2 3 4 5 6 (PRODUCT LEVEL)	SEE PAGE
	1	1	**6I-0364**	3	STUD (M10X1.5X30MM)	
	2	1	**6I-0594**	3	NUT (M10X1.5)	
YR	3	1	**143-0539**	1	STARTING MOTOR GP-ELECTRIC	152

R-REMFG PART MAY BE AVAILABLE
Y-SEPARATE ILLUSTRATION

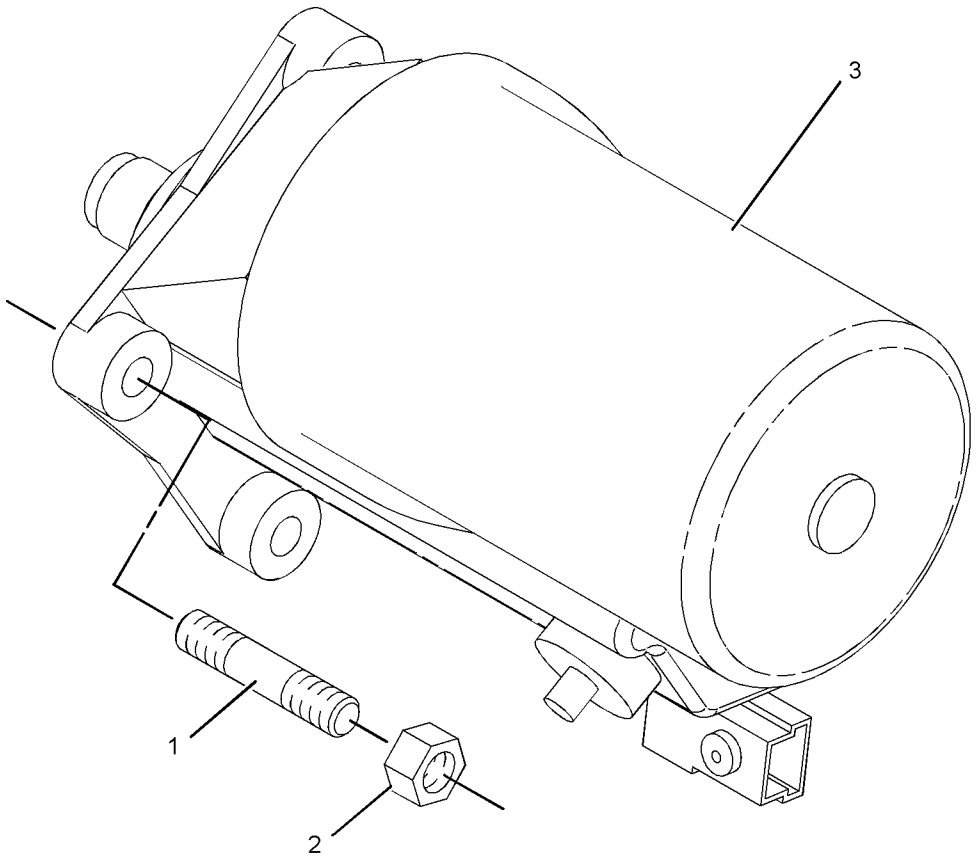

GRAPHIC #1 **<END>** g01039910

211-4267 SWITCH GP-ALL WHEEL DRIVE–INCLUDES RELAY

S/N: SHA1-UP

PART OF 220-9183 DRIVE AR-BACKHOE LOADER

AN ATTACHMENT

SMCS-1435, 4493 **i02451223**

NOTE	REF NO	GRAPHIC REF	PART NUMBER	QTY	PART NAME 1 2 3 4 5 6 (PRODUCT LEVEL)	SEE PAGE
	1	1	**146-9439**	1	RELAY AS (12-VOLT)	
	2	1	**214-4692**	1	SWITCH AS-ROCKER (ALL WHEEL DRIVE)	

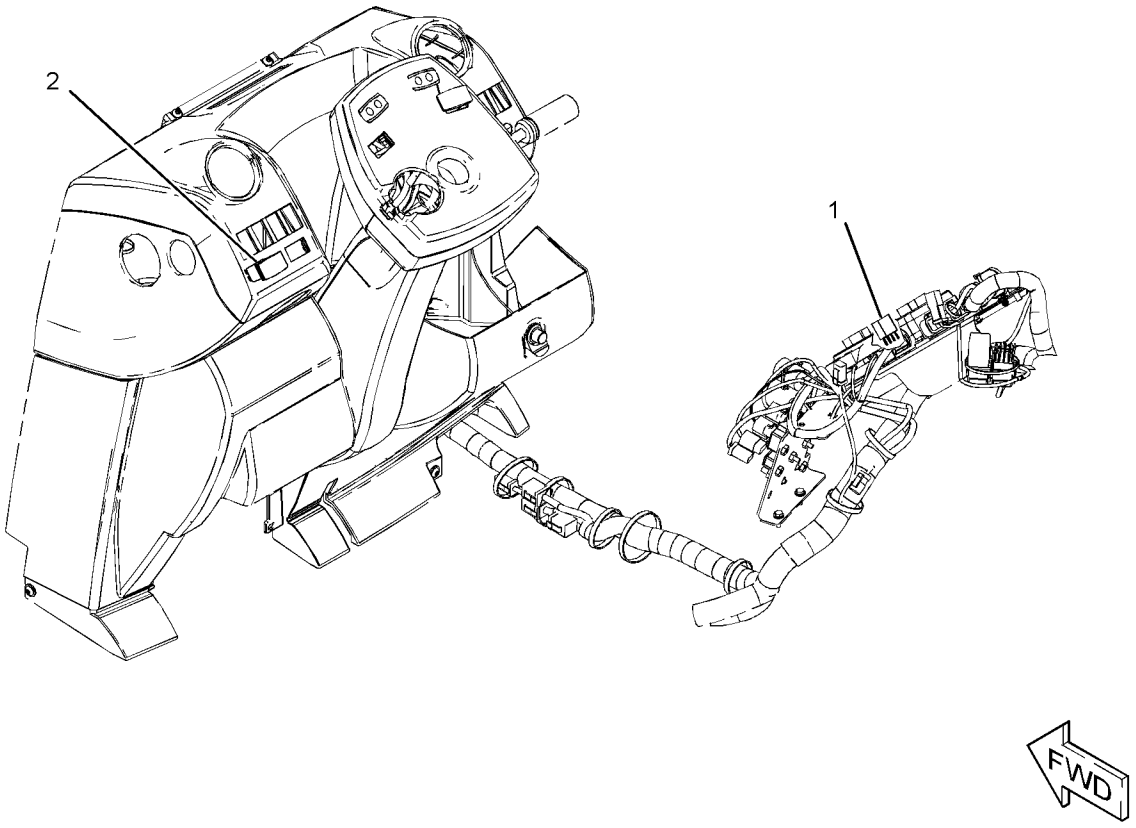

GRAPHIC #1 **<END>** g01211965

202-6010 SWITCH GP-DIFFERENTIAL LOCK–CENTER PIVOT

S/N: SHA1-UP

PART OF 214-6910, 214-6911, 214-6912, 214-6913 POWER TRAIN AR

AN ATTACHMENT

SMCS-1435, 3264 **i02442926**

NOTE	REF NO	GRAPHIC REF	PART NUMBER	QTY	PART NAME 1 2 3 4 5 6 (PRODUCT LEVEL)	SEE PAGE
	1	1	**201-9459**	1	BOOT	
	2	1	**204-0775**	1	SWITCH AS-FOOT	
	3	1	**205-6298**	1	ACTUATOR	
	4	1	**213-6060**	1	HARNESS AS-WIRING (DIFFERENTIAL LOCK)	
		1	**102-8802**	1	KIT-RECEPTACLE (2-PIN)	
					(INCLUDES RECEPTACLE AS & WEDGE)	
		1	**205-9362**	1	PLUG AS	

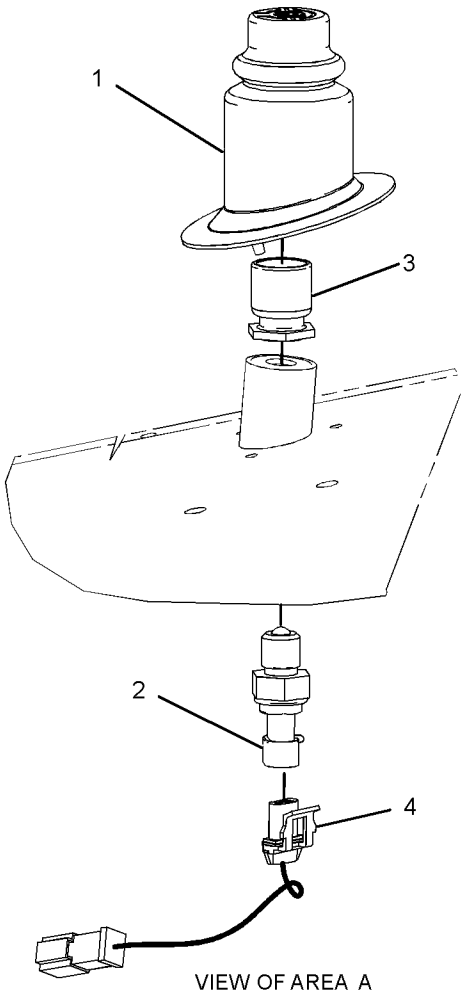

VIEW OF AREA A

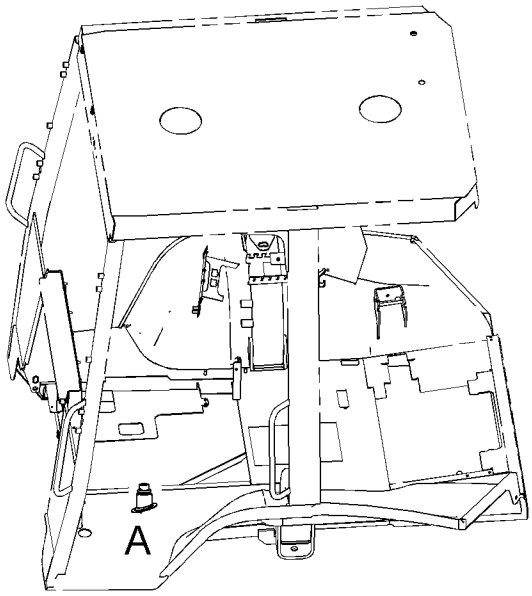

LEFT SIDE VIEW
(UPPER FRONT)

GRAPHIC #1 **<END>** g01230746

7N-0718 SWITCH GP-DISCONNECT–BATTERY

S/N: SHA1-UP
12-VOLT
PART OF 290-6790 BATTERY & WIRING GP

SMCS-1411 **i02459121**

NOTE	REF NO	GRAPHIC REF	PART NUMBER	QTY	PART NAME 1 2 3 4 5 6 (PRODUCT LEVEL)	SEE PAGE
	1	1	**8H-5306**	1	KEY (BATTERY DISCONNECT)	
	2	1	**8H-5303**	1	NUT (3/4-16-THD)	
	3	1	**2H-3922**	2	LOCKWASHER	
	4	1	**9F-5644**	2	LOCKWASHER	
	5	1	**6F-7045**	2	NUT-FULL (3/8-24-THD)	

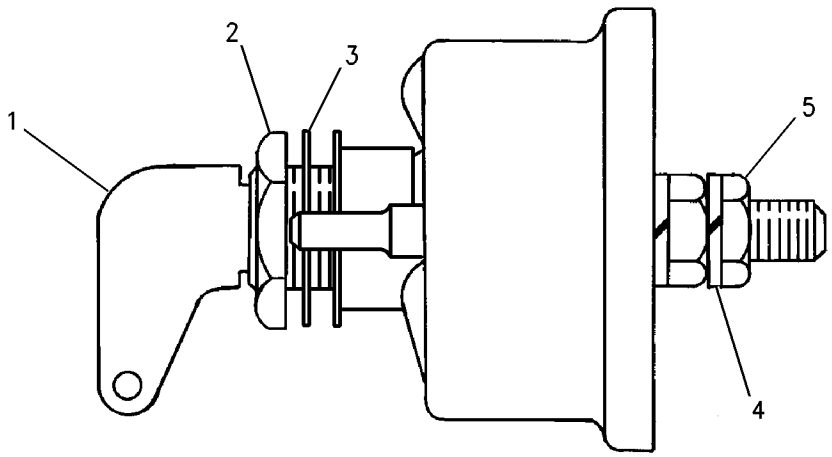

GRAPHIC #1 **<END>** g00715584

237-4896 SWITCH GP-PRESSURE–ENGINE OIL

S/N: G4D1-UP; CRS1-UP
PART OF 273-3610 ENGINE AR, 245-6841 ENGINE AR-PRIMARY
AN ATTACHMENT

SMCS-1435 **i02437894**

NOTE	REF NO	GRAPHIC REF	PART NUMBER	QTY	PART NAME 1 2 3 4 5 6 (PRODUCT LEVEL)	SEE PAGE
	1	1	**237-4894**	1	SWITCH AS-PRESSURE (ENGINE OIL)	
	2	1	**199-9267**	1	SEAL-O-RING	

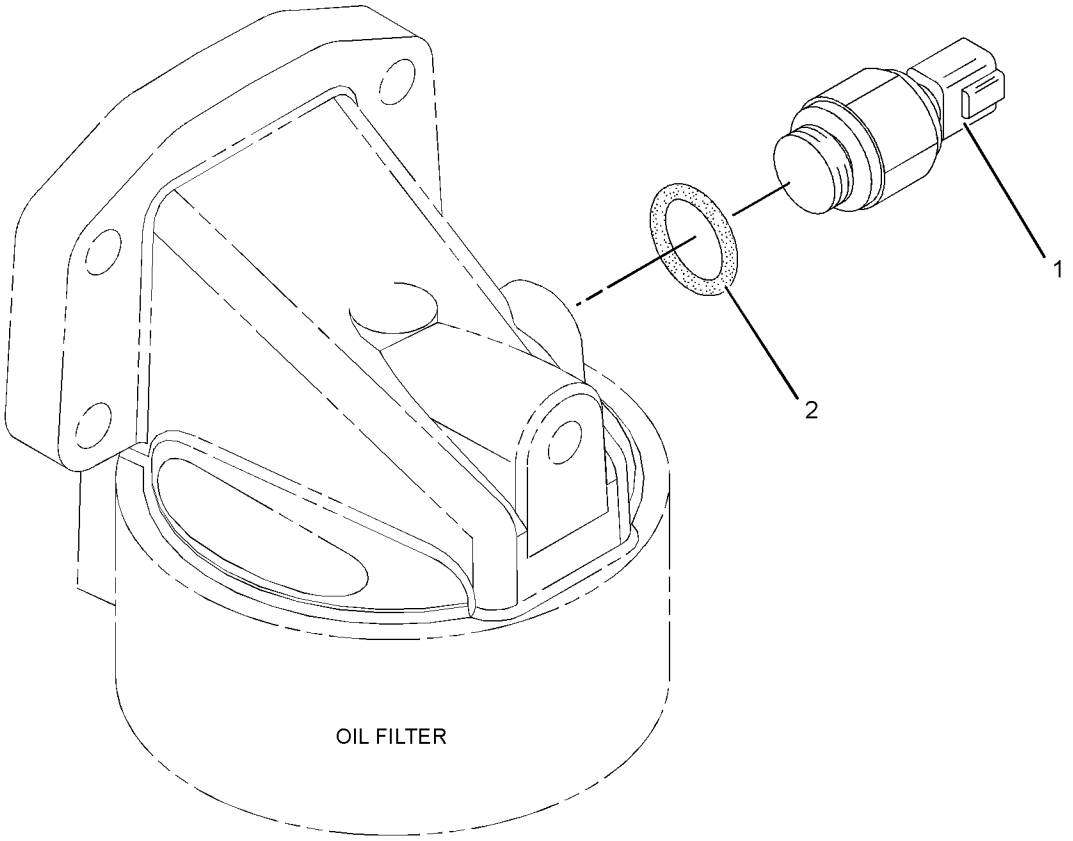

GRAPHIC #1 **<END>** g01218504

211-4268 WIRING GP-AIR CONDITIONER

S/N: SHA1-UP
PART OF 228-4602 CAB AR-ENCLOSED ROPS
AN ATTACHMENT

SMCS-1408, 7320 **i02531014**

NOTE	REF NO	GRAPHIC REF	PART NUMBER	QTY	PART NAME 1 2 3 4 5 6 (PRODUCT LEVEL)	SEE PAGE
	1	1	**3E-9362**	1	RELAY AS (12-VOLT)	
	2	1	**6K-0806**	2	STRAP-CABLE	
	3	1	**9X-7378**	1	SEAL-O-RING	
	4	1	**106-8704**	1	SUPPRESSOR AS-ARC	
		1	**102-8802**	1	KIT-RECEPTACLE (2-PIN)	
					(INCLUDES RECEPTACLE AS & WEDGE)	
		1	**186-3735**	2	PIN-CONNECTOR (16-GA TO 18-GA)	
	5	1	**202-6108**	1	HARNESS AS-HEATER & AIR COND (POWER)	
		1	**111-6792**	1	TERMINAL-RECEPTACLE	
		1	**102-8802**	1	KIT-RECEPTACLE (2-PIN)	
					(INCLUDES RECEPTACLE AS & WEDGE)	
		1	**8L-8413**	11	STRAP-CABLE	
		1	**111-6795**	1	HOUSING-RELAY	
		1	**111-6816**	1	LOCK	
	6	1	**213-6055**	1	HARNESS AS-HEATER & AIR COND	
		1	**9X-1055**	2	TERMINAL-RECEPTACLE	
		1	**091-2436**	7	TERMINAL-BLADE	
		1	**100-5041**	2	TERMINAL-RECEPTACLE	
		1	**104-1995**	11	TERMINAL-BLADE	
		1	**122-4401**	1	TERMINAL	
		1	**8L-8413**	29	STRAP-CABLE	
		1	**213-0139**	5	PIN	
E		1	**119-3662**		TUBE-HEAT SHRINK (10.85-MM DIA) (20-CM)	
E		1	**125-7874**		TUBE-HEAT SHRINK (5.72-MM DIA) (10-CM)	
		1	**9X-1054**	1	PLUG AS-CONNECTOR (4-PIN)	
		1	**102-8802**	1	KIT-RECEPTACLE (2-PIN)	
		1	**102-8803**	1	KIT-RECEPTACLE (3-PIN)	
					(EACH RECEPTACLE KIT INCLUDES RECEPTACLE AS & WEDGE)	
		1	**177-9648**	1	KIT-CONNECTING PLUG (2-PIN)	
		1	**177-9656**	1	KIT-CONNECTING PLUG (4-PIN)	
					(EACH PLUG KIT INCLUDES PLUG AS & WEDGE)	
		1	**155-2270**	1	KIT-CONNECTING PLUG (2-PIN)	
					(INCLUDES PLUG AS, WEDGE & INTERFACE SEAL)	
	7	1	**214-4695**	1	SWITCH AS-ROCKER (BLOWER FAN SPEED)	
	8	1	**214-4718**	1	SWITCH AS-ROCKER (AIR CONDITIONER, HEATER)	
	9	1	**236-6923**	1	SWITCH AS-PRESSURE (REFRIGERANT)	
	10	1	**238-7492**	1	HARNESS AS-HEATER & AIR COND (COMPRESSOR)	
		1	**8L-8413**	1	STRAP-CABLE	
E		1	**125-7874**		TUBE-HEAT SHRINK (5.72-MM DIA) (10-CM)	
		1	**100-6674**	2	SEAL-CONNECTOR	
		1	**124-5640**	2	TERMINAL-SOCKET	
		1	**102-8802**	1	KIT-RECEPTACLE (2-PIN)	
					(INCLUDES RECEPTACLE AS & WEDGE)	
		1	**155-2270**	2	KIT-CONNECTING PLUG (2-PIN)	
					(EACH INCLUDES PLUG AS, WEDGE & INTERFACE SEAL)	
	11	1	**275-0570**	1	BAR-BUS	
Y	12	1	**276-7287**	1	RELAY GP (12-VOLT)	149
	13	1	**115-1615**	1	RELAY AS (12-VOLT)	
	14	1	**4P-8134**	2	CLIP	
	15	1	**3S-2093**	11	STRAP-CABLE	
M	16	1	**5C-2890**	1	NUT (M6X1-THD)	
M	17	1	**5C-7261**	1	NUT (M8X1.25-THD)	
M	18	1	**7X-2534**	1	BOLT (M6X1X50-MM)	

211-4268 **WIRING GP-AIR CONDITIONER** *(contd.)* **i02531014**

NOTE	REF NO	GRAPHIC REF	PART NUMBER	QTY	PART NAME 1 2 3 4 5 6 (PRODUCT LEVEL)	SEE PAGE
	19	1	**8T-4205**	1	WASHER-HARD (7.2X14.5X2-MM THK)	
	20	1	**8T-4224**	1	WASHER-HARD (8.8X16X2-MM THK)	
	21	1	**7K-1181**	1	STRAP-CABLE	
	22	1	**8T-8799**	1	BOOT	

E-ORDER BY THE CENTIMETER
M-METRIC PART
Y-SEPARATE ILLUSTRATION

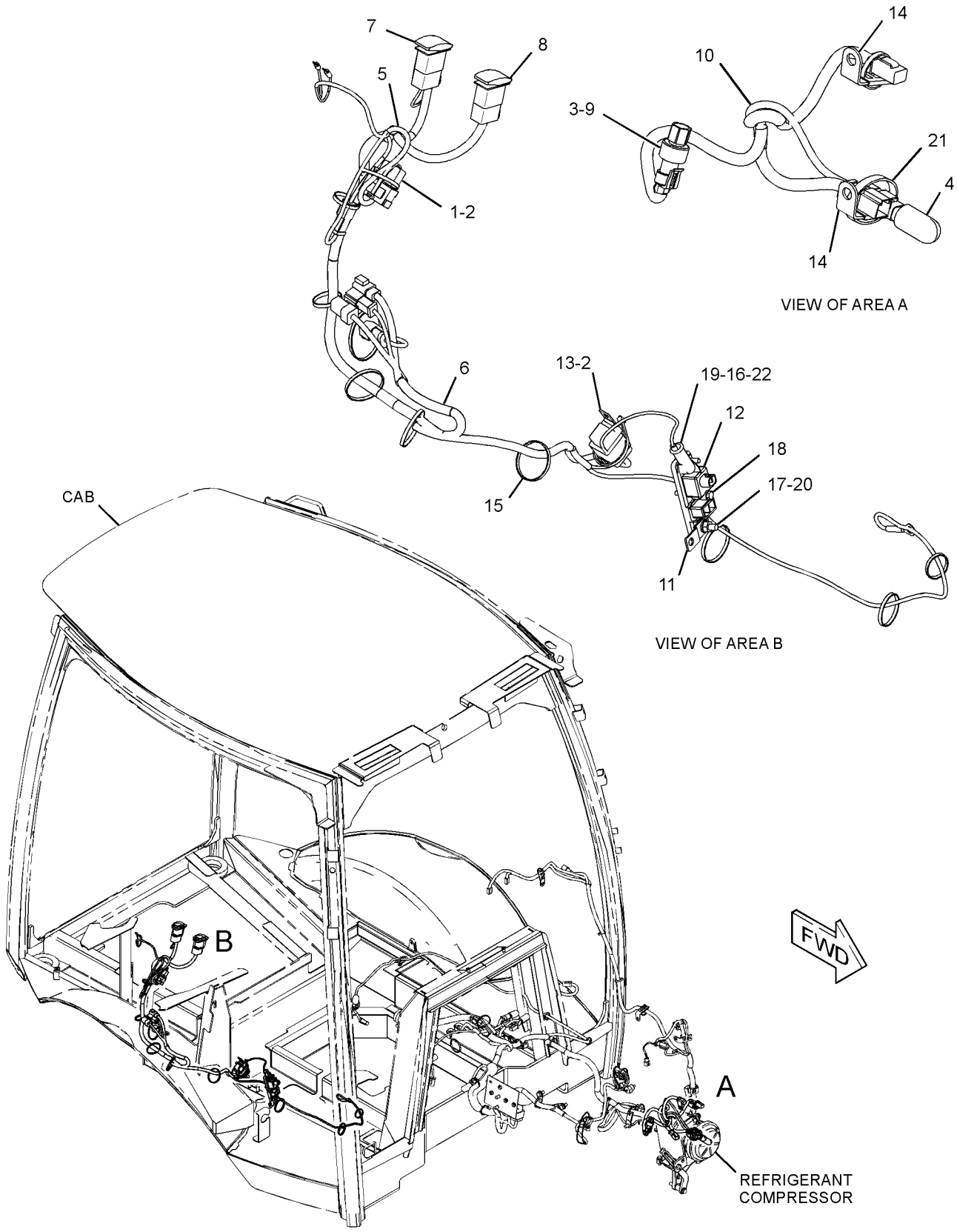

GRAPHIC #1 **<END>** g01282625

ELECTRICAL AND STARTING SYSTEM

211-4243 WIRING GP-CONSOLE–SIDE

S/N: SHA1-UP

PART OF 204-4161, 204-4162, 228-4602 CAB AR-ENCLOSED ROPS, 204-4160, 204-4164 CANOPY AR-OPEN ROPS

AN ATTACHMENT

SMCS-1408 **i02676109**

NOTE	REF NO	GRAPHIC REF	PART NUMBER	QTY	PART NAME 1 2 3 4 5 6 (PRODUCT LEVEL)	SEE PAGE
J	1	1	**110-7887**	1	SWITCH AS-START (KEY)	
		1	**7T-6799**	1	NUT-MOUNTING (1-32-THD)	
		1	**102-8804**	1	KIT-RECEPTACLE (4-PIN)	
					(INCLUDES RECEPTACLE AS & WEDGE)	
		1	**186-3735**	4	PIN-CONNECTOR (16-GA TO 18-GA)	
	2	1	**165-0312**	1	WIRE AS	
M	3	1	**197-7499**	2	BOLT (M4X0.7X25-MM)	
	4	1	**206-1345**	3	STRAP-CABLE	
	5	1	**206-1649**	1	BRACKET	
	6	1	**212-3416**	3	SCREW-PAN HEAD (8-16X0.5-IN)	
	7	1	**214-4693**	1	SWITCH AS-ROCKER (WARNING BEACON)	
		1	**111-7899**	1	GASKET	
	8	1	**214-4722**	1	SWITCH AS-ROCKER (STARTING AID)	
		1	**111-7899**	1	GASKET	
	10	1	**226-7164**	1	GAUGE GP-COOLANT TEMPERATURE	
		1	**4B-2043**	6	NUT (8-32-THD)	
		1	**7X-9065**	1	LAMP (12-VOLT)	
		1	**9B-7233**	3	LOCKWASHER	
B	11	1	**227-1057**	7	PLUG-HOLE	
	12	1	**231-9357**	1	FILM-INDENTIFICATION	
	13	1	**268-7758**	1	HARNESS AS-CONSOLE (SIDE CONSOLE)	
		1	**102-8802**	1	KIT-RECEPTACLE (2-PIN)	
					(INCLUDES RECEPTACLE AS & WEDGE)	
		1	**8L-8413**	56	STRAP-CABLE	
		1	**200-2213**	4	HARNESS AS-WIRING (3-PIN, GAUGE)	
E		1	**119-3662**		TUBE-HEAT SHRINK (10.85-MM DIA) (20-CM)	
E		1	**125-7874**		TUBE-HEAT SHRINK (5.72-MM DIA) (25-CM)	
		1	**228-5856**	10	CONNECTOR	
		1	**167-3693**	1	PLUG AS-CONNECTOR (31-PIN)	
		1	**155-2271**	1	KIT-CONNECTING PLUG (4-PIN)	
		1	**155-2274**	1	KIT-CONNECTING PLUG (6-PIN)	
		1	**155-2255**	2	KIT-CONNECTING PLUG (12-PIN)	
					(EACH PLUG CONNECTING KIT INCLUDES PLUG AS, WEDGE & INTERFACE SEAL)	
	14	1	**270-2728**	1	LAMP GP	
		1	**8T-8737**	1	PLUG-SEAL	
		1	**102-8801**	1	KIT-RECEPTACLE (12-PIN)	
					(INCLUDES RECEPTACLE AS & WEDGE)	
		1	**186-3735**	9	PIN-CONNECTOR (16-GA TO 18-GA)	
		1	**232-4706**	1	GASKET	
	15	1	**131-1424**	1	SEAL	
	16	1	**170-6305**	1	GAUGE GP-FUEL LEVEL	
		1	**4B-2043**	3	NUT (8-32-THD)	
		1	**7X-9065**	1	LAMP (12-VOLT)	
		1	**9B-7233**	3	LOCKWASHER	
	17	1	**170-6542**	1	GAUGE GP-OIL TEMPERATURE (TORQUE CONVERTER)	
		1	**4B-2043**	3	NUT (8-32-THD)	
		1	**7X-9065**	1	LAMP (12-VOLT)	
		1	**9B-7233**	3	LOCKWASHER	
Y	18	1	**239-1080**	1	TACHOMETER GP-ELECTRIC (12-VOLT)	736
	19	1	**3S-2093**	5	STRAP-CABLE	
	20	1	**6V-3507**	3	SEAL-RECTANGULAR	
M	21	1	**8T-2659**	2	LOCKNUT (M4X0.7-THD)	

211-4243 **WIRING GP-CONSOLE** *(contd.)* **i02676109**

B-USE AS REQUIRED
E-ORDER BY THE CENTIMETER
J-REQUIRES 5P-8500 KEY
M-METRIC PART
Y-SEPARATE ILLUSTRATION

211-4243 **WIRING GP-CONSOLE** *(contd.)* **i02676109**

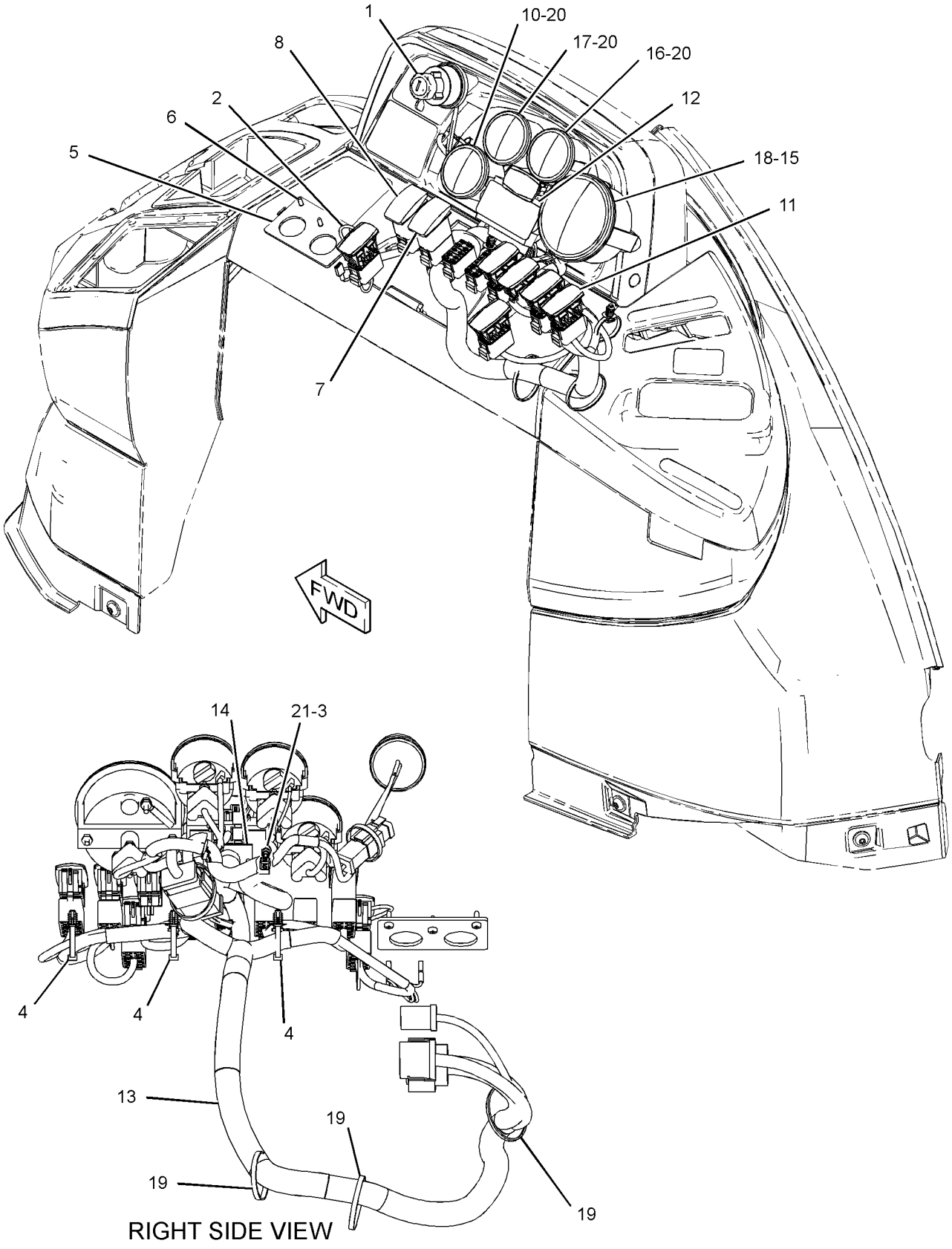

GRAPHIC #1 **<END>** g01349299

211-4245 WIRING GP-CONSOLE–FRONT

S/N: SHA1-UP

PART OF 204-4161, 204-4162, 228-4602 CAB AR-ENCLOSED ROPS, 204-4160, 204-4164 CANOPY AR-OPEN ROPS AN ATTACHMENT

SMCS-1408 **i02521286**

NOTE	REF NO	GRAPHIC REF	PART NUMBER	QTY	PART NAME 1 2 3 4 5 6 (PRODUCT LEVEL)	SEE PAGE
	1	1	**7K-1181**	3	STRAP-CABLE	
	2	1	**268-1964**	1	KIT-SERVICE METER	
					(INCLUDES METER & FILM)	
	3	1	**213-6040**	1	HARNESS AS-CONSOLE	
		1	**102-8802**	1	KIT-RECEPTACLE (2-PIN)	
					(INCLUDES RECEPTACLE AS & WEDGE)	
		1	*130-6791*	3	TERMINAL AS	
					(EACH INCLUDES)	
		1	**7N-7221**	1	TERMINAL (18-GA TO 22-GA)	
		1	**6V-2689**		TUBE-HEAT SHRINK (6.35-MM DIA)	
		1	**155-2270**	1	KIT-CONNECTING PLUG (2-PIN)	
					(INCLUDES PLUG AS, INTERFACE SEAL & WEDGE)	
		1	**091-2436**	27	TERMINAL-BLADE	
		1	**104-1995**	3	TERMINAL-BLADE	
		1	**122-4401**	1	TERMINAL	
E		1	**125-7874**		TUBE-HEAT SHRINK (5.72-MM DIA) (25-CM)	
E		1	**125-7875**		TUBE-HEAT SHRINK (7.44-MM DIA) (5-CM)	
		1	**8L-8413**	26	STRAP-CABLE	
		1	**167-3693**	1	PLUG AS-CONNECTOR (31-PIN)	
	4	1	**214-4716**	1	SWITCH AS-ROCKER (TRANSMISSION NEUTRAL LOCK)	
B	5	1	**227-1057**	10	PLUG-HOLE	
	6	1	**3S-2093**	4	STRAP-CABLE	

B-USE AS REQUIRED
E-ORDER BY THE CENTIMETER

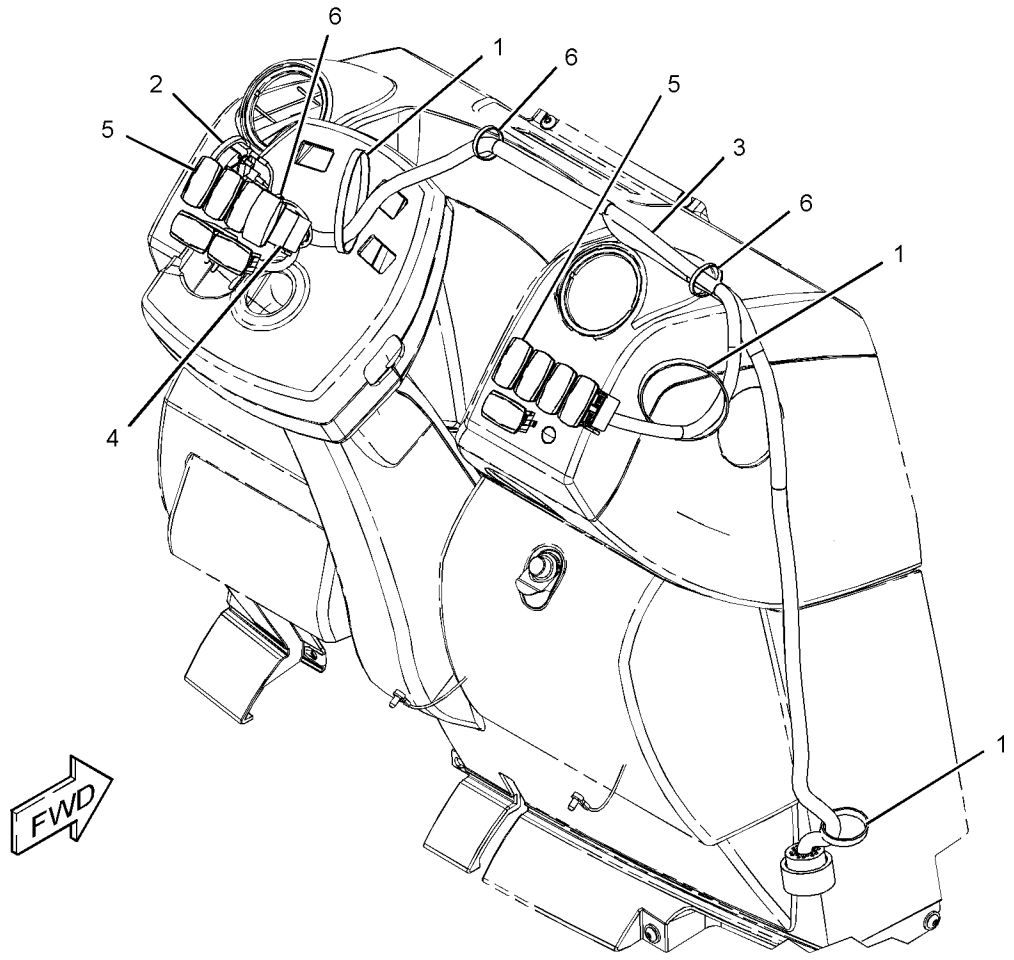

GRAPHIC #1 **<END>** g01190392

235-0336 WIRING GP-ENGINE

S/N: SHA1-UP

PART OF 213-9271 COMMON AR

SMCS-1408 **i02784044**

NOTE	REF NO	GRAPHIC REF	PART NUMBER	QTY	PART NAME 1 2 3 4 5 6 (PRODUCT LEVEL)	SEE PAGE
	1	1	**3J-4818**	1	LOCKWASHER	
	2	1,2	**7K-1181**	7	STRAP-CABLE	
	3	1	**7Y-3883**	1	CABLE AS	
		1	**1S-7251**	2	TERMINAL-RING (FOR 1/2-IN BOLT)	
E		1	**5P-0747**		CABLE (00-GA, BLACK) (40-CM)	
	4	1,2	**189-3158**	3	SUPPRESSOR-ARC	
	5	1	**164-9425**	1	HORN AS (24-VOLT, LOW TONE)	
		1	**199-9751**	1	SEAL-O-RING	
		1	**235-8747**	1	SWITCH-TEMPERATURE	
	6	2	**235-8747**	1	SWITCH-TEMPERATURE (ENGINE COOLANT)	
	7	2	**238-9397**	1	RESISTOR AS	
		2	**102-8802**	1	KIT-RECEPTACLE (2-PIN)	
					(INCLUDES RECEPTACLE AS & WEDGE)	
	8	2	**244-3106**	1	SENDER AS-TEMPERATURE (ENGINE COOLANT)	
		2	**186-3735**	2	PIN-CONNECTOR (16-GA TO 18-GA)	
		2	**102-8802**	1	KIT-RECEPTACLE (2-PIN)	
					(INCLUDES RECEPTACLE AS & WEDGE)	
	9	1	**246-8051**	1	HARNESS AS-ENGINE	
	10	2	**251-9570**	1	PLATE AS (RELAY)	
	11	1,2	**274-3774**	5	CAP-CONNECTOR	
	12	2	**115-1615**	3	RELAY AS (12-VOLT) (STARTING AID)	
	13	2	**199-9751**	1	SEAL-O-RING	
	14	1,2	**3S-2093**	29	STRAP-CABLE	
	15	1,2	**4P-7581**	8	CLIP (LADDER)	
	16	1,2	**4P-8134**	7	CLIP (LADDER)	
M	17	2	**5C-2874**	2	NUT (M5X0.8-THD)	
	18	2	**8F-1434**	2	LOCKWASHER	
	19	1	**8F-3590**	1	LOCKWASHER	
	20	2	**8T-0328**	2	WASHER-HARD (5.5X10X1-MM THK)	
	21	1,2	**8T-4121**	10	WASHER-HARD (11X21X2.5-MM THK)	
M	22	1	**8T-4136**	2	BOLT (M10X1.5X25-MM)	
M	23	1,2	**8T-4137**	7	BOLT (M10X1.5X20-MM)	
M	24	1	**8T-4139**	1	BOLT (M12X1.75X30-MM)	
M	25	2	**8T-4171**	3	BOLT (M6X1X12-MM)	
M	26	1,2	**8T-4189**	3	BOLT (M8X1.25X20-MM)	
	27	2	**8T-4205**	3	WASHER-HARD (7.2X14.5X2-MM THK)	
	28	1	**8T-4223**	2	WASHER-HARD (13.5X25.5X3-MM THK)	
	29	1,2	**8T-4224**	4	WASHER-HARD (8.8X16X2-MM THK)	
M	30	1	**8T-5093**	1	BOLT-LOCKING (M8X1.25X25-MM)	

E-ORDER BY THE CENTIMETER
M-METRIC PART

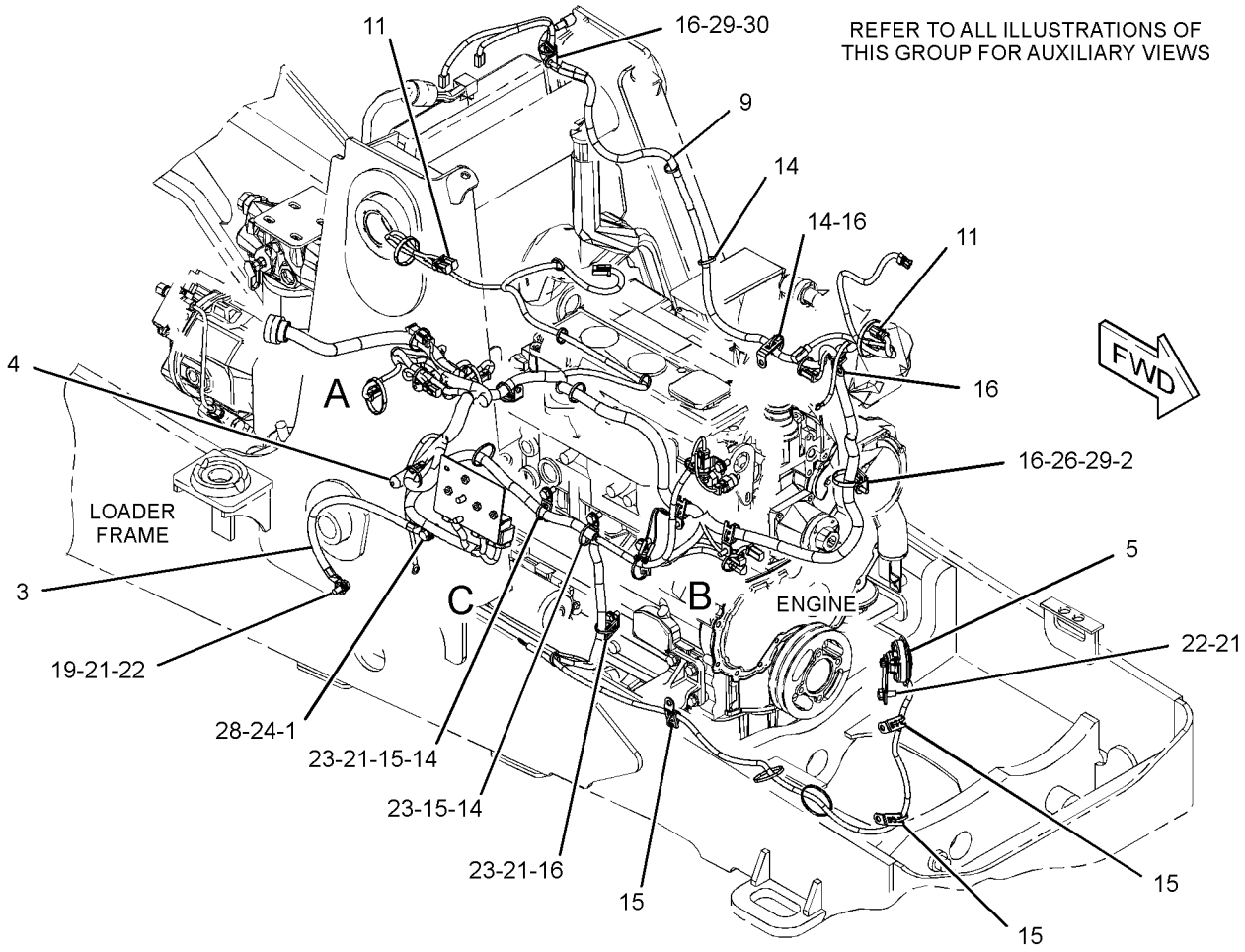

GRAPHIC #1 g01397844

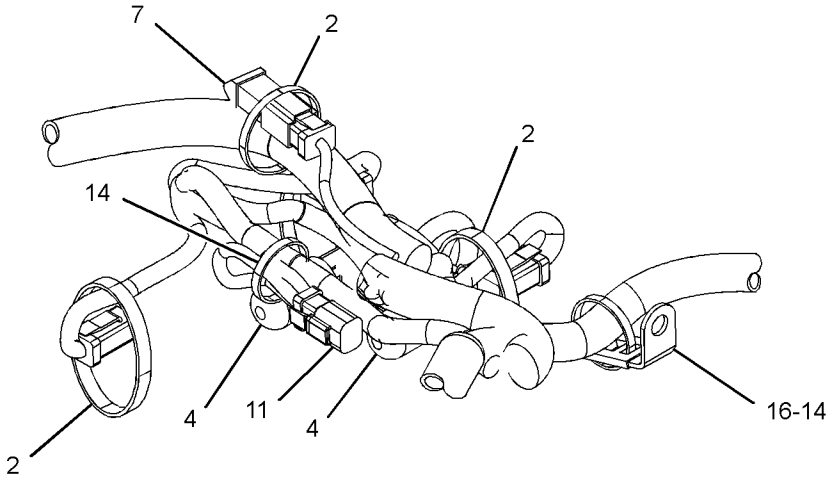

VIEW OF AREA A

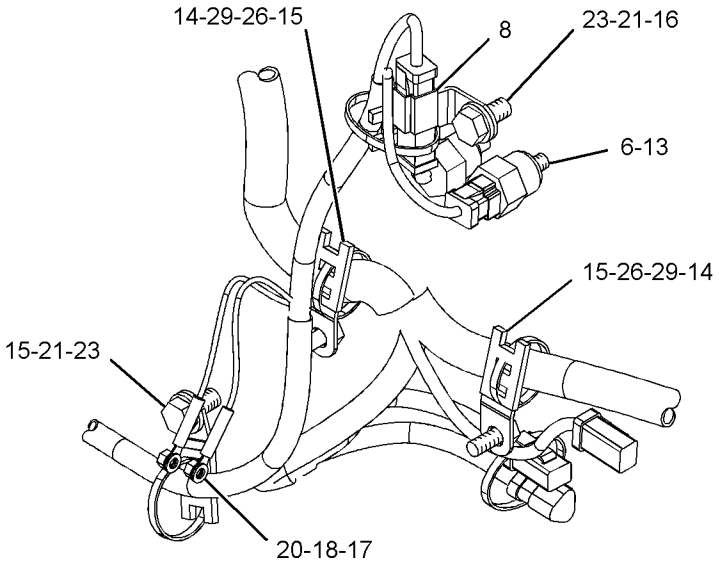

VIEW OF AREA B

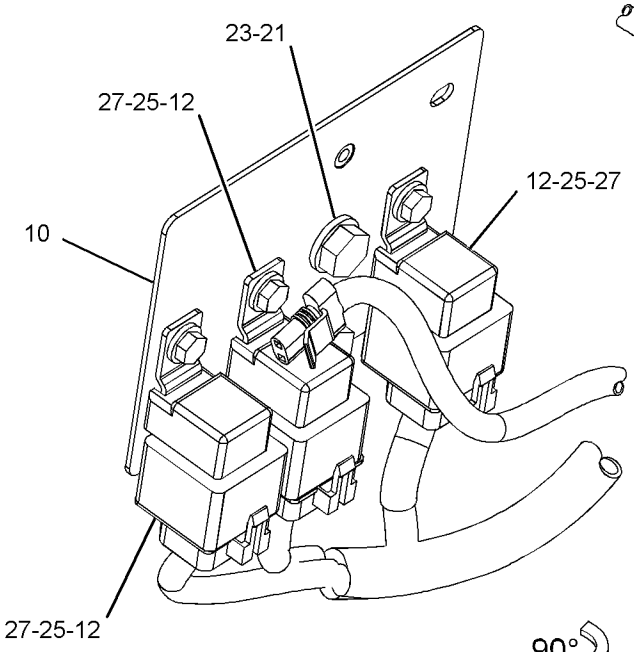

VIEW OF AREA C

GRAPHIC #2 **<END>** g01397845

211-4260 WIRING GP-EXTENDABLE STICK

S/N: SHA1-UP
PART OF 271-1401 STICK GP-EXTENDABLE
AN ATTACHMENT

SMCS-1408 **i02595944**

NOTE	REF NO	GRAPHIC REF	PART NUMBER	QTY	PART NAME 1 2 3 4 5 6 (PRODUCT LEVEL)	SEE PAGE
	1	1	**290-6806**	1	HARNESS AS-SENSOR (EXTENDABLE STICK)	
		1	**102-8804**	1	KIT-RECEPTACLE (4-PIN)	
					(INCLUDES RECEPTACLE AS & WEDGE)	
E		1	**6V-8523**		HOSE (250-CM)	
E		1	**8T-6885**		TUBE-HEAT SHRINK (19.05-MM DIA) (10-CM)	
		1	**155-2260**	1	KIT-CONNECTING PLUG (3-PIN)	
					(INCLUDES PLUG AS, WEDGE & INTERFACE SEAL)	
	2	1	**3S-2093**	2	STRAP-CABLE	

E-ORDER BY THE CENTIMETER

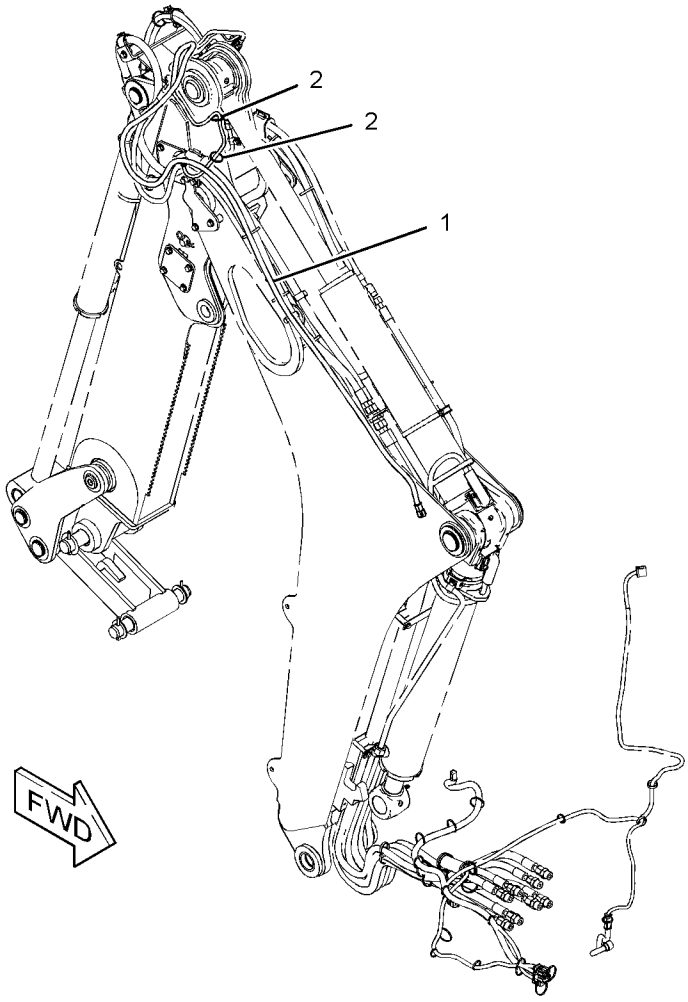

GRAPHIC #1 **<END>** g01208417

231-3513 WIRING GP-GRADE CONTROL–ACCUGRADE

S/N: SHA1-UP

PART OF 213-9293, 291-9203 BACKHOE AR-EXTENDABLE STICK, 213-9290, 291-9202 BACKHOE AR-STANDARD STICK AN ATTACHMENT

SMCS-1408 **i02770379**

NOTE	REF NO	GRAPHIC REF	PART NUMBER	QTY	PART NAME 1 2 3 4 5 6 (PRODUCT LEVEL)	SEE PAGE
M	1	1	**5C-7261**	4	NUT (M8X1.25-THD)	
	2	1	**5P-0599**	1	CLAMP-BAND	
	3	1	**5P-3860**	2	CLAMP-HOSE	
	4	1	**6I-1418**	4	SPACER (8.2X12.7X28.7-MM THK)	
	5	1	**8T-9655**	8	MOUNT-ISOLATION	
	6	1	**9R-2053**	3	BLOCK	
	7	1	**177-2215**	11	STRAP-DUAL CLAMP	
	8	1	**216-9069**	1	BRACKET AS	
M		1	**6V-9632**	1	NUT-WELD (M6X1-THD)	
	9	1	**263-9498**	1	HARNESS AS-WIRING (RESISTOR)	
	10	1	**268-7754**	1	HARNESS AS-CHASSIS (ECM)	
	11	1	**268-7761**	1	HARNESS AS-PLATFORM (DISPLAY)	
	12	1	**274-7409**	4	SCREW-TRUSS HEAD	
	13	1	**1S-6420**	1	CLIP	
	14	1	**2G-1133**	1	GROMMET	
	15	1	**3S-2093**	35	STRAP-CABLE	
	16	1	**9N-0869**	8	WASHER-HARD (8.8X25.5X2-MM THK)	
	17	1	**305-3102**	6	GUARD	
	18	1	**305-3103**	1	GUARD	
	24	1	**290-6805**	1	HARNESS AS-SENSOR (BOOM, STICK, BUCKET)	
	25	1	**290-6804**	1	HARNESS AS-SENSOR (SWING)	
	26	1	**232-1792**	1	HORN	
	27	1	**305-3104**	2	SLEEVE-ABRASION	
M	28	1	**8T-4137**	2	BOLT (M10X1.5X20-MM)	
	29	1	**8T-4121**	1	WASHER-HARD (11X21X2.5-MM THK)	
	30	1	**7X-7729**	1	WASHER (11X25X3-MM THK)	
	31	1	**7K-1181**	6	STRAP-CABLE	
	32	1	**4P-8134**	1	CLIP	
	33	1	**4P-7581**	1	CLIP	

M-METRIC PART

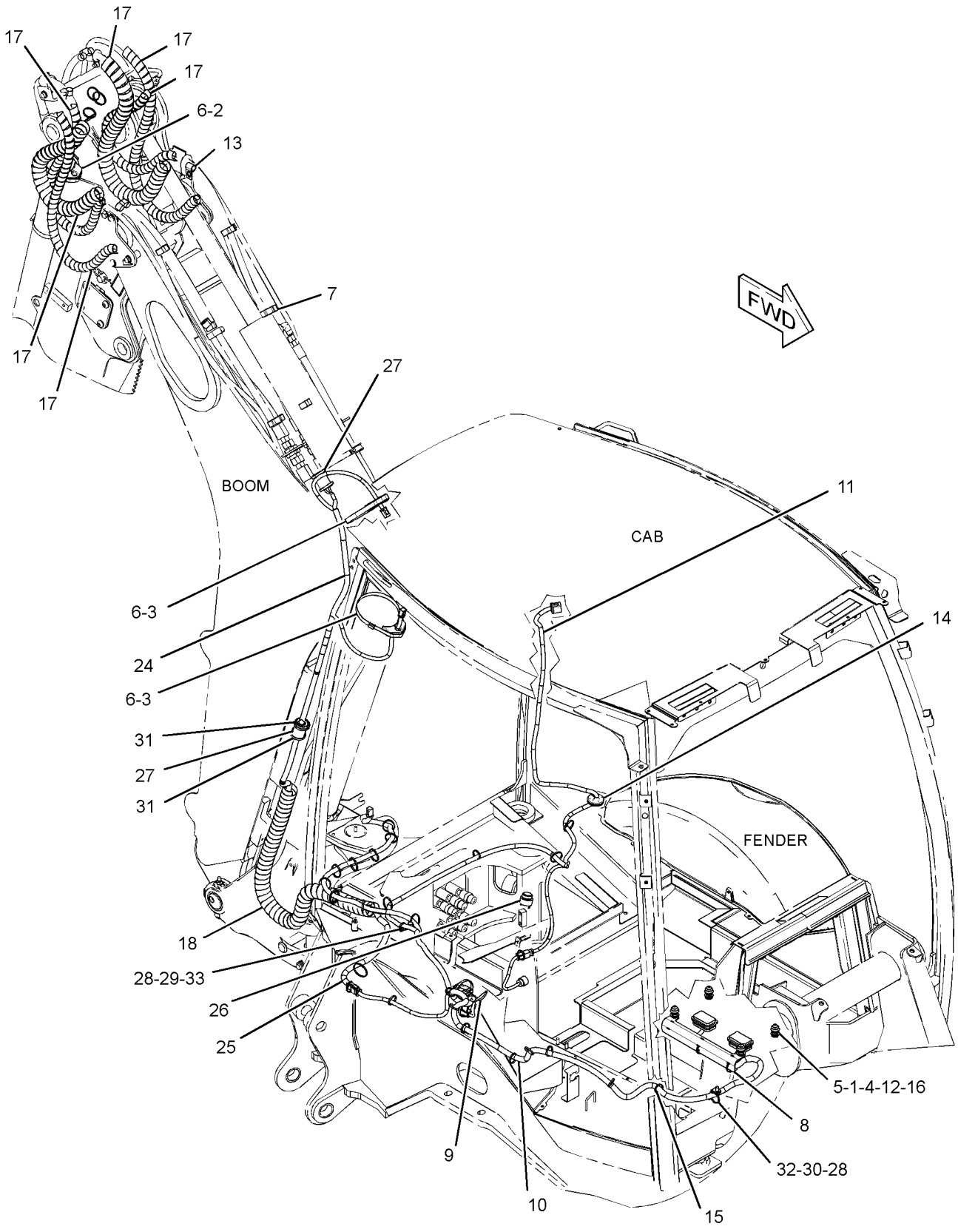

GRAPHIC #1 **<END>** g01387674

211-4269 WIRING GP-HEATER

S/N: SHA1-UP
PART OF 204-4161, 204-4162 CAB AR-ENCLOSED ROPS
AN ATTACHMENT

SMCS-1408, 7304 **i02531016**

NOTE	REF NO	GRAPHIC REF	PART NUMBER	QTY	PART NAME 1 2 3 4 5 6 (PRODUCT LEVEL)	SEE PAGE
	1	1	**213-6055**	1	HARNESS AS-HEATER & AIR COND	
E		1	**119-3662**		TUBE-HEAT SHRINK (10.85-MM DIA) (20-CM)	
E		1	**125-7874**		TUBE-HEAT SHRINK (5.72-MM DIA) (10-CM)	
		1	**9X-1055**	2	TERMINAL-RECEPTACLE	
		1	**091-2436**	7	TERMINAL-BLADE	
		1	**100-5041**	2	TERMINAL-RECEPTACLE	
		1	**104-1995**	11	TERMINAL-BLADE	
		1	**122-4401**	1	TERMINAL	
		1	**102-8802**	1	KIT-RECEPTACLE (2-PIN)	
		1	**102-8803**	1	KIT-RECEPTACLE (3-PIN)	
					(EACH RECEPTACLE KIT INCLUDES RECEPTACLE AS & WEDGE)	
		1	**8L-8413**	29	STRAP-CABLE	
		1	**9X-1054**	1	PLUG AS-CONNECTOR (4-PIN)	
		1	**155-2270**	1	KIT-CONNECTING PLUG (2-PIN)	
					(INCLUDES PLUG AS, WEDGE & INTERFACE SEAL)	
		1	**177-9648**	1	KIT-CONNECTING PLUG (2-PIN)	
		1	**177-9656**	1	KIT-CONNECTING PLUG (4-PIN)	
					(EACH PLUG KIT INCLUDES PLUG AS & WEDGE)	
	2	1	**214-4695**	1	SWITCH AS-ROCKER (BLOWER FAN SPEED)	
	3	1	**214-4703**	1	SWITCH AS-ROCKER (HEATER)	
	4	1	**275-0570**	1	BAR-BUS	
Y	5	1	**276-7287**	1	RELAY GP (12-VOLT)	149
	6	1	**115-1615**	1	RELAY AS (12-VOLT)	
	7	1	**3S-2093**	9	STRAP-CABLE	
M	8	1	**5C-2890**	1	NUT (M6X1-THD)	
M	9	1	**5C-7261**	1	NUT (M8X1.25-THD)	
M	10	1	**7X-2534**	1	BOLT (M6X1X50-MM)	
	11	1	**8T-4205**	1	WASHER-HARD (7.2X14.5X2-MM THK)	
	12	1	**8T-4224**	1	WASHER-HARD (8.8X16X2-MM THK)	
	13	1	**8T-8799**	1	BOOT	

E-ORDER BY THE CENTIMETER
M-METRIC PART
Y-SEPARATE ILLUSTRATION

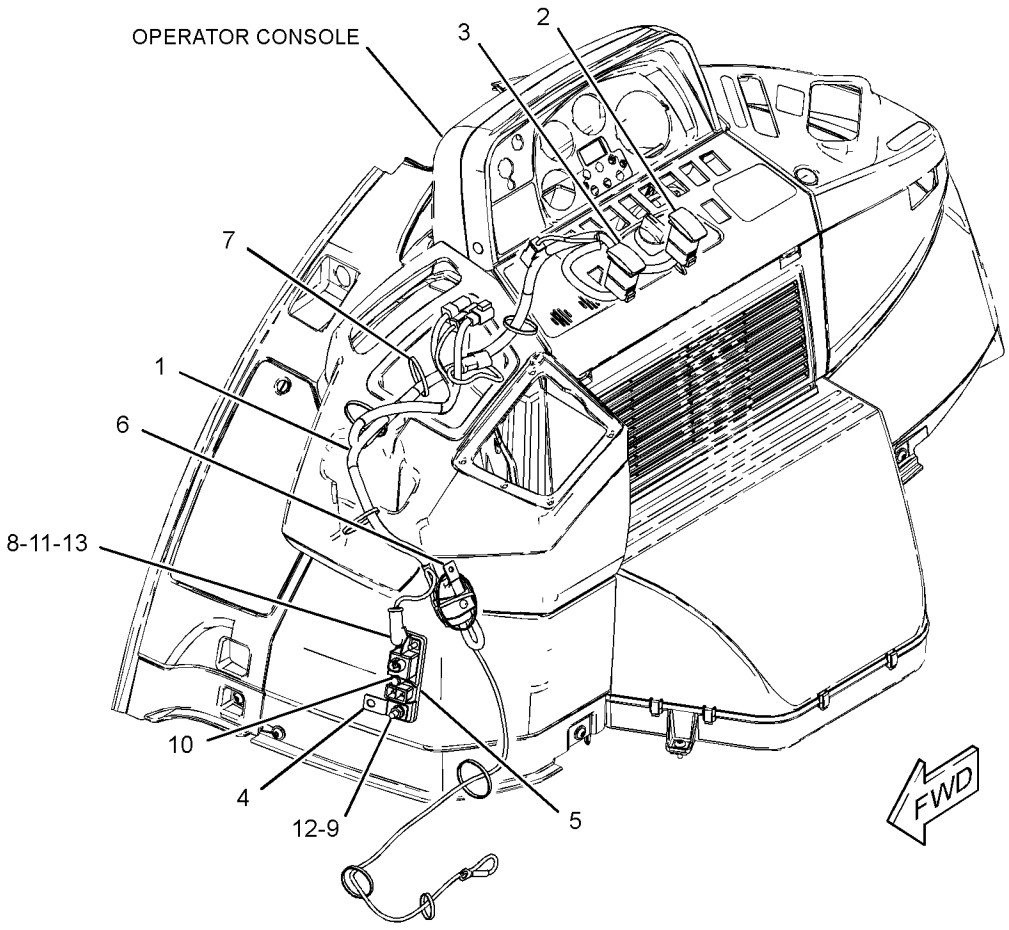

GRAPHIC #1 **<END>** g01282800

211-4262 WIRING GP-KICKOUT & POSITIONER

S/N: SHA1-UP
PART OF 213-9298 LOADER AR
TYPE 1

SMCS-5109, 5112, 5734 **i02465796**

NOTE	REF NO	GRAPHIC REF	PART NUMBER	QTY	PART NAME 1 2 3 4 5 6 (PRODUCT LEVEL)	SEE PAGE
	1	1	**118-7790**	1	BRACKET AS	
	2	1	**206-1486**	1	SWITCH AS-ROLLER (KICKOUT, POSITIONER)	
		1	**2H-3922**	1	LOCKWASHER	
		1	**6V-8363**	2	SCREW (10-32X0.312-IN)	
		1	**6V-8370**	1	NUT-HEX (3/4-32-THD)	
		1	**8F-1434**	2	LOCKWASHER	
		1	**9X-0199**	1	BOOT-SWITCH	
	3	1	**233-7977**	1	HARNESS AS-WIRING (KICKOUT, POSITIONER)	
		1	**102-8803**	1	KIT-RECEPTACLE (3-PIN)	
					(INCLUDES RECEPTACLE AS & WEDGE)	
	4	1	**3S-2093**	31	STRAP-CABLE	
M	5	1	**8T-4138**	2	BOLT (M6X1X20-MM)	
	6	1	**8T-4205**	2	WASHER-HARD (7.2X14.5X2-MM THK)	
	7	1	**225-7992**	1	HARNESS AS-WIRING (KICKOUT, POSITIONER)	
		1	**9X-3401**	2	PIN-CONNECTOR (16-GA TO 18-GA) (16-GA TO 18-GA)	
		1	**8L-8413**	2	STRAP-CABLE	
		1	**102-8802**	1	KIT-RECEPTACLE (2-PIN)	
					(INCLUDES RECEPTACLE AS & WEDGE)	
		1	**155-2270**	2	KIT-CONNECTING PLUG (2-PIN)	
		1	**155-2260**	1	KIT-CONNECTING PLUG (3-PIN)	
					(EACH PLUG KIT INCLUDES PLUG AS, WEDGE & INTERFACE SEAL)	
	8	1	**9X-7344**	1	GROMMET	
G	9	1	**160-2245**		SLEEVE-ABRASION (12-IN)	

G-ORDER BY THE INCH
M-METRIC PART

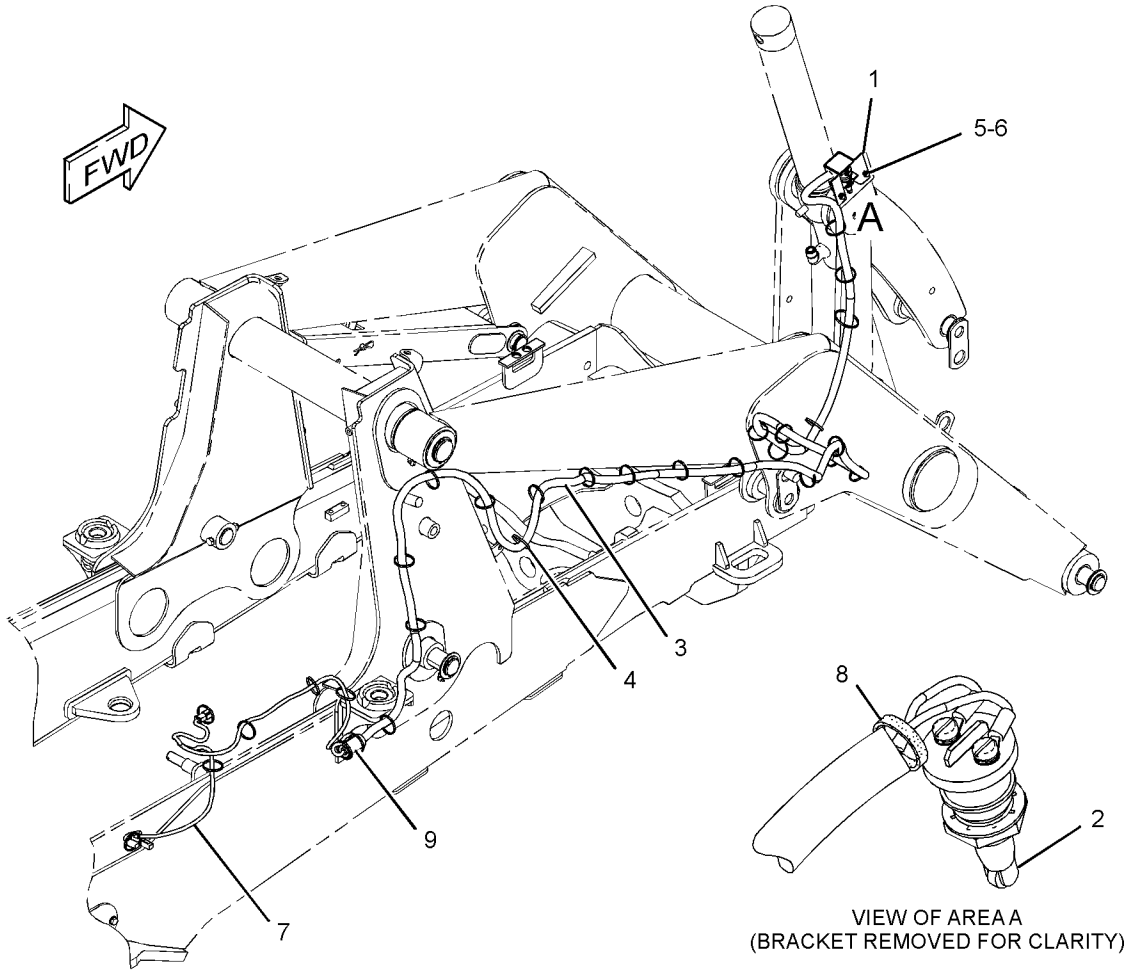

GRAPHIC #1 **<END>** g01233398

211-4262 WIRING GP-KICKOUT & POSITIONER

S/N: SHA1-UP
PART OF 213-9298 LOADER AR
TYPE 2

SMCS-5109, 5112, 5734 **i02536785**

NOTE	REF NO	GRAPHIC REF	PART NUMBER	QTY	PART NAME 1 2 3 4 5 6 (PRODUCT LEVEL)	SEE PAGE
	1	1	**118-7790**	1	BRACKET AS	
	2	1	**206-1486**	1	SWITCH AS-ROLLER (KICKOUT, POSITIONER)	
		1	**2H-3922**	1	LOCKWASHER	
		1	**6V-8363**	2	SCREW (10-32X0.312-IN)	
		1	**6V-8370**	1	NUT-HEX (3/4-32-THD)	
		1	**8F-1434**	2	LOCKWASHER	
		1	**9X-0199**	1	BOOT-SWITCH	
	3	1	**233-7977**	1	HARNESS AS-WIRING (KICKOUT, POSITIONER)	
		1	**5P-1476**	2	TERMINAL-BLADE (14-GA TO 16-GA, NO. 10 SCREW)	
E		1	**6V-8523**		HOSE (453-CM)	
		1	**102-8803**	1	KIT-RECEPTACLE (3-PIN)	
					(INCLUDES RECEPTACLE AS & WEDGE)	
	4	1	**3S-2093**	31	STRAP-CABLE	
M	5	1	**8T-4138**	2	BOLT (M6X1X20-MM)	
	6	1	**8T-4205**	2	WASHER-HARD (7.2X14.5X2-MM THK)	
	7	1	**225-7992**	1	HARNESS AS-WIRING (KICKOUT, POSITIONER)	
E		1	**125-7874**		TUBE-HEAT SHRINK (5.72-MM DIA) (15-CM)	
		1	**8L-8413**	2	STRAP-CABLE	
		1	**102-8802**	1	KIT-RECEPTACLE (2-PIN)	
					(INCLUDES RECEPTACLE AS & WEDGE)	
		1	**155-2270**	1	KIT-CONNECTING PLUG (2-PIN)	
		1	**155-2274**	1	KIT-CONNECTING PLUG (6-PIN)	
		1	**155-2260**	1	KIT-CONNECTING PLUG (3-PIN)	
					(EACH PLUG KIT INCLUDES PLUG AS & WEDGE)	
	8	1	**9X-7344**	1	GROMMET	
CG	9	1	**160-2246**		SLEEVE-ABRASION (12-IN)	

C-CHANGE FROM PREVIOUS TYPE
E-ORDER BY THE CENTIMETER
G-ORDER BY THE INCH
M-METRIC PART

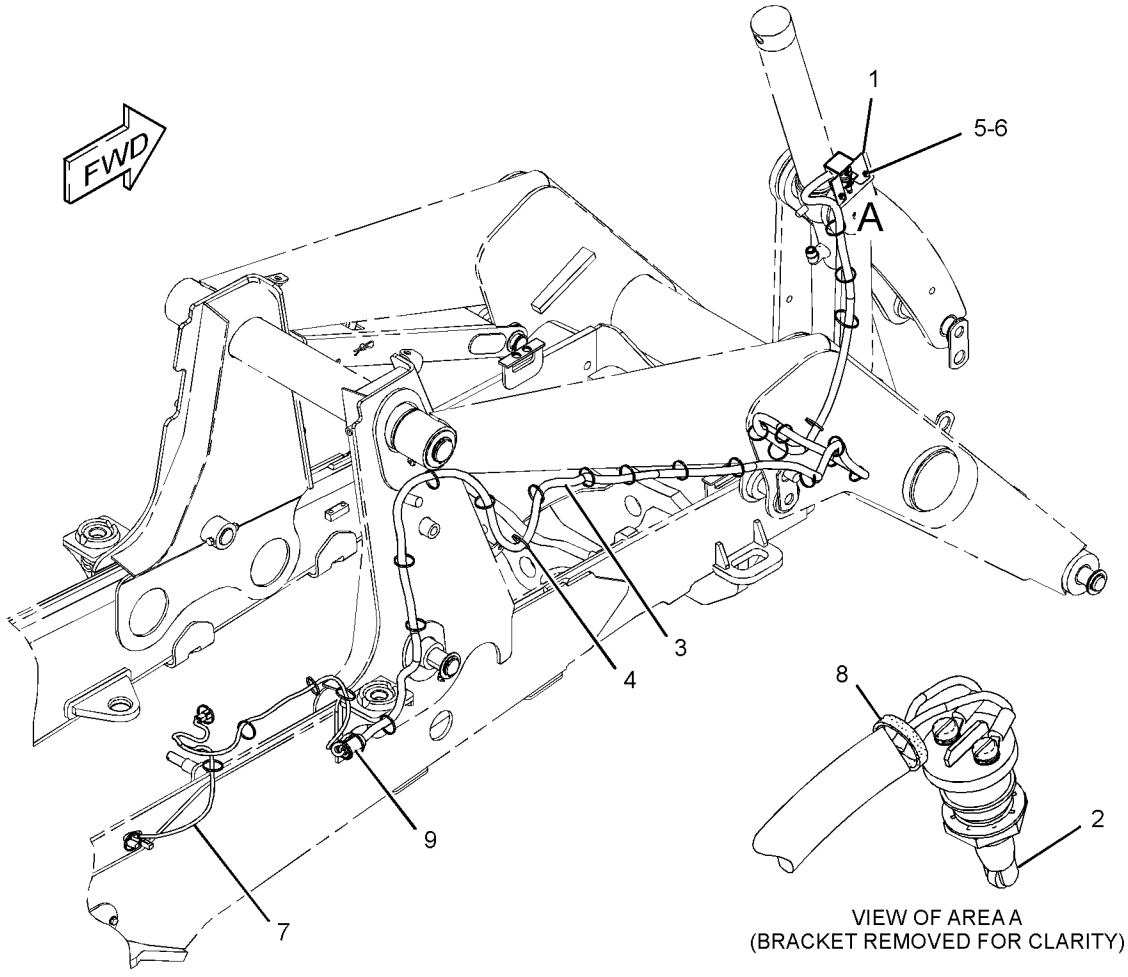

GRAPHIC #1 **<END>** g01233398

211-4262 WIRING GP-KICKOUT & POSITIONER

S/N: SHA1-UP
PART OF 213-9298 LOADER AR
TYPE 3

SMCS-5109, 5112, 5734 **i02676092**

NOTE	REF NO	GRAPHIC REF	PART NUMBER	QTY	PART NAME 1 2 3 4 5 6 (PRODUCT LEVEL)	SEE PAGE
	1	1	**118-7790**	1	BRACKET AS	
	2	1	**206-1486**	1	SWITCH AS-ROLLER (KICKOUT, POSITIONER)	
		1	**2H-3922**	1	LOCKWASHER	
		1	**6V-8363**	2	SCREW (10-32X0.312-IN)	
		1	**6V-8370**	1	NUT-HEX (3/4-32-THD)	
		1	**8F-1434**	2	LOCKWASHER	
		1	**9X-0199**	1	BOOT-SWITCH	
	3	1	**233-7977**	1	HARNESS AS-WIRING (KICKOUT, POSITIONER)	
D		1	**6V-2722**		TUBE-HEAT SHRINK (25.4-MM DIA) (1-M)	
E		1	**6V-8523**		HOSE (453-CM)	
		1	**102-8803**	1	KIT-RECEPTACLE (3-PIN)	
					(INCLUDES RECEPTACLE AS & WEDGE)	
	4	1	**3S-2093**	31	STRAP-CABLE	
M	5	1	**8T-4138**	2	BOLT (M6X1X20-MM)	
	6	1	**8T-4205**	2	WASHER-HARD (7.2X14.5X2-MM THK)	
C	7	1	**290-6801**	1	HARNESS AS-WIRING	
		1	**102-8802**	1	KIT-RECEPTACLE (2-PIN)	
					(INCLUDES RECEPTACLE AS & WEDGE)	
		1	**155-2260**	1	KIT-CONNECTING PLUG (3-PIN)	
		1	**155-2270**	1	KIT-CONNECTING PLUG (2-PIN)	
					(EACH PLUG CONNECTING KIT INCLUDES PLUG AS & WEDGE)	
	8	1	**9X-7344**	1	GROMMET	
G	9	1	**160-2246**		SLEEVE-ABRASION (12-IN)	
C	10	1	**7K-1181**	1	STRAP-CABLE	

C-CHANGE FROM PREVIOUS TYPE
D-ORDER BY THE METER
E-ORDER BY THE CENTIMETER
G-ORDER BY THE INCH
M-METRIC PART

211-4262 **WIRING GP-KICKOUT & POSITIONER** *(contd.)* **i02676092**

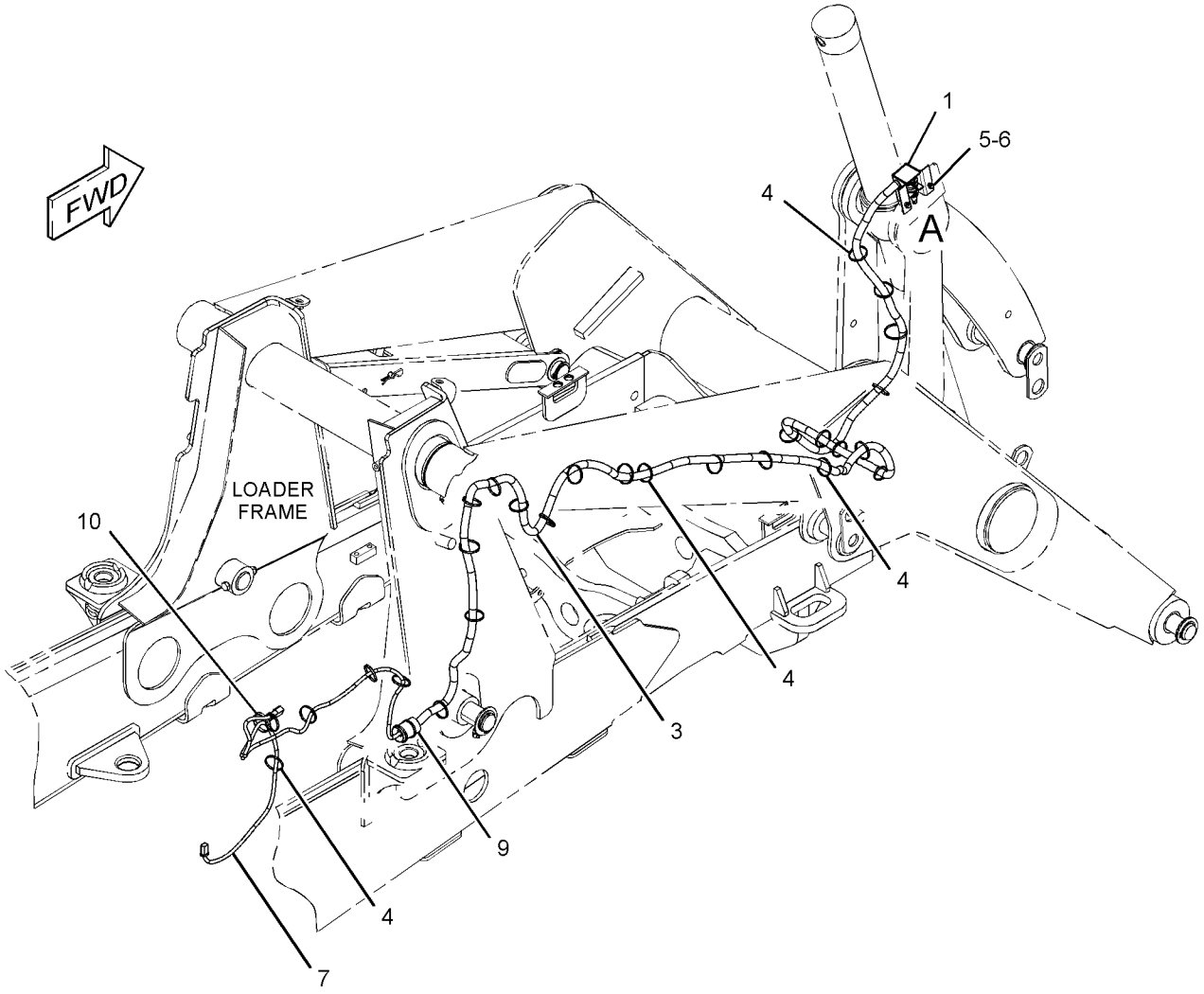

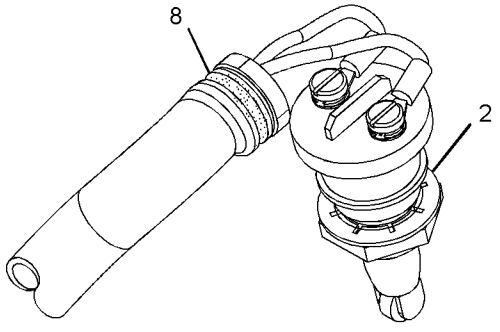

VIEW OF AREA A
(BRACKET REMOVED)

GRAPHIC #1 **<END>** g01350931

211-4242 WIRING GP-PLATFORM

S/N: SHA1-1528

PART OF 204-4161, 204-4162, 228-4602 CAB AR-ENCLOSED ROPS, 204-4160, 204-4164 CANOPY AR-OPEN ROPS AN ATTACHMENT

SMCS-1408 **i02545024**

NOTE	REF NO	GRAPHIC REF	PART NUMBER	QTY	PART NAME 1 2 3 4 5 6 (PRODUCT LEVEL)	SEE PAGE
E	1	1	**103-2543**		SEAL (1-CM)	
	2	2	**4B-4863**	1	WASHER (4.7X11X1.2-MM THK)	
	3	1	**4I-3038**	8	WASHER (3.3X8X0.5-MM THK)	
	4	1	**4P-8134**	1	CLIP	
	5	2	**7G-1060**	1	STRAP AS-GROUND	
	6	2	**7K-1181**	21	STRAP-CABLE	
	7	2	**7T-4848**	1	FLASHER AS (12-VOLT)	
	8	1	**8T-8799**	3	BOOT	
	9	2	**6K-0806**	1	STRAP-CABLE	
	10	1	**8C-6354**	1	CAP-RECEPTACLE	
	11	1	**206-1345**	3	STRAP-CABLE	
	12	2	**106-8704**	3	SUPPRESSOR AS-ARC	
					(EACH INCLUDES)	
		2	**186-3735**	2	PIN-CONNECTOR (16-GA TO 18-GA)	
		2	**102-8802**	1	KIT-RECEPTACLE (2-PIN)	
					(INCLUDES RECEPTACLE AS & WEDGE)	
	14	1,2	**146-9439**	5	RELAY AS (12-VOLT)	
	15	2	**178-7539**	1	RECEPTACLE AS (POWER SUPPLY)	
	16	1	**179-6401**	5	SCREW-PAN HEAD (6-32X0.5-IN)	
	17	2	**201-1024**	2	BRACKET	
	18	1	**206-1718**	1	BRACKET AS	
	19	2	**214-4702**	1	SWITCH AS-ROCKER (HAZARD WARNING LIGHTS)	
	20	2	**214-4717**	1	INDICATOR AS (TURN SIGNAL LH, PARKING BRAKE)	
	21	2	**214-4723**	1	INDICATOR AS (HIGH BEAM, TURN SIGNAL RH)	
	22	1	**225-7970**	1	BRACKET AS	
	23	2	**227-1057**	1	PLUG-HOLE	
	24	2	**246-2671**	1	SWITCH AS-COLUMN (HD LIGHT, TURN SIG, WDO WIPER)	
	25	2	**246-8030**	1	HARNESS AS-PLATFORM	
		1	**7N-7221**	3	TERMINAL (18-GA TO 22-GA)	
		1	**134-2540**	1	RECEPTACLE AS (3-PIN)	
		2	**091-2436**	13	TERMINAL-BLADE	
		2	**111-6792**	2	TERMINAL-RECEPTACLE	
		2	**111-6793**	1	TERMINAL-RECEPTACLE	
		2	**155-2255**	6	KIT-CONNECTING PLUG (12-PIN)	
		2	**155-2265**	2	KIT-CONNECTING PLUG (8-PIN)	
		2	**155-2260**	3	KIT-CONNECTING PLUG (3-PIN)	
		2	**155-2270**	10	KIT-CONNECTING PLUG (2-PIN)	
		2	**155-2271**	2	KIT-CONNECTING PLUG (4-PIN)	
		2	**155-2274**	4	KIT-CONNECTING PLUG (6-PIN)	
					(EACH PLUG KIT INCLUDES PLUG AS, WEDGE & INTERFACE SEAL)	
		2	**196-2384**	1	KIT-CONNECTING PLUG (8-PIN)	
		2	**196-2385**	1	KIT-CONNECTING PLUG (8-PIN)	
		2	**196-2386**	1	KIT-CONNECTING PLUG (8-PIN)	
		2	**242-6114**	1	KIT-CONNECTING PLUG (8-PIN)	
		2	**242-6116**	1	KIT-CONNECTING PLUG (8-PIN)	
		2	**242-6118**	1	KIT-CONNECTING PLUG (8-PIN)	
		2	**242-6120**	1	KIT-CONNECTING PLUG (8-PIN)	
					(EACH PLUG KIT INCLUDES PLUG AS-CONNECTOR, LOCK-CONNECTOR & TERMINAL ASSEMBLIES)	
		2	**102-8802**	1	KIT-RECEPTACLE (2-PIN)	
		2	**102-8804**	3	KIT-RECEPTACLE (4-PIN)	
		2	**102-8805**	1	KIT-RECEPTACLE (6-PIN)	

211-4242 **WIRING GP-PLATFORM** ***(contd.)*** **i02545024**

NOTE	REF NO	GRAPHIC REF	PART NUMBER	QTY	PART NAME 1 2 3 4 5 6 (PRODUCT LEVEL)	SEE PAGE
		2	**102-8801**	2	KIT-RECEPTACLE (12-PIN)	
					(EACH RECEPTACLE KIT INCLUDES RECEPTACLE AS & WEDGE)	
		2	**9W-1951**	1	RECEPTACLE-CONNECTOR (9-PIN)	
		2	**9X-4813**	1	RECEPTACLE AS-CONNECTOR (3-PIN)	
		2	**134-2540**	1	RECEPTACLE AS (3-PIN)	
		2	**167-3692**	3	RECEPTACLE AS-CONNECTOR (31-PIN)	
		2	**230-4011**	3	PLUG AS-CONNECTOR (2-PIN)	
		2	**111-6795**	1	HOUSING-RELAY	
		2	**128-4249**	3	LOCKWASHER	
		2	**211-0052**	3	NUT (11/16-18-THD)	
		2	**8L-8413**	195	STRAP-CABLE	
		2	**128-4123**	4	SEAL	
E		2	**119-3662**		TUBE-HEAT SHRINK (10.85-MM DIA) (26-CM)	
E		2	**125-7874**		TUBE-HEAT SHRINK (5.72-MM DIA) (175-CM)	
E		2	**125-7875**		TUBE-HEAT SHRINK (7.44-MM DIA) (25-CM)	
D		2	**141-8061**		TAPE (3-M)	
	26	1	**267-2701**	1	FUSE (60-AMPERE)	
	27	1	**268-7759**	1	HARNESS AS-POWER	
		1	**8L-8413**	7	STRAP-CABLE	
	28	1	**275-0553**	1	BAR-BUS	
Y	29	1	**276-7290**	1	RELAY GP (12-VOLT) (12-VDC)	150
Y	30	1	**276-7291**	1	RELAY GP (12-VOLT) (12-VDC)	151
	31	2	**156-6175**	1	CLIP	
	32	2	**1L-6377**	1	BUTTON-PLUG	
	33	1	**247-8199**	1	PANEL GP-FUSE (INCLUDES RELAY)	
	34	2	**3S-2093**	25	STRAP-CABLE	
M	35	1,2	**5C-2890**	4	NUT (M6X1-THD)	
M	36	1	**5C-7261**	6	NUT (M8X1.25-THD)	
M	37	1	**7X-2534**	2	BOLT (M6X1X50-MM)	
	38	2	**7X-7729**	2	WASHER (11X25X3-MM THK)	
	39	2	**8C-3398**	1	LOCKWASHER	
M	40	2	**8T-0352**	2	BOLT (M5X0.8X45-MM)	
	41	2	**8T-4121**	4	WASHER-HARD (11X21X2.5-MM THK)	
M	42	2	**8T-4133**	2	NUT (M10X1.5-THD)	
M	43	2	**8T-4136**	2	BOLT (M10X1.5X25-MM)	
M	44	1,2	**8T-4138**	7	BOLT (M6X1X20-MM)	
M	45	1,2	**8T-4200**	5	BOLT (M8X1.25X16-MM)	
	46	1,2	**8T-4205**	14	WASHER-HARD (7.2X14.5X2-MM THK)	
	47	1,2	**8T-4224**	11	WASHER-HARD (8.8X16X2-MM THK)	
E	48	1	**3E-8299**		SEAL (3-CM)	
E	49	1	**3E-8299**		SEAL (3-CM)	
E	50	1	**3E-8299**		SEAL (3-CM)	
F		1	**235-4752**	1	WIRE AS	

D-ORDER BY THE METER
E-ORDER BY THE CENTIMETER
F-NOT SHOWN
M-METRIC PART
Y-SEPARATE ILLUSTRATION

211-4242 **WIRING GP-PLATFORM** *(contd.)* **i02545024**

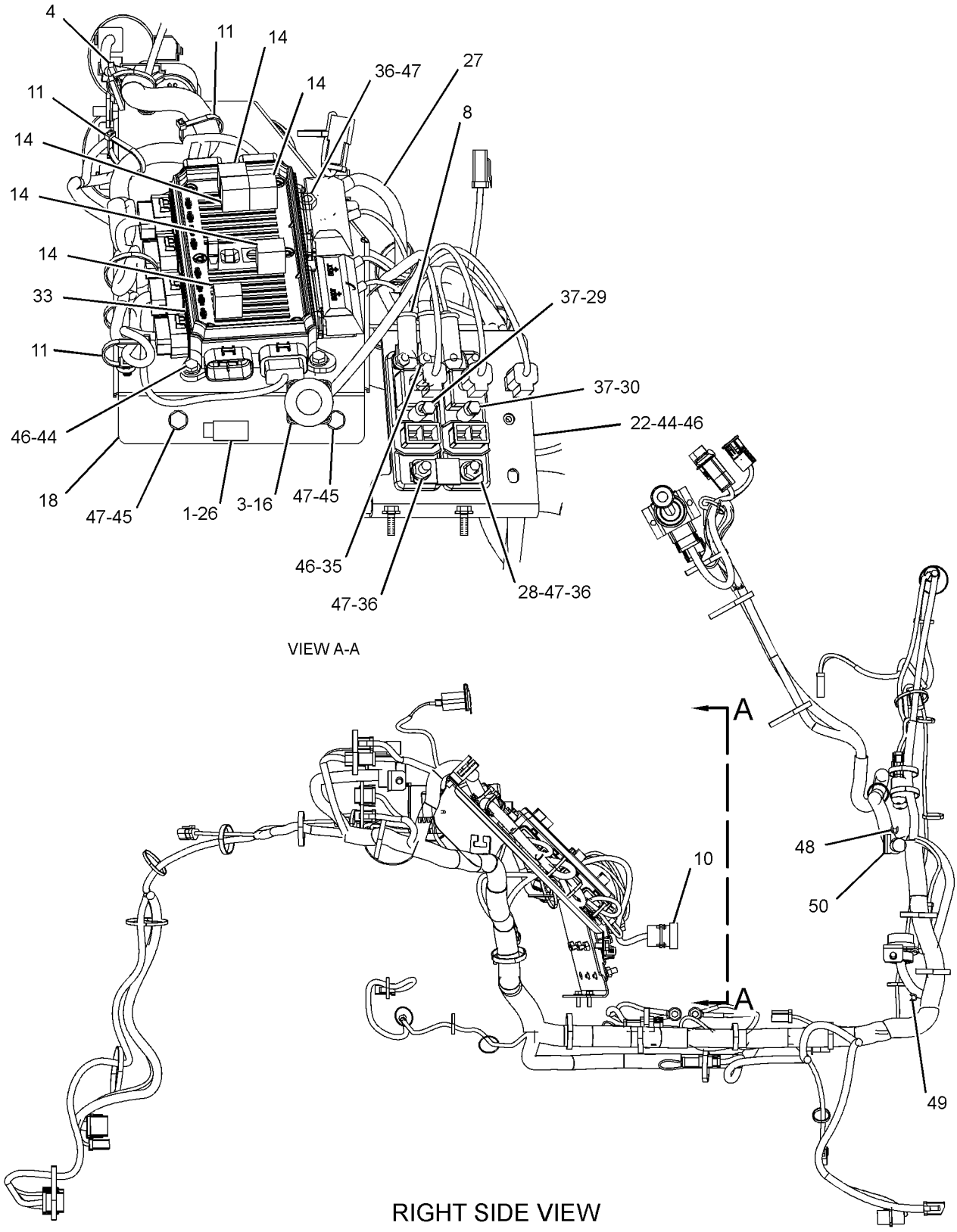

GRAPHIC #1 g01260469

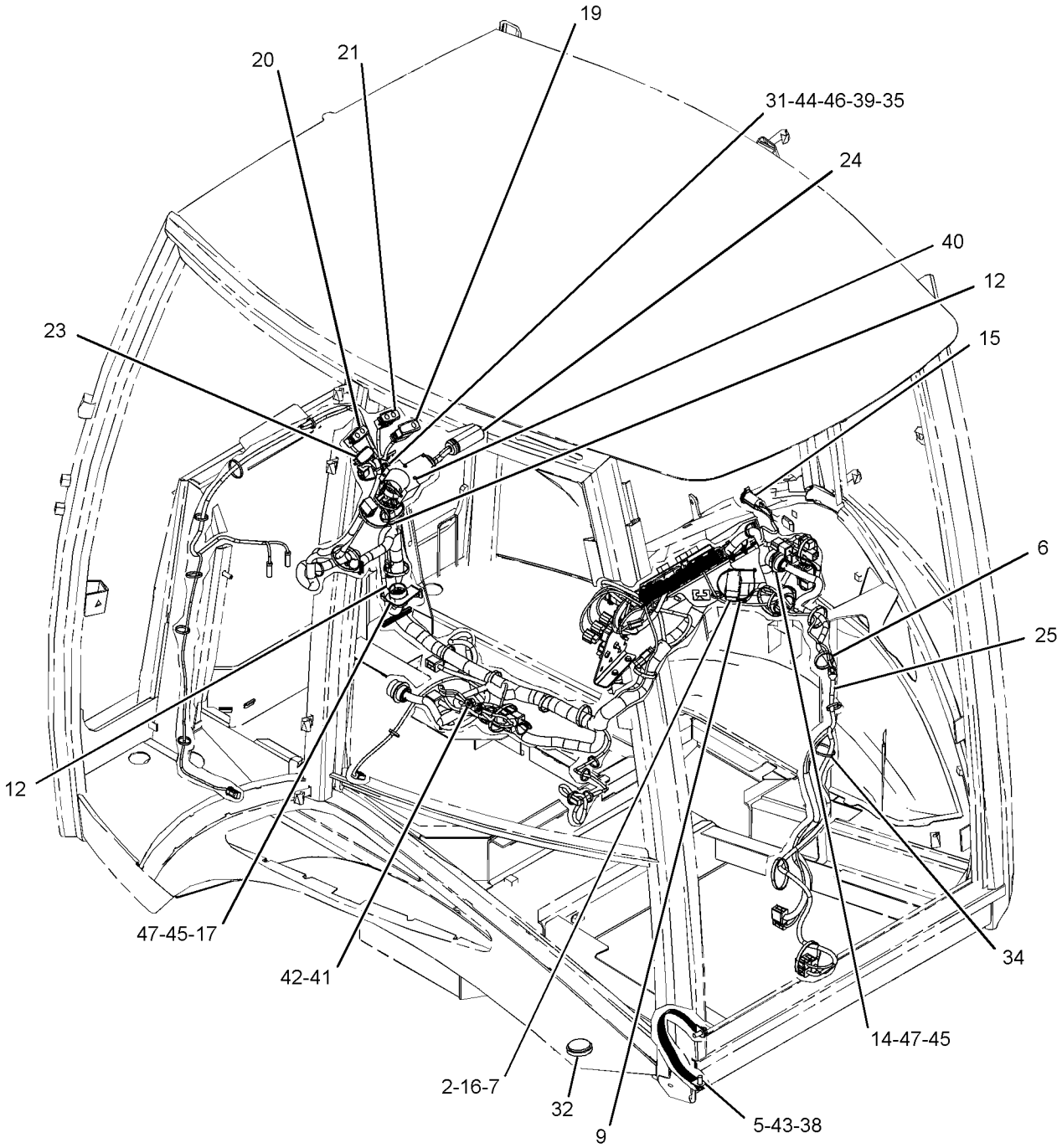

GRAPHIC #2 **<END>** g01281842

ELECTRICAL AND STARTING SYSTEM

211-4242 WIRING GP-PLATFORM

S/N: SHA1529-UP

PART OF 204-4161, 204-4162, 228-4602 CAB AR-ENCLOSED ROPS, 204-4160, 204-4164 CANOPY AR-OPEN ROPS AN ATTACHMENT

SMCS-1408 **i02645000**

NOTE	REF NO	GRAPHIC REF	PART NUMBER	QTY	PART NAME 1 2 3 4 5 6 (PRODUCT LEVEL)	SEE PAGE
E	1	1	**103-2543**		SEAL (1-CM)	
	2	2	**4B-4863**	1	WASHER (4.7X11X1.2-MM THK)	
	3	1	**4I-3038**	8	WASHER (3.3X8X0.5-MM THK)	
	4	1	**4P-8134**	1	CLIP	
	5	2	**7G-1060**	1	STRAP AS-GROUND	
	6	2	**7K-1181**	21	STRAP-CABLE	
	7	2	**7T-4848**	1	FLASHER AS (12-VOLT)	
	8	1	**8T-8799**	3	BOOT	
	9	2	**6K-0806**	1	STRAP-CABLE	
	10	1	**8C-6354**	1	CAP-RECEPTACLE	
	11	1	**206-1345**	3	STRAP-CABLE	
	12	2	**106-8704**	3	SUPPRESSOR AS-ARC	
	14	1	**146-9439**	1	RELAY AS (12-VOLT) (POSITION LAMP)	
	14A	1	**146-9439**	1	RELAY AS (12-VOLT) (HORN)	
	14B	1	**146-9439**	1	RELAY AS (12-VOLT) (BACKUP ALARM)	
	14C	1	**146-9439**	1	RELAY AS (12-VOLT) (DIFFERENTIAL LOCK)	
	14D	1	**146-9439**	1	RELAY AS (12-VOLT) (IMPLEMENT DISABLE)	
	15	2	**178-7539**	1	RECEPTACLE AS (POWER SUPPLY)	
	16	1,2	**179-6401**	5	SCREW-PAN HEAD (6-32X0.5-IN)	
	17	2	**201-1024**	2	BRACKET	
	18	1	**206-1718**	1	BRACKET AS	
	19	2	**214-4702**	1	SWITCH AS-ROCKER (HAZARD WARNING LIGHTS)	
	20	2	**214-4717**	1	INDICATOR AS (TURN SIGNAL LH, PARKING BRAKE)	
	21	2	**214-4723**	1	INDICATOR AS (HIGH BEAM, TURN SIGNAL RH)	
	22	1	**225-7970**	1	BRACKET AS	
	23	2	**227-1057**	1	PLUG-HOLE	
C	24	2	**246-2671**	1	SWITCH AS-COLUMN (HD LIGHT, TURN SIG, WDO WIPER)	
	25	2	**246-8030**	1	HARNESS AS-PLATFORM	
		2	**155-2255**	6	KIT-CONNECTING PLUG (12-PIN)	
		2	**155-2265**	2	KIT-CONNECTING PLUG (8-PIN)	
		2	**155-2260**	3	KIT-CONNECTING PLUG (3-PIN)	
		2	**155-2270**	10	KIT-CONNECTING PLUG (2-PIN)	
		2	**155-2271**	2	KIT-CONNECTING PLUG (4-PIN)	
		2	**155-2274**	4	KIT-CONNECTING PLUG (6-PIN)	
					(EACH PLUG KIT INCLUDES PLUG AS, WEDGE & INTERFACE SEAL)	
		2	**196-2384**	1	KIT-CONNECTING PLUG (8-PIN)	
		2	**196-2385**	1	KIT-CONNECTING PLUG (8-PIN)	
		2	**196-2386**	1	KIT-CONNECTING PLUG (8-PIN)	
		2	**242-6114**	1	KIT-CONNECTING PLUG (8-PIN)	
		2	**242-6116**	1	KIT-CONNECTING PLUG (8-PIN)	
		2	**242-6118**	1	KIT-CONNECTING PLUG (8-PIN)	
		2	**242-6120**	1	KIT-CONNECTING PLUG (8-PIN)	
					(EACH PLUG KIT INCLUDES PLUG AS-CONNECTOR, LOCK-CONNECTOR & TERMINAL ASSEMBLIES)	
		2	**102-8802**	1	KIT-RECEPTACLE (2-PIN)	
		2	**102-8804**	3	KIT-RECEPTACLE (4-PIN)	
		2	**102-8805**	1	KIT-RECEPTACLE (6-PIN)	
		2	**102-8801**	2	KIT-RECEPTACLE (12-PIN)	
					(EACH RECEPTACLE KIT INCLUDES RECEPTACLE AS & WEDGE)	
		2	**9W-1951**	1	RECEPTACLE-CONNECTOR (9-PIN)	
		2	**9X-4813**	1	RECEPTACLE AS-CONNECTOR (3-PIN)	
		2	**7R-2750**	2	SEAL-CONNECTOR	

211-4242 **WIRING GP-PLATFORM** *(contd.)* **i02645000**

NOTE	REF NO	GRAPHIC REF	PART NUMBER	QTY	PART NAME 1 2 3 4 5 6 (PRODUCT LEVEL)	SEE PAGE
		2	**7R-2751**	20	PLUG-CONNECTOR	
		2	**134-2540**	1	RECEPTACLE AS (3-PIN)	
		2	**167-3692**	3	RECEPTACLE AS-CONNECTOR (31-PIN)	
		2	**230-4011**	3	PLUG AS-CONNECTOR (2-PIN)	
		2	**111-6795**	1	HOUSING-RELAY	
		2	**111-6816**	1	LOCK	
		2	**128-4249**	3	LOCKWASHER	
		2	**211-0052**	3	NUT (11/16-18-THD)	
		2	**8L-8413**	195	STRAP-CABLE	
		2	**128-4123**	3	SEAL	
E		2	**119-3662**		TUBE-HEAT SHRINK (10.85-MM DIA) (26-CM)	
E		2	**125-7874**		TUBE-HEAT SHRINK (5.72-MM DIA) (170-CM)	
E		2	**125-7875**		TUBE-HEAT SHRINK (7.44-MM DIA) (25-CM)	
		2	**128-5016**	30	SEAL-CABLE	
B		2	**141-8061**		TAPE	
	26	1	**267-2701**	1	FUSE (60-AMPERE)	
	27	1	**268-7759**	1	HARNESS AS-POWER	
		1	**8L-8413**	7	STRAP-CABLE	
	28	1	**275-0553**	1	BAR-BUS	
Y	29	1	**276-7290**	1	RELAY GP (12-VOLT) (POWER, 1)	150
Y	30	1	**276-7291**	1	RELAY GP (12-VOLT) (POWER, 2)	151
	31	2	**156-6175**	1	CLIP	
	32	2	**1L-6377**	1	BUTTON-PLUG	
Y	33	1	**247-8199**	1	PANEL GP-FUSE (INCLUDES RELAY)	148
	34	2	**3S-2093**	25	STRAP-CABLE	
M	35	1,2	**5C-2890**	4	NUT (M6X1-THD)	
M	36	1	**5C-7261**	6	NUT (M8X1.25-THD)	
M	37	1	**7X-2534**	2	BOLT (M6X1X50-MM)	
	38	2	**7X-7729**	2	WASHER (11X25X3-MM THK)	
	39	2	**8C-3398**	1	LOCKWASHER	
M	40	2	**8T-0352**	2	BOLT (M5X0.8X45-MM)	
	41	2	**8T-4121**	4	WASHER-HARD (11X21X2.5-MM THK)	
M	42	2	**8T-4133**	2	NUT (M10X1.5-THD)	
M	43	2	**8T-4136**	2	BOLT (M10X1.5X25-MM)	
M	44	1,2	**8T-4138**	7	BOLT (M6X1X20-MM)	
M	45	1,2	**8T-4200**	5	BOLT (M8X1.25X16-MM)	
	46	1,2	**8T-4205**	14	WASHER-HARD (7.2X14.5X2-MM THK)	
	47	1,2	**8T-4224**	11	WASHER-HARD (8.8X16X2-MM THK)	
E	48	1	**3E-8299**		SEAL (3-CM EACH)	

B-USE AS REQUIRED
C-CHANGE FROM PREVIOUS TYPE
E-ORDER BY THE CENTIMETER
M-METRIC PART
Y-SEPARATE ILLUSTRATION

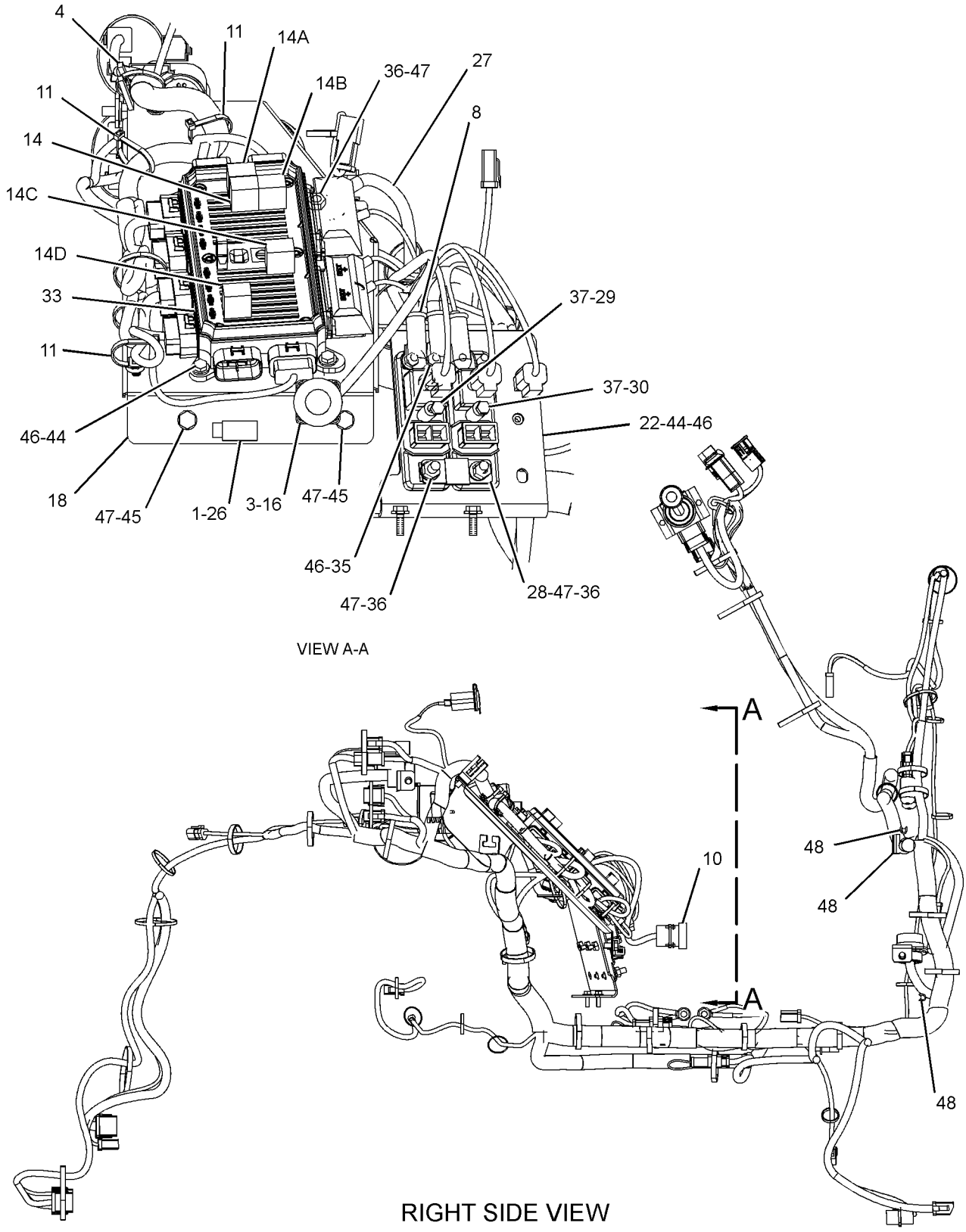

GRAPHIC #1

g01355059

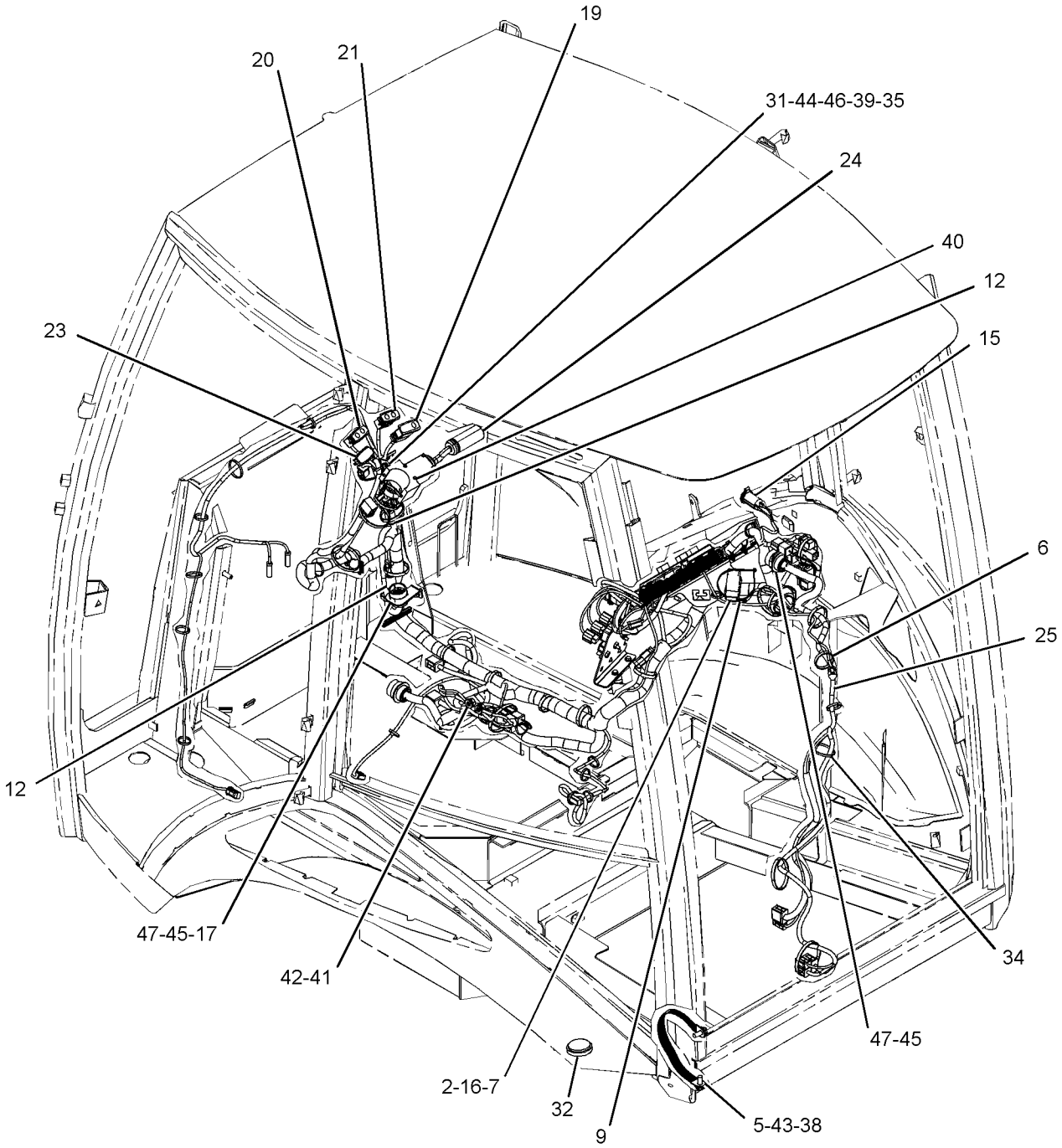

GRAPHIC #2 **<END>** g01355060

211-4283 WIRING GP-REAR–BACKUP ALARM

S/N: SHA1-UP

PART OF 213-9284 CHASSIS AR

SMCS-1408 **i02364714**

NOTE	REF NO	GRAPHIC REF	PART NUMBER	QTY	PART NAME 1 2 3 4 5 6 (PRODUCT LEVEL)	SEE PAGE
	1	1	**3S-2093**	4	STRAP-CABLE	
	2	1	**9U-2277**	1	CLIP AS	
		1	**8C-3334**	1	RIVET-TUBULAR	
	3	1	**154-5428**	1	ALARM AS	
		1	**102-8802**	1	KIT-RECEPTACLE (2-PIN)	
					(INCLUDES RECEPTACLE AS & WEDGE)	
		1	**186-3735**	2	PIN-CONNECTOR (16-GA TO 18-GA)	
	4	1	**213-6043**	1	HARNESS AS-REAR	
		1	**9X-3401**	4	PIN-CONNECTOR (16-GA TO 18-GA) (16-GA TO 18-GA)	
		1	**102-8805**	1	KIT-RECEPTACLE (6-PIN)	
					(INCLUDES RECEPTACLE AS & WEDGE)	
		1	**155-2270**	1	KIT-CONNECTING PLUG (2-PIN)	
					(INCLUDES PLUG AS, WEDGE, & INTERFACE SEAL)	
M	5	1	**111-4627**	2	SCREW-MACHINE (M6X1X30-MM)	
M	6	1	**8T-4134**	1	NUT (M6X1-THD)	
	7	1	**9X-6165**	1	WASHER (6.5X22X2.5-MM THK)	

M-METRIC PART

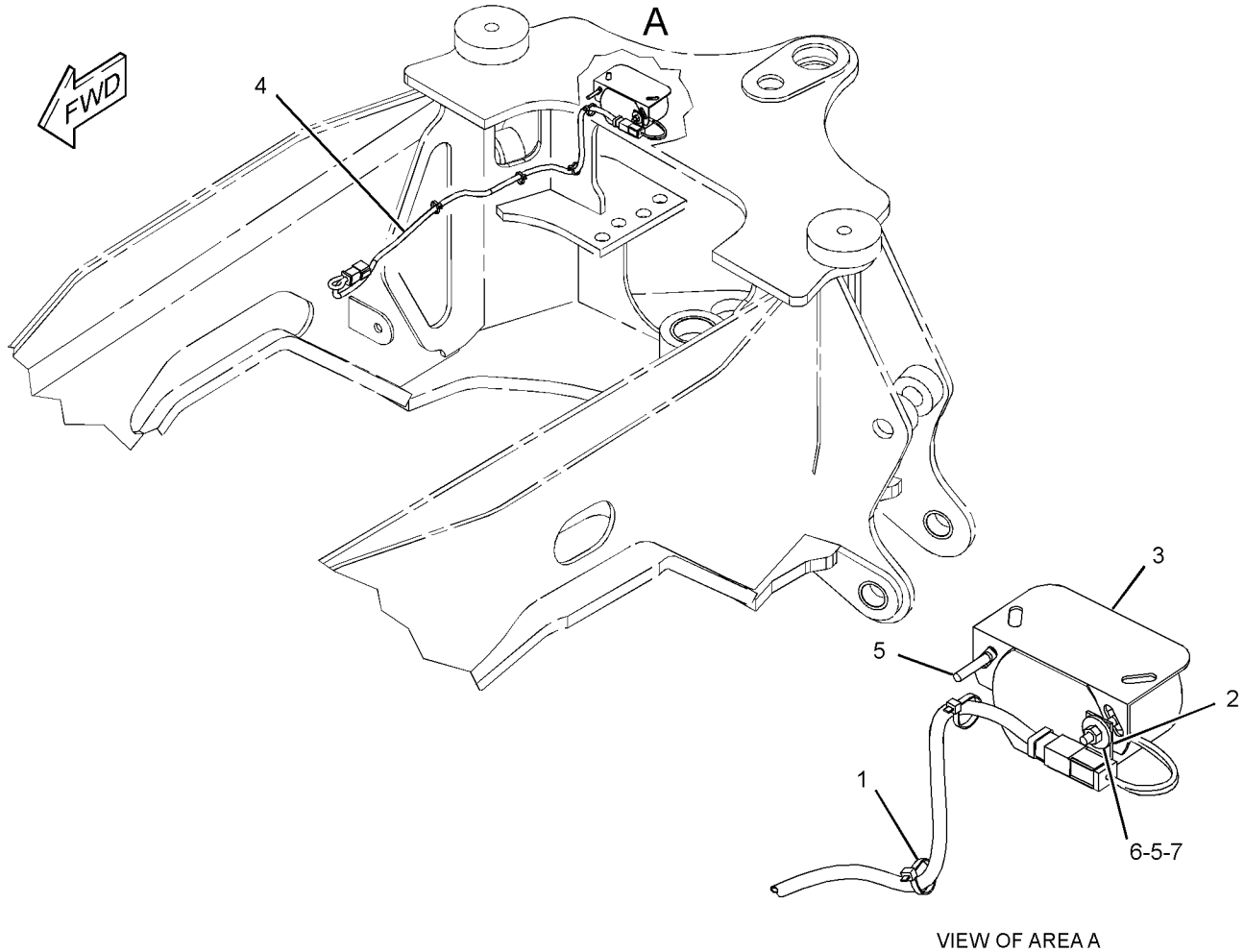

VIEW OF AREA A

GRAPHIC #1 **<END>** g01183295

211-4264 WIRING GP-RIDE CONTROL

S/N: SHA1-UP
PART OF 220-9179 CONTROL AR-RIDE
AN ATTACHMENT

SMCS-1408 **i02755824**

NOTE	REF NO	GRAPHIC REF	PART NUMBER	QTY	PART NAME 1 2 3 4 5 6 (PRODUCT LEVEL)	SEE PAGE
	1	1	**3J-1907**	1	SEAL-O-RING	
	2	1	**106-8704**	1	SUPPRESSOR AS-ARC	
	3	1	**146-9439**	1	RELAY AS (12-VOLT)	
	4	1	**246-8038**	1	HARNESS AS-RIDE CONTROL	
E		1	**125-7874**		TUBE-HEAT SHRINK (5.72-MM DIA) (10-CM)	
		1	**102-8804**	1	KIT-RECEPTACLE (4-PIN)	
					(INCLUDES RECEPTACLE AS & WEDGE)	
		1	**155-2260**	1	KIT-CONNECTING PLUG (3-PIN)	
		1	**155-2270**	3	KIT-CONNECTING PLUG (2-PIN)	
					(EACH PLUG KIT INCLUDES PLUG AS, WEDGE & INTERFACE SEAL)	
	5	1	**213-6085**	1	HARNESS AS-RIDE CONTROL (PLATFORM)	
		1	**8L-8413**	6	STRAP-CABLE	
		1	**091-2436**	6	TERMINAL-BLADE	
E		1	**125-7874**		TUBE-HEAT SHRINK (5.72-MM DIA) (5-CM)	
		1	**102-8805**	1	KIT-RECEPTACLE (6-PIN)	
					(INCLUDES RECEPTACLE AS & WEDGE)	
	6	1	**214-4719**	1	SWITCH AS-ROCKER (RIDE CONTROL)	
	7	1	**304-5696**	1	SWITCH AS-PRESSURE (RIDE CONTROL)	
		1	**102-8803**	1	KIT-RECEPTACLE (3-PIN)	
					(INCLUDES RECEPTACLE AS & WEDGE)	
		1	**186-3735**	3	PIN-CONNECTOR (16-GA TO 18-GA)	
	8	1	**3S-2093**	4	STRAP-CABLE	
	9	1	**4P-7581**	1	CLIP	

E-ORDER BY THE CENTIMETER

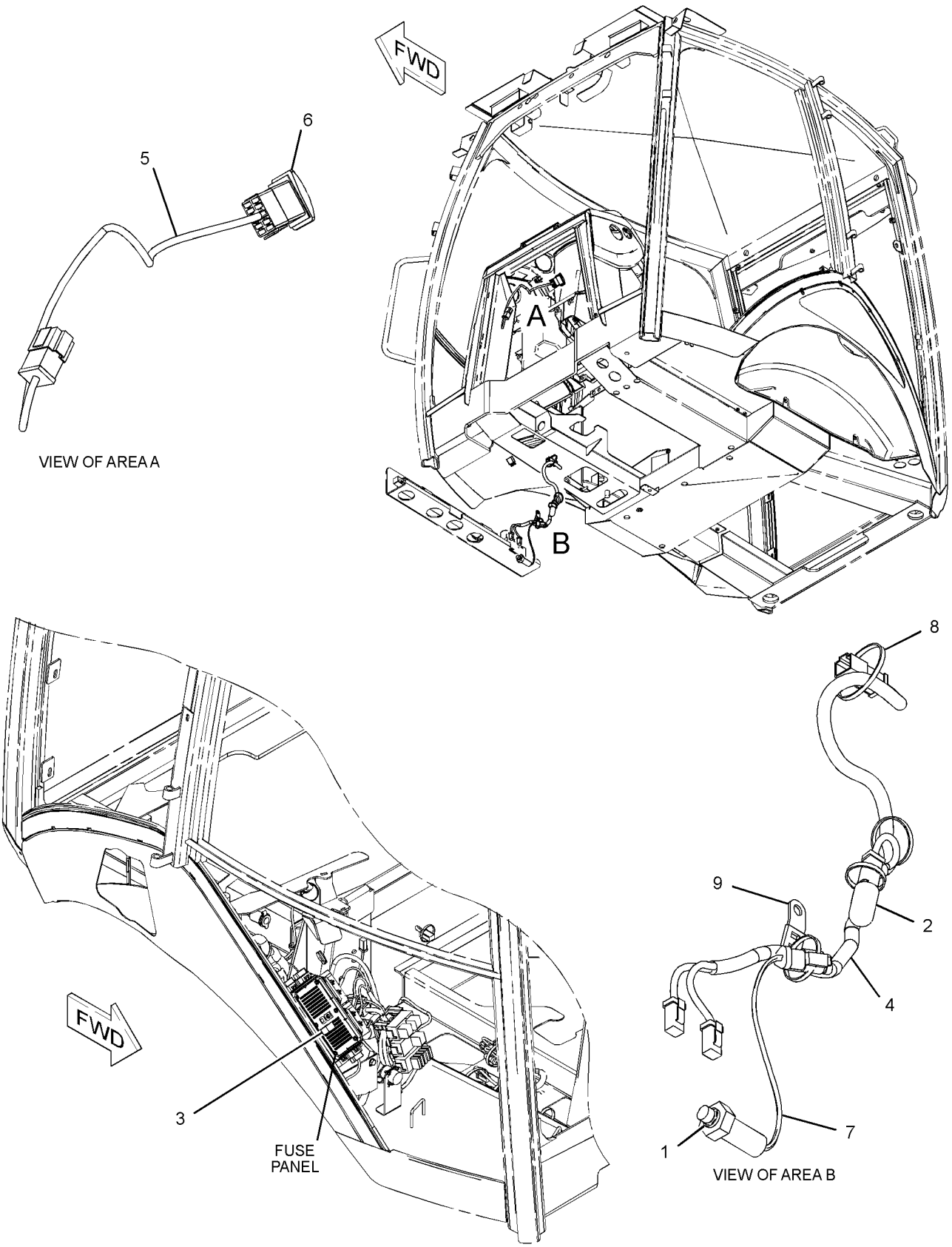

GRAPHIC #1 **<END>** g01173098

230-5743 AXLE GP-DRIVE & STEERING

S/N: SHA1-UP
PART OF 220-9183 DRIVE AR-BACKHOE LOADER
AN ATTACHMENT

SMCS-3020, 3250, 3258, 3259, 3260, 3264, 3278, 4050, 4313

i02510761

NOTE	REF NO	GRAPHIC REF	PART NUMBER	QTY	PART NAME 1 2 3 4 5 6 (PRODUCT LEVEL)	SEE PAGE
	1	1	**199-0639**	4	SCREW (WHEEL HUB)	
	2	1	**207-4254**	6	BOLT (STEERING CYLINDER)	
	3	1	**207-4258**	2	NUT (M20X1.5-THD)	
	4	1	**219-8798**	2	SEAL-LIP TYPE	
	5	1	**219-8795**	1	CAP	
	6	1	**209-9875**	2	DOWEL	
	7	1	**209-7456**	2	BUSHING	
	8	1	**152-6144**	4	PLUG AS-DRAIN (MAGNETIC)	
	9	1	**208-0321**	11	BOLT-FLANGE HEAD (M12X1.75X33-MM)	
	10	1	**209-7464**	2	SEAL	
M	11	1	**199-0683**	16	BOLT (M16X2X38-MM)	
	12	1	**210-5937**	2	WASHER (46X66X3-MM THK)	
Y	13	1	**209-9882**	1	DIFFERENTIAL & BEVEL GEAR GP	205
	14	1	**210-5942**	2	RING	
	15	1	**209-9883**	1	HOUSING	
J	16	1	**210-5946**	2	SHAFT GP-AXLE	
					(EACH INCLUDES)	
		1	**174-4671**	1	YOKE	
	17	1	**209-9886**	2	TIE ROD GP	
					(EACH INCLUDES)	
		1	**204-3080**	1	BALL JOINT	
		1	**217-2883**	1	TIE ROD	
		1	**217-2885**	1	NUT	
	18	1	**209-9887**	1	BUSHING	
	19	1	**210-5947**	2	WASHER-THRUST (44.6X58X7-MM THK)	
	20	1	*216-7473*	4	PIN AS (UPPER)	
					(EACH INCLUDES)	
		1	**198-7823**	1	BEARING AS	
		1	**198-7825**	1	SEAL	
		1	**198-7838**	1	PIN	
Y	21	1	**210-5924**	2	PLANETARY GP-FINAL DRIVE	226
Y	22	1	**209-9884**	1	HOUSING & FLANGE GP-AXLE (RH)	217
Y	23	1	**209-9885**	1	HOUSING & FLANGE GP-AXLE (LH)	218
	24	1	**211-6735**	2	SEAL-O-RING	
L	25	1	**214-5097**	1	CYLINDER GP-STEERING	
		1	**238-5254**	1	ROD	
		1	**238-5255**	2	CYLINDER HEAD	
	26	1	**253-5024**	1	BREATHER (FRONT AXLE)	
	27	1	**069-4707**	1	SEALANT (GASKET)	
	28	1	**154-5404**	2	BEARING	
B	29	1	**198-7841**	8	SHIM (0.15-MM THK)	
B	30	1	**198-7842**	4	SHIM (0.2-MM THK)	
B	31	1	**198-7843**	4	SHIM (0.5-MM THK)	
					AVAILABLE REPAIR KIT(S):	
J			**174-4643**	2	KIT-SPIDER	
					(INCLUDES SPIDER & RINGS)	
L			**215-2023**	1	KIT-SEAL	
					(INCLUDES RINGS, SEALS & WASHERS)	

B-USE AS REQUIRED
J-KIT MARKED J AVAILABLE FOR PART MARKED J
L-KIT MARKED L AVAILABLE FOR PART MARKED L
M-METRIC PART
Y-SEPARATE ILLUSTRATION

230-5743 AXLE GP-DRIVE & STEERING *(contd.)* **i02510761**

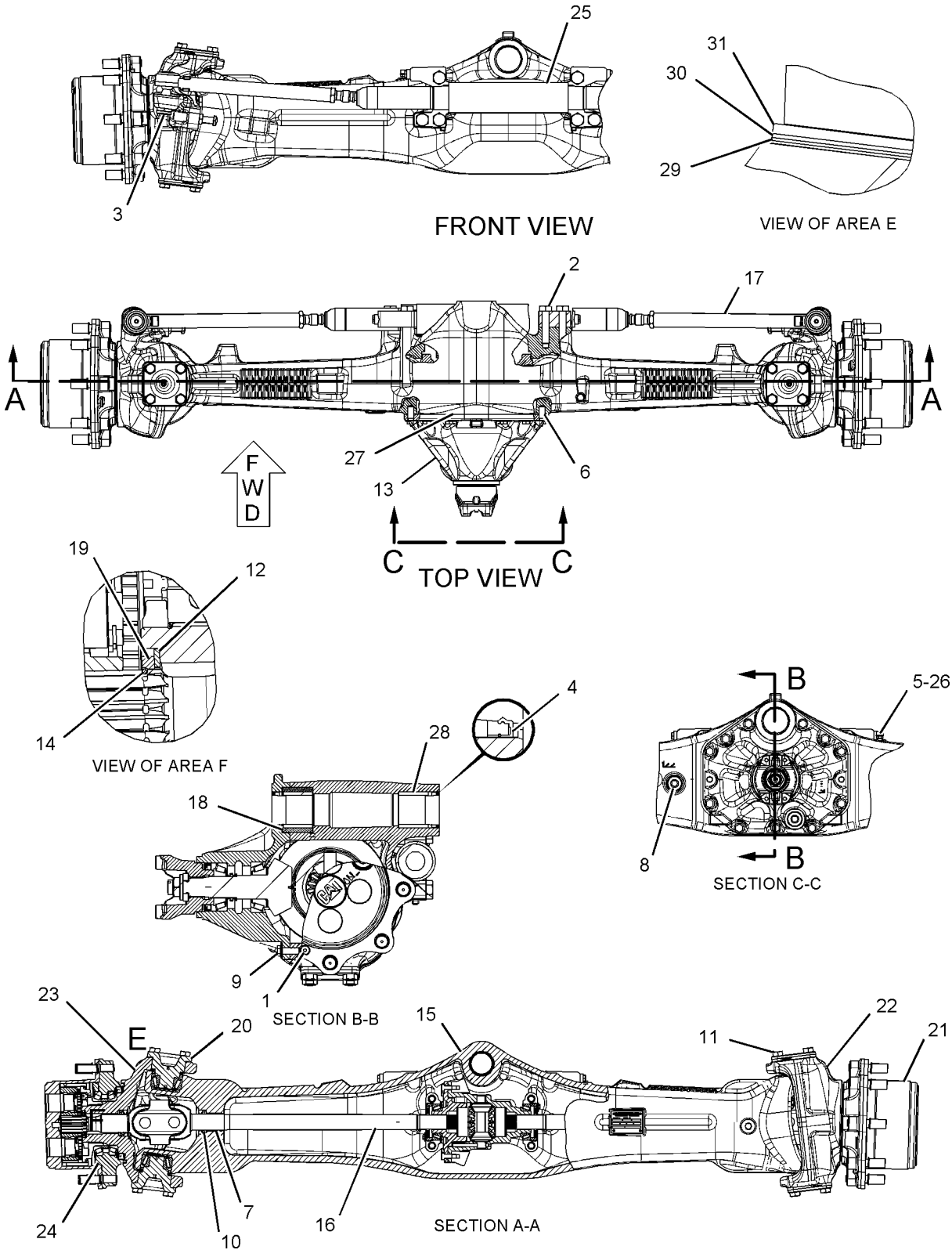

GRAPHIC #1 **<END>** g01094314

POWER TRAIN

230-5739 AXLE GP-REAR

S/N: SHA1-UP

PART OF 220-9182, 220-9183 DRIVE AR-BACKHOE LOADER

AN ATTACHMENT

SMCS-3278, 3282 **i02762808**

NOTE	REF NO	GRAPHIC REF	PART NUMBER	QTY	PART NAME 1 2 3 4 5 6 (PRODUCT LEVEL)	SEE PAGE
	1	1	**199-0639**	4	SCREW (WHEEL HUB)	
	2	1	**199-0641**	2	BOLT (DIFFERENTIAL LOCK)	
M	3	1	**8T-0292**	2	BOLT (M8X1.25X90-MM) (DIFFERENTIAL LOCK)	
	4	1	**199-0652**	2	CLIP-PIN	
	5	1	**210-3097**	2	CLIP	
	6	1	**210-3098**	2	SEAL	
	7	1	**199-0668**	2	BRACKET	
	8	1	**197-9155**	1	BREATHER (AXLE)	
	9	1	**199-0670**	2	BLEED SCREW	
	10	1	**198-7811**	2	DOWEL	
	11	1	**152-6144**	4	PLUG AS-DRAIN (MAGNETIC)	
	12	1	**199-0676**	2	SPRING	
M	13	1	**199-0679**	2	BOLT (M16X2X95-MM) (BRAKE)	
	14	1	**210-3099**	2	SLEEVE	
	15	1	**210-3100**	2	BUSHING	
	16	1	**199-0706**	1	PISTON	
	17	1	**199-0786**	8	PLATE	
	18	1	**199-0787**	6	PIN	
	19	1	**210-7305**	2	SHAFT	
	20	1	**210-3106**	1	BRACKET	
	21	1	**212-5713**	2	PLUG	
	22	1	*216-1608*	2	GEAR GP-RING	
					(EACH INCLUDES)	
		1	**199-0778**	1	RING-SNAP	
		1	**210-7302**	1	GEAR-RING (81-TEETH)	
		1	**226-4364**	1	HUB	
Y	23	1	*216-1609*	2	FLANGE GP-WHEEL	215
Y	24	1	**216-1610**	2	PLANETARY GP-FINAL DRIVE	227
	25	1	**217-2914**	1	COVER (DIFFERENTIAL LOCK)	
	26	1	**231-0699**	1	COVER (DIFFERENTIAL LOCK)	
	27	1	**219-8839**	1	ROD	
	28	1	**174-4647**	1	BUSHING	
	29	1	**174-4650**	1	SPACER (20X32X8-MM THK)	
	30	1	**231-0698**	2	SHAFT-AXLE	
	31	1	**226-4366**	2	NUT-SPANNER	
	32	1	**226-4365**	2	WASHER-TAB	
	33	1	**226-4367**	2	SPACER (110X123X22.99-MM THK)	
	34	1	**226-4370**	6	BOLT-SELF-LOCKING	
	35	1	**238-5291**	6	DISC-BRAKE	
	36	1	**238-5292**	2	HUB-BRAKE	
	37	1	**238-5293**	1	HOUSING-AXLE (LH)	
	38	1	**238-5294**	1	HOUSING-AXLE (RH)	
Y	39	1	*238-5289*	1	HOUSING GP-AXLE	221
	40	1	**199-0658**	2	O-RING-CAP	
	41	1	**219-8799**	2	SEAL-O-RING	
	42	1	**199-0662**	2	SEAL-O-RING	
	43	1	**130-7282**	1	BRACKET	
M	44	1	**7X-2559**	26	BOLT (M16X2X160-MM)	
	45	1	**4L-6454**	2	BOLT (3/8-16X1-IN)	
	46	1	**3J-1907**	1	SEAL-O-RING	
	47	1	**9S-8004**	1	PLUG-O-RING	
	48	1	**219-8795**	1	CAP	
	49	1	**069-4707**	1	SEALANT (GASKET)	
J	50	1	**259-0127**	1	BRAKE GP-HYDRAULIC CALIPER	

230-5739 **AXLE GP-REAR** ***(contd.)*** **i02762808**

NOTE	REF NO	GRAPHIC REF	PART NUMBER	QTY	PART NAME 1 2 3 4 5 6 (PRODUCT LEVEL)	SEE PAGE
					AVAILABLE REPAIR KIT(S):	
J			**166-9413**	1	KIT-CAM (COUNTERCLOCKWISE)	
					(INCLUDES CAMS BEARINGS & RETAINER)	
J			**259-0128**	1	KIT-BRAKE LINING	
					(INCLUDES LINERS & SPRING)	
J			**259-0129**	1	KIT-BRAKE CALIPER	
					(INCLUDES SLEEVES, WASHERS, NUTS, BOLT, LININGS, BEARING & BOOT)	

J-KITS MARKED J SERVICES PART(S) MARKED J
M-METRIC PART
Y-SEPARATE ILLUSTRATION

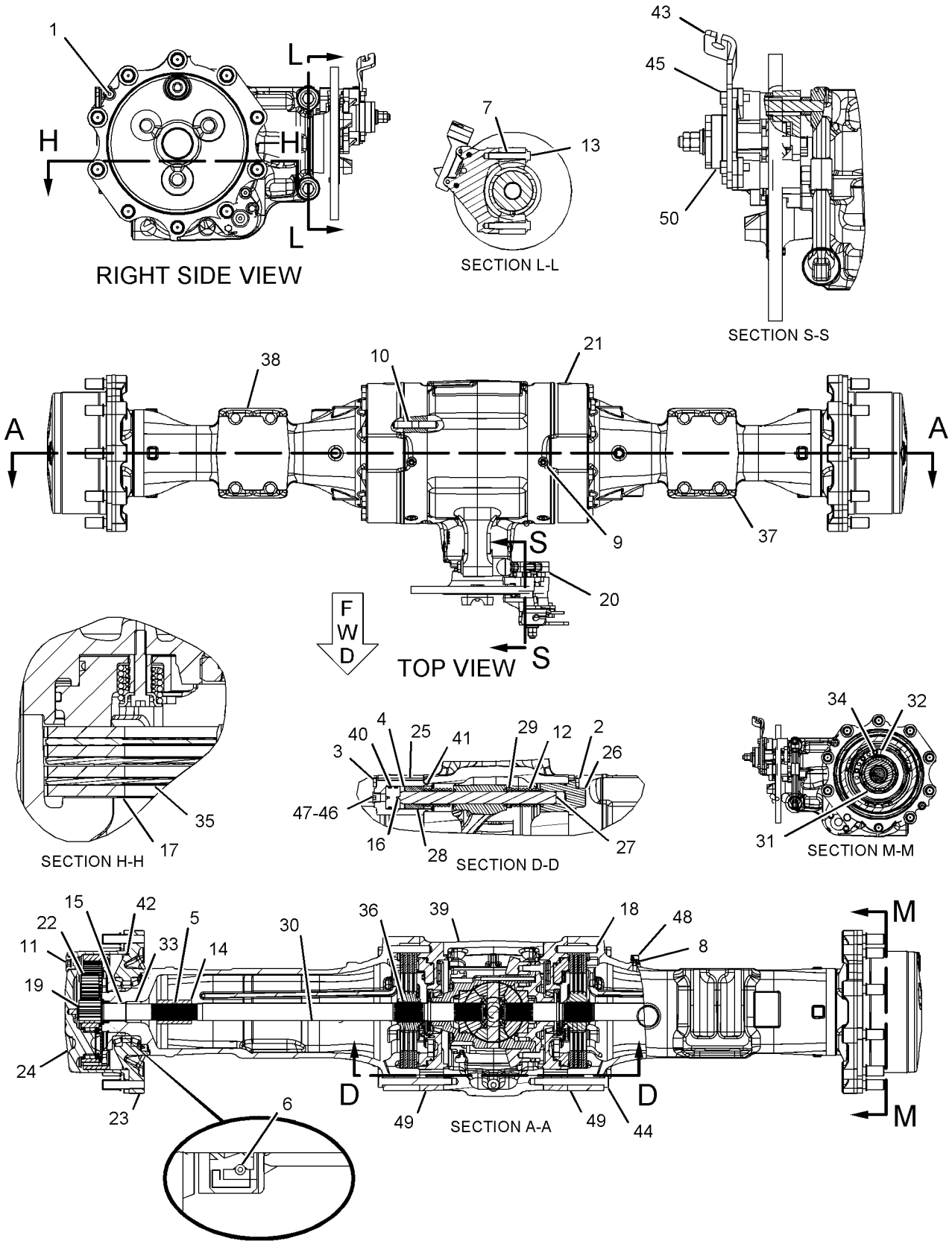

GRAPHIC #1 **<END>** g01093644

275-0467 CASE AS-TRANSMISSION–REAR

S/N: SHA1-UP

PART OF 271-2408 TRANSMISSION GP-DIRECT DRIVE

AN ATTACHMENT

SMCS-3030, 3064 **i02445140**

NOTE	REF NO	GRAPHIC REF	PART NUMBER	QTY	PART NAME 1 2 3 4 5 6 (PRODUCT LEVEL)	SEE PAGE
	1	1	**123-8906**	1	CUP-TAPERED ROLLER	
B	2	1	**6T-9144**	1	SHIM (0.051-MM THK)	
B	3	1	**6T-9147**	1	SHIM (0.076-MM THK)	
B	4	1	**6T-9146**	1	SHIM (0.127-MM THK)	
B	5	1	**6T-9145**	1	SHIM (0.178-MM THK)	
B	6	1	**6T-9143**	1	SHIM (0.381-MM THK)	
B	7	1	**6T-9142**	1	SHIM (0.508-MM THK)	
	8	1	**7T-3034**	1	SPACER (56.9X64.5X1.98-MM)	
	9	1	**7T-2646**	2	SPACER (66X79.5X2.02-MM THK)	
B	10	1	**6T-9166**	2	SHIM (0.051-MM THK)	
B	11	1	**6T-9165**	2	SHIM (0.076-MM THK)	
B	12	1	**6T-9164**	2	SHIM (0.178-MM THK)	
B	13	1	**6T-9163**	2	SHIM (0.599-MM THK)	
B	14	1	**121-7399**	1	SHIM (0.05-MM THK)	
B	15	1	**121-7400**	1	SHIM (0.08-MM THK)	
B	16	1	**121-7401**	1	SHIM (0.18-MM THK)	
B	17	1	**121-7402**	1	SHIM (0.6-MM THK)	
	18	1	**121-7398**	1	SPACER (70X79.5X2-MM THK)	
	19	1	**005-0469**	1	CUP-BEARING	
	20	1	**123-8908**	1	CUP-TAPERED ROLLER	
	21	1	**123-8910**	1	CUP-TAPERED ROLLER	
	22	1	**274-8631**	1	CASE-REAR	
	23	1	**122-1879**	1	SPACER (58X67.5X2-MM THK)	
B	24	1	**104-3288**	1	SHIM (0.05-MM THK)	
B	25	1	**121-2059**	1	SHIM (0.08-MM THK)	
B	26	1	**121-2060**	1	SHIM (0.18-MM THK)	
B	27	1	**121-2061**	1	SHIM (0.6-MM THK)	

B-USE AS REQUIRED

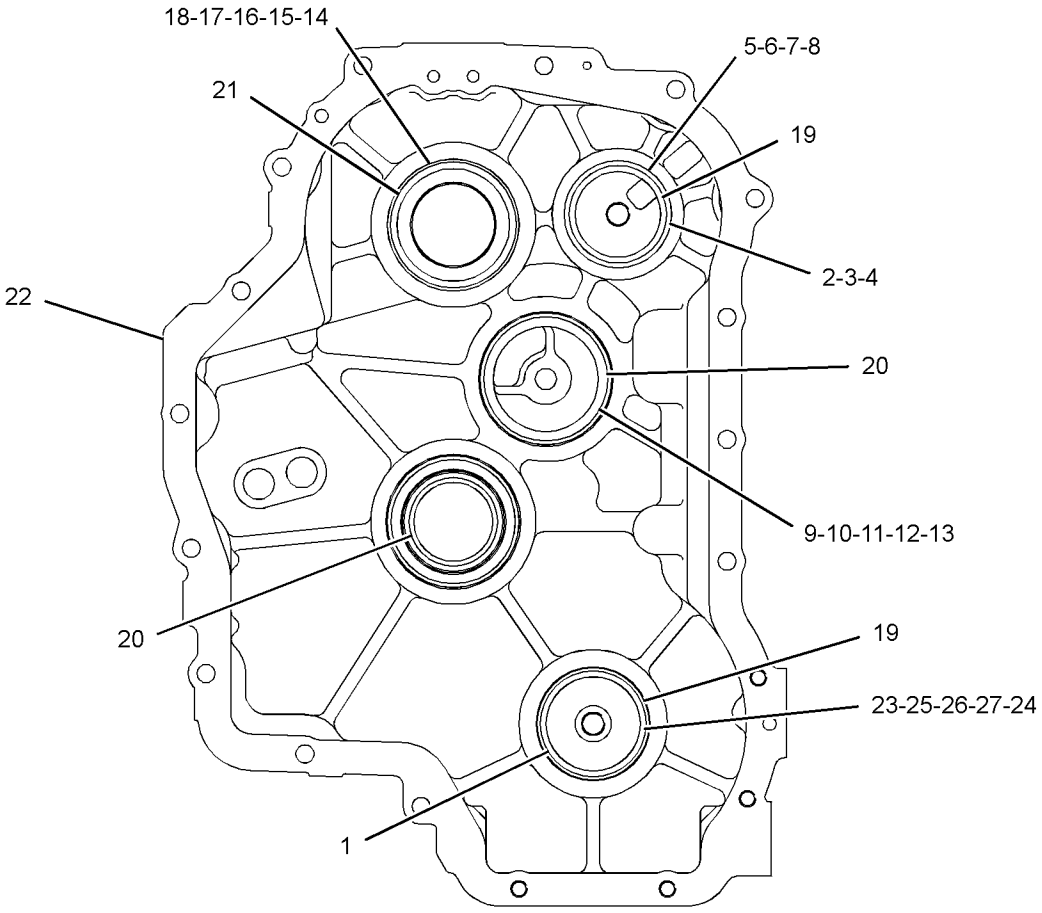

REAR VIEW

GRAPHIC #1 **<END>** g01220672

275-0468 CASE AS-TRANSMISSION–FRONT

S/N: SHA1-UP

PART OF 271-2408 TRANSMISSION GP-DIRECT DRIVE

AN ATTACHMENT

SMCS-3030, 3064 **i02485611**

NOTE	REF NO	GRAPHIC REF	PART NUMBER	QTY	PART NAME 1 2 3 4 5 6 (PRODUCT LEVEL)	SEE PAGE
	1	1	**120-9762**	4	SEAL-O-RING	
M	2	1	**6V-8210**	2	BOLT (M8X1.25X16-MM)	
	3	1	**7T-2651**	1	STRAINER (SUCTION)	
	4	1	**106-9861**	1	PLATE-COVER	
	5	1	**7T-3051**	1	PLUG	
	6	1	**005-0469**	1	CUP-BEARING	
	7	1	**8T-1580**	1	CUP	
	8	1	**6Y-2737**	1	CUP-BEARING	
	9	1	**123-8906**	2	CUP-TAPERED ROLLER	
	10	1	**9W-5460**	1	RING	
	11	1	**4F-7952**	1	SEAL-O-RING	
	12	1	**275-0469**	1	CASE AS-FRONT	
	13	1	**7T-3253**	2	DOWEL	

M-METRIC PART

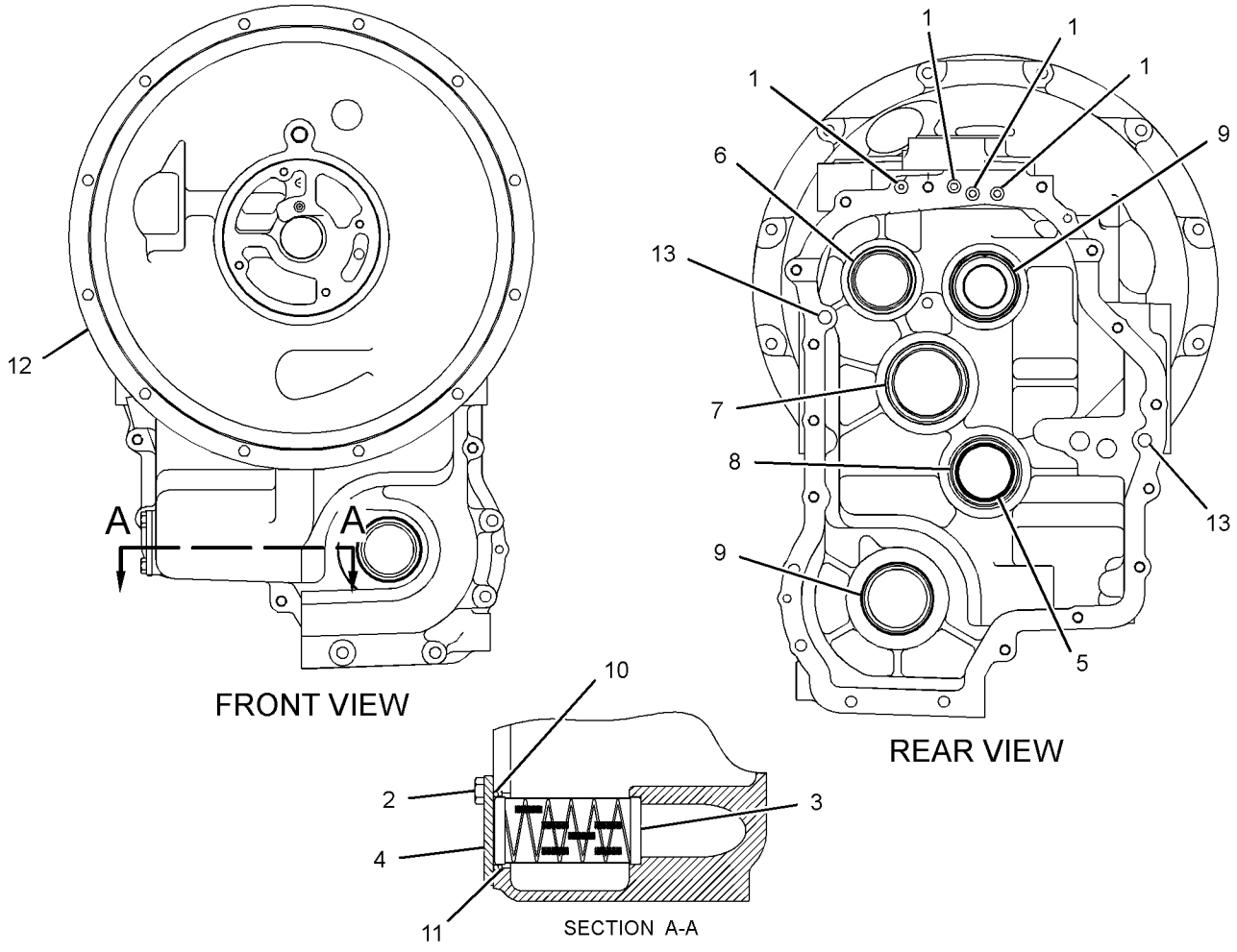

GRAPHIC #1 **<END>** g01220674

275-0473 CASE AS-TRANSMISSION–REAR

S/N: SHA1-UP

PART OF 271-2407 TRANSMISSION GP-DIRECT DRIVE

AN ATTACHMENT

SMCS-3030, 3064 **i02444907**

NOTE	REF NO	GRAPHIC REF	PART NUMBER	QTY	PART NAME 1 2 3 4 5 6 (PRODUCT LEVEL)	SEE PAGE
	1	1	**274-8631**	1	CASE-REAR	
B	2	1	**6T-9144**	1	SHIM (0.051-MM THK)	
B	3	1	**6T-9147**	1	SHIM (0.076-MM THK)	
B	4	1	**6T-9146**	1	SHIM (0.127-MM THK)	
B	5	1	**6T-9145**	1	SHIM (0.178-MM THK)	
B	6	1	**6T-9143**	1	SHIM (0.381-MM THK)	
B	7	1	**6T-9142**	1	SHIM (0.508-MM THK)	
	8	1	**7T-3034**	1	SPACER (56.9X64.5X1.98-MM)	
	9	1	**7T-2646**	2	SPACER (66X79.5X2.02-MM THK)	
B	10	1	**6T-9166**	2	SHIM (0.051-MM THK)	
B	11	1	**6T-9165**	2	SHIM (0.076-MM THK)	
B	12	1	**6T-9164**	2	SHIM (0.178-MM THK)	
B	13	1	**6T-9163**	2	SHIM (0.599-MM THK)	
B	14	1	**121-7399**	1	SHIM (0.05-MM THK)	
B	15	1	**121-7400**	1	SHIM (0.08-MM THK)	
B	16	1	**121-7401**	1	SHIM (0.18-MM THK)	
B	17	1	**121-7402**	1	SHIM (0.6-MM THK)	
	18	1	**121-7398**	1	SPACER (70X79.5X2-MM THK)	
	19	1	**005-0469**	1	CUP-BEARING	
	20	1	**123-8908**	2	CUP-TAPERED ROLLER	
	21	1	**123-8910**	1	CUP-TAPERED ROLLER	

B-USE AS REQUIRED

275-0473 CASE AS-TRANSMISSION *(contd.)* **i02444907**

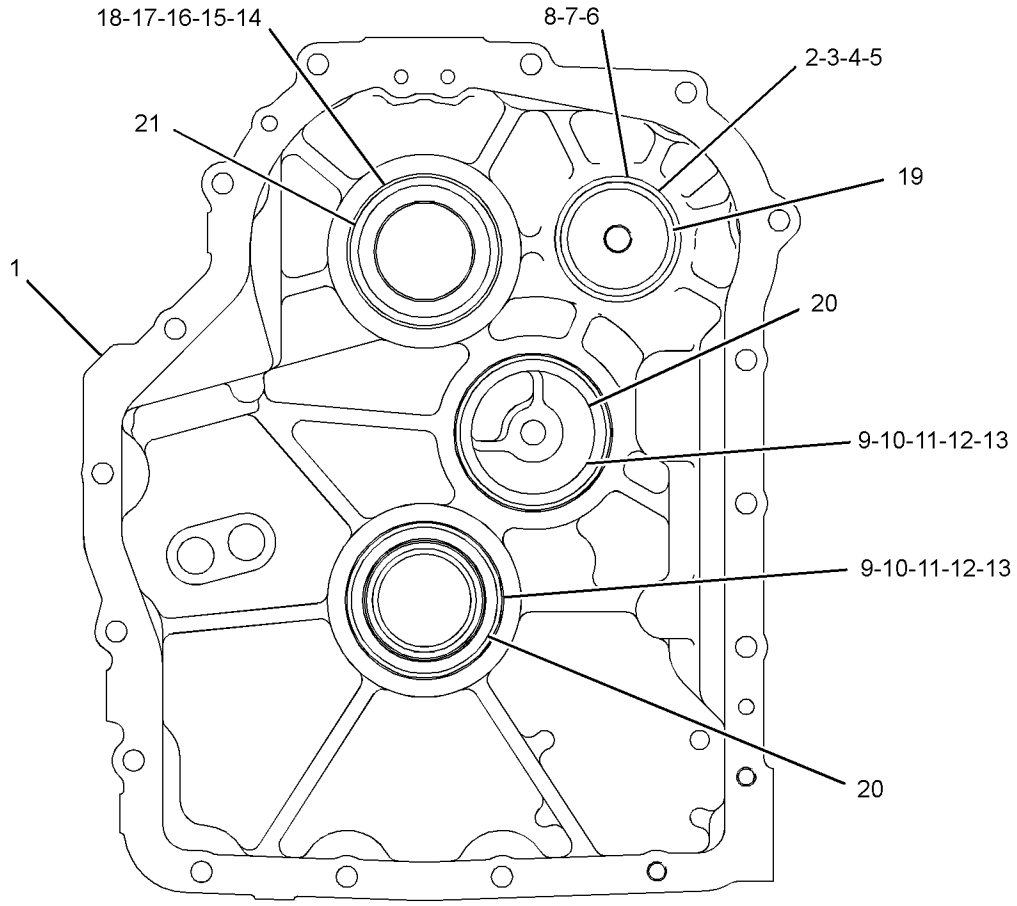

REAR VIEW

GRAPHIC #1 **<END>** g01220681

275-0472 CASE GP-TRANSMISSION–FRONT

S/N: SHA1-UP
PART OF 271-2407 TRANSMISSION GP-DIRECT DRIVE
AN ATTACHMENT

SMCS-3030, 3064 **i02485613**

NOTE	REF NO	GRAPHIC REF	PART NUMBER	QTY	PART NAME 1 2 3 4 5 6 (PRODUCT LEVEL)	SEE PAGE
M	1	1	**6V-8210**	2	BOLT (M8X1.25X16-MM)	
	2	1	**7T-2651**	1	STRAINER (SUCTION) (SUCTION)	
	3	1	**106-9861**	1	PLATE-COVER	
	4	1	**7T-3051**	1	PLUG	
	5	1	**005-0469**	1	CUP-BEARING	
	6	1	**8T-1580**	1	CUP	
	7	1	**6Y-2737**	1	CUP-BEARING	
	8	1	**123-8906**	1	CUP-TAPERED ROLLER	
	9	1	**9W-5460**	1	RING	
	10	1	**4F-7952**	1	SEAL-O-RING	
	11	1	**275-0471**	1	CASE AS-FRONT	
	12	1	**7T-3253**	2	DOWEL	
	13	1	**120-9762**	3	SEAL-O-RING	

M-METRIC PART

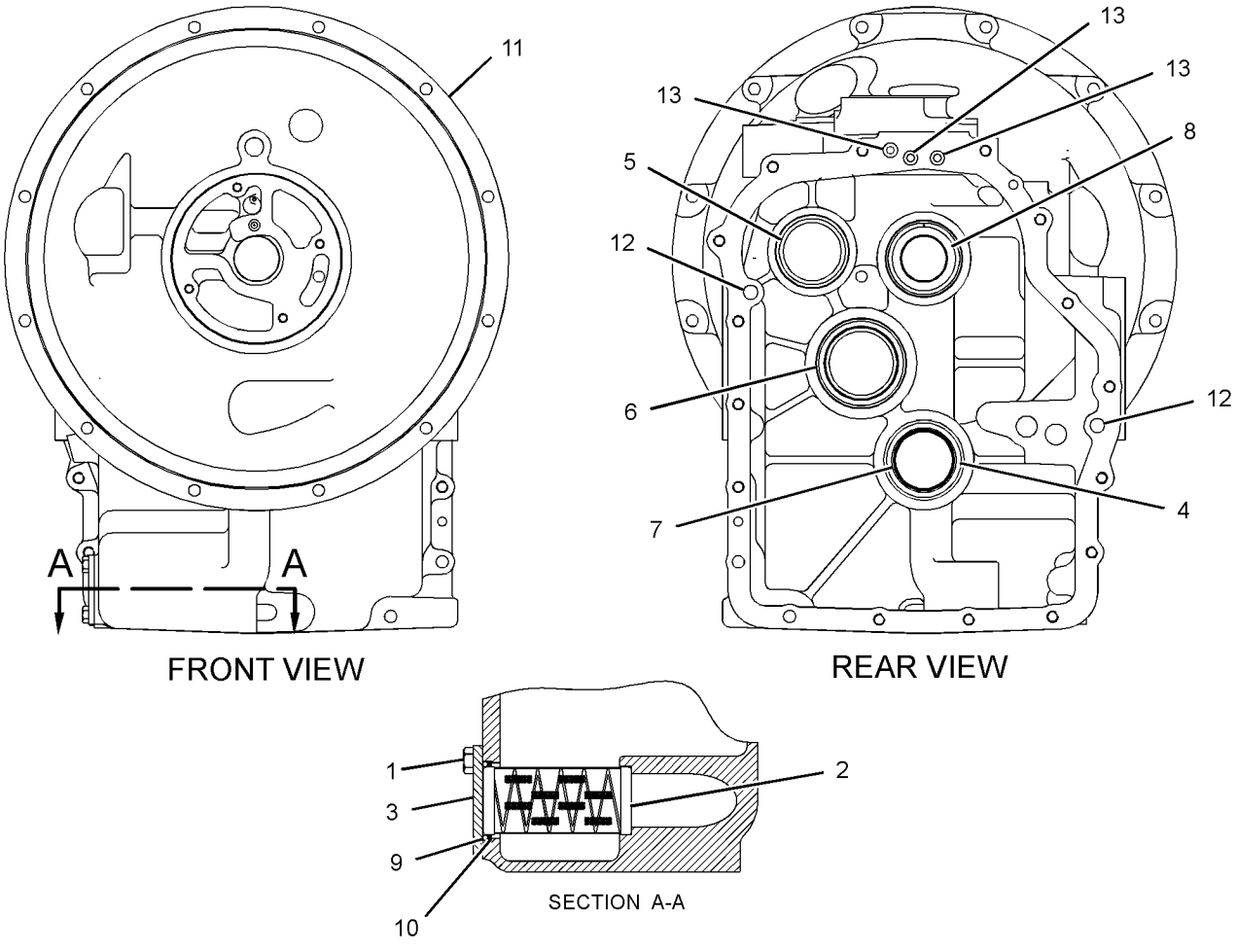

GRAPHIC #1 **<END>** g01220682

294-9809 CASE GP-TRANSMISSION

S/N: SHA1-UP

PART OF 271-2407 TRANSMISSION GP-DIRECT DRIVE

AN ATTACHMENT

SMCS-3030, 3064 **i02740653**

NOTE	REF NO	GRAPHIC REF	PART NUMBER	QTY	PART NAME 1 2 3 4 5 6 (PRODUCT LEVEL)	SEE PAGE
M	1	1	**6V-8210**	2	BOLT (M8X1.25X16-MM)	
	2	1	**7T-2651**	1	STRAINER (SUCTION)	
	3	1	**106-9861**	1	PLATE-COVER	
	4	1	**7T-3051**	1	PLUG	
	5	1	**005-0469**	1	CUP-BEARING	
	6	1	**8T-1580**	1	CUP (TAPERED ROLLER)	
	7	1	**6Y-2737**	1	CUP-BEARING	
	8	1	**123-8906**	1	CUP-TAPERED ROLLER	
	9	1	**4F-7952**	1	SEAL-O-RING	
	10	1	**9W-5460**	1	RING	
	11	1	*294-9808*	1	CASE AS-FRONT	
		1	**122-3652**	3	PLUG	
		1	**123-2920**	2	PLUG	
		1	**237-5188**	1	PLUG-EXPANSION	
	12	1	**7T-3253**	2	DOWEL	
	13	1	**120-9762**	3	SEAL-O-RING	

M-METRIC PART

294-9809 CASE GP-TRANSMISSION *(contd.)* **i02740653**

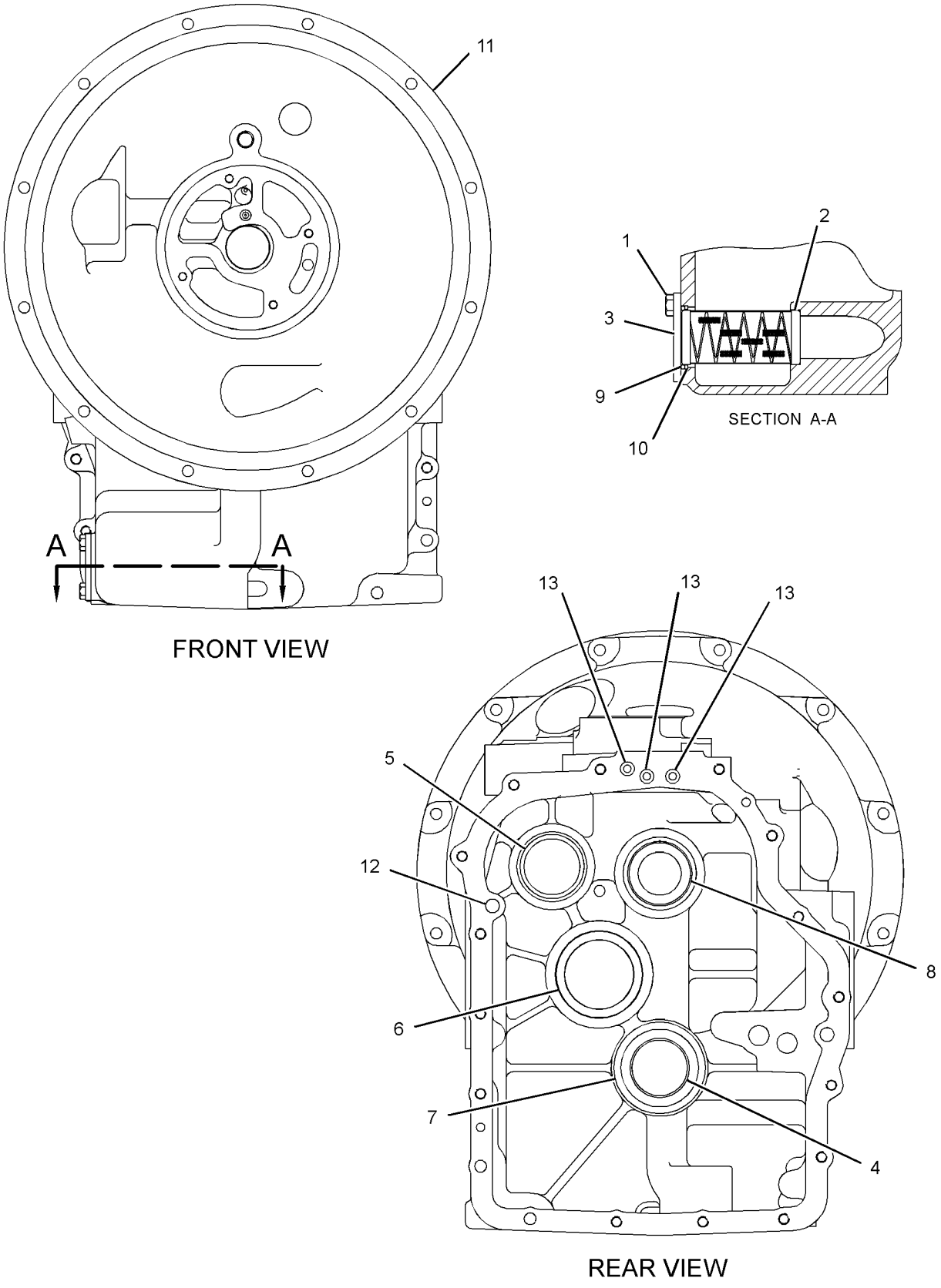

GRAPHIC #1 **<END>** g01383783

209-9882 DIFFERENTIAL & BEVEL GEAR GP

S/N: SHA1-UP

PART OF 230-5743 AXLE GP-DRIVE & STEERING

AN ATTACHMENT

SMCS-3256, 3258, 3281, 3283, 3284 **i02310846**

NOTE	REF NO	GRAPHIC REF	PART NUMBER	QTY	PART NAME 1 2 3 4 5 6 (PRODUCT LEVEL)	SEE PAGE
	1	1	**216-4457**	1	SEAL	
	2	1	**216-4458**	2	BEARING	
	3	1	**136-7808**	1	BEARING AS-TAPERED ROLLER	
	4	1	**216-4461**	1	BEARING	
	5	1	**209-7454**	2	NUT (M94X2-THD)	
	6	1	**152-6144**	1	PLUG AS-DRAIN (MAGNETIC)	
	7	1	**209-7462**	2	WASHER (40X50X2-MM THK)	
	8	1	**209-7463**	1	SLEEVE (COLLAPSIBLE)	
M	9	1	**199-0695**	2	BOLT (M6X1X14-MM)	
M	10	1	**209-7472**	1	NUT (M24X1.5-THD)	
	11	1	**216-4465**	1	WASHER (24.5X52X10-MM THK)	
	12	1	**216-4464**	1	YOKE	
	13	1	**199-0858**	2	RETAINER	
	14	1	**217-2868**	1	GEAR GP-BEVEL & PINION	
		1	**216-4466**	1	GEAR GP-BEVEL & PINION	
		1	**216-4467**	1	SEAL-O-RING	
		1	**209-7462**	1	WASHER (40X50X2-MM THK)	
		1	**209-7463**	1	SLEEVE	
M		1	**209-7472**	1	NUT (M24X1.5-THD)	
		1	**216-4465**	1	WASHER (24.5X52X10-MM THK)	
Y	15	1	**216-9498**	1	DIFFERENTIAL GP	207
	16	1	**4J-0520**	1	SEAL-O-RING	
	17	1	**216-5515**	1	HOUSING AS-DIFFERENTIAL	
	17A	1	**208-0322**	4	BOLT-FLANGE HEAD	
	17B	1	**217-2880**	4	DOWEL	
B	18	1	**209-7473**	1	SHIM (2.5-MM THK)	
B			**219-8751**	1	SHIM (2.6-MM THK)	
B			**219-8752**	1	SHIM (2.7-MM THK)	
B			**219-8753**	1	SHIM (2.8-MM THK)	
B			**219-8754**	1	SHIM (2.9-MM THK)	
B			**219-8755**	1	SHIM (3-MM THK)	
B			**219-8756**	1	SHIM (3.1-MM THK)	
B			**219-8757**	1	SHIM (3.2-MM THK)	
B			**219-8758**	1	SHIM (3.3-MM THK)	
B			**219-8759**	1	SHIM (3.4-MM THK)	

B-USE AS REQUIRED
M-METRIC PART
Y-SEPARATE ILLUSTRATION

209-9882 DIFFERENTIAL & BEVEL GEAR GP *(contd.)* i02310846

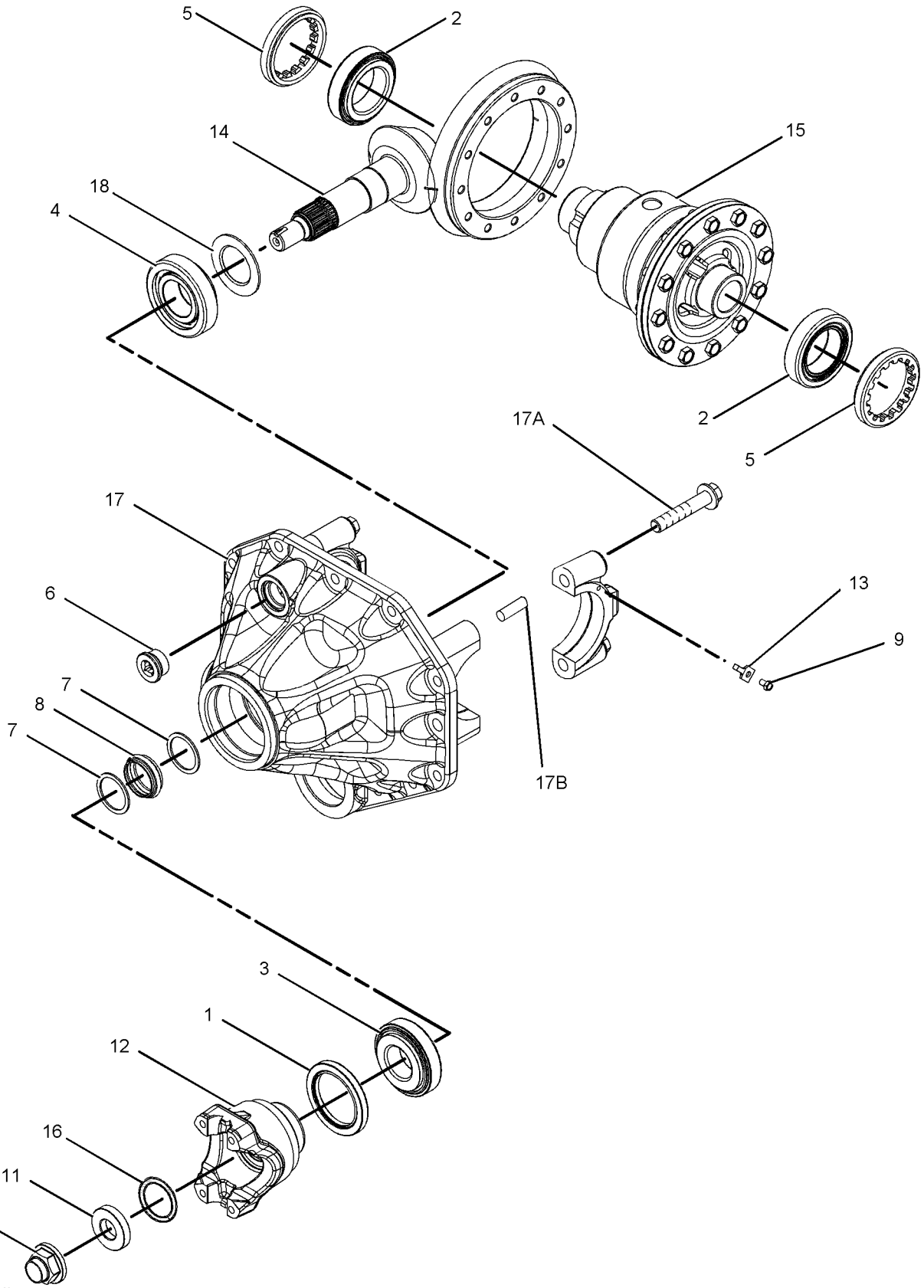

GRAPHIC #1 **<END>** g01062316

216-9498 DIFFERENTIAL GP

S/N: SHA1-UP

PART OF 209-9882 DIFFERENTIAL & BEVEL GEAR GP

AN ATTACHMENT

SMCS-3258 **i02583799**

NOTE	REF NO	GRAPHIC REF	PART NUMBER	QTY	PART NAME 1 2 3 4 5 6 (PRODUCT LEVEL)	SEE PAGE
	1	1	**216-8687**	1	COVER (DIFFERENTIAL CASE)	
	2	1	**216-8689**	1	HOUSING-DIFFERENTIAL	
	3	1	**229-5093**	2	WASHER-THRUST (49X72X1.5-MM THK)	
M	4	1	**144-6734**	12	BOLT (M10X1.5X30-MM)	
	5	1	**211-0092**	2	WASHER-THRUST (22X42X2-MM THK)	
	6	1	**209-7455**	1	PIN	
	7	1	**216-8691**	1	RETAINER	
	8	1	**216-9497**	1	GEAR GP-DIFFERENTIAL & BEVEL	
					AVAILABLE REPAIR KIT(S):	
			216-8700		KIT-DIFFERENTIAL (KIT)	
					(INCLUDES PIN,WASHERS,PIN,DISC AND GEARS)	

M-METRIC PART

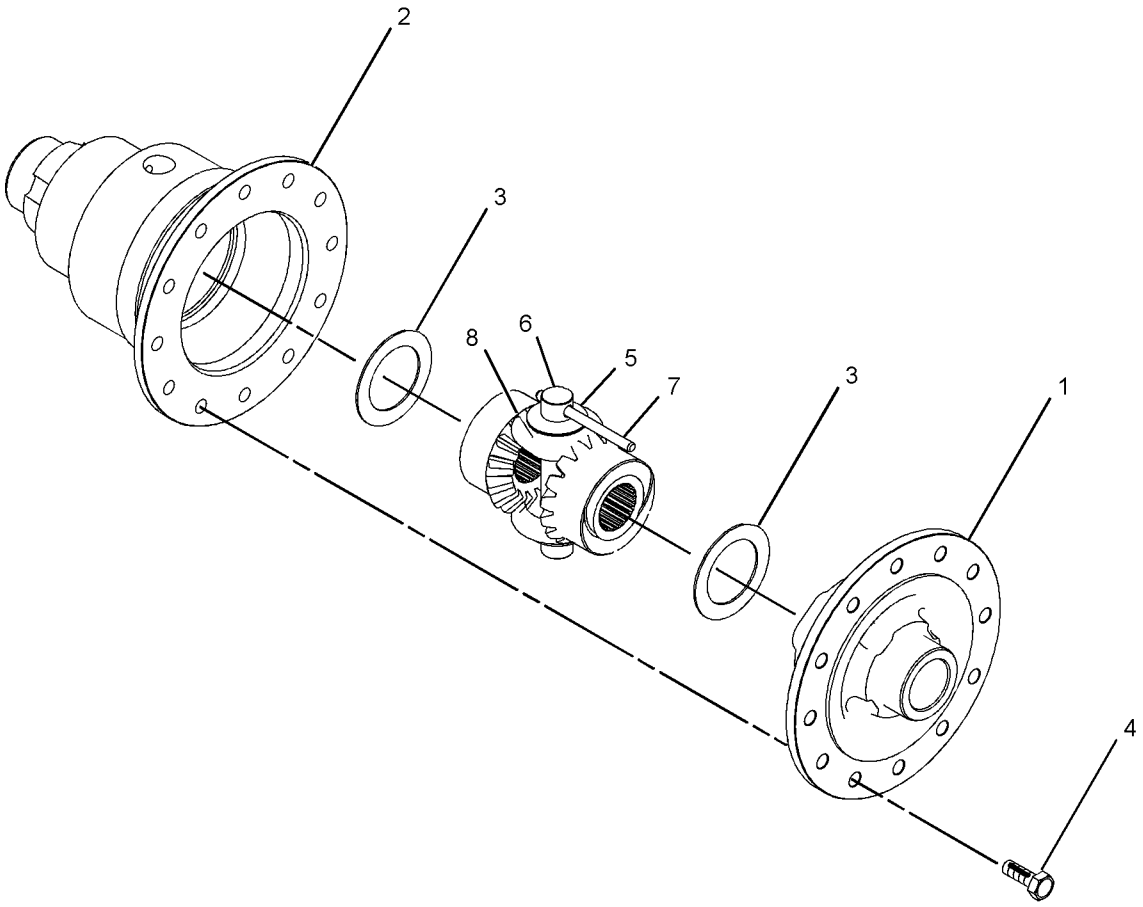

GRAPHIC #1 **<END>** g01043312

231-0692 DIFFERENTIAL GP

S/N: SHA1-UP
PART OF 238-5289 HOUSING GP-AXLE
AN ATTACHMENT

SMCS-3258 **i02196803**

NOTE	REF NO	GRAPHIC REF	PART NUMBER	QTY	PART NAME 1 2 3 4 5 6 (PRODUCT LEVEL)	SEE PAGE
	1	1	**199-0673**	2	BUSHING	
	2	1	**199-0694**	12	BOLT (M14X2X40-MM)	
	3	1	**199-0756**	1	COLLAR	
	4	1	**199-0784**	1	COVER-DIFFERENTIAL	
	5	1	**199-0807**	4	PIN	
	6	1	**199-0808**	3	PIN	
	7	1	**231-0670**	1	SHAFT	
	8	1	**231-0671**	4	WASHER-THRUST	
	9	1	**231-0695**	2	WASHER-THRUST	
	10	1	**231-0693**	1	CASE-DIFFERENTIAL	
	11	1	**231-0696**	2	SHAFT	
	12	1	**231-0697**	1	RETAINER	
	13	1	**231-0694**	1	GEAR AS	
	14	1	**199-0659**	4	SEAL-PIN	

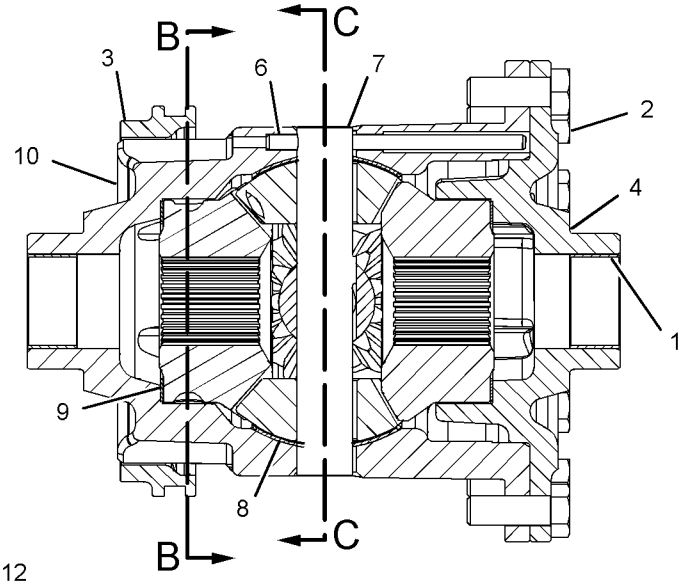

FRONT VIEW
(SECTIONED)

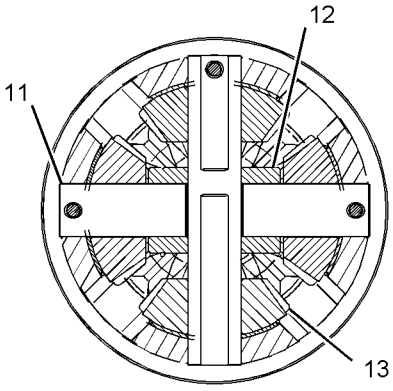

SECTION C-C

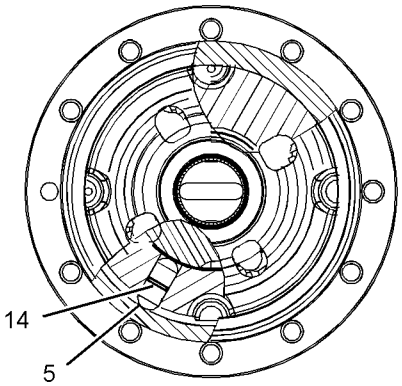

SECTION B-B

GRAPHIC #1 **<END>** g01107764

220-9182 DRIVE AR-BACKHOE LOADER–
2-WHEEL DRIVE, 2-WHEEL STEER
S/N: SHA1-UP
PART OF 214-6910, 214-6912 POWER TRAIN AR
AN ATTACHMENT

SMCS-3278, 4313 **i02179716**

NOTE	PART NUMBER	QTY	PART NAME 1 2 3 4 5 6 (PRODUCT LEVEL)	SEE PAGE
Y	**230-5745**	1	AXLE GP-FRONT	281
Y	**230-5739**	1	AXLE GP-REAR	194
Y	*219-5752*	1	LINES GP-STEERING	287
Y	*221-0811*	1	MOUNTING GP-AXLE	224
Y	*216-4475*	1	SHAFT GP-DRIVE (REAR)	230

Y-SEPARATE ILLUSTRATION

<END>

220-9183 DRIVE AR-BACKHOE LOADER–
ALL WHEEL DRIVE, 2-WHEEL STEER
S/N: SHA1-UP
PART OF 214-6911, 214-6913 POWER TRAIN AR
AN ATTACHMENT

SMCS-3278, 4313 **i02274848**

NOTE	PART NUMBER	QTY	PART NAME 1 2 3 4 5 6 (PRODUCT LEVEL)	SEE PAGE
Y	**230-5743**	1	AXLE GP-DRIVE & STEERING (FRONT)	192
Y	**230-5739**	1	AXLE GP-REAR	194
Y	*217-9672*	1	GUARD GP-DRIVE SHAFT	307
Y	*219-5753*	1	LINES GP-STEERING	289
Y	*221-0811*	1	MOUNTING GP-AXLE	224
Y	*216-4475*	1	SHAFT GP-DRIVE (REAR)	230
Y	*211-4267*	1	SWITCH GP-ALL WHEEL DRIVE (INCLUDES RELAY)	155

Y-SEPARATE ILLUSTRATION

<END>

111-7907 DRIVE GP-FLEXIBLE COUPLING

S/N: SHA1-UP

PART OF 251-6352, 251-6353 TRANSMISSION AR-DIRECT DRIVE

AN ATTACHMENT

SMCS-3252 **i02790044**

NOTE	REF NO	GRAPHIC REF	PART NUMBER	QTY	PART NAME 1 2 3 4 5 6 (PRODUCT LEVEL)	SEE PAGE
M	1	1	**8T-4200**	8	BOLT (M8X1.25X16-MM)	
M	2	1	**6V-8455**	6	BOLT (M10X1.5X16-MM)	
	3	1	**117-9713**	1	PLATE-CONVERTER REINFORCEMENT	
	4	1	**8T-4224**	8	WASHER-HARD (8.8X16X2-MM THK)	
	5	1	**111-7906**	1	PLATE-CONVERTER DRIVE	

M-METRIC PART

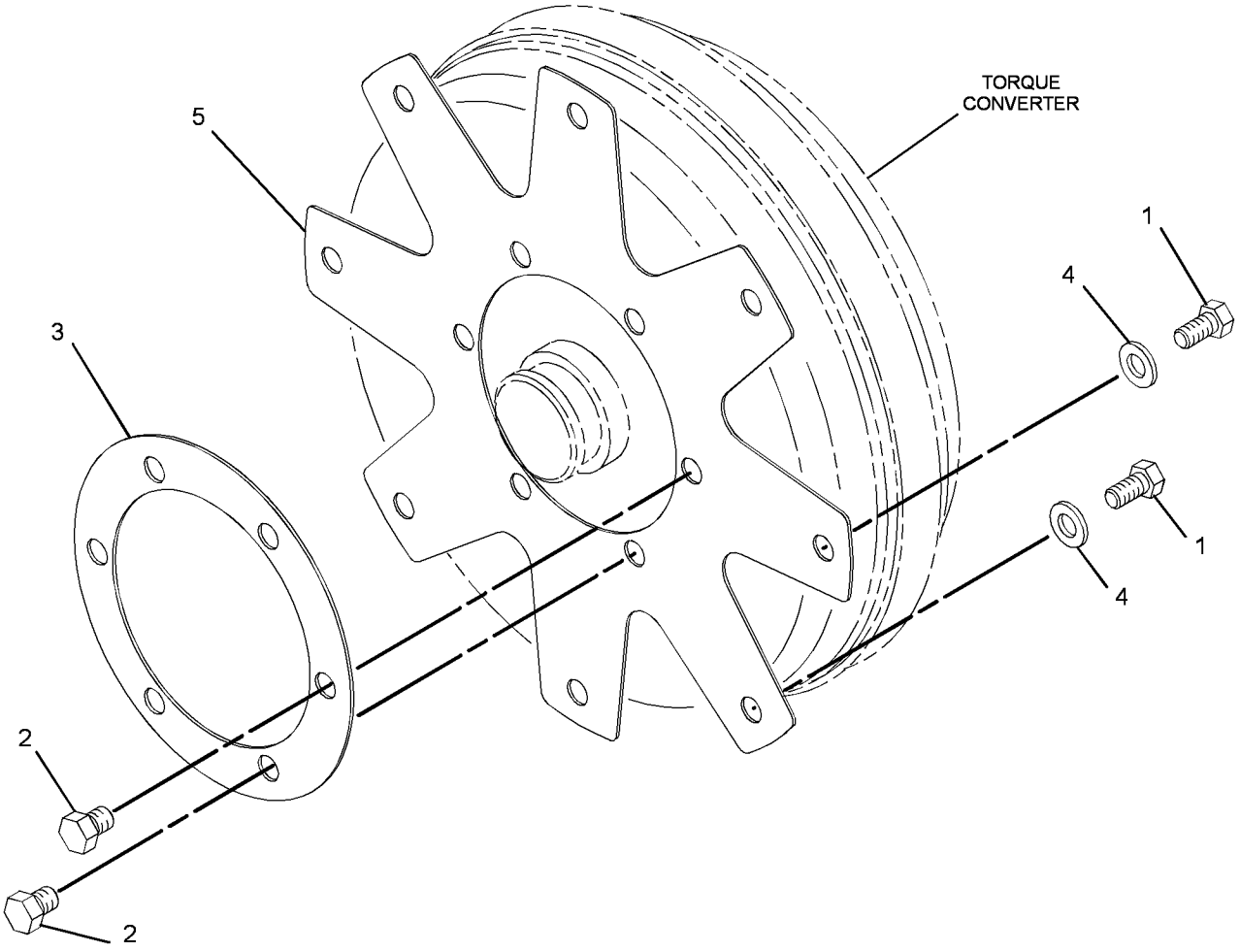

GRAPHIC #1 **<END>** g01393781

214-3740 FILLER GP-POWER TRAIN OIL–

ALL WHEEL DRIVE, STANDARD SHIFT

S/N: SHA1-UP

PART OF 214-6911, 214-6913 POWER TRAIN AR

AN ATTACHMENT

SMCS-3005, 3081 **i02355840**

NOTE	REF NO	GRAPHIC REF	PART NUMBER	QTY	PART NAME 1 2 3 4 5 6 (PRODUCT LEVEL)	SEE PAGE
	1	1	**6V-0852**	2	CAP-DUST	
	2	1	**6V-3965**	2	FITTING-COUPLER	
	3	1	**2B-0941**	1	SPACER (10.5X19X19-MM THK)	
	4	1	**271-7167**	1	GAUGE-OIL LEVEL (DIPSTICK)	
	5	1	**230-2610**	1	TUBE AS	
	6	1	*165-4931*	1	ELBOW AS	
		1	**3J-1907**	1	SEAL-O-RING	
		1	**6V-8077**	1	ELBOW	
	7	1	**3J-1907**	2	SEAL-O-RING	
	8	1	**4J-0522**	1	SEAL-O-RING	
	9	1	**236-1583**	1	BOSS	
	10	1	**8S-0023**	3	CLIP (SLOT)	
	11	1	**8S-0024**	3	CLIP (TAB)	
	12	1	**8T-4121**	1	WASHER-HARD (11X21X2.5-MM THK)	
M	13	1	**8T-4136**	1	BOLT (M10X1.5X25-MM)	
	14	1	**8T-4223**	3	WASHER-HARD (13.5X25.5X3-MM THK)	
M	15	1	**8T-4956**	2	BOLT (M12X1.75X35-MM)	
M	16	1	**8T-4176**	1	BOLT (M12X1.75X90-MM)	
	17	1	**5P-4116**	1	WASHER-HARD (8.8X20.5X2-MM THK)	
M	18	1	**7X-0818**	1	BOLT (M8X1.25X45-MM)	

M-METRIC PART

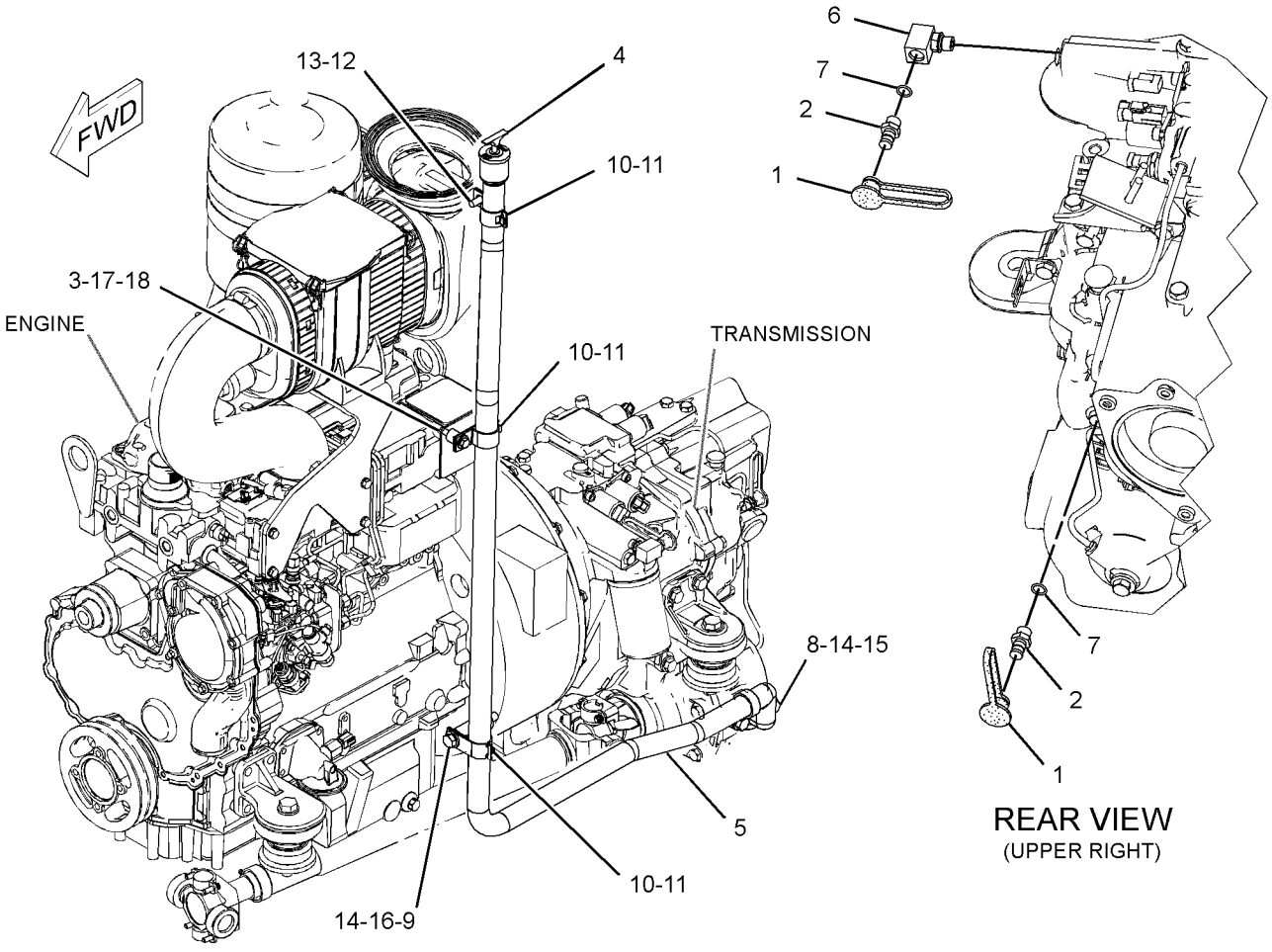

GRAPHIC #1 **<END>** g01198800

256-0551 FILLER GP-POWER TRAIN OIL–

2-WHEEL DRIVE, STANDARD SHIFT

S/N: SHA1-UP

PART OF 214-6910, 214-6912 POWER TRAIN AR

AN ATTACHMENT

SMCS-3005, 3081 **i02356714**

NOTE	REF NO	GRAPHIC REF	PART NUMBER	QTY	PART NAME 1 2 3 4 5 6 (PRODUCT LEVEL)	SEE PAGE
	1	1	**2B-0941**	1	SPACER (10.5X19X19-MM THK)	
	2	1	**6V-0852**	2	CAP-DUST	
	3	1	**6V-3965**	2	FITTING-COUPLER	
	4	1	**136-3112**	1	SPACER	
	5	1	**230-2610**	1	TUBE AS	
	6	1	**236-1583**	1	BOSS	
	7	1	**271-7167**	1	GAUGE-OIL LEVEL (DIPSTICK)	
	8	1	*165-4931*	1	ELBOW AS	
		1	**3J-1907**	1	SEAL-O-RING	
		1	**6V-8077**	1	ELBOW	
	9	1	**3J-1907**	2	SEAL-O-RING	
	10	1	**4J-0522**	2	SEAL-O-RING	
	11	1	**5P-4116**	1	WASHER-HARD (8.8X20.5X2-MM THK)	
M	12	1	**7X-0818**	1	BOLT (M8X1.25X45-MM)	
	13	1	**8S-0023**	3	CLIP (SLOT)	
	14	1	**8S-0024**	3	CLIP (TAB)	
	15	1	**8T-4121**	1	WASHER-HARD (11X21X2.5-MM THK)	
M	16	1	**8T-4136**	1	BOLT (M10X1.5X25-MM)	
M	17	1	**8T-4176**	1	BOLT (M12X1.75X90-MM)	
M	18	1	**8T-4194**	2	BOLT (M12X1.75X50-MM)	
	19	1	**8T-4223**	3	WASHER-HARD (13.5X25.5X3-MM THK)	

M-METRIC PART

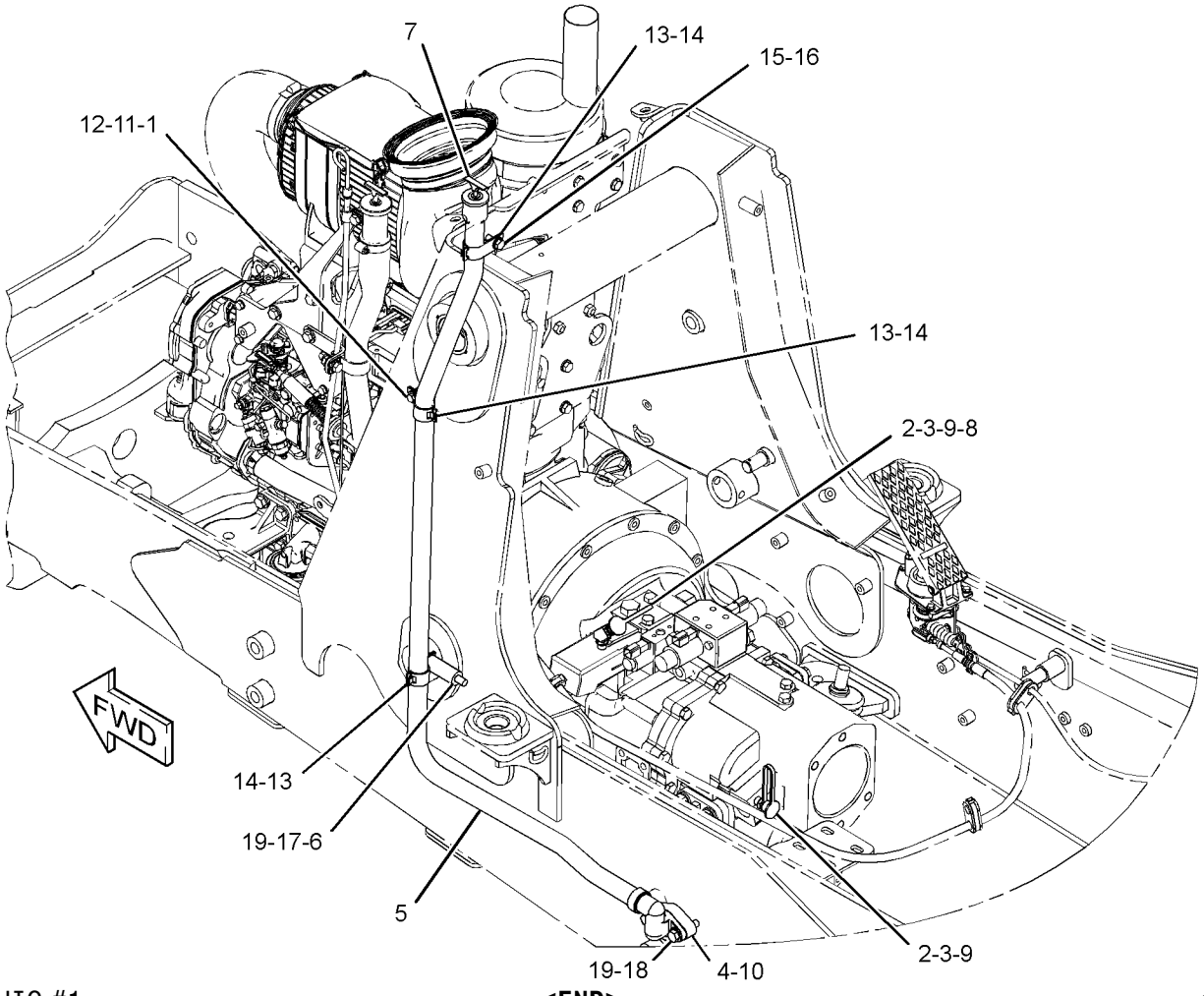

GRAPHIC #1 **<END>** g01202572

216-1609 FLANGE GP-WHEEL

S/N: SHA1-UP
PART OF 230-5739 AXLE GP-REAR
AN ATTACHMENT

SMCS-4057 **i02361136**

NOTE	REF NO	GRAPHIC REF	PART NUMBER	QTY	PART NAME 1 2 3 4 5 6 (PRODUCT LEVEL)	SEE PAGE
	1	1	**210-5932**	2	BEARING-WHEEL	
	2	1	**216-1602**	1	FLANGE	
	3	1	**226-4346**	10	STUD	
	4	1	**229-5092**	1	SEAL	

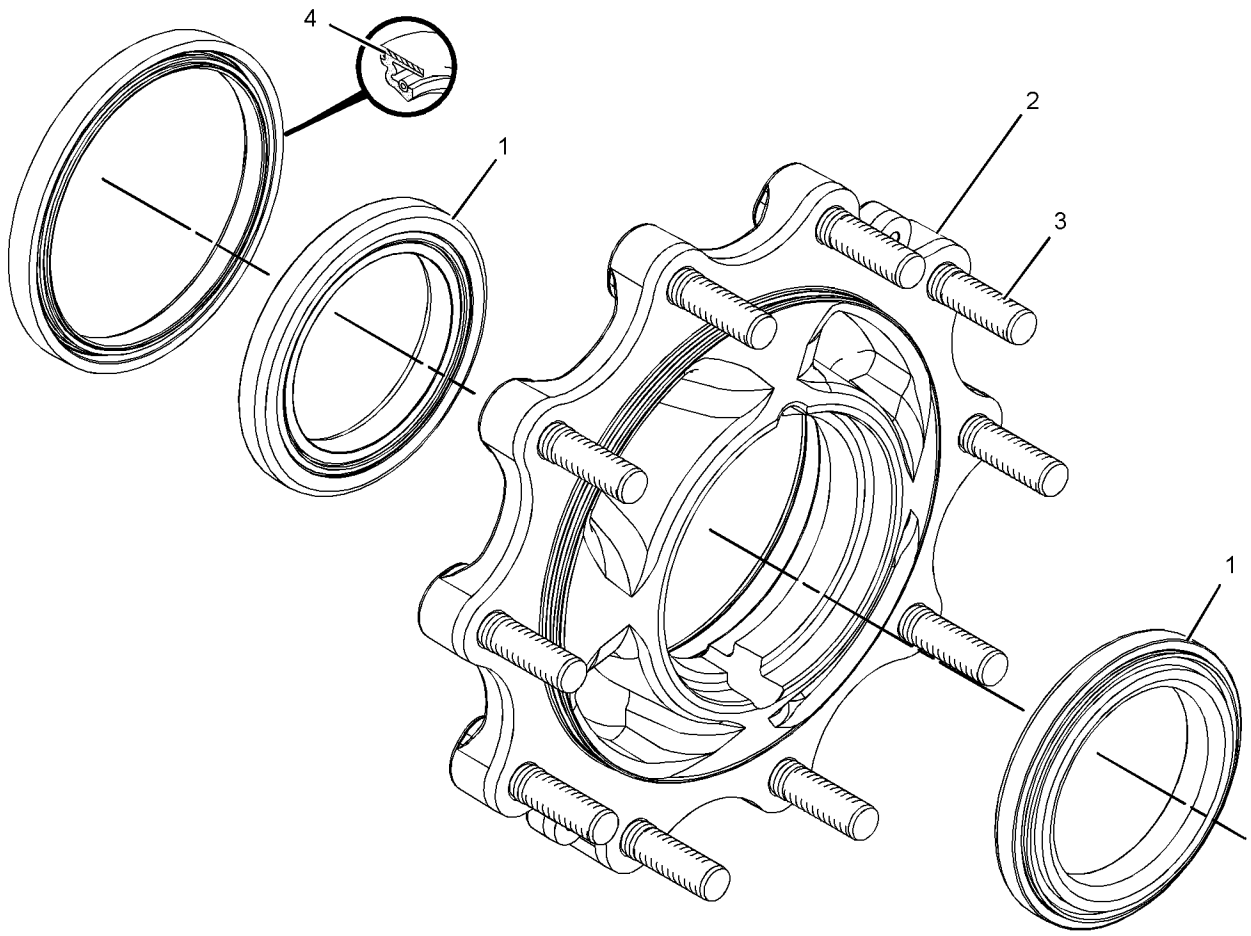

GRAPHIC #1 **<END>** g01180592

231-0683 FLANGE GP-WHEEL

S/N: SHA1-UP
PART OF 230-5745 AXLE GP-FRONT
AN ATTACHMENT

SMCS-4057 **i02581942**

NOTE	REF NO	GRAPHIC REF	PART NUMBER	QTY	PART NAME 1 2 3 4 5 6 (PRODUCT LEVEL)	SEE PAGE
	1	1	**207-4263**	1	BEARING AS	
	2	1	**207-4267**	1	BEARING AS	
	3	1	**238-5228**	1	KIT-HUB	
		1	**231-0687**	8	STUD	
	4	1	**231-0688**	1	SEAL	

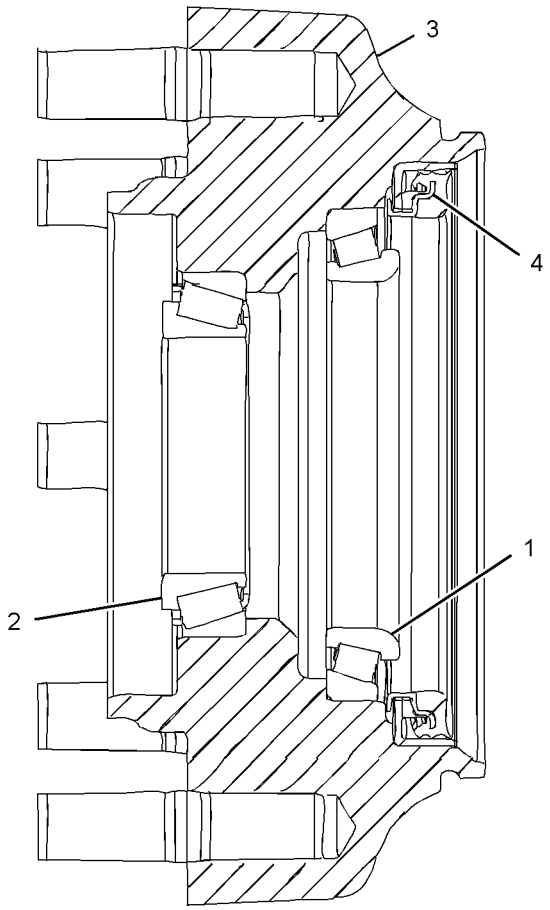

GRAPHIC #1

<END>

g01132035

209-9884 HOUSING & FLANGE GP-AXLE–RH

S/N: SHA1-UP

PART OF 230-5743 AXLE GP-DRIVE & STEERING

AN ATTACHMENT

SMCS-4057, 4234 **i02364477**

NOTE	REF NO	GRAPHIC REF	PART NUMBER	QTY	PART NAME 1 2 3 4 5 6 (PRODUCT LEVEL)	SEE PAGE
Y	1	1	**217-2877**	1	HOUSING GP-AXLE (RH)	219
J	2	1	**231-0703**	1	FLANGE AS	
	2A	1	**210-5932**	2	BEARING-WHEEL	
	2B	1	**226-4346**	8	STUD	
	2C	1	**229-5092**	1	SEAL	
	3	1	**226-4366**	1	NUT-SPANNER	
	4	1	**226-4370**	3	BOLT-SELF-LOCKING	
	5	1	**229-5085**	1	SPACER (110X123X18.36-MM THK)	
	6	1	**217-2879**	1	GEAR GP-RING	
		1	**209-7459**	1	RETAINER	
		1	**209-7461**	1	GEAR-RING	
	7	1	**226-4365**	1	WASHER-TAB	
					AVAILABLE REPAIR KIT(S):	
J			**238-5256**	1	KIT-FLANGE	

J-KIT MARKED J AVAILABLE FOR PART MARKED J
Y-SEPARATE ILLUSTRATION

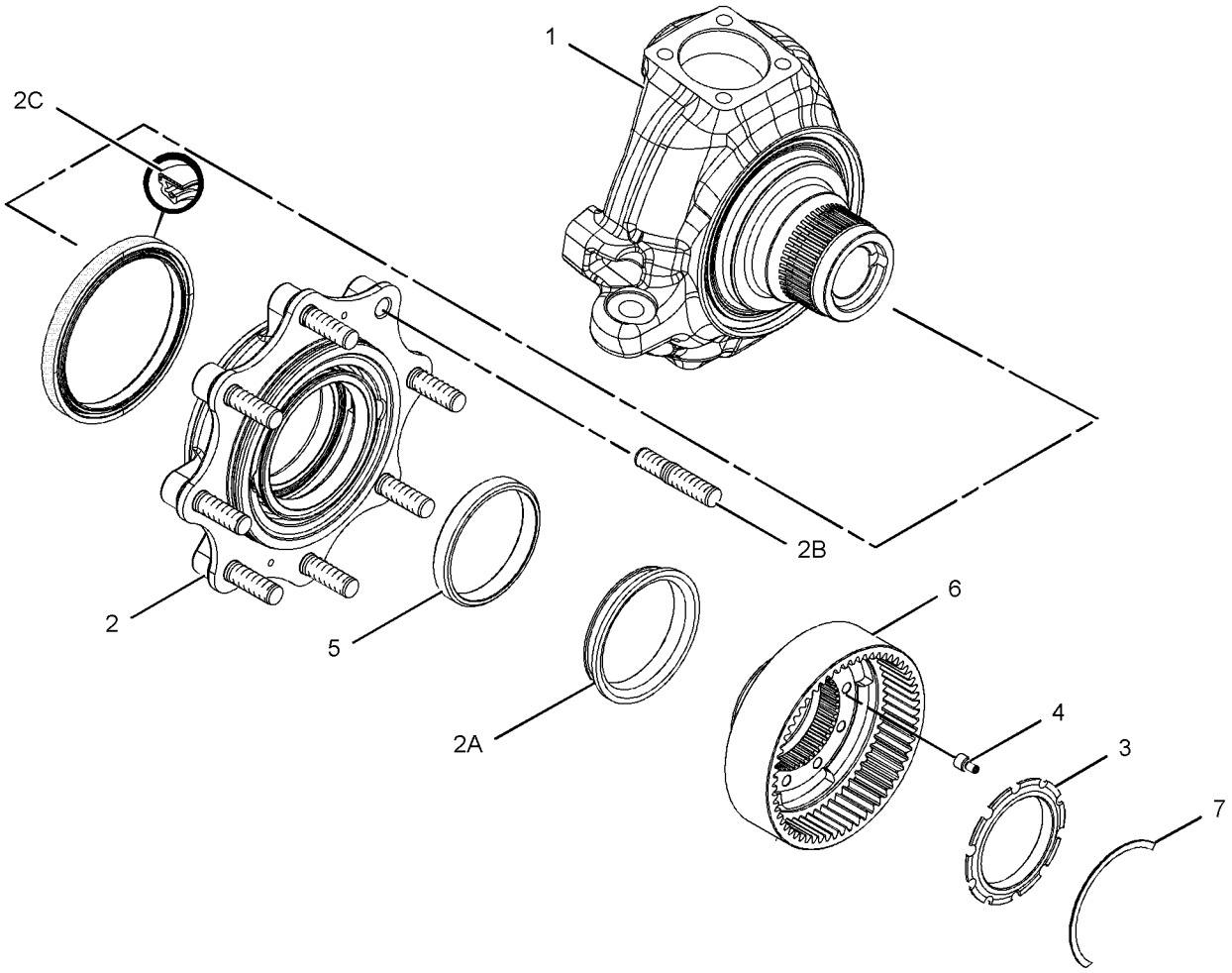

GRAPHIC #1 **<END>** g01181019

209-9885 HOUSING & FLANGE GP-AXLE–LH

S/N: SHA1-UP

PART OF 230-5743 AXLE GP-DRIVE & STEERING

AN ATTACHMENT

SMCS-4057, 4234 **i02581990**

NOTE	REF NO	GRAPHIC REF	PART NUMBER	QTY	PART NAME 1 2 3 4 5 6 (PRODUCT LEVEL)	SEE PAGE
Y	1	1	**217-2878**	1	HOUSING GP-AXLE (LH)	220
J	2	1	**231-0703**	1	FLANGE AS	
	2A	1	**210-5932**	2	BEARING-WHEEL	
	2B	1	**226-4346**	8	STUD	
	2C	1	**229-5092**	1	SEAL	
C	3	1	**226-4366**	1	NUT-SPANNER	
C	4	1	**226-4370**	3	BOLT-SELF-LOCKING	
	5	1	**229-5085**	1	SPACER (110X123X18.36-MM THK)	
C	6	1	**217-2879**	1	GEAR GP-RING	
		1	**209-7459**	1	RETAINER	
		1	**209-7461**	1	GEAR-RING	
C	7	1	**226-4365**	1	WASHER-TAB	
					AVAILABLE REPAIR KIT(S):	
J			**238-5256**	1	KIT-FLANGE	

C-CHANGE FROM PREVIOUS TYPE
J-KIT MARKED J AVAILABLE FOR PART MARKED J
Y-SEPARATE ILLUSTRATION

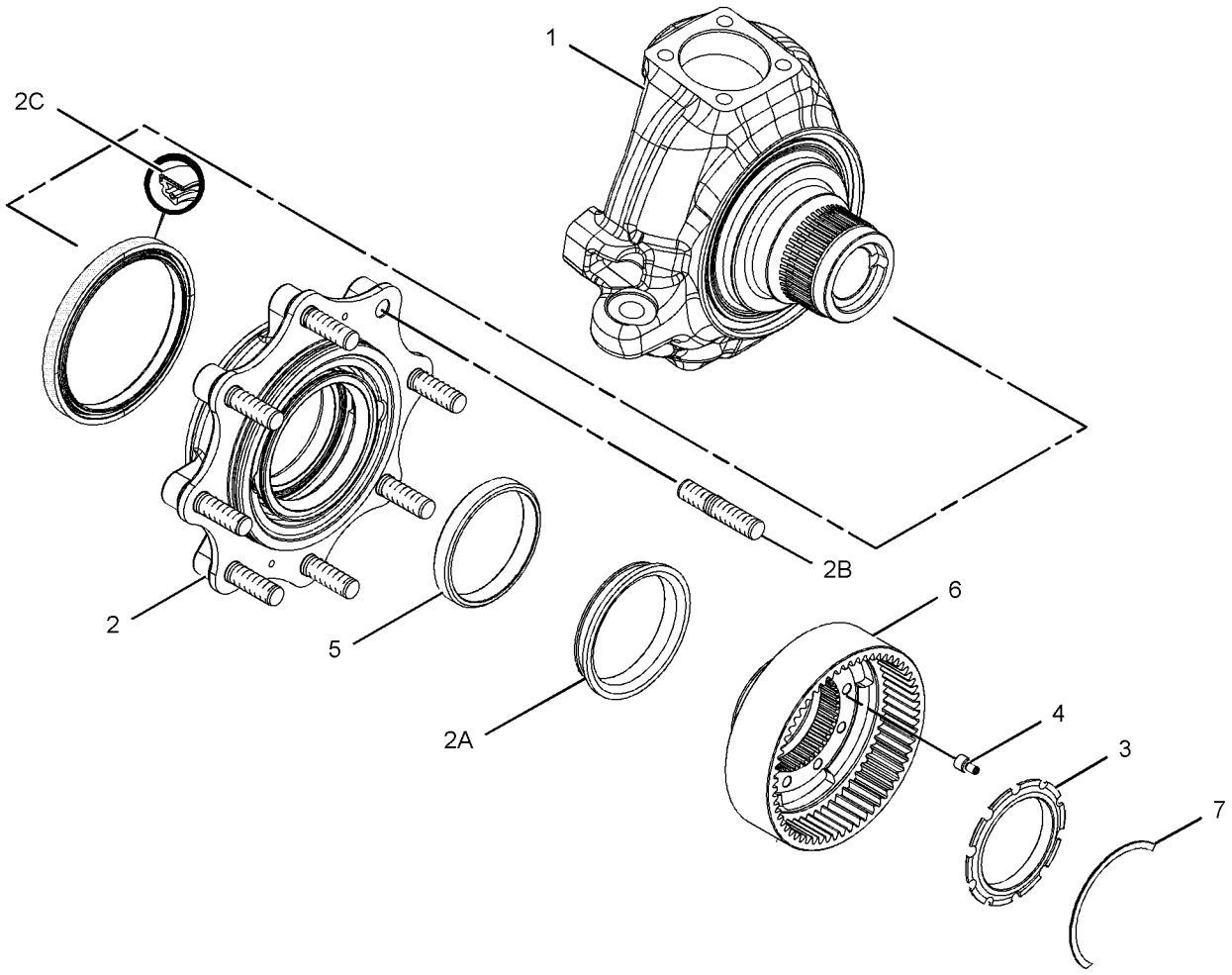

GRAPHIC #1 **<END>** g01180841

217-2877 HOUSING GP-AXLE–RH

S/N: SHA1-UP
PART OF 209-9884 HOUSING & FLANGE GP-AXLE
AN ATTACHMENT

SMCS-3256, 3258, 3260, 4251 **i02365010**

NOTE	REF NO	GRAPHIC REF	PART NUMBER	QTY	PART NAME 1 2 3 4 5 6 (PRODUCT LEVEL)	SEE PAGE
	1	1	**199-0648**	1	NUT-JAM (M16X2-THD)	
	2	1	**198-7814**	1	BOLT (M16X100-MM)	
	3	1	**209-7460**	1	BUSHING	
	4	1	**209-7465**	1	SEAL	
	5	1	**231-0700**	1	HOUSING	

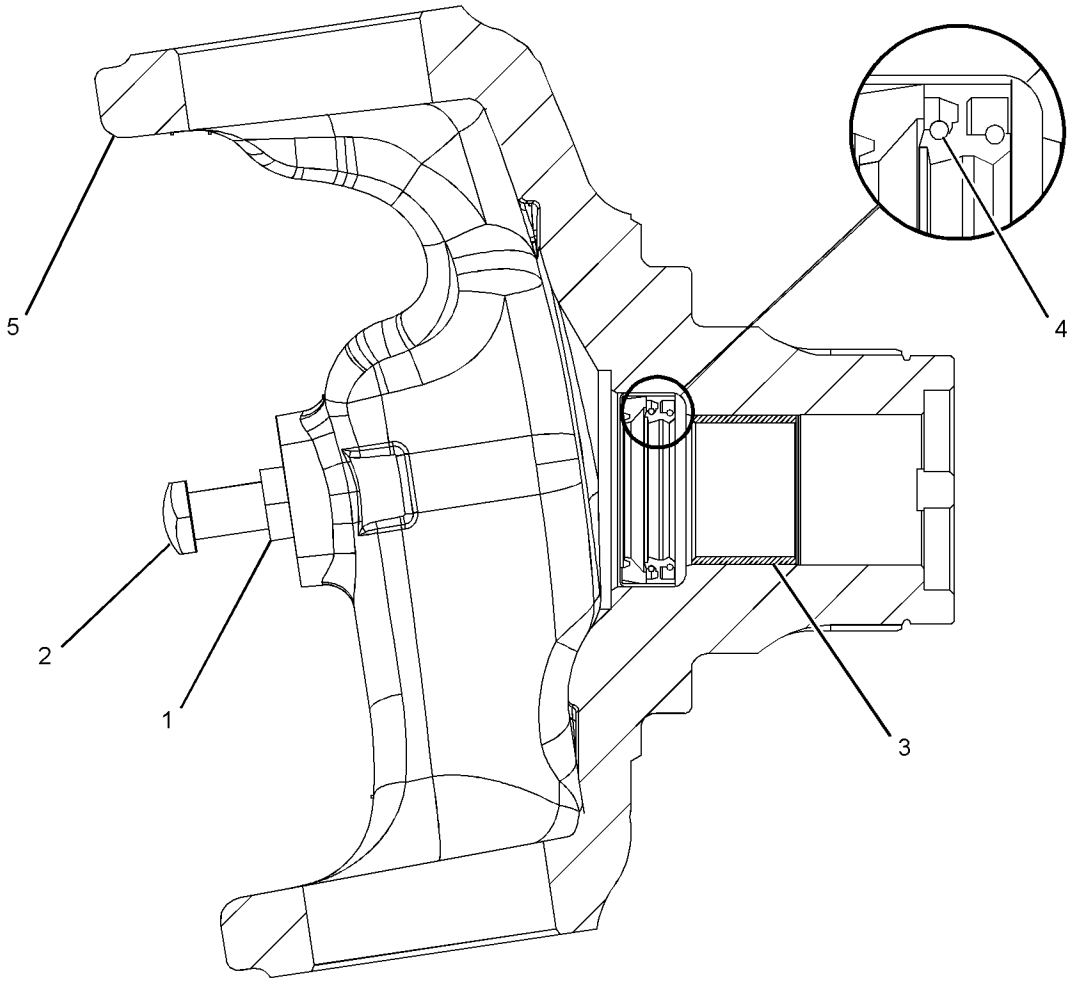

GRAPHIC #1 **<END>** g01181175

217-2878 HOUSING GP-AXLE–LH

S/N: SHA1-UP
PART OF 209-9885 HOUSING & FLANGE GP-AXLE
AN ATTACHMENT

SMCS-3256, 3258, 3260, 4251 **i02365011**

NOTE	REF NO	GRAPHIC REF	PART NUMBER	QTY	PART NAME 1 2 3 4 5 6 (PRODUCT LEVEL)	SEE PAGE
	1	1	**199-0648**	1	NUT-JAM (M16X2-THD)	
	2	1	**198-7814**	1	BOLT (M16X100-MM)	
	3	1	**209-7460**	1	BUSHING	
	4	1	**209-7465**	1	SEAL	
	5	1	*231-0701*	1	HOUSING	

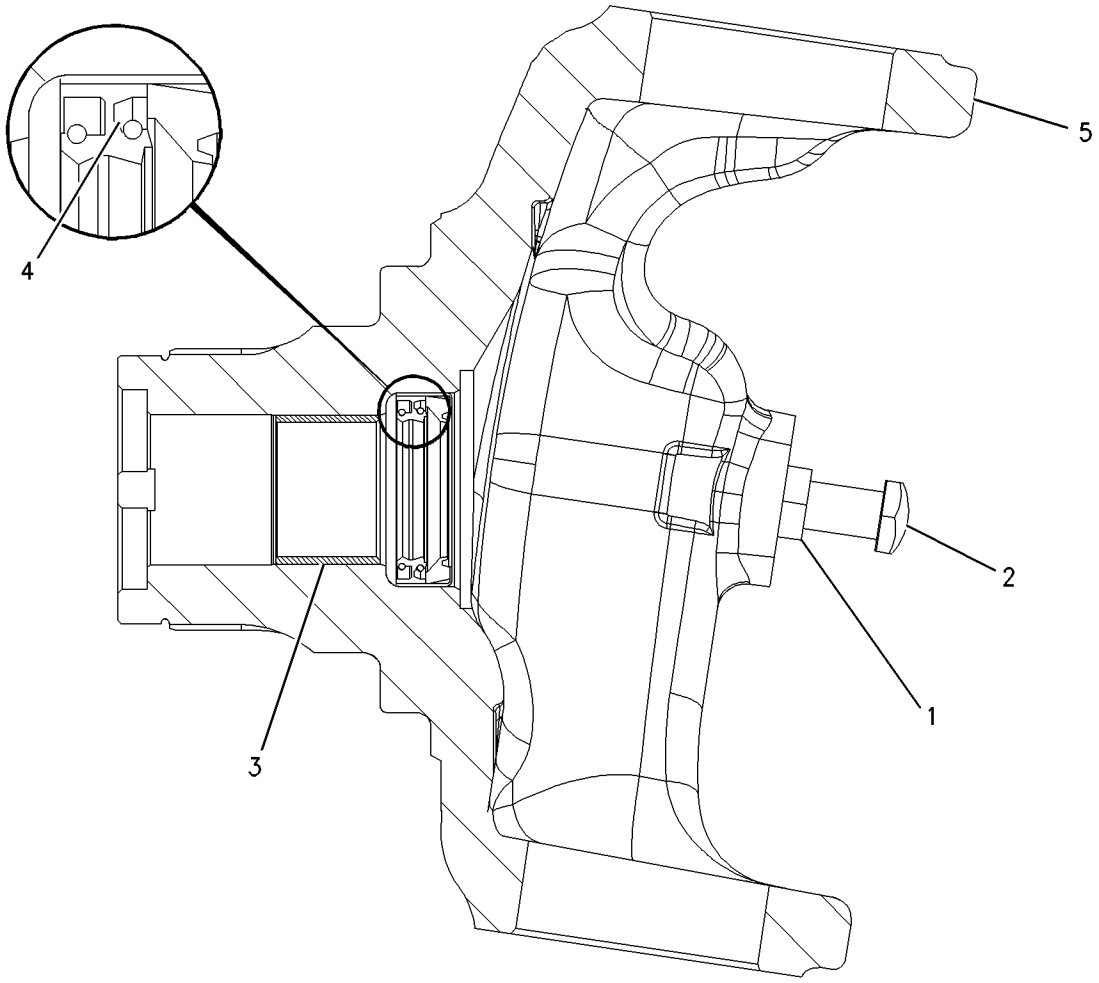

GRAPHIC #1 **<END>** g00926639

238-5289 HOUSING GP-AXLE

S/N: SHA1-UP
PART OF 230-5739 AXLE GP-REAR
AN ATTACHMENT

SMCS-3256, 3258, 3260, 4251 **i02780260**

NOTE	REF NO	GRAPHIC REF	PART NUMBER	QTY	PART NAME 1 2 3 4 5 6 (PRODUCT LEVEL)	SEE PAGE
	1	1	**199-0646**	4	BOLT	
	2	1	**199-0656**	2	BEARING	
J	3	1	**199-0663**	1	SEAL-O-RING	
	4	1	**198-7811**	2	DOWEL	
	5	1	**199-0675**	2	NUT (M104X2-THD)	
J	6	1	**199-0678**	2	WASHER (45.5X55X2-MM THK)	
J	7	1	**199-0680**	1	SPACER (47X50X19.2-MM THK)	
M	8	1	**199-0695**	2	BOLT (M6X1X14-MM)	
	9	1	**199-0697**	1	SEAL	
J	10	1	**199-0785**	1	WASHER (30.5X58X10-MM THK)	
	11	1	**199-0858**	2	RETAINER	
J	12	1	**217-2876**	1	KIT-BEVEL GEAR & PINION	
J	13	1	**212-5702**	1	NUT (M30X2-THD)	
	14	1	**216-1600**	1	DISC-BRAKE	
	15	1	**095-1041**	1	BEARING AS	
	16	1	**093-8828**	1	BEARING AS	
Y	17	1	**216-1612**	1	CYLINDER GP-BRAKE (LH)	276
Y	18	1	**216-1613**	1	CYLINDER GP-BRAKE (RH)	277
	19	1	**219-8836**	1	FORK	
Y	20	1	**231-0692**	1	DIFFERENTIAL GP	208
	22	1	**069-4707**	1	SEALANT (GASKET)	
B	23	1	**199-0684**	1	SHIM (2.5-MM THK)	
B	24	1	**199-0685**	1	SHIM (2.6-MM THK)	
B	25	1	**199-0686**	1	SHIM (2.7-MM THK)	
B	26	1	**199-0687**	1	SHIM (2.8-MM THK)	
B	27	1	**199-0688**	1	SHIM (2.9-MM THK)	
B	28	1	**199-0689**	1	SHIM (3-MM THK)	
B	29	1	**199-0690**	1	SHIM (3.1-MM THK)	
B	30	1	**199-0691**	1	SHIM (3.2-MM THK)	
B	31	1	**199-0692**	1	SHIM (3.3-MM THK)	
B	32	1	**199-0693**	1	SHIM (3.4-MM THK)	
					AVAILABLE REPAIR KIT(S):	
			217-2345	1	KIT-DIFFERENTIAL	
					(INCLUDES PIN, SHAFT & WASHERS)	
J			**217-2346**		KIT-BEVEL GEAR & PINION	
					(INCLUDES BEVEL GEAR, PINION & PARTS MARKED J)	

B-USE AS REQUIRED
J-KIT MARKED J AVAILABLE FOR PART(S) MARKED J
M-METRIC PART
Y-SEPARATE ILLUSTRATION

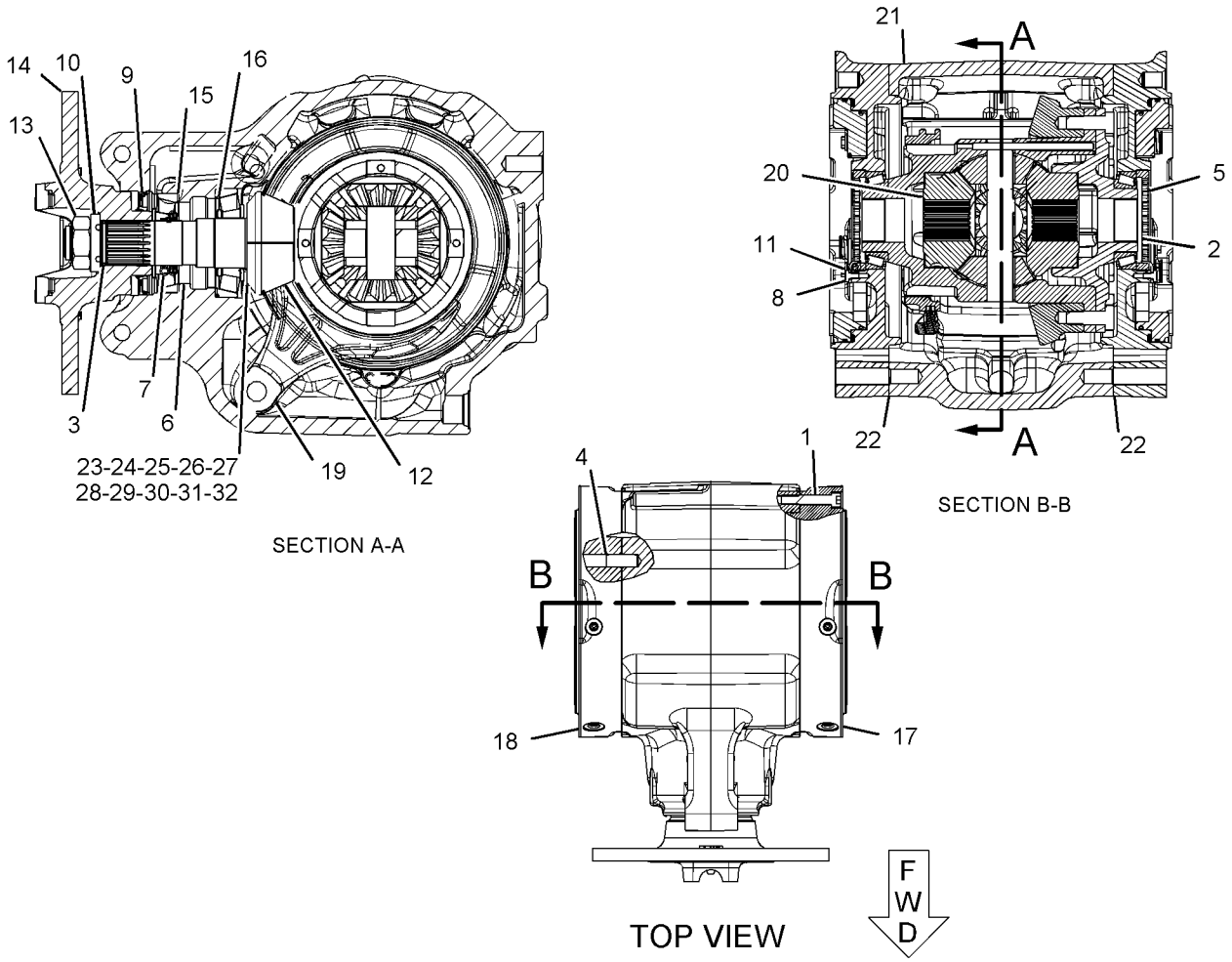

GRAPHIC #1 **<END>** g01135243

256-0546 LINES GP-POWER TRAIN OIL—DIFFERENTIAL LOCK

S/N: SHA1-UP

PART OF 214-6910, 214-6911, 214-6912, 214-6913 POWER TRAIN AR

AN ATTACHMENT

SMCS-3016, 3154 **i02356720**

NOTE	REF NO	GRAPHIC REF	PART NUMBER	QTY	PART NAME 1 2 3 4 5 6 (PRODUCT LEVEL)	SEE PAGE
	1	1	*148-8325*	1	CONNECTOR AS	
		1	**3J-1907**	1	SEAL-O-RING	
		1	**4J-5477**	1	SEAL-O-RING	
		1	**6V-8641**	1	CONNECTOR	
I	2	1	**256-0550**	1	HOSE AS	
	3	1	*148-8368*	1	ELBOW AS	
		1	**3J-1907**	1	SEAL-O-RING	
		1	**4J-5477**	1	SEAL-O-RING	
		1	**6V-8627**	1	ELBOW	
	4	1	**151-4841**	1	BLOCK	
	5	1	**7K-1181**	1	STRAP-CABLE	

I-REFER TO HYDRAULIC INFORMATION SYSTEM

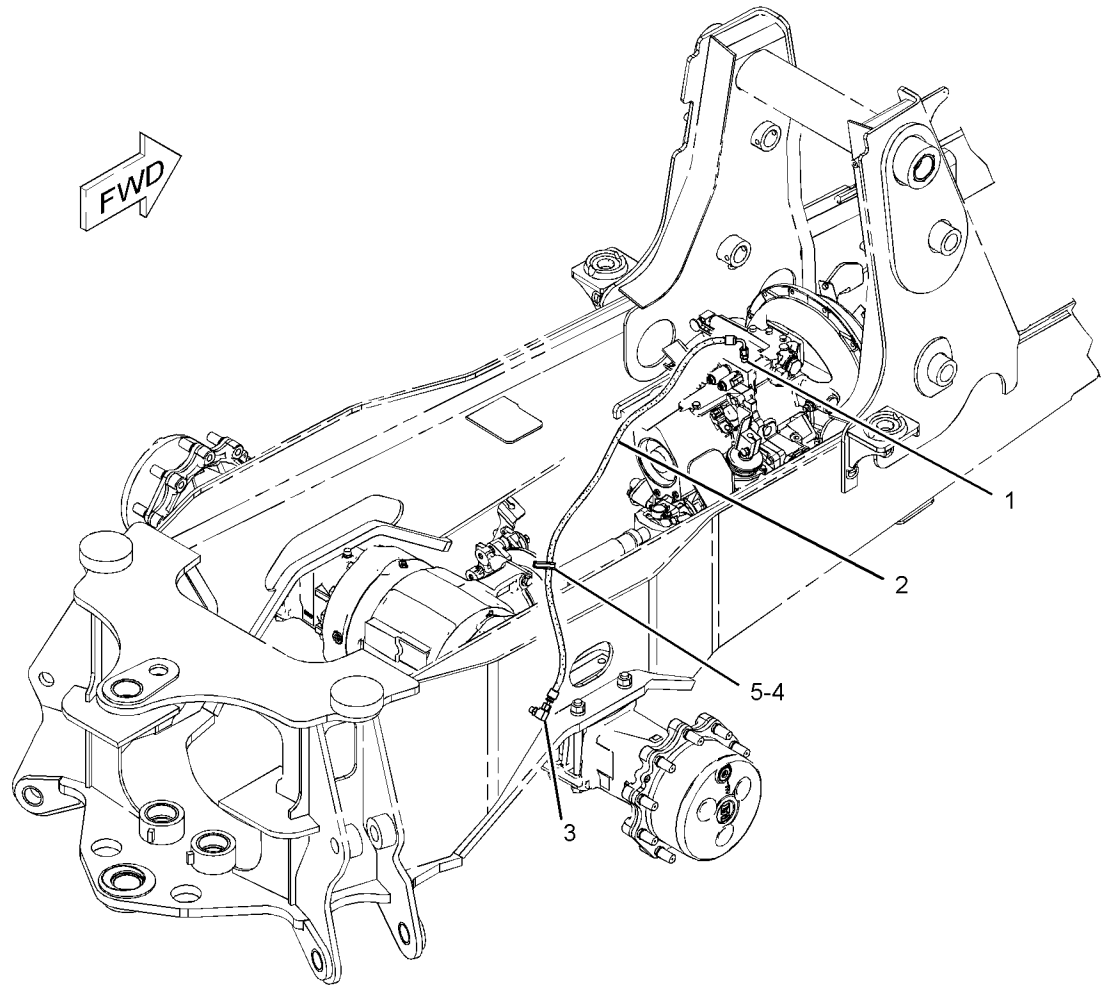

GRAPHIC #1 **<END>** g01238239

POWER TRAIN

221-0811 MOUNTING GP-AXLE

S/N: SHA1-UP

PART OF 220-9182, 220-9183 DRIVE AR-BACKHOE LOADER

AN ATTACHMENT

SMCS-3268 **i02355759**

NOTE	REF NO	GRAPHIC REF	PART NUMBER	QTY	PART NAME 1 2 3 4 5 6 (PRODUCT LEVEL)	SEE PAGE
B	1	1	**1K-7082**	1	WASHER (2.266X4X0.031-IN THK)	
B	2	1	**9R-9702**	2	WASHER (56X100X1.6-MM THK)	
	3	1	**165-8996**	2	WASHER-THRUST (55.5X100.5X5-MM THK)	
	4	1	**211-9286**	1	PIN AS	
	5	1	**212-0770**	2	PLATE	
M	6	1	**089-7990**	8	BOLT (M20X2.5X250-MM)	
	7	1	**226-4192**	12	WASHER-HARD (21.5X35X8-MM THK)	
	8	1	**7X-0618**	1	WASHER-HARD (13.5X40X5-MM THK)	
M	9	1	**8T-4131**	4	NUT (M20X2.5-THD)	
M	10	1	**8T-4192**	1	BOLT (M12X1.75X25-MM)	

B-USE AS REQUIRED
M-METRIC PART

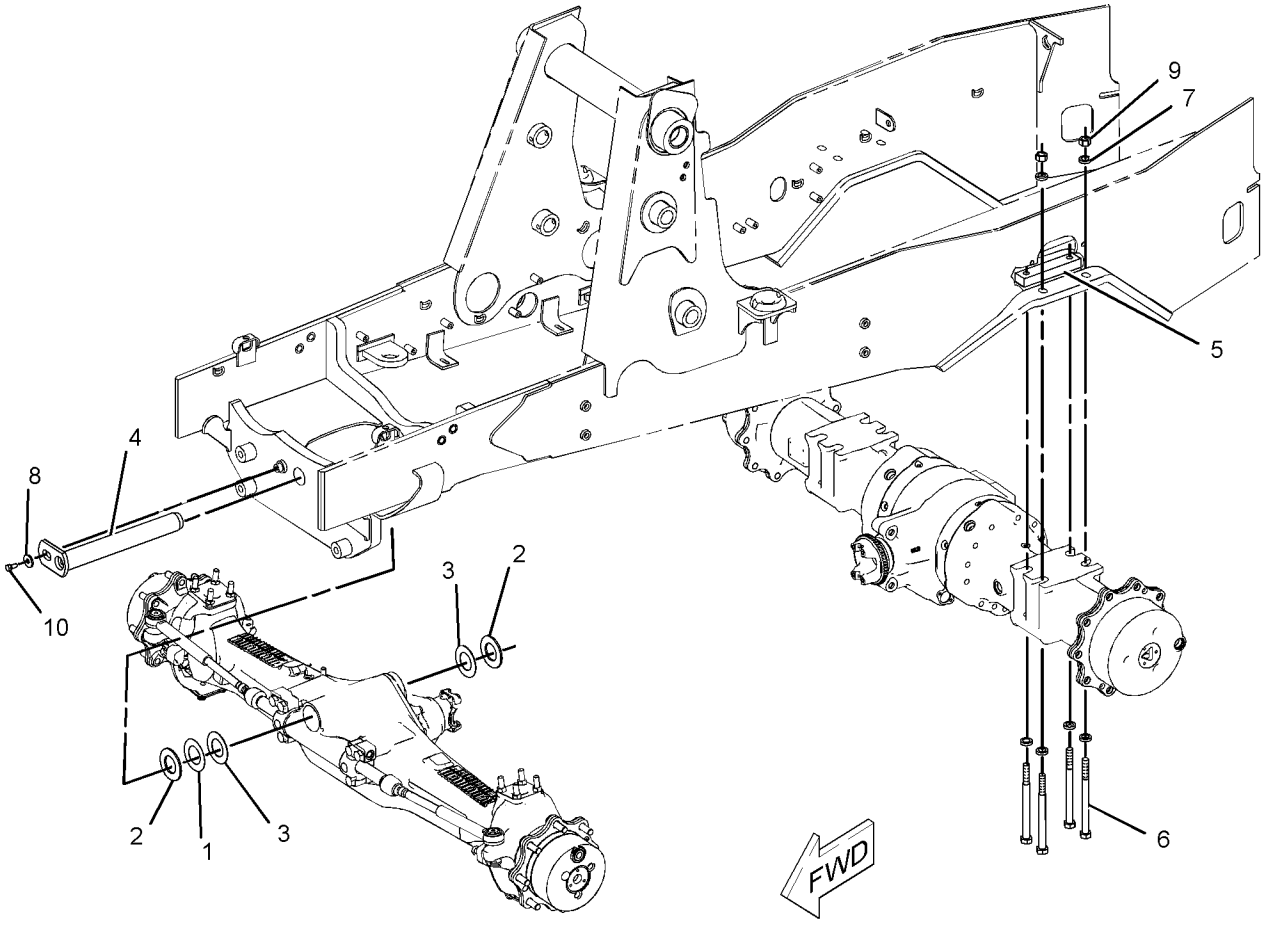

GRAPHIC #1 **<END>** g01200213

271-4487 MOUNTING GP-TRANSMISSION

S/N: SHA1-UP

PART OF 271-2403, 271-2404 TRANSMISSION & MOUNTING GP

AN ATTACHMENT

SMCS-3082 **i02354354**

NOTE	REF NO	GRAPHIC REF	PART NUMBER	QTY	PART NAME 1 2 3 4 5 6 (PRODUCT LEVEL)	SEE PAGE
	1	1	**245-4827**	1	SUPPORT AS (RH)	
	2	1	**271-7309**	1	SUPPORT AS (LH)	
M	3	1	**7X-2553**	4	BOLT (M16X2X40-MM)	
	4	1	**8T-4223**	4	WASHER-HARD (13.5X25.5X3-MM THK)	
M	5	1	**8T-4956**	4	BOLT (M12X1.75X35-MM)	
	6	1	**9X-8257**	4	WASHER (17.5X30X3.5-MM THK)	

M-METRIC PART

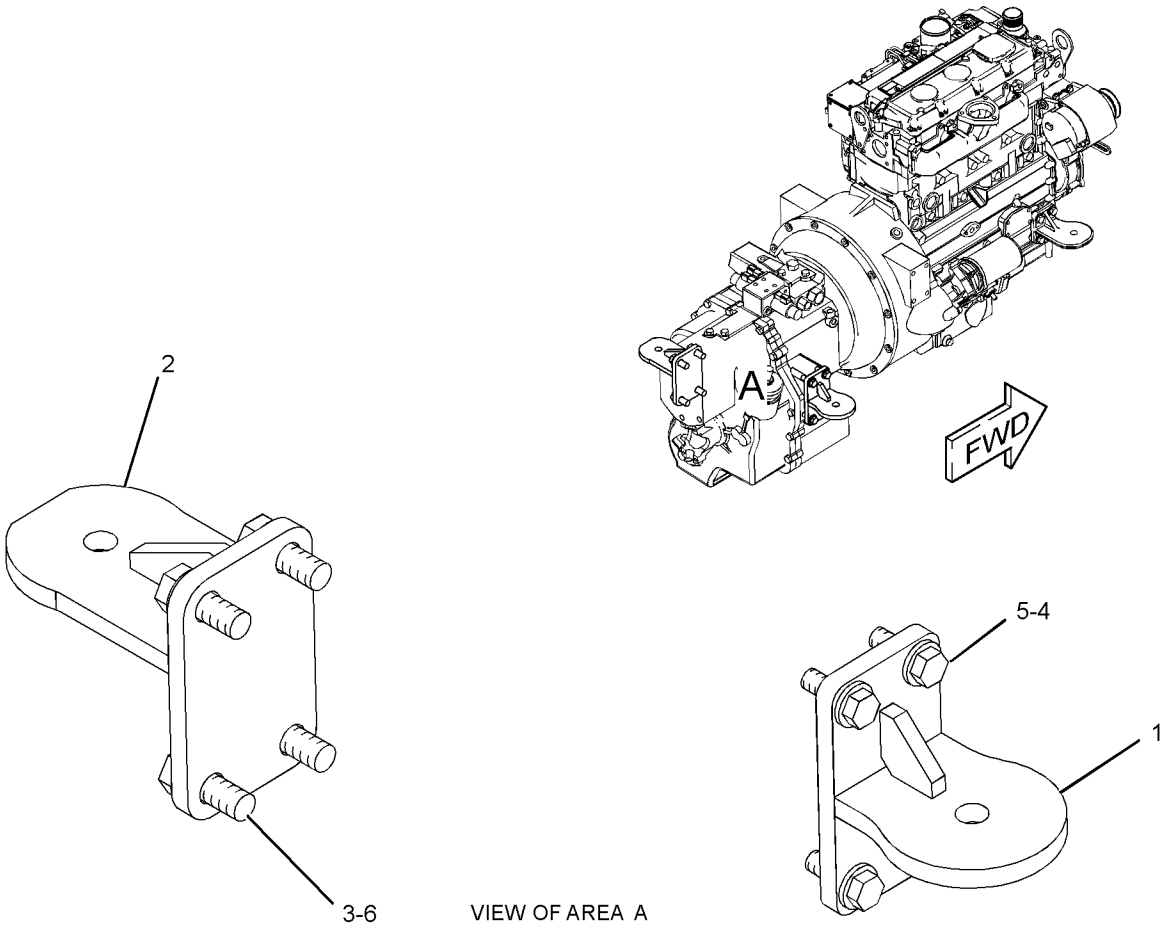

VIEW OF AREA A

GRAPHIC #1 **<END>** g01231911

210-5924 PLANETARY GP-FINAL DRIVE

S/N: SHA1-UP

PART OF 230-5743 AXLE GP-DRIVE & STEERING

AN ATTACHMENT

SMCS-4050 **i02249722**

NOTE	REF NO	GRAPHIC REF	PART NUMBER	QTY	PART NAME 1 2 3 4 5 6 (PRODUCT LEVEL)	SEE PAGE
	1	1	**210-5931**	4	RETAINER	
	2	1	**209-4157**	4	GEAR (23-TEETH)	
	3	1	**095-0924**	4	RING-RETAINING	
					AVAILABLE REPAIR KIT(S):	
			209-7466	1	KIT-PLANETARY CARRIER	
					(INCLUDES PLUG, SHAFTS & CARRIER)	
			219-8783	23	KIT-ROLLER BEARING	
					(EACH INCLUDES NEEDLES)	

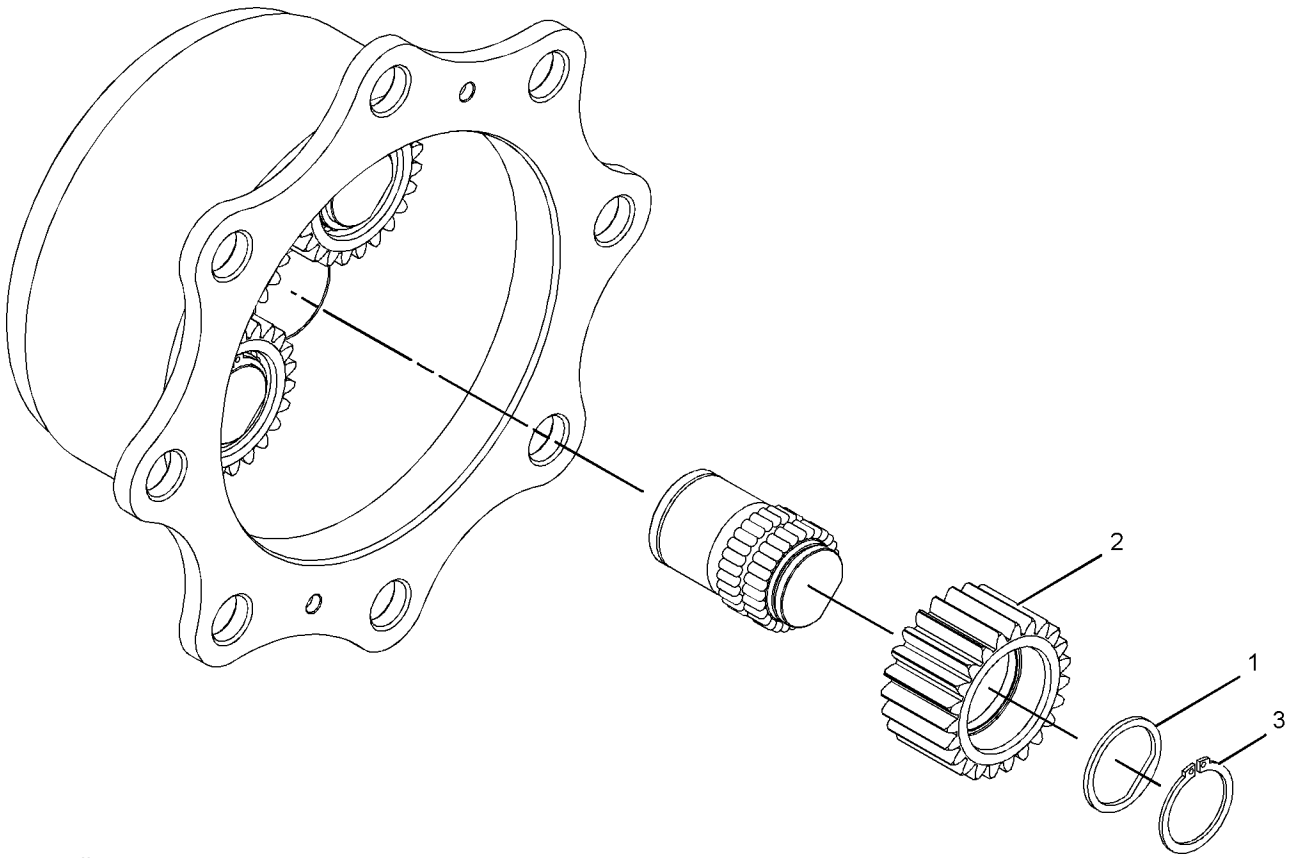

GRAPHIC #1 **<END>** g01132397

216-1610 PLANETARY GP-FINAL DRIVE

S/N: SHA1-UP
PART OF 230-5739 AXLE GP-REAR
AN ATTACHMENT

SMCS-4050 **i01686952**

NOTE	REF NO	GRAPHIC REF	PART NUMBER	QTY	PART NAME 1 2 3 4 5 6 (PRODUCT LEVEL)	SEE PAGE
	1	1	**199-0653**	3	PIN	
	2	1	**207-4257**	6	BEARING	
	3	1	**199-0669**	1	PLUG	
	4	1	**199-0760**	3	BEARING	
	5	1	**213-4222**	3	WASHER	
	6	1	**207-5962**	6	WASHER	
	7	1	**216-1606**	3	GEAR-PLANET	
	8	1	**216-1601**	1	CARRIER	

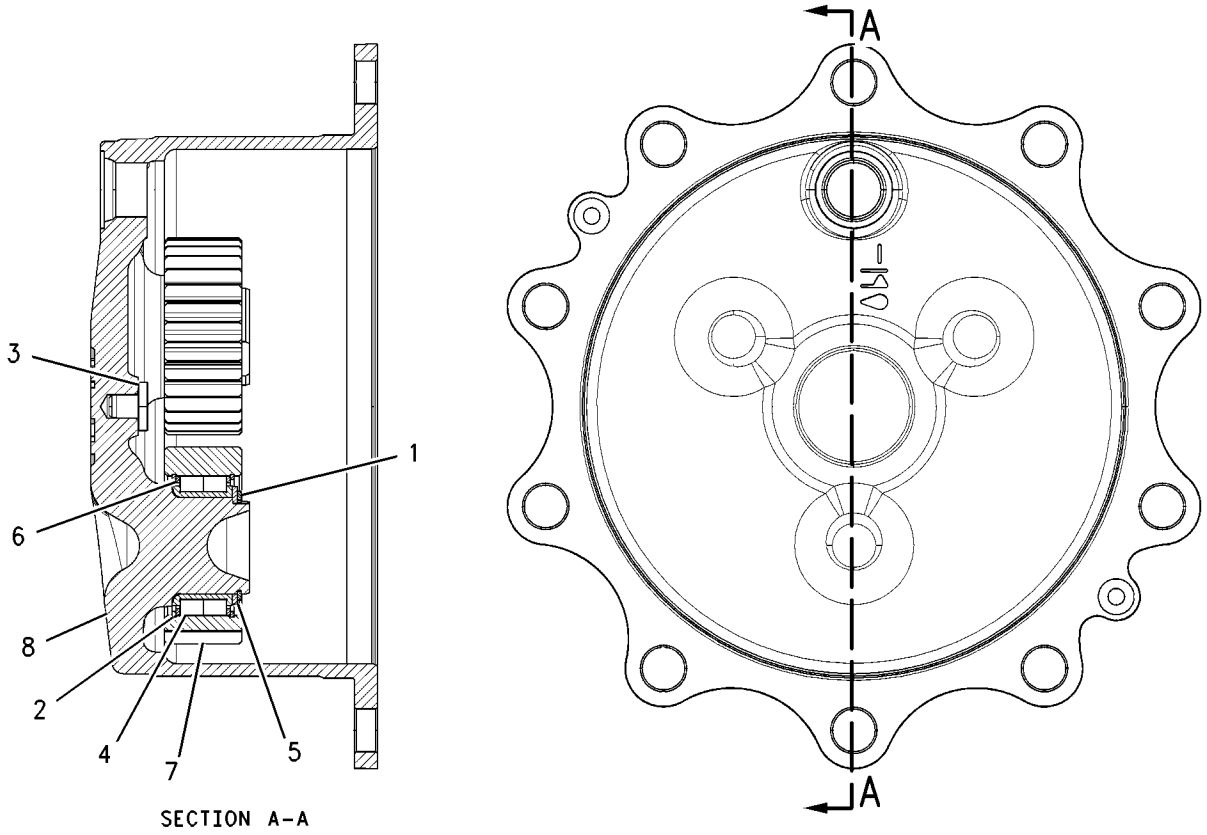

SECTION A-A

GRAPHIC #1 **<END>** g00873301

214-6910 POWER TRAIN AR—2-WHEEL DRIVE, STANDARD SHIFT

S/N: SHA1-UP
AN ATTACHMENT

SMCS-3000, 4000 **i02354669**

NOTE	PART NUMBER	QTY	PART NAME 1 2 3 4 5 6 (PRODUCT LEVEL)	SEE PAGE
Y	*206-1642*	1	CONTROL GP-PARKING BRAKE	271
Y	*206-1638*	1	CONTROL GP-SERVICE BRAKE	273
Y	*206-1643*	1	CONTROL GP-TRANSMISSION	686
Y	*112-1826*	1	DRIVE & MTG GP-PUMP	341
Y	*220-9182*	1	DRIVE AR-BACKHOE LOADER	209
Y	*252-4640*	1	ENGINE AR	7
Y	*256-0551*	1	FILLER GP-POWER TRAIN OIL	213
Y	*256-0546*	1	LINES GP-POWER TRAIN OIL (DIFFERENTIAL LOCK)	223
Y	*202-6010*	1	SWITCH GP-DIFFERENTIAL LOCK	156
Y	*251-6352*	1	TRANSMISSION AR-DIRECT DRIVE	238
	119-4740	1	FILTER AS-OIL (STANDARD EFFICIENCY)	

Y-SEPARATE ILLUSTRATION

<END>

214-6911 POWER TRAIN AR—ALL WHEEL DRIVE, STD SHIFT

S/N: SHA1-UP
AN ATTACHMENT

SMCS-3000, 4000 **i02354676**

NOTE	PART NUMBER	QTY	PART NAME 1 2 3 4 5 6 (PRODUCT LEVEL)	SEE PAGE
Y	*206-1642*	1	CONTROL GP-PARKING BRAKE	271
Y	*206-1638*	1	CONTROL GP-SERVICE BRAKE	273
Y	*206-1643*	1	CONTROL GP-TRANSMISSION	686
Y	*112-1826*	1	DRIVE & MTG GP-PUMP	341
Y	*220-9183*	1	DRIVE AR-BACKHOE LOADER	209
Y	*252-4640*	1	ENGINE AR	7
Y	*214-3740*	1	FILLER GP-POWER TRAIN OIL	211
Y	*256-0546*	1	LINES GP-POWER TRAIN OIL (DIFFERENTIAL LOCK)	223
Y	*216-4476*	1	SHAFT GP-DRIVE (FRONT)	230
Y	*202-6010*	1	SWITCH GP-DIFFERENTIAL LOCK	156
Y	*251-6353*	1	TRANSMISSION AR-DIRECT DRIVE	238
	119-4740	1	FILTER AS-OIL (STANDARD EFFICIENCY)	

Y-SEPARATE ILLUSTRATION

<END>

214-6912 POWER TRAIN AR–
2-WHEEL DRIVE, 2-WHEEL STEER, STD SHIFT
S/N: SHA1-UP
AN ATTACHMENT

SMCS-3000, 4000 **i02443554**

NOTE	PART NUMBER	QTY	PART NAME 1 2 3 4 5 6 (PRODUCT LEVEL)	SEE PAGE
Y	*206-1642*	1	CONTROL GP-PARKING BRAKE	271
Y	*206-1638*	1	CONTROL GP-SERVICE BRAKE	273
Y	*206-1643*	1	CONTROL GP-TRANSMISSION	686
Y	*112-1826*	1	DRIVE & MTG GP-PUMP	341
Y	*220-9182*	1	DRIVE AR-BACKHOE LOADER	209
Y	*252-4641*	1	ENGINE AR	8
Y	*256-0551*	1	FILLER GP-POWER TRAIN OIL	213
Y	*256-0546*	1	LINES GP-POWER TRAIN OIL (DIFFERENTIAL LOCK)	223
Y	*202-6010*	1	SWITCH GP-DIFFERENTIAL LOCK	156
Y	*251-6352*	1	TRANSMISSION AR-DIRECT DRIVE	238
	119-4740	1	FILTER AS-OIL (STANDARD EFFICIENCY)	

Y-SEPARATE ILLUSTRATION

<END>

214-6913 POWER TRAIN AR–ALL WHEEL DRIVE, STANDARD SHIFT
S/N: SHA1-UP
AN ATTACHMENT

SMCS-3000, 4000 **i02443565**

NOTE	PART NUMBER	QTY	PART NAME 1 2 3 4 5 6 (PRODUCT LEVEL)	SEE PAGE
Y	*206-1642*	1	CONTROL GP-PARKING BRAKE	271
Y	*206-1638*	1	CONTROL GP-SERVICE BRAKE	273
Y	*206-1643*	1	CONTROL GP-TRANSMISSION	686
Y	*112-1826*	1	DRIVE & MTG GP-PUMP	341
Y	*220-9183*	1	DRIVE AR-BACKHOE LOADER	209
Y	*252-4641*	1	ENGINE AR	8
Y	*214-3740*	1	FILLER GP-POWER TRAIN OIL	211
Y	*256-0546*	1	LINES GP-POWER TRAIN OIL (DIFFERENTIAL LOCK)	223
Y	*216-4476*	1	SHAFT GP-DRIVE (FRONT)	230
Y	*202-6010*	1	SWITCH GP-DIFFERENTIAL LOCK	156
Y	*251-6353*	1	TRANSMISSION AR-DIRECT DRIVE	238
	119-4740	1	FILTER AS-OIL (STANDARD EFFICIENCY)	

Y-SEPARATE ILLUSTRATION

<END>

216-4475 SHAFT GP-DRIVE—REAR

S/N: SHA1-UP
PART OF 220-9182, 220-9183 DRIVE AR-BACKHOE LOADER
AN ATTACHMENT

SMCS-3253 **i02511001**

NOTE	PART NUMBER	QTY	PART NAME 1 2 3 4 5 6 (PRODUCT LEVEL)	SEE PAGE
J	**216-4473**	1	SHAFT GP-DRIVE	
M	**107-6826**	8	BOLT (M24X19.1-MM)	
	5V-2545	4	STRAP	
			AVAILABLE REPAIR KIT(S):	
J	**117-9887**	2	KIT-SPIDER & BEARING (DRIVE SHAFT)	
			(EACH INCLUDES RINGS & SPIDER)	

J-KIT MARKED J AVAILABLE FOR PART MARKED J
M-METRIC PART

<END>

216-4476 SHAFT GP-DRIVE—FRONT

S/N: SHA1-UP
PART OF 214-6911, 214-6913 POWER TRAIN AR
AN ATTACHMENT

SMCS-3253 **i02511009**

NOTE	PART NUMBER	QTY	PART NAME 1 2 3 4 5 6 (PRODUCT LEVEL)	SEE PAGE
J	**249-5276**	1	SHAFT AS (FRONT)	
M	**107-6826**	8	BOLT (M24X19.1-MM)	
	5V-2545	4	STRAP	
			AVAILABLE REPAIR KIT(S):	
J	**117-9887**	2	KIT-SPIDER & BEARING (DRIVE SHAFT)	
			(EACH INCLUDES RINGS & SPIDER)	

J-KIT MARKED J AVAILABLE FOR PART MARKED J
M-METRIC PART

<END>

275-0476 SHAFT GP-INPUT

S/N: SHA1-UP

PART OF 271-2407, 271-2408 TRANSMISSION GP-DIRECT DRIVE

AN ATTACHMENT

SMCS-3063 **i02444909**

NOTE	REF NO	GRAPHIC REF	PART NUMBER	QTY	PART NAME 1 2 3 4 5 6 (PRODUCT LEVEL)	SEE PAGE
	1	1	**9U-8875**	2	RING-RETAINING	
	2	1	**6T-9196**	2	SEAL	
	3	1	**172-5317**	1	BEARING-SPECIAL	
	4	1	**172-6050**	1	BEARING-SPECIAL	
	5	1	**6V-5100**	2	SEAL-O-RING	
	6	1	**9U-8886**	4	RING-SEAL	
	7	1	**274-4553**	10	DISC-CLUTCH	
	8	1	**122-1886**	1	RING-SEAL	
	9	1	**238-7567**	3	RING-RETAINING	
	10	1	**121-2500**	2	WASHER-THRUST (50X70X4-MM THK)	
	11	1	**123-8905**	1	CUP-TAPERED ROLLER	
	12	1	**123-8909**	1	CONE-BEARING	
	13	1	**147-0227**	2	PISTON-CLUTCH	
	14	1	**147-0238**	2	SPRING AS	
	15	1	**147-0203**	2	WASHER-THRUST (45.3X65X5-MM THK)	
	16	1	**6Y-7957**	10	DISC-FRICTION	
	17	1	**274-8616**	1	GEAR-FORWARD	
	18	1	**274-8617**	1	GEAR-REVERSE	
	19	1	**274-8628**	1	BEARING-NEEDLE	
	20	1	**274-8629**	1	BEARING-NEEDLE	
	21	1	**274-8635**	1	RING-SNAP	
	22	1	**274-8636**	1	SHAFT AS	
	23	1	**8E-5707**	2	PLATE-END	

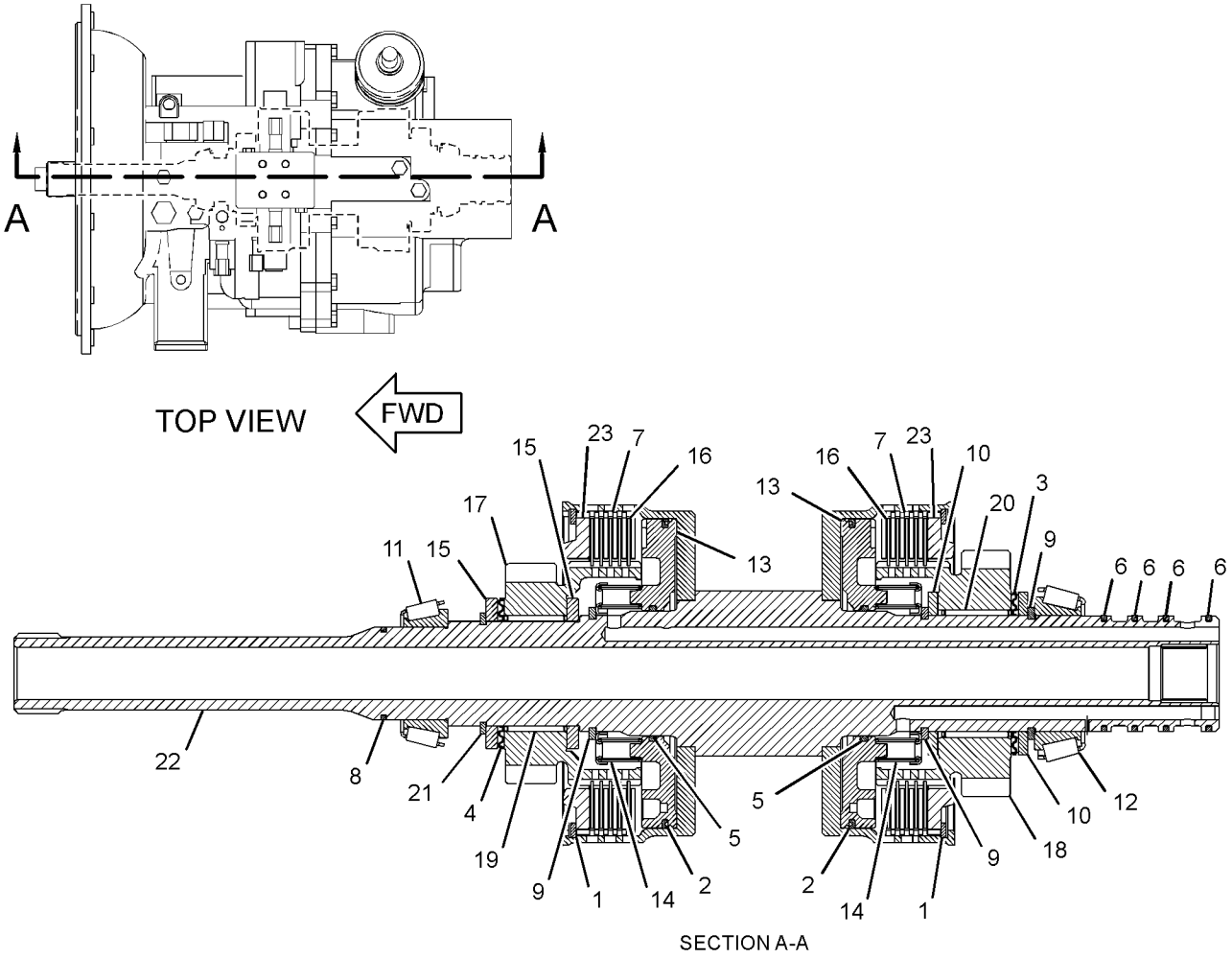

SECTION A-A

GRAPHIC #1 **<END>** g01226307

275-0478 SHAFT GP-OUTPUT–REAR

S/N: SHA1-UP

PART OF 271-2408 TRANSMISSION GP-DIRECT DRIVE

AN ATTACHMENT

SMCS-3063 **i02445142**

NOTE	REF NO	GRAPHIC REF	PART NUMBER	QTY	PART NAME 1 2 3 4 5 6 (PRODUCT LEVEL)	SEE PAGE
	1	1	**7T-3022**	2	SLEEVE	
	2	1	**6V-8500**	4	BEARING	
	3	1	**6T-9160**	1	GEAR (43-TEETH)	
	4	1	**7T-3017**	1	SPACER (52.5X59X9.6-MM THK)	
	5	1	**7T-3021**	2	SYNCHRONIZER GP	
	6	1	**096-5516**	1	RING-RETAINING	
	7	1	**259-1831**	1	GEAR (37-TEETH)	
	8	1	**6Y-2736**	1	CONE-BEARING	
	9	1	**123-8907**	1	CONE-BEARING	
	10	1	**274-8634**	1	SPACER	
	11	1	**274-8620**	1	GEAR-OUTPUT (37-TEETH)	
	12	1	**274-8621**	1	GEAR-OUTPUT (28-TEETH)	
	13	1	**274-8637**	1	SPACER-BEARING	
	14	1	**278-0215**	1	SHAFT-OUTPUT	
	15	1	**278-0216**	1	GEAR-OUTPUT (17-TEETH)	
	16	1	**278-0217**	2	BEARING-NEEDLE	
	17	1	**278-0218**	1	WASHER-THRUST	
	18	1	**278-0219**	1	CLIP	

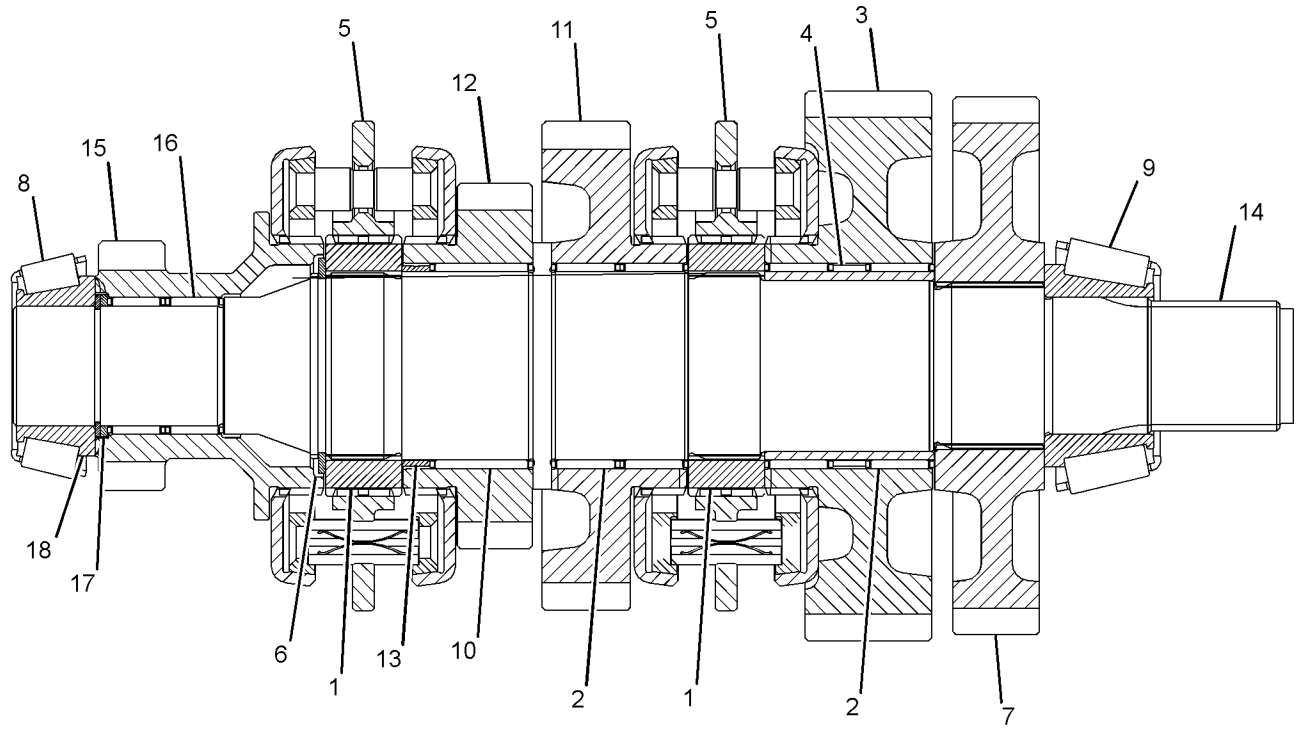

GRAPHIC #1 **<END>** g01228114

276-5337 SHAFT GP-OUTPUT–FRONT

S/N: SHA1-UP
PART OF 271-2408 TRANSMISSION GP-DIRECT DRIVE
AN ATTACHMENT

SMCS-3063 **i02445143**

NOTE	REF NO	GRAPHIC REF	PART NUMBER	QTY	PART NAME 1 2 3 4 5 6 (PRODUCT LEVEL)	SEE PAGE
	1	1	**095-0927**	1	RING-RETAINING	
	2	1	**274-4553**	8	DISC-CLUTCH	
	3	1	**6T-9196**	1	SEAL	
	4	1	**6Y-7957**	8	DISC-FRICTION	
	5	1	**121-0697**	1	WASHER-THRUST (45X65X5-MM THK)	
	6	1	**172-6050**	2	BEARING-SPECIAL	
	7	1	**6V-5100**	1	SEAL-O-RING	
	8	1	**122-1878**	1	RING-SEAL	
	9	1	**122-1877**	1	WASHER-THRUST (40X65X4-MM THK)	
	10	1	**122-1884**	1	SPACER (45X49X8-MM THK)	
	11	1	**121-0885**	1	RETAINER	
	12	1	**121-0714**	1	PISTON	
	13	1	**123-8905**	2	CUP-TAPERED ROLLER	
	14	1	**178-9566**	1	SPRING-PISTON	
	15	1	**161-3249**	1	RING-RETAINING	
	16	1	**123-8912**	2	BEARING-ROLLER	
	17	1	**190-9767**	1	SHAFT AS (OUTPUT)	
	18	1	**121-0904**	1	GEAR AS (36-TEETH)	
	19	1	**8E-5707**	1	PLATE-END	

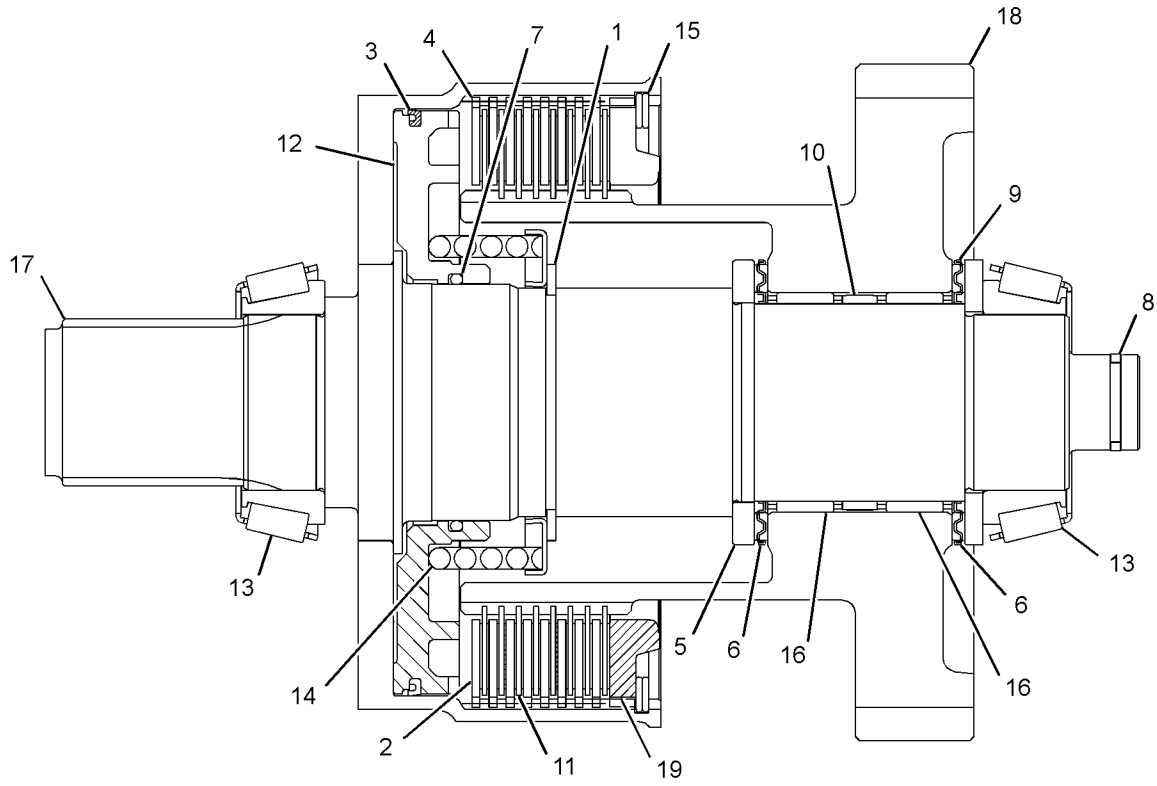

GRAPHIC #1 **<END>** g01233297

276-5339 SHAFT GP-OUTPUT–REAR

S/N: SHA1-UP
PART OF 271-2407 TRANSMISSION GP-DIRECT DRIVE
AN ATTACHMENT

SMCS-3063 **i02770380**

NOTE	REF NO	GRAPHIC REF	PART NUMBER	QTY	PART NAME 1 2 3 4 5 6 (PRODUCT LEVEL)	SEE PAGE
	1	1	**7T-3022**	2	SLEEVE	
	2	1	**6V-8500**	4	BEARING	
	3	1	**6T-9160**	1	GEAR (43-TEETH)	
	4	1	**259-1832**	1	SPACER-SPECIAL	
	5	1	**7T-3017**	1	SPACER (52.5X59X9.6-MM THK)	
	6	1	**7T-3021**	2	SYNCHRONIZER GP	
	7	1	**096-5516**	1	RING-RETAINING	
	8	1	**6Y-2736**	1	CONE-BEARING	
	9	1	**123-8907**	1	CONE-BEARING	
	10	1	**150-3757**	1	BEARING	
	11	1	**274-8620**	1	GEAR-OUTPUT (37-TEETH)	
	12	1	**274-8621**	1	GEAR-OUTPUT (28-TEETH)	
	13	1	**274-8637**	1	SPACER-BEARING	
	14	1	**278-0215**	1	SHAFT-OUTPUT	
	15	1	**278-0216**	1	GEAR-OUTPUT (17-TEETH)	
	16	1	**278-0217**	2	BEARING-NEEDLE	
	17	1	**278-0218**	1	WASHER-THRUST	
	18	1	**178-8214**	1	CLIP	

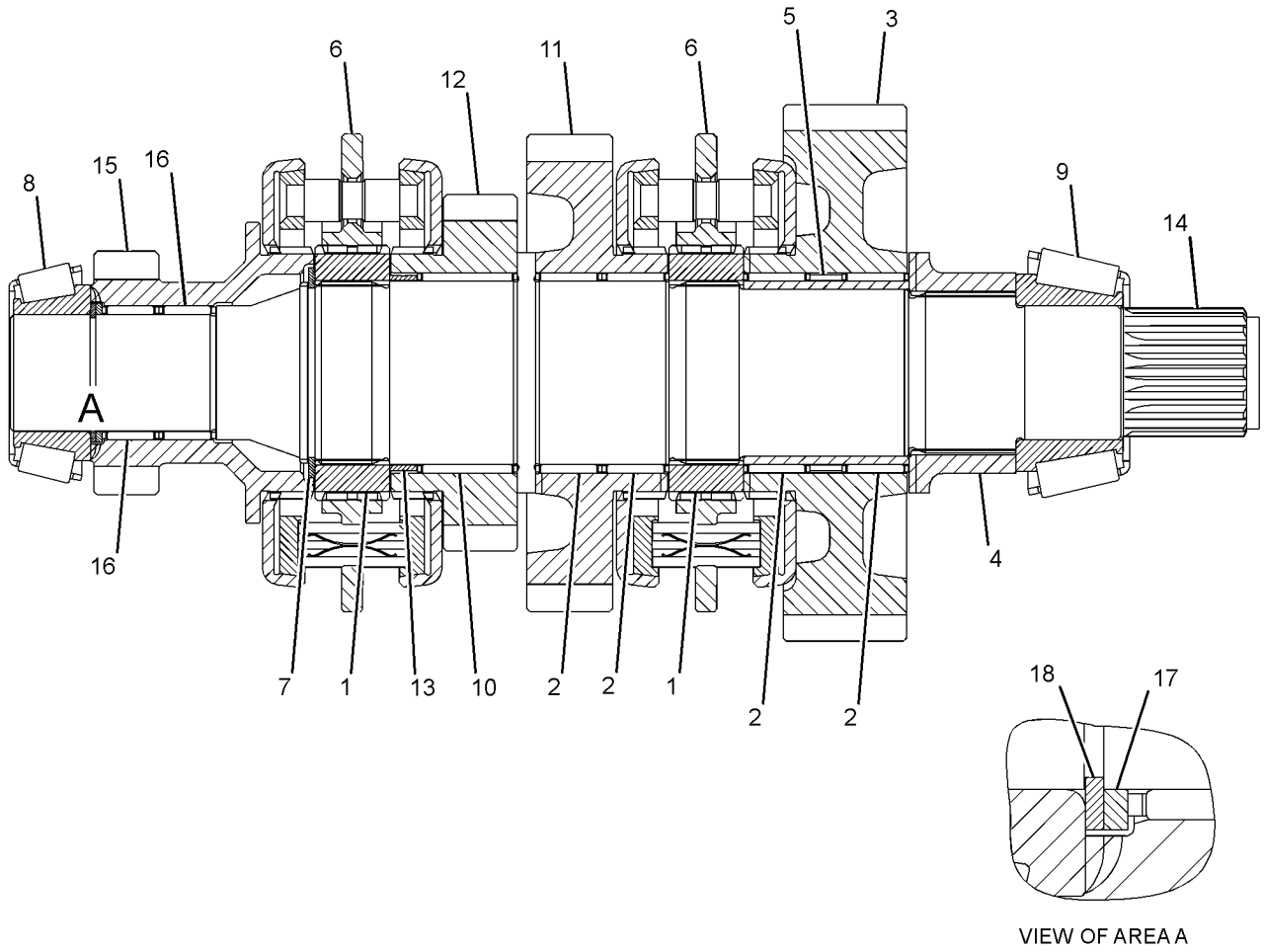

VIEW OF AREA A

GRAPHIC #1 **<END>** g01226076

271-2403 TRANSMISSION & MOUNTING GP

S/N: SHA1-UP

PART OF 251-6352 TRANSMISSION AR-DIRECT DRIVE

AN ATTACHMENT

SMCS-3030 **i02442952**

NOTE	REF NO	GRAPHIC REF	PART NUMBER	QTY	PART NAME 1 2 3 4 5 6 (PRODUCT LEVEL)	SEE PAGE
Y	1	1	**271-2407**	1	TRANSMISSION GP-DIRECT DRIVE	239
Y	2	1	*271-4487*	1	MOUNTING GP-TRANSMISSION	225

Y-SEPARATE ILLUSTRATION

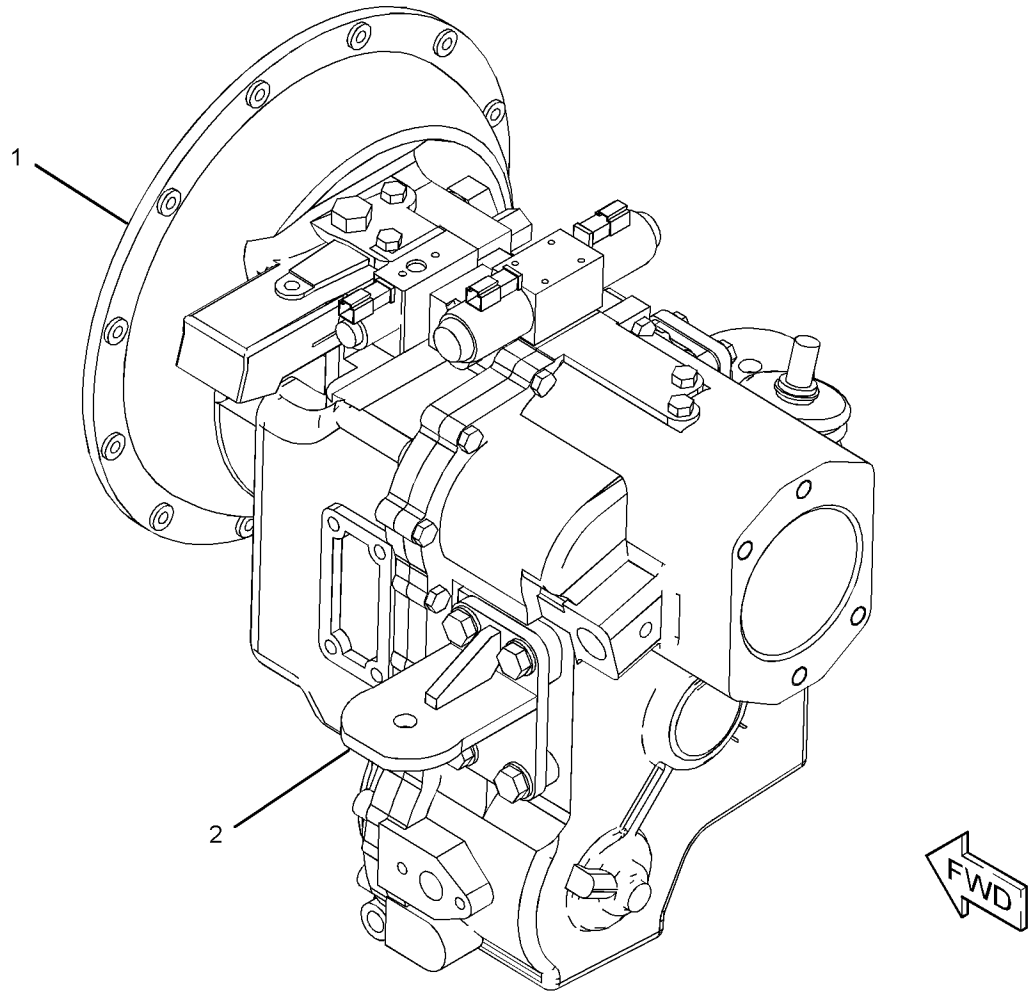

GRAPHIC #1

<END>

g01230749

271-2404 TRANSMISSION & MOUNTING GP

S/N: SHA1-UP

PART OF 251-6353 TRANSMISSION AR-DIRECT DRIVE

AN ATTACHMENT

SMCS-3030 **i02443485**

NOTE	REF NO	GRAPHIC REF	PART NUMBER	QTY	PART NAME 1 2 3 4 5 6 (PRODUCT LEVEL)	SEE PAGE
Y	1	1	**271-2408**	1	TRANSMISSION GP-DIRECT DRIVE	249
Y	2	1	*271-4487*	1	MOUNTING GP-TRANSMISSION	225

Y-SEPARATE ILLUSTRATION

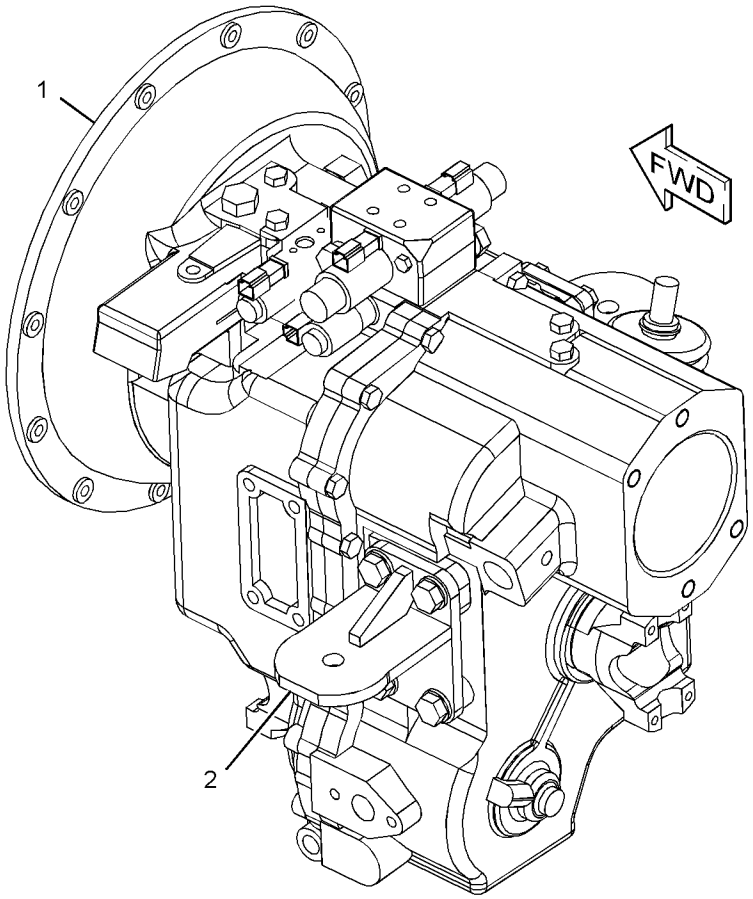

GRAPHIC #1 **<END>** g01230443

251-6352 TRANSMISSION AR-DIRECT DRIVE—2-WHEEL DRIVE

S/N: SHA1-UP
PART OF 214-6910, 214-6912 POWER TRAIN AR
AN ATTACHMENT

SMCS-3030 **i02442941**

NOTE	PART NUMBER	QTY	PART NAME 1 2 3 4 5 6 (PRODUCT LEVEL)	SEE PAGE
Y	*111-7907*	1	DRIVE GP-FLEXIBLE COUPLING	210
Y	*271-2403*	1	TRANSMISSION & MOUNTING GP	236
	212-6215	1	TORQUE CONVERTER AS	

Y-SEPARATE ILLUSTRATION

<END>

251-6353 TRANSMISSION AR-DIRECT DRIVE—ALL WHEEL DRIVE

S/N: SHA1-UP
PART OF 214-6911, 214-6913 POWER TRAIN AR
AN ATTACHMENT

SMCS-3030 **i02443458**

NOTE	PART NUMBER	QTY	PART NAME 1 2 3 4 5 6 (PRODUCT LEVEL)	SEE PAGE
Y	*111-7907*	1	DRIVE GP-FLEXIBLE COUPLING	210
Y	*271-2404*	1	TRANSMISSION & MOUNTING GP	237
	212-6215	1	TORQUE CONVERTER AS	

Y-SEPARATE ILLUSTRATION

<END>

271-2407 TRANSMISSION GP-DIRECT DRIVE–
2-WHEEL DRIVE, STANDARD SHIFT
S/N: SHA1-UP
PART OF 271-2403 TRANSMISSION & MOUNTING GP
AN ATTACHMENT
TYPE 1

SMCS-3030 **i02524345**

NOTE	REF NO	GRAPHIC REF	PART NUMBER	QTY	PART NAME 1 2 3 4 5 6 (PRODUCT LEVEL)	SEE PAGE
Y	1	2	**275-0472**	1	CASE GP-TRANSMISSION (FRONT)	202
Y	2	2	**275-0473**	1	CASE AS-TRANSMISSION (REAR)	200
	3	2	**121-7385**	1	PUMP GP-TRANSMISSION	
	4	3	**121-7391**	1	LEVER	
	5	2	**216-2267**	1	SEAL-LIP TYPE	
	6	1	**9P-9150**	4	WASHER (8.25X18X0.84-MM THK)	
	7	2	**275-0475**	1	SHAFT GP-IDLER (TRANSMISSION)	
		1	**005-0471**	2	CONE-BEARING	
		1	**274-8623**	1	SHAFT-REVERSE	
Y	8	2	**275-0476**	1	SHAFT GP-INPUT (TRANSMISSION)	231
	9	2	**275-0477**	1	SHAFT GP-COUNTER (TRANSMISSION)	
		1	**8T-1581**	1	CONE	
		1	**123-8907**	1	CONE-BEARING	
		1	**274-8614**	1	GEAR-COUNTERSHAFT	
		1	**274-8625**	1	GEAR-COUNTERSHAFT	
Y	10	2	**276-5339**	1	SHAFT GP-OUTPUT (REAR)	235
	11	3	**121-7403**	1	FORK-SHIFT (1ST, 2ND)	
	12	3	**121-7404**	1	FORK-SHIFT (THIRD, FOURTH)	
	13	3	**121-7389**	1	ROD AS-GEARSHIFT (FIRST, SECOND)	
	14	3	**121-7390**	1	ROD AS-GEARSHIFT (THIRD, FOURTH)	
	15	3	**6Y-1341**	2	SPRING	
	16	3	**014-5645**	3	BALL	
	17	3	**9M-1974**	3	WASHER-HARD (8.8X16X2-MM THK)	
	18	3	**7T-3109**	1	PIN	
	19	3	**7T-3249**	2	SCREW (3/8-24X0.75-IN)	
	20	1,3	**9S-4191**	7	PLUG-O-RING	
	21	3	**127-3017**	1	SEAT AS	
	22	1,3	**122-6785**	4	PLUG AS	
	23	3	**175-0054**	1	SEAL-O-RING	
	24	3	**174-9711**	1	GASKET	
	25	3	**278-0205**	1	VALVE GP-SOLENOID (FORWARD)	
		1	**8L-2779**	4	SEAL-O-RING	
		1	**274-4557**	1	PLUG-ORIFICE	
		1	**274-4560**	2	NUT-SELF LOCKING	
		1	**280-7009**	2	COIL AS	
M	26	3	**9X-6615**	4	BOLT (M5X0.8X30-MM)	
	27	2,3	**248-3290**	1	VALVE GP-SOLENOID	
	28	2,3	**121-7396**	1	VALVE GP-RELIEF	
Y	29	2	**147-0209**	1	VALVE GP-RELIEF	254
M	30	1,3	**8C-5748**	7	BOLT (M8X1.25X55-MM)	
M	31	3	**6V-7731**	2	BOLT (M10X1.5X70-MM)	
M	32	1	**6V-8335**	17	BOLT-SELF-LOCKING (M10X1.5X40-MM)	
M	33	2	**6V-8097**	1	BOLT (M12X1.75X30-MM)	
	34	3	**7T-3251**	1	BREATHER (TRANSMISSION)	
	35	3	**7T-3119**	1	HOUSING	
	36	3	**6K-0806**	1	STRAP-CABLE	
	37	2	**7T-3195**	1	WASHER (12.3X47X6.35-MM THK)	
	38	1	**6Y-1896**	1	PLUG AS (TRANSMISSION DRAIN)	
	39	3	**6Y-2035**	1	GASKET	
	40	2	**5P-8066**	1	SEAL-O-RING	
	41	2	**122-6787**	1	YOKE AS	
	42	3	**4W-9972**	1	SENDER AS-TEMPERATURE (12-VOLT)	
	43	1,3	**3J-1907**	8	SEAL-O-RING	

271-2407 TRANSMISSION GP-DIRECT DRIVE *(contd.)* i02524345

NOTE	REF NO	GRAPHIC REF	PART NUMBER	QTY	PART NAME 1 2 3 4 5 6 (PRODUCT LEVEL)	SEE PAGE
	44	3	**7T-3111**	1	COVER	
	45	3	**3S-2093**	1	STRAP-CABLE	

M-METRIC PART
Y-SEPARATE ILLUSTRATION

271-2407 TRANSMISSION GP-DIRECT DRIVE *(contd.)* **i02524345**

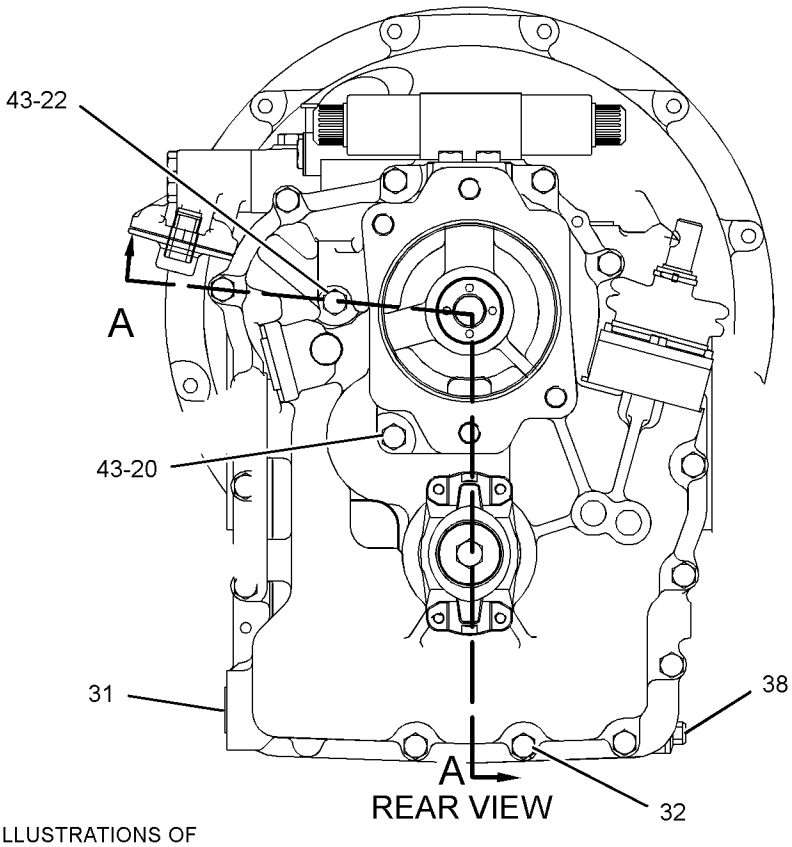

REFER TO ALL ILLUSTRATIONS OF THIS GROUP FOR AUXILIARY VIEWS

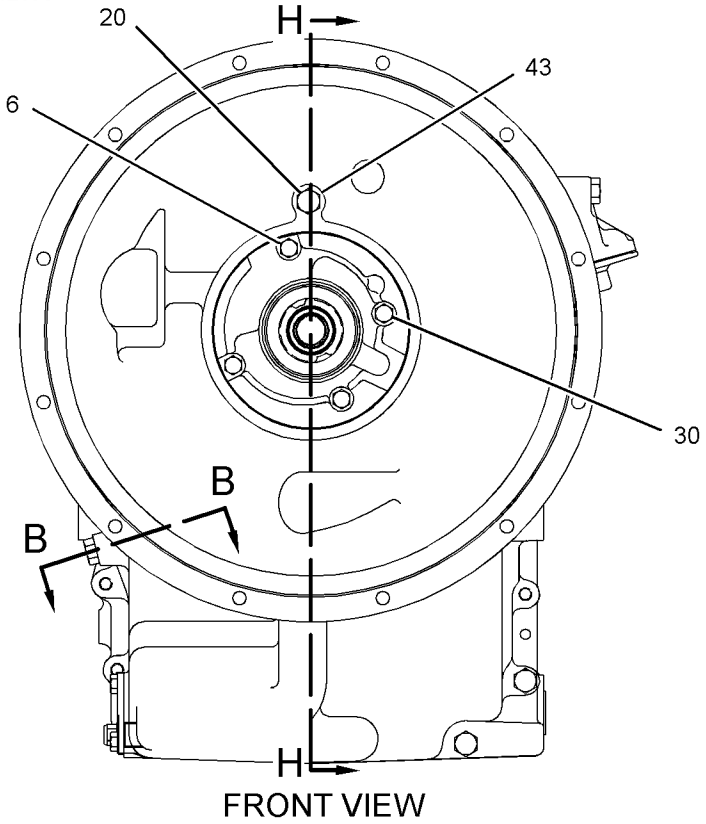

GRAPHIC #1

g01262661

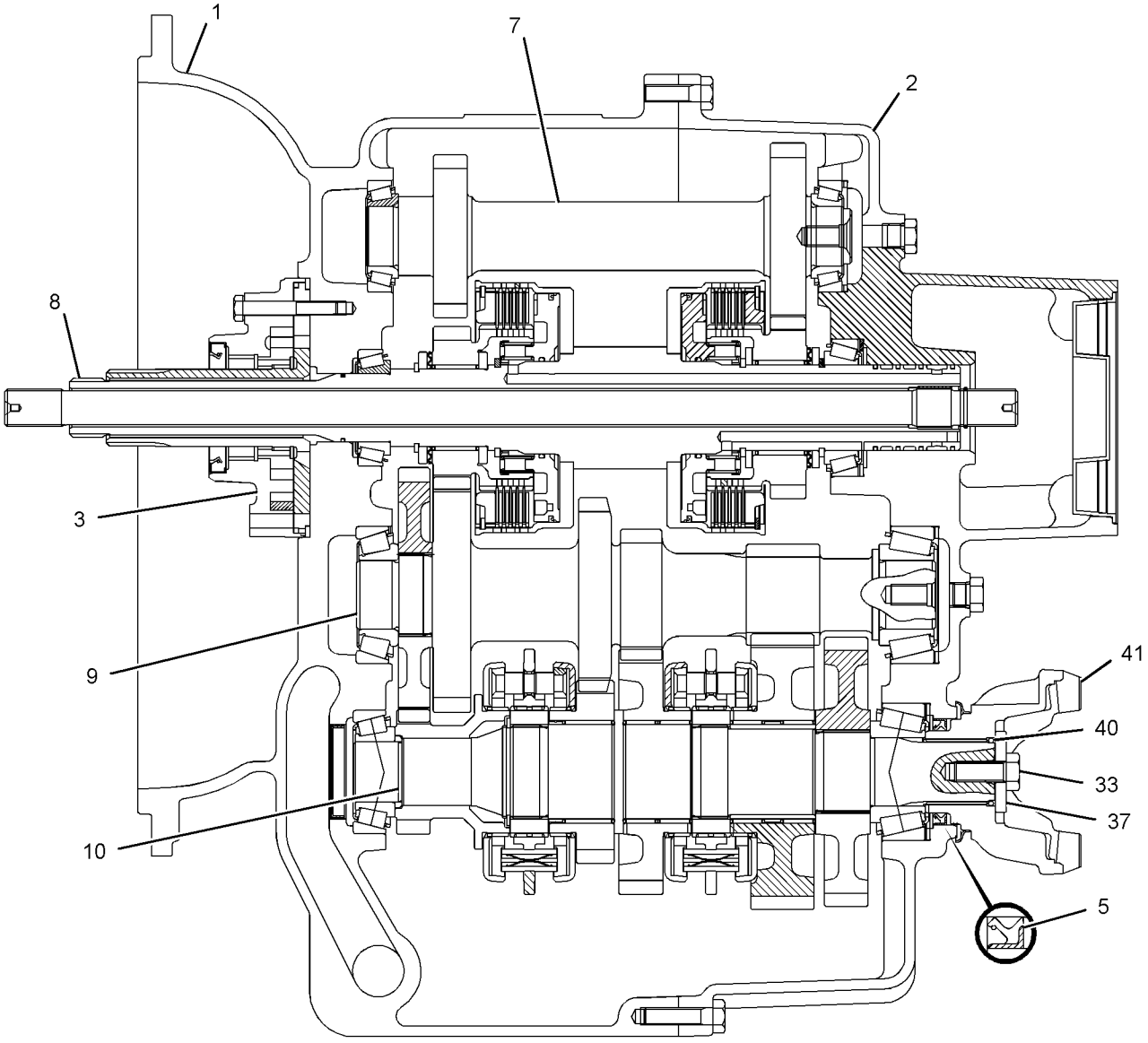

SECTION H-H

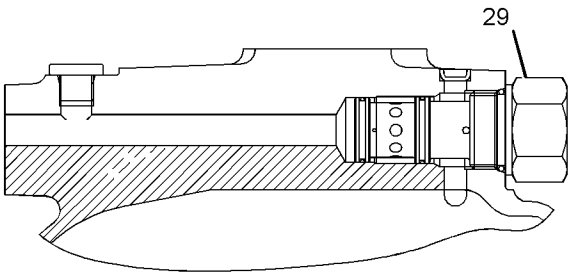

SECTION F-F

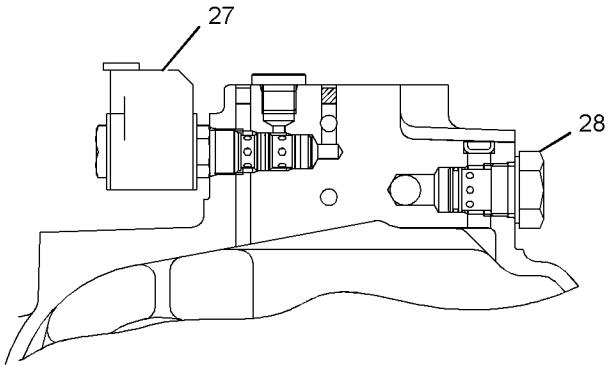

SECTION D-D

GRAPHIC #2

g01225579

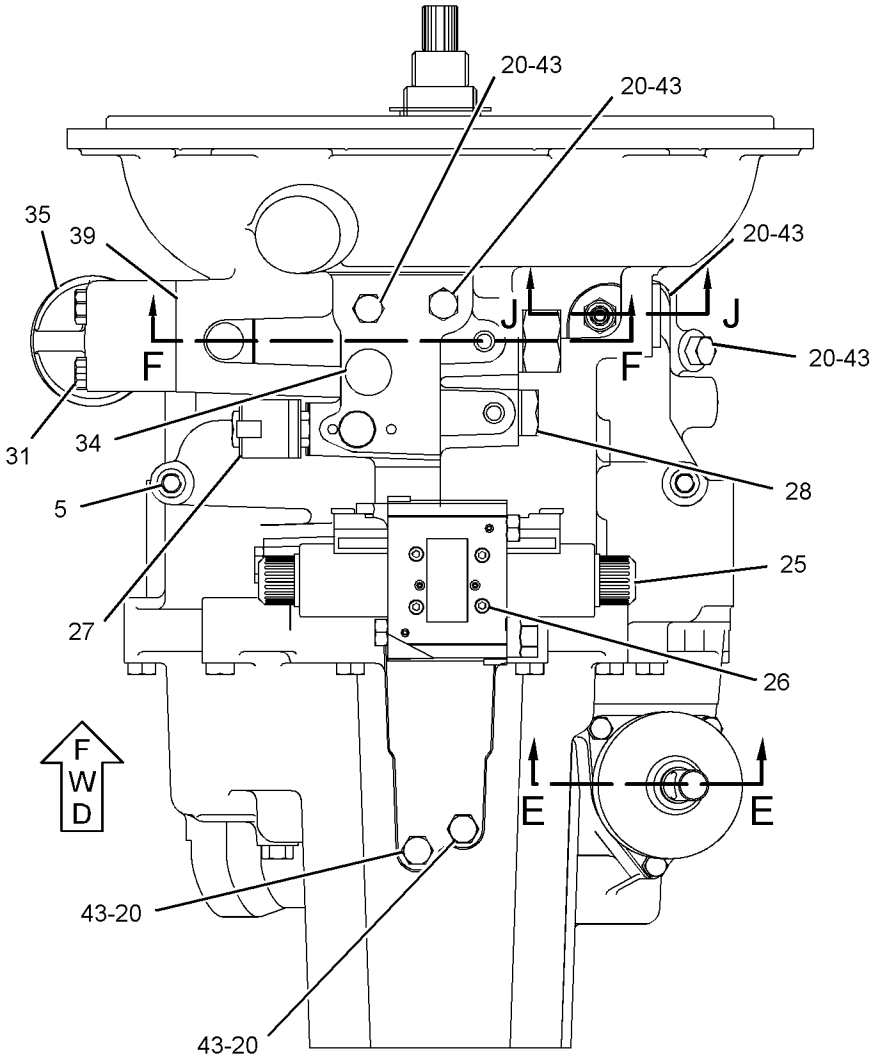

TOP VIEW

REFER TO ALL ILLUSTRATIONS OF THIS GROUP FOR AUXILIARY VIEWS

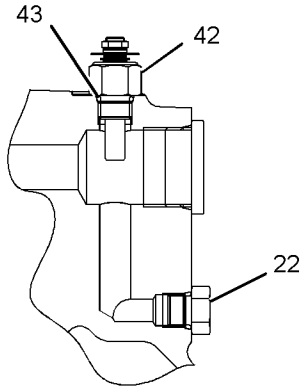

SECTION J-J

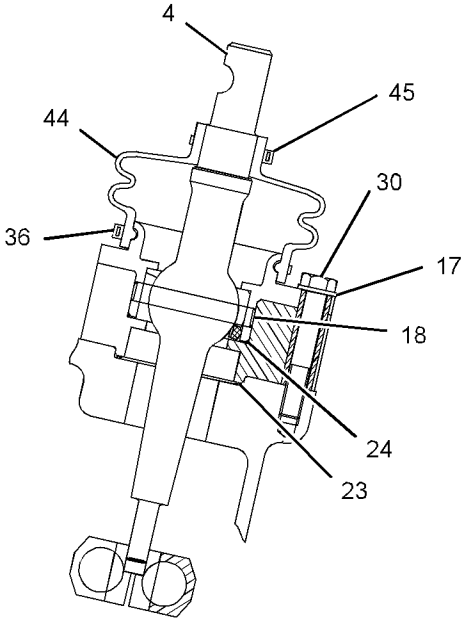

SECTION E-E

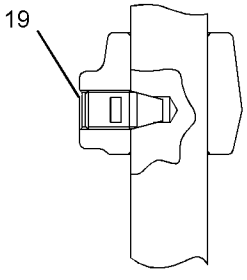

SECTION C-C

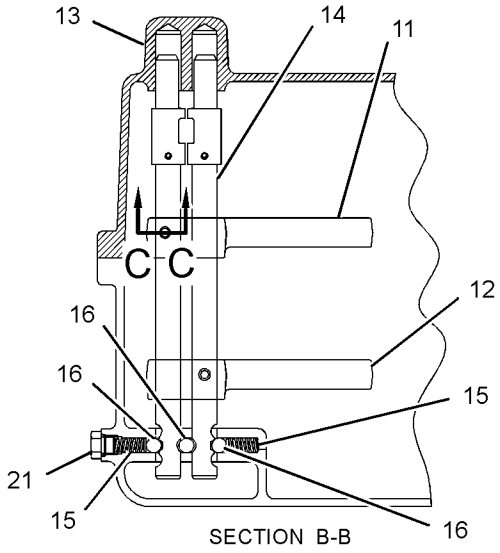

SECTION B-B

GRAPHIC #3

<END>

g01262666

271-2407 TRANSMISSION GP-DIRECT DRIVE–
2-WHEEL DRIVE, STANDARD SHIFT
S/N: SHA1-UP
PART OF 271-2403 TRANSMISSION & MOUNTING GP
AN ATTACHMENT
TYPE 2

SMCS-3030 **i02779545**

NOTE	REF NO	GRAPHIC REF	PART NUMBER	QTY	PART NAME 1 2 3 4 5 6 (PRODUCT LEVEL)	SEE PAGE
CY	1	3	**294-9809**	1	CASE GP-TRANSMISSION (FRONT) (TRANSMISSION)	203
Y	2	3	**275-0473**	1	CASE AS-TRANSMISSION (REAR)	200
	3	3	**121-7385**	1	PUMP GP-TRANSMISSION	
	4	2	**121-7391**	1	LEVER	
	5	3	**216-2267**	1	SEAL-LIP TYPE	
	6	3	**9P-9150**	4	WASHER (8.25X18X0.84-MM THK)	
	7	3	**275-0475**	1	SHAFT GP-IDLER (TRANSMISSION)	
		3	**005-0471**	2	CONE-BEARING	
		3	**274-8623**	1	SHAFT-REVERSE	
Y	8	3	**275-0476**	1	SHAFT GP-INPUT (TRANSMISSION)	231
	9	3	**275-0477**	1	SHAFT GP-COUNTER (TRANSMISSION)	
		3	**8T-1581**	1	CONE	
		3	**123-8907**	1	CONE-BEARING	
		3	**274-8614**	1	GEAR-COUNTERSHAFT	
		3	**274-8625**	1	GEAR-COUNTERSHAFT	
Y	10	3	**276-5339**	1	SHAFT GP-OUTPUT (REAR)	235
	11	2	**121-7403**	1	FORK-SHIFT (1ST, 2ND)	
	12	2	**121-7404**	1	FORK-SHIFT (THIRD, FOURTH)	
	13	2	**121-7389**	1	ROD AS-GEARSHIFT (FIRST, SECOND)	
	14	2	**121-7390**	1	ROD AS-GEARSHIFT (THIRD, FOURTH)	
	15	2	**6Y-1341**	2	SPRING	
	16	2	**014-5645**	3	BALL	
	17	2	**9M-1974**	3	WASHER-HARD (8.8X16X2-MM THK)	
	18	2	**7T-3109**	1	PIN	
	19	2	**7T-3249**	2	SCREW (3/8-24X0.75-IN)	
C	20	1,2	**9S-4191**	10	PLUG-O-RING	
	21	2	**127-3017**	1	SEAT AS	
C	22	3	**208-8240**	1	SEAL-LIP TYPE	
	23	2	**175-0054**	1	SEAL-O-RING	
	24	2	**174-9711**	1	GASKET	
	25	2	**278-0205**	1	VALVE GP-SOLENOID (FORWARD)	
		2	**8L-2779**	4	SEAL-O-RING	
		2	**274-4557**	1	PLUG-ORIFICE	
		2	**274-4560**	2	NUT-SELF LOCKING	
		2	**280-7009**	2	COIL AS	
M	26	2	**9X-6615**	4	BOLT (M5X0.8X30-MM)	
	27	2	**248-3290**	1	VALVE GP-SOLENOID	
	28	2	**121-7396**	1	VALVE GP-RELIEF	
Y	29	2	**147-0209**	1	VALVE GP-RELIEF	254
M	30	2,3	**8C-5748**	7	BOLT (M8X1.25X55-MM)	
M	31	1,2	**6V-7731**	2	BOLT (M10X1.5X70-MM)	
M	32	1	**6V-8335**	17	BOLT-SELF-LOCKING (M10X1.5X40-MM)	
M	33	3	**6V-8097**	1	BOLT (M12X1.75X30-MM)	
C	34	1	**294-9822**	1	BREATHER AS (TRANSMISSION)	
		1	**7T-3251**	1	BREATHER (TRANSMISSION)	
		1	**250-6855**	2	WASHER (14.5X18X1.5-MM THK)	
		1	**294-9823**	1	PLUG-BREATHER	
		1	**294-9824**	1	TUBE-BREATHER	
	35	2	**7T-3119**	1	HOUSING	
	36	2	**6K-0806**	1	STRAP-CABLE	
	37	3	**7T-3195**	1	WASHER (12.3X47X6.35-MM THK)	
	38	1	**6Y-1896**	1	PLUG AS (TRANSMISSION DRAIN)	
	39	2	**6Y-2035**	1	GASKET	

271-2407 TRANSMISSION GP-DIRECT DRIVE *(contd.)* i02779545

NOTE	REF NO	GRAPHIC REF	PART NUMBER	QTY	PART NAME 1 2 3 4 5 6 (PRODUCT LEVEL)	SEE PAGE
	40	3	**5P-8066**	1	SEAL-O-RING	
	41	3	**122-6787**	1	YOKE AS	
	42	2	**4W-9972**	1	SENDER AS-TEMPERATURE (12-VOLT)	
C	43	1,2	**3J-1907**	11	SEAL-O-RING	
	44	2	**7T-3111**	1	COVER	
	45	2	**3S-2093**	1	STRAP-CABLE	
C	46	3	**7X-4741**	1	SEAL	

C-CHANGE FROM PREVIOUS TYPE
M-METRIC PART
Y-SEPARATE ILLUSTRATION

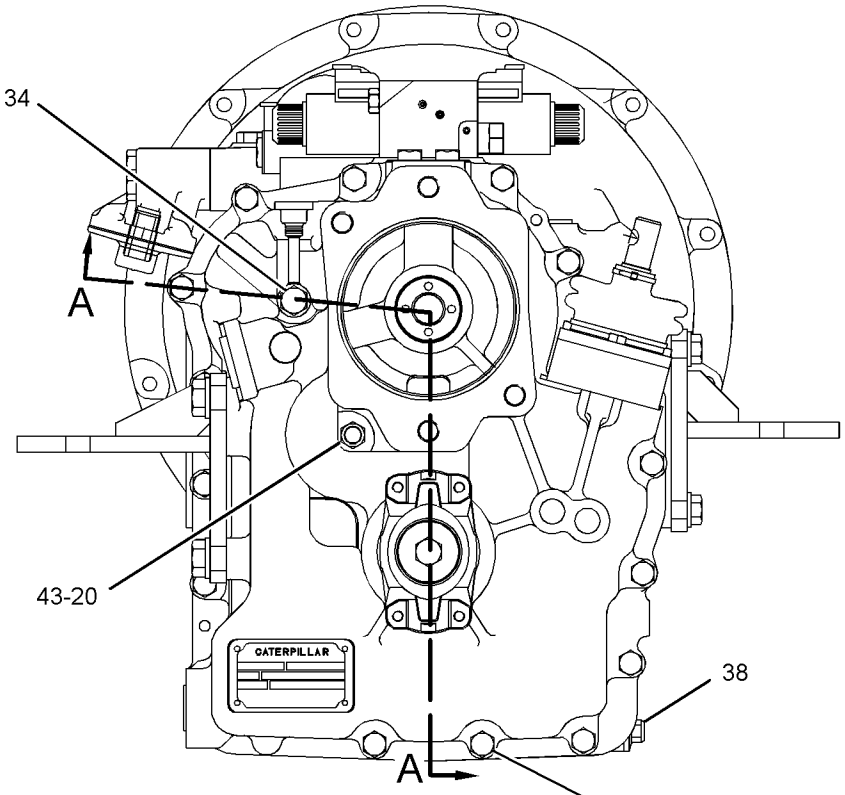

REAR VIEW

REFER TO ALL ILLUSTRATIONS OF THIS GROUP FOR AUXILIARY VIEWS

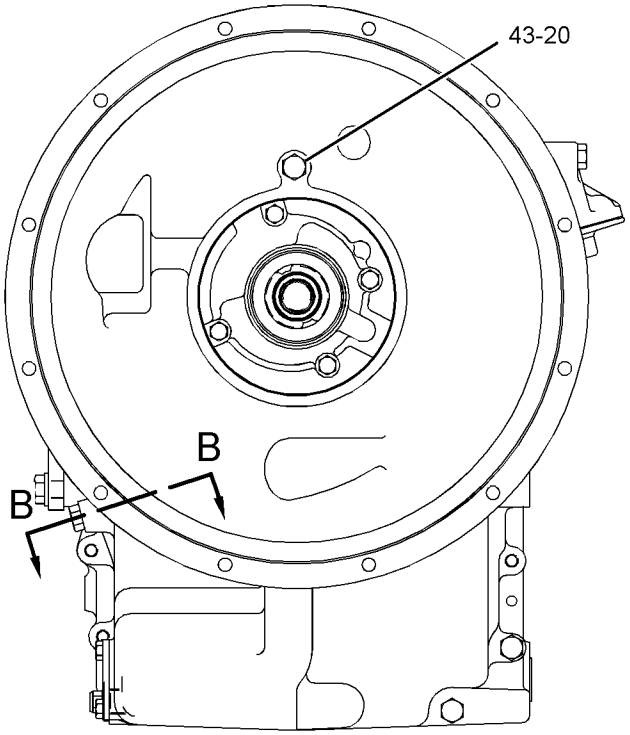

FRONT VIEW

GRAPHIC #1 g01389558

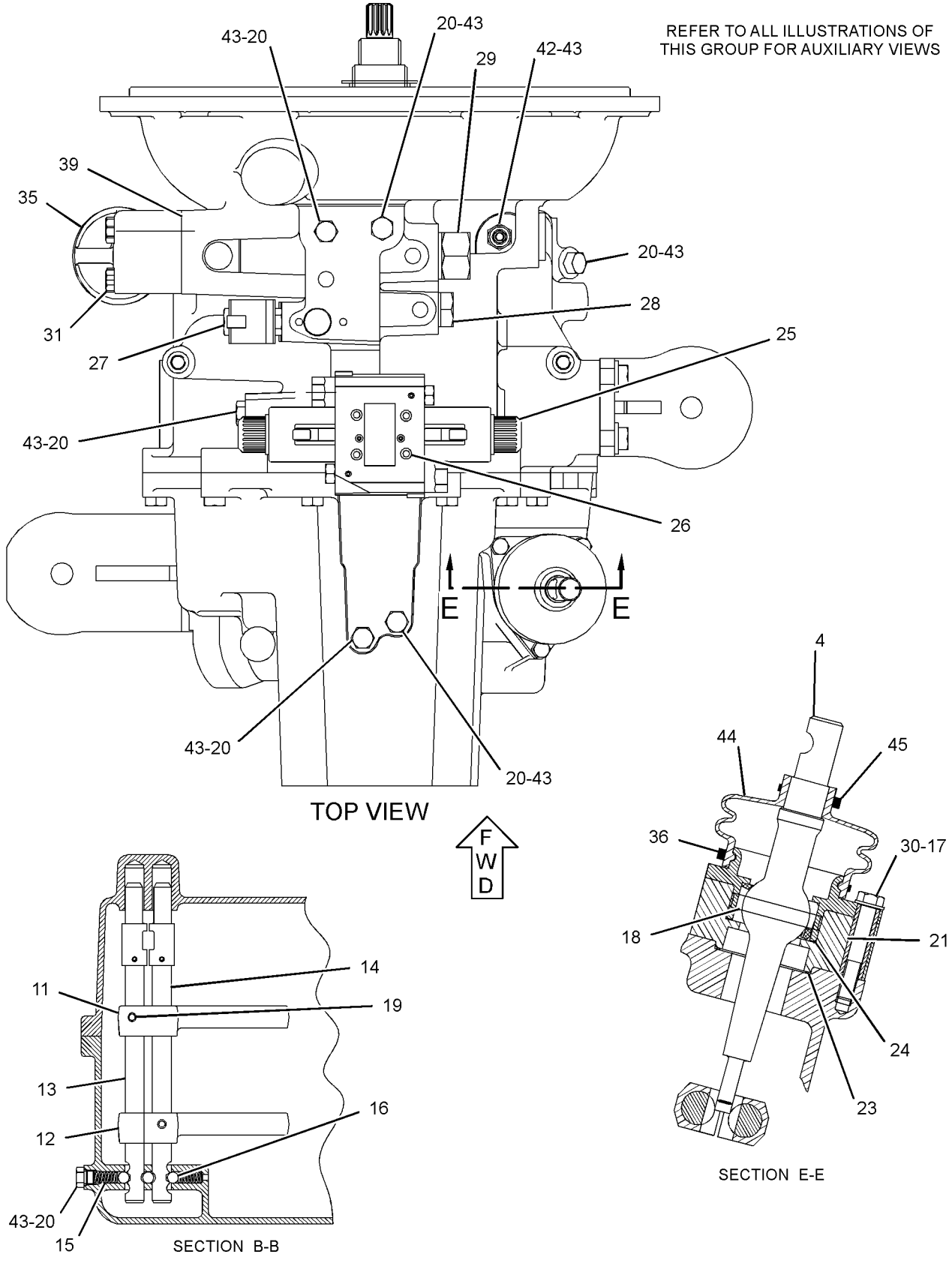

GRAPHIC #2

g01389561

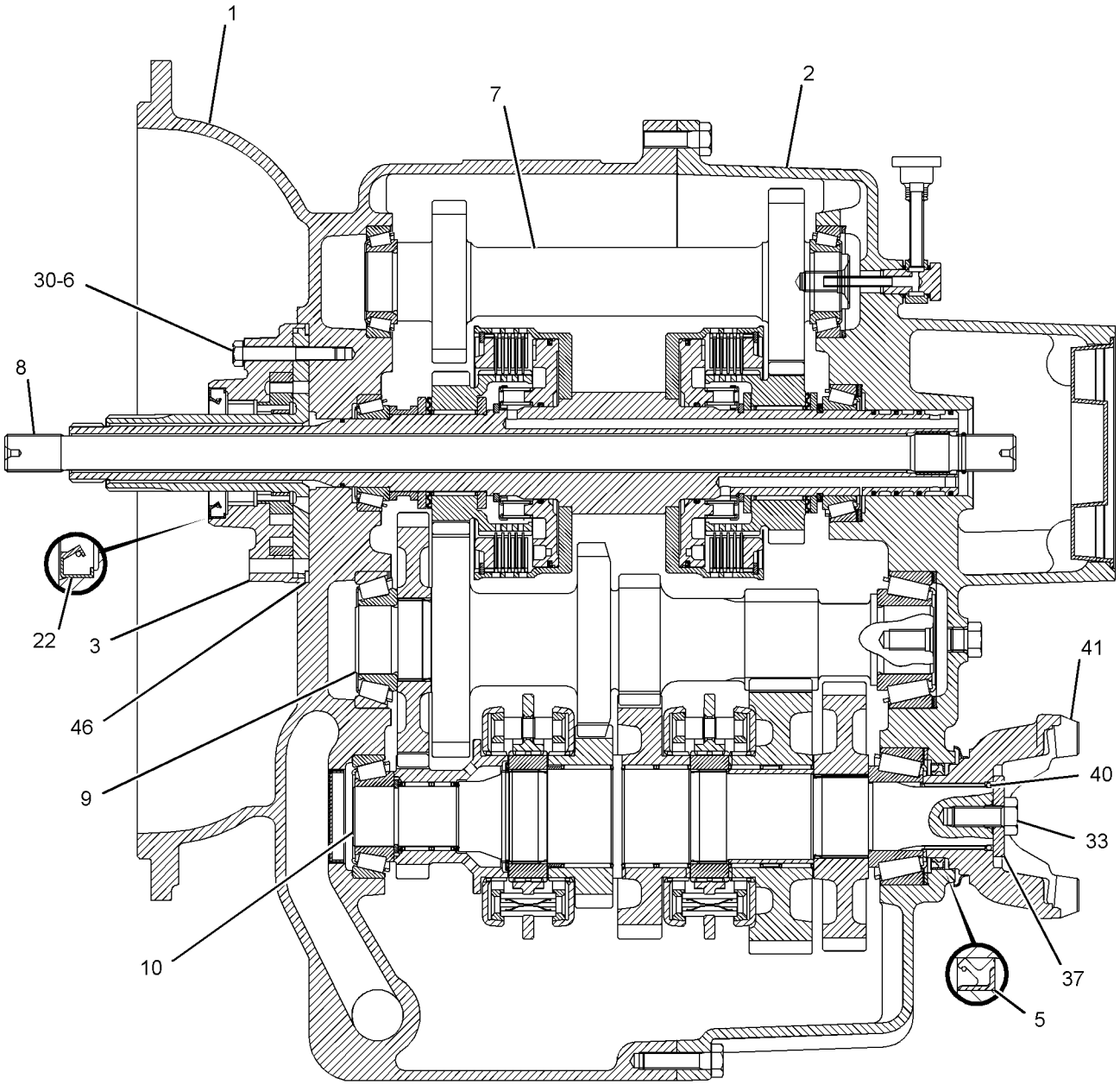

SECTION A-A

GRAPHIC #3 **<END>** g01389563

271-2408 TRANSMISSION GP-DIRECT DRIVE–

ALL WHEEL DRIVE, STANDARD SHIFT

S/N: SHA1-UP

PART OF 271-2404 TRANSMISSION & MOUNTING GP

AN ATTACHMENT

SMCS-3030 **i02755826**

NOTE	REF NO	GRAPHIC REF	PART NUMBER	QTY	PART NAME 1 2 3 4 5 6 (PRODUCT LEVEL)	SEE PAGE
Y	1	3	**275-0468**	1	CASE AS-TRANSMISSION (FRONT)	199
Y	2	3	**275-0467**	1	CASE AS-TRANSMISSION (REAR)	197
	3	3	**121-7385**	1	PUMP GP-TRANSMISSION	
	4	3	**216-2267**	2	SEAL-LIP TYPE	
M	5	2,3	**8C-5748**	7	BOLT (M8X1.25X55-MM)	
Y	6	3	**275-0476**	1	SHAFT GP-INPUT (TRANSMISSION)	231
	7	3	**9P-9150**	4	WASHER (8.25X18X0.84-MM THK)	
	8	3	**275-0475**	1	SHAFT GP-IDLER (TRANSMISSION)	
		3	**005-0471**	2	CONE-BEARING	
		3	**274-8623**	1	SHAFT-REVERSE	
	9	3	**275-0477**	1	SHAFT GP-COUNTER (TRANSMISSION)	
		3	**8T-1581**	1	CONE	
		3	**123-8907**	1	CONE-BEARING	
		3	**274-8614**	1	GEAR-COUNTERSHAFT	
		3	**274-8625**	1	GEAR-COUNTERSHAFT	
Y	10	3	**275-0478**	1	SHAFT GP-OUTPUT (REAR)	233
Y	11	3	**276-5337**	1	SHAFT GP-OUTPUT (FRONT)	234
	12	1	**121-7403**	1	FORK-SHIFT (1ST, 2ND)	
	13	1	**121-7404**	1	FORK-SHIFT (THIRD, FOURTH)	
	14	1	**121-7389**	1	ROD AS-GEARSHIFT (FIRST, SECOND)	
	15	1	**121-7390**	1	ROD AS-GEARSHIFT (THIRD, FOURTH)	
	16	1	**6Y-1341**	2	SPRING	
	17	1	**014-5645**	3	BALL	
	18	2	**9M-1974**	3	WASHER-HARD (8.8X16X2-MM THK)	
	19	2	**7T-3109**	1	PIN	
	20	1	**7T-3249**	2	SCREW (3/8-24X0.75-IN)	
	21	1,2	**9S-4191**	13	PLUG-O-RING	
	22	2	**127-3017**	1	SEAT AS	
	23	2	**121-7391**	1	LEVER	
	24	2	**175-0054**	1	SEAL-O-RING	
	25	2	**174-9711**	1	GASKET	
	27	2	**278-0205**	1	VALVE GP-SOLENOID (FORWARD, REVERSE)	
		2	**280-7009**	2	COIL AS	
		2	**8L-2779**	4	SEAL-O-RING	
		2	**274-4557**	1	PLUG-ORIFICE	
		2	**274-4560**	2	NUT-SELF LOCKING	
M	28	2	**9X-6615**	4	BOLT (M5X0.8X30-MM)	
	29	2	**248-3290**	2	VALVE GP-SOLENOID (ALL WHEEL DRIVE, CLUTCH ONE)	
	30	2	**121-7396**	1	VALVE GP-RELIEF (TORQUE CONVERTER INLET)	
Y	31	2	**147-0209**	1	VALVE GP-RELIEF (PRESSURE REGULATOR)	254
	32	2	**6K-0806**	1	STRAP-CABLE	
	33	3	**208-8240**	1	SEAL-LIP TYPE	
M	34	1	**6V-8335**	14	BOLT-SELF-LOCKING (M10X1.5X40-MM)	
M	35	1	**121-9875**	4	BOLT (M10X1.5X55-MM)	
M	36	2	**6V-7731**	2	BOLT (M10X1.5X70-MM)	
M	37	1	**6V-8097**	2	BOLT (M12X1.75X30-MM)	
	38	1	**293-2147**	1	BREATHER AS (TRANSMISSION)	
		1	**3J-1907**	1	SEAL-O-RING	
		1	**122-6785**	1	PLUG AS	
	39	2	**7T-3119**	1	HOUSING	
	40	2	**3S-2093**	1	STRAP-CABLE	
	41	3	**7T-3195**	2	WASHER (12.3X47X6.35-MM THK)	
	42	2	**6Y-2035**	1	GASKET	
	43	3	**5P-8066**	2	SEAL-O-RING	

271-2408 TRANSMISSION GP-DIRECT DRIVE *(contd.)* i02755826

NOTE	REF NO	GRAPHIC REF	PART NUMBER	QTY	PART NAME 1 2 3 4 5 6 (PRODUCT LEVEL)	SEE PAGE
	44	1	**294-9820**	1	TUBE	
	45	3	**122-1883**	1	SPACER (38X45X5-MM THK)	
	46	3	**122-6787**	2	YOKE AS	
	47	1	**6Y-1896**	1	PLUG AS	
	48	2	**4W-9972**	1	SENDER AS-TEMPERATURE (12-VOLT)	
	49	1,2	**3J-1907**	14	SEAL-O-RING	
	51	2	**7T-3111**	1	COVER	
	52	3	**7X-4741**	1	SEAL	
	54	1	**123-2918**	2	SLEEVE	
	55	1	**123-2919**	2	NUT (M11X1-THD)	
	56	2	**7T-3251**	1	BREATHER (TRANSMISSION)	

M-METRIC PART
Y-SEPARATE ILLUSTRATION

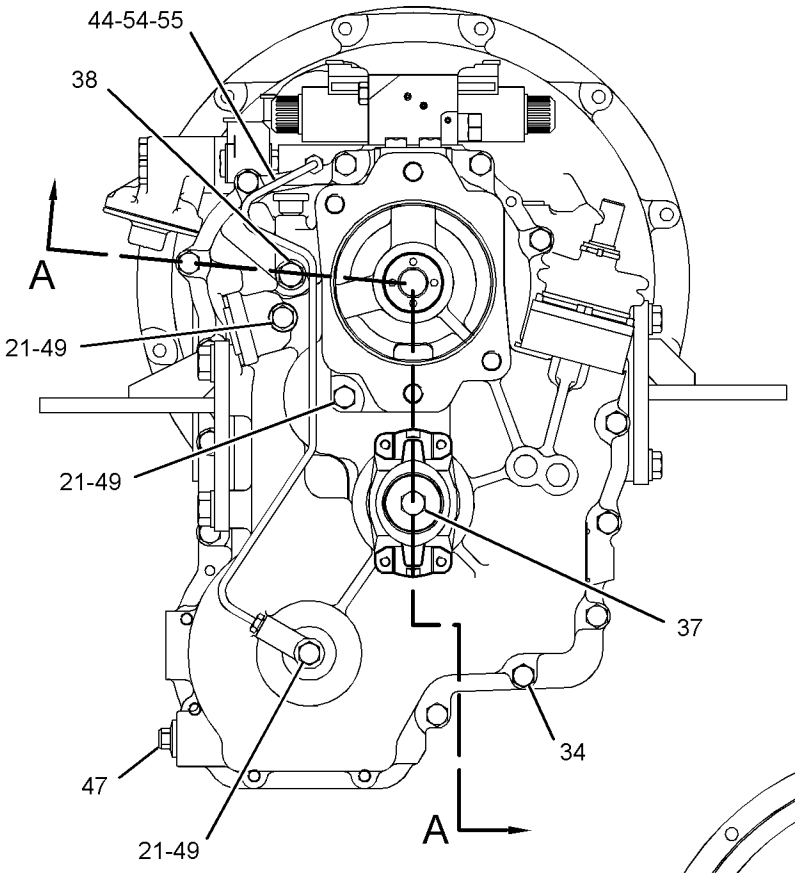

REAR VIEW

REFER TO ALL ILLUSTRATIONS OF THIS GROUP FOR AUXILIARY VIEWS

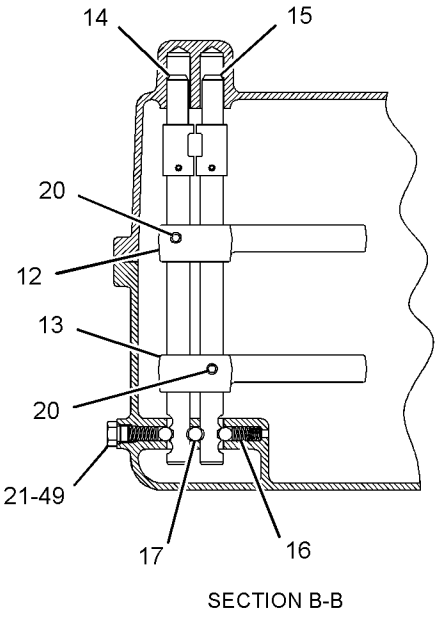

SECTION B-B

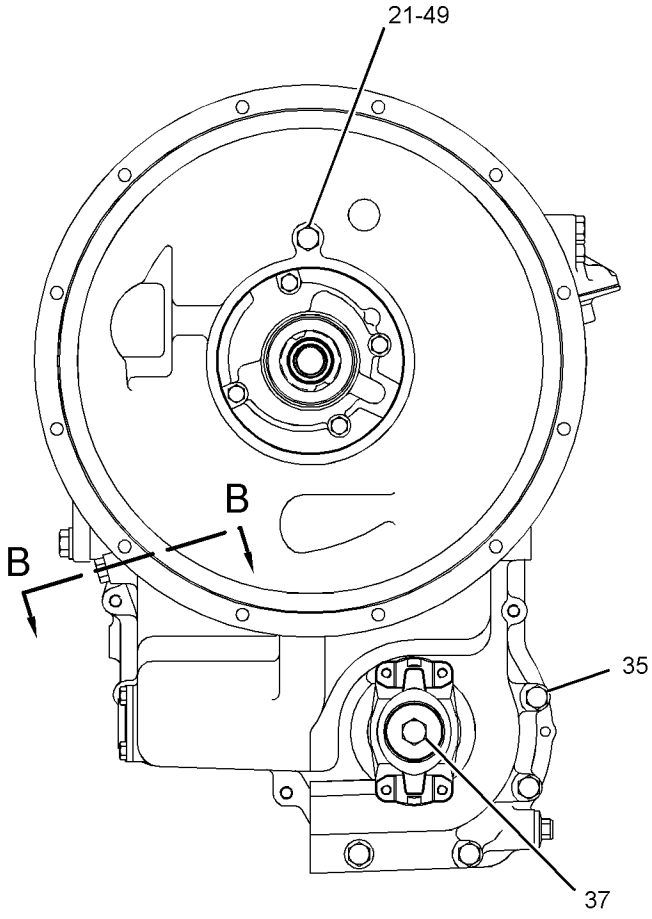

FRONT VIEW

GRAPHIC #1

g01383738

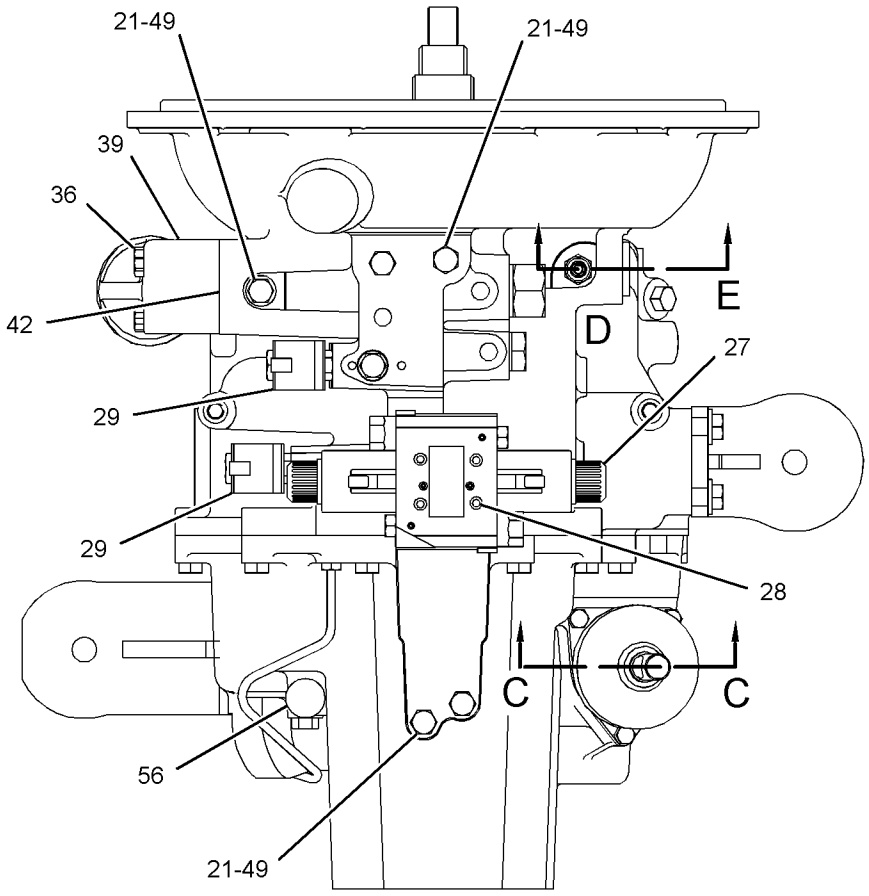

TOP VIEW

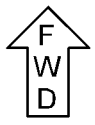

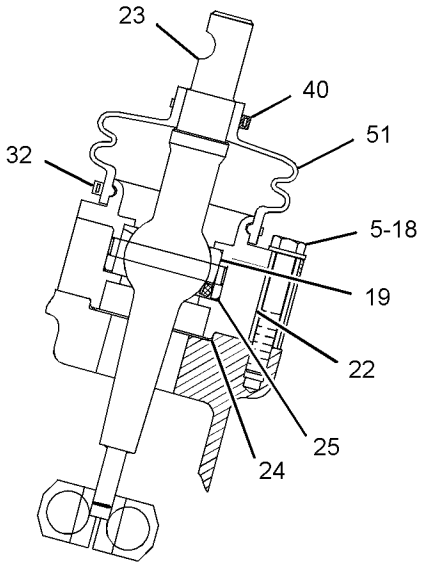

SECTION E

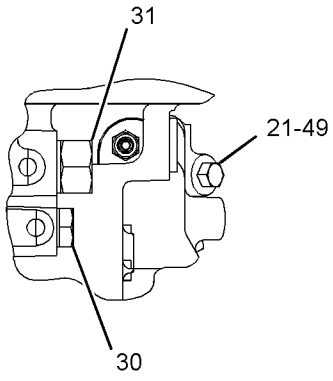

VIEW OF AREA D

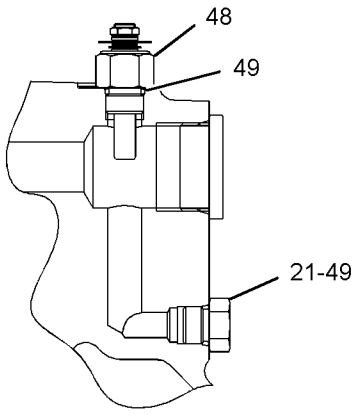

SECTION C-C

GRAPHIC #2

g01384638

271-2408 TRANSMISSION GP-DIRECT DRIVE *(contd.)* **i02755826**

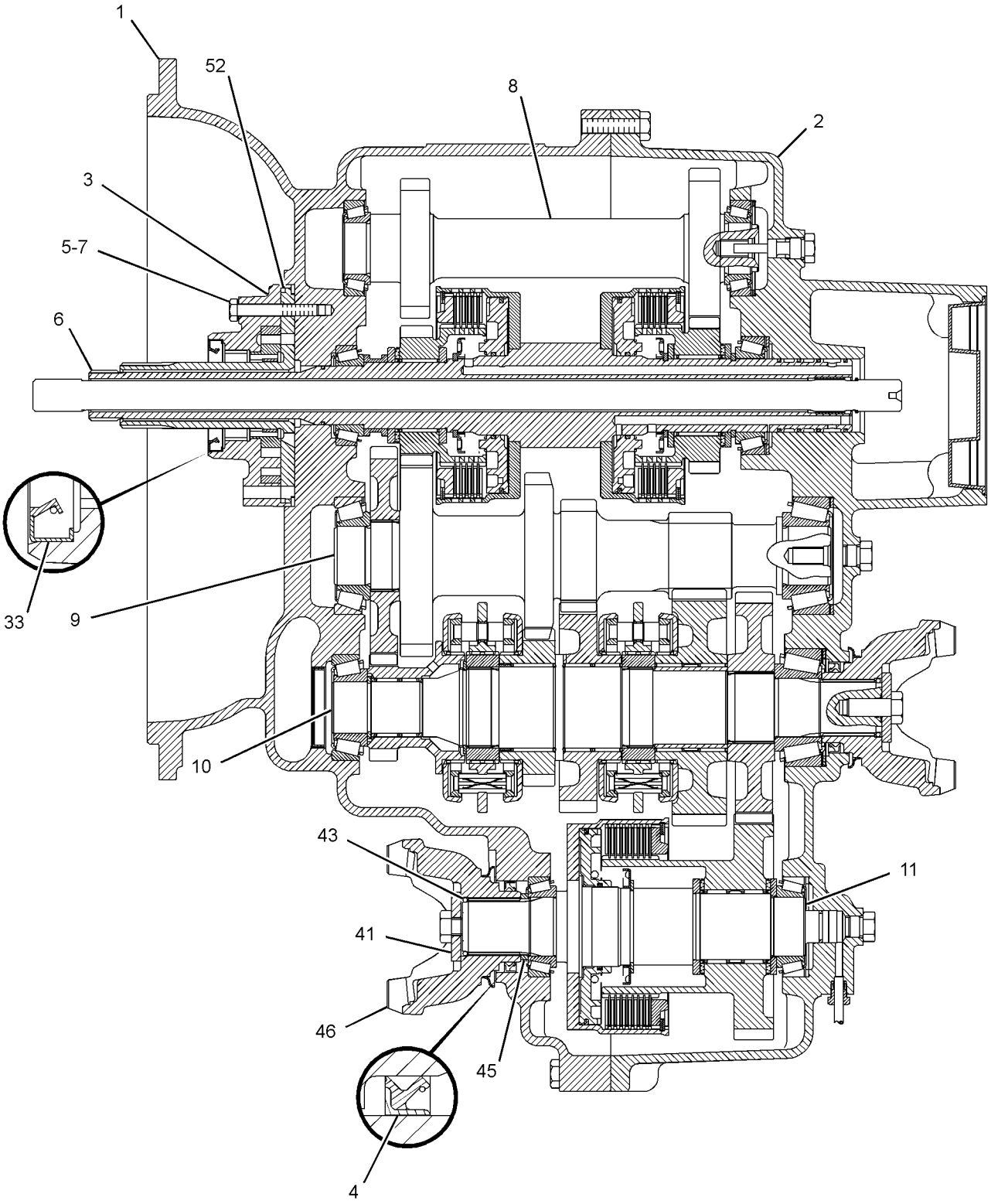

SECTION A-A

GRAPHIC #3 **<END>** g01383748

147-0209 VALVE GP-RELIEF

S/N: SHA1-UP

PART OF 271-2407, 271-2408 TRANSMISSION GP-DIRECT DRIVE

AN ATTACHMENT

SMCS-3133, 3182, 3210, 3213 **i01980265**

NOTE	REF NO	GRAPHIC REF	PART NUMBER	QTY	PART NAME 1 2 3 4 5 6 (PRODUCT LEVEL)	SEE PAGE
	1	1	**7X-4744**	1	SEAL-O-RING	
	2	1	**6V-9178**	1	SEAL-O-RING	
	3	1	**106-9586**	1	SEAL-O-RING	

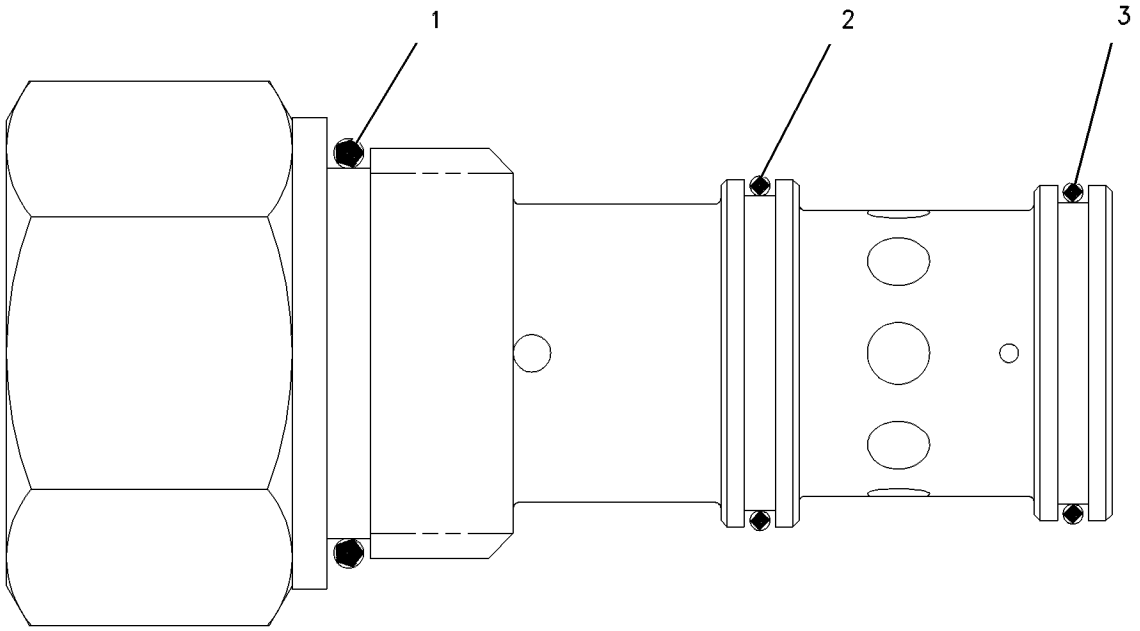

GRAPHIC #1 **<END>** g00304718

6D-0337 VALVE GP-TIRE

S/N: SHA1-UP
PART OF 201-1920 VALVE GP-TIRE
AN ATTACHMENT

SMCS-4203 **i02126852**

NOTE	REF NO	GRAPHIC REF	PART NUMBER	QTY	PART NAME 1 2 3 4 5 6 (PRODUCT LEVEL)	SEE PAGE
	1	1	**6D-0443**	1	HOUSING AS-CORE	
	2	1	**2D-2628**	1	CORE-VALVE	
	3	1	**2D-2633**	1	CAP	
	4	1	**8D-2707**	1	SPUD AS	
	5	1	**2D-2629**	1	GROMMET	
	6	1	**2D-2630**	1	WASHER	
	7	1	**2D-2631**	1	NUT (0.482-26-THD)	

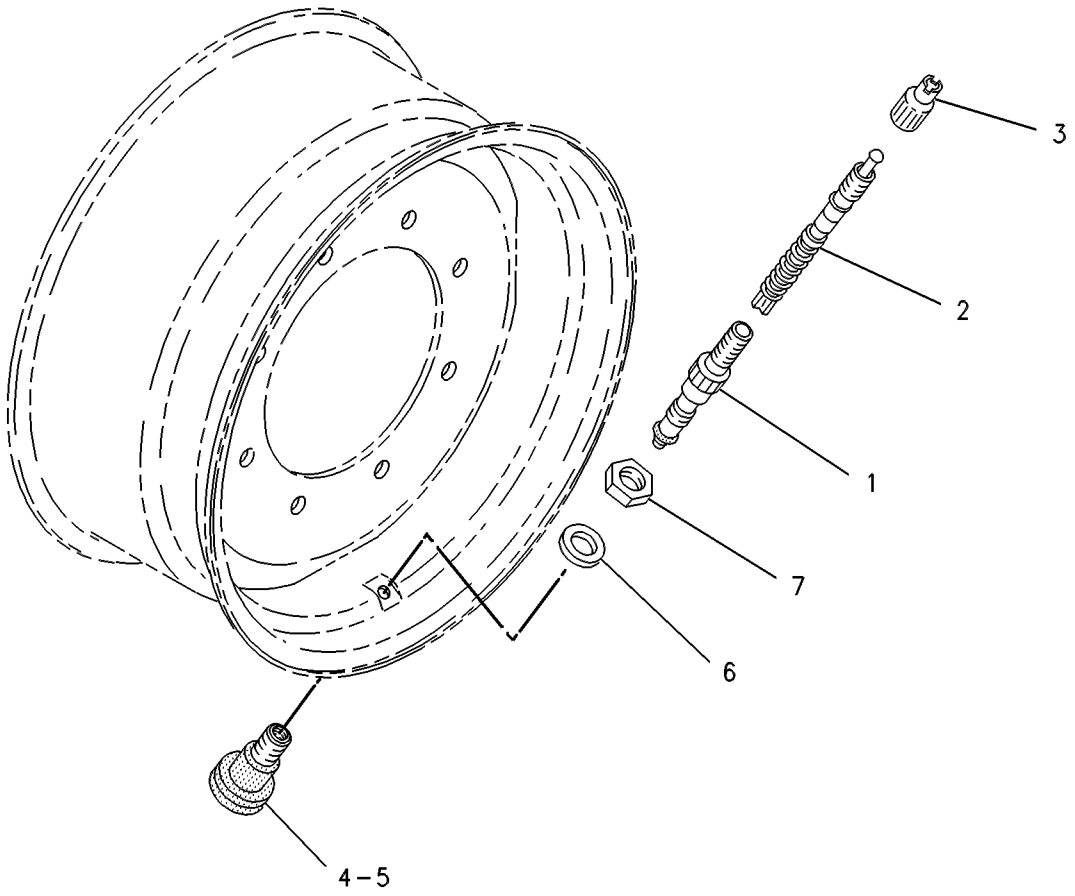

GRAPHIC #1 **<END>** g00121904

201-1920 VALVE GP-TIRE

S/N: SHA1-UP

PART OF 201-1863, 201-1864, 201-1875, 201-1876, 201-1878, 201-1882, 201-1883, 201-1911, 201-1912, 201-1960, 201-1961, 282-3860, 282-3861, 282-3863, 282-3864, 282-3866, 282-3867, 282-3869, 282-3870, 282-3872, 282-3873, 286-9084, 286-9085

WHEEL & TIRE GP

AN ATTACHMENT

SMCS-4203 **i02126869**

NOTE	PART NUMBER	QTY	PART NAME 1 2 3 4 5 6 (PRODUCT LEVEL)	SEE PAGE
Y	**6D-0337**	1	VALVE GP-TIRE	255

Y-SEPARATE ILLUSTRATION

<END>

201-1918 WHEEL & TIRE AR

S/N: SHA1-UP

TWO WHEEL STEER OR ALL WHEEL STEER, FOUR WHEEL DRIVE

AN ATTACHMENT

SMCS-4201, 4202, 4203, 4208, 4209 **i01685047**

NOTE	PART NUMBER	QTY	PART NAME 1 2 3 4 5 6 (PRODUCT LEVEL)	SEE PAGE
Y	*201-1874*	1	WHEEL & TIRE GP (FRONT)	260
Y	*201-1913*	1	WHEEL & TIRE GP (REAR)	263

Y-SEPARATE ILLUSTRATION

<END>

201-1923 WHEEL & TIRE AR

S/N: SHA1-UP

AN ATTACHMENT

SMCS-4201, 4202, 4203, 4208, 4209 **i01589996**

NOTE	PART NUMBER	QTY	PART NAME 1 2 3 4 5 6 (PRODUCT LEVEL)	SEE PAGE
Y	*201-1862*	1	WHEEL & TIRE GP (FRONT)	259
Y	*201-1881*	1	WHEEL & TIRE GP (REAR)	262

Y-SEPARATE ILLUSTRATION

<END>

201-1925 WHEEL & TIRE AR

S/N: SHA1-UP

TWO WHEEL DRIVE

AN ATTACHMENT

SMCS-4201, 4202, 4203, 4208, 4209 **i01685065**

NOTE	PART NUMBER	QTY	PART NAME 1 2 3 4 5 6 (PRODUCT LEVEL)	SEE PAGE
Y	*201-1877*	1	WHEEL & TIRE GP (FRONT)	261
Y	*201-1913*	1	WHEEL & TIRE GP (REAR)	263

Y-SEPARATE ILLUSTRATION

<END>

201-1954 WHEEL & TIRE AR

S/N: SHA1-UP
FOUR WHEEL DRIVE, TWO WHEEL STEER OR ALL WHEEL STEER
AN ATTACHMENT

SMCS-4201, 4202, 4203, 4208, 4209 **i01684120**

NOTE	PART NUMBER	QTY	PART NAME 1 2 3 4 5 6 (PRODUCT LEVEL)	SEE PAGE
Y	*201-1862*	1	WHEEL & TIRE GP (FRONT)	259
Y	*201-1913*	1	WHEEL & TIRE GP (REAR)	263

Y-SEPARATE ILLUSTRATION

<END>

282-3847 WHEEL & TIRE AR

S/N: SHA1-UP
AN ATTACHMENT

SMCS-4201, 4202, 4203, 4208, 4209 **i02452276**

NOTE	PART NUMBER	QTY	PART NAME 1 2 3 4 5 6 (PRODUCT LEVEL)	SEE PAGE
Y	*201-1949*	1	WHEEL & TIRE GP (FRONT)	264
Y	*282-3859*	1	WHEEL & TIRE GP (REAR)	265

Y-SEPARATE ILLUSTRATION

<END>

282-3853 WHEEL & TIRE AR

S/N: SHA1-UP
AN ATTACHMENT

SMCS-4201, 4202, 4203, 4208, 4209 **i02502831**

NOTE	PART NUMBER	QTY	PART NAME 1 2 3 4 5 6 (PRODUCT LEVEL)	SEE PAGE
Y	*282-3862*	1	WHEEL & TIRE GP (FRONT)	266
Y	*282-3865*	1	WHEEL & TIRE GP (REAR)	267

Y-SEPARATE ILLUSTRATION

<END>

282-3854 WHEEL & TIRE AR

S/N: SHA1-UP
AN ATTACHMENT

SMCS-4201, 4202, 4203, 4208, 4209 **i02502983**

NOTE	PART NUMBER	QTY	PART NAME 1 2 3 4 5 6 (PRODUCT LEVEL)	SEE PAGE
Y	*282-3865*	1	WHEEL & TIRE GP (REAR)	267
Y	*282-3868*	1	WHEEL & TIRE GP (FRONT)	268

Y-SEPARATE ILLUSTRATION

<END>

282-3855 WHEEL & TIRE AR

S/N: SHA1-UP
AN ATTACHMENT

SMCS-4201, 4202, 4203, 4208, 4209 **i02503000**

NOTE	PART NUMBER	QTY	PART NAME 1 2 3 4 5 6 (PRODUCT LEVEL)	SEE PAGE
Y	*282-3868*	1	WHEEL & TIRE GP (FRONT)	268
Y	*282-3871*	1	WHEEL & TIRE GP (REAR)	269

Y-SEPARATE ILLUSTRATION

<END>

282-3857 WHEEL & TIRE AR

S/N: SHA1-UP
AN ATTACHMENT

SMCS-4201, 4202, 4203, 4208, 4209 **i02502997**

NOTE	PART NUMBER	QTY	PART NAME 1 2 3 4 5 6 (PRODUCT LEVEL)	SEE PAGE
Y	*201-1949*	1	WHEEL & TIRE GP (FRONT)	264
Y	*282-3865*	1	WHEEL & TIRE GP (REAR)	267

Y-SEPARATE ILLUSTRATION

<END>

282-3858 WHEEL & TIRE AR

S/N: SHA1-UP
AN ATTACHMENT

SMCS-4201, 4202, 4203, 4208, 4209 **i02503060**

NOTE	PART NUMBER	QTY	PART NAME 1 2 3 4 5 6 (PRODUCT LEVEL)	SEE PAGE
Y	*201-1881*	1	WHEEL & TIRE GP (REAR)	262
Y	*201-1949*	1	WHEEL & TIRE GP (FRONT)	264

Y-SEPARATE ILLUSTRATION

<END>

286-9082 WHEEL & TIRE AR—2-WHEEL DRIVE, BIAS

S/N: SHA1-UP
AN ATTACHMENT

SMCS-4201, 4202, 4203, 4208, 4209 **i02532902**

NOTE	PART NUMBER	QTY	PART NAME 1 2 3 4 5 6 (PRODUCT LEVEL)	SEE PAGE
Y	*282-3862*	1	WHEEL & TIRE GP (FRONT)	266
Y	*286-9083*	1	WHEEL & TIRE GP (REAR)	270

Y-SEPARATE ILLUSTRATION

<END>

286-9086 WHEEL & TIRE AR—ALL WHEEL DRIVE, BIAS

S/N: SHA1-UP
AN ATTACHMENT

SMCS-4201, 4202, 4203, 4208, 4209 **i02532912**

NOTE	PART NUMBER	QTY	PART NAME 1 2 3 4 5 6 (PRODUCT LEVEL)	SEE PAGE
Y	*201-1874*	1	WHEEL & TIRE GP (FRONT)	260
Y	*286-9083*	1	WHEEL & TIRE GP (REAR)	270

Y-SEPARATE ILLUSTRATION

<END>

201-1862 WHEEL & TIRE GP—FRONT

S/N: SHA1-UP
PART OF 201-1923, 201-1954 WHEEL & TIRE AR
AN ATTACHMENT

SMCS-4201, 4202, 4203, 4208, 4209 **i02242350**

NOTE	PART NUMBER	QTY	PART NAME 1 2 3 4 5 6 (PRODUCT LEVEL)	SEE PAGE
Y	*201-1863*	1	WHEEL & TIRE GP (LH)	259
Y	*201-1864*	1	WHEEL & TIRE GP (RH)	260
	201-1915	1	MOUNTING GP-WHEEL (FRONT)	
	8T-5439	16	WASHER-HARD (21.5X45X6-MM THK)	
M	**201-1919**	16	NUT (M20X1.5-THD)	

M-METRIC PART
Y-SEPARATE ILLUSTRATION

<END>

201-1863 WHEEL & TIRE GP—LH

S/N: SHA1-UP
10X18
PART OF 201-1862 WHEEL & TIRE GP
AN ATTACHMENT

SMCS-4201, 4202, 4203, 4208, 4209 **i02597582**

NOTE	PART NUMBER	QTY	PART NAME 1 2 3 4 5 6 (PRODUCT LEVEL)	SEE PAGE
Y	*201-1920*	1	VALVE GP-TIRE	256
	112-9338	1	TIRE (340/80-R18)	
	202-6186	1	WHEEL AS (FRONT)	

Y-SEPARATE ILLUSTRATION

<END>

201-1864 WHEEL & TIRE GP—RH

S/N: SHA1-UP
10X18
PART OF 201-1862 WHEEL & TIRE GP
AN ATTACHMENT

SMCS-4201, 4202, 4203, 4208, 4209 **i02597583**

NOTE	PART NUMBER	QTY	PART NAME 1 2 3 4 5 6 (PRODUCT LEVEL)	SEE PAGE
Y	*201-1920*	1	VALVE GP-TIRE	256
	112-9338	1	TIRE (340/80-R18)	
	202-6186	1	WHEEL AS (FRONT)	

Y-SEPARATE ILLUSTRATION

<END>

201-1874 WHEEL & TIRE GP—FRONT

S/N: SHA1-UP
PART OF 201-1918, 286-9086 WHEEL & TIRE AR
AN ATTACHMENT

SMCS-4201, 4202, 4203, 4208, 4209 **i02242353**

NOTE	PART NUMBER	QTY	PART NAME 1 2 3 4 5 6 (PRODUCT LEVEL)	SEE PAGE
Y	*201-1875*	1	WHEEL & TIRE GP (LH)	260
Y	*201-1876*	1	WHEEL & TIRE GP (RH)	261
	201-1915	1	MOUNTING GP-WHEEL (FRONT)	
	8T-5439	16	WASHER-HARD (21.5X45X6-MM THK)	
M	**178-1304**	16	NUT-HEX FLANGE (M20X1.5-THD)	

M-METRIC PART
Y-SEPARATE ILLUSTRATION

<END>

201-1875 WHEEL & TIRE GP—LH

S/N: SHA1-UP
10X18
PART OF 201-1874 WHEEL & TIRE GP
AN ATTACHMENT

SMCS-4201, 4202, 4203, 4208, 4209 **i02597584**

NOTE	PART NUMBER	QTY	PART NAME 1 2 3 4 5 6 (PRODUCT LEVEL)	SEE PAGE
Y	*201-1920*	1	VALVE GP-TIRE	256
	9R-6481	1	TIRE (12.5/80-18)	
	202-6186	1	WHEEL AS (FRONT)	

Y-SEPARATE ILLUSTRATION

<END>

201-1876 WHEEL & TIRE GP–RH

S/N: SHA1-UP
10X18
PART OF 201-1874 WHEEL & TIRE GP
AN ATTACHMENT

SMCS-4201, 4202, 4203, 4208, 4209 **i02597585**

NOTE	PART NUMBER	QTY	PART NAME 1 2 3 4 5 6 (PRODUCT LEVEL)	SEE PAGE
Y	*201-1920*	1	VALVE GP-TIRE	256
	9R-6481	1	TIRE (12.5/80-18)	
	202-6186	1	WHEEL AS (FRONT)	

Y-SEPARATE ILLUSTRATION

<END>

201-1877 WHEEL & TIRE GP–FRONT

S/N: SHA1-UP
PART OF 201-1925 WHEEL & TIRE AR
AN ATTACHMENT

SMCS-4201, 4202, 4203, 4208, 4209 **i02242357**

NOTE	PART NUMBER	QTY	PART NAME 1 2 3 4 5 6 (PRODUCT LEVEL)	SEE PAGE
Y	*201-1878*	2	WHEEL & TIRE GP (FRONT)	261
	201-1915	1	MOUNTING GP-WHEEL (FRONT)	
	8T-5439	16	WASHER-HARD (21.5X45X6-MM THK)	
M	**201-1919**	16	NUT (M20X1.5-THD)	

M-METRIC PART
Y-SEPARATE ILLUSTRATION

<END>

201-1878 WHEEL & TIRE GP–FRONT

S/N: SHA1-UP
8X16
PART OF 201-1877 WHEEL & TIRE GP
AN ATTACHMENT

SMCS-4201, 4202, 4203, 4208, 4209 **i02597586**

NOTE	PART NUMBER	QTY	PART NAME 1 2 3 4 5 6 (PRODUCT LEVEL)	SEE PAGE
Y	*201-1920*	1	VALVE GP-TIRE	256
	9R-1956	1	TIRE (11L-16)	
	195-6341	1	WHEEL AS (FRONT)	

Y-SEPARATE ILLUSTRATION

<END>

201-1881 WHEEL & TIRE GP–REAR

S/N: SHA1-UP
PART OF 201-1923, 282-3858 WHEEL & TIRE AR
AN ATTACHMENT

SMCS-4201, 4202, 4203, 4208, 4209 **i01671733**

NOTE	PART NUMBER	QTY	PART NAME 1 2 3 4 5 6 (PRODUCT LEVEL)	SEE PAGE
Y	*201-1882*	1	WHEEL & TIRE GP (LH)	262
Y	*201-1883*	1	WHEEL & TIRE GP (RH)	262
	201-1916	1	MOUNTING GP-WHEEL	
	8T-5439	20	WASHER-HARD (21.5X45X6-MM THK)	
M	**201-1919**	20	NUT (M20X1.5-THD)	

M-METRIC PART
Y-SEPARATE ILLUSTRATION

<END>

201-1882 WHEEL & TIRE GP–LH

S/N: SHA1-UP
PART OF 201-1881 WHEEL & TIRE GP
AN ATTACHMENT

SMCS-4201, 4202, 4203, 4208, 4209 **i01551473**

NOTE	PART NUMBER	QTY	PART NAME 1 2 3 4 5 6 (PRODUCT LEVEL)	SEE PAGE
Y	*201-1920*	1	VALVE GP-TIRE	256
J	*127-4293*	1	TIRE (19.5-R24)	
	195-6344	1	WHEEL AS (REAR)	

J-PROCURE LOCALLY
Y-SEPARATE ILLUSTRATION

<END>

201-1883 WHEEL & TIRE GP–RH

S/N: SHA1-UP
PART OF 201-1881 WHEEL & TIRE GP
AN ATTACHMENT

SMCS-4201, 4202, 4203, 4208, 4209 **i01551375**

NOTE	PART NUMBER	QTY	PART NAME 1 2 3 4 5 6 (PRODUCT LEVEL)	SEE PAGE
Y	*201-1920*	1	VALVE GP-TIRE	256
J	*127-4293*	1	TIRE (19.5-R24)	
	195-6344	1	WHEEL AS (REAR)	

J-PROCURE LOCALLY
Y-SEPARATE ILLUSTRATION

<END>

201-1911 WHEEL & TIRE GP

S/N: SHA1-UP
LH
PART OF 201-1913 WHEEL & TIRE GP
AN ATTACHMENT

SMCS-4201, 4202, 4203, 4208, 4209 **i01671601**

NOTE	PART NUMBER	QTY	PART NAME 1 2 3 4 5 6 (PRODUCT LEVEL)	SEE PAGE
Y	*201-1920*	1	VALVE GP-TIRE	256
J	*201-1902*	1	TIRE (19.5L-24)	
	195-6344	1	WHEEL AS (REAR)	

J-PROCURE LOCALLY
Y-SEPARATE ILLUSTRATION

<END>

201-1912 WHEEL & TIRE GP

S/N: SHA1-UP
RH
PART OF 201-1913 WHEEL & TIRE GP
AN ATTACHMENT

SMCS-4201, 4202, 4203, 4208, 4209 **i01671608**

NOTE	PART NUMBER	QTY	PART NAME 1 2 3 4 5 6 (PRODUCT LEVEL)	SEE PAGE
Y	*201-1920*	1	VALVE GP-TIRE	256
J	*201-1902*	1	TIRE (19.5L-24)	
	195-6344	1	WHEEL AS (REAR)	

J-PROCURE LOCALLY
Y-SEPARATE ILLUSTRATION

<END>

201-1913 WHEEL & TIRE GP—REAR

S/N: SHA1-UP
PART OF 201-1918, 201-1925, 201-1954 WHEEL & TIRE AR
AN ATTACHMENT

SMCS-4201, 4202, 4203, 4208, 4209 **i02484883**

NOTE	PART NUMBER	QTY	PART NAME 1 2 3 4 5 6 (PRODUCT LEVEL)	SEE PAGE
Y	*201-1911*	1	WHEEL & TIRE GP (LH)	263
Y	*201-1912*	1	WHEEL & TIRE GP (RH)	263
	201-1916	1	MOUNTING GP-WHEEL	
	8T-5439	20	WASHER-HARD (21.5X45X6-MM THK)	
M	**201-1919**	20	NUT (M20X1.5-THD)	

M-METRIC PART
Y-SEPARATE ILLUSTRATION

<END>

201-1949 WHEEL & TIRE GP

S/N: SHA1-UP
PART OF 282-3847, 282-3857, 282-3858 WHEEL & TIRE AR
AN ATTACHMENT

SMCS-4201, 4202, 4203, 4208, 4209 **i02430038**

NOTE	PART NUMBER	QTY	PART NAME 1 2 3 4 5 6 (PRODUCT LEVEL)	SEE PAGE
Y	*201-1960*	1	WHEEL & TIRE GP (LH)	264
Y	*201-1961*	1	WHEEL & TIRE GP (RH)	264
	201-1915	1	MOUNTING GP-WHEEL (FRONT)	
	8T-5439	16	WASHER-HARD (21.5X45X6-MM THK)	
M	**201-1919**	16	NUT (M20X1.5-THD)	

M-METRIC PART
Y-SEPARATE ILLUSTRATION

<END>

201-1960 WHEEL & TIRE GP—LH

S/N: SHA1-UP
10X18
PART OF 201-1949 WHEEL & TIRE GP
AN ATTACHMENT

SMCS-4201, 4202, 4203, 4208, 4209 **i02430050**

NOTE	PART NUMBER	QTY	PART NAME 1 2 3 4 5 6 (PRODUCT LEVEL)	SEE PAGE
Y	*201-1920*	1	VALVE GP-TIRE	256
	202-6186	1	WHEEL AS (FRONT)	
	201-1879	1	TIRE (12.5/80-R18)	

Y-SEPARATE ILLUSTRATION

<END>

201-1961 WHEEL & TIRE GP—RH

S/N: SHA1-UP
10X18
PART OF 201-1949 WHEEL & TIRE GP
AN ATTACHMENT

SMCS-4201, 4202, 4203, 4208, 4209 **i02430055**

NOTE	PART NUMBER	QTY	PART NAME 1 2 3 4 5 6 (PRODUCT LEVEL)	SEE PAGE
Y	*201-1920*	1	VALVE GP-TIRE	256
	202-6186	1	WHEEL AS (FRONT)	
	201-1879	1	TIRE (12.5/80-R18)	

Y-SEPARATE ILLUSTRATION

<END>

282-3859 WHEEL & TIRE GP–REAR

S/N: SHA1-UP
PART OF 282-3847 WHEEL & TIRE AR
AN ATTACHMENT

SMCS-4201, 4202, 4203, 4208, 4209 **i02452283**

NOTE	PART NUMBER	QTY	PART NAME 1 2 3 4 5 6 (PRODUCT LEVEL)	SEE PAGE
Y	*282-3860*	1	WHEEL & TIRE GP (LH)	265
Y	*282-3861*	1	WHEEL & TIRE GP (RH)	265
	201-1916	1	MOUNTING GP-WHEEL	

Y-SEPARATE ILLUSTRATION

<END>

282-3860 WHEEL & TIRE GP–REAR, LH

S/N: SHA1-UP
PART OF 282-3859 WHEEL & TIRE GP
AN ATTACHMENT

SMCS-4201, 4202, 4203, 4208, 4209 **i02452319**

NOTE	PART NUMBER	QTY	PART NAME 1 2 3 4 5 6 (PRODUCT LEVEL)	SEE PAGE
Y	*201-1920*	1	VALVE GP-TIRE	256
	195-6344	1	WHEEL AS (REAR)	
	276-5021	1	TIRE (19.5-LR24)	

Y-SEPARATE ILLUSTRATION

<END>

282-3861 WHEEL & TIRE GP–REAR, RH

S/N: SHA1-UP
PART OF 282-3859 WHEEL & TIRE GP
AN ATTACHMENT

SMCS-4201, 4202, 4203, 4208, 4209 **i02452324**

NOTE	PART NUMBER	QTY	PART NAME 1 2 3 4 5 6 (PRODUCT LEVEL)	SEE PAGE
Y	*201-1920*	1	VALVE GP-TIRE	256
	195-6344	1	WHEEL AS (REAR)	
	276-5021	1	TIRE (19.5-LR24)	

Y-SEPARATE ILLUSTRATION

<END>

282-3862 WHEEL & TIRE GP—FRONT

S/N: SHA1-UP
PART OF 282-3853, 286-9082 WHEEL & TIRE AR
AN ATTACHMENT

SMCS-4201, 4202, 4203, 4208, 4209 **i02502833**

NOTE	PART NUMBER	QTY	PART NAME 1 2 3 4 5 6 (PRODUCT LEVEL)	SEE PAGE
Y	*282-3863*	1	WHEEL & TIRE GP (FRONT, LH)	266
Y	*282-3864*	1	WHEEL & TIRE GP (FRONT, RH)	266
	201-1915	1	MOUNTING GP-WHEEL (FRONT)	

Y-SEPARATE ILLUSTRATION

<END>

282-3863 WHEEL & TIRE GP—LH

S/N: SHA1-UP
PART OF 282-3862 WHEEL & TIRE GP
AN ATTACHMENT

SMCS-4201, 4202, 4203, 4208, 4209 **i02502835**

NOTE	PART NUMBER	QTY	PART NAME 1 2 3 4 5 6 (PRODUCT LEVEL)	SEE PAGE
Y	*201-1920*	1	VALVE GP-TIRE	256
	276-8086	1	TIRE (11L-16)	
	195-6341	1	WHEEL AS (FRONT)	

Y-SEPARATE ILLUSTRATION

<END>

282-3864 WHEEL & TIRE GP—RH

S/N: SHA1-UP
PART OF 282-3862 WHEEL & TIRE GP
AN ATTACHMENT

SMCS-4201, 4202, 4203, 4208, 4209 **i02502837**

NOTE	PART NUMBER	QTY	PART NAME 1 2 3 4 5 6 (PRODUCT LEVEL)	SEE PAGE
Y	*201-1920*	1	VALVE GP-TIRE	256
	276-8086	1	TIRE (11L-16)	
	195-6341	1	WHEEL AS (FRONT)	

Y-SEPARATE ILLUSTRATION

<END>

282-3865 WHEEL & TIRE GP–REAR

S/N: SHA1-UP
PART OF 282-3853, 282-3854, 282-3857 WHEEL & TIRE AR
AN ATTACHMENT

SMCS-4201, 4202, 4203, 4208, 4209 **i02502834**

NOTE	PART NUMBER	QTY	PART NAME 1 2 3 4 5 6 (PRODUCT LEVEL)	SEE PAGE
Y	*282-3866*	1	WHEEL & TIRE GP (LH)	267
Y	*282-3867*	1	WHEEL & TIRE GP (RH)	267
	201-1916	1	MOUNTING GP-WHEEL	

Y-SEPARATE ILLUSTRATION

<END>

282-3866 WHEEL & TIRE GP–LH

S/N: SHA1-UP
PART OF 282-3865 WHEEL & TIRE GP
AN ATTACHMENT

SMCS-4201, 4202, 4203, 4208, 4209 **i02502843**

NOTE	PART NUMBER	QTY	PART NAME 1 2 3 4 5 6 (PRODUCT LEVEL)	SEE PAGE
Y	*201-1920*	1	VALVE GP-TIRE	256
	276-6820	1	TIRE (19.5L-24)	
	195-6344	1	WHEEL AS (REAR)	

Y-SEPARATE ILLUSTRATION

<END>

282-3867 WHEEL & TIRE GP–RH

S/N: SHA1-UP
PART OF 282-3865 WHEEL & TIRE GP
AN ATTACHMENT

SMCS-4201, 4202, 4203, 4208, 4209 **i02502845**

NOTE	PART NUMBER	QTY	PART NAME 1 2 3 4 5 6 (PRODUCT LEVEL)	SEE PAGE
Y	*201-1920*	1	VALVE GP-TIRE	256
	276-6820	1	TIRE (19.5L-24)	
	195-6344	1	WHEEL AS (REAR)	

Y-SEPARATE ILLUSTRATION

<END>

282-3868 WHEEL & TIRE GP—REAR

S/N: SHA1-UP
PART OF 282-3854, 282-3855 WHEEL & TIRE AR
AN ATTACHMENT

SMCS-4201, 4202, 4203, 4208, 4209 **i02502984**

NOTE	PART NUMBER	QTY	PART NAME 1 2 3 4 5 6 (PRODUCT LEVEL)	SEE PAGE
Y	*282-3869*	1	WHEEL & TIRE GP (LH)	268
Y	*282-3870*	1	WHEEL & TIRE GP (RH)	268
	201-1915	1	MOUNTING GP-WHEEL (FRONT)	

Y-SEPARATE ILLUSTRATION

<END>

282-3869 WHEEL & TIRE GP—LH

S/N: SHA1-UP
PART OF 282-3868 WHEEL & TIRE GP
AN ATTACHMENT

SMCS-4201, 4202, 4203, 4208, 4209 **i02502990**

NOTE	PART NUMBER	QTY	PART NAME 1 2 3 4 5 6 (PRODUCT LEVEL)	SEE PAGE
Y	*201-1920*	1	VALVE GP-TIRE	256
	286-9087	1	TIRE (12.5/80-18)	
	202-6186	1	WHEEL AS (FRONT)	

Y-SEPARATE ILLUSTRATION

<END>

282-3870 WHEEL & TIRE GP—RH

S/N: SHA1-UP
PART OF 282-3868 WHEEL & TIRE GP
AN ATTACHMENT

SMCS-4201, 4202, 4203, 4208, 4209 **i02502991**

NOTE	PART NUMBER	QTY	PART NAME 1 2 3 4 5 6 (PRODUCT LEVEL)	SEE PAGE
Y	*201-1920*	1	VALVE GP-TIRE	256
	286-9087	1	TIRE (12.5/80-18)	
	202-6186	1	WHEEL AS (FRONT)	

Y-SEPARATE ILLUSTRATION

<END>

282-3871 WHEEL & TIRE GP—REAR

S/N: SHA1-UP
PART OF 282-3855 WHEEL & TIRE AR
AN ATTACHMENT

SMCS-4201, 4202, 4203, 4208, 4209 **i02503021**

NOTE	PART NUMBER	QTY	PART NAME 1 2 3 4 5 6 (PRODUCT LEVEL)	SEE PAGE
Y	*282-3872*	1	WHEEL & TIRE GP (LH)	269
Y	*282-3873*	1	WHEEL & TIRE GP (RH)	269
	201-1916	1	MOUNTING GP-WHEEL	
	8T-5439	20	WASHER-HARD (21.5X45X6-MM THK)	
M	**201-1919**	20	NUT (M20X1.5-THD)	

M-METRIC PART
Y-SEPARATE ILLUSTRATION

<END>

282-3872 WHEEL & TIRE GP—LH

S/N: SHA1-UP
PART OF 282-3871 WHEEL & TIRE GP
AN ATTACHMENT

SMCS-4201, 4202, 4203, 4208, 4209 **i02503023**

NOTE	PART NUMBER	QTY	PART NAME 1 2 3 4 5 6 (PRODUCT LEVEL)	SEE PAGE
Y	*201-1920*	1	VALVE GP-TIRE	256
	272-5116	1	TIRE (21L-24)	
	272-5111	1	WHEEL AS (REAR)	

Y-SEPARATE ILLUSTRATION

<END>

282-3873 WHEEL & TIRE GP—RH

S/N: SHA1-UP
18L X 24W
PART OF 282-3871 WHEEL & TIRE GP
AN ATTACHMENT

SMCS-4201, 4202, 4203, 4208, 4209 **i02650171**

NOTE	PART NUMBER	QTY	PART NAME 1 2 3 4 5 6 (PRODUCT LEVEL)	SEE PAGE
Y	*201-1920*	1	VALVE GP-TIRE	256
	272-5111	1	WHEEL AS (REAR)	
	272-5116	1	TIRE (21L-24)	

Y-SEPARATE ILLUSTRATION

<END>

286-9083 WHEEL & TIRE GP–REAR

S/N: SHA1-UP
PART OF 286-9082, 286-9086 WHEEL & TIRE AR
AN ATTACHMENT

SMCS-4201, 4202, 4203, 4208, 4209 **i02532905**

NOTE	PART NUMBER	QTY	PART NAME 1 2 3 4 5 6 (PRODUCT LEVEL)	SEE PAGE
Y	*286-9084*	1	WHEEL & TIRE GP (REAR, LH)	270
Y	*286-9085*	1	WHEEL & TIRE GP (REAR, RH)	270
	201-1916	1	MOUNTING GP-WHEEL	
	8T-5439	20	WASHER-HARD (21.5X45X6-MM THK)	
M	**201-1919**	20	NUT (M20X1.5-THD)	

M-METRIC PART
Y-SEPARATE ILLUSTRATION

<END>

286-9084 WHEEL & TIRE GP–LH

S/N: SHA1-UP
PART OF 286-9083 WHEEL & TIRE GP
AN ATTACHMENT

SMCS-4201, 4202, 4203, 4208, 4209 **i02532908**

NOTE	PART NUMBER	QTY	PART NAME 1 2 3 4 5 6 (PRODUCT LEVEL)	SEE PAGE
Y	*201-1920*	1	VALVE GP-TIRE	256
	277-3638	1	TIRE (16.9-28)	
	195-6348	1	WHEEL AS (REAR)	

Y-SEPARATE ILLUSTRATION

<END>

286-9085 WHEEL & TIRE GP–RH

S/N: SHA1-UP
PART OF 286-9083 WHEEL & TIRE GP
AN ATTACHMENT

SMCS-4201, 4202, 4203, 4208, 4209 **i02532911**

NOTE	PART NUMBER	QTY	PART NAME 1 2 3 4 5 6 (PRODUCT LEVEL)	SEE PAGE
Y	*201-1920*	1	VALVE GP-TIRE	256
	277-3638	1	TIRE (16.9-28)	
	195-6348	1	WHEEL AS	

Y-SEPARATE ILLUSTRATION

<END>

206-1642 CONTROL GP-PARKING BRAKE

S/N: SHA1-UP

PART OF 214-6910, 214-6911, 214-6912, 214-6913 POWER TRAIN AR

AN ATTACHMENT

SMCS-4282, 4284 **i02442925**

NOTE	REF NO	GRAPHIC REF	PART NUMBER	QTY	PART NAME 1 2 3 4 5 6 (PRODUCT LEVEL)	SEE PAGE
	1	1	**7K-1181**	1	STRAP-CABLE	
	2	1	**9R-2806**	1	PIN	
	3	1	**9R-2807**	1	CLIP	
	4	1	**154-5416**	1	SWITCH AS	
Y	5	1	**261-5517**	1	CONTROL GP-PARKING BRAKE	272
	6	1	**261-9635**	1	BOOT (PARKING BRAKE)	
	7	1	**8T-4224**	2	WASHER-HARD (8.8X16X2-MM THK)	
M	8	1	**8T-6912**	2	BOLT (M8X1.25X50-MM)	
	9	1	**164-1368**	2	FASTENER-PANEL	

M-METRIC PART
Y-SEPARATE ILLUSTRATION

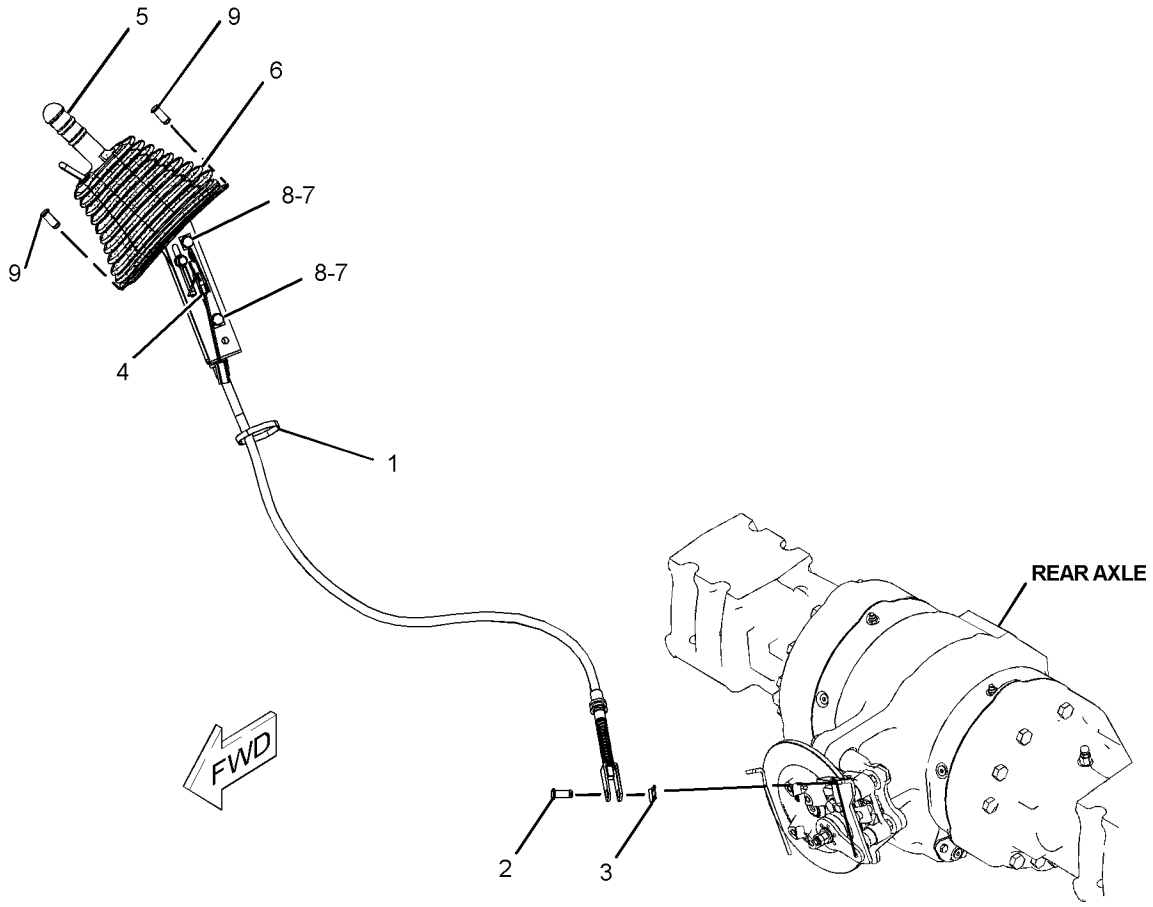

GRAPHIC #1 **<END>** g01228986

261-5517 CONTROL GP-PARKING BRAKE

S/N: SHA1-UP

PART OF 206-1642 CONTROL GP-PARKING BRAKE

AN ATTACHMENT

SMCS-4282, 4284 **i02472580**

NOTE	REF NO	GRAPHIC REF	PART NUMBER	QTY	PART NAME 1 2 3 4 5 6 (PRODUCT LEVEL)	SEE PAGE
Y	1	1	**163-0753**	1	LEVER GP-HAND CONTROL	278
	2	1	**261-5519**	1	CABLE AS	
		1	**6V-8759**	1	RING-RETAINING	

Y-SEPARATE ILLUSTRATION

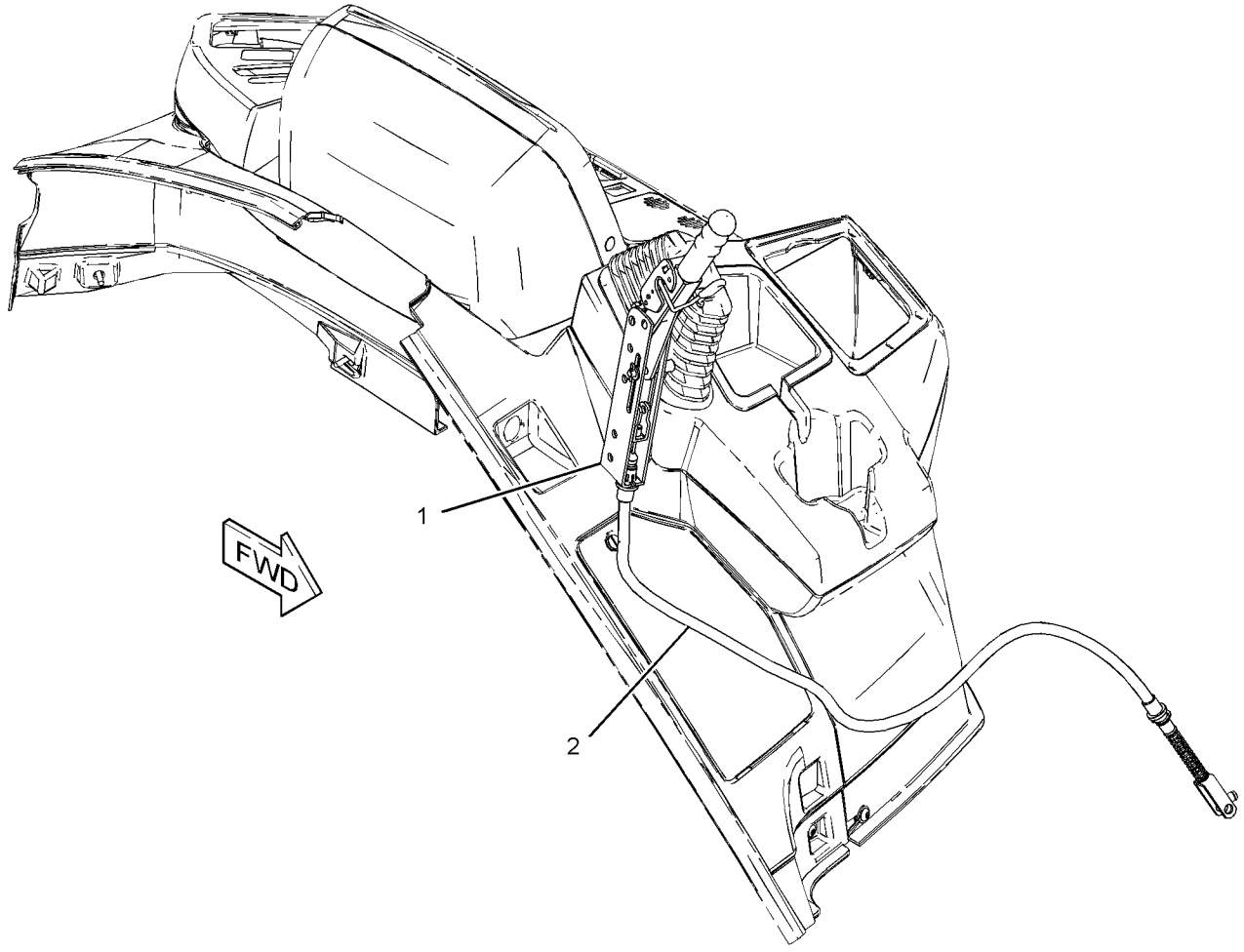

GRAPHIC #1 **<END>** g01210353

206-1638 CONTROL GP-SERVICE BRAKE

S/N: SHA1-UP

PART OF 214-6910, 214-6911, 214-6912, 214-6913 POWER TRAIN AR

AN ATTACHMENT

SMCS-4269 **i02673254**

NOTE	REF NO	GRAPHIC REF	PART NUMBER	QTY	PART NAME 1 2 3 4 5 6 (PRODUCT LEVEL)	SEE PAGE
	1	1	**1A-0621**	2	GROMMET	
	2	1	**2K-5986**	1	PIN-SPRING	
	3	1	**6S-8620**	4	CLAMP-HOSE	
	4	1	**8T-1889**	2	CLIP (SLOT)	
	5	1	**8T-1890**	2	CLIP (TAB)	
	6	1	**101-0333**	1	FILM-IDENTIFICATION (HYDRAULIC OIL)	
	7	1	**105-8034**	2	SWITCH AS-LIMIT (SERVICE BRAKE)	
	8	1	**151-4841**	1	BLOCK	
	9	1	**165-6595**	1	PIN AS	
	10	1	*148-8368*	2	ELBOW AS	
					(EACH INCLUDES)	
		1	**3J-1907**	1	SEAL-O-RING	
		1	**4J-5477**	1	SEAL-O-RING	
		1	**6V-8627**	1	ELBOW (90-DEG)	
M	11	1	**9X-2045**	4	SCREW-TRUSS HEAD (M6X1X20-MM)	
	12	1	**201-3652**	1	PLATE AS	
M		1	**8T-3490**	1	NUT-WELD (M10X1.5-THD)	
	13	1	**202-5993**	1	PLATE	
	14	1	**206-1634**	1	PLATE AS (BRAKE)	
	15	1	**275-0652**	1	PEDAL AS (LH)	
		1	**202-6029**	2	BEARING-SLEEVE	
	16	1	**275-0653**	1	PEDAL AS (RH)	
		1	**202-6029**	2	BEARING-SLEEVE	
	17	1	**206-1760**	1	PLATE AS (BRAKE)	
	18	1	**206-1766**	2	PIN	
	19	1	**285-3583**	1	SPRING (LH)	
	20	1	**285-3584**	1	SPRING (RH)	
	21	1	**206-1769**	1	VALVE GP-BRAKE CONTROL	
		1	**262-4084**	2	BOOT	
	22	1	*215-7067*	2	ELBOW AS	
					(EACH INCLUDES)	
		1	**3J-1907**	1	SEAL-O-RING	
		1	**215-7066**	1	ELBOW	
Y	23	1	*217-9920*	1	RESERVOIR GP-BRAKE	280
I	24	1	**220-8024**	2	HOSE AS	
	25	1	**291-8378**	1	COVER-BRAKE	
	26	1	**298-3599**	1	PLATE AS	
	27	1	**262-4080**	1	GROMMET	
	28	1	**262-4082**	2	END-YOKE ROD	
M	29	1	**142-0485**	2	NUT (M10X1.15-THD)	
	30	1	*150-3033*	2	ELBOW AS (DRUM)	
					(EACH INCLUDES)	
		1	**3J-1907**	1	SEAL-O-RING	
		1	**4J-5477**	1	SEAL-O-RING	
		1	**8T-0164**	1	ELBOW (45-DEG)	
E	31	1	**5P-1442**		HOSE (75-CM EACH)	
M	32	1	**5C-7261**	6	NUT (M8X1.25-THD)	
	33	1	**5K-5338**	1	CLIP	
	34	1	**5P-4116**	4	WASHER-HARD (8.8X20.5X2-MM THK)	
	35	1	**6V-0826**	2	GROMMET	
	36	1	**7K-1181**	1	STRAP-CABLE (PLASTIC)	
	37	1	**7X-7729**	6	WASHER (11X25X3-MM THK)	
	38	1	**8T-4121**	2	WASHER-HARD (11X21X2.5-MM THK)	
M	39	1	**8T-4133**	2	NUT (M10X1.5-THD)	
M	40	1	**8T-4136**	6	BOLT (M10X1.5X25-MM)	

206-1638 **CONTROL GP-SERVICE BRAKE** *(contd.)* **i02673254**

NOTE	REF NO	GRAPHIC REF	PART NUMBER	QTY	PART NAME 1 2 3 4 5 6 (PRODUCT LEVEL)	SEE PAGE
M	41	1	**8T-4138**	1	BOLT (M6X1X20-MM)	
	42	1	**8T-4205**	1	WASHER-HARD (7.2X14.5X2-MM THK)	
	43	1	**8T-4224**	4	WASHER-HARD (8.8X16X2-MM THK)	
M	44	1	**8T-4908**	1	BOLT (M8X1.25X25-MM)	
M	45	1	**8T-7547**	1	BOLT (M8X1.25X30-MM)	
	46	1	**9R-2807**	2	CLIP	
M	47	1	**9X-2044**	2	SCREW-TRUSS HEAD (M6X1X16-MM)	
M	48	1	**5C-2890**	1	NUT (M6X1-THD)	
M	49	1	**6V-7357**	1	BOLT (M6X1X25-MM)	

E-ORDER BY THE CENTIMETER
I-REFER TO HYDRAULIC INFORMATION SYSTEM
M-METRIC PART
Y-SEPARATE ILLUSTRATION

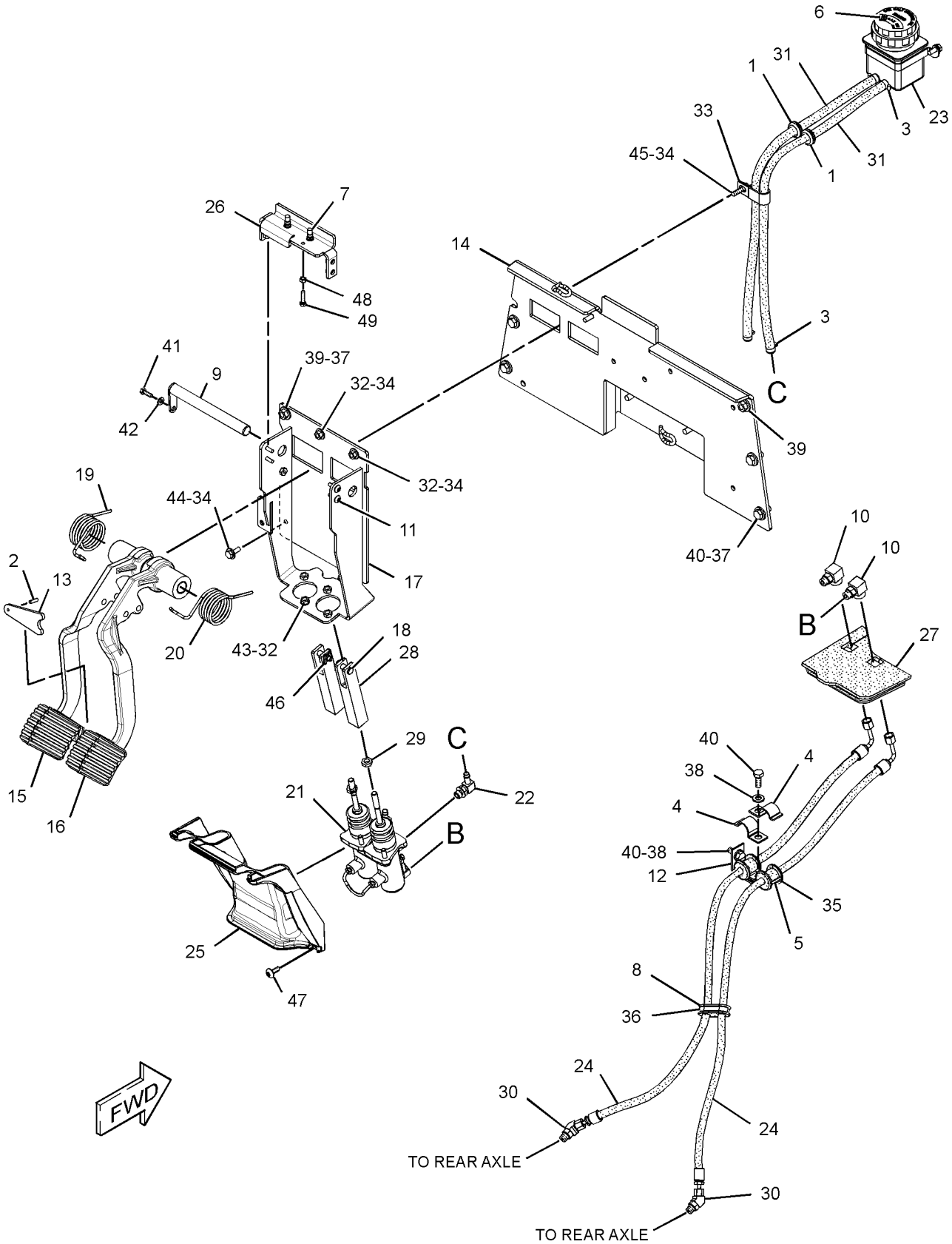

GRAPHIC #1 **<END>** g01343971

BRAKING SYSTEM

216-1612 CYLINDER GP-BRAKE–LH

S/N: SHA1-UP
PART OF 238-5289 HOUSING GP-AXLE
AN ATTACHMENT

SMCS-4262 **i01873014**

NOTE	REF NO	GRAPHIC REF	PART NUMBER	QTY	PART NAME 1 2 3 4 5 6 (PRODUCT LEVEL)	SEE PAGE
J	1	1	**199-0640**	3	BOLT	
L	2	1	**199-0645**	3	BOLT	
J	3	1	**199-0672**	3	SPACER	
J	4	1	**199-0681**	3	WASHER (6.2X16.5X2-MM THK)	
L	5	1	**199-0701**	3	BRAKE-COVER	
L	6	1	**199-0702**	3	SPRING (INNER)	
L	7	1	**199-0703**	3	SPRING (OUTER)	
	8	1	**199-0752**	1	PISTON-BRAKE	
	9	1	**199-0759**	1	O-RING-INNER	
JL	10	1	**212-5712**	6	BUSHING	
	11	1	**219-8834**	1	CYLINDER-BRAKE (RH)	
	12	1	**199-0700**	1	O-RING-OUTER	
					AVAILABLE REPAIR KIT(S):	
J			**217-2347**	3	KIT-BRAKE CYLINDER (ADJUSTER)	
L			**217-2349**	3	KIT-BRAKE CYLINDER (SPRING RETENTION)	

J-KIT MARKED J SERVICES PARTS MARKED J
L-KIT MARKED L SERVICES PARTS MARKED L

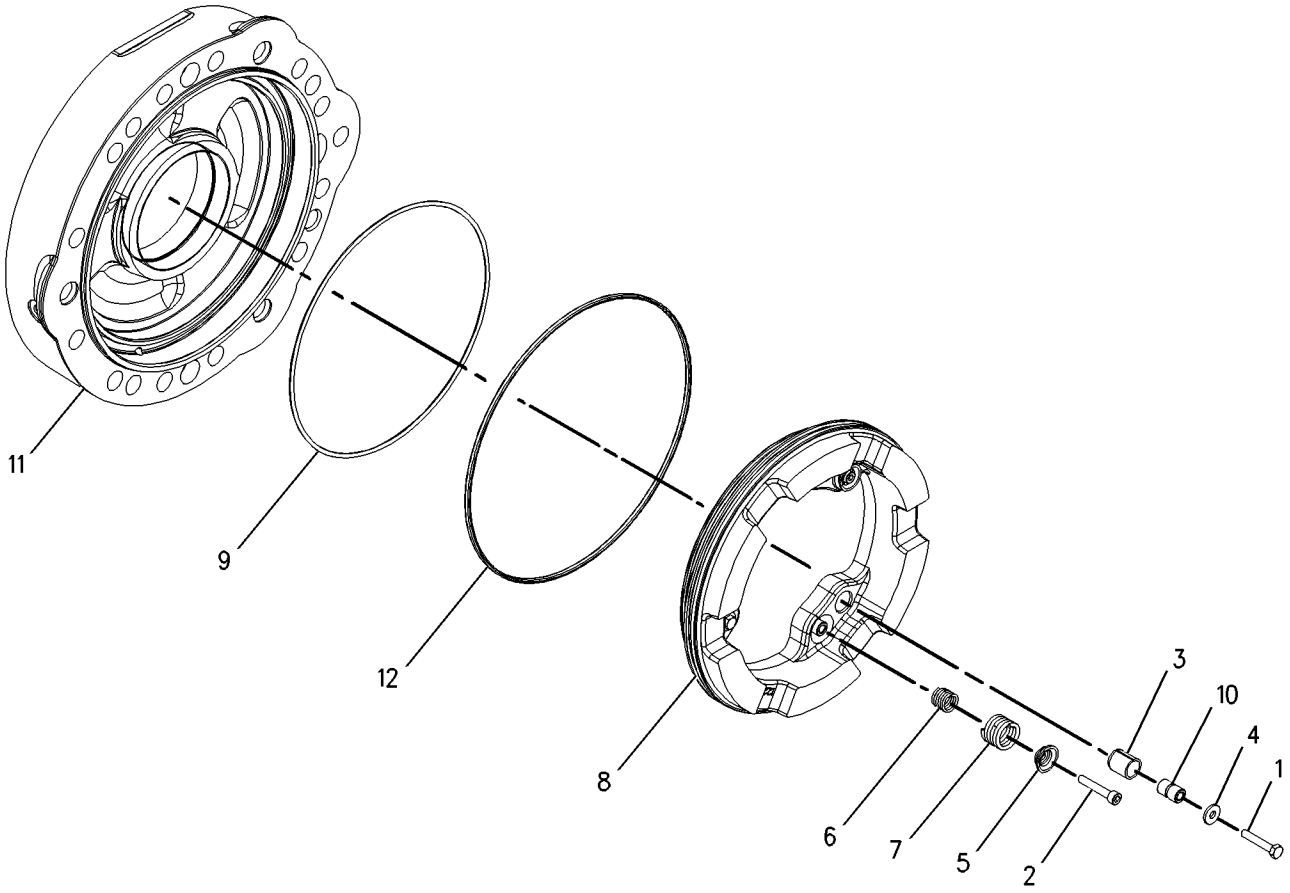

GRAPHIC #1 **<END>** g00953880

216-1613 CYLINDER GP-BRAKE–RH

S/N: SHA1-UP
PART OF 238-5289 HOUSING GP-AXLE
AN ATTACHMENT

SMCS-4262 **i02449601**

NOTE	REF NO	GRAPHIC REF	PART NUMBER	QTY	PART NAME 1 2 3 4 5 6 (PRODUCT LEVEL)	SEE PAGE
M	1	1	**6V-2315**	3	BOLT (M6X1X35-MM)	
JLM	2	1	**1R-5396**	3	BOLT (M6X1X35-MM)	
J	3	1	**199-0672**	3	SPACER	
J	4	1	**199-0681**	3	WASHER (6.2X16.5X2-MM THK)	
L	5	1	**199-0701**	3	BRAKE-COVER	
L	6	1	**199-0702**	3	SPRING (INNER)	
L	7	1	**199-0703**	3	SPRING (OUTER)	
	8	1	**199-0752**	1	PISTON-BRAKE	
	9	1	**199-0759**	1	O-RING-INNER	
JL	10	1	**212-5712**	6	BUSHING	
	11	1	**219-8835**	1	CYLINDER-BRAKE (LH)	
	12	1	**199-0700**	1	O-RING-OUTER	
					AVAILABLE REPAIR KIT(S):	
J			**217-2347**	3	KIT-BRAKE CYLINDER (ADJUSTER)	
L			**217-2349**	3	KIT-BRAKE CYLINDER (SPRING RETENTION)	

J-KIT MARKED J INCLUDES PARTS MARKED J
L-KIT MARKED L INCLUDES PARTS MARKED L
M-METRIC PART

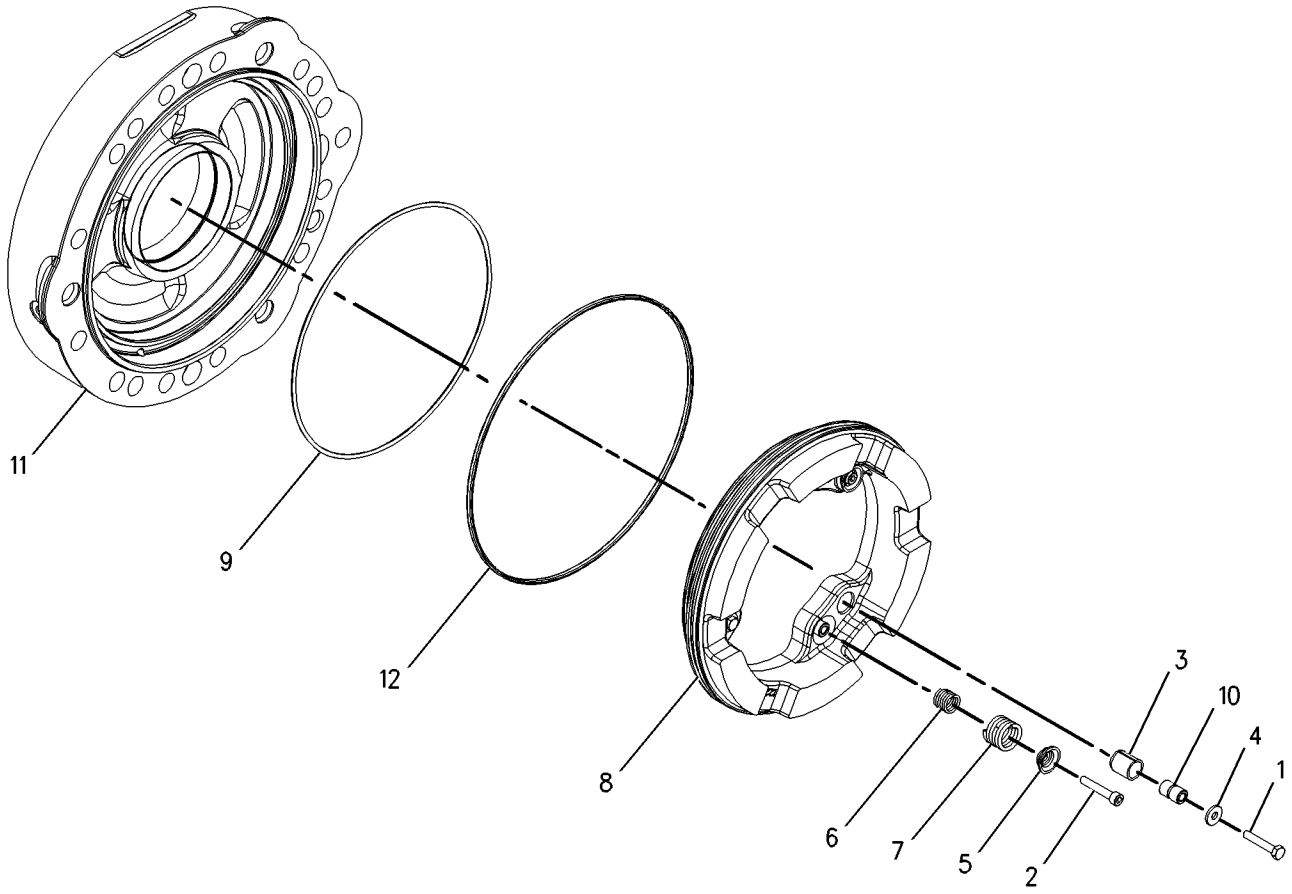

GRAPHIC #1 **<END>** g00995396

163-0753 LEVER GP-HAND CONTROL

S/N: SHA1-UP
PART OF 261-5517 CONTROL GP-PARKING BRAKE
AN ATTACHMENT

SMCS-4284 **i01548326**

NOTE	REF NO	GRAPHIC REF	PART NUMBER	QTY	PART NAME 1 2 3 4 5 6 (PRODUCT LEVEL)	SEE PAGE
	1	1	**7R-8239**	2	SPACER	
	2	1	**039-9133**	1	PIN	
	3	1	**164-9598**	1	GRIP	
	4	1	**164-9599**	1	COVER	
	5	1	**3B-4610**	1	PIN-COTTER	
	6	1	**8T-4224**	2	WASHER-HARD (8.8X16X2MM THK)	

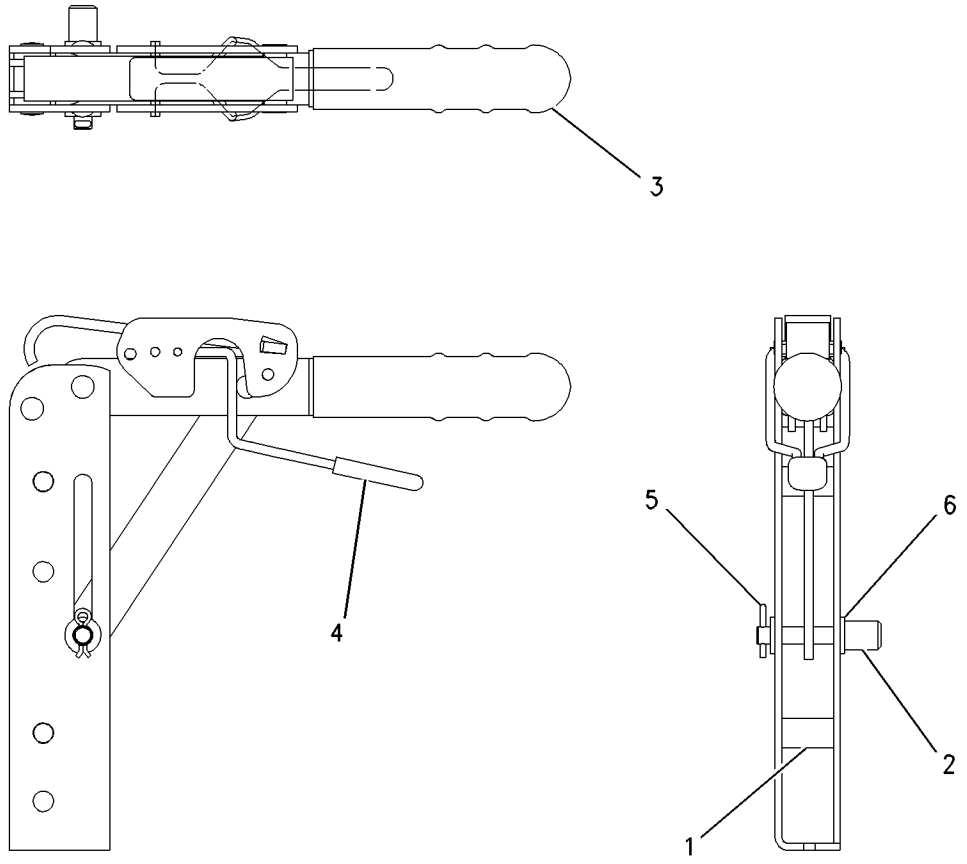

GRAPHIC #1 **<END>** g00729504

4E-8619 RESERVOIR GP-BRAKE

S/N: SHA1-UP

PART OF 217-9920 RESERVOIR GP-BRAKE

AN ATTACHMENT

SMCS-4291 **i02248636**

NOTE	REF NO	GRAPHIC REF	PART NUMBER	QTY	PART NAME 1 2 3 4 5 6 (PRODUCT LEVEL)	SEE PAGE
	1	1	**7N-9737**	1	HOUSING-PLUG	
	2	1	**7N-7780**	1	PIN-CONNECTOR	
	3	1	**7N-7779**	1	SOCKET-CONNECTOR	
F			**8R-6263**	1	INDICATOR AS	
					AVAILABLE REPAIR KIT(S):	
			159-7907	1	KIT-BRAKE RESERVOIR	
					(INCLUDES CAP & DIAPHRAM)	

F-NOT SHOWN

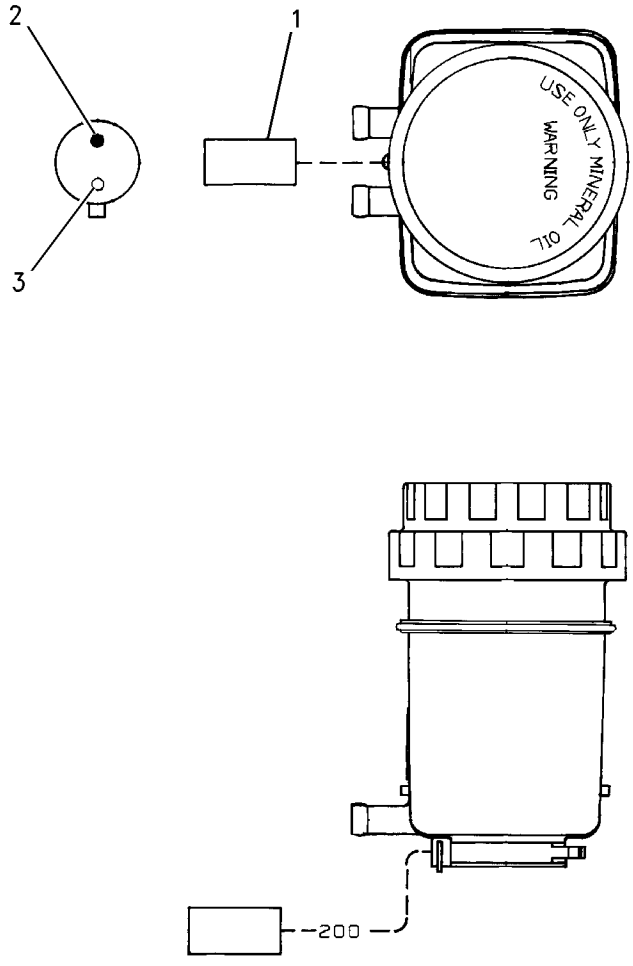

GRAPHIC #1 **<END>** g00906412

217-9920 RESERVOIR GP-BRAKE

S/N: SHA1-UP
PART OF 206-1638 CONTROL GP-SERVICE BRAKE
AN ATTACHMENT

SMCS-4291 **i02194835**

NOTE	REF NO	GRAPHIC REF	PART NUMBER	QTY	PART NAME 1 2 3 4 5 6 (PRODUCT LEVEL)	SEE PAGE
Y	1	1	**4E-8619**	1	RESERVOIR GP-BRAKE	279
	2	1	**254-5303**	1	BRACKET	
M	3	1	**8T-4189**	2	BOLT (M8X1.25X20-MM)	
	4	1	**8T-4224**	2	WASHER-HARD (8.8X16X2-MM THK)	

M-METRIC PART
Y-SEPARATE ILLUSTRATION

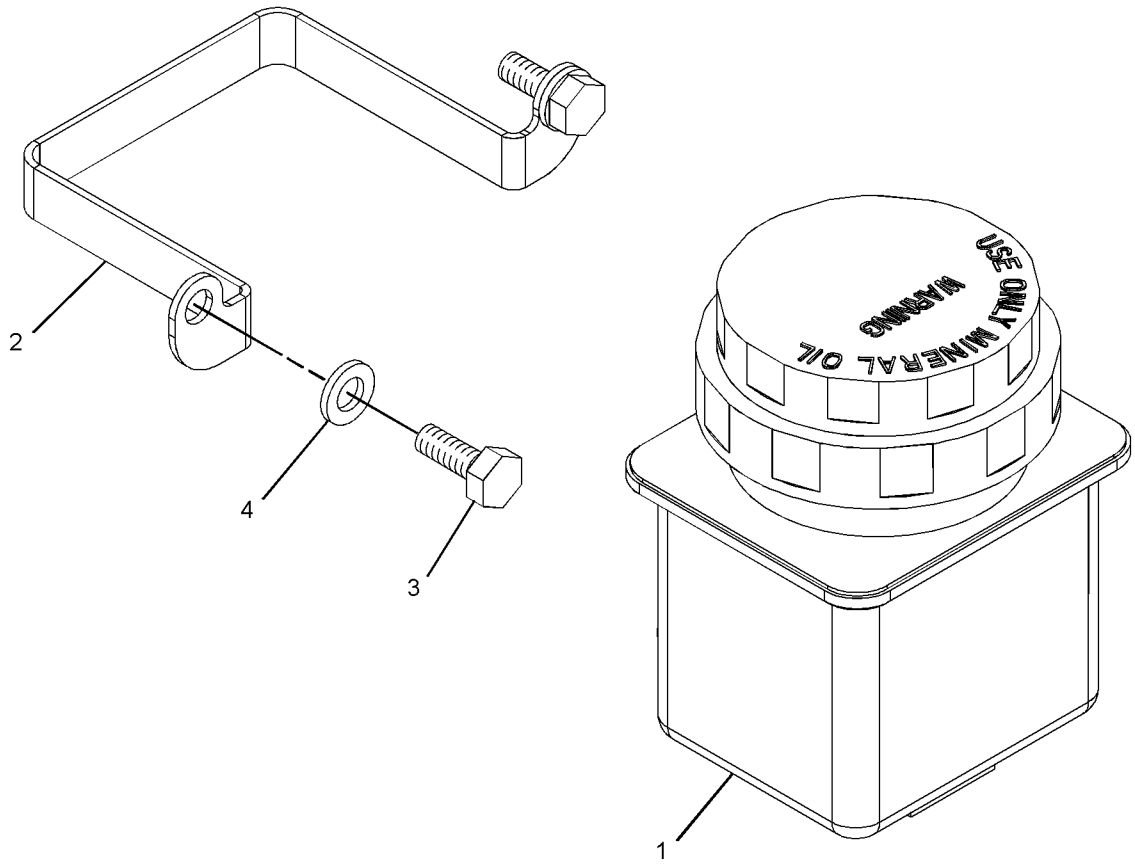

GRAPHIC #1 **<END>** g01109152

230-5745 AXLE GP-FRONT

S/N: SHA1-UP

PART OF 220-9182 DRIVE AR-BACKHOE LOADER

AN ATTACHMENT

SMCS-3282 **i02179623**

NOTE	REF NO	GRAPHIC REF	PART NUMBER	QTY	PART NAME 1 2 3 4 5 6 (PRODUCT LEVEL)	SEE PAGE
	1	1	**207-4254**	6	BOLT (STEERING CYLINDER)	
	2	1	**207-4255**	2	PLUG	
	3	1	**199-0648**	2	NUT-JAM (M16X2-THD)	
	4	1	**207-4258**	2	NUT (M20X1.5-THD)	
	5	1	**207-4260**	2	SEAL-O-RING	
	6	1	**219-8798**	2	SEAL-LIP TYPE	
M	7	1	**199-0683**	16	BOLT (M16X2X38-MM)	
	8	1	**207-4262**	2	BOLT (STEERING STOP)	
	9	1	**198-7825**	4	SEAL	
	10	1	**207-4266**	2	RETAINER	
	11	1	**198-7838**	4	PIN	
	12	1	**207-4268**	1	BEAM	
	13	1	**207-4271**	2	COVER	
Y	14	1	**231-0683**	2	FLANGE GP-WHEEL	216
	15	1	**231-0684**	1	HOUSING (RH)	
	16	1	**231-0685**	1	HOUSING (LH)	
	17	1	**207-4272**	2	TIE ROD GP	
					(EACH INCLUDES)	
		1	**204-3080**	1	BALL JOINT	
		1	**216-4459**	1	TIE ROD	
		1	**217-2885**	1	NUT	
	18	1	**154-5404**	2	BEARING	
M	19	1	**8T-4139**	6	BOLT (M12X1.75X30-MM)	
J	20	1	**214-5097**	1	CYLINDER GP-STEERING	
		1	**238-5254**	1	ROD	
		1	**238-5255**	2	CYLINDER HEAD	
	21	1	**198-7823**	4	BEARING AS	
B	22	1	**198-7841**	4	SHIM (0.15-MM THK)	
B	23	1	**198-7842**	4	SHIM (0.2-MM THK)	
B	24	1	**198-7843**	4	SHIM (0.5-MM THK)	
					AVAILABLE REPAIR KIT(S):	
J			**215-2023**	1	KIT-SEAL	
					(INCLUDES RINGS, SEALS, WASHERS & WIPERS)	

B-USE AS REQUIRED
J-KIT MARKED J AVAILABLE FOR PART MARKED J
M-METRIC PART
Y-SEPARATE ILLUSTRATION

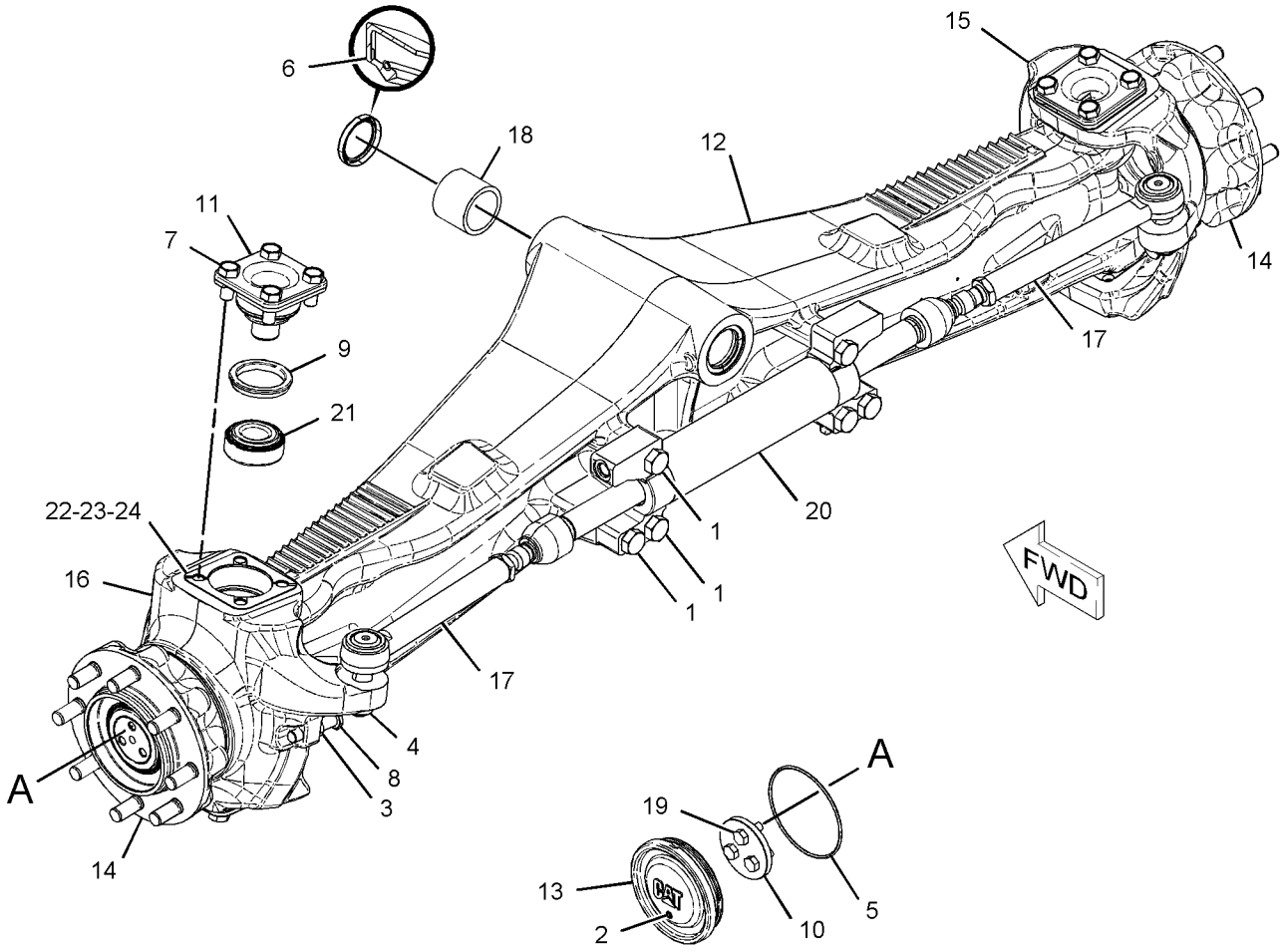

GRAPHIC #1 **<END>** g01118534

STEERING SYSTEM

206-1630 CONTROL GP-STEERING

S/N: SHA1-UP

PART OF 204-4161 CAB AR-ENCLOSED ROPS, 204-4160 CANOPY AR-OPEN ROPS AN ATTACHMENT

SMCS-4309, 4310, 4322, 4338, 4343 **i02380676**

NOTE	REF NO	GRAPHIC REF	PART NUMBER	QTY	PART NAME 1 2 3 4 5 6 (PRODUCT LEVEL)	SEE PAGE
	1	1	**1V-9385**	1	COVER-EMBLEM	
	2	1	**032-1557**	1	STEERING WHEEL	
	3	1	**206-1631**	1	COLUMN AS-STEERING	
	4	1	**206-1632**	1	PLATE AS	
	5	1	**214-4701**	1	SWITCH AS-ROCKER (HORN)	
		1	**111-7899**	1	GASKET	
	6	1	**7X-7729**	6	WASHER (11X25X3-MM THK)	
	7	1	**8T-4121**	4	WASHER-HARD (11X21X2.5-MM THK)	
M	8	1	**8T-4133**	2	NUT (M10X1.5-THD)	
M	9	1	**8T-4136**	4	BOLT (M10X1.5X25-MM)	
M	10	1	**8T-4195**	4	BOLT (M10X1.5X30-MM)	
M	11	1	**8T-8894**	1	BOLT-SOCKET HEAD (M10X1.5X20-MM)	
	12	1	**9K-5635**	3	SCREW-TAPPING (8-18X1-IN)	

M-METRIC PART

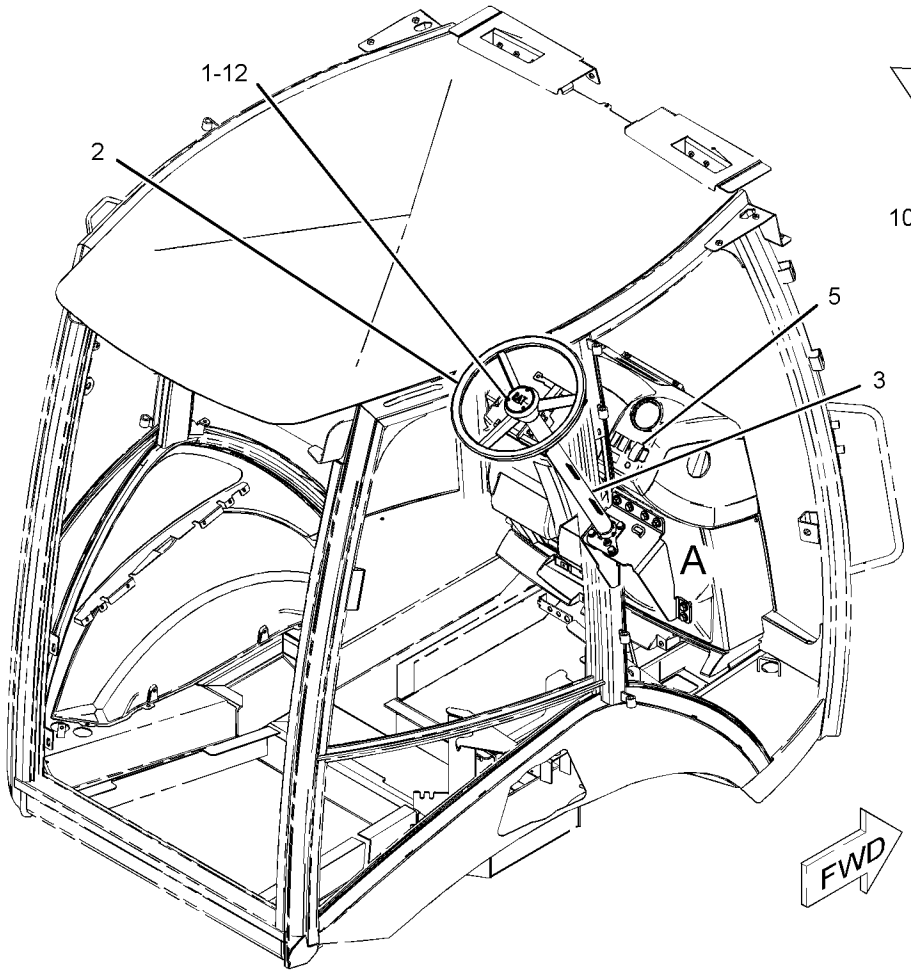

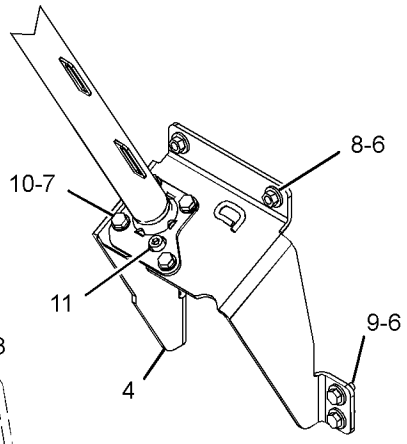

VIEW OF AREA A

GRAPHIC #1 **<END>** g01189226

STEERING SYSTEM

206-1633 CONTROL GP-STEERING–TILT

S/N: SHA1-UP

PART OF 204-4162, 228-4602 CAB AR-ENCLOSED ROPS, 204-4164 CANOPY AR-OPEN ROPS AN ATTACHMENT

SMCS-4309, 4310, 4322, 4338, 4343 **i02515694**

NOTE	REF NO	GRAPHIC REF	PART NUMBER	QTY	PART NAME 1 2 3 4 5 6 (PRODUCT LEVEL)	SEE PAGE
	1	1	**2T-3360**	1	BUTTON AS-HORN	
	2	1	**153-7368**	1	PLUG	
Y	3	1	**153-7369**	1	KNOB GP-STEERING	286
	4	1	**206-1632**	1	PLATE AS	
J	5	1	**206-1635**	1	COLUMN AS-STEERING	
M		1	**6V-8227**	1	NUT (M18X1.5-6-THD)	
	6	1	**217-8058**	1	WIRE AS	
	7	1	**227-1057**	1	PLUG-HOLE	
	8	1	**145-9291**	1	STEERING WHEEL AS	
	9	1	**7X-7729**	6	WASHER (11X25X3-MM THK)	
	10	1	**8T-4121**	4	WASHER-HARD (11X21X2.5-MM THK)	
M	11	1	**8T-4133**	2	NUT (M10X1.5-THD)	
M	12	1	**8T-4136**	4	BOLT (M10X1.5X25-MM)	
M	13	1	**8T-4195**	4	BOLT (M10X1.5X30-MM)	
M	14	1	**8T-6411**	1	SCREW-MACHINE (M6X1X12-MM)	
M	15	1	**8T-8894**	1	BOLT-SOCKET HEAD (M10X1.5X20-MM)	
					AVAILABLE REPAIR KIT(S):	
J			**254-9926**	1	KIT-TILT PEDAL	
					(INCLUDES SPRING, RING, BOLT, NUT & TILT LEVER)	
J			**254-9927**	1	KIT-PIVOT	
					(INCLUDES BUSHINGS, NUTS, PINS & WASHERS)	
J			**254-9925**	1	KIT-GAS SPRING	
					(INCLUDES PINS, RINGS & SPRING AS)	
J			**252-8059**	1	KIT-HORN	
					(INCLUDES HORN CONTACT AS, SCREWS & LOCKWASHERS)	

J-KITS MARKED J AVAILABLE FOR PART(S) MARKED J
M-METRIC PART
Y-SEPARATE ILLUSTRATION

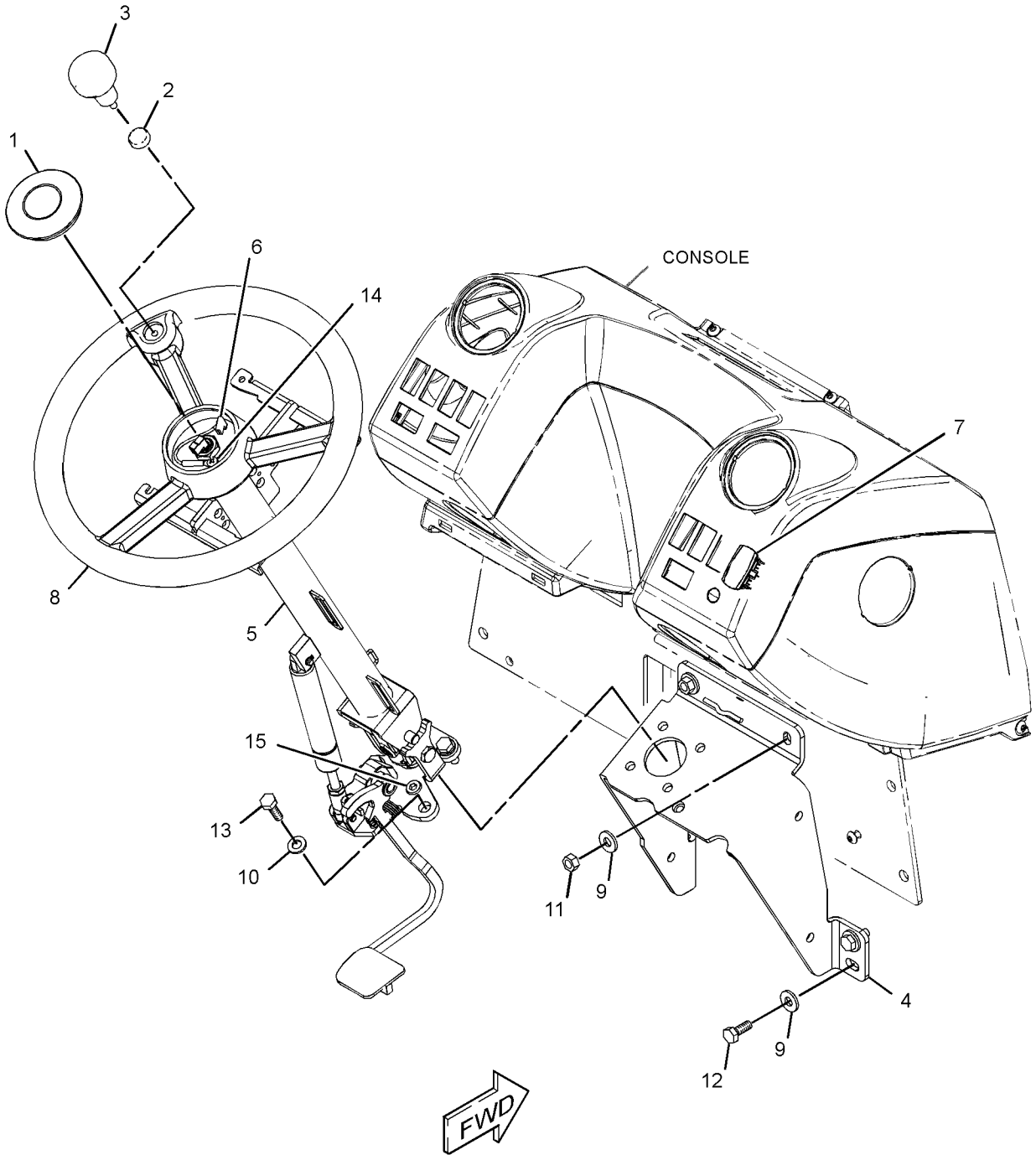

GRAPHIC #1 **<END>** g01233577

153-7369 KNOB GP-STEERING

S/N: SHA1-UP
STEERING WHEEL
PART OF 206-1633 CONTROL GP-STEERING
AN ATTACHMENT

SMCS-4309 **i01877136**

NOTE	REF NO	GRAPHIC REF	PART NUMBER	QTY	PART NAME 1 2 3 4 5 6 (PRODUCT LEVEL)	SEE PAGE
M	1	1	**8T-6869**	1	BOLT (M8X1.25X60-MM)	
	2	1	**8T-4224**	1	WASHER-HARD (8.8X16X2-MM THK)	
M	3	1	**5C-7261**	1	NUT (M8X1.25-THD)	
Z	4	1		1	KNOB	

M-METRIC PART
Z-NOT SERVICED SEPARATELY

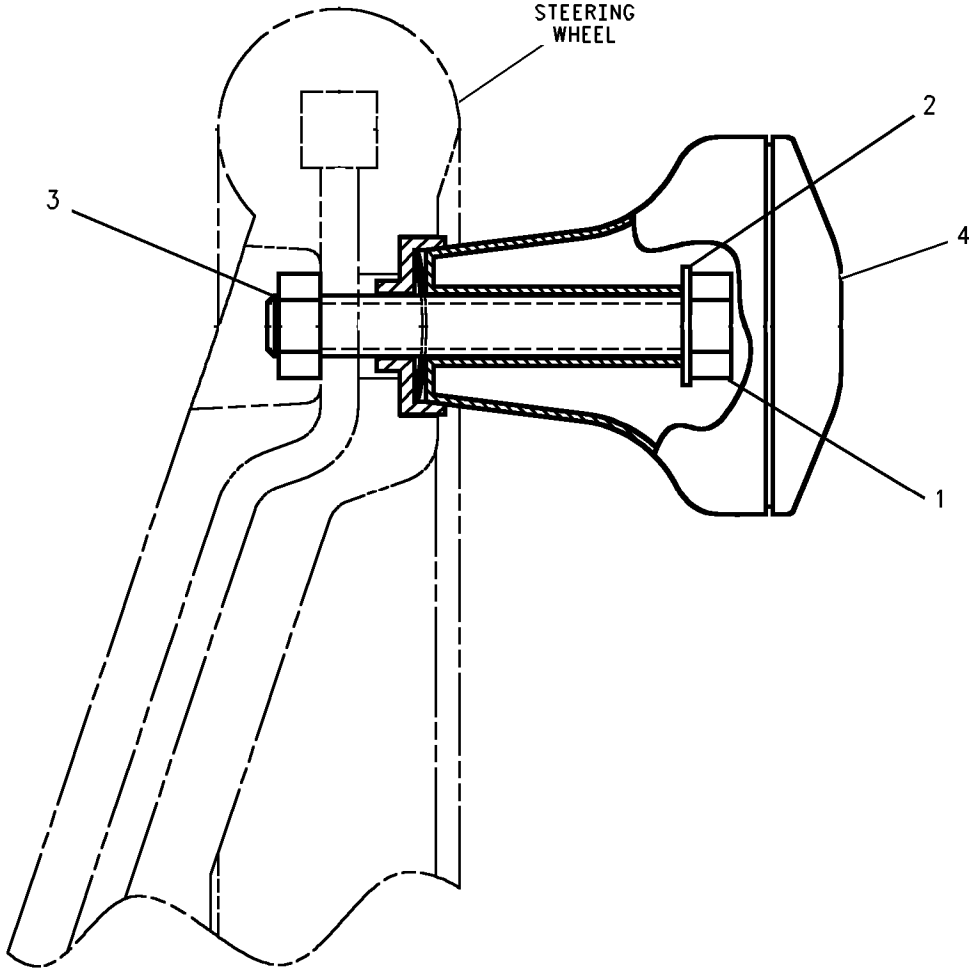

GRAPHIC #1 **<END>** g00955149

STEERING SYSTEM

219-5752 LINES GP-STEERING—2-WHEEL DRIVE

S/N: SHA1-UP
PART OF 220-9182 DRIVE AR-BACKHOE LOADER
AN ATTACHMENT

SMCS-4304 **i02658704**

NOTE	REF NO	GRAPHIC REF	PART NUMBER	QTY	PART NAME 1 2 3 4 5 6 (PRODUCT LEVEL)	SEE PAGE
E	1	1	**5P-1505**		HOSE (60-CM)	
	2	1	**5D-1026**	2	CLAMP-HOSE	
	3	1	**7K-1181**	2	STRAP-CABLE	
	4	1	*204-0317*	1	CONNECTOR AS	
		1	**3K-0360**	1	SEAL-O-RING	
		1	**6V-8397**	1	SEAL-O-RING	
		1	**092-3635**	1	CONNECTOR	
	5	1	**206-1652**	1	SEAL	
I	6	1	**215-3882**	1	HOSE AS	
I	7	1	**215-3883**	1	HOSE AS	
I	8	1	**217-8199**	1	HOSE AS	
I	9	1	**217-8200**	1	HOSE AS	
	10	1	**9R-3884**	1	SPACER (13X20X45-MM THK)	
	11	1	*148-8318*	2	CONNECTOR AS	
					(EACH INCLUDES)	
		1	**3K-0360**	1	SEAL-O-RING	
		1	**6V-8397**	1	SEAL-O-RING	
		1	**6V-8634**	1	CONNECTOR	
	12	1	*148-8336*	1	CONNECTOR AS	
		1	**3J-1907**	1	SEAL-O-RING	
		1	**6V-8397**	1	SEAL-O-RING	
		1	**6V-8636**	1	CONNECTOR	
	13	1	*148-8367*	3	ELBOW AS	
					(EACH INCLUDES)	
		1	**6V-8397**	1	SEAL-O-RING	
		1	**6V-9850**	1	ELBOW	
	14	1	*148-8369*	1	ELBOW AS	
		1	**3J-7354**	1	SEAL-O-RING	
		1	**4J-5477**	1	SEAL-O-RING	
		1	**6V-8628**	1	ELBOW	
	15	1	*148-8374*	2	ELBOW AS	
					(EACH INCLUDES)	
		1	**3K-0360**	1	SEAL-O-RING	
		1	**6V-8397**	1	SEAL-O-RING	
		1	**6V-8723**	1	ELBOW	
	16	1	*150-3026*	1	ELBOW AS	
		1	**3K-0360**	1	SEAL-O-RING	
		1	**6V-4292**	1	ELBOW	
	17	1	*150-3027*	1	ELBOW AS	
		1	**2M-9780**	1	SEAL-O-RING	
		1	**6V-5653**	1	ELBOW	
M	18	1	**8T-6466**	1	BOLT (M10X1.5X60-MM)	
	19	1	*164-5605*	1	CONNECTOR AS	
		1	**3K-0360**	1	SEAL-O-RING	
		1	**6V-8397**	1	SEAL-O-RING	
		1	**8T-0076**	1	CONNECTOR	
	20	1	**5P-4295**	5	CLIP	
	21	1	**8T-4121**	3	WASHER-HARD (11X21X2.5-MM THK)	
	22	1	**9M-8406**	1	CLIP	
M	23	1	**8T-4195**	2	BOLT (M10X1.5X30-MM)	

E-ORDER BY THE CENTIMETER
I-REFER TO HYDRAULIC INFORMATION SYSTEM
M-METRIC PART

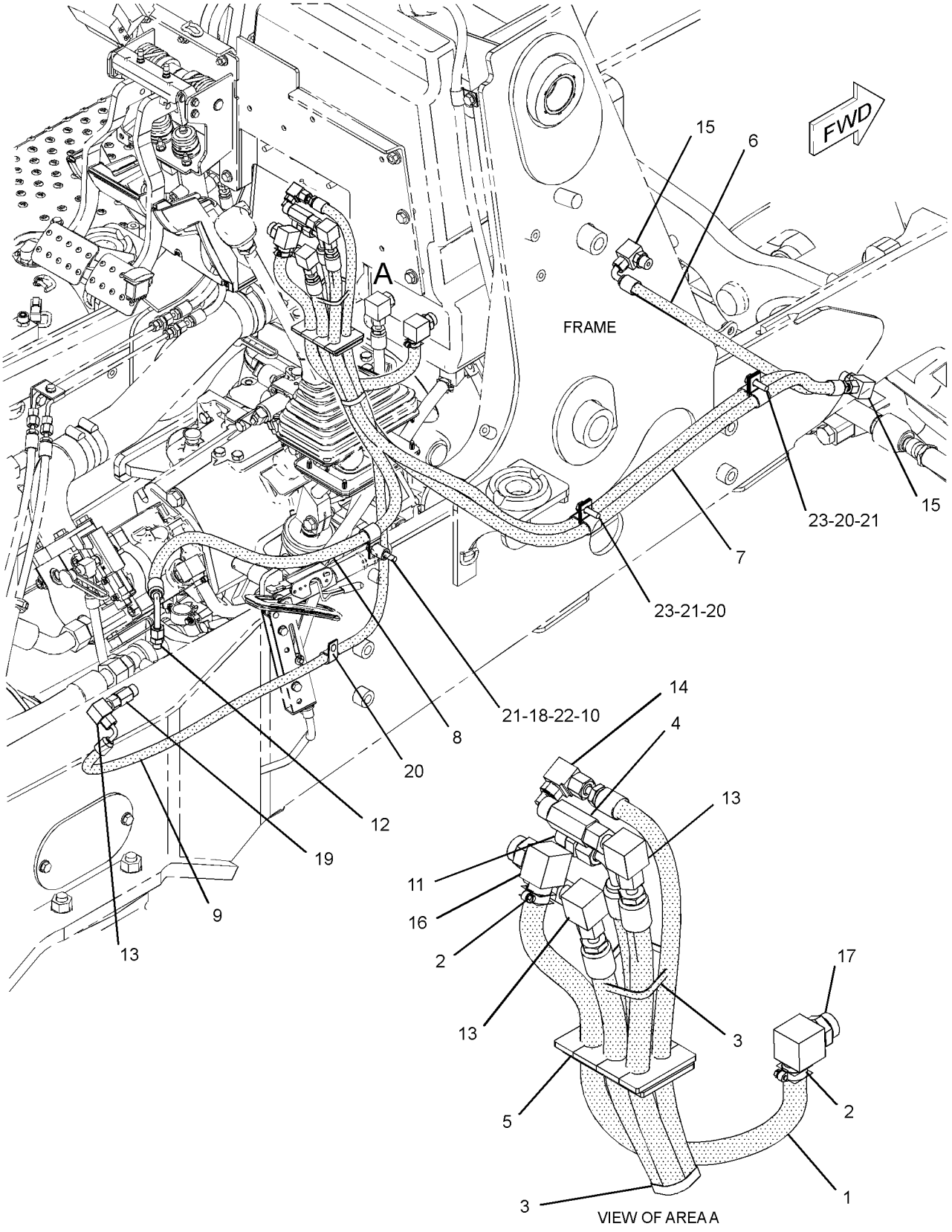

GRAPHIC #1 **<END>** g01351332

STEERING SYSTEM

219-5753 LINES GP-STEERING—ALL WHEEL DRIVE

S/N: SHA1-UP

PART OF 220-9183 DRIVE AR-BACKHOE LOADER

AN ATTACHMENT

SMCS-4304 **i02658734**

NOTE	REF NO	GRAPHIC REF	PART NUMBER	QTY	PART NAME 1 2 3 4 5 6 (PRODUCT LEVEL)	SEE PAGE
E	1	1	**5P-1505**		HOSE (60-CM)	
	2	1	**5D-1026**	2	CLAMP-HOSE	
	3	1	**7K-1181**	2	STRAP-CABLE	
	4	1	*204-0317*	1	CONNECTOR AS	
		1	**3K-0360**	1	SEAL-O-RING	
		1	**6V-8397**	1	SEAL-O-RING	
		1	**092-3635**	1	CONNECTOR	
	5	1	**206-1652**	1	SEAL	
M	6	1	**8T-4195**	2	BOLT (M10X1.5X30-MM)	
	7	1	**9M-8406**	1	CLIP	
I	8	1	**217-8199**	1	HOSE AS	
I	9	1	**217-8200**	1	HOSE AS	
	10	1	**9R-3884**	1	SPACER (13X20X45-MM THK)	
	11	1	*148-8318*	2	CONNECTOR AS	
					(EACH INCLUDES)	
		1	**3K-0360**	1	SEAL-O-RING	
		1	**6V-8397**	1	SEAL-O-RING	
		1	**6V-8634**	1	CONNECTOR	
	12	1	*148-8336*	1	CONNECTOR AS	
		1	**3J-1907**	1	SEAL-O-RING	
		1	**6V-8397**	1	SEAL-O-RING	
		1	**6V-8636**	1	CONNECTOR	
	13	1	*148-8367*	4	ELBOW AS	
					(EACH INCLUDES)	
		1	**6V-8397**	1	SEAL-O-RING	
		1	**6V-9850**	1	ELBOW	
	14	1	*148-8369*	1	ELBOW AS	
		1	**3J-7354**	1	SEAL-O-RING	
		1	**4J-5477**	1	SEAL-O-RING	
		1	**6V-8628**	1	ELBOW	
	15	1	*148-8383*	2	ELBOW AS	
					(EACH INCLUDES)	
		1	**3K-0360**	1	SEAL-O-RING	
		1	**6V-8397**	1	SEAL-O-RING	
		1	**8T-1683**	1	ELBOW	
	16	1	*150-3026*	1	ELBOW AS	
		1	**3K-0360**	1	SEAL-O-RING	
		1	**6V-4292**	1	ELBOW	
	17	1	*150-3027*	1	ELBOW AS	
		1	**2M-9780**	1	SEAL-O-RING	
		1	**6V-5653**	1	ELBOW	
M	18	1	**8T-6466**	1	BOLT (M10X1.5X60-MM)	
	19	1	*164-5605*	1	CONNECTOR AS	
		1	**3K-0360**	1	SEAL-O-RING	
		1	**6V-8397**	1	SEAL-O-RING	
		1	**8T-0076**	1	CONNECTOR	
	20	1	**5P-4295**	5	CLIP	
	21	1	**5P-7462**	1	CLIP (SLOT)	
	22	1	**5P-7463**	1	CLIP (TAB)	
	23	1	**6V-0683**	1	GROMMET	
	24	1	**8T-4121**	4	WASHER-HARD (11X21X2.5-MM THK)	
M	25	1	**8T-4136**	1	BOLT (M10X1.5X25-MM)	
	26	1	**217-8195**	1	HOSE AS	
	27	1	**217-8197**	1	HOSE AS	

219-5753 **LINES GP-STEERING** *(contd.)* **i02658734**

E-ORDER BY THE CENTIMETER
I-REFER TO HYDRAULIC INFORMATION SYSTEM
M-METRIC PART

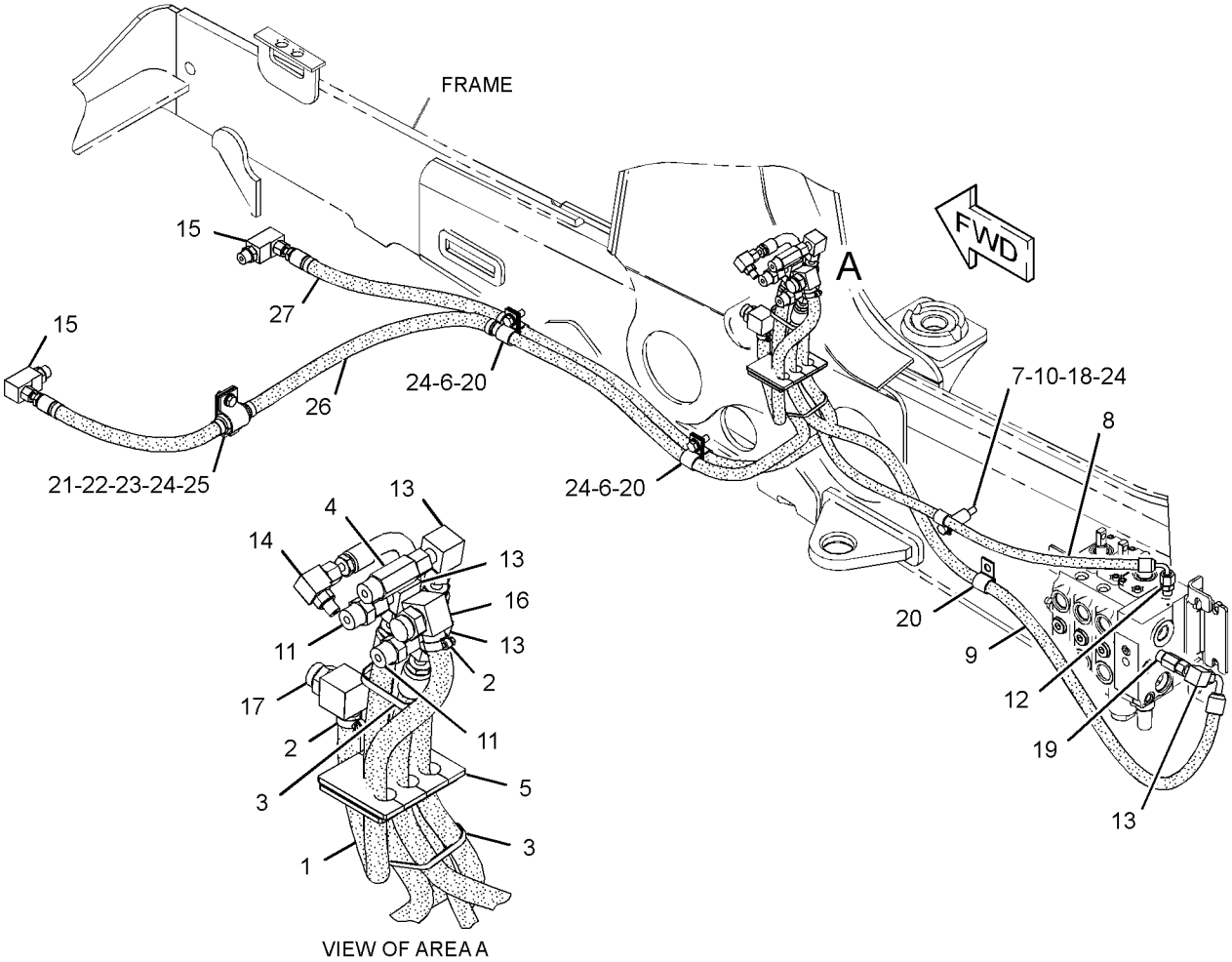

GRAPHIC #1 **<END>** g01338668

247-7868 PUMP GP-METERING

S/N: SHA1-UP

PART OF 214-2198 HYDRAULIC AR

SMCS-4312 **i02455498**

NOTE	REF NO	GRAPHIC REF	PART NUMBER	QTY	PART NAME 1 2 3 4 5 6 (PRODUCT LEVEL)	SEE PAGE
	1	1	**7X-9866**	1	SEAL	
	2	1	**054-6882**	1	BEARING AS	
	3	1	**054-6733**	1	RING	
	4	1	**7X-9873**	7	WASHER	
					PARTS SHOWN IN GRAPHIC(S) WITHOUT A REFERENCE NUMBER ARE NOT SERVICED SEPARATELY	
					AVAILABLE REPAIR KIT(S):	
			214-7469	1	KIT-SEAL (METERING PUMP, STEERING)	
					(CONTAINS RING, WASHERS & SEALS)	

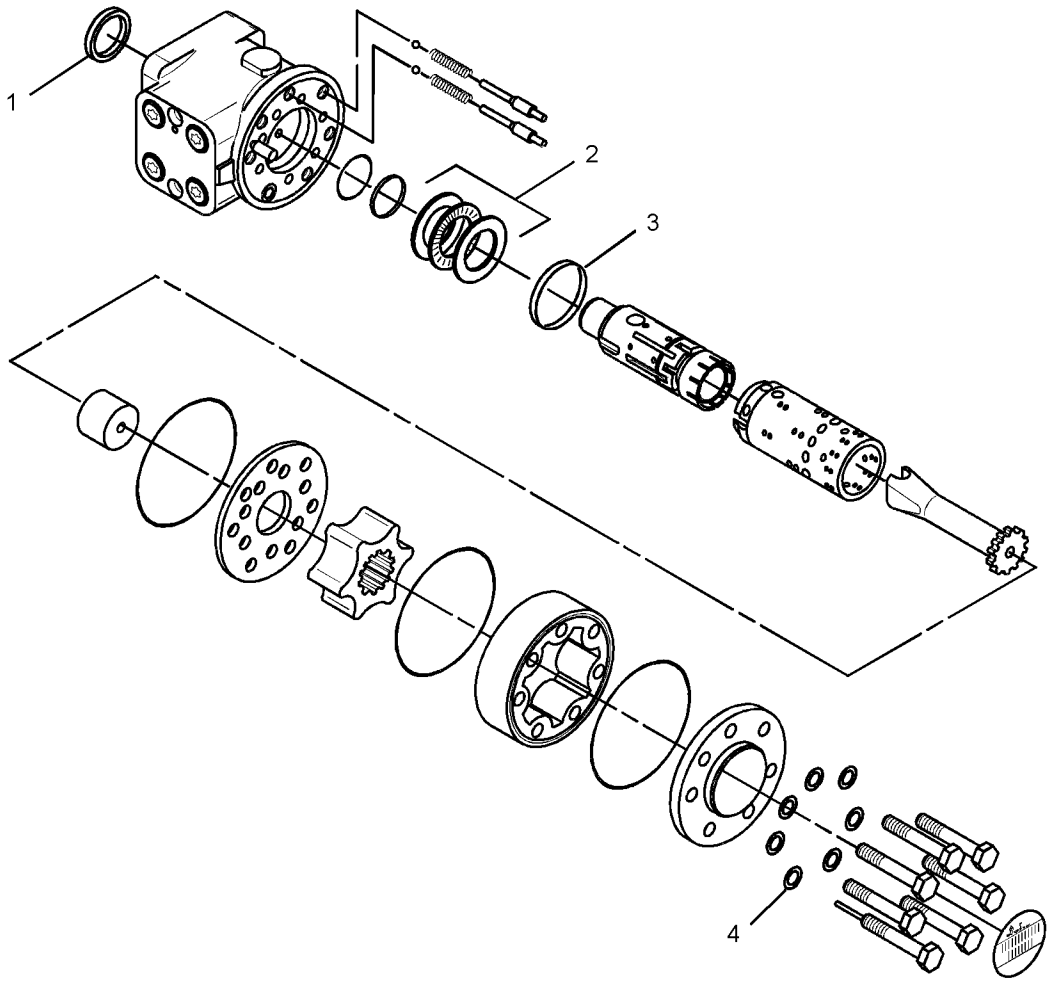

GRAPHIC #1 **<END>** g01228426

FRAME AND BODY

253-0784 BOX GP-BATTERY

S/N: SHA1-UP

PART OF 213-9284 CHASSIS AR

SMCS-7257 **i02772589**

NOTE	REF NO	GRAPHIC REF	PART NUMBER	QTY	PART NAME 1 2 3 4 5 6 (PRODUCT LEVEL)	SEE PAGE
Y	1	1	**118-6842**	1	DOOR GP-BATTERY	296
	2	1	**118-6854**	1	TREAD	
	3	1	**164-3876**	1	STEP AS	
M		1	**8T-3612**	4	NUT-WELD (M8X1.25-THD)	
	4	1	**245-6109**	1	PLATE AS	
	5	1	**253-0783**	1	BOX AS-BATTERY	
	6	1	**5P-4116**	6	WASHER-HARD (8.8X20.5X2-MM THK)	
	7	1	**5G-2934**	1	PLUG	
M	8	1	**8T-4183**	4	BOLT (M12X1.75X40-MM)	
M	9	1	**8T-4189**	9	BOLT (M8X1.25X20-MM)	
M	10	1	**8T-4200**	7	BOLT (M8X1.25X16-MM)	
	11	1	**8T-4223**	5	WASHER-HARD (13.5X25.5X3-MM THK)	
	12	1	**8T-4224**	10	WASHER-HARD (8.8X16X2-MM THK)	
M	13	1	**8T-7963**	1	LOCKNUT (M8X1.25-THD)	
	14	1	**295-8472**	1	BRACKET AS	

M-METRIC PART
Y-SEPARATE ILLUSTRATION

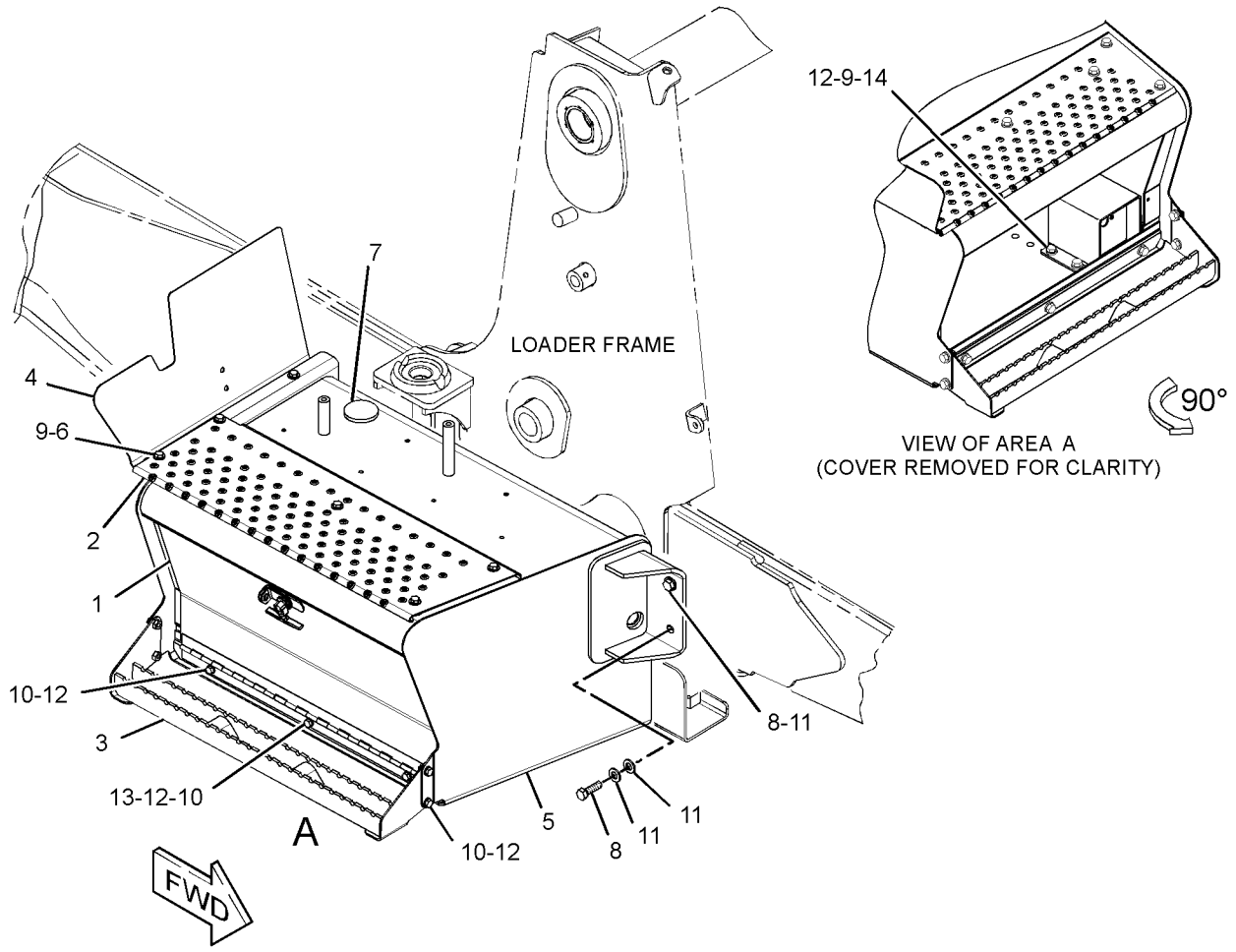

GRAPHIC #1 **<END>** g01388013

FRAME AND BODY

211-3649 COUNTERWEIGHT GP

S/N: SHA1-UP
115-KG (250-LB)
AN ATTACHMENT

SMCS-7056 **i02110486**

NOTE	REF NO	GRAPHIC REF	PART NUMBER	QTY	PART NAME 1 2 3 4 5 6 (PRODUCT LEVEL)	SEE PAGE
	1	1	**214-3254**	1	COUNTERWEIGHT	
M	2	1	**8C-3290**	2	BOLT (M24X3X150-MM)	
	3	1	**8T-4167**	2	WASHER-HARD (26X44X4-MM THK)	

M-METRIC PART

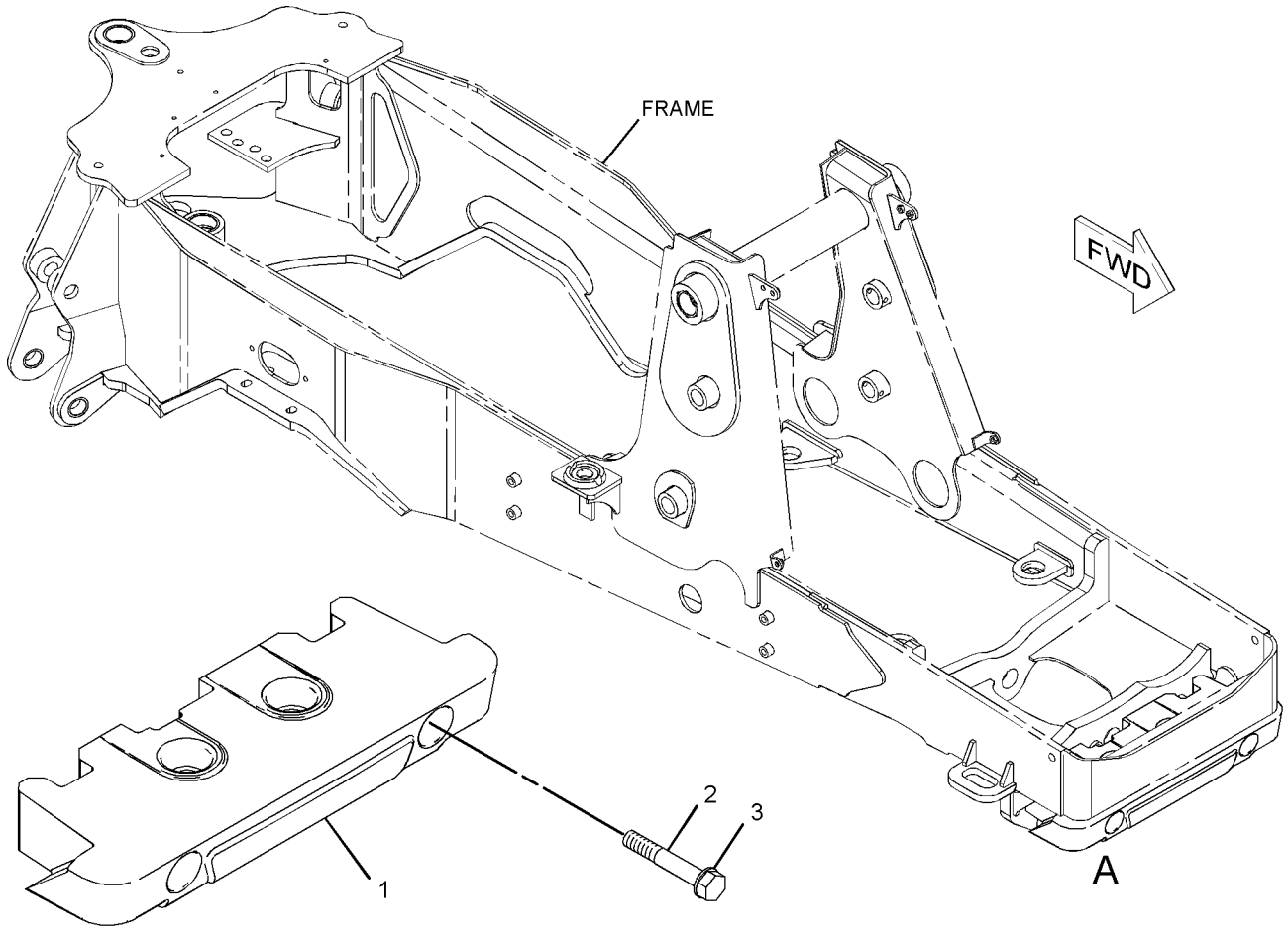

VIEW OF AREA A

GRAPHIC #1 **<END>** g01074968

252-9984 COUNTERWEIGHT GP

S/N: SHA1-UP
485-KG (1070 LB)
AN ATTACHMENT

SMCS-7056 **i02116848**

NOTE	REF NO	GRAPHIC REF	PART NUMBER	QTY	PART NAME 1 2 3 4 5 6 (PRODUCT LEVEL)	SEE PAGE
	1	1	**252-9983**	1	COUNTERWEIGHT GP	
M		1	**8T-4001**	2	NUT (M24X3-THD)	
		1	**8T-4167**	2	WASHER-HARD (26X44X4-MM THK)	
M		1	**127-4834**	2	BOLT (M24X3X340-MM)	
M	2	1	**8C-3290**	4	BOLT (M24X3X150-MM)	
	3	1	**8T-4167**	4	WASHER-HARD (26X44X4-MM THK)	

M-METRIC PART

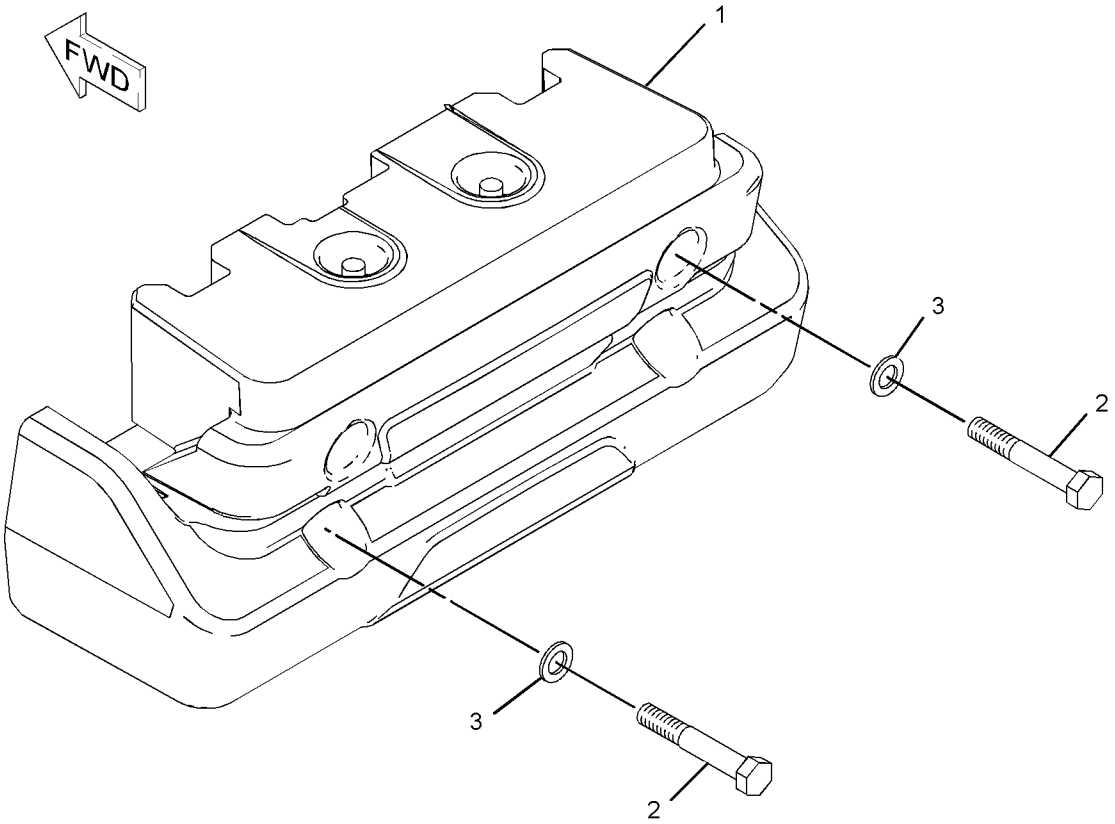

GRAPHIC #1 **<END>** g01084203

FRAME AND BODY

252-9986 COUNTERWEIGHT GP

S/N: SHA1-UP
235-KG (515-LB)
AN ATTACHMENT

SMCS-7056 **i02406812**

NOTE	REF NO	GRAPHIC REF	PART NUMBER	QTY	PART NAME 1 2 3 4 5 6 (PRODUCT LEVEL)	SEE PAGE
	1	1	*252-9985*	1	COUNTERWEIGHT GP	
M		1	**7X-2476**	2	BOLT (M24X3X220-MM)	
M		1	**8T-4001**	2	NUT (M24X3-THD)	
		1	**8T-4167**	2	WASHER-HARD (26X44X4-MM THK)	
		1	**214-3254**	2	COUNTERWEIGHT	
M	2	1	**8C-3290**	4	BOLT (M24X3X150-MM)	
	3	1	**8T-4167**	4	WASHER-HARD (26X44X4-MM THK)	

M-METRIC PART

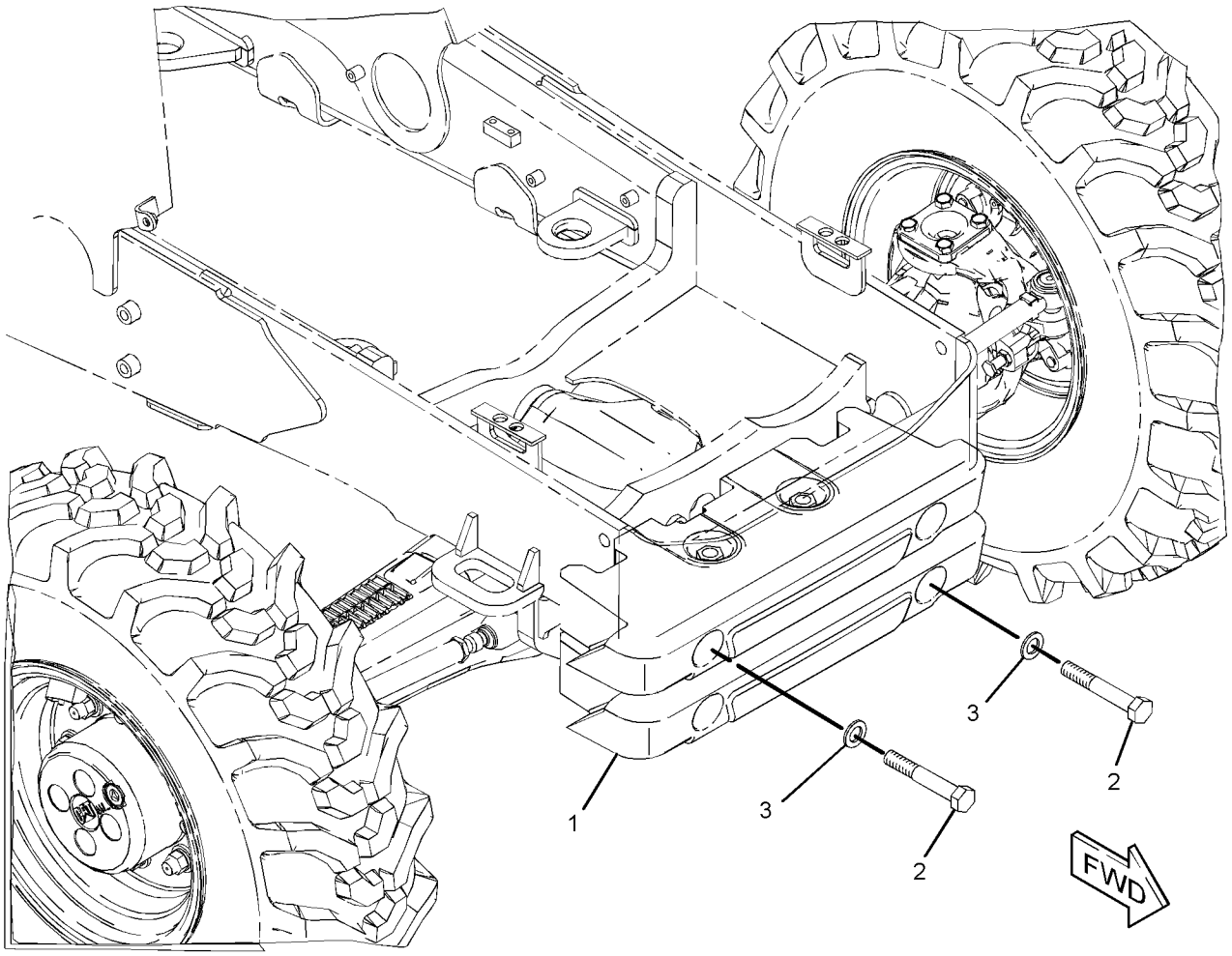

GRAPHIC #1 **<END>** g01202979

118-6842 DOOR GP-BATTERY

S/N: SHA1-UP

PART OF 253-0784 BOX GP-BATTERY

SMCS-7273 **i02249051**

NOTE	REF NO	GRAPHIC REF	PART NUMBER	QTY	PART NAME 1 2 3 4 5 6 (PRODUCT LEVEL)	SEE PAGE
	1	1	**8C-8522**	1	PAWL-LATCH	
	2	1	**129-4741**	1	LATCH AS-T-BAR	
	3	1	**151-2963**	1	DOOR AS	
M	4	1	**6V-7743**	2	LOCKNUT (M6X1-THD)	
M	5	1	**8T-4133**	2	NUT (M10X1.5-THD)	
	6	1	**8T-4205**	2	WASHER-HARD (7.2X14.5X2-MM THK)	

M-METRIC PART

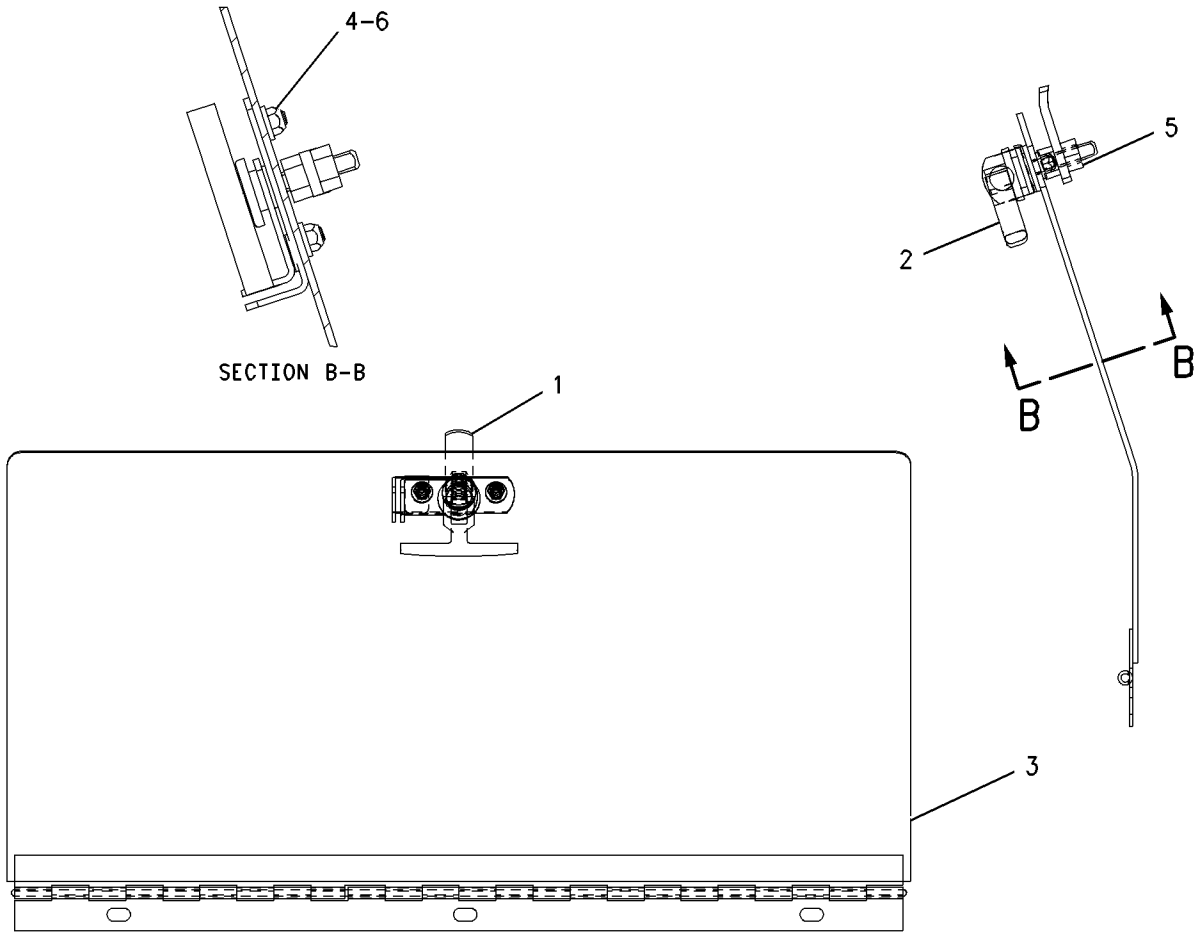

GRAPHIC #1 **<END>** g00739059

249-9328 EXTENSION GP-FENDER

S/N: SHA1-UP
AN ATTACHMENT

SMCS-7252 **i02446010**

NOTE	REF NO	GRAPHIC REF	PART NUMBER	QTY	PART NAME 1 2 3 4 5 6 (PRODUCT LEVEL)	SEE PAGE
	1	1	**249-9329**	1	EXTENSION-FENDER (LH)	
	2	1	**249-9330**	1	EXTENSION-FENDER (RH)	
	3	1	**251-4889**	8	WASHER-HARD	
	4	1	**251-4890**	4	SCREW-MACHINE	
	5	1	**251-4891**	4	LOCKNUT	

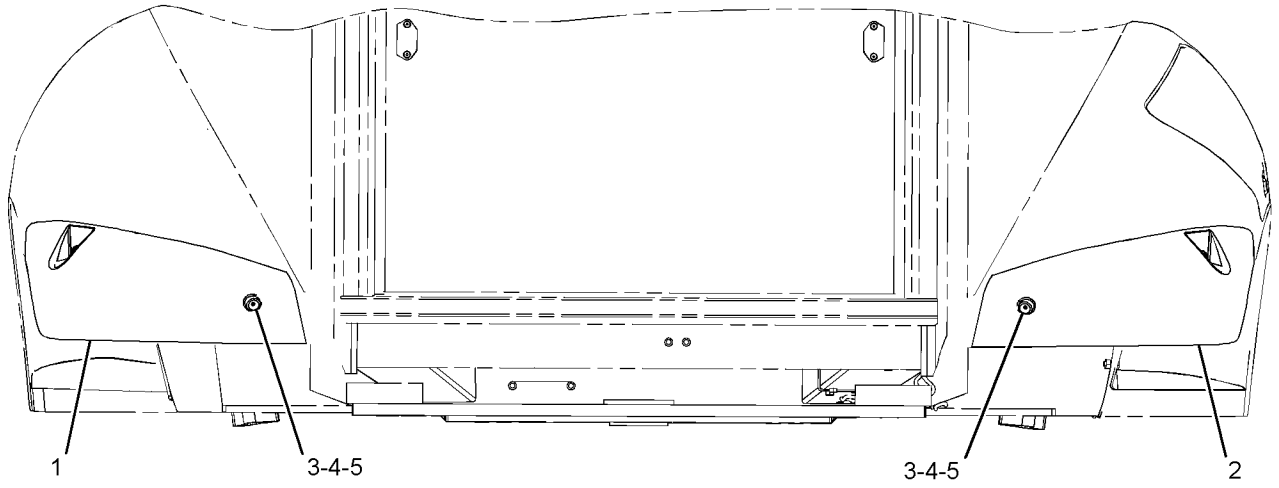

REAR VIEW

GRAPHIC #1 **<END>** g01231585

FRAME AND BODY

201-3954 FENDER GP-FRONT

S/N: SHA1-UP
FOR USE WITH AWD MACHINES ONLY
AN ATTACHMENT

SMCS-7252 **i02597587**

NOTE	REF NO	GRAPHIC REF	PART NUMBER	QTY	PART NAME 1 2 3 4 5 6 (PRODUCT LEVEL)	SEE PAGE
	1	1	**162-4004**	2	FENDER (FRONT)	
M	2	1	**199-0783**	4	BOLT (M16X2X38-MM)	
	3	1	**222-1801**	1	BRACKET AS (LH)	
	4	1	**222-1802**	1	BRACKET AS (RH)	
M	5	1	**6V-7744**	4	LOCKNUT (M10X1.15-THD)	
	6	1	**8T-4121**	4	WASHER-HARD (11X21X2.5-MM THK)	
	7	1	**8T-4122**	12	WASHER-HARD (17X32X3.5-MM THK)	
M	8	1	**8T-4195**	4	BOLT (M10X1.5X30-MM)	
	9	1	**8T-4222**	4	WASHER-PLATED (11X32X2.5-MM THK)	
M	10	1	**8T-4778**	4	LOCKNUT (M16X2-THD)	

M-METRIC PART

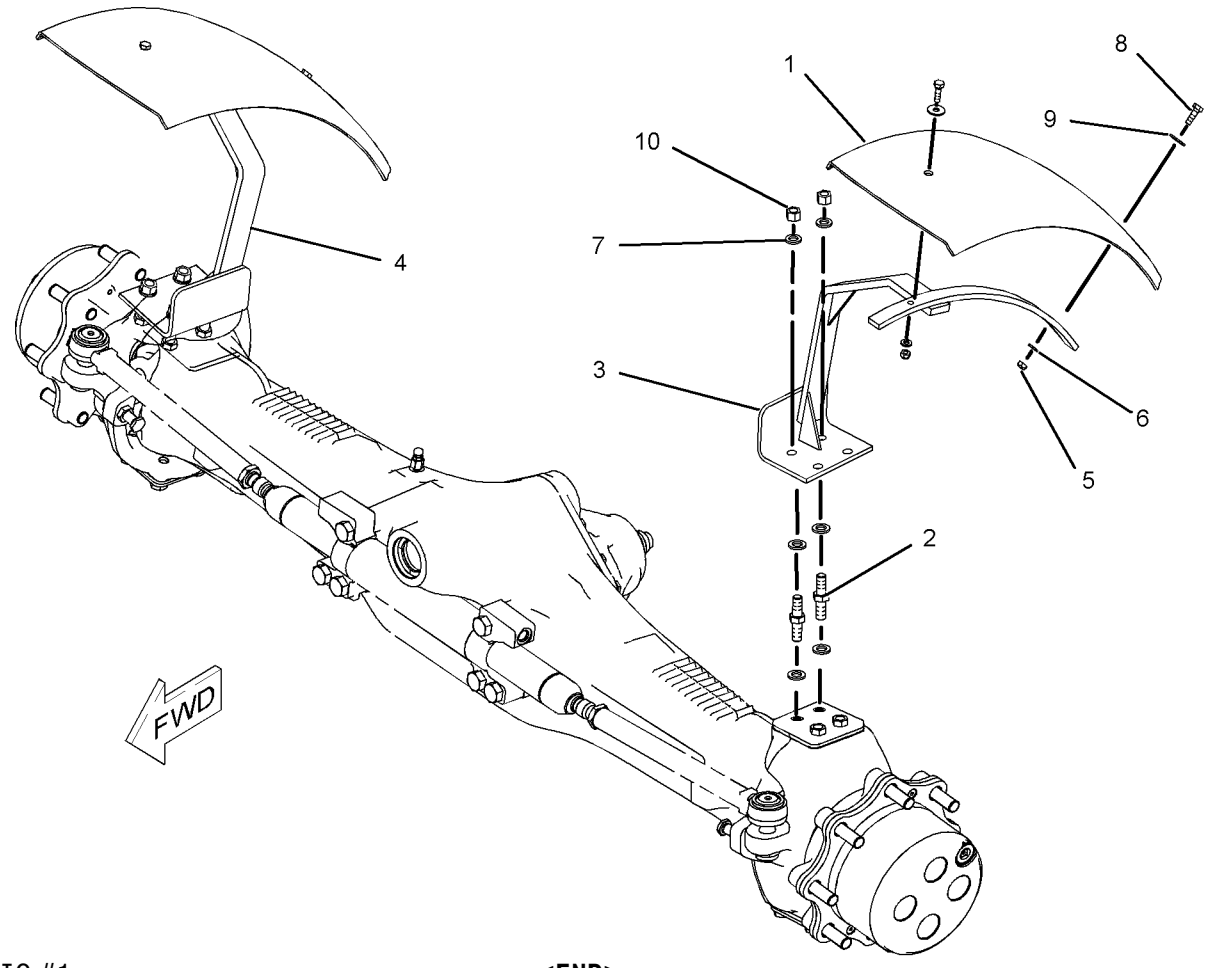

GRAPHIC #1 **<END>** g01027709

213-1891 FENDER GP-REAR

S/N: SHA1-UP
PART OF 204-4161, 204-4162, 228-4602 CAB AR-ENCLOSED ROPS, 204-4160, 204-4164 CANOPY AR-OPEN ROPS
AN ATTACHMENT

SMCS-7252 **i02531023**

NOTE	REF NO	GRAPHIC REF	PART NUMBER	QTY	PART NAME 1 2 3 4 5 6 (PRODUCT LEVEL)	SEE PAGE
M	1	1	**8T-5093**	4	BOLT-LOCKING (M8X1.25X25-MM)	
E	2	1	**244-3113**		SEAL (203-CM EACH)	
	3	1	**116-5763**	1	CLIP-SPRING	
M	4	1	**193-9055**	4	SCREW-HEX FLANGE (M4X1.79X17-MM)	
	5	1	**211-3783**	1	FENDER-REAR (LH)	
	6	1	**213-1881**	1	FENDER-REAR (RH)	
	7	1	**213-1884**	1	CLIP	
	8	1	**213-1887**	1	COVER-FENDER	
	9	1	**213-1889**	1	PLATE	
	10	1	**225-0060**	1	GUARD	
J	11	1	**226-0291**	1	LOCK AS	
	12	1	**227-5556**	1	PLATE	
M	13	1	**127-2170**	1	SCREW-TRUSS HEAD (M8X1.25X20-MM)	
	14	1	**156-0283**	20	WASHER-HARD (8.4X35X2.5-MM THK)	
M	15	1	**5C-7261**	4	NUT (M8X1.25-THD)	
M	16	1	**8T-5091**	12	BOLT (M8X1.25X20-MM)	
E	17	1	**220-0738**		SEAL (74-CM)	
E	18	1	**220-0738**		SEAL (118-CM)	

E-ORDER BY THE CENTIMETER
J-REQUIRES 5P8500 KEY
M-METRIC PART

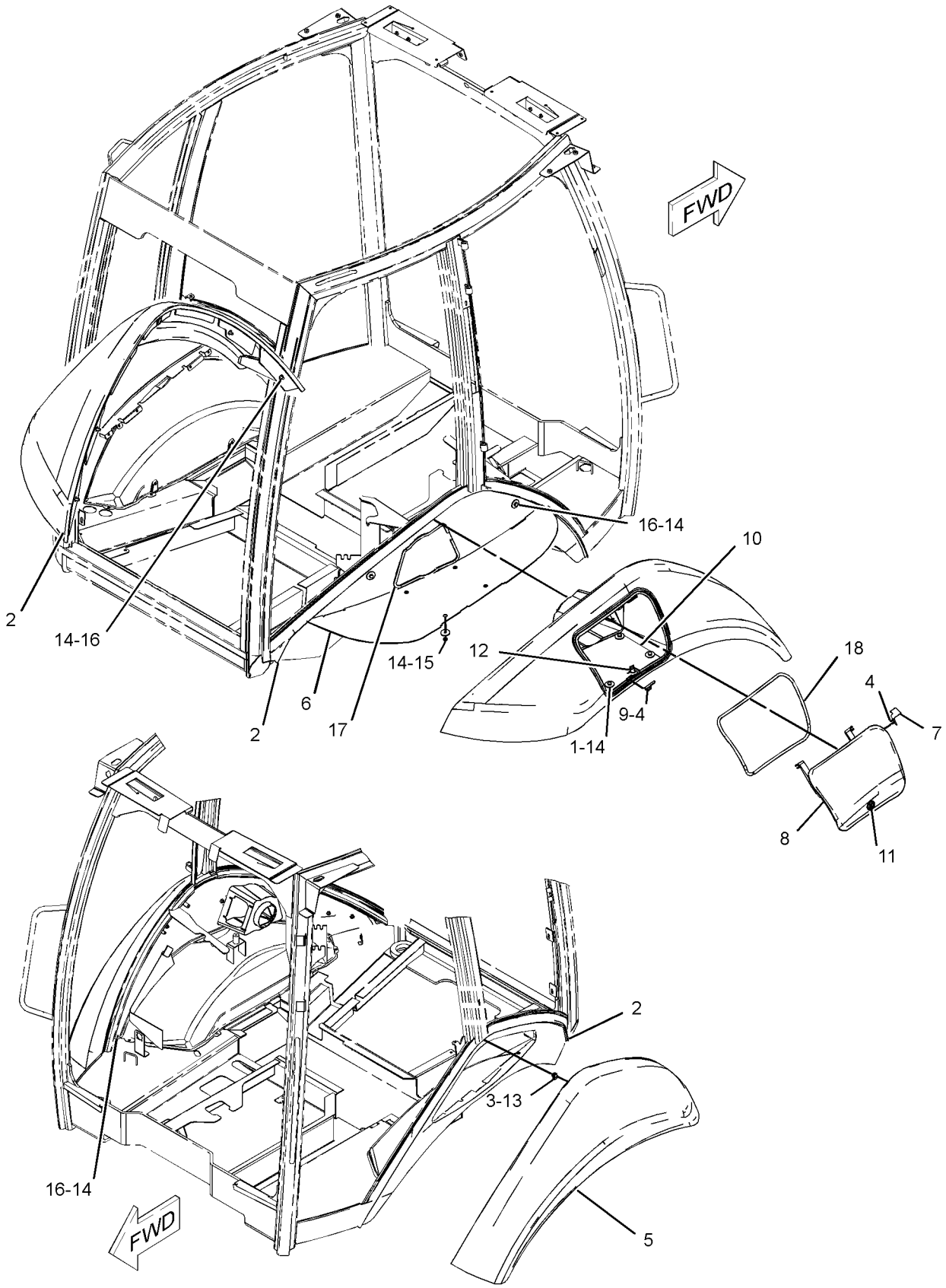

GRAPHIC #1 **<END>** g01275112

223-3967 FLOORPLATE GP–CANOPY

S/N: SHA1-UP
PART OF 204-4160, 204-4164 CANOPY AR-OPEN ROPS
AN ATTACHMENT

SMCS-7265 **i02452606**

NOTE	REF NO	GRAPHIC REF	PART NUMBER	QTY	PART NAME 1 2 3 4 5 6 (PRODUCT LEVEL)	SEE PAGE
	1	1	**206-1832**	1	PLATE AS	
	2	1	**206-1835**	1	PLATE AS	
	3	1	**206-1845**	1	PLATE AS	
	4	1	**223-3962**	1	PLATE AS	
	5	1	**223-4546**	1	PLATE AS	
	6	1	**223-8267**	1	PLATE AS	
	7	1	**232-2865**	1	PLATE AS	
	8	1	**232-2869**	1	PLATE AS	
	9	1	**232-2870**	1	PLATE AS	
	10	1	**9X-2038**	43	WASHER (7X19X2-MM THK)	
M	11	1	**9X-2043**	43	SCREW-TRUSS HEAD (M6X1X14-MM)	

M-METRIC PART

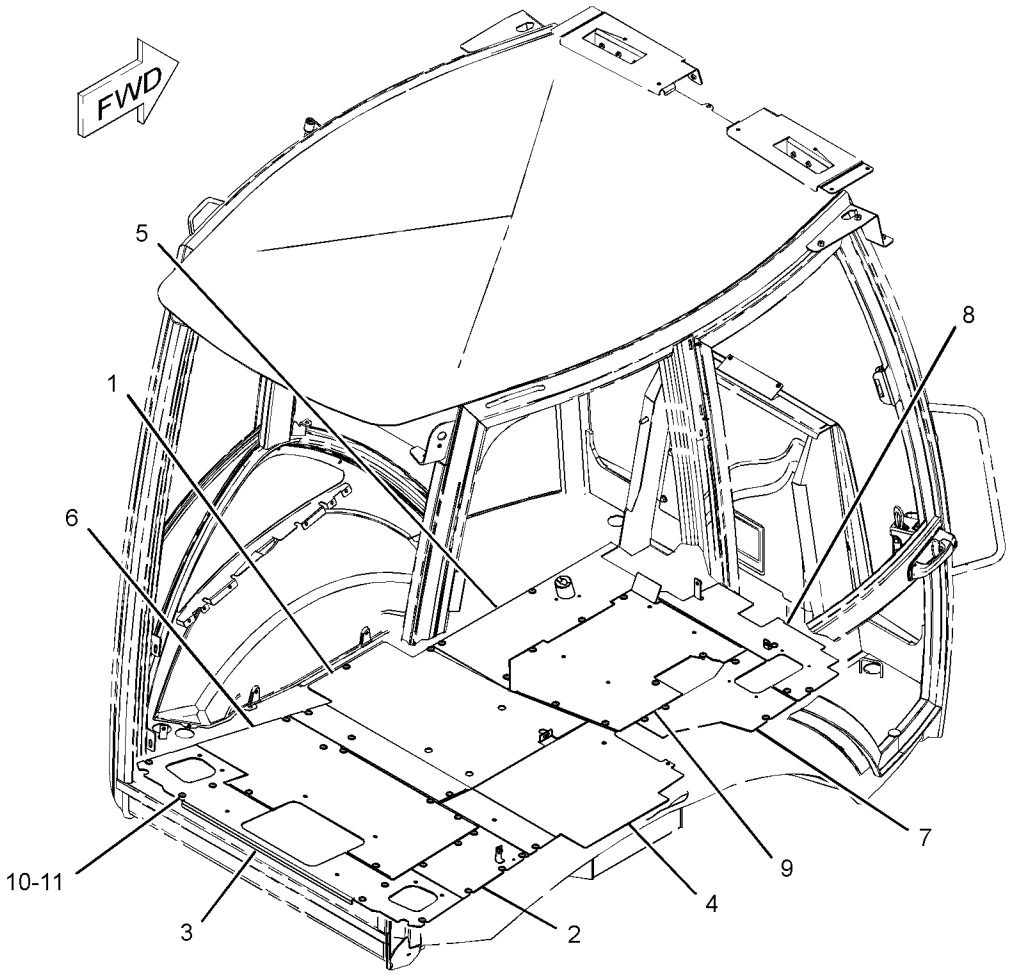

GRAPHIC #1 **<END>** g01233084

223-3968 FLOORPLATE GP–CAB

S/N: SHA1-UP

PART OF 204-4161, 204-4162, 228-4602 CAB AR-ENCLOSED ROPS

AN ATTACHMENT

SMCS-7265 **i02445867**

NOTE	REF NO	GRAPHIC REF	PART NUMBER	QTY	PART NAME 1 2 3 4 5 6 (PRODUCT LEVEL)	SEE PAGE
	1	1	**206-1832**	1	PLATE AS	
	2	1	**206-1835**	1	PLATE AS	
	3	1	**206-1845**	1	PLATE AS	
	4	1	**206-1850**	1	PLATE AS	
	5	1	**223-3964**	1	PLATE AS	
	6	1	**223-4546**	1	PLATE AS	
	7	1	**223-8267**	1	PLATE AS	
	8	1	**232-2865**	1	PLATE AS	
	9	1	**232-2869**	1	PLATE AS	
	10	1	**232-2870**	1	PLATE AS	
	11	1	**9X-2038**	43	WASHER (7X19X2-MM THK)	
M	12	1	**9X-2043**	47	SCREW-TRUSS HEAD (M6X1X14-MM)	

M-METRIC PART

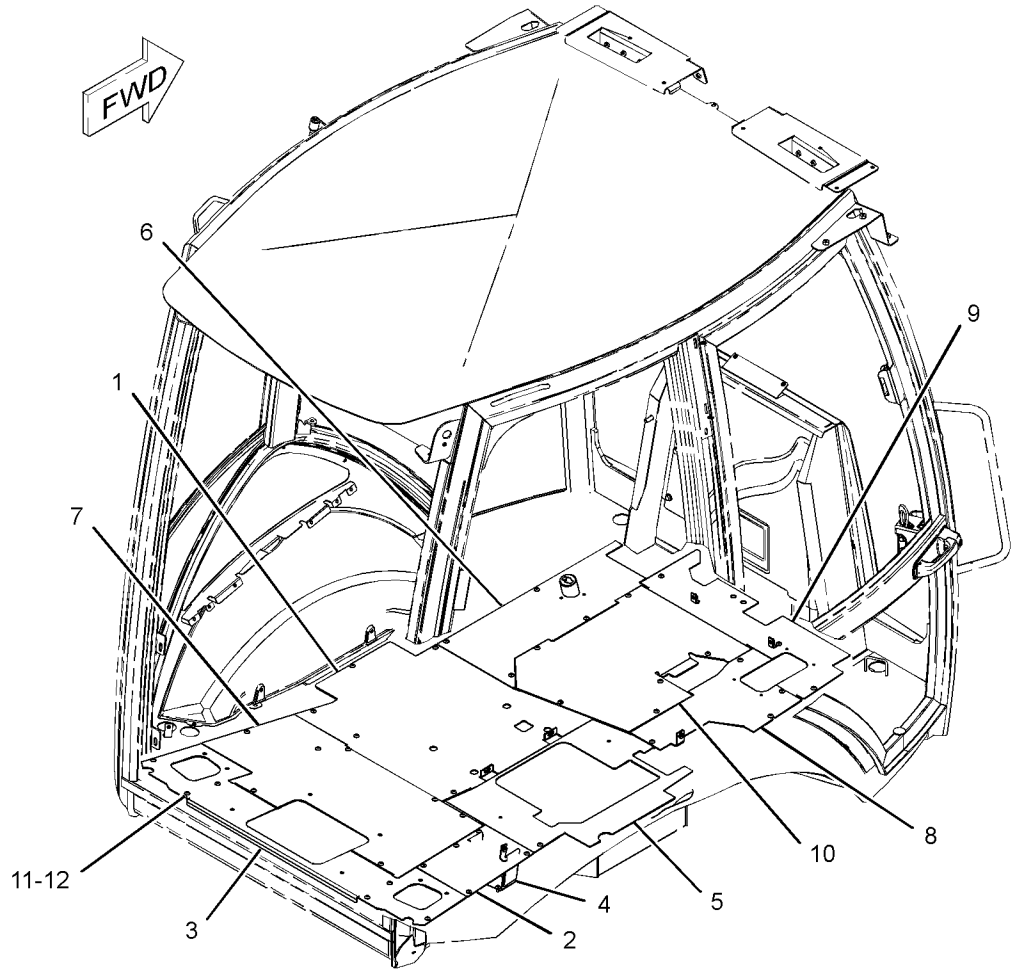

GRAPHIC #1 **<END>** g01233096

214-2000 FRAME GP-LOADER—SINGLE TILT

S/N: SHA1-UP

PART OF 213-9284 CHASSIS AR

SMCS-7054 **i02747587**

NOTE	REF NO	GRAPHIC REF	PART NUMBER	QTY	PART NAME 1 2 3 4 5 6 (PRODUCT LEVEL)	SEE PAGE
	1	1	**9R-0481**	2	WASHER (71X110X4-MM THK)	
	2	1	**209-4777**	1	CAP & BEARING AS	
		1	**9R-4110**	2	BEARING-SLEEVE	
	3	1	**214-2001**	1	FRAME AS	
	3A	1	**278-7695**	1	BEARING-SLEEVE	
	3B	1	**9R-0431**	4	BEARING-SLEEVE	
	3C	1	**9R-0431**	2	BEARING-SLEEVE	
	3D	1	**278-7066**	4	BEARING	
	3E	1	**262-7044**	1	BEARING	
	4	1	**214-4754**	2	PLATE	
M	5	1	**114-6099**	8	BOLT (M24X3X80-MM)	
	6	1	**3B-8488**	3	FITTING-GREASE	
	7	1	**3B-8489**	2	FITTING-GREASE	
M	8	1	**8T-4001**	8	NUT (M24X3-THD)	
	9	1	**8T-4121**	4	WASHER-HARD (11X21X2.5-MM THK)	
	10	1	**8T-4167**	16	WASHER-HARD (26X44X4-MM THK)	
M	11	1	**8T-4195**	4	BOLT (M10X1.5X30-MM)	

M-METRIC PART

214-2000 **FRAME GP-LOADER** *(contd.)* **i02747587**

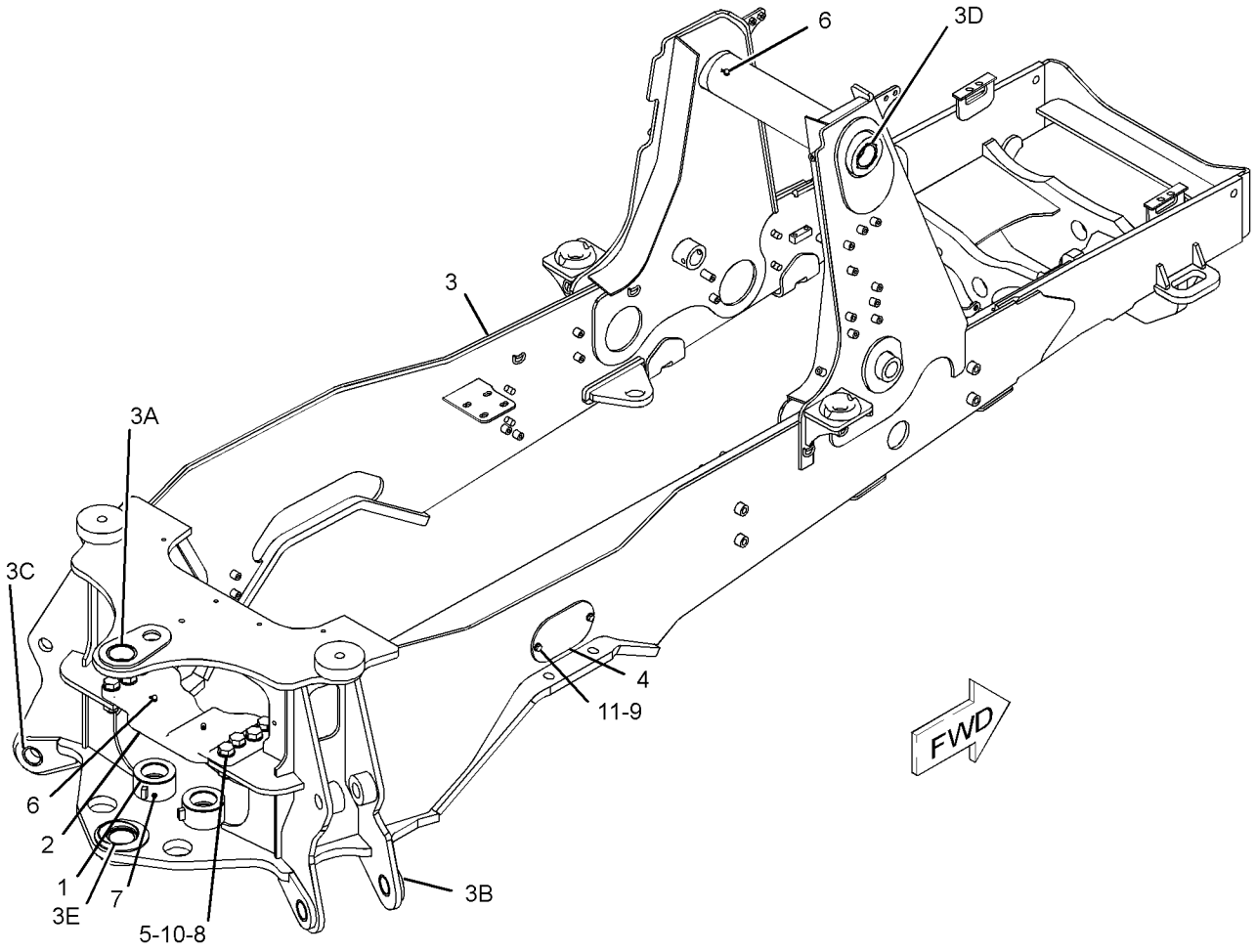

GRAPHIC #1 **<END>** g01376272

251-4519 FRAME GP-SWING

S/N: SHA1-UP

PART OF 213-9284 CHASSIS AR

SMCS-6506 **i02717248**

NOTE	REF NO	GRAPHIC REF	PART NUMBER	QTY	PART NAME 1 2 3 4 5 6 (PRODUCT LEVEL)	SEE PAGE
	1	1	**8T-4821**	1	WASHER (13.5X40X3-MM THK)	
	2	1	**8T-4837**	1	WASHER (48X85X6-MM THK)	
	3	1	**300-5440**	1	PIN	
B	4	1	**9R-5429**	2	SPACER (67.5X120X3-MM THK)	
	5	1	**9R-7882**	1	SPACER (14X25X7-MM THK)	
B	6	1	**9R-8291**	2	SPACER (66X125X1-MM THK)	
	7	1	**270-5290**	1	BOLT-SOCKET HEAD (M12X1.75X300-MM)	
	8	1	**209-6850**	1	PIN AS	
	9	1	**209-6855**	2	PIN	
	10	1	**209-6862**	1	FRAME AS-SWING	
	10A	1	**9R-0366**	1	WASHER (80X140X5-MM THK)	
	10B	1	**213-6702**	4	BEARING-SLEEVE	
	10C	1	**237-0944**	2	BEARING-SLEEVE	
	10D	1	**262-7043**	2	BEARING	
	10E	1	**278-5454**	2	BEARING-SLEEVE	
	11	1	**237-5330**	2	PIN	
	12	1	**290-8156**	1	PIN AS	
		1	**9F-2049**	1	DOWEL	
	13	1	**250-0741**	1	LUG	
B	14	1	**136-7440**	2	SHIM (1-MM THK)	
	15	1	**3B-8488**	1	FITTING-GREASE	
	16	1	**3B-8489**	3	FITTING-GREASE	
M	17	1	**6V-7687**	4	LOCKNUT (M12X1.75-THD)	
M	18	1	**8T-6868**	1	BOLT (M12X1.75X80-MM)	
M	19	1	**8T-3652**	1	NUT (M42X25-THD)	
M	20	1	**8T-4139**	1	BOLT (M12X1.75X30-MM)	
B	21	1	**8T-4821**	4	WASHER (13.5X40X3-MM THK)	
M	22	1	**8T-7930**	2	BOLT (M12X1.75X160-MM)	
	23	1	**5P-1076**	4	WASHER-HARD (13.5X30X4-MM THK)	

B-USE AS REQUIRED
M-METRIC PART

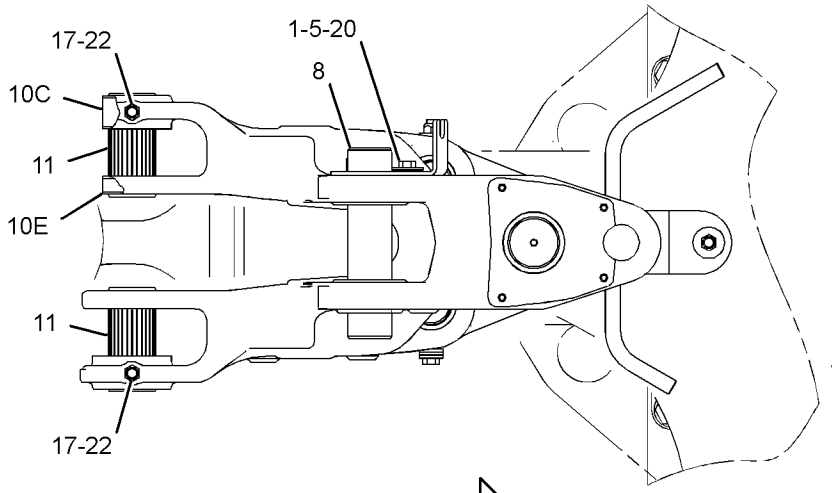

TOP VIEW FWD

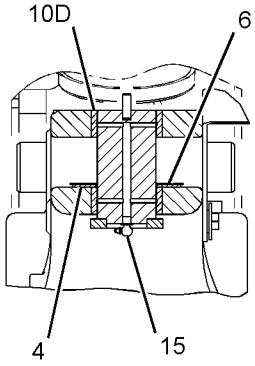

SECTION A-A

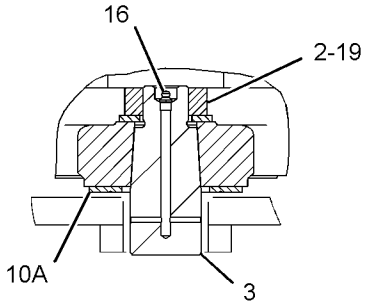

SECTION B-B

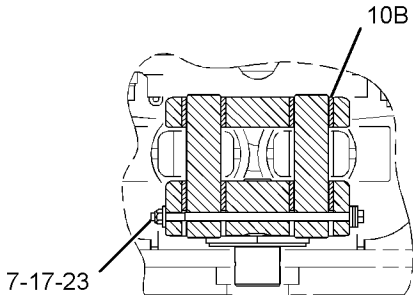

SECTION C-C

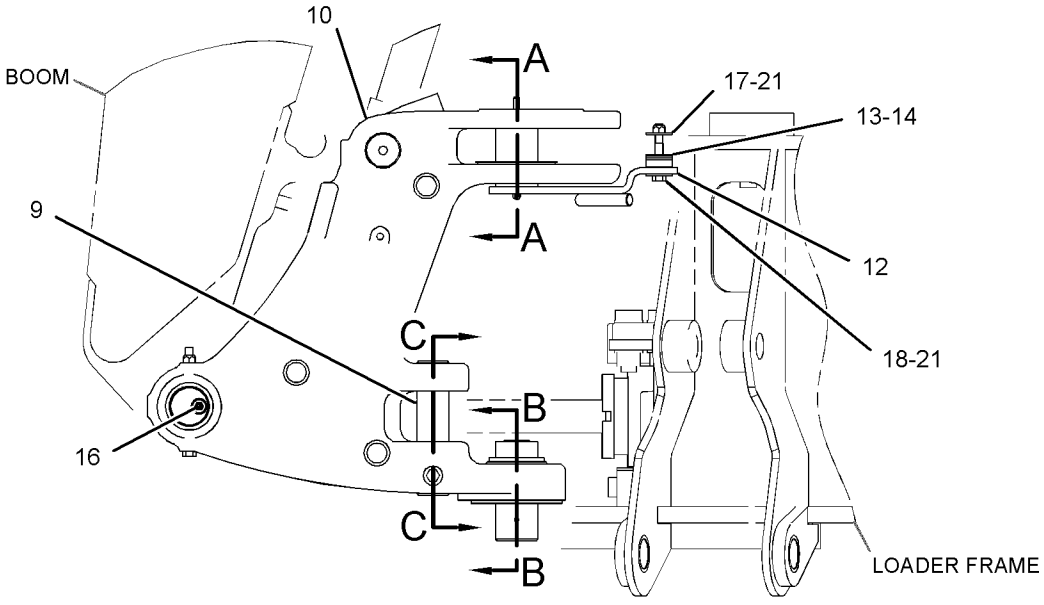

RIGHT SIDE VIEW

GRAPHIC #1 **<END>** g01353685

217-9672 GUARD GP-DRIVE SHAFT

S/N: SHA1-UP
PART OF 220-9183 DRIVE AR-BACKHOE LOADER
AN ATTACHMENT

SMCS-7153 **i02531163**

NOTE	REF NO	GRAPHIC REF	PART NUMBER	QTY	PART NAME 1 2 3 4 5 6 (PRODUCT LEVEL)	SEE PAGE
	1	1	**216-5981**	1	GUARD AS	
M	2	1	**290-3347**	4	BOLT-CARRIAGE (M16X2X40-MM)	
	3	1	**8T-4122**	4	WASHER-HARD (17X32X3.5-MM THK)	
M	4	1	**8T-4132**	4	NUT (M16X2-THD)	

M-METRIC PART

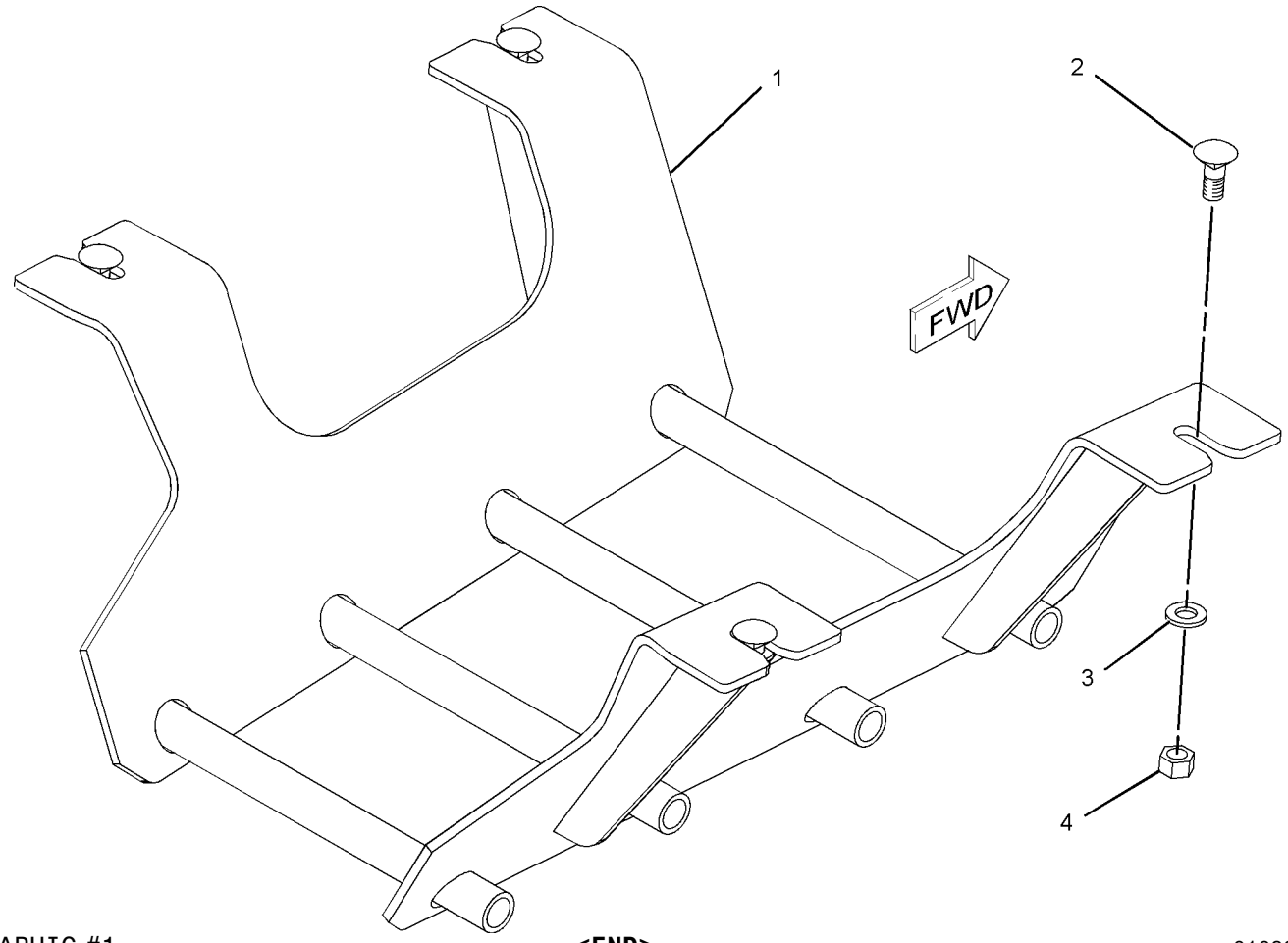

GRAPHIC #1 **<END>** g01083443

256-0324 GUARD GP-RADIATOR

S/N: SHA1-UP
AN ATTACHMENT

SMCS-7155 **i02446181**

NOTE	REF NO	GRAPHIC REF	PART NUMBER	QTY	PART NAME 1 2 3 4 5 6 (PRODUCT LEVEL)	SEE PAGE
	1	1	**256-0323**	1	COVER	
M	2	1	**7X-2572**	2	BOLT (M24X3X35-MM)	
	3	1	**8T-4167**	2	WASHER-HARD (26X44X4-MM THK)	

M-METRIC PART

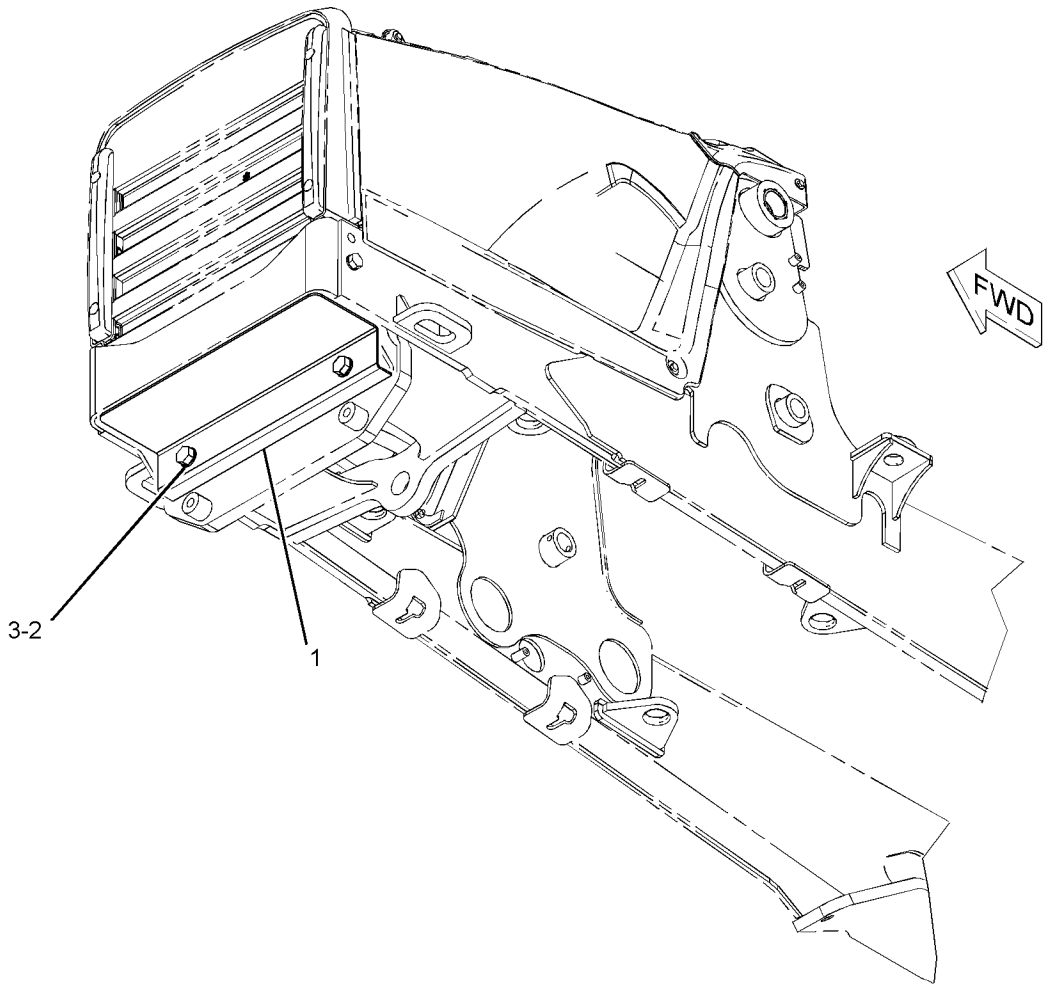

GRAPHIC #1 **<END>** g01096781

211-3546 HOOD & GUARD GP

S/N: SHA1-UP

PART OF 213-9284 CHASSIS AR

SMCS-7150, 7251, 7263 **i02430898**

NOTE	REF NO	GRAPHIC REF	PART NUMBER	QTY	PART NAME 1 2 3 4 5 6 (PRODUCT LEVEL)	SEE PAGE
D	1	1	**6V-1580**		SEAL (0.4-M)	
	2	1	**123-0428**	2	BAR	
	3	1	**231-9363**	1	ENCLOSURE AS (RH)	
	4	1	**244-1085**	1	ENCLOSURE (LH)	
	5	1	**244-7614**	1	GUARD AS	
Y	6	1	*245-5728*	1	HOOD GP-ENGINE	311
	7	1	**247-1080**	2	BUMPER AS	
	8	1	**247-6296**	1	GRILL	
	9	1	**250-3344**	1	COWLING AS	
		1	**250-3331**	1	FILM-STRIPE (YELLOW)	
	10	1	**252-9725**	1	BRACE	
	11	1	**7X-0579**	10	WASHER-HARD (8.8X25.5X2-MM THK)	
M	12	1	**7X-2564**	2	BOLT (M20X2.5X90-MM)	
	13	1	**8T-4121**	8	WASHER-HARD (11X21X2.5-MM THK)	
	14	1	**8T-4123**	2	WASHER (22X35X3.5-MM THK)	
M	15	1	**8T-4136**	2	BOLT (M10X1.5X25-MM)	
M	16	1	**8T-4137**	6	BOLT (M10X1.5X20-MM)	
M	17	1	**8T-4139**	2	BOLT (M12X1.75X30-MM)	
M	18	1	**8T-4189**	12	BOLT (M8X1.25X20-MM)	
	19	1	**8T-4223**	2	WASHER-HARD (13.5X25.5X3-MM THK)	
	20	1	**8T-4224**	7	WASHER-HARD (8.8X16X2-MM THK)	
M	21	1	**8T-7547**	5	BOLT (M8X1.25X30-MM)	

D-ORDER BY THE METER
M-METRIC PART
Y-SEPARATE ILLUSTRATION

211-3546 **HOOD & GUARD GP** *(contd.)* **i02430898**

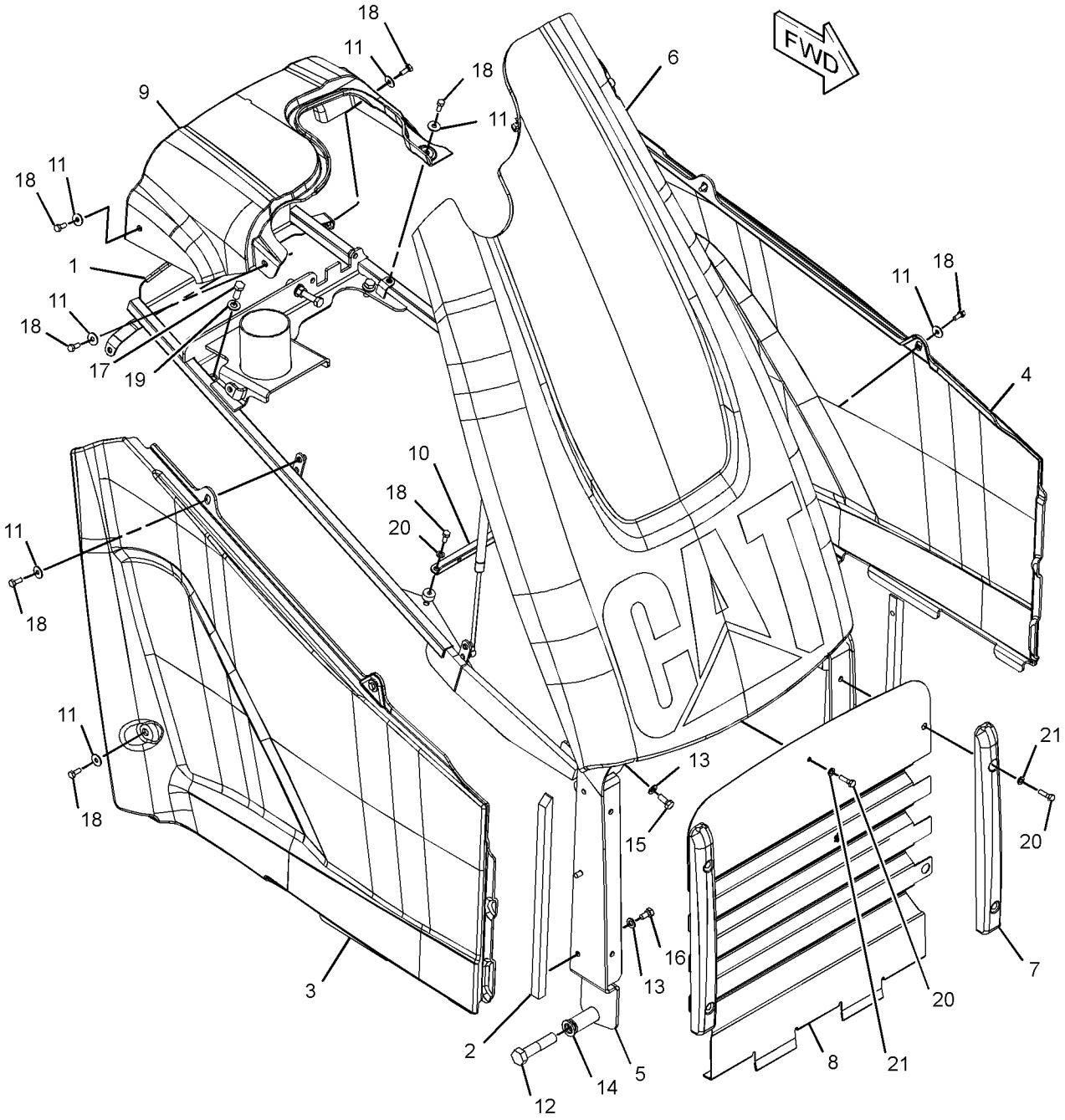

GRAPHIC #1 **<END>** g01214320

FRAME AND BODY

245-5728 HOOD GP-ENGINE

S/N: SHA1-UP

PART OF 211-3546 HOOD & GUARD GP

SMCS-7251 **i02523398**

NOTE	REF NO	GRAPHIC REF	PART NUMBER	QTY	PART NAME 1 2 3 4 5 6 (PRODUCT LEVEL)	SEE PAGE
	1	1	**245-1223**	1	FRAME AS	
J	2	1	**250-5881**	1	SPRING AS-GAS (LH)	
Y	3	1	*253-5384*	1	HOOD GP-ENGINE	312
J	4	1	**254-9301**	1	SPRING AS-GAS (RH)	
	5	1	**3B-4505**	2	LOCKWASHER	
	6	1	**8T-4223**	2	WASHER-HARD (13.5X25.5X3-MM THK)	
M	7	1	**8T-4244**	2	NUT (M12X1.75-THD)	
M	8	1	**8T-4648**	1	BOLT (M12X1.75X70-MM)	
M	9	1	**8T-6869**	2	BOLT (M8X1.25X60-MM)	
	10	1	**288-1157**	1	FILM-INSTRUCTION (UNLOCK)	
	11	1	**8T-4224**	4	WASHER-HARD (8.8X16X2-MM THK)	
					AVAILABLE REPAIR KIT(S):	
J			**275-0001**	2	KIT-GAS SPRING	
					(EACH INCLUDES STUDS & CLIPS)	

J-KIT MARKED J AVAILABLE FOR PART(S) MARKED J
M-METRIC PART
Y-SEPARATE ILLUSTRATION

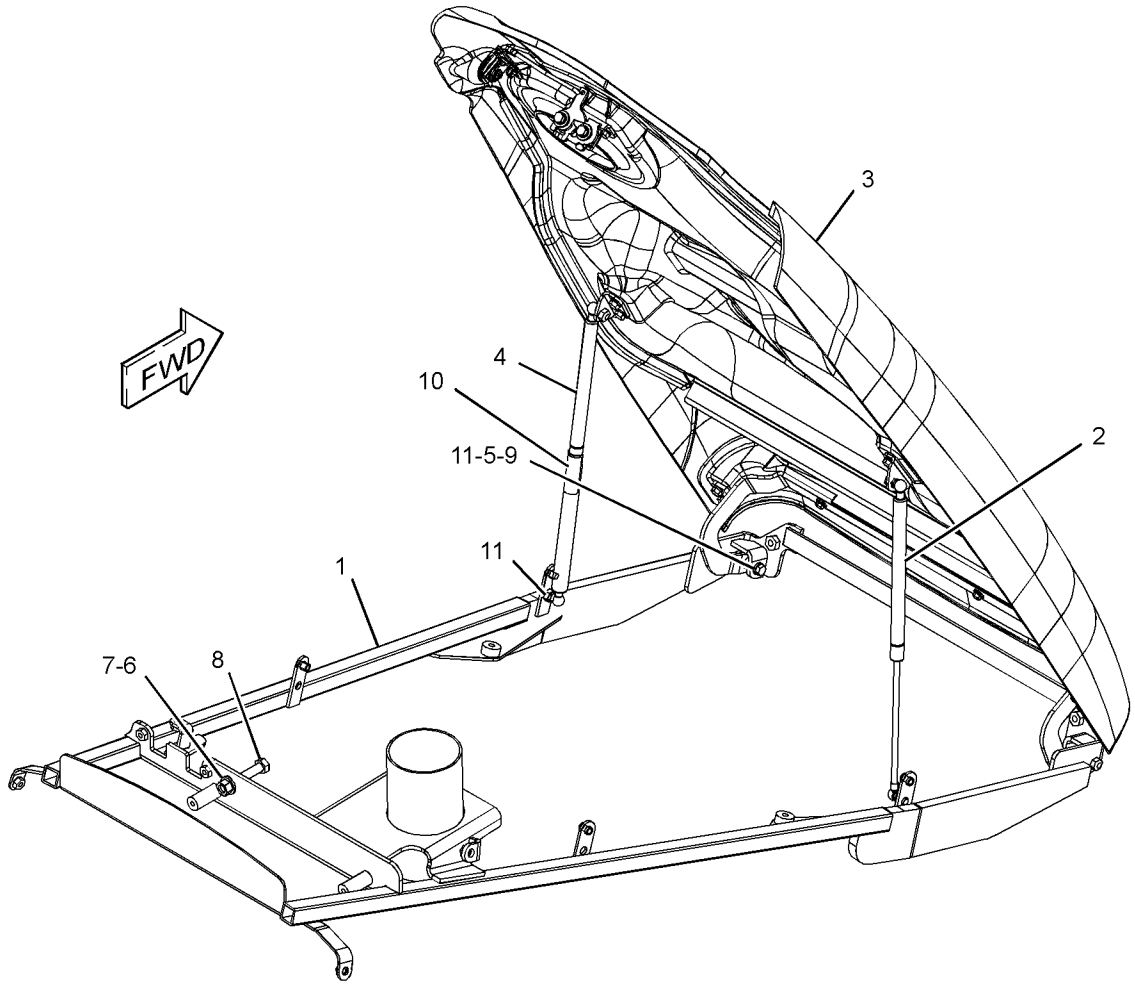

GRAPHIC #1 **<END>** g01281696

FRAME AND BODY

253-5384 HOOD GP-ENGINE

S/N: SHA1-UP

PART OF 245-5728 HOOD GP-ENGINE

SMCS-7251 **i02707232**

NOTE	REF NO	GRAPHIC REF	PART NUMBER	QTY	PART NAME 1 2 3 4 5 6 (PRODUCT LEVEL)	SEE PAGE
	1	1	**5E-8557**	1	CLIP	
	2	1	**245-4914**	1	HINGE AS	
	3	1	**246-2718**	1	HOOD AS	
	4	1	**248-0395**	1	BRACKET AS	
	5	1	**250-1878**	1	FILM-IDENTIFICATION (CAT)	
	6	1	**250-3330**	1	FILM-STRIPE (YELLOW)	
	7	1	**250-6850**	2	BRACKET AS	
	8	1	**250-6858**	1	LATCH AS (HOOD)	
	9	1	**251-4374**	1	LOCK AS (HOOD)	
	10	1	**251-4375**	1	ROD	
	11	1	**6V-5834**	2	SCREW-HEAD (10-14X0.75-IN)	
M	12	1	**7X-2537**	2	BOLT (M8X1.25X35-MM)	
M	13	1	**8T-4189**	10	BOLT (M8X1.25X20-MM)	
	14	1	**8T-4224**	12	WASHER-HARD (8.8X16X2-MM THK)	
E	15	1	**9X-8699**		SEAL (70-CM)	
	16	1	**7X-0620**	2	WASHER-HARD (5.5X13X1.6-MM THK)	

E-ORDER BY THE CENTIMETER
M-METRIC PART

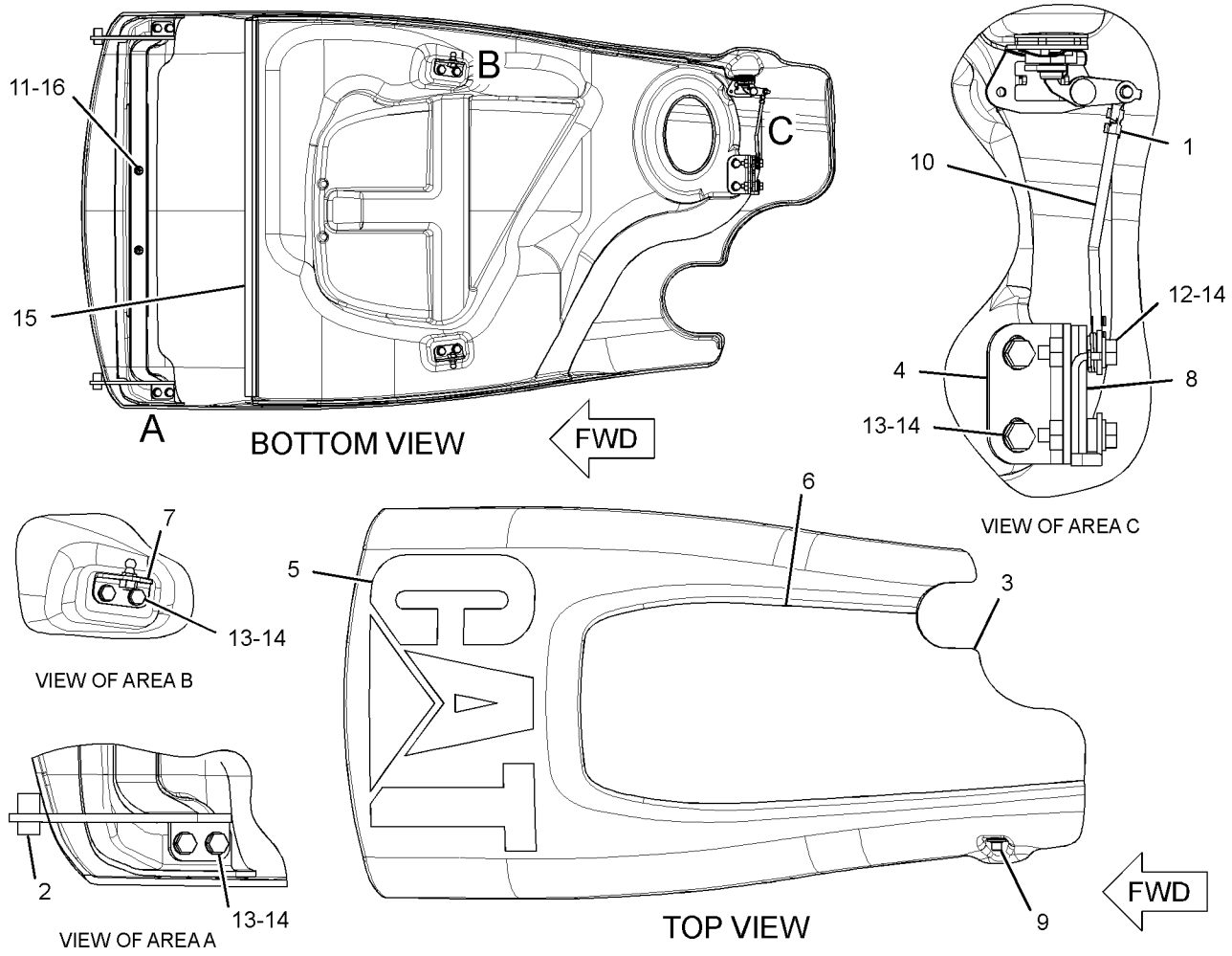

GRAPHIC #1 **<END>** g01364466

162-3960 ACCUMULATOR GP-RIDE CONTROL–CHARGED

S/N: SHA1-UP
PART OF 246-9802 LINES GP-RIDE CONTROL
FIELD REPLACEMENT ORDER 162-3961–PAGE 314
AN ATTACHMENT

SMCS-5077 **i02429597**

NOTE	REF NO	GRAPHIC REF	PART NUMBER	QTY	PART NAME 1 2 3 4 5 6 (PRODUCT LEVEL)	SEE PAGE
	1	1	**158-2306**	1	VALVE-GAS	
	2	1	**241-0037**	1	FILM-WARNING (HIGH PRESSURE, READ OMM)	
	3	1	**170-0503**	1	FILM-WARNING (ACCUM, HIGH PRESS, READ OMM)	
					AVAILABLE REPAIR KIT(S):	
			160-0496	1	KIT-SEAL (ACCUMULATOR)	
					(INCLUDES SEALS)	

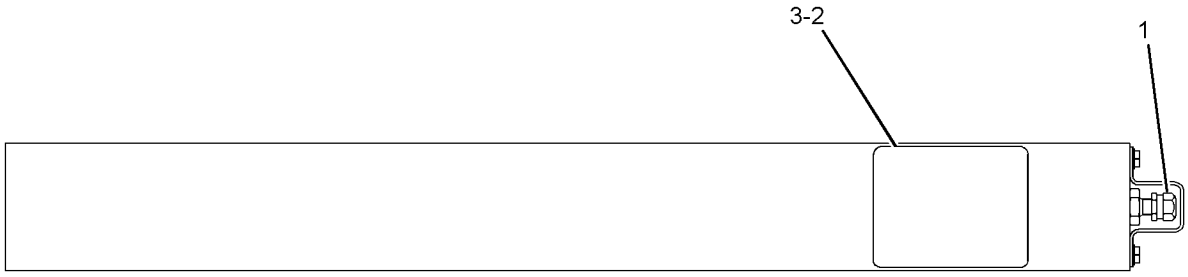

GRAPHIC #1 **<END>** g01220710

162-3961 ACCUMULATOR GP-RIDE CONTROL—UNCHARGED

S/N: SHA1-UP

FIELD REPLACEMENT FOR 162-3960—PAGE 313

SMCS-5077 **i02188280**

NOTE	PART NUMBER	QTY	PART NAME 1 2 3 4 5 6 (PRODUCT LEVEL)	SEE PAGE
			(NO SERVICED PARTS)	

<END>

220-9179 CONTROL AR-RIDE

S/N: SHA1-UP

AN ATTACHMENT

SMCS-5004 **i02116405**

NOTE	PART NUMBER	QTY	PART NAME 1 2 3 4 5 6 (PRODUCT LEVEL)	SEE PAGE
Y	*246-9802*	1	LINES GP-RIDE CONTROL	379
Y	*211-4264*	1	WIRING GP-RIDE CONTROL	190

Y-SEPARATE ILLUSTRATION

<END>

224-6237 CYLINDER & LINES GP-THUMB

S/N: SHA1-UP

PART OF 271-3024, 271-3025, 271-3026, 271-3027, 281-6716, 282-0865, 282-0866, 282-0887, 282-0888, 282-0889, 282-0890, 282-0891, 282-0892, 282-0893, 282-0894, 282-5409 THUMB AR

AN ATTACHMENT

TYPE 1

SMCS-5057, 5362 **i02501589**

NOTE	REF NO	GRAPHIC REF	PART NUMBER	QTY	PART NAME 1 2 3 4 5 6 (PRODUCT LEVEL)	SEE PAGE
	1	1	**106-0401**	1	FITTING (QUICK DISCONNECT, FEMALE)	
	2	1	**106-0406**	1	FITTING (QUICK DISCONNECT, MALE)	
I	3	1	**221-4314**	2	HOSE AS	
	4	1	**270-3409**	2	SPACER (45.24X63.5X10-MM THK)	
Y	5	1	**275-4243**	1	CYLINDER GP-THUMB	339
	6	1	*153-6252*	2	CONNECTOR AS	
					(EACH INCLUDES)	
		1	**6V-8398**	1	SEAL-O-RING	
		1	**7M-8485**	1	SEAL-O-RING	
		1	**9X-8408**	1	CONNECTOR	
	7	1	**6V-8398**	2	SEAL-O-RING	

I-REFER TO HYDRAULIC INFORMATION SYSTEM
Y-SEPARATE ILLUSTRATION

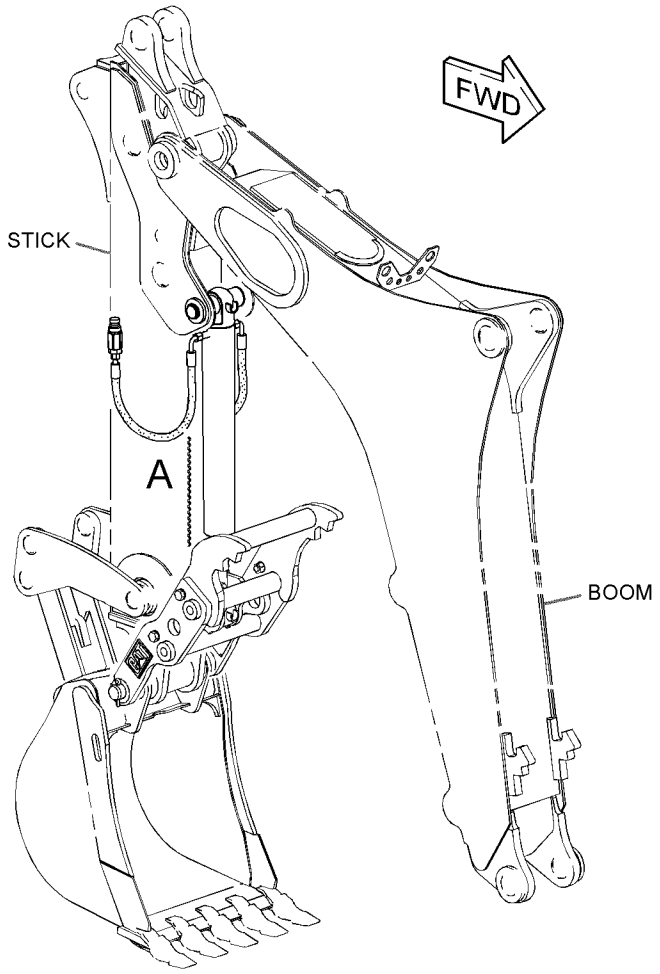

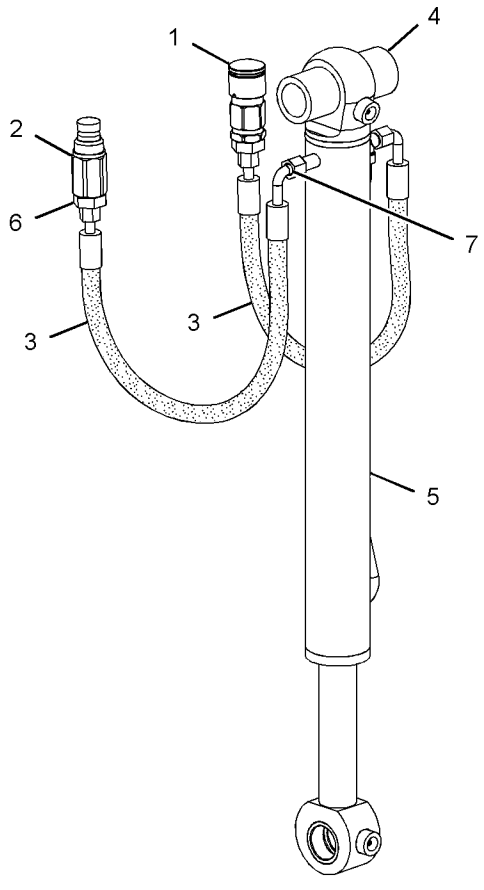

VIEW OF AREA A

GRAPHIC #1 **<END>** g01290622

HYDRAULIC SYSTEM

224-6237 CYLINDER & LINES GP-THUMB

S/N: SHA1-UP

PART OF 271-3024, 271-3025, 271-3026, 271-3027, 281-6716, 282-0865, 282-0866, 282-0887, 282-0888, 282-0889, 282-0890, 282-0891, 282-0892, 282-0893, 282-0894, 282-5409 THUMB AR

AN ATTACHMENT

TYPE 2

SMCS-5057, 5362 **i02783040**

NOTE	REF NO	GRAPHIC REF	PART NUMBER	QTY	PART NAME 1 2 3 4 5 6 (PRODUCT LEVEL)	SEE PAGE
I	1	1	**221-4314**	2	HOSE AS	
	2	1	**270-3409**	2	SPACER (45.24X63.5X10-MM THK)	
Y	3	1	**275-4243**	1	CYLINDER GP-THUMB	339
C	4	1	**278-4497**	1	BRACKET	
C	5	1	**278-4498**	1	BRACKET	
C	6	1	**280-2652**	2	VALVE-BALL	
C	7	1	**294-0973**	1	TOOL	
C	8	1	*148-8340*	2	CONNECTOR AS	
					(EACH INCLUDES)	
		1	**3K-0360**	1	SEAL-O-RING	
		1	**6V-8398**	1	SEAL-O-RING	
		1	**6V-8639**	1	CONNECTOR	
C	9	1	*148-8392*	2	ELBOW AS	
					(EACH INCLUDES)	
		1	**6V-9746**	1	SEAL-O-RING	
		1	**6V-9853**	1	ELBOW	
C	10	1	*148-8449*	2	TEE AS-SWIVEL	
					(EACH INCLUDES)	
		1	**6V-9746**	2	SEAL-O-RING	
		1	**6V-9839**	1	TEE-SWIVEL	
C	11	1	**3K-0360**	2	SEAL-O-RING	
	12	1	**6V-8398**	2	SEAL-O-RING	
C	13	1	**7C-4354**	2	CLIP	
C	14	1	**7I-1036**	2	COUPLING AS	
C	15	1	**8T-4121**	8	WASHER-HARD (11X21X2.5-MM THK)	
CM	16	1	**8T-4133**	2	NUT (M10X1.5-THD)	
CM	17	1	**8T-4136**	6	BOLT (M10X1.5X25-MM)	

C-CHANGE FROM PREVIOUS TYPE
I-REFER TO HYDRAULIC INFORMATION SYSTEM
M-METRIC PART
Y-SEPARATE ILLUSTRATION

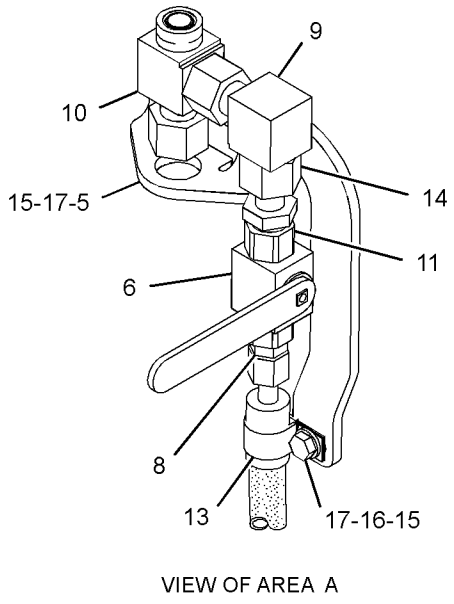

VIEW OF AREA A

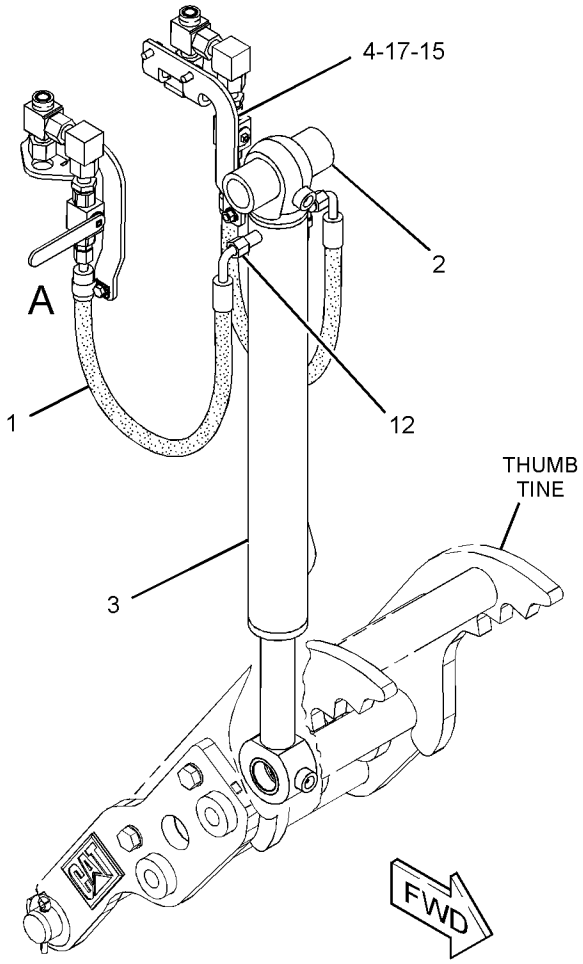

GRAPHIC #1 **<END>** g01392330

HYDRAULIC SYSTEM

210-7085 CYLINDER GP-BACKHOE BUCKET

S/N: SHA1-UP
85-MM (3.3-IN) BORE X 852-MM (33.5-IN) STROKE
PART OF 213-9293, 291-9203 BACKHOE AR-EXTENDABLE STICK, 213-9290, 291-9202 BACKHOE AR-STANDARD STICK
AN ATTACHMENT

SMCS-5457 **i02219500**

NOTE	REF NO	GRAPHIC REF	PART NUMBER	QTY	PART NAME 1 2 3 4 5 6 (PRODUCT LEVEL)	SEE PAGE
	1	1	**102-2244**	1	GROMMET	
	2	1	**212-0907**	1	PLATE-CONNECTOR	
	3	1	**213-2483**	1	HEAD	
	4	1	**213-2494**	1	ROD AS	
		1	**9R-0162**	2	BEARING-SLEEVE	
	5	1	**213-2497**	1	CYLINDER AS	
		1	**6V-8398**	1	SEAL-O-RING	
	6	1	**217-8763**	1	COVER-PROTECTION	
	7	1	**222-1395**	1	BOLT AS	
	8	1	**223-3502**	1	RING-WEAR	
	9	1	**228-8547**	1	PISTON	
	10	1	**102-8804**	1	KIT-RECEPTACLE (4-PIN)	
					(INCLUDES RECEPTACLE AS & WEDGE)	
	11	1	**106-1251**	1	WASHER (36.7X66X6-MM THK)	
	12	1	**167-2202**	1	SEAL AS-BUFFER	
	13	1	**167-2310**	1	SEAL-U-CUP	
	14	1	**188-2199**	1	SEAL-O-RING	
	15	1	**1H-7339**	1	SEAL-O-RING	
	16	1	**210-7026**	1	SEAL AS	
E	17	1	**9X-1386**		SLEEVE (3.2-CM)	
E	17A	1	**9X-1386**		SLEEVE (9-CM)	
	18	1	**213-2491**	1	SENSOR GP-POSITION	
	19	1	**215-1942**	1	RING-BACKUP	
	20	1	**2H-6338**	1	SEAL-O-RING	
	21	1	**3V-2431**	2	WASHER (10.2X16X2-MM THK)	
	22	1	**4S-5565**	2	BOLT (3/8-16X0.875-IN)	
	23	1	**5J-8016**	1	WIPER-ROD	
	24	1	**8J-2574**	1	RING-BACKUP	
	25	1	**8T-5070**	1	SETSCREW-SOCKET (3/8-16X0.5-IN)	
	26	1	**8T-8737**	1	PLUG-SEAL	
	27	1	**9X-7260**	1	RING-WEAR	

E-ORDER BY THE CENTIMETER

210-7085 CYLINDER GP-BACKHOE BUCKET *(contd.)* i02219500

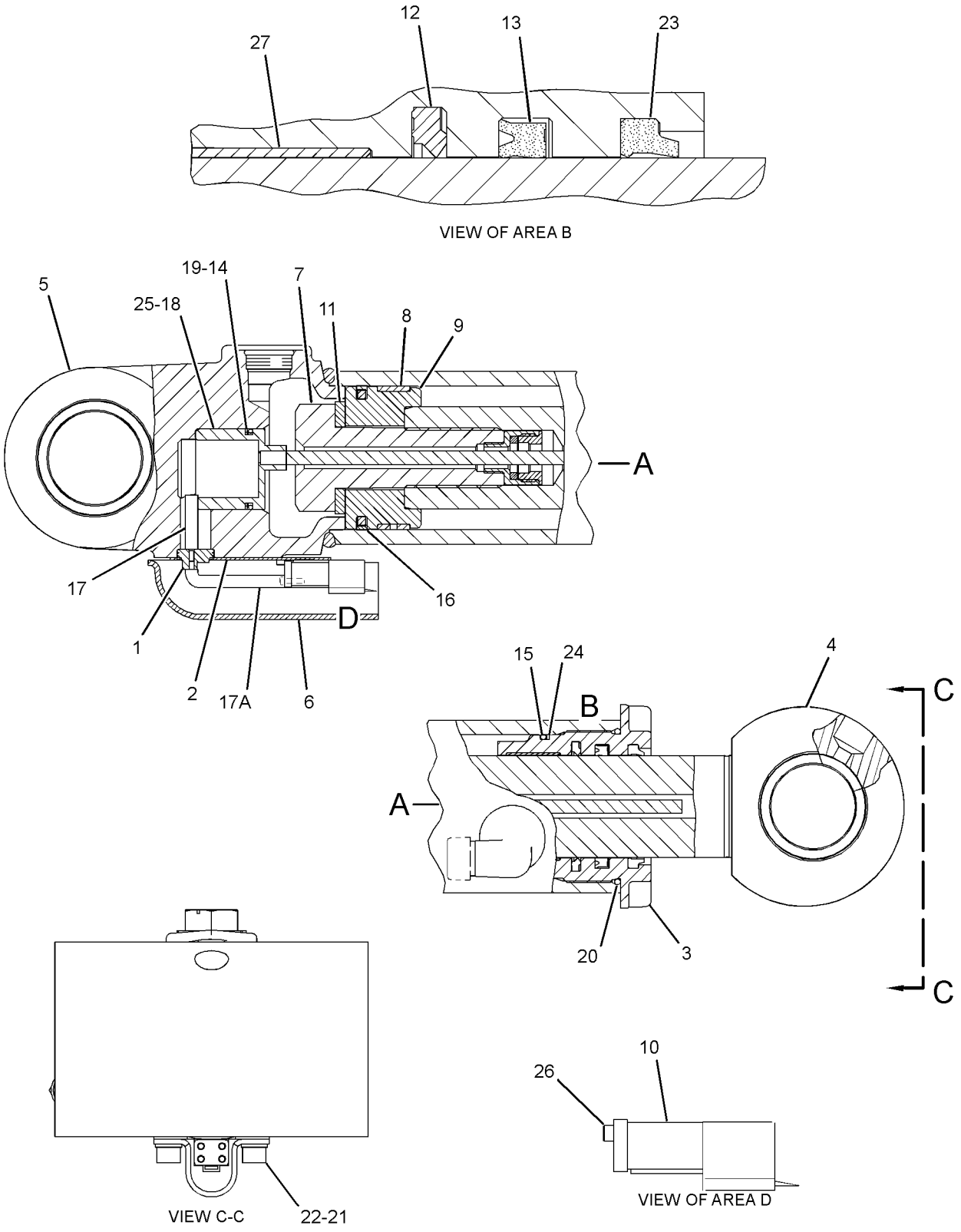

GRAPHIC #1 **<END>** g01205944

HYDRAULIC SYSTEM

210-7086 CYLINDER GP-BACKHOE BUCKET

S/N: SHA1-UP

85-MM (3.3-IN) BORE X 852-MM (33.5-IN) STROKE

PART OF 209-9929 BACKHOE AR-EXTENDABLE STICK, 209-9924 BACKHOE AR-STANDARD STICK AN ATTACHMENT

SMCS-5457 **i02164173**

NOTE	REF NO	GRAPHIC REF	PART NUMBER	QTY	PART NAME 1 2 3 4 5 6 (PRODUCT LEVEL)	SEE PAGE
	1	1	**213-2483**	1	HEAD	
	2	1	**213-2484**	1	PISTON	
	3	1	**213-2486**	1	ROD AS	
		1	**9R-0162**	2	BEARING-SLEEVE	
	4	1	**213-2490**	1	CYLINDER AS	
		1	**6V-8398**	1	SEAL-O-RING	
	5	1	**223-3502**	1	RING-WEAR	
	6	1	**167-2202**	1	SEAL AS-BUFFER	
	7	1	**167-2310**	2	SEAL-U-CUP	
M	8	1	**173-9683**	1	BOLT (M30X3.5X90-MM)	
	9	1	**1H-7339**	1	SEAL-O-RING	
	10	1	**210-7026**	1	SEAL AS	
	11	1	**2H-6338**	1	SEAL-O-RING	
	12	1	**5J-8016**	1	WIPER-ROD	
	13	1	**8J-2574**	1	RING-BACKUP	
	14	1	**9X-7260**	1	RING-WEAR	
	15	1	**9X-8399**	1	WASHER (33X56X6-MM THK)	

M-METRIC PART

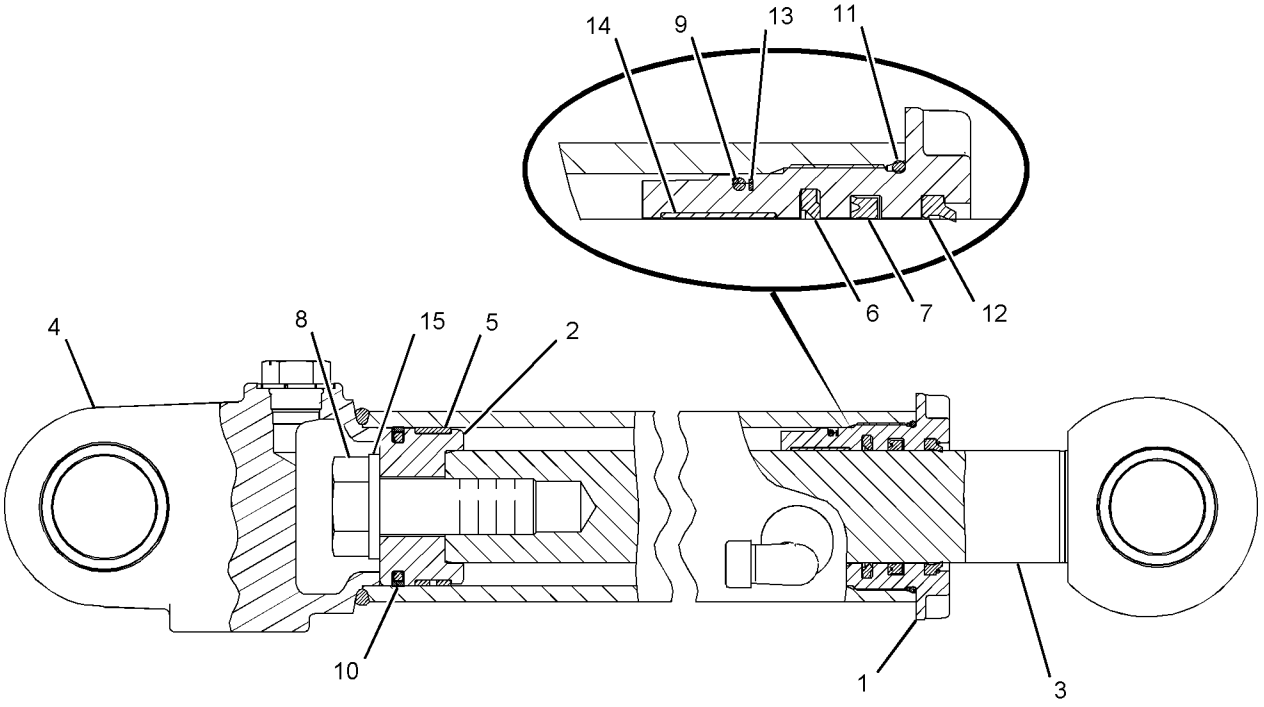

GRAPHIC #1 **<END>** g01082116

210-7074 CYLINDER GP-BOOM BASCULAMENTO

S/N: SHA1-UP

114.3-MM (4.5-IN) BORE X 943-MM (37.1-IN) STROKE

PART OF 209-9929 BACKHOE AR-EXTENDABLE STICK, 209-9924 BACKHOE AR-STANDARD STICK AN ATTACHMENT

SMCS-5456 **i02639329**

NOTE	REF NO	GRAPHIC REF	PART NUMBER	QTY	PART NAME 1 2 3 4 5 6 (PRODUCT LEVEL)	SEE PAGE
	1	1	**276-3859**	1	HEAD	
	2	1	**214-3850**	1	ROD AS	
		1	**276-6142**	1	PLUNGER	
		1	**2Y-5821**	1	RING	
		1	**9R-2700**	2	BEARING-SLEEVE	
		1	**9T-2178**	1	SPRING	
	3	1	**276-4005**	1	CYLINDER AS	
		1	**6V-9746**	1	SEAL-O-RING	
	4	1	**228-4136**	1	PISTON	
J	5	1	**167-2200**	1	SEAL AS	
J	6	1	**167-2307**	1	SEAL-U-CUP	
J	7	1	**175-7902**	1	SEAL-O-RING	
J	8	1	**231-3538**	1	SEAL-WIPER	
J	9	1	**4J-9220**	1	RING-BACKUP	
J	10	1	**4M-0189**	1	SEAL-O-RING	
J	11	1	**5J-4986**	1	SEAL AS	
	12	1	**5J-5731**	1	LOCKNUT (1-3/4-12-THD)	
J	13	1	**8T-4958**	1	RING-WEAR	
J	14	1	**226-4162**	1	RING-WEAR	
					AVAILABLE REPAIR KIT(S):	
J			**295-9891**	1	KIT-SEAL	
					(INCLUDES SEALS & RINGS)	

J-KIT MARKED J SERVICES PARTS MARKED J

210-7074 CYLINDER GP-BOOM *(contd.)* **i02639329**

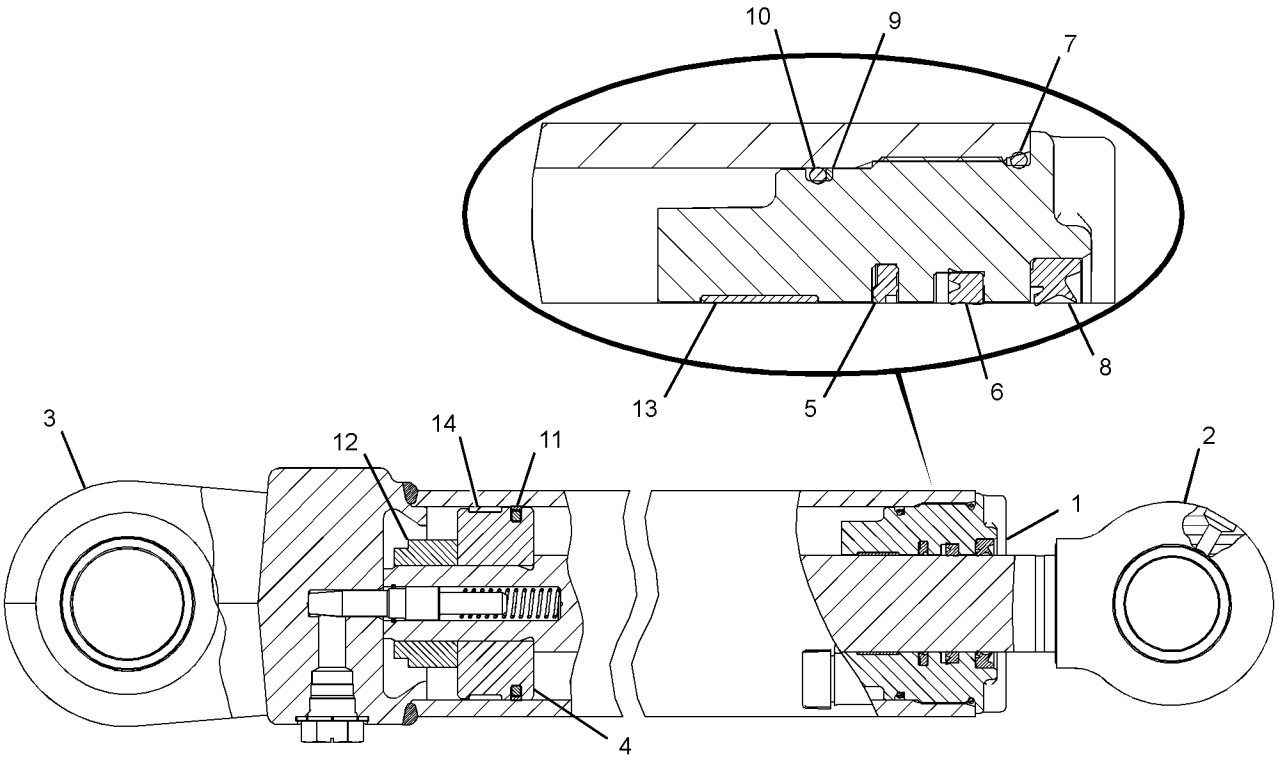

GRAPHIC #1 **<END>** g01339532

HYDRAULIC SYSTEM

246-9885 CYLINDER GP-BOOM–ACCUGRADE BASCULAMENTO

S/N: SHA1-UP
114.3-MM (4.5-IN) BORE X 928-MM (36.5-IN) STROKE
PART OF 213-9293, 291-9203 BACKHOE AR-EXTENDABLE STICK, 213-9290, 291-9202 BACKHOE AR-STANDARD STICK
AN ATTACHMENT

SMCS-5456 **i02730904**

NOTE	REF NO	GRAPHIC REF	PART NUMBER	QTY	PART NAME 1 2 3 4 5 6 (PRODUCT LEVEL)	SEE PAGE
	1	1	**305-0042**	1	SETSCREW (3/8-16-THD)	
	2	1	**102-2244**	1	GROMMET	
	3	1	**159-3046**	4	BOLT (M8X1.25X20-MM)	
	4	1	**212-0907**	1	PLATE-CONNECTOR	
	5	1	**217-3312**	1	MAGNET	
	6	1	**276-1816**	1	GUARD	
	7	1	**246-9113**	1	RETAINER	
	8	1	**249-0953**	1	SEAL-RING	
	9	1	**273-9417**	1	COVER	
	10	1	**212-1490**	1	SENSOR GP-POSITION	
	11	1	**274-5231**	1	PLUNGER	
	12	1	**276-3859**	1	HEAD	
	13	1	**276-3860**	1	PISTON	
	14	1	**276-3862**	1	ROD AS	
		1	**9R-2700**	2	BEARING-SLEEVE	
	15	1	**276-3865**	1	CYLINDER AS	
	17	1	**167-2200**	1	SEAL AS	
	18	1	**167-2307**	1	SEAL-U-CUP	
	19	1	**175-7902**	1	SEAL-O-RING	
	20	1	**188-2199**	1	SEAL-O-RING	
	21	1	**215-1942**	1	RING-BACKUP	
	22	1	**231-3538**	1	SEAL-WIPER	
	23	1	**102-8804**	1	KIT-RECEPTACLE (4-PIN)	
					(INCLUDES RECEPTACLE AS & WEDGE)	
	24	1	**300-7930**	1	RING-RETAINING	
	25	1	**3V-2431**	2	WASHER (10.2X16X2-MM THK)	
	26	1	**4J-3745**	1	RING-WEAR	
	27	1	**4J-9220**	1	RING-BACKUP	
	28	1	**4M-0189**	1	SEAL-O-RING	
	29	1	**4S-5565**	2	BOLT (3/8-16X0.875-IN)	
	30	1	**5J-4986**	1	SEAL AS	
	31	1	**6F-0711**	1	SEAL-O-RING	
	32	1	**8T-4958**	1	RING-WEAR	
	33	1	**8T-8737**	1	PLUG-SEAL	
E	34	1	**9X-1386**		SLEEVE (14-CM)	

E-ORDER BY THE CENTIMETER

246-9885 CYLINDER GP-BOOM *(contd.)* **i02730904**

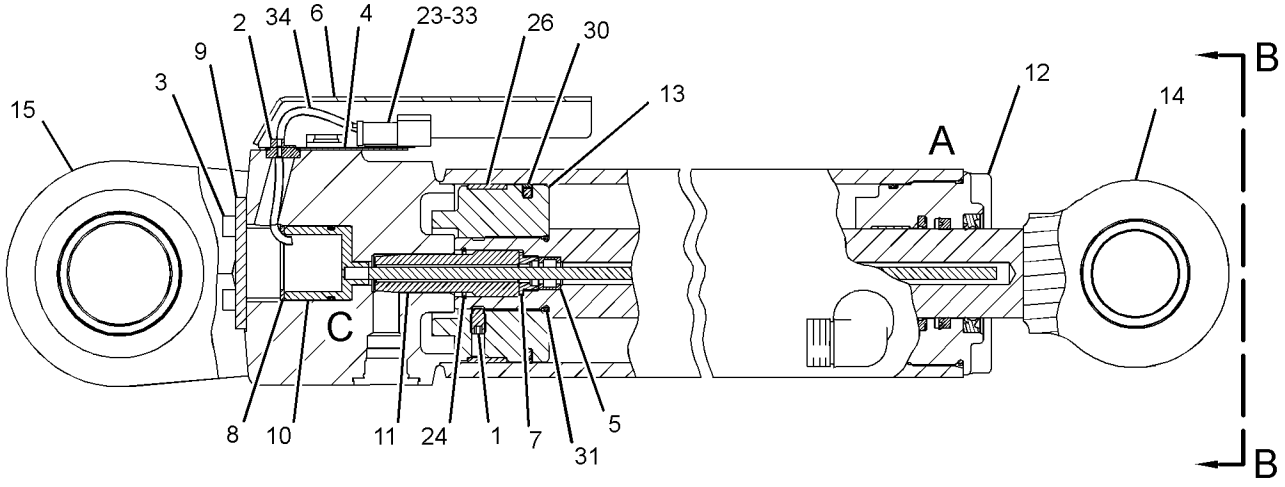

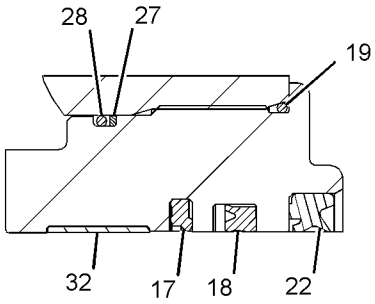

VIEW OF AREA A

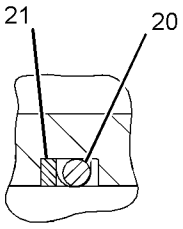

VIEW OF AREA C

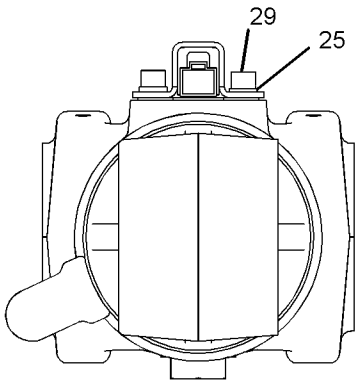

VIEW B-B

GRAPHIC #1 **<END>** g01371024

210-7097 CYLINDER GP-EXTENDABLE STICK

S/N: SHA1-UP
76-MM (3-IN) BORE X 1164-MM (45.8-IN) STROKE
PART OF 271-1401 STICK GP-EXTENDABLE
AN ATTACHMENT

SMCS-5486 **i02119865**

NOTE	REF NO	GRAPHIC REF	PART NUMBER	QTY	PART NAME 1 2 3 4 5 6 (PRODUCT LEVEL)	SEE PAGE
BE	1	1	**9X-1386**		SLEEVE	
	2	1	**102-2244**	1	GROMMET	
	3	1	**155-2260**	1	KIT-CONNECTING PLUG (3-PIN)	
	4	1	**191-6159**	1	HEAD	
	5	1	**214-6471**	1	CYLINDER AS	
		1	**6V-8398**	1	SEAL-O-RING	
	6	1	**214-6475**	1	ROD AS	
	7	1	**214-6480**	1	PISTON	
	8	1	**214-6879**	1	COVER	
	9	1	**214-6897**	1	PLATE	
	10	1	**217-3311**	1	MAGNET	
	11	1	**230-5579**	1	SCREW-BUTTON HEAD	
	12	1	**230-5580**	1	SCREW-BUTTON HEAD	
	13	1	**242-9514**	1	CARRIER	
	14	1	**242-9515**	1	RING-RETAINING	
	15	1	**167-2186**	1	SEAL AS-BUFFER	
	16	1	**167-2294**	1	SEAL-U-CUP	
	17	1	**188-2199**	1	SEAL-O-RING	
	18	1	**1H-7339**	1	SEAL-O-RING	
	19	1	**215-1942**	1	RING-BACKUP	
	20	1	**215-8934**	1	SENSOR GP-POSITION	
	21	1	**223-3353**	1	RING-WEAR	
	22	1	**226-8202**	1	SEAL-WIPER	
	23	1	**102-8803**	1	KIT-RECEPTACLE (3-PIN)	
	24	1	**4T-6780**	1	RING-WEAR	
	25	1	**5H-8848**	1	SEAL-O-RING	
	26	1	**5J-4561**	1	LOCKNUT (1-14-THD)	
	27	1	**6J-1972**	1	SEAL AS	
	28	1	**6J-5731**	1	RING-BACKUP	
	29	1	**8T-5070**	1	SETSCREW-SOCKET (3/8-16X0.5-IN)	
	30	1	**8T-8737**	3	PLUG-SEAL	

B-USE AS REQUIRED
E-ORDER BY THE CENTIMETER

210-7097 CYLINDER GP-EXTENDABLE STICK *(contd.)* i02119865

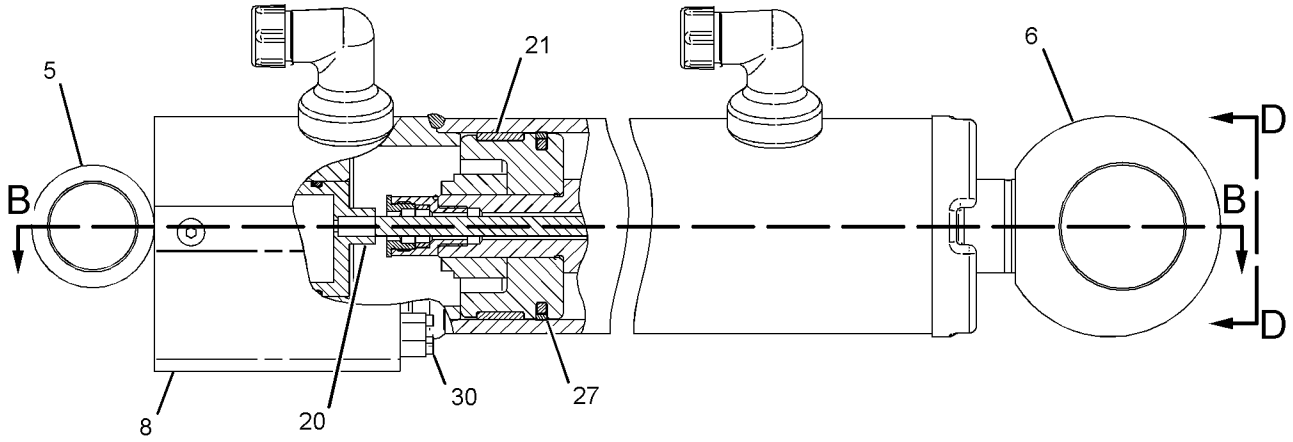

RIGHT SIDE VIEW

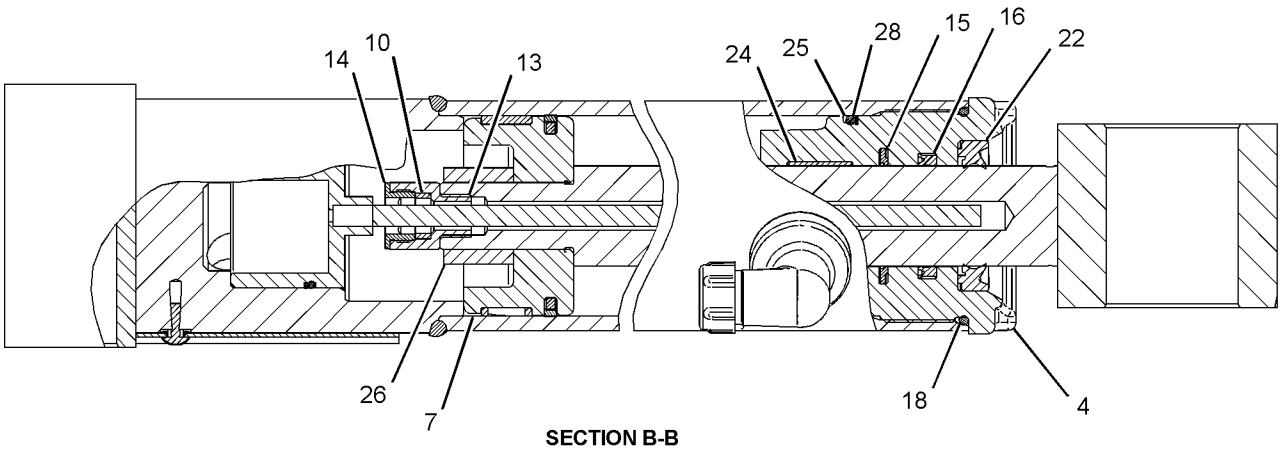

SECTION B-B

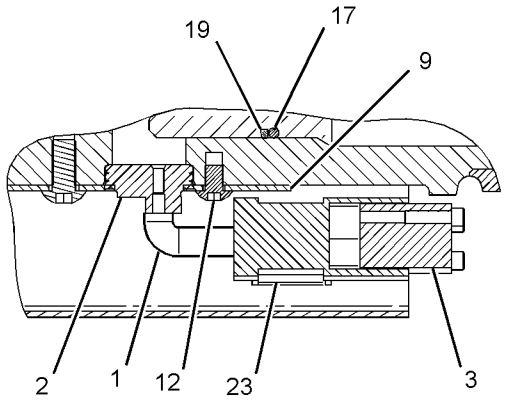

SECTION C-C

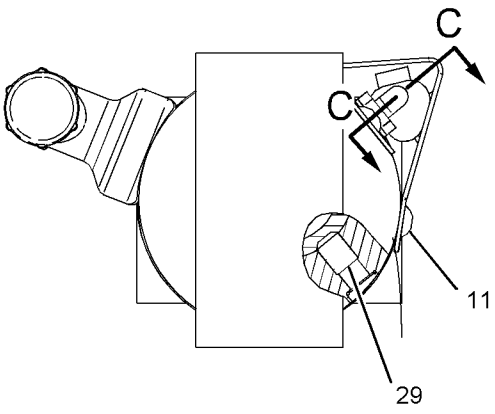

VIEW D-D

GRAPHIC #1 **<END>** g01081080

228-3508 CYLINDER GP-LIFT ELEVAÇÃO

S/N: SHA1-UP

PART OF 213-9298 LOADER AR

SMCS-5102 **i02517463**

NOTE	REF NO	GRAPHIC REF	PART NUMBER	QTY	PART NAME 1 2 3 4 5 6 (PRODUCT LEVEL)	SEE PAGE
J	1	1	**8J-6371**	1	RING-WEAR	
J	2	1	**227-1143**	1	SEAL-WIPER	
	3	1	**233-2568**	1	ROD AS	
	4	1	**233-2578**	1	PISTON	
	5	1	**233-2590**	1	HEAD AS	
		1	**233-2605**	1	BEARING	
J	6	1	**233-2597**	1	SEAL-O-RING	
J	7	1	**233-2599**	1	RING-BACKUP	
J	8	1	**233-2601**	1	SEAL-O-RING	
J	9	1	**233-2609**	1	SEAL-U-CUP	
J	10	1	**244-3839**	1	SEAL-PISTON	
	11	1	**252-9207**	1	CYLINDER AS	
	12	1	**3B-8489**	2	FITTING-GREASE	
	13	1	**9R-0153**	2	BEARING-SLEEVE	
	14	1	**9R-0321**	2	BEARING-SLEEVE	
JM	15	1	**9X-6611**	1	SETSCREW-SOCKET (M10X1.5X16-MM)	
					AVAILABLE REPAIR KIT(S):	
J			**233-2628**	1	KIT-SEAL	

J-KIT MARKED J SERVICES PARTS MARKED J
M-METRIC PART

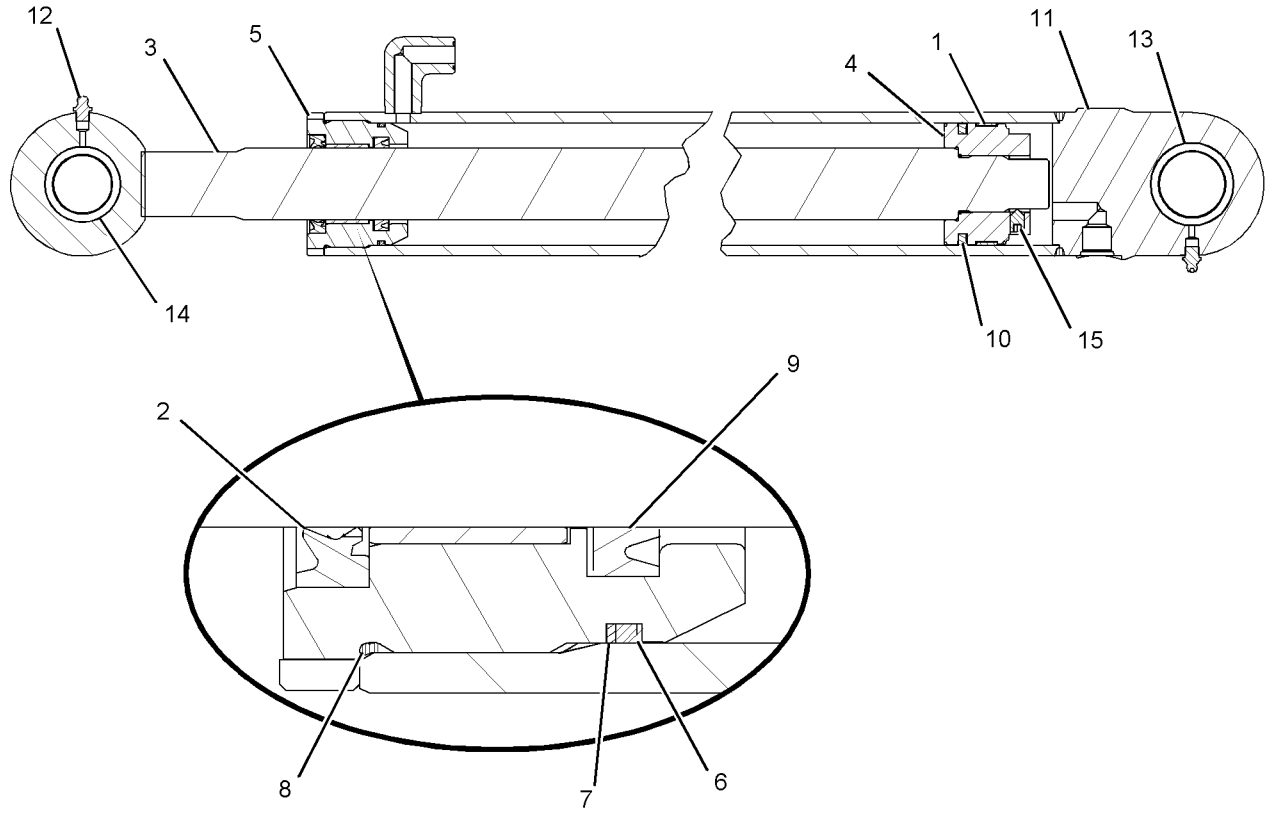

GRAPHIC #1 **<END>** g01085626

HYDRAULIC SYSTEM

226-5540 CYLINDER GP-MULTIPURPOSE BUKT

S/N: SHA1-UP
76-MM (2.99-IN) BORE X 262-MM (10.31-IN) STROKE
PART OF 216-8800, 216-8801, 216-8820, 216-8821 BUCKET GP-MULTIPURPOSE AN ATTACHMENT

SMCS-5457 **i02597612**

NOTE	REF NO	GRAPHIC REF	PART NUMBER	QTY	PART NAME 1 2 3 4 5 6 (PRODUCT LEVEL)	SEE PAGE
	1	1	**3B-8489**	2	FITTING-GREASE	
	2	1	**9S-8004**	2	PLUG-O-RING	
	3	1	**3J-1907**	2	SEAL-O-RING	
	4	1	**9T-4007**	2	BEARING	
					AVAILABLE REPAIR KIT(S):	
			230-9357	1	KIT-SEAL	
					(INCLUDES WIPER SEAL, O-RINGS, MOISTURE EXCLUDER & POLYPAK)	

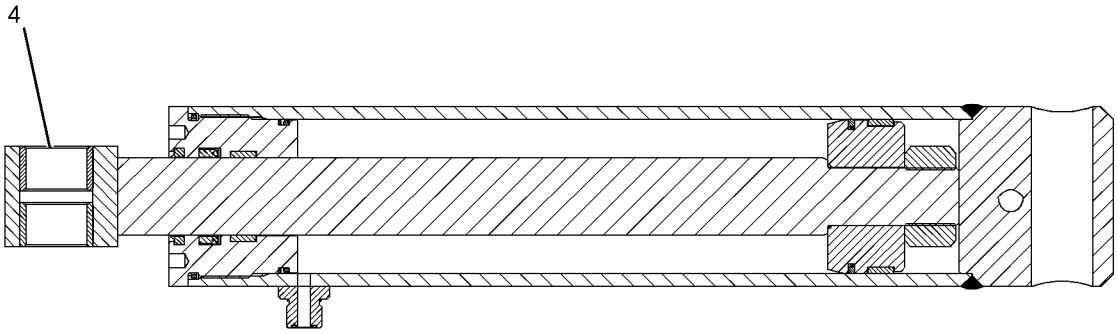

SECTION A-A

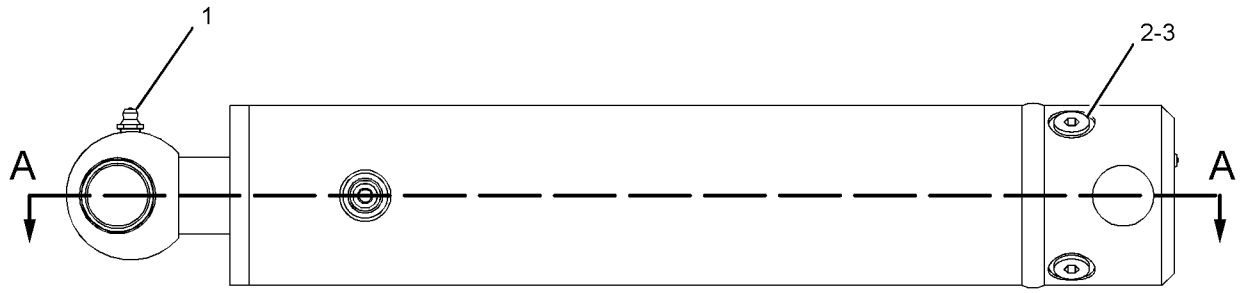

GRAPHIC #1 **<END>** g01086486

262-7049 CYLINDER GP-STABILIZER

S/N: SHA1-UP
100-MM (3.9-IN) BORE X 541-MM (21.3-IN) STROKE
PART OF 214-2198 HYDRAULIC AR

SMCS-5468 **i02363608**

NOTE	REF NO	GRAPHIC REF	PART NUMBER	QTY	PART NAME 1 2 3 4 5 6 (PRODUCT LEVEL)	SEE PAGE
	1	1	**233-2576**	1	ROD AS	
	2	1	**233-2582**	1	PISTON	
J	3	1	**233-2585**	1	SEAL AS	
J	4	1	**233-2588**	1	RING-WEAR	
	5	1	**233-2594**	1	HEAD AS	
		1	**233-2614**	1	RING-WEAR	
	6	1	**233-2603**	1	SEAL-O-RING	
J	7	1	**233-2607**	1	SEAL AS	
J	8	1	**233-2611**	1	SEAL-U-CUP	
J	9	1	**233-2615**	1	SEAL	
J	10	1	**244-8826**	1	RING-BACKUP	
	11	1	**262-7051**	1	CYLINDER AS	
	12	1	**3B-8489**	2	FITTING-GREASE	
J	13	1	**3E-6735**	1	SEAL-O-RING	
J	14	1	**4J-0526**	1	SEAL-O-RING	
	15	1	**9R-0321**	4	BEARING-SLEEVE	
JM	16	1	**9X-6611**	1	SETSCREW-SOCKET (M10X1.5X16-MM)	
					AVAILABLE REPAIR KIT(S):	
J			**233-2623**	1	KIT-SEAL	

J-KIT(S) MARKED J SERVICES PART(S) MARKED J
M-METRIC PART

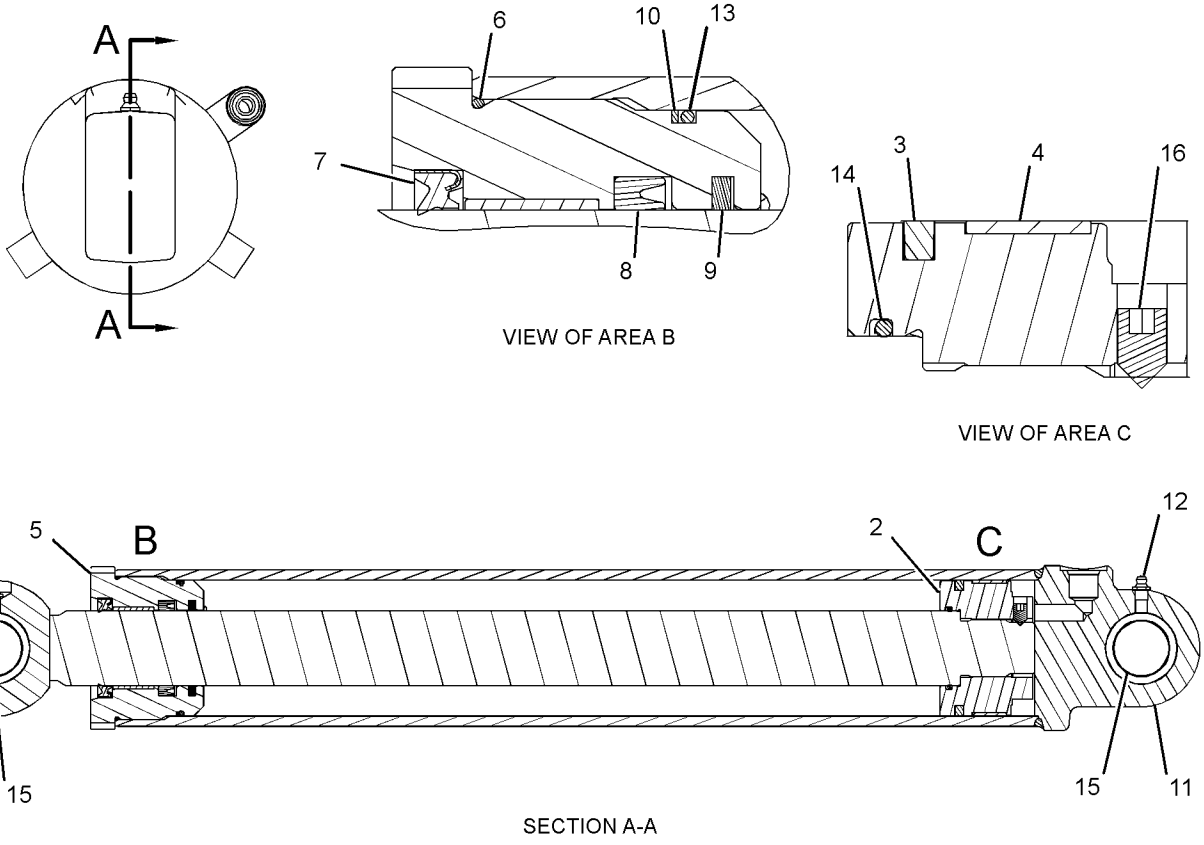

GRAPHIC #1 **<END>** g01201682

262-7050 CYLINDER GP-STABILIZER

S/N: SHA1-UP
100-MM (3.9-IN) BORE X 541-MM (21.3-IN) STROKE
PART OF 214-2198 HYDRAULIC AR

SMCS-5468 **i02510963**

NOTE	REF NO	GRAPHIC REF	PART NUMBER	QTY	PART NAME 1 2 3 4 5 6 (PRODUCT LEVEL)	SEE PAGE
	1	1	**233-2576**	1	ROD AS	
	2	1	**233-2582**	1	PISTON	
J	3	1	**233-2585**	1	SEAL AS	
J	4	1	**233-2588**	1	RING-WEAR	
	5	1	**233-2594**	1	HEAD AS	
		1	**233-2614**	1	RING-WEAR	
J	6	1	**233-2603**	1	SEAL-O-RING	
J	7	1	**233-2607**	1	SEAL AS	
J	8	1	**233-2611**	1	SEAL-U-CUP	
J	9	1	**233-2615**	1	SEAL	
J	10	1	**244-8826**	1	RING-BACKUP	
	11	1	**262-7052**	1	CYLINDER AS	
	12	1	**3B-8489**	2	FITTING-GREASE	
J	13	1	**3E-6735**	1	SEAL-O-RING	
J	14	1	**4J-0526**	1	SEAL-O-RING	
	15	1	**9R-0321**	4	BEARING-SLEEVE	
JM	16	1	**9X-6611**	1	SETSCREW-SOCKET (M10X1.5X16-MM)	
					AVAILABLE REPAIR KIT(S):	
J			**233-2623**	1	KIT-SEAL	

J-KIT MARKED J SERVICES PART(S) MARKED J)
M-METRIC PART

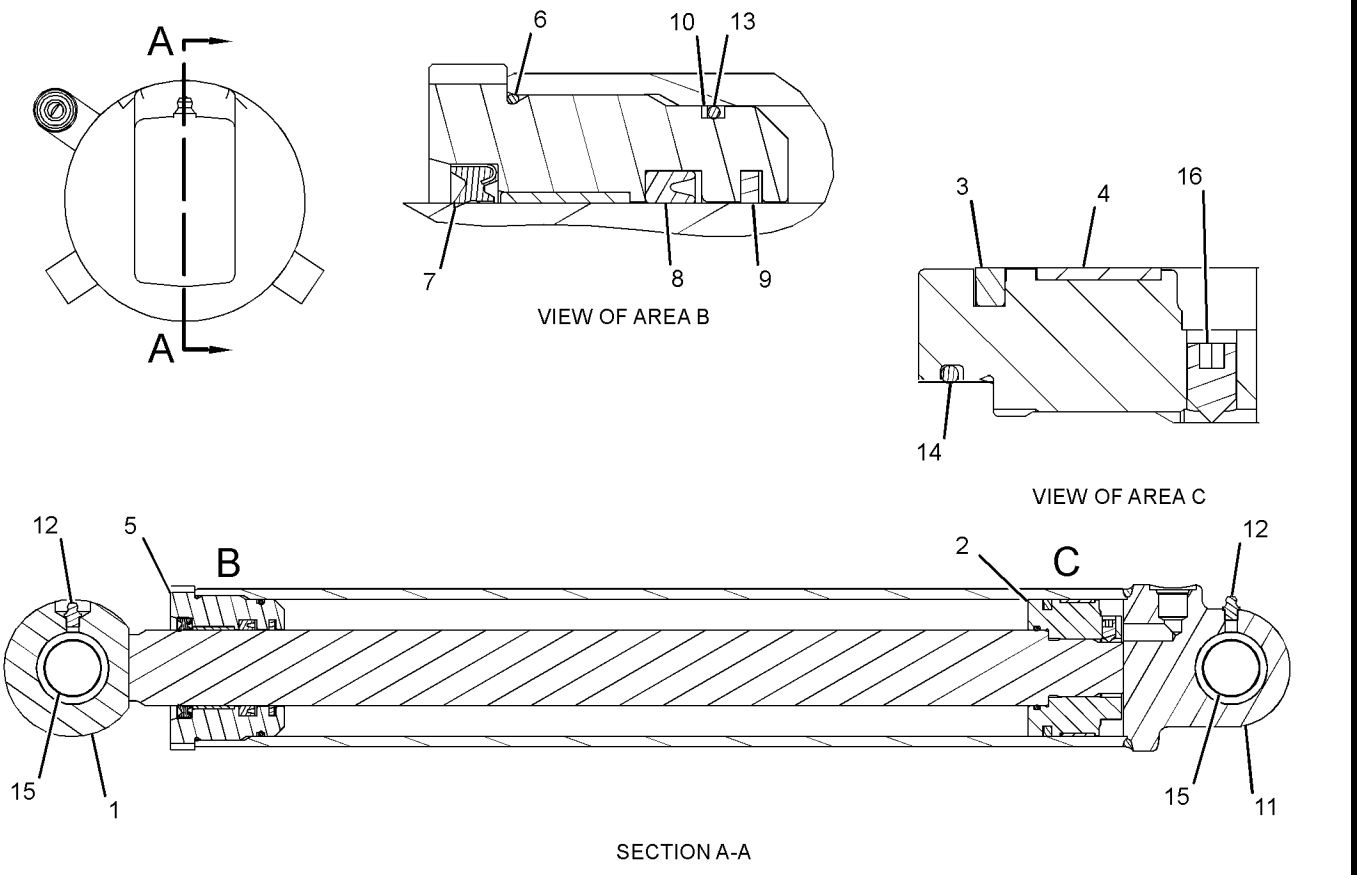

GRAPHIC #1 **<END>** g01201741

210-7077 CYLINDER GP-STICK–ACCUGRADE

S/N: SHA1-UP
108-MM (4.3-IN) BORE X 679-MM (26.7-IN) STROKE
PART OF 213-9293, 291-9203 BACKHOE AR-EXTENDABLE STICK, 213-9290, 291-9202 BACKHOE AR-STANDARD STICK
AN ATTACHMENT

SMCS-5458 **i02501579**

NOTE	REF NO	GRAPHIC REF	PART NUMBER	QTY	PART NAME 1 2 3 4 5 6 (PRODUCT LEVEL)	SEE PAGE
	1	1	**102-2244**	1	GROMMET	
	2	1	**212-0907**	1	PLATE-CONNECTOR	
	3	1	**214-2249**	1	HEAD	
	4	1	**214-3798**	1	CYLINDER AS	
		1	**6V-8398**	1	SEAL-O-RING	
	5	1	**217-3312**	1	MAGNET	
	6	1	**276-1816**	1	GUARD	
	7	1	**228-8006**	1	PISTON	
	8	1	**228-8008**	1	ROD AS	
		1	**9R-3092**	2	BEARING-SLEEVE	
	9	1	**246-9113**	1	RETAINER	
	10	1	**102-8804**	1	KIT-RECEPTACLE (4-PIN)	
					(INCLUDES RECEPTACLE AS & WEDGE)	
	11	1	**167-2200**	1	SEAL AS	
	12	1	**167-2307**	1	SEAL-U-CUP	
	13	1	**188-2199**	1	SEAL-O-RING	
	14	1	**1H-6227**	1	SEAL-O-RING	
	15	1	**215-1942**	1	RING-BACKUP	
	16	1	**217-5776**	1	SENSOR GP-POSITION (LINEAR)	
	17	1	**225-9524**	1	RING-WEAR	
	18	1	**231-3538**	1	SEAL-WIPER	
	19	1	**3V-2431**	2	WASHER (10.2X16X2-MM THK)	
	20	1	**4M-0189**	1	SEAL-O-RING	
	21	1	**4S-5565**	2	BOLT (3/8-16X0.875-IN)	
	22	1	**5J-7852**	1	SEAL	
	24	1	**5J-5731**	1	LOCKNUT (1-3/4-12-THD)	
	25	1	**5J-7865**	1	RING-BACKUP	
	26	1	**8T-4958**	1	RING-WEAR	
	27	1	**8T-5070**	1	SETSCREW-SOCKET (3/8-16X0.5-IN)	
	28	1	**8T-8737**	1	PLUG-SEAL	
E	29	1	**9X-1386**		SLEEVE (9-CM)	
E	29A	1	**9X-1386**		SLEEVE (3-CM)	

E-ORDER BY THE CENTIMETER

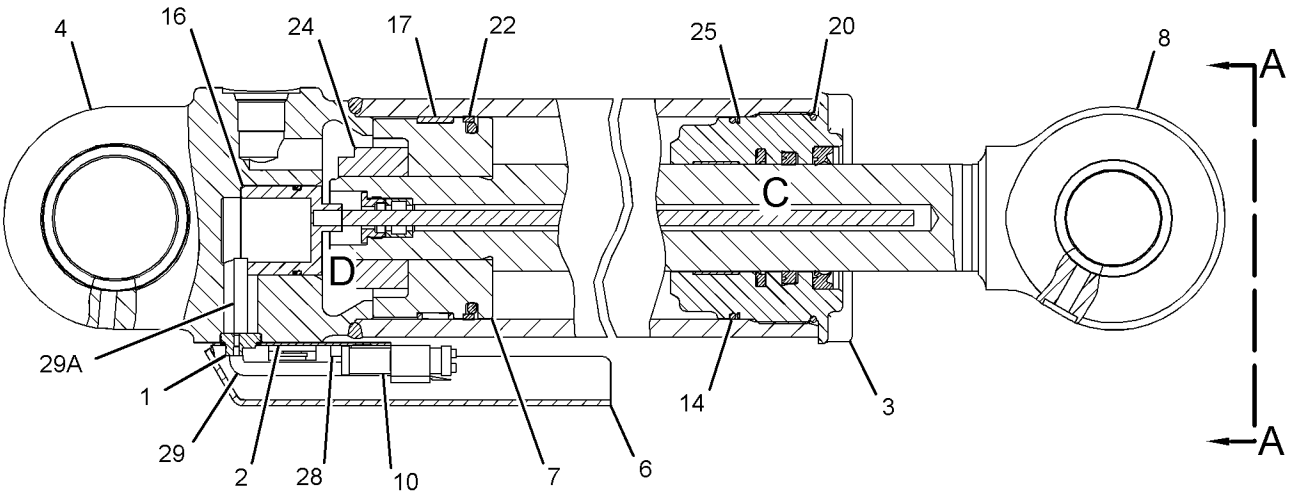

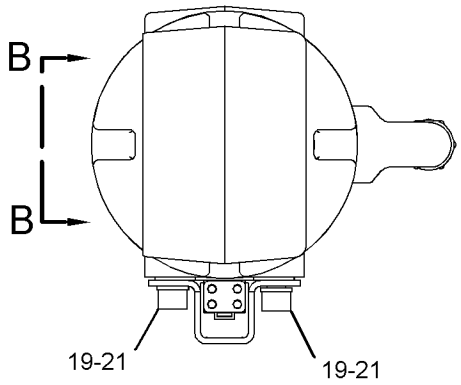

VIEW A-A

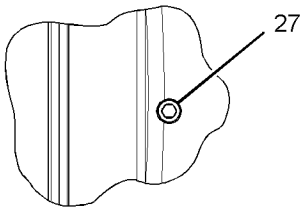

VIEW B-B

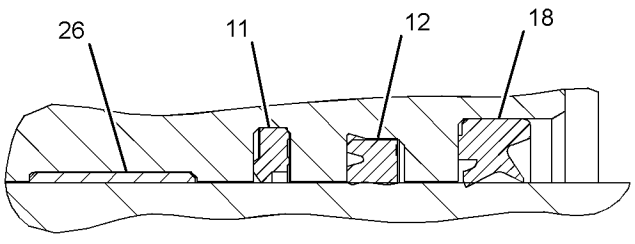

VIEW OF AREA C

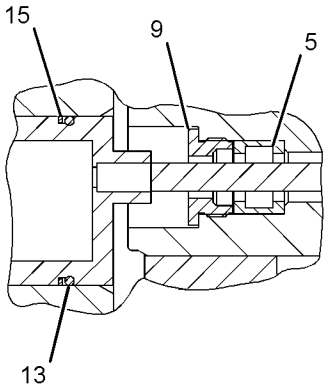

VIEW OF AREA D

GRAPHIC #1 **<END>** g01390553

210-7078 CYLINDER GP-STICK

S/N: SHA1-UP

108-MM (4.3-IN) BORE X 679-MM (26.7-IN) STROKE

PART OF 209-9929 BACKHOE AR-EXTENDABLE STICK, 209-9924 BACKHOE AR-STANDARD STICK AN ATTACHMENT

SMCS-5458 **i02121325**

NOTE	REF NO	GRAPHIC REF	PART NUMBER	QTY	PART NAME 1 2 3 4 5 6 (PRODUCT LEVEL)	SEE PAGE
	1	1	**214-2249**	1	HEAD	
	2	1	**214-2250**	1	PISTON	
	3	1	**214-3729**	1	CYLINDER AS	
		1	**6V-8398**	1	SEAL-O-RING	
	4	1	**228-6061**	1	ROD AS	
		1	**9R-3092**	2	BEARING-SLEEVE	
	5	1	**167-2200**	1	SEAL AS	
	6	1	**167-2307**	1	SEAL-U-CUP	
	7	1	**1H-6227**	1	SEAL-O-RING	
	8	1	**225-9524**	1	RING-WEAR	
	9	1	**231-3538**	1	SEAL-WIPER	
	10	1	**4M-0189**	1	SEAL-O-RING	
	11	1	**5J-5731**	1	LOCKNUT (1-3/4-12-THD)	
	12	1	**5J-7852**	1	SEAL	
	13	1	**5J-7865**	1	RING-BACKUP	
	14	1	**8T-4958**	1	RING-WEAR	

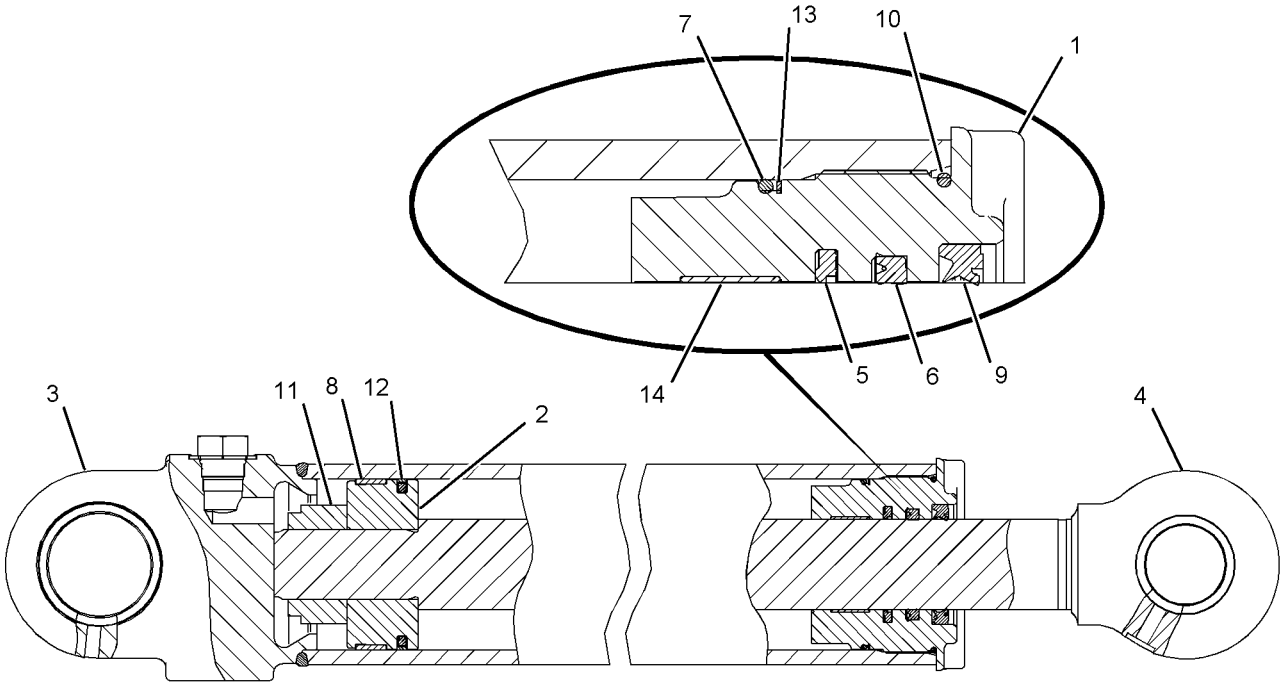

GRAPHIC #1 **<END>** g01082087

HYDRAULIC SYSTEM

210-7098 CYLINDER GP-STICK

S/N: SHA1-UP
76.2-MM (3-IN) BORE X 1164-MM (45.8-IN) STROKE
PART OF 271-1404 STICK GP
AN ATTACHMENT

SMCS-5458 **i02164171**

NOTE	REF NO	GRAPHIC REF	PART NUMBER	QTY	PART NAME 1 2 3 4 5 6 (PRODUCT LEVEL)	SEE PAGE
	1	1	**191-6159**	1	HEAD	
	2	1	**215-7457**	1	ROD AS	
	3	1	**215-7460**	1	CYLINDER AS	
		1	**6V-8398**	1	SEAL-O-RING	
	4	1	**229-8911**	1	PISTON	
	5	1	**167-2186**	1	SEAL AS-BUFFER	
	6	1	**167-2294**	1	SEAL-U-CUP	
M	7	1	**173-9779**	1	BOLT (M24X3X80-MM)	
	8	1	**1H-7339**	1	SEAL-O-RING	
	9	1	**223-3353**	1	RING-WEAR	
	10	1	**226-8202**	1	SEAL-WIPER	
	11	1	**4T-6780**	1	RING-WEAR	
	12	1	**5H-8848**	1	SEAL-O-RING	
	13	1	**6J-1972**	2	SEAL AS	
	14	1	**6J-5731**	1	RING-BACKUP	
	15	1	**6V-8237**	1	WASHER (26X44X4-MM THK)	

M-METRIC PART

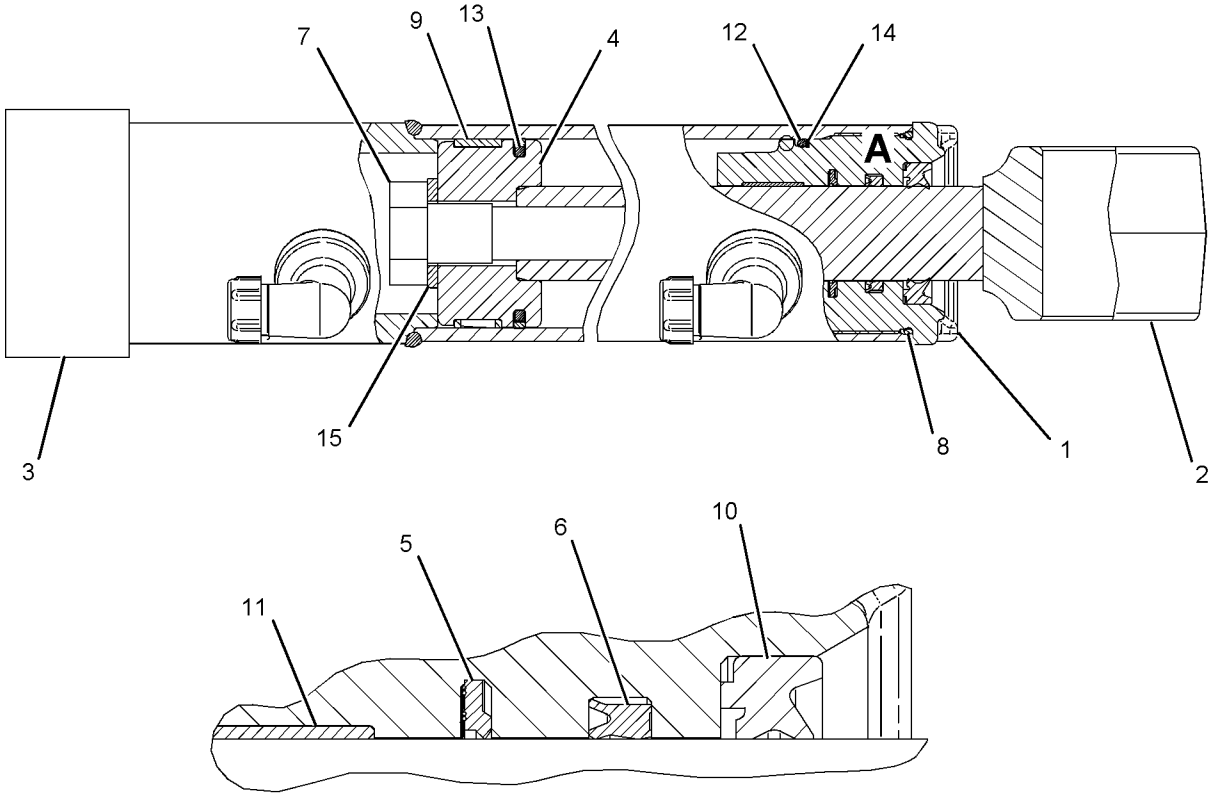

VIEW OF AREA A

GRAPHIC #1 **<END>** g01089695

278-1971 CYLINDER GP-SWING

S/N: SHA1-UP
100-MM (3.9-IN) BORE X 254-MM (10-IN) STROKE
PART OF 214-2198 HYDRAULIC AR

SMCS-5105 **i02430842**

NOTE	REF NO	GRAPHIC REF	PART NUMBER	QTY	PART NAME 1 2 3 4 5 6 (PRODUCT LEVEL)	SEE PAGE
	1	1	**2Y-5821**	1	RING	
	2	1	**3N-5739**	1	SPRING	
	3	1	**6E-1478**	1	PLUNGER	
	4	1	**9T-2883**	2	BEARING	
	5	1	**102-3582**	1	WASHER (11X19.5X2.5-MM THK)	
	6	1	**233-2583**	1	PISTON	
	7	1	**233-2585**	1	SEAL AS	
	8	1	**233-2589**	1	RING-WEAR	
	9	1	**233-2595**	1	HEAD AS	
		1	**233-2613**	1	BEARING	
	10	1	**233-2603**	1	SEAL-O-RING	
	11	1	**233-2606**	1	SEAL-WIPER	
	12	1	**233-2610**	1	SEAL-U-CUP	
	13	1	**233-2616**	1	SEAL	
	14	1	**233-2631**	1	ROD AS	
	15	1	**244-8826**	1	RING-BACKUP	
	16	1	**274-4274**	1	BEARING-SLEEVE	
	17	1	**278-1972**	1	CYLINDER AS	
	18	1	**3B-8489**	1	FITTING-GREASE	
	19	1	**3E-6735**	1	SEAL-O-RING	
M	20	1	**9X-6611**	1	SETSCREW-SOCKET (M10X1.5X16-MM)	
					AVAILABLE REPAIR KIT(S):	
			233-2622	1	KIT-SEAL	
					(INCLUDES SEALS, RINGS, & SETSCREW)	

M-METRIC PART

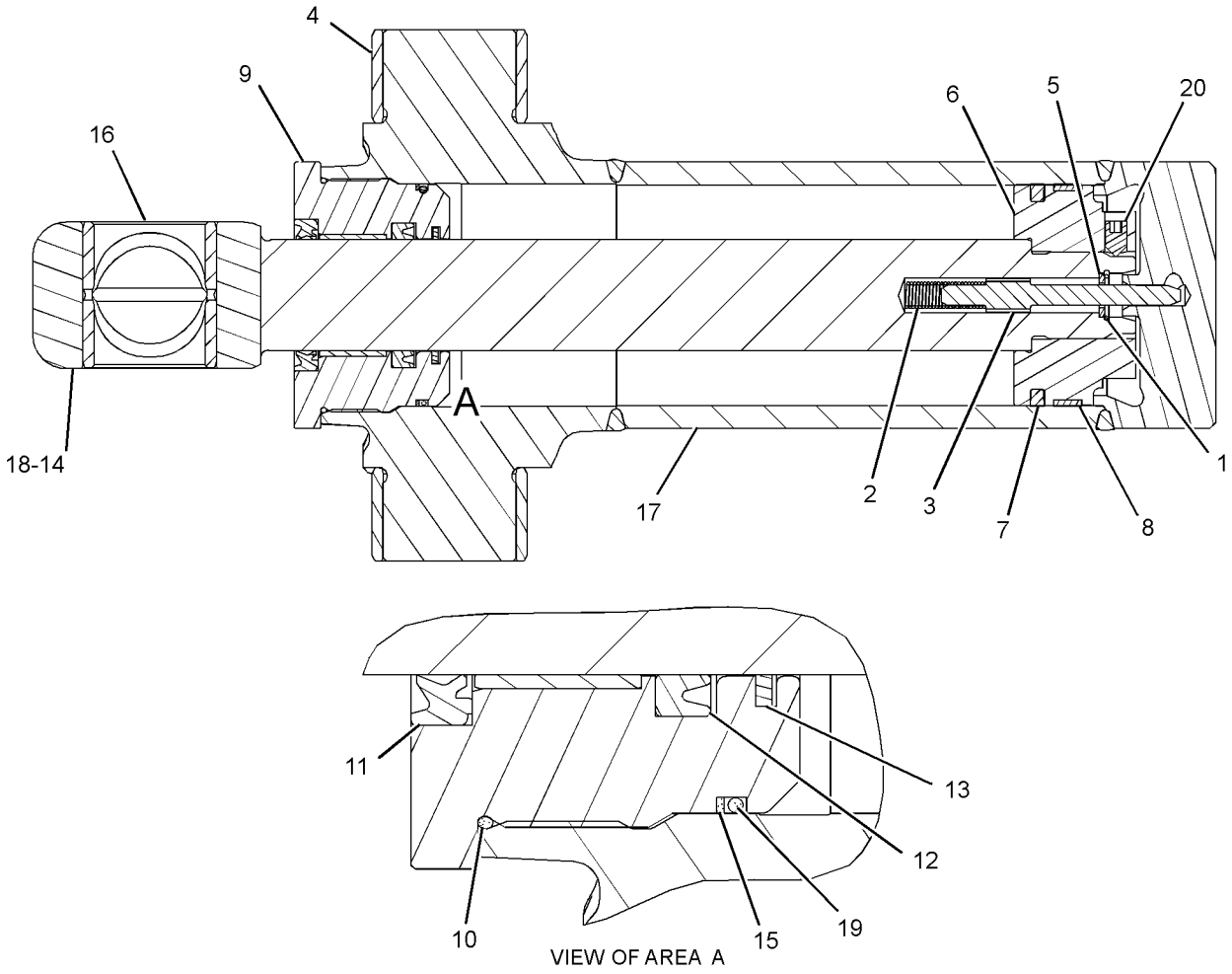

GRAPHIC #1 **<END>** g01202480

275-4243 CYLINDER GP-THUMB

S/N: SHA1-UP
70-MM (2.75-IN) BORE X 595-MM (23.4-IN) STROKE
PART OF 224-6237 CYLINDER & LINES GP-THUMB
AN ATTACHMENT

SMCS-5362 **i02598424**

NOTE	REF NO	GRAPHIC REF	PART NUMBER	QTY	PART NAME 1 2 3 4 5 6 (PRODUCT LEVEL)	SEE PAGE
	1	1	**276-4168**	1	CYLINDER AS	
	2	1	**276-4169**	1	ROD AS	
	3	1	**276-4170**	1	PISTON	
	4	1	**276-4171**	1	HEAD	
	5	1	**282-6836**	1	STOP	
	6	1	**3B-8489**	2	FITTING-GREASE	
	7	1	**9R-0320**	4	BEARING-SLEEVE	
					AVAILABLE REPAIR KIT(S):	
			276-4172	1	KIT-SEAL	
					(INCLUDES SEALS, RINGS & SETSCREW)	

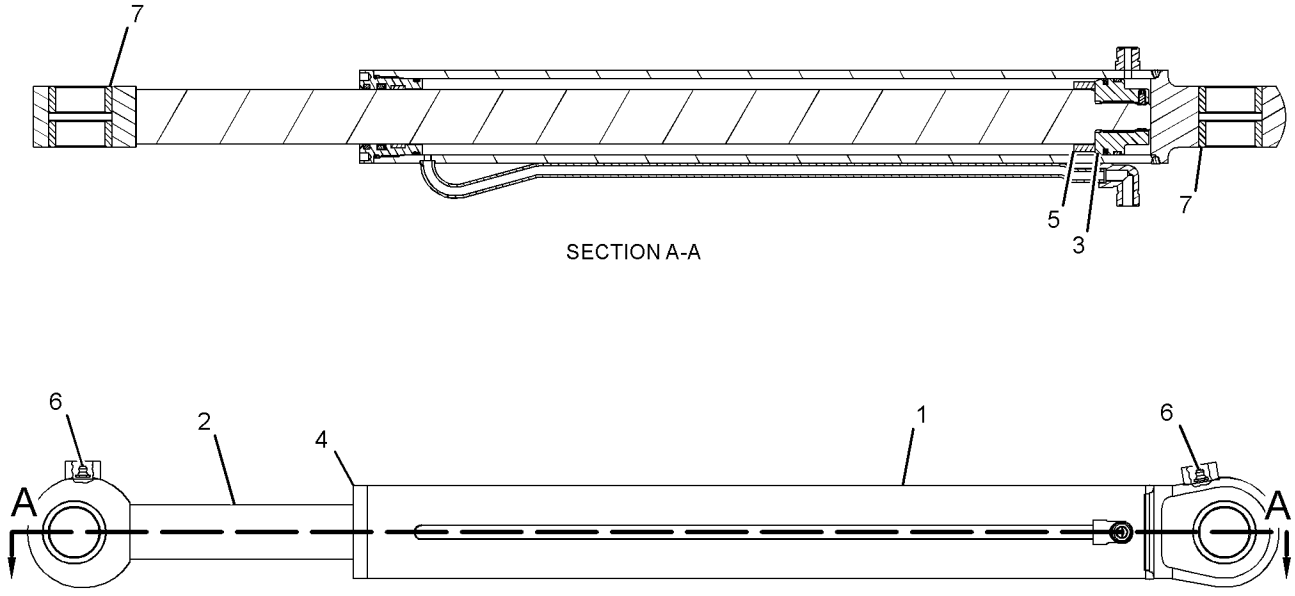

GRAPHIC #1 **<END>** g01234167

206-3553 CYLINDER GP-TILT

S/N: SHA1-UP
82.55-MM (3.3-IN) BORE X 642.1-MM (25.3-IN) STROKE
PART OF 213-9298 LOADER AR

SMCS-5104 **i02360284**

NOTE	REF NO	GRAPHIC REF	PART NUMBER	QTY	PART NAME 1 2 3 4 5 6 (PRODUCT LEVEL)	SEE PAGE
	1	1	**4T-7010**	1	PISTON	
R	2	1	**9T-3948**	1	ROD AS	
	2A	1	**9R-0320**	2	BEARING-SLEEVE	
	3	1	**206-3552**	1	CYLINDER AS	
	3A	1	**7J-9108**	2	SEAL-O-RING	
	3B	1	**9T-0766**	1	BEARING	
	4	1	**167-2192**	1	SEAL AS-BUFFER	
	5	1	**167-2302**	1	SEAL-U-CUP	
	6	1	**227-1143**	1	SEAL-WIPER	
	7	1	**191-6112**	1	HEAD	
	8	1	**1H-7339**	1	SEAL-O-RING	
	9	1	**2H-3931**	1	SEAL-O-RING	
	10	1	**4T-6779**	1	RING	
	11	1	**5P-8250**	1	WASHER (28X49X5-MM THK)	
	12	1	**6J-0793**	1	SEAL AS	
		1	**6J-0789**	1	RING-EXPANDER	
		1	**6J-0790**	1	SEAL	
	13	1	**7J-5639**	1	BOLT-LOCKING (1-14X2.5-IN)	
	14	1	**8J-2574**	1	RING-BACKUP	
	15	1	**8J-6371**	1	RING-WEAR	

R-REMFG PART MAY BE AVAILABLE

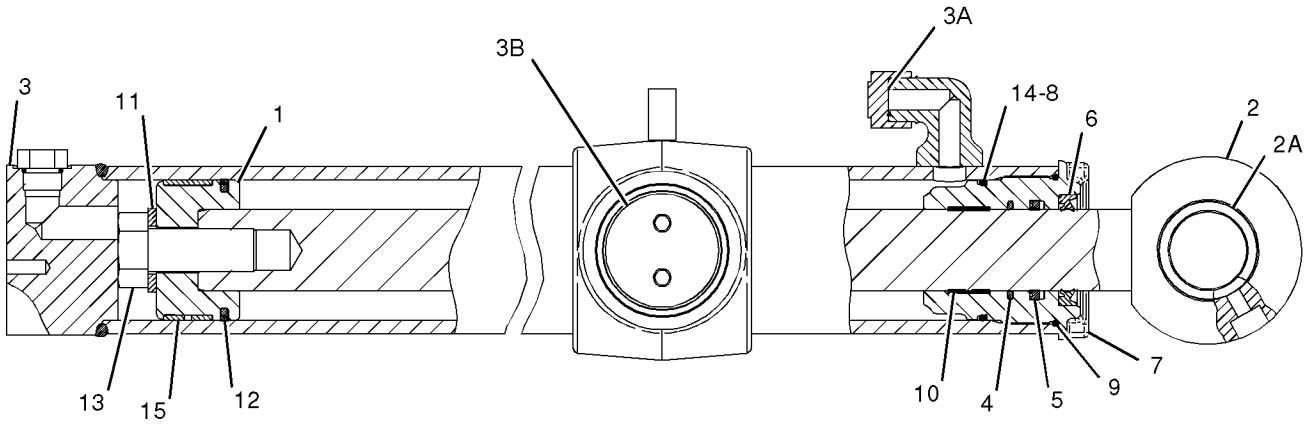

GRAPHIC #1 **<END>** g01012548

112-1826 DRIVE & MTG GP-PUMP

S/N: SHA1-UP

PART OF 214-6910, 214-6911, 214-6912, 214-6913 POWER TRAIN AR

AN ATTACHMENT

SMCS-3108, 5070 **i02442913**

NOTE	REF NO	GRAPHIC REF	PART NUMBER	QTY	PART NAME 1 2 3 4 5 6 (PRODUCT LEVEL)	SEE PAGE
M	1	1	**8T-9405**	4	BOLT-SOCKET HEAD (M4X0.7X16-MM)	
	2	1	**9U-8886**	1	RING-SEAL	
	3	1	**115-1918**	1	PLATE	
	4	1	**117-3534**	1	ADAPTER	
	5	1	**274-4555**	1	HUB	
Y	6	1	**128-5596**	1	SHAFT GP-PUMP DRIVE	405
	7	1	**5F-3106**	1	SEAL-O-RING	
	8	1	**8T-4122**	2	WASHER-HARD (17X32X3.5-MM THK)	
M	9	1	**8T-7338**	2	BOLT (M16X2X45-MM)	

M-METRIC PART
Y-SEPARATE ILLUSTRATION

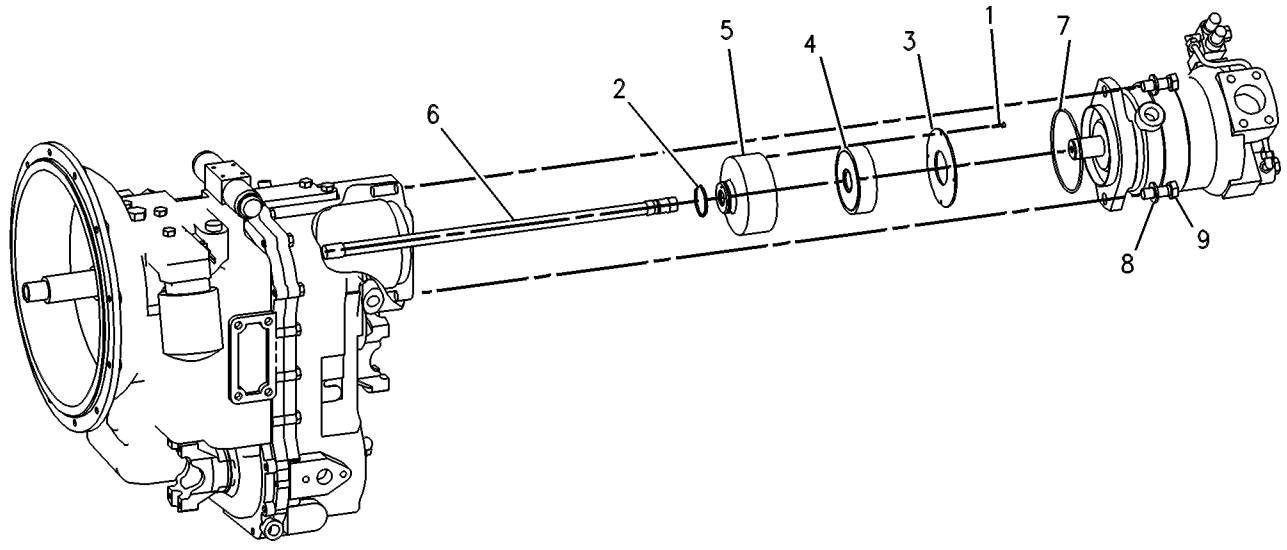

GRAPHIC #1 **<END>** g00131524

HYDRAULIC SYSTEM

219-8566 FASTENER GP-VALVE–BANK

S/N: SHA1-UP

PART OF 209-9943 VALVE AR-BANK 2, 209-9944 VALVE AR-BANK 3

AN ATTACHMENT

SMCS-5051 **i02125711**

NOTE	REF NO	GRAPHIC REF	PART NUMBER	QTY	PART NAME 1 2 3 4 5 6 (PRODUCT LEVEL)	SEE PAGE
	1	1	**8T-4121**	3	WASHER-HARD (11X21X2.5-MM THK)	
M	2	1	**8T-4195**	3	BOLT (M10X1.5X30-MM)	

M-METRIC PART

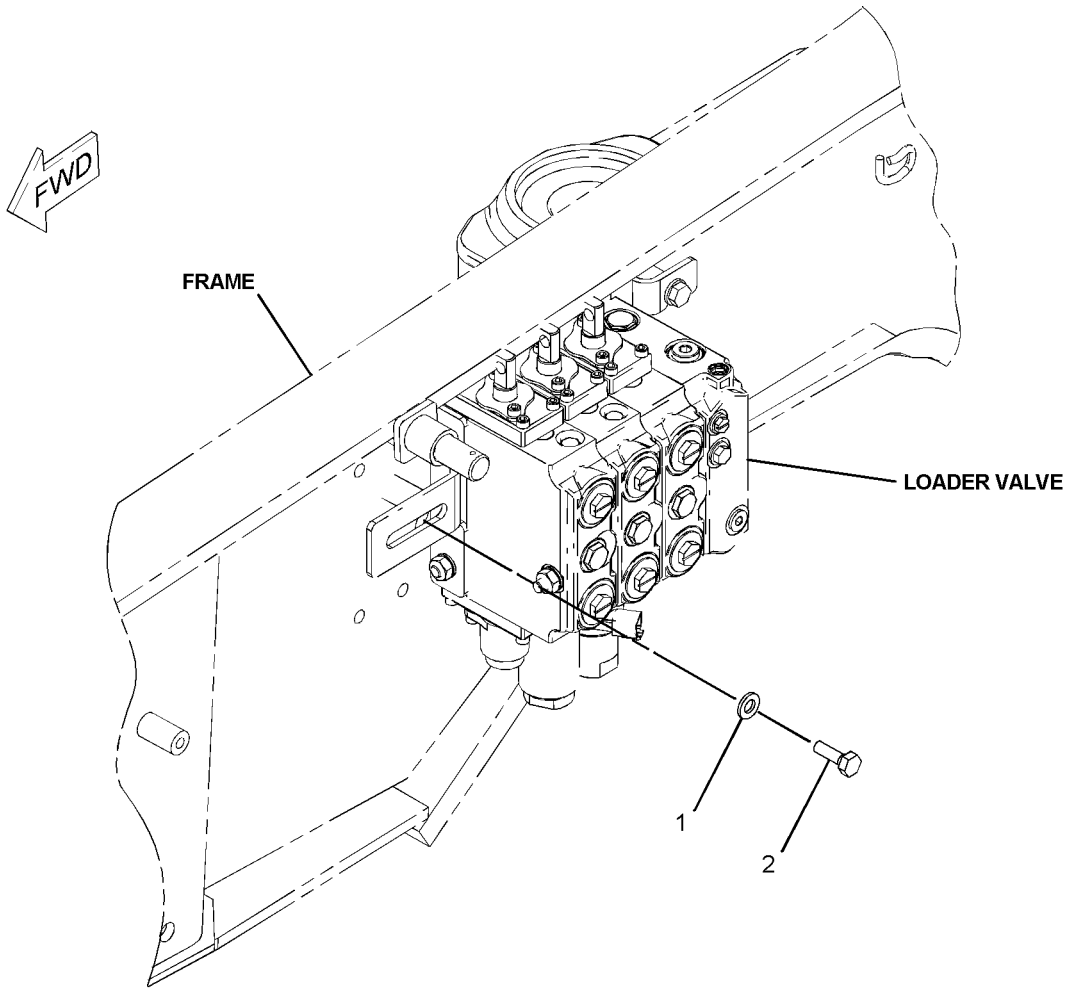

GRAPHIC #1 **<END>** g01082895

132-8769 FITTING GP-HYDRAULIC

S/N: SHA1-UP
AN ATTACHMENT

SMCS-5057 **i02249052**

NOTE	REF NO	GRAPHIC REF	PART NUMBER	QTY	PART NAME 1 2 3 4 5 6 (PRODUCT LEVEL)	SEE PAGE
	1	1	**106-0406**	1	FITTING (QUICK DISCONNECT, MALE)	
	2	1	**106-0401**	1	FITTING (QUICK DISCONNECT, FEMALE)	

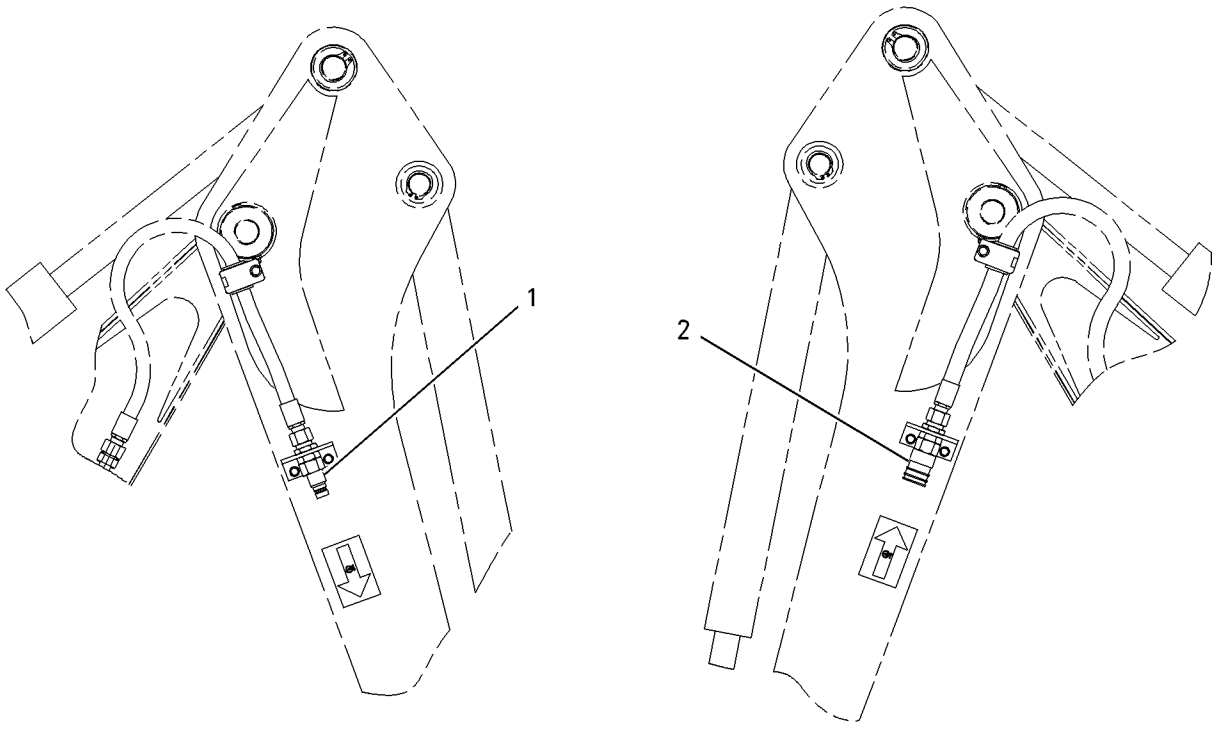

GRAPHIC #1 **<END>** g00759123

HYDRAULIC SYSTEM

214-2198 HYDRAULIC AR

S/N: SHA1-UP

PART OF 213-9271 COMMON AR

SMCS-5050 **i02779355**

NOTE	PART NUMBER	QTY	PART NAME 1 2 3 4 5 6 (PRODUCT LEVEL)	SEE PAGE
Y	**262-7050**	1	CYLINDER GP-STABILIZER (RH)	331
Y	**262-7049**	1	CYLINDER GP-STABILIZER (LH)	329
Y	**278-1971**	2	CYLINDER GP-SWING (RH)	337
Y	*216-5332*	1	LINES GP-DRAIN	362
Y	*257-3160*	1	LINES GP-HYDRAULIC OIL COOLER	365
Y	*219-8568*	1	LINES GP-PILOT (SIGNAL)	375
Y	*219-8567*	1	LINES GP-PUMP	377
Y	*232-1248*	1	LINES GP-SWING	388
Y	**247-7868**	1	PUMP GP-METERING (HMU)	291
Y	**247-7867**	1	PUMP GP-PISTON	401
			S/N: SHA1-2590, 2613-2622	
Y	**296-6714**	1	PUMP GP-PISTON	403
			S/N: SHA2591-2612, 2623-UP	
Y	*245-8777*	1	TANK & MTG GP-HYDRAULIC	406
	210-6243	1	FILTER GP-OIL (HYDRAULIC)	
	126-1817	1	FILTER AS-OIL (ULTRA HIGH EFFICIENCY) (OIL FILTER BYPASS)	
			—OR—	
	134-3014	1	FILTER AS-OIL (FIRE RESISTANT FLUID) (OIL FILTER BYPASS)	
			(OPTIONAL SERVICE REPLACEMENT)	

Y-SEPARATE ILLUSTRATION

<END>

220-5973 KICKOUT & POSITIONER GP

S/N: SHA1-UP

PART OF 213-9298 LOADER AR

SMCS-5109, 5112 **i02515896**

NOTE	REF NO	GRAPHIC REF	PART NUMBER	QTY	PART NAME 1 2 3 4 5 6 (PRODUCT LEVEL)	SEE PAGE
	1	1	**112-5494**	1	LEVER AS	
M	2	1	**8T-4189**	2	BOLT (M8X1.25X20-MM)	
	3	1	**268-5689**	1	FILM-INDENTIFICATION (BUCKET LEVEL)	
	4	1	**8T-0706**	1	RING-RETAINING	
	5	1	**8T-5063**	1	ROD END	
	6	1	**9R-3255**	1	LEVER	
	7	1	**9R-5301**	2	PIN-COTTER	
	8	1	**128-7902**	1	SPACER (60.25X75X6-MM THK)	
B	9	1	**128-7903**	3	SPACER (61X114.3X3-MM THK)	
B	10	1	**128-7905**	3	SPACER (61X114.3X1-MM THK)	
	11	1	**279-6052**	1	LINK AS	
	12	1	**130-5891**	1	LEVER AS	
	13	1	**130-7952**	1	PLATE	
	14	1	**140-6009**	1	LEVER AS	
	15	1	**141-6343**	1	SPRING	
	16	1	**220-5974**	1	PLATE	
	17	1	**106-7301**	1	ROD AS	
	18	1	**227-5571**	1	TUBE AS	
	19	1	**272-0555**	1	PIVOT AS	
	20	1	**1B-8736**	1	KEY-WOODRUFF	
	21	1	**3B-8489**	2	FITTING-GREASE	
	22	1	**272-0557**	1	PLATE AS	
	23	1	**8C-6955**	1	END-YOKE ROD	
	24	1	**8T-4123**	8	WASHER (22X35X3.5-MM THK)	
M	25	1	**8T-4133**	2	NUT (M10X1.5-THD)	
M	26	1	**8T-4182**	1	BOLT (M10X1.5X45-MM)	
	27	1	**9R-2806**	2	PIN	
	28	1	**9R-2807**	4	CLIP	
	29	1	**8T-4224**	2	WASHER-HARD (8.8X16X2-MM THK)	

B-USE AS REQUIRED
M-METRIC PART

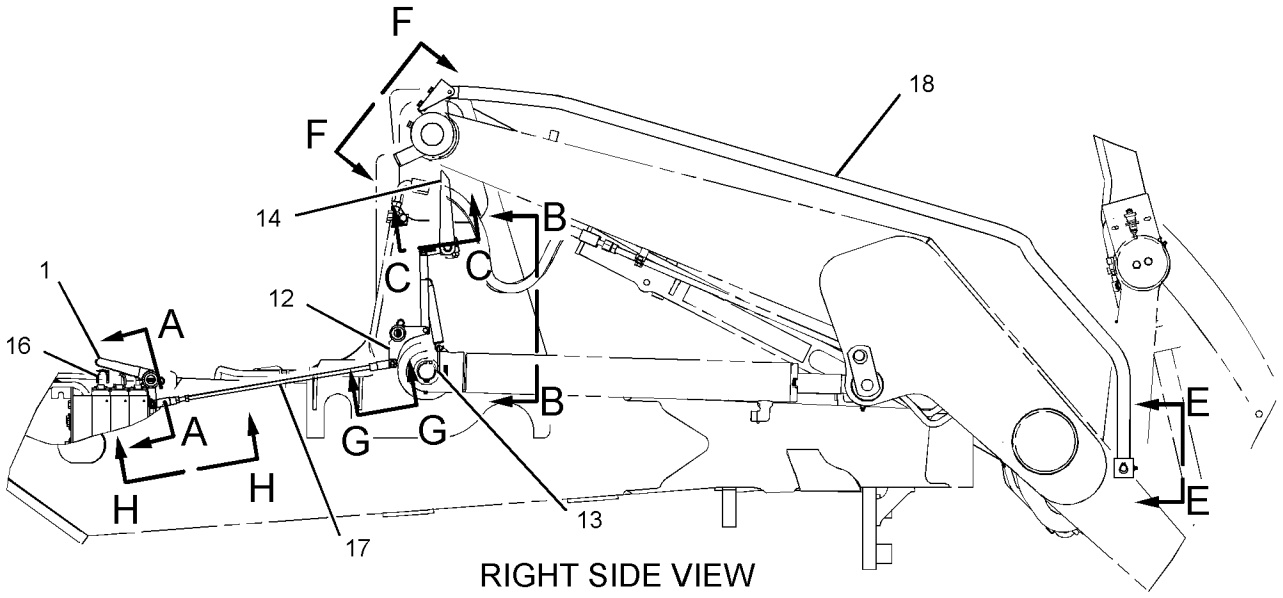

RIGHT SIDE VIEW

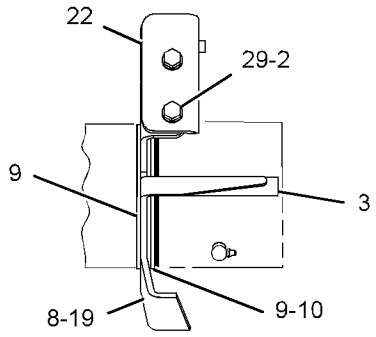

VIEW F-F

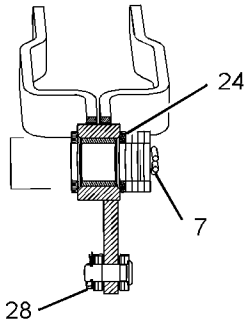

SECTION A-A

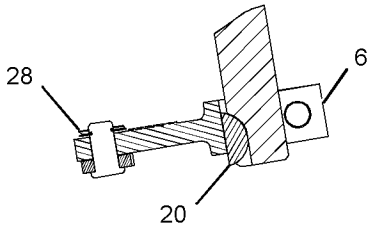

SECTION C-C

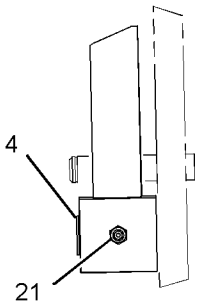

VIEW E-E

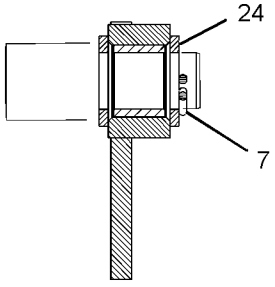

SECTION D-D

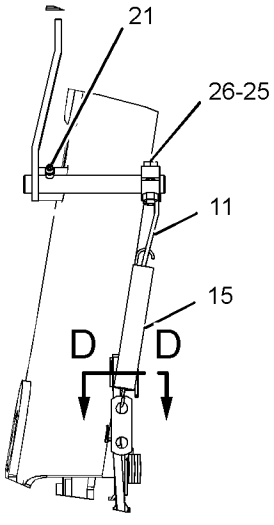

VIEW B-B

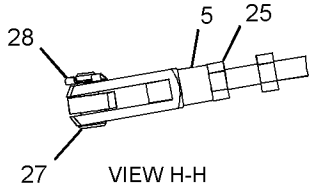

VIEW H-H

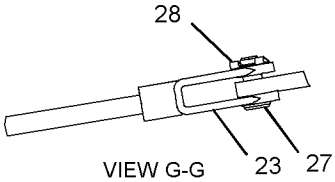

VIEW G-G

GRAPHIC #1

<END>

g01214274

HYDRAULIC SYSTEM

249-7912 LINES GP-BACKHOE AUXILIARY

S/N: SHA1-UP
AN ATTACHMENT

SMCS-5057 **i02532506**

NOTE	REF NO	GRAPHIC REF	PART NUMBER	QTY	PART NAME 1 2 3 4 5 6 (PRODUCT LEVEL)	SEE PAGE
	1	1	**4W-3753**	2	SPACER (13.5X25X38.1-MM THK)	
	2	1	**106-0401**	1	FITTING (QUICK DISCONNECT, FEMALE)	
	3	1	**106-0406**	1	FITTING (QUICK DISCONNECT, MALE)	
	4	1	**109-1260**	2	BRACKET	
	5	1	**144-8344**	1	SPACER (11X19X20-MM THK)	
	6	1	*155-2026*	1	UNION AS	
		1	**5K-9090**	2	SEAL-O-RING	
		1	**6V-8998**	1	UNION	
	7	1	**217-2617**	1	TUBE AS	
I	8	1	**217-2699**	1	HOSE AS	
	9	1	*241-6226*	1	TEE AS	
		1	**6V-8398**	1	SEAL-O-RING	
		1	**6V-9746**	1	SEAL-O-RING	
		1	**7J-9108**	1	SEAL-O-RING	
		1	**241-6225**	1	TEE	
	10	1	**241-8448**	2	FILM-WARNING (HYD PRESS, READ OMM, U.S.)	
I	11	1	**290-6711**	1	HOSE AS	
	12	1	**251-9360**	1	TUBE AS	
I	13	1	**252-0200**	1	HOSE AS	
	14	1	**277-4543**	1	BRACKET AS	
	15	1	**281-4726**	2	FILM-INSTRUCTION (OIL FLOW DIRECTION)	
	16	1	*148-8392*	1	ELBOW AS	
		1	**6V-9746**	1	SEAL-O-RING	
		1	**6V-9853**	1	ELBOW	
	17	1	*150-3053*	2	CONNECTOR AS	
					(EACH INCLUDES)	
		1	**6V-9746**	1	SEAL-O-RING	
		1	**7M-8485**	1	SEAL-O-RING	
		1	**108-3872**	1	CONNECTOR	
I	18	1	**262-4459**	1	HOSE AS	
	19	1	**2P-1293**	2	LOCKNUT (1-3/16-12-THD)	
	20	1	**5K-9090**	2	SEAL-O-RING	
	21	1	**5P-7466**	4	CLIP (SLOT)	
	22	1	**5P-7467**	4	CLIP (TAB)	
	23	1	**5P-8112**	4	GROMMET	
	24	1	**8S-0023**	1	CLIP (SLOT)	
	25	1	**6V-9170**	1	NUT-BULKHEAD (1-14-THD)	
	26	1	**6V-9172**	1	NUT (1-7/16-12-THD)	
	27	1	**6V-9746**	1	SEAL-O-RING	
	28	1	**7X-7729**	2	WASHER (11X25X3-MM THK)	
	29	1	**8T-1889**	3	CLIP (SLOT)	
	30	1	**8T-1890**	3	CLIP (TAB)	
	31	1	**8T-4121**	8	WASHER-HARD (11X21X2.5-MM THK)	
M	32	1	**8T-4133**	1	NUT (M10X1.5-THD)	
M	33	1	**8T-4136**	5	BOLT (M10X1.5X25-MM)	
M	34	1	**7X-2549**	2	BOLT (M12X1.75X100-MM)	
M	35	1	**8T-4185**	1	BOLT (M10X1.5X50-MM)	
M	36	1	**8T-4196**	2	BOLT (M10X1.5X35-MM)	
	37	1	**8T-4223**	2	WASHER-HARD (13.5X25.5X3-MM THK)	
	38	1	**8S-0024**	1	CLIP (TAB)	

I-REFER TO HYDRAULIC INFORMATION SYSTEM
M-METRIC PART

249-7912 **LINES GP-BACKHOE AUXILIARY** *(contd.)* **i02532506**

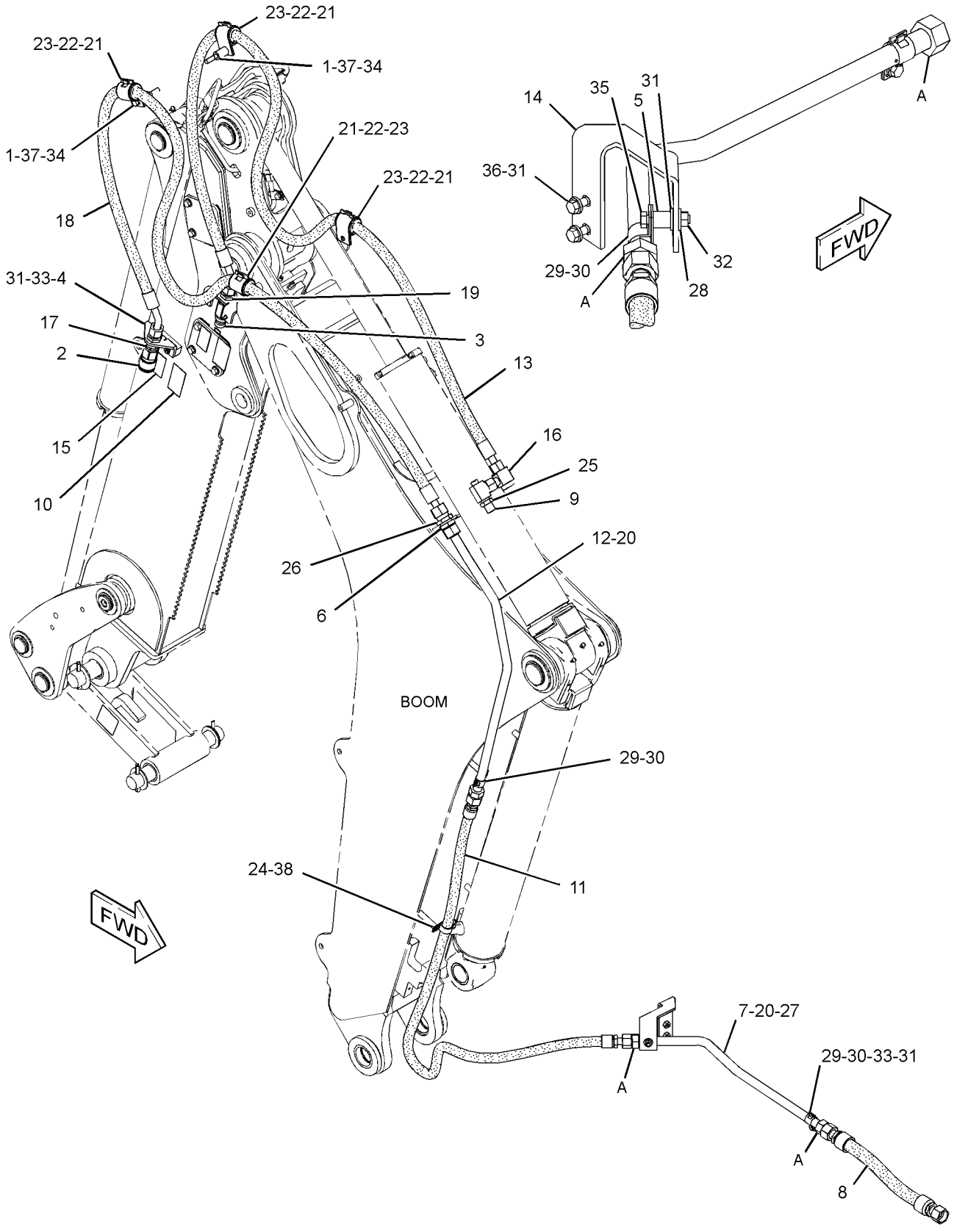

GRAPHIC #1 **<END>** g01318075

HYDRAULIC SYSTEM

262-4212 LINES GP-BACKHOE AUXILIARY

S/N: SHA1-UP
AN ATTACHMENT

SMCS-5057 **i02502873**

NOTE	REF NO	GRAPHIC REF	PART NUMBER	QTY	PART NAME 1 2 3 4 5 6 (PRODUCT LEVEL)	SEE PAGE
	1	1	**106-0401**	1	FITTING (QUICK DISCONNECT, FEMALE)	
	2	1	**106-0406**	1	FITTING (QUICK DISCONNECT, MALE)	
	3	1	**109-1260**	2	BRACKET	
	4	1	**144-8344**	1	SPACER (11X19X20-MM THK)	
	5	1	*155-2026*	2	UNION AS	
					(EACH INCLUDES)	
		1	**5K-9090**	2	SEAL-O-RING	
		1	**6V-8998**	1	UNION	
	6	1	**235-5729**	1	VALVE AS-MANUAL (DIRECTIONAL FLOW)	
	7	1	**241-8448**	2	FILM-WARNING (HYD PRESS, READ OMM, U.S.)	
	8	1	**251-9360**	1	TUBE AS	
	9	1	**262-3036**	1	BRACKET	
I	10	1	**262-3038**	1	HOSE AS	
I	11	1	**262-4203**	2	HOSE AS	
	12	1	**262-4217**	1	TUBE AS	
	13	1	**262-4220**	1	TUBE AS	
	14	1	**277-4543**	1	BRACKET AS	
	15	1	**286-0689**	1	TUBE AS	
	16	1	**109-5825**	1	ELBOW	
	17	1	*148-8327*	1	CONNECTOR AS	
		1	**3D-2824**	1	SEAL-O-RING	
		1	**6V-8637**	1	CONNECTOR	
		1	**6V-9746**	1	SEAL-O-RING	
	18	1	*148-8335*	1	CONNECTOR AS	
		1	**5K-9090**	1	SEAL-O-RING	
		1	**6V-8635**	1	CONNECTOR	
		1	**7M-8485**	1	SEAL-O-RING	
	19	1	*148-8347*	1	ELBOW AS	
		1	**3D-2824**	1	SEAL-O-RING	
		1	**6V-9007**	1	ELBOW	
		1	**6V-9746**	1	SEAL-O-RING	
	20	1	*150-3053*	2	CONNECTOR AS	
					(EACH INCLUDES)	
		1	**6V-9746**	1	SEAL-O-RING	
		1	**7M-8485**	1	SEAL-O-RING	
		1	**108-3872**	1	CONNECTOR	
	21	1	**260-9143**	1	ELBOW AS	
		1	**6V-9746**	1	SEAL-O-RING	
		1	**109-5825**	1	ELBOW	
I	22	1	**290-6711**	1	HOSE AS	
I	23	1	**290-6712**	1	HOSE AS	
	24	1	**2P-1293**	2	LOCKNUT (1-3/16-12-THD)	
	25	1	**5K-9090**	2	SEAL-O-RING	
	26	1	**5P-4116**	2	WASHER-HARD (8.8X20.5X2-MM THK)	
	27	1	**5P-7466**	2	CLIP (SLOT)	
	28	1	**5P-7467**	2	CLIP (TAB)	
	29	1	**5P-8112**	2	GROMMET	
	30	1	**6V-9172**	2	NUT (1-7/16-12-THD)	
	31	1	**6V-9746**	2	SEAL-O-RING	
	32	1	**8S-0023**	1	CLIP (SLOT)	
	33	1	**8S-0024**	1	CLIP (TAB)	
	34	1	**8T-1887**	1	CLIP (SLOT)	
	35	1	**8T-1888**	1	CLIP (TAB)	
	36	1	**8T-1889**	2	CLIP (SLOT)	
	37	1	**8T-1890**	2	CLIP (TAB)	
	38	1	**8T-4121**	12	WASHER-HARD (11X21X2.5-MM THK)	

262-4212 LINES GP-BACKHOE AUXILIARY *(contd.)* i02502873

NOTE	REF NO	GRAPHIC REF	PART NUMBER	QTY	PART NAME 1 2 3 4 5 6 (PRODUCT LEVEL)	SEE PAGE
M	39	1	**8T-4133**	1	NUT (M10X1.5-THD)	
M	40	1	**8T-4136**	4	BOLT (M10X1.5X25-MM)	
M	41	1	**8T-4137**	2	BOLT (M10X1.5X20-MM)	
M	42	1	**8T-4185**	1	BOLT (M10X1.5X50-MM)	
M	43	1	**8T-4189**	2	BOLT (M8X1.25X20-MM)	
M	44	1	**8T-4196**	2	BOLT (M10X1.5X35-MM)	
BM	45	1	**8T-4910**	2	BOLT (M12X1.75X60-MM)	

B-USE AS REQUIRED
I-REFER TO HYDRAULIC INFORMATION SYSTEM
M-METRIC PART

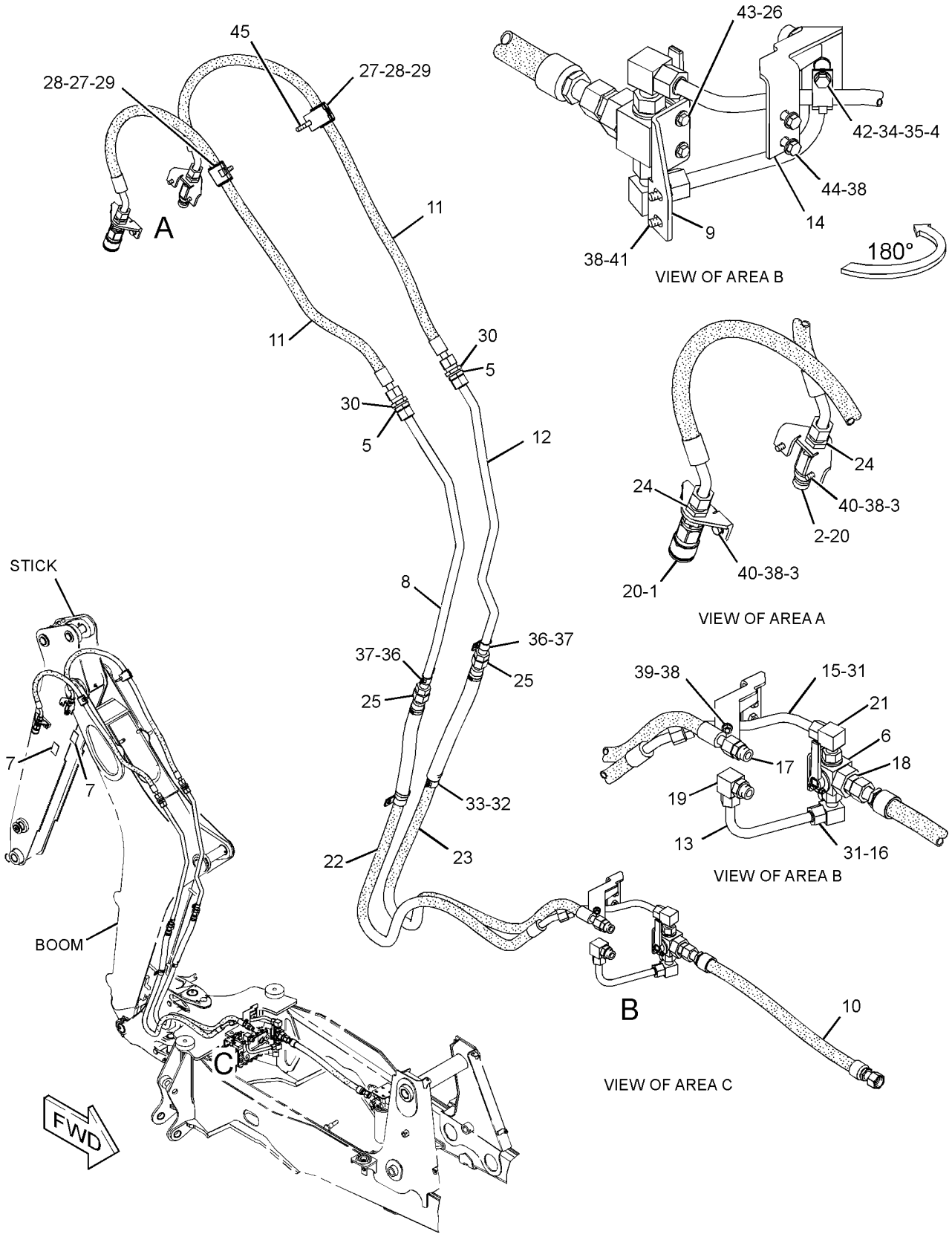

GRAPHIC #1 **<END>** g01332996

HYDRAULIC SYSTEM

262-4213 LINES GP-BACKHOE AUXILIARY

S/N: SHA1-UP

AN ATTACHMENT

SMCS-5057 **i02502874**

NOTE	REF NO	GRAPHIC REF	PART NUMBER	QTY	PART NAME 1 2 3 4 5 6 (PRODUCT LEVEL)	SEE PAGE
	1	1	**4W-3753**	2	SPACER (13.5X25X38.1-MM THK)	
	2	1	**106-0401**	1	FITTING (QUICK DISCONNECT, FEMALE)	
	3	1	**106-0406**	1	FITTING (QUICK DISCONNECT, MALE)	
	4	1	*106-8715*	1	ELBOW AS	
		1	**8C-8400**	1	ELBOW	
		1	**6V-9746**	1	SEAL-O-RING	
		1	**3D-2824**	1	SEAL-O-RING	
	5	1	**109-1260**	2	BRACKET	
	6	1	**144-8344**	1	SPACER (11X19X20-MM THK)	
	7	1	*155-2026*	2	UNION AS	
					(EACH INCLUDES)	
		1	**5K-9090**	2	SEAL-O-RING	
		1	**6V-8998**	1	UNION	
	8	1	**235-5729**	1	VALVE AS-MANUAL (DIRECTIONAL FLOW)	
		1	**6V-9746**	2	SEAL-O-RING	
		1	**281-4022**	1	HANDLE AS	
	9	1	**241-8448**	2	FILM-WARNING (HYD PRESS, READ OMM, U.S.)	
					(APPLY TO STICK SURFACE)	
	10	1	**251-9360**	1	TUBE AS	
	11	1	**262-3036**	1	BRACKET	
I	12	1	**262-3038**	1	HOSE AS	
	13	1	**262-4217**	1	TUBE AS	
	14	1	**262-4462**	1	TUBE AS	
	15	1	**277-4543**	1	BRACKET AS	
	16	1	**286-0689**	1	TUBE AS	
	17	1	**109-5825**	1	ELBOW	
	18	1	*148-8327*	1	CONNECTOR AS (DRUM)	
		1	**3D-2824**	1	SEAL-O-RING	
		1	**6V-8637**	1	CONNECTOR	
		1	**6V-9746**	1	SEAL-O-RING	
	19	1	*148-8335*	1	CONNECTOR AS	
		1	**5K-9090**	1	SEAL-O-RING	
		1	**6V-8635**	1	CONNECTOR	
		1	**7M-8485**	1	SEAL-O-RING	
	20	1	*150-3053*	2	CONNECTOR AS	
					(EACH INCLUDES)	
		1	**6V-9746**	1	SEAL-O-RING	
		1	**7M-8485**	1	SEAL-O-RING	
		1	**108-3872**	1	CONNECTOR	
	21	1	*260-9143*	1	ELBOW AS	
		1	**6V-9746**	1	SEAL-O-RING	
		1	**109-5825**	1	ELBOW	
I	22	1	**262-4459**	2	HOSE AS	
I	23	1	**290-6711**	1	HOSE AS	
I	24	1	**290-6712**	1	HOSE AS	
	25	1	**2P-1293**	2	LOCKNUT (1-3/16-12-THD)	
	26	1	**5K-9090**	2	SEAL-O-RING	
	27	1	**5P-4116**	2	WASHER-HARD (8.8X20.5X2-MM THK)	
	28	1	**5P-7466**	4	CLIP (SLOT)	
	29	1	**5P-7467**	4	CLIP (TAB)	
	30	1	**5P-8112**	4	GROMMET	
	31	1	**6V-9172**	2	NUT (1-7/16-12-THD)	
	32	1	**6V-9746**	2	SEAL-O-RING	
M	33	1	**7X-2549**	2	BOLT (M12X1.75X100-MM)	
	34	1	**8S-0023**	2	CLIP (SLOT)	
	35	1	**8S-0024**	2	CLIP (TAB)	

262-4213 **LINES GP-BACKHOE AUXILIARY** *(contd.)* **i02502874**

NOTE	REF NO	GRAPHIC REF	PART NUMBER	QTY	PART NAME 1 2 3 4 5 6 (PRODUCT LEVEL)	SEE PAGE
	36	1	**8T-1887**	1	CLIP (SLOT)	
	37	1	**8T-1888**	1	CLIP (TAB)	
	38	1	**8T-1889**	2	CLIP (SLOT) (2-PIECE)	
	39	1	**8T-1890**	2	CLIP (TAB) (2-PIECE)	
	40	1	**8T-4121**	12	WASHER-HARD (11X21X2.5-MM THK)	
M	41	1	**8T-4133**	1	NUT (M10X1.5-THD)	
M	42	1	**8T-4136**	4	BOLT (M10X1.5X25-MM)	
M	43	1	**8T-4137**	2	BOLT (M10X1.5X20-MM)	
M	44	1	**8T-4185**	1	BOLT (M10X1.5X50-MM)	
M	45	1	**8T-4189**	2	BOLT (M8X1.25X20-MM)	
M	46	1	**8T-4196**	2	BOLT (M10X1.5X35-MM)	
	47	1	**8T-4223**	2	WASHER-HARD (13.5X25.5X3-MM THK)	

I-REFER TO HYDRAULIC INFORMATION SYSTEM
M-METRIC PART

262-4213 **LINES GP-BACKHOE AUXILIARY** *(contd.)* **i02502874**

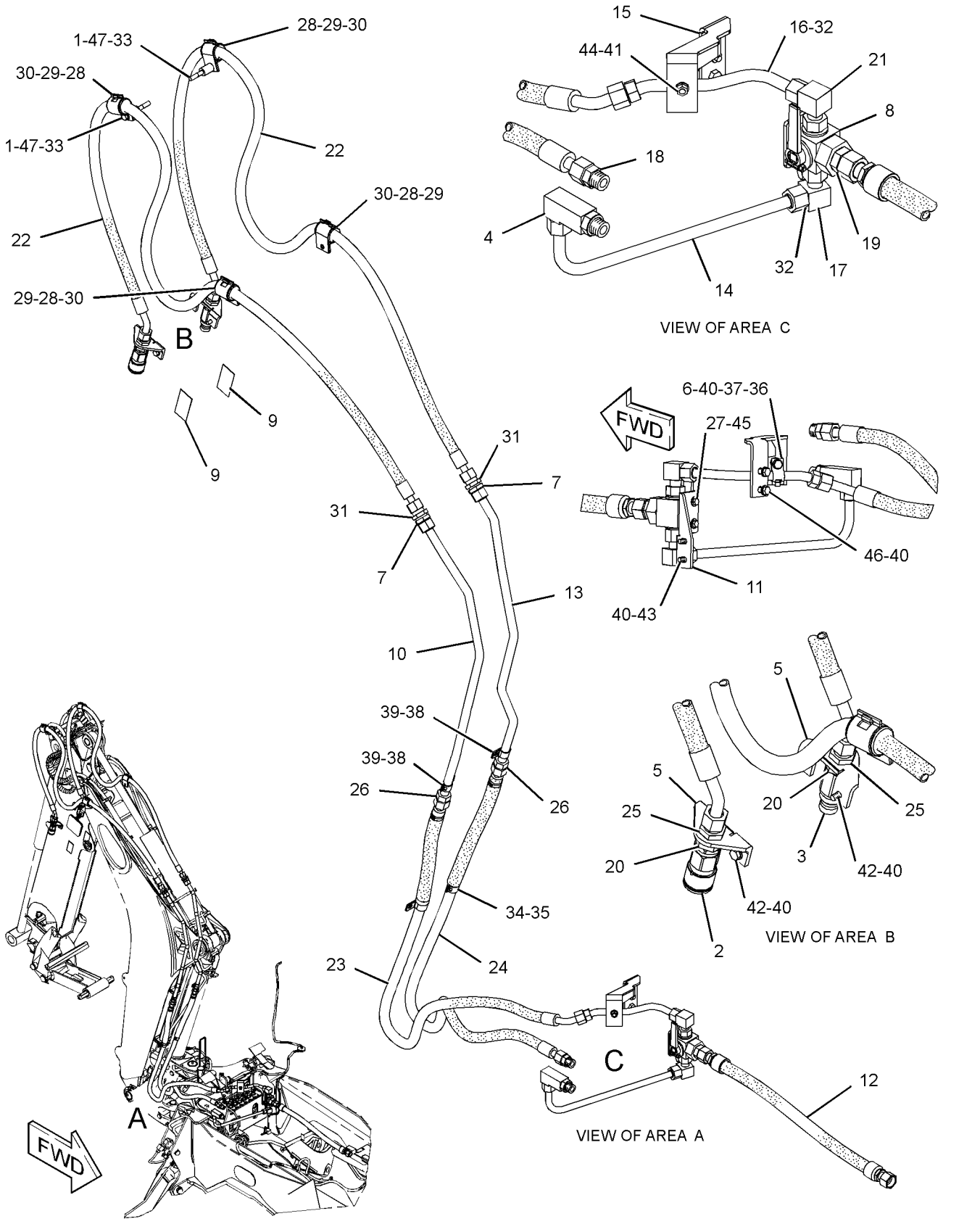

GRAPHIC #1 **<END>** g01264525

HYDRAULIC SYSTEM

211-7601 LINES GP-BOOM

S/N: SHA1-UP

PART OF 209-9929, 213-9293, 291-9203 BACKHOE AR-EXTENDABLE STICK, 209-9924, 213-9290, 291-9202 BACKHOE AR-STANDARD STICK AN ATTACHMENT

SMCS-5057, 5456 **i02755947**

NOTE	REF NO	GRAPHIC REF	PART NUMBER	QTY	PART NAME 1 2 3 4 5 6 (PRODUCT LEVEL)	SEE PAGE
	1	1	**5P-0599**	1	CLAMP-BAND	
	2	1	**9R-4619**	1	SUPPORT AS	
M		1	**6V-8224**	1	NUT-WELD (M10X1.15-THD)	
I	3	1	**290-6700**	1	HOSE AS	
	4	1	**250-0658**	1	TUBE AS	
I	5	1	**250-0804**	1	HOSE AS	
	6	1	*148-8341*	2	CONNECTOR AS	
					(EACH INCLUDES)	
		1	**3D-2824**	1	SEAL-O-RING	
		1	**6V-8713**	1	CONNECTOR	
		1	**7J-9108**	1	SEAL-O-RING	
	7	1	*148-8382*	1	ELBOW AS	
		1	**3D-2824**	1	SEAL-O-RING	
		1	**7J-9108**	1	SEAL-O-RING	
		1	**8T-0404**	1	ELBOW	
	8	1	**7J-9108**	1	SEAL-O-RING	
	9	1	**8T-1887**	1	CLIP (SLOT)	
	10	1	**8T-1888**	1	CLIP (TAB)	
	11	1	**8T-4121**	1	WASHER-HARD (11X21X2.5-MM THK)	
M	12	1	**8T-4137**	1	BOLT (M10X1.5X20-MM)	

I-REFER TO HYDRAULIC INFORMATION SYSTEM
M-METRIC PART

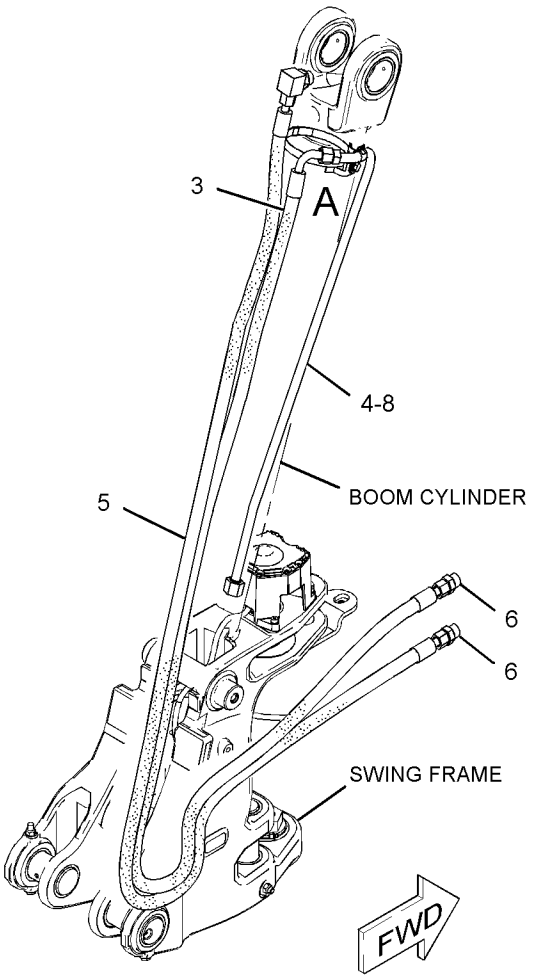

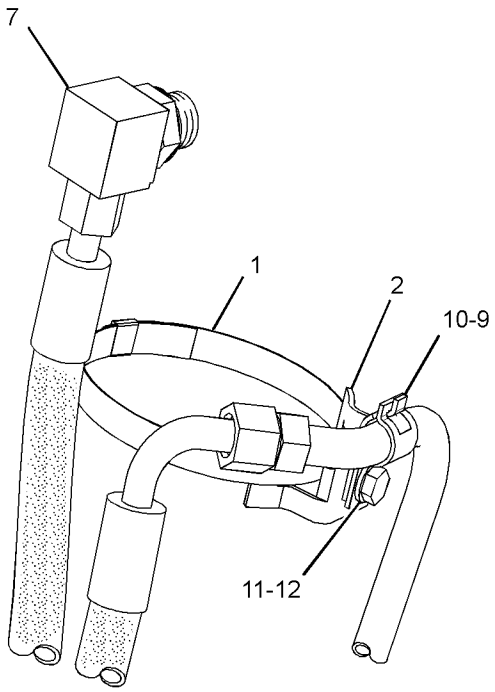

VIEW OF AREA A

GRAPHIC #1 **<END>** g01384581

246-9311 LINES GP-BUCKET—STANDARD STICK

S/N: SHA1-UP

PART OF 209-9924, 213-9290, 291-9202 BACKHOE AR-STANDARD STICK AN ATTACHMENT

SMCS-5057, 5457 **i02634525**

NOTE	REF NO	GRAPHIC REF	PART NUMBER	QTY	PART NAME 1 2 3 4 5 6 (PRODUCT LEVEL)	SEE PAGE
	1	1	**5P-0599**	1	CLAMP-BAND	
	2	1	**9R-5948**	1	BLOCK	
I	3	1	**250-6793**	1	HOSE AS	
	4	1	**248-5547**	2	PLATE	
I	5	1	**250-6755**	1	HOSE AS	
	6	1	**251-1541**	1	PLATE AS	
I	7	1	**252-0165**	1	HOSE AS	
I	8	1	**266-4326**	1	HOSE AS	
	9	1	*148-8328*	1	CONNECTOR AS (WATER LINES)	
		1	**3D-2824**	1	SEAL-O-RING	
		1	**6V-8398**	1	SEAL-O-RING	
		1	**6V-8633**	1	CONNECTOR	
	10	1	*148-8341*	1	CONNECTOR AS	
		1	**3D-2824**	1	SEAL-O-RING	
		1	**6V-8713**	1	CONNECTOR	
		1	**7J-9108**	1	SEAL-O-RING	
	11	1	*148-8382*	1	ELBOW AS	
		1	**3D-2824**	1	SEAL-O-RING	
		1	**7J-9108**	1	SEAL-O-RING	
		1	**8T-0404**	1	ELBOW (90-DEG)	
	12	1	*148-8457*	1	UNION AS (ORFS)	
		1	**6V-8398**	2	SEAL-O-RING	
		1	**6V-8995**	1	UNION (BULKHEAD)	
	13	1	*169-7409*	1	UNION AS	
		1	**6V-8996**	1	UNION	
		1	**7J-9108**	2	SEAL-O-RING	
	14	1	**5P-7464**	4	CLIP (SLOT)	
	15	1	**5P-7465**	4	CLIP (TAB)	
	16	1	**6V-1249**	2	GROMMET	
	17	1	**6V-1889**	1	CLIP	
	18	1	**6V-7359**	2	GROMMET	
	19	1	**6V-9169**	1	NUT-BULKHEAD (13/16-16-THD)	
	20	1	**6V-9170**	1	NUT-BULKHEAD (1-14-THD)	
	21	1	**7C-4354**	1	CLIP	
	22	1	**7X-7729**	4	WASHER (11X25X3-MM THK)	
	23	1	**8T-4121**	2	WASHER-HARD (11X21X2.5-MM THK)	
M	24	1	**8T-4136**	2	BOLT (M10X1.5X25-MM)	
M	25	1	**8T-4139**	4	BOLT (M12X1.75X30-MM)	
M	26	1	**8T-4183**	2	BOLT (M12X1.75X40-MM)	
M	27	1	**8T-4195**	4	BOLT (M10X1.5X30-MM)	
	28	1	**8T-4223**	8	WASHER-HARD (13.5X25.5X3-MM THK)	
M	29	1	**8T-4244**	2	NUT (M12X1.75-THD)	

I-REFER TO HYDRAULIC INFORMATION SYSTEM
M-METRIC PART

246-9311 **LINES GP-BUCKET** *(contd.)* **i02634525**

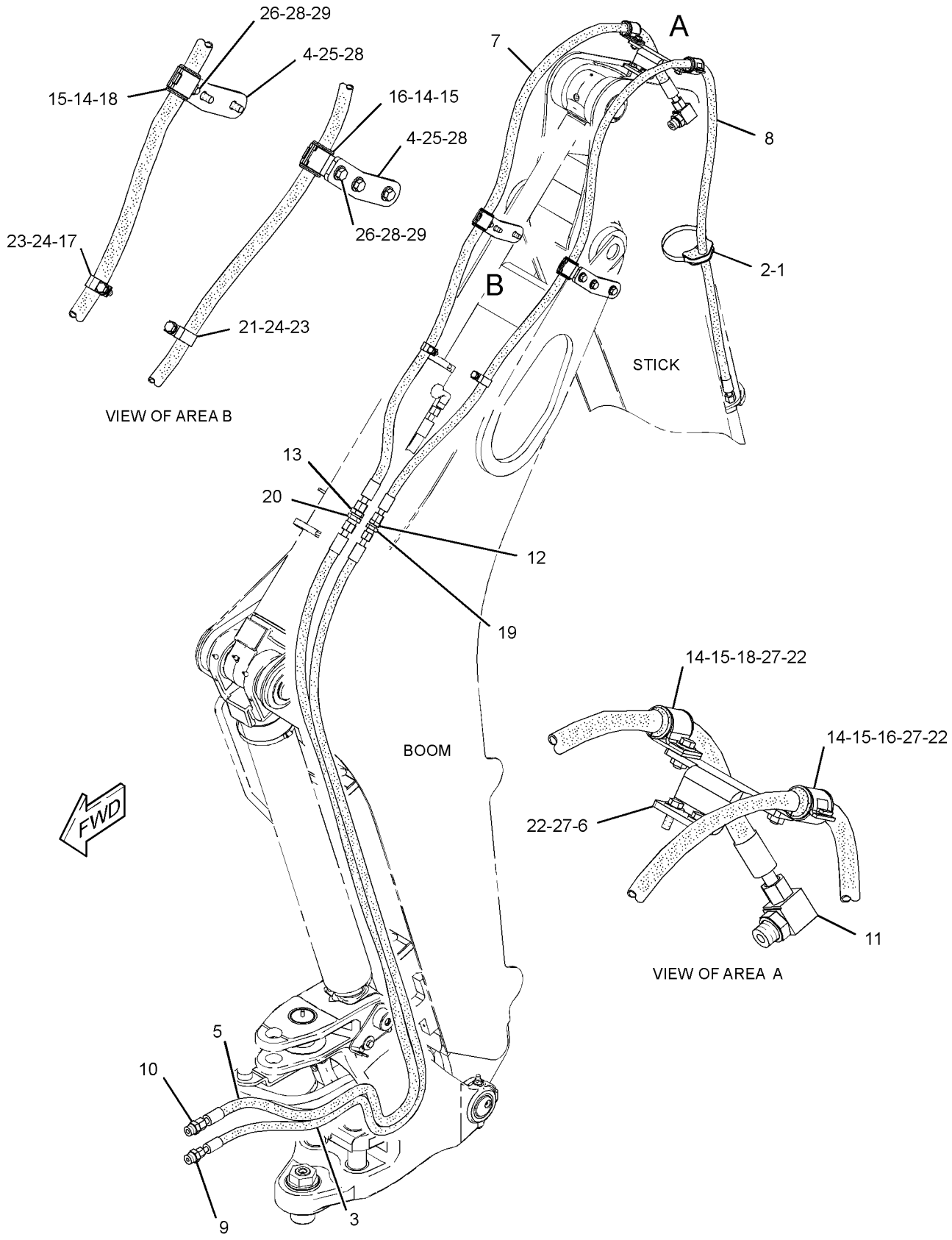

GRAPHIC #1 **<END>** g01297720

246-9318 LINES GP-BUCKET—EXTENDABLE STICK

S/N: SHA1-UP

PART OF 209-9929, 213-9293, 291-9203 BACKHOE AR-EXTENDABLE STICK AN ATTACHMENT

SMCS-5057, 5457 **i02634334**

NOTE	REF NO	GRAPHIC REF	PART NUMBER	QTY	PART NAME 1 2 3 4 5 6 (PRODUCT LEVEL)	SEE PAGE
	1	1	**5P-0599**	1	CLAMP-BAND	
	2	1	**3G-8057**	2	CLIP (SLOT)	
	3	1	**9R-5948**	1	BLOCK	
	4	1	**6V-9990**	1	GROMMET	
I	5	1	**297-4081**	1	HOSE AS	
M	6	1	**8T-4194**	4	BOLT (M12X1.75X50-MM)	
M	7	1	**8T-4183**	2	BOLT (M12X1.75X40-MM)	
	8	1	**262-1315**	1	PLATE	
	9	1	**281-4770**	1	PLATE AS (RIGHT)	
		1	**262-1314**	1	PLATE	
I	10	1	**266-4571**	1	HOSE AS	
	11	1	*268-1548*	2	CONNECTOR AS	
					(EACH INCLUDES)	
		1	**6V-8398**	1	SEAL-O-RING	
		1	**7J-9108**	1	SEAL-O-RING	
		1	**268-1547**	1	CONNECTOR	
I	12	1	**250-5462**	1	HOSE AS	
I	13	1	**250-6755**	2	HOSE AS	
I	14	1	**250-6793**	1	HOSE AS	
I	15	1	**266-4570**	2	HOSE AS	
	16	1	*148-8328*	1	CONNECTOR AS (WATER LINES)	
		1	**3D-2824**	1	SEAL-O-RING	
		1	**6V-8398**	1	SEAL-O-RING	
		1	**6V-8633**	1	CONNECTOR	
	17	1	*148-8341*	3	CONNECTOR AS	
					(EACH INCLUDES)	
		1	**3D-2824**	1	SEAL-O-RING	
		1	**6V-8713**	1	CONNECTOR	
		1	**7J-9108**	1	SEAL-O-RING	
	18	1	*148-8382*	1	ELBOW AS	
		1	**3D-2824**	1	SEAL-O-RING	
		1	**7J-9108**	1	SEAL-O-RING	
		1	**8T-0404**	1	ELBOW (90-DEG)	
	19	1	*148-8457*	1	UNION AS (ORFS)	
		1	**6V-8398**	2	SEAL-O-RING	
		1	**6V-8995**	1	UNION (BULKHEAD)	
	20	1	**3G-8047**	1	GROMMET	
	21	1	*169-7409*	1	UNION AS	
		1	**6V-8996**	1	UNION	
		1	**7J-9108**	2	SEAL-O-RING	
	22	1	**5P-7464**	2	CLIP (SLOT)	
	23	1	**5P-7465**	2	CLIP (TAB)	
	24	1	**6V-1249**	1	GROMMET	
	25	1	**6V-1889**	1	CLIP	
	26	1	**6V-7359**	1	GROMMET	
	27	1	**6V-9169**	1	NUT-BULKHEAD (13/16-16-THD)	
	28	1	**6V-9170**	3	NUT-BULKHEAD (1-14-THD)	
	29	1	**3G-8054**	2	CLIP (TAB)	
	30	1	**7C-4354**	3	CLIP	
	31	1	**8T-4121**	2	WASHER-HARD (11X21X2.5-MM THK)	
M	32	1	**8T-4136**	2	BOLT (M10X1.5X25-MM)	
M	33	1	**8T-4139**	7	BOLT (M12X1.75X30-MM)	
	34	1	**8T-4223**	19	WASHER-HARD (13.5X25.5X3-MM THK)	
M	35	1	**8T-4244**	6	NUT (M12X1.75-THD)	
	36	1	**281-4618**	1	PLATE AS (LEFT)	

246-9318 **LINES GP-BUCKET** *(contd.)* **i02634334**

NOTE	REF NO	GRAPHIC REF	PART NUMBER	QTY	PART NAME 1 2 3 4 5 6 (PRODUCT LEVEL)	SEE PAGE
		1	**262-1314**	1	PLATE	

I-REFER TO HYDRAULIC INFORMATION SYSTEM
M-METRIC PART

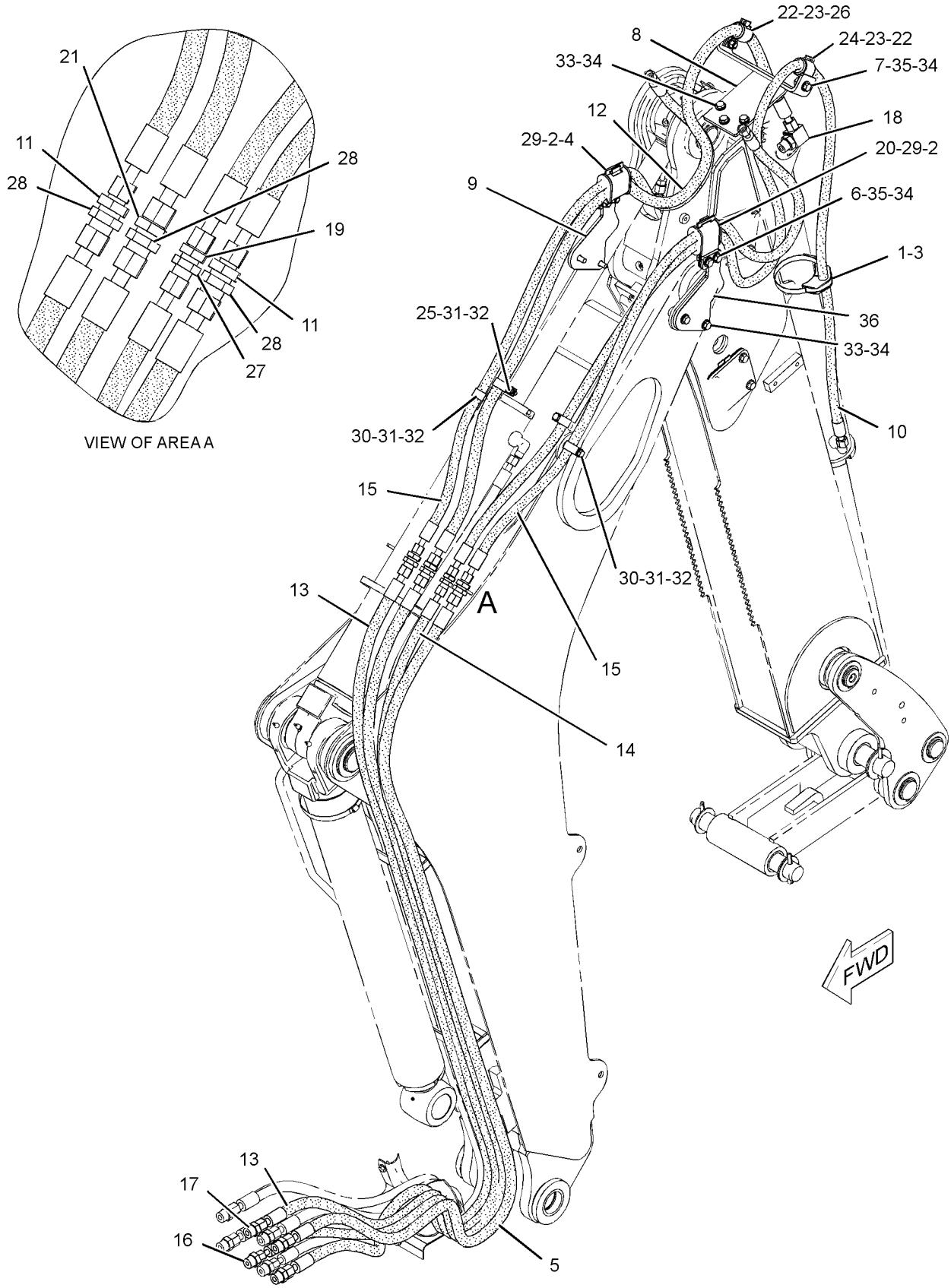

GRAPHIC #1 **<END>** g01322521

HYDRAULIC SYSTEM

216-5332 LINES GP-DRAIN

S/N: SHA1-UP

PART OF 214-2198 HYDRAULIC AR

SMCS-5057 **i02148675**

NOTE	REF NO	GRAPHIC REF	PART NUMBER	QTY	PART NAME 1 2 3 4 5 6 (PRODUCT LEVEL)	SEE PAGE
	1	1	**8T-0154**	1	CLAMP-HOSE	
	2	1	*165-2273*	1	VALVE AS-SHUTOFF	
		1	**3K-0360**	1	SEAL-O-RING	
		1	**6V-7238**	1	VALVE-SHUTOFF	
E	3	1	**5P-0743**		HOSE (35-CM)	

E-ORDER BY THE CENTIMETER

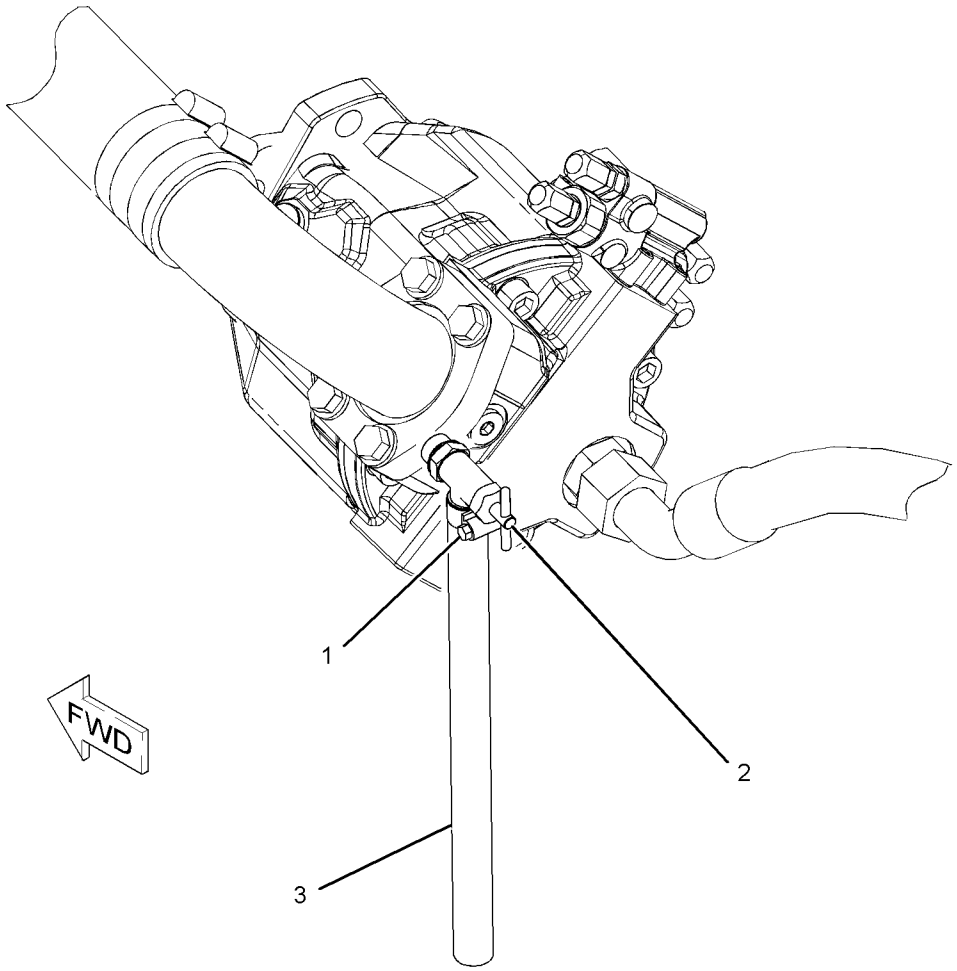

GRAPHIC #1 **<END>** g01087946

HYDRAULIC SYSTEM

247-3267 LINES GP-EXTENDABLE STICK

S/N: SHA1-UP

PART OF 271-1404 STICK GP, 271-1401 STICK GP-EXTENDABLE

AN ATTACHMENT

SMCS-5057 **i02666993**

NOTE	REF NO	GRAPHIC REF	PART NUMBER	QTY	PART NAME 1 2 3 4 5 6 (PRODUCT LEVEL)	SEE PAGE
	1	1	**8T-6726**	3	CLAMP-HOSE	
	2	1	**9R-2053**	3	BLOCK	
	3	1	**262-7314**	1	PLATE AS	
I	4	1	**221-3234**	1	HOSE AS	
I	5	1	**290-6023**	1	HOSE AS	
	6	1	**305-3570**	1	TUBE AS	
	7	1	**305-3571**	1	TUBE AS	
	8	1	**6V-8398**	4	SEAL-O-RING	
	9	1	**8T-1885**	2	CLIP (SLOT)	
	10	1	**8T-1886**	2	CLIP (TAB)	
	11	1	**8T-4121**	6	WASHER-HARD (11X21X2.5-MM THK)	
M	12	1	**8T-4136**	2	BOLT (M10X1.5X25-MM)	
	13	1	*148-8364*	1	ELBOW AS	
		1	**3K-0360**	1	SEAL-O-RING	
		1	**6V-8625**	1	ELBOW	
		1	**6V-8398**	1	SEAL-O-RING	
M	14	1	**8T-4195**	4	BOLT (M10X1.5X30-MM)	
	15	1	**206-2423**	2	SADDLE	
	16	1	**8T-1892**	2	CLIP (TAB)	
	17	1	**8T-1891**	2	CLIP (SLOT)	
	18	1	**7K-1181**	4	STRAP-CABLE	

I-REFER TO HYDRAULIC INFORMATION SYSTEM
M-METRIC PART

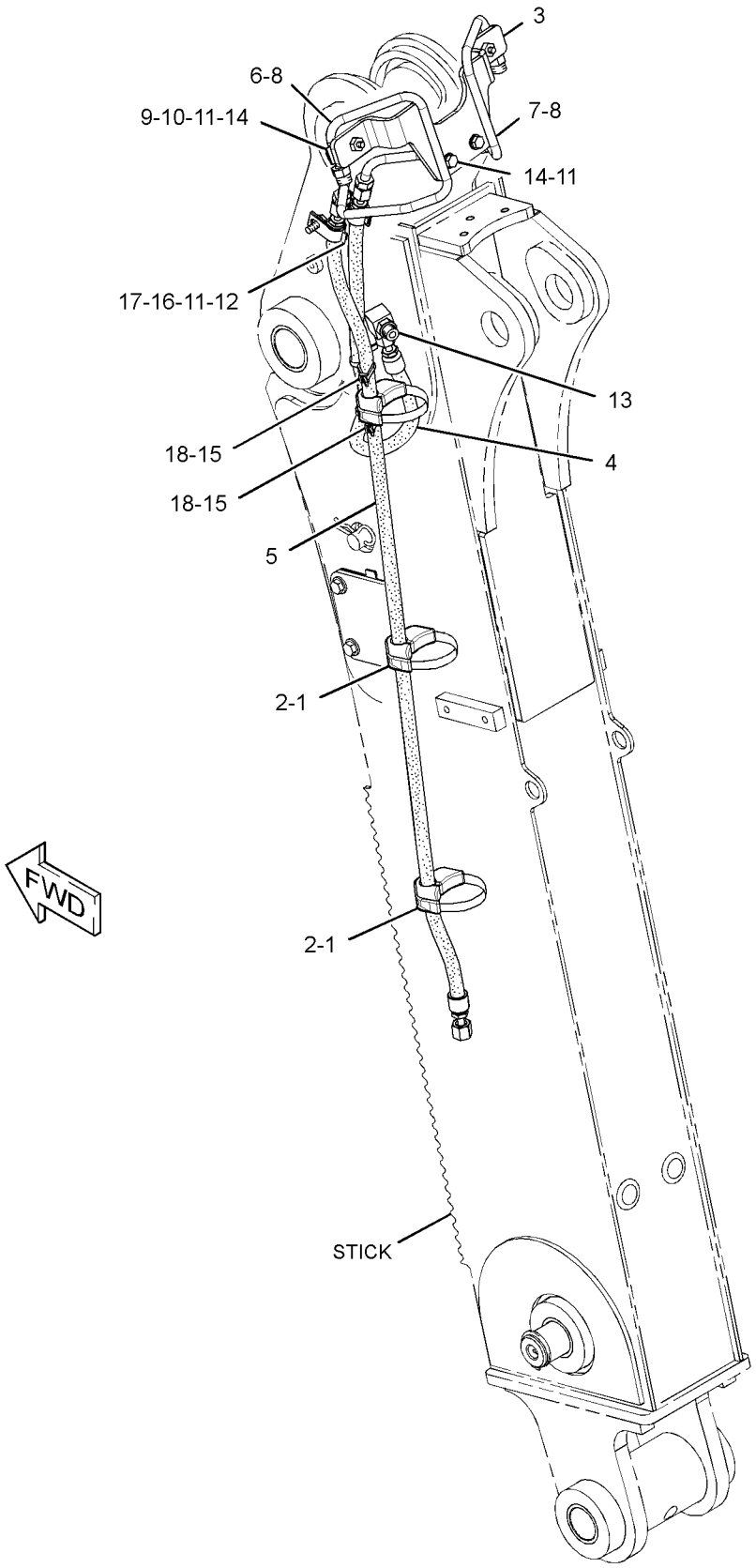

GRAPHIC #1 **<END>** g01316423

257-3160 LINES GP-HYDRAULIC OIL COOLER

S/N: SHA1-UP

PART OF 214-2198 HYDRAULIC AR

SMCS-1374, 5057 **i02504558**

NOTE	REF NO	GRAPHIC REF	PART NUMBER	QTY	PART NAME 1 2 3 4 5 6 (PRODUCT LEVEL)	SEE PAGE
E	1	1	**5P-1506**		HOSE (92-CM)	
	2	1	**7K-1181**	5	STRAP-CABLE	
	3	1	**130-9984**	1	CLIP	
	4	1	**159-1503**	4	CLAMP-HOSE	
I	5	1	**194-4334**	1	HOSE AS	
	6	1	**232-0252**	1	TEE	
	7	1	**235-7091**	1	HOSE	
E	8	1	**262-8088**		HOSE (223-CM)	
E	9	1	**262-8088**		HOSE (126-CM)	
	10	1	*148-8370*	1	ELBOW AS	
		1	**6V-8398**	1	SEAL-O-RING	
		1	**6V-9851**	1	ELBOW	
E	11	1	**149-7372**		SLEEVE-ABRASION (55-CM)	
	12	1	*150-3072*	1	PLUG AS	
		1	**6V-8398**	1	SEAL-O-RING	
		1	**6V-9509**	1	PLUG (13/16-16-THD)	
	13	1	**5P-4116**	2	WASHER-HARD (8.8X20.5X2-MM THK)	
	14	1	**7D-7233**	2	CLIP	
	15	1	**7X-7958**	4	CLAMP-HOSE	
	16	1	**8T-4121**	2	WASHER-HARD (11X21X2.5-MM THK)	
M	17	1	**8T-4136**	1	BOLT (M10X1.5X25-MM)	
M	18	1	**8T-4137**	1	BOLT (M10X1.5X20-MM)	
M	19	1	**8T-4189**	2	BOLT (M8X1.25X20-MM)	
	20	1	**8T-7529**	3	CLIP	

E-ORDER BY THE CENTIMETER
I-REFER TO HYDRAULIC INFORMATION SYSTEM
M-METRIC PART

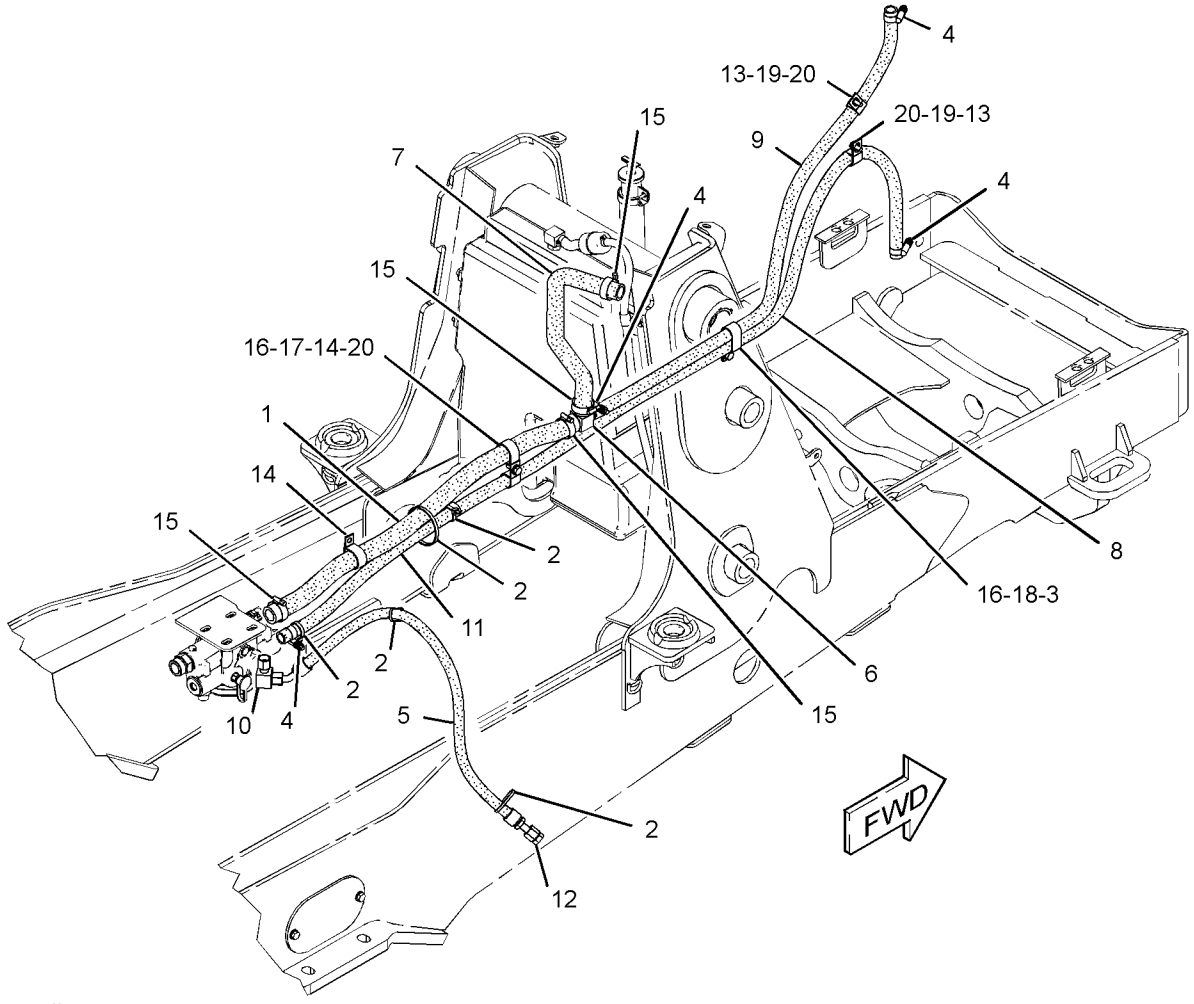

GRAPHIC #1 **<END>** g01253742

HYDRAULIC SYSTEM

246-5293 LINES GP-LIFT CYLINDER

S/N: SHA1-UP

PART OF 213-9298 LOADER AR

SMCS-5057, 5102 **i02592184**

NOTE	REF NO	GRAPHIC REF	PART NUMBER	QTY	PART NAME 1 2 3 4 5 6 (PRODUCT LEVEL)	SEE PAGE
	1	1	**7K-1181**	2	STRAP-CABLE	
	2	1	**8T-6726**	4	CLAMP-HOSE (BAND)	
	3	1	**143-0777**	1	PLATE AS	
	4	1	**143-0779**	1	PLATE AS	
	5	1	**151-4841**	2	BLOCK	
	6	1	**158-3412**	10	CLIP (SLOT)	
	7	1	**211-3207**	1	TUBE AS	
	8	1	**211-3208**	1	TUBE AS	
	9	1	**231-2808**	1	TUBE AS	
	10	1	**231-2809**	1	TUBE AS	
I	11	1	**231-4784**	2	HOSE AS	
I	12	1	**231-4785**	2	HOSE AS	
	13	1	**249-4020**	1	TUBE AS	
	14	1	**249-4021**	1	TUBE AS	
	15	1	**249-4022**	1	TUBE AS	
	16	1	**249-4023**	1	TUBE AS	
	17	1	**249-4024**	1	TUBE AS	
	18	1	*148-8341*	1	CONNECTOR AS	
		1	**3D-2824**	1	SEAL-O-RING	
		1	**6V-8713**	1	CONNECTOR	
		1	**7J-9108**	1	SEAL-O-RING	
	19	1	*148-8390*	2	ELBOW AS	
					(EACH INCLUDES)	
		1	**2M-9780**	1	SEAL-O-RING	
		1	**6V-8626**	1	ELBOW	
		1	**7J-9108**	1	SEAL-O-RING	
	20	1	*148-8446*	2	TEE AS-SWIVEL	
					(EACH INCLUDES)	
		1	**6V-9838**	1	TEE-SWIVEL	
		1	**7J-9108**	2	SEAL-O-RING	
	21	1	*150-3063*	1	TEE AS	
		1	**3D-2824**	1	SEAL-O-RING	
		1	**7J-9108**	2	SEAL-O-RING	
		1	**120-9809**	1	TEE	
	22	1	*222-4732*	1	TEE AS	
		1	**6V-8398**	1	SEAL-O-RING	
		1	**6V-9031**	1	TEE-UNION	
		1	**7J-9108**	2	SEAL-O-RING	
	23	1	**6V-8398**	8	SEAL-O-RING	
	24	1	**6V-9830**	1	CAP AS	
	25	1	**6V-9831**	1	CAP AS	
	26	1	**8T-4121**	6	WASHER-HARD (11X21X2.5-MM THK)	
M	28	1	**8T-4136**	5	BOLT (M10X1.5X25-MM)	
	32	1	**9R-7803**	5	CLIP (TAB)	
M	33	1	**8T-4133**	1	NUT (M10X1.5-THD)	

I-REFER TO HYDRAULIC INFORMATION SYSTEM
M-METRIC PART

246-5293 **LINES GP-LIFT CYLINDER** *(contd.)* **i02592184**

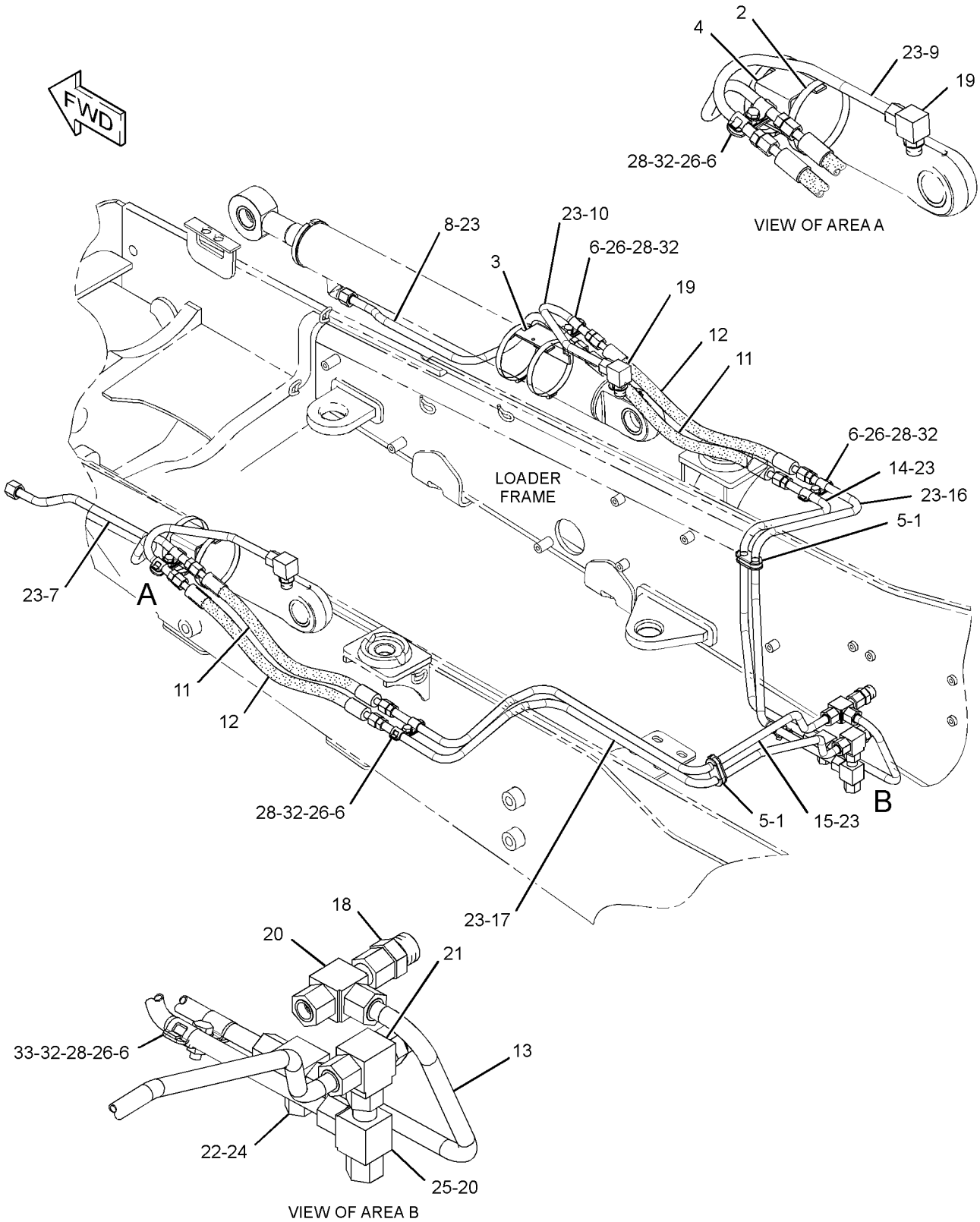

GRAPHIC #1 **<END>** g01310476

HYDRAULIC SYSTEM

246-8478 LINES GP-LOADER AUXILIARY

S/N: SHA1-UP
PART OF 209-9944 VALVE AR-BANK 3
AN ATTACHMENT

SMCS-5057 **i02273118**

NOTE	REF NO	GRAPHIC REF	PART NUMBER	QTY	PART NAME 1 2 3 4 5 6 (PRODUCT LEVEL)	SEE PAGE
	1	1	**7K-1181**	1	STRAP-CABLE	
	2	1	**151-4841**	1	BLOCK	
	3	1	**158-3412**	8	CLIP (SLOT)	
I	4	1	**215-7453**	2	HOSE AS	
	5	1	**215-7454**	1	TUBE AS	
	6	1	**215-7619**	1	TUBE AS	
	7	1	**231-3528**	1	BRACKET AS	
M		1	**8T-3490**	1	NUT-WELD (M10X1.5-THD)	
	8	1	**249-4034**	1	TUBE AS	
	9	1	**249-4035**	1	TUBE AS	
	10	1	**254-7271**	1	PLATE AS	
	11	1	*148-8382*	2	ELBOW AS	
					(EACH INCLUDES)	
		1	**3D-2824**	1	SEAL-O-RING	
		1	**7J-9108**	1	SEAL-O-RING	
		1	**8T-0404**	1	ELBOW	
	12	1	**6V-8398**	6	SEAL-O-RING	
	13	1	**6V-9830**	2	CAP AS	
	14	1	**8T-4121**	6	WASHER-HARD (11X21X2.5-MM THK)	
M	15	1	**8T-4136**	5	BOLT (M10X1.5X25-MM)	
M	16	1	**8T-4137**	1	BOLT (M10X1.5X20-MM)	
	17	1	**9R-7803**	4	CLIP (TAB)	

I-REFER TO HYDRAULIC INFORMATION SYSTEM
M-METRIC PART

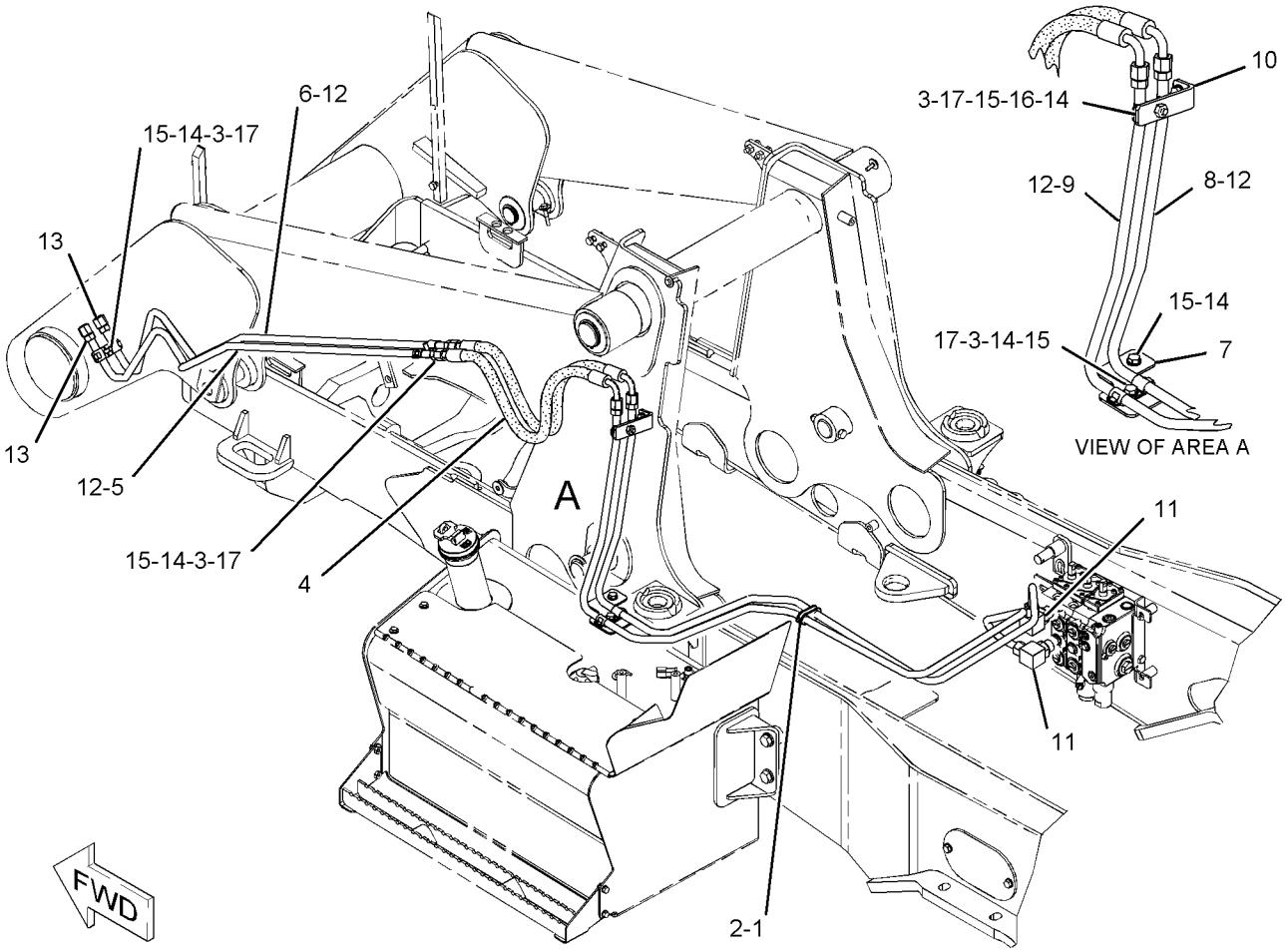

GRAPHIC #1

<END>

g01094033

HYDRAULIC SYSTEM

251-5854 LINES GP-MULTIPURPOSE BUCKET

S/N: SHA1-UP

PART OF 216-8800, 216-8801 BUCKET GP-MULTIPURPOSE

AN ATTACHMENT

SMCS-5057 **i02747049**

NOTE	REF NO	GRAPHIC REF	PART NUMBER	QTY	PART NAME 1 2 3 4 5 6 (PRODUCT LEVEL)	SEE PAGE
	1	1	**8T-6726**	2	CLAMP-HOSE (BAND)	
I	2	1	**8W-9230**	1	HOSE AS	
I	3	1	**9R-0418**	2	HOSE AS	
	4	1	**9R-8870**	2	BLOCK	
I	5	1	**122-0668**	1	HOSE AS	
I	6	1	**152-0816**	1	HOSE AS	
I	7	1	**251-5859**	1	HOSE AS	
	8	1	*148-8378*	2	ELBOW AS	
					(EACH INCLUDES)	
		1	**3J-1907**	1	SEAL-O-RING	
		1	**6V-8397**	1	SEAL-O-RING	
		1	**6V-8724**	1	ELBOW	
	9	1	*150-3060*	2	TEE AS	
					(EACH INCLUDES)	
		1	**6V-8397**	2	SEAL-O-RING	
		1	**6V-8398**	1	SEAL-O-RING	
		1	**8T-3444**	1	TEE-UNION	
	10	1	**6V-3341**	2	GROMMET	
	11	1	**6V-8397**	2	SEAL-O-RING	
	12	1	**4V-0611**	8	CLAMP	
	13	1	**4V-0612**	4	PLATE	
	14	1	**8T-1899**	2	CLIP (SLOT)	
	15	1	**8T-1900**	2	CLIP (TAB)	
	16	1	**8T-4121**	2	WASHER-HARD (11X21X2.5-MM THK)	
M	17	1	**8T-4136**	2	BOLT (M10X1.5X25-MM)	
	18	1	**7X-0440**	4	BOLT (5/16-18X1.75-IN)	
	19	1	**8T-4224**	4	WASHER-HARD (8.8X16X2-MM THK)	

I-REFER TO HYDRAULIC INFORMATION SYSTEM
M-METRIC PART

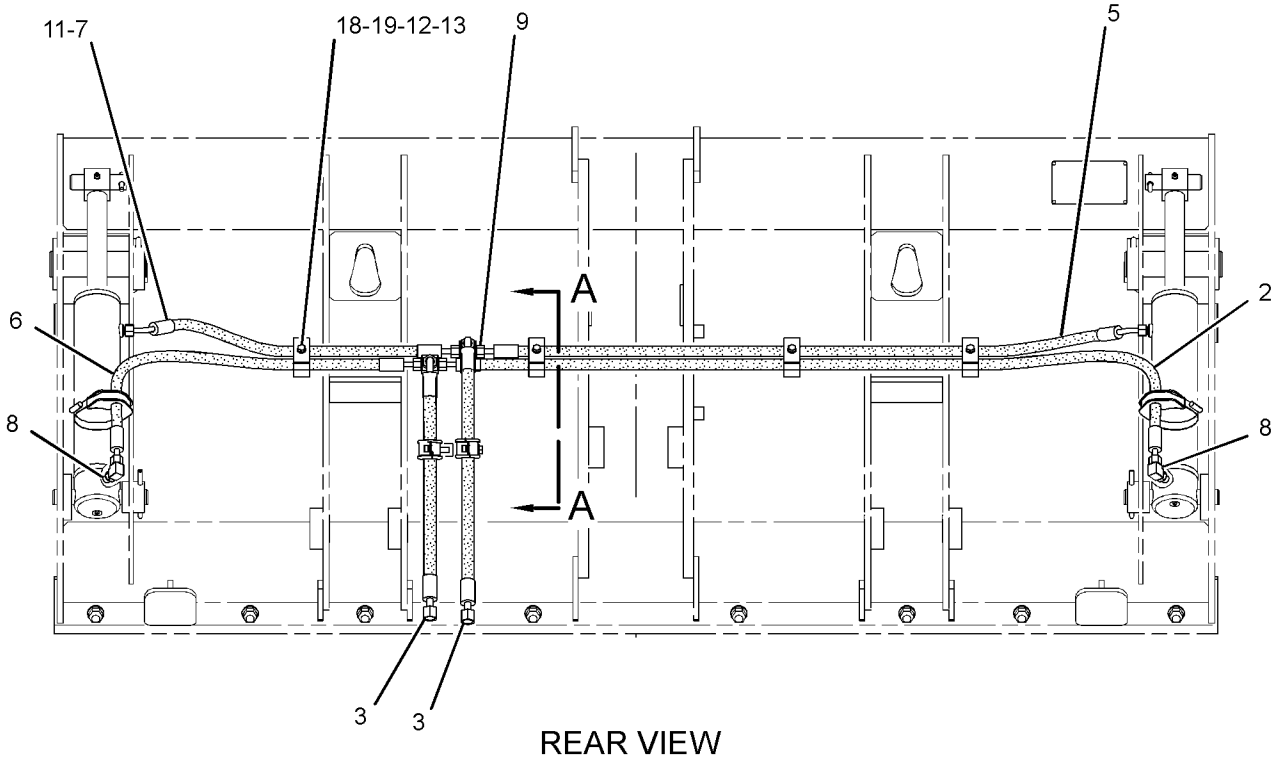

REAR VIEW

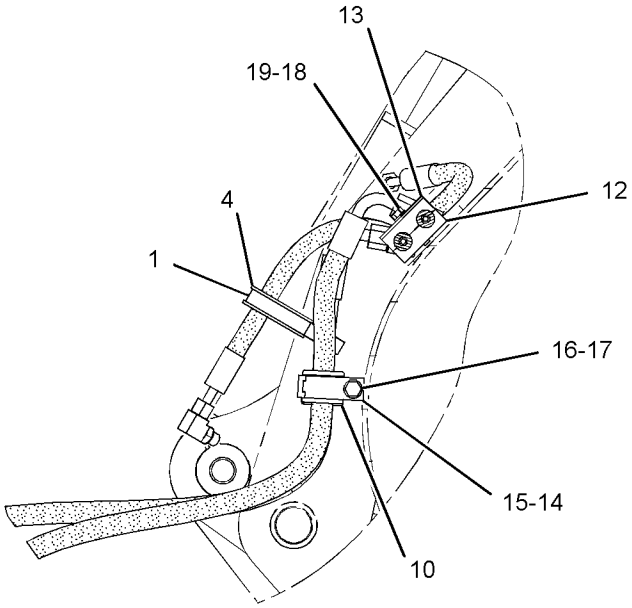

SECTION A-A

GRAPHIC #1

<END>

g01390071

HYDRAULIC SYSTEM

251-5855 LINES GP-MULTIPURPOSE BUCKET

S/N: SHA1-UP

PART OF 216-8820, 216-8821 BUCKET GP-MULTIPURPOSE

AN ATTACHMENT

SMCS-5057 **i02747031**

NOTE	REF NO	GRAPHIC REF	PART NUMBER	QTY	PART NAME 1 2 3 4 5 6 (PRODUCT LEVEL)	SEE PAGE
I	1	1	**271-7389**	1	HOSE AS	
	2	1	**8T-6726**	2	CLAMP-HOSE (BAND)	
I	3	1	**141-8437**	1	HOSE AS	
I	4	1	**9R-0418**	2	HOSE AS	
	5	1	**9R-8870**	2	BLOCK	
I	6	1	**270-9176**	1	HOSE AS	
I	7	1	**272-1750**	1	HOSE AS	
	8	1	*148-8378*	2	ELBOW AS	
					(EACH INCLUDES)	
		1	**3J-1907**	1	SEAL-O-RING	
		1	**6V-8397**	1	SEAL-O-RING	
		1	**6V-8724**	1	ELBOW	
	9	1	*150-3060*	2	TEE AS	
					(EACH INCLUDES)	
		1	**6V-8397**	2	SEAL-O-RING	
		1	**6V-8398**	1	SEAL-O-RING	
		1	**8T-3444**	1	TEE-UNION	
	10	1	**6V-3341**	2	GROMMET	
	11	1	**6V-8397**	2	SEAL-O-RING	
	14	1	**8T-1899**	2	CLIP (SLOT)	
	15	1	**8T-1900**	2	CLIP (TAB)	
	16	1	**8T-4121**	2	WASHER-HARD (11X21X2.5-MM THK)	
M	17	1	**8T-4136**	2	BOLT (M10X1.5X25-MM)	
	18	1	**8T-4224**	4	WASHER-HARD (8.8X16X2-MM THK)	
	19	1	**7X-0440**	4	BOLT (5/16-18X1.75-IN)	
	20	1	**4V-0612**	4	PLATE	
	21	1	**4V-0611**	8	CLAMP	

I-REFER TO HYDRAULIC INFORMATION SYSTEM
M-METRIC PART

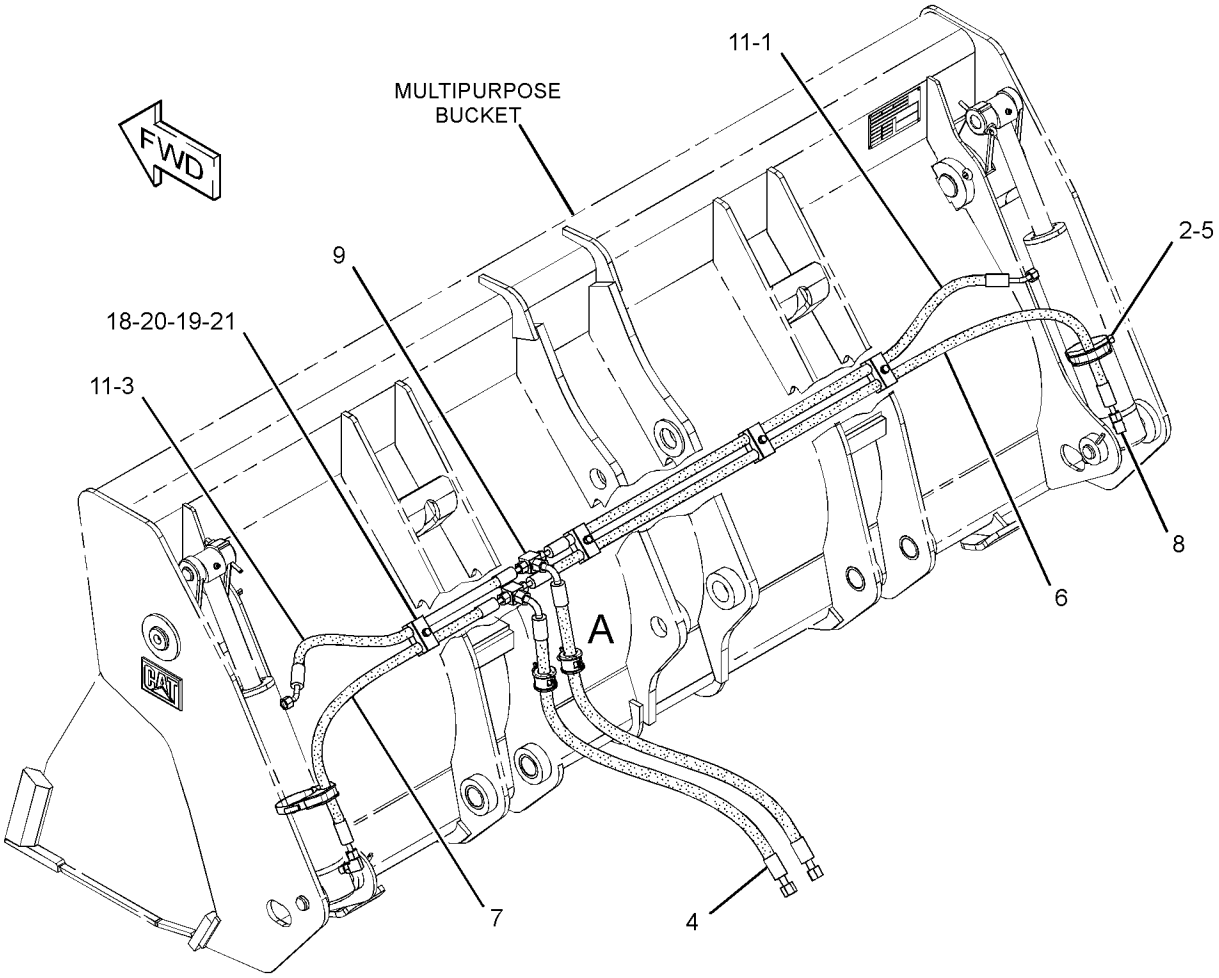

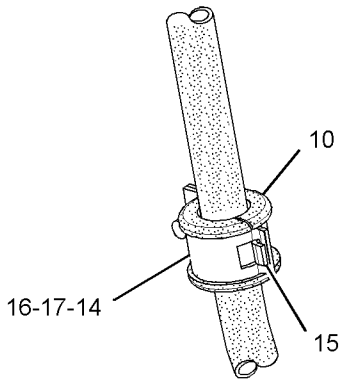

VIEW OF AREA A

GRAPHIC #1 **<END>** g01384966

HYDRAULIC SYSTEM

219-8568 LINES GP-PILOT

S/N: SHA1-UP

PART OF 214-2198 HYDRAULIC AR

SMCS-5057, 5059 **i02531170**

NOTE	REF NO	GRAPHIC REF	PART NUMBER	QTY	PART NAME 1 2 3 4 5 6 (PRODUCT LEVEL)	SEE PAGE
	1	1	**5D-1026**	2	CLAMP-HOSE	
	2	1	**6V-0852**	2	CAP-DUST	
	3	1	**7K-1181**	1	STRAP-CABLE	
Y	4	1	**8J-6875**	1	VALVE GP-SHUTTLE	434
I	5	1	**285-3582**	1	HOSE AS	
I	6	1	**222-1216**	1	HOSE AS	
I	7	1	**222-2257**	1	HOSE AS	
I	8	1	**222-2258**	1	HOSE AS	
	9	1	*250-1418*	1	CONNECTOR AS	
		1	**3J-1907**	1	SEAL-O-RING	
		1	**6V-8397**	1	SEAL-O-RING	
		1	**089-7702**	1	CONNECTOR	
I	10	1	**252-8684**	1	HOSE AS	
	11	1	*148-8336*	6	CONNECTOR AS	
					(EACH INCLUDES)	
		1	**3J-1907**	1	SEAL-O-RING	
		1	**6V-8397**	1	SEAL-O-RING	
		1	**6V-8636**	1	CONNECTOR	
	12	1	*148-8374*	1	ELBOW AS	
		1	**3K-0360**	1	SEAL-O-RING	
		1	**6V-8397**	1	SEAL-O-RING	
		1	**6V-8723**	1	ELBOW	
	13	1	*148-8433*	1	TEE AS	
		1	**6V-8397**	2	SEAL-O-RING	
		1	**6V-9836**	1	TEE-SWIVEL	
E	14	1	**5P-1505**		HOSE (61-CM)	
	15	1	*150-3027*	2	ELBOW AS	
					(EACH INCLUDES)	
		1	**2M-9780**	1	SEAL-O-RING	
		1	**6V-5653**	1	ELBOW	
	16	1	*150-3062*	1	TEE AS	
		1	**3J-7354**	1	SEAL-O-RING	
		1	**4J-5477**	1	SEAL-O-RING	
		1	**101-1787**	1	TEE AS	
	17	1	*164-5567*	2	FITTING AS (QUICK DISCONNECT, MALE)	
					(EACH INCLUDES)	
		1	**3J-1907**	1	SEAL-O-RING	
		1	**6V-3965**	1	FITTING-COUPLER	
	18	1	**5P-4295**	1	CLIP	
	19	1	**6V-9168**	1	NUT (11/16-16-THD)	
	20	1	**8T-4121**	1	WASHER-HARD (11X21X2.5-MM THK)	
M	21	1	**8T-4137**	1	BOLT (M10X1.5X20-MM)	
	22	1	**9X-8257**	2	WASHER (17.5X30X3.5-MM THK)	
	23	1	**165-4931**	1	ELBOW AS	
		1	**3J-1907**	1	SEAL-O-RING	
		1	**6V-8077**	1	ELBOW	

E-ORDER BY THE CENTIMETER
I-REFER TO HYDRAULIC INFORMATION SYSTEM
M-METRIC PART
Y-SEPARATE ILLUSTRATION

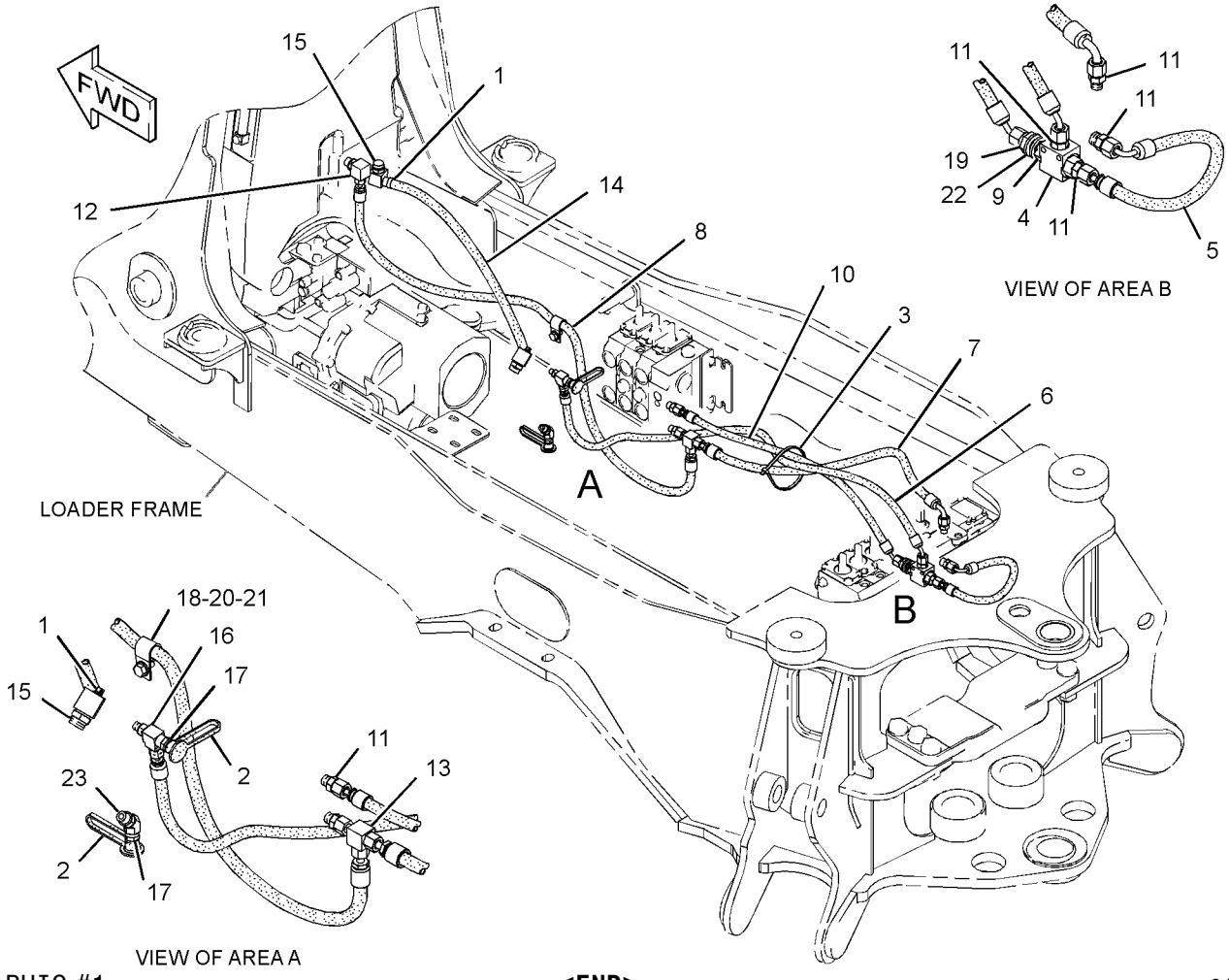

GRAPHIC #1 **<END>** g01290605

HYDRAULIC SYSTEM

219-8567 LINES GP-PUMP

S/N: SHA1-UP

PART OF 214-2198 HYDRAULIC AR

SMCS-5057 **i02510318**

NOTE	REF NO	GRAPHIC REF	PART NUMBER	QTY	PART NAME 1 2 3 4 5 6 (PRODUCT LEVEL)	SEE PAGE
	1	1	**5P-4868**	2	CLAMP-HOSE	
	2	1	**144-0367**	1	CLAMP-HOSE	
	3	1	**211-4348**	1	ELBOW AS	
I	4	1	**213-2279**	1	HOSE AS	
I	5	1	**221-9352**	1	HOSE AS	
	6	1	**235-8528**	1	HOSE	
I	7	1	**255-9107**	1	HOSE AS	
I	8	1	**285-3581**	1	HOSE AS	
	9	1	*148-8317*	3	CONNECTOR AS	
					(EACH INCLUDES)	
		1	**3D-2824**	1	SEAL-O-RING	
		1	**5K-9090**	1	SEAL-O-RING	
		1	**6V-8714**	1	CONNECTOR	
	10	1	*148-8335*	4	CONNECTOR AS	
					(EACH INCLUDES)	
		1	**5K-9090**	1	SEAL-O-RING	
		1	**6V-8635**	1	CONNECTOR	
		1	**7M-8485**	1	SEAL-O-RING	
	11	1	**1P-4584**	2	FLANGE-HALF	
	12	1	**6J-2680**	1	SEAL-O-RING	
	13	1	**7X-7729**	4	WASHER (11X25X3-MM THK)	
M	14	1	**8T-4136**	4	BOLT (M10X1.5X25-MM)	
M	15	1	**8T-4183**	4	BOLT (M12X1.75X40-MM)	
	16	1	**8T-4223**	4	WASHER-HARD (13.5X25.5X3-MM THK)	

I-REFER TO HYDRAULIC INFORMATION SYSTEM
M-METRIC PART

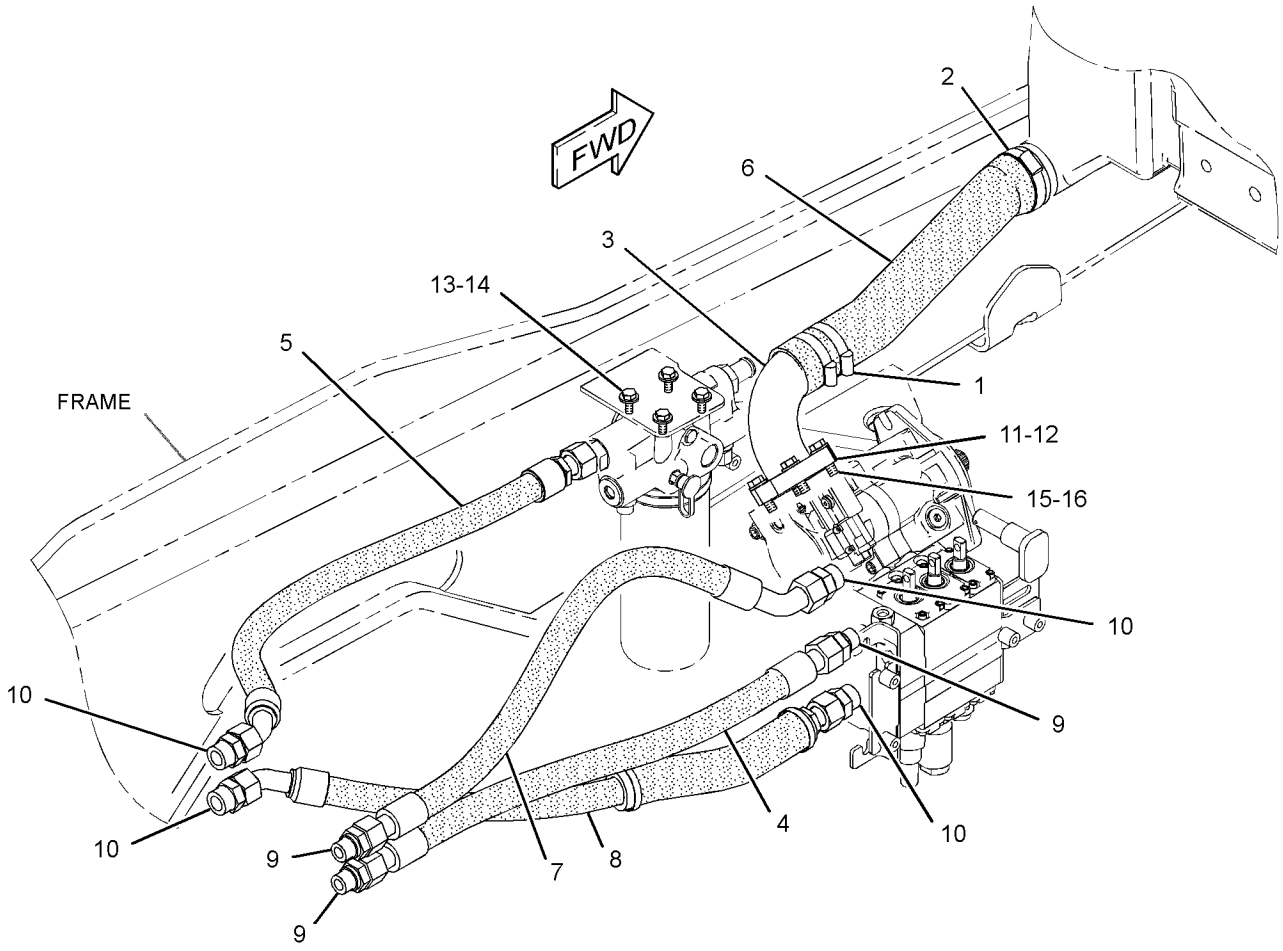

GRAPHIC #1 **<END>** g01231756

HYDRAULIC SYSTEM

246-9802 LINES GP-RIDE CONTROL

S/N: SHA1-1664
PART OF 220-9179 CONTROL AR-RIDE
AN ATTACHMENT

SMCS-5057, 5077 **i02545872**

NOTE	REF NO	GRAPHIC REF	PART NUMBER	QTY	PART NAME 1 2 3 4 5 6 (PRODUCT LEVEL)	SEE PAGE
	1	1	**7K-1181**	2	STRAP-CABLE	
Y	2	1	*162-3960*	1	ACCUMULATOR GP-RIDE CONTROL (CHARGED)	313
	3	1	**279-5016**	1	FILM-WARNING (HIGH PRESS CYLINDER, READ OMM)	
Y	4	1	**245-8780**	1	MANIFOLD GP-RIDE CONTROL	393
	5	1	**247-0320**	1	BRACKET AS	
I	6	1	**252-1221**	1	HOSE AS	
I	7	1	**265-0868**	1	HOSE AS	
M	8	1	**096-5866**	2	BOLT (M8X1.25X75-MM)	
	9	1	**109-1633**	2	CLIP (SLOT)	
	10	1	**109-1634**	2	CLIP (TAB)	
	11	1	*148-8318*	1	CONNECTOR AS	
		1	**3K-0360**	1	SEAL-O-RING	
		1	**6V-8397**	1	SEAL-O-RING	
		1	**6V-8634**	1	CONNECTOR	
	12	1	*148-8340*	1	CONNECTOR AS	
		1	**3K-0360**	1	SEAL-O-RING	
		1	**6V-8398**	1	SEAL-O-RING	
		1	**6V-8639**	1	CONNECTOR	
	13	1	*148-8358*	2	ELBOW AS	
					(EACH INCLUDES)	
		1	**2M-9780**	1	SEAL-O-RING	
		1	**6V-8398**	1	SEAL-O-RING	
		1	**6V-8624**	1	ELBOW	
	14	1	*153-6241*	1	ELBOW AS	
		1	**6V-8398**	1	SEAL-O-RING	
		1	**8C-8989**	1	ELBOW	
	15	1	*164-5549*	1	COUPLING AS	
		1	**3J-1907**	1	SEAL-O-RING	
		1	**4I-6287**	1	COUPLING	
	16	1	**8T-4121**	4	WASHER-HARD (11X21X2.5-MM THK)	
M	17	1	**8T-4137**	4	BOLT (M10X1.5X20-MM)	
M	18	1	**8T-4956**	2	BOLT (M12X1.75X35-MM)	
	19	1	**8T-4223**	8	WASHER-HARD (13.5X25.5X3-MM THK)	
	20	1	**8T-4224**	2	WASHER-HARD (8.8X16X2-MM THK)	

I-REFER TO HYDRAULIC INFORMATION SYSTEM
M-METRIC PART
Y-SEPARATE ILLUSTRATION

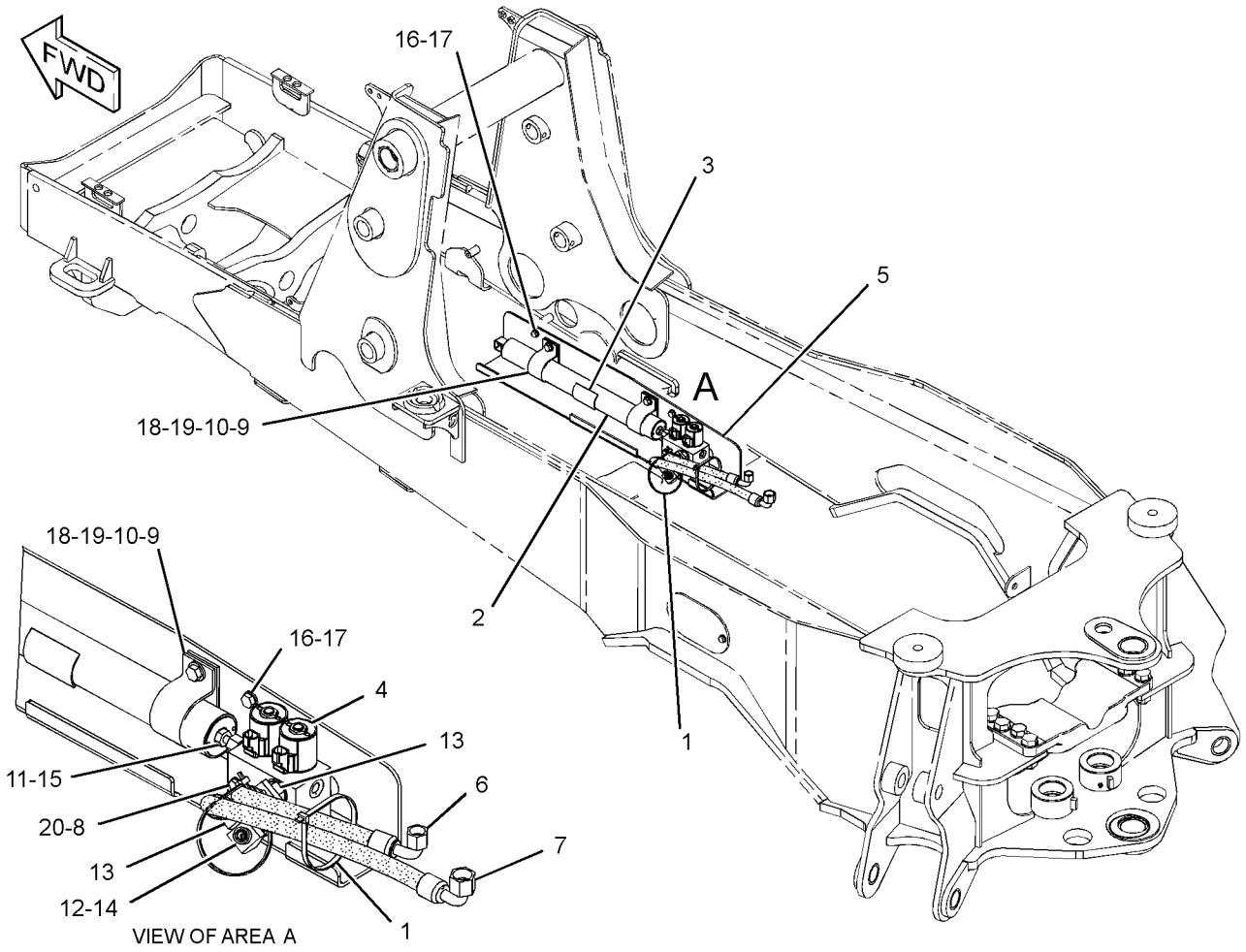

GRAPHIC #1 **<END>** g01260995

HYDRAULIC SYSTEM

246-9802 LINES GP-RIDE CONTROL

S/N: SHA1665-UP
PART OF 220-9179 CONTROL AR-RIDE
AN ATTACHMENT

SMCS-5057, 5077 **i02676144**

NOTE	REF NO	GRAPHIC REF	PART NUMBER	QTY	PART NAME 1 2 3 4 5 6 (PRODUCT LEVEL)	SEE PAGE
	1	1	**7K-1181**	2	STRAP-CABLE	
Y	2	1	*162-3960*	1	ACCUMULATOR GP-RIDE CONTROL (CHARGED)	313
	3	1	**279-5016**	1	FILM-WARNING (HIGH PRESS CYLINDER, READ OMM)	
Y	4	1	**245-8780**	1	MANIFOLD GP-RIDE CONTROL	393
	5	1	**247-0320**	1	BRACKET AS	
I	6	1	**252-1221**	1	HOSE AS	
I	7	1	**265-0868**	1	HOSE AS	
M	8	1	**096-5866**	2	BOLT (M8X1.25X75-MM)	
	9	1	**109-1633**	2	CLIP (SLOT)	
	10	1	**109-1634**	2	CLIP (TAB)	
	12	1	*148-8340*	1	CONNECTOR AS	
		1	**3K-0360**	1	SEAL-O-RING	
		1	**6V-8398**	1	SEAL-O-RING	
		1	**6V-8639**	1	CONNECTOR	
	13	1	*148-8358*	2	ELBOW AS	
					(EACH INCLUDES)	
		1	**2M-9780**	1	SEAL-O-RING	
		1	**6V-8398**	1	SEAL-O-RING	
		1	**6V-8624**	1	ELBOW	
	14	1	*153-6241*	1	ELBOW AS	
		1	**6V-8398**	1	SEAL-O-RING	
		1	**8C-8989**	1	ELBOW	
C	16	1	**8T-4121**	3	WASHER-HARD (11X21X2.5-MM THK)	
CM	17	1	**8T-4137**	2	BOLT (M10X1.5X20-MM)	
M	18	1	**8T-4139**	2	BOLT (M12X1.75X30-MM)	
C	19	1	**8T-4223**	2	WASHER-HARD (13.5X25.5X3-MM THK)	
	20	1	**8T-4224**	2	WASHER-HARD (8.8X16X2-MM THK)	
C	21	1	**292-8222**	1	TUBE AS	
C	22	1	*148-8365*	1	ELBOW AS	
		1	**3J-1907**	1	SEAL-O-RING	
		1	**6V-8398**	1	SEAL-O-RING	
		1	**8T-6876**	1	ELBOW	
C	23	1	*148-8354*	1	ELBOW AS	
		1	**3K-0360**	1	SEAL-O-RING	
		1	**6V-8398**	1	SEAL-O-RING	
		1	**6V-9002**	1	ELBOW	
CM	24	1	**8T-7004**	1	STUD-TAPERLOCK	
CM	25	1	**8T-4133**	1	NUT (M10X1.5-THD)	

C-CHANGE FROM PREVIOUS TYPE
I-REFER TO HYDRAULIC INFORMATION SYSTEM
M-METRIC PART
Y-SEPARATE ILLUSTRATION

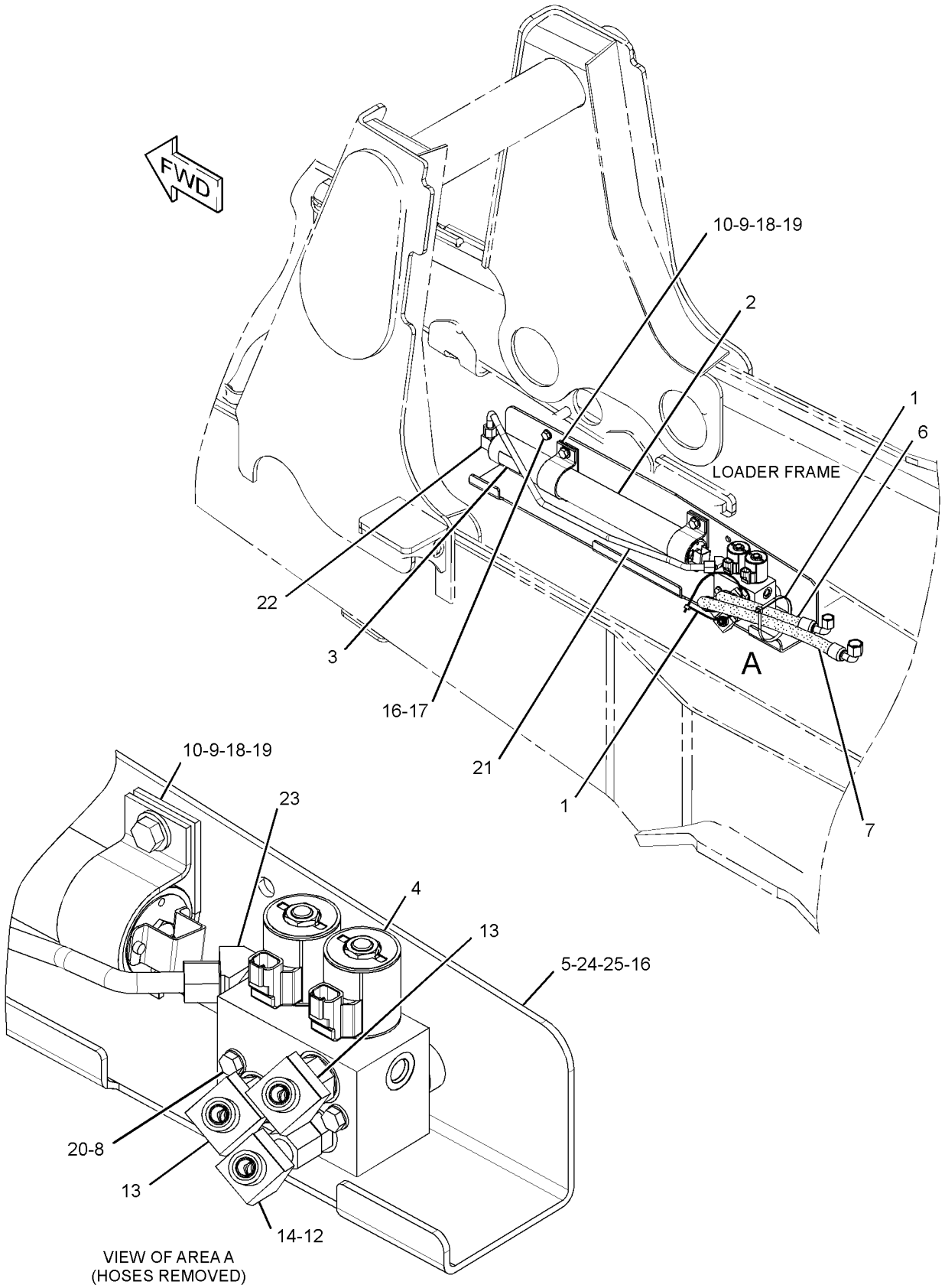

GRAPHIC #1

<END>

g01337811

HYDRAULIC SYSTEM

211-7568 LINES GP-STABILIZER

S/N: SHA1-UP
PART OF 212-0206 VALVE AR-BANK 8
AN ATTACHMENT

SMCS-5057, 5468 **i02531021**

NOTE	REF NO	GRAPHIC REF	PART NUMBER	QTY	PART NAME 1 2 3 4 5 6 (PRODUCT LEVEL)	SEE PAGE
	1	1	**201-3621**	1	TUBE AS	
	2	1	**201-3622**	1	TUBE AS	
	3	1	**201-3623**	1	TUBE AS	
	4	1	**201-3624**	1	TUBE AS	
I	5	1	**289-8744**	1	HOSE AS	
I	6	1	**289-8745**	1	HOSE AS	
I	7	1	**289-8746**	1	HOSE AS	
I	8	1	**289-8747**	1	HOSE AS	
	9	1	*148-8345*	3	CONNECTOR AS	
					(EACH INCLUDES)	
		1	**2M-9780**	1	SEAL-O-RING	
		1	**6V-8398**	1	SEAL-O-RING	
		1	**6V-8638**	1	CONNECTOR	
	10	1	*148-8372*	2	ELBOW AS	
					(EACH INCLUDES)	
		1	**2M-9780**	1	SEAL-O-RING	
		1	**6V-8398**	1	SEAL-O-RING	
		1	**6V-8721**	1	ELBOW	
	11	1	*164-5557*	1	CONNECTOR AS	
		1	**2M-9780**	1	SEAL-O-RING	
		1	**5I-4370**	1	CONNECTOR	
		1	**6V-8398**	1	SEAL-O-RING	
	12	1	**5P-7462**	4	CLIP (SLOT)	
	13	1	**5P-7463**	4	CLIP (TAB)	
	14	1	**6V-0683**	4	GROMMET	
	15	1	**6V-8397**	4	SEAL-O-RING	
	16	1	**8T-1885**	4	CLIP (SLOT)	
	17	1	**8T-1886**	4	CLIP (TAB)	
	18	1	**8T-4121**	6	WASHER-HARD (11X21X2.5-MM THK)	
M	19	1	**8T-4137**	4	BOLT (M10X1.5X20-MM)	
M	20	1	**8T-4196**	2	BOLT (M10X1.5X35-MM)	

I-REFER TO HYDRAULIC INFORMATION SYSTEM
M-METRIC PART

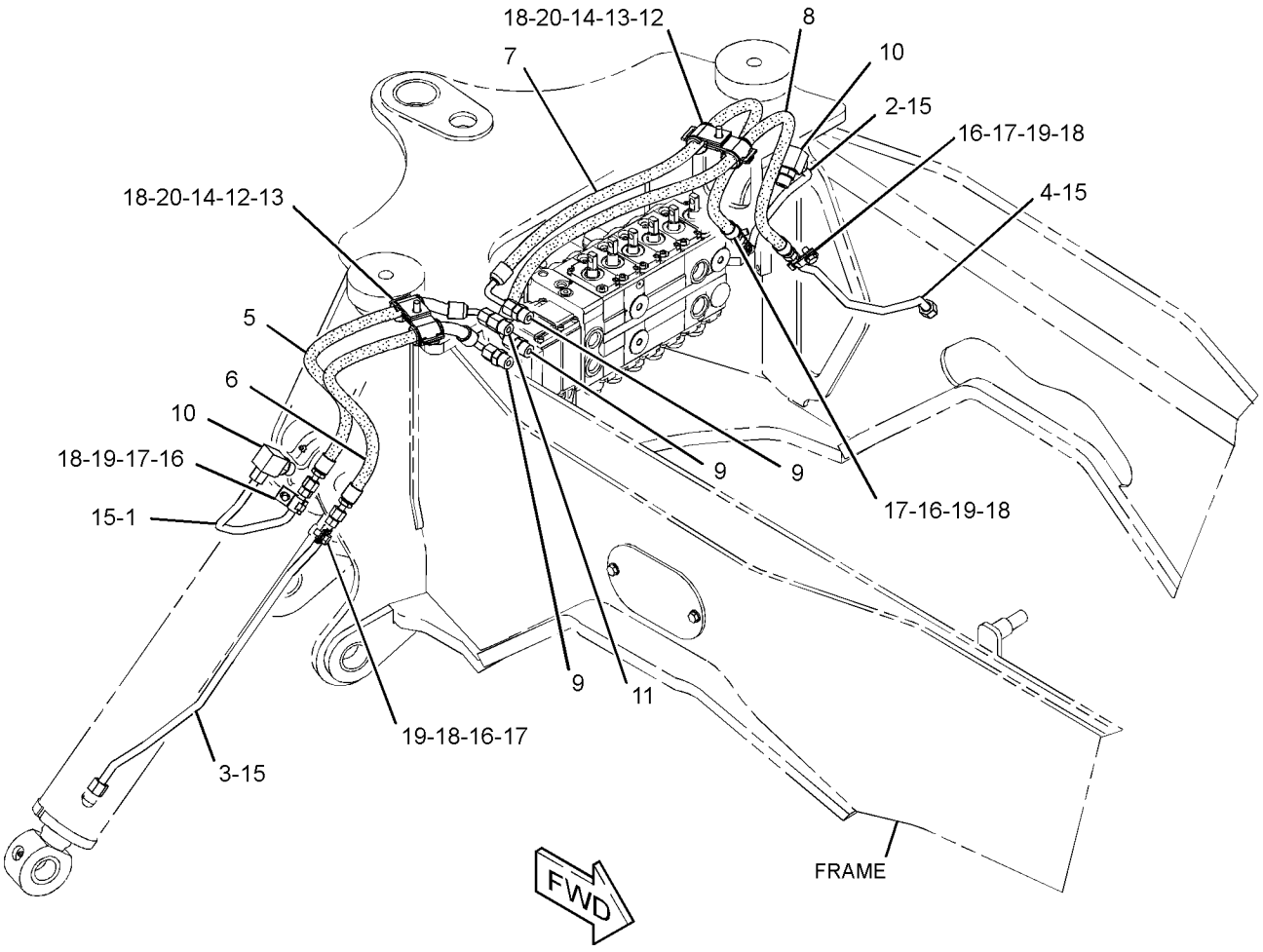

GRAPHIC #1

<END>

g01286060

HYDRAULIC SYSTEM

228-3974 LINES GP-STABILIZER

S/N: SHA1-UP

PART OF 209-9934 VALVE AR-BANK 6, 209-9935 VALVE AR-BANK 7

AN ATTACHMENT

SMCS-5057, 5468 **i02560054**

NOTE	REF NO	GRAPHIC REF	PART NUMBER	QTY	PART NAME 1 2 3 4 5 6 (PRODUCT LEVEL)	SEE PAGE
	1	1	**201-3621**	1	TUBE AS	
	2	1	**201-3622**	1	TUBE AS	
	3	1	**201-3623**	1	TUBE AS	
	4	1	**201-3624**	1	TUBE AS	
I	5	1	**289-8740**	1	HOSE AS	
I	6	1	**289-8741**	1	HOSE AS	
I	7	1	**289-8742**	1	HOSE AS	
I	8	1	**289-8743**	1	HOSE AS	
	9	1	*148-8345*	3	CONNECTOR AS	
					(EACH INCLUDES)	
		1	**2M-9780**	1	SEAL-O-RING	
		1	**6V-8398**	1	SEAL-O-RING	
		1	**6V-8638**	1	CONNECTOR	
	10	1	*148-8372*	2	ELBOW AS	
					(EACH INCLUDES)	
		1	**2M-9780**	1	SEAL-O-RING	
		1	**6V-8398**	1	SEAL-O-RING	
		1	**6V-8721**	1	ELBOW	
	11	1	*164-5557*	1	CONNECTOR AS	
		1	**2M-9780**	1	SEAL-O-RING	
		1	**5I-4370**	1	CONNECTOR	
		1	**6V-8398**	1	SEAL-O-RING	
	12	1	**5P-7462**	4	CLIP (SLOT)	
	13	1	**5P-7463**	4	CLIP (TAB)	
	14	1	**6V-0683**	4	GROMMET	
	15	1	**6V-8397**	4	SEAL-O-RING	
	16	1	**8T-1885**	4	CLIP (SLOT)	
	17	1	**8T-1886**	4	CLIP (TAB)	
	18	1	**8T-4121**	6	WASHER-HARD (11X21X2.5-MM THK)	
M	19	1	**8T-4137**	4	BOLT (M10X1.5X20-MM)	
M	20	1	**8T-4196**	2	BOLT (M10X1.5X35-MM)	

I-REFER TO HYDRAULIC INFORMATION SYSTEM
M-METRIC PART

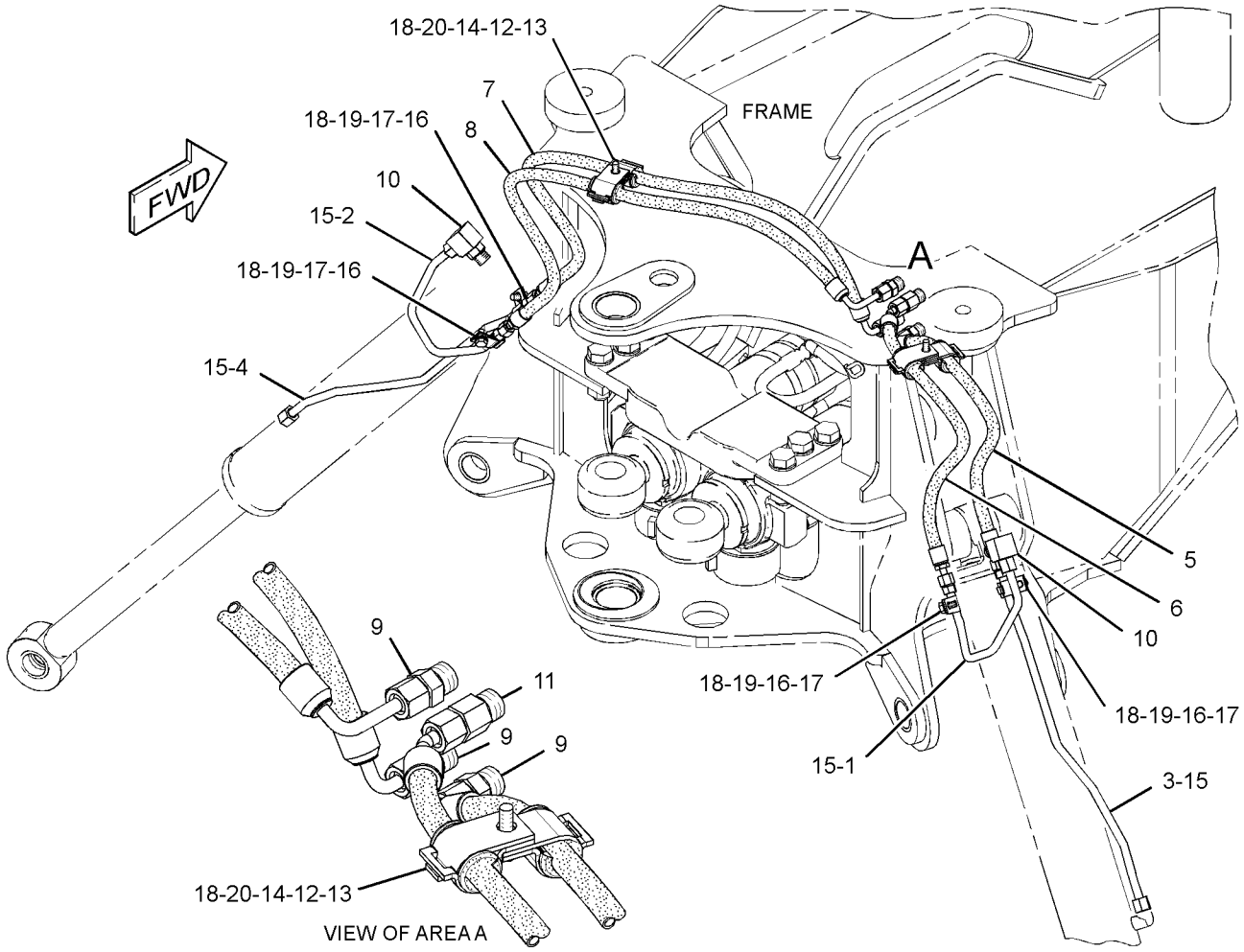

GRAPHIC #1 **<END>** g01298716

211-7564 LINES GP-STICK

S/N: SHA1-UP

PART OF 209-9929, 213-9293, 291-9203 BACKHOE AR-EXTENDABLE STICK, 209-9924, 213-9290, 291-9202 BACKHOE AR-STANDARD STICK AN ATTACHMENT

SMCS-5057 **i02639393**

NOTE	REF NO	GRAPHIC REF	PART NUMBER	QTY	PART NAME 1 2 3 4 5 6 (PRODUCT LEVEL)	SEE PAGE
	1	1	**5P-3860**	1	CLAMP-HOSE	
	2	1	**9R-5948**	1	BLOCK	
I	3	1	**199-2566**	1	HOSE AS	
I	4	1	**297-1230**	1	HOSE AS	
	5	1	*148-8328*	1	CONNECTOR AS	
		1	**3D-2824**	1	SEAL-O-RING	
		1	**6V-8398**	1	SEAL-O-RING	
		1	**6V-8633**	1	CONNECTOR	
	6	1	*148-8341*	1	CONNECTOR AS	
		1	**3D-2824**	1	SEAL-O-RING	
		1	**6V-8713**	1	CONNECTOR	
		1	**7J-9108**	1	SEAL-O-RING	
	7	1	*153-6232*	1	ELBOW AS	
		1	**3D-2824**	1	SEAL-O-RING	
		1	**7J-9108**	1	SEAL-O-RING	
		1	**8T-0120**	1	ELBOW	

I-REFER TO HYDRAULIC INFORMATION SYSTEM

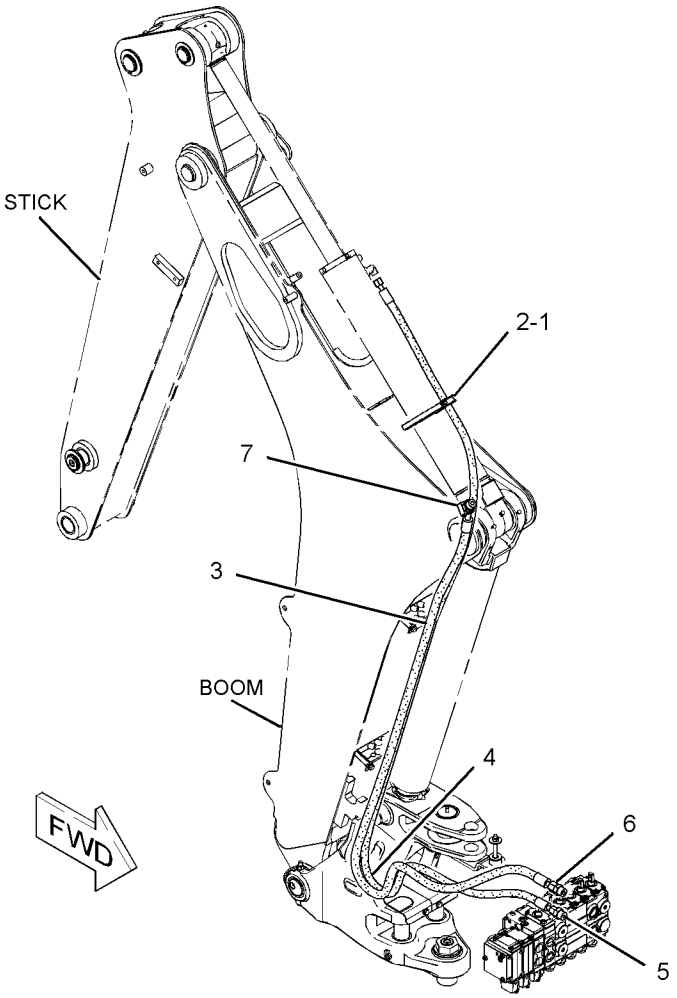

GRAPHIC #1 **<END>** g01078872

HYDRAULIC SYSTEM

232-1248 LINES GP-SWING

S/N: SHA1-UP

PART OF 214-2198 HYDRAULIC AR

SMCS-5057, 5105 **i02733009**

NOTE	REF NO	GRAPHIC REF	PART NUMBER	QTY	PART NAME 1 2 3 4 5 6 (PRODUCT LEVEL)	SEE PAGE
	1	1	**5P-0599**	2	CLAMP-BAND	
	2	1	**9R-2053**	2	BLOCK	
I	3	1	**9R-9005**	2	HOSE AS	
	4	1	*155-7321*	2	ADAPTER AS	
					(EACH INCLUDES)	
		1	**3D-2824**	1	SEAL-O-RING	
		1	**6V-1722**	1	ADAPTER-O-RING	
I	5	1	**216-2777**	1	HOSE AS	
I	6	1	**233-1488**	1	HOSE AS	
	7	1	*148-8340*	4	CONNECTOR AS	
					(EACH INCLUDES)	
		1	**3K-0360**	1	SEAL-O-RING	
		1	**6V-8398**	1	SEAL-O-RING	
		1	**6V-8639**	1	CONNECTOR	
	8	1	*148-8364*	4	ELBOW AS	
					(EACH INCLUDES)	
		1	**3K-0360**	1	SEAL-O-RING	
		1	**6V-8398**	1	SEAL-O-RING	
		1	**6V-8625**	1	ELBOW	

I-REFER TO HYDRAULIC INFORMATION SYSTEM

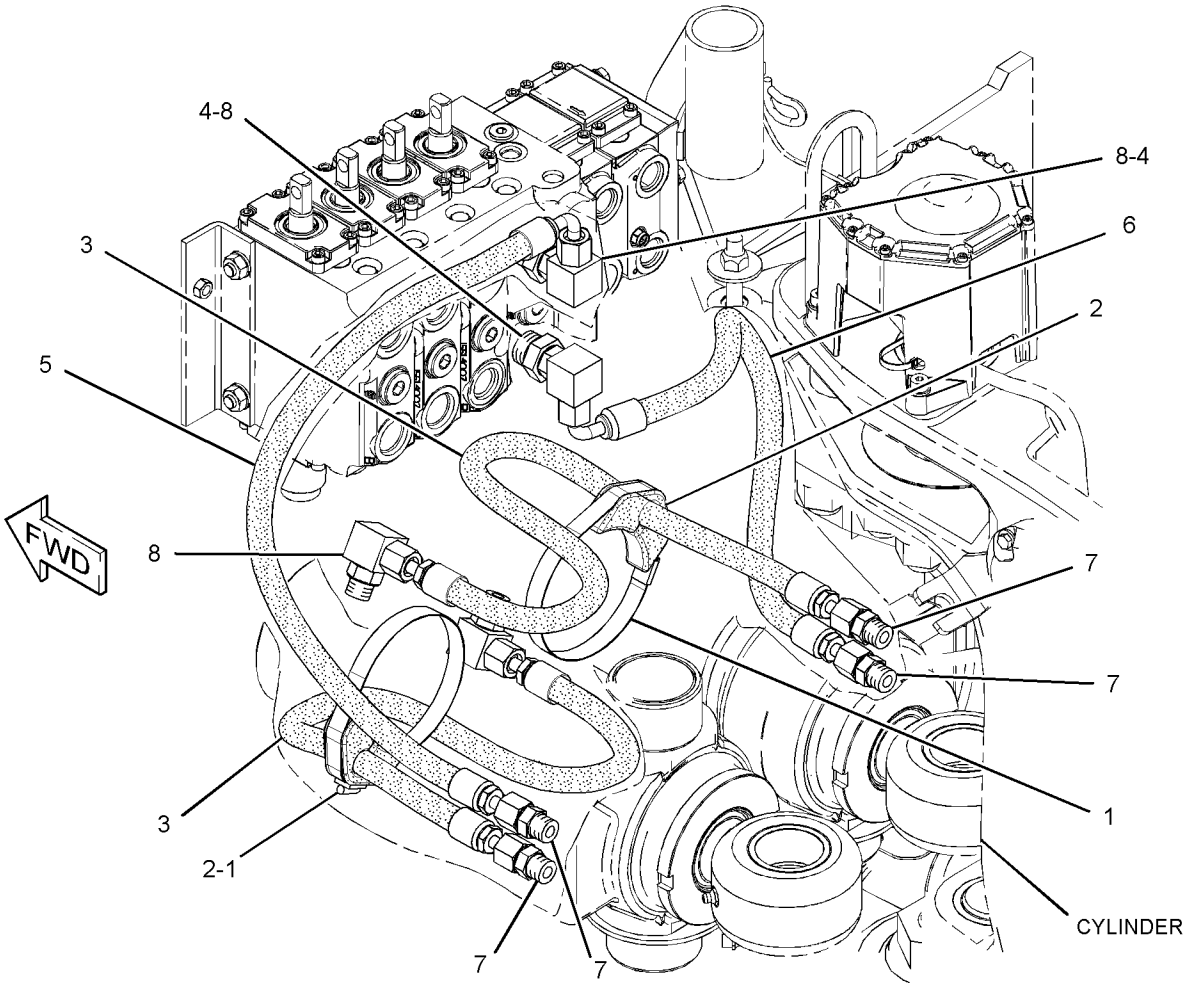

GRAPHIC #1 **<END>** g01372112

HYDRAULIC SYSTEM

246-5292 LINES GP-TILT CYLINDER

S/N: SHA1-UP

PART OF 213-9298 LOADER AR

SMCS-5057, 5104 **i02634521**

NOTE	REF NO	GRAPHIC REF	PART NUMBER	QTY	PART NAME 1 2 3 4 5 6 (PRODUCT LEVEL)	SEE PAGE
I	1	1	**9R-1034**	2	HOSE AS	
	2	1	**156-3837**	4	CLIP (SLOT)	
	3	1	**156-3838**	2	CLIP (TAB)	
	4	1	**158-3412**	8	CLIP (SLOT)	
	5	1	**187-3164**	1	TUBE AS	
	6	1	**187-3166**	1	TUBE AS	
I	7	1	**215-7453**	2	HOSE AS	
	8	1	**232-3244**	1	TUBE AS	
	9	1	**187-4329**	1	TUBE AS	
	10	1	**232-3277**	1	BRACKET AS	
	11	1	**207-7581**	1	TUBE AS	
	12	1	**249-4032**	1	TUBE AS	
	13	1	**151-4841**	1	BLOCK	
	14	1	**254-7271**	1	PLATE AS	
	15	1	*148-8341*	2	CONNECTOR AS	
					(EACH INCLUDES)	
		1	**3D-2824**	1	SEAL-O-RING	
		1	**6V-8713**	1	CONNECTOR	
		1	**7J-9108**	1	SEAL-O-RING	
	16	1	*148-8390*	1	ELBOW AS	
		1	**2M-9780**	1	SEAL-O-RING	
		1	**6V-8626**	1	ELBOW (FACE SEAL)	
		1	**7J-9108**	1	SEAL-O-RING	
	17	1	*148-8393*	2	ELBOW AS	
					(EACH INCLUDES)	
		1	**6V-9852**	1	ELBOW	
		1	**7J-9108**	1	SEAL-O-RING	
	18	1	**6V-8398**	8	SEAL-O-RING	
	19	1	**8T-4121**	8	WASHER-HARD (11X21X2.5-MM THK)	
M	20	1	**8T-4136**	6	BOLT (M10X1.5X25-MM)	
M	21	1	**8T-4137**	2	BOLT (M10X1.5X20-MM)	
	22	1	**7K-1181**	1	STRAP-CABLE (PLASTIC)	
	23	1	**9R-7803**	4	CLIP (TAB)	

I-REFER TO HYDRAULIC INFORMATION SYSTEM
M-METRIC PART

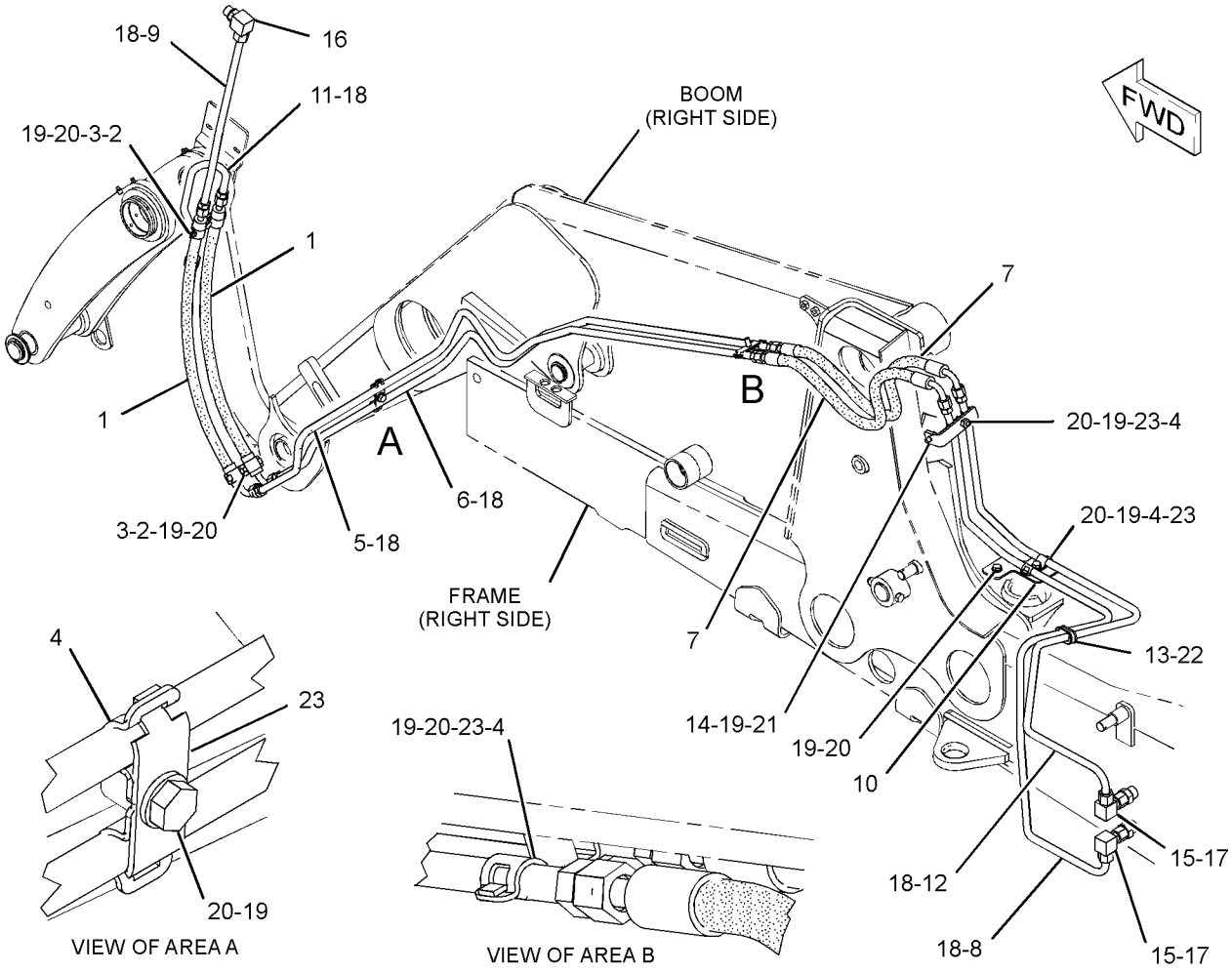

GRAPHIC #1 **<END>** g01321697

259-6742 MANIFOLD GP-CONTROL

S/N: SHA1-UP

PART OF 248-0483 VALVE GP-BANK 6, 248-0484 VALVE GP-BANK 7, 248-0485 VALVE GP-BANK 8

AN ATTACHMENT

SMCS-5264 **i02273217**

NOTE	REF NO	GRAPHIC REF	PART NUMBER	QTY	PART NAME 1 2 3 4 5 6 (PRODUCT LEVEL)	SEE PAGE
	1	1	**259-6758**	1	VALVE GP-RELIEF	
	2	1	**192-7515**	1	SEAL-O-RING	
	3	1	**6V-5138**	1	SEAL-O-RING	

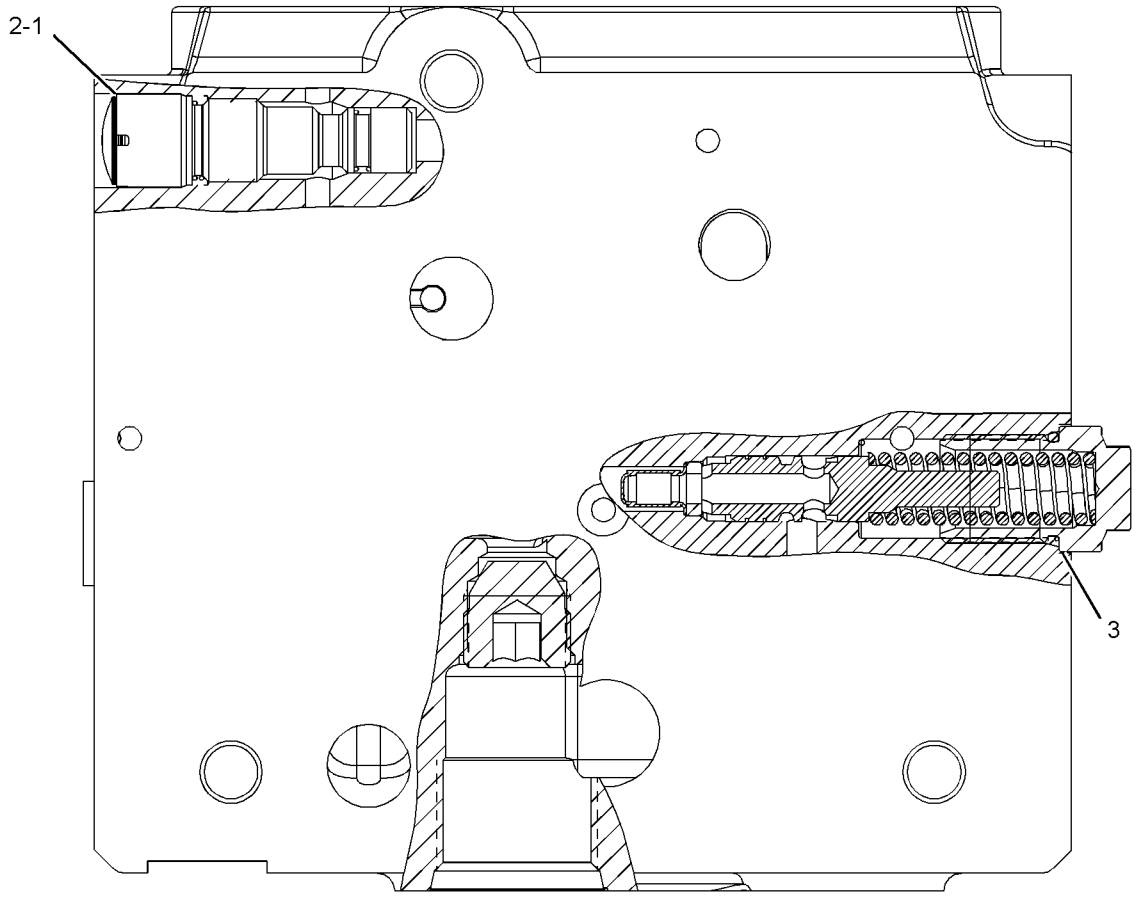

GRAPHIC #1 **<END>** g01140755

HYDRAULIC SYSTEM

259-6745 MANIFOLD GP-CONTROL

S/N: SHA1-UP

PART OF 248-0481 VALVE GP-BANK 2, 248-0482 VALVE GP-BANK 3

AN ATTACHMENT

SMCS-5264 **i02351138**

NOTE	REF NO	GRAPHIC REF	PART NUMBER	QTY	PART NAME 1 2 3 4 5 6 (PRODUCT LEVEL)	SEE PAGE
	1	1	**259-6758**	1	VALVE GP-RELIEF	
	2	1	**4J-7533**	1	SEAL-O-RING	
	3	1	**6V-7970**	1	SEAL-O-RING	
	4	1	**7M-8485**	1	SEAL-O-RING	
	5	1	**192-7515**	1	SEAL-O-RING	
	6	1	**9S-8001**	1	PLUG	

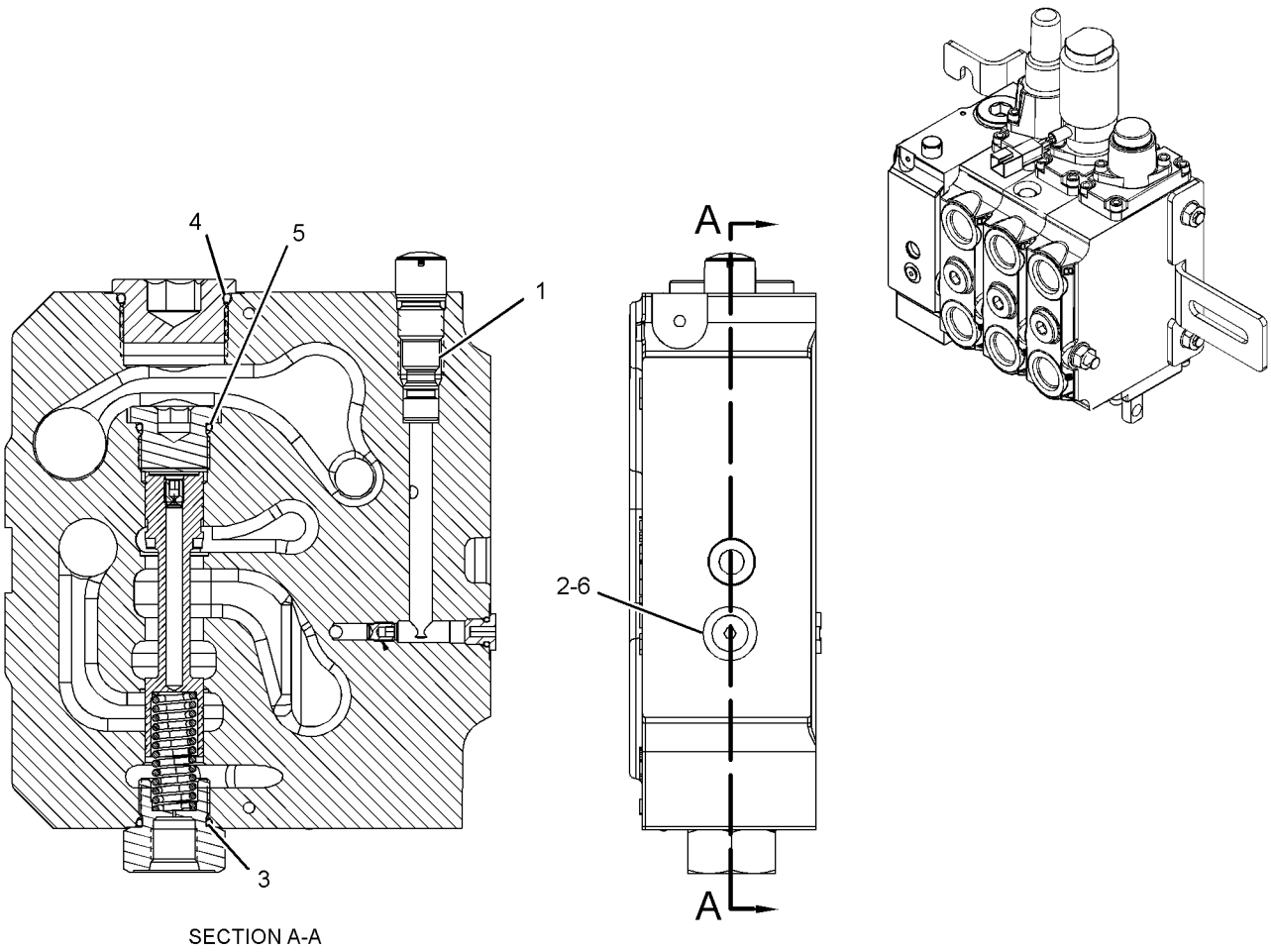

SECTION A-A

GRAPHIC #1 **<END>** g01183742

HYDRAULIC SYSTEM

245-8780 MANIFOLD GP-RIDE CONTROL

S/N: SHA1-UP
PART OF 246-9802 LINES GP-RIDE CONTROL
AN ATTACHMENT

SMCS-5264 **i02333886**

NOTE	REF NO	GRAPHIC REF	PART NUMBER	QTY	PART NAME 1 2 3 4 5 6 (PRODUCT LEVEL)	SEE PAGE
J	1	1	**249-3124**	1	VALVE GP-SOLENOID (RIDE CONTROL, SWITCH)	
L	2	1	**249-3125**	1	VALVE GP-SOLENOID (ACCUMULATOR)	
	3	1	**238-4628**	2	COIL AS	
					AVAILABLE REPAIR KIT(S):	
J			**141-0888**	1	KIT-SEAL	
L			**227-5509**	1	KIT-SEAL	

J-KIT MARKED J AVAILABLE FOR PART MARKED J
L-KIT MARKED L AVAILABLE FOR PART MARKED L

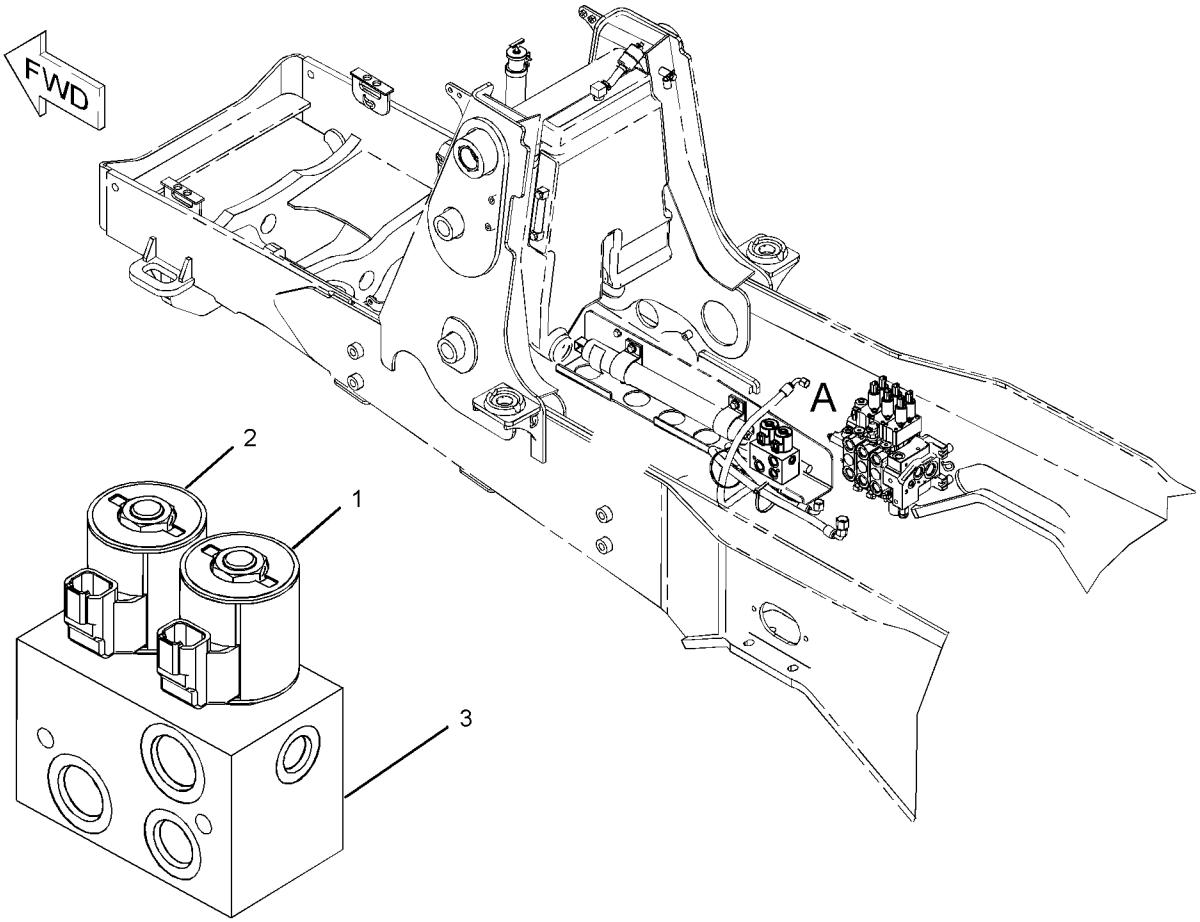

VIEW OF AREA A

GRAPHIC #1 **<END>** g01094840

HYDRAULIC SYSTEM

219-8564 MOUNTING GP-BANK VALVE

S/N: SHA1-UP

PART OF 209-9935 VALVE AR-BANK 7, 212-0206 VALVE AR-BANK 8

AN ATTACHMENT

SMCS-5051 **i02528372**

NOTE	REF NO	GRAPHIC REF	PART NUMBER	QTY	PART NAME 1 2 3 4 5 6 (PRODUCT LEVEL)	SEE PAGE
	1	1	**219-0006**	1	BRACKET AS	
M	2	1	**165-7019**	1	BOLT (M12X1.75X45-MM)	
M	3	1	**8T-4183**	2	BOLT (M12X1.75X40-MM)	
M	4	1	**8T-4192**	3	BOLT (M12X1.75X25-MM)	
	5	1	**8T-4223**	6	WASHER-HARD (13.5X25.5X3-MM THK)	

M-METRIC PART

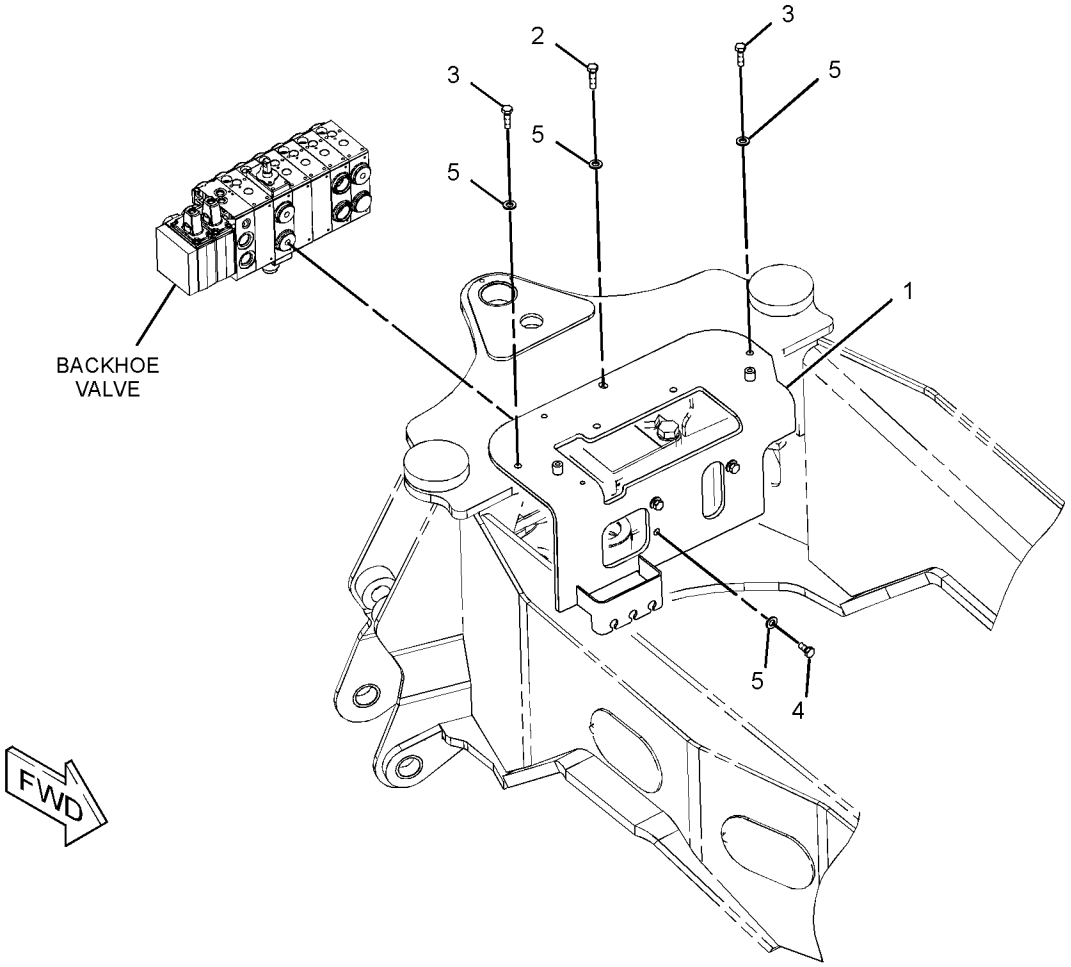

GRAPHIC #1 **<END>** g01390190

290-8077 MOUNTING GP-BANK VALVE

S/N: SHA1-UP

PART OF 209-9934 VALVE AR-BANK 6

AN ATTACHMENT

SMCS-5051 **i02527298**

NOTE	REF NO	GRAPHIC REF	PART NUMBER	QTY	PART NAME 1 2 3 4 5 6 (PRODUCT LEVEL)	SEE PAGE
	1	1	**219-0006**	1	BRACKET AS	
M	2	1	**165-7019**	1	BOLT (M12X1.75X45-MM)	
M	3	1	**8T-4183**	3	BOLT (M12X1.75X40-MM)	
M	4	1	**8T-4192**	2	BOLT (M12X1.75X25-MM)	
	5	1	**8T-4223**	6	WASHER-HARD (13.5X25.5X3-MM THK)	

M-METRIC PART

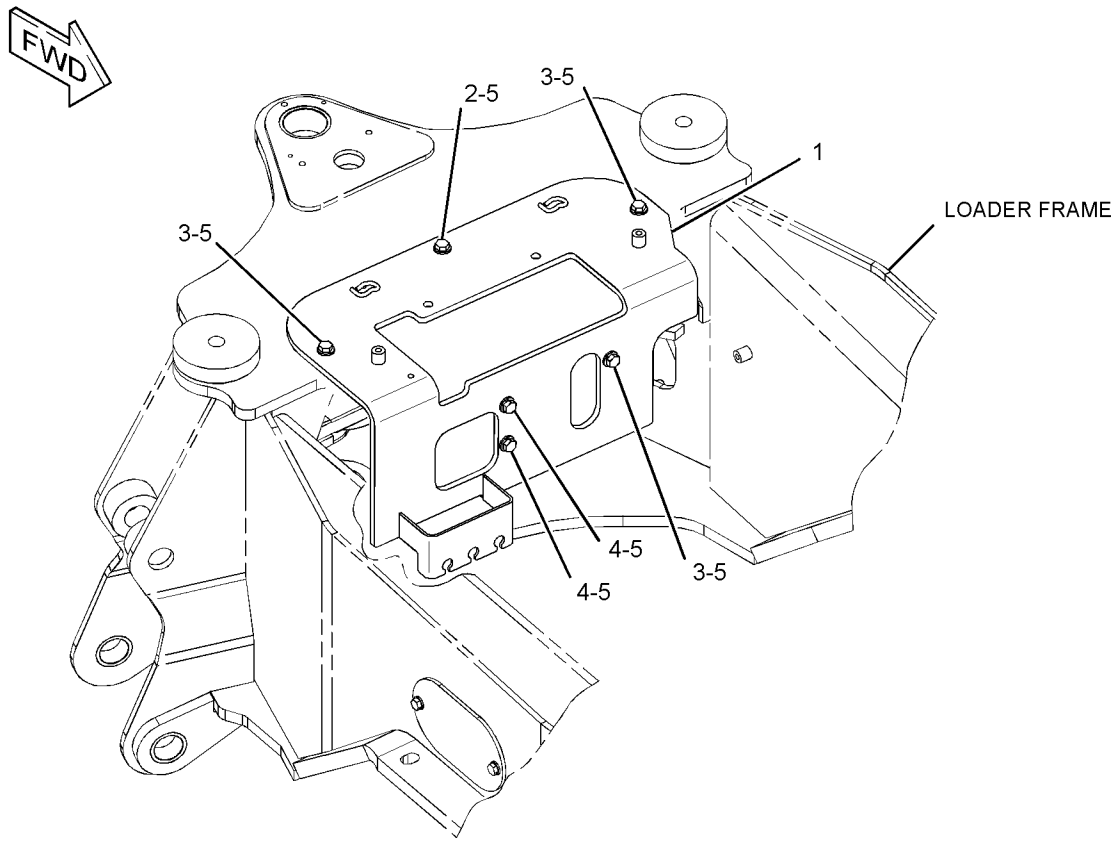

GRAPHIC #1 **<END>** g01321704

221-4265 MOUNTING GP-CYLINDER–THUMB

S/N: SHA1-UP
PART OF 221-4260 THUMB AR
AN ATTACHMENT

SMCS-5102, 6068, 7562 **i02445754**

NOTE	REF NO	GRAPHIC REF	PART NUMBER	QTY	PART NAME 1 2 3 4 5 6 (PRODUCT LEVEL)	SEE PAGE
	1	1	**9R-1510**	8	WASHER (51X82X4-MM THK)	
	2	1	**221-4295**	1	PIN	
	3	1	**221-4296**	1	PIN	
	4	1	**221-4297**	1	PIN	
	5	1	**221-4315**	1	STOP AS	
	6	1	**221-4316**	1	BRACKET AS	
	7	1	**3B-5319**	2	PIN-COTTER	
	8	1	**6V-3213**	2	RING-RETAINING	
M	9	1	**6V-9189**	1	LOCKNUT (M8X1.25-THD)	
M	10	1	**8T-3647**	1	BOLT (M8X1.25X80-MM)	
	11	1	**9R-0158**	2	WASHER (46X69X3-MM THK)	

M-METRIC PART

221-4265 **MOUNTING GP-CYLINDER** *(contd.)* **i02445754**

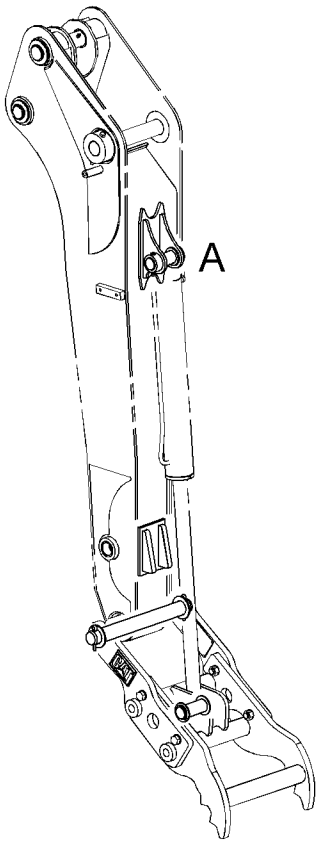

HYDRAULIC CYLINDER
STANDARD STICK

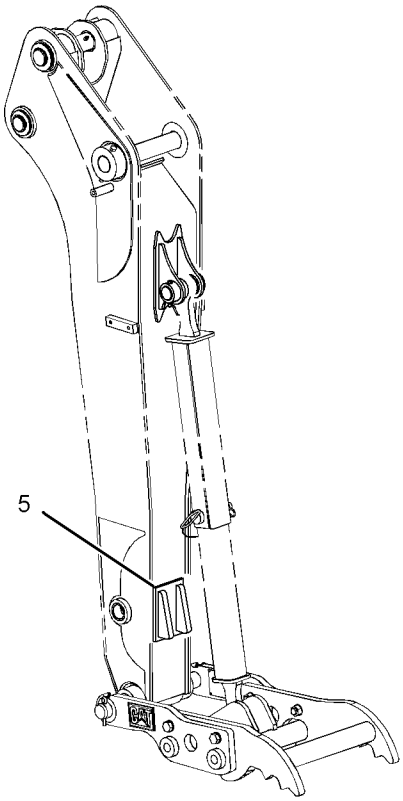

ADJUSTABLE LINK
STANDARD STICK

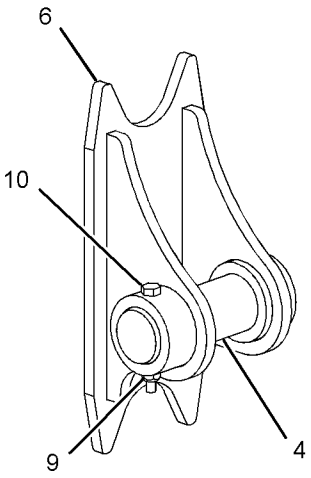

VIEW OF AREA A

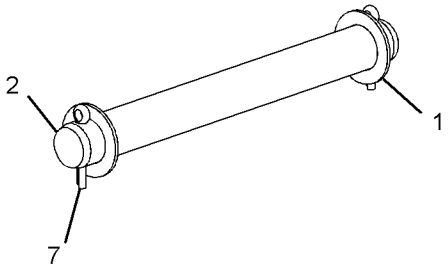

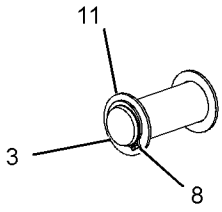

VIEW OF AREA B

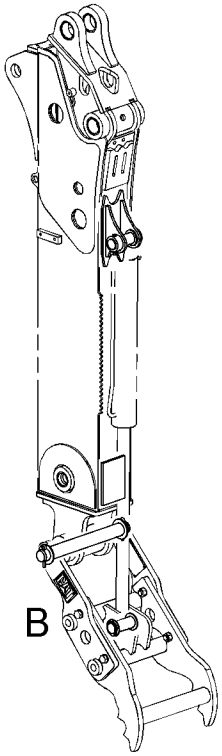

HYDRAULIC CYLINDER
EXTENDABLE STICK

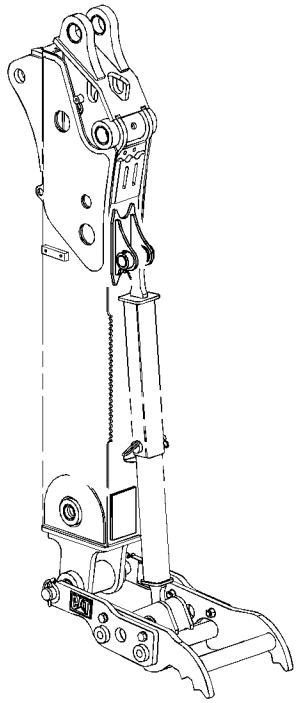

ADJUSTABLE LINK
EXTENDABLE STICK

GRAPHIC #1 **<END>** g01224751

263-8577 MOUNTING GP-CYLINDER–THUMB

S/N: SHA1-UP
PART OF 271-3023 THUMB GP
AN ATTACHMENT

SMCS-5102, 6068, 7562 **i02673700**

NOTE	REF NO	GRAPHIC REF	PART NUMBER	QTY	PART NAME 1 2 3 4 5 6 (PRODUCT LEVEL)	SEE PAGE
B	1	1	**9R-1510**	8	WASHER (51X82X4-MM THK)	
	2	1	**221-4295**	1	PIN	
	3	1	**221-4296**	1	PIN	
	4	1	**270-3410**	1	PIN	
	5	1	**3B-5319**	2	PIN-COTTER	
	6	1	**6V-3213**	4	RING-RETAINING (EXTERNAL)	
BM	7	1	**6V-7744**	1	LOCKNUT (M10X1.15-THD)	
BM	8	1	**8T-6685**	1	BOLT (M10X1.5X110-MM)	
B	9	1	**9R-0158**	6	WASHER (46X69X3-MM THK)	

B-USE AS REQUIRED
M-METRIC PART

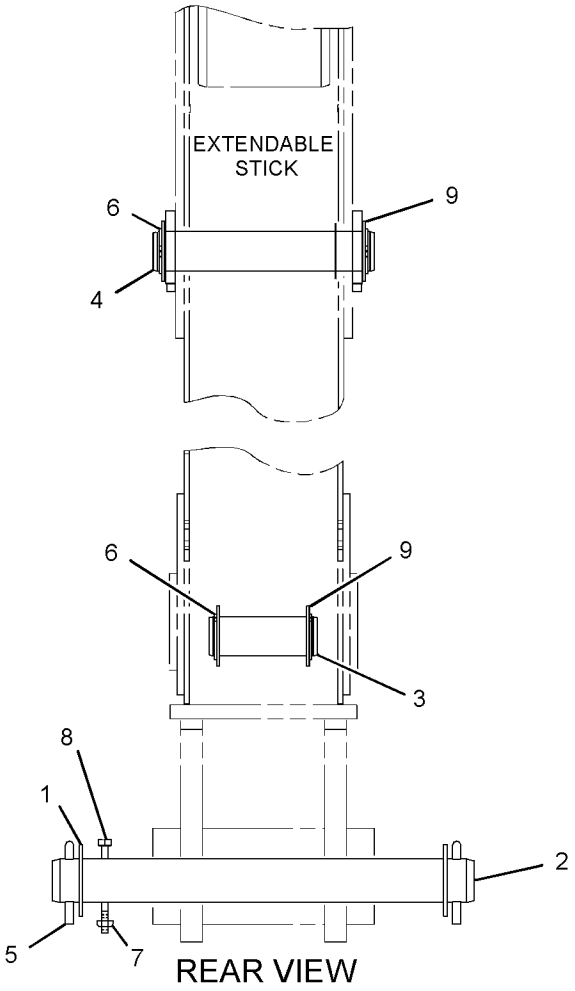

GRAPHIC #1 **<END>** g01339061

246-9309 MOUNTING GP-LINES–BACKHOE

S/N: SHA1-UP

PART OF 209-9929, 213-9293, 291-9203 BACKHOE AR-EXTENDABLE STICK, 209-9924, 213-9290, 291-9202 BACKHOE AR-STANDARD STICK AN ATTACHMENT

SMCS-5057, 5456 **i02378922**

NOTE	REF NO	GRAPHIC REF	PART NUMBER	QTY	PART NAME 1 2 3 4 5 6 (PRODUCT LEVEL)	SEE PAGE
	1	1	**248-4274**	2	BLOCK	
	2	1	**248-4275**	2	BLOCK	
	3	1	**248-4276**	2	BLOCK	
	4	1	**248-4277**	2	PLATE	
	5	1	**8T-4121**	4	WASHER-HARD (11X21X2.5-MM THK)	
M	6	1	**8T-4196**	4	BOLT (M10X1.5X35-MM)	

M-METRIC PART

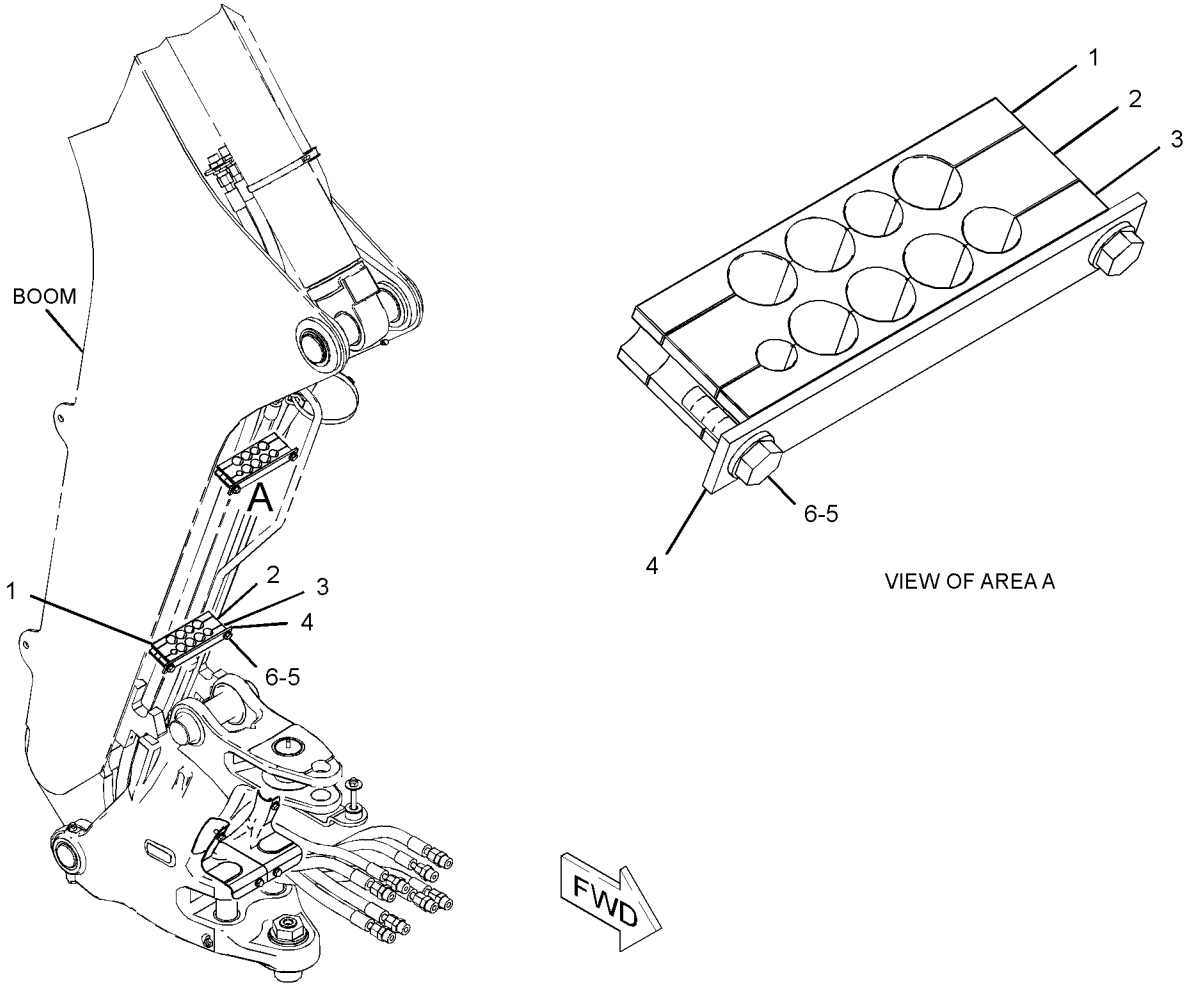

GRAPHIC #1 **<END>** g01190731

HYDRAULIC SYSTEM

247-7867 PUMP GP-PISTON

S/N: SHA1-2590, 2613-2622

PART OF 214-2198 HYDRAULIC AR

SMCS-5070 **i02782544**

NOTE	REF NO	GRAPHIC REF	PART NUMBER	QTY	PART NAME 1 2 3 4 5 6 (PRODUCT LEVEL)	SEE PAGE
	1	1	**232-3587**	1	KIT-BEARING (FRONT)	
					(INCLUDES CUP & CONE)	
	2	1	**232-3586**	1	KIT-BEARING (REAR)	
					(INCLUDES CUP & CONE)	
	3	1	**296-6715**	1	KIT-BEARING	
					(INCLUDES BEARINGS & PINS)	
	4	1	**263-5514**	1	SHAFT-DRIVE	
	5	1	**260-3146**	1	SWASHPLATE	
	6	1	**260-3149**	1	KIT-CYLINDER (PISTON PUMP)	
					(INCLUDES PISTON AS, RETAINER, RETAINER GUIDE, PINS, BLOCK, SPRING, SPRING SEATS & RING)	
	7	1	**260-3147**	1	PLATE	
	8	1	**248-1348**	1	KIT-CONTROL (GENERATOR PUMP)	
	9	1	**3J-1907**	1	SEAL-O-RING	
	10	1	**3K-0360**	1	SEAL-O-RING	
	11	1	**232-3591**	1	SEAL-LIP TYPE	
	12	1	**6J-7855**	1	RING-LOCK	
	13	1	**2M-9780**	2	SEAL-O-RING	
	14	1	**8L-2777**	1	SEAL-O-RING	
	15	1	**6J-2245**	1	SEAL-O-RING	
	16	1	**3J-7354**	4	SEAL-O-RING	
	17	1	**234-4173**	4	SEAL-O-RING	
					PARTS SHOWN IN GRAPHIC(S) WITHOUT A REFERENCE NUMBER ARE NOT SERVICED SEPARATELY	
					AVAILABLE REPAIR KIT(S):	
			260-3150	1	KIT-SEAL (PISTON PUMP)	
					(INCLUDES RINGS & SEALS)	

247-7867 PUMP GP-PISTON *(contd.)* **i02782544**

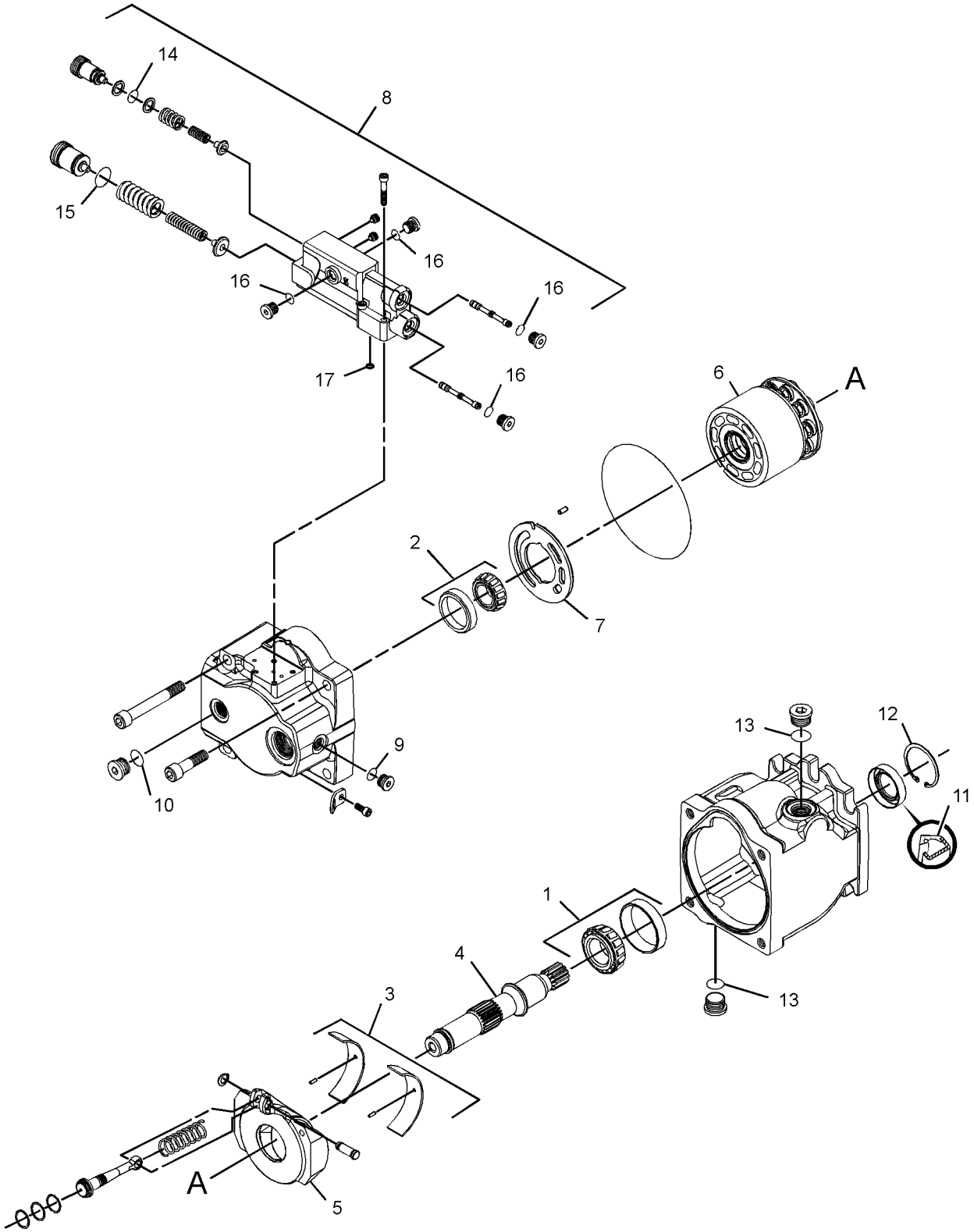

GRAPHIC #1 **<END>** g01276503

296-6714 PUMP GP-PISTON

S/N: SHA2591-2612, 2623-UP

PART OF 214-2198 HYDRAULIC AR

SMCS-5070 **i02779366**

NOTE	REF NO	GRAPHIC REF	PART NUMBER	QTY	PART NAME 1 2 3 4 5 6 (PRODUCT LEVEL)	SEE PAGE
	1	1	**232-3587**	1	KIT-BEARING (FRONT)	
					(INCLUDES CUP & CONE)	
	2	1	**232-3586**	1	KIT-BEARING (REAR)	
					(INCLUDES CUP & CONE)	
	3	1	**296-6715**	1	KIT-BEARING (SWASHPLATE)	
					(INCLUDES BEARINGS & PINS)	
	4	1	**263-5514**	1	SHAFT-DRIVE	
	5	1	**260-3146**	1	SWASHPLATE	
	6	1	**260-3149**	1	KIT-CYLINDER (PISTON PUMP)	
					(INCLUDES PISTON AS, RETAINER, GUIDE, PINS, BLOCK, SPRING, SPRING SEATS, & RING)	
	7	1	**260-3147**	1	PLATE	
	8	1	**248-1348**	1	KIT-CONTROL (GENERATOR PUMP)	
	9	1	**232-3591**	1	SEAL-LIP TYPE	
	10	1	**6J-7855**	1	RING-LOCK	
	11	1	**2M-9780**	2	SEAL-O-RING	
	12	1	**3J-1907**	1	SEAL-O-RING	
	13	1	**3K-0360**	1	SEAL-O-RING	
	14	1	**8L-2777**	1	SEAL-O-RING	
	15	1	**6J-2245**	1	SEAL-O-RING	
	16	1	**3J-7354**	4	SEAL-O-RING	
	17	1	**234-4173**	4	SEAL-O-RING	
					PARTS SHOWN IN GRAPHIC(S) WITHOUT A REFERENCE NUMBER ARE NOT SERVICED SEPARATELY	
					AVAILABLE REPAIR KIT(S):	
			260-3150	1	KIT-SEAL (PISTON PUMP)	
					(INCLUDES SEALS & RINGS)	

296-6714 PUMP GP-PISTON *(contd.)* i02779366

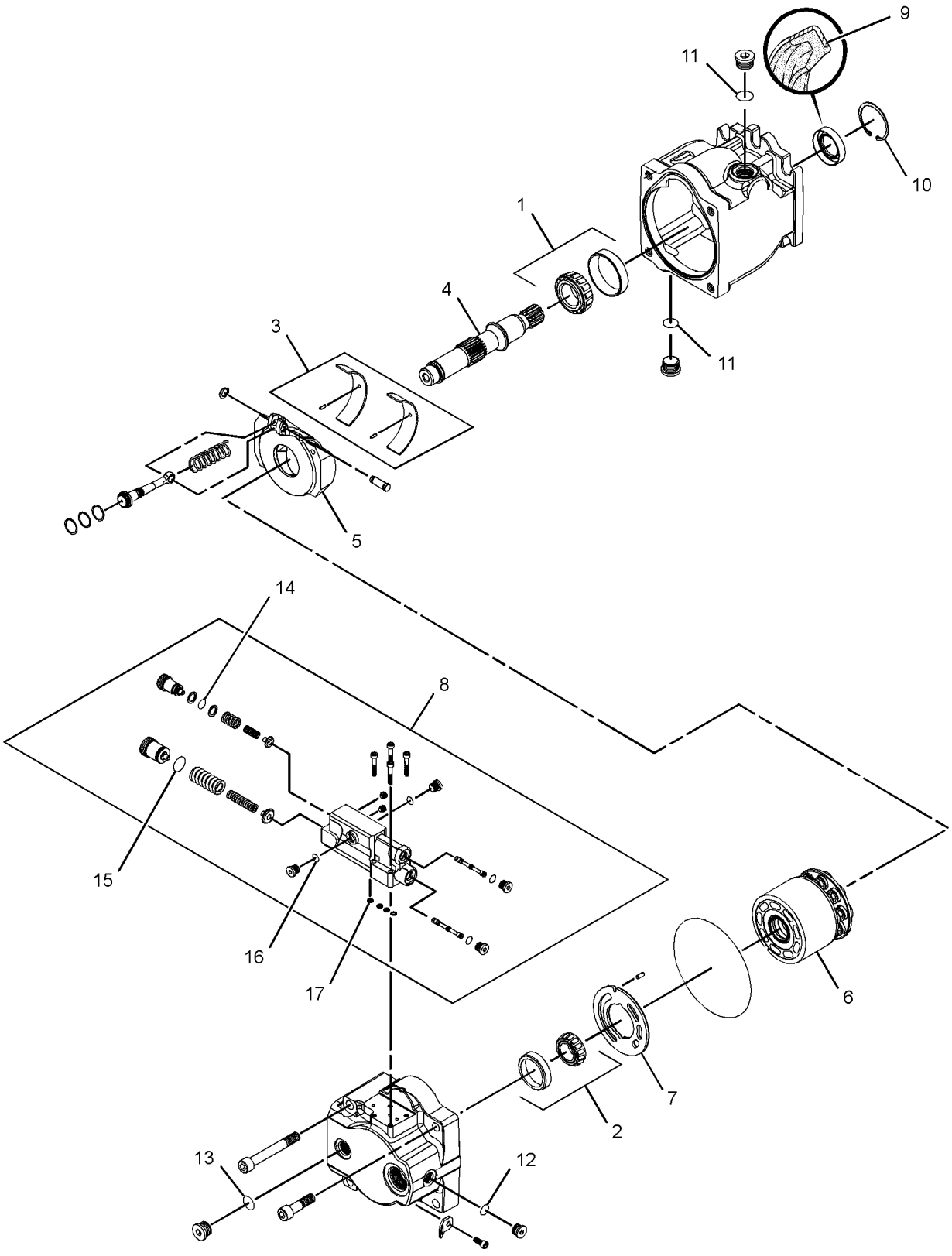

GRAPHIC #1 **<END>** g01389188

128-5596 SHAFT GP-PUMP DRIVE

S/N: SHA1-UP
PART OF 112-1826 DRIVE & MTG GP-PUMP
AN ATTACHMENT

SMCS-3108 **i00512642**

NOTE	REF NO	GRAPHIC REF	PART NUMBER	QTY	PART NAME 1 2 3 4 5 6 (PRODUCT LEVEL)	SEE PAGE
	1	1	**130-8150**	1	RING-RETAINING	

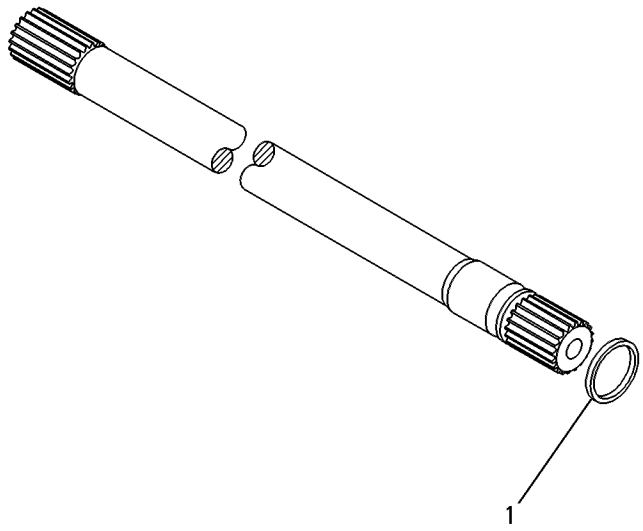

GRAPHIC #1 **<END>** g00131851

HYDRAULIC SYSTEM

245-8777 TANK & MTG GP-HYDRAULIC

S/N: SHA1-2280

PART OF 214-2198 HYDRAULIC AR

SMCS-5056 **i02513409**

NOTE	REF NO	GRAPHIC REF	PART NUMBER	QTY	PART NAME 1 2 3 4 5 6 (PRODUCT LEVEL)	SEE PAGE
	1	1	**1P-4278**	1	CLAMP-HOSE	
	2	1	**5D-1026**	2	CLAMP-HOSE	
E	3	1	**5P-1442**		HOSE (124-CM)	
E	4	1	**5P-1505**		HOSE (8-CM)	
	5	1	**9M-0164**	1	CLAMP-HOSE	
	6	1	**9R-9925**	1	FILTER-BREATHER (HYDRAULIC TANK)	
	7	1	**127-4471**	1	CLAMP-HOSE	
	8	1	**132-3056**	1	SEAL-O-RING	
	9	1	**210-7773**	1	BRACKET AS	
	10	1	**222-4067**	6	BOLT-SOCKET HEAD (M5X0.8X14-MM)	
	11	1	**234-6927**	1	HOSE	
	12	1	**293-4671**	1	TUBE AS	
	13	1	**235-5843**	1	DIFFUSER AS	
	14	1	**237-3797**	1	CAP-FILL (HYDRAULIC OIL)	
	15	1	*245-8778*	1	TANK GP-HYDRAULIC	
		1	**253-8295**	1	GAUGE-SIGHT	
	16	1	*150-3026*	1	ELBOW AS	
		1	**3K-0360**	1	SEAL-O-RING	
		1	**6V-4292**	1	ELBOW	
	17	1	**6D-3479**	1	CLIP	
	18	1	**8T-4121**	2	WASHER-HARD (11X21X2.5-MM THK)	
M	19	1	**8T-4137**	2	BOLT (M10X1.5X20-MM)	
	20	1	**7X-7729**	4	WASHER (11X25X3-MM THK)	
M	21	1	**8T-4139**	1	BOLT (M12X1.75X30-MM)	
M	22	1	**8T-4179**	3	BOLT (M12X1.75X20-MM)	
M	23	1	**8T-4191**	4	BOLT (M10X1.5X16-MM)	
	24	1	**8T-4223**	4	WASHER-HARD (13.5X25.5X3-MM THK)	

E-ORDER BY THE CENTIMETER
M-METRIC PART

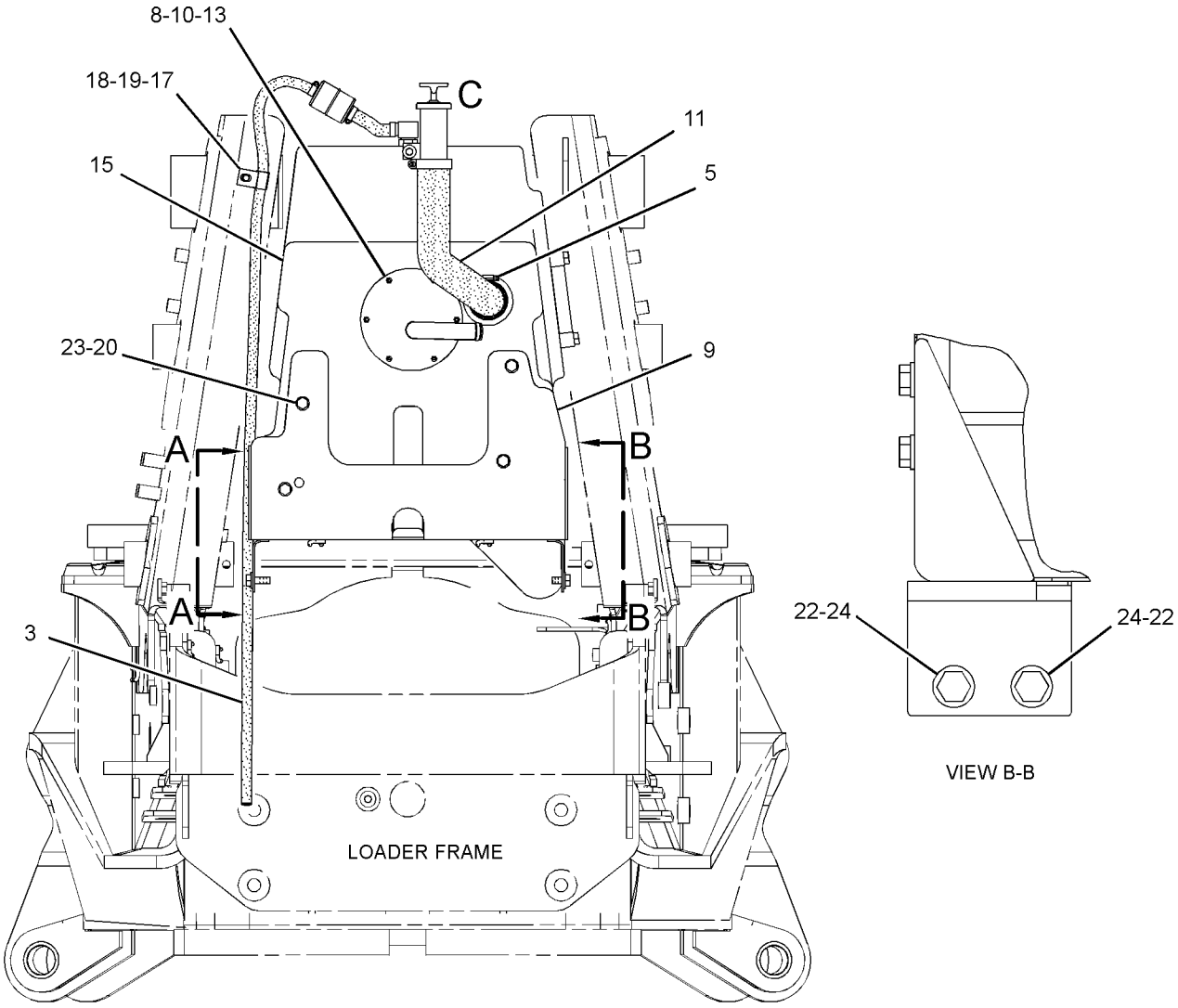

FRONT VIEW

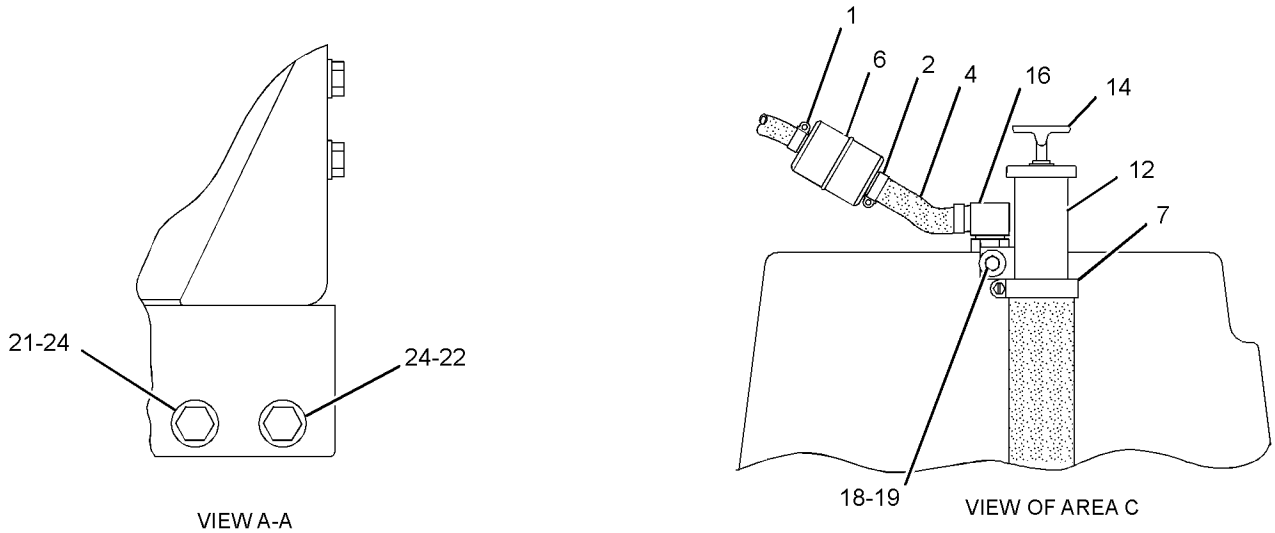

GRAPHIC #1 **<END>** g01343487

HYDRAULIC SYSTEM

245-8777 TANK & MTG GP-HYDRAULIC

S/N: SHA2281-UP

PART OF 214-2198 HYDRAULIC AR

SMCS-5056 **i02760894**

NOTE	REF NO	GRAPHIC REF	PART NUMBER	QTY	PART NAME 1 2 3 4 5 6 (PRODUCT LEVEL)	SEE PAGE
C	1	1	**1P-4278**	3	CLAMP-HOSE	
CE	3	1	**5P-1442**		HOSE (8-CM)	
CE	3A	1	**5P-1442**		HOSE (124-CM)	
	5	1	**9M-0164**	1	CLAMP-HOSE	
	6	1	**9R-9925**	1	FILTER-BREATHER (HYDRAULIC TANK)	
	7	1	**127-4471**	1	CLAMP-HOSE	
	8	1	**132-3056**	1	SEAL-O-RING	
	9	1	**210-7773**	1	BRACKET AS	
	10	1	**222-4067**	6	BOLT-SOCKET HEAD (M5X0.8X14-MM)	
	11	1	**234-6927**	1	HOSE	
	12	1	**293-4671**	1	TUBE AS	
	13	1	**235-5843**	1	DIFFUSER AS	
	14	1	**237-3797**	1	CAP-FILL (HYDRAULIC OIL)	
	15	1	*245-8778*	1	TANK GP-HYDRAULIC	
		1	**253-8295**	1	GAUGE-SIGHT	
C	16	1	*217-8185*	1	ELBOW AS	
		1	**3K-0360**	1	SEAL-O-RING	
		1	**9X-3982**	1	ELBOW (90-DEG)	
	17	1	**6D-3479**	1	CLIP	
	18	1	**8T-4121**	2	WASHER-HARD (11X21X2.5-MM THK)	
M	19	1	**8T-4137**	2	BOLT (M10X1.5X20-MM)	
	20	1	**7X-7729**	4	WASHER (11X25X3-MM THK)	
M	21	1	**8T-4139**	1	BOLT (M12X1.75X30-MM)	
M	22	1	**8T-4179**	3	BOLT (M12X1.75X20-MM)	
M	23	1	**8T-4191**	4	BOLT (M10X1.5X16-MM)	
	24	1	**8T-4223**	4	WASHER-HARD (13.5X25.5X3-MM THK)	

C-CHANGE FROM PREVIOUS TYPE
E-ORDER BY THE CENTIMETER
M-METRIC PART

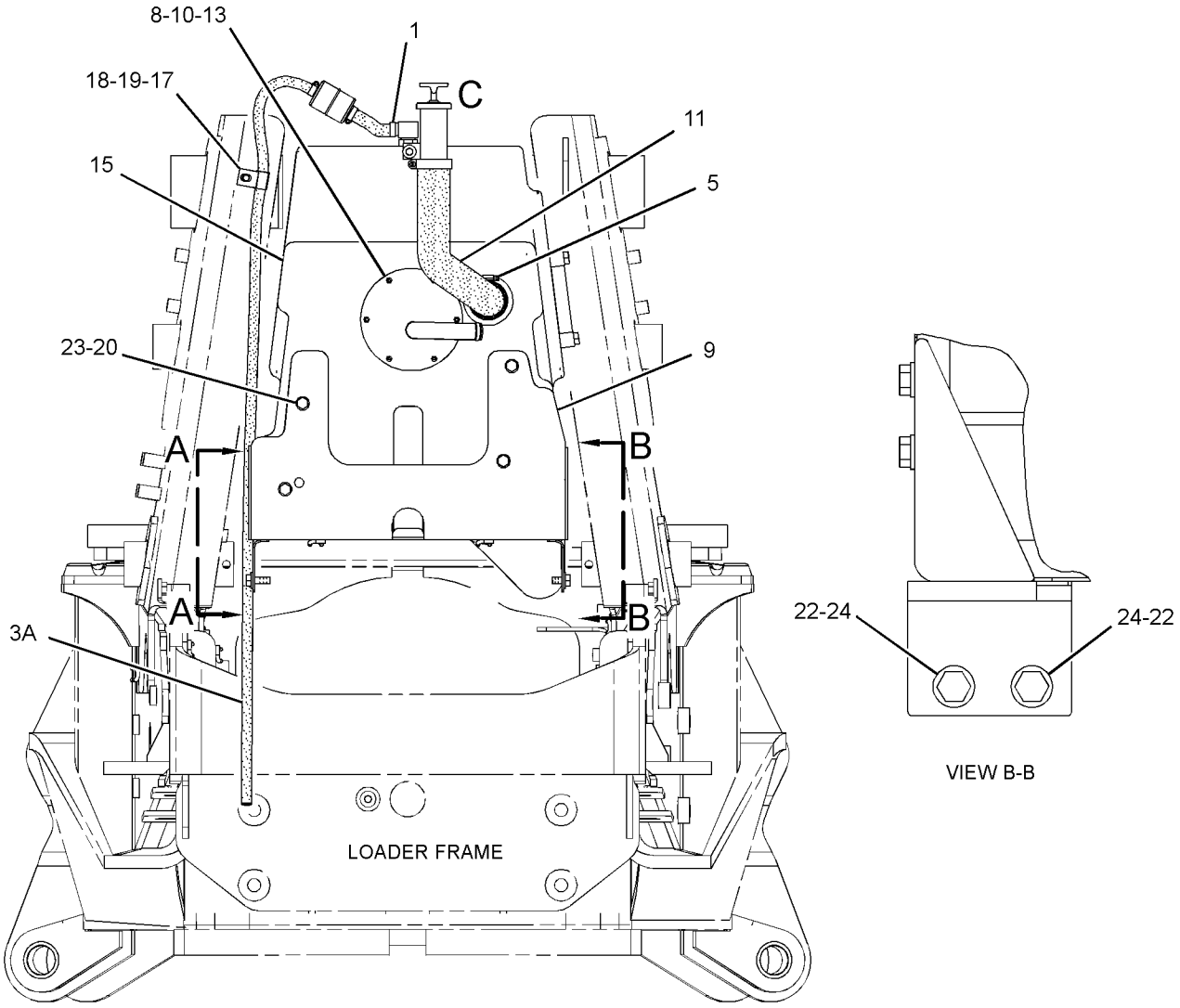

FRONT VIEW

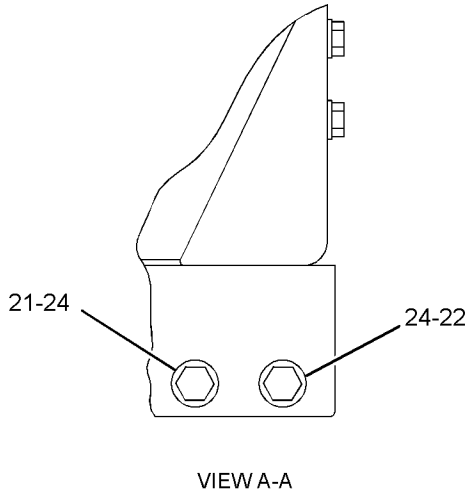

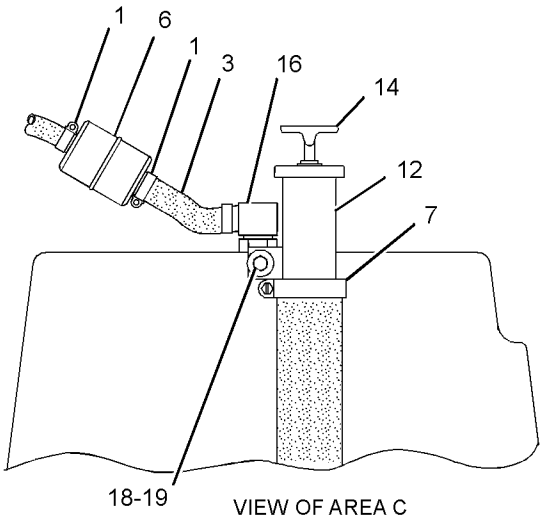

GRAPHIC #1 **<END>** g01384575

HYDRAULIC SYSTEM

209-9943 VALVE AR-BANK 2

S/N: SHA1-UP
AN ATTACHMENT

SMCS-5051 **i02440634**

NOTE	PART NUMBER	QTY	PART NAME 1 2 3 4 5 6 (PRODUCT LEVEL)	SEE PAGE
Y	*206-1645*	1	CONTROL GP-HYDRAULIC HAND	674
Y	*219-8566*	1	FASTENER GP-VALVE (BANK)	342
Y	*248-0481*	1	VALVE GP-BANK 2	412
	251-5625	1	FILM-INSTRUCTION (BUCKET CONTROL)	
			(ON RIGHT HAND CONSOLE)	

Y-SEPARATE ILLUSTRATION

<END>

209-9944 VALVE AR-BANK 3

S/N: SHA1-UP
AN ATTACHMENT

SMCS-5051 **i02273097**

NOTE	PART NUMBER	QTY	PART NAME 1 2 3 4 5 6 (PRODUCT LEVEL)	SEE PAGE
Y	*209-3364*	1	CONTROL GP-HYDRAULIC HAND	676
Y	*219-8566*	1	FASTENER GP-VALVE (BANK)	342
Y	*246-8478*	1	LINES GP-LOADER AUXILIARY	369
Y	**248-0482**	1	VALVE GP-BANK 3	413
	251-5626	1	FILM-INSTRUCTION (BUCKET CONTROL)	
			(ON RH CONSOLE)	

Y-SEPARATE ILLUSTRATION

<END>

209-9934 VALVE AR-BANK 6

S/N: SHA1-UP
AN ATTACHMENT

SMCS-5051 **i02527307**

NOTE	PART NUMBER	QTY	PART NAME 1 2 3 4 5 6 (PRODUCT LEVEL)	SEE PAGE
Y	*228-3974*	1	LINES GP-STABILIZER	385
Y	*290-8077*	1	MOUNTING GP-BANK VALVE	395
Y	**248-0483**	1	VALVE GP-BANK 6	414

Y-SEPARATE ILLUSTRATION

<END>

HYDRAULIC SYSTEM

209-9935 VALVE AR-BANK 7

S/N: SHA1-UP
AN ATTACHMENT

SMCS-5051 **i02527308**

NOTE	PART NUMBER	QTY	PART NAME 1 2 3 4 5 6 (PRODUCT LEVEL)	SEE PAGE
Y	*209-3375*	1	CONTROL GP-HYDRAULIC PEDAL (SINGLE FUNCTION, RH)	685
Y	*228-3974*	1	LINES GP-STABILIZER	385
Y	*219-8564*	1	MOUNTING GP-BANK VALVE	394
Y	**248-0484**	1	VALVE GP-BANK 7	416
B	**6V-9831**	2	CAP AS	
			(USE WHEN EXTRA VALVE BANK IS NOT USED)	
B	*148-8341*	2	CONNECTOR AS	
			(USE WHEN EXTRA VALVE BANK IS NOT USED)	
			(EACH INCLUDES)	
	3D-2824	1	SEAL-O-RING	
	6V-8713	1	CONNECTOR	
	7J-9108	1	SEAL-O-RING	

B-USE AS REQUIRED
Y-SEPARATE ILLUSTRATION

<END>

212-0206 VALVE AR-BANK 8

S/N: SHA1-UP
AN ATTACHMENT

SMCS-5051 **i02531022**

NOTE	PART NUMBER	QTY	PART NAME 1 2 3 4 5 6 (PRODUCT LEVEL)	SEE PAGE
Y	*209-3365*	1	CONTROL GP-HYDRAULIC PEDAL (SINGLE FUNCTION, LH)	684
Y	*209-3375*	1	CONTROL GP-HYDRAULIC PEDAL (SINGLE FUNCTION, RH)	685
Y	*211-7568*	1	LINES GP-STABILIZER	383
Y	*219-8564*	1	MOUNTING GP-BANK VALVE	394
Y	**248-0485**	1	VALVE GP-BANK 8	418
B	**6V-9831**	4	CAP AS	
B	*148-8341*	4	CONNECTOR AS	
			(EACH INCLUDES)	
	3D-2824	1	SEAL-O-RING	
	6V-8713	1	CONNECTOR	
	7J-1908	1	SEAL	

B-USE AS REQUIRED
Y-SEPARATE ILLUSTRATION

<END>

HYDRAULIC SYSTEM

248-0481 VALVE GP-BANK 2

S/N: SHA1-UP
PART OF 209-9943 VALVE AR-BANK 2
AN ATTACHMENT

SMCS-5051 **i02440702**

NOTE	REF NO	GRAPHIC REF	PART NUMBER	QTY	PART NAME 1 2 3 4 5 6 (PRODUCT LEVEL)	SEE PAGE
	1	1	**259-6747**	1	KIT-BRACKET (INLET MANIFOLD)	
					(INCLUDES BRACKET, BOLTS & WASHERS)	
	2	1	**259-6748**	1	KIT-BRACKET (VALVE)	
					(INCLUDES BRACKET, NUTS & WASHERS)	
Y	3	1	**259-6745**	1	MANIFOLD GP-CONTROL (INLET)	392
Y	4	1	**259-6732**	1	VALVE GP-CONTROL (LIFT)	423
Y	5	1	**259-6731**	1	VALVE GP-CONTROL (TILT)	422
	6	1	**259-6749**	1	KIT-FASTENER	
					(INCLUDES RODS, NUTS & WASHERS)	
	7	1	**259-6754**	2	KIT-SEAL	
					(EACH INCLUDES SEAL-O-RINGS)	
	8	1	**8T-4121**	2	WASHER-HARD (11X21X2.5-MM THK)	
M	9	1	**8T-4137**	2	BOLT (M10X1.5X20-MM)	

M-METRIC PART
Y-SEPARATE ILLUSTRATION

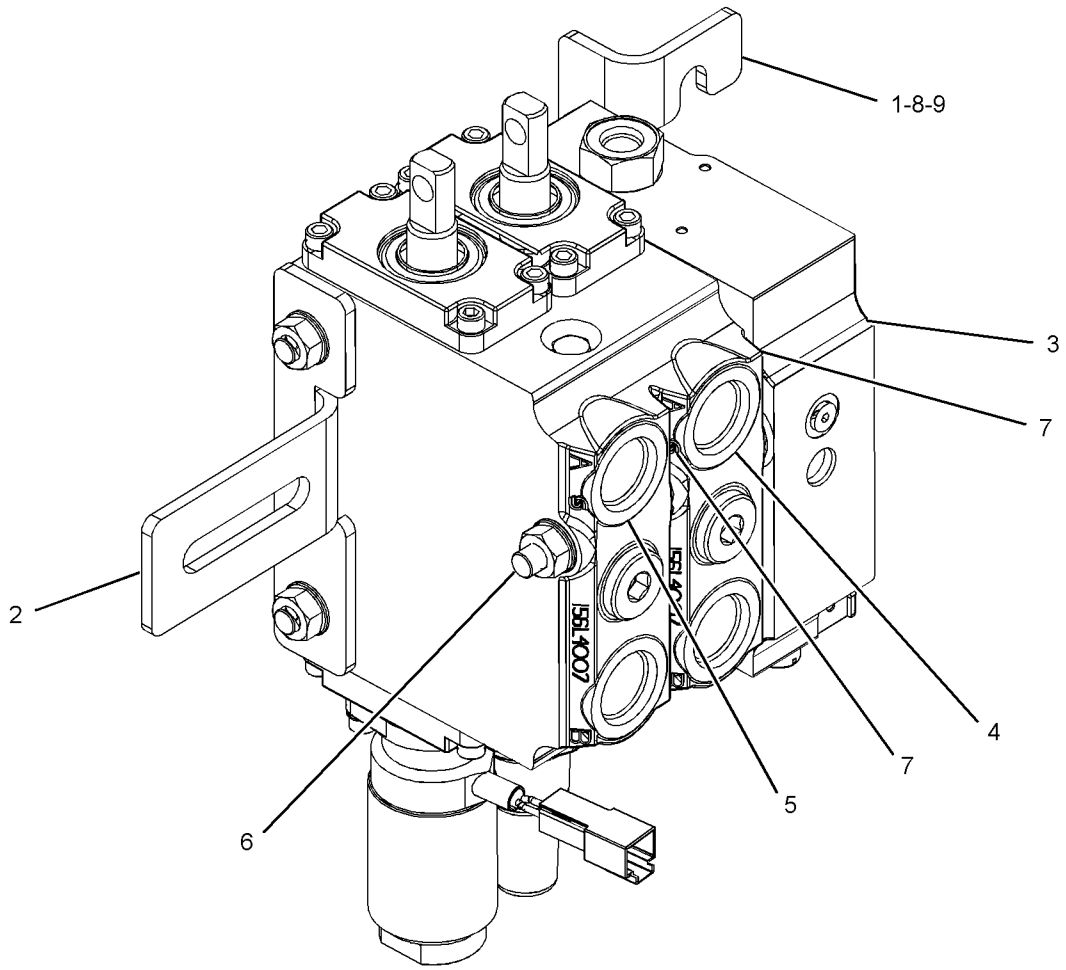

GRAPHIC #1 **<END>** g01122328

248-0482 VALVE GP-BANK 3

S/N: SHA1-UP
PART OF 209-9944 VALVE AR-BANK 3
AN ATTACHMENT

SMCS-5051 **i02532737**

NOTE	REF NO	GRAPHIC REF	PART NUMBER	QTY	PART NAME 1 2 3 4 5 6 (PRODUCT LEVEL)	SEE PAGE
	1	1	**259-6747**	1	KIT-BRACKET (INLET MANIFOLD)	
					(INCLUDES WASHERS, BOLTS & BRACKET)	
	2	1	**259-6748**	1	KIT-BRACKET (VALVE)	
					(INCLUDES NUTS, WASHERS & BRACKET)	
Y	3	1	**259-6745**	1	MANIFOLD GP-CONTROL (INLET)	392
Y	4	1	**259-6732**	1	VALVE GP-CONTROL (LIFT)	423
Y	5	1	**259-6730**	1	VALVE GP-CONTROL (TILT)	421
Y	6	1	**259-6729**	1	VALVE GP-CONTROL (AUXILIARY)	420
	7	1	**259-6754**	3	KIT-SEAL (VALVES)	
					(EACH INCLUDES SEALS)	
	8	1	**259-6750**	1	KIT-FASTENER (3-BANK)	
					(INCLUDES RODS, WASHERS & NUTS)	
	9	1	**8T-4121**	2	WASHER-HARD (11X21X2.5-MM THK)	
M	10	1	**8T-4137**	2	BOLT (M10X1.5X20-MM)	

M-METRIC PART
Y-SEPARATE ILLUSTRATION

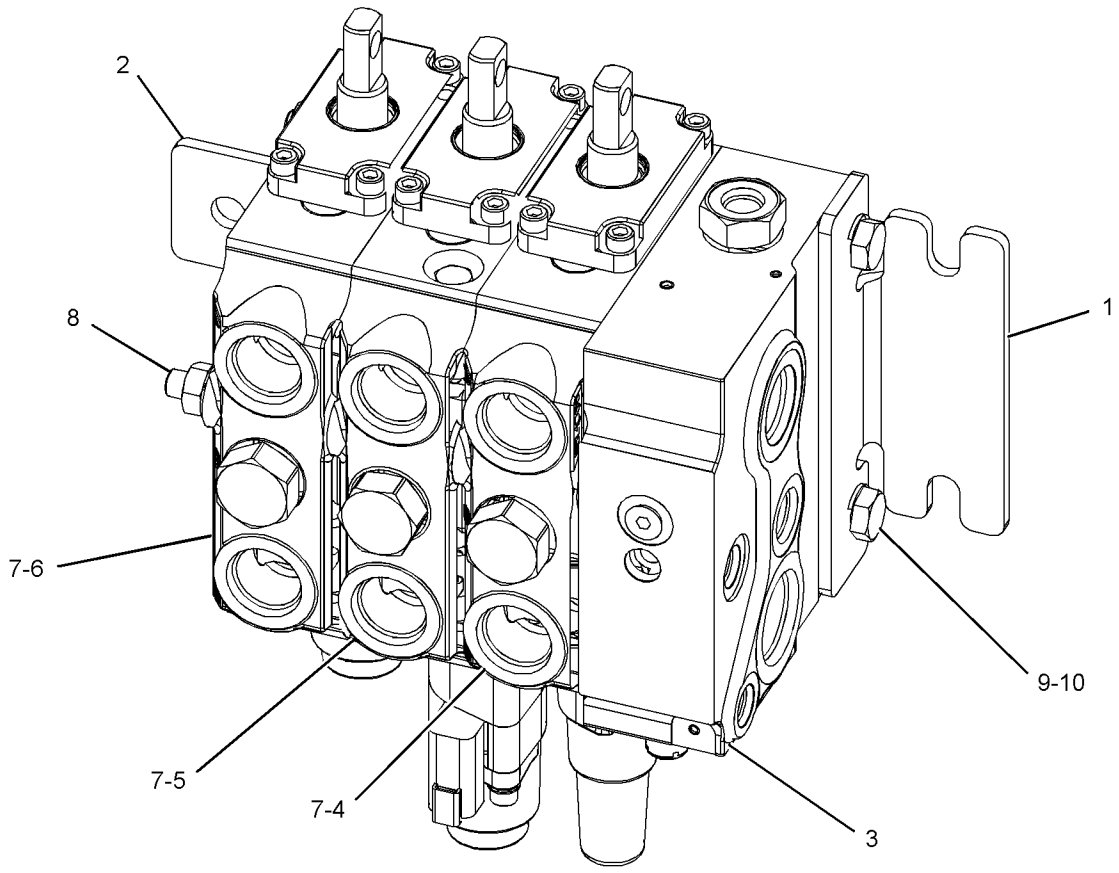

GRAPHIC #1 **<END>** g01263561

HYDRAULIC SYSTEM

248-0483 VALVE GP-BANK 6

S/N: SHA1-UP
PART OF 209-9934 VALVE AR-BANK 6
AN ATTACHMENT

SMCS-5051 **i02435605**

NOTE	REF NO	GRAPHIC REF	PART NUMBER	QTY	PART NAME 1 2 3 4 5 6 (PRODUCT LEVEL)	SEE PAGE
	1	1	**259-6757**	1	KIT-BRACKET	
					(INCLUDES WASHERS, NUTS & BRACKET)	
	2	1	**259-6746**	2	VALVE GP-CONTROL (STABILIZER)	
					(EACH INCLUDES)	
		1	**210-8917**	1	LEVER GP-CONTROL VALVE (STABILIZER)	
Y	3	1	**259-6742**	1	MANIFOLD GP-CONTROL (INLET)	391
Y	4	1	**259-6739**	1	VALVE GP-CONTROL (BOOM)	432
Y	5	1	**259-6738**	1	VALVE GP-CONTROL (SWING)	430
Y	6	1	**259-6737**	1	VALVE GP-CONTROL (BUCKET)	429
Y	7	1	**259-6736**	1	VALVE GP-CONTROL (STICK)	428
	8	1	**259-6751**	1	KIT-FASTENER (4-BANK)	
					(INCLUDES RODS, WASHERS & NUTS)	
	9	1	**259-6754**	4	KIT-SEAL	
					(EACH INCLUDES)	
		1	**3E-6714**	1	SEAL-O-RING	
		1	**133-4771**	2	SEAL-O-RING	
		1	**192-7506**	4	SEAL-O-RING	
		1	**192-7508**	2	SEAL-O-RING	
	10	1	**259-6755**	1	KIT-COVER	
	11	1	**259-6756**	1	KIT-FASTENER (2-BANK)	
					(INCLUDES RODS, WASHERS & NUTS)	
	12	1	**192-7506**	12	SEAL-O-RING	
	13	1	**192-7511**	1	SEAL	
	14	1	**192-7508**	10	SEAL-O-RING	
	15	1	**192-7509**	2	SEAL-O-RING	

Y-SEPARATE ILLUSTRATION

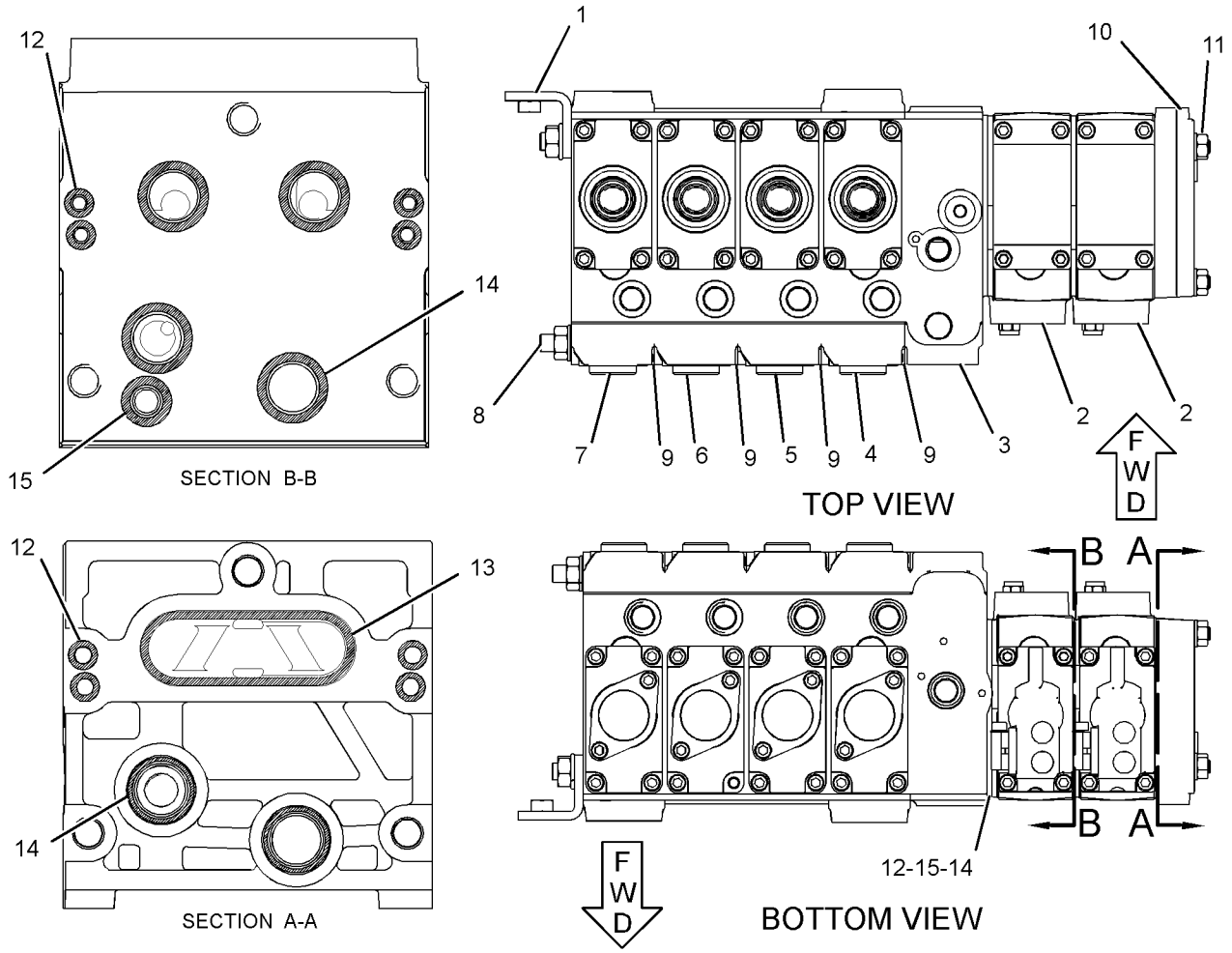

GRAPHIC #1

<END>

g01230751

HYDRAULIC SYSTEM

248-0484 VALVE GP-BANK 7

S/N: SHA1-UP

PART OF 209-9935 VALVE AR-BANK 7

AN ATTACHMENT

SMCS-5051 **i02436100**

NOTE	REF NO	GRAPHIC REF	PART NUMBER	QTY	PART NAME 1 2 3 4 5 6 (PRODUCT LEVEL)	SEE PAGE
	1	1	**259-6746**	2	VALVE GP-CONTROL (STABILIZER)	
					(EACH INCLUDES)	
		1	**210-8917**	1	LEVER GP-CONTROL VALVE (STABILIZER)	
Y	2	1	**259-6742**	1	MANIFOLD GP-CONTROL (INLET)	391
Y	3	1	**259-6739**	1	VALVE GP-CONTROL (BOOM)	432
Y	4	1	**259-6738**	1	VALVE GP-CONTROL (SWING)	430
Y	5	1	**259-6737**	1	VALVE GP-CONTROL (BUCKET)	429
Y	6	1	**259-6735**	1	VALVE GP-CONTROL (STICK)	427
Y	7	1	**259-6734**	1	VALVE GP-CONTROL (EXTENDABLE STICK)	425
	8	1	**259-6754**	5	KIT-SEAL	
					(EACH INCLUDES)	
		1	**3E-6714**	1	SEAL-O-RING	
		1	**133-4771**	2	SEAL-O-RING	
		1	**192-7506**	4	SEAL-O-RING	
		1	**192-7508**	2	SEAL-O-RING	
	9	1	**259-6755**	1	KIT-COVER	
	10	1	**259-6756**	1	KIT-FASTENER (2-BANK)	
					(INCLUDES RODS, WASHERS & NUTS)	
	11	1	**259-6752**	1	KIT-FASTENER (5-BANK)	
					(INCLUDES RODS, WASHERS & NUTS)	
	12	1	**192-7506**	12	SEAL-O-RING	
	13	1	**192-7511**	1	SEAL	
	14	1	**192-7508**	10	SEAL-O-RING	
	15	1	**192-7509**	2	SEAL-O-RING	

Y-SEPARATE ILLUSTRATION

248-0484 VALVE GP-BANK 7 *(contd.)* **i02436100**

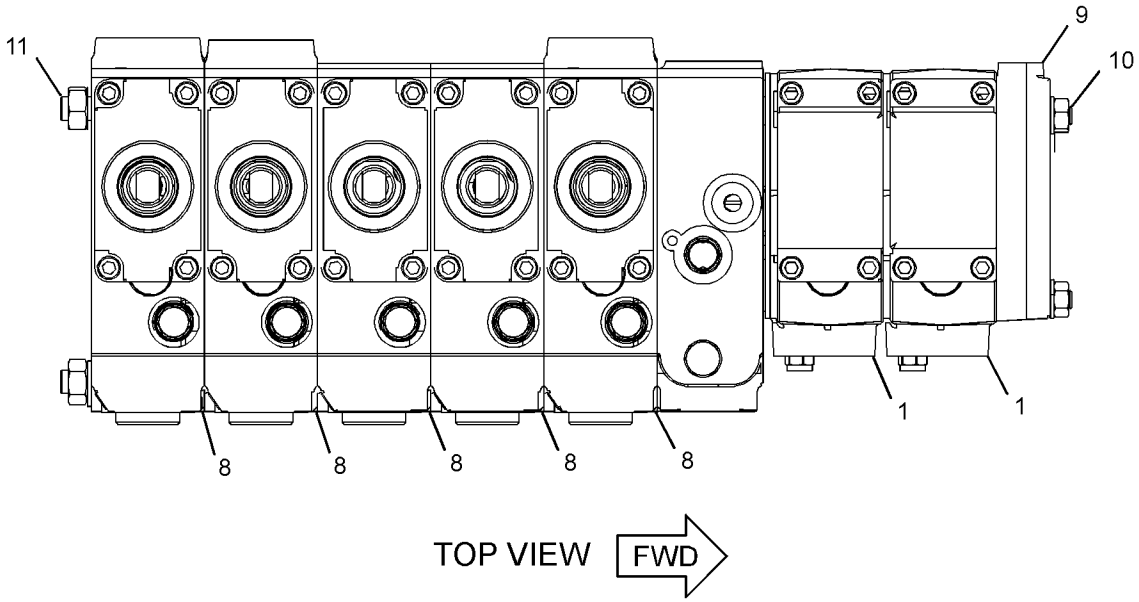

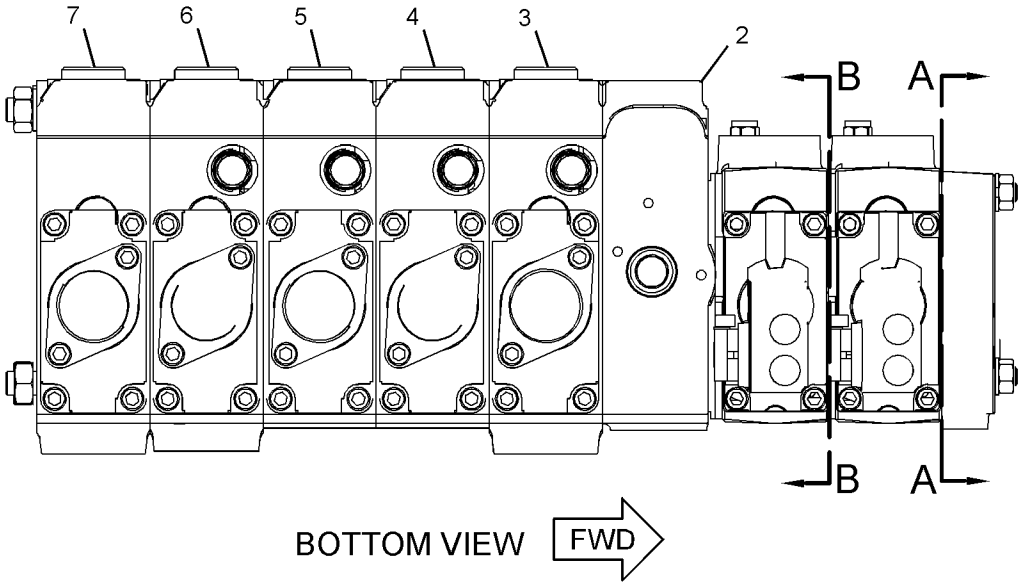

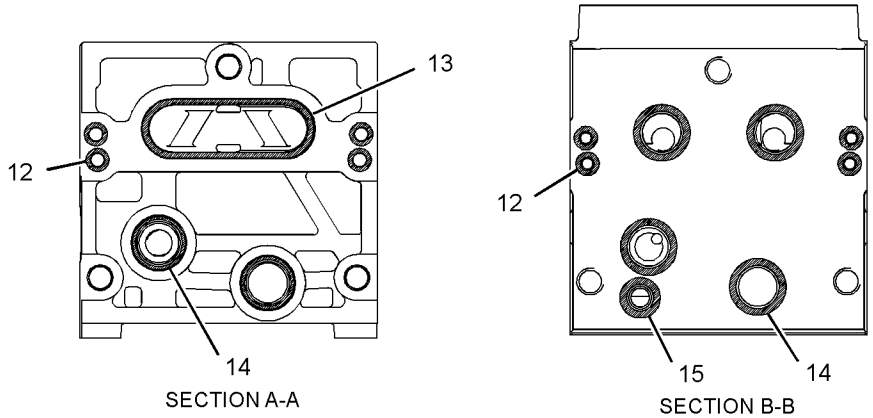

GRAPHIC #1 **<END>** g01230930

HYDRAULIC SYSTEM

248-0485 VALVE GP-BANK 8

S/N: SHA1-UP
PART OF 212-0206 VALVE AR-BANK 8
AN ATTACHMENT

SMCS-5051 **i02273168**

NOTE	REF NO	GRAPHIC REF	PART NUMBER	QTY	PART NAME 1 2 3 4 5 6 (PRODUCT LEVEL)	SEE PAGE
	1	1	**259-6746**	2	VALVE GP-CONTROL (STABILIZER)	
		1	**210-8917**	1	LEVER GP-CONTROL VALVE (STABILIZER)	
		1	**8T-0328**	1	WASHER-HARD (5.5X10X1-MM THK)	
M		1	**134-1374**	1	BOLT-SOCKET HEAD (M5X0.8X20-MM)	
M		1	**136-0155**	1	SETSCREW (M4X0.7X8-MM)	
Y	2	1	**259-6742**	1	MANIFOLD GP-CONTROL (INLET)	391
Y	3	1	**259-6733**	1	VALVE GP-CONTROL (AUXILIARY)	424
Y	4	1	**259-6739**	1	VALVE GP-CONTROL (BOOM)	432
Y	5	1	**259-6738**	1	VALVE GP-CONTROL (SWING)	430
Y	6	1	**259-6737**	1	VALVE GP-CONTROL (BUCKET)	429
Y	7	1	**259-6735**	1	VALVE GP-CONTROL (STICK)	427
Y	8	1	**259-6734**	1	VALVE GP-CONTROL (EXTENDABLE STICK)	425
	9	1	**259-6756**	1	KIT-FASTENER (2-BANK)	
					(INCLUDES RODS, WASHERS, & NUTS)	
	10	1	**259-6753**	1	KIT-FASTENER (6-BANK)	
					(INCLUDES RODS, WASHERS, & NUTS)	
	11	1	**259-6755**	1	KIT-COVER	
	12	1	**259-6754**	6	KIT-SEAL	
					(INCLUDES SEAL-O-RINGS)	
	13	1	**192-7506**	12	SEAL-O-RING	
	14	1	**192-7511**	1	SEAL	
	15	1	**192-7508**	10	SEAL-O-RING	
	16	1	**192-7509**	2	SEAL-O-RING	

M-METRIC PART
Y-SEPARATE ILLUSTRATION

248-0485 VALVE GP-BANK 8 *(contd.)* **i02273168**

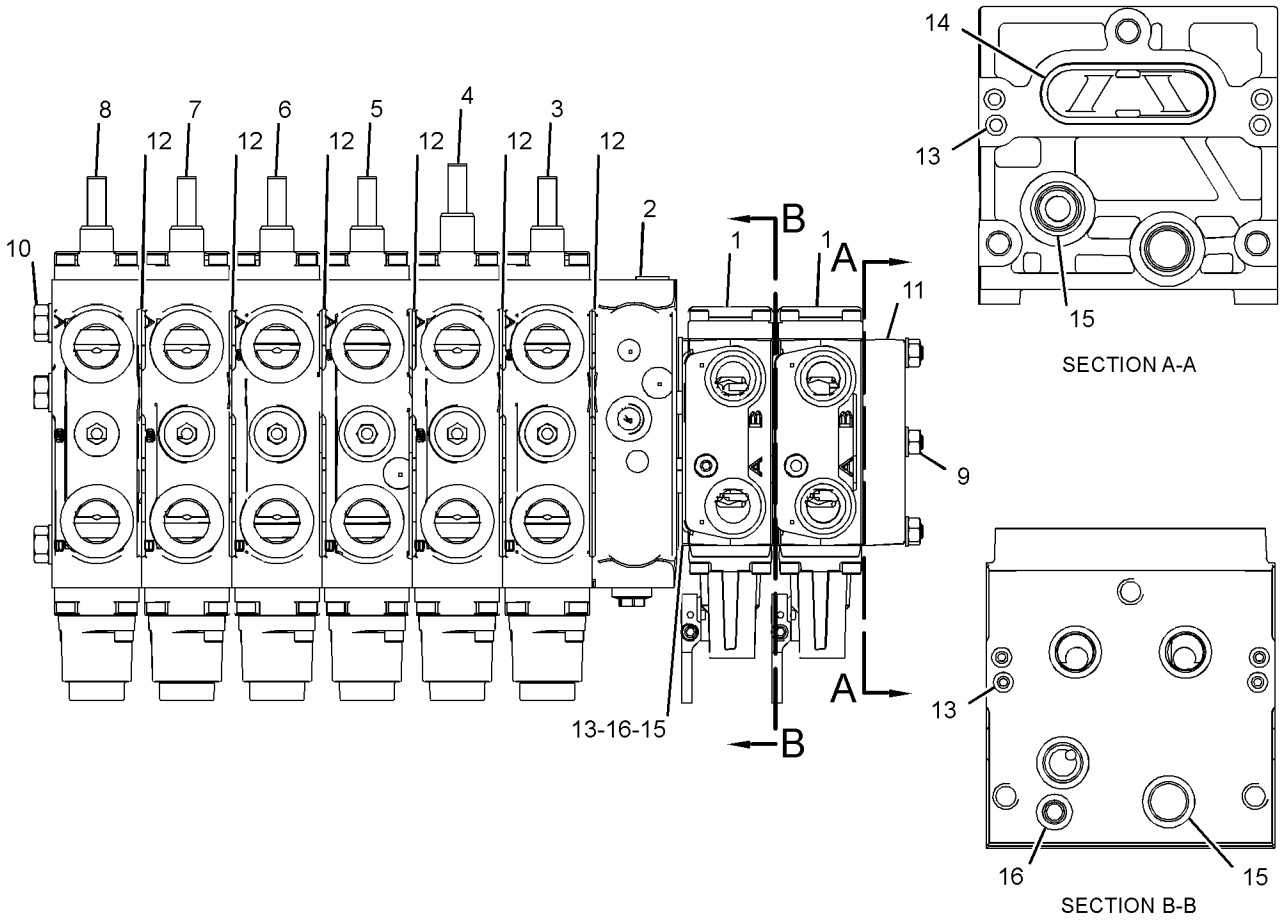

GRAPHIC #1 **<END>** g01168887

HYDRAULIC SYSTEM

259-6729 VALVE GP-CONTROL–AUXILIARY

S/N: SHA1-UP

PART OF 248-0482 VALVE GP-BANK 3

AN ATTACHMENT

SMCS-5051 **i02351532**

NOTE	REF NO	GRAPHIC REF	PART NUMBER	QTY	PART NAME 1 2 3 4 5 6 (PRODUCT LEVEL)	SEE PAGE
	1	1	**260-3005**	1	VALVE GP-RELIEF	
	2	1	**260-3010**	1	KIT-SEAL	
					(INCLUDES SCREWS & SEALS)	
	3	1	**6V-7970**	1	SEAL-O-RING	
	4	1	**260-3009**	1	KIT-SEAL	
					(INCLUDES SEALS, SCREWS & HOUSING)	
	5	1	**260-3011**	1	KIT-COVER	
					(INCLUDES SCREWS, SPRINGS & CAP)	
	6	1	**192-7863**	1	PLUG	
	7	1	**192-7864**	2	PLUG	
	8	1	**192-7510**	2	SEAL-O-RING	

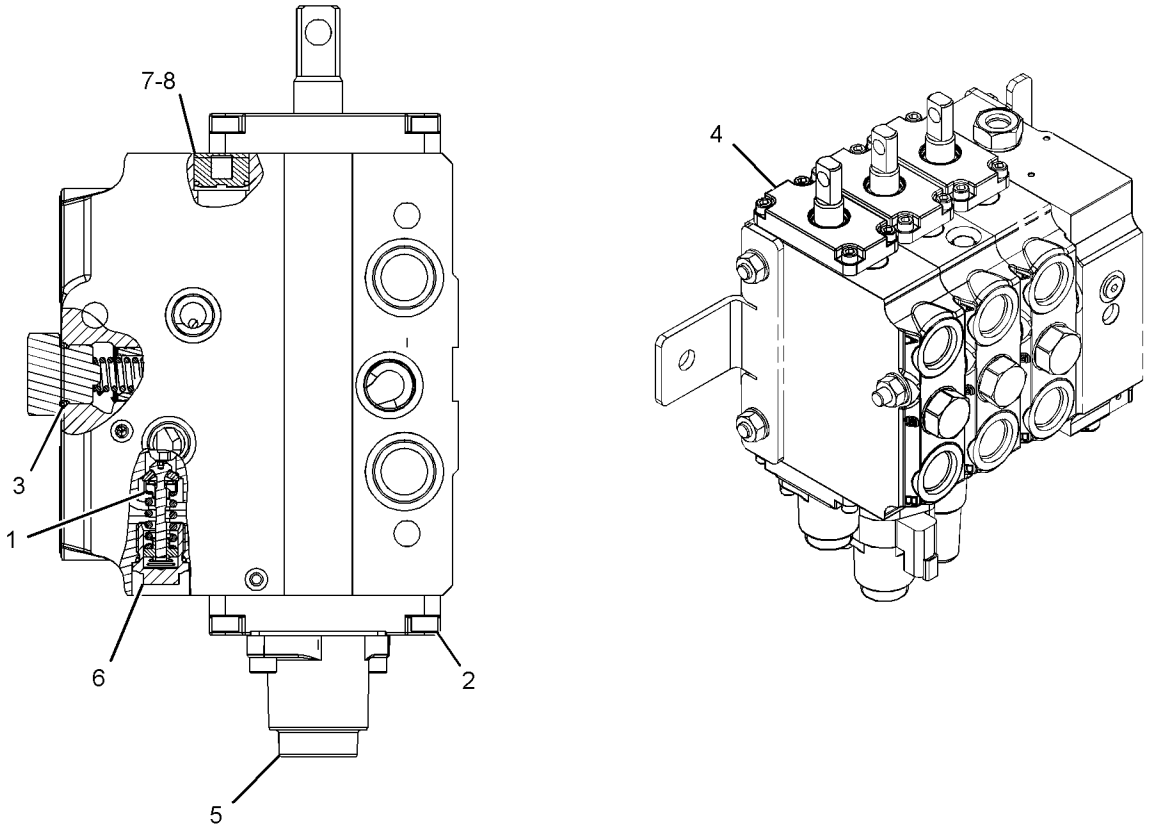

GRAPHIC #1 **<END>** g01214255

259-6730 VALVE GP-CONTROL–TILT

S/N: SHA1-UP
PART OF 248-0482 VALVE GP-BANK 3
AN ATTACHMENT

SMCS-5051 **i02351536**

NOTE	REF NO	GRAPHIC REF	PART NUMBER	QTY	PART NAME 1 2 3 4 5 6 (PRODUCT LEVEL)	SEE PAGE
	1	1	**260-3005**	1	VALVE GP-RELIEF (TILT CYLINDER HEAD END)	
	2	1	**260-3002**	1	VALVE GP-RELIEF (TILT CYLINDER ROD END)	
	3	1	**260-3012**	1	KIT-DETENT	
					(INCLUDES SEAL, GASKETS, E-CLIP, PLATE, SCREWS, COIL, END CAP, STEM, MAGNET, SPRINGS, WASHERS & HOUSING)	
	4	1	**260-3009**	1	KIT-SEAL	
					(INCLUDES HOUSING, SEALS, WIPER, & SCREWS)	
	5	1	**6V-5138**	2	SEAL-O-RING	
	6	1	**6V-7970**	1	SEAL-O-RING	
	7	1	**260-3010**	1	KIT-SEAL	
					(INCLUDES SEALS, HOUSING, & SCREWS)	
	8	1	**192-7863**	2	PLUG	
	9	1	**192-7864**	2	PLUG	
	10	1	**192-7510**	2	SEAL-O-RING	

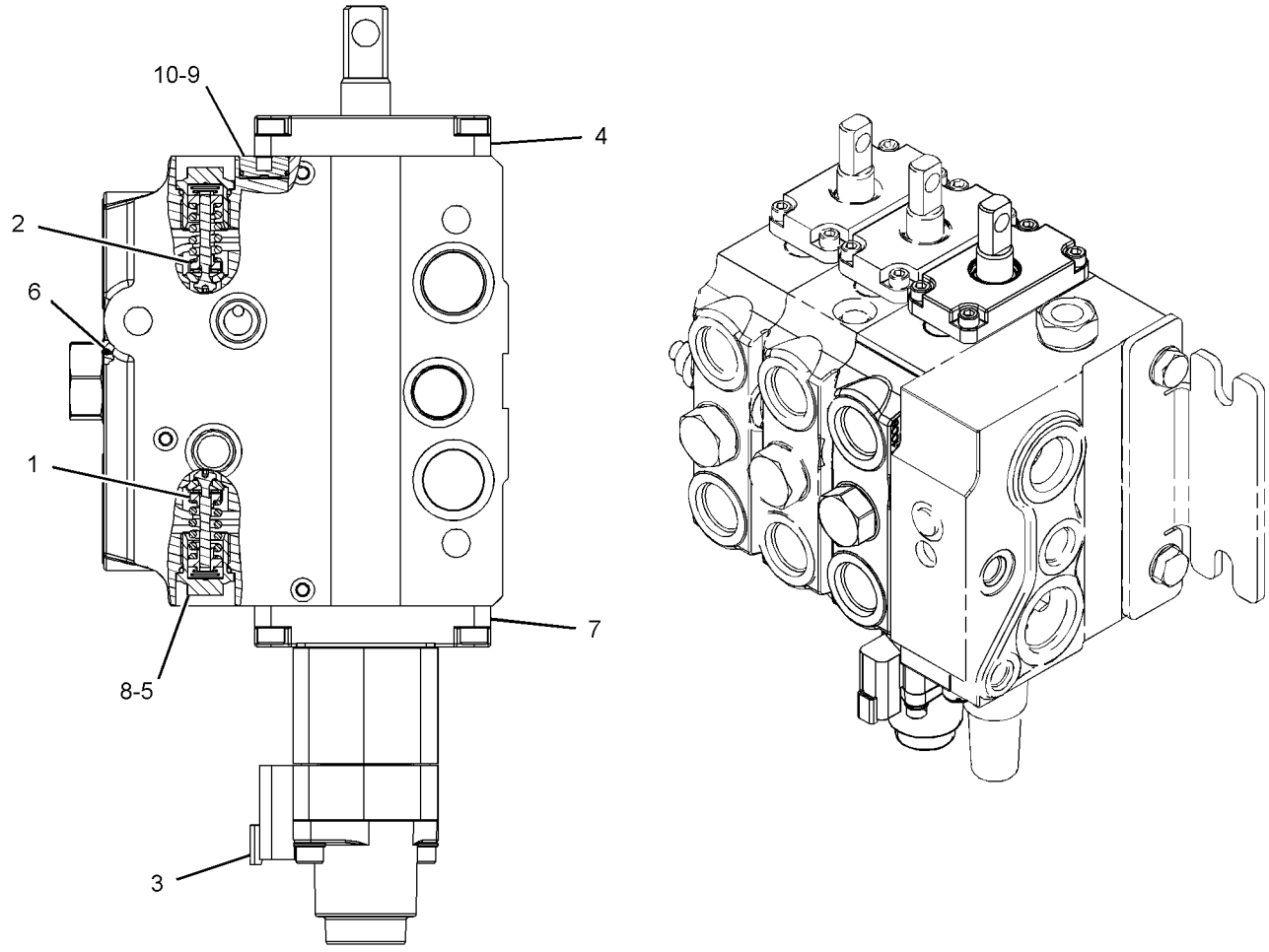

GRAPHIC #1 **<END>** g01213218

259-6731 VALVE GP-CONTROL–TILT

S/N: SHA1-UP
PART OF 248-0481 VALVE GP-BANK 2
AN ATTACHMENT

SMCS-5051 **i02440766**

NOTE	REF NO	GRAPHIC REF	PART NUMBER	QTY	PART NAME 1 2 3 4 5 6 (PRODUCT LEVEL)	SEE PAGE
	1	1	**260-3005**	1	VALVE GP-RELIEF	
	2	1	**260-3002**	1	VALVE GP-RELIEF	
	3	1	**260-3012**	1	KIT-DETENT	
					(INCLUDES SEAL, GASKETS, CLIP, PLATE, SCREWS, COIL, END CAP, STEM, MAGNET, RETAINERS, SPRINGS, WASHERS & HOUSING)	
	4	1	**260-3009**	1	KIT-SEAL	
					(INCLUDES HOUSING, SEALS, WIPER & SCREWS)	
	5	1	**6V-5138**	2	SEAL-O-RING	
	6	1	**6V-7970**	1	SEAL-O-RING	
	7	1	**260-3010**	1	KIT-SEAL	
					(INCLUDES HOUSING, SEALS & SCREWS)	
	8	1	**192-7864**	2	PLUG	
	9	1	**192-7863**	2	PLUG	
	10	1	**192-7510**	2	SEAL-O-RING	

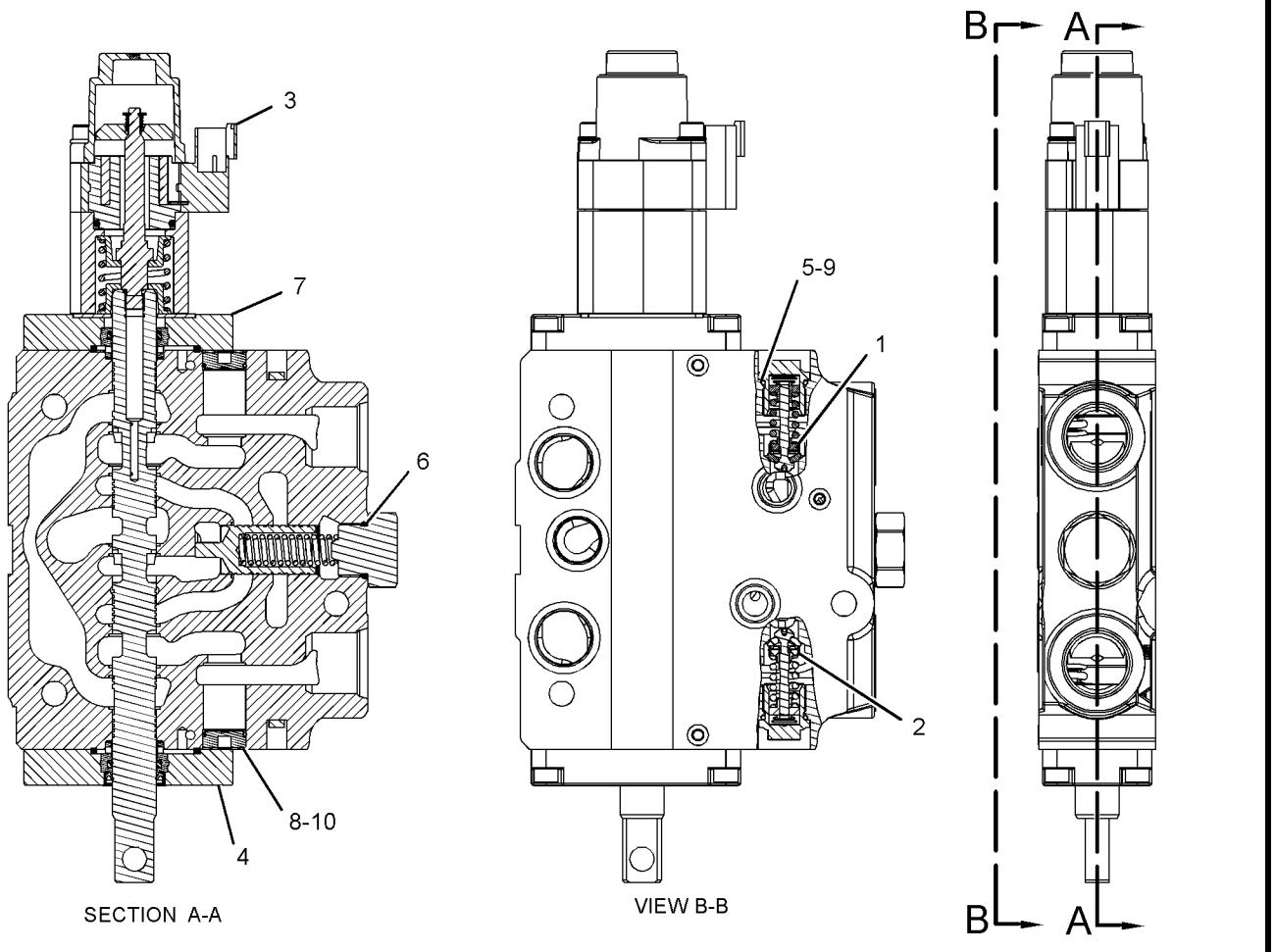

GRAPHIC #1 **<END>** g01230676

259-6732 VALVE GP-CONTROL–LIFT

S/N: SHA1-UP

PART OF 248-0481 VALVE GP-BANK 2, 248-0482 VALVE GP-BANK 3

AN ATTACHMENT

SMCS-5051 **i02502869**

NOTE	REF NO	GRAPHIC REF	PART NUMBER	QTY	PART NAME 1 2 3 4 5 6 (PRODUCT LEVEL)	SEE PAGE
	1	1	**260-3010**	1	KIT-SEAL (VALVE)	
					(INCLUDES HOUSING, SEALS, & SCREWS)	
	2	1	**260-3009**	1	KIT-SEAL (CONTROL VALVE)	
					(INCLUDES HOUSING, SEALS, WIPER, & SCREWS)	
	3	1	**6V-7970**	1	SEAL-O-RING	
	4	1	**260-3013**	1	KIT-DETENT (MECHANICAL)	
					(INCLUDES WASHERS, END CAP, SCREWS, SPACER, SPRINGS & SLEEVE)	
	5	1	**192-7864**	2	PLUG	
	6	1	**192-7510**	2	SEAL-O-RING	

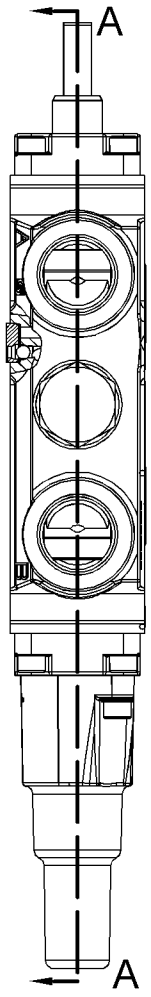

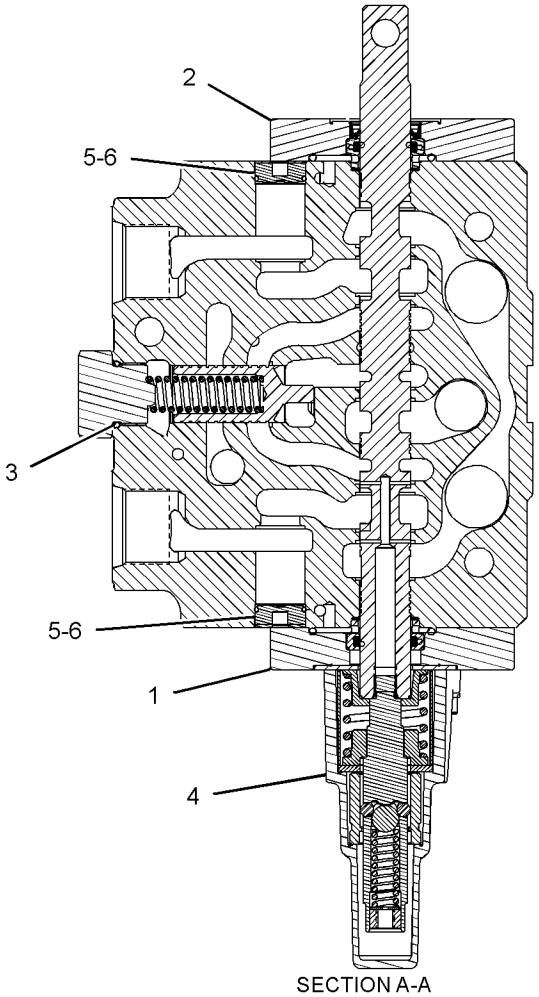

SECTION A-A

GRAPHIC #1

<END>

g01214247

259-6733 VALVE GP-CONTROL–AUXILIARY

S/N: SHA1-UP
PART OF 248-0485 VALVE GP-BANK 8
AN ATTACHMENT

SMCS-5051 **i02273173**

NOTE	REF NO	GRAPHIC REF	PART NUMBER	QTY	PART NAME 1 2 3 4 5 6 (PRODUCT LEVEL)	SEE PAGE
	1	1	**260-3004**	2	VALVE GP-RELIEF	
	2	1	**260-3010**	1	KIT-SEAL	
					(INCLUDES HOUSING, SEALS & SCREWS)	
	3	1	**260-3009**	1	KIT-SEAL	
					(INCLUDES HOUSING, SEALS, WIPER & SCREWS)	
	4	1	**6V-7970**	1	SEAL-O-RING	
	5	1	**6V-5138**	2	SEAL-O-RING	
	6	1	**260-3011**	1	KIT-COVER	
					(INCLUDES SCREWS, WASHERS, RETAINER, SPRING & END CAP)	
	7	1	**192-7863**	2	PLUG	
	8	1	**192-7864**	2	PLUG	
	9	1	**192-7510**	2	SEAL-O-RING	

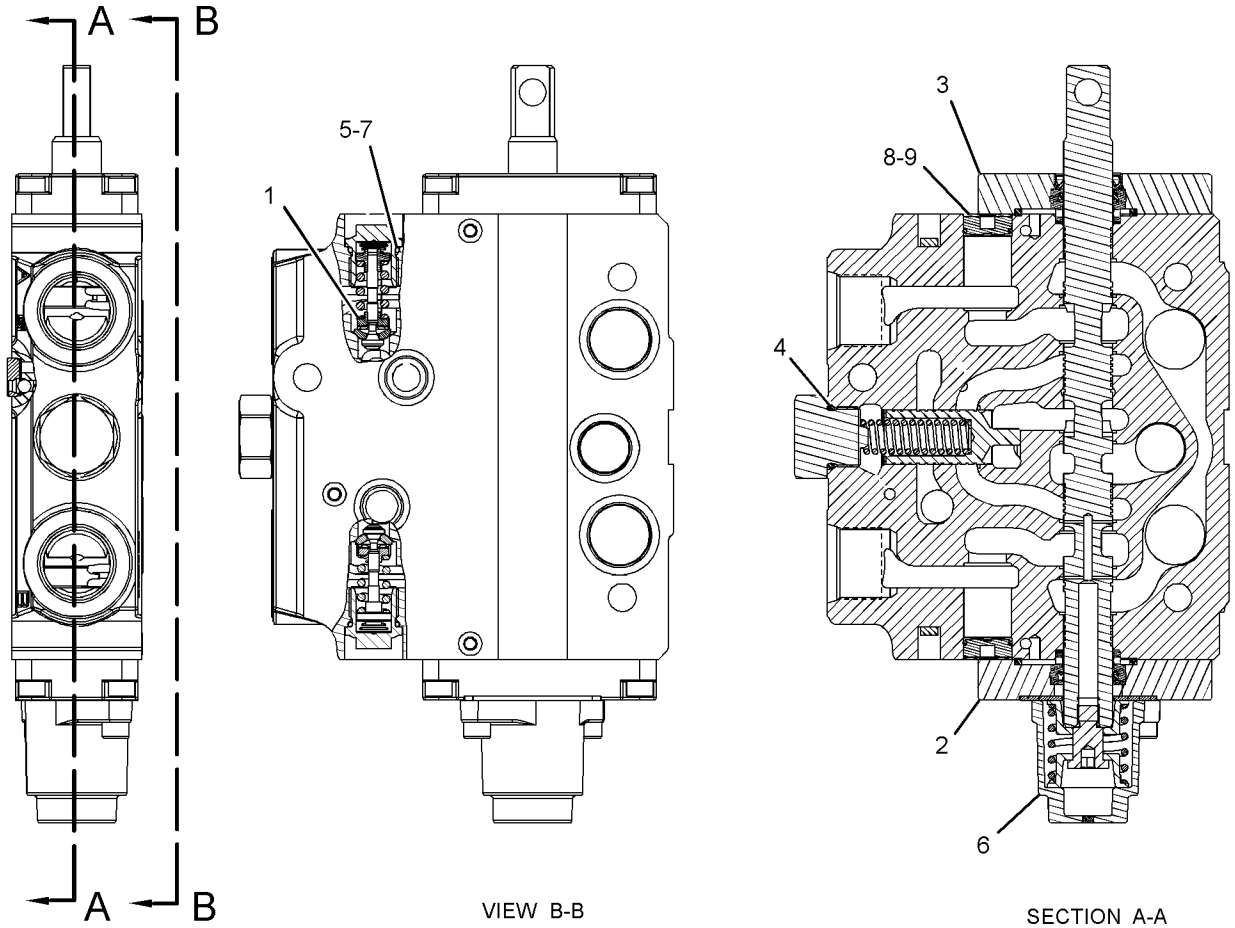

VIEW B-B

SECTION A-A

GRAPHIC #1

<END>

g01228296

259-6734 VALVE GP-CONTROL–EXTENDABLE STICK

S/N: SHA1-UP
PART OF 248-0484 VALVE GP-BANK 7, 248-0485 VALVE GP-BANK 8
AN ATTACHMENT
TYPE 1

SMCS-5051 **i02273174**

NOTE	REF NO	GRAPHIC REF	PART NUMBER	QTY	PART NAME 1 2 3 4 5 6 (PRODUCT LEVEL)	SEE PAGE
	1	1	**260-3005**	1	VALVE GP-RELIEF	
	2	1	**260-3010**	1	KIT-SEAL	
					(INCLUDES SEALS & SCREWS)	
	3	1	**260-3009**	1	KIT-SEAL	
					(INCLUDES SEALS, WIPER & SCREWS)	
	4	1	**6V-5138**	1	SEAL-O-RING	
	5	1	**6V-7970**	1	SEAL-O-RING	
	6	1	**260-3011**	1	KIT-COVER	
					(INCLUDES SCREWS, WASHER, RETAINER, SPRING & END CAP)	
	7	1	**192-7510**	2	SEAL-O-RING	
	8	1	**192-7863**	2	PLUG	
	9	1	**192-7864**	2	PLUG	
	10	1	**170-5076**	1	VALVE GP-PILOT RELIEF	
		1	**9X-7737**	1	SEAL-O-RING	

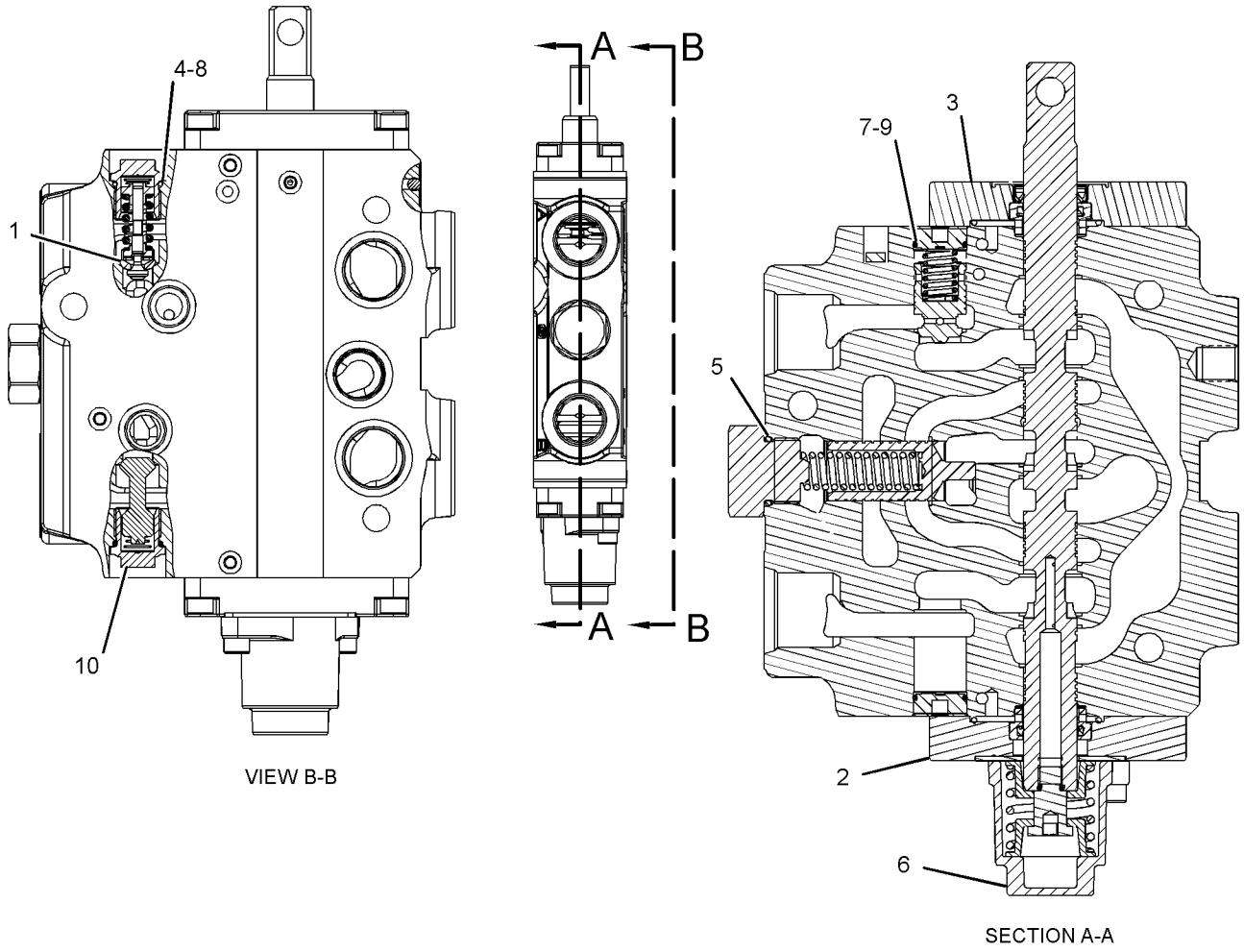

VIEW B-B

SECTION A-A

GRAPHIC #1 **<END>** g01230803

259-6734 VALVE GP-CONTROL–EXTENDABLE STICK

S/N: SHA1-UP
PART OF 248-0484 VALVE GP-BANK 7, 248-0485 VALVE GP-BANK 8
AN ATTACHMENT
TYPE 2

SMCS-5051 **i02545734**

NOTE	REF NO	GRAPHIC REF	PART NUMBER	QTY	PART NAME 1 2 3 4 5 6 (PRODUCT LEVEL)	SEE PAGE
	1	1	**260-3005**	2	VALVE GP-RELIEF	
	2	1	**260-3010**	1	KIT-SEAL	
					(INCLUDES SEALS & SCREWS)	
	3	1	**260-3009**	1	KIT-SEAL	
					(INCLUDES SEALS, WIPER & SCREWS)	
	4	1	**6V-5138**	2	SEAL-O-RING	
	5	1	**6V-7970**	1	SEAL-O-RING	
	6	1	**260-3011**	1	KIT-COVER	
					(INCLUDES SCREWS, WASHER, RETAINER, SPRING & END CAP)	
	7	1	**192-7510**	2	SEAL-O-RING	
	8	1	**192-7863**	2	PLUG	
	9	1	**192-7864**	2	PLUG	

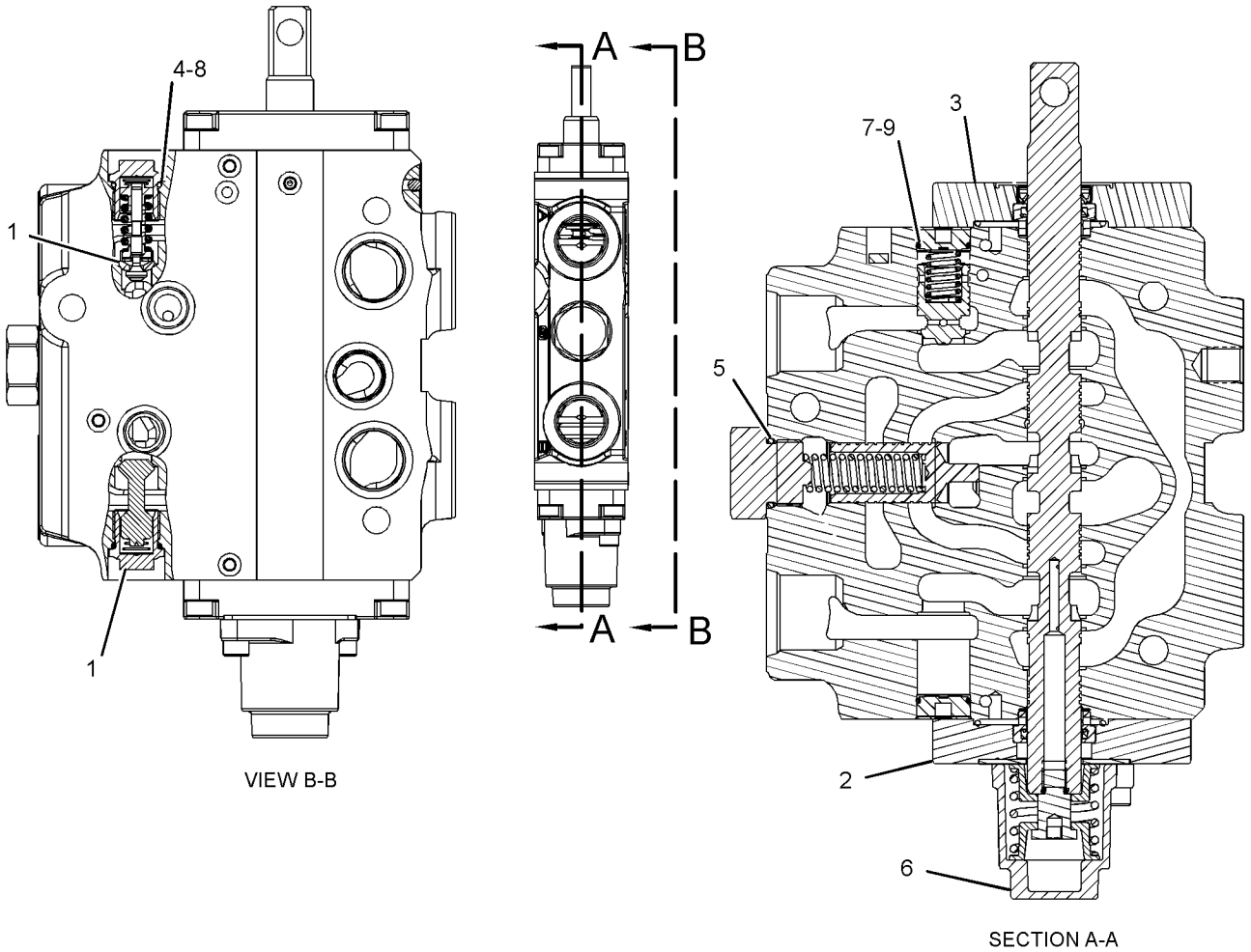

GRAPHIC #1 **<END>** g01340005

259-6735 VALVE GP-CONTROL–STICK

S/N: SHA1-UP

PART OF 248-0484 VALVE GP-BANK 7, 248-0485 VALVE GP-BANK 8

AN ATTACHMENT

SMCS-5051 **i02273178**

NOTE	REF NO	GRAPHIC REF	PART NUMBER	QTY	PART NAME 1 2 3 4 5 6 (PRODUCT LEVEL)	SEE PAGE
	1	1	**260-3004**	2	VALVE GP-RELIEF	
	2	1	**260-3009**	1	KIT-SEAL	
					(INCLUDES SEALS, WIPER & SCREWS)	
	3	1	**260-3010**	1	KIT-SEAL	
					(INCLUDES SEALS & SCREWS)	
	4	1	**6V-5138**	2	SEAL-O-RING	
	5	1	**6V-7970**	1	SEAL-O-RING	
	6	1	**260-3011**	1	KIT-COVER	
					(INCLUDES SCREWS, WASHERS, SPRINGS & END CAP)	
	7	1	**192-7510**	2	SEAL-O-RING	
	8	1	**192-7863**	2	PLUG	
	9	1	**192-7864**	2	PLUG	

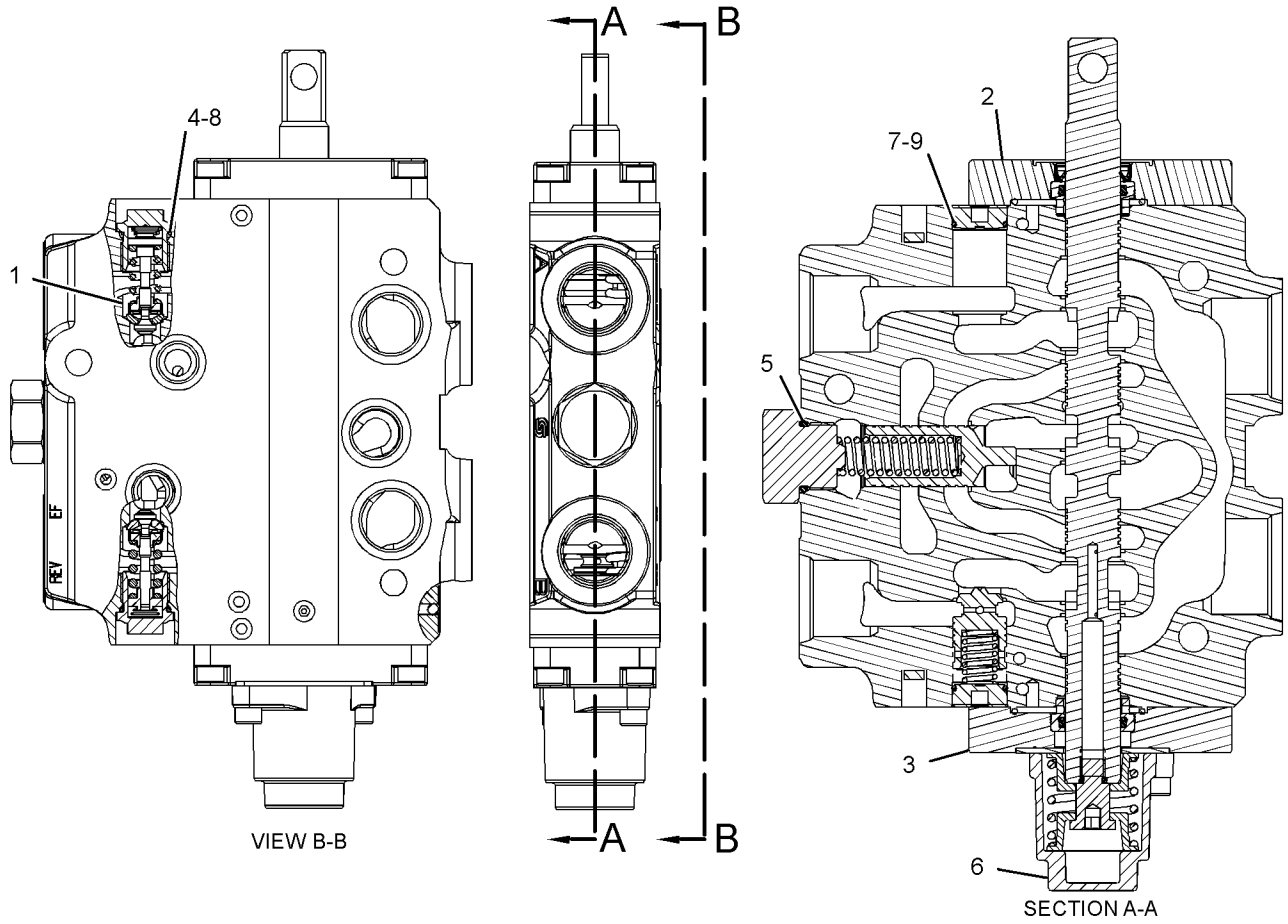

GRAPHIC #1 **<END>** g01169174

HYDRAULIC SYSTEM

259-6736 VALVE GP-CONTROL–STICK

S/N: SHA1-UP
PART OF 248-0483 VALVE GP-BANK 6
AN ATTACHMENT

SMCS-5051 **i02273190**

NOTE	REF NO	GRAPHIC REF	PART NUMBER	QTY	PART NAME 1 2 3 4 5 6 (PRODUCT LEVEL)	SEE PAGE
	1	1	**260-3004**	2	VALVE GP-RELIEF	
	2	1	**6V-5138**	2	SEAL-O-RING	
	3	1	**260-3010**	1	KIT-SEAL	
					(INCLUDES SEALS & SCREWS)	
	4	1	**260-3009**	1	KIT-SEAL	
					(INCLUDES SEALS, WIPER & SCREWS)	
	5	1	**6V-7970**	1	SEAL-O-RING	
	6	1	**260-3011**	1	KIT-COVER	
					(INCLUDES SCREWS, WASHERS, SPRINGS & END CAP)	
	7	1	**192-7510**	2	SEAL-O-RING	
	8	1	**192-7863**	2	PLUG	
	9	1	**192-7864**	2	PLUG	

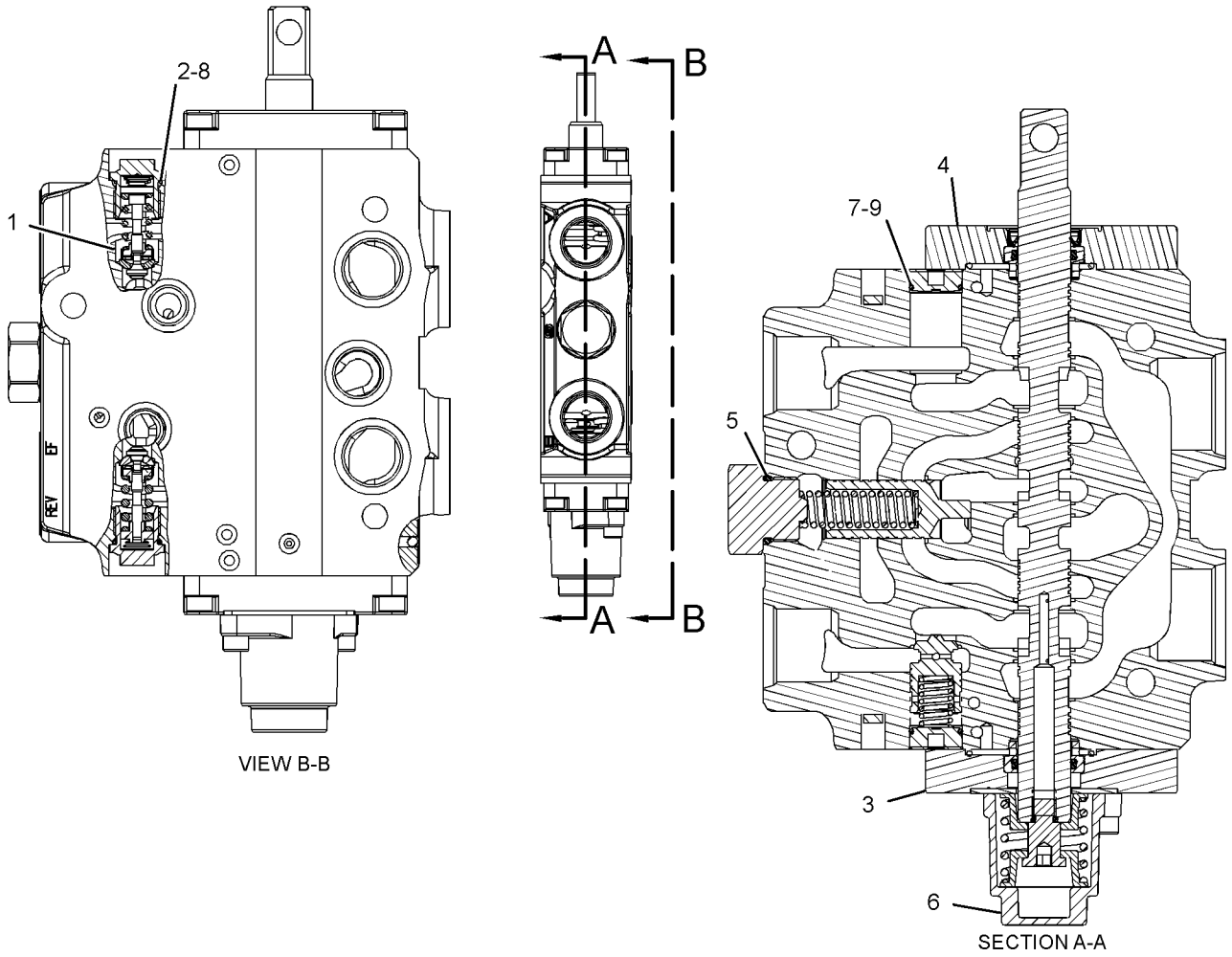

VIEW B-B

SECTION A-A

GRAPHIC #1 **<END>** g01168245

HYDRAULIC SYSTEM

259-6737 VALVE GP-CONTROL–BUCKET

S/N: SHA1-UP

PART OF 248-0483 VALVE GP-BANK 6, 248-0484 VALVE GP-BANK 7, 248-0485 VALVE GP-BANK 8

AN ATTACHMENT

SMCS-5051 **i02273195**

NOTE	REF NO	GRAPHIC REF	PART NUMBER	QTY	PART NAME 1 2 3 4 5 6 (PRODUCT LEVEL)	SEE PAGE
	1	1	**260-3006**	2	VALVE GP-RELIEF	
	2	1	**260-3010**	1	KIT-SEAL	
					(INCLUDES SCREWS, SEALS & HOUSING)	
	3	1	**260-3009**	1	KIT-SEAL	
					(INCLUDES SCREWS, SEALS, WIPER & HOUSING)	
	4	1	**6V-7970**	2	SEAL-O-RING	
	5	1	**6V-5138**	1	SEAL-O-RING	
	6	1	**260-3011**	1	KIT-COVER	
					(INCLUDES SCREWS, WASHERS, SPRINGS & CAP)	
	7	1	**192-7863**	2	PLUG	
	8	1	**192-7864**	2	PLUG	
	9	1	**192-7510**	2	SEAL-O-RING	

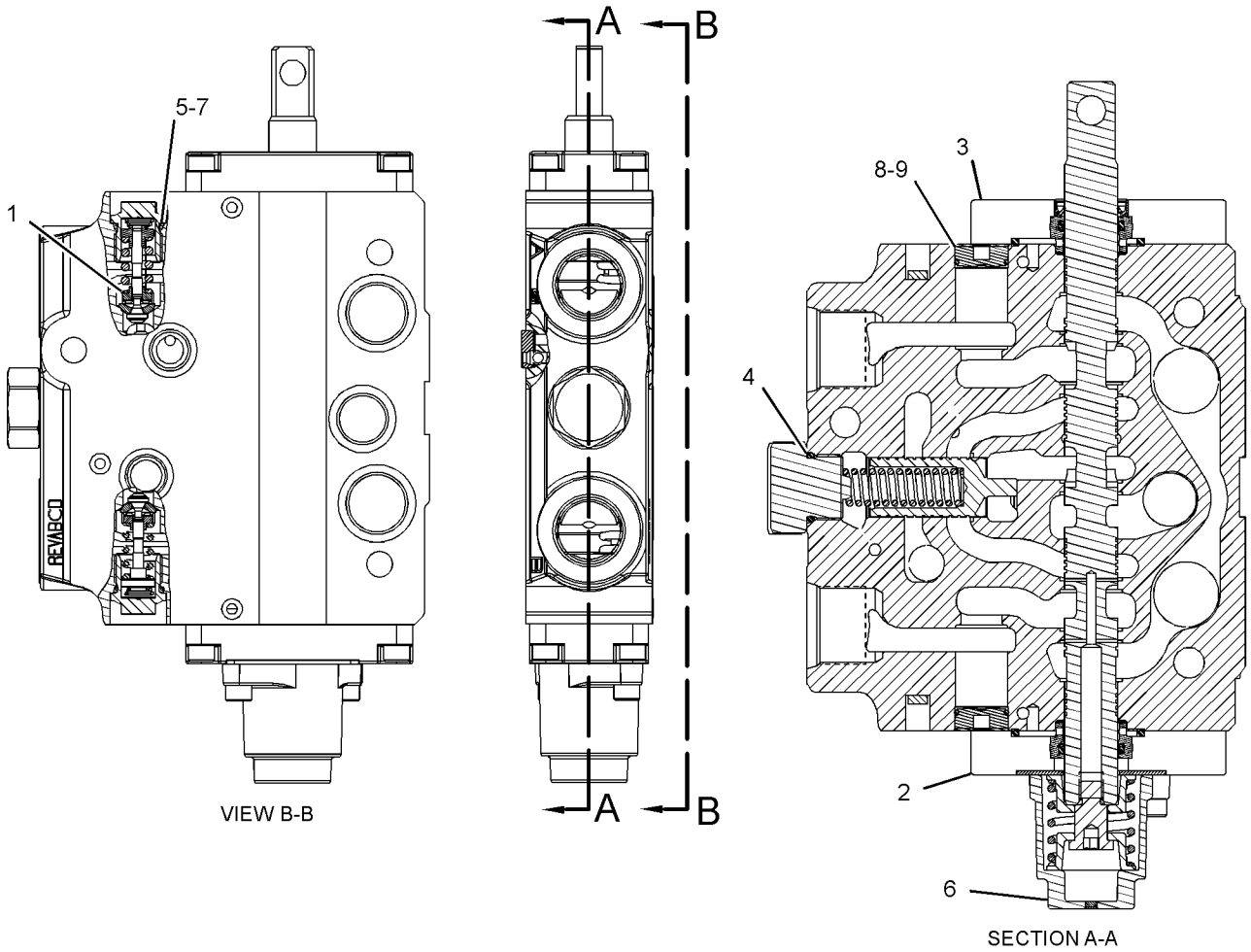

GRAPHIC #1 **<END>** g01235702

259-6738 VALVE GP-CONTROL–SWING

S/N: SHA1-UP

PART OF 248-0483 VALVE GP-BANK 6, 248-0484 VALVE GP-BANK 7, 248-0485 VALVE GP-BANK 8

AN ATTACHMENT

SMCS-5051 **i02435620**

NOTE	REF NO	GRAPHIC REF	PART NUMBER	QTY	PART NAME 1 2 3 4 5 6 (PRODUCT LEVEL)	SEE PAGE
	1	1	**260-3007**	2	VALVE GP-RELIEF	
	2	1	**260-3010**	1	KIT-SEAL	
					(INCLUDES SEALS, SCREWS & HOUSING)	
	3	1	**260-3009**	1	KIT-SEAL	
					(INCLUDES SEALS, SCREWS, WIPER & HOUSING)	
	4	1	**6V-7970**	1	SEAL-O-RING	
	5	1	**6V-5138**	1	SEAL-O-RING	
	6	1	**260-3011**	1	KIT-COVER	
					(INCLUDES SCREWS, SPRINGS, & END CAP)	
	7	1	**192-7863**	2	PLUG	
	8	1	**192-7864**	2	PLUG	
	9	1	**192-7510**	2	SEAL-O-RING	

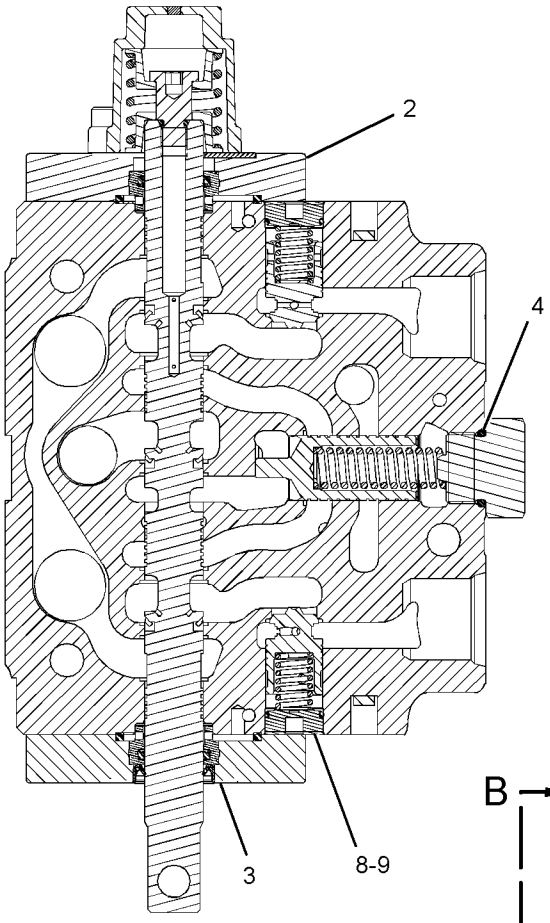

SECTION A-A

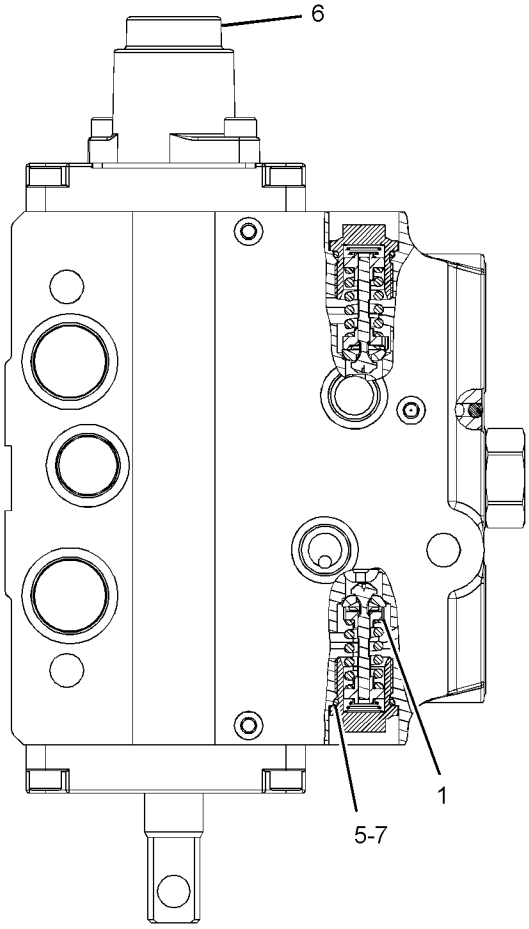

VIEW B-B

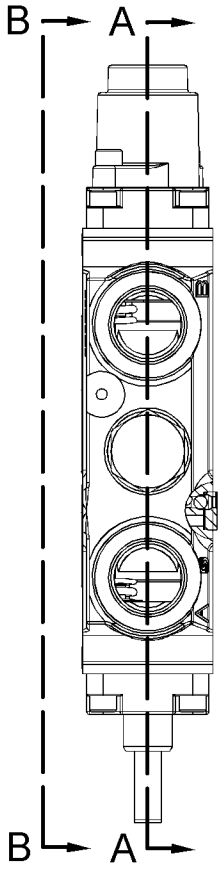

GRAPHIC #1

<END>

g01228165

HYDRAULIC SYSTEM

259-6739 VALVE GP-CONTROL–BOOM

S/N: SHA1-UP

PART OF 248-0483 VALVE GP-BANK 6, 248-0484 VALVE GP-BANK 7, 248-0485 VALVE GP-BANK 8

AN ATTACHMENT

SMCS-5051 **i02273206**

NOTE	REF NO	GRAPHIC REF	PART NUMBER	QTY	PART NAME 1 2 3 4 5 6 (PRODUCT LEVEL)	SEE PAGE
	1	1	**260-3003**	1	VALVE GP-RELIEF (160-BAR (2321-PSI))	
	2	1	**260-3006**	1	VALVE GP-RELIEF	
	3	1	**260-3010**	1	KIT-SEAL	
					(INCLUDES SEALS & SCREWS)	
	4	1	**6V-7970**	1	SEAL-O-RING	
	5	1	**6V-5138**	2	SEAL-O-RING	
	6	1	**192-7510**	2	SEAL-O-RING	
	7	1	**260-3009**	1	KIT-SEAL	
					(INCLUDES SEALS, WIPER & SCREWS)	
	8	1	**260-3011**	1	KIT-COVER	
					(INCLUDES SCREWS, WASHERS, SPRINGS & END CAP)	
	9	1	**192-7863**	2	PLUG	
	10	1	**192-7864**	2	PLUG	

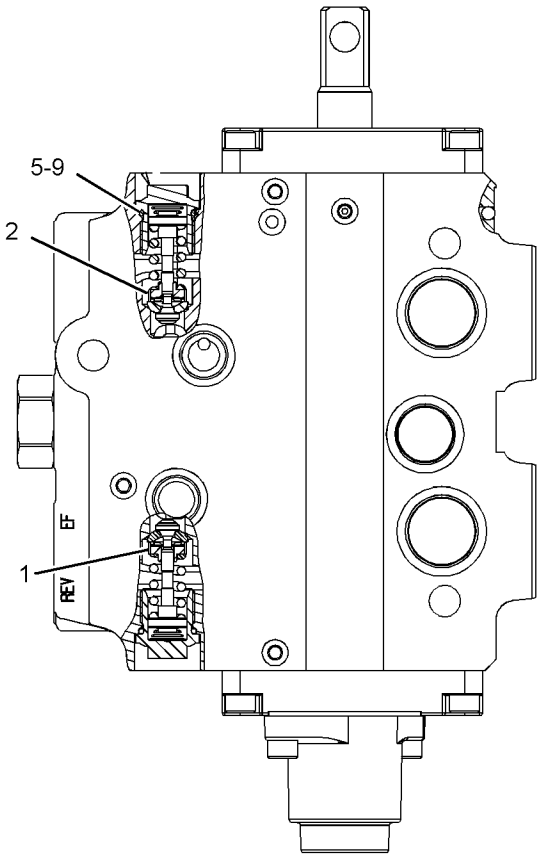

REAR VIEW

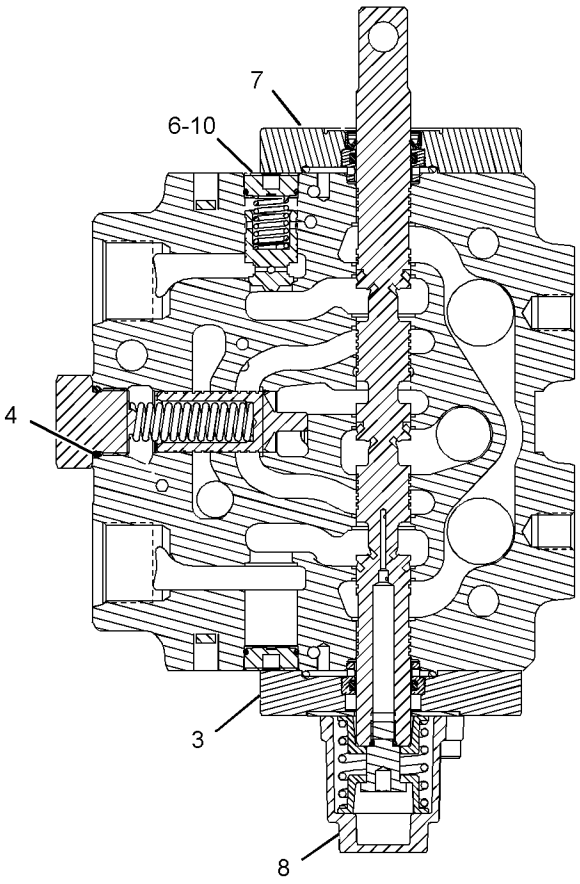

SECTION A-A

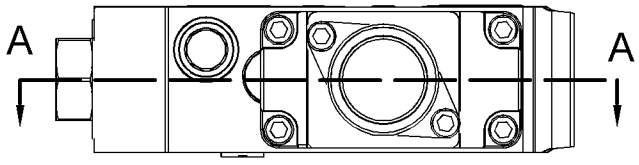

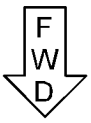

BOTTOM VIEW

GRAPHIC #1 **<END>** g01165684

HYDRAULIC SYSTEM

8J-6875 VALVE GP-SHUTTLE

S/N: SHA1-UP

PART OF 219-8568 LINES GP-PILOT

SMCS-5079 **i02773478**

NOTE	REF NO	GRAPHIC REF	PART NUMBER	QTY	PART NAME 1 2 3 4 5 6 (PRODUCT LEVEL)	SEE PAGE
	1	1	**4T-9905**	2	ADAPTER	
	2	1	**2M-9780**	2	SEAL-O-RING	
	3	1	**4B-9784**	1	BALL	

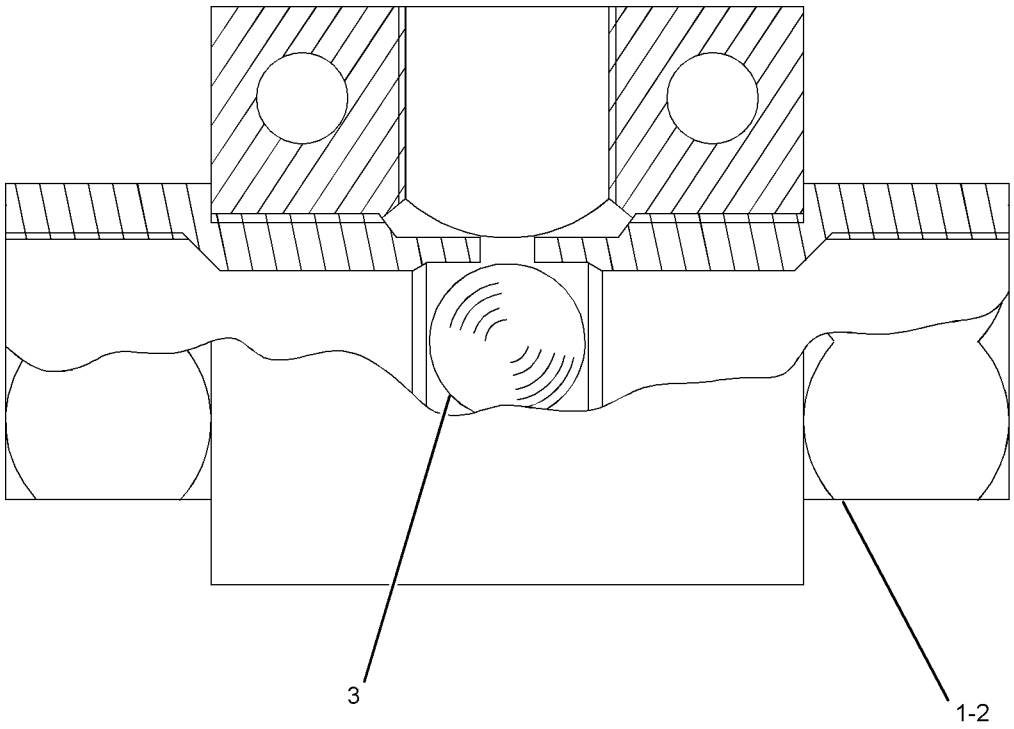

GRAPHIC #1 **<END>** g01047576

227-8378 ARM GP-LIFT

S/N: SHA1-UP

PART OF 213-9298 LOADER AR

SMCS-6118, 6119 **i02639431**

NOTE	REF NO	GRAPHIC REF	PART NUMBER	QTY	PART NAME 1 2 3 4 5 6 (PRODUCT LEVEL)	SEE PAGE
B	1	1	**9R-0109**	10	WASHER (41X64X3-MM THK)	
	2	1	**9R-0158**	2	WASHER (46X69X3-MM THK)	
	3	1	**9R-3182**	2	PIN	
B	4	1	**9R-4066**	2	WASHER (61X98X4-MM THK)	
B	5	1	**9R-8390**	2	SPACER (61X98X1-MM THK)	
	6	1	**9R-9373**	1	PIN AS	
	7	1	**127-8987**	2	RING-RETAINING	
	8	1	**128-5010**	1	PIN	
B	9	1	**128-7903**	2	SPACER (61X114.3X3-MM THK)	
B	10	1	**128-7905**	2	SPACER (61X114.3X1-MM THK)	
	11	1	**130-5451**	2	PIN	
	12	1	**132-6496**	1	PIN AS	
	13	1	**248-2257**	1	ARM AS LIFT	
		1	*248-2272*	1	ARM AS (RH)	
		1	**9R-0111**	2	BEARING-SLEEVE	
		1	**9R-6690**	2	BEARING-SLEEVE	
		1	*248-2273*	1	ARM AS (LH)	
		1	**9R-0111**	2	BEARING-SLEEVE	
		1	**9R-6690**	2	BEARING-SLEEVE	
	14	1	**3B-8488**	4	FITTING-GREASE	
	15	1	**3B-8489**	5	FITTING-GREASE	
	16	1	**6V-3213**	2	RING-RETAINING	
M	17	1	**6V-7687**	2	LOCKNUT (M12X1.75-THD)	
	18	1	**6V-8144**	6	RING-RETAINING	
M	19	1	**8T-4176**	2	BOLT (M12X1.75X90-MM)	
B	20	1	**111-4337**	6	WASHER (46X70X1-MM THK)	
B	21	1	**119-4594**	4	WASHER (41X64X1-MM THK)	

B-USE AS REQUIRED
M-METRIC PART

227-8378 **ARM GP-LIFT** *(contd.)* **i02639431**

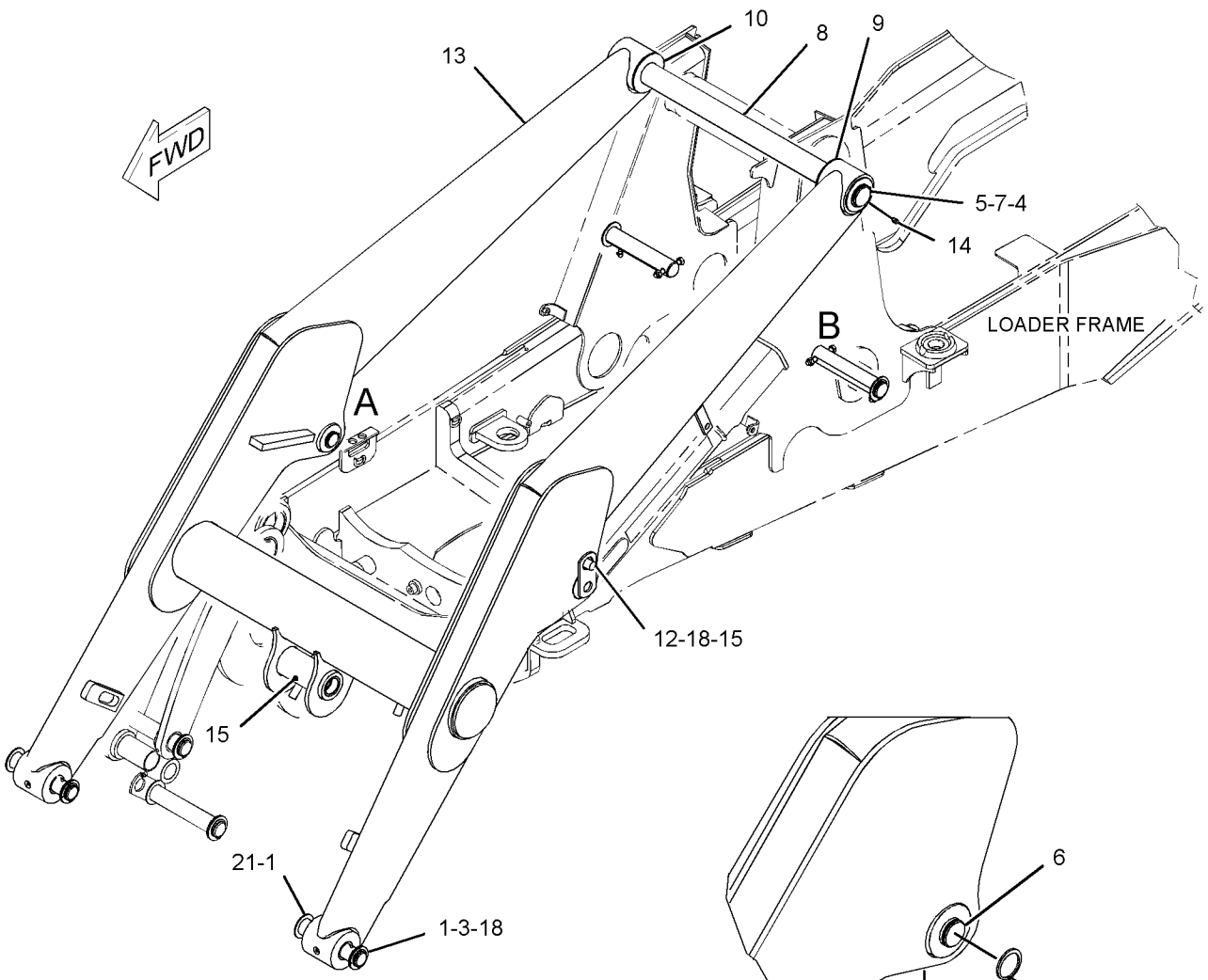

VIEW OF AREA A

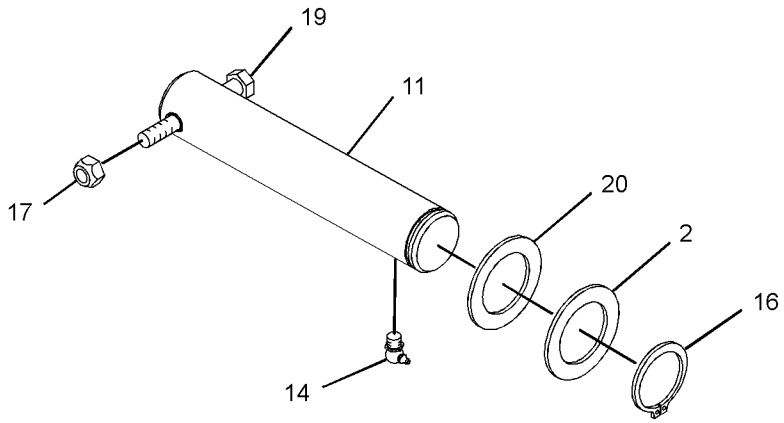

VIEW OF AREA B

GRAPHIC #1 **<END>** g01328523

209-9928 BOOM GP

S/N: SHA1-UP

PART OF 209-9929, 213-9293, 291-9203 BACKHOE AR-EXTENDABLE STICK, 209-9924, 213-9290, 291-9202 BACKHOE AR-STANDARD STICK AN ATTACHMENT

SMCS-6501 **i02762746**

NOTE	REF NO	GRAPHIC REF	PART NUMBER	QTY	PART NAME 1 2 3 4 5 6 (PRODUCT LEVEL)	SEE PAGE
	1	1	**213-6726**	1	PIN	
B	2	1	**176-0626**	4	WASHER (67.5X120X3-MM THK)	
	3	1	**219-6469**	1	BOOM AS	
	3A	1	**9R-0413**	2	BEARING-SLEEVE	
M	3B	1	**9R-9866**	2	BOSS (M10X1.5X45-MM)	
	3C	1	**209-6181**	2	BEARING-SLEEVE	
	4	1	**095-0929**	2	RING-RETAINING	
	5	1	**3B-8488**	3	FITTING-GREASE	
	6	1	**3B-8489**	1	FITTING-GREASE	

B-USE AS REQUIRED
M-METRIC PART

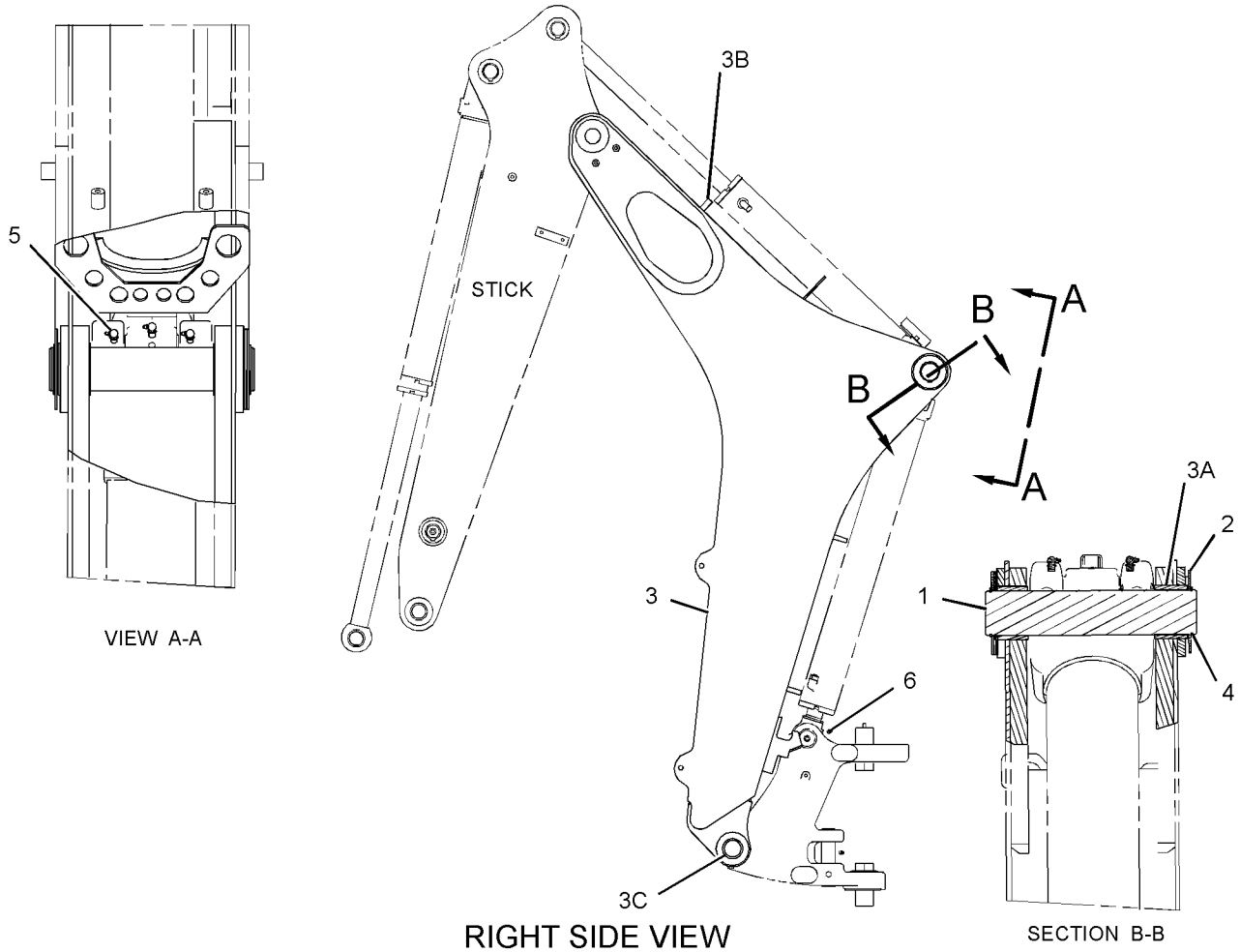

GRAPHIC #1

<END>

g01383372

218-0745 BRACE GP-LIFT CYLINDER

S/N: SHA1-UP

PART OF 213-9298 LOADER AR

SMCS-7507 **i02531165**

NOTE	REF NO	GRAPHIC REF	PART NUMBER	QTY	PART NAME 1 2 3 4 5 6 (PRODUCT LEVEL)	SEE PAGE
	1	1	**9R-0109**	1	WASHER (41X64X3-MM THK)	
	2	1	**9R-0189**	1	PIN	
	3	1	**132-6497**	1	BRACE AS (LIFT CYLINDER)	
	4	1	**9R-5301**	1	PIN-COTTER	

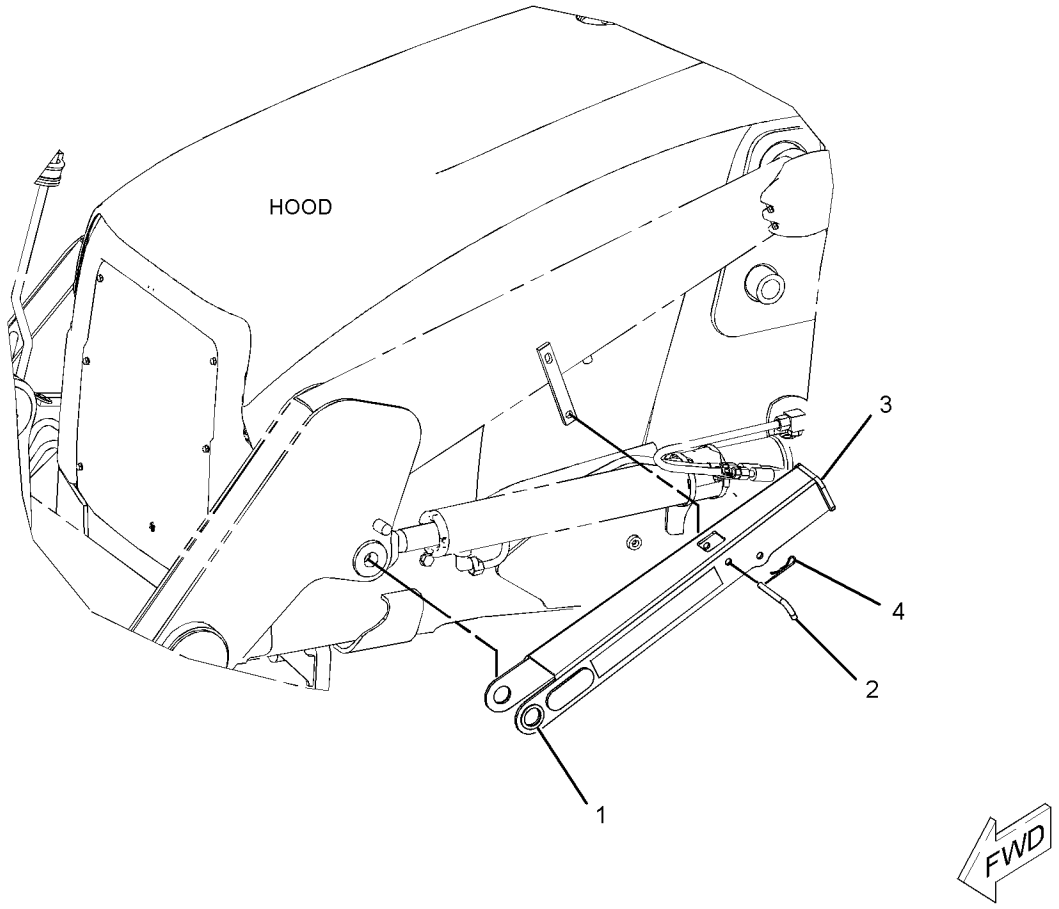

GRAPHIC #1 **<END>** g01183429

270-3204 GUARD GP-BOOM

S/N: SHA1-UP
AN ATTACHMENT

SMCS-7150 **i02448779**

NOTE	REF NO	GRAPHIC REF	PART NUMBER	QTY	PART NAME 1 2 3 4 5 6 (PRODUCT LEVEL)	SEE PAGE
	1	1	**270-3205**	1	PLATE AS	
M	2	1	**8T-4184**	4	BOLT (M12X1.75X45-MM)	
	3	1	**8T-4223**	16	WASHER-HARD (13.5X25.5X3-MM THK)	

M-METRIC PART

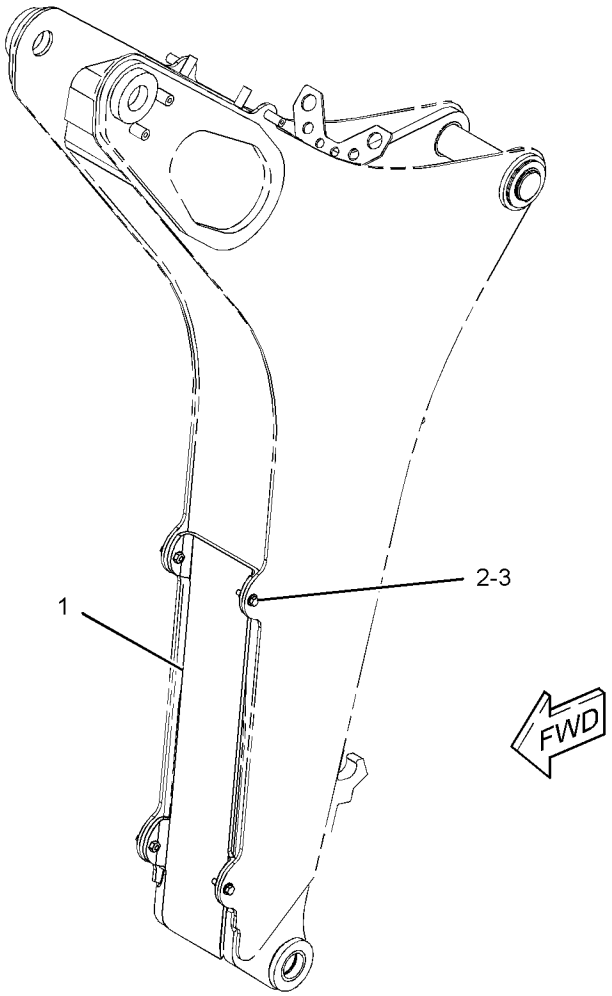

GRAPHIC #1 **<END>** g01230743

221-4276 LINK GP-THUMB–ADJUSTABLE

S/N: SHA1-UP

PART OF 224-6232, 224-6233, 224-6234, 224-6235 THUMB AR

AN ATTACHMENT

SMCS-6547 **i01923588**

NOTE	REF NO	GRAPHIC REF	PART NUMBER	QTY	PART NAME 1 2 3 4 5 6 (PRODUCT LEVEL)	SEE PAGE
	1	1	**221-4271**	1	LINK AS	
	2	1	**221-4272**	1	LINK AS	
	3	1	**224-4527**	1	PIN AS	

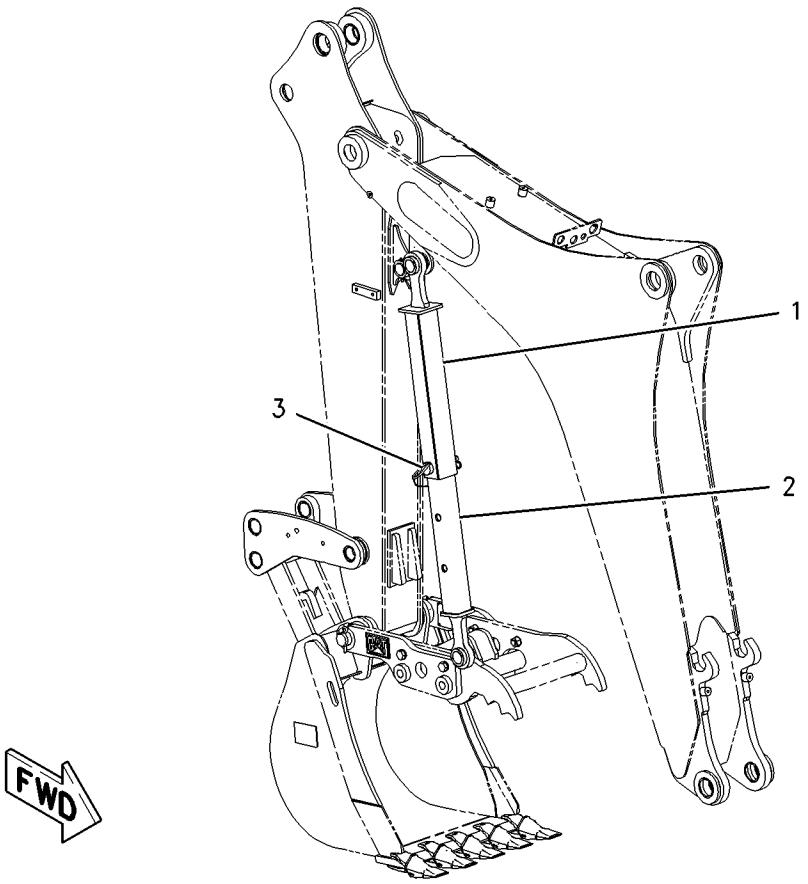

GRAPHIC #1 **<END>** g01003484

213-6692 LINKAGE GP-BACKHOE BUCKET

S/N: SHA1-UP

PART OF 209-9929, 213-9293, 291-9203 BACKHOE AR-EXTENDABLE STICK, 209-9924, 213-9290, 291-9202 BACKHOE AR-STANDARD STICK

AN ATTACHMENT

SMCS-6513 **i02098007**

NOTE	REF NO	GRAPHIC REF	PART NUMBER	QTY	PART NAME 1 2 3 4 5 6 (PRODUCT LEVEL)	SEE PAGE
B	1	1	**9R-0158**	5	WASHER (46X69X3-MM THK)	
B	2	1	**9R-1502**	4	WASHER (56X90X4-MM THK)	
B	3	1	**9R-1510**	9	WASHER (51X82X4-MM THK)	
	4	1	**154-5278**	1	PIN	
	5	1	**154-5279**	1	PIN	
	6	1	**154-5280**	1	PIN	
	7	1	**213-6690**	1	GUIDE AS (RH)	
		1	**9R-0162**	1	BEARING-SLEEVE	
		1	**9R-0170**	1	BEARING	
		1	**213-6687**	1	BEARING-SLEEVE	
	8	1	**213-6691**	1	GUIDE AS (LH)	
		1	**9R-0162**	1	BEARING-SLEEVE	
		1	**9R-0170**	1	BEARING	
		1	**213-6687**	1	BEARING-SLEEVE	
	9	1	**213-6698**	1	PIN	
	10	1	**213-6723**	1	LINK AS	
		1	**9R-0170**	2	BEARING	
		1	**213-6703**	2	BEARING	
	11	1	**239-9435**	1	FILM-INSTRUCTION (LINK)	
	12	1	**3B-5319**	4	PIN-COTTER	
	13	1	**3B-8489**	3	FITTING-GREASE	
	14	1	**6V-4364**	2	RING-RETAINING	
	15	1	**6V-8344**	2	RING-RETAINING	

B-USE AS REQUIRED

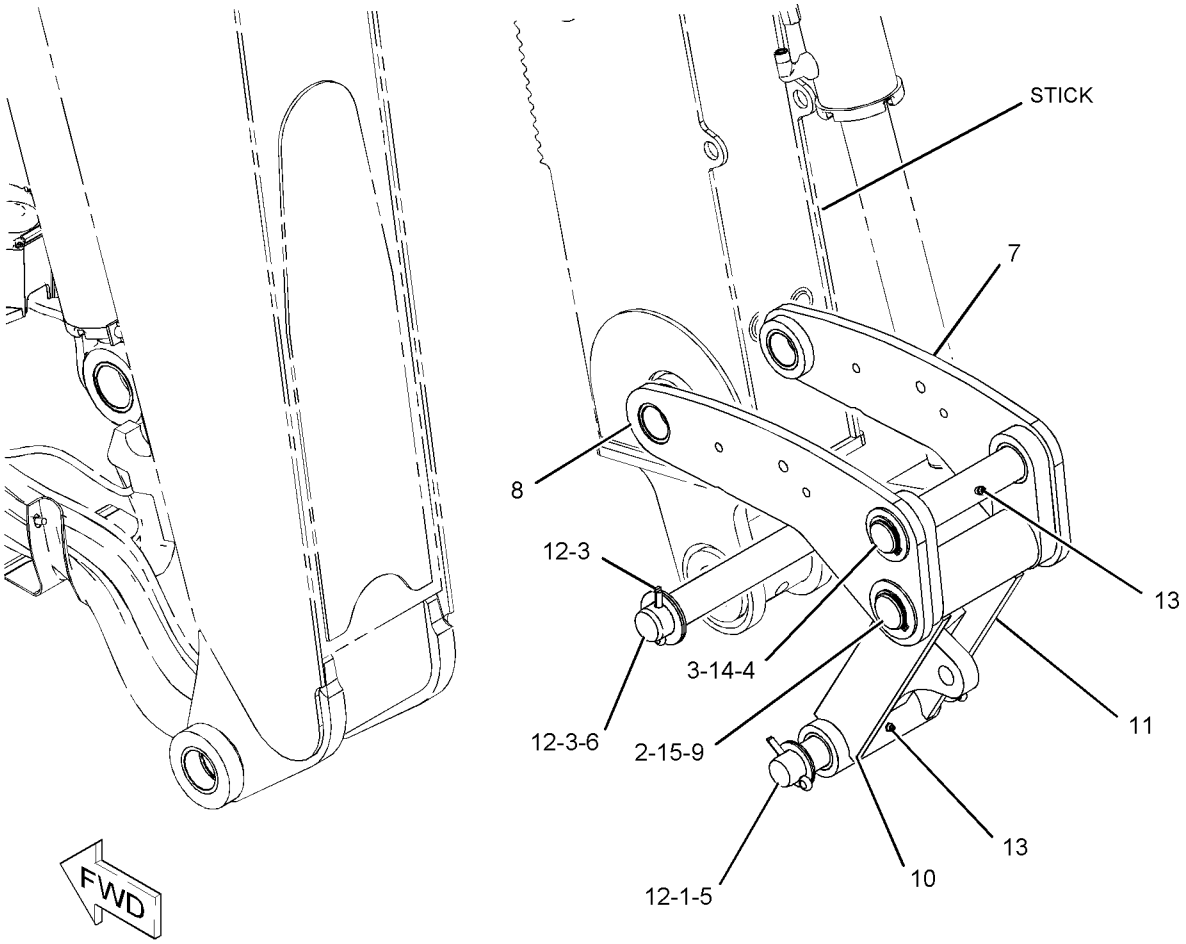

GRAPHIC #1 **<END>** g01079508

9R-9140 LINKAGE GP-LOADER BUCKET

S/N: SHA1-UP

PART OF 213-9298 LOADER AR

SMCS-6513 **i02238213**

NOTE	REF NO	GRAPHIC REF	PART NUMBER	QTY	PART NAME 1 2 3 4 5 6 (PRODUCT LEVEL)	SEE PAGE
M	1	1	**8T-4137**	4	BOLT (M10X1.5X20-MM)	
	2	1	**8T-4121**	4	WASHER-HARD (11X21X2.5-MM THK)	
	3	1	**101-0117**	1	PLATE	
	4	1	**9R-5834**	1	LINK AS (RH)	
	5	1	**9R-1107**	1	BEARING	
	6	1	**9R-5828**	1	BEARING-SLEEVE	
	7	1	**9R-5835**	1	LINK AS (LH)	
	8	1	**9R-1107**	1	BEARING	
	9	1	**9R-5828**	1	BEARING-SLEEVE	
	10	1	**3B-8489**	7	FITTING-GREASE	
	11	1	**118-7789**	1	PLATE	
	12	1	**9R-4494**	3	PIN AS	
B	13	1	**9R-0158**	8	WASHER (46X69X3-MM THK)	
	14	1	**6V-3213**	3	RING-RETAINING	
	15	1	**9R-4482**	1	SPACER (52.7X60.3X99-MM)	
	16	1	**9R-5063**	1	GUIDE AS	
	17	1	**9R-1104**	1	BEARING	
	18	1	**9R-9152**	1	GUIDE AS (RH)	
	19	1	**9R-1104**	1	BEARING	
	20	1	**9R-3933**	1	PIN	
	21	1	**9R-9153**	1	GUIDE	
B	22	1	**111-4337**	10	WASHER (46X70X1-MM THK)	

B-USE AS REQUIRED
M-METRIC PART

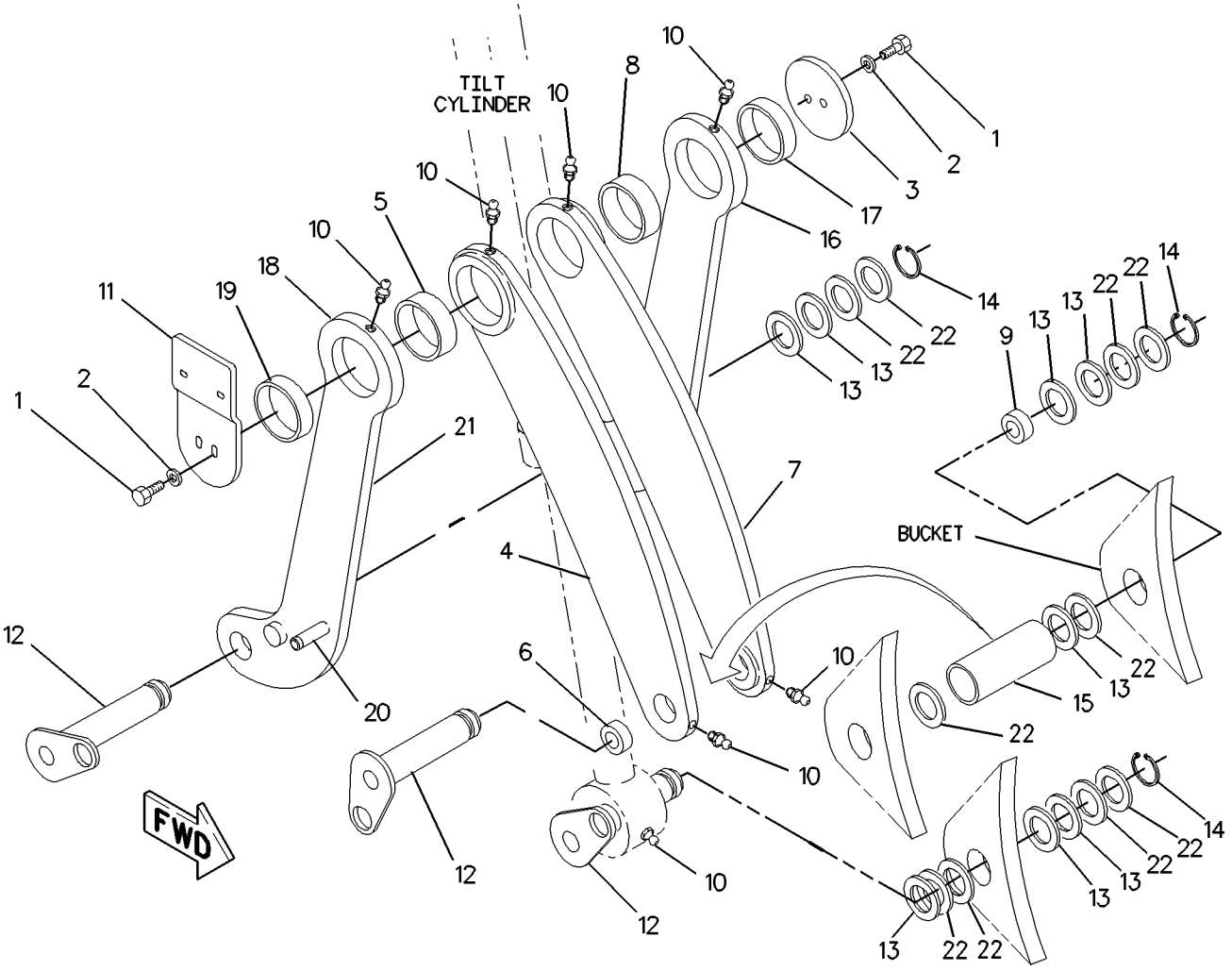

GRAPHIC #1 **<END>** g00834314

211-5182 LOCK GP-TRANSPORT–BOOM

S/N: SHA1-UP

PART OF 213-9284 CHASSIS AR

SMCS-7505 **i02531020**

NOTE	REF NO	GRAPHIC REF	PART NUMBER	QTY	PART NAME 1 2 3 4 5 6 (PRODUCT LEVEL)	SEE PAGE
	1	1	**5P-7958**	1	SLEEVE-CABLE SPLICE	
	2	1	**9R-8594**	1	PIN AS	
	3	1	**131-8775**	1	BRACKET AS	
	4	1	**134-0143**	1	CABLE (2.38-GA)	
	5	1	**214-4285**	2	PAD AS	
	6	1	**214-6999**	1	HOOK	
	7	1	**214-7043**	1	SPACER (6.15X7.94X10-MM THK)	
	8	1	**225-8227**	1	HOOK	
	9	1	**276-2353**	1	CABLE AS	
		1	**2R-0364**	1	RING-RETAINING	
		1	**4D-9517**	1	CLIP	
		1	**6V-0826**	1	GROMMET	
		1	**279-9452**	1	CLIP	
	10	1	**3B-8489**	2	FITTING-GREASE	
M	11	1	**5A-3604**	2	BOLT-SOCKET HEAD (M8X1.25X25-MM)	
M	12	1	**5C-9553**	1	BOLT (M6X1X16-MM)	
	13	1	**6E-1135**	2	PIN	
	14	1	**8T-4121**	3	WASHER-HARD (11X21X2.5-MM THK)	
M	15	1	**8T-4137**	1	BOLT (M10X1.5X20-MM)	
M	16	1	**8T-4195**	2	BOLT (M10X1.5X30-MM)	
	17	1	**214-4281**	1	PIN	
	18	1	**8T-4224**	1	WASHER-HARD (8.8X16X2-MM THK)	
M	19	1	**8T-4908**	1	BOLT (M8X1.25X25-MM)	

M-METRIC PART

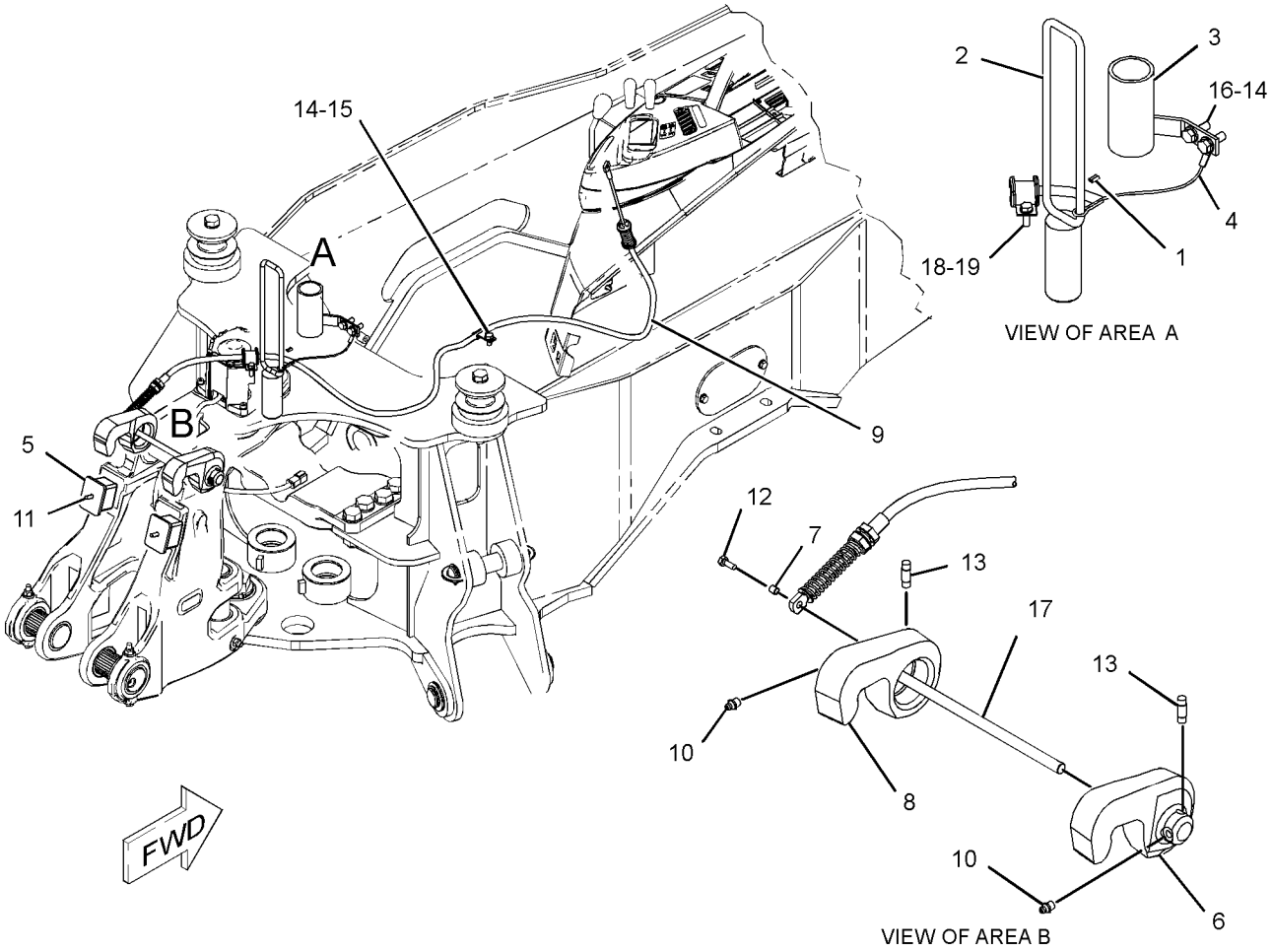

GRAPHIC #1 **<END>** g01272830

252-4660 LOCK GP-TRANSPORT

S/N: SHA1-UP
AN ATTACHMENT

SMCS-7505 **i02333972**

NOTE	REF NO	GRAPHIC REF	PART NUMBER	QTY	PART NAME 1 2 3 4 5 6 (PRODUCT LEVEL)	SEE PAGE
	1	1	**9R-5301**	2	PIN-COTTER	
	2	1	**252-4659**	1	CABLE AS	
	3	1	**9R-9028**	1	PIN	

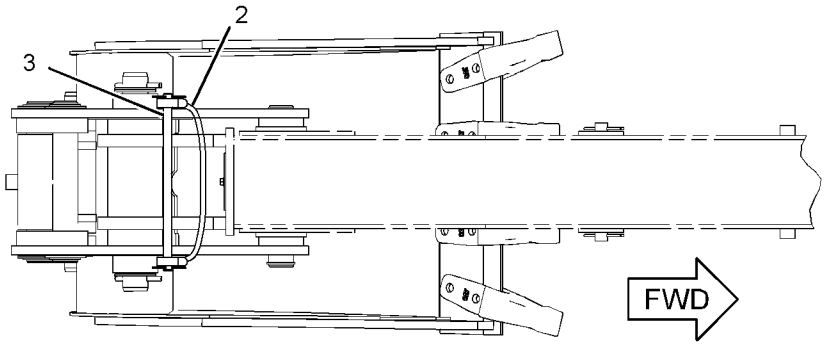

TOP VIEW

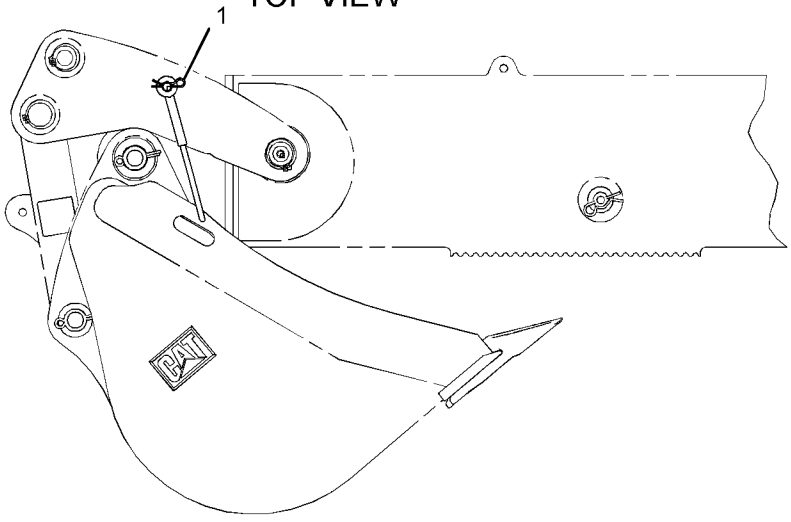

RIGHT SIDE VIEW

GRAPHIC #1 **<END>** g01178751

209-9938 MOUNTING GP-STICK

S/N: SHA1-UP

PART OF 209-9929, 213-9293, 291-9203 BACKHOE AR-EXTENDABLE STICK AN ATTACHMENT

SMCS-6502 **i02531010**

NOTE	REF NO	GRAPHIC REF	PART NUMBER	QTY	PART NAME 1 2 3 4 5 6 (PRODUCT LEVEL)	SEE PAGE
B	1	1	**9R-5238**	6	SPACER (56X110X3-MM THK)	
B	2	1	**9R-1510**	7	WASHER (51X82X4-MM THK)	
B	3	1	**286-3086**	3	SPACER (56X130X1-MM THK)	
	4	1	**213-6710**	1	PIN AS	
	5	1	**213-6714**	1	PIN	
	6	1	**220-1019**	1	PIN	
	7	1	**3B-8488**	1	FITTING-GREASE	
	8	1	**3B-8489**	1	FITTING-GREASE	
	9	1	**6V-4364**	2	RING-RETAINING	
	10	1	**6V-8344**	2	RING-RETAINING	

B-USE AS REQUIRED

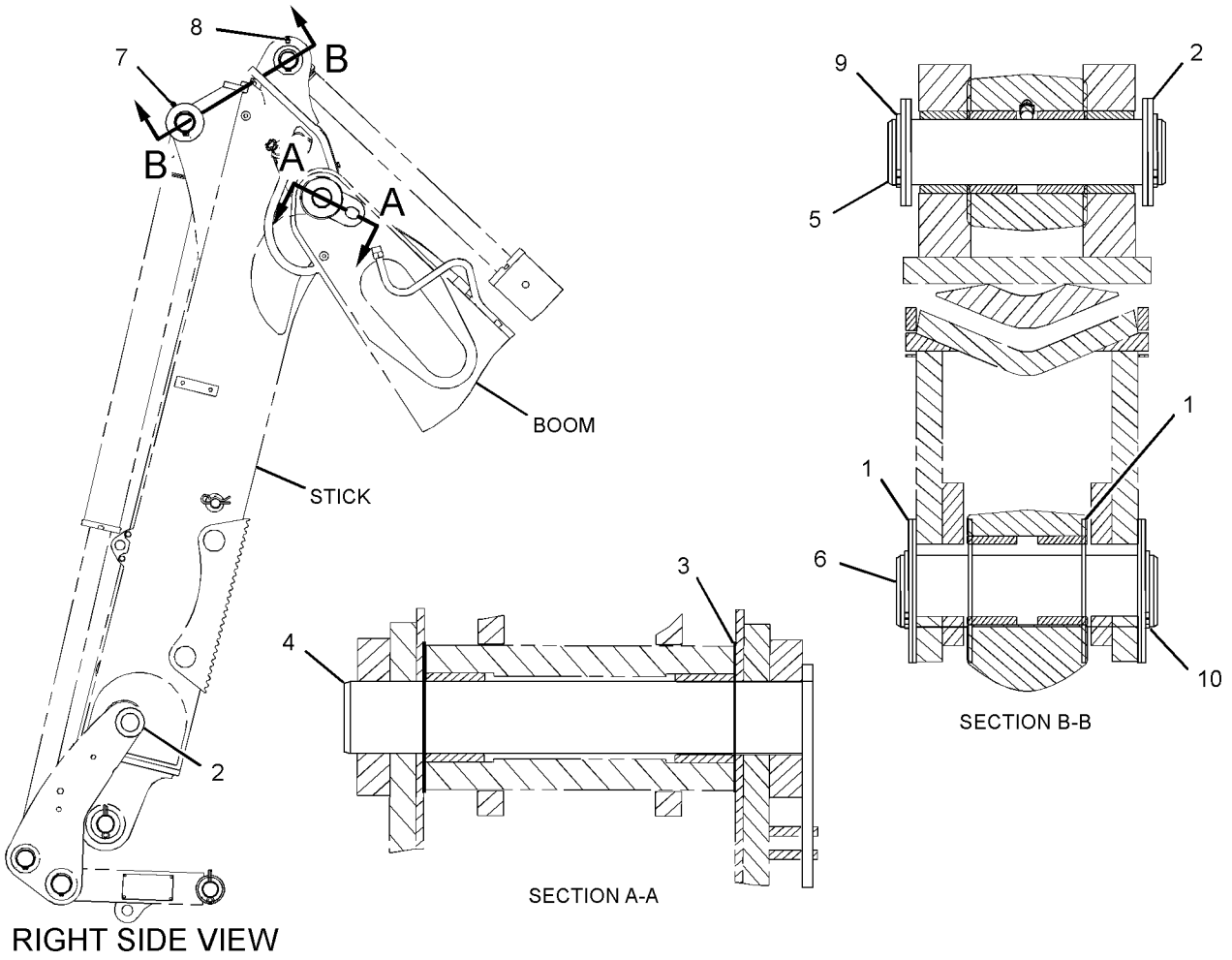

GRAPHIC #1 **<END>** g01198453

133-3362 PAD & GUARD GP-STABILIZER—STREET

S/N: SHA1-UP
AN ATTACHMENT

SMCS-7222 **i02650971**

NOTE	REF NO	GRAPHIC REF	PART NUMBER	QTY	PART NAME 1 2 3 4 5 6 (PRODUCT LEVEL)	SEE PAGE
	1	1	**8T-4986**	4	CLAMP-HOSE	
B	2	1	**9R-0109**	12	WASHER (41X64X3-MM THK)	
BC	3	1	**9R-0158**	6	WASHER (46X69X3-MM THK)	
	4	1	**130-1638**	2	PIN	
	5	1	**188-3953**	2	PAD	
	6	1	**201-5810**	2	PLATE	
	7	1	**201-5812**	2	PLATE AS	
					(EACH INCLUDES)	
M		1	**8T-3612**	2	NUT-WELD (M8X1.25-THD)	
		1	**201-5810**	1	PLATE	
C	8	1	**203-7060**	2	SPACER (12.58X15.88X8-MM)	
C	9	1	**238-9546**	2	SHAFT	
CY	10	1	*238-9547*	2	PAD GP-STABILIZER (STREET)	458
C	11	1	**241-0888**	2	PLATE	
C	12	1	**241-0889**	2	GUARD AS	
					(EACH INCLUDES)	
M		1	**8T-3490**	2	NUT-WELD (M10X1.5-THD)	
	13	1	**5P-4116**	2	WASHER-HARD (8.8X20.5X2-MM THK)	
C	14	1	**6V-3213**	4	RING-RETAINING	
	15	1	**6V-8144**	4	RING-RETAINING	
M	16	1	**7X-2537**	2	BOLT (M8X1.25X35-MM)	
C	17	1	**7X-7729**	2	WASHER (11X25X3-MM THK)	
CM	18	1	**8T-4195**	2	BOLT (M10X1.5X30-MM)	
	19	1	**214-4285**	2	PAD AS	
M	20	1	**5A-3604**	2	BOLT-SOCKET HEAD (M8X1.25X25-MM)	

B-USE AS REQUIRED
C-CHANGE FROM PREVIOUS TYPE
M-METRIC PART
Y-SEPARATE ILLUSTRATION

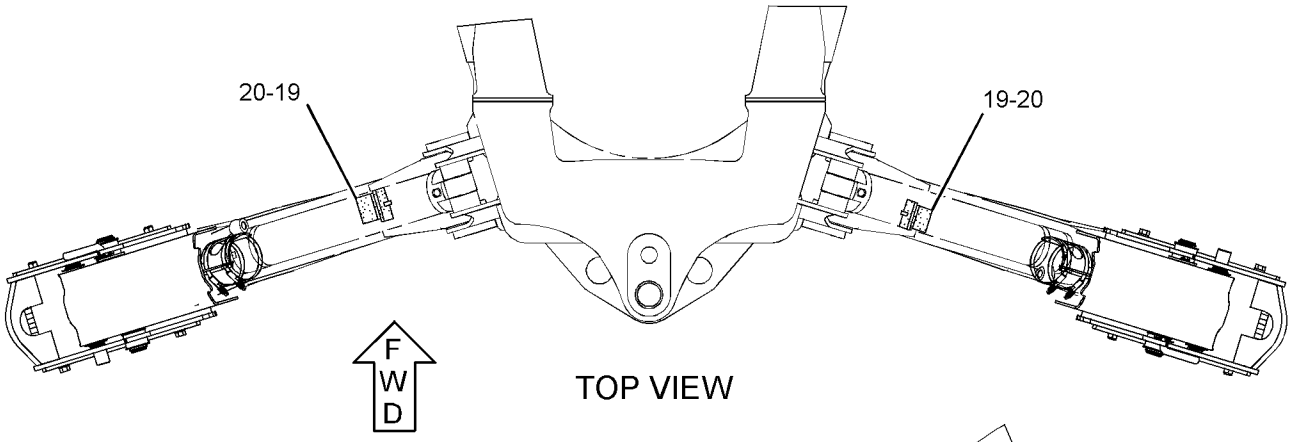

TOP VIEW

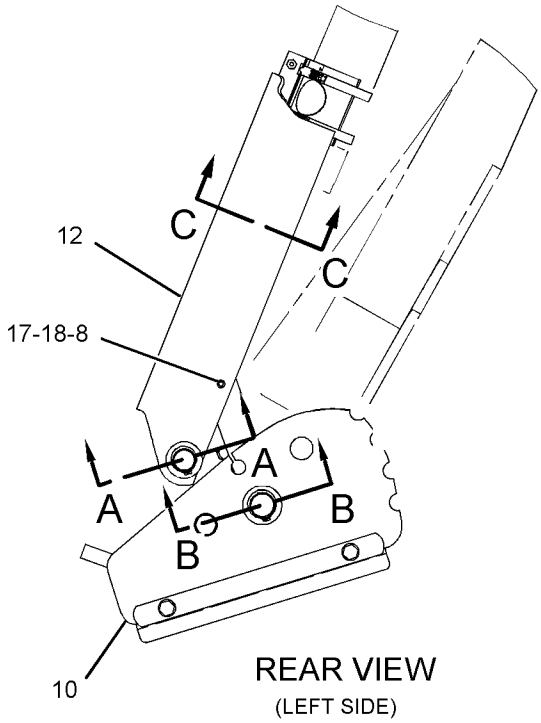

REAR VIEW
(LEFT SIDE)

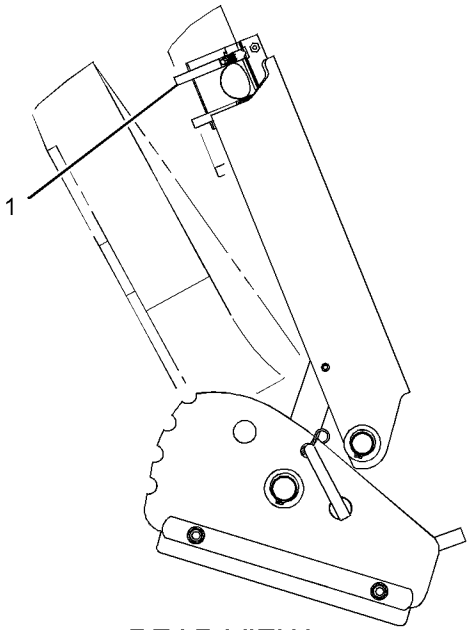

REAR VIEW
(RIGHT SIDE)

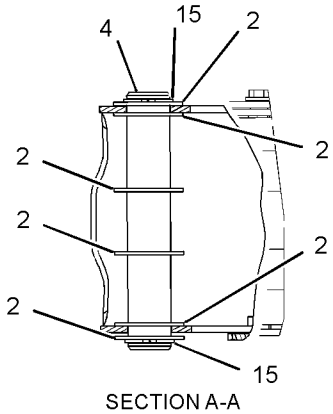

SECTION A-A

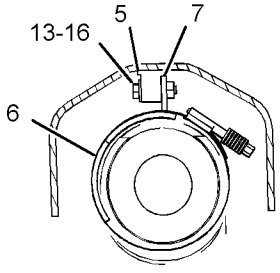

SECTION C-C

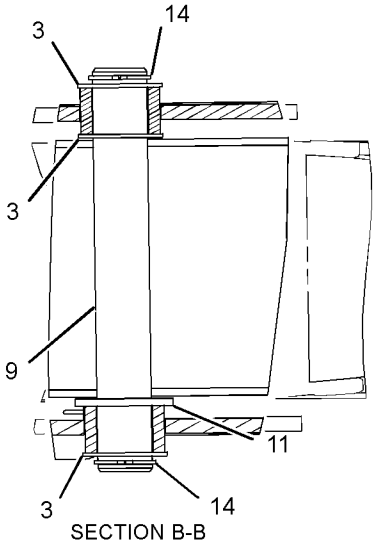

SECTION B-B

GRAPHIC #1

<END>

g01386905

133-3363 PAD & GUARD GP-STABILIZER

S/N: SHA1-UP
AN ATTACHMENT

SMCS-7222 **i02650972**

NOTE	REF NO	GRAPHIC REF	PART NUMBER	QTY	PART NAME 1 2 3 4 5 6 (PRODUCT LEVEL)	SEE PAGE
	1	1	**8T-4986**	4	CLAMP-HOSE	
BC	2	1	**9R-0109**	12	WASHER (41X64X3-MM THK)	
BC	3	1	**9R-0158**	6	WASHER (46X69X3-MM THK)	
	4	1	**130-1638**	2	PIN	
	5	1	**188-3953**	2	PAD	
	6	1	**201-5810**	2	PLATE	
	7	1	**201-5812**	2	PLATE AS	
					(EACH INCLUDES)	
M		1	**8T-3612**	2	NUT-WELD (M8X1.25-THD)	
		1	**201-5810**	1	PLATE	
C	8	1	**203-7060**	2	SPACER (12.58X15.88X8-MM)	
C	9	1	**238-9546**	2	SHAFT	
C	10	1	**239-1416**	2	PAD AS	
C	11	1	**241-0888**	2	PLATE	
C	12	1	**241-0889**	2	GUARD AS	
					(EACH INCLUDES)	
M		1	**8T-3490**	2	NUT-WELD (M10X1.5-THD)	
	13	1	**5P-4116**	2	WASHER-HARD (8.8X20.5X2-MM THK)	
	14	1	**6V-3213**	4	RING-RETAINING	
	15	1	**6V-8144**	4	RING-RETAINING	
M	16	1	**7X-2537**	2	BOLT (M8X1.25X35-MM)	
C	17	1	**7X-7729**	2	WASHER (11X25X3-MM THK)	
CM	18	1	**8T-4195**	2	BOLT (M10X1.5X30-MM)	
	19	1	**214-4285**	2	PAD AS	
M	20	1	**5A-3604**	2	BOLT-SOCKET HEAD (M8X1.25X25-MM)	

B-USE AS REQUIRED
C-CHANGE FROM PREVIOUS TYPE
M-METRIC PART

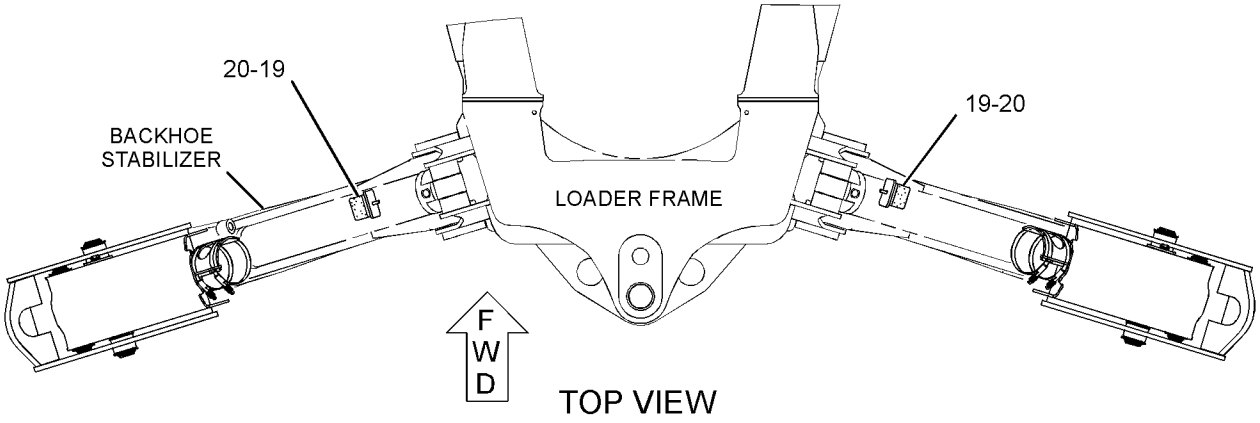

TOP VIEW

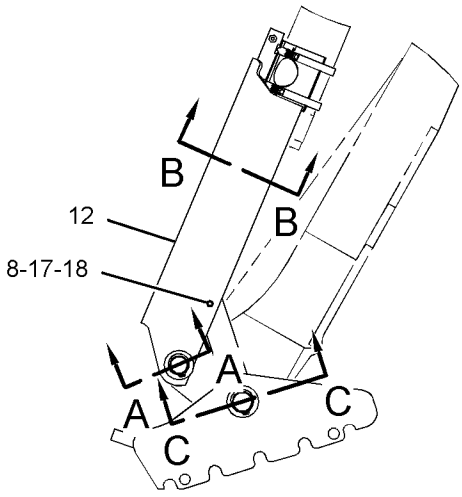

REAR VIEW
(LEFT SIDE)

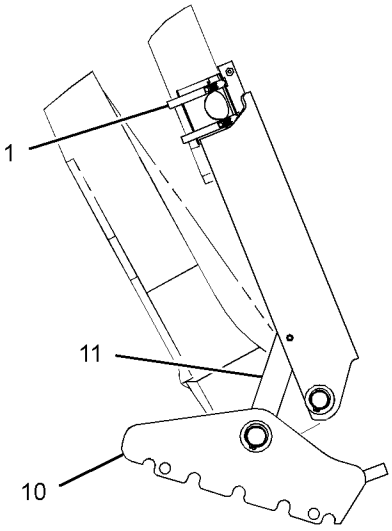

REAR VIEW
(RIGHT SIDE)

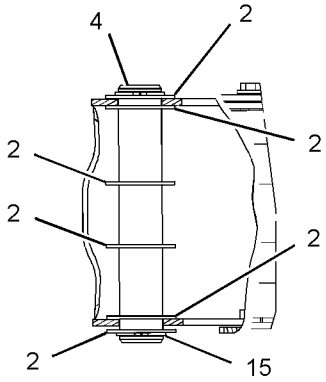

SECTION A-A

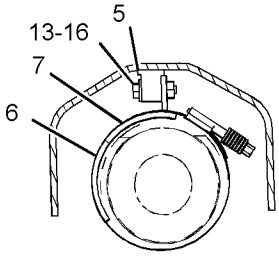

SECTION B-B

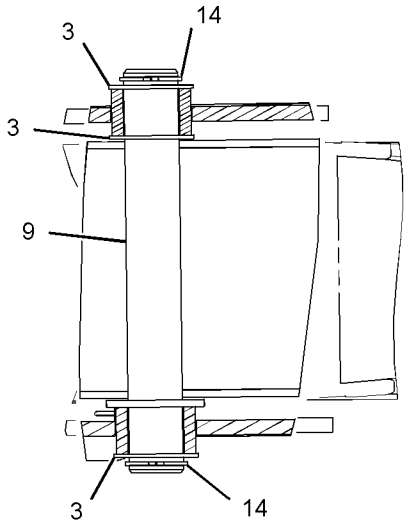

SECTION C-C

GRAPHIC #1

<END>

g01366814

133-3366 PAD & GUARD GP-STABILIZER—STREET

S/N: SHA1-UP
AN ATTACHMENT

SMCS-7222 **i02650973**

NOTE	REF NO	GRAPHIC REF	PART NUMBER	QTY	PART NAME 1 2 3 4 5 6 (PRODUCT LEVEL)	SEE PAGE
	1	1	**8T-4986**	4	CLAMP-HOSE	
B	2	1	**9R-0109**	12	WASHER (41X64X3-MM THK)	
BC	3	1	**9R-0158**	6	WASHER (46X69X3-MM THK)	
	4	1	**130-1638**	2	PIN	
	5	1	**188-3953**	2	PAD	
	6	1	**201-5810**	2	PLATE	
	7	1	**201-5812**	2	PLATE AS	
					(EACH INCLUDES)	
M		1	**8T-3612**	2	NUT-WELD (M8X1.25-THD)	
		1	**201-5810**	1	PLATE	
C	8	1	**203-7060**	2	SPACER (12.58X15.88X8-MM)	
C	9	1	**238-9546**	2	SHAFT	
C	10	1	**241-0888**	2	PLATE	
C	11	1	**241-0889**	2	GUARD AS	
					(EACH INCLUDES)	
M		1	**8T-3490**	2	NUT-WELD (M10X1.5-THD)	
CY	12	1	*247-7555*	2	PAD GP-STABILIZER (STREET)	459
	13	1	**5P-4116**	2	WASHER-HARD (8.8X20.5X2-MM THK)	
	14	1	**6V-3213**	4	RING-RETAINING	
	15	1	**6V-8144**	4	RING-RETAINING	
M	16	1	**7X-2537**	2	BOLT (M8X1.25X35-MM)	
C	17	1	**7X-7729**	2	WASHER (11X25X3-MM THK)	
CM	18	1	**8T-4195**	2	BOLT (M10X1.5X30-MM)	
	19	1	**214-4285**	2	PAD AS	
M	20	1	**5A-3604**	2	BOLT-SOCKET HEAD (M8X1.25X25-MM)	

B-USE AS REQUIRED
C-CHANGE FROM PREVIOUS TYPE
M-METRIC PART
Y-SEPARATE ILLUSTRATION

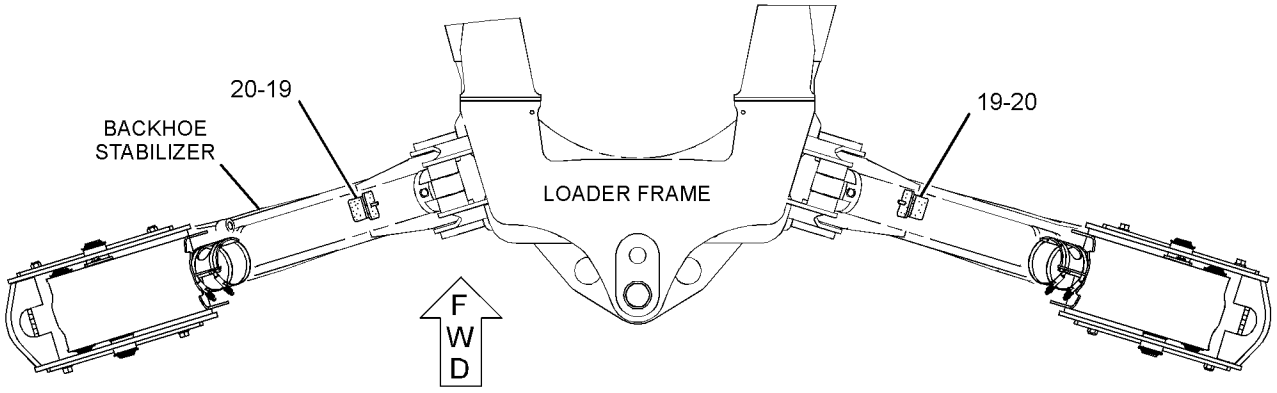

TOP VIEW

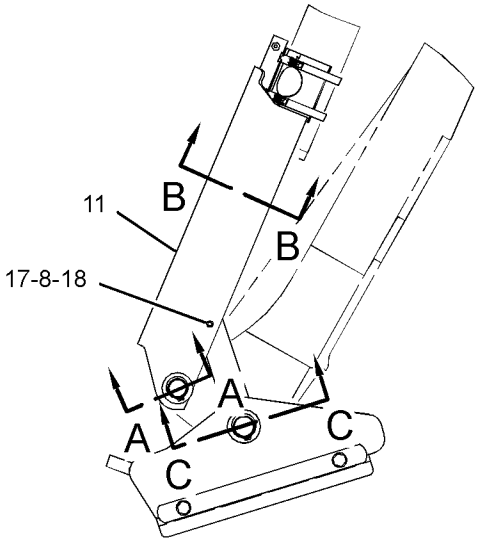

REAR VIEW
(LEFT SIDE)

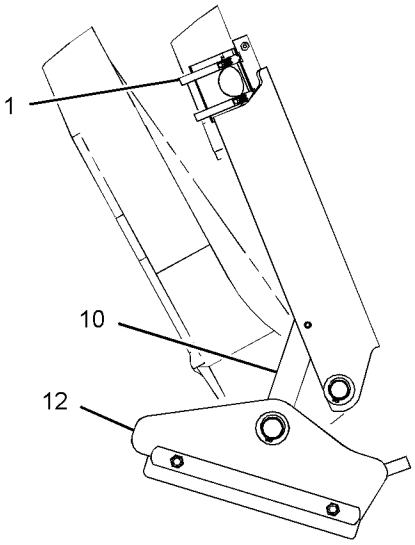

REAR VIEW
(RIGHT SIDE)

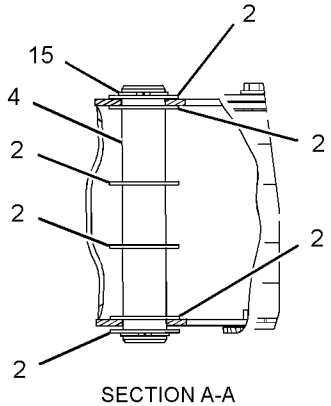

SECTION A-A

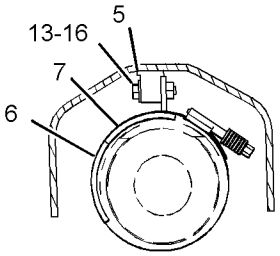

SECTION B-B

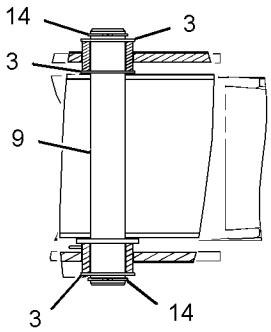

SECTION C-C

GRAPHIC #1 **<END>** g01367194

9R-1085 PAD & MTG GP-STABILIZER–STREET

S/N: SHA1-UP
AN ATTACHMENT

SMCS-7222 **i02593850**

NOTE	REF NO	GRAPHIC REF	PART NUMBER	QTY	PART NAME 1 2 3 4 5 6 (PRODUCT LEVEL)	SEE PAGE
	1	1	**9R-0422**	2	PIN	
C	2	1	**238-9546**	2	SHAFT	
CY	3	1	*247-7555*	2	PAD GP-STABILIZER (STREET)	459
	4	1	**6V-3213**	4	RING-RETAINING	
	5	1	**6V-8144**	4	RING-RETAINING	
B	6	1	**9R-0109**	8	WASHER (41X64X3-MM THK)	
BC	7	1	**9R-0158**	16	WASHER (46X69X3-MM THK)	

B-USE AS REQUIRED
C-CHANGE FROM PREVIOUS TYPE
Y-SEPARATE ILLUSTRATION

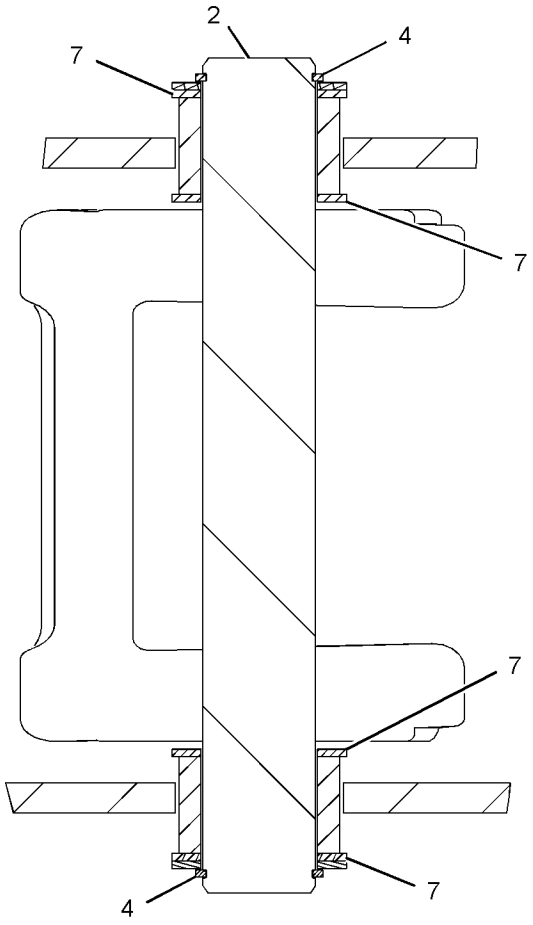

SECTION A-A

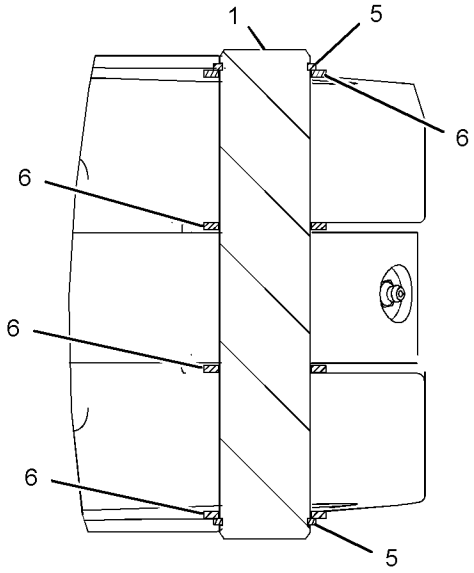

SECTION B-B

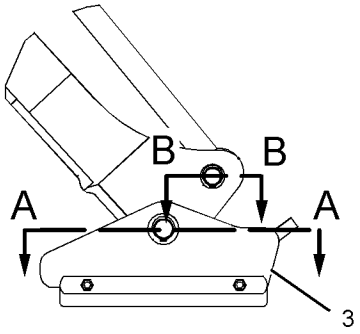

GRAPHIC #1 **<END>** g01084155

9R-6007 PAD & MTG GP-STABILIZER–STREET

S/N: SHA1-UP
AN ATTACHMENT

SMCS-7222 **i02127790**

NOTE	REF NO	GRAPHIC REF	PART NUMBER	QTY	PART NAME 1 2 3 4 5 6 (PRODUCT LEVEL)	SEE PAGE
BC	1	1	**9R-0109**	10	WASHER (41X64X3-MM THK)	
BC	2	1	**9R-0158**	16	WASHER (46X69X3-MM THK)	
C	3	1	**9R-0422**	2	PIN	
C	4	1	**238-9546**	2	SHAFT	
CY	5	1	*238-9547*	2	PAD GP-STABILIZER (STREET)	458
C	6	1	**6V-3213**	4	RING-RETAINING	
	7	1	**6V-8144**	4	RING-RETAINING	

B-USE AS REQUIRED
C-CHANGE FROM PREVIOUS TYPE
Y-SEPARATE ILLUSTRATION

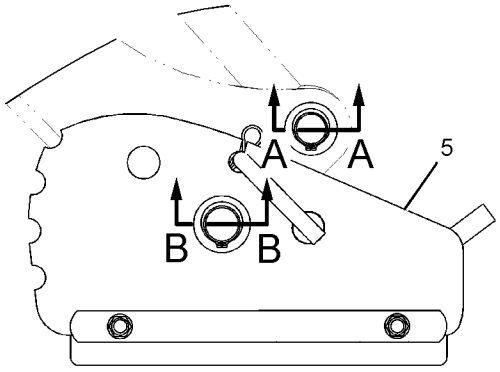

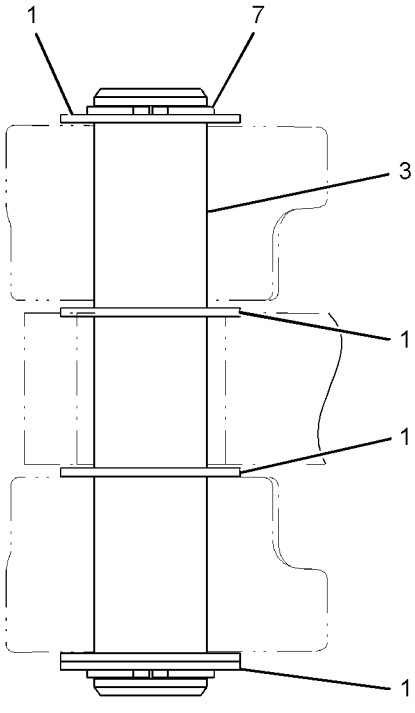

SECTION A-A

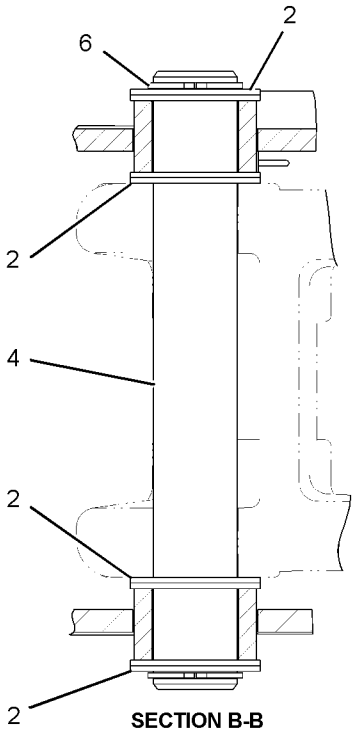

SECTION B-B

GRAPHIC #1

<END>

g01084460

116-4942 PAD & MTG GP-STABILIZER

S/N: SHA1-UP
AN ATTACHMENT

SMCS-7222 **i02159221**

NOTE	REF NO	GRAPHIC REF	PART NUMBER	QTY	PART NAME 1 2 3 4 5 6 (PRODUCT LEVEL)	SEE PAGE
B	1	1	**9R-0109**	12	WASHER (41X64X3-MM THK)	
B	2	1	**9R-0158**	14	WASHER (46X69X3-MM THK)	
	3	1	**9R-0422**	2	PIN	
C	4	1	**238-9546**	2	SHAFT	
C	5	1	**239-1416**	2	PAD AS	
	6	1	**6V-3213**	4	RING-RETAINING	
	7	1	**6V-8144**	4	RING-RETAINING	

B-USE AS REQUIRED
C-CHANGE FROM PREVIOUS TYPE

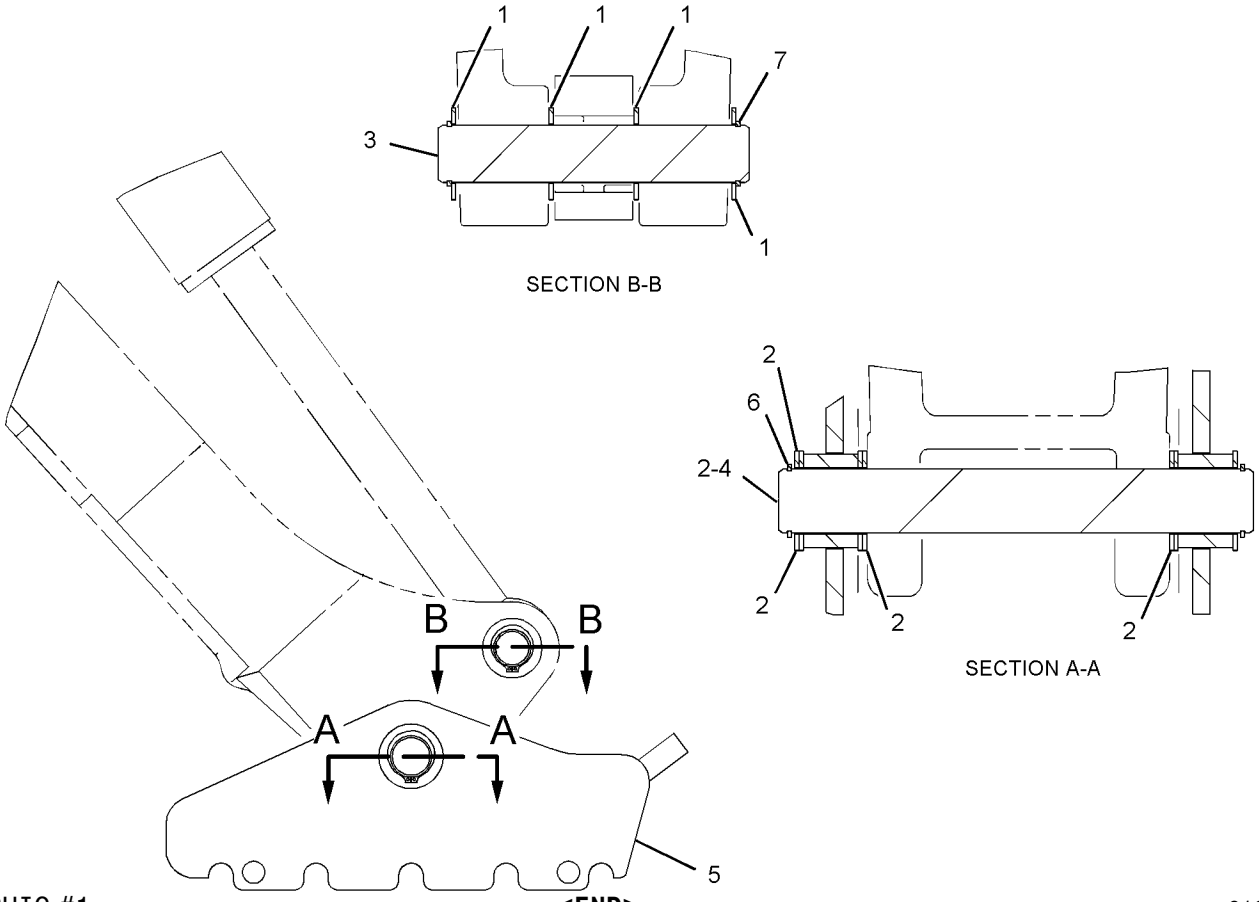

GRAPHIC #1 **<END>** g01096084

238-9547 PAD GP-STABILIZER—STREET

S/N: SHA1-UP

PART OF 133-3362 PAD & GUARD GP-STABILIZER, 9R-6007 PAD & MTG GP-STABILIZER

AN ATTACHMENT

SMCS-7222 **i02202299**

NOTE	REF NO	GRAPHIC REF	PART NUMBER	QTY	PART NAME 1 2 3 4 5 6 (PRODUCT LEVEL)	SEE PAGE
	1	1	**237-9349**	1	PAD AS	
	2	1	**237-9355**	1	PIN AS	
	3	1	**237-9356**	1	PAD AS	
	4	1	**241-0890**	2	SPACER (16.7X22.2X22.2-MM THK)	
	5	1	**241-0891**	2	PLATE	
	6	1	**241-0892**	1	PLATE	
	7	1	**5P-7971**	2	BOLT (5/8-11X12-IN)	
	8	1	**5P-0370**	1	LOCK PIN	
	9	1	**3K-2889**	2	LOCKNUT (5/8-11-THD)	
	10	1	**9X-8257**	2	WASHER (17.5X30X3.5-MM THK)	

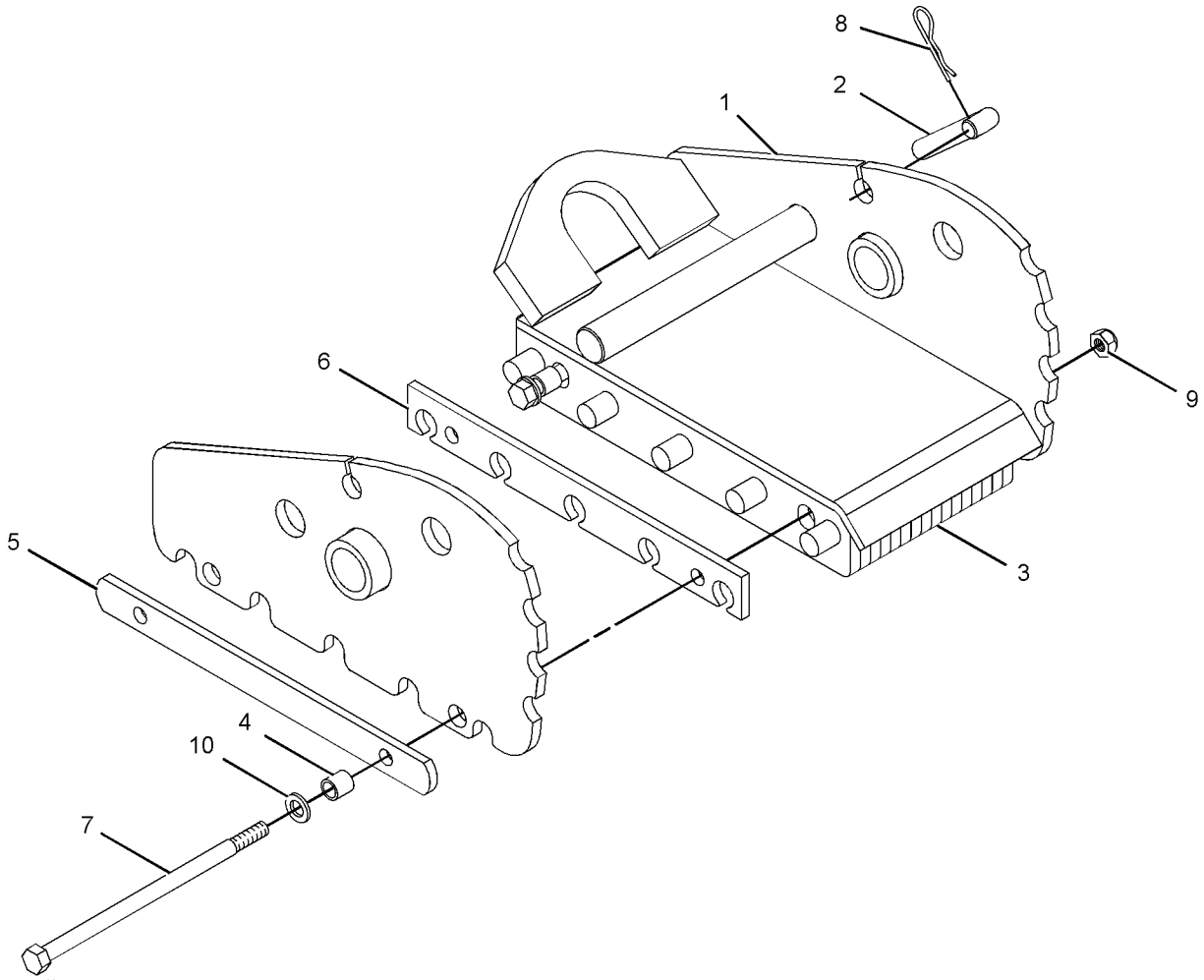

GRAPHIC #1 **<END>** g01084456

247-7555 PAD GP-STABILIZER—STREET

S/N: SHA1-UP

PART OF 133-3366 PAD & GUARD GP-STABILIZER, 9R-1085 PAD & MTG GP-STABILIZER

AN ATTACHMENT

SMCS-7222 **i02202704**

NOTE	REF NO	GRAPHIC REF	PART NUMBER	QTY	PART NAME 1 2 3 4 5 6 (PRODUCT LEVEL)	SEE PAGE
	1	1	**237-9356**	1	PAD AS	
	2	1	**239-1416**	1	PAD AS	
	3	1	**241-0890**	2	SPACER (16.7X22.2X22.2-MM THK)	
	4	1	**241-0891**	2	PLATE	
	5	1	**241-0892**	1	PLATE	
	6	1	**3K-2889**	2	LOCKNUT (5/8-11-THD)	
	7	1	**5P-7971**	2	BOLT (5/8-11X12-IN)	
	8	1	**9X-8257**	2	WASHER (17.5X30X3.5-MM THK)	

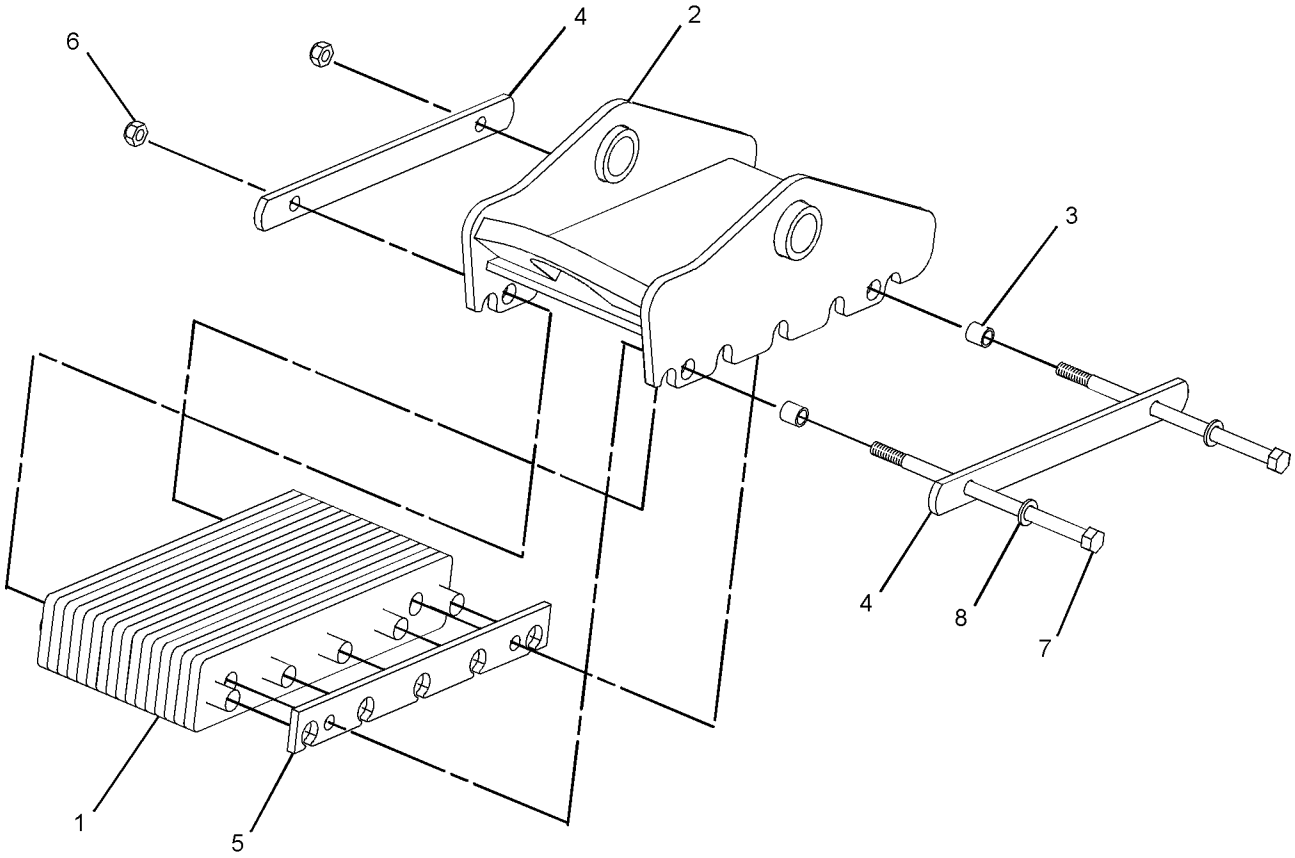

GRAPHIC #1 **<END>** g01113818

IMPLEMENTS

266-5834 STABILIZER GP-BACKHOE

S/N: SHA1-UP

PART OF 213-9284 CHASSIS AR

SMCS-7222 **i02646557**

NOTE	REF NO	GRAPHIC REF	PART NUMBER	QTY	PART NAME 1 2 3 4 5 6 (PRODUCT LEVEL)	SEE PAGE
	1	1	**293-7383**	2	PIN	
B	2	1	**111-4337**	2	WASHER (46X70X1-MM THK)	
B	3	1	**119-4594**	2	WASHER (41X64X1-MM THK)	
	4	1	**130-0777**	2	STABILIZER AS	
					(EACH INCLUDES)	
		1	**9R-0411**	2	BEARING-SLEEVE	
	5	1	**261-6703**	2	PIN	
	6	1	**6V-3213**	4	RING-RETAINING	
	7	1	**6V-8144**	4	RING-RETAINING	
B	8	1	**9R-0109**	8	WASHER (41X64X3-MM THK)	
B	9	1	**9R-0158**	14	WASHER (46X69X3-MM THK)	

B-USE AS REQUIRED

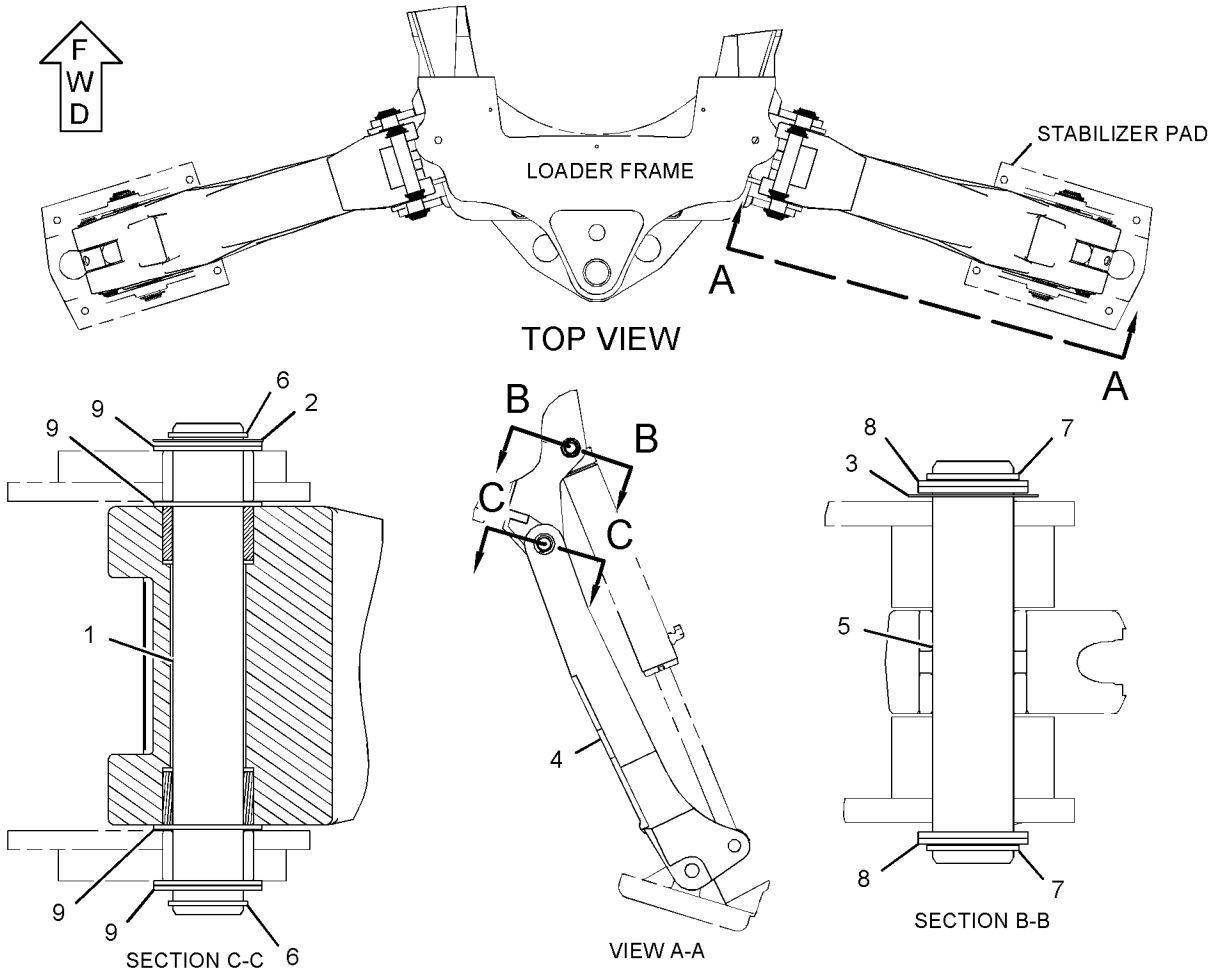

GRAPHIC #1 **<END>** g01335487

IMPLEMENTS

271-8669 STICK AS

S/N: SHA1-UP
PART OF 271-8666 STICK GP-HOE
AN ATTACHMENT

SMCS-6502 **i02647279**

NOTE	REF NO	GRAPHIC REF	PART NUMBER	QTY	PART NAME 1 2 3 4 5 6 (PRODUCT LEVEL)	SEE PAGE
	1	1	**9R-0162**	4	BEARING-SLEEVE	
	2	1	**9R-0170**	2	BEARING	
M	3	1	**9R-2672**	2	BOSS-THREADED (M10X1.5-THD)	
	4	1	**9R-3092**	2	BEARING-SLEEVE	
	5	1	**107-6711**	2	BLOCK	
	6	1	**221-4315**	1	STOP AS	
		1	**221-4322**	1	PLATE	
	7	1	**299-7603**	2	PLATE	
	8	1	**299-7593**	2	PLATE	
	9	1	**299-5508**	2	PLATE	
	10	1	**299-5421**	1	PLATE	

M-METRIC PART

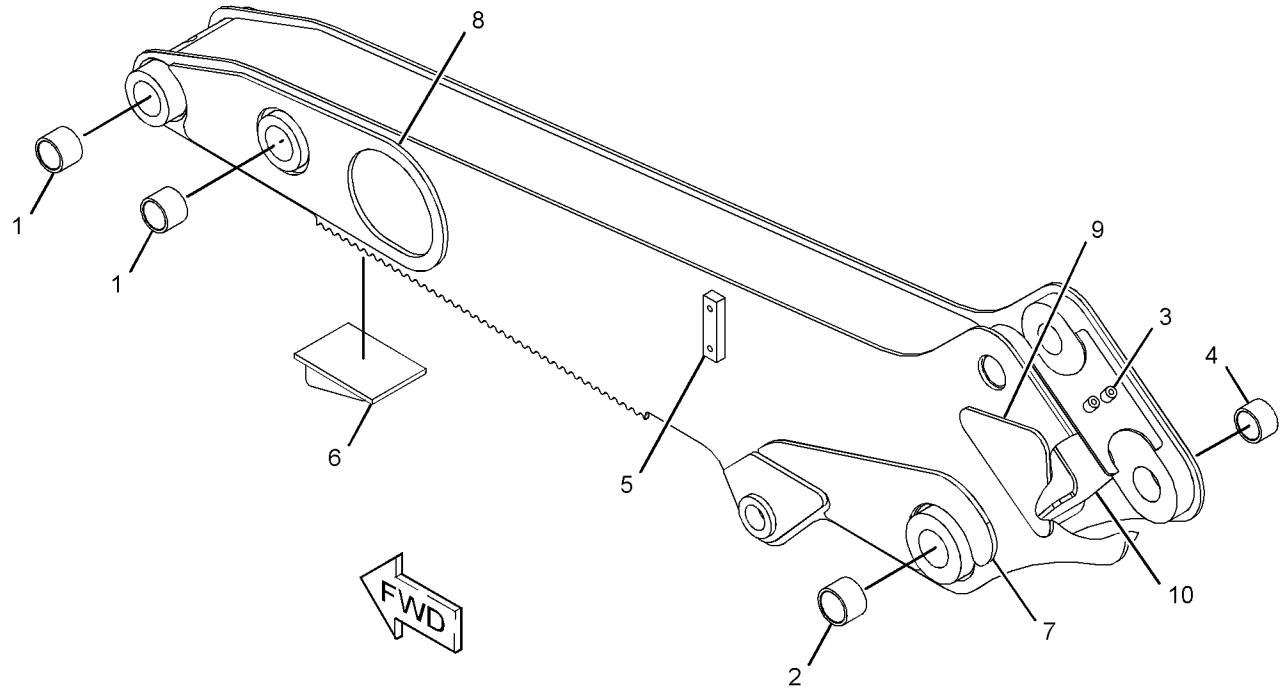

GRAPHIC #1 **<END>** g01328895

IMPLEMENTS

271-1404 STICK GP

S/N: SHA1-UP

PART OF 209-9929 BACKHOE AR-EXTENDABLE STICK

AN ATTACHMENT

SMCS-6502 **i02532509**

NOTE	REF NO	GRAPHIC REF	PART NUMBER	QTY	PART NAME 1 2 3 4 5 6 (PRODUCT LEVEL)	SEE PAGE
	1	1	**3B-8489**	4	FITTING-GREASE	
	2	1	**9R-2959**	2	CLIP	
	3	1	**209-2435**	2	BLOCK	
Y	4	1	**210-7098**	1	CYLINDER GP-STICK	336
	5	1	**214-6143**	1	PIN	
	6	1	**216-6295**	1	PLATE	
	7	1	**217-0055**	1	PIN	
	8	1	**217-1577**	2	PAD AS	
	9	1	**305-2695**	1	STICK AS (INNER)	
	10	1	**220-1018**	1	PIN	
	11	1	**222-5171**	2	SCREW AS (ADJUSTER)	
	12	1	**223-3926**	1	PLATE	
	13	1	**226-9764**	2	PAD AS	
	14	1	**233-5165**	4	PLATE	
B	15	1	**233-5166**	4	SHIM (1-MM THK)	
B	16	1	**233-5167**	12	SHIM (2-MM THK)	
	17	1	**233-5169**	4	PAD	
Y	18	1	*247-3267*	1	LINES GP-EXTENDABLE STICK	363
	19	1	**271-1408**	1	STICK AS (OUTER)	
	20	1	**1L-3768**	2	RING-RETAINING	
	21	1	**2Y-2881**	2	BUTTON-PLUG	
	22	1	**5V-7190**	4	WASHER-HARD (10.5X45.2X6-MM THK)	
	23	1	**6V-4364**	2	RING-RETAINING	
B	24	1	**8T-4121**	12	WASHER-HARD (11X21X2.5-MM THK)	
M	25	1	**8T-4136**	2	BOLT (M10X1.5X25-MM)	
M	26	1	**8T-4139**	2	BOLT (M12X1.75X30-MM)	
M	27	1	**8T-4183**	2	BOLT (M12X1.75X40-MM)	
M	28	1	**8T-4194**	2	BOLT (M12X1.75X50-MM)	
M	29	1	**8T-4195**	2	BOLT (M10X1.5X30-MM)	
	30	1	**8T-4223**	26	WASHER-HARD (13.5X25.5X3-MM THK)	
M	31	1	**8T-4910**	4	BOLT (M12X1.75X60-MM)	
M	32	1	**297-5510**	16	SCREW-HEX SOCKET (M12X1.75X30-MM)	
	33	1	**287-5667**	6	SHIM (1-MM THK)	
	34	1	**7X-0603**	2	WASHER-HARD (9.9X35X2.5-MM THK)	
B	35	1	**293-9882**	4	SHIM (1-MM THK)	
B	36	1	**293-9884**	4	SHIM (0.25-MM THK)	

B-USE AS REQUIRED
M-METRIC PART
Y-SEPARATE ILLUSTRATION

271 - 1404 **STICK GP** *(contd.)* **i02532509**

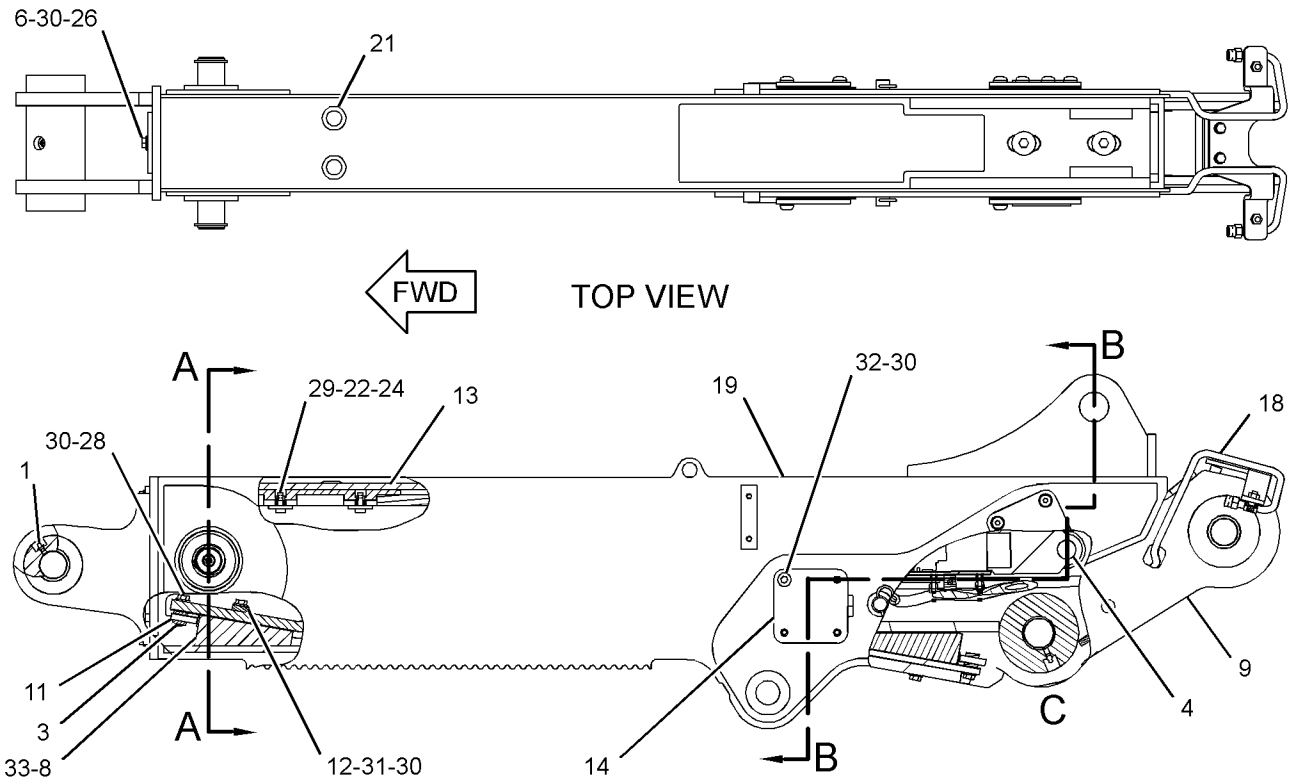

GRAPHIC #1 **<END>** g01343024

IMPLEMENTS

271-1401 STICK GP-EXTENDABLE

S/N: SHA1-UP

PART OF 213-9293, 291-9203 BACKHOE AR-EXTENDABLE STICK

AN ATTACHMENT

SMCS-6533 **i02658692**

NOTE	REF NO	GRAPHIC REF	PART NUMBER	QTY	PART NAME 1 2 3 4 5 6 (PRODUCT LEVEL)	SEE PAGE
	1	1	**3B-8489**	4	FITTING-GREASE	
	2	1	**9R-2959**	2	CLIP	
	3	1	**209-2435**	2	BLOCK	
Y	4	1	**210-7097**	1	CYLINDER GP-EXTENDABLE STICK	325
Y	5	1	*211-4260*	1	WIRING GP-EXTENDABLE STICK	170
	6	1	**214-6143**	1	PIN	
	7	1	**216-6295**	1	PLATE	
	8	1	**217-0055**	1	PIN	
	9	1	**217-1577**	2	PAD AS	
	10	1	**305-2695**	1	STICK AS (INNER)	
	11	1	**220-1018**	1	PIN	
	12	1	**222-5171**	2	SCREW AS (ADJUSTER)	
	13	1	**223-3926**	1	PLATE	
	14	1	**226-9764**	2	PAD AS	
	15	1	**233-5165**	4	PLATE	
B	16	1	**233-5166**	4	SHIM (1-MM THK)	
B	17	1	**233-5167**	12	SHIM (2-MM THK)	
	18	1	**233-5169**	4	PAD	
Y	19	1	*247-3267*	1	LINES GP-EXTENDABLE STICK	363
	20	1	**271-1408**	1	STICK AS (OUTER)	
M	21	1	**297-5510**	16	SCREW-HEX SOCKET (M12X1.75X30-MM)	
	22	1	**1L-3768**	2	RING-RETAINING	
	23	1	**4F-8711**	2	BUTTON-PLUG	
	24	1	**5V-7190**	4	WASHER-HARD (10.5X45.2X6-MM THK)	
	25	1	**6V-4364**	2	RING-RETAINING	
B	26	1	**8T-4121**	12	WASHER-HARD (11X21X2.5-MM THK)	
M	27	1	**8T-4136**	2	BOLT (M10X1.5X25-MM)	
M	28	1	**8T-4139**	2	BOLT (M12X1.75X30-MM)	
M	29	1	**8T-4183**	2	BOLT (M12X1.75X40-MM)	
M	30	1	**8T-4194**	2	BOLT (M12X1.75X50-MM)	
M	31	1	**8T-4195**	2	BOLT (M10X1.5X30-MM)	
	32	1	**8T-4223**	26	WASHER-HARD (13.5X25.5X3-MM THK)	
M	33	1	**8T-4910**	4	BOLT (M12X1.75X60-MM)	
B	34	1	**287-5667**	6	SHIM (1-MM THK)	
B	35	1	**293-9882**	4	SHIM (1-MM THK)	
B	36	1	**293-9884**	4	SHIM (0.25-MM THK)	
	37	1	**7X-0603**	2	WASHER-HARD (9.9X35X2.5-MM THK)	

B-USE AS REQUIRED
M-METRIC PART
Y-SEPARATE ILLUSTRATION

271-1401 **STICK GP-EXTENDABLE** *(contd.)* **i02658692**

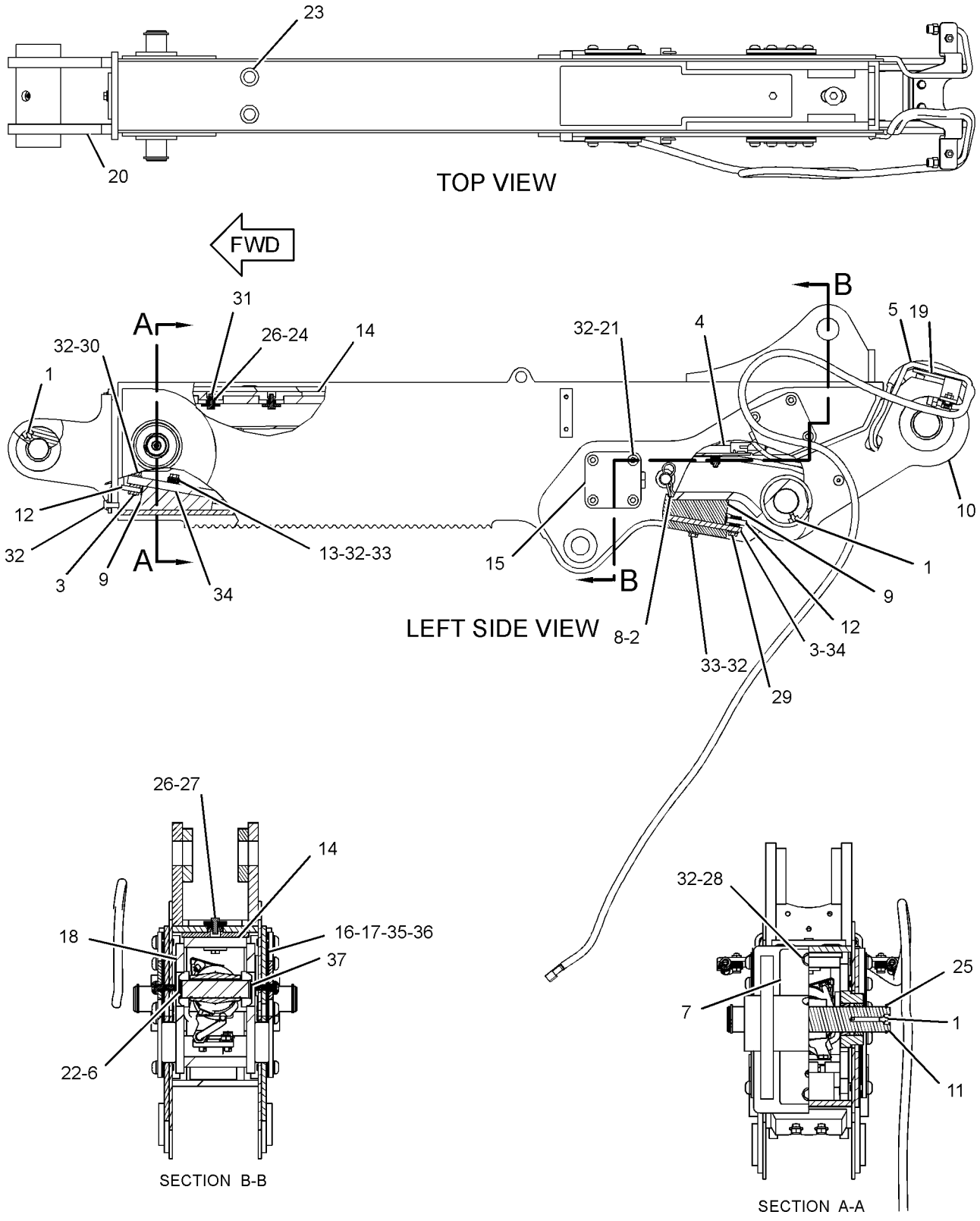

GRAPHIC #1 **<END>** g01340085

271-8666 STICK GP-HOE

S/N: SHA1-UP

PART OF 209-9924, 213-9290, 291-9202 BACKHOE AR-STANDARD STICK

AN ATTACHMENT

SMCS-6502 **i02532883**

NOTE	REF NO	GRAPHIC REF	PART NUMBER	QTY	PART NAME 1 2 3 4 5 6 (PRODUCT LEVEL)	SEE PAGE
B	1	1	**9R-1510**	8	WASHER (51X82X4-MM THK)	
B	2	1	**286-3086**	3	SPACER (56X130X1-MM THK)	
	3	1	**213-6696**	1	PIN	
	4	1	**213-6697**	1	PIN	
	5	1	**213-6710**	1	PIN AS	
	6	1	**213-6714**	1	PIN	
Y	7	1	**271-8669**	1	STICK AS	461
	8	1	**3B-8488**	1	FITTING-GREASE	
	9	1	**3B-8489**	5	FITTING-GREASE	
	10	1	**6V-4364**	4	RING-RETAINING	
	11	1	**6V-8344**	2	RING-RETAINING	
B	12	1	**9R-1502**	6	WASHER (56X90X4-MM THK)	

B-USE AS REQUIRED
Y-SEPARATE ILLUSTRATION

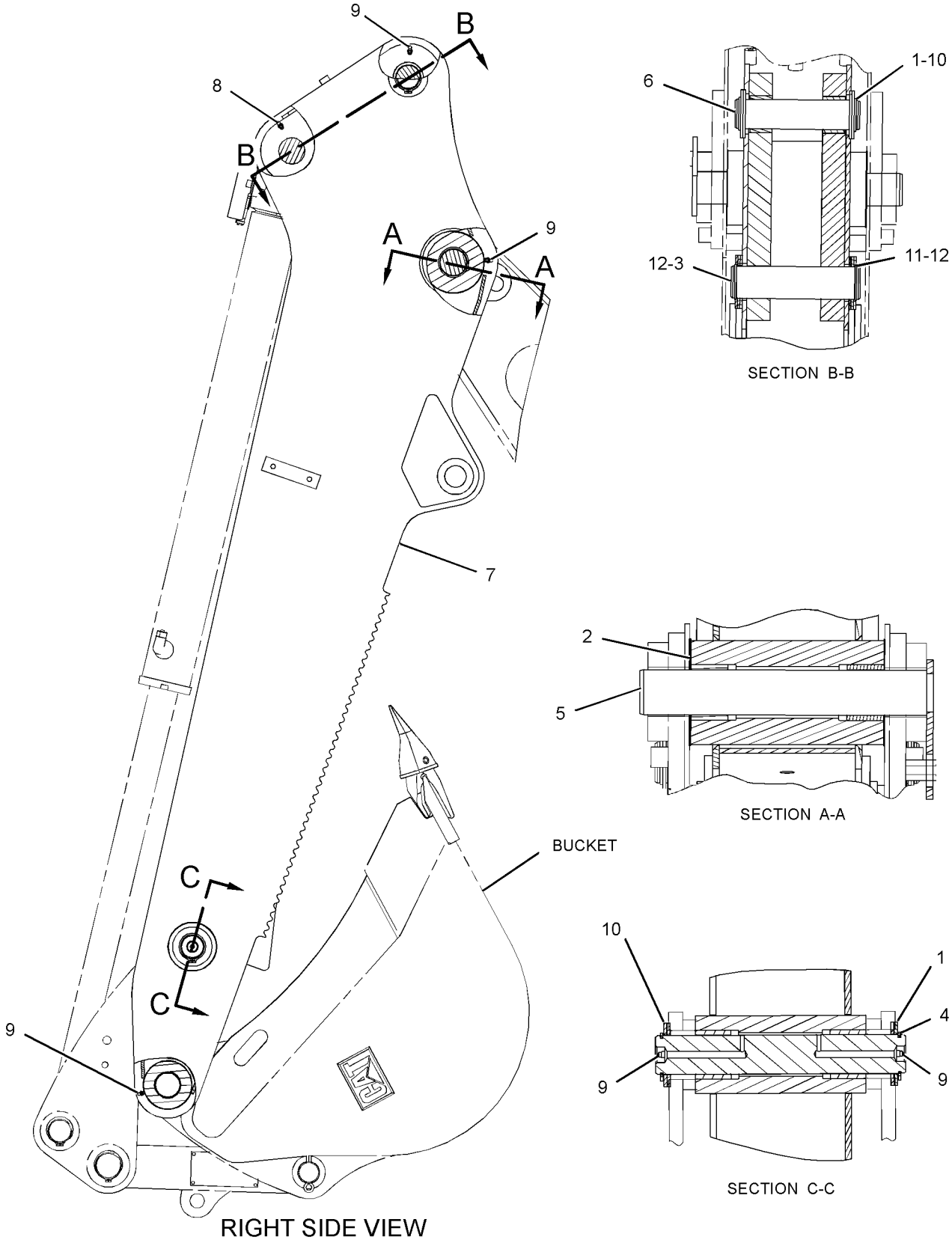

GRAPHIC #1 **<END>** g01239378

WORK TOOLS

251-1776 BUCKET AR-GENERAL PURPOSE

S/N: SHA1-UP

AN ATTACHMENT

SMCS-6101 **i02105044**

NOTE	PART NUMBER	QTY	PART NAME 1 2 3 4 5 6 (PRODUCT LEVEL)	SEE PAGE
Y	**251-1777**	1	BUCKET GP-GENERAL PURPOSE	512
Y	*9R-5866*	1	TOOTH GP-UNI	638

Y-SEPARATE ILLUSTRATION

<END>

232-2681 BUCKET AR-MULTIPURPOSE

S/N: SHA1-UP

AN ATTACHMENT

SMCS-6104 **i02218649**

NOTE	PART NUMBER	QTY	PART NAME 1 2 3 4 5 6 (PRODUCT LEVEL)	SEE PAGE
Y	**216-8800**	1	BUCKET GP-MULTIPURPOSE	562
Y	*9R-5321*	1	EDGE GP-CUTTING	579

Y-SEPARATE ILLUSTRATION

<END>

232-2682 BUCKET AR-MULTIPURPOSE

S/N: SHA1-UP

AN ATTACHMENT

SMCS-6104 **i02207479**

NOTE	PART NUMBER	QTY	PART NAME 1 2 3 4 5 6 (PRODUCT LEVEL)	SEE PAGE
Y	**216-8800**	1	BUCKET GP-MULTIPURPOSE	562
Y	*9R-5866*	1	TOOTH GP-UNI	638

Y-SEPARATE ILLUSTRATION

<END>

232-2683 BUCKET AR-MULTIPURPOSE

S/N: SHA1-UP

AN ATTACHMENT

SMCS-6104 **i02218657**

NOTE	PART NUMBER	QTY	PART NAME 1 2 3 4 5 6 (PRODUCT LEVEL)	SEE PAGE
Y	*232-2685*	1	BUCKET AR-MULTIPURPOSE	469
Y	*9R-5321*	1	EDGE GP-CUTTING	579

Y-SEPARATE ILLUSTRATION

<END>

232-2684 BUCKET AR-MULTIPURPOSE

S/N: SHA1-UP
AN ATTACHMENT

SMCS-6104 **i02218679**

NOTE	PART NUMBER	QTY	PART NAME 1 2 3 4 5 6 (PRODUCT LEVEL)	SEE PAGE
Y	*232-2685*	1	BUCKET AR-MULTIPURPOSE	469
Y	*9R-5866*	1	TOOTH GP-UNI	638
Y-SEPARATE ILLUSTRATION				

<END>

232-2685 BUCKET AR-MULTIPURPOSE

S/N: SHA1-UP
PART OF 232-2683, 232-2684 BUCKET AR-MULTIPURPOSE
AN ATTACHMENT

SMCS-6104 **i02218717**

NOTE	PART NUMBER	QTY	PART NAME 1 2 3 4 5 6 (PRODUCT LEVEL)	SEE PAGE
Y	**216-8801**	1	BUCKET GP-MULTIPURPOSE	563
Y	**104-6310**	1	FORK GP	580
Y-SEPARATE ILLUSTRATION				

<END>

232-2686 BUCKET AR-MULTIPURPOSE

S/N: SHA1-UP
AN ATTACHMENT

SMCS-6104 **i02218734**

NOTE	PART NUMBER	QTY	PART NAME 1 2 3 4 5 6 (PRODUCT LEVEL)	SEE PAGE
Y	**216-8820**	1	BUCKET GP-MULTIPURPOSE	564
Y	*9R-5320*	1	EDGE GP-CUTTING	578
Y-SEPARATE ILLUSTRATION				

<END>

232-2687 BUCKET AR-MULTIPURPOSE

S/N: SHA1-UP
AN ATTACHMENT

SMCS-6104 **i02218740**

NOTE	PART NUMBER	QTY	PART NAME 1 2 3 4 5 6 (PRODUCT LEVEL)	SEE PAGE
Y	**216-8820**	1	BUCKET GP-MULTIPURPOSE	564
Y	*9R-5866*	1	TOOTH GP-UNI	638
Y-SEPARATE ILLUSTRATION				

<END>

232-2688 BUCKET AR-MULTIPURPOSE

S/N: SHA1-UP

AN ATTACHMENT

SMCS-6104 **i02218761**

NOTE	PART NUMBER	QTY	PART NAME 1 2 3 4 5 6 (PRODUCT LEVEL)	SEE PAGE
Y	*232-2690*	1	BUCKET AR-MULTIPURPOSE	470
Y	*9R-5320*	1	EDGE GP-CUTTING	578

Y-SEPARATE ILLUSTRATION

<END>

232-2689 BUCKET AR-MULTIPURPOSE

S/N: SHA1-UP

AN ATTACHMENT

SMCS-6104 **i02218829**

NOTE	PART NUMBER	QTY	PART NAME 1 2 3 4 5 6 (PRODUCT LEVEL)	SEE PAGE
Y	*232-2690*	1	BUCKET AR-MULTIPURPOSE	470
Y	*9R-5866*	1	TOOTH GP-UNI	638

Y-SEPARATE ILLUSTRATION

<END>

232-2690 BUCKET AR-MULTIPURPOSE

S/N: SHA1-UP

PART OF 232-2688, 232-2689 BUCKET AR-MULTIPURPOSE

AN ATTACHMENT

SMCS-6104 **i02218853**

NOTE	PART NUMBER	QTY	PART NAME 1 2 3 4 5 6 (PRODUCT LEVEL)	SEE PAGE
Y	*216-8821*	1	BUCKET GP-MULTIPURPOSE	565
Y	**104-6310**	1	FORK GP	580

Y-SEPARATE ILLUSTRATION

<END>

251-1156 BUCKET AS-GENERAL PURPOSE

S/N: SHA1-UP
1.25 CU M (1.5 CU YD)
PART OF 251-1777 BUCKET GP-GENERAL PURPOSE
AN ATTACHMENT

SMCS-6101 **i02793578**

NOTE	REF NO	GRAPHIC REF	PART NUMBER	QTY	PART NAME 1 2 3 4 5 6 (PRODUCT LEVEL)	SEE PAGE
	1	1	*251-1168*	2	BRACKET AS-LIFT (RH)	
					(EACH INCLUDES)	
	1A	1	**9R-0111**	1	BEARING-SLEEVE	
	2	1	*251-1169*	2	BRACKET AS-LIFT (LH)	
					(EACH INCLUDES)	
	2A	1	**9R-0111**	1	BEARING-SLEEVE	
	3	1	**9R-0376**	2	EDGE	
	4	1	**9R-5313**	1	EDGE	
	5	1	**9R-5205**	1	EDGE (LH)	
	6	1	**9R-5206**	1	EDGE (RH)	

251-1156 **BUCKET AS-GENERAL PURPOSE** *(contd.)* **i02793578**

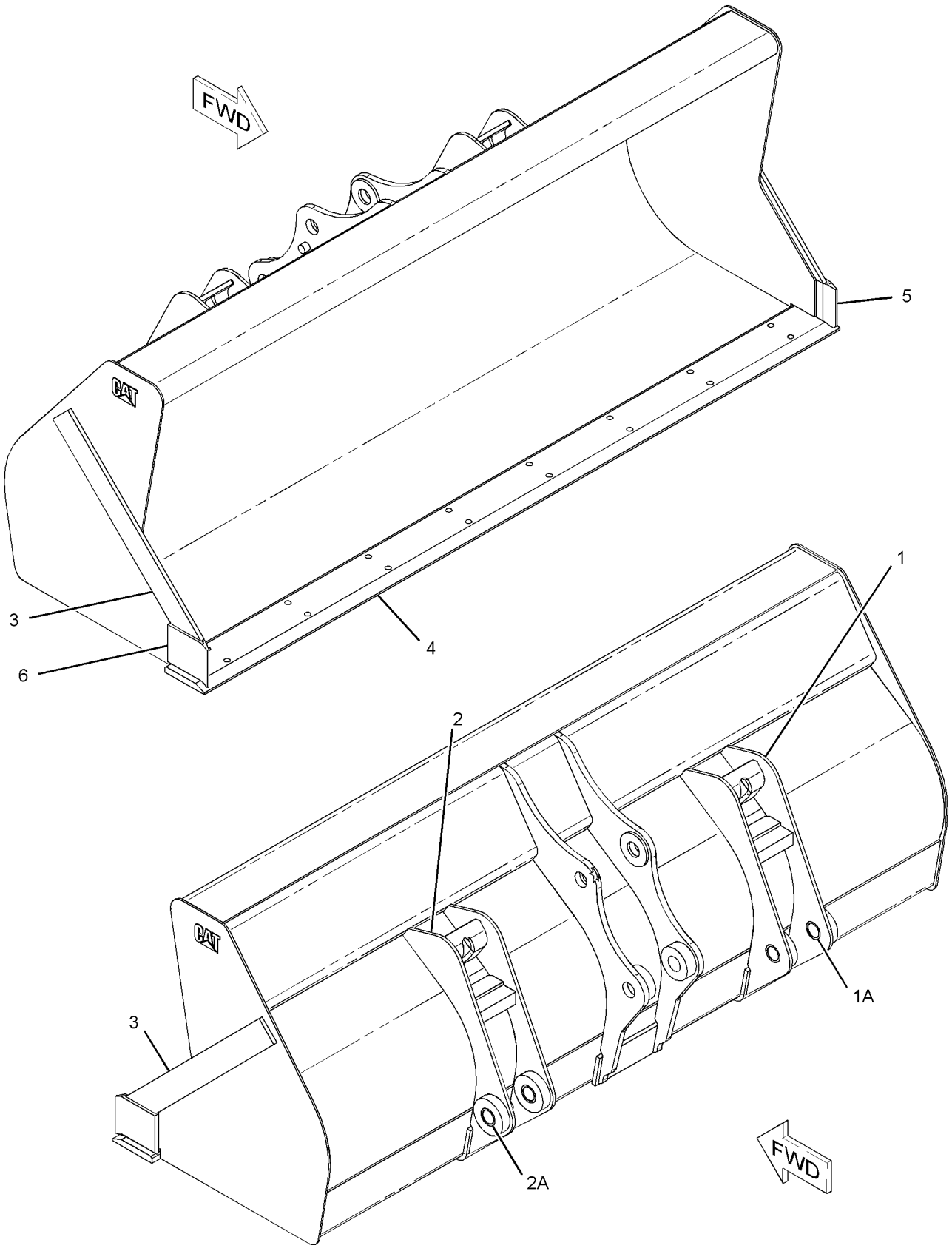

GRAPHIC #1 **<END>** g01395028

251-1157 BUCKET AS-GENERAL PURPOSE

S/N: SHA1-UP
0.76 CU M (1.00 CU YD)
PART OF 251-1780 BUCKET GP-GENERAL PURPOSE
AN ATTACHMENT

SMCS-6101 **i02660182**

NOTE	REF NO	GRAPHIC REF	PART NUMBER	QTY	PART NAME 1 2 3 4 5 6 (PRODUCT LEVEL)	SEE PAGE
	1	1	*251-1172*	2	BRACKET AS-LIFT (RH)	
					(EACH INCLUDES)	
	1A	1	**9R-0111**	1	BEARING-SLEEVE	
	2	1	*251-1173*	2	BRACKET AS-LIFT (LH)	
					(EACH INCLUDES)	
	2A	1	**9R-0111**	1	BEARING-SLEEVE	
	3	1	**9R-0347**	2	EDGE	
	4	1	**9R-4672**	1	EDGE	
	5	1	**9R-5205**	1	EDGE (LH)	
	6	1	**9R-5206**	1	EDGE (RH)	

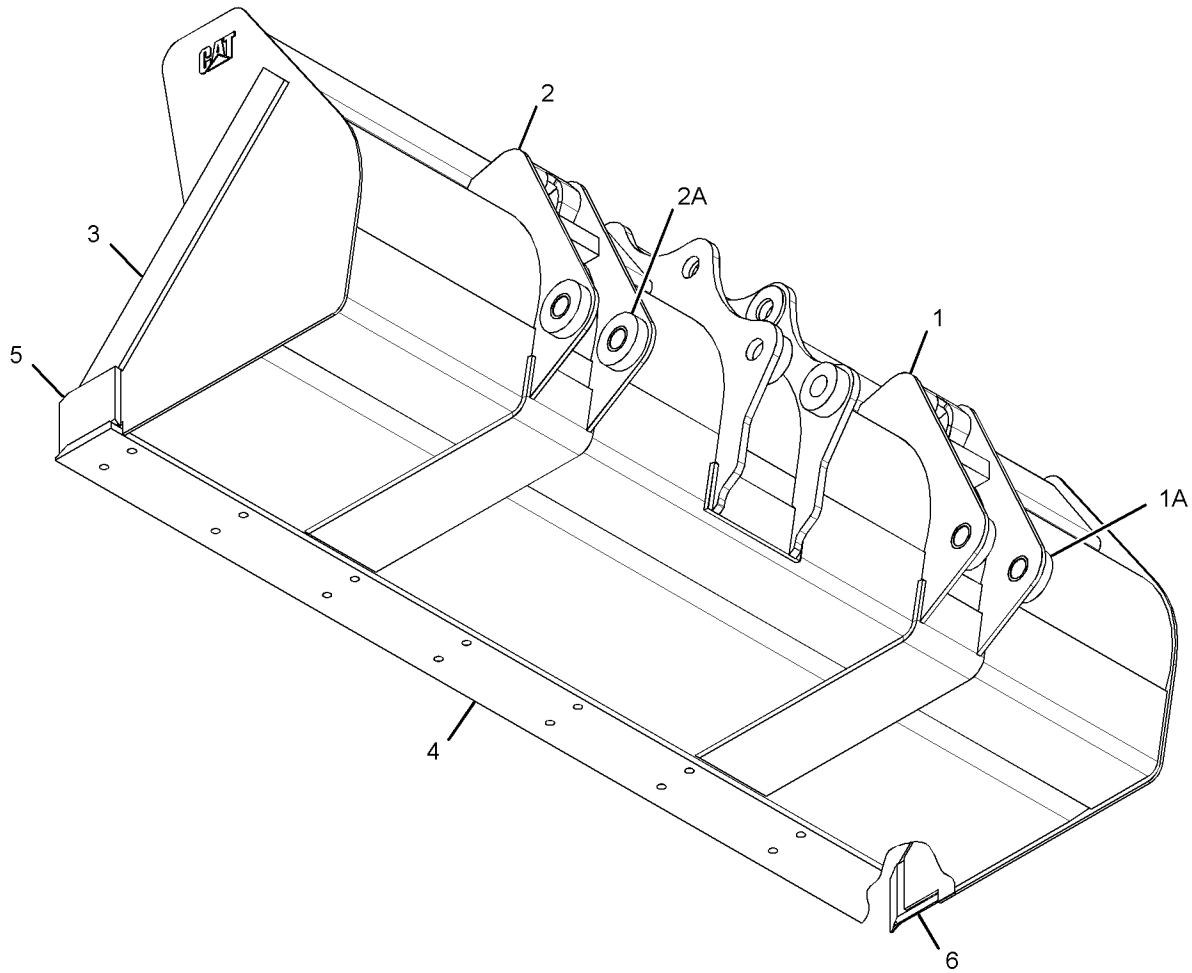

GRAPHIC #1 **<END>** g01342321

251-1158 BUCKET AS-GENERAL PURPOSE

S/N: SHA1-UP
1.0 CU M (1.131 CU YD)
PART OF 251-1783 BUCKET GP-GENERAL PURPOSE
AN ATTACHMENT

SMCS-6101 **i02111684**

NOTE	REF NO	GRAPHIC REF	PART NUMBER	QTY	PART NAME 1 2 3 4 5 6 (PRODUCT LEVEL)	SEE PAGE
	1	1	*9R-0371*	1	BRACKET AS-TILT (LH)	
	1A	1	**9R-4485**	1	BOSS	
	1B	1	**9R-4486**	1	BOSS	
	2	1	*9R-0372*	1	BRACKET AS-TILT (RH)	
	2A	1	**9R-4485**	1	BOSS	
	2B	1	**9R-4486**	1	BOSS	
	3	1	**9R-5832**	2	EDGE	
	4	1	**9R-5313**	1	EDGE	
	5	1	**9R-5205**	1	EDGE (LH)	
	6	1	**9R-5206**	1	EDGE (RH)	
	7	1	*251-1172*	2	BRACKET AS-LIFT (RH)	
					(EACH INCLUDES)	
	7A	1	**9R-0111**	1	BEARING-SLEEVE	
	8	1	*251-1173*	2	BRACKET AS-LIFT (LH)	
					(EACH INCLUDES)	
	8A	1	**9R-0111**	1	BEARING-SLEEVE	

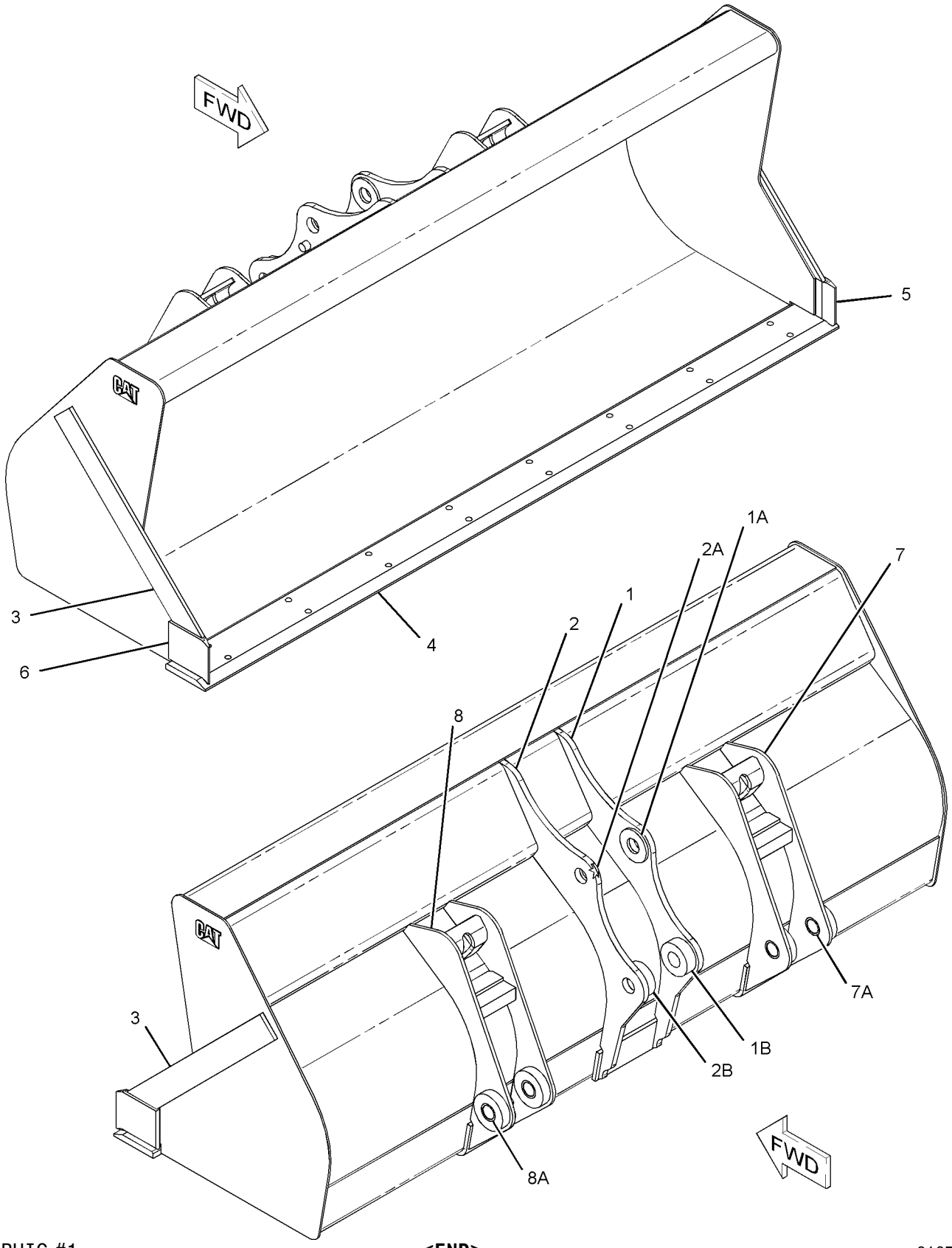

GRAPHIC #1 **<END>** g01074897

251-1159 BUCKET AS-GENERAL PURPOSE

S/N: SHA1-UP
1.17 CU M (1.4 CU YD)
PART OF 251-1786 BUCKET GP-GENERAL PURPOSE
AN ATTACHMENT

SMCS-6101 **i02108904**

NOTE	REF NO	GRAPHIC REF	PART NUMBER	QTY	PART NAME 1 2 3 4 5 6 (PRODUCT LEVEL)	SEE PAGE
	1	1	*9R-5901*	1	BRACKET AS-TILT (RH)	
	1A	1	**9R-4485**	1	BOSS	
	1B	1	**9R-4486**	1	BOSS	
	2	1	*9R-5902*	1	BRACKET AS-TILT (LH)	
	2A	1	**9R-4485**	1	BOSS	
	2B	1	**9R-4486**	1	BOSS	
	3	1	**9R-0376**	2	EDGE	
	4	1	**9R-4672**	1	EDGE	
	5	1	**9R-5205**	1	EDGE (LH)	
	6	1	**9R-5206**	1	EDGE (RH)	
	7	1	*251-1168*	2	BRACKET AS-LIFT (RH)	
					(EACH INCLUDES)	
	7A	1	**9R-0111**	1	BEARING-SLEEVE	
	8	1	*251-1169*	2	BRACKET AS-LIFT (LH)	
					(EACH INCLUDES)	
	8A	1	**9R-0111**	1	BEARING-SLEEVE	

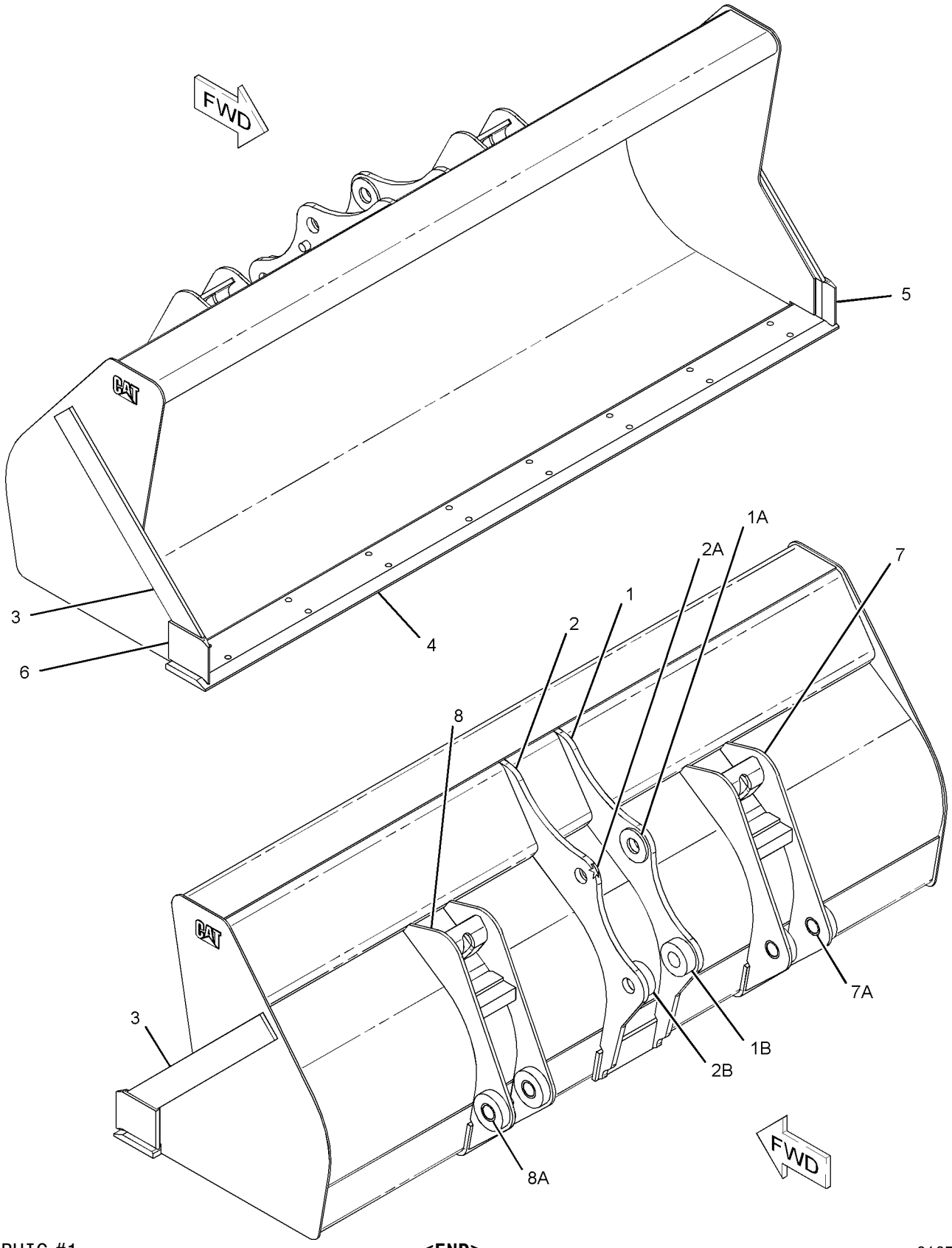

GRAPHIC #1 **<END>** g01074897

WORK TOOLS

251-1160 BUCKET AS-GENERAL PURPOSE

S/N: SHA1-UP
0.96 CU M (1.25 CU YD)
PART OF 251-1789 BUCKET GP-GENERAL PURPOSE
AN ATTACHMENT

SMCS-6101 **i02660184**

NOTE	REF NO	GRAPHIC REF	PART NUMBER	QTY	PART NAME 1 2 3 4 5 6 (PRODUCT LEVEL)	SEE PAGE
	1	1	*251-1172*	2	BRACKET AS-LIFT (RH)	
					(EACH INCLUDES)	
	1A	1	**9R-0111**	1	BEARING-SLEEVE	
	2	1	*251-1173*	2	BRACKET AS-LIFT (LH)	
					(EACH INCLUDES)	
	2A	1	**9R-0111**	1	BEARING-SLEEVE	
	3	1	**9R-0376**	2	EDGE	
	4	1	**9R-4672**	1	EDGE	
	5	1	**9R-5205**	1	EDGE (LH)	
	6	1	**9R-5206**	1	EDGE (RH)	

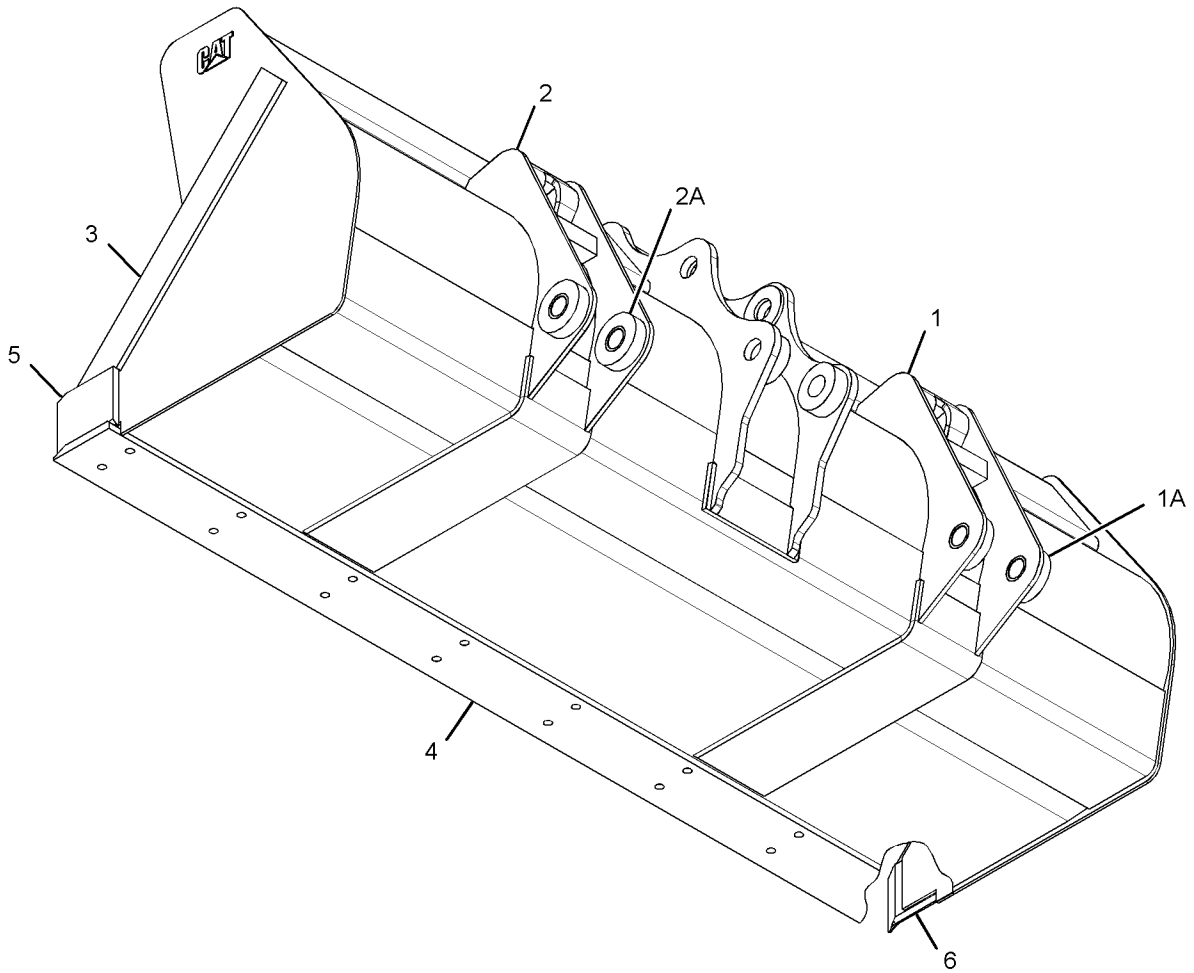

GRAPHIC #1 **<END>** g01342321

WORK TOOLS

219-3355 BUCKET AS-HOE

S/N: SHA1-UP
305-MM (12-IN)
PART OF 219-3379 BUCKET GP-HOE
AN ATTACHMENT

SMCS-6503 **i02756521**

NOTE	REF NO	GRAPHIC REF	PART NUMBER	QTY	PART NAME 1 2 3 4 5 6 (PRODUCT LEVEL)	SEE PAGE
	1	1	*286-9338*	1	BRACKET AS (RH)	
	1A	1	**9R-0320**	1	BEARING-SLEEVE	
	1B	1	**154-5257**	1	BEARING-SLEEVE	
	2	1	*286-9340*	1	BRACKET AS (LH)	
	2A	1	**9R-0320**	1	BEARING-SLEEVE	
	2B	1	**154-5257**	1	BEARING-SLEEVE	
	3	1	*304-8424*	1	EDGE AS	
			201-1235	3	ADAPTER (2-STRAP)	
			219-9494	1	EDGE	

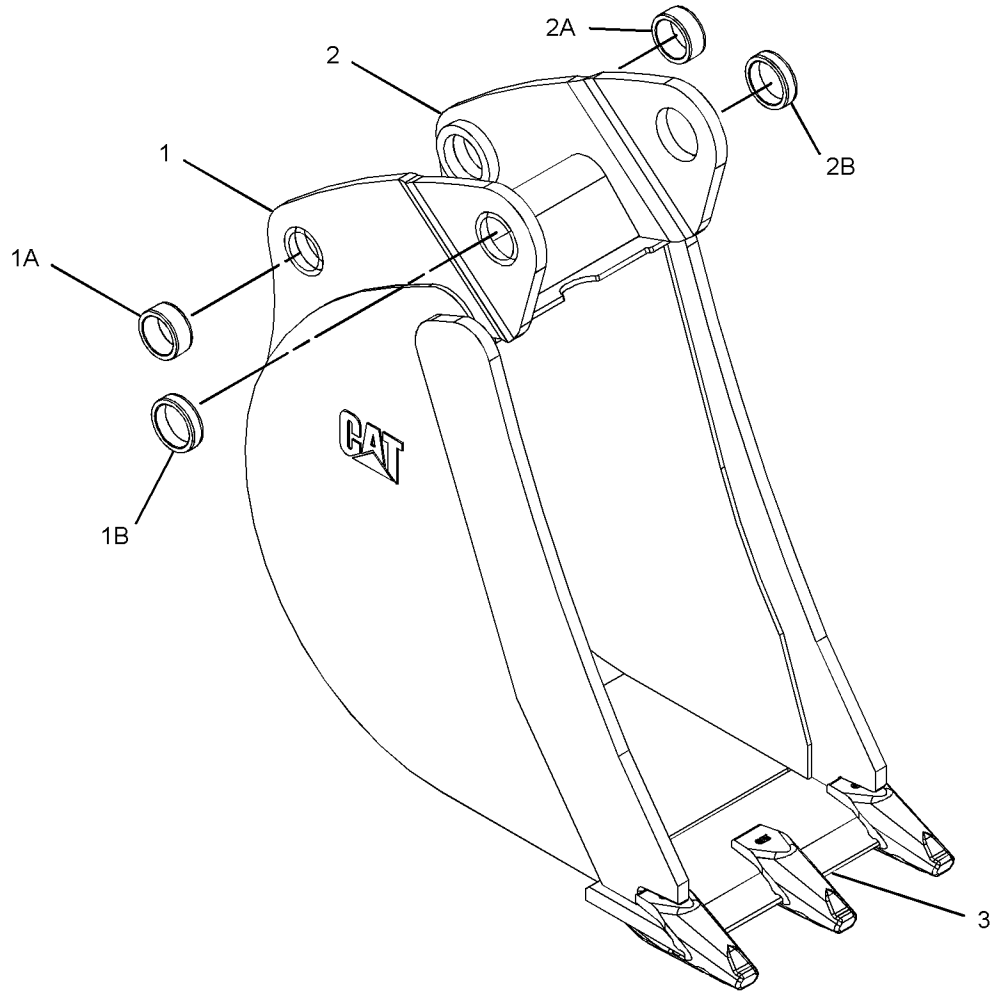

GRAPHIC #1 **<END>** g01381373

WORK TOOLS

219-3356 BUCKET AS-HOE

S/N: SHA1-UP
458-MM (18-IN)
PART OF 219-3380 BUCKET GP-HOE
AN ATTACHMENT

SMCS-6503 **i02756525**

NOTE	REF NO	GRAPHIC REF	PART NUMBER	QTY	PART NAME 1 2 3 4 5 6 (PRODUCT LEVEL)	SEE PAGE
	1	1	*286-9336*	1	BRACKET AS (RH)	
	1A	1	**9R-0162**	1	BEARING-SLEEVE	
	1B	1	**168-0480**	1	BEARING-SLEEVE	
	2	1	*286-9337*	1	BRACKET AS (LH)	
	2A	1	**9R-0162**	1	BEARING-SLEEVE	
	2B	1	**168-0480**	1	BEARING-SLEEVE	
	3	1	*300-4157*	1	EDGE AS	
			201-1235	4	ADAPTER (2-STRAP)	
			219-9487	1	EDGE	

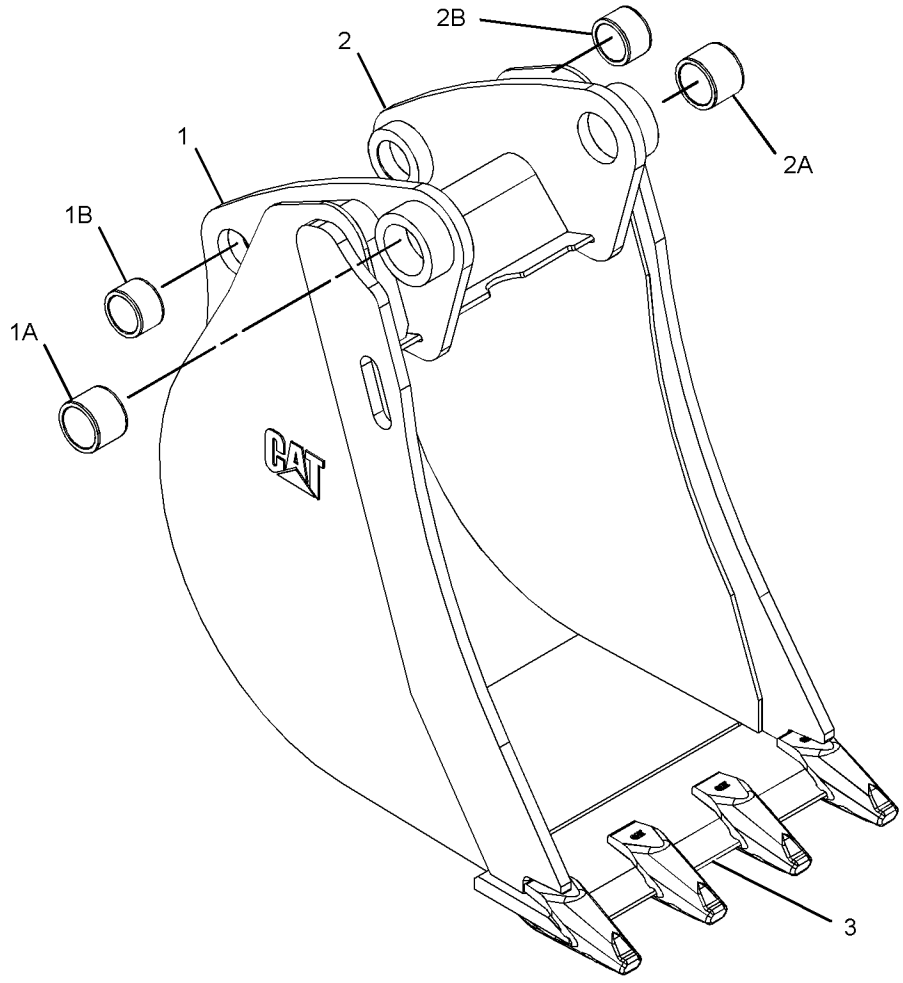

GRAPHIC #1 **<END>** g01382130

WORK TOOLS

219-3357 BUCKET AS-H0E

S/N: SHA1-UP
610-MM (24-IN)
PART OF 219-3381 BUCKET GP-H0E
AN ATTACHMENT

SMCS-6503 **i02756529**

NOTE	REF NO	GRAPHIC REF	PART NUMBER	QTY	PART NAME 1 2 3 4 5 6 (PRODUCT LEVEL)	SEE PAGE
	1	1	*286-9336*	1	BRACKET AS (RH)	
	1A	1	**9R-0162**	1	BEARING-SLEEVE	
	1B	1	**168-0480**	1	BEARING-SLEEVE	
	2	1	*286-9337*	1	BRACKET AS (LH)	
	2A	1	**9R-0162**	1	BEARING-SLEEVE	
	2B	1	**168-0480**	1	BEARING-SLEEVE	
	3	1	*300-4158*	1	EDGE AS	
		1	**201-1235**	5	ADAPTER (2-STRAP)	
		1	**219-9488**	1	EDGE	

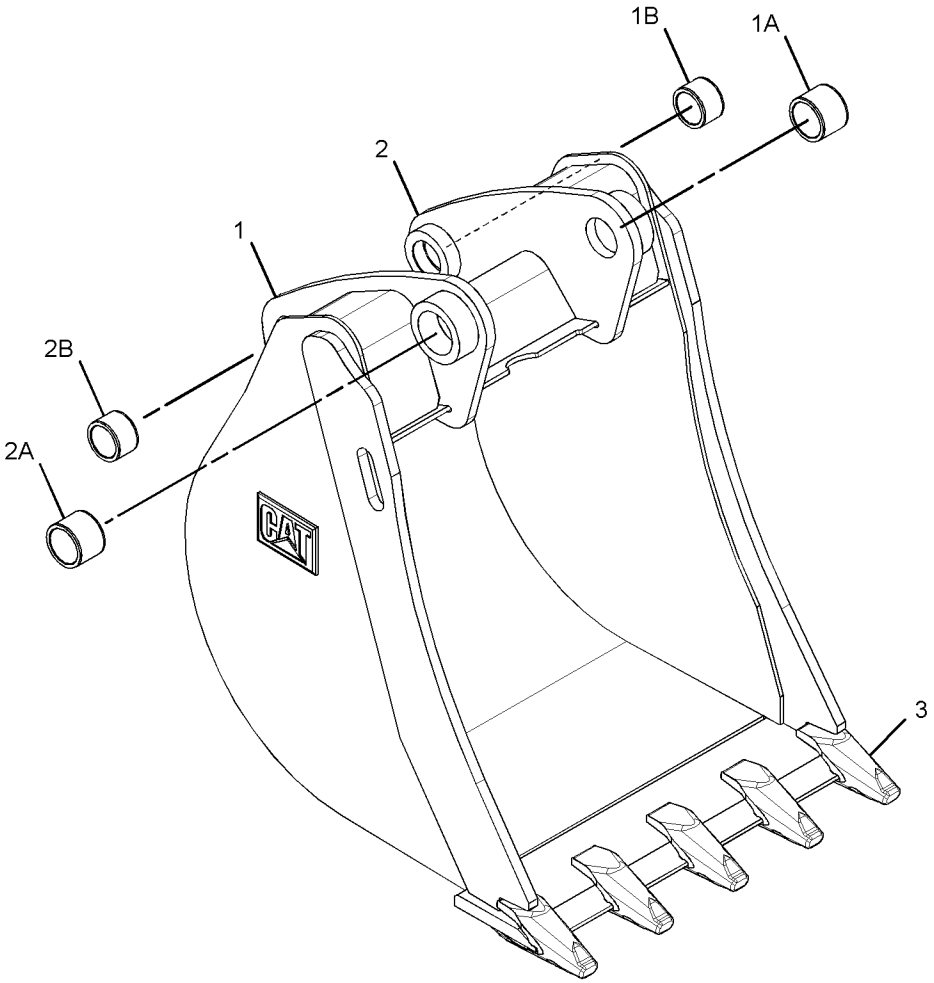

GRAPHIC #1 **<END>** g01382136

WORK TOOLS

219-3358 BUCKET AS-HOE

S/N: SHA1-UP
762-MM (30-IN)
PART OF 219-3382 BUCKET GP-HOE
AN ATTACHMENT

SMCS-6503 **i02756531**

NOTE	REF NO	GRAPHIC REF	PART NUMBER	QTY	PART NAME 1 2 3 4 5 6 (PRODUCT LEVEL)	SEE PAGE
	1	1	*286-9336*	1	BRACKET AS (RH)	
	1A	1	**9R-0162**	1	BEARING-SLEEVE	
	1B	1	**168-0480**	1	BEARING-SLEEVE	
	2	1	*286-9337*	1	BRACKET AS (LH)	
	2A	1	**9R-0162**	1	BEARING-SLEEVE	
	2B	1	**168-0480**	1	BEARING-SLEEVE	
	3	1	*300-4159*	1	EDGE AS	
		1	**201-1235**	5	ADAPTER (2-STRAP)	
		1	**219-9489**	1	EDGE	

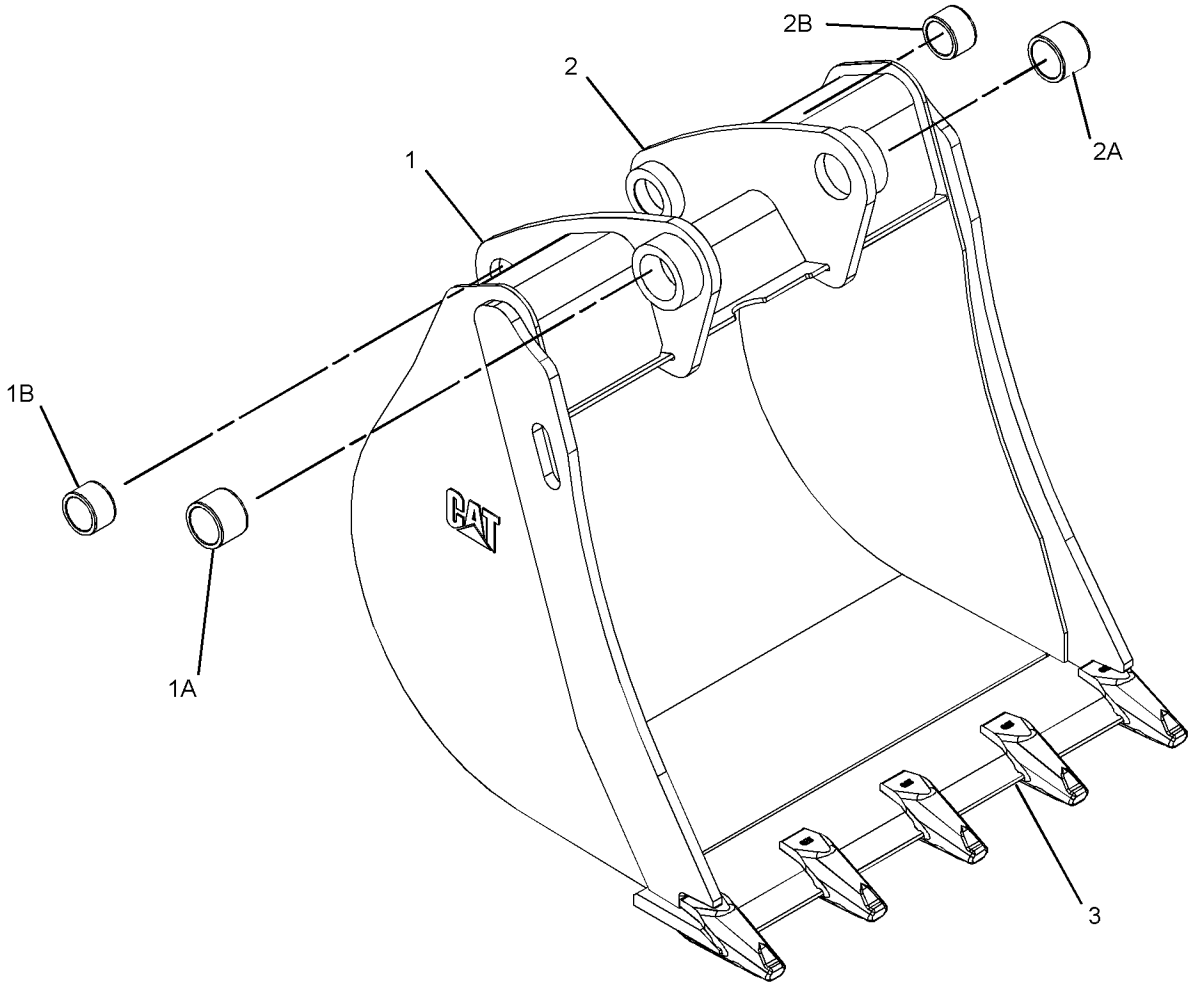

GRAPHIC #1 **<END>** g01382117

WORK TOOLS

219-3359 BUCKET AS-H0E

S/N: SHA1-UP
914-MM (36-IN)
PART OF 219-3383 BUCKET GP-H0E
AN ATTACHMENT

SMCS-6503 **i02756532**

NOTE	REF NO	GRAPHIC REF	PART NUMBER	QTY	PART NAME 1 2 3 4 5 6 (PRODUCT LEVEL)	SEE PAGE
	1	1	*286-9336*	1	BRACKET AS (RH)	
	1A	1	**9R-0162**	1	BEARING-SLEEVE	
	1B	1	**168-0480**	1	BEARING-SLEEVE	
	2	1	*286-9337*	1	BRACKET AS (LH)	
	2A	1	**9R-0162**	1	BEARING-SLEEVE	
	2B	1	**168-0480**	1	BEARING-SLEEVE	
	3	1	*300-4160*	1	EDGE AS	
			201-1235	6	ADAPTER (2-STRAP)	
			219-9490	1	EDGE	

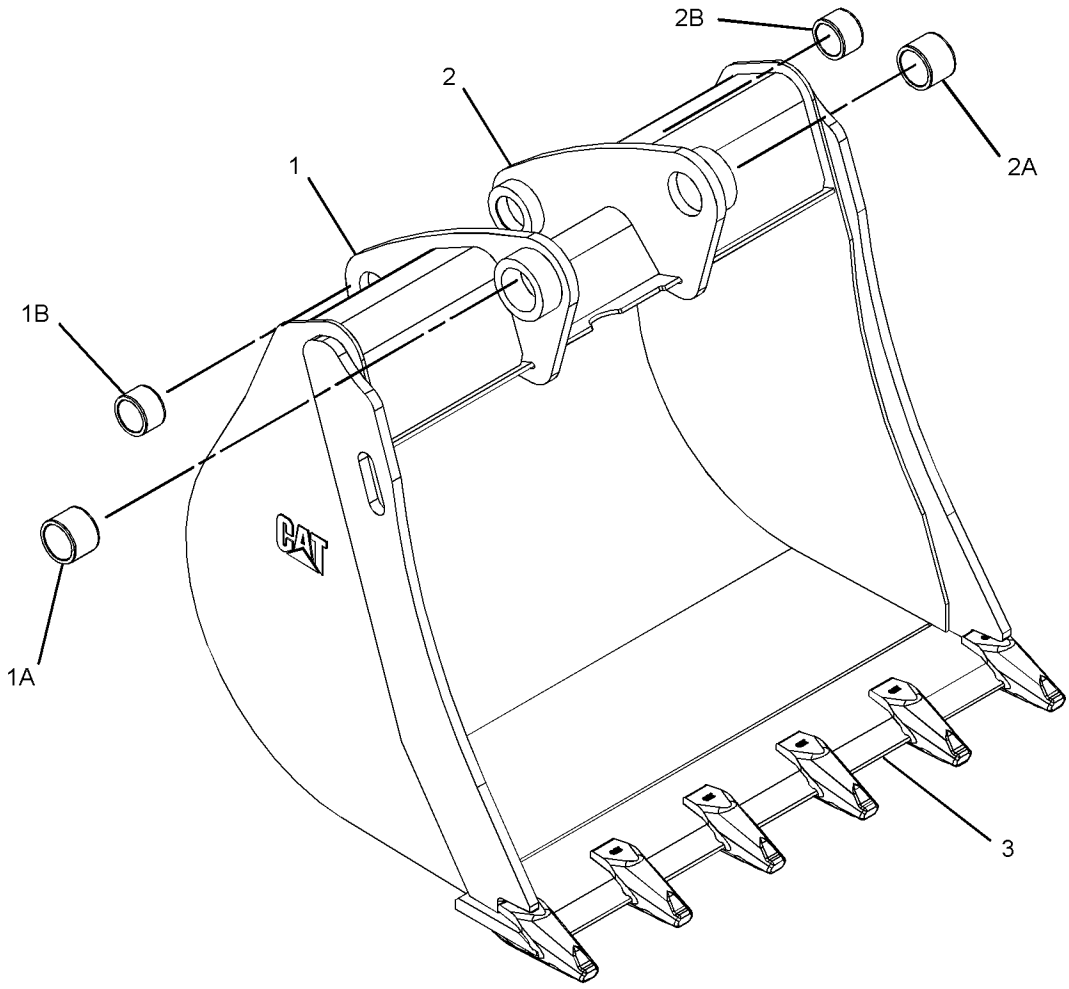

GRAPHIC #1 **<END>** g01382084

WORK TOOLS

219-3360 BUCKET AS-HOE—HEAVY-DUTY

S/N: SHA1-UP
305-MM (12-IN)
PART OF 219-3384 BUCKET GP-HOE
AN ATTACHMENT

SMCS-6503 **i02756533**

NOTE	REF NO	GRAPHIC REF	PART NUMBER	QTY	PART NAME 1 2 3 4 5 6 (PRODUCT LEVEL)	SEE PAGE
	2	1	**174-3950**	5	PLATE	
	4	1	*286-9338*	1	BRACKET AS (RH)	
	5	1	*286-9340*	1	BRACKET AS (LH)	
					(EACH BRACKET AS INCUDES)	
		1	**9R-0320**	1	BEARING-SLEEVE	
		1	**154-5257**	1	BEARING-SLEEVE	
	6	1	*300-4161*	1	EDGE AS	
		1	**201-1234**	3	ADAPTER (2-STRAP)	
		1	**219-9493**	1	EDGE	
	7	1	**304-8420**	1	PLATE AS	
		1	**134-5885**	1	EDGE (RH)	
	8	1	**304-8421**	1	PLATE AS	
		1	**134-5884**	1	EDGE (LH)	

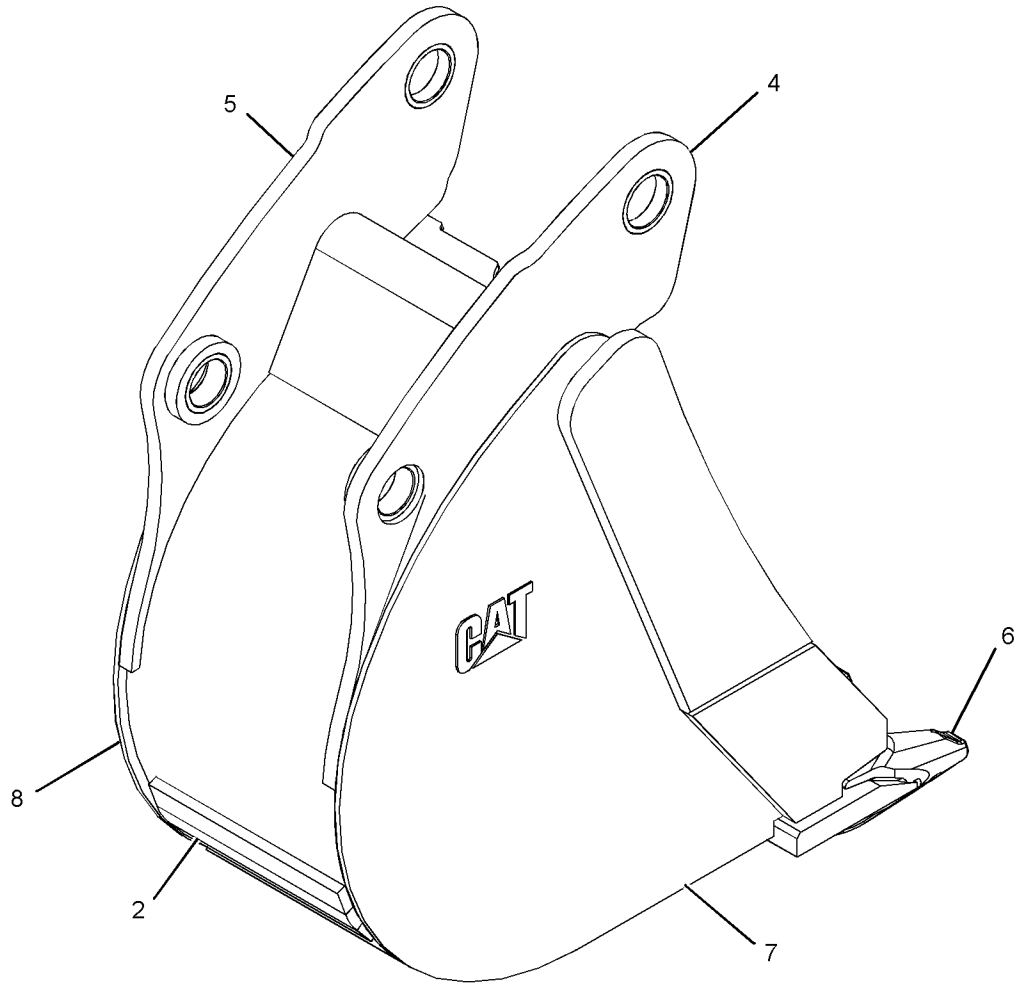

GRAPHIC #1 **<END>** g01381086

219-3361 BUCKET AS-HOE–HEAVY-DUTY

S/N: SHA1-UP
407-MM (16-IN)
PART OF 219-3385 BUCKET GP-HOE
AN ATTACHMENT

SMCS-6503 **i02756634**

NOTE	REF NO	GRAPHIC REF	PART NUMBER	QTY	PART NAME 1 2 3 4 5 6 (PRODUCT LEVEL)	SEE PAGE
	1	1	**174-3950**	5	PLATE	
	2	1	*286-9336*	1	BRACKET AS (RH)	
	2A	1	**9R-0162**	1	BEARING-SLEEVE	
	2B	1	**168-0480**	1	BEARING-SLEEVE	
	3	1	*286-9337*	1	BRACKET AS (LH)	
	3A	1	**9R-0162**	1	BEARING-SLEEVE	
	3B	1	**168-0480**	1	BEARING-SLEEVE	
	4	1	*299-3342*	1	EDGE AS	
		1	**219-9482**	1	EDGE	
		1	**201-1234**	3	ADAPTER (2-STRAP)	
	5	1	*300-7049*	1	PLATE AS	
		1	**134-5885**	1	EDGE (RH)	
	6	1	*300-7051*	1	PLATE AS	
		1	**134-5884**	1	EDGE (LH)	

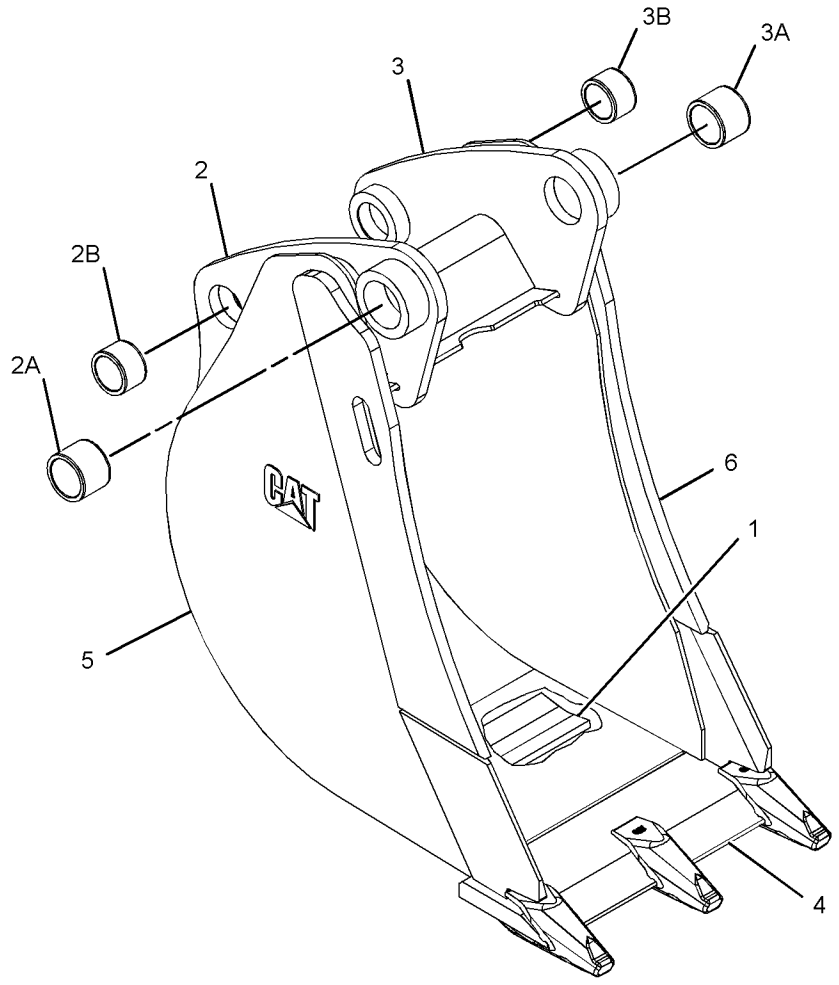

GRAPHIC #1 **<END>** g01381334

219-3362 BUCKET AS-HOE—HEAVY-DUTY

S/N: SHA1-UP
458-MM (18-IN)
PART OF 219-3386 BUCKET GP-HOE
AN ATTACHMENT

SMCS-6503 **i02756635**

NOTE	REF NO	GRAPHIC REF	PART NUMBER	QTY	PART NAME 1 2 3 4 5 6 (PRODUCT LEVEL)	SEE PAGE
	1	1	**172-8279**	5	PLATE	
	2	1	*286-9336*	1	BRACKET AS (RH)	
	3	1	*286-9337*	1	BRACKET AS (LH)	
					(EACH BRACKET AS INCLUDES)	
		1	**9R-0162**	1	BEARING-SLEEVE	
		1	**168-0480**	1	BEARING-SLEEVE	
	4	1	*299-3344*	1	EDGE AS	
		1	**201-1234**	4	ADAPTER (2-STRAP)	
		1	**219-9483**	1	EDGE	
	5	1	*300-7049*	1	PLATE AS	
		1	**134-5885**	1	EDGE (RH)	
	6	1	*300-7051*	1	PLATE AS	
		1	**134-5884**	1	EDGE (LH)	

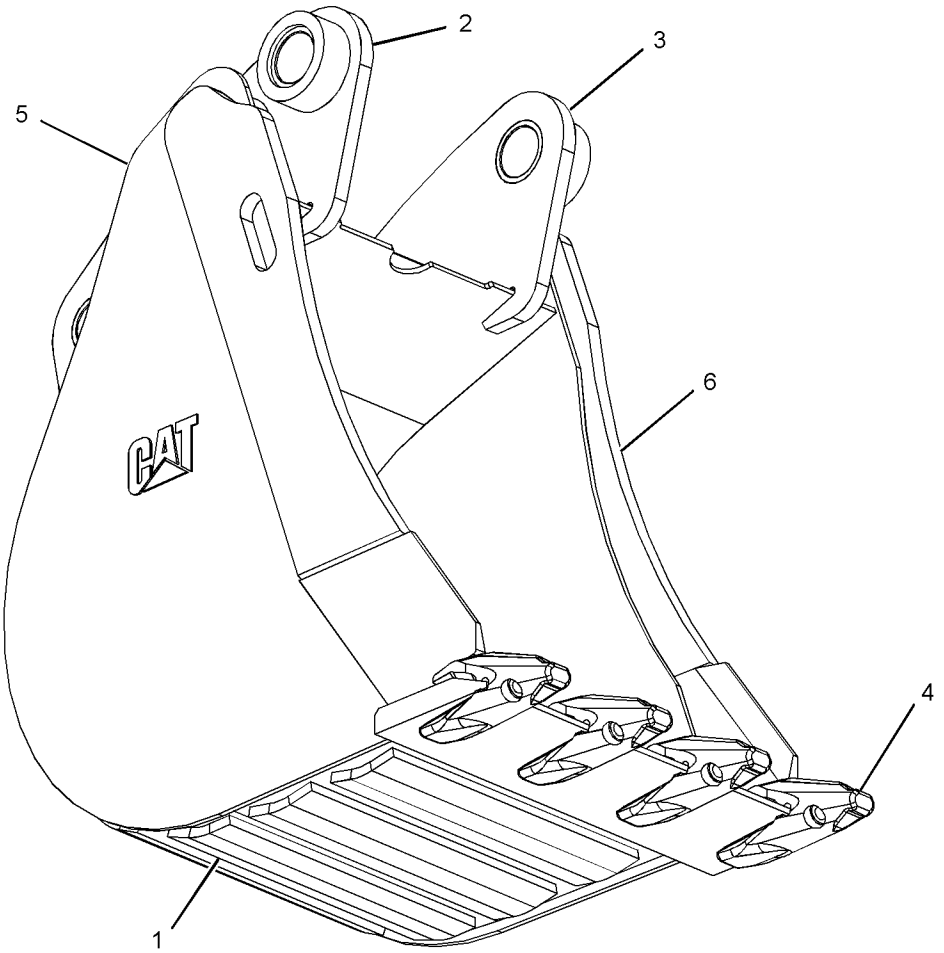

GRAPHIC #1 **<END>** g01381354

219-3363 BUCKET AS-HOE–HEAVY-DUTY

S/N: SHA1-UP
610-MM (24-IN)
PART OF 219-3387 BUCKET GP-HOE
AN ATTACHMENT

SMCS-6503 **i02674429**

NOTE	REF NO	GRAPHIC REF	PART NUMBER	QTY	PART NAME 1 2 3 4 5 6 (PRODUCT LEVEL)	SEE PAGE
	1	1	**172-8280**	5	PLATE	
C	2	1	*286-9336*	1	BRACKET AS (RH)	
	2A	1	**9R-0162**	1	BEARING-SLEEVE	
	2B	1	**168-0480**	1	BEARING-SLEEVE	
C	3	1	*286-9337*	1	BRACKET AS (LH)	
	3A	1	**9R-0162**	1	BEARING-SLEEVE	
	3B	1	**168-0480**	1	BEARING-SLEEVE	
	4	1	*299-3348*	1	EDGE AS	
		1	**219-9484**	1	EDGE	
		1	**201-1234**	5	ADAPTER (2-STRAP)	
	5	1	*300-7049*	1	PLATE AS	
		1	**134-5885**	1	EDGE (RH)	
	6	1	*300-7051*	1	PLATE AS	
		1	**134-5884**	1	EDGE (LH)	

C-CHANGE FROM PREVIOUS TYPE

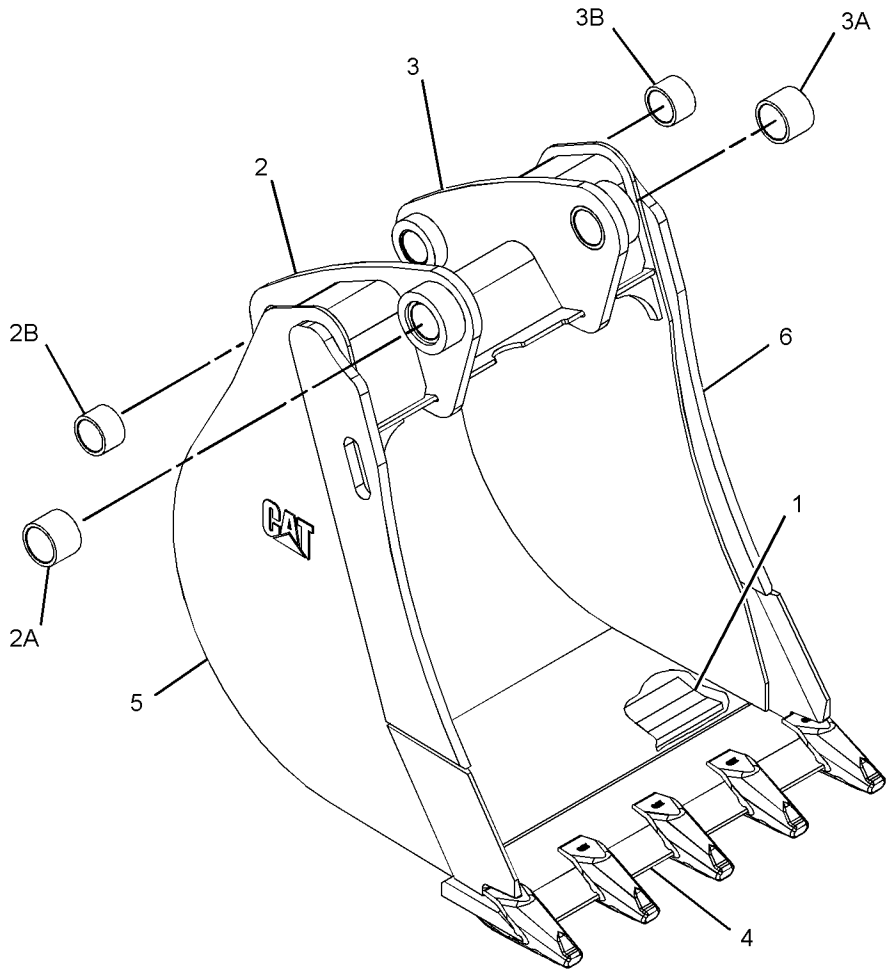

GRAPHIC #1 **<END>** g01381312

219-3364 BUCKET AS-HOE—HEAVY-DUTY

S/N: SHA1-UP
762-MM (30-IN)
PART OF 219-3388 BUCKET GP-HOE
AN ATTACHMENT

SMCS-6503 **i02674448**

NOTE	REF NO	GRAPHIC REF	PART NUMBER	QTY	PART NAME 1 2 3 4 5 6 (PRODUCT LEVEL)	SEE PAGE
	1	1	**174-4765**	5	PLATE	
C	2	1	*286-9336*	1	BRACKET AS (RH)	
	2A	1	**9R-0162**	1	BEARING-SLEEVE	
	2B	1	**168-0480**	1	BEARING-SLEEVE	
C	3	1	*286-9337*	1	BRACKET AS (LH)	
	3A	1	**9R-0162**	1	BEARING-SLEEVE	
	3B	1	**168-0480**	1	BEARING-SLEEVE	
	4	1	*299-3351*	1	EDGE AS	
		1	**219-9485**	1	EDGE	
		1	**201-1234**	1	ADAPTER (2-STRAP)	
	5	1	*300-7049*	1	PLATE AS	
		1	**134-5885**	1	EDGE (RH)	
	6	1	*300-7051*	1	PLATE AS	
		1	**134-5884**	1	EDGE (LH)	

C-CHANGE FROM PREVIOUS TYPE

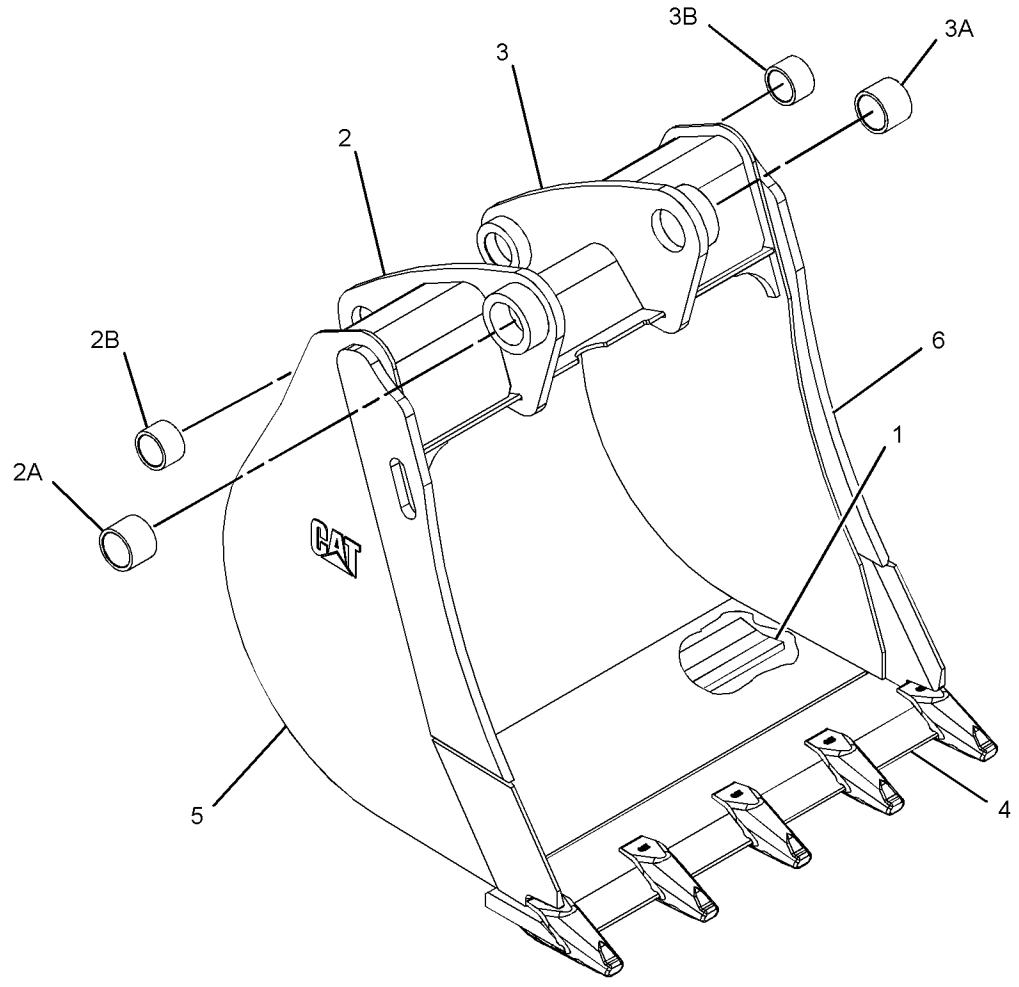

GRAPHIC #1 **<END>** g01381371

WORK TOOLS

219-3365 BUCKET AS-HOE—HEAVY-DUTY

S/N: SHA1-UP
914-MM (36-IN)
PART OF 219-3389 BUCKET GP-HOE
AN ATTACHMENT

SMCS-6503 **i02756650**

NOTE	REF NO	GRAPHIC REF	PART NUMBER	QTY	PART NAME 1 2 3 4 5 6 (PRODUCT LEVEL)	SEE PAGE
	1	1	**193-5416**	5	PLATE	
	2	1	*286-9336*	1	BRACKET AS (RH)	
	3	1	*286-9337*	1	BRACKET AS (LH)	
					(EACH BRACKET AS INCLUDES)	
		1	**9R-0162**	1	BEARING-SLEEVE	
		1	**168-0480**	1	BEARING-SLEEVE	
	4	1	*300-4154*	1	EDGE AS	
		1	**201-1234**	6	ADAPTER (2-STRAP)	
		1	**219-9486**	1	EDGE	
	5	1	*300-7049*	1	PLATE AS	
		1	**134-5885**	1	EDGE (RH)	
	6	1	*300-7051*	1	PLATE AS	
		1	**134-5884**	1	EDGE (LH)	

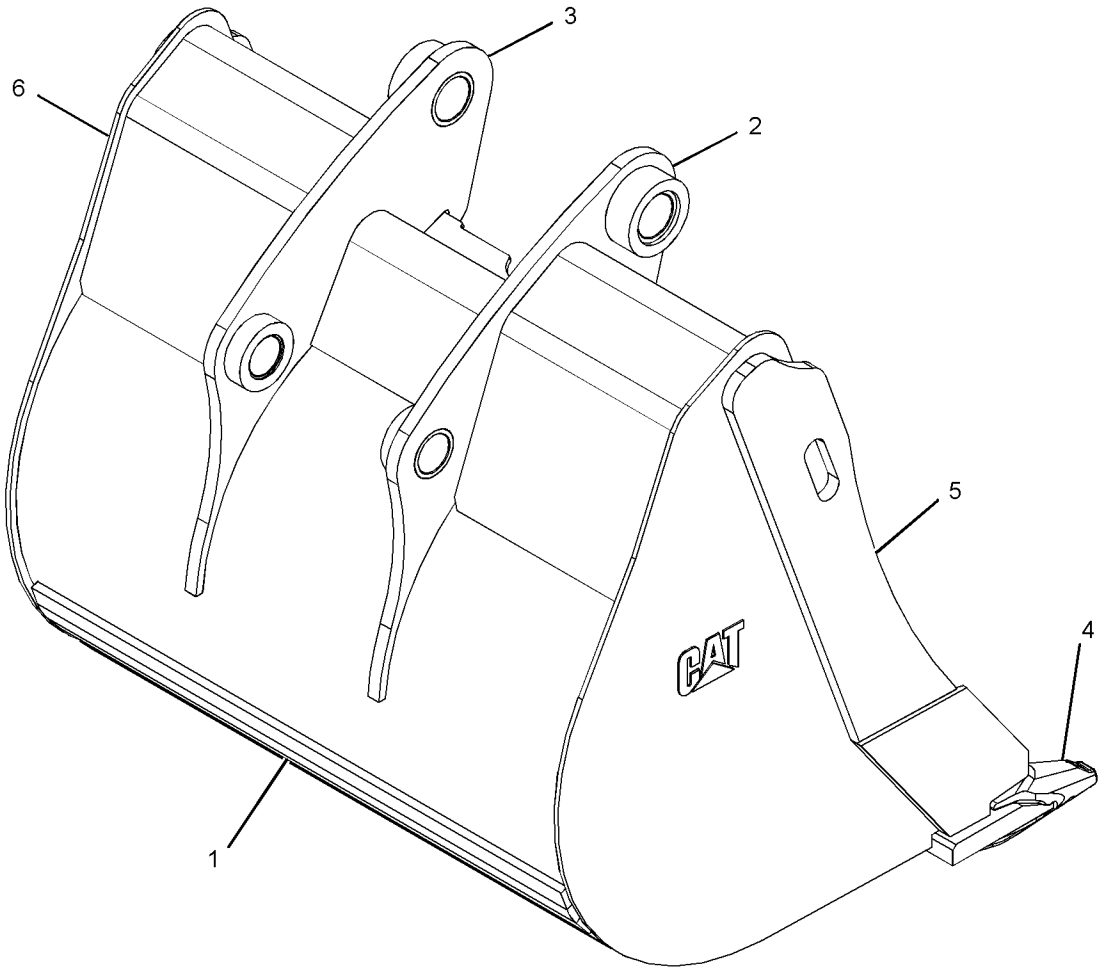

GRAPHIC #1 **<END>** g01381329

219-3366 BUCKET AS-HOE—HIGH CAPACITY

S/N: SHA1-UP
458-MM (18-IN)
PART OF 219-3390 BUCKET GP-HOE
AN ATTACHMENT

SMCS-6503 **i02756735**

NOTE	REF NO	GRAPHIC REF	PART NUMBER	QTY	PART NAME 1 2 3 4 5 6 (PRODUCT LEVEL)	SEE PAGE
	1	1	**172-8279**	5	PLATE	
	2	1	*286-9336*	1	BRACKET AS	
	2A	1	**9R-0162**	1	BEARING-SLEEVE	
	2B	1	**168-0480**	1	BEARING-SLEEVE	
	3	1	*286-9337*	1	BRACKET AS	
	3A	1	**9R-0162**		BEARING-SLEEVE	
	3B	1	**168-0480**	1	BEARING-SLEEVE	
	4	1	*299-3344*	1	EDGE AS	
			201-1234	4	ADAPTER	
			219-9483	1	EDGE	
	5	1	*300-7054*	1	PLATE AS	
		1	**134-5885**	1	EDGE (RH)	
	6	1	*300-7055*	1	PLATE AS	
		1	**134-5884**	1	EDGE (LH)	

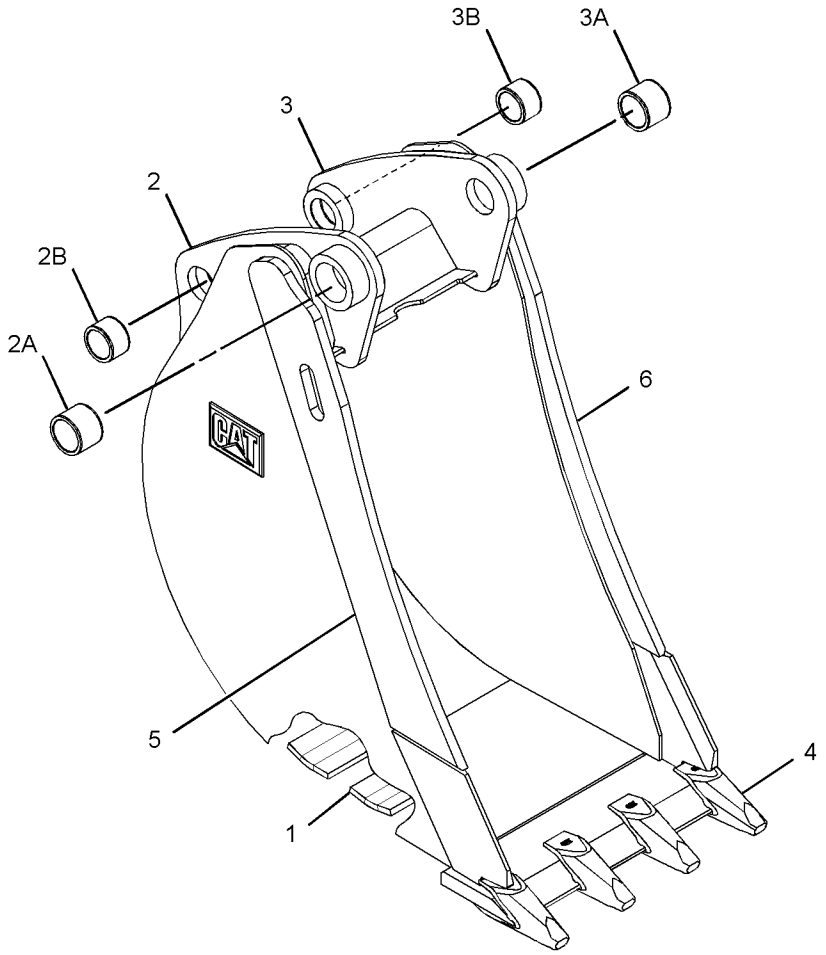

GRAPHIC #1 **<END>** g01381674

219-3367 BUCKET AS-HOE—HIGH CAPACITY

S/N: SHA1-UP
610-MM (24-IN)
PART OF 219-3391 BUCKET GP-HOE
AN ATTACHMENT

SMCS-6503 **i02756756**

NOTE	REF NO	GRAPHIC REF	PART NUMBER	QTY	PART NAME 1 2 3 4 5 6 (PRODUCT LEVEL)	SEE PAGE
	1	1	**172-8280**	5	PLATE	
	2	1	*286-9336*	1	BRACKET AS	
	2A	1	**9R-0162**	1	BEARING-SLEEVE	
	2B	1	**168-0480**	1	BEARING-SLEEVE	
	3	1	*286-9337*	1	BRACKET AS	
	3A	1	**9R-0162**	1	BEARING-SLEEVE	
	3B	1	**168-0480**	1	BEARING-SLEEVE	
	4	1	*299-3348*	1	EDGE AS	
		1	**201-1234**	5	ADAPTER	
		1	**219-9483**	1	EDGE	
	5	1	*300-7054*	1	PLATE AS	
		1	**134-5885**	1	EDGE (RH)	
	6	1	*300-7055*	1	PLATE AS	
		1	**134-5884**	1	EDGE (LH)	

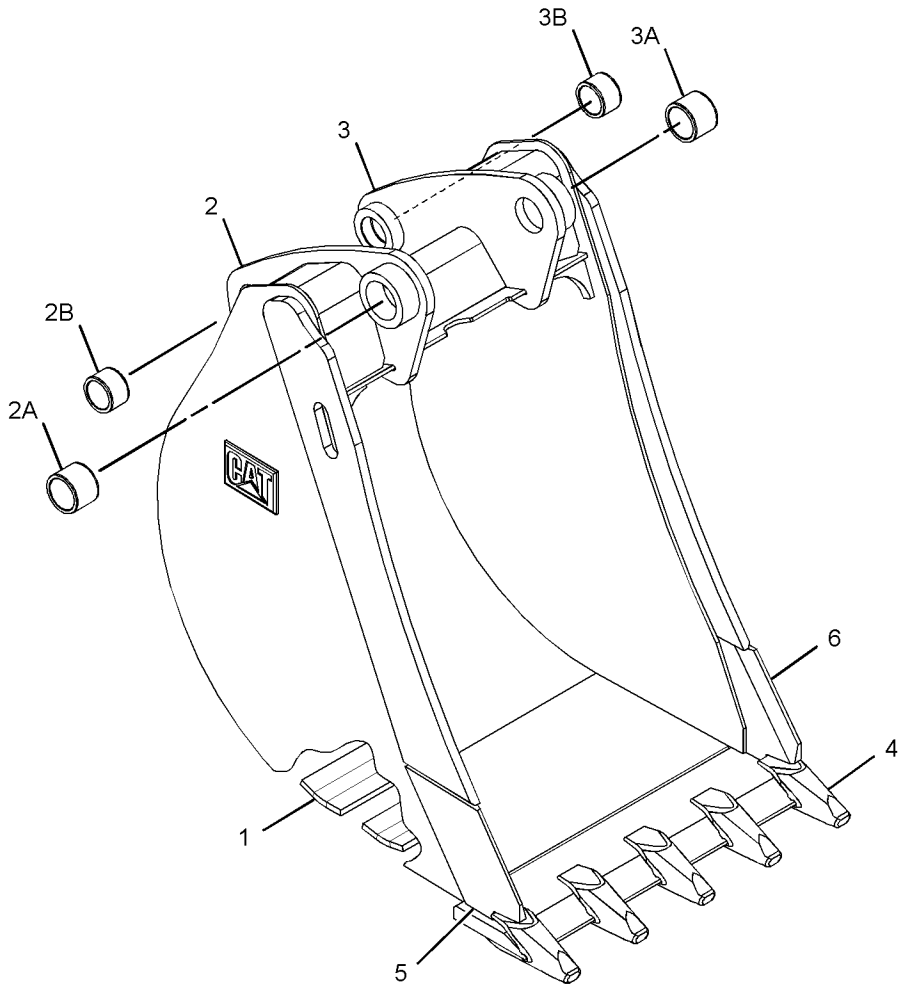

GRAPHIC #1 **<END>** g01382190

219-3368 BUCKET AS-HOE—HIGH CAPACITY

S/N: SHA1-UP
762-MM (30-IN)
PART OF 219-3392 BUCKET GP-HOE
AN ATTACHMENT

SMCS-6503 **i02756737**

NOTE	REF NO	GRAPHIC REF	PART NUMBER	QTY	PART NAME 1 2 3 4 5 6 (PRODUCT LEVEL)	SEE PAGE
	1	1	**174-4765**	5	PLATE	
	2	1	*286-9336*	1	BRACKET AS	
	2A	1	**9R-0162**	1	BEARING-SLEEVE	
	2B	1	**168-0480**	1	BEARING-SLEEVE	
	3	1	*286-9337*	1	BRACKET AS	
	3A	1	**9R-0162**		BEARING-SLEEVE	
	3B	1	**168-0480**	1	BEARING-SLEEVE	
	4	1	*299-3351*	1	EDGE AS	
			201-1234	5	ADAPTER	
			219-9485	1	EDGE	
	5	1	*300-7054*	1	PLATE AS	
		1	**134-5885**	1	EDGE (RH)	
	6	1	*300-7055*	1	PLATE AS	
		1	**134-5884**	1	EDGE (LH)	

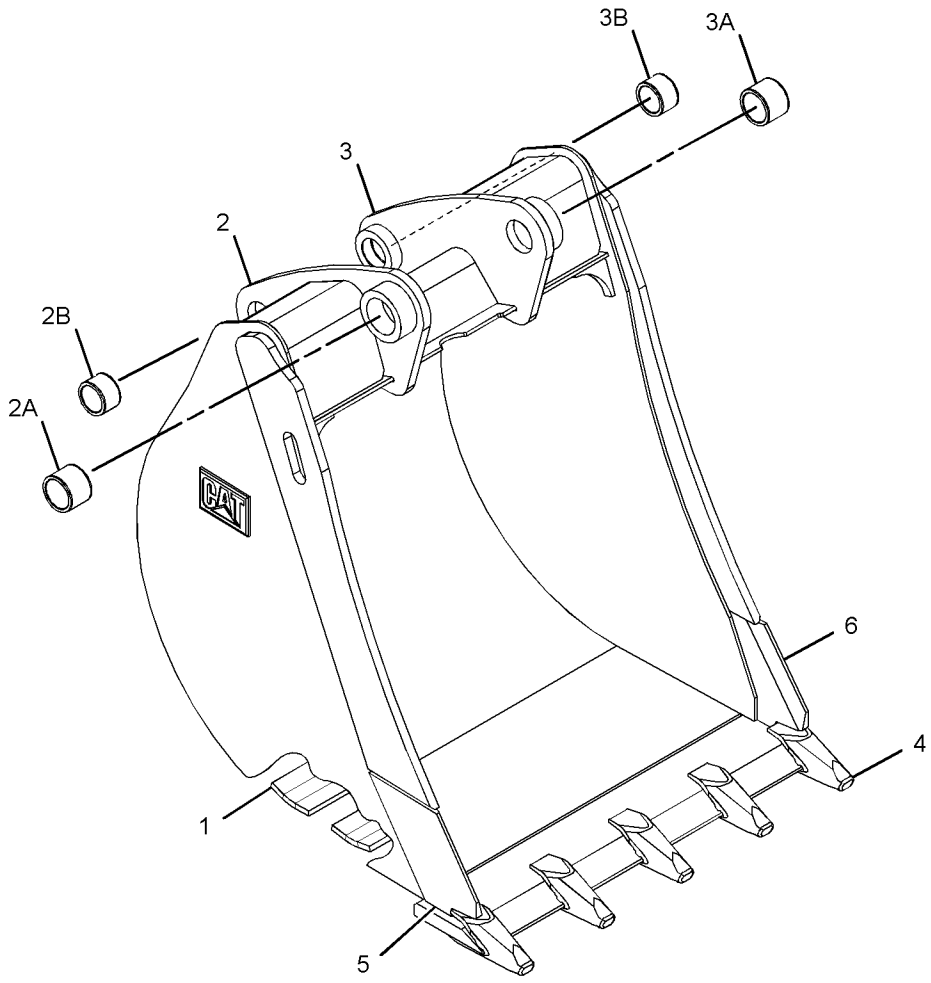

GRAPHIC #1 **<END>** g01381718

219-3369 BUCKET AS-HOE—HIGH CAPACITY

S/N: SHA1-UP
914-MM (36-IN)
PART OF 219-3393 BUCKET GP-HOE
AN ATTACHMENT

SMCS-6503 **i02756738**

NOTE	REF NO	GRAPHIC REF	PART NUMBER	QTY	PART NAME 1 2 3 4 5 6 (PRODUCT LEVEL)	SEE PAGE
	1	1	**193-5416**	5	PLATE	
	2	1	*286-9336*	1	BRACKET AS	
	2A	1	**9R-0162**	1	BEARING-SLEEVE	
	2B	1	**168-0480**	1	BEARING-SLEEVE	
	3	1	*286-9337*	1	BRACKET AS	
	3A	1	**9R-0162**		BEARING-SLEEVE	
	3B	1	**168-0480**	1	BEARING-SLEEVE	
	4	1	*300-4155*	1	EDGE AS	
			201-1234	6	ADAPTER	
			219-9486	1	EDGE	
	5	1	*300-7054*	1	PLATE AS	
			134-5885	1	EDGE (RH)	
	6	1	*300-7055*	1	PLATE AS	
			134-5884	1	EDGE (LH)	

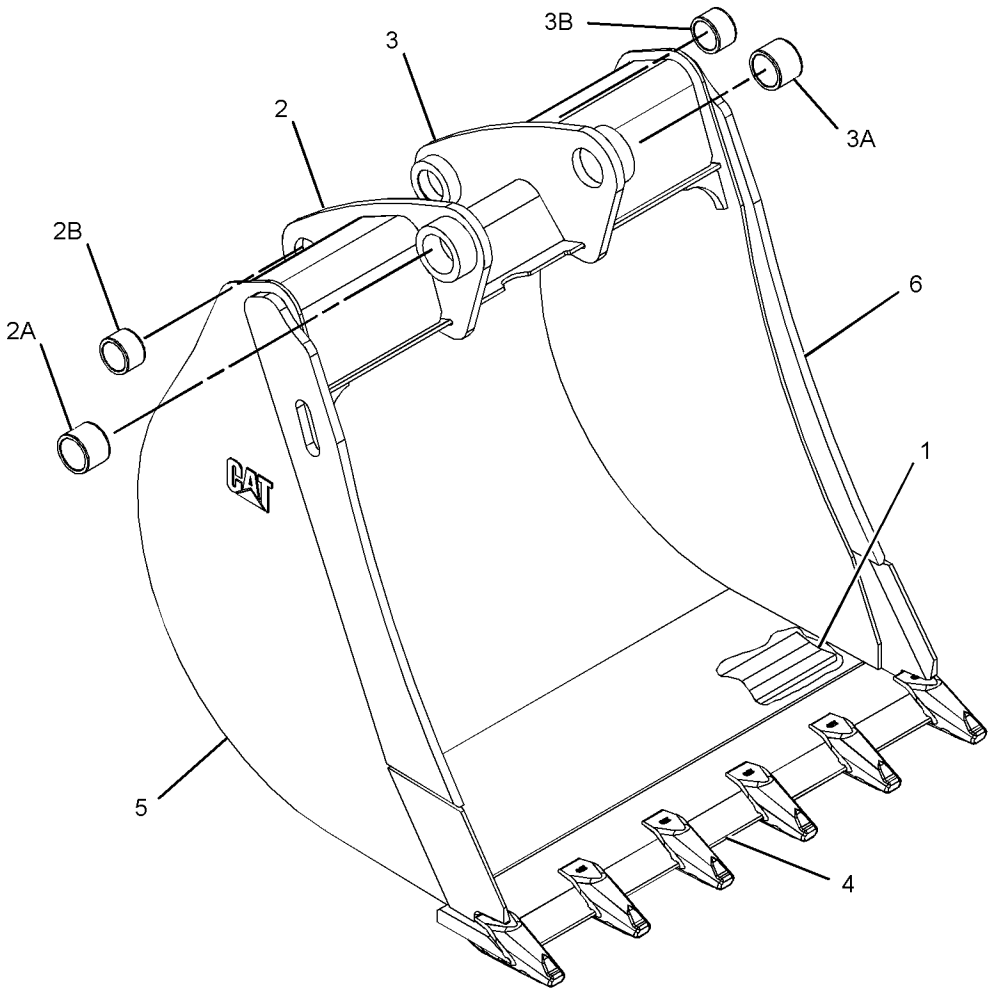

GRAPHIC #1 **<END>** g01382185

219-3370 BUCKET AS-HOE–ROCK

S/N: SHA1-UP
305-MM (12-IN)
PART OF 219-3394 BUCKET GP-HOE
AN ATTACHMENT

SMCS-6503 **i02756739**

NOTE	REF NO	GRAPHIC REF	PART NUMBER	QTY	PART NAME 1 2 3 4 5 6 (PRODUCT LEVEL)	SEE PAGE
	1	1	**174-3950**	6	PLATE	
C	2	1	*286-9338*	1	BRACKET AS (RH) (RH)	
	2A	1	**9R-0320**	1	BEARING-SLEEVE	
	2B	1	**154-5257**	1	BEARING-SLEEVE	
C	3	1	*286-9340*	1	BRACKET AS (LH) (LH)	
	3A	1	**9R-0320**	1	BEARING-SLEEVE	
	3B	1	**154-5257**	1	BEARING-SLEEVE	
	4	1	*300-4161*	1	EDGE AS	
		1	**201-1234**	3	ADAPTER	
		1	**219-9485**	1	EDGE	
	5	1	*300-7059*	1	PLATE AS	
		1	**197-6258**	1	EDGE-RH	
	6	1	*300-7061*	1	PLATE AS	
		1	**197-6259**	1	EDGE-LH	

C-CHANGE FROM PREVIOUS TYPE

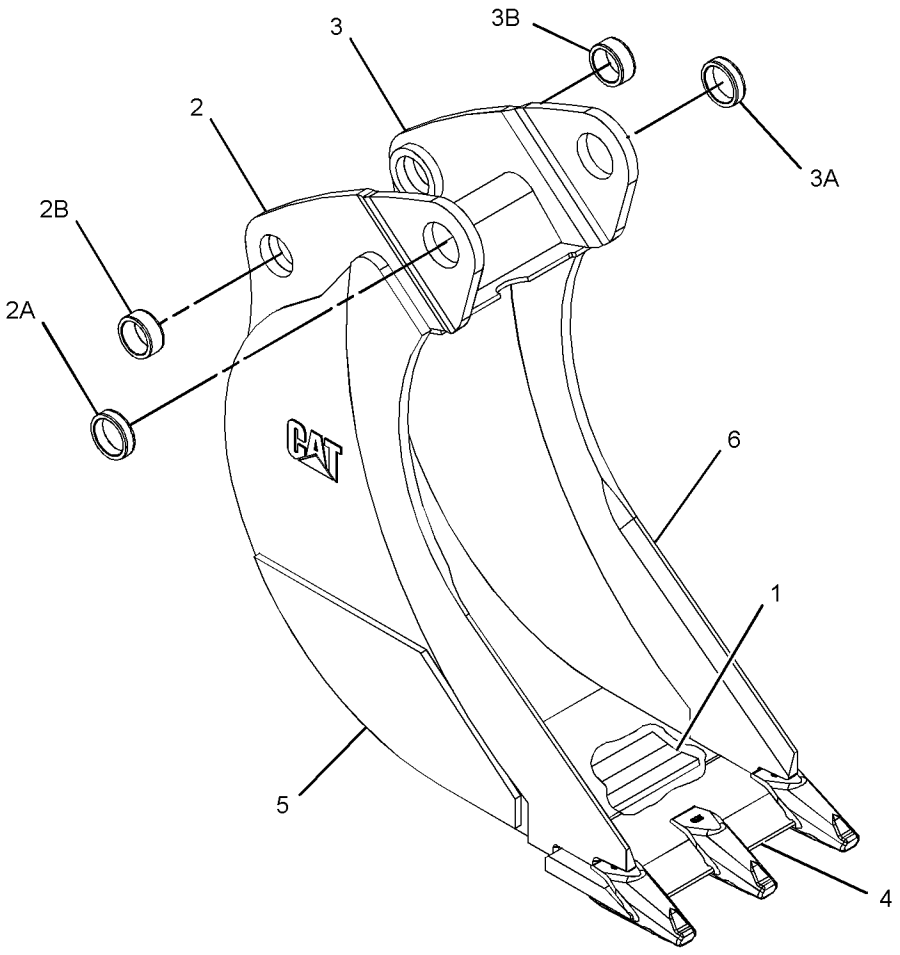

GRAPHIC #1 **<END>** g01382722

219-3371 BUCKET AS-HOE–ROCK

S/N: SHA1-UP
458-MM (18-IN)
PART OF 219-3395 BUCKET GP-HOE
AN ATTACHMENT

SMCS-6503 **i02756741**

NOTE	REF NO	GRAPHIC REF	PART NUMBER	QTY	PART NAME 1 2 3 4 5 6 (PRODUCT LEVEL)	SEE PAGE
	1	1	**172-8279**	6	PLATE	
C	2	1	*286-9336*	1	BRACKET AS (RH)	
	2A	1	**9R-0162**	1	BEARING-SLEEVE	
	2B	1	**168-0480**	1	BEARING-SLEEVE	
C	3	1	*286-9337*	1	BRACKET AS (LH)	
	3A	1	**9R-0162**	1	BEARING-SLEEVE	
	3B	1	**168-0480**	1	BEARING-SLEEVE	
	4	1	*299-3344*	1	EDGE AS	
		1	**201-1234**	4	ADAPTER	
		1	**219-9483**	1	EDGE	
	5	1	*300-7056*	1	PLATE AS	
		1	**196-8921**	1	EDGE (RH)	
	6	1	*300-7057*	1	PLATE AS	
		1	**196-8922**	1	EDGE (LH)	

C-CHANGE FROM PREVIOUS TYPE

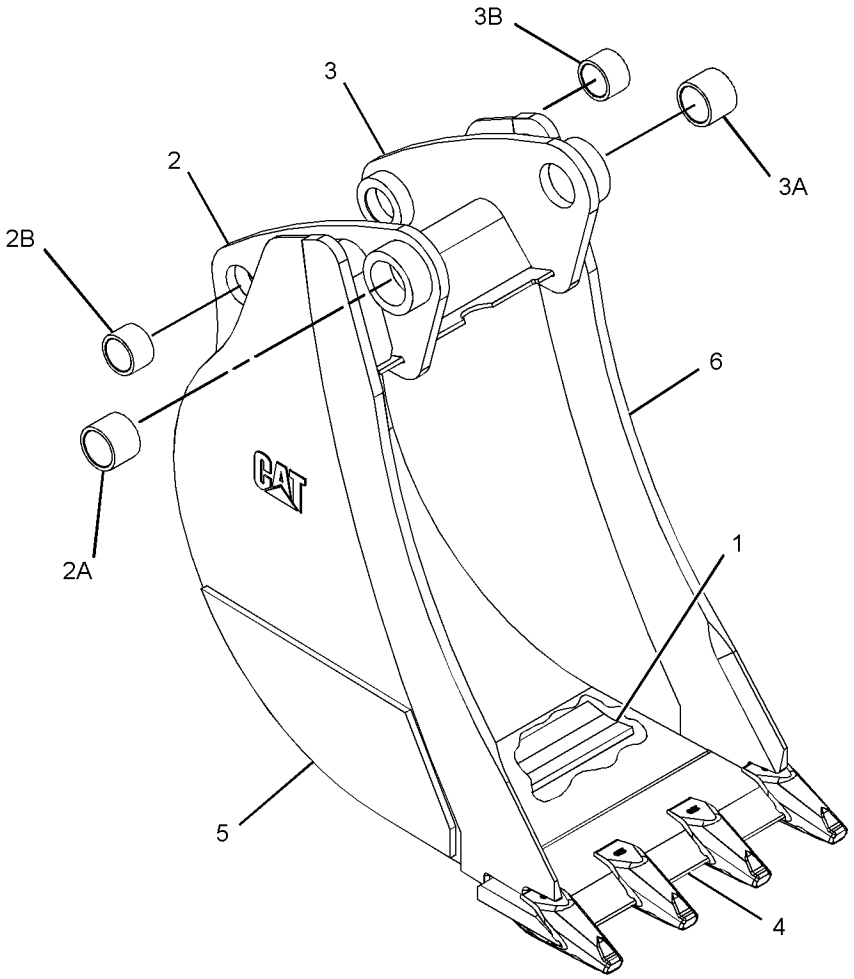

GRAPHIC #1 **<END>** g01382715

WORK TOOLS

219-3372 BUCKET AS-HOE–ROCK

S/N: SHA1-UP
610-MM (24-IN)
PART OF 219-3396 BUCKET GP-HOE
AN ATTACHMENT

SMCS-6503 **i02756742**

NOTE	REF NO	GRAPHIC REF	PART NUMBER	QTY	PART NAME 1 2 3 4 5 6 (PRODUCT LEVEL)	SEE PAGE
	1	1	**172-8280**	6	PLATE	
C	2	1	*286-9336*	1	BRACKET AS (RH)	
	2A	1	**9R-0162**	1	BEARING-SLEEVE	
	2B	1	**168-0480**	1	BEARING-SLEEVE	
C	3	1	*286-9337*	1	BRACKET AS (LH)	
	3A	1	**9R-0162**	1	BEARING-SLEEVE	
	3B	1	**168-0480**	1	BEARING-SLEEVE	
	4	1	*299-3351*	1	EDGE AS	
		1	**201-1234**	5	ADAPTER	
		1	**219-9485**	1	EDGE	
	5	1	*300-7056*	1	PLATE AS	
		1	**196-8921**	1	EDGE (RH)	
	6	1	*300-7057*	1	PLATE AS	
		1	**196-8922**	1	EDGE (LH)	

C-CHANGE FROM PREVIOUS TYPE

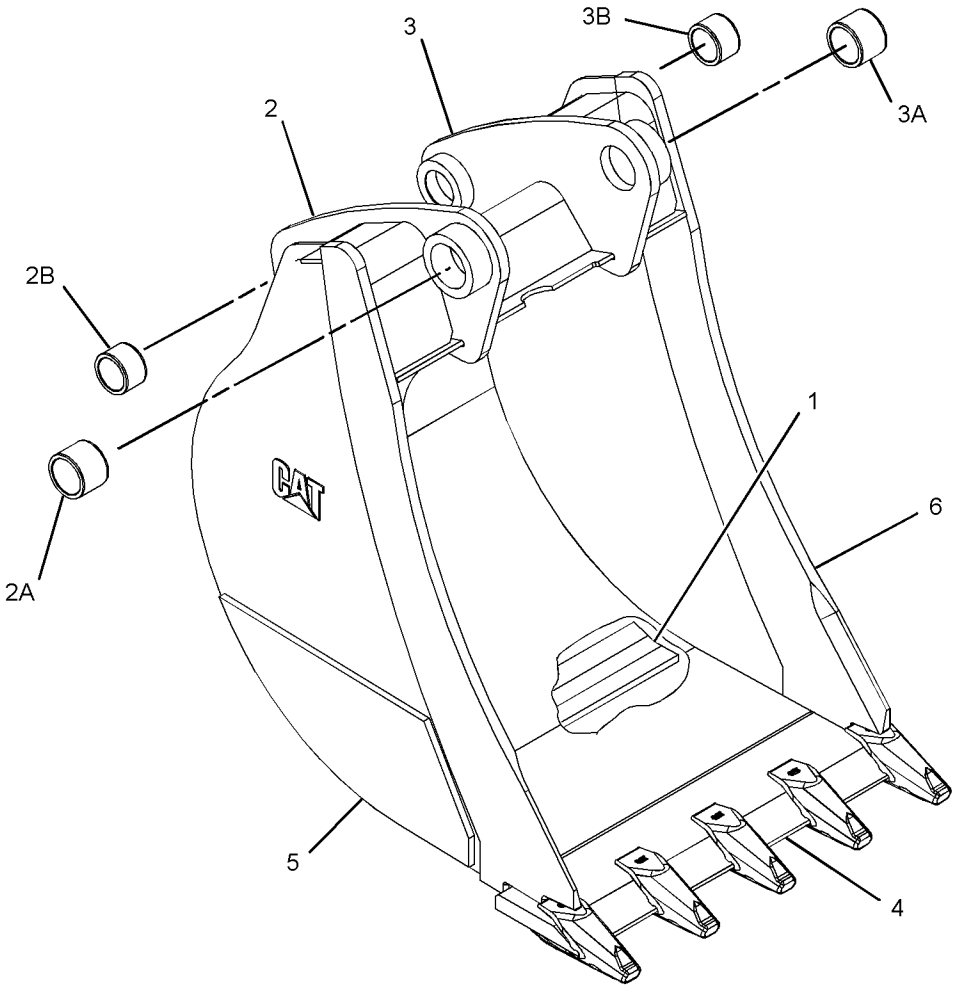

GRAPHIC #1 **<END>** g01382695

219-3374 BUCKET AS-HOE–ROCK

S/N: SHA1-UP
914-MM (36-IN)
PART OF 219-3397 BUCKET GP-HOE
AN ATTACHMENT
TYPE 1

SMCS-6503 **i02660333**

NOTE	REF NO	GRAPHIC REF	PART NUMBER	QTY	PART NAME 1 2 3 4 5 6 (PRODUCT LEVEL)	SEE PAGE
	1	1	*151-7902*	1	BRACKET AS (LH)	
	1A	1	**9R-0162**	1	BEARING-SLEEVE	
	1B	1	**168-0480**	1	BEARING-SLEEVE	
	2	1	*151-7903*	1	BRACKET AS (RH)	
	2A	1	**9R-0162**	1	BEARING-SLEEVE	
	2B	1	**168-0480**	1	BEARING-SLEEVE	
	3	1	**161-4130**	2	PLATE-IDENTIFICATION (CAT)	
	4	1	**196-8921**	1	EDGE (RH)	
	5	1	**196-8922**	1	EDGE (LH)	
	6	1	**201-1234**	6	ADAPTER (2-STRAP)	
	7	1	**219-9486**	1	EDGE	

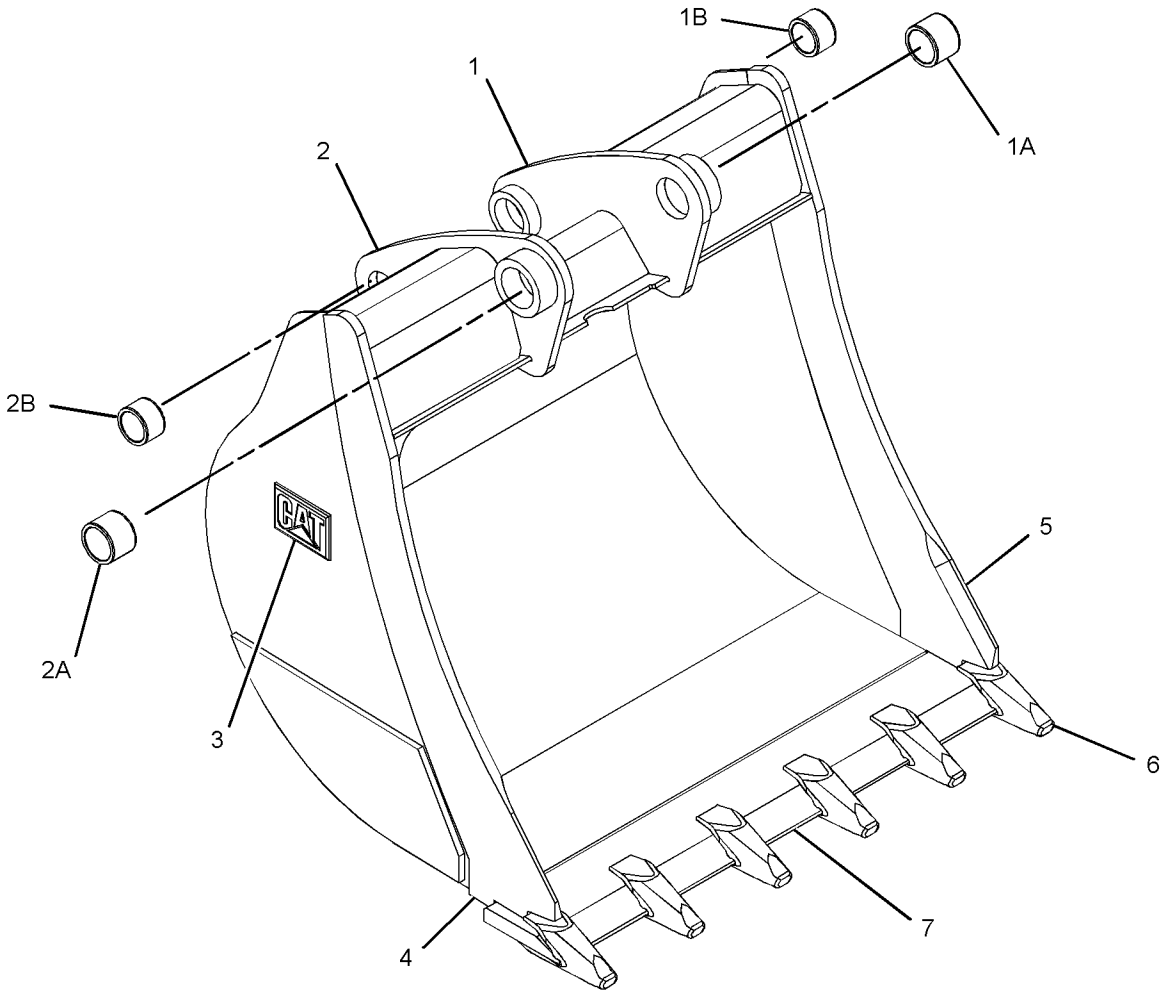

GRAPHIC #1 **<END>** g01342084

219-3374 BUCKET AS-HOE–ROCK

S/N: SHA1-UP
914-MM (36-IN)
PART OF 219-3398 BUCKET GP-HOE
AN ATTACHMENT
TYPE 2

SMCS-6503 **i02756744**

NOTE	REF NO	GRAPHIC REF	PART NUMBER	QTY	PART NAME 1 2 3 4 5 6 (PRODUCT LEVEL)	SEE PAGE
	1	1	**193-5416**	5	PLATE	
	2	1	*286-9336*	1	BRACKET AS	
	2A	1	**9R-0162**	1	BEARING-SLEEVE	
	2B	1	**168-0480**	1	BEARING-SLEEVE	
	3	1	*286-9337*	1	BRACKET AS	
	3A	1	**9R-0162**	1	BEARING-SLEEVE	
	3B	1	**168-0480**	1	BEARING-SLEEVE	
	4	1	*300-4154*	1	EDGE AS	
			201-1234	6	ADAPTER	
			219-9486	1	EDGE	
	5	1	*300-7054*	1	PLATE AS	
			134-5885	1	EDGE (RH)	
	6	1	*300-7055*	1	PLATE AS	
			134-5884	1	EDGE (LH)	

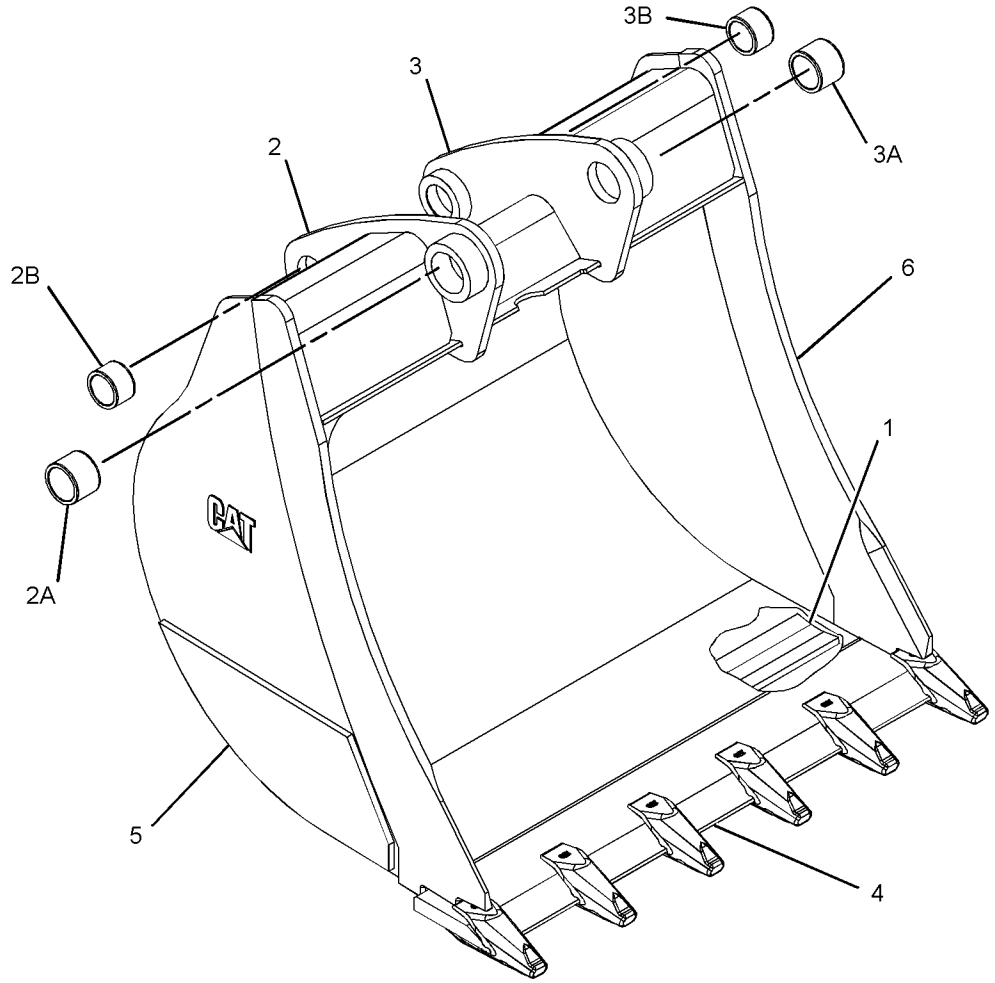

GRAPHIC #1 **<END>** g01382166

219-3375 BUCKET AS-HOE–CORAL

S/N: SHA1-UP
305-MM (12-IN)
PART OF 219-3399 BUCKET GP-HOE
AN ATTACHMENT

SMCS-6503 **i02661574**

NOTE	REF NO	GRAPHIC REF	PART NUMBER	QTY	PART NAME 1 2 3 4 5 6 (PRODUCT LEVEL)	SEE PAGE
	1	1	**161-4130**	2	PLATE-IDENTIFICATION (CAT)	
	2	1	**174-3949**	2	PLATE	
	3	1	**174-3950**	1	PLATE	
	4	1	**197-8914**	1	EDGE-ROUTER (RH)	
	5	1	**197-8915**	1	EDGE-ROUTER (LH)	
	6	1	**201-1234**	4	ADAPTER (2-STRAP)	
	7	1	*202-4162*	1	BRACKET AS (LH)	
	7A	1	**9R-0320**	1	BEARING-SLEEVE	
	7B	1	**154-5257**	1	BEARING-SLEEVE	
	8	1	*202-4163*	1	BRACKET AS (RH)	
	8A	1	**9R-0320**	1	BEARING-SLEEVE	
	8B	1	**154-5257**	1	BEARING-SLEEVE	
	9	1	**219-9496**	1	EDGE	

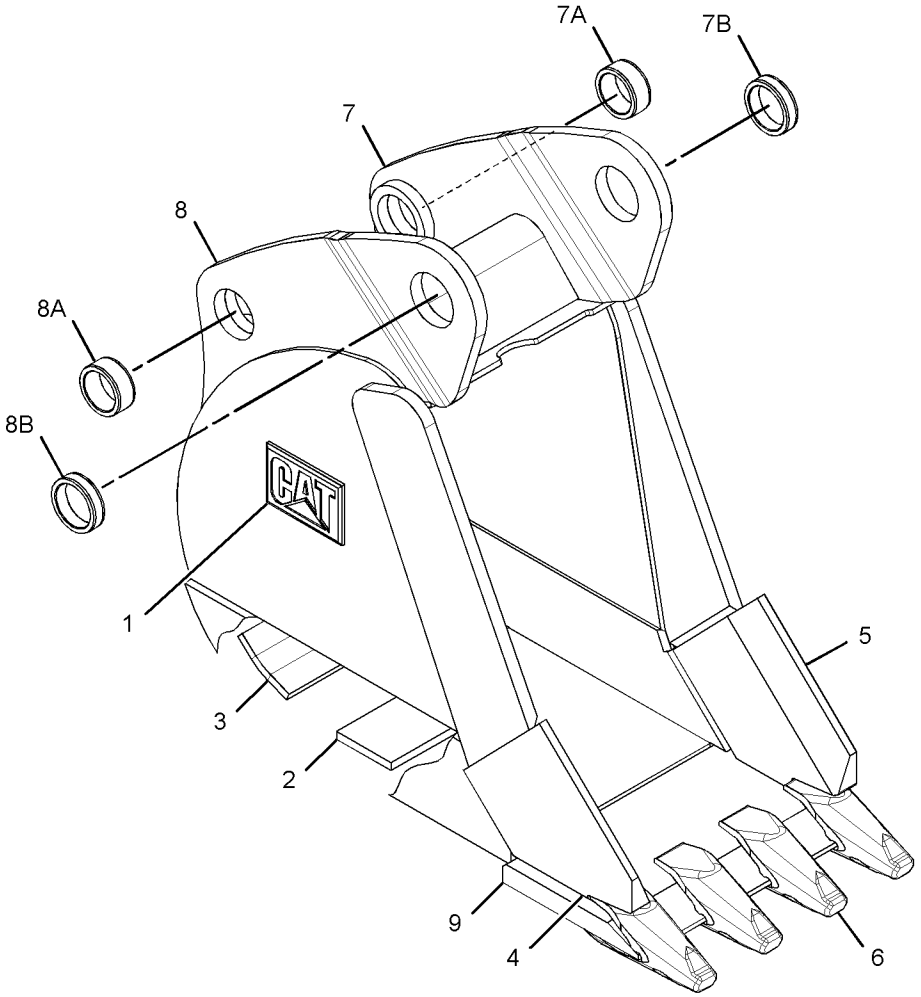

GRAPHIC #1 **<END>** g01342300

WORK TOOLS

219-3376 BUCKET AS-HOE–CORAL

S/N: SHA1-UP
458-MM (18-IN)
PART OF 219-3400 BUCKET GP-HOE
AN ATTACHMENT

SMCS-6503 **i02661611**

NOTE	REF NO	GRAPHIC REF	PART NUMBER	QTY	PART NAME 1 2 3 4 5 6 (PRODUCT LEVEL)	SEE PAGE
	1	1	**136-7049**	1	BIT-ROUTER (LH)	
	2	1	**136-7051**	1	BIT-ROUTER (RH)	
	3	1	**172-8276**	2	PLATE	
	4	1	**161-4130**	2	PLATE-IDENTIFICATION (CAT)	
	5	1	**172-8279**	1	PLATE	
	6	1	**201-1234**	6	ADAPTER (2-STRAP)	
	7	1	*202-0596*	1	BRACKET AS (LH)	
	7A	1	**9R-0162**	1	BEARING-SLEEVE	
	7B	1	**168-0480**	1	BEARING-SLEEVE	
	8	1	*202-0597*	1	BRACKET AS (RH)	
	8A	1	**9R-0162**	1	BEARING-SLEEVE	
	8B	1	**168-0480**	1	BEARING-SLEEVE	
	9	1	**219-9491**	1	EDGE	

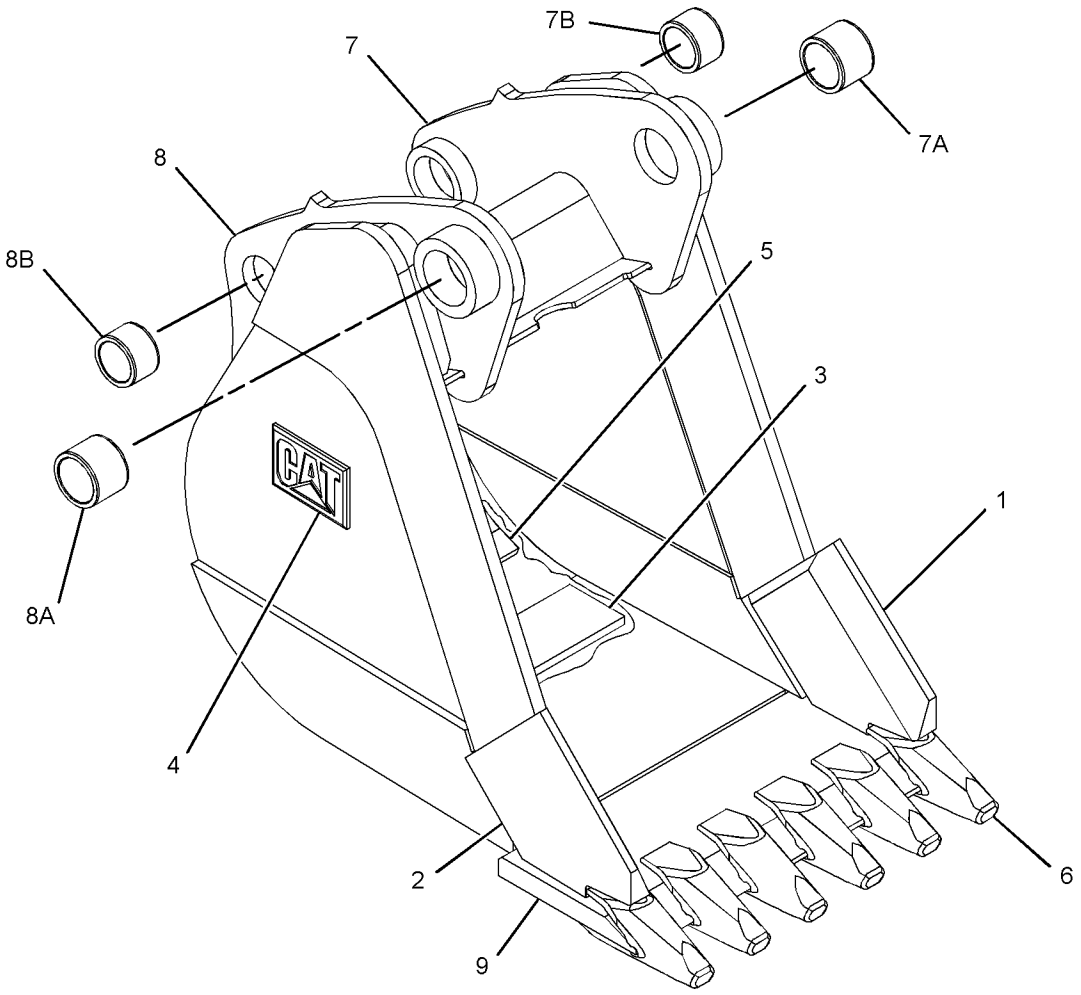

GRAPHIC #1 **<END>** g01342325

219-3377 BUCKET AS-HOE–CORAL

S/N: SHA1-UP
610-MM (24-IN)
PART OF 219-3401 BUCKET GP-HOE
AN ATTACHMENT

SMCS-6503 **i02661614**

NOTE	REF NO	GRAPHIC REF	PART NUMBER	QTY	PART NAME 1 2 3 4 5 6 (PRODUCT LEVEL)	SEE PAGE
	1	1	**172-8277**	2	PLATE	
	2	1	**136-7049**	1	BIT-ROUTER (LH)	
	3	1	**136-7051**	1	BIT-ROUTER (RH)	
	4	1	**172-8280**	1	PLATE	
	5	1	**161-4130**	2	PLATE-IDENTIFICATION (CAT)	
	6	1	**201-1234**	8	ADAPTER (2-STRAP)	
	7	1	*202-0596*	1	BRACKET AS (LH)	
	7A	1	**9R-0162**	1	BEARING-SLEEVE	
	7B	1	**168-0480**	1	BEARING-SLEEVE	
	8	1	*202-0597*	1	BRACKET AS (RH)	
	8A	1	**9R-0162**	1	BEARING-SLEEVE	
	8B	1	**168-0480**	1	BEARING-SLEEVE	
	9	1	**219-9492**	1	EDGE	

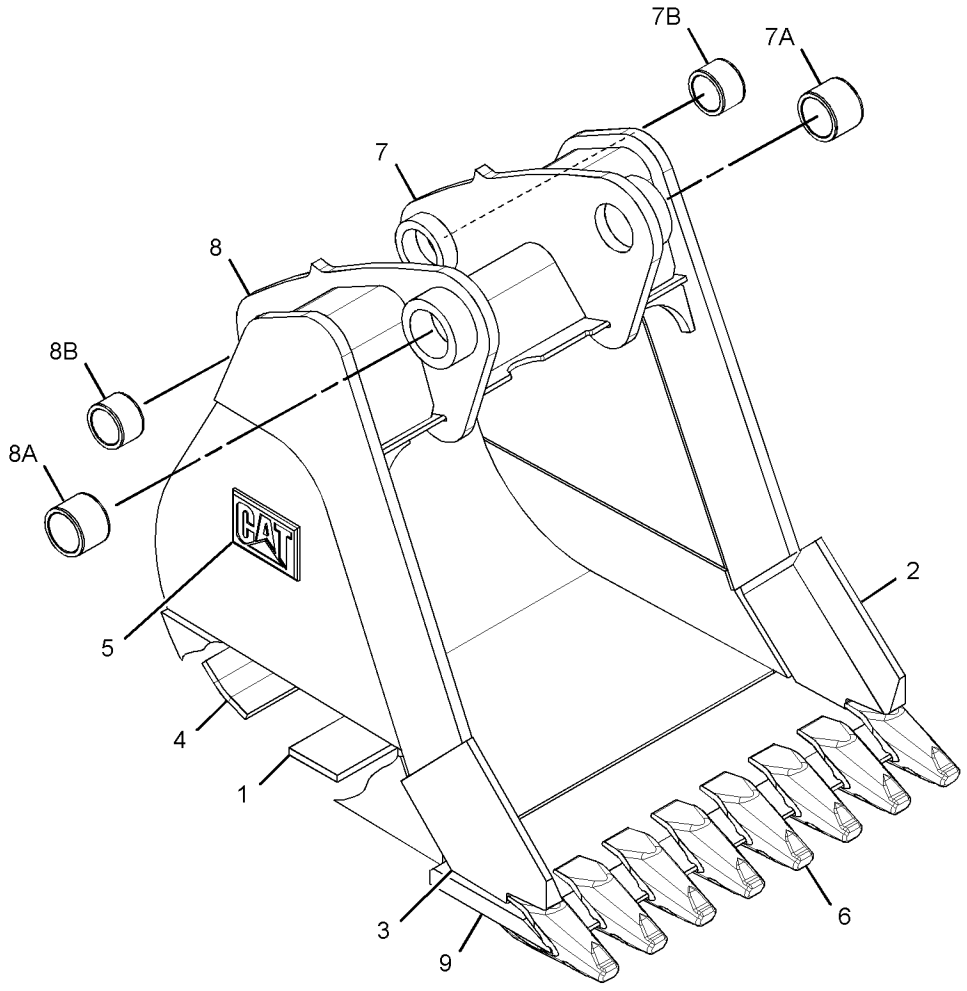

GRAPHIC #1 **<END>** g01342455

WORK TOOLS

219-3378 BUCKET AS-HOE–CORAL

S/N: SHA1-UP
762-MM (30-IN)
PART OF 219-3402 BUCKET GP-HOE
AN ATTACHMENT

SMCS-6503 **i02661618**

NOTE	REF NO	GRAPHIC REF	PART NUMBER	QTY	PART NAME 1 2 3 4 5 6 (PRODUCT LEVEL)	SEE PAGE
	1	1	**136-7049**	1	BIT-ROUTER (LH)	
	2	1	**136-7051**	1	BIT-ROUTER (RH)	
	3	1	**161-4130**	2	PLATE-IDENTIFICATION (CAT)	
	4	1	**172-8278**	2	PLATE	
	5	1	**174-4765**	1	PLATE	
	6	1	**201-1234**	10	ADAPTER (2-STRAP)	
	7	1	*202-0596*	1	BRACKET AS (LH)	
	7A	1	**9R-0162**	1	BEARING-SLEEVE	
	7B	1	**168-0480**	1	BEARING-SLEEVE	
	8	1	*202-0597*	1	BRACKET AS (RH)	
	8A	1	**9R-0162**	1	BEARING-SLEEVE	
	8B	1	**168-0480**	1	BEARING-SLEEVE	
	9	1	**219-9495**	1	EDGE	

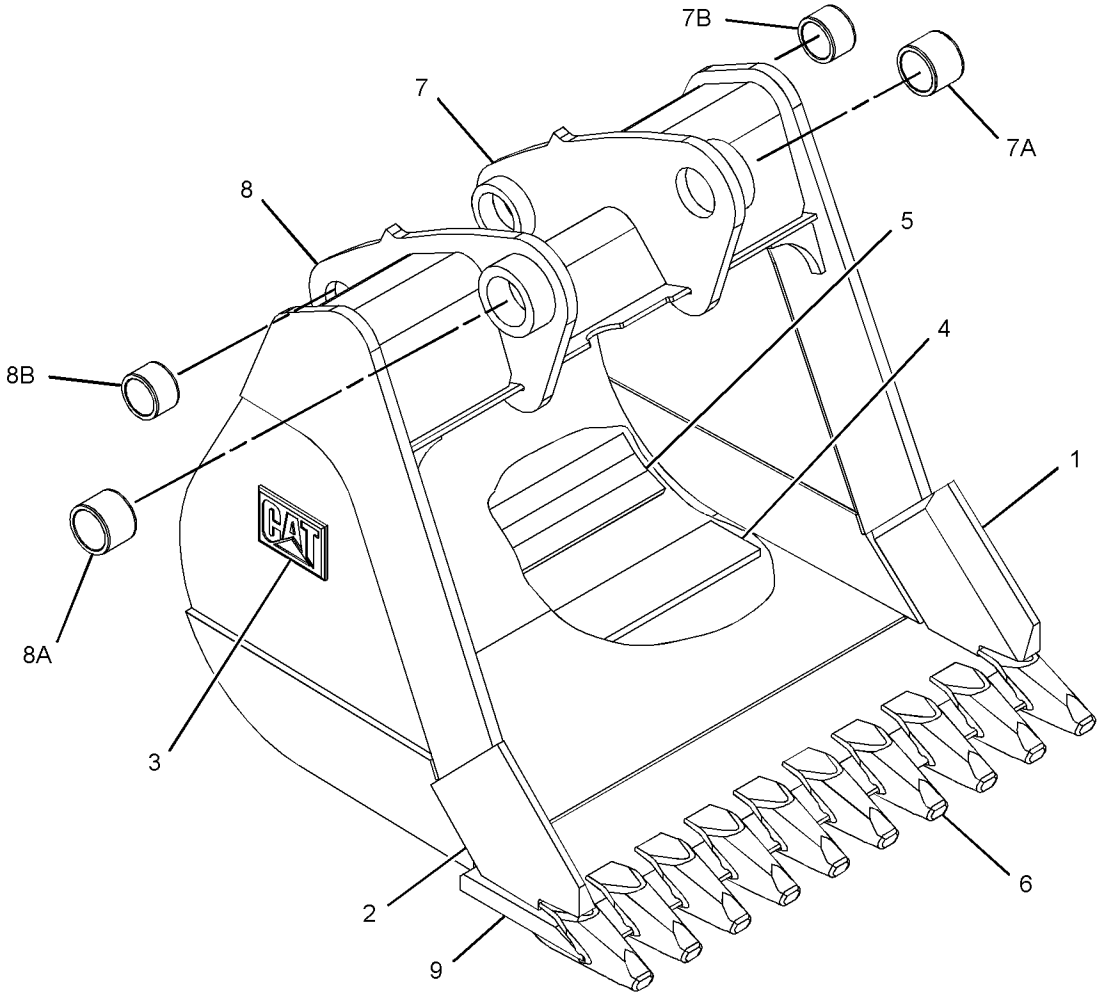

GRAPHIC #1 **<END>** g01342605

254-8939 BUCKET AS-HOE—HIGH CAPACITY, PIN-LOCK

S/N: SHA1-UP
458-MM (18-IN)
PART OF 254-8940 BUCKET GP-HOE
AN ATTACHMENT
TYPE 1

SMCS-6503 **i02284325**

NOTE	REF NO	GRAPHIC REF	PART NUMBER	QTY	PART NAME 1 2 3 4 5 6 (PRODUCT LEVEL)	SEE PAGE
	1	1	**134-5884**	1	EDGE (LH)	
	2	1	**134-5885**	1	EDGE (RH)	
	3	1	*151-7902*	1	BRACKET AS (LH)	
		1	**9R-0162**	1	BEARING-SLEEVE	
		1	**168-0480**	1	BEARING-SLEEVE	
	4	1	*151-7903*	1	BRACKET AS (RH)	
		1	**9R-0162**	1	BEARING-SLEEVE	
		1	**168-0480**	1	BEARING-SLEEVE	
	5	1	**161-4130**	2	PLATE-IDENTIFICATION (CAT)	
	6	1	**219-9483**	1	EDGE	
	7	1	**253-0234**	4	ADAPTER	

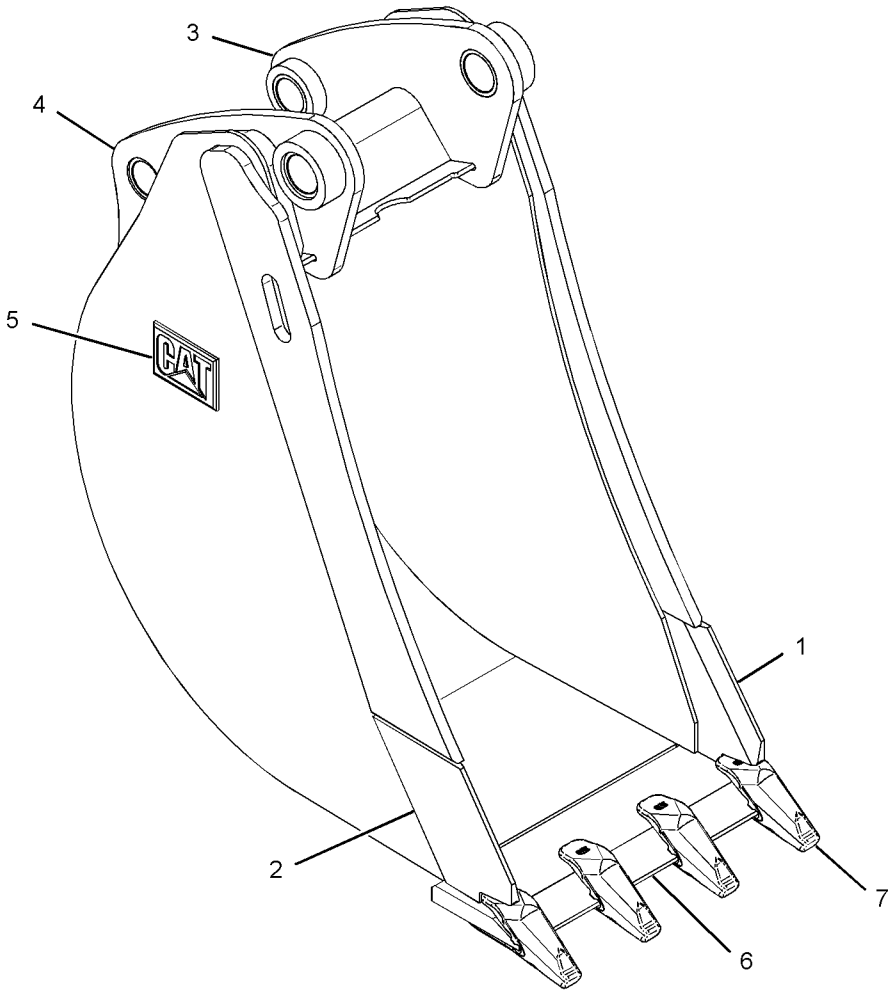

GRAPHIC #1 **<END>** g01150300

254-8939 BUCKET AS-HOE—HIGH CAPACITY, PIN-LOCK

S/N: SHA1-UP
458-MM (18-IN)
PART OF 254-8940 BUCKET GP-HOE
AN ATTACHMENT
TYPE 2

SMCS-6503 **i02756753**

NOTE	REF NO	GRAPHIC REF	PART NUMBER	QTY	PART NAME 1 2 3 4 5 6 (PRODUCT LEVEL)	SEE PAGE
	1	1	**172-8279**	5	PLATE	
	2	1	*286-9336*	1	BRACKET AS	
	2A	1	**9R-0162**	1	BEARING-SLEEVE	
	2B	1	**168-0480**	1	BEARING-SLEEVE	
	3	1	*286-9337*	1	BRACKET AS	
	3A	1	**9R-0162**	1	BEARING-SLEEVE	
	3B	1	**168-0480**	1	BEARING-SLEEVE	
	4	1	*299-3346*	1	EDGE AS	
		1	**219-9483**	1	EDGE	
		1	**253-0234**	4	ADAPTER	
	5	1	*300-7054*	1	PLATE AS	
		1	**134-5885**	1	EDGE (RH)	
	6	1	*300-7055*	1	PLATE AS	
		1	**134-5884**	1	EDGE (LH)	

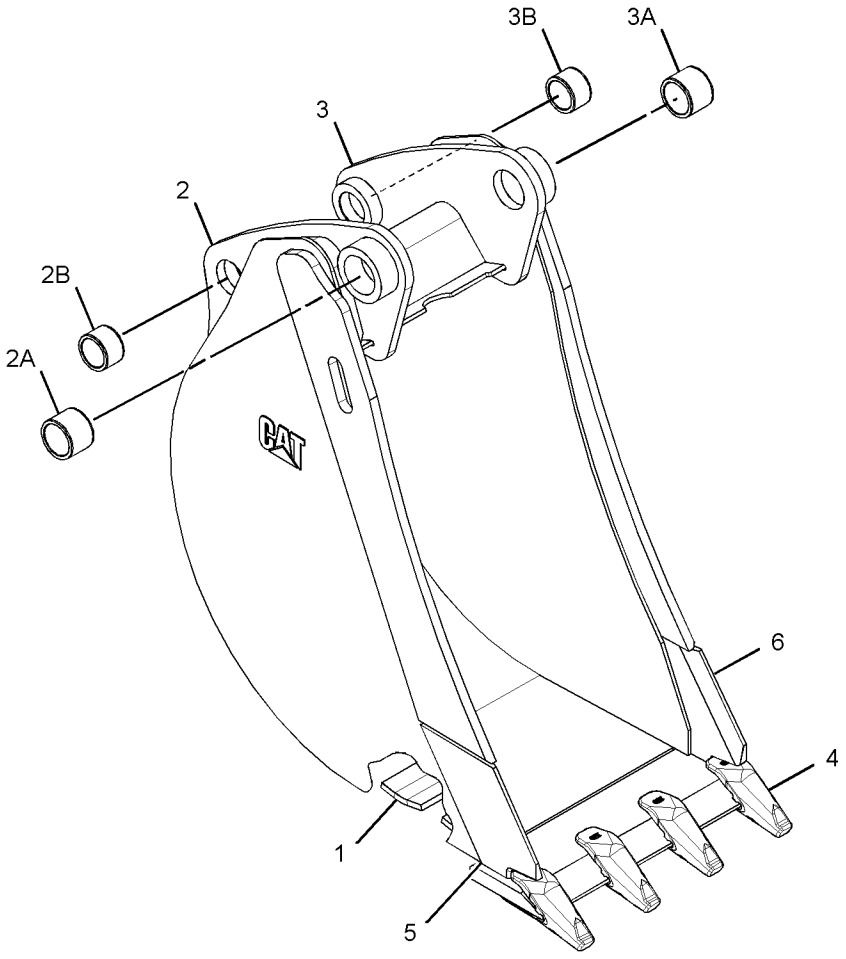

GRAPHIC #1 **<END>** g01382177

254-8944 BUCKET AS-HOE—HIGH CAPACITY, PIN-LOCK

S/N: SHA1-UP
610-MM (24-IN)
PART OF 254-8941 BUCKET GP-HOE
AN ATTACHMENT
TYPE 1

SMCS-6503 **i02284375**

NOTE	REF NO	GRAPHIC REF	PART NUMBER	QTY	PART NAME 1 2 3 4 5 6 (PRODUCT LEVEL)	SEE PAGE
	1	1	**134-5884**	1	EDGE (LH)	
	2	1	**134-5885**	1	EDGE (RH)	
	3	1	*151-7902*	1	BRACKET AS (LH)	
		1	**9R-0162**	1	BEARING-SLEEVE	
		1	**168-0480**	1	BEARING-SLEEVE	
	4	1	*151-7903*	1	BRACKET AS (RH)	
		1	**9R-0162**	1	BEARING-SLEEVE	
		1	**168-0480**	1	BEARING-SLEEVE	
	5	1	**161-4130**	2	PLATE-IDENTIFICATION (CAT)	
	6	1	**219-9484**	1	EDGE	
	7	1	**253-0234**	5	ADAPTER	

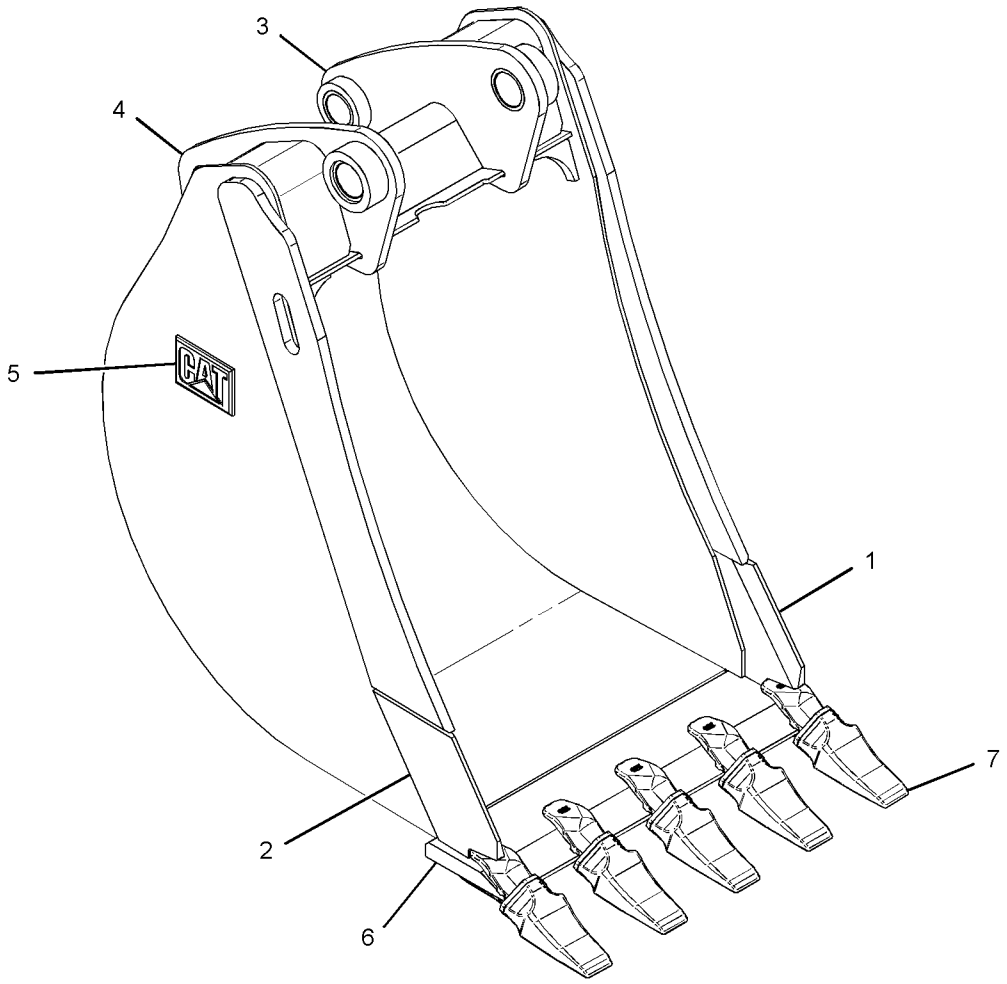

GRAPHIC #1 **<END>** g01150213

254-8944 BUCKET AS-HOE—HIGH CAPACITY, PIN-LOCK

S/N: SHA1-UP
610-MM (24-IN)
PART OF 254-8941 BUCKET GP-HOE
AN ATTACHMENT
TYPE 2

SMCS-6503 **i02756754**

NOTE	REF NO	GRAPHIC REF	PART NUMBER	QTY	PART NAME 1 2 3 4 5 6 (PRODUCT LEVEL)	SEE PAGE
	1	1	**172-8280**	5	PLATE	
	2	1	*286-9336*	1	BRACKET AS	
	2A	1	**9R-0162**	1	BEARING-SLEEVE	
	2B	1	**168-0480**	1	BEARING-SLEEVE	
	3	1	*286-9337*	1	BRACKET AS	
	3A	1	**9R-0162**	1	BEARING-SLEEVE	
	3B	1	**168-0480**	1	BEARING-SLEEVE	
	4	1	*300-4156*	1	EDGE AS	
			219-9486	1	EDGE	
			253-0234	6	ADAPTER	
	5	1	*300-7054*	1	PLATE AS	
			134-5885	1	EDGE (RH)	
	6	1	*300-7055*	1	PLATE AS	
			134-5884	1	EDGE (LH)	

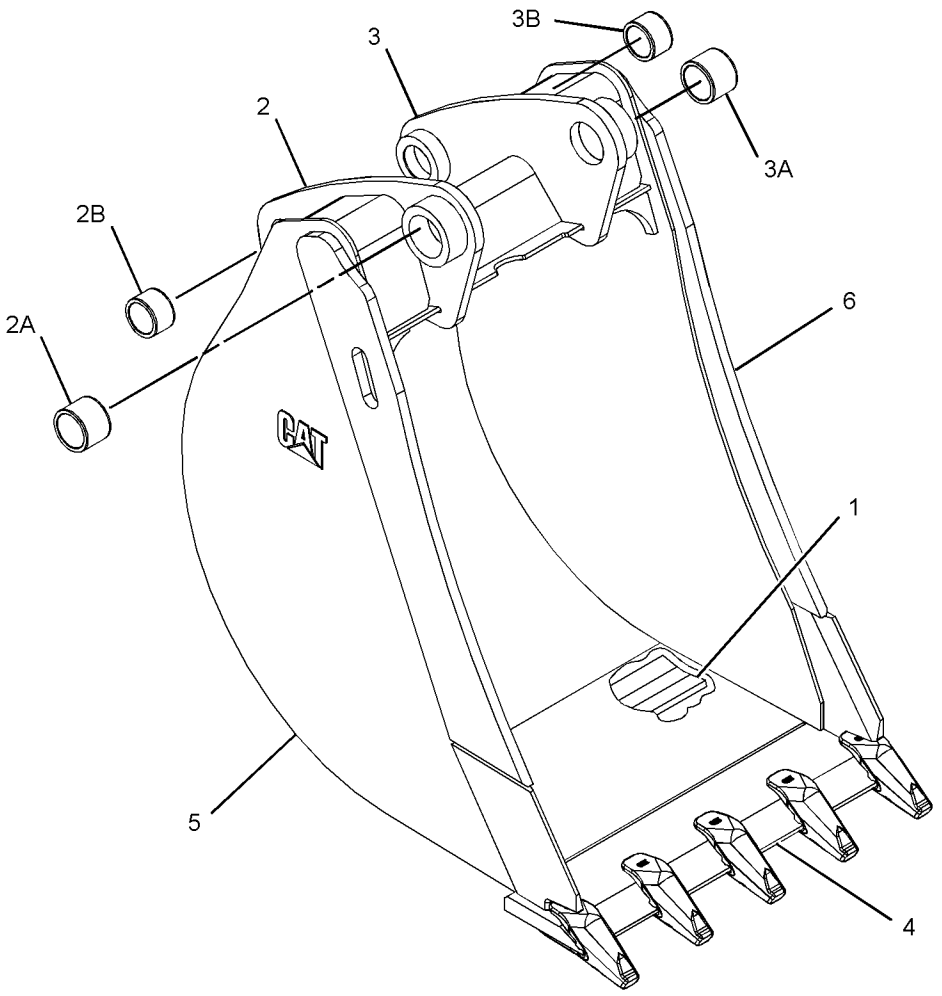

GRAPHIC #1 **<END>** g01382158

254-8945 BUCKET AS-HOE—HIGH CAPACITY, PIN-LOCK

S/N: SHA1-UP
762-MM (30-IN)
PART OF 254-8942 BUCKET GP-HOE
AN ATTACHMENT
TYPE 1

SMCS-6503 **i02284391**

NOTE	REF NO	GRAPHIC REF	PART NUMBER	QTY	PART NAME 1 2 3 4 5 6 (PRODUCT LEVEL)	SEE PAGE
	1	1	**134-5884**	1	EDGE (LH)	
	2	1	**134-5885**	1	EDGE (RH)	
	3	1	*151-7902*	1	BRACKET AS (LH)	
		1	**9R-0162**	1	BEARING-SLEEVE	
		1	**168-0480**	1	BEARING-SLEEVE	
	4	1	*151-7903*	1	BRACKET AS (RH)	
		1	**9R-0162**	1	BEARING-SLEEVE	
		1	**168-0480**	1	BEARING-SLEEVE	
	5	1	**161-4130**	2	PLATE-IDENTIFICATION (CAT)	
	6	1	**219-9485**	1	EDGE	
	7	1	**253-0234**	5	ADAPTER	

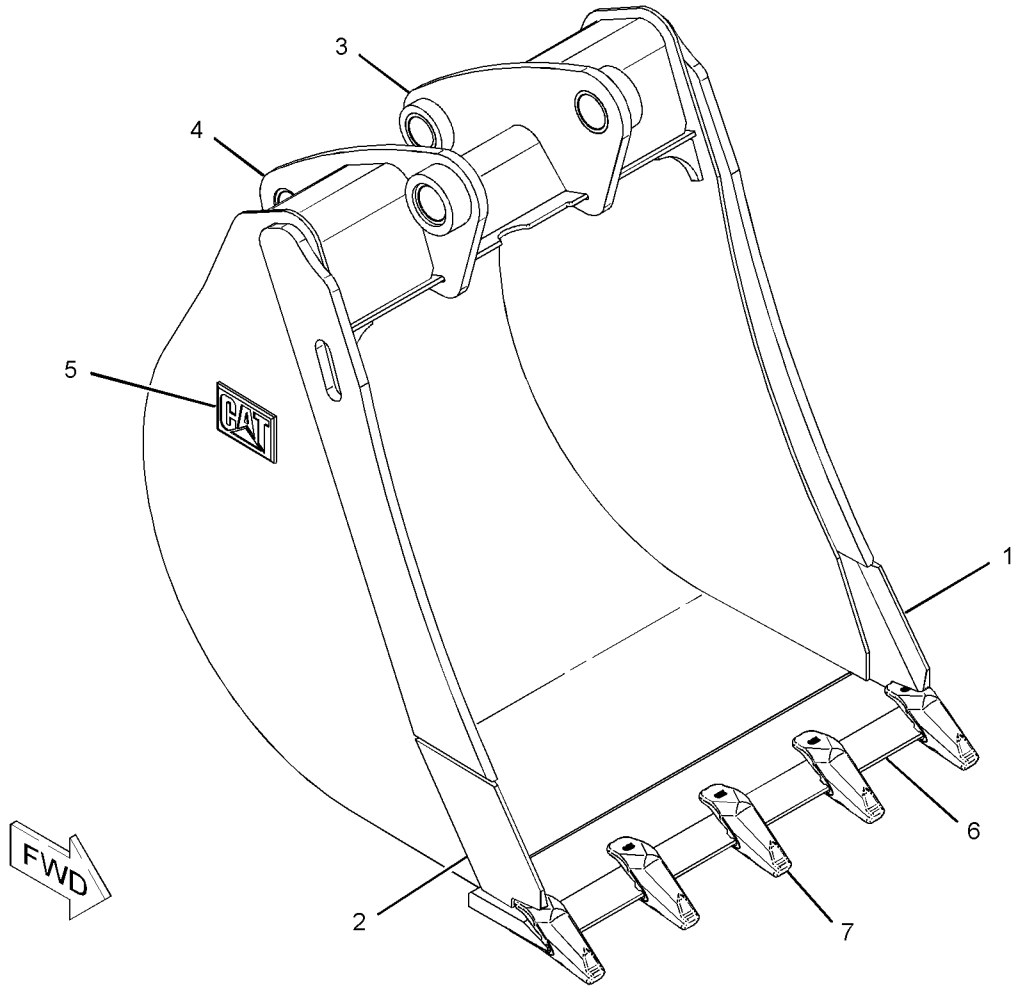

GRAPHIC #1 **<END>** g01144822

254-8945 BUCKET AS-HOE—HIGH CAPACITY, PIN-LOCK

S/N: SHA1-UP
762-MM (30-IN)
PART OF 254-8942 BUCKET GP-HOE
AN ATTACHMENT
TYPE 2

SMCS-6503 **i02503321**

NOTE	REF NO	GRAPHIC REF	PART NUMBER	QTY	PART NAME 1 2 3 4 5 6 (PRODUCT LEVEL)	SEE PAGE
	1	1	**134-5884**	1	EDGE (LH)	
	2	1	**134-5885**	1	EDGE (RH)	
C	3	1	*286-9337*	1	BRACKET AS (LH)	
		1	**9R-0162**	1	BEARING-SLEEVE	
		1	**168-0480**	1	BEARING-SLEEVE	
C	4	1	*286-9336*	1	BRACKET AS (RH)	
		1	**9R-0162**	1	BEARING-SLEEVE	
		1	**168-0480**	1	BEARING-SLEEVE	
	5	1	**161-4130**	2	PLATE-IDENTIFICATION (CAT)	
	6	1	**219-9485**	1	EDGE	
	7	1	**253-0234**	5	ADAPTER	

C-CHANGE FROM PREVIOUS TYPE

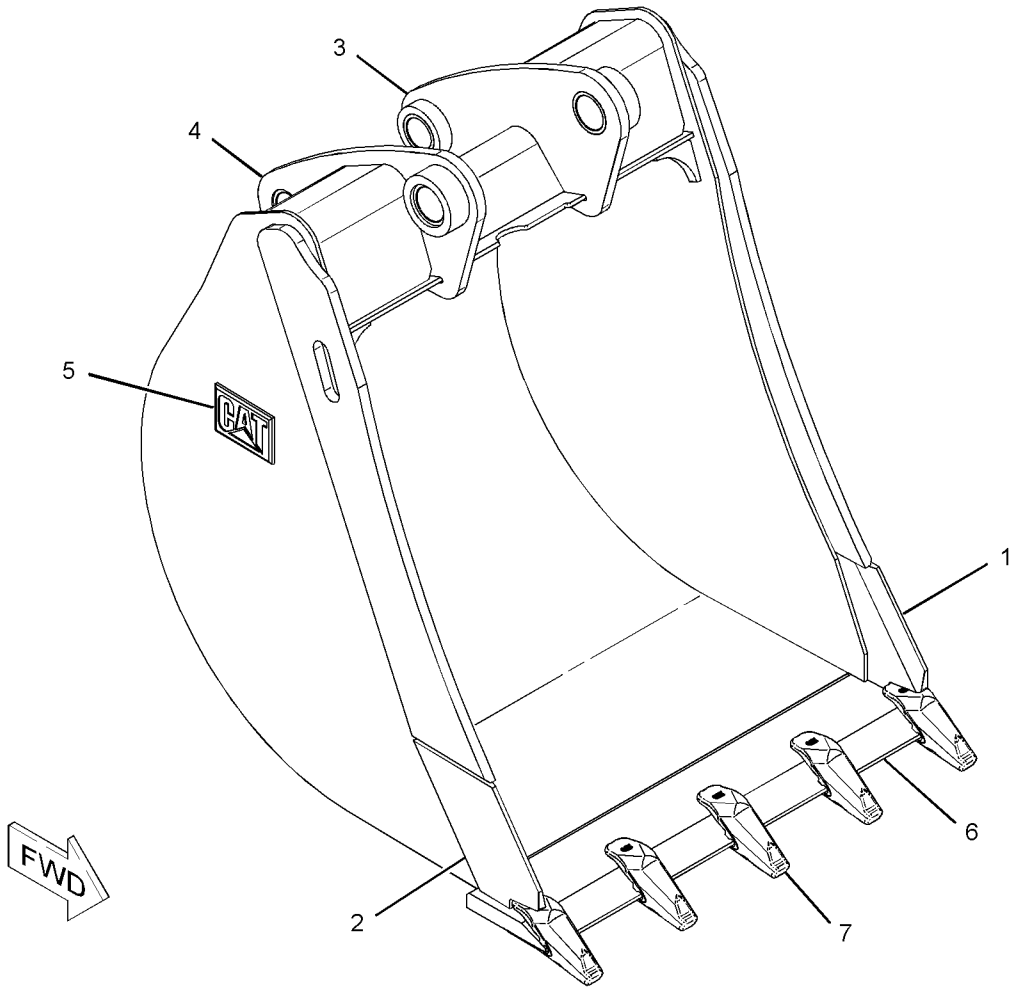

GRAPHIC #1 **<END>** g01144822

254-8946 BUCKET AS-HOE—HIGH CAPACITY, PIN-LOCK

S/N: SHA1-UP
914-MM (36-IN)
PART OF 254-8943 BUCKET GP-HOE
AN ATTACHMENT
TYPE 1

SMCS-6503 **i02284403**

NOTE	REF NO	GRAPHIC REF	PART NUMBER	QTY	PART NAME 1 2 3 4 5 6 (PRODUCT LEVEL)	SEE PAGE
	1	1	**134-5884**	1	EDGE (LH)	
	2	1	**134-5885**	1	EDGE (RH)	
	3	1	*151-7902*	1	BRACKET AS (LH)	
		1	**9R-0162**	1	BEARING-SLEEVE	
		1	**168-0480**	1	BEARING-SLEEVE	
	4	1	*151-7903*	1	BRACKET AS (RH)	
		1	**9R-0162**	1	BEARING-SLEEVE	
		1	**168-0480**	1	BEARING-SLEEVE	
	5	1	**161-4130**	2	PLATE-IDENTIFICATION (CAT)	
	6	1	**219-9486**	1	EDGE	
	7	1	**253-0234**	6	ADAPTER	

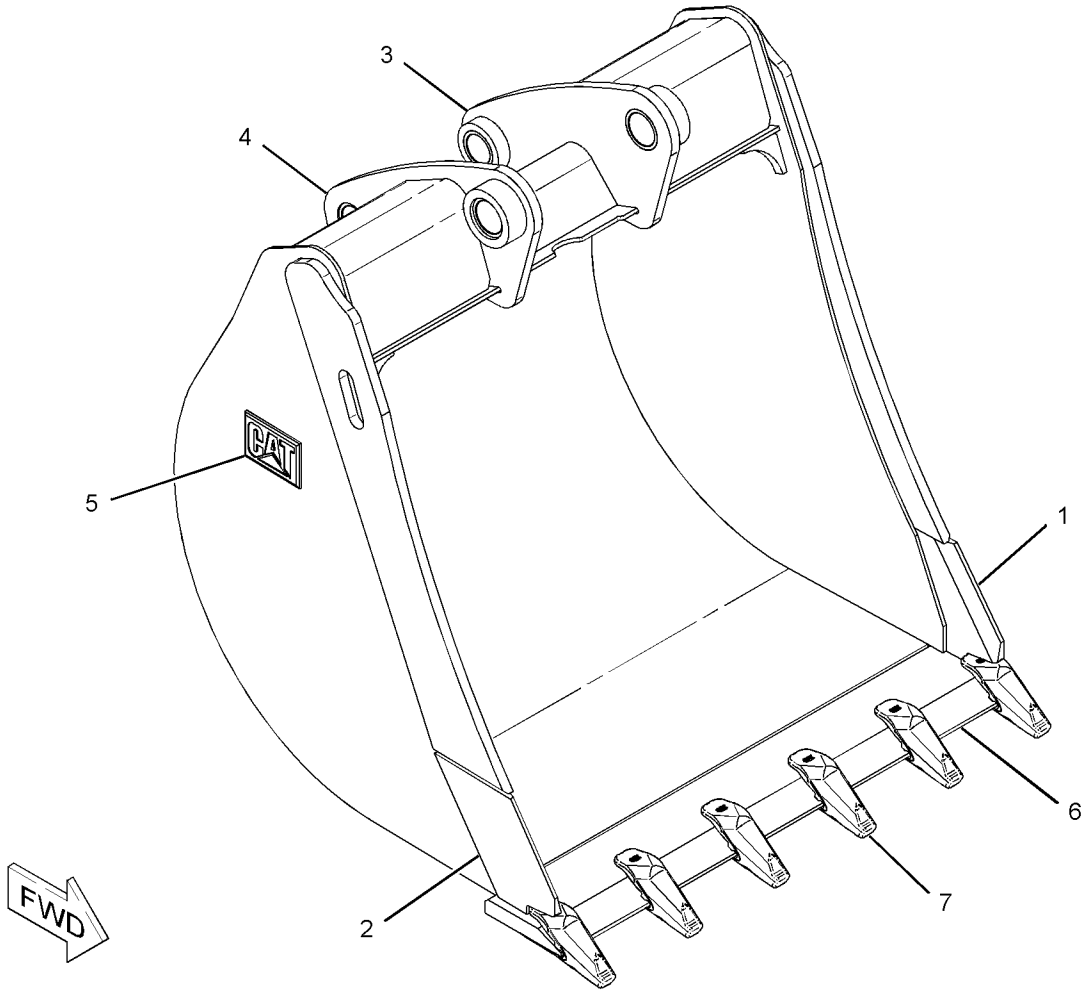

GRAPHIC #1 **<END>** g01144814

254-8946 BUCKET AS-HOE—HIGH CAPACITY, PIN-LOCK

S/N: SHA1-UP
914-MM (36-IN)
PART OF 254-8943 BUCKET GP-HOE
AN ATTACHMENT
TYPE 2

SMCS-6503 **i02756755**

NOTE	REF NO	GRAPHIC REF	PART NUMBER	QTY	PART NAME 1 2 3 4 5 6 (PRODUCT LEVEL)	SEE PAGE
	1	1	**193-5416**	5	PLATE	
	2	1	*286-9336*	1	BRACKET AS	
	2A	1	**9R-0162**	1	BEARING-SLEEVE	
	2B	1	**168-0480**	1	BEARING-SLEEVE	
	3	1	*286-9337*	1	BRACKET AS	
	3A	1	**9R-0162**	1	BEARING-SLEEVE	
	3B	1	**168-0480**	1	BEARING-SLEEVE	
	4	1	*300-4156*	1	EDGE AS	
		1	**219-9486**	1	EDGE	
		1	**253-0234**	6	ADAPTER	
	5	1	*300-7054*	1	PLATE AS	
		1	**134-5885**	1	EDGE (RH)	
	6	1	*300-7055*	1	PLATE AS	
		1	**134-5884**	1	EDGE (LH)	

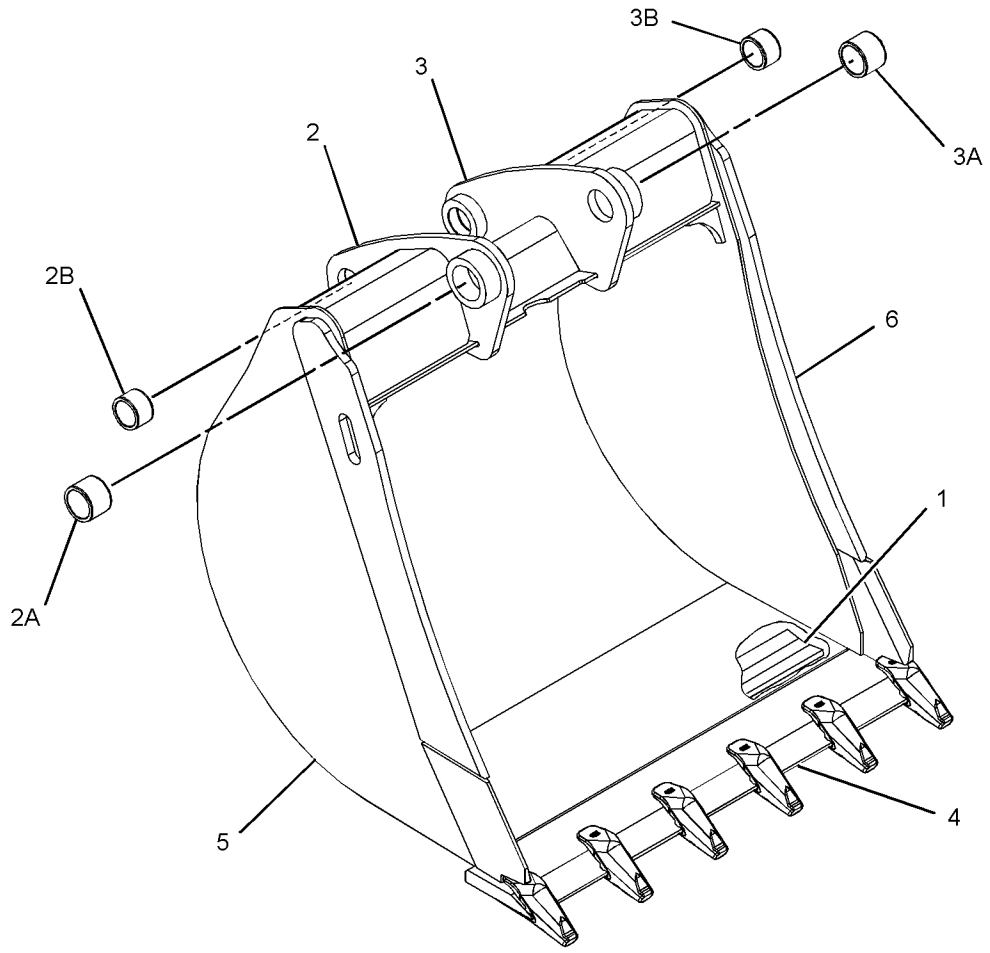

GRAPHIC #1 **<END>** g01382156

WORK TOOLS

251-1775 BUCKET GP-GENERAL PURPOSE

S/N: SHA1-UP

AN ATTACHMENT

SMCS-6101 **i02104816**

NOTE	PART NUMBER	QTY	PART NAME 1 2 3 4 5 6 (PRODUCT LEVEL)	SEE PAGE
Y	**251-1777**	1	BUCKET GP-GENERAL PURPOSE	512
Y	*9R-5320*	1	EDGE GP-CUTTING	578

Y-SEPARATE ILLUSTRATION

<END>

WORK TOOLS

251-1777 BUCKET GP-GENERAL PURPOSE

S/N: SHA1-UP

1.25 CU M (1.5 CU YD)

PART OF 251-1776 BUCKET AR-GENERAL PURPOSE, 251-1775 BUCKET GP-GENERAL PURPOSE AN ATTACHMENT

SMCS-6101 **i02206249**

NOTE	REF NO	GRAPHIC REF	PART NUMBER	QTY	PART NAME 1 2 3 4 5 6 (PRODUCT LEVEL)	SEE PAGE
	1	1	**137-4234**	1	PLATE-IDENTIFICATION (WORK TOOL)	
	2	1	**168-8389**	4	TACK-FASTENER	
Y	3	1	*251-1156*	1	BUCKET AS-GENERAL PURPOSE	471

Y-SEPARATE ILLUSTRATION

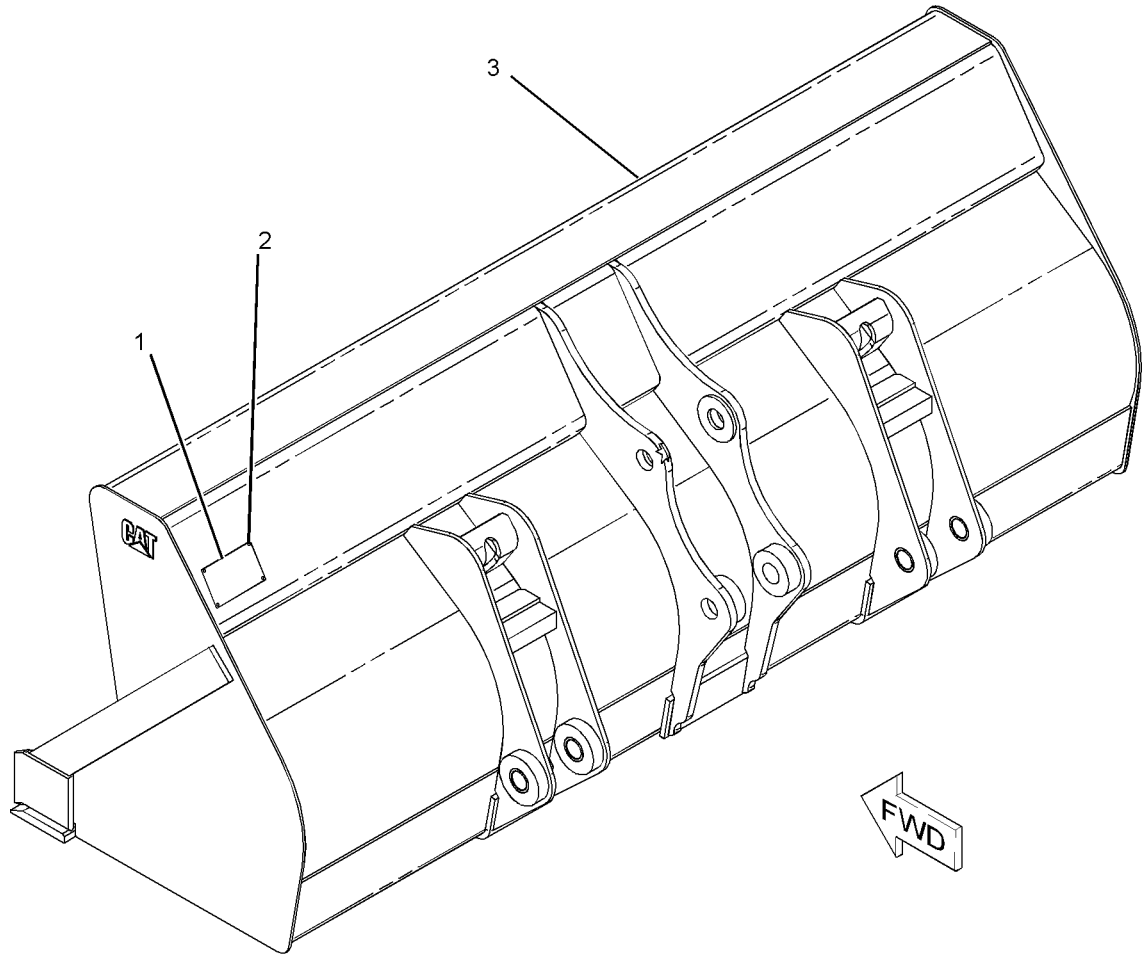

GRAPHIC #1 **<END>** g01114161

251-1778 BUCKET GP-GENERAL PURPOSE

S/N: SHA1-UP
AN ATTACHMENT

SMCS-6101 **i02105045**

NOTE	PART NUMBER	QTY	PART NAME 1 2 3 4 5 6 (PRODUCT LEVEL)	SEE PAGE
Y	**251-1780**	1	BUCKET GP-GENERAL PURPOSE	514
Y	*9R-5321*	1	EDGE GP-CUTTING	579
Y-SEPARATE ILLUSTRATION				

<END>

251-1779 BUCKET GP-GENERAL PURPOSE

S/N: SHA1-UP
AN ATTACHMENT

SMCS-6101 **i02105046**

NOTE	PART NUMBER	QTY	PART NAME 1 2 3 4 5 6 (PRODUCT LEVEL)	SEE PAGE
Y	**251-1780**	1	BUCKET GP-GENERAL PURPOSE	514
Y	*9R-5866*	1	TOOTH GP-UNI	638
Y-SEPARATE ILLUSTRATION				

<END>

251-1780 BUCKET GP-GENERAL PURPOSE

S/N: SHA1-UP
0.76 CU M (1.0 CU YD)
PART OF 251-1778, 251-1779 BUCKET GP-GENERAL PURPOSE
AN ATTACHMENT

SMCS-6101 **i02206792**

NOTE	REF NO	GRAPHIC REF	PART NUMBER	QTY	PART NAME 1 2 3 4 5 6 (PRODUCT LEVEL)	SEE PAGE
	1	1	**137-4234**	1	PLATE-IDENTIFICATION (WORK TOOL)	
	2	1	**168-8389**	4	TACK-FASTENER	
Y	3	1	*251-1157*	1	BUCKET AS-GENERAL PURPOSE	473

Y-SEPARATE ILLUSTRATION

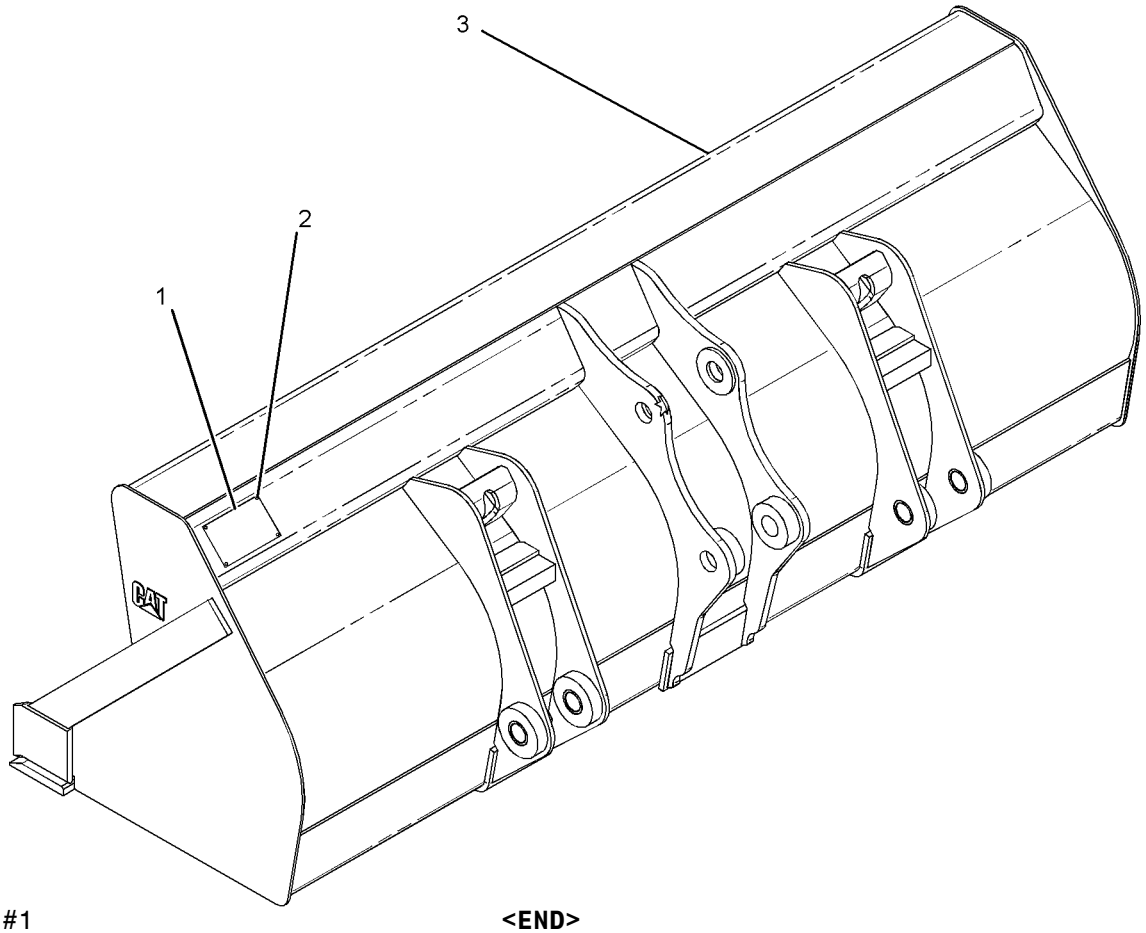

GRAPHIC #1 **<END>** g01114180

251-1781 BUCKET GP-GENERAL PURPOSE

S/N: SHA1-UP
AN ATTACHMENT

SMCS-6101 **i02105047**

NOTE	PART NUMBER	QTY	PART NAME 1 2 3 4 5 6 (PRODUCT LEVEL)	SEE PAGE
Y	**251-1783**	1	BUCKET GP-GENERAL PURPOSE	515
Y	*9R-5320*	1	EDGE GP-CUTTING	578
Y-SEPARATE ILLUSTRATION				

<END>

251-1782 BUCKET GP-GENERAL PURPOSE

S/N: SHA1-UP
AN ATTACHMENT

SMCS-6101 **i02105048**

NOTE	PART NUMBER	QTY	PART NAME 1 2 3 4 5 6 (PRODUCT LEVEL)	SEE PAGE
Y	**251-1783**	1	BUCKET GP-GENERAL PURPOSE	515
Y	*9R-5866*	1	TOOTH GP-UNI	638
Y-SEPARATE ILLUSTRATION				

<END>

251-1783 BUCKET GP-GENERAL PURPOSE

S/N: SHA1-UP
PART OF 251-1781, 251-1782 BUCKET GP-GENERAL PURPOSE
AN ATTACHMENT

SMCS-6101 **i02106209**

NOTE	PART NUMBER	QTY	PART NAME 1 2 3 4 5 6 (PRODUCT LEVEL)	SEE PAGE
Y	*251-1158*	1	BUCKET AS-GENERAL PURPOSE	474
Y-SEPARATE ILLUSTRATION				

<END>

251-1784 BUCKET GP-GENERAL PURPOSE

S/N: SHA1-UP
AN ATTACHMENT

SMCS-6101 **i02105049**

NOTE	PART NUMBER	QTY	PART NAME 1 2 3 4 5 6 (PRODUCT LEVEL)	SEE PAGE
Y	**251-1786**	1	BUCKET GP-GENERAL PURPOSE	516
Y	*9R-5321*	1	EDGE GP-CUTTING	579
Y-SEPARATE ILLUSTRATION				

<END>

251-1786 BUCKET GP-GENERAL PURPOSE

S/N: SHA1-UP
PART OF 251-1784, 251-1790 BUCKET GP-GENERAL PURPOSE
AN ATTACHMENT

SMCS-6101 **i02108903**

NOTE	PART NUMBER	QTY	PART NAME 1 2 3 4 5 6 (PRODUCT LEVEL)	SEE PAGE
Y	*251-1159*	1	BUCKET AS-GENERAL PURPOSE	476
Y-SEPARATE ILLUSTRATION				

<END>

251-1787 BUCKET GP-GENERAL PURPOSE

S/N: SHA1-UP
AN ATTACHMENT

SMCS-6101 **i02105050**

NOTE	PART NUMBER	QTY	PART NAME 1 2 3 4 5 6 (PRODUCT LEVEL)	SEE PAGE
Y	**251-1789**	1	BUCKET GP-GENERAL PURPOSE	516
Y	*9R-5321*	1	EDGE GP-CUTTING	579
Y-SEPARATE ILLUSTRATION				

<END>

251-1788 BUCKET GP-GENERAL PURPOSE

S/N: SHA1-UP
AN ATTACHMENT

SMCS-6101 **i02105051**

NOTE	PART NUMBER	QTY	PART NAME 1 2 3 4 5 6 (PRODUCT LEVEL)	SEE PAGE
Y	**251-1789**	1	BUCKET GP-GENERAL PURPOSE	516
Y	*9R-5866*	1	TOOTH GP-UNI	638
Y-SEPARATE ILLUSTRATION				

<END>

251-1789 BUCKET GP-GENERAL PURPOSE

S/N: SHA1-UP
PART OF 251-1787, 251-1788 BUCKET GP-GENERAL PURPOSE
AN ATTACHMENT

SMCS-6101 **i02106210**

NOTE	PART NUMBER	QTY	PART NAME 1 2 3 4 5 6 (PRODUCT LEVEL)	SEE PAGE
Y	*251-1160*	1	BUCKET AS-GENERAL PURPOSE	478
Y-SEPARATE ILLUSTRATION				

<END>

WORK TOOLS

251-1790 BUCKET GP-GENERAL PURPOSE

S/N: SHA1-UP

AN ATTACHMENT

SMCS-6101 **i02105052**

NOTE	PART NUMBER	QTY	PART NAME 1 2 3 4 5 6 (PRODUCT LEVEL)	SEE PAGE
Y	**251-1786**	1	BUCKET GP-GENERAL PURPOSE	516
Y	*9R-5866*	1	TOOTH GP-UNI	638

Y-SEPARATE ILLUSTRATION

<END>

WORK TOOLS

219-3379 BUCKET GP-HOE

S/N: SHA1-UP
PART OF 219-3410 BUCKET GP-HOE
AN ATTACHMENT

SMCS-6503 **i02655046**

NOTE	REF NO	GRAPHIC REF	PART NUMBER	QTY	PART NAME 1 2 3 4 5 6 (PRODUCT LEVEL)	SEE PAGE
	1	1	**137-4234**	1	PLATE-IDENTIFICATION (WORK TOOL)	
	2	1	**168-8389**	1	TACK-FASTENER	
	3	1	*208-5245*	3	TIP GP-PENETRATION	
					(EACH INCLUDES)	
		1	**201-1238**	1	PIN	
		1	**201-1239**	1	RETAINER AS	
		1	**208-5235**	1	TIP-PENETRATION	
Y	4	1	*219-3355*	1	BUCKET AS-HOE	479

Y-SEPARATE ILLUSTRATION

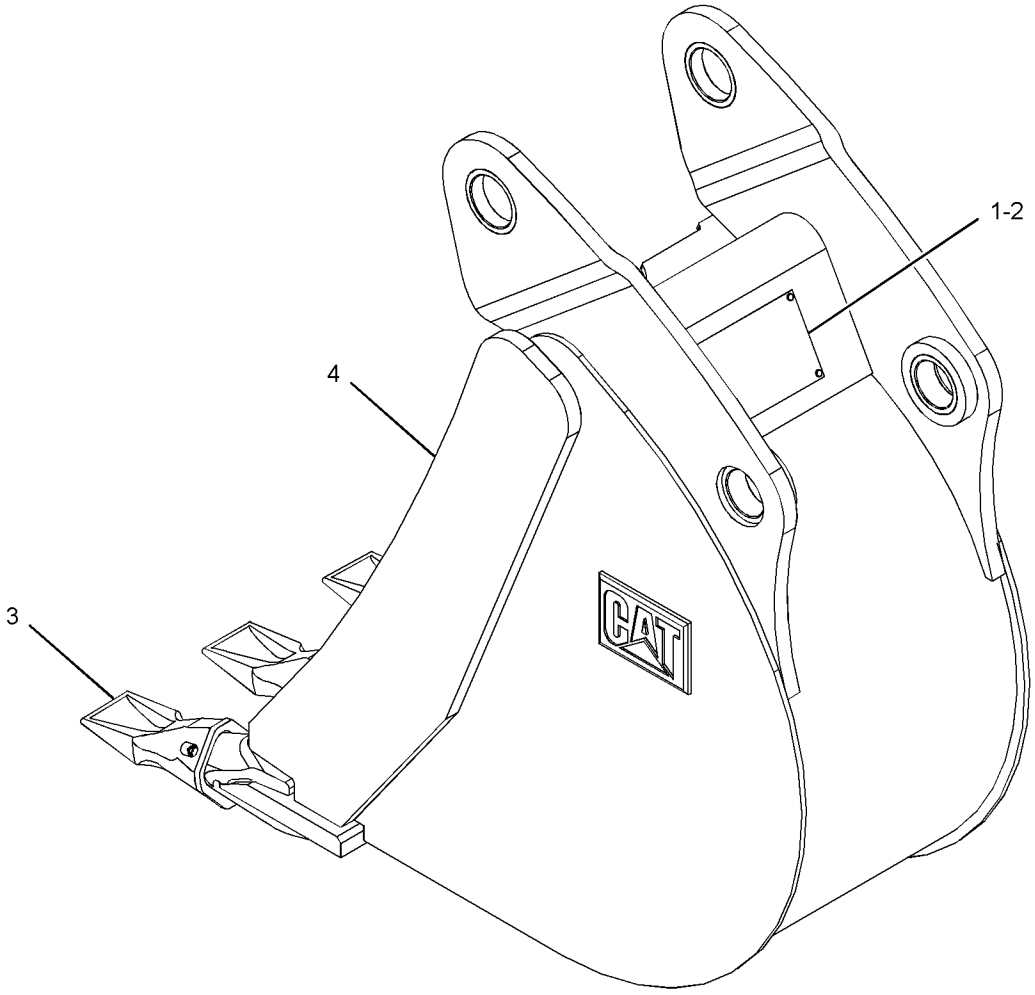

GRAPHIC #1 **<END>** g01341882

WORK TOOLS

219-3380 BUCKET GP-HOE

S/N: SHA1-UP
AN ATTACHMENT

SMCS-6503 **i02655101**

NOTE	REF NO	GRAPHIC REF	PART NUMBER	QTY	PART NAME 1 2 3 4 5 6 (PRODUCT LEVEL)	SEE PAGE
	1	1	**137-4234**	1	PLATE-IDENTIFICATION (WORK TOOL)	
	2	1	**168-8389**	4	TACK-FASTENER	
	3	1	*208-5245*	4	TIP GP-PENETRATION	
					(EACH INCLUDES)	
		1	**201-1238**	1	PIN	
		1	**201-1239**	1	RETAINER AS	
		1	**208-5235**	1	TIP-PENETRATION	
Y	4	1	*219-3356*	1	BUCKET AS-HOE	480

Y-SEPARATE ILLUSTRATION

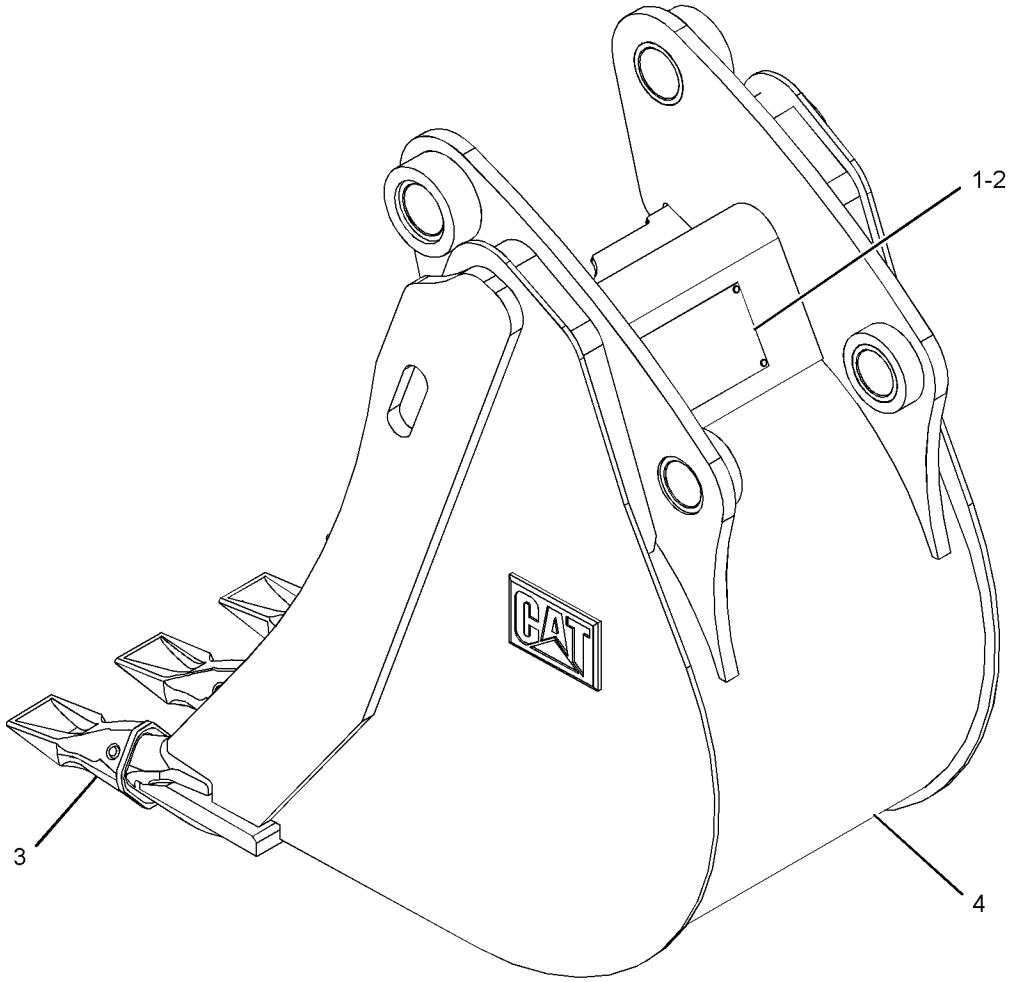

GRAPHIC #1 **<END>** g01339842

WORK TOOLS

219-3381 BUCKET GP-HOE

S/N: SHA1-UP

AN ATTACHMENT

SMCS-6503 **i02651121**

NOTE	REF NO	GRAPHIC REF	PART NUMBER	QTY	PART NAME 1 2 3 4 5 6 (PRODUCT LEVEL)	SEE PAGE
	1	1	**137-4234**	1	PLATE-IDENTIFICATION (WORK TOOL)	
	2	1	**168-8389**	4	TACK-FASTENER	
	3		*208-5245*	5	TIP GP-PENETRATION	
					(EACH INCLUDES)	
		1	**201-1238**	1	PIN	
		1	**201-1239**	1	RETAINER AS	
		1	**208-5235**	1	TIP-PENETRATION	
Y	4	1	*219-3357*	1	BUCKET AS-HOE	481

Y-SEPARATE ILLUSTRATION

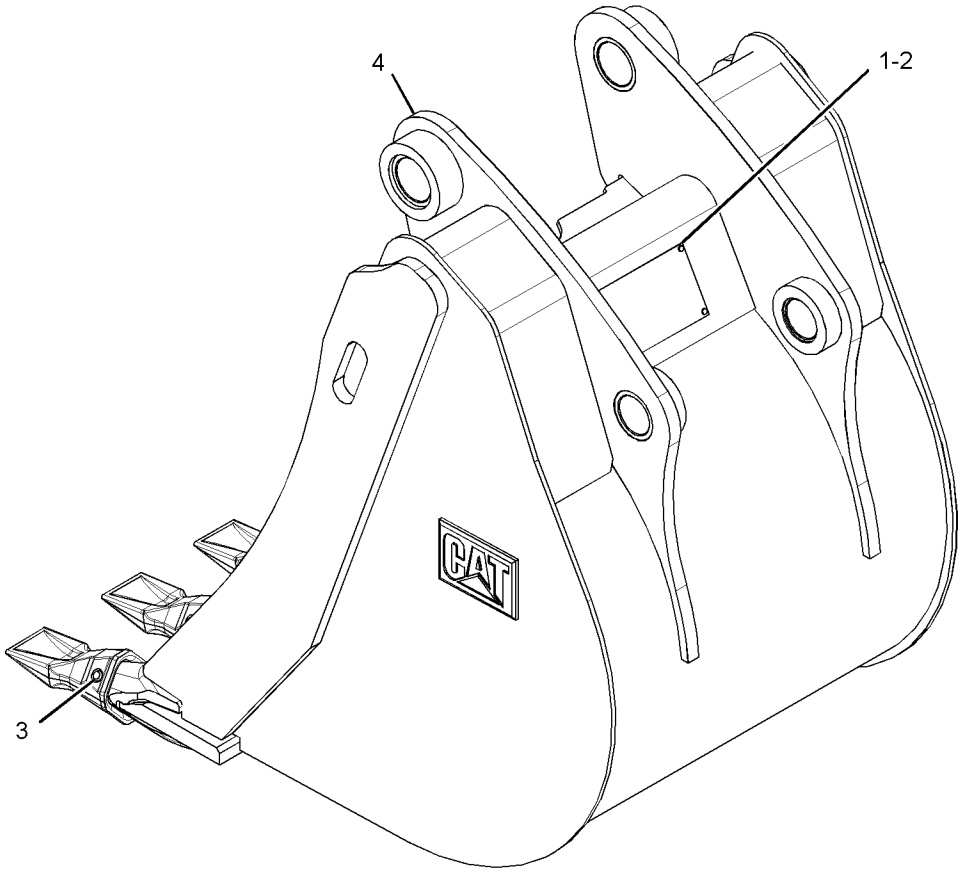

GRAPHIC #1 **<END>** g01340268

WORK TOOLS

219-3382 BUCKET GP-HOE

S/N: SHA1-UP
AN ATTACHMENT

SMCS-6503 **i02651191**

NOTE	REF NO	GRAPHIC REF	PART NUMBER	QTY	PART NAME 1 2 3 4 5 6 (PRODUCT LEVEL)	SEE PAGE
	1	1	**137-4234**	1	PLATE-IDENTIFICATION (WORK TOOL)	
	2	1	**168-8389**	4	TACK-FASTENER	
	3	1	*208-5245*	5	TIP GP-PENETRATION	
					(EACH INCLUDES)	
		1	**201-1238**	1	PIN	
		1	**201-1239**	1	RETAINER AS	
		1	**208-5235**	1	TIP-PENETRATION	
Y	4	1	*219-3358*	1	BUCKET AS-HOE	482

Y-SEPARATE ILLUSTRATION

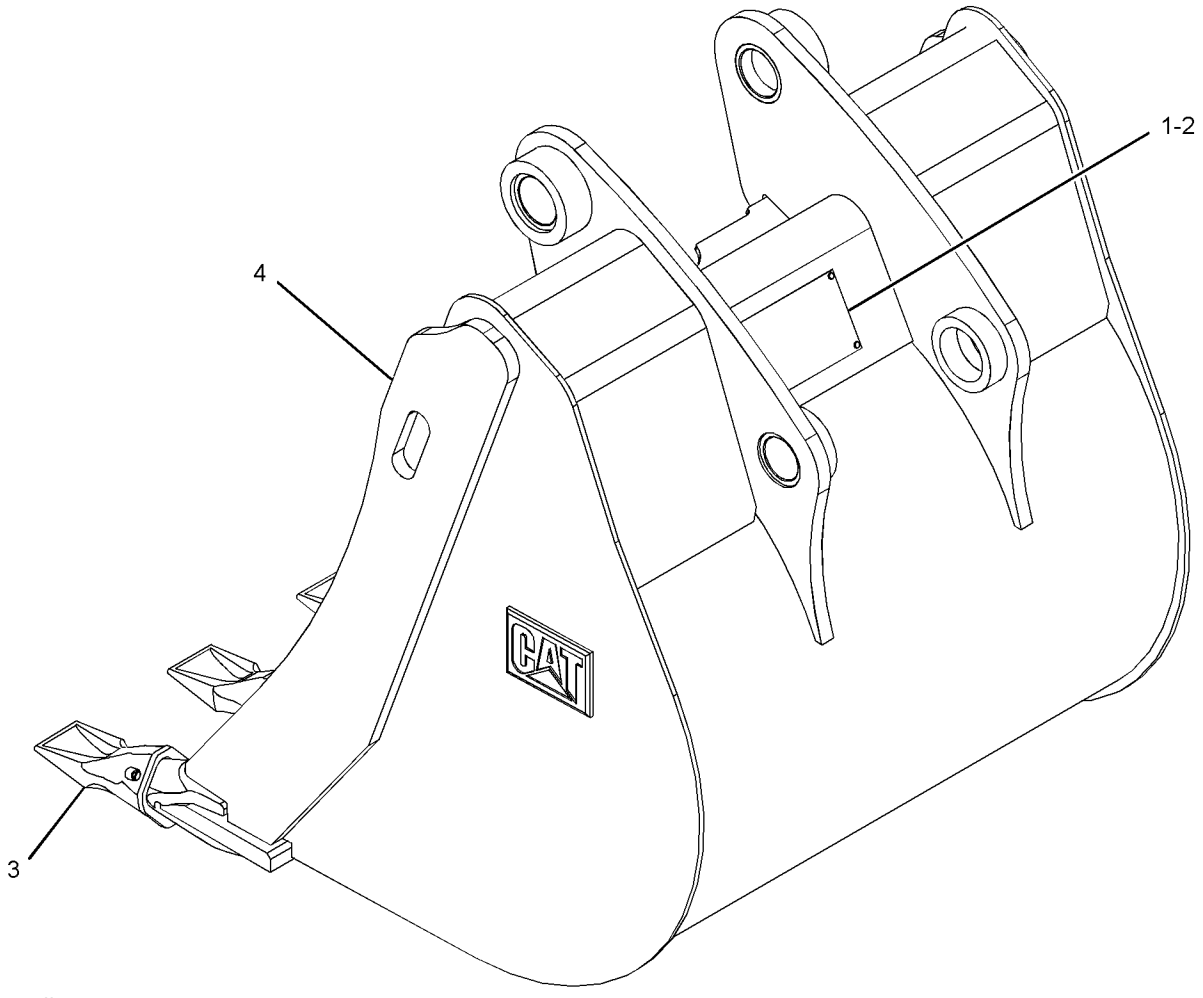

GRAPHIC #1 **<END>** g01341854

WORK TOOLS

219-3383 BUCKET GP-HOE

S/N: SHA1-UP
AN ATTACHMENT

SMCS-6503 **i02651284**

NOTE	REF NO	GRAPHIC REF	PART NUMBER	QTY	PART NAME 1 2 3 4 5 6 (PRODUCT LEVEL)	SEE PAGE
	1	1	**137-4234**	1	PLATE-IDENTIFICATION (WORK TOOL)	
	2	1	**168-8389**	4	TACK-FASTENER	
	3	1	*208-5245*	6	TIP GP-PENETRATION	
					(EACH INCLUDES)	
		1	**201-1238**	1	PIN	
		1	**201-1239**	1	RETAINER AS	
		1	**208-5235**	1	TIP-PENETRATION	
Y	4	1	*219-3359*	1	BUCKET AS-HOE	483

Y-SEPARATE ILLUSTRATION

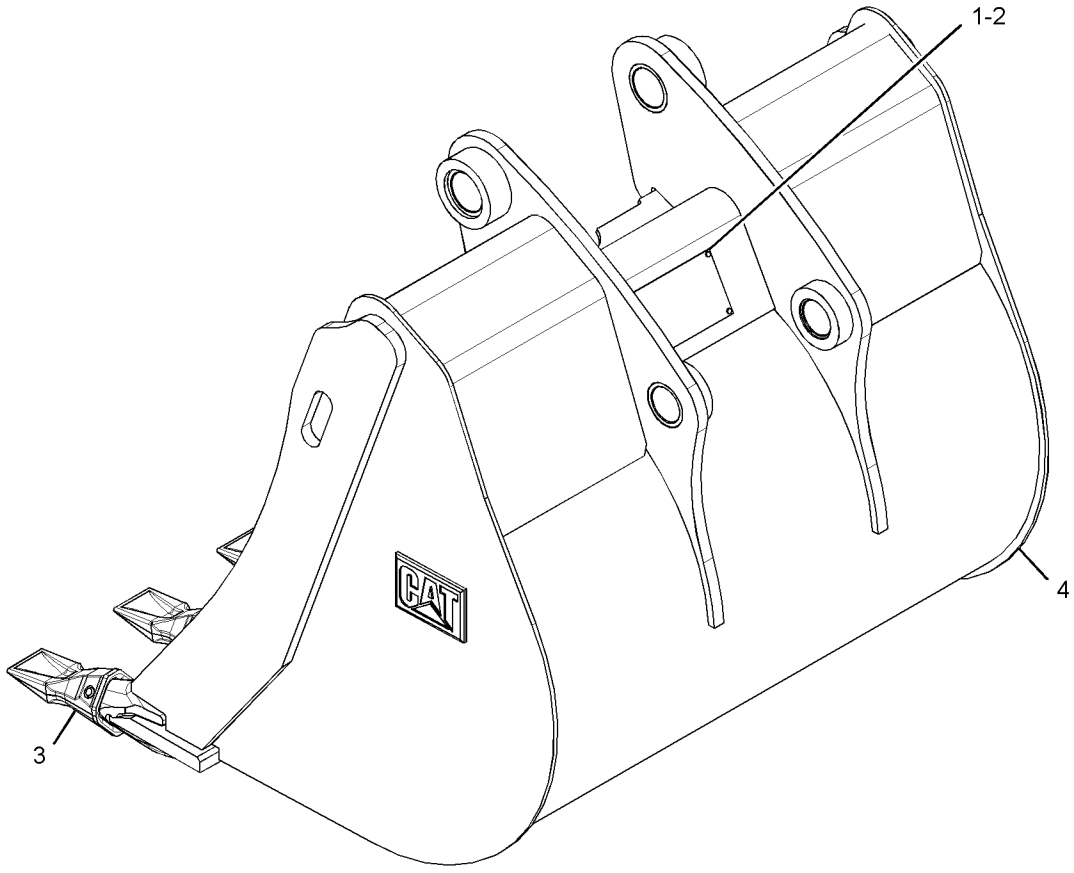

GRAPHIC #1 **<END>** g01341780

WORK TOOLS

219-3384 BUCKET GP-HOE

S/N: SHA1-UP
PART OF 219-3411 BUCKET GP-HOE
AN ATTACHMENT

SMCS-6503 **i02651326**

NOTE	REF NO	GRAPHIC REF	PART NUMBER	QTY	PART NAME 1 2 3 4 5 6 (PRODUCT LEVEL)	SEE PAGE
	1	1	**137-4234**	1	PLATE-IDENTIFICATION (WORK TOOL)	
	2	1	**168-8389**	4	TACK-FASTENER	
	3	1	*208-5245*	3	TIP GP-PENETRATION	
					(EACH INCLUDES)	
		1	**201-1238**	1	PIN	
		1	**201-1239**	1	RETAINER AS	
		1	**208-5235**	1	TIP-PENETRATION	
Y	4	1	*219-3360*	1	BUCKET AS-HOE	484

Y-SEPARATE ILLUSTRATION

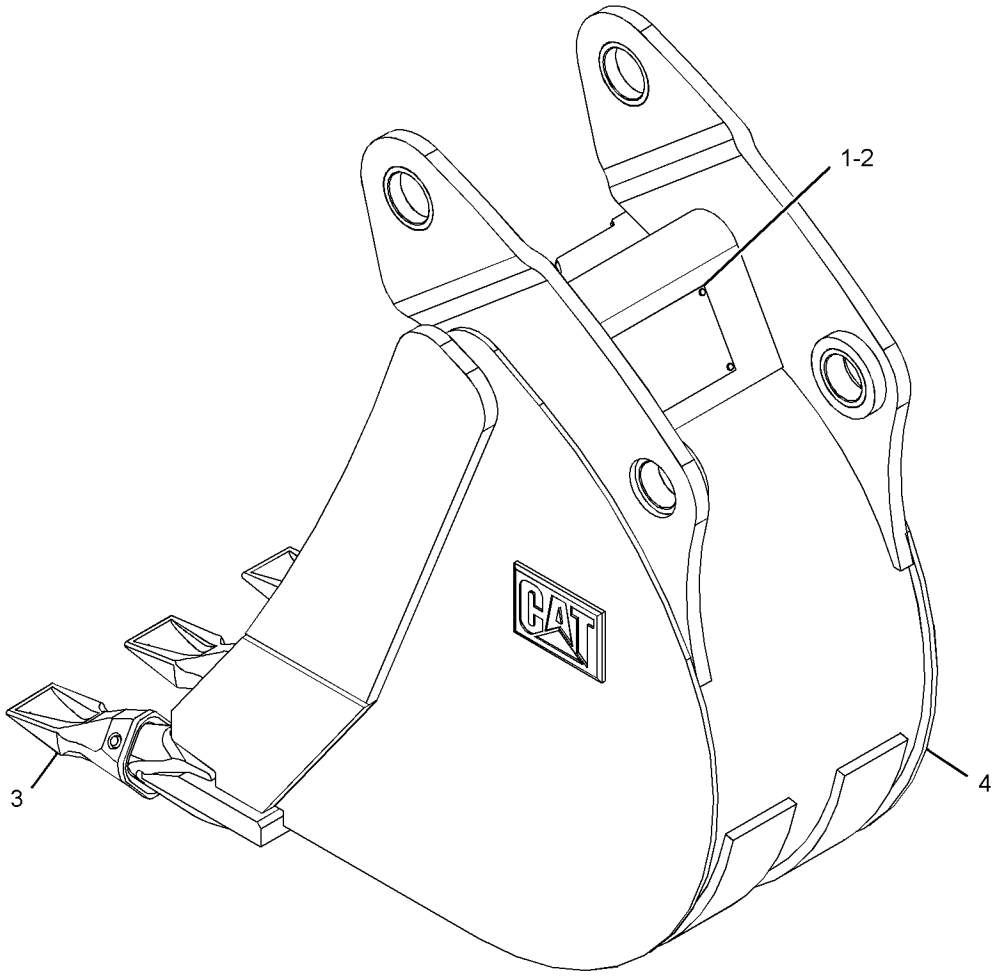

GRAPHIC #1 **<END>** g01335483

WORK TOOLS

219-3385 BUCKET GP-HOE

S/N: SHA1-UP

AN ATTACHMENT

SMCS-6503 **i02651375**

NOTE	REF NO	GRAPHIC REF	PART NUMBER	QTY	PART NAME 1 2 3 4 5 6 (PRODUCT LEVEL)	SEE PAGE
	1	1	**137-4234**	1	PLATE-IDENTIFICATION (WORK TOOL)	
	2	1	**168-8389**	4	TACK-FASTENER	
	3	1	*208-5245*	3	TIP GP-PENETRATION	
					(EACH INCLUDES)	
		1	**201-1238**	1	PIN	
		1	**201-1239**	1	RETAINER AS	
		1	**208-5235**	1	TIP-PENETRATION	
Y	4	1	*219-3361*	1	BUCKET AS-HOE	485

Y-SEPARATE ILLUSTRATION

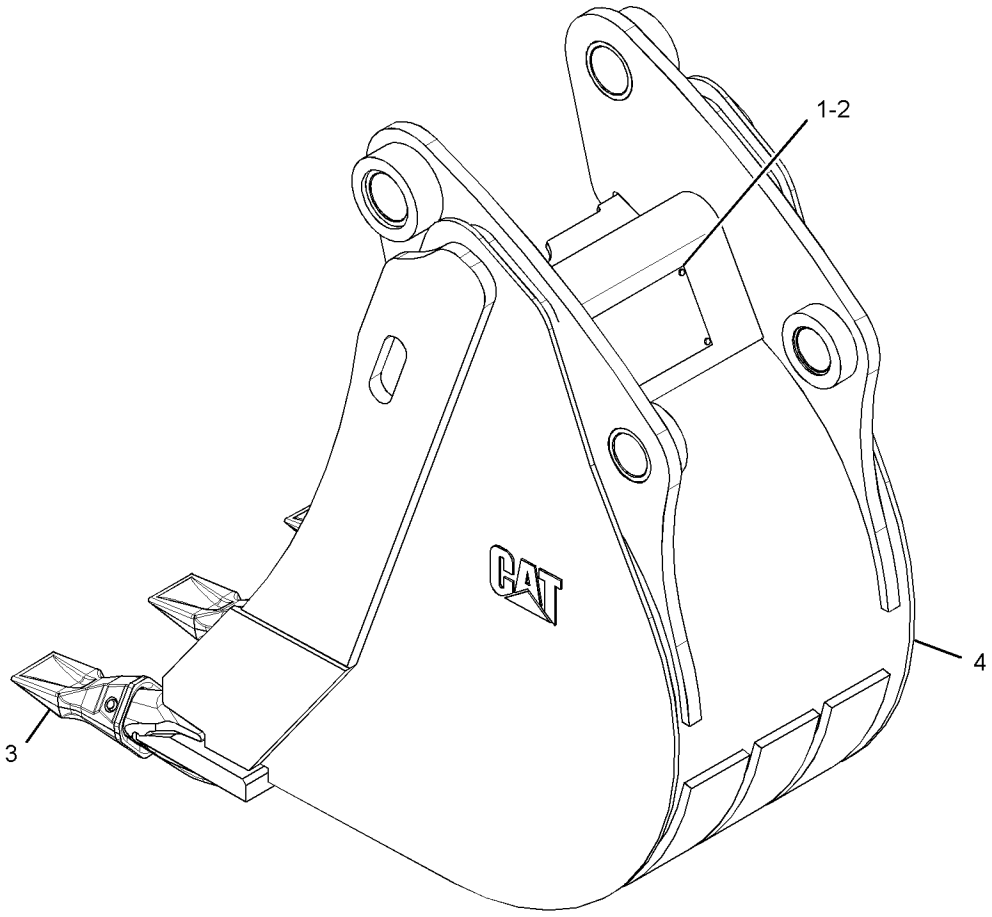

GRAPHIC #1 **<END>** g01341891

WORK TOOLS

219-3386 BUCKET GP-HOE

S/N: SHA1-UP
AN ATTACHMENT

SMCS-6503 **i02655165**

NOTE	REF NO	GRAPHIC REF	PART NUMBER	QTY	PART NAME 1 2 3 4 5 6 (PRODUCT LEVEL)	SEE PAGE
	1	1	**137-4234**	1	PLATE-IDENTIFICATION (WORK TOOL)	
	2	1	**168-8389**	4	TACK-FASTENER	
	3	1	*208-5245*	4	TIP GP-PENETRATION	
					(EACH INCLUDES)	
		1	**201-1238**	1	PIN	
		1	**201-1239**	1	RETAINER AS	
		1	**208-5235**	1	TIP-PENETRATION	
Y	4	1	*219-3362*	1	BUCKET AS-HOE	486

Y-SEPARATE ILLUSTRATION

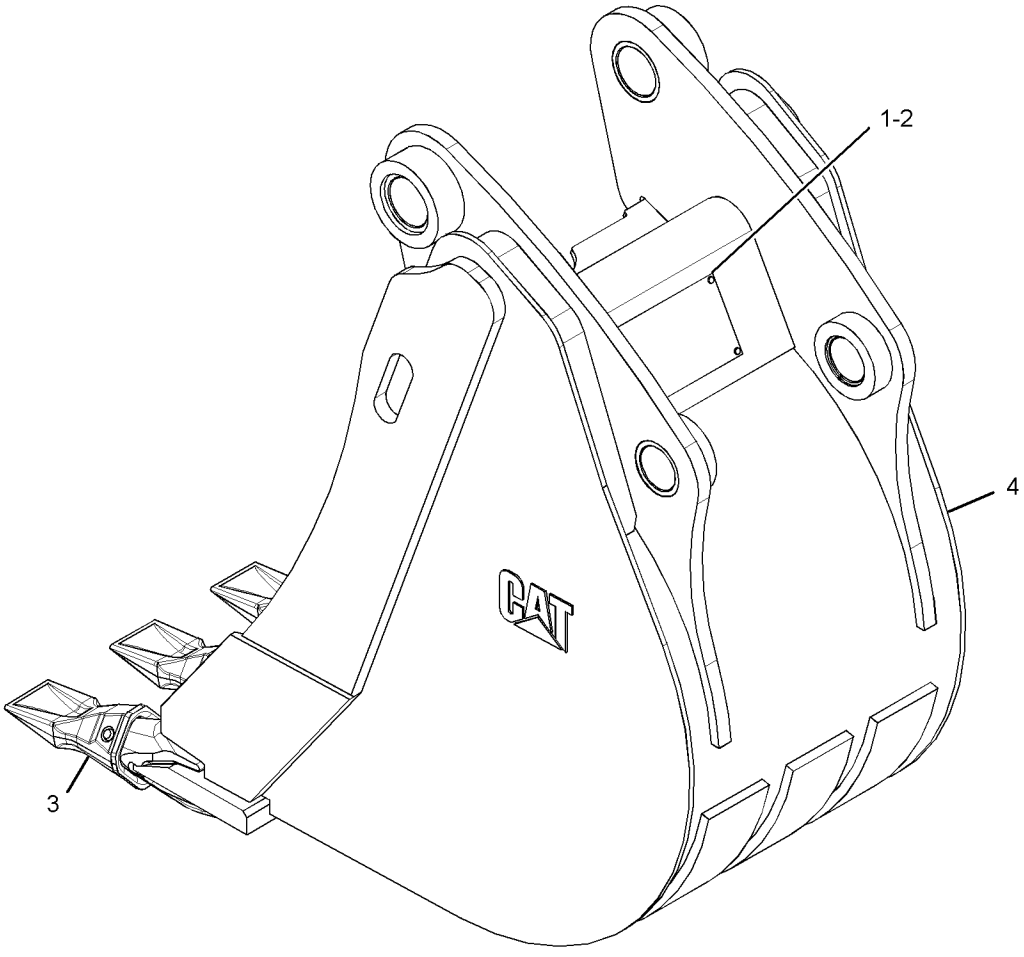

GRAPHIC #1 **<END>** g01341827

WORK TOOLS

219-3387 BUCKET GP-HOE

S/N: SHA1-UP

AN ATTACHMENT

SMCS-6503 **i02655210**

NOTE	REF NO	GRAPHIC REF	PART NUMBER	QTY	PART NAME 1 2 3 4 5 6 (PRODUCT LEVEL)	SEE PAGE
	1	1	**137-4234**	1	PLATE-IDENTIFICATION (WORK TOOL)	
	2	1	**168-8389**	4	TACK-FASTENER	
	3		*208-5245*	5	TIP GP-PENETRATION	
					(EACH INCLUDES)	
		1	**201-1238**	1	PIN	
		1	**201-1239**	1	RETAINER AS	
		1	**208-5235**	1	TIP-PENETRATION	
Y	4	1	*219-3363*	1	BUCKET AS-HOE	487

Y-SEPARATE ILLUSTRATION

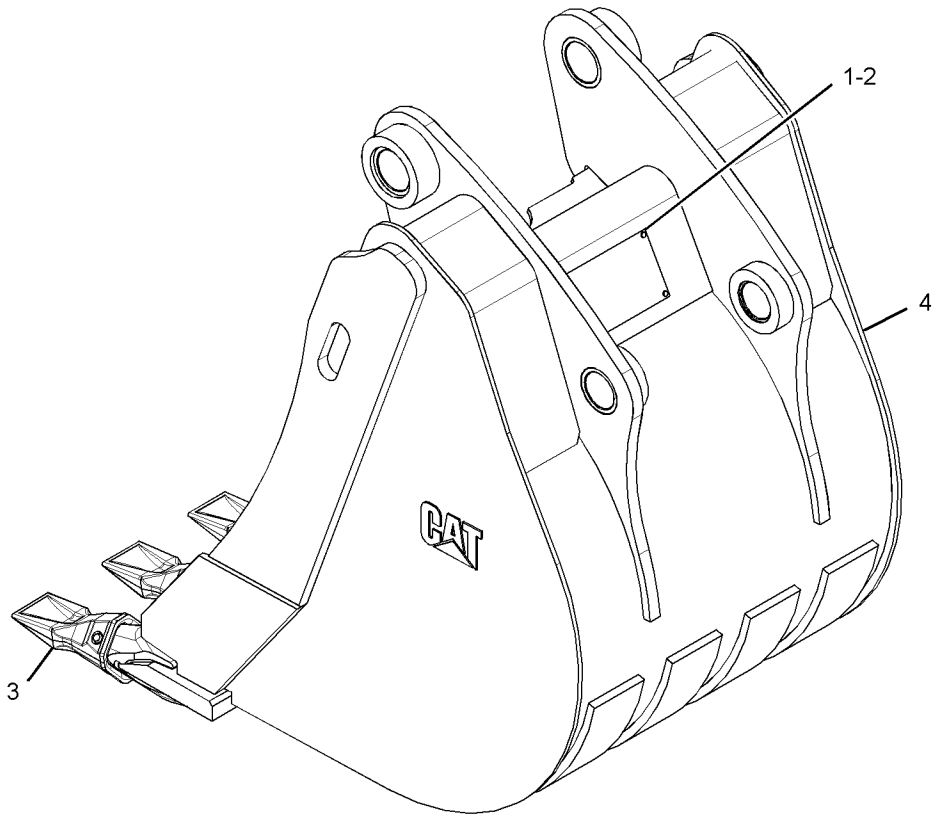

GRAPHIC #1 **<END>** g01336850

WORK TOOLS

219-3388 BUCKET GP-HOE

S/N: SHA1-UP
AN ATTACHMENT

SMCS-6503 **i02651412**

NOTE	REF NO	GRAPHIC REF	PART NUMBER	QTY	PART NAME 1 2 3 4 5 6 (PRODUCT LEVEL)	SEE PAGE
	1	1	**137-4234**	1	PLATE-IDENTIFICATION (WORK TOOL)	
	2	1	**168-8389**	4	TACK-FASTENER	
	3	1	*208-5245*	5	TIP GP-PENETRATION	
					(EACH INCLUDES)	
		1	**201-1238**	1	PIN	
		1	**201-1239**	1	RETAINER AS	
		1	**208-5235**	1	TIP-PENETRATION	
Y	4	1	*219-3364*	1	BUCKET AS-HOE	488

Y-SEPARATE ILLUSTRATION

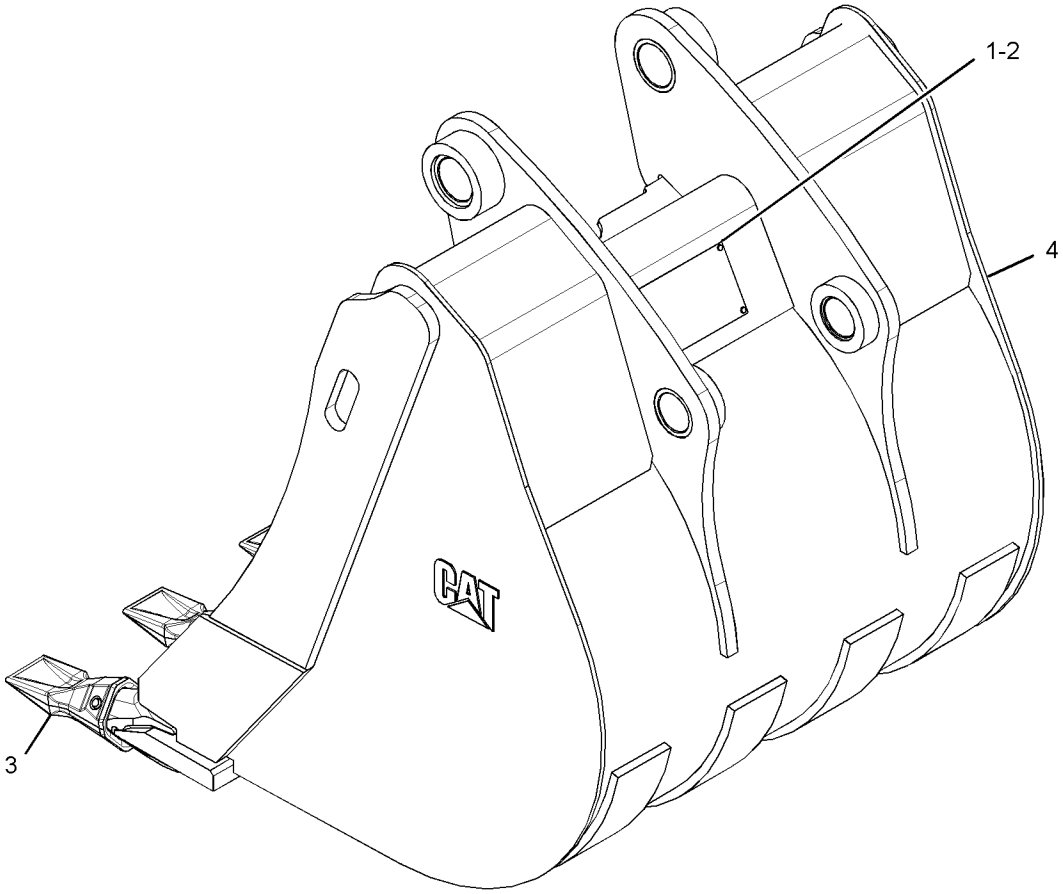

GRAPHIC #1 **<END>** g01337564

WORK TOOLS

219-3389 BUCKET GP-HOE

S/N: SHA1-UP

AN ATTACHMENT

SMCS-6503 **i02655232**

NOTE	REF NO	GRAPHIC REF	PART NUMBER	QTY	PART NAME 1 2 3 4 5 6 (PRODUCT LEVEL)	SEE PAGE
	1	1	**137-4234**	1	PLATE-IDENTIFICATION (WORK TOOL)	
	2	1	**168-8389**	4	TACK-FASTENER	
	3	1	*208-5245*	6	TIP GP-PENETRATION	
					(EACH INCLUDES)	
		1	**201-1238**	1	PIN	
		1	**201-1239**	1	RETAINER AS	
		1	**208-5235**	1	TIP-PENETRATION	
Y	4	1	*219-3365*	1	BUCKET AS-HOE	489

Y-SEPARATE ILLUSTRATION

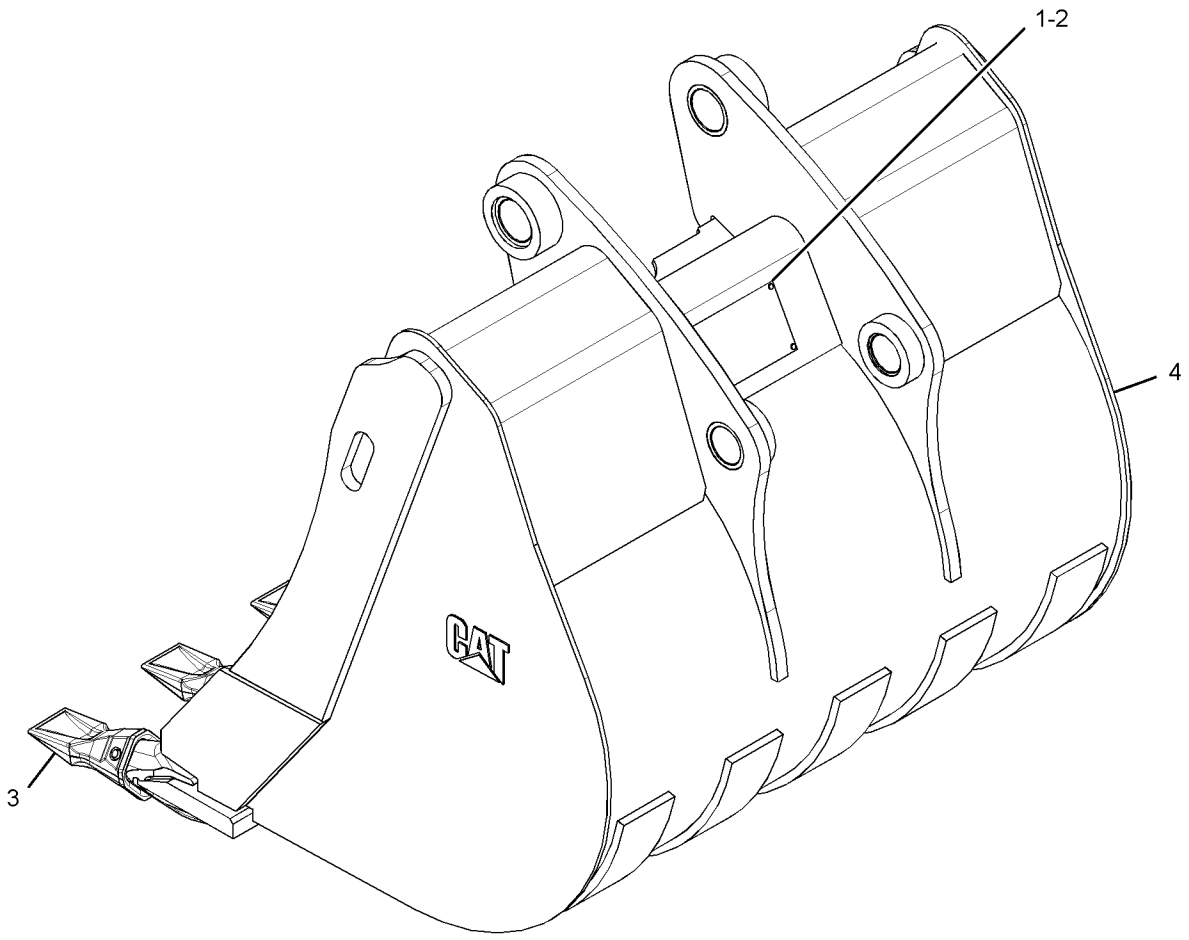

GRAPHIC #1 **<END>** g01341913

WORK TOOLS

219-3390 BUCKET GP-HOE

S/N: SHA1-UP
AN ATTACHMENT

SMCS-6503 **i02651417**

NOTE	REF NO	GRAPHIC REF	PART NUMBER	QTY	PART NAME 1 2 3 4 5 6 (PRODUCT LEVEL)	SEE PAGE
	1	1	**137-4234**	1	PLATE-IDENTIFICATION (WORK TOOL)	
	2	1	**168-8389**	4	TACK-FASTENER	
	3		*208-5245*	4	TIP GP-PENETRATION	
					(EACH INCLUDES)	
		1	**201-1238**	1	PIN	
		1	**201-1239**	1	RETAINER AS	
		1	**208-5235**	1	TIP-PENETRATION	
Y	4	1	*219-3366*	1	BUCKET AS-HOE	490

Y-SEPARATE ILLUSTRATION

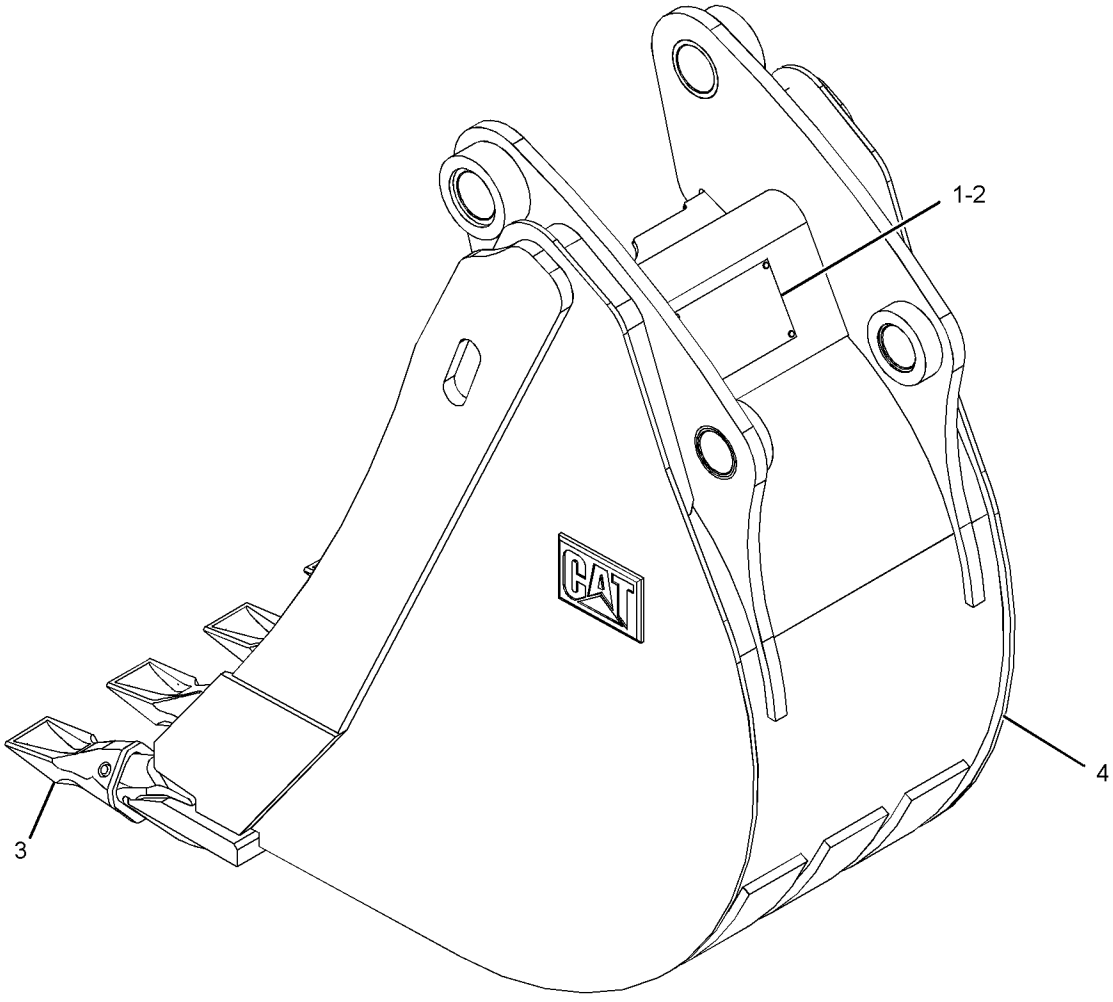

GRAPHIC #1 **<END>** g01337541

WORK TOOLS

219-3391 BUCKET GP-HOE

S/N: SHA1-UP

AN ATTACHMENT

SMCS-6503 **i02651580**

NOTE	REF NO	GRAPHIC REF	PART NUMBER	QTY	PART NAME 1 2 3 4 5 6 (PRODUCT LEVEL)	SEE PAGE
	1	1	**137-4234**	1	PLATE-IDENTIFICATION (WORK TOOL)	
	2	1	**168-8389**	4	TACK-FASTENER	
	3	1	*208-5245*	5	TIP GP-PENETRATION	
					(EACH INCLUDES)	
		1	**201-1238**	1	PIN	
		1	**201-1239**	1	RETAINER AS	
		1	**208-5235**	1	TIP-PENETRATION	
Y	4	1	*219-3367*	1	BUCKET AS-HOE	491

Y-SEPARATE ILLUSTRATION

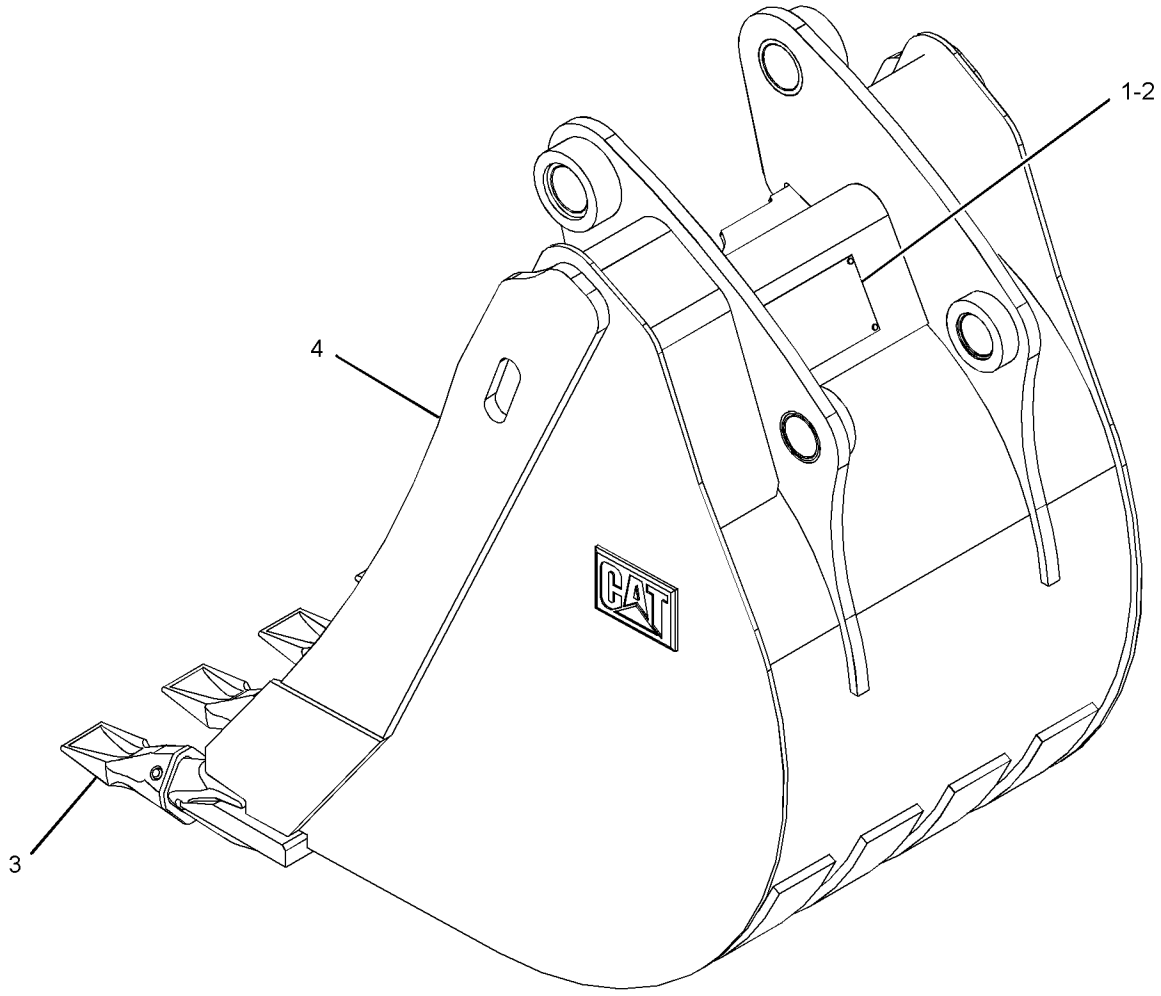

GRAPHIC #1 **<END>** g01341952

WORK TOOLS

219-3392 BUCKET GP-HOE

S/N: SHA1-UP
AN ATTACHMENT

SMCS-6503 **i02651583**

NOTE	REF NO	GRAPHIC REF	PART NUMBER	QTY	PART NAME 1 2 3 4 5 6 (PRODUCT LEVEL)	SEE PAGE
	1	1	**137-4234**	1	PLATE-IDENTIFICATION (WORK TOOL)	
	2	1	**168-8389**	4	TACK-FASTENER	
	3	1	*208-5245*	5	TIP GP-PENETRATION	
					(EACH INCLUDES)	
		1	**201-1238**	1	PIN	
		1	**201-1239**	1	RETAINER AS	
		1	**208-5235**	1	TIP-PENETRATION	
Y	4	1	*219-3368*	1	BUCKET AS-HOE	492

Y-SEPARATE ILLUSTRATION

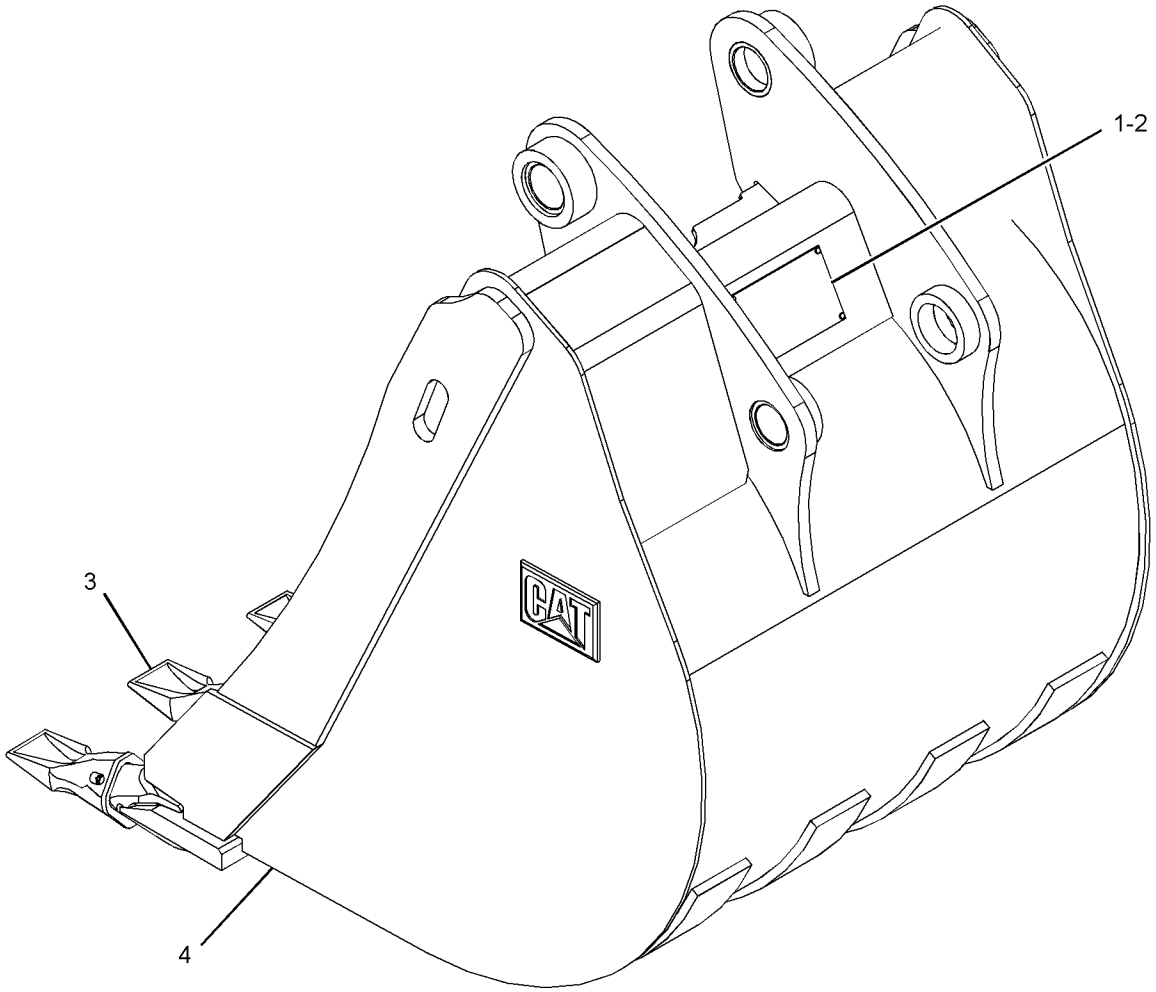

GRAPHIC #1 **<END>** g01341920

WORK TOOLS

219-3393 BUCKET GP-HOE

S/N: SHA1-UP

AN ATTACHMENT

SMCS-6503 **i02651584**

NOTE	REF NO	GRAPHIC REF	PART NUMBER	QTY	PART NAME 1 2 3 4 5 6 (PRODUCT LEVEL)	SEE PAGE
	1	1	**137-4234**	1	PLATE-IDENTIFICATION (WORK TOOL)	
	2	1	**168-8389**	4	TACK-FASTENER	
	3		*208-5245*	6	TIP GP-PENETRATION	
					(EACH INCLUDES)	
		1	**201-1238**	1	PIN	
		1	**201-1239**	1	RETAINER AS	
		1	**208-5235**	1	TIP-PENETRATION	
Y	4	1	*219-3369*	1	BUCKET AS-HOE	493

Y-SEPARATE ILLUSTRATION

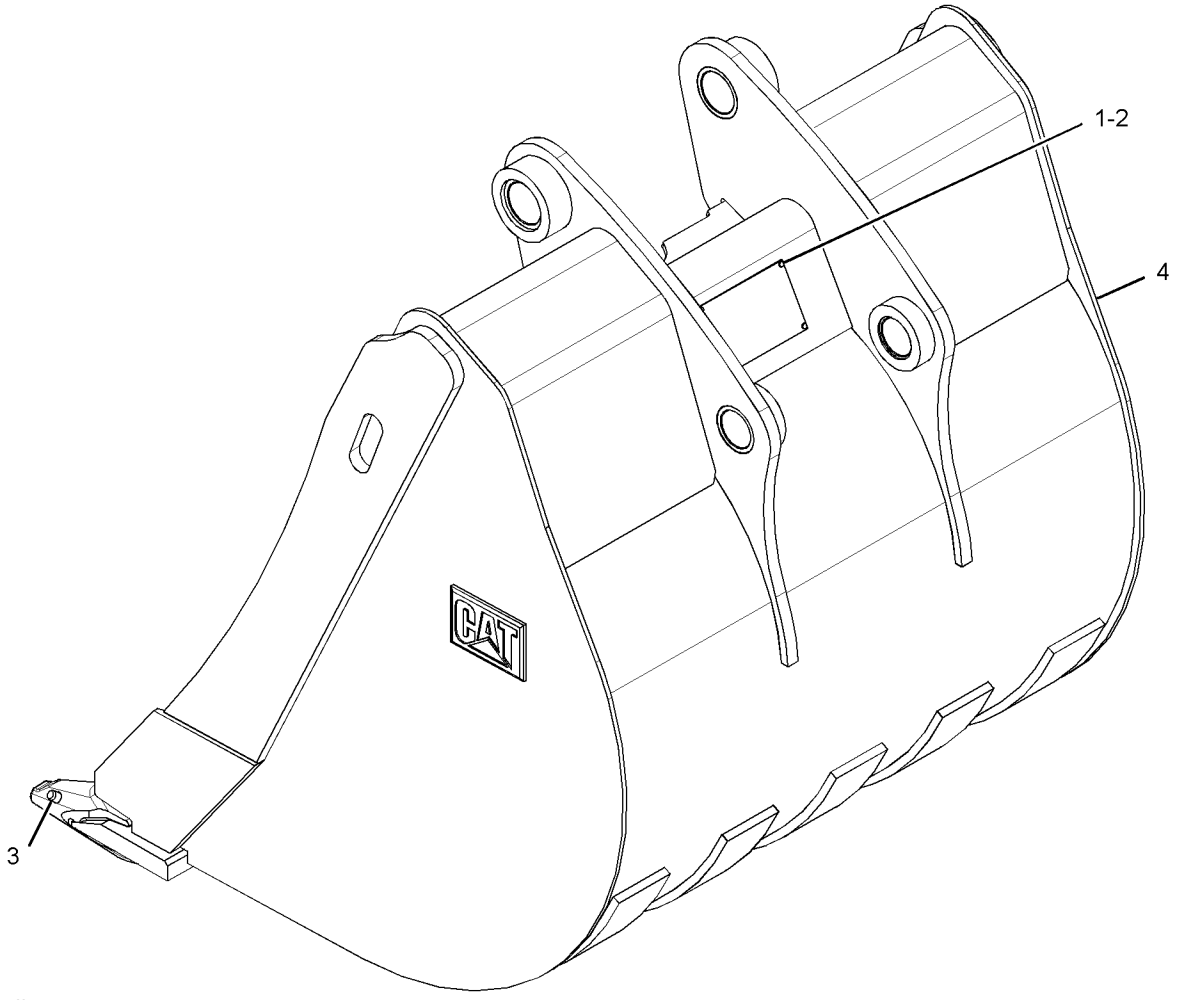

GRAPHIC #1 **<END>** g01336804

WORK TOOLS

219-3394 BUCKET GP-HOE

S/N: SHA1-UP
PART OF 219-3412 BUCKET GP-HOE
AN ATTACHMENT

SMCS-6503 **i02659874**

NOTE	REF NO	GRAPHIC REF	PART NUMBER	QTY	PART NAME 1 2 3 4 5 6 (PRODUCT LEVEL)	SEE PAGE
	1	1	**137-4234**	1	PLATE-IDENTIFICATION (WORK TOOL)	
	2	1	**168-8389**	4	TACK-FASTENER	
	3	1	*208-5245*	4	TIP GP-PENETRATION	
					(EACH INCLUDES)	
		1	**201-1238**	1	PIN	
		1	**201-1239**	1	RETAINER AS	
		1	**208-5235**	1	TIP-PENETRATION	
Y	4	1	*219-3370*	1	BUCKET AS-HOE (ROCK)	494

Y-SEPARATE ILLUSTRATION

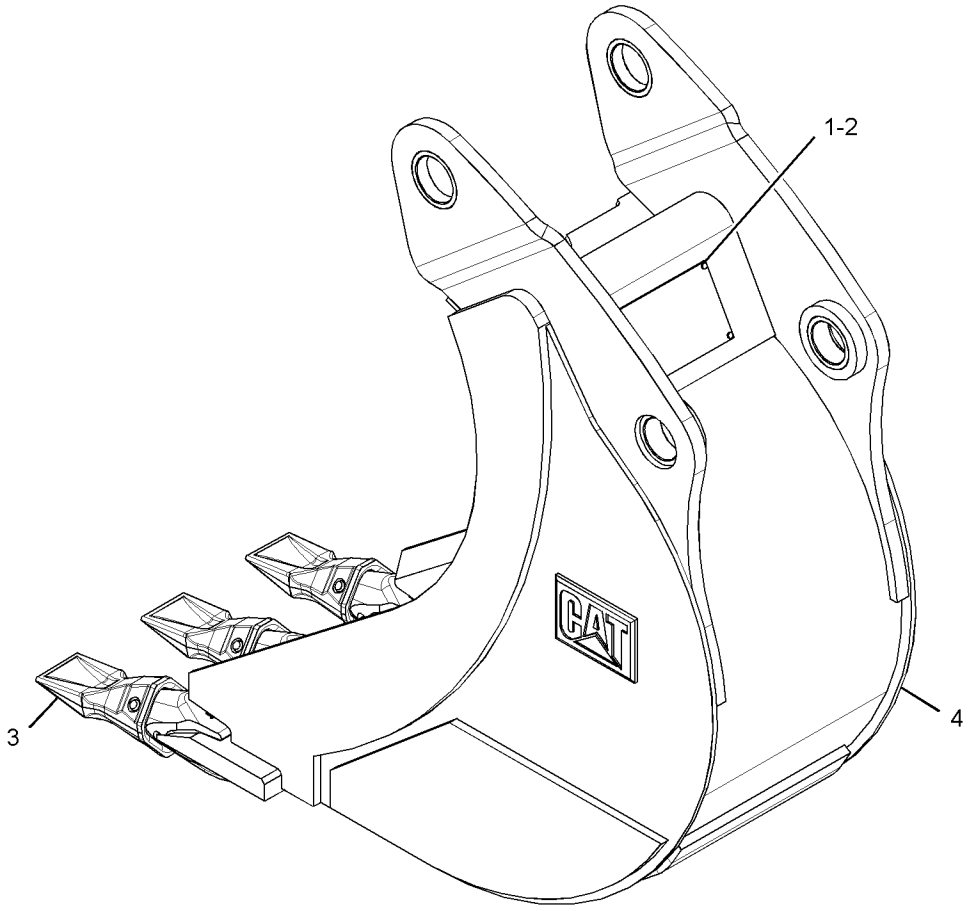

GRAPHIC #1 **<END>** g01342095

WORK TOOLS

219-3395 BUCKET GP-HOE

S/N: SHA1-UP

AN ATTACHMENT

SMCS-6503 **i02651589**

NOTE	REF NO	GRAPHIC REF	PART NUMBER	QTY	PART NAME 1 2 3 4 5 6 (PRODUCT LEVEL)	SEE PAGE
	1	1	**137-4234**	1	PLATE-IDENTIFICATION (WORK TOOL)	
	2	1	**168-8389**	4	TACK-FASTENER	
	3	1	*208-5245*	4	TIP GP-PENETRATION	
					(EACH INCLUDES)	
		1	**201-1238**	1	PIN	
		1	**201-1239**	1	RETAINER AS	
		1	**208-5235**	1	TIP-PENETRATION	
Y	4	1	*219-3371*	1	BUCKET AS-HOE (ROCK)	495

Y-SEPARATE ILLUSTRATION

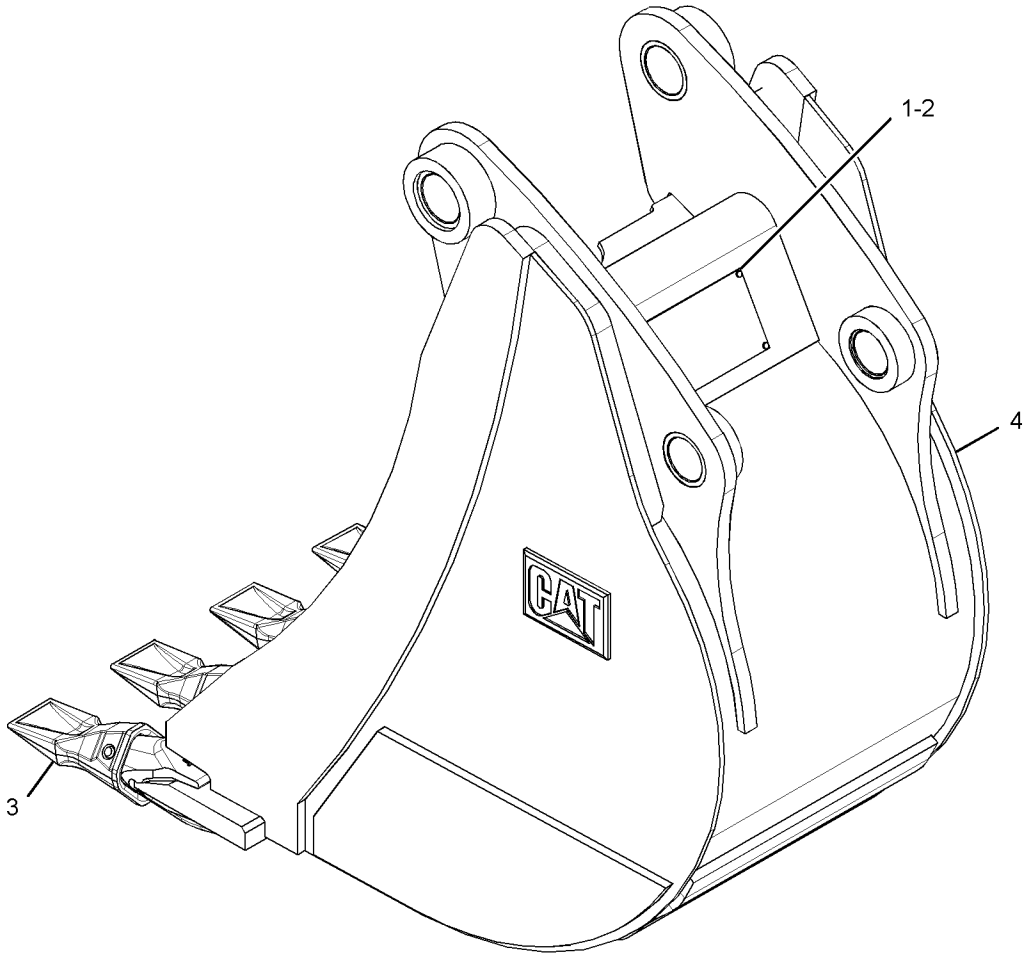

GRAPHIC #1 **<END>** g01340728

WORK TOOLS

219-3396 BUCKET GP-HOE

S/N: SHA1-UP
AN ATTACHMENT

SMCS-6503 **i02651591**

NOTE	REF NO	GRAPHIC REF	PART NUMBER	QTY	PART NAME 1 2 3 4 5 6 (PRODUCT LEVEL)	SEE PAGE
	1	1	**137-4234**	1	PLATE-IDENTIFICATION (WORK TOOL)	
	2	1	**168-8389**	4	TACK-FASTENER	
	3	1	*208-5245*	5	TIP GP-PENETRATION	
					(EACH INCLUDES)	
		1	**201-1238**	1	PIN	
		1	**201-1239**	1	RETAINER AS	
		1	**208-5235**	1	TIP-PENETRATION	
Y	4	1	*219-3372*	1	BUCKET AS-HOE (ROCK)	496

Y-SEPARATE ILLUSTRATION

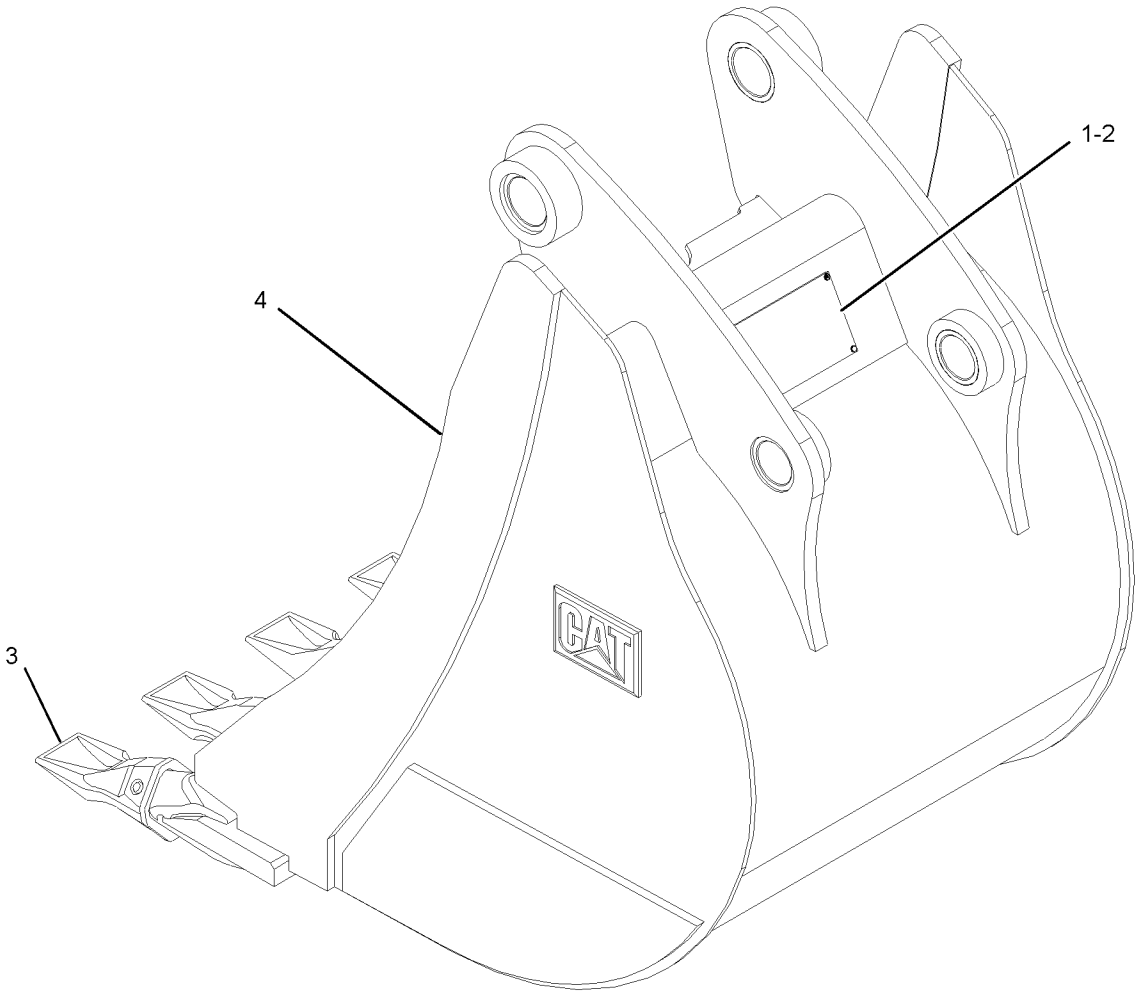

GRAPHIC #1 **<END>** g01341821

WORK TOOLS

219-3397 BUCKET GP-HOE

S/N: SHA1-UP

AN ATTACHMENT

SMCS-6503 **i02651594**

NOTE	REF NO	GRAPHIC REF	PART NUMBER	QTY	PART NAME 1 2 3 4 5 6 (PRODUCT LEVEL)	SEE PAGE
	1	1	**137-4234**	1	PLATE-IDENTIFICATION (WORK TOOL)	
	2	1	**168-8389**	4	TACK-FASTENER	
	3	1	*208-5245*	5	TIP GP-PENETRATION	
					(EACH INCLUDES)	
		1	**201-1238**	1	PIN	
		1	**201-1239**	1	RETAINER AS	
		1	**208-5235**	1	TIP-PENETRATION	
Y	4		*219-3374*	1	BUCKET AS-HOE (ROCK)	497

Y-SEPARATE ILLUSTRATION

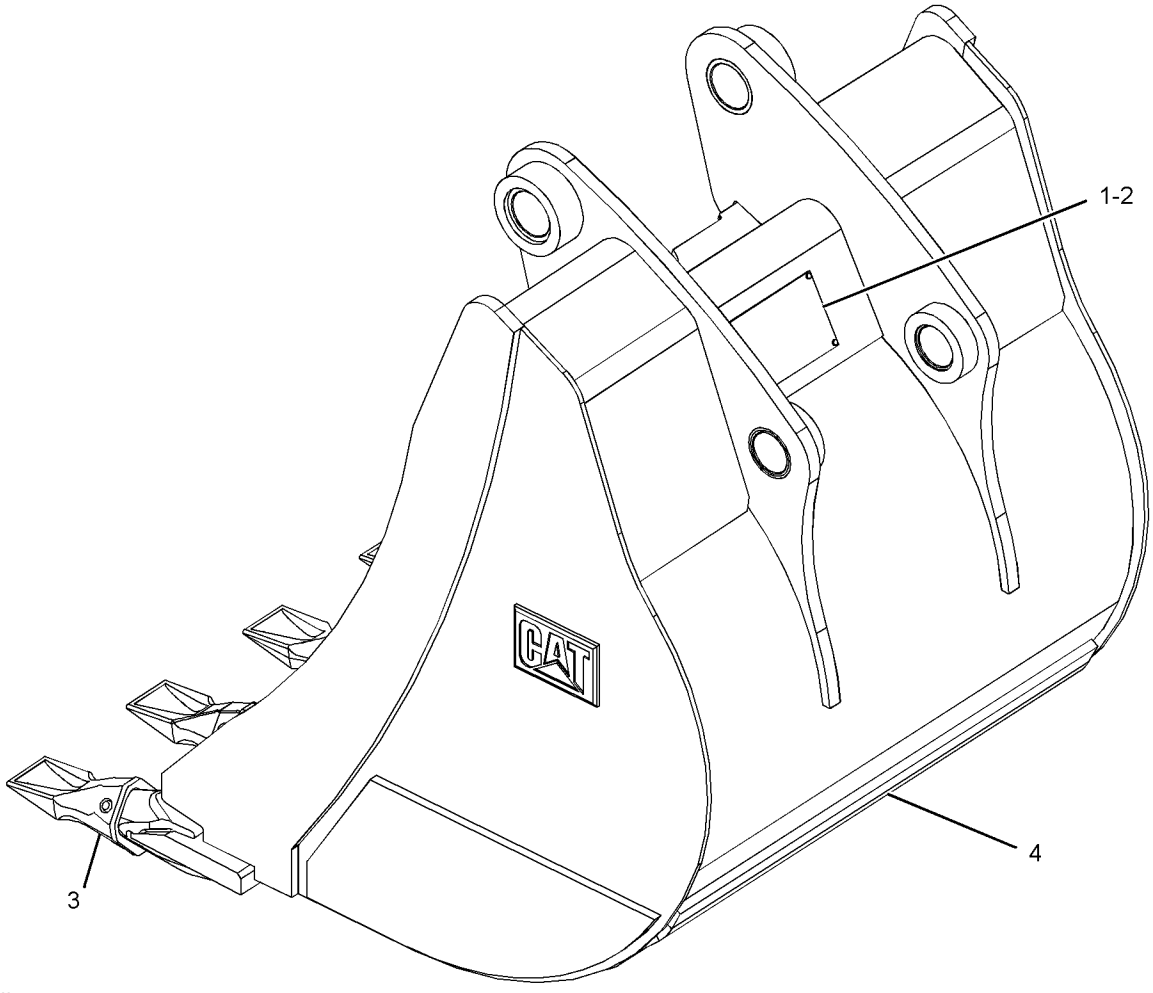

GRAPHIC #1 **<END>** g01341885

WORK TOOLS

219-3398 BUCKET GP-HOE

S/N: SHA1-UP
AN ATTACHMENT

SMCS-6503 **i02660345**

NOTE	REF NO	GRAPHIC REF	PART NUMBER	QTY	PART NAME 1 2 3 4 5 6 (PRODUCT LEVEL)	SEE PAGE
	1	1	**137-4234**	1	PLATE-IDENTIFICATION (WORK TOOL)	
	2	1	**168-8389**	4	TACK-FASTENER	
	3	1	*208-5245*	6	TIP GP-PENETRATION	
					(EACH INCLUDES)	
		1	**201-1238**	1	PIN	
		1	**201-1239**	1	RETAINER AS	
		1	**208-5235**	1	TIP-PENETRATION	
Y	4	1	*219-3374*	1	BUCKET AS-HOE (ROCK)	497

Y-SEPARATE ILLUSTRATION

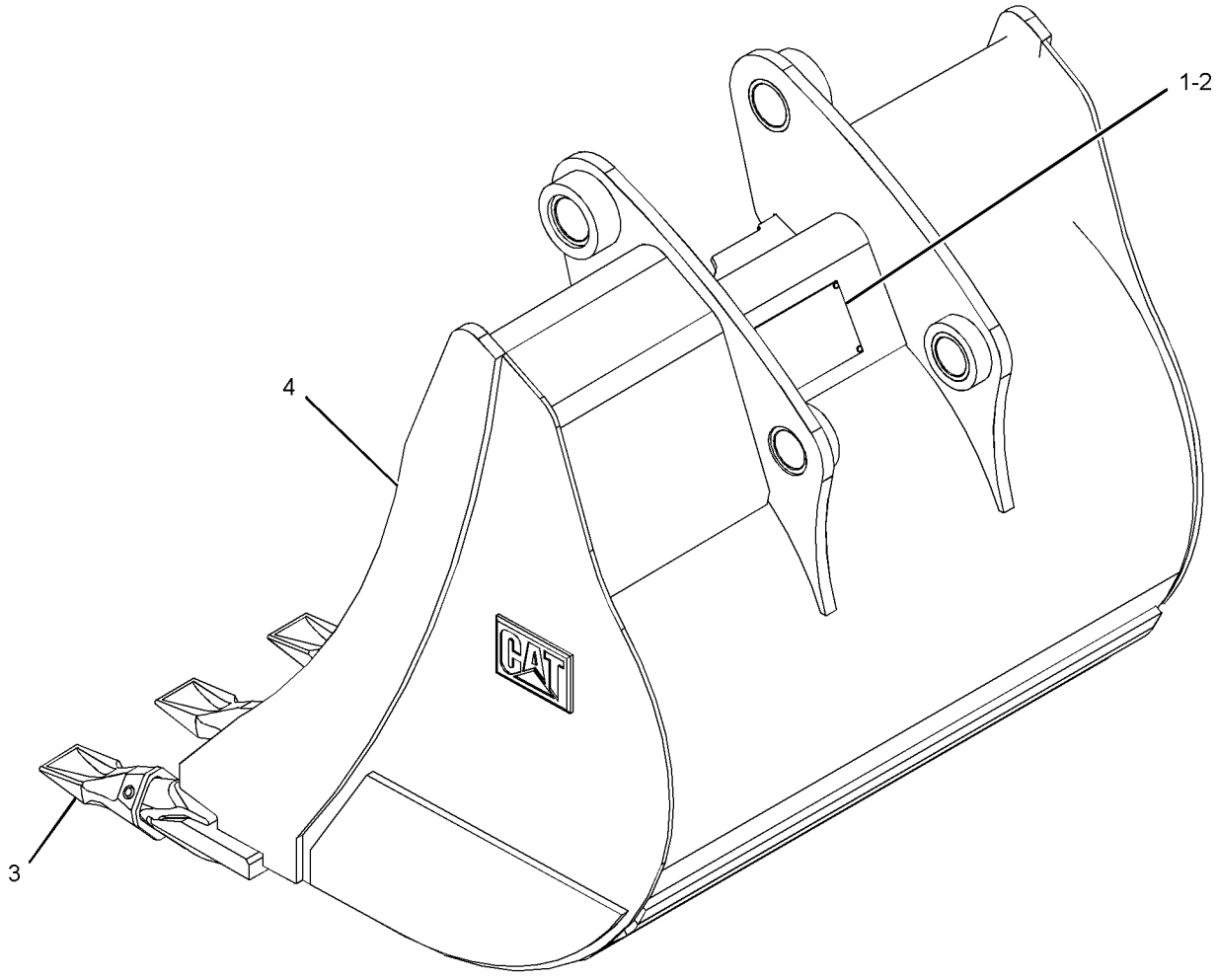

GRAPHIC #1 **<END>** g01342103

WORK TOOLS

219-3399 BUCKET GP-HOE

S/N: SHA1-UP
PART OF 219-3413 BUCKET GP-HOE
AN ATTACHMENT

SMCS-6503 **i02661567**

NOTE	REF NO	GRAPHIC REF	PART NUMBER	QTY	PART NAME 1 2 3 4 5 6 (PRODUCT LEVEL)	SEE PAGE
	1	1	**137-4234**	1	PLATE-IDENTIFICATION (WORK TOOL)	
	2	1	**168-8389**	4	TACK-FASTENER	
	3	1	*208-5242*	4	TIP GP-CHISEL	
					(EACH INCLUDES)	
		1	**201-1238**	1	PIN	
		1	**201-1239**	1	RETAINER AS	
		1	**208-5235**	1	TIP-PENETRATION	
Y	4	1	*219-3375*	1	BUCKET AS-HOE	499

Y-SEPARATE ILLUSTRATION

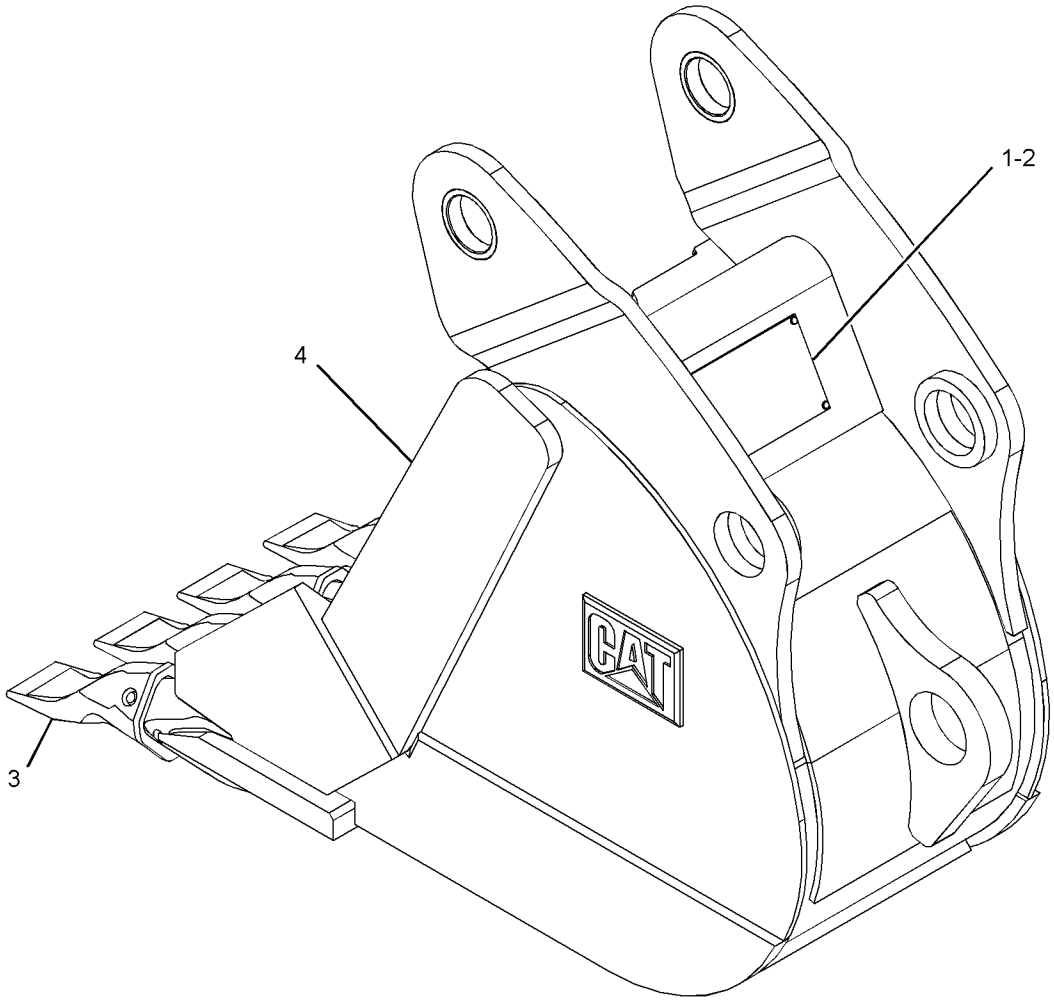

GRAPHIC #1 **<END>** g01342465

WORK TOOLS

219-3400 BUCKET GP-HOE

S/N: SHA1-UP
AN ATTACHMENT

SMCS-6503 **i02661599**

NOTE	REF NO	GRAPHIC REF	PART NUMBER	QTY	PART NAME 1 2 3 4 5 6 (PRODUCT LEVEL)	SEE PAGE
	1	1	**137-4234**	1	PLATE-IDENTIFICATION (WORK TOOL)	
	2	1	**168-8389**	4	TACK-FASTENER	
	3	1	*208-5242*	6	TIP GP-CHISEL	
					(EACH INCLUDES)	
		1	**201-1238**	1	PIN	
		1	**201-1239**	1	RETAINER AS	
		1	**208-5232**	1	TIP-CHISEL	
Y	4	1	*219-3376*	1	BUCKET AS-HOE	500

Y-SEPARATE ILLUSTRATION

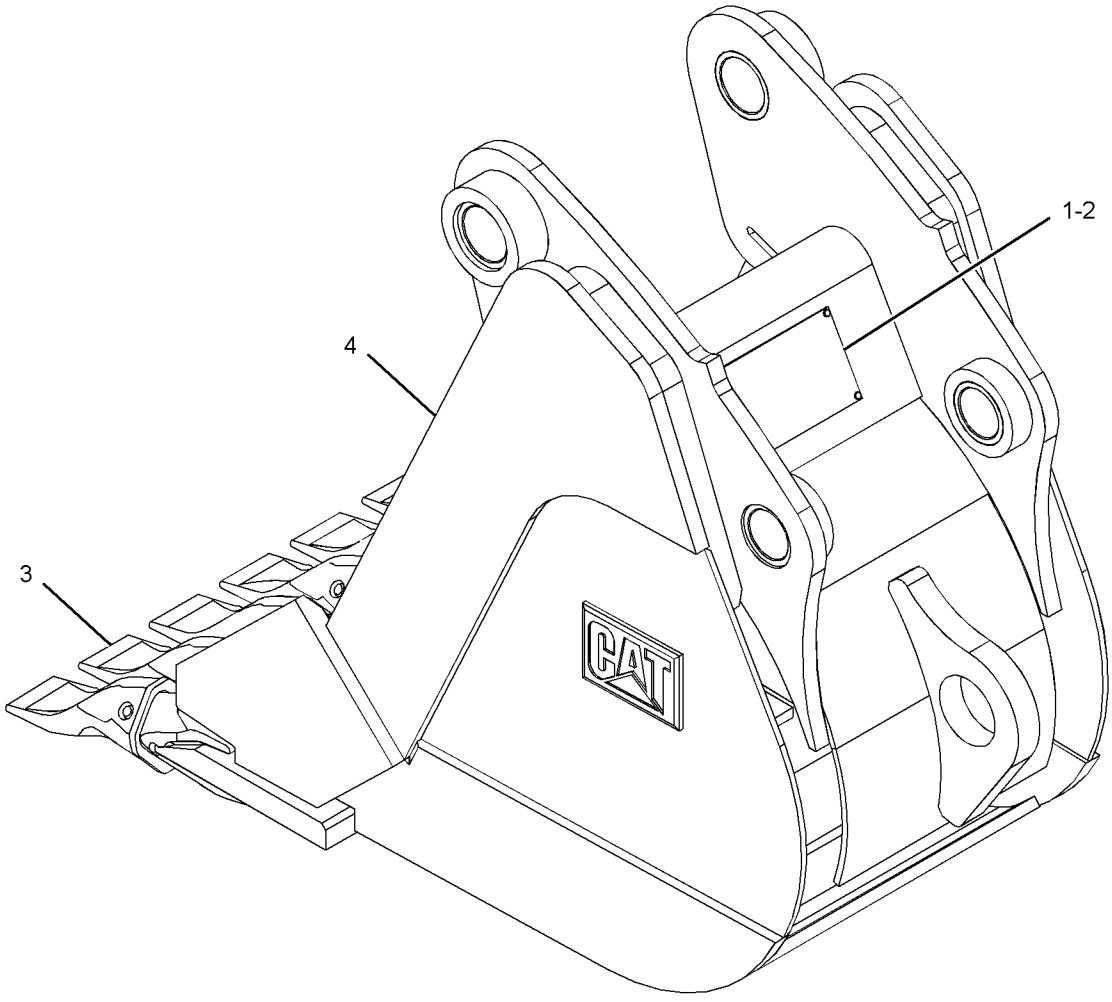

GRAPHIC #1 **<END>** g01342327

WORK TOOLS

219-3401 BUCKET GP-HOE

S/N: SHA1-UP

AN ATTACHMENT

SMCS-6503 **i02661603**

NOTE	REF NO	GRAPHIC REF	PART NUMBER	QTY	PART NAME 1 2 3 4 5 6 (PRODUCT LEVEL)	SEE PAGE
	1	1	**137-4234**	1	PLATE-IDENTIFICATION (WORK TOOL)	
	2	1	**168-8389**	4	TACK-FASTENER	
	3	1	*208-5242*	8	TIP GP-CHISEL	
					(EACH INCLUDES)	
		1	**201-1238**	1	PIN	
		1	**201-1239**	1	RETAINER AS	
		1	**208-5232**	1	TIP-CHISEL	
Y	4	1	*219-3377*	1	BUCKET AS-HOE	501

Y-SEPARATE ILLUSTRATION

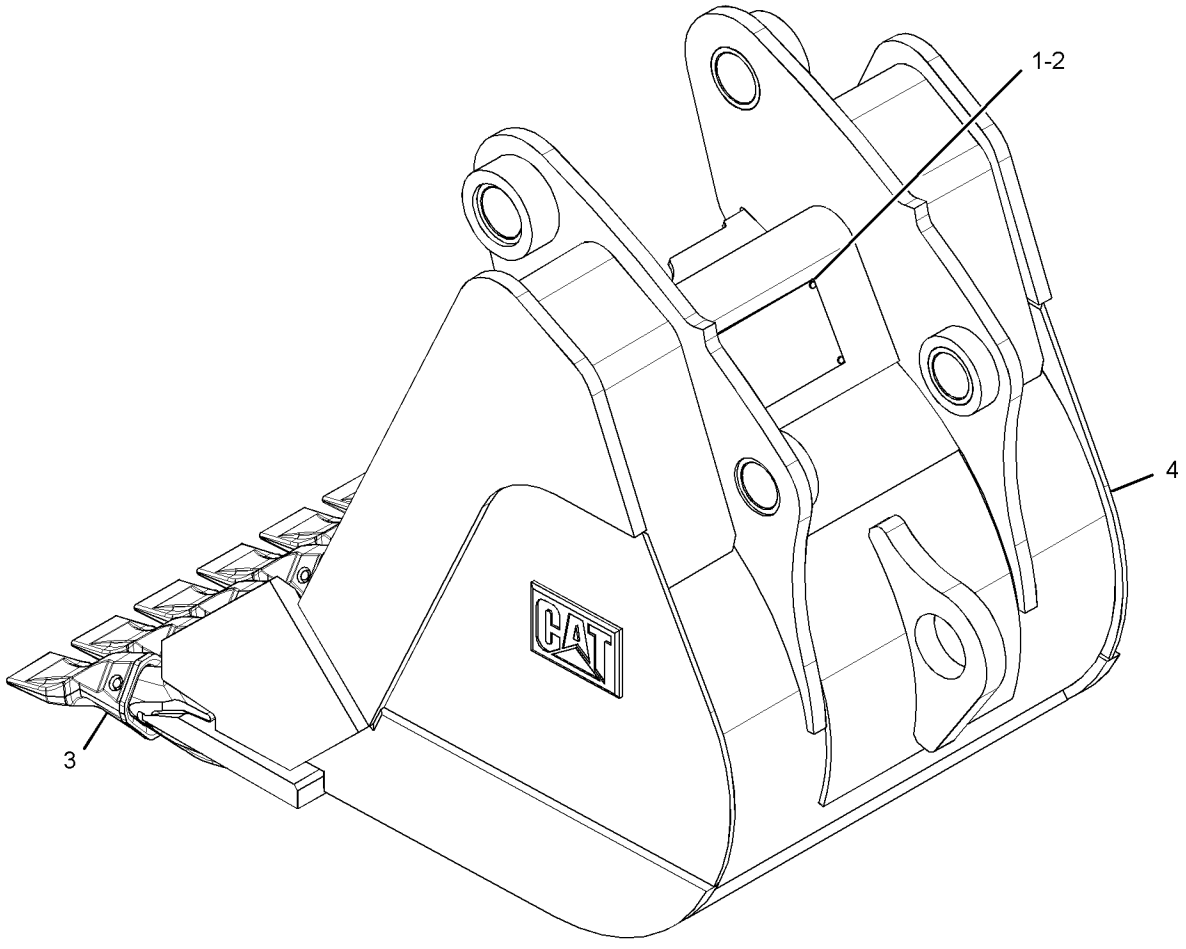

GRAPHIC #1 **<END>** g01342450

WORK TOOLS

219-3402 BUCKET GP-HOE

S/N: SHA1-UP
AN ATTACHMENT

SMCS-6503 **i02661605**

NOTE	REF NO	GRAPHIC REF	PART NUMBER	QTY	PART NAME 1 2 3 4 5 6 (PRODUCT LEVEL)	SEE PAGE
	1	1	**137-4234**	1	PLATE-IDENTIFICATION (WORK TOOL)	
	2	1	**168-8389**	4	TACK-FASTENER	
	3	1	*208-5242*	10	TIP GP-CHISEL	
					(EACH INCLUDES)	
		1	**201-1238**	1	PIN	
		1	**201-1239**	1	RETAINER AS	
		1	**208-5235**	1	TIP-PENETRATION	
Y	4	1	*219-3378*	1	BUCKET AS-HOE (CORAL)	502

Y-SEPARATE ILLUSTRATION

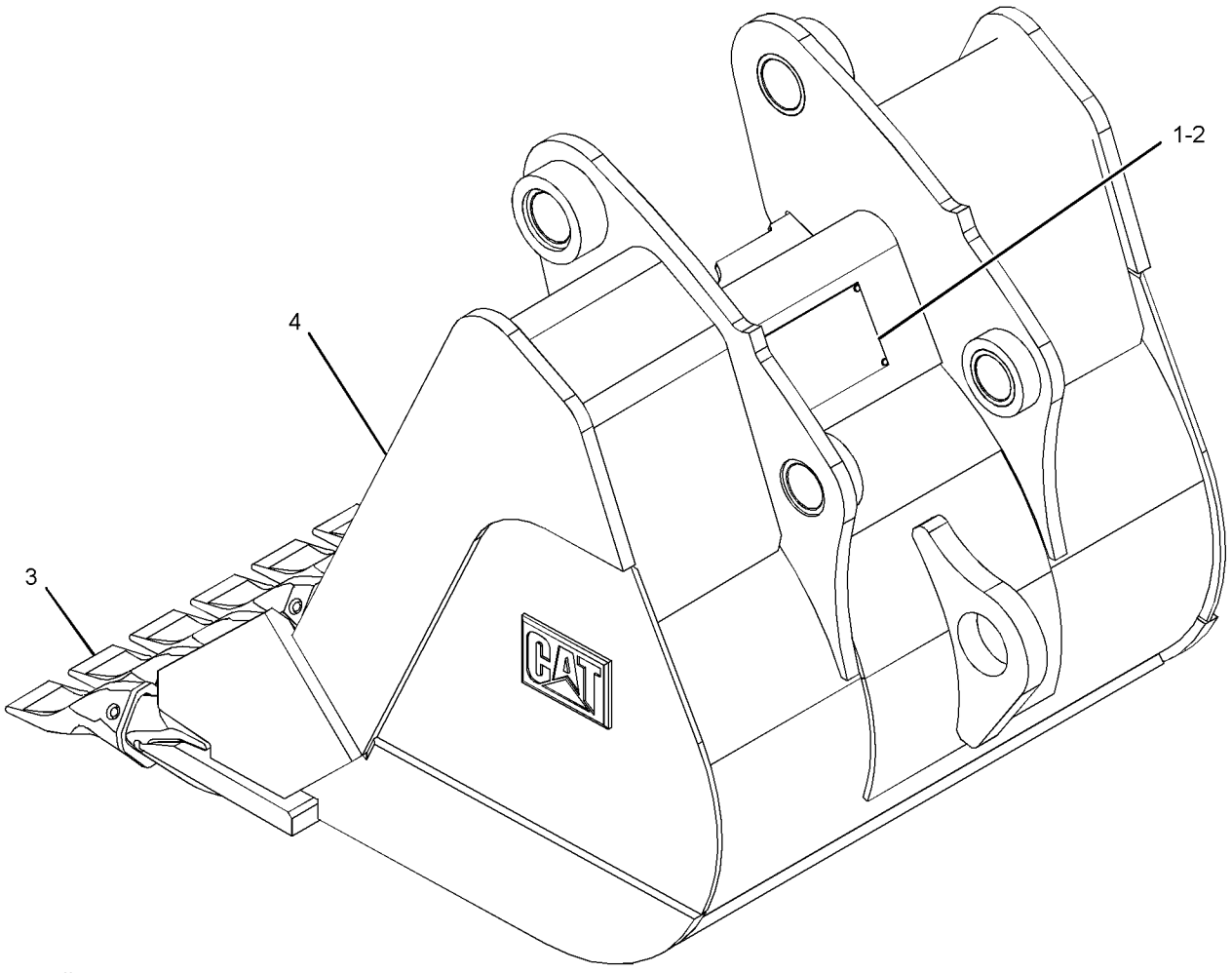

GRAPHIC #1 **<END>** g01342615

WORK TOOLS

219-3410 BUCKET GP-HOE

S/N: SHA1-UP
305-MM (12-IN)
AN ATTACHMENT

SMCS-6503 **i01916048**

NOTE	REF NO	GRAPHIC REF	PART NUMBER	QTY	PART NAME 1 2 3 4 5 6 (PRODUCT LEVEL)	SEE PAGE
	1	1	**6V-3213**	2	RING-RETAINING	
	2	1	**6V-4364**	2	RING-RETAINING	
	3	1	**9R-0158**	5	WASHER (46X69X3-MM THK)	
	4	1	**9R-1510**	3	WASHER (51X82X4-MM THK)	
	5	1	**168-0443**	1	PIN	
	6	1	**168-0444**	1	PIN	
Y	7	1	**219-3379**	1	BUCKET GP-HOE	518

Y-SEPARATE ILLUSTRATION

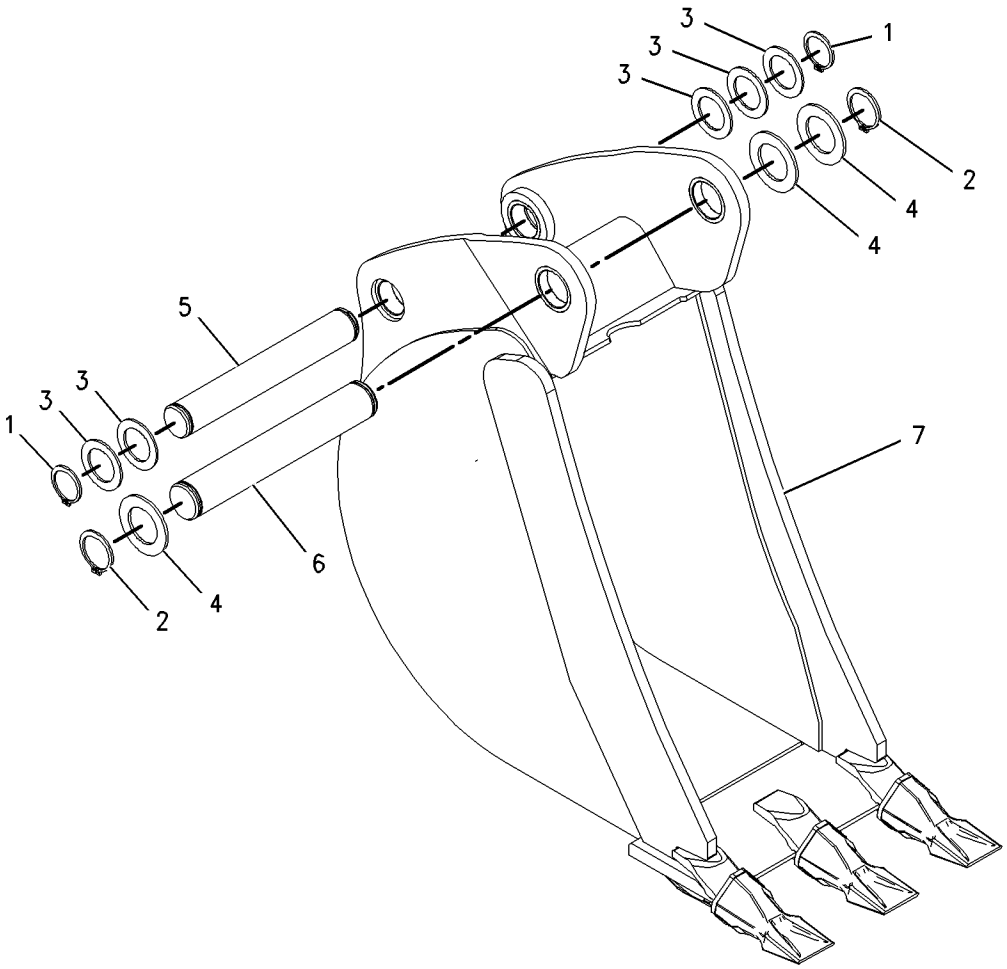

GRAPHIC #1 **<END>** g01001892

219-3411 BUCKET GP-HOE–HEAVY DUTY

S/N: SHA1-UP
305-MM (12-IN)
AN ATTACHMENT

SMCS-6503 **i01916050**

NOTE	REF NO	GRAPHIC REF	PART NUMBER	QTY	PART NAME 1 2 3 4 5 6 (PRODUCT LEVEL)	SEE PAGE
	1	1	**6V-3213**	2	RING-RETAINING	
	2	1	**6V-4364**	2	RING-RETAINING	
	3	1	**9R-0158**	5	WASHER (46X69X3-MM THK)	
	4	1	**9R-1510**	3	WASHER (51X82X4-MM THK)	
	5	1	**168-0443**	1	PIN	
	6	1	**168-0444**	1	PIN	
Y	7	1	**219-3384**	1	BUCKET GP-HOE (HEAVY-DUTY)	523

Y-SEPARATE ILLUSTRATION

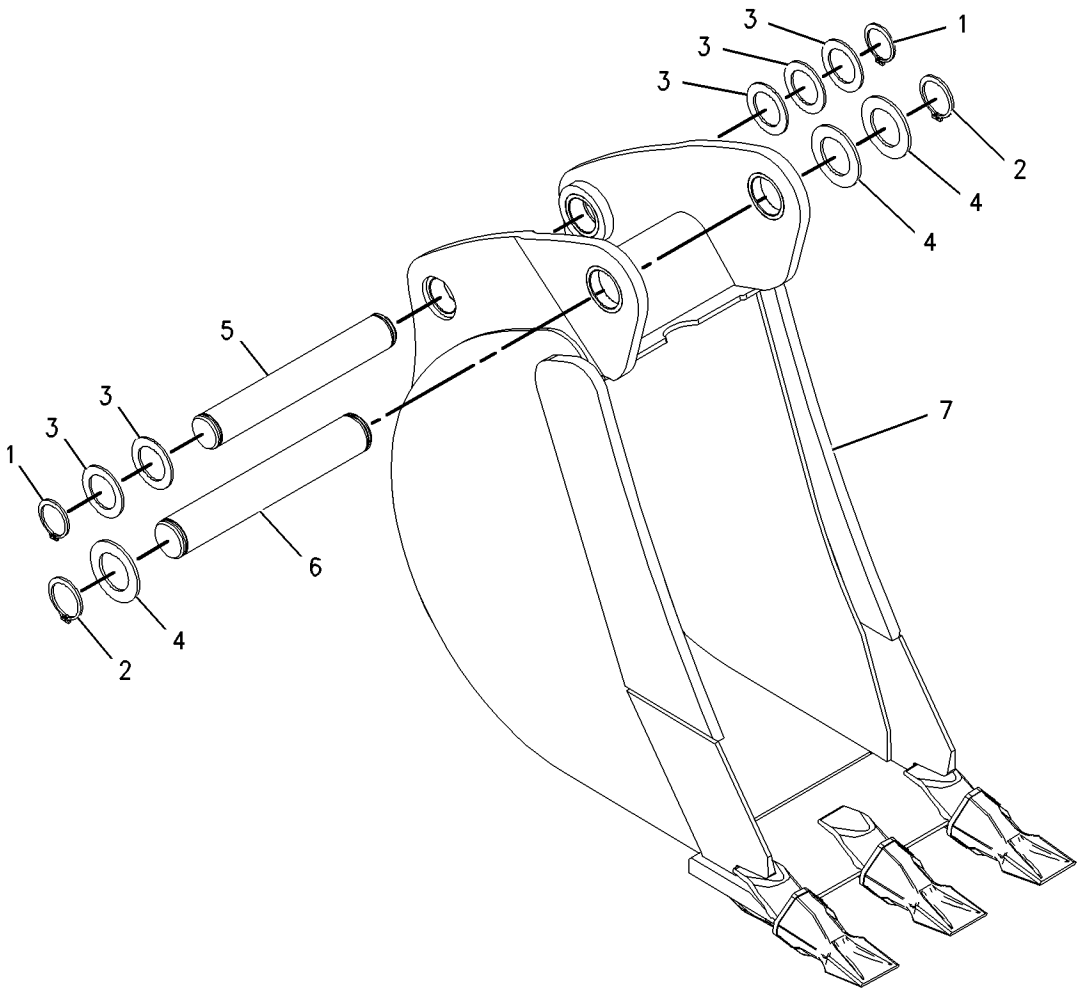

GRAPHIC #1 **<END>** g01001906

WORK TOOLS

219-3412 BUCKET GP-HOE–ROCK

S/N: SHA1-UP
305-MM (12-IN)
AN ATTACHMENT

SMCS-6503 **i02250023**

NOTE	REF NO	GRAPHIC REF	PART NUMBER	QTY	PART NAME 1 2 3 4 5 6 (PRODUCT LEVEL)	SEE PAGE
	1	1	**6V-3213**	2	RING-RETAINING	
	2	1	**6V-4364**	2	RING-RETAINING	
	3	1	**9R-0158**	4	WASHER (46X69X3-MM THK)	
	4	1	**9R-1510**	3	WASHER (51X82X4-MM THK)	
	5	1	**168-0443**	1	PIN	
	6	1	**168-0444**	1	PIN	
Y	7	1	**219-3394**	1	BUCKET GP-HOE (ROCK)	533

Y-SEPARATE ILLUSTRATION

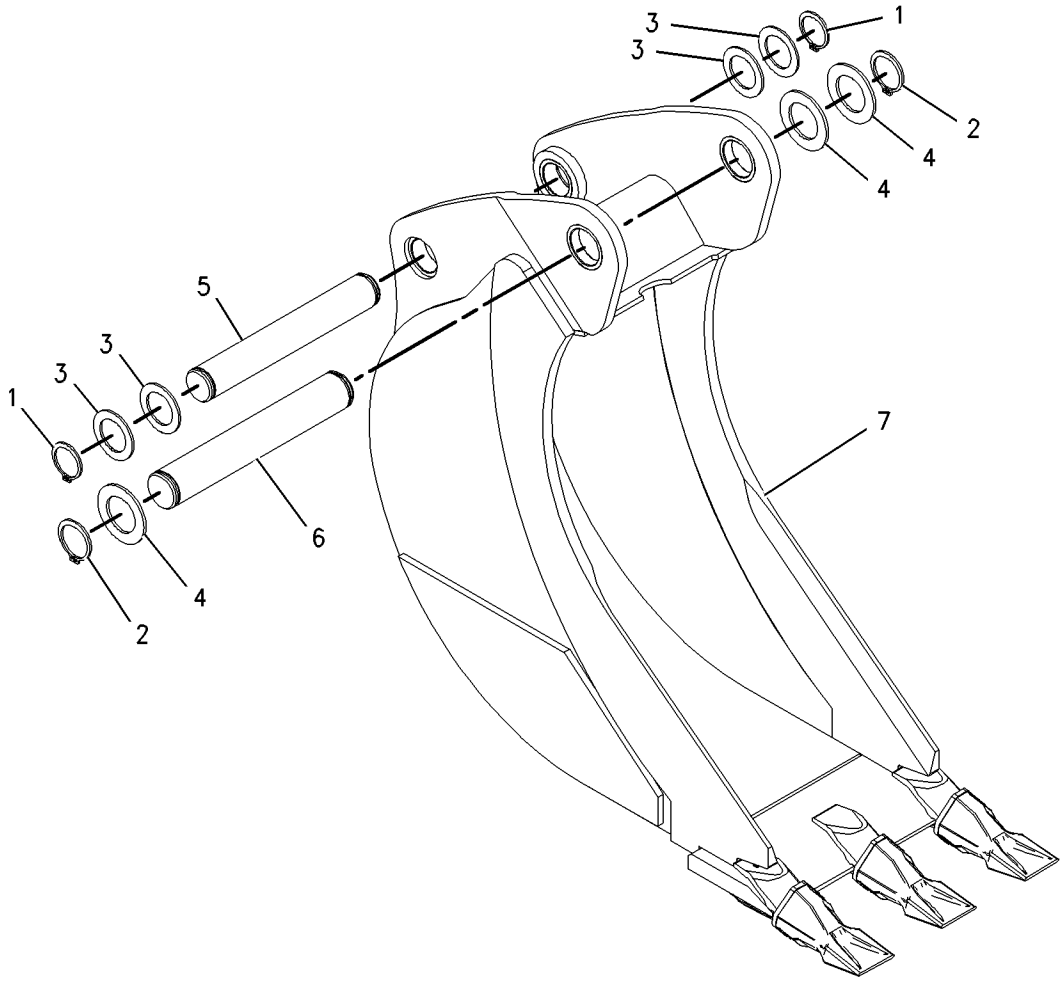

GRAPHIC #1 **<END>** g01001913

219-3413 BUCKET GP-HOE–CORAL

S/N: SHA1-UP
305-MM (12-IN)
AN ATTACHMENT

SMCS-6503 **i02250031**

NOTE	REF NO	GRAPHIC REF	PART NUMBER	QTY	PART NAME 1 2 3 4 5 6 (PRODUCT LEVEL)	SEE PAGE
	1	1	**6V-3213**	2	RING-RETAINING	
	2	1	**6V-4364**	2	RING-RETAINING	
	3	1	**9R-0158**	4	WASHER (46X69X3-MM THK)	
	4	1	**9R-1510**	3	WASHER (51X82X4-MM THK)	
	5	1	**168-0443**	1	PIN	
	6	1	**168-0444**	1	PIN	
Y	7	1	**219-3399**	1	BUCKET GP-HOE (CORAL)	538

Y-SEPARATE ILLUSTRATION

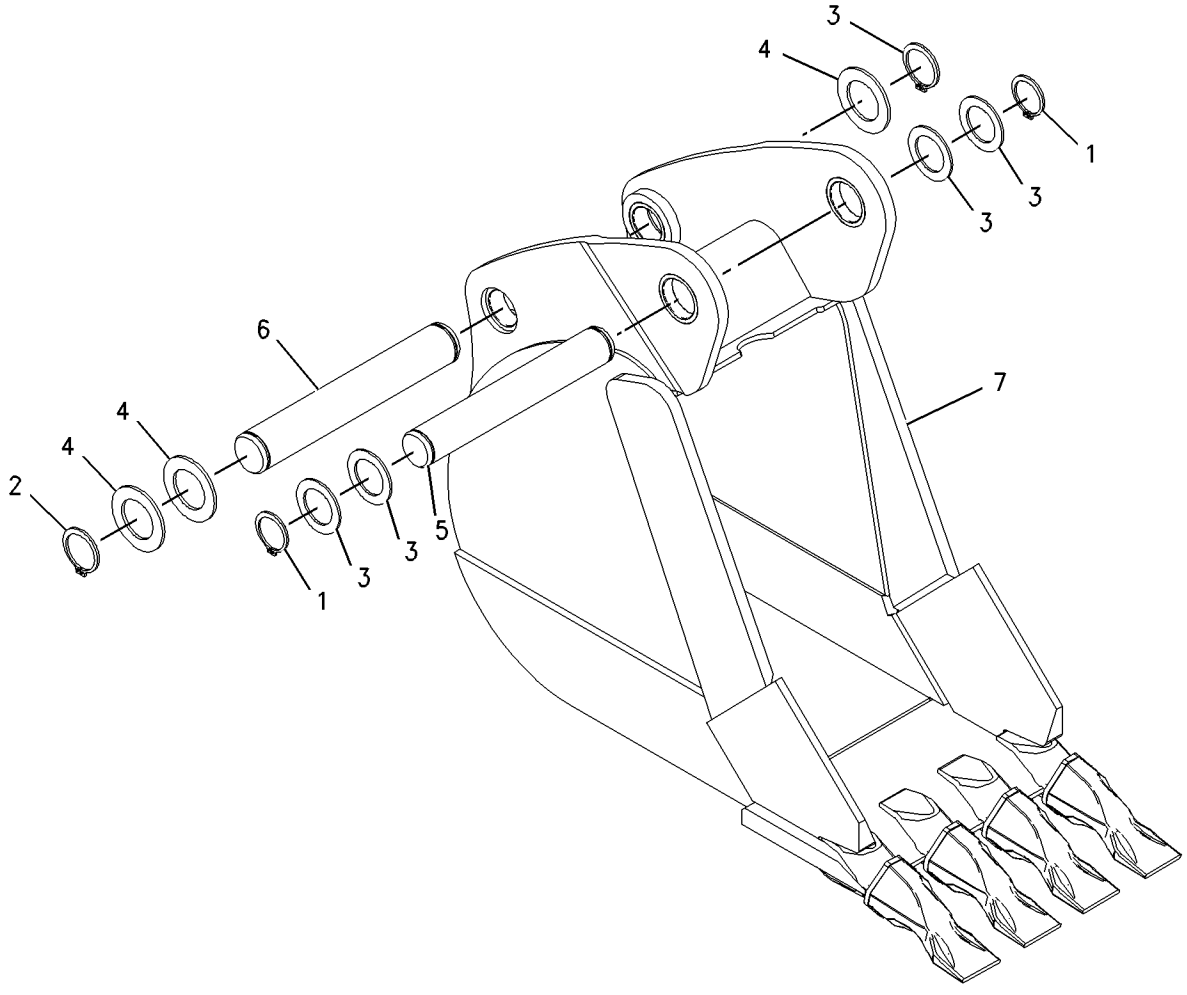

GRAPHIC #1 **<END>** g01001674

WORK TOOLS

247-1947 BUCKET GP-HOE—HEAVY-DUTY, PIN-LOCK

S/N: SHA1-UP
305-MM (12-IN)
AN ATTACHMENT

SMCS-6503 **i02044174**

NOTE	REF NO	GRAPHIC REF	PART NUMBER	QTY	PART NAME 1 2 3 4 5 6 (PRODUCT LEVEL)	SEE PAGE
	1	1	*208-5245*	3	TIP GP-PENETRATION	
					(EACH INCLUDES)	
	1A	1	**201-1238**	1	PIN	
	1B	1	**201-1239**	1	RETAINER AS	
	1C	1	**208-5235**	1	TIP-PENETRATION	
	2	1	*232-2752*	1	BUCKET AS	
	2A	1	**201-1234**	3	ADAPTER	
	2B	1	**9R-0431**	2	BEARING-SLEEVE	

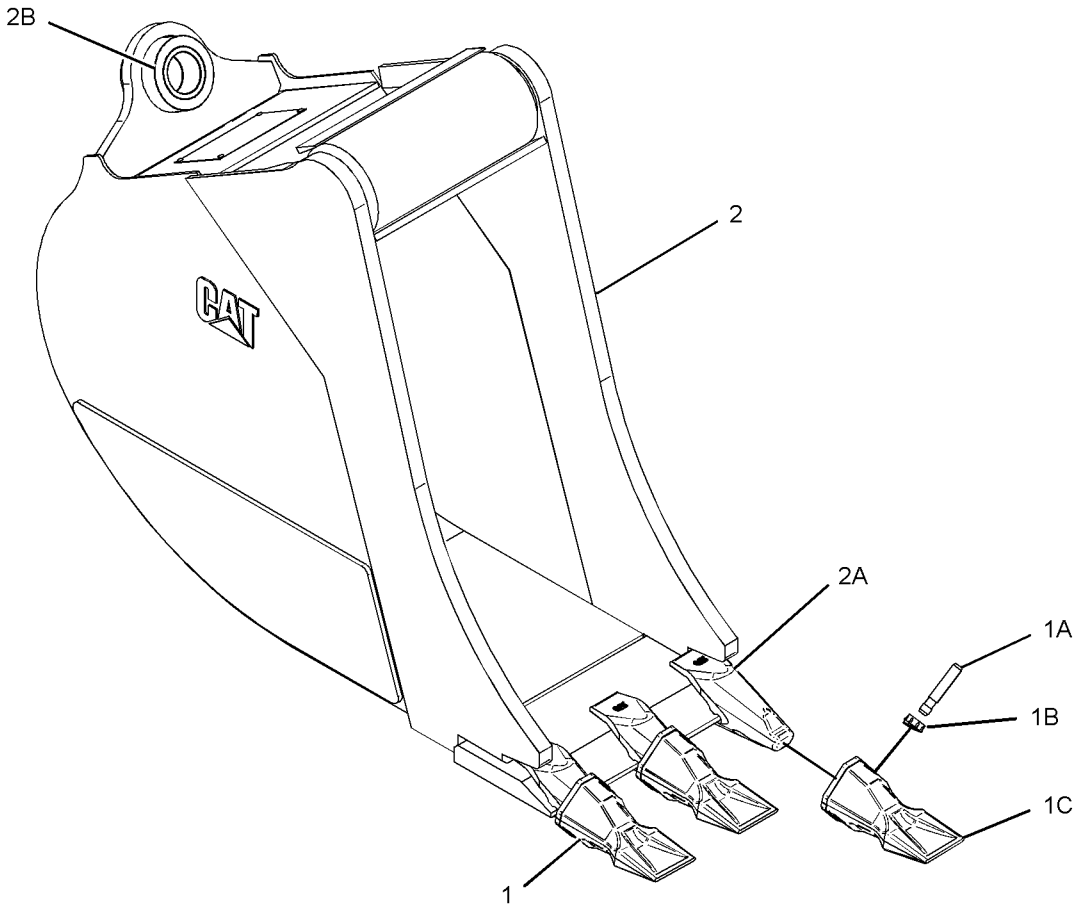

GRAPHIC #1 **<END>** g01071544

247-1948 BUCKET GP-HOE—HEAVY-DUTY, PIN-LOCK

S/N: SHA1-UP
406-MM (16-IN)
AN ATTACHMENT

SMCS-6503 **i02044171**

NOTE	REF NO	GRAPHIC REF	PART NUMBER	QTY	PART NAME 1 2 3 4 5 6 (PRODUCT LEVEL)	SEE PAGE
	1	1	*208-5245*	3	TIP GP-PENETRATION	
					(EACH INCLUDES)	
	1A	1	**201-1238**	1	PIN	
	1B	1	**201-1239**	1	RETAINER AS	
	1C	1	**208-5235**	1	TIP-PENETRATION	
	2	1	*232-2753*	1	BUCKET AS	
	2A	1	**201-1234**	3	ADAPTER	
	2B	1	**9R-0431**	2	BEARING-SLEEVE	

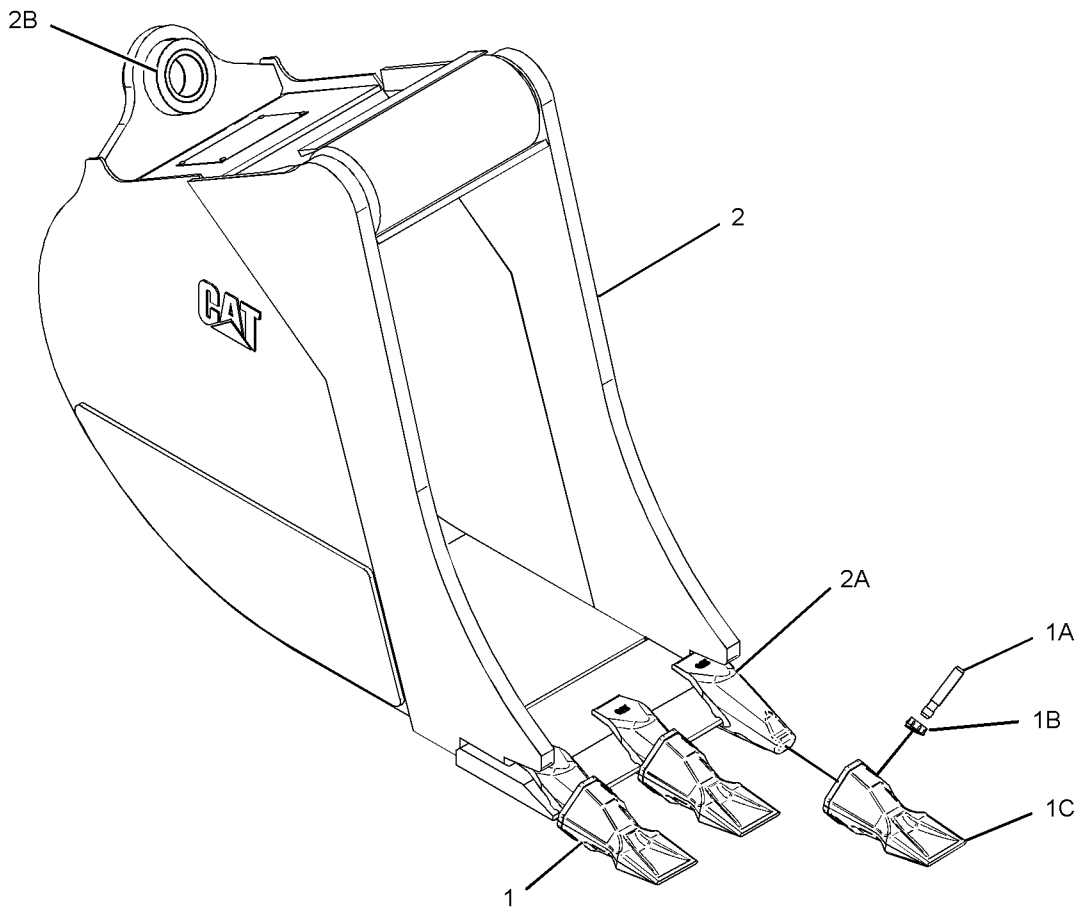

GRAPHIC #1 **<END>** g01071544

247-1949 BUCKET GP-HOE—HEAVY-DUTY, PIN-LOCK

S/N: SHA1-UP
458-MM (18-IN)
AN ATTACHMENT

SMCS-6503 **i02044168**

NOTE	REF NO	GRAPHIC REF	PART NUMBER	QTY	PART NAME 1 2 3 4 5 6 (PRODUCT LEVEL)	SEE PAGE
	1	1	*208-5245*	4	TIP GP-PENETRATION	
					(EACH INCLUDES)	
	1A	1	**201-1238**	1	PIN	
	1B	1	**201-1239**	1	RETAINER AS	
	1C	1	**208-5235**	1	TIP-PENETRATION	
	2	1	*232-2754*	1	BUCKET AS	
	2A	1	**201-1234**	4	ADAPTER	
	2B	1	**9R-0431**	2	BEARING-SLEEVE	
	2C	1	**219-9483**	1	EDGE	

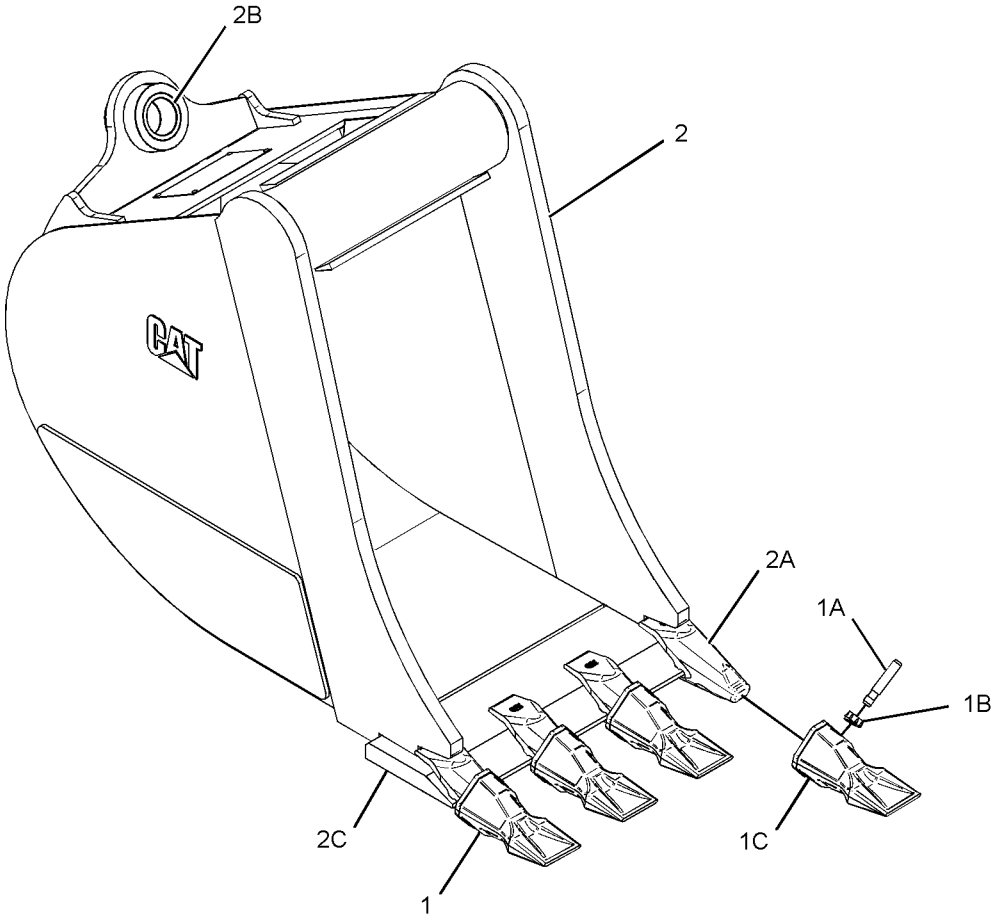

GRAPHIC #1

<END>

g01071567

247-1950 BUCKET GP-HOE—HEAVY-DUTY, PIN-LOCK

S/N: SHA1-UP
610-MM (24-IN)
AN ATTACHMENT

SMCS-6503 **i02044165**

NOTE	REF NO	GRAPHIC REF	PART NUMBER	QTY	PART NAME 1 2 3 4 5 6 (PRODUCT LEVEL)	SEE PAGE
	1	1	*208-5245*	5	TIP GP-PENETRATION	
					(EACH INCLUDES)	
	1A	1	**201-1238**	1	PIN	
	1B	1	**201-1239**	1	RETAINER AS	
	1C	1	**208-5235**	1	TIP-PENETRATION	
	2	1	*232-2755*	1	BUCKET AS	
	2A	1	**201-1234**	5	ADAPTER	
	2B	1	**9R-0431**	2	BEARING-SLEEVE	
	2C	1	**219-9484**	1	EDGE	

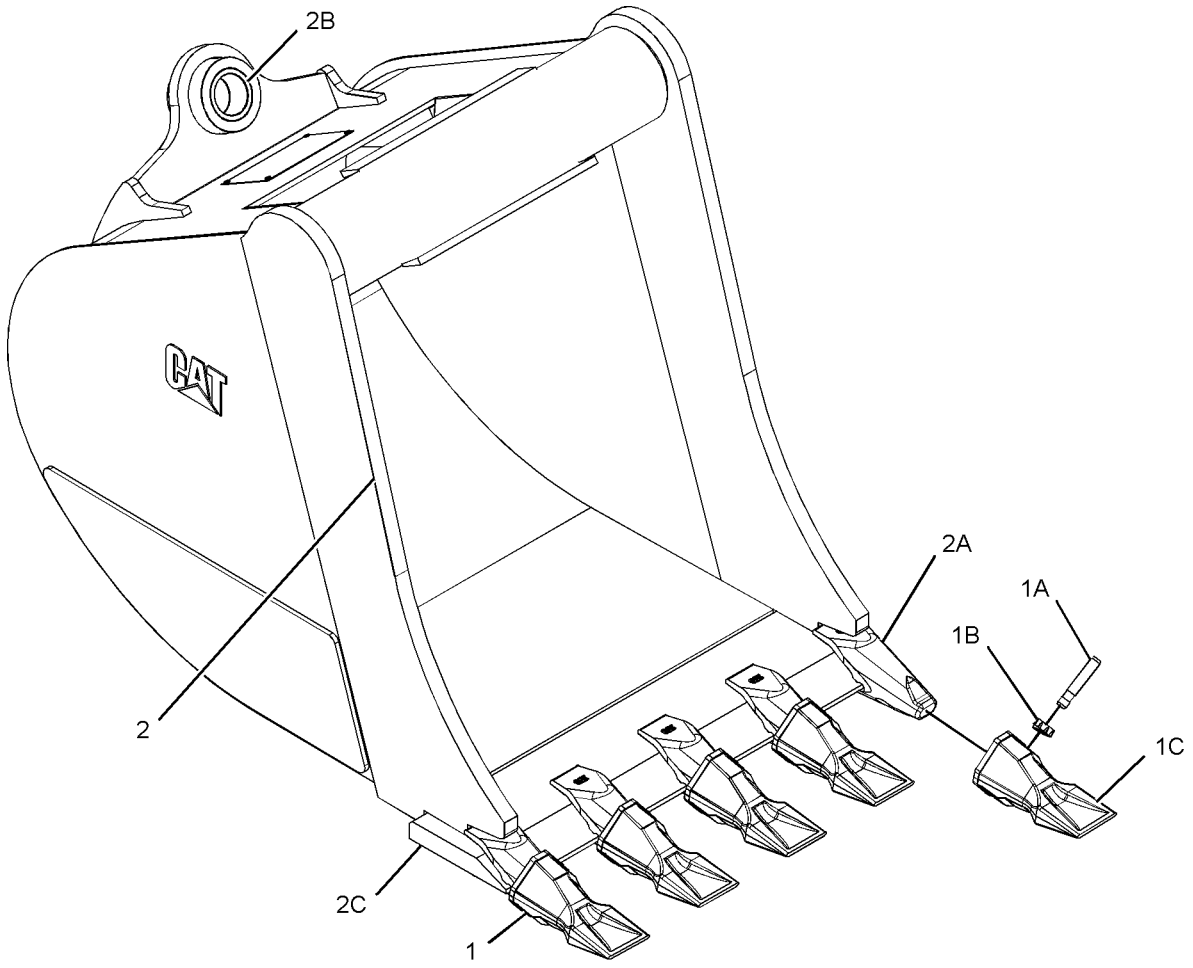

GRAPHIC #1 **<END>** g01071585

WORK TOOLS

247-1951 BUCKET GP-HOE—HEAVY-DUTY, PIN-LOCK

S/N: SHA1-UP
762-MM (30-IN)
AN ATTACHMENT

SMCS-6503 **i02044162**

NOTE	REF NO	GRAPHIC REF	PART NUMBER	QTY	PART NAME 1 2 3 4 5 6 (PRODUCT LEVEL)	SEE PAGE
	1	1	*208-5245*	5	TIP GP-PENETRATION	
					(EACH INCLUDES)	
	1A	1	**201-1238**	1	PIN	
	1B	1	**201-1239**	1	RETAINER AS	
	1C	1	**208-5235**	1	TIP-PENETRATION	
	2	1	*232-2756*	1	BUCKET AS	
	2A	1	**201-1234**	5	ADAPTER	
	2B	1	**9R-0431**	2	BEARING-SLEEVE	
	2C	1	**219-9485**	1	EDGE	

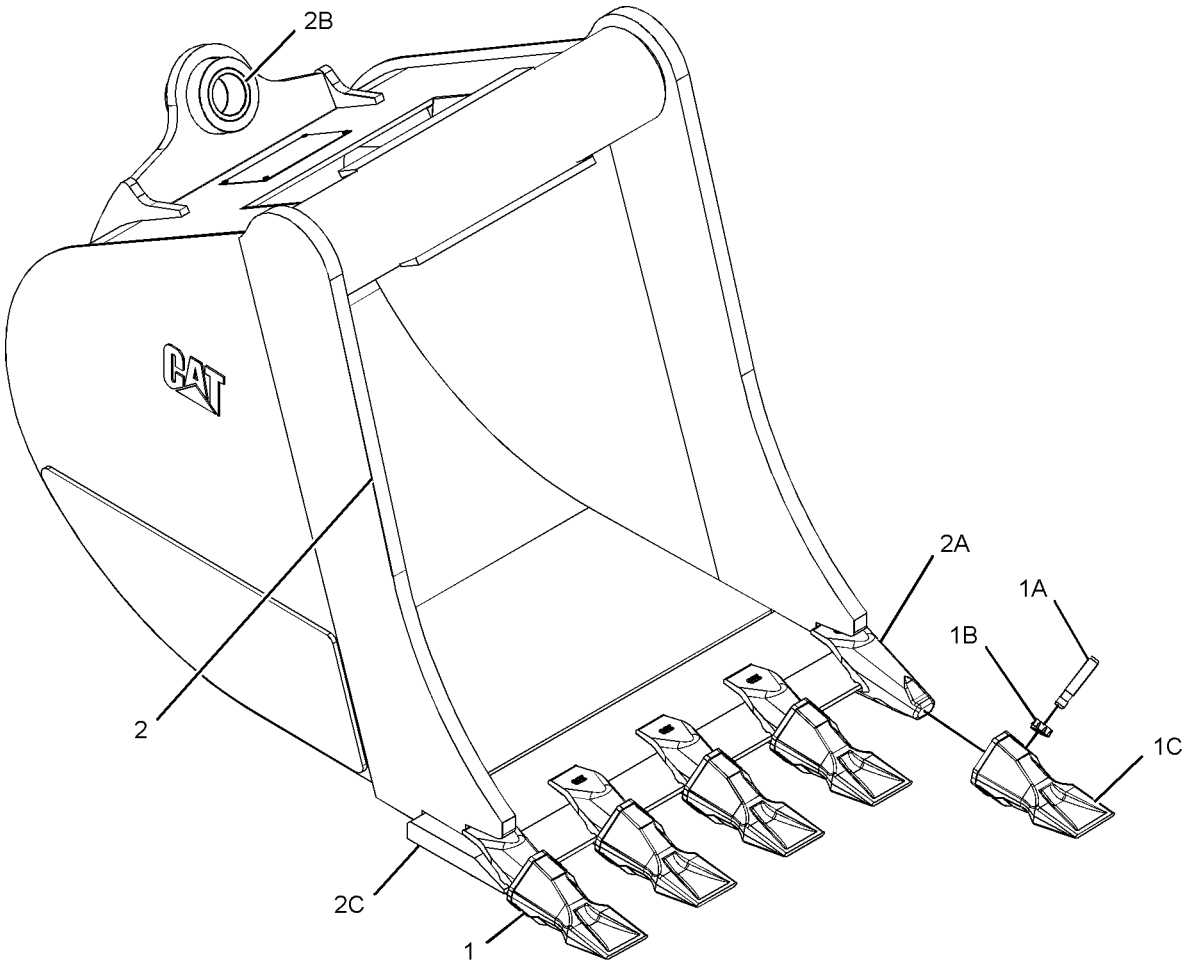

GRAPHIC #1 **<END>** g01071585

247-1952 BUCKET GP-HOE—HEAVY-DUTY, PIN-LOCK

S/N: SHA1-UP
914-MM (36-IN)
AN ATTACHMENT

SMCS-6503 **i02044160**

NOTE	REF NO	GRAPHIC REF	PART NUMBER	QTY	PART NAME 1 2 3 4 5 6 (PRODUCT LEVEL)	SEE PAGE
	1	1	*208-5245*	6	TIP GP-PENETRATION	
					(EACH INCLUDES)	
	1A	1	**201-1238**	1	PIN	
	1B	1	**201-1239**	1	RETAINER AS	
	1C	1	**208-5235**	1	TIP-PENETRATION	
	2	1	*232-2757*	1	BUCKET AS	
	2A	1	**201-1234**	6	ADAPTER	
	2B	1	**9R-0431**	2	BEARING-SLEEVE	
	2C	1	**219-9486**	1	EDGE	

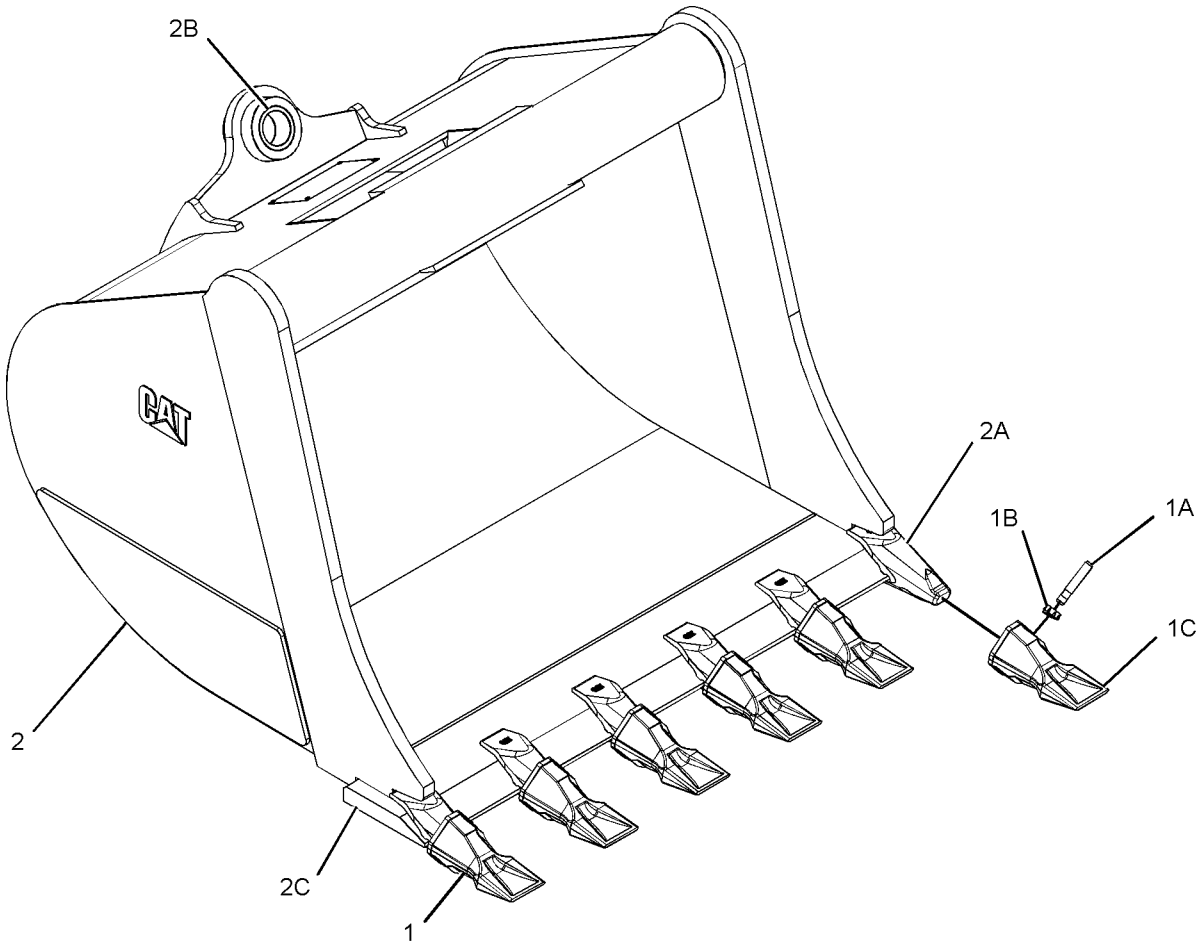

GRAPHIC #1 **<END>** g01071602

247-1953 BUCKET GP-HOE—HIGH CAPACITY, PIN-LOCK

S/N: SHA1-UP
305-MM (12-IN)
AN ATTACHMENT

SMCS-6503 **i02044151**

NOTE	REF NO	GRAPHIC REF	PART NUMBER	QTY	PART NAME 1 2 3 4 5 6 (PRODUCT LEVEL)	SEE PAGE
	1	1	*208-5245*	3	TIP GP-PENETRATION	
					(EACH INCLUDES)	
	1A	1	**201-1238**	1	PIN	
	1B	1	**201-1239**	1	RETAINER AS	
	1C	1	**208-5235**	1	TIP-PENETRATION	
	2	1	*232-2758*	1	BUCKET AS	
	2A	1	**201-1234**	3	ADAPTER	
	2B	1	**9R-0431**	2	BEARING-SLEEVE	

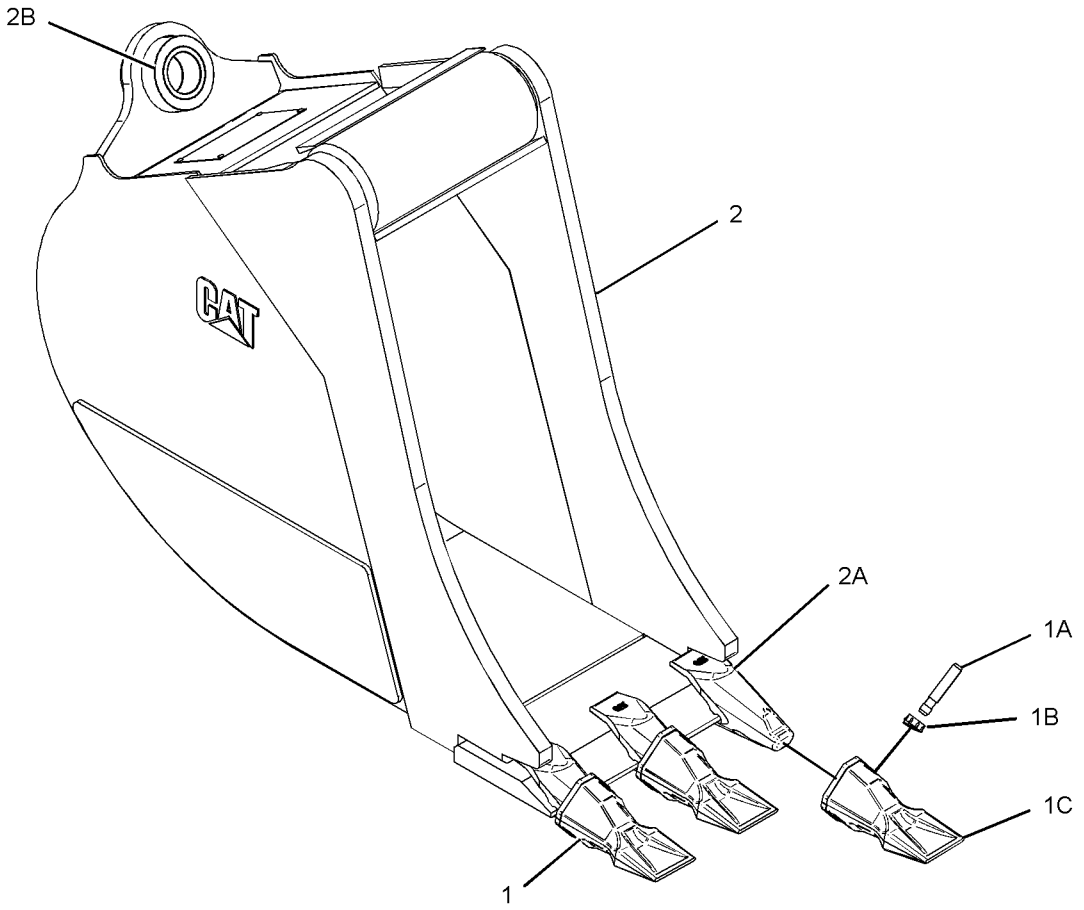

GRAPHIC #1

<END>

g01071544

247-1954 BUCKET GP-HOE—HIGH CAPACITY, PIN-LOCK

S/N: SHA1-UP
406-MM (16-IN)
AN ATTACHMENT

SMCS-6503 **i02593675**

NOTE	REF NO	GRAPHIC REF	PART NUMBER	QTY	PART NAME 1 2 3 4 5 6 (PRODUCT LEVEL)	SEE PAGE
	1	1	**137-4234**	1	PLATE-IDENTIFICATION (WORK TOOL)	
	2	1	**168-8389**	4	TACK-FASTENER	
	3	1	*208-5245*	3	TIP GP-PENETRATION	
					(EACH INCLUDES)	
	3A	1	**201-1238**	1	PIN	
	3B	1	**201-1239**	1	RETAINER AS	
	3C	1	**208-5235**	1	TIP-PENETRATION	
	4	1	**232-2759**	1	BUCKET AS	
		1	**248-2575**	1	EDGE	
		1	**201-1234**	3	ADAPTER	

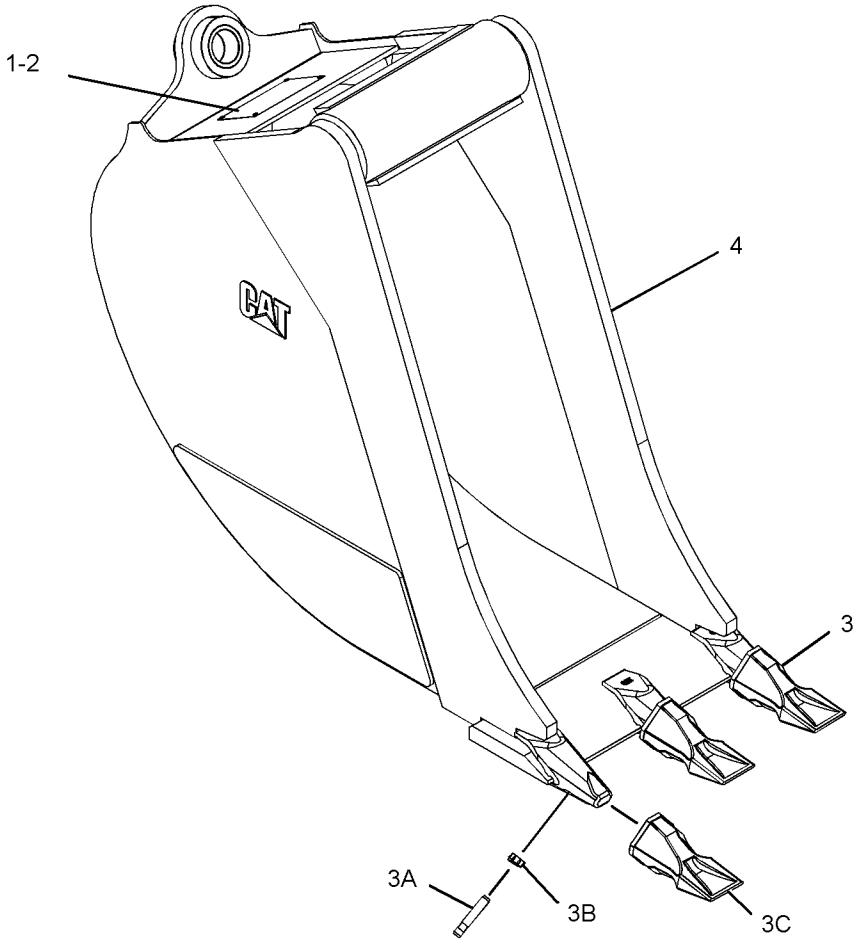

GRAPHIC #1 **<END>** g01161218

247-1955 BUCKET GP-HOE—HIGH CAPACITY, PIN-LOCK

S/N: SHA1-UP
458-MM (18-IN)
AN ATTACHMENT

SMCS-6503 **i02044147**

NOTE	REF NO	GRAPHIC REF	PART NUMBER	QTY	PART NAME 1 2 3 4 5 6 (PRODUCT LEVEL)	SEE PAGE
	1	1	*208-5245*	4	TIP GP-PENETRATION	
					(EACH INCLUDES)	
	1A	1	**201-1238**	1	PIN	
	1B	1	**201-1239**	1	RETAINER AS	
	1C	1	**208-5235**	1	TIP-PENETRATION	
	2	1	*232-2760*	1	BUCKET AS	
	2A	1	**201-1234**	4	ADAPTER	
	2B	1	**9R-0431**	2	BEARING-SLEEVE	
	2C	1	**219-9483**	1	EDGE	

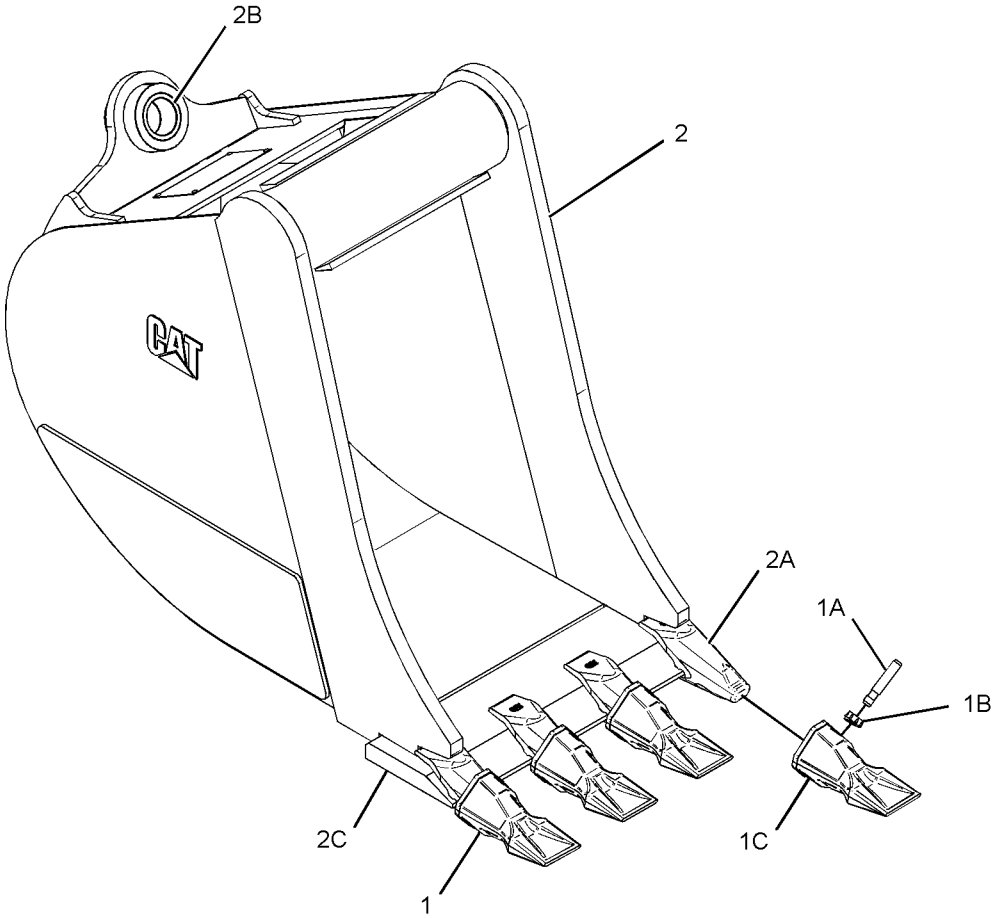

GRAPHIC #1 **<END>** g01071567

247-1956 BUCKET GP-HOE—HIGH CAPACITY, PIN-LOCK

S/N: SHA1-UP
610-MM (24-IN)
AN ATTACHMENT

SMCS-6503 **i02044145**

NOTE	REF NO	GRAPHIC REF	PART NUMBER	QTY	PART NAME 1 2 3 4 5 6 (PRODUCT LEVEL)	SEE PAGE
	1	1	*208-5245*	5	TIP GP-PENETRATION	
					(EACH INCLUDES)	
	1A	1	**201-1238**	1	PIN	
	1B	1	**201-1239**	1	RETAINER AS	
	1C	1	**208-5235**	1	TIP-PENETRATION	
	2	1	*232-2761*	1	BUCKET AS	
	2A	1	**201-1234**	5	ADAPTER	
	2B	1	**9R-0431**	2	BEARING-SLEEVE	
	2C	1	**219-9484**	1	EDGE	

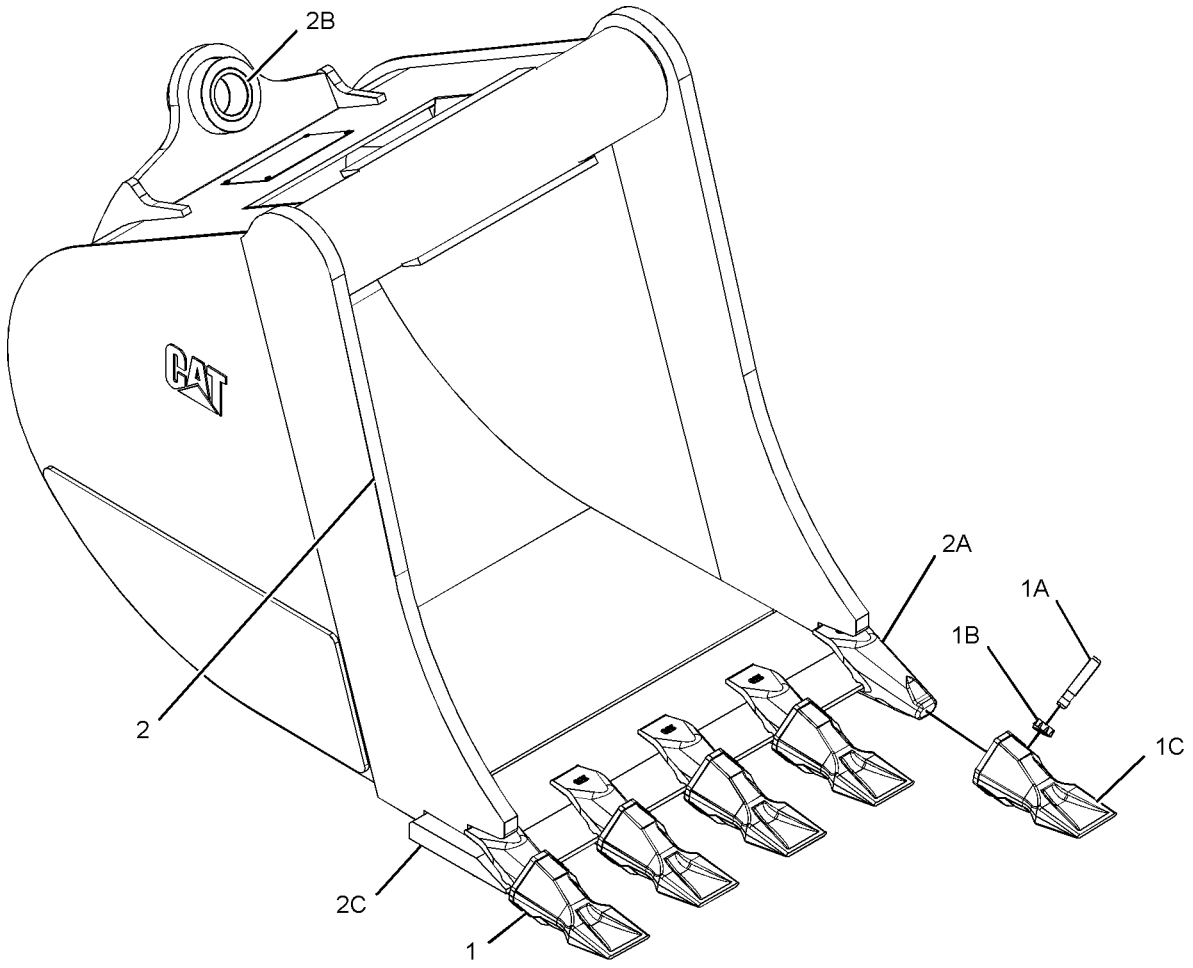

GRAPHIC #1 **<END>** g01071585

247-1957 BUCKET GP-HOE—HIGH CAPACITY, PIN-LOCK

S/N: SHA1-UP
762-MM (30-IN)
AN ATTACHMENT

SMCS-6503 **i02044144**

NOTE	REF NO	GRAPHIC REF	PART NUMBER	QTY	PART NAME 1 2 3 4 5 6 (PRODUCT LEVEL)	SEE PAGE
	1	1	*208-5245*	5	TIP GP-PENETRATION	
					(EACH INCLUDES)	
	1A	1	**201-1238**	1	PIN	
	1B	1	**201-1239**	1	RETAINER AS	
	1C	1	**208-5235**	1	TIP-PENETRATION	
	2	1	*232-2762*	1	BUCKET AS	
	2A	1	**201-1234**	5	ADAPTER	
	2B	1	**9R-0431**	2	BEARING-SLEEVE	
	2C	1	**219-9485**	1	EDGE	

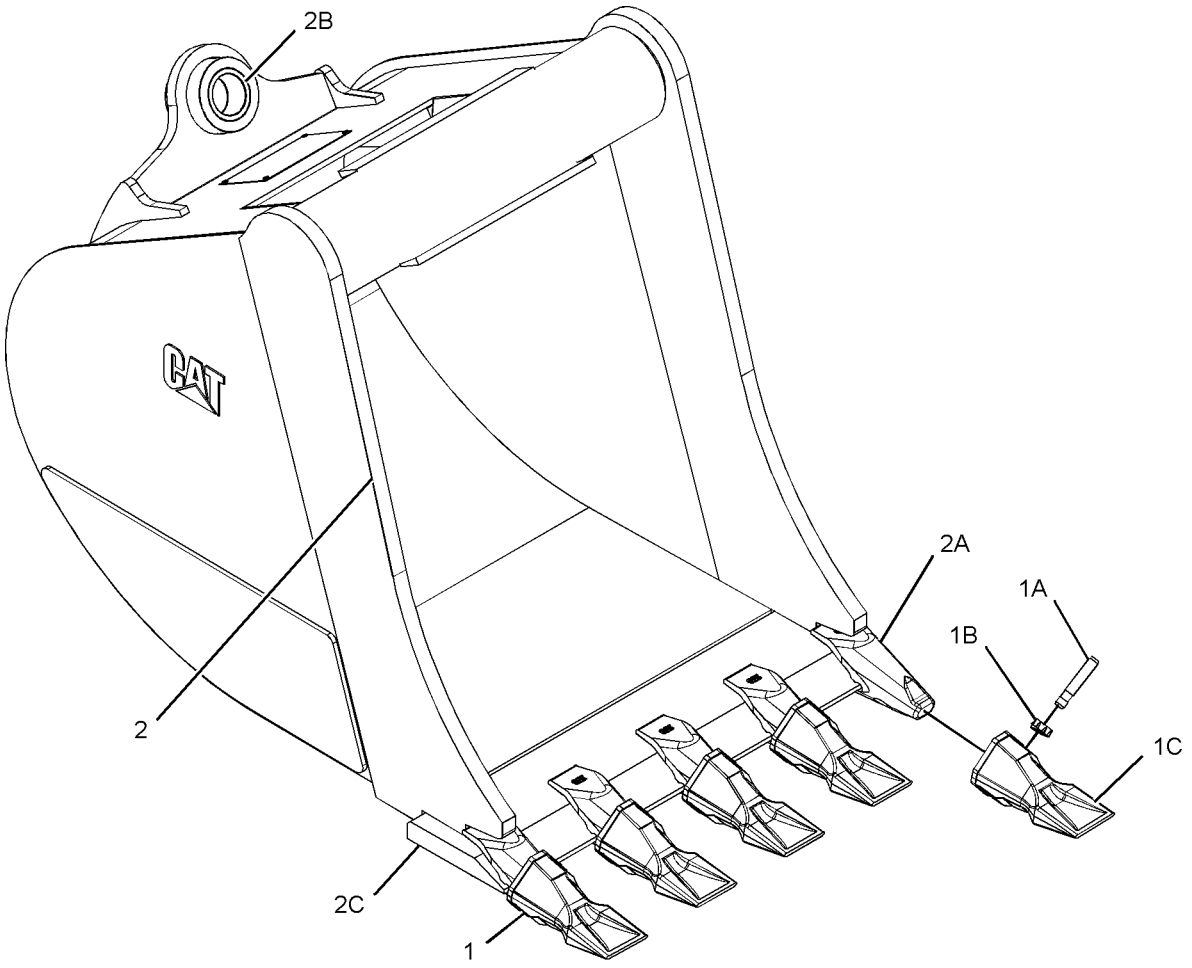

GRAPHIC #1 **<END>** g01071585

247-1958 BUCKET GP-HOE—HIGH CAPACITY, PIN-LOCK

S/N: SHA1-UP
914-MM (36-IN)
AN ATTACHMENT

SMCS-6503 **i02044137**

NOTE	REF NO	GRAPHIC REF	PART NUMBER	QTY	PART NAME 1 2 3 4 5 6 (PRODUCT LEVEL)	SEE PAGE
	1	1	*208-5245*	6	TIP GP-PENETRATION	
	1A	1	**201-1238**	1	PIN	
	1B	1	**201-1239**	1	RETAINER AS	
	1C	1	**208-5235**	1	TIP-PENETRATION	
	2	1	*232-2763*	1	BUCKET AS	
	2A	1	**201-1234**	6	ADAPTER	
	2B	1	**9R-0431**	2	BEARING-SLEEVE	
	2C	1	**219-9486**	1	EDGE	

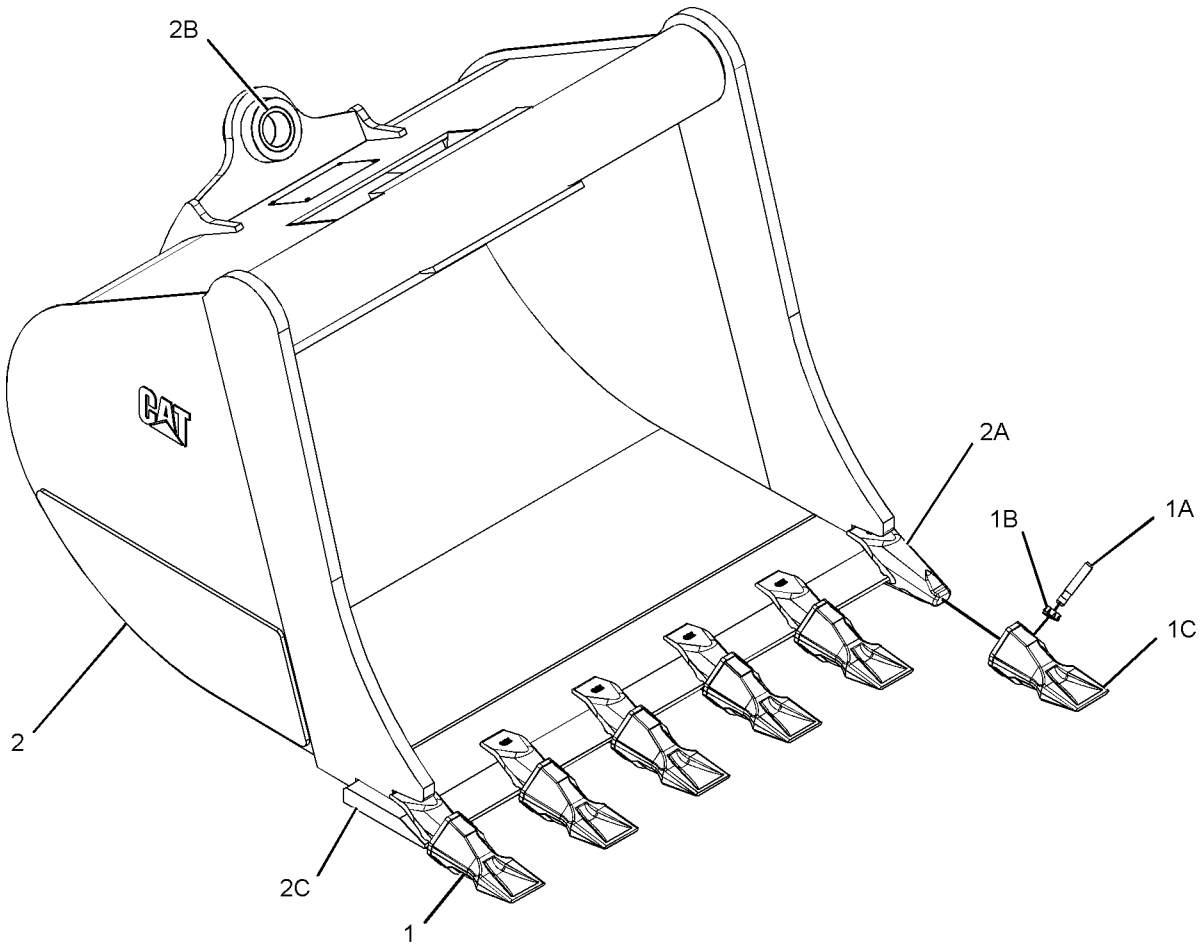

GRAPHIC #1 **<END>** g01071602

WORK TOOLS

254-8940 BUCKET GP-HOE—HIGH CAPACITY

S/N: SHA1-UP
458-MM (18-IN)
AN ATTACHMENT

SMCS-6503 **i02284301**

NOTE	REF NO	GRAPHIC REF	PART NUMBER	QTY	PART NAME 1 2 3 4 5 6 (PRODUCT LEVEL)	SEE PAGE
	1	1	**137-4234**	1	PLATE-IDENTIFICATION (WORK TOOL)	
	2	1	**168-8389**	4	TACK-FASTENER	
	3	1	*208-5244*	4	TIP GP-BUCKET (SOIL)	
					(EACH INCLUDES)	
		1	**201-1238**	1	PIN	
		1	**201-1239**	1	RETAINER AS	
		1	**208-5234**	1	TIP-BUCKET (SOIL)	
Y	4	1	*254-8939*	1	BUCKET AS-HOE	503

Y-SEPARATE ILLUSTRATION

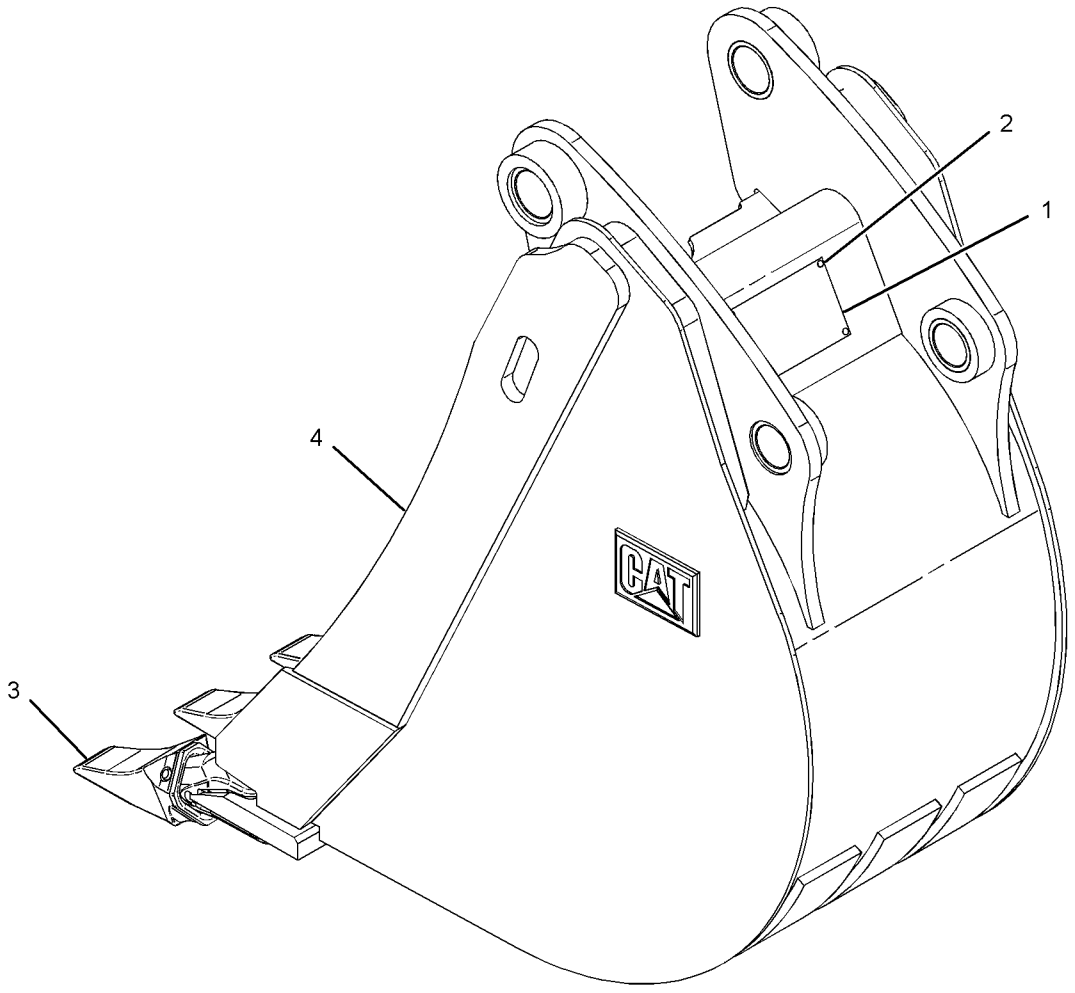

GRAPHIC #1 **<END>** g01150288

WORK TOOLS

254-8941 BUCKET GP-HOE

S/N: SHA1-UP
610-MM (24-IN)
AN ATTACHMENT

SMCS-6503 **i02284371**

NOTE	REF NO	GRAPHIC REF	PART NUMBER	QTY	PART NAME 1 2 3 4 5 6 (PRODUCT LEVEL)	SEE PAGE
	1	1	**137-4234**	1	PLATE-IDENTIFICATION (WORK TOOL)	
	2	1	**168-8389**	4	TACK-FASTENER	
	3	1	*208-5244*	5	TIP GP-BUCKET (SOIL)	
					(EACH INCLUDES)	
		1	**201-1238**	1	PIN	
		1	**201-1239**	1	RETAINER AS	
		1	**208-5234**	1	TIP-BUCKET (SOIL)	
Y	4	1	*254-8944*	1	BUCKET AS-HOE (HIGH CAPACITY, PIN-LOCK)	505

Y-SEPARATE ILLUSTRATION

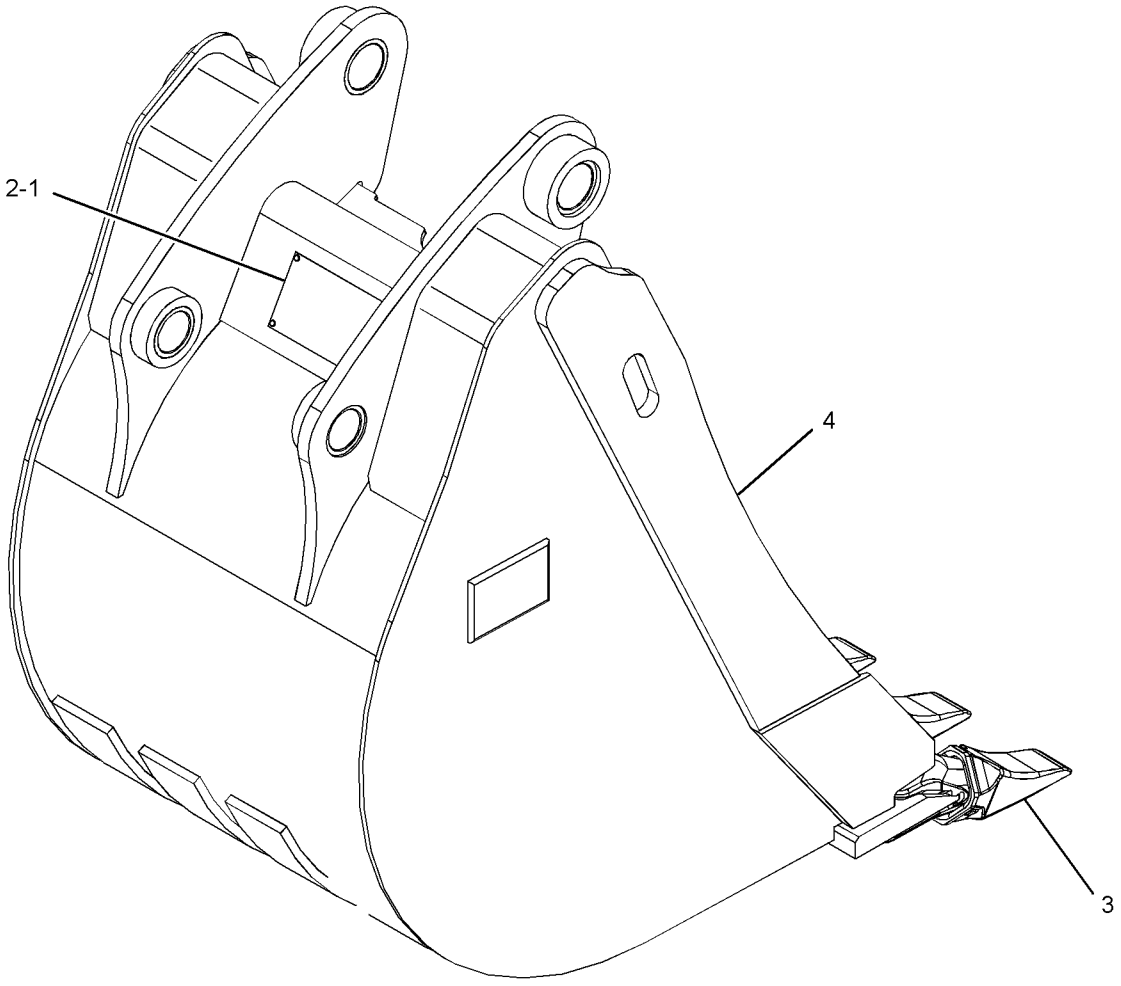

GRAPHIC #1 **<END>** g01150193

WORK TOOLS

254-8942 BUCKET GP-HOE

S/N: SHA1-UP
762-MM (30-IN)
AN ATTACHMENT

SMCS-6503 **i02290138**

NOTE	REF NO	GRAPHIC REF	PART NUMBER	QTY	PART NAME 1 2 3 4 5 6 (PRODUCT LEVEL)	SEE PAGE
	1	1	**137-4234**	1	PLATE-IDENTIFICATION (WORK TOOL)	
	2	1	**168-8389**	4	TACK-FASTENER	
	3	1	*208-5244*	5	TIP GP-BUCKET (SOIL)	
					(EACH INCLUDES)	
		1	**201-1238**	1	PIN	
		1	**201-1239**	1	RETAINER AS	
		1	**208-5234**	1	TIP-BUCKET (SOIL)	
Y	4	1	*254-8945*	1	BUCKET AS-HOE (HIGH CAPACITY, PIN-LOCK)	507

Y-SEPARATE ILLUSTRATION

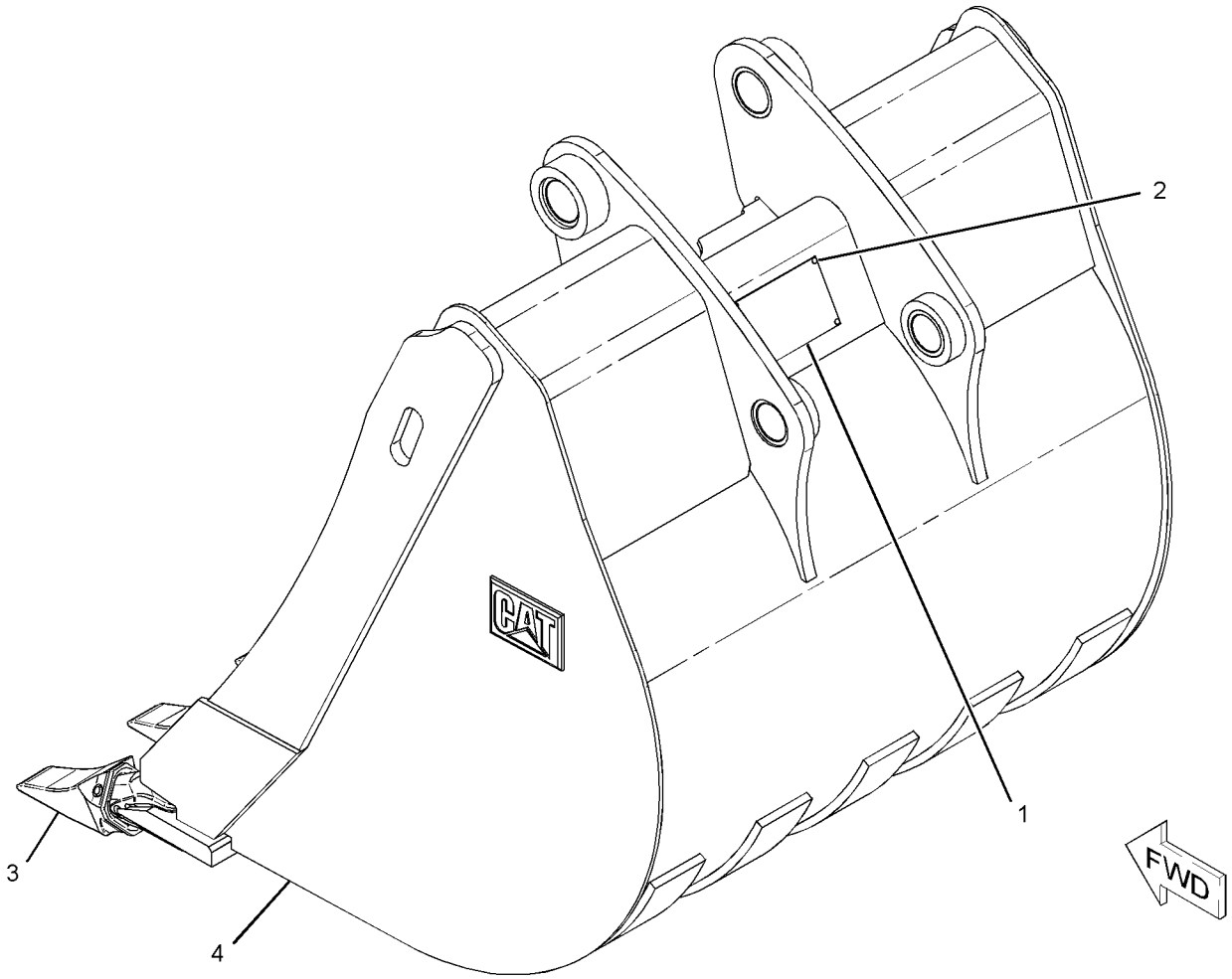

GRAPHIC #1 **<END>** g01144833

WORK TOOLS

254-8943 BUCKET GP-HOE

S/N: SHA1-UP
914-MM (36-IN)
AN ATTACHMENT

SMCS-6503 **i02284389**

NOTE	REF NO	GRAPHIC REF	PART NUMBER	QTY	PART NAME 1 2 3 4 5 6 (PRODUCT LEVEL)	SEE PAGE
	1	1	**137-4234**	1	PLATE-IDENTIFICATION (WORK TOOL)	
	2	1	**168-8389**	4	TACK-FASTENER	
	3	1	*208-5244*	6	TIP GP-BUCKET (SOIL)	
					(EACH INCLUDES)	
		1	**201-1238**		PIN	
		1	**201-1239**	1	RETAINER AS	
		1	**208-5234**	1	TIP-BUCKET (SOIL)	
Y	4	1	*254-8946*	1	BUCKET AS-HOE (HIGH CAPACITY, PIN-LOCK)	509

Y-SEPARATE ILLUSTRATION

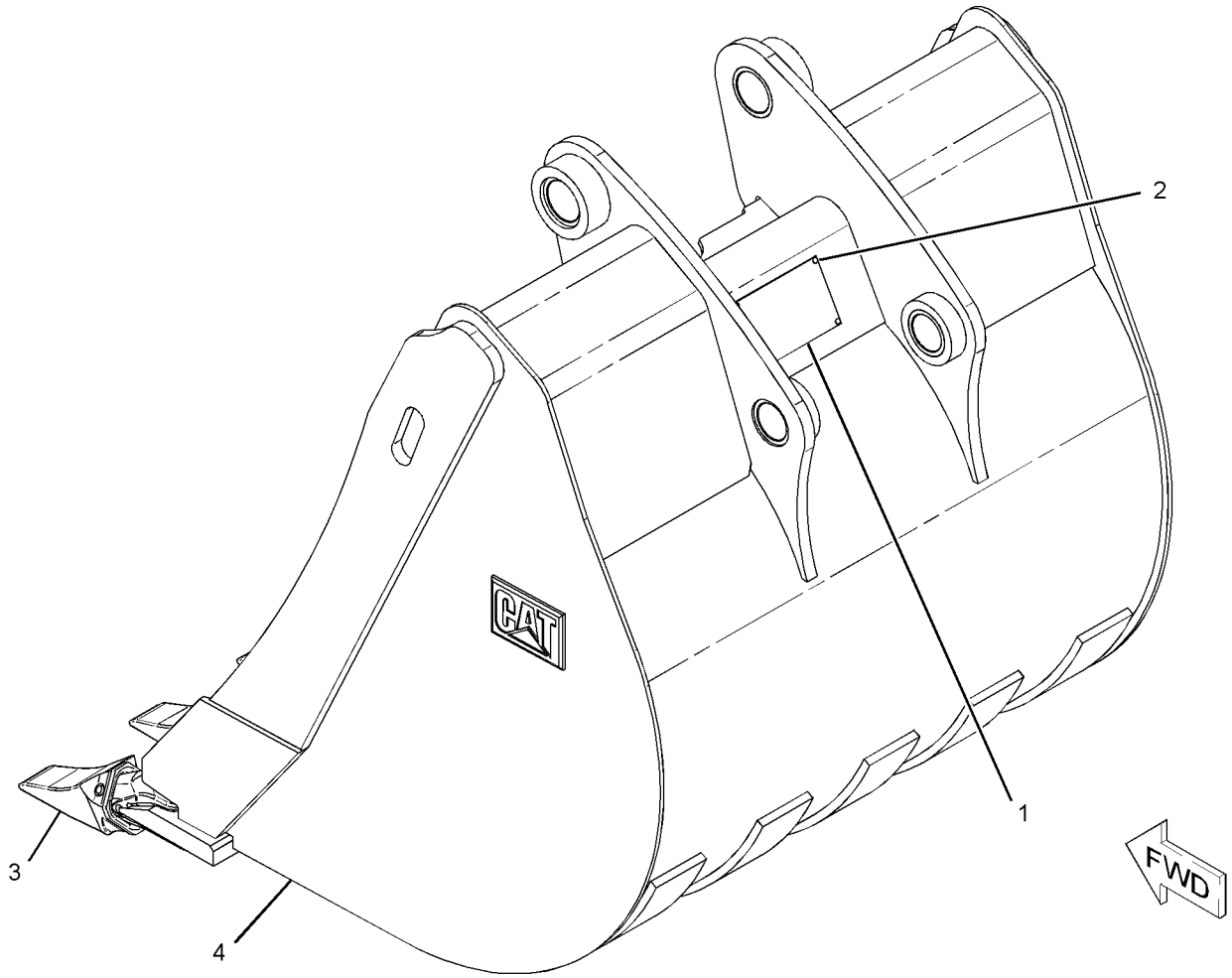

GRAPHIC #1 **<END>** g01144797

WORK TOOLS

216-8800 BUCKET GP-MULTIPURPOSE

S/N: SHA1-UP

PART OF 232-2681, 232-2682 BUCKET AR-MULTIPURPOSE

AN ATTACHMENT

SMCS-6104 **i02535101**

NOTE	REF NO	GRAPHIC REF	PART NUMBER	QTY	PART NAME 1 2 3 4 5 6 (PRODUCT LEVEL)	SEE PAGE
	1	1	**9R-4676**	2	PIN	
	2	1	**9R-4677**	2	PIN	
	3	1	**9R-4678**	2	PIN	
	4	1	**095-0865**	4	PIN-COTTER	
	5	1	**096-1820**	2	PIN-COTTER	
	6	1	**137-4234**	1	PLATE-IDENTIFICATION (WORK TOOL)	
	7	1	**168-8389**	4	TACK-FASTENER	
Y	8	1	**216-8802**	1	BULLDOZER AS	567
Y	9	1	**216-8803**	1	CLAM AS-MULTIPURPOSE BUCKET	570
Y	10	1	**226-5540**	2	CYLINDER GP-MULTIPURPOSE BUKT	328
	11	1	**233-3757**	1	EDGE	
Y	12	1	*251-5854*	1	LINES GP-MULTIPURPOSE BUCKET	371
	13	1	**3B-8489**	2	FITTING-GREASE	
	14	1	**3F-5108**	8	BOLT-PLOW (5/8-11X2.25-IN)	
	15	1	**4K-0367**	8	NUT-FULL (5/8-11-THD)	
	16	1	**8T-4122**	8	WASHER-HARD (17X32X3.5-MM THK)	

Y-SEPARATE ILLUSTRATION

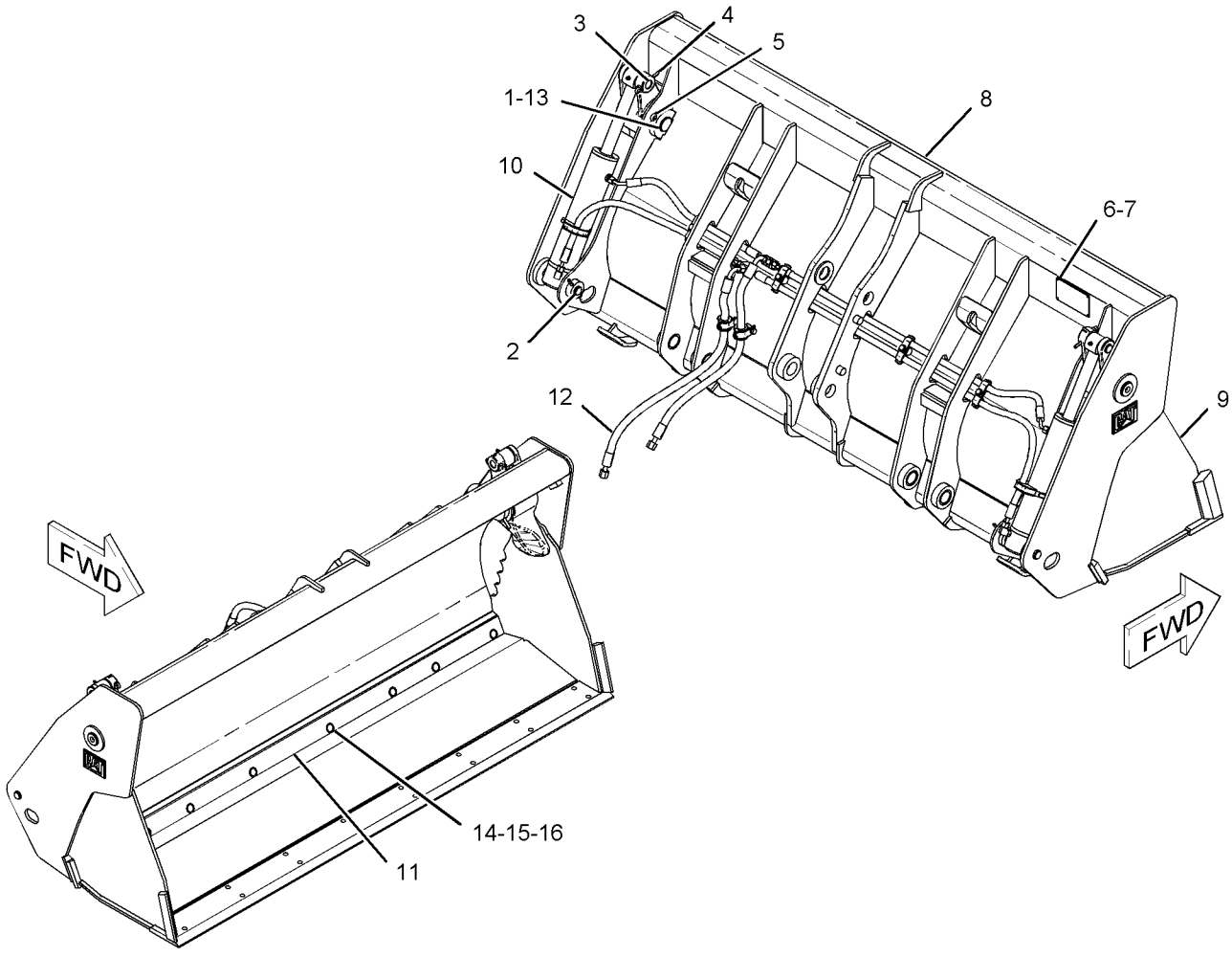

GRAPHIC #1 **<END>** g01131814

216-8801 BUCKET GP-MULTIPURPOSE

S/N: SHA1-UP
1.0 CU M(1.31 CU YD)
PART OF 232-2685 BUCKET AR-MULTIPURPOSE
AN ATTACHMENT

SMCS-6104 **i02356568**

NOTE	REF NO	GRAPHIC REF	PART NUMBER	QTY	PART NAME 1 2 3 4 5 6 (PRODUCT LEVEL)	SEE PAGE
	1	1	**9R-4676**	2	PIN	
	2	1	**137-4234**	1	PLATE-IDENTIFICATION (WORK TOOL)	
	3	1	**168-8389**	4	TACK-FASTENER	
Y	4	1	**216-8803**	1	CLAM AS-MULTIPURPOSE BUCKET	570
Y	5	1	**216-8811**	1	BULLDOZER AS	568
Y	6	1	**226-5540**	2	CYLINDER GP-MULTIPURPOSE BUKT	328
	7	1	**233-3757**	1	EDGE	
Y	8	1	*251-5854*	1	LINES GP-MULTIPURPOSE BUCKET	371
	9	1	**095-0865**	4	PIN-COTTER	
	10	1	**096-1820**	2	PIN-COTTER	
	11	1	**3B-8489**	2	FITTING-GREASE	
	12	1	**3F-5108**	8	BOLT-PLOW (5/8-11X2.25-IN)	
	13	1	**4K-0367**	8	NUT-FULL (5/8-11-THD)	
	14	1	**8T-4122**	8	WASHER-HARD (17X32X3.5-MM THK)	
	15	1	**9R-4677**	2	PIN	
	16	1	**9R-4678**	2	PIN	
Y	17	1	*263-8591*	1	PLATE & FILM GP	761

Y-SEPARATE ILLUSTRATION

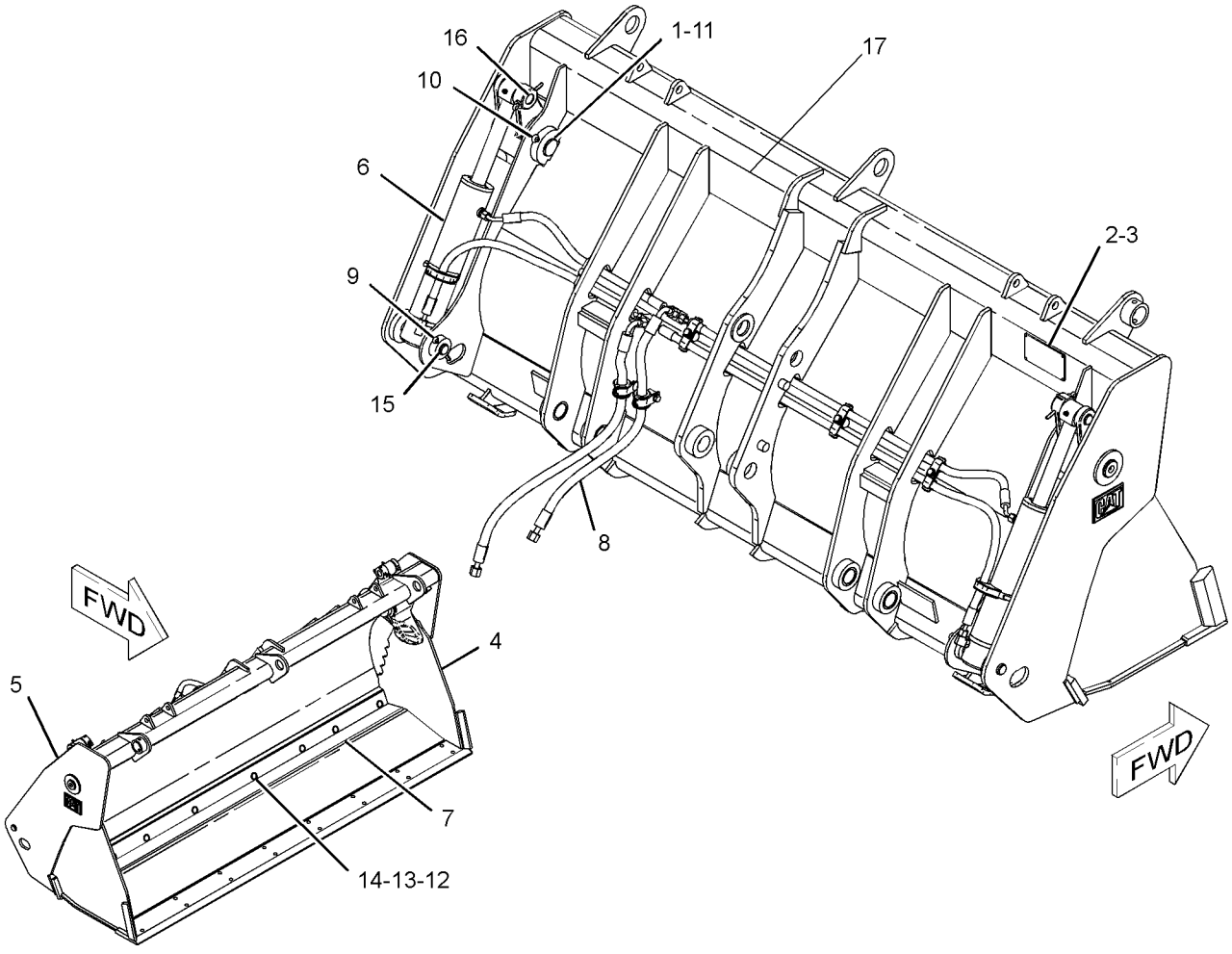

GRAPHIC #1 **<END>** g01239509

WORK TOOLS

216-8820 BUCKET GP-MULTIPURPOSE

S/N: SHA1-UP
1.1 CU M(1.4 CU YD)
PART OF 232-2686, 232-2687 BUCKET AR-MULTIPURPOSE
AN ATTACHMENT

SMCS-6104 **i02747036**

NOTE	REF NO	GRAPHIC REF	PART NUMBER	QTY	PART NAME 1 2 3 4 5 6 (PRODUCT LEVEL)	SEE PAGE
	1	1	**9R-4676**	2	PIN	
	2	1	**9R-4677**	2	PIN	
	3	1	**9R-4678**	2	PIN	
	4	1	**095-0865**	4	PIN-COTTER	
	5	1	**096-1820**	2	PIN-COTTER	
	6	1	**137-4234**	1	PLATE-IDENTIFICATION (WORK TOOL)	
	7	1	**168-8389**	4	TACK-FASTENER	
Y	8	1	**216-8822**	1	BULLDOZER AS	569
Y	9	1	**216-8826**	1	CLAM AS-MULTIPURPOSE BUCKET	571
Y	10	1	**226-5540**	2	CYLINDER GP-MULTIPURPOSE BUKT	328
	11	1	**233-0859**	1	EDGE	
Y	12	1	*251-5855*	1	LINES GP-MULTIPURPOSE BUCKET	373
	13	1	**3B-8489**	2	FITTING-GREASE	
	14	1	**3F-5108**	8	BOLT-PLOW (5/8-11X2.25-IN)	
	15	1	**4K-0367**	8	NUT-FULL (5/8-11-THD)	
	16	1	**8T-4122**	8	WASHER-HARD (17X32X3.5-MM THK)	

Y-SEPARATE ILLUSTRATION

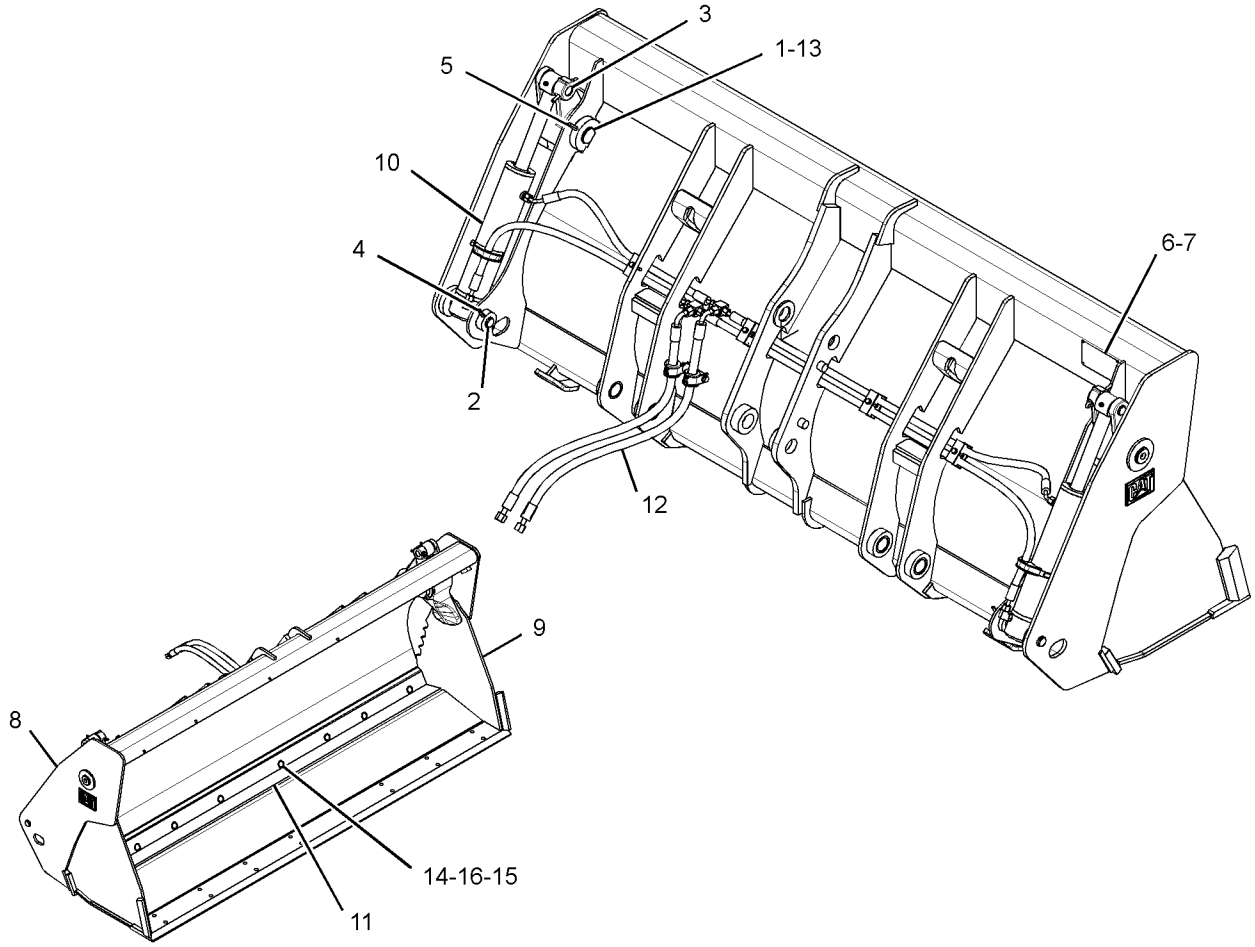

GRAPHIC #1 **<END>** g01392329

WORK TOOLS

216-8821 BUCKET GP-MULTIPURPOSE

S/N: SHA1-UP
1.1 CU M(1.4 CU YD)
PART OF 232-2690 BUCKET AR-MULTIPURPOSE
AN ATTACHMENT

SMCS-6104 **i02747035**

NOTE	REF NO	GRAPHIC REF	PART NUMBER	QTY	PART NAME 1 2 3 4 5 6 (PRODUCT LEVEL)	SEE PAGE
	1	1	**9R-4676**	2	PIN	
	2	1	**137-4234**	1	PLATE-IDENTIFICATION (WORK TOOL)	
	3	1	**168-8389**	4	TACK-FASTENER	
Y	4	1	**216-8762**	1	BULLDOZER AS	566
Y	5	1	**216-8826**	1	CLAM AS-MULTIPURPOSE BUCKET	571
Y	6	1	**226-5540**	2	CYLINDER GP-MULTIPURPOSE BUKT	328
	7	1	**233-0859**	1	EDGE	
Y	8	1	*251-5855*	1	LINES GP-MULTIPURPOSE BUCKET	373
	9	1	**095-0865**	4	PIN-COTTER	
	10	1	**096-1820**	2	PIN-COTTER	
	11	1	**3B-8489**	2	FITTING-GREASE	
	12	1	**3F-5108**	8	BOLT-PLOW (5/8-11X2.25-IN)	
	13	1	**4K-0367**	8	NUT-FULL (5/8-11-THD)	
	14	1	**8T-4122**	8	WASHER-HARD (17X32X3.5-MM THK)	
	15	1	**9R-4677**	2	PIN	
	16	1	**9R-4678**	2	PIN	
Y	17	1	*263-8591*	1	PLATE & FILM GP	761

Y-SEPARATE ILLUSTRATION

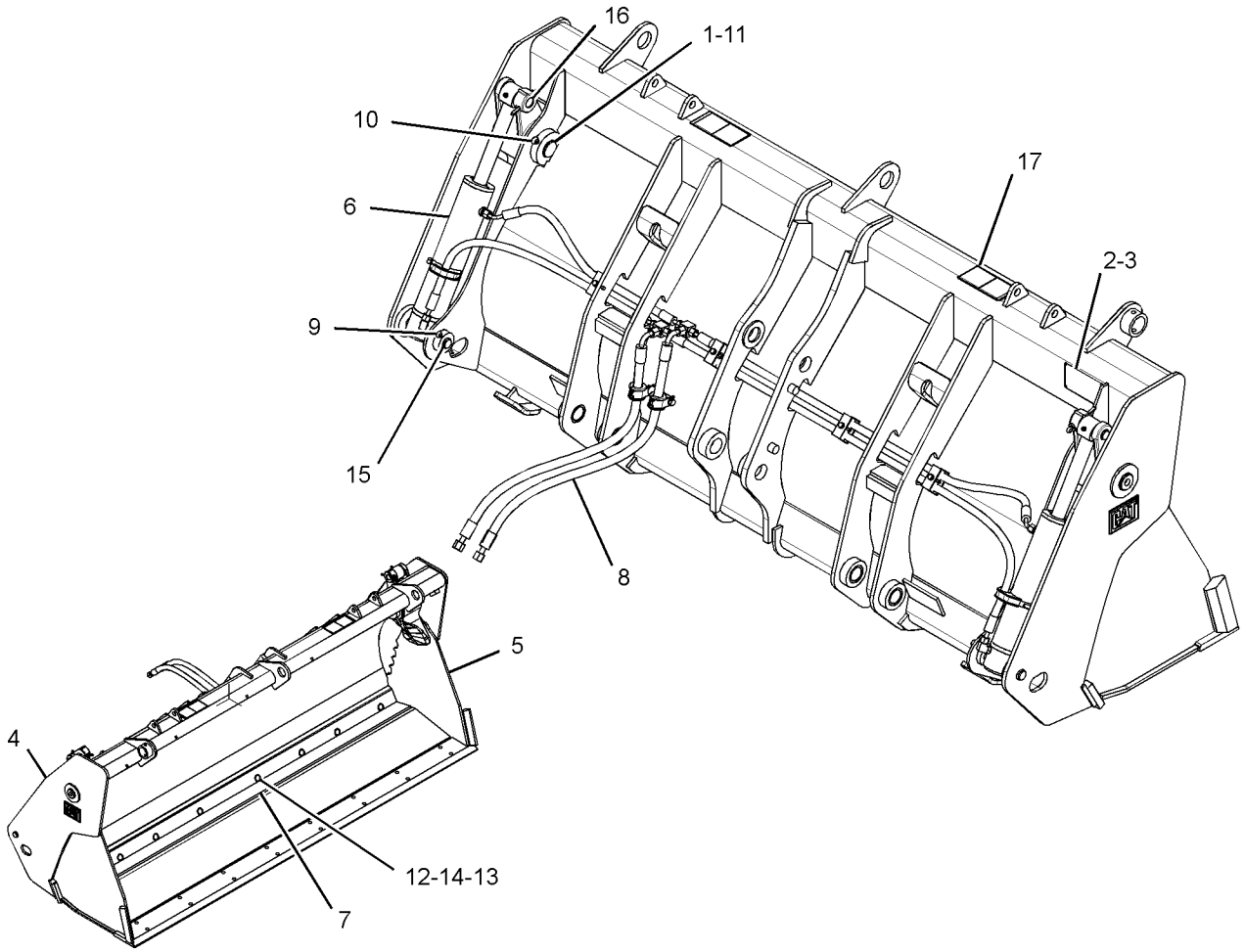

GRAPHIC #1 **<END>** g01392421

216-8762 BULLDOZER AS

S/N: SHA1-UP
PART OF 216-8821 BUCKET GP-MULTIPURPOSE
FIELD REPLACEMENT FOR 216-8822—PAGE 569
AN ATTACHMENT

SMCS-6050 **i02747034**

NOTE	REF NO	GRAPHIC REF	PART NUMBER	QTY	PART NAME 1 2 3 4 5 6 (PRODUCT LEVEL)	SEE PAGE
	1	1	**216-8778**	2	BRACKET	
	2	1	**216-8780**	1	BRACKET AS	
	3	1	**216-8781**	4	BRACKET	
Y	4	1	**216-8822**	1	BULLDOZER AS	569
	5	1	**224-6250**	2	PLATE	

Y-SEPARATE ILLUSTRATION

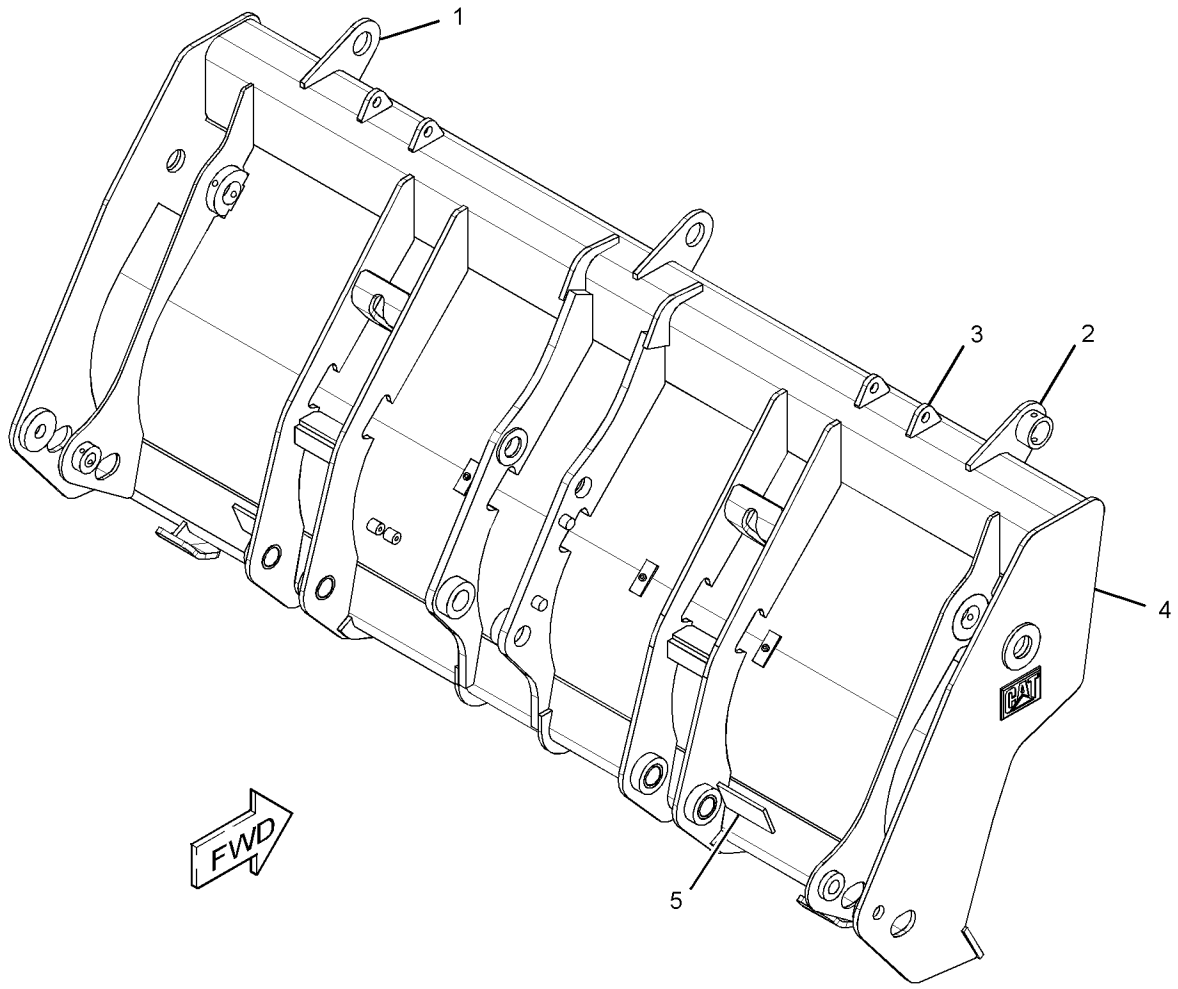

GRAPHIC #1 **<END>** g01384995

WORK TOOLS

216-8802 BULLDOZER AS

S/N: SHA1-UP

PART OF 216-8800 BUCKET GP-MULTIPURPOSE, 216-8811 BULLDOZER AS

FIELD REPLACEMENT ORDER 216-8811—PAGE 568

AN ATTACHMENT

SMCS-6050 **i02508054**

NOTE	REF NO	GRAPHIC REF	PART NUMBER	QTY	PART NAME 1 2 3 4 5 6 (PRODUCT LEVEL)	SEE PAGE
					(NO SERVICEABLE PARTS AT TIME OF PUBLICATION)	

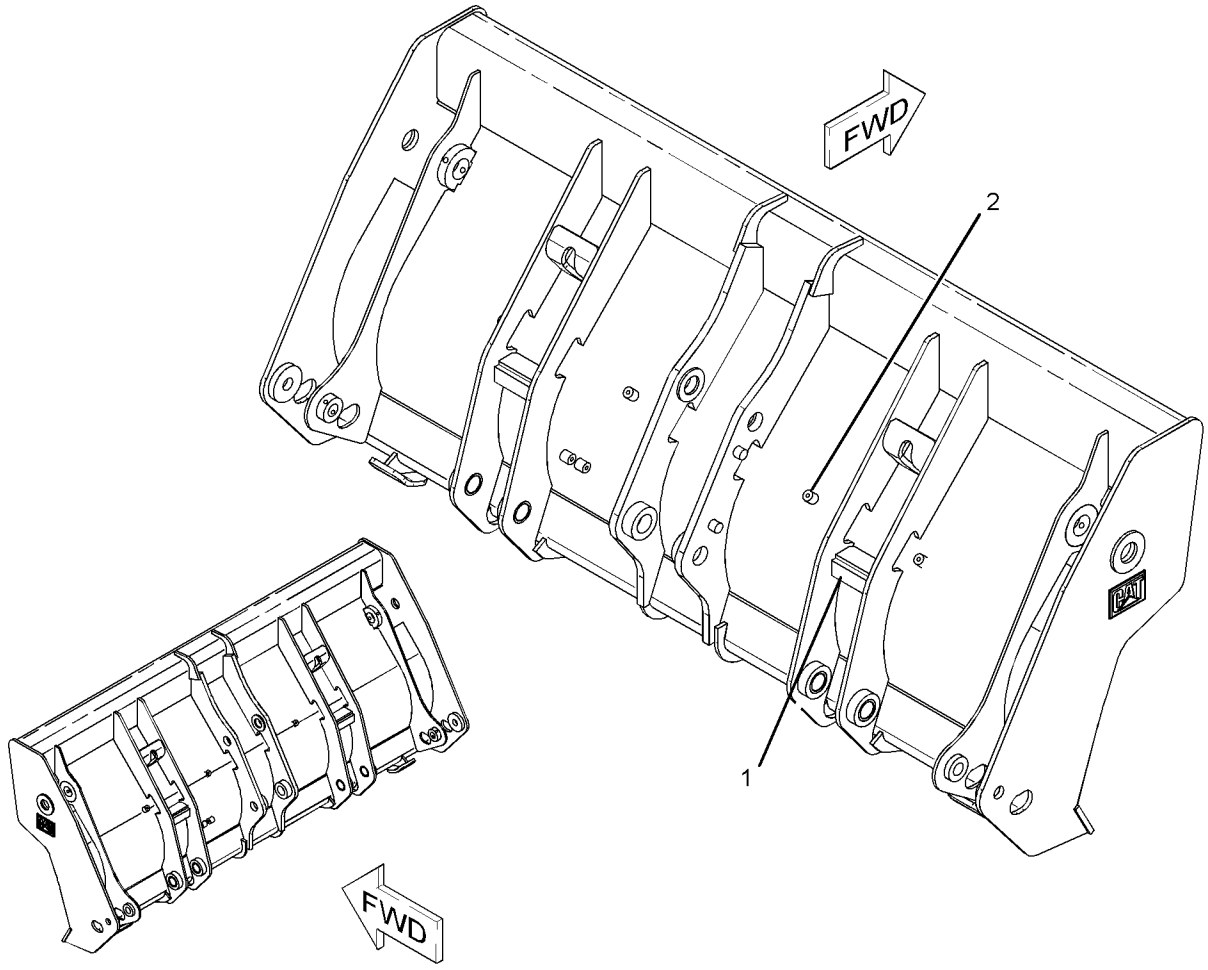

GRAPHIC #1 **<END>** g01298137

216-8811 BULLDOZER AS

S/N: SHA1-UP
PART OF 216-8801 BUCKET GP-MULTIPURPOSE
FIELD REPLACEMENT FOR 216-8802—PAGE 567
AN ATTACHMENT

SMCS-6050 **i02747048**

NOTE	REF NO	GRAPHIC REF	PART NUMBER	QTY	PART NAME 1 2 3 4 5 6 (PRODUCT LEVEL)	SEE PAGE
	1	1	**216-8778**	2	BRACKET	
	2	1	**216-8780**	1	BRACKET AS	
	3	1	**216-8781**	4	BRACKET	
Y	4	1	**216-8802**	1	BULLDOZER AS	567
	5	1	**224-6250**	2	PLATE	

Y-SEPARATE ILLUSTRATION

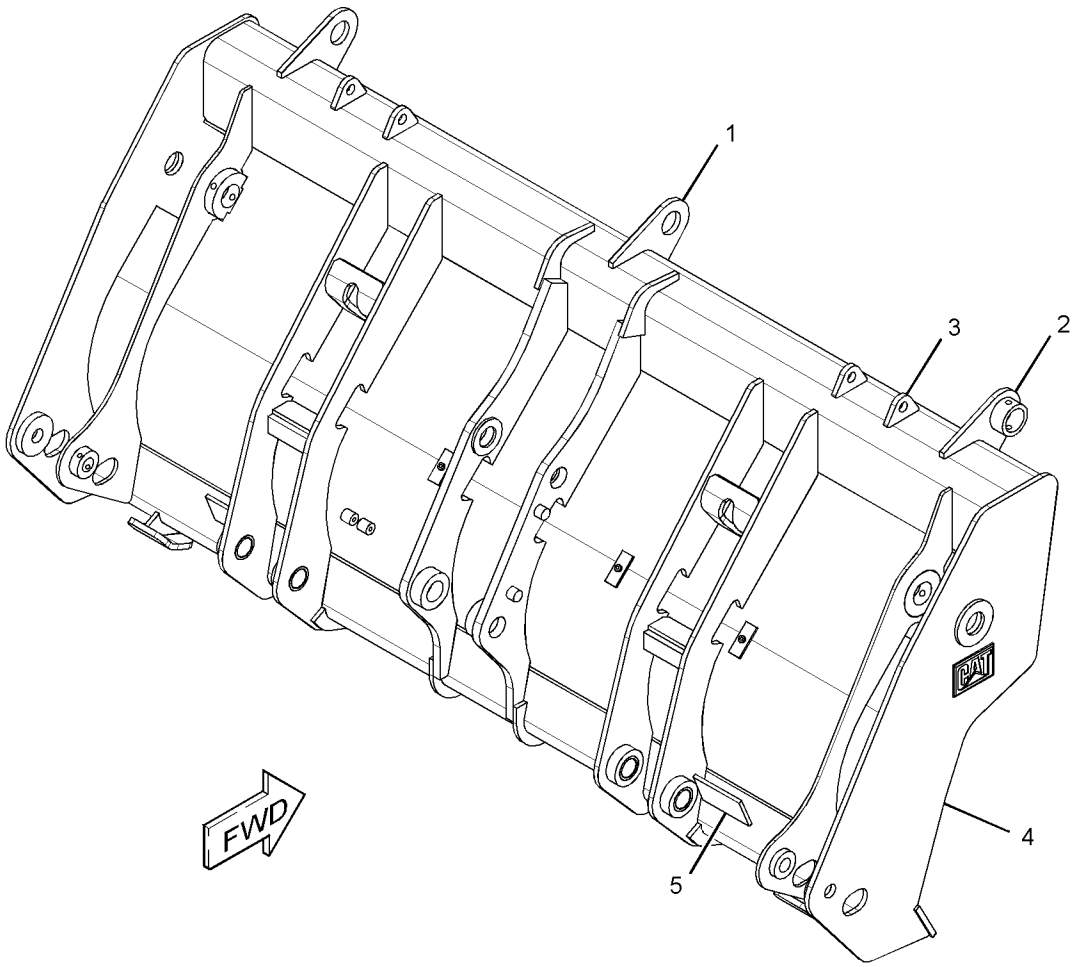

GRAPHIC #1 **<END>** g01385103

216-8822 BULLDOZER AS

S/N: SHA1-UP

PART OF 216-8820 BUCKET GP-MULTIPURPOSE, 216-8762 BULLDOZER AS

FIELD REPLACEMENT ORDER 216-8762—PAGE 566

AN ATTACHMENT

SMCS-6050 **i02236782**

NOTE	REF NO	GRAPHIC REF	PART NUMBER	QTY	PART NAME 1 2 3 4 5 6 (PRODUCT LEVEL)	SEE PAGE
	1	1	**9R-0111**	4	BEARING-SLEEVE	
	2	1	*216-8794*	1	BRACKET AS (LH)	
	2A	1	**161-4130**	1	PLATE-IDENTIFICATION (CAT)	
	3	1	*216-8796*	1	BRACKET AS (RH)	
	3A	1	**161-4130**	1	PLATE-IDENTIFICATION (CAT)	
M	4	1	**9R-5271**	6	BOSS (M10X1.5X25-MM)	

M-METRIC PART

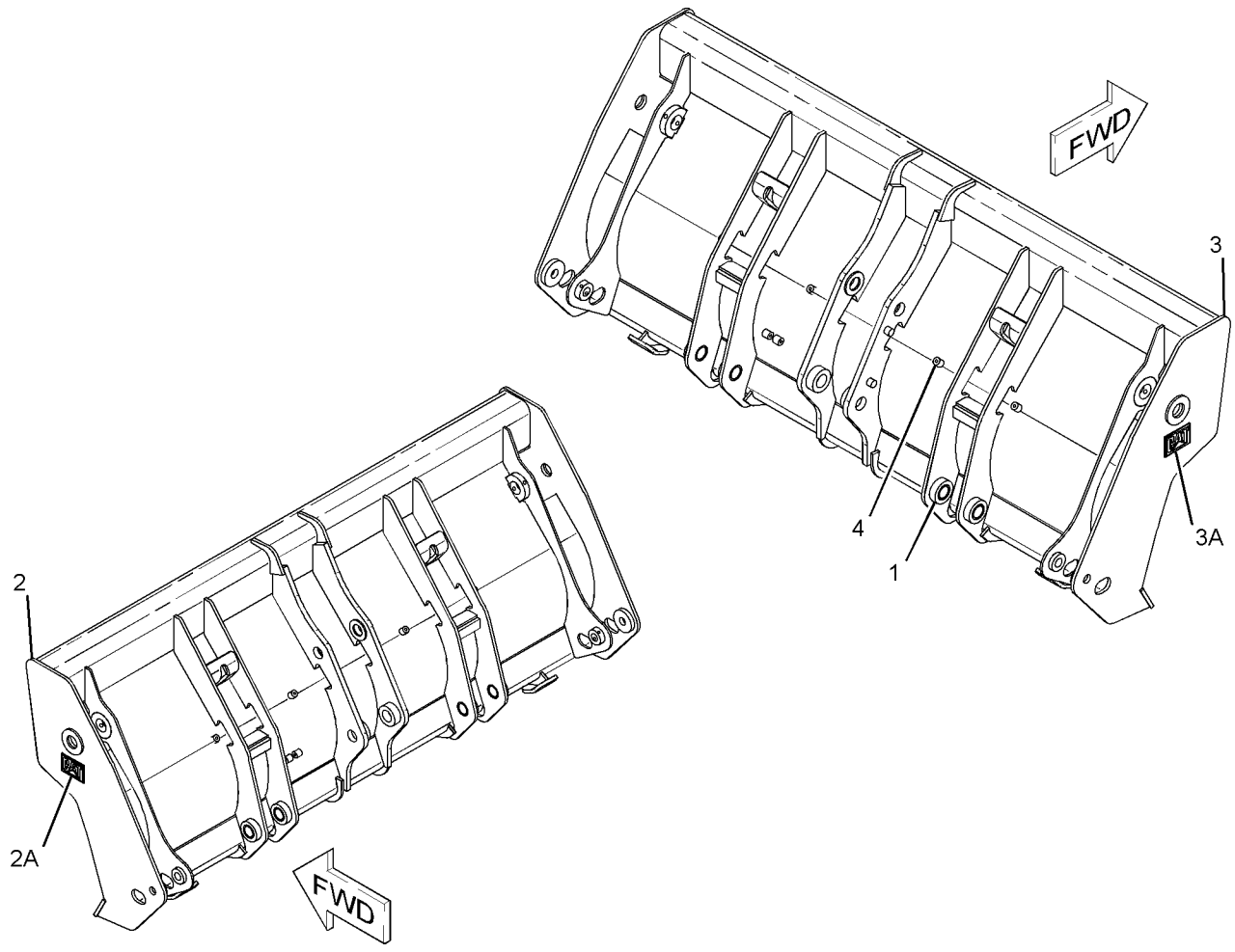

GRAPHIC #1 **<END>** g01134456

216-8803 CLAM AS-MULTIPURPOSE BUCKET

S/N: SHA1-UP

PART OF 216-8800, 216-8801 BUCKET GP-MULTIPURPOSE

AN ATTACHMENT

SMCS-6104 **i02236689**

NOTE	REF NO	GRAPHIC REF	PART NUMBER	QTY	PART NAME 1 2 3 4 5 6 (PRODUCT LEVEL)	SEE PAGE
	1	1	*216-8843*	1	PLATE AS	
		1	**216-8839**	1	PLATE (WEAR)	
		1	**9R-4672**	1	EDGE	

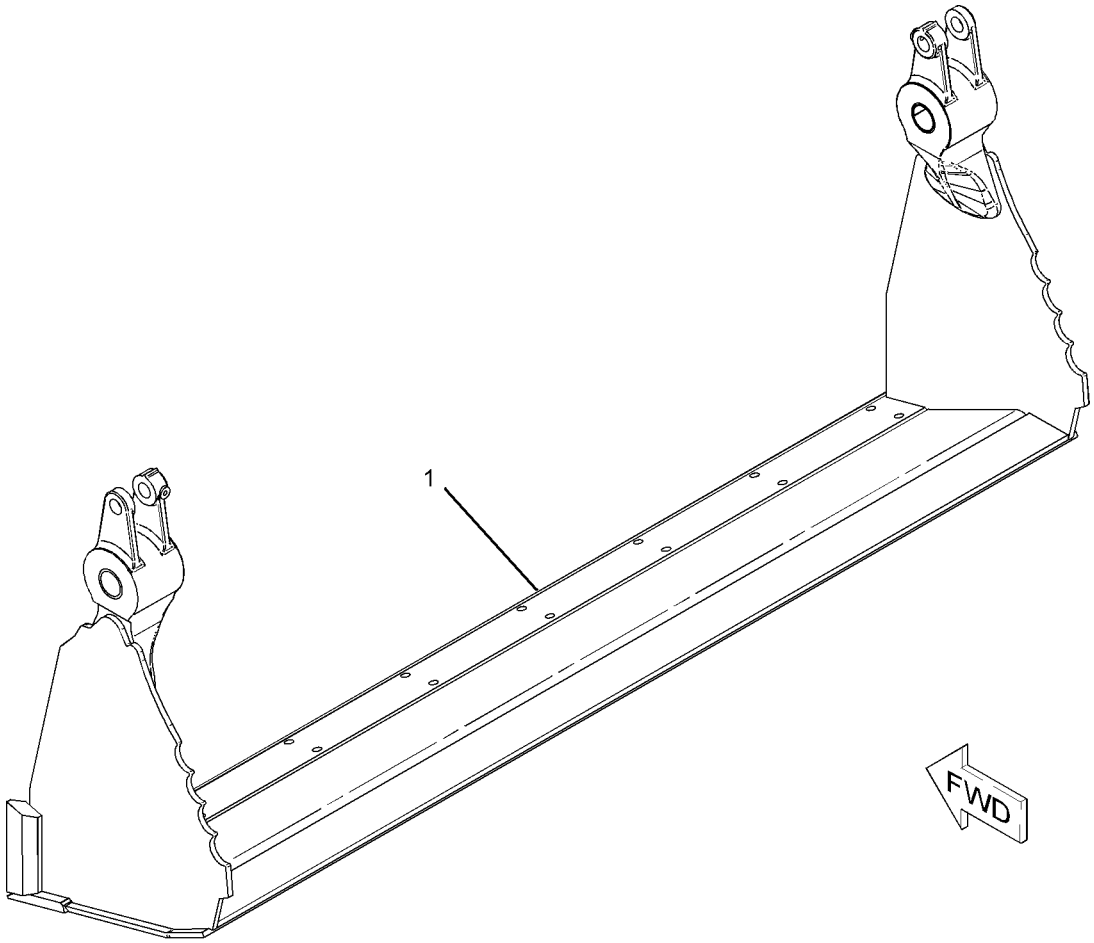

GRAPHIC #1 **<END>** g01134490

216-8826 CLAM AS-MULTIPURPOSE BUCKET

S/N: SHA1-UP

PART OF 216-8820, 216-8821 BUCKET GP-MULTIPURPOSE

AN ATTACHMENT

SMCS-6104 **i02236747**

NOTE	REF NO	GRAPHIC REF	PART NUMBER	QTY	PART NAME 1 2 3 4 5 6 (PRODUCT LEVEL)	SEE PAGE
	1	1	*216-8804*	1	PLATE AS (LH)	
		1	**9R-4675**	1	BUSHING-TERMINAL	
		1	**9R-5294**	1	HINGE	
	2	1	*216-8805*	1	PLATE AS (RH)	
		1	**9R-4675**	1	BUSHING-TERMINAL	
		1	**9R-5294**	1	HINGE	
	3	1	*216-8829*	1	PLATE AS	
		1	**9R-5313**	1	EDGE	

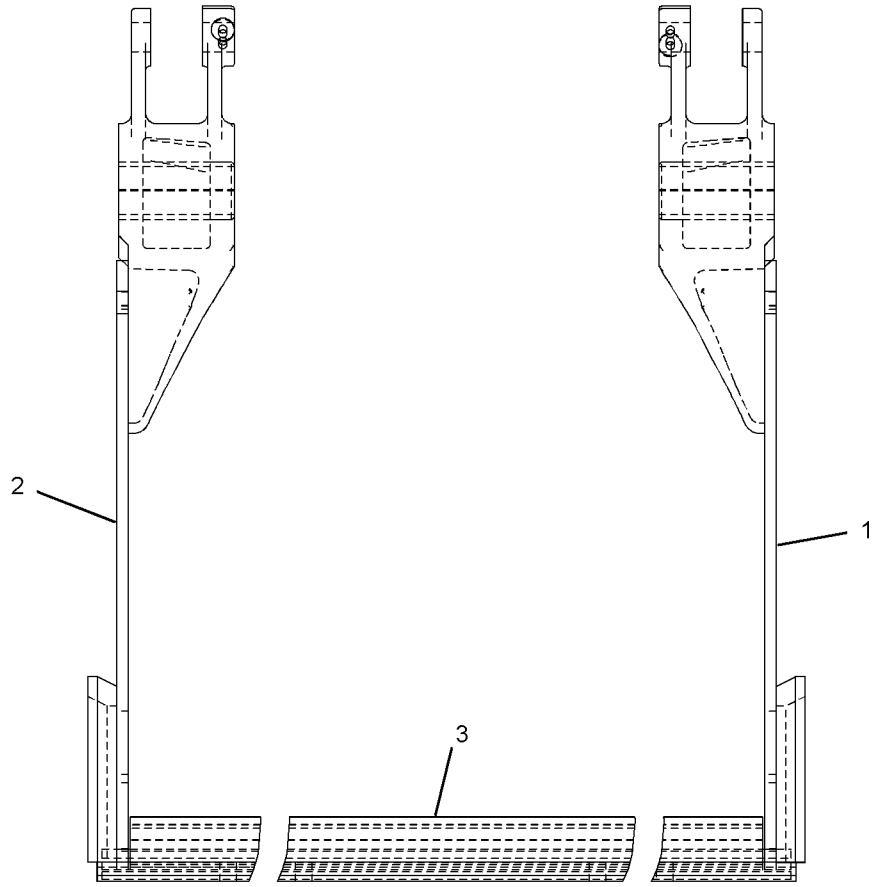

FRONT VIEW

GRAPHIC #1 **<END>** g01135645

WORK TOOLS

222-7379 COUPLER AR-QUICK—PIN-LOCK

S/N: SHA1-UP

AN ATTACHMENT

SMCS-6129 **i02246220**

NOTE	PART NUMBER	QTY	PART NAME 1 2 3 4 5 6 (PRODUCT LEVEL)	SEE PAGE
Y	*222-7464*	1	COUPLER GP-QUICK	575
Y	*216-0928*	1	PIN GP-COUPLER (BUCKET)	585
Y	*215-9478*	1	PIN GP-COUPLER (MACHINE)	584

Y-SEPARATE ILLUSTRATION

<END>

176-6251 COUPLER GP-QUICK–BACKHOE

S/N: SHA1-UP

PART OF 178-8850 COUPLER GP-QUICK

AN ATTACHMENT

SMCS-6129 **i02534983**

NOTE	REF NO	GRAPHIC REF	PART NUMBER	QTY	PART NAME 1 2 3 4 5 6 (PRODUCT LEVEL)	SEE PAGE
	1	1	**176-6252**	1	COUPLER	
	2	1	**200-5921**	1	HOOK	
	3	1	**132-3725**	1	SPRING	
	4	1	**132-3721**	1	PIN AS (HOOK)	
	5	1	**132-3723**	1	LOCK PIN	
	6	1	**091-5928**	1	FITTING-GREASE	
	7	1	**8T-0144**	1	PIN-SPRING	
F			**132-3821**	1	LEVER-ACTUATING	

F-NOT SHOWN

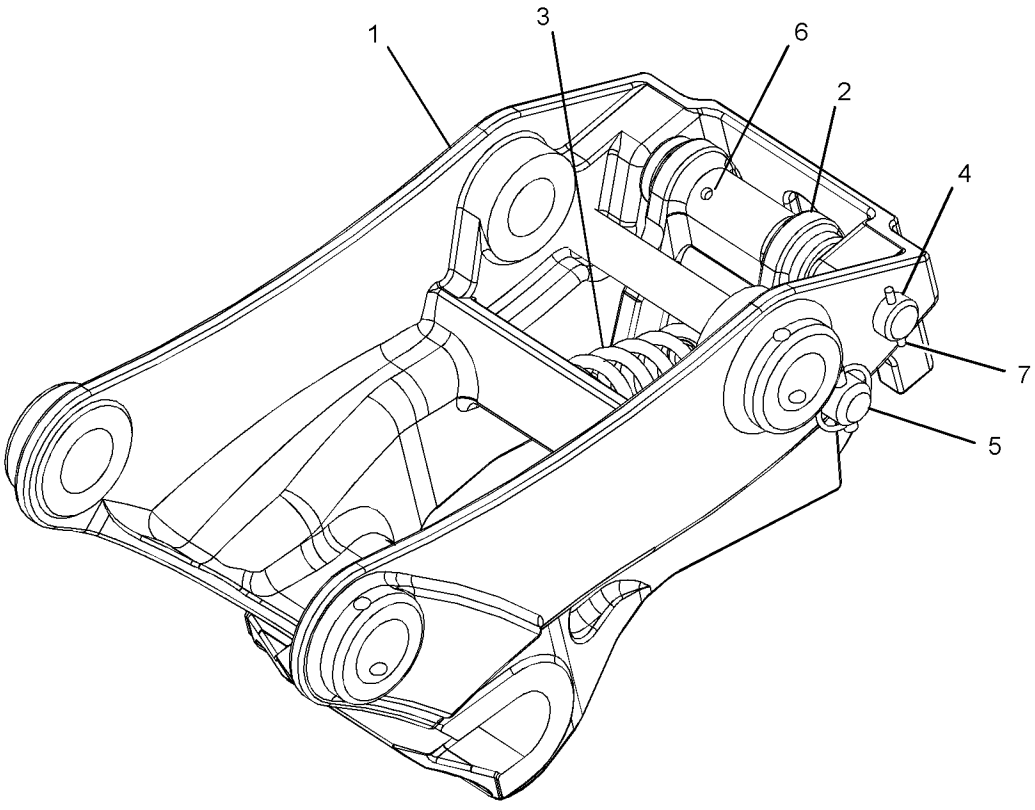

GRAPHIC #1 **<END>** g01268127

WORK TOOLS

178-8850 COUPLER GP-QUICK–BACKHOE

S/N: SHA1-UP

AN ATTACHMENT

SMCS-6129 **i02593679**

NOTE	REF NO	GRAPHIC REF	PART NUMBER	QTY	PART NAME 1 2 3 4 5 6 (PRODUCT LEVEL)	SEE PAGE
	1	1	**4J-1888**	2	PIN-COTTER	
	2	1	**132-3777**	1	PIN	
	3	1	**132-3778**	1	PIN	
Y	4	1	**176-6251**	1	COUPLER GP-QUICK (BACKHOE)	573

Y-SEPARATE ILLUSTRATION

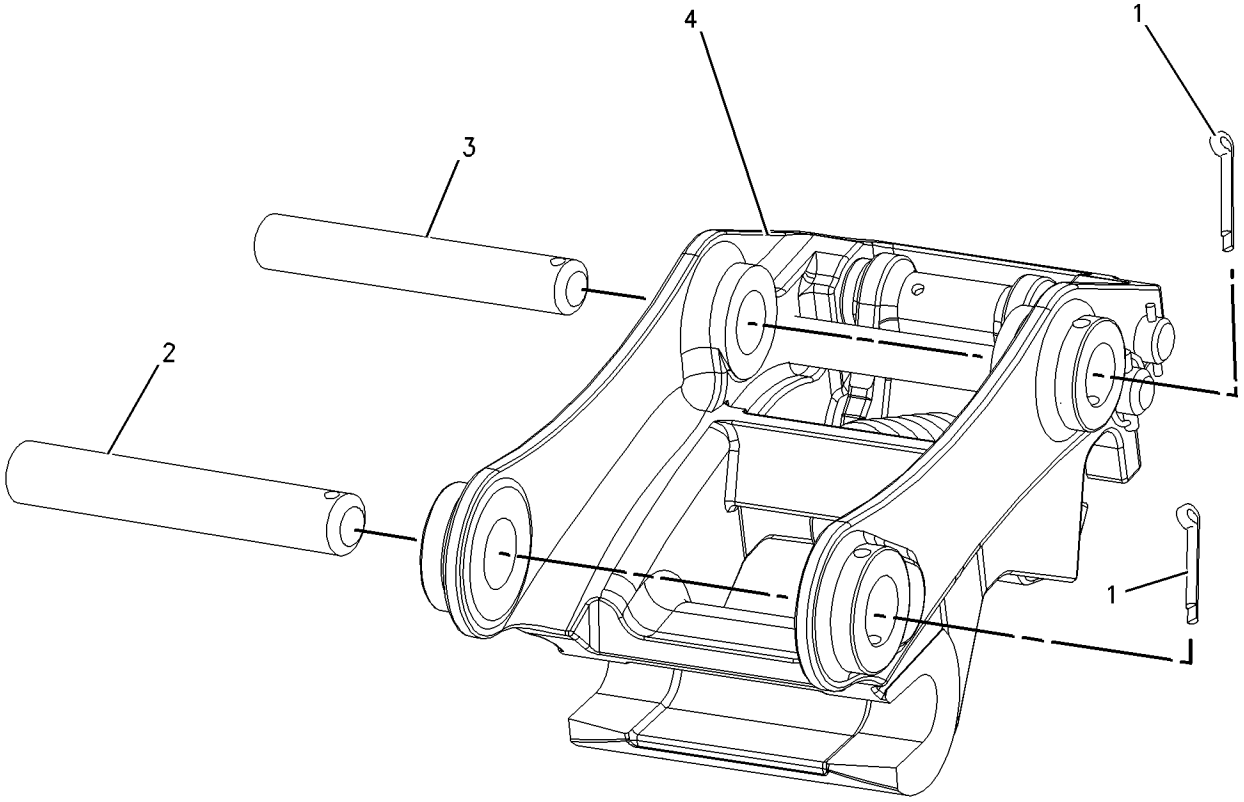

GRAPHIC #1 **<END>** g00904540

222-7464 COUPLER GP-QUICK–PIN-LOCK

S/N: SHA1-UP

PART OF 222-7379 COUPLER AR-QUICK

AN ATTACHMENT

SMCS-6129 **i02409083**

NOTE	REF NO	GRAPHIC REF	PART NUMBER	QTY	PART NAME 1 2 3 4 5 6 (PRODUCT LEVEL)	SEE PAGE
	1	1	**154-2704**	1	PLATE-INSTRUCTION (BUCKET SPECIFICATIONS)	
	2	1	**168-8389**	4	TACK-FASTENER	
	3	1	**276-1368**	2	BEARING-SLEEVE	
	4	1	**232-2735**	1	COUPLER AS	
	4A	1	**161-4130**	2	PLATE-IDENTIFICATION (CAT)	
	5	1	**3B-8489**	1	FITTING-GREASE	
	6	1	**9R-0320**	2	BEARING-SLEEVE	
	7	1	**9R-3700**	2	BEARING-SLEEVE	

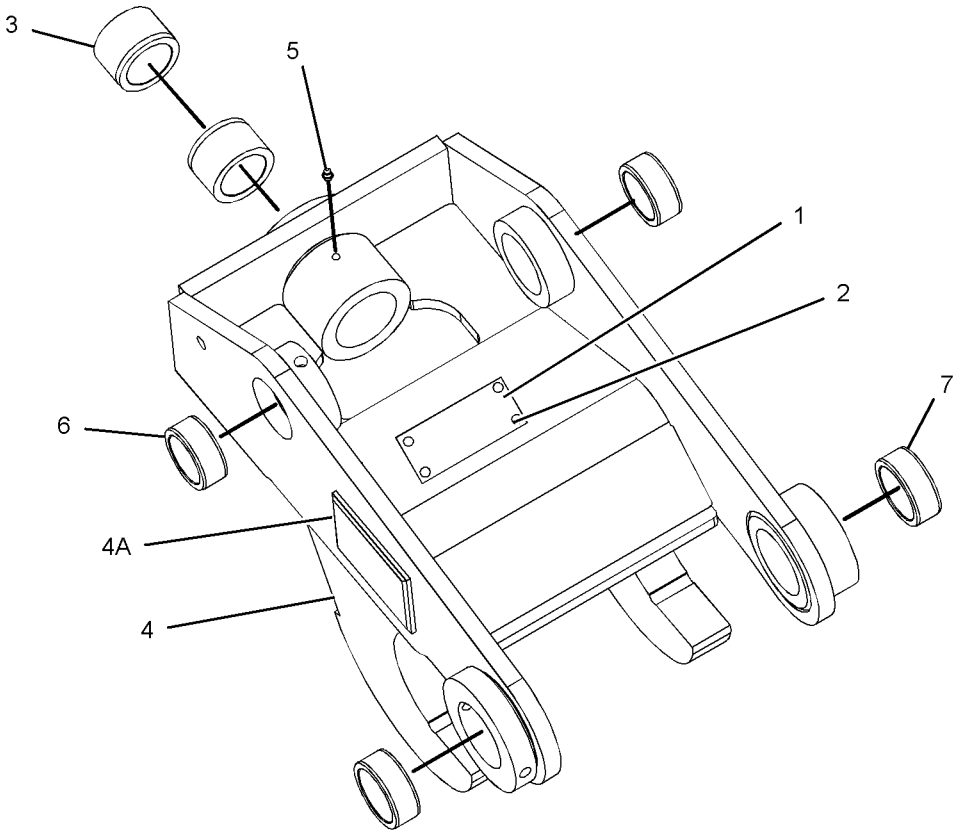

GRAPHIC #1 **<END>** g01072399

WORK TOOLS

229-7226 COUPLER GP-QUICK–CAT, CASE

S/N: SHA1-UP

AN ATTACHMENT

SMCS-6129 **i01889083**

NOTE	REF NO	GRAPHIC REF	PART NUMBER	QTY	PART NAME 1 2 3 4 5 6 (PRODUCT LEVEL)	SEE PAGE
B	1	1	**9R-0158**	15	WASHER (46X69X3-MM THK)	
	2	1	**145-8348**	1	PIN AS	
	3	1	**168-0425**	1	PIN	
	4	1	**168-0446**	1	PIN	
	5	1	**168-0475**	1	PIN AS	
B	6	1	**188-9592**	7	WASHER-THRUST (39X75X2.3-MM THK)	
	7	1	**229-5535**	1	COUPLER AS	
		1	**154-2704**	1	PLATE-INSTRUCTION (BUCKET SPECIFICATIONS)	
		1	**168-8389**	4	TACK-FASTENER	
	8	1	**096-1820**	1	PIN-COTTER	
	9	1	**3B-5319**	2	PIN-COTTER	
	10	1	**6V-3213**	2	RING-RETAINING	

B-USE AS REQUIRED

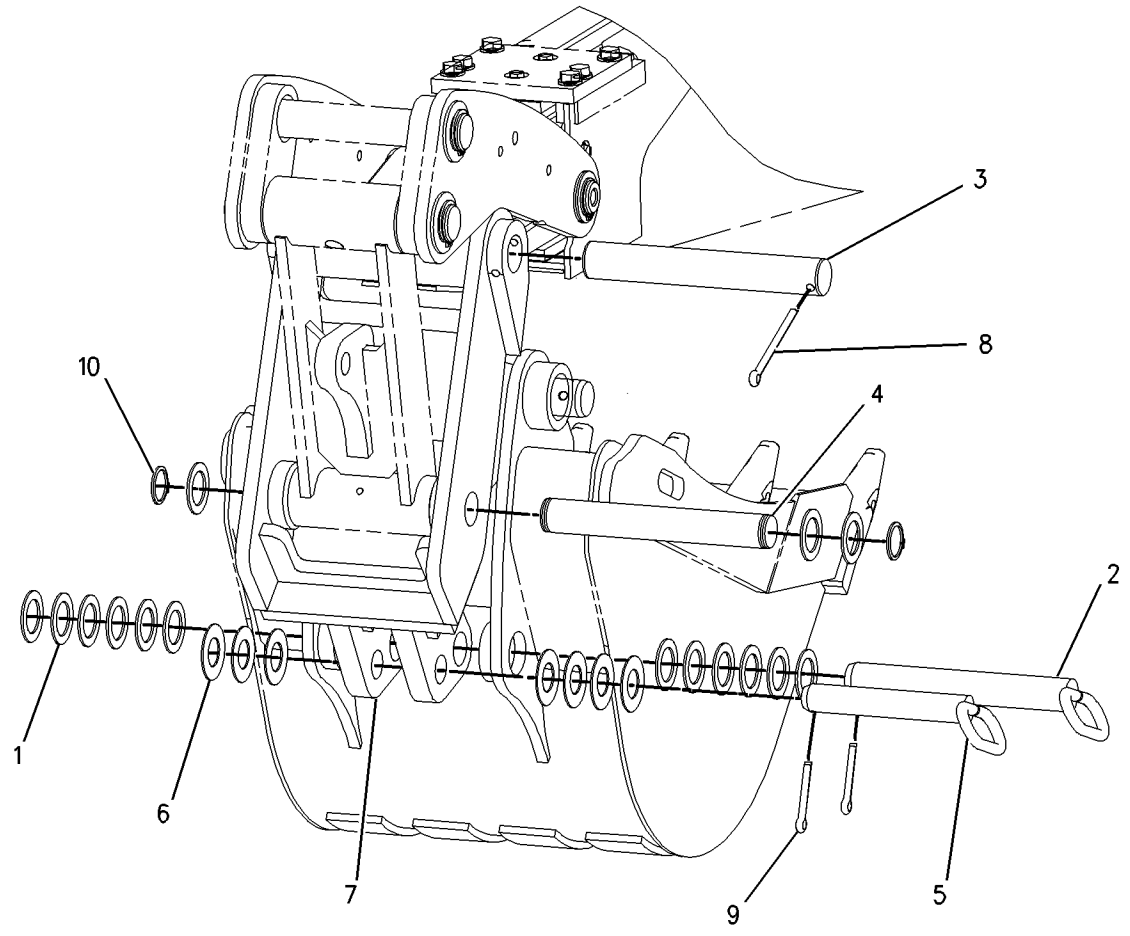

GRAPHIC #1 **<END>** g00981049

229-7227 COUPLER GP-QUICK–CAT, DEERE

S/N: SHA1-UP
AN ATTACHMENT

SMCS-6129 **i01943411**

NOTE	REF NO	GRAPHIC REF	PART NUMBER	QTY	PART NAME 1 2 3 4 5 6 (PRODUCT LEVEL)	SEE PAGE
B	1	1	**9R-0158**	15	WASHER (46X69X3-MM THK)	
	2	1	**145-8348**	1	PIN AS	
	3	1	**168-0425**	1	PIN	
	4	1	**168-0446**	1	PIN	
	5	1	**168-0445**	1	PIN AS	
B	6	1	**9R-1510**	4	WASHER (51X82X4-MM THK)	
	7	1	**229-8253**	1	COUPLER AS	
	7A	1	**154-2704**	1	PLATE-INSTRUCTION (BUCKET SPECIFICATIONS)	
	7B	1	**168-8389**	4	TACK-FASTENER	
	8	1	**096-1820**	1	PIN-COTTER	
	9	1	**3B-5319**	2	PIN-COTTER	
	10	1	**6V-3213**	2	RING-RETAINING	

B-USE AS REQUIRED

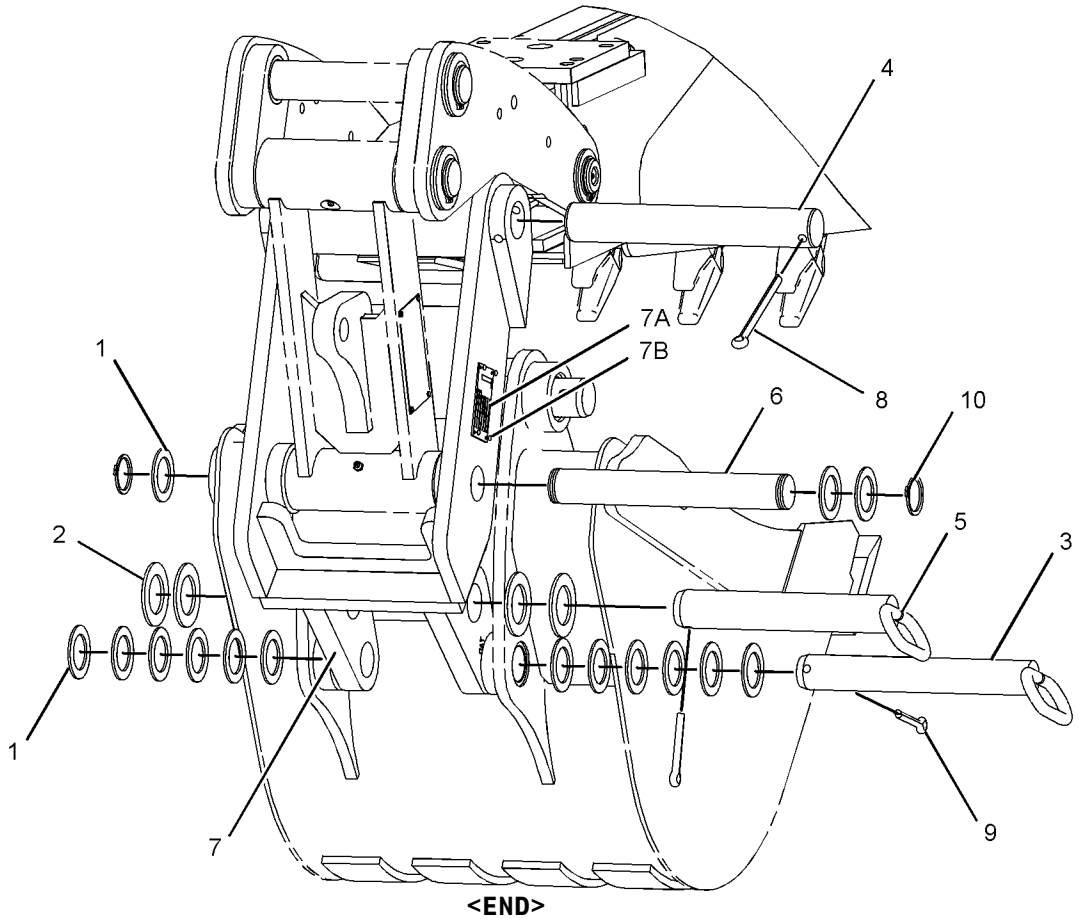

GRAPHIC #1 **<END>** g01008791

9R-5320 EDGE GP-CUTTING

S/N: SHA1-UP

PART OF 232-2686, 232-2688 BUCKET AR-MULTIPURPOSE, 251-1775, 251-1781 BUCKET GP-GENERAL PURPOSE AN ATTACHMENT

SMCS-6801 **i02238662**

NOTE	REF NO	GRAPHIC REF	PART NUMBER	QTY	PART NAME 1 2 3 4 5 6 (PRODUCT LEVEL)	SEE PAGE
	1	1	**118-7110**	2	EDGE-CUTTING	
	2	1	**4F-3657**	8	BOLT-PLOW (5/8-11X2.75-IN)	
	3	1	**4K-0367**	8	NUT-FULL (5/8-11-THD)	
	4	1	**8T-4122**	8	WASHER-HARD (17X32X3.5-MM THK)	

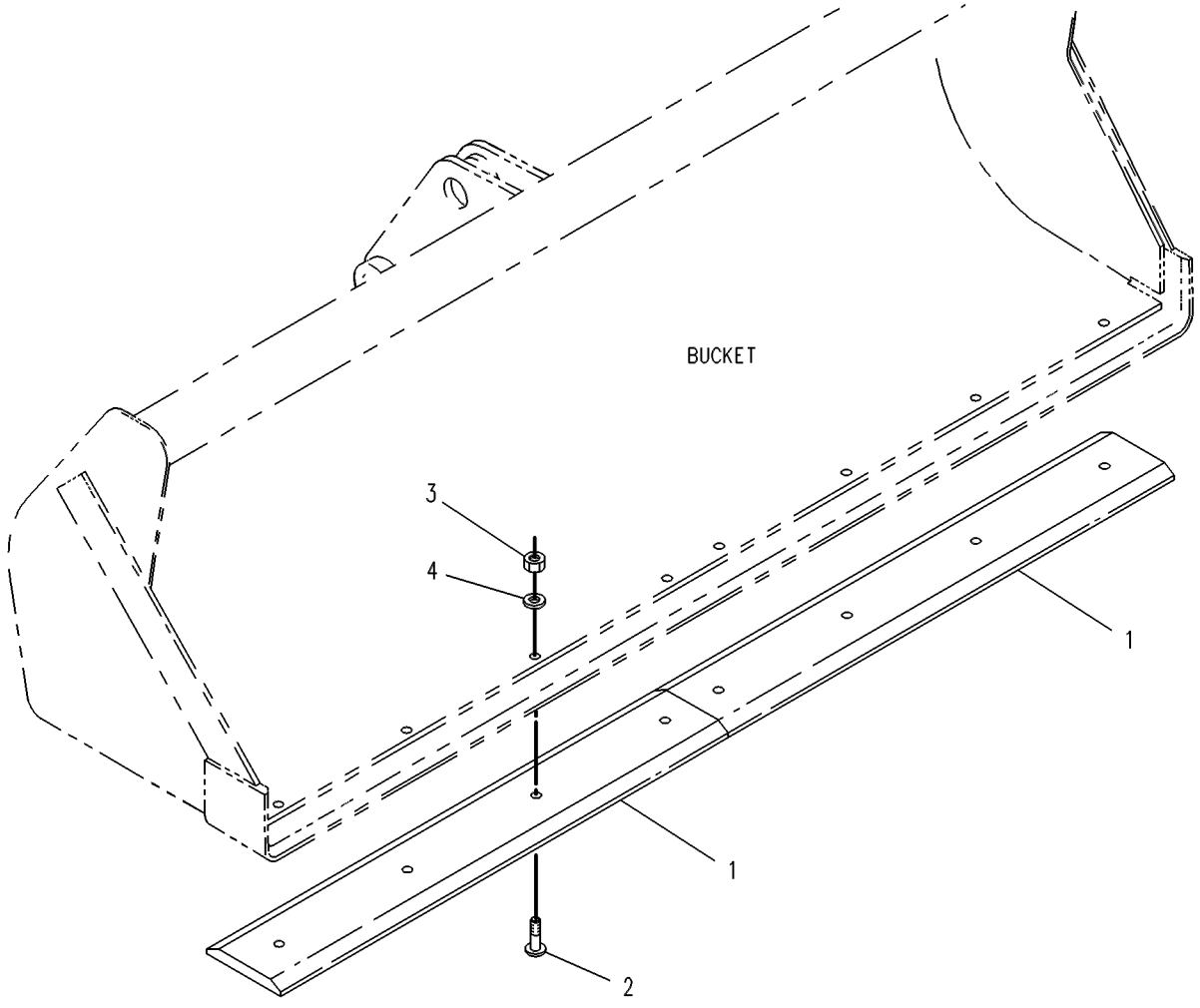

GRAPHIC #1 **<END>** g00131376

WORK TOOLS

9R-5321 EDGE GP-CUTTING

S/N: SHA1-UP

PART OF 232-2681, 232-2683 BUCKET AR-MULTIPURPOSE, 251-1778, 251-1784, 251-1787
BUCKET GP-GENERAL PURPOSE
AN ATTACHMENT

SMCS-6801 **i02238663**

NOTE	REF NO	GRAPHIC REF	PART NUMBER	QTY	PART NAME 1 2 3 4 5 6 (PRODUCT LEVEL)	SEE PAGE
	1	1	**9W-8215**	2	EDGE-CUTTING	
	2	1	**3F-5108**	8	BOLT-PLOW (5/8-11X2.25-IN)	
	3	1	**4K-0367**	8	NUT-FULL (5/8-11-THD)	
	4	1	**8T-4122**	8	WASHER-HARD (17X32X3.5-MM THK)	

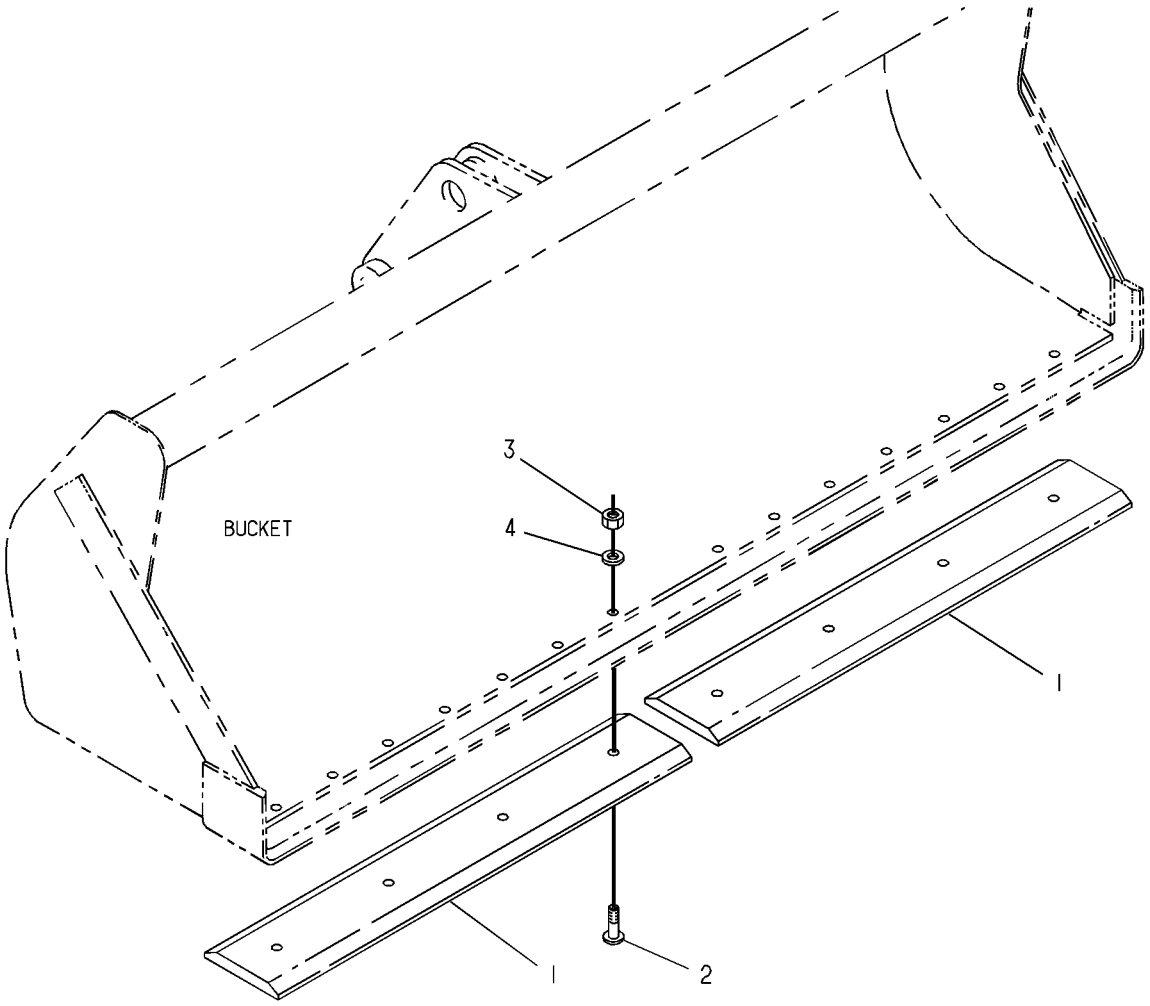

GRAPHIC #1 **<END>** g00130834

WORK TOOLS

104-6310 FORK GP

S/N: SHA1-UP

PART OF 232-2685, 232-2690 BUCKET AR-MULTIPURPOSE

AN ATTACHMENT

SMCS-6405 **i02238666**

NOTE	REF NO	GRAPHIC REF	PART NUMBER	QTY	PART NAME 1 2 3 4 5 6 (PRODUCT LEVEL)	SEE PAGE
	1	1	**104-6311**	2	BRACKET AS	
	2	1	**104-6312**	2	FORK AS	
	3	1	**104-6316**	1	PIN	
	4	1	**104-6317**	2	PIN	
	5	1	**4J-1888**	1	PIN-COTTER	
	6	1	**9R-0109**	4	WASHER (41X64X3-MM THK)	
	7	1	**112-1776**	2	PIN AS	
	8	1	**6V-8144**	4	RING-RETAINING	
	9	1	**5D-8159**	2	PIN AS	

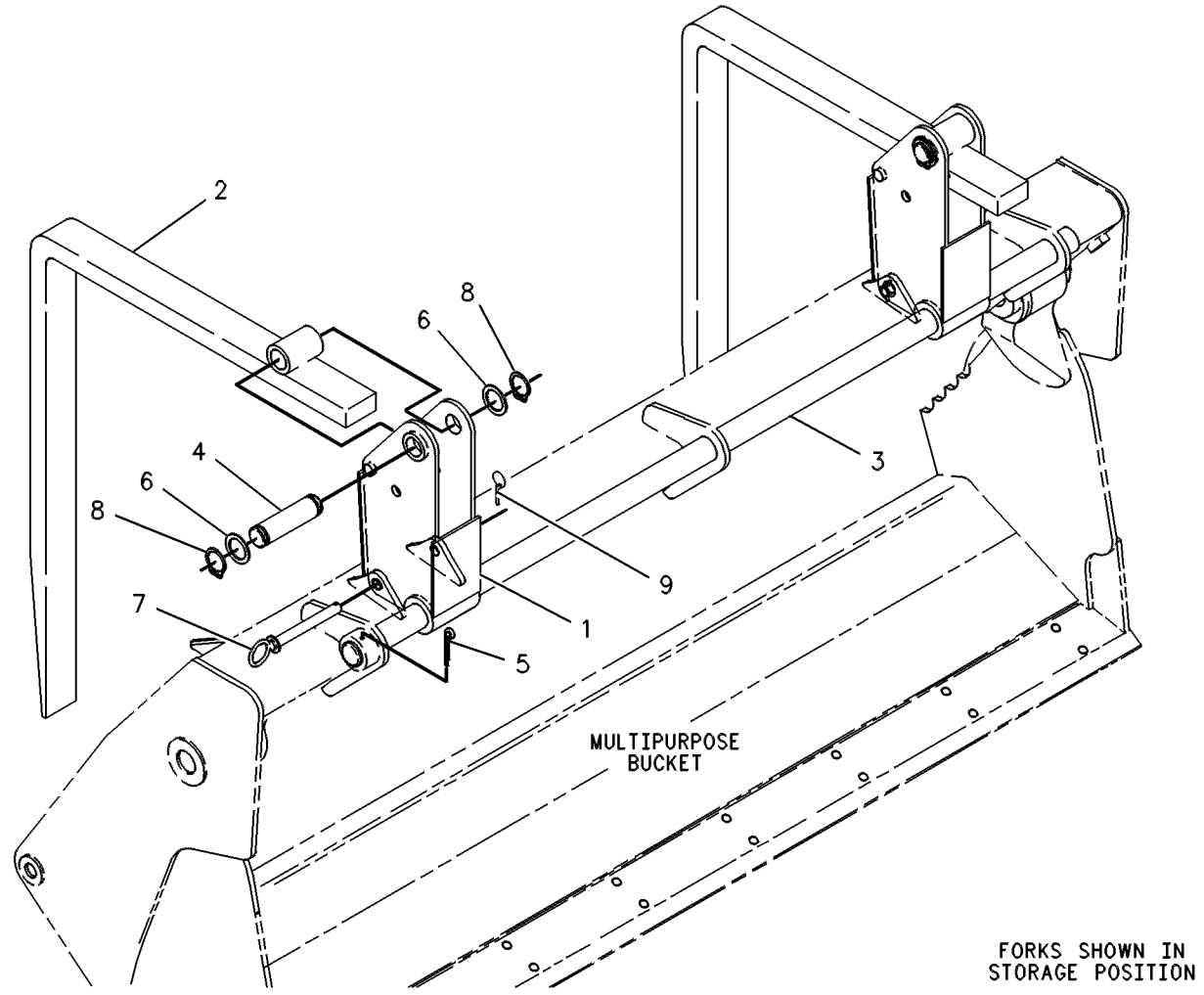

GRAPHIC #1 **<END>** g00131084

WORK TOOLS

270-3203 GUARD GP-WORK TOOL

S/N: SHA1-UP
AN ATTACHMENT

SMCS-6700, 6800 **i02448683**

NOTE	REF NO	GRAPHIC REF	PART NUMBER	QTY	PART NAME 1 2 3 4 5 6 (PRODUCT LEVEL)	SEE PAGE
	1	1	**270-3206**	1	PLATE AS	
M	2	1	**8T-4184**	4	BOLT (M12X1.75X45-MM)	
	3	1	**8T-4223**	16	WASHER-HARD (13.5X25.5X3-MM THK)	

M-METRIC PART

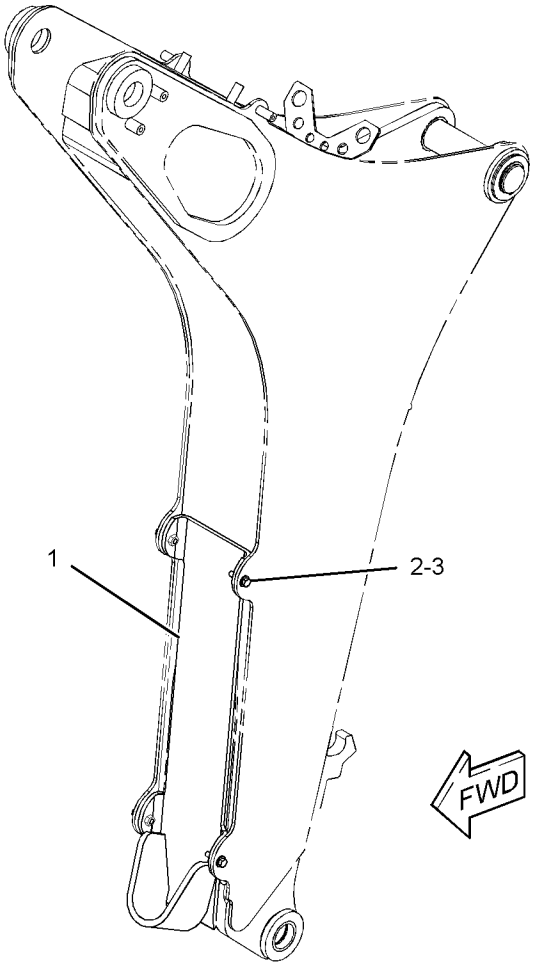

GRAPHIC #1 **<END>** g01230740

WORK TOOLS

178-3593 MOUNTING GP-BUCKET

S/N: SHA1-UP
QUICK COUPLER-BACKHOE
FOR USE WITH HIGH ROTATION BUCKETS
AN ATTACHMENT

SMCS-6101 **i02597559**

NOTE	PART NUMBER	QTY	PART NAME 1 2 3 4 5 6 (PRODUCT LEVEL)	SEE PAGE
	154-5279	1	PIN	
	154-5280	1	PIN	
	3B-5319	4	PIN-COTTER	
B	**9R-0158**	5	WASHER (46X69X3-MM THK)	
B	**9R-1510**	5	WASHER (51X82X4-MM THK)	

B-USE AS REQUIRED

<END>

225-4323 MOUNTING GP-MAST—ACCUGRADE

S/N: SHA1-UP
PART OF 246-8045 GRADE CONTROL AR-LASER
AN ATTACHMENT

SMCS-79NS **i02586808**

NOTE	REF NO	GRAPHIC REF	PART NUMBER	QTY	PART NAME 1 2 3 4 5 6 (PRODUCT LEVEL)	SEE PAGE
	1	1	**9W-4361**	1	MOUNT-FLEXIBLE	
	2	1	**225-4324**	1	PLATE AS	
M		1	**8T-3612**	4	NUT-WELD (M8X1.25-THD)	
		1	**091-4113**	1	SPACER	
	3	1	**225-4326**	1	PLATE	
	4	1	**251-6708**	1	PLATE	
	5	1	**2H-3740**	1	BOLT (3/4-16X1.25-IN)	
	6	1	**5P-8248**	1	WASHER-HARD (20X36.5X3.5-MM THK)	
	7	1	**6V-1869**	1	GROMMET	
	8	1	**6V-8801**	2	NUT (3/8-16-THD)	
	9	1	**8T-4121**	8	WASHER-HARD (11X21X2.5-MM THK)	
M	10	1	**8T-4133**	1	NUT (M10X1.5-THD)	
M	11	1	**8T-4136**	5	BOLT (M10X1.5X25-MM)	
M	12	1	**8T-4137**	2	BOLT (M10X1.5X20-MM)	
	13	1	**8T-4224**	6	WASHER-HARD (8.8X16X2-MM THK)	
M	14	1	**8T-4908**	4	BOLT (M8X1.25X25-MM)	

M-METRIC PART

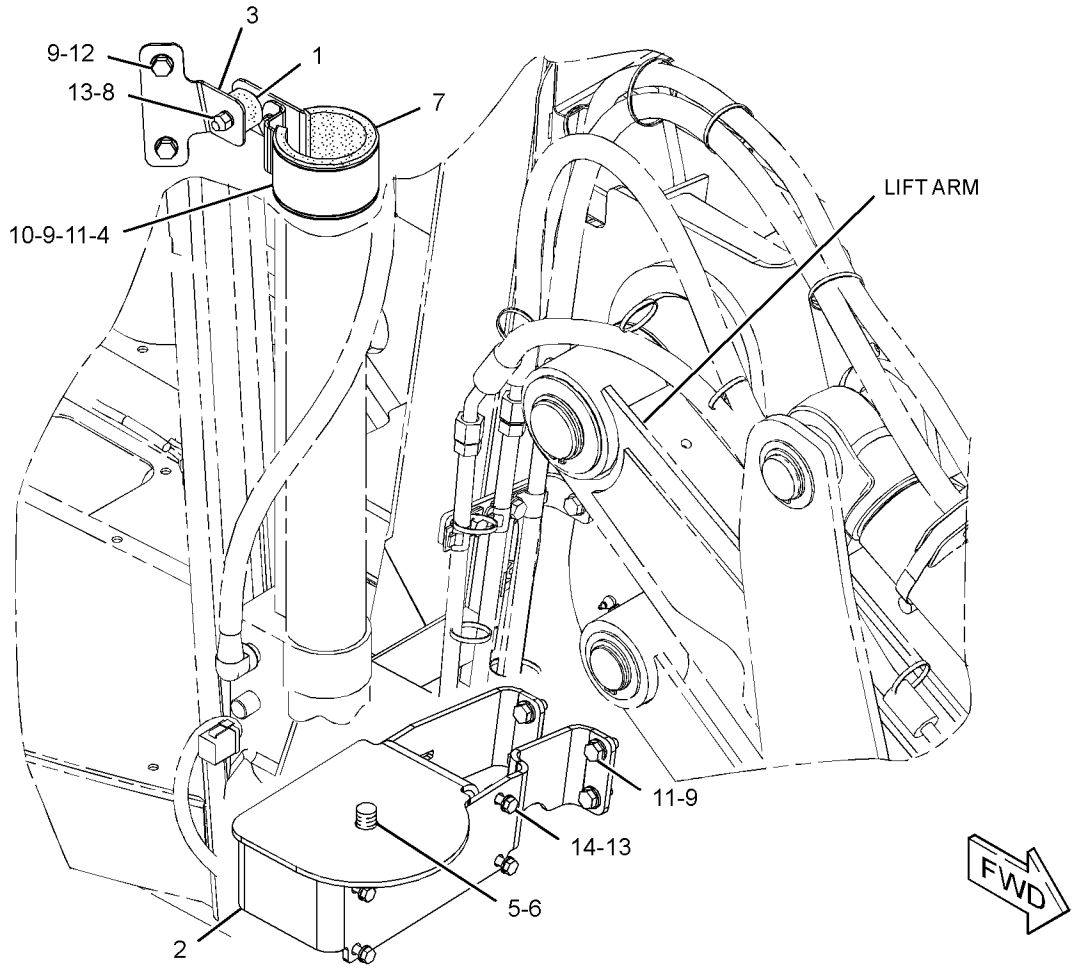

GRAPHIC #1 **<END>** g01302221

WORK TOOLS

215-9478 PIN GP-COUPLER—MACHINE

S/N: SHA1-UP
PART OF 222-7379 COUPLER AR-QUICK
AN ATTACHMENT

SMCS-6129 **i02445881**

NOTE	REF NO	GRAPHIC REF	PART NUMBER	QTY	PART NAME 1 2 3 4 5 6 (PRODUCT LEVEL)	SEE PAGE
	1	1	**215-3373**	1	PIN	
	2	1	**168-0425**	1	PIN	
M	3	1	**6V-7744**	2	LOCKNUT (M10X1.15-THD)	
M	4	1	**8T-4198**	2	BOLT (M10X1.5X100-MM)	

M-METRIC PART

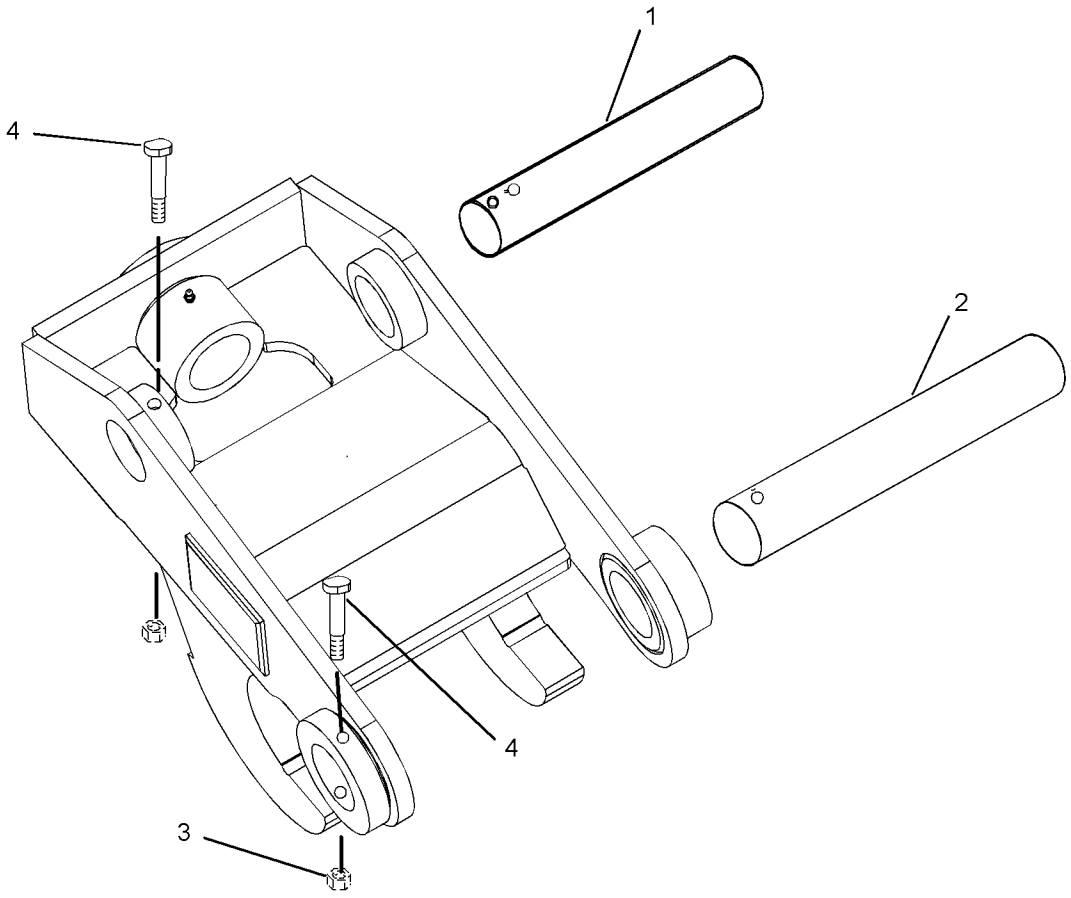

GRAPHIC #1 **<END>** g01224240

WORK TOOLS

216-0928 PIN GP-COUPLER—PIN-LOCK

S/N: SHA1-UP

PART OF 222-7379 COUPLER AR-QUICK

AN ATTACHMENT

SMCS-6129 **i02445882**

NOTE	REF NO	GRAPHIC REF	PART NUMBER	QTY	PART NAME 1 2 3 4 5 6 (PRODUCT LEVEL)	SEE PAGE
	1	1	**222-7411**	1	PIN AS	
	2	1	**216-3712**	1	PIN	

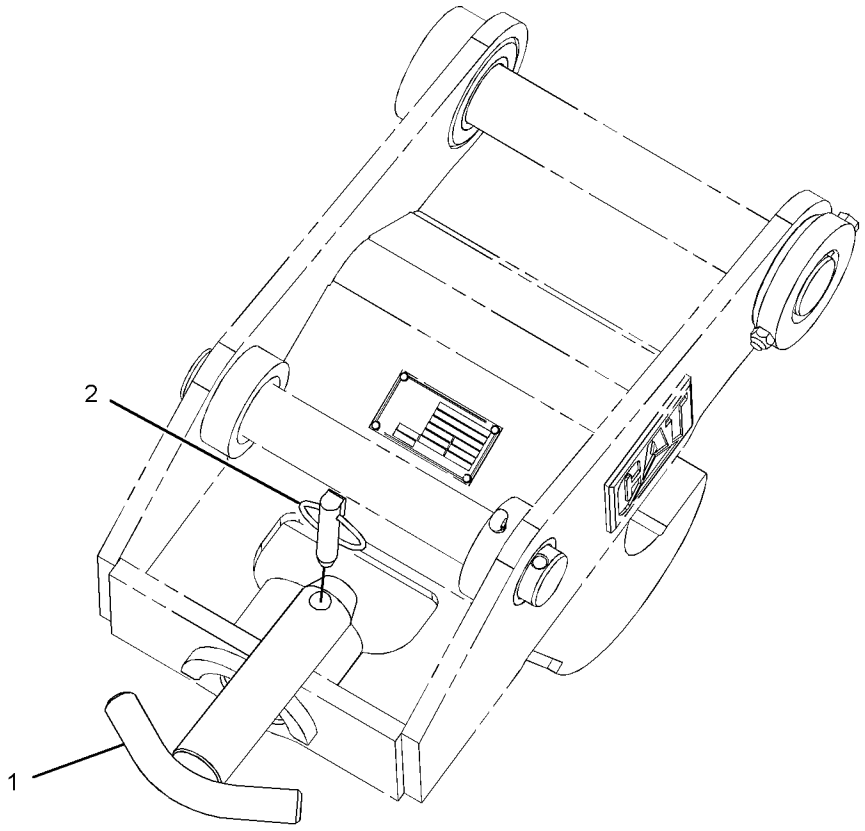

GRAPHIC #1 **<END>** g01239833

WORK TOOLS

221-4260 THUMB AR—BACKHOE

S/N: SHA1-UP
PART OF 224-6232, 224-6233, 224-6234, 224-6235 THUMB AR
AN ATTACHMENT

SMCS-6547 **i02208899**

NOTE	PART NUMBER	QTY	PART NAME 1 2 3 4 5 6 (PRODUCT LEVEL)	SEE PAGE
Y	*221-4265*	1	MOUNTING GP-CYLINDER (THUMB)	396
Y	*221-4267*	1	THUMB GP	636

Y-SEPARATE ILLUSTRATION

<END>

224-6232 THUMB AR—24-IN, MANUAL

S/N: SHA1-UP
AN ATTACHMENT

SMCS-6547 **i02238733**

NOTE	PART NUMBER	QTY	PART NAME 1 2 3 4 5 6 (PRODUCT LEVEL)	SEE PAGE
Y	**221-4276**	1	LINK GP-THUMB (ADJUSTABLE)	440
Y	**221-4260**	1	THUMB AR	586
	221-4282	1	TINE AS-THUMB (24-IN)	

Y-SEPARATE ILLUSTRATION

<END>

224-6233 THUMB AR—24-IN, MANUAL, WITH COUPLER

S/N: SHA1-UP
AN ATTACHMENT

SMCS-6547 **i02238735**

NOTE	PART NUMBER	QTY	PART NAME 1 2 3 4 5 6 (PRODUCT LEVEL)	SEE PAGE
Y	**221-4276**	1	LINK GP-THUMB (ADJUSTABLE)	440
Y	**221-4260**	1	THUMB AR	586
	221-4283	1	TINE AS-THUMB (24-IN)	

Y-SEPARATE ILLUSTRATION

<END>

224-6234 THUMB AR—24-IN, ROCK, MANUAL

S/N: SHA1-UP
AN ATTACHMENT

SMCS-6547 **i02238854**

NOTE	PART NUMBER	QTY	PART NAME 1 2 3 4 5 6 (PRODUCT LEVEL)	SEE PAGE
Y	**221-4276**	1	LINK GP-THUMB (ADJUSTABLE)	440
Y	**221-4260**	1	THUMB AR	586
	221-4284	1	TINE AS-THUMB (24-IN, ROCK)	

Y-SEPARATE ILLUSTRATION

<END>

224-6235 THUMB AR–24-IN, ROCK, MANUAL, WITH COUPLER

S/N: SHA1-UP

AN ATTACHMENT

SMCS-6547 **i02238853**

NOTE	PART NUMBER	QTY	PART NAME 1 2 3 4 5 6 (PRODUCT LEVEL)	SEE PAGE
Y	**221-4276**	1	LINK GP-THUMB (ADJUSTABLE)	440
Y	**221-4260**	1	THUMB AR	586
	221-4285	1	TINE AS-THUMB (24-IN, ROCK)	

Y-SEPARATE ILLUSTRATION

<END>

271-3024 THUMB AR–24-IN, HYD, HEAVY-DUTY

S/N: SHA1-UP
AN ATTACHMENT
TYPE 1

SMCS-6547 **i02449262**

NOTE	REF NO	GRAPHIC REF	PART NUMBER	QTY	PART NAME 1 2 3 4 5 6 (PRODUCT LEVEL)	SEE PAGE
	1	1	**221-4282**	1	TINE AS-THUMB (24-IN)	
Y	2	1	*224-6237*	1	CYLINDER & LINES GP-THUMB	315
Y	3	1	*271-3023*	1	THUMB GP	637

Y-SEPARATE ILLUSTRATION

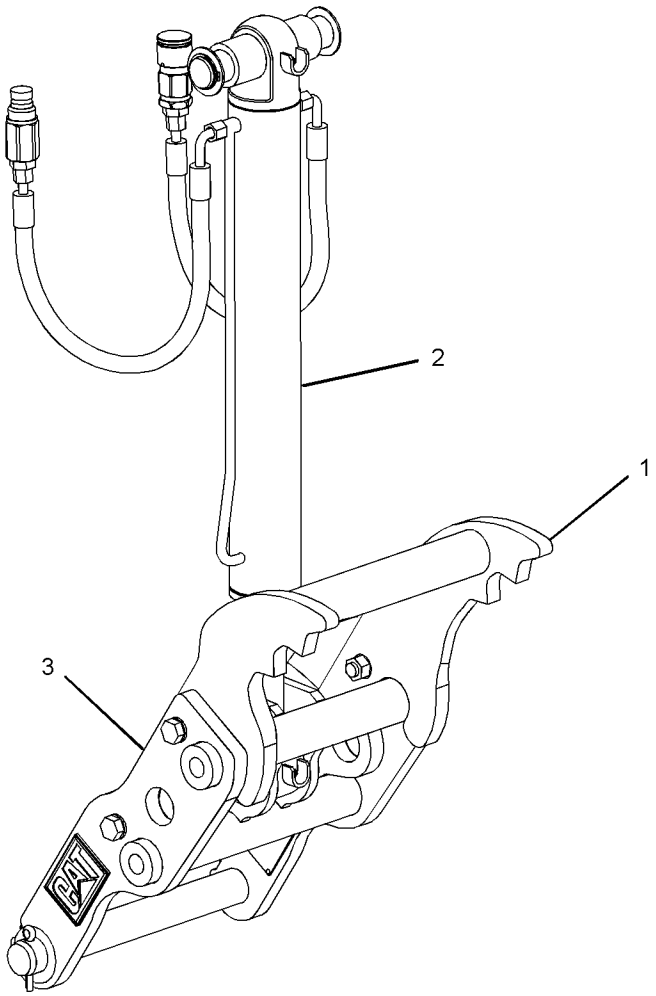

GRAPHIC #1 **<END>** g01234163

WORK TOOLS

271-3024 THUMB AR–24-IN, HYD, HEAVY-DUTY

S/N: SHA1-UP
AN ATTACHMENT
TYPE 2

SMCS-6547 **i02727943**

NOTE	REF NO	GRAPHIC REF	PART NUMBER	QTY	PART NAME 1 2 3 4 5 6 (PRODUCT LEVEL)	SEE PAGE
	1	1	**221-4282**	1	TINE AS-THUMB (24-IN)	
Y	2	1	*224-6237*	1	CYLINDER & LINES GP-THUMB	315
Y	3	1	*271-3023*	1	THUMB GP	637

Y-SEPARATE ILLUSTRATION

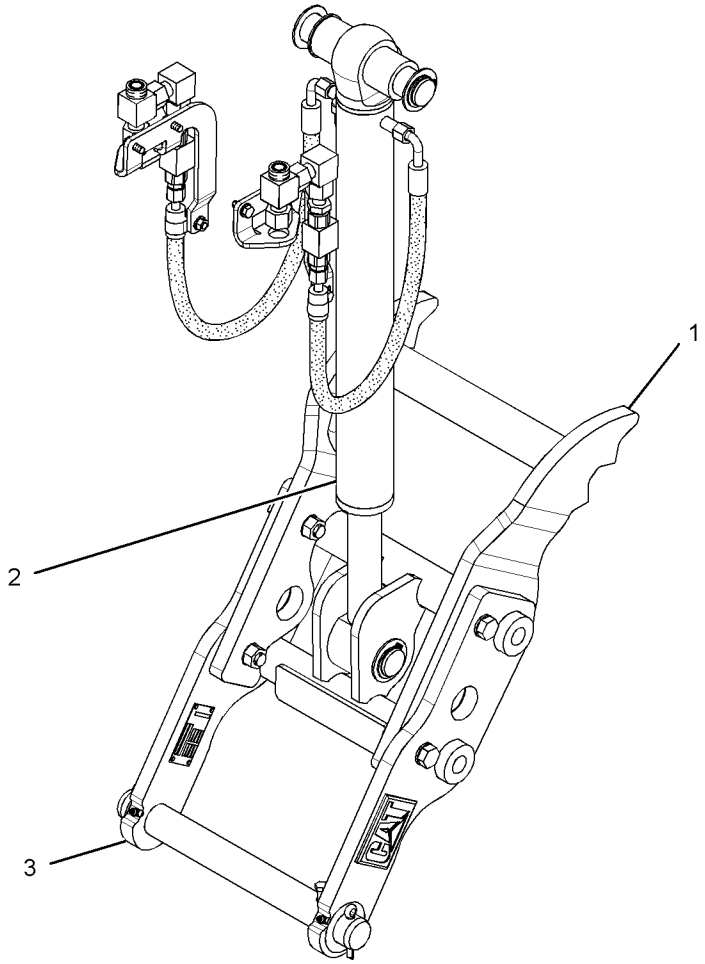

GRAPHIC #1 **<END>** g01383761

271-3025 THUMB AR–24-IN, HYD, HEAVY-DUTY, WITH COUPLER

S/N: SHA1-UP
AN ATTACHMENT
TYPE 1

SMCS-6547 **i02449274**

NOTE	REF NO	GRAPHIC REF	PART NUMBER	QTY	PART NAME 1 2 3 4 5 6 (PRODUCT LEVEL)	SEE PAGE
	1	1	**221-4283**	1	TINE AS-THUMB (24-IN)	
Y	2	1	*224-6237*	1	CYLINDER & LINES GP-THUMB	315
Y	3	1	*271-3023*	1	THUMB GP	637

Y-SEPARATE ILLUSTRATION

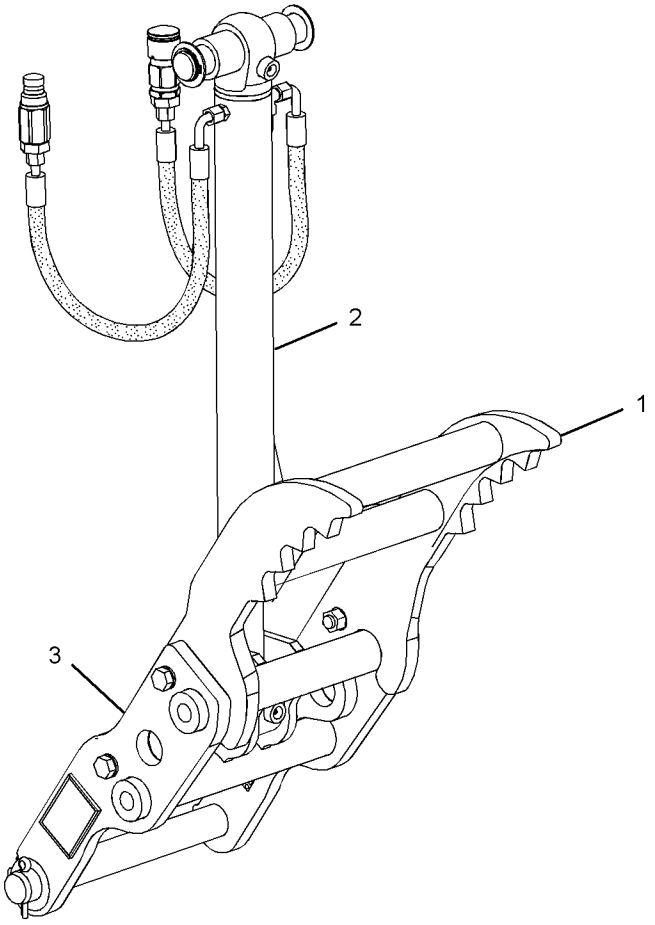

GRAPHIC #1 **<END>** g01234133

271-3025 THUMB AR–24-IN, HYD, HEAVY-DUTY, WITH COUPLER

S/N: SHA1-UP
AN ATTACHMENT
TYPE 2

SMCS-6547 **i02757230**

NOTE	REF NO	GRAPHIC REF	PART NUMBER	QTY	PART NAME 1 2 3 4 5 6 (PRODUCT LEVEL)	SEE PAGE
	1	1	**221-4283**	1	TINE AS-THUMB (24-IN)	
Y	2	1	*224-6237*	1	CYLINDER & LINES GP-THUMB	315
Y	3	1	*271-3023*	1	THUMB GP	637

Y-SEPARATE ILLUSTRATION

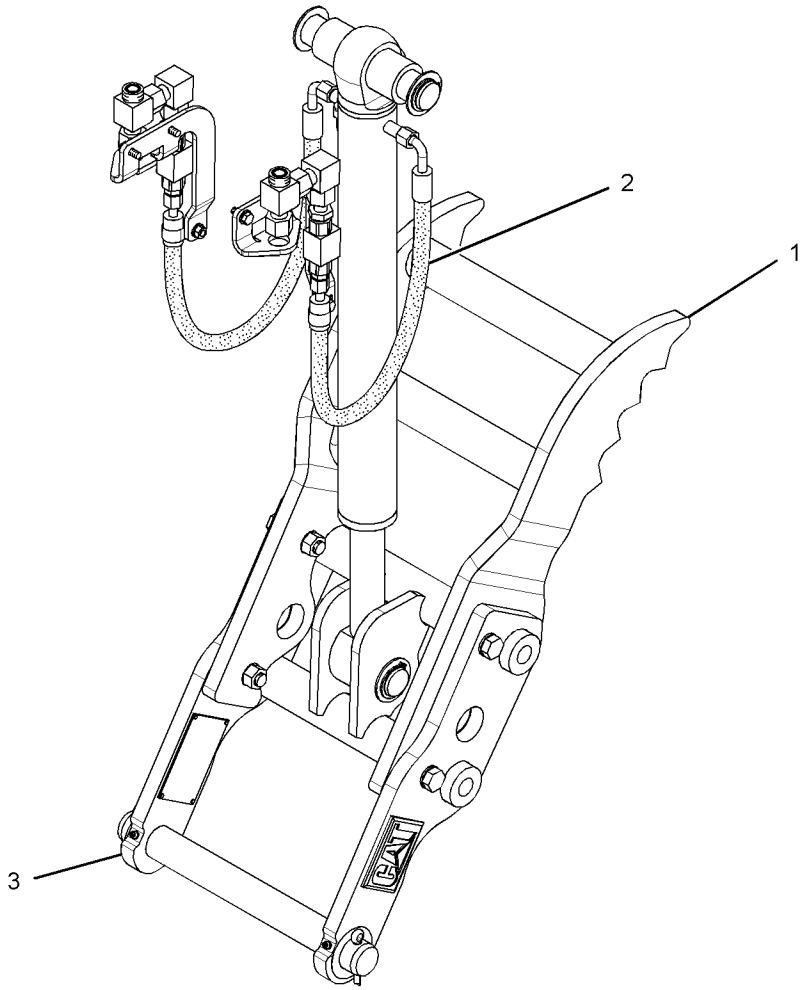

GRAPHIC #1 **<END>** g01384135

271-3026 THUMB AR–24-IN, HYD, ROCK

S/N: SHA1-UP
AN ATTACHMENT
TYPE 1

SMCS-6547 **i02449275**

NOTE	REF NO	GRAPHIC REF	PART NUMBER	QTY	PART NAME 1 2 3 4 5 6 (PRODUCT LEVEL)	SEE PAGE
	1	1	**221-4284**	1	TINE AS-THUMB (24-IN, ROCK)	
Y	2	1	*224-6237*	1	CYLINDER & LINES GP-THUMB	315
Y	3	1	*271-3023*	1	THUMB GP	637

Y-SEPARATE ILLUSTRATION

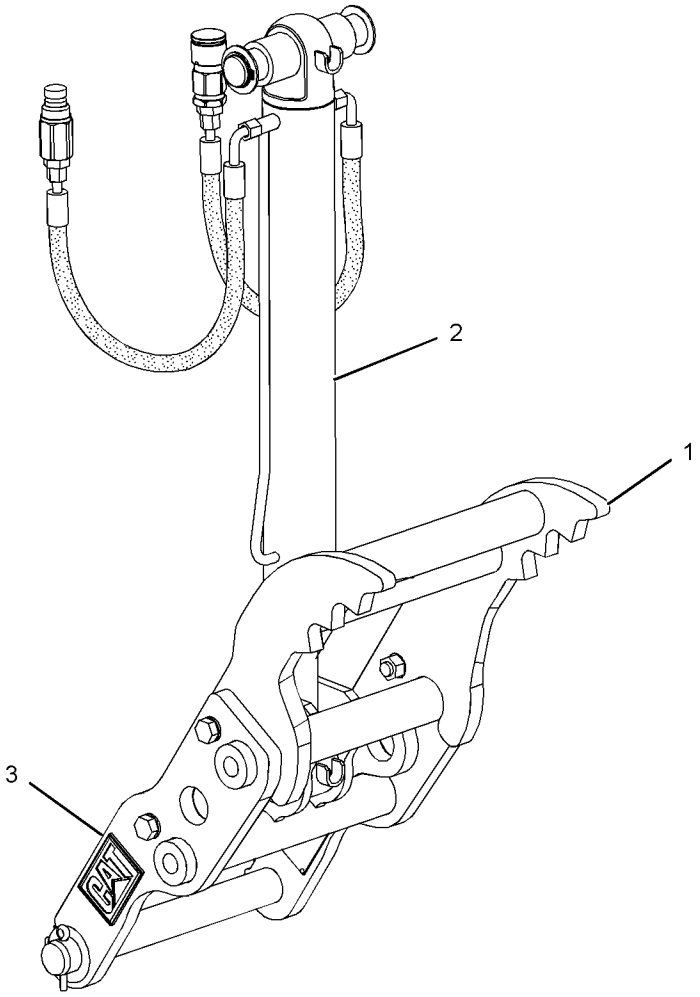

GRAPHIC #1 **<END>** g01232061

271-3026 THUMB AR–24-IN, HYD, ROCK

S/N: SHA1-UP
AN ATTACHMENT
TYPE 2

SMCS-6547 **i02730905**

NOTE	REF NO	GRAPHIC REF	PART NUMBER	QTY	PART NAME 1 2 3 4 5 6 (PRODUCT LEVEL)	SEE PAGE
	1	1	**221-4284**	1	TINE AS-THUMB (24-IN, ROCK)	
Y	2	1	*224-6237*	1	CYLINDER & LINES GP-THUMB	315
Y	3	1	*271-3023*	1	THUMB GP	637

Y-SEPARATE ILLUSTRATION

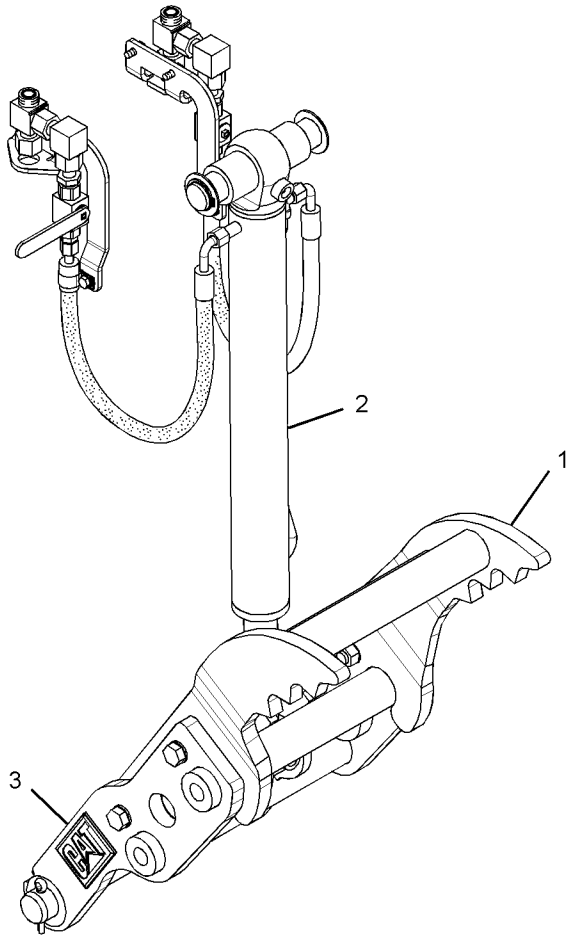

GRAPHIC #1 **<END>** g01370673

WORK TOOLS

271-3027 THUMB AR–24-IN, MAN, ROCK, WITH COUPLER

S/N: SHA1-UP
AN ATTACHMENT
TYPE 1

SMCS-6547 **i02449276**

NOTE	REF NO	GRAPHIC REF	PART NUMBER	QTY	PART NAME 1 2 3 4 5 6 (PRODUCT LEVEL)	SEE PAGE
	1	1	**221-4285**	1	TINE AS-THUMB (24-IN, ROCK)	
Y	2	1	*224-6237*	1	CYLINDER & LINES GP-THUMB	315
Y	3	1	*271-3023*	1	THUMB GP	637

Y-SEPARATE ILLUSTRATION

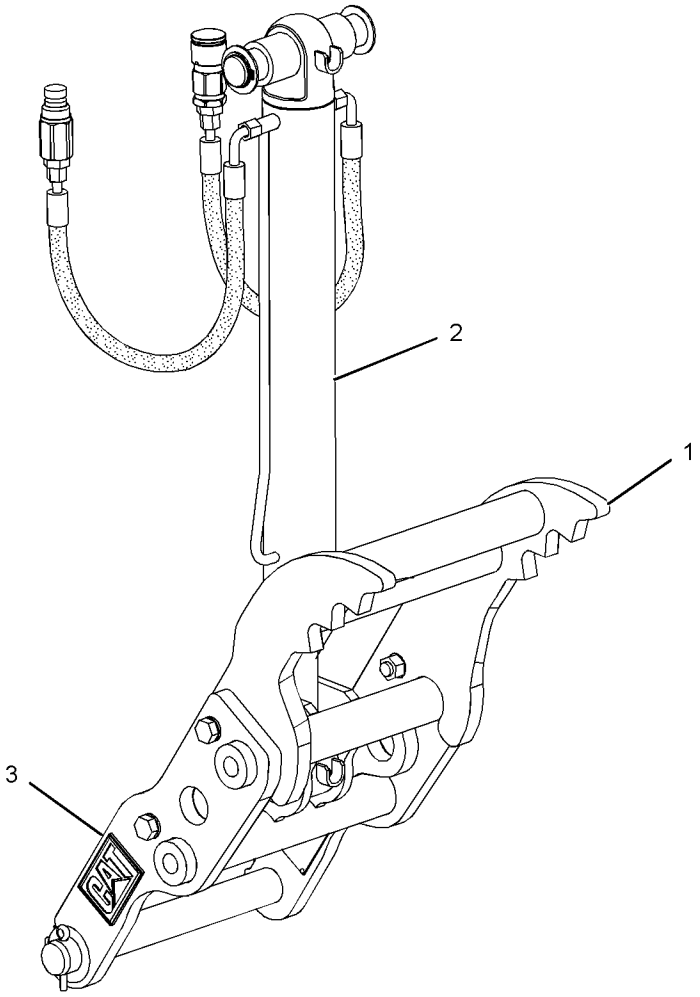

GRAPHIC #1 **<END>** g01232061

271-3027 THUMB AR–24-IN, MAN, ROCK, WITH COUPLER

S/N: SHA1-UP
AN ATTACHMENT
TYPE 2

SMCS-6547 **i02730906**

NOTE	REF NO	GRAPHIC REF	PART NUMBER	QTY	PART NAME 1 2 3 4 5 6 (PRODUCT LEVEL)	SEE PAGE
	1	1	**221-4285**	1	TINE AS-THUMB (24-IN, ROCK)	
Y	2	1	*224-6237*	1	CYLINDER & LINES GP-THUMB	315
Y	3	1	*271-3023*	1	THUMB GP	637

Y-SEPARATE ILLUSTRATION

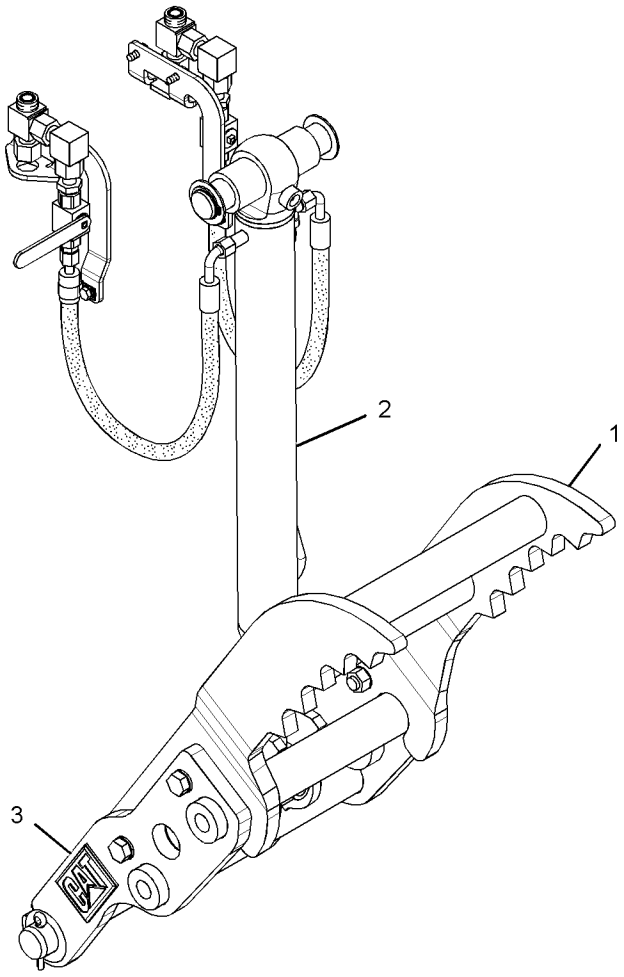

GRAPHIC #1 **<END>** g01370638

WORK TOOLS

271-3028 THUMB AR–24-IN, MAN, HEAVY-DUTY

S/N: SHA1-UP

AN ATTACHMENT

SMCS-6547 **i02449282**

NOTE	REF NO	GRAPHIC REF	PART NUMBER	QTY	PART NAME 1 2 3 4 5 6 (PRODUCT LEVEL)	SEE PAGE
	1	1	**221-4282**	1	TINE AS-THUMB (24-IN)	
	2	1	*263-8576*	1	LINK GP-THUMB	
		1	**221-4272**	1	LINK AS	
		1	**224-4527**	1	PIN AS	
		1	**263-8575**	1	LINK AS	
Y	3	1	*271-3023*	1	THUMB GP	637

Y-SEPARATE ILLUSTRATION

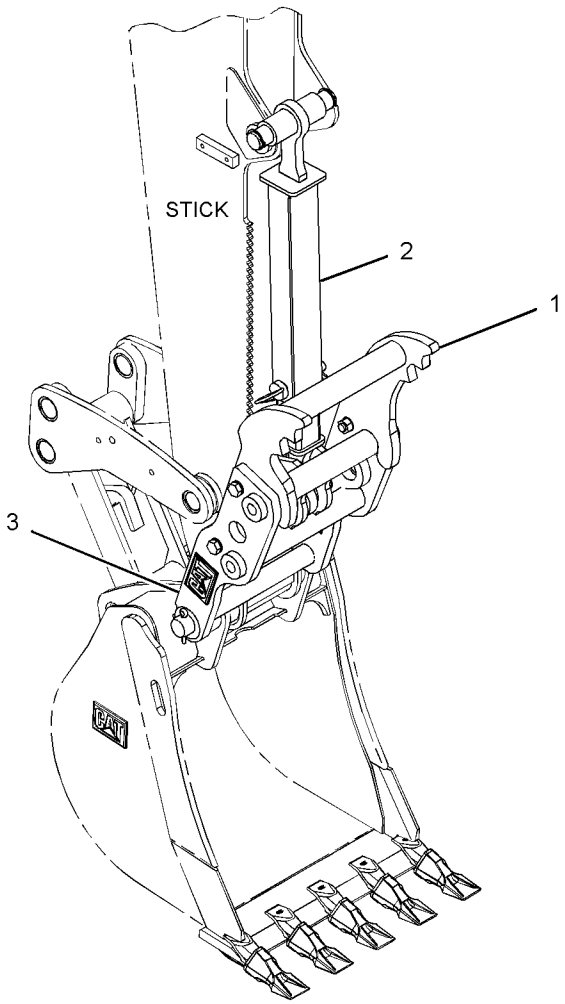

GRAPHIC #1

<END>

g01230547

WORK TOOLS

271-3029 THUMB AR–24-IN, MAN, HEAVY-DUTY, WITH COUPLER

S/N: SHA1-UP

AN ATTACHMENT

SMCS-6547 **i02449283**

NOTE	REF NO	GRAPHIC REF	PART NUMBER	QTY	PART NAME 1 2 3 4 5 6 (PRODUCT LEVEL)	SEE PAGE
	1	1	**221-4283**	1	TINE AS-THUMB (24-IN)	
	2	1	*263-8576*	1	LINK GP-THUMB	
		1	**221-4272**	1	LINK AS	
		1	**224-4527**	1	PIN AS	
		1	**263-8575**	1	LINK AS	
Y	3	1	*271-3023*	1	THUMB GP	637

Y-SEPARATE ILLUSTRATION

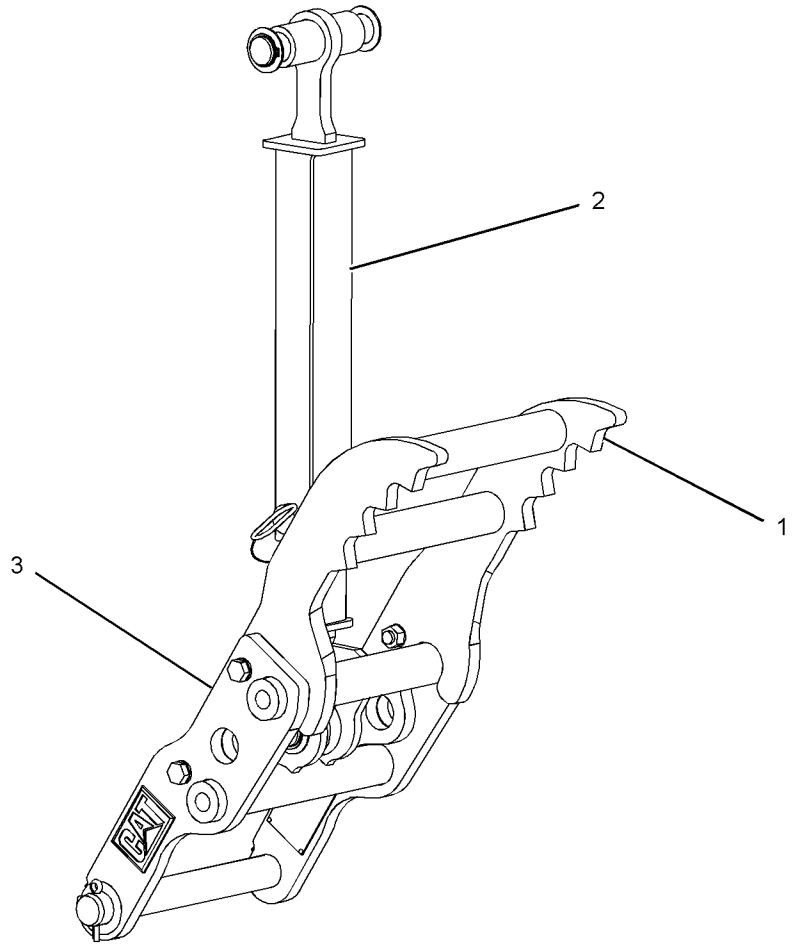

GRAPHIC #1 **<END>** g01230639

WORK TOOLS

271-3030 THUMB AR–24-IN, MAN, ROCK

S/N: SHA1-UP

AN ATTACHMENT

SMCS-6547 **i02449281**

NOTE	REF NO	GRAPHIC REF	PART NUMBER	QTY	PART NAME 1 2 3 4 5 6 (PRODUCT LEVEL)	SEE PAGE
	1	1	**221-4284**	1	TINE AS-THUMB (24-IN, ROCK)	
	2	1	*263-8576*	1	LINK GP-THUMB	
		1	**221-4272**	1	LINK AS	
		1	**224-4527**	1	PIN AS	
		1	**263-8575**	1	LINK AS	
Y	3	1	*271-3023*	1	THUMB GP	637

Y-SEPARATE ILLUSTRATION

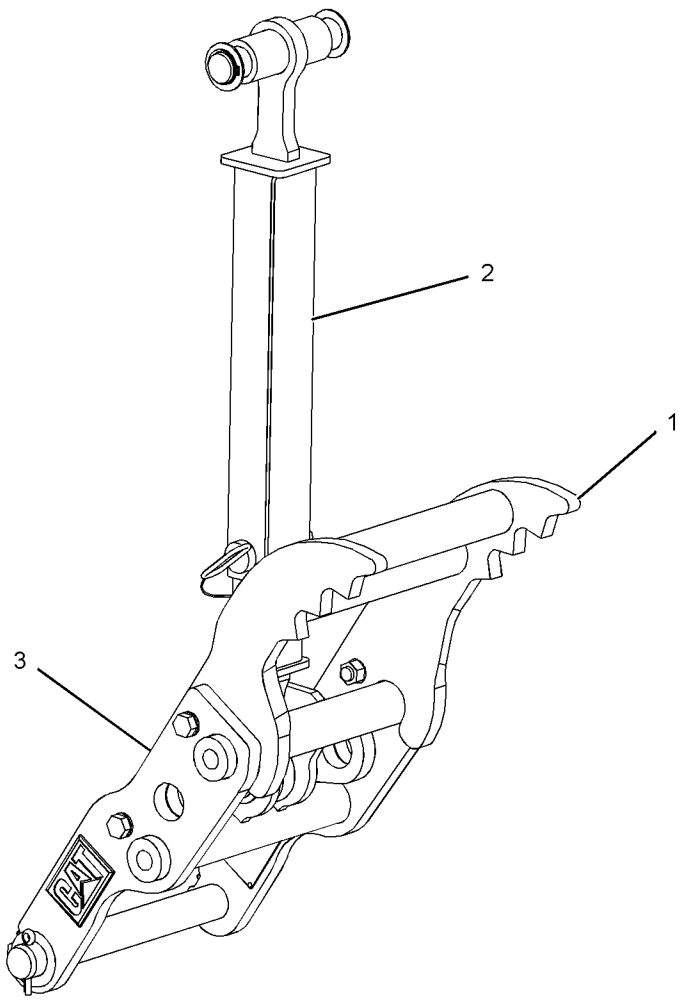

GRAPHIC #1 **<END>** g01232067

WORK TOOLS

271-3031 THUMB AR–24-IN, MAN, ROCK, WITH COUPLER

S/N: SHA1-UP

AN ATTACHMENT

SMCS-6547 **i02449279**

NOTE	REF NO	GRAPHIC REF	PART NUMBER	QTY	PART NAME 1 2 3 4 5 6 (PRODUCT LEVEL)	SEE PAGE
	1	1	**221-4285**	1	TINE AS-THUMB (24-IN, ROCK)	
	2	1	**263-8576**	1	LINK GP-THUMB	
		1	**221-4272**	1	LINK AS	
		1	**224-4527**	1	PIN AS	
		1	**263-8575**	1	LINK AS	
Y	3	1	*271-3023*	1	THUMB GP	637

Y-SEPARATE ILLUSTRATION

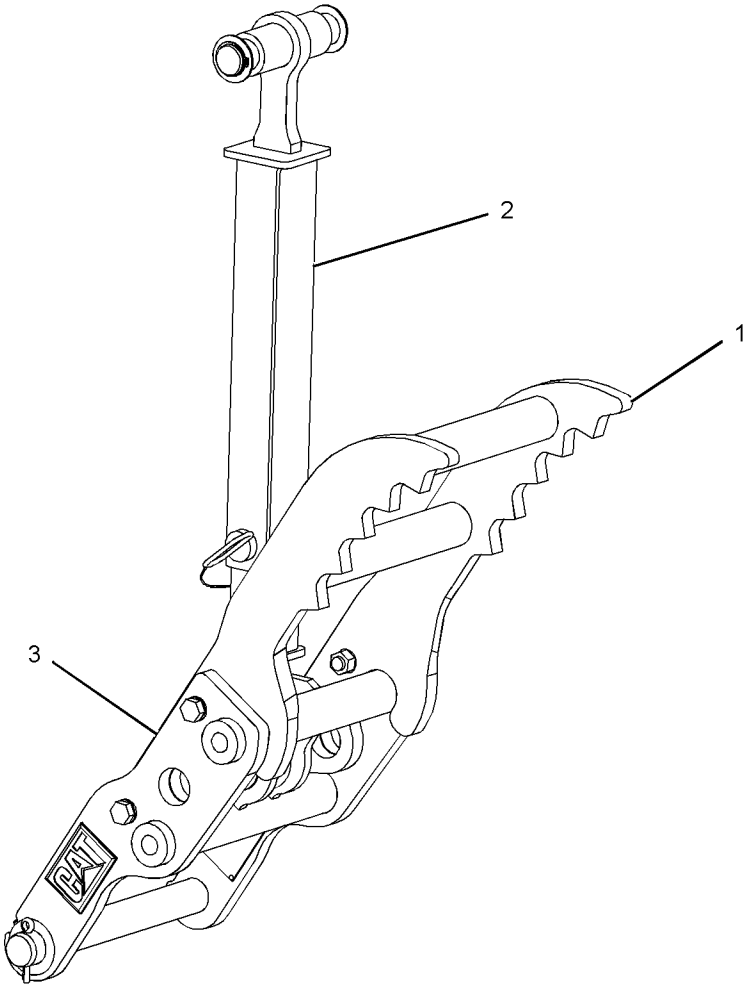

GRAPHIC #1 **<END>** g01232083

281-6716 THUMB AR–24-IN, HYD, WITH COUPLER

S/N: SHA1-UP
AN ATTACHMENT
TYPE 1

SMCS-6547 **i02479936**

NOTE	REF NO	GRAPHIC REF	PART NUMBER	QTY	PART NAME 1 2 3 4 5 6 (PRODUCT LEVEL)	SEE PAGE
Y	1	1	*224-6237*	1	CYLINDER & LINES GP-THUMB	315
Y	2	1	*271-3023*	1	THUMB GP	637
	3	1	**281-6708**	1	TINE AS-THUMB (24-IN)	

Y-SEPARATE ILLUSTRATION

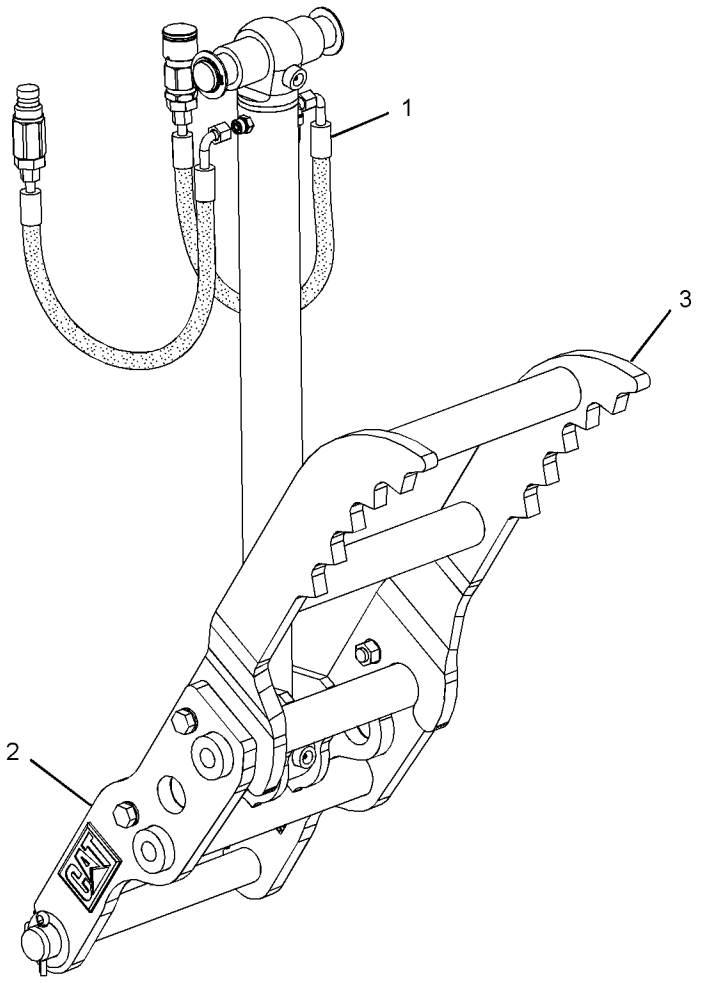

GRAPHIC #1 **<END>** g01230585

281-6716 THUMB AR–24-IN, HYD, WITH COUPLER

S/N: SHA1-UP
AN ATTACHMENT
TYPE 2

SMCS-6547 **i02730907**

NOTE	REF NO	GRAPHIC REF	PART NUMBER	QTY	PART NAME 1 2 3 4 5 6 (PRODUCT LEVEL)	SEE PAGE
Y	1	1	*224-6237*	1	CYLINDER & LINES GP-THUMB	315
Y	2	1	*271-3023*	1	THUMB GP	637
	3	1	**281-6708**	1	TINE AS-THUMB (24-IN)	

Y-SEPARATE ILLUSTRATION

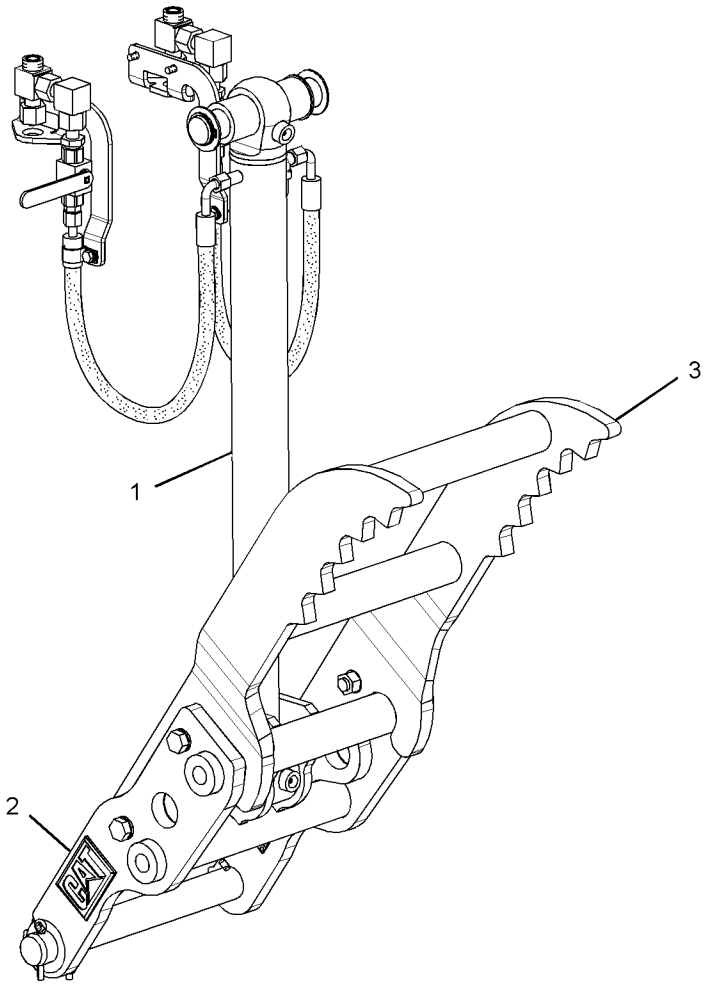

GRAPHIC #1 **<END>** g01370594

282-0865 THUMB AR–30-IN, HYD, WITH COUPLER

S/N: SHA1-UP
AN ATTACHMENT
TYPE 1

SMCS-6547 **i02449314**

NOTE	REF NO	GRAPHIC REF	PART NUMBER	QTY	PART NAME 1 2 3 4 5 6 (PRODUCT LEVEL)	SEE PAGE
Y	1	1	*224-6237*	1	CYLINDER & LINES GP-THUMB	315
Y	2	1	*271-3023*	1	THUMB GP	637
	3	1	**281-6711**	1	TINE AS-THUMB (30-IN)	

Y-SEPARATE ILLUSTRATION

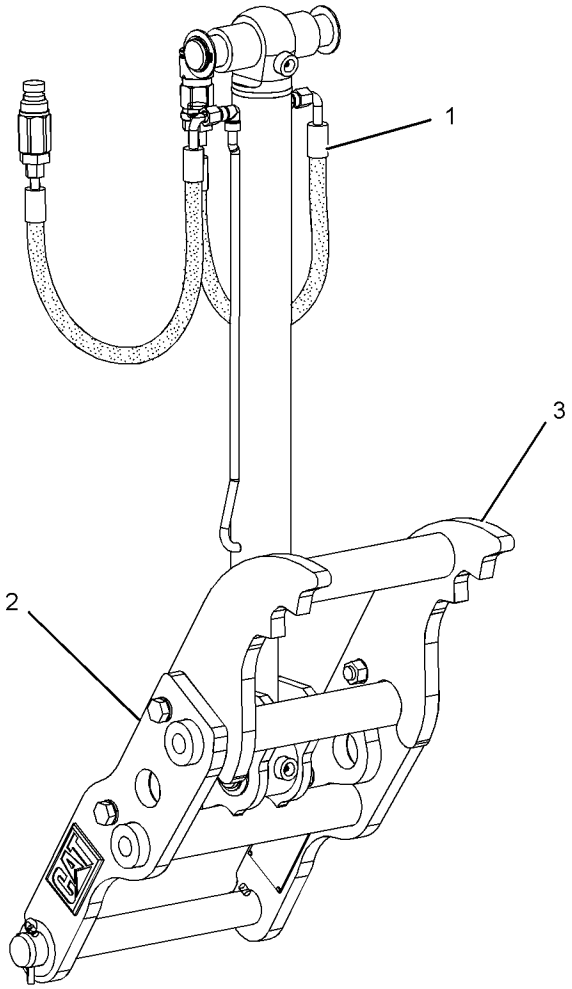

GRAPHIC #1 **<END>** g01232062

282-0865 THUMB AR–30-IN, HYD, WITH COUPLER

S/N: SHA1-UP
AN ATTACHMENT
TYPE 2

SMCS-6547 **i02730908**

NOTE	REF NO	GRAPHIC REF	PART NUMBER	QTY	PART NAME 1 2 3 4 5 6 (PRODUCT LEVEL)	SEE PAGE
Y	1	1	*224-6237*	1	CYLINDER & LINES GP-THUMB	315
Y	2	1	*271-3023*	1	THUMB GP	637
	3	1	**281-6711**	1	TINE AS-THUMB (30-IN)	

Y-SEPARATE ILLUSTRATION

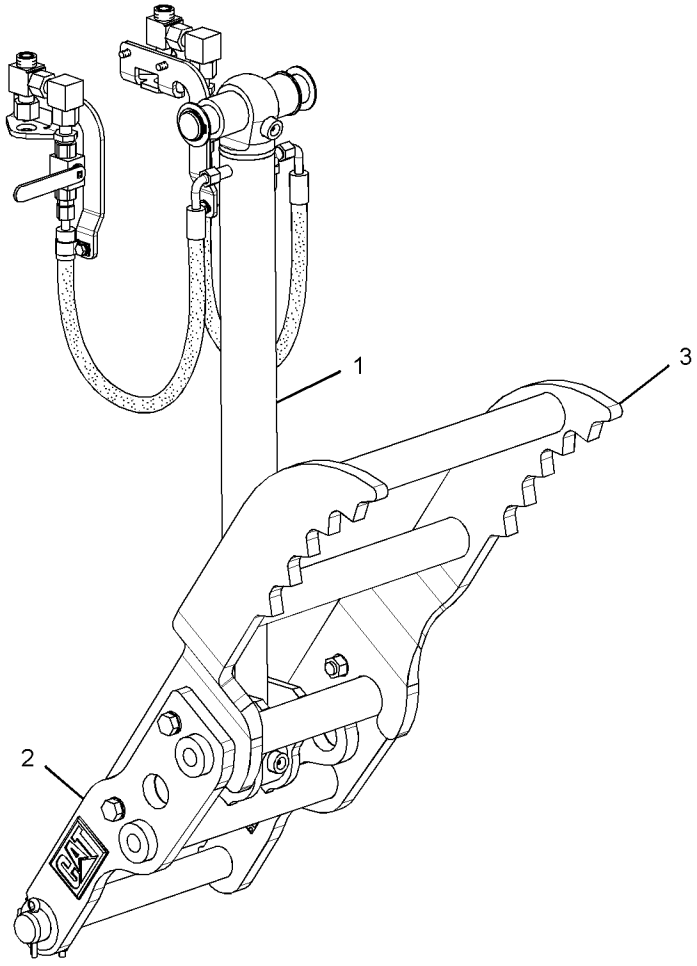

GRAPHIC #1 **<END>** g01371021

282-0866 THUMB AR—36-IN, HYD, WITH COUPLER

S/N: SHA1-UP
AN ATTACHMENT
TYPE 1

SMCS-6547 **i02449328**

NOTE	REF NO	GRAPHIC REF	PART NUMBER	QTY	PART NAME 1 2 3 4 5 6 (PRODUCT LEVEL)	SEE PAGE
Y	1	1	*224-6237*	1	CYLINDER & LINES GP-THUMB	315
Y	2	1	*271-3023*	1	THUMB GP	637
	3	1	**281-6714**	1	TINE AS-THUMB	

Y-SEPARATE ILLUSTRATION

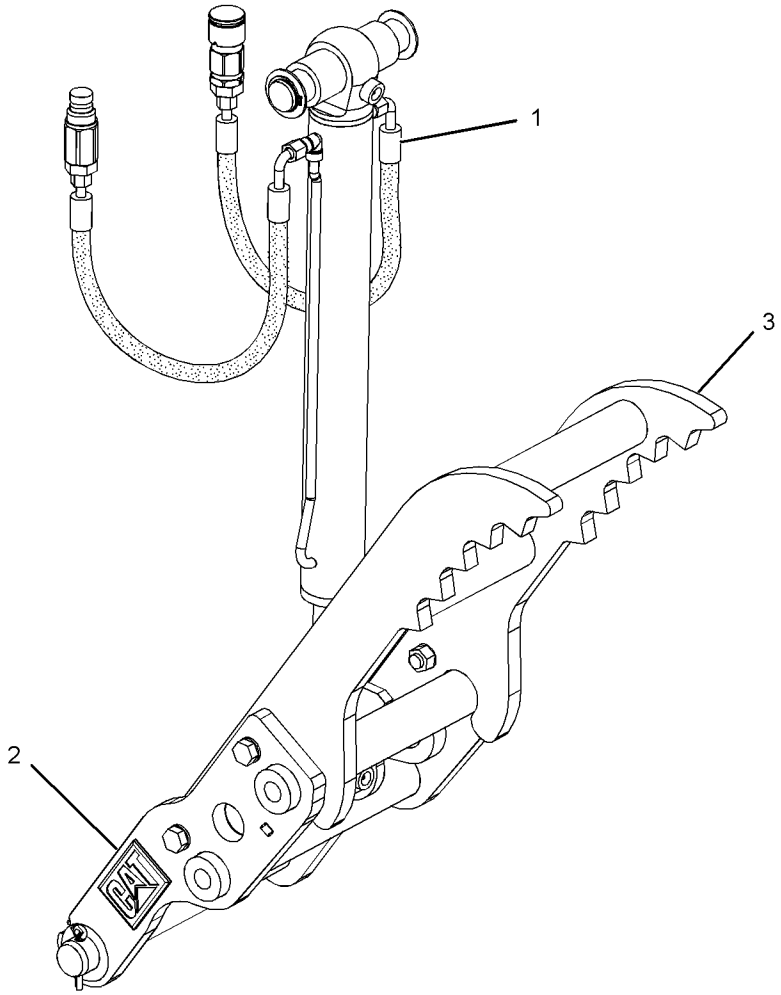

GRAPHIC #1 **<END>** g01232063

282-0866 THUMB AR–36-IN, HYD, WITH COUPLER

S/N: SHA1-UP
AN ATTACHMENT
TYPE 2

SMCS-6547 **i02730916**

NOTE	REF NO	GRAPHIC REF	PART NUMBER	QTY	PART NAME 1 2 3 4 5 6 (PRODUCT LEVEL)	SEE PAGE
Y	1	1	*224-6237*	1	CYLINDER & LINES GP-THUMB	315
Y	2	1	*271-3023*	1	THUMB GP	637
	3	1	**281-6714**	1	TINE AS-THUMB (30-IN)	

Y-SEPARATE ILLUSTRATION

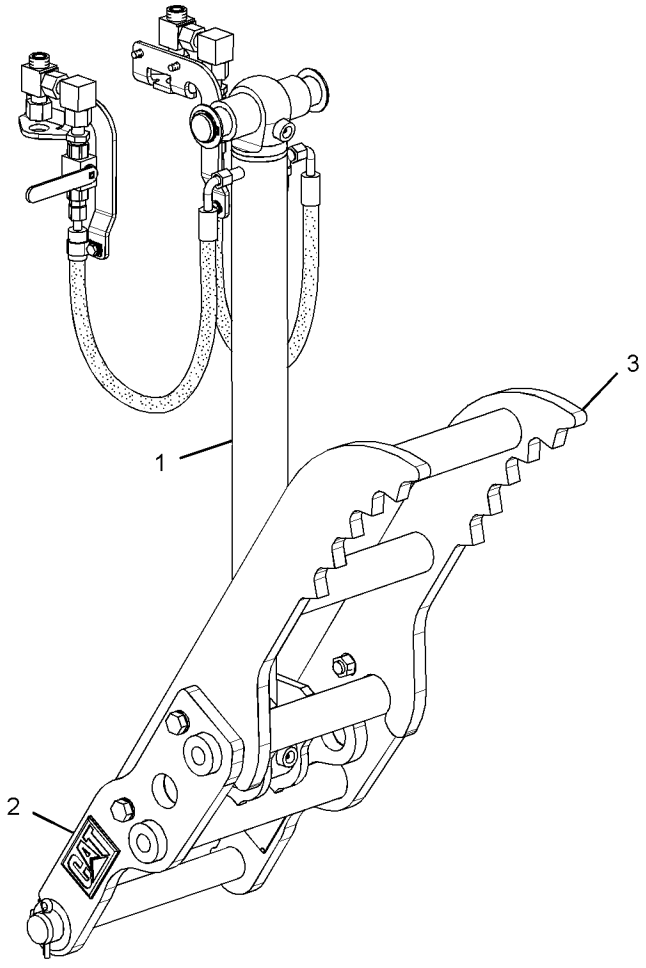

GRAPHIC #1 **<END>** g01370989

282-0887 THUMB AR–30-IN, HYD, HEAVY-DUTY

S/N: SHA1-UP
AN ATTACHMENT
TYPE 1

SMCS-6547 **i02449320**

NOTE	REF NO	GRAPHIC REF	PART NUMBER	QTY	PART NAME 1 2 3 4 5 6 (PRODUCT LEVEL)	SEE PAGE
Y	1	1	*224-6237*	1	CYLINDER & LINES GP-THUMB	315
Y	2	1	*271-3023*	1	THUMB GP	637
	3	1	**274-5819**	1	TINE AS-THUMB (30-IN)	

Y-SEPARATE ILLUSTRATION

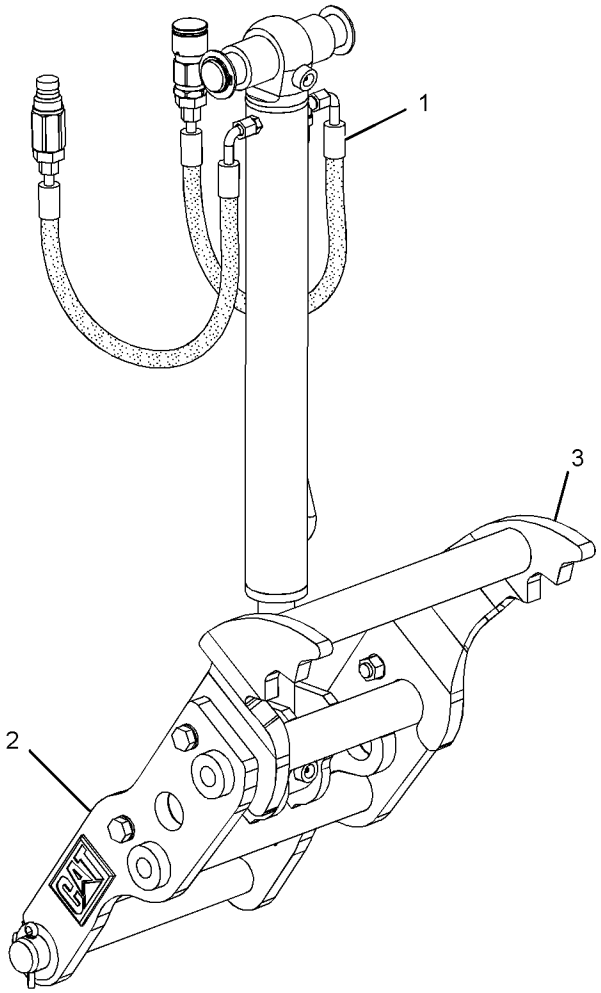

GRAPHIC #1 **<END>** g01234185

282-0887 THUMB AR–30-IN, HYD, HEAVY-DUTY

S/N: SHA1-UP
AN ATTACHMENT
TYPE 2

SMCS-6547 **i02730920**

NOTE	REF NO	GRAPHIC REF	PART NUMBER	QTY	PART NAME 1 2 3 4 5 6 (PRODUCT LEVEL)	SEE PAGE
Y	1	1	*224-6237*	1	CYLINDER & LINES GP-THUMB	315
Y	2	1	*271-3023*	1	THUMB GP	637
	3	1	**274-5819**	1	TINE AS-THUMB (30-IN)	

Y-SEPARATE ILLUSTRATION

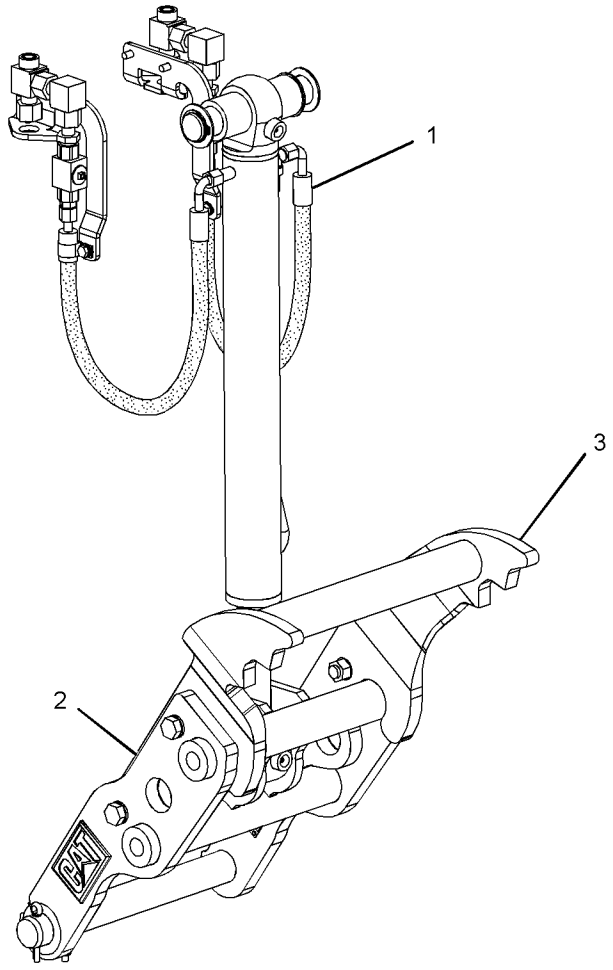

GRAPHIC #1 **<END>** g01370522

282-0888 THUMB AR–30-IN, HYD, HEAVY-DUTY, WITH COUPLER

S/N: SHA1-UP
AN ATTACHMENT
TYPE 1

SMCS-6547 **i02449324**

NOTE	REF NO	GRAPHIC REF	PART NUMBER	QTY	PART NAME 1 2 3 4 5 6 (PRODUCT LEVEL)	SEE PAGE
Y	1	1	*224-6237*	1	CYLINDER & LINES GP-THUMB	315
Y	2	1	*271-3023*	1	THUMB GP	637
	3	1	**274-5823**	1	TINE AS-THUMB (30-IN)	

Y-SEPARATE ILLUSTRATION

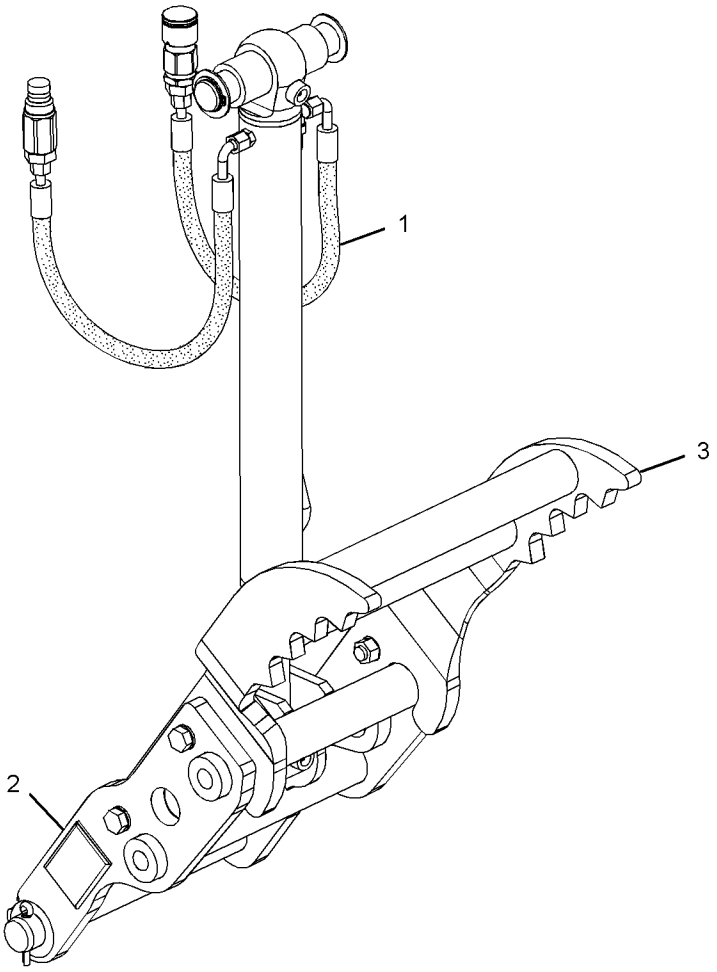

GRAPHIC #1 **<END>** g01234203

282-0888 THUMB AR–30-IN, HYD, HEAVY-DUTY, WITH COUPLER

S/N: SHA1-UP
AN ATTACHMENT
TYPE 2

SMCS-6547 **i02730911**

NOTE	REF NO	GRAPHIC REF	PART NUMBER	QTY	PART NAME 1 2 3 4 5 6 (PRODUCT LEVEL)	SEE PAGE
Y	1	1	*224-6237*	1	CYLINDER & LINES GP-THUMB	315
Y	2	1	*271-3023*	1	THUMB GP	637
	3	1	**274-5823**	1	TINE AS-THUMB (30-IN)	

Y-SEPARATE ILLUSTRATION

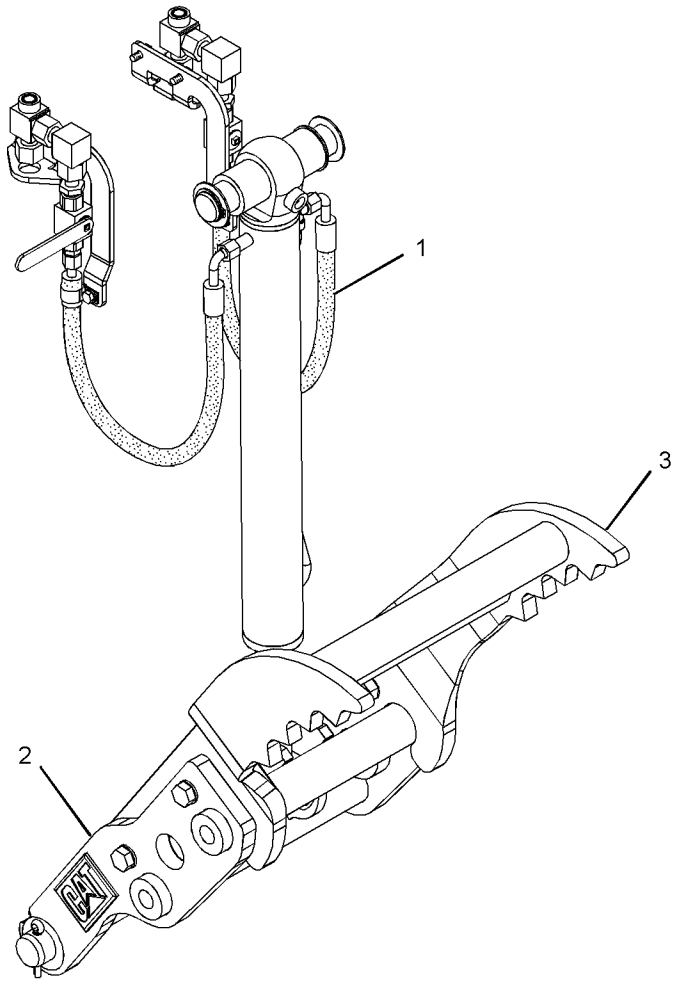

GRAPHIC #1 **<END>** g01370533

282-0889 THUMB AR–30-IN, HYD, ROCK

S/N: SHA1-UP
AN ATTACHMENT
TYPE 1

SMCS-6547 **i02449325**

NOTE	REF NO	GRAPHIC REF	PART NUMBER	QTY	PART NAME 1 2 3 4 5 6 (PRODUCT LEVEL)	SEE PAGE
Y	1	1	*224-6237*	1	CYLINDER & LINES GP-THUMB	315
Y	2	1	*271-3023*	1	THUMB GP	637
	3	1	**274-5826**	1	TINE AS-THUMB (30-IN, ROCK)	

Y-SEPARATE ILLUSTRATION

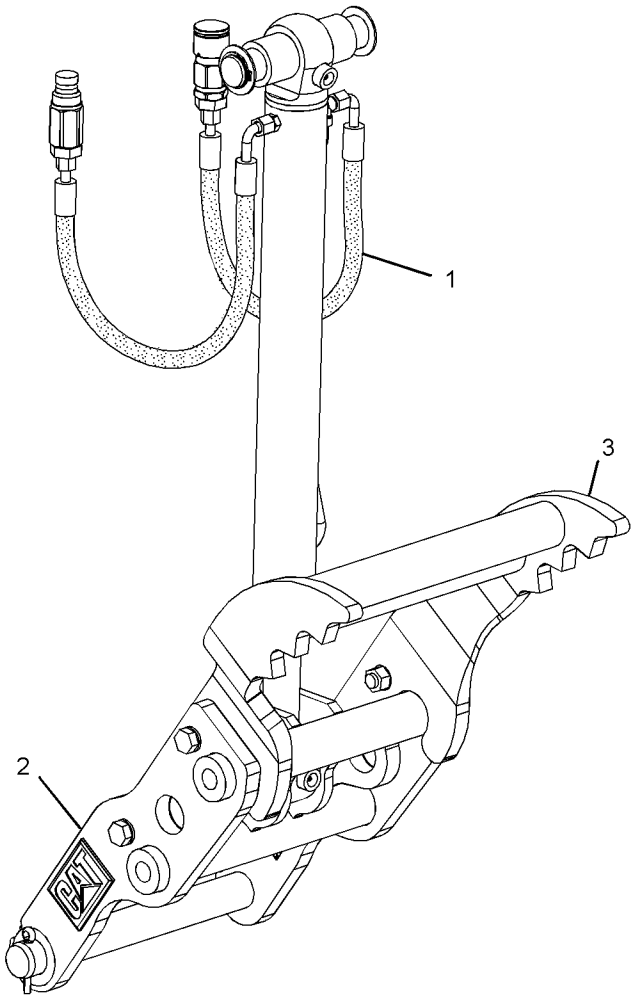

GRAPHIC #1

<END>

g01234196

282-0889 THUMB AR–30-IN, HYD, ROCK

S/N: SHA1-UP
AN ATTACHMENT
TYPE 2

SMCS-6547 **i02730918**

NOTE	REF NO	GRAPHIC REF	PART NUMBER	QTY	PART NAME 1 2 3 4 5 6 (PRODUCT LEVEL)	SEE PAGE
Y	1	1	*224-6237*	1	CYLINDER & LINES GP-THUMB	315
Y	2	1	*271-3023*	1	THUMB GP	637
	3	1	**274-5826**	1	TINE AS-THUMB (30-IN, ROCK)	

Y-SEPARATE ILLUSTRATION

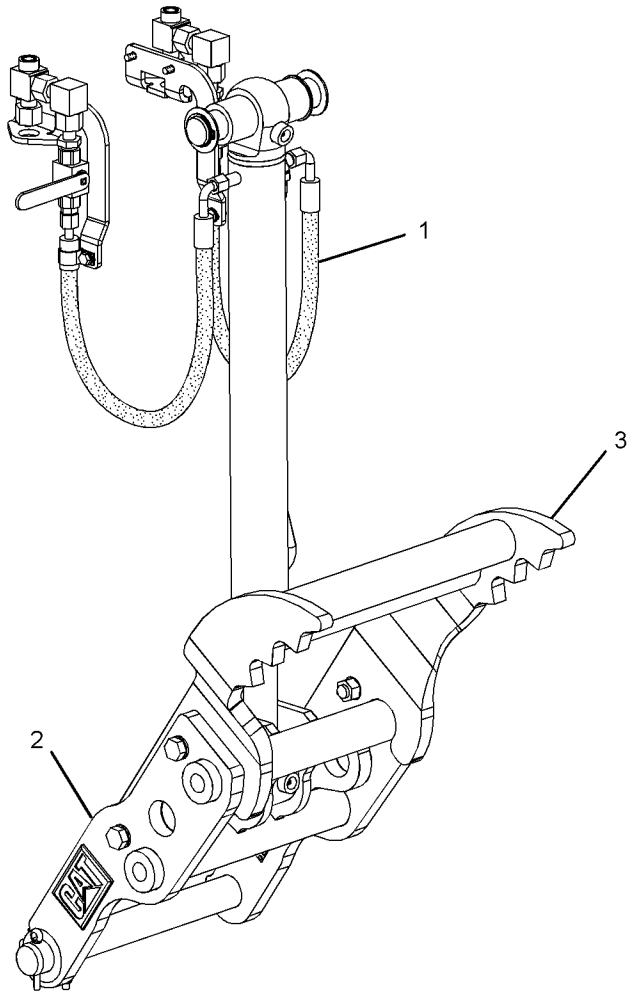

GRAPHIC #1 **<END>** g01370539

282-0890 THUMB AR–30-IN, HYD, ROCK, WITH COUPLER

S/N: SHA1-UP
AN ATTACHMENT
TYPE 1

SMCS-6547 **i02449321**

NOTE	REF NO	GRAPHIC REF	PART NUMBER	QTY	PART NAME 1 2 3 4 5 6 (PRODUCT LEVEL)	SEE PAGE
Y	1	1	*224-6237*	1	CYLINDER & LINES GP-THUMB	315
Y	2	1	*271-3023*	1	THUMB GP	637
	3	1	**274-5829**	1	TINE AS-THUMB (30-IN, ROCK)	

Y-SEPARATE ILLUSTRATION

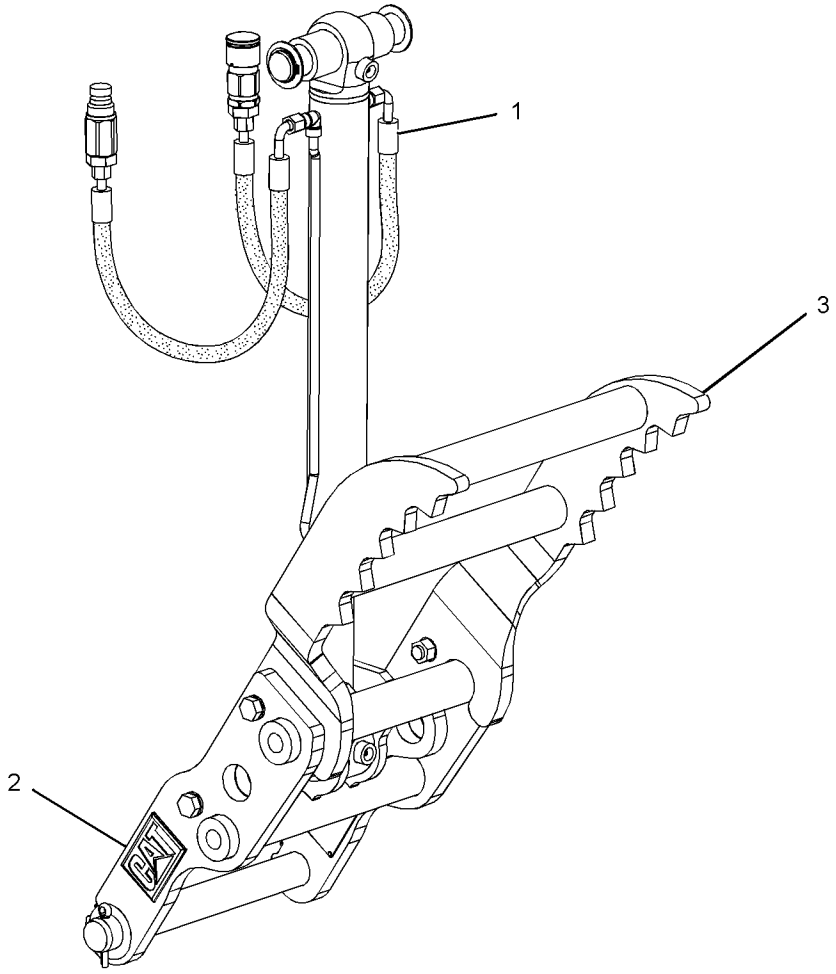

GRAPHIC #1 **<END>** g01234198

282-0890 THUMB AR–30-IN, HYD, ROCK, WITH COUPLER

S/N: SHA1-UP
AN ATTACHMENT
TYPE 2

SMCS-6547 **i02730917**

NOTE	REF NO	GRAPHIC REF	PART NUMBER	QTY	PART NAME 1 2 3 4 5 6 (PRODUCT LEVEL)	SEE PAGE
Y	1	1	*224-6237*	1	CYLINDER & LINES GP-THUMB	315
Y	2	1	*271-3023*	1	THUMB GP	637
	3	1	**274-5829**	1	TINE AS-THUMB (30-IN, ROCK)	

Y-SEPARATE ILLUSTRATION

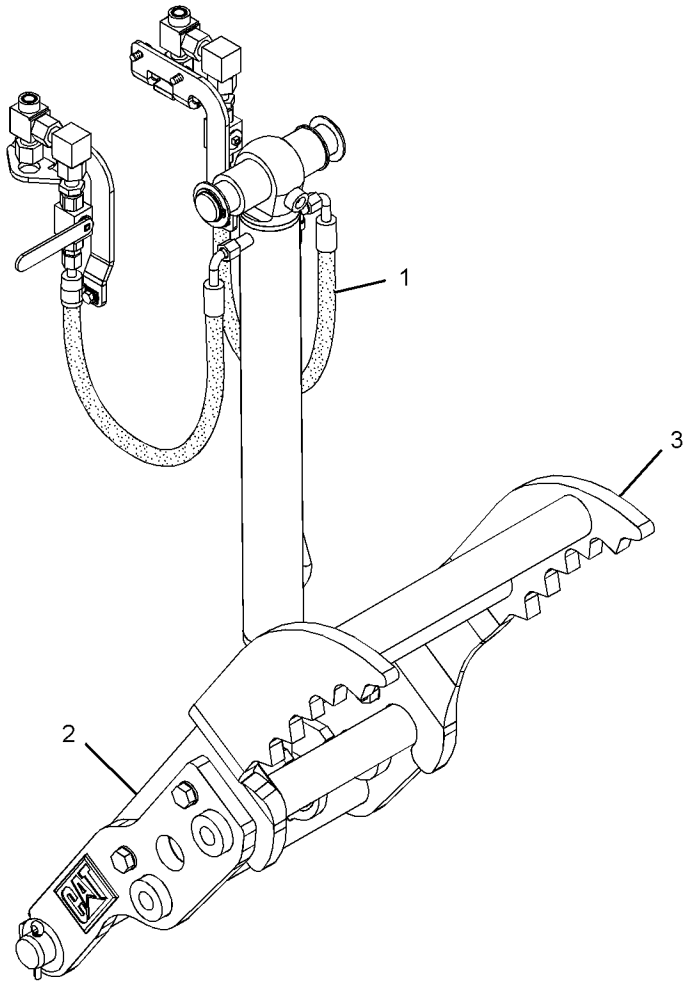

GRAPHIC #1 **<END>** g01370948

282-0891 THUMB AR–36-IN, HYD, HEAVY-DUTY

S/N: SHA1-UP
AN ATTACHMENT
TYPE 1

SMCS-6547 **i02449329**

NOTE	REF NO	GRAPHIC REF	PART NUMBER	QTY	PART NAME 1 2 3 4 5 6 (PRODUCT LEVEL)	SEE PAGE
Y	1	1	*224-6237*	1	CYLINDER & LINES GP-THUMB	315
Y	2	1	*271-3023*	1	THUMB GP	637
	3	1	**274-5832**	1	TINE AS-THUMB (36-IN)	

Y-SEPARATE ILLUSTRATION

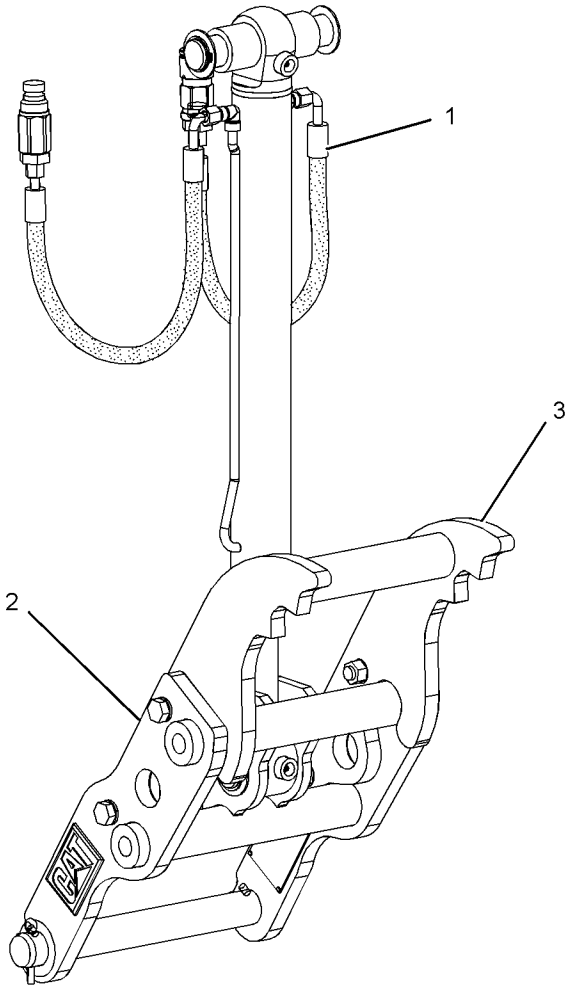

GRAPHIC #1 **<END>** g01232062

282-0891 THUMB AR–36-IN, HYD, HEAVY-DUTY

S/N: SHA1-UP
AN ATTACHMENT
TYPE 2

SMCS-6547 **i02730912**

NOTE	REF NO	GRAPHIC REF	PART NUMBER	QTY	PART NAME 1 2 3 4 5 6 (PRODUCT LEVEL)	SEE PAGE
Y	1	1	*224-6237*	1	CYLINDER & LINES GP-THUMB	315
Y	2	1	*271-3023*	1	THUMB GP	637
	3	1	**274-5832**	1	TINE AS-THUMB (36-IN)	

Y-SEPARATE ILLUSTRATION

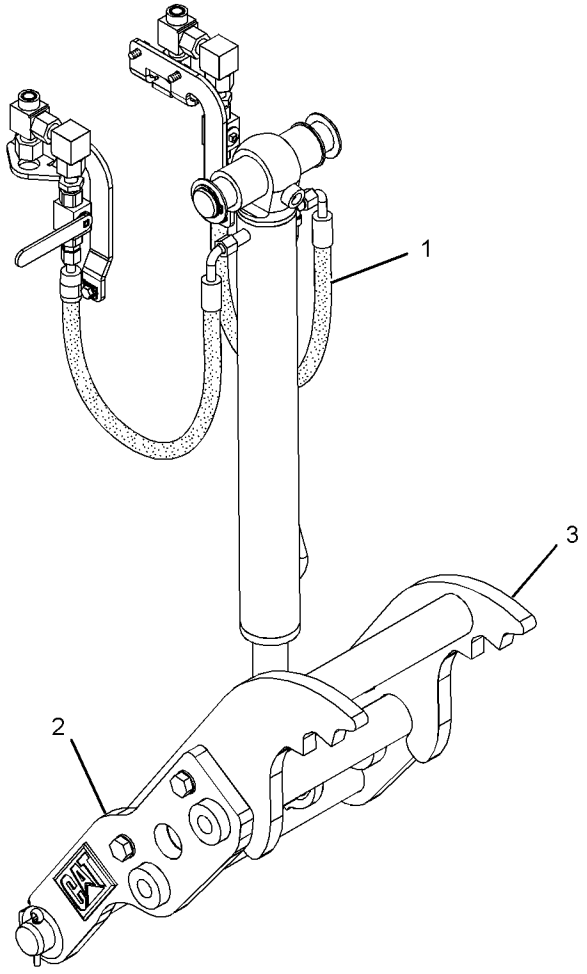

GRAPHIC #1 **<END>** g01370953

282-0892 THUMB AR–36-IN, HYD, HEAVY-DUTY, WITH COUPLER

S/N: SHA1-UP
AN ATTACHMENT
TYPE 1

SMCS-6547 **i02449316**

NOTE	REF NO	GRAPHIC REF	PART NUMBER	QTY	PART NAME 1 2 3 4 5 6 (PRODUCT LEVEL)	SEE PAGE
Y	1	1	*224-6237*	1	CYLINDER & LINES GP-THUMB	315
Y	2	1	*271-3023*	1	THUMB GP	637
	3	1	**274-5835**	1	TINE AS-THUMB (36-IN)	

Y-SEPARATE ILLUSTRATION

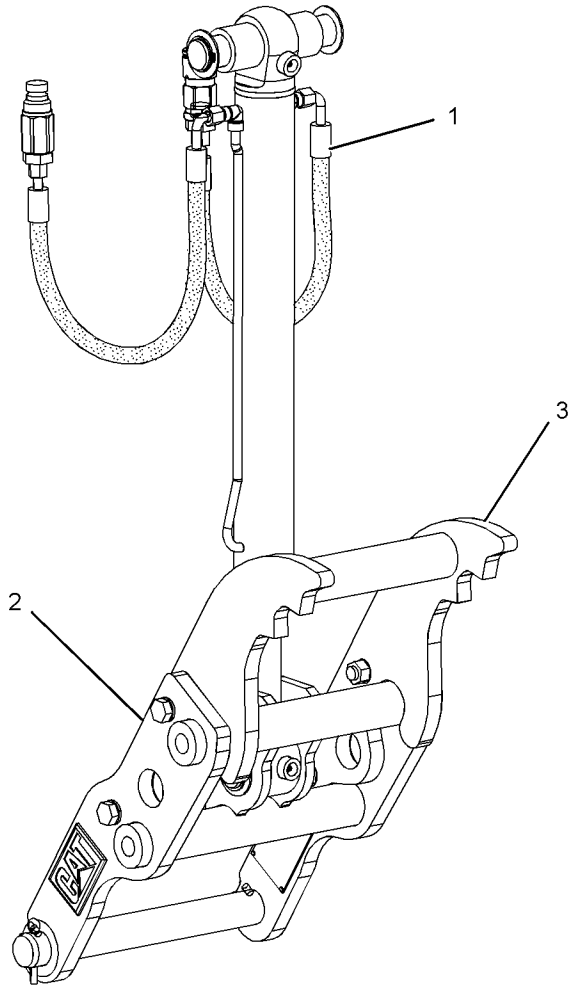

GRAPHIC #1 **<END>** g01232062

282-0892 THUMB AR–36-IN, HYD, HEAVY-DUTY, WITH COUPLER

S/N: SHA1-UP
AN ATTACHMENT
TYPE 2

SMCS-6547 **i02730919**

NOTE	REF NO	GRAPHIC REF	PART NUMBER	QTY	PART NAME 1 2 3 4 5 6 (PRODUCT LEVEL)	SEE PAGE
Y	1	1	*224-6237*	1	CYLINDER & LINES GP-THUMB	315
Y	2	1	*271-3023*	1	THUMB GP	637
	3	1	**274-5835**	1	TINE AS-THUMB (36-IN)	

Y-SEPARATE ILLUSTRATION

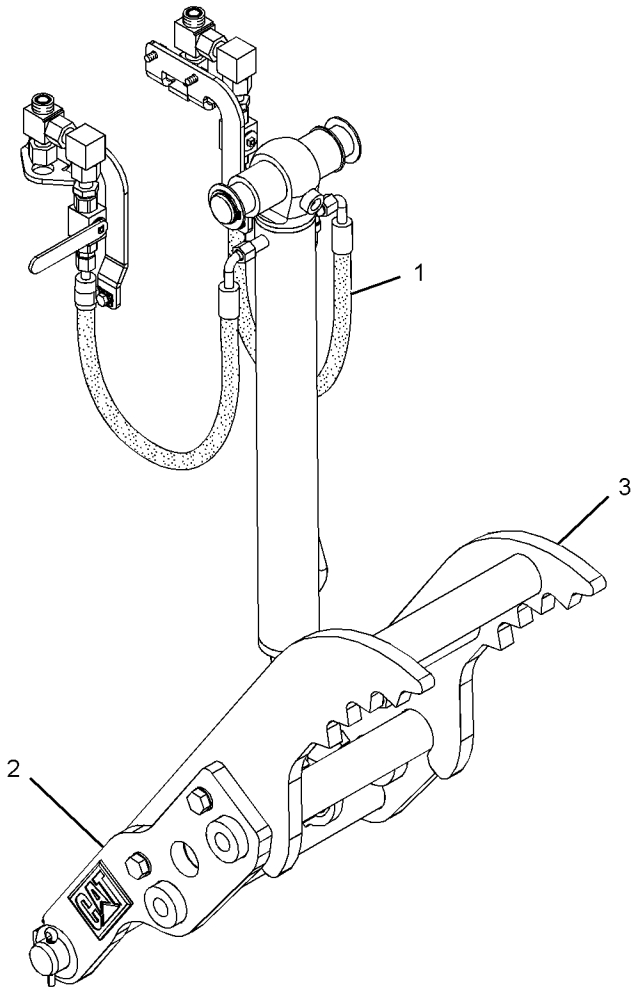

GRAPHIC #1 **<END>** g01370967

WORK TOOLS

282-0893 THUMB AR–36-IN, HYD, ROCK

S/N: SHA1-UP
AN ATTACHMENT
TYPE 1

SMCS-6547 **i02449311**

NOTE	REF NO	GRAPHIC REF	PART NUMBER	QTY	PART NAME 1 2 3 4 5 6 (PRODUCT LEVEL)	SEE PAGE
Y	1	1	*224-6237*	1	CYLINDER & LINES GP-THUMB	315
Y	2	1	*271-3023*	1	THUMB GP	637
	3	1	**274-5837**	1	TINE AS-THUMB (36-IN, ROCK)	

Y-SEPARATE ILLUSTRATION

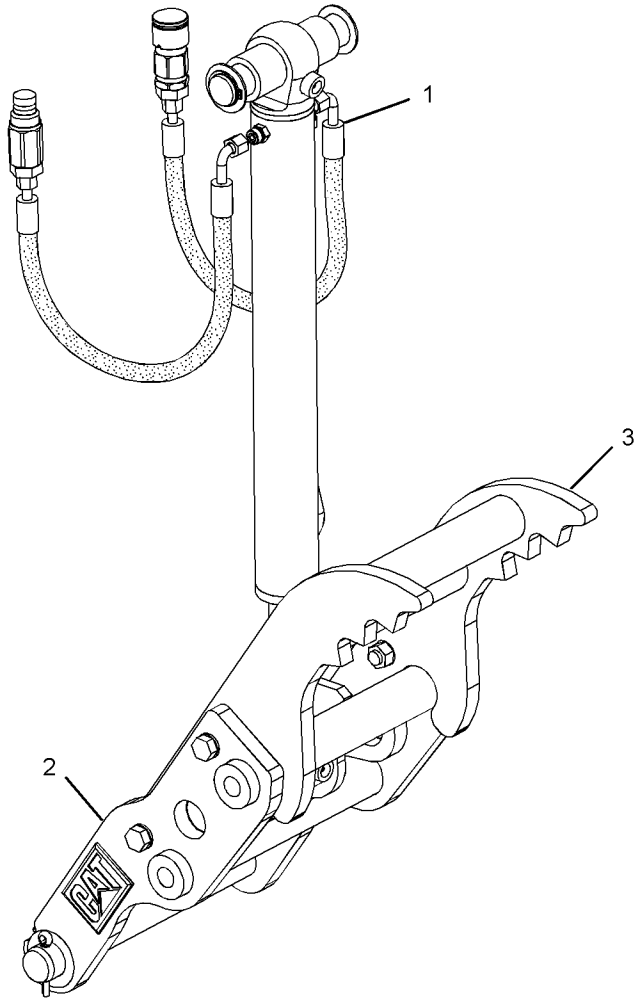

GRAPHIC #1 **<END>** g01230654

282-0893 THUMB AR–36-IN, HYD, ROCK

S/N: SHA1-UP
AN ATTACHMENT
TYPE 2

SMCS-6547 **i02730914**

NOTE	REF NO	GRAPHIC REF	PART NUMBER	QTY	PART NAME 1 2 3 4 5 6 (PRODUCT LEVEL)	SEE PAGE
Y	1	1	*224-6237*	1	CYLINDER & LINES GP-THUMB	315
Y	2	1	*271-3023*	1	THUMB GP	637
	3	1	**274-5837**	1	TINE AS-THUMB (36-IN, ROCK)	

Y-SEPARATE ILLUSTRATION

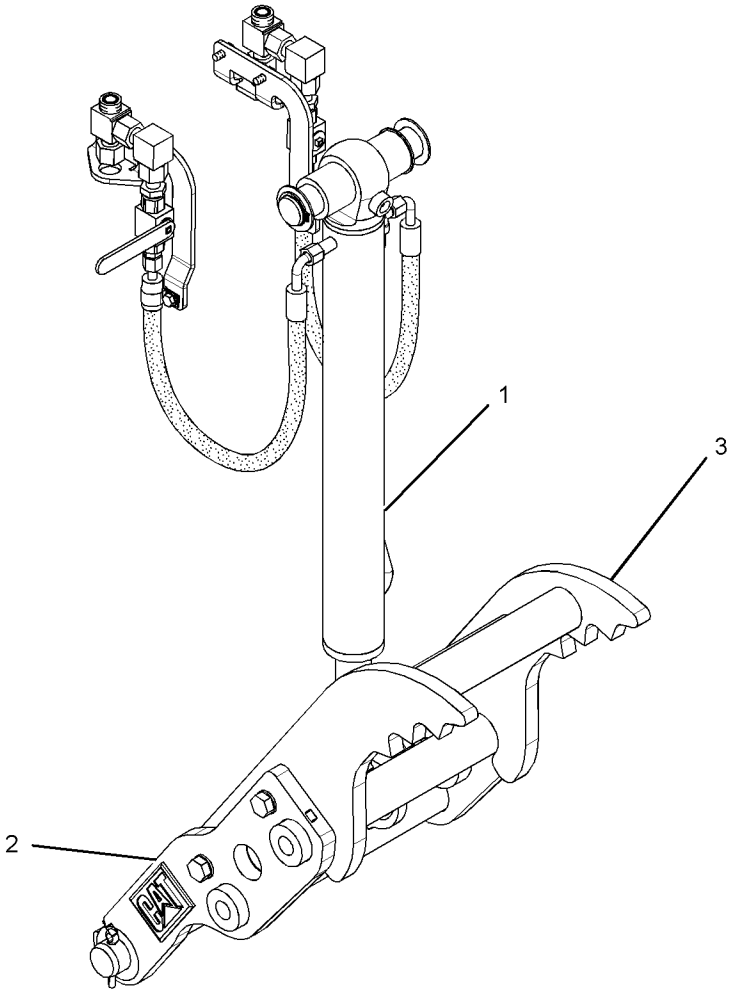

GRAPHIC #1 **<END>** g01370636

WORK TOOLS

282-0894 THUMB AR–36-IN, HYD, ROCK, WITH COUPLER

S/N: SHA1-UP
AN ATTACHMENT
TYPE 1

SMCS-6547 **i02449312**

NOTE	REF NO	GRAPHIC REF	PART NUMBER	QTY	PART NAME 1 2 3 4 5 6 (PRODUCT LEVEL)	SEE PAGE
Y	1	1	*224-6237*	1	CYLINDER & LINES GP-THUMB	315
Y	2	1	*271-3023*	1	THUMB GP	637
	3	1	**274-5839**	1	TINE AS-THUMB (36-IN, ROCK)	

Y-SEPARATE ILLUSTRATION

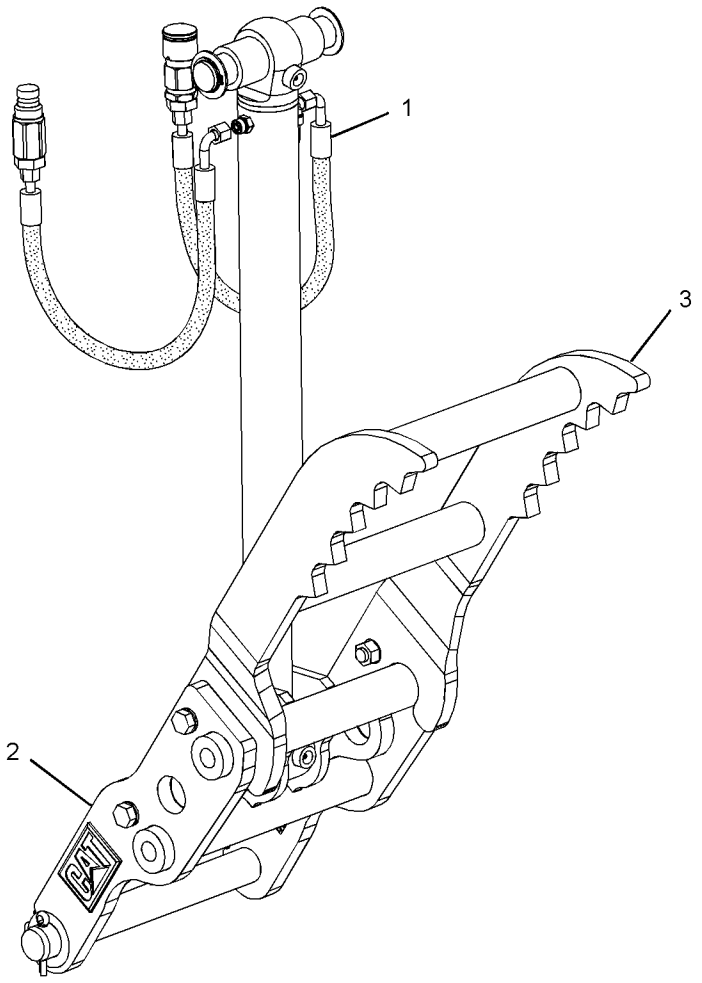

GRAPHIC #1 **<END>** g01230657

WORK TOOLS

282-0894 THUMB AR–36-IN, HYD, ROCK, WITH COUPLER

S/N: SHA1-UP
AN ATTACHMENT
TYPE 2

SMCS-6547 **i02730915**

NOTE	REF NO	GRAPHIC REF	PART NUMBER	QTY	PART NAME 1 2 3 4 5 6 (PRODUCT LEVEL)	SEE PAGE
Y	1	1	*224-6237*	1	CYLINDER & LINES GP-THUMB	315
Y	2	1	*271-3023*	1	THUMB GP	637
	3	1	**274-5839**	1	TINE AS-THUMB (36-IN, ROCK)	

Y-SEPARATE ILLUSTRATION

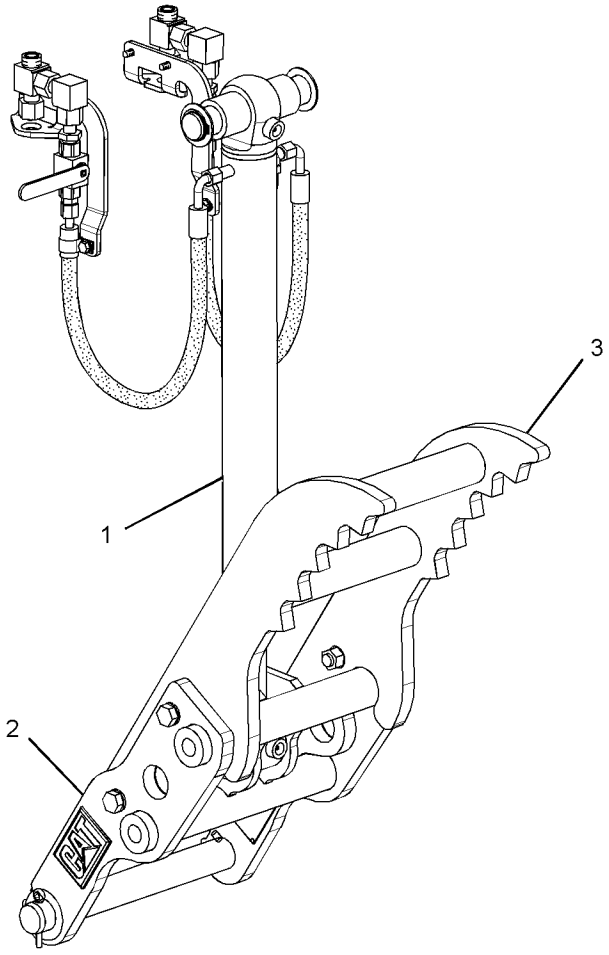

GRAPHIC #1 **<END>** g01371128

282-5398 THUMB AR–24-IN, MANUAL, WITH COUPLER

S/N: SHA1-UP

AN ATTACHMENT

SMCS-6547 **i02482321**

NOTE	REF NO	GRAPHIC REF	PART NUMBER	QTY	PART NAME 1 2 3 4 5 6 (PRODUCT LEVEL)	SEE PAGE
	1	1	*263-8576*	1	LINK GP-THUMB	
		1	**221-4272**	1	LINK AS	
		1	**224-4527**	1	PIN AS	
		1	**263-8575**	1	LINK AS	
Y	2	1	*271-3023*	1	THUMB GP	637
	3	1	**281-6708**	1	TINE AS-THUMB (24-IN)	

Y-SEPARATE ILLUSTRATION

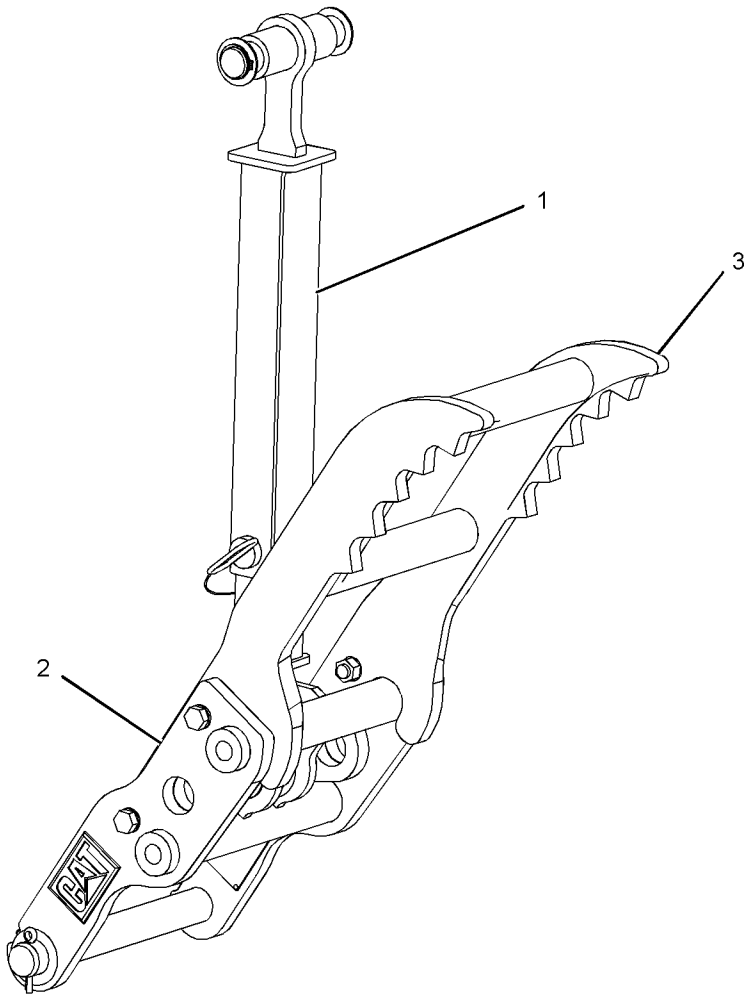

GRAPHIC #1 **<END>** g01232078

282-5399 THUMB AR–30-IN, MANUAL, HEAVY-DUTY

S/N: SHA1-UP

AN ATTACHMENT

SMCS-6547 **i02449330**

NOTE	REF NO	GRAPHIC REF	PART NUMBER	QTY	PART NAME 1 2 3 4 5 6 (PRODUCT LEVEL)	SEE PAGE
	1	1	**263-8576**	1	LINK GP-THUMB	
		1	**221-4272**	1	LINK AS	
		1	**224-4527**	1	PIN AS	
		1	**263-8575**	1	LINK AS	
Y	2	1	*271-3023*	1	THUMB GP	637
	3	1	**274-5819**	1	TINE AS-THUMB (30-IN)	

Y-SEPARATE ILLUSTRATION

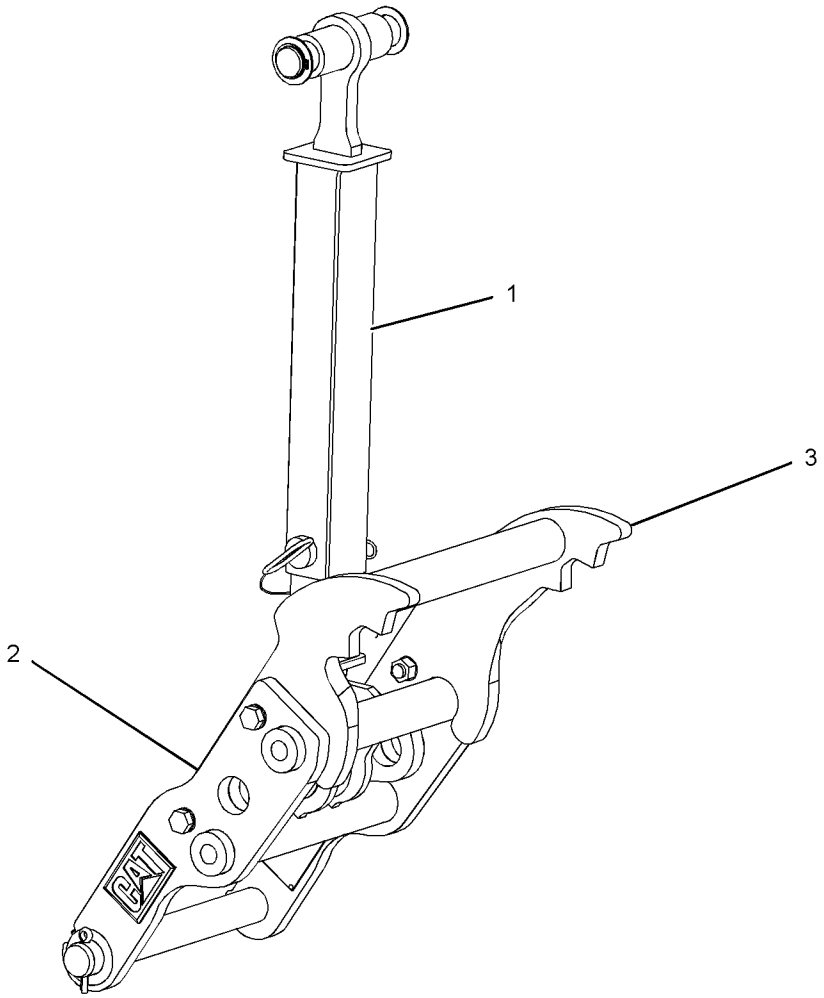

GRAPHIC #1 **<END>** g01232091

282-5400 THUMB AR–30-IN, MANUAL, ROCK

S/N: SHA1-UP

AN ATTACHMENT

SMCS-6547 **i02449322**

NOTE	REF NO	GRAPHIC REF	PART NUMBER	QTY	PART NAME 1 2 3 4 5 6 (PRODUCT LEVEL)	SEE PAGE
	1	1	*263-8576*	1	LINK GP-THUMB	
		1	**221-4272**	1	LINK AS	
		1	**224-4527**	1	PIN AS	
		1	**263-8575**	1	LINK AS	
Y	2	1	*271-3023*	1	THUMB GP	637
	3	1	**274-5826**	1	TINE AS-THUMB (30-IN, ROCK)	

Y-SEPARATE ILLUSTRATION

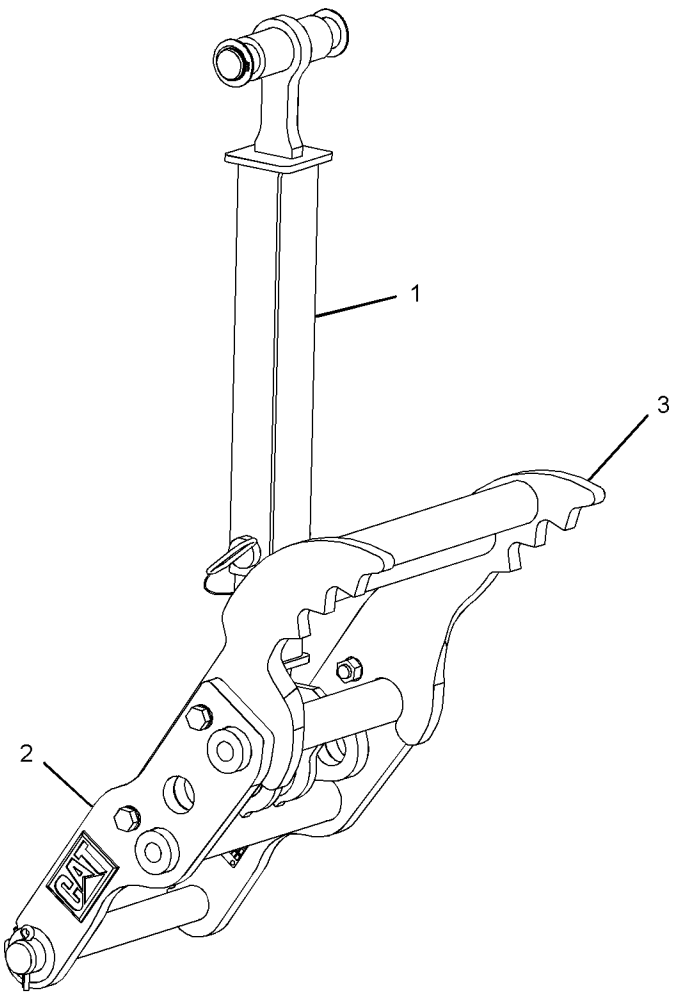

GRAPHIC #1 **<END>** g01234205

282-5401 THUMB AR–30-IN, MAN, HEAVY-DUTY, WITH COUPLER

S/N: SHA1-UP

AN ATTACHMENT

SMCS-6547 **i02449326**

NOTE	REF NO	GRAPHIC REF	PART NUMBER	QTY	PART NAME 1 2 3 4 5 6 (PRODUCT LEVEL)	SEE PAGE
	1	1	*263-8576*	1	LINK GP-THUMB	
		1	**263-8575**		LINK AS	
		1	**221-4272**	1	LINK AS	
		1	**224-4527**	1	PIN AS	
Y	2	1	*271-3023*	1	THUMB GP	637
	3	1	**274-5823**	1	TINE AS-THUMB (30-IN)	

Y-SEPARATE ILLUSTRATION

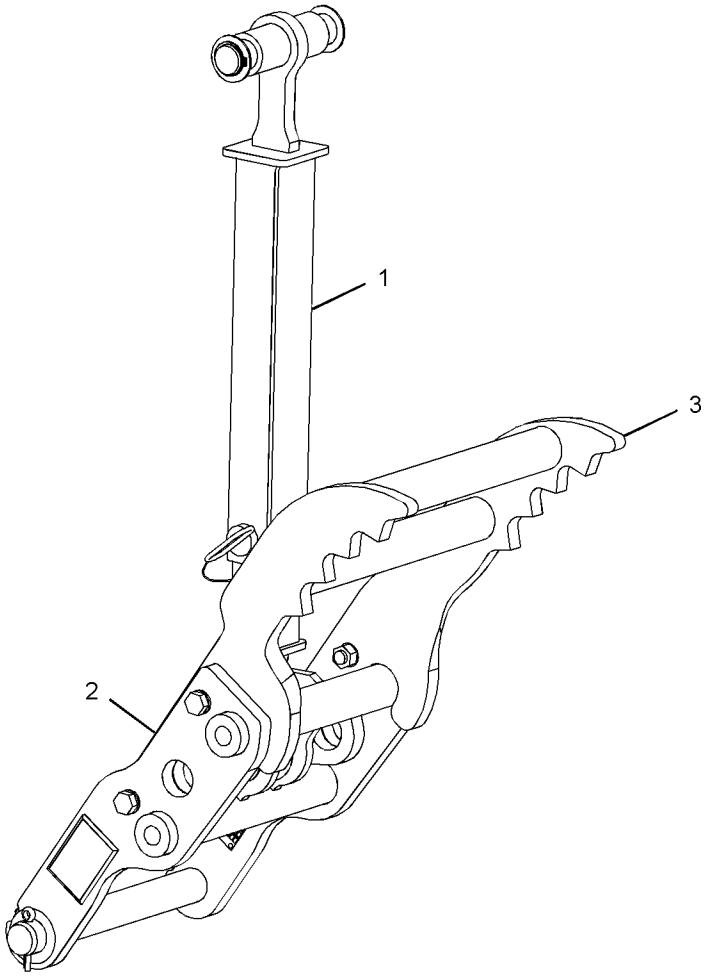

GRAPHIC #1 **<END>** g01234213

282-5402 THUMB AR–30-IN, MAN, ROCK, WITH COUPLER

S/N: SHA1-UP

AN ATTACHMENT

SMCS-6547 **i02449327**

NOTE	REF NO	GRAPHIC REF	PART NUMBER	QTY	PART NAME 1 2 3 4 5 6 (PRODUCT LEVEL)	SEE PAGE
	1	1	*263-8576*	1	LINK GP-THUMB	
		1	**263-8575**	1	LINK AS	
		1	**221-4272**	1	LINK AS	
		1	**224-4527**	1	PIN AS	
Y	2	1	*271-3023*	1	THUMB GP	637
	3	1	**274-5829**	1	TINE AS-THUMB (30-IN, ROCK)	

Y-SEPARATE ILLUSTRATION

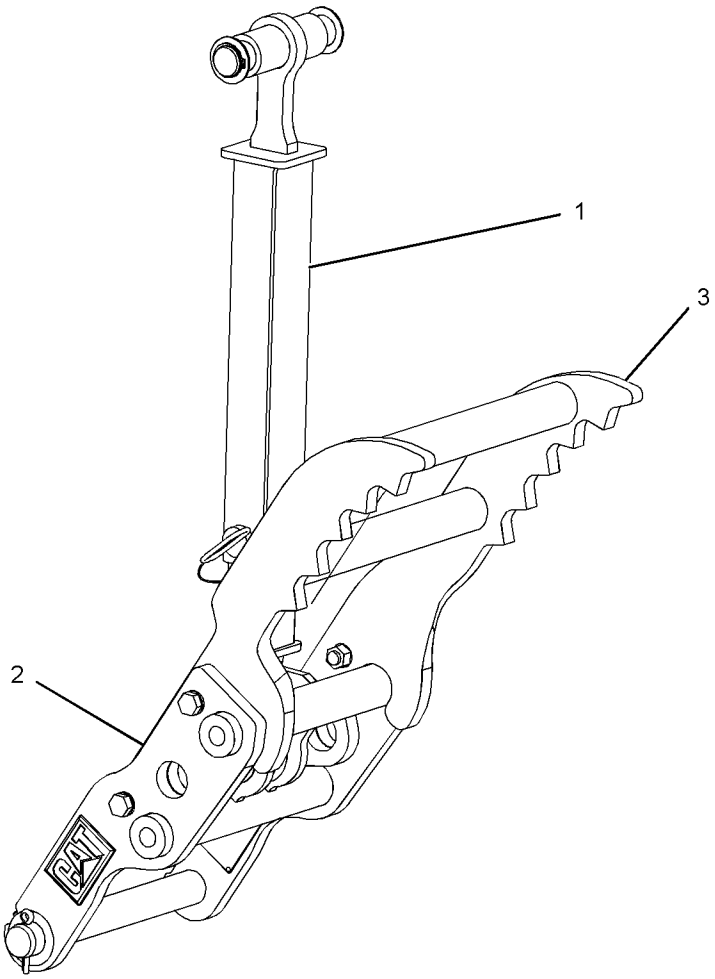

GRAPHIC #1 **<END>** g01234207

282-5403 THUMB AR–30-IN, MAN, WITH COUPLER

S/N: SHA1-UP

AN ATTACHMENT

SMCS-6547 **i02449323**

NOTE	REF NO	GRAPHIC REF	PART NUMBER	QTY	PART NAME 1 2 3 4 5 6 (PRODUCT LEVEL)	SEE PAGE
	1	1	*263-8576*	1	LINK GP-THUMB	
		1	**221-4272**	1	LINK AS	
		1	**224-4527**	1	PIN AS	
		1	**263-8575**	1	LINK AS	
Y	2	1	*271-3023*	1	THUMB GP	637
	3	1	**281-6711**	1	TINE AS-THUMB (30-IN)	

Y-SEPARATE ILLUSTRATION

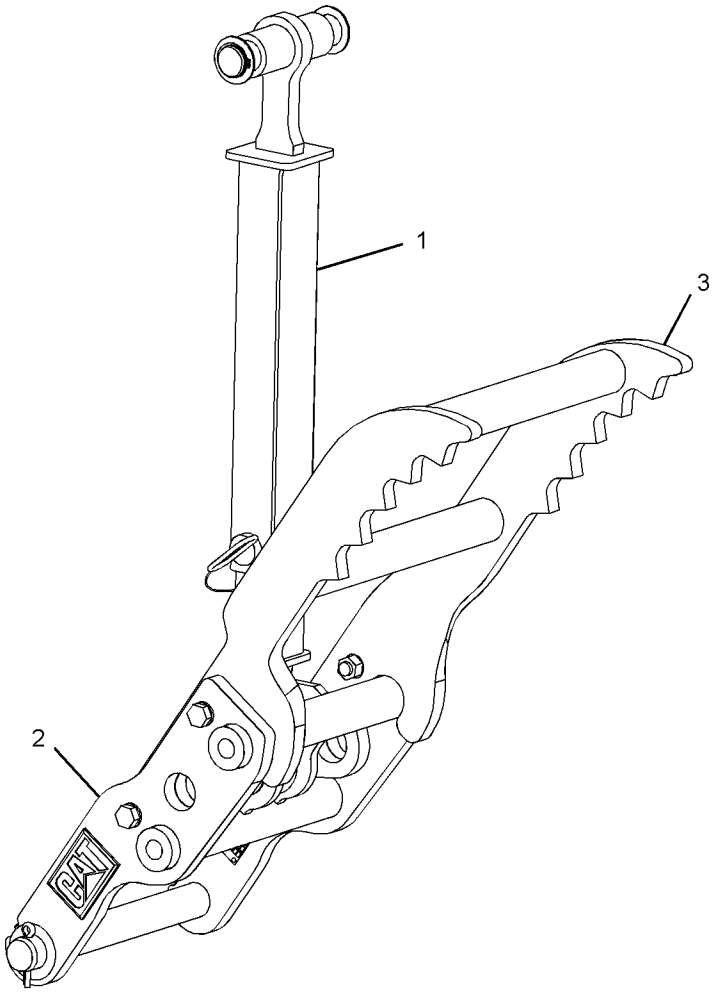

GRAPHIC #1 **<END>** g01234215

WORK TOOLS

282-5404 THUMB AR–36-IN, MAN, HEAVY-DUTY

S/N: SHA1-UP

AN ATTACHMENT

SMCS-6547 **i02449331**

NOTE	REF NO	GRAPHIC REF	PART NUMBER	QTY	PART NAME 1 2 3 4 5 6 (PRODUCT LEVEL)	SEE PAGE
	1	1	**263-8576**	1	LINK GP-THUMB	
		1	**221-4272**	1	LINK AS	
		1	**224-4527**	1	PIN AS	
		1	**263-8575**	1	LINK AS	
Y	2	1	*271-3023*	1	THUMB GP	637
	3	1	**274-5832**	1	TINE AS-THUMB (36-IN)	

Y-SEPARATE ILLUSTRATION

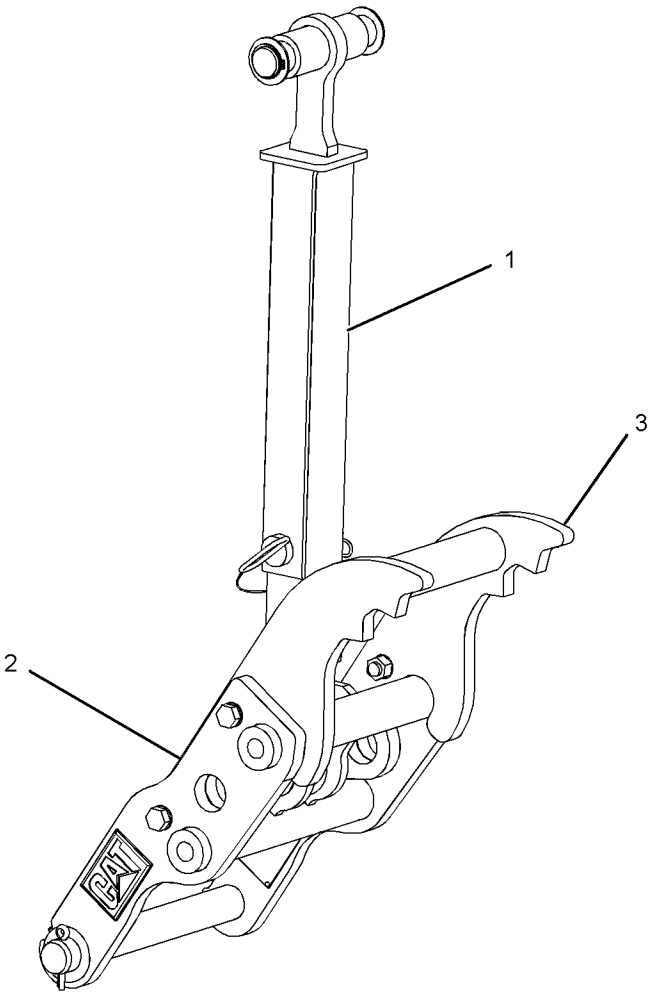

GRAPHIC #1 **<END>** g01232484

WORK TOOLS

282-5405 THUMB AR—36-IN, MAN, ROCK

S/N: SHA1-UP

AN ATTACHMENT

SMCS-6547 **i02449318**

NOTE	REF NO	GRAPHIC REF	PART NUMBER	QTY	PART NAME 1 2 3 4 5 6 (PRODUCT LEVEL)	SEE PAGE
	1	1	*263-8576*	1	LINK GP-THUMB	
		1	**221-4272**	1	LINK AS	
		1	**224-4527**	1	PIN AS	
		1	**263-8575**	1	LINK AS	
Y	2	1	*271-3023*	1	THUMB GP	637
	3	1	**274-5837**	1	TINE AS-THUMB (36-IN, ROCK)	

Y-SEPARATE ILLUSTRATION

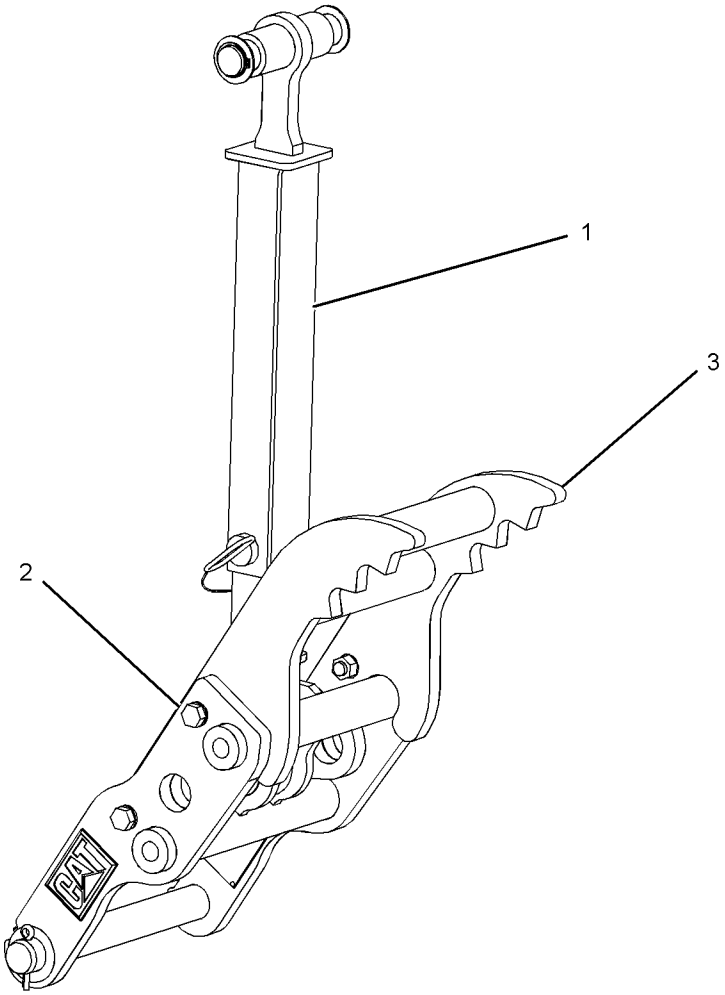

GRAPHIC #1 **<END>** g01232106

282-5406 THUMB AR—36-IN, MAN, HEAVY-DUTY, WITH COUPLER

S/N: SHA1-UP

AN ATTACHMENT

SMCS-6547 **i02449313**

NOTE	REF NO	GRAPHIC REF	PART NUMBER	QTY	PART NAME 1 2 3 4 5 6 (PRODUCT LEVEL)	SEE PAGE
	1	1	*263-8576*	1	LINK GP-THUMB	
		1	**221-4272**	1	LINK AS	
		1	**224-4527**	1	PIN AS	
		1	**263-8575**	1	LINK AS	
Y	2	1	*271-3023*	1	THUMB GP	637
	3	1	**274-5835**	1	TINE AS-THUMB (36-IN)	

Y-SEPARATE ILLUSTRATION

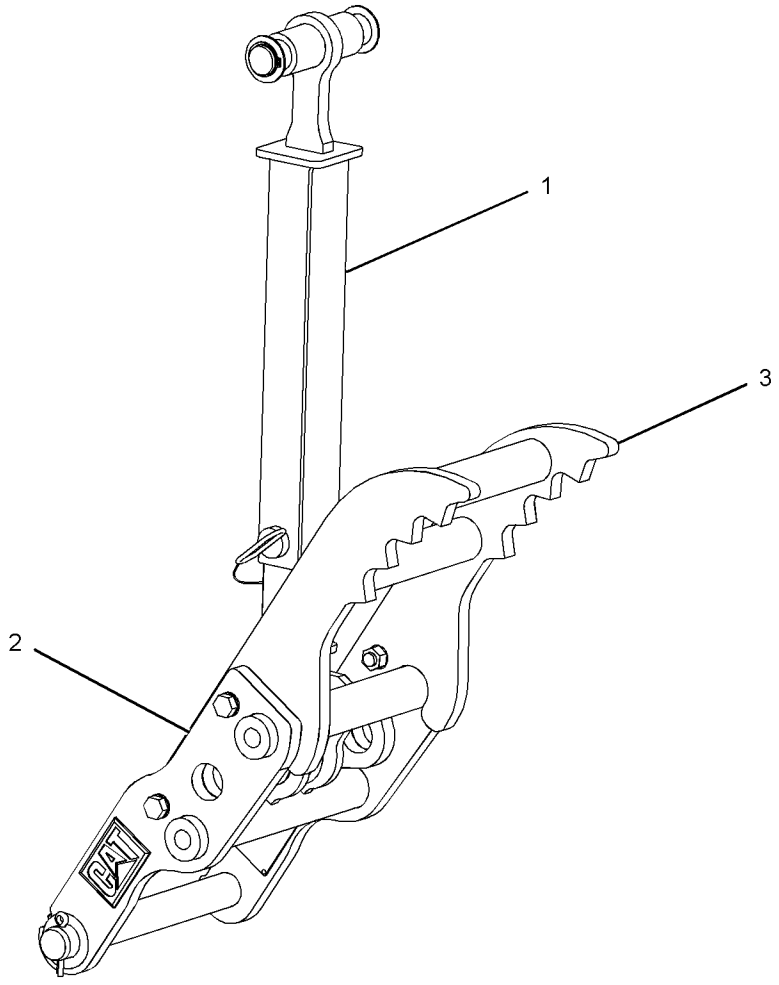

GRAPHIC #1 **<END>** g01230669

WORK TOOLS

282-5407 THUMB AR—36-IN, MAN, ROCK, WITH COUPLER

S/N: SHA1-UP

AN ATTACHMENT

SMCS-6547 **i02449332**

NOTE	REF NO	GRAPHIC REF	PART NUMBER	QTY	PART NAME 1 2 3 4 5 6 (PRODUCT LEVEL)	SEE PAGE
	1	1	**263-8576**	1	LINK GP-THUMB	
		1	**221-4272**	1	LINK AS	
		1	**224-4527**	1	PIN AS	
		1	**263-8575**	1	LINK AS	
Y	2	1	*271-3023*	1	THUMB GP	637
	3	1	**274-5839**	1	TINE AS-THUMB (36-IN, ROCK)	

Y-SEPARATE ILLUSTRATION

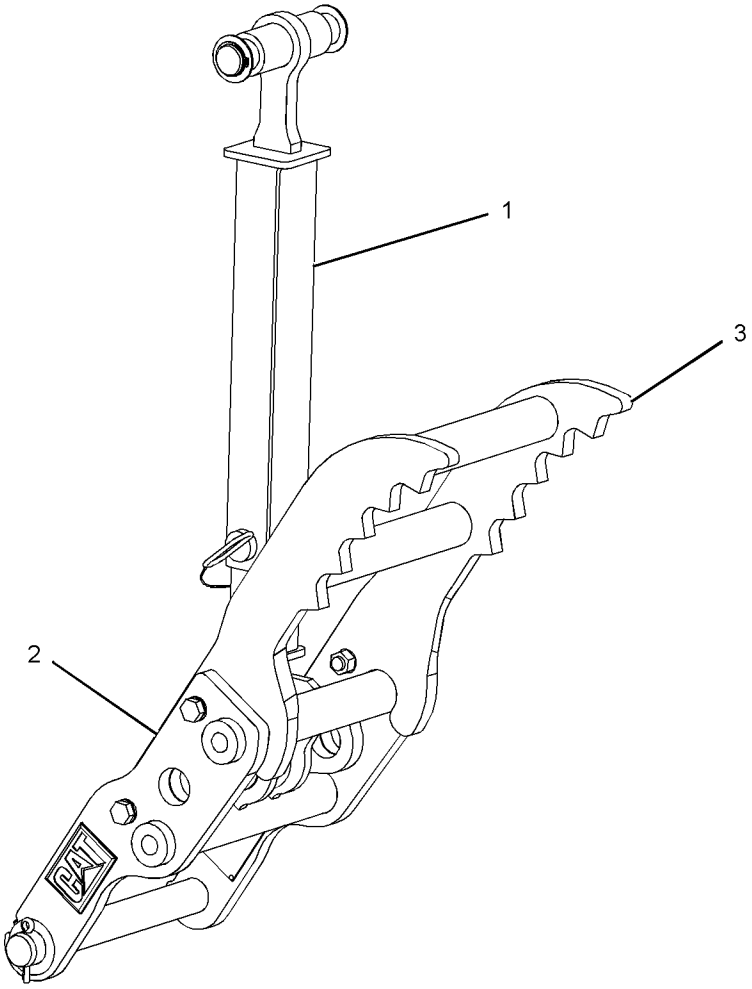

GRAPHIC #1 **<END>** g01232087

282-5408 THUMB AR–36-IN, MAN, WITH COUPLER

S/N: SHA1-UP

AN ATTACHMENT

SMCS-6547 **i02449333**

NOTE	REF NO	GRAPHIC REF	PART NUMBER	QTY	PART NAME 1 2 3 4 5 6 (PRODUCT LEVEL)	SEE PAGE
	1	1	**263-8576**	1	LINK GP-THUMB	
		1	**221-4272**	1	LINK AS	
		1	**224-4527**	1	PIN AS	
		1	**263-8575**	1	LINK AS	
Y	2	1	*271-3023*	1	THUMB GP	637
	3	1	**281-6714**	1	TINE AS-THUMB	

Y-SEPARATE ILLUSTRATION

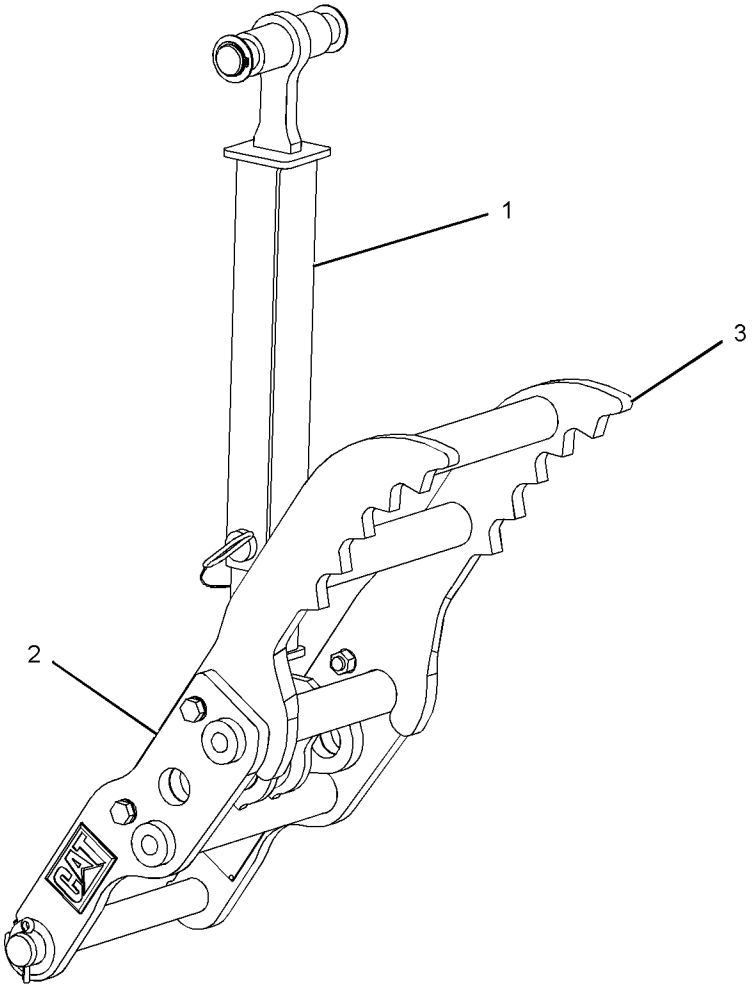

GRAPHIC #1 **<END>** g01232087

282-5409 THUMB AR–BACKHOE, HYDRAULIC COMMON

S/N: SHA1-UP
AN ATTACHMENT
TYPE 1

SMCS-6547 **i02449334**

NOTE	REF NO	GRAPHIC REF	PART NUMBER	QTY	PART NAME 1 2 3 4 5 6 (PRODUCT LEVEL)	SEE PAGE
Y	1	1	*224-6237*	1	CYLINDER & LINES GP-THUMB	315
Y	2	1	*271-3023*	1	THUMB GP	637

Y-SEPARATE ILLUSTRATION

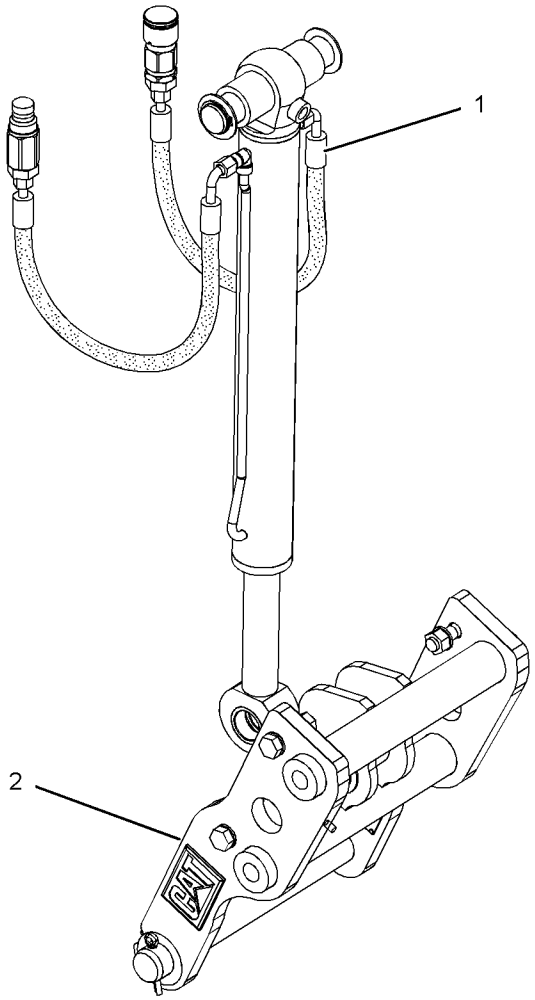

GRAPHIC #1 **<END>** g01232113

WORK TOOLS

282-5409 THUMB AR–BACKHOE, HYDRAULIC COMMON

S/N: SHA1-UP
AN ATTACHMENT
TYPE 2

SMCS-6547 **i02733298**

NOTE	REF NO	GRAPHIC REF	PART NUMBER	QTY	PART NAME 1 2 3 4 5 6 (PRODUCT LEVEL)	SEE PAGE
Y	1	1	*224-6237*	1	CYLINDER & LINES GP-THUMB	315
Y	2	1	*271-3023*	1	THUMB GP	637

Y-SEPARATE ILLUSTRATION

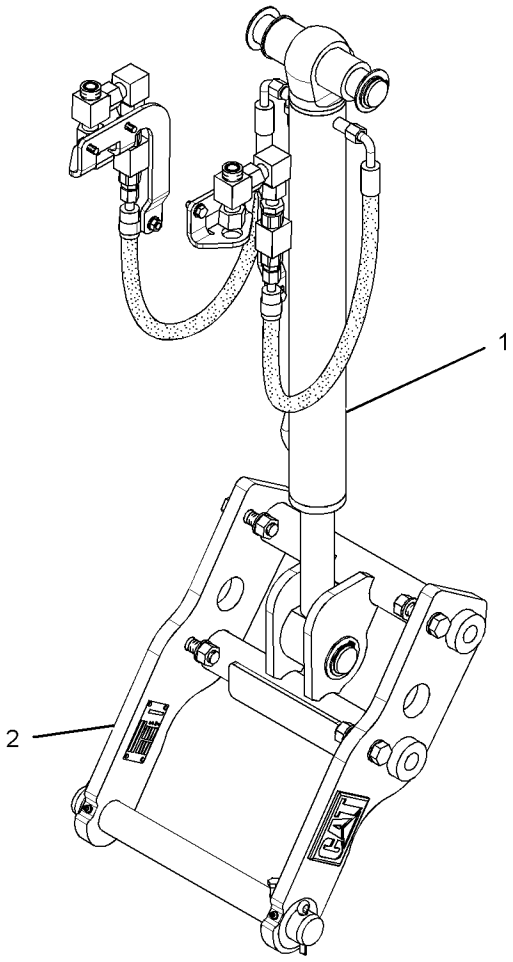

GRAPHIC #1 **<END>** g01379867

WORK TOOLS

282-5410 THUMB AR–BACKHOE, MANUAL COMMON

S/N: SHA1-UP

AN ATTACHMENT

SMCS-6547 **i02449335**

NOTE	REF NO	GRAPHIC REF	PART NUMBER	QTY	PART NAME 1 2 3 4 5 6 (PRODUCT LEVEL)	SEE PAGE
	1	1	**263-8576**	1	LINK GP-THUMB	
		1	**221-4272**	1	LINK AS	
		1	**224-4527**	1	PIN AS	
		1	**263-8575**	1	LINK AS	
Y	2	1	*271-3023*	1	THUMB GP	637

Y-SEPARATE ILLUSTRATION

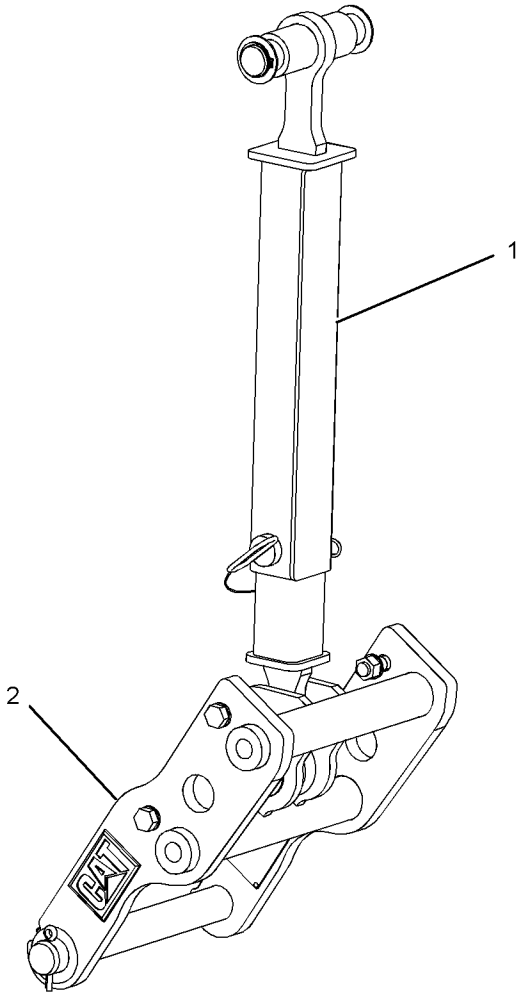

GRAPHIC #1 **<END>** g01232128

WORK TOOLS

221-4267 THUMB GP–BACKHOE

S/N: SHA1-UP

PART OF 221-4260 THUMB AR, 271-3023 THUMB GP

AN ATTACHMENT

SMCS-6547 **i02501588**

NOTE	REF NO	GRAPHIC REF	PART NUMBER	QTY	PART NAME 1 2 3 4 5 6 (PRODUCT LEVEL)	SEE PAGE
	1	1	**221-4263**	1	LINK AS	
	2	1	**3B-8489**	2	FITTING-GREASE	
	3	1	**8T-4123**	8	WASHER (22X35X3.5-MM THK)	
M	4	1	**8T-4131**	4	NUT (M20X2.5-THD)	
M	5	1	**8T-4187**	4	BOLT (M20X2.5X80-MM)	

M-METRIC PART

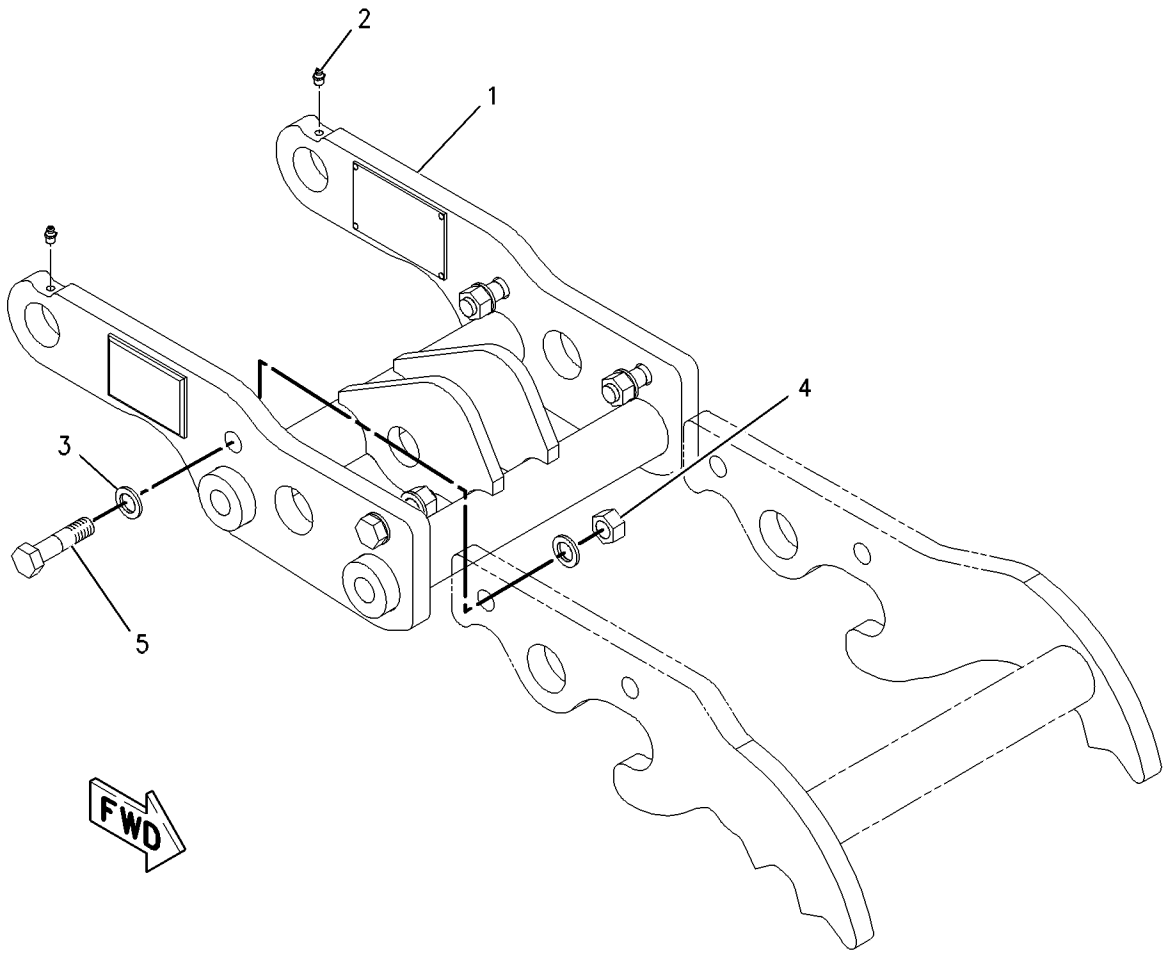

GRAPHIC #1 **<END>** g01003468

271-3023 THUMB GP—BACKHOE, COMMON

S/N: SHA1-UP

PART OF 271-3024, 271-3025, 271-3026, 271-3027, 271-3028, 271-3029, 271-3030, 271-3031, 281-6716, 282-0865, 282-0866, 282-0887, 282-0888, 282-0889, 282-0890, 282-0891, 282-0892, 282-0893, 282-0894, 282-5398, 282-5399, 282-5400, 282-5401, 282-5402, 282-5403, 282-5404, 282-5405, 282-5406, 282-5407, 282-5408, 282-5409, 282-5410 THUMB AR

AN ATTACHMENT

SMCS-6547 **i02449272**

NOTE	REF NO	GRAPHIC REF	PART NUMBER	QTY	PART NAME 1 2 3 4 5 6 (PRODUCT LEVEL)	SEE PAGE
Y	1	1	*221-4267*	1	THUMB GP	636
Y	2	1	*263-8577*	1	MOUNTING GP-CYLINDER	398

Y-SEPARATE ILLUSTRATION

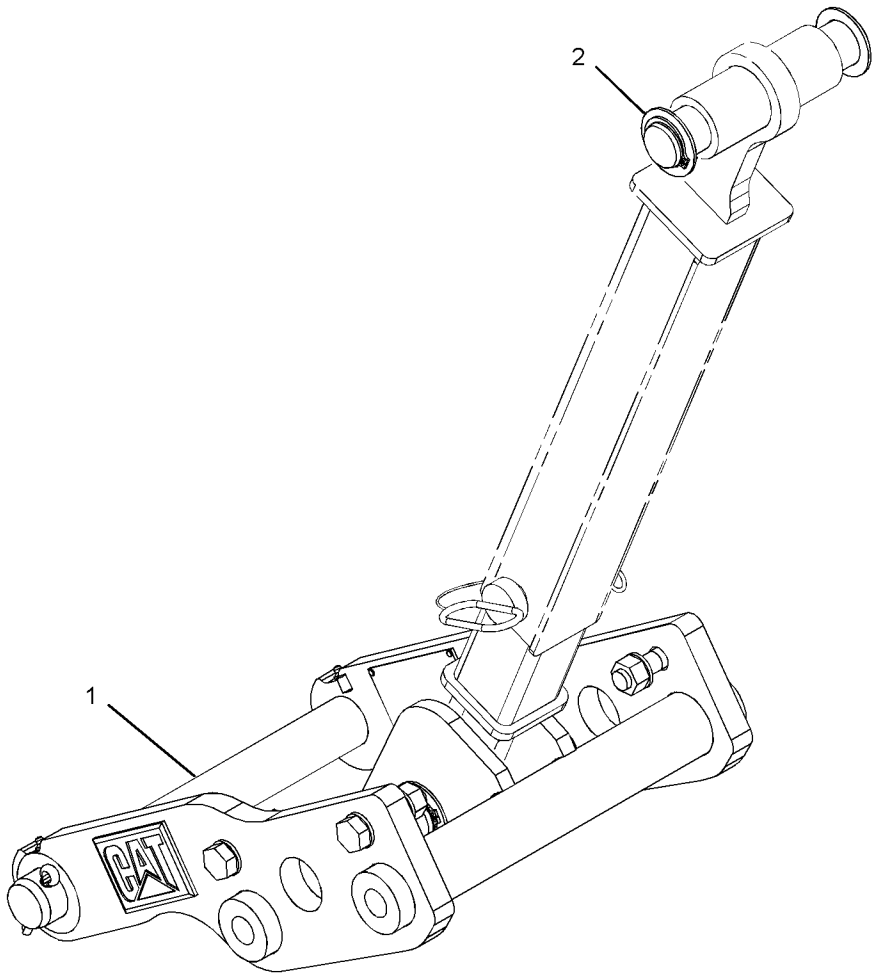

GRAPHIC #1 **<END>** g01234131

WORK TOOLS

9R-5866 TOOTH GP-UNI

S/N: SHA1-UP
PART OF 251-1776 BUCKET AR-GENERAL PURPOSE, 232-2682, 232-2684, 232-2687, 232-2689 BUCKET AR-MULTIPURPOSE, 251-1779, 251-1782, 251-1788, 251-1790 BUCKET GP-GENERAL PURPOSE
FOR USE WITH LOADER BUCKETS
AN ATTACHMENT

SMCS-6822 **i02238664**

NOTE	REF NO	GRAPHIC REF	PART NUMBER	QTY	PART NAME 1 2 3 4 5 6 (PRODUCT LEVEL)	SEE PAGE
	1	1	**135-8203**	8	TOOTH-UNI	
	2	1	**4F-3657**	16	BOLT-PLOW (5/8-11X2.75-IN)	
	3	1	**4K-0367**	16	NUT-FULL (5/8-11-THD)	

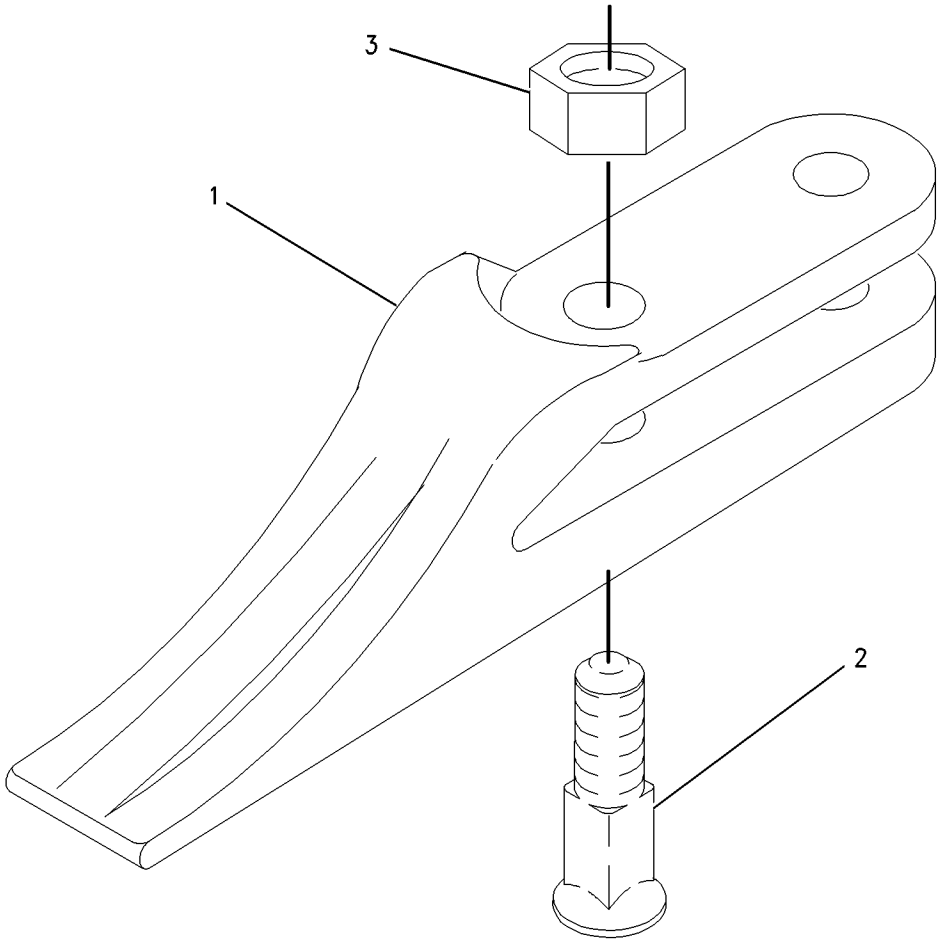

GRAPHIC #1 **<END>** g00915958

OPERATOR STATION

206-1801 AIR CONDITIONER & MOUNTING GP

S/N: SHA1-UP

PART OF 228-4602 CAB AR-ENCLOSED ROPS

AN ATTACHMENT

SMCS-7320 **i02527300**

NOTE	REF NO	GRAPHIC REF	PART NUMBER	QTY	PART NAME 1 2 3 4 5 6 (PRODUCT LEVEL)	SEE PAGE
	1	1	**221-2420**	2	HOSE-AIR	
E	2	1	**6V-6813**		HOSE (28-CM)	
	3	1	**6L-4725**	2	CLAMP-HOSE	
	4	1	**8Y-5737**	1	CLAMP	
	5	1	**8Y-6967**	6	LOUVER AS	
	6	1	**9M-7959**	4	CLAMP-HOSE	
	7	1	**9N-2231**	1	GROMMET AS	
	8	1	**110-6109**	1	KNOB-CONTROL (A/C)	
	9	1	**130-4832**	2	SCREW (8-18X10-MM)	
	10	1	**206-1684**	1	COVER (CAB FILTER)	
	11	1	**164-1368**	4	FASTENER-PANEL	
	12	1	**164-8474**	2	LOUVER AS-VENT	
	13	1	**189-0881**	1	CONTROL AS	
		1	**129-1831**	1	CLAMP	
	14	1	**193-3356**	1	CABLE AS	
	15	1	**194-5622**	1	VALVE AS-WATER	
		1	**6V-6717**	1	SCREW-WASHER HEAD (8-32X9.52-MM)	
		1	**124-0312**	2	SCREW-PAN HEAD (8-16X0.32-IN)	
	16	1	**206-1648**	1	LOUVER	
	17	1	**206-1653**	4	GASKET	
	18	1	**206-1682**	1	PANEL-CONTROL	
	19	1	**206-1803**	2	GASKET	
	20	1	**206-1804**	1	GASKET	
	21	1	**206-1805**	1	GASKET	
BE	22	1	**220-0738**		SEAL (87-CM)	
	23	1	**206-1807**	1	GASKET	
	24	1	**206-1808**	1	PLATE	
	25	1	**206-1809**	1	ROD AS	
		1	**5B-3254**	1	NUT-JAM (7/16-20-THD)	
	26	1	**206-1810**	1	DUCT-AIR	
	27	1	**206-1812**	1	DUCT-AIR	
	28	1	**206-1814**	1	DUCT-AIR	
	29	1	**206-1815**	1	DUCT-AIR	
	30	1	**206-1816**	1	DUCT-AIR	
	31	1	**206-1817**	2	DUCT-AIR	
	32	1	**206-1818**	1	DUCT AS-AIR	
	33	1	**206-1846**	1	INSULATION	
	34	1	**206-1847**	1	INSULATION	
Y	35	1	*210-8363*	1	AIR CONDITIONER GP	642
	36	1	**211-2661**	1	FILTER ELEMENT AS-AIR (CAB HEATER, AIR CONDITIONER)	
	37	1	**218-0666**	6	LOUVER AS	
D	38	1	**5P-6129**		TUBE (0.55-M EACH)	
	39	1	**255-0795**	1	FILM (TEMPERATURE CONTROL)	
	40	1	**5P-4116**	1	WASHER-HARD (8.8X20.5X2-MM THK)	
M	41	1	**111-4627**	3	SCREW-MACHINE (M6X1X30-MM)	
	42	1	**8Y-6352**	1	LOUVER AS	
	43	1	**7X-0579**	1	WASHER-HARD (8.8X25.5X2-MM THK)	
M	44	1	**8T-4200**	1	BOLT (M8X1.25X16-MM)	
	45	1	**9X-2038**	4	WASHER (7X19X2-MM THK)	
M	46	1	**9X-2045**	8	SCREW-TRUSS HEAD (M6X1X20-MM)	
	48	1	**4H-2558**	1	GROMMET	

B-USE AS REQUIRED
D-ORDER BY THE METER
E-ORDER BY THE CENTIMETER
M-METRIC PART
Y-SEPARATE ILLUSTRATION

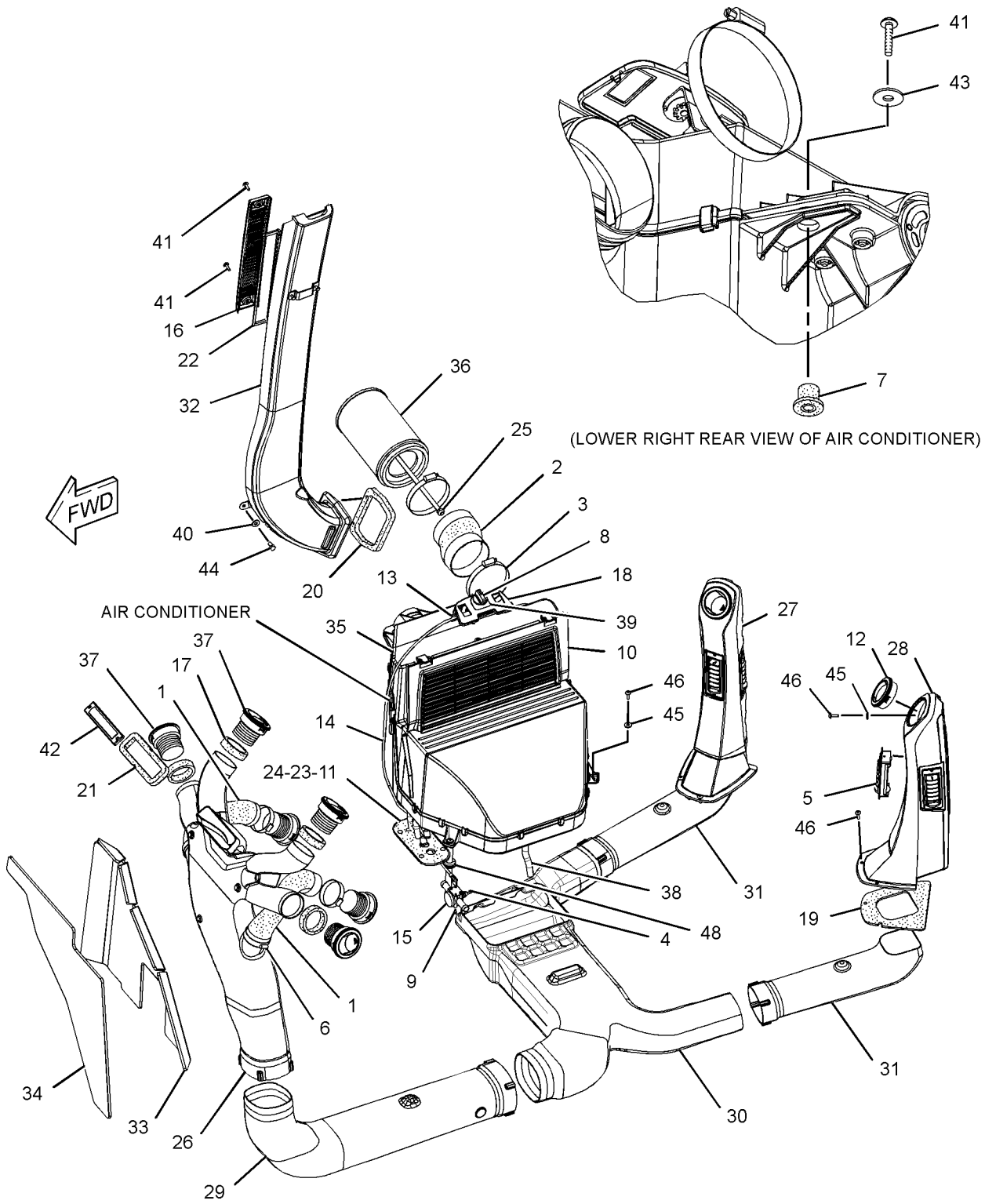

GRAPHIC #1 **<END>** g01359971

OPERATOR STATION

210-8363 AIR CONDITIONER GP

S/N: SHA1-UP

PART OF 206-1801 AIR CONDITIONER & MOUNTING GP

AN ATTACHMENT

SMCS-7320 **i02527581**

NOTE	REF NO	GRAPHIC REF	PART NUMBER	QTY	PART NAME 1 2 3 4 5 6 (PRODUCT LEVEL)	SEE PAGE
	1	1	**8C-3756**	1	FILM-IDENTIFICATION (GROUP NUMBER)	
	2	1	**119-9631**	1	SWITCH-TEMPERATURE (AIR CONDITIONER)	
	3	1	**168-2313**	1	FAN AS (HEATER)	
		1	**7T-0093**	2	PIN-CONNECTOR	
		1	**177-9645**	1	KIT-RECEPTACLE (2-PIN)	
					(INCLUDES RECEPTACLE AS & WEDGE)	
	4	1	**185-4015**	11	CLIP	
	5	1	**204-9921**	1	RESISTOR AS (HEATER)	
	6	1	**210-7665**	1	HOUSING-TOP	
	7	1	**210-7666**	1	BAFFLE	
	8	1	**210-8401**	1	COIL AS-EVAPORATOR	
J		1	**219-6288**	1	GASKET	
DJ		1	**5P-5688**		SEAL (1-M)	
	9	1	**211-2660**	1	FILTER AS-AIR (RECIRCULATION)	
	10	1	**212-3416**	1	SCREW-PAN HEAD (8-16X0.5-IN)	
	11	1	**219-6281**	1	COVER AS (FILTER)	
		1	**219-6283**	1	LATCH	
		1	**6C-3680**	1	RIVET-POP	
J	12	1	**219-6284**	2	GASKET	
J	13	1	**219-6285**	1	GASKET	
J	14	1	**219-6286**	1	GASKET	
J	15	1	**219-6287**	2	GASKET	
	16	1	**219-6292**	1	HOUSING AS (BOTTOM)	
		1	**7H-3937**	4	LOCKWASHER (2-M)	
M		1	**129-3178**	4	LOCKNUT (M6X1-THD)	
J	17	1	**219-6294**	2	SEAL (DRAIN TUBE)	
	18	1	**220-3762**	1	HARNESS AS-HEATER & AIR COND	
		1	**8T-8737**	1	PLUG-SEAL	
		1	**177-9653**	1	KIT-RECEPTACLE (4-PIN)	
					(INCLUDES RECEPTACLE AS & WEDGE)	
		1	**155-2270**	1	KIT-CONNECTING PLUG (2-PIN)	
					(INCLUDES PLUG AS, WEDGE & INTERFACE SEAL)	
	19	1	**253-9510**	1	GUARD (RESISTOR)	
	20	1	**2S-3745**	4	SCREW-TAPPING (10-16X0.5-IN)	
M	21	1	**6V-7357**	4	BOLT (M6X1X25-MM)	
	22	1	**8T-4205**	5	WASHER-HARD (7.2X14.5X2-MM THK)	
D	23	1	**5P-5655**		SEAL (0.5-M)	
DJ	24	1	**5P-5637**		SEAL (0.8-M)	
EJ	25	1	**8C-7524**		SEAL (35-CM)	
					AVAILABLE REPAIR KIT(S):	
J			**285-9109**	1	KIT-SEAL (HVAC UNIT)	

D-ORDER BY THE METER
E-ORDER BY THE CENTIMETER
J-KIT MARKED J SERVICES PARTS MARKED J
M-METRIC PART

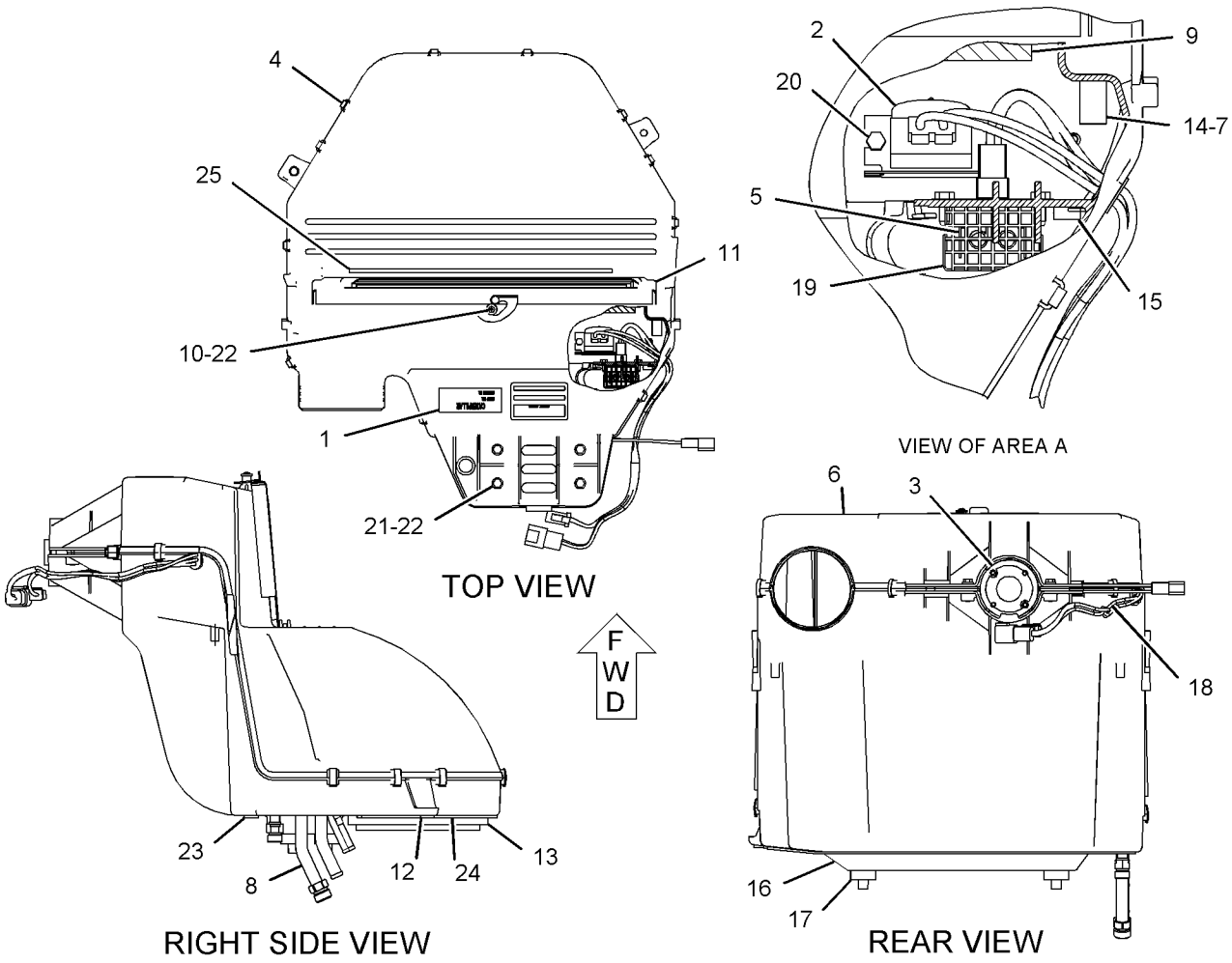

GRAPHIC #1 **<END>** g01095421

OPERATOR STATION

229-8743 BRACKET GP-MOUNTING—MONITOR

S/N: SHA1-UP

PART OF 211-4253 INSTALLATION GP-MONITOR

AN ATTACHMENT

SMCS-7301 **i02676133**

NOTE	REF NO	GRAPHIC REF	PART NUMBER	QTY	PART NAME 1 2 3 4 5 6 (PRODUCT LEVEL)	SEE PAGE
	1	1	**9R-8165**	1	BEARING	
	2	1	**7X-0510**	1	WASHER-HARD (15.5X29X3-MM THK)	
	3	1	**248-2284**	1	KNOB-CONTROL	
	4	1	**251-0075**	1	BRACKET	
	5	1	**251-0076**	1	BRACKET AS	
	6	1	**254-6826**	1	SPACER (10.5X14X8.8-MM THK)	
	7	1	**9K-6540**	1	WASHER-SPRING (0.63X1.25X0.04-IN THK)	
	8	1	**9X-2038**	2	WASHER (7X19X2-MM THK)	
M	9	1	**9X-2045**	2	SCREW-TRUSS HEAD (M6X1X20-MM)	
	10	1	**121-1029**	1	CLIP	

M-METRIC PART

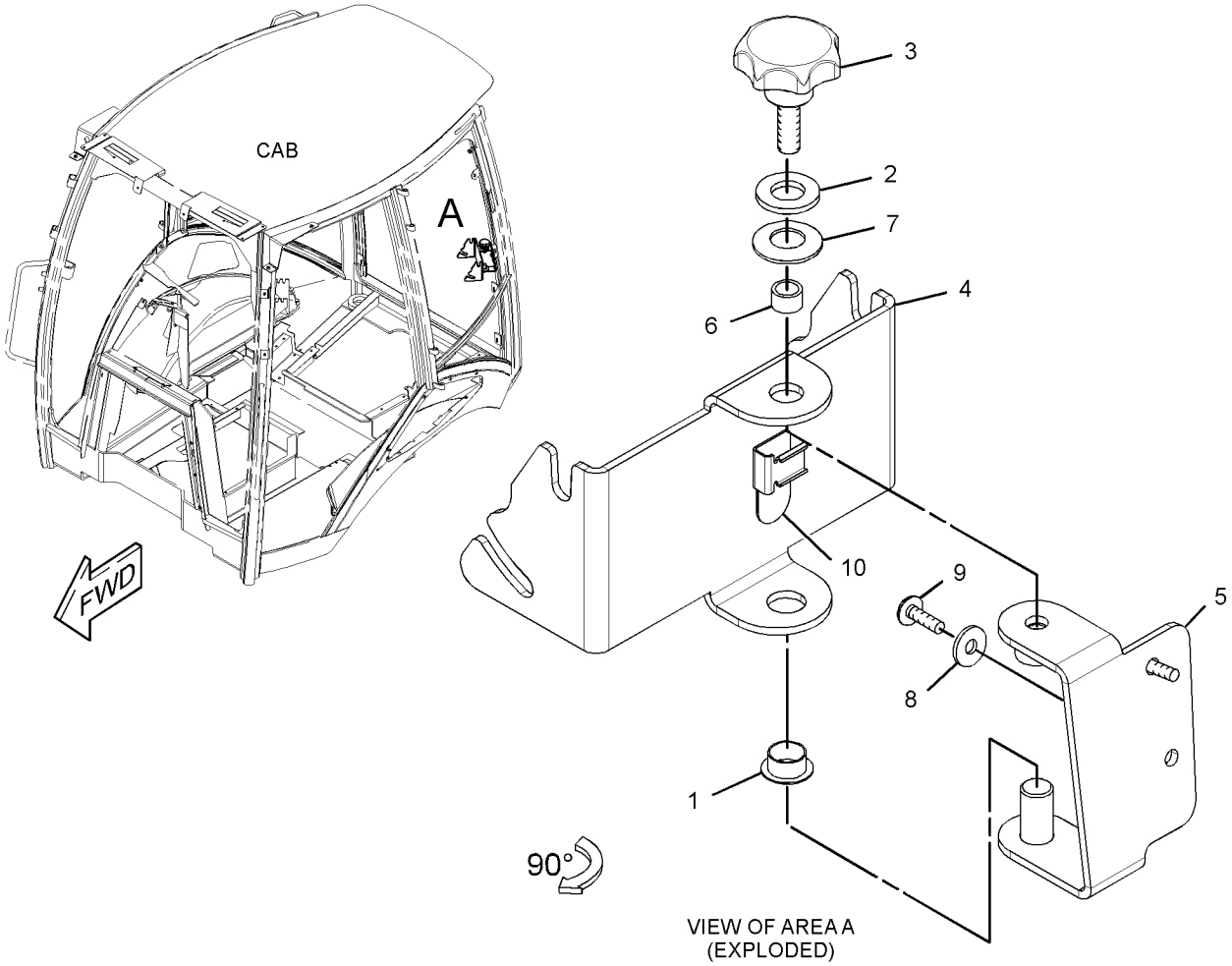

GRAPHIC #1 **<END>** g01350345

OPERATOR STATION

204-4161 CAB AR-ENCLOSED ROPS—SINGLE DOOR, WITHOUT A/C

S/N: SHA1-UP

AN ATTACHMENT

SMCS-7301, 7325 **i02527217**

NOTE	PART NUMBER	QTY	PART NAME 1 2 3 4 5 6 (PRODUCT LEVEL)	SEE PAGE
Y	**206-1888**	1	CAB GP-ENCLOSED ROPS	649
Y	*248-2720*	1	COMPARTMENT GP-LITERATURE (STORAGE BOX)	661
Y	*206-1700*	1	CONSOLE GP-OPERATOR (RH)	666
Y	*206-1703*	1	CONSOLE GP-OPERATOR (FRONT)	670
Y	*221-3002*	1	CONTROL & MTG GP-STABILIZER	672
Y	*206-1630*	1	CONTROL GP-STEERING	283
Y	*220-3785*	1	COVER GP-WIPER MOTOR	688
Y	*213-9311*	1	FAN GP-SUCTION (WITHOUT AIR CONDITIONER)	67
Y	*213-1891*	1	FENDER GP-REAR	299
Y	*206-1620*	1	FLOOR MAT GP	694
Y	*223-3968*	1	FLOORPLATE GP	302
Y	*206-1800*	1	HEATER GP-CAB	695
Y	*211-4276*	1	LIGHTING GP-FLOOD & SIGNAL (NACD)	140
Y	*211-0072*	1	LINES GP-HEATER	708
Y	*259-6276*	1	MIRROR GP-REAR VIEW (INSIDE)	712
Y	*205-9560*	1	MOUNTING GP-CAB	714
Y	*205-9568*	1	ROOF GP-CAB	718
Y	*280-7365*	1	SEAT GP-SUSPENSION (CLOTH)	729
Y	*206-1727*	1	WASHER GP-WINDOW	739
Y	*206-1725*	1	WIPER GP-WINDOW	754
Y	*211-4243*	1	WIRING GP-CONSOLE (SIDE)	162
Y	*211-4245*	1	WIRING GP-CONSOLE (FRONT)	165
Y	*211-4269*	1	WIRING GP-HEATER	173
Y	*211-4242*	1	WIRING GP-PLATFORM	181
	250-7912	1	FILM-IDENTIFICATION (CATERPILLAR, FRONT)	
			(ON FRONT WINDSHIELD)	
	251-5628	1	FILM-IDENTIFICATION (STABILIZER CONTROL)	
			(ON RH CONSOLE NEXT TO STABILIZER CONTROLS)	
	285-1207	1	MAT-PROTECTIVE	

Y-SEPARATE ILLUSTRATION

<END>

OPERATOR STATION

204-4162 CAB AR-ENCLOSED ROPS—DOUBLE DOOR, WITHOUT A/C

S/N: SHA1-UP

AN ATTACHMENT

SMCS-7301, 7325 **i02501161**

NOTE	PART NUMBER	QTY	PART NAME 1 2 3 4 5 6 (PRODUCT LEVEL)	SEE PAGE
Y	*206-1889*	1	CAB GP-ENCLOSED ROPS	653
Y	*206-1700*	1	CONSOLE GP-OPERATOR (RH)	666
Y	*206-1703*	1	CONSOLE GP-OPERATOR (FRONT)	670
Y	*206-1702*	1	CONSOLE GP-OPERATOR (LH)	668
Y	*221-3002*	1	CONTROL & MTG GP-STABILIZER	672
Y	*206-1633*	1	CONTROL GP-STEERING	284
Y	*213-9311*	1	FAN GP-SUCTION (WITHOUT AIR CONDITIONER)	67
Y	*213-1891*	1	FENDER GP-REAR	299
Y	*206-1618*	1	FLOOR MAT GP	693
Y	*223-3968*	1	FLOORPLATE GP	302
Y	*206-1800*	1	HEATER GP-CAB	695
Y	*211-4277*	1	LIGHTING GP-FLOOD & SIGNAL (NACD, OPTIONAL)	142
Y	*209-4703*	1	LINER GP-CAB	704
Y	*211-0072*	1	LINES GP-HEATER	708
Y	*205-9578*	1	MIRROR GP-REAR VIEW (INSIDE)	711
Y	*205-9560*	1	MOUNTING GP-CAB	714
Y	*205-9569*	1	ROOF GP-CAB	720
Y	*280-7365*	1	SEAT GP-SUSPENSION (CLOTH)	729
Y	*206-1727*	1	WASHER GP-WINDOW	739
Y	*206-1725*	1	WIPER GP-WINDOW	754
Y	*211-4243*	1	WIRING GP-CONSOLE (SIDE)	162
Y	*211-4245*	1	WIRING GP-CONSOLE (FRONT)	165
Y	*211-4269*	1	WIRING GP-HEATER	173
Y	*211-4242*	1	WIRING GP-PLATFORM	181
	250-7912	1	FILM-IDENTIFICATION (CATERPILLAR, FRONT)	
			(ON FRONT WINDSHIELD)	
	251-5628	1	FILM-IDENTIFICATION (STABILIZER CONTROL)	
			(ON RH CONSOLE NEXT TO STABILIZER CONTROLS)	
	285-1207	1	MAT-PROTECTIVE	
	5P-9768	1	PLUG-HOLE	

Y-SEPARATE ILLUSTRATION

<END>

OPERATOR STATION

228-4602 CAB AR-ENCLOSED ROPS—DOUBLE DOOR, WITH A/C

S/N: SHA1-UP

AN ATTACHMENT

SMCS-7301, 7325 **i02503719**

NOTE	PART NUMBER	QTY	PART NAME 1 2 3 4 5 6 (PRODUCT LEVEL)	SEE PAGE
Y	*206-1801*	1	AIR CONDITIONER & MOUNTING GP	639
Y	**206-1889**	1	CAB GP-ENCLOSED ROPS	653
Y	*248-5025*	1	COMPRESSOR & MTG GP-REFRIG	662
Y	*211-0705*	1	CONDENSER & MTG GP-REFRIGERANT	665
Y	*206-1702*	1	CONSOLE GP-OPERATOR (LH)	668
Y	*206-1700*	1	CONSOLE GP-OPERATOR (RH)	666
Y	*206-1703*	1	CONSOLE GP-OPERATOR (FRONT)	670
Y	*221-3002*	1	CONTROL & MTG GP-STABILIZER	672
Y	*206-1633*	1	CONTROL GP-STEERING	284
Y	*266-2234*	1	FAN GP-SUCTION (WITH AIR CONDITIONER)	68
Y	*213-1891*	1	FENDER GP-REAR	299
Y	*206-1618*	1	FLOOR MAT GP	693
Y	*223-3968*	1	FLOORPLATE GP	302
Y	*211-4277*	1	LIGHTING GP-FLOOD & SIGNAL (NACD, OPTIONAL)	142
Y	*209-4703*	1	LINER GP-CAB	704
Y	*211-0071*	1	LINES GP-HEATER & AIR COND	709
Y	*205-9578*	1	MIRROR GP-REAR VIEW (INSIDE)	711
Y	*205-9560*	1	MOUNTING GP-CAB	714
Y	*205-9569*	1	ROOF GP-CAB	720
Y	*280-7365*	1	SEAT GP-SUSPENSION (CLOTH)	729
Y	*206-1727*	1	WASHER GP-WINDOW	739
Y	*206-1725*	1	WIPER GP-WINDOW	754
Y	*211-4268*	1	WIRING GP-AIR CONDITIONER	159
Y	*211-4243*	1	WIRING GP-CONSOLE (SIDE)	162
Y	*211-4245*	1	WIRING GP-CONSOLE (FRONT)	165
Y	*211-4242*	1	WIRING GP-PLATFORM	181
	251-5628	1	FILM-IDENTIFICATION (STABILIZER CONTROL)	
			(ON RH CONSOLE NEXT TO STABILIZER CONTROLS)	
	250-7912	1	FILM-IDENTIFICATION (CATERPILLAR, FRONT)	
			(ON FRONT WINDSHIELD)	
	285-1207	1	MAT-PROTECTIVE	
	5P-9768	1	PLUG-HOLE	

Y-SEPARATE ILLUSTRATION

<END>

OPERATOR STATION

288-8043 CAB AS

S/N: SHA1-UP

PART OF 206-1888 CAB GP-ENCLOSED ROPS

AN ATTACHMENT

SMCS-7301 **i02783239**

NOTE	REF NO	GRAPHIC REF	PART NUMBER	QTY	PART NAME 1 2 3 4 5 6 (PRODUCT LEVEL)	SEE PAGE
	1	1	**5D-9629**	2	ROD	
	2	1	**204-4175**	1	ROPS AS	
	3	1	**205-9566**	1	POST AS	
	4	1	**205-9567**	1	POST AS	
	5	1	**206-1717**	1	BRACKET	
	6	1	**205-7048**	2	INSERT-THREADED (M6X1-6H-THD)	
M	7	1	**6V-9632**	4	NUT-WELD (M6X1-THD)	
	8	1	**7T-1099**	28	LINK	
M	9	1	**8T-3612**	10	NUT-WELD (M8X1.25-THD)	

M-METRIC PART

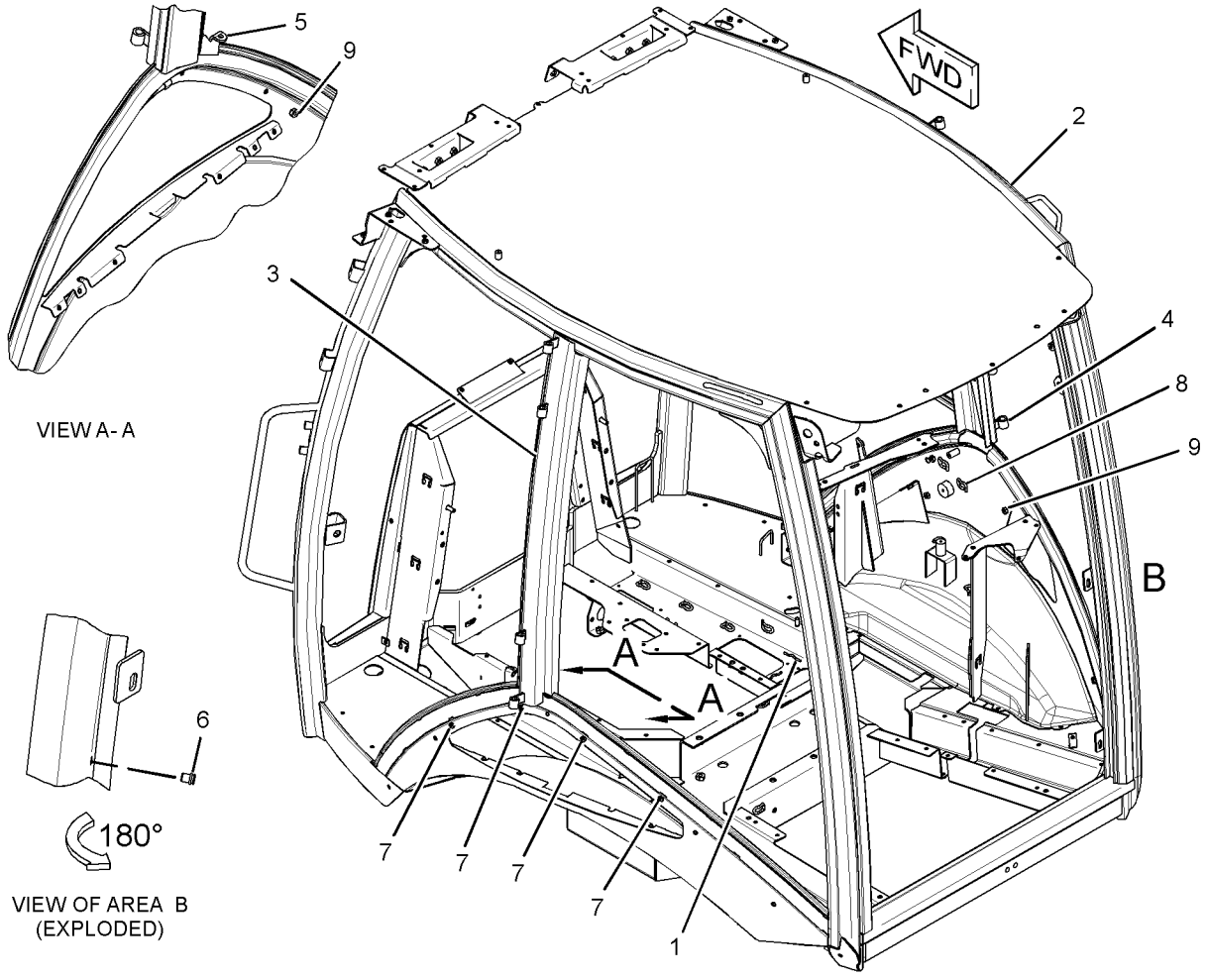

GRAPHIC #1 **<END>** g01390055

OPERATOR STATION

206-1888 CAB GP-ENCLOSED ROPS—SINGLE DOOR

S/N: SHA1-UP
PART OF 204-4161 CAB AR-ENCLOSED ROPS
AN ATTACHMENT
TYPE 1

SMCS-7301, 7325 **i02506753**

NOTE	REF NO	GRAPHIC REF	PART NUMBER	QTY	PART NAME 1 2 3 4 5 6 (PRODUCT LEVEL)	SEE PAGE
	1	1	**8Y-7309**	2	RETAINER	
	2	1	**123-0380**	1	SHIELD-STRIKER	
B	3	1	**177-4877**	1	SHIM (1-MM THK)	
	4	1	**187-0413**	1	STRIKER	
	5	1	**205-9605**	1	GLASS (FRONT, LH)	
	6	1	**205-9606**	1	GLASS (FRONT, RH)	
	7	1	**205-9607**	1	GLASS (FRONT) (WINDSHIELD)	
	8	1	**205-9608**	1	GLASS (REAR, RH)	
	9	1	**205-9609**	1	GLASS (REAR, LH)	
Y	10	1	**205-9611**	1	WINDOW GP-CAB (RH)	741
	11	1	**205-9613**	1	GLASS (SIDE, RH)	
	12	1	**205-9616**	2	SPACER (15.8X21.34X101-MM THK)	
	13	1	**205-9629**	2	SPACER (15.9X21.4X50-MM THK)	
	14	1	**206-1590**	4	PIN	
Y	15	1	**206-1592**	1	DOOR GP-CAB (LH)	689
	16	1	**206-1647**	1	PLATE	
	17	1	**210-6475**	1	PLATE	
Y	18	1	*229-0300*	1	WINDOW GP-CAB (REAR)	746
	19	1	**129-5256**	8	BUSHING	
	20	1	**129-5257**	12	BUSHING	
M	21	1	**131-3987**	2	SCREW (M4X0.7X12-MM)	
	22	1	**159-4945**	1	KEEPER	
	23	1	**204-4200**	1	CAB AS	
	24	1	**223-2030**	2	LATCH AS (HOLD OPEN)	
M	25	1	**5C-7261**	2	NUT (M8X1.25-THD)	
	26	1	**5P-4116**	10	WASHER-HARD (8.8X20.5X2-MM THK)	
	27	1	**7X-2393**	2	BUMPER-CONICAL	
	28	1	**8S-7803**	8	RING-RETAINING	
M	29	1	**8T-4189**	8	BOLT (M8X1.25X20-MM)	
M	30	1	**8T-4200**	2	BOLT (M8X1.25X16-MM)	
	31	1	**9R-5616**	3	PLUG	

B-USE AS REQUIRED
M-METRIC PART
Y-SEPARATE ILLUSTRATION

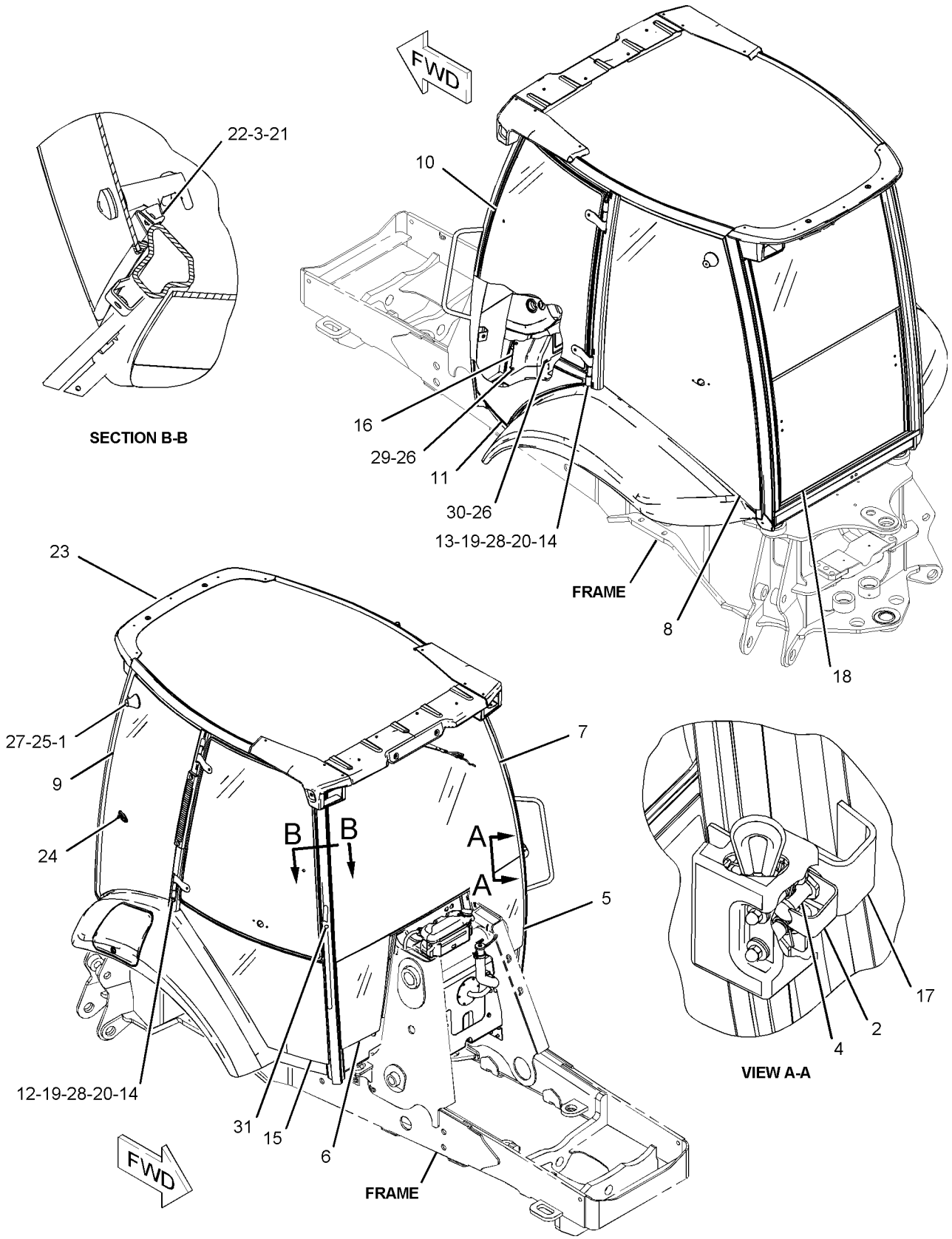

GRAPHIC #1

<END>

g01083675

OPERATOR STATION

206-1888 CAB GP-ENCLOSED ROPS—SINGLE DOOR

S/N: SHA1-UP
PART OF 204-4161 CAB AR-ENCLOSED ROPS
AN ATTACHMENT
TYPE 2

SMCS-7301, 7325 **i02657531**

NOTE	REF NO	GRAPHIC REF	PART NUMBER	QTY	PART NAME 1 2 3 4 5 6 (PRODUCT LEVEL)	SEE PAGE
	1	1	**8Y-7309**	2	RETAINER	
	2	1	**123-0380**	1	SHIELD-STRIKER	
B	3	1	**177-4877**	1	SHIM (1-MM THK)	
	4	1	**187-0413**	1	STRIKER	
	5	1	**205-9605**	1	GLASS (FRONT, LH)	
	6	1	**205-9606**	1	GLASS (FRONT, RH)	
	7	1	**205-9607**	1	GLASS (FRONT)	
	8	1	**205-9608**	1	GLASS (REAR, RH)	
	9	1	**205-9609**	1	GLASS (REAR, LH)	
Y	10	1	**205-9611**	1	WINDOW GP-CAB (RH)	741
	11	1	**205-9613**	1	GLASS (SIDE, RH)	
	12	1	**205-9616**	2	SPACER (15.8X21.34X101-MM THK)	
	13	1	**205-9629**	2	SPACER (15.9X21.4X50-MM THK)	
	14	1	**206-1590**	4	PIN	
Y	15	1	**206-1592**	1	DOOR GP-CAB (LH)	689
	16	1	**206-1647**	1	PLATE	
	17	1	**210-6475**	1	PLATE	
Y	18	1	*229-0300*	1	WINDOW GP-CAB (REAR)	746
	19	1	**129-5256**	8	BUSHING	
	20	1	**129-5257**	12	BUSHING	
M	21	1	**131-3987**	2	SCREW (M4X0.7X12-MM)	
	22	1	**159-4945**	1	KEEPER	
CY	23	1	**288-8043**	1	CAB AS	648
	24	1	**223-2030**	2	LATCH AS (HOLD OPEN)	
					(EACH INCLUDES)	
M		1	**6V-7743**	2	LOCKNUT (M6X1-THD)	
M		1	**9X-2045**	2	SCREW-TRUSS HEAD (M6X1X20-MM)	
		1	**143-2827**	1	SPRING	
M	25	1	**5C-7261**	2	NUT (M8X1.25-THD)	
	26	1	**5P-4116**	10	WASHER-HARD (8.8X20.5X2-MM THK)	
	27	1	**7X-2393**	2	BUMPER-CONICAL	
	28	1	**8S-7803**	8	RING-RETAINING	
CM	30	1	**8T-4200**	10	BOLT (M8X1.25X16-MM)	
	31	1	**9R-5616**	3	PLUG	

B-USE AS REQUIRED
C-CHANGE FROM PREVIOUS TYPE
M-METRIC PART
Y-SEPARATE ILLUSTRATION

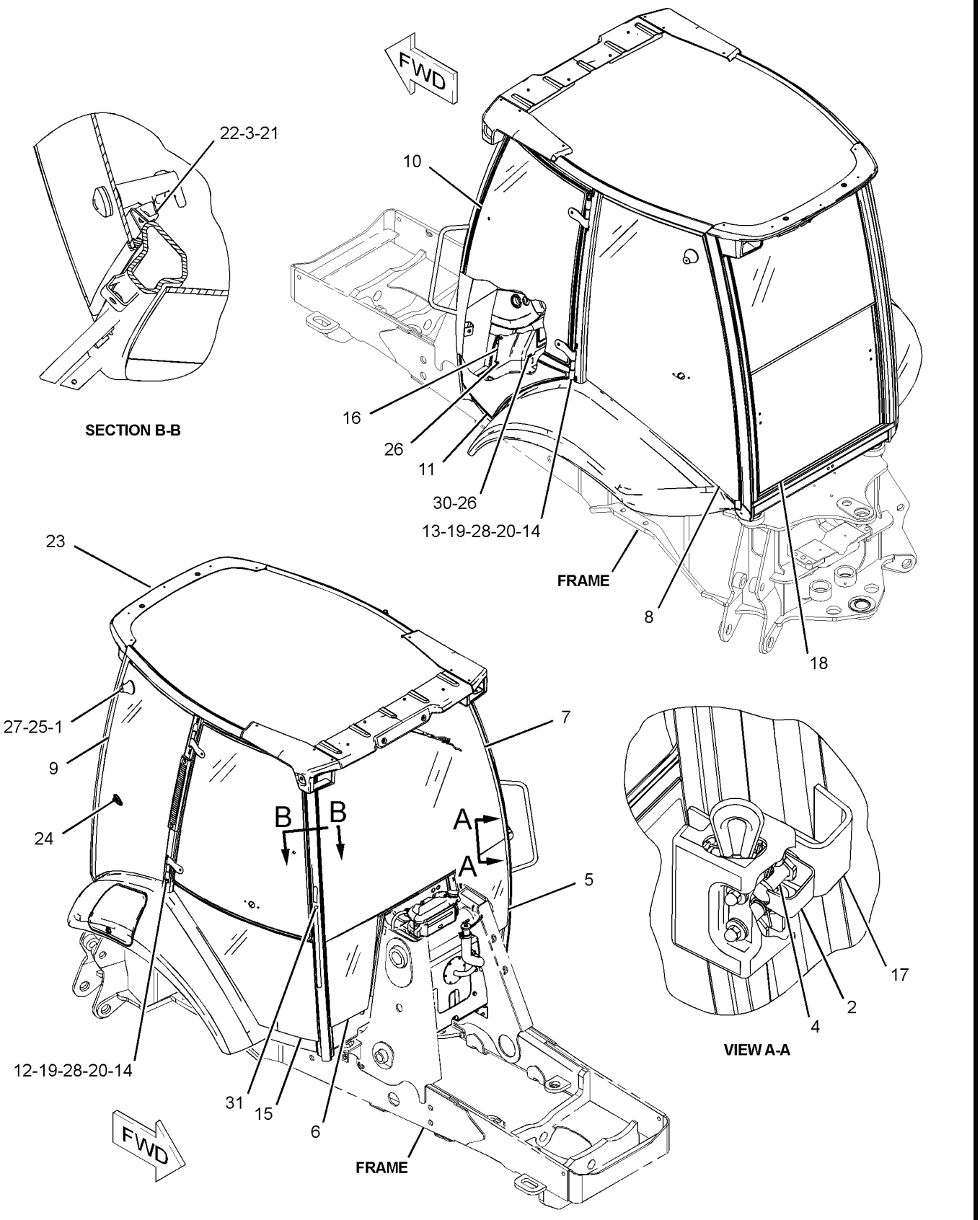

GRAPHIC #1

<END>

g01343581

OPERATOR STATION

206-1889 CAB GP-ENCLOSED ROPS

S/N: SHA1-UP

PART OF 204-4162, 228-4602 CAB AR-ENCLOSED ROPS

AN ATTACHMENT

SMCS-7301, 7325 **i02649744**

NOTE	REF NO	GRAPHIC REF	PART NUMBER	QTY	PART NAME 1 2 3 4 5 6 (PRODUCT LEVEL)	SEE PAGE
	1	1	**123-0380**	2	SHIELD-STRIKER	
B	2	1	**177-4877**	4	SHIM (1-MM THK)	
	3	1	**187-0413**	2	STRIKER	
	4	1	**204-4220**	1	CANOPY AS	
	5	1	**205-9605**	1	GLASS (FRONT, LH)	
	6	1	**205-9606**	1	GLASS (FRONT, RH)	
	7	1	**205-9607**	1	GLASS (FRONT)	
Y	8	1	**205-9619**	1	WINDOW GP-CAB (UPPER, LH)	742
	9	1	**205-9622**	1	GLASS (LOWER, LH)	
Y	10	2	**205-9628**	1	WINDOW GP-CAB (UPPER, RH)	744
	11	2	**205-9631**	1	GLASS (LOWER, RH)	
	12	2	**206-1590**	4	PIN	
Y	13	1	**206-1592**	1	DOOR GP-CAB (LH)	689
Y	14	2	**206-1593**	1	DOOR GP-CAB (RH)	691
	15	1	**206-1647**	1	PLATE	
	16	1	**210-6475**	2	PLATE	
Y	17	2	*229-0300*	1	WINDOW GP-CAB (REAR)	746
	18	2	**129-5256**	12	BUSHING	
	19	2	**129-5257**	8	BUSHING	
M	20	1	**131-3987**	8	SCREW (M4X0.7X12-MM)	
	21	1	**159-4945**	2	KEEPER	
	22	1	**159-4946**	2	KEEPER	
	23	1	**5P-4116**	11	WASHER-HARD (8.8X20.5X2-MM THK)	
	24	2	**8S-7803**	8	RING-RETAINING	
M	25	1	**8T-4189**	9	BOLT (M8X1.25X20-MM)	
M	26	1	**8T-4200**	2	BOLT (M8X1.25X16-MM)	
	27	1	**9R-5616**	3	PLUG	
BE	28	2	**201-1601**		SEAL (6-CM)	

B-USE AS REQUIRED
E-ORDER BY THE CENTIMETER
M-METRIC PART
Y-SEPARATE ILLUSTRATION

REFER TO ALL ILLUSTRATIONS OF THIS GROUP FOR AUXILIARY VIEWS

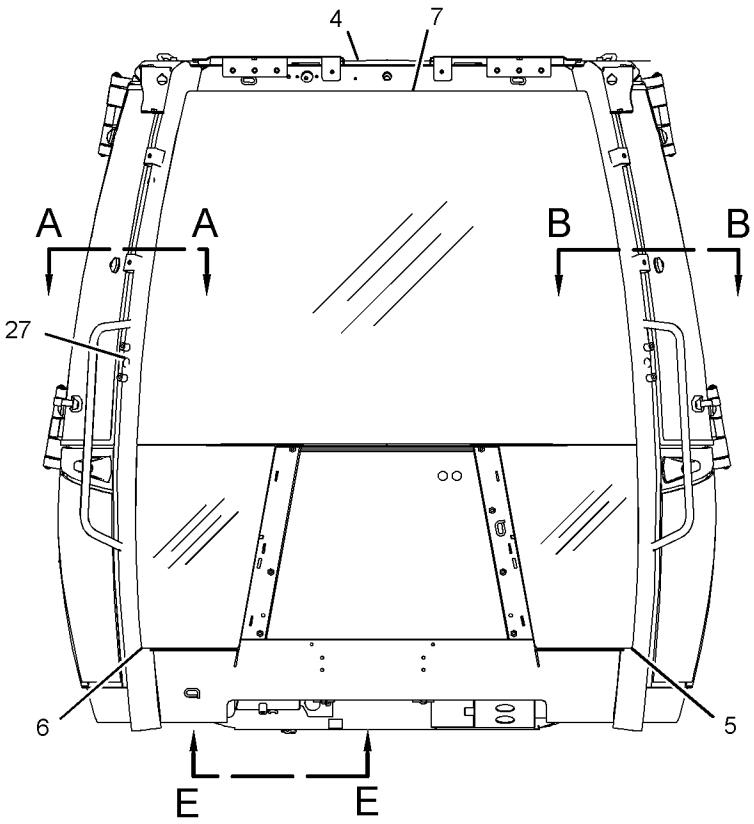

FRONT VIEW

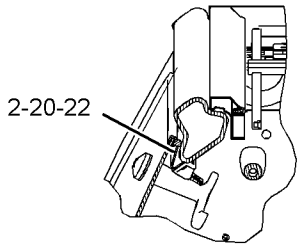

SECTION A-A

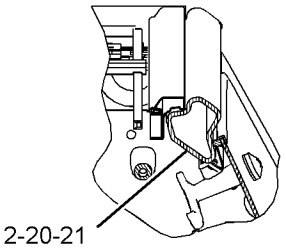

SECTION B-B

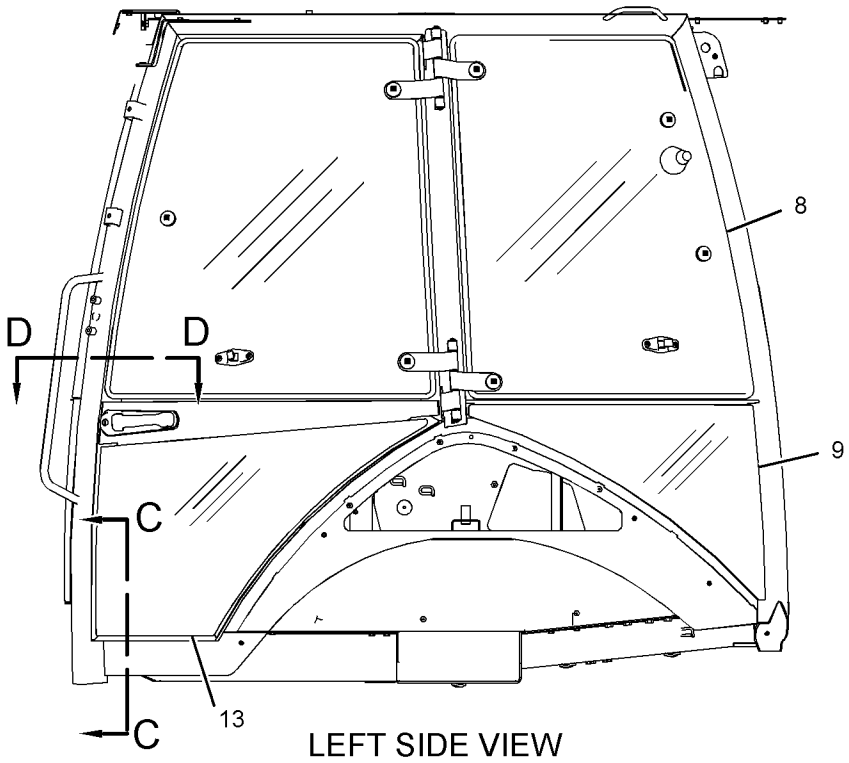

LEFT SIDE VIEW

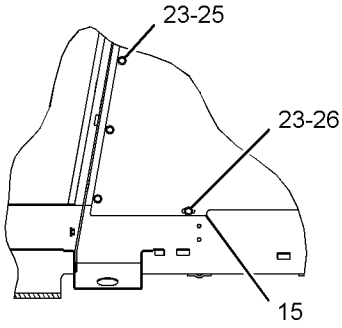

SECTION C-C

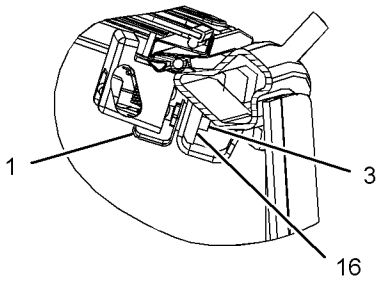

SECTION D-D

GRAPHIC #1 g01334063

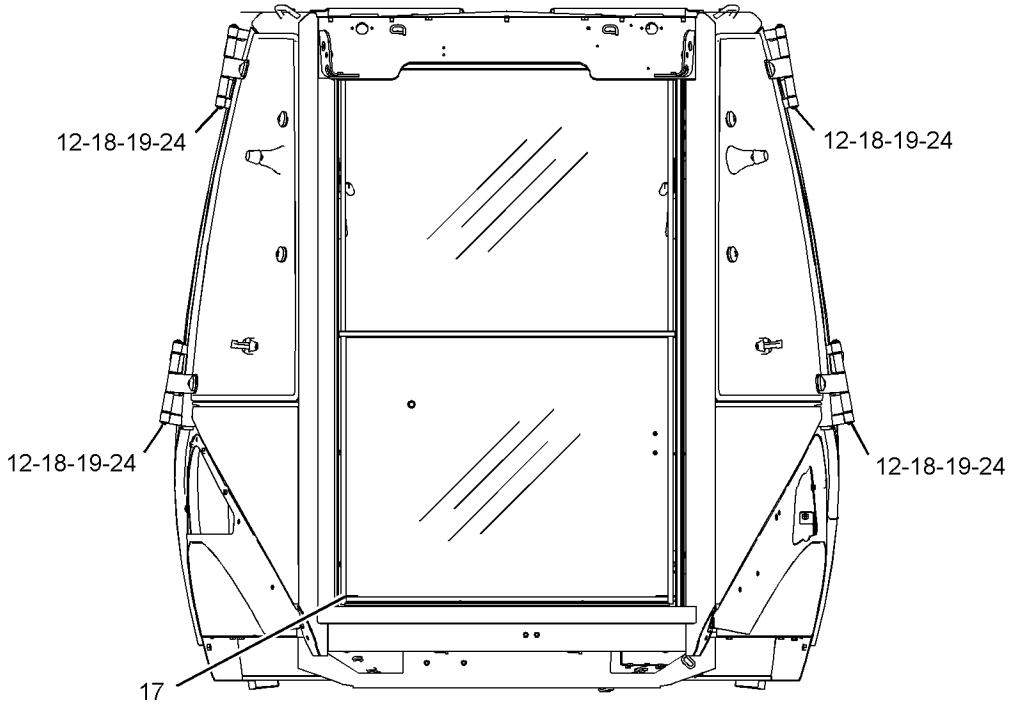

REAR VIEW

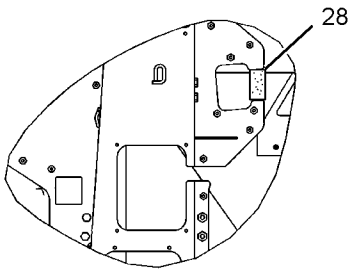

VIEW E-E

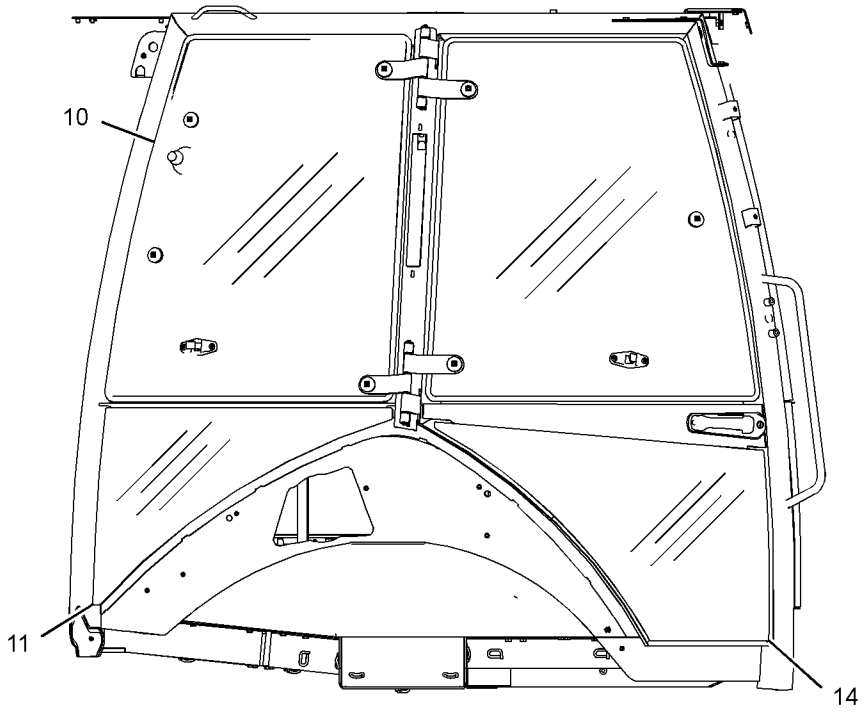

RIGHT SIDE VIEW

GRAPHIC #2 **<END>** g01334448

OPERATOR STATION

204-4160 CANOPY AR-OPEN ROPS—WITHOUT FRONT WINDOW

S/N: SHA1-UP

AN ATTACHMENT

SMCS-7302, 7323 **i02545030**

NOTE	PART NUMBER	QTY	PART NAME 1 2 3 4 5 6 (PRODUCT LEVEL)	SEE PAGE
Y	*206-1884*	1	CANOPY GP-OPEN ROPS	658
Y	*248-2720*	1	COMPARTMENT GP-LITERATURE (STORAGE BOX)	661
Y	*206-1700*	1	CONSOLE GP-OPERATOR (RH)	666
Y	*206-1703*	1	CONSOLE GP-OPERATOR (FRONT)	670
Y	*221-3002*	1	CONTROL & MTG GP-STABILIZER	672
Y	*206-1630*	1	CONTROL GP-STEERING	283
Y	*213-9311*	1	FAN GP-SUCTION (WITHOUT AIR CONDITIONER)	67
Y	*213-1891*	1	FENDER GP-REAR	299
Y	*206-1620*	1	FLOOR MAT GP	694
Y	*223-3967*	1	FLOORPLATE GP	301
Y	*211-4276*	1	LIGHTING GP-FLOOD & SIGNAL (NACD)	140
Y	*259-6276*	1	MIRROR GP-REAR VIEW (INSIDE)	712
Y	*205-9560*	1	MOUNTING GP-CAB	714
Y	*206-1701*	1	PROTECTION GP-VANDALISM (ROTATING GUARD)	762
Y	*205-9568*	1	ROOF GP-CAB	718
Y	*280-7364*	1	SEAT GP-SUSPENSION (VINYL)	729
Y	*206-1704*	1	TRIM GP-CAB	737
Y	*211-4243*	1	WIRING GP-CONSOLE (SIDE)	162
Y	*211-4245*	1	WIRING GP-CONSOLE (FRONT)	165
Y	*211-4242*	1	WIRING GP-PLATFORM	181
	256-5299	1	FILM-IDENTIFICATION (CATERPILLAR, REAR)	
			(ON CAB ROOF CENTERED HORIZONTALLY & VERTICALLY)	
	251-5628	1	FILM-IDENTIFICATION (STABILIZER CONTROL)	
			(ON RH CONSOLE NEXT TO STABILIZER CONTROLS)	
	227-1057	1	PLUG-HOLE	

Y-SEPARATE ILLUSTRATION

<END>

OPERATOR STATION

204-4164 CANOPY AR-OPEN ROPS—WITH FRONT WINDOW

S/N: SHA1-UP
AN ATTACHMENT

SMCS-7302, 7323 **i02545029**

NOTE	PART NUMBER	QTY	PART NAME 1 2 3 4 5 6 (PRODUCT LEVEL)	SEE PAGE
Y	*206-1885*	1	CANOPY GP-OPEN ROPS	660
Y	*206-1700*	1	CONSOLE GP-OPERATOR (RH)	666
Y	*206-1703*	1	CONSOLE GP-OPERATOR (FRONT)	670
Y	*206-1702*	1	CONSOLE GP-OPERATOR (LH)	668
Y	*221-3002*	1	CONTROL & MTG GP-STABILIZER	672
Y	*206-1633*	1	CONTROL GP-STEERING	284
Y	*220-3785*	1	COVER GP-WIPER MOTOR	688
Y	*213-9311*	1	FAN GP-SUCTION (WITHOUT AIR CONDITIONER)	67
Y	*213-1891*	1	FENDER GP-REAR	299
Y	*206-1618*	1	FLOOR MAT GP	693
Y	*223-3967*	1	FLOORPLATE GP	301
Y	*211-4277*	1	LIGHTING GP-FLOOD & SIGNAL (NACD, OPTIONAL)	142
Y	*259-6276*	1	MIRROR GP-REAR VIEW (INSIDE)	712
Y	*205-9560*	1	MOUNTING GP-CAB	714
Y	*206-1701*	1	PROTECTION GP-VANDALISM (ROTATING GUARD)	762
Y	*205-9569*	1	ROOF GP-CAB	720
Y	*280-7364*	1	SEAT GP-SUSPENSION (VINYL)	729
Y	*206-1704*	1	TRIM GP-CAB	737
Y	*206-1728*	1	WIPER & WASHER GP-WINDOW	752
Y	*211-4243*	1	WIRING GP-CONSOLE (SIDE)	162
Y	*211-4245*	1	WIRING GP-CONSOLE (FRONT)	165
Y	*211-4242*	1	WIRING GP-PLATFORM	181
	250-7912	1	FILM-IDENTIFICATION (CATERPILLAR, FRONT)	
			(ON FRONT WINDSHIELD)	
	251-5628	1	FILM-IDENTIFICATION (STABILIZER CONTROL)	
			(ON RH CONSOLE NEXT TO STABILIZER CONTROLS)	
	5P-9768	1	PLUG-HOLE	
	227-1057	1	PLUG-HOLE	

Y-SEPARATE ILLUSTRATION

<END>

OPERATOR STATION

206-1884 CANOPY GP-OPEN ROPS—WITHOUT FRONT WINDOW

S/N: SHA1-UP

PART OF 204-4160 CANOPY AR-OPEN ROPS

AN ATTACHMENT

SMCS-7302, 7323 **i02527301**

NOTE	REF NO	GRAPHIC REF	PART NUMBER	QTY	PART NAME 1 2 3 4 5 6 (PRODUCT LEVEL)	SEE PAGE
E	1	1	**9X-2092**		STRIP-EDGE (40-CM EACH)	
	2	1	**204-4230**	1	CANOPY AS-OPEN ROPS	
	3	1	**205-9605**	1	GLASS (FRONT, LH)	
	4	1	**205-9606**	1	GLASS (FRONT, RH)	
	5	1	**206-1647**	1	PLATE	
	6	1	**5P-4116**	11	WASHER-HARD (8.8X20.5X2-MM THK)	
M	7	1	**8T-4200**	11	BOLT (M8X1.25X16-MM)	
	8	1	**9R-5616**	3	PLUG	

E-ORDER BY THE CENTIMETER
M-METRIC PART

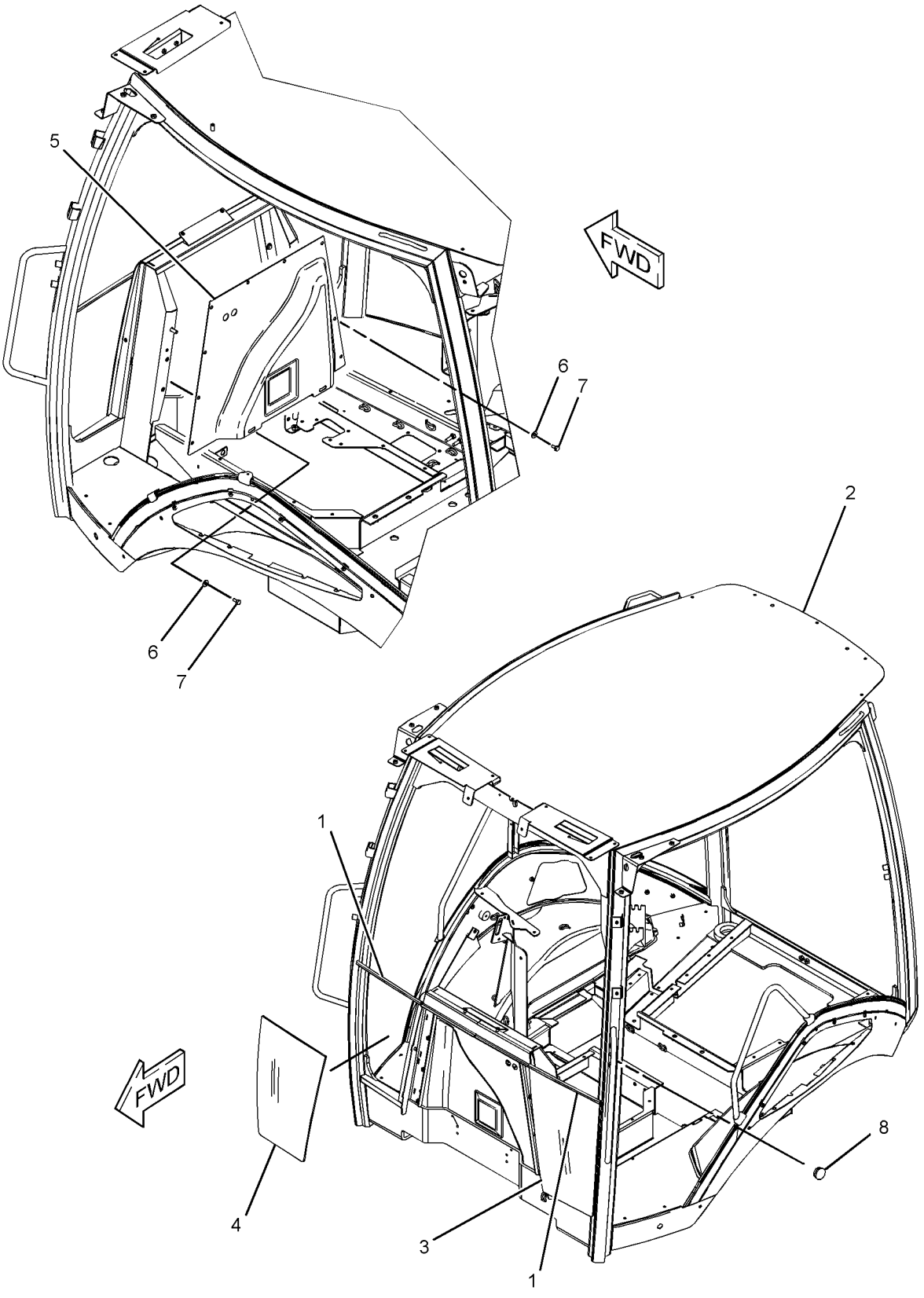

GRAPHIC #1 **<END>** g01272044

OPERATOR STATION

206-1885 CANOPY GP-OPEN ROPS—WITH FRONT WINDOW

S/N: SHA1-UP

PART OF 204-4164 CANOPY AR-OPEN ROPS

AN ATTACHMENT

SMCS-7302, 7323 **i02527302**

NOTE	REF NO	GRAPHIC REF	PART NUMBER	QTY	PART NAME 1 2 3 4 5 6 (PRODUCT LEVEL)	SEE PAGE
	1	1	**204-4240**	1	CANOPY AS	
	2	1	**205-9605**	1	GLASS (FRONT, LH)	
	3	1	**205-9606**	1	GLASS (FRONT, RH)	
	4	1	**205-9607**	1	GLASS (FRONT)	
	5	1	**206-1647**	1	PLATE	
	6	1	**5P-4116**	10	WASHER-HARD (8.8X20.5X2-MM THK)	
M	7	1	**8T-4200**	10	BOLT (M8X1.25X16-MM)	
	8	1	**9R-5616**	3	PLUG	

M-METRIC PART

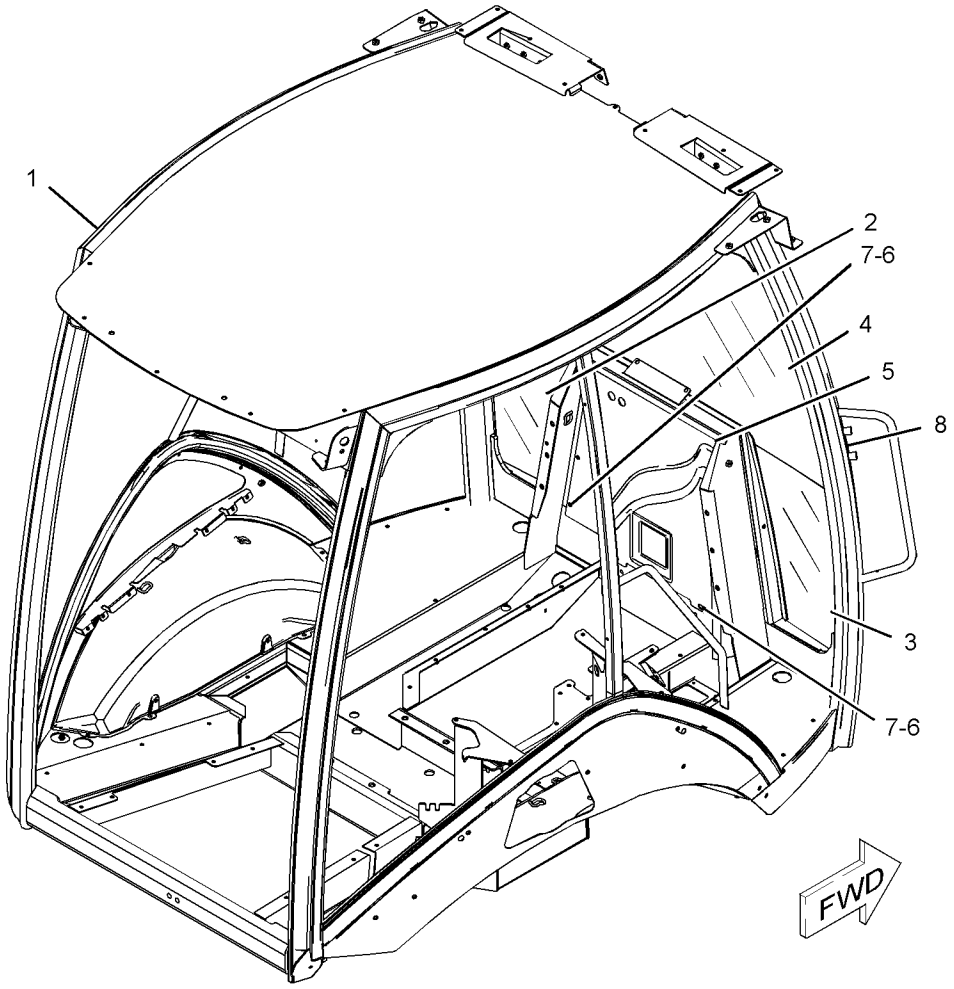

GRAPHIC #1 **<END>** g01272029

OPERATOR STATION

248-2720 COMPARTMENT GP-LITERATURE

S/N: SHA1-UP

PART OF 204-4161 CAB AR-ENCLOSED ROPS, 204-4160 CANOPY AR-OPEN ROPS

AN ATTACHMENT

SMCS-7268 **i02697251**

NOTE	REF NO	GRAPHIC REF	PART NUMBER	QTY	PART NAME 1 2 3 4 5 6 (PRODUCT LEVEL)	SEE PAGE
	1	1	**206-1706**	1	BOX AS-STORAGE	
J	2	1	**206-1708**	1	LOCK AS	
	3	1	**261-9639**	6	SCREW-PAN HEAD (NO 12X0.5-IN)	
	4	1	**232-4454**	2	HINGE-DOOR	
	5	1	**223-2035**	1	COVER AS (STORAGE)	
	6	1	**252-5218**	1	LANYARD (371-MM)	
	7	1	**252-5219**	1	LANYARD (281-MM)	
M	8	1	**9X-2043**	2	SCREW-TRUSS HEAD (M6X1X14-MM)	
M	9	1	**9X-2044**	10	SCREW-TRUSS HEAD (M6X1X16-MM)	
E	10	1	**220-0738**		SEAL (88-CM)	
D	11	1	**5P-5927**		SEAL (1.7-M)	

D-ORDER BY THE METER
E-ORDER BY THE CENTIMETER
J-REQUIRES 5P8500 KEY
M-METRIC PART

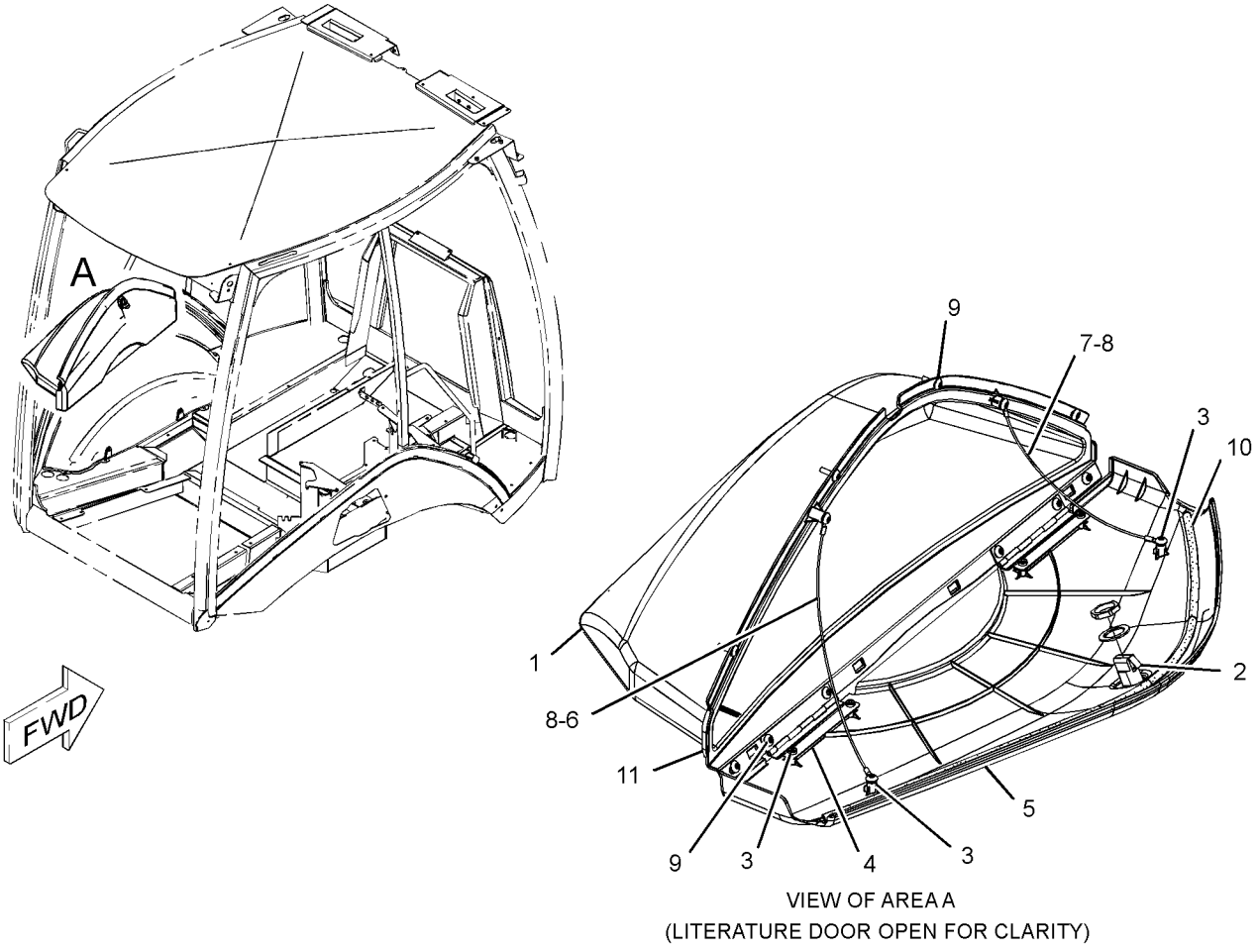

VIEW OF AREA A
(LITERATURE DOOR OPEN FOR CLARITY)

GRAPHIC #1 **<END>** g01283737

OPERATOR STATION

248-5025 COMPRESSOR & MTG GP-REFRIG

S/N: SHA1-UP

PART OF 228-4602 CAB AR-ENCLOSED ROPS

AN ATTACHMENT

SMCS-1802 **i02532504**

NOTE	REF NO	GRAPHIC REF	PART NUMBER	QTY	PART NAME 1 2 3 4 5 6 (PRODUCT LEVEL)	SEE PAGE
	1	1	**9R-5383**	1	BOSS	
Y	2	1	**214-4302**	1	COMPRESSOR GP-REFRIGERANT	664
	3	1	**296-3740**	1	BRACKET AS	
	4	1	**249-2707**	1	BRACKET	
	5	1	**249-9312**	1	PLATE	
	6	1	**5P-4116**	8	WASHER-HARD (8.8X20.5X2-MM THK)	
M	7	1	**6V-7744**	1	LOCKNUT (M10X1.15-THD)	
	8	1	**9Y-0083**	1	SPACER (14.3X16.0X10-MM THK)	
M	9	1	**108-2989**	2	BOLT (M8X1.25X130-MM)	
M	10	1	**7X-2541**	2	BOLT (M8X1.25X140-MM)	
	11	1	**8T-4121**	6	WASHER-HARD (11X21X2.5-MM THK)	
M	12	1	**8T-4195**	2	BOLT (M10X1.5X30-MM)	
	13	1	**8T-4224**	2	WASHER-HARD (8.8X16X2-MM THK)	
M	14	1	**8T-6466**	1	BOLT (M10X1.5X60-MM)	
M	15	1	**8T-5436**	1	BOLT (M10X1.5X130-MM)	
M	16	1	**8T-7547**	2	BOLT (M8X1.25X30-MM)	
B	17	1	**6J-6517**	3	SHIM (0.12-MM THK)	
B	18	1	**9G-3732**	3	SHIM	
B	19	1	**9G-3733**	3	SHIM (0.25-MM THK)	
M	20	1	**6V-9189**	4	LOCKNUT (M8X1.25-THD)	

B-USE AS REQUIRED
M-METRIC PART
Y-SEPARATE ILLUSTRATION

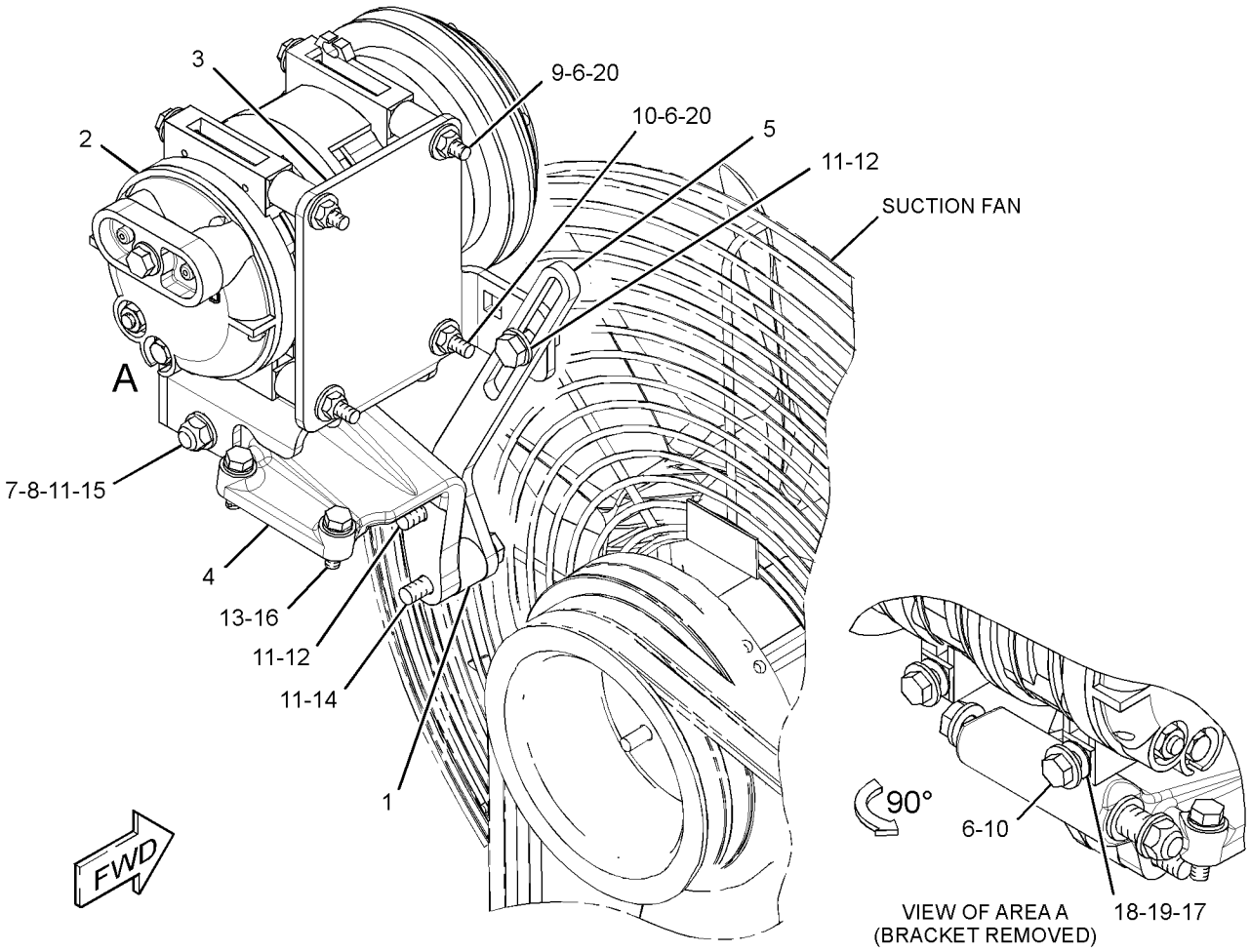

GRAPHIC #1 **<END>** g01342094

OPERATOR STATION

214-4302 COMPRESSOR GP-REFRIGERANT

S/N: SHA1-UP

PART OF 248-5025 COMPRESSOR & MTG GP-REFRIG

AN ATTACHMENT

SMCS-1802 **i02504973**

NOTE	REF NO	GRAPHIC REF	PART NUMBER	QTY	PART NAME 1 2 3 4 5 6 (PRODUCT LEVEL)	SEE PAGE
	1	1	**102-8802**	1	KIT-RECEPTACLE (2-PIN)	
					(INCLUDES RECEPTACLE AS & WEDGE)	
	2	1	**229-4896**	2	SEAL-O-RING	
	3	1	**229-7356**	1	VALVE AS-RELIEF	
		1	**9X-7378**	1	SEAL-O-RING	

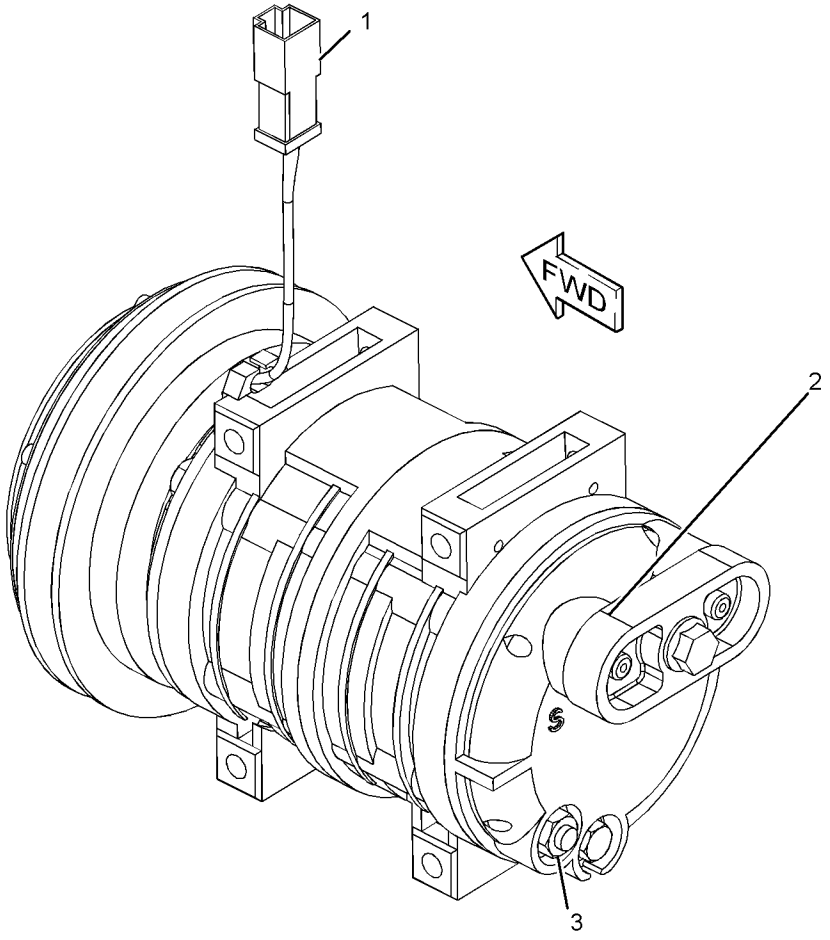

GRAPHIC #1 **<END>** g01239853

OPERATOR STATION

211-0705 CONDENSER & MTG GP-REFRIGERANT

S/N: SHA1-UP
PART OF 228-4602 CAB AR-ENCLOSED ROPS
AN ATTACHMENT

SMCS-1805 **i02445824**

NOTE	REF NO	GRAPHIC REF	PART NUMBER	QTY	PART NAME 1 2 3 4 5 6 (PRODUCT LEVEL)	SEE PAGE
	1	1	**211-1381**	1	CORE AS-CONDENSER	
	2	1	**7X-0579**	4	WASHER-HARD (8.8X25.5X2-MM THK)	
M	3	1	**8T-4189**	4	BOLT (M8X1.25X20-MM)	

M-METRIC PART

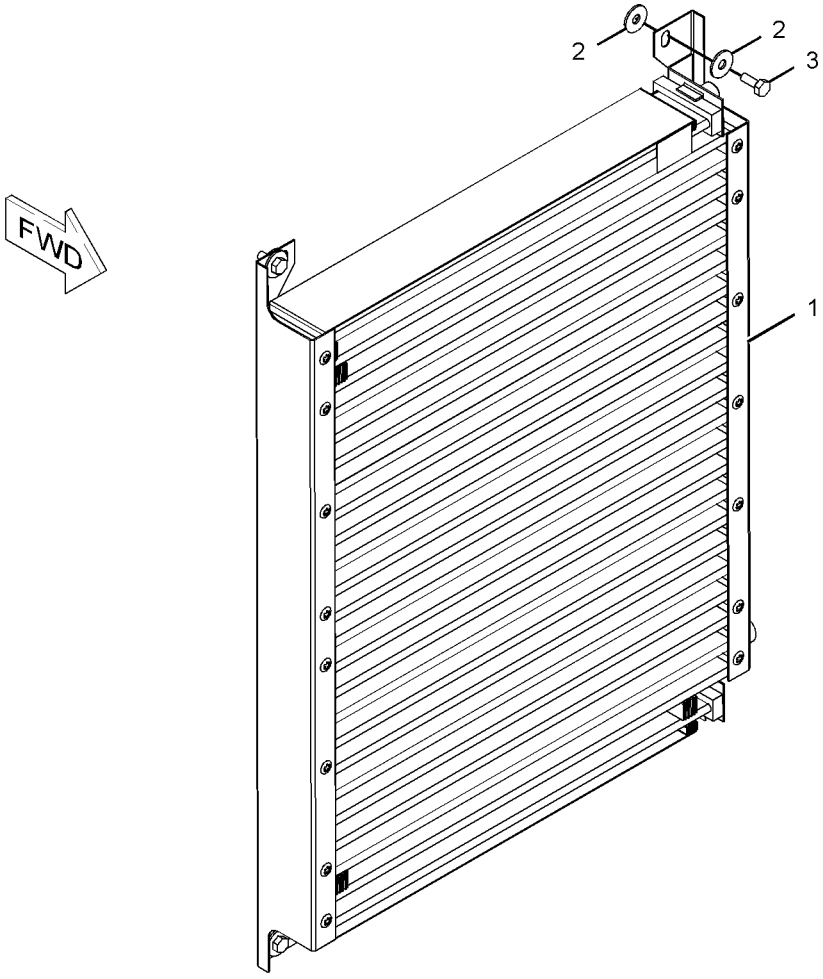

GRAPHIC #1 **<END>** g01080362

OPERATOR STATION

206-1700 CONSOLE GP-OPERATOR—RH

S/N: SHA1-UP

PART OF 204-4161, 204-4162, 228-4602 CAB AR-ENCLOSED ROPS, 204-4160, 204-4164 CANOPY AR-OPEN ROPS

AN ATTACHMENT

SMCS-5258, 7451 **i02700053**

NOTE	REF NO	GRAPHIC REF	PART NUMBER	QTY	PART NAME 1 2 3 4 5 6 (PRODUCT LEVEL)	SEE PAGE
B	1	1	**2S-3163**	1	PLUG	
	2	1	**164-1178**	1	CLIP	
	3	1	**167-8251**	1	FASTENER	
	4	1	**206-1678**	1	HOUSING AS (UPPER)	
	5	1	**206-1679**	1	PANEL AS (UPPER GAUGE)	
		1	**206-1667**	2	CLIP	
	6	1	**206-1681**	1	PANEL AS (LOWER GAUGE)	
		1	**172-8591**	5	NUT-SPRING	
	7	1	**261-9645**	1	COVER AS (CONTROLS, FRONT, UPPER)	
		1	**206-1667**	4	CLIP	
	8	1	**261-9644**	1	COVER AS (CONTROLS, FRONT, LOWER)	
		1	**206-1667**	1	CLIP	
	9	1	**269-9115**	1	COVER AS (FENDER, FRONT)	
		1	**172-8591**	1	NUT-SPRING	
	10	1	**206-1690**	1	COVER (FENDER, REAR)	
	11	1	**206-1692**	1	COVER AS (CONTROLS, REAR)	
		1	**206-1667**	3	CLIP	
M	12	1	**9X-2045**	16	SCREW-TRUSS HEAD (M6X1X20-MM)	
B	13	1	**248-2709**	2	PLUG	
	14	1	**9X-2038**	5	WASHER (7X19X2-MM THK)	
	15	1	**206-1687**	1	COVER-FUSE	
E	16	1	**293-1980**		SEAL (78-CM)	
E	17	1	**293-1980**		SEAL (73-CM)	

B-USE AS REQUIRED
E-ORDER BY THE CENTIMETER
M-METRIC PART

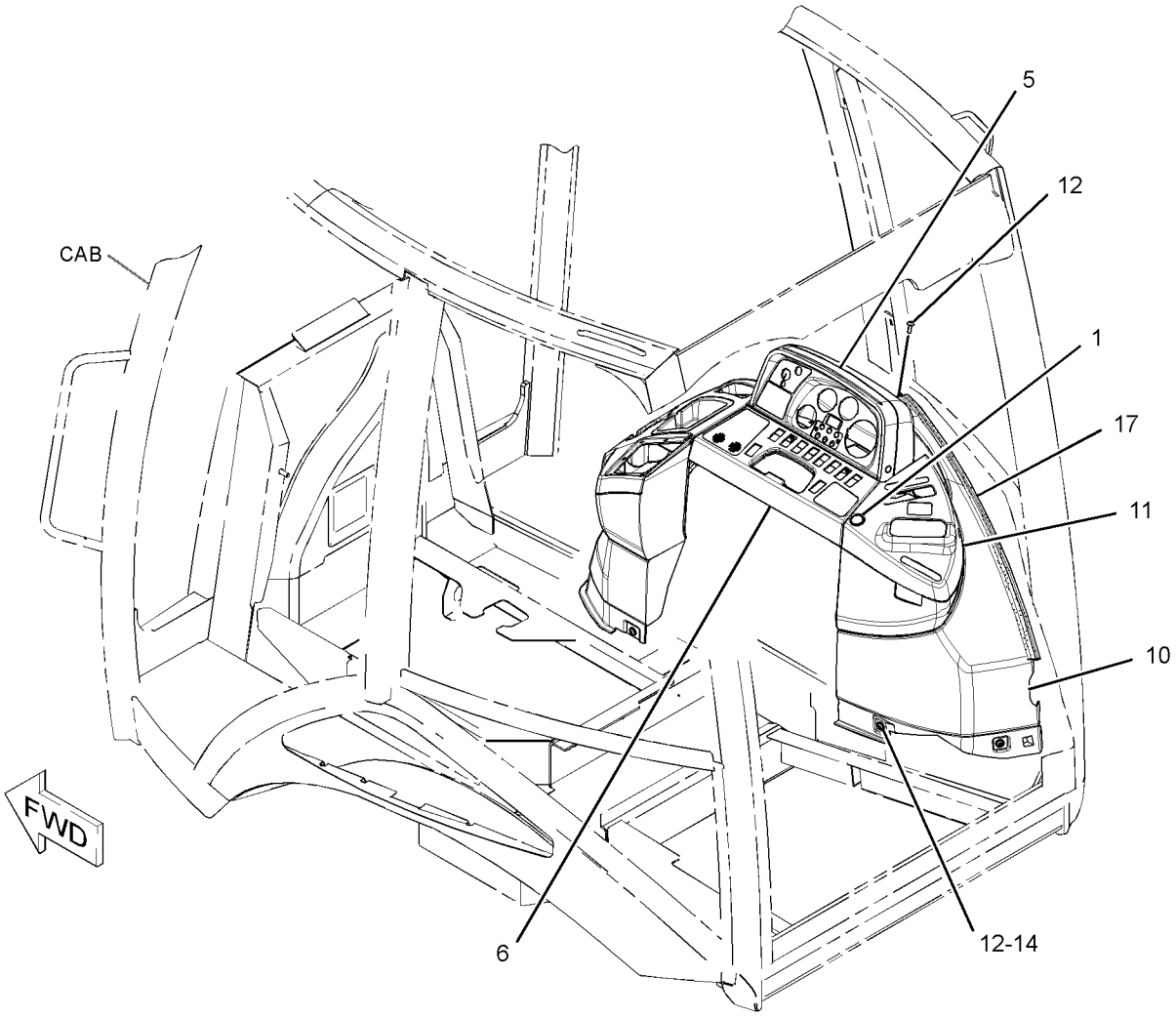

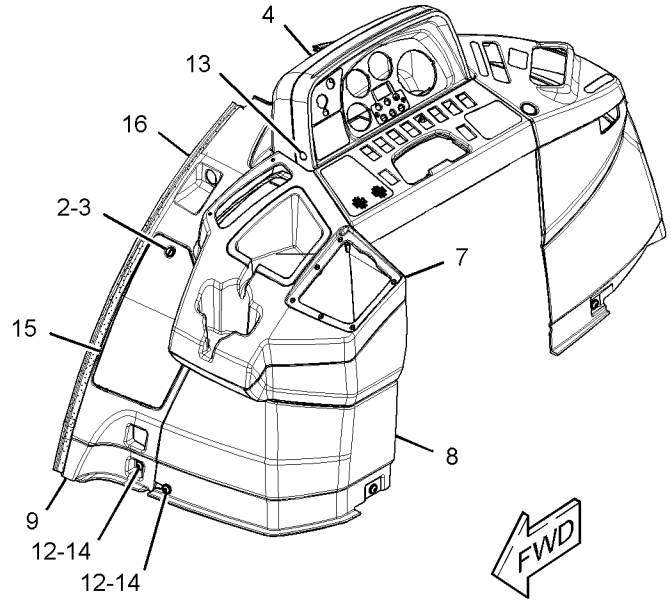

GRAPHIC #1 **<END>** g01299291

OPERATOR STATION

206-1702 CONSOLE GP-OPERATOR–LH

S/N: SHA1-UP

PART OF 204-4162, 228-4602 CAB AR-ENCLOSED ROPS, 204-4164 CANOPY AR-OPEN ROPS AN ATTACHMENT

SMCS-5258, 7451 **i02775623**

NOTE	REF NO	GRAPHIC REF	PART NUMBER	QTY	PART NAME 1 2 3 4 5 6 (PRODUCT LEVEL)	SEE PAGE
E	1	1	**3E-6600**		SEAL (33-CM)	
D	2	1	**5P-5927**		SEAL (1.7-M)	
E	3	1	**293-1980**		SEAL (71.2-CM)	
E	3A	1	**293-1980**		SEAL (77.4-CM)	
	4	1	**206-1696**	1	CONSOLE AS	
	5	1	**206-1698**	1	DOOR-STORAGE	
	6	1	**206-1699**	1	CUP HOLDER (FRONT)	
	7	1	**206-1706**	1	BOX AS-STORAGE	
J	8	1	**206-1708**	1	LOCK AS	
	9	1	**206-1712**	1	HINGE-DOOR	
	10	1	**210-6491**	1	CUP HOLDER (REAR)	
	11	1	**249-2482**	1	PLATE	
	12	1	**261-9636**	1	BRACKET-SUPPORT	
E	13	1	**261-9637**	2	BRACKET AS	
	14	1	**261-9639**	3	SCREW-PAN HEAD (NO 12X0.5-IN)	
M	15	1	**5C-2890**	3	NUT (M6X1-THD)	
	16	1	**8T-4205**	3	WASHER-HARD (7.2X14.5X2-MM THK)	
	17	1	**9X-2038**	6	WASHER (7X19X2-MM THK)	
M	18	1	**9X-2044**	19	SCREW-TRUSS HEAD (M6X1X16-MM)	

D-ORDER BY THE METER
E-ORDER BY THE CENTIMETER
J-REQUIRES CORPORATE KEY
M-METRIC PART

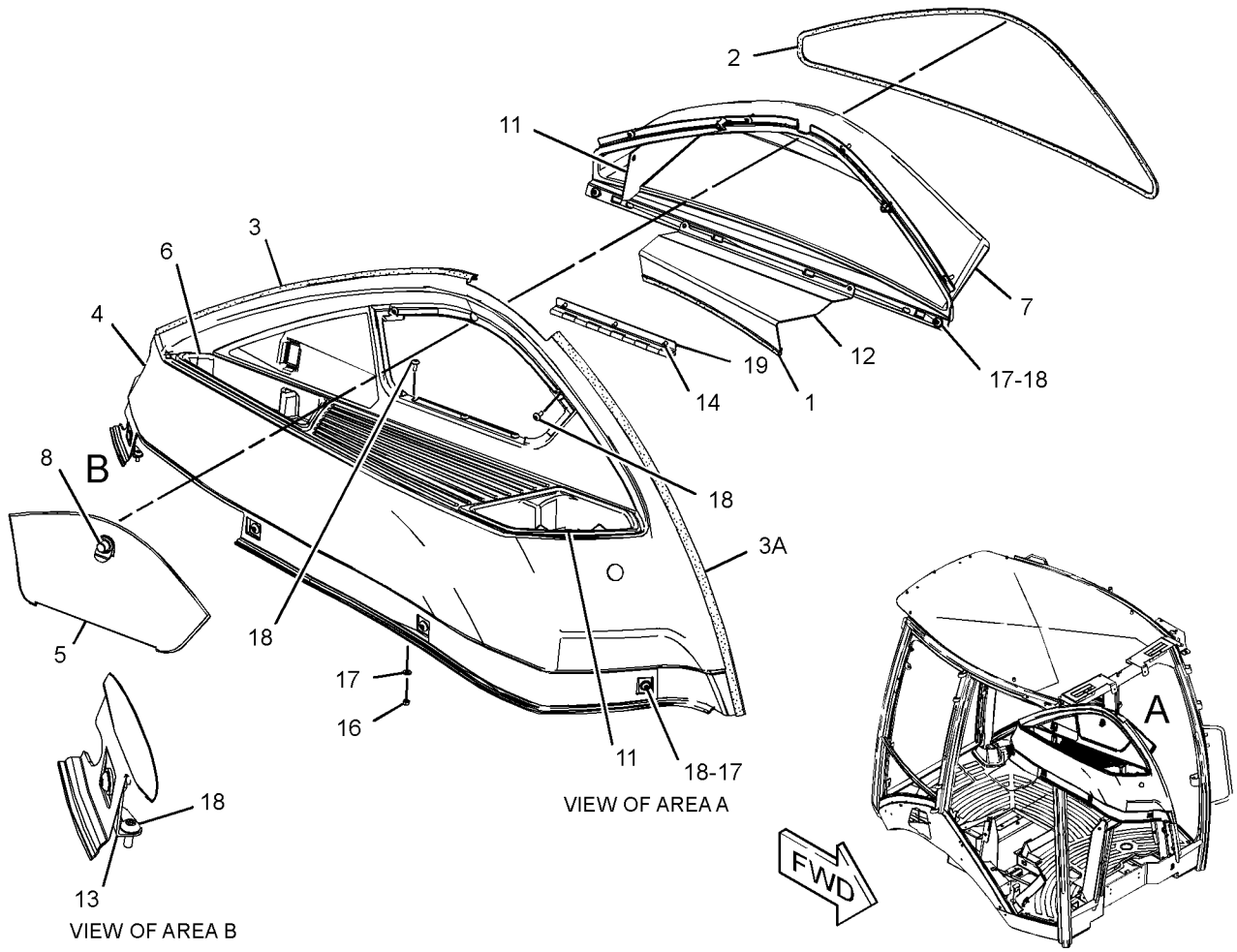

GRAPHIC #1 **<END>** g01387149

OPERATOR STATION

206-1703 CONSOLE GP-OPERATOR–FRONT

S/N: SHA1-UP

PART OF 204-4161, 204-4162, 228-4602 CAB AR-ENCLOSED ROPS, 204-4160, 204-4164 CANOPY AR-OPEN ROPS

AN ATTACHMENT

SMCS-5258, 7451 **i02693965**

NOTE	REF NO	GRAPHIC REF	PART NUMBER	QTY	PART NAME 1 2 3 4 5 6 (PRODUCT LEVEL)	SEE PAGE
B	1	1	**184-5293**	1	PLUG	
	2	1	**206-1658**	1	COVER AS-STEERING COLUMN (UPPER)	
		1	**206-1667**	2	CLIP	
	3	1	**206-1659**	1	DOOR-STORAGE	
	4	1	**206-1660**	1	COVER AS-STEERING COLUMN (FRONT)	
		1	**206-1667**	4	CLIP	
	5	1	**206-1661**	1	COVER AS-STEERING COLUMN (REAR)	
		1	**206-1667**	4	CLIP	
	6	1	**206-1662**	1	CONSOLE AS-FRONT (UPPER)	
		1	**206-1667**	8	CLIP	
	7	1	**206-1663**	1	CONSOLE-FRONT (MIDDLE)	
J	8	1	**206-1708**	1	LOCK AS	
	9	1	**261-9639**	10	SCREW-PAN HEAD (NO 12X0.5-IN)	
E	10	1	**220-0738**		SEAL (22-CM)	
	11	1	**224-2147**	1	CONSOLE AS-FRONT (LOWER, LH)	
	12	1	**224-2149**	1	CONSOLE AS-FRONT (LOWER, RH)	
	13	1	**233-5260**	2	LANYARD	
M	14	1	**120-9027**	2	SCREW-PAN HEAD (M3X0.5X16-MM)	
	15	1	**206-1854**	1	HINGE	
M	16	1	**8T-2658**	2	LOCKNUT (M3X0.5-THD)	
M	17	1	**9X-2044**	2	SCREW-TRUSS HEAD (M6X1X16-MM)	
M	18	1	**9X-2045**	16	SCREW-TRUSS HEAD (M6X1X20-MM)	
	19	1	**258-2354**	1	BRACKET-LATCH	
	20	1	**9X-2038**	3	WASHER (7X19X2-MM THK)	
	21	1	**4I-3038**	2	WASHER (3.3X8X0.5-MM THK)	

B-USE AS REQUIRED
E-ORDER BY THE CENTIMETER
J-REQUIRES CORPORATE KEY
M-METRIC PART

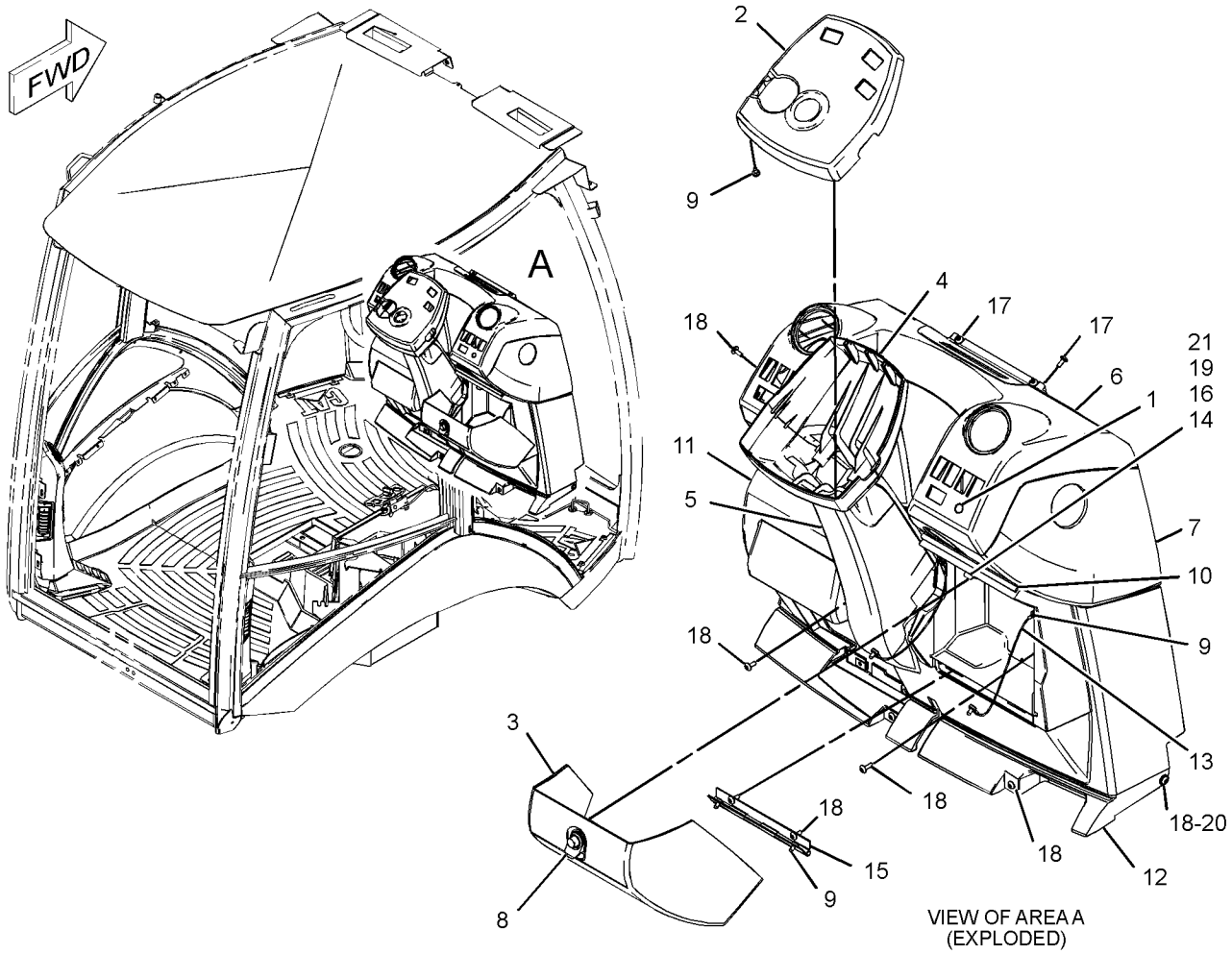

GRAPHIC #1 **<END>** g01189640

OPERATOR STATION

221-3002 CONTROL & MTG GP-STABILIZER

S/N: SHA1-UP

PART OF 204-4161, 204-4162, 228-4602 CAB AR-ENCLOSED ROPS, 204-4160, 204-4164 CANOPY AR-OPEN ROPS

AN ATTACHMENT

SMCS-7222 **i02398059**

NOTE	REF NO	GRAPHIC REF	PART NUMBER	QTY	PART NAME 1 2 3 4 5 6 (PRODUCT LEVEL)	SEE PAGE
	1	1	**8T-6902**	1	CLIP	
	2	1	**9R-8165**	1	BEARING	
	3	1	**183-6084**	1	BEARING	
	4	1	**206-1874**	1	LEVER AS	
Y	5	1	**221-3006**	2	CONTROL GP-HYDRAULIC HAND	683
	6	1	**229-5280**	1	PLATE AS	
	7	1	**229-5745**	1	SPACER (8X15.875X11.6-MM THK)	
	8	1	**232-1542**	1	SEAL	
	9	1	**248-2708**	1	GROMMET	
	10	1	**248-2710**	1	GROMMET	
	11	1	**164-1395**	1	KNOB	
	12	1	**5P-4116**	6	WASHER-HARD (8.8X20.5X2-MM THK)	
	13	1	**6E-5431**	1	SHIM (0.5-MM THK)	
M	14	1	**7X-0465**	3	BOLT (M6X1X100-MM)	
M	15	1	**8T-4189**	4	BOLT (M8X1.25X20-MM)	
M	16	1	**8T-7547**	1	BOLT (M8X1.25X30-MM)	
	17	1	**9X-8256**	4	WASHER (6.6X12X2-MM THK)	
M	18	1	**8T-4138**	1	BOLT (M6X1X20-MM)	

M-METRIC PART
Y-SEPARATE ILLUSTRATION

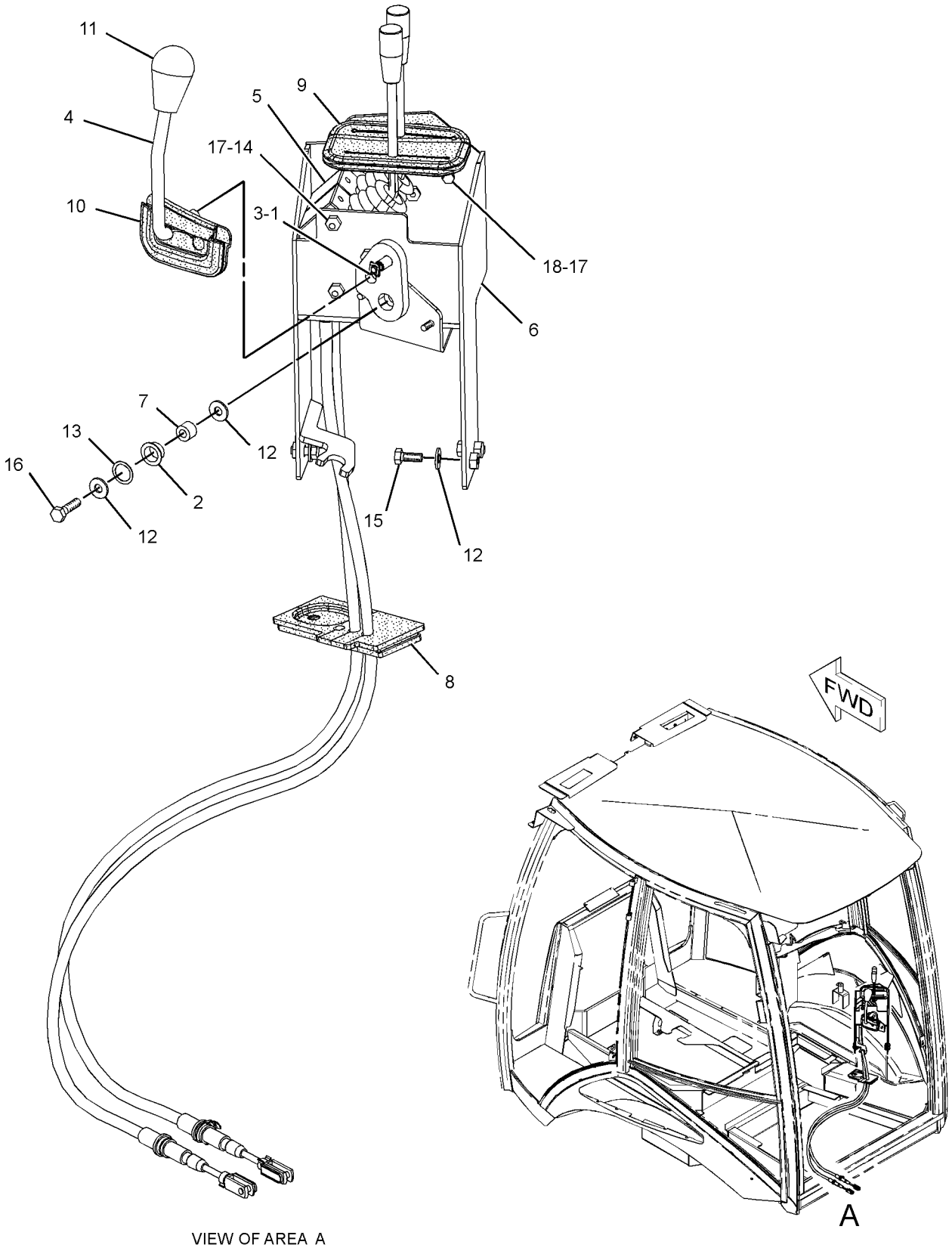

VIEW OF AREA A

GRAPHIC #1 **<END>** g01230695

OPERATOR STATION

206-1645 CONTROL GP-HYDRAULIC HAND–LOADER

S/N: SHA1-UP
SINGLE TILT
PART OF 209-9943 VALVE AR-BANK 2
AN ATTACHMENT

SMCS-5063 **i02593985**

NOTE	REF NO	GRAPHIC REF	PART NUMBER	QTY	PART NAME 1 2 3 4 5 6 (PRODUCT LEVEL)	SEE PAGE
	1	1	**1K-0502**	7	WASHER (16.3X25.4X1.2-MM THK)	
	2	1	**2R-0364**	3	RING-RETAINING	
M	3	1	**9X-2040**	2	SCREW-TRUSS HEAD (M10X1.5X25-MM)	
	4	1	**5H-3193**	1	PIN-SPRING	
	5	1	**9R-1765**	1	KNOB (TOP)	
	6	1	**9R-1766**	1	KNOB (LOWER)	
	7	1	**9R-1767**	1	BOOT	
	8	1	**9R-9868**	1	SWITCH GP-PUSH BUTTON (NEUTRALIZER, DOWNSHIFT)	
		1	**9W-0625**	1	SWITCH AS	
		1	**9X-3401**	2	PIN-CONNECTOR (16-GA TO 18-GA)	
M	9	1	**9X-2065**	2	NUT (M10X1.15-THD)	
	10	1	**107-5591**	1	NUT-JAM (3/4-16-THD)	
M	11	1	**134-0453**	2	TURNBUCKLE	
	12	1	**164-1368**	12	FASTENER-PANEL	
	13	1	**183-3135**	1	JOINT AS	
	14	1	**183-3137**	1	PIN	
	15	1	**206-1695**	1	BOOT	
	16	1	**209-3363**	1	ROD	
	17	1	**216-3351**	1	ROD	
	18	1	**216-3358**	1	DAMPER AS (SPRING)	
		1	**095-9230**	1	PIN-SPRING	
		1	**183-3132**	1	CYLINDER	
	19	1	**291-5108**	1	GASKET	
	20	1	**220-0269**	1	SHAFT	
	21	1	**230-2510**	1	LEVER AS	
	22	1	**269-8129**	1	BRACKET AS	
	23	1	**269-8817**	1	PLATE	
	24	1	**270-2795**	1	PLATE	
	25	1	**272-7104**	1	ROD	
	26	1	**275-8869**	1	BRACKET AS	
	27	1	**179-8235**	1	LOCK PIN	
	28	1	**102-8802**	1	KIT-RECEPTACLE (2-PIN)	
					(INCLUDES RECEPTACLE AS & WEDGE)	
M	29	1	**6V-7744**	4	LOCKNUT (M10X1.15-THD)	
	30	1	**7X-7729**	4	WASHER (11X25X3-MM THK)	
	31	1	**8C-4987**	1	PIN-CLEVIS	
	32	1	**8T-4121**	3	WASHER-HARD (11X21X2.5-MM THK)	
M	33	1,1	**8T-4133**	6	NUT (M10X1.5-THD)	
M	34	1	**8T-4136**	1	BOLT (M10X1.5X25-MM)	
M	35	1	**8T-4137**	2	BOLT (M10X1.5X20-MM)	
M	36	1	**8T-4189**	4	BOLT (M8X1.25X20-MM)	
	37	1	**5P-4116**	4	WASHER-HARD (8.8X20.5X2-MM THK)	
	38	1	**8T-4773**	2	BALL JOINT	
	39	1	**8T-4815**	2	ROD END	
	40	1	**8T-9501**	2	SCREW (10-16X0.75-IN)	
	41	1	**9R-2807**	1	CLIP	
	42	1	**9R-3067**	1	PIN	
E	43	1	**3E-6600**		SEAL (7-CM)	

E-ORDER BY THE CENTIMETER
M-METRIC PART

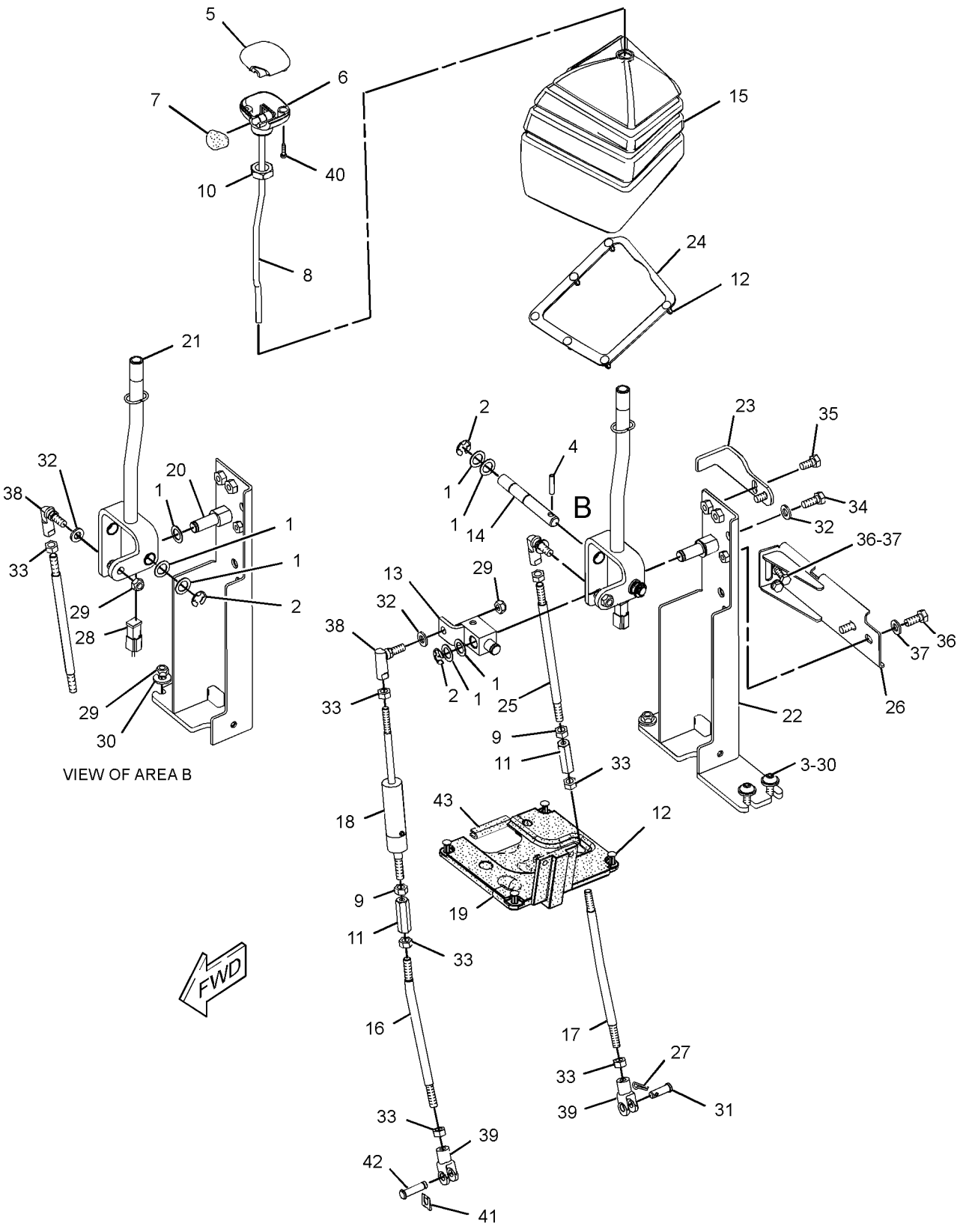

GRAPHIC #1 **<END>** g01312659

OPERATOR STATION

209-3364 CONTROL GP-HYDRAULIC HAND–LOADER

S/N: SHA1-UP
PART OF 209-9944 VALVE AR-BANK 3
AN ATTACHMENT

SMCS-5063 **i02531006**

NOTE	REF NO	GRAPHIC REF	PART NUMBER	QTY	PART NAME 1 2 3 4 5 6 (PRODUCT LEVEL)	SEE PAGE
B	1	1	**1K-0502**	10	WASHER (16.3X25.4X1.2-MM THK)	
	2	1	**2R-0364**	4	RING-RETAINING	
M	3	1	**9X-2040**	2	SCREW-TRUSS HEAD (M10X1.5X25-MM)	
	4	1	**5H-3193**	1	PIN-SPRING	
	5	1	**9R-1765**	1	KNOB (TOP)	
	6	1	**9R-1766**	1	KNOB (LOWER)	
	7	1	**9R-1767**	1	BOOT	
	8	1	**9R-9868**	1	SWITCH GP-PUSH BUTTON (NEUTRALIZER, DOWNSHIFT)	
BD		1	**6V-2689**		TUBE-HEAT SHRINK (6.35-MM DIA)	
		1	**9W-0625**	1	SWITCH AS	
M	9	1	**9X-2065**	3	NUT (M10X1.15-THD)	
	10	1	**107-5591**	1	NUT-JAM (3/4-16-THD)	
M	11	1	**134-0453**	3	TURNBUCKLE	
	12	1	**164-1368**	12	FASTENER-PANEL	
	13	1	**183-3135**	1	JOINT AS	
	14	1	**183-3137**	1	PIN	
	15	1	**206-1668**	1	BOOT	
	16	1	**209-3363**	1	ROD	
	17	1	**216-3350**	1	ROD	
	18	1	**216-3351**	1	ROD	
	19	1	**216-3358**	1	DAMPER AS (SPRING)	
		1	**095-9230**	1	PIN-SPRING	
		1	**183-3132**	1	CYLINDER	
	20	1	**291-5108**	1	GASKET	
	21	1	**220-0269**	1	SHAFT	
	22	1	**220-3251**	1	ROD	
	23	1	**230-2510**	1	LEVER AS	
	24	1	**230-3038**	1	LEVER AS	
	25	1	**269-8129**	1	BRACKET AS	
	26	1	**269-8817**	1	PLATE	
	27	1	**270-2795**	1	PLATE	
	28	1	**272-7104**	1	ROD	
	29	1	**275-8869**	1	BRACKET AS	
	30	1	**164-1395**	1	KNOB	
	31	1	**179-8235**	2	LOCK PIN	
	32	1	**102-8802**	1	KIT-RECEPTACLE (2-PIN)	
					(INCLUDES RECEPTACLE AS & WEDGE)	
M	33	1	**6V-7744**	4	LOCKNUT (M10X1.15-THD)	
	34	1	**7X-7729**	4	WASHER (11X25X3-MM THK)	
	35	1	**8C-4987**	2	PIN-CLEVIS	
	36	1	**8T-4121**	4	WASHER-HARD (11X21X2.5-MM THK)	
M	37	1	**8T-4133**	9	NUT (M10X1.5-THD)	
M	38	1	**8T-4136**	1	BOLT (M10X1.5X25-MM)	
M	39	1	**8T-4137**	2	BOLT (M10X1.5X20-MM)	
M	40	1	**8T-4189**	4	BOLT (M8X1.25X20-MM)	
	41	1	**5P-4116**	4	WASHER-HARD (8.8X20.5X2-MM THK)	
	42	1	**8T-4773**	3	BALL JOINT	
	43	1	**8T-4815**	3	ROD END	
	44	1	**8T-9501**	2	SCREW (10-16X0.75-IN)	
	45	1	**9R-2807**	1	CLIP	
	46	1	**9R-3067**	1	PIN	
E	47	1	**3E-6600**		SEAL (7-CM)	

B-USE AS REQUIRED
D-ORDER BY THE METER
E-ORDER BY THE CENTIMETER
M-METRIC PART

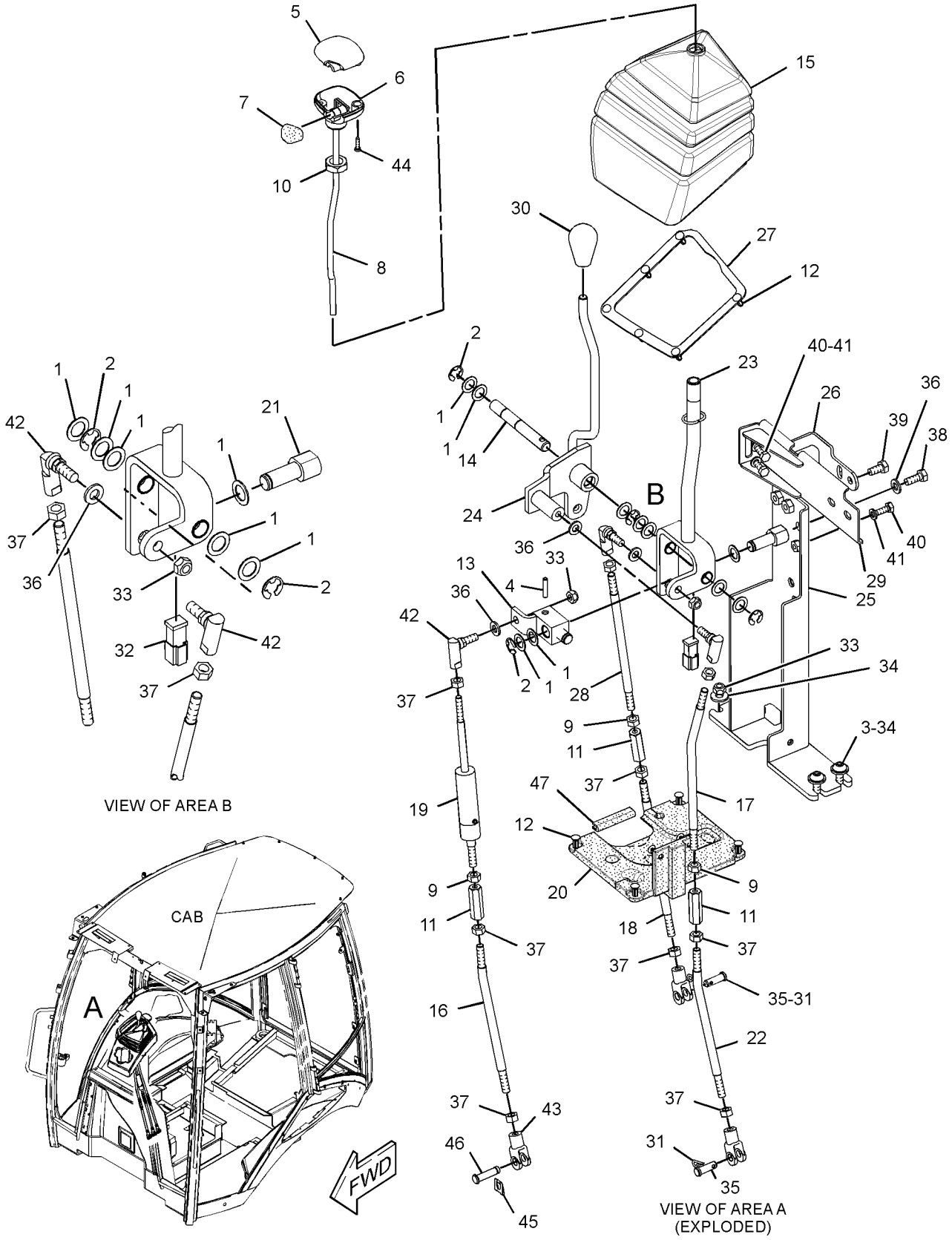

GRAPHIC #1

<END>

g01314431

OPERATOR STATION

209-3370 CONTROL GP-HYDRAULIC HAND–BACKHOE

S/N: SHA1-UP
STANDARD
AN ATTACHMENT

SMCS-5063 **i02115800**

NOTE	REF NO	GRAPHIC REF	PART NUMBER	QTY	PART NAME 1 2 3 4 5 6 (PRODUCT LEVEL)	SEE PAGE
	1	1	**164-1361**	2	BOOT	
	2	1	**164-1371**	2	PLATE	
	3	1	**164-1399**	2	KNOB	
	4	1	**164-1409**	1	LEVER AS (RH)	
	5	1	**164-1411**	1	LEVER AS (LH)	
	6	1	**164-1435**	2	PLATE	
	7	1	**170-6312**	4	BEARING	
	8	1	**190-5130**	1	FILM-INSTRUCTION	
	9	1	**206-1672**	1	CONSOLE	
	10	1	**206-1673**	1	CONSOLE AS	
		1	**172-8591**	2	NUT-SPRING	
	11	1	**209-3348**	4	ROD	
	12	1	**209-3353**	1	TOWER AS	
	13	1	**209-3368**	1	GASKET	
	14	1	**164-1402**	2	SLEEVE	
	15	1	**164-1404**	2	SPACER (10.67X16.95X23-MM THK)	
	16	1	**179-8235**	4	LOCK PIN	
M	17	1	**6V-7744**	8	LOCKNUT (M10X1.15-THD)	
	18	1	**7X-7729**	8	WASHER (11X25X3-MM THK)	
	19	1	**8C-4987**	4	PIN-CLEVIS	
	20	1	**8T-4121**	8	WASHER-HARD (11X21X2.5-MM THK)	
M	21	1	**8T-4133**	8	NUT (M10X1.5-THD)	
M	22	1	**8T-4138**	6	BOLT (M6X1X20-MM)	
M	23	1	**8T-4172**	2	BOLT (M10X1.5X80-MM)	
M	24	1	**8T-4195**	2	BOLT (M10X1.5X30-MM)	
	25	1	**8T-4773**	4	BALL JOINT	
	26	1	**8T-4815**	4	ROD END	
M	27	1	**8T-6466**	2	BOLT (M10X1.5X60-MM)	
	28	1	**9R-9901**	6	FASTENER (CLIP)	
	29	1	**9X-2038**	4	WASHER (7X19X2-MM THK)	
M	30	1	**9X-2045**	6	SCREW-TRUSS HEAD (M6X1X20-MM)	
	31	1	**9X-8256**	6	WASHER (6.6X12X2-MM THK)	

M-METRIC PART

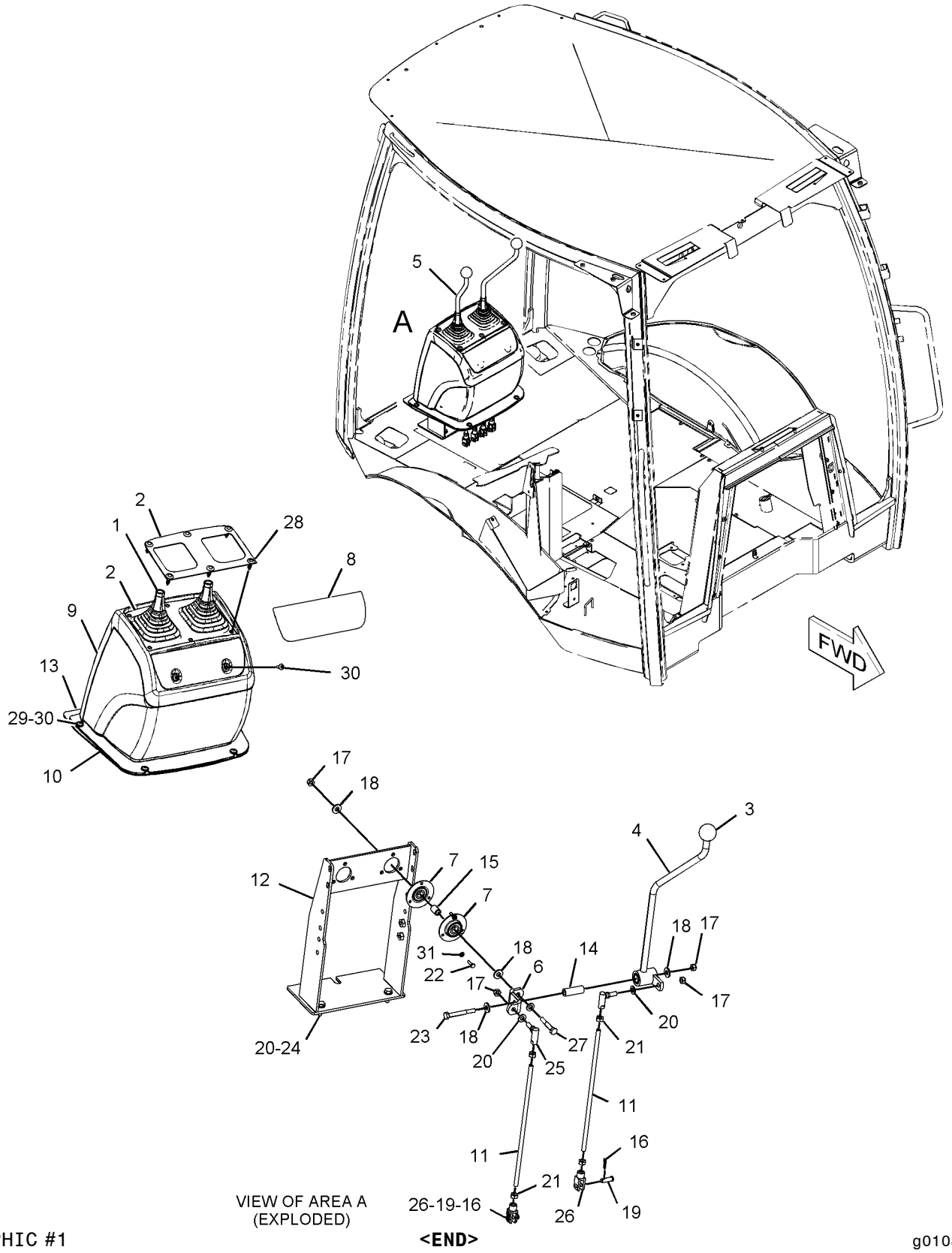

VIEW OF AREA A
(EXPLODED)

GRAPHIC #1

<END>

g01080443

OPERATOR STATION

209-3371 CONTROL GP-HYDRAULIC HAND–
4-FUNCTION, EXCAVATOR
S/N: SHA1-UP
AN ATTACHMENT

SMCS-5063 **i02500398**

NOTE	REF NO	GRAPHIC REF	PART NUMBER	QTY	PART NAME 1 2 3 4 5 6 (PRODUCT LEVEL)	SEE PAGE
	1	1	**142-7405**	2	COLLAR	
	2	1	**164-1361**	2	BOOT	
	3	1	**164-1371**	2	PLATE	
	4	1	**164-1399**	2	KNOB	
	5	1	**164-1409**	1	LEVER AS (RH)	
	6	1	**164-1411**	1	LEVER AS (LH)	
	7	1	**164-1421**	1	PLATE	
	8	1	**164-1422**	1	SHAFT AS	
	9	1	**164-1425**	1	COUPLER AS	
	10	1	**164-1429**	1	COUPLER AS	
	11	1	**164-1435**	2	PLATE	
	12	1	**164-1438**	2	ROD	
	13	1	**170-6312**	4	BEARING	
	14	1	**190-5128**	1	FILM (BUCKET CONTROL)	
	15	1	**206-1672**	1	CONSOLE	
	16	1	**206-1673**	1	CONSOLE AS	
		1	**172-8591**	2	NUT-SPRING	
	17	1	**209-3349**	2	ROD	
	18	1	**209-3350**	2	ROD	
	19	1	**209-3353**	1	TOWER AS	
	20	1	**231-2878**	1	GASKET	
	21	1	**164-1402**	2	SLEEVE	
	22	1	**164-1404**	2	SPACER (10.67X16.95X23-MM THK)	
M	23	1	**6V-7744**	14	LOCKNUT (M10X1.15-THD)	
M	24	1	**6V-8932**	2	SETSCREW-SOCKET (M6X1X10-MM)	
	25	1	**7X-7729**	8	WASHER (11X25X3-MM THK)	
	26	1	**8T-4121**	20	WASHER-HARD (11X21X2.5-MM THK)	
M	27	1	**8T-4133**	16	NUT (M10X1.5-THD)	
M	28	1	**8T-4138**	6	BOLT (M6X1X20-MM)	
M	29	1	**8T-4172**	2	BOLT (M10X1.5X80-MM)	
M	30	1	**8T-4195**	6	BOLT (M10X1.5X30-MM)	
	31	1	**8T-4773**	10	BALL JOINT	
	32	1	**8T-4815**	2	ROD END	
M	33	1	**8T-6466**	2	BOLT (M10X1.5X60-MM)	
	34	1	**9R-2806**	2	PIN	
	35	1	**9R-2807**	2	CLIP	
	36	1	**9R-9901**	6	FASTENER (CLIP)	
	37	1	**9X-2038**	4	WASHER (7X19X2-MM THK)	
M	38	1	**9X-2045**	6	SCREW-TRUSS HEAD (M6X1X20-MM)	
	39	1	**9X-8256**	6	WASHER (6.6X12X2-MM THK)	

M-METRIC PART

209-3371 **CONTROL GP-HYDRAULIC HAND** *(contd.)* **i02500398**

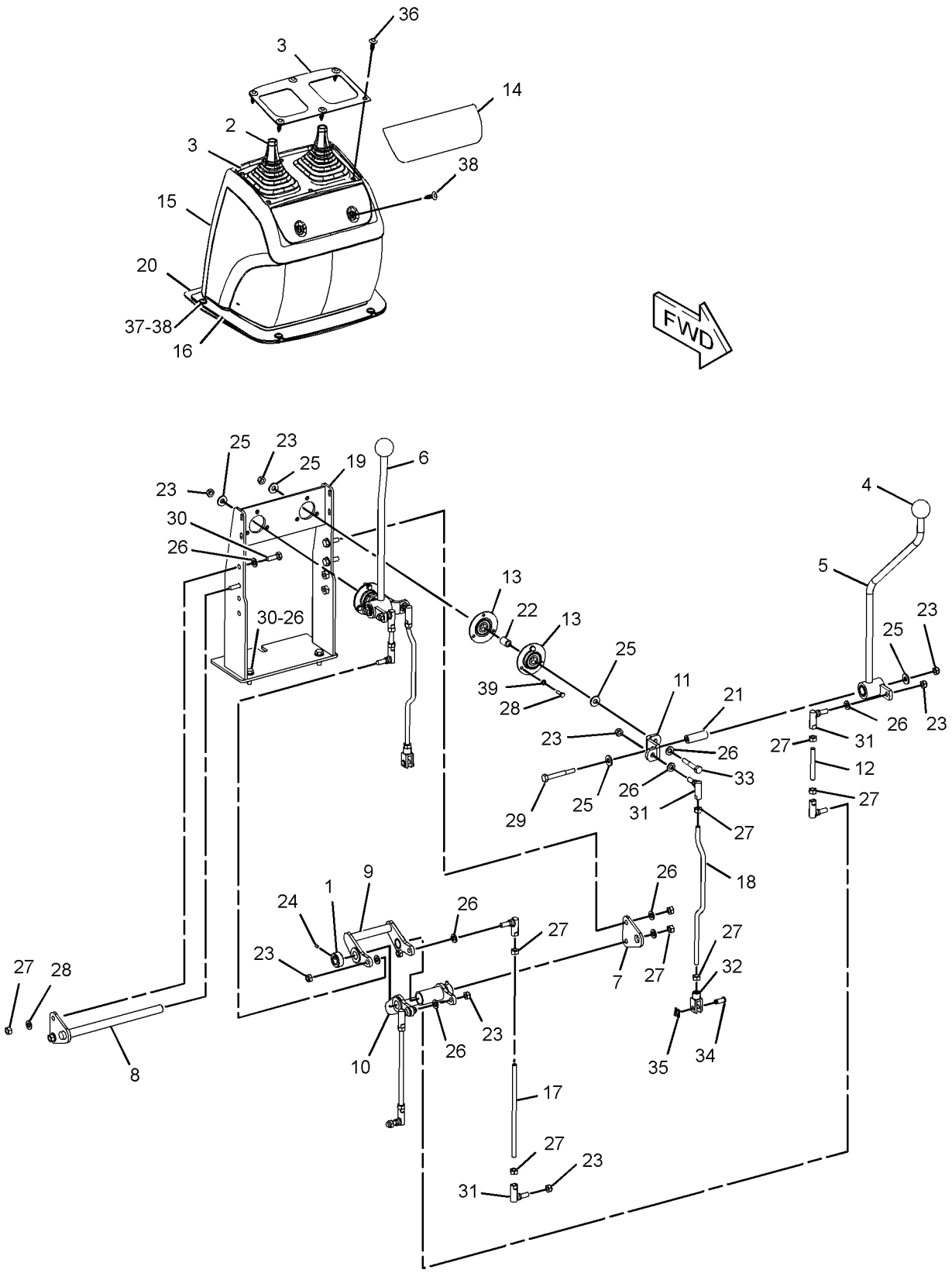

GRAPHIC #1 **<END>** g01167264

OPERATOR STATION

221-3006 CONTROL GP-HYDRAULIC HAND–STABILIZER

S/N: SHA1-UP

PART OF 221-3002 CONTROL & MTG GP-STABILIZER

AN ATTACHMENT

SMCS-5063 **i02736355**

NOTE	REF NO	GRAPHIC REF	PART NUMBER	QTY	PART NAME 1 2 3 4 5 6 (PRODUCT LEVEL)	SEE PAGE
	1	1	**228-4592**	1	KNOB	
	2	1	**228-4593**	1	GAITER	
	3	1	**228-4597**	1	CLIP	
	4	1	**232-3072**	1	CABLE AS	
M	5	1	**5C-2890**	1	NUT (M6X1-THD)	

M-METRIC PART

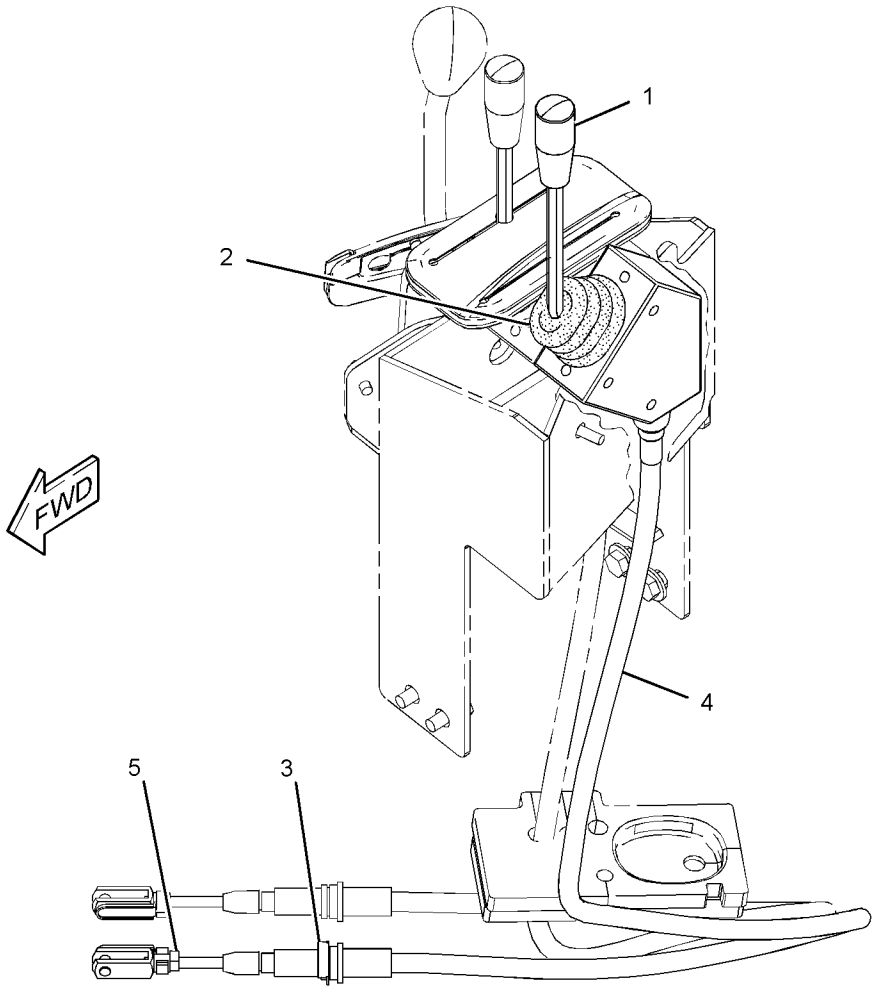

GRAPHIC #1 **<END>** g01387312

OPERATOR STATION

209-3365 CONTROL GP-HYDRAULIC PEDAL–
SINGLE FUNCTION, LH
S/N: SHA1-UP
PART OF 212-0206 VALVE AR-BANK 8
AN ATTACHMENT

SMCS-5063 **i02523387**

NOTE	REF NO	GRAPHIC REF	PART NUMBER	QTY	PART NAME 1 2 3 4 5 6 (PRODUCT LEVEL)	SEE PAGE
	1	1	**8T-4815**	1	ROD END (YOKE)	
	2	1	**8T-6431**	1	ROD END (BEARING)	
	3	1	**164-1547**	1	SHAFT AS	
	4	1	**179-8235**	1	LOCK PIN	
	5	1	**209-3352**	1	ROD	
	6	1	**231-2877**	1	PEDAL AS (LH)	
	7	1	**232-1536**	1	SUPPORT AS	
	8	1	**232-1540**	1	SEAL	
M	9	1	**6V-7744**	1	LOCKNUT (M10X1.15-THD)	
M	10	1	**6V-8335**	1	BOLT-SELF-LOCKING (M10X1.5X40-MM)	
	11	1	**8C-4987**	1	PIN-CLEVIS	
	12	1	**8M-3175**	1	WASHER-HARD (10.2X16X3-MM THK)	
	13	1	**8T-4121**	6	WASHER-HARD (11X21X2.5-MM THK)	
M	14	1	**8T-4133**	4	NUT (M10X1.5-THD)	
M	15	1	**8T-4186**	1	BOLT (M10X1.5X40-MM)	
M	16	1	**8T-4195**	2	BOLT (M10X1.5X30-MM)	
	17	1	**198-0098**	1	FILM-INSTRUCTION (AUXILIARY)	

M-METRIC PART

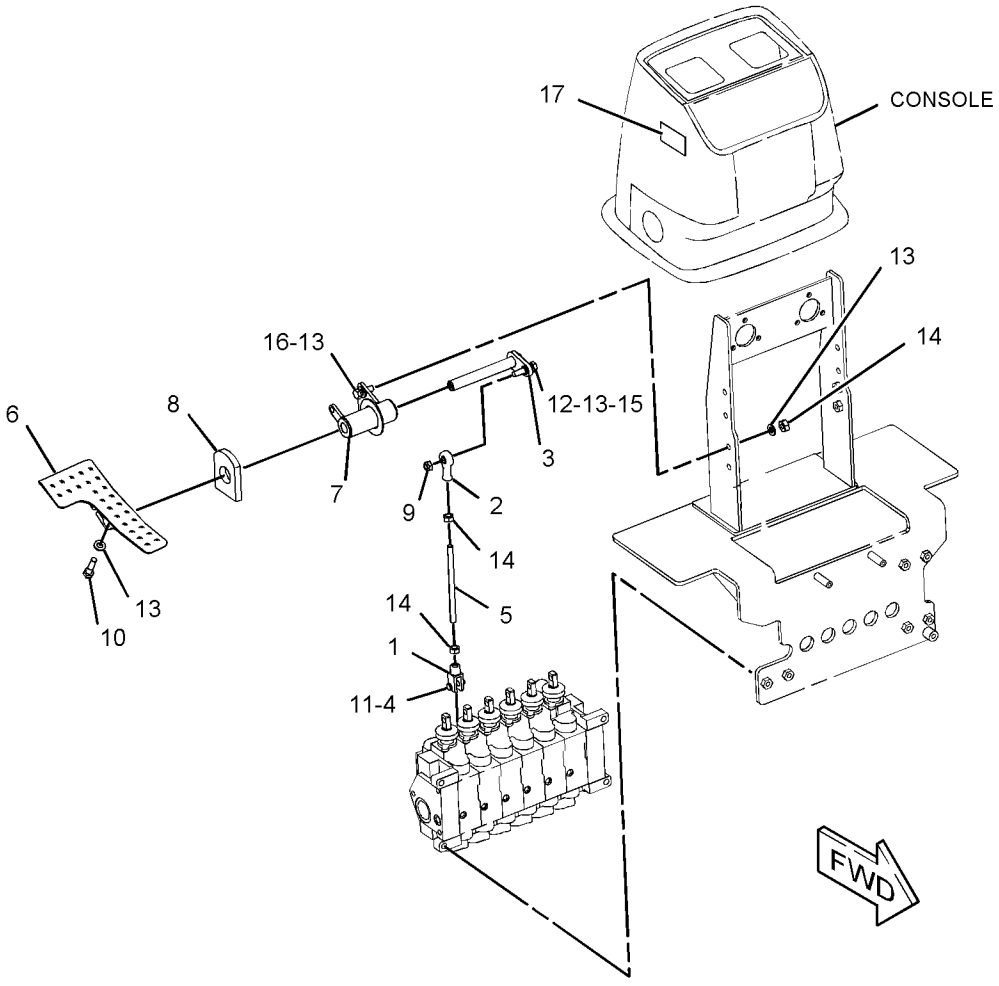

GRAPHIC #1 **<END>** g01305508

209-3375 CONTROL GP-HYDRAULIC PEDAL–
SINGLE FUNCTION, RH
S/N: SHA1-UP
PART OF 209-9935 VALVE AR-BANK 7, 212-0206 VALVE AR-BANK 8
AN ATTACHMENT

SMCS-5063 **i02117334**

NOTE	REF NO	GRAPHIC REF	PART NUMBER	QTY	PART NAME 1 2 3 4 5 6 (PRODUCT LEVEL)	SEE PAGE
	1	1	**8T-4815**	1	ROD END	
	2	1	**8T-6431**	1	ROD END	
B	3	1	**133-8916**	1	FILM-INSTRUCTION (EXTENDABLE STICK)	
	4	1	**164-1547**	1	SHAFT AS	
	5	1	**179-8235**	1	LOCK PIN	
B	6	1	**198-0098**	1	FILM-INSTRUCTION (AUXILIARY)	
	7	1	**209-3352**	1	ROD	
	8	1	**231-2875**	1	SUPPORT AS	
	9	1	**231-2876**	1	PEDAL AS (RH)	
	10	1	**232-1540**	1	SEAL	
M	11	1	**6V-7744**	1	LOCKNUT (M10X1.15-THD)	
M	12	1	**6V-8335**	1	BOLT-SELF-LOCKING (M10X1.5X40-MM)	
	13	1	**8C-4987**	1	PIN-CLEVIS	
	14	1	**8M-3175**	1	WASHER-HARD (10.2X16X3-MM THK)	
	15	1	**8T-4121**	4	WASHER-HARD (11X21X2.5-MM THK)	
M	16	1	**8T-4133**	2	NUT (M10X1.5-THD)	
M	17	1	**8T-4186**	1	BOLT (M10X1.5X40-MM)	
M	18	1	**8T-4195**	2	BOLT (M10X1.5X30-MM)	

B-USE AS REQUIRED
M-METRIC PART

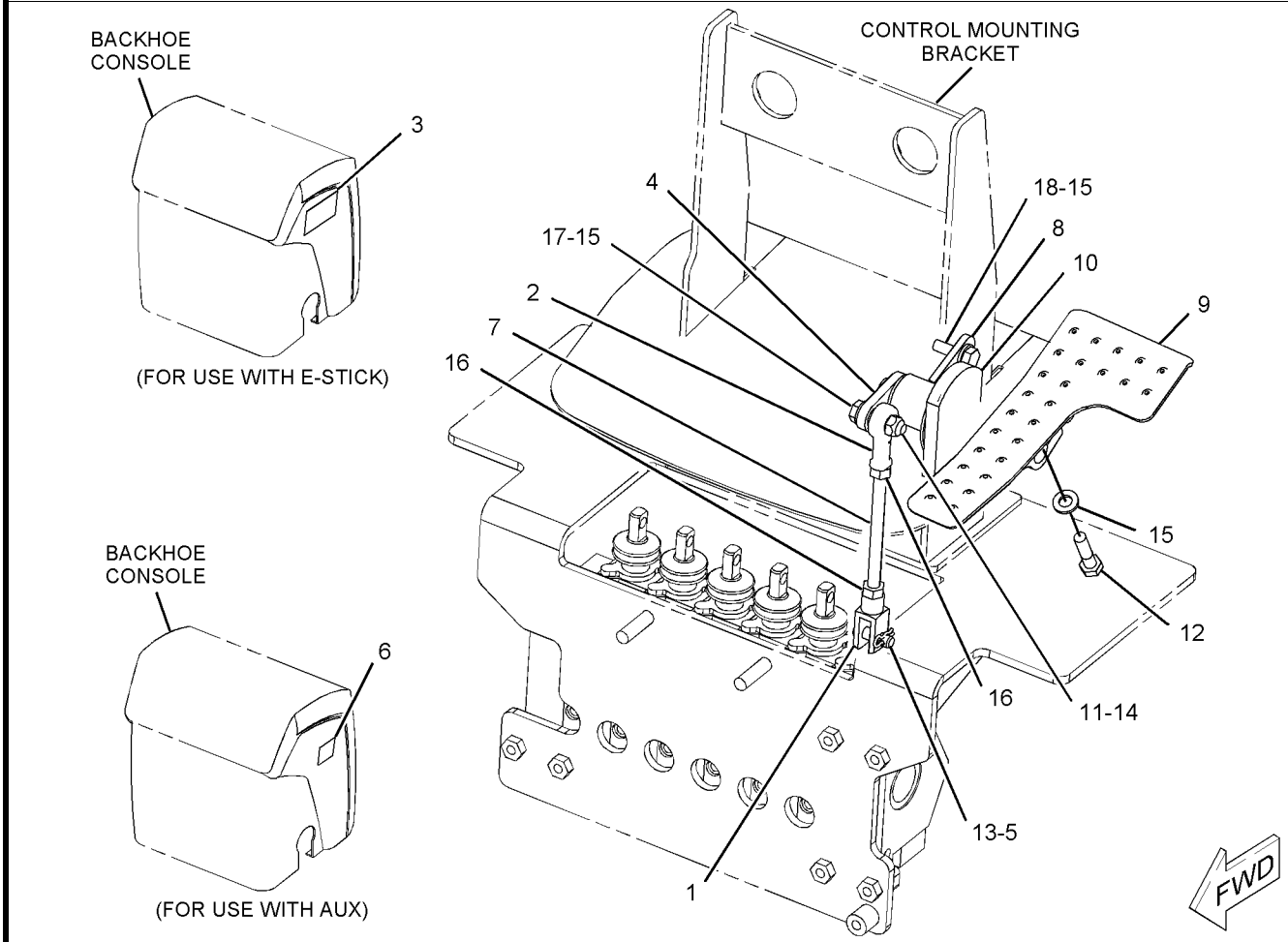

GRAPHIC #1 **<END>** g01080154

OPERATOR STATION

206-1643 CONTROL GP-TRANSMISSION

S/N: SHA1-UP

PART OF 214-6910, 214-6911, 214-6912, 214-6913 POWER TRAIN AR

AN ATTACHMENT

SMCS-3065, 3168 **i02512424**

NOTE	REF NO	GRAPHIC REF	PART NUMBER	QTY	PART NAME 1 2 3 4 5 6 (PRODUCT LEVEL)	SEE PAGE
	1	1	**102-8802**	1	KIT-RECEPTACLE (2-PIN)	
					(INCLUDES RECEPTACLE AS & WEDGE)	
	2	1	**9R-1766**	1	KNOB (LOWER)	
	3	1	**9R-1767**	1	BOOT	
	4	1	**107-5591**	1	NUT-JAM (3/4-16-THD)	
	5	1	**164-1153**	1	KNOB (UPPER)	
	6	1	**164-1368**	8	FASTENER-PANEL	
	7	1	**206-1669**	1	BOOT	
	8	1	**220-3469**	1	ROD AS	
	9	1	**220-3470**	1	BOOT-SEAL	
	10	1	**230-2389**	1	PLATE	
	11	1	**230-2390**	1	PLATE	
	12	1	**261-2207**	1	CONTROL GP-HANDLE	
	13	1	**263-7261**	1	SWITCH GP-PUSH BUTTON (NEUTRALIZER, DOWNSHIFT)	
M	14	1	**095-0756**	4	SCREW-MACHINE (M5X0.8X16-MM)	
	15	1	**8T-4223**	1	WASHER-HARD (13.5X25.5X3-MM THK)	
M	16	1	**8T-4956**	1	BOLT (M12X1.75X35-MM)	
	17	1	**8T-9501**	2	SCREW (10-16X0.75-IN)	

M-METRIC PART

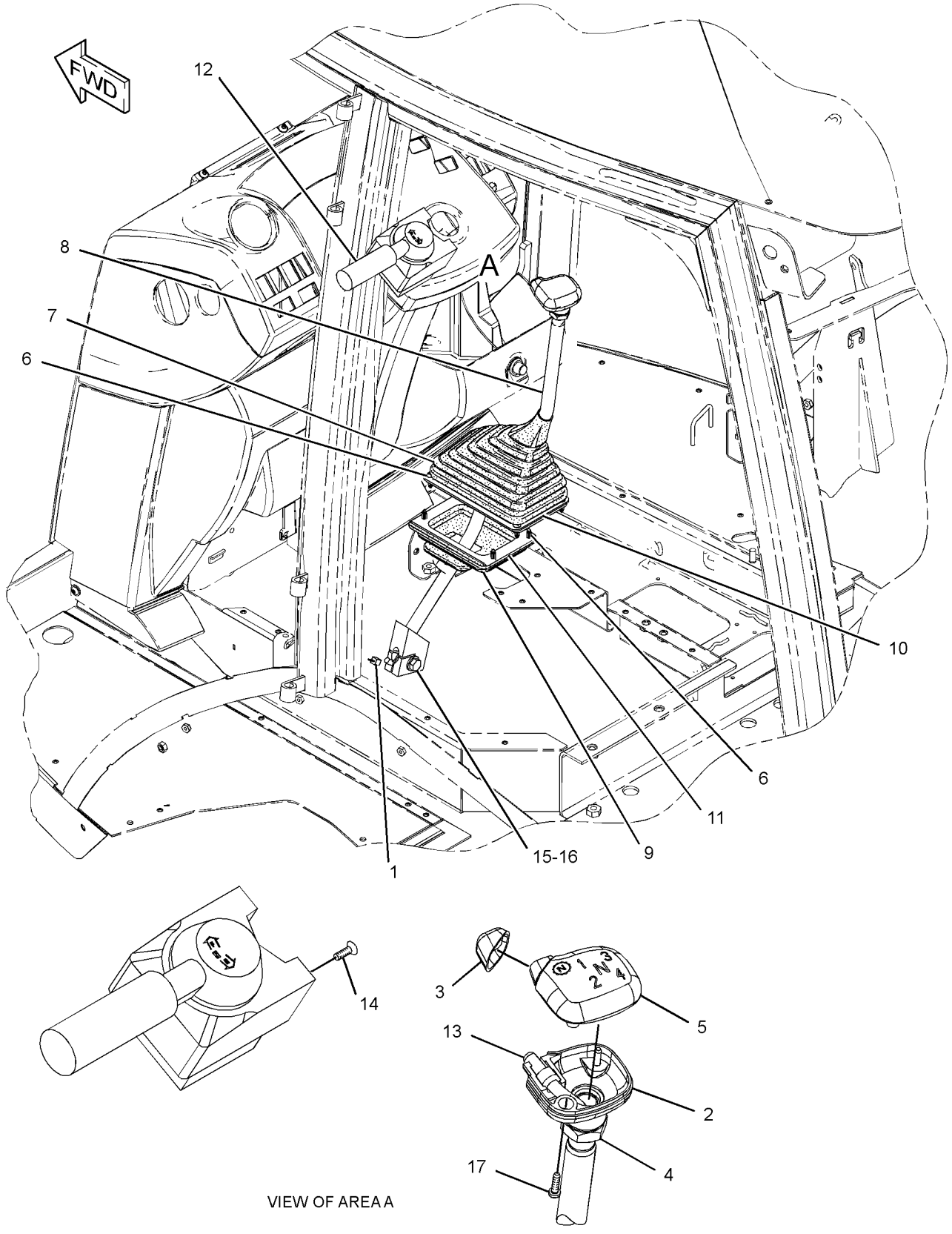

GRAPHIC #1 **<END>** g01212489

OPERATOR STATION

220-3785 COVER GP-WIPER MOTOR

S/N: SHA1-UP

PART OF 204-4161 CAB AR-ENCLOSED ROPS, 204-4164 CANOPY AR-OPEN ROPS

AN ATTACHMENT

SMCS-7305 **i02639355**

NOTE	REF NO	GRAPHIC REF	PART NUMBER	QTY	PART NAME 1 2 3 4 5 6 (PRODUCT LEVEL)	SEE PAGE
	1	1	**226-5635**	1	COVER	
M	2	1	**9X-2043**	3	SCREW-TRUSS HEAD (M6X1X14-MM)	
	3	1	**282-7835**	1	PLATE	
M	4	1	**8C-3798**	2	BOLT-LOCKING (M6X1X30)	
	5	1	**282-7833**	1	GROMMET	
	6	1	**9X-8256**	2	WASHER (6.6X12X2-MM THK)	
	7	1	**9X-2038**	3	WASHER (7X19X2-MM THK)	

M-METRIC PART

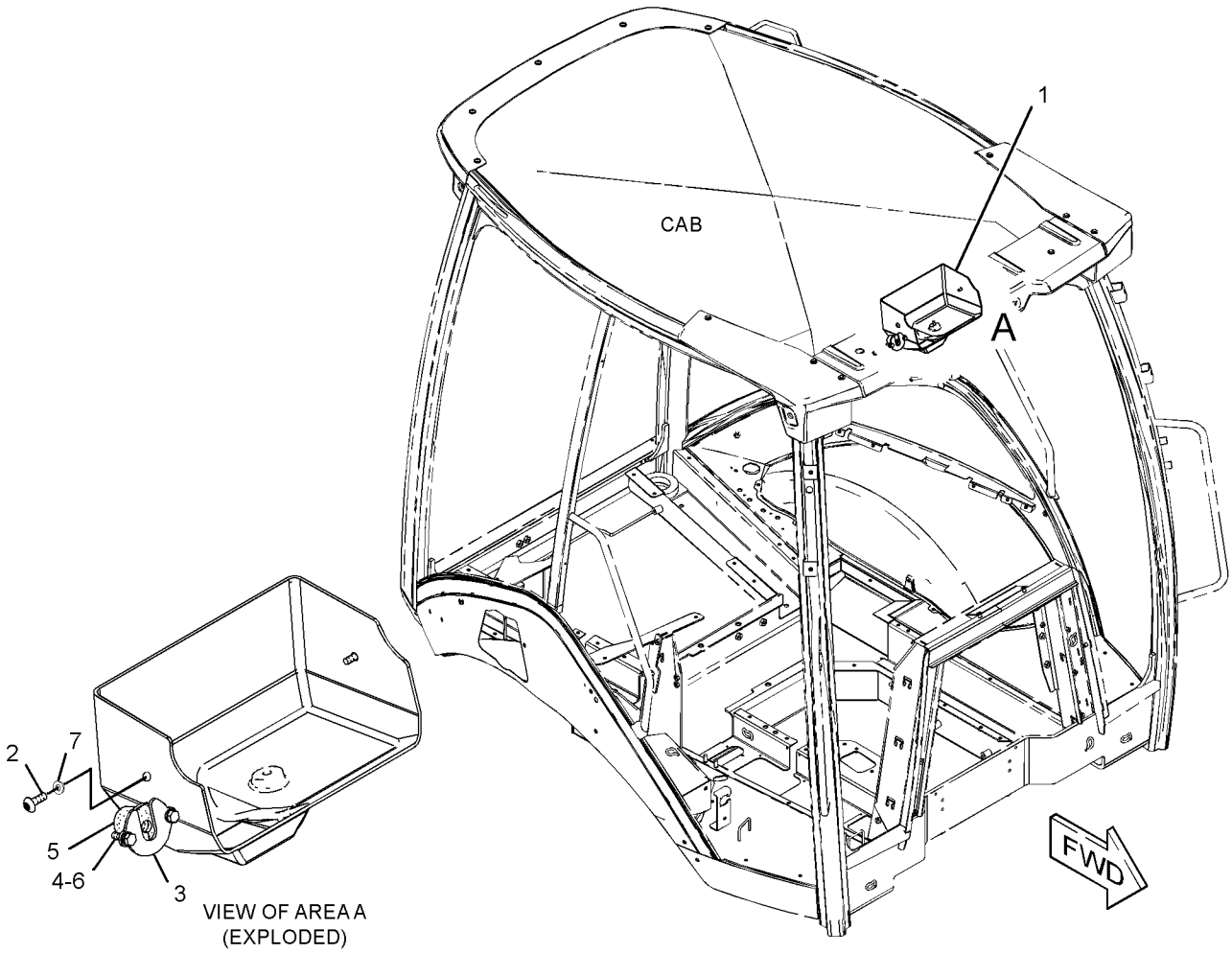

GRAPHIC #1 **<END>** g01328104

OPERATOR STATION

206-1592 DOOR GP-CAB—LH

S/N: SHA1-UP
PART OF 206-1888, 206-1889 CAB GP-ENCLOSED ROPS
AN ATTACHMENT

SMCS-7308 **i02530997**

NOTE	REF NO	GRAPHIC REF	PART NUMBER	QTY	PART NAME 1 2 3 4 5 6 (PRODUCT LEVEL)	SEE PAGE
	1	1	**132-2249**	2	SPACER (7.4X12.7X24-MM THK)	
J	2	1	**159-4269**	1	SPRING AS-GAS	
B	3	1	**177-4877**	1	SHIM (1-MM THK)	
Y	4	1	**205-9585**	1	WINDOW GP-DOOR (LH)	750
	5	1	**205-9588**	1	GLASS (LH)	
	6	1	**206-1594**	1	DOOR AS (LH)	
	7	1	**223-2028**	1	SEAL AS (LH)	
	8	1	**248-2714**	2	NUT-ACORN	
L	9	1	**252-1862**	1	HANDLE AS	
	10	1	**252-1863**	1	GASKET	
	11	1	**252-1864**	1	LATCH AS (LH)	
	12	1	**253-1817**	1	SPACER (6.5X14.5X12-MM THK)	
	13	1	**253-1857**	1	PLATE	
	14	1	**253-1858**	1	COVER-LATCH	
	15	1	**254-1126**	1	PLATE	
	16	1	**254-1127**	1	PLATE	
M	17	1	**131-3987**	2	SCREW (M4X0.7X12-MM)	
	18	1	**159-4946**	1	KEEPER (B)	
	19	1	**197-5107**	2	SCREW-TRUSS HEAD (M6X1X60-MM)	
	20	1	**205-7048**	2	INSERT-THREADED (M6X1-6H-THD)	
M	21	1	**5C-9553**	3	BOLT (M6X1X16-MM)	
M	22	1	**5Y-0660**	1	NUT (M6-THD)	
	23	1	**287-8257**	1	BOLT (M6X1X65-MM)	
	24	1	**9X-2038**	4	WASHER (7X19X2-MM THK)	
M	25	1	**9X-2045**	4	SCREW-TRUSS HEAD (M6X1X20-MM)	
	26	1	**258-3697**	1	WASHER-NYLON (7X20X2-MM THK)	
					AVAILABLE REPAIR KIT(S):	
J			**161-9044**	1	KIT-FITTING (BALL STUD)	
					(INCLUDES NUT & FITTING AS)	

B-USE AS REQUIRED
J-KIT MARKED J AVAILABLE FOR PART MARKED J
L-REQUIRES 5P8500 KEY
M-METRIC PART
Y-SEPARATE ILLUSTRATION

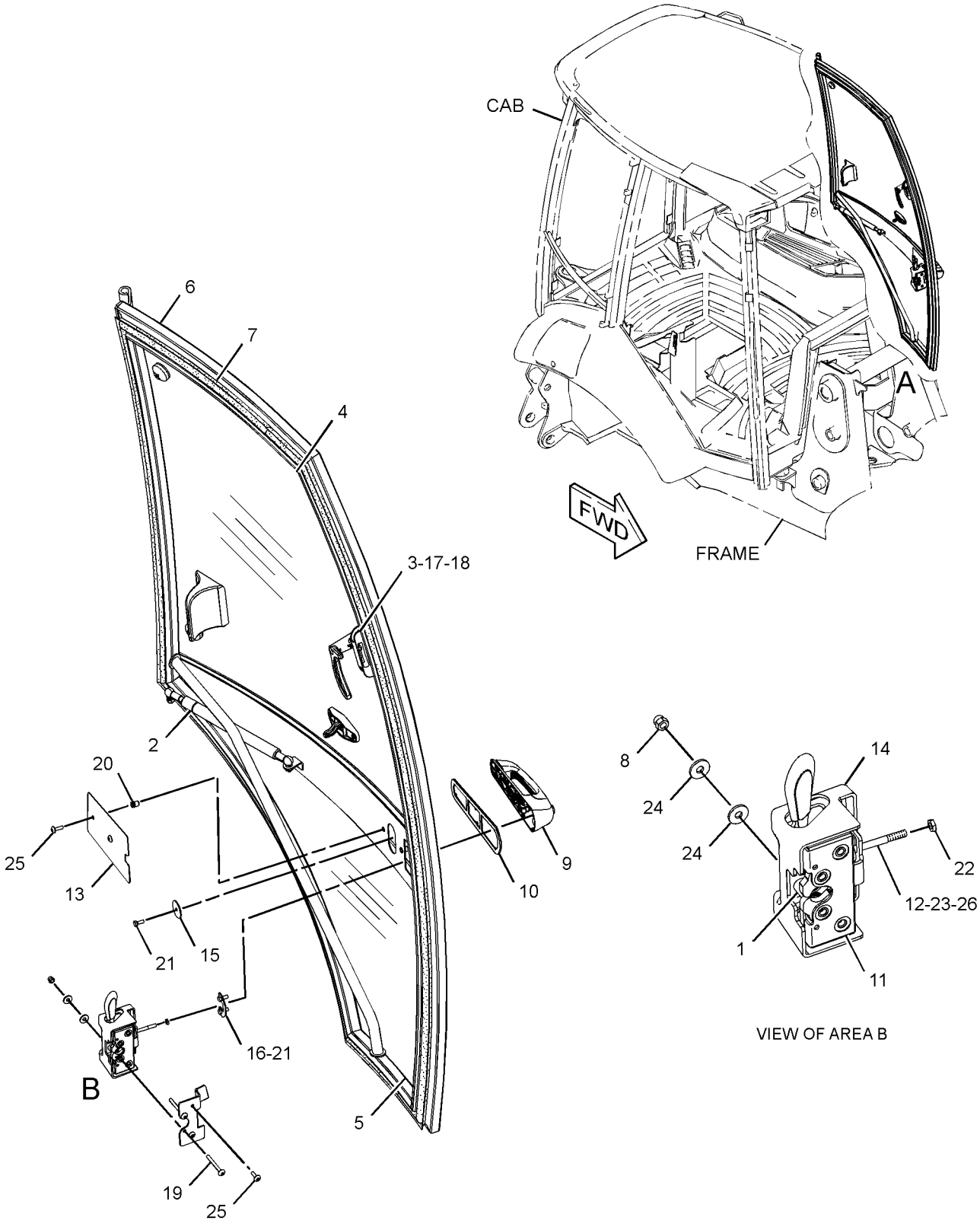

GRAPHIC #1

<END>

g01274276

OPERATOR STATION

206-1593 DOOR GP-CAB—RH

S/N: SHA1-UP
PART OF 206-1889 CAB GP-ENCLOSED ROPS
AN ATTACHMENT

SMCS-7308 **i02527227**

NOTE	REF NO	GRAPHIC REF	PART NUMBER	QTY	PART NAME 1 2 3 4 5 6 (PRODUCT LEVEL)	SEE PAGE
	1	1	**132-2249**	2	SPACER (7.4X12.7X24-MM THK)	
J	2	1	**159-4269**	1	SPRING AS-GAS	
B	3	1	**177-4877**	1	SHIM (1-MM THK)	
Y	4	1	**205-9595**	1	WINDOW GP-DOOR (RH)	751
	5	1	**205-9598**	1	GLASS (RH)	
	6	1	**206-1606**	1	DOOR AS (RH)	
	7	1	**223-2029**	1	SEAL AS (RH)	
	8	1	**248-2714**	2	NUT-ACORN	
L	9	1	**252-1862**	1	HANDLE AS	
	10	1	**252-1863**	1	GASKET	
	11	1	**252-1865**	1	LATCH AS (RH)	
	12	1	**253-1817**	1	SPACER (6.5X14.5X12-MM THK)	
	13	1	**253-1857**	1	PLATE	
	14	1	**253-1858**	1	COVER-LATCH	
	15	1	**254-1126**	1	PLATE	
	16	1	**254-1127**	1	PLATE	
M	17	1	**131-3987**	2	SCREW (M4X0.7X12-MM)	
	18	1	**159-4945**	1	KEEPER	
	19	1	**197-5107**	2	SCREW-TRUSS HEAD (M6X1X60-MM)	
	20	1	**205-7048**	2	INSERT-THREADED (M6X1-6H-THD)	
M	21	1	**5C-9553**	3	BOLT (M6X1X16-MM)	
M	22	1	**5Y-0660**	1	NUT (M6-THD)	
	23	1	**287-8257**	1	BOLT (M6X1X65-MM)	
	24	1	**9X-2038**	4	WASHER (7X19X2-MM THK)	
M	25	1	**9X-2045**	4	SCREW-TRUSS HEAD (M6X1X20-MM)	
	26	1	**258-3697**	1	WASHER-NYLON (7X20X2-MM THK)	
					AVAILABLE REPAIR KIT(S):	
J			**161-9044**	1	KIT-FITTING	
					(INCLUDES NUT & FITTING AS)	

B-USE AS REQUIRED
J-KIT MARKED J AVAILABLE FOR PART MARKED J
L-REQUIRES 5P8500 KEY
M-METRIC PART
Y-SEPARATE ILLUSTRATION

206-1593 DOOR GP-CAB *(contd.)* **i02527227**

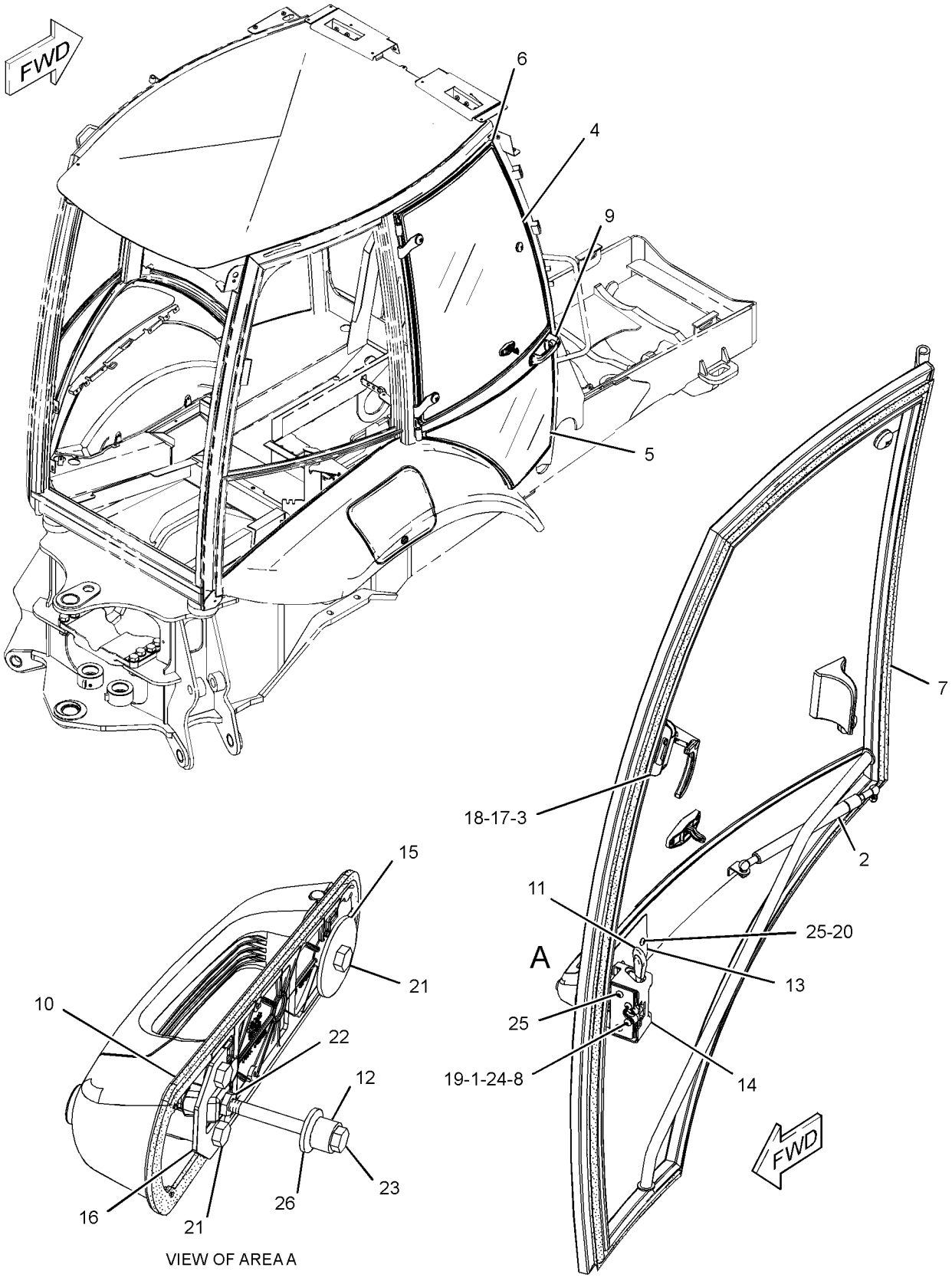

GRAPHIC #1 **<END>** g01270233

OPERATOR STATION

206-1618 FLOOR MAT GP

S/N: SHA1-UP

PART OF 204-4162, 228-4602 CAB AR-ENCLOSED ROPS, 204-4164 CANOPY AR-OPEN ROPS AN ATTACHMENT

SMCS-7265 **i02460066**

NOTE	REF NO	GRAPHIC REF	PART NUMBER	QTY	PART NAME 1 2 3 4 5 6 (PRODUCT LEVEL)	SEE PAGE
	1	1	**247-8179**	2	PLATE	
	2	1	**284-1602**	1	FLOOR MAT	
	3	1	**1H-3244**	4	LOCKWASHER	
M	4	1	**9X-2045**	4	SCREW-TRUSS HEAD (M6X1X20-MM)	

M-METRIC PART

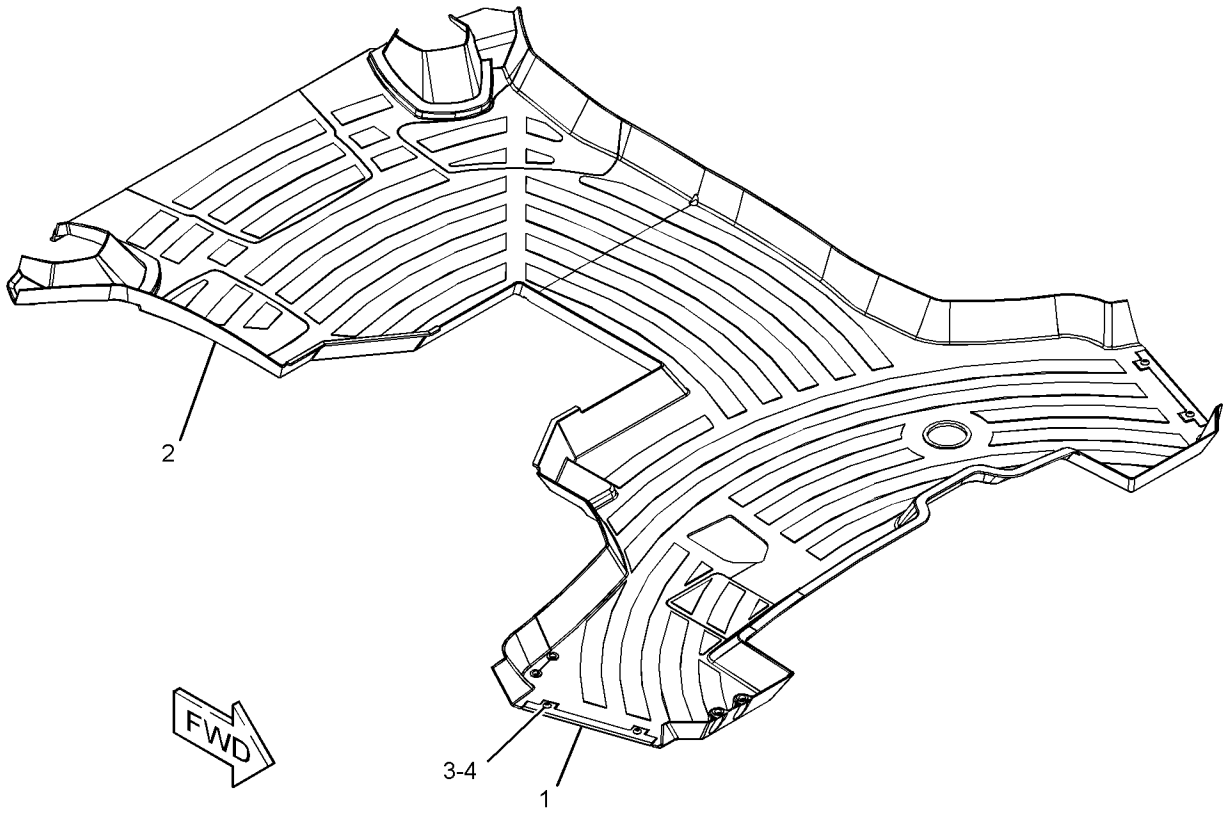

GRAPHIC #1 **<END>** g01228081

OPERATOR STATION

206-1620 FLOOR MAT GP

S/N: SHA1-UP

PART OF 204-4161 CAB AR-ENCLOSED ROPS, 204-4160 CANOPY AR-OPEN ROPS

AN ATTACHMENT

SMCS-7265 **i02098634**

NOTE	REF NO	GRAPHIC REF	PART NUMBER	QTY	PART NAME 1 2 3 4 5 6 (PRODUCT LEVEL)	SEE PAGE
	1	1	**206-1621**	1	FLOOR MAT	
	2	1	**247-8179**	2	PLATE	
	3	1	**1H-3244**	4	LOCKWASHER	
M	4	1	**9X-2045**	4	SCREW-TRUSS HEAD (M6X1X20-MM)	

M-METRIC PART

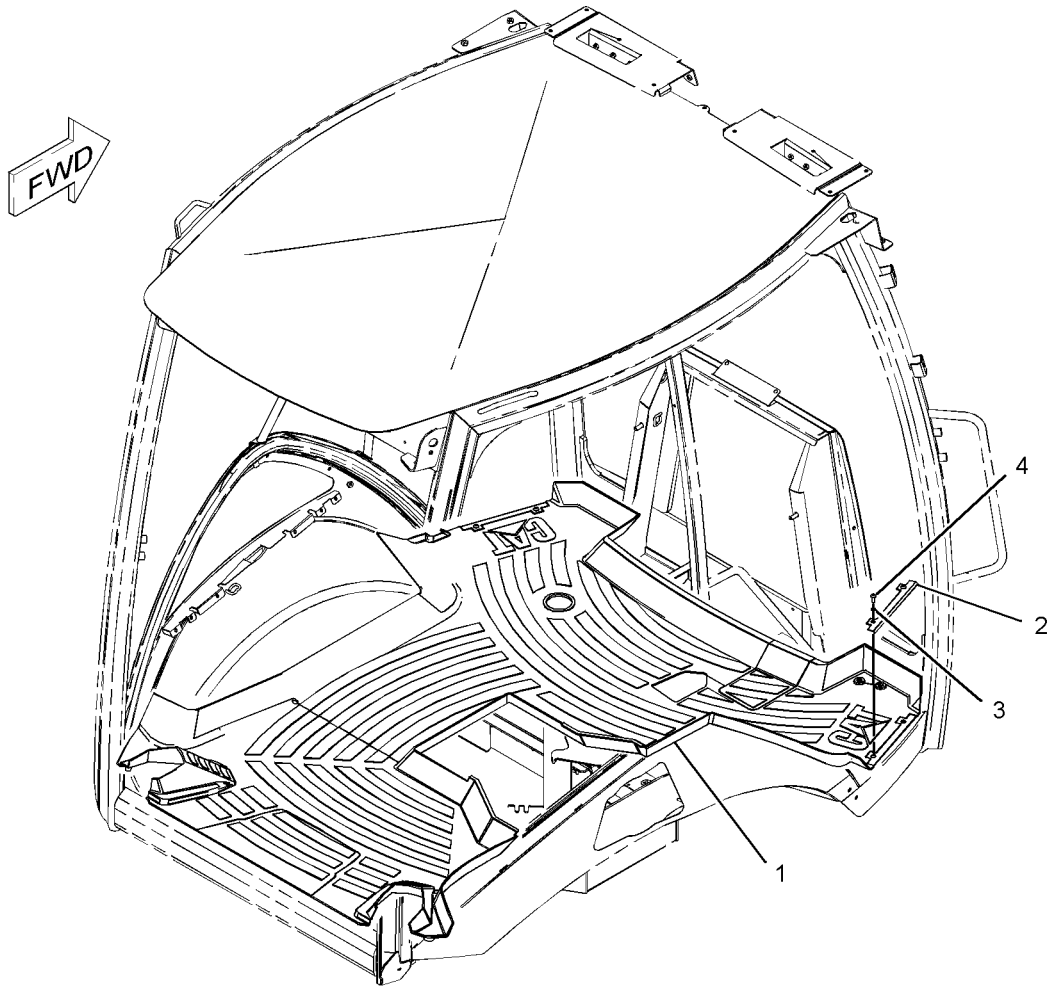

GRAPHIC #1 **<END>** g01080493

OPERATOR STATION

206-1800 HEATER GP-CAB

S/N: SHA1-UP

PART OF 204-4161, 204-4162 CAB AR-ENCLOSED ROPS

AN ATTACHMENT

SMCS-7304 **i02753190**

NOTE	REF NO	GRAPHIC REF	PART NUMBER	QTY	PART NAME 1 2 3 4 5 6 (PRODUCT LEVEL)	SEE PAGE
	1	1	**221-2420**	2	HOSE-AIR	
E	2	1	**6V-6813**		HOSE (28-CM)	
	3	1	**6L-4725**	2	CLAMP-HOSE	
	4	1	**8Y-5737**	1	CLAMP	
	5	1	**8Y-6967**	6	LOUVER AS	
	6	1	**9M-7959**	4	CLAMP-HOSE	
	7	1	**9N-2231**	1	GROMMET AS	
	8	1	**110-6109**	1	KNOB-CONTROL (TEMPERATURE)	
	9	1	**130-4832**	2	SCREW (8-18X10-MM)	
	10	1	**164-1368**	4	FASTENER-PANEL	
	11	1	**164-8474**	2	LOUVER AS-VENT	
	12	1	**189-0881**	1	CONTROL AS (PANEL)	
		1	**129-1831**	1	CLAMP	
	13	1	**193-3356**	1	CABLE AS	
	14	1	**194-5622**	1	VALVE AS-WATER	
		1	**6V-6717**	1	SCREW-WASHER HEAD (8-32X9.52-MM)	
		1	**124-0312**	2	SCREW-PAN HEAD (8-16X0.32-IN)	
	15	1	**206-1648**	1	LOUVER	
	16	1	**206-1653**	4	GASKET	
	17	1	**206-1682**	1	PANEL-CONTROL (INSERT)	
	18	1	**206-1684**	1	COVER (CAB FILTER)	
	19	1	**206-1803**	2	GASKET	
	20	1	**206-1804**	1	GASKET	
	21	1	**206-1805**	1	GASKET	
E	22	1	**220-0738**		SEAL (87-CM)	
	23	1	**206-1807**	1	GASKET	
	24	1	**206-1808**	1	PLATE	
	25	1	**206-1809**	1	ROD AS	
	26	1	**206-1810**	1	DUCT-AIR	
	27	1	**206-1812**	1	DUCT-AIR	
	28	1	**206-1814**	1	DUCT-AIR	
	29	1	**206-1815**	1	DUCT-AIR	
	30	1	**206-1816**	1	DUCT-AIR	
	31	1	**206-1817**	2	DUCT-AIR	
	32	1	**206-1818**	1	DUCT AS-AIR	
Y	33	1	*210-8364*	1	HEATER GP-CAB	697
	34	1	**211-2661**	1	FILTER ELEMENT AS-AIR (CAB HEATER, AIR CONDITIONER)	
	35	1	**218-0666**	6	LOUVER AS	
	36	1	**255-0795**	1	FILM (TEMPERATURE CONTROL)	
M	37	1	**111-4627**	3	SCREW-MACHINE (M6X1X30-MM)	
	38	1	**5P-4116**	1	WASHER-HARD (8.8X20.5X2-MM THK)	
	39	1	**7X-0579**	1	WASHER-HARD (8.8X25.5X2-MM THK)	
M	40	1	**8T-4200**	1	BOLT (M8X1.25X16-MM)	
	41	1	**8Y-6352**	1	LOUVER AS	
	42	1	**9X-2038**	4	WASHER (7X19X2-MM THK)	
M	43	1	**9X-2045**	8	SCREW-TRUSS HEAD (M6X1X20-MM)	
	44	1	**8T-4205**	4	WASHER-HARD (7.2X14.5X2-MM THK)	

E-ORDER BY THE CENTIMETER
M-METRIC PART
Y-SEPARATE ILLUSTRATION

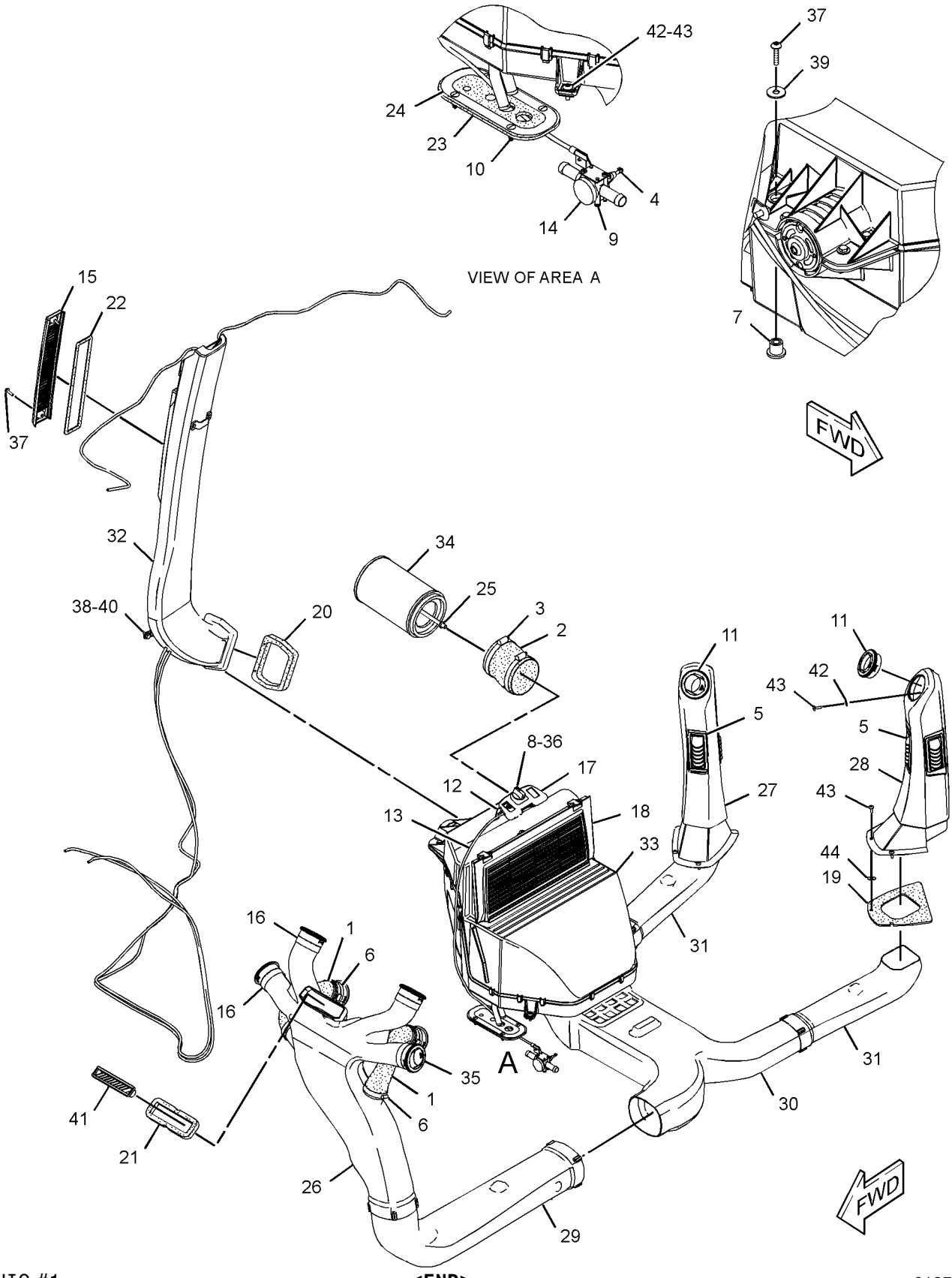

GRAPHIC #1

<END>

g01379893

OPERATOR STATION

210-8364 HEATER GP-CAB

S/N: SHA1-UP
PART OF 206-1800 HEATER GP-CAB
AN ATTACHMENT

SMCS-7304 **i02507728**

NOTE	REF NO	GRAPHIC REF	PART NUMBER	QTY	PART NAME 1 2 3 4 5 6 (PRODUCT LEVEL)	SEE PAGE
	1	1	**8C-3756**	1	FILM-IDENTIFICATION (GROUP NUMBER)	
	2	1	**168-2313**	1	FAN AS (HEATER)	
		1	**177-9645**	1	KIT-RECEPTACLE (2-PIN)	
					(INCLUDES RECEPTACLE AS & WEDGE)	
		1	**7T-0093**	2	PIN-CONNECTOR	
	3	1	**185-4015**	11	CLIP	
	4	1	**204-9921**	1	RESISTOR AS (HEATER)	
	5	1	**210-7665**	1	HOUSING-TOP	
	6	1	**210-7666**	1	BAFFLE	
	7	1	**210-8402**	1	COIL AS-HEATER	
JZ		1		1	GASKET	
DJ		1	**5P-5688**		SEAL (1-M)	
	8	1	**211-2660**	1	FILTER AS-AIR (RECIRCULATION)	
	9	1	**212-3416**	1	SCREW-PAN HEAD (8-16X0.5-IN)	
	10	1	**219-6281**	1	COVER AS (FILTER)	
		1	**6C-3680**	1	RIVET-POP	
JZ	11	1		2	GASKET	
JZ	12	1		1	GASKET	
JZ	13	1		1	GASKET	
JZ	14	1		2	GASKET	
	15	1	**219-6292**	1	HOUSING AS	
		1	**7H-3937**	4	LOCKWASHER	
M		1	**129-3178**	4	LOCKNUT (M6X1-THD)	
JZ	16	1		2	SEAL (DRAIN TUBE)	
	17	1	**253-2470**	1	HARNESS AS-HEATER	
		1	**220-5725**	1	GROMMET	
		1	**177-9653**	1	KIT-RECEPTACLE (4-PIN)	
					(INCLUDES RECEPTACLE AS & WEDGE)	
	18	1	**253-9510**	1	GUARD	
	19	1	**2S-3745**	2	SCREW-TAPPING (10-16X0.5-IN)	
M	20	1	**6V-7357**	4	BOLT (M6X1X25-MM)	
	21	1	**8T-4205**	5	WASHER-HARD (7.2X14.5X2-MM THK)	
D	22	1	**5P-5655**		SEAL (0.5-M)	
DJ	23	1	**5P-5637**		SEAL (0.8-M)	
EJ	24	1	**8C-7524**		SEAL (35-CM)	
					AVAILABLE REPAIR KIT(S):	
J			**285-9109**	1	KIT-SEAL	

D-ORDER BY THE METER
E-ORDER BY THE CENTIMETER
J-KIT MARKED J SERVICES PARTS MARKED J
M-METRIC PART
Z-NOT SERVICED SEPARATELY

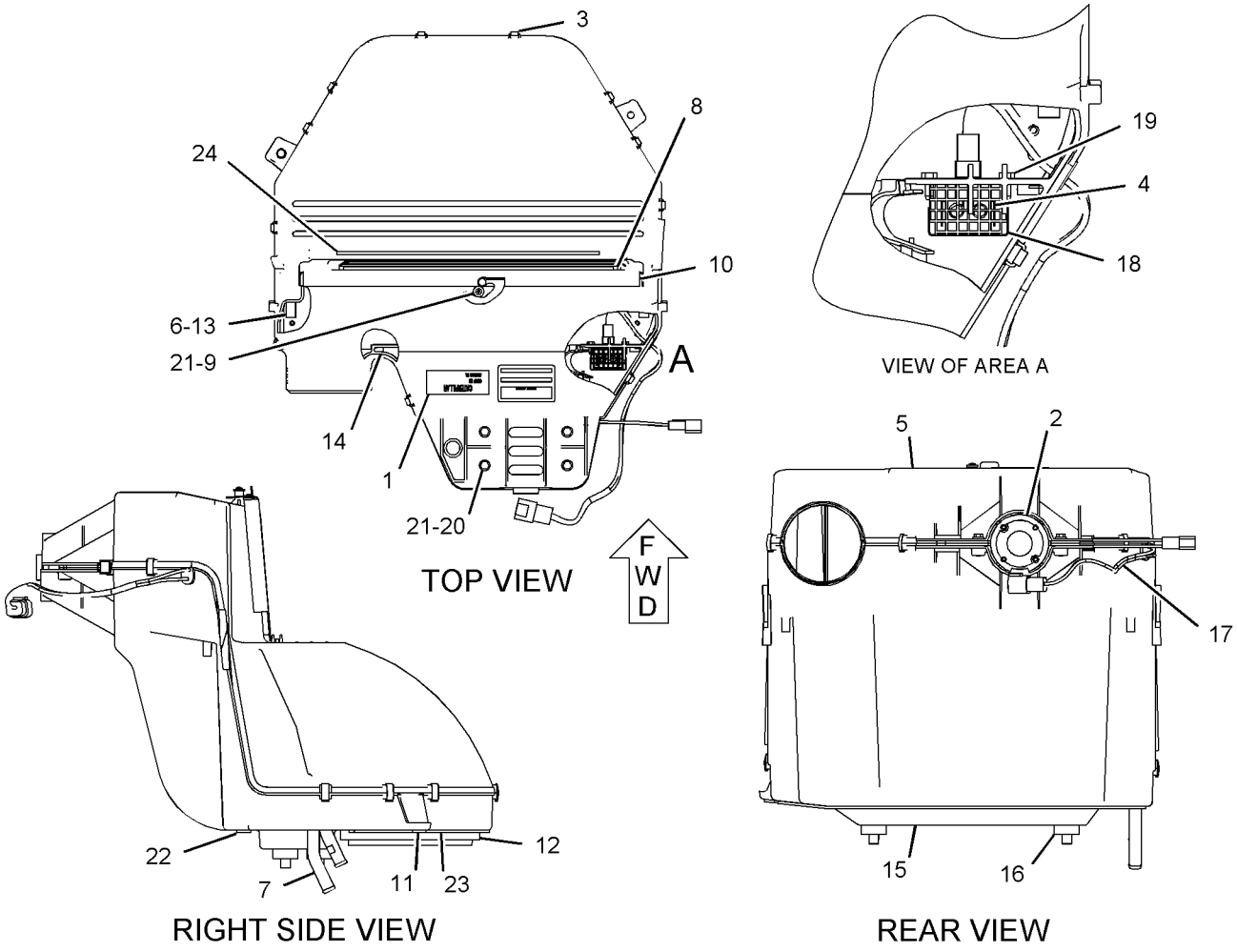

GRAPHIC #1 **<END>** g01091609

OPERATOR STATION

211-4253 INSTALLATION GP-MONITOR—ADVISOR

S/N: SHA1-UP

PART OF 291-9203 BACKHOE AR-EXTENDABLE STICK, 291-9202 BACKHOE AR-STANDARD STICK, 246-8045 GRADE CONTROL AR-LASER AN ATTACHMENT

SMCS-1408, 7490 **i02595942**

NOTE	REF NO	GRAPHIC REF	PART NUMBER	QTY	PART NAME 1 2 3 4 5 6 (PRODUCT LEVEL)	SEE PAGE
M	1	1	**136-4184**	4	BOLT-SOCKET HEAD (M8X1.25X40-MM)	
	3	1	**214-4293**	1	SENSOR AS-POSITION (BOOM SWING)	
	4	1	**217-8432**	1	COUPLING	
Y	5	1	*227-7374*	1	ELECTRONICS GP-MONITOR (ADVISOR)	130
Y	6	1	*229-8743*	1	BRACKET GP-MOUNTING (MONITOR)	644
	7	1	**246-8046**	1	HARNESS AS-CONTROL	
		1	**102-8801**	1	KIT-RECEPTACLE (12-PIN)	
					(INCLUDES RECEPTACLE AS & WEDGE)	
		1	**147-1444**	1	PLUG AS-CONNECTOR (70-PIN)	
		1	**159-9322**	1	SEAL-O-RING	
	8	1	**249-5652**	1	SENSOR AS-POSITION (ANGLE)	
Y	9	1	*251-1222*	1	MOUNTING GP-MONITOR (GRADE CONTROL)	715
Y	10	1	*251-3200*	1	MOUNTING GP-SENSOR (ANGLE)	147
	11	1	**3S-2093**	1	STRAP-CABLE	
M	12	1	**8T-4171**	4	BOLT (M6X1X12-MM)	
	13	1	**8T-4205**	4	WASHER-HARD (7.2X14.5X2-MM THK)	
	14	1	**8T-4224**	4	WASHER-HARD (8.8X16X2-MM THK)	
	16	1	**4P-8134**	1	CLIP	

M-METRIC PART
Y-SEPARATE ILLUSTRATION

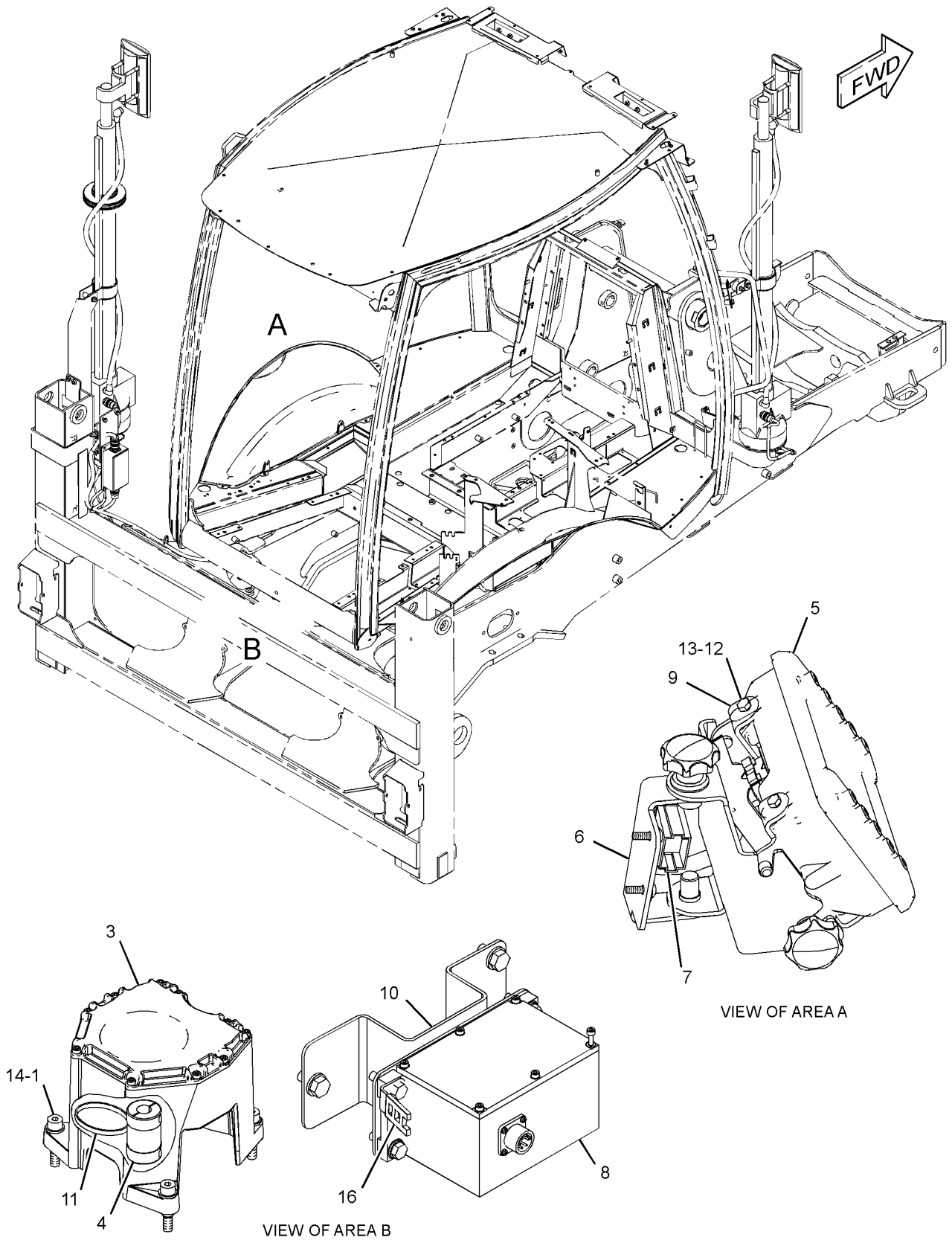

GRAPHIC #1 **<END>** g01308629

OPERATOR STATION

299-6985 LATCH GP-CAB DOOR & WINDOW

S/N: SHA1-UP

PART OF 205-9611, 205-9619, 205-9628 WINDOW GP-CAB, 205-9595 WINDOW GP-DOOR

AN ATTACHMENT

SMCS-7308, 7310 **i02752222**

NOTE	REF NO	GRAPHIC REF	PART NUMBER	QTY	PART NAME 1 2 3 4 5 6 (PRODUCT LEVEL)	SEE PAGE
M	1	1	**161-6984**	1	SCREW-TRUSS HEAD (M5X0.8X20-MM)	
	2	1	**161-6987**	1	WASHER-HARD (5.2X16X1.5-MM THK)	
	3	1	**161-9294**	1	SPRING-FLAT WIRE	
M	4	1	**162-6556**	1	LOCKNUT (M6X1-THD)	
M	5	1	**5C-2874**	1	NUT (M5X0.8-THD)	
					PARTS SHOWN IN GRAPHIC(S) WITHOUT A REFERENCE NUMBER ARE NOT SERVICED SEPARATELY	

M-METRIC PART

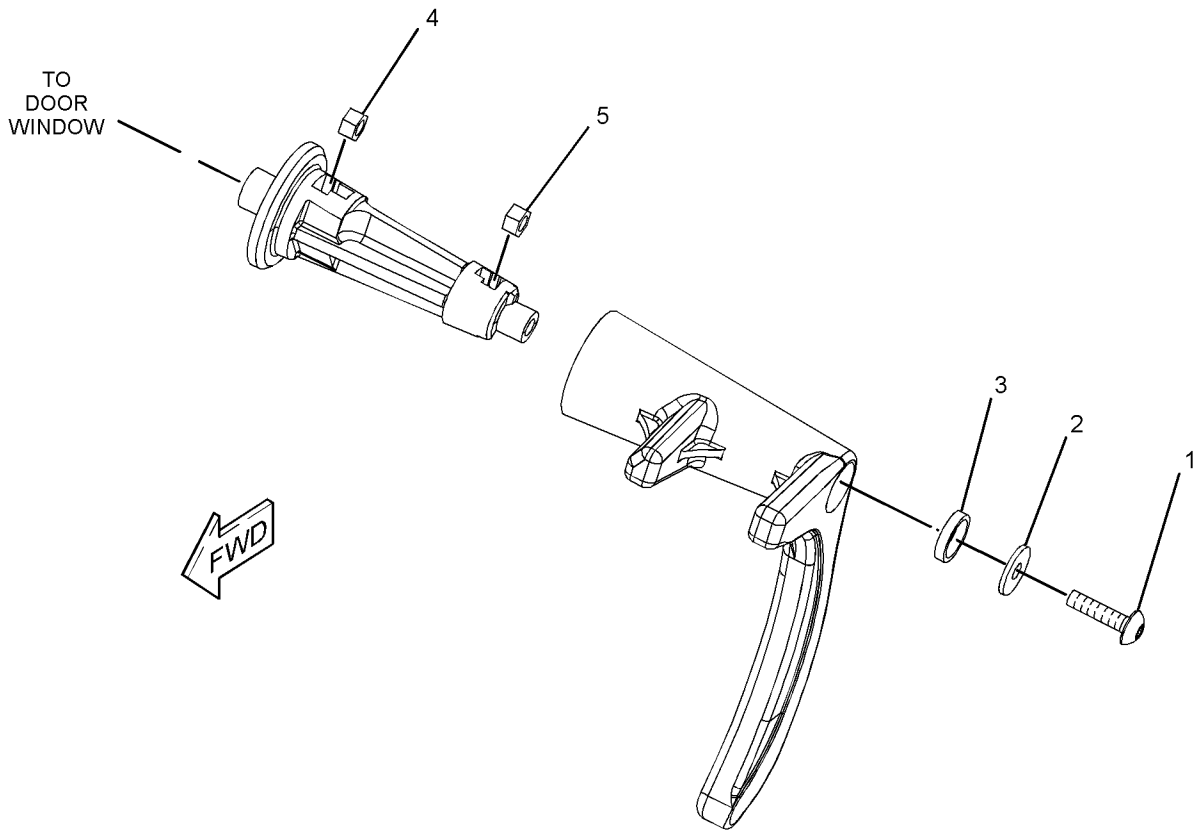

GRAPHIC #1 **<END>** g01384222

OPERATOR STATION

299-6986 LATCH GP-CAB DOOR & WINDOW

S/N: SHA1-UP

PART OF 205-9619, 205-9628 WINDOW GP-CAB, 205-9585 WINDOW GP-DOOR

AN ATTACHMENT

SMCS-7308, 7310 **i02752226**

NOTE	REF NO	GRAPHIC REF	PART NUMBER	QTY	PART NAME 1 2 3 4 5 6 (PRODUCT LEVEL)	SEE PAGE
M	1	1	**161-6984**	1	SCREW-TRUSS HEAD (M5X0.8X20-MM)	
	2	1	**161-6987**	1	WASHER-HARD (5.2X16X1.5-MM THK)	
	3	1	**161-9294**	1	SPRING-FLAT WIRE	
M	4	1	**162-6556**	1	LOCKNUT (M6X1-THD)	
M	5	1	**5C-2874**	1	NUT (M5X0.8-THD)	
					PARTS SHOWN IN GRAPHIC(S) WITHOUT A REFERENCE NUMBER ARE NOT SERVICED SEPARATELY	

M-METRIC PART

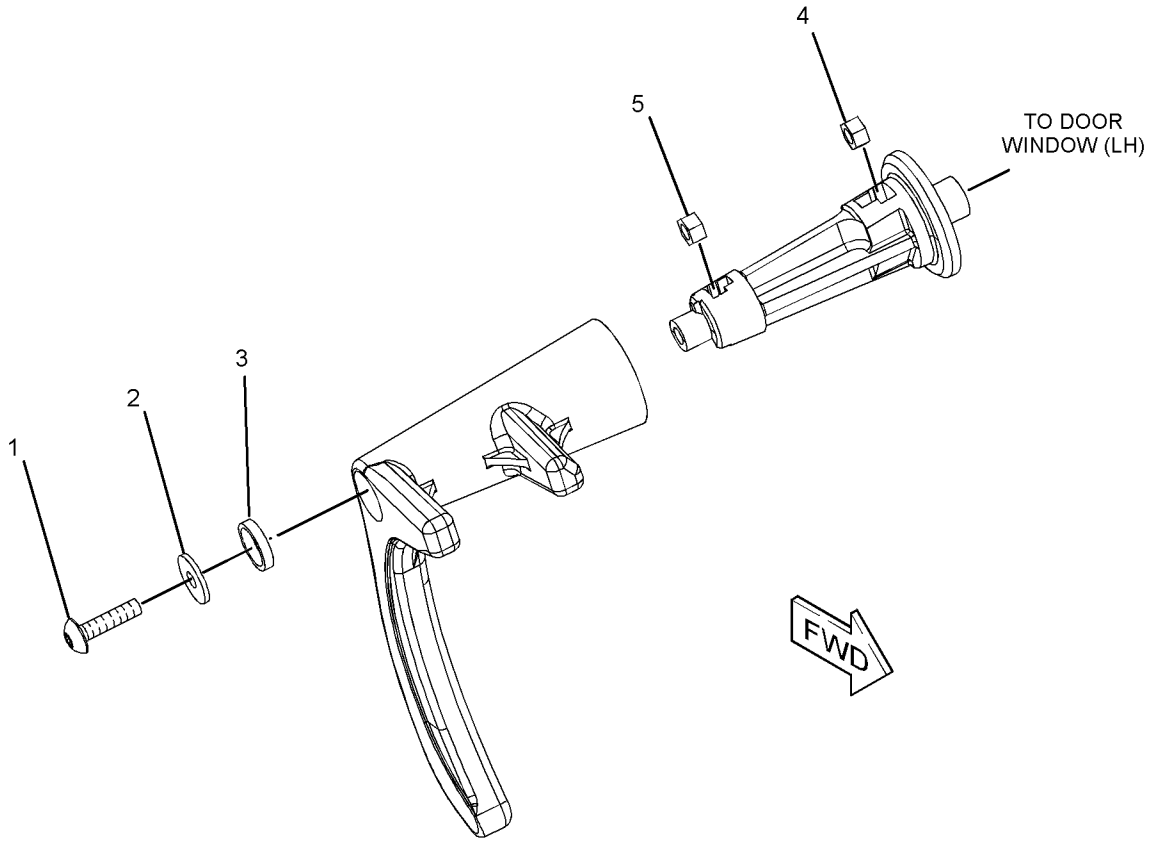

GRAPHIC #1 **<END>** g01384201

209-3367 LEVER GP-GOVERNOR

S/N: SHA1-UP

PART OF 206-1640, 251-3802 CONTROL GP-GOVERNOR

AN ATTACHMENT

SMCS-1265 **i02124988**

NOTE	REF NO	GRAPHIC REF	PART NUMBER	QTY	PART NAME 1 2 3 4 5 6 (PRODUCT LEVEL)	SEE PAGE
	1	1	**8T-4742**	1	END-YOKE ROD	
	2	1	**8T-4744**	1	PIN AS-SPRING	
	3	1	**209-3366**	1	CABLE AS	
	4	1	**219-0343**	1	LEVER AS	
M	5	1	**8T-4971**	1	BOLT (M6X1X30-MM)	
M	6	1	**129-3178**	1	LOCKNUT (M6X1 THD)	

M-METRIC PART

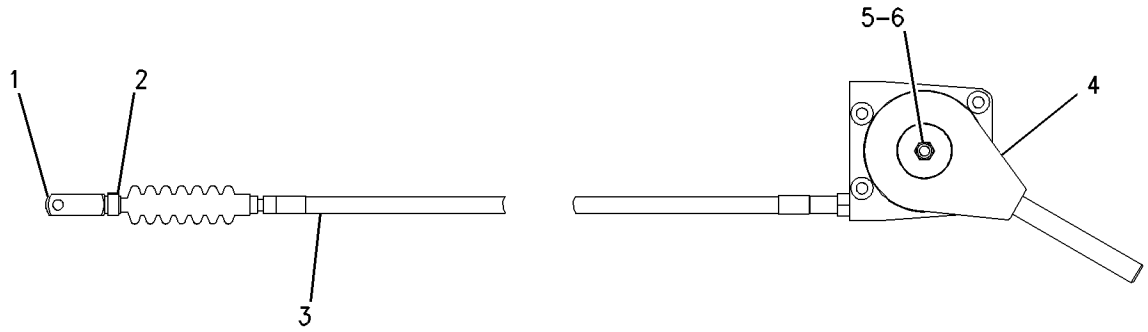

GRAPHIC #1 **<END>** g00743371

OPERATOR STATION

209-4703 LINER GP-CAB

S/N: SHA1-910

PART OF 204-4162, 228-4602 CAB AR-ENCLOSED ROPS

AN ATTACHMENT

SMCS-7329 **i02531008**

NOTE	REF NO	GRAPHIC REF	PART NUMBER	QTY	PART NAME 1 2 3 4 5 6 (PRODUCT LEVEL)	SEE PAGE
	1	1	**8E-1118**	1	ANTENNA AS	
	2	1	**8R-6111**	1	CABLE AS-COAXIAL	
	3	1	**9U-8263**	1	COVER	
	4	1	**084-4277**	1	LAMP GP-DOME	
		1	**210-8754**	1	LAMP (12-VOLT)	
M	5	1	**113-0920**	8	BOLT-SOCKET HEAD (M4X0.7X35-MM)	
	6	1	**169-7291**	2	COVER-SPEAKER	
	7	1	**209-4704**	1	LINER AS-CAB	
	8	1	**209-4705**	1	COVER	
	9	1	**209-4716**	2	PLATE	
	10	1	**229-6052**	2	SPACER (9.7X12.7X7.5-MM THK)	
	11	1	**262-9567**	2	SPEAKER	
	12	1	**282-7832**	1	GROMMET	
	13	1	**282-7835**	1	PLATE	
M	14	1	**121-9870**	5	SCREW-MACHINE (M6X1X40-MM)	
M	15	1	**123-0707**	8	SCREW-HEX SOCKET (M4X0.7X20-MM)	
M	16	1	**8T-4181**	2	BOLT (M6X1X20-MM)	
	17	1	**9X-2038**	2	WASHER (7X19X2-MM THK)	
	18	1	**9X-8256**	2	WASHER (6.6X12X2-MM THK)	
	19	1	**132-2249**	1	SPACER (7.4X12.7X24-MM THK)	

M-METRIC PART

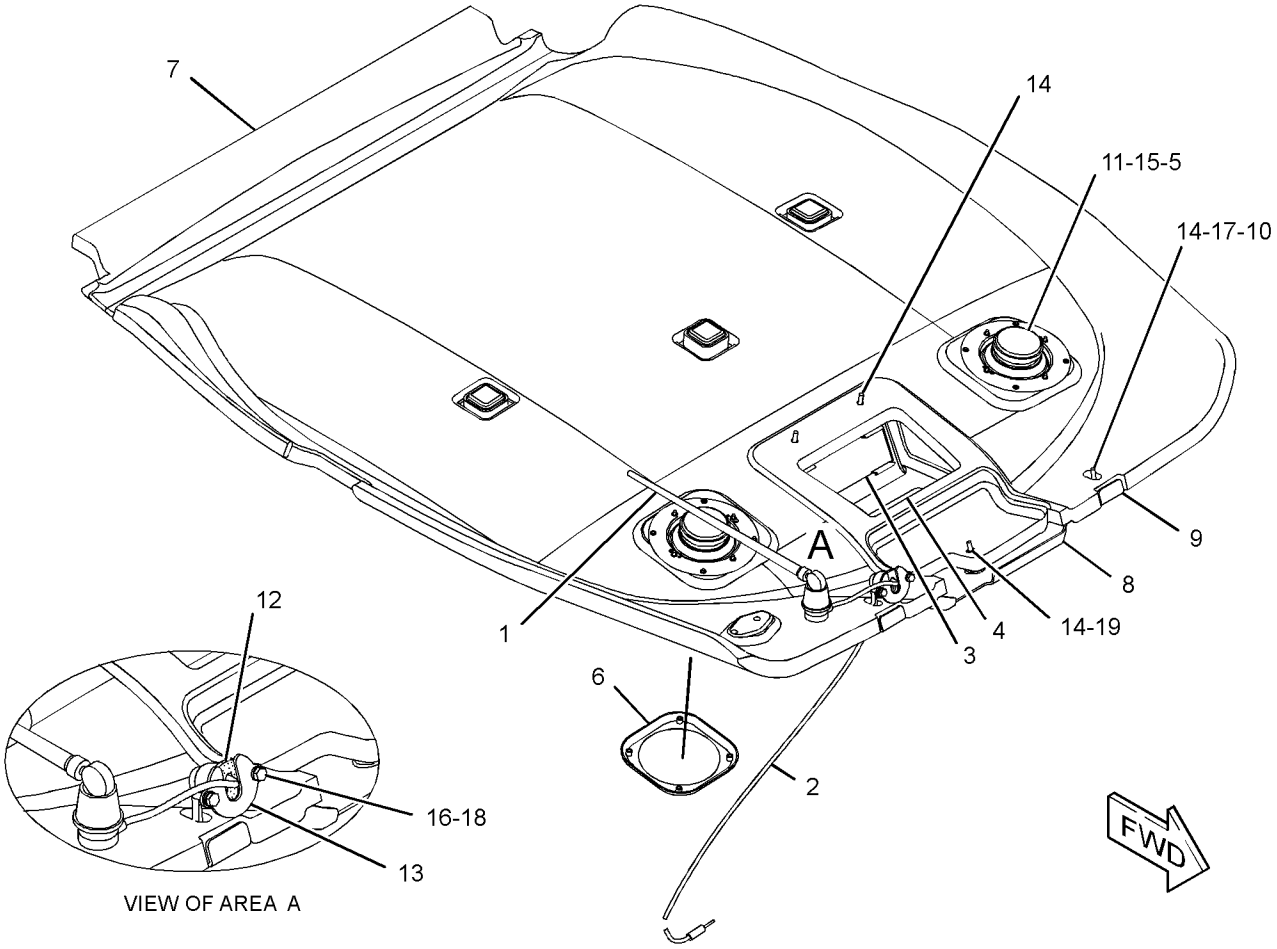

GRAPHIC #1 **<END>** g01282191

OPERATOR STATION

209-4703 LINER GP-CAB

S/N: SHA911-UP

PART OF 204-4162, 228-4602 CAB AR-ENCLOSED ROPS

AN ATTACHMENT

SMCS-7329 **i02639361**

NOTE	REF NO	GRAPHIC REF	PART NUMBER	QTY	PART NAME 1 2 3 4 5 6 (PRODUCT LEVEL)	SEE PAGE
	1	1	**8E-1118**	1	ANTENNA AS	
	2	1	**8R-6111**	1	CABLE AS-COAXIAL	
	3	1	**9U-8263**	1	COVER	
	4	1	**084-4277**	1	LAMP GP-DOME (12-VOLT)	
		1	**210-8754**	1	LAMP (12-VOLT)	
M	5	1	**113-0920**	8	BOLT-SOCKET HEAD (M4X0.7X35-MM)	
	6	1	**169-7291**	2	COVER-SPEAKER	
	7	1	**209-4704**	1	LINER AS-CAB	
		1	**263-5781**	2	PLATE AS	
					(EACH INCLUDES)	
		1	**205-7047**	8	INSERT-THREADED (M4X7-6H-THD)	
C	8	1	**292-5773**	1	COVER	
	9	1	**209-4716**	2	PLATE	
C	10	1	**145-0981**	4	SPACER (8.5X12.7X18-MM)	
	11	1	**262-9567**	2	SPEAKER	
	12	1	**282-7832**	1	GROMMET	
	13	1	**282-7835**	1	PLATE	
M	14	1	**121-9870**	5	SCREW-MACHINE (M6X1X40-MM)	
M	15	1	**123-0707**	8	SCREW-HEX SOCKET (M4X0.7X20-MM)	
M	16	1	**8C-3798**	2	BOLT-LOCKING (M6X1X30)	
	17	1	**9X-2038**	3	WASHER (7X19X2-MM THK)	
	18	1	**9X-8256**	2	WASHER (6.6X12X2-MM THK)	
	19	1	**132-2249**	1	SPACER (7.4X12.7X24-MM THK)	

C-CHANGE FROM PREVIOUS TYPE
M-METRIC PART

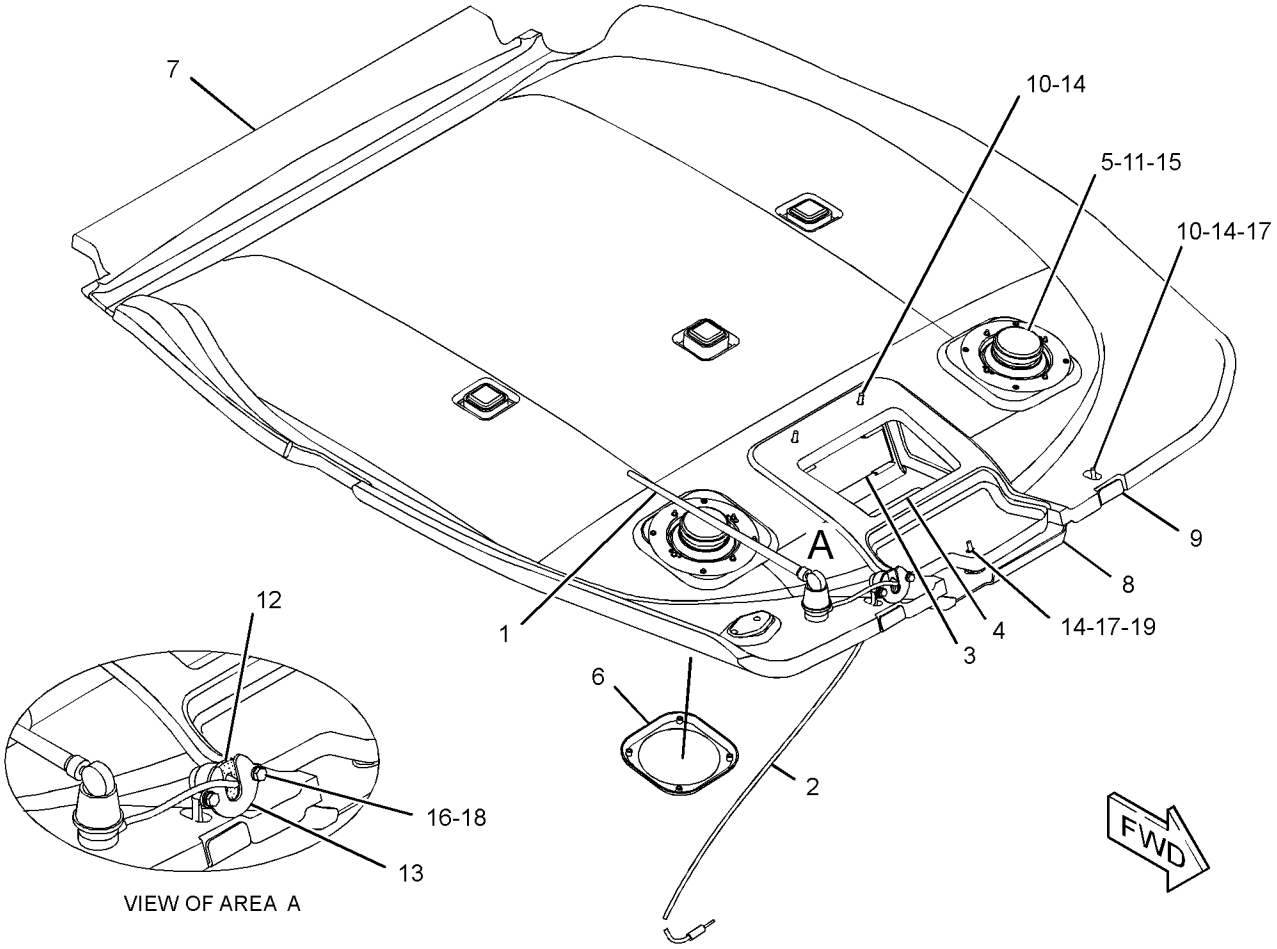

GRAPHIC #1 **<END>** g01343299

OPERATOR STATION

211-0072 LINES GP-HEATER

S/N: SHA1-UP
PART OF 204-4161, 204-4162 CAB AR-ENCLOSED ROPS
AN ATTACHMENT

SMCS-1812 **i02466511**

NOTE	REF NO	GRAPHIC REF	PART NUMBER	QTY	PART NAME 1 2 3 4 5 6 (PRODUCT LEVEL)	SEE PAGE
M	1	1	**8T-4137**	3	BOLT (M10X1.5X20-MM)	
	2	1	**5D-1026**	8	CLAMP-HOSE	
	3	1	**6P-8855**	1	SPACER (0.56X0.625X3-IN THK)	
	4	1	**9M-4814**	1	CONNECTOR-HOSE	
	5	1	**134-3856**	1	ELBOW	
	6	1	**3E-4321**	4	CLIP	
	7	1	**7K-1181**	3	STRAP-CABLE	
	8	1	**8T-4121**	3	WASHER-HARD (11X21X2.5-MM THK)	
E	9	1	**5P-0767**		HOSE (22-CM)	
E	10	1	**5P-0767**		HOSE (65-CM)	
E	11	1	**5P-0767**		HOSE (205-CM)	
E	12	1	**5P-0767**		HOSE (260-CM)	

E-ORDER BY THE CENTIMETER
M-METRIC PART

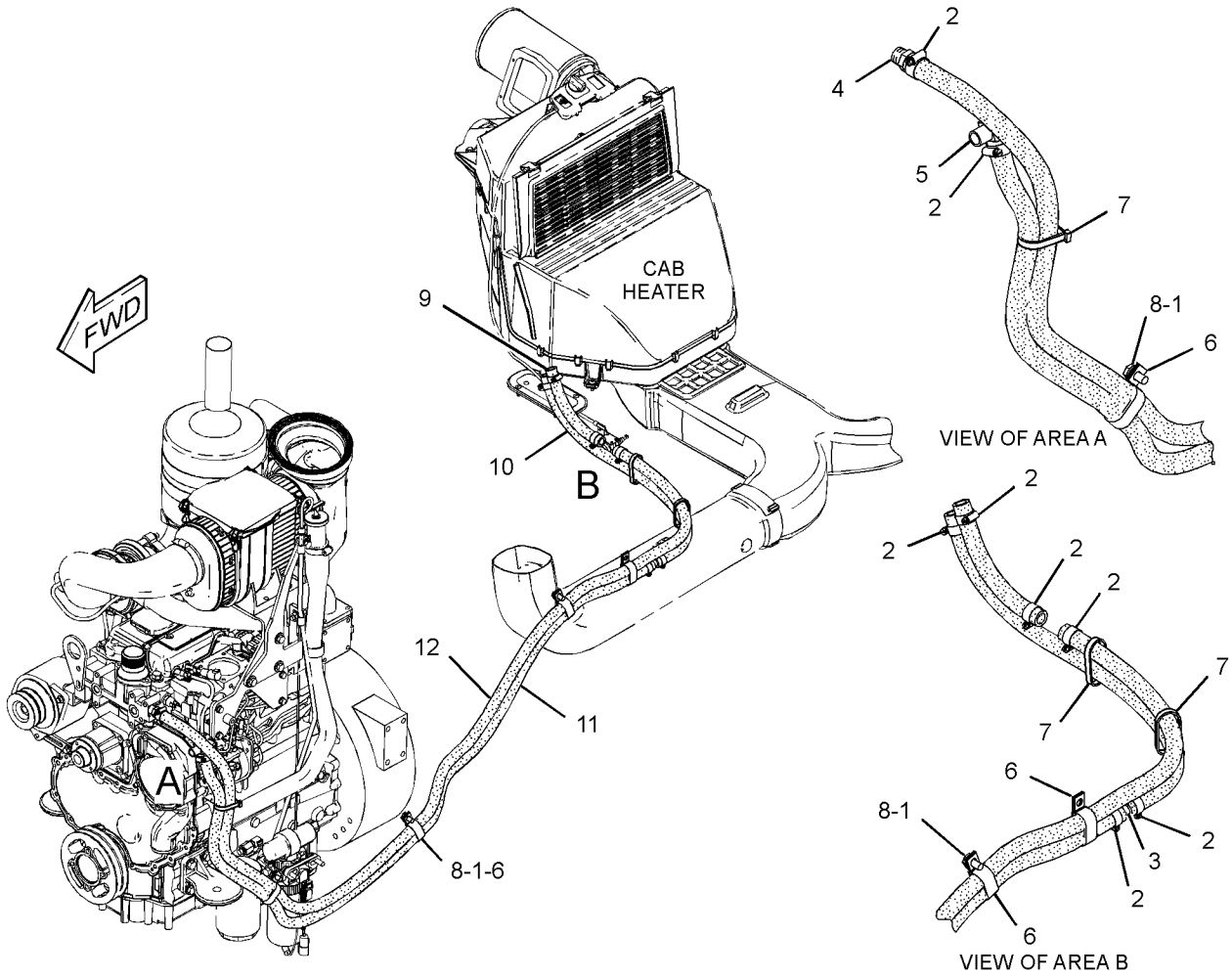

GRAPHIC #1 **<END>** g01231612

OPERATOR STATION

211-0071 LINES GP-HEATER & AIR COND

S/N: SHA1-UP
PART OF 228-4602 CAB AR-ENCLOSED ROPS
AN ATTACHMENT

SMCS-1380, 1808, 1812 **i02545026**

NOTE	REF NO	GRAPHIC REF	PART NUMBER	QTY	PART NAME 1 2 3 4 5 6 (PRODUCT LEVEL)	SEE PAGE
E	1	1	**5P-0767**		HOSE (22-CM)	
E	1A	1	**5P-0767**		HOSE (65-CM)	
E	1B	1	*5P-0767*		HOSE (205-CM)	
E	1C	1	**5P-0767**		HOSE (260-CM)	
	5	1	**3S-2093**	1	STRAP-CABLE	
	6	1	**6P-8855**	1	SPACER (0.56X0.625X3-IN THK)	
	7	1	**7K-1181**	8	STRAP-CABLE	
	8	1	**9M-4814**	1	CONNECTOR-HOSE	
	9	1	**105-9411**	1	SUPPORT	
	10	1	**130-9984**	2	CLIP	
	11	1	**134-3856**	1	ELBOW	
	12	1	**289-6021**	1	PLATE	
	13	1	**289-6018**	2	U-BOLT	
	14	1	**170-0235**	1	ACCUMULATOR-REFRIGERANT	
I	15	1	**214-3735**	1	HOSE AS	
I	16	1	**214-3736**	1	HOSE AS	
I	17	1	**214-3737**	1	HOSE AS	
I	18	1	**214-3738**	1	HOSE AS	
	19	1	**214-3739**	1	HOSE AS	
	21	1	**255-0800**	1	PLATE	
	22	1	**283-4237**	1	DRYER AS-AIR	
		1	**3E-0068**	1	TUBE AS-REFRIGERANT ORIFICE	
	23	1	**109-1633**	1	CLIP (SLOT)	
	24	1	**109-1634**	1	CLIP (TAB)	
M	25	1	**208-9293**	2	BOLT-FLANGE HEAD (M10X1.5X30-MM)	
	26	1	**3E-4321**	4	CLIP	
	27	1	**5D-1026**	8	CLAMP-HOSE	
	28	1	**5K-5338**	1	CLIP	
	29	1	**2K-4973**	4	LOCKNUT (3/8-16-THD)	
	30	1	**8T-4121**	9	WASHER-HARD (11X21X2.5-MM THK)	
M	31	1	**8T-4136**	2	BOLT (M10X1.5X25-MM)	
M	32	1	**8T-4137**	3	BOLT (M10X1.5X20-MM)	
M	33	1	**8T-4139**	1	BOLT (M12X1.75X30-MM)	
M	34	1	**8T-4189**	1	BOLT (M8X1.25X20-MM)	
	35	1	**8T-4223**	1	WASHER-HARD (13.5X25.5X3-MM THK)	
	36	1	**8T-4224**	1	WASHER-HARD (8.8X16X2-MM THK)	
	37	1	**9M-8406**	1	CLIP	
	38	1	**9X-7380**	2	SEAL-O-RING	
	39	1	**9X-7381**	3	SEAL-O-RING	
	40	1	**9X-7382**	1	SEAL-O-RING	
	41	1	**9X-7383**	2	SEAL-O-RING	
	42	1	**132-5789**	1	CLIP	

E-ORDER BY THE CENTIMETER
I-REFER TO HYDRAULIC INFORMATION SYSTEM
M-METRIC PART

211-0071 LINES GP-HEATER & AIR COND *(contd.)* i02545026

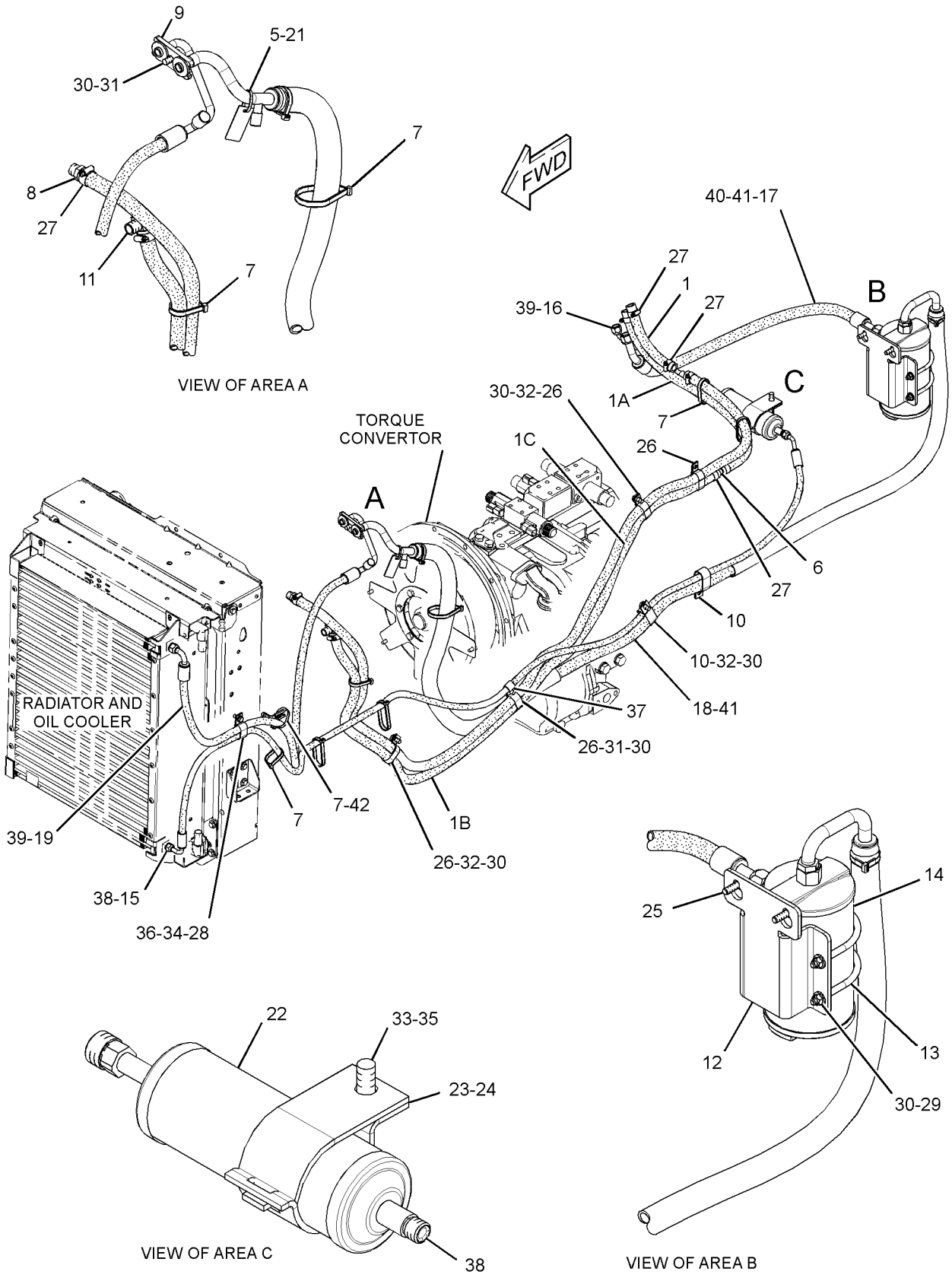

GRAPHIC #1 **<END>** g01343470

205-9578 MIRROR GP-REAR VIEW—INSIDE

S/N: SHA1-UP

PART OF 204-4162, 228-4602 CAB AR-ENCLOSED ROPS

AN ATTACHMENT

SMCS-7319 **i02357018**

NOTE	REF NO	GRAPHIC REF	PART NUMBER	QTY	PART NAME 1 2 3 4 5 6 (PRODUCT LEVEL)	SEE PAGE
	1	1	**199-0929**	1	MIRROR AS	
	2	1	**096-6166**	2	WASHER-HARD (4.5X9X1-MM THK)	
M	3	1	**153-8004**	2	BOLT-SOCKET HEAD (M4X0.7X35-MM)	

M-METRIC PART

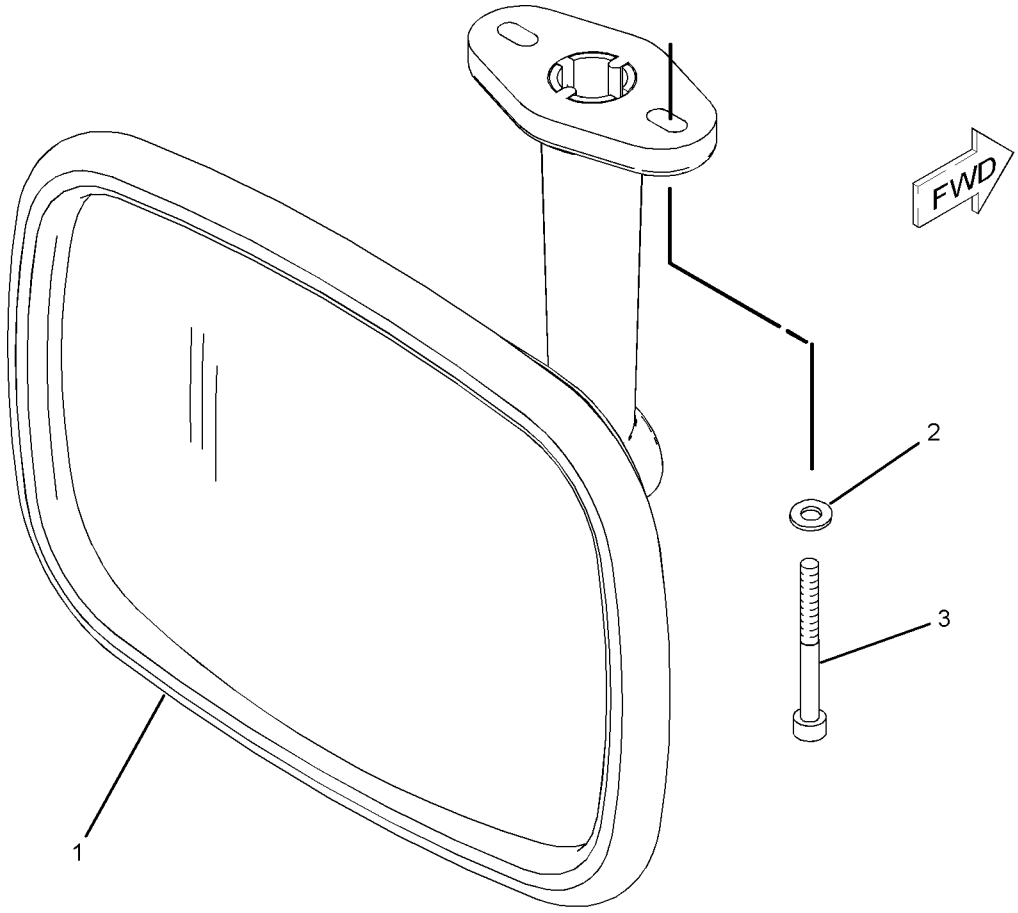

GRAPHIC #1 **<END>** g01080519

OPERATOR STATION

259-6276 MIRROR GP-REAR VIEW—INSIDE

S/N: SHA1-UP

PART OF 204-4161 CAB AR-ENCLOSED ROPS, 204-4160, 204-4164 CANOPY AR-OPEN ROPS

AN ATTACHMENT

SMCS-7319 **i02380434**

NOTE	REF NO	GRAPHIC REF	PART NUMBER	QTY	PART NAME 1 2 3 4 5 6 (PRODUCT LEVEL)	SEE PAGE
M	1	1	**8C-4982**	2	BOLT-SOCKET HEAD (M4X0.7X20-MM)	
	2	1	**199-0929**	1	MIRROR AS	
	3	1	**096-6166**	2	WASHER-HARD (4.5X9X1-MM THK)	

M-METRIC PART

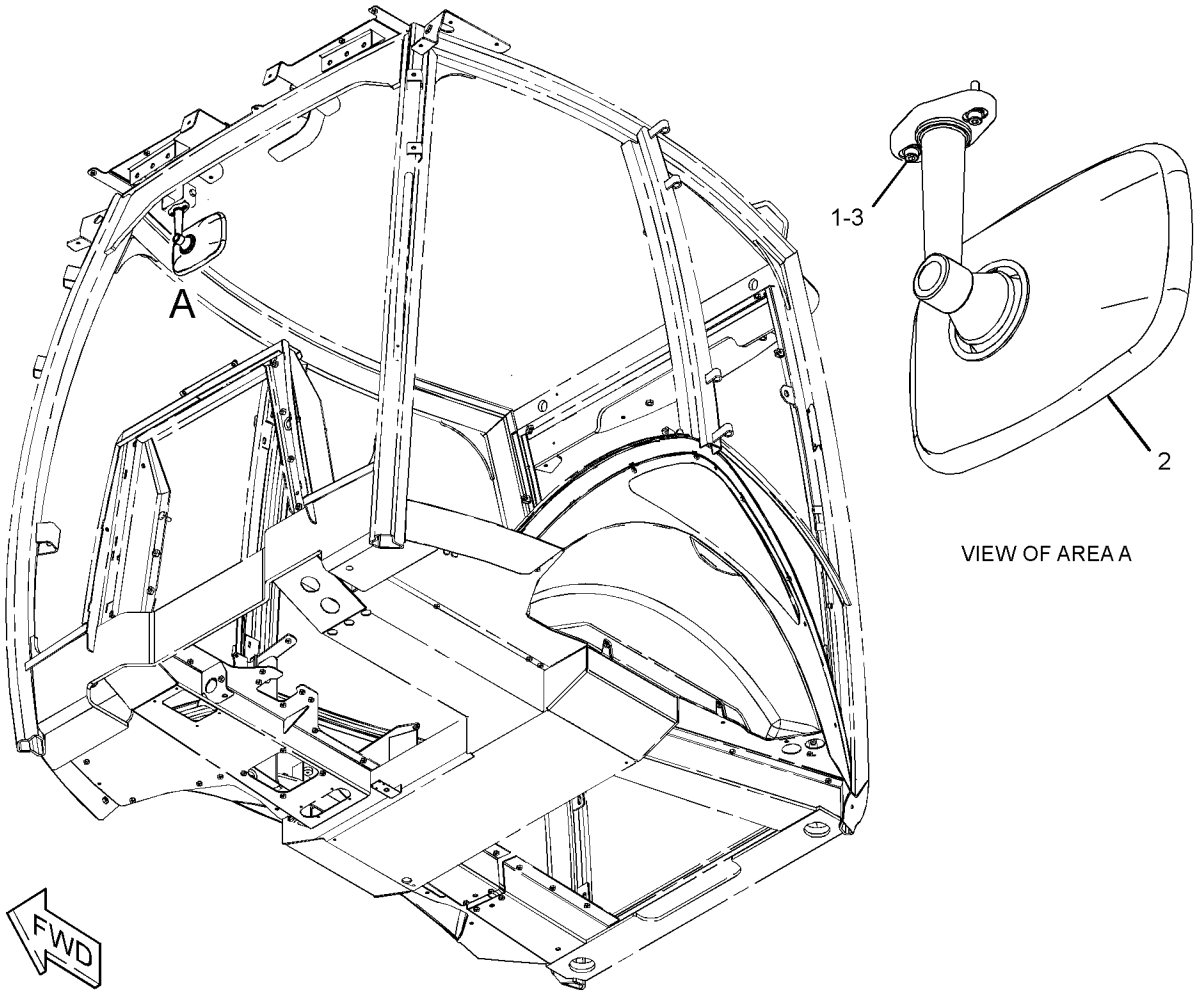

VIEW OF AREA A

GRAPHIC #1 **<END>** g01190426

186-2589 MOTOR GP-WINDOW WIPER–FRONT

S/N: SHA1-UP
12 VOLT
PART OF 206-1728 WIPER & WASHER GP-WINDOW, 206-1725 WIPER GP-WINDOW
AN ATTACHMENT

SMCS-7305 **i02445792**

NOTE	REF NO	GRAPHIC REF	PART NUMBER	QTY	PART NAME 1 2 3 4 5 6 (PRODUCT LEVEL)	SEE PAGE
M	1	1	**5C-7261**	1	NUT (M8X1.25-THD)	
	2	1	**3F-9556**	1	LOCKWASHER	
	3	1	**152-7691**	1	MOTOR GP-WINDOW WIPER	
		1	**9G-3695**	1	PLUG (GROMMET SEALING)	
		1	**102-8805**	1	KIT-RECEPTACLE (6-PIN)	
					(INCLUDES RECEPTACLE AS & WEDGE)	
		1	**186-3735**	5	PIN-CONNECTOR (16-GA TO 18-GA)	
	4	1	**206-5823**	1	CAP (WIPER)	

M-METRIC PART

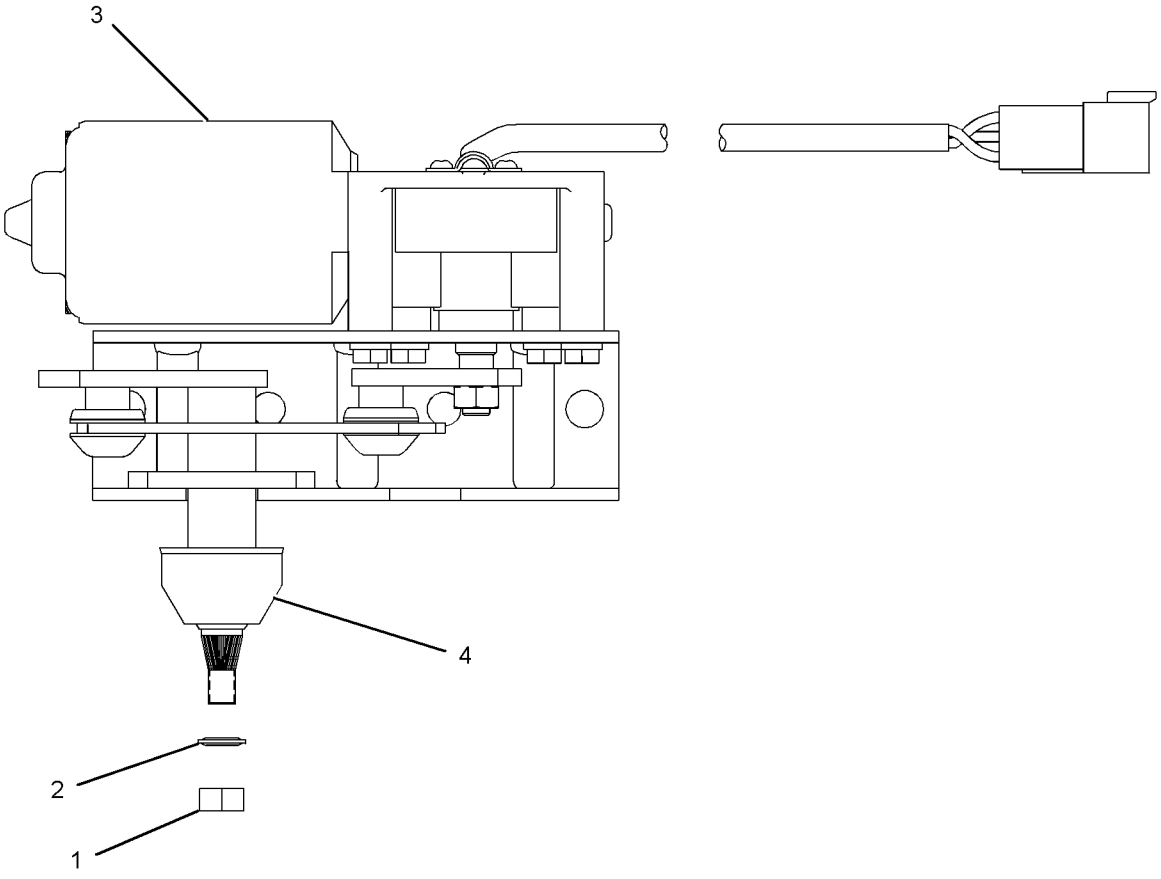

GRAPHIC #1 **<END>** g01120206

OPERATOR STATION

205-9560 MOUNTING GP-CAB

S/N: SHA1-UP

PART OF 204-4161, 204-4162, 228-4602 CAB AR-ENCLOSED ROPS, 204-4160, 204-4164 CANOPY AR-OPEN ROPS

AN ATTACHMENT

SMCS-7301 **i02700059**

NOTE	REF NO	GRAPHIC REF	PART NUMBER	QTY	PART NAME 1 2 3 4 5 6 (PRODUCT LEVEL)	SEE PAGE
	1	1	**6Y-9930**	2	MOUNT AS	
	2	1	**118-2990**	2	MOUNT AS	
	3	1	**9W-6582**	2	SLEEVE	
M	4	1	**7X-2568**	2	BOLT (M20X2.5X180-MM)	
	5	1	**297-5849**	2	WASHER-HARD (17X75X10-MM THK)	
	6	1	**8T-4123**	4	WASHER (22X35X3.5-MM THK)	
M	7	1	**8T-4131**	2	NUT (M20X2.5-THD)	
M	8	1	**8T-4132**	2	NUT (M16X2-THD)	
M	9	1	**8T-4173**	2	BOLT (M16X2X110-MM)	
	10	1	**9W-6584**	2	WASHER (20.5X114X10-MM THK)	
	11	1	**9X-8257**	4	WASHER (17.5X30X3.5-MM THK)	
	12	1	**1L-6377**	2	BUTTON-PLUG	

M-METRIC PART

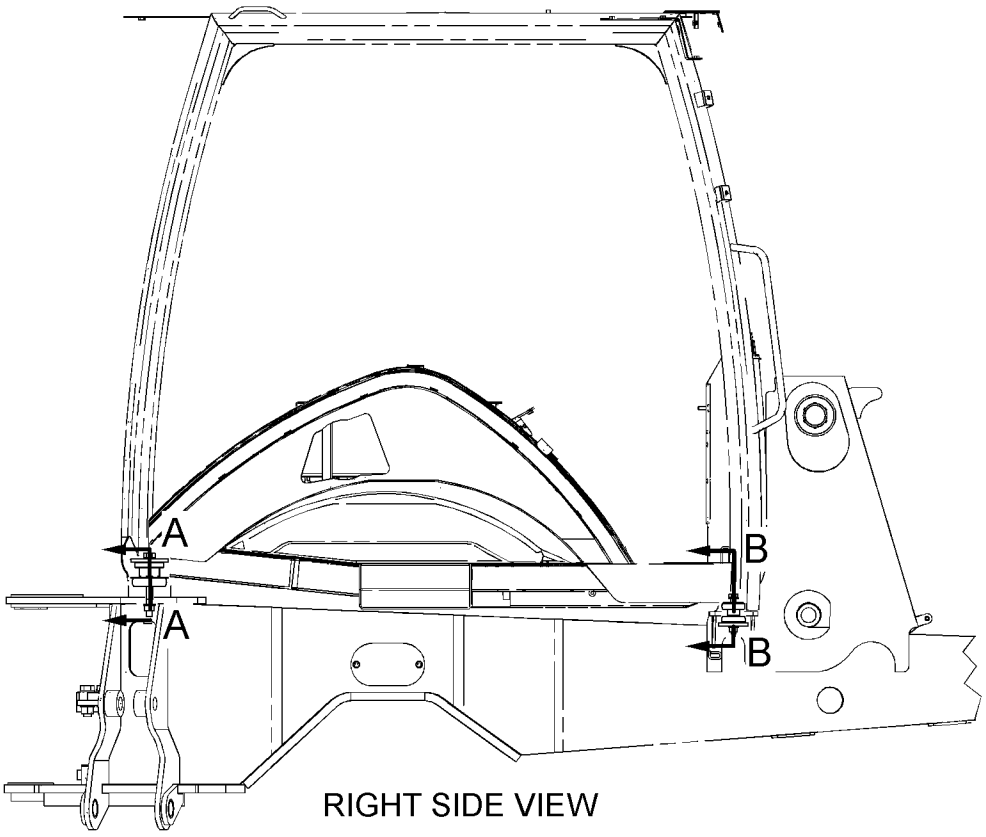

RIGHT SIDE VIEW

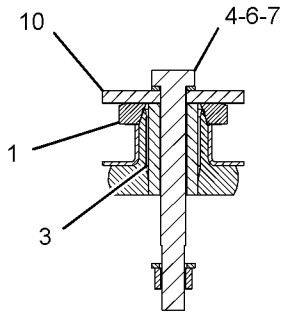

SECTION A-A

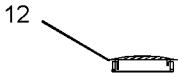

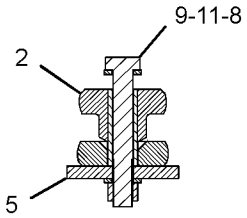

SECTION B-B

GRAPHIC #1 **<END>** g01189655

OPERATOR STATION

251-1222 MOUNTING GP-MONITOR–ACCUGRADE

S/N: SHA1-UP

PART OF 211-4253 INSTALLATION GP-MONITOR

AN ATTACHMENT

SMCS-7490 **i02755948**

NOTE	REF NO	GRAPHIC REF	PART NUMBER	QTY	PART NAME 1 2 3 4 5 6 (PRODUCT LEVEL)	SEE PAGE
	1	1	**248-2284**	2	KNOB-CONTROL	
	2	1	**251-0077**	1	BRACKET AS	
M		1	**8T-3490**	1	NUT-WELD (M10X1.5-THD)	
	3	1	**251-9571**	1	BRACKET AS	
M		1	**8T-3490**	1	NUT-WELD (M10X1.5-THD)	

M-METRIC PART

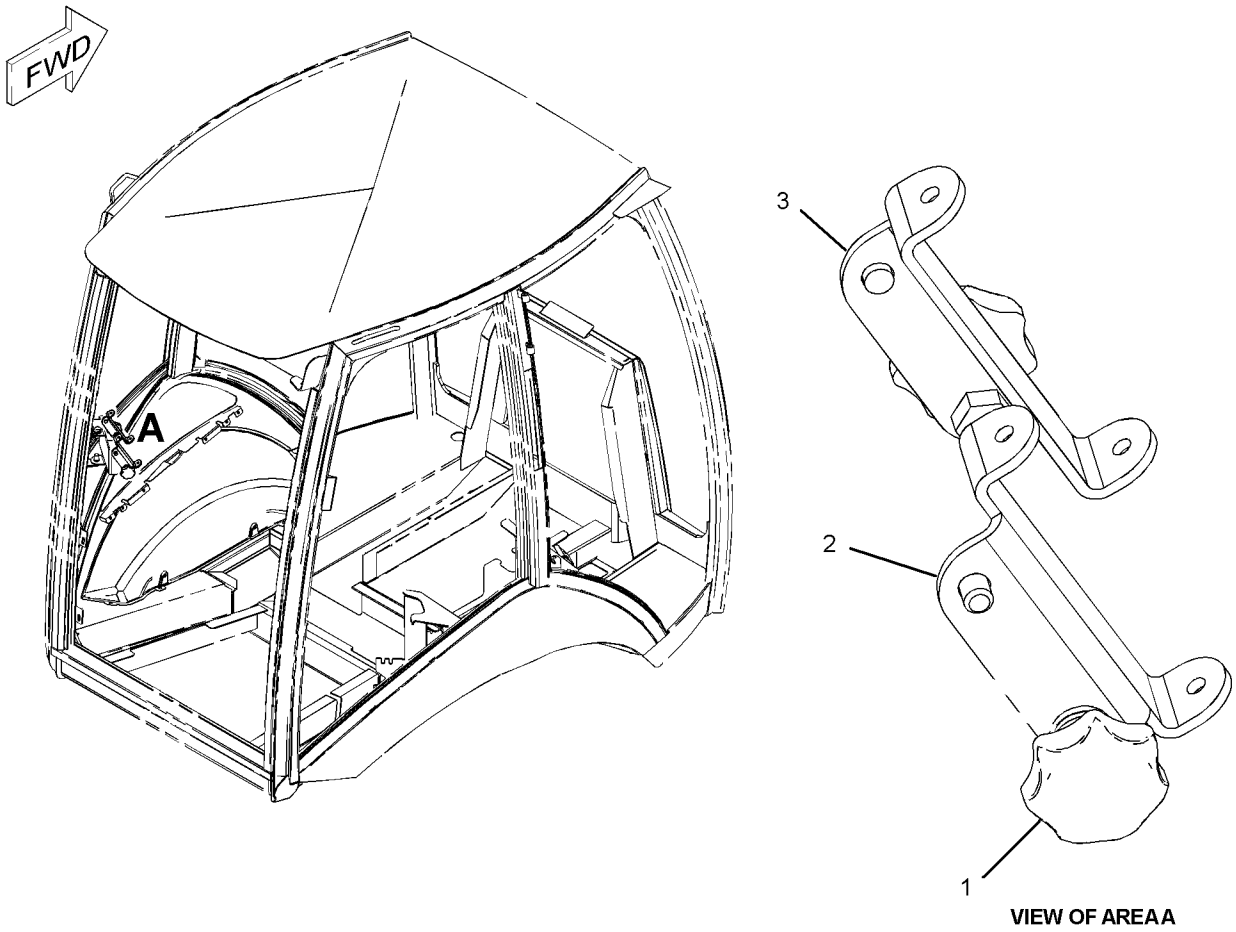

VIEW OF AREA A

GRAPHIC #1 **<END>** g01381138

OPERATOR STATION

209-3378 PEDAL GP-GOVERNOR

S/N: SHA1-UP

PART OF 206-1640 CONTROL GP-GOVERNOR

AN ATTACHMENT

SMCS-1265 **i02121479**

NOTE	REF NO	GRAPHIC REF	PART NUMBER	QTY	PART NAME 1 2 3 4 5 6 (PRODUCT LEVEL)	SEE PAGE
M	1	1	**129-3178**	1	LOCKNUT (M6X1-THD)	
M	2	1	**5C-7261**	1	NUT (M8X1.25-THD)	
M	3	1	**5C-9553**	1	BOLT (M6X1X16-MM)	
	4	1	**8T-4205**	1	WASHER-HARD (7.2X14.5X2-MM THK)	
M	5	1	**095-0641**	4	BOLT-SOCKET HEAD (M4X0.7X10-MM)	
	6	1	**243-0063**	1	BOOT	
	7	1	**3F-9556**	2	LOCKWASHER	
	8	1	**6V-8186**	2	NUT-FULL (5/16-24-THD)	
	9	1	**8T-6902**	3	CLIP	
M	10	1	**9X-2842**	1	BOLT (M8X1.25X45-MM)	
					AVAILABLE REPAIR KIT(S):	
			164-1154	1	KIT-SERVICE	
					(INCLUDES CLAMP & SCREWS)	
			243-0062	1	KIT-REPAIR (GOVERNOR PEDAL)	
					(INCLUDES SHAFT, CLIPS & BEARINGS)	

M-METRIC PART

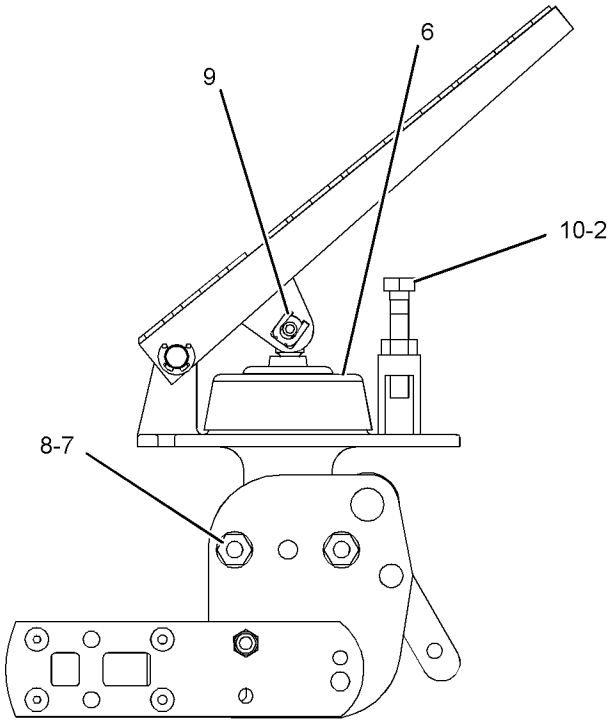

RIGHT SIDE VIEW

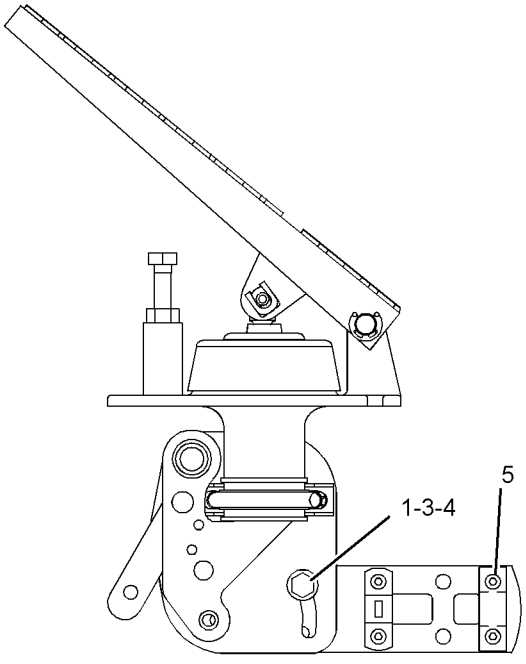

LEFT SIDE VIEW

GRAPHIC #1 **<END>** g01081364

OPERATOR STATION

243-0059 PEDAL GP-GOVERNOR

S/N: SHA1-UP
PART OF 251-3802 CONTROL GP-GOVERNOR
AN ATTACHMENT

SMCS-1265 **i02150979**

NOTE	REF NO	GRAPHIC REF	PART NUMBER	QTY	PART NAME 1 2 3 4 5 6 (PRODUCT LEVEL)	SEE PAGE
	1	1	**243-0063**	1	BOOT	
M	2	1	**129-3178**	1	LOCKNUT (M6X1-THD)	
M	3	1	**5C-7261**	1	NUT (M8X1.25-THD)	
M	4	1	**5C-9553**	1	BOLT (M6X1X16-MM)	
	5	1	**8T-4205**	1	WASHER-HARD (7.2X14.5X2-MM THK)	
M	6	1	**095-0641**	4	BOLT-SOCKET HEAD (M4X0.7X10-MM)	
	7	1	**3F-9556**	2	LOCKWASHER	
	8	1	**6V-8186**	2	NUT-FULL (5/16-24-THD)	
	9	1	**8T-6902**	3	CLIP	
M	10	1	**9X-2842**	1	BOLT (M8X1.25X45-MM)	
					AVAILABLE REPAIR KIT(S):	
			164-1154	1	KIT-SERVICE	
					(INCLUDES CABLE CLAMPS & SCREWS)	
			243-0062	1	KIT-REPAIR (GOVERNOR PEDAL)	
					(INCLUDES SHAFT, CLIP & BEARING)	

M-METRIC PART

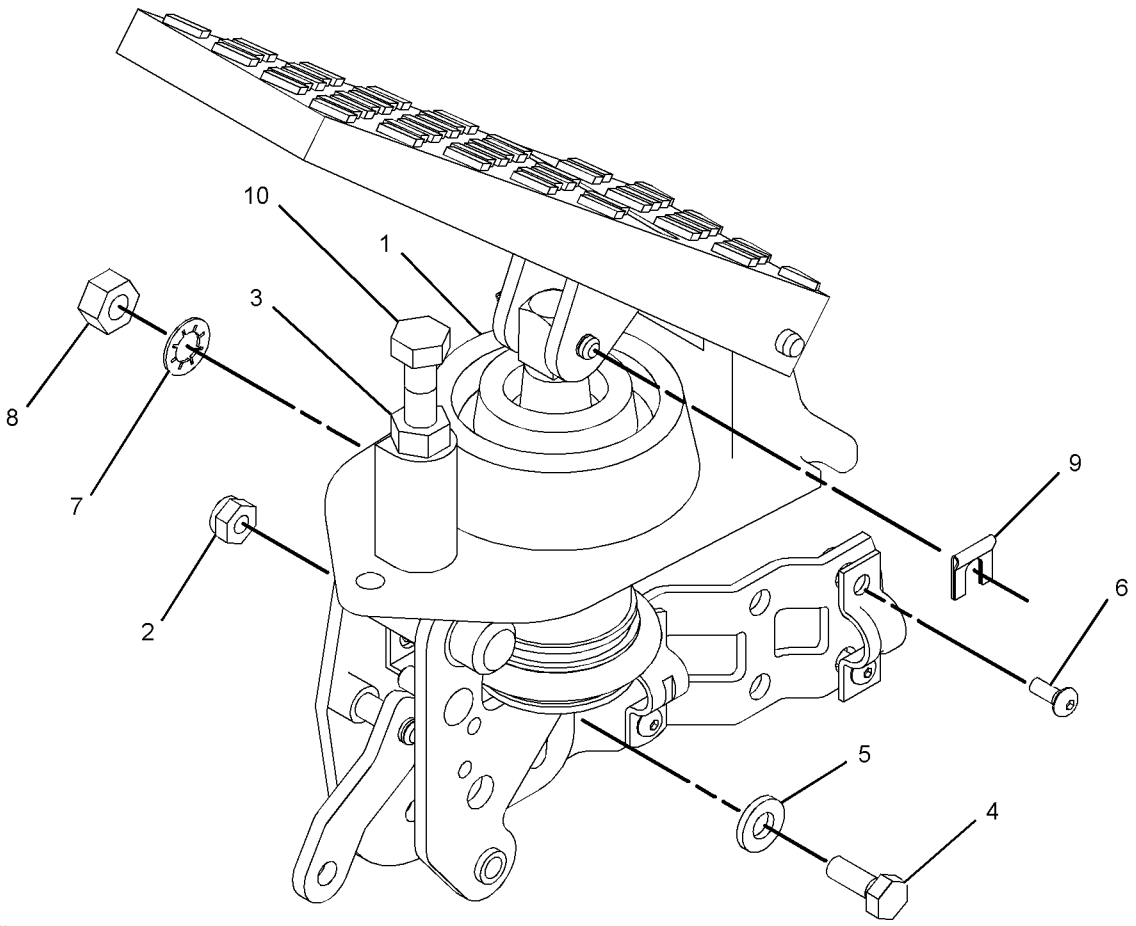

GRAPHIC #1 **<END>** g01081478

OPERATOR STATION

205-9568 ROOF GP-CAB

S/N: SHA1-UP

PART OF 204-4161 CAB AR-ENCLOSED ROPS, 204-4160 CANOPY AR-OPEN ROPS

AN ATTACHMENT

SMCS-7301 **i02527225**

NOTE	REF NO	GRAPHIC REF	PART NUMBER	QTY	PART NAME 1 2 3 4 5 6 (PRODUCT LEVEL)	SEE PAGE
	1	1	**205-9570**	1	COVER-ROOF (CENTER)	
	2	1	**205-9576**	1	COVER-ROOF (LH)	
	3	1	**205-9577**	1	COVER-ROOF (RH)	
	4	1	**220-3786**	1	COVER-ROOF (REAR)	
	5	1	**9X-6165**	16	WASHER (6.5X22X2.5-MM THK)	
M	6	1	**9X-2045**	9	SCREW-TRUSS HEAD (M6X1X20-MM)	
M	7	1	**8T-4138**	16	BOLT (M6X1X20-MM)	
	8	1	**9X-2038**	7	WASHER (7X19X2-MM THK)	

M-METRIC PART

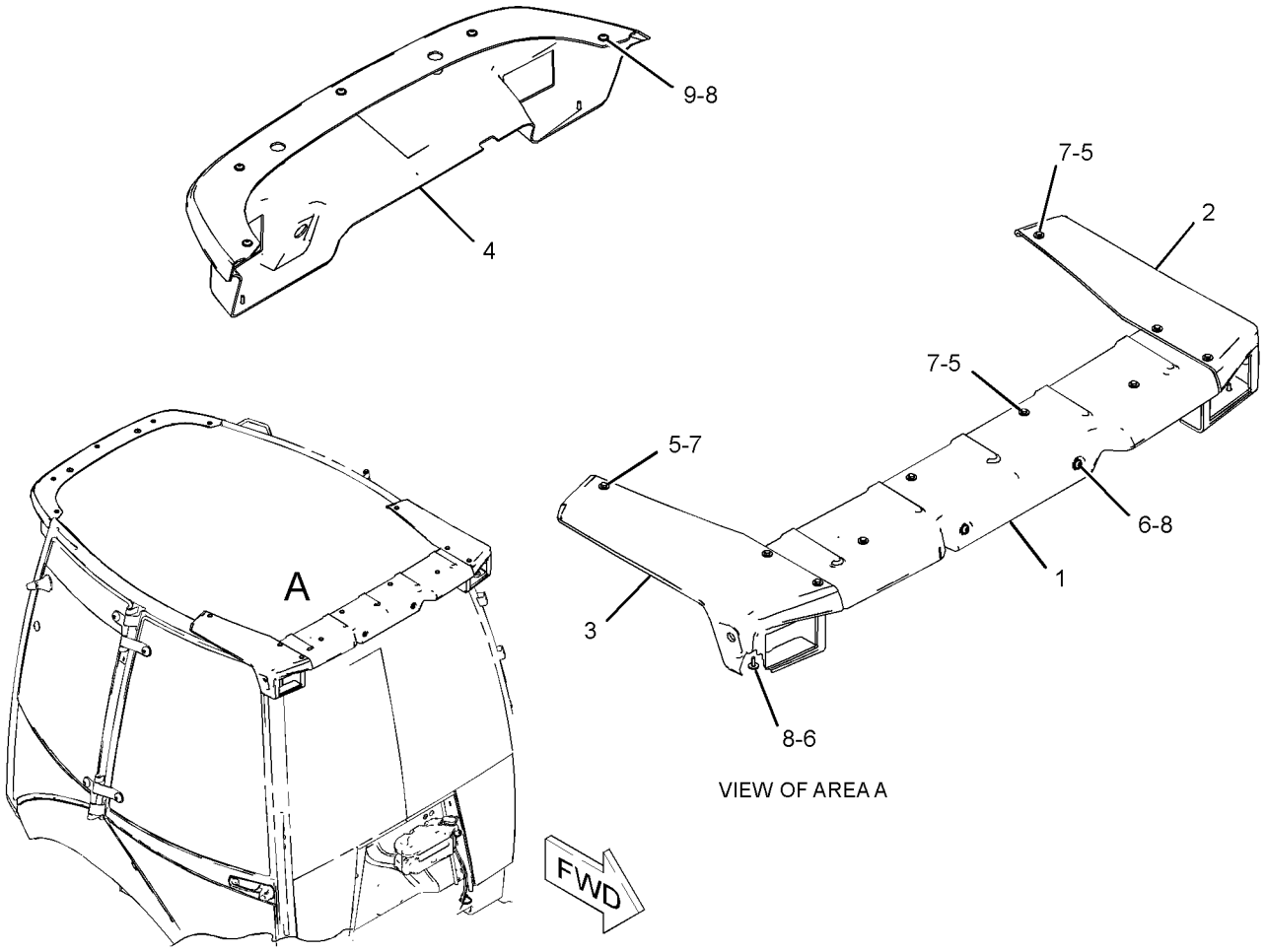

VIEW OF AREA A

GRAPHIC #1 **<END>** g01267607

OPERATOR STATION

205-9569 ROOF GP-CAB

S/N: SHA1-UP

PART OF 204-4162, 228-4602 CAB AR-ENCLOSED ROPS, 204-4164 CANOPY AR-OPEN ROPS AN ATTACHMENT

SMCS-7301 **i02527226**

NOTE	REF NO	GRAPHIC REF	PART NUMBER	QTY	PART NAME 1 2 3 4 5 6 (PRODUCT LEVEL)	SEE PAGE
	1	1	**205-9570**	1	COVER-ROOF (CENTER)	
	2	1	**205-9571**	1	COVER-ROOF (REAR)	
	3	1	**205-9576**	1	COVER-ROOF (LH)	
	4	1	**205-9577**	1	COVER-ROOF (RH)	
	5	1	**9X-6165**	16	WASHER (6.5X22X2.5-MM THK)	
M	6	1	**8T-4138**	16	BOLT (M6X1X20-MM)	
	7	1	**9X-2038**	7	WASHER (7X19X2-MM THK)	
M	8	1	**9X-2045**	9	SCREW-TRUSS HEAD (M6X1X20-MM)	

M-METRIC PART

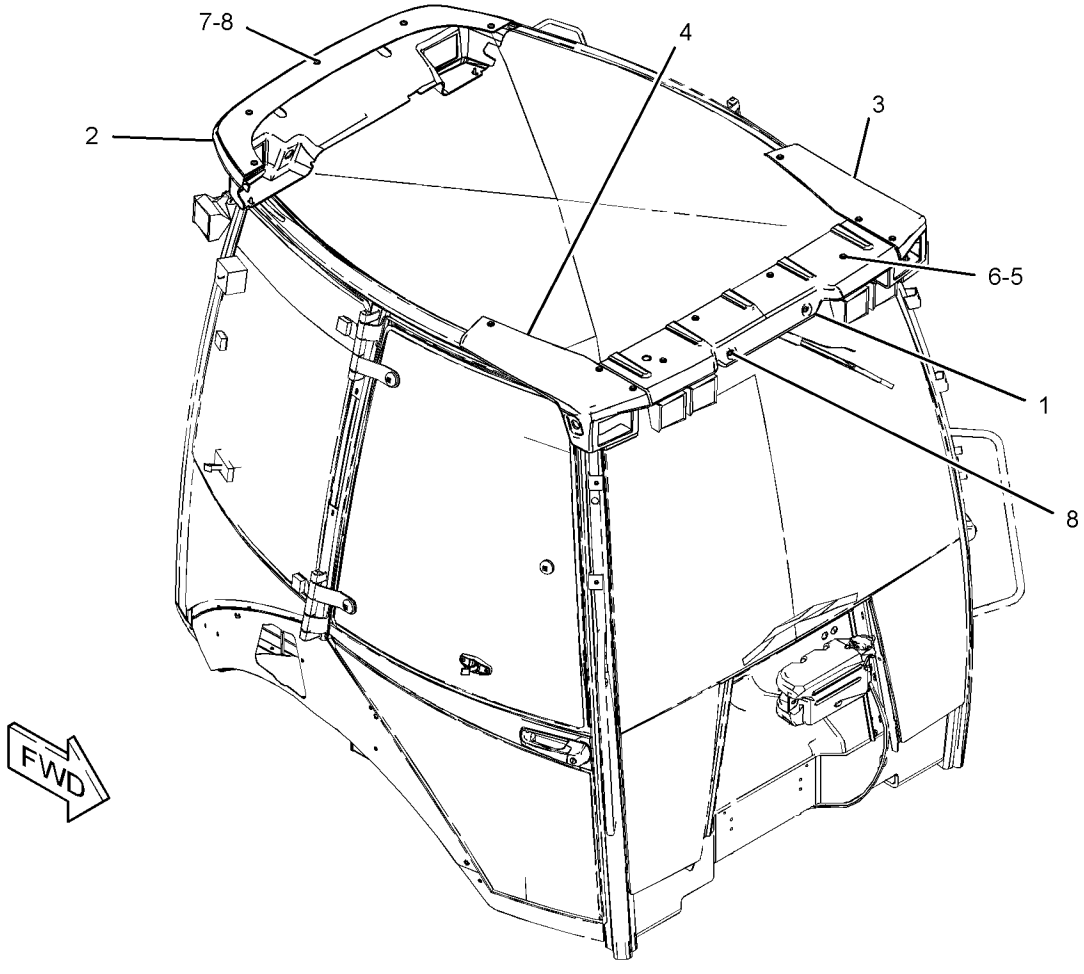

GRAPHIC #1 **<END>** g01233481

OPERATOR STATION

206-1747 SEAT BELT GP–RETRACTABLE, 2-IN

S/N: SHA1-UP

AN ATTACHMENT

SMCS-7327 **i02105092**

NOTE	REF NO	GRAPHIC REF	PART NUMBER	QTY	PART NAME 1 2 3 4 5 6 (PRODUCT LEVEL)	SEE PAGE
	1	1	**206-1749**	1	SEAT BELT GP	
	2	1	**8T-4223**	4	WASHER-HARD (13.5X25.5X3-MM THK)	
M	3	1	**8T-4956**	2	BOLT (M12X1.75X35-MM)	

M-METRIC PART

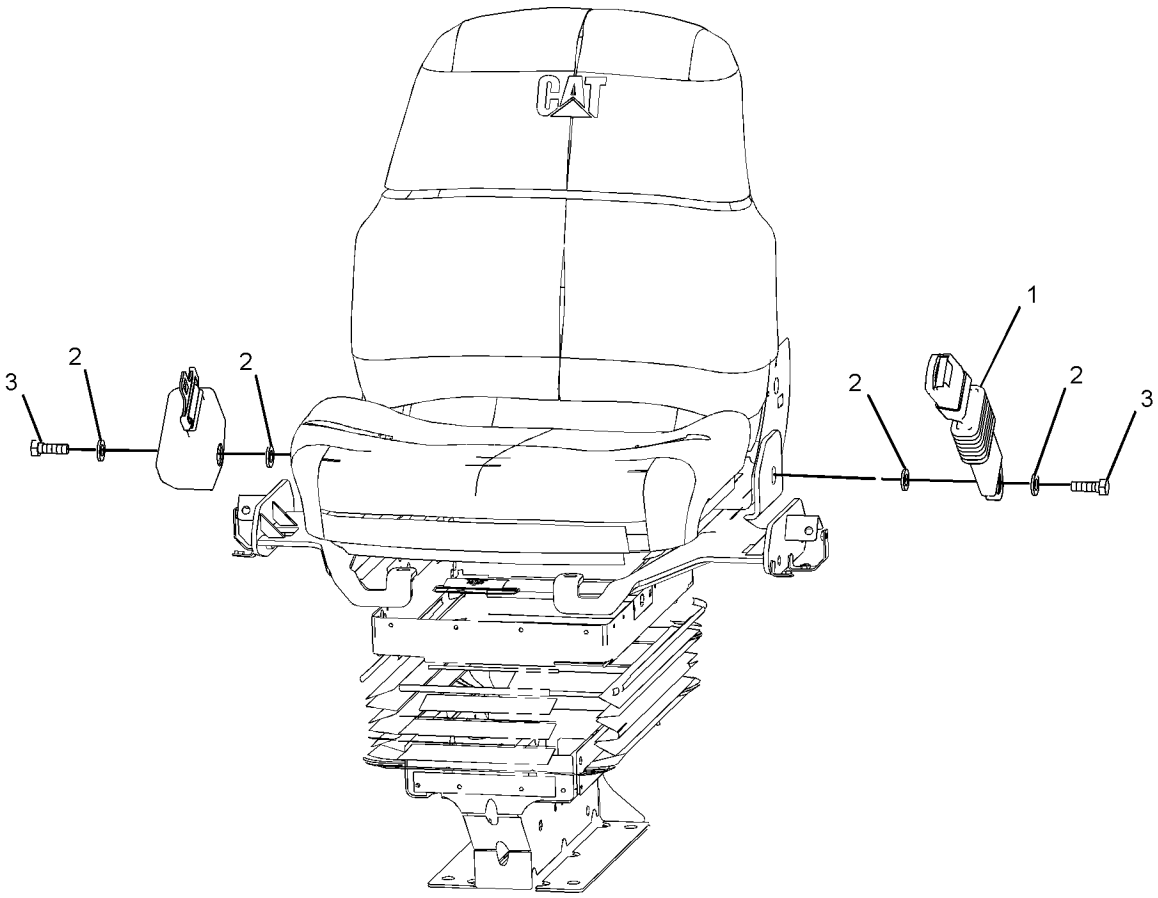

FRONT VIEW
(TOP LEFT)

GRAPHIC #1 **<END>** g01078751

OPERATOR STATION

206-1748 SEAT BELT GP–RETRACTABLE, 3-IN

S/N: SHA1-UP

AN ATTACHMENT

SMCS-7327 **i02105089**

NOTE	REF NO	GRAPHIC REF	PART NUMBER	QTY	PART NAME 1 2 3 4 5 6 (PRODUCT LEVEL)	SEE PAGE
	1	1	**206-1750**	1	SEAT BELT GP	
	2	1	**8T-4223**	4	WASHER-HARD (13.5X25.5X3-MM THK)	
M	3	1	**8T-4956**	2	BOLT (M12X1.75X35-MM)	

M-METRIC PART

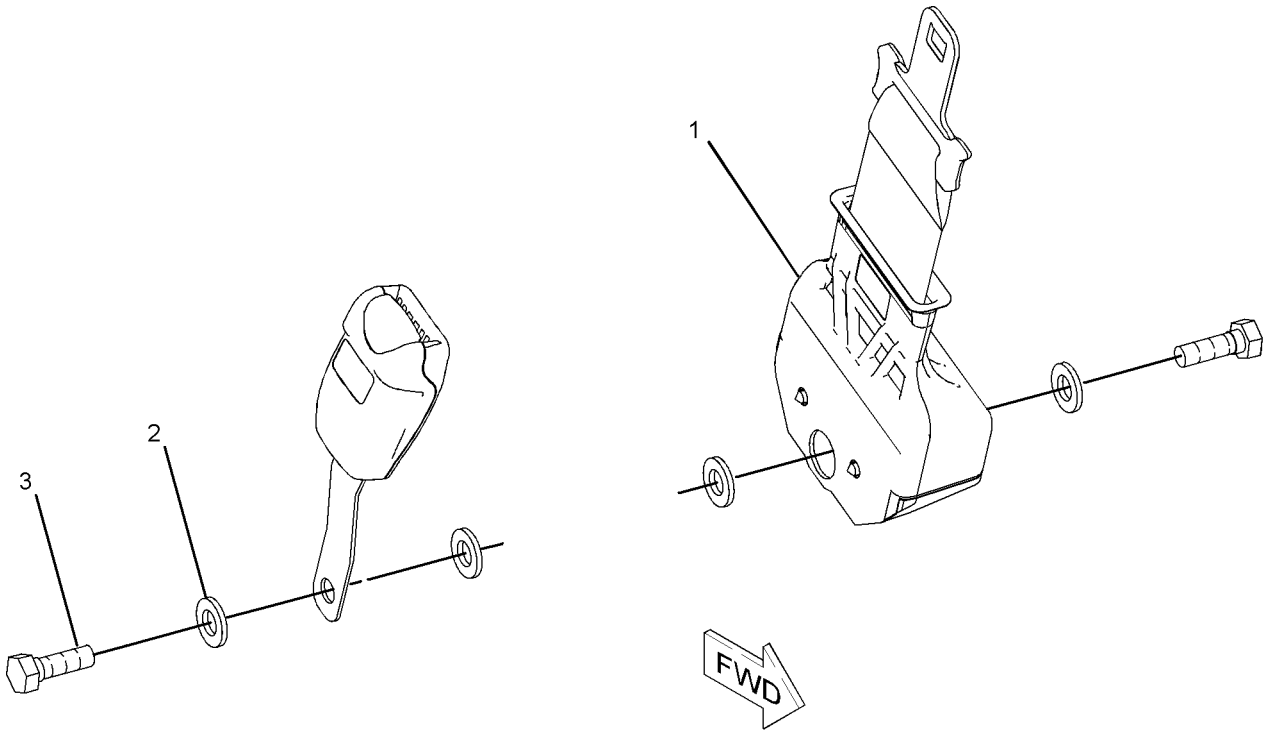

GRAPHIC #1 **<END>** g01078668

OPERATOR STATION

273-5905 SEAT GP

S/N: SHA1-UP

PART OF 206-1791 SEAT GP-SUSPENSION

AN ATTACHMENT

SMCS-7312, 7321, 7324, 7336 **i02593694**

NOTE	REF NO	GRAPHIC REF	PART NUMBER	QTY	PART NAME 1 2 3 4 5 6 (PRODUCT LEVEL)	SEE PAGE
M	1	1	**105-3481**	2	BOLT-SOCKET HEAD (M8X1.25X20-MM)	
	2	1	**161-9283**	3	WASHER (19.8X31.8X1.6-MM THK)	
	3	1	**164-1249**	1	LEVER AS	
	4	1	**164-1250**	1	HANDLE	
	5	1	**164-1251**	1	SPRING	
	6	1	**164-1252**	1	SPRING	
M	7	1	**9X-6620**	1	LOCKNUT	
	8	1	**8T-9501**	2	SCREW (10-16X0.75-IN)	
M	9	1	**8T-4189**	2	BOLT (M8X1.25X20-MM)	
	10	1	**164-1258**	1	BRACKET AS (RH)	
	11	1	**164-1259**	1	BRACKET AS (LH)	
	12	1	**164-1266**	1	CUSHION AS-BACK	
	13	1	**5P-8245**	2	WASHER-HARD (13.5X25.5X3-MM THK)	
	14	1	**180-5795**	1	CUSHION AS-SEAT	
	15	1	**180-5797**	1	PAN AS	
	16	1	**195-9223**	2	SCREW-PAN HEAD	
	17	1	**260-0029**	1	PAN	
	18	1	**260-0045**	1	BOLT-SHOULDER (3/8-16X1.18-IN)	
M	19	1	**3T-0852**	8	LOCKNUT (M8X1.25-THD)	
M	20	1	**129-3180**	2	LOCKNUT (M12X1.75-THD)	

M-METRIC PART

273-5905 SEAT GP *(contd.)* **i02593694**

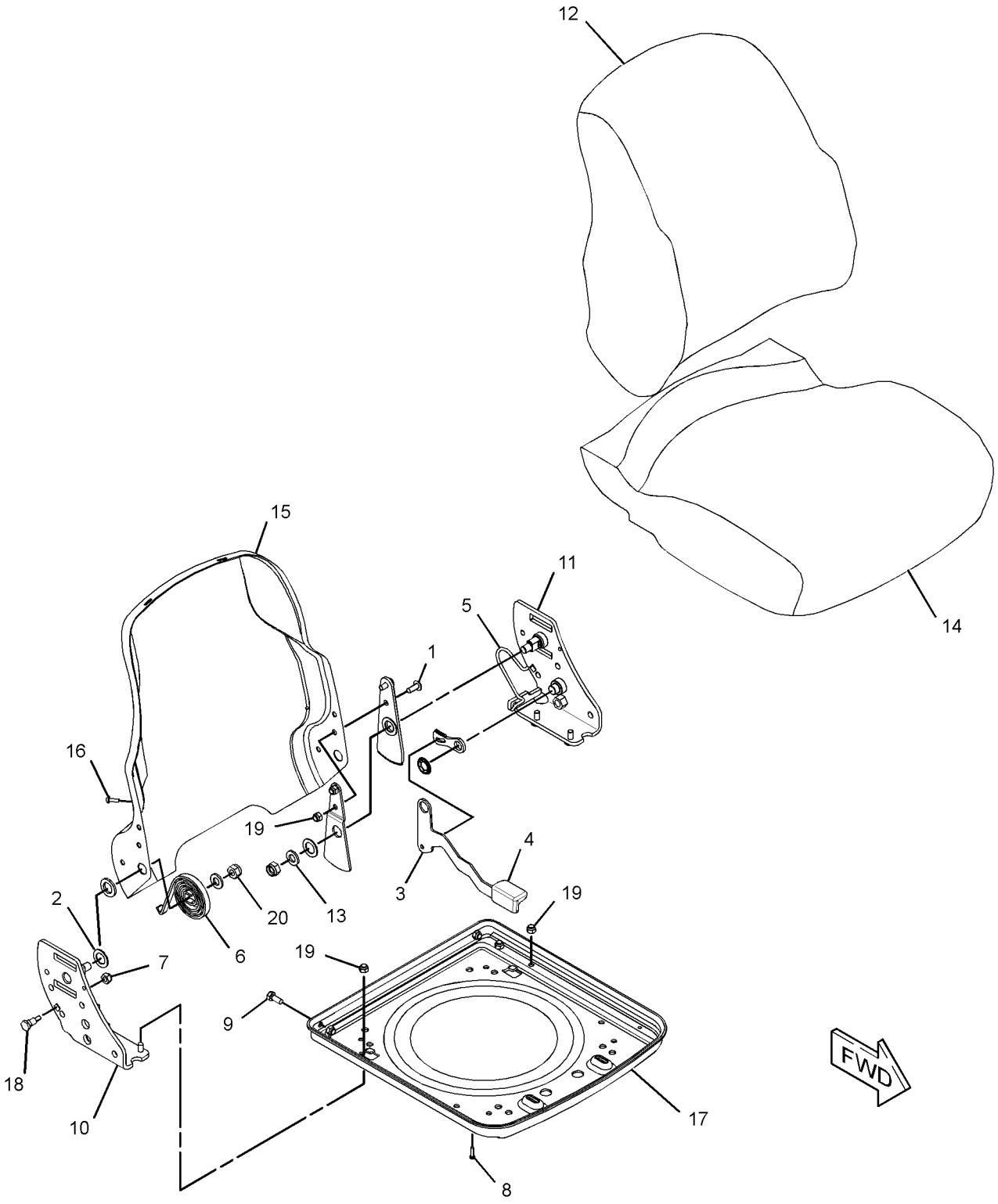

GRAPHIC #1 **<END>** g01283752

OPERATOR STATION

273-6036 SEAT GP–CLOTH

S/N: SHA1-UP

PART OF 206-1792 SEAT GP-SUSPENSION

AN ATTACHMENT

SMCS-7312, 7321, 7324, 7336 **i02593695**

NOTE	REF NO	GRAPHIC REF	PART NUMBER	QTY	PART NAME 1 2 3 4 5 6 (PRODUCT LEVEL)	SEE PAGE
M	1	1	**105-3481**	2	BOLT-SOCKET HEAD (M8X1.25X20-MM)	
	2	1	**161-9283**	3	WASHER (19.8X31.8X1.6-MM THK)	
	3	1	**164-1244**	1	CUSHION AS-BACK	
	4	1	**164-1249**	1	LEVER AS	
	5	1	**164-1250**	1	HANDLE	
	6	1	**164-1251**	1	SPRING	
	7	1	**164-1252**	1	SPRING	
M	8	1	**9X-6620**	1	LOCKNUT	
	9	1	**8T-9501**	2	SCREW (10-16X0.75-IN)	
M	10	1	**8T-4189**	2	BOLT (M8X1.25X20-MM)	
	11	1	**164-1258**	1	BRACKET AS (RH)	
	12	1	**164-1259**	1	BRACKET AS (LH)	
	13	1	**5P-8245**	2	WASHER-HARD (13.5X25.5X3-MM THK)	
	14	1	**180-5796**	1	CUSHION AS-SEAT	
	15	1	**180-5797**	1	PAN AS	
	16	1	**195-9223**	2	SCREW-PAN HEAD	
	17	1	**260-0029**	1	PAN	
	18	1	**260-0045**	1	BOLT-SHOULDER (3/8-16X1.18-IN)	
M	19	1	**3T-0852**	8	LOCKNUT (M8X1.25-THD)	
M	20	1	**129-3180**	2	LOCKNUT (M12X1.75-THD)	

M-METRIC PART

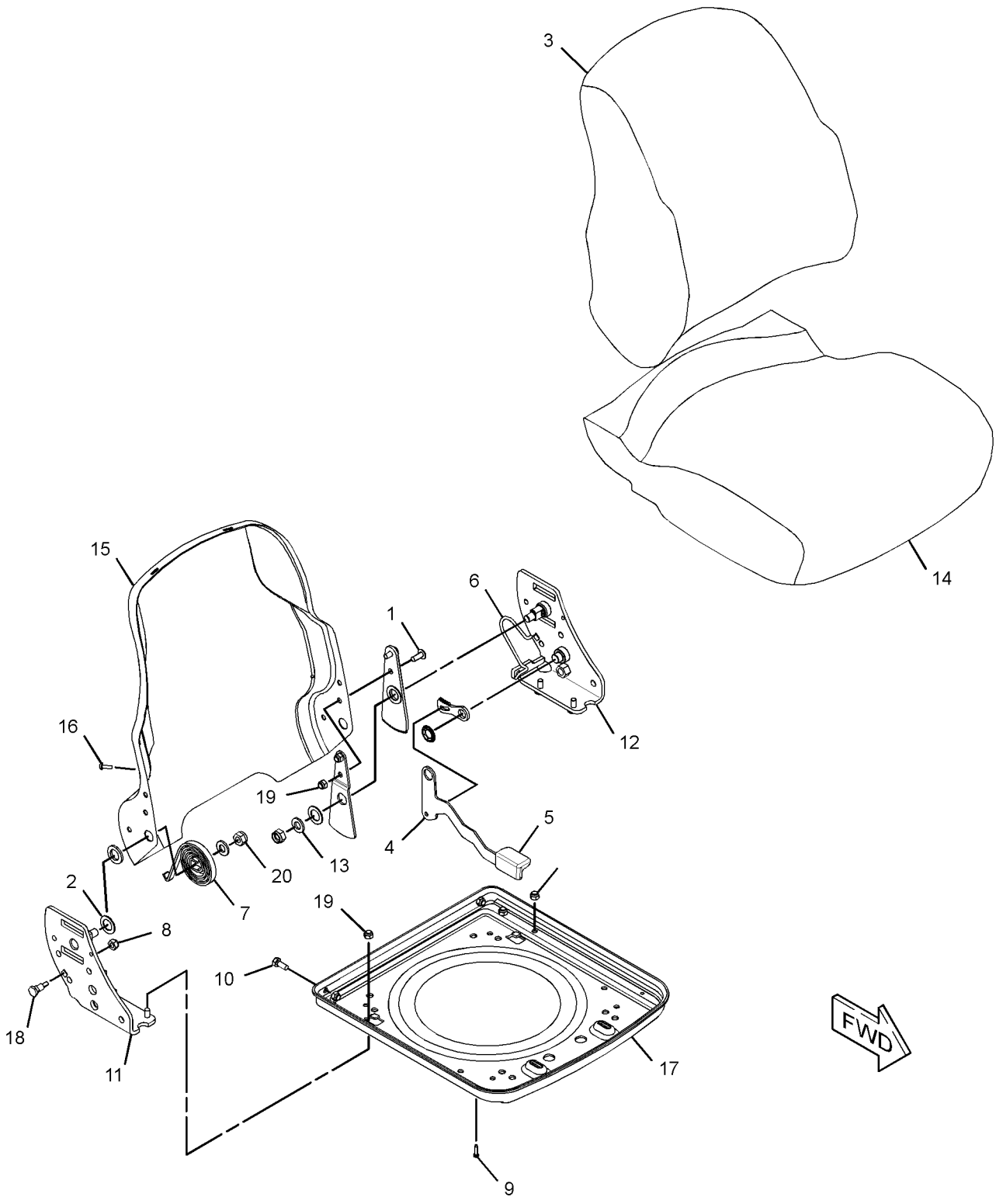

GRAPHIC #1 **<END>** g01283972

OPERATOR STATION

206-1791 SEAT GP-SUSPENSION–VINYL

S/N: SHA1-UP
PART OF 280-7364 SEAT GP-SUSPENSION
AN ATTACHMENT

SMCS-7324, 7336 **i02590316**

NOTE	REF NO	GRAPHIC REF	PART NUMBER	QTY	PART NAME 1 2 3 4 5 6 (PRODUCT LEVEL)	SEE PAGE
	1	1	**2K-4973**	4	LOCKNUT (3/8-16-THD)	
	2	1	**4L-6454**	4	BOLT (3/8-16X1-IN)	
	3	1	**195-7055**	4	WASHER-HARD (9.9X28.5X3.2-MM THK)	
Y	4	1	**273-5905**	1	SEAT GP	723
Y	5	1	**273-6372**	1	SUSPENSION GP-SEAT	729
	6	1	**164-1265**	4	BOLT (3/8-16X1.1-IN)	
	7	1	**4B-5271**	4	WASHER (25.5X11.2X2-MM THK)	
	8	1	**5T-7870**	4	KNOB	
	9	1	**164-1247**	1	BRACKET AS (RH)	
	10	1	**220-3790**	1	ARMREST AS (RH)	
M		1	**6A-9083**	1	SCREW-MACHINE (M6X1X15-MM)	
	11	1	**164-1261**	1	BRACKET AS (LH)	
	12	1	**220-3791**	1	ARMREST AS (LH)	
M		1	**6A-9083**	1	SCREW-MACHINE (M6X1X15-MM)	
	13	1	**1K-6872**	2	LOCKNUT (1/2-13-THD)	
	14	1	**0S-1595**	2	BOLT (1/2-13X1.25-IN)	
	15	1	**5P-8245**	2	WASHER-HARD (13.5X25.5X3-MM THK)	

M-METRIC PART
Y-SEPARATE ILLUSTRATION

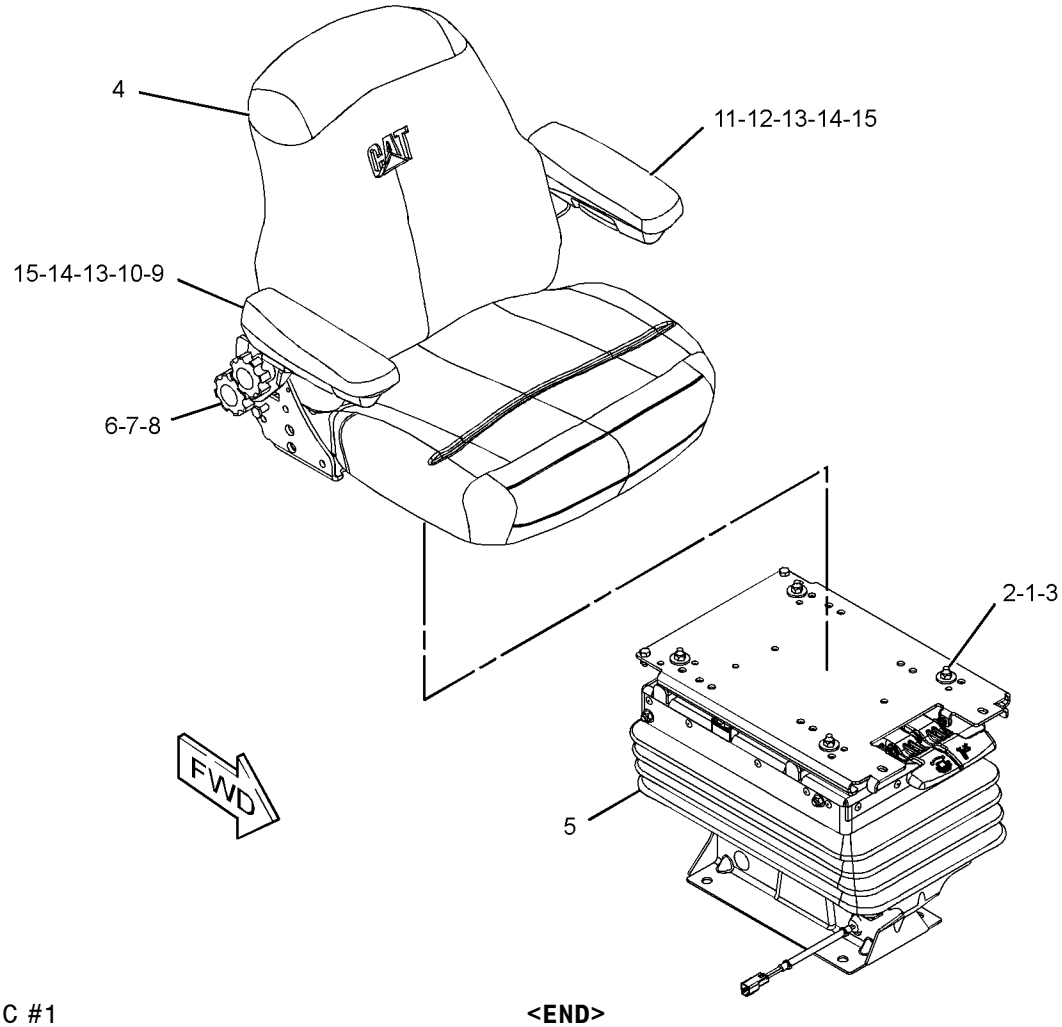

GRAPHIC #1 **<END>** g01298418

OPERATOR STATION

206-1792 SEAT GP-SUSPENSION—CLOTH

S/N: SHA1-UP
PART OF 280-7365 SEAT GP-SUSPENSION
AN ATTACHMENT

SMCS-7324, 7336 **i02597490**

NOTE	REF NO	GRAPHIC REF	PART NUMBER	QTY	PART NAME 1 2 3 4 5 6 (PRODUCT LEVEL)	SEE PAGE
	1	1	**2K-4973**	4	LOCKNUT (3/8-16-THD)	
	2	1	**4L-6454**	4	BOLT (3/8-16X1-IN)	
	3	1	**195-7055**	4	WASHER-HARD (9.9X28.5X3.2-MM THK)	
Y	4	1	**273-6036**	1	SEAT GP	725
Y	5	1	**273-6372**	1	SUSPENSION GP-SEAT	729
	6	1	**164-1265**	4	BOLT (3/8-16X1.1-IN)	
	7	1	**4B-5271**	4	WASHER (25.5X11.2X2-MM THK)	
	8	1	**164-1214**	4	KNOB	
	9	1	**164-1247**	1	BRACKET AS (RH)	
	10	1	**220-3790**	1	ARMREST AS (RH)	
M		1	**6A-9083**	1	SCREW-MACHINE (M6X1X15-MM)	
	11	1	**164-1261**	1	BRACKET AS (LH)	
	12	1	**220-3791**	1	ARMREST AS (LH)	
M		1	**6A-9083**	1	SCREW-MACHINE (M6X1X15-MM)	
	13	1	**1K-6872**	2	LOCKNUT (1/2-13-THD)	
	14	1	**0S-1595**	2	BOLT (1/2-13X1.25-IN)	
	15	1	**5P-8245**	2	WASHER-HARD (13.5X25.5X3-MM THK)	

M-METRIC PART
Y-SEPARATE ILLUSTRATION

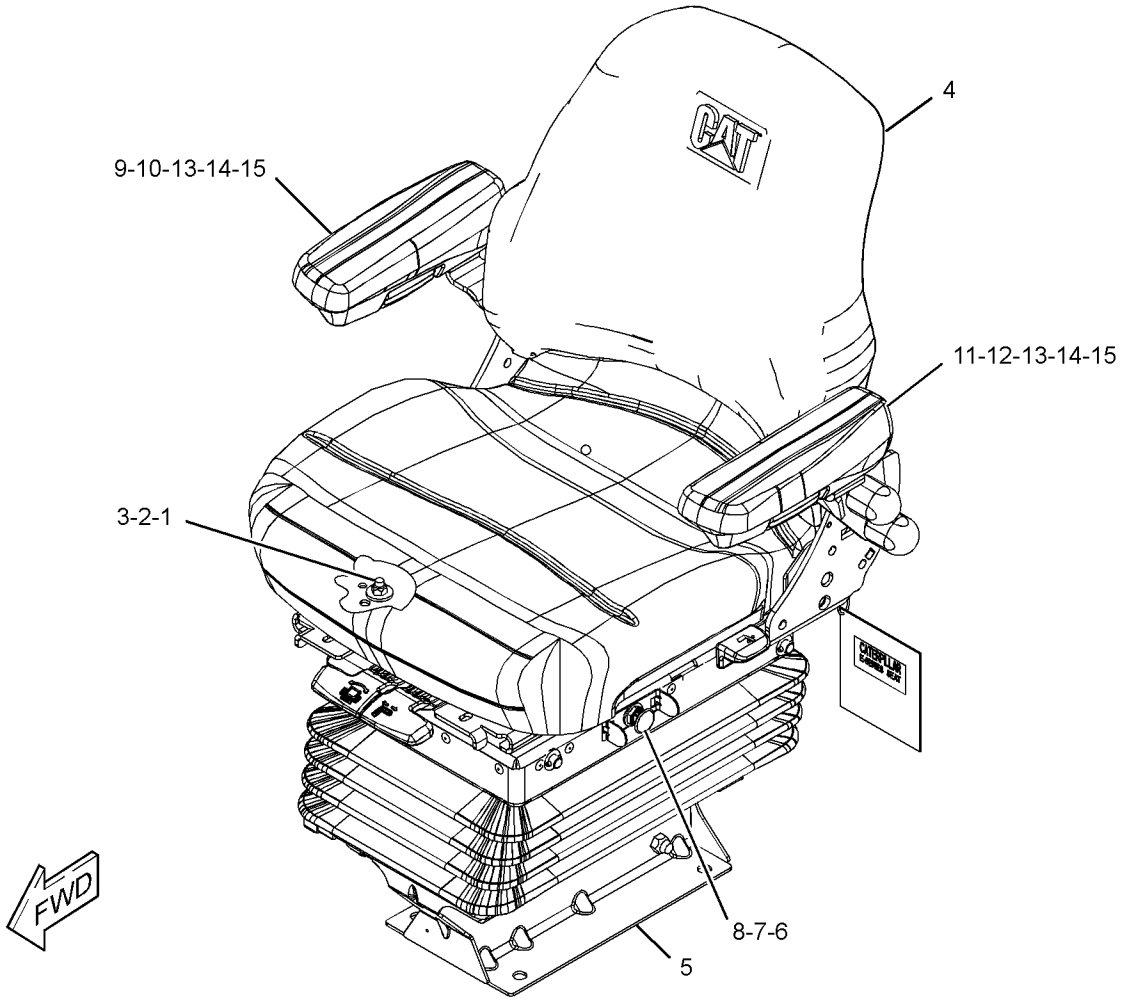

GRAPHIC #1 **<END>** g01225777

OPERATOR STATION

280-7364 SEAT GP-SUSPENSION—VINYL

S/N: SHA1-UP
PART OF 204-4160, 204-4164 CANOPY AR-OPEN ROPS
AN ATTACHMENT

SMCS-7324, 7336 **i02434492**

NOTE	PART NUMBER	QTY	PART NAME 1 2 3 4 5 6 (PRODUCT LEVEL)	SEE PAGE
Y	**206-1791**	1	SEAT GP-SUSPENSION	727
M	**8T-4139**	4	BOLT (M12X1.75X30-MM)	
	3S-2093	1	STRAP-CABLE	
	8T-4223	4	WASHER-HARD (13.5X25.5X3-MM THK)	

M-METRIC PART
Y-SEPARATE ILLUSTRATION

<END>

280-7365 SEAT GP-SUSPENSION—CLOTH

S/N: SHA1-UP
PART OF 204-4161, 204-4162, 228-4602 CAB AR-ENCLOSED ROPS
AN ATTACHMENT

SMCS-7324, 7336 **i02434559**

NOTE	PART NUMBER	QTY	PART NAME 1 2 3 4 5 6 (PRODUCT LEVEL)	SEE PAGE
Y	**206-1792**	1	SEAT GP-SUSPENSION	728
M	**8T-4139**	4	BOLT (M12X1.75X30-MM)	
	3S-2093	1	STRAP-CABLE	
	8T-4223	4	WASHER-HARD (13.5X25.5X3-MM THK)	

M-METRIC PART
Y-SEPARATE ILLUSTRATION

<END>

273-6372 SUSPENSION GP-SEAT

S/N: SHA1-UP
PART OF 206-1791, 206-1792 SEAT GP-SUSPENSION
AN ATTACHMENT
TYPE 1

SMCS-7312, 7324 **i02532882**

NOTE	PART NUMBER	QTY	PART NAME 1 2 3 4 5 6 (PRODUCT LEVEL)	SEE PAGE
	260-0059	1	AIR COMPRESSOR GP (SUSPENSION SEAT)	
	164-1215	1	ABSORBER AS-SHOCK (SEAT)	
	164-1218	2	ARM AS-SUSPENSION (OUTER)	
	260-0060	1	ARM AS-SUSPENSION (INNER)	
	164-1219	1	BRACKET AS (FRONT)	
	164-1220	1	BRACKET AS (REAR)	
	260-0036	1	HARNESS AS-RIDE CONTROL	
	260-0057	1	LATCH AS-SLIDE	
	260-0052	1	PLATE AS-SLIDE	
	260-0051	1	PLATE AS-UPPER	
	102-8804	1	KIT-RECEPTACLE (4-PIN)	
			(INCLUDES RECEPTACLE AS & WEDGE)	
	260-0047	2	SHAFT AS	
	218-0235	2	SWITCH AS-LIMIT (SUSPENSION SEAT)	
			(EACH INCLUDES)	
	102-8803	1	KIT-RECEPTACLE (3-PIN)	

273-6372 SUSPENSION GP-SEAT *(contd.)* i02532882

NOTE	PART NUMBER	QTY	PART NAME 1 2 3 4 5 6 (PRODUCT LEVEL)	SEE PAGE
			(INCLUDES RECEPTACLE AS & WEDGE)	
	186-3735	3	PIN-CONNECTOR (16-GA TO 18-GA)	
	4B-9784	8	BALL	
	260-0063	1	BASE-SEAT	
	164-1230	12	BEARING	
	260-0067	2	BEARING	
	260-0042	1	BEARING-FLANGED	
	149-4745	2	KIT-SLIDER BLOCK (SUSPENSION SEAT) (SEAT)	
			(EACH INCLUDES BOLT & BLOCKS)	
	161-9289	2	BLOCK-SLIDER	
	260-0043	1	BLOCK-STOP	
	0S-0509	1	BOLT (3/8-16X0.75-IN)	
	1H-3337	4	BOLT (1/4-20X0.875-IN)	
	4M-0061	2	BOLT (5/16-18X0.75-IN)	
	7X-0481	1	BOLT (1/2-13X8-IN)	
	260-0041	1	BOLT (3/4-1-X1.42-IN)	
M	**197-6657**	1	BOLT-ROUND HEAD (M12X1.75X80-MM)	
	164-1240	1	BOOT	
	237-3943	1	BRACKET	
	164-1229	4	BUMPER	
	164-1237	1	BUSHING	
	111-5042	34	FASTENER	
	260-0046	1	HOUSING-UPPER	
	260-0031	1	LEVER	
	260-0032	1	LEVER	
	1K-6872	1	LOCKNUT (1/2-13-THD)	
	2D-6235	4	LOCKNUT (1/4-20-THD)	
	2K-4973	8	LOCKNUT (3/8-16-THD)	
M	**6V-7687**	1	LOCKNUT (M12X1.75-THD)	
M	**096-4882**	2	LOCKNUT (M8X1.25-THD)	
	142-2928	4	LOCKNUT (4-40-THD)	
	3B-4505	2	LOCKWASHER	
	3J-4818	2	LOCKWASHER	
	6V-8185	2	NUT (1/4-20-THD)	
	2L-5893	1	PIN-SPRING	
	4H-8380	4	PIN-SPRING	
	164-1232	1	PLATE	
	260-0044	1	PLATE-LATCH	
	5V-1497	2	RETAINER	
	215-1242	1	RING	
	8S-7803	3	RING-RETAINING	
	130-8343	1	SCREW-BUTTON HEAD (3/8-16X0.625-IN)	
	6L-7155	2	SCREW-MACHINE (1/4-20X0.5-IN)	
	173-5787	2	SETSCREW (1/4-20-THD)	
	164-1226	2	SHAFT	
	260-0049	2	SHAFT-LOWER	
	161-9288	1	SHAFT-PIVOT	
	260-0030	1	SHAFT-PIVOT	
	164-1233	2	SPACER (13X25.4X20.5-MM THK)	
	164-1238	1	SPACER (12.8X22.2X3.1-MM THK)	
	164-1239	2	SPACER (13.5X19X61.9-MM THK)	
	163-1135	1	SPRING	
	260-0034	1	SPRING-RETURN	
	260-0035	1	SPRING-RETURN	
	260-0033	1	SPRING-TORSION	
	7X-0622	6	WASHER (13X24X2.5-MM THK)	
	9X-1481	2	WASHER (13X25.4X1.6-MM THK)	

273-6372 SUSPENSION GP-SEAT *(contd.)* **i02532882**

M-METRIC PART

<END>

OPERATOR STATION

273-6372 SUSPENSION GP-SEAT

S/N: SHA1-UP
PART OF 206-1791, 206-1792 SEAT GP-SUSPENSION
AN ATTACHMENT
TYPE 2

SMCS-7312, 7324 **i02605552**

NOTE	REF NO	GRAPHIC REF	PART NUMBER	QTY	PART NAME 1 2 3 4 5 6 (PRODUCT LEVEL)	SEE PAGE
C	1	2	**3S-2093**	2	STRAP-CABLE	
	2	1,2	**111-5042**	34	FASTENER	
	3	2	**130-8343**	1	SCREW-BUTTON HEAD (3/8-16X0.625-IN)	
	4	1	**149-4745**	2	KIT-SLIDER BLOCK (SUSPENSION SEAT)	
					(EACH INCLUDES BOLT & BLOCKS)	
C	5	1	**161-9283**	1	WASHER (19.8X31.8X1.6-MM THK)	
C	6	1	**161-9285**	1	NUT (3/4-10-THD)	
	7	1	**161-9288**	1	SHAFT-PIVOT	
	8	1	**161-9289**	2	BLOCK-SLIDER	
	9	2	**163-1135**	1	SPRING (AIR)	
	10	2	**164-1215**	1	ABSORBER AS-SHOCK (SEAT)	
	11	2	**164-1218**	2	ARM AS-SUSPENSION (OUTER)	
	12	2	**164-1219**	1	BRACKET AS (FRONT)	
	13	2	**164-1220**	1	BRACKET AS (REAR)	
	14	2	**164-1226**	2	SHAFT	
C	15	2	**164-1228**	1	HARNESS AS-RIDE CONTROL	
	16	2	**164-1229**	4	BUMPER	
	17	2	**164-1230**	12	BEARING	
	18	2	**164-1232**	1	PLATE	
	19	2	**164-1233**	2	SPACER (13X25.4X20.5-MM THK)	
C	20	1	**164-1234**	1	PLATE	
C	21	1	**164-1235**	1	KNOB	
	22	2	**164-1237**	1	BUSHING	
	23	2	**164-1238**	1	SPACER (12.8X22.2X3.1-MM THK)	
	24	2	**164-1239**	2	SPACER (13.5X19X61.9-MM THK)	
	25	1	**164-1240**	1	BOOT	
	26	1	**173-5787**	2	SETSCREW (1/4-20-THD)	
C	28	2	**185-3890**	2	SCREW-PAN HEAD (8-32X33.3-MM)	
M	29	2	**197-6657**	1	BOLT-ROUND HEAD (M12X1.75X80-MM)	
C	30	1	**215-8196**	1	VALVE AS	
	31	2	**237-3943**	1	BRACKET	
	32	1	**260-0030**	1	SHAFT-PIVOT	
	33	1	**260-0031**	1	LEVER (HANDLE-SWIVEL)	
	34	1	**260-0032**	1	LEVER (HANDLE-SLIDE)	
	35	1	**260-0033**	1	SPRING-TORSION (SWIVEL LATCH)	
	36	1	**260-0034**	1	SPRING-RETURN (SWIVEL)	
	37	1	**260-0035**	1	SPRING-RETURN (SLIDE)	
	38	1	**260-0041**	1	BOLT (3/4-1-X1.42-IN)	
	40	1	**260-0043**	1	BLOCK-STOP	
	41	1	**260-0044**	1	PLATE-LATCH	
	42	1	**260-0046**	1	HOUSING-UPPER	
	43	1	**260-0047**	2	SHAFT AS (UPPER)	
	44	2	**260-0049**	2	SHAFT-LOWER	
	45	1	**260-0051**	1	PLATE AS-UPPER	
	46	1	**260-0052**	1	PLATE AS-SLIDE	
	47	1	**260-0057**	1	LATCH AS-SLIDE	
	48	2	**260-0059**	1	AIR COMPRESSOR GP (SUSPENSION SEAT)	
	50	2	**260-0063**	1	BASE-SEAT	
	51	2,2	**260-0067**	2	BEARING	
C	52	1	**289-1204**	1	RING	
M	53	1	**096-4882**	2	LOCKNUT (M8X1.25-THD)	
CM	54	2	**129-3180**	1	LOCKNUT (M12X1.75-THD)	
C	55	1,2	**153-0088**	4	WASHER-HARD (10.31X20X1.65-MM THK)	
	56	2	**0S-0509**	1	BOLT (3/8-16X0.75-IN)	

273-6372 SUSPENSION GP-SEAT *(contd.)* i02605552

NOTE	REF NO	GRAPHIC REF	PART NUMBER	QTY	PART NAME 1 2 3 4 5 6 (PRODUCT LEVEL)	SEE PAGE
	57	2	**1H-3337**	4	BOLT (1/4-20X0.875-IN)	
	58	2	**1K-6872**	1	LOCKNUT (1/2-13-THD)	
	59	2	**2D-6235**	4	LOCKNUT (1/4-20-THD)	
	60	1,2	**2K-4973**	8	LOCKNUT (3/8-16-THD)	
	61	1	**2L-5893**	1	PIN-SPRING	
	62	1	**3B-4505**	2	LOCKWASHER	
C	63	1	**3B-4631**	1	PIN-COTTER	
	64	2	**3J-4818**	2	LOCKWASHER	
C	65	1	**4B-9784**	12	BALL	
	66	1,2	**4H-8380**	4	PIN-SPRING	
	67	1	**4M-0061**	2	BOLT (5/16-18X0.75-IN)	
	68	1	**6L-7155**	2	SCREW-MACHINE (1/4-20X0.5-IN)	
	69	2	**6V-8185**	4	NUT (1/4-20-THD)	
	70	2	**7X-0481**	1	BOLT (1/2-13X8-IN)	
	71	2	**7X-0622**	6	WASHER (13X24X2.5-MM THK)	
	72	1	**8S-7803**	3	RING-RETAINING	
	73	2	**9X-1481**	2	WASHER (13X25.4X1.6-MM THK)	

C-CHANGE FROM PREVIOUS TYPE
M-METRIC PART

273-6372 SUSPENSION GP-SEAT *(contd.)* i02605552

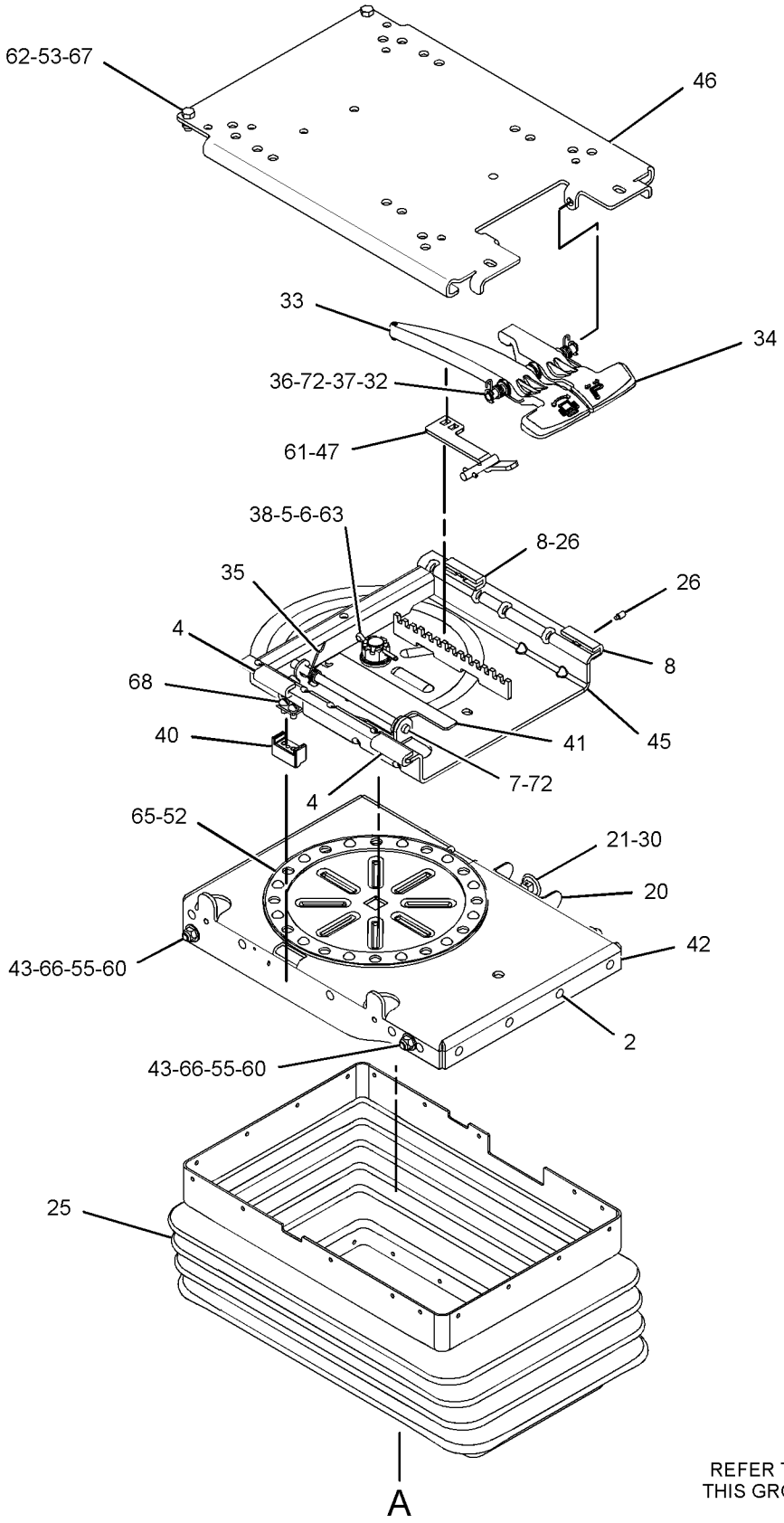

REFER TO ALL ILLUSTRATIONS OF THIS GROUP FOR AUXILIARY VIEWS

GRAPHIC #1

g01346728

273-6372 SUSPENSION GP-SEAT *(contd.)* i02605552

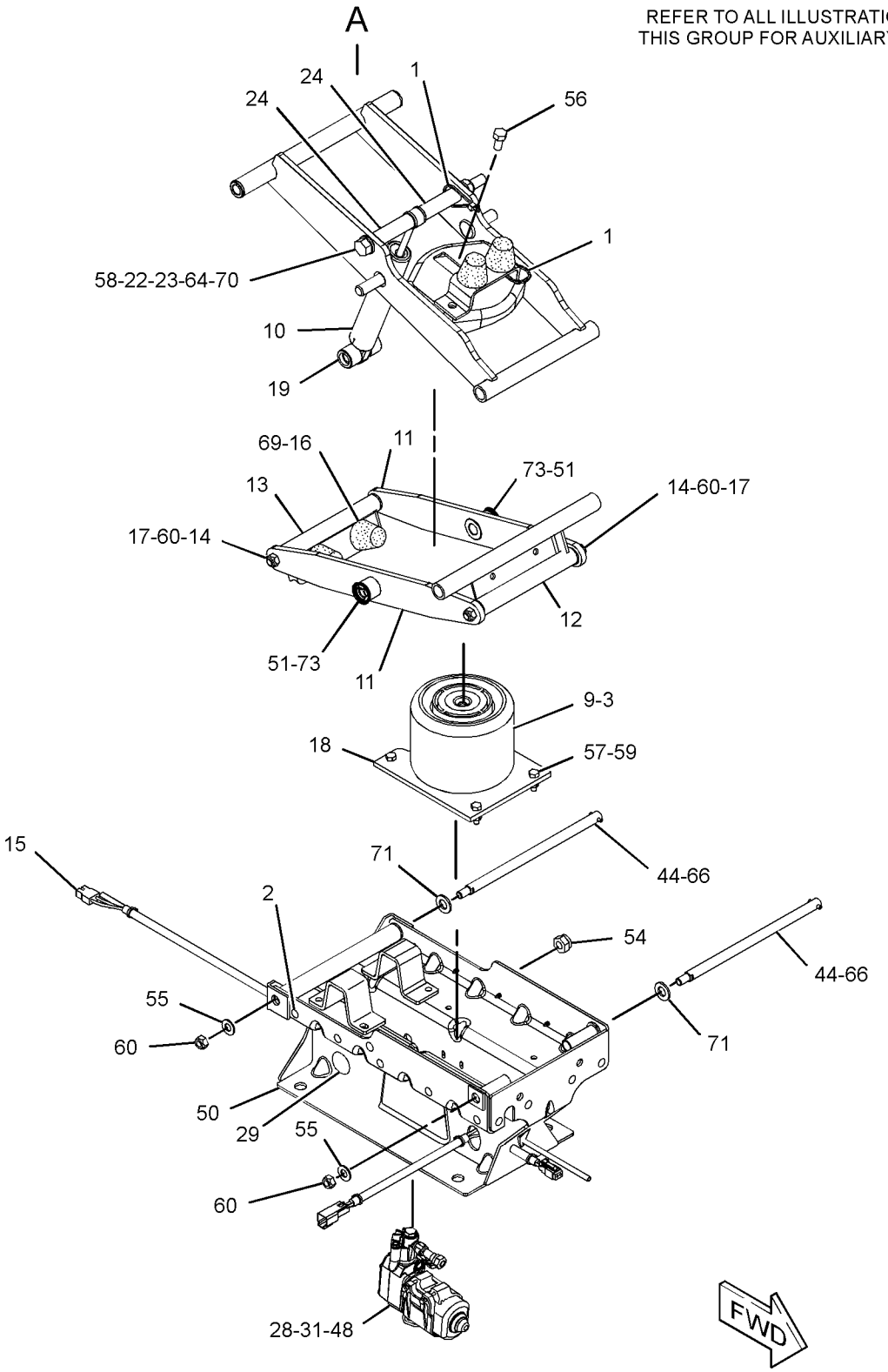

GRAPHIC #2 **<END>** g01347521

OPERATOR STATION

239-1080 TACHOMETER GP-ELECTRIC

S/N: SHA1-UP

PART OF 211-4243 WIRING GP-CONSOLE

AN ATTACHMENT

SMCS-7462 **i01986564**

NOTE	REF NO	GRAPHIC REF	PART NUMBER	QTY	PART NAME 1 2 3 4 5 6 (PRODUCT LEVEL)	SEE PAGE
	1	1	**4B-2043**	7	NUT (8-32-THD)	
	2	1	**9B-7233**	7	LOCKWASHER	
	3	1	**122-7137**	1	LAMP (12-VOLT)	
	4	1	**131-1424**	1	SEAL	

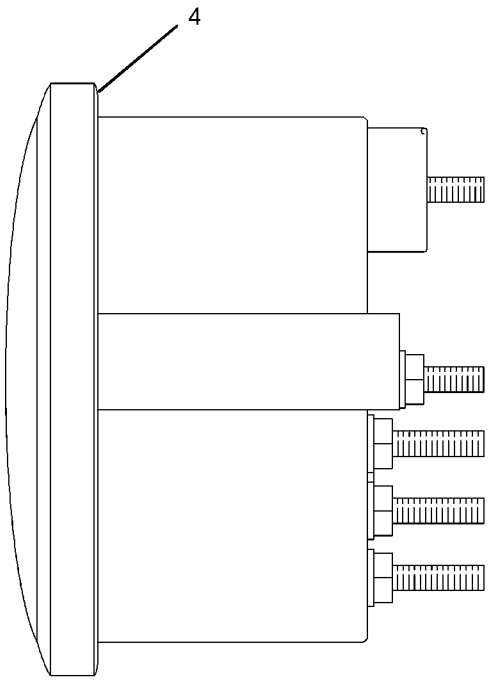

LEFT SIDE VIEW

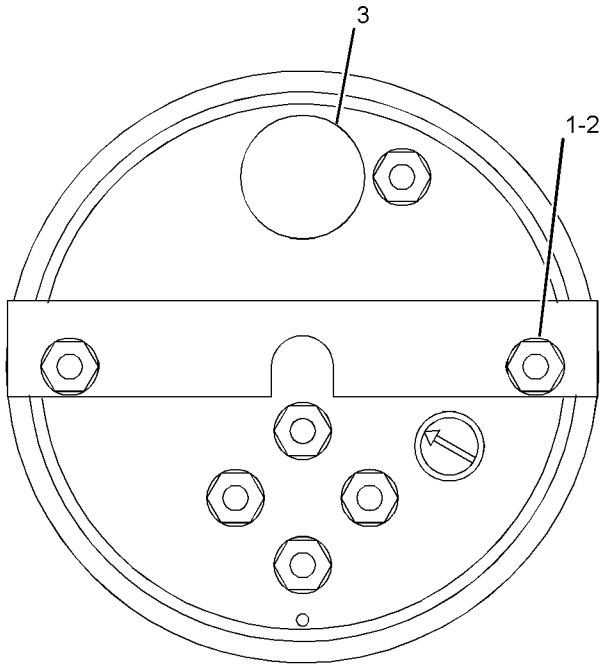

REAR VIEW

GRAPHIC #1

<END>

g01030658

OPERATOR STATION

206-1704 TRIM GP-CAB

S/N: SHA1-UP

PART OF 204-4160, 204-4164 CANOPY AR-OPEN ROPS

AN ATTACHMENT

SMCS-7329, 7451 **i02787052**

NOTE	REF NO	GRAPHIC REF	PART NUMBER	QTY	PART NAME 1 2 3 4 5 6 (PRODUCT LEVEL)	SEE PAGE
	1	1	**6V-0292**	1	PLUG	
	2	1	**9C-4457**	4	FASTENER	
	3	1	**141-1762**	1	SPACER (21.2X25.4X20-MM THK)	
	4	1	**206-1623**	1	INSERT (LH)	
	5	1	**206-1625**	1	INSERT (RH)	
	6	1	**206-1637**	1	CONSOLE-STORAGE	
	7	1	**206-1665**	2	PLUG	
	8	1	**206-1666**	1	PLUG	
	9	1	**206-1683**	1	INSERT	
	10	1	**206-1798**	1	COVER-POST	
	11	1	**206-1799**	4	PLUG	
	12	1	**213-1888**	1	COVER-FENDER	
	13	1	**261-9632**	1	COVER AS	
		1	**206-1684**	1	COVER (CAB FILTER)	
	14	1	**282-7833**	1	GROMMET	
	15	1	**282-7835**	1	PLATE	
M	16	1	**6V-7744**	1	LOCKNUT (M10X1.15-THD)	
	17	1	**8T-4222**	1	WASHER-PLATED (11X32X2.5-MM THK)	
M	18	1	**8T-4178**	1	BOLT (M10X1.5X90-MM)	
M	19	1	**8C-3798**	2	BOLT-LOCKING (M6X1X30)	
	20	1	**9X-2038**	3	WASHER (7X19X2-MM THK)	
M	21	1	**9X-2044**	7	SCREW-TRUSS HEAD (M6X1X16-MM)	
	22	1	**9X-8256**	2	WASHER (6.6X12X2-MM THK)	
E	23	1	**8C-7524**		SEAL (40-CM)	

E-ORDER BY THE CENTIMETER
M-METRIC PART

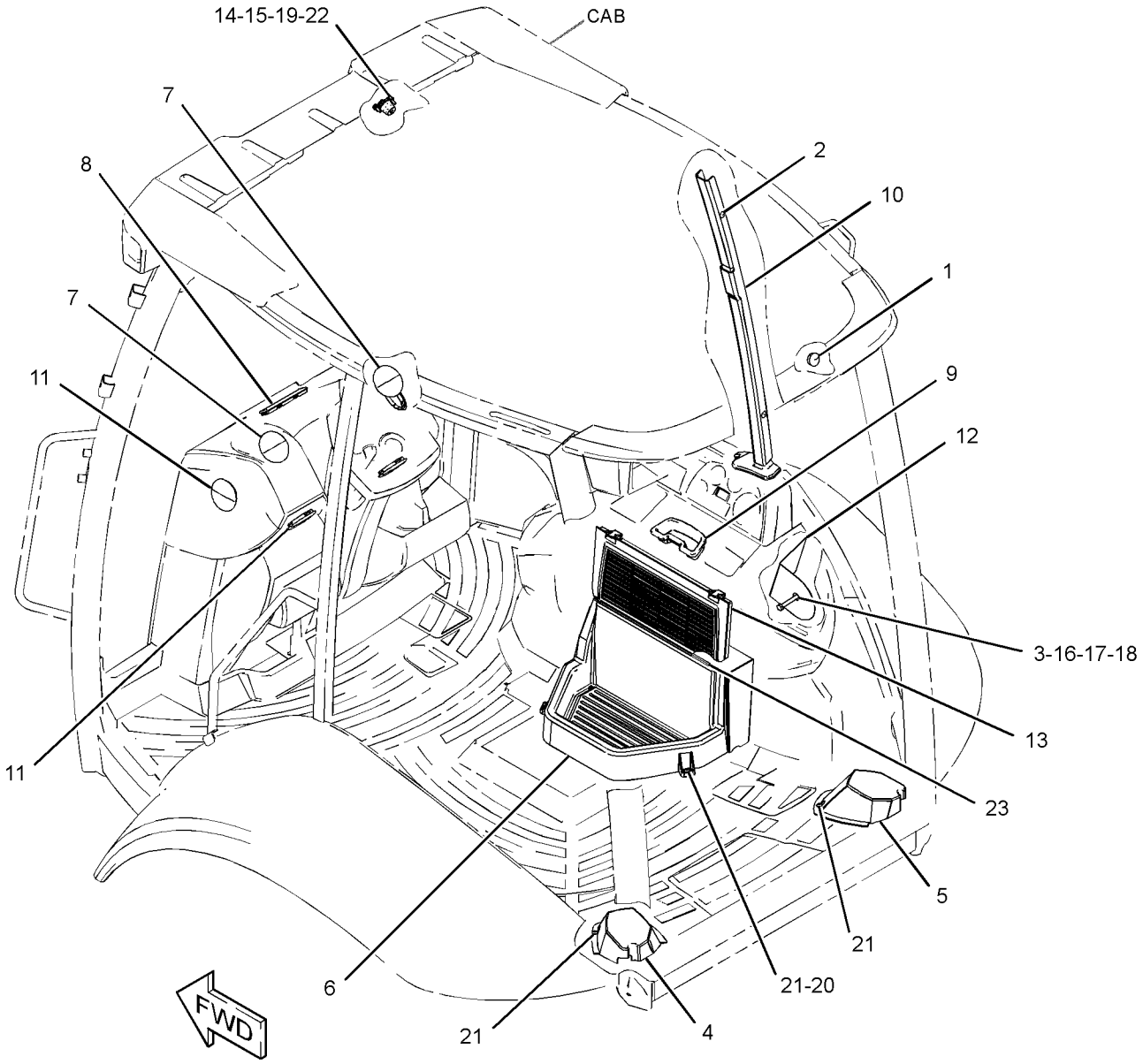

GRAPHIC #1 **<END>** g01274349

OPERATOR STATION

206-1727 WASHER GP-WINDOW

S/N: SHA1-UP

PART OF 204-4161, 204-4162, 228-4602 CAB AR-ENCLOSED ROPS

AN ATTACHMENT

SMCS-7306 **i02639325**

NOTE	REF NO	GRAPHIC REF	PART NUMBER	QTY	PART NAME 1 2 3 4 5 6 (PRODUCT LEVEL)	SEE PAGE
	1	1	**282-7835**	1	PLATE	
D	2	1	**6V-0505**		SEAL (0.5-M)	
	3	1	**3S-2093**	11	STRAP-CABLE (PLASTIC)	
	4	1	**8T-1118**	1	NOZZLE AS	
	5	1	**9R-3469**	2	DIAPHRAGM	
	6	1	**9X-8372**	1	FILM-INSTRUCTION (WASHER FILL)	
	7	1	**121-6936**	1	CONNECTOR	
	8	1	**213-6051**	1	HARNESS AS-CAB	
		1	**124-8616**	2	TERMINAL-RECEPTACLE	
		1	**097-7234**	2	TERMINAL	
E		1	**125-7874**		TUBE-HEAT SHRINK (5.72-MM DIA) (5-CM)	
E		1	**119-3662**		TUBE-HEAT SHRINK (10.85-MM DIA) (7-CM)	
		1	**8L-8413**	15	STRAP-CABLE (PLASTIC)	
		1	**102-8805**	1	KIT-RECEPTACLE (6-PIN)	
					(INCLUDES RECEPTACLE AS & WEDGE)	
		1	**155-2265**	1	KIT-CONNECTING PLUG (8-PIN)	
		1	**155-2271**	2	KIT-CONNECTING PLUG (4-PIN)	
		1	**155-2274**	1	KIT-CONNECTING PLUG (6-PIN)	
					(EACH PLUG KIT INCLUDES PLUG AS, WEDGE & INTERFACE SEAL)	
	9	1	**214-3763**	1	TANK GP-WINDOW WASHER	
		1	**254-5683**	1	CAP	
		1	**8E-8293**	2	GROMMET	
		1	**6T-1375**	2	PUMP AS-WASHER	
		1	**214-3742**	1	TANK	
	10	1	**276-8791**	1	CLIP	
	11	1	**283-3451**	2	CONNECTOR AS	
	12	1	**156-0283**	2	WASHER-HARD (8.4X35X2.5-MM THK)	
M	13	1	**8T-5093**	2	BOLT-LOCKING (M8X1.25X25-MM)	
E	14	1	**144-0195**		HOSE (17-CM)	
E	15	1	**144-0195**		HOSE (21-CM EACH)	
E	16	1	**144-0195**		HOSE (81-CM)	
M	17	1	**8C-3798**	2	BOLT-LOCKING (M6X1X30)	
	18	1	**282-7833**	1	GROMMET	
	19	1	**9X-8256**	2	WASHER (6.6X12X2-MM THK)	

D-ORDER BY THE METER
E-ORDER BY THE CENTIMETER
M-METRIC PART

206 - 1727 **WASHER GP - WINDOW** *(contd.)* **i02639325**

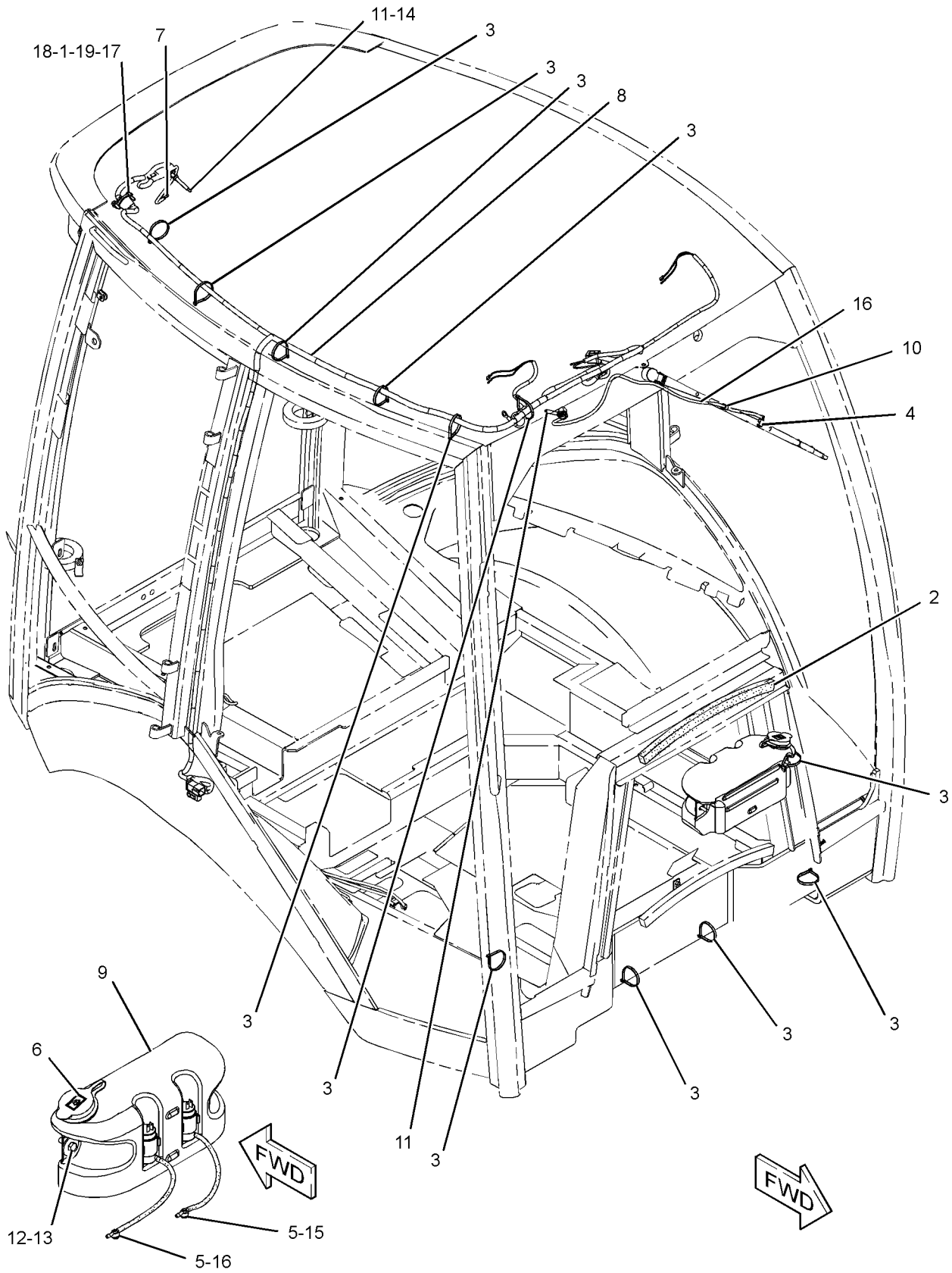

GRAPHIC #1 **<END>** g01255501

OPERATOR STATION

205-9611 WINDOW GP-CAB–RH

S/N: SHA1-UP
PART OF 206-1888 CAB GP-ENCLOSED ROPS
AN ATTACHMENT

SMCS-7310 **i02752203**

NOTE	REF NO	GRAPHIC REF	PART NUMBER	QTY	PART NAME 1 2 3 4 5 6 (PRODUCT LEVEL)	SEE PAGE
E	1	1	**148-5353**		SEAL (360-CM)	
	2	1	**100-7608**	1	HANDLE (RH)	
	3	1	**129-8542**	5	RETAINER	
	4	1	**129-8545**	6	WASHER (13X40X3-MM THK)	
M	5	1	**136-4192**	3	BOLT (M6X1X35-MM)	
	6	1	**154-5423**	2	SPACER (6.6X12.7X17-MM THK)	
Y	7	1	**299-6985**	1	LATCH GP-CAB DOOR & WINDOW (RH)	701
	8	1	**205-9612**	1	GLASS (RH)	
	9	1	**205-9617**	1	HINGE (UPPER)	
	10	1	**205-9618**	1	HINGE (LOWER)	
	11	1	**223-2030**	1	LATCH AS (HOLD OPEN)	
M		1	**6V-7743**	2	LOCKNUT (M6X1-THD)	
M		1	**9X-2045**	2	SCREW-TRUSS HEAD (M6X1X20-MM)	
		1	**143-2827**	1	SPRING	
M	12	1	**6V-7743**	2	LOCKNUT (M6X1-THD)	

E-ORDER BY THE CENTIMETER
M-METRIC PART
Y-SEPARATE ILLUSTRATION

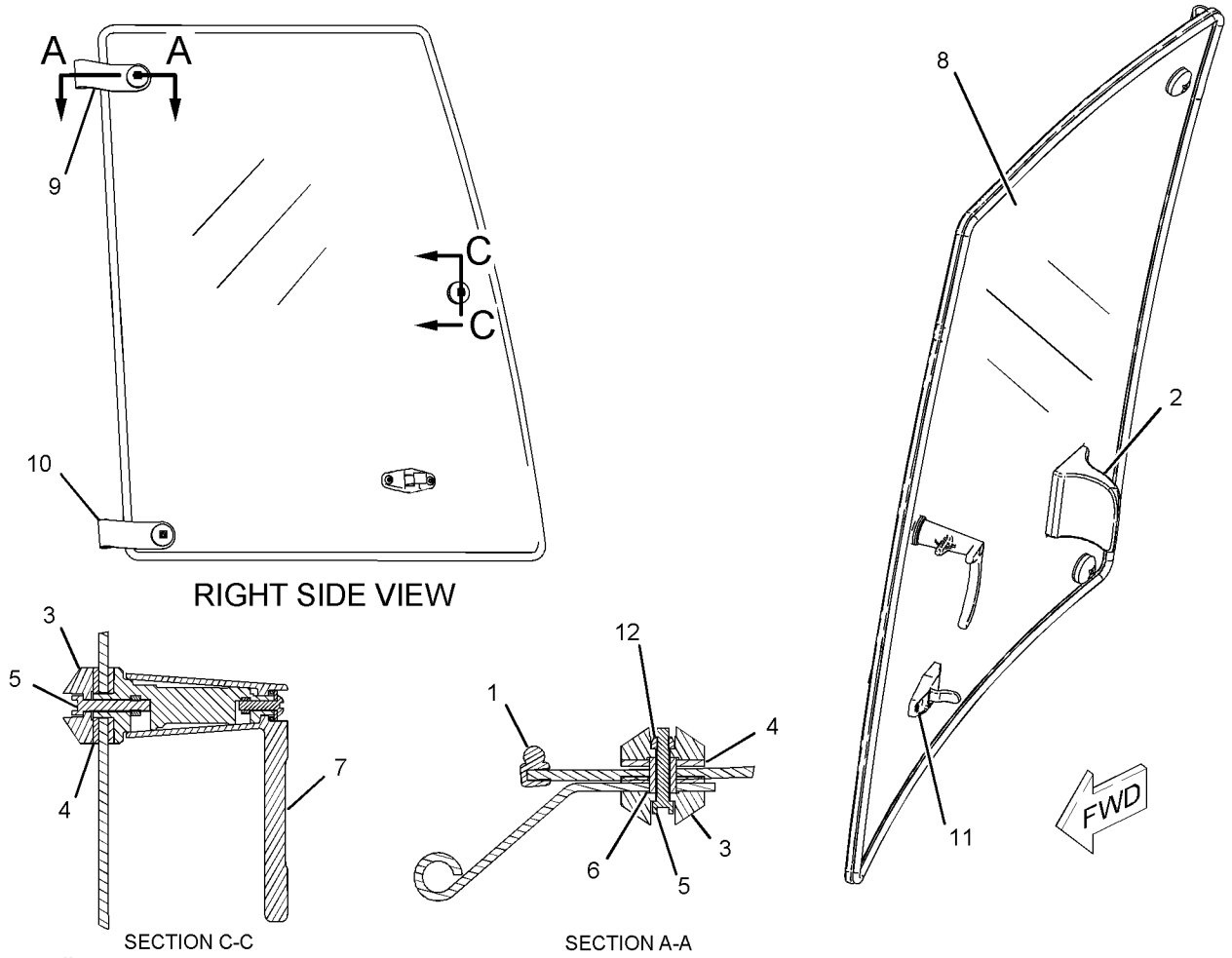

GRAPHIC #1

<END>

g01090128

OPERATOR STATION

205-9619 WINDOW GP-CAB—UPPER, LH

S/N: SHA1-UP

PART OF 206-1889 CAB GP-ENCLOSED ROPS

AN ATTACHMENT

SMCS-7310 **i02752205**

NOTE	REF NO	GRAPHIC REF	PART NUMBER	QTY	PART NAME 1 2 3 4 5 6 (PRODUCT LEVEL)	SEE PAGE
E	1	1	**148-5353**		SEAL (342-CM)	
	2	1	**8Y-7309**	1	RETAINER	
	3	1	**100-7608**	1	HANDLE	
	4	1	**129-8542**	6	RETAINER	
	5	1	**129-8545**	8	WASHER (13X40X3-MM THK)	
M	6	1	**136-4192**	4	BOLT (M6X1X35-MM)	
	7	1	**154-5423**	2	SPACER (6.6X12.7X17-MM THK)	
Y	8	1	**299-6985**	1	LATCH GP-CAB DOOR & WINDOW (RH)	701
Y	9	1	**299-6986**	1	LATCH GP-CAB DOOR & WINDOW (LH)	702
	10	1	**205-9621**	1	GLASS (UPPER, LH)	
	11	1	**205-9623**	1	HINGE (LOWER, LH)	
	12	1	**205-9624**	1	HINGE (UPPER, LH)	
	13	1	**223-2030**	1	LATCH AS (HOLD OPEN)	
M		1	**6V-7743**	2	LOCKNUT (M6X1-THD)	
M		1	**9X-2045**	2	SCREW-TRUSS HEAD (M6X1X20-MM)	
		1	**143-2827**	1	SPRING	
M	14	1	**5C-7261**	1	NUT (M8X1.25-THD)	
M	15	1	**6V-7743**	2	LOCKNUT (M6X1-THD)	
	16	1	**7X-2393**	1	BUMPER-CONICAL	

E-ORDER BY THE CENTIMETER
M-METRIC PART
Y-SEPARATE ILLUSTRATION

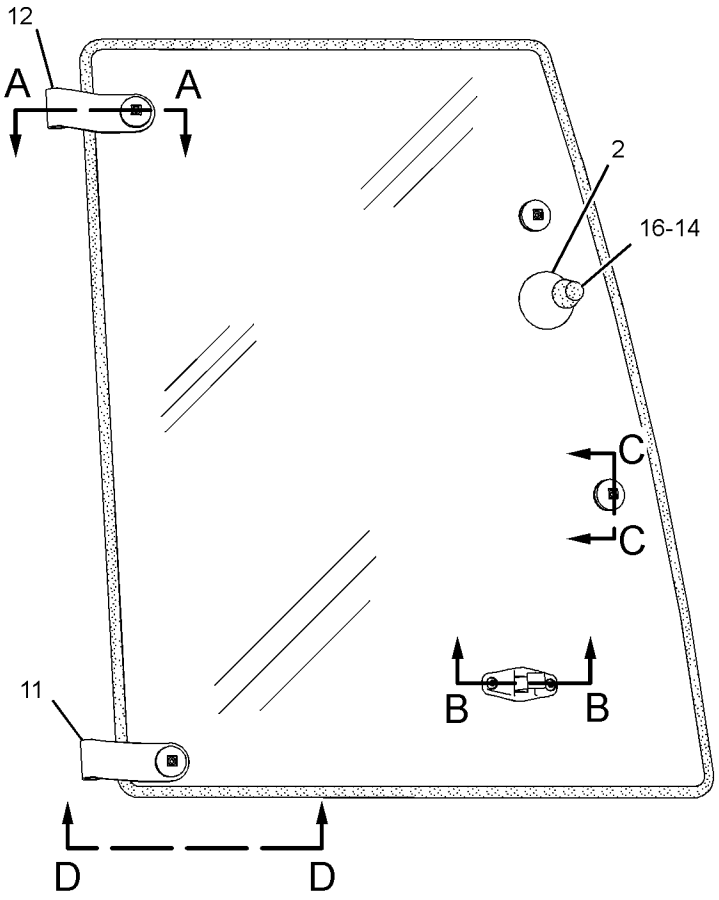

LEFT SIDE VIEW

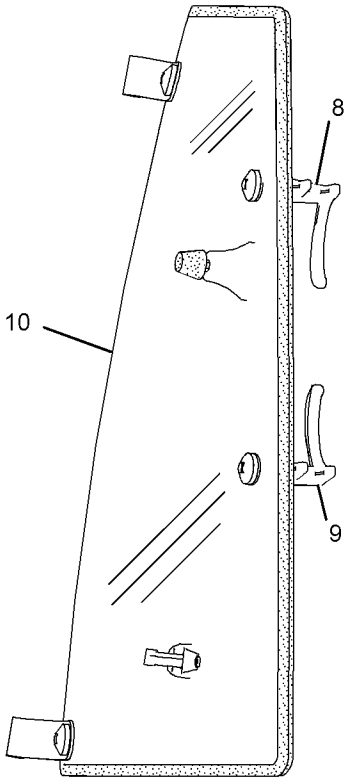

REAR VIEW

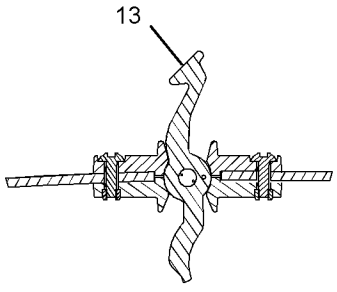

SECTION B-B

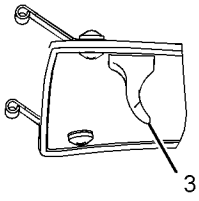

VIEW D-D

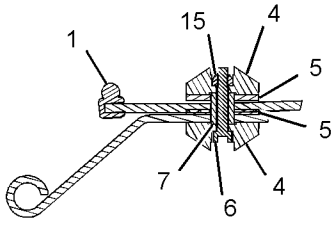

SECTION A-A

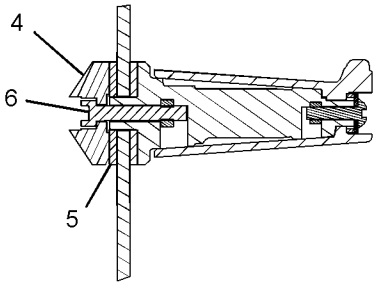

SECTION C-C

GRAPHIC #1 **<END>** g01225815

OPERATOR STATION

205-9628 WINDOW GP-CAB—UPPER, RH

S/N: SHA1-UP

PART OF 206-1889 CAB GP-ENCLOSED ROPS

AN ATTACHMENT

SMCS-7310 **i02752204**

NOTE	REF NO	GRAPHIC REF	PART NUMBER	QTY	PART NAME 1 2 3 4 5 6 (PRODUCT LEVEL)	SEE PAGE
E	1	1	**148-5353**		SEAL (342-CM)	
	2	1	**8Y-7309**	1	RETAINER	
	3	1	**100-7608**	1	HANDLE	
	4	1	**129-8542**	6	RETAINER	
	5	1	**129-8545**	8	WASHER (13X40X3-MM THK)	
M	6	1	**136-4192**	4	BOLT (M6X1X35-MM)	
	7	1	**154-5423**	2	SPACER (6.6X12.7X17-MM THK)	
Y	8	1	**299-6985**	1	LATCH GP-CAB DOOR & WINDOW (RH)	701
Y	9	1	**299-6986**	1	LATCH GP-CAB DOOR & WINDOW (LH)	702
	10	1	**205-9630**	1	GLASS (UPPER, RH)	
	11	1	**205-9633**	1	HINGE (LOWER, RH)	
	12	1	**205-9634**	1	HINGE (UPPER, RH)	
	13	1	**223-2030**	1	LATCH AS (HOLD OPEN)	
M		1	**6V-7743**	2	LOCKNUT (M6X1-THD)	
M		1	**9X-2045**	2	SCREW-TRUSS HEAD (M6X1X20-MM)	
		1	**143-2827**	1	SPRING	
M	14	1	**5C-7261**	1	NUT (M8X1.25-THD)	
M	15	1	**6V-7743**	2	LOCKNUT (M6X1-THD)	
	16	1	**7X-2393**	1	BUMPER-CONICAL	

E-ORDER BY THE CENTIMETER
M-METRIC PART
Y-SEPARATE ILLUSTRATION

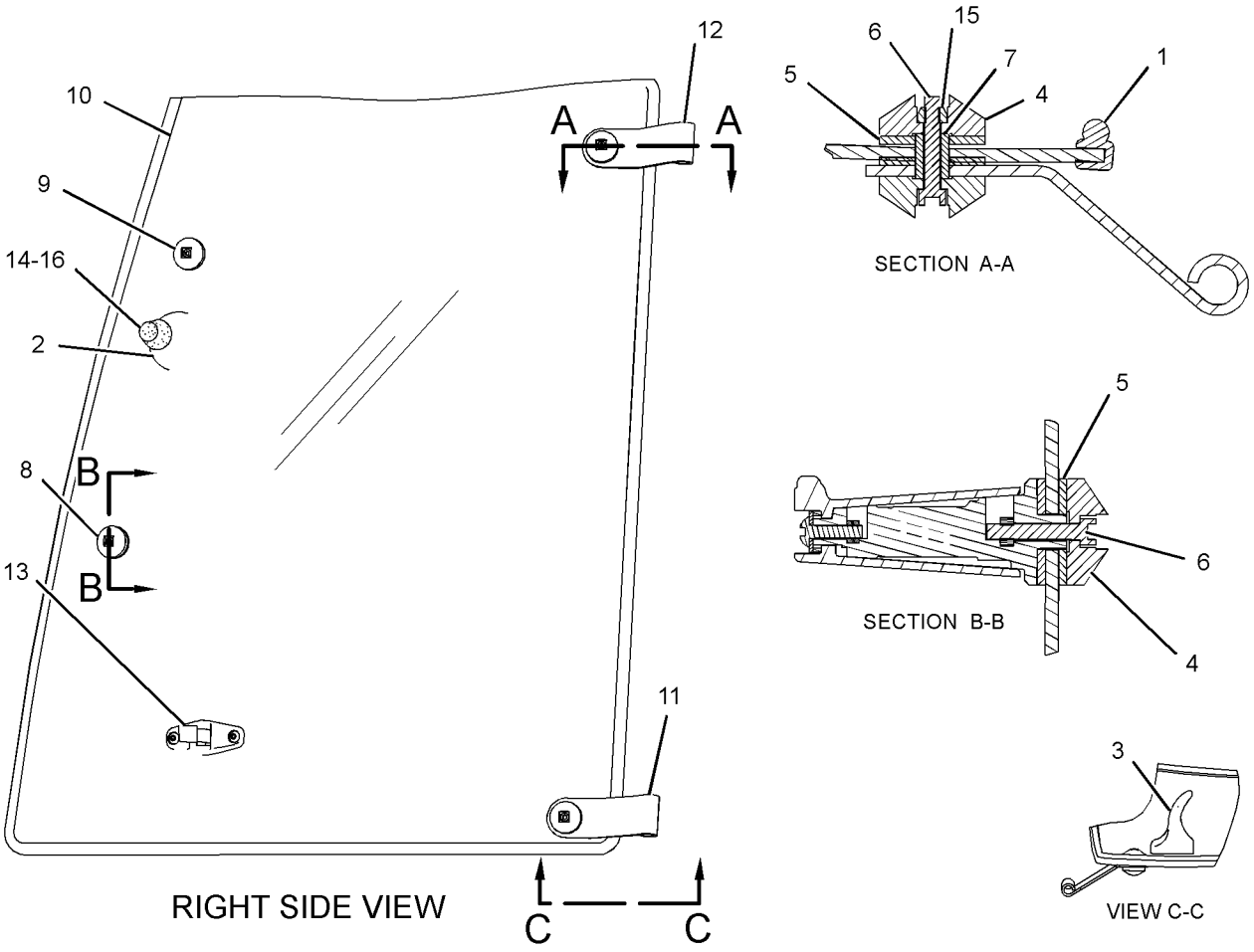

GRAPHIC #1 **<END>** g01225801

OPERATOR STATION

229-0300 WINDOW GP-CAB—REAR

S/N: SHA1-UP
PART OF 206-1888, 206-1889 CAB GP-ENCLOSED ROPS
AN ATTACHMENT
TYPE 1

SMCS-7310 **i02510260**

NOTE	REF NO	GRAPHIC REF	PART NUMBER	QTY	PART NAME 1 2 3 4 5 6 (PRODUCT LEVEL)	SEE PAGE
	1	1	**5P-4115**	6	WASHER-HARD (7.2X19X2-MM THK)	
M	2	1	**9X-2044**	4	SCREW-TRUSS HEAD (M6X1X16-MM)	
	3	1	**9X-2132**	4	RETAINER	
	4	1	**110-5602**	2	KNOB	
	5	1	**119-8349**	2	CAP	
	6	1	**121-9743**	1	SEAL	
M	7	1	**129-3180**	4	LOCKNUT (M12X1.75-THD)	
M	8	1	**131-8203**	4	SCREW-FLAT HEAD (M8X1.25X30-MM)	
	9	1	**146-7744**	1	KIT-LATCH (RH)	
	10	1	**146-7745**	1	KIT-LATCH (LH)	
	11	1	**164-1308**	2	ROLLER	
	12	1	**164-1328**	2	SPRING AS-GAS	
	13	1	**164-1342**	4	BOLT-SPECIAL (M10X1.5-THD)	
	14	1	**164-1343**	4	WASHER-THRUST	
	15	1	**164-1344**	4	WASHER-THRUST	
	16	1	**164-1345**	4	BEARING	
	17	1	**164-1346**	4	STRIKER	
	18	1	**164-1351**	2	PIN	
	19	1	**164-1352**	1	LATCH AS (LH)	
	20	1	**164-1353**	1	LATCH AS (RH)	
	21	1	**167-8182**	2	BUMPER	
	22	1	**171-2870**	2	SPACER (7X10X5.4-MM THK)	
B	23	1	**201-9465**	4	SHIM (1-MM THK)	
	24	1	**218-4854**	1	PLATE AS	
	25	1	**218-4856**	1	PLATE AS	
	26	1	**229-0298**	1	LINKAGE AS	
	27	1	**229-0305**	1	FRAME AS	
	28	1	**229-0308**	1	GLASS	
	29	1	**229-0310**	1	WINDOW AS	
		1	**229-0309**	1	GLASS	
M	30	1	**5C-2890**	2	NUT (M6X1-THD)	
	31	1	**5P-4116**	4	WASHER-HARD (8.8X20.5X2-MM THK)	
M	32	1	**8T-4200**	4	BOLT (M8X1.25X16-MM)	
	33	1	**8T-4223**	4	WASHER-HARD (13.5X25.5X3-MM THK)	
D	34	1	**5P-5637**		SEAL (1-M)	
E	35	1	**9X-6383**		SEAL (88-CM)	
E	36	1	**164-1314**		SEAL-BULK (153-CM EACH)	
E	37	1	**164-1354**		CHANNEL-WINDOW (90-CM)	
E	38	1	**164-1354**		CHANNEL-WINDOW (75-CM)	
E	39	1	**164-1354**		CHANNEL-WINDOW (74-CM)	

B-USE AS REQUIRED
D-ORDER BY THE METER
E-ORDER BY THE CENTIMETER
M-METRIC PART

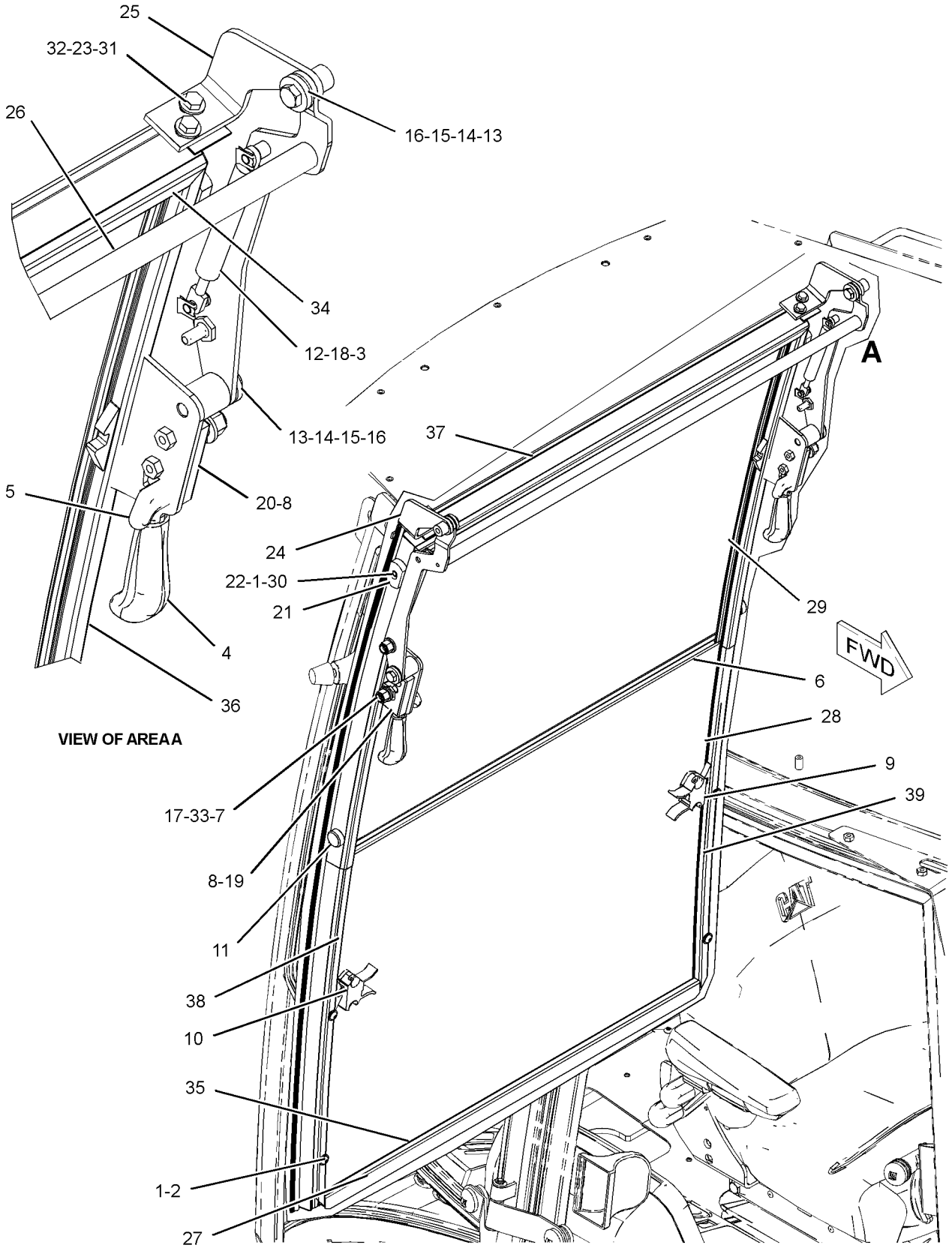

GRAPHIC #1 **<END>** g01257484

OPERATOR STATION

229-0300 WINDOW GP-CAB—REAR

S/N: SHA1-UP
PART OF 206-1888, 206-1889 CAB GP-ENCLOSED ROPS
AN ATTACHMENT
TYPE 2

SMCS-7310 **i02657526**

NOTE	REF NO	GRAPHIC REF	PART NUMBER	QTY	PART NAME 1 2 3 4 5 6 (PRODUCT LEVEL)	SEE PAGE
	1	1	**5P-4115**	6	WASHER-HARD (7.2X19X2-MM THK)	
M	2	1	**9X-2044**	4	SCREW-TRUSS HEAD (M6X1X16-MM)	
	3	1	**9X-2132**	4	RETAINER	
	4	1	**110-5602**	2	KNOB	
	5	1	**119-8349**	2	CAP	
	6	1	**121-9743**	1	SEAL	
M	7	1	**129-3180**	4	LOCKNUT (M12X1.75-THD)	
CM	8	1	**179-7262**	4	SCREW-FLAT HEAD (M8X1.25X40-MM)	
	9	1	**146-7744**	1	KIT-LATCH (RH)	
	10	1	**146-7745**	1	KIT-LATCH (LH)	
	11	1	**164-1308**	2	ROLLER	
	12	1	**164-1328**	2	SPRING AS-GAS	
	13	1	**164-1342**	4	BOLT-SPECIAL (M10X1.5-THD)	
	14	1	**164-1343**	4	WASHER-THRUST	
	15	1	**164-1344**	4	WASHER-THRUST	
	16	1	**164-1345**	4	BEARING	
	17	1	**164-1346**	4	STRIKER	
	18	1	**164-1351**	2	PIN	
	19	1	**164-1352**	1	LATCH AS (LH)	
	20	1	**164-1353**	1	LATCH AS (RH)	
	21	1	**167-8182**	2	BUMPER	
	22	1	**171-2870**	2	SPACER (7X10X5.4-MM THK)	
B	23	1	**201-9465**	4	SHIM (1-MM THK)	
	24	1	**218-4854**	1	PLATE AS	
	25	1	**218-4856**	1	PLATE AS	
	26	1	**229-0298**	1	LINKAGE AS	
C	27	1	**290-1273**	1	FRAME AS	
	28	1	**229-0308**	1	GLASS	
	29	1	**229-0310**	1	WINDOW AS	
		1	**229-0309**	1	GLASS	
M	30	1	**5C-2890**	2	NUT (M6X1-THD)	
	31	1	**5P-4116**	4	WASHER-HARD (8.8X20.5X2-MM THK)	
M	32	1	**8T-4200**	4	BOLT (M8X1.25X16-MM)	
	33	1	**8T-4223**	4	WASHER-HARD (13.5X25.5X3-MM THK)	
D	34	1	**5P-5637**		SEAL (1-M)	
E	35	1	**9X-6383**		SEAL (88-CM)	
E	36	1	**164-1314**		SEAL-BULK (153-CM EACH)	
CE	37	1	**164-1354**		CHANNEL-WINDOW (90-CM)	
CE	37A	1	**164-1354**		CHANNEL-WINDOW (75-CM EACH)	
CE	37B	1	**164-1354**		CHANNEL-WINDOW (74-CM EACH)	
C	38	1	**150-8015**	2	GASKET	

B-USE AS REQUIRED
C-CHANGE FROM PREVIOUS TYPE
D-ORDER BY THE METER
E-ORDER BY THE CENTIMETER
M-METRIC PART

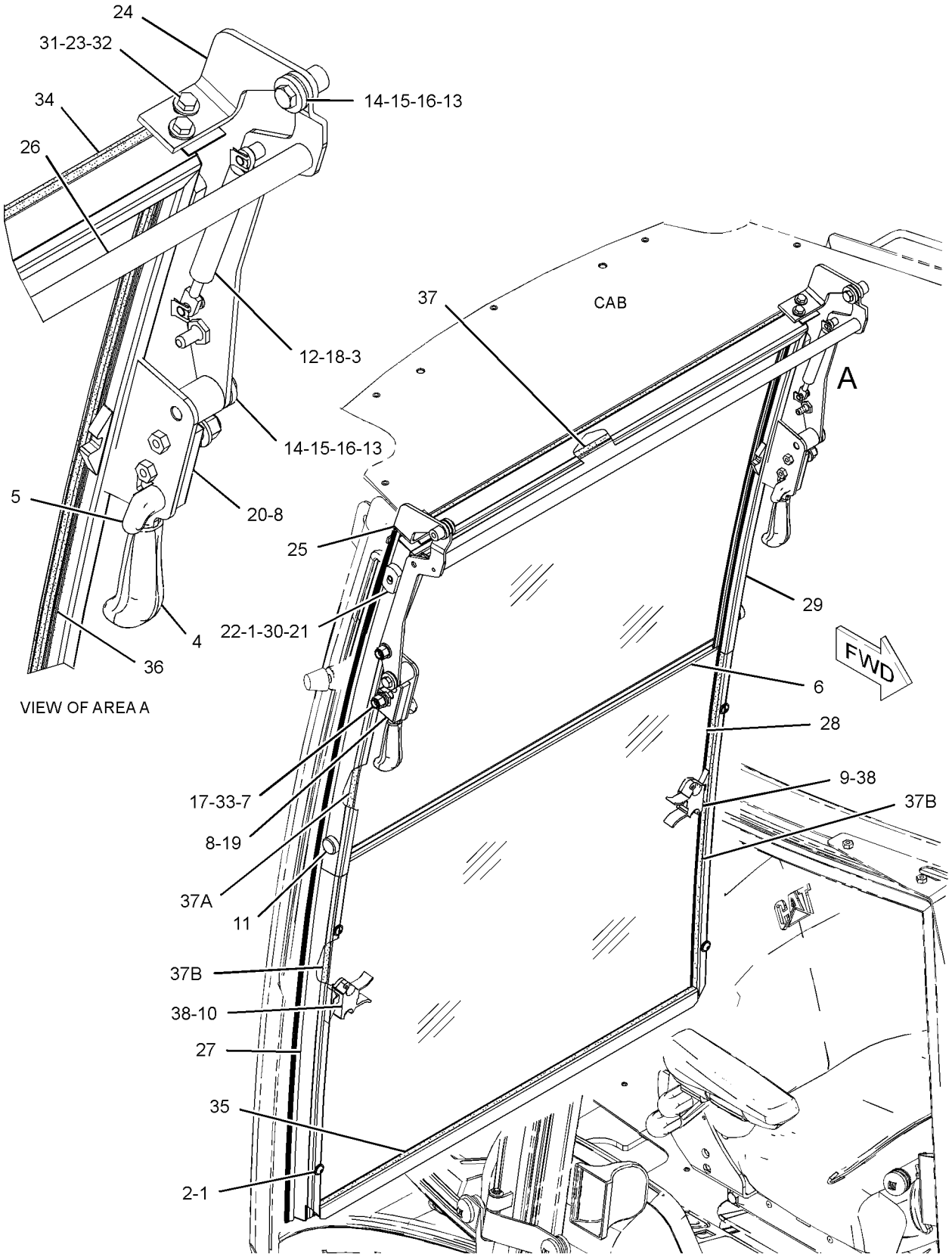

GRAPHIC #1 **<END>** g01366206

OPERATOR STATION

205-9585 WINDOW GP-DOOR–LH

S/N: SHA1-UP
PART OF 206-1592 DOOR GP-CAB
AN ATTACHMENT

SMCS-7308, 7310 **i02752202**

NOTE	REF NO	GRAPHIC REF	PART NUMBER	QTY	PART NAME 1 2 3 4 5 6 (PRODUCT LEVEL)	SEE PAGE
E	1	1	**148-5353**		SEAL (354-CM)	
	2	1	**100-7608**	1	HANDLE	
	3	1	**129-8542**	5	RETAINER (MOUNT)	
	4	1	**129-8545**	6	WASHER (13X40X3-MM THK)	
M	5	1	**136-4192**	3	BOLT (M6X1X35-MM)	
	6	1	**154-5423**	2	SPACER (6.6X12.7X17-MM THK)	
Y	7	1	**299-6986**	1	LATCH GP-CAB DOOR & WINDOW (LH)	702
	8	1	**205-9587**	1	GLASS (LH)	
	9	1	**205-9590**	1	HINGE (UPPER)	
	10	1	**205-9591**	1	HINGE (LOWER)	
	11	1	**223-2030**	1	LATCH AS (HOLD OPEN)	
M		1	**6V-7743**	2	LOCKNUT (M6X1-THD)	
M		1	**9X-2045**	2	SCREW-TRUSS HEAD (M6X1X20-MM)	
		1	**143-2827**	1	SPRING	
M	12	1	**6V-7743**	2	LOCKNUT (M6X1-THD)	

E-ORDER BY THE CENTIMETER
M-METRIC PART
Y-SEPARATE ILLUSTRATION

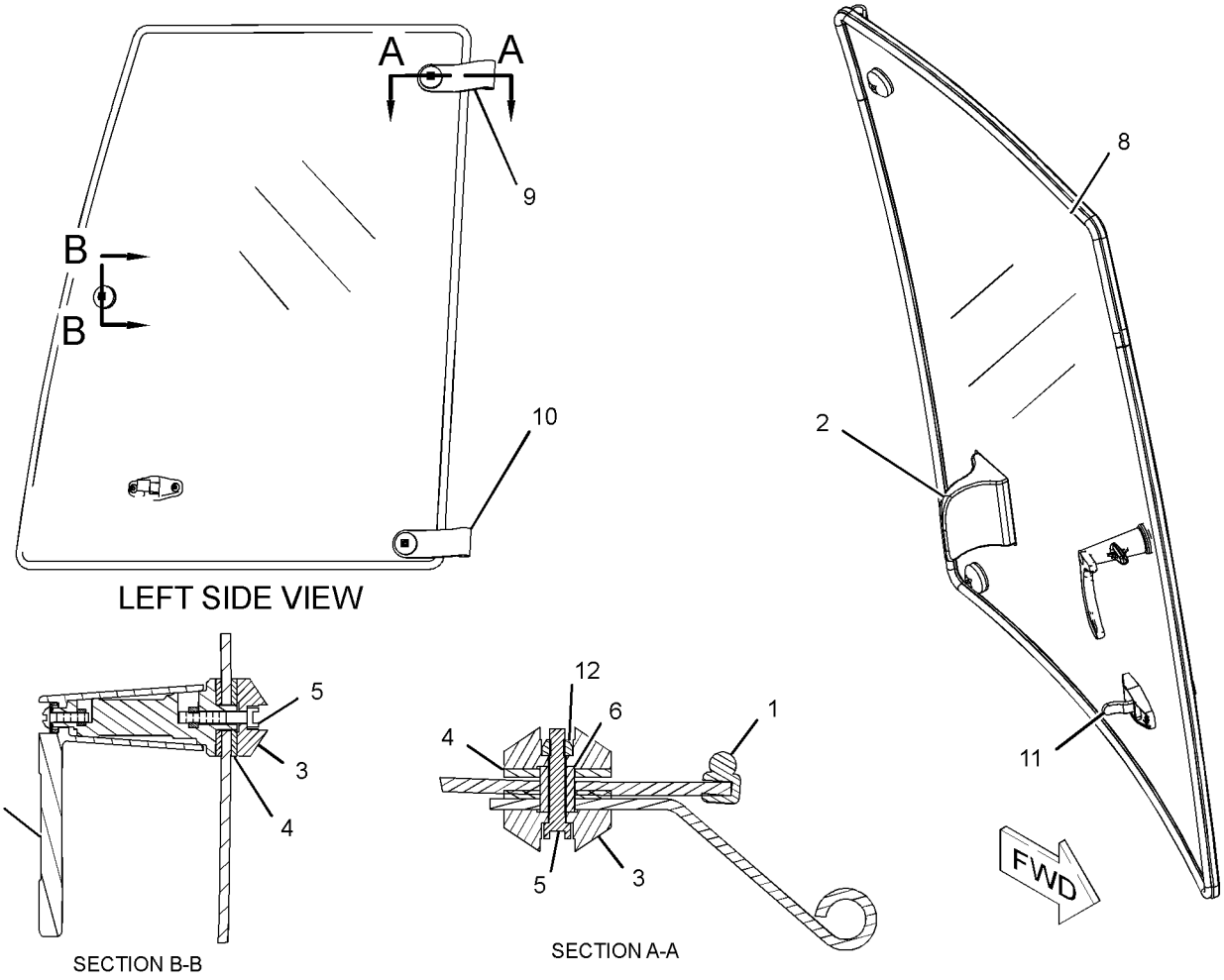

GRAPHIC #1 **<END>** g01384169

OPERATOR STATION

205-9595 WINDOW GP-DOOR—RH

S/N: SHA1-UP
PART OF 206-1593 DOOR GP-CAB
AN ATTACHMENT

SMCS-7308, 7310 **i02752201**

NOTE	REF NO	GRAPHIC REF	PART NUMBER	QTY	PART NAME 1 2 3 4 5 6 (PRODUCT LEVEL)	SEE PAGE
E	1	1	**148-5353**		SEAL (354-CM)	
	2	1	**100-7608**	1	HANDLE	
	3	1	**129-8542**	5	RETAINER (MOUNT)	
	4	1	**129-8545**	6	WASHER (13X40X3-MM THK)	
M	5	1	**136-4192**	3	BOLT (M6X1X35-MM)	
	6	1	**154-5423**	2	SPACER (6.6X12.7X17-MM THK)	
Y	7	1	**299-6985**	1	LATCH GP-CAB DOOR & WINDOW (RH)	701
	8	1	**205-9597**	1	GLASS (RH)	
	9	1	**205-9614**	1	HINGE (LOWER)	
	10	1	**205-9615**	1	HINGE (UPPER)	
	11	1	**223-2030**	1	LATCH AS (HOLD OPEN)	
M		1	**6V-7743**	2	LOCKNUT (M6X1-THD)	
M		1	**9X-2045**	2	SCREW-TRUSS HEAD (M6X1X20-MM)	
		1	**143-2827**	1	SPRING	
M	12	1	**6V-7743**	2	LOCKNUT (M6X1-THD)	

E-ORDER BY THE CENTIMETER
M-METRIC PART
Y-SEPARATE ILLUSTRATION

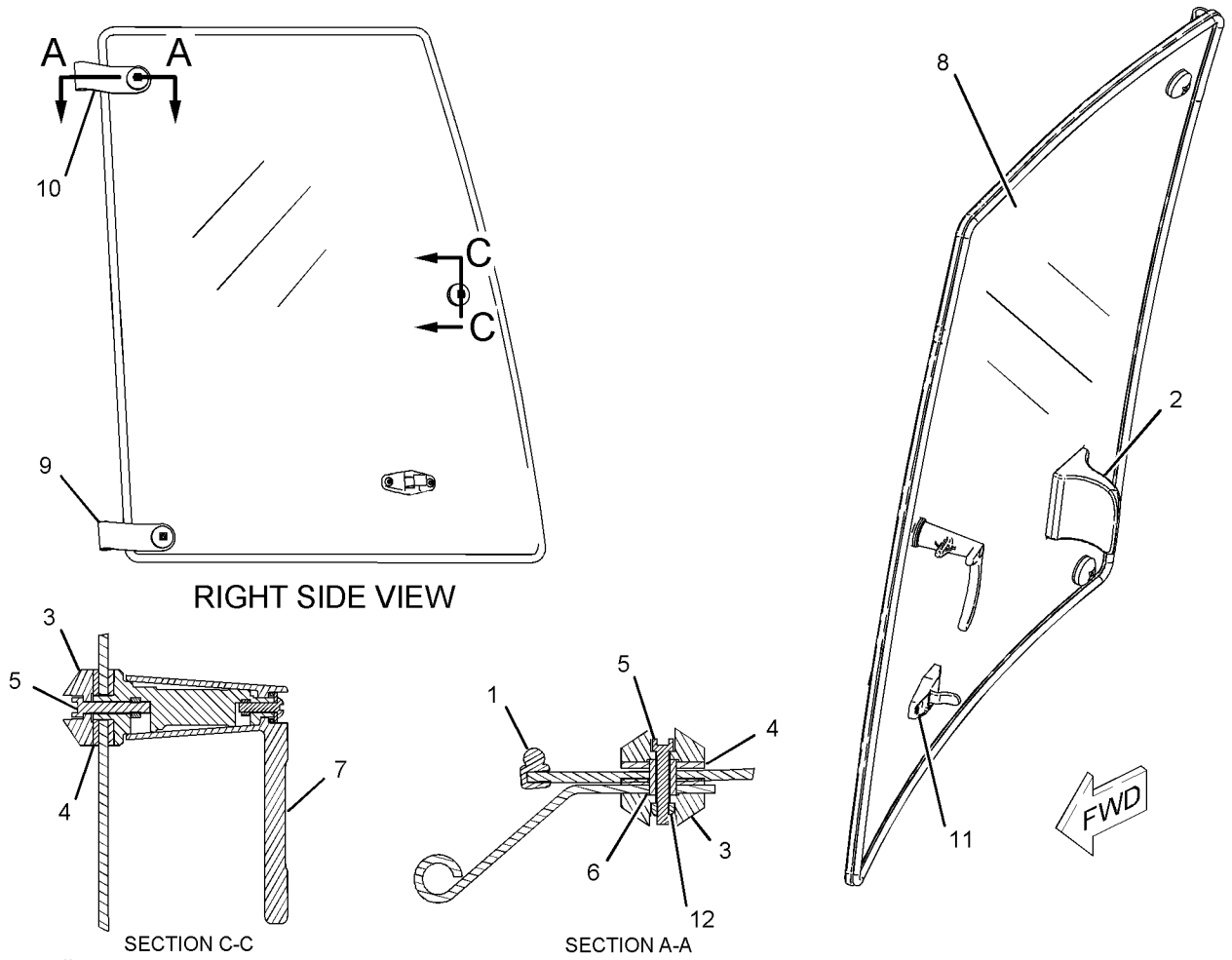

GRAPHIC #1 **<END>** g01088742

OPERATOR STATION

206-1728 WIPER & WASHER GP-WINDOW

S/N: SHA1-UP

PART OF 204-4164 CANOPY AR-OPEN ROPS

AN ATTACHMENT

SMCS-7305, 7306 **i02531002**

NOTE	REF NO	GRAPHIC REF	PART NUMBER	QTY	PART NAME 1 2 3 4 5 6 (PRODUCT LEVEL)	SEE PAGE
	1	1	**3S-2093**	10	STRAP-CABLE	
	2	1	**276-8791**	1	CLIP	
	3	1	**8T-1118**	1	NOZZLE AS	
	4	1	**9R-3469**	1	DIAPHRAGM	
	5	1	**101-0745**	1	BLADE AS-WIPER (600-MM) (FRONT)	
	6	1	**283-3451**	1	CONNECTOR AS	
	7	1	**213-6051**	1	HARNESS AS-CAB	
		1	**097-7234**	1	TERMINAL	
E		1	**119-3662**		TUBE-HEAT SHRINK (10.85-MM DIA) (7-CM)	
E		1	**125-7874**		TUBE-HEAT SHRINK (5.72-MM DIA) (5-CM)	
		1	**124-8616**	2	TERMINAL-RECEPTACLE	
		1	**8L-8413**	15	STRAP-CABLE	
		1	**102-8804**	1	KIT-RECEPTACLE (4-PIN)	
					(EACH RECEPTACLE KIT INCLUDES RECEPTACLE AS & WEDGE)	
		1	**155-2265**	1	KIT-CONNECTING PLUG (8-PIN)	
		1	**155-2271**	2	KIT-CONNECTING PLUG (4-PIN)	
		1	**155-2274**	1	KIT-CONNECTING PLUG (6-PIN)	
					(EACH PLUG KIT INCLUDES PLUG AS, WEDGE & INTERFACE SEAL)	
	8	1	**154-5410**	1	ARM AS-WIPER	
Y	9	1	**186-2589**	1	MOTOR GP-WINDOW WIPER (FRONT)	713
	10	1	**214-3763**	1	TANK GP-WINDOW WASHER	
M	11	1	**6V-7357**	1	BOLT (M6X1X25-MM)	
	12	1	**8T-4205**	1	WASHER-HARD (7.2X14.5X2-MM THK)	
E	13	1	**144-0195**		HOSE (217-CM)	
E	14	1	**144-0195**		HOSE (79-CM)	
E	15	1	**144-0195**		HOSE (297-CM)	
	16	1	**156-0283**	2	WASHER-HARD (8.4X35X2.5-MM THK)	
	17	1	**9X-8372**	1	FILM-INSTRUCTION (WASHER FILL)	
M	18	1	**8T-5093**	1	BOLT-LOCKING (M8X1.25X25-MM)	
D	19	1	**6V-0505**		SEAL (0.5-M)	
	20	1	**6K-9632**	1	TEE	
	21	1	**144-0195**		HOSE (15-CM EACH)	

D-ORDER BY THE METER
E-ORDER BY THE CENTIMETER
M-METRIC PART
Y-SEPARATE ILLUSTRATION

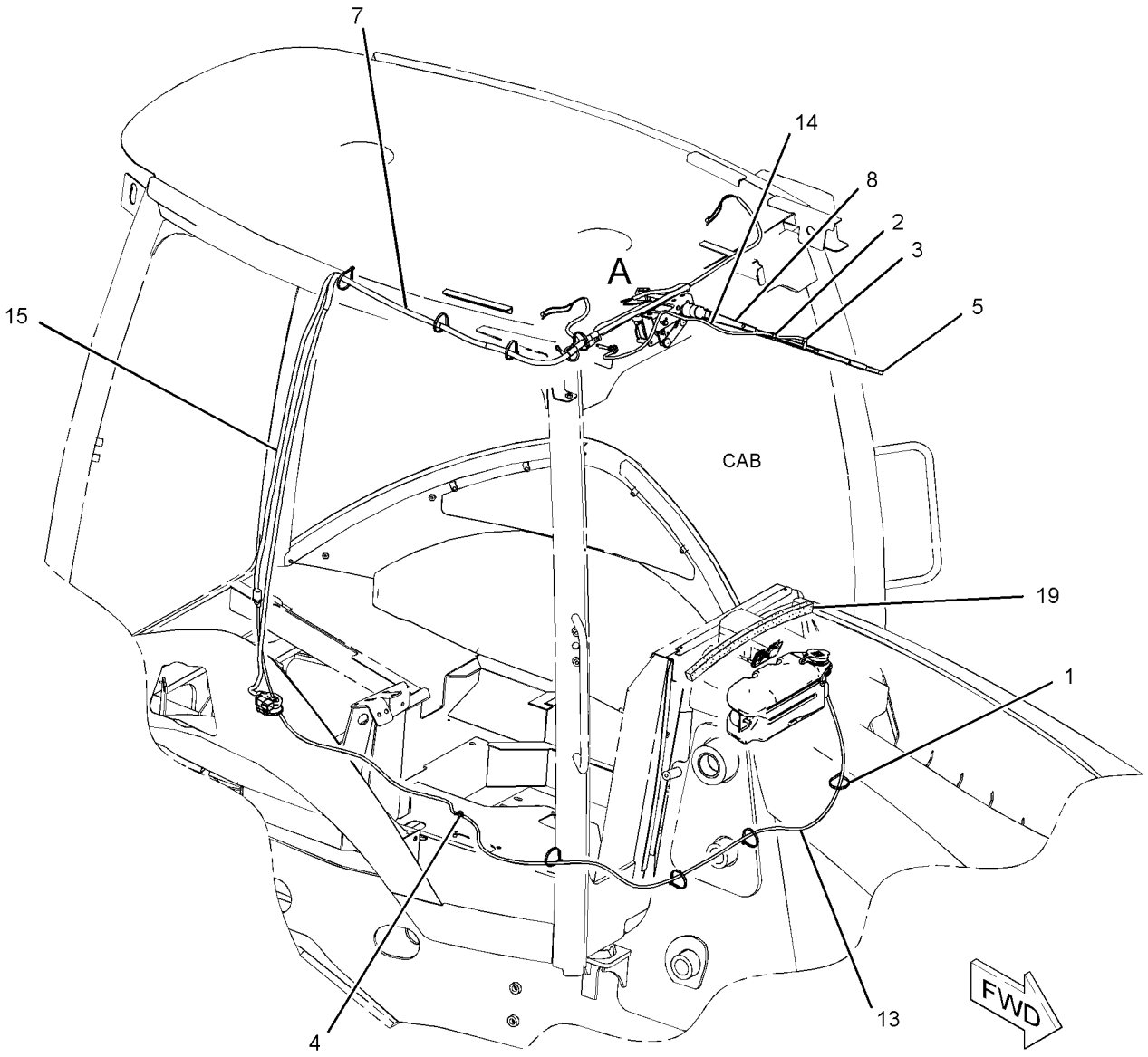

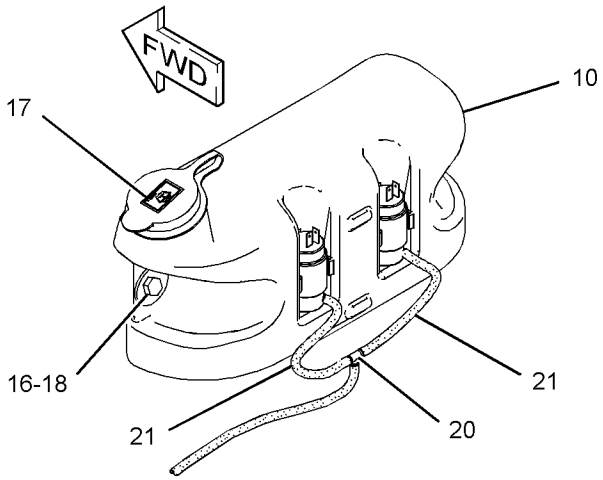

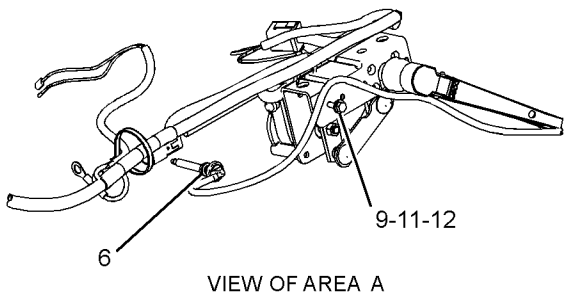

VIEW OF AREA A

GRAPHIC #1 **<END>** g01277958

OPERATOR STATION

206-1725 WIPER GP-WINDOW

S/N: SHA1-UP

PART OF 204-4161, 204-4162, 228-4602 CAB AR-ENCLOSED ROPS

AN ATTACHMENT

SMCS-7305 **i02639323**

NOTE	REF NO	GRAPHIC REF	PART NUMBER	QTY	PART NAME 1 2 3 4 5 6 (PRODUCT LEVEL)	SEE PAGE
	1	1	**5C-8811**	1	BLADE AS-WIPER (500-MM) (REAR)	
	2	1	**101-0745**	1	BLADE AS-WIPER (600-MM) (FRONT)	
	3	1	**154-5410**	1	ARM AS-WIPER (FRONT)	
	4	1	**160-2169**	2	SPACER (7X11X8.4-MM THK)	
Y	5	1	**186-2589**	1	MOTOR GP-WINDOW WIPER (FRONT)	713
	6	1	**214-4709**	1	SWITCH AS-ROCKER (WIPER, WASHER, REAR)	
	7	1	**220-2000**	1	MOTOR GP-WINDOW WIPER (REAR)	
		1	**186-3735**	5	PIN-CONNECTOR (16-GA TO 18-GA)	
		1	**102-8804**	1	KIT-RECEPTACLE (4-PIN)	
					(INCLUDES RECEPTACLE AS & WEDGE)	
	8	1	**220-2001**	1	ARM AS-WIPER (REAR)	
		1	**136-3194**	1	NOZZLE AS-WASHER	
E		1	**194-5171**		HOSE (35-CM)	
	9	1	**223-8263**	1	PLATE	
	10	1	**229-0306**	1	PLATE	
M	11	1	**6V-7357**	1	BOLT (M6X1X25-MM)	
M	12	1	**8T-4138**	2	BOLT (M6X1X20-MM)	
M	13	1	**8T-4171**	4	BOLT (M6X1X12-MM)	
	14	1	**8T-4205**	9	WASHER-HARD (7.2X14.5X2-MM THK)	
M	15	1	**5C-2890**	1	NUT (M6X1-THD)	
M	16	1	**8T-4971**	1	BOLT (M6X1X30-MM)	

E-ORDER BY THE CENTIMETER
M-METRIC PART
Y-SEPARATE ILLUSTRATION

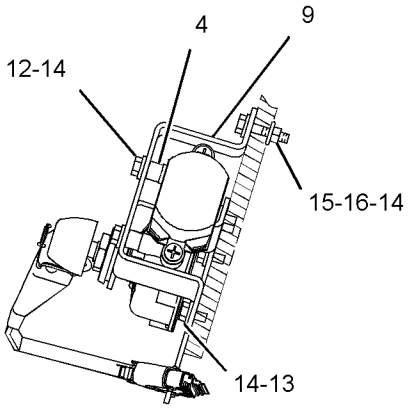

SECTION A-A

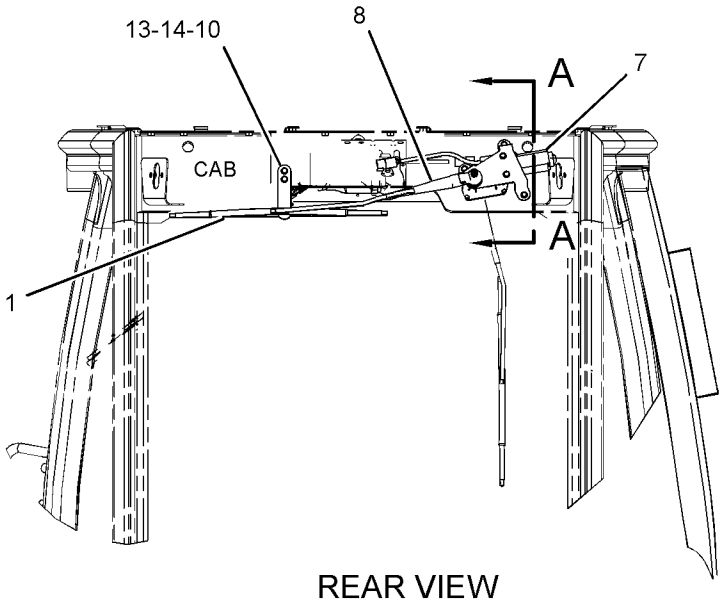

REAR VIEW

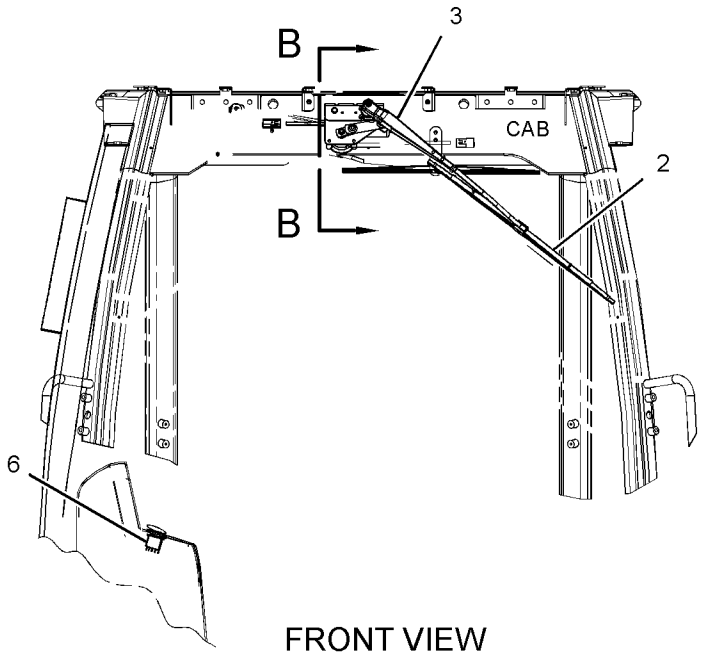

FRONT VIEW

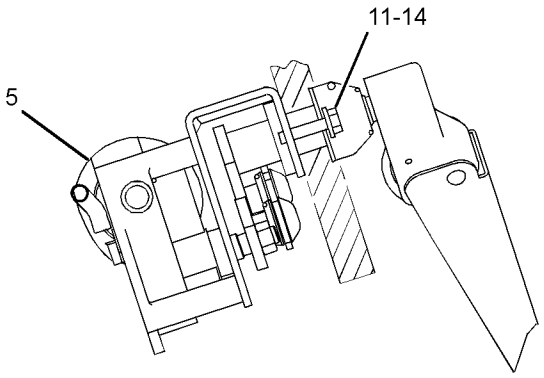

SECTION B-B

GRAPHIC #1 **<END>** g01328113

SERVICE EQUIPMENT AND SUPPLIES

120-9289 BRACKET GP-TRANSPORT

S/N: SHA1-UP
PART OF 119-1530 SHIPPING AR-BUCKET
AN ATTACHMENT

SMCS-7505 **i02204843**

NOTE	REF NO	GRAPHIC REF	PART NUMBER	QTY	PART NAME 1 2 3 4 5 6 (PRODUCT LEVEL)	SEE PAGE
	1	1	**3B-5322**	2	PIN-COTTER	
	2	1	**9R-0109**	2	WASHER (41X64X3-MM THK)	
B	3	1	**9R-4066**	6	WASHER (61X98X4-MM THK)	
	4	1	**9R-6014**	4	TUBE	
	5	1	**034-1432**	2	STRAP-CABLE	
	6	1	**120-9332**	2	BLOCK	
	7	1	**120-9333**	1	TUBE	

B-USE AS REQUIRED

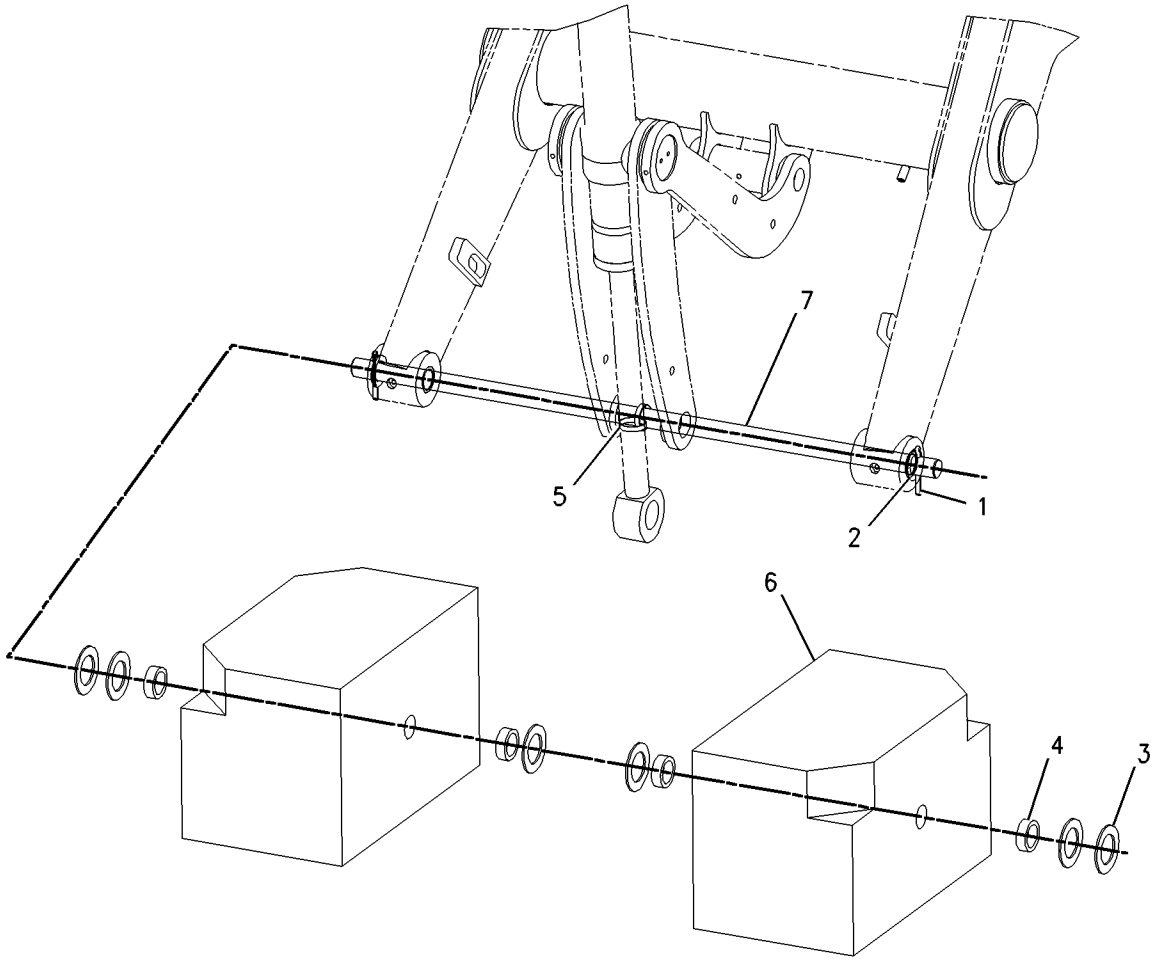

GRAPHIC #1 **<END>** g00778843

250-7914 FILM GP

S/N: SHA1-UP

PART OF 213-9284 CHASSIS AR

SMCS-7405, 7557 **i02658762**

NOTE	REF NO	GRAPHIC REF	PART NUMBER	QTY	PART NAME 1 2 3 4 5 6 (PRODUCT LEVEL)	SEE PAGE
	1	1	**294-4955**	1	FILM-IDENTIFICATION (416E, RH)	
	2	1	**292-2833**	1	FILM (BOOM, RH)	
	3	1	**294-4954**	1	FILM-IDENTIFICATION (416E, LH)	
	4	1	**292-2834**	1	FILM (BOOM, LH)	

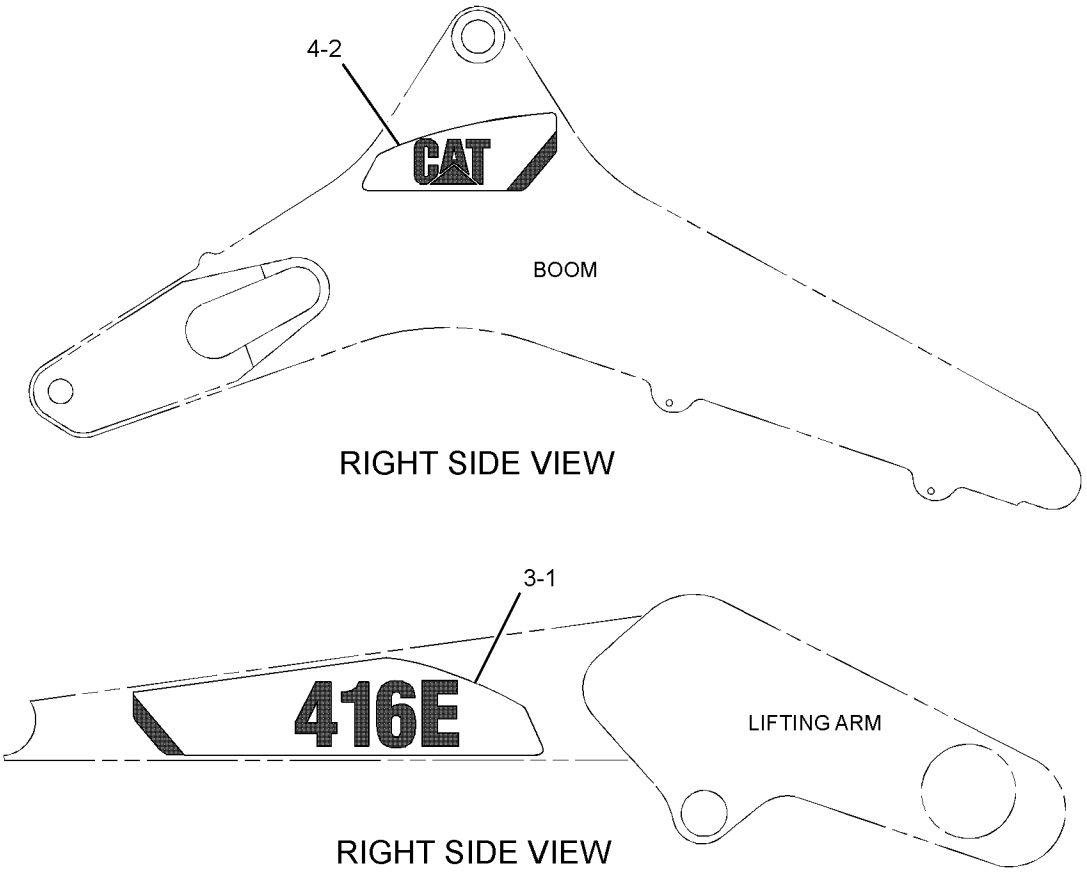

GRAPHIC #1 **<END>** g01342406

SERVICE EQUIPMENT AND SUPPLIES

175-7877 LINK GP-SHIPPING

S/N: SHA1-UP
AN ATTACHMENT

SMCS-6513 **i01411821**

NOTE	PART NUMBER	QTY	PART NAME 1 2 3 4 5 6 (PRODUCT LEVEL)	SEE PAGE
	120-9286	1	PLATE	

<END>

216-0909 LOCK GP-VANDALISM

S/N: SHA1-UP
AN ATTACHMENT

SMCS-7315 **i02485595**

NOTE	PART NUMBER	QTY	PART NAME 1 2 3 4 5 6 (PRODUCT LEVEL)	SEE PAGE
J	**246-2641**	1	PADLOCK GP (VANDALISM GUARD)	
J-REQUIRES 5P-8500 KEY				

<END>

248-5711 PLATE & FILM GP

S/N: SHA1-UP
PART OF 213-9284 CHASSIS AR

SMCS-7405 **i02532778**

NOTE	PART NUMBER	QTY	PART NAME 1 2 3 4 5 6 (PRODUCT LEVEL)	SEE PAGE
	225-4150	1	PLATE-SERVICE INFORMATION (MACHINE)	
			(ON SERVICE PLATE ON MAIN FRAME TOWER)	
	239-6989	1	PLATE-SERIAL NUMBER (MACHINE)	
			(ON MAIN FRAME TOWER)	
A	**4P-6236**	1	PLATE-SERIAL NUMBER (ENGINE)	
	231-9361	1	FILM-FUSE	
			(UNDER RH CONSOLE COVER THAT COVERS THE POWER DISTRUBUTION BLOCK. ORIENT FILM SUCH THAT IT CAN BE READ WHEN THE COVER	
			IS OPEN AND THE BLOCK IS EXPOSED)	
	250-7910	1	FILM (BOOM LOCK)	
			(NEXT TO BOOM LOCK ON RH CONSOLE)	
	250-7911	1	FILM (VARIABLE SPEED)	
			(ON RH CONSOLE NEXT TO GOVERNER CONTROL HANDLE)	
	252-2157	4	FILM-INFORMATION (TIE-DOWN)	
			(APPLY 2 FILMS, ONE ON EACH SIDE OF THE MACHINE ON THE MAIN FRAME ABOVE THE FRONT AXLE, ABOVE THE TIE DOWN MOUNTING	
			PLATE. APPLY THE OTHER 2 FILMS IN THE REAR OF THE MACHINE ON THE MAIN FRAME NEXT TO THE TIE DOWN HOLES UNDER THE	
			SWING CYLINDERS)	
	134-7258	1	FILM-INFORMATION (EXTENDED LIFE COOLANT-READ OMM)	
			(NEXT TO RADIATOR CAP. ORIENT FILM SUCH THAT IT CAN BE READ FROM THE LH SIDE OF THE MACHINE)	
	159-8033	1	FILM-IDENTIFICATION (12-VOLT)	
			(INSIDE BATTERY BOX DOOR 90 +/-5-MM FROM THE BOTTOM EDGE (SAME AS STACKING THE WARNING BATTERY FILM & THE 12 VOLT	

248-5711 **PLATE & FILM GP** *(contd.)* **i02532778**

NOTE	PART NUMBER	QTY	PART NAME 1 2 3 4 5 6 (PRODUCT LEVEL)	SEE PAGE
			FILM ON TOP OF EACH OTHER) & CENTERED BELOW THE WARNING BATTERY FILM)	
	226-1242	2	FILM-WARNING (CRUSH HAZARD, STAY BACK)	
			(ON BOOM 700-MM +/-5 UP FROM CENTER LINE OF SWING & BOOM LOWER FOOT PIN & 65-MM +/-5 OVER FROM INSIDE OF THE REAR EDGE	
			OF BOOM WRAPPER PLATE)	
	239-9429	1	FILM-WARNING (ARM BRACE, READ OMM)	
			(ON LH SIDE OF THE MACHINE ON SAFETY BRACE CENTERED FROM TOP TO BOTTOM & FROM SIDE TO SIDE)	
	225-0313	1	FILM-WARNING (JUMP START, READ OMM, U.S.)	
			(INSIDE OF BATTERY BOX DOOR 150 +/-5-MM FROM THE BOTTOM EDGE (SAME AS STACKING THE NO STEP FILM ON TOP OF THE 12 VOLT	
			FILM) & THE RIGHT EDGE OF THE FILM 210 +/-5-MM FROM LEFT SIDE (SAME AS THE NO STEP FILM PLACED SIDE BY SIDE THE	
			WARNING BATTERY FILM)	
	255-0791	1	FILM-WARNING (READ OMM)	
			(ON RH CONSOLE UNDER KEYSWITCH IN AREA PROVIDED. UNIVERSAL FILM IS LOCATED ON THE UPPER HALF AND THE SEATBELT IS ON THE	
			THE LOWER HALF)	
	255-0792	1	FILM-WARNING (SEAT BELT)	
			(ON RH CONSOLE UNDER KEYSWITCH IN AREA PROVIDED. UNIVERSAL FILM IS LOCATED ON THE UPPER HALF AND THE SEATBELT IS ON THE	
			LOWER HALF)	
	219-0302	1	FILM-WARNING (NO WELD, NO DRILL, READ OMM)	
			(ON LH A-POST 350 +/-5-MM FROM THE FLOOR. THE UPPER FILM SHOULD BE THE NO WELD/NO DRILL & THE ROPS/FOPS FILM IN THE	
			LOWER POSITION)	
	225-0041	1	FILM-INFORMATION (ROPS, FOPS, READ OMM)	
			(ON LH A-POST 350 +/-5-MM FROM THE FLOOR. THE UPPER FILM SHOULD BE THE NO WELD/NO	
			DRILL & THE ROPS/FOPS FILM IN THE LOWER POSITION)	
	124-2456	1	FILM-INSTRUCTION (NO STEP)	
			(POSITION INSIDE BATTERY BOX DOOR 75 +/- 5-MM FROM THE RIGHT EDGE & THE TOP EDGE IS EVEN WITH THE 12 VOLT FILM)	
	224-8945	1	FILM-WARNING (DO NOT USE ETHER)	
			(UNDER HOOD ON THE PRE-CLEANER UNDER THE SERVICE FILM. ORIENT FILM SUCH THAT IT CAN	
			BE READ FROM THE LEFT SIDE OF THE MACHINE)	
	258-9999	4	FILM (LIFT EYE LOCATION)	
			(APPLY A TOTAL OF 4 FILMS. THE FIRST 2 FILMS ARE TO BE APPLIED TO THE FRONT SIDE OF THE FRONT AXLE BETWEEN THE CHASSIS	
			& WHEEL ASSEMBLY ON THE LH & RH SIDE OF THE MACHINE. THE REMAINDER 2 FILMS ARE TO BE APPLIED TO THE STAB PAD CENTERED	
			UNDER THE LIFTING HOLE ORIENTED WITH THE ARROW POINTING UP WHEN THE STABILIZER IS IN THE UPPER WARD POSITION)	
	240-7094	2	FILM-WARNING (NO ENTRANCE, EXIT)	
			(ON THE REAR OF THE CAB STRUCTURE AT THE BOTTOM 50 +/-5-MM FROM THE RED REFLECTOR TOWARD THE CENTER OF THE MACHINE FOR)	
			BOTH FILMS, CENTERED FROM TOP TO BOTTOM)	
	159-3590	1	FILM-IDENTIFICATION (WATER SEPARATOR)	
			(ON LEFT SIDE OF THE MAIN FRAME NEXT TO THE FUEL TANK. 20-MM +/- 10-MM FROM THE FUEL	

248-5711 **PLATE & FILM GP** ***(contd.)*** **i02532778**

NOTE	PART NUMBER	QTY	PART NAME 1 2 3 4 5 6 (PRODUCT LEVEL)	SEE PAGE
			TANK BRACKET & UP FROM THE BOTTOM EDGE OF THE MAIN FRAME 50-MM +/- 10-MM)	
	231-9358	1	FILM-IDENTIFICATION (FUSE PANEL)	
			(INSIDE RH CONSOLE ACCESS PANEL. ORIENT FILM SUCH THAT IS CAN BE READ WHILE STANDING ON THE GROUND WITH THE ACCESS DOOR	
			OPEN & VIEWING FILM)	
	255-0796	1	FILM-IDENTIFICATION (LUBRICATION POINTS)	
			(UNDER THE HOOD ON PRE-CLEANER, REMOVE SUPPLIER FILM & ORIENT FILM SUCH THAT IT	
			CAN BE READ FROM THE LEFT SIDE OF THE MACHINE)	
	252-8435	1	FILM (START SWITCH, READ OMM)	
			(ON RH CONSOLE AROUND KEYSWITCH)	
	259-4401	1	FILM-WARNING (HOT FLUID UND PRESS, READ OMM)	
			(ON RADIATOR CAP ORIENTED SUCH THAT IT CAN BE READ FROM THE LH SIDE OF THE MACHINE)	
	289-3412	1	FILM-COVER	
			IN THE BATTERY BOX ON LEFT HAND SIDE. FILM SHOULD BE 150 +/- 5-MM UP FROM THE BOTTOM OF	
			THE BOX & LEVEL WITH THE BOTTOM OF BOX CENTERED FROM SIDE TO SIDE)	
A-NOT PART OF THIS GROUP				

<END>

SERVICE EQUIPMENT AND SUPPLIES

263-8591 PLATE & FILM GP

S/N: SHA1-UP
PART OF 216-8801, 216-8821 BUCKET GP-MULTIPURPOSE
AN ATTACHMENT

SMCS-7405 **i02444490**

NOTE	REF NO	GRAPHIC REF	PART NUMBER	QTY	PART NAME 1 2 3 4 5 6 (PRODUCT LEVEL)	SEE PAGE
	1	1	**247-6118**	2	FILM-WARNING (CRUSH HAZARD, STAY BACK)	

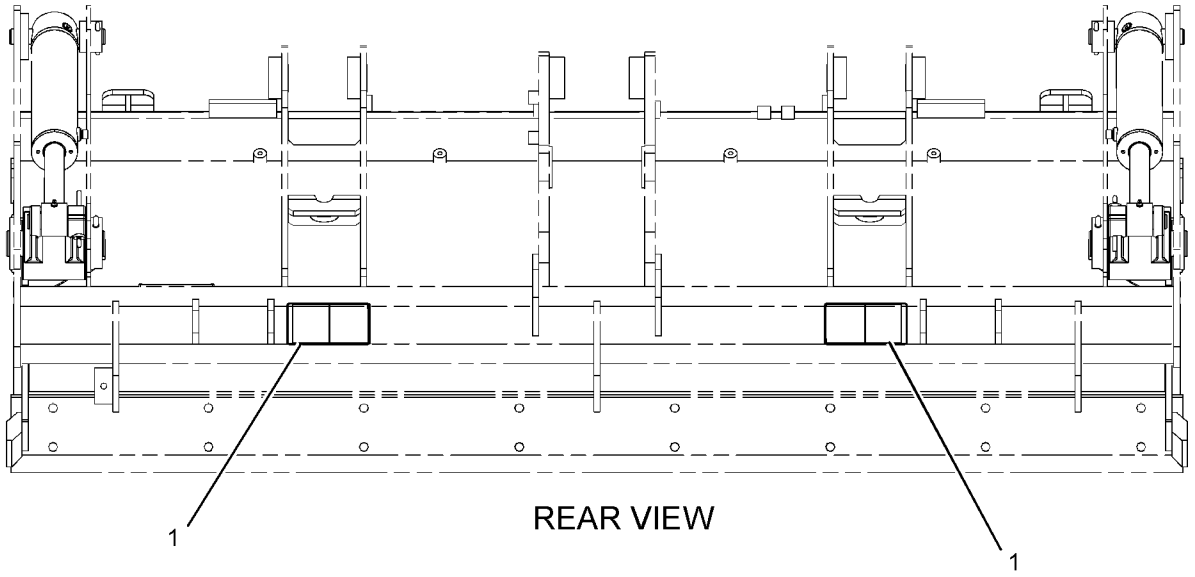

GRAPHIC #1 **<END>** g01231780

SERVICE EQUIPMENT AND SUPPLIES

206-1701 PROTECTION GP-VANDALISM

S/N: SHA1-UP
PART OF 204-4160, 204-4164 CANOPY AR-OPEN ROPS
AN ATTACHMENT

SMCS-7315 **i02098370**

NOTE	REF NO	GRAPHIC REF	PART NUMBER	QTY	PART NAME 1 2 3 4 5 6 (PRODUCT LEVEL)	SEE PAGE
	1	1	**206-1852**	1	COVER-VANDALISM	
	2	1	**206-1853**	2	BUSHING	
	3	1	**206-1855**	1	PLATE	
	4	1	**206-1856**	1	BRACKET	
J	5	1	**226-0291**	1	LOCK AS	
M	6	1	**129-3178**	2	LOCKNUT (M6X1 THD)	
M	7	1	**174-8131**	1	SCREW-TRUSS HEAD (M4X0.7X12-MM)	
	8	1	**232-4636**	2	BOLT-CARRIAGE (M6X1-MM)	
	9	1	**8C-9660**	1	WASHER (4.6X7.9X0.8-MM THK)	
M	10	1	**8T-2659**	1	LOCKNUT (M4X0.7-THD)	
	11	1	**9X-2038**	2	WASHER (7X19X2-MM THK)	

J-REQUIRES 5P-8500 KEY
M-METRIC PART

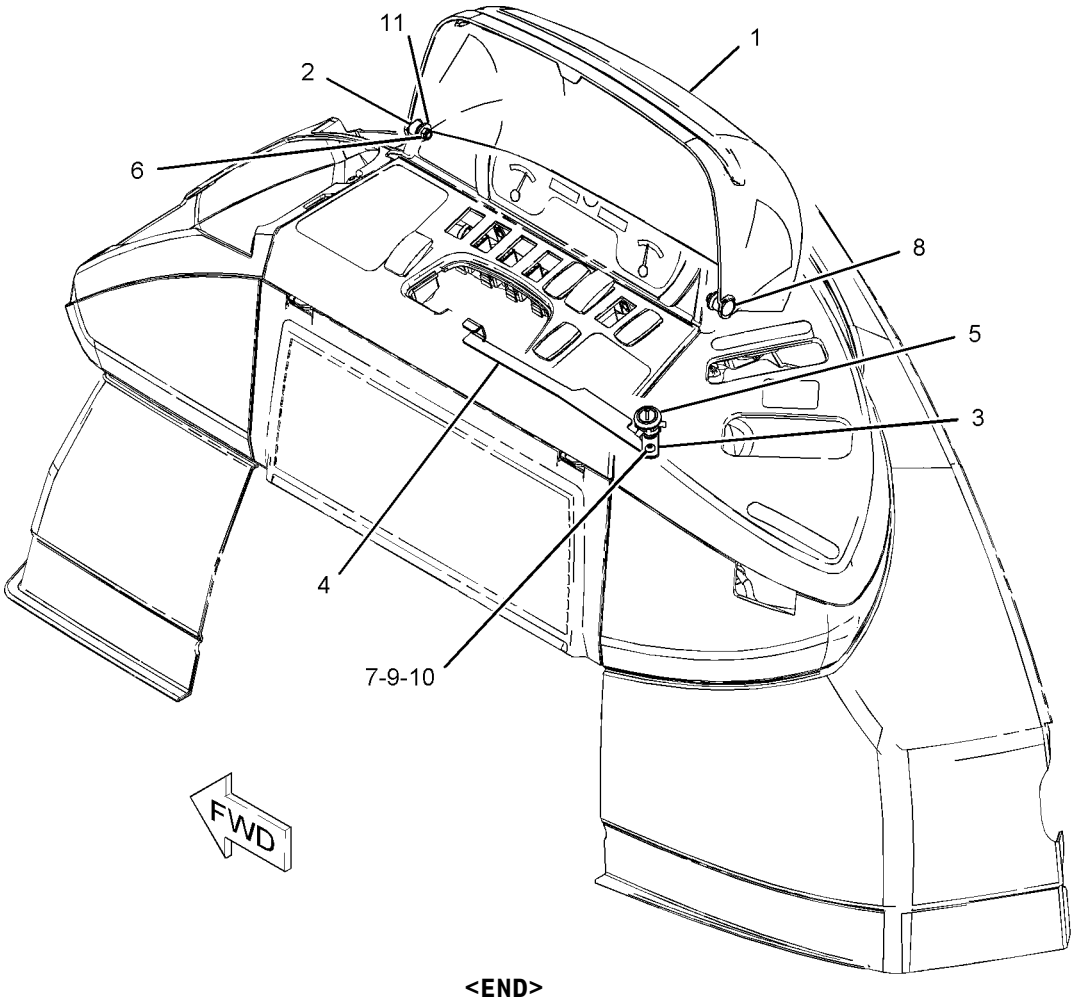

GRAPHIC #1 **<END>** g01083362

SERVICE EQUIPMENT AND SUPPLIES

119-1530 SHIPPING AR-BUCKET

S/N: SHA1-UP
TRANSPORT (NO BUCKET OPTION)
CANNOT BE USED WITH PARALLEL LIFT LOADER CONFIGURATIONS
AN ATTACHMENT

SMCS-7505 **i00756012**

NOTE	PART NUMBER	QTY	PART NAME 1 2 3 4 5 6 (PRODUCT LEVEL)	SEE PAGE
Y	*120-9289*	1	BRACKET GP-TRANSPORT	756
Y-SEPARATE ILLUSTRATION				

<END>

MEMORANDA

PART NUMBER INDEX

Part	Page
0	
0S-0509	730
	732
0S-1595	727
	728
0S-1603	33
1	
1A-0621	273
1B-8736	11
	21
	23
	35
	37
	345
1H-3244	149
	150
	151
	693
	694
1H-3337	730
	733
1H-6227	333
	335
1H-7339	318
	320
	325
	336
	340
1K-0502	674
	676
1K-6872	727
	728
	730
	733
1K-7082	224
1L-3768	462
	464
1L-6377	182
	186
	714
1M-1230	135
1P-0810	128
1P-4278	101
	103
	406
	408
1P-4584	377
1P-7009	101
1R-5396	277
1S-6420	171
1S-7251	125
	128
	167
1S-7252	127
1V-6585	77
	79
1V-9385	283
2	
2B-0858	29
2B-0941	47
	211
	213
2D-2628	255
2D-2629	255
2D-2630	255
2D-2631	255
2D-2633	255
2D-6235	730
	733
2G-1133	171
2H-3740	583
2H-3922	157
	175
	177
	179
2H-3931	340
2H-6338	318
	320
2K-4973	709
	727
	728
	730
	733
2K-5986	273
2L-5893	730
	733
2L-8069	140
2M-9780	287
	289
	367
	375
	379
	381
	383
	385
	389
	401
	403
	434
2P-1293	347
	349
	352
2P-8104	152
2R-0364	445
	674
	676
2S-3163	666
2S-3745	642
	697
2T-3360	284
2W-9710	73
2Y-2881	462
2Y-5821	321
	337
3	
3B-4505	311
	730
	733
3B-4610	278
3B-4631	733
3B-5319	396
	398
	441
	576
	577
	582
3B-5322	756
3B-8488	303
	305
	435
	437
	448
	466
3B-8489	303
	305
	327
	328
	329
	331
	337
	339
	345
	435
	437
	441
	443
	445
	448
	462
	464
	466
	562
	563
	564
	565
	575
	636
3C-4883	142
	144
3D-2824	349
	352
	355
	357
	359
	367
	369
	377
	387
	388
	389
	411
3E-0068	709
3E-4321	708
	709
3E-5153	152
3E-5154	152
3E-6600	668
	674
	676
3E-6714	414
	416
3E-6735	329
	331
	337
3E-8299	128
	182
	186
3E-8320	128
3E-9362	159
3F-5108	562
	563
	564
	565
	579
3F-9556	713
	716
	717
3G-8047	359
3G-8054	359
3G-8057	359
3J-1907	119
	122
	190
	194
	211
	213
	223
	239
	245
	249
	250
	273
	287
	289
	328
	371
	373
	375
	379
	381
	401
	403
3J-4818	167
	730
	733
3J-7354	122
	287
	289
	375
	401
	403
3K-0360	287
	289
	316
	362
	363
	375
	379
	381
	388
	401
	403
	406
	408
3K-2889	458
	459
3K-8460	100
3K-8782	139
3N-5739	337
3P-0130	68
3S-2093	94

► **PRIMARY REFERENCE**

PART NUMBER INDEX

Part	Page
	96
	119
	125
	128
	133
	135
	140
	142
	144
	159
	162
	165
	167
	170
	171
	173
	175
	177
	179
	182
	186
	189
	190
	240
	245
	249
	699
	709
	729
	732
	739
	752
3T-0852	723
	725
3V-2431	318
	323
	333
4	
4B-0418	80
4B-2043	162
	736
4B-4863	87
	88
	181
	185
4B-5271	727
	728
4B-9784	434
	730
	733
4D-6466	125
	128
4D-7388	80
4D-9517	445
4E-8619	▶279
	280
4F-3657	578
	638
4F-7952	199
	202
	203
4F-8711	464
4H-2558	639
4H-8380	730
	733
4I-3038	181
	185
	670
4I-6287	379
4J-0520	205
4J-0522	211
	213
4J-0526	329
	331
4J-1888	574
	580
4J-3745	323
4J-5477	223
	273
	287
	289
	375
4J-7533	392
4J-9220	321
	323
4K-0367	562
	563
	564
	565
	578
	579
	638
4L-6454	194
	727
	728
4M-0061	730
	733
4M-0189	321
	323
	333
	335
4P-6236	758
4P-7581	125
	128
	167
	171
	190
4P-8134	125
	159
	167
	171
	181
	185
	699
4S-5565	318
	323
	333
4T-6779	340
4T-6780	325
	336
4T-7010	340
4T-9905	434
4V-0611	371
	373
4V-0612	371
	373
4W-3753	347
	352
4W-9972	239
	245
	250
5	
5A-3604	445
	449
	451
	453
5B-3254	639
5B-9079	51
	52
5C-2874	167
	701
	702
5C-2890	125
	128
	149
	150
	151
	159
	173
	182
	186
	274
	668
	683
	746
	748
	754
5C-7261	125
	148
	149
	150
	151
	159
	171
	173
	182
	186
	273
	286
	299
	649
	651
	713
	716
	717
	742
	744
5C-8312	87
	88
5C-8811	754
5C-9553	125
	128
	445
	689
	691
	716
	717
5D-1026	13
	15
5D-8159	580
5D-9629	648
5E-8557	312
5F-3106	341
5G-2934	292
5H-3193	674
	676
5H-8848	325
	336
5I-4370	383
	385
5J-4561	325
5J-4986	321
	323
5J-5731	321
	333
	335
5J-7852	333
	335
5J-7865	333
	335
5J-8016	318
	320
5K-5338	273
	709
5K-9090	347
	349
	352
	377
5P-0370	458
5P-0599	171
	355
	357
	359
	388
5P-0743	362
5P-0747	125
	127
	167
5P-0761	127
5P-0767	2
	4
	708
	709
5P-1076	305
5P-1420	101
	103
5P-1442	101
	103
	273
	406
	408
5P-1476	177
5P-1505	55
	287
	289
	375
	406
5P-1506	365

▶ **PRIMARY REFERENCE**

PART NUMBER INDEX

Part	Page
5P-3860	171
	387
5P-4115	746
	748
5P-4116	55
	67
	68
	70
	120
	211
	213
	273
	292
	349
	352
	365
	449
	451
	453
	639
	649
	651
	653
	658
	660
	662
	672
	674
	676
	695
	746
	748
5P-4295	287
	289
	375
5P-4571	140
5P-4868	377
5P-5637	642
	697
	746
	748
5P-5655	642
	697
5P-5688	642
	697
5P-5927	661
	668
5P-6129	639
5P-7462	289
	383
	385
5P-7463	289
	383
	385
5P-7464	357
	359
5P-7465	357
	359
5P-7466	347
	349
	352
5P-7467	347
	349
	352
5P-7814	100
5P-7958	445
5P-7971	458
	459
5P-8066	239
	245
	249
5P-8112	347
	349
	352
5P-8245	33
	723
	725
	727
	728
5P-8248	583
5P-8250	340
5P-9085	101
	103
5P-9768	646
	647
	657
5T-7870	727
5V-1497	730
5V-2545	230
5V-7190	462
	464
5Y-0660	689
	691
6	
6A-9083	727
	728
6B-0933	123
	124
6C-3680	642
	697
6D-0337	▶255
	256
6D-0443	255
6D-3479	406
	408
6D-4246	55
6E-1135	445
6E-1478	337
6E-5431	672
6F-0711	323
6F-7045	157
6G-2263	55
6H-3616	40
6I-0217	35
	37
	42
	75
	92
	108
	111
	115
6I-0218	65
6I-0254	75
	92
6I-0260	13
	15
	17
	19
	42
	60
	61
	63
	65
	108
	111
	115
	123
	124
6I-0289	42
6I-0291	108
	111
	115
6I-0363	42
6I-0364	90
	91
	154
6I-0423	34
6I-0454	123
	124
6I-0501	50
6I-0502	50
6I-0563	90
	91
	92
6I-0572	12
	25
	42
	62
	63
	65
	86
	92
6I-0594	123
	124
	154
6I-0645	35
	37
	62
	63
	65
	86
	92
6I-0650	35
	37
6I-0846	13
	15
	17
	19
6I-0847	34
6I-0917	13
	15
	17
	19
6I-1418	171
6I-1497	55
	58
6I-4039	90
6I-4374	61
	63
	65
6J-0789	340
6J-0790	340
6J-0793	340
6J-1972	325
	336
6J-2245	401
	403
6J-2680	377
6J-5731	325
	336
6J-6517	662
6J-7855	401
	403
6K-0806	159
	181
	185
	239
	244
	249
6K-8178	103
6K-9632	752
6L-4725	639
	695
6L-7155	730
	733
6N-6984	73
6P-8855	708
	709
6S-8620	55
	80
	273
6T-0465	125
	128
6T-1375	739
6T-9142	197
	200
6T-9143	197
	200
6T-9144	197
	200
6T-9145	197
	200
6T-9146	197
	200
6T-9147	197
	200
6T-9160	233
	235
6T-9163	197
	200
6T-9164	197
	200
6T-9165	197
	200
6T-9166	197
	200
6T-9196	231
	234
6V-0292	737
6V-0505	739
	752
6V-0683	289
	383
	385
6V-0826	273
	445
6V-0852	211
	213

▶ **PRIMARY REFERENCE**

PART NUMBER INDEX

Part	Page	Part	Page	Part	Page	Part	Page
	375		430		455	6V-8523	2
6V-1249	357		432		456		3
	359	6V-5653	287		457		4
6V-1363	87		289		460		5
	88		375		580		170
6V-1580	309	6V-5834	312	6V-8185	730		177
6V-1722	388	6V-6717	639		733		179
6V-1869	583		695	6V-8186	716	6V-8624	379
6V-1889	357	6V-6813	639		717		381
	359		695	6V-8210	199	6V-8625	363
6V-2315	277	6V-7238	362		202		388
6V-2689	165	6V-7357	274		203	6V-8626	367
	676		642	6V-8224	355		389
6V-2721	2		697	6V-8227	284	6V-8627	223
6V-2722	3		752	6V-8237	336		273
	4		754	6V-8335	239	6V-8628	287
	5	6V-7359	357		244		289
	179		359		249	6V-8633	357
6V-3213	396	6V-7687	305		684		359
	398		435		685		387
	435		730	6V-8344	441	6V-8634	287
	443	6V-7731	239		448		289
	449		244		466		379
	451		249	6V-8363	175	6V-8635	349
	453	6V-7743	296		177		352
	455		651		179		377
	456		741	6V-8370	175	6V-8636	287
	457		742		177		289
	460		744		179		375
	542		750	6V-8397	122	6V-8637	349
	543		751		287		352
	544	6V-7744	298		289	6V-8638	383
	545		398		371		385
	576		584		373	6V-8639	316
	577		662		375		379
6V-3341	371		674		379		381
	373		676		383		388
6V-3507	162		679		385	6V-8641	223
6V-3582	81		681	6V-8398	315	6V-8713	355
6V-3965	211		684		316		357
	213		685		318		359
	375		737		320		367
6V-4292	287	6V-7970	392		325		387
	289		420		333		389
	406		421		335		411
6V-4364	441		422		336	6V-8714	377
	448		423		347	6V-8716	70
	462		424		357	6V-8721	383
	464		425		359		385
	466		426		363	6V-8723	287
	542		427		365		375
	543		428		367	6V-8724	371
	544		429		369		373
	545		430		371	6V-8759	272
6V-5100	231		432		373	6V-8801	583
	234	6V-8077	211		379	6V-8932	681
6V-5138	391		213		381	6V-8995	357
	421		375		383		359
	422	6V-8097	239		385	6V-8996	357
	424		244		387		359
	425		249		388	6V-8998	347
	426	6V-8144	435		389		349
	427		449	6V-8455	210		352
	428		451	6V-8500	233	6V-9002	381
	429		453		235	6V-9007	349

PART NUMBER INDEX

Part	Page
6V-9031	367
6V-9168	375
6V-9169	357
	359
6V-9170	347
	357
	359
6V-9172	347
	349
	352
6V-9178	254
6V-9182	70
6V-9189	396
	662
6V-9509	365
6V-9632	55
	171
	648
6V-9746	70
	316
	321
	347
	349
	352
6V-9830	367
	369
6V-9831	367
	411
6V-9836	375
6V-9838	367
6V-9839	316
6V-9850	287
	289
6V-9851	365
6V-9852	389
6V-9853	316
	347
6V-9872	122
6V-9990	359
6Y-1341	239
	244
	249
6Y-1896	239
	244
	250
6Y-2035	239
	244
	249
6Y-2736	233
	235
6Y-2737	199
	202
	203
6Y-7957	231
	234
6Y-9930	714

7

Part	Page
7C-0351	42
7C-1224	42
7C-1281	13
	15
7C-4354	103
7C-4616	35
	37
7D-7233	58
	365
7E-3870	7
	8
7G-1060	181
	185
7H-3937	642
	697
7I-1036	316
7J-1908	411
7J-5639	340
7J-9108	340
	347
	355
	357
	359
	367
	369
	387
	389
	411
7K-1181	94
	95
	96
	98
	101
	103
	125
	128
	160
	165
	167
	171
	179
	181
	185
	223
	271
	273
	287
	289
	363
	365
	367
	369
	375
	379
	381
	389
	708
	709
7M-8485	70
	315
	347
	349
	352
	377
	392
7N-0718	128
	▶157
7N-3718	101
	103
7N-5274	127
7N-7221	165
	181
7N-7779	279
7N-7780	279
7N-9737	279
7R-2750	185
7R-2751	186
7R-8239	278
7S-1912	101
	103
7T-0093	642
	697
7T-1099	648
7T-2646	197
	200
7T-2651	199
	202
	203
7T-3017	233
	235
7T-3021	233
	235
7T-3022	233
	235
7T-3034	197
	200
7T-3051	199
	202
	203
7T-3109	239
	244
	249
7T-3111	240
	245
	250
7T-3119	239
	244
	249
7T-3195	239
	244
	249
7T-3249	239
	244
	249
7T-3251	239
	244
	250
7T-3253	199
	202
	203
7T-4848	181
	185
7T-6087	152
7T-6088	152
7T-6090	152
7T-6092	152
7T-6093	152
7T-6099	152
7T-6799	162
7T-9987	127
7W-1176	34
7W-2326	10
7W-2632	123
	124
7W-4634	50
7W-4642	34
7X-0440	371
	373
7X-0465	672
7X-0481	730
	733
7X-0510	644
7X-0579	73
	309
	639
	665
	695
7X-0586	81
	82
7X-0603	73
	462
	464
7X-0608	148
7X-0618	224
7X-0620	312
7X-0622	730
	733
7X-0818	95
	98
	211
	213
7X-2393	649
	651
	742
	744
7X-2476	295
7X-2534	159
	173
	182
	186
7X-2537	312
	449
	451
	453
7X-2541	662
7X-2549	347
	352
7X-2553	225
7X-2559	194
7X-2564	309
7X-2568	714
7X-2572	308
7X-4741	245
	250
7X-4744	254
7X-7729	58
	101
	103
	125
	127
	128
	171
	182
	186
	273
	283

▶ **PRIMARY REFERENCE**

PART NUMBER INDEX

Part	Page
	284
	347
	357
	377
	406
	408
	449
	451
	453
	674
	676
	679
	681
7X-7958	365
7X-9065	162
7X-9866	291
7X-9873	291
7Y-3883	167
8	
8C-0572	77
	79
8C-3056	128
8C-3290	293
	294
	295
8C-3334	189
8C-3398	182
	186
8C-3681	73
	80
8C-3756	642
	697
8C-3798	55
	140
	144
	688
	706
	737
	739
8C-4982	712
8C-4987	674
	676
	679
	684
	685
8C-5748	239
	244
	249
8C-6354	181
	185
8C-6955	345
8C-7524	642
	697
	737
8C-8400	352
8C-8522	296
8C-8989	379
	381
8C-9660	762
8C-9778	152
8C-9783	152
8D-2707	255
8E-1118	704
	706
8E-5707	231
	234
8E-8293	739
8F-1434	152
	167
	175
	177
	179
8F-3590	140
	144
	167
8H-5303	157
8H-5306	157
8J-2574	318
	320
	340
8J-4455	152
8J-6371	327
	340
8J-6875	375
	▶434
8L-2777	401
	403
8L-2779	239
	244
	249
8L-8413	121
	127
	140
	142
	144
	159
	162
	165
	173
	175
	177
	182
	186
	190
	739
	752
8M-2773	103
8M-3175	684
	685
8N-0869	127
8R-6111	704
	706
8R-6263	279
8S-0023	211
	213
	347
	349
	352
8S-0024	211
	213
	347
	349
	352
8S-3020	127
	128
8S-7803	649
	651
	653
	730
	733
8T-0076	287
	289
8T-0120	387
8T-0144	573
8T-0154	362
8T-0164	273
8T-0292	194
8T-0328	167
	418
8T-0352	182
	186
8T-0389	136
	137
	138
8T-0404	355
	357
	359
	369
8T-0706	345
8T-1118	739
	752
8T-1580	199
	202
	203
8T-1581	239
	244
	249
8T-1683	289
8T-1885	363
	383
	385
8T-1886	363
	383
	385
8T-1887	349
	353
	355
8T-1888	349
	353
	355
8T-1889	273
	347
	349
	353
8T-1890	273
	347
	349
	353
8T-1891	363
8T-1892	363
8T-1899	371
	373
8T-1900	371
	373
8T-2658	670
8T-2659	162
	762
8T-3444	371
	373
8T-3490	82
	90
	91
	273
	369
	449
	451
	453
	715
8T-3612	80
	135
	292
	449
	451
	453
	583
	648
8T-3647	396
8T-3652	305
8T-4001	294
	295
	303
8T-4121	41
	55
	58
	70
	90
	91
	100
	103
	119
	125
	128
	136
	137
	138
	140
	142
	144
	147
	152
	167
	171
	182
	186
	211
	213
	273
	283
	284
	287
	289
	298
	303
	309
	316
	342
	347
	349
	353
	355
	357
	359
	363
	365
	367
	369
	371

▶ **PRIMARY REFERENCE**

PART NUMBER INDEX

Part	Page	Part	Page	Part	Page	Part	Page
	373		316		381		704
	375		345		383	8T-4182	73
	379		347		385		345
	381		350		389	8T-4183	292
	383		353		406		357
	385		367		408		359
	389		381		412		377
	399		583		413		394
	406		674		443		395
	408		676		445		462
	412		679		583		464
	413		681		674	8T-4184	439
	443		684		676		581
	445		685		708	8T-4185	55
	462	8T-4134	189		709		125
	464	8T-4136	58	8T-4138	55		127
	583		70		94		128
	662		90		95		347
	674		91		96		350
	676		101		98		353
	679		103		133	8T-4186	684
	681		167		175		685
	684		182		177	8T-4187	636
	685		186		179	8T-4189	55
	708		211		182		70
	709		213		186		73
8T-4122	41		273		274		81
	120		283		672		82
	298		284		679		101
	307		289		681		103
	341		309		718		120
	562		316		720		135
	563		347		754		167
	564		350	8T-4139	167		280
	565		353		281		292
	578		357		305		309
	579		359		309		312
8T-4123	309		363		357		345
	345		365		359		350
	636		367		381		353
	714		369		406		365
8T-4131	224		371		408		649
	636		373		462		653
	714		377		464		665
8T-4132	41		389		709		672
	307		462		729		674
	714		464	8T-4167	293		676
8T-4133	58		583		294		709
	73		674		295		723
	90		676		303		725
	91		709		308	8T-4191	406
	103	8T-4137	125	8T-4171	167		408
	125		127		699	8T-4192	70
	127		128		754		101
	128		147	8T-4172	679		103
	140		167		681		224
	142		171	8T-4173	714		394
	144		309	8T-4174	41		395
	152		350	8T-4176	211	8T-4193	120
	182		353		213	8T-4194	213
	186		355		435		359
	273		365	8T-4178	737		462
	283		369	8T-4179	406		464
	284		375		408	8T-4195	58
	296		379	8T-4181	142		90

► **PRIMARY REFERENCE**

PART NUMBER INDEX

Part	Page	Part	Page	Part	Page	Part	Page
	91		179		151		323
	100		182		160		333
	283		186		167		335
	284		274		173	8T-4971	703
	287		296		182		754
	289		642		186	8T-4986	449
	298		668		210		451
	303		695		271		453
	342		697		274	8T-5063	345
	357		699		278	8T-5070	318
	363		716		280		325
	445		717		286		333
	449		752		292	8T-5091	299
	451		754		309	8T-5093	167
	453	8T-4222	73		311		299
	462		298		312		739
	464		737		345		752
	662	8T-4223	70		371	8T-5436	662
	679		101		373	8T-5439	259
	681		103		379		260
	684		167		381		261
	685		211		445		262
8T-4196	41		213		583		263
	58		225		662		264
	119		292		699		269
	347		309		709		270
	350		311	8T-4244	311	8T-6411	284
	353		347		357	8T-6431	684
	383		353		359		685
	385		357	8T-4648	311	8T-6466	287
	399		359	8T-4742	703		289
8T-4198	584		377	8T-4744	703		662
8T-4200	73		379	8T-4773	674		679
	77		381		676		681
	79		394		679	8T-6685	398
	120		395		681	8T-6726	81
	182		406	8T-4778	298		82
	186		408	8T-4815	674		363
	210		439		676		367
	292		462		679		371
	639		464		681		373
	649		581		684	8T-6868	305
	651		686		685	8T-6869	286
	653		709	8T-4821	305		311
	658		721	8T-4837	305	8T-6876	381
	660		722	8T-4908	67	8T-6885	170
	695		729		68	8T-6902	672
	746		746		73		716
	748		748		94		717
8T-4205	55	8T-4224	67		95	8T-6912	271
	94		68		96	8T-7004	381
	95		81		98	8T-7338	341
	96		82		274	8T-7529	55
	98		94		445		70
	125		95		583		365
	128		96	8T-4910	350	8T-7547	147
	133		98		462		274
	149		101		464		309
	150		103	8T-4956	211		662
	151		120		225		672
	160		125		379	8T-7876	62
	167		135		686		63
	173		147		721		65
	175		149		722	8T-7930	305
	177		150	8T-4958	321	8T-7963	292

PART NUMBER INDEX

Part	Page
8T-8737	162
	318
	323
	325
	333
	642
8T-8799	160
	173
	181
	185
8T-8894	119
	283
	284
8T-9402	55
8T-9405	87
	88
	341
8T-9501	674
	676
	686
	723
	725
8T-9655	171
8W-9230	371
8Y-5737	639
	695
8Y-6352	639
	695
8Y-6967	639
	695
8Y-7309	649
	651
	742
	744
8Y-8080	128
8Y-8081	127

9

Part	Page
9B-7233	162
	736
9C-4457	737
9F-2049	305
9F-2247	115
9F-5644	148
	157
9G-3695	713
9G-3732	662
9G-3733	662
9G-4191	125
	128
9K-5635	283
9K-6540	644
9M-0164	406
	408
9M-1974	239
	244
	249
9M-4814	708
	709
9M-7958	58
	80
9M-7959	639
	695
9M-8406	101
	103
	287
	289
	709
9M-9224	82
9N-0869	171
9N-2231	639
	695
9P-9150	239
	244
	249
9R-0109	435
	438
	449
	451
	453
	455
	456
	457
	460
	580
	756
9R-0111	435
	471
	473
	474
	476
	478
	569
9R-0153	327
9R-0158	396
	398
	435
	441
	443
	449
	451
	453
	455
	456
	457
	460
	542
	543
	544
	545
	576
	577
	582
9R-0162	318
	320
	441
	461
	480
	481
	482
	483
	485
	486
	487
	488
	489
	490
	491
	492
	493
	495
	496
	497
	498
	500
	501
	502
	503
	504
	505
	506
	507
	508
	509
	510
9R-0170	441
	461
9R-0189	438
9R-0320	339
	340
	479
	484
	494
	499
	575
9R-0321	327
	329
	331
9R-0347	473
9R-0366	305
9R-0371	474
9R-0372	474
9R-0376	471
	476
	478
9R-0411	460
9R-0413	437
9R-0418	371
	373
9R-0422	455
	456
	457
9R-0431	303
	546
	547
	548
	549
	550
	551
	552
	554
	555
	556
	557
9R-0481	303
9R-1034	389
9R-1085	▶455
9R-1104	443
9R-1107	443
9R-1499	140
	142
	144
9R-1502	441
	466
9R-1510	396
	398
	441
	448
	466
	542
	543
	544
	545
	577
	582
9R-1765	674
	676
9R-1766	674
	676
	686
9R-1767	674
	676
	686
9R-1956	261
9R-2053	171
	363
	388
9R-2672	82
	461
9R-2700	321
	323
9R-2806	271
	345
	681
9R-2807	271
	274
	345
	674
	676
	681
9R-2959	462
	464
9R-3067	674
	676
9R-3092	333
	335
	461
9R-3182	435
9R-3255	345
9R-3469	739
	752
9R-3700	575
9R-3884	287
	289
9R-3933	443
9R-4066	435
	756
9R-4110	303
9R-4482	443
9R-4485	474
	476
9R-4486	474
	476
9R-4494	443
9R-4619	355
9R-4672	473
	476
	478

▶ **PRIMARY REFERENCE**

PART NUMBER INDEX

Part	Page
	570
9R-4675	571
9R-4676	562
	563
	564
	565
9R-4677	562
	563
	564
	565
9R-4678	562
	563
	564
	565
9R-5063	443
9R-5205	471
	473
	474
	476
	478
9R-5206	471
	473
	474
	476
	478
9R-5238	448
9R-5271	569
9R-5294	571
9R-5301	345
	438
	447
9R-5313	471
	474
	571
9R-5320	469
	470
	511
	515
	▶578
9R-5321	468
	513
	515
	516
	▶579
9R-5383	662
9R-5429	305
9R-5616	649
	651
	653
	658
	660
9R-5828	443
9R-5832	474
9R-5834	443
9R-5835	443
9R-5866	468
	469
	470
	513
	515
	516
	517
	▶638
9R-5901	476
9R-5902	476
9R-5948	357
	359
	387
9R-6007	▶456
9R-6014	756
9R-6481	260
	261
9R-6690	435
9R-7240	121
9R-7803	367
	369
	389
9R-7882	305
9R-8165	644
	672
9R-8291	305
9R-8390	435
9R-8594	445
9R-8870	371
	373
9R-9005	388
9R-9028	447
9R-9140	6
	▶443
9R-9152	443
9R-9153	443
9R-9373	435
9R-9702	224
9R-9866	437
9R-9868	674
	676
9R-9901	679
	681
9R-9925	406
	408
9S-4191	119
	239
	244
	249
9S-8001	392
9S-8004	194
	328
9T-0766	340
9T-2178	321
9T-2883	337
9T-3948	340
9T-4007	328
9U-2277	189
9U-8263	704
	706
9U-8875	231
9U-8886	231
	341
9W-0607	136
	137
	138
9W-0625	674
	676
9W-1951	182
	185
9W-3326	142
	144
9W-4361	583
9W-5460	199
	202
	203
9W-6582	714
9W-6584	714
9W-8215	579
9W-9910	41
9W-9915	41
9W-9952	41
9W-9953	41
9X-0199	175
	177
	179
9X-1054	159
	173
9X-1055	159
	173
9X-1386	318
	323
	325
	333
9X-1481	730
	733
9X-2036	152
9X-2038	301
	302
	639
	644
	666
	668
	670
	679
	681
	688
	689
	691
	695
	704
	706
	718
	720
	737
	762
9X-2040	674
	676
9X-2043	301
	302
	661
	688
9X-2044	274
	661
	668
	670
	737
	746
	748
9X-2045	273
	639
	644
	651
	666
	670
	679
	681
	689
	691
	693
	694
	695
	718
	720
	741
	742
	744
	750
	751
9X-2065	674
	676
9X-2092	658
9X-2132	746
	748
9X-2133	80
9X-2842	716
	717
9X-3401	175
	189
	674
9X-3982	408
9X-4244	136
	137
	138
9X-4813	182
	185
9X-6165	189
	718
	720
9X-6383	746
	748
9X-6611	327
	329
	331
	337
9X-6615	239
	244
	249
9X-6620	723
	725
9X-7260	318
	320
9X-7344	175
	177
	179
9X-7378	159
	664
9X-7380	709
9X-7381	709
9X-7382	709
9X-7383	709
9X-7737	425
9X-8118	139
9X-8139	139
9X-8256	140
	142
	144
	672
	679
	681
	688
	704
	706
	737
	739

▶ PRIMARY REFERENCE

PART NUMBER INDEX

Part	Page
9X-8257	225
	375
	458
	459
	714
9X-8372	739
	752
9X-8399	320
9X-8408	315
9X-8699	312
9Y-0083	662
9Y-5015	29
0	
005-0469	197
	199
	200
	202
	203
005-0471	239
	244
	249
014-5645	239
	244
	249
031-5644	80
	146
032-1557	283
032-9090	21
032-9091	21
033-7687	33
033-8248	58
034-1432	756
035-8068	25
038-9317	125
	127
	128
039-9133	278
054-6733	291
054-6882	291
067-6002	25
067-6006	25
	29
067-6043	25
067-6095	52
	53
067-6179	35
	37
067-6213	42
067-6366	123
	124
067-6873	21
067-6874	21
069-4080	119
069-4707	192
	194
	221
084-4277	704
	706
084-4348	142
	144
089-7702	375
089-7990	224
091-2436	159
	165
	173
	181
	190
091-4113	583
091-5928	573
092-3635	287
	289
093-8828	221
095-0641	716
	717
095-0756	686
095-0865	562
	563
	564
	565
095-0924	226
095-0927	234
095-0929	437
095-1041	221
095-9230	674
	676
096-1820	562
	563
	564
	565
	576
	577
096-4882	730
	732
096-5516	233
	235
096-5866	81
	82
	379
	381
096-6166	711
	712
097-7234	739
	752
1	
100-3685	152
100-3751	35
	37
	75
100-4112	152
100-4113	152
100-4115	152
100-4118	152
100-4119	152
100-4461	59
100-4830	39
	108
	111
	115
100-4838	13
	15
	17
	19
100-4841	13
	15
	17
	19
100-5041	159
	173
100-6674	159
100-7608	741
	742
	744
	750
	751
100-8451	123
	124
101-0117	443
101-0333	273
101-0745	752
	754
101-1787	375
101-2987	40
101-3617	34
101-3771	42
101-3895	61
	63
	65
102-2244	318
	323
	325
	333
102-3582	337
102-8801	162
	182
	185
	699
102-8802	7
	8
	88
	121
	144
	156
	159
	162
	165
	167
	173
	175
	177
	179
	181
	185
	189
102-8803	133
	159
	173
	175
	177
	179
	190
	325
	729
102-8804	3
	5
102-8805	2
	4
	140
	142
	144
	181
	185
	189
	190
	713
	739
102-8806	133
	140
	142
	144
103-2543	181
	185
104-1995	159
	165
	173
104-3288	197
104-6310	469
	470
	▶580
104-6311	580
104-6312	580
104-6316	580
104-6317	580
105-3481	723
	725
105-8034	273
105-9411	709
106-0401	315
	343
	347
	349
	352
106-0406	315
	343
	347
	349
	352
106-1251	318
106-7301	345
106-8020	122
106-8704	159
	181
	185
	190
106-8715	352
106-8916	92
106-9586	254
106-9861	199

▶ **PRIMARY REFERENCE**

PART NUMBER INDEX

Part	Page
	202
	203
107-5591	674
	676
	686
107-6711	461
107-6826	230
108-2989	662
108-3872	347
	349
	352
109-1260	347
	349
	352
109-1633	379
	381
	709
109-1634	379
	381
	709
109-5825	349
	352
110-2445	81
	82
110-5602	746
	748
110-6109	639
	695
110-7887	162
111-0859	32
111-4337	435
	443
	460
111-4627	189
	639
	695
111-5042	730
	732
111-6792	159
	181
111-6793	181
111-6795	159
	182
	186
111-6816	159
	186
111-7899	162
	283
111-7906	210
111-7907	▶210
	238
112-1776	580
112-1826	228
	229
	▶341
112-5494	345
112-9338	259
	260
113-0920	704
	706
113-6349	123
	124
113-8129	75
113-8490	148
113-8491	148
113-8492	148
114-2579	12
	86
114-4363	34
114-6099	303
115-1162	12
	86
115-1615	133
	159
	167
	173
115-1918	341
116-4942	▶457
116-5763	299
117-3534	341
117-9713	210
117-9887	230
118-2990	714
118-6842	292
	▶296
118-6854	292
118-7110	578
118-7286	70
118-7789	443
118-7790	175
	177
	179
118-8118	100
	118
118-8119	100
119-1530	▶763
119-3662	2
	4
	159
	162
	173
	182
	186
	739
	752
119-4594	435
	460
119-4740	228
	229
119-5025	94
	95
	96
	98
119-8349	746
	748
119-9631	642
120-9027	670
120-9286	758
120-9289	▶756
	763
120-9332	756
120-9333	756
120-9762	199
	202
	203
120-9809	367
121-0697	234
121-0714	234
121-0883	34
121-0885	234
121-0904	234
121-1029	644
121-2059	197
121-2060	197
121-2061	197
121-2500	231
121-6936	739
121-7385	239
	244
	249
121-7389	239
	244
	249
121-7390	239
	244
	249
121-7391	239
	244
	249
121-7396	239
	244
	249
121-7398	197
	200
121-7399	197
	200
121-7400	197
	200
121-7401	197
	200
121-7402	197
	200
121-7403	239
	244
	249
121-7404	239
	244
	249
121-9743	746
	748
121-9870	704
	706
121-9875	249
122-0668	371
122-1877	234
122-1878	234
122-1879	197
122-1883	250
122-1884	234
122-1886	231
122-3652	203
122-4401	159
	165
	173
122-6785	239
	249
122-6787	239
	245
	250
122-7137	736
123-0380	649
	651
	653
123-0428	309
123-0707	704
	706
123-2899	32
123-2918	250
123-2919	250
123-2920	203
123-4065	73
123-4950	121
	122
123-8905	231
	234
123-8906	197
	199
	202
	203
123-8907	233
	235
	239
	244
	249
123-8908	197
	200
123-8909	231
123-8910	197
	200
123-8912	234
124-0312	639
	695
124-2456	759
124-3536	44
	46
124-3815	35
	37
	108
	111
	115
124-5640	159
124-8616	739
	752
125-7874	140
	142
	144
	159
	162
	165
	173
	177
	182
	186
	190
	739
	752
125-7875	140
	142
	144
	165
	182
	186
126-1817	344
127-2170	299
127-3017	239
	244
	249
127-4293	262
127-4471	58
	81

▶ **PRIMARY REFERENCE**

PART NUMBER INDEX

Part	Page	Part	Page	Part	Page	Part	Page
	82	130-8150	405		505		535
	406	130-8343	730		506		536
	408		732		507		537
127-4834	294	130-9984	70		508		538
127-8987	435		365		509		539
128-4123	182		709		510		540
	186	131-0232	121	134-5885	484		541
128-4249	182	131-1424	162		485		553
	186		736		486		558
128-5010	435	131-3987	649		487		559
128-5016	186		651		488		560
128-5596	341		653		489		561
	▶405		689		490		562
128-7902	345		691		491		563
128-7903	345	131-8203	746		492		564
	435	131-8775	445		493		565
128-7905	345	132-2249	689		498	138-2053	52
	435		691		503		53
129-1831	639		704		504	140-3640	73
	695		706		505	140-6009	345
129-3178	81	132-3056	406		506	140-8714	108
	82		408		507		111
	642	132-3721	573		508		115
	697	132-3723	573		509	140-8718	108
	703	132-3725	573		510		111
	716	132-3777	574	134-7258	758		115
	717	132-3778	574	135-8203	638	140-8783	123
	762	132-3821	573	136-0155	418		124
129-3180	723	132-5789	709	136-1955	55	141-0888	393
	725	132-6496	435	136-3112	213	141-1667	92
	732	132-6497	438	136-3194	754	141-1762	737
	746	132-8769	▶343	136-4184	699	141-6343	345
	748	133-1011	35	136-4192	741	141-8061	182
129-4741	296		37		742		186
129-5256	649	133-3362	▶449		744	141-8437	373
	651	133-3363	▶451		750	142-0485	273
	653	133-3366	▶453		751	142-2928	730
129-5257	649	133-3413	135	136-7049	500	142-3388	67
	651	133-4771	414		501		68
	653		416		502	142-3391	67
129-8542	741	133-6517	135	136-7051	500		68
	742	133-8916	685		501	142-7405	681
	744	134-0143	445		502	143-0539	▶152
	750	134-0453	674	136-7440	305		154
	751		676	136-7728	73	143-0777	367
129-8545	741	134-1374	418	136-7808	205	143-0779	367
	742	134-2540	181	137-4234	512	143-1344	152
	744		182		514	143-2827	651
	750		186		518		741
	751	134-3014	344		519		742
130-0165	135	134-3856	708		520		744
130-0777	460		709		521		750
130-1638	449	134-5884	484		522		751
	451		485		523	144-0195	739
	453		486		524		752
130-3216	67		487		525	144-0367	377
	68		488		526	144-6734	207
130-3880	67		489		527	144-8344	347
130-4832	639		490		528		349
	695		491		529		352
130-5451	435		492		530	145-0981	706
130-5891	345		493		531	145-8327	108
130-6791	165		498		532		111
130-7282	194		503		533	145-8348	576
130-7952	345		504		534		577

▶ **PRIMARY REFERENCE**

PART NUMBER INDEX

Part	Page	Part	Page	Part	Page	Part	Page
145-9291	284		289		507		752
146-6729	152	148-8368	223		509	155-2270	140
146-7744	746		273	151-7903	497		142
	748	148-8369	287		503		144
146-7745	746		289		505		159
	748	148-8370	365		507		165
146-9439	155	148-8372	383		509		173
	181		385	152-0816	371		175
	185	148-8374	287	152-6144	192		177
	190		375		194		179
147-0203	231	148-8378	371		205		181
147-0209	239		373	152-7691	713		185
	244	148-8382	355	153-0088	732		189
	249		357	153-3061	67		190
	▶254		359		68		642
147-0227	231		369	153-6232	387	155-2271	2
147-0238	231	148-8383	289	153-6241	379		4
147-1444	699	148-8390	367		381		5
147-1979	29		389	153-6252	315		140
147-5553	92	148-8392	316	153-7368	284		142
148-5353	741		347	153-7369	284		144
	742	148-8393	389		▶286		162
	744	148-8433	375	153-8004	711		181
	750	148-8446	367	154-2704	575		185
	751	148-8449	316		576		739
148-8317	377	148-8457	357		577		752
148-8318	287		359	154-5257	479	155-2272	3
	289	149-3516	100		484	155-2274	162
	379	149-4745	730		494		177
148-8325	223		732		499		181
148-8326	122	149-7372	365	154-5278	441		185
148-8327	349	149-9954	118	154-5279	441		739
	352	150-3026	287		582		752
148-8328	357		289	154-5280	441	155-7321	388
	359		406		582	155-8804	108
	387	150-3027	287	154-5404	192		111
148-8335	349		289		281	156-0283	299
	352		375	154-5410	752		739
	377	150-3033	273		754		752
148-8336	287	150-3053	347	154-5416	271	156-1200	100
	289		349	154-5423	741	156-3837	389
	375		352		742	156-3838	389
148-8339	70	150-3060	371		744	156-6175	125
148-8340	316		373		750		128
	379	150-3062	375		751		182
	381	150-3063	367	154-5428	189		186
	388	150-3072	365	155-2026	347	157-1669	119
148-8341	355	150-3757	235		349	158-2306	313
	357	150-7732	17		352	158-3412	367
	359		19	155-2255	162		369
	367	150-8015	748		181		389
	387	151-1975	100		185	159-1503	70
	389	151-2963	296	155-2260	133		365
	411	151-4841	94		170	159-3046	323
148-8345	383		95		175	159-3590	759
	385		96		177	159-4269	689
148-8347	349		98		179		691
148-8354	381		223		181	159-4945	649
148-8358	379		273		185		651
	381		367		190		653
148-8360	70		369		325		691
148-8364	363		389	155-2265	133	159-4946	653
	388	151-7902	497		181		689
148-8365	381		503		185	159-7907	279
148-8367	287		505		739	159-8033	758

▶ PRIMARY REFERENCE

PART NUMBER INDEX

Part	Page
159-8050	128
159-9322	699
160-0496	313
160-2169	754
160-2245	175
160-2246	70
	177
	179
161-3249	234
161-4130	497
	499
	500
	501
	502
	503
	505
	507
	508
	509
	569
	575
161-6984	701
	702
161-6987	701
	702
161-9044	689
	691
161-9283	723
	725
	732
161-9285	732
161-9288	730
	732
161-9289	730
	732
161-9294	701
	702
162-1565	13
	15
162-3960	▶313
	379
	381
162-3961	▶314
162-4004	298
162-6556	701
	702
163-0753	272
	▶278
163-1135	730
	732
164-1153	686
164-1154	716
	717
164-1178	666
164-1214	728
164-1215	729
	732
164-1218	729
	732
164-1219	729
	732
164-1220	729
	732
164-1226	730
	732
164-1228	732
164-1229	730
	732
164-1230	730
	732
164-1232	730
	732
164-1233	730
	732
164-1234	732
164-1235	732
164-1237	730
	732
164-1238	730
	732
164-1239	730
	732
164-1240	730
	732
164-1244	725
164-1247	727
	728
164-1249	723
	725
164-1250	723
	725
164-1251	723
	725
164-1252	723
	725
164-1258	723
	725
164-1259	723
	725
164-1261	727
	728
164-1265	727
	728
164-1266	723
164-1308	746
	748
164-1314	746
	748
164-1328	746
	748
164-1342	746
	748
164-1343	746
	748
164-1344	746
	748
164-1345	746
	748
164-1346	746
	748
164-1351	746
	748
164-1352	746
	748
164-1353	746
	748
164-1354	746
	748
164-1361	679
	681
164-1368	271
	639
	674
	676
	686
	695
164-1371	679
	681
164-1395	94
	95
	96
	98
	672
	676
164-1399	679
	681
164-1402	679
	681
164-1404	679
	681
164-1409	679
	681
164-1411	679
	681
164-1421	681
164-1422	681
164-1425	681
164-1429	681
164-1435	679
	681
164-1438	681
164-1547	684
	685
164-3876	292
164-5549	379
164-5557	383
	385
164-5567	375
164-5605	287
	289
164-7556	136
	137
	138
164-8474	639
	695
164-9425	167
164-9598	278
164-9599	278
165-0312	162
165-2273	362
165-4021	55
165-4931	211
	213
	375
165-6595	273
165-7019	394
	395
165-7951	119
165-8357	135
165-8996	224
166-9413	195
167-2186	325
	336
167-2192	340
167-2200	321
167-2202	318
	320
167-2294	325
	336
167-2302	340
167-2307	321
	323
	333
	335
167-2310	318
	320
167-3692	182
	186
167-3693	162
	165
167-8182	746
	748
167-8251	666
168-0425	576
	577
	584
168-0443	542
	543
	544
	545
168-0444	542
	543
	544
	545
168-0445	577
168-0446	576
	577
168-0475	576
168-0480	480
	481
	482
	483
	485
	486
	487
	488
	489
	490
	491
	492
	493
	495
	496
	497
	498
	500
	501
	502
	503
	504
	505
	506
	507
	508
	509
	510
168-2313	642

▶ **PRIMARY REFERENCE**

PART NUMBER INDEX

Part	Page	Part	Page	Part	Page	Part	Page
	697	172-8278	502	178-1304	260	187-3164	389
168-4511	135	172-8279	486	178-1781	125	187-3166	389
168-8389	512		490		128	187-4329	389
	514		495	178-3593	▶582	188-2199	318
	518		500	178-7539	140		323
	519		504		142		325
	520	172-8280	487		144		333
	521		491		181	188-3953	449
	522		496		185		451
	523		501	178-8214	235		453
	524		506	178-8465	8	188-9592	576
	525	172-8591	666	178-8850	▶574	189-0881	639
	526		679	178-9566	234		695
	527		681	179-5434	139	189-3158	167
	528	173-5787	730	179-6401	181	190-5128	681
	529		732		185	190-5130	679
	530	173-9683	320	179-7262	748	190-9767	234
	531	173-9779	336	179-8235	674	191-6112	340
	532	174-0503	133		676	191-6159	325
	533	174-3949	499		679		336
	534	174-3950	484		684	192-7506	414
	535		485		685		416
	536		494	180-3664	▶139		418
	537		499		146	192-7508	414
	538	174-4643	192	180-3730	122		416
	539	174-4647	194	180-5795	723		418
	540	174-4650	194	180-5796	725	192-7509	414
	541	174-4671	192	180-5797	723		416
	553	174-4765	488		725		418
	558		492	183-3132	674	192-7510	420
	559		502		676		421
	560	174-8131	762	183-3135	674		422
	561	174-9638	89		676		423
	562		92	183-3137	674		424
	563	174-9711	239		676		425
	564		244	183-6084	672		426
	565		249	184-5293	670		427
	575	175-0054	239	185-0882	29		428
	576		244	185-0884	25		429
	577		249	185-1546	51		430
169-5861	100	175-7877	▶758		52		432
169-7291	704	175-7902	321	185-3890	732	192-7511	414
	706		323	185-4015	642		416
169-7409	357	176-0348	142		697		418
	359		144	185-6643	55	192-7515	391
170-0235	709	176-0626	437	186-2589	▶713		392
170-0503	313	176-1477	8		752	192-7863	420
170-5076	425	176-1522	8		754		421
170-6305	162	176-6251	▶573	186-3735	88		422
170-6312	679		574		121		424
	681	176-6252	573		142		425
170-6542	162	177-2215	171		144		426
171-2870	746	177-4877	649		159		427
	748		651		162		428
172-5317	231		653		167		429
172-6050	231		689		181		430
	234		691		189		432
172-6489	140	177-9645	642		190	192-7864	420
	142		697		713		421
	144	177-9648	159		730		422
172-6490	140		173		754		423
	142	177-9653	642	187-0413	649		424
	144		697		651		425
172-8276	500	177-9656	159		653		426
172-8277	501		173	187-2866	88		427

▶ **PRIMARY REFERENCE**

PART NUMBER INDEX

Part	Page
	428
	429
	430
	432
193-0618	118
193-3356	639
	695
193-5416	489
	493
	498
	510
193-9055	299
194-4334	365
194-5171	754
194-5390	92
194-5622	639
	695
195-2132	40
195-2134	40
195-2136	40
195-2221	40
195-6341	261
	266
195-6344	262
	263
	265
	267
195-6348	270
195-7055	727
	728
195-9223	723
	725
196-2384	181
	185
196-2385	181
	185
196-2386	181
	185
196-8921	495
	496
	497
196-8922	495
	496
	497
197-5107	689
	691
197-6258	494
197-6259	494
197-6657	730
	732
197-7499	162
197-8914	499
197-8915	499
197-9155	194
198-0098	684
	685
198-7811	194
	221
198-7814	219
	220
198-7823	192
	281
198-7825	192
	281
198-7838	192
	281
198-7841	192
	281
198-7842	192
	281
198-7843	192
	281
198-8645	13
	15
199-0639	192
	194
199-0640	276
199-0641	194
199-0645	276
199-0646	221
199-0648	219
	220
	281
199-0652	194
199-0653	227
199-0656	221
199-0658	194
199-0659	208
199-0662	194
199-0663	221
199-0668	194
199-0669	227
199-0670	194
199-0672	276
	277
199-0673	208
199-0675	221
199-0676	194
199-0678	221
199-0679	194
199-0680	221
199-0681	276
	277
199-0683	192
	281
199-0684	221
199-0685	221
199-0686	221
199-0687	221
199-0688	221
199-0689	221
199-0690	221
199-0691	221
199-0692	221
199-0693	221
199-0694	208
199-0695	205
	221
199-0697	221
199-0700	276
	277
199-0701	276
	277
199-0702	276
	277
199-0703	276
	277
199-0706	194
199-0752	276
	277
199-0756	208
199-0759	276
	277
199-0760	227
199-0778	194
199-0783	298
199-0784	208
199-0785	221
199-0786	194
199-0787	194
199-0807	208
199-0808	208
199-0858	205
	221
199-0929	711
	712
199-2566	387
199-9252	108
	111
199-9267	158
199-9751	29
	49
	108
	111
	167
	2
200-2213	162
200-5921	573
201-0330	122
201-1024	181
	185
201-1234	484
	485
	486
	487
	488
	489
	490
	491
	492
	493
	494
	495
	496
	497
	498
	499
	500
	501
	502
	546
	547
	548
	549
	550
	551
	552
	553
	554
	555
	556
	557
201-1235	479
	480
	481
	482
	483
201-1238	518
	519
	520
	521
	522
	523
	524
	525
	526
	527
	528
	529
	530
	531
	532
	533
	534
	535
	536
	537
	538
	539
	540
	541
	546
	547
	548
	549
	550
	551
	552
	553
	554
	555
	556
	557
201-1239	518
	519
	520
	521
	522
	523
	524
	525
	526
	527
	528
	529
	530
	531
	532
	533
	534
	535
	536
	537

► **PRIMARY REFERENCE**

PART NUMBER INDEX

Part	Page
	538
	539
	540
	541
	546
	547
	548
	549
	550
	551
	552
	553
	554
	555
	556
	557
	558
	559
	560
	561
201-1601	653
201-1835	122
201-1862	256
	257
	▶259
201-1863	259
201-1864	259
	▶260
201-1874	256
	259
	▶260
201-1875	▶260
201-1876	260
	▶261
201-1877	256
	▶261
201-1878	261
201-1879	264
201-1881	256
	258
	▶262
201-1882	262
201-1883	▶262
201-1902	263
201-1911	▶263
201-1912	263
201-1913	256
	257
	▶263
201-1915	259
	260
	261
	264
	266
	268
201-1916	262
	263
	265
	267
	269
	270
201-1918	▶256
201-1919	259
	261
	262
	263
	264
	269
201-1920	▶256
	259
	260
	261
	262
	263
	264
	265
	266
	267
	268
201-1923	▶256
201-1925	▶256
201-1949	257
	258
	▶264
201-1954	▶257
201-1960	▶264
201-1961	264
201-3621	383
	385
201-3622	383
	385
201-3623	383
	385
201-3624	383
	385
201-3652	273
201-3954	▶298
201-5810	449
	451
	453
201-5812	449
	451
	453
201-9459	156
201-9465	746
	748
202-0596	500
	501
	502
202-0597	500
	501
	502
202-4162	499
202-4163	499
202-5909	55
202-5993	273
202-6010	▶156
	228
	229
202-6029	273
202-6108	159
202-6186	259
	260
	261
	264
	268
202-6611	137
	138
202-6614	136
203-7060	449
	451
	453
204-0317	287
	289
204-0775	156
204-3080	192
	281
204-4160	▶656
204-4161	▶645
204-4162	▶646
204-4164	▶657
204-4175	648
204-4200	649
204-4220	653
204-4230	658
204-4240	660
204-9921	642
	697
205-1627	87
205-6298	156
205-7047	706
205-7048	648
	689
	691
205-9362	156
205-9560	645
	646
	647
	656
	657
	▶714
205-9566	648
205-9567	648
205-9568	645
	656
	▶718
205-9569	646
	647
	657
	▶720
205-9570	718
	720
205-9571	720
205-9576	718
	720
205-9577	718
	720
205-9578	646
	647
	▶711
205-9585	689
	▶750
205-9587	750
205-9588	689
205-9590	750
205-9591	750
205-9595	691
	▶751
205-9597	751
205-9598	691
205-9605	649
	651
205-9606	649
	651
	653
	658
	660
205-9607	649
	651
	653
	660
205-9608	649
	651
205-9609	649
	651
205-9611	649
	651
	▶741
205-9612	741
205-9613	649
	651
205-9614	751
205-9615	751
205-9616	649
	651
205-9617	741
205-9618	741
205-9619	653
	▶742
205-9621	742
205-9622	653
205-9623	742
205-9624	742
205-9628	653
	▶744
205-9629	649
	651
205-9630	744
205-9631	653
205-9633	744
205-9634	744
206-1345	162
	181
	185
206-1486	175
	177
	179
206-1590	649
	651
	653
206-1592	649
	651
	653
	▶689
206-1593	653
	▶691
206-1594	689
206-1606	691
206-1618	646
	647
	657
	▶693
206-1620	645
	656

▶ PRIMARY REFERENCE

PART NUMBER INDEX

Part	Page
	▶694
206-1621	694
206-1623	737
206-1625	737
206-1630	▶283
	645
	656
206-1631	283
206-1632	283
	284
206-1633	▶284
	646
	647
	657
206-1634	273
206-1635	284
206-1637	737
206-1638	228
	229
	▶273
206-1640	8
	▶94
	▶95
206-1642	228
	229
	▶271
206-1643	228
	229
	▶686
206-1645	410
	▶674
206-1647	649
	651
	653
	658
	660
206-1648	639
	695
206-1649	162
206-1652	287
	289
206-1653	639
	695
206-1658	670
206-1659	670
206-1660	670
206-1661	670
206-1662	670
206-1663	670
206-1665	737
206-1666	737
206-1667	666
	670
206-1668	676
206-1669	686
206-1672	679
	681
206-1673	679
	681
206-1678	666
206-1679	666
206-1681	666
206-1682	639
	695
206-1683	737
206-1684	639
	695
	737
206-1687	666
206-1690	666
206-1692	666
206-1695	674
206-1696	668
206-1698	668
206-1699	668
206-1700	645
	646
	647
	656
	657
	▶666
206-1701	656
	657
	▶762
206-1702	646
	647
	657
	▶668
206-1703	645
	646
	647
	656
	657
	▶670
206-1704	656
	657
	▶737
206-1706	661
	668
206-1708	661
	668
	670
206-1712	668
206-1717	648
206-1718	181
	185
206-1725	645
	646
	647
	▶754
206-1727	645
	646
	647
	▶739
206-1728	657
	▶752
206-1747	▶721
206-1748	▶722
206-1749	721
206-1750	722
206-1760	273
206-1766	273
206-1769	273
206-1791	▶727
	729
206-1792	▶728
	729
206-1798	737
206-1799	737
206-1800	645
	646
	▶695
206-1801	▶639
	647
206-1803	639
	695
206-1804	639
	695
206-1805	639
	695
206-1807	639
	695
206-1808	639
	695
206-1809	639
	695
206-1810	639
	695
206-1812	639
	695
206-1814	639
	695
206-1815	639
	695
206-1816	639
	695
206-1817	639
	695
206-1818	639
	695
206-1832	301
	302
206-1835	301
	302
206-1845	301
	302
206-1846	639
206-1847	639
206-1850	302
206-1852	762
206-1853	762
206-1854	670
206-1855	762
206-1856	762
206-1874	672
206-1884	656
	▶658
206-1885	657
	▶660
206-1888	645
	▶649
	▶651
206-1889	646
	647
	▶653
206-2423	363
206-3552	340
206-3553	6
	▶340
206-5823	713
207-4254	192
	281
207-4255	281
207-4257	227
207-4258	192
	281
207-4260	281
207-4262	281
207-4263	216
207-4266	281
207-4267	216
207-4268	281
207-4271	281
207-4272	281
207-5962	227
207-7581	389
208-0321	192
208-0322	205
208-5029	107
	114
208-5232	539
	540
208-5234	558
	559
	560
	561
208-5235	518
	519
	520
	521
	522
	523
	524
	525
	526
	527
	528
	529
	530
	531
	532
	533
	534
	535
	536
	537
	538
	541
	546
	547
	548
	549
	550
	551
	552
	553
	554
	555
	556
	557
208-5242	538
	539
	540
	541
208-5244	558
	559
	560
	561
208-5245	518
	519

▶ **PRIMARY REFERENCE**

PART NUMBER INDEX

Part	Page	Part	Page	Part	Page	Part	Page
	520		▶704	210-5932	215		▶697
	521		▶706		217	210-8401	642
	522	209-4704	704		218	210-8402	697
	523		706	210-5937	192	210-8754	704
	524	209-4705	704	210-5942	192		706
	525	209-4716	704	210-5946	192	210-8917	414
	526		706	210-5947	192		416
	527	209-4777	303	210-5948	77		418
	528	209-6181	437		79	211-0052	182
	529	209-6850	305	210-5949	▶77		186
	530	209-6855	305		78	211-0071	647
	531	209-6862	305	210-5951	72		▶709
	532	209-7454	205		▶73	211-0072	645
	533	209-7455	207	210-5953	77		646
	534	209-7456	192	210-5954	77		▶708
	535	209-7459	217	210-5955	77	211-0092	207
	536		218	210-6139	73	211-0705	647
	537	209-7460	219	210-6141	73		▶665
	546		220	210-6243	344	211-1018	▶78
	547	209-7461	217	210-6475	649	211-1019	▶79
	548		218		651	211-1381	665
	549	209-7462	205		653	211-2660	642
	550	209-7463	205	210-6491	668		697
	551	209-7464	192	210-6803	7	211-2661	639
	552	209-7465	219		▶81		695
	553		220	210-6807	7	211-3207	367
	554	209-7466	226		8	211-3208	367
	555	209-7472	205	210-6813	7	211-3461	79
	556	209-7473	205		▶90	211-3462	79
	557	209-9219	27	210-7026	318	211-3463	79
208-8240	244		28		320	211-3546	5
	249	209-9875	192	210-7074	1		▶309
208-9293	709	209-9882	192		3	211-3649	▶293
209-2435	462		▶205		▶321	211-3783	299
	464	209-9883	192	210-7077	2	211-4242	▶181
209-3348	679	209-9884	192		3		▶185
209-3349	681		▶217		4		645
209-3350	681	209-9885	192		5		646
209-3352	684		▶218		▶333		647
	685	209-9886	192	210-7078	1		656
209-3353	679	209-9887	192		3		657
	681	209-9924	▶3		▶335	211-4243	▶162
209-3363	674	209-9928	1	210-7085	2		645
	676		2		3		646
209-3364	410		3		4		647
	▶676		4		5		656
209-3365	411		5		▶318		657
	▶684		▶437	210-7086	1	211-4245	▶165
209-3366	703	209-9929	▶1		3		645
209-3367	94	209-9934	▶410		▶320		646
	95	209-9935	▶411	210-7097	▶325		647
	96	209-9938	1		464		656
	98		2	210-7098	▶336		657
	▶703		3		462	211-4253	3
209-3368	679		▶448	210-7302	194		5
209-3370	▶679	209-9943	▶410	210-7305	194		133
209-3371	▶681	209-9944	▶410	210-7665	642		▶699
209-3375	411	210-3097	194		697	211-4260	▶170
	▶685	210-3098	194	210-7666	642		464
209-3378	94	210-3099	194		697	211-4262	6
	95	210-3100	194	210-7773	406		▶175
	▶716	210-3106	194		408		▶177
209-4157	226	210-5924	192	210-8363	639		▶179
209-4703	646		▶226		▶642	211-4264	▶190
	647	210-5931	226	210-8364	695		314

▶ PRIMARY REFERENCE

PART NUMBER INDEX

Part	Page
211-4267	▶155
	209
211-4268	▶159
	647
211-4269	▶173
	645
	646
211-4276	▶140
	645
	656
211-4277	▶142
	▶144
	646
	647
	657
211-4283	5
	▶189
211-4285	5
	▶125
211-4286	▶127
211-4292	▶146
211-4348	377
211-5182	5
	▶445
211-6735	192
211-7564	1
	2
	3
	4
	5
	▶387
211-7568	▶383
	411
211-7601	1
	2
	3
	4
	5
	▶355
211-9286	224
212-0206	▶411
212-0770	224
212-0907	318
	323
	333
212-1490	323
212-3416	162
	642
	697
212-5702	221
212-5712	276
	277
212-5713	194
212-6215	238
213-0139	159
213-1881	299
213-1884	299
213-1887	299
213-1888	737
213-1889	299
213-1891	▶299
	645
	646
	647
	656
	657
213-2279	377
213-2483	318
	320
213-2484	320
213-2486	320
213-2490	320
213-2491	318
213-2494	318
213-2497	318
213-4222	227
213-6040	165
213-6043	189
213-6049	140
	142
	144
213-6051	739
	752
213-6055	159
	173
213-6060	156
213-6069	2
	4
213-6085	190
213-6088	125
213-6089	125
	128
213-6091	127
213-6092	127
213-6094	125
	128
213-6687	441
213-6690	441
213-6691	441
213-6692	1
	2
	3
	▶441
213-6696	466
213-6697	466
213-6698	441
213-6702	305
213-6703	441
213-6710	448
	466
213-6714	448
	466
213-6723	441
213-6726	437
213-9271	▶6
213-9284	▶5
	6
213-9290	▶4
213-9293	▶2
213-9298	▶6
213-9311	▶67
	645
	646
	656
	657
214-0973	7
	8
	▶41
214-2000	5
	▶303
214-2001	303
214-2198	6
	▶344
214-2202	6
	▶72
214-2249	333
	335
214-2250	335
214-3254	293
	295
214-3647	73
214-3729	335
214-3735	709
214-3736	709
214-3737	709
214-3738	709
214-3739	709
214-3740	▶211
	228
	229
214-3742	739
214-3751	▶70
	72
214-3753	70
214-3763	739
	752
214-3798	333
214-3850	321
214-4281	445
214-4285	445
	449
	451
	453
214-4293	699
214-4302	662
	▶664
214-4692	155
214-4693	162
214-4695	159
	173
214-4697	140
214-4698	142
	144
214-4699	140
214-4700	142
	144
214-4701	283
214-4702	181
	185
214-4703	173
214-4709	754
214-4716	165
214-4717	181
	185
214-4718	159
214-4719	190
214-4722	162
214-4723	181
	185
214-4754	303
214-5097	192
	281
214-6143	462
	464
214-6471	325
214-6475	325
214-6480	325
214-6879	325
214-6897	325
214-6910	▶228
214-6911	▶228
214-6912	▶229
214-6913	▶229
214-6999	445
214-7043	445
214-7407	73
	▶80
214-7457	73
214-7458	73
214-7469	291
215-1242	730
215-1942	318
	323
	325
	333
215-2023	192
	281
215-3373	584
215-3882	287
215-3883	287
215-7066	273
215-7067	273
215-7453	369
	389
215-7454	369
215-7457	336
215-7460	336
215-7619	369
215-8196	732
215-8934	325
215-9478	572
	▶584
215-9515	101
	103
216-0909	▶758
216-0928	572
	▶585
216-1600	221
216-1601	227
216-1602	215
216-1606	227
216-1608	194
216-1609	194
	▶215
216-1610	194
	▶227
216-1612	221
	▶276
216-1613	221
	▶277
216-2267	239
	244
	249
216-2777	388
216-3350	676
216-3351	674
	676
216-3358	674

▶ **PRIMARY REFERENCE**

PART NUMBER INDEX

Part	Page	Part	Page	Part	Page	Part	Page
	676	216-8822	564		748	219-3388	▶527
216-3712	585		566	219-0006	394	219-3389	▶528
216-4457	205		▶569		395	219-3390	▶529
216-4458	205	216-8826	564	219-0302	759	219-3391	▶530
216-4459	281		565	219-0343	703	219-3392	▶531
216-4461	205		▶571	219-3273	135	219-3393	▶532
216-4464	205	216-8829	571	219-3355	▶479	219-3394	▶533
216-4465	205	216-8839	570		518		544
216-4466	205	216-8843	570	219-3356	▶480	219-3395	▶534
216-4467	205	216-9069	171		519	219-3396	▶535
216-4473	230	216-9497	207	219-3357	▶481	219-3397	▶536
216-4475	209	216-9498	205		520	219-3398	▶537
	▶230		▶207	219-3358	▶482	219-3399	▶538
216-4476	228	217-0055	462		521		545
	229		464	219-3359	▶483	219-3400	▶539
	▶230	217-1577	462		522	219-3401	▶540
216-5332	344		464	219-3360	▶484	219-3402	▶541
	▶362	217-2308	73		523	219-3410	▶542
216-5515	205	217-2345	221	219-3361	▶485	219-3411	▶543
216-5981	307	217-2346	221		524	219-3412	▶544
216-6069	2	217-2347	276	219-3362	▶486	219-3413	▶545
216-6295	462		277		525	219-5752	209
	464	217-2349	276	219-3363	▶487		▶287
216-6891	101		277		526	219-5753	209
	103	217-2617	347	219-3364	▶488		▶289
216-6892	101	217-2699	347		527	219-6281	642
	103	217-2868	205	219-3365	▶489		697
216-6945	73	217-2876	221		528	219-6283	642
216-7473	192	217-2877	217	219-3366	▶490	219-6284	642
216-8314	23		▶219		529	219-6285	642
	24	217-2878	218	219-3367	▶491	219-6286	642
216-8634	35		▶220		530	219-6287	642
	37	217-2879	217	219-3368	▶492	219-6288	642
216-8687	207		218		531	219-6292	642
216-8689	207	217-2880	205	219-3369	▶493		697
216-8691	207	217-2883	192		532	219-6294	642
216-8700	207	217-2885	192	219-3370	▶494	219-6469	437
216-8762	565		281		533	219-8564	▶394
	▶566	217-2914	194	219-3371	▶495		411
216-8778	566	217-3311	325		534	219-8566	▶342
	568	217-3312	323	219-3372	▶496		410
216-8780	566		333		535	219-8567	344
	568	217-5776	333	219-3374	▶497		▶377
216-8781	566	217-8058	284		▶498	219-8568	344
	568	217-8185	408		536		▶375
216-8794	569	217-8195	289		537	219-8751	205
216-8796	569	217-8197	289	219-3375	▶499	219-8752	205
216-8800	468	217-8199	287		538	219-8753	205
	▶562		289	219-3376	▶500	219-8754	205
216-8801	469	217-8200	287		539	219-8755	205
	▶563		289	219-3377	▶501	219-8756	205
216-8802	562	217-8432	699		540	219-8757	205
	▶567	217-8763	318	219-3378	▶502	219-8758	205
	568	217-9672	209		541	219-8759	205
216-8803	562		▶307	219-3379	▶518	219-8783	226
	563	217-9920	273		542	219-8795	192
	▶570		▶280	219-3380	▶519		194
216-8804	571	218-0235	729	219-3381	▶520	219-8798	192
216-8805	571	218-0666	639	219-3382	▶521		281
216-8811	563		695	219-3383	▶522	219-8799	194
	▶568	218-0745	6	219-3384	▶523	219-8834	276
216-8820	469		▶438		543	219-8835	277
	▶564	218-4854	746	219-3385	▶524	219-8836	221
216-8821	470		748	219-3386	▶525	219-8839	194
	▶565	218-4856	746	219-3387	▶526	219-9482	485

▶ PRIMARY REFERENCE

PART NUMBER INDEX

Part	Page	Part	Page	Part	Page	Part	Page
219-9483	486		▶345		598	223-8267	301
	490	220-5974	345	221-4285	587		302
	491	220-8024	273		594	223-8995	82
	495	220-8631	34		595	224-2147	670
	503	220-9179	▶314		599	224-2149	670
	504	220-9182	▶209	221-4295	396	224-4527	440
	548		228		398		596
	554		229	221-4296	396		597
219-9484	487	220-9183	▶209		398		598
	505		228	221-4297	396		599
	549		229	221-4314	315		622
	555	221-0811	209		316		623
219-9485	488		▶224	221-4315	396		624
	492	221-2375	2		461		625
	494	221-2420	639	221-4316	396		626
	496		695	221-4322	461		627
	507	221-3002	645	221-9352	377		628
	508		646	222-1216	375		629
	550		647	222-1395	318		630
	556		656	222-1801	298		631
219-9486	489		657	222-1802	298		632
	493		▶672	222-2257	375		635
	497	221-3006	672	222-2258	375	224-5917	103
	498		▶683	222-4067	406	224-6232	▶586
	506	221-3234	363		408	224-6233	▶586
	509	221-4260	586	222-4732	367	224-6234	▶586
	510		587	222-5171	462	224-6235	▶587
	551	221-4263	636		464	224-6237	▶315
	557	221-4265	▶396	222-7091	7		▶316
219-9487	480		586		8		588
219-9488	481	221-4267	586		▶58		589
219-9489	482		▶636	222-7379	▶572		590
219-9490	483		637	222-7411	585		591
219-9491	500	221-4271	440	222-7464	572		592
219-9492	501	221-4272	440		▶575		593
219-9493	484		596	223-2028	689		594
219-9494	479		597	223-2029	691		595
219-9495	502		598	223-2030	649		600
219-9496	499		599		651		601
220-0269	674		622		741		602
	676		623		742		603
220-0738	299		624		744		604
	639		625		750		605
	661		626		751		606
	670		627	223-2035	661		607
	695		628	223-3353	325		608
220-1018	462		629		336		609
	464		630	223-3502	318		610
220-1019	448		631		320		611
220-2000	754		632	223-3926	462		612
220-2001	754		635		464		613
220-3251	676	221-4276	▶440	223-3962	301		614
220-3469	686		586	223-3964	302		615
220-3470	686		587	223-3967	▶301		616
220-3762	642	221-4282	586		656		617
220-3785	645		588		657		618
	657		589	223-3968	▶302		619
	▶688		596		645		620
220-3786	718	221-4283	586		646		621
220-3790	727		590		647		633
	728		591	223-4546	301		634
220-3791	727		597		302	224-6250	566
	728	221-4284	586	223-4960	8		568
220-5725	697		592		▶91	224-8945	759
220-5973	6		593	223-8263	754	224-9473	8

▶ **PRIMARY REFERENCE**

PART NUMBER INDEX

Part	Page
	▶82
225-0041	759
225-0060	299
225-0313	759
225-3144	124
225-3145	123
225-4150	758
225-4317	9
	10
	▶47
225-4323	133
	▶583
225-4324	583
225-4326	583
225-5436	46
225-5437	46
225-5438	44
	46
225-5439	44
	46
225-5441	44
	46
225-5451	44
	46
225-5453	44
	46
225-5454	44
	46
225-5458	44
	46
225-5459	44
	46
225-5493	29
225-5494	29
225-5495	29
225-5496	29
225-5498	29
225-5499	29
225-5501	30
	31
225-5502	30
	31
225-5625	51
	52
225-5629	51
	52
225-5634	51
	52
225-5638	51
	52
225-5640	51
	52
225-5959	32
	51
	52
225-5960	51
	52
225-5961	51
	52
225-5962	51
	52
225-5963	▶51
	52
	53
225-5967	53
225-6005	42
225-6041	42
225-6451	13
	15
	17
	19
225-6455	13
	17
225-6456	13
	15
	17
	19
225-6461	13
	15
	17
	19
225-6464	13
	15
	17
	19
225-6477	13
	15
	17
	19
225-6478	13
	15
	17
	19
225-6479	13
	15
	17
	19
225-6522	13
	15
	17
	19
225-6817	61
225-6818	61
	63
	65
225-6820	63
225-7738	75
225-7739	75
225-7741	75
225-7772	21
225-7781	21
225-7941	62
	63
	65
225-7944	25
	62
	63
	65
225-7970	181
	185
225-7992	175
	177
225-8016	75
225-8019	75
225-8227	445
225-8287	35
	37
225-8329	59
225-8524	92
225-8526	92
225-8533	92
225-8534	92
225-8536	89
	92
225-8848	39
225-8858	25
225-9524	333
	335
226-0291	299
	762
226-0449	82
226-1242	759
226-2333	133
226-2334	133
226-4162	321
226-4192	224
226-4346	215
	217
	218
226-4364	194
226-4365	194
	217
	218
226-4366	194
	217
	218
226-4367	194
226-4370	194
	217
	218
226-5540	▶328
	562
	563
	564
	565
226-5635	688
226-7164	162
226-8202	325
	336
226-9167	133
226-9169	133
226-9270	133
226-9764	462
	464
227-1057	162
	165
	181
	185
	284
	656
	657
227-1143	327
	340
227-5509	393
227-5556	299
227-5571	345
227-7373	2
	3
	4
	5
	▶130
227-7374	▶130
	699
227-7448	84
227-7449	84
	85
227-8378	6
	▶435
228-3508	6
	▶327
228-3974	▶385
	410
	411
228-4136	321
228-4592	683
228-4593	683
228-4597	683
228-4602	▶647
228-5856	162
228-6061	335
228-7391	124
228-8006	333
228-8008	333
228-8547	318
228-9129	▶118
	119
228-9130	118
228-9132	118
229-0298	746
	748
229-0300	649
	651
	653
	▶746
	▶748
229-0305	746
229-0306	754
229-0308	746
	748
229-0309	746
	748
229-0310	746
	748
229-4896	13
	15
	17
	19
	664
229-5085	217
	218
229-5092	215
	217
	218
229-5093	207
229-5280	672
229-5535	576
229-5745	672
229-6052	704
229-7226	▶576
229-7227	▶577
229-7356	664
229-8253	577
229-8743	▶644
	699
229-8911	336
230-2389	686
230-2390	686
230-2510	674
	676
230-2610	211

▶ PRIMARY REFERENCE

PART NUMBER INDEX

Part	Page	Part	Page	Part	Page	Part	Page
	213	231-0699	194		111		62
230-3038	676	231-0700	219	232-2721	108		63
230-4011	182	231-0701	220		111		65
	186	231-0703	217	232-2722	108	232-4454	661
230-5579	325		218		111	232-4636	762
230-5580	325	231-2808	367	232-2723	108	232-4706	162
230-5739	▶194	231-2809	367		111	232-6204	9
	209	231-2875	685	232-2725	108		10
230-5743	▶192	231-2876	685		111		▶49
	209	231-2877	684		115	232-6661	9
230-5745	209	231-2878	681	232-2726	108		10
	▶281	231-3052	135		111		▶131
230-6368	125	231-3054	135		115		▶132
	127	231-3513	2	232-2735	575	232-6662	131
	128		3	232-2752	546		132
230-7300	9		4	232-2753	547	232-7399	131
	10		5	232-2754	548	232-7400	▶21
	▶33		▶171	232-2755	549		23
230-7353	9	231-3528	369	232-2756	550		24
	10	231-3538	321	232-2757	551	232-7440	25
	▶50		323	232-2758	552	232-7449	27
230-7355	9		333	232-2759	553		28
	10		335	232-2760	554	232-7519	▶29
	▶75	231-4784	367	232-2761	555		30
230-7569	9	231-4785	367	232-2762	556		31
	10	231-9357	162	232-2763	557	232-7596	25
	▶48	231-9358	760	232-2865	301	232-7597	25
230-7578	9	231-9361	758		302	232-7599	25
	10	231-9363	309	232-2869	301	232-7600	25
	▶59	232-0252	365		302	232-7603	25
230-8094	42	232-1117	108	232-2870	301	232-7604	▶25
230-8989	115		111		302		27
230-8995	115	232-1248	344	232-3072	683		28
230-8996	115		▶388	232-3126	106	233-0859	564
230-8997	115	232-1295	108		131		565
230-8998	115		111		132	233-1488	388
230-9127	13	232-1322	29	232-3149	108	233-2568	327
	15		49		111	233-2576	329
	17		108		115		331
	19		111	232-3157	108	233-2578	327
230-9357	328	232-1323	108		111	233-2582	329
230-9527	108		111		115		331
	111		115	232-3158	108	233-2583	337
231-0033	9	232-1328	111	232-3244	389	233-2585	329
	10		115	232-3263	108		331
	▶60	232-1536	684		111		337
231-0046	48	232-1540	684	232-3274	108	233-2588	329
231-0149	9		685		111		331
	▶12	232-1542	672		115	233-2589	337
231-0670	208	232-1792	171	232-3277	389	233-2590	327
231-0671	208	232-1793	115	232-3586	401	233-2594	329
231-0683	▶216	232-1794	111		403		331
	281		115	232-3587	401	233-2595	337
231-0684	281	232-2681	▶468		403	233-2597	327
231-0685	281	232-2682	▶468	232-3591	401	233-2599	327
231-0687	216	232-2683	▶468		403	233-2601	327
231-0688	216	232-2684	▶469	232-3657	35	233-2603	329
231-0692	▶208	232-2685	468		37		331
	221		▶469	232-3666	35		337
231-0693	208	232-2686	▶469		37	233-2605	327
231-0694	208	232-2687	▶469	232-3670	10	233-2606	337
231-0695	208	232-2688	▶470		▶35	233-2607	329
231-0696	208	232-2689	▶470	232-3722	▶61		331
231-0697	208	232-2690	470		62	233-2609	327
231-0698	194	232-2720	108	232-3751	25	233-2610	337

▶ **PRIMARY REFERENCE**

PART NUMBER INDEX

Part	Page
233-2611	329
	331
233-2613	337
233-2614	329
	331
233-2615	329
	331
233-2616	337
233-2622	337
233-2623	329
	331
233-2628	327
233-2631	337
233-3757	562
	563
233-3784	21
233-3785	21
233-3786	21
233-3788	21
233-3789	21
233-3790	21
233-5165	462
	464
233-5166	462
	464
233-5167	462
	464
233-5169	462
	464
233-5260	670
233-7007	10
	▶27
233-7027	10
	▶23
233-7104	108
	111
233-7214	108
	111
233-7222	63
	65
233-7223	63
233-7231	44
233-7232	44
233-7233	10
	▶44
233-7234	10
	▶30
233-7235	10
	▶52
233-7236	10
	▶11
233-7244	11
233-7432	9
	10
	▶39
233-7972	108
233-7977	175
	177
	179
233-9530	123
	124
233-9531	123
	124
233-9532	123
234-0387	108
	111
234-1981	81
	82
	▶84
	▶85
234-2622	81
	82
234-3030	92
234-3035	10
	▶57
234-4173	401
	403
234-4328	▶136
	140
	142
	144
234-4329	▶137
	142
	144
234-6927	406
	408
234-7730	136
	137
	138
234-7731	136
	137
	138
235-0128	94
	95
	96
	98
235-0336	6
	▶167
235-1790	115
235-4752	182
235-5363	91
235-5364	90
235-5729	349
	352
235-5843	406
	408
235-6281	105
235-7091	365
235-8528	377
235-8747	167
236-1583	211
	213
236-1673	115
236-1674	115
236-6651	58
236-6923	159
236-8238	9
	10
	▶34
237-0022	13
	15
237-0024	9
	10
	▶154
237-0025	9
	10
	▶42
237-0769	13
	15
	17
	19
237-0944	305
237-0975	90
	91
237-2799	92
237-3658	9
	10
	▶40
237-3786	92
237-3791	92
237-3794	92
237-3797	406
	408
237-3921	92
237-3922	92
237-3943	730
	732
237-4157	84
	85
237-4894	158
237-4896	9
	10
	▶158
237-5188	203
237-5330	305
237-5393	▶107
	108
237-5394	10
	▶108
	▶111
237-5408	10
	▶89
237-9349	458
237-9355	458
237-9356	458
	459
238-2799	9
	▶62
238-4628	393
238-5228	216
238-5254	192
	281
238-5255	192
	281
238-5256	217
	218
238-5289	194
	▶221
238-5291	194
238-5292	194
238-5293	194
238-5294	194
238-7492	159
238-7567	231
238-8288	86
238-8289	86
238-8290	10
	▶86
238-8671	111
	115
238-9192	81
238-9397	167
238-9546	449
	451
	453
	455
	456
	457
238-9547	449
	456
	▶458
239-1080	162
	▶736
239-1416	451
	457
	459
239-1434	94
	95
239-1435	94
	96
239-2270	7
	8
239-6989	758
239-9271	133
239-9272	133
239-9429	759
239-9435	441
240-4639	125
	127
	128
240-5571	115
240-7094	759
241-0037	313
241-0888	449
	451
	453
241-0889	449
	451
	453
241-0890	458
	459
241-0891	458
	459
241-0892	458
	459
241-4275	101
	103
241-6225	347
241-6226	347
241-8448	347
	349
	352
242-6114	181
	185
242-6116	181
	185
242-6118	181
	185
242-6120	181
	185
242-9514	325
242-9515	325
242-9751	67
	68
243-0059	96
	98
	▶717
243-0062	716
	717
243-0063	716

▶ PRIMARY REFERENCE

PART NUMBER INDEX

Part	Page	Part	Page	Part	Page	Part	Page
	717		128		▶401	249-4021	367
243-5027	125	246-8478	▶369	247-7868	▶291	249-4022	367
	128		410		344	249-4023	367
244-1085	309	246-9113	323	247-8179	693	249-4024	367
244-3106	167		333		694	249-4032	389
244-3113	299	246-9309	1	247-8199	▶148	249-4034	369
244-3839	327		2		182	249-4035	369
244-7614	309		3		186	249-5046	58
244-8826	329		4	248-0395	312	249-5276	230
	331		5	248-0481	410	249-5295	58
	337		▶399		▶412	249-5297	58
245-1223	311	246-9311	3	248-0482	410	249-5512	81
245-4827	225		4		▶413		82
245-4914	312		5	248-0483	410	249-5652	699
245-5728	309		▶357		▶414	249-7912	▶347
	▶311	246-9318	1	248-0484	411	249-9312	662
245-6098	5		2		▶416	249-9328	▶297
	▶120		3	248-0485	411	249-9329	297
245-6101	120		▶359		▶418	249-9330	297
245-6103	120	246-9802	314	248-1348	401	250-0658	355
245-6104	120		▶379		403	250-0741	305
	▶121		▶381	248-2214	▶135	250-0804	355
245-6105	121	246-9885	2	248-2257	435	250-1418	375
	▶122		3	248-2272	435	250-1878	312
245-6107	122		4	248-2273	435	250-2314	80
245-6108	120		5	248-2284	644	250-3330	312
245-6109	292		▶323		715	250-3331	309
245-6841	7	247-0144	75	248-2575	553	250-3344	309
	▶10	247-0320	379	248-2707	94	250-4337	70
245-8777	344		381		95	250-5462	359
	▶406	247-1080	309		96	250-5881	311
	▶408	247-1385	80		98	250-6755	357
245-8778	406	247-1947	▶546	248-2708	672		359
	408	247-1948	▶547	248-2709	666	250-6793	357
245-8780	379	247-1949	▶548	248-2710	672		359
	381	247-1950	▶549	248-2714	689	250-6850	312
	▶393	247-1951	▶550		691	250-6855	244
245-9828	33	247-1952	▶551	248-2720	645	250-6858	312
246-0568	7	247-1953	▶552		656	250-7910	758
246-1163	13	247-1954	▶553		▶661	250-7911	758
	15	247-1955	▶554	248-3231	81	250-7912	645
	17	247-1956	▶555		82		646
	19	247-1957	▶556	248-3290	239		647
246-2582	9	247-1958	▶557		244		657
	▶13	247-3267	▶363		249	250-7914	5
	▶15		462	248-4274	399		▶757
246-2583	10		464	248-4275	399	250-7963	▶55
	▶17	247-4001	90	248-4276	399	251-0075	644
	▶19		91	248-4277	399	251-0076	644
246-2641	758	247-4884	106	248-5025	647	251-0077	715
246-2671	181	247-4885	9		▶662	251-1156	▶471
	185		▶106	248-5547	357		512
246-2718	312	247-5360	7	248-5711	5	251-1157	▶473
246-5292	6		▶101		▶758		514
	▶389	247-5361	8	249-0403	96	251-1158	▶474
246-5293	6		▶103		98		515
	▶367	247-6118	761	249-0953	323	251-1159	▶476
246-8030	181	247-6296	309	249-0974	62		516
	185	247-6313	▶114		63	251-1160	▶478
246-8038	190	247-7555	453		65		516
246-8044	133		455	249-2482	668	251-1168	471
246-8045	▶133		▶459	249-2707	662		476
246-8046	699	247-7798	13	249-3124	393	251-1169	471
246-8051	167		17	249-3125	393		476
246-8053	125	247-7867	344	249-4020	367	251-1172	473

▶ **PRIMARY REFERENCE**

PART NUMBER INDEX

Part	Page
	474
	478
251-1173	473
	474
	478
251-1222	699
	▶715
251-1541	357
251-1775	▶511
251-1776	▶468
251-1777	468
	511
	▶512
251-1778	▶513
251-1779	▶513
251-1780	513
	▶514
251-1781	▶515
251-1782	▶515
251-1783	515
251-1784	▶515
251-1786	515
	▶516
	517
251-1787	▶516
251-1788	▶516
251-1789	516
251-1790	▶517
251-2432	9
	10
	▶32
251-2436	32
251-2437	32
251-3200	▶147
	699
251-3227	80
251-3231	121
251-3802	7
	▶96
	▶98
251-4336	35
	37
251-4374	312
251-4375	312
251-4519	5
	▶305
251-4889	297
251-4890	297
251-4891	297
251-5625	410
251-5626	410
251-5628	645
	646
	647
	656
	657
251-5854	▶371
	562
	563
251-5855	▶373
	564
	565
251-5859	371
251-6352	228
	229
	▶238
251-6353	228
	229
	▶238
251-6708	583
251-9360	347
	349
	352
251-9570	167
251-9571	715
252-0165	357
252-0200	347
252-0315	81
252-1221	379
	381
252-1862	689
	691
252-1863	689
	691
252-1864	689
252-1865	691
252-2157	758
252-4640	▶7
	228
252-4641	▶8
	229
252-4659	447
252-4660	▶447
252-5218	661
252-5219	661
252-6256	9
	▶123
252-6438	29
252-8059	284
252-8435	760
252-8684	375
252-9207	327
252-9612	89
252-9725	309
252-9983	294
252-9984	▶294
252-9985	295
252-9986	▶295
253-0234	503
	504
	505
	506
	507
	508
	509
	510
253-0352	7
	8
	▶119
253-0354	119
253-0783	292
253-0784	5
	▶292
253-1817	689
	691
253-1857	689
	691
253-1858	689
	691
253-2470	697
253-2472	10
	▶63
	▶65
253-4137	81
	82
253-4138	81
	82
253-5024	192
253-5384	311
	▶312
253-8295	406
	408
253-9510	642
	697
254-1126	689
	691
254-1127	689
	691
254-2187	90
	91
254-2267	60
254-2270	60
254-3954	29
254-4418	55
254-4419	55
254-5303	280
254-5683	739
254-6826	644
254-7271	369
	389
254-8939	▶503
	▶504
	558
254-8940	▶558
254-8941	▶559
254-8942	▶560
254-8943	▶561
254-8944	▶505
	▶506
	559
254-8945	▶507
	▶508
	560
254-8946	▶509
	▶510
	561
254-9301	311
254-9925	284
254-9926	284
254-9927	284
255-0791	759
255-0792	759
255-0795	639
	695
255-0796	760
255-0800	709
255-2279	8
	▶87
255-3447	92
255-4692	87
	88
255-9107	377
256-0143	58
256-0323	308
256-0324	▶308
256-0546	▶223
	228
	229
256-0550	223
256-0551	▶213
	228
	229
256-5299	656
256-7736	10
	▶124
257-3160	344
	▶365
258-2354	670
258-3697	689
	691
258-4946	30
	31
258-9999	759
259-0127	194
259-0128	195
259-0129	195
259-1802	1
	2
	3
259-1831	233
259-1832	235
259-4401	760
259-6276	645
	656
	657
	▶712
259-6729	413
	▶420
259-6730	413
	▶421
259-6731	412
	▶422
259-6732	412
	413
	▶423
259-6733	418
	▶424
259-6734	416
	418
	▶425
	▶426
259-6735	416
	418
	▶427
259-6736	414
	▶428
259-6737	414
	416
	418
	▶429
259-6738	414
	416
	418
	▶430
259-6739	414
	416
	418
	▶432
259-6742	▶391
	414

▶ **PRIMARY REFERENCE**

PART NUMBER INDEX

Part	Page
	416
	418
259-6745	▶392
	412
	413
259-6746	414
	416
	418
259-6747	412
	413
259-6748	412
	413
259-6749	412
259-6750	413
259-6751	414
259-6752	416
259-6753	418
259-6754	412
	413
	414
	416
	418
259-6755	414
	416
	418
259-6756	414
	416
	418
259-6757	414
259-6758	391
	392
259-6918	101
259-8417	80
260-0029	723
	725
260-0030	730
	732
260-0031	730
	732
260-0032	730
	732
260-0033	730
	732
260-0034	730
	732
260-0035	730
	732
260-0036	729
260-0041	730
	732
260-0042	730
260-0043	730
	732
260-0044	730
	732
260-0045	723
	725
260-0046	730
	732
260-0047	729
	732
260-0049	730
	732
260-0051	729
	732
260-0052	729
	732
260-0057	729
	732
260-0059	729
	732
260-0060	729
260-0063	730
	732
260-0067	730
	732
260-1336	87
260-3002	421
	422
260-3003	432
260-3004	424
	427
	428
260-3005	420
	421
	422
	425
	426
260-3006	429
	432
260-3007	430
260-3009	420
	421
	422
	423
	424
	425
	426
	427
	428
	429
	430
	432
260-3010	420
	421
	422
	423
	424
	425
	426
	427
	428
	429
	430
	432
260-3011	420
	424
	425
	426
	427
	428
	429
	430
	432
260-3012	421
	422
260-3013	423
260-3122	87
260-3146	401
	403
260-3147	401
	403
260-3149	401
	403
260-3150	401
	403
260-9143	349
	352
261-2207	686
261-2320	7
	▶88
261-3572	58
261-5517	271
	▶272
261-5519	272
261-6703	460
261-9632	737
261-9635	271
261-9636	668
261-9637	668
261-9639	661
	668
	670
261-9644	666
261-9645	666
262-1314	359
	360
262-1315	359
262-1408	130
262-3036	349
	352
262-3038	349
	352
262-4080	273
262-4082	273
262-4084	273
262-4203	349
262-4212	▶349
262-4213	▶352
262-4217	349
	352
262-4220	349
262-4459	347
	352
262-4462	352
262-7043	305
262-7044	303
262-7049	▶329
	344
262-7050	▶331
	344
262-7051	329
262-7052	331
262-7314	363
262-8088	365
262-9567	704
	706
262-9786	84
	85
263-5376	92
263-5514	401
	403
263-5781	706
263-7261	686
263-8575	596
263-8576	596
	597
	598
	599
	622
	623
	624
	625
	626
	627
	628
	629
	630
	631
	632
	635
	637
263-8591	563
	565
	▶761
263-9498	171
264-3756	147
265-0868	379
	381
265-8182	148
266-2234	▶68
	647
266-2235	68
266-2994	111
266-3712	111
266-4326	357
266-4570	359
266-4571	359
266-5834	5
	▶460
266-6830	111
267-2701	150
	151
	182
	186
267-2809	142
	144
267-5211	149
	150
267-5213	149
	150
	151
267-7065	105

▶ **PRIMARY REFERENCE**

PART NUMBER INDEX

Part	Page
267-7069	10
	▶105
268-0867	9
268-1547	359
268-1548	359
268-1964	165
268-5689	345
268-7754	171
268-7758	162
268-7759	182
	186
268-7761	171
269-8129	674
	676
269-8817	674
	676
269-9115	666
270-2728	162
270-2795	674
	676
270-3203	▶581
270-3204	▶439
270-3205	439
270-3206	581
270-3409	315
	316
270-3410	398
270-5290	305
270-9176	373
271-1401	2
	3
	▶464
271-1404	1
	▶462
271-1408	462
	464
271-2403	▶236
	238
271-2404	▶237
	238
271-2407	236
	▶239
	▶244
271-2408	237
	▶249
271-3023	588
	589
	590
	591
	592
	593
	594
	595
	596
	597
	598
	599
	600
	601
	602
	603
	604
	605
	606
	607
	608
	609
	610
	611
	612
	613
	614
	615
	616
	617
	618
	619
	620
	621
	622
	623
	624
	625
	626
	627
	628
	629
	630
	631
	632
	633
	634
	635
	▶637
271-3024	▶588
	▶589
271-3025	▶590
	▶591
271-3026	▶592
	▶593
271-3027	▶594
	▶595
271-3028	▶596
271-3029	▶597
271-3030	▶598
271-3031	▶599
271-4487	▶225
	236
	237
271-7167	211
	213
271-7309	225
271-7389	373
271-8666	3
	4
	5
	▶466
271-8669	▶461
	466
272-0537	122
272-0555	345
272-0557	345
272-1750	373
272-2232	9
	10
272-2265	61
	65
272-5111	269
272-5116	269
272-7104	674
	676
272-9800	139
273-3610	8
	▶9
273-5905	▶723
	727
273-6036	▶725
	728
273-6372	727
	728
	▶729
	▶732
273-9417	323
274-3774	167
274-4274	337
274-4553	231
	234
274-4555	341
274-4557	239
	244
	249
274-4560	239
	244
	249
274-4962	115
274-5231	323
274-5819	606
	607
	623
274-5823	608
	609
	625
274-5826	610
	611
	624
274-5829	612
	613
	626
274-5832	614
	615
	628
274-5835	616
	617
	630
274-5837	618
	619
	629
274-5839	620
	621
	631
274-7409	171
274-8614	239
	244
	249
274-8616	231
274-8617	231
274-8620	233
	235
274-8621	233
	235
274-8623	239
	244
	249
274-8625	239
	244
	249
274-8628	231
274-8629	231
274-8631	197
	200
274-8634	233
274-8635	231
274-8636	231
274-8637	233
	235
275-0001	311
275-0467	▶197
	249
275-0468	▶199
	249
275-0469	199
275-0471	202
275-0472	▶202
	239
275-0473	▶200
	239
	244
275-0475	239
	244
	249
275-0476	▶231
	239
	244
	249
275-0477	239
	244
	249
275-0478	▶233
	249
275-0553	182
	186
275-0570	159
	173
275-0652	273
275-0653	273
275-1038	111
	115
275-4243	315
	316
	▶339
275-8869	674
	676
275-9883	42
276-1368	575
276-1816	323
	333
276-2353	445
276-3420	10
276-3859	321
	323
276-3860	323
276-3862	323
276-3865	323
276-4005	321
276-4168	339
276-4169	339
276-4170	339
276-4171	339
276-4172	339
276-5021	265

▶ PRIMARY REFERENCE

PART NUMBER INDEX

Part	Page
276-5337	▶234
	249
276-5339	▶235
	239
	244
276-5605	25
276-6142	321
276-6820	267
276-7287	▶149
	159
	173
276-7290	▶150
	182
	186
276-7291	▶151
	182
	186
276-7464	▶6
276-8086	266
276-8791	739
	752
277-3012	35
	37
277-3638	270
277-4543	347
	349
	352
277-5156	9
278-0205	239
	244
	249
278-0215	233
	235
278-0216	233
	235
278-0217	233
	235
278-0218	233
	235
278-0219	233
278-1971	▶337
	344
278-1972	337
278-4497	316
278-4498	316
278-5454	305
278-6377	149
278-7066	303
278-7695	303
279-5016	379
	381
279-6052	345
279-9452	445
280-2652	316
280-7009	239
	244
	249
280-7364	656
	657
	▶729
280-7365	645
	646
	647
	▶729
281-4022	352
281-4618	359
281-4726	347
281-4770	359
281-6708	600
	601
	622
281-6711	602
	603
	627
281-6714	604
	605
	632
281-6716	▶600
	▶601
282-0865	▶602
	▶603
282-0866	▶604
	▶605
282-0887	▶606
	▶607
282-0888	▶608
	▶609
282-0889	▶610
	▶611
282-0890	▶612
	▶613
282-0891	▶614
	▶615
282-0892	▶616
	▶617
282-0893	▶618
	▶619
282-0894	▶620
	▶621
282-3847	▶257
282-3853	▶257
282-3854	▶257
282-3855	▶258
282-3857	▶258
282-3858	▶258
282-3859	257
	▶265
282-3860	▶265
282-3861	265
282-3862	257
	258
	▶266
282-3863	▶266
282-3864	266
282-3865	257
	258
	▶267
282-3866	267
282-3867	267
282-3868	257
	258
	▶268
282-3869	▶268
282-3870	268
282-3871	258
	▶269
282-3872	▶269
282-3873	269
282-5398	▶622
282-5399	▶623
282-5400	▶624
282-5401	▶625
282-5402	▶626
282-5403	▶627
282-5404	▶628
282-5405	▶629
282-5406	▶630
282-5407	▶631
282-5408	▶632
282-5409	▶633
	▶634
282-5410	▶635
282-6836	339
282-7832	704
	706
282-7833	140
	142
	144
	688
	737
	739
282-7835	140
	142
	144
	688
	704
	706
	737
	739
282-9861	35
	37
283-3451	739
	752
283-4237	709
284-1602	693
284-8905	130
285-0432	92
285-0438	9
	▶92
285-1207	645
	646
	647
285-3581	377
285-3582	375
285-3583	273
285-3584	273
285-3605	7
	8
	▶100
285-5098	100
285-9109	642
	697
286-0689	349
	352
286-3029	17
	19
286-3030	17
	19
286-3086	448
	466
286-3592	75
286-4880	132
286-9082	▶258
286-9083	258
	259
	▶270
286-9084	270
286-9085	▶270
286-9086	▶259
286-9087	268
286-9336	480
	481
	482
	483
	485
	486
	487
	488
	489
	490
	491
	492
	493
	495
	496
	498
	504
	506
	508
	510
286-9337	480
	481
	482
	483
	485
	486
	487
	488
	489
	490
	491
	492
	493
	495
	496
	498
	504
	506
	508
	510
286-9338	479
	484
	494
286-9340	479
	484
	494
287-5667	462
	464
287-8257	689
	691
287-8573	13
	15
287-8597	34
288-0422	35
	37
288-1157	311
288-6954	82
288-8043	▶648
	651
288-9942	44

▶ **PRIMARY REFERENCE**

PART NUMBER INDEX

Part	Page
288-9943	44
289-1204	732
289-3412	760
289-6018	709
289-6021	709
289-8740	385
289-8741	385
289-8742	385
289-8743	385
289-8744	383
289-8745	383
289-8746	383
289-8747	383
290-1273	748
290-3347	307
290-5760	▶138
	144
290-6023	363
290-6700	355
290-6711	347
	349
	352
290-6712	349
	352
290-6790	5
	▶128
290-6791	128
290-6792	128
290-6801	179
290-6804	171
290-6805	171
290-6806	170
290-6808	5
290-6809	3
290-8077	▶395
	410
290-8156	305
291-5108	674
	676
291-8378	273
291-9202	▶5
291-9203	▶3
292-2833	757
292-2834	757
292-5773	706
292-8222	381
293-1980	666
	668
293-2147	249
293-4053	85
293-4671	406
	408
293-7383	460
293-9882	462
	464
293-9884	462
	464
294-0288	35
	37
294-0973	316
294-4954	757
294-4955	757
294-9118	130
294-9119	130
294-9808	203
294-9809	▶203
	244
294-9820	250
294-9822	244
294-9823	244
294-9824	244
295-1711	35
	37
295-8472	292
295-9891	321
296-3740	662
296-5615	65
296-6714	344
	▶403
296-6715	401
	403
297-1230	387
297-4081	359
297-5510	462
	464
297-5849	714
298-3599	273
299-3342	485
299-3344	486
	490
	495
299-3346	504
299-3348	487
	491
299-3351	488
	492
	496
299-5421	461
299-5508	461
299-6985	▶701
	741
	742
	744
	751
299-6986	▶702
	742
	744
	750
299-7593	461
299-7603	461
300-1702	95
	98
300-4154	489
	498
300-4155	493
300-4156	506
	510
300-4157	480
300-4158	481
300-4159	482
300-4160	483
300-4161	484
	494
300-5440	305
300-7049	485
	486
	487
	488
	489
300-7051	485
	486
	487
	488
	489
300-7054	490
	491
	492
	493
	498
	504
	506
	510
300-7055	490
	491
	492
	493
	498
	504
	506
	510
300-7056	495
	496
300-7057	495
	496
300-7059	494
300-7061	494
300-7930	323
302-6388	130
302-6389	130
304-5696	190
304-8420	484
304-8421	484
304-8424	479
304-8764	42
305-0042	323
305-2695	462
	464
305-3102	171
305-3103	171
305-3104	171
305-3570	363
305-3571	363
308-1792	15
	19
308-4728	9
	▶28
308-4729	9
	▶24
308-4730	9
	▶46
308-4731	9
	▶31
308-4732	9
	▶53
313-1375	9
	▶115
313-1380	9
	▶37

3

▶ PRIMARY REFERENCE



© 2007 Caterpillar
All Rights Reserved

Printed in U.S.A.