CATERPILLAR®

SEBP5900
May 2010

RUTHZIL TRATOR COMERCIAL DE PEÇAS LTDA 11 97083-6812 ROLANDO

Parts Manual

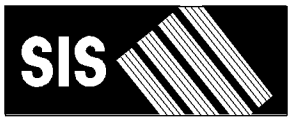

See "General Information" for New Parts Manual Features.

416E Backhoe Loader
Single Tilt

LMS1-Up (Machine)
C4Z1-Up (Engine)

Powered By C4.4 Engine
This Parts Manual is also available in .pdf Format on Compact Disc (CD - ROM) Caterpillar Form No. SERP5900.

Product and Dealer Information

Note: For product identification plate locations, see the section “Product Identification Information” in the Operation and Maintenance Manual.

Delivery Date: _____

Product Information

Model: _____

Product Identification Number: _____

Engine Serial Number: _____

Transmission Serial Number: _____

Generator Serial Number: _____

Attachment Serial Numbers: _____

Attachment Information: _____

Customer Equipment Number: _____

Dealer Equipment Number: _____

Dealer Information

Name: _____ Branch: _____

Address: _____

_____

_____

	Dealer Contact	Phone Number	Hours
Sales:	_____	_____	_____
Parts:	_____	_____	_____
Service:	_____	_____	_____

MEMORANDA

TABLE OF CONTENTS

Name	Page
GENERAL INFORMATION	A4
REPAIR ALTERNATIVES	A7
SUPPLEMENTAL COOLANT ADDITIVES	A8
MAINTENANCE PARTS	A9
INDEX	A11
MACHINE ARRANGEMENT	1
BACKHOE AR-EXTENDABLE STICK	1
BACKHOE AR-STANDARD STICK	1
CHASSIS AR	2
COMMON AR	2
DISTRIBUTION AR	2
DRIVE AR-BACKHOE LOADER	4
LOADER AR	4
OPTION AR-BACKHOE	5
OPTION AR-CAB	6
OPTION AR-MACHINE	7
ENGINE ARRANGEMENT	8
ENGINE AR	8
ENGINE AR-PRIMARY	9
BASIC ENGINE	10
CAMSHAFT GP	10
COVER GP-VALVE MECHANISM	11
CRANKSHAFT GP	13
CYLINDER BLOCK GP	16
CYLINDER HEAD GP	19
DRIVE GP-FAN	21
FLYWHEEL GP	22
HOUSING GP-FLYWHEEL	23
HOUSING GP-FRONT	24
LIFTING GP-ENGINE	26
MOUNTING GP-ENGINE	27
MOUNTING GP-ENGINE & XMSN	28
PAN GP-OIL	29
PISTON & ROD GP	31
PLUG GP-CYLINDER HEAD	32
PLUG GP-ENGINE	33
PULLEY GP-CRANKSHAFT	35
ROCKER ARM GP	36
VALVE MECHANISM GP	37
LUBRICATION SYSTEM	38
BREATHER GP	38
FILLER GP-ENGINE OIL	39
GAUGE GP-OIL LEVEL & FILLER	40
PUMP GP-ENGINE OIL	41
COOLING SYSTEM	42
CONNECTION GP-WATER	42
COOLER GP-ENGINE OIL	43
COOLER GP-FLTR BASE & ENG OIL	44
FAN GP-SUCTION	45
LINES GP-POWER TRAIN COOLER	47
LINES GP-RADIATOR	49
PUMP GP-WATER	51
RADIATOR & HYD OIL COOLER GP	53
AIR INLET AND EXHAUST SYSTEM	55
AIR CLEANER GP	55
COVER GP-INLET MANIFOLD	58
EXTENSION GP-EXHAUST	60
LINES GP-AIR	61
MUFFLER GP	62
TURBOCHARGER GP	63
FUEL SYSTEM	65
CONTROL GP-GOVERNOR	65
FILTER & LINES GP-FUEL	67
LINES GP-FUEL	69
PUMP GP-FUEL INJECTION	71
PUMP GP-FUEL PRM & PRIM FILTER	75
TANK GP-FUEL	76
ELECTRICAL AND STARTING SYSTEM	78
ALTERNATOR GP-CHARGING	78
BATTERY & WIRING GP	79
GLOW PLUG GP	83
HEATER GP-JACKET WATER	84
INSTALLATION GP-COMMUNICATION	85
LAMP GP-FLOOD	87
LAMP GP-WARNING BEACON	90
LIGHTING GP-FLOOD & SIGNAL	91
LIGHTING GP-WARNING BEACON	96
PANEL GP-FUSE	97
RELAY GP	98
STARTING MOTOR GP-ELECTRIC	101
SWITCH GP-ALL WHEEL DRIVE	102
SWITCH GP-DIFFERENTIAL LOCK	103
SWITCH GP-DISCONNECT	104
SWITCH GP-PRESSURE	105
WIRING GP-AIR CONDITIONER	106
WIRING GP-CONSOLE	109
WIRING GP-ENGINE	112
WIRING GP-HEATER	115
WIRING GP-KICKOUT & POSITIONER	117
WIRING GP-PLATFORM	119
WIRING GP-REAR	124
WIRING GP-RIDE CONTROL	125
POWER TRAIN	127
AXLE GP-DRIVE & STEERING	127
AXLE GP-REAR	129
CASE AS-TRANSMISSION	132
CASE GP-TRANSMISSION	135

TABLE OF CONTENTS

Name	Page
DIFFERENTIAL & BEVEL GEAR GP	138
DIFFERENTIAL GP	140
DRIVE GP-FLEXIBLE COUPLING	142
FILLER GP-POWER TRAIN OIL	143
FLANGE GP-WHEEL	146
HOUSING & FLANGE GP-AXLE	148
HOUSING GP-AXLE	150
LINES GP-POWER TRAIN OIL	154
MOUNTING GP-AXLE	155
MOUNTING GP-TRANSMISSION	156
PLANETARY GP-FINAL DRIVE	157
POWER TRAIN AR	159
SHAFT GP-DRIVE	160
SHAFT GP-INPUT	161
SHAFT GP-OUTPUT	165
TRANSMISSION & MOUNTING GP	168
TRANSMISSION AR-DIRECT DRIVE	169
TRANSMISSION GP-DIRECT DRIVE	170
VALVE GP-RELIEF	180
VALVE GP-TIRE	181
WHEEL & TIRE AR	182
WHEEL & TIRE GP	183
BRAKING SYSTEM	190
CONTROL GP-PARKING BRAKE	190
CONTROL GP-SERVICE BRAKE	192
CYLINDER GP-BRAKE	195
LEVER GP-HAND CONTROL	197
RESERVOIR GP-BRAKE	198
STEERING SYSTEM	200
AXLE GP-FRONT	200
KNOB GP-STEERING	202
LINES GP-STEERING	203
PUMP GP-METERING	208
STEERING COLUMN GP	209
FRAME AND BODY	210
BOX GP-BATTERY	210
COUNTERWEIGHT GP	211
EXTENSION GP-FENDER	215
FENDER GP-FRONT	216
FENDER GP-REAR	217
FLOORPLATE GP	219
FRAME AS-SWING	221
FRAME GP-LOADER	222
FRAME GP-SWING	223
GUARD GP-CYLINDER	225
GUARD GP-DRIVE SHAFT	231
GUARD GP-RADIATOR	232
HOOD & GUARD GP	233
HOOD GP-ENGINE	235
HYDRAULIC SYSTEM	237
ACCUMULATOR GP-RIDE CONTROL	237
CONTROL AR-RIDE	238
CONVERSION AR-CUSHION SWING	239
CONVERSION GP-HYD HAND CONTROL	241
COOLER GP-HYD & XMSN OIL	243
CYLINDER & LINES GP-THUMB	244
CYLINDER GP-BACKHOE BUCKET	246
CYLINDER GP-BOOM	248
CYLINDER GP-HYDRAULIC	250
CYLINDER GP-LIFT	252
CYLINDER GP-MULTIPURPOSE BUKT	253
CYLINDER GP-STABILIZER	254
CYLINDER GP-STICK	256
CYLINDER GP-THUMB	258
CYLINDER GP-TILT	259
DRIVE & MTG GP-PUMP	261
FASTENER GP-VALVE	262
FILTER GP-OIL	263
FITTING GP-HYDRAULIC	264
HYDRAULIC AR	265
KICKOUT & POSITIONER GP	266
KIT-RIDE CONTROL	268
LINES GP-BACKHOE AUXILIARY	271
LINES GP-BOOM	288
LINES GP-BUCKET	290
LINES GP-DRAIN	294
LINES GP-EXTENDABLE STICK	295
LINES GP-HYDRAULIC OIL COOLER	297
LINES GP-LIFT CYLINDER	299
LINES GP-LOADER AUXILIARY	301
LINES GP-MULTIPURPOSE BUCKET	303
LINES GP-PILOT	307
LINES GP-PUMP	309
LINES GP-RIDE CONTROL	311
LINES GP-STABILIZER	313
LINES GP-STICK	317
LINES GP-SWING	319
LINES GP-TILT CYLINDER	320
MANIFOLD GP-CONTROL	322
MANIFOLD GP-RIDE CONTROL	324
MOUNTING GP-BANK VALVE	325
MOUNTING GP-CYLINDER	327
MOUNTING GP-LINES	328
PUMP GP-PISTON	329
SHAFT GP-PUMP DRIVE	332
TANK & MTG GP-HYDRAULIC	333
VALVE AR-BANK 2	335
VALVE AR-BANK 3	335
VALVE AR-BANK 6	335
VALVE AR-BANK 7	336
VALVE AR-BANK 8	336
VALVE GP-BANK 2	337
VALVE GP-BANK 3	338
VALVE GP-BANK 6	339

TABLE OF CONTENTS

Name	Page
VALVE GP-BANK 7	341
VALVE GP-BANK 8	343
VALVE GP-CONTROL	345
VALVE GP-PUMP CONTROL	360
IMPLEMENTS	361
ARM GP-LIFT	361
BOOM GP	363
BRACE GP-LIFT CYLINDER	364
GUARD GP-BOOM	365
LINKAGE GP-BACKHOE BUCKET	366
LINKAGE GP-LOADER BUCKET	368
LOCK GP-TRANSPORT	369
MOUNTING GP-STICK	372
PAD & GUARD GP-STABILIZER	373
PAD & MTG GP-STABILIZER	378
PAD GP-STABILIZER	381
STABILIZER GP-BACKHOE	383
STICK AS	385
STICK GP	386
STICK GP-HOE	389
WORK TOOLS	391
BUCKET AR-MULTIPURPOSE	391
BUCKET AS-GENERAL PURPOSE	392
BUCKET AS-HOE	394
BUCKET GP-GENERAL PURPOSE	426
BUCKET GP-HOE	428
BUCKET GP-MULTIPURPOSE	463
BULLDOZER AS	465
CLAM AS-MULTIPURPOSE BUCKET	467
COUPLER AR-QUICK	468
COUPLER GP-QUICK	469
EDGE GP-CUTTING	478
FORK GP	479
MOUNTING GP-BUCKET	480
PIN GP-COUPLER	481
THUMB AR	483
THUMB GP	489
TOOTH GP-UNI	491
OPERATOR STATION	492
AIR CONDITIONER & MOUNTING GP	492
CAB AR-ENCLOSED ROPS	495
CAB GP	497
CANOPY AR-OPEN ROPS	499
CANOPY GP-OPEN ROPS	500
COMPARTMENT GP-LITERATURE	503
COMPRESSOR GP-REFRIGERANT	504
CONDENSER & MTG GP-REFRIGERANT	506
CONSOLE GP-OPERATOR	507
CONTROL & MTG GP-STABILIZER	513
CONTROL GP-HYDRAULIC HAND	515
CONTROL GP-HYDRAULIC LOCKOUT	531
CONTROL GP-HYDRAULIC PEDAL	532
CONTROL GP-STEERING	536
CONTROL GP-TRANSMISSION	538
COVER GP-WIPER MOTOR	540
DOOR GP-CAB	541
FLOOR MAT GP	545
HEATER GP-CAB	547
KIT-CAB WINDOW	553
LATCH GP-CAB DOOR & WINDOW	555
LEVER GP-GOVERNOR	557
LINER GP-CAB	558
LINES GP-HEATER	560
LINES GP-HEATER & AIR COND	561
MIRROR GP-REAR VIEW	563
MOTOR GP-WINDOW WIPER	565
MOUNTING GP-CAB	567
PEDAL GP-GOVERNOR	568
RADIO GP-COMMUNICATION	569
ROOF GP-CAB	570
SEAT BELT GP	573
SEAT GP	575
SEAT GP-SUSPENSION	578
SUSPENSION GP-SEAT	580
TACHOMETER GP-ELECTRIC	583
TRIM GP-CAB	584
WASHER GP-WINDOW	586
WINDOW GP-CAB	588
WINDOW GP-DOOR	598
WIPER & WASHER GP-WINDOW	600
WIPER GP-WINDOW	602
SERVICE EQUIPMENT AND SUPPLIES	604
FILM GP	604
INSTALLATION AR-WHEEL CHOCK	605
LINK GP-SHIPPING	606
LOCK GP-VANDALISM	607
PLATE & FILM GP	608
PROTECTION GP-VANDALISM	613
TRANSPORT AR-MACHINE	614
PART NUMBER INDEX	B1

GENERAL INFORMATION

1. MACHINE IDENTIFICATION

Caterpillar machines are identified by Product Identification Numbers (PIN). Some components included in a machine may be identified by Serial Numbers (S/N). Typical components that will be serialized include engines, transmissions, bulldozers, and rippers. The machine and engine are further identified by arrangement numbers and in some cases modification numbers. These numbers are shown on the product identification plate(s) and on the master plate in the operator's compartment.

Caterpillar dealers need all of these numbers to determine accurate parts identification.

SIS *New Feature*

Effective First Quarter 2001 the Caterpillar Product Identification Number (PIN) changed from 8 to 17 characters. In an effort to provide uniform equipment identification, Caterpillar and other construction equipment manufacturers are moving to comply with the latest version of the product identification numbering standard. Non-road machine PINs are defined by ISO 10261. The new PIN format will apply to all Caterpillar machines and generator sets. The PIN plates and frame marking will display the 17 character PIN. The new format will look like the following:

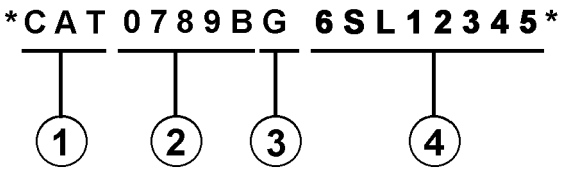

Where:

1. Caterpillar's World Manufacturing Code (characters 1-3)

2. Machine Descriptor (characters 4-8)

3. Check Character (character 9)

4. Machine Indicator Section (MIS) or Product Sequence Number (characters 10-17). These were previously referred to as the Serial Number.

Machines and generator sets produced before First Quarter 2001 will maintain their 8 character PIN format.

Components such as engines, transmissions, axles, etc. and work tools will continue to use an 8 character Serial Number (S/N).

2. ORDERING PARTS

⚠ WARNING

When replacement parts are required for this product Caterpillar recommends using Caterpillar replacement parts or parts with equivalent specifications including, but not limited to, physical dimensions, type, strength and material.

Failure to heed this warning can lead to premature failures, product damage, personal injury or death.

Quality Caterpillar replacement parts are available from Caterpillar dealers throughout the world. Their parts inventories are up to date and include all parts normally required to protect your investment in Caterpillar machines. Dealers may offer repair kits or remanufactured parts to allow selection of the most effective repair alternative for a particular situation. When ordering parts, your order should specify the quantity, part number, part name, and the serial number/product identification number of the machine for which the parts are needed.

3. PARTS MANUAL ORGANIZATION

Product information in this manual is presented as "information elements" that represent all of the components for the specific model. Engine Arrangement and Seat Group are examples of information elements. The information elements are organized alphabetically by part name and secondarily by part number within each major section of the manual.

4. TABLE OF CONTENTS

A table of contents (TOC) is found at the beginning of the manual. The TOC lists each section of the manual with a complete list of all information elements organized as they appear in the manual. Page numbers are provided for quick reference to detailed parts identification illustrations and serviceable consist lists.

5. MAINTENANCE PARTS INDEX

The Maintenance Parts Index, located near the beginning of the manual, references most frequently used maintenance part numbers, providing description, quantity, usage and page number. This information is organized alphabetically by part description.

6. INDEX

The index located near the front of the manual is an alphabetical listing of all information elements included in the manual. Page numbers are provided for quick reference to detailed parts identification illustrations and serviceable consist lists.

7. PART NUMBER INDEX

A numerical index listing all part numbers and the corresponding page number(s) appears at the back of the manual.

8. CAPTIONS

Captions located at the beginning of each information element identify the part number and part name along with additional descriptive information. PIN and S/N information found in each caption should be used to select correct information for a specific machine. Field replacement options, identification of optional attachment components, and where used ("part of") information is also provided.

The first line of a caption is shown in larger type font to indicate the beginning of an information element. Captions for additional pages that may be required to illustrate an information element will be shown in standard type font and will include the term *(contd.)* .

9. NON-SERVICED PARTS

In some instances it is necessary to display non-serviced parts that are a link to a lower level serviceable consist lists. These non-serviced part numbers are shown in *italic* type indicating that they are not available.

10. PARTS LIST REFERENCE NUMBERS

Numbers shown in the Ref No column correspond to numbers used in the associated graphic(s). An alphabetic suffix may be added to a reference number to identify lower level consist items. Numbers shown in the Graphic Ref column refer to the graphic number identifier displayed in the lower left corner of each illustration. The Graphic Ref number may be used in combination with the item Ref No to determine the correct part number. There may be intentional omission of a Ref No in a consist list as information is updated to reflect the latest serviceable part numbers.

11. INDENTED PART NAMES

When a part name is indented in a parts list, it is part of (included in) the group or assembly under which it is indented.

12. ILLUSTRATION REFERENCE LETTERS

When necessary, illustrations contain reference letters (A, B, C etc.) that are intended to track lines and harnesses from one point to another. They are also used to show where to reconnect illustrations that have been separated.

13. ABBREVIATIONS AND SYMBOLS

O.D. – Outside Diameter
I.D. – Inside Diameter
A – Not Part Of This Group
B – Use As Required
C – Change From Previous Type
D – Order By The Meter
E – Order By The Centimeter
F – Not Shown
G – Order By The Inch
I – Refer To Hydraulic Information System
M – Metric Part
R – Remfg Part May Be Available
Y – Separate Illustration
Z – Not Serviced Separately

SIS *New Feature*

14. DESCRIPTION OF TYPE CHANGES

Type - A type is defined as any configuration change that requires an additional Information Element for an Arrangement, Group, or Assembly. If serial number breaks for types are not available, a type # (Type 1, Type 2, etc.) will be displayed in the caption. These "type" changes are identified with a "C" note (change from previous type) in the Parts List. Only the "types" that apply to this Parts Manual will be included. Additional types may exist causing "C" notes to appear on an Information Element when no other types are shown.

15.<END>

This symbol indicates the end of an information element.

NOTE:

Continuing improvement and advancement of product design may cause changes to your machine which may not be included in this publication. Whenever a question arises regarding your Caterpillar product or this publication, please consult your Caterpillar dealer for the latest available information.

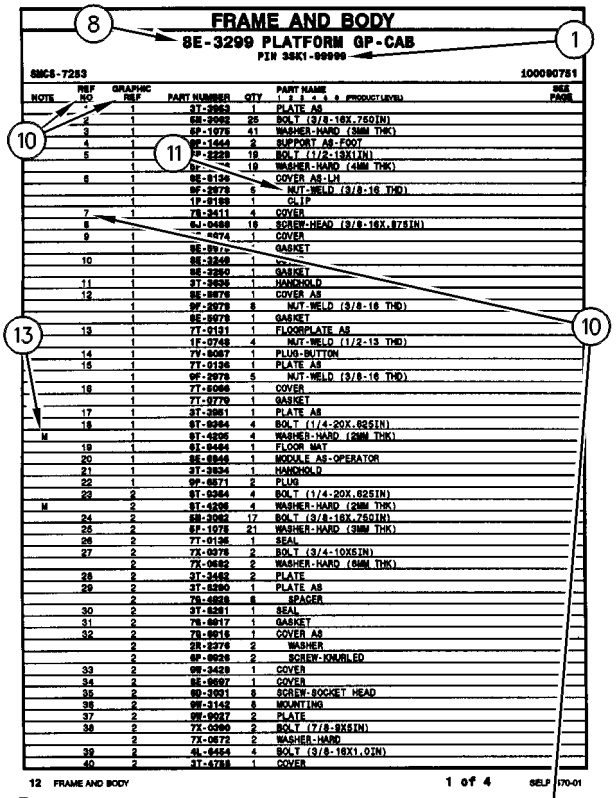

FRAME AND BODY

8E-3299 PLATFORM GP-CAB

PIN 3SK1-99999

SMCS-7283 100090751

NOTE	REF NO	GRAPHIC REF	PART NUMBER	QTY	PART NAME 1 2 3 4 5 6 (PRODUCT LEVEL)	SEE PAGE
	*	1	3T-3963	1	PLATE AS	
	2	1	6M-2062	25	BOLT (3/8-16X.750IN)	
	3	1	6P-1075	41	WASHER-HARD (3MM THK)	
	4	1	9F-1444	2	SUPPORT AS-FOOT	
	5	1	9P-2229	19	BOLT (1/2-13X1IN)	
		1	9P-[illegible]	19	WASHER-HARD (4MM THK)	
	6	1	8E-8136	*	COVER AS-LH	
		1	9F-2078	6	NUT-WELD (3/8-16 THD)	
		1	1P-8189	1	CLIP	
	7	1	7X-3411	4	COVER	
	8	1	6J-0468	18	SCREW-HEAD (3/8-16X.875IN)	
	9	1	[illegible]-8074	1	COVER	
		1	8E-8976	*	GASKET	
	10	1	8E-3248	1	[illegible]	
		1	8E-2260	1	GASKET	
	11	1	3T-3636	1	HANDHOLD	
	12	1	8E-8976	1	COVER AS	
		1	9F-2078	8	NUT-WELD (3/8-16 THD)	
		1	8E-8978	1	GASKET	
	13	1	7T-0131	1	FLOORPLATE AS	
		1	1F-0748	4	NUT-WELD (1/2-13 THD)	
	14	1	7Y-8067	1	PLUG-BUTTON	
	15	1	7T-0126	1	PLATE AS	
		1	9F-2078	5	NUT-WELD (3/8-16 THD)	
	16	1	7T-8066	1	COVER	
		1	7T-0779	1	GASKET	
	17	1	3T-3961	1	PLATE AS	
	18	1	9T-0264	4	BOLT (1/4-20X.625IN)	
M		1	9T-4295	4	WASHER-HARD (2MM THK)	
	19	1	9T-8464	1	FLOOR MAT	
	20	1	8E-8846	1	MODULE AS-OPERATOR	
	21	1	3T-3934	1	HANDHOLD	
	22	1	9F-8871	2	PLUG	
	23	2	9T-0264	4	BOLT (1/4-20X.625IN)	
M		2	9T-4295	4	WASHER-HARD (2MM THK)	
	24	2	6M-2062	17	BOLT (3/8-16X.750IN)	
	25	2	6P-1075	21	WASHER-HARD (3MM THK)	
	26	2	7T-0136	1	SEAL	
	27	2	7X-0078	2	BOLT (3/4-10X5IN)	
		2	7X-0682	2	WASHER-HARD (6MM THK)	
	28	2	3T-3482	2	PLATE	
	29	2	3T-8290	1	PLATE AS	
		2	7S-4828	6	SPACER	
	30	2	3T-8281	1	SEAL	
	31	2	7S-8817	1	GASKET	
	32	2	7S-8816	1	COVER AS	
		2	2R-2276	2	WASHER	
		2	9F-8826	2	SCREW-KNURLED	
	33	2	9M-3429	1	COVER	
	34	2	8E-8697	1	COVER	
	35	2	9D-3931	8	SCREW-SOCKET HEAD	
	36	2	9M-3142	8	MOUNTING	
	37	2	9M-9017	2	PLATE	
	38	2	7X-0360	2	BOLT (7/8-9X5IN)	
		2	7X-0672	2	WASHER-HARD	
	39	2	4L-8454	4	BOLT (3/8-16X1.0IN)	
	40	2	3T-4788	1	COVER	

12 FRAME AND BODY 1 of 4 SELP4570-01

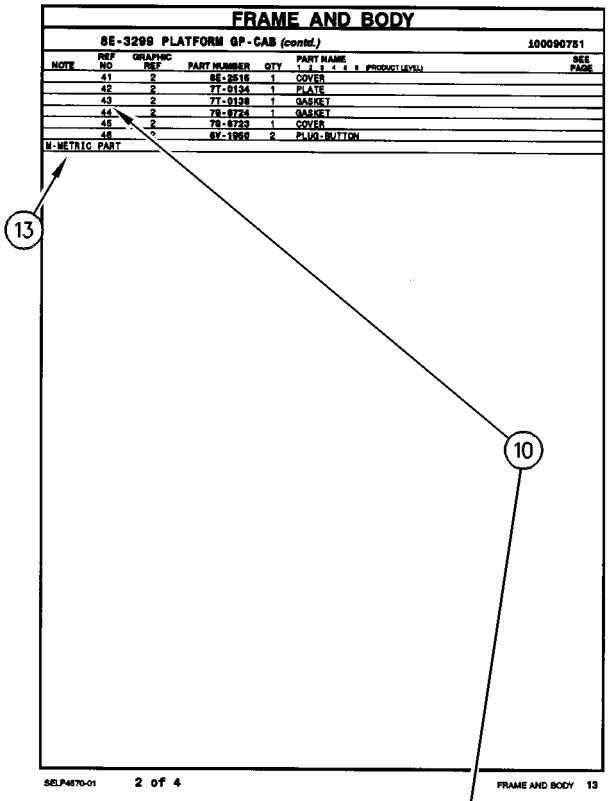

FRAME AND BODY

8E-3299 PLATFORM GP-CAB (contd.) 100090751

NOTE	REF NO	GRAPHIC REF	PART NUMBER	QTY	PART NAME 1 2 3 4 5 6 (PRODUCT LEVEL)	SEE PAGE
	41	2	8E-2516	1	COVER	
	42	2	7T-0134	1	PLATE	
	43	2	7T-0136	1	GASKET	
	44	2	7S-8724	1	GASKET	
	45	2	7S-8723	1	COVER	
	46	*	8Y-1950	2	PLUG-BUTTON	

M-METRIC PART

SELP4570-01 2 of 4 FRAME AND BODY 13

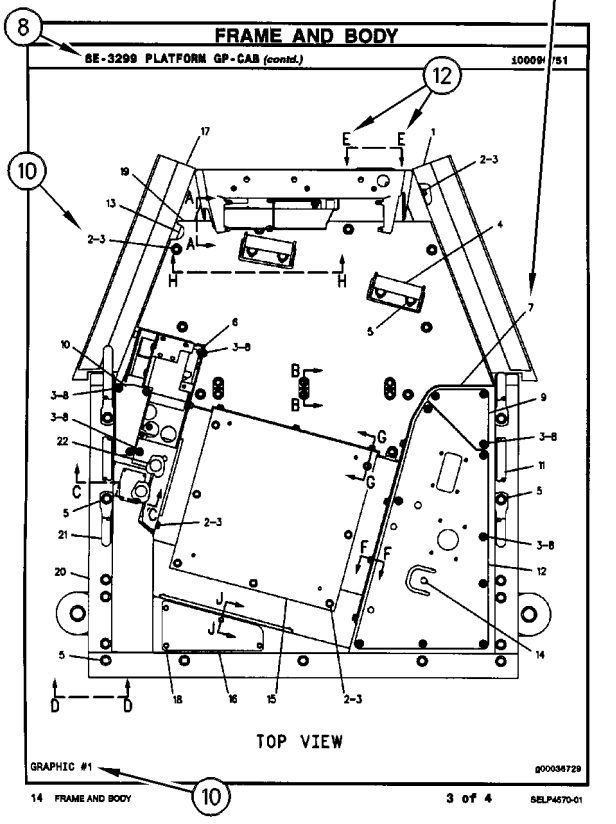

FRAME AND BODY

8E-3299 PLATFORM GP-CAB (contd.) 100090751

GRAPHIC #1 g00036729

14 FRAME AND BODY 3 of 4 SELP4570-01

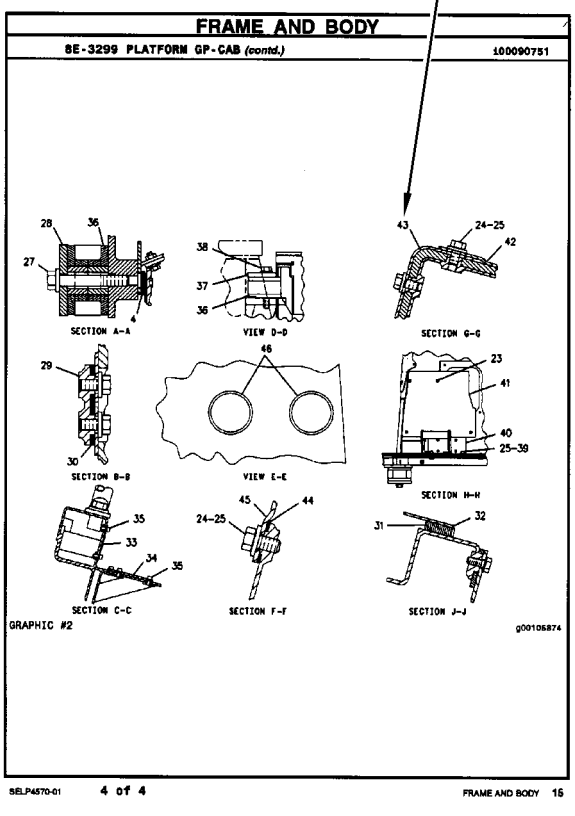

FRAME AND BODY

8E-3299 PLATFORM GP-CAB (contd.) 100090751

GRAPHIC #2 g00105874

SELP4570-01 4 of 4 FRAME AND BODY 15

REPAIR ALTERNATIVES

REMANUFACTURED COMPONENTS

As an option when making repairs consider Caterpillar Remanufactured Components. Components that are available through the Caterpillar Remanufactured Program are identified three ways in the parts book:

- with the letter R in the note field of the parts list
- with an R* at the beginning of the first line of the caption
- with an *R at the end of the first line of the caption

Typical components included in the Remanufacturing Program include:

ALTERNATORS
CONNECTING RODS
CRANKSHAFTS - UNDERSIZE
CRANKSHAFTS - UPGRADE TO NEW
CYLINDER HEADS
ELECTRONIC CONTROL MODULES (ECM)
ELECTRONIC SENSORS
FUEL INJECTORS
FUEL NOZZLES
FUEL PUMPS
GOVERNORS
OIL PUMPS
PISTONS
SHORT BLOCKS
STARTERS
TURBOCHARGERS - COMPLETE
TURBOCHARGER CARTRIDGES
WATER PUMPS

Caterpillar Remanufactured engines for many engine arrangements are also available.

SUPPLEMENTAL COOLANT ADDITIVES

CUSTOMER BENEFITS:

Protects against cavitation, foam, erosion, corrosion, and scale buildup in cooling systems.

- Provides measured coolant conditioner.

DESCRIPTION:

Additives deplete from the coolant with normal operation. For this reason, Supplemental Coolant Additives (SCA) must be added to all heavy duty coolants at regular intervals. In addition, when not using a fully formulated, pre-charged antifreeze, like Caterpillar's DEAC, an initial charge of SCA must be added to the cooling system. The amount of SCA added to the system is dependent on the capacity of the system.

The SCA for initial fill is provided as a liquid. SCA's for maintenance intervals are available in liquid form and as a spin-on element. (No Spin-on available for 3600 Family of Engines)

NOTE:

The amount of SCA added at initial fill is not the same as the amount added at maintenance intervals.

The coolant additive elements can be used with any ethylene or propylene glycol type antifreeze which meets ASTM D4985 or ASTM D5345 Specifications.

NOTE:

For use with standard heavy duty coolant only, not for use with Extended Life Coolant.

PARTS NEEDED:

Cooling System Capacity		Liquid SCA at Initial Fill	Liquid SCA at Maintenance*	Spin-on SCA Maintenance Element*
Liters	Gallons			
22-30	(6-8)	3P-2044 (1)	6V-3542 (1)	111-2370 (1)
30-38	(8-10)	3P-2044 (1) 6V-3542 (1)	111-2372 (1)	111-2369 (1)
38-49	(10-13)	3P-2044 (1) 8T-1589 (1)	111-2372 (1)	111-2369 (1)
49-64	(13-17)	3P-2044 (2)	8T-1589 (1)	9N-3368 (1)
64-83	(17-22)	3P-2044 (2) 8T-1589 (1)	111-2372 (1) 6V-3542 (1)	111-2371 (1)
83-114	(22-30)	3P-2044 (3) 8T-1589 (1)	3P-2044 (1)	9N-3718 (1)
114-163	(30-43)	3P-2044 (5)	3P-2044 (1) 6V-3542 (1)	111-2371 (2)
163-242	(43-64)	3P-2044 (8)	3P-2044 (2)	9N-3718 (2)

** Normal maintenance period is 250 hrs. See your Operation and Maintenance Manual for complete coolant maintenance instructions.*

( ) Indicates quantity required.

MAINTENANCE PARTS

DESCRIPTION	PART NUMBER	QTY	WHERE USED	PAGE
AIR INLET AND EXHAUST SYSTEM				
FILTER ELEMENT-AIR (PRIMARY)	293-4053	1	AIR CLEANER GP	55
FILTER ELEMENT-AIR (SECONDARY)	227-7449	1	AIR CLEANER GP	55
BASIC ENGINE				
GASKET (VALVE COVER)	225-6451	1	COVER GP-VALVE MECHANISM	11
PLUG-DRAIN (ENGINE OIL)	7C-0351	2	PAN GP-OIL	29
COOLING SYSTEM				
BELT-SERPENTINE (FAN)	212-9353	1	FAN GP-SUCTION	45
	324-3408	1	FAN GP-SUCTION	46
CAP AS-COOLANT TANK	251-3227	1	LINES GP-RADIATOR	49
HOSE-RADIATOR (UPPER)	325-5855	1	LINES GP-RADIATOR	49
REGULATOR GP-TEMPERATURE (INCLUDES CONNECTOR) (WATER)	254-2267	1	CONNECTION GP-WATER	42
ELECTRICAL AND STARTING SYSTEM				
BATTERY (12-VOLT, MAINTENANCE FREE)	230-6368	1	BATTERY & WIRING GP	79
		1	BATTERY & WIRING GP	81
BELT-DRIVE	9X-8139	1	LAMP GP-WARNING BEACON	90
FLASHER AS (12-VOLT) (HAZARD)	7T-4848	1	WIRING GP-PLATFORM	119
FUSE (10-AMPERE)	113-8490	11	PANEL GP-FUSE	97
	3K-8782	1	LAMP GP-WARNING BEACON	90
FUSE (15-AMPERE)	113-8491	13	PANEL GP-FUSE	97
FUSE (20-AMPERE)	113-8492	10	PANEL GP-FUSE	97
FUSE (40-AMPERE)	278-6377	1	RELAY GP	98
FUSE (40-AMPERE) (POWER, 2)	278-6377	1	RELAY GP	100
FUSE (60-AMPERE)	267-2701	2	RELAY GP	99
		1	WIRING GP-PLATFORM	119
FUSE (60-AMPERE) (POWER, 1)	267-2701	1	RELAY GP	100
GLOW PLUG (12-VOLT)	232-6662	4	GLOW PLUG GP	83
KEY (BATTERY DISCONNECT)	8H-5306	1	SWITCH GP-DISCONNECT	104
LAMP (12-VOLT) (COOLANT TEMPERATURE)	7X-9065	1	WIRING GP-CONSOLE	109
LAMP (12-VOLT) (FUEL LEVEL INDICATOR)	7X-9065	1	WIRING GP-CONSOLE	109
LAMP (12-VOLT) (OIL TEMPERATURE)	7X-9065	1	WIRING GP-CONSOLE	109
LAMP (12-VOLT, 21-WATT)	3C-4883	1	LIGHTING GP-FLOOD & SIGNAL	91
		1	LIGHTING GP-FLOOD & SIGNAL	93
	9W-3326	1	LIGHTING GP-FLOOD & SIGNAL	91
		1	LIGHTING GP-FLOOD & SIGNAL	93
LAMP (12-VOLT, 5-WATT)	084-4348	1	LIGHTING GP-FLOOD & SIGNAL	91
		1	LIGHTING GP-FLOOD & SIGNAL	93
LAMP (12-VOLT, 55-WATT)	9W-0607	1	LAMP GP-FLOOD	87
		1	LAMP GP-FLOOD	88
		1	LAMP GP-FLOOD	89
	9X-8118	1	LAMP GP-WARNING BEACON	90
LAMP GP (12-VOLT) (FAULT INDICATOR)	270-2728	1	WIRING GP-CONSOLE	109
LAMP GP-WARNING BEACON (MAGNETIC MOUNT)	185-7016	1	LAMP GP-WARNING BEACON	90

MAINTENANCE PARTS

DESCRIPTION	PART NUMBER	QTY	WHERE USED	PAGE
FUEL SYSTEM				
CAP-FUEL	284-9039	1	TANK GP-FUEL	77
FILTER AS-WATER SEP & FUEL	228-9130	1	PUMP GP-FUEL PRM & PRIM FILTER	75
FILTER ELEMENT-FUEL (WATER SEPARATOR)	156-1200	1	FILTER & LINES GP-FUEL	67
STRAINER-FUEL (FILLER NECK SCREEN)	180-3730	1	TANK GP-FUEL	77
HYDRAULIC SYSTEM				
CAP-FILL (HYDRAULIC OIL)	237-3797	1	TANK & MTG GP-HYDRAULIC	333
FILTER ELEMENT-BREATHER (HYDRAULIC TANK)	9R-9925	1	TANK & MTG GP-HYDRAULIC	333
FILTER-OIL (ULTRA HIGH EFFICIENCY)	126-1817	1	FILTER GP-OIL	263
LUBRICATION SYSTEM				
FILTER AS-ENGINE OIL	7W-2326	1	GAUGE GP-OIL LEVEL & FILLER	40
OPERATOR STATION				
BLADE AS-WIPER (500-MM) (REAR)	5C-8811	1	WIPER GP-WINDOW	602
BLADE AS-WIPER (600-MM) (FRONT)	101-0745	1	WIPER & WASHER GP-WINDOW	600
		1	WIPER GP-WINDOW	602
FILTER ELEMENT AS-AIR (CAB HEATER)	211-2661	1	AIR CONDITIONER & MOUNTING GP	492
		1	HEATER GP-CAB	547
FILTER ELEMENT-AIR (CAB HEATER, AIR CONDITIONER)	211-2660	1	HEATER GP-CAB	551
FILTER ELEMENT-AIR (RECIRCULATION)	211-2660	1	HEATER GP-CAB	549
LAMP (12-VOLT)	122-7137	1	TACHOMETER GP-ELECTRIC	583
	210-8754	1	LINER GP-CAB	558
RECEIVER-REFRIGERANT DRYER (AIR CONDITIONER)	283-4237	1	LINES GP-HEATER & AIR COND	561
SEAT BELT (2-IN)	206-1749	1	SEAT BELT GP	573
SEAT BELT (3-IN)	206-1750	1	SEAT BELT GP	574
POWER TRAIN				
BREATHER	7T-3251	1	TRANSMISSION GP-DIRECT DRIVE	170
BREATHER (AXLE, REAR)	197-9155	1	AXLE GP-REAR	129
BREATHER (FRONT AXLE)	253-5024	1	AXLE GP-DRIVE & STEERING	127
BREATHER (TRANSMISSION)	7T-3251	1	TRANSMISSION GP-DIRECT DRIVE	175
BREATHER AS (SIDE)	293-2147	1	TRANSMISSION GP-DIRECT DRIVE	176
FILTER-OIL (STANDARD EFFICIENCY)	119-4740	1	POWER TRAIN AR	159
PLUG AS-DRAIN (MAGNETIC) (AXLE)	152-6144	4	AXLE GP-DRIVE & STEERING	127
		1	DIFFERENTIAL & BEVEL GEAR GP	138
PLUG AS-DRAIN (MAGNETIC) (AXLE, REAR)	152-6144	4	AXLE GP-REAR	129
STRAINER (SUCTION)	7T-2651	1	CASE GP-TRANSMISSION	135
STRAINER (SUCTION) (TRANSMISSION)	7T-2651	1	CASE AS-TRANSMISSION	134

INDEX

Name	Page
A	
ACCUMULATOR GP-RIDE CONTROL–CHARGED	237
ACCUMULATOR GP-RIDE CONTROL–UNCHARGED	238
ACCUMULATOR-REFRIGERANT (AIR CONDITIONER)	561
AFTERCOOLER GP-AIR	53
AIR CLEANER GP	56
AIR CLEANER GP–BASIC	55
AIR COMPRESSOR GP (SUSPENSION SEAT)	580
AIR CONDITIONER & MOUNTING GP	492
ALTERNATOR GP-CHARGING	78
ARM GP-LIFT	361
AXLE GP-DRIVE & STEERING–FRONT	127
AXLE GP-FRONT	200
AXLE GP-REAR	129
B	
BACKHOE AR-EXTENDABLE STICK	1
BACKHOE AR-STANDARD STICK	1
BATTERY & WIRING GP–DISCONNECT	81
BATTERY & WIRING GP–HEAVY-DUTY	79
BATTERY (12-VOLT, MAINTENANCE FREE)	79
	81
BELT-DRIVE	90
BELT-SERPENTINE (FAN)	45
	46
BLADE AS-WIPER (500-MM) (REAR)	602
BLADE AS-WIPER (600-MM) (FRONT)	600
	602
BLOWER GP-CAB (HEATER)	549
	551
BOOM GP	363
BOX GP-BATTERY–WITH STORAGE	210
BRACE GP-LIFT CYLINDER	364
BREATHER	170
BREATHER (AXLE, REAR)	129
BREATHER (FRONT AXLE)	127
BREATHER (TRANSMISSION)	175
BREATHER AS (SIDE)	176
BREATHER GP–CRANKCASE	38
BUCKET AR-MULTIPURPOSE	391
BUCKET AS-GENERAL PURPOSE	392
	393
BUCKET AS-HOE	394
	395
	396
	397
	398
BUCKET AS-HOE–HEAVY-DUTY	399
	400
	401
	402
	403
	404
BUCKET AS-HOE–HEAVY-DUTY, PIN-LOCK	410
	411
	412
	413
	414
	415
BUCKET AS-HOE–HIGH CAPACITY, PIN-LOCK	416
	417
	418
	419
	420
	421
	422
	423
	424
	425
BUCKET AS-HOE–ROCK	405
	406
	407
	408
	409
BUCKET GP-GENERAL PURPOSE	426
	427
BUCKET GP-HOE	428
	429
	430
	431
	432
	444
BUCKET GP-HOE–HEAVY-DUTY	433
	434
	435
	436
	437
	438
	445
BUCKET GP-HOE–HEAVY-DUTY, PIN-LOCK	447
	448
	449
	450
	451
	452
BUCKET GP-HOE–HIGH CAPACITY, PIN-LOCK	453
	454
	455
	456
	457
	458
	459

INDEX

Name	Page
	460
	461
	462
BUCKET GP-HOE–ROCK	439
	440
	441
	442
	443
	446
BUCKET GP-MULTIPURPOSE	463
	464
BULLDOZER AS	465
	466

C

CAB AR-ENCLOSED ROPS–DOUBLE DOOR, WITH A/C	496
CAB AR-ENCLOSED ROPS–DOUBLE DOOR, WITHOUT A/C	495
CAB GP–DELUXE	497
CAMSHAFT GP	10
CANOPY AR-OPEN ROPS–WITH FRONT WINDOW	499
CANOPY GP-OPEN ROPS	500
	502
CANOPY GP-OPEN ROPS–WITHOUT FRONT WINDOW	501
CAP AS-COOLANT TANK	49
CAP-FILL (HYDRAULIC OIL)	333
CAP-FUEL	77
CASE AS-TRANSMISSION–FRONT	134
CASE AS-TRANSMISSION–REAR	132
CASE GP-TRANSMISSION–FRONT	135
CASE GP-TRANSMISSION–REAR	136
CHASSIS AR	2
CHOCK GP-WHEEL	605
CLAM AS-MULTIPURPOSE BUCKET	467
COMMON AR	2
COMPARTMENT GP-LITERATURE–STORAGE BOX	503
COMPRESSOR GP-REFRIGERANT	504
	505
CONDENSER & MTG GP-REFRIGERANT	506
CONNECTION GP-WATER	42
CONSOLE GP-OPERATOR–FRONT	511
CONSOLE GP-OPERATOR–LH	509
CONSOLE GP-OPERATOR–RH	507
CONTROL & MTG GP-STABILIZER	513
CONTROL AR-RIDE	238
CONTROL GP-GOVERNOR	65
CONTROL GP-HYDRAULIC HAND	527
	529
CONTROL GP-HYDRAULIC HAND–4-FUNCTION, EXCAVATOR	522
CONTROL GP-HYDRAULIC HAND–KIT, BACKHOE	525
CONTROL GP-HYDRAULIC HAND–LOADER	515
	517
CONTROL GP-HYDRAULIC HAND–STABILIZER	524
CONTROL GP-HYDRAULIC HAND–STANDARD	520
CONTROL GP-HYDRAULIC LOCKOUT	531
CONTROL GP-HYDRAULIC PEDAL–AUXILIARY	534
CONTROL GP-HYDRAULIC PEDAL–EXTENDABLE STICK, AUXILIARY	535
CONTROL GP-HYDRAULIC PEDAL–SINGLE FUNCTION, LH	532
CONTROL GP-HYDRAULIC PEDAL–SINGLE FUNCTION, RH	533
CONTROL GP-PARKING BRAKE	190
	191
CONTROL GP-SERVICE BRAKE	192
CONTROL GP-STEERING	536
CONTROL GP-STEERING–TILT	537
CONTROL GP-TRANSMISSION	538
CONTROL GP-TRANSMISSION (FORWARD, NEUTRAL, REVERSE)	538
CONVERSION AR-CUSHION SWING–KIT	239
CONVERSION GP-HYD HAND CONTROL–KIT, 4-FUNCTION, EXCAVATOR	241
COOLER GP-ENGINE OIL	43
COOLER GP-FLTR BASE & ENG OIL	44
COOLER GP-HYD & XMSN OIL	243
CORE AS-CONDENSER	506
CORE AS-OIL COOLER (11 PLATE)	243
CORE AS-OIL COOLER (HYDRAULIC) (18 PLATE)	243
COUNTERWEIGHT GP	211
	212
	213
	214
COUPLER AR-QUICK–PIN-LOCK	468
COUPLER GP-QUICK–BACKHOE	469
	470
	471
	472
	477
COUPLER GP-QUICK–CAT, CASE	474
COUPLER GP-QUICK–CAT, DEERE	475
COUPLER GP-QUICK–PIN-LOCK	473
COVER GP-INLET MANIFOLD	58
COVER GP-VALVE MECHANISM	11
COVER GP-WIPER MOTOR	540
CRANKSHAFT GP	13
	15
CYLINDER & LINES GP-THUMB	244
CYLINDER BLOCK GP	16

INDEX

Name	Page
	17
CYLINDER GP-BACKHOE BUCKET	246
CYLINDER GP-BOOM	248
CYLINDER GP-BRAKE–LH	195
CYLINDER GP-BRAKE–RH	196
CYLINDER GP-HYDRAULIC–RH	250
CYLINDER GP-LIFT	252
CYLINDER GP-MULTIPURPOSE BUKT	253
CYLINDER GP-STABILIZER–LH	254
CYLINDER GP-STABILIZER–RH	255
CYLINDER GP-STEERING	127
	200
CYLINDER GP-STICK	256
CYLINDER GP-STICK–EXTENDABLE	257
CYLINDER GP-THUMB	258
CYLINDER GP-TILT	259
CYLINDER HEAD GP	19
	20

D

DIFFERENTIAL & BEVEL GEAR GP–FRONT	138
DIFFERENTIAL GP–AXLE	141
DIFFERENTIAL GP–FRONT	140
DISTRIBUTION AR	2
	3
DOOR GP-CAB–LH	543
DOOR GP-CAB–RH	541
DRIVE & MTG GP-PUMP	261
DRIVE AR-BACKHOE LOADER– 2-WHEEL DRIVE, 2-WHEEL STEER	4
DRIVE AR-BACKHOE LOADER– ALL WHEEL DRIVE, 2-WHEEL STEER	4
DRIVE GP-FAN	21
DRIVE GP-FLEXIBLE COUPLING	142

E

EDGE GP-CUTTING	478
ENGINE AR	8
ENGINE AR-PRIMARY	9
EXTENSION GP-EXHAUST	60
EXTENSION GP-FENDER	215

F

FAN GP-SUCTION–WITH AIR CONDITIONER	45
FAN GP-SUCTION– WITHOUT AIR CONDITIONER	46
FASTENER GP-VALVE–BANK	262
FENDER GP-FRONT	216
FENDER GP-REAR	217
FILLER GP-ENGINE OIL	39
FILLER GP-POWER TRAIN OIL– 2-WHEEL DRIVE, STANDARD SHIFT	144
FILLER GP-POWER TRAIN OIL– ALL WHEEL DRIVE, STANDARD SHIFT	143
FILM (TEMPERATURE CONTROL)	492
	547
FILM GP	604
FILM-CERTIFICATION (OPS, READ OMM)	501
	502
FILM-IDENTIFICATION (CAT)	236
FILM-IDENTIFICATION (CATERPILLAR)	500
FILM-IDENTIFICATION (CATERPILLAR, FRONT)	495
	496
	499
FILM-IDENTIFICATION (FUSE, RELAY)	121
FILM-IDENTIFICATION (GROUP NO., SEQUENCE NO.)	549
	551
FILM-IDENTIFICATION (HYDRAULIC OIL)	192
FILM-IDENTIFICATION (STABILIZER CONTROL)	495
	496
	499
	500
FILM-IDENTIFICATION (START SWITCH, READ OMM)	609
	611
FILM-INSTRUCTION (AUXILIARY)	532
	533
	534
	535
FILM-INSTRUCTION (BACKHOE)	520
	525
	527
FILM-INSTRUCTION (BUCKET CONTROL)	335
FILM-INSTRUCTION (EXCAVATOR CONTROL)	241
	522
	529
FILM-INSTRUCTION (EXTENDABLE STICK PIN, READ OMM)	1
FILM-INSTRUCTION (EXTENDABLE STICK)	533
	535
FILM-INSTRUCTION (LINK)	366
FILM-INSTRUCTION (OIL FLOW DIRECTION)	271
	273
FILM-INSTRUCTION (PRESSURE WASHER)	193
FILM-INSTRUCTION (UNLOCK)	235
FILM-INSTRUCTION (WASHER FILL)	586
	600
FILM-WARNING (ACCUM, HIGH PRESS, READ OMM)	237
FILM-WARNING (ARM BRACE, READ OMM)	612
FILM-WARNING (CRUSH HAZARD, STAY BACK, INTL)	612

INDEX

Name	Page
FILM-WARNING (HIGH PRESSURE, READ OMM)	237
FILM-WARNING (HIGH PRESSURE, READ OMM, INTL)	268, 311
FILM-WARNING (HYD PRESS, READ OMM, INTL)	271, 275, 278
FILM-WARNING (HYD PRESS, READ OMM, U.S.)	271, 273, 275, 278, 281, 285
FILM-WARNING (NO WELD, NO DRILL, READ OMM)	501, 502, 610, 611
FILM-WARNING (PRODUCT LINK 300, U.S.)	85
FILM-WARNING (READ OMM)	612
FILM-WARNING (SEAT BELT)	612
FILTER & LINES GP-FUEL	67
FILTER AS-ENGINE OIL	40
FILTER AS-WATER SEP & FUEL	75
FILTER BASE & ENG OIL COOLER	44
FILTER ELEMENT AS-AIR (CAB HEATER)	492, 547
FILTER ELEMENT-AIR (CAB HEATER, AIR CONDITIONER)	551
FILTER ELEMENT-AIR (PRIMARY)	55
FILTER ELEMENT-AIR (RECIRCULATION)	549
FILTER ELEMENT-AIR (SECONDARY)	55
FILTER ELEMENT-BREATHER (HYDRAULIC TANK)	333
FILTER ELEMENT-FUEL (WATER SEPARATOR)	67
FILTER GP-FUEL	67
FILTER GP-OIL–HYDRAULIC	263
FILTER-OIL (STANDARD EFFICIENCY)	159
FILTER-OIL (ULTRA HIGH EFFICIENCY)	263
FINAL DRIVE GP	158
FITTING GP-HYDRAULIC–QUICK DISCONNECT	264
FLANGE GP-WHEEL	146, 147
FLASHER AS (12-VOLT) (HAZARD)	119
FLOOR MAT	545, 546
FLOOR MAT GP	545, 546
FLOORPLATE GP	219, 220
FLYWHEEL GP	22
FORK GP	479
FRAME AS-SWING	221
FRAME GP-LOADER–SINGLE TILT	222
FRAME GP-SWING	223
FUSE (10-AMPERE)	90, 97
FUSE (15-AMPERE)	97
FUSE (20-AMPERE)	97
FUSE (40-AMPERE)	98
FUSE (40-AMPERE) (POWER, 2)	100
FUSE (60-AMPERE)	99, 119
FUSE (60-AMPERE) (POWER, 1)	100

G

Name	Page
GASKET (VALVE COVER)	11
GAUGE GP-COOLANT TEMPERATURE (ENGINE)	109
GAUGE GP-FUEL LEVEL	109
GAUGE GP-OIL LEVEL & FILLER	40
GAUGE GP-OIL TEMPERATURE (TORQUE CONVERTER)	109
GAUGE-OIL LEVEL (DIPSTICK)	144
GAUGE-OIL LEVEL (DIPSTICK) (ENGINE)	40, 143
GAUGE-SIGHT (FLUID LEVEL)	333
GEAR GP-RING	148, 149
GEAR GP-RING (REAR AXLE)	129
GLOW PLUG (12-VOLT)	83
GLOW PLUG GP	83
GUARD GP-BOOM	365
GUARD GP-CYLINDER–STABILIZER	225, 227, 229
GUARD GP-DRIVE SHAFT	231
GUARD GP-RADIATOR	232

H

Name	Page
HARNESS AS-CONSOLE	109
HARNESS AS-ENGINE	112
HARNESS AS-FUEL TANK (FUEL SHUTOFF)	112
HARNESS AS-HEATER	551
HARNESS AS-HEATER & AIR COND	115, 549
HARNESS AS-HEATER & AIR COND (COMPRESSOR)	106
HARNESS AS-HEATER & AIR COND (PLATFORM)	106
HARNESS AS-HEATER & AIR COND (POWER)	106
HARNESS AS-LIGHTING (ROOF)	91

INDEX

Name	Page
	93
HARNESS AS-PLATFORM	119
HARNESS AS-POWER (DISTRIBUTION)	119
HARNESS AS-RADIO (PRODUCT LINK)	85
HARNESS AS-REAR (BACKUP ALARM)	124
HARNESS AS-RIDE CONTROL	125
	580
HARNESS AS-RIDE CONTROL (FRONT CONSOLE)	268
HARNESS AS-RIDE CONTROL (PLATFORM)	268
HARNESS AS-WIRING	117
HARNESS AS-WIRING (DIFFERENTIAL LOCK)	103
HARNESS AS-WIRING (KICKOUT, POSITIONER)	117
HEATER GP-CAB	547
	549
	551
HEATER GP-JACKET WATER	84
HEATER GP-JACKET WATER–120-VOLT	84
HOOD & GUARD GP	233
HOOD GP-ENGINE	235
	236
HOSE GP-RADIATOR	49
HOSE-RADIATOR (UPPER)	49
HOUSING & FLANGE GP-AXLE–LH	149
HOUSING & FLANGE GP-AXLE–RH	148
HOUSING GP-AXLE–LH	151
HOUSING GP-AXLE–REAR	152
HOUSING GP-AXLE–RH	150
HOUSING GP-FLYWHEEL	23
HOUSING GP-FRONT	24
HYDRAULIC AR	265

I

INDICATOR AS (BRAKE RESERVOIR)	198
INDICATOR AS (LH TURN SIGNAL, PARKING BRAKE)	119
INDICATOR AS (RH TURN SIGNAL, HIGH BEAM)	119
INDICATOR GP-AIR FILTER CHANGE	56
INSTALLATION AR-WHEEL CHOCK	605
INSTALLATION GP-COMMUNICATION–PRODUCT LINK 121SR	85

K

KEY (BATTERY DISCONNECT)	104
KICKOUT & POSITIONER GP	266
KIT-CAB WINDOW–REAR	553
KIT-HUB	147
KIT-RIDE CONTROL	268
KNOB GP-STEERING	202

L

LAMP (12-VOLT)	558
	583
LAMP (12-VOLT) (COOLANT TEMPERATURE)	109
LAMP (12-VOLT) (FUEL LEVEL INDICATOR)	109
LAMP (12-VOLT) (OIL TEMPERATURE)	109
LAMP (12-VOLT, 21-WATT)	91
	93
LAMP (12-VOLT, 5-WATT)	91
	93
LAMP (12-VOLT, 55-WATT)	87
	88
	89
	90
LAMP GP (12-VOLT) (FAULT INDICATOR)	109
LAMP GP-DOME (12-VOLT)	558
LAMP GP-FLOOD	87
	88
	89
LAMP GP-HEAD & SIGNAL (DIRECTIONAL)	91
	93
LAMP GP-SIGNAL (STOP, TAIL, TURN)	91
	93
LAMP GP-WARNING BEACON (MAGNETIC MOUNT)	90
LAMP GP-WARNING BEACON–AMBER, MAGNETIC MOUNT, ROTATING	90
LATCH GP-CAB DOOR & WINDOW	555
	556
LEVER GP-CONTROL VALVE (STABILIZER)	358
LEVER GP-GOVERNOR–HANDHELD	557
LEVER GP-HAND CONTROL	197
LIFTING GP-ENGINE	26
LIGHTING GP-FLOOD & SIGNAL–NACD	91
LIGHTING GP-FLOOD & SIGNAL–NACD, OPTIONAL	93
LIGHTING GP-WARNING BEACON–AMBER, MAGNETIC MOUNT, ROTATING	96
LINER GP-CAB	558
LINES GP-AIR	61
LINES GP-BACKHOE AUXILIARY	271
LINES GP-BACKHOE AUXILIARY–EXTENDABLE STICK, 1-WAY	278
LINES GP-BACKHOE AUXILIARY–KIT	273
	281
LINES GP-BACKHOE AUXILIARY–KIT, EXTENDABLE STICK	285
LINES GP-BACKHOE AUXILIARY–STANDARD STICK, 1-WAY	275
LINES GP-BOOM	288
LINES GP-BUCKET	1
LINES GP-BUCKET–EXTENDABLE STICK	292
LINES GP-BUCKET–STANDARD STICK	290

INDEX

Name	Page
LINES GP-DRAIN	294
LINES GP-EXTENDABLE STICK	295
LINES GP-FUEL	69
LINES GP-HEATER	560
LINES GP-HEATER & AIR COND	561
LINES GP-HYDRAULIC (BUCKET)	290 292
LINES GP-HYDRAULIC OIL COOLER	297
LINES GP-LIFT CYLINDER	299
LINES GP-LOADER AUXILIARY	301
LINES GP-MULTIPURPOSE BUCKET	303 305
LINES GP-PILOT–SIGNAL	307
LINES GP-POWER TRAIN COOLER	47
LINES GP-POWER TRAIN OIL–DIFFERENTIAL LOCK	154
LINES GP-PUMP	309
LINES GP-RADIATOR	49
LINES GP-RIDE CONTROL	311
LINES GP-STABILIZER	313 315
LINES GP-STEERING–2-WHEEL DRIVE	203
LINES GP-STEERING–ALL WHEEL DRIVE, 2-WHEEL STEER	205
LINES GP-STICK	317
LINES GP-SWING	319
LINES GP-TILT CYLINDER	320
LINK GP-SHIPPING	606
LINKAGE GP-BACKHOE BUCKET	366
LINKAGE GP-LOADER BUCKET	368
LOADER AR	4
LOCK GP-TRANSPORT–BACKHOE BUCKET	371
LOCK GP-TRANSPORT–BOOM	369
LOCK GP-VANDALISM	607

M

Name	Page
MANIFOLD GP-CONTROL–INLET	322 323
MANIFOLD GP-RIDE CONTROL	324
MIRROR GP-REAR VIEW–EXTERIOR	563
MIRROR GP-REAR VIEW–INTERIOR	564
MOTOR GP-WINDOW WIPER	565
MOTOR GP-WINDOW WIPER–FRONT	565
MOTOR GP-WINDOW WIPER–REAR	566
MOUNTING GP-AXLE	155
MOUNTING GP-BANK VALVE	325 326
MOUNTING GP-BUCKET–BACKHOE, QUICK COUPLER	480
MOUNTING GP-CAB	567
MOUNTING GP-CYLINDER–THUMB	327
MOUNTING GP-ENGINE	27
MOUNTING GP-ENGINE & XMSN	28
MOUNTING GP-LINES	328
MOUNTING GP-STICK	372
MOUNTING GP-TRANSMISSION	156
MOUNTING GP-WHEEL (FRONT)	183 185 187
MOUNTING GP-WHEEL (REAR)	184 186 188
MUFFLER GP–TURBOCHARGER	62

O

Name	Page
OPTION AR-BACKHOE–EXTENDABLE STICK, 5 FUNCTION	6
OPTION AR-BACKHOE–EXTENDABLE STICK, 6 FUNCTION	6
OPTION AR-BACKHOE–STANDARD STICK, 4 FUNCTION	5
OPTION AR-BACKHOE–STANDARD STICK, 5 FUNCTION	5
OPTION AR-CAB–STANDARD, CANOPY	6
OPTION AR-CAB–WITH AIR CONDITIONER	6
OPTION AR-CAB–WITH AIR CONDITIONER, HEATER	7
OPTION AR-MACHINE–SINGLE TILT, 2-WHL DRIVE, GP	7
OPTION AR-MACHINE–SINGLE TILT, 4-WHL DRIVE, GP	7
OPTION AR-MACHINE–SINGLE TILT, 4-WHL DRIVE, MP	7

P

Name	Page
PAD & GUARD GP-STABILIZER	374
PAD & GUARD GP-STABILIZER–STREET	373 376
PAD & MTG GP-STABILIZER	380
PAD & MTG GP-STABILIZER–STREET	378 379
PAD GP-STABILIZER–STREET	381 382
PADLOCK GP	607
PAN GP-OIL	29
PANEL GP-FUSE–INCLUDES RELAY	97
PEDAL GP-GOVERNOR	568
PIN GP-COUPLER–MACHINE	481
PIN GP-COUPLER–PIN-LOCK	482
PISTON & ROD GP	31
PLANETARY GP-FINAL DRIVE–AXLE	157 158
PLATE & FILM GP	608
PLATE & FILM GP–NACD	609
PLATE & FILM GP–OUTSIDE NACD	610
PLATE-IDENTIFICATION (CAT)	394 395

INDEX

Name	Page
	396
	397
	398
	399
	400
	401
	402
	403
	404
	405
	406
	407
	408
	409
PLATE-IDENTIFICATION (WORK TOOL)	426
	429
	430
	432
	433
	434
	435
	436
	437
	438
	439
	440
	441
	442
	443
PLUG AS-DRAIN (MAGNETIC) (AXLE)	127
	138
PLUG AS-DRAIN (MAGNETIC) (AXLE, REAR)	129
PLUG GP-CYLINDER HEAD	32
PLUG GP-ENGINE	33
	34
PLUG-DRAIN (ENGINE OIL)	29
POWER TRAIN AR–2-WHEEL DRIVE, 2-WHEEL STEER, STD SHIFT	159
POWER TRAIN AR–ALL WHEEL DRIVE, 2-WHEEL STEER, STD SHIFT	159
PROTECTION GP-VANDALISM–ROTATING GUARD	613
PULLEY GP-CRANKSHAFT	35
PUMP GP-ENGINE OIL	41
PUMP GP-FUEL INJECTION	71
	72
PUMP GP-FUEL PRM & PRIM FILTER–WITH WATER SEPARATOR	75
PUMP GP-METERING–HMU	208
PUMP GP-PISTON	329
	331
PUMP GP-TRANSMISSION	170
	175
PUMP GP-WATER	51

R

RADIATOR & HYD OIL COOLER GP	54
RADIATOR & HYD OIL COOLER GP–INCLUDES AFTCLR, XMSN COOLER	53
RADIATOR GP	53
RADIO GP-COMMUNICATION–PRODUCT LINK 121SR	569
RECEIVER-REFRIGERANT DRYER (AIR CONDITIONER)	561
REGULATOR GP-TEMPERATURE (INCLUDES CONNECTOR) (WATER)	42
RELAY AS (12-VOLT) (ALL WHEEL DRIVE)	102
RELAY AS (12-VOLT) (BACKUP ALARM)	119
RELAY AS (12-VOLT) (FAN SPEED)	107
	115
RELAY AS (12-VOLT) (HEATER, A/C POWER)	106
RELAY AS (12-VOLT) (HORN)	119
RELAY AS (12-VOLT) (IMPLEMENT DISABLE)	119
RELAY AS (12-VOLT) (POSITION LAMP)	119
RELAY AS (12-VOLT) (RIDE CONTROL)	125
	268
RELAY AS (12-VOLT) (START)	121
RELAY GP–POWER DISTRIBUTION	98
RELAY GP–POWER, 1	99
	100
RESERVOIR GP-BRAKE	198
	199
ROCKER ARM GP	36
ROOF GP-CAB	570
	572
ROTATING GP-PUMP	329

S

SEAT BELT (2-IN)	573
SEAT BELT (3-IN)	574
SEAT BELT GP–RETRACTABLE, 2-IN	573
SEAT BELT GP–RETRACTABLE, 3-IN	574
SEAT GP–CLOTH	576
SEAT GP–VINYL	575
SEAT GP-SUSPENSION–CLOTH	579
	580
SEAT GP-SUSPENSION–VINYL	578
	580
SENDER AS-FUEL LEVEL	77
SENDER AS-TEMPERATURE (12-VOLT)	171
SENDER AS-TEMPERATURE (12-VOLT) (TRANSMISSION OIL)	176
SENDER AS-TEMPERATURE (ENGINE COOLANT)	112
SENSOR GP-MOISTURE (WATER SEPARATOR)	75
SHAFT GP-AXLE	127
SHAFT GP-COUNTER	170

INDEX

Name	Page
SHAFT GP-COUNTER (TRANSMISSION)	175
SHAFT GP-DRIVE–FRONT	160
SHAFT GP-DRIVE–REAR	160
SHAFT GP-IDLER	170
SHAFT GP-IDLER (TRANSMISSION)	175
SHAFT GP-INPUT	161 163
SHAFT GP-OUTPUT–FRONT	166
SHAFT GP-OUTPUT–REAR	165 167
SHAFT GP-PUMP DRIVE	332
SOFTWARE GP-COMMUNICATION (PRODUCT LINK 121SR)	569
SPRING AS-GAS (ENGINE)	235
SPRING AS-GAS (LOCKABLE)	235
SPRING GP-GAS	209
SPRING GP-GAS (CAB DOOR)	541 543
STABILIZER GP-BACKHOE	383
STARTING MOTOR GP-ELECTRIC–12-VOLT	101
STEERING COLUMN GP–TILT	209
STICK AS	385
STICK GP	386
STICK GP-HOE	389
STRAINER (SUCTION)	135
STRAINER (SUCTION) (TRANSMISSION)	134
STRAINER-FUEL (FILLER NECK SCREEN)	77
SUSPENSION GP-SEAT	580
SWITCH AS (PARKING BRAKE)	190
SWITCH AS-FOOT (DIFFERENTIAL LOCK ON, OFF)	103
SWITCH AS-LIMIT (SERVICE BRAKE)	192
SWITCH AS-LIMIT (SUSPENSION SEAT)	580
SWITCH AS-MULTIFUNCTION (HD LIGHT, TURN SIG, WDO WIPER)	119
SWITCH AS-PRESSURE (ENGINE OIL)	105
SWITCH AS-PRESSURE (REFRIGERANT COMPR, HIGH SIDE)	106
SWITCH AS-PRESSURE (RIDE CONTROL)	125 268
SWITCH AS-PUSH BUTTON	538
SWITCH AS-PUSH BUTTON (PUSH BUTTON)	515 517
SWITCH AS-ROCKER (AIR CONDITIONER, HEATER SELECT)	106
SWITCH AS-ROCKER (ALL WHEEL DRIVE)	102
SWITCH AS-ROCKER (BLOWER FAN SPEED)	106 115
SWITCH AS-ROCKER (FLOODLIGHT, FRONT)	93
SWITCH AS-ROCKER (FLOODLIGHT, REAR)	91 93
SWITCH AS-ROCKER (FLOODLIGHTS, FRONT)	91
SWITCH AS-ROCKER (HAZARD WARNING LIGHTS)	119
SWITCH AS-ROCKER (HEATER)	115
SWITCH AS-ROCKER (HORN)	536 537
SWITCH AS-ROCKER (RIDE CONTROL)	125 268
SWITCH AS-ROCKER (STARTING AID)	109
SWITCH AS-ROCKER (TRANSMISSION NEUTRAL LOCK)	119
SWITCH AS-ROCKER (WARNING BEACON)	109
SWITCH AS-ROCKER (WIPER, WASHER, REAR)	602
SWITCH AS-ROLLER (KICKOUT, POSITIONER)	117
SWITCH AS-START (KEY)	109
SWITCH GP-ALL WHEEL DRIVE	102
SWITCH GP-DIFFERENTIAL LOCK–CENTER PIVOT MACHINE	103
SWITCH GP-DISCONNECT–BATTERY	104
SWITCH GP-PRESSURE	105
SWITCH GP-PUSH BUTTON (NEUTRALIZER, DOWNSHIFT)	515 517 538
SWITCH-TEMPERATURE (ENGINE COOLANT)	112
SWITCH-TEMPERATURE (FUEL)	72
SYNCHRONIZER GP	165 167

T

TACHOMETER GP-ELECTRIC	583
TANK & MTG GP-HYDRAULIC	333
TANK GP-EXPANSION (COOLANT)	49
TANK GP-FUEL	77
TANK GP-FUEL–INCLUDES STEP	76
TANK GP-HYDRAULIC	333
TANK GP-WINDOW WASHER	586 600
TEE AS-SWIVEL	299
THUMB AR–24-IN, HYD, HEAVY-DUTY	483
THUMB AR–24-IN, HYD, HEAVY-DUTY, WITH COUPLER	484
THUMB AR–24-IN, HYD, ROCK	485
THUMB AR–24-IN, HYD, ROCK, WITH COUPLER	486
THUMB AR–24-IN, HYD, WITH COUPLER	487
THUMB AR–30-IN, HYD, HEAVY-DUTY	488
THUMB GP–BACKHOE	489
THUMB GP–BACKHOE, COMMON	490
TIE ROD GP	127 200
TIP GP-BUCKET (SOIL)	459

INDEX

Name	Page
	460
	461
	462
TIP GP-PENETRATION	428
	429
	430
	431
	432
	433
	434
	435
	436
	437
	438
	439
	440
	441
	442
	443
	447
	448
	449
	450
	451
	452
	453
	454
	455
	456
	457
	458
TOOTH GP-UNI	491
TRANSMISSION & MOUNTING GP	168
TRANSMISSION AR-DIRECT DRIVE– 2-WHEEL DRIVE, STANDARD SHIFT	169
TRANSMISSION AR-DIRECT DRIVE– ALL WHEEL DRIVE, STANDARD SHIFT	169
TRANSMISSION GP-DIRECT DRIVE	175
TRANSMISSION GP-DIRECT DRIVE– ALL WHEEL DRIVE, STANDARD SHIFT	170
TRANSPORT AR-MACHINE– WITHOUT BUCKET	614
TRIM GP-CAB–OPEN ROPS	584
TURBOCHARGER GP	63

V

Name	Page
VALVE AR-BANK 2	335
VALVE AR-BANK 3	335
VALVE AR-BANK 6	335
VALVE AR-BANK 7	336
VALVE AR-BANK 8	336
VALVE AS-PRESSURE RELIEF (REFRIGERANT COMPRESSOR)	504
VALVE GP-BANK 2	337
VALVE GP-BANK 3	338
VALVE GP-BANK 6	339
VALVE GP-BANK 7	341
VALVE GP-BANK 8	343
VALVE GP-BRAKE CONTROL	192
VALVE GP-CHECK	358
VALVE GP-COMPENSATING	358
VALVE GP-CONTROL	358
VALVE GP-CONTROL–AUXILIARY	345
	349
VALVE GP-CONTROL–BOOM	356
VALVE GP-CONTROL–BUCKET	353
VALVE GP-CONTROL–EXTENDABLE STICK	350
VALVE GP-CONTROL–LIFT	348
VALVE GP-CONTROL–STABILIZER	358
VALVE GP-CONTROL–STICK	351
	352
VALVE GP-CONTROL–SWING	354
VALVE GP-CONTROL–TILT	346
	347
VALVE GP-CUSHION CROSSOVER RLF	239
VALVE GP-PUMP CONTROL– PRESSURE, FLOW COMPENSATOR	360
VALVE GP-RADIATOR DRAIN	53
VALVE GP-RELIEF	180
	349
	350
	353
	354
VALVE GP-RELIEF (160-BAR) (2321-PSI) (BOOM CYLINDER HEAD END)	356
VALVE GP-RELIEF (AUX, BUCKET CYL HEAD END)	345
VALVE GP-RELIEF (BOOM CYLINDER ROD END)	356
VALVE GP-RELIEF (DIRECT OPERATED)	322
	323
VALVE GP-RELIEF (STICK CYL, HEAD END, ROD END)	351
	352
VALVE GP-RELIEF (TILT CYLINDER HEAD END)	346
	347
VALVE GP-RELIEF (TILT CYLINDER ROD END)	346
	347
VALVE GP-RELIEF (TORQUE CONVERTER INLET)	170
	175
VALVE GP-SHUTOFF (HYDRAULIC TANK DRAIN)	294
VALVE GP-SOLENOID (12-VDC)	175
VALVE GP-SOLENOID (ACCUMULATOR)	324
VALVE GP-SOLENOID (ALL WHEEL DRIVE, CLUTCH ONE)	170

INDEX

Name	Page
VALVE GP-SOLENOID (FORWARD, REVERSE)	170, 175
VALVE GP-SOLENOID (RIDE CONTROL, SWITCH)	324
VALVE GP-TIRE	181, 182
VALVE MECHANISM GP	37

W

Name	Page
WASHER GP-WINDOW	586
WHEEL & TIRE AR–2-WHEEL DRIVE, BIAS	182
WHEEL & TIRE AR–4-WHEEL DRIVE	183
WHEEL & TIRE AR–4-WHEEL DRIVE, BIAS	182, 183
WHEEL & TIRE GP–FRONT	183, 185, 187
WHEEL & TIRE GP–FRONT, LH	184, 188
WHEEL & TIRE GP–FRONT, RH	184, 188
WHEEL & TIRE GP–LH	185, 186, 187, 189
WHEEL & TIRE GP–REAR	184, 186, 188
WHEEL & TIRE GP–RH	185, 186, 187, 189
WINDOW GP-CAB–LH	594
WINDOW GP-CAB–REAR	592
WINDOW GP-CAB–RH	596
WINDOW GP-CAB–UPPER, LH	588
WINDOW GP-CAB–UPPER, RH	590
WINDOW GP-DOOR–LH	598
WINDOW GP-DOOR–RH	599
WIPER & WASHER GP-WINDOW	600
WIPER GP-WINDOW	602
WIRING GP-AIR CONDITIONER	106
WIRING GP-CONSOLE–SIDE	109
WIRING GP-ENGINE	112
WIRING GP-HEATER	115
WIRING GP-KICKOUT & POSITIONER	117
WIRING GP-PLATFORM	119
WIRING GP-REAR–BACKUP ALARM	124
WIRING GP-RIDE CONTROL	125

MACHINE ARRANGEMENT

209-9929 BACKHOE AR-EXTENDABLE STICK

S/N: LMS1-UP

PART OF 357-0416, 357-0417 OPTION AR-BACKHOE

FOR USE WITH 209-9935—PAGE 336, 212-0206—PAGE 336

AN ATTACHMENT

SMCS-6504, 6533 **i03866874**

NOTE	PART NUMBER	QTY	PART NAME 1 2 3 4 5 6 (PRODUCT LEVEL)	SEE PAGE
Y	*209-9928*	1	BOOM GP	363
Y	**210-7088**	1	CYLINDER GP-BACKHOE BUCKET	246
Y	**210-7074**	1	CYLINDER GP-BOOM	248
Y	**210-7078**	1	CYLINDER GP-STICK	256
Y	*211-7601*	1	LINES GP-BOOM	288
Y	*246-9318*	1	LINES GP-BUCKET	292
Y	*211-7564*	1	LINES GP-STICK	317
Y	*213-6692*	1	LINKAGE GP-BACKHOE BUCKET	366
Y	*246-9309*	1	MOUNTING GP-LINES	328
Y	*209-9938*	1	MOUNTING GP-STICK	372
Y	*271-1404*	1	STICK GP	386
	259-1802	2	FILM-INSTRUCTION (EXTENDABLE STICK PIN, READ OMM)	
			(ON THE RH & LH SIDE OF THE MACHINE E-STICK. ALIGN THE EDGE OF THE DECAL WITH THE E-STICK PIN HOLE)	

Y-SEPARATE ILLUSTRATION

<END>

209-9924 BACKHOE AR-STANDARD STICK

S/N: LMS1-UP

PART OF 357-0413, 357-0414, 357-0415 OPTION AR-BACKHOE

FOR USE WITH 209-9934—PAGE 335, 209-9935—PAGE 336, 212-0206—PAGE 336

AN ATTACHMENT

SMCS-6502, 6504 **i03866873**

NOTE	PART NUMBER	QTY	PART NAME 1 2 3 4 5 6 (PRODUCT LEVEL)	SEE PAGE
Y	*209-9928*	1	BOOM GP	363
Y	**210-7088**	1	CYLINDER GP-BACKHOE BUCKET	246
Y	**210-7074**	1	CYLINDER GP-BOOM	248
Y	**210-7078**	1	CYLINDER GP-STICK	256
Y	*211-7601*	1	LINES GP-BOOM	288
Y	*246-9311*	1	LINES GP-BUCKET	290
Y	*211-7564*	1	LINES GP-STICK	317
Y	*213-6692*	1	LINKAGE GP-BACKHOE BUCKET	366
Y	*246-9309*	1	MOUNTING GP-LINES	328
Y	*271-8666*	1	STICK GP-HOE	389

Y-SEPARATE ILLUSTRATION

<END>

MACHINE ARRANGEMENT

291-9190 CHASSIS AR

S/N: LMS1-UP

PART OF 291-9185 COMMON AR

SMCS-7000 **i03879267**

NOTE	PART NUMBER	QTY	PART NAME 1 2 3 4 5 6 (PRODUCT LEVEL)	SEE PAGE
Y	*290-6789*	1	BATTERY & WIRING GP	81
Y	*253-0784*	1	BOX GP-BATTERY	210
Y	*306-7466*	1	FILM GP	604
Y	*293-5309*	1	FRAME GP-LOADER	222
Y	*251-4519*	1	FRAME GP-SWING	223
Y	*297-5300*	1	HOOD & GUARD GP	233
Y	*211-5182*	1	LOCK GP-TRANSPORT (BOOM)	369
Y	*266-5834*	1	STABILIZER GP-BACKHOE	383
Y	*297-5260*	1	TANK GP-FUEL	76
Y	*211-4283*	1	WIRING GP-REAR (BACKUP ALARM)	124

Y-SEPARATE ILLUSTRATION

<END>

291-9185 COMMON AR

S/N: LMS1-UP

SMCS-7000 **i03879906**

NOTE	PART NUMBER	QTY	PART NAME 1 2 3 4 5 6 (PRODUCT LEVEL)	SEE PAGE
Y	*291-9190*	1	CHASSIS AR	2
Y	*291-9188*	1	ENGINE AR	8
Y	*297-0165*	1	HYDRAULIC AR	265
Y	*318-9555*	1	LOADER AR	4

Y-SEPARATE ILLUSTRATION

<END>

357-1656 DISTRIBUTION AR

S/N: LMS1-UP

AN ATTACHMENT

SMCS-7000 **i03879961**

NOTE	PART NUMBER	QTY	PART NAME 1 2 3 4 5 6 (PRODUCT LEVEL)	SEE PAGE
Y	*357-0415*	1	OPTION AR-BACKHOE (STANDARD STICK, 5 FUNCTION)	5
Y	*357-0406*	1	OPTION AR-CAB (STANDARD, CANOPY)	6
Y	*357-0398*	1	OPTION AR-MACHINE (SINGLE TILT, 4-WHL DRIVE, GP)	7

Y-SEPARATE ILLUSTRATION

<END>

MACHINE ARRANGEMENT

357-1658 DISTRIBUTION AR

S/N: LMS1-UP

AN ATTACHMENT

SMCS-7000 **i03879959**

NOTE	PART NUMBER	QTY	PART NAME 1 2 3 4 5 6 (PRODUCT LEVEL)	SEE PAGE
Y	*357-0414*	1	OPTION AR-BACKHOE (STANDARD STICK, 5 FUNCTION)	5
Y	*357-0406*	1	OPTION AR-CAB (STANDARD, CANOPY)	6
Y	*357-0398*	1	OPTION AR-MACHINE (SINGLE TILT, 4-WHL DRIVE, GP)	7

Y-SEPARATE ILLUSTRATION

<END>

357-1659 DISTRIBUTION AR

S/N: LMS1-UP

AN ATTACHMENT

SMCS-7000 **i03879964**

NOTE	PART NUMBER	QTY	PART NAME 1 2 3 4 5 6 (PRODUCT LEVEL)	SEE PAGE
Y	*357-0415*	1	OPTION AR-BACKHOE (STANDARD STICK, 5 FUNCTION)	5
Y	*357-0406*	1	OPTION AR-CAB (STANDARD, CANOPY)	6
Y	*357-0398*	1	OPTION AR-MACHINE (SINGLE TILT, 4-WHL DRIVE, GP)	7

Y-SEPARATE ILLUSTRATION

<END>

357-1660 DISTRIBUTION AR

S/N: LMS1-UP

AN ATTACHMENT

SMCS-7000 **i03879963**

NOTE	PART NUMBER	QTY	PART NAME 1 2 3 4 5 6 (PRODUCT LEVEL)	SEE PAGE
Y	*357-0416*	1	OPTION AR-BACKHOE (EXTENDABLE STICK, 5 FUNCTION)	6
Y	*357-0406*	1	OPTION AR-CAB (STANDARD, CANOPY)	6
Y	*357-0398*	1	OPTION AR-MACHINE (SINGLE TILT, 4-WHL DRIVE, GP)	7

Y-SEPARATE ILLUSTRATION

<END>

MACHINE ARRANGEMENT

317-1454 DRIVE AR-BACKHOE LOADER–

ALL WHEEL DRIVE, 2-WHEEL STEER

S/N: LMS1-UP

PART OF 291-9187 POWER TRAIN AR

AN ATTACHMENT

SMCS-3268, 3278, 3282, 4304, 4313, 4334 **i03871536**

NOTE	PART NUMBER	QTY	PART NAME 1 2 3 4 5 6 (PRODUCT LEVEL)	SEE PAGE
Y	**230-5743**	1	AXLE GP-DRIVE & STEERING (FRONT)	127
Y	**230-5739**	1	AXLE GP-REAR	129
Y	*217-9672*	1	GUARD GP-DRIVE SHAFT	231
Y	*324-9742*	1	LINES GP-STEERING	205
Y	*221-0811*	1	MOUNTING GP-AXLE	155
Y	*216-4475*	1	SHAFT GP-DRIVE (REAR)	160
Y	*290-6784*	1	SWITCH GP-ALL WHEEL DRIVE	102

Y-SEPARATE ILLUSTRATION

<END>

324-9744 DRIVE AR-BACKHOE LOADER–

2-WHEEL DRIVE, 2-WHEEL STEER

S/N: LMS1-UP

PART OF 291-9186 POWER TRAIN AR

AN ATTACHMENT

SMCS-3268, 3278, 3282, 4304, 4313, 4334 **i03866781**

NOTE	PART NUMBER	QTY	PART NAME 1 2 3 4 5 6 (PRODUCT LEVEL)	SEE PAGE
Y	**230-5745**	1	AXLE GP-FRONT	200
Y	**230-5739**	1	AXLE GP-REAR	129
Y	*324-9741*	1	LINES GP-STEERING	203
Y	*221-0811*	1	MOUNTING GP-AXLE	155
Y	*216-4475*	1	SHAFT GP-DRIVE (REAR)	160

Y-SEPARATE ILLUSTRATION

<END>

318-9555 LOADER AR

S/N: LMS1-UP

PART OF 291-9185 COMMON AR

SMCS-6100 **i03879290**

NOTE	PART NUMBER	QTY	PART NAME 1 2 3 4 5 6 (PRODUCT LEVEL)	SEE PAGE
Y	*227-8378*	1	ARM GP-LIFT	361
Y	*218-0745*	1	BRACE GP-LIFT CYLINDER	364
Y	**215-7298**	2	CYLINDER GP-LIFT	252
Y	**206-3553**	1	CYLINDER GP-TILT	259
Y	*220-5973*	1	KICKOUT & POSITIONER GP	266
Y	*315-1554*	1	LINES GP-LIFT CYLINDER	299
Y	*246-5292*	1	LINES GP-TILT CYLINDER	320
Y	*297-2834*	1	LINKAGE GP-LOADER BUCKET	368
Y	*211-4262*	1	WIRING GP-KICKOUT & POSITIONER	117

Y-SEPARATE ILLUSTRATION

<END>

MACHINE ARRANGEMENT

357-0413 OPTION AR-BACKHOE—STANDARD STICK, 4 FUNCTION

S/N: LMS1-UP

AN ATTACHMENT

SMCS-7000 **i03865312**

NOTE	PART NUMBER	QTY	PART NAME 1 2 3 4 5 6 (PRODUCT LEVEL)	SEE PAGE
Y	*209-9924*	1	BACKHOE AR-STANDARD STICK	1
Y	*209-3370*	1	CONTROL GP-HYDRAULIC HAND	520
Y	*252-9986*	1	COUNTERWEIGHT GP (235-KG (515-LB))	214
Y	*209-9934*	1	VALVE AR-BANK 6	335
Y-SEPARATE ILLUSTRATION				

<END>

357-0414 OPTION AR-BACKHOE—STANDARD STICK, 5 FUNCTION

S/N: LMS1-UP

PART OF 357-1658 DISTRIBUTION AR

AN ATTACHMENT

SMCS-7000 **i03865316**

NOTE	PART NUMBER	QTY	PART NAME 1 2 3 4 5 6 (PRODUCT LEVEL)	SEE PAGE
Y	*209-9924*	1	BACKHOE AR-STANDARD STICK	1
Y	*209-3370*	1	CONTROL GP-HYDRAULIC HAND	520
Y	*252-9986*	1	COUNTERWEIGHT GP (235-KG (515-LB))	214
Y	*209-9935*	1	VALVE AR-BANK 7	336
Y-SEPARATE ILLUSTRATION				

<END>

357-0415 OPTION AR-BACKHOE—STANDARD STICK, 5 FUNCTION

S/N: LMS1-UP

PART OF 357-1656, 357-1659 DISTRIBUTION AR

AN ATTACHMENT

SMCS-7000 **i03880396**

NOTE	PART NUMBER	QTY	PART NAME 1 2 3 4 5 6 (PRODUCT LEVEL)	SEE PAGE
Y	*209-9924*	1	BACKHOE AR-STANDARD STICK	1
Y	*209-3370*	1	CONTROL GP-HYDRAULIC HAND	520
Y	*252-9984*	1	COUNTERWEIGHT GP (485-KG (1070-LB))	213
Y	*262-4212*	1	LINES GP-BACKHOE AUXILIARY	275
Y	*209-9935*	1	VALVE AR-BANK 7	336
Y-SEPARATE ILLUSTRATION				

<END>

MACHINE ARRANGEMENT

357-0416 OPTION AR-BACKHOE—EXTENDABLE STICK, 5 FUNCTION

S/N: LMS1-UP
PART OF 357-1660 DISTRIBUTION AR
AN ATTACHMENT

SMCS-7000 **i03880397**

NOTE	PART NUMBER	QTY	PART NAME 1 2 3 4 5 6 (PRODUCT LEVEL)	SEE PAGE
Y	*209-9929*	1	BACKHOE AR-EXTENDABLE STICK	1
Y	*209-3370*	1	CONTROL GP-HYDRAULIC HAND	520
Y	*252-9984*	1	COUNTERWEIGHT GP (485-KG (1070-LB))	213
Y	*209-9935*	1	VALVE AR-BANK 7	336

Y-SEPARATE ILLUSTRATION

<END>

357-0417 OPTION AR-BACKHOE—EXTENDABLE STICK, 6 FUNCTION

S/N: LMS1-UP
AN ATTACHMENT

SMCS-7000 **i03880832**

NOTE	PART NUMBER	QTY	PART NAME 1 2 3 4 5 6 (PRODUCT LEVEL)	SEE PAGE
Y	*209-9929*	1	BACKHOE AR-EXTENDABLE STICK	1
Y	*209-3370*	1	CONTROL GP-HYDRAULIC HAND	520
Y	*252-9984*	1	COUNTERWEIGHT GP (485-KG (1070-LB))	213
Y	*262-4213*	1	LINES GP-BACKHOE AUXILIARY	278
Y	*212-0206*	1	VALVE AR-BANK 8	336

Y-SEPARATE ILLUSTRATION

<END>

357-0406 OPTION AR-CAB—STANDARD, CANOPY

S/N: LMS1-UP
PART OF 357-1656, 357-1658, 357-1659, 357-1660 DISTRIBUTION AR
AN ATTACHMENT

SMCS-7000, 7301 **i03879955**

NOTE	PART NUMBER	QTY	PART NAME 1 2 3 4 5 6 (PRODUCT LEVEL)	SEE PAGE
Y	*291-9191*	1	CANOPY GP-OPEN ROPS	500

Y-SEPARATE ILLUSTRATION

<END>

357-0407 OPTION AR-CAB—WITH AIR CONDITIONER

S/N: LMS1-UP
AN ATTACHMENT

SMCS-7000, 7301 **i03880401**

NOTE	PART NUMBER	QTY	PART NAME 1 2 3 4 5 6 (PRODUCT LEVEL)	SEE PAGE
Y	*291-9195*	1	CAB AR-ENCLOSED ROPS (DOUBLE DOOR, WITH A/C)	496

Y-SEPARATE ILLUSTRATION

<END>

MACHINE ARRANGEMENT

357-0408 OPTION AR-CAB—WITH AIR CONDITIONER, HEATER

S/N: LMS1-UP

AN ATTACHMENT

SMCS-7000, 7301 **i03879957**

NOTE	PART NUMBER	QTY	PART NAME 1 2 3 4 5 6 (PRODUCT LEVEL)	SEE PAGE
Y	*211-4286*	1	BATTERY & WIRING GP (HEAVY-DUTY)	79
Y	*291-9195*	1	CAB AR-ENCLOSED ROPS (DOUBLE DOOR, WITH A/C)	496
Y	*332-7131*	1	CONTROL AR-RIDE	238
Y	*248-2214*	1	HEATER GP-JACKET WATER	84

Y-SEPARATE ILLUSTRATION

<END>

357-0395 OPTION AR-MACHINE—SINGLE TILT, 2-WHL DRIVE, GP

S/N: LMS1-UP

AN ATTACHMENT

SMCS-7000 **i03865342**

NOTE	PART NUMBER	QTY	PART NAME 1 2 3 4 5 6 (PRODUCT LEVEL)	SEE PAGE
Y	*291-9186*	1	POWER TRAIN AR	159
Y	*209-9943*	1	VALVE AR-BANK 2	335
Y	*282-3853*	1	WHEEL & TIRE AR (2-WHEEL DRIVE, BIAS)	182

Y-SEPARATE ILLUSTRATION

<END>

357-0398 OPTION AR-MACHINE—SINGLE TILT, 4-WHL DRIVE, GP

S/N: LMS1-UP

PART OF 357-1656, 357-1658, 357-1659, 357-1660 DISTRIBUTION AR

AN ATTACHMENT

SMCS-7000 **i03907492**

NOTE	PART NUMBER	QTY	PART NAME 1 2 3 4 5 6 (PRODUCT LEVEL)	SEE PAGE
Y	*291-9187*	1	POWER TRAIN AR (ALL WHEEL DRIVE, 2-WHEEL STEER)	159
Y	*209-9943*	1	VALVE AR-BANK 2	335
Y	*282-3854*	1	WHEEL & TIRE AR (4-WHEEL DRIVE, BIAS)	182

Y-SEPARATE ILLUSTRATION

<END>

357-0399 OPTION AR-MACHINE—SINGLE TILT, 4-WHL DRIVE, MP

S/N: LMS1-UP

AN ATTACHMENT

SMCS-7000 **i03865338**

NOTE	PART NUMBER	QTY	PART NAME 1 2 3 4 5 6 (PRODUCT LEVEL)	SEE PAGE
Y	*291-9186*	1	POWER TRAIN AR	159
Y	*317-1463*	1	VALVE AR-BANK 3	335
Y	*282-3854*	1	WHEEL & TIRE AR (4-WHEEL DRIVE, BIAS)	182

Y-SEPARATE ILLUSTRATION

<END>

ENGINE ARRANGEMENT

291-9188 ENGINE AR

S/N: LMS1-UP
70 BRAKE KW (92 BHP)
PART OF 291-9185 COMMON AR

SMCS-1000 **i03879293**

NOTE	PART NUMBER	QTY	PART NAME 1 2 3 4 5 6 (PRODUCT LEVEL)	SEE PAGE
Y	*298-5661*	1	AIR CLEANER GP (TURBO)	56
Y	*323-9307*	1	BREATHER GP	38
Y	*206-1640*	1	CONTROL GP-GOVERNOR	65
Y	**322-0590**	1	ENGINE AR-PRIMARY	9
Y	*210-6807*	1	EXTENSION GP-EXHAUST	60
Y	*297-8488*	1	FILTER & LINES GP-FUEL	67
Y	*326-3185*	1	GAUGE GP-OIL LEVEL & FILLER	40
Y	*335-9162*	1	LINES GP-AIR	61
Y	*315-1369*	1	LINES GP-POWER TRAIN COOLER	47
Y	*304-4022*	1	LINES GP-RADIATOR	49
Y	*322-5799*	1	MOUNTING GP-ENGINE & XMSN	28
Y	*298-5629*	1	MUFFLER GP (TURBOCHARGER)	62
Y	*309-9106*	1	RADIATOR & HYD OIL COOLER GP	54
Y	*290-6752*	1	WIRING GP-ENGINE	112

Y-SEPARATE ILLUSTRATION

ENGINE ARRANGEMENT

322-0590 ENGINE AR-PRIMARY

S/N: C4Z1-UP
70 BRAKE KW (94 BHP) AT 2200 RPM
PART OF 291-9188 ENGINE AR

SMCS-1000 **i03899009**

NOTE	PART NUMBER	QTY	PART NAME 1 2 3 4 5 6 (PRODUCT LEVEL)	SEE PAGE
Y	*317-9776*	1	ALTERNATOR GP-CHARGING	78
Y	*326-9005*	1	CAMSHAFT GP	10
Y	*316-6941*	1	CONNECTION GP-WATER	42
Y	*323-9153*	1	COOLER GP-FLTR BASE & ENG OIL	44
Y	*329-0129*	1	COVER GP-INLET MANIFOLD	58
Y	*326-9008*	1	COVER GP-VALVE MECHANISM	11
Y	*326-9000*	1	CRANKSHAFT GP	15
Y	*326-8999*	1	CYLINDER BLOCK GP	16
Y	*326-9003*	1	CYLINDER HEAD GP	20
Y	*303-5770*	1	DRIVE GP-FAN	21
Y	*309-7555*	1	FILLER GP-ENGINE OIL	39
Y	*303-5768*	1	FLYWHEEL GP	22
Y	*315-3418*	1	GLOW PLUG GP	83
Y	*303-5767*	1	HOUSING GP-FLYWHEEL	23
Y	*304-8760*	1	HOUSING GP-FRONT	24
Y	*326-9013*	1	LIFTING GP-ENGINE	26
Y	*326-9012*	1	LINES GP-FUEL	69
Y	*303-5778*	1	MOUNTING GP-ENGINE	27
Y	*322-9476*	1	PAN GP-OIL	29
Y	*326-9002*	1	PISTON & ROD GP	31
Y	*298-5129*	1	PLUG GP-CYLINDER HEAD	32
Y	*298-5131*	1	PLUG GP-ENGINE (THREADED)	33
Y	*304-8761*	1	PLUG GP-ENGINE	34
Y	*360-7347*	1	PULLEY GP-CRANKSHAFT	35
Y	*298-5112*	1	PUMP GP-ENGINE OIL	41
Y	*326-9006*	1	PUMP GP-FUEL INJECTION	72
Y	*315-3411*	1	PUMP GP-WATER	51
Y	*303-5769*	1	STARTING MOTOR GP-ELECTRIC	101
Y	*326-9896*	1	SWITCH GP-PRESSURE	105
Y	*326-9010*	1	TURBOCHARGER GP	63
Y	*326-9004*	1	VALVE MECHANISM GP	37
	321-7782	1	CYLINDER BLOCK GP-SHORT	

Y-SEPARATE ILLUSTRATION

BASIC ENGINE

326-9005 CAMSHAFT GP

S/N: C4Z1-UP

PART OF 322-0590 ENGINE AR-PRIMARY

SMCS-1210, 1211, 1212 **i03796634**

NOTE	REF NO	GRAPHIC REF	PART NUMBER	QTY	PART NAME 1 2 3 4 5 6 (PRODUCT LEVEL)	SEE PAGE
	1	1	**278-5126**	8	PUSHROD	
	2	1	**315-3384**	8	TAPPET	
	3	1	**350-2666**	1	CAMSHAFT AS	
	3A	1	**1B-8736**	1	KEY-WOODRUFF	

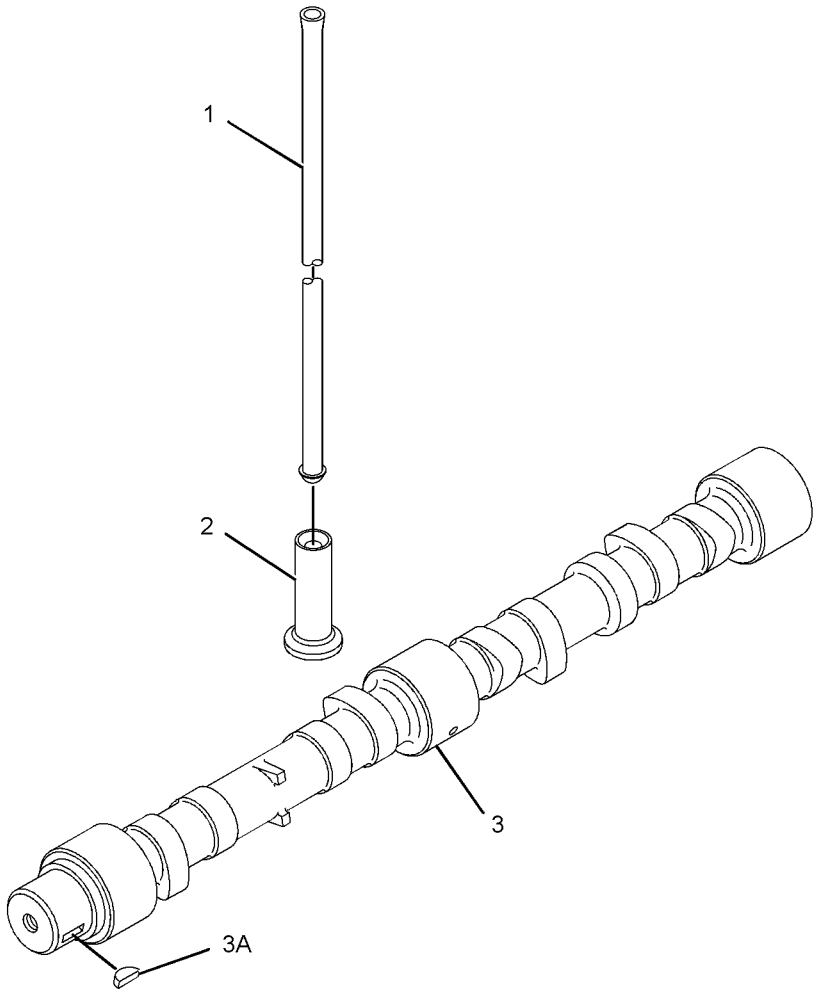

GRAPHIC #1 **<END>** g01611455

BASIC ENGINE

326-9008 COVER GP-VALVE MECHANISM

S/N: C4Z1-UP

PART OF 322-0590 ENGINE AR-PRIMARY

SMCS-1107, 1120 **i03127792**

NOTE	REF NO	GRAPHIC REF	PART NUMBER	QTY	PART NAME 1 2 3 4 5 6 (PRODUCT LEVEL)	SEE PAGE
	1	1	**6I-0846**	3	BOLT (M6X1X14-MM)	
	2	1	**6I-0917**	1	BOLT (M6X1X25-MM)	
	3	1	**100-4838**	2	BOLT (M6X20-MM)	
M	4	1	**100-4841**	2	BOLT (M6X1X10-MM)	
	5	1	**230-9127**	1	COVER	
	6	1	**237-0769**	1	SHIELD-HEAT	
	7	1	**287-8573**	1	PIPE-BREATHER	
	8	1	**308-1792**	1	COVER GP-VALVE MECHANISM	
	8A	1	**225-6451**	1	GASKET (VALVE COVER)	
	8B	1	**225-6456**	1	SPRING	
	8C	1	**225-6461**	1	CAP	
	8D	1	**225-6464**	1	DIAPHRAGM (CRANKCASE PRESSURE CONTACTOR)	
	8E	1	**225-6477**	1	PLATE	
	8F	1	**225-6478**	4	SCREW-MACHINE	
	8G	1	**225-6479**	1	CAP	

M-METRIC PART

326-9008 **COVER GP-VALVE MECHANISM** *(contd.)* **i03127792**

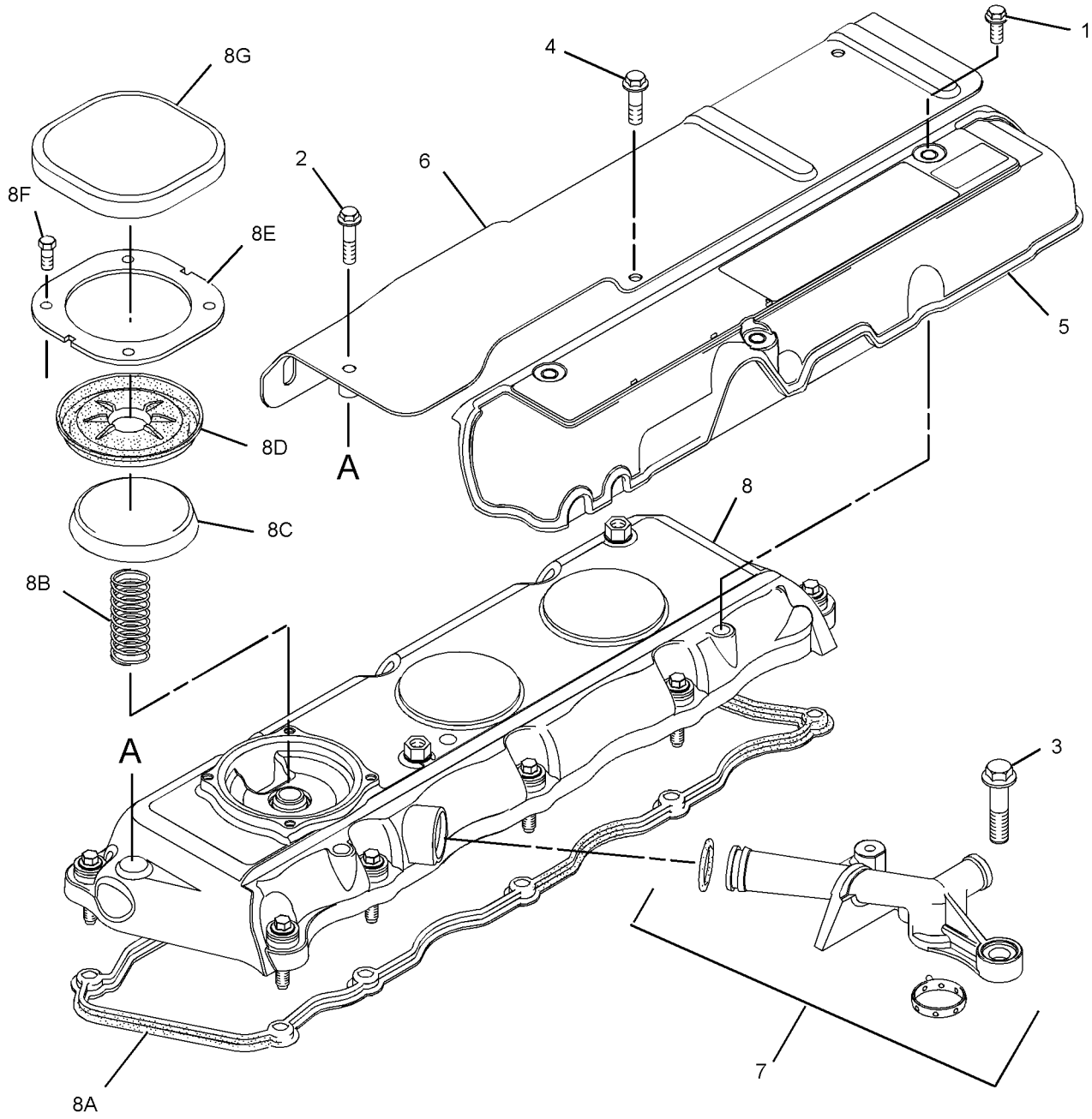

GRAPHIC #1 **<END>** g01615434

BASIC ENGINE

232-7400 CRANKSHAFT GP

S/N: C4Z1-UP

PART OF 326-9000 CRANKSHAFT GP

SMCS-1202, 1203, 1204, 1230, 1231, 1232 **i03775494**

NOTE	REF NO	GRAPHIC REF	PART NUMBER	QTY	PART NAME 1 2 3 4 5 6 (PRODUCT LEVEL)	SEE PAGE
	1	1	**1B-8736**	1	KEY-WOODRUFF	
	2	1	**225-7772**	1	BEARING SET-MAIN (STANDARD)	
AB		1	**233-3785**		KIT-CRANKSHAFT BEARING (0.020-IN US)	
AB		1	**233-3784**		KIT-CRANKSHAFT BEARING (0.010-IN US)	
AB		1	**233-3786**		KIT-CRANKSHAFT BEARING (0.030-IN US)	
	3	1	**032-9090**	2	WASHER-THRUST (STANDARD-UPPER)	
AB		1	**067-6873**		WASHER-THRUST (0.18-MM OS)	
	4	1	**032-9091**	2	WASHER-THRUST (STANDARD-LOWER)	
AB		1	**067-6874**		WASHER-THRUST (0.18-MM OS)	
	5	1	**353-2205**	1	KIT-ROD BEARING	
AB		1	**353-2206**		KIT-ROD BEARING (0.25-MM US)	
AB		1	**353-2207**		KIT-ROD BEARING (0.5-MM US)	
AB		1	**353-2208**		KIT-ROD BEARING (0.75-MM US)	

A-NOT PART OF THIS GROUP
B-USE AS REQUIRED

232-7400 CRANKSHAFT GP *(contd.)* **i03775494**

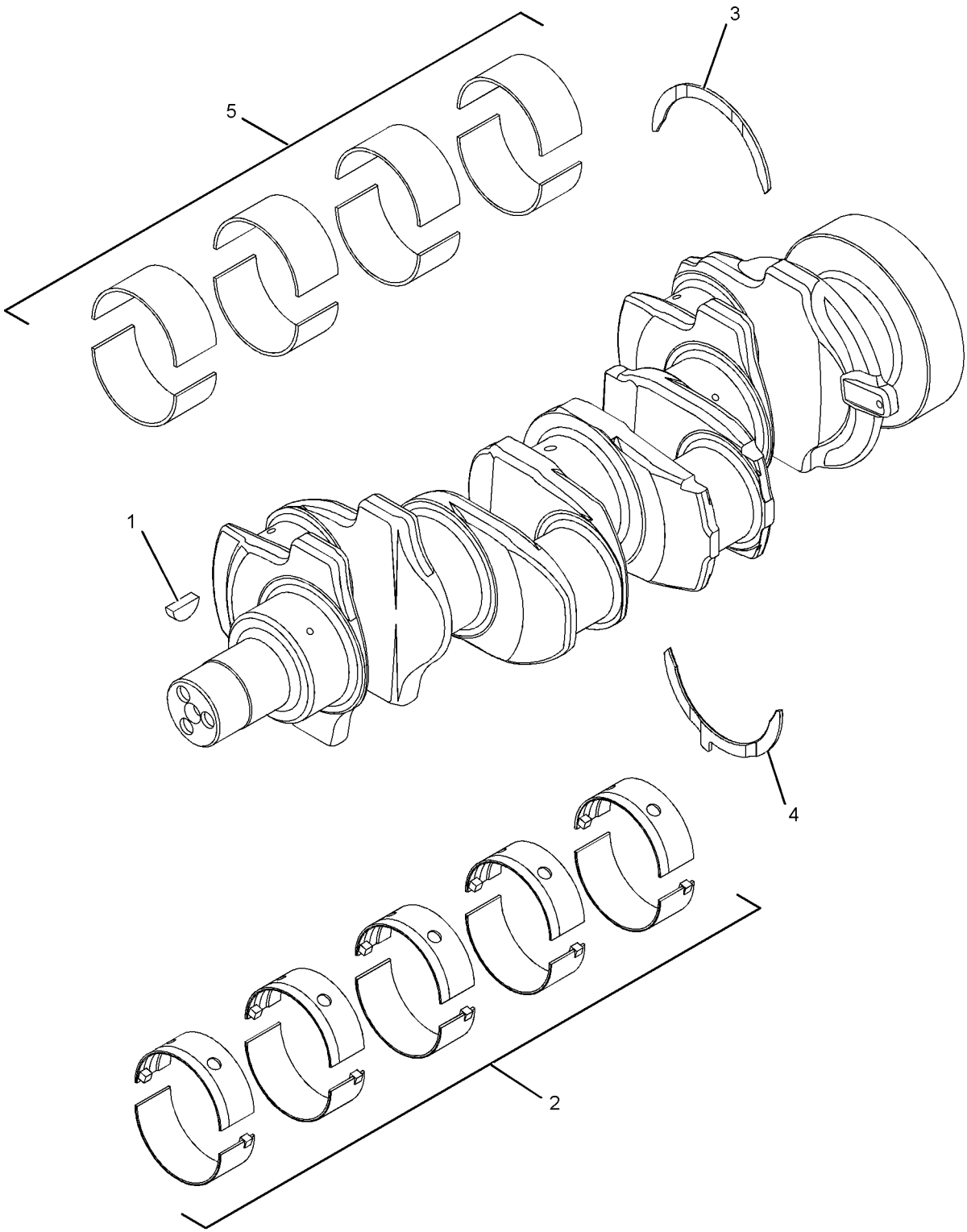

GRAPHIC #1 **<END>** g01369317

326-9000 CRANKSHAFT GP

S/N: C4Z1-UP

PART OF 322-0590 ENGINE AR-PRIMARY

SMCS-1202, 1203, 1204, 1230, 1231, 1232 **i03631869**

NOTE	REF NO	GRAPHIC REF	PART NUMBER	QTY	PART NAME 1 2 3 4 5 6 (PRODUCT LEVEL)	SEE PAGE
	1	1	**216-8314**	1	GEAR-CRANKSHAFT (34-TEETH)	
Y	2	1	**232-7400**	1	CRANKSHAFT GP	13
					AVAILABLE REPAIR KIT(S):	
			274-4716	1	KIT-CRANKSHAFT	

Y-SEPARATE ILLUSTRATION

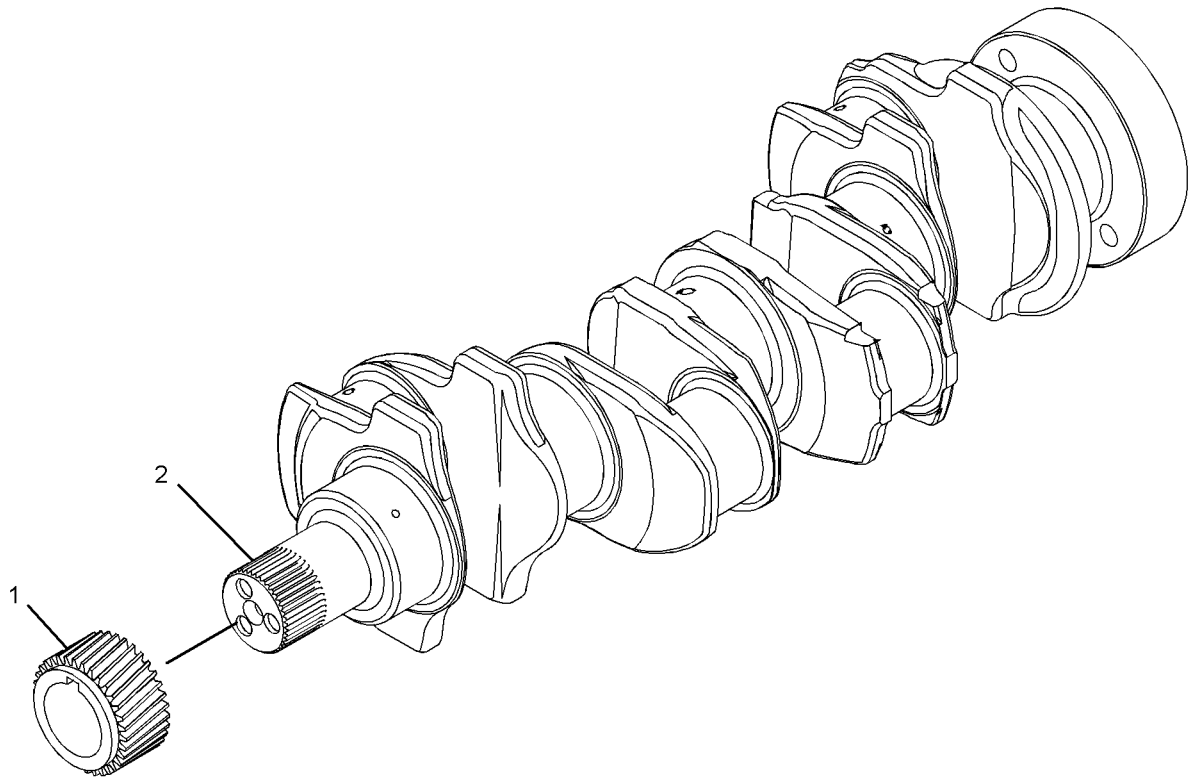

GRAPHIC #1 **<END>** g01420823

BASIC ENGINE

326-8999 CYLINDER BLOCK GP

S/N: C4Z1-UP

PART OF 322-0590 ENGINE AR-PRIMARY

SMCS-1201 **i03410100**

NOTE	REF NO	GRAPHIC REF	PART NUMBER	QTY	PART NAME 1 2 3 4 5 6 (PRODUCT LEVEL)	SEE PAGE
M	1	1	**209-9219**	10	BOLT (M8X1.25X16-MM)	
	2	1	**232-7449**	1	HOUSING AS	
Y	3	1	**335-1584**	1	CYLINDER BLOCK GP	17

M-METRIC PART
Y-SEPARATE ILLUSTRATION

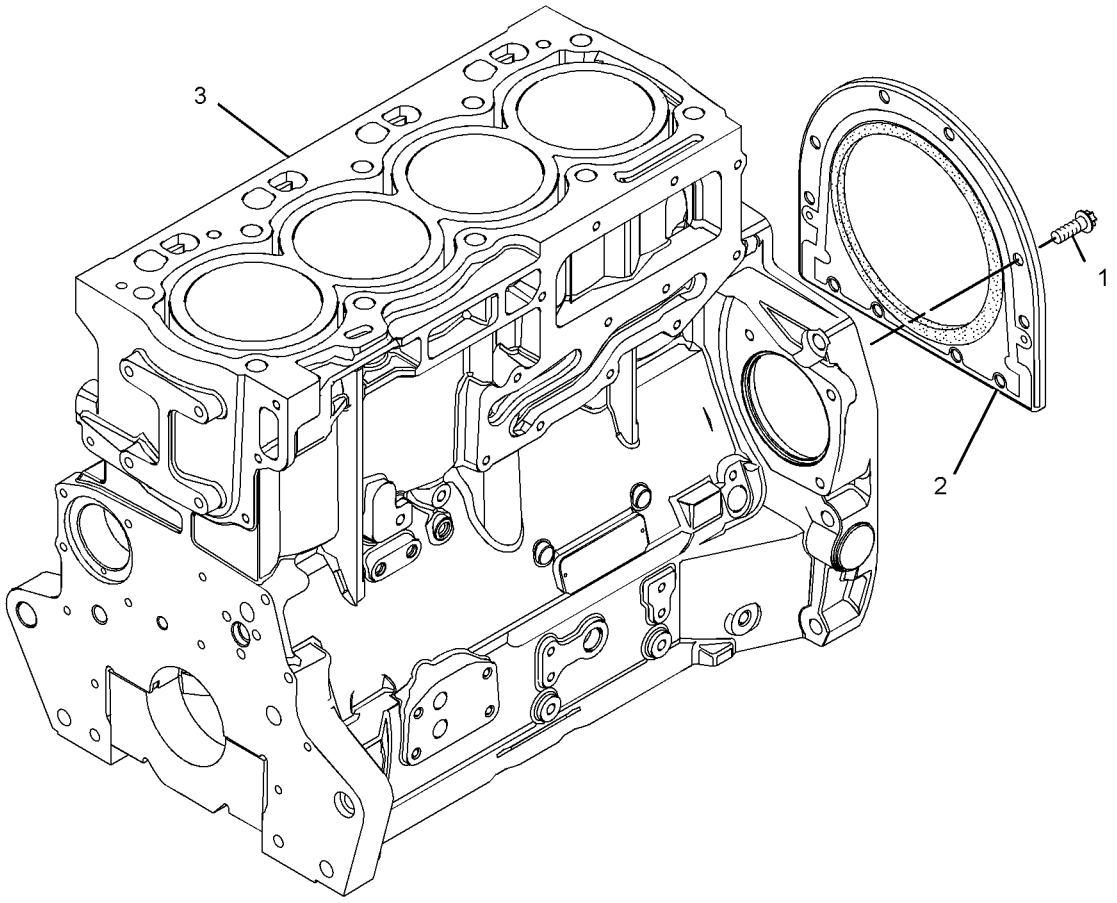

GRAPHIC #1 **<END>** g01770793

BASIC ENGINE

335-1584 CYLINDER BLOCK GP

S/N: C4Z1-UP

PART OF 326-8999 CYLINDER BLOCK GP

SMCS-1201 **i03411464**

NOTE	REF NO	GRAPHIC REF	PART NUMBER	QTY	PART NAME 1 2 3 4 5 6 (PRODUCT LEVEL)	SEE PAGE
	1	1	**6I-0572**	4	BOLT (M8X1.25X20-MM)	
	2	1	**6I-0646**	1	BOLT (M10X1.5X14-MM)	
	3	1	**035-8063**	1	PLUG	
	4	1	**035-8068**	10	BOLT (5/8-18X3.75-IN)	
	5	1	**067-6002**	10	DOWEL	
	6	1	**067-6006**	1	PLUG	
	7	1	**067-6043**	1	PLUG-SIDE	
M	8	1	**100-4841**	4	BOLT (M6X1X10-MM)	
	9	1	**185-0884**	2	DOWEL	
	10	1	**214-3203**	1	WASHER (SEALING)	
	11	1	**225-7944**	1	GASKET	
	12	1	**225-8858**	2	PLUG	
	13	1	**232-3751**	1	PLATE	
	14	1	**232-7440**	1	BEARING	
	15	1	**232-7596**	1	PLUG	
	16	1	**232-7597**	2	PLUG	
	17	1	**232-7599**	1	PLUG	
	18	1	**276-5605**	4	JET AS-PISTON COOLING	

M-METRIC PART

335-1584 CYLINDER BLOCK GP *(contd.)* i03411464

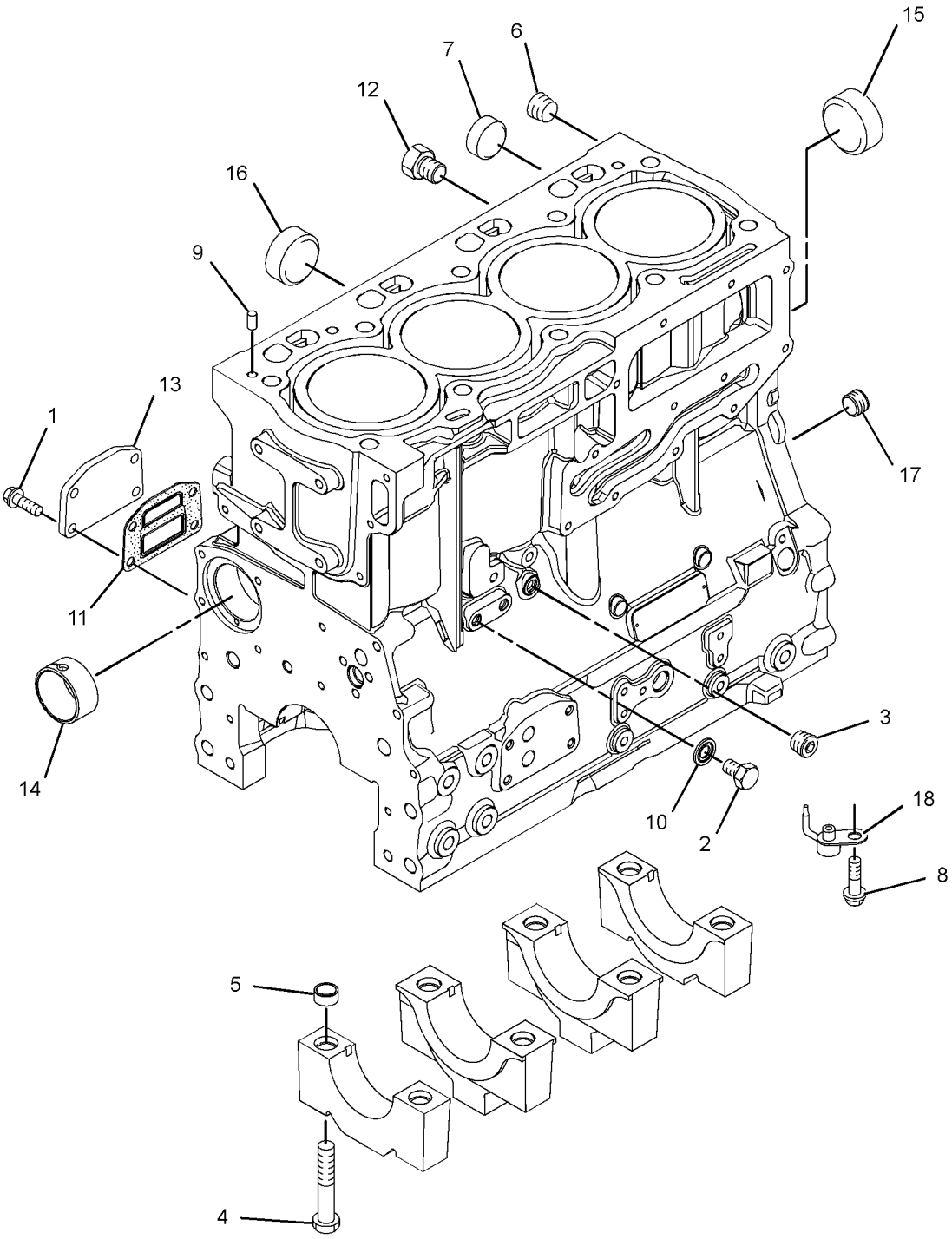

GRAPHIC #1 **<END>** g01769514

316-7896 CYLINDER HEAD GP

S/N: C4Z1-UP

PART OF 326-9003 CYLINDER HEAD GP

SMCS-1100, 1101, 1103, 1104, 1105, 1106, 1108, 1109, 1115, 1117, 1121, 1124, 1125

i03131134

NOTE	REF NO	GRAPHIC REF	PART NUMBER	QTY	PART NAME 1 2 3 4 5 6 (PRODUCT LEVEL)	SEE PAGE
	1	1	**2B-0858**	2	PLUG-PIPE	
	2	1	**9Y-5015**	2	PLUG-FREEZE	
	3	1	**067-6006**	4	PLUG	
	4	1	**185-0882**	8	GUIDE-VALVE	
	5	1	**199-9751**	1	SEAL-O-RING	
	6	1	**232-1322**	1	PLUG	
	7	1	**315-3390**	4	VALVE-INLET	
	8	1	**315-3391**	8	SPRING	
	9	1	**315-3392**	8	CAP	
	10	1	**315-3393**	16	COLLET	
	11	1	**315-3394**	4	VALVE-EXHAUST	
	12	1	**252-6438**	4	SEAL-INLET VALVE (GREEN)	
	13	1	**254-3954**	4	SEAL-EXHAUST VALVE (BROWN)	
	14	1	**322-9663**	4	INSERT-VALVE SEAT	
	15	1	**322-9664**	4	SEAT-VALVE	

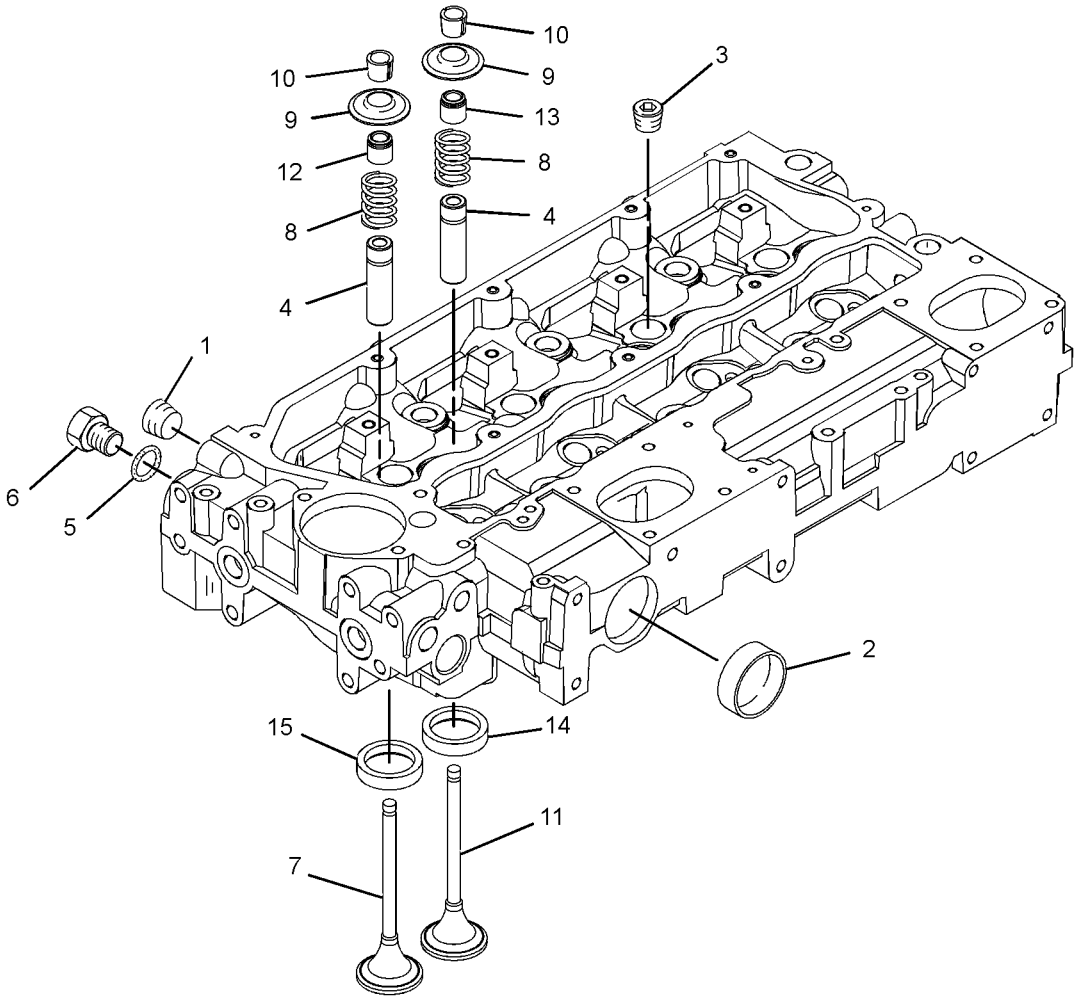

GRAPHIC #1 **<END>** g01542313

326-9003 CYLINDER HEAD GP

S/N: C4Z1-UP

PART OF 322-0590 ENGINE AR-PRIMARY

SMCS-1100, 1101, 1103, 1104, 1105, 1106, 1108, 1109, 1115, 1117, 1121, 1124, 1125 **i03127782**

NOTE	REF NO	GRAPHIC REF	PART NUMBER	QTY	PART NAME 1 2 3 4 5 6 (PRODUCT LEVEL)	SEE PAGE
	1	1	**225-5501**	7	BOLT (M15X1.5X137-MM)	
	2	1	**225-5502**	3	BOLT (M15X1.5X162-MM)	
	3	1	**258-4946**	1	GASKET-HEAD	
Y	4	1	**316-7896**	1	CYLINDER HEAD GP	19

Y-SEPARATE ILLUSTRATION

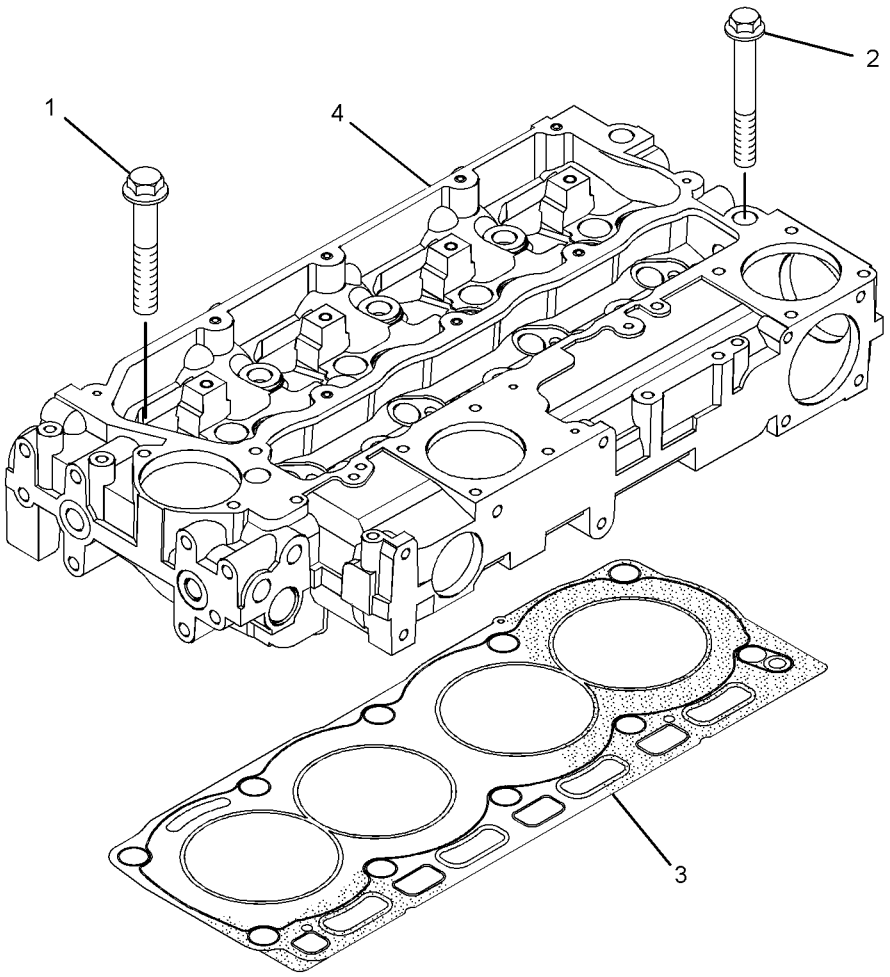

GRAPHIC #1 **<END>** g01523242

BASIC ENGINE

303-5770 DRIVE GP-FAN

S/N: C4Z1-UP

PART OF 322-0590 ENGINE AR-PRIMARY

SMCS-1357, 1358, 1359, 1390 **i03128283**

NOTE	REF NO	GRAPHIC REF	PART NUMBER	QTY	PART NAME 1 2 3 4 5 6 (PRODUCT LEVEL)	SEE PAGE
	1	1	**326-1880**	1	HOUSING-FAN DRIVE	
	2	1	**251-2437**	1	PLATE	
	3	1	**111-0859**	8	BOLT (M10X1.5X35-MM)	

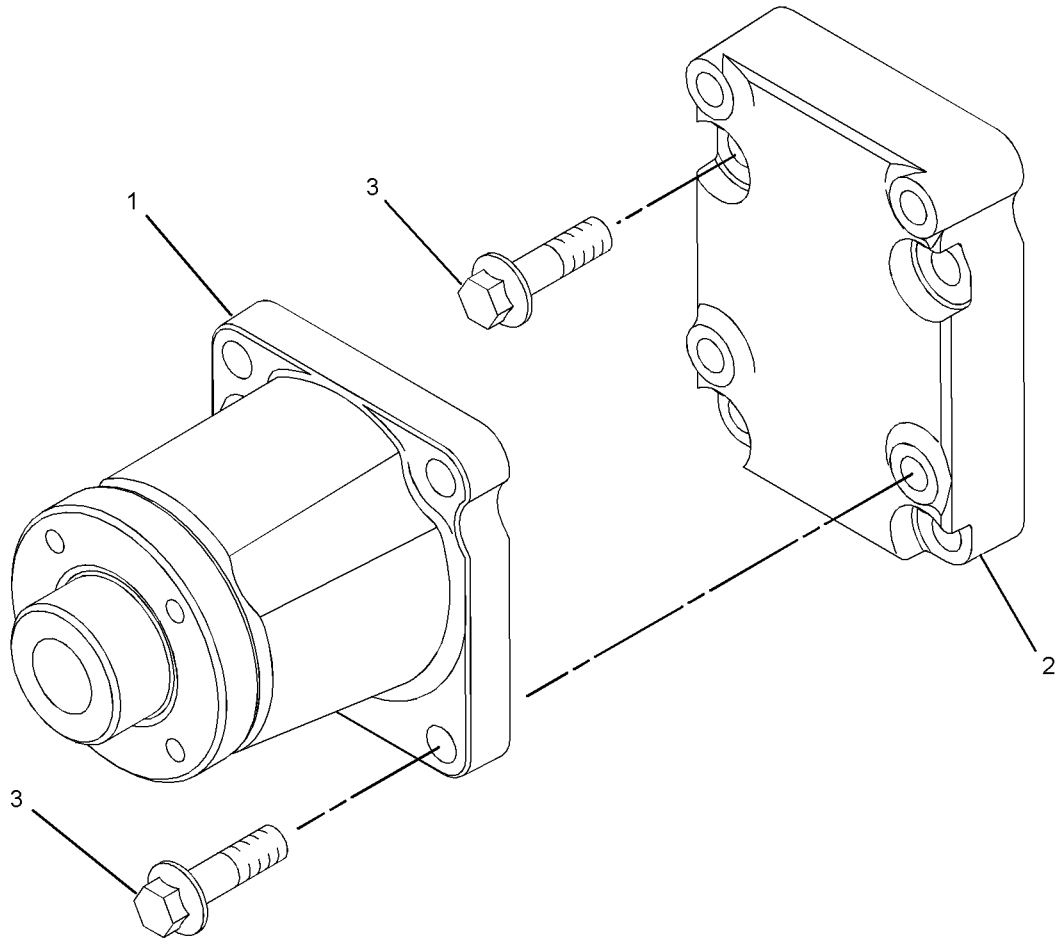

GRAPHIC #1 **<END>** g01340877

BASIC ENGINE

303-5768 FLYWHEEL GP

S/N: C4Z1-UP

PART OF 322-0590 ENGINE AR-PRIMARY

SMCS-1156, 1158 **i03128301**

NOTE	REF NO	GRAPHIC REF	PART NUMBER	QTY	PART NAME 1 2 3 4 5 6 (PRODUCT LEVEL)	SEE PAGE
	1	1	**245-9828**	1	FLYWHEEL AS	
	1A	1	**033-7687**	1	RING-STARTING MOTOR (126-TEETH)	
	2	1	**0S-1603**	10	BOLT (1/2-20X1.5-IN)	
	3	1	**5P-8245**	10	WASHER-HARD (13.5X25.5X3-MM THK)	

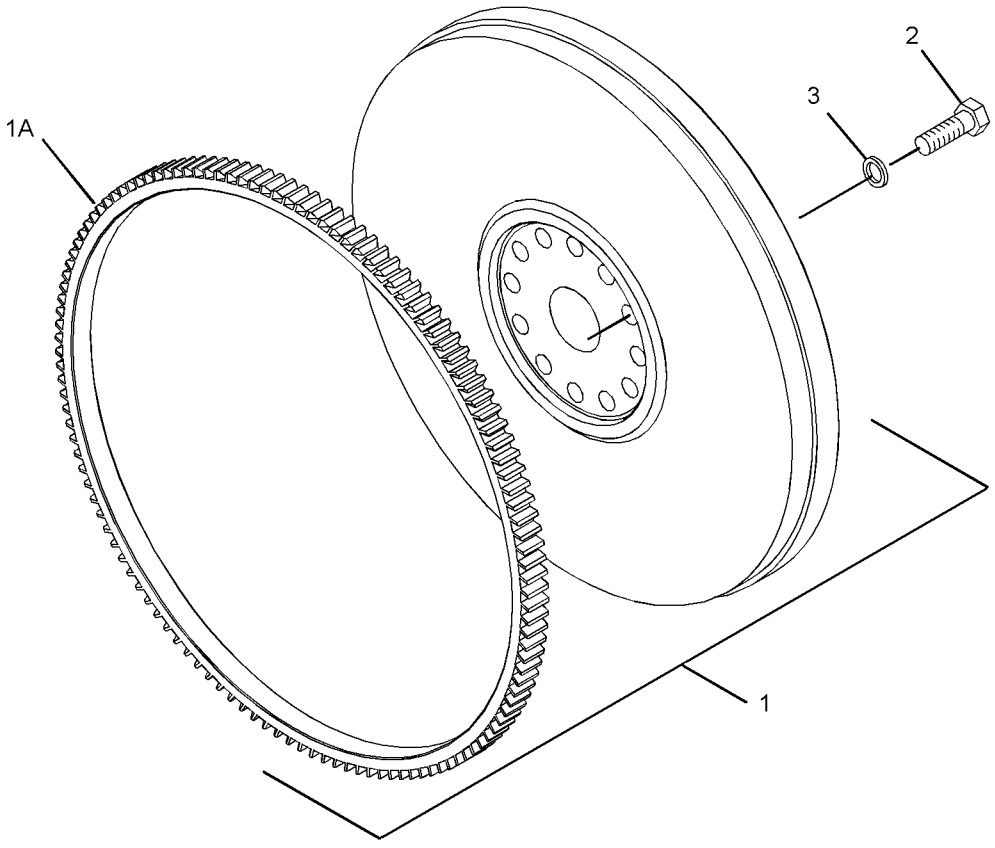

GRAPHIC #1 **<END>** g01372699

303-5767 HOUSING GP-FLYWHEEL

S/N: C4Z1-UP

PART OF 322-0590 ENGINE AR-PRIMARY

SMCS-1157 **i03128293**

NOTE	REF NO	GRAPHIC REF	PART NUMBER	QTY	PART NAME 1 2 3 4 5 6 (PRODUCT LEVEL)	SEE PAGE
M	1	1	**6I-0423**	2	BOLT (M12X1.75X30-MM)	
	2	1	**6I-0847**	2	PLUG	
	3	1	**7W-1176**	1	PLATE-COVER	
	4	1	**7W-4642**	1	SHIELD-DUST	
	5	1	**287-8597**	2	DOWEL	
	6	1	**114-4363**	2	BOLT (M8X1.25X12-MM)	
	7	1	**4H-0408**	3	PLUG-PROTECTION	
M	8	1	**121-0883**	6	BOLT (M10X1.5X30-MM)	
	9	1	**220-8631**	1	HOUSING-FLYWHEEL	

M-METRIC PART

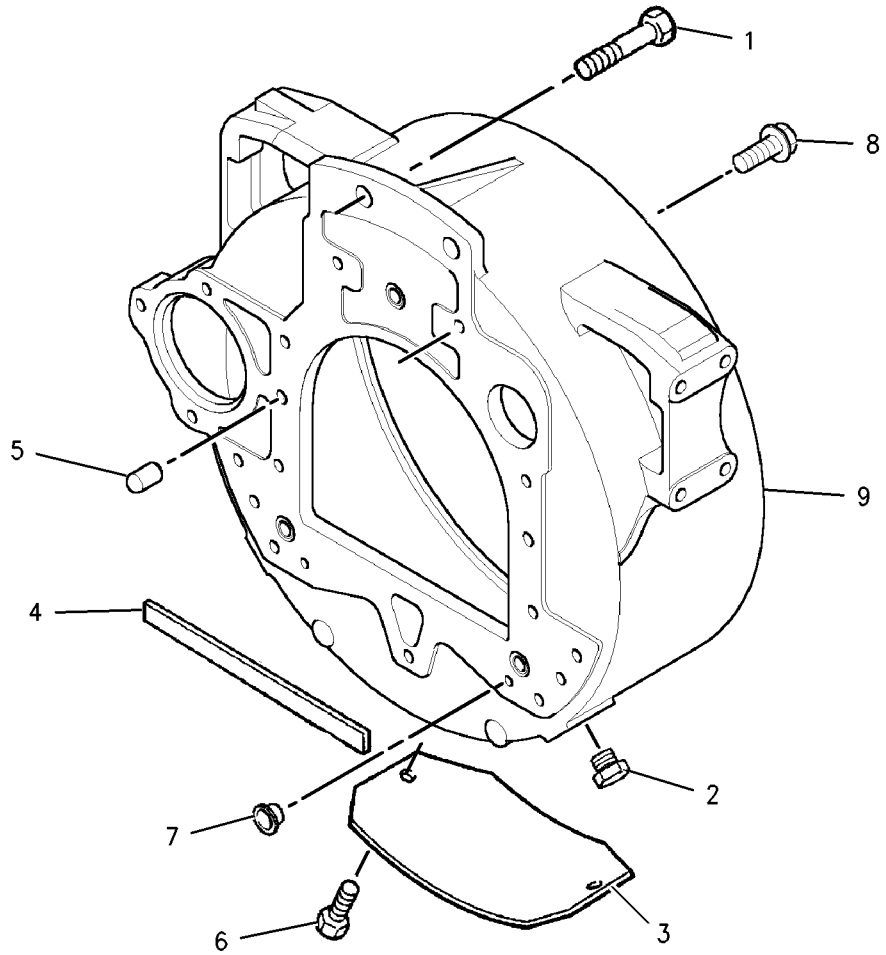

GRAPHIC #1 **<END>** g00902549

BASIC ENGINE

304-8760 HOUSING GP-FRONT

S/N: C4Z1-UP

PART OF 322-0590 ENGINE AR-PRIMARY

SMCS-1151, 1162, 1166, 1206 **i03569721**

NOTE	REF NO	GRAPHIC REF	PART NUMBER	QTY	PART NAME 1 2 3 4 5 6 (PRODUCT LEVEL)	SEE PAGE
	1	1	**294-0288**	1	HOUSING-FRONT	
	2	1	**277-3012**	1	GASKET-COVER	
	3	1	**288-0422**	1	SEAL-OIL (FRONT)	
M	4	1	**6I-0217**	6	BOLT (M8X1.25X20-MM)	
M	5	1	**101-3895**	2	BOLT (M8X1.25X35-MM)	
M	6	1	**6I-0645**	4	BOLT (M8X1.25X25-MM)	
CJ	7	1	**346-0407**	1	GEAR-IDLER (73-TEETH)	
	8	1	**324-0444**	1	HUB-IDLER GEAR	
C	9	1	**346-0408**	1	PLATE	
M	10	1	**6I-0650**	3	BOLT (M10X1.5X65-MM)	
	11	1	**216-8634**	1	GEAR-CAMSHAFT (68-TEETH)	
	12	1	**133-1011**	1	WASHER	
	13	1	**067-6179**	1	DOWEL	
	14	1	**232-3666**	1	WASHER-THRUST	
	15	1	**7C-4616**	1	BOLT (M12X1.75X45-MM)	
	16	1	**232-3657**	1	COVER AS-FRONT	
	16A	1	**225-8287**	1	GASKET	
M	17	1	**124-3815**	10	BOLT (M8X16X1.25-MM)	
M	18	1	**100-3751**	5	BOLT (M8X1.25X65-MM)	

C-CHANGE FROM PREVIOUS TYPE
J-CAN ONLY BE USED IN CONJUNCTION WITH 346-0408 & 324-0444
M-METRIC PART

304-8760 **HOUSING GP-FRONT** *(contd.)* **i03569721**

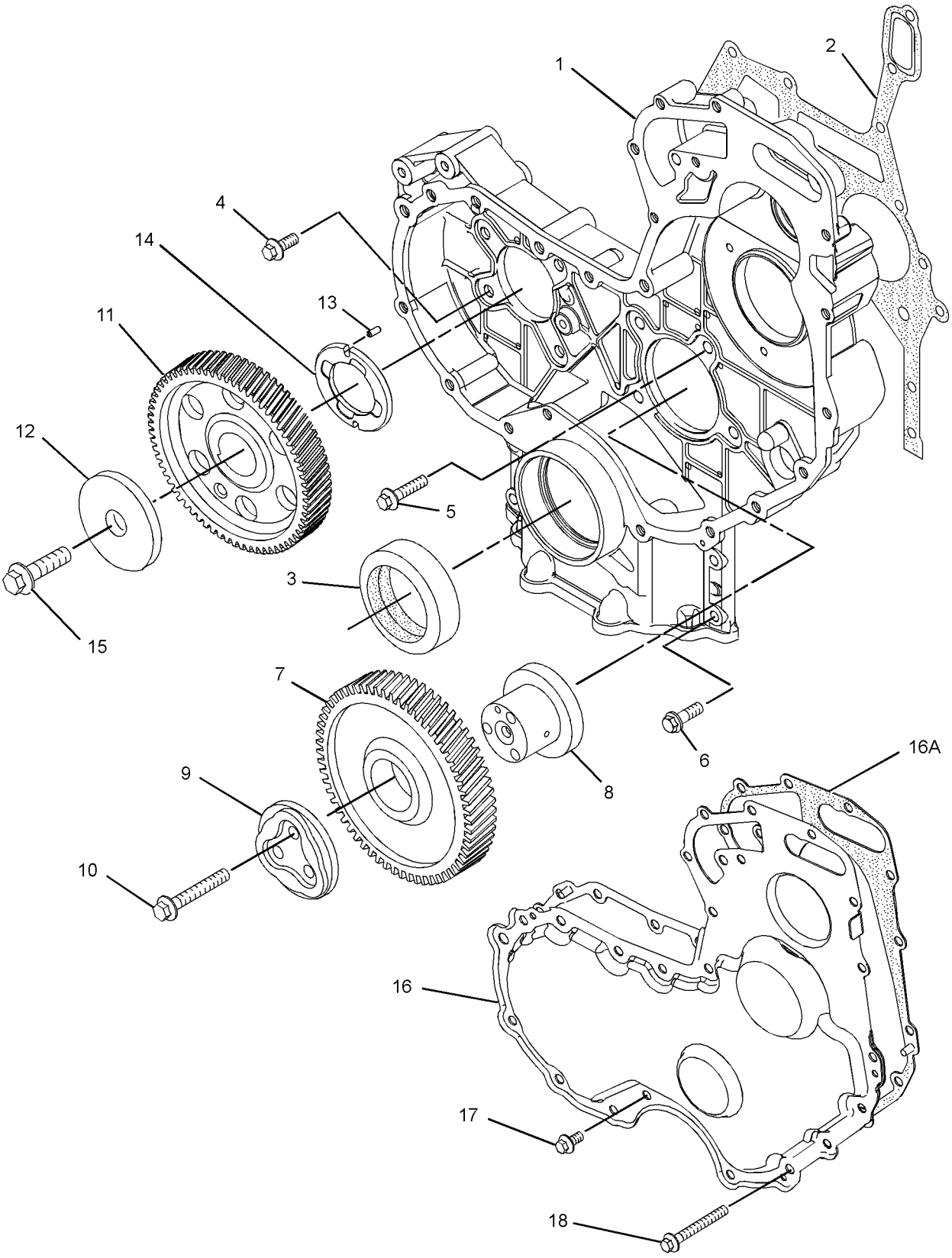

GRAPHIC #1 **<END>** g01900827

BASIC ENGINE

326-9013 LIFTING GP-ENGINE

S/N: C4Z1-UP

PART OF 322-0590 ENGINE AR-PRIMARY

SMCS-1122 **i03124517**

NOTE	REF NO	GRAPHIC REF	PART NUMBER	QTY	PART NAME 1 2 3 4 5 6 (PRODUCT LEVEL)	SEE PAGE
M	1	1	**100-4830**	4	BOLT (M10X1.5X20-MM)	
	2	1	**225-8848**	2	PLATE-LIFTING	

M-METRIC PART

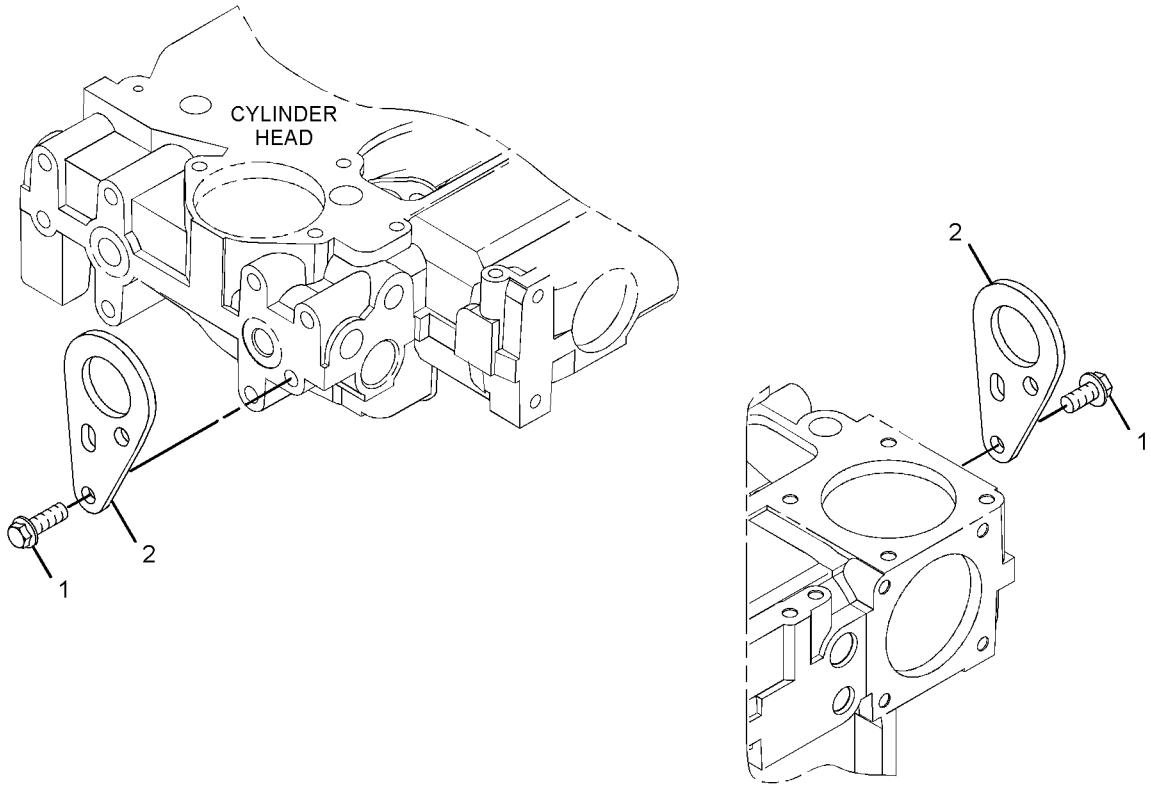

GRAPHIC #1 **<END>** g01636462

303-5778 MOUNTING GP-ENGINE

S/N: C4Z1-UP

PART OF 322-0590 ENGINE AR-PRIMARY

SMCS-1152, 1153, 1154 **i03128292**

NOTE	REF NO	GRAPHIC REF	PART NUMBER	QTY	PART NAME 1 2 3 4 5 6 (PRODUCT LEVEL)	SEE PAGE
	1	1	**6H-3616**	3	PLUG-PROTECTION	
	2	1	**101-2987**	6	PLUG	
	3	1	**195-2132**	1	SUPPORT-FRONT	
	4	1	**195-2134**	1	SUPPORT-FRONT	
	5	1	**195-2136**	8	STUD	
	6	1	**195-2221**	8	NUT (M12X1.75-THD)	

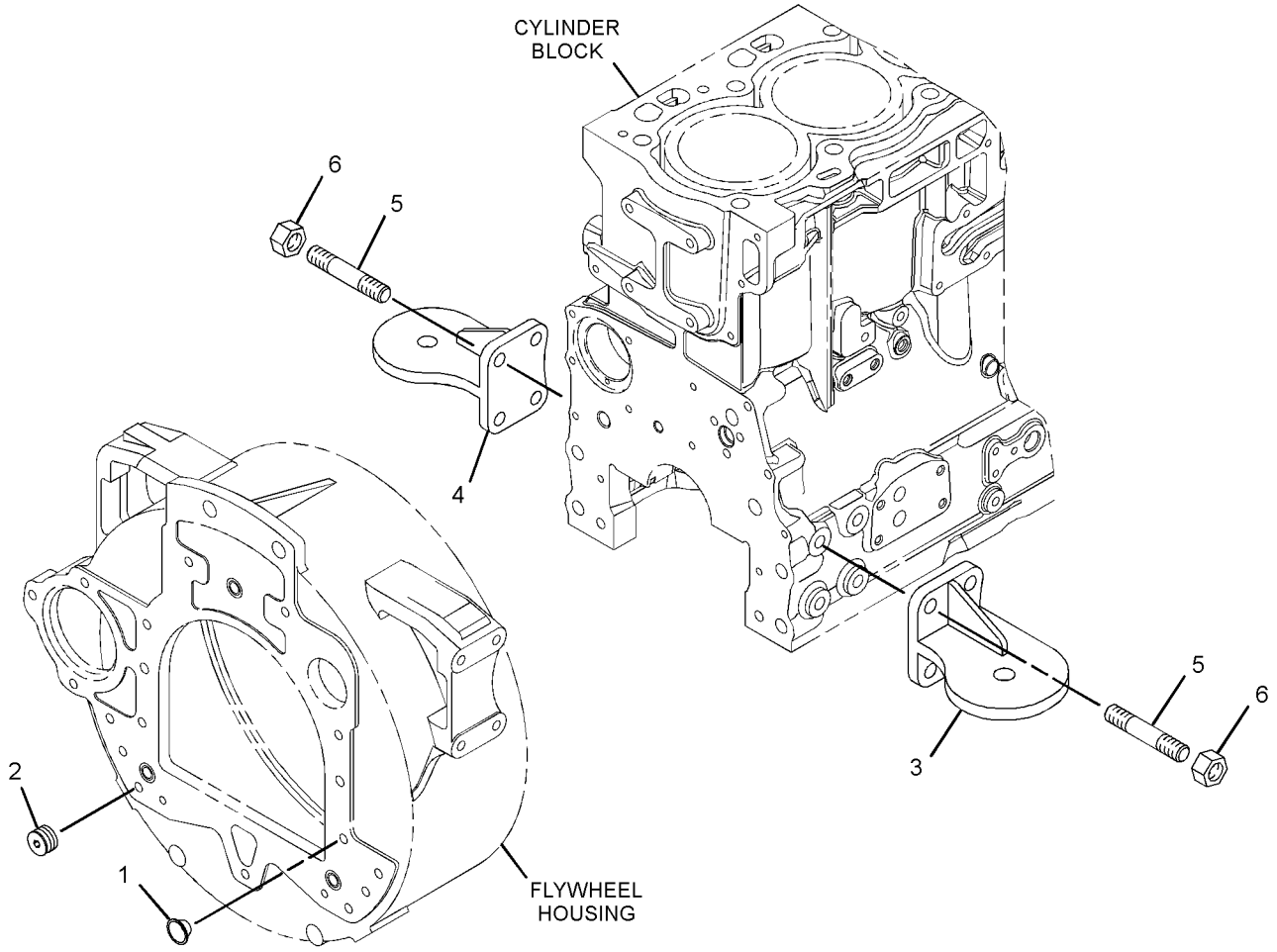

GRAPHIC #1 **<END>** g01378883

BASIC ENGINE

322-5799 MOUNTING GP-ENGINE & XMSN

S/N: LMS1-UP

PART OF 291-9188 ENGINE AR

SMCS-1152, 1153, 1154 **i03894553**

NOTE	REF NO	GRAPHIC REF	PART NUMBER	QTY	PART NAME 1 2 3 4 5 6 (PRODUCT LEVEL)	SEE PAGE
	1	1	**9W-9915**	4	MOUNT AS (ENGINE, FRONT)	
	2	1	**9W-9953**	4	SLEEVE	
	3	1	**8T-4121**	12	WASHER-HARD (11X21X2.5-MM THK)	
	4	1	**8T-4122**	8	WASHER-HARD (17X32X3.5-MM THK)	
M	5	1	**8T-4132**	4	NUT (M16X2-THD)	
	6	1	**335-1836**	4	BOLT-SPECIAL	
M	7	1	**8T-4196**	12	BOLT (M10X1.5X35-MM)	
	8	1	**9W-9952**	4	WASHER (16.75X86X8-MM THK)	

M-METRIC PART

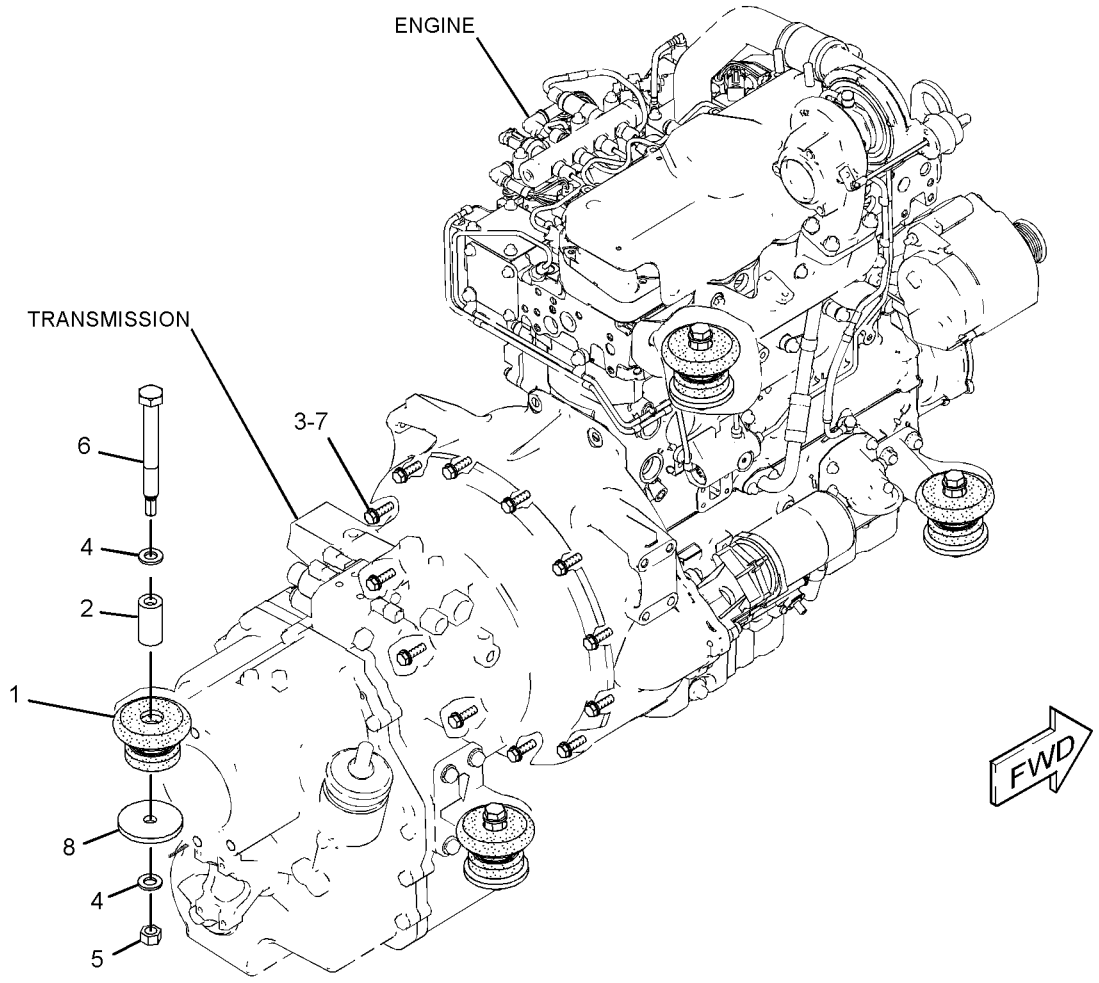

GRAPHIC #1 **<END>** g02100053

BASIC ENGINE

322-9476 PAN GP-OIL

S/N: C4Z1-UP

PART OF 322-0590 ENGINE AR-PRIMARY

SMCS-1302 **i03728724**

NOTE	REF NO	GRAPHIC REF	PART NUMBER	QTY	PART NAME 1 2 3 4 5 6 (PRODUCT LEVEL)	SEE PAGE
M	1	1	**6I-0217**	14	BOLT (M8X1.25X20-MM)	
M	2	1	**6I-0260**	2	BOLT (M8X1.25X25-MM)	
	3	1	**6I-0289**	2	PLUG	
M	4	1	**6I-0363**	2	BOLT (M6X1X20-MM)	
	5	1	**6I-0572**	2	BOLT (M8X1.25X20-MM)	
	6	1	**7C-0351**	2	PLUG-DRAIN (ENGINE OIL)	
	7	1	**067-6213**	1	GASKET	
	8	1	**101-3771**	4	BOLT	
	9	1	**225-6005**	1	GASKET	
	10	1	**225-6041**	1	TUBE	
	11	1	**230-8094**	1	BRIDGE	
	12	1	**275-9883**	2	SEAL (DRAIN PLUG)	
	13	1	**304-8764**	1	PAN AS-OIL (ENGINE)	
	13A	1	**7C-1224**	2	INSERT	

M-METRIC PART

322-9476 **PAN GP-OIL** *(contd.)* **i03728724**

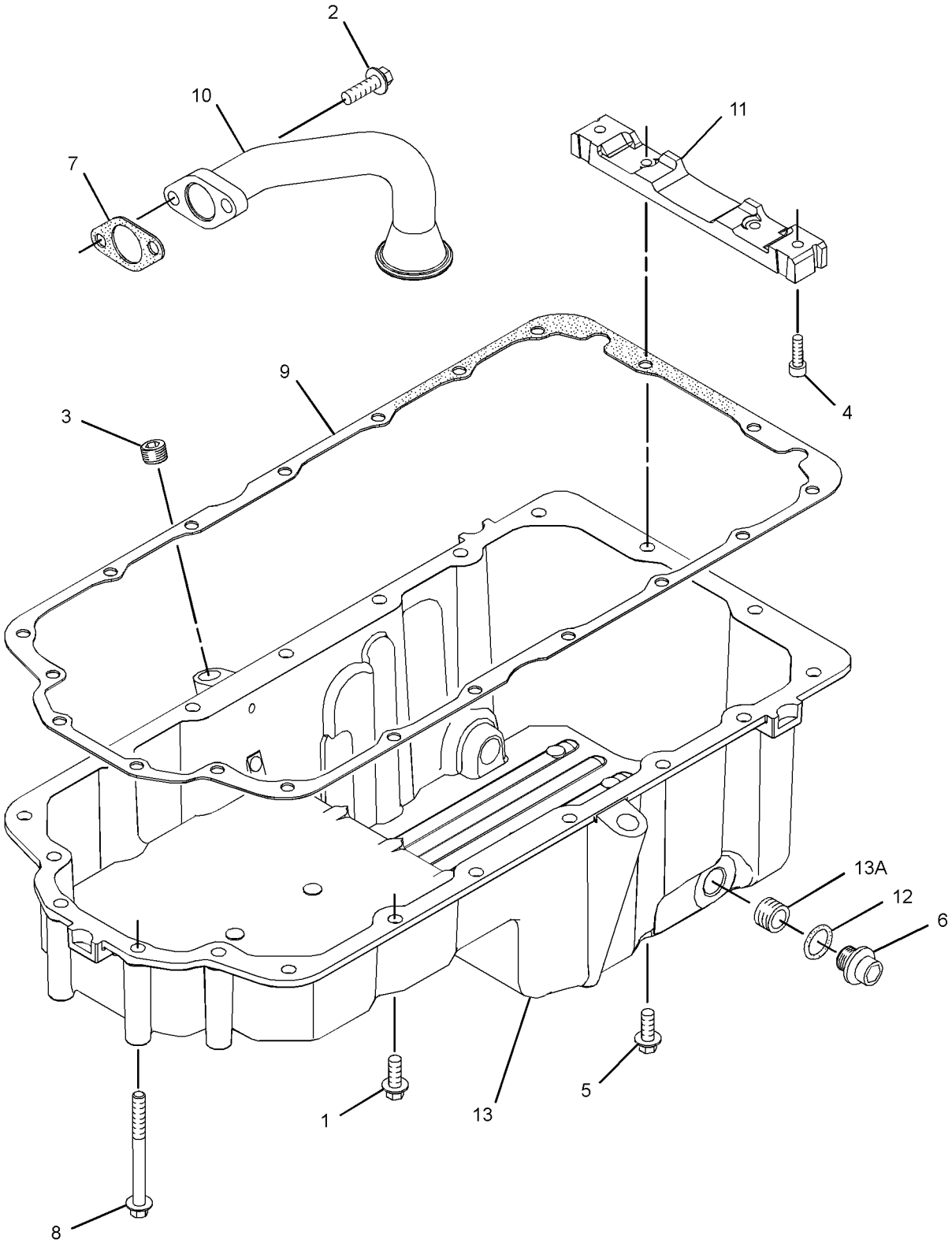

GRAPHIC #1 **<END>** g01442277

BASIC ENGINE

326-9002 PISTON & ROD GP

S/N: C4Z1-UP

PART OF 322-0590 ENGINE AR-PRIMARY

SMCS-1213, 1214, 1215, 1218, 1219, 1225, 1239 **i03906810**

NOTE	REF NO	GRAPHIC REF	PART NUMBER	QTY	PART NAME 1 2 3 4 5 6 (PRODUCT LEVEL)	SEE PAGE
	1	1	**315-3395**	4	PISTON AS	
					(EACH INCLUDES)	
	1A	1	**124-3536**	2	RING-RETAINING	
	1B	1	**276-7476**	1	KIT-PISTON RING	
BJ	2	1	**225-5441**	4	ROD AS-CONNECTING (LENGTH L)	
					—OR—	
BJ		1	**225-5451**	8	ROD AS-CONNECTING (LENGTH K)	
					—OR—	
BJ		1	**225-5453**	4	ROD AS-CONNECTING (LENGTH J)	
					—OR—	
BJ		1	**225-5454**	4	ROD AS-CONNECTING (LENGTH H)	
					—OR—	
BJ		1	**225-5458**	4	ROD AS-CONNECTING (LENGTH G)	
					—OR—	
BJ		1	**225-5459**	4	ROD AS-CONNECTING (LENGTH F)	
					(EACH INCLUDES)	
	2A	1	**225-5438**	1	BUSHING	
	2B	1	**225-5439**	2	BOLT-SPECIAL (CONNECTING ROD)	

B-USE AS REQUIRED
J-ENSURE THAT CORRECT ROD LENGTH IS FITTED

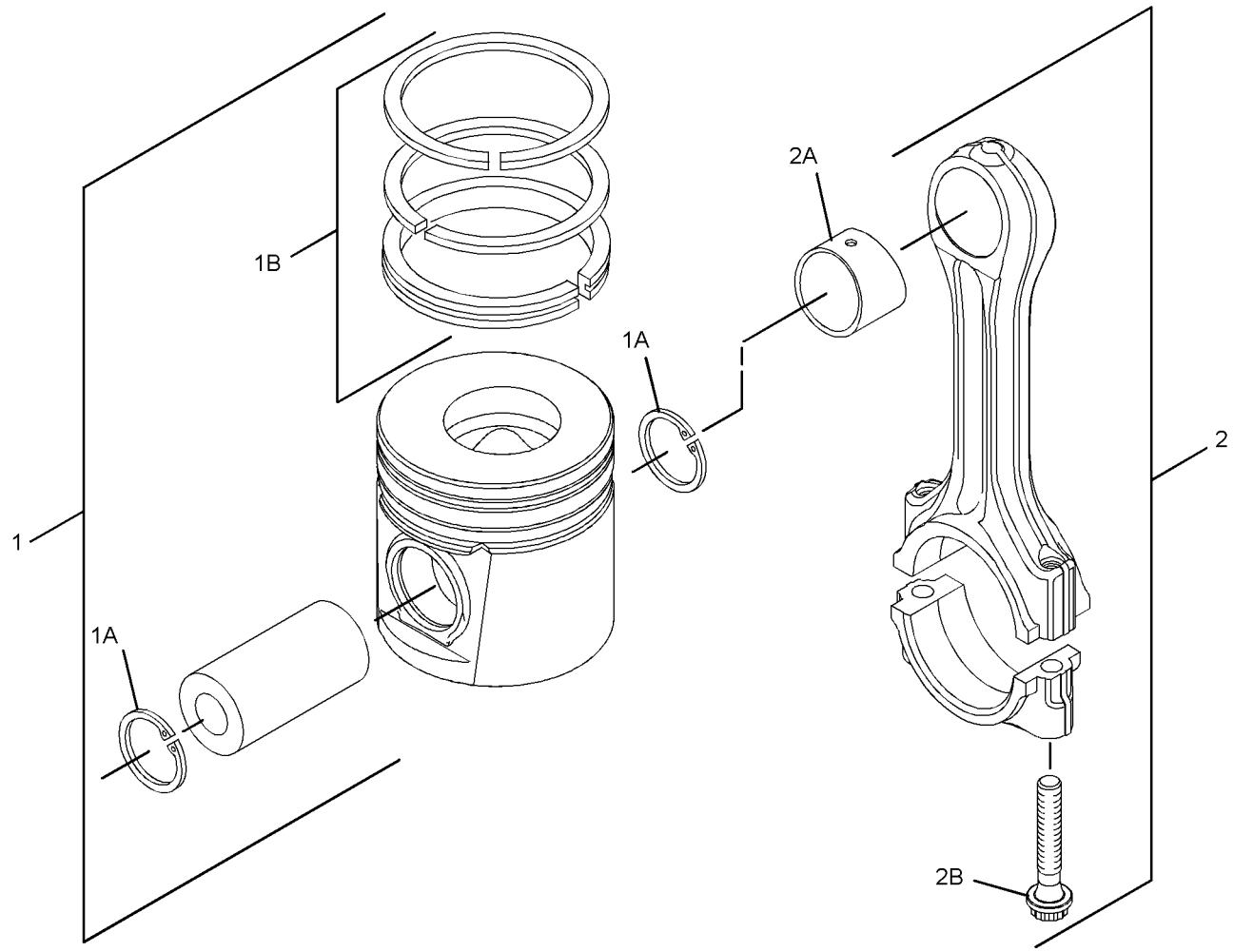

GRAPHIC #1 **<END>** g01523198

BASIC ENGINE

298-5129 PLUG GP-CYLINDER HEAD

S/N: C4Z1-UP

PART OF 322-0590 ENGINE AR-PRIMARY

SMCS-1100 **i03128287**

NOTE	REF NO	GRAPHIC REF	PART NUMBER	QTY	PART NAME 1 2 3 4 5 6 (PRODUCT LEVEL)	SEE PAGE
	1	1	**232-1322**	1	PLUG	
	2	1	**199-9751**	1	SEAL-O-RING	

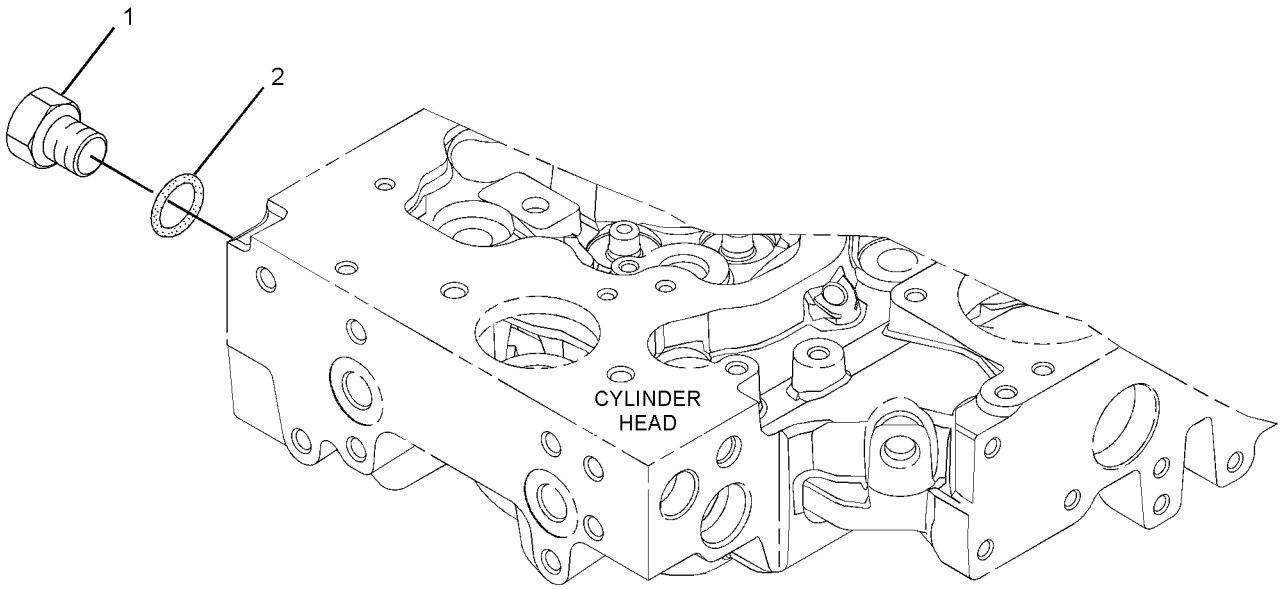

GRAPHIC #1 **<END>** g01305536

298-5131 PLUG GP-ENGINE

S/N: C4Z1-UP

PART OF 322-0590 ENGINE AR-PRIMARY

SMCS-1000 **i03128286**

NOTE	REF NO	GRAPHIC REF	PART NUMBER	QTY	PART NAME 1 2 3 4 5 6 (PRODUCT LEVEL)	SEE PAGE
	1	1	**2B-0858**	3	PLUG-PIPE	

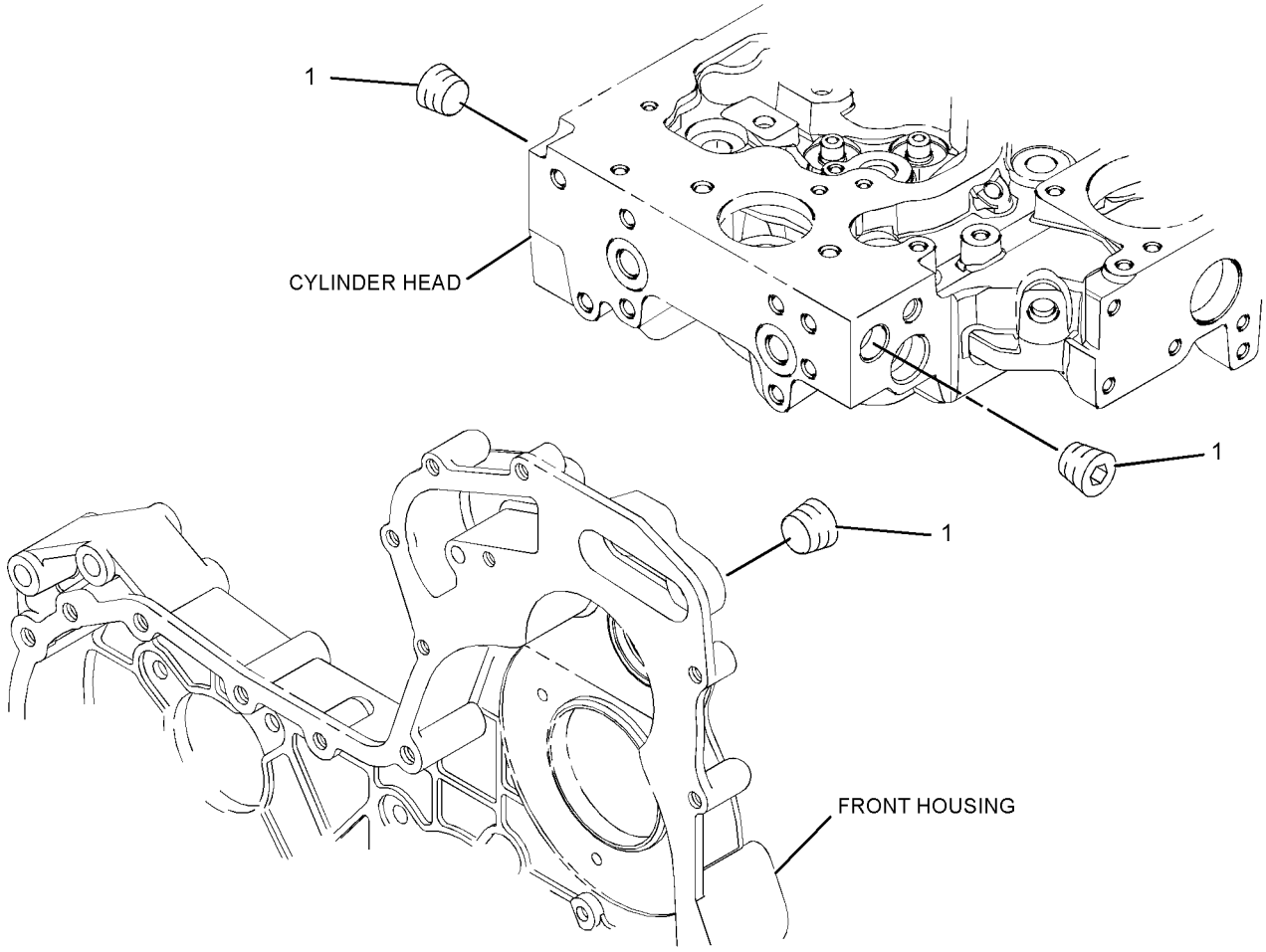

GRAPHIC #1 **<END>** g01305448

304-8761 PLUG GP-ENGINE

S/N: C4Z1-UP

PART OF 322-0590 ENGINE AR-PRIMARY

SMCS-1000 **i03128290**

NOTE	REF NO	GRAPHIC REF	PART NUMBER	QTY	PART NAME 1 2 3 4 5 6 (PRODUCT LEVEL)	SEE PAGE
	1	1	**6I-0646**	1	BOLT (M10X1.5X14-MM)	
	2	1	**214-3203**	1	WASHER (SEALING)	

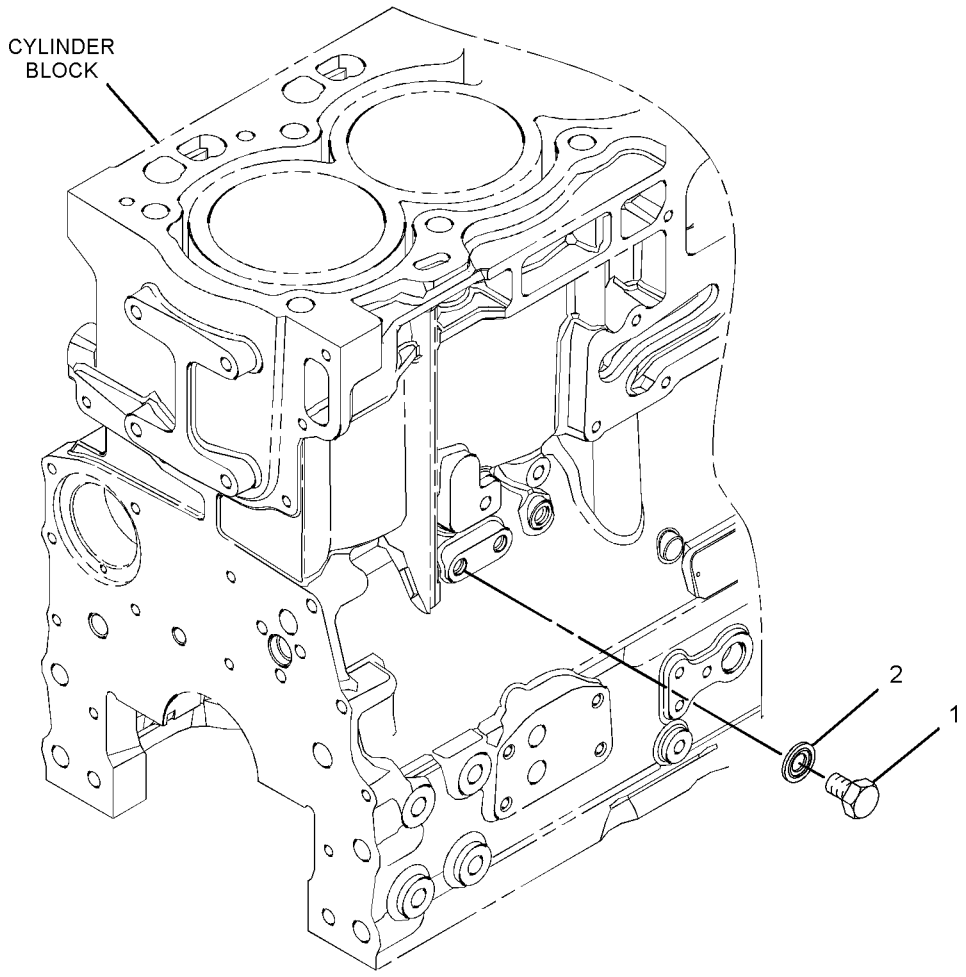

GRAPHIC #1 **<END>** g01373022

360-7347 PULLEY GP-CRANKSHAFT

S/N: C4Z1-UP

PART OF 322-0590 ENGINE AR-PRIMARY

SMCS-1205 **i03902916**

NOTE	PART NUMBER	QTY	PART NAME 1 2 3 4 5 6 (PRODUCT LEVEL)	SEE PAGE
M	**102-9941**	3	BOLT (M12X1.75X25-MM)	
	334-9334	3	BOLT	
	286-7848	1	PULLEY GP-ENGINE	
	359-0750	1	PULLEY-CRANKSHAFT	

M-METRIC PART

<END>

BASIC ENGINE

315-3385 ROCKER ARM GP

S/N: C4Z1-UP

PART OF 326-9004 VALVE MECHANISM GP

SMCS-1102, 1123 **i03131135**

NOTE	REF NO	GRAPHIC REF	PART NUMBER	QTY	PART NAME 1 2 3 4 5 6 (PRODUCT LEVEL)	SEE PAGE
	1	1	**225-5634**	1	SHAFT AS	
	1A	1	**225-5629**	2	PLUG	
	2	1	**225-5638**	3	SPRING	
	3	1	**225-5959**	2	CLIP	
	4	1	**225-5960**	1	BOLT (M8X1.25X60-MM)	
	5	1	**225-5961**	2	WASHER (26.7X34.32X0.38-MM THK)	
	6	1	**225-5962**	3	BOLT (M8X1.25X30-MM)	
	7	1	**315-3386**	4	ROCKER ARM AS	
					(EACH INCLUDES)	
	7A	1	**278-5113**	1	ADJUSTING SCREW (TORX)	
	7B	1	**315-3387**	1	NUT	
	8	1	**315-3388**	4	ROCKER ARM AS	
					(EACH INCLUDES)	
	8A	1	**278-5113**	1	ADJUSTING SCREW (TORX)	
	8B	1	**315-3387**	1	NUT	

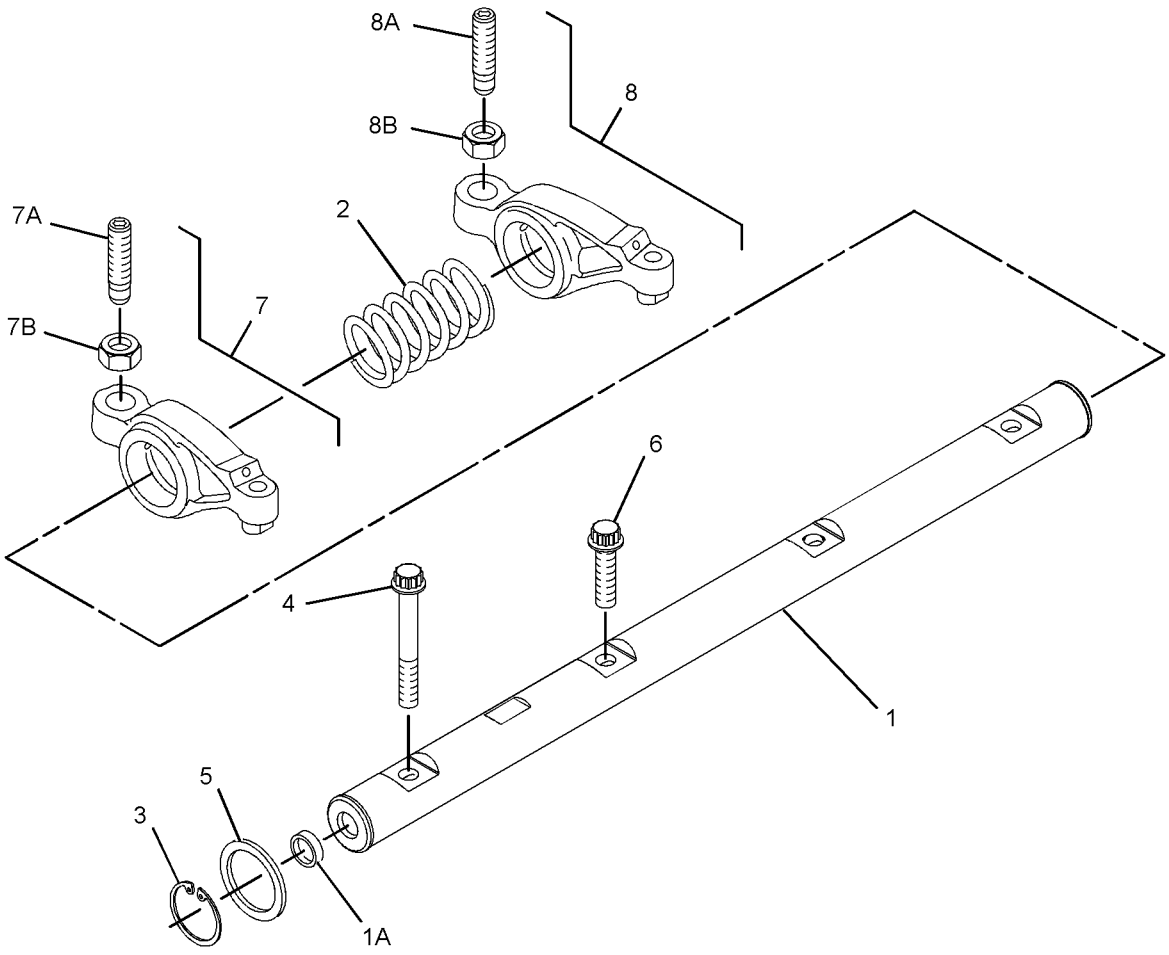

GRAPHIC #1 **<END>** g01399975

326-9004 VALVE MECHANISM GP

S/N: C4Z1-UP

PART OF 322-0590 ENGINE AR-PRIMARY

SMCS-1102, 1112, 1121, 1123, 1208, 1209 **i03127783**

NOTE	REF NO	GRAPHIC REF	PART NUMBER	QTY	PART NAME 1 2 3 4 5 6 (PRODUCT LEVEL)	SEE PAGE
Y	1	1	**315-3385**	1	ROCKER ARM GP	36

Y-SEPARATE ILLUSTRATION

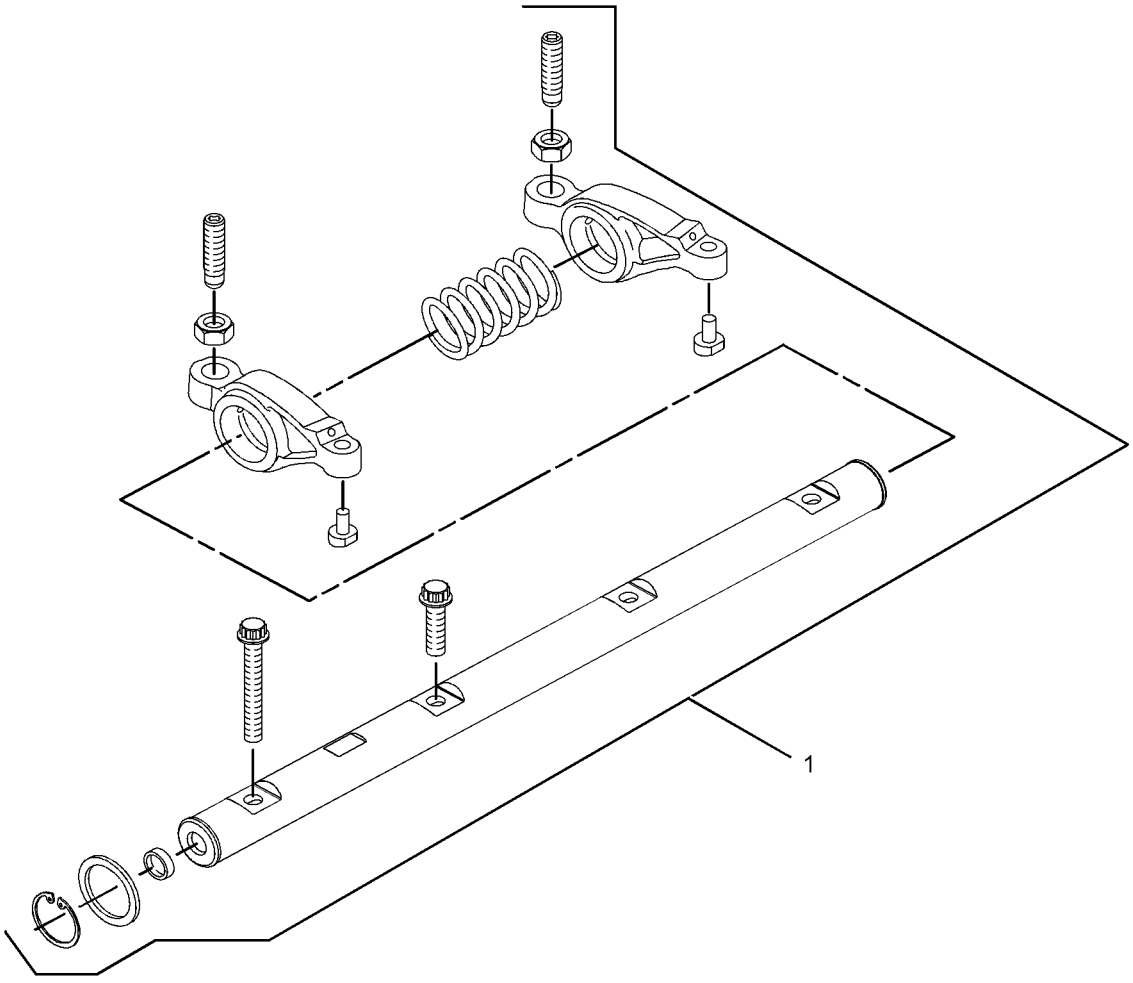

GRAPHIC #1 **<END>** g01611483

LUBRICATION SYSTEM

323-9307 BREATHER GP–CRANKCASE

S/N: LMS1-UP

PART OF 291-9188 ENGINE AR

SMCS-1317 **i03564702**

NOTE	REF NO	GRAPHIC REF	PART NUMBER	QTY	PART NAME 1 2 3 4 5 6 (PRODUCT LEVEL)	SEE PAGE
	1	1	**6I-1497**	1	SEAL	
	2	1	**8T-9402**	3	CLAMP-HOSE	
	3	1	**165-4021**	1	CANISTER AS-BREATHER (CRANKCASE)	
		1	**185-6643**	1	SEAL (BREATHER)	
	4	1	**202-5909**	1	TUBE AS-OIL	
	5	1	**254-4418**	1	HOSE	
	6	1	**311-6094**	1	PLATE AS	
	7	1	**315-5496**	1	HOSE	
	8	1	**5D-1026**	2	CLAMP-BAND	
	9	1	**5P-4116**	2	WASHER-HARD (8.8X20.5X2-MM THK)	
M	10	1	**8C-3798**	2	BOLT-LOCKING (M6X1X30-MM)	
M	11	1	**8T-4138**	2	BOLT (M6X1X20-MM)	
M	12	1	**8T-4189**	2	BOLT (M8X1.25X20-MM)	
	13	1	**8T-4205**	4	WASHER-HARD (7.2X14.5X2-MM THK)	
	14	1	**8T-7529**	2	CLIP	
E	15	1	**136-1955**		HOSE (82-CM)	

E-ORDER BY THE CENTIMETER
M-METRIC PART

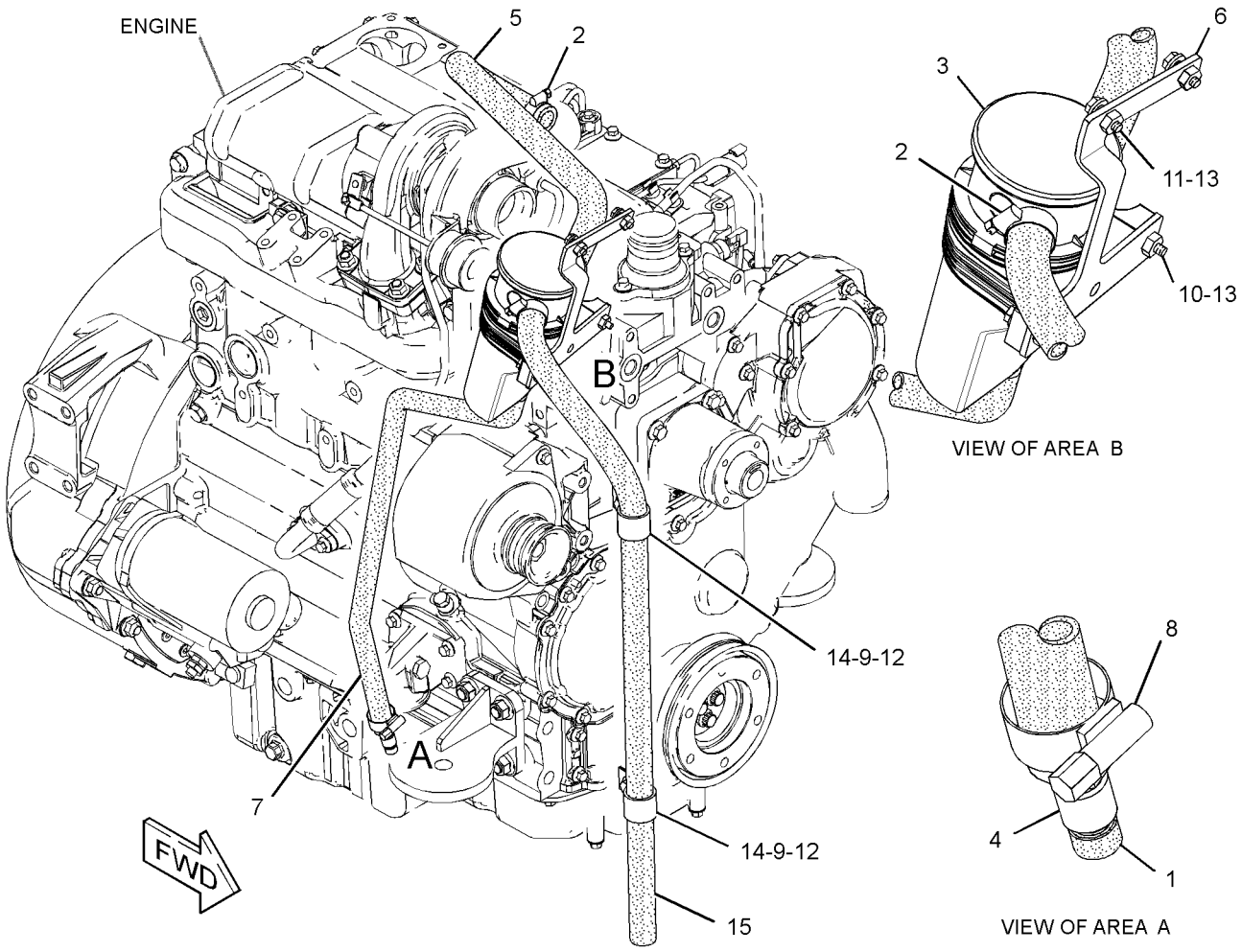

GRAPHIC #1 **<END>** g01890134

309-7555 FILLER GP-ENGINE OIL

S/N: C4Z1-UP

PART OF 322-0590 ENGINE AR-PRIMARY

SMCS-1316 **i03128307**

NOTE	REF NO	GRAPHIC REF	PART NUMBER	QTY	PART NAME 1 2 3 4 5 6 (PRODUCT LEVEL)	SEE PAGE
M	1	1	**6I-0260**	2	BOLT (M8X1.25X25-MM)	
	2	1	**225-6522**	1	PLUG-CUP	
	3	1	**317-3769**	1	FILLER GP-ENGINE OIL	
	3A	1	**317-3778**	1	SEAL-O-RING	

M-METRIC PART

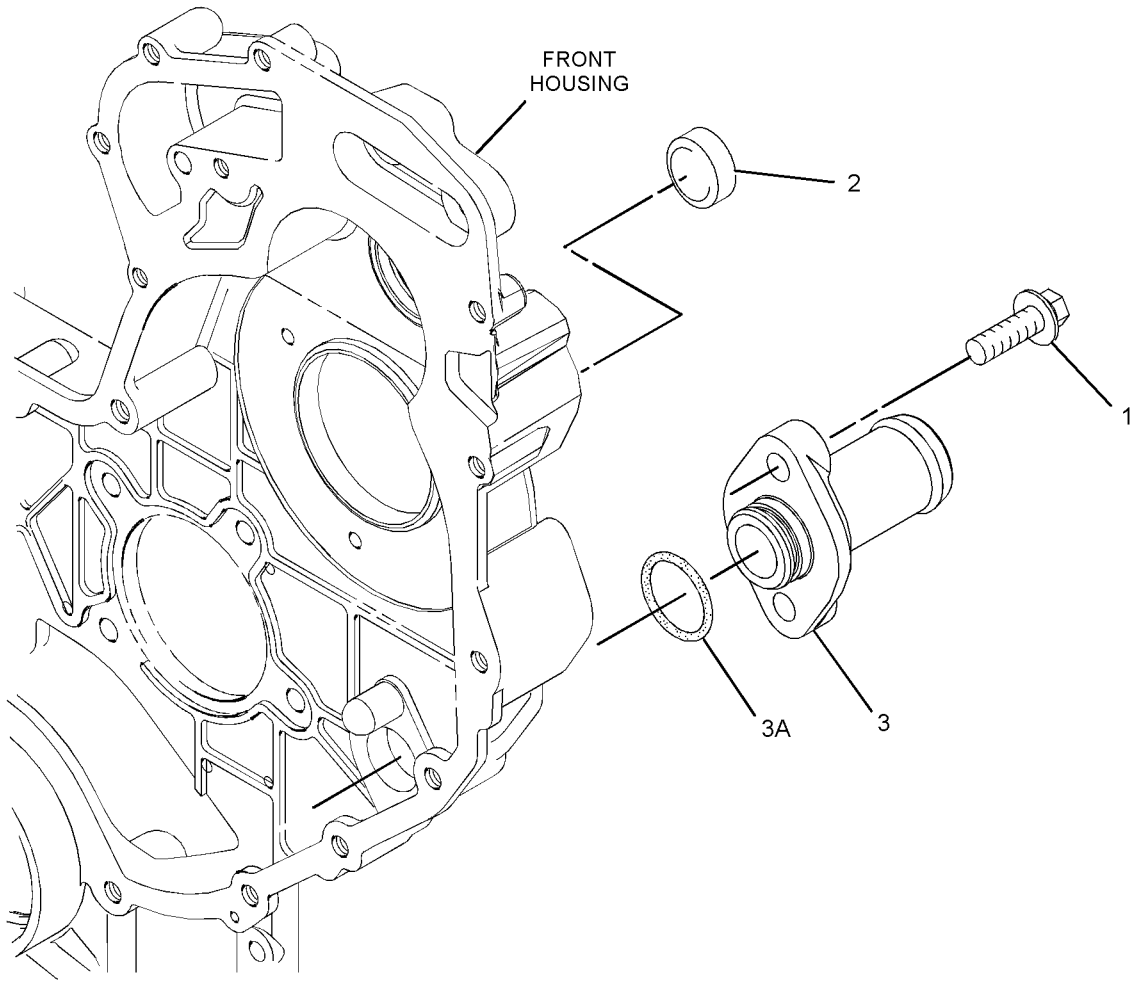

GRAPHIC #1 **<END>** g01378834

LUBRICATION SYSTEM

326-3185 GAUGE GP-OIL LEVEL & FILLER

S/N: LMS1-UP

PART OF 291-9188 ENGINE AR

SMCS-1316, 1326 **i03849798**

NOTE	REF NO	GRAPHIC REF	PART NUMBER	QTY	PART NAME 1 2 3 4 5 6 (PRODUCT LEVEL)	SEE PAGE
	1	1	**6I-1497**	1	SEAL	
	2	1	**7W-2326**	1	FILTER AS-ENGINE OIL	
	3	1	**9M-7958**	1	CLAMP-HOSE	
	4	1	**127-4471**	1	CLAMP-HOSE	
	5	1	**236-6651**	1	CAP AS (ENGINE OIL FILLER)	
	6	1	**293-4671**	1	TUBE AS	
	7	1	**326-3186**	1	TUBE AS	
	8	1	**341-8233**	1	GAUGE-OIL LEVEL (DIPSTICK) (ENGINE)	
	9	1	**326-3188**	1	HOSE	
	10	1	**5P-9297**	1	CLIP	
	11	1	**8M-6678**	1	CLIP	
	12	1	**8T-4121**	2	WASHER-HARD (11X21X2.5-MM THK)	
M	13	1	**8T-4136**	2	BOLT (M10X1.5X25-MM)	
M	14	1	**8T-4189**	1	BOLT (M8X1.25X20-MM)	
	15	1	**8T-4224**	1	WASHER-HARD (8.8X16X2-MM THK)	

M-METRIC PART

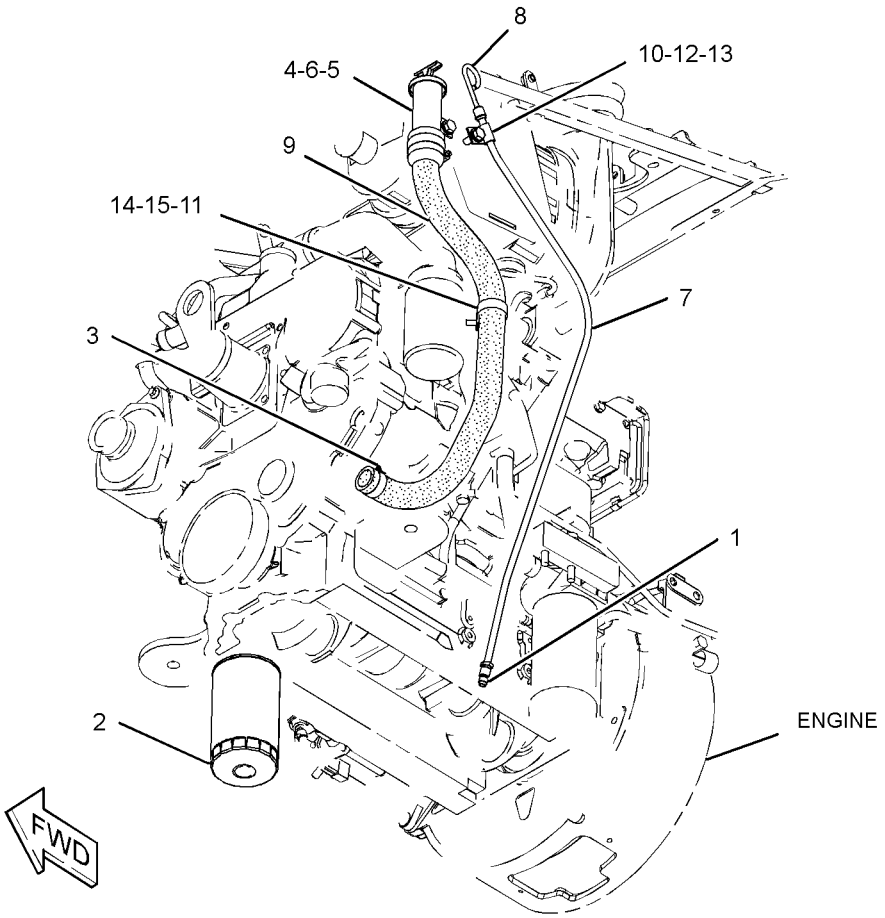

GRAPHIC #1 **<END>** g01688933

298-5112 PUMP GP-ENGINE OIL

S/N: C4Z1-UP

PART OF 322-0590 ENGINE AR-PRIMARY

SMCS-1304, 1315 **i03128291**

NOTE	REF NO	GRAPHIC REF	PART NUMBER	QTY	PART NAME 1 2 3 4 5 6 (PRODUCT LEVEL)	SEE PAGE
	1	1	**225-8329**	1	PUMP AS-ENGINE OIL	
M	2	1	**100-4461**	5	BOLT (M10X1.50X50-MM)	

M-METRIC PART

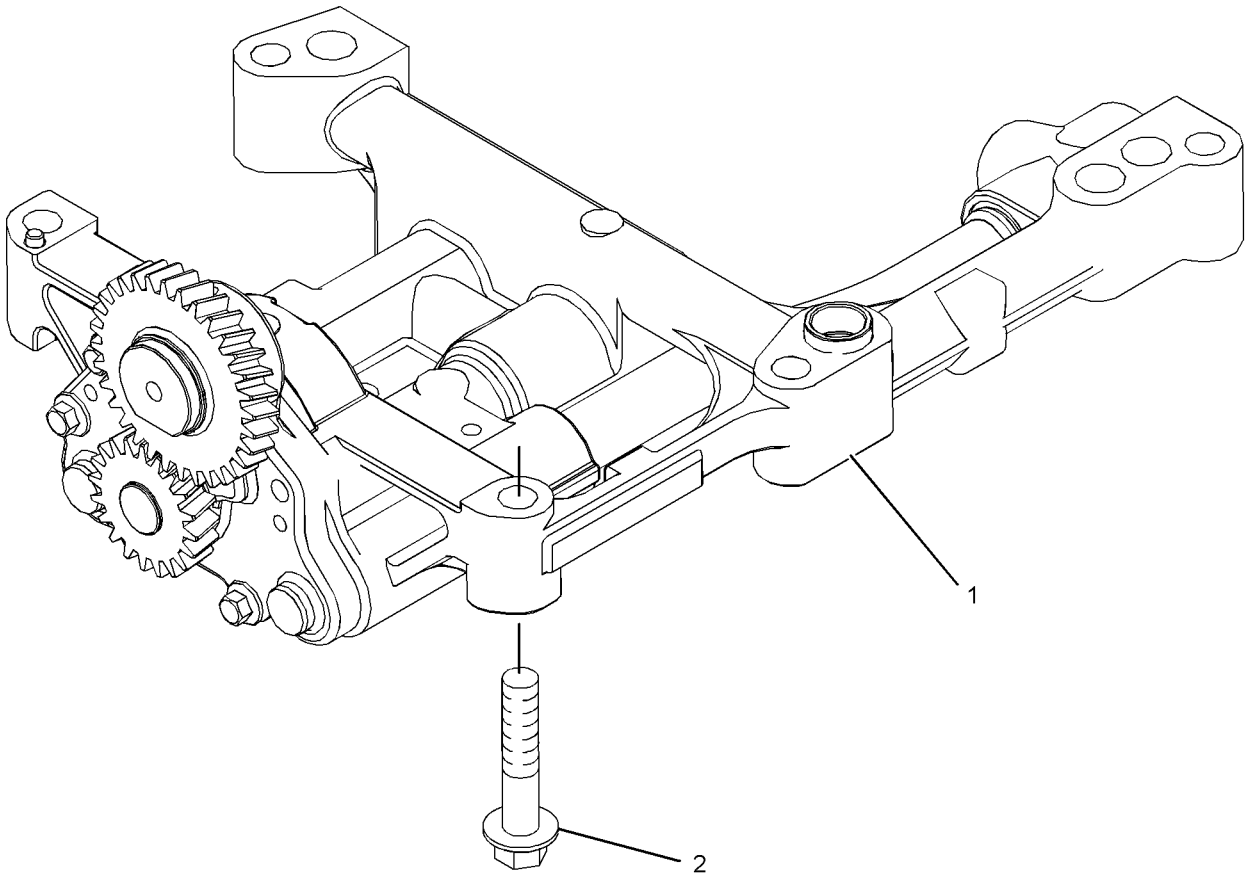

GRAPHIC #1 **<END>** g01304952

COOLING SYSTEM

316-6941 CONNECTION GP-WATER

S/N: C4Z1-UP

PART OF 322-0590 ENGINE AR-PRIMARY

SMCS-1380 **i03128305**

NOTE	REF NO	GRAPHIC REF	PART NUMBER	QTY	PART NAME 1 2 3 4 5 6 (PRODUCT LEVEL)	SEE PAGE
	1	1	**254-2267**	1	REGULATOR GP-TEMPERATURE (INCLUDES CONNECTOR) (WATER)	
	1A	1	**254-2270**	1	SEAL-O-RING	
M	2	1	**6I-0260**	2	BOLT (M8X1.25X25-MM)	

M-METRIC PART

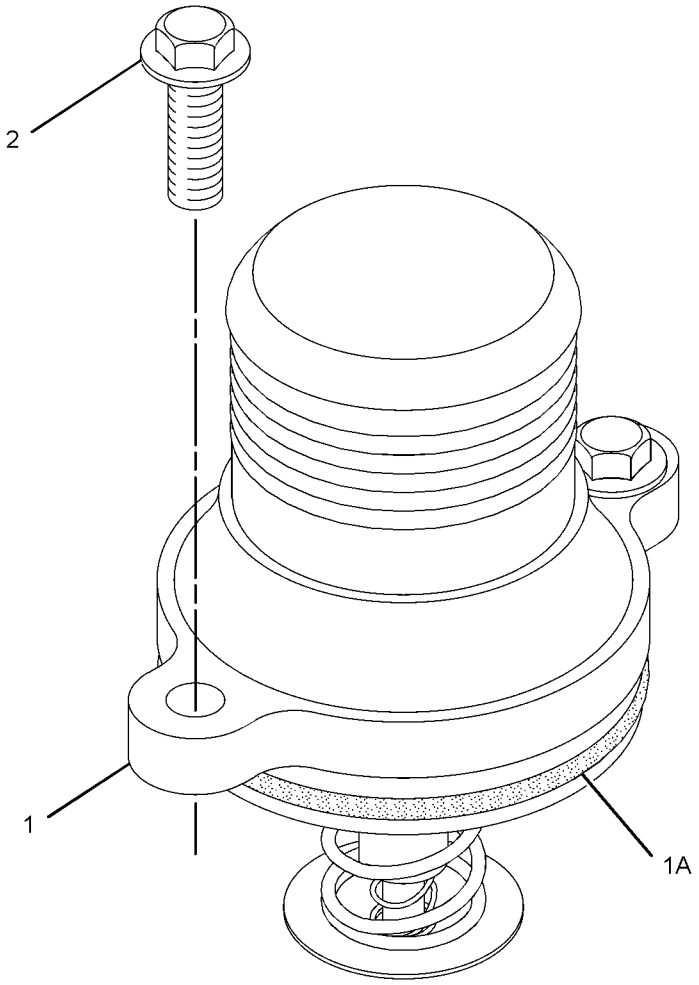

GRAPHIC #1 **<END>** g01319398

354-1274 COOLER GP-ENGINE OIL

S/N: C4Z1-UP

PART OF 323-9153 COOLER GP-FLTR BASE & ENG OIL

SMCS-1378 **i03900469**

NOTE	REF NO	GRAPHIC REF	PART NUMBER	QTY	PART NAME 1 2 3 4 5 6 (PRODUCT LEVEL)	SEE PAGE
M	1	1	**6I-0260**	10	BOLT (M8X1.25X25-MM)	
	2	1	**6I-4374**	3	BOLT (M8X1.25X60-MM)	
M	3	1	**101-3895**	4	BOLT (M8X1.25X35-MM)	
	4	1	**225-6817**	1	COOLER-OIL	
	5	1	**225-6818**	2	SEAL	
	6	1	**272-2265**	1	SEAL	

M-METRIC PART

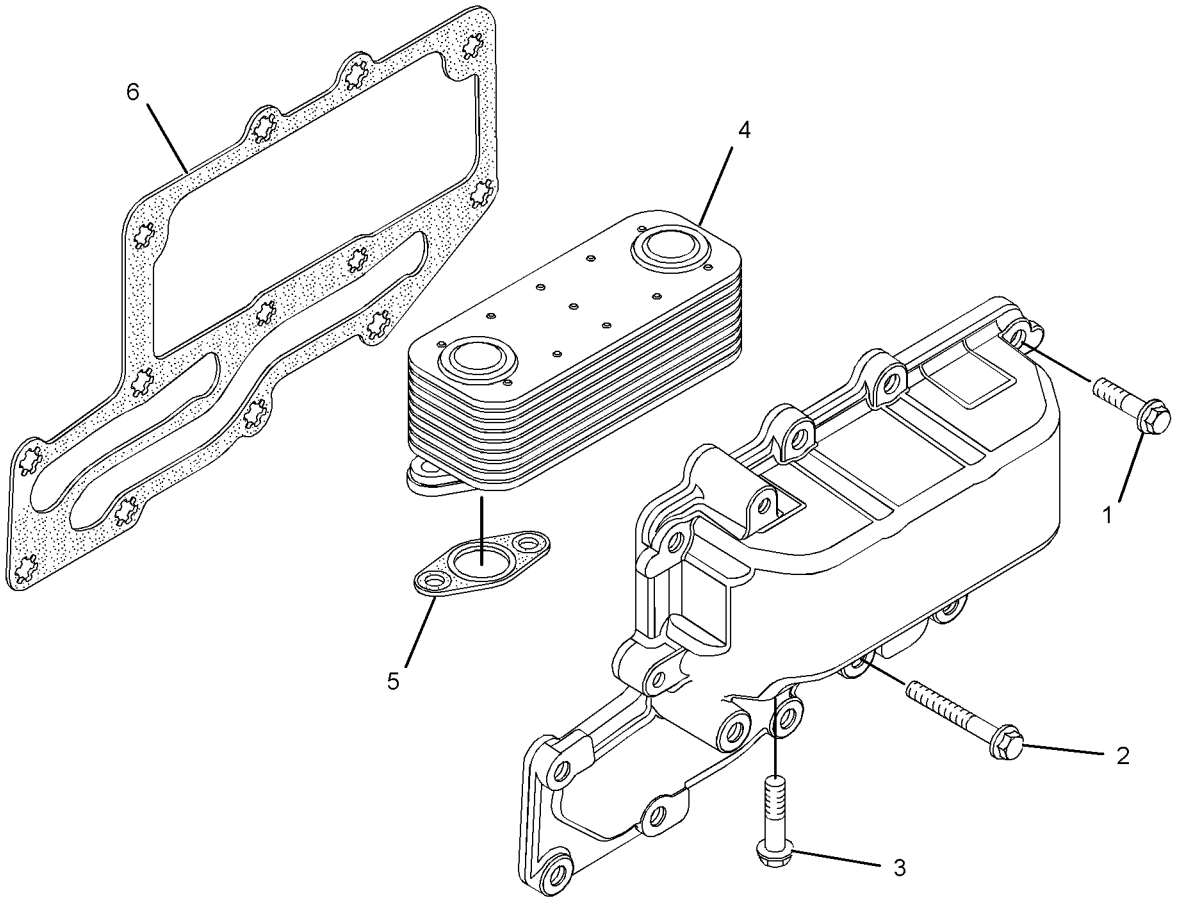

GRAPHIC #1 **<END>** g02140458

323-9153 COOLER GP-FLTR BASE & ENG OIL

S/N: C4Z1-UP

PART OF 322-0590 ENGINE AR-PRIMARY

SMCS-1306, 1378 **i03919097**

NOTE	REF NO	GRAPHIC REF	PART NUMBER	QTY	PART NAME 1 2 3 4 5 6 (PRODUCT LEVEL)	SEE PAGE
	1	1	**6I-0572**	4	BOLT (M8X1.25X20-MM)	
M	2	1	**6I-0645**	4	BOLT (M8X1.25X25-MM)	
	3	1	**225-7944**	2	GASKET (ENGINE OIL FILTER BASE)	
	4	1	**232-3751**	1	PLATE	
	5	1	**249-0974**	1	HEAD AS-OIL FILTER	
Y	6	1	**354-1274**	1	COOLER GP-ENGINE OIL	43

M-METRIC PART
Y-SEPARATE ILLUSTRATION

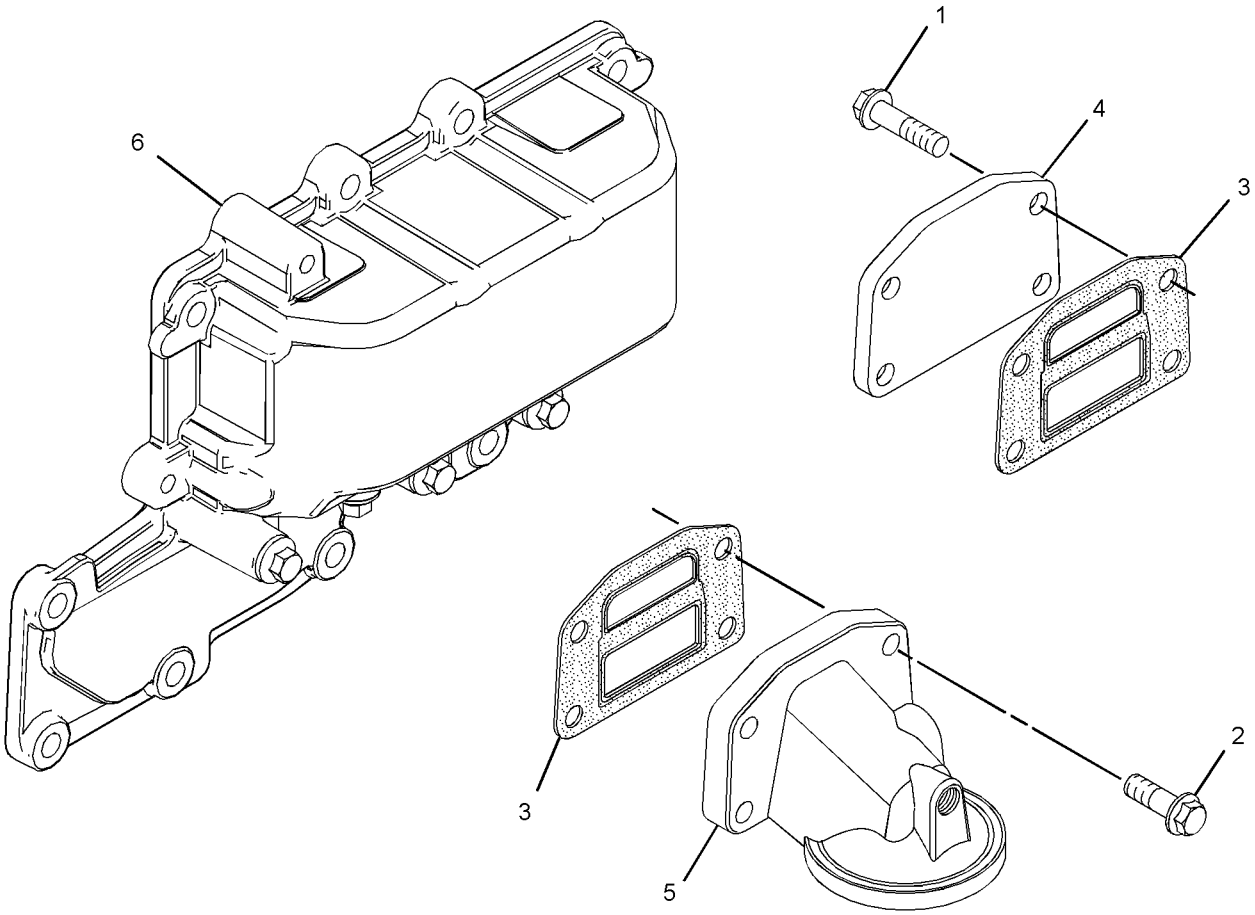

GRAPHIC #1 **<END>** g02151330

299-4716 FAN GP-SUCTION—WITH AIR CONDITIONER

S/N: LMS1-UP

PART OF 291-9195 CAB AR-ENCLOSED ROPS

AN ATTACHMENT

SMCS-1356, 1360 **i03918910**

NOTE	REF NO	GRAPHIC REF	PART NUMBER	QTY	PART NAME 1 2 3 4 5 6 (PRODUCT LEVEL)	SEE PAGE
	1	1	**130-7881**	1	SPACER	
	2	1	**142-3391**	1	SPIDER AS (9-BLADE)	
	3	1	**212-9353**	1	BELT-SERPENTINE (FAN)	
	4	1	**242-9751**	1	GUARD AS (FAN)	
	5	1	**261-0376**	1	BELT TENSIONER	
	6	1	**348-8149**	1	PLATE-MOUNTING	
	7	1	**261-0428**	1	PULLEY AS-IDLER	
M		1	**307-2242**	1	BOLT (M10X1.5X45-MM)	
	8	1	**299-4732**	1	PULLEY	
	9	1	**5P-4116**	4	WASHER-HARD (8.8X20.5X2-MM THK)	
M	10	1	**7X-2540**	4	BOLT (M8X1.25X120-MM)	
	11	1	**7X-7729**	1	WASHER (11X25X3-MM THK)	
	12	1	**8T-4121**	3	WASHER-HARD (11X21X2.5-MM THK)	
M	13	1	**8T-4172**	1	BOLT (M10X1.5X80-MM)	
M	14	1	**8T-4196**	3	BOLT (M10X1.5X35-MM)	
	15	1	**8T-4224**	4	WASHER-HARD (8.8X16X2-MM THK)	
M	16	1	**8T-4908**	4	BOLT (M8X1.25X25-MM)	

M-METRIC PART

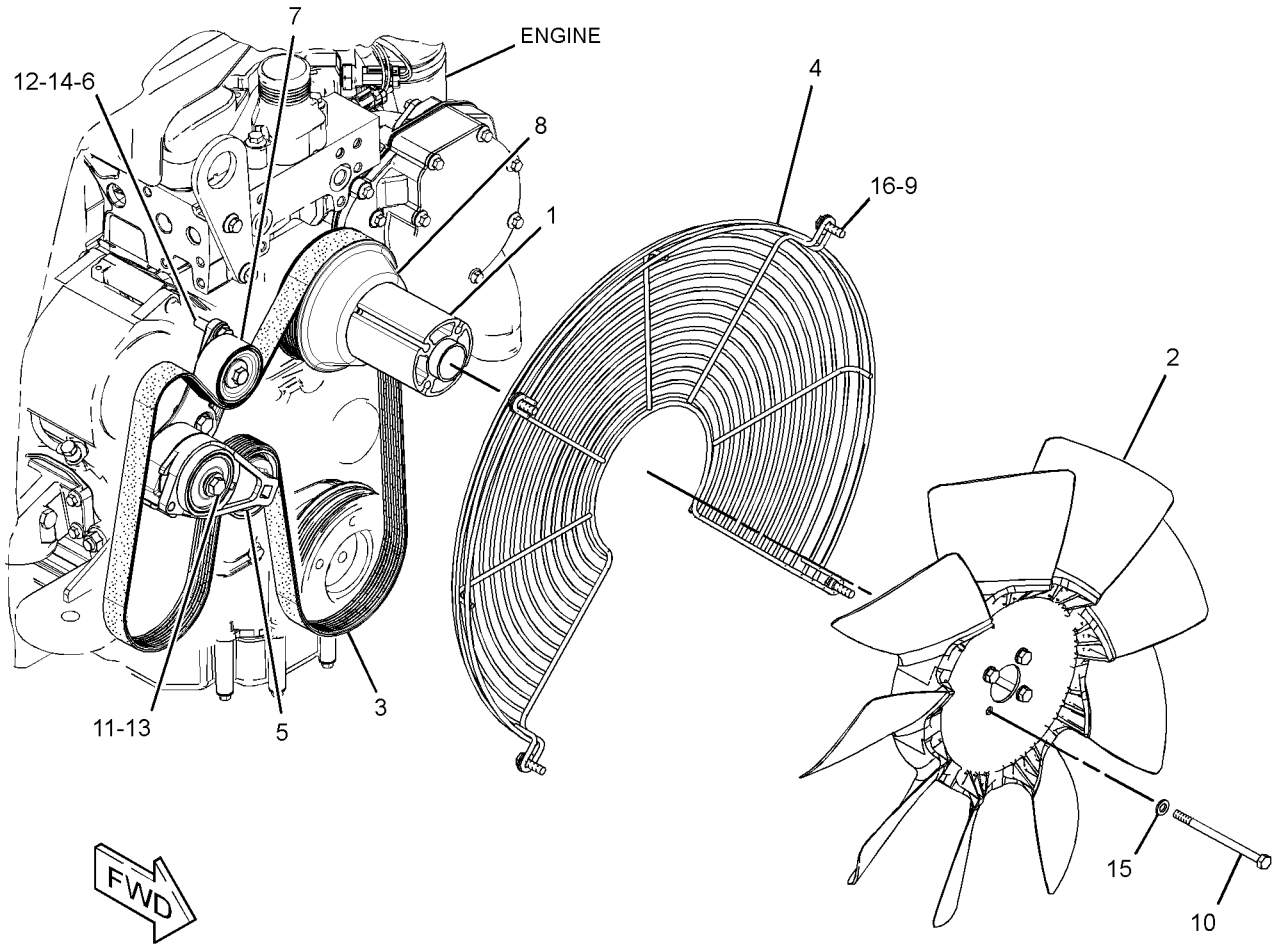

GRAPHIC #1 **<END>** g02103417

299-4729 FAN GP-SUCTION—WITHOUT AIR CONDITIONER

S/N: LMS1-UP

PART OF 291-9194 CAB AR-ENCLOSED ROPS, 291-9192 CANOPY AR-OPEN ROPS, 291-9191 CANOPY GP-OPEN ROPS

AN ATTACHMENT

SMCS-1356, 1360 **i03875189**

NOTE	REF NO	GRAPHIC REF	PART NUMBER	QTY	PART NAME 1 2 3 4 5 6 (PRODUCT LEVEL)	SEE PAGE
	1	1	**130-7881**	1	SPACER	
	2	1	**142-3391**	1	SPIDER AS (9-BLADE)	
	3	1	**242-9751**	1	GUARD AS (FAN)	
	4	1	**349-3261**	1	PLATE-TENSIONER	
	5	1	**261-0406**	1	BELT TENSIONER	
	6	1	**299-4732**	1	PULLEY	
	7	1	**324-3408**	1	BELT-SERPENTINE (FAN)	
	8	1	**5P-4116**	4	WASHER-HARD (8.8X20.5X2-MM THK)	
M	9	1	**7X-2540**	4	BOLT (M8X1.25X120-MM)	
	10	1	**7X-7729**	1	WASHER (11X25X3-MM THK)	
	11	1	**8T-4121**	3	WASHER-HARD (11X21X2.5-MM THK)	
M	12	1	**8T-4172**	1	BOLT (M10X1.5X80-MM)	
M	13	1	**8T-4196**	3	BOLT (M10X1.5X35-MM)	
	14	1	**8T-4224**	4	WASHER-HARD (8.8X16X2-MM THK)	
M	15	1	**8T-4908**	4	BOLT (M8X1.25X25-MM)	

M-METRIC PART

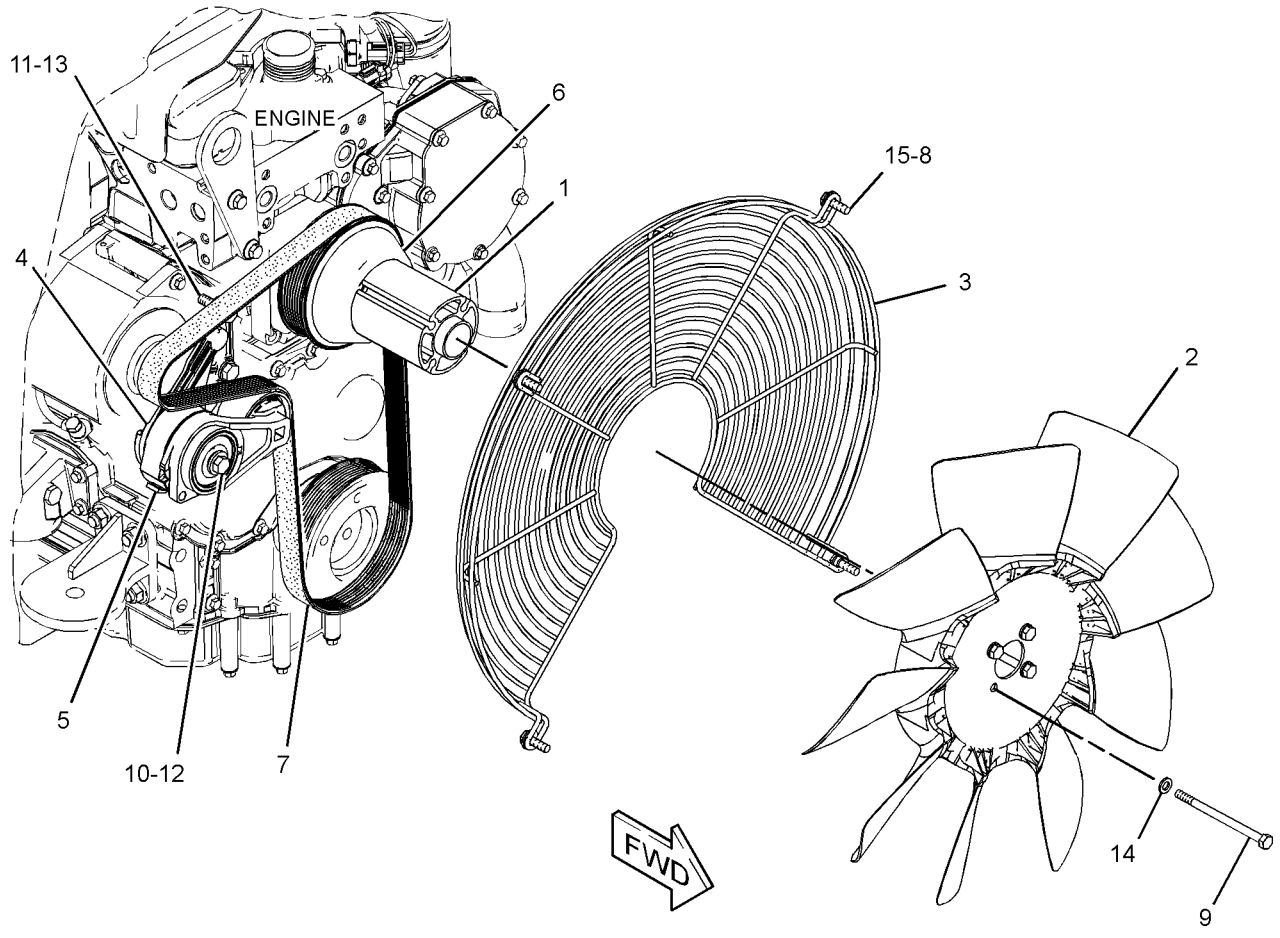

GRAPHIC #1 **<END>** g01520127

315-1369 LINES GP-POWER TRAIN COOLER

S/N: LMS1-UP

PART OF 291-9188 ENGINE AR

SMCS-1375, 3016 **i03627134**

NOTE	REF NO	GRAPHIC REF	PART NUMBER	QTY	PART NAME 1 2 3 4 5 6 (PRODUCT LEVEL)	SEE PAGE
	1	1	**118-7286**	1	BRACKET AS	
M		1	**8T-3490**	1	NUT-WELD (M10X1.5-THD)	
	2	1	**130-9984**	1	CLIP	
	3	1	**332-7541**	1	HOSE AS	
	4	1	**332-7542**	1	HOSE AS	
	5	1	**315-5401**	1	TUBE AS	
	6	1	*148-8339*	1	CONNECTOR AS	
		1	**6V-8716**	1	CONNECTOR	
		1	**6V-9746**	1	SEAL-O-RING	
		1	**7M-8485**	1	SEAL-O-RING	
	7	1	*148-8360*	1	ELBOW AS	
		1	**6V-9182**	1	ELBOW	
		1	**6V-9746**	1	SEAL-O-RING	
		1	**7M-8485**	1	SEAL-O-RING	
	8	1	**159-1503**	6	CLAMP-HOSE	
	9	1	**8T-4121**	2	WASHER-HARD (11X21X2.5-MM THK)	
M	10	1	**5C-7261**	2	NUT (M8X1.25-THD)	
M	11	1	**8T-4136**	2	BOLT (M10X1.5X25-MM)	
M	12	1	**8T-4192**	2	BOLT (M12X1.75X25-MM)	
	13	1	**8T-4223**	2	WASHER-HARD (13.5X25.5X3-MM THK)	
	14	1	**8T-7529**	3	CLIP	
E	15	1	**262-8088**		HOSE (80-CM)	
E	15A	1	**262-8088**		HOSE (70-CM)	
	16	1	**5P-4116**	2	WASHER-HARD (8.8X20.5X2-MM THK)	

E-ORDER BY THE CENTIMETER
M-METRIC PART

315-1369 **LINES GP-POWER TRAIN COOLER** *(contd.)* **i03627134**

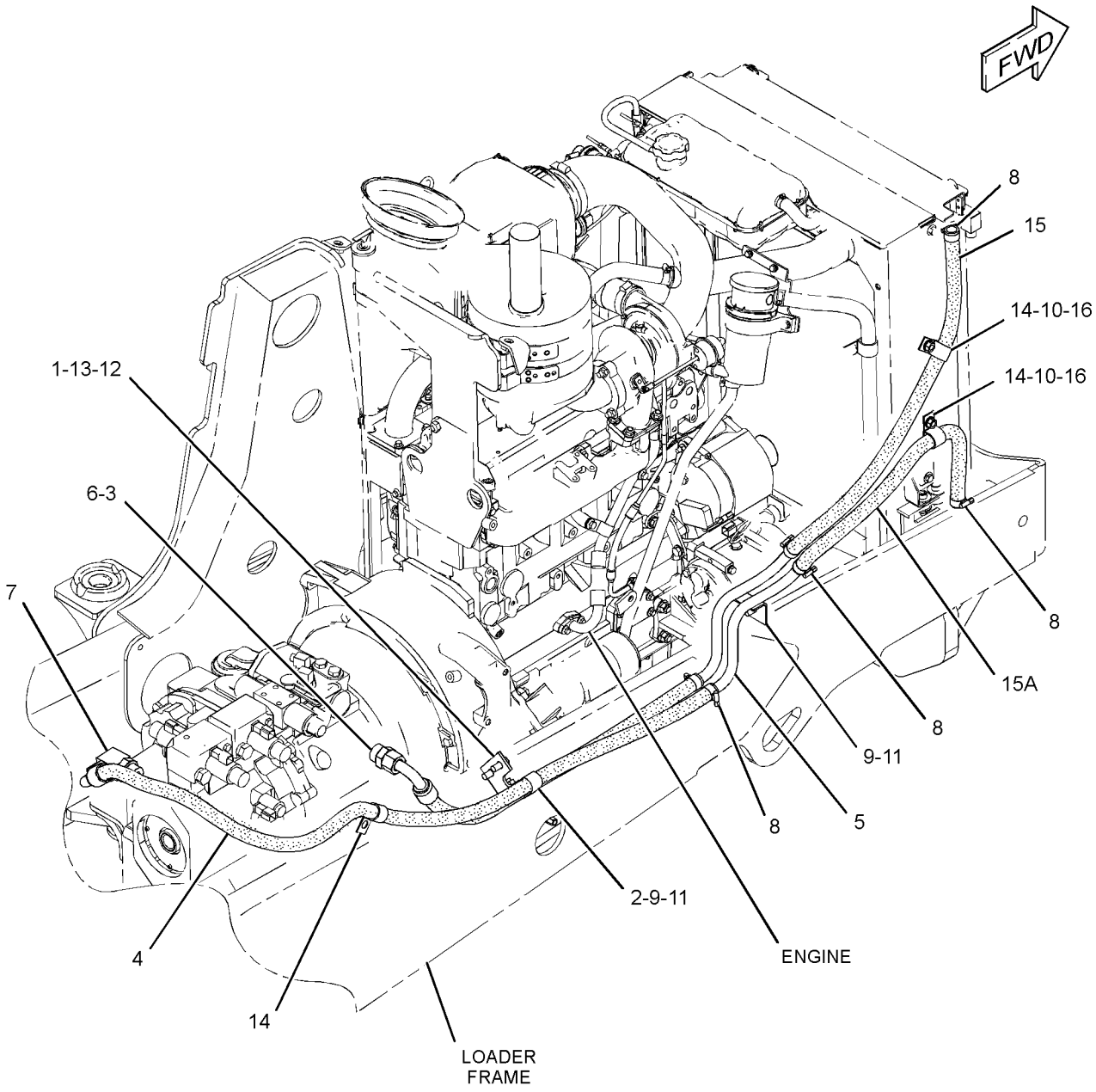

GRAPHIC #1 **<END>** g01636336

304-4022 LINES GP-RADIATOR

S/N: LMS1-UP

PART OF 291-9188 ENGINE AR

SMCS-1353, 1380 **i03919030**

NOTE	REF NO	GRAPHIC REF	PART NUMBER	QTY	PART NAME 1 2 3 4 5 6 (PRODUCT LEVEL)	SEE PAGE
	1	1	**2W-9710**	4	MOUNT AS	
	2	1	**5D-1026**	2	CLAMP-BAND	
	3	1	**6N-6984**	2	MOUNT-RUBBER	
	4	1	**9M-7958**	1	CLAMP-HOSE	
	5	1	**031-5644**	2	CLIP	
	6	1	**140-3640**	2	PLATE	
	7	1	**247-1385**	1	TANK GP-EXPANSION (COOLANT)	
		1	**251-3227**	1	CAP AS-COOLANT TANK	
	8	1	**250-2314**	1	BRACKET AS	
M		1	**8T-3612**	2	NUT-WELD (M8X1.25-THD)	
	9	1	**304-7848**	1	HOSE GP-RADIATOR	
	10	1	**325-5855**	1	HOSE-RADIATOR (UPPER)	
	11	1	**329-5700**	1	HOSE	
	12	1	**4D-7388**	1	CLIP	
M	13	1	**5C-7261**	2	NUT (M8X1.25-THD)	
	14	1	**7X-0579**	7	WASHER-HARD (8.8X25.5X2-MM THK)	
	15	1	**7X-0603**	4	WASHER-HARD (9.9X35X2.5-MM THK)	
M	16	1	**8T-2223**	4	BOLT-SOCKET HEAD (M10X1.5X45-MM)	
M	17	1	**8T-4133**	4	NUT (M10X1.5-THD)	
M	18	1	**8T-4189**	2	BOLT (M8X1.25X20-MM)	
M	19	1	**8T-4200**	4	BOLT (M8X1.25X16-MM)	
	20	1	**8T-4222**	8	WASHER-PLATED (11X32X2.5-MM THK)	
	21	1	**8T-4984**	3	CLAMP-HOSE	
	22	1	**8T-6703**	1	CLAMP-HOSE	
M	23	1	**8T-7547**	2	BOLT (M8X1.25X30-MM)	
E	24	1	**8C-3681**		HOSE (110.5-CM)	
E	24A	1	**8C-3681**		HOSE (30.2-CM)	
M	25	1	**8T-4908**	1	BOLT (M8X1.25X25-MM)	

E-ORDER BY THE CENTIMETER
M-METRIC PART

304-4022 **LINES GP-RADIATOR** *(contd.)* **i03919030**

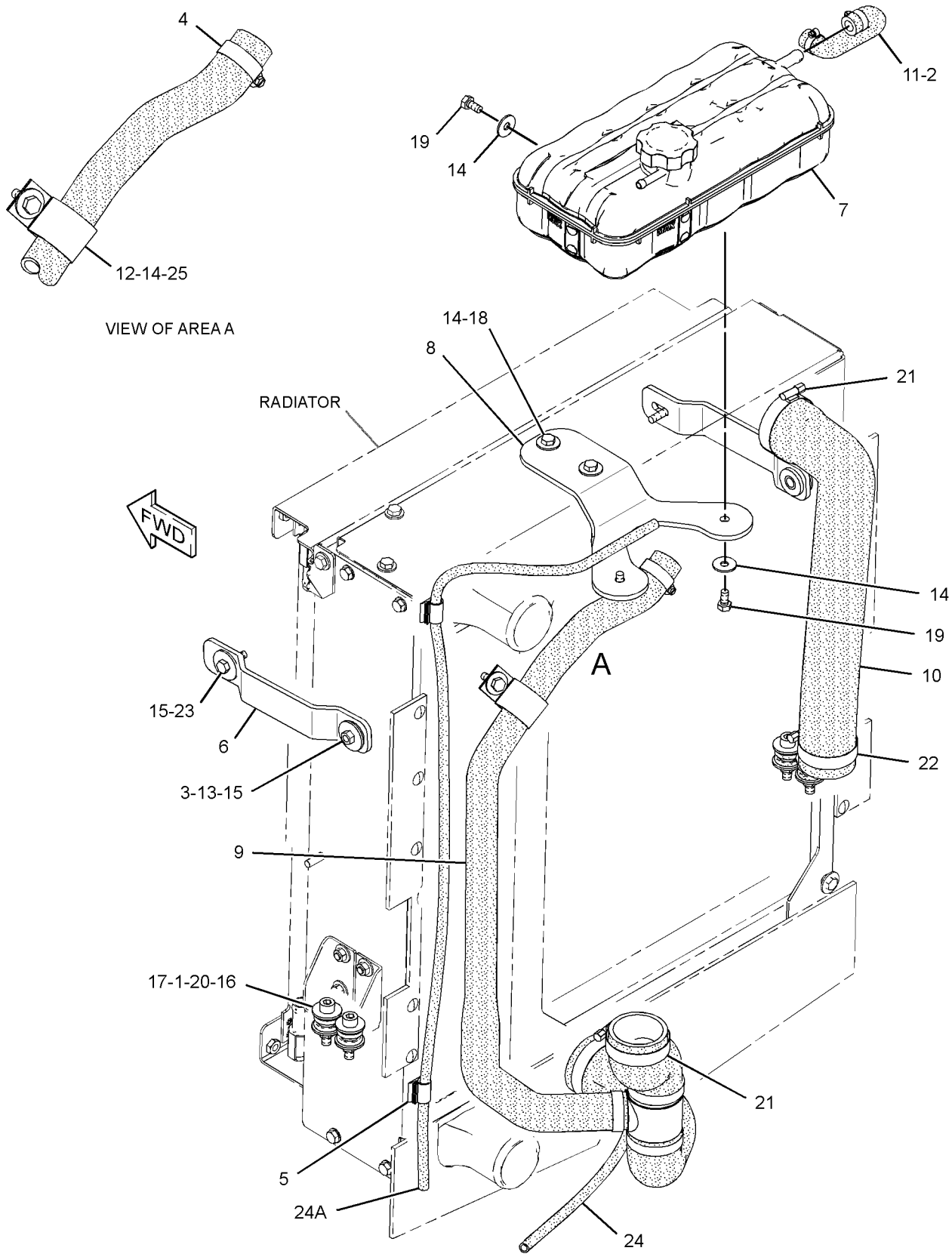

GRAPHIC #1 **<END>** g01869628

COOLING SYSTEM

315-3411 PUMP GP-WATER

S/N: C4Z1-UP

PART OF 322-0590 ENGINE AR-PRIMARY

SMCS-1361 **i03899940**

NOTE	REF NO	GRAPHIC REF	PART NUMBER	QTY	PART NAME 1 2 3 4 5 6 (PRODUCT LEVEL)	SEE PAGE
M	1	1	**6I-0217**	2	BOLT (M8X1.25X20-MM)	
M	2	1	**6I-0254**	2	BOLT (M8X1.25X30-MM)	
M	3	1	**100-3751**	5	BOLT (M8X1.25X65-MM)	
	4	1	**113-8129**	2	BOLT (M8X1.25X75-MM)	
	5	1	**225-7741**	1	CONNECTION AS	
	5A	1	**225-7738**	1	SEAL-O-RING	
	5B	1	**225-7739**	1	SEAL-O-RING	
	6	1	**355-2252**	1	PUMP GP-WATER	
	6A	1	**225-8019**	1	GASKET	

M-METRIC PART

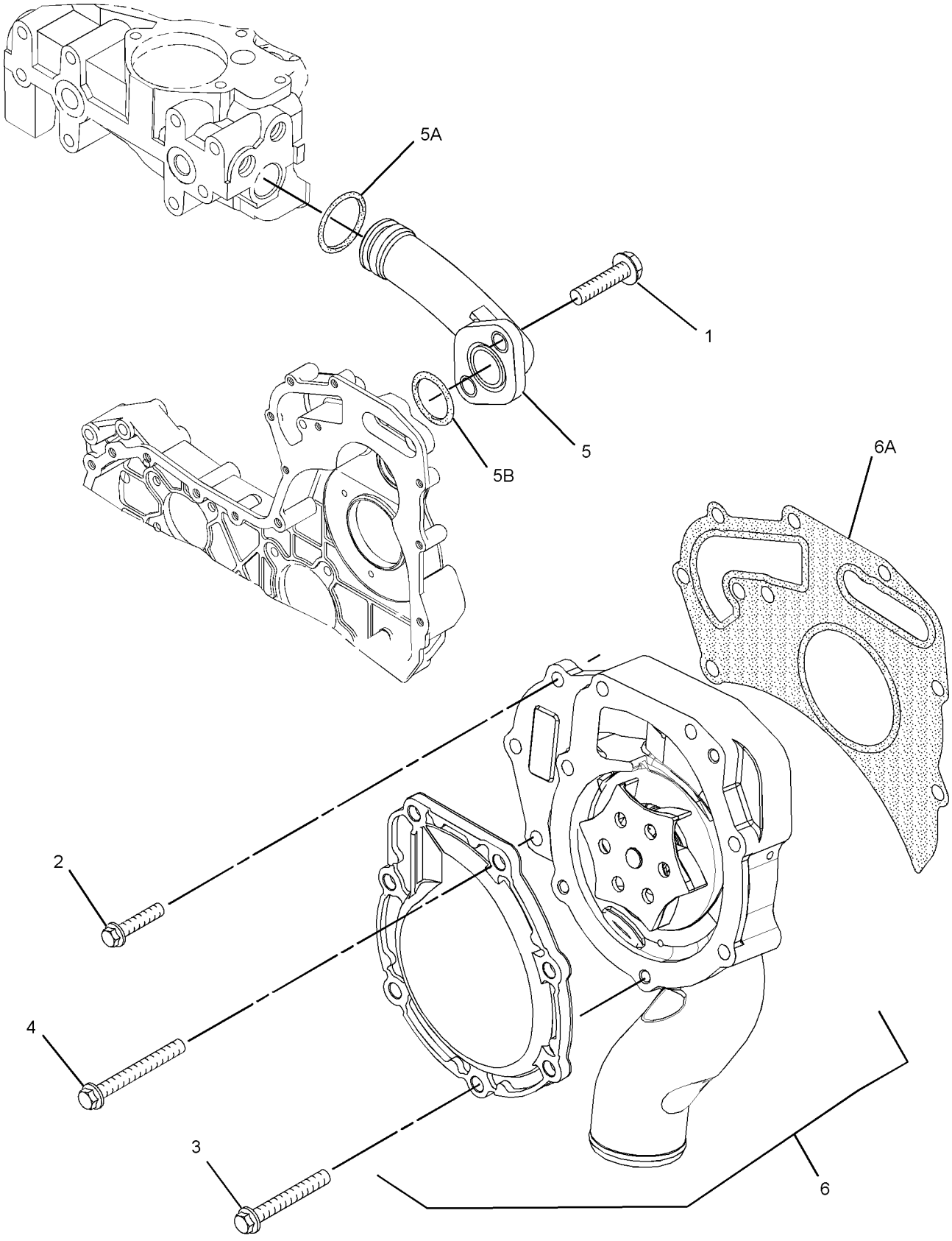

GRAPHIC #1 **<END>** g02146895

304-4023 RADIATOR & HYD OIL COOLER GP–

INCLUDES AFTCLR, XMSN COOLER

S/N: LMS1-UP

PART OF 309-9106 RADIATOR & HYD OIL COOLER GP

SMCS-1353, 1374 **i03887691**

NOTE	REF NO	GRAPHIC REF	PART NUMBER	QTY	PART NAME 1 2 3 4 5 6 (PRODUCT LEVEL)	SEE PAGE
Y	1	1	**304-7847**	1	COOLER GP-HYD & XMSN OIL	243
	2	1	**304-7850**	1	AFTERCOOLER GP-AIR	
	3	1	**304-7851**	1	RADIATOR GP	
		1	**225-4287**	1	VALVE GP-RADIATOR DRAIN	
		1	**315-0033**	2	GASKET	
	4	1	**310-7304**	1	PLATE	
M	5	1	**178-3336**	4	NUT-HEX FLANGE (M8X1.25-THD)	
	6	1	**5P-4116**	6	WASHER-HARD (8.8X20.5X2-MM THK)	
M	7	1	**8T-4189**	2	BOLT (M8X1.25X20-MM)	
M	8	1	**8T-4200**	4	BOLT (M8X1.25X16-MM)	
M	9	1	**174-9194**	4	BOLT (M8X1.25X16-MM)	
E	10	1	**145-2350**		SEAL (68-CM)	

E-ORDER BY THE CENTIMETER
M-METRIC PART
Y-SEPARATE ILLUSTRATION

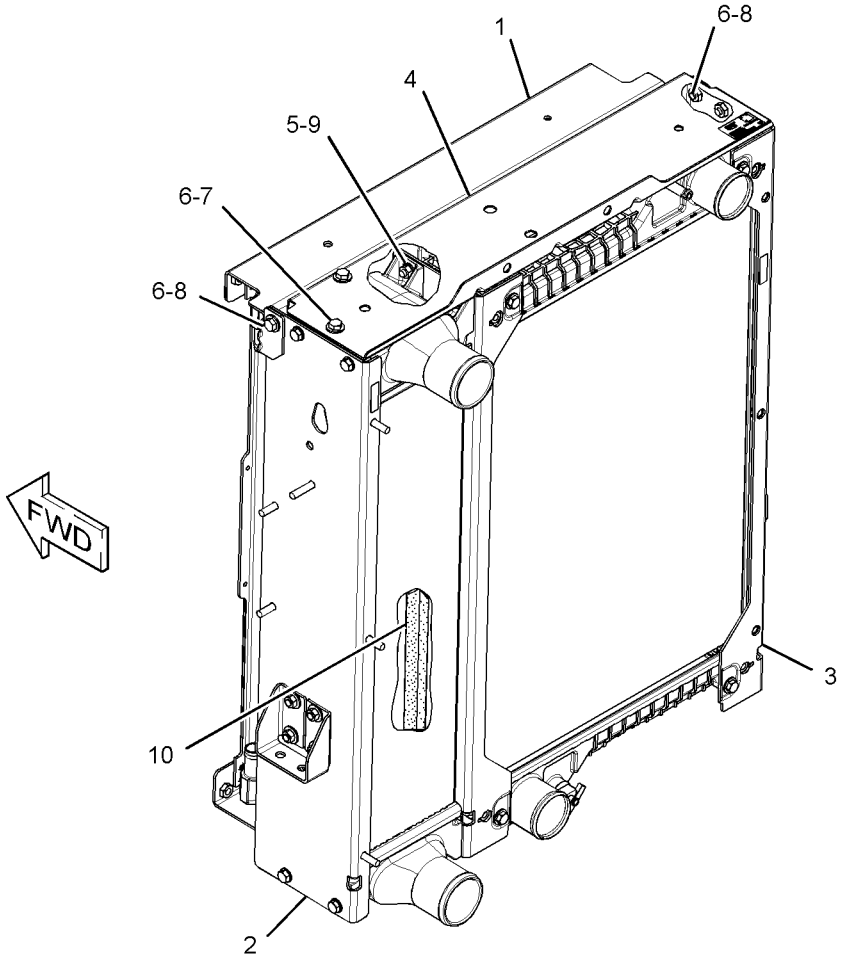

GRAPHIC #1 **<END>** g01618115

COOLING SYSTEM

309-9106 RADIATOR & HYD OIL COOLER GP

S/N: LMS1-UP

PART OF 291-9188 ENGINE AR

SMCS-1353, 1374 **i03712189**

NOTE	REF NO	GRAPHIC REF	PART NUMBER	QTY	PART NAME 1 2 3 4 5 6 (PRODUCT LEVEL)	SEE PAGE
Y	1	1	**304-4023**	1	RADIATOR & HYD OIL COOLER GP	53
	2	1	**305-6918**	1	BAFFLE (LOWER)	
	3	1	**322-9761**	1	SHROUD AS-RADIATOR	
	4	1	**324-3851**	2	SKIRT	
	5	1	**123-4065**	16	RIVET-POP	
M	6	1	**5C-7261**	3	NUT (M8X1.25-THD)	
	7	1	**7X-0579**	6	WASHER-HARD (8.8X25.5X2-MM THK)	
M	8	1	**8T-4189**	3	BOLT (M8X1.25X20-MM)	

M-METRIC PART
Y-SEPARATE ILLUSTRATION

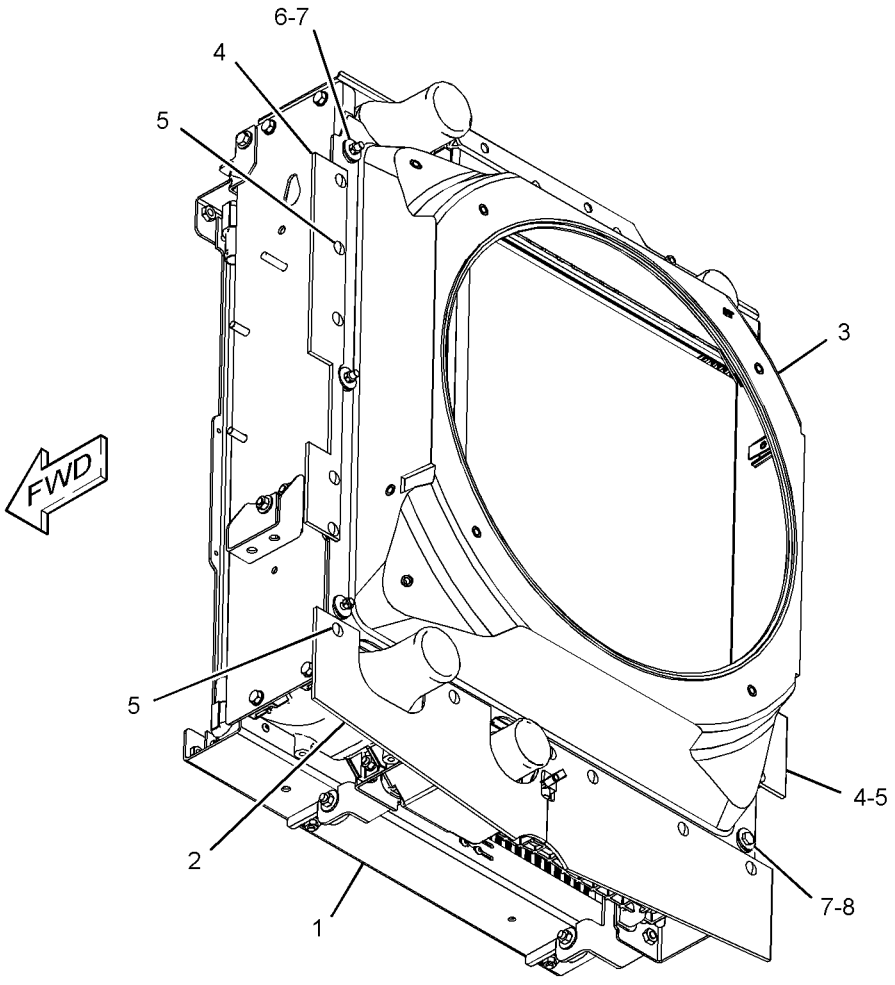

GRAPHIC #1 **<END>** g01599896

AIR INLET AND EXHAUST SYSTEM

234-1981 AIR CLEANER GP–BASIC

S/N: LMS1-UP

PART OF 298-5661 AIR CLEANER GP

SMCS-1051, 1054 **i03126100**

NOTE	REF NO	GRAPHIC REF	PART NUMBER	QTY	PART NAME 1 2 3 4 5 6 (PRODUCT LEVEL)	SEE PAGE
	1	1	**227-7449**	1	FILTER ELEMENT-AIR (SECONDARY)	
	2	1	**237-4157**	1	COVER	
	3	1	**262-9786**	1	FRAME (ELEMENT)	
	4	1	**293-4053**	1	FILTER ELEMENT-AIR (PRIMARY)	

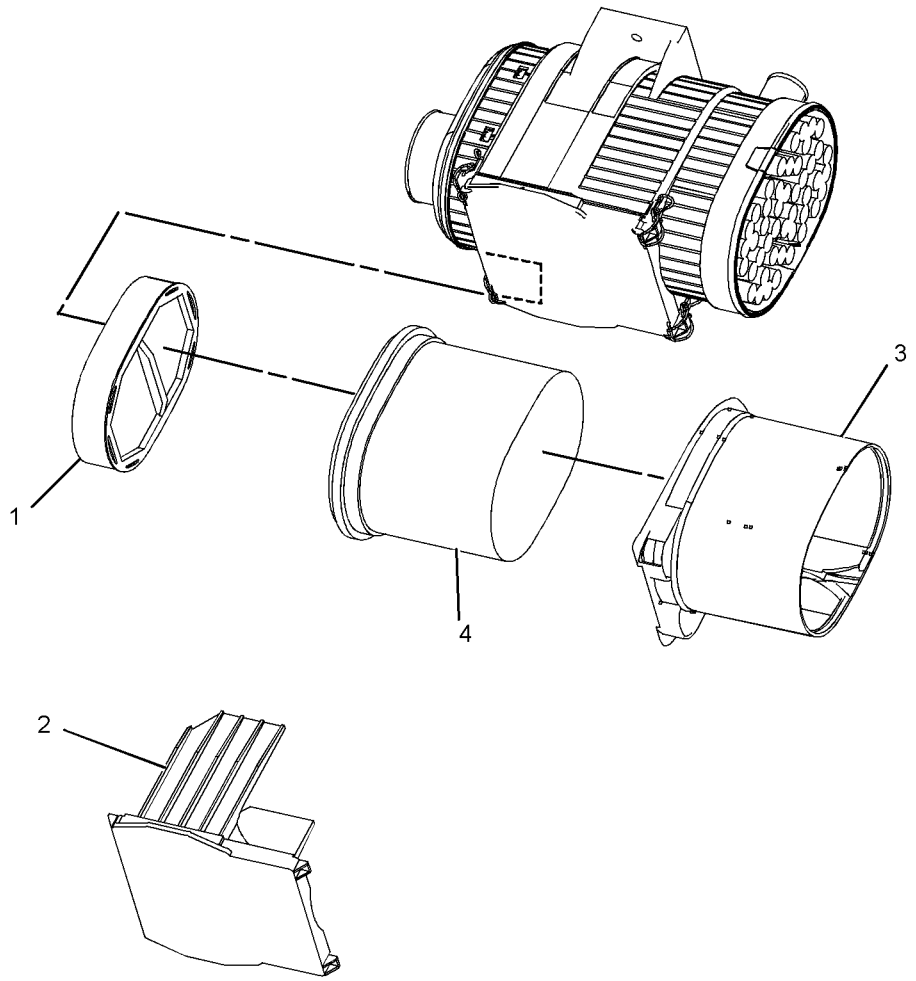

GRAPHIC #1 **<END>** g01601293

AIR INLET AND EXHAUST SYSTEM

298-5661 AIR CLEANER GP

S/N: LMS1-UP

PART OF 291-9188 ENGINE AR

SMCS-1051, 1054 **i03894531**

NOTE	REF NO	GRAPHIC REF	PART NUMBER	QTY	PART NAME 1 2 3 4 5 6 (PRODUCT LEVEL)	SEE PAGE
	1	1	**8T-6726**	1	CLAMP-HOSE	
	2	1	**110-2445**	1	CLAMP-HOSE	
	3	1	**124-6259**	3	CLAMP-HOSE	
Y	4	1	**234-1981**	1	AIR CLEANER GP	55
	5	1	**247-9730**	1	VALVE AS-CHECK	
	6	1	**248-3231**	1	DUCT-AIR	
	7	1	**249-5512**	1	SEAL	
	8	1	**253-4137**	1	SEAL	
	9	1	**253-4138**	1	STUD	
	10	1	**255-4692**	1	CONNECTOR-FILTER	
	11	1	**260-0634**	1	TUBE	
	12	1	**260-1393**	1	HOSE	
	13	1	**293-5352**	1	HOSE-AIR	
	14	1	**329-8803**	1	PLATE AS	
	15	1	**330-6734**	1	HOSE	
	16	1	**332-7333**	1	INDICATOR GP-AIR FILTER CHANGE	
		1	**205-1627**	1	BRACKET	
M	17	1	**129-3178**	1	LOCKNUT (M6X1-THD)	
	18	1	**226-0449**	1	CLAMP-HOSE	
	19	1	**4B-4863**	4	WASHER (4.7X11X1.2-MM THK)	
M	20	1	**5C-8312**	2	NUT (M4X0.7-THD)	
	21	1	**5P-4116**	6	WASHER-HARD (8.8X20.5X2-MM THK)	
	22	1	**7X-0586**	2	WASHER-HARD (7.2X32X2-MM THK)	
M	23	1	**8T-4189**	2	BOLT (M8X1.25X20-MM)	
M	24	1	**8T-4908**	4	BOLT (M8X1.25X25-MM)	
M	25	1	**8T-9405**	2	BOLT-SOCKET HEAD (M4X0.7X16-MM)	
D	26	1	**6V-1363**		HOSE (0.25-M)	

D-ORDER BY THE METER
M-METRIC PART
Y-SEPARATE ILLUSTRATION

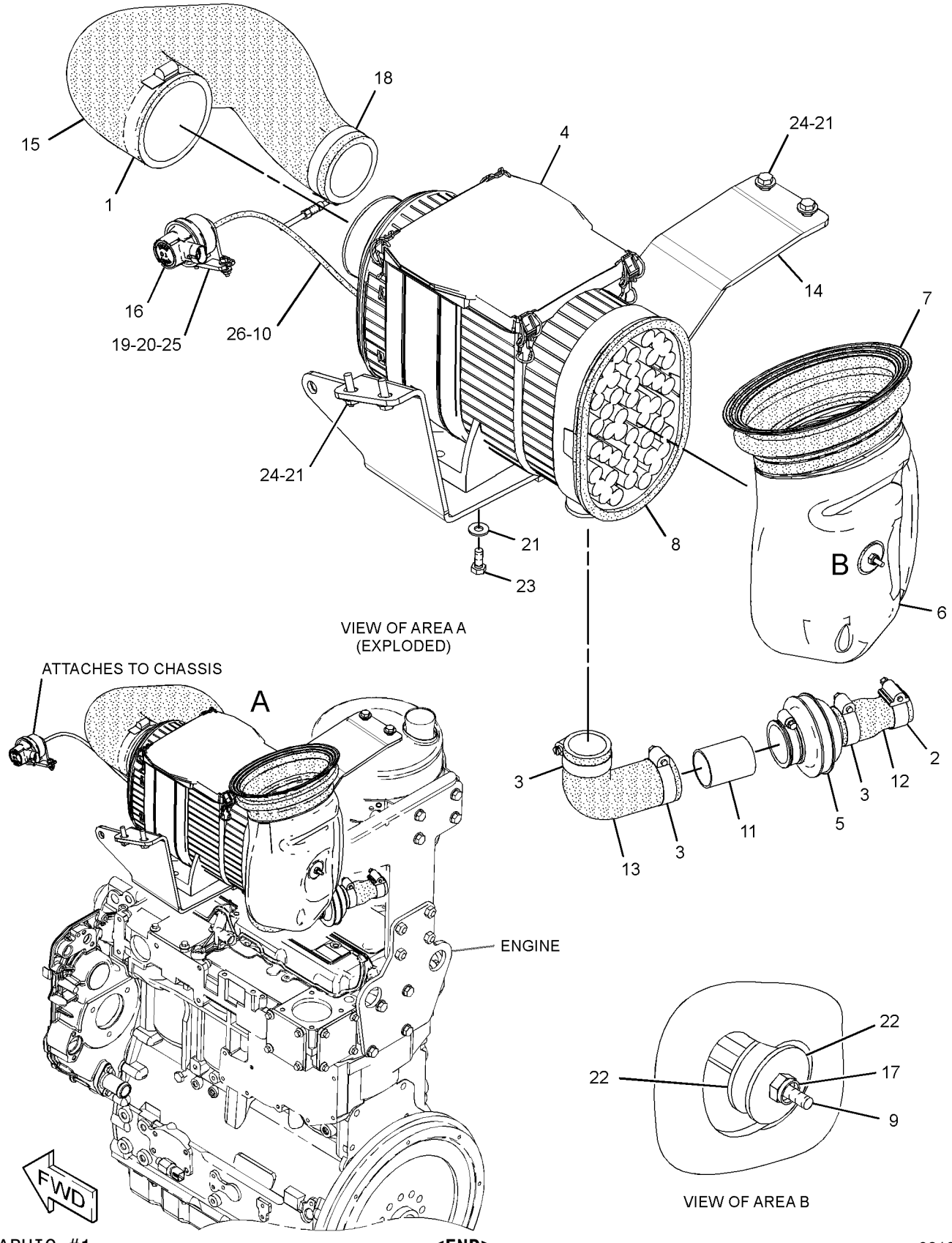

GRAPHIC #1 **<END>** g02139479

AIR INLET AND EXHAUST SYSTEM

329-0129 COVER GP-INLET MANIFOLD

S/N: C4Z1-UP

PART OF 322-0590 ENGINE AR-PRIMARY

SMCS-1058 **i03130574**

NOTE	REF NO	GRAPHIC REF	PART NUMBER	QTY	PART NAME 1 2 3 4 5 6 (PRODUCT LEVEL)	SEE PAGE
	1	1	**111-8222**	4	BOLT (M8X16-MM)	
	2	1	**114-2579**	3	GASKET	
M	3	1	**124-3815**	8	BOLT (M8X16X1.25-MM)	
	4	1	**185-6627**	3	PLATE	

M-METRIC PART

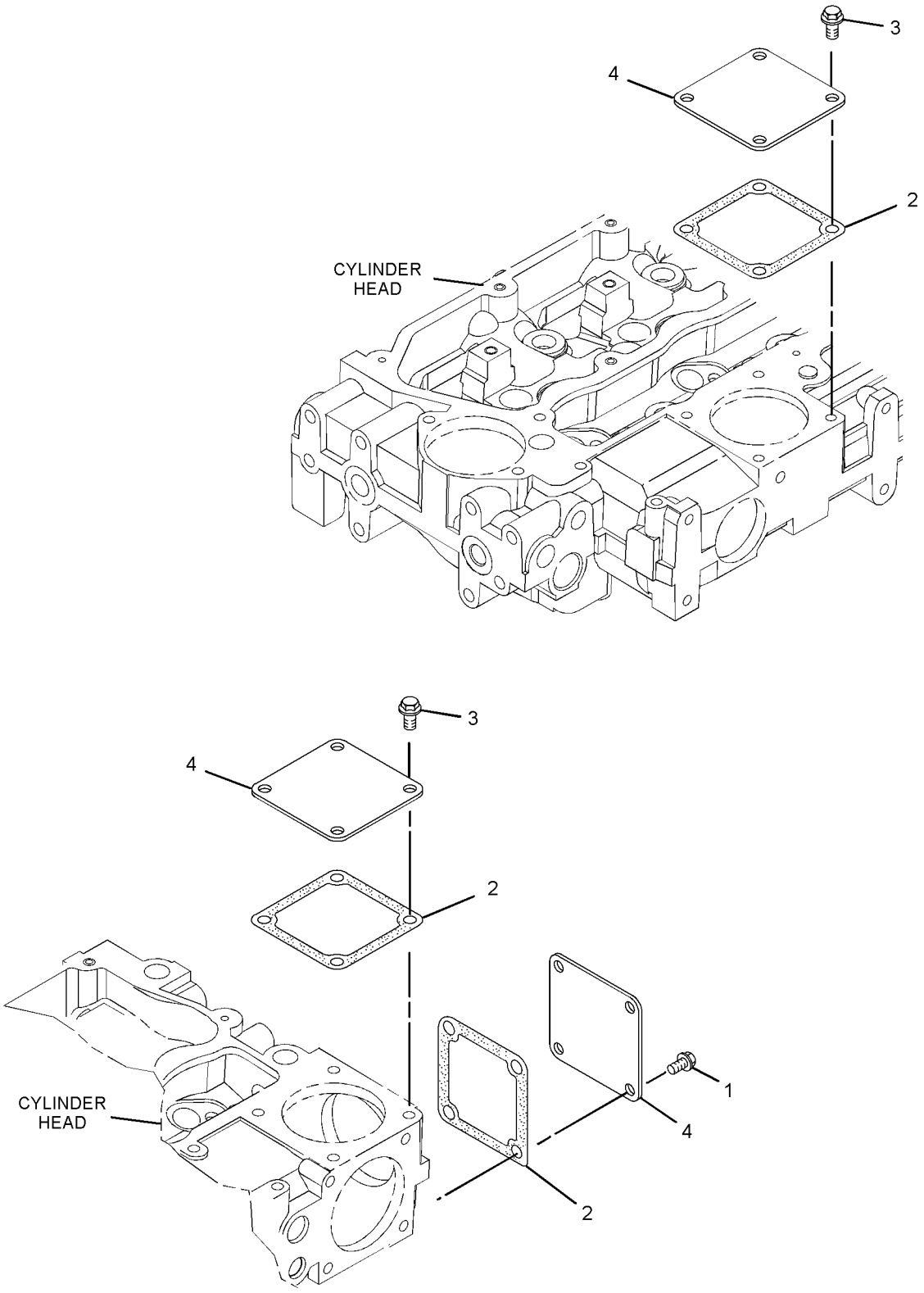

GRAPHIC #1 **<END>** g01619466

AIR INLET AND EXHAUST SYSTEM

210-6807 EXTENSION GP-EXHAUST

S/N: LMS1-UP

PART OF 291-9188 ENGINE AR

SMCS-1061 **i02159788**

NOTE	REF NO	GRAPHIC REF	PART NUMBER	QTY	PART NAME 1 2 3 4 5 6 (PRODUCT LEVEL)	SEE PAGE
	1	1	**7E-3870**	1	CLAMP-MUFFLER	
	2	1	**239-2270**	1	PIPE-EXTENSION	

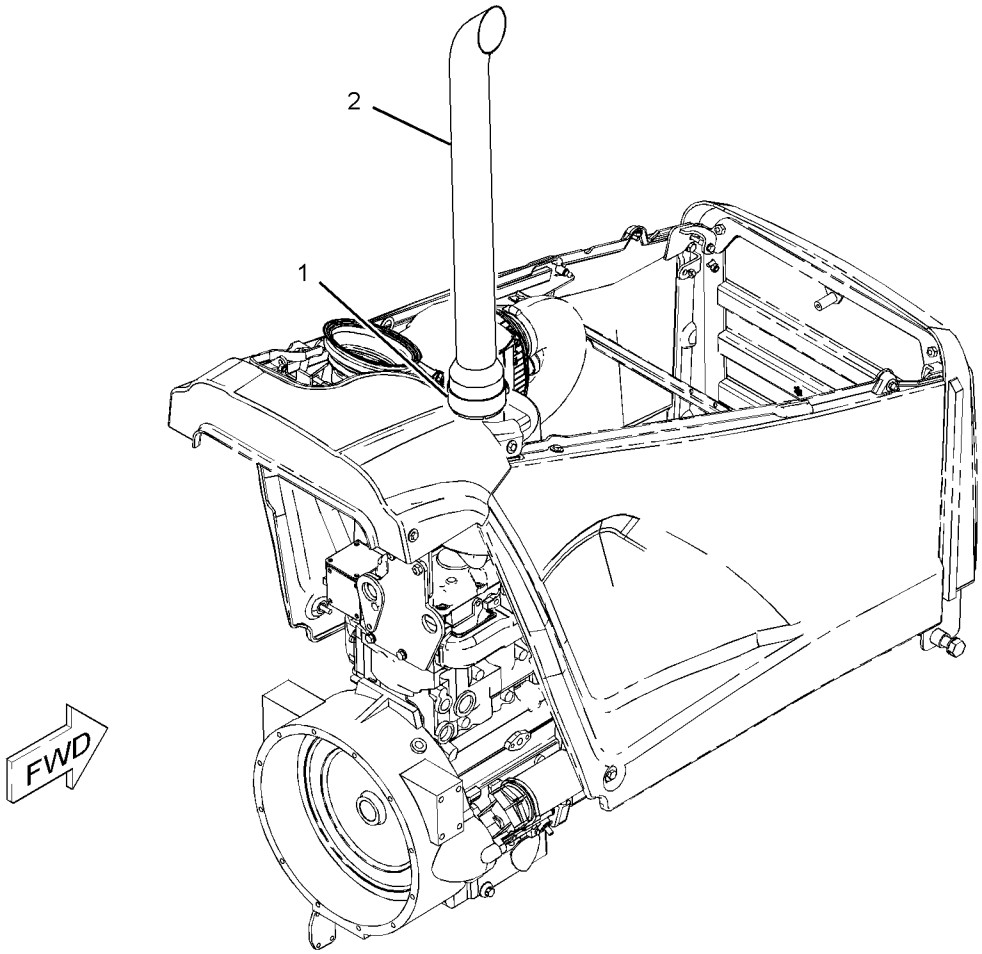

GRAPHIC #1 **<END>** g01098165

335-9162 LINES GP-AIR

S/N: LMS1-UP

PART OF 291-9188 ENGINE AR

SMCS-1071 **i03879306**

NOTE	REF NO	GRAPHIC REF	PART NUMBER	QTY	PART NAME 1 2 3 4 5 6 (PRODUCT LEVEL)	SEE PAGE
	1	1	**141-1667**	2	CLAMP-HOSE	
	2	1	**234-3030**	1	GASKET	
	3	1	**263-5376**	1	HOSE	
	4	1	**301-9765**	1	TUBE	
	5	1	**301-9766**	1	HOSE	
	6	1	**305-6917**	1	TUBE AS	
	7	1	**311-2768**	1	HOSE	
	8	1	**317-5502**	1	HOSE	
	9	1	**335-9163**	1	TUBE	
	10	1	**208-9281**	5	BOLT-FLANGE HEAD (M8X1.25X20-MM)	
	11	1	**343-1820**	2	CLAMP-BAND	
	12	1	**343-6821**	2	CLAMP-BAND	
	13	1	**215-4012**	1	CLAMP	
	14	1	**216-4983**	1	CLAMP	

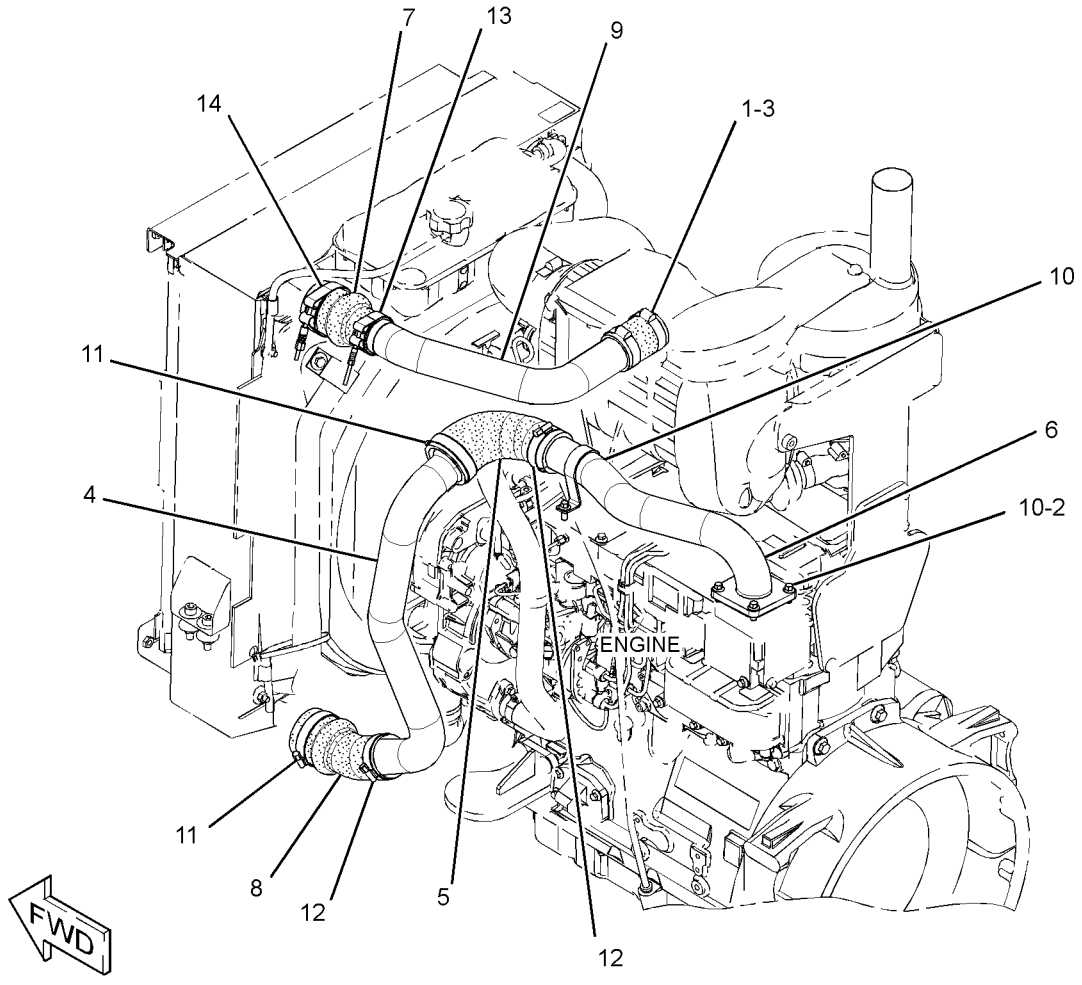

GRAPHIC #1 **<END>** g01932776

AIR INLET AND EXHAUST SYSTEM

298-5629 MUFFLER GP–TURBOCHARGER

S/N: LMS1-UP

PART OF 291-9188 ENGINE AR

SMCS-1062 **i03879303**

NOTE	REF NO	GRAPHIC REF	PART NUMBER	QTY	PART NAME 1 2 3 4 5 6 (PRODUCT LEVEL)	SEE PAGE
	1	1	**6I-0364**	3	STUD (M10X1.5X30-MM)	
	2	1	**6I-0563**	3	NUT (M10X1.5-THD)	
	3	1	**235-5363**	1	MUFFLER AS	
	4	1	**237-0975**	1	PLATE AS	
	5	1	**247-4001**	1	PLATE AS	
	6	1	**254-2187**	2	CLAMP AS	
	7	1	**7X-7729**	4	WASHER (11X25X3-MM THK)	
	8	1	**8T-4121**	12	WASHER-HARD (11X21X2.5-MM THK)	
M	9	1	**8T-4133**	4	NUT (M10X1.5-THD)	
M	10	1	**8T-4136**	4	BOLT (M10X1.5X25-MM)	
M	11	1	**8T-4195**	8	BOLT (M10X1.5X30-MM)	

M-METRIC PART

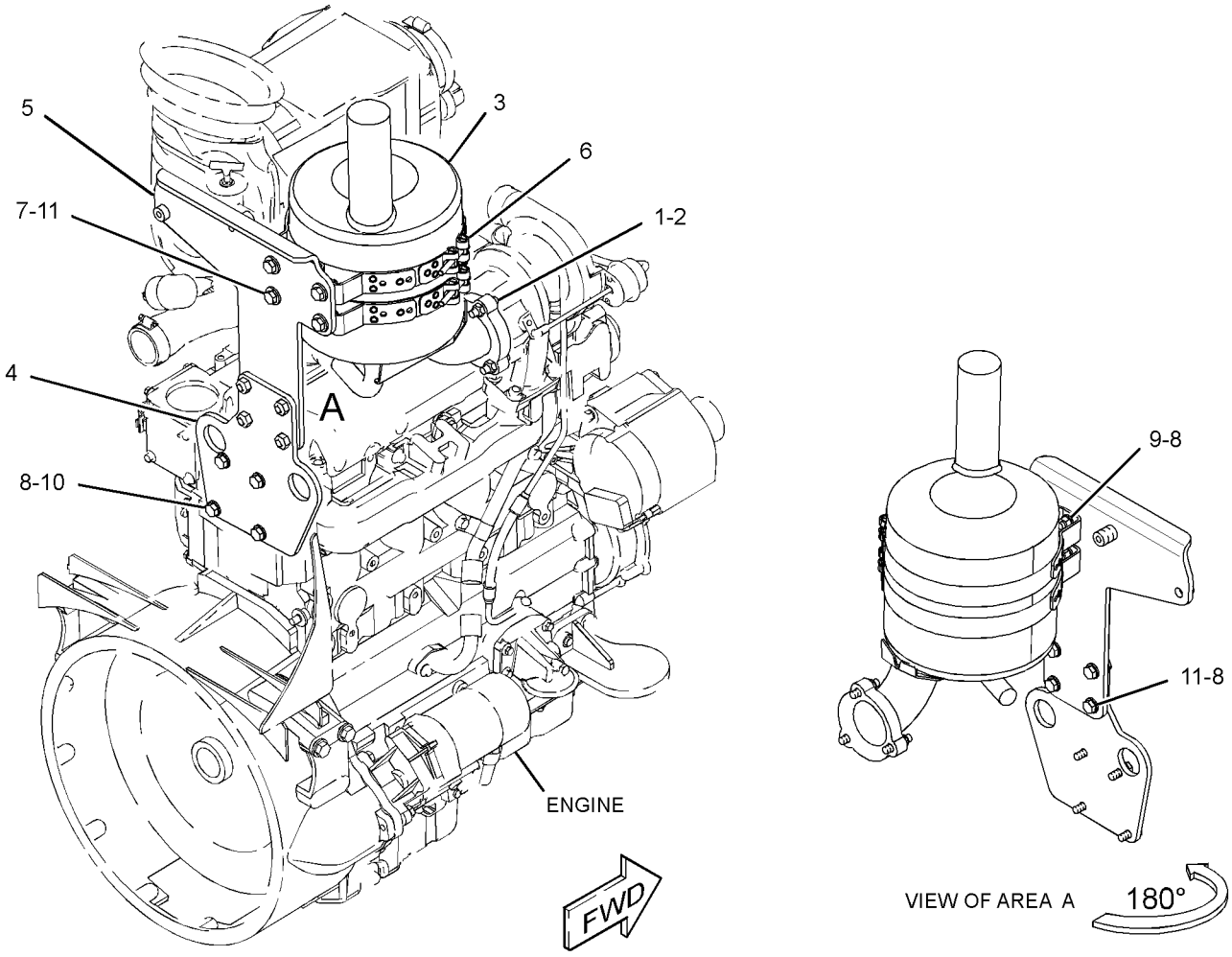

GRAPHIC #1

<END>

g01778896

AIR INLET AND EXHAUST SYSTEM

326-9010 TURBOCHARGER GP

S/N: C4Z1-UP

PART OF 322-0590 ENGINE AR-PRIMARY

SMCS-1052, 1053 **i03127785**

NOTE	REF NO	GRAPHIC REF	PART NUMBER	QTY	PART NAME 1 2 3 4 5 6 (PRODUCT LEVEL)	SEE PAGE
M	1	1	**6I-0217**	2	BOLT (M8X1.25X20-MM)	
	2	1	**6I-0563**	4	NUT (M10X1.5-THD)	
	3	1	**106-8916**	2	BOLT (M6X16-MM)	
	4	1	**147-5553**	4	STUD	
	5	1	**174-9638**	8	BOLT	
	6	1	**194-5390**	1	GASKET-MANIFOLD	
	7	1	**225-8533**	1	GASKET	
	8	1	**225-8534**	1	GASKET	
	9	1	**225-8536**	1	GASKET	
	10	1	**237-3794**	1	BOLT	
	11	1	**237-3921**	1	CLIP	
	12	1	**255-3447**	1	MANIFOLD-EXHAUST	
	13	1	**315-9721**	1	TURBOCHARGER	
	14	1	**322-9615**	1	TUBE-TURBOCHARGER	
	15	1	**322-9616**	1	TUBE AS-TURBOCHARGER	
	15A	1	**225-8524**	2	BOLT-SPECIAL (BANJO)	
	15B	1	**225-8526**	4	WASHER (10.4X13.75X1.37-MM THK)	

M-METRIC PART

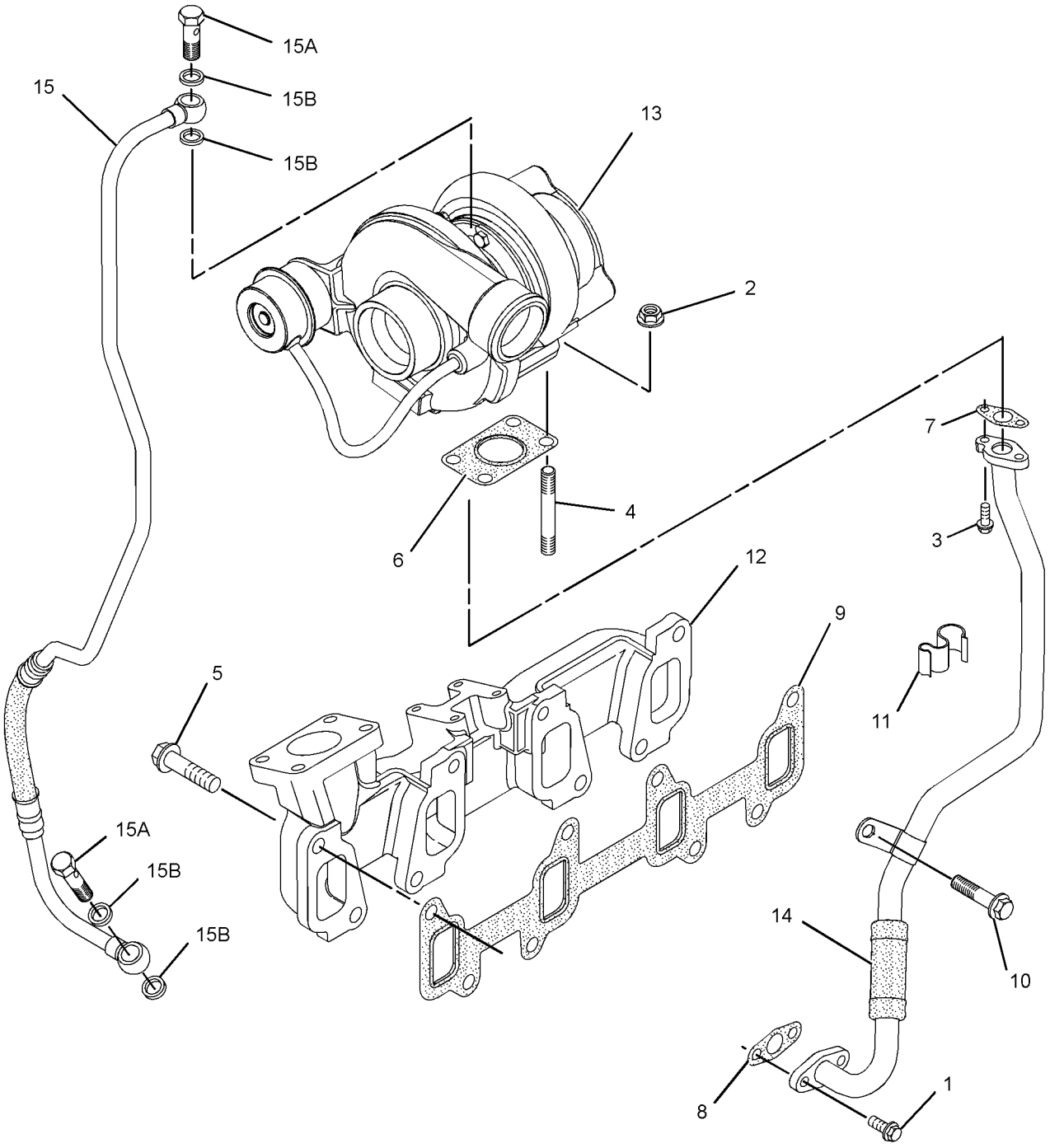

GRAPHIC #1 **<END>** g01615204

206-1640 CONTROL GP-GOVERNOR

S/N: LMS1-UP

PART OF 291-9188 ENGINE AR

SMCS-1265 **i03920821**

NOTE	REF NO	GRAPHIC REF	PART NUMBER	QTY	PART NAME 1 2 3 4 5 6 (PRODUCT LEVEL)	SEE PAGE
	1	1	**151-4841**	3	BLOCK	
Y	2	1	**209-3378**	1	PEDAL GP-GOVERNOR	568
	3	1	**235-0128**	1	CABLE AS	
M		1	**5C-2890**	2	NUT (M6X1-THD)	
		1	**8T-4742**	2	END-YOKE ROD	
		1	**8T-4744**	2	PIN AS-SPRING	
		1	**222-2690**	1	CLIP	
	4	1	**239-1434**	1	PLATE	
C	5	1	**300-1702**	1	BRACKET AS	
		1	**6T-5017**	1	SPACER (2.11X12.7X24-MM THK)	
M		1	**8T-3612**	2	NUT-WELD (M8X1.25-THD)	
	6	1	**248-2707**	1	GROMMET	
M	7	1	**119-5025**	3	SCREW-FLAT HEAD (M6X1X25-MM)	
	8	1	**164-1395**	1	KNOB (GOVERNOR CONTROL)	
Y	9	1	**209-3367**	1	LEVER GP-GOVERNOR (HANDHELD)	557
C	11	1	**7K-1181**	4	STRAP-CABLE	
M	12	1	**8T-4138**	3	BOLT (M6X1X20-MM)	
	13	1	**8T-4205**	3	WASHER-HARD (7.2X14.5X2-MM THK)	
	14	1	**8T-4224**	4	WASHER-HARD (8.8X16X2-MM THK)	
CM	15	1	**8T-4908**	3	BOLT (M8X1.25X25-MM)	
CM	16	1	**7X-0818**	1	BOLT (M8X1.25X45-MM)	

C-CHANGE FROM PREVIOUS TYPE
M-METRIC PART
Y-SEPARATE ILLUSTRATION

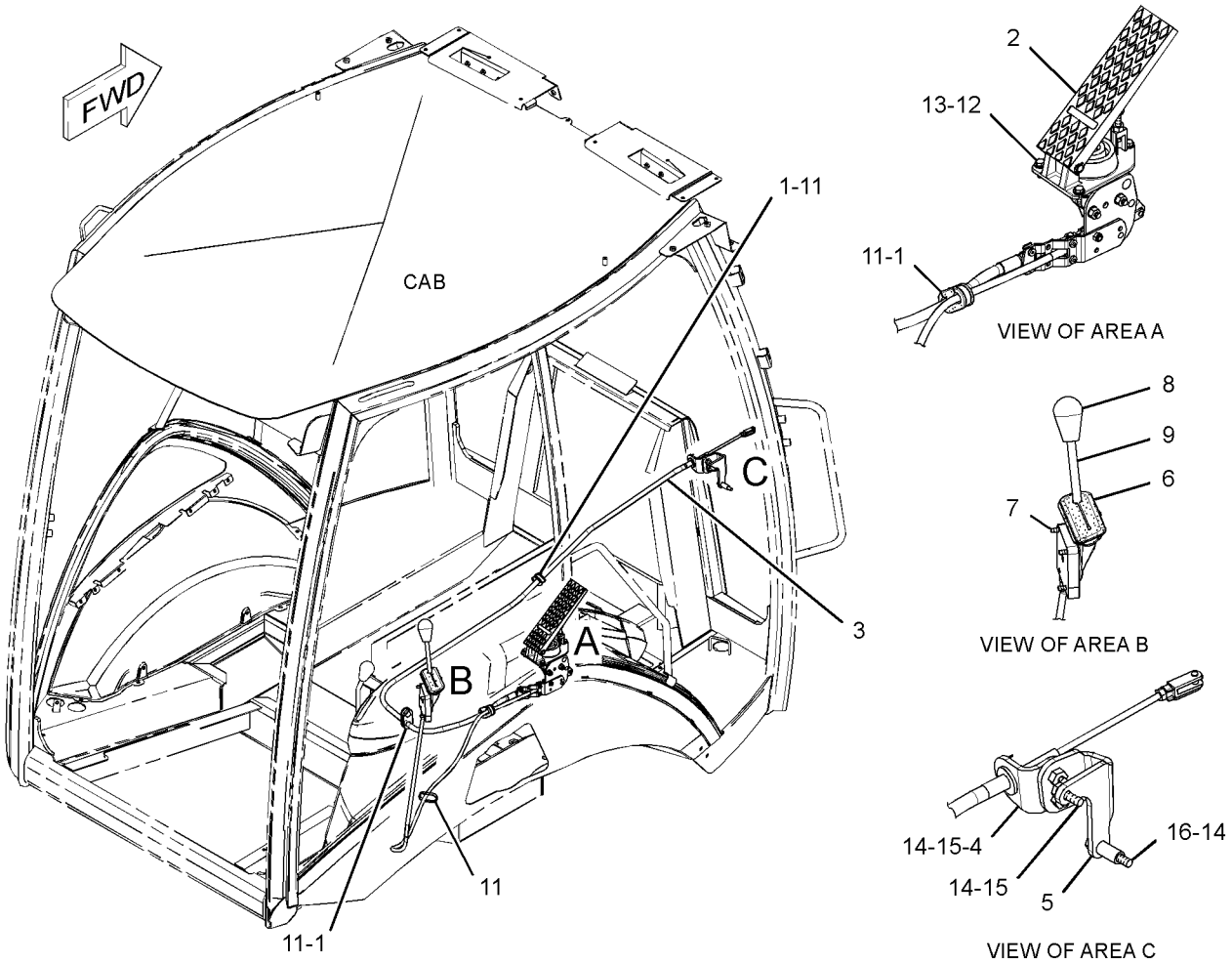

GRAPHIC #1 **<END>** g01347506

FUEL SYSTEM

297-8488 FILTER & LINES GP-FUEL

S/N: LMS1-UP

PART OF 291-9188 ENGINE AR

SMCS-1261, 1274 **i03879296**

NOTE	REF NO	GRAPHIC REF	PART NUMBER	QTY	PART NAME 1 2 3 4 5 6 (PRODUCT LEVEL)	SEE PAGE
	1	1	**5I-3978**	1	CLIP	
	2	1	**6S-8620**	10	CLAMP-HOSE	
	3	1	**7K-1181**	5	STRAP-CABLE	
	4	1	**069-4080**	1	FITTING	
	5	1	**151-1975**	1	CONNECTOR	
	6	1	*165-7951*	1	CONNECTOR AS	
		1	**3J-1907**	1	SEAL-O-RING	
		1	**157-1669**	1	CONNECTOR	
	7	1	**215-9513**	1	CONNECTOR-HOSE (FUEL LINES)	
	8	1	**215-9515**	1	CONNECTOR-HOSE (QUICK DISCONNECT)	
	9	1	**224-5917**	1	CONNECTOR-SPECIAL	
Y	10	1	**228-9129**	1	PUMP GP-FUEL PRM & PRIM FILTER (WITH WATER SEPARATOR)	75
	11	1	**246-2622**	1	ELBOW	
	12	1	**285-5098**	1	FILTER GP-FUEL	
		1	**118-8118**	1	RING-RETAINING	
		1	**118-8119**	1	NUT	
		1	**149-3516**	1	BASE AS	
		1	**156-1200**	1	FILTER ELEMENT-FUEL (WATER SEPARATOR)	
	13	1	**296-3744**	1	BRACKET AS	
	14	1	**297-7964**	1	CONNECTOR	
	15	1	**304-7621**	1	BRACKET AS	
	16	1	**304-9460**	1	TUBE AS	
	17	1	**335-8523**	1	HOSE AS	
	18	1	**335-8529**	1	HOSE	
	19	1	**5D-1026**	2	CLAMP-BAND	
	20	1	*169-5861*	2	PLUG AS	
					(EACH INCLUDES)	
		1	**3K-8460**	1	PLUG	
		1	**5P-7814**	1	SEAL-O-RING	
	21	1	**2T-3019**	1	CLIP	
	22	1	**3E-4321**	1	CLIP	
	23	1	**3J-1907**	3	SEAL-O-RING	
	24	1	**5P-7814**	1	SEAL-O-RING	
	25	1	**6D-4636**	1	CLIP	
	26	1	**7C-4354**	1	CLIP	
M	27	1	**8T-1159**	2	BOLT-SOCKET HEAD (M10X1.5X25-MM)	
	28	1	**8T-4121**	7	WASHER-HARD (11X21X2.5-MM THK)	
M	29	1	**8T-4136**	1	BOLT (M10X1.5X25-MM)	
M	30	1	**8T-4189**	7	BOLT (M8X1.25X20-MM)	
M	31	1	**8T-4192**	2	BOLT (M12X1.75X25-MM)	
M	32	1	**8T-4195**	4	BOLT (M10X1.5X30-MM)	
	33	1	**8T-4223**	2	WASHER-HARD (13.5X25.5X3-MM THK)	
	34	1	**8T-4224**	7	WASHER-HARD (8.8X16X2-MM THK)	
	35	1	**9M-8406**	5	CLIP	
	36	1	**9S-4191**	2	PLUG-O-RING	
E	37	1	**5P-1420**		HOSE (54-CM)	
E	38	1	**5P-1442**		HOSE (68-CM)	
E	39	1	**5P-1505**		HOSE (130-CM)	
G	40	1	**160-2243**		SLEEVE-ABRASION (23-IN)	
G	41	1	**160-2244**		SLEEVE-ABRASION (32-IN)	

E-ORDER BY THE CENTIMETER
G-ORDER BY THE INCH
M-METRIC PART
Y-SEPARATE ILLUSTRATION

297-8488 **FILTER & LINES GP-FUEL** *(contd.)* **i03879296**

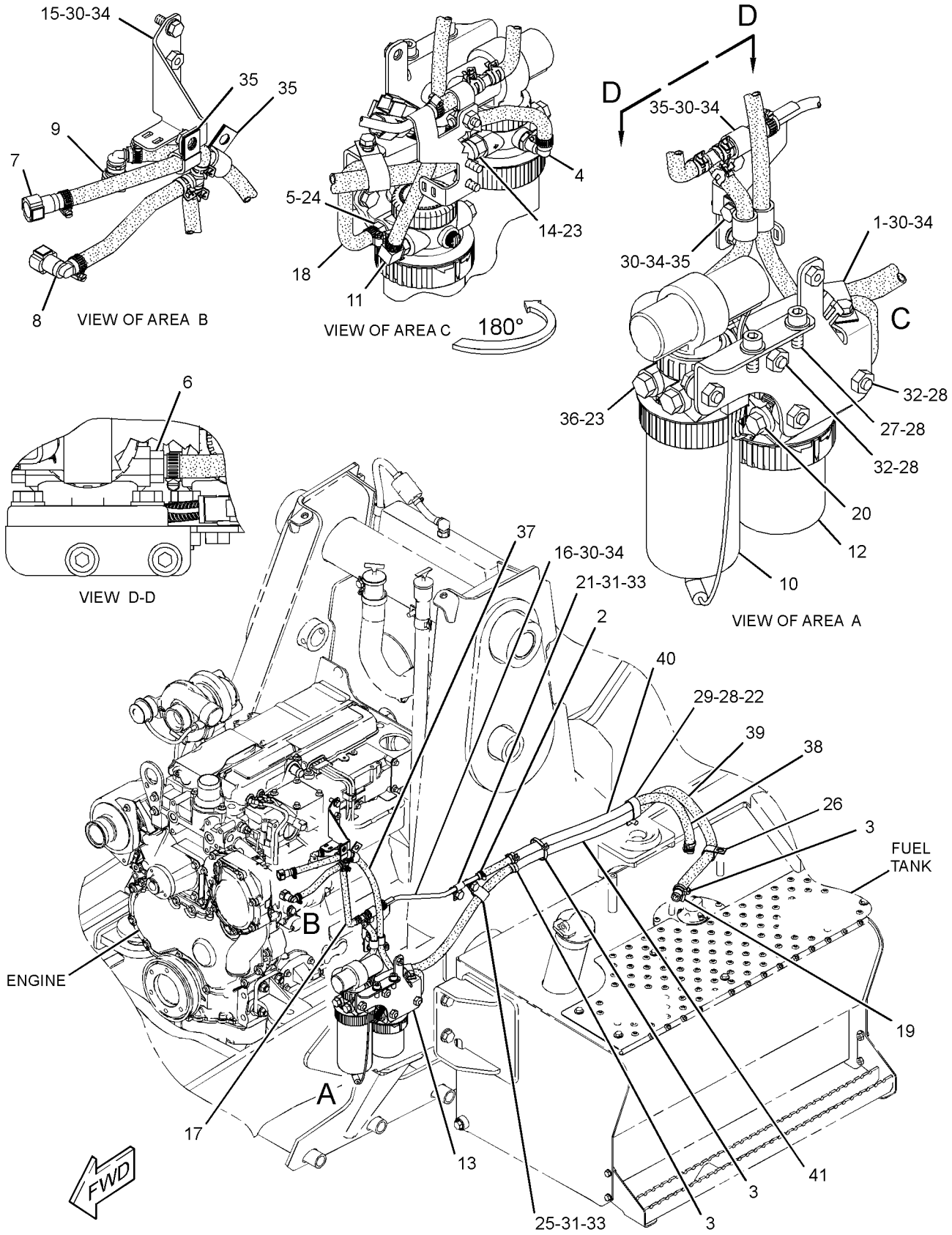

GRAPHIC #1 **<END>** g01781017

FUEL SYSTEM

326-9012 LINES GP-FUEL

S/N: C4Z1-UP

PART OF 322-0590 ENGINE AR-PRIMARY

SMCS-1274 **i03127784**

NOTE	REF NO	GRAPHIC REF	PART NUMBER	QTY	PART NAME 1 2 3 4 5 6 (PRODUCT LEVEL)	SEE PAGE
	1	1	**8T-7876**	1	SEAL-O-RING	
	2	1	**035-8017**	1	UNION	
	3	1	**067-6264**	1	FITTING-FLARED	
	4	1	**067-6265**	1	FITTING-BRASS	
	5	1	**232-3126**	1	CLIP	
	6	1	**236-2144**	1	TUBE AS	
	6A	1	**067-6999**	1	FERRULE	
	7	1	**247-4884**	1	TUBE AS	
	8	1	**320-9213**	1	CONNECTION	

326-9012 **LINES GP-FUEL** *(contd.)* **i03127784**

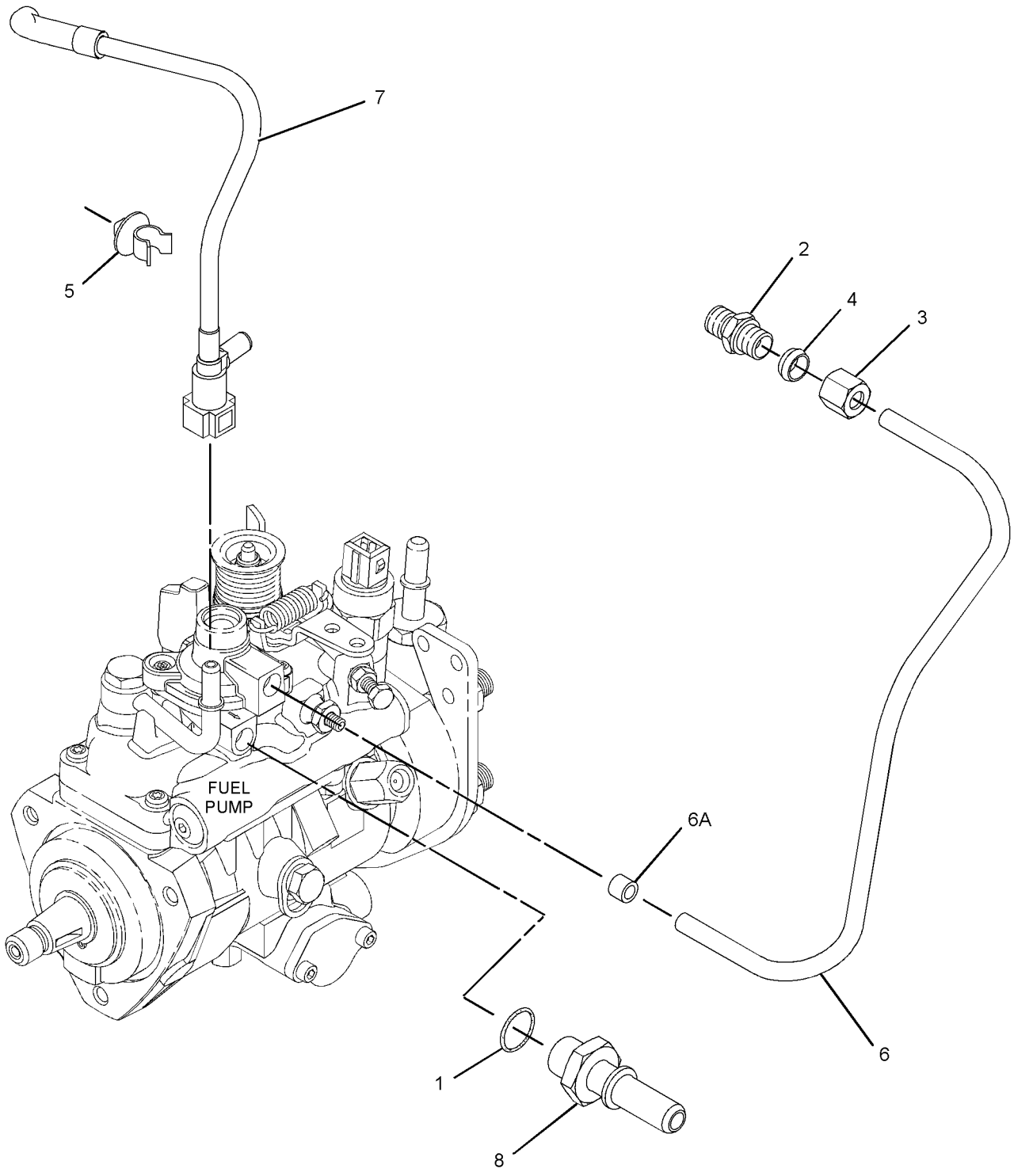

GRAPHIC #1 **<END>** g01613613

326-8993 PUMP GP-FUEL INJECTION

S/N: C4Z1-UP

PART OF 326-9006 PUMP GP-FUEL INJECTION

SMCS-1251, 1290 **i03138002**

NOTE	REF NO	GRAPHIC REF	PART NUMBER	QTY	PART NAME 1 2 3 4 5 6 (PRODUCT LEVEL)	SEE PAGE
	1	1	**111-3422**	1	NUT	
	2	1	**111-3423**	1	WASHER	
	3	1	**152-3968**	1	SEAL-O-RING	
	4	1	**176-6219**	1	VALVE GP-SOLENOID (12-VOLT)	

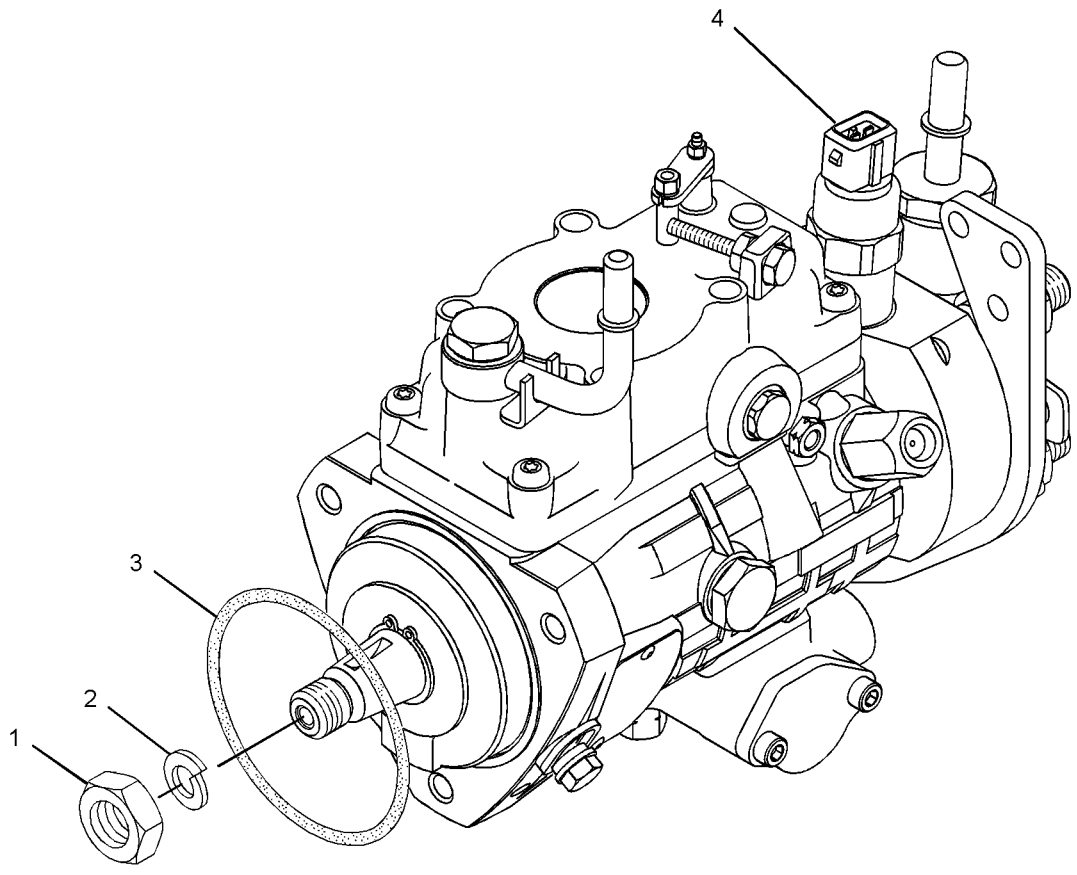

GRAPHIC #1 **<END>** g01615399

326-9006 PUMP GP-FUEL INJECTION

S/N: C4Z1-UP

PART OF 322-0590 ENGINE AR-PRIMARY

SMCS-1251, 1290 **i03313780**

NOTE	REF NO	GRAPHIC REF	PART NUMBER	QTY	PART NAME 1 2 3 4 5 6 (PRODUCT LEVEL)	SEE PAGE
M	1	1	**6I-0217**	1	BOLT (M8X1.25X20-MM)	
M	2	1	**6I-0260**	3	BOLT (M8X1.25X25-MM)	
	3	1	**6I-0291**	1	NUT (M8X1.25-THD)	
M	4	1	**100-4830**	1	BOLT (M10X1.5X20-MM)	
M	5	1	**124-3815**	1	BOLT (M8X16X1.25-MM)	
	6	1	**140-8714**	1	CLIP	
	7	2	**169-5326**	1	SWITCH-TEMPERATURE (FUEL)	
	8	1	**230-8989**	1	GEAR-FUEL PUMP (68-TEETH)	
	9	1	**230-8995**	1	TUBE AS (CYL NO.1)	
	10	1	**230-8996**	1	TUBE AS (CYL NO.2)	
	11	1	**230-8997**	1	TUBE AS (CYL NO.3)	
	12	1	**230-8998**	1	TUBE AS (CYL NO.4)	
	13	2	**232-1323**	1	PLUG-CUP	
	14	1	**232-1328**	1	CAP	
	15	2	**232-1793**	1	CABLE	
	16	1	**232-1794**	3	HOSE	
	17	1	**232-2725**	2	CLIP	
	18	1	**232-2726**	1	CLIP	
	19	1	**232-3126**	1	CLIP	
	20	1	**232-3149**	3	WASHER (8.35X16.85X1.55-MM THK)	
	21	1	**232-3157**	1	BRACKET	
	22	1	**232-3274**	4	BOLT (M8X1.25X48.1-MM)	
	23	1	**238-8671**	4	CLAMP-INJECTOR	
	24	1	**240-5571**	1	BRACKET	
	25	1	**315-3381**	4	ATOMIZER AS	
					(EACH INCLUDES)	
	25A	1	**140-8718**	1	WASHER	
	25B	1	**275-1038**	1	SEAL-O-RING	
Y	26	1	**326-8993**	1	PUMP GP-FUEL INJECTION	71

M-METRIC PART
Y-SEPARATE ILLUSTRATION

326-9006 **PUMP GP-FUEL INJECTION** *(contd.)* **i03313780**

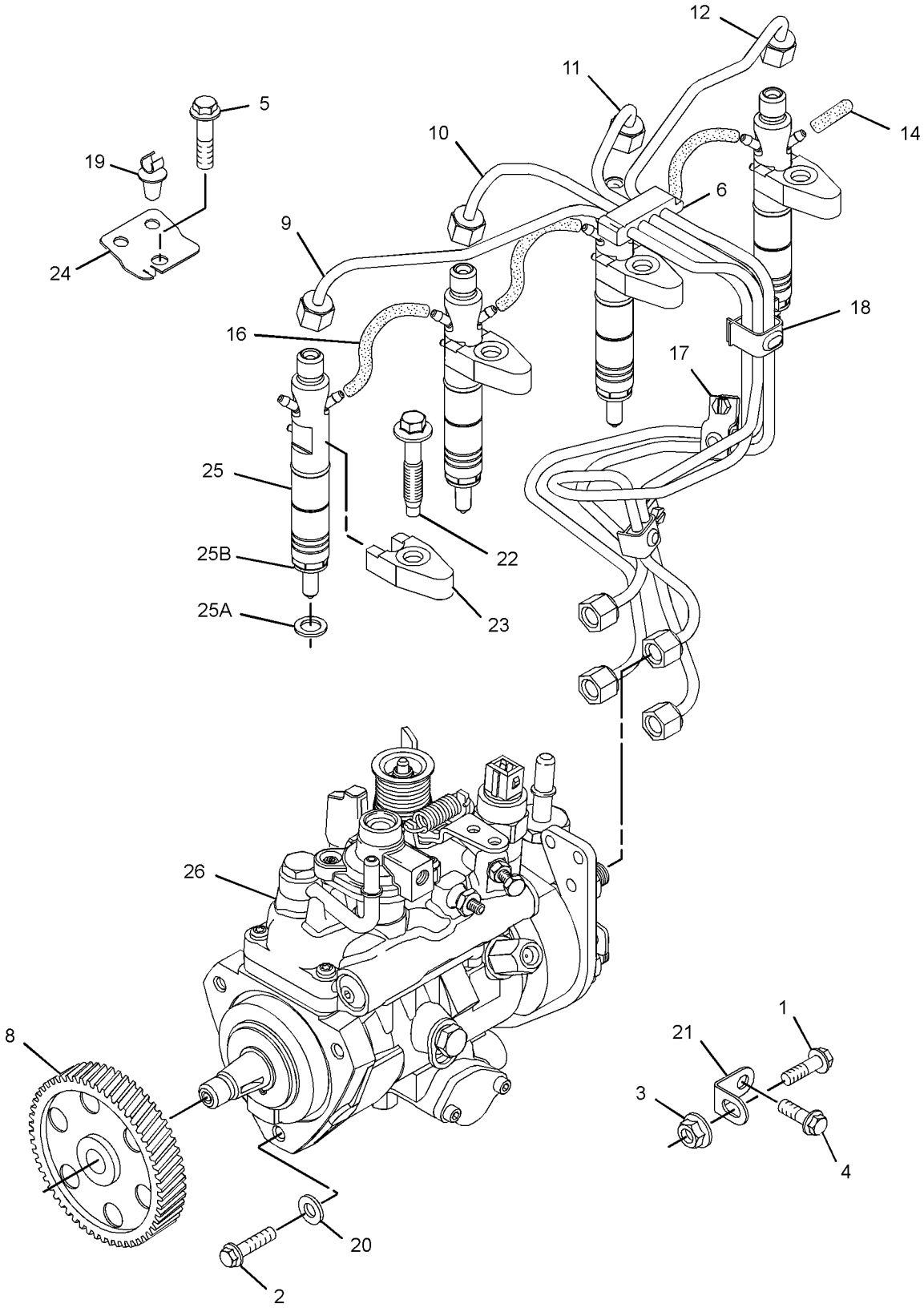

GRAPHIC #1 g01613834

326-9006 **PUMP GP-FUEL INJECTION** *(contd.)* **i03313780**

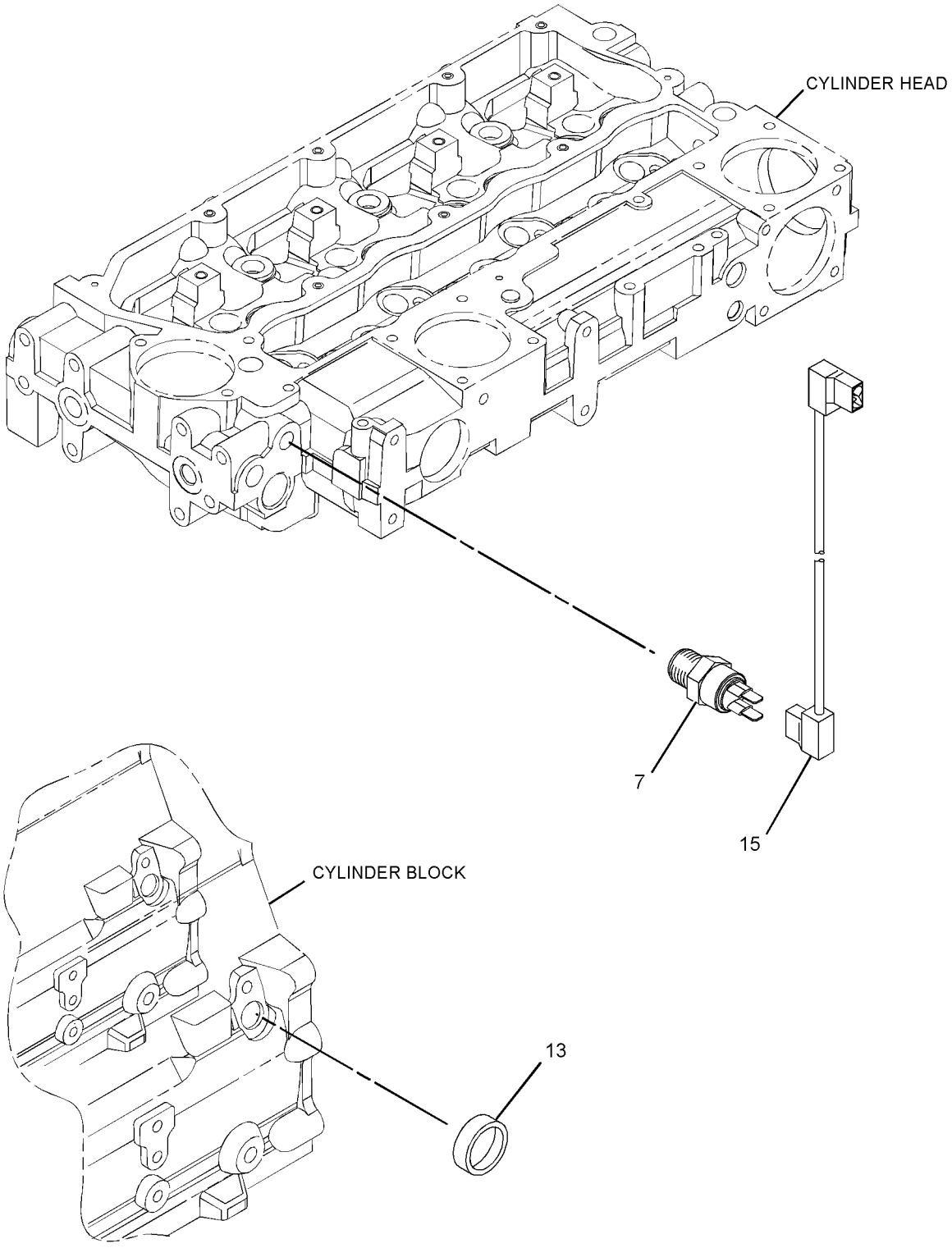

GRAPHIC #2 **<END>** g01611701

228-9129 PUMP GP-FUEL PRM & PRIM FILTER–
WITH WATER SEPARATOR
S/N: LMS1-UP
PART OF 297-8488 FILTER & LINES GP-FUEL

SMCS-1258, 1260, 1261 **i02469658**

NOTE	REF NO	GRAPHIC REF	PART NUMBER	QTY	PART NAME 1 2 3 4 5 6 (PRODUCT LEVEL)	SEE PAGE
	1	1	**118-8118**	1	RING-RETAINING	
	2	1	**228-9130**	1	FILTER AS-WATER SEP & FUEL	
	3	1	**228-9132**	1	FITTING (FUEL PUMP)	
	4	1	**193-0618**	1	SENSOR GP-MOISTURE (WATER SEPARATOR)	
	5	1	**149-9954**	1	DRAIN AS	

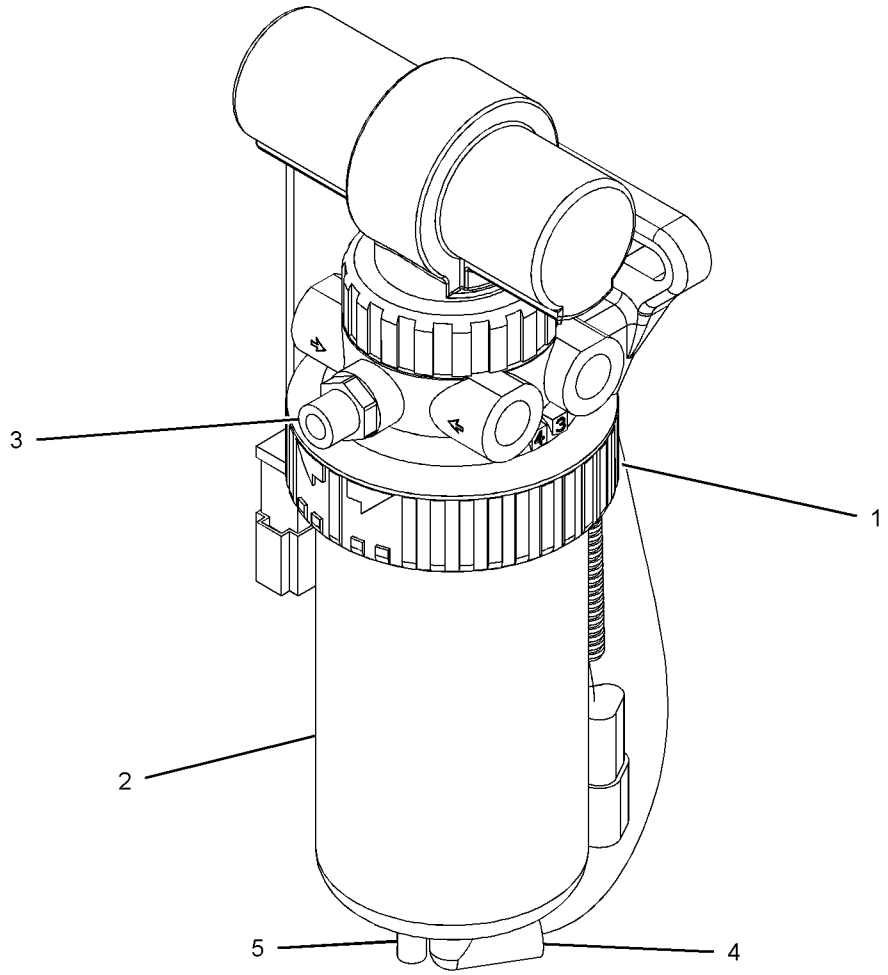

GRAPHIC #1

<END>

g01093427

FUEL SYSTEM

297-5260 TANK GP-FUEL—INCLUDES STEP

S/N: LMS1-UP
170-LITERS(45-US GAL)
PART OF 291-9190 CHASSIS AR

SMCS-1273 **i03845805**

NOTE	REF NO	GRAPHIC REF	PART NUMBER	QTY	PART NAME 1 2 3 4 5 6 (PRODUCT LEVEL)	SEE PAGE
Y	1	1	**297-5261**	1	TANK GP-FUEL	77
	2	1	**297-5266**	1	STEP AS	
	3	1	**297-5268**	1	TREAD	
	4	1	**297-5278**	1	PLATE AS	
	5	1	**5P-4116**	7	WASHER-HARD (8.8X20.5X2-MM THK)	
	6	1	**8T-4122**	4	WASHER-HARD (17X32X3.5-MM THK)	
M	7	1	**8T-4140**	4	BOLT (M16X2X60-MM)	
M	8	1	**8T-4189**	7	BOLT (M8X1.25X20-MM)	
M	9	1	**8T-4200**	4	BOLT (M8X1.25X16-MM)	
	10	1	**8T-4224**	4	WASHER-HARD (8.8X16X2-MM THK)	

M-METRIC PART
Y-SEPARATE ILLUSTRATION

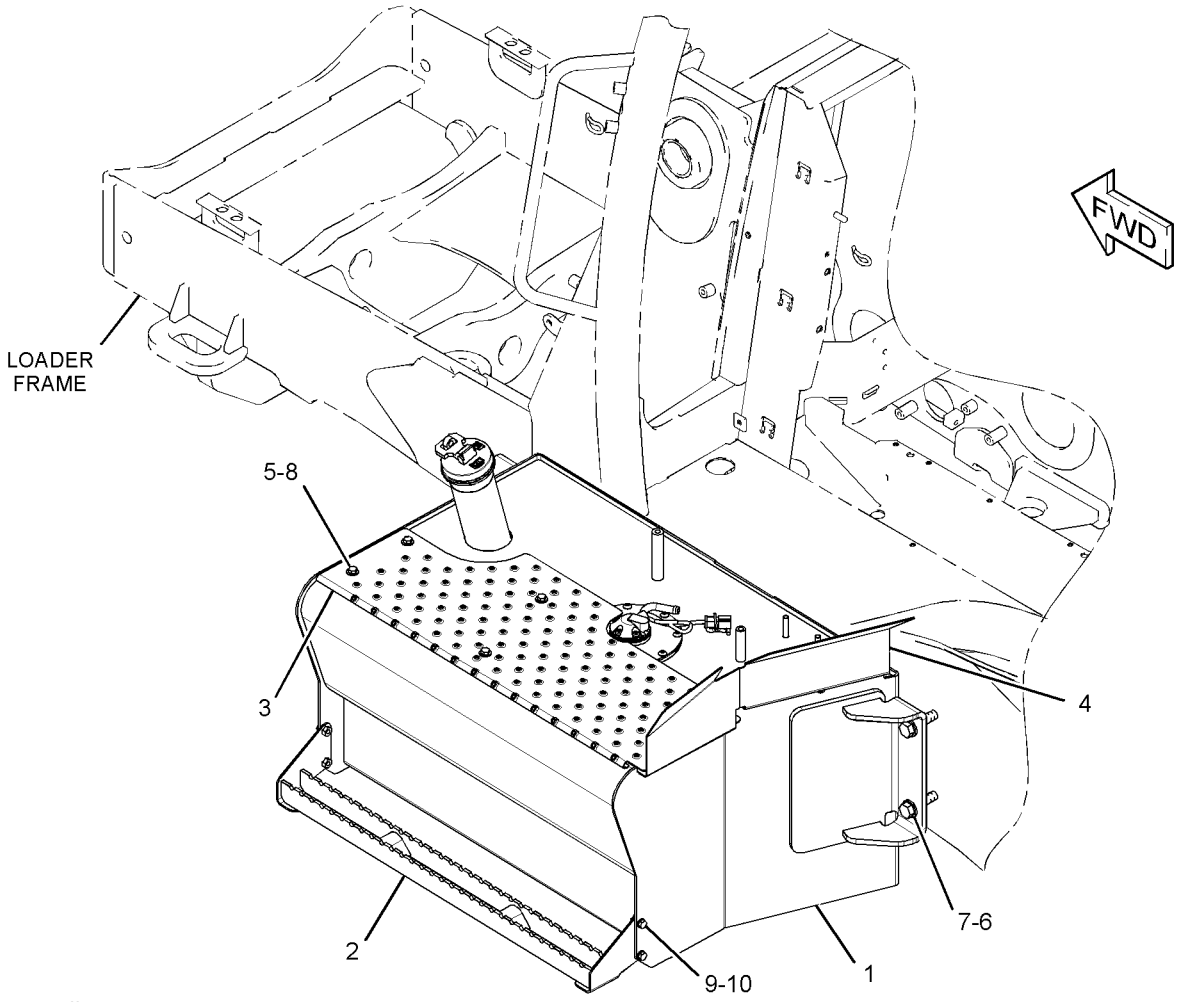

GRAPHIC #1 **<END>** g01520076

297-5261 TANK GP-FUEL

S/N: LMS1-UP

PART OF 297-5260 TANK GP-FUEL

SMCS-1273 **i03845806**

NOTE	REF NO	GRAPHIC REF	PART NUMBER	QTY	PART NAME 1 2 3 4 5 6 (PRODUCT LEVEL)	SEE PAGE
	1	1	**8L-8413**	1	STRAP-CABLE	
	2	1	**9R-7240**	1	GASKET	
	3	1	**131-0232**	1	COVER	
	4	1	**180-3730**	1	STRAINER-FUEL (FILLER NECK SCREEN)	
M	5	1	**184-0982**	5	SCREW-PAN HEAD (M6X1X16-MM)	
	6	1	**251-3231**	1	SENDER AS-FUEL LEVEL	
		1	**102-8802**	1	KIT-RECEPTACLE (2-PIN)	
					(INCLUDES RECEPTACLE AS & WEDGE)	
		1	**186-3735**	2	PIN-CONNECTOR (16-GA TO 18-GA)	
	7	1	**284-9039**	1	CAP-FUEL	
	8	1	**314-7618**	1	PLUG AS	
		1	**190-7634**	1	SEAL-O-RING	
	9	1	**323-4142**	1	TANK AS-FUEL	
	10	1	**323-4145**	1	PLATE AS	
	11	1	**6V-1195**	1	SEAL-O-RING	
M	12	1	**9X-2042**	8	SCREW-TRUSS HEAD (M6X1X12-MM)	

M-METRIC PART

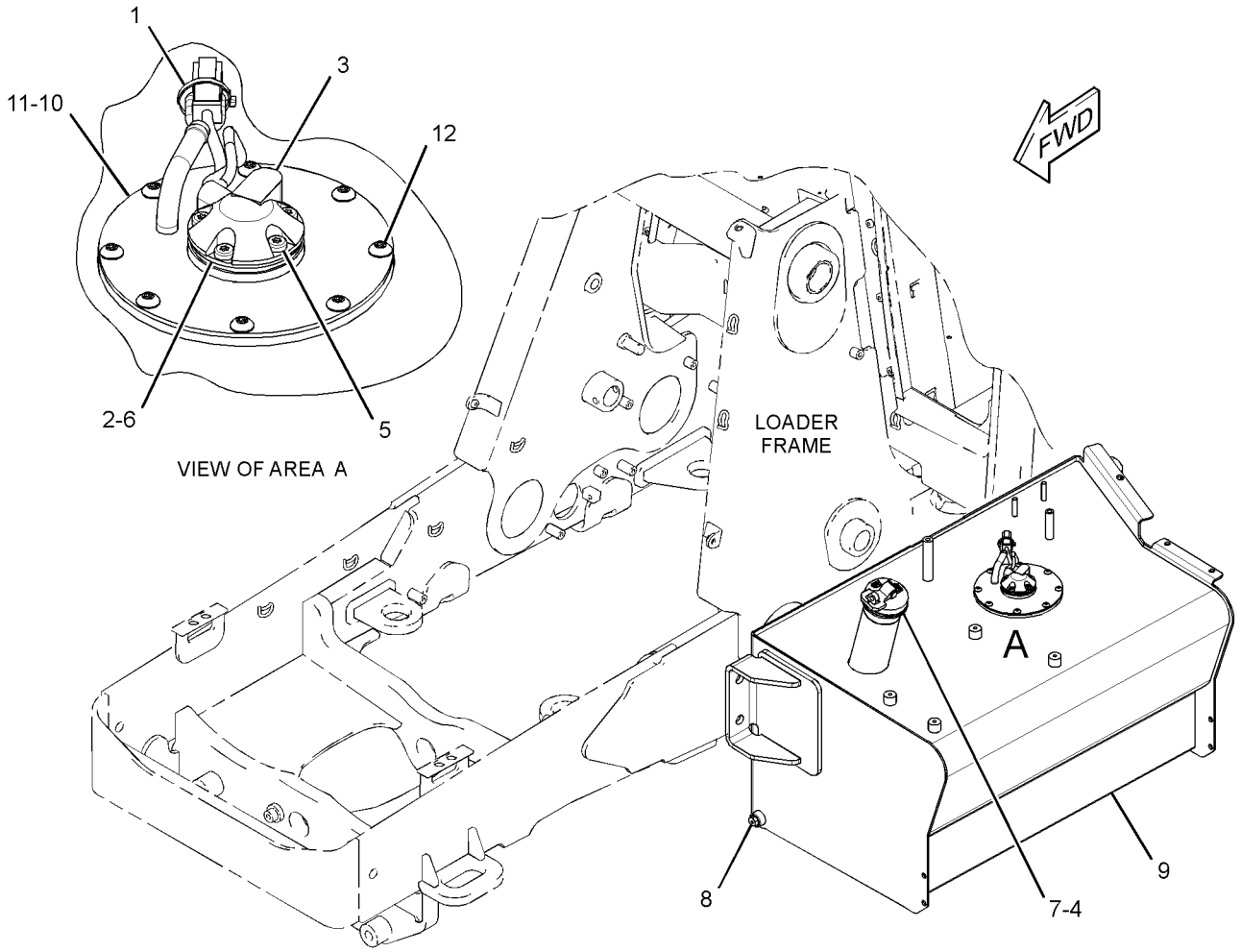

GRAPHIC #1 **<END>** g01520093

317-9776 ALTERNATOR GP-CHARGING

S/N: C4Z1-UP
12 VOLT 120 AMPERE
PART OF 322-0590 ENGINE AR-PRIMARY

SMCS-1405, 1425 **i03899392**

NOTE	REF NO	GRAPHIC REF	PART NUMBER	QTY	PART NAME 1 2 3 4 5 6 (PRODUCT LEVEL)	SEE PAGE
M	1	1	**6I-0260**	1	BOLT (M8X1.25X25-MM)	
M	2	1	**6I-0650**	1	BOLT (M10X1.5X65-MM)	
	3	1	**359-9666**	1	BOLT-FLANGE HEAD	
	4	1	**113-6349**	1	NUT (M12X1.75X93-MM)	
M	5	1	**140-8783**	2	BOLT (M10X1.5X45-MM)	
	7	1	**346-9825**	1	ALTERNATOR GP-CHARGING	
	8	1	**284-3425**	1	PULLEY-ALTERNATOR	
	9	1	**305-7881**	1	BRACKET AS-ALTERNATOR	
	9A	1	**161-9820**	1	PIN	

M-METRIC PART

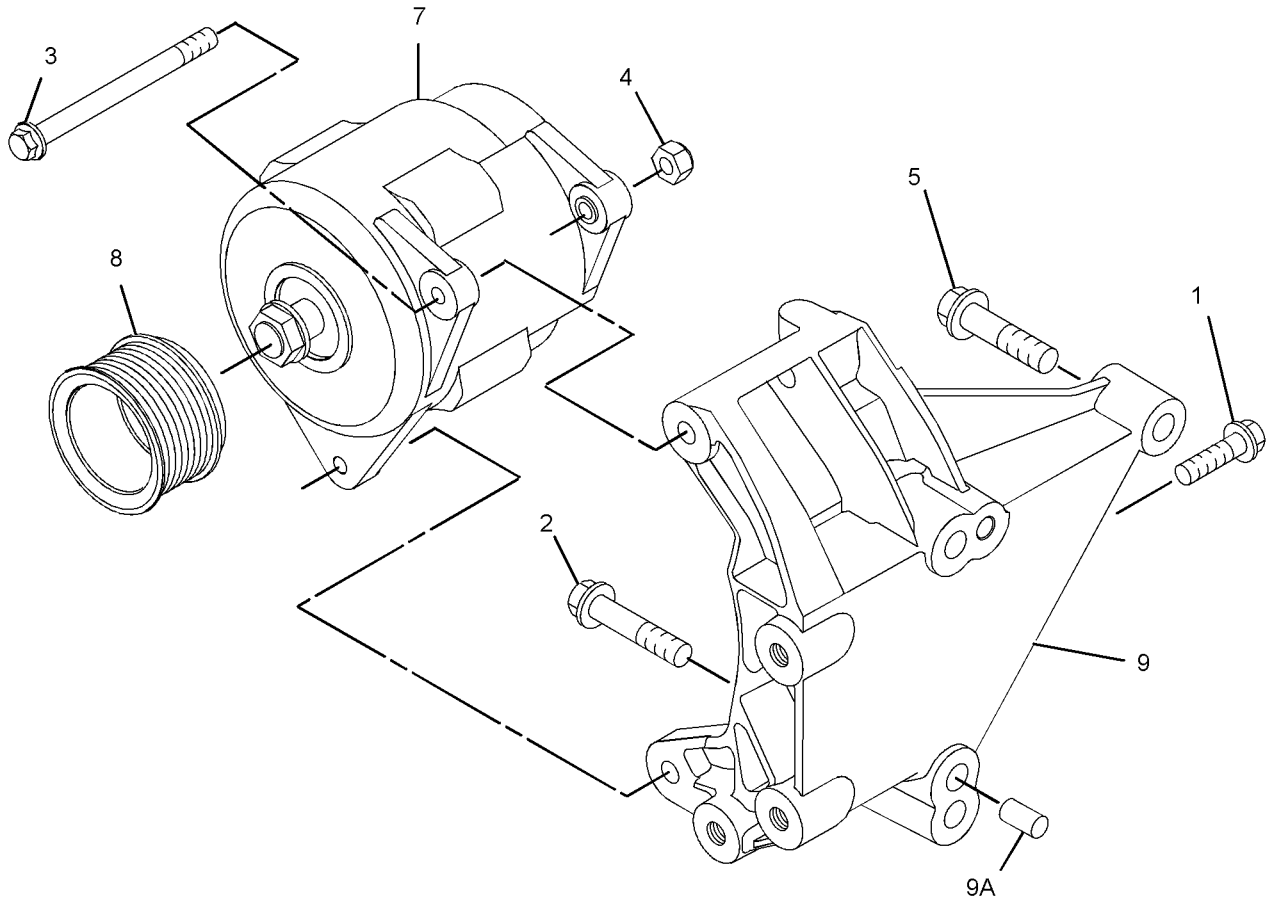

GRAPHIC #1 **<END>** g01953021

211-4286 BATTERY & WIRING GP–HEAVY-DUTY

S/N: LMS1-UP
PART OF 357-0408 OPTION AR-CAB
AN ATTACHMENT

SMCS-1401, 1402, 1408, 1411 **i03845631**

NOTE	REF NO	GRAPHIC REF	PART NUMBER	QTY	PART NAME 1 2 3 4 5 6 (PRODUCT LEVEL)	SEE PAGE
	1	1	**038-9317**	1	TREAD-NONSKID	
	2	1	**213-6091**	1	CABLE AS-BATTERY (POSITIVE)	
		1	**3S-2093**	1	STRAP-CABLE	
E		1	**5P-0761**		CABLE (00-GA, RED) (36-CM)	
		1	**7T-9987**	1	COVER-TERMINAL (RED)	
		1	**8S-3020**	1	TERMINAL-CABLE (00-GA, 3/8-IN SCREW)	
E		1	**8Y-8081**		TUBE-CONVOLUTED (36-CM)	
		1	**3S-6049**	1	TERMINAL AS-BATTERY (POSITIVE)	
		1	**1M-6119**	1	BOLT (5/16-18X1.375-IN)	
		1	**1M-6120**	1	NUT (5/16-18-THD)	
	3	1	**213-6092**	1	CABLE AS-BATTERY (NEGATIVE)	
		1	**1S-7252**	1	TERMINAL-CABLE (00-GA, 3/8-IN SCREW)	
E		1	**5P-0747**		CABLE (00-GA, BLACK) (44-CM)	
		1	**7N-5274**	1	COVER-TERMINAL (BLACK)	
		1	**3S-6050**	1	TERMINAL AS-BATTERY (NEGATIVE)	
		1	**1M-6119**	1	BOLT (5/16-18X1.375-IN)	
		1	**1M-6120**	1	NUT (5/16-18-THD)	
	4	1	**230-6368**	1	BATTERY (12-VOLT, MAINTENANCE FREE)	
	5	1	**240-4639**	1	BRACKET AS	
	6	1	**7X-7729**	2	WASHER (11X25X3-MM THK)	
M	7	1	**8T-4133**	1	NUT (M10X1.5-THD)	
M	8	1	**8T-4137**	1	BOLT (M10X1.5X20-MM)	
M	9	1	**8T-4185**	1	BOLT (M10X1.5X50-MM)	

E-ORDER BY THE CENTIMETER
M-METRIC PART

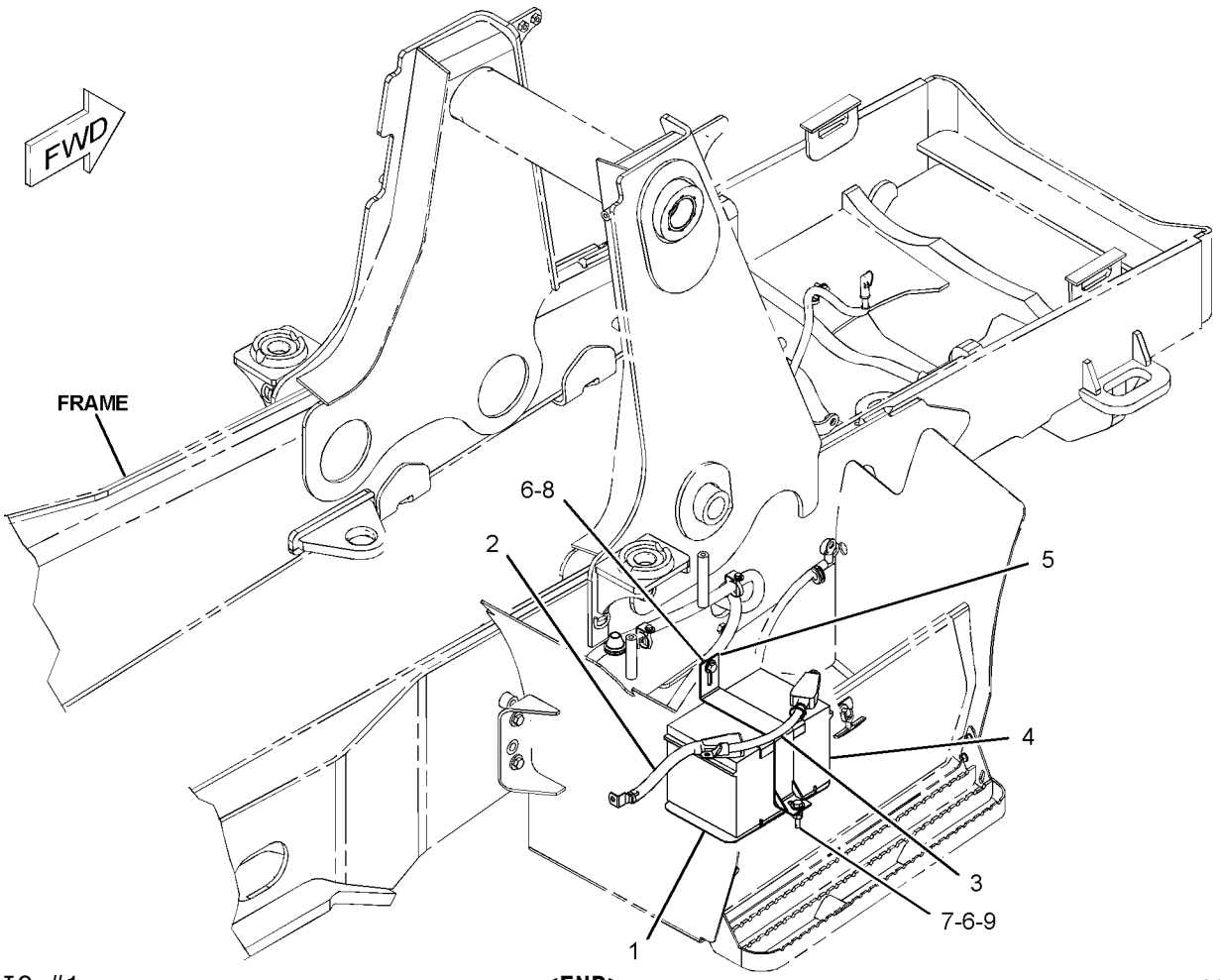

GRAPHIC #1 **<END>** g01082047

290-6789 BATTERY & WIRING GP–DISCONNECT

S/N: LMS1-UP

PART OF 291-9190 CHASSIS AR

SMCS-1401, 1402, 1408, 1411 **i03845795**

NOTE	REF NO	GRAPHIC REF	PART NUMBER	QTY	PART NAME 1 2 3 4 5 6 (PRODUCT LEVEL)	SEE PAGE
	1	1	**3E-8320**	1	PLATE-INSTRUCTION (BATTERY)	
	2	1	**6T-0465**	1	COVER-TERMINAL (BLACK)	
	3	1	**7K-1181**	6	STRAP-CABLE	
	4	1	**038-9317**	1	TREAD-NONSKID	
	5	1	**230-6368**	1	BATTERY (12-VOLT, MAINTENANCE FREE)	
	6	1	**240-4639**	1	BRACKET AS	
	7	1	**243-5027**	1	NUT AS (M6X1-THD)	
	8	1	**246-8053**	1	CABLE AS-BATTERY (POSITIVE)	
		1	**1S-7251**	1	TERMINAL-CABLE (00-GA, 1/2-IN SCREW)	
		1	**8N-0869**	1	COVER-TERMINAL (RED)	
		1	**3S-2093**	2	STRAP-CABLE	
E		1	**5P-0761**		CABLE (00-GA, RED) (110-CM)	
E		1	**8Y-8081**		TUBE-CONVOLUTED (105-CM)	
	9	1	**290-6745**	1	CABLE AS-POWER	
		1	**8N-0869**	1	COVER-TERMINAL (RED)	
		1	**8S-3020**	1	TERMINAL-CABLE (00-GA, 3/8-IN SCREW)	
		1	**030-1705**	1	TERMINAL-CABLE (00-GA, 5/16-IN SCREW)	
		1	**135-5009**	5	TUBE-HEAT SHRINK (32-MM DIA)	
E		1	**159-8049**		CABLE (00-GA, RED) (221-CM)	
E		1	**1P-0810**		TAPE-ELECTRICAL (23-CM EACH)	
E		1	**201-3304**		CONDUIT (221-CM)	
	10	1	**290-6746**	1	CABLE AS (ALTERNATOR)	
		1	**311-6184**	1	TERMINAL-RING (2-GA, 3/8-IN SCREW)	
		1	**312-6455**	1	TERMINAL AS	
E		1	**125-7876**		TUBE-HEAT SHRINK (17.78-MM DIA) (7-CM)	
	11	1	**290-6791**	1	CABLE AS (NEGATIVE)	
		1	**8S-3020**	1	TERMINAL-CABLE (00-GA, 3/8-IN SCREW)	
E		1	**159-8050**		CABLE (00-GA, BLACK) (44-CM)	
		1	*229-9855*	1	TERMINAL AS-BATTERY (NEGATIVE)	
		1	**1M-6119**	1	BOLT (5/16-18X1.375-IN)	
		1	**1M-6120**	2	NUT (5/16-18-THD)	
	12	1	**290-6792**	1	CABLE AS (NEGATIVE)	
		1	**1S-7251**	1	TERMINAL-CABLE (00-GA, 1/2-IN SCREW)	
		1	**8S-3020**	1	TERMINAL-CABLE (00-GA, 3/8-IN SCREW)	
E		1	**159-8050**		CABLE (00-GA, BLACK) (6-CM)	
	13	1	**156-6175**	2	CLIP	
	14	1	**277-1873**	2	CLIP	
	15	1	**4P-7581**	1	CLIP	
	16	1	**4P-8134**	1	CLIP	
M	17	1	**5C-2890**	2	NUT (M6X1-THD)	
M	18	1	**5C-9553**	2	BOLT (M6X1X16-MM)	
	19	1	**5T-6374**	1	SPACER (10.5X20X40-MM THK)	
	20	1	**7C-4354**	2	CLIP	
Y	21	1	**7N-0718**	1	SWITCH GP-DISCONNECT (BATTERY) (12-VOLT)	104
	22	1	**7X-7729**	2	WASHER (11X25X3-MM THK)	
	23	1	**8T-1887**	1	CLIP (SLOT)	
	24	1	**8T-1888**	1	CLIP (TAB)	
	25	1	**8T-4121**	8	WASHER-HARD (11X21X2.5-MM THK)	
M	26	1	**8T-4133**	1	NUT (M10X1.5-THD)	
M	27	1	**8T-4137**	6	BOLT (M10X1.5X20-MM)	
M	28	1	**8T-4185**	1	BOLT (M10X1.5X50-MM)	
	29	1	**8T-4205**	4	WASHER-HARD (7.2X14.5X2-MM THK)	
M	30	1	**8T-6466**	1	BOLT (M10X1.5X60-MM)	
	31	1	**8T-7934**	2	WASHER-HARD (11X21X5-MM THK)	
	32	1	**8X-5489**	1	SLEEVE	
	33	1	**9G-4191**	1	GROMMET	

290-6789 **BATTERY & WIRING GP** *(contd.)* **i03845795**

E-ORDER BY THE CENTIMETER
M-METRIC PART
Y-SEPARATE ILLUSTRATION

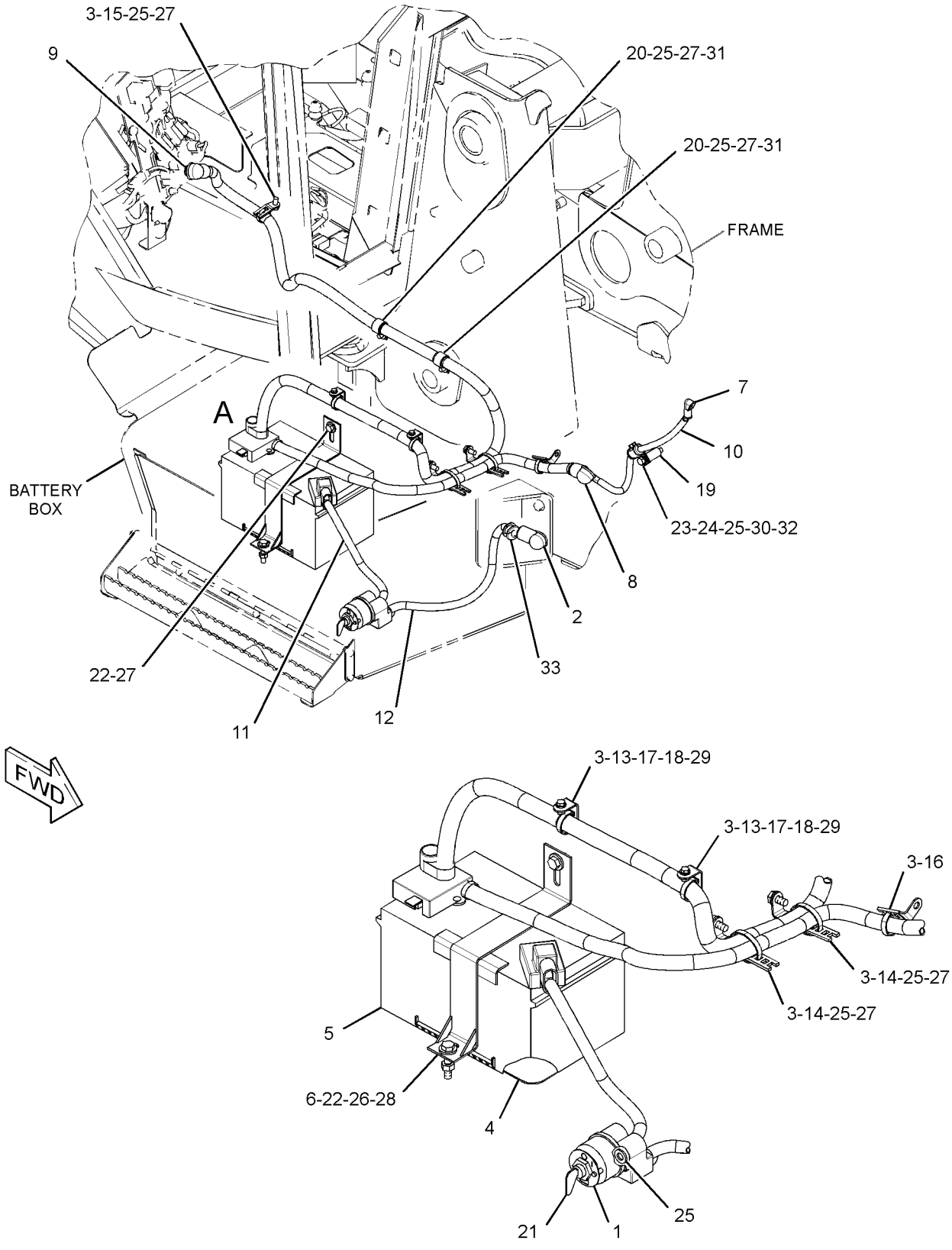

VIEW OF AREA A

GRAPHIC #1 **<END>** g01675149

315-3418 GLOW PLUG GP

S/N: C4Z1-UP

PART OF 322-0590 ENGINE AR-PRIMARY

SMCS-1412 **i03128300**

NOTE	REF NO	GRAPHIC REF	PART NUMBER	QTY	PART NAME 1 2 3 4 5 6 (PRODUCT LEVEL)	SEE PAGE
	1	1	**286-4880**	1	BUS BAR AS	
	2	1	**232-6662**	4	GLOW PLUG (12-VOLT)	

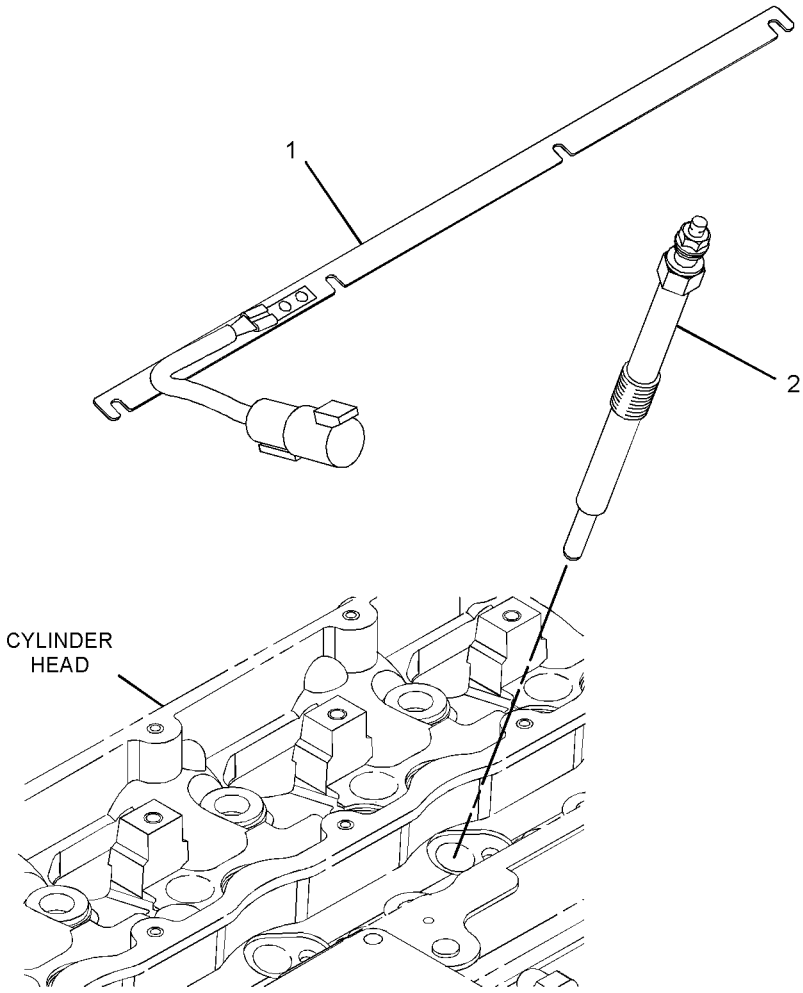

GRAPHIC #1 **<END>** g01398213

248-2214 HEATER GP-JACKET WATER–120-VOLT

S/N: LMS1-UP
PART OF 357-0408 OPTION AR-CAB
AN ATTACHMENT

SMCS-1383 **i03845633**

NOTE	REF NO	GRAPHIC REF	PART NUMBER	QTY	PART NAME 1 2 3 4 5 6 (PRODUCT LEVEL)	SEE PAGE
	1	1	**3S-2093**	2	STRAP-CABLE	
	2	1	**130-0165**	1	RECEPTACLE AS	
	3	1	**165-8357**	1	BRACKET AS	
	4	1	*231-3054*	1	HEATER GP-JACKET WATER	
		1	**219-3273**	1	ELEMENT AS-JACKET WATER HEATER (120-VOLT, 1000-WATT)	
		1	**133-3413**	1	KIT-SEAL (WATER JACKET)	
					(INCLUDES SEAL, SPACER & RINGS)	
		1	**133-6517**	1	CAP AS-DUST	
		1	**231-3052**	1	CORD AS	
M	5	1	**8T-4189**	2	BOLT (M8X1.25X20-MM)	
	6	1	**8T-4224**	2	WASHER-HARD (8.8X16X2-MM THK)	

M-METRIC PART

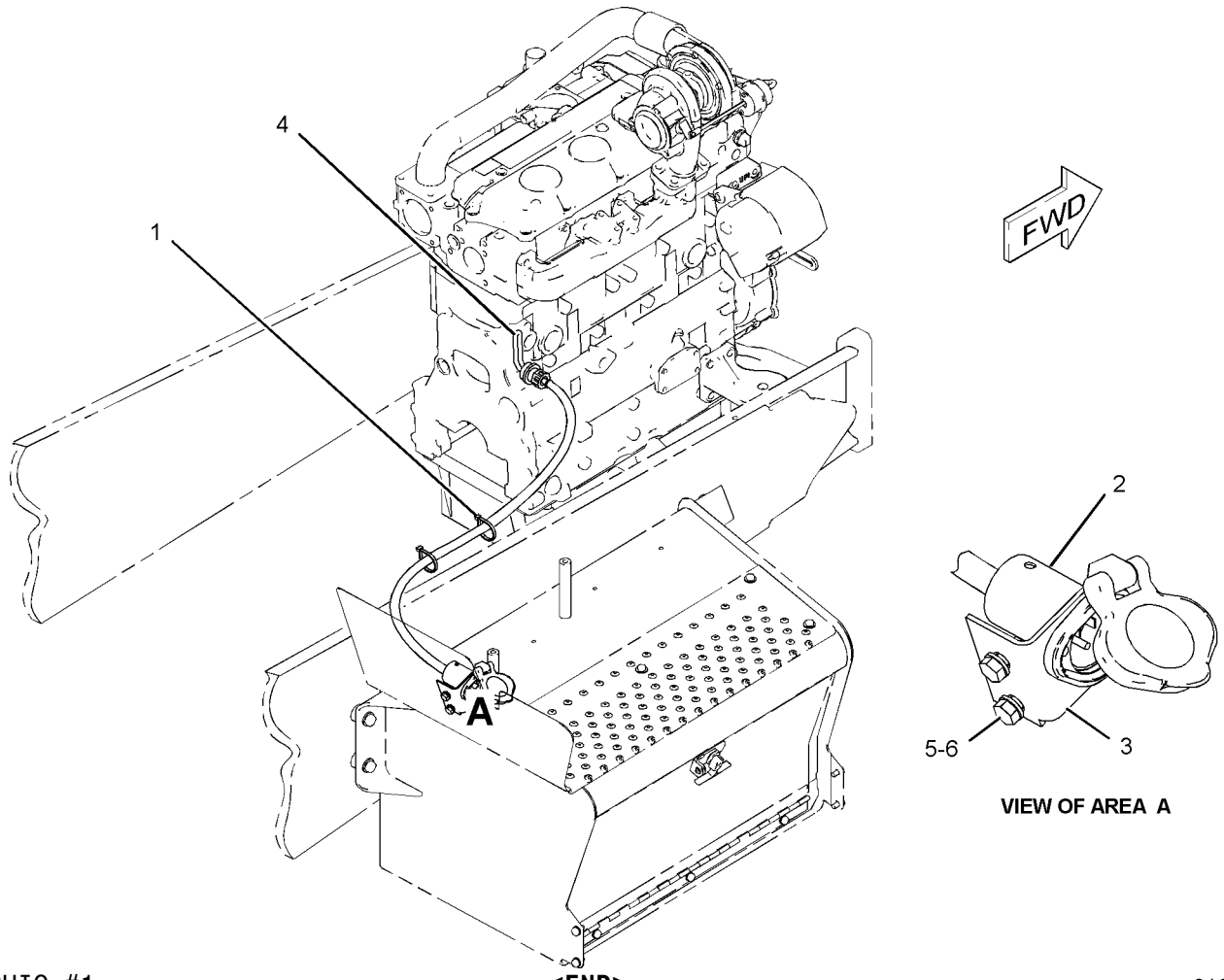

VIEW OF AREA A

GRAPHIC #1 **<END>** g01083542

225-7994 INSTALLATION GP-COMMUNICATION–
PRODUCT LINK 121SR
S/N: LMS1-UP
FOR USE WITH 211-4286–PAGE 79
AN ATTACHMENT

SMCS-7606 **i03848075**

NOTE	REF NO	GRAPHIC REF	PART NUMBER	QTY	PART NAME 1 2 3 4 5 6 (PRODUCT LEVEL)	SEE PAGE
	1	1	**7K-1181**	10	STRAP-CABLE	
	2	1	**249-9076**	4	CLIP	
	3	1	**256-6803**	1	HARNESS AS-RADIO (PRODUCT LINK)	
		1	**102-8802**	1	KIT-RECEPTACLE (2-PIN)	
		1	**102-8801**	1	KIT-RECEPTACLE (12-PIN)	
					(EACH RECEPTACLE KIT INCLUDES RECEPTACLE AS WEDGE)	
		1	**8T-8729**	9	PIN-CONNECTOR (16-GA TO 18-GA)	
		1	**8T-8730**	9	SOCKET-CONNECTOR (16-GA TO 18-GA)	
		1	**8T-8737**	10	PLUG-SEAL	
		1	**155-2255**	1	KIT-CONNECTING PLUG (12-PIN)	
		1	**155-2270**	1	KIT-CONNECTING PLUG (2-PIN)	
					(EACH PLUG KIT INCLUDES PLUG AS, WEDGE & INTERFACE SEAL)	
	4	1	**260-7652**	1	FILM-WARNING (PRODUCT LINK 300, U.S.)	
Y	5	1	**263-9088**	1	RADIO GP-COMMUNICATION (PRODUCT LINK 121SR)	569
	6	1	**284-8531**	1	ANTENNA AS (MAGNETIC MOUNT, PRODUCT LINK)	
		1	**301-0589**	1	ANTENNA (FLEXIBLE)	
M	7	1	**129-3178**	4	LOCKNUT (M6X1-THD)	
	8	1	**156-6175**	2	CLIP	
	9	1	**170-9360**	1	GROMMET	
	10	1	**6P-6591**	1	GROMMET	
M	11	1	**6V-7357**	4	BOLT (M6X1X25-MM)	
	12	1	**8T-4205**	6	WASHER-HARD (7.2X14.5X2-MM THK)	

M-METRIC PART
Y-SEPARATE ILLUSTRATION

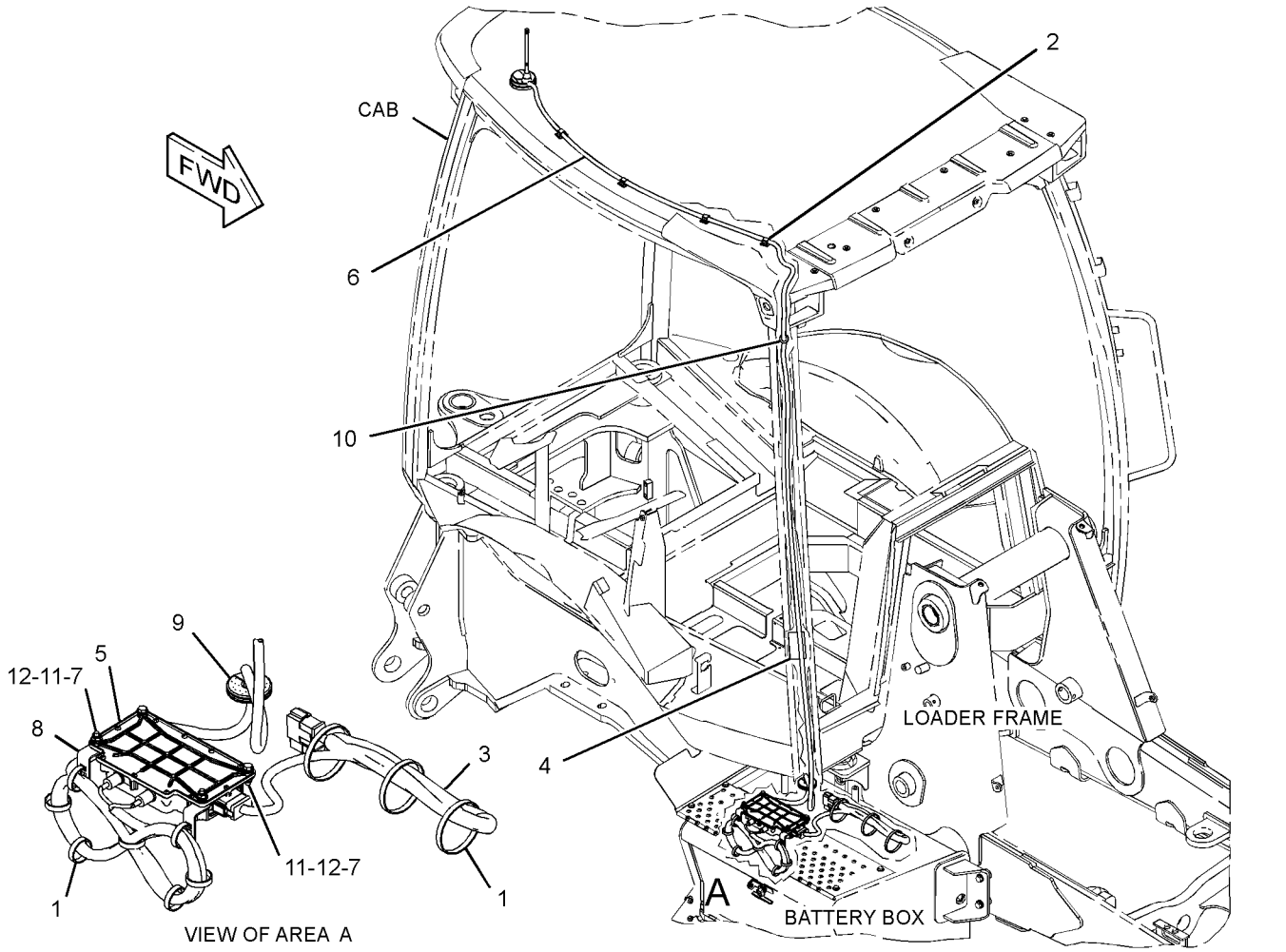

GRAPHIC #1 **<END>** g01522350

234-4328 LAMP GP-FLOOD

S/N: LMS1-UP
12-VOLT
PART OF 211-4276, 211-4277 LIGHTING GP-FLOOD & SIGNAL
AN ATTACHMENT

SMCS-1429, 1434 **i03091796**

NOTE	REF NO	GRAPHIC REF	PART NUMBER	QTY	PART NAME 1 2 3 4 5 6 (PRODUCT LEVEL)	SEE PAGE
	1	1	**9W-0607**	1	LAMP (12-VOLT, 55-WATT)	
M	2	1	**8T-0389**	1	LOCKNUT (M10X1.5-THD)	
	3	1	**9X-4244**	2	SCREW-SPECIAL (M4X1.79X25-MM)	
	4	1	**202-6614**	1	LENS AS (FLOOD)	
	5	1	**234-7730**	1	BODY AS	
	6	1	**164-7556**	1	BRACKET (LAMP RETAINING)	
	7	1	**234-7731**	1	BRACKET AS	
	8	1	**8T-4121**	1	WASHER-HARD (11X21X2.5-MM THK)	

M-METRIC PART

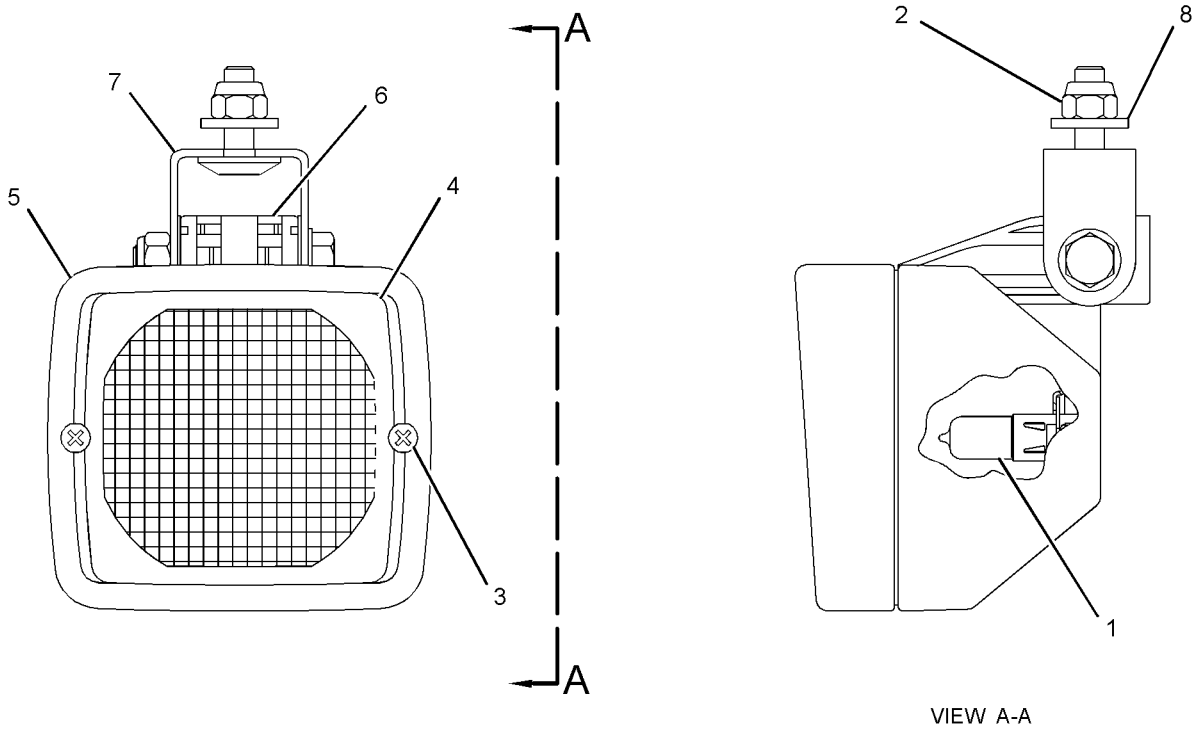

GRAPHIC #1 **<END>** g01283627

234-4329 LAMP GP-FLOOD

S/N: LMS1-UP
12-VOLT
PART OF 211-4277 LIGHTING GP-FLOOD & SIGNAL
AN ATTACHMENT

SMCS-1429, 1434 **i03325046**

NOTE	REF NO	GRAPHIC REF	PART NUMBER	QTY	PART NAME 1 2 3 4 5 6 (PRODUCT LEVEL)	SEE PAGE
	1	1	**9W-0607**	1	LAMP (12-VOLT, 55-WATT)	
M	2	1	**8T-0389**	1	LOCKNUT (M10X1.5-THD)	
	3	1	**9X-4244**	2	SCREW-SPECIAL (M4X1.79X25-MM)	
	4	1	**202-6611**	1	LENS AS (FLOODLIGHT)	
	5	1	**234-7730**	1	BODY AS	
	6	1	**164-7556**	1	BRACKET (LAMP RETAINING)	
	7	1	**234-7731**	1	BRACKET AS	
	8	1	**8T-4121**	1	WASHER-HARD (11X21X2.5-MM THK)	

M-METRIC PART

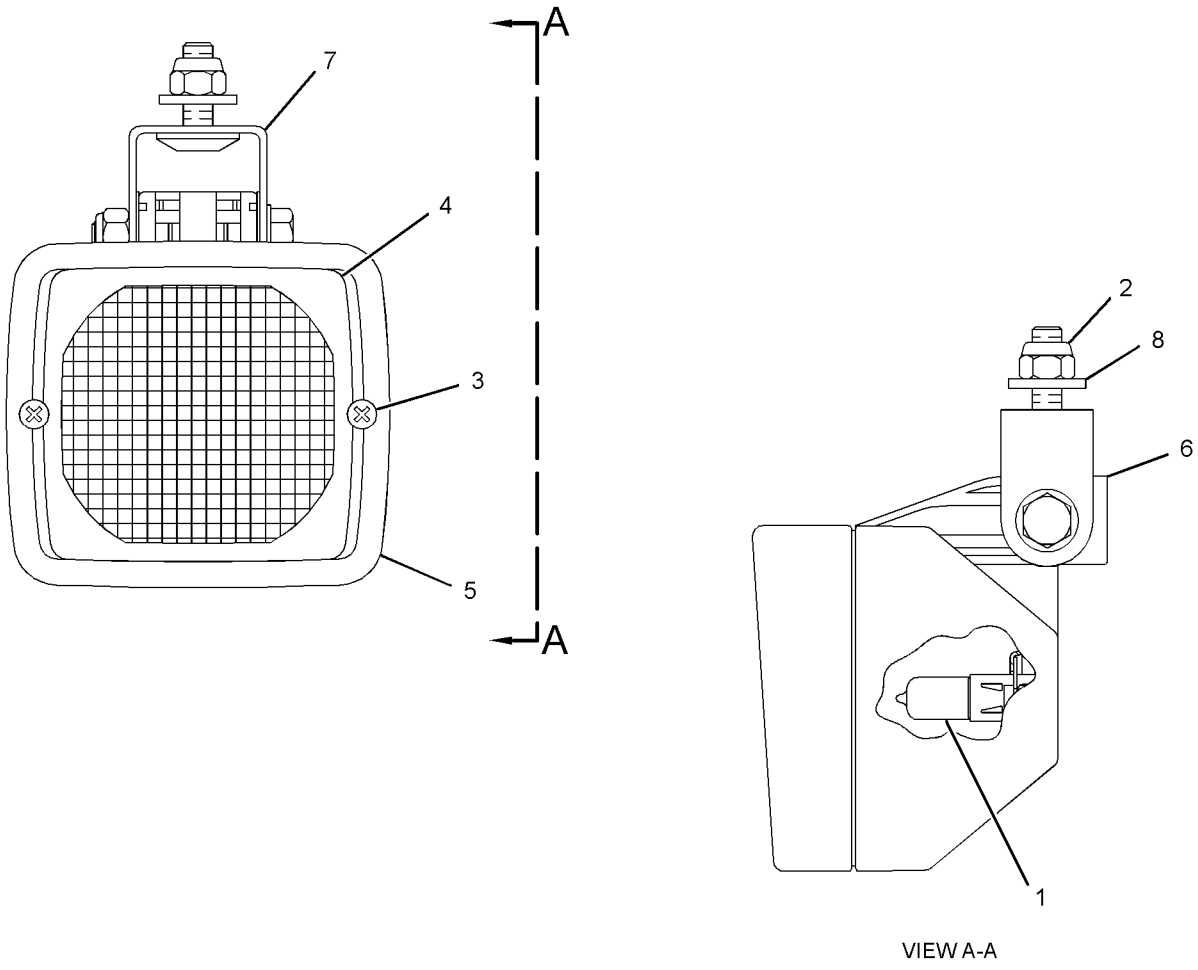

VIEW A-A

GRAPHIC #1 **<END>** g01431519

290-5760 LAMP GP-FLOOD

S/N: LMS1-UP
PART OF 211-4277 LIGHTING GP-FLOOD & SIGNAL
AN ATTACHMENT

SMCS-1429, 1434 **i02643648**

NOTE	REF NO	GRAPHIC REF	PART NUMBER	QTY	PART NAME 1 2 3 4 5 6 (PRODUCT LEVEL)	SEE PAGE
	1	1	**9W-0607**	1	LAMP (12-VOLT, 55-WATT)	
	2	1	**9X-4244**	2	SCREW-SPECIAL	
	3	1	**202-6611**	1	LENS AS	
	4	1	**234-7730**	1	BODY AS (FLOODLIGHT)	
	5	1	**164-7556**	1	BRACKET (LAMP RETAINING)	
M	6	1	**8T-0389**	1	LOCKNUT (M10X1.5-THD)	
	7	1	**234-7731**	1	BRACKET AS	
	8	1	**8T-4121**	1	WASHER-HARD (11X21X2.5-MM THK)	

M-METRIC PART

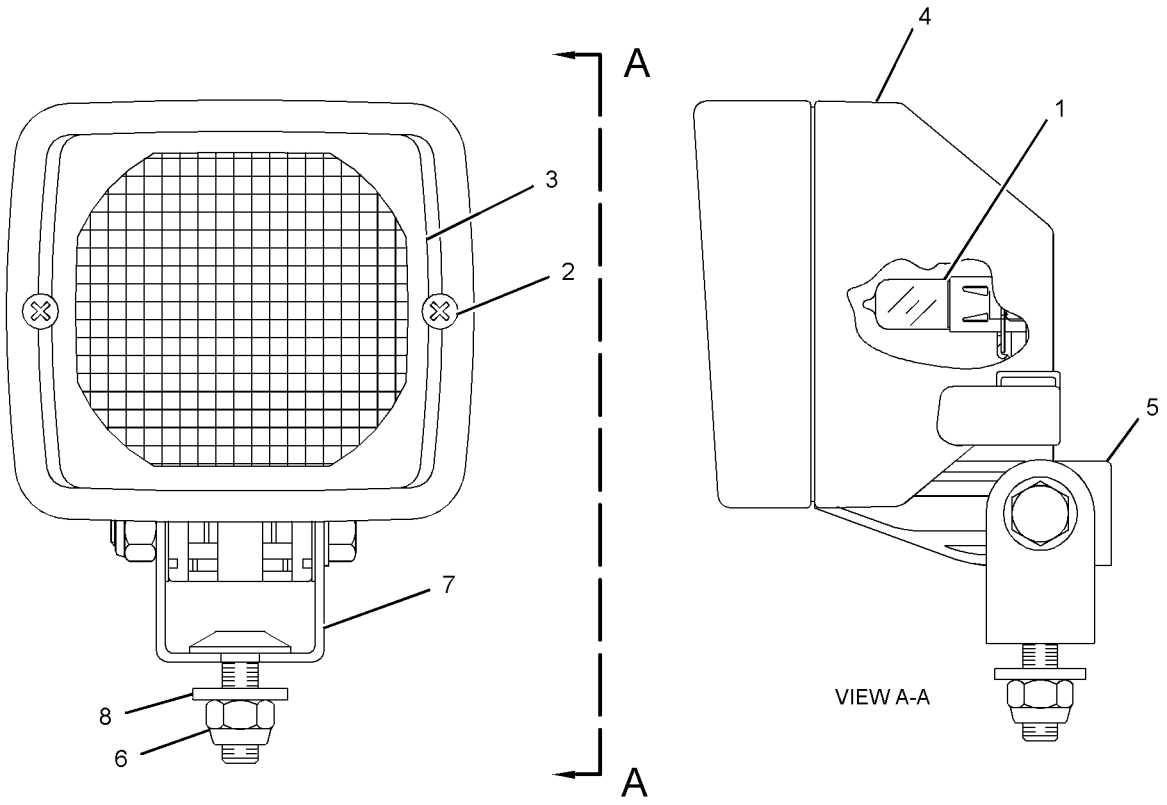

GRAPHIC #1 **<END>** g01349258

180-3664 LAMP GP-WARNING BEACON–

AMBER, MAGNETIC MOUNT, ROTATING
S/N: LMS1-UP
12-VOLT
PART OF 211-4292 LIGHTING GP-WARNING BEACON
AN ATTACHMENT

SMCS-1431 **i02600333**

NOTE	REF NO	GRAPHIC REF	PART NUMBER	QTY	PART NAME 1 2 3 4 5 6 (PRODUCT LEVEL)	SEE PAGE
	1	1	**185-7016**	1	LAMP GP-WARNING BEACON (MAGNETIC MOUNT)	
	2	1	**9X-8139**	1	BELT-DRIVE	
	3	1	**9X-8121**	1	LENS (AMBER, WARNING BEACON)	
	4	1	**9X-8118**	1	LAMP (12-VOLT, 55-WATT)	
	5	1	**179-5434**	1	PLUG AS	
	6	1	**3K-8782**	1	FUSE (10-AMPERE)	

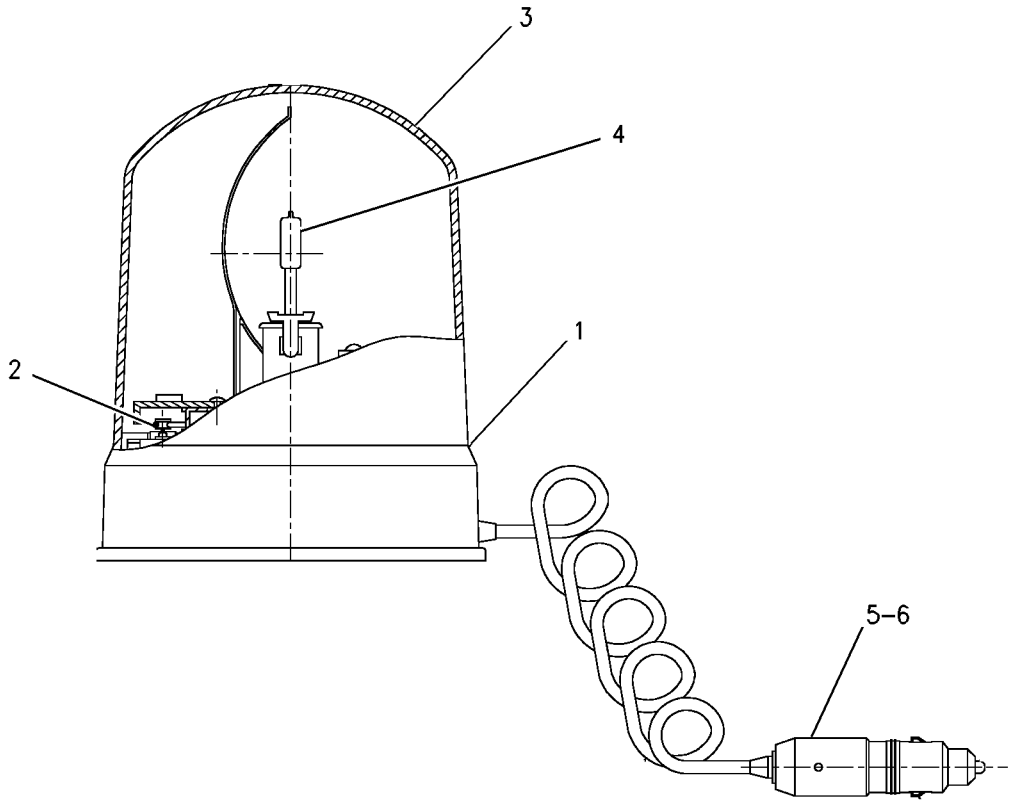

GRAPHIC #1 **<END>** g00781826

ELECTRICAL AND STARTING SYSTEM

211-4276 LIGHTING GP-FLOOD & SIGNAL—NACD

S/N: LMS1-UP
PART OF 291-9191 CANOPY GP-OPEN ROPS
AN ATTACHMENT

SMCS-1429, 1430, 1432, 1434 **i03911319**

NOTE	REF NO	GRAPHIC REF	PART NUMBER	QTY	PART NAME 1 2 3 4 5 6 (PRODUCT LEVEL)	SEE PAGE
	1	1	**9R-1499**	2	REFLECTOR	
	2	1	**178-7539**	1	RECEPTACLE AS (POWER SUPPLY)	
	3	1	**282-7835**	1	PLATE	
	4	1	**290-6799**	1	HARNESS AS-LIGHTING (ROOF)	
		1	**274-3774**	4	CAP-CONNECTOR	
		1	**186-3735**	10	PIN-CONNECTOR (16-GA TO 18-GA)	
		1	**155-2270**	10	KIT-CONNECTING PLUG (2-PIN)	
		1	**155-2271**	2	KIT-CONNECTING PLUG (4-PIN)	
					(EACH PLUG KIT INCLUDES PLUG AS, WEDGE & INTERFACE SEAL)	
		1	**8T-8737**	4	PLUG-SEAL	
		1	**102-8805**	1	KIT-RECEPTACLE (6-PIN)	
		1	**102-8806**	1	KIT-RECEPTACLE (8-PIN)	
					(EACH RECEPTACLE KIT INCLUDES RECEPTACLE AS & WEDGE)	
		1	**186-3736**	28	SOCKET-CONNECTOR (16-GA TO 18-GA)	
		1	**8L-8413**	15	STRAP-CABLE	
B		1	**1P-0810**	1	TAPE-ELECTRICAL	
		1	**2L-8069**	2	TERMINAL-RING (2-GA TO 10-GA, 3/8-IN SCREW)	
		1	**5P-4571**	2	TERMINAL-BLADE (14-GA TO 16-GA)	
E		1	**119-3662**		TUBE-HEAT SHRINK (10.85-MM DIA) (13-CM)	
E		1	**125-7874**		TUBE-HEAT SHRINK (5.72-MM DIA) (35-CM)	
E		1	**125-7876**		TUBE-HEAT SHRINK (17.78-MM DIA) (20-CM)	
	5	1	**303-5149**	1	SWITCH AS-ROCKER (FLOODLIGHTS, FRONT)	
	6	1	**303-5154**	1	SWITCH AS-ROCKER (FLOODLIGHT, REAR)	
					(EACH SWITCH AS INCLUDES)	
		1	**111-7899**	1	GASKET	
Y	7	1	**234-4328**	4	LAMP GP-FLOOD (12-VOLT)	87
	8	1	**282-7833**	1	GROMMET	
	9	1	**172-6489**	2	LAMP GP-HEAD & SIGNAL (DIRECTIONAL)	
					(EACH INCLUDES)	
		1	**102-8802**	1	KIT-RECEPTACLE (2-PIN)	
					(INCLUDES RECEPTACLE AS & WEDGE)	
		1	**3C-4883**	1	LAMP (12-VOLT, 21-WATT)	
		1	**176-0348**	1	LENS	
	10	1	**172-6490**	2	LAMP GP-SIGNAL (STOP, TAIL, TURN)	
					(EACH INCLUDES)	
		1	**102-8804**	1	KIT-RECEPTACLE (4-PIN)	
					(INCLUDES RECEPTACLE AS & WEDGE)	
		1	**267-2809**	1	LENS	
		1	**9W-3326**	1	LAMP (12-VOLT, 21-WATT)	
		1	**084-4348**	1	LAMP (12-VOLT, 5-WATT)	
		1	**186-3735**	4	PIN-CONNECTOR (16-GA TO 18-GA)	
M	11	1	**8C-3798**	2	BOLT-LOCKING (M6X1X30-MM)	
	12	1	**3S-2093**	20	STRAP-CABLE	
	13	1	**8T-4121**	6	WASHER-HARD (11X21X2.5-MM THK)	
M	14	1	**8T-4133**	5	NUT (M10X1.5-THD)	
	15	1	**9X-8256**	2	WASHER (6.6X12X2-MM THK)	
	16	1	**8F-3590**	1	LOCKWASHER	
E	17	1	**3E-6600**		SEAL (5-CM)	

B-USE AS REQUIRED
E-ORDER BY THE CENTIMETER
M-METRIC PART
Y-SEPARATE ILLUSTRATION

211-4276 **LIGHTING GP-FLOOD & SIGNAL** *(contd.)* **i03911319**

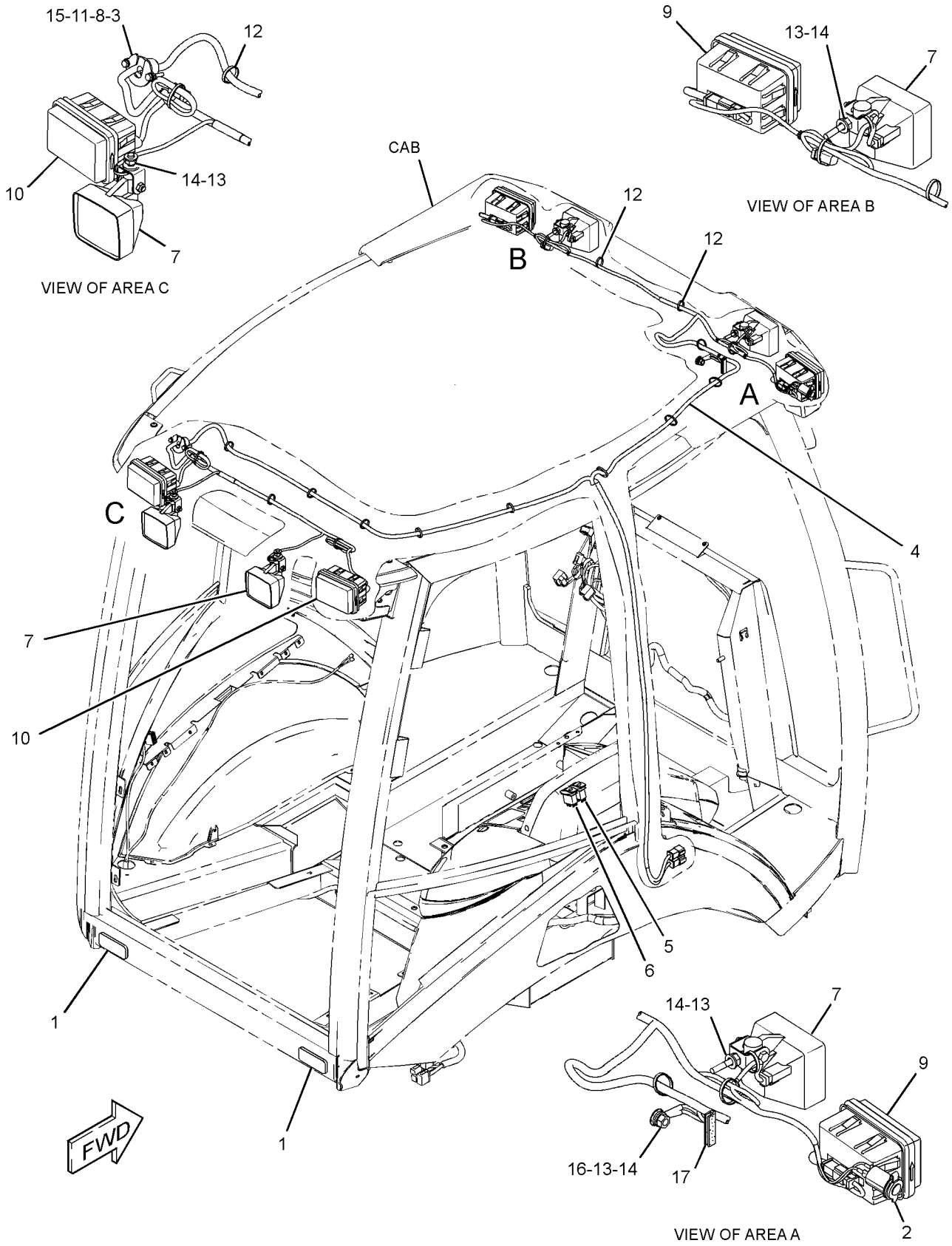

GRAPHIC #1 **<END>** g01689093

ELECTRICAL AND STARTING SYSTEM

211-4277 LIGHTING GP-FLOOD & SIGNAL—NACD, OPTIONAL

S/N: LMS1-UP

PART OF 291-9194, 291-9195 CAB AR-ENCLOSED ROPS, 291-9192 CANOPY AR-OPEN ROPS

AN ATTACHMENT

SMCS-1429, 1430, 1432, 1434 **i03852120**

NOTE	REF NO	GRAPHIC REF	PART NUMBER	QTY	PART NAME 1 2 3 4 5 6 (PRODUCT LEVEL)	SEE PAGE
	1	1	**9R-1499**	2	REFLECTOR	
	2	1	**178-7539**	1	RECEPTACLE AS (POWER SUPPLY)	
	3	1	**290-6799**	1	HARNESS AS-LIGHTING (ROOF)	
		1	**274-3774**	4	CAP-CONNECTOR	
		1	**186-3735**	10	PIN-CONNECTOR (16-GA TO 18-GA)	
		1	**155-2270**	10	KIT-CONNECTING PLUG (2-PIN)	
		1	**155-2271**	2	KIT-CONNECTING PLUG (4-PIN)	
					(EACH PLUG AS INCLUDES PLUG AS, WEDGE & INTERFACE SEAL)	
		1	**8T-8737**	4	PLUG-SEAL	
		1	**102-8805**	1	KIT-RECEPTACLE (6-PIN)	
		1	**102-8806**	1	KIT-RECEPTACLE (8-PIN)	
					(EACH RECEPTACLE KIT INCLUDES RECEPTACLE AS & WEDGE)	
		1	**186-3736**	28	SOCKET-CONNECTOR (16-GA TO 18-GA)	
		1	**8L-8413**	15	STRAP-CABLE	
BD		1	**1P-0810**		TAPE-ELECTRICAL	
		1	**2L-8069**	2	TERMINAL-RING (2-GA TO 10-GA, 3/8-IN SCREW)	
		1	**5P-4571**	2	TERMINAL-BLADE (14-GA TO 16-GA)	
E		1	**119-3662**		TUBE-HEAT SHRINK (10.85-MM DIA) (13-CM)	
E		1	**125-7874**		TUBE-HEAT SHRINK (5.72-MM DIA) (35-CM)	
E		1	**125-7875**		TUBE-HEAT SHRINK (7.44-MM DIA) (20-CM)	
	4	1	**300-4995**	1	SWITCH AS-ROCKER (FLOODLIGHT, FRONT)	
	5	1	**300-4996**	1	SWITCH AS-ROCKER (FLOODLIGHT, REAR)	
					(EACH SWITCH AS ROCKER INCLUDES)	
		1	**111-7899**	1	GASKET	
Y	6	1	**234-4328**	4	LAMP GP-FLOOD (12-VOLT)	87
Y	7	1	**234-4329**	2	LAMP GP-FLOOD (12-VOLT)	88
	8	1	**282-7833**	1	GROMMET	
	9	1	**282-7835**	1	PLATE	
	10	1	**172-6489**	2	LAMP GP-HEAD & SIGNAL (DIRECTIONAL)	
					(EACH INCLUDES)	
		1	**102-8802**	1	KIT-RECEPTACLE (2-PIN)	
					(INCLUDES RECEPTACLE AS & WEDGE)	
		1	**3C-4883**	1	LAMP (12-VOLT, 21-WATT)	
		1	**176-0348**	1	LENS	
	11	1	**172-6490**	2	LAMP GP-SIGNAL (STOP, TAIL, TURN)	
					(EACH INCLUDES)	
		1	**102-8804**	1	KIT-RECEPTACLE (4-PIN)	
					(INCLUDES RECEPTACLE AS & WEDGE)	
		1	**9W-3326**	1	LAMP (12-VOLT, 21-WATT)	
		1	**084-4348**	1	LAMP (12-VOLT, 5-WATT)	
		1	**267-2809**	1	LENS	
		1	**186-3735**	4	PIN-CONNECTOR (16-GA TO 18-GA)	
	12	1	**3S-2093**	24	STRAP-CABLE	
	13	1	**8T-4121**	10	WASHER-HARD (11X21X2.5-MM THK)	
M	14	1	**8T-4133**	9	NUT (M10X1.5-THD)	
M	15	1	**8C-3798**	2	BOLT-LOCKING (M6X1X30-MM)	
	16	1	**9X-8256**	2	WASHER (6.6X12X2-MM THK)	
Y	17	1	**290-5760**	2	LAMP GP-FLOOD (12-VOLT) (REAR OUTER)	89
	18	1	**8F-3590**	1	LOCKWASHER	
E	19	1	**3E-6600**		SEAL (5-CM)	

B-USE AS REQUIRED
D-ORDER BY THE METER
E-ORDER BY THE CENTIMETER
M-METRIC PART
Y-SEPARATE ILLUSTRATION

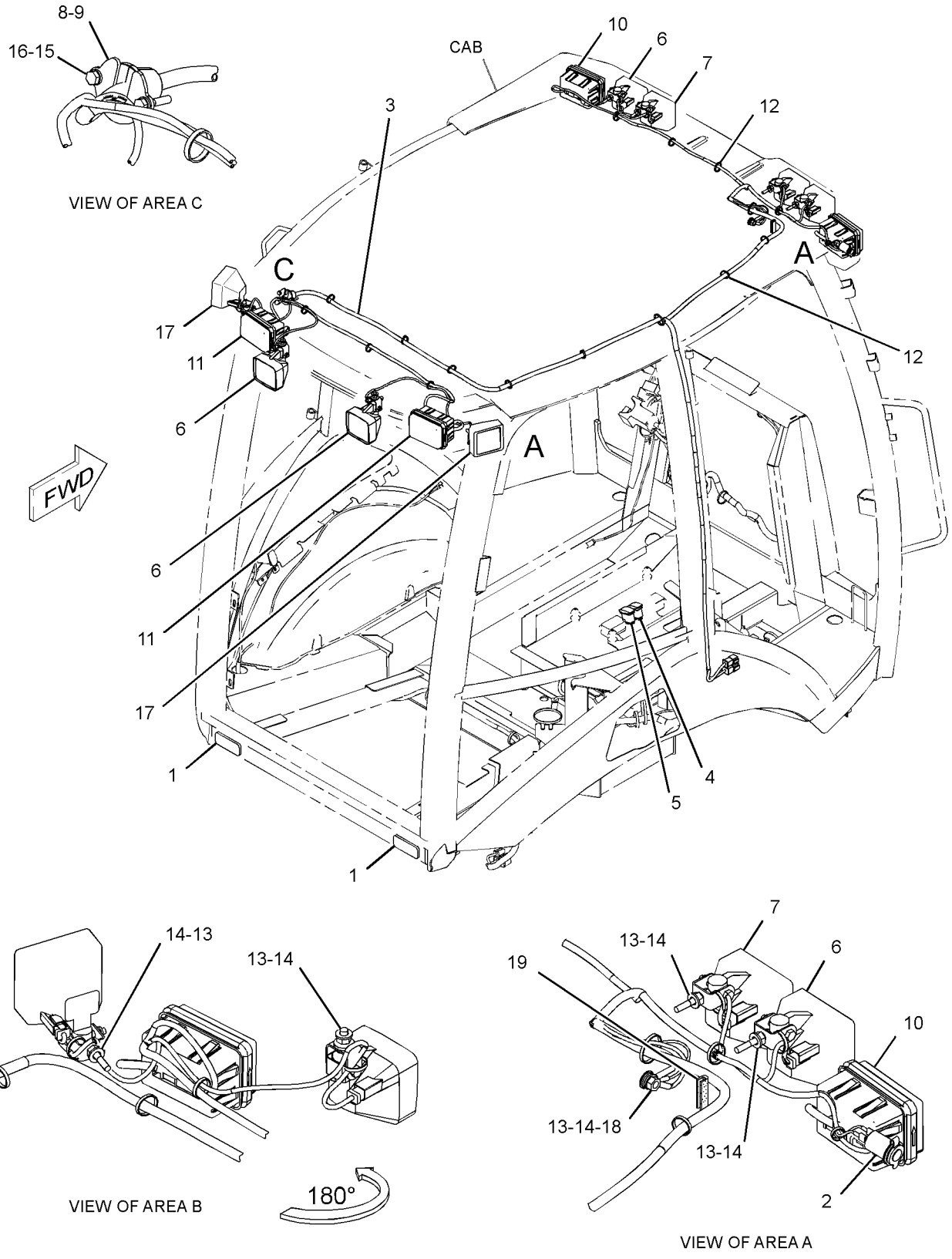

GRAPHIC #1 **<END>** g01405458

211-4292 LIGHTING GP-WARNING BEACON–
AMBER, MAGNETIC MOUNT, ROTATING
S/N: LMS1-UP
AN ATTACHMENT

SMCS-1431 **i03848712**

NOTE	REF NO	GRAPHIC REF	PART NUMBER	QTY	PART NAME 1 2 3 4 5 6 (PRODUCT LEVEL)	SEE PAGE
	1	1	**031-5644**	2	CLIP	
Y	2	1	**180-3664**	1	LAMP GP-WARNING BEACON (12-VOLT, AMBER)	90

Y-SEPARATE ILLUSTRATION

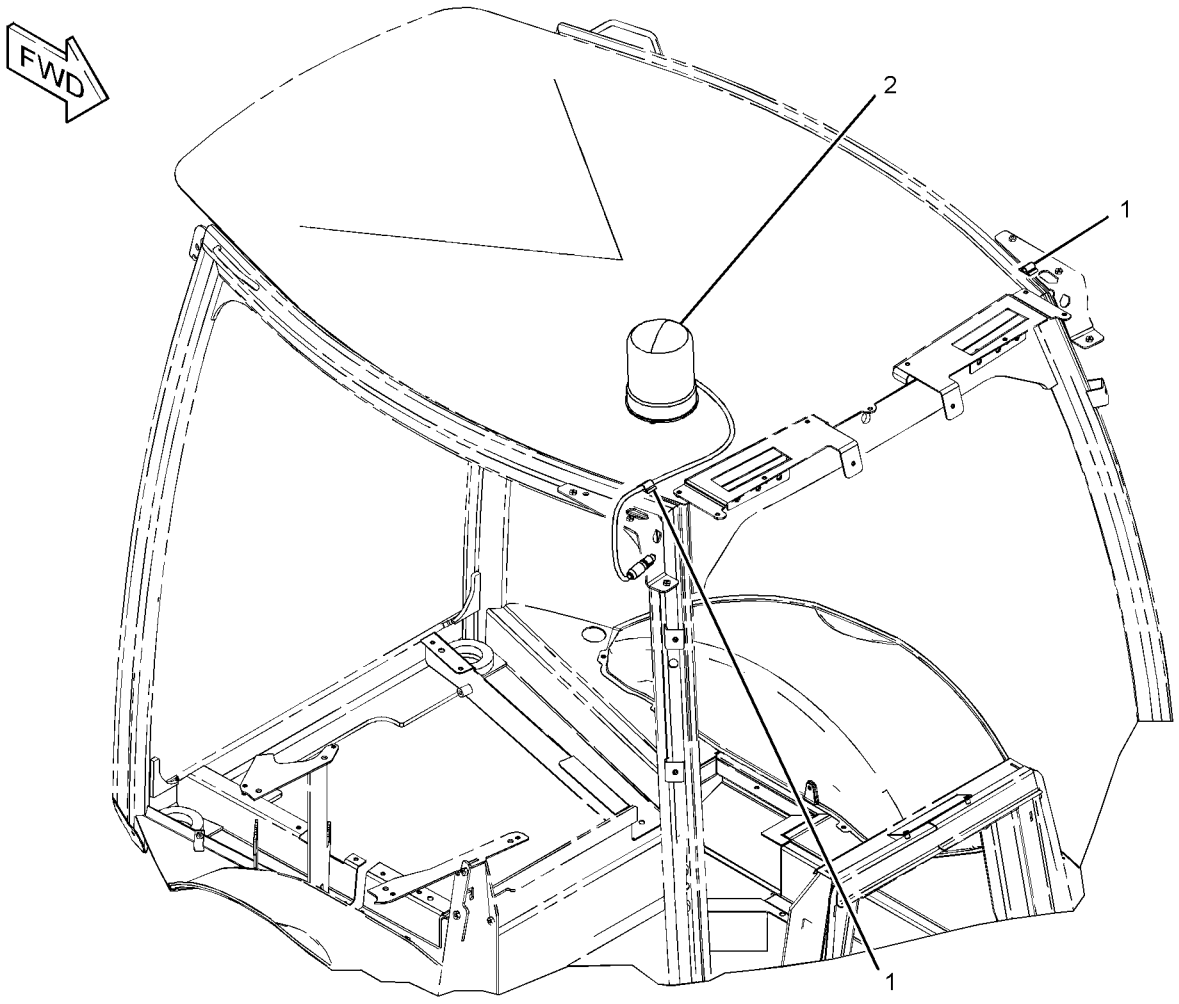

GRAPHIC #1 **<END>** g01233454

247-8199 PANEL GP-FUSE–INCLUDES RELAY

S/N: LMS1-UP
PART OF 290-6722 WIRING GP-PLATFORM
AN ATTACHMENT

SMCS-1417, 1422 **i03340693**

NOTE	REF NO	GRAPHIC REF	PART NUMBER	QTY	PART NAME 1 2 3 4 5 6 (PRODUCT LEVEL)	SEE PAGE
	1	1	**113-8490**	11	FUSE (10-AMPERE)	
	2	1	**113-8491**	13	FUSE (15-AMPERE)	
	3	1	**113-8492**	10	FUSE (20-AMPERE)	
	4	1	**265-8182**	1	COVER-FUSE BLOCK	
M	6	1	**5C-7261**	4	NUT (M8X1.25-THD)	
	7	1	**9F-5644**	4	LOCKWASHER	
	8	1	**7X-0608**	4	WASHER-HARD (10.2X16X2-MM THK)	

M-METRIC PART

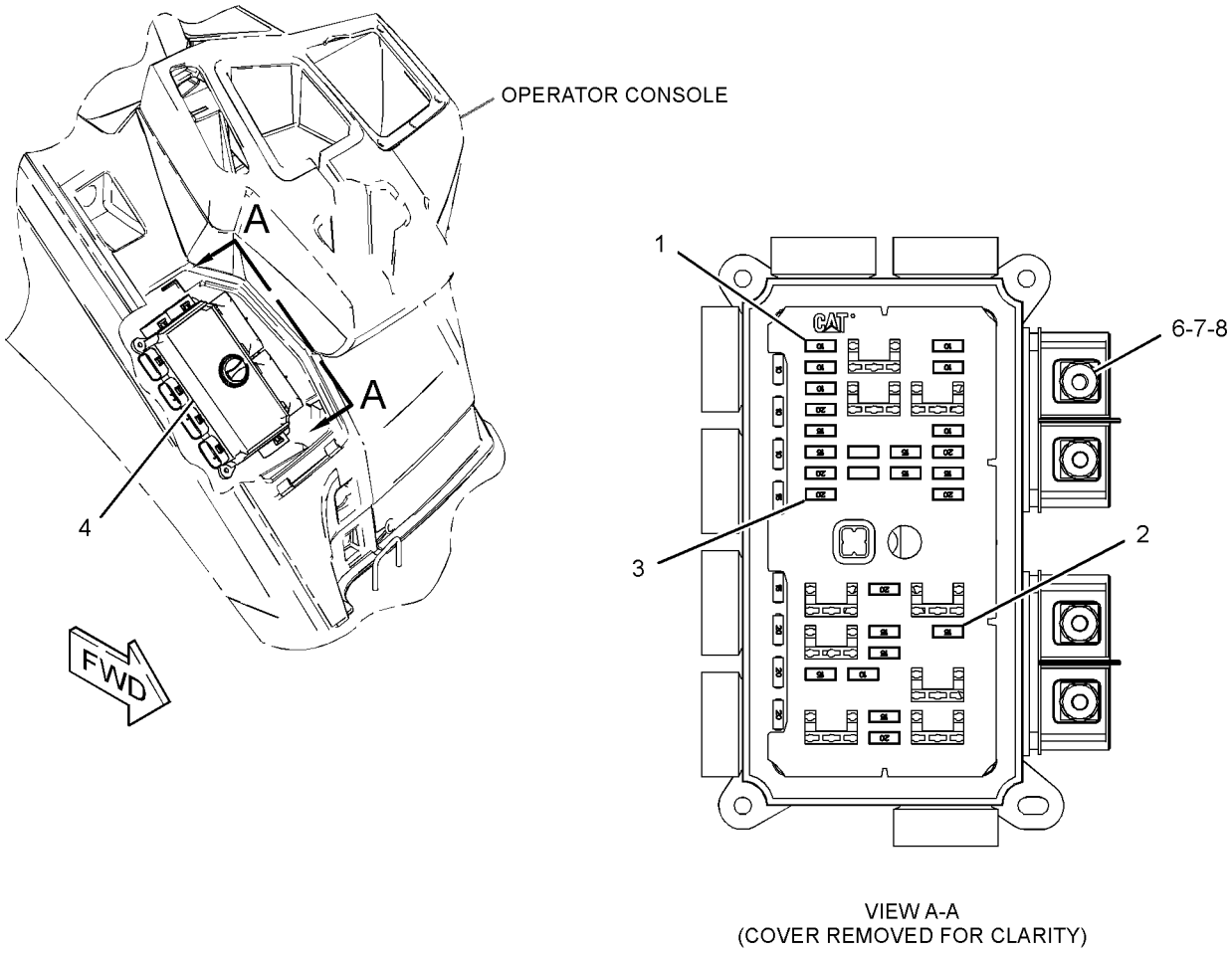

VIEW A-A
(COVER REMOVED FOR CLARITY)

GRAPHIC #1 **<END>** g01331615

276-7287 RELAY GP—POWER DISTRIBUTION

S/N: LMS1-UP
12-VOLT
PART OF 290-6732 WIRING GP-AIR CONDITIONER, 290-6769 WIRING GP-HEATER
AN ATTACHMENT

SMCS-1422, 4493 **i03325084**

NOTE	REF NO	GRAPHIC REF	PART NUMBER	QTY	PART NAME 1 2 3 4 5 6 (PRODUCT LEVEL)	SEE PAGE
M	1	1	**5C-2890**	2	NUT (M6X1-THD)	
	2	1	**8T-4205**	2	WASHER-HARD (7.2X14.5X2-MM THK)	
	3	1	**1H-3244**	2	LOCKWASHER	
M	4	1	**5C-7261**	1	NUT (M8X1.25-THD)	
	5	1	**8T-4224**	1	WASHER-HARD (8.8X16X2-MM THK)	
	6	1	**267-5213**	1	COVER	
	7	1	**267-5211**	1	SEAL	
	8	1	**278-6377**	1	FUSE (40-AMPERE)	

M-METRIC PART

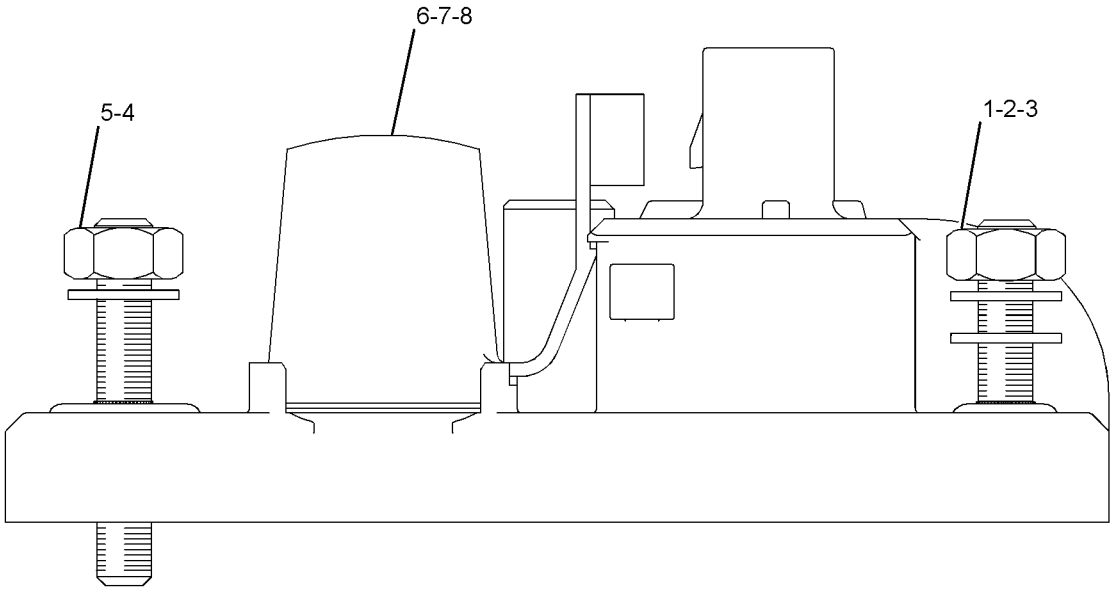

GRAPHIC #1 **<END>** g01290616

276-7290 RELAY GP–POWER, 1

S/N: LMS1-UP
12-VOLT
PART OF 290-6722 WIRING GP-PLATFORM
AN ATTACHMENT

SMCS-1422, 4493 **i03325122**

NOTE	REF NO	GRAPHIC REF	PART NUMBER	QTY	PART NAME 1 2 3 4 5 6 (PRODUCT LEVEL)	SEE PAGE
M	1	1	**5C-2890**	2	NUT (M6X1-THD)	
	2	1	**8T-4205**	2	WASHER-HARD (7.2X14.5X2-MM THK)	
	3	1	**1H-3244**	2	LOCKWASHER	
M	4	1	**5C-7261**	1	NUT (M8X1.25-THD)	
	5	1	**8T-4224**	1	WASHER-HARD (8.8X16X2-MM THK)	
	6	1	**267-5213**	1	COVER	
	7	1	**267-5211**	1	SEAL	
	8	1	**267-2701**	2	FUSE (60-AMPERE)	

M-METRIC PART

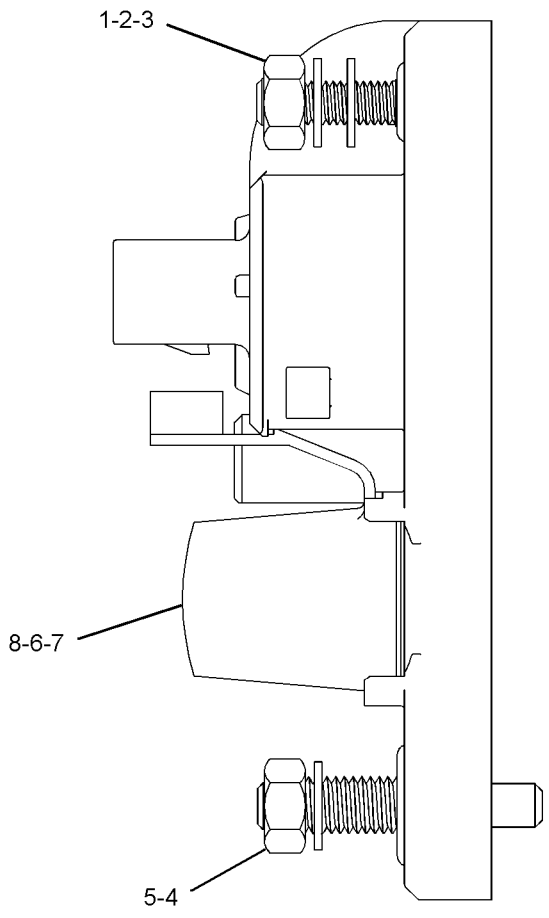

GRAPHIC #1 **<END>** g01278211

311-7567 RELAY GP–POWER, 1

S/N: LMS1-UP
12-VOLT
PART OF 290-6722 WIRING GP-PLATFORM
AN ATTACHMENT

SMCS-1422, 4493 **i03852132**

NOTE	REF NO	GRAPHIC REF	PART NUMBER	QTY	PART NAME 1 2 3 4 5 6 (PRODUCT LEVEL)	SEE PAGE
	1	1	**278-6377**	1	FUSE (40-AMPERE) (POWER, 2)	
	2	1	**267-2701**	1	FUSE (60-AMPERE) (POWER, 1)	
	3	1	**267-5213**	1	COVER	
	4	1	**267-5211**	1	SEAL	
M	5	1	**5C-2890**	2	NUT (M6X1-THD)	
	6	1	**8T-4205**	2	WASHER-HARD (7.2X14.5X2-MM THK)	
	7	1	**1H-3244**	2	LOCKWASHER	
M	8	1	**5C-7261**	1	NUT (M8X1.25-THD)	
	9	1	**8T-4224**	1	WASHER-HARD (8.8X16X2-MM THK)	
	10	1	**9F-5644**	1	LOCKWASHER	

M-METRIC PART

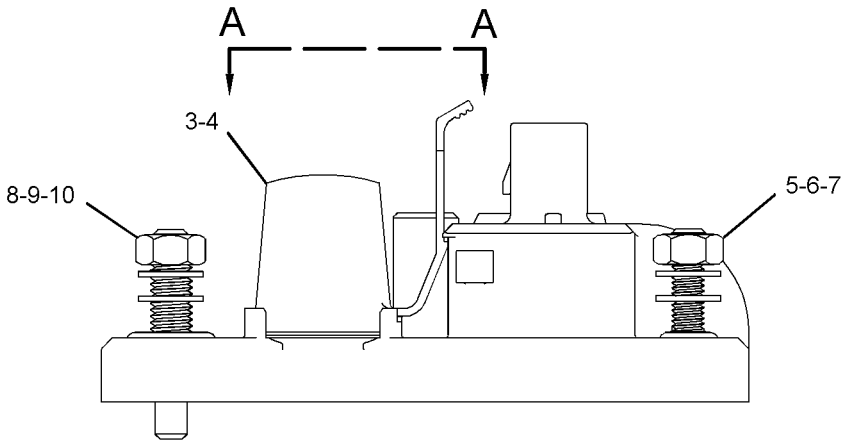

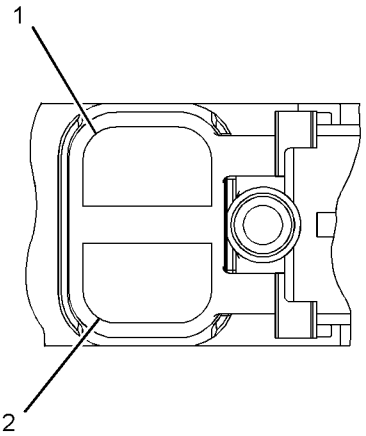

VIEW A-A
(COVER REMOVED FOR CLARITY)

GRAPHIC #1 **<END>** g01522285

303-5769 STARTING MOTOR GP-ELECTRIC–12-VOLT

S/N: C4Z1-UP

PART OF 322-0590 ENGINE AR-PRIMARY

SMCS-1453 **i03128303**

NOTE	REF NO	GRAPHIC REF	PART NUMBER	QTY	PART NAME 1 2 3 4 5 6 (PRODUCT LEVEL)	SEE PAGE
	1	1	**6I-0364**	3	STUD (M10X1.5X30-MM)	
	2	1	**6I-0594**	3	NUT (M10X1.5-THD)	
	3	1	**303-5795**	1	STARTING MOTOR-ELECTRIC	

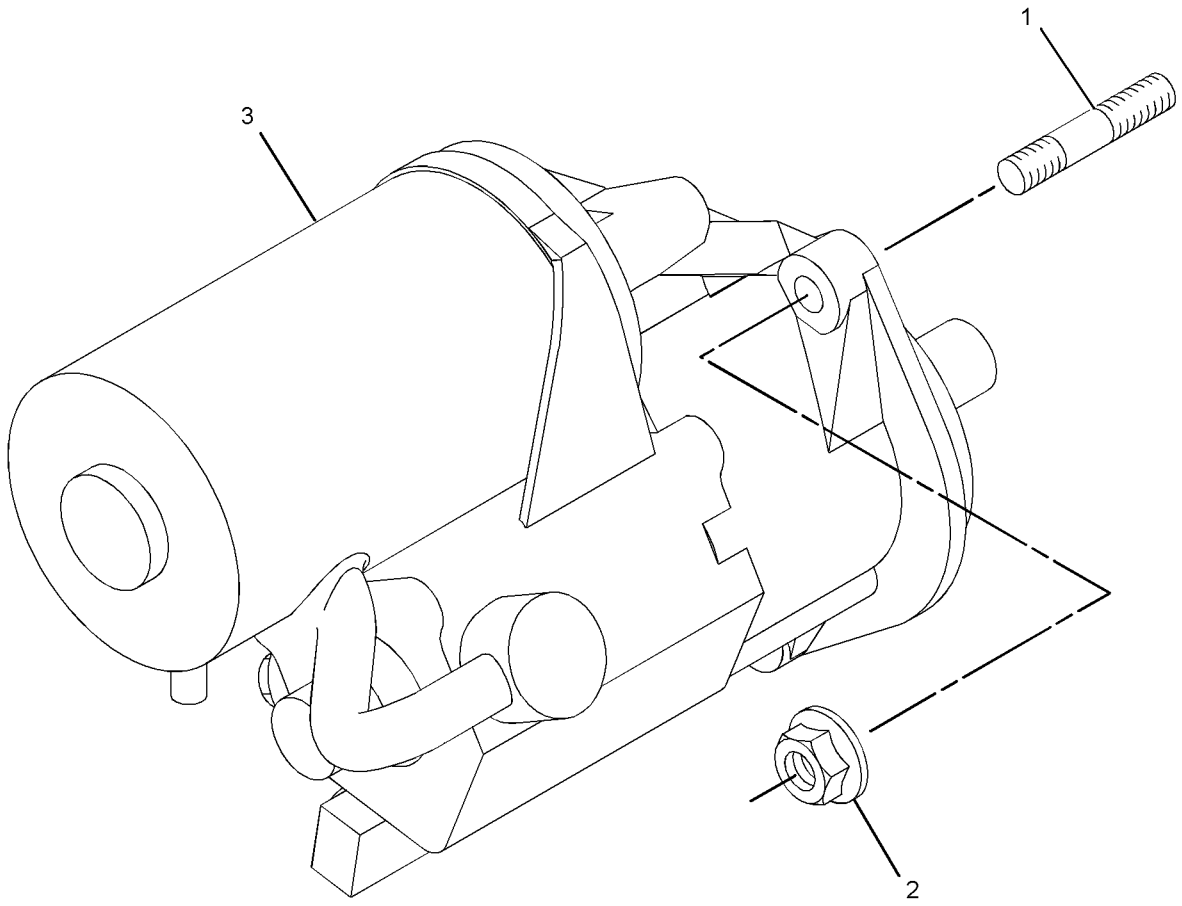

GRAPHIC #1 **<END>** g01376189

290-6784 SWITCH GP-ALL WHEEL DRIVE

S/N: LMS1-UP
PART OF 317-1454 DRIVE AR-BACKHOE LOADER
AN ATTACHMENT

SMCS-1435, 4493 **i03845470**

NOTE	REF NO	GRAPHIC REF	PART NUMBER	QTY	PART NAME 1 2 3 4 5 6 (PRODUCT LEVEL)	SEE PAGE
	1	1	**214-4692**	1	SWITCH AS-ROCKER (ALL WHEEL DRIVE)	
		1	**111-7899**	1	GASKET	
	2	1	**146-9439**	1	RELAY AS (12-VOLT) (ALL WHEEL DRIVE)	
	3	1	**189-3158**	1	SUPPRESSOR-ARC	

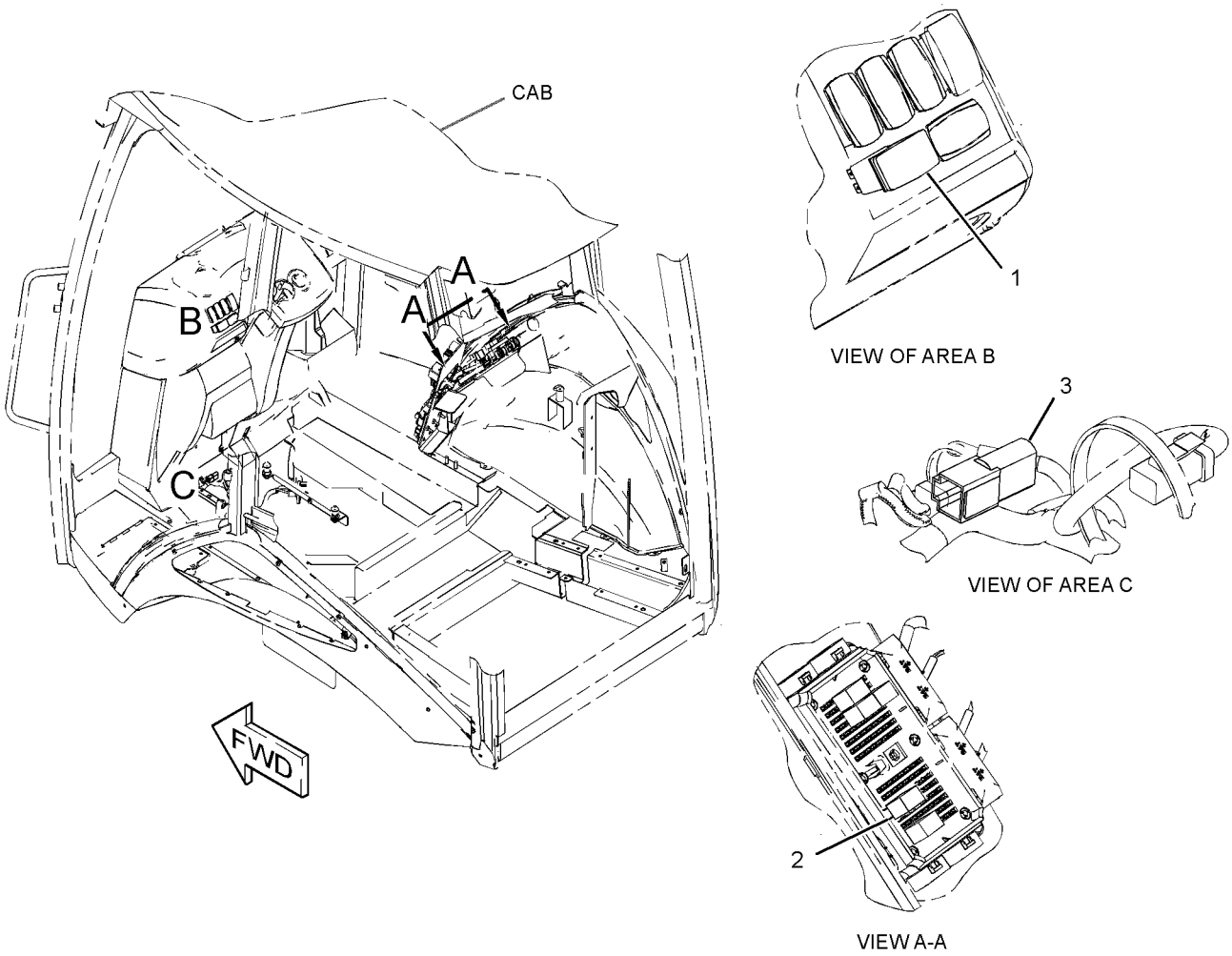

GRAPHIC #1 **<END>** g01522210

202-6010 SWITCH GP-DIFFERENTIAL LOCK–

CENTER PIVOT MACHINE

S/N: LMS1-UP

PART OF 291-9186, 291-9187 POWER TRAIN AR

AN ATTACHMENT

SMCS-1435, 3264 **i03845429**

NOTE	REF NO	GRAPHIC REF	PART NUMBER	QTY	PART NAME 1 2 3 4 5 6 (PRODUCT LEVEL)	SEE PAGE
	1	1	**201-9459**	1	BOOT	
	2	1	**204-0775**	1	SWITCH AS-FOOT (DIFFERENTIAL LOCK ON, OFF)	
	3	1	**205-6298**	1	ACTUATOR	
	4	1	**213-6060**	1	HARNESS AS-WIRING (DIFFERENTIAL LOCK)	
		1	**9X-3401**	2	PIN-CONNECTOR (16-GA TO 18-GA)	
		1	**205-9362**	1	PLUG AS	
		1	**102-8802**	1	KIT-RECEPTACLE (2-PIN)	
					(INCLUDES RECEPTACLE AS & WEDGE)	
		1	**100-6674**	2	SEAL-CONNECTOR	
		1	**8L-8413**	2	STRAP-CABLE	

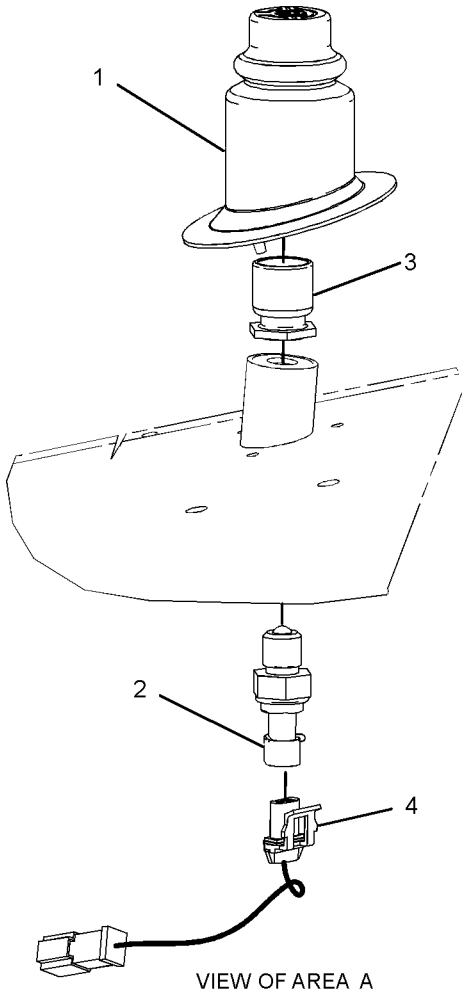

VIEW OF AREA A

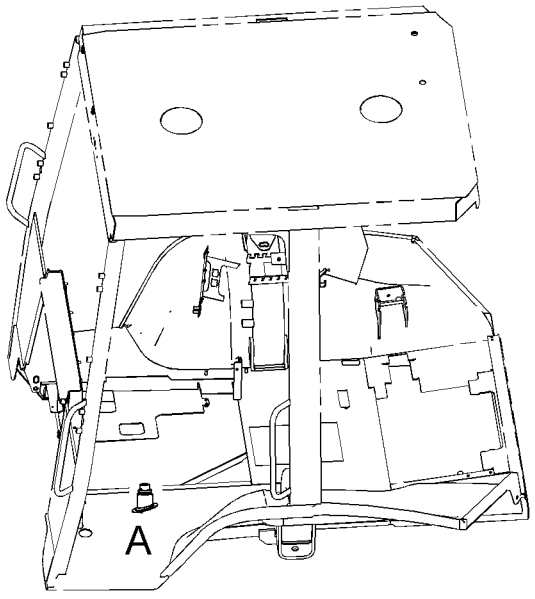

LEFT SIDE VIEW
(UPPER FRONT)

GRAPHIC #1 **<END>** g01230746

7N-0718 SWITCH GP-DISCONNECT–BATTERY

S/N: LMS1-UP

PART OF 290-6789 BATTERY & WIRING GP

SMCS-1411 **i02544993**

NOTE	REF NO	GRAPHIC REF	PART NUMBER	QTY	PART NAME 1 2 3 4 5 6 (PRODUCT LEVEL)	SEE PAGE
	1	1	**8H-5306**	1	KEY (BATTERY DISCONNECT)	
	2	1	**8H-5303**	1	NUT (3/4-16-THD)	
	3	1	**2H-3922**	2	LOCKWASHER	
	4	1	**9F-5644**	2	LOCKWASHER	
	5	1	**6F-7045**	2	NUT-FULL (3/8-24-THD)	

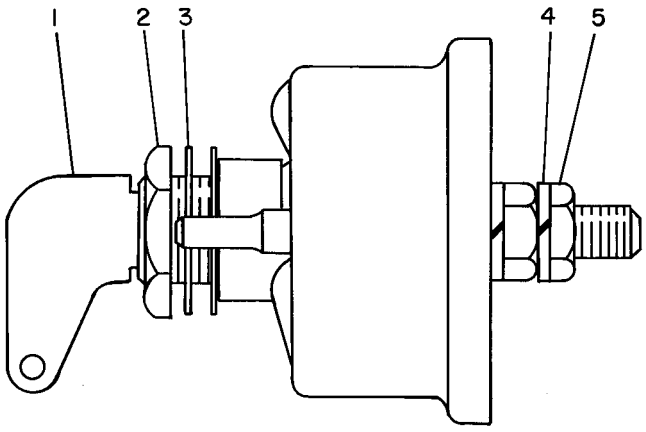

GRAPHIC #1 **<END>** g00084912

326-9896 SWITCH GP-PRESSURE

S/N: C4Z1-UP

PART OF 322-0590 ENGINE AR-PRIMARY

SMCS-1435 **i03899270**

NOTE	REF NO	GRAPHIC REF	PART NUMBER	QTY	PART NAME 1 2 3 4 5 6 (PRODUCT LEVEL)	SEE PAGE
	1	1	**8T-7876**	1	SEAL-O-RING	
	2	1	**035-8063**	1	PLUG	
	3	1	**199-9267**	1	SEAL-O-RING	
	4	1	**225-7941**	1	PLUG	
	5	1	**237-4894**	1	SWITCH AS-PRESSURE (ENGINE OIL)	

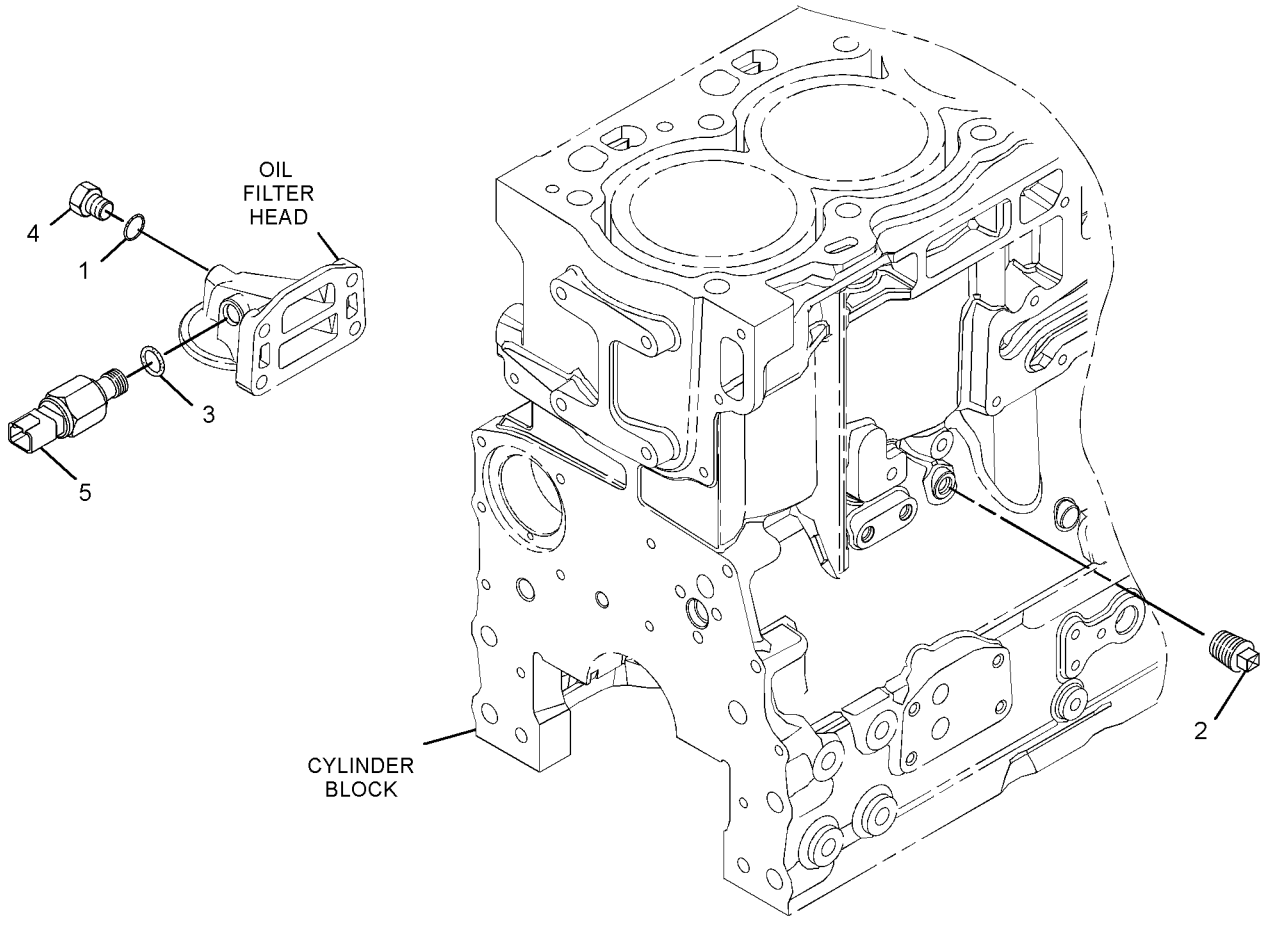

GRAPHIC #1 **<END>** g01772815

ELECTRICAL AND STARTING SYSTEM

290-6732 WIRING GP-AIR CONDITIONER

S/N: LMS1-UP
PART OF 291-9195 CAB AR-ENCLOSED ROPS
AN ATTACHMENT

SMCS-1408, 7320 **i03880424**

NOTE	REF NO	GRAPHIC REF	PART NUMBER	QTY	PART NAME 1 2 3 4 5 6 (PRODUCT LEVEL)	SEE PAGE
	1	1	**3E-9362**	1	RELAY AS (12-VOLT) (HEATER, A/C POWER)	
	2	1	**6K-0806**	1	STRAP-CABLE	
	3	1	**7K-1181**	3	STRAP-CABLE	
	4	1	**8T-8799**	1	BOOT	
	5	1	**189-3158**	1	SUPPRESSOR-ARC	
	6	1	**202-6108**	1	HARNESS AS-HEATER & AIR COND (POWER)	
		1	**111-6795**	1	HOUSING-RELAY	
		1	**111-6816**	1	LOCK	
		1	**9X-3401**	2	PIN-CONNECTOR (16-GA TO 18-GA)	
		1	**102-8802**	1	KIT-RECEPTACLE (2-PIN)	
					(INCLUDES RECEPTACLE AS & WEDGE)	
		1	**8L-8413**	11	STRAP-CABLE	
		1	**2L-8075**	2	TERMINAL-RING (14-GA TO 16-GA, NO. 8 SCREW)	
		1	**111-6792**	4	TERMINAL-RECEPTACLE (18-GA TO 20-GA)	
	7	1	**213-6055**	1	HARNESS AS-HEATER & AIR COND (PLATFORM)	
		1	**228-5856**	2	CONNECTOR	
		1	**213-0139**	5	PIN	
		1	**9X-3401**	5	PIN-CONNECTOR (16-GA TO 18-GA)	
		1	**9X-1054**	1	PLUG AS-CONNECTOR (4-PIN)	
		1	**155-2270**	1	KIT-CONNECTING PLUG (2-PIN)	
		1	**177-9648**	1	KIT-CONNECTING PLUG (2-PIN)	
		1	**177-9656**	1	KIT-CONNECTING PLUG (4-PIN)	
					(EACH PLUG KIT INCLUDES PLUG AS, WEDGE & INTERFACE SEAL)	
		1	**8T-8737**	1	PLUG-SEAL	
		1	**102-8802**	1	KIT-RECEPTACLE (2-PIN)	
		1	**102-8803**	1	KIT-RECEPTACLE (3-PIN)	
					(EACH RECEPTACLE KIT INCLUDES RECEPTACLE AS & WEDGE)	
		1	**180-9340**	2	SOCKET-CONNECTOR (14-GA TO 18-GA)	
		1	**8L-8413**	29	STRAP-CABLE	
		1	**122-4401**	1	TERMINAL	
		1	**2L-8069**	1	TERMINAL-RING (2-GA TO 10-GA, 3/8-IN SCREW)	
		1	**2L-8067**	1	TERMINAL-RING (10-GA TO 12-GA, 1/4-IN SCREW)	
		1	**091-2436**	7	TERMINAL-BLADE (18-GA TO 22-GA)	
		1	**104-1995**	11	TERMINAL-BLADE (14-GA TO 18-GA)	
		1	**9X-1055**	2	TERMINAL-RECEPTACLE (12-GA)	
		1	**100-5041**	2	TERMINAL-RECEPTACLE (18-GA TO 20-GA)	
E		1	**119-3662**		TUBE-HEAT SHRINK (10.85-MM DIA) (20-CM)	
E		1	**125-7874**		TUBE-HEAT SHRINK (5.72-MM DIA) (10-CM)	
	8	1	**214-4695**	1	SWITCH AS-ROCKER (BLOWER FAN SPEED)	
	9	1	**214-4718**	1	SWITCH AS-ROCKER (AIR CONDITIONER, HEATER SELECT)	
					(EACH SWITCH AS INCLUDES)	
		1	**111-7899**	1	GASKET	
	10	1	**236-6923**	1	SWITCH AS-PRESSURE (REFRIGERANT COMPR, HIGH SIDE)	
	11	1	**238-7492**	1	HARNESS AS-HEATER & AIR COND (COMPRESSOR)	
		1	**9X-3401**	2	PIN-CONNECTOR (16-GA TO 18-GA)	
		1	**155-2270**	2	KIT-CONNECTING PLUG (2-PIN)	
					(EACH INCLUDES PLUG AS, WEDGE & INTERFACE SEAL)	
		1	**102-8802**	1	KIT-RECEPTACLE (2-PIN)	
					(INCLUDES RECEPTACLE AS & WEDGE)	
		1	**100-6674**	2	SEAL-CONNECTOR	

290-6732 **WIRING GP-AIR CONDITIONER** *(contd.)* **i03880424**

NOTE	REF NO	GRAPHIC REF	PART NUMBER	QTY	PART NAME 1 2 3 4 5 6 (PRODUCT LEVEL)	SEE PAGE
		1	**180-9340**	4	SOCKET-CONNECTOR (14-GA TO 18-GA)	
		1	**124-5640**	2	TERMINAL-SOCKET	
		1	**8L-8413**	1	STRAP-CABLE	
E		1	**125-7874**		TUBE-HEAT SHRINK (5.72-MM DIA) (10-CM)	
	12	1	**275-0570**	1	BAR-BUS	
	13	1	**115-1615**	1	RELAY AS (12-VOLT) (FAN SPEED)	
M	14	1	**8T-9534**	1	BOLT (M6X1X50-MM)	
Y	15	1	**276-7287**	1	RELAY GP (12-VOLT) (POWER DISTRIBUTION)	98
	16	1	**3S-2093**	12	STRAP-CABLE	
M	17	1	**5C-2890**	1	NUT (M6X1-THD)	
M	18	1	**5C-7261**	1	NUT (M8X1.25-THD)	
M	19	1	**8T-4171**	1	BOLT (M6X1X12-MM)	
	20	1	**8T-4205**	2	WASHER-HARD (7.2X14.5X2-MM THK)	
	21	1	**8T-4224**	1	WASHER-HARD (8.8X16X2-MM THK)	
	22	1	**9X-7378**	1	SEAL-O-RING	

E-ORDER BY THE CENTIMETER
M-METRIC PART
Y-SEPARATE ILLUSTRATION

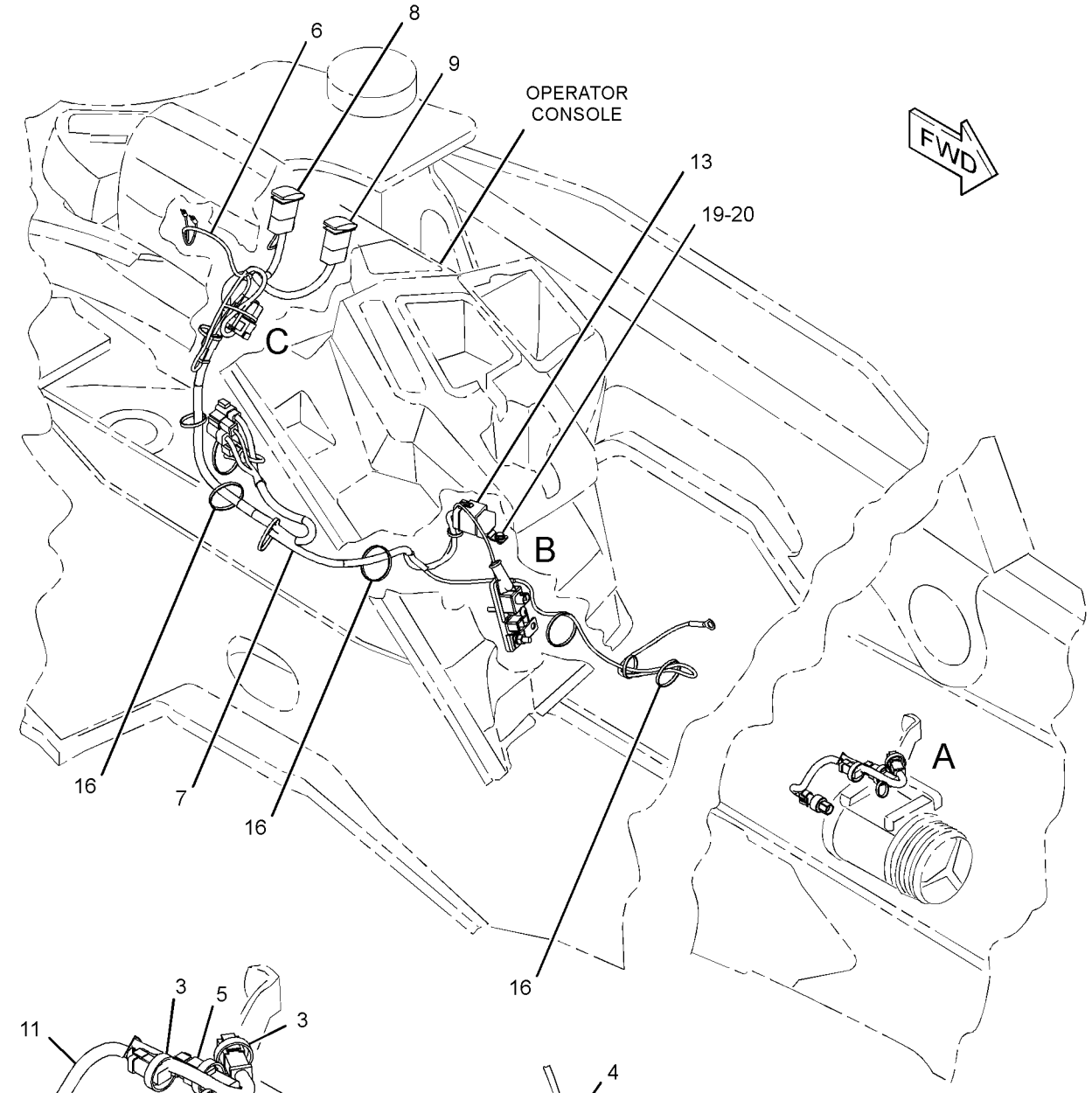

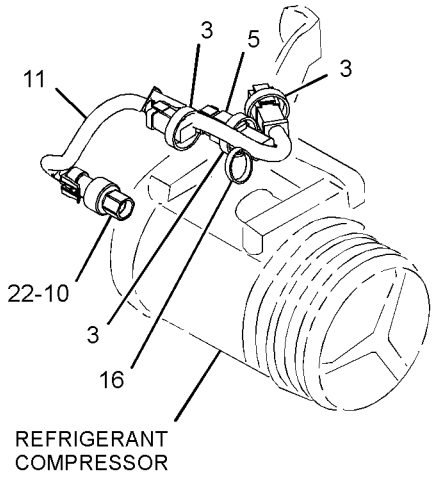

VIEW OF AREA A

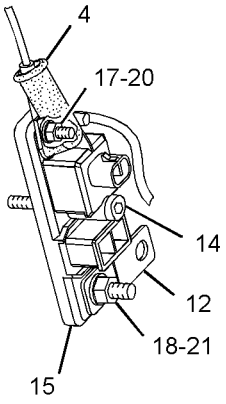

VIEW OF AREA B

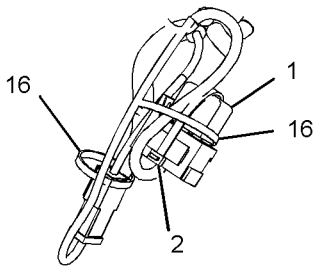

VIEW OF AREA C

GRAPHIC #1 **<END>** g02104375

290-6737 WIRING GP-CONSOLE–SIDE

S/N: LMS1-UP

PART OF 291-9194, 291-9195 CAB AR-ENCLOSED ROPS, 291-9192 CANOPY AR-OPEN ROPS, 291-9191 CANOPY GP-OPEN ROPS AN ATTACHMENT

SMCS-1408 **i03880428**

NOTE	REF NO	GRAPHIC REF	PART NUMBER	QTY	PART NAME 1 2 3 4 5 6 (PRODUCT LEVEL)	SEE PAGE
	1	1	**110-7887**	1	SWITCH AS-START (KEY)	
		1	**7T-6799**	1	NUT-MOUNTING (1-32-THD)	
		1	**102-8804**	1	KIT-RECEPTACLE (4-PIN)	
					(INCLUDES RECEPTACLE AS & WEDGE)	
		1	**186-3735**	4	PIN-CONNECTOR (16-GA TO 18-GA)	
	2	1	**131-1424**	1	SEAL	
	3	1	**170-6542**	1	GAUGE GP-OIL TEMPERATURE (TORQUE CONVERTER)	
		1	**4B-2043**	3	NUT (8-32-THD)	
		1	**7X-9065**	1	LAMP (12-VOLT) (OIL TEMPERATURE)	
		1	**9B-7233**	3	LOCKWASHER	
M	4	1	**197-7499**	2	BOLT (M4X0.7X25-MM)	
	5	1	**206-1345**	3	STRAP-CABLE	
	6	1	**214-4693**	1	SWITCH AS-ROCKER (WARNING BEACON)	
	7	1	**214-4722**	1	SWITCH AS-ROCKER (STARTING AID)	
					(EACH SWITCH AS INCLUDES)	
		1	**111-7899**	1	GASKET	
	8	1	**226-7164**	1	GAUGE GP-COOLANT TEMPERATURE (ENGINE)	
		1	**4B-2043**	6	NUT (8-32-THD)	
		1	**7X-9065**	1	LAMP (12-VOLT) (COOLANT TEMPERATURE)	
		1	**9B-7233**	3	LOCKWASHER	
B	9	1	**227-1057**	7	PLUG-HOLE	
	10	1	**231-9357**	1	FILM-IDENTIFICATION (CONSOLE, RH)	
Y	11	1	**239-1080**	1	TACHOMETER GP-ELECTRIC	583
	12	1	**270-2728**	1	LAMP GP (12-VOLT) (FAULT INDICATOR)	
		1	**102-8801**	1	KIT-RECEPTACLE (12-PIN)	
					(INCLUDES RECEPTACLE AS & WEDGE)	
		1	**232-4706**	1	GASKET	
		1	**186-3735**	10	PIN-CONNECTOR (16-GA TO 18-GA)	
		1	**8T-8737**	2	PLUG-SEAL	
	13	1	**290-6738**	1	HARNESS AS-CONSOLE	
		1	**228-5856**	6	CONNECTOR	
		1	**155-2255**	2	KIT-CONNECTING PLUG (12-PIN)	
		1	**155-2271**	1	KIT-CONNECTING PLUG (4-PIN)	
		1	**155-2274**	1	KIT-CONNECTING PLUG (6-PIN)	
					(EACH PLUG KIT INCLUDES PLUG AS, WEDGE & INTERFACE SEAL)	
		1	**167-3693**	1	PLUG AS-CONNECTOR (31-PIN)	
		1	**8T-8737**	17	PLUG-SEAL	
		1	**180-9340**	18	SOCKET-CONNECTOR (14-GA TO 18-GA)	
		1	**186-3736**	30	SOCKET-CONNECTOR (16-GA TO 18-GA)	
		1	**3S-2093**	17	STRAP-CABLE	
B		1	**141-8061**		TAPE	
		1	**122-4401**	1	TERMINAL	
		1	**2L-8075**	1	TERMINAL-RING (14-GA TO 16-GA, NO. 8 SCREW)	
		1	**7N-7221**	5	TERMINAL-BLADE (18-GA TO 22-GA)	
		1	**091-2436**	19	TERMINAL-BLADE (18-GA TO 22-GA)	
		1	**104-1995**	13	TERMINAL-BLADE (14-GA TO 18-GA)	
E		1	**125-7874**		TUBE-HEAT SHRINK (5.72-MM DIA) (10-CM)	
E		1	**119-3662**		TUBE-HEAT SHRINK (10.85-MM DIA) (13-CM)	
	14	1	**170-6305**	1	GAUGE GP-FUEL LEVEL	
		1	**4B-2043**	3	NUT (8-32-THD)	
		1	**7X-9065**	1	LAMP (12-VOLT) (FUEL LEVEL INDICATOR)	
		1	**9B-7233**	3	LOCKWASHER	
	15	1	**3S-2093**	5	STRAP-CABLE	

290-6737 **WIRING GP-CONSOLE** *(contd.)* **i03880428**

NOTE	REF NO	GRAPHIC REF	PART NUMBER	QTY	PART NAME 1 2 3 4 5 6 (PRODUCT LEVEL)	SEE PAGE
	16	1	**6V-3507**	3	SEAL-RECTANGULAR	
M	17	1	**8T-2659**	2	LOCKNUT (M4X0.7-THD)	

B-USE AS REQUIRED
E-ORDER BY THE CENTIMETER
M-METRIC PART
Y-SEPARATE ILLUSTRATION

290-6737 **WIRING GP-CONSOLE** *(contd.)* **i03880428**

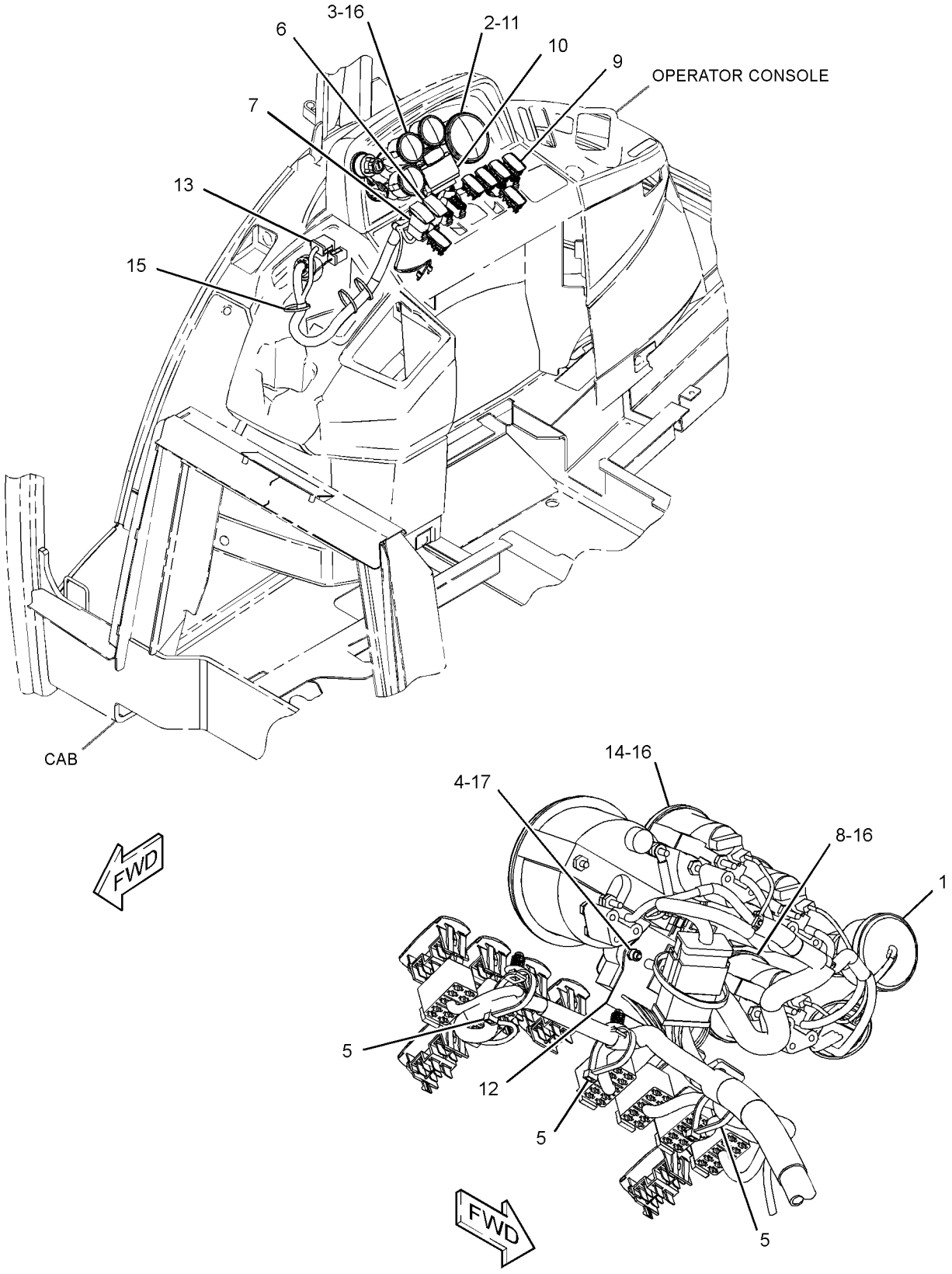

GRAPHIC #1 **<END>** g01728636

ELECTRICAL AND STARTING SYSTEM

290-6752 WIRING GP-ENGINE

S/N: LMS1-UP

PART OF 291-9188 ENGINE AR

SMCS-1408 **i03879294**

NOTE	REF NO	GRAPHIC REF	PART NUMBER	QTY	PART NAME 1 2 3 4 5 6 (PRODUCT LEVEL)	SEE PAGE
	1	1	**7K-1181**	26	STRAP-CABLE	
	2	1	**7Y-3883**	1	CABLE AS	
		1	**1S-7251**	2	TERMINAL-CABLE (00-GA, 1/2-IN SCREW)	
E		1	**5P-0747**		CABLE (00-GA, BLACK) (40-CM)	
	3	1	**164-9425**	1	HORN AS (24-VOLT, LOW TONE)	
	4	1	**178-8465**	1	HARNESS AS-FUEL TANK (FUEL SHUTOFF)	
		1	**9X-3401**	2	PIN-CONNECTOR (16-GA TO 18-GA)	
		1	**176-1477**	1	PLUG AS (2-PIN)	
		1	**102-8802**	1	KIT-RECEPTACLE (2-PIN)	
					(INCLUDES RECEPTACLE AS & WEDGE)	
		1	**185-1861**	2	SEAL-WIRE	
		1	**8L-8413**	2	STRAP-CABLE	
		1	**176-1521**	2	TERMINAL	
	5	1	**200-6345**	2	MOUNT (DUAL SWIVEL)	
	7	1	**235-8747**	1	SWITCH-TEMPERATURE (ENGINE COOLANT)	
	8	1	**244-3106**	1	SENDER AS-TEMPERATURE (ENGINE COOLANT)	
		1	**102-8802**	1	KIT-RECEPTACLE (2-PIN)	
					(INCLUDES RECEPTACLE AS & WEDGE)	
		1	**186-3735**	2	PIN-CONNECTOR (16-GA TO 18-GA)	
	9	1	**269-7680**	1	CLIP	
	10	1	**290-6753**	1	HARNESS AS-ENGINE	
		1	**274-3774**	3	CAP-CONNECTOR	
		1	**123-7615**	2	CONNECTOR	
		1	**7N-9738**	1	HOUSING-RECEPTACLE (14-GA TO 18-GA)	
		1	**213-0139**	2	PIN	
		1	**186-3735**	5	PIN-CONNECTOR (16-GA TO 18-GA)	
		1	**7N-7780**	1	PIN-CONNECTOR (14-GA TO 18-GA)	
		1	**155-2270**	17	KIT-CONNECTING PLUG (2-PIN)	
		1	**155-2260**	1	KIT-CONNECTING PLUG (3-PIN)	
		1	**177-9648**	1	KIT-CONNECTING PLUG (2-PIN)	
					(EACH PLUG KIT INCLUDES PLUG AS, WEDGE & INTERFACE SEAL)	
		1	**167-3693**	1	PLUG AS-CONNECTOR (31-PIN)	
		1	**8T-8737**	19	PLUG-SEAL	
		1	**102-8801**	1	KIT-RECEPTACLE (12-PIN)	
					(INCLUDES RECEPTACLE AS & WEDGE)	
		1	**238-9397**	1	RESISTOR AS	
		1	**100-6674**	2	SEAL-CONNECTOR	
		1	**180-9340**	17	SOCKET-CONNECTOR (14-GA TO 18-GA)	
		1	**186-3736**	35	SOCKET-CONNECTOR (16-GA TO 18-GA)	
		1	**9W-0844**	4	SOCKET-CONNECTOR (14-GA)	
		1	**7N-7779**	1	SOCKET-CONNECTOR (14-GA TO 18-GA)	
		1	**124-5640**	2	TERMINAL-SOCKET	
		1	**3S-2093**	12	STRAP-CABLE	
		1	**189-3158**	3	SUPPRESSOR-ARC	
B		1	**1P-0810**		TAPE-ELECTRICAL	
		1	**5P-1478**	1	TERMINAL-FORK (10-GA TO 12-GA, NO. 10 SCREW)	
		1	**2L-8079**	2	TERMINAL-RING (14-GA TO 16-GA, 3/8-IN SCREW)	
		1	**7N-7221**	1	TERMINAL-BLADE (18-GA TO 22-GA)	
		1	**7N-9017**	3	TERMINAL-RING (18-GA TO 22-GA, NO. 10 SCREW)	
		1	**6V-0491**	4	TERMINAL-BLADE (14-GA TO 18-GA)	
E		1	**119-3662**		TUBE-HEAT SHRINK (10.85-MM DIA) (7-CM)	
E		1	**125-7874**		TUBE-HEAT SHRINK (5.72-MM DIA) (20-CM)	
E		1	**125-7875**		TUBE-HEAT SHRINK (7.44-MM DIA) (10-CM)	

290-6752 **WIRING GP-ENGINE** *(contd.)* **i03879294**

NOTE	REF NO	GRAPHIC REF	PART NUMBER	QTY	PART NAME 1 2 3 4 5 6 (PRODUCT LEVEL)	SEE PAGE
	11	1	**297-5257**	1	BRACKET AS	
	12	1	**298-0663**	4	CLIP	
	13	1	**132-5789**	6	CLIP	
	14	1	**199-9751**	1	SEAL-O-RING	
	15	1	**3J-4818**	3	LOCKWASHER	
	16	1	**3S-2093**	19	STRAP-CABLE	
	17	1	**4P-7428**	1	CLIP	
	18	1	**4P-7581**	2	CLIP	
	19	1	**4P-8134**	1	CLIP	
M	20	1	**5C-2874**	2	NUT (M5X0.8-THD)	
	21	1	**5P-4116**	1	WASHER-HARD (8.8X20.5X2-MM THK)	
	22	1	**5P-6459**	1	GROMMET	
	23	1	**6V-7359**	1	GROMMET	
	24	1	**8D-9671**	1	CLIP	
	25	1	**8F-1434**	2	LOCKWASHER	
	26	1	**8T-0328**	2	WASHER-HARD (5.5X10X1-MM THK)	
	27	1	**8T-4121**	7	WASHER-HARD (11X21X2.5-MM THK)	
M	28	1	**8T-4136**	1	BOLT (M10X1.5X25-MM)	
M	29	1	**8T-4137**	4	BOLT (M10X1.5X20-MM)	
M	30	1	**8T-4189**	3	BOLT (M8X1.25X20-MM)	
M	31	1	**8T-4192**	4	BOLT (M12X1.75X25-MM)	
	32	1	**8T-4223**	5	WASHER-HARD (13.5X25.5X3-MM THK)	
	33	1	**8T-4224**	3	WASHER-HARD (8.8X16X2-MM THK)	
M	34	1	**8T-5093**	1	BOLT-LOCKING (M8X1.25X25-MM)	

B-USE AS REQUIRED
E-ORDER BY THE CENTIMETER
M-METRIC PART

290-6752 **WIRING GP-ENGINE** *(contd.)* **i03879294**

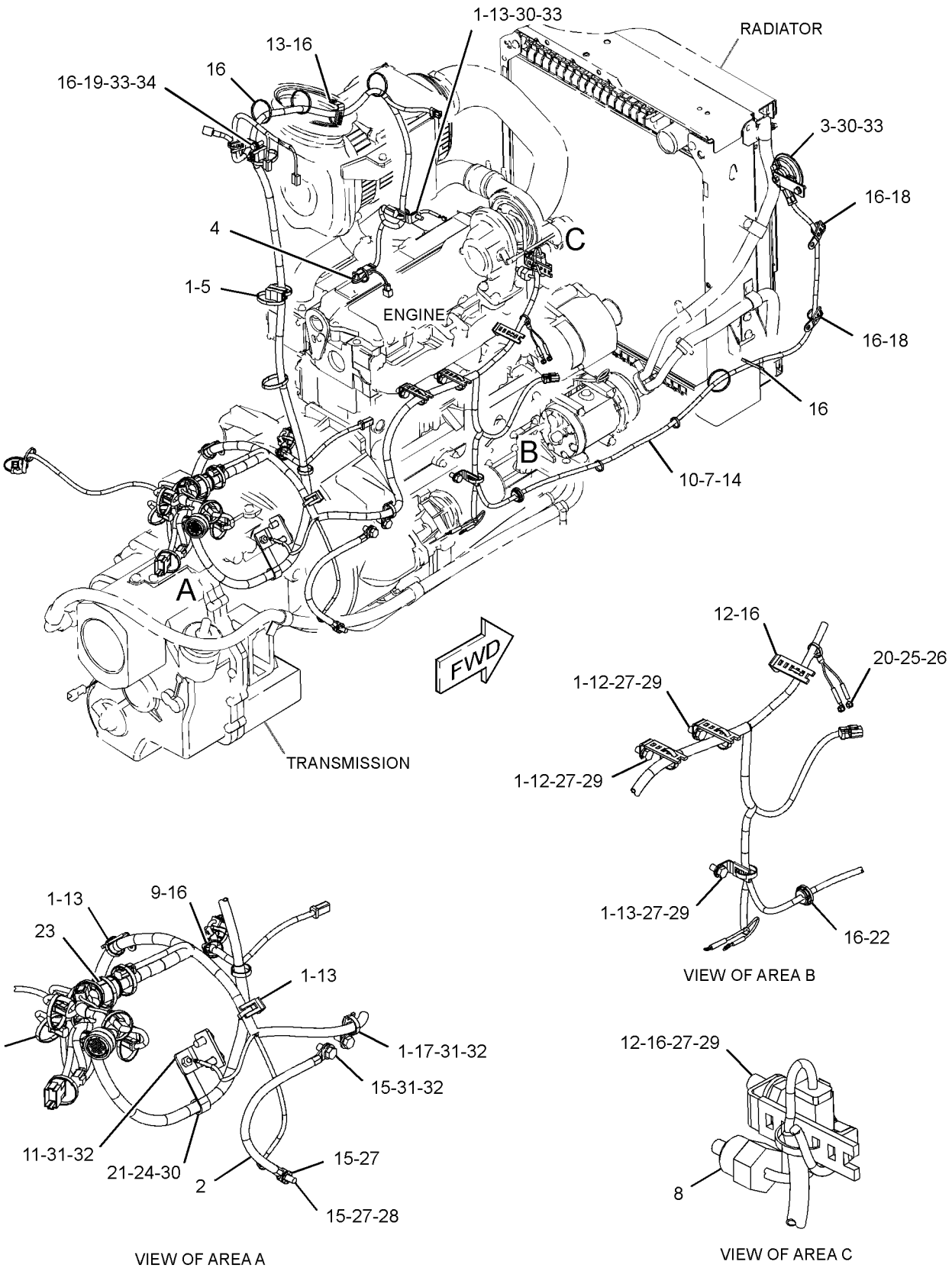

GRAPHIC #1 **<END>** g01943454

290-6769 WIRING GP-HEATER

S/N: LMS1-UP
PART OF 291-9194 CAB AR-ENCLOSED ROPS
AN ATTACHMENT

SMCS-1408, 7304 **i03880439**

NOTE	REF NO	GRAPHIC REF	PART NUMBER	QTY	PART NAME 1 2 3 4 5 6 (PRODUCT LEVEL)	SEE PAGE
	1	1	**8T-8799**	1	BOOT	
	2	1	**213-6055**	1	HARNESS AS-HEATER & AIR COND	
		1	**228-5856**	2	CONNECTOR	
		1	**213-0139**	5	PIN	
		1	**9X-3401**	5	PIN-CONNECTOR (16-GA TO 18-GA)	
		1	**9X-1054**	1	PLUG AS-CONNECTOR (4-PIN)	
		1	**155-2270**	1	KIT-CONNECTING PLUG (2-PIN)	
		1	**177-9648**	1	KIT-CONNECTING PLUG (2-PIN)	
		1	**177-9656**	1	KIT-CONNECTING PLUG (4-PIN)	
					(EACH PLUG KIT INCLUDES PLUG AS, WEDGE & INTERFACE SEAL)	
		1	**8T-8737**	1	PLUG-SEAL	
		1	**102-8802**	1	KIT-RECEPTACLE (2-PIN)	
		1	**102-8803**	1	KIT-RECEPTACLE (3-PIN)	
					(EACH RECEPTACLE KIT INCLUDES RECEPTACLE AS & WEDGE)	
		1	**180-9340**	2	SOCKET-CONNECTOR (14-GA TO 18-GA)	
		1	**8L-8413**	29	STRAP-CABLE	
		1	**122-4401**	1	TERMINAL	
		1	**2L-8069**	1	TERMINAL-RING (2-GA TO 10-GA, 3/8-IN SCREW)	
		1	**2L-8067**	1	TERMINAL-RING (10-GA TO 12-GA, 1/4-IN SCREW)	
		1	**091-2436**	7	TERMINAL-BLADE (18-GA TO 22-GA)	
		1	**104-1995**	11	TERMINAL-BLADE (14-GA TO 18-GA)	
		1	**9X-1055**	2	TERMINAL-RECEPTACLE (12-GA)	
		1	**100-5041**	2	TERMINAL-RECEPTACLE (18-GA TO 20-GA)	
E		1	**119-3662**		TUBE-HEAT SHRINK (10.85-MM DIA) (20-CM)	
E		1	**125-7874**		TUBE-HEAT SHRINK (5.72-MM DIA) (10-CM)	
	3	1	**214-4695**	1	SWITCH AS-ROCKER (BLOWER FAN SPEED)	
	4	1	**214-4703**	1	SWITCH AS-ROCKER (HEATER)	
					(EACH SWITCH AS INCLUDES)	
		1	**111-7899**	1	GASKET	
	5	1	**275-0570**	1	BAR-BUS	
Y	6	1	**276-7287**	1	RELAY GP (12-VOLT) (POWER DISTRIBUTION)	98
	7	1	**115-1615**	1	RELAY AS (12-VOLT) (FAN SPEED)	
M	8	1	**8T-9534**	1	BOLT (M6X1X50-MM)	
	9	1	**3S-2093**	8	STRAP-CABLE	
M	10	1	**5C-2890**	1	NUT (M6X1-THD)	
M	11	1	**5C-7261**	1	NUT (M8X1.25-THD)	
M	12	1	**8T-4171**	1	BOLT (M6X1X12-MM)	
	13	1	**8T-4205**	2	WASHER-HARD (7.2X14.5X2-MM THK)	
	14	1	**8T-4224**	1	WASHER-HARD (8.8X16X2-MM THK)	

E-ORDER BY THE CENTIMETER
M-METRIC PART
Y-SEPARATE ILLUSTRATION

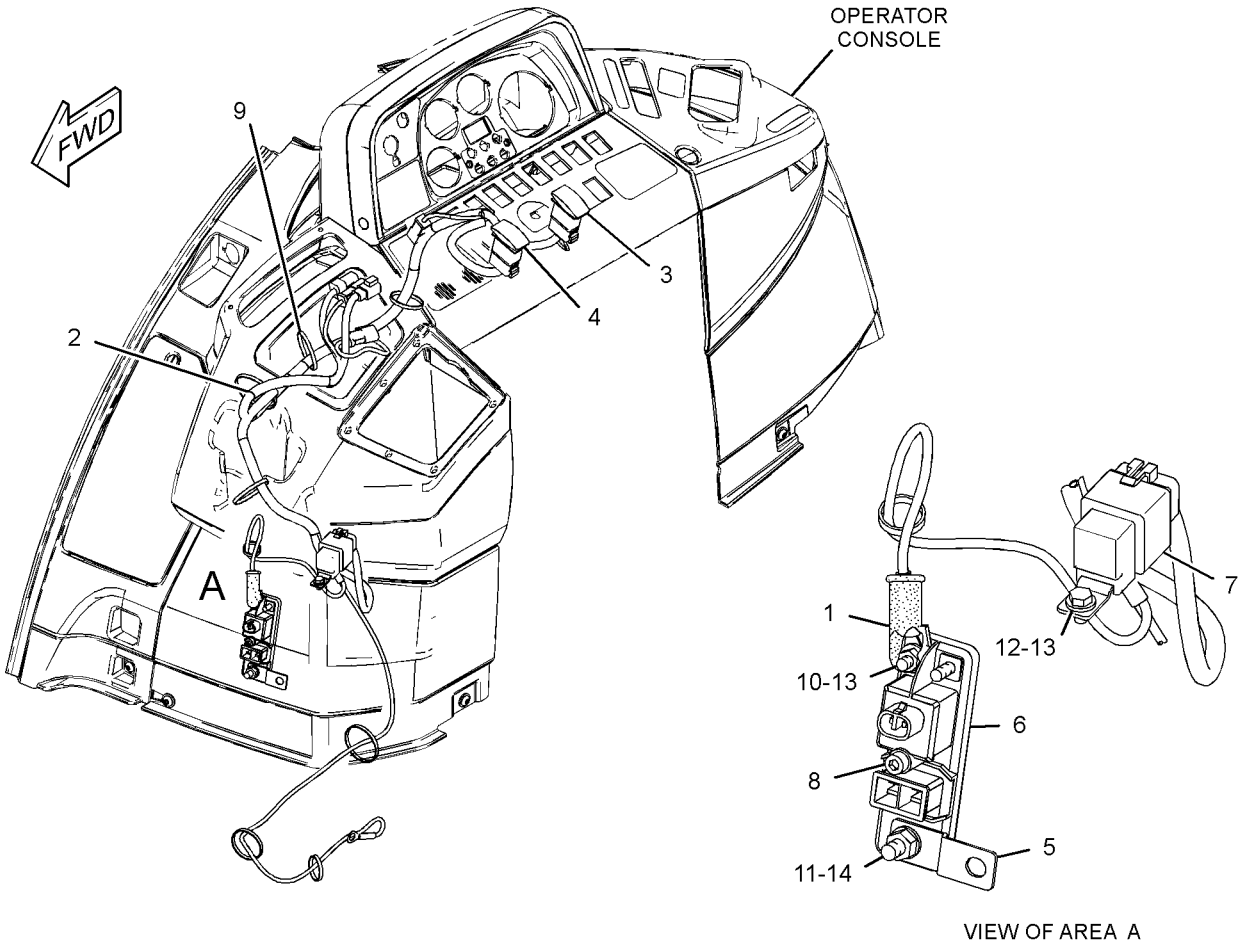

GRAPHIC #1 **<END>** g02105214

211-4262 WIRING GP-KICKOUT & POSITIONER

S/N: LMS1-UP

PART OF 318-9555 LOADER AR

SMCS-5109, 5112, 5734 **i03868630**

NOTE	REF NO	GRAPHIC REF	PART NUMBER	QTY	PART NAME 1 2 3 4 5 6 (PRODUCT LEVEL)	SEE PAGE
	1	1	**118-7790**	1	BRACKET AS	
	2	1	**206-1486**	1	SWITCH AS-ROLLER (KICKOUT, POSITIONER)	
		1	**2H-3922**	1	LOCKWASHER	
		1	**6V-8363**	2	SCREW (10-32X0.312-IN)	
		1	**6V-8370**	1	NUT-HEX (3/4-32-THD)	
		1	**8F-1434**	2	LOCKWASHER	
		1	**9X-0199**	1	BOOT-SWITCH	
	3	1	**233-7977**	1	HARNESS AS-WIRING (KICKOUT, POSITIONER)	
E		1	**6V-8523**		HOSE (453-CM)	
		1	**186-3735**	2	PIN-CONNECTOR (16-GA TO 18-GA)	
		1	**8T-8737**	1	PLUG-SEAL	
		1	**102-8803**	1	KIT-RECEPTACLE (3-PIN)	
					(INCLUDES RECEPTACLE AS & WEDGE)	
		1	**5P-1476**	2	TERMINAL-FORK (14-GA TO 16-GA, NO. 10 SCREW)	
D		1	**6V-2722**		TUBE-HEAT SHRINK (0.1-M)	
	4	1	**3S-2093**	35	STRAP-CABLE	
M	5	1	**8T-4138**	2	BOLT (M6X1X20-MM)	
	6	1	**8T-4205**	2	WASHER-HARD (7.2X14.5X2-MM THK)	
	7	1	**290-6801**	1	HARNESS AS-WIRING	
		1	**186-3735**	2	PIN-CONNECTOR (16-GA TO 18-GA)	
		1	**155-2260**	1	KIT-CONNECTING PLUG (3-PIN)	
		1	**155-2270**	2	KIT-CONNECTING PLUG (2-PIN)	
					(ECAH PLUG KIT INCLUDES PLUG AS, WEDGE & INTERFACE SEAL)	
		1	**8T-8737**	1	PLUG-SEAL	
		1	**102-8802**	1	KIT-RECEPTACLE (2-PIN)	
					(INCLUDES RECEPTACLE AS & WEDGE)	
		1	**186-3736**	6	SOCKET-CONNECTOR (16-GA TO 18-GA)	
		1	**189-3158**	1	SUPPRESSOR-ARC	
E		1	**125-7874**		TUBE-HEAT SHRINK (5.72-MM DIA) (10-CM)	
	8	1	**9X-7344**	1	GROMMET	
G	9	1	**160-2246**		SLEEVE-ABRASION (11.9-IN)	
	10	1	**7K-1181**	1	STRAP-CABLE	
	11	1	**6K-0806**	2	STRAP-CABLE	

D-ORDER BY THE METER
E-ORDER BY THE CENTIMETER
G-ORDER BY THE INCH
M-METRIC PART

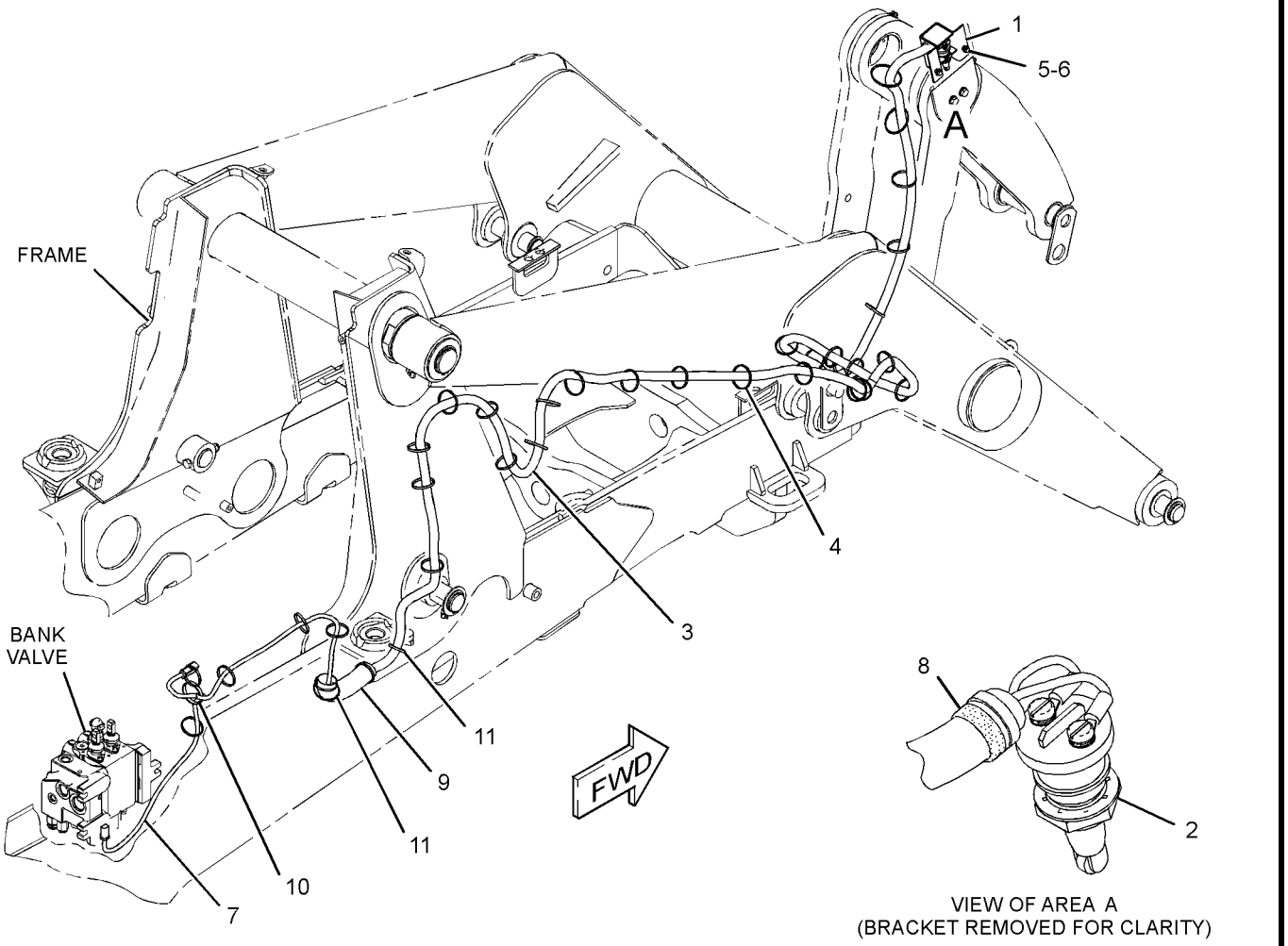

GRAPHIC #1 **<END>** g01640362

ELECTRICAL AND STARTING SYSTEM

290-6722 WIRING GP-PLATFORM

S/N: LMS1-UP

PART OF 291-9194, 291-9195 CAB AR-ENCLOSED ROPS, 291-9192 CANOPY AR-OPEN ROPS, 291-9191 CANOPY GP-OPEN ROPS

AN ATTACHMENT

SMCS-1408 **i03880436**

NOTE	REF NO	GRAPHIC REF	PART NUMBER	QTY	PART NAME 1 2 3 4 5 6 (PRODUCT LEVEL)	SEE PAGE
	1	2	**4I-3038**	8	WASHER (3.3X8X0.5-MM THK)	
	2	1,2	**7K-1181**	33	STRAP-CABLE	
	3	2	**7T-4848**	1	FLASHER AS (12-VOLT) (HAZARD)	
	4	2	**8T-8799**	4	BOOT	
	5	1	**132-1806**	1	STRAP AS-GROUND	
	6	2	**146-9439**	1	RELAY AS (12-VOLT) (HORN)	
	6A	2	**146-9439**	1	RELAY AS (12-VOLT) (POSITION LAMP)	
	6B	2	**146-9439**	1	RELAY AS (12-VOLT) (BACKUP ALARM)	
	6C	2	**146-9439**	1	RELAY AS (12-VOLT) (IMPLEMENT DISABLE)	
	7	1	**301-7292**	1	KIT-SERVICE METER	
					(INCLUDES FILM & METER)	
	8	1	**178-7539**	1	RECEPTACLE AS (POWER SUPPLY)	
	9	2	**179-6401**	4	SCREW-PAN HEAD (6-32X0.5-IN)	
	10	2	**180-9900**	1	CAP AS	
		2	**5P-7958**	1	SLEEVE-CABLE SPLICE	
		2	**8C-6354**	1	CAP-RECEPTACLE	
		2	**179-9392**	1	LANYARD	
	11	1	**201-1024**	1	BRACKET	
	12	2	**206-1345**	3	STRAP-CABLE	
	13	2	**206-1718**	1	BRACKET AS	
	14	1	**214-4702**	1	SWITCH AS-ROCKER (HAZARD WARNING LIGHTS)	
	15	1	**214-4716**	1	SWITCH AS-ROCKER (TRANSMISSION NEUTRAL LOCK)	
					(EACH SWITCH AS-ROCKER INCLUDES)	
		1	**111-7899**	1	GASKET	
	16	1	**214-4717**	1	INDICATOR AS (LH TURN SIGNAL, PARKING BRAKE)	
	17	1	**214-4723**	1	INDICATOR AS (RH TURN SIGNAL, HIGH BEAM)	
					(EACH INDICATOR AS INCLUDES)	
		1	**111-7899**	1	GASKET	
	18	1	**227-1057**	10	PLUG-HOLE	
	19	1	**246-2671**	1	SWITCH AS-MULTIFUNCTION (HD LIGHT, TURN SIG, WDO WIPER)	
Y	20	2	**247-8199**	1	PANEL GP-FUSE (INCLUDES RELAY)	97
	21	2	**267-2701**	1	FUSE (60-AMPERE)	
	22	2	**268-7759**	1	HARNESS AS-POWER (DISTRIBUTION)	
		2	**3S-2093**	1	STRAP-CABLE	
		2	**2L-8067**	1	TERMINAL-RING (10-GA TO 12-GA, 1/4-IN SCREW)	
		2	*128-4178*	3	TERMINAL AS	
					(EACH INCLUDES)	
		2	**2L-8068**	1	TERMINAL-RING (10-GA TO 12-GA, 5/16-IN SCREW)	
D		2	**5P-6006**		TUBE-HEAT SHRINK (9.52-MM DIA) (0.1-M)	
		2	*128-4168*	1	TERMINAL AS	
		2	**6H-3592**	1	TERMINAL-RING (6-GA TO 8-GA, 5/16-IN SCREW)	
E		2	**6V-9023**		TUBE-HEAT SHRINK (12.7-MM DIA) (4-CM)	
		2	*152-5532*	2	TERMINAL AS	
					(EACH INCLUDES)	
		2	**9X-9882**	1	TERMINAL-RING (6-GA TO 8-GA, 1/4-IN SCREW)	
D		2	**5P-6006**		TUBE-HEAT SHRINK (9.52-MM DIA) (0.1-M)	
	23	2	**275-0553**	1	BAR-BUS	
Y	24	2	**276-7290**	1	RELAY GP (12-VOLT) (POWER, 1)	99
	25	1	**290-6723**	1	HARNESS AS-PLATFORM	
		1	**274-3774**	1	CAP-CONNECTOR	

290-6722 **WIRING GP-PLATFORM** ***(contd.)*** **i03880436**

NOTE	REF NO	GRAPHIC REF	PART NUMBER	QTY	PART NAME 1 2 3 4 5 6 (PRODUCT LEVEL)	SEE PAGE
		1	**274-3775**	1	CAP-CONNECTOR	
		1	**274-3777**	1	CAP-CONNECTOR	
		1	**228-5856**	4	CONNECTOR	
		1	**211-0052**	2	NUT (1-11/16-18-THD)	
		1	**9X-3401**	23	PIN-CONNECTOR (16-GA TO 18-GA)	
		1	**274-3776**	1	CAP-SEAL	
		1	**274-3779**	2	CAP-SEAL	
		1	**274-3780**	1	CAP	
		1	**100-5805**	1	CAP-RECEPTACLE	
		1	**110-0203**	10	CONNECTOR AS	
		1	**111-6795**	1	HOUSING-RELAY	
		1	**111-6816**	1	LOCK	
		1	**186-3735**	45	PIN-CONNECTOR (16-GA TO 18-GA)	
		1	**9W-0852**	2	PIN-CONNECTOR (14-GA)	
		1	**155-2255**	5	KIT-CONNECTING PLUG (12-PIN)	
		1	**155-2270**	9	KIT-CONNECTING PLUG (2-PIN)	
		1	**155-2271**	2	KIT-CONNECTING PLUG (4-PIN)	
		1	**155-2265**	1	KIT-CONNECTING PLUG (8-PIN)	
		1	**155-2260**	2	KIT-CONNECTING PLUG (3-PIN)	
		1	**155-2274**	3	KIT-CONNECTING PLUG (6-PIN)	
					(EACH PLUG KIT INCLUDES PLUG AS, WEDGE & INTERFACE SEAL)	
		1	**196-2384**	1	KIT-CONNECTING PLUG (8-PIN)	
		1	**196-2385**	1	KIT-CONNECTING PLUG (8-PIN)	
		1	**196-2386**	1	KIT-CONNECTING PLUG (8-PIN)	
		1	**242-6114**	1	KIT-CONNECTING PLUG (8-PIN)	
		1	**242-6116**	1	KIT-CONNECTING PLUG (8-PIN)	
		1	**242-6118**	1	KIT-CONNECTING PLUG (8-PIN)	
		1	**242-6120**	1	KIT-CONNECTING PLUG (8-PIN)	
					(EACH PLUG KIT INCLUDES PLUG AS, TERMINAL AS & LOCK CONNECTOR)	
		1	**9X-1054**	3	PLUG AS-CONNECTOR (4-PIN)	
		1	**230-4011**	3	PLUG AS-CONNECTOR (2-PIN)	
					(EACH INCLUDES)	
		1	**264-7029**	1	SEAL-CONNECTOR	
		1	**7R-2751**	21	PLUG-CONNECTOR	
		1	**8T-8737**	54	PLUG-SEAL	
		1	**102-8802**	1	KIT-RECEPTACLE (2-PIN)	
		1	**102-8804**	1	KIT-RECEPTACLE (4-PIN)	
		1	**102-8801**	1	KIT-RECEPTACLE (12-PIN)	
		1	**102-8805**	1	KIT-RECEPTACLE (6-PIN)	
		1	**177-9645**	1	KIT-RECEPTACLE (2-PIN)	
					(EACH RECEPTACLE KIT INCLUDES RECEPTACLE AS & WEDGE)	
		1	**9X-4813**	1	RECEPTACLE AS-CONNECTOR (3-PIN)	
		1	**134-2540**	1	RESISTOR AS-CONNECTION (3-PIN)	
		1	**167-3692**	2	RECEPTACLE AS-CONNECTOR (31-PIN)	
		1	**9W-1951**	1	RECEPTACLE-CONNECTOR (9-PIN)	
		1	**128-4123**	4	SEAL	
		1	**128-5016**	31	SEAL-CABLE	
		1	**196-2412**	31	TERMINAL AS	
					(EACH INCLUDES)	
		1	**7R-2750**	1	SEAL-CONNECTOR	
		1	**9X-3402**	6	SOCKET-CONNECTOR (16-GA TO 18-GA)	
		1	**180-9340**	29	SOCKET-CONNECTOR (14-GA TO 18-GA)	
		1	**186-3736**	51	SOCKET-CONNECTOR (16-GA TO 18-GA)	
		1	**9W-0844**	4	SOCKET-CONNECTOR (14-GA)	
		1	**196-2413**	4	TERMINAL AS	
					(EACH INCLUDES)	
		1	**128-4123**	1	SEAL	

290-6722 **WIRING GP-PLATFORM** *(contd.)* **i03880436**

NOTE	REF NO	GRAPHIC REF	PART NUMBER	QTY	PART NAME 1 2 3 4 5 6 (PRODUCT LEVEL)	SEE PAGE
		1	**8T-8730**	8	SOCKET-CONNECTOR (16-GA TO 18-GA)	
		1	**3S-2093**	8	STRAP-CABLE	
		1	**189-3158**	3	SUPPRESSOR-ARC	
B		1	**141-8061**		TAPE	
		1	**2L-8067**	2	TERMINAL-RING (10-GA TO 12-GA, 1/4-IN SCREW)	
		1	**2L-8069**	2	TERMINAL-RING (2-GA TO 10-GA, 3/8-IN SCREW)	
		1	**2L-8077**	1	TERMINAL (14-GA TO 16-GA, 1/4-IN SCREW)	
		1	**2L-8079**	2	TERMINAL-RING (14-GA TO 16-GA, 3/8-IN SCREW)	
		1	**7N-7221**	6	TERMINAL-BLADE (18-GA TO 22-GA)	
		1	**091-2436**	34	TERMINAL-BLADE (18-GA TO 22-GA)	
		1	**104-1995**	1	TERMINAL-BLADE (14-GA TO 18-GA)	
		1	**9X-1055**	6	TERMINAL-RECEPTACLE (12-GA)	
		1	**100-5041**	6	TERMINAL-RECEPTACLE (18-GA TO 20-GA)	
		1	**111-6792**	2	TERMINAL-RECEPTACLE (18-GA TO 20-GA)	
		1	**111-6793**	1	TERMINAL-RECEPTACLE	
E		1	**119-3662**		TUBE-HEAT SHRINK (10.85-MM DIA) (26-CM)	
E		1	**125-7874**		TUBE-HEAT SHRINK (5.72-MM DIA) (135-CM)	
E		1	**125-7875**		TUBE-HEAT SHRINK (7.44-MM DIA) (20-CM)	
		1	**310-0674**	2	LOCKWASHER	
	26	1	**298-0663**	1	CLIP	
	27	2	**290-6739**	1	BRACKET AS	
Y	28	2	**311-7567**	1	RELAY GP (12-VOLT) (POWER, 1)	100
	29	1	**324-9745**	1	FILM-IDENTIFICATION (FUSE, RELAY)	
	30	2	**115-1615**	3	RELAY AS (12-VOLT) (START)	
M	31	2	**138-8454**	1	SCREW-TRUSS HEAD (M4X0.7X10-MM)	
	32	1,2	**156-6175**	2	CLIP	
M	33	2	**8T-9534**	2	BOLT (M6X1X50-MM)	
	34	1	**1L-6377**	1	BUTTON-PLUG	
	35	1,2	**3S-2093**	22	STRAP-CABLE	
	36	2	**4B-4863**	1	WASHER (4.7X11X1.2-MM THK)	
	37	2	**4P-7581**	1	CLIP	
	38	2	**4P-8134**	1	CLIP	
M	39	1,2	**5C-2890**	5	NUT (M6X1-THD)	
M	40	2	**5C-7261**	6	NUT (M8X1.25-THD)	
M	41	2	**5C-9553**	4	BOLT (M6X1X16-MM)	
	42	1	**7X-7729**	4	WASHER (11X25X3-MM THK)	
	43	1,2	**8C-3398**	5	LOCKWASHER	
	44	1	**8F-3590**	4	LOCKWASHER	
M	45	1	**8T-0352**	2	BOLT (M5X0.8X45-MM)	
	46	1,2	**8T-4121**	6	WASHER-HARD (11X21X2.5-MM THK)	
M	47	1	**8T-4133**	2	NUT (M10X1.5-THD)	
M	48	1,2	**8T-4137**	2	BOLT (M10X1.5X20-MM)	
M	49	1,2	**8T-4138**	7	BOLT (M6X1X20-MM)	
M	50	1	**8T-4195**	2	BOLT (M10X1.5X30-MM)	
M	51	1,2	**8T-4200**	4	BOLT (M8X1.25X16-MM)	
	52	1,2	**8T-4205**	19	WASHER-HARD (7.2X14.5X2-MM THK)	
	53	1,2	**8T-4224**	10	WASHER-HARD (8.8X16X2-MM THK)	
	54	2	**9F-5644**	4	LOCKWASHER	
D	55	1	**5P-7070**		INSULATION-STRIP (0.1-M)	
D	55A	1,2	**5P-7070**		INSULATION-STRIP (0.05-M EACH)	
E	56	2	**103-2543**		SEAL (1-CM)	

B-USE AS REQUIRED
D-ORDER BY THE METER
E-ORDER BY THE CENTIMETER
M-METRIC PART
Y-SEPARATE ILLUSTRATION

290-6722 **WIRING GP-PLATFORM** *(contd.)* **i03880436**

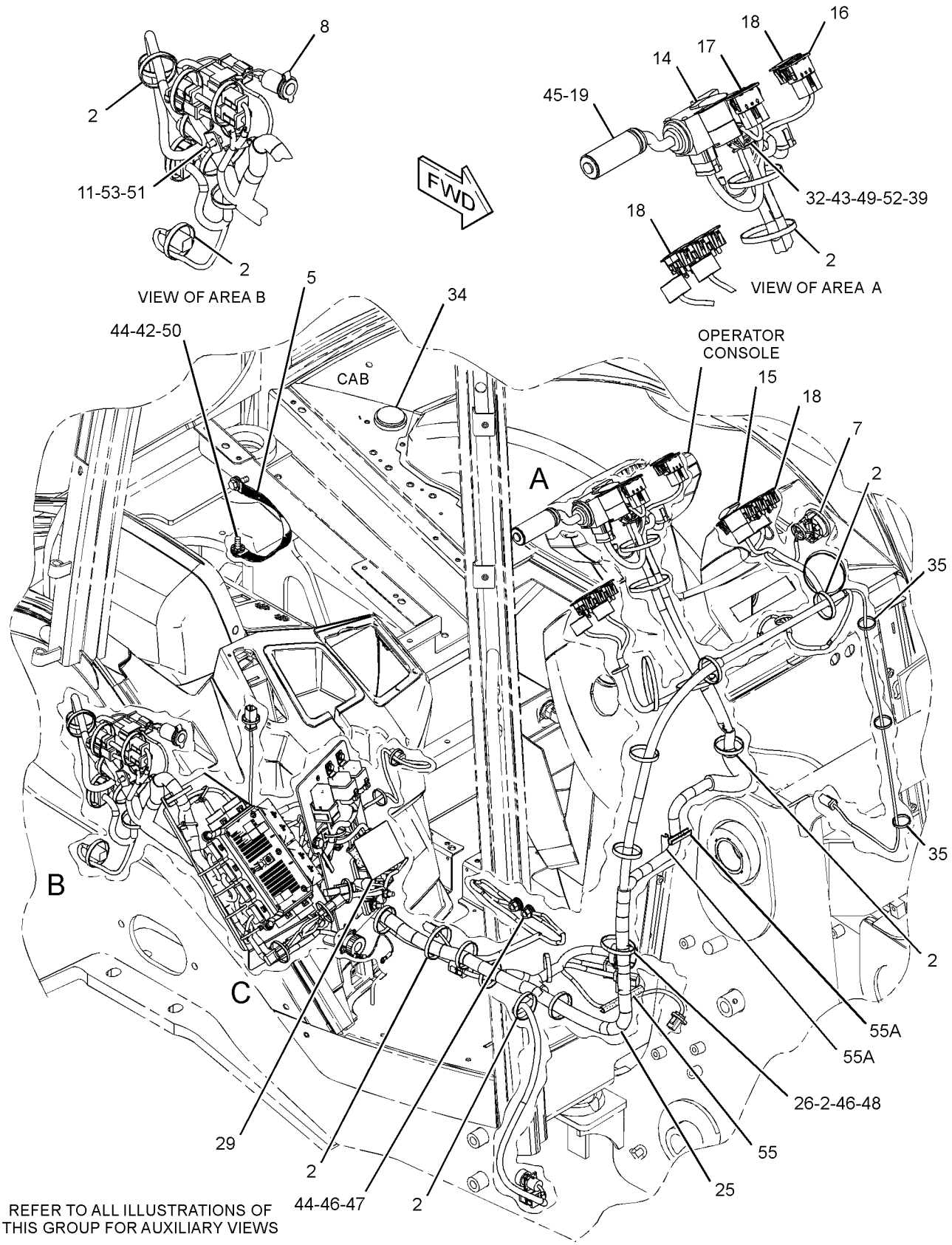

REFER TO ALL ILLUSTRATIONS OF THIS GROUP FOR AUXILIARY VIEWS

GRAPHIC #1 g02025335

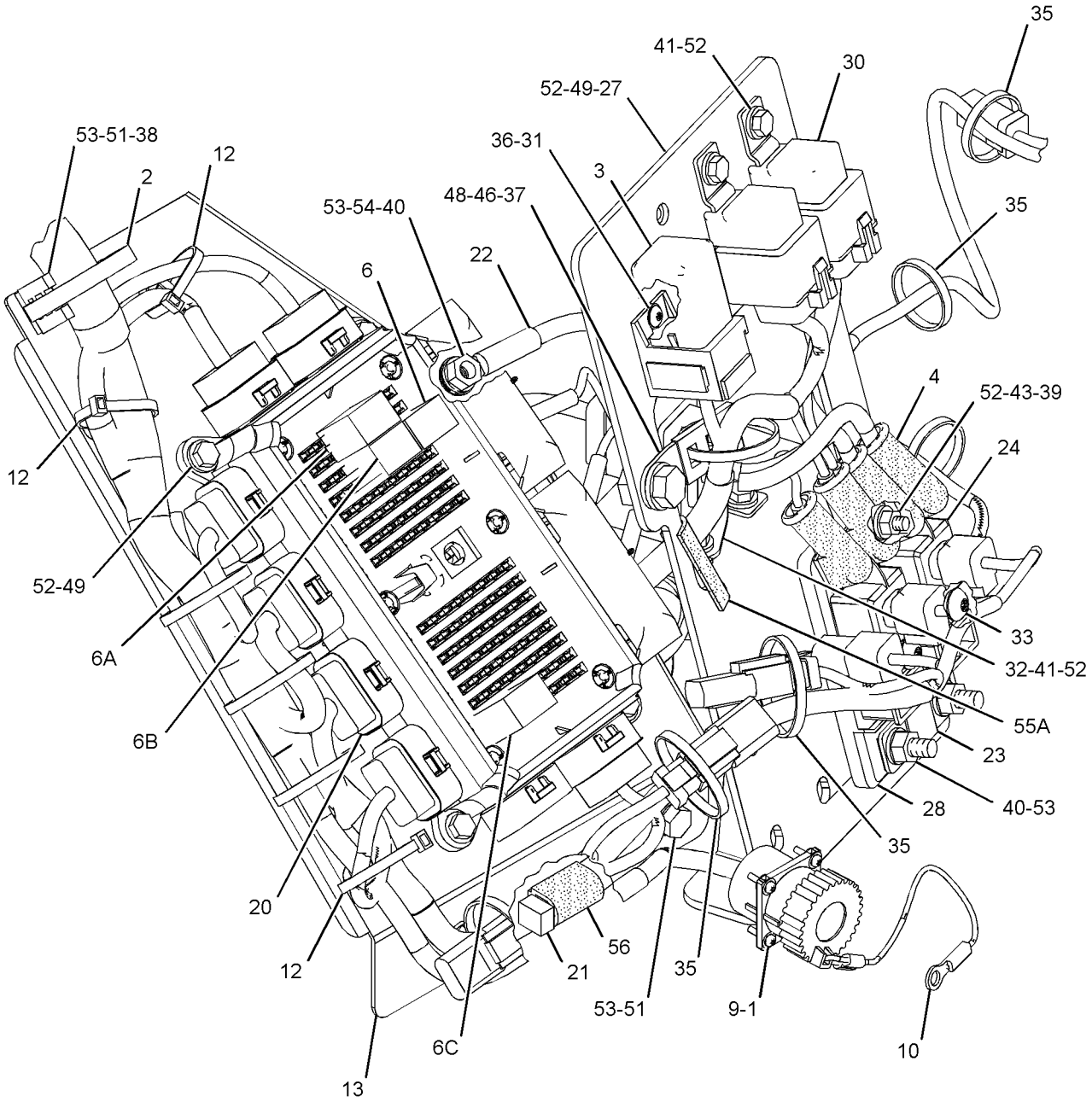

VIEW OF AREA C

GRAPHIC #2 **<END>** g02025336

211-4283 WIRING GP-REAR–BACKUP ALARM

S/N: LMS1-UP

PART OF 291-9190 CHASSIS AR

SMCS-1408 **i03879277**

NOTE	REF NO	GRAPHIC REF	PART NUMBER	QTY	PART NAME 1 2 3 4 5 6 (PRODUCT LEVEL)	SEE PAGE
	1	1	**3S-2093**	4	STRAP-CABLE	
	2	1	**9U-2277**	1	CLIP AS	
	3	1	**154-5428**	1	ALARM AS (BACKUP)	
D		1	**5P-5623**		WIRE-ELECTRICAL (16-GA, BLACK) (0.2-M EACH)	
		1	**102-8802**	1	KIT-RECEPTACLE (2-PIN)	
					(INCLUDES RECEPTACLE AS & WEDGE)	
		1	**8T-8729**	2	PIN-CONNECTOR (16-GA TO 18-GA)	
	4	1	**213-6043**	1	HARNESS AS-REAR (BACKUP ALARM)	
		1	**9X-3401**	4	PIN-CONNECTOR (16-GA TO 18-GA)	
		1	**155-2270**	1	KIT-CONNECTING PLUG (2-PIN)	
					(INCLUDES PLUG AS, WEDGE & INTERFACE SEAL)	
		1	**8T-8737**	2	PLUG-SEAL	
		1	**102-8805**	1	KIT-RECEPTACLE (6-PIN)	
					(INCLUDES RECEPTACLE AS & WEDGE)	
		1	**180-9340**	2	SOCKET-CONNECTOR (14-GA TO 18-GA)	
M	5	1	**111-4627**	2	SCREW-MACHINE (M6X1X30-MM)	
M	6	1	**5C-2890**	1	NUT (M6X1-THD)	
	7	1	**9X-6165**	1	WASHER (6.5X22X2.5-MM THK)	

D-ORDER BY THE METER
M-METRIC PART

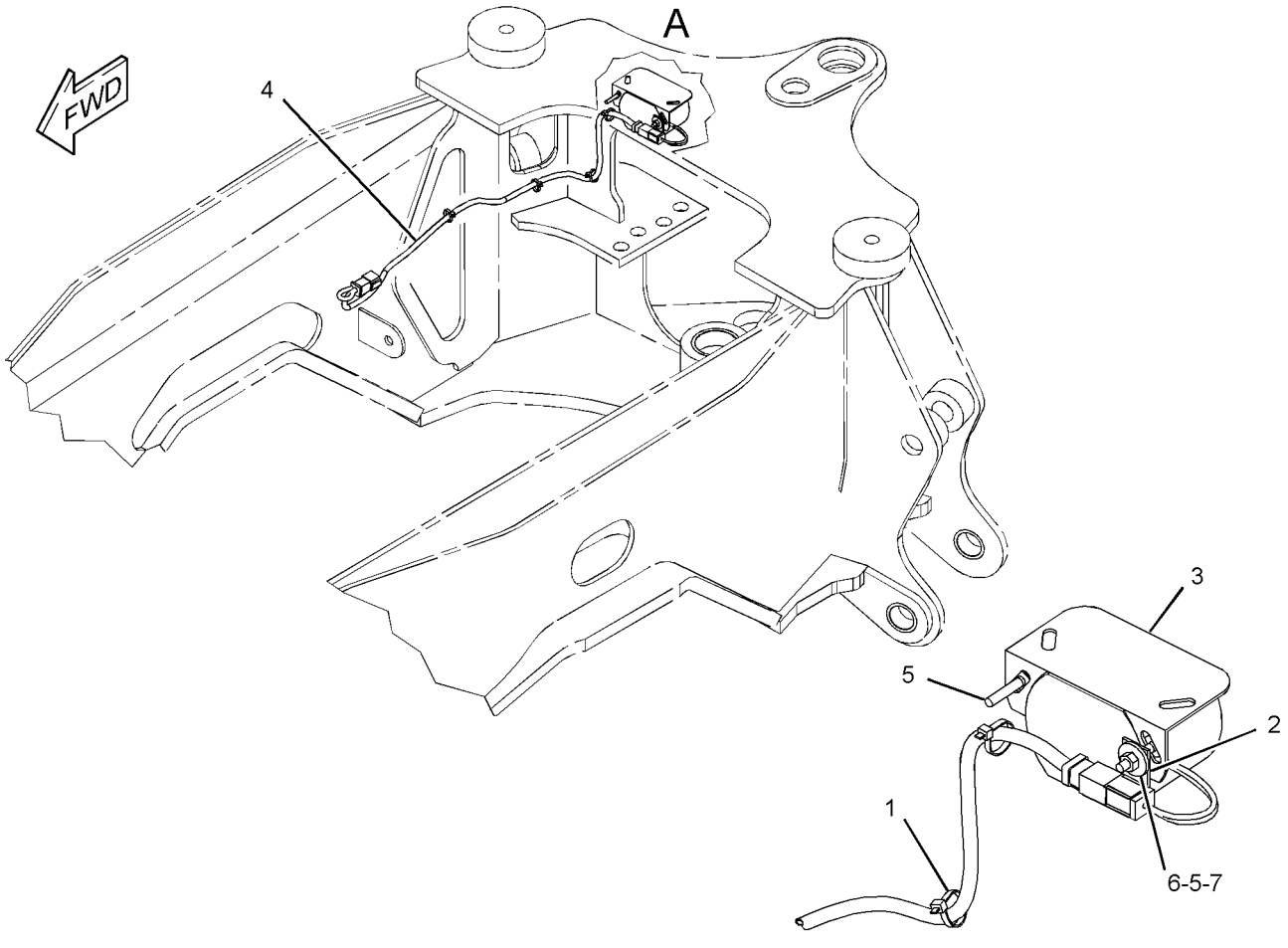

VIEW OF AREA A

GRAPHIC #1 **<END>** g01183295

290-6783 WIRING GP-RIDE CONTROL

S/N: LMS1-UP
PART OF 332-7131 CONTROL AR-RIDE
AN ATTACHMENT

SMCS-1408 **i03879898**

NOTE	REF NO	GRAPHIC REF	PART NUMBER	QTY	PART NAME 1 2 3 4 5 6 (PRODUCT LEVEL)	SEE PAGE
	1	1	**146-9439**	1	RELAY AS (12-VOLT) (RIDE CONTROL)	
	2	1	**189-3158**	1	SUPPRESSOR-ARC	
	3	1	**214-4719**	1	SWITCH AS-ROCKER (RIDE CONTROL)	
		1	**111-7899**	1	GASKET	
	4	1	**246-8038**	1	HARNESS AS-RIDE CONTROL	
		1	**186-3735**	2	PIN-CONNECTOR (16-GA TO 18-GA)	
		1	**9X-3401**	2	PIN-CONNECTOR (16-GA TO 18-GA)	
		1	**155-2260**	1	KIT-CONNECTING PLUG (3-PIN)	
		1	**155-2270**	3	KIT-CONNECTING PLUG (2-PIN)	
					(EACH PLUG KIT INCLUDES PLUG AS, WEDGE & INTERFACE SEAL)	
		1	**8T-8737**	1	PLUG-SEAL	
		1	**102-8804**	1	KIT-RECEPTACLE (4-PIN)	
					(INCLUDES RECEPTACLE AS & WEDGE)	
		1	**186-3736**	8	SOCKET-CONNECTOR (16-GA TO 18-GA)	
		1	**8L-8413**	4	STRAP-CABLE	
E		1	**125-7874**		TUBE-HEAT SHRINK (5.72-MM DIA) (10-CM)	
	5	1	**304-5696**	1	SWITCH AS-PRESSURE (RIDE CONTROL)	
		1	**102-8803**	2	KIT-RECEPTACLE (3-PIN)	
					(EACH INCLUDES RECEPTACLE AS & WEDGE)	
		1	**186-3735**	3	PIN-CONNECTOR (16-GA TO 18-GA)	
		1	**8T-8729**	3	PIN-CONNECTOR (16-GA TO 18-GA)	
E		1	**9X-1813**		SLEEVE (23-CM)	
	6	1	**132-5789**	1	CLIP	
	7	1	**133-6934**	1	SPACER (11X20X25-MM THK)	
	8	1	**3J-1907**	1	SEAL-O-RING	
	9	1	**3S-2093**	4	STRAP-CABLE	
	10	1	**8T-4121**	1	WASHER-HARD (11X21X2.5-MM THK)	
M	11	1	**8T-4182**	1	BOLT (M10X1.5X45-MM)	

E-ORDER BY THE CENTIMETER
M-METRIC PART

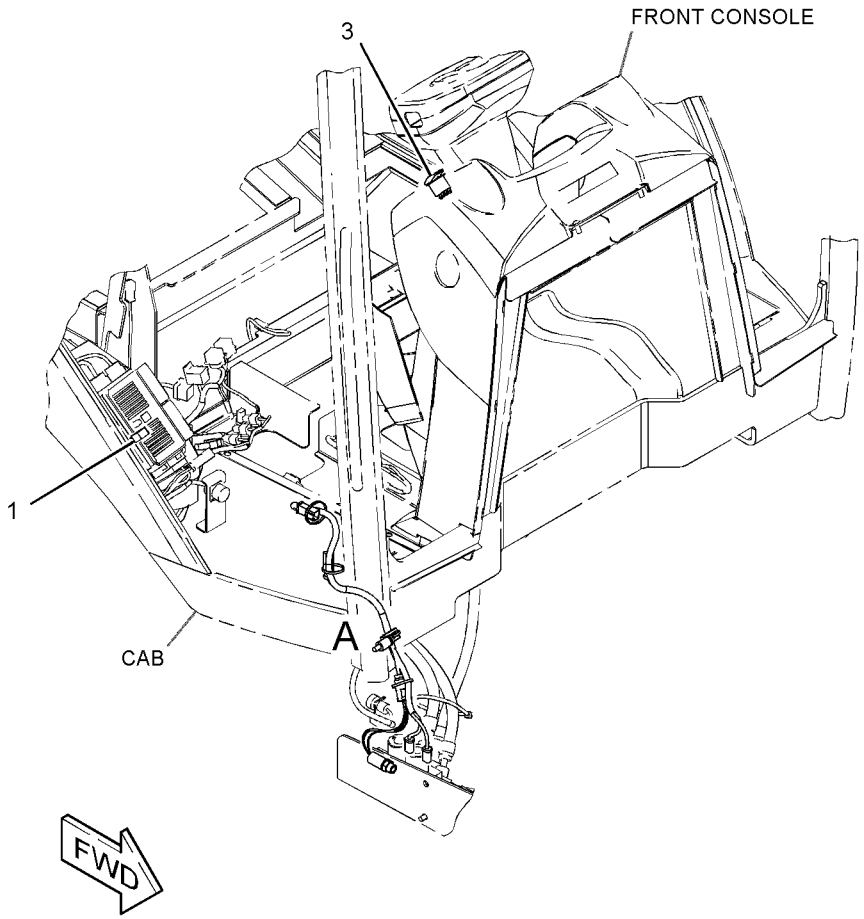

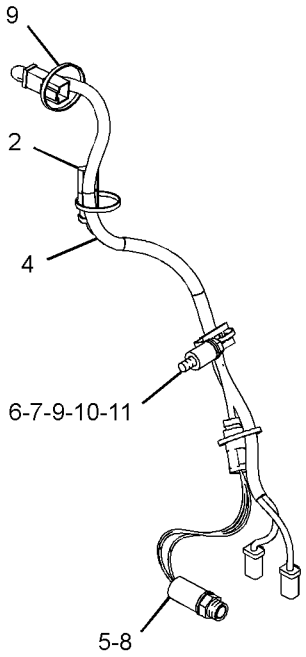

VIEW OF AREA A

GRAPHIC #1 **<END>** g01694614

230-5743 AXLE GP-DRIVE & STEERING–FRONT

S/N: LMS1-UP

PART OF 317-1454 DRIVE AR-BACKHOE LOADER

AN ATTACHMENT

SMCS-3020, 3250, 3258, 3259, 3260, 3264, 3278, 4050, 4303, 4313

i03922812

NOTE	REF NO	GRAPHIC REF	PART NUMBER	QTY	PART NAME 1 2 3 4 5 6 (PRODUCT LEVEL)	SEE PAGE
	1	1	**199-0639**	4	SCREW-FLAT HEAD (M8X1.25X20-MM)	
M	2	1	**207-4254**	6	BOLT (M20X1.5X80-MM)	
	3	1	**207-4258**	2	NUT (M20X1.5-THD)	
	4	1	**219-8798**	2	SEAL-LIP TYPE	
	5	1	**219-8795**	1	CAP	
	6	1	**209-9875**	2	DOWEL	
	7	1	**209-7456**	2	BUSHING	
	8	1	**152-6144**	4	PLUG AS-DRAIN (MAGNETIC) (AXLE)	
					(EACH INCLUDES)	
		1	**6V-6228**	1	SEAL-O-RING	
	9	1	**208-0321**	11	BOLT-FLANGE HEAD (M12X1.75X33-MM)	
	10	1	**209-7464**	2	SEAL	
M	11	1	**199-0683**	16	BOLT (M16X2X38-MM)	
	12	1	**210-5937**	2	WASHER (46X66X3-MM THK)	
Y	13	1	**209-9882**	1	DIFFERENTIAL & BEVEL GEAR GP (FRONT)	138
	14	1	**210-5942**	2	RING	
	15	1	**209-9883**	1	HOUSING	
J	16	1	**210-5946**	2	SHAFT GP-AXLE	
					(EACH INCLUDES)	
		1	**174-4671**	1	YOKE	
	17	1	**209-9886**	2	TIE ROD GP	
					(EACH INCLUDES)	
		1	**204-3080**	1	BALL JOINT	
		1	**217-2883**	1	TIE ROD	
		1	**217-2885**	1	NUT (M24X1.5-THD)	
	18	1	**209-9887**	1	BUSHING	
	19	1	**210-5947**	2	WASHER-THRUST (44.6X58X7-MM THK)	
	20	1	*216-7473*	4	PIN AS (UPPER)	
					(EACH INCLUDES)	
		1	**198-7823**	1	BEARING AS	
		1	**198-7825**	1	SEAL	
		1	**198-7838**	1	PIN	
Y	21	1	**210-5924**	2	PLANETARY GP-FINAL DRIVE (AXLE)	157
Y	22	1	**209-9884**	1	HOUSING & FLANGE GP-AXLE (RH)	148
Y	23	1	**209-9885**	1	HOUSING & FLANGE GP-AXLE (LH)	149
	24	1	**211-6735**	2	SEAL-O-RING	
L	25	1	**214-5097**	1	CYLINDER GP-STEERING	
		1	**238-5254**	1	ROD	
		1	**238-5255**	2	CYLINDER HEAD	
	26	1	**253-5024**	1	BREATHER (FRONT AXLE)	
B	27	1	**069-4707**		SEALANT (GASKET)	
	28	1	**154-5404**	2	BEARING	
B	29	1	**198-7841**	8	SHIM (0.15-MM THK)	
B	30	1	**198-7842**	4	SHIM (0.2-MM THK)	
B	31	1	**198-7843**	4	SHIM (0.5-MM THK)	
					AVAILABLE REPAIR KIT(S):	
J			**174-4643**	2	KIT-SPIDER	
					(EACH INCLUDES SPIDER & RINGS)	
L			**215-2023**	1	KIT-SEAL	
					(INCLUDES RINGS, SEALS & WASHERS)	

230-5743 AXLE GP-DRIVE & STEERING *(contd.)* i03922812

B-USE AS REQUIRED
J-KIT MARKED J SERVICES PART MARKED J
L-KIT MARKED L SERVICES PART MARKED L
M-METRIC PART
Y-SEPARATE ILLUSTRATION

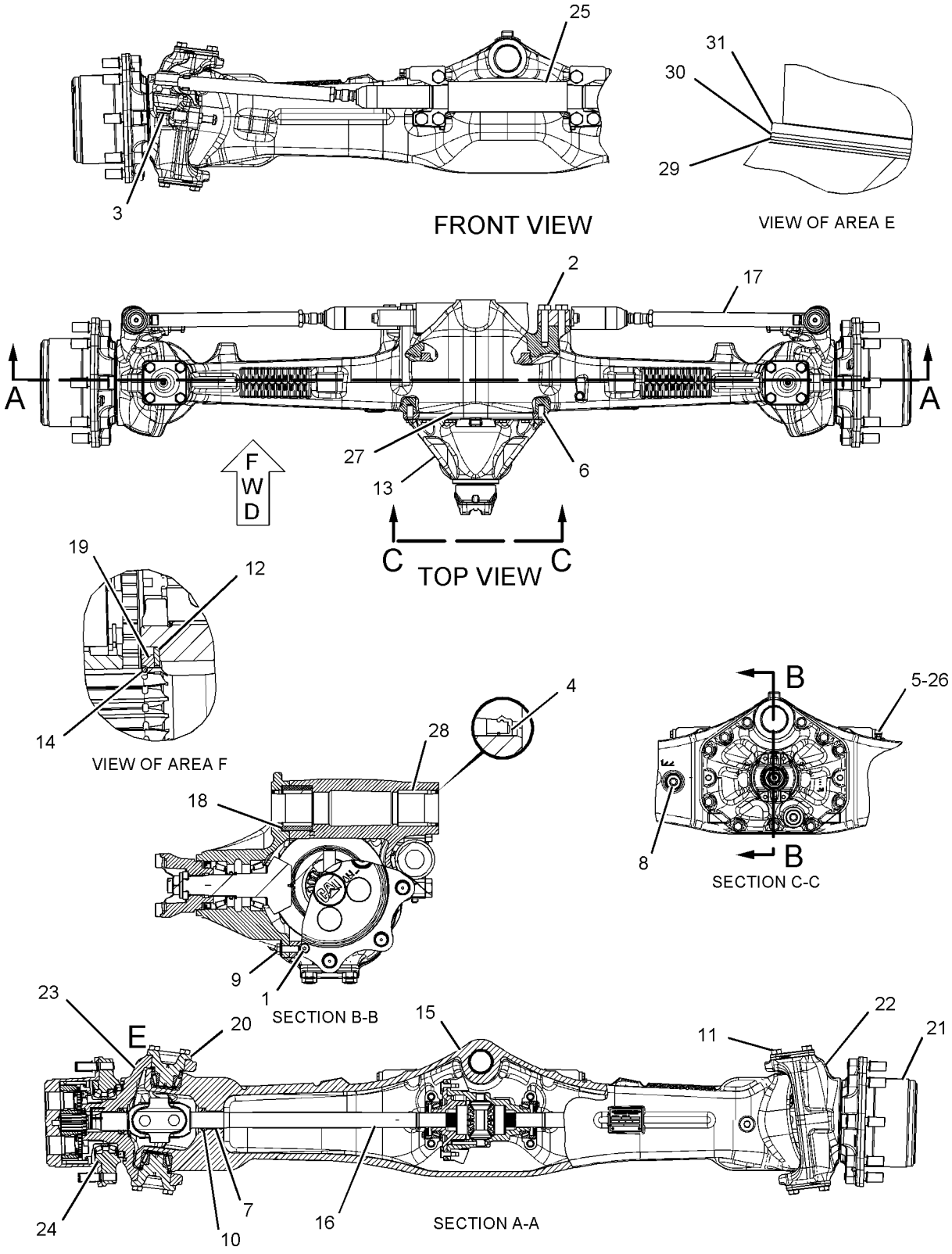

GRAPHIC #1 **<END>** g01094314

230-5739 AXLE GP-REAR

S/N: LMS1-UP

PART OF 317-1454, 324-9744 DRIVE AR-BACKHOE LOADER

AN ATTACHMENT

SMCS-3278, 3282 **i03889129**

NOTE	REF NO	GRAPHIC REF	PART NUMBER	QTY	PART NAME 1 2 3 4 5 6 (PRODUCT LEVEL)	SEE PAGE
M	1	1	**8C-7505**	4	SCREW-FLAT HEAD (M8X1.25X20-MM)	
M	2	1	**6V-3940**	2	BOLT (M8X1.25X25-MM)	
M	3	1	**8T-0292**	2	BOLT (M8X1.25X90-MM)	
	4	1	**199-0652**	2	CLIP-PIN	
	5	1	**9X-6378**	2	RING-RETAINING	
	6	1	**210-3098**	2	SEAL	
	7	1	**199-0668**	2	BRACKET	
	8	1	**197-9155**	1	BREATHER (AXLE, REAR)	
	9	1	**199-0670**	2	SCREW-PURGE	
	10	1	**198-7811**	2	DOWEL	
	11	1	**152-6144**	4	PLUG AS-DRAIN (MAGNETIC) (AXLE, REAR)	
	12	1	**199-0676**	2	SPRING	
M	13	1	**199-0679**	2	BOLT (M16X2X95-MM)	
	14	1	**210-3099**	2	SLEEVE	
	15	1	**210-3100**	2	BUSHING	
	16	1	**199-0706**	1	PISTON	
	17	1	**199-0786**	8	PLATE	
	18	1	**199-0787**	6	PIN	
	19	1	**210-7305**	2	SHAFT	
	20	1	**210-3106**	1	BRACKET	
	21	1	**212-5713**	2	PLUG	
	22	1	*216-1608*	2	GEAR GP-RING (REAR AXLE)	
					(EACH INCLUDES)	
		1	**199-0778**	1	RING-SNAP	
		1	**210-7302**	1	GEAR-RING (81-TEETH)	
		1	**226-4364**	1	HUB	
Y	23	1	*216-1609*	2	FLANGE GP-WHEEL	146
Y	24	1	**216-1610**	2	PLANETARY GP-FINAL DRIVE (AXLE)	158
	25	1	**217-2914**	1	COVER (DIFFERENTIAL LOCK)	
	26	1	**231-0699**	1	COVER (DIFFERENTIAL LOCK)	
	27	1	**219-8839**	1	ROD	
	28	1	**174-4647**	1	BUSHING	
	29	1	**174-4650**	1	SPACER (20X32X8-MM THK)	
	30	1	**231-0698**	2	SHAFT-AXLE	
	31	1	**226-4366**	2	NUT-SPANNER	
	32	1	**226-4365**	2	WASHER-TAB	
	33	1	**226-4367**	2	SPACER (110X123X22.99-MM THK)	
	34	1	**226-4370**	6	BOLT-SELF-LOCKING	
	35	1	**238-5291**	6	DISC-BRAKE	
	36	1	**238-5292**	2	HUB-BRAKE	
	37	1	**238-5293**	1	HOUSING-AXLE (LH)	
	38	1	**238-5294**	1	HOUSING-AXLE (RH)	
Y	39	1	*238-5289*	1	HOUSING GP-AXLE (REAR)	152
	40	1	**4F-9029**	2	SEAL	
	41	1	**9X-7684**	2	SEAL-O-RING	
	42	1	**5H-4909**	2	SEAL-O-RING	
	43	1	**130-7282**	1	BRACKET	
M	44	1	**7X-2559**	26	BOLT (M16X2X160-MM)	
	45	1	**4L-6454**	2	BOLT (3/8-16X1-IN)	
	46	1	**3J-1907**	1	SEAL-O-RING	
	47	1	**9S-8004**	1	PLUG-O-RING	
	48	1	**219-8795**	1	CAP	
B	49	1	**1U-8846**		SEALANT-GASKET	
J	50	1	**230-3809**	1	BRAKE AS	

230-5739 **AXLE GP-REAR** *(contd.)* **i03889129**

NOTE	REF NO	GRAPHIC REF	PART NUMBER	QTY	PART NAME 1 2 3 4 5 6 (PRODUCT LEVEL)	SEE PAGE
					AVAILABLE REPAIR KIT(S):	
J			**166-9413**	1	KIT-CAM (COUNTERCLOCKWISE)	
					(INCLUDES CAMS, BALL BEARINGS & BALL RETAINER)	
J			**230-3810**	1	KIT-BRAKE LINING	
					(INCLUDES LINING AS & SPRING)	
J			**230-3811**	1	KIT-BRAKE CALIPER	
					(INCLUDES SLEEVES, FLAT WASHERS, NUTS, BOLT, LINING AS, BEARING THRUST & BOOT)	

B-USE AS REQUIRED
J-KITS MARKED J SERVICES PARTS MARKED J
M-METRIC PART
Y-SEPARATE ILLUSTRATION

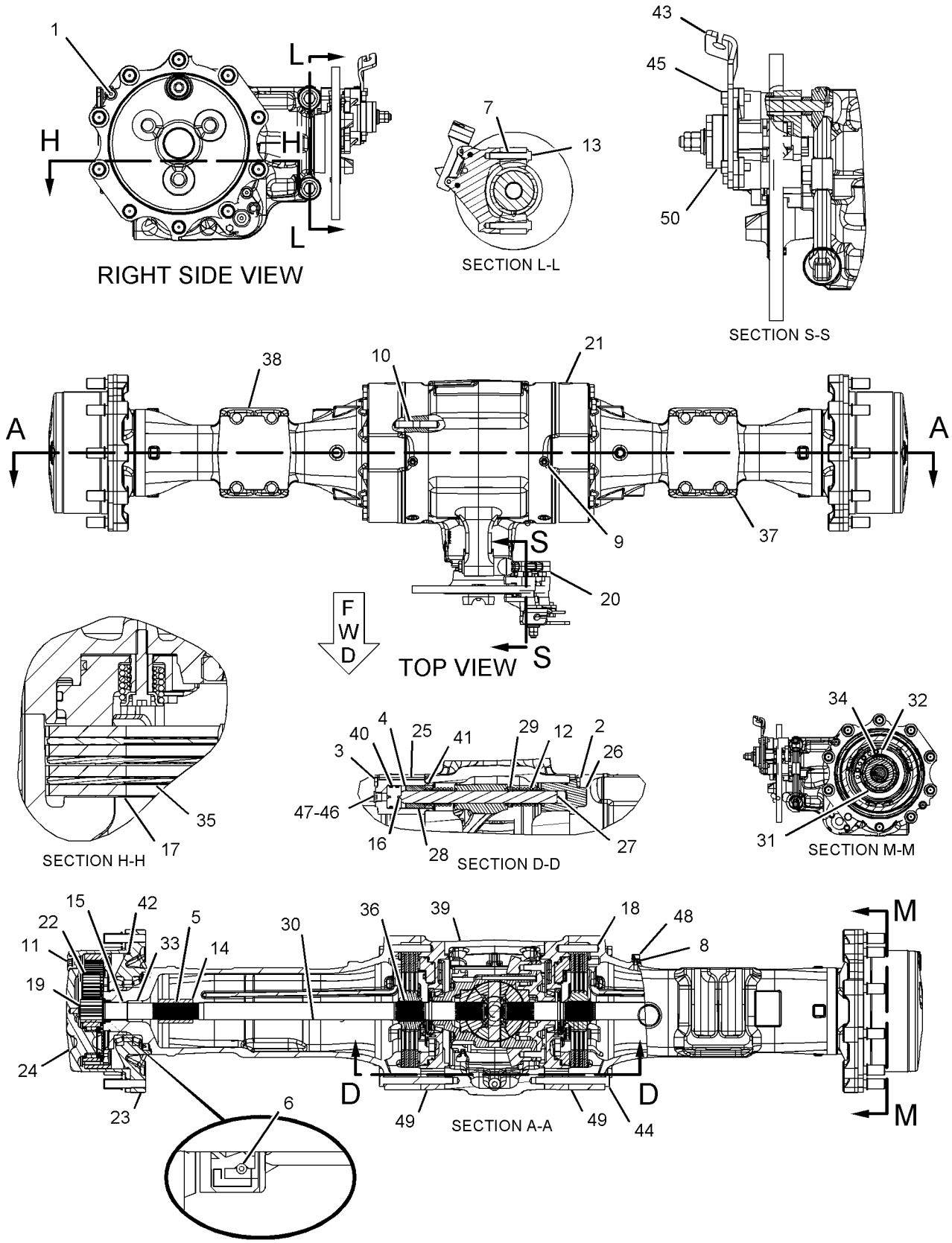

GRAPHIC #1 **<END>** g01093644

275-0467 CASE AS-TRANSMISSION–REAR

S/N: LMS1-UP
PART OF 271-2408 TRANSMISSION GP-DIRECT DRIVE
AN ATTACHMENT

SMCS-3030, 3064 **i02431705**

NOTE	REF NO	GRAPHIC REF	PART NUMBER	QTY	PART NAME 1 2 3 4 5 6 (PRODUCT LEVEL)	SEE PAGE
	1	1	**123-8906**	1	CUP-TAPERED ROLLER	
B	2	1	**6T-9144**	1	SHIM (0.051-MM THK)	
B	3	1	**6T-9147**	1	SHIM (0.076-MM THK)	
B	4	1	**6T-9146**	1	SHIM (0.127-MM THK)	
B	5	1	**6T-9145**	1	SHIM (0.178-MM THK)	
B	6	1	**6T-9143**	1	SHIM (0.381-MM THK)	
B	7	1	**6T-9142**	1	SHIM (0.508-MM THK)	
	8	1	**7T-3034**	1	SPACER (56.9X64.5X1.98-MM)	
	9	1	**7T-2646**	2	SPACER (66X79.5X2.02-MM THK)	
B	10	1	**6T-9166**	2	SHIM (0.051-MM THK)	
B	11	1	**6T-9165**	2	SHIM (0.076-MM THK)	
B	12	1	**6T-9164**	2	SHIM (0.178-MM THK)	
B	13	1	**6T-9163**	2	SHIM (0.599-MM THK)	
B	14	1	**121-7399**	1	SHIM (0.05-MM THK)	
B	15	1	**121-7400**	1	SHIM (0.08-MM THK)	
B	16	1	**121-7401**	1	SHIM (0.18-MM THK)	
B	17	1	**121-7402**	1	SHIM (0.6-MM THK)	
	18	1	**121-7398**	1	SPACER (70X79.5X2-MM THK)	
	19	1	**005-0469**	1	CUP-BEARING	
	20	1	**123-8908**	1	CUP-TAPERED ROLLER	
	21	1	**123-8910**	1	CUP-TAPERED ROLLER	
	22	1	**274-8631**	1	CASE-REAR	
	23	1	**122-1879**	1	SPACER (58X67.5X2-MM THK)	
B	24	1	**104-3288**	1	SHIM (0.05-MM THK)	
B	25	1	**121-2059**	1	SHIM (0.08-MM THK)	
B	26	1	**121-2060**	1	SHIM (0.18-MM THK)	
B	27	1	**121-2061**	1	SHIM (0.6-MM THK)	

B-USE AS REQUIRED

275-0467 CASE AS-TRANSMISSION *(contd.)* **i02431705**

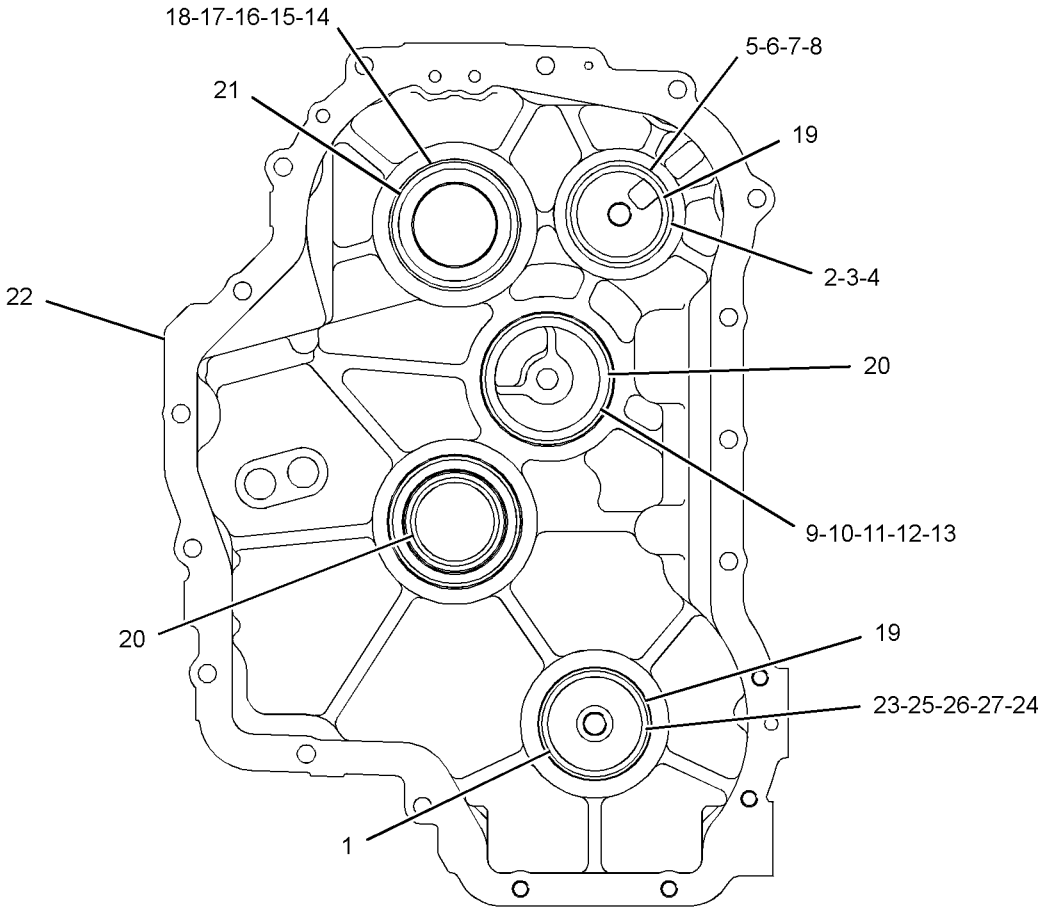

REAR VIEW

GRAPHIC #1 **<END>** g01220672

275-0468 CASE AS-TRANSMISSION–FRONT

S/N: LMS1-UP
PART OF 271-2408 TRANSMISSION GP-DIRECT DRIVE
AN ATTACHMENT

SMCS-3030, 3064 **i03926078**

NOTE	REF NO	GRAPHIC REF	PART NUMBER	QTY	PART NAME 1 2 3 4 5 6 (PRODUCT LEVEL)	SEE PAGE
	1	1	**120-9762**	4	SEAL-O-RING	
M	2	1	**6V-5215**	2	BOLT (M8X1.25X16-MM)	
	3	1	**7T-2651**	1	STRAINER (SUCTION) (TRANSMISSION)	
	4	1	**106-9861**	1	PLATE-COVER	
	5	1	**7T-3051**	1	PLUG	
	6	1	**005-0469**	1	CUP-BEARING	
	7	1	**8T-1580**	1	CUP	
	8	1	**6Y-2737**	1	CUP-BEARING	
	9	1	**123-8906**	2	CUP-TAPERED ROLLER	
	10	1	**9W-5460**	1	RING	
	11	1	**4J-0522**	1	SEAL-O-RING	
	12	1	**275-0469**	1	CASE AS-FRONT	
		1	**122-3652**	2	PLUG	
		1	**123-2920**	3	PLUG	
		1	**237-5188**	1	PLUG-EXPANSION	
	13	1	**7T-3253**	2	DOWEL	

M-METRIC PART

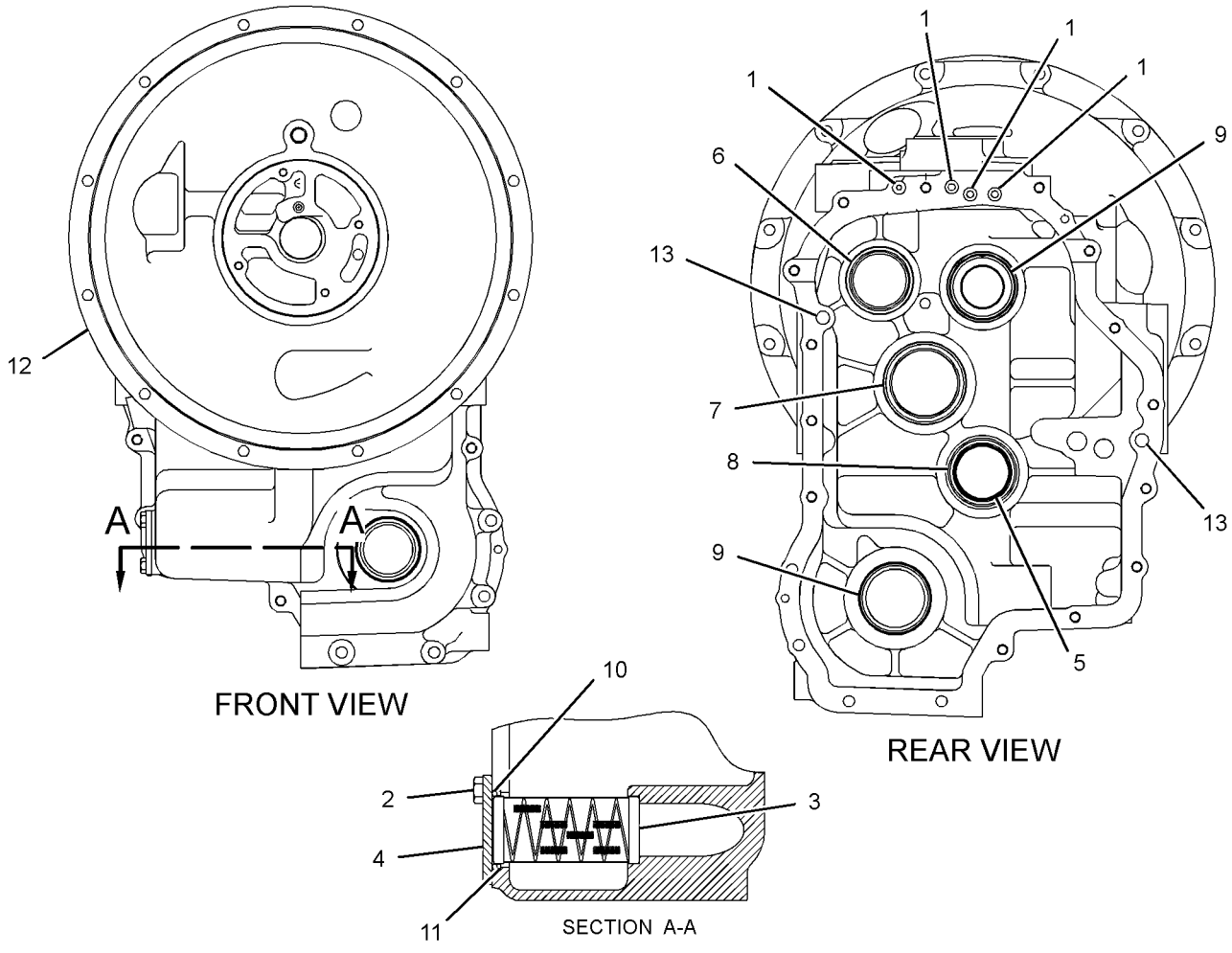

GRAPHIC #1 **<END>** g01220674

275-0472 CASE GP-TRANSMISSION–FRONT

S/N: LMS1-UP

PART OF 294-9814 TRANSMISSION GP-DIRECT DRIVE

AN ATTACHMENT

SMCS-3030, 3064 **i03261603**

NOTE	REF NO	GRAPHIC REF	PART NUMBER	QTY	PART NAME 1 2 3 4 5 6 (PRODUCT LEVEL)	SEE PAGE
M	1	1	**6V-5215**	2	BOLT (M8X1.25X16-MM)	
	2	1	**7T-2651**	1	STRAINER (SUCTION)	
	3	1	**106-9861**	1	PLATE-COVER	
	4	1	**7T-3051**	1	PLUG	
	5	1	**005-0469**	1	CUP-BEARING	
	6	1	**8T-1580**	1	CUP	
	7	1	**6Y-2737**	1	CUP-BEARING	
	8	1	**123-8906**	1	CUP-TAPERED ROLLER	
	9	1	**9W-5460**	1	RING	
	10	1	**4J-0522**	1	SEAL-O-RING	
	11	1	**275-0471**	1	CASE AS-FRONT	
		1	**122-3652**	2	PLUG	
		1	**123-2920**	2	PLUG	
		1	**237-5188**	1	PLUG-EXPANSION	
	12	1	**7T-3253**	2	DOWEL	
	13	1	**120-9762**	3	SEAL-O-RING	

M-METRIC PART

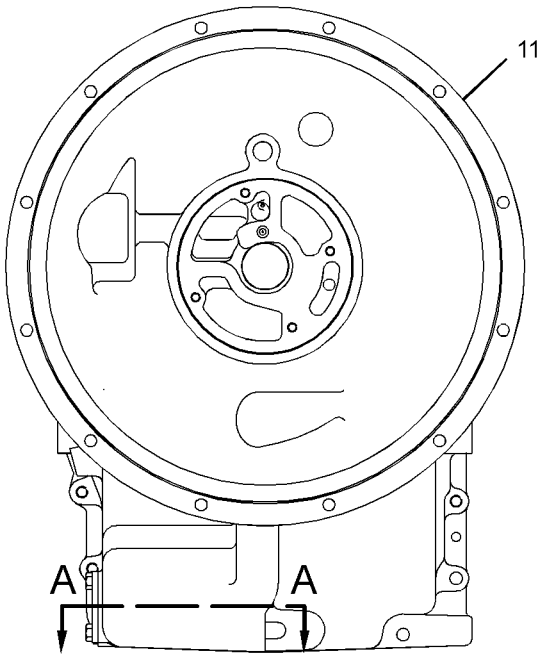

FRONT VIEW

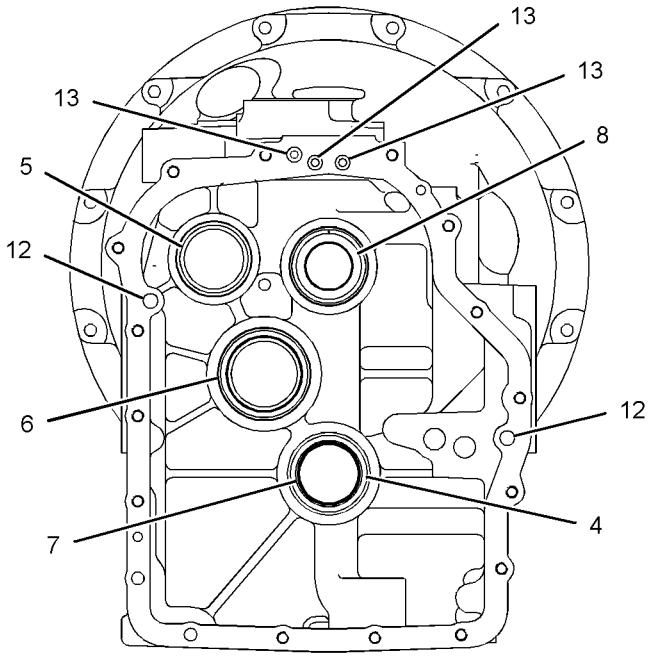

REAR VIEW

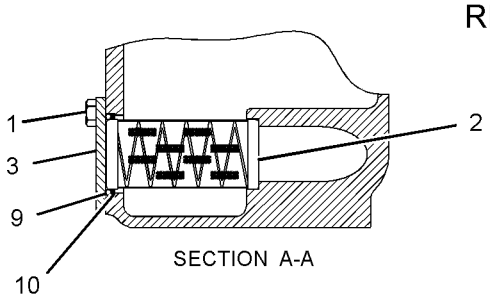

SECTION A-A

GRAPHIC #1 **<END>** g01220682

275-0474 CASE GP-TRANSMISSION–REAR

S/N: LMS1-UP
PART OF 294-9814 TRANSMISSION GP-DIRECT DRIVE
AN ATTACHMENT

SMCS-3030, 3064 **i02778766**

NOTE	REF NO	GRAPHIC REF	PART NUMBER	QTY	PART NAME 1 2 3 4 5 6 (PRODUCT LEVEL)	SEE PAGE
	1	1	**274-8632**	1	CASE-REAR	
B	2	1	**6T-9144**	1	SHIM (0.051-MM THK)	
B	3	1	**6T-9147**	1	SHIM (0.076-MM THK)	
B	4	1	**6T-9146**	1	SHIM (0.127-MM THK)	
B	5	1	**6T-9145**	1	SHIM (0.178-MM THK)	
B	6	1	**6T-9143**	1	SHIM (0.381-MM THK)	
B	7	1	**6T-9142**	1	SHIM (0.508-MM THK)	
	8	1	**7T-3034**	1	SPACER (56.9X64.5X1.98-MM)	
	9	1	**7T-2646**	2	SPACER (66X79.5X2.02-MM THK)	
B	10	1	**6T-9166**	2	SHIM (0.051-MM THK)	
B	11	1	**6T-9165**	2	SHIM (0.076-MM THK)	
B	12	1	**6T-9164**	2	SHIM (0.178-MM THK)	
B	13	1	**6T-9163**	2	SHIM (0.599-MM THK)	
B	14	1	**121-7399**	1	SHIM (0.05-MM THK)	
B	15	1	**121-7400**	1	SHIM (0.08-MM THK)	
B	16	1	**121-7401**	1	SHIM (0.18-MM THK)	
B	17	1	**121-7402**	1	SHIM (0.6-MM THK)	
	18	1	**121-7398**	1	SPACER (70X79.5X2-MM THK)	
	19	1	**005-0469**	1	CUP-BEARING	
	20	1	**123-8908**	2	CUP-TAPERED ROLLER	
	21	1	**123-8910**	1	CUP-TAPERED ROLLER	

B-USE AS REQUIRED

275-0474 **CASE GP-TRANSMISSION** *(contd.)* **i02778766**

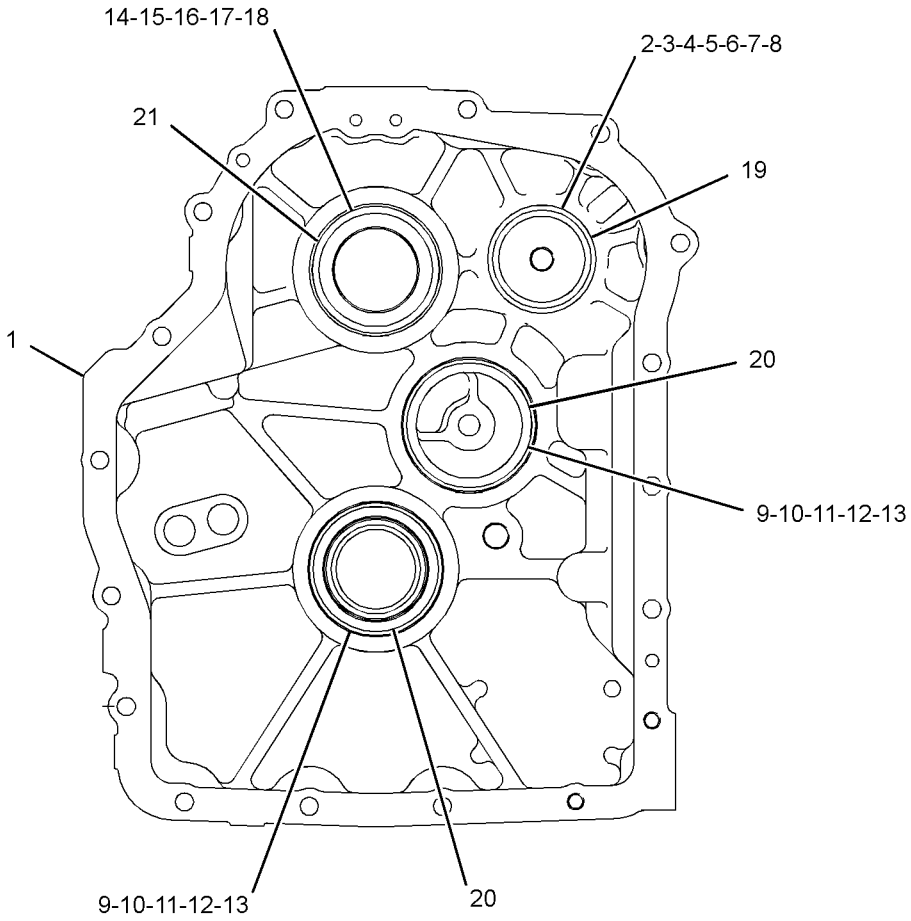

FRONT VIEW

GRAPHIC #1 **<END>** g01388814

209-9882 DIFFERENTIAL & BEVEL GEAR GP–FRONT

S/N: LMS1-UP
PART OF 230-5743 AXLE GP-DRIVE & STEERING
AN ATTACHMENT

SMCS-3256, 3258, 3281, 3283, 3284 **i03920851**

NOTE	REF NO	GRAPHIC REF	PART NUMBER	QTY	PART NAME 1 2 3 4 5 6 (PRODUCT LEVEL)	SEE PAGE
	1	1	**4J-0520**	1	SEAL-O-RING	
	2	1	**216-4457**	1	SEAL	
	3	1	**216-4458**	2	BEARING	
	4	1	**136-7808**	1	BEARING AS-TAPERED ROLLER	
	5	1	**216-4461**	1	BEARING	
	6	1	**209-7454**	2	NUT (M94X2-THD)	
	7	1	**152-6144**	1	PLUG AS-DRAIN (MAGNETIC) (AXLE)	
		1	**6V-6228**	1	SEAL-O-RING	
	8	1	**209-7462**	2	WASHER (40X50X2-MM THK)	
	9	1	**209-7463**	1	SLEEVE	
M	10	1	**199-0695**	2	BOLT (M6X1X14-MM)	
M	11	1	**209-7472**	1	NUT (M24X1.5-THD)	
B	12	1	**209-7473**	1	SHIM (2.5-MM THK)	
B		1	**219-8751**	1	SHIM (2.6-MM THK)	
B		1	**219-8752**	1	SHIM (2.7-MM THK)	
B		1	**219-8753**	1	SHIM (2.8-MM THK)	
B		1	**219-8754**	1	SHIM (2.9-MM THK)	
B		1	**219-8755**	1	SHIM (3-MM THK)	
B		1	**219-8756**	1	SHIM (3.1-MM THK)	
B		1	**219-8757**	1	SHIM (3.2-MM THK)	
B		1	**219-8758**	1	SHIM (3.3-MM THK)	
B		1	**219-8759**	1	SHIM (3.4-MM THK)	
	13	1	**216-4465**	1	WASHER (24.5X52X10-MM THK)	
	14	1	**216-4464**	1	YOKE	
	15	1	**199-0858**	2	RETAINER	
	16	1	**216-4466**	1	KIT-BEVEL GEAR & PINION	
					(INCLUDES SPACER, NUT, WASHERS, O-RING SEAL & BEVEL GEAR AS)	
Y	17	1	**216-9498**	1	DIFFERENTIAL GP (FRONT)	140
	18	1	**208-0322**	4	BOLT-FLANGE HEAD (M14X2X75-MM)	

B-USE AS REQUIRED
M-METRIC PART
Y-SEPARATE ILLUSTRATION

209-9882 DIFFERENTIAL & BEVEL GEAR GP *(contd.)* i03920851

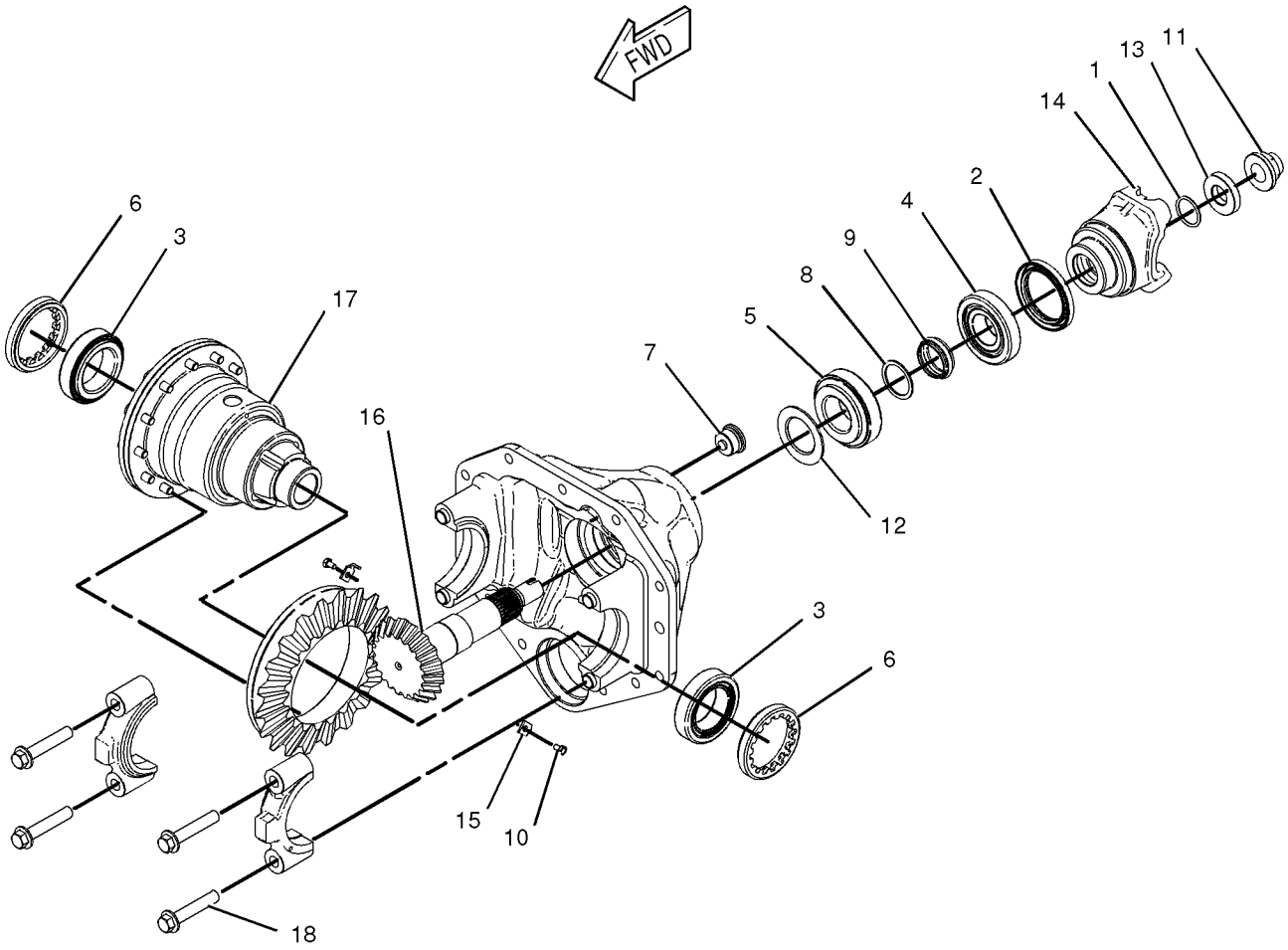

GRAPHIC #1 **<END>** g01028597

216-9498 DIFFERENTIAL GP–FRONT

S/N: LMS1-UP
PART OF 209-9882 DIFFERENTIAL & BEVEL GEAR GP
AN ATTACHMENT

SMCS-3258 **i03726325**

NOTE	REF NO	GRAPHIC REF	PART NUMBER	QTY	PART NAME 1 2 3 4 5 6 (PRODUCT LEVEL)	SEE PAGE
	1	1	**216-8687**	1	COVER (DIFFERENTIAL CASE)	
	2	1	**216-8689**	1	HOUSING-DIFFERENTIAL	
	3	1	**229-5093**	2	WASHER-THRUST (49X72X1.5-MM THK)	
M	4	1	**144-6734**	12	BOLT (M10X1.5X30-MM)	
					AVAILABLE REPAIR KIT(S):	
			216-8700		KIT-DIFFERENTIAL (KIT)	
					(INCLUDES PINS,WASHERS,DISC & GEARS)	

M-METRIC PART

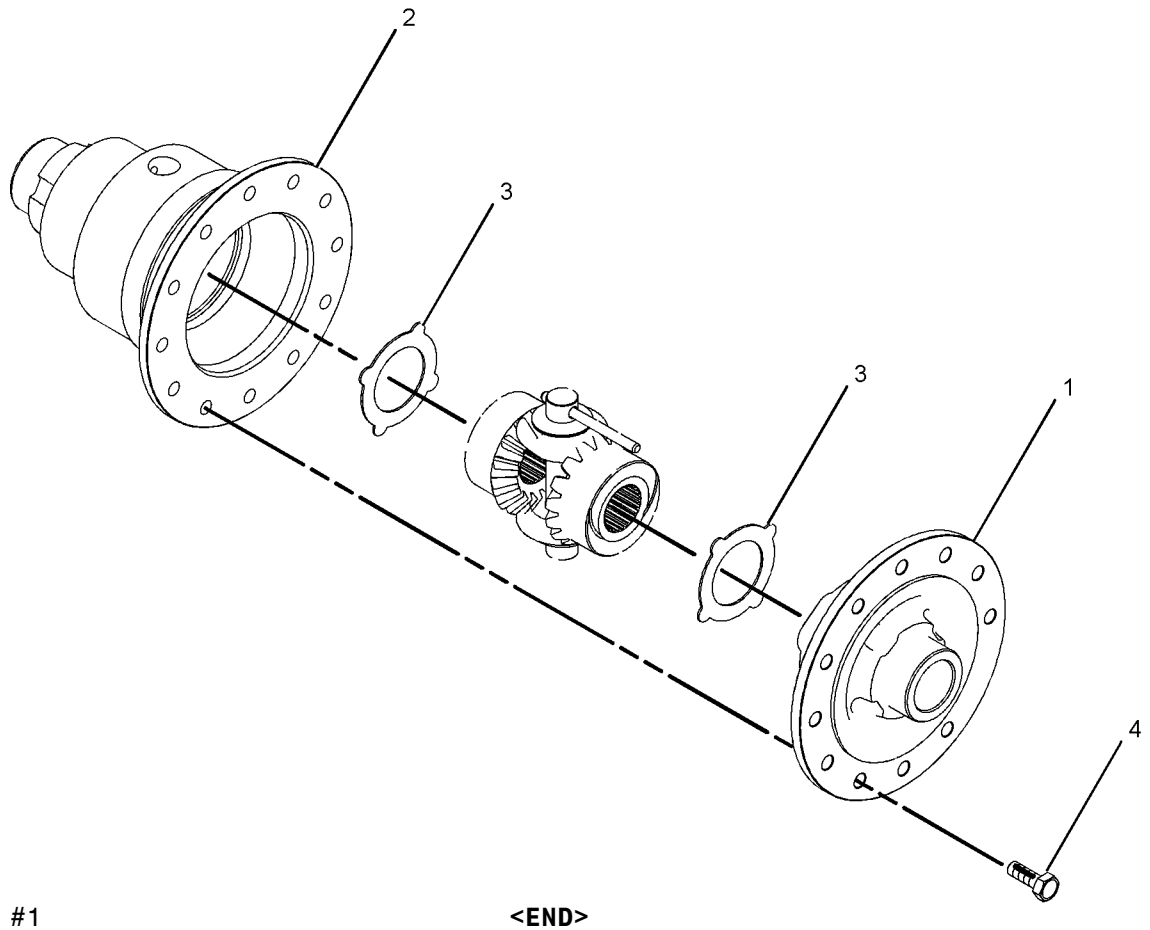

GRAPHIC #1 **<END>** g01008123

231-0692 DIFFERENTIAL GP–AXLE

S/N: LMS1-UP
PART OF 238-5289 HOUSING GP-AXLE
AN ATTACHMENT

SMCS-3258 **i02188622**

NOTE	REF NO	GRAPHIC REF	PART NUMBER	QTY	PART NAME 1 2 3 4 5 6 (PRODUCT LEVEL)	SEE PAGE
	1	1	**199-0673**	2	BUSHING	
	2	1	**199-0694**	12	BOLT (M14X2X40-MM)	
	3	1	**199-0756**	1	COLLAR	
	4	1	**199-0784**	1	COVER-DIFFERENTIAL	
	5	1	**199-0807**	4	PIN	
	6	1	**199-0808**	3	PIN	
	7	1	**231-0670**	1	SHAFT	
	8	1	**231-0671**	4	WASHER-THRUST	
	9	1	**231-0695**	2	WASHER-THRUST	
	10	1	**231-0693**	1	CASE-DIFFERENTIAL	
	11	1	**231-0696**	2	SHAFT	
	12	1	**231-0697**	1	RETAINER	
	13	1	**231-0694**	1	GEAR AS	
	14	1	**199-0659**	4	SEAL-PIN	

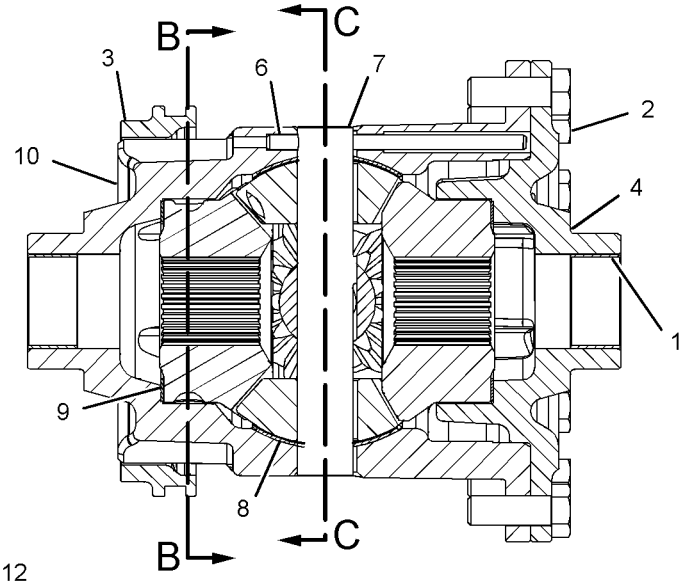

FRONT VIEW
(SECTIONED)

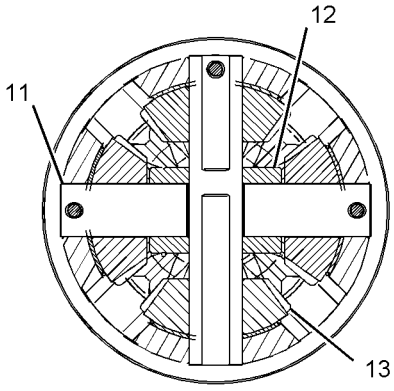

SECTION C-C

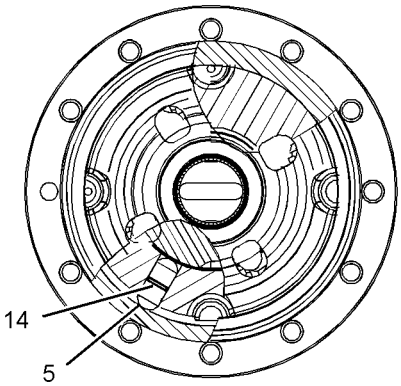

SECTION B-B

GRAPHIC #1 **<END>** g01107764

111-7907 DRIVE GP-FLEXIBLE COUPLING

S/N: LMS1-UP

PART OF 251-6352, 251-6353 TRANSMISSION AR-DIRECT DRIVE AN ATTACHMENT

SMCS-3252 **i02594396**

NOTE	REF NO	GRAPHIC REF	PART NUMBER	QTY	PART NAME 1 2 3 4 5 6 (PRODUCT LEVEL)	SEE PAGE
M	1	1	**8T-4200**	8	BOLT (M8X1.25X16-MM)	
M	2	1	**6V-8455**	6	BOLT (M10X1.5X16-MM)	
	3	1	**117-9713**	1	PLATE-CONVERTER REINFORCEMENT	
	4	1	**8T-4224**	8	WASHER-HARD (8.8X16X2-MM THK)	
	5	1	**111-7906**	1	PLATE-CONVERTER DRIVE	

M-METRIC PART

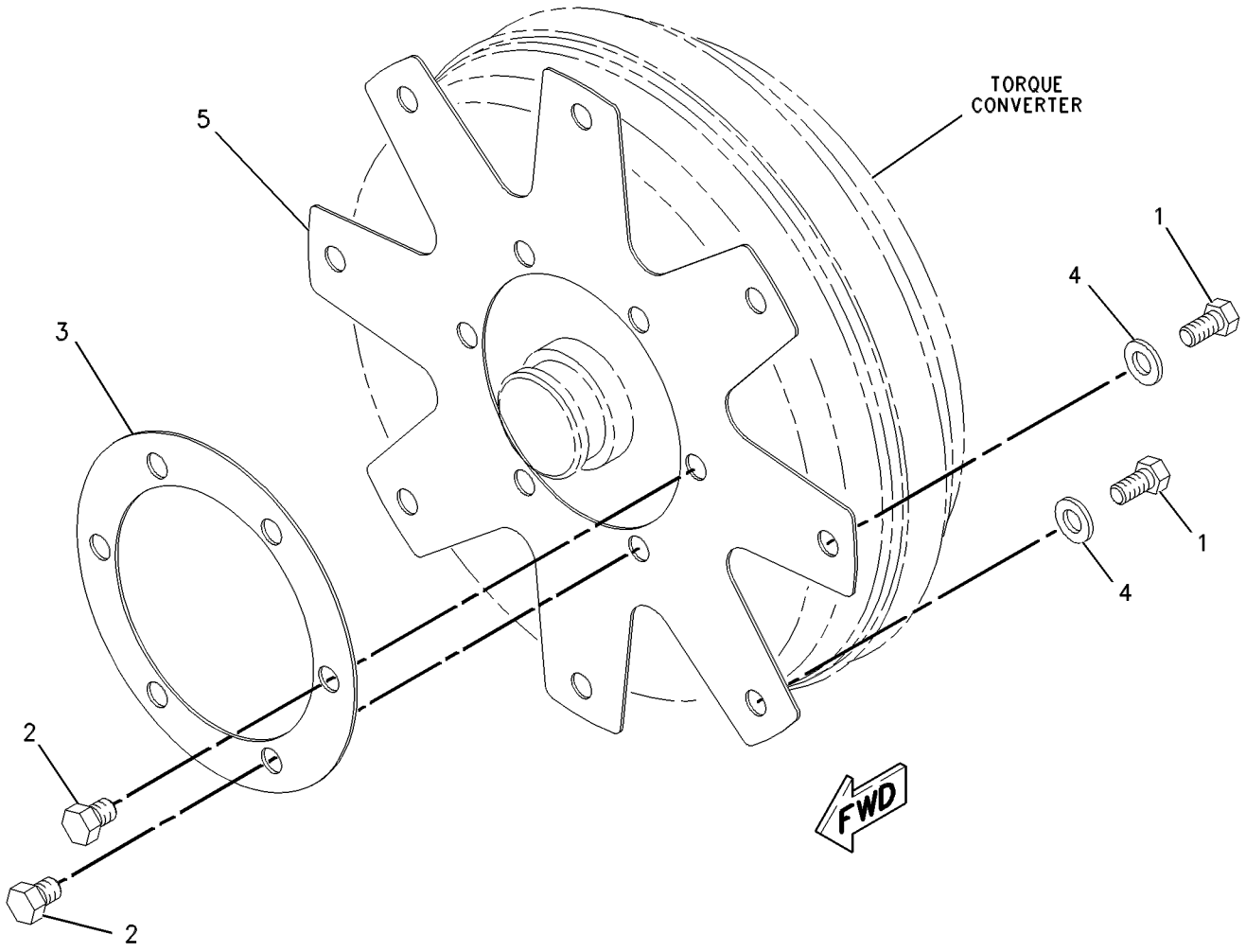

GRAPHIC #1 **<END>** g00547374

214-3740 FILLER GP-POWER TRAIN OIL–

ALL WHEEL DRIVE, STANDARD SHIFT
S/N: LMS1-UP
PART OF 291-9187 POWER TRAIN AR
AN ATTACHMENT

SMCS-3005, 3081 **i03532203**

NOTE	REF NO	GRAPHIC REF	PART NUMBER	QTY	PART NAME 1 2 3 4 5 6 (PRODUCT LEVEL)	SEE PAGE
B	1	1	**2B-0941**	1	SPACER (10.5X19X19-MM THK)	
B	2	1	**164-1404**	1	SPACER (10.67X16.95X23-MM THK)	
	3	1	**230-2610**	1	TUBE AS	
	4	1	**236-1583**	1	BOSS	
	5	1	**271-7167**	1	GAUGE-OIL LEVEL (DIPSTICK) (ENGINE)	
	6	1	**4J-0522**	1	SEAL-O-RING	
	7	1	**5P-4116**	1	WASHER-HARD (8.8X20.5X2-MM THK)	
M	8	1	**7X-0818**	1	BOLT (M8X1.25X45-MM)	
	9	1	**8S-0023**	3	CLIP (SLOT)	
	10	1	**8S-0024**	3	CLIP (TAB)	
	11	1	**8T-4121**	1	WASHER-HARD (11X21X2.5-MM THK)	
M	12	1	**8T-4136**	1	BOLT (M10X1.5X25-MM)	
M	13	1	**8T-4176**	1	BOLT (M12X1.75X90-MM)	
	14	1	**8T-4223**	3	WASHER-HARD (13.5X25.5X3-MM THK)	
M	15	1	**8T-4956**	2	BOLT (M12X1.75X35-MM)	

B-USE AS REQUIRED
M-METRIC PART

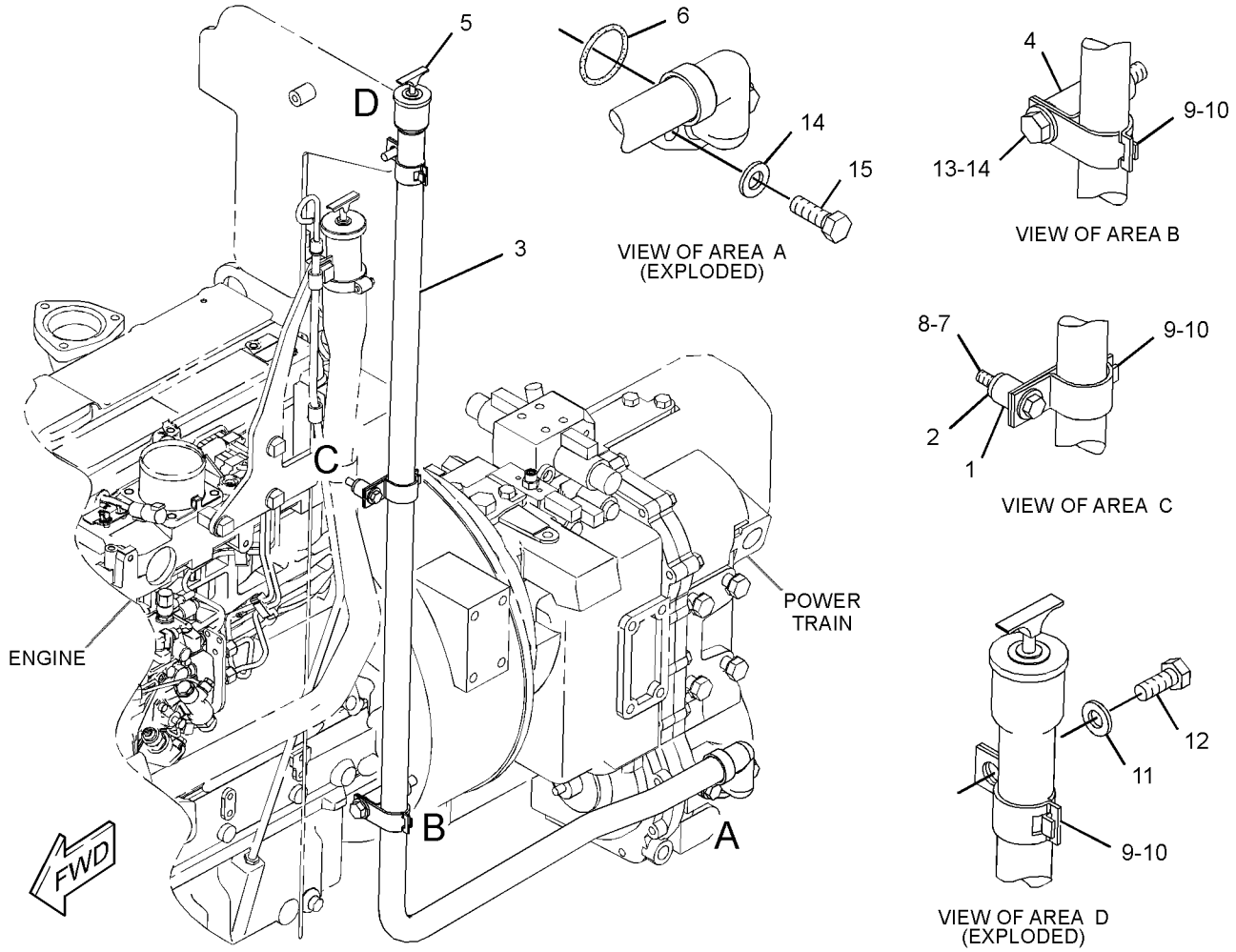

GRAPHIC #1 **<END>** g01870493

256-0551 FILLER GP-POWER TRAIN OIL–

2-WHEEL DRIVE, STANDARD SHIFT

S/N: LMS1-UP

PART OF 291-9186 POWER TRAIN AR

AN ATTACHMENT

SMCS-3005, 3081 **i02852162**

NOTE	REF NO	GRAPHIC REF	PART NUMBER	QTY	PART NAME 1 2 3 4 5 6 (PRODUCT LEVEL)	SEE PAGE
	1	1	**2B-0941**	1	SPACER (10.5X19X19-MM THK)	
	2	1	**6V-0852**	2	CAP-DUST	
	3	1	**136-3112**	1	SPACER	
C	4	1	*164-5567*	2	COUPLER AS-QUICK DISCONNECT (MALE)	
					(EACH INCLUDES)	
		1	**3J-1907**	1	SEAL-O-RING	
		1	**6V-3965**	1	FITTING (QUICK DISCONNECT)	
	5	1	**230-2610**	1	TUBE AS	
	6	1	**236-1583**	1	BOSS	
	7	1	**271-7167**	1	GAUGE-OIL LEVEL (DIPSTICK)	
	8	1	*165-4931*	1	ELBOW AS	
		1	**3J-1907**	1	SEAL-O-RING	
		1	**6V-8077**	1	ELBOW	
	9	1	**4J-0522**	2	SEAL-O-RING	
	10	1	**5P-4116**	1	WASHER-HARD (8.8X20.5X2-MM THK)	
M	11	1	**7X-0818**	1	BOLT (M8X1.25X45-MM)	
	12	1	**8S-0023**	3	CLIP (SLOT)	
	13	1	**8S-0024**	3	CLIP (TAB)	
	14	1	**8T-4121**	1	WASHER-HARD (11X21X2.5-MM THK)	
M	15	1	**8T-4136**	1	BOLT (M10X1.5X25-MM)	
M	16	1	**8T-4176**	1	BOLT (M12X1.75X90-MM)	
M	17	1	**8T-4194**	2	BOLT (M12X1.75X50-MM)	
	18	1	**8T-4223**	3	WASHER-HARD (13.5X25.5X3-MM THK)	

C-CHANGE FROM PREVIOUS TYPE
M-METRIC PART

256-0551 **FILLER GP-POWER TRAIN OIL** *(contd.)* **i02852162**

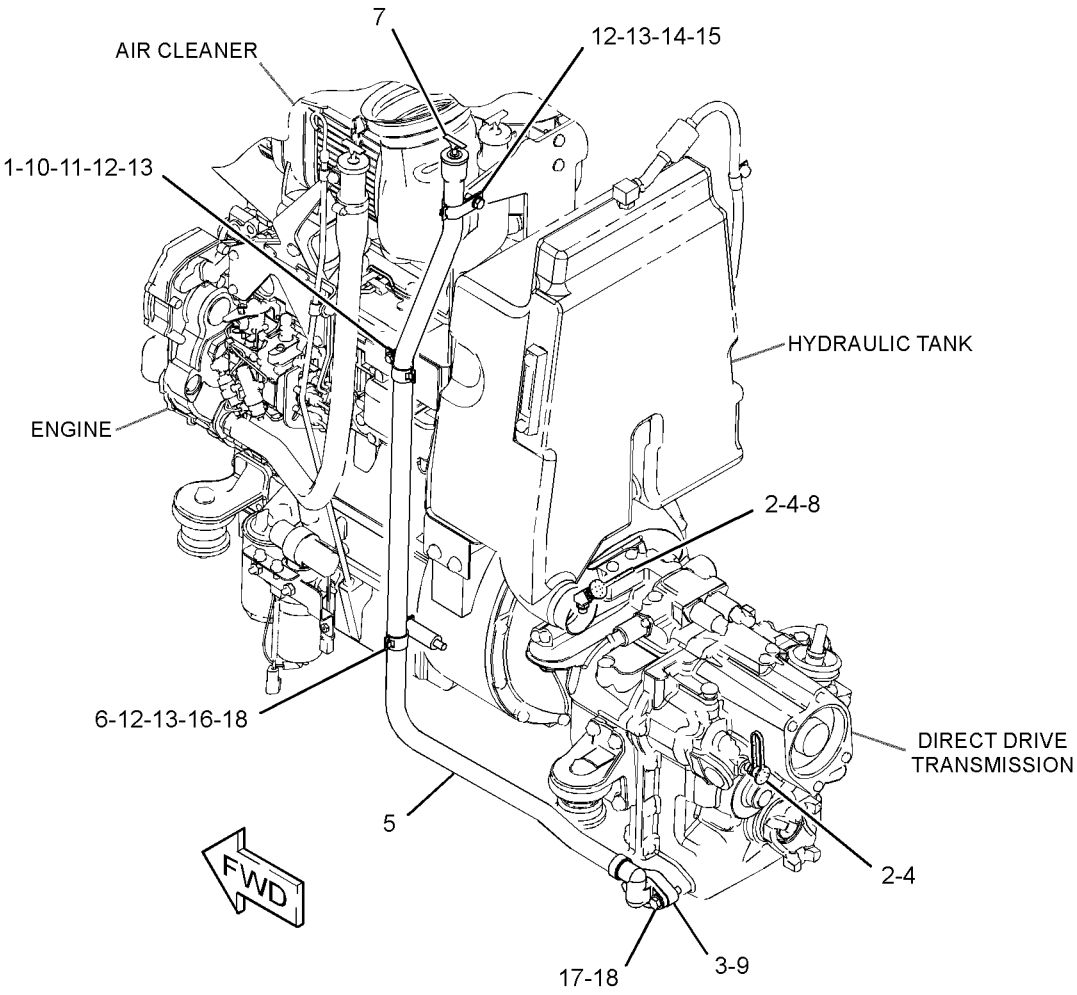

GRAPHIC #1 **<END>** g01424336

216-1609 FLANGE GP-WHEEL

S/N: LMS1-UP
PART OF 230-5739 AXLE GP-REAR
AN ATTACHMENT

SMCS-4057 **i02361154**

NOTE	REF NO	GRAPHIC REF	PART NUMBER	QTY	PART NAME 1 2 3 4 5 6 (PRODUCT LEVEL)	SEE PAGE
	1	1	**210-5932**	2	BEARING-WHEEL	
	2	1	**216-1602**	1	FLANGE	
	3	1	**226-4346**	10	STUD	
	4	1	**229-5092**	1	SEAL	

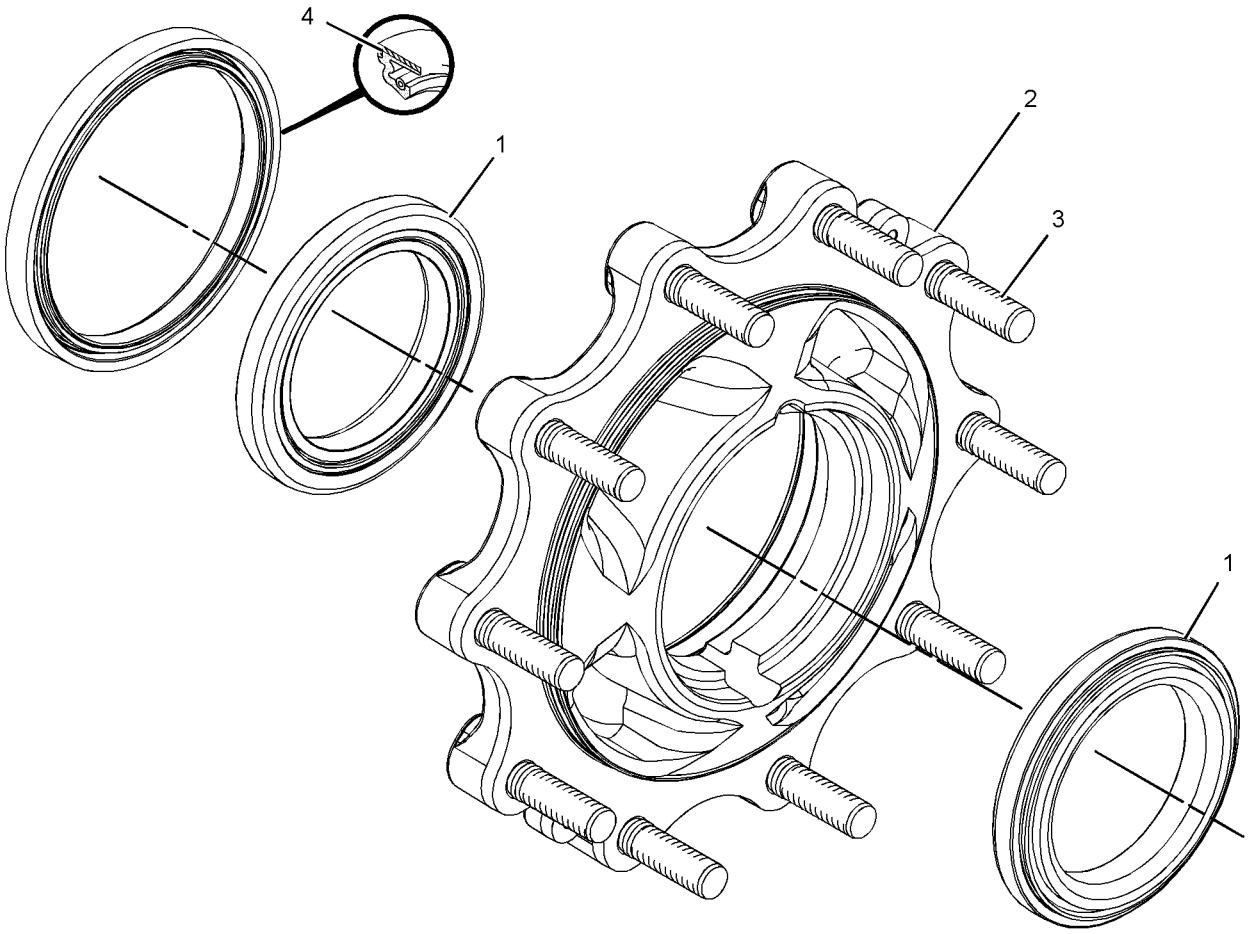

GRAPHIC #1 **<END>** g01180592

231-0683 FLANGE GP-WHEEL

S/N: LMS1-UP
PART OF 230-5745 AXLE GP-FRONT
AN ATTACHMENT

SMCS-4057 **i02221574**

NOTE	REF NO	GRAPHIC REF	PART NUMBER	QTY	PART NAME 1 2 3 4 5 6 (PRODUCT LEVEL)	SEE PAGE
	1	1	**207-4263**	1	BEARING AS	
	2	1	**207-4267**	1	BEARING AS	
	3	1	**231-0687**	8	STUD	
	4	1	**231-0686**	1	HUB-WHEEL	
	5	1	**231-0688**	1	SEAL	
					AVAILABLE REPAIR KIT(S):	
			238-5228	1	KIT-HUB	
					(INCLUDES WHEEL HUB & WHEEL STUDS)	

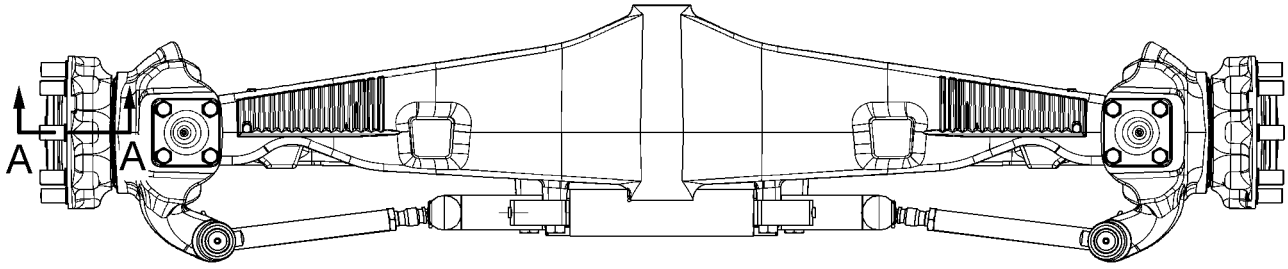

FRONT VIEW

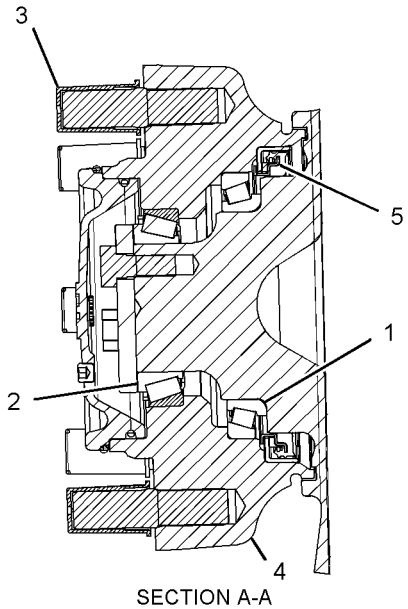

SECTION A-A

GRAPHIC #1 **<END>** g01121040

209-9884 HOUSING & FLANGE GP-AXLE–RH

S/N: LMS1-UP
PART OF 230-5743 AXLE GP-DRIVE & STEERING
AN ATTACHMENT

SMCS-4057, 4234 **i03920893**

NOTE	REF NO	GRAPHIC REF	PART NUMBER	QTY	PART NAME 1 2 3 4 5 6 (PRODUCT LEVEL)	SEE PAGE
Y	1	1	**217-2877**	1	HOUSING GP-AXLE (RH)	150
J	2	1	*231-0703*	1	FLANGE AS (AXLE)	
	2A	1	**210-5932**	2	BEARING-WHEEL	
	2B	1	**226-4346**	8	STUD	
	2C	1	**331-8538**	1	SEAL	
	3	1	**226-4366**	1	NUT-SPANNER	
	4	1	**226-4370**	3	BOLT-SELF-LOCKING	
	5	1	**229-5085**	1	SPACER (110X123X18.36-MM THK)	
	6	1	**217-2879**	1	GEAR GP-RING	
	7	1	**226-4365**	1	WASHER-TAB	
					PARTS SHOWN IN GRAPHIC(S) WITHOUT A REFERENCE NUMBER ARE NOT SERVICED SEPARATELY	
					AVAILABLE REPAIR KIT(S):	
J			**238-5256**	1	KIT-FLANGE (AXLE HOUSING)	
					(INCLUDES STUDS & WHEEL FLANGE)	

J-KIT MARKED J SERVICES PART MARKED J
Y-SEPARATE ILLUSTRATION

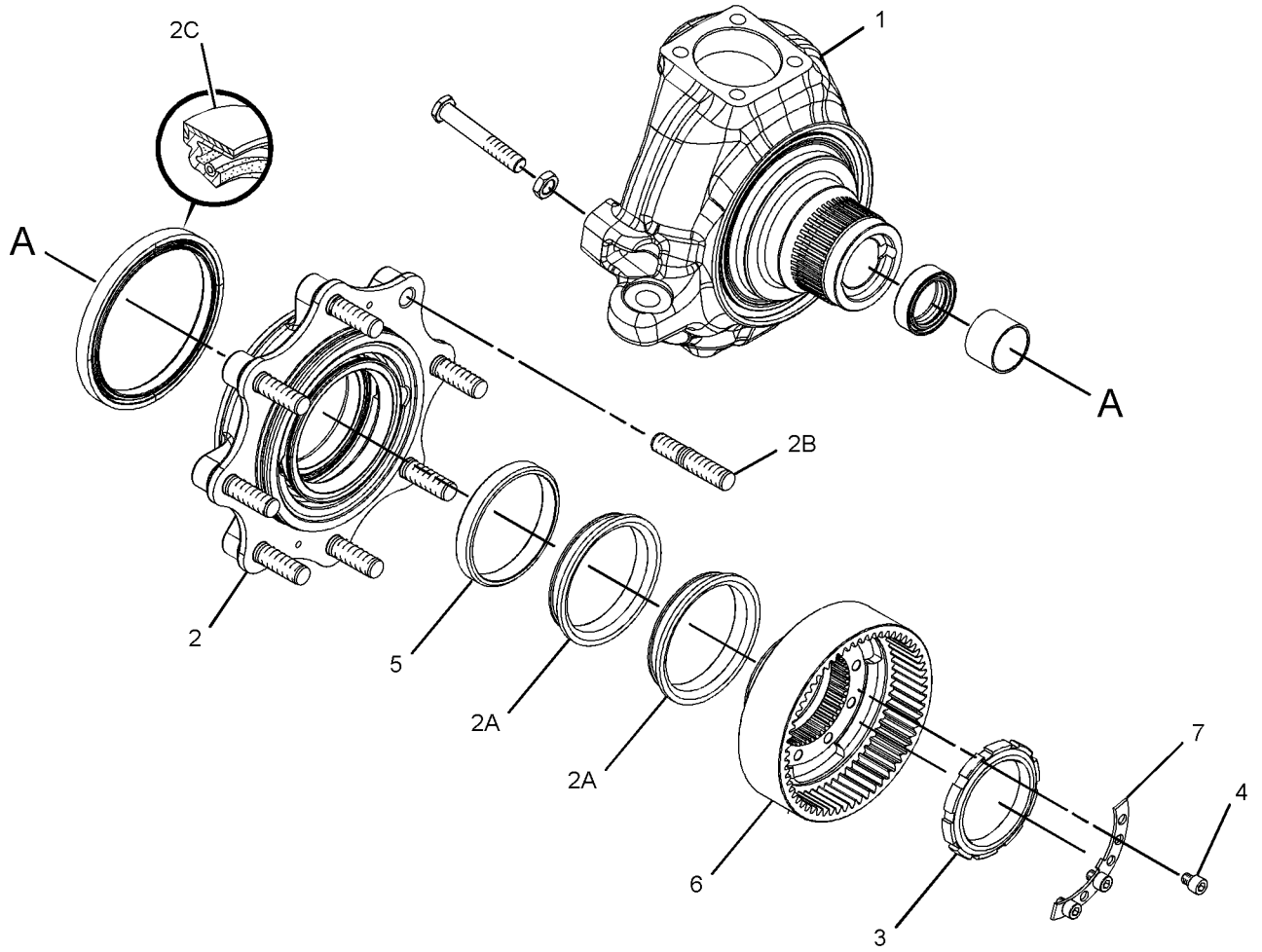

GRAPHIC #1 **<END>** g02133433

209-9885 HOUSING & FLANGE GP-AXLE–LH

S/N: LMS1-UP
PART OF 230-5743 AXLE GP-DRIVE & STEERING
AN ATTACHMENT

SMCS-4057, 4234 **i03920894**

NOTE	REF NO	GRAPHIC REF	PART NUMBER	QTY	PART NAME 1 2 3 4 5 6 (PRODUCT LEVEL)	SEE PAGE
Y	1	1	**217-2878**	1	HOUSING GP-AXLE (LH)	151
J	2	1	*231-0703*	1	FLANGE AS (AXLE)	
	2A	1	**210-5932**	2	BEARING-WHEEL	
	2B	1	**226-4346**	8	STUD	
	2C	1	**331-8538**	1	SEAL	
	3	1	**226-4366**	1	NUT-SPANNER	
	4	1	**226-4370**	4	BOLT-SELF-LOCKING	
	5	1	**229-5085**	1	SPACER (110X123X18.36-MM THK)	
	6	1	**217-2879**	1	GEAR GP-RING	
	7	1	**226-4365**	1	WASHER-TAB	
					AVAILABLE REPAIR KIT(S):	
J			**238-5256**	1	KIT-FLANGE (AXLE HOUSING)	
					(INCLUDES WHEEL FLANGE & STUDS)	

J-KIT MARKED J SERVICES PART(S) MARKED J
Y-SEPARATE ILLUSTRATION

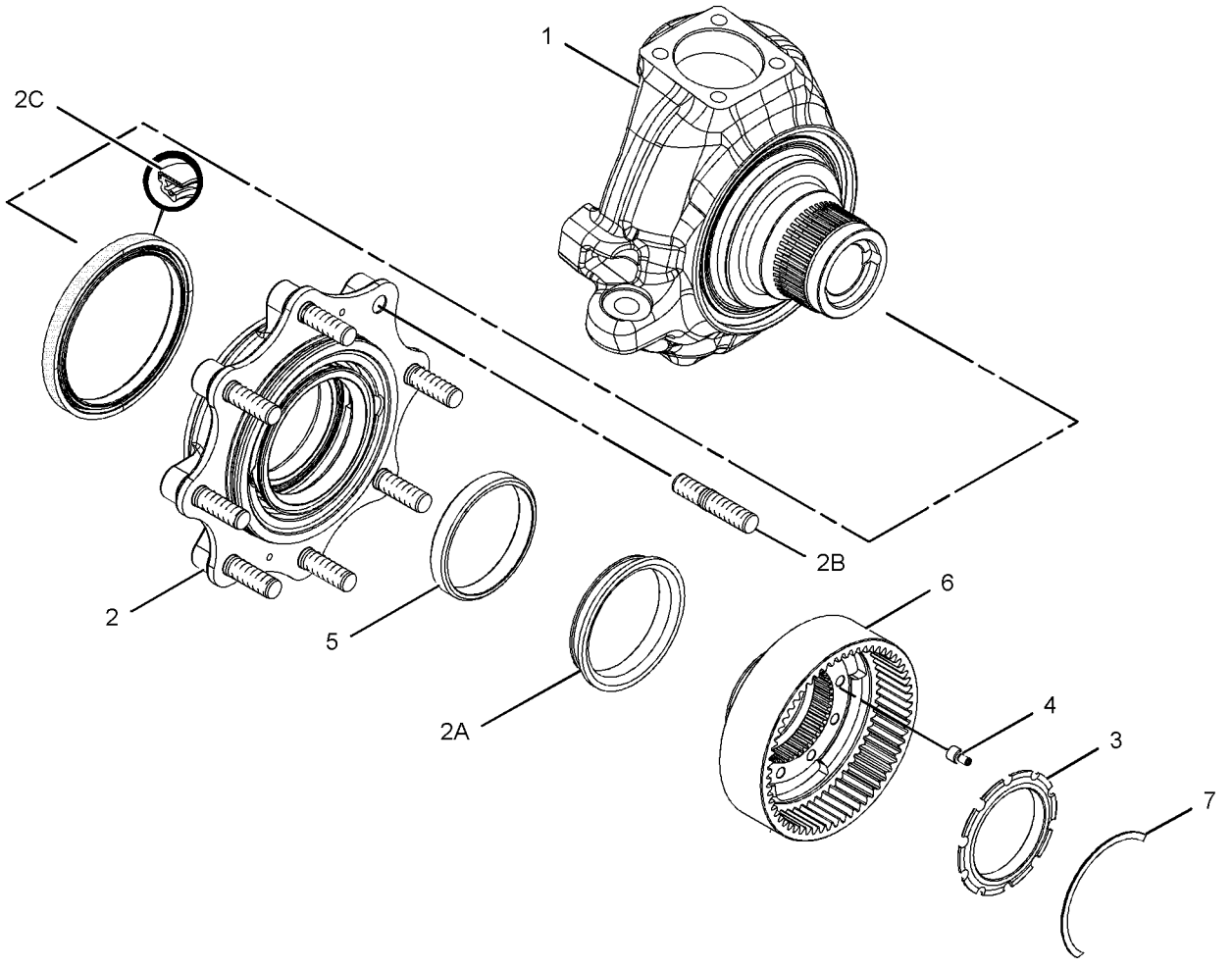

GRAPHIC #1 **<END>** g01180841

217-2877 HOUSING GP-AXLE–RH

S/N: LMS1-UP

PART OF 209-9884 HOUSING & FLANGE GP-AXLE

AN ATTACHMENT

SMCS-3256, 3258, 3260, 4251 **i02364961**

NOTE	REF NO	GRAPHIC REF	PART NUMBER	QTY	PART NAME 1 2 3 4 5 6 (PRODUCT LEVEL)	SEE PAGE
	1	1	**199-0648**	1	NUT-JAM (M16X2-THD)	
	2	1	**198-7814**	1	BOLT (M16X2X100-MM)	
	3	1	**209-7460**	1	BUSHING	
	4	1	**209-7465**	1	SEAL	
	5	1	**231-0700**	1	HOUSING	

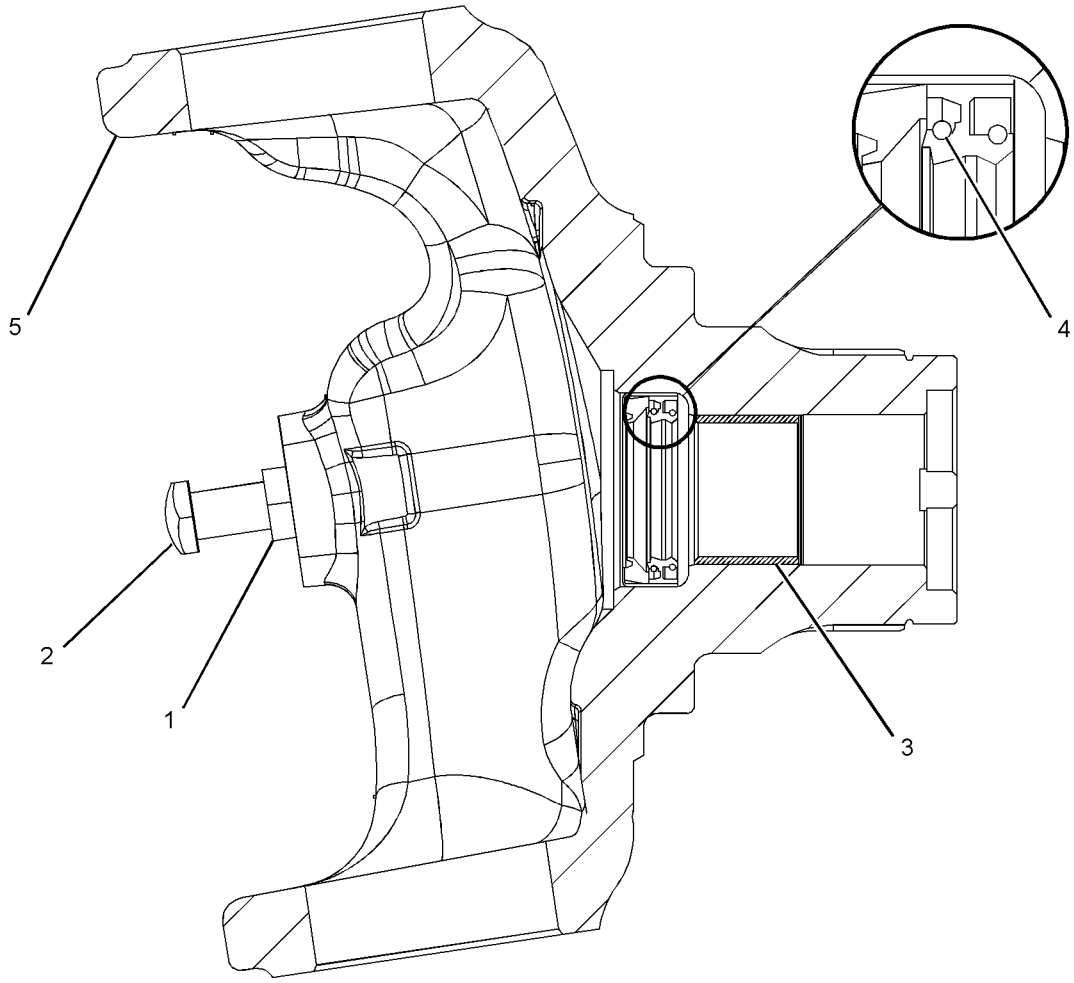

GRAPHIC #1 **<END>** g01181175

217-2878 HOUSING GP-AXLE–LH

S/N: LMS1-UP
PART OF 209-9885 HOUSING & FLANGE GP-AXLE
AN ATTACHMENT

SMCS-3256, 3258, 3260, 4251 **i02364974**

NOTE	REF NO	GRAPHIC REF	PART NUMBER	QTY	PART NAME 1 2 3 4 5 6 (PRODUCT LEVEL)	SEE PAGE
	1	1	**199-0648**	1	NUT-JAM (M16X2-THD)	
	2	1	**198-7814**	1	BOLT (M16X2X100-MM)	
	3	1	**209-7460**	1	BUSHING	
	4	1	**209-7465**	1	SEAL	
	5	1	**231-0701**	1	HOUSING	

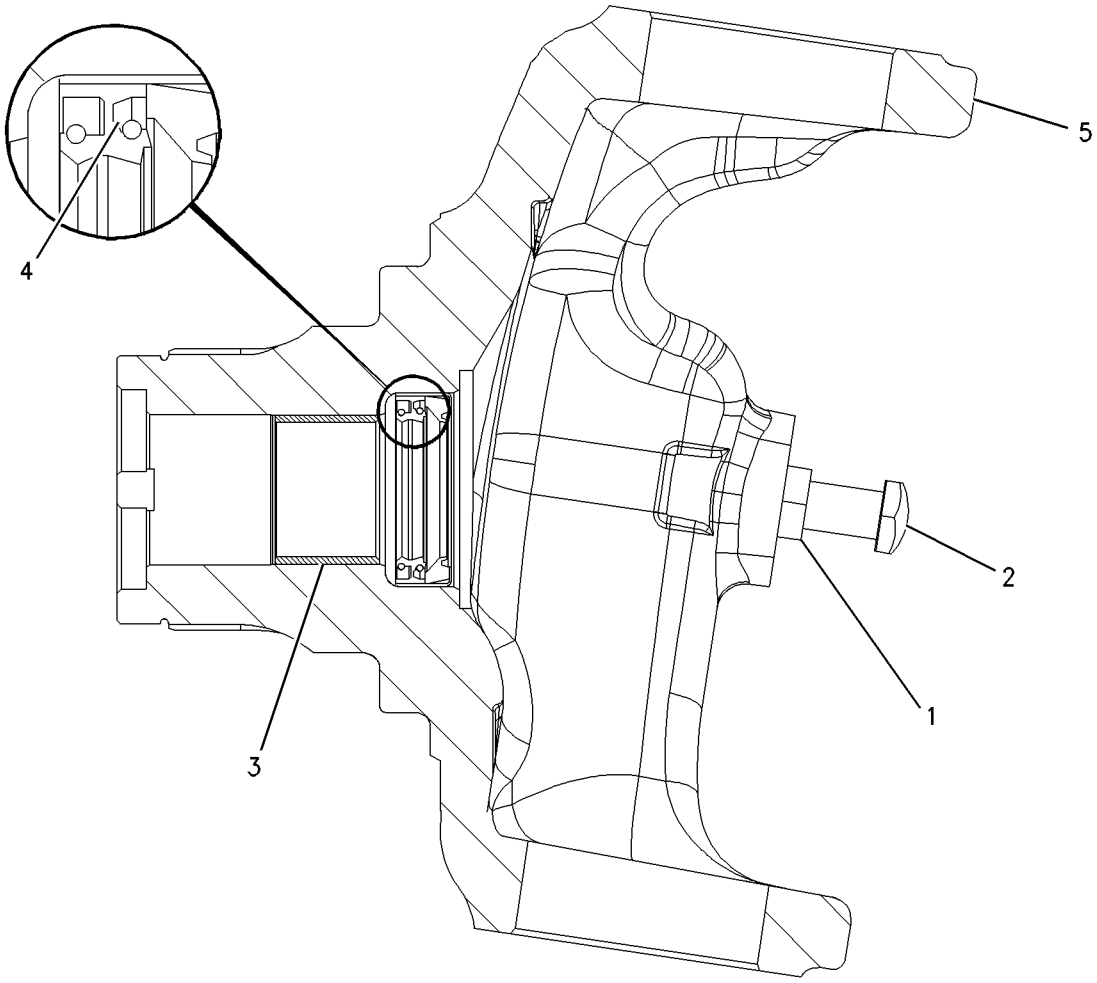

GRAPHIC #1 **<END>** g00926639

238-5289 HOUSING GP-AXLE—REAR

S/N: LMS1-UP
PART OF 230-5739 AXLE GP-REAR
AN ATTACHMENT

SMCS-3256, 3258, 3260, 4251 **i03911315**

NOTE	REF NO	GRAPHIC REF	PART NUMBER	QTY	PART NAME 1 2 3 4 5 6 (PRODUCT LEVEL)	SEE PAGE
M	1	1	**095-0674**	4	BOLT-SOCKET HEAD (M12X1.75X65-MM)	
	2	1	**199-0656**	2	BEARING	
	3	1	**199-0663**	1	SEAL-O-RING	
	4	1	**198-7811**	2	DOWEL	
	5	1	**199-0675**	2	NUT (M104X2-THD)	
	6	1	**199-0678**	2	WASHER (45.5X55X2-MM THK)	
	7	1	**199-0680**	1	SPACER (47X50X19.2-MM THK)	
M	8	1	**199-0695**	2	BOLT (M6X1X14-MM)	
	9	1	**199-0697**	1	SEAL	
	10	1	**199-0785**	1	WASHER (30.5X58X10-MM THK)	
	11	1	**199-0858**	2	RETAINER	
	12	1	**217-2876**	1	KIT-BEVEL GEAR & PINION	
					(INCLUDES WASHERS, SPACER, PINIONS, BEVEL GEAR, NUT & SEAL-O-RING)	
	13	1	**212-5702**	1	NUT (M30X2-THD)	
	14	1	**216-1600**	1	DISC-BRAKE	
	15	1	**095-1041**	1	BEARING AS	
	16	1	**093-8828**	1	BEARING AS	
Y	17	1	**216-1612**	1	CYLINDER GP-BRAKE (LH)	195
Y	18	1	**216-1613**	1	CYLINDER GP-BRAKE (RH)	196
	19	1	**219-8836**	1	FORK	
Y	20	1	**231-0692**	1	DIFFERENTIAL GP (AXLE)	141
	21	1	**238-5290**	1	HOUSING-CENTER	
B	22	1	**1U-8846**		SEALANT-GASKET	
B	23	1	**199-0684**	1	SHIM (2.5-MM THK)	
B		1	**199-0685**	1	SHIM (2.6-MM THK)	
B		1	**199-0686**	1	SHIM (2.7-MM THK)	
B		1	**199-0687**	1	SHIM (2.8-MM THK)	
B		1	**199-0688**	1	SHIM (2.9-MM THK)	
B		1	**199-0689**	1	SHIM (3-MM THK)	
B		1	**199-0690**	1	SHIM (3.1-MM THK)	
B		1	**199-0691**	1	SHIM (3.2-MM THK)	
B		1	**199-0692**	1	SHIM (3.3-MM THK)	
B		1	**199-0693**	1	SHIM (3.4-MM THK)	
					AVAILABLE REPAIR KIT(S):	
			217-2345	1	KIT-DIFFERENTIAL	
					(INCLUDES PIN, GEAR SHAFT & THRUST WASHERS)	

B-USE AS REQUIRED
M-METRIC PART
Y-SEPARATE ILLUSTRATION

238-5289 **HOUSING GP-AXLE** *(contd.)* **i03911315**

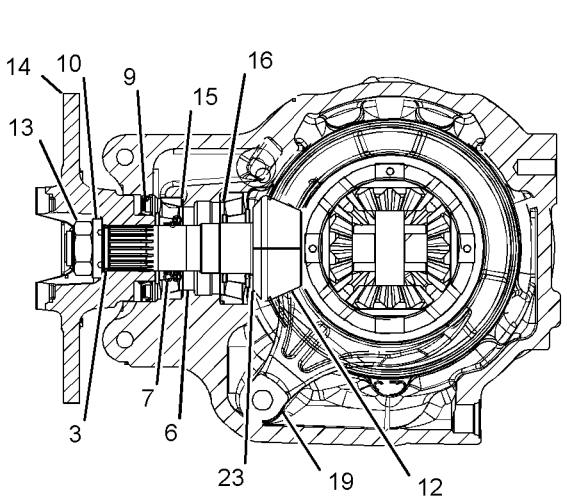

SECTION A-A

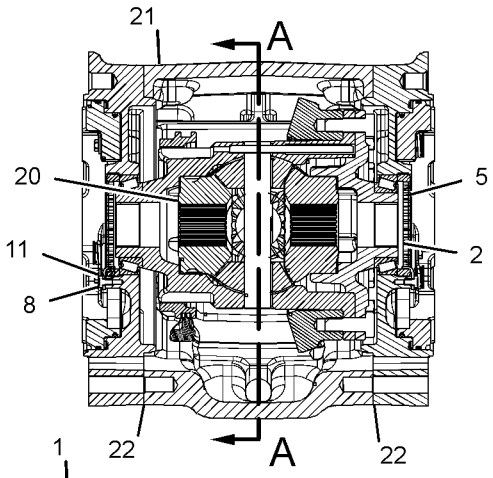

SECTION B-B

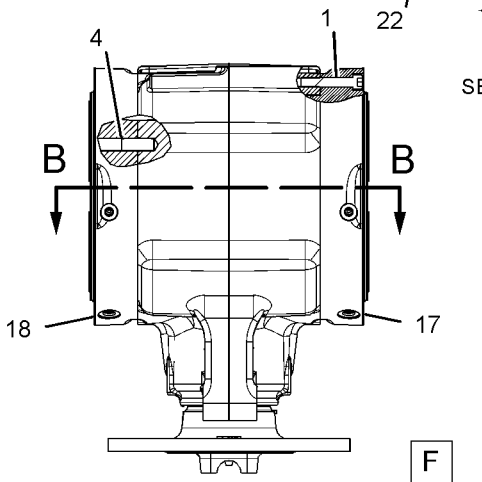

TOP VIEW

GRAPHIC #1 **<END>** g02120933

256-0546 LINES GP-POWER TRAIN OIL–DIFFERENTIAL LOCK

S/N: LMS1-UP

PART OF 291-9186, 291-9187 POWER TRAIN AR

AN ATTACHMENT

SMCS-3016, 3154 **i03920912**

NOTE	REF NO	GRAPHIC REF	PART NUMBER	QTY	PART NAME 1 2 3 4 5 6 (PRODUCT LEVEL)	SEE PAGE
	1	1	*148-8325*	1	CONNECTOR AS	
		1	**3J-1907**	1	SEAL-O-RING	
		1	**4J-5477**	1	SEAL-O-RING	
		1	**6V-8641**	1	CONNECTOR	
I	2	1	**256-0550**	1	HOSE AS	
	3	1	*148-8368*	1	ELBOW AS	
		1	**3J-1907**	1	SEAL-O-RING	
		1	**4J-5477**	1	SEAL-O-RING	
		1	**6V-8627**	1	ELBOW	
	4	1	**7K-1181**	1	STRAP-CABLE	
	5	1	**151-4841**	1	BLOCK	

I-REFER TO HYDRAULIC INFORMATION SYSTEM

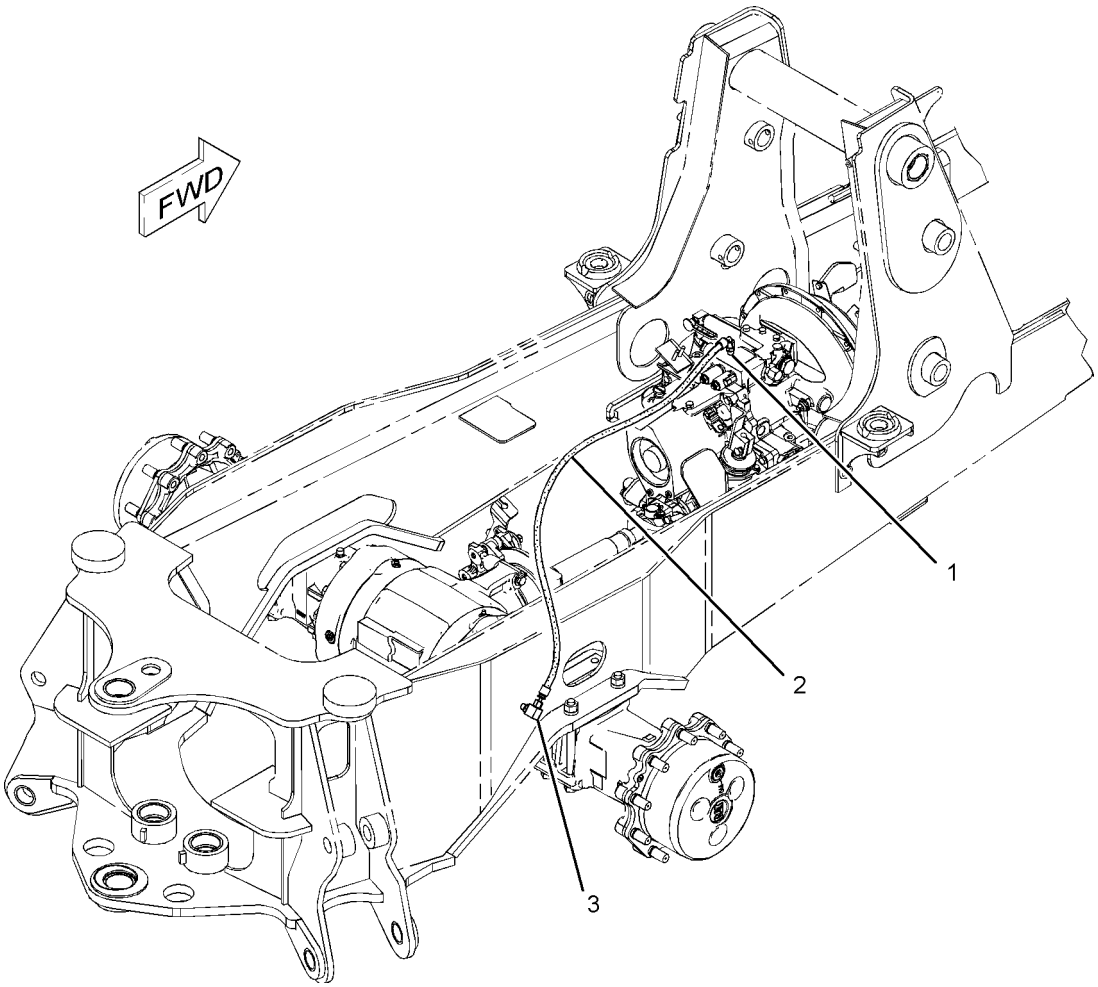

GRAPHIC #1 **<END>** g01083159

221-0811 MOUNTING GP-AXLE

S/N: LMS1-UP

PART OF 317-1454, 324-9744 DRIVE AR-BACKHOE LOADER AN ATTACHMENT

SMCS-3268 **i03837451**

NOTE	REF NO	GRAPHIC REF	PART NUMBER	QTY	PART NAME 1 2 3 4 5 6 (PRODUCT LEVEL)	SEE PAGE
B	1	1	**1K-7082**	1	WASHER (2.266X4X0.031-IN THK)	
B	2	1	**9R-9702**	2	WASHER (56X100X1.6-MM THK)	
	3	1	**211-9286**	1	PIN AS	
	4	1	**293-9289**	2	BLOCK	
M	5	1	**089-7990**	8	BOLT (M20X2.5X250-MM)	
	6	1	**165-8996**	2	WASHER-THRUST (55.5X100.5X5-MM THK)	
	7	1	**7X-0618**	1	WASHER-HARD (13.5X40X5-MM THK)	
M	8	1	**8T-4131**	4	NUT (M20X2.5-THD)	
M	9	1	**8T-4192**	1	BOLT (M12X1.75X25-MM)	
	10	1	**8T-5439**	12	WASHER-HARD (21.5X45X6-MM THK)	

B-USE AS REQUIRED
M-METRIC PART

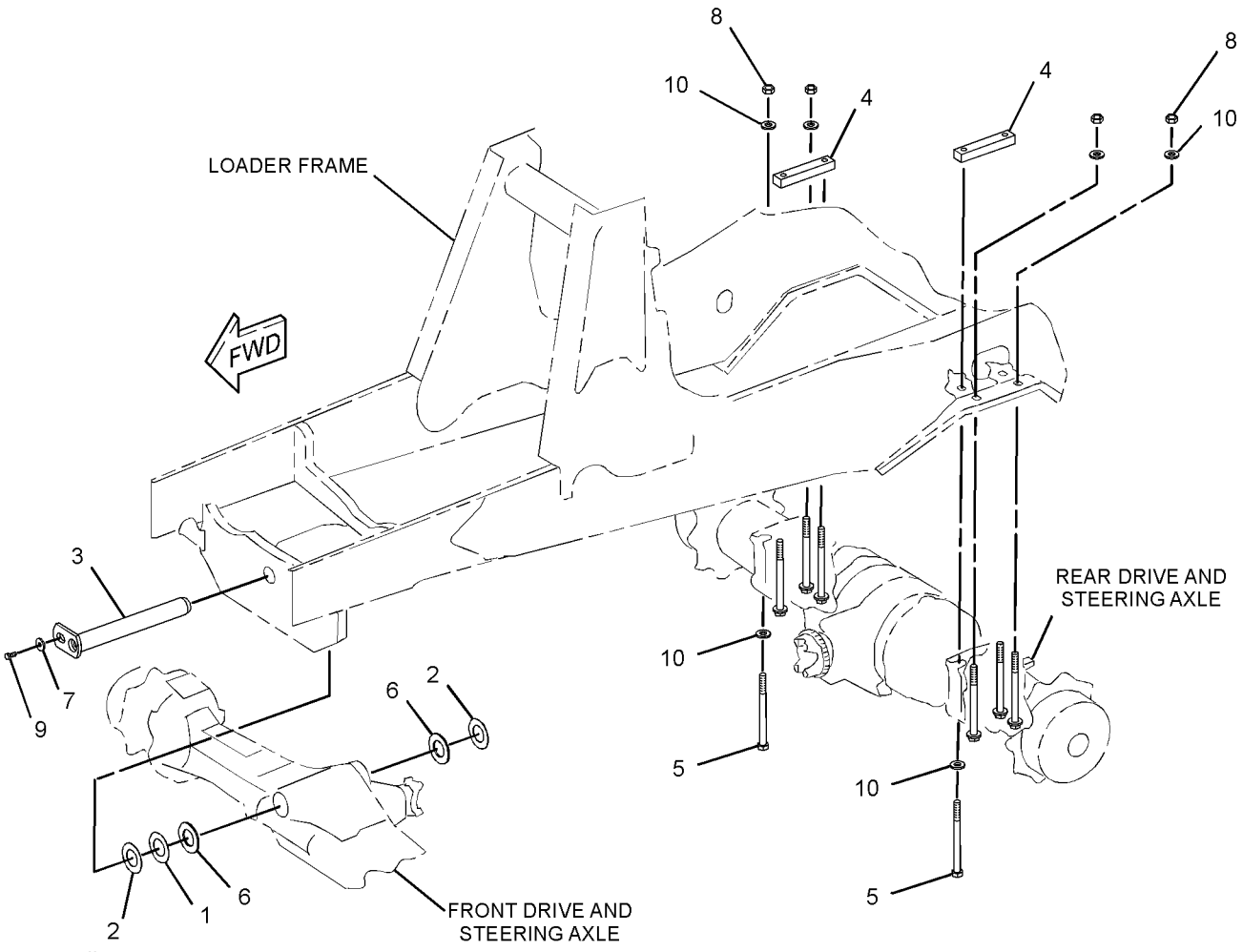

GRAPHIC #1 **<END>** g02100285

271-4487 MOUNTING GP-TRANSMISSION

S/N: LMS1-UP
PART OF 271-2404 TRANSMISSION & MOUNTING GP, 251-6352 TRANSMISSION AR-DIRECT DRIVE
AN ATTACHMENT

SMCS-3082 **i02354756**

NOTE	REF NO	GRAPHIC REF	PART NUMBER	QTY	PART NAME 1 2 3 4 5 6 (PRODUCT LEVEL)	SEE PAGE
	1	1	**245-4827**	1	SUPPORT AS (RH)	
	2	1	**271-7309**	1	SUPPORT AS (LH)	
M	3	1	**7X-2553**	4	BOLT (M16X2X40-MM)	
	4	1	**8T-4223**	4	WASHER-HARD (13.5X25.5X3-MM THK)	
M	5	1	**8T-4956**	4	BOLT (M12X1.75X35-MM)	
	6	1	**9X-8257**	4	WASHER (17.5X30X3.5-MM THK)	

M-METRIC PART

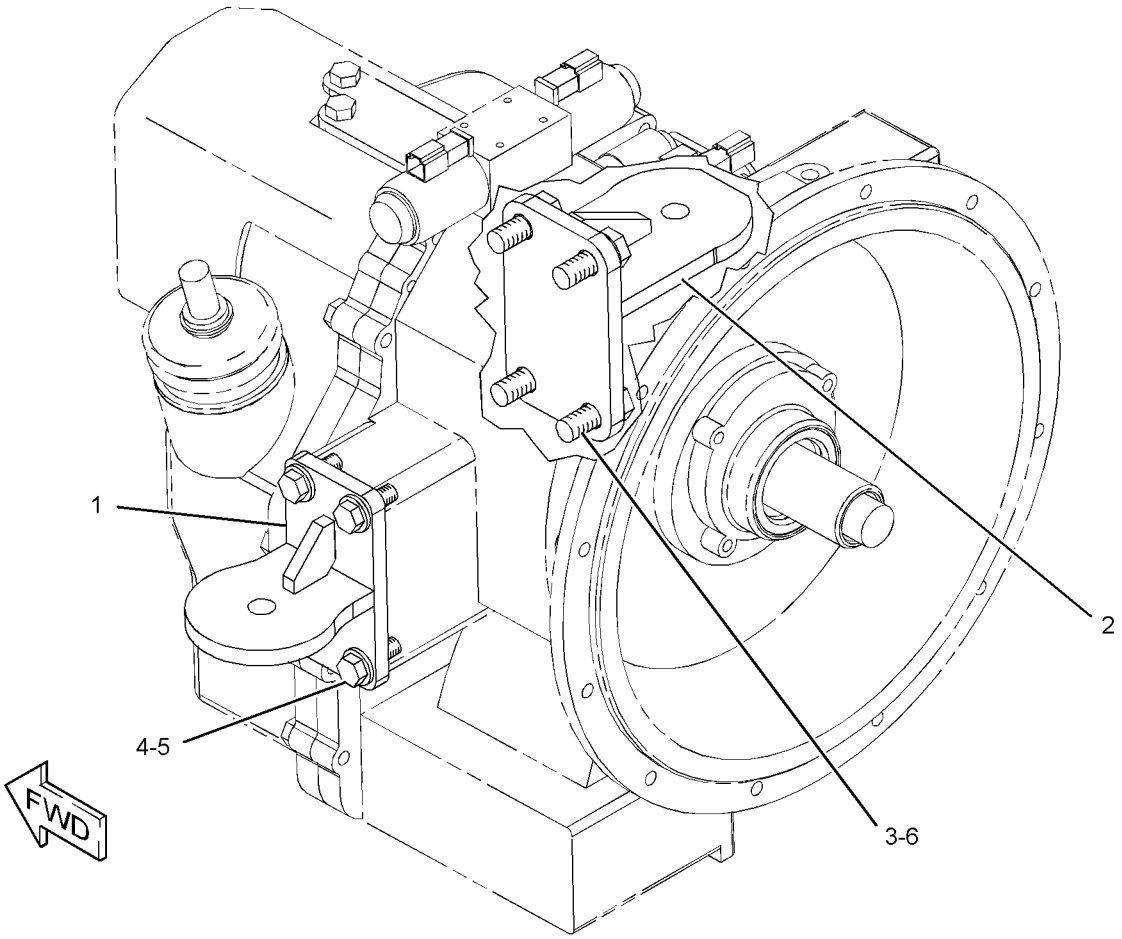

GRAPHIC #1 **<END>** g01202844

210-5924 PLANETARY GP-FINAL DRIVE–AXLE

S/N: LMS1-UP
PART OF 230-5743 AXLE GP-DRIVE & STEERING
AN ATTACHMENT

SMCS-4050 **i03156043**

NOTE	REF NO	GRAPHIC REF	PART NUMBER	QTY	PART NAME 1 2 3 4 5 6 (PRODUCT LEVEL)	SEE PAGE
	1	1	**210-5931**	4	RETAINER	
	2	1	**209-4157**	4	GEAR (23-TEETH)	
	3	1	**095-0924**	4	RING-RETAINING	
					AVAILABLE REPAIR KIT(S):	
			209-7466	1	KIT-PLANETARY CARRIER	
					(INCLUDES THRUST PLUG, SUN GEAR SHAFT & PLANET CARRIER)	
			219-8783	23	KIT-ROLLER BEARING	
					(EACH INCLUDES 10 NEEDLES)	
					(SERVICED IN QUANITY OF 10, EACH GEAR REQUIRES 56 ROLLERS OR 6 KITS, EACH WHEEL END AS. REQUIRES 224 ROLLERS OR 23 KITS)	

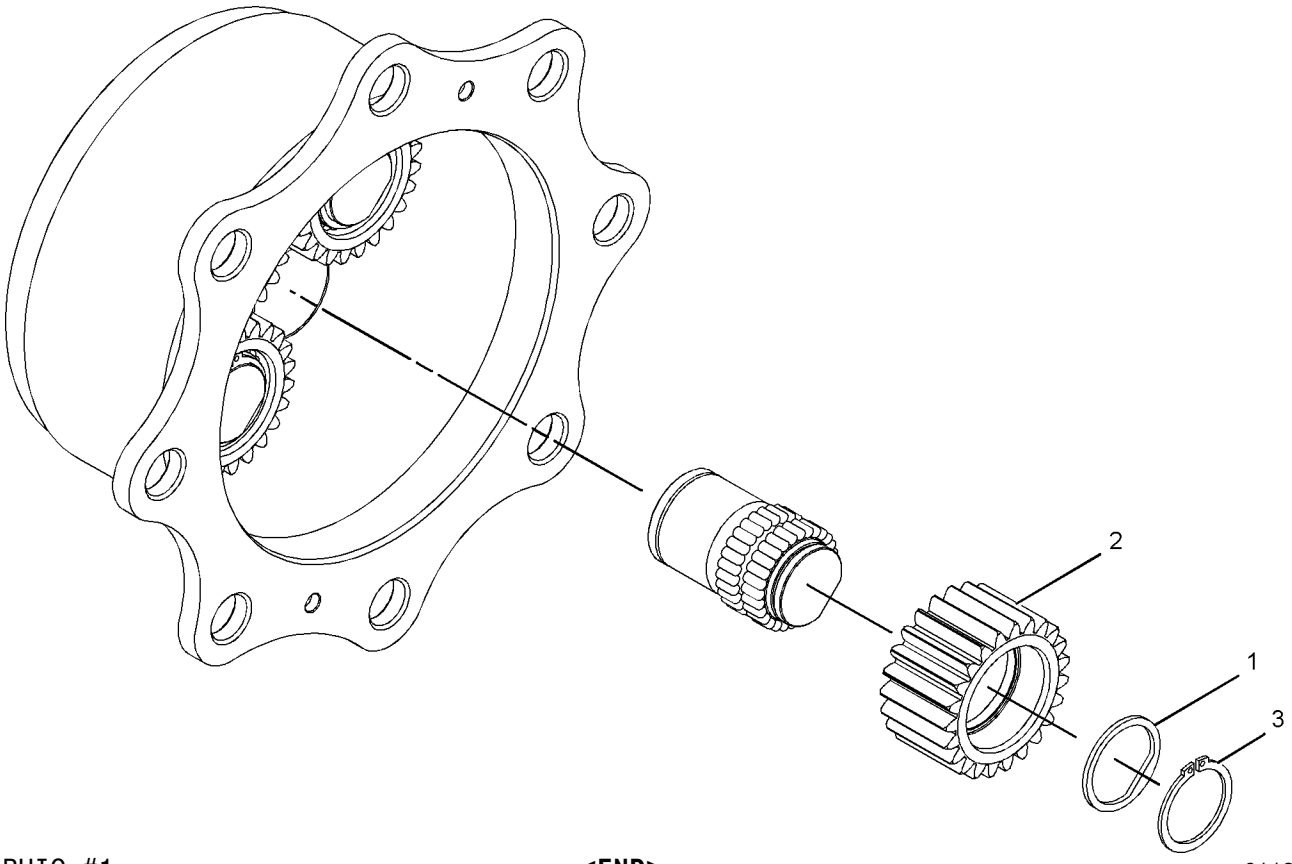

GRAPHIC #1 **<END>** g01132397

216-1610 PLANETARY GP-FINAL DRIVE–AXLE

S/N: LMS1-UP
PART OF 230-5739 AXLE GP-REAR
AN ATTACHMENT

SMCS-4050 **i03898318**

NOTE	REF NO	GRAPHIC REF	PART NUMBER	QTY	PART NAME 1 2 3 4 5 6 (PRODUCT LEVEL)	SEE PAGE
	1	1	**199-0653**	3	RING-RETAINING	
	2	1	**207-4257**	6	RING-RETAINER	
	3	1	**199-0760**	3	BEARING	
	4	1	**213-4222**	3	WASHER (50.1X61X2.5-MM THK)	
	5	1	**207-5962**	6	WASHER (65X72X2-MM THK)	
	6	1	**216-1606**	3	GEAR-PLANETARY (31-TEETH)	
	7	1	**216-1601**	1	CARRIER	
	8	1	**253-5022**	1	PLUG	

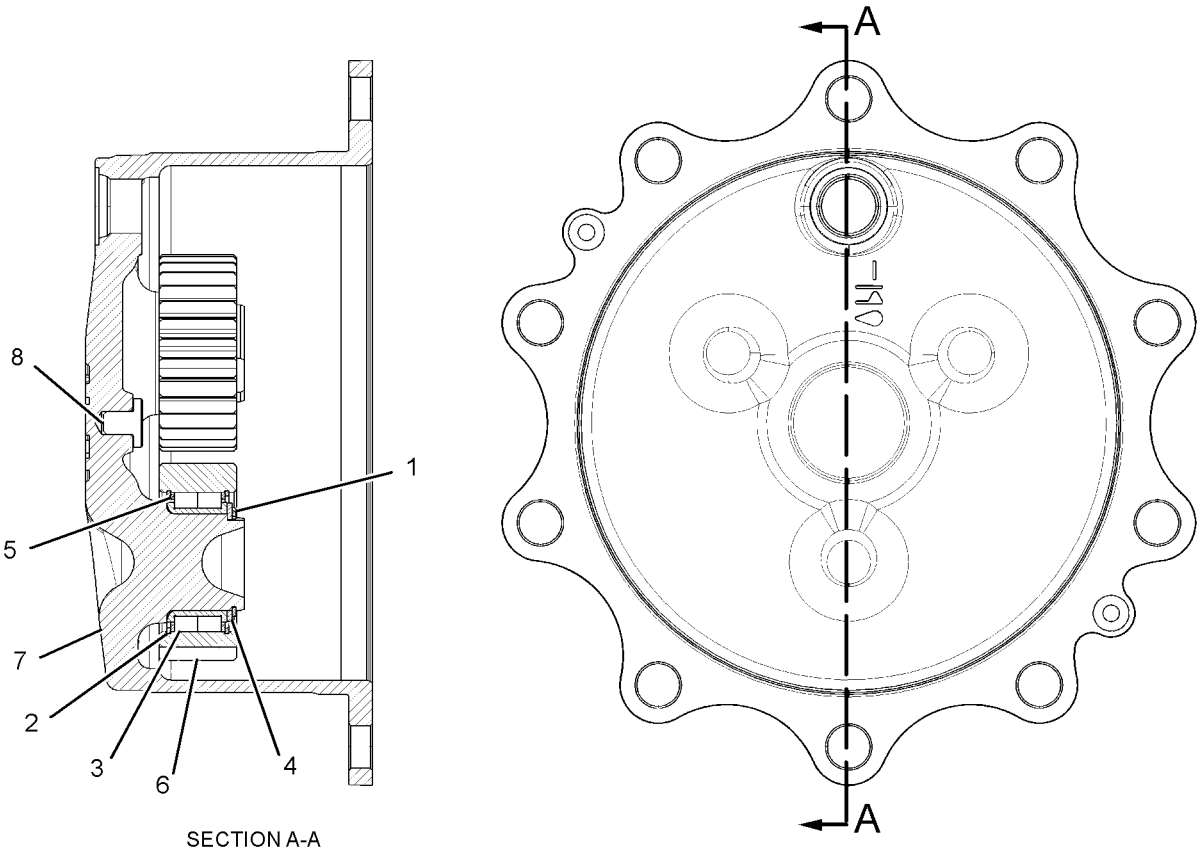

SECTION A-A

GRAPHIC #1 **<END>** g02141640

291-9186 POWER TRAIN AR–
2-WHEEL DRIVE, 2-WHEEL STEER, STD SHIFT
S/N: LMS1-UP
PART OF 357-0395, 357-0399 OPTION AR-MACHINE
AN ATTACHMENT

SMCS-3000, 4000 **i03865263**

NOTE	PART NUMBER	QTY	PART NAME 1 2 3 4 5 6 (PRODUCT LEVEL)	SEE PAGE
Y	*206-1642*	1	CONTROL GP-PARKING BRAKE	190
Y	*206-1638*	1	CONTROL GP-SERVICE BRAKE	192
Y	*206-1643*	1	CONTROL GP-TRANSMISSION	538
Y	*112-1826*	1	DRIVE & MTG GP-PUMP	261
Y	*324-9744*	1	DRIVE AR-BACKHOE LOADER (2-WHEEL DRIVE, 2-WHEEL STEER)	4
Y	*256-0551*	1	FILLER GP-POWER TRAIN OIL (2-WHEEL DRIVE, STANDARD SHIFT)	144
Y	*256-0546*	1	LINES GP-POWER TRAIN OIL (DIFFERENTIAL LOCK)	154
Y	*202-6010*	1	SWITCH GP-DIFFERENTIAL LOCK (CENTER PIVOT MACHINE)	103
Y	*251-6352*	1	TRANSMISSION AR-DIRECT DRIVE (2-WHEEL DRIVE, STANDARD SHIFT)	169
	119-4740	1	FILTER-OIL (STANDARD EFFICIENCY)	

Y-SEPARATE ILLUSTRATION

<END>

291-9187 POWER TRAIN AR–
ALL WHEEL DRIVE, 2-WHEEL STEER, STD SHIFT
S/N: LMS1-UP
PART OF 357-0398 OPTION AR-MACHINE
AN ATTACHMENT

SMCS-3000, 4000 **i03865264**

NOTE	PART NUMBER	QTY	PART NAME 1 2 3 4 5 6 (PRODUCT LEVEL)	SEE PAGE
Y	*206-1642*	1	CONTROL GP-PARKING BRAKE	190
Y	*206-1638*	1	CONTROL GP-SERVICE BRAKE	192
Y	*206-1643*	1	CONTROL GP-TRANSMISSION	538
Y	*112-1826*	1	DRIVE & MTG GP-PUMP	261
Y	*317-1454*	1	DRIVE AR-BACKHOE LOADER (ALL WHEEL DRIVE, 2-WHEEL STEER)	4
Y	*214-3740*	1	FILLER GP-POWER TRAIN OIL (ALL WHEEL DRIVE, STD SHIFT)	143
Y	*256-0546*	1	LINES GP-POWER TRAIN OIL (DIFFERENTIAL LOCK)	154
Y	*216-4476*	1	SHAFT GP-DRIVE (FRONT)	160
Y	*202-6010*	1	SWITCH GP-DIFFERENTIAL LOCK (CENTER PIVOT MACHINE)	103
Y	*251-6353*	1	TRANSMISSION AR-DIRECT DRIVE (ALL WHEEL DRIVE)	169
	119-4740	1	FILTER-OIL (STANDARD EFFICIENCY)	

Y-SEPARATE ILLUSTRATION

<END>

216-4475 SHAFT GP-DRIVE–REAR

S/N: LMS1-UP
PART OF 317-1454, 324-9744 DRIVE AR-BACKHOE LOADER
AN ATTACHMENT

SMCS-3253 **i03498387**

NOTE	PART NUMBER	QTY	PART NAME 1 2 3 4 5 6 (PRODUCT LEVEL)	SEE PAGE
J	**304-3269**	1	SHAFT AS (REAR)	
M	**107-6826**	8	BOLT (M24X19.1-MM)	
	5V-2545	4	STRAP	
			AVAILABLE REPAIR KIT(S):	
J	**117-9887**	2	KIT-SPIDER & BEARING (DRIVE SHAFT)	
			(EACH INCLUDES SPIDER & RINGS)	

J-KITS MARKED J SERVICES PART MARKED J
M-METRIC PART

<END>

216-4476 SHAFT GP-DRIVE–FRONT

S/N: LMS1-UP
PART OF 291-9187 POWER TRAIN AR
AN ATTACHMENT

SMCS-3253 **i02858065**

NOTE	PART NUMBER	QTY	PART NAME 1 2 3 4 5 6 (PRODUCT LEVEL)	SEE PAGE
J	**304-3266**	1	SHAFT AS (FRONT)	
M	**107-6826**	8	BOLT (M24X19.1-MM)	
	5V-2545	4	STRAP	
			AVAILABLE REPAIR KIT(S):	
J	**117-9887**	2	KIT-SPIDER & BEARING (DRIVE SHAFT)	
			(EACH INCLUDES SPIDER & RINGS)	

J-KIT MARKED J SERVICES PART MARKED J
M-METRIC PART

<END>

275-0476 SHAFT GP-INPUT

S/N: LMS1-UP
PART OF 271-2408 TRANSMISSION GP-DIRECT DRIVE
AN ATTACHMENT

SMCS-3053, 3063 **i02861192**

NOTE	REF NO	GRAPHIC REF	PART NUMBER	QTY	PART NAME 1 2 3 4 5 6 (PRODUCT LEVEL)	SEE PAGE
	1	1	**9U-8875**	2	RING-RETAINING	
	2	1	**6T-9196**	2	SEAL	
	3	1	**172-5317**	1	BEARING-SPECIAL	
	4	1	**172-6050**	1	BEARING-SPECIAL	
	5	1	**6V-5100**	2	SEAL-O-RING	
	6	1	**9U-8886**	4	RING-SEAL	
	7	1	**274-4553**	10	DISC-FRICTION	
	8	1	**122-1886**	1	RING-SEAL	
	9	1	**6V-8757**	3	RING-RETAINING	
	10	1	**121-2500**	2	WASHER-THRUST (50X70X4-MM THK)	
	11	1	**123-8905**	1	CUP-TAPERED ROLLER	
	12	1	**123-8909**	1	CONE-BEARING	
	13	1	**147-0227**	2	PISTON-CLUTCH	
	14	1	**147-0238**	2	SPRING AS	
	15	1	**147-0203**	2	WASHER-THRUST (45.3X65X5-MM THK)	
	16	1	**6Y-7957**	10	DISC-FRICTION	
	17	1	**274-8616**	1	GEAR-FORWARD (24-TEETH)	
	18	1	**274-8617**	1	GEAR-REVERSE (27-TEETH)	
	19	1	**274-8628**	1	BEARING-NEEDLE	
	20	1	**274-8629**	1	BEARING-NEEDLE	
	21	1	**294-9821**	1	SPACER	
	22	1	**274-8636**	1	SHAFT AS	
	22A	1	**123-2920**	3	PLUG	
	22B	1	**123-0714**	2	BEARING	
	23	1	**8E-5707**	2	PLATE-END	

275-0476 SHAFT GP-INPUT *(contd.)* **i02861192**

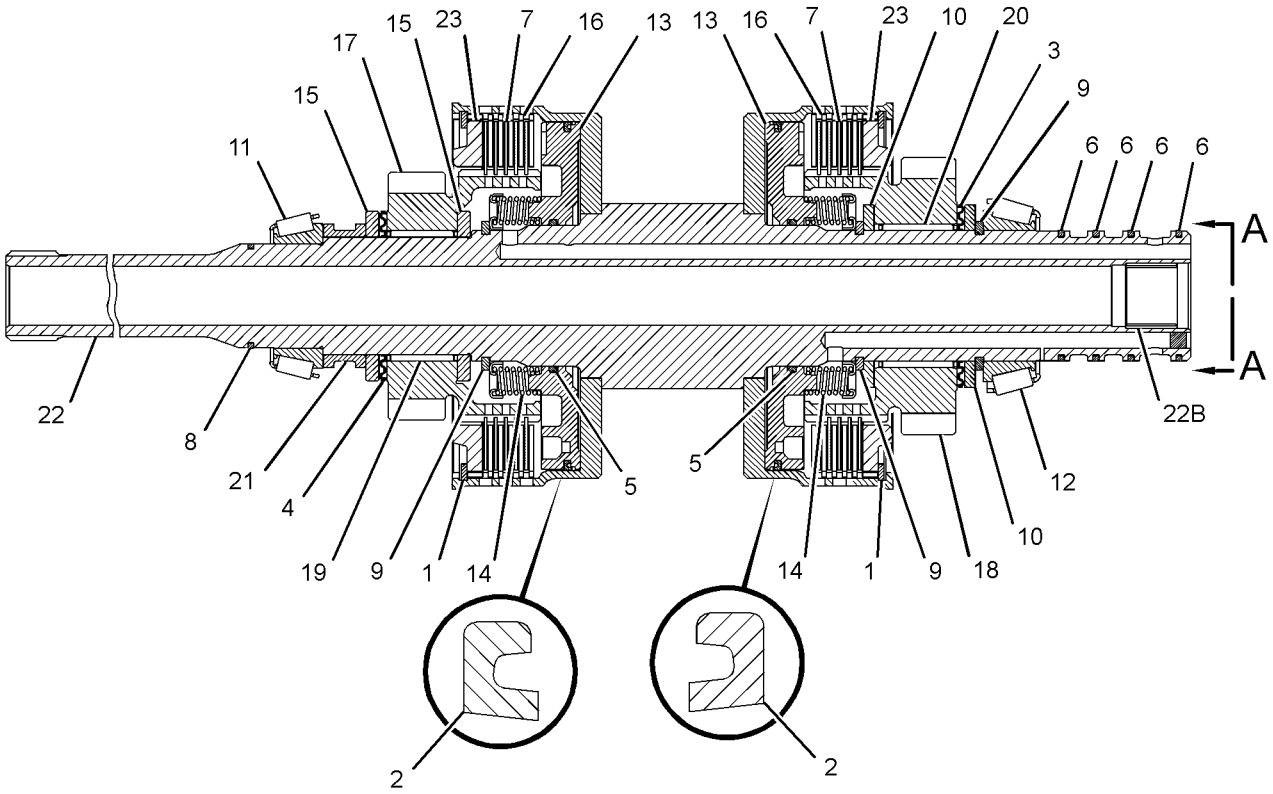

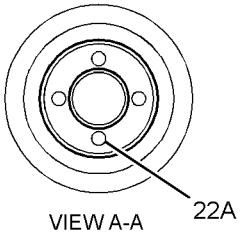

GRAPHIC #1 **<END>** g01436061

305-3429 SHAFT GP-INPUT

S/N: LMS1-UP
PART OF 294-9814 TRANSMISSION GP-DIRECT DRIVE
AN ATTACHMENT

SMCS-3053, 3063 **i03043822**

NOTE	REF NO	GRAPHIC REF	PART NUMBER	QTY	PART NAME 1 2 3 4 5 6 (PRODUCT LEVEL)	SEE PAGE
	1	1	**9U-8875**	2	RING-RETAINING	
	2	1	**172-5317**	1	BEARING-SPECIAL	
	3	1	**172-6050**	1	BEARING-SPECIAL	
	4	1	**9U-8886**	4	RING-SEAL	
	5	1	**274-4553**	10	DISC-FRICTION	
	6	1	**122-1886**	1	RING-SEAL	
	7	1	**6V-8757**	3	RING-RETAINING	
	8	1	**121-2500**	2	WASHER-THRUST (50X70X4-MM THK)	
	9	1	**123-8905**	1	CUP-TAPERED ROLLER	
	10	1	**123-8909**	1	CONE-BEARING	
	11	1	**305-3431**	2	PISTON	
	12	1	**147-0238**	2	SPRING AS	
	13	1	**147-0203**	2	WASHER-THRUST (45.3X65X5-MM THK)	
	14	1	**6Y-7929**	10	DISC-FRICTION	
	15	1	**274-8616**	1	GEAR-FORWARD (24-TEETH)	
	16	1	**274-8617**	1	GEAR-REVERSE (27-TEETH)	
	17	1	**274-8628**	1	BEARING-NEEDLE	
	18	1	**274-8629**	1	BEARING-NEEDLE	
	19	1	**294-9821**	1	SPACER	
	20	1	**274-8636**	1	SHAFT AS	
		1	**123-0714**	2	BEARING	
		1	**123-2920**	3	PLUG	
	21	1	**8E-5707**	2	PLATE-END	
	22	1	**294-9812**	2	RETAINER-SPRING	

305-3429 SHAFT GP-INPUT *(contd.)* **i03043822**

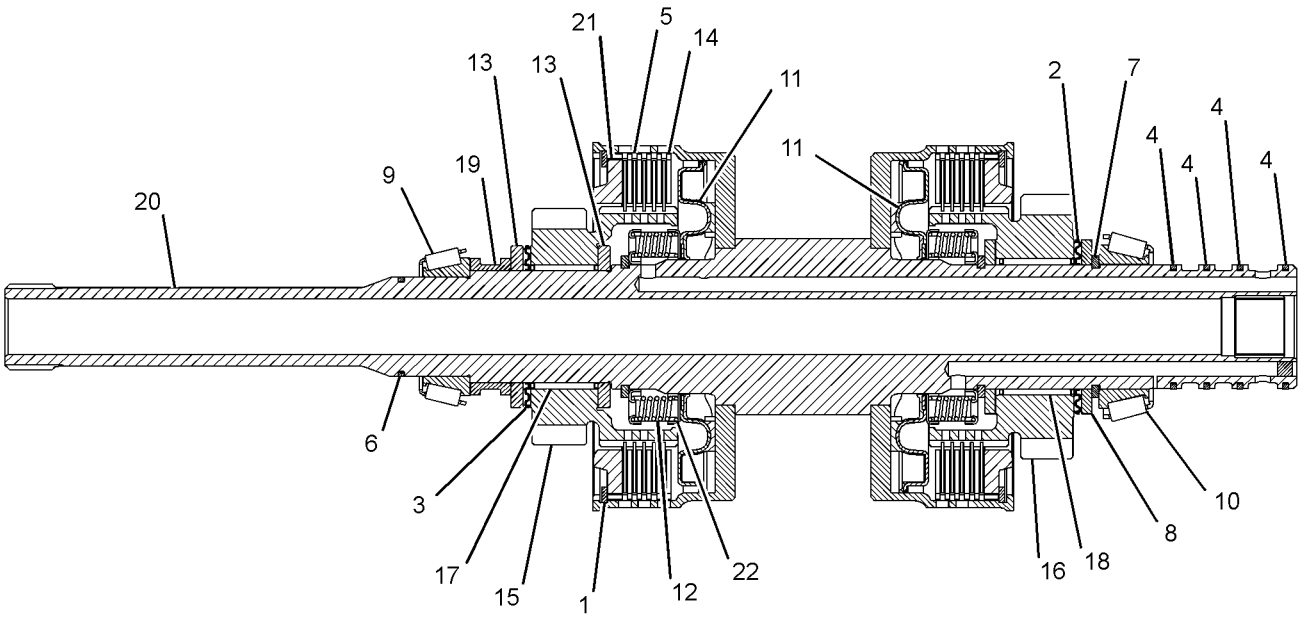

GRAPHIC #1 **<END>** g01383731

275-0478 SHAFT GP-OUTPUT–REAR

S/N: LMS1-UP
PART OF 271-2408 TRANSMISSION GP-DIRECT DRIVE
AN ATTACHMENT

SMCS-3053, 3063 **i02922492**

NOTE	REF NO	GRAPHIC REF	PART NUMBER	QTY	PART NAME 1 2 3 4 5 6 (PRODUCT LEVEL)	SEE PAGE
	1	1	**7T-3022**	2	SLEEVE	
	2	1	**6V-8500**	4	BEARING	
	3	1	**6T-9160**	1	GEAR (43-TEETH)	
	4	1	**7T-3017**	1	SPACER (52.5X59X9.6-MM THK)	
	5	1	**7T-3021**	2	SYNCHRONIZER GP	
	6	1	**096-5516**	1	RING-RETAINING	
	7	1	**259-1831**	1	GEAR (37-TEETH)	
	8	1	**6Y-2736**	1	CONE-BEARING	
	9	1	**123-8907**	1	CONE-BEARING	
	11	1	**274-8620**	1	GEAR-OUTPUT (37-TEETH)	
	12	1	**274-8621**	1	GEAR-OUTPUT (28-TEETH)	
	13	1	**274-8637**	1	SPACER-BEARING	
	14	1	**278-0215**	1	SHAFT-OUTPUT	
	15	1	**278-0216**	1	GEAR-OUTPUT (17-TEETH)	
	16	1	**278-0217**	1	BEARING-NEEDLE	
	17	1	**278-0218**	2	WASHER-THRUST	
	18	1	**178-8214**	1	CLIP	
	19	1	**7T-3018**	1	SLEEVE	
	20	1	**150-3757**	1	BEARING	
	21	1	**293-8761**	1	BEARING-NEEDLE	

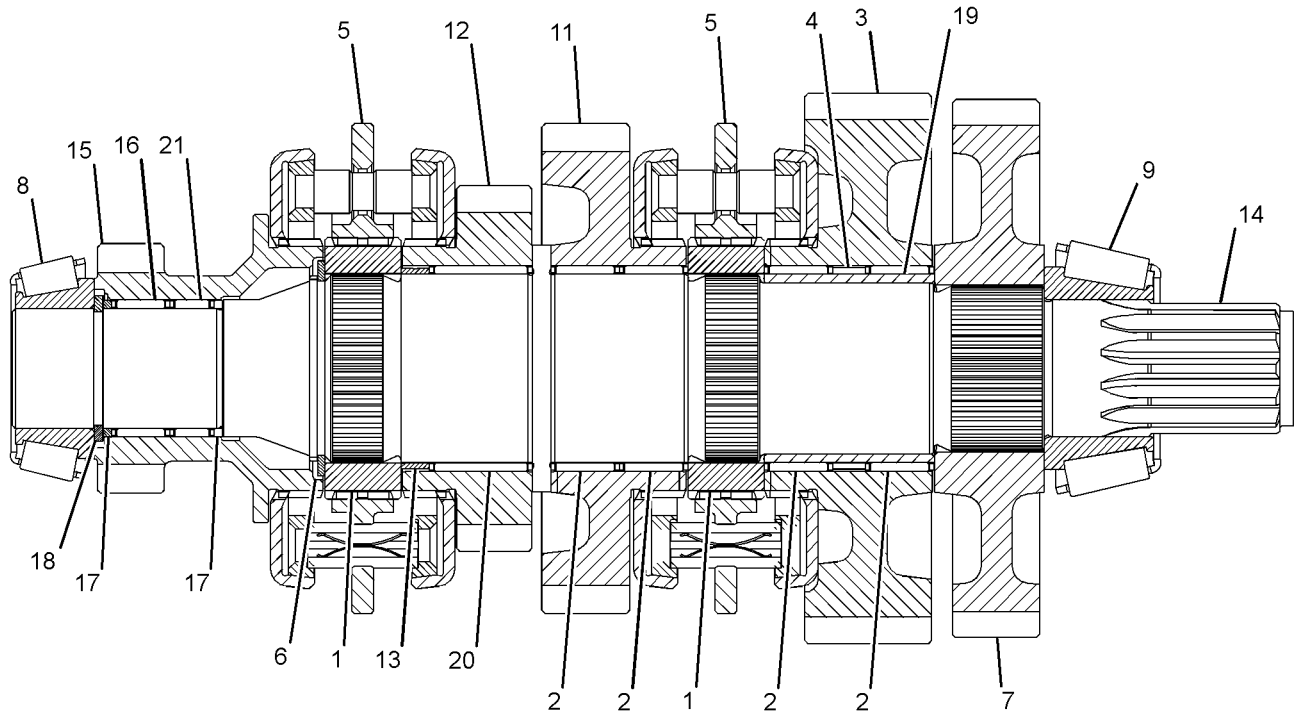

GRAPHIC #1 **<END>** g01508474

276-5337 SHAFT GP-OUTPUT–FRONT

S/N: LMS1-UP
PART OF 271-2408 TRANSMISSION GP-DIRECT DRIVE
AN ATTACHMENT

SMCS-3053, 3063 **i02442703**

NOTE	REF NO	GRAPHIC REF	PART NUMBER	QTY	PART NAME 1 2 3 4 5 6 (PRODUCT LEVEL)	SEE PAGE
	1	1	**095-0927**	1	RING-RETAINING	
	2	1	**274-4553**	8	DISC-FRICTION	
	3	1	**6T-9196**	1	SEAL	
	4	1	**6Y-7957**	8	DISC-FRICTION	
	5	1	**121-0697**	1	WASHER-THRUST (45X65X5-MM THK)	
	6	1	**172-6050**	2	BEARING-SPECIAL	
	7	1	**6V-5100**	1	SEAL-O-RING	
	8	1	**122-1878**	1	RING-SEAL	
	9	1	**122-1877**	1	WASHER-THRUST (40X65X4-MM THK)	
	10	1	**122-1884**	1	SPACER (45X49X8-MM THK)	
	11	1	**121-0885**	1	RETAINER	
	12	1	**121-0714**	1	PISTON	
	13	1	**123-8905**	2	CUP-TAPERED ROLLER	
	14	1	**178-9566**	1	SPRING-PISTON	
	15	1	**161-3249**	1	RING-RETAINING	
	16	1	**123-8912**	2	BEARING-ROLLER	
	17	1	**190-9767**	1	SHAFT AS (OUTPUT)	
	18	1	**121-0904**	1	GEAR AS (36-TEETH)	
	19	1	**8E-5707**	1	PLATE-END	

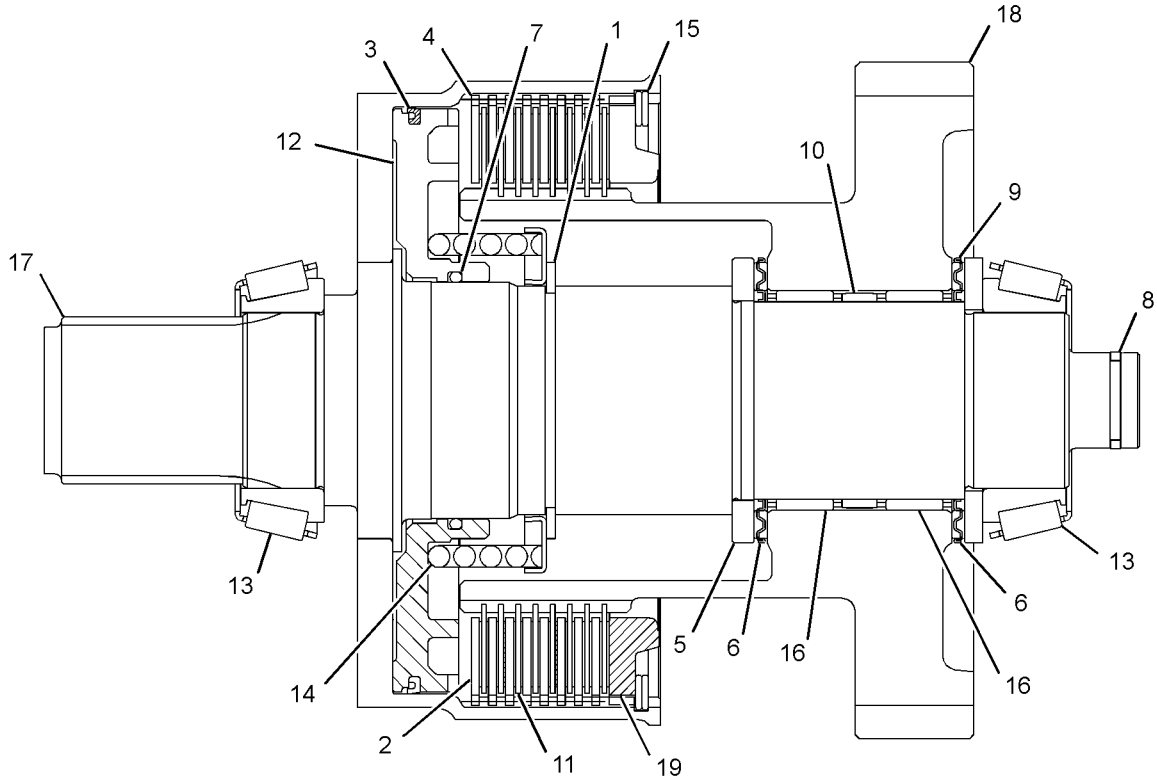

GRAPHIC #1 **<END>** g01233297

276-5339 SHAFT GP-OUTPUT–REAR

S/N: LMS1-UP
PART OF 294-9814 TRANSMISSION GP-DIRECT DRIVE
AN ATTACHMENT

SMCS-3053, 3063 **i02770377**

NOTE	REF NO	GRAPHIC REF	PART NUMBER	QTY	PART NAME 1 2 3 4 5 6 (PRODUCT LEVEL)	SEE PAGE
	1	1	**7T-3022**	2	SLEEVE	
	2	1	**6V-8500**	4	BEARING	
	3	1	**6T-9160**	1	GEAR (43-TEETH)	
	4	1	**259-1832**	1	SPACER-SPECIAL	
	5	1	**7T-3017**	1	SPACER (52.5X59X9.6-MM THK)	
	6	1	**7T-3021**	2	SYNCHRONIZER GP	
	7	1	**096-5516**	1	RING-RETAINING	
	8	1	**6Y-2736**	1	CONE-BEARING	
	9	1	**123-8907**	1	CONE-BEARING	
	10	1	**150-3757**	1	BEARING	
	11	1	**274-8620**	1	GEAR-OUTPUT (37-TEETH)	
	12	1	**274-8621**	1	GEAR-OUTPUT (28-TEETH)	
	13	1	**274-8637**	1	SPACER-BEARING	
	14	1	**278-0215**	1	SHAFT-OUTPUT	
	15	1	**278-0216**	1	GEAR-OUTPUT (17-TEETH)	
	16	1	**278-0217**	2	BEARING-NEEDLE	
	17	1	**278-0218**	1	WASHER-THRUST	
	18	1	**178-8214**	1	CLIP	

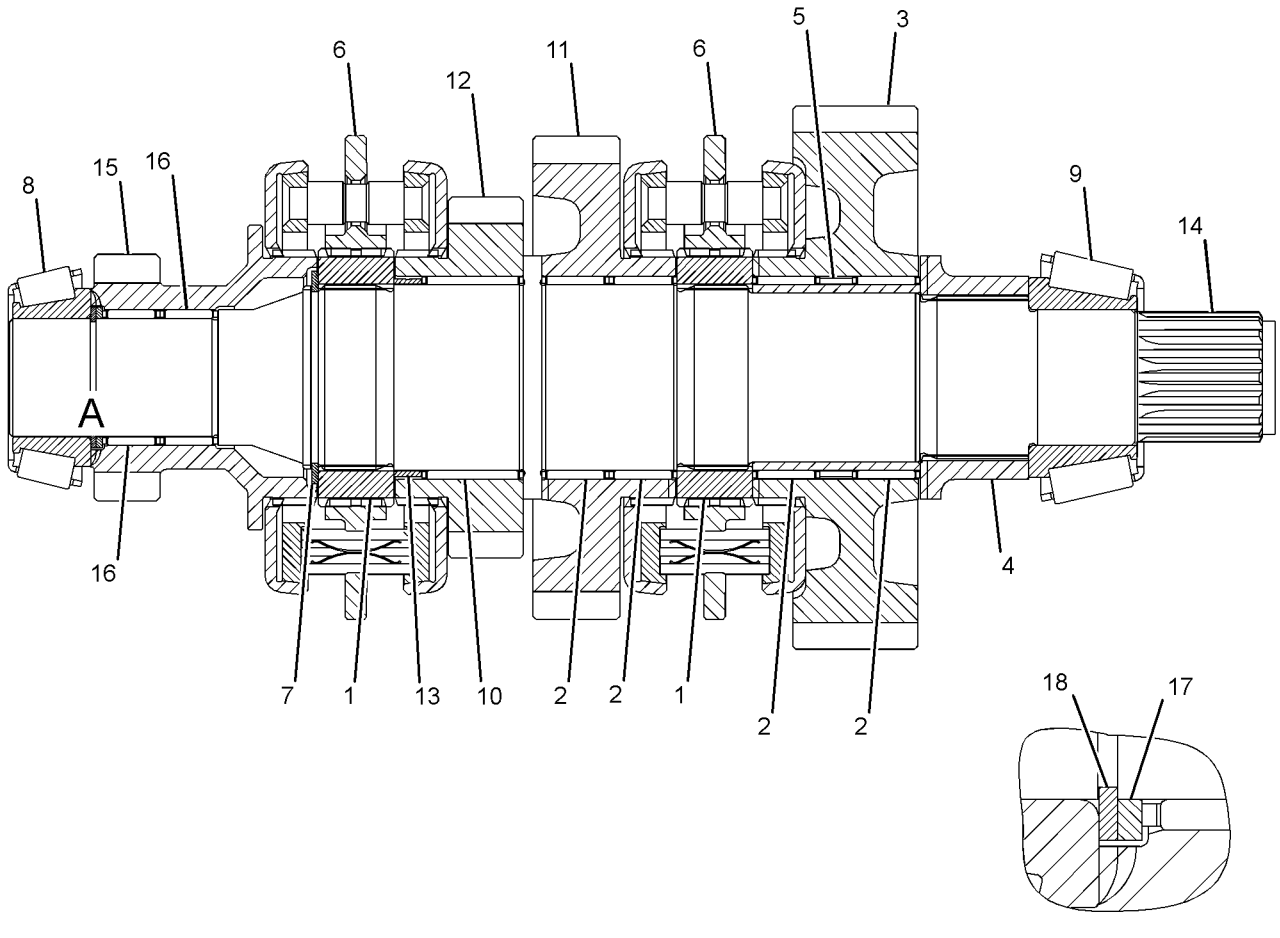

VIEW OF AREA A

GRAPHIC #1 **<END>** g01226076

271-2404 TRANSMISSION & MOUNTING GP

S/N: LMS1-UP
PART OF 251-6353 TRANSMISSION AR-DIRECT DRIVE
AN ATTACHMENT

SMCS-3030 **i03875195**

NOTE	REF NO	GRAPHIC REF	PART NUMBER	QTY	PART NAME 1 2 3 4 5 6 (PRODUCT LEVEL)	SEE PAGE
Y	1	1	**271-2408**	1	TRANSMISSION GP-DIRECT DRIVE (ALL WHEEL DRIVE, STD SHIFT)	170
Y	2	1	*271-4487*	1	MOUNTING GP-TRANSMISSION	156

Y-SEPARATE ILLUSTRATION

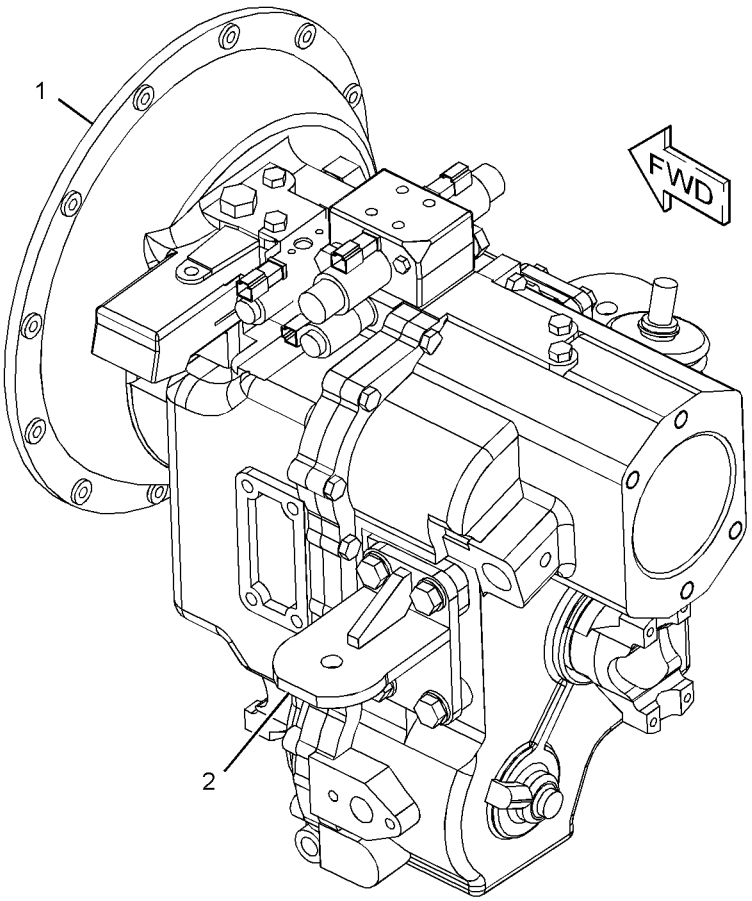

GRAPHIC #1 **<END>** g01230443

251-6352 TRANSMISSION AR-DIRECT DRIVE–
2-WHEEL DRIVE, STANDARD SHIFT
S/N: LMS1-UP
PART OF 291-9186 POWER TRAIN AR
AN ATTACHMENT

SMCS-3030 **i03866780**

NOTE	PART NUMBER	QTY	PART NAME 1 2 3 4 5 6 (PRODUCT LEVEL)	SEE PAGE
Y	*111-7907*	1	DRIVE GP-FLEXIBLE COUPLING	142
Y	*271-4487*	1	MOUNTING GP-TRANSMISSION	156
Y	**294-9814**	1	TRANSMISSION GP-DIRECT DRIVE	175
	268-1709	1	TORQUE CONVERTER AS	

Y-SEPARATE ILLUSTRATION

<END>

251-6353 TRANSMISSION AR-DIRECT DRIVE–
ALL WHEEL DRIVE, STANDARD SHIFT
S/N: LMS1-UP
PART OF 291-9187 POWER TRAIN AR
AN ATTACHMENT

SMCS-3030 **i03875194**

NOTE	PART NUMBER	QTY	PART NAME 1 2 3 4 5 6 (PRODUCT LEVEL)	SEE PAGE
Y	*111-7907*	1	DRIVE GP-FLEXIBLE COUPLING	142
Y	**271-2404**	1	TRANSMISSION & MOUNTING GP	168
	268-1709	1	TORQUE CONVERTER AS	

Y-SEPARATE ILLUSTRATION

<END>

271-2408 TRANSMISSION GP-DIRECT DRIVE–
ALL WHEEL DRIVE, STANDARD SHIFT
S/N: LMS1-UP

PART OF 271-2404 TRANSMISSION & MOUNTING GP

AN ATTACHMENT

SMCS-3030 **i02481451**

NOTE	REF NO	GRAPHIC REF	PART NUMBER	QTY	PART NAME 1 2 3 4 5 6 (PRODUCT LEVEL)	SEE PAGE
Y	1	2	**275-0468**	1	CASE AS-TRANSMISSION (FRONT)	134
Y	2	2	**275-0467**	1	CASE AS-TRANSMISSION (REAR)	132
	3	2	**121-7385**	1	PUMP GP-TRANSMISSION	
	4	2	**216-2267**	2	SEAL-LIP TYPE	
M	5	1,3	**8C-5748**	7	BOLT (M8X1.25X55-MM)	
Y	6	2	**275-0476**	1	SHAFT GP-INPUT	161
	7	3	**9P-9150**	4	WASHER (8.25X18X0.84-MM THK)	
	8	2	**275-0475**	1	SHAFT GP-IDLER	
		1	**005-0471**	2	CONE-BEARING	
		1	**274-8623**	1	SHAFT-REVERSE	
	9	2	**275-0477**	1	SHAFT GP-COUNTER	
		1	**8T-1581**	1	CONE	
		1	**123-8907**	1	CONE-BEARING	
		1	**274-8614**	1	GEAR-COUNTERSHAFT (37-TEETH)	
		1	**274-8625**	1	GEAR-COUNTERSHAFT (38-TEETH)	
Y	10	2	**275-0478**	1	SHAFT GP-OUTPUT (REAR)	165
Y	11	2	**276-5337**	1	SHAFT GP-OUTPUT (FRONT)	166
	12	2	**121-7403**	1	FORK-SHIFT	
	13	2	**121-7404**	1	FORK-SHIFT	
	14	2	**121-7389**	1	ROD AS-GEARSHIFT	
	15	2	**121-7390**	1	ROD AS-GEARSHIFT	
	16	2	**6Y-1341**	2	SPRING	
	17	2	**014-5645**	3	BALL	
	18	1	**9M-1974**	3	WASHER-HARD (8.8X16X2-MM THK)	
	19	1	**7T-3109**	1	PIN	
	20	1	**7T-3249**	2	SCREW (3/8-24X0.75-IN)	
	21	1,2,3	**9S-4191**	10	PLUG-O-RING	
	22	1,2	**127-3017**	1	SEAT AS	
	23	1	**121-7391**	1	LEVER	
	24	1	**175-0054**	1	SEAL-O-RING	
	25	1	**174-9711**	1	GASKET	
	27	1	**278-0205**	1	VALVE GP-SOLENOID (FORWARD, REVERSE)	
		1	**280-7009**	2	COIL AS	
		1	**8L-2779**	4	SEAL-O-RING	
		1	**274-4557**	1	PLUG-ORIFICE	
		1	**274-4560**	2	NUT-SELF LOCKING	
M	28	1	**9X-6615**	4	BOLT (M5X0.8X30-MM)	
	29	1	**248-3290**	2	VALVE GP-SOLENOID (ALL WHEEL DRIVE, CLUTCH ONE)	
	30	1	**121-7396**	1	VALVE GP-RELIEF (TORQUE CONVERTER INLET)	
		1	**6V-4589**	1	SEAL-O-RING	
		1	**8L-2746**		SEAL-O-RING	
Y	31	1	**147-0209**	1	VALVE GP-RELIEF (PRESSURE REGULATOR)	180
	32	1	**6K-0806**	1	STRAP-CABLE	
	33	1	**7T-3111**	1	COVER	
M	34	3	**6V-8335**	14	BOLT-SELF-LOCKING (M10X1.5X40-MM)	
M	35	3	**121-9875**	4	BOLT (M10X1.5X55-MM)	
M	36	1	**6V-7731**	2	BOLT (M10X1.5X70-MM)	
M	37	3	**6V-8097**	2	BOLT (M12X1.75X30-MM)	
	38	1	**7T-3251**	1	BREATHER	
	39	1	**7T-3119**	1	HOUSING	
	40	1	**3S-2093**	1	STRAP-CABLE	
	41	2	**7T-3195**	2	WASHER (12.3X47X6.35-MM THK)	
	42	1	**6Y-2035**	1	GASKET	

271-2408 **TRANSMISSION GP-DIRECT DRIVE** *(contd.)* **i02481451**

NOTE	REF NO	GRAPHIC REF	PART NUMBER	QTY	PART NAME 1 2 3 4 5 6 (PRODUCT LEVEL)	SEE PAGE
	43	2	**5P-8066**	2	SEAL-O-RING	
	44	3	**122-1876**	1	TUBE	
	45	2	**122-1883**	1	SPACER (38X45X5-MM THK)	
	46	2	**122-6787**	2	YOKE AS	
					(EACH INCLUDES)	
		1	**123-1377**	1	GUARD	
	47	3	**6Y-1896**	1	PLUG AS	
	48	1	**4W-9972**	1	SENDER AS-TEMPERATURE (12-VOLT)	
		1	**6V-8378**	1	NUT (10-32-THD)	
		1	**8F-1434**	1	LOCKWASHER	
		1	**8T-0328**	1	WASHER-HARD (5.5X10X1-MM THK)	
	49	1,2,3	**3J-1907**	11	SEAL-O-RING	

M-METRIC PART
Y-SEPARATE ILLUSTRATION

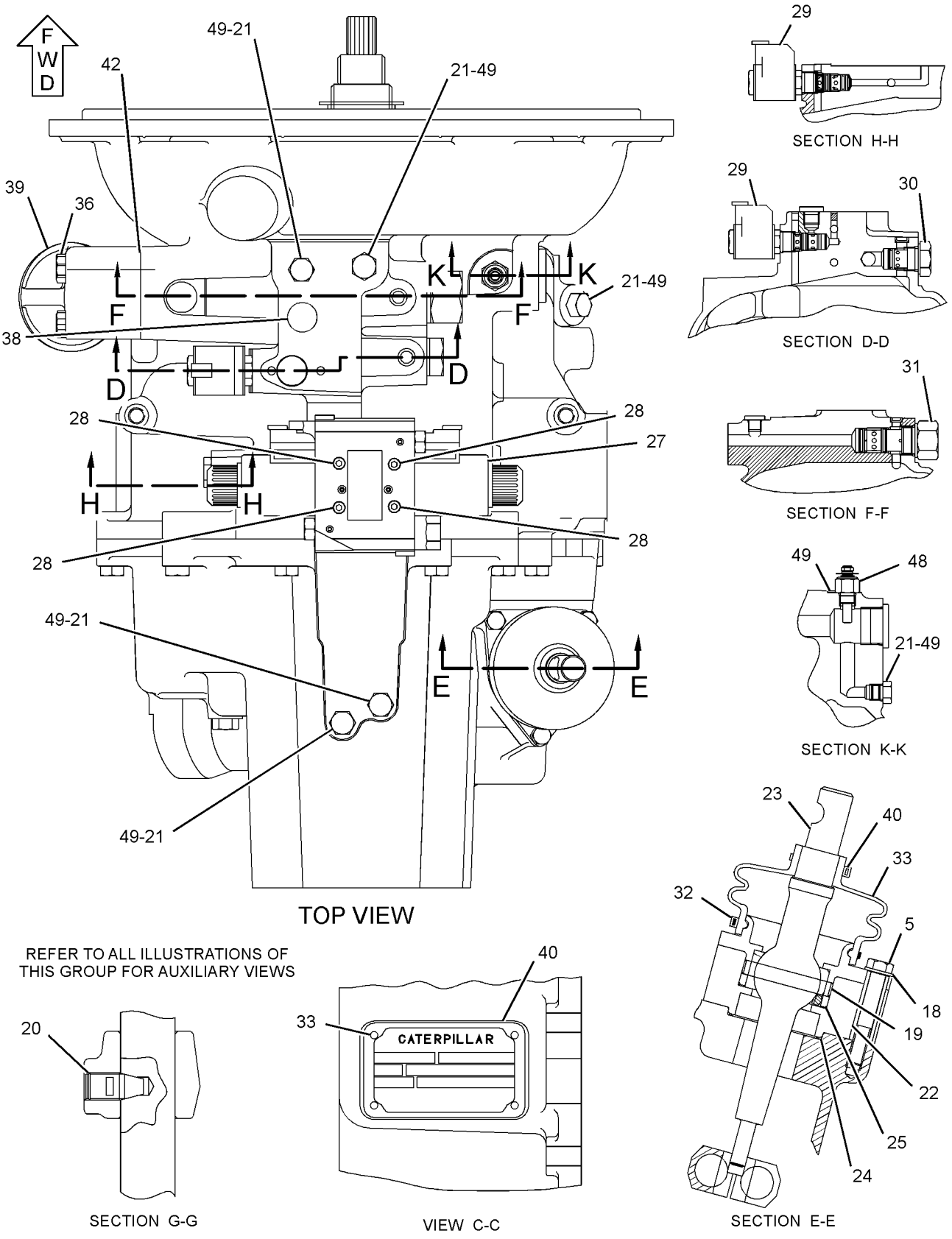

GRAPHIC #1

g01230038

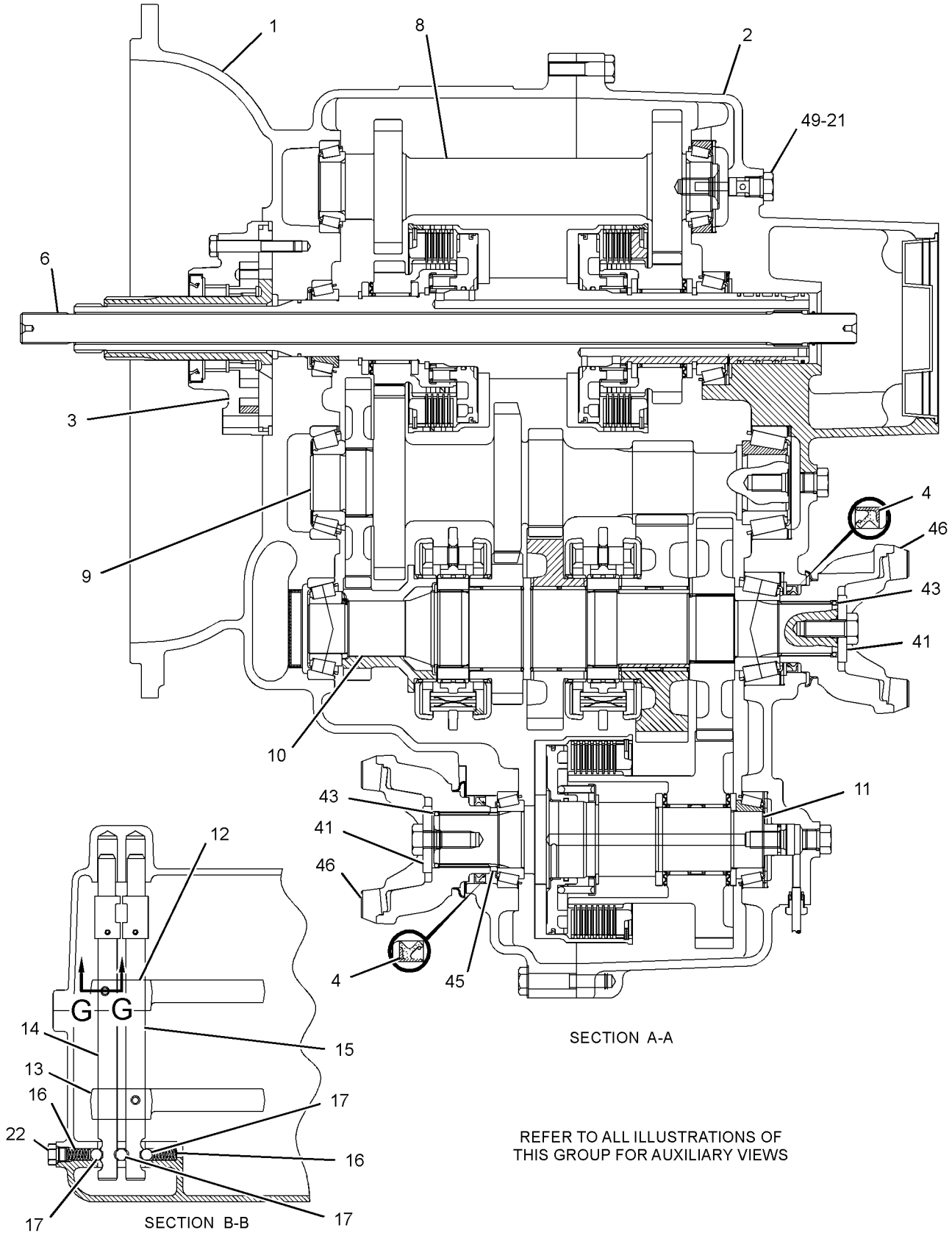

GRAPHIC #2

g01230051

REFER TO ALL ILLUSTRATIONS OF
THIS GROUP FOR AUXILIARY VIEWS

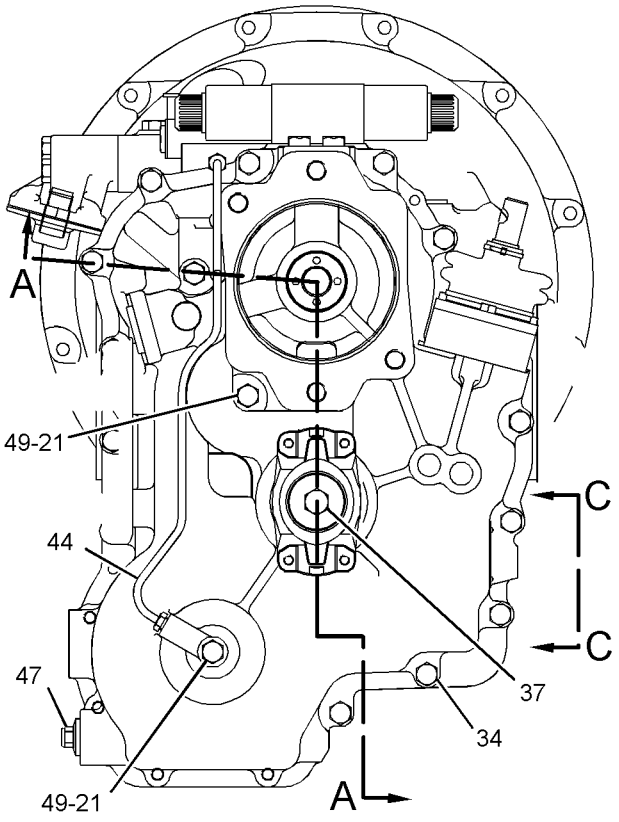

REAR VIEW

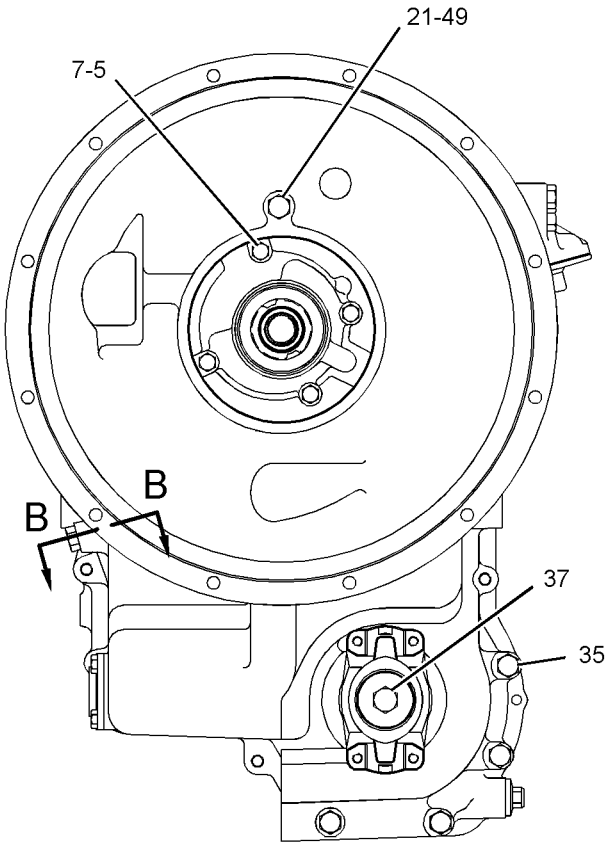

FRONT VIEW

GRAPHIC #3 **<END>** g01230082

POWER TRAIN

294-9814 TRANSMISSION GP-DIRECT DRIVE

S/N: LMS1-UP

PART OF 251-6352 TRANSMISSION AR-DIRECT DRIVE

AN ATTACHMENT

SMCS-3030 **i03726389**

NOTE	REF NO	GRAPHIC REF	PART NUMBER	QTY	PART NAME 1 2 3 4 5 6 (PRODUCT LEVEL)	SEE PAGE
Y	1	2	**275-0472**	1	CASE GP-TRANSMISSION (FRONT)	135
Y	2	2	**275-0474**	1	CASE GP-TRANSMISSION (REAR)	136
	3	2	**121-7385**	1	PUMP GP-TRANSMISSION	
		1	**208-8240**	1	SEAL-LIP TYPE	
	4	3	**121-7391**	1	LEVER	
	5	2	**7X-4741**	1	SEAL	
	6	2	**9P-9150**	4	WASHER (8.25X18X0.84-MM THK)	
	7	2	**275-0475**	1	SHAFT GP-IDLER (TRANSMISSION)	
		2	**005-0471**	2	CONE-BEARING	
		2	**274-8623**	1	SHAFT-REVERSE	
Y	8	2	**305-3429**	1	SHAFT GP-INPUT (ALL WHEEL DRIVE)	163
	9	2	**275-0477**	1	SHAFT GP-COUNTER (TRANSMISSION)	
		2	**8T-1581**	1	CONE (TAPERED ROLLER BEARING)	
		2	**123-8907**	1	CONE-BEARING	
		2	**274-8614**	1	GEAR-COUNTERSHAFT (37-TEETH)	
		2	**274-8625**	1	GEAR-COUNTERSHAFT (38-TEETH)	
Y	10	2	**276-5339**	1	SHAFT GP-OUTPUT (REAR)	167
	11	1	**121-7403**	1	FORK-SHIFT (FIRST, SECOND)	
	12	1	**121-7404**	1	FORK-SHIFT (THIRD, FOURTH)	
	13	1	**121-7389**	1	ROD AS-GEARSHIFT (FIRST, SECOND)	
	14	1	**121-7390**	1	ROD AS-GEARSHIFT (THIRD, FOURTH)	
	15	1	**6Y-1341**	2	SPRING	
	16	1	**014-5645**	3	BALL	
	17	3	**9M-1974**	3	WASHER-HARD (8.8X16X2-MM THK)	
	18	3	**7T-3109**	1	PIN	
	19	1	**7T-3249**	2	SCREW (3/8-24X0.75-IN)	
	20	1,3	**9S-4191**	12	PLUG-O-RING	
	21	3	**127-3017**	1	SEAT AS (BALL)	
	22	3	**7T-3251**	1	BREATHER (TRANSMISSION)	
	23	3	**175-0054**	1	SEAL-O-RING	
	24	3	**174-9711**	1	GASKET	
C	25	3	**324-2578**	1	VALVE GP-SOLENOID (FORWARD, REVERSE)	
		3	**8L-2779**	4	SEAL-O-RING	
		3	**280-7009**	2	COIL AS (12-VOLT)	
		3	**280-7012**	2	TUBE AS	
M	26	3	**9X-6615**	4	BOLT (M5X0.8X30-MM)	
	27	3	**305-3423**	1	VALVE GP-SOLENOID (12-VDC)	
		3	**274-8034**	1	COIL AS (12-VOLT)	
C	28	3	**121-7396**	1	VALVE GP-RELIEF (TORQUE CONVERTER INLET)	
		1	**6V-4589**	1	SEAL-O-RING	
		1	**8L-2746**	1	SEAL-O-RING	
Y	29	3	**147-0209**	1	VALVE GP-RELIEF (PUMP PRESSURE)	180
M	30	2,3	**8C-5748**	7	BOLT (M8X1.25X55-MM)	
M	32	1	**6V-8335**	17	BOLT-SELF-LOCKING (M10X1.5X40-MM)	
M	33	1	**6V-8097**	1	BOLT (M12X1.75X30-MM)	
	34	1	**6V-3965**	1	FITTING (QUICK DISCONNECT)	
	35	3	**7T-3119**	1	HOUSING (FILTER)	
	37	2	**7T-3195**	1	WASHER (12.3X47X6.35-MM THK)	
	38	1	**6Y-1896**	1	PLUG AS (TRANSMISSION DRAIN)	
		1	**5P-6718**	1	SEAL-O-RING	
	39	3	**6Y-2035**	1	GASKET	
	40	2	**5P-8066**	1	SEAL-O-RING	
	41	2	**122-6787**	1	YOKE AS	
		1	**123-1377**	1	GUARD	

294-9814 **TRANSMISSION GP-DIRECT DRIVE** *(contd.)* **i03726389**

NOTE	REF NO	GRAPHIC REF	PART NUMBER	QTY	PART NAME 1 2 3 4 5 6 (PRODUCT LEVEL)	SEE PAGE
	42	3	**4W-9972**	1	SENDER AS-TEMPERATURE (12-VOLT) (TRANSMISSION OIL)	
		3	**6V-8378**	1	NUT (10-32-THD)	
		3	**8F-1434**	1	LOCKWASHER	
		3	**8T-0328**	1	WASHER-HARD (5.5X10X1-MM THK)	
	43	1,3	**3J-1907**	13	SEAL-O-RING	
	44	3	**7T-3111**	1	COVER	
	45	3	**3S-2093**	1	STRAP-CABLE	
	46	3	**6K-0806**	1	STRAP-CABLE	
M	47	3	**6V-7731**	2	BOLT (M10X1.5X70-MM)	
	48	2	**302-8432**	1	SEAL-LIP TYPE	
	49	1	**293-2147**	1	BREATHER AS (SIDE)	
		1	**3J-1907**	1	SEAL-O-RING	
		1	**122-6785**	1	PLUG AS	
	50	2	**208-8240**	1	SEAL-LIP TYPE	
	51	1	**6V-0852**	1	CAP-DUST	
	52	1	**222-9824**	1	PLUG	
	53	1	**205-9163**	1	WASHER (16X22X3-MM THK)	

C-CHANGE FROM PREVIOUS TYPE
M-METRIC PART
Y-SEPARATE ILLUSTRATION

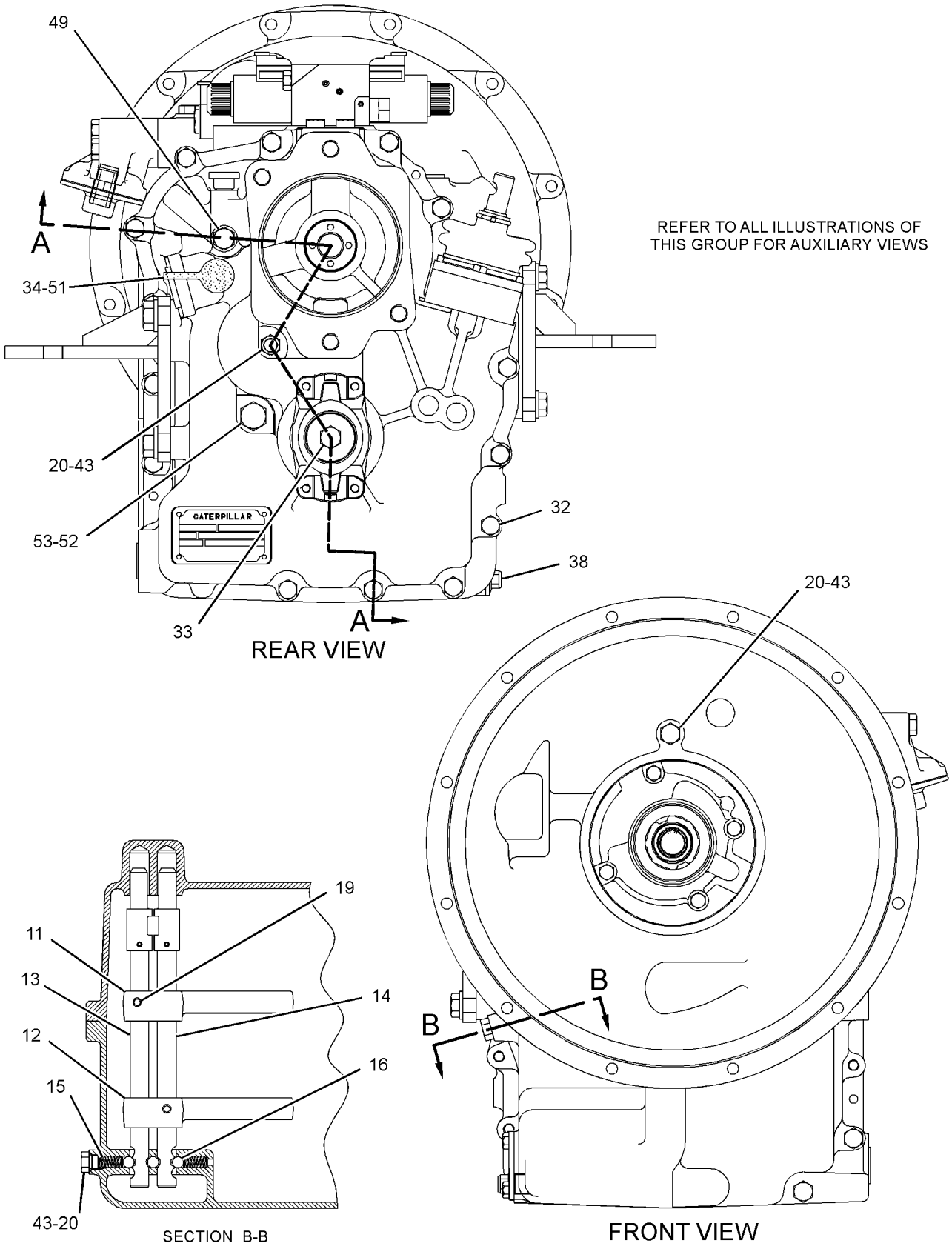

GRAPHIC #1

g01388444

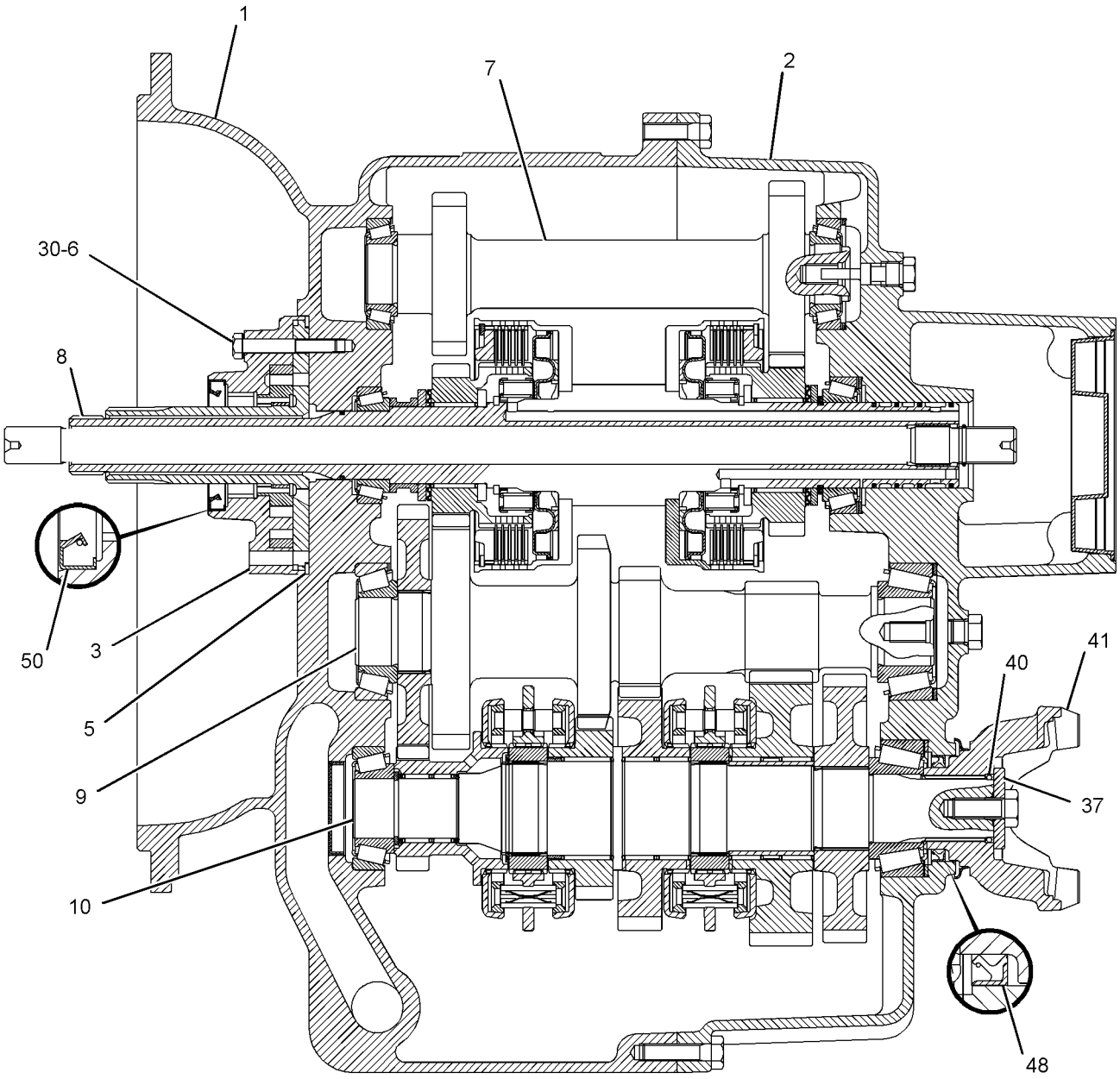

SECTION A-A

GRAPHIC #2

g01388446

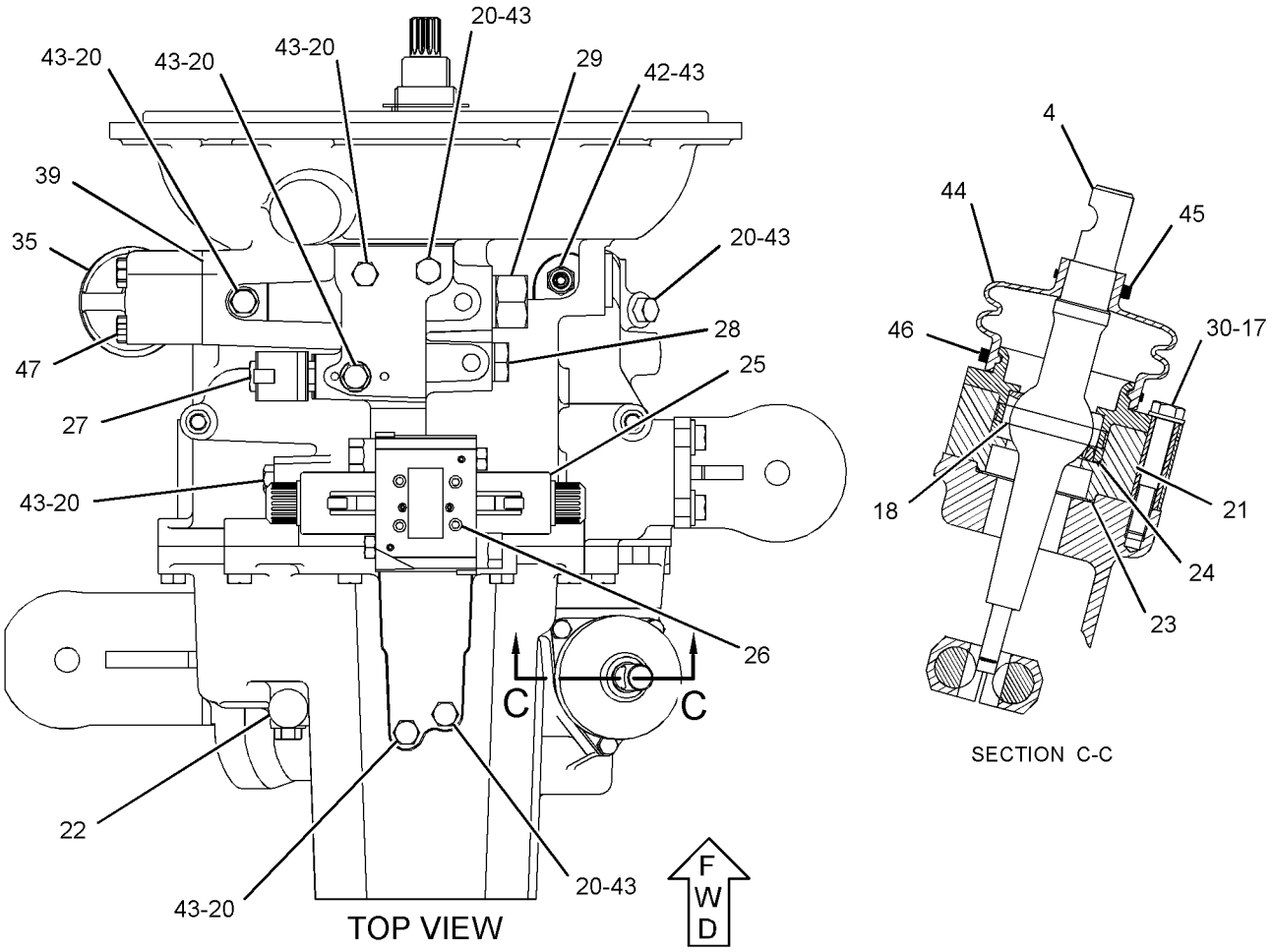

GRAPHIC #3 **<END>** g01388448

147-0209 VALVE GP-RELIEF

S/N: LMS1-UP
PART OF 271-2408, 294-9814 TRANSMISSION GP-DIRECT DRIVE
AN ATTACHMENT

SMCS-3133, 3182, 3210, 3213 **i00724885**

NOTE	REF NO	GRAPHIC REF	PART NUMBER	QTY	PART NAME 1 2 3 4 5 6 (PRODUCT LEVEL)	SEE PAGE
	1	1	**7X-4744**	1	SEAL-O-RING	
	2	1	**6V-9178**	1	SEAL-O-RING	
	3	1	**106-9586**	1	SEAL-O-RING	

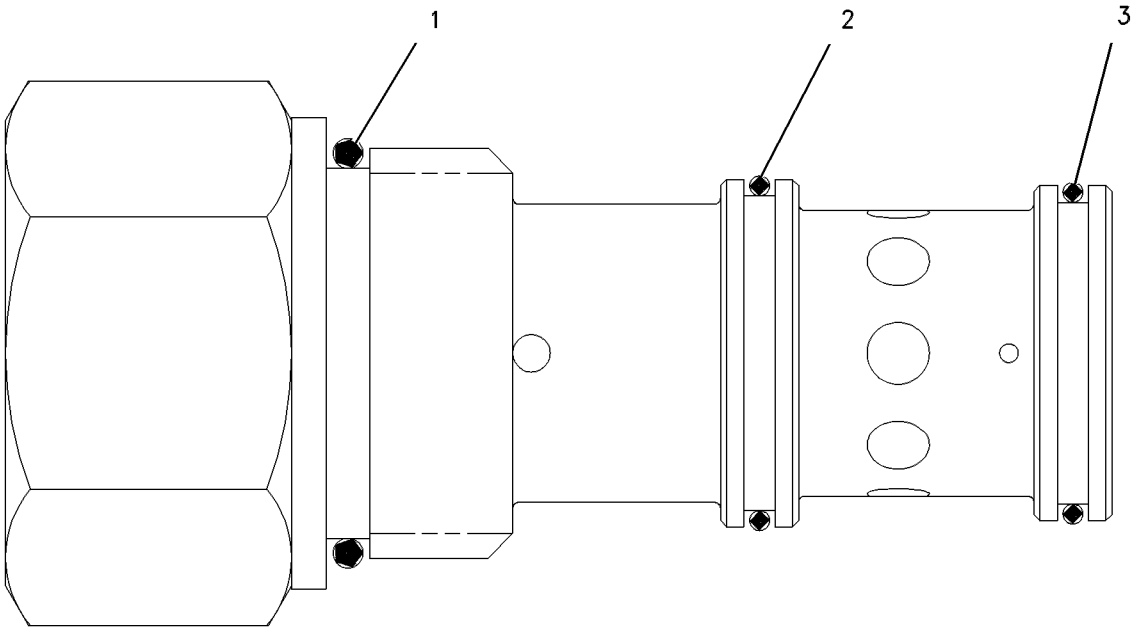

GRAPHIC #1 **<END>** g00304718

6D-0337 VALVE GP-TIRE

S/N: LMS1-UP
PART OF 201-1920 VALVE GP-TIRE
AN ATTACHMENT

SMCS-4203 **i03644348**

NOTE	REF NO	GRAPHIC REF	PART NUMBER	QTY	PART NAME 1 2 3 4 5 6 (PRODUCT LEVEL)	SEE PAGE
	1	1	**6D-0443**	1	HOUSING AS-CORE	
	1A	1	**2D-2628**	1	CORE-VALVE	
	1B	1	**2D-2633**	1	CAP (VALVE STEM)	
	2	1	**8D-2707**	1	SPUD AS	
	2A	1	**2D-2629**	1	GROMMET	
	2B	1	**2D-2630**	1	WASHER	
	2C	1	**2D-2631**	1	NUT (0.482-26-THD)	

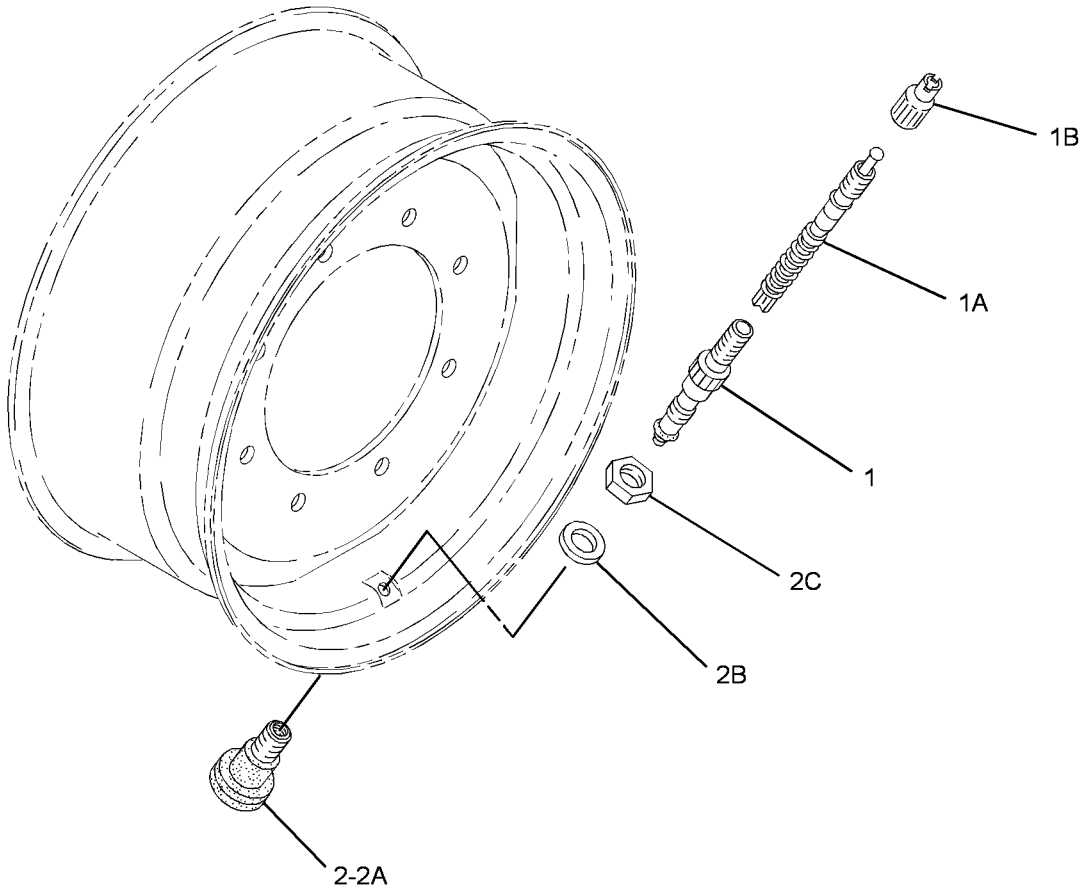

GRAPHIC #1 **<END>** g01955522

201-1920 VALVE GP-TIRE

S/N: LMS1-UP
PART OF 282-3863, 282-3864, 282-3866, 282-3867, 282-3869, 282-3870, 282-3872, 282-3873, 303-0428, 303-0429, 322-4572, 322-4573 WHEEL & TIRE GP
AN ATTACHMENT

SMCS-4203 **i03498408**

NOTE	PART NUMBER	QTY	PART NAME 1 2 3 4 5 6 (PRODUCT LEVEL)	SEE PAGE
Y	**6D-0337**	1	VALVE GP-TIRE	181

Y-SEPARATE ILLUSTRATION

<END>

282-3853 WHEEL & TIRE AR—2-WHEEL DRIVE, BIAS

S/N: LMS1-UP
PART OF 357-0395 OPTION AR-MACHINE
FOR USE WITH 291-9186—PAGE 159
AN ATTACHMENT

SMCS-4201, 4202, 4203, 4208, 4209 **i03847996**

NOTE	PART NUMBER	QTY	PART NAME 1 2 3 4 5 6 (PRODUCT LEVEL)	SEE PAGE
Y	*282-3862*	1	WHEEL & TIRE GP (FRONT)	183
Y	*282-3865*	1	WHEEL & TIRE GP (REAR)	184

Y-SEPARATE ILLUSTRATION

<END>

282-3854 WHEEL & TIRE AR—4-WHEEL DRIVE, BIAS

S/N: LMS1-UP
PART OF 357-0398, 357-0399 OPTION AR-MACHINE
FOR USE WITH 291-9187—PAGE 159
AN ATTACHMENT

SMCS-4201, 4202, 4203, 4208, 4209 **i03845530**

NOTE	PART NUMBER	QTY	PART NAME 1 2 3 4 5 6 (PRODUCT LEVEL)	SEE PAGE
Y	*282-3865*	1	WHEEL & TIRE GP (REAR)	184
Y	*282-3868*	1	WHEEL & TIRE GP (FRONT)	185

Y-SEPARATE ILLUSTRATION

<END>

282-3855 WHEEL & TIRE AR—4-WHEEL DRIVE, BIAS

S/N: LMS1-UP
FOR USE WITH 291-9187—PAGE 159
AN ATTACHMENT

SMCS-4201, 4202, 4203, 4208, 4209 **i03856929**

NOTE	PART NUMBER	QTY	PART NAME 1 2 3 4 5 6 (PRODUCT LEVEL)	SEE PAGE
Y	*282-3868*	1	WHEEL & TIRE GP (FRONT)	185
Y	*282-3871*	1	WHEEL & TIRE GP (REAR)	186

Y-SEPARATE ILLUSTRATION

<END>

320-2384 WHEEL & TIRE AR—4-WHEEL DRIVE

S/N: LMS1-UP
FOR USE WITH 291-9187—PAGE 159
AN ATTACHMENT

SMCS-4201, 4202, 4203, 4208, 4209 **i03847990**

NOTE	PART NUMBER	QTY	PART NAME 1 2 3 4 5 6 (PRODUCT LEVEL)	SEE PAGE
Y	*303-0418*	1	WHEEL & TIRE GP (FRONT)	187
Y	*322-4571*	1	WHEEL & TIRE GP (REAR)	188

Y-SEPARATE ILLUSTRATION

<END>

320-2385 WHEEL & TIRE AR—4-WHEEL DRIVE, BIAS

S/N: LMS1-UP
FOR USE WITH 291-9187—PAGE 159
AN ATTACHMENT

SMCS-4201, 4202, 4203, 4208, 4209 **i03847971**

NOTE	PART NUMBER	QTY	PART NAME 1 2 3 4 5 6 (PRODUCT LEVEL)	SEE PAGE
Y	*303-0418*	1	WHEEL & TIRE GP (FRONT)	187
Y	*282-3865*	1	WHEEL & TIRE GP (REAR)	184

Y-SEPARATE ILLUSTRATION

<END>

282-3862 WHEEL & TIRE GP—FRONT

S/N: LMS1-UP
PART OF 282-3853 WHEEL & TIRE AR
AN ATTACHMENT

SMCS-4201, 4202, 4203, 4208, 4209 **i03847998**

NOTE	PART NUMBER	QTY	PART NAME 1 2 3 4 5 6 (PRODUCT LEVEL)	SEE PAGE
Y	*282-3863*	1	WHEEL & TIRE GP (FRONT, LH)	184
Y	*282-3864*	1	WHEEL & TIRE GP (FRONT, RH)	184
	201-1915	1	MOUNTING GP-WHEEL (FRONT)	
	8T-5439	16	WASHER-HARD (21.5X45X6-MM THK)	
M	**201-1919**	16	NUT (M20X1.5-THD)	

M-METRIC PART
Y-SEPARATE ILLUSTRATION

<END>

282-3863 WHEEL & TIRE GP—FRONT, LH

S/N: LMS1-UP
8X16
PART OF 282-3862 WHEEL & TIRE GP
AN ATTACHMENT

SMCS-4201, 4202, 4203, 4208, 4209 **i03848000**

NOTE	PART NUMBER	QTY	PART NAME 1 2 3 4 5 6 (PRODUCT LEVEL)	SEE PAGE
Y	*201-1920*	1	VALVE GP-TIRE	182
	195-6341	1	WHEEL AS (FRONT)	
	276-8086	1	TIRE (11L-16)	

Y-SEPARATE ILLUSTRATION

<END>

282-3864 WHEEL & TIRE GP—FRONT, RH

S/N: LMS1-UP
8X16
PART OF 282-3862 WHEEL & TIRE GP
AN ATTACHMENT

SMCS-4201, 4202, 4203, 4208, 4209 **i03848002**

NOTE	PART NUMBER	QTY	PART NAME 1 2 3 4 5 6 (PRODUCT LEVEL)	SEE PAGE
Y	*201-1920*	1	VALVE GP-TIRE	182
	195-6341	1	WHEEL AS (FRONT)	
	276-8086	1	TIRE (11L-16)	

Y-SEPARATE ILLUSTRATION

<END>

282-3865 WHEEL & TIRE GP—REAR

S/N: LMS1-UP
PART OF 282-3853, 282-3854, 320-2385 WHEEL & TIRE AR
AN ATTACHMENT

SMCS-4201, 4202, 4203, 4208, 4209 **i03845549**

NOTE	PART NUMBER	QTY	PART NAME 1 2 3 4 5 6 (PRODUCT LEVEL)	SEE PAGE
Y	*282-3866*	1	WHEEL & TIRE GP (LH)	185
Y	*282-3867*	1	WHEEL & TIRE GP (RH)	185
	201-1916	1	MOUNTING GP-WHEEL (REAR)	
	8T-5439	20	WASHER-HARD (21.5X45X6-MM THK)	
M	**201-1919**	20	NUT (M20X1.5-THD)	

M-METRIC PART
Y-SEPARATE ILLUSTRATION

<END>

282-3866 WHEEL & TIRE GP—LH

S/N: LMS1-UP
16X24
PART OF 282-3865 WHEEL & TIRE GP
AN ATTACHMENT

SMCS-4201, 4202, 4203, 4208, 4209 **i03845551**

NOTE	PART NUMBER	QTY	PART NAME 1 2 3 4 5 6 (PRODUCT LEVEL)	SEE PAGE
Y	*201-1920*	1	VALVE GP-TIRE	182
	195-6344	1	WHEEL AS (REAR)	
	276-6820	1	TIRE (19.5L-24)	

Y-SEPARATE ILLUSTRATION

<END>

282-3867 WHEEL & TIRE GP—RH

S/N: LMS1-UP
16X24
PART OF 282-3865 WHEEL & TIRE GP
AN ATTACHMENT

SMCS-4201, 4202, 4203, 4208, 4209 **i03845552**

NOTE	PART NUMBER	QTY	PART NAME 1 2 3 4 5 6 (PRODUCT LEVEL)	SEE PAGE
Y	*201-1920*	1	VALVE GP-TIRE	182
	195-6344	1	WHEEL AS (REAR)	
	276-6820	1	TIRE (19.5L-24)	

Y-SEPARATE ILLUSTRATION

<END>

282-3868 WHEEL & TIRE GP—FRONT

S/N: LMS1-UP
PART OF 282-3854, 282-3855 WHEEL & TIRE AR
AN ATTACHMENT

SMCS-4201, 4202, 4203, 4208, 4209 **i03845569**

NOTE	PART NUMBER	QTY	PART NAME 1 2 3 4 5 6 (PRODUCT LEVEL)	SEE PAGE
Y	*282-3869*	1	WHEEL & TIRE GP (LH)	186
Y	*282-3870*	1	WHEEL & TIRE GP (RH)	186
	201-1915	1	MOUNTING GP-WHEEL (FRONT)	
	8T-5439	16	WASHER-HARD (21.5X45X6-MM THK)	
M	**201-1919**	16	NUT (M20X1.5-THD)	

M-METRIC PART
Y-SEPARATE ILLUSTRATION

<END>

282-3869 WHEEL & TIRE GP—LH

S/N: LMS1-UP
10X18
PART OF 282-3868 WHEEL & TIRE GP
AN ATTACHMENT

SMCS-4201, 4202, 4203, 4208, 4209 **i03845570**

NOTE	PART NUMBER	QTY	PART NAME 1 2 3 4 5 6 (PRODUCT LEVEL)	SEE PAGE
Y	*201-1920*	1	VALVE GP-TIRE	182
	202-6186	1	WHEEL AS (FRONT)	
	286-9087	1	TIRE (12.5/80-18)	

Y-SEPARATE ILLUSTRATION

<END>

282-3870 WHEEL & TIRE GP—RH

S/N: LMS1-UP
10X18
PART OF 282-3868 WHEEL & TIRE GP
AN ATTACHMENT

SMCS-4201, 4202, 4203, 4208, 4209 **i03845571**

NOTE	PART NUMBER	QTY	PART NAME 1 2 3 4 5 6 (PRODUCT LEVEL)	SEE PAGE
Y	*201-1920*	1	VALVE GP-TIRE	182
	202-6186	1	WHEEL AS (FRONT)	
	286-9087	1	TIRE (12.5/80-18)	

Y-SEPARATE ILLUSTRATION

<END>

282-3871 WHEEL & TIRE GP—REAR

S/N: LMS1-UP
PART OF 282-3855 WHEEL & TIRE AR
AN ATTACHMENT

SMCS-4201, 4202, 4203, 4208, 4209 **i03856991**

NOTE	PART NUMBER	QTY	PART NAME 1 2 3 4 5 6 (PRODUCT LEVEL)	SEE PAGE
Y	*282-3872*	1	WHEEL & TIRE GP (LH)	187
Y	*282-3873*	1	WHEEL & TIRE GP (RH)	187
	201-1916	1	MOUNTING GP-WHEEL (REAR)	
	8T-5439	20	WASHER-HARD (21.5X45X6-MM THK)	
M	**201-1919**	20	NUT (M20X1.5-THD)	

M-METRIC PART
Y-SEPARATE ILLUSTRATION

<END>

282-3872 WHEEL & TIRE GP—LH

S/N: LMS1-UP
18X24
PART OF 282-3871 WHEEL & TIRE GP
AN ATTACHMENT

SMCS-4201, 4202, 4203, 4208, 4209 **i03856992**

NOTE	PART NUMBER	QTY	PART NAME 1 2 3 4 5 6 (PRODUCT LEVEL)	SEE PAGE
Y	*201-1920*	1	VALVE GP-TIRE	182
	272-5111	1	WHEEL AS (REAR)	
	272-5116	1	TIRE (21L-24)	

Y-SEPARATE ILLUSTRATION

<END>

282-3873 WHEEL & TIRE GP—RH

S/N: LMS1-UP
18X24
PART OF 282-3871 WHEEL & TIRE GP
AN ATTACHMENT

SMCS-4201, 4202, 4203, 4208, 4209 **i03856993**

NOTE	PART NUMBER	QTY	PART NAME 1 2 3 4 5 6 (PRODUCT LEVEL)	SEE PAGE
Y	*201-1920*	1	VALVE GP-TIRE	182
	272-5111	1	WHEEL AS (REAR)	
	272-5116	1	TIRE (21L-24)	

Y-SEPARATE ILLUSTRATION

<END>

303-0418 WHEEL & TIRE GP—FRONT

S/N: LMS1-UP
PART OF 320-2384, 320-2385 WHEEL & TIRE AR
AN ATTACHMENT

SMCS-4201, 4202, 4203, 4208, 4209 **i02675650**

NOTE	PART NUMBER	QTY	PART NAME 1 2 3 4 5 6 (PRODUCT LEVEL)	SEE PAGE
Y	*303-0428*	1	WHEEL & TIRE GP (FRONT, LH)	188
Y	*303-0429*	1	WHEEL & TIRE GP (FRONT, RH)	188
	201-1915	1	MOUNTING GP-WHEEL (FRONT)	
	5T-5439	16	PLATE	
M	**201-1919**	16	NUT (M20X1.5-THD)	

M-METRIC PART
Y-SEPARATE ILLUSTRATION

<END>

303-0428 WHEEL & TIRE GP—FRONT, LH

S/N: LMS1-UP
(10X18)
PART OF 303-0418 WHEEL & TIRE GP
AN ATTACHMENT

SMCS-4201, 4202, 4203, 4208, 4209 **i03592819**

NOTE	PART NUMBER	QTY	PART NAME 1 2 3 4 5 6 (PRODUCT LEVEL)	SEE PAGE
Y	*201-1920*	1	VALVE GP-TIRE	182
	202-6186	1	WHEEL AS (FRONT)	
	259-2940	1	TIRE (340/80-R18)	

Y-SEPARATE ILLUSTRATION

<END>

303-0429 WHEEL & TIRE GP—FRONT, RH

S/N: LMS1-UP
(10X18)
PART OF 303-0418 WHEEL & TIRE GP
AN ATTACHMENT

SMCS-4201, 4202, 4203, 4208, 4209 **i03592820**

NOTE	PART NUMBER	QTY	PART NAME 1 2 3 4 5 6 (PRODUCT LEVEL)	SEE PAGE
Y	*201-1920*	1	VALVE GP-TIRE	182
	202-6186	1	WHEEL AS (FRONT)	
	259-2940	1	TIRE (340/80-R18)	

Y-SEPARATE ILLUSTRATION

<END>

322-4571 WHEEL & TIRE GP—REAR

S/N: LMS1-UP
PART OF 320-2384 WHEEL & TIRE AR
AN ATTACHMENT

SMCS-4201, 4202, 4203, 4208, 4209 **i03847992**

NOTE	PART NUMBER	QTY	PART NAME 1 2 3 4 5 6 (PRODUCT LEVEL)	SEE PAGE
Y	*322-4572*	1	WHEEL & TIRE GP (LH)	189
Y	*322-4573*	1	WHEEL & TIRE GP (RH)	189
	201-1916	1	MOUNTING GP-WHEEL (REAR)	
	8T-5439	20	WASHER-HARD (21.5X45X6-MM THK)	
M	**201-1919**	20	NUT (M20X1.5-THD)	

M-METRIC PART
Y-SEPARATE ILLUSTRATION

<END>

322-4572 WHEEL & TIRE GP–LH

S/N: LMS1-UP
16X24
PART OF 322-4571 WHEEL & TIRE GP
AN ATTACHMENT

SMCS-4201, 4202, 4203, 4208, 4209 **i03847994**

NOTE	PART NUMBER	QTY	PART NAME 1 2 3 4 5 6 (PRODUCT LEVEL)	SEE PAGE
Y	*201-1920*	1	VALVE GP-TIRE	182
	195-6344	1	WHEEL AS (REAR)	
	322-4574	1	TIRE (500/70-R24)	

Y-SEPARATE ILLUSTRATION

<END>

322-4573 WHEEL & TIRE GP–RH

S/N: LMS1-UP
16X24
PART OF 322-4571 WHEEL & TIRE GP
AN ATTACHMENT

SMCS-4201, 4202, 4203, 4208, 4209 **i03847995**

NOTE	PART NUMBER	QTY	PART NAME 1 2 3 4 5 6 (PRODUCT LEVEL)	SEE PAGE
Y	*201-1920*	1	VALVE GP-TIRE	182
	195-6344	1	WHEEL AS (REAR)	
	322-4574	1	TIRE (500/70-R24)	

Y-SEPARATE ILLUSTRATION

<END>

206-1642 CONTROL GP-PARKING BRAKE

S/N: LMS1-UP
PART OF 291-9186, 291-9187 POWER TRAIN AR
AN ATTACHMENT

SMCS-4282, 4284 **i03920823**

NOTE	REF NO	GRAPHIC REF	PART NUMBER	QTY	PART NAME 1 2 3 4 5 6 (PRODUCT LEVEL)	SEE PAGE
	1	1	**7K-1181**	1	STRAP-CABLE	
	2	1	**9R-2806**	1	PIN	
	3	1	**9R-2807**	1	CLIP	
	4	1	**154-5416**	1	SWITCH AS (PARKING BRAKE)	
		1	**155-2270**	1	KIT-CONNECTING PLUG (2-PIN)	
					(INCLUDES PLUG AS, WEDGE & INTERFACE SEAL)	
Y	5	1	**261-5517**	1	CONTROL GP-PARKING BRAKE	191
	6	1	**261-9635**	1	BOOT (PARKING BRAKE)	
	7	1	**8T-4224**	2	WASHER-HARD (8.8X16X2-MM THK)	
M	8	1	**8T-6912**	2	BOLT (M8X1.25X50-MM)	
	9	1	**164-1368**	2	FASTENER-PANEL	

M-METRIC PART
Y-SEPARATE ILLUSTRATION

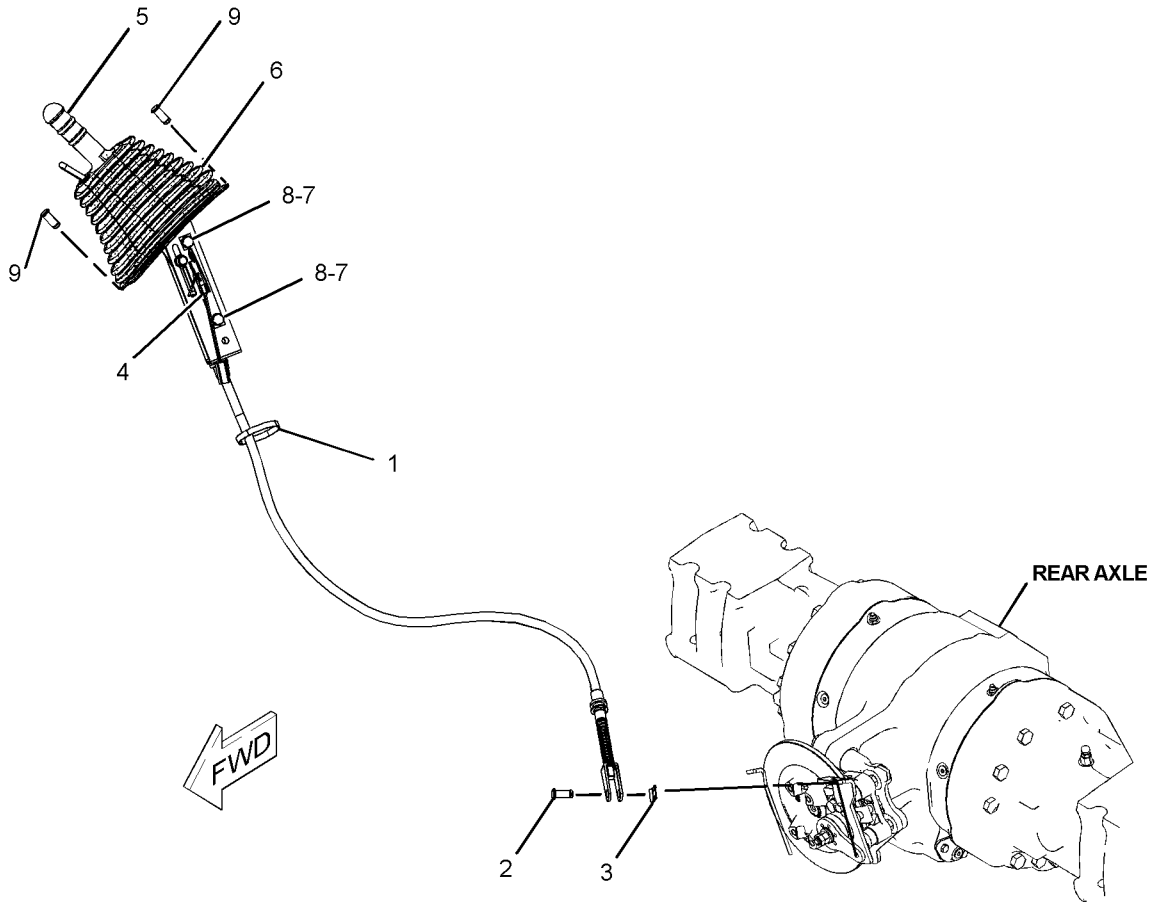

GRAPHIC #1 **<END>** g01228986

261-5517 CONTROL GP-PARKING BRAKE

S/N: LMS1-UP

PART OF 206-1642 CONTROL GP-PARKING BRAKE

AN ATTACHMENT

SMCS-4282, 4284 **i03712421**

NOTE	REF NO	GRAPHIC REF	PART NUMBER	QTY	PART NAME 1 2 3 4 5 6 (PRODUCT LEVEL)	SEE PAGE
Y	1	1	**163-0753**	1	LEVER GP-HAND CONTROL (PARKING BRAKE)	197
	2	1	**261-5519**	1	CABLE AS	
		1	**6V-8759**	1	RING-RETAINING	

Y-SEPARATE ILLUSTRATION

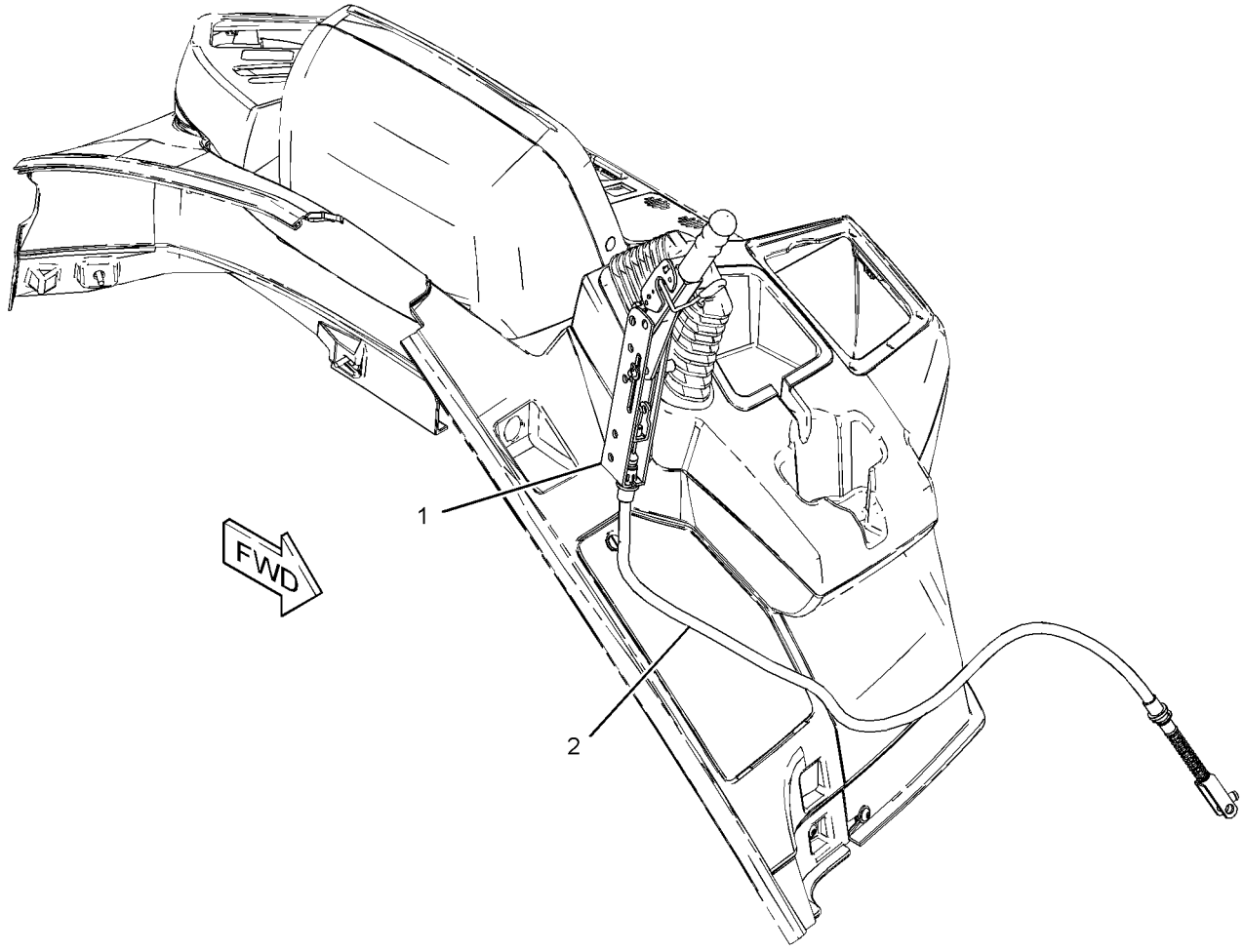

GRAPHIC #1 **<END>** g01210353

BRAKING SYSTEM

206-1638 CONTROL GP-SERVICE BRAKE

S/N: LMS1-UP

PART OF 291-9186, 291-9187 POWER TRAIN AR

AN ATTACHMENT

SMCS-4269 **i03767011**

NOTE	REF NO	GRAPHIC REF	PART NUMBER	QTY	PART NAME 1 2 3 4 5 6 (PRODUCT LEVEL)	SEE PAGE
	1	1	**1A-0621**	2	GROMMET	
	2	1	**2K-5986**	1	PIN-SPRING	
	3	1	**6S-8620**	4	CLAMP-HOSE	
M	4	1	**5C-2890**	1	NUT (M6X1-THD)	
M	5	1	**6V-7357**	1	BOLT (M6X1X25-MM)	
	6	1	**101-0333**	1	FILM-IDENTIFICATION (HYDRAULIC OIL)	
	7	1	**105-8034**	2	SWITCH AS-LIMIT (SERVICE BRAKE)	
	8	1	**151-4841**	1	BLOCK	
	9	1	**165-6595**	1	PIN AS	
	10	1	*169-5862*	2	ELBOW AS	
					(EACH INCLUDES)	
		1	**3J-1907**	1	SEAL-O-RING	
		1	**8C-6712**	1	ELBOW	
M	11	1	**9X-2045**	4	SCREW-TRUSS HEAD (M6X1X20-MM)	
	12	1	**290-3972**	1	PLATE	
	13	1	**202-5993**	1	PLATE	
	14	1	**206-1634**	1	PLATE AS (BRAKE)	
M		1	**6V-4248**	2	BOLT (M10X1.5X25-MM)	
M		1	**6V-9632**	5	NUT-WELD (M6X1-THD)	
		1	**7T-1099**	4	LINK	
M		1	**8T-4908**	1	BOLT (M8X1.25X25-MM)	
	15	1	**275-0652**	1	PEDAL AS (LH)	
	15A	1	**202-6029**	2	BUSHING	
	16	1	**275-0653**	1	PEDAL AS (RH)	
	16A	1	**202-6029**	2	BUSHING	
	17	1	**206-1760**	1	PLATE AS (BRAKE)	
	18	1	**206-1766**	2	PIN	
	19	1	**285-3583**	1	SPRING (LH)	
	20	1	**285-3584**	1	SPRING (RH)	
	21	1	**206-1769**	1	VALVE GP-BRAKE CONTROL	
		1	**262-4084**	2	BOOT	
	22	1	*215-7067*	2	ELBOW AS	
					(EACH INCLUDES)	
		1	**3J-1907**	1	SEAL-O-RING	
		1	**215-7066**	1	ELBOW	
Y	23	1	*217-9920*	1	RESERVOIR GP-BRAKE	199
	24	1	**253-1549**	2	HOSE AS	
	25	1	**291-8378**	1	COVER-BRAKE	
	26	1	**298-3599**	1	PLATE AS	
	27	1	**262-4080**	1	GROMMET	
	28	1	**262-4082**	2	END-YOKE ROD	
M	29	1	**142-0485**	2	NUT (M10X1.5-THD)	
	30	1	*150-3033*	2	ELBOW AS	
					(EACH INCLUDES)	
		1	**3J-1907**	1	SEAL-O-RING	
		1	**4J-5477**	1	SEAL-O-RING	
		1	**8T-0164**	1	ELBOW	
E	31	1	**5P-1442**		HOSE (75-CM EACH)	
M	32	1	**5C-7261**	6	NUT (M8X1.25-THD)	
	33	1	**5K-5338**	1	CLIP	
	34	1	**5P-4116**	4	WASHER-HARD (8.8X20.5X2-MM THK)	
	35	1	*148-8385*	2	ELBOW AS	
					(EACH INCLUDES)	
		1	**3J-7354**	1	SEAL-O-RING	
		1	**4J-5477**	1	SEAL-O-RING	

206-1638 **CONTROL GP-SERVICE BRAKE** *(contd.)* **i03767011**

NOTE	REF NO	GRAPHIC REF	PART NUMBER	QTY	PART NAME 1 2 3 4 5 6 (PRODUCT LEVEL)	SEE PAGE
		1	**6V-9000**	1	ELBOW	
	36	1	**7K-1181**	2	STRAP-CABLE	
	37	1	**7X-7729**	6	WASHER (11X25X3-MM THK)	
	38	1	**8T-4121**	1	WASHER-HARD (11X21X2.5-MM THK)	
M	39	1	**8T-4133**	2	NUT (M10X1.5-THD)	
M	40	1	**8T-4136**	5	BOLT (M10X1.5X25-MM)	
M	41	1	**8T-4138**	1	BOLT (M6X1X20-MM)	
	42	1	**8T-4205**	1	WASHER-HARD (7.2X14.5X2-MM THK)	
	43	1	**8T-4224**	4	WASHER-HARD (8.8X16X2-MM THK)	
M	44	1	**8T-4908**	1	BOLT (M8X1.25X25-MM)	
M	45	1	**8T-7547**	1	BOLT (M8X1.25X30-MM)	
	46	1	**9R-2807**	2	CLIP	
M	47	1	**9X-2044**	2	SCREW-TRUSS HEAD (M6X1X16-MM)	
	48	1	**349-2856**	1	FILM-INSTRUCTION (PRESSURE WASHER)	

E-ORDER BY THE CENTIMETER
M-METRIC PART
Y-SEPARATE ILLUSTRATION

206-1638 **CONTROL GP-SERVICE BRAKE** *(contd.)* **i03767011**

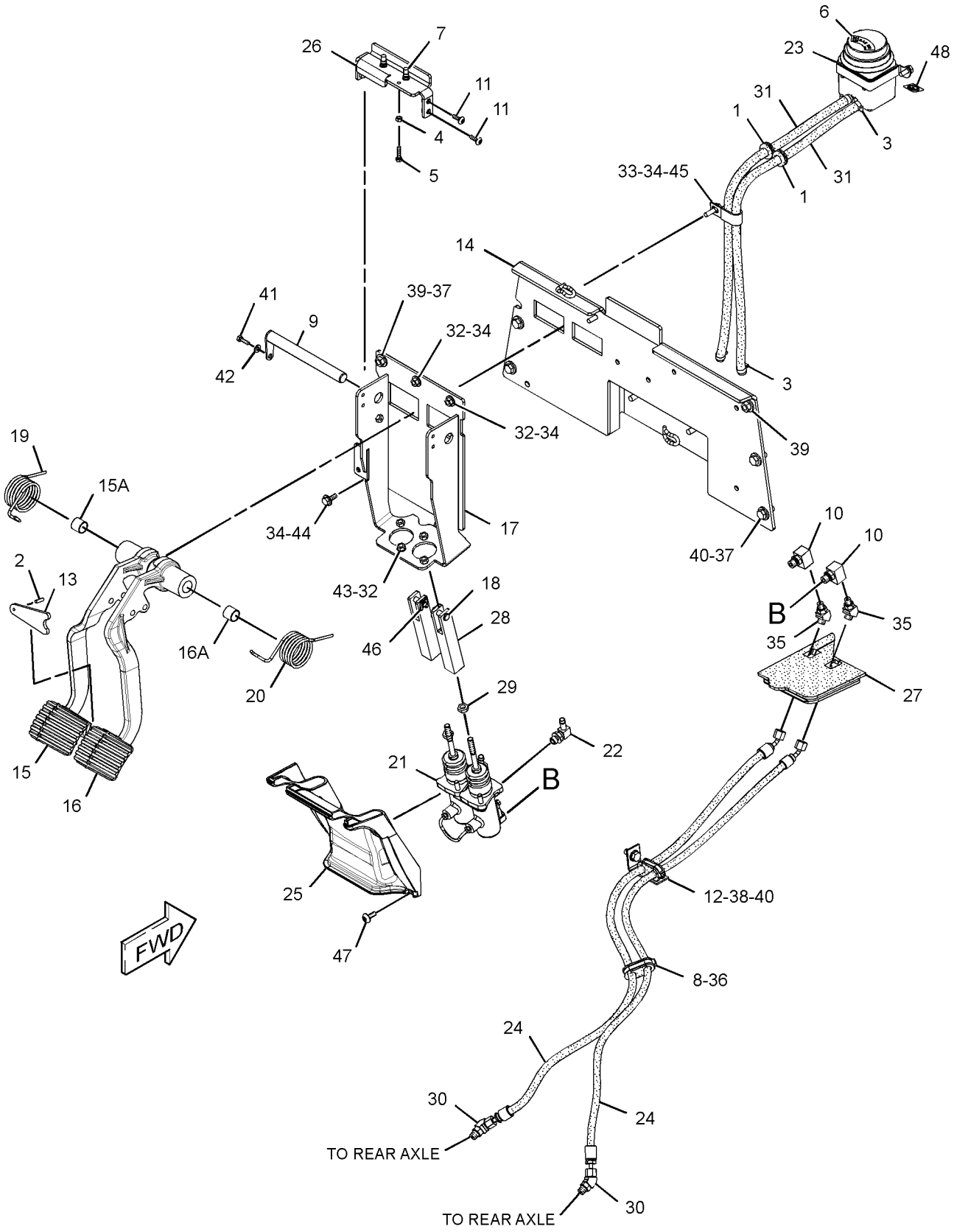

GRAPHIC #1 **<END>** g02071374

216-1612 CYLINDER GP-BRAKE–LH

S/N: LMS1-UP
PART OF 238-5289 HOUSING GP-AXLE
AN ATTACHMENT

SMCS-4262 **i03563407**

NOTE	REF NO	GRAPHIC REF	PART NUMBER	QTY	PART NAME 1 2 3 4 5 6 (PRODUCT LEVEL)	SEE PAGE
M	1	1	**6V-2315**	3	BOLT (M6X1X35-MM)	
JLM	2	1	**1R-5396**	3	BOLT (M6X1X35-MM)	
J	3	1	**199-0672**	3	SPACER-SPECIAL	
J	4	1	**199-0681**	3	WASHER (6.2X16.5X2-MM THK)	
L	5	1	**199-0701**	3	BRAKE-COVER	
L	6	1	**199-0702**	3	SPRING (INNER)	
L	7	1	**199-0703**	3	SPRING (OUTER)	
	8	1	**199-0752**	1	PISTON-BRAKE	
	9	1	**199-0759**	1	O-RING-INNER	
JL	10	1	**212-5712**	6	BUSHING	
	11	1	**219-8834**	1	CYLINDER-BRAKE	
	12	1	**199-0700**	1	O-RING-OUTER	
					AVAILABLE REPAIR KIT(S):	
J			**217-2347**	3	KIT-BRAKE CYLINDER (ADJUSTER)	
L			**217-2349**	3	KIT-BRAKE CYLINDER (SPRING RETENTION)	

J-KIT MARKED J SERVICES PARTS MARKED J
L-KIT MARKED L SERVICES PARTS MARKED L
M-METRIC PART

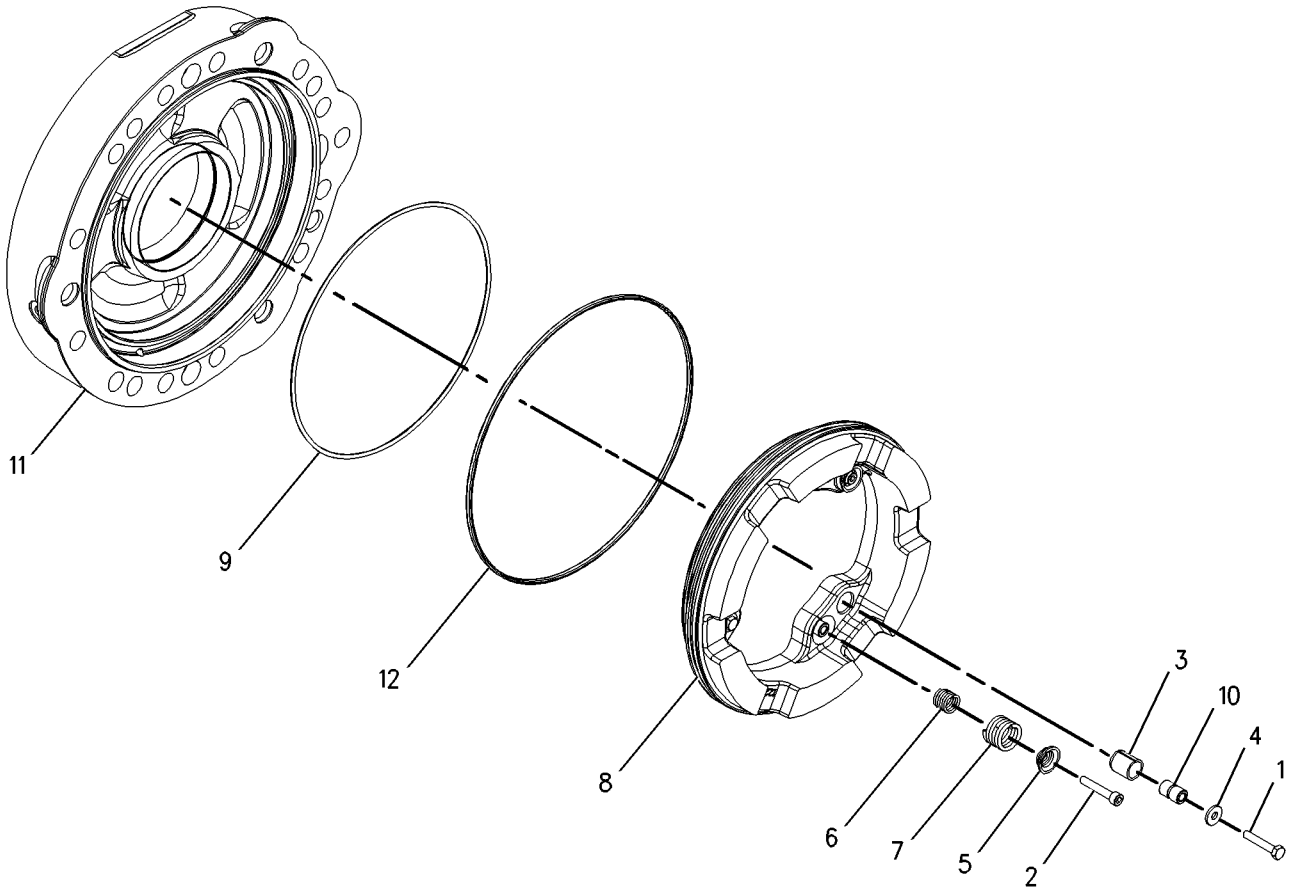

GRAPHIC #1 **<END>** g00953880

BRAKING SYSTEM

216-1613 CYLINDER GP-BRAKE–RH

S/N: LMS1-UP
PART OF 238-5289 HOUSING GP-AXLE
AN ATTACHMENT

SMCS-4262 **i03627160**

NOTE	REF NO	GRAPHIC REF	PART NUMBER	QTY	PART NAME 1 2 3 4 5 6 (PRODUCT LEVEL)	SEE PAGE
M	1	1	**6V-2315**	3	BOLT (M6X1X35-MM)	
JLM	2	1	**1R-5396**	3	BOLT (M6X1X35-MM)	
J	3	1	**199-0672**	3	SPACER-SPECIAL	
J	4	1	**199-0681**	3	WASHER (6.2X16.5X2-MM THK)	
L	5	1	**199-0701**	3	BRAKE-COVER	
L	6	1	**199-0702**	3	SPRING (INNER)	
L	7	1	**199-0703**	3	SPRING (OUTER)	
	8	1	**199-0752**	1	PISTON-BRAKE	
	9	1	**199-0759**	1	O-RING-INNER	
JL	10	1	**212-5712**	6	BUSHING	
	11	1	**219-8835**	1	CYLINDER-BRAKE	
	12	1	**199-0700**	1	O-RING-OUTER	
					AVAILABLE REPAIR KIT(S):	
J			**217-2347**	3	KIT-BRAKE CYLINDER (ADJUSTER)	
L			**217-2349**	3	KIT-BRAKE CYLINDER (SPRING RETENTION)	

J-KIT MARKED J SERVICES PARTS MARKED J
L-KIT MARKED L SERVICES PARTS MARKED L
M-METRIC PART

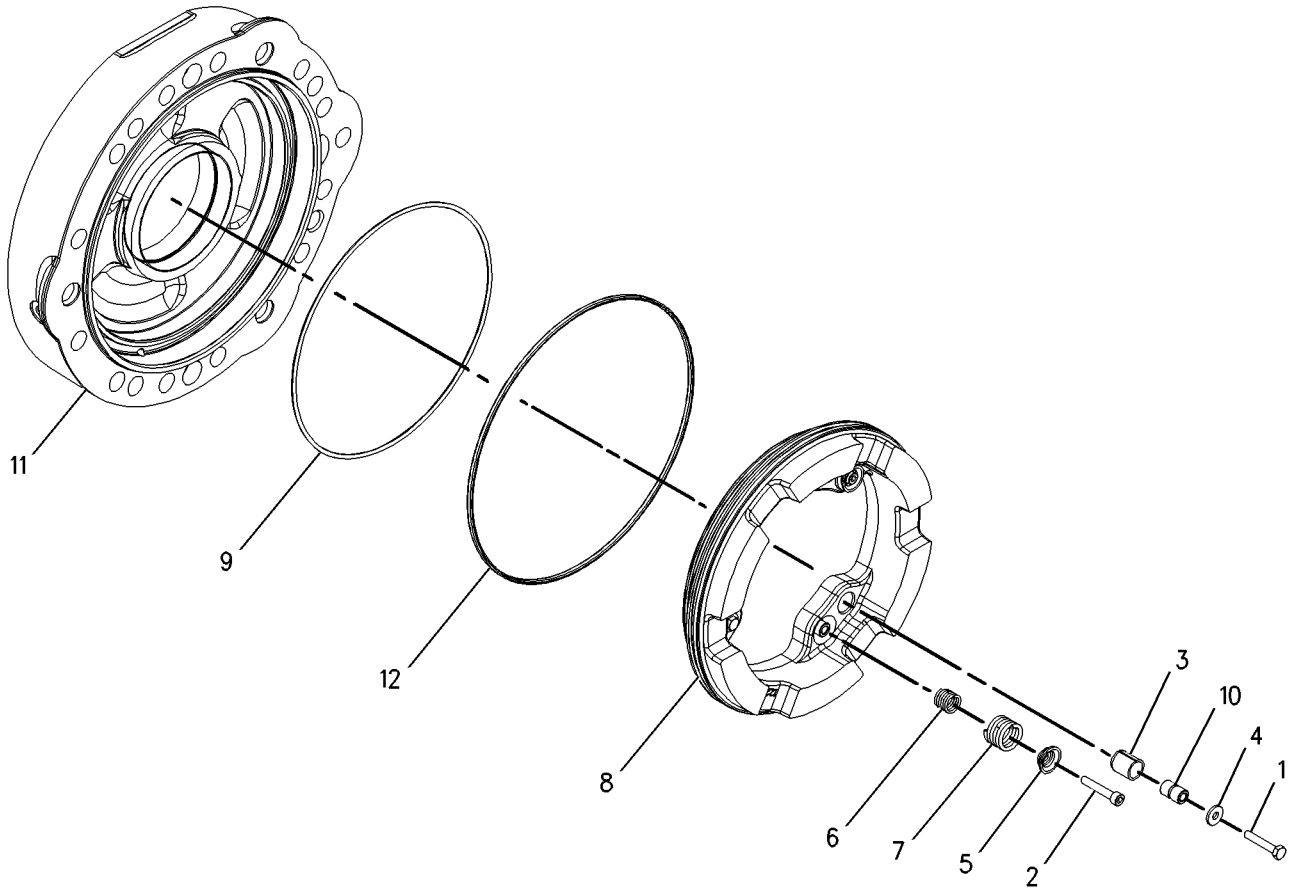

GRAPHIC #1 **<END>** g00995396

163-0753 LEVER GP-HAND CONTROL

S/N: LMS1-UP

PART OF 261-5517 CONTROL GP-PARKING BRAKE

AN ATTACHMENT

SMCS-4284 **i02156244**

NOTE	REF NO	GRAPHIC REF	PART NUMBER	QTY	PART NAME 1 2 3 4 5 6 (PRODUCT LEVEL)	SEE PAGE
	1	1	**7R-8239**	2	SPACER	
	2	1	**039-9133**	1	PIN	
	3	1	**164-9598**	1	GRIP	
	4	1	**164-9599**	1	COVER	
	5	1	**3B-4610**	1	PIN-COTTER	
	6	1	**8T-4224**	2	WASHER-HARD (8.8X16X2-MM THK)	

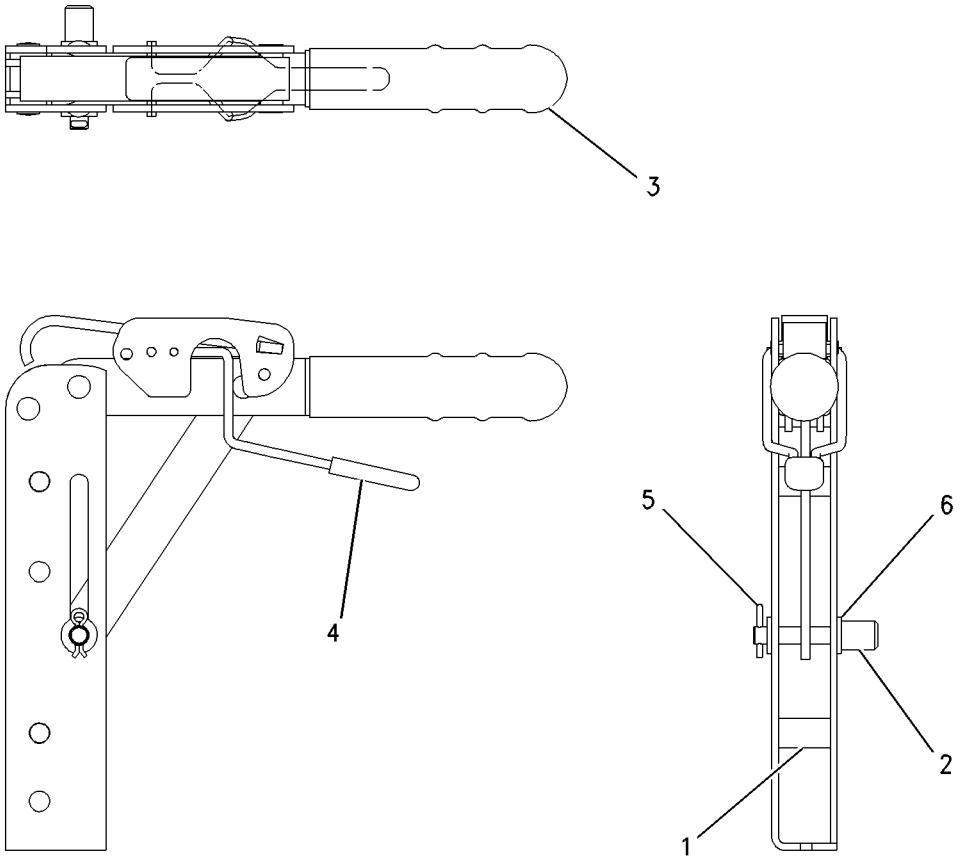

GRAPHIC #1 **<END>** g00729504

4E-8619 RESERVOIR GP-BRAKE

S/N: LMS1-UP
PART OF 217-9920 RESERVOIR GP-BRAKE
AN ATTACHMENT

SMCS-4291 **i03920827**

NOTE	REF NO	GRAPHIC REF	PART NUMBER	QTY	PART NAME 1 2 3 4 5 6 (PRODUCT LEVEL)	SEE PAGE
	1	1	**7N-7779**	1	SOCKET-CONNECTOR (14-GA TO 18-GA)	
	2	1	**7N-9737**	1	HOUSING-RECEPTACLE (14-GA TO 18-GA)	
	3	1	**7N-7780**	1	PIN-CONNECTOR (14-GA TO 18-GA)	
F			**8R-6263**	1	INDICATOR AS (BRAKE RESERVOIR)	
					AVAILABLE REPAIR KIT(S):	
			159-7907	1	KIT-BRAKE RESERVOIR	
					(INCLUDES CAP & DIAPHRAGM)	

F-NOT SHOWN

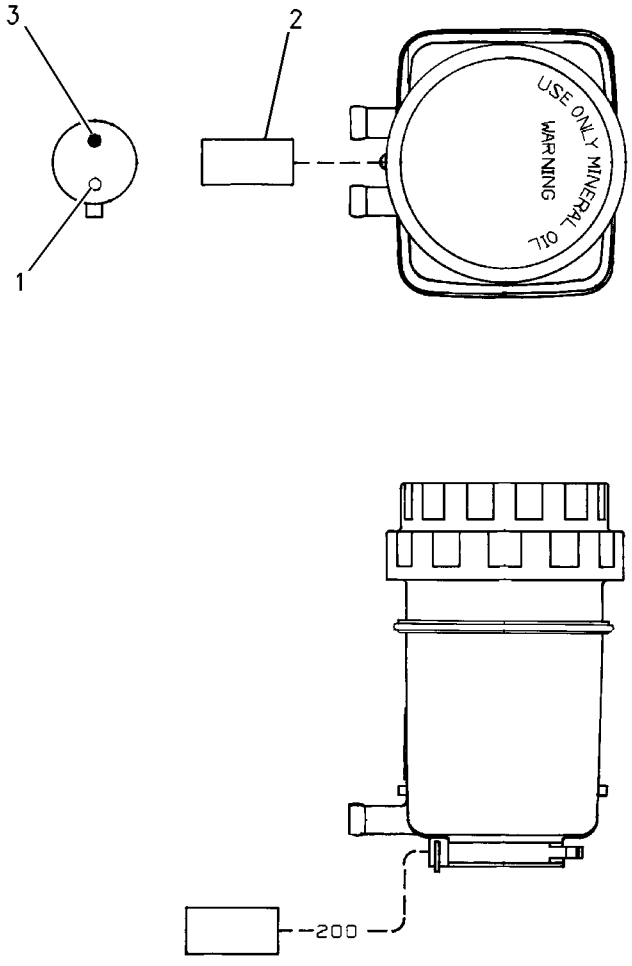

GRAPHIC #1 **<END>** g00862942

217-9920 RESERVOIR GP-BRAKE

S/N: LMS1-UP
PART OF 206-1638 CONTROL GP-SERVICE BRAKE
AN ATTACHMENT

SMCS-4291 **i03633344**

NOTE	REF NO	GRAPHIC REF	PART NUMBER	QTY	PART NAME 1 2 3 4 5 6 (PRODUCT LEVEL)	SEE PAGE
Y	1	1	**4E-8619**	1	RESERVOIR GP-BRAKE	198
	2	1	**254-5303**	1	BRACKET	
M	3	1	**8T-4189**	2	BOLT (M8X1.25X20-MM)	
	4	1	**8T-4224**	2	WASHER-HARD (8.8X16X2-MM THK)	
	5	1	**344-8938**	1	RING-SEAL	
	6	1	**344-8939**	1	RING-SUPPORT	

M-METRIC PART
Y-SEPARATE ILLUSTRATION

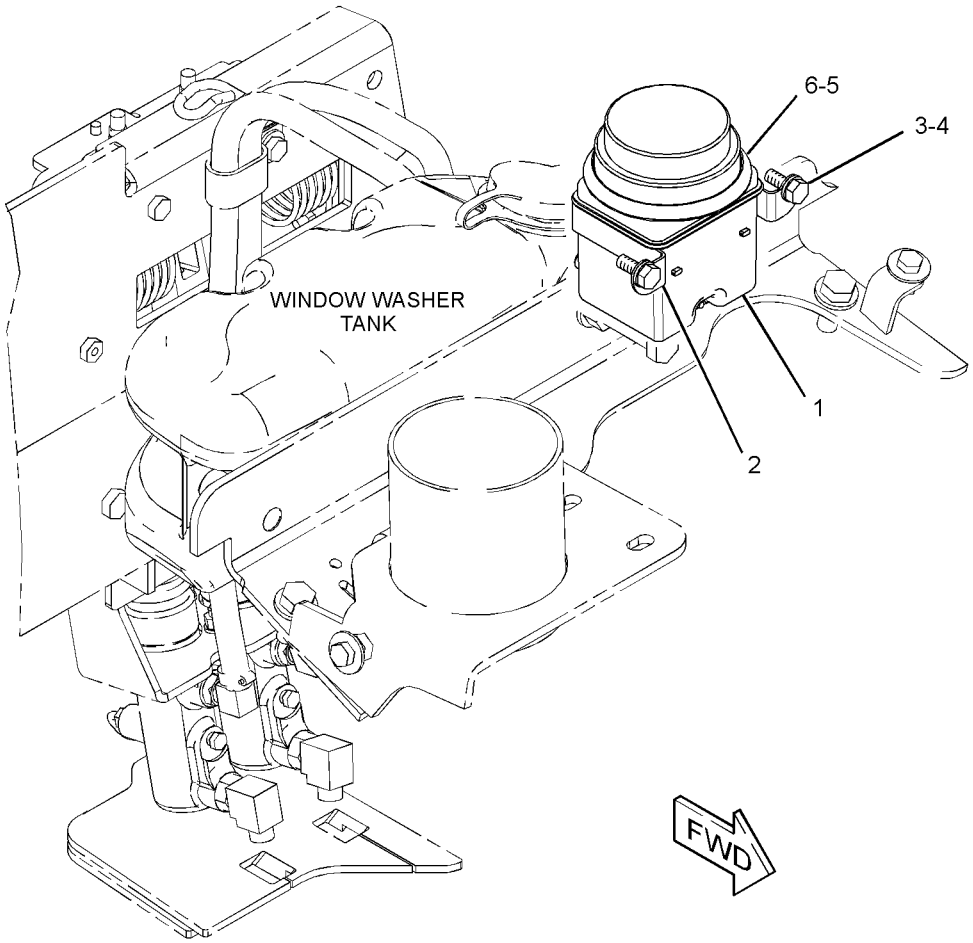

GRAPHIC #1 **<END>** g01960491

STEERING SYSTEM

230-5745 AXLE GP-FRONT

S/N: LMS1-UP
PART OF 324-9744 DRIVE AR-BACKHOE LOADER
AN ATTACHMENT

SMCS-3282, 4303 **i02221409**

NOTE	REF NO	GRAPHIC REF	PART NUMBER	QTY	PART NAME 1 2 3 4 5 6 (PRODUCT LEVEL)	SEE PAGE
M	1	1	**207-4254**	6	BOLT (M20X1.5X80-MM)	
	2	1	**207-4255**	2	PLUG	
	3	1	**199-0648**	2	NUT-JAM (M16X2-THD)	
	4	1	**207-4258**	2	NUT (M20X1.5-THD)	
	5	1	**207-4260**	2	SEAL-O-RING	
	6	1	**219-8798**	2	SEAL-LIP TYPE	
M	7	1	**199-0683**	16	BOLT (M16X2X38-MM)	
	8	1	**207-4262**	2	BOLT (STEERING STOP)	
	9	1	**198-7825**	4	SEAL	
	10	1	**207-4266**	2	RETAINER	
	11	1	**198-7838**	4	PIN	
	12	1	**207-4268**	1	BEAM	
	13	1	**207-4271**	2	COVER	
Y	14	1	**231-0683**	2	FLANGE GP-WHEEL	147
	15	1	**231-0684**	1	HOUSING (RH)	
	16	1	**231-0685**	1	HOUSING (LH)	
	17	1	**207-4272**	2	TIE ROD GP	
					(EACH INCLUDES)	
		1	**204-3080**	1	BALL JOINT	
		1	**216-4459**	1	TIE ROD	
		1	**217-2885**	1	NUT (M24X1.5-THD)	
	18	1	**154-5404**	2	BEARING	
M	19	1	**8T-4139**	6	BOLT (M12X1.75X30-MM)	
J	20	1	**214-5097**	1	CYLINDER GP-STEERING	
		1	**238-5254**	1	ROD	
		1	**238-5255**	2	CYLINDER HEAD	
	21	1	**198-7823**	4	BEARING AS	
B	22	1	**198-7841**	4	SHIM (0.15-MM THK)	
B	23	1	**198-7842**	4	SHIM (0.2-MM THK)	
B	24	1	**198-7843**	4	SHIM (0.5-MM THK)	
					AVAILABLE REPAIR KIT(S):	
J			**215-2023**	1	KIT-SEAL	
					(INCLUDES GUIDE RINGS, SEALS, WASHERS & WIPERS)	

B-USE AS REQUIRED
J-KIT MARKED J AVAILABLE FOR PART MARKED J
M-METRIC PART
Y-SEPARATE ILLUSTRATION

230-5745 AXLE GP-FRONT *(contd.)* i02221409

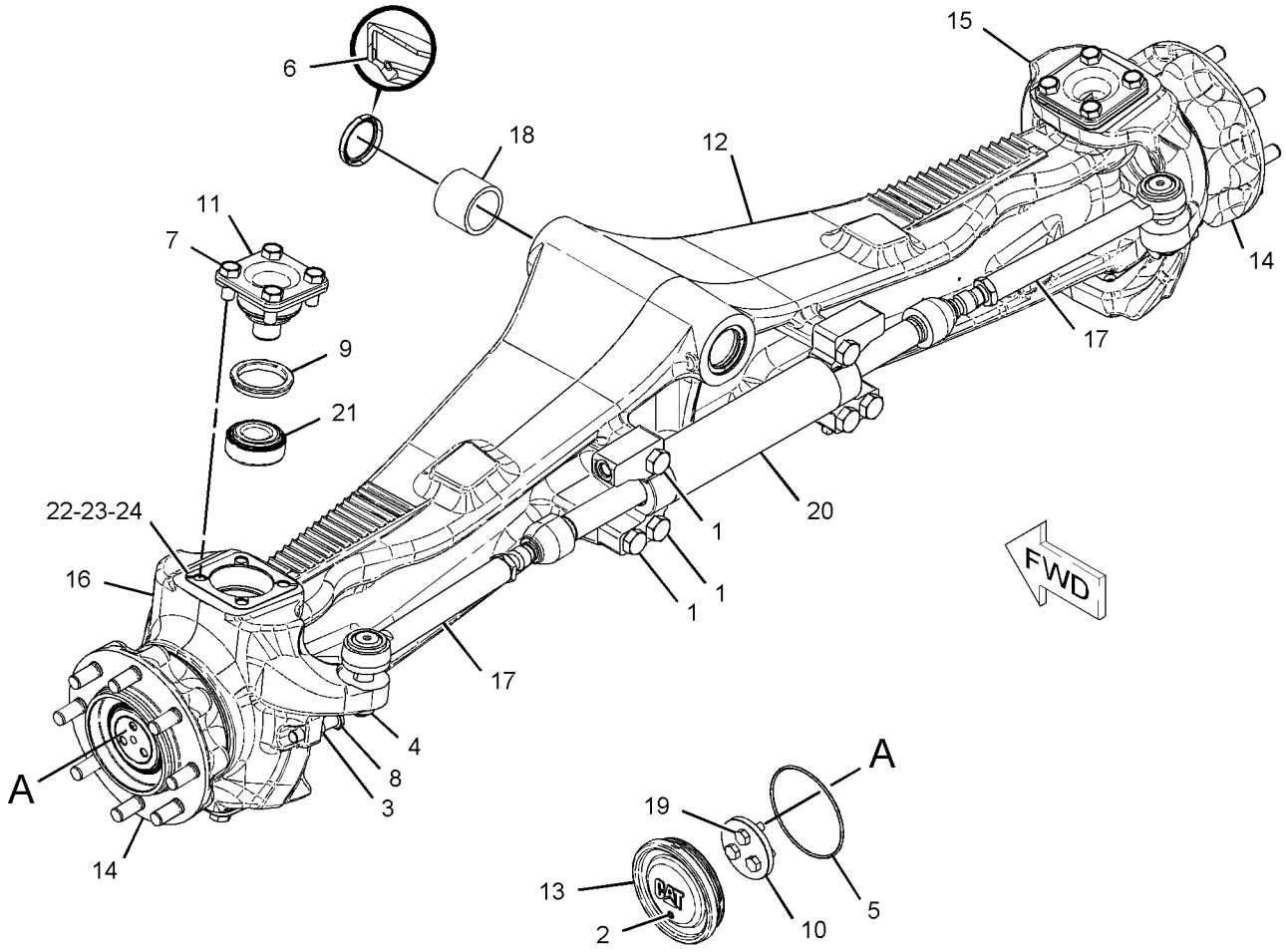

GRAPHIC #1 **<END>** g01118534

153-7369 KNOB GP-STEERING

S/N: LMS1-UP
PART OF 218-4453 CONTROL GP-STEERING
AN ATTACHMENT

SMCS-4309 **i01029926**

NOTE	REF NO	GRAPHIC REF	PART NUMBER	QTY	PART NAME 1 2 3 4 5 6 (PRODUCT LEVEL)	SEE PAGE
M	1	1	**8T-6869**	1	BOLT (M8X1.25X60-MM)	
	2	1	**8T-4224**	1	WASHER-HARD (8.8X16X2-MM THK)	
M	3	1	**5C-7261**	1	NUT (M8X1.25-THD)	

M-METRIC PART

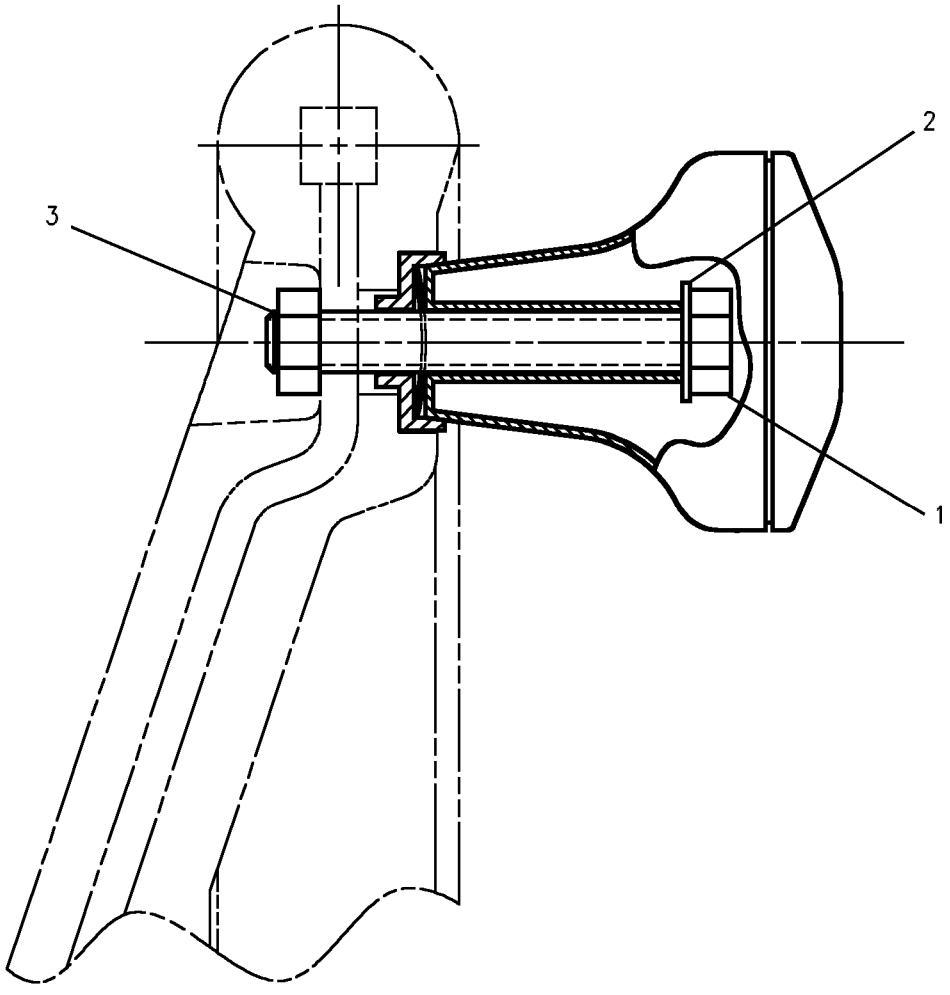

GRAPHIC #1 **<END>** g00534771

STEERING SYSTEM

324-9741 LINES GP-STEERING—2-WHEEL DRIVE

S/N: LMS1-UP

PART OF 324-9744 DRIVE AR-BACKHOE LOADER

AN ATTACHMENT

SMCS-4304 **i03866782**

NOTE	REF NO	GRAPHIC REF	PART NUMBER	QTY	PART NAME 1 2 3 4 5 6 (PRODUCT LEVEL)	SEE PAGE
	1	1	**5D-1026**	2	CLAMP-BAND	
E	2	1	**5P-1505**		HOSE (60-CM)	
I	3	1	**215-3882**	1	HOSE AS	
I	4	1	**215-3883**	1	HOSE AS	
I	5	1	**217-8199**	1	HOSE AS	
	6	1	**236-1583**	1	BOSS	
	7	1	*148-8318*	2	CONNECTOR AS	
					(EACH INCLUDES)	
		1	**3K-0360**	1	SEAL-O-RING	
		1	**6V-8397**	1	SEAL-O-RING	
		1	**6V-8634**	1	CONNECTOR	
	8	1	*148-8336*	1	CONNECTOR AS	
		1	**3J-1907**	1	SEAL-O-RING	
		1	**6V-8397**	1	SEAL-O-RING	
		1	**6V-8636**	1	CONNECTOR	
	9	1	*148-8367*	3	ELBOW AS	
					(EACH INCLUDES)	
		1	**6V-8397**	1	SEAL-O-RING	
		1	**6V-9850**	1	ELBOW	
	10	1	*148-8369*	1	ELBOW AS	
		1	**3J-7354**	1	SEAL-O-RING	
		1	**4J-5477**	1	SEAL-O-RING	
		1	**6V-8628**	1	ELBOW	
	11	1	*148-8374*	2	ELBOW AS	
					(EACH INCLUDES)	
		1	**3K-0360**	1	SEAL-O-RING	
		1	**6V-8397**	1	SEAL-O-RING	
		1	**6V-8723**	1	ELBOW	
	12	1	*150-3026*	1	ELBOW AS	
		1	**3K-0360**	1	SEAL-O-RING	
		1	**6V-4292**	1	ELBOW	
	13	1	*150-3027*	1	ELBOW AS	
		1	**2M-9780**	1	SEAL-O-RING	
		1	**6V-5653**	1	ELBOW	
	14	1	*164-5605*	1	CONNECTOR AS	
		1	**3K-0360**	1	SEAL-O-RING	
		1	**6V-8397**	1	SEAL-O-RING	
		1	**8T-0076**	1	CONNECTOR	
	15	1	*204-0317*	1	CONNECTOR AS	
		1	**3K-0360**	1	SEAL-O-RING	
		1	**6V-8397**	1	SEAL-O-RING	
		1	**092-3635**	1	CONNECTOR	
	16	1	**206-1652**	1	SEAL	
I	17	1	**217-8200**	1	HOSE AS	
	18	1	**5P-4295**	4	CLIP	
	19	1	**7K-1181**	2	STRAP-CABLE	
	20	1	**8T-4121**	5	WASHER-HARD (11X21X2.5-MM THK)	
M	21	1	**8T-4137**	2	BOLT (M10X1.5X20-MM)	
M	22	1	**8T-4172**	1	BOLT (M10X1.5X80-MM)	
M	23	1	**8T-4195**	2	BOLT (M10X1.5X30-MM)	
	24	1	**9M-8406**	3	CLIP	

E-ORDER BY THE CENTIMETER
I-REFER TO HYDRAULIC INFORMATION SYSTEM
M-METRIC PART

324-9741 **LINES GP-STEERING** *(contd.)* **i03866782**

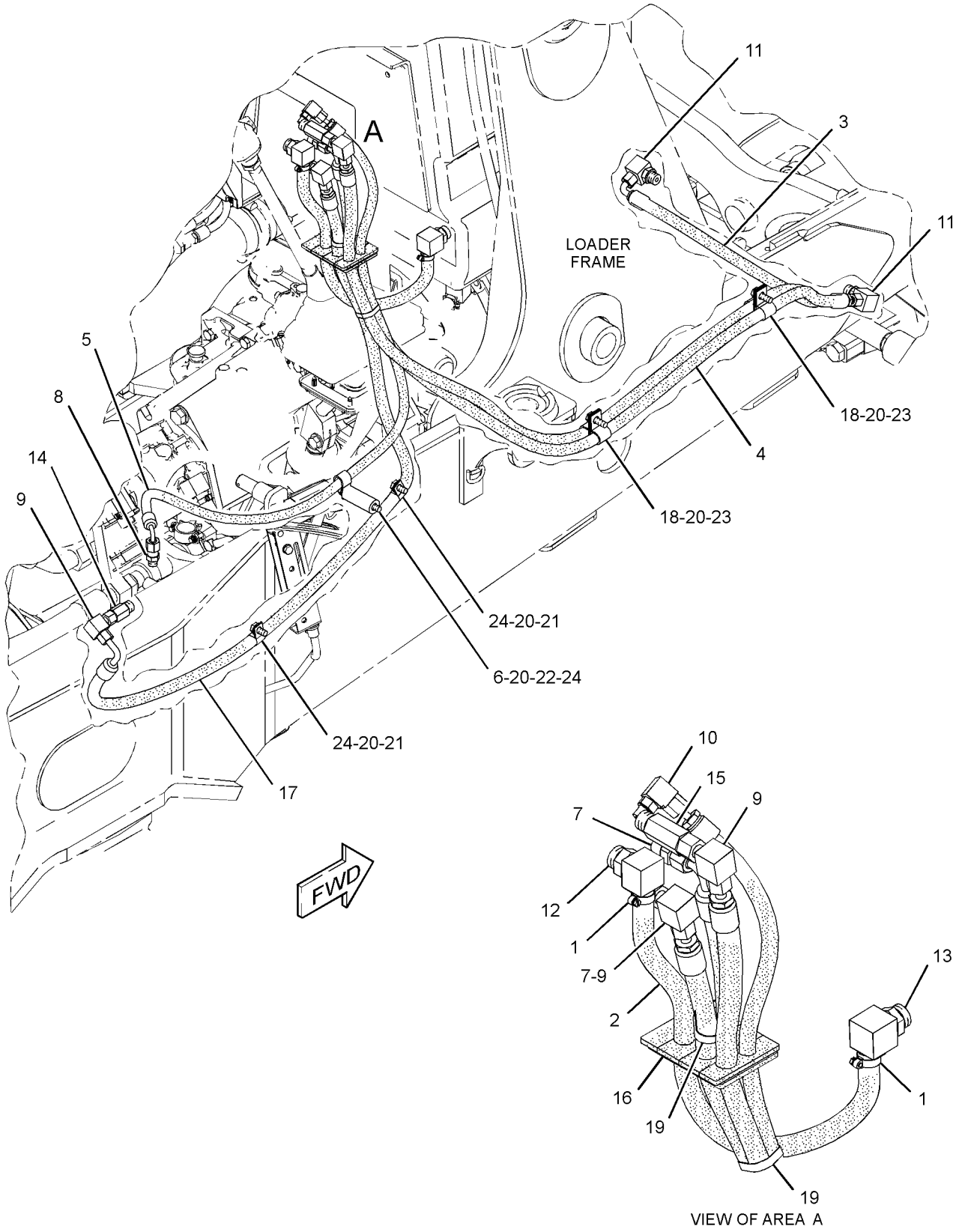

GRAPHIC #1 **<END>** g01692935

STEERING SYSTEM

324-9742 LINES GP-STEERING–

ALL WHEEL DRIVE, 2-WHEEL STEER

S/N: LMS1-UP

PART OF 317-1454 DRIVE AR-BACKHOE LOADER

AN ATTACHMENT

SMCS-4304 **i03871537**

NOTE	REF NO	GRAPHIC REF	PART NUMBER	QTY	PART NAME 1 2 3 4 5 6 (PRODUCT LEVEL)	SEE PAGE
	1	1	**5D-1026**	2	CLAMP-BAND	
E	2	1	**5P-1505**		HOSE (60-CM)	
I	3	1	**217-8196**	1	HOSE AS	
I	4	1	**217-8198**	1	HOSE AS	
I	5	1	**217-8199**	1	HOSE AS	
	6	1	**236-1583**	1	BOSS	
	7	1	*148-8318*	2	CONNECTOR AS	
					(EACH INCLUDES)	
		1	**3K-0360**	1	SEAL-O-RING	
		1	**6V-8397**	1	SEAL-O-RING	
		1	**6V-8634**	1	CONNECTOR	
	8	1	*148-8336*	1	CONNECTOR AS	
		1	**3J-1907**	1	SEAL-O-RING	
		1	**6V-8397**	1	SEAL-O-RING	
		1	**6V-8636**	1	CONNECTOR	
	9	1	*148-8367*	4	ELBOW AS	
					(EACH INCLUDES)	
		1	**6V-8397**	1	SEAL-O-RING	
		1	**6V-9850**	1	ELBOW	
	10	1	*148-8369*	1	ELBOW AS	
		1	**3J-7354**	1	SEAL-O-RING	
		1	**4J-5477**	1	SEAL-O-RING	
		1	**6V-8628**	1	ELBOW	
	11	1	*148-8383*	2	ELBOW AS	
					(EACH INCLUDES)	
		1	**3K-0360**	1	SEAL-O-RING	
		1	**6V-8397**	1	SEAL-O-RING	
		1	**8T-1683**	1	ELBOW	
	12	1	*150-3026*	1	ELBOW AS	
		1	**3K-0360**	1	SEAL-O-RING	
		1	**6V-4292**	1	ELBOW	
	13	1	*150-3027*	1	ELBOW AS	
		1	**2M-9780**	1	SEAL-O-RING	
		1	**6V-5653**	1	ELBOW	
	14	1	*164-5605*	1	CONNECTOR AS	
		1	**3K-0360**	1	SEAL-O-RING	
		1	**6V-8397**	1	SEAL-O-RING	
		1	**8T-0076**	1	CONNECTOR	
	15	1	*204-0317*	1	CONNECTOR AS	
		1	**3K-0360**	1	SEAL-O-RING	
		1	**6V-8397**	1	SEAL-O-RING	
		1	**092-3635**	1	CONNECTOR	
	16	1	**206-1652**	1	SEAL	
I	17	1	**217-8200**	1	HOSE AS	
	18	1	**5P-4295**	4	CLIP	
	19	1	**5P-7462**	1	CLIP (SLOT)	
	20	1	**5P-7463**	1	CLIP (TAB)	
	21	1	**6V-0683**	1	GROMMET	
	22	1	**7K-1181**	2	STRAP-CABLE	
	23	1	**8T-4121**	6	WASHER-HARD (11X21X2.5-MM THK)	
M	24	1	**8T-4136**	1	BOLT (M10X1.5X25-MM)	
M	25	1	**8T-4137**	2	BOLT (M10X1.5X20-MM)	
M	26	1	**8T-4172**	1	BOLT (M10X1.5X80-MM)	
M	27	1	**8T-4195**	2	BOLT (M10X1.5X30-MM)	

324-9742 **LINES GP-STEERING** *(contd.)* **i03871537**

NOTE	REF NO	GRAPHIC REF	PART NUMBER	QTY	PART NAME 1 2 3 4 5 6 (PRODUCT LEVEL)	SEE PAGE
	28	1	**9M-8406**	3	CLIP	

E-ORDER BY THE CENTIMETER
I-REFER TO HYDRAULIC INFORMATION SYSTEM
M-METRIC PART

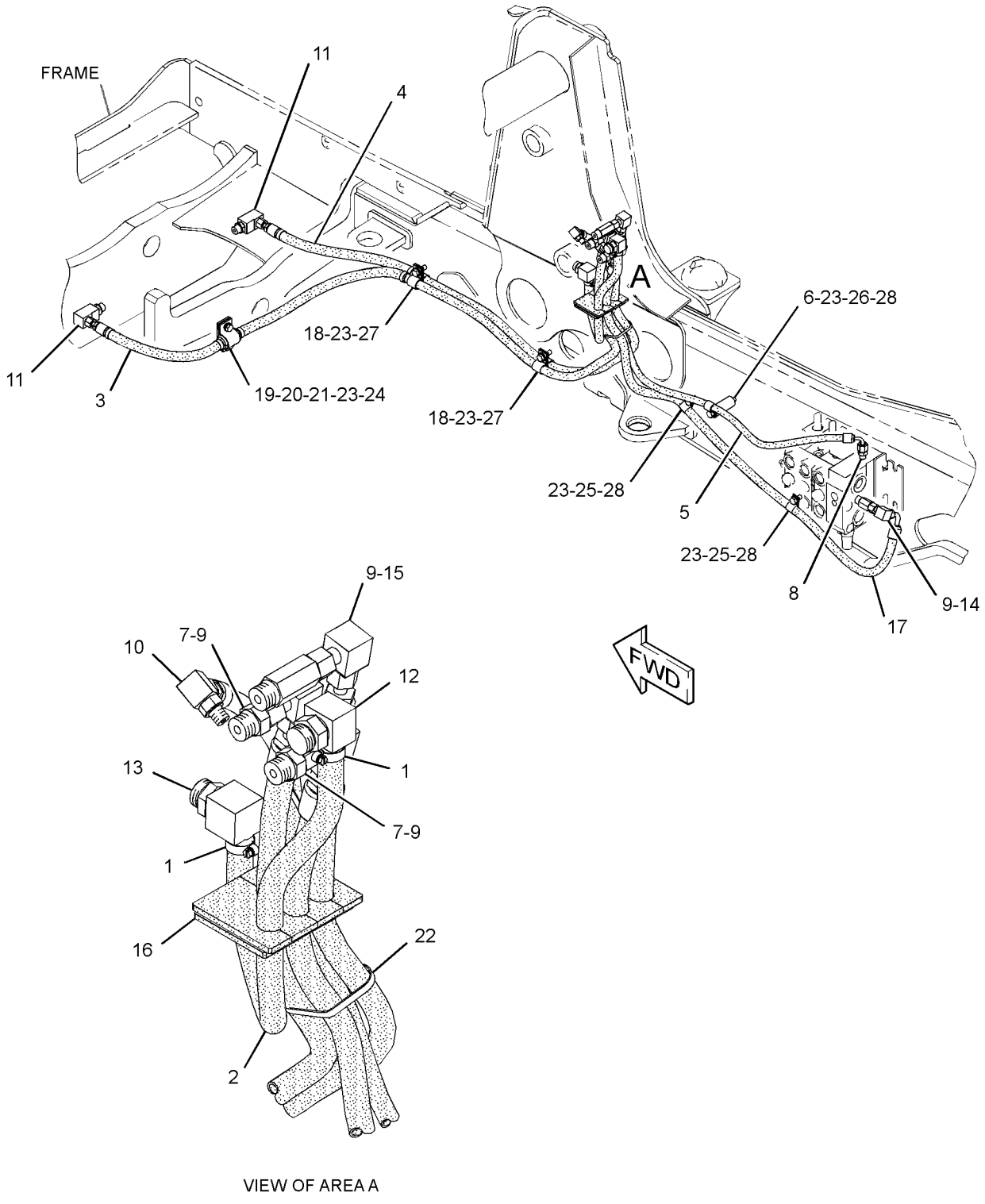

GRAPHIC #1 **<END>** g01698374

STEERING SYSTEM

247-7868 PUMP GP-METERING–HMU

S/N: LMS1-UP

PART OF 297-0165 HYDRAULIC AR

SMCS-4312 **i03695254**

NOTE	REF NO	GRAPHIC REF	PART NUMBER	QTY	PART NAME 1 2 3 4 5 6 (PRODUCT LEVEL)	SEE PAGE
	1	1	**7X-9866**	1	SEAL	
	2	1	**054-6882**	1	BEARING AS	
	3	1	**054-6733**	1	RING	
	4	1	**7X-9873**	7	WASHER (8.2X11.9X1-MM THK)	
					PARTS SHOWN IN GRAPHIC(S) WITHOUT A REFERENCE NUMBER ARE NOT SERVICED SEPARATELY	
					AVAILABLE REPAIR KIT(S):	
			214-7469	1	KIT-SEAL (HMU STEERING)	
					(INCLUDES RING, WASHERS & SEALS)	

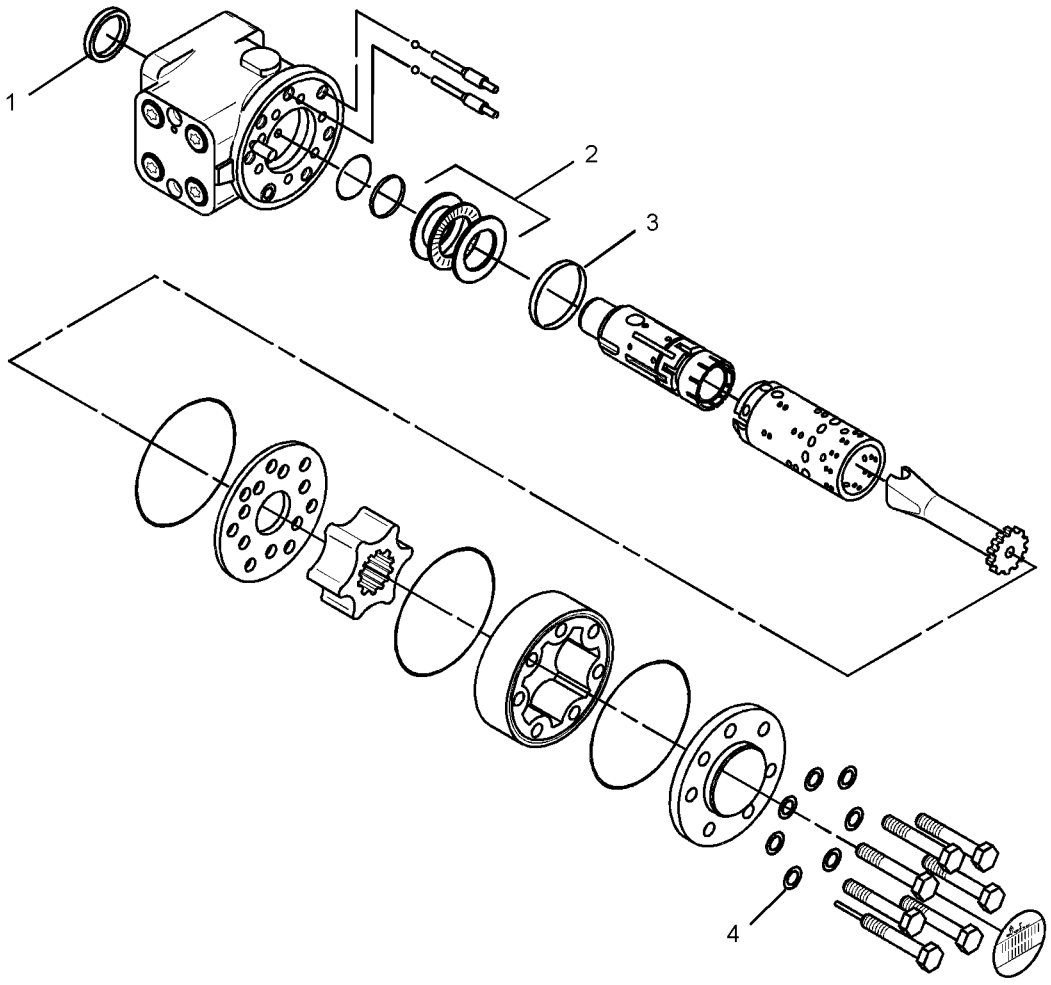

GRAPHIC #1 **<END>** g01988180

218-4454 STEERING COLUMN GP–TILT

S/N: LMS1-UP
PART OF 218-4453 CONTROL GP-STEERING
AN ATTACHMENT

SMCS-4310, 4338 **i03574204**

NOTE	REF NO	GRAPHIC REF	PART NUMBER	QTY	PART NAME 1 2 3 4 5 6 (PRODUCT LEVEL)	SEE PAGE
	1	1	**338-1508**	1	SPRING GP-GAS	
		1	**146-6347**	2	RING-RETAINING	
	2	1	**254-9926**	1	KIT-TILT PEDAL	
					(INCLUDES SPRING, BOLT, NUT, RING-RETAINING & TILT-LEVER)	
	3	1	**254-9927**	1	KIT-PIVOT	
					(INCLUDES BUSHINGS, NUTS, PINS & WASHERS)	
M	4	1	**6V-8227**	1	NUT (M18X1.5-THD)	

M-METRIC PART

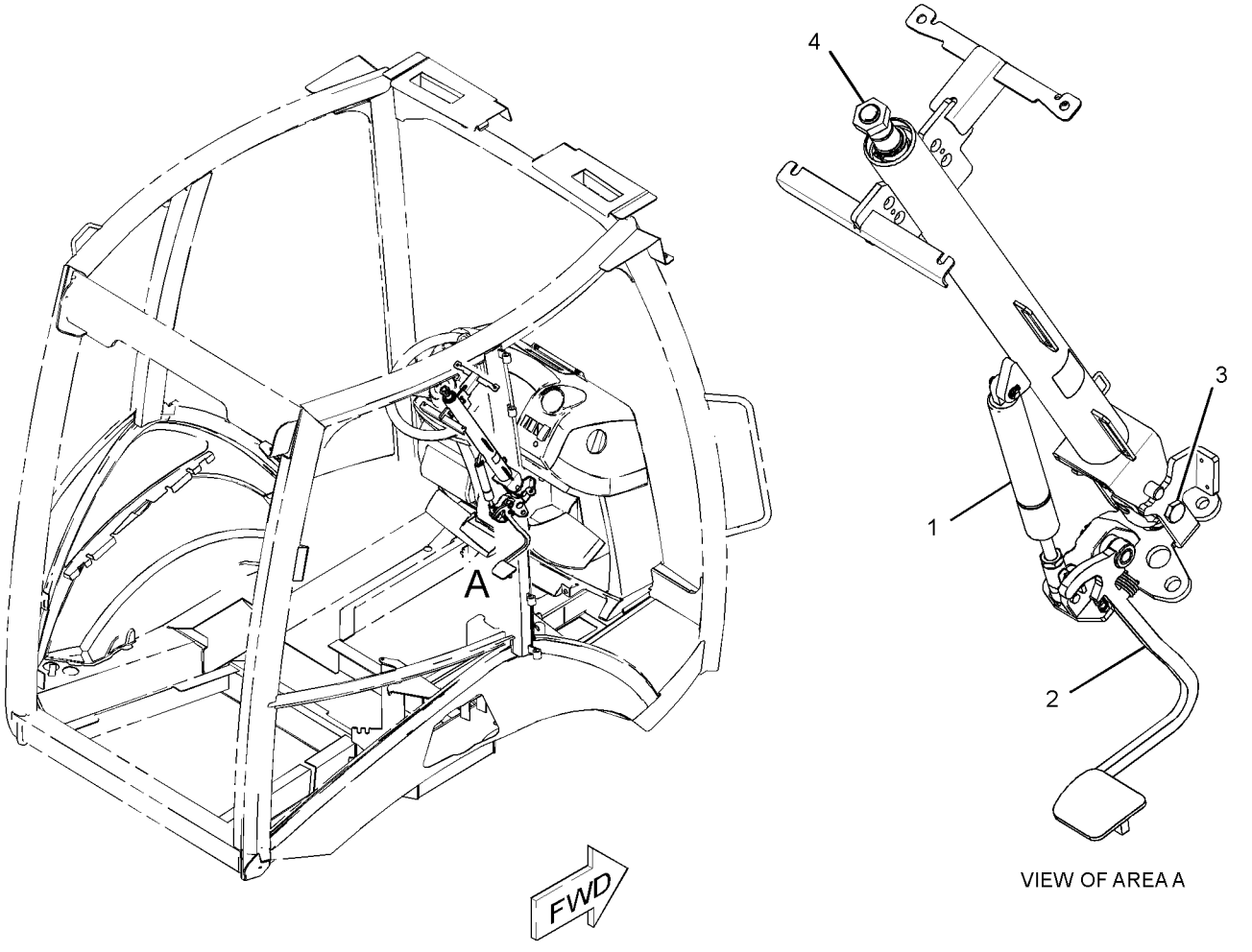

GRAPHIC #1 **<END>** g01910773

FRAME AND BODY

253-0784 BOX GP-BATTERY—WITH STORAGE

S/N: LMS1-UP

PART OF 291-9190 CHASSIS AR

SMCS-7257 **i03856957**

NOTE	REF NO	GRAPHIC REF	PART NUMBER	QTY	PART NAME 1 2 3 4 5 6 (PRODUCT LEVEL)	SEE PAGE
	1	1	**8C-8522**	1	PAWL-LATCH	
	2	1	**118-6854**	1	TREAD	
	3	1	**129-4741**	1	LATCH AS-T-BAR	
	4	1	**164-3876**	1	STEP AS	
M		1	**8T-3612**	4	NUT-WELD (M8X1.25-THD)	
	5	1	**245-6109**	1	PLATE AS	
M		1	**8T-3612**	3	NUT-WELD (M8X1.25-THD)	
	6	1	**295-8472**	1	BRACKET AS	
	7	1	**321-2559**	1	COVER AS-ACCESS	
	8	1	**349-3650**	1	BOX AS-BATTERY	
M	9	1	**5C-7261**	3	NUT (M8X1.25-THD)	
	10	1	**5P-4116**	16	WASHER-HARD (8.8X20.5X2-MM THK)	
M	11	1	**6V-7743**	2	LOCKNUT (M6X1-THD)	
M	12	1	**8T-4133**	2	NUT (M10X1.5-THD)	
M	13	1	**8T-4183**	4	BOLT (M12X1.75X40-MM)	
M	14	1	**8T-4189**	13	BOLT (M8X1.25X20-MM)	
	15	1	**8T-4205**	2	WASHER-HARD (7.2X14.5X2-MM THK)	
	16	1	**8T-4223**	5	WASHER-HARD (13.5X25.5X3-MM THK)	

M-METRIC PART

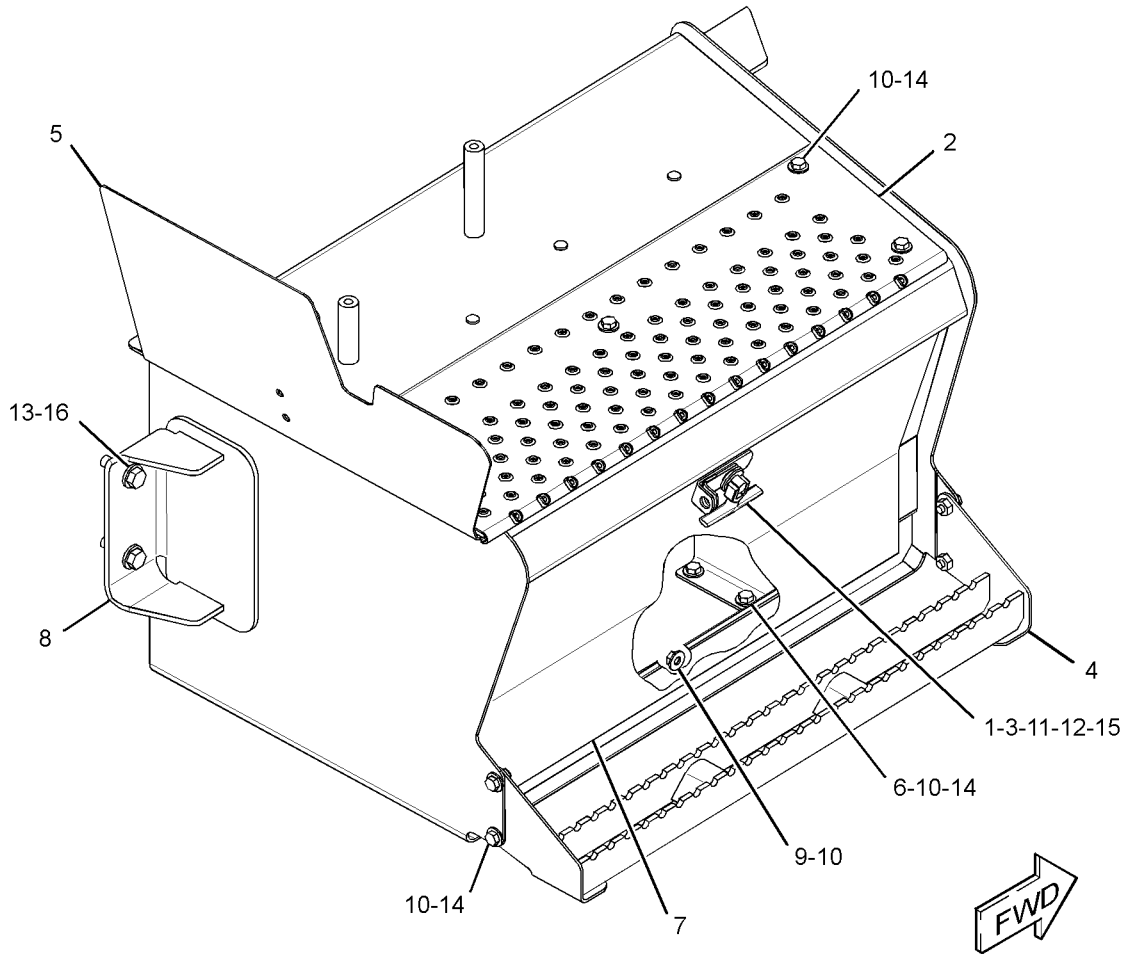

GRAPHIC #1 **<END>** g02116514

FRAME AND BODY

211-3649 COUNTERWEIGHT GP

S/N: LMS1-UP
115-KG (250-LB)
AN ATTACHMENT

SMCS-7056 **i03779310**

NOTE	REF NO	GRAPHIC REF	PART NUMBER	QTY	PART NAME 1 2 3 4 5 6 (PRODUCT LEVEL)	SEE PAGE
	1	1	**214-3254**	1	COUNTERWEIGHT	
M	2	1	**8C-3290**	2	BOLT (M24X3X150-MM)	
	3	1	**8T-4167**	2	WASHER-HARD (26X44X4-MM THK)	

M-METRIC PART

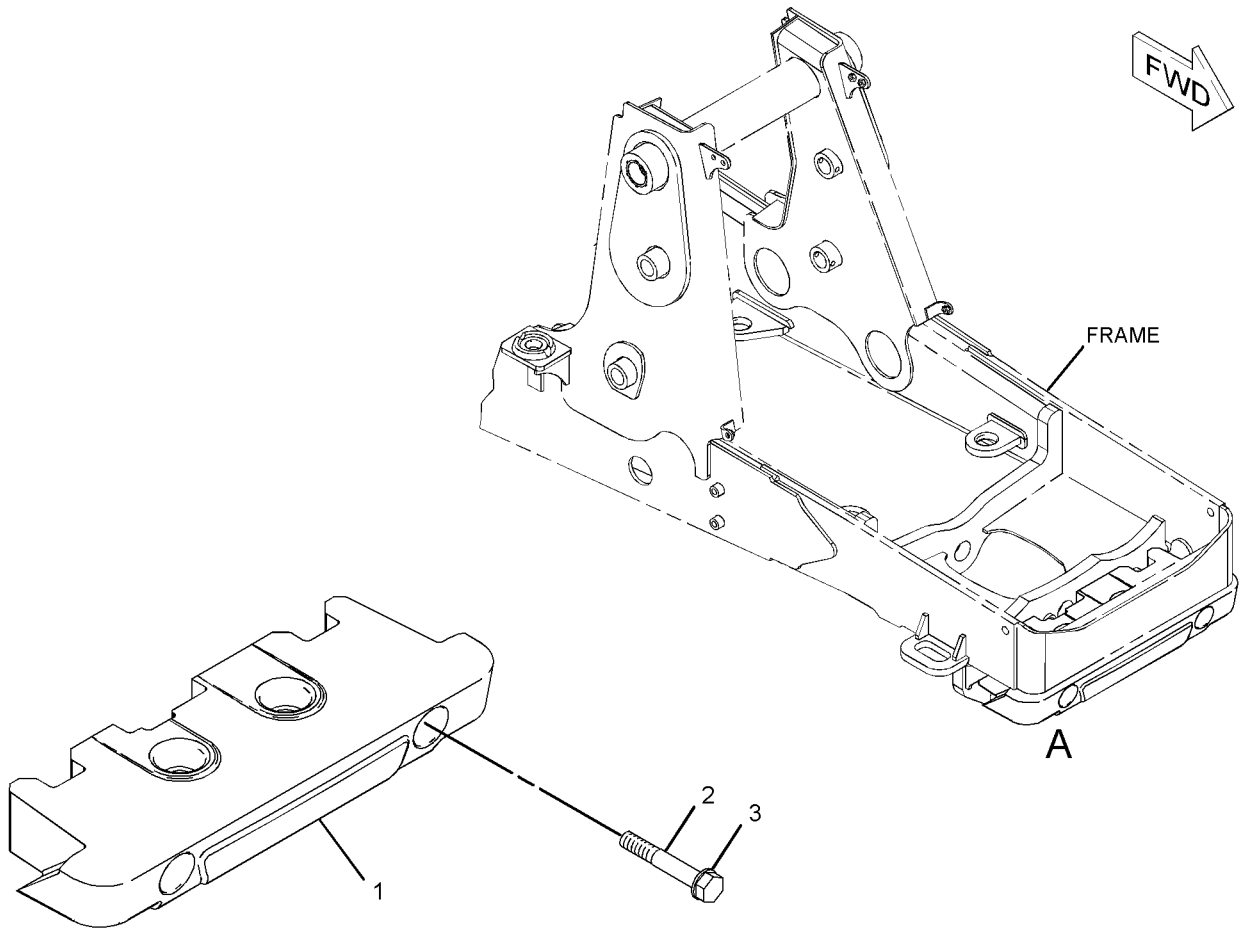

VIEW OF AREA A

GRAPHIC #1 **<END>** g01996882

252-9983 COUNTERWEIGHT GP

S/N: LMS1-UP
485-KG (1070-LB)
PART OF 252-9984 COUNTERWEIGHT GP
AN ATTACHMENT

SMCS-7056 **i03845738**

NOTE	REF NO	GRAPHIC REF	PART NUMBER	QTY	PART NAME 1 2 3 4 5 6 (PRODUCT LEVEL)	SEE PAGE
	1	1	**214-3255**	1	COUNTERWEIGHT	
	2	1	**247-8222**	1	COUNTERWEIGHT	
M	3	1	**127-4834**	2	BOLT (M24X3X340-MM)	
M	4	1	**8T-4001**	2	NUT (M24X3-THD)	
	5	1	**8T-4167**	2	WASHER-HARD (26X44X4-MM THK)	

M-METRIC PART

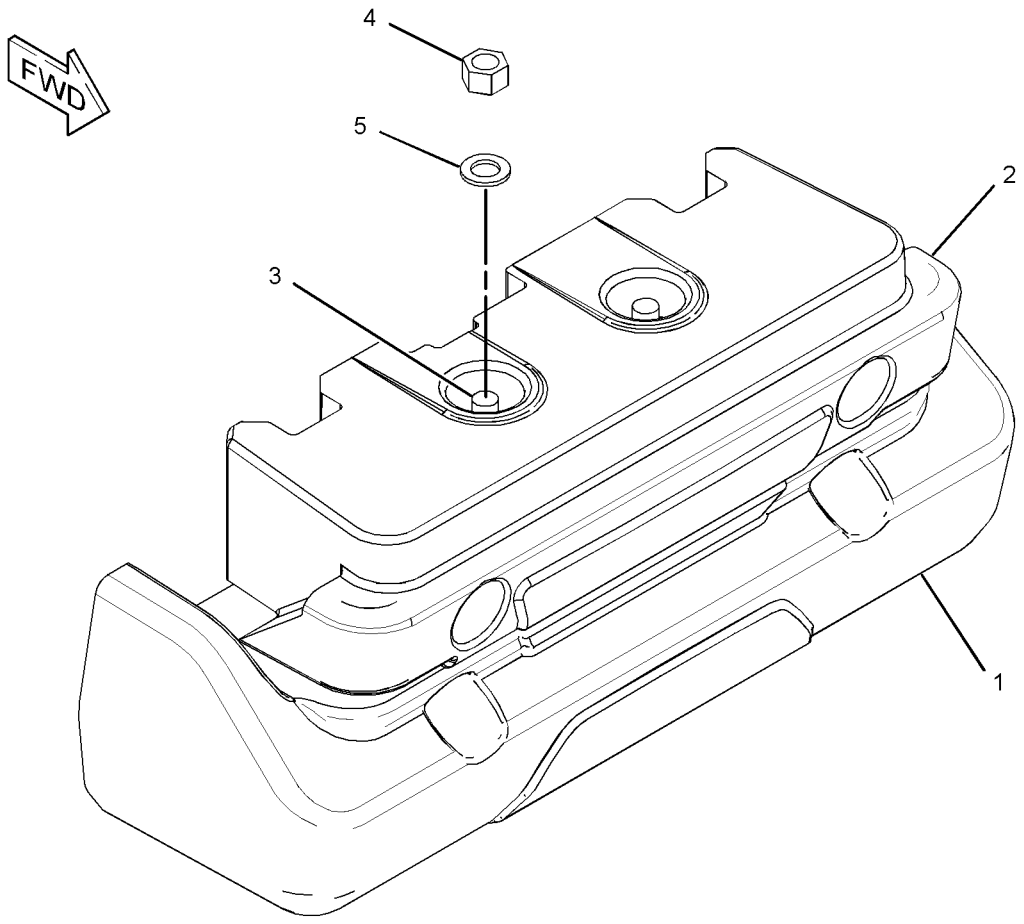

GRAPHIC #1 **<END>** g01834874

252-9984 COUNTERWEIGHT GP

S/N: LMS1-UP
485-KG (1070 LB)
PART OF 357-0415, 357-0416, 357-0417 OPTION AR-BACKHOE
AN ATTACHMENT

SMCS-7056 **i03845732**

NOTE	REF NO	GRAPHIC REF	PART NUMBER	QTY	PART NAME 1 2 3 4 5 6 (PRODUCT LEVEL)	SEE PAGE
Y	1	1	*252-9983*	1	COUNTERWEIGHT GP	212
M	2	1	**8C-3290**	4	BOLT (M24X3X150-MM)	
	3	1	**8T-4167**	4	WASHER-HARD (26X44X4-MM THK)	

M-METRIC PART
Y-SEPARATE ILLUSTRATION

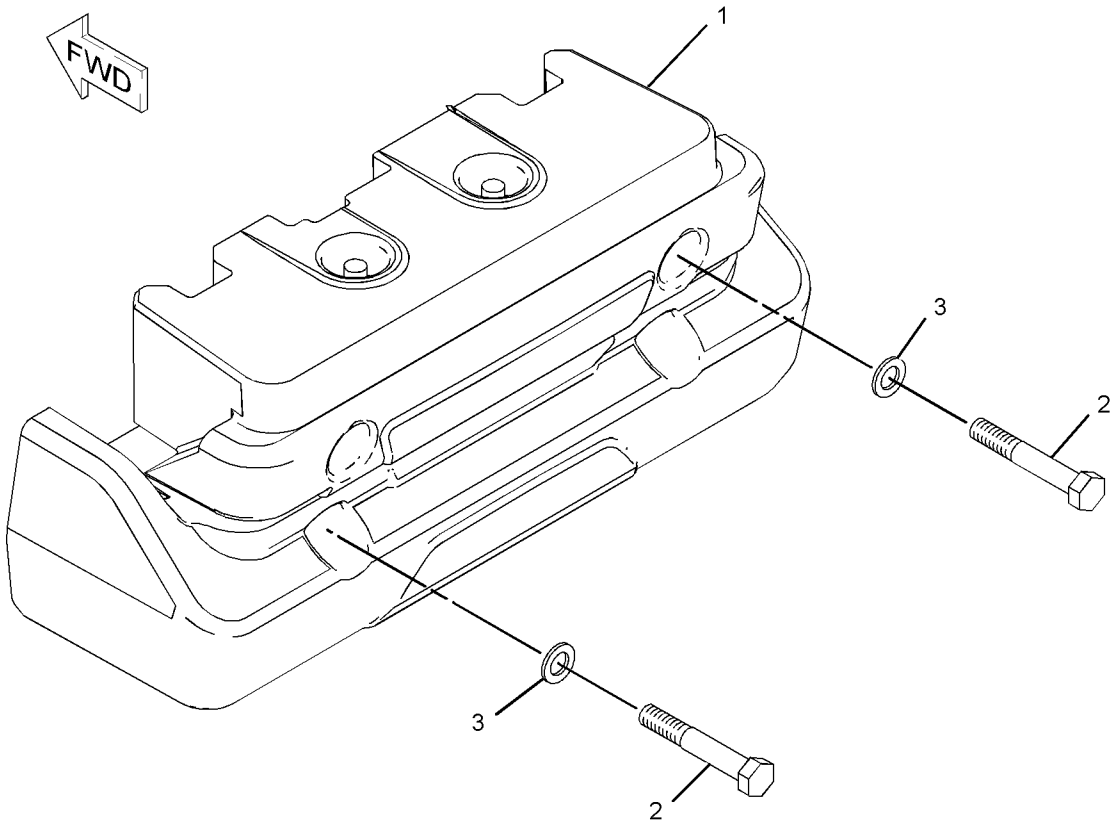

GRAPHIC #1 **<END>** g01084203

252-9986 COUNTERWEIGHT GP

S/N: LMS1-UP
235-KG (515-LB)
PART OF 357-0413, 357-0414 OPTION AR-BACKHOE
AN ATTACHMENT

SMCS-7056 **i03848058**

NOTE	REF NO	GRAPHIC REF	PART NUMBER	QTY	PART NAME 1 2 3 4 5 6 (PRODUCT LEVEL)	SEE PAGE
	1	1	*252-9985*	1	COUNTERWEIGHT GP	
M		1	**7X-2476**	2	BOLT (M24X3X220-MM)	
M		1	**8T-4001**	2	NUT (M24X3-THD)	
		1	**8T-4167**	2	WASHER-HARD (26X44X4-MM THK)	
		1	**214-3254**	2	COUNTERWEIGHT	
M	2	1	**8C-3290**	4	BOLT (M24X3X150-MM)	
	3	1	**8T-4167**	4	WASHER-HARD (26X44X4-MM THK)	

M-METRIC PART

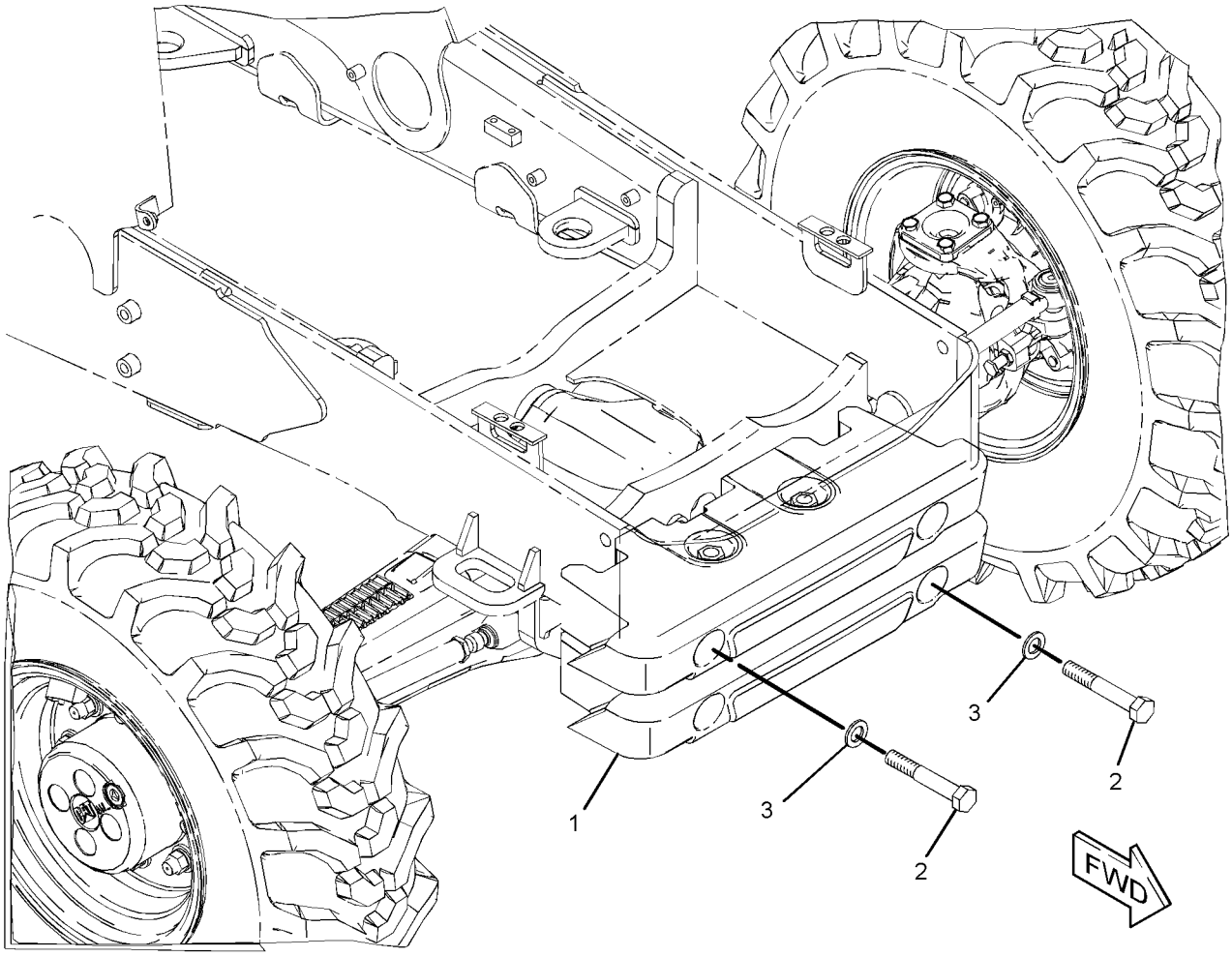

GRAPHIC #1 **<END>** g01202979

FRAME AND BODY

249-9328 EXTENSION GP-FENDER

S/N: LMS1-UP
AN ATTACHMENT

SMCS-7252 **i03849756**

NOTE	REF NO	GRAPHIC REF	PART NUMBER	QTY	PART NAME 1 2 3 4 5 6 (PRODUCT LEVEL)	SEE PAGE
	1	1	**249-9329**	1	EXTENSION-FENDER (LH)	
	2	1	**249-9330**	1	EXTENSION-FENDER (RH)	
	3	1	**251-4889**	8	WASHER-HARD (7.2X14.5X2-MM THK)	
	4	1	**251-4890**	4	SCREW-MACHINE (M6X1X25-MM)	
	5	1	**251-4891**	4	LOCKNUT (M6X1-THD)	

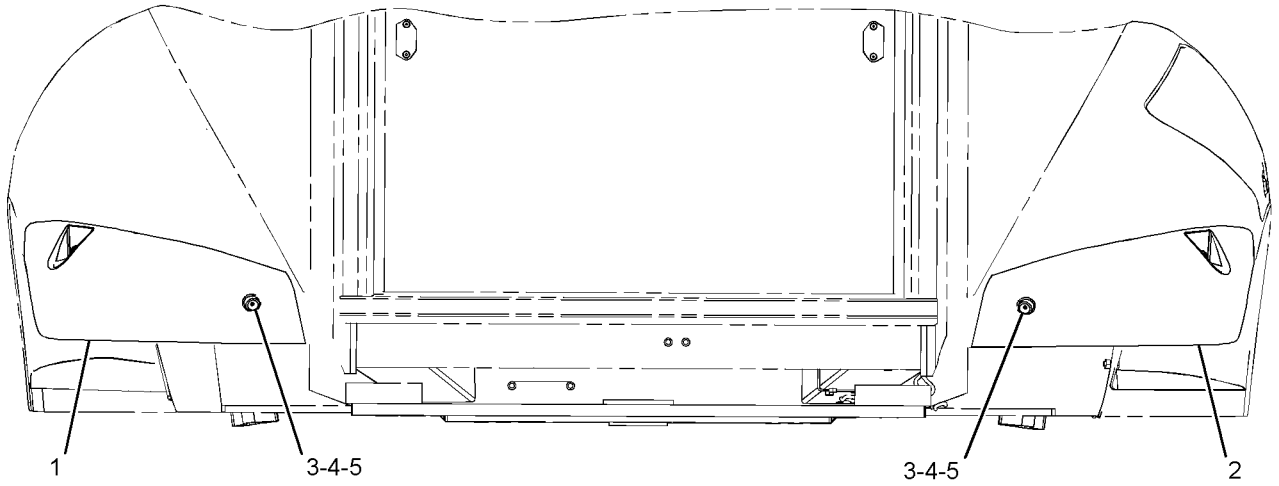

REAR VIEW

GRAPHIC #1 **<END>** g01231585

FRAME AND BODY

201-3954 FENDER GP-FRONT

S/N: LMS1-UP

AN ATTACHMENT

SMCS-7252 **i03498522**

NOTE	REF NO	GRAPHIC REF	PART NUMBER	QTY	PART NAME 1 2 3 4 5 6 (PRODUCT LEVEL)	SEE PAGE
	1	1	**162-4004**	2	FENDER	
M	2	1	**199-0783**	4	BOLT (M16X2X38-MM)	
	3	1	**222-1801**	1	BRACKET AS (LH)	
	4	1	**222-1802**	1	BRACKET AS (RH)	
M	5	1	**6V-7744**	4	LOCKNUT (M10X1.5-THD)	
	6	1	**8T-4121**	4	WASHER-HARD (11X21X2.5-MM THK)	
	7	1	**8T-4122**	12	WASHER-HARD (17X32X3.5-MM THK)	
M	8	1	**8T-4195**	4	BOLT (M10X1.5X30-MM)	
	9	1	**8T-4222**	4	WASHER-PLATED (11X32X2.5-MM THK)	
M	10	1	**8T-4778**	4	LOCKNUT (M16X2-THD)	

M-METRIC PART

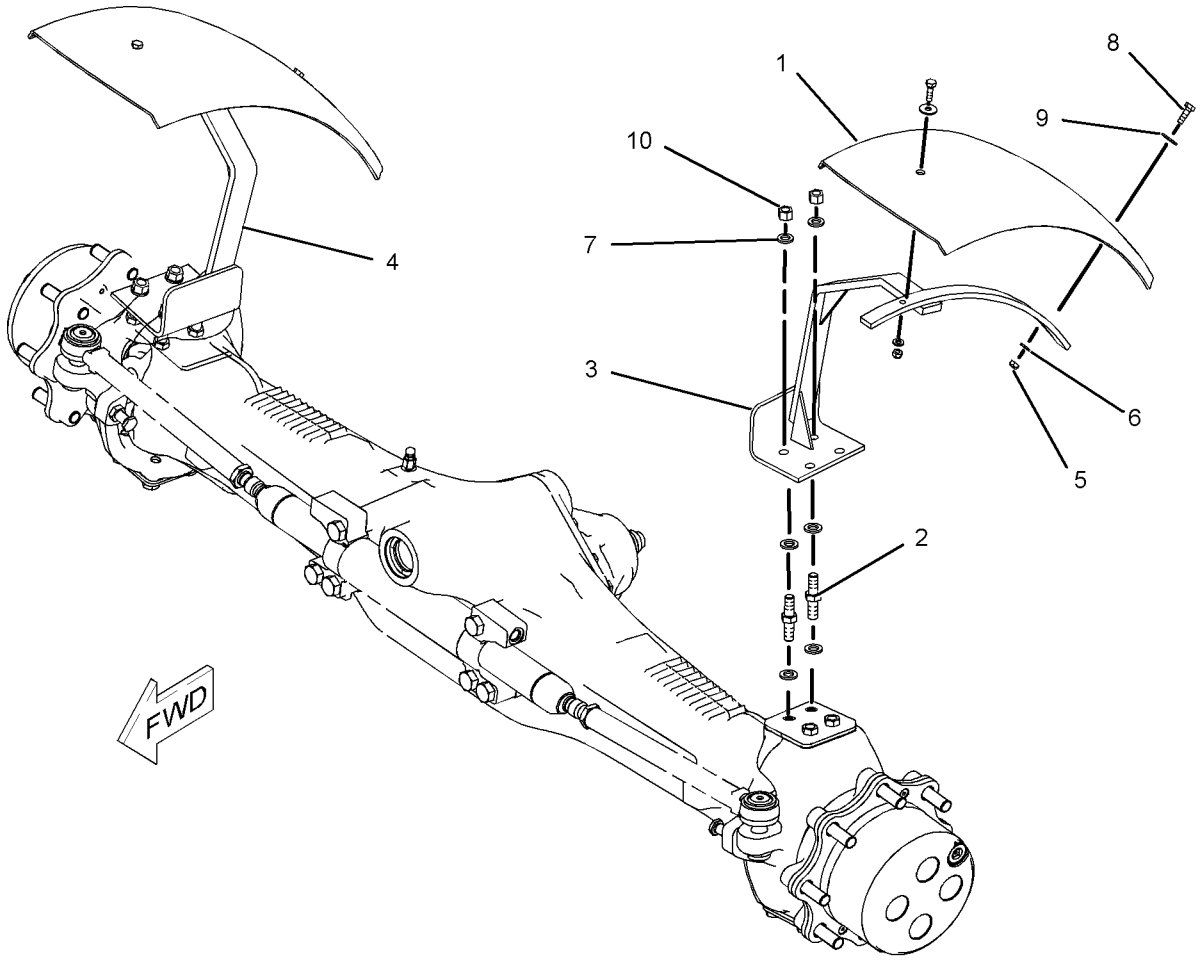

GRAPHIC #1 **<END>** g01027709

213-1891 FENDER GP-REAR

S/N: LMS1-UP

PART OF 291-9194, 291-9195 CAB AR-ENCLOSED ROPS, 291-9192 CANOPY AR-OPEN ROPS, 291-9191 CANOPY GP-OPEN ROPS

AN ATTACHMENT

SMCS-7252 **i03852124**

NOTE	REF NO	GRAPHIC REF	PART NUMBER	QTY	PART NAME 1 2 3 4 5 6 (PRODUCT LEVEL)	SEE PAGE
M	1	1	**8T-5093**	4	BOLT-LOCKING (M8X1.25X25-MM)	
E	2	1	**244-3113**		SEAL (210-CM EACH)	
	3	1	**116-5763**	1	CLIP-SPRING	
M	4	1	**193-9055**	4	SCREW-HEX FLANGE (M4X1.79X17-MM)	
	5	1	**211-3783**	1	FENDER-REAR (LH)	
	6	1	**213-1881**	1	FENDER-REAR (RH)	
	7	1	**213-1884**	1	CLIP	
	8	1	**213-1887**	1	COVER-FENDER	
	9	1	**213-1889**	1	PLATE	
	10	1	**225-0060**	1	GUARD	
J	11	1	**226-0291**	1	LOCK AS (PROTECTION)	
	12	1	**227-5556**	1	PLATE	
M	13	1	**7Y-9099**	1	SCREW-TRUSS HEAD (M8X1.25X25-MM)	
	14	1	**156-0283**	20	WASHER-HARD (8.4X35X2.5-MM THK)	
M	15	1	**5C-7261**	4	NUT (M8X1.25-THD)	
M	16	1	**8T-5091**	12	BOLT (M8X1.25X20-MM)	
L	17	1	**5P-0805**		SEAL (8-DM)	
E	18	1	**220-0738**		SEAL (118-CM)	

E-ORDER BY THE CENTIMETER
J-REQUIRES 5P8500 KEY
L-ORDER BY THE DECIMETER
M-METRIC PART

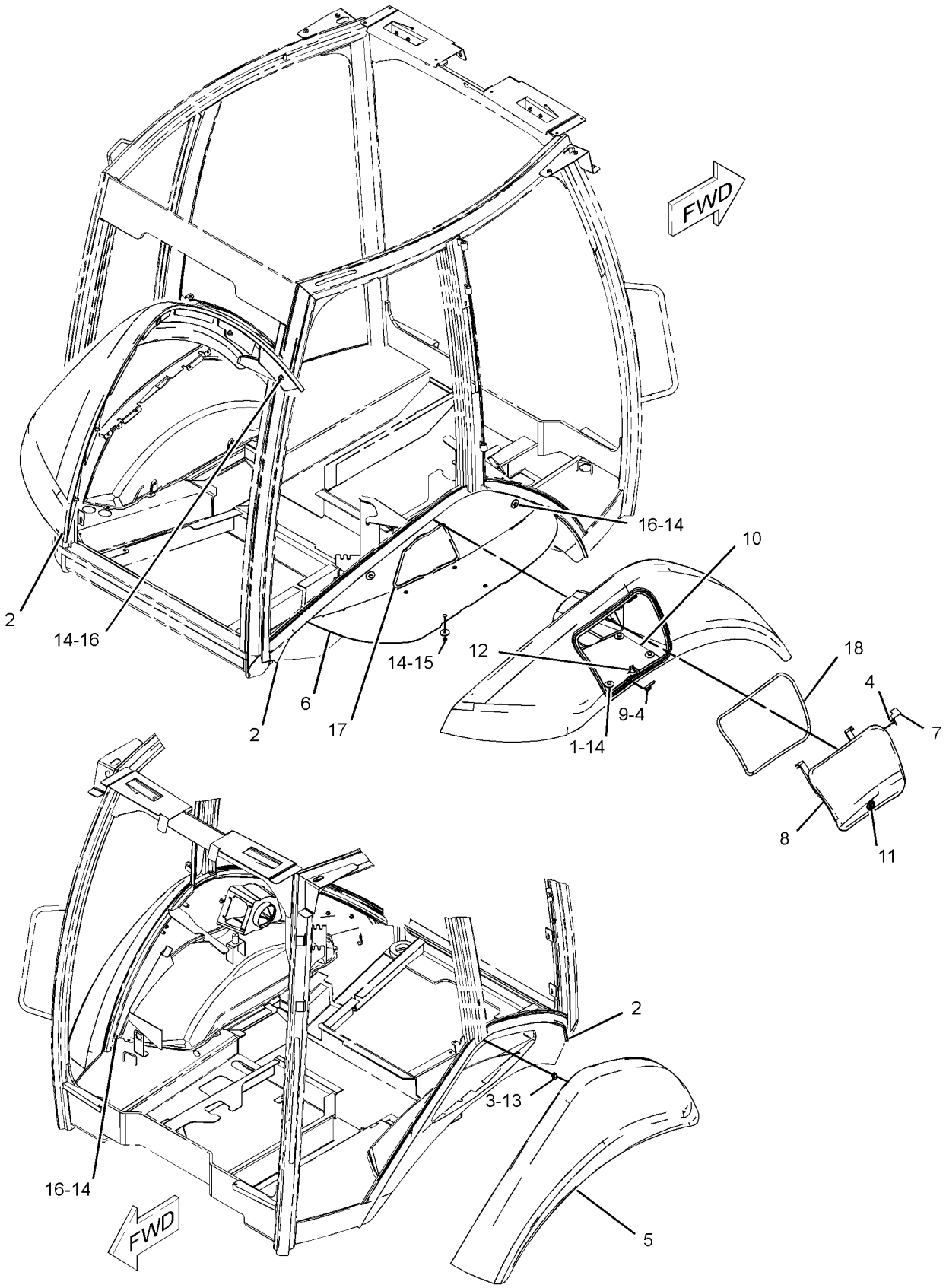

GRAPHIC #1 **<END>** g01275112

206-1840 FLOORPLATE GP

S/N: LMS1-UP

PART OF 291-9192 CANOPY AR-OPEN ROPS, 291-9191 CANOPY GP-OPEN ROPS

AN ATTACHMENT

SMCS-7265 **i03908726**

NOTE	REF NO	GRAPHIC REF	PART NUMBER	QTY	PART NAME 1 2 3 4 5 6 (PRODUCT LEVEL)	SEE PAGE
	1	1	**289-9871**	1	PLATE AS	
	2	1	**206-1835**	1	PLATE AS	
C	3	1	**223-4546**	1	PLATE AS	
	4	1	**289-9875**	1	PLATE AS	
	5	1	**289-9872**	1	PLATE AS	
	6	1	**223-8267**	1	PLATE AS	
	7	1	**232-2865**	1	PLATE AS	
	8	1	**232-2869**	1	PLATE AS	
	9	1	**232-2870**	1	PLATE AS	
	10	1	**9X-2038**	41	WASHER (7X19X2-MM THK)	
M	11	1	**9X-2043**	41	SCREW-TRUSS HEAD (M6X1X14-MM)	

C-CHANGE FROM PREVIOUS TYPE
M-METRIC PART

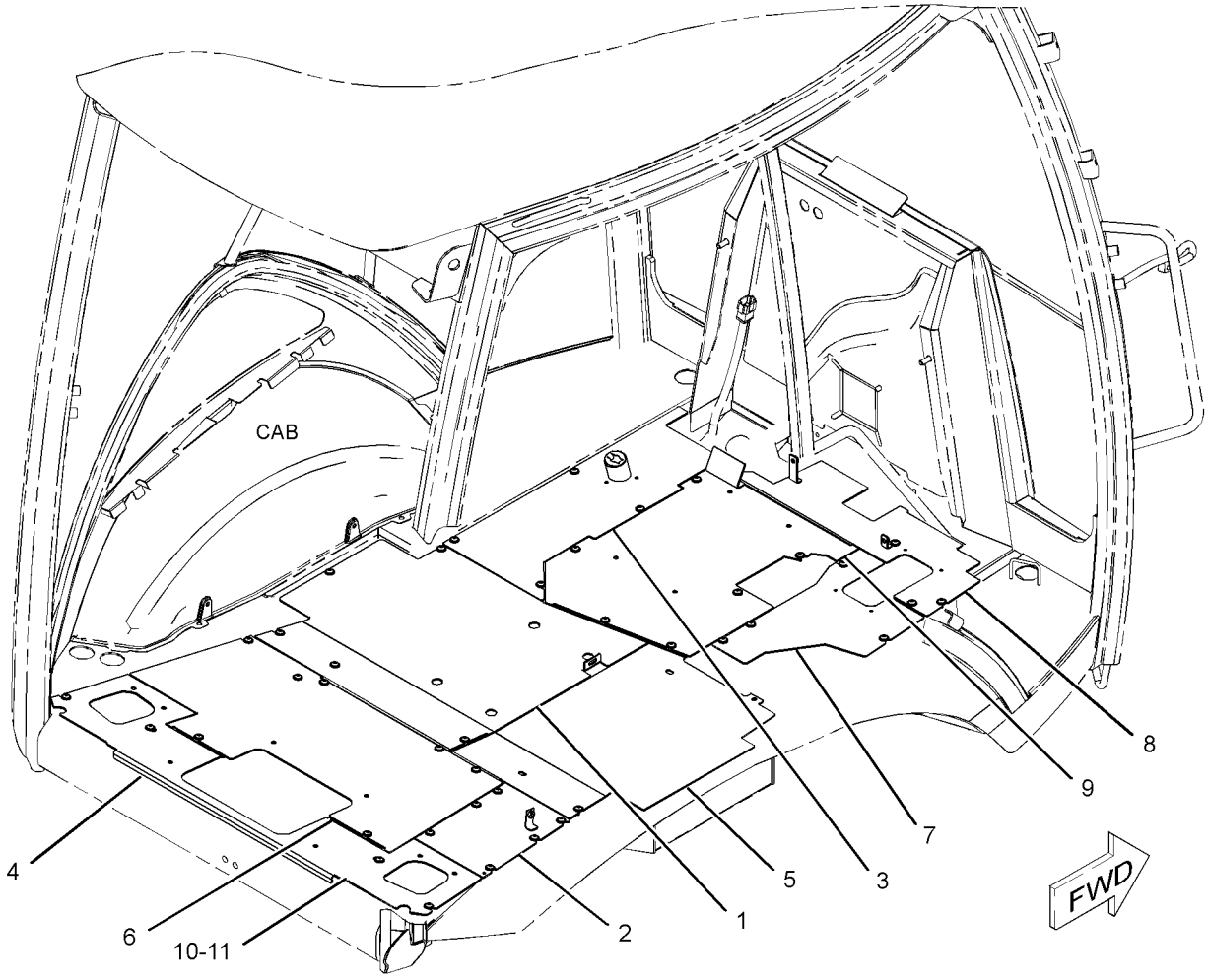

GRAPHIC #1 **<END>** g02149191

FRAME AND BODY

206-1841 FLOORPLATE GP

S/N: LMS1-UP
PART OF 291-9194, 291-9195 CAB AR-ENCLOSED ROPS
AN ATTACHMENT

SMCS-7265 **i03908751**

NOTE	REF NO	GRAPHIC REF	PART NUMBER	QTY	PART NAME 1 2 3 4 5 6 (PRODUCT LEVEL)	SEE PAGE
	1	1	**289-9871**	1	PLATE AS	
	2	1	**206-1835**	1	PLATE AS	
C	3	1	**223-4546**	1	PLATE AS	
	4	1	**289-9875**	1	PLATE AS	
C	5	1	**299-4777**	1	PLATE AS	
	6	1	**289-9873**	1	PLATE AS	
	7	1	**223-8267**	1	PLATE AS	
	8	1	**232-2865**	1	PLATE AS	
	9	1	**232-2869**	1	PLATE AS	
	10	1	**232-2870**	1	PLATE AS	
	11	1	**9X-2038**	41	WASHER (7X19X2-MM THK)	
M	12	1	**9X-2043**	45	SCREW-TRUSS HEAD (M6X1X14-MM)	

C-CHANGE FROM PREVIOUS TYPE
M-METRIC PART

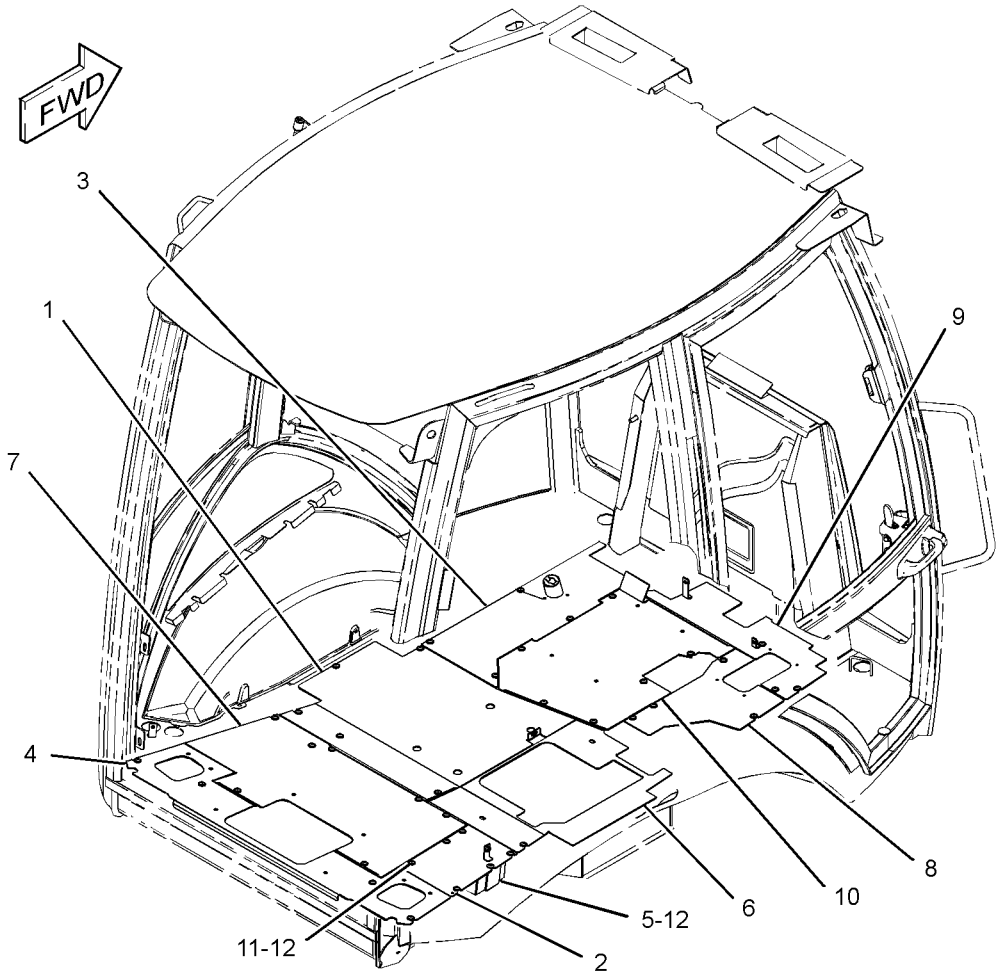

GRAPHIC #1 **<END>** g02149179

316-1079 FRAME AS-SWING

S/N: LMS1-UP

PART OF 251-4519 FRAME GP-SWING

SMCS-6506 **i02940307**

NOTE	REF NO	GRAPHIC REF	PART NUMBER	QTY	PART NAME 1 2 3 4 5 6 (PRODUCT LEVEL)	SEE PAGE
	1	1	**9R-0366**	1	WASHER (80X140X5-MM THK)	
	2	1	**213-6702**	4	BEARING-SLEEVE	
	3	1	**237-0944**	2	BEARING-SLEEVE	
	4	1	**262-7043**	2	BEARING	
	5	1	**278-5454**	2	BEARING-SLEEVE	

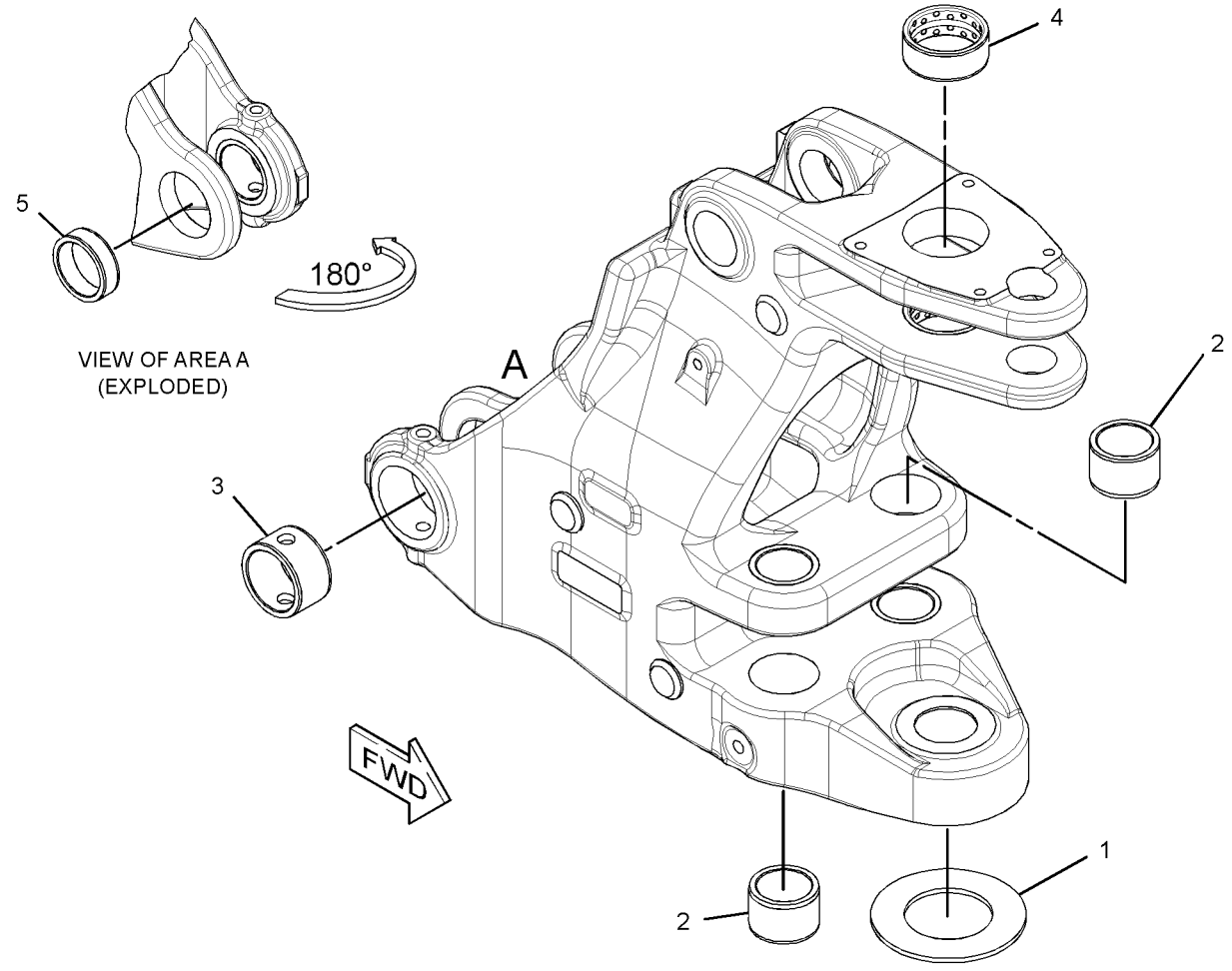

GRAPHIC #1 **<END>** g01595653

293-5309 FRAME GP-LOADER—SINGLE TILT

S/N: LMS1-UP

PART OF 291-9190 CHASSIS AR

SMCS-7054 **i03893389**

NOTE	REF NO	GRAPHIC REF	PART NUMBER	QTY	PART NAME 1 2 3 4 5 6 (PRODUCT LEVEL)	SEE PAGE
	1	1	**9R-0481**	2	WASHER (71X110X4-MM THK)	
	2	1	**209-4777**	1	CAP & BEARING AS	
	2A	1	**9R-4110**	2	BEARING-SLEEVE	
	3	1	**317-7120**	2	COVER	
	4	1	**293-5308**	1	FRAME AS	
	4A	1	**278-7695**	1	BEARING-SLEEVE	
	4B	1	**9R-0431**	4	BEARING-SLEEVE	
	4C	1	**278-7066**	4	BEARING	
	4D	1	**262-7044**	1	BEARING	
	4E	1	**9R-4110**	2	BEARING-SLEEVE	
M	5	1	**114-6099**	8	BOLT (M24X3X80-MM)	
	6	1	**3B-8488**	2	FITTING-GREASE	
	7	1	**3B-8489**	2	FITTING-GREASE	
M	8	1	**8T-4001**	8	NUT (M24X3-THD)	
	9	1	**8T-4222**	4	WASHER-PLATED (11X32X2.5-MM THK)	
	10	1	**8T-4167**	16	WASHER-HARD (26X44X4-MM THK)	
M	11	1	**8T-4196**	4	BOLT (M10X1.5X35-MM)	
	12	1	**3B-8486**	1	FITTING-GREASE	
M	13	1	**246-7854**	14	NUT-SPECIAL (M10X1.5-THD)	

M-METRIC PART

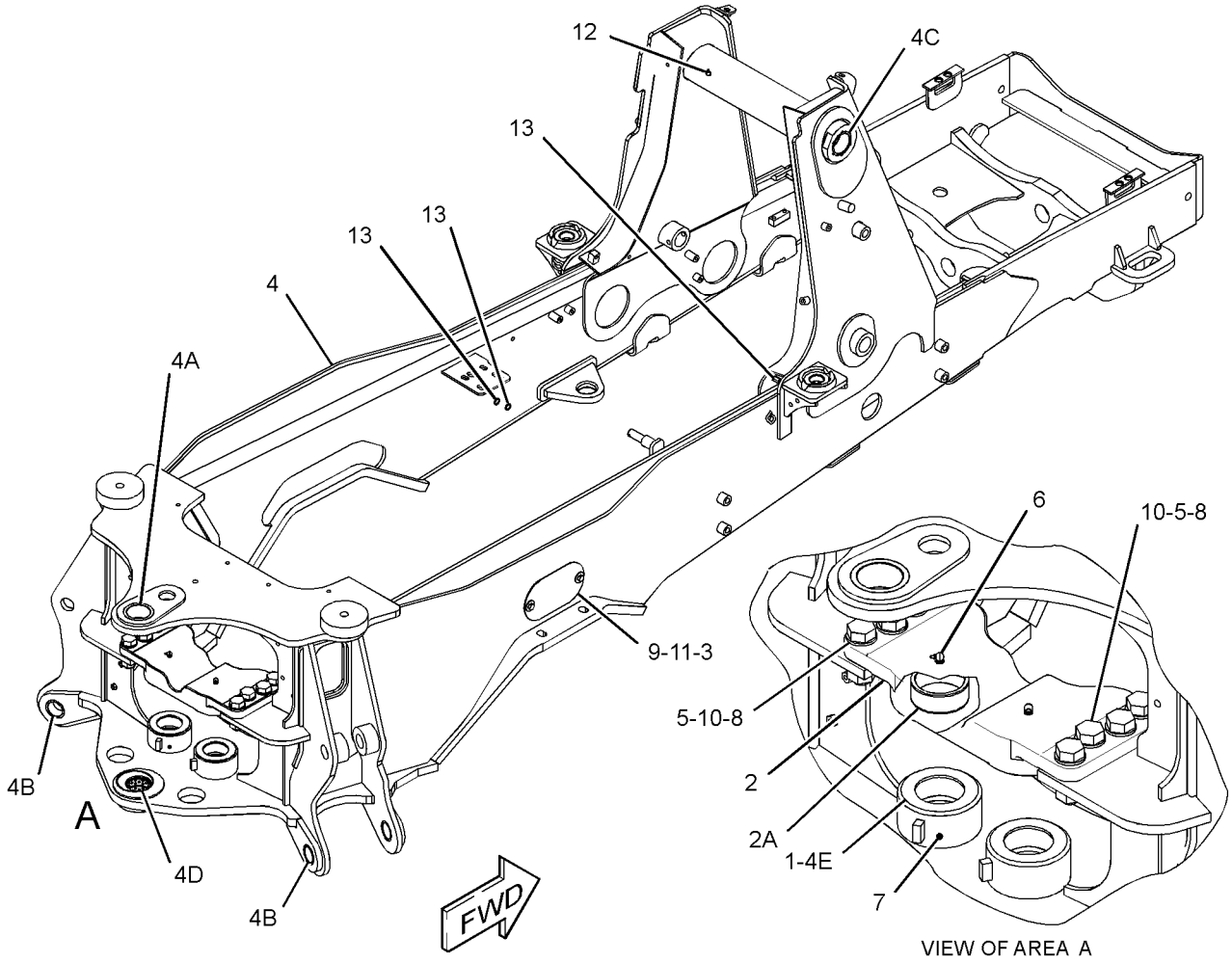

GRAPHIC #1 **<END>** g02139615

251-4519 FRAME GP-SWING

S/N: LMS1-UP

PART OF 291-9190 CHASSIS AR

SMCS-6506 **i03845853**

NOTE	REF NO	GRAPHIC REF	PART NUMBER	QTY	PART NAME 1 2 3 4 5 6 (PRODUCT LEVEL)	SEE PAGE
	1	1	**8T-4821**	5	WASHER (13.5X40X3-MM THK)	
	2	1	**8T-4837**	1	WASHER (48X85X6-MM THK)	
	3	1	**300-5440**	1	PIN	
B	4	1	**176-0626**	2	WASHER (67.5X120X3-MM THK)	
	5	1	**9R-7882**	1	SPACER (14X25X7-MM THK)	
B	6	1	**9R-8291**	2	SPACER (66X125X1-MM THK)	
	7	1	**270-5290**	1	BOLT-SOCKET HEAD (M12X1.75X300-MM)	
	8	1	**209-6850**	1	PIN AS	
	9	1	**209-6855**	2	PIN	
Y	10	1	**316-1079**	1	FRAME AS-SWING	221
	11	1	**237-5330**	2	PIN	
	12	1	**328-8776**	1	PIN AS	
	13	1	**250-0741**	1	LUG	
B	14	1	**136-7440**	2	SHIM (1-MM THK)	
	15	1	**3B-8486**	2	FITTING-GREASE	
	16	1	**3B-8489**	3	FITTING-GREASE	
M	17	1	**6V-7687**	4	LOCKNUT (M12X1.75-THD)	
M	18	1	**8T-6868**	1	BOLT (M12X1.75X80-MM)	
M	19	1	**8T-3652**	1	NUT (M42X2-THD)	
M	20	1	**8T-4139**	1	BOLT (M12X1.75X30-MM)	
	21	1	**5P-1076**	3	WASHER-HARD (13.5X30X4-MM THK)	
M	22	1	**8T-7930**	2	BOLT (M12X1.75X160-MM)	

B-USE AS REQUIRED
M-METRIC PART
Y-SEPARATE ILLUSTRATION

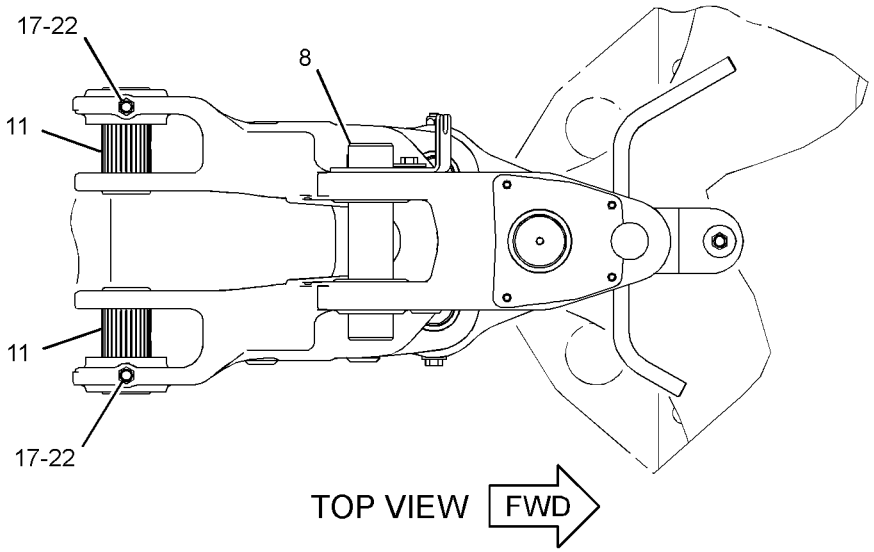

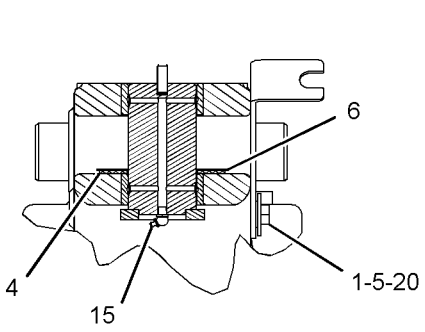

SECTION A-A

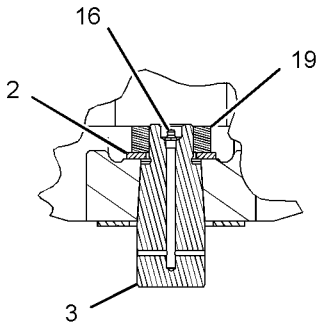

SECTION B-B

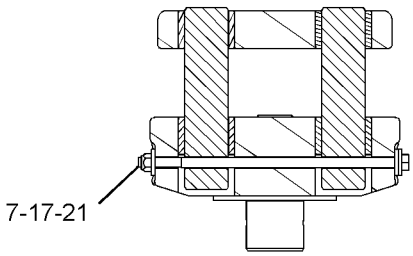

SECTION C-C

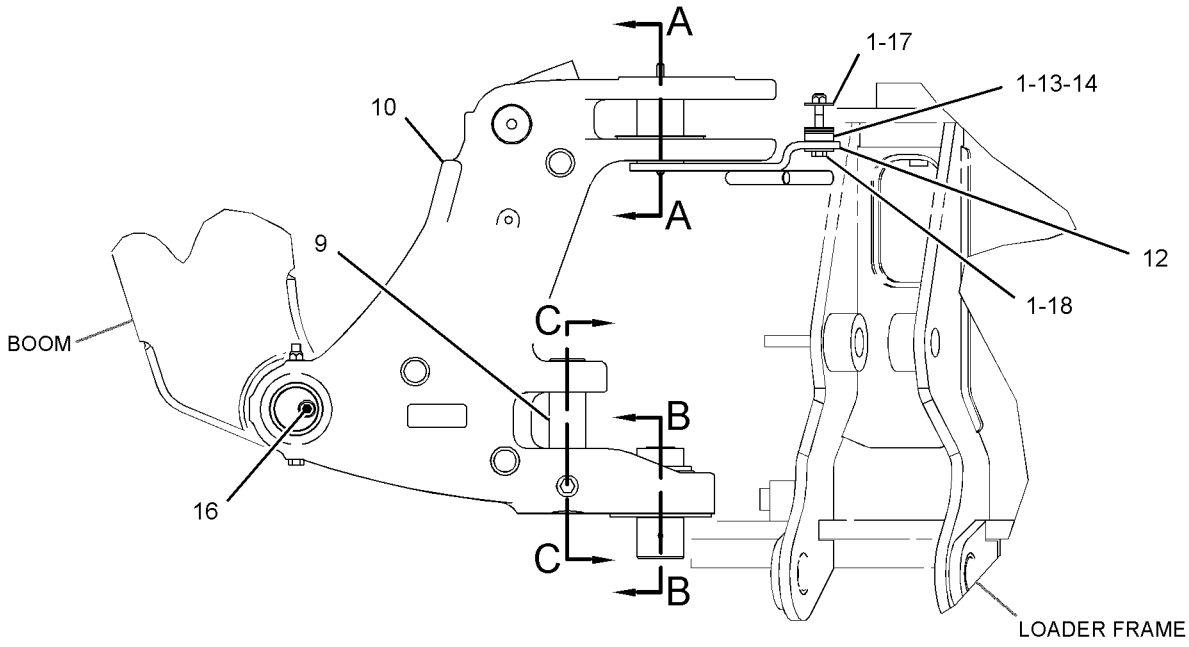

RIGHT SIDE VIEW

GRAPHIC #1

<END>

g01517969

133-3361 GUARD GP-CYLINDER–STABILIZER

S/N: LMS1-UP

AN ATTACHMENT

SMCS-7164 **i03872812**

NOTE	REF NO	GRAPHIC REF	PART NUMBER	QTY	PART NAME 1 2 3 4 5 6 (PRODUCT LEVEL)	SEE PAGE
	1	1	**8T-4986**	4	CLAMP-HOSE	
	2	1	**130-1638**	2	PIN	
	3	1	**130-1640**	2	GUARD AS	
	4	1	**188-3953**	2	PAD	
B	5	1	**9R-0109**	12	WASHER (41X64X3-MM THK)	
	6	1	**318-8228**	2	PLATE AS	
	7	1	**5P-4116**	2	WASHER-HARD (8.8X20.5X2-MM THK)	
	8	1	**6V-8144**	4	RING-RETAINING	
M	9	1	**7X-2537**	2	BOLT (M8X1.25X35-MM)	

B-USE AS REQUIRED
M-METRIC PART

133-3361 **GUARD GP-CYLINDER** *(contd.)* **i03872812**

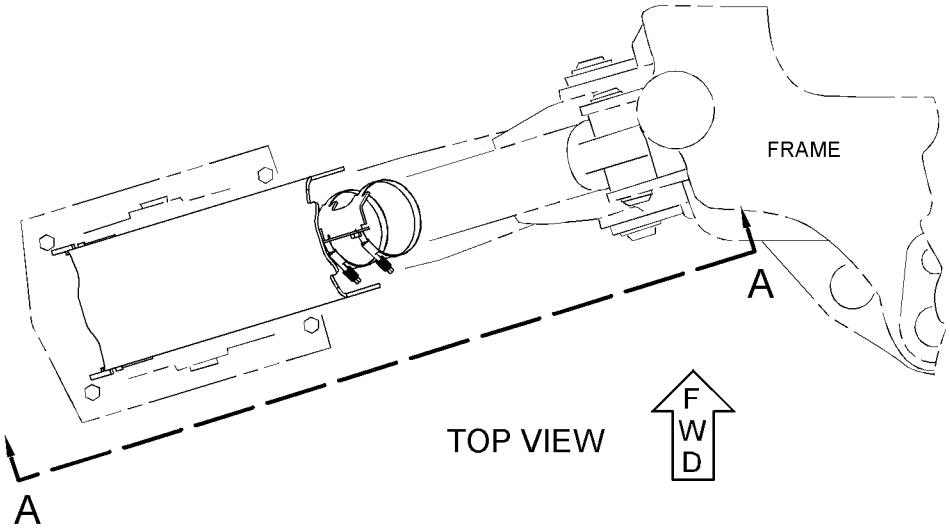

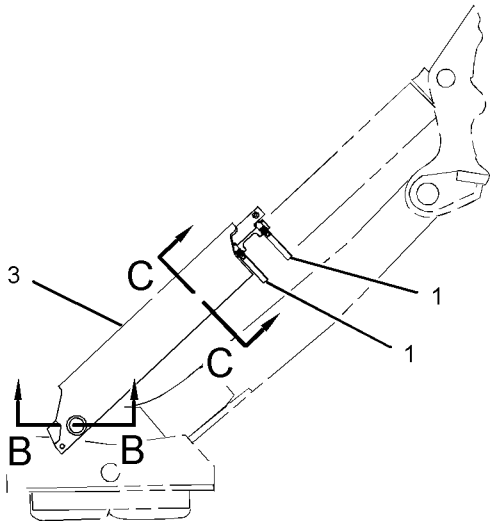

VIEW A-A

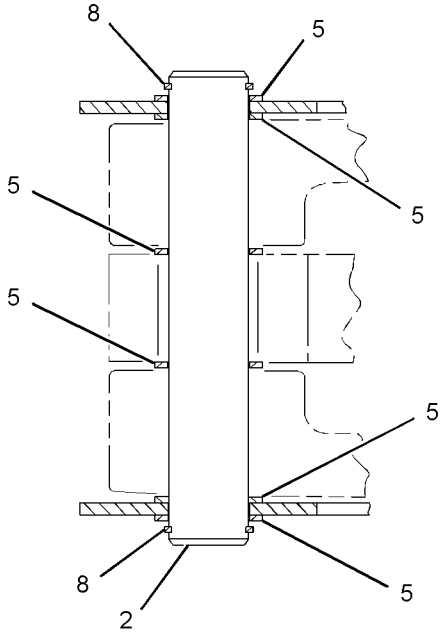

SECTION B-B

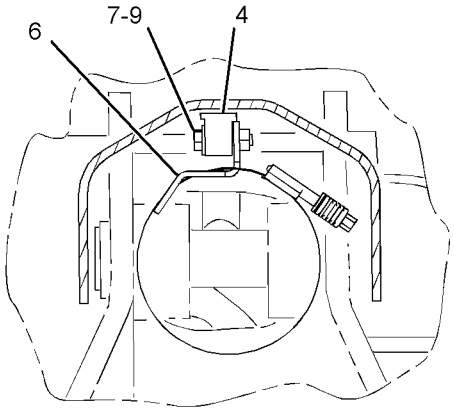

SECTION C-C

GRAPHIC #1 **<END>** g02117233

135-4744 GUARD GP-CYLINDER—STABILIZER

S/N: LMS1-UP

AN ATTACHMENT

SMCS-7164 **i03872817**

NOTE	REF NO	GRAPHIC REF	PART NUMBER	QTY	PART NAME 1 2 3 4 5 6 (PRODUCT LEVEL)	SEE PAGE
	1	1	**8T-4986**	4	CLAMP-HOSE	
	2	1	**130-1640**	2	GUARD AS	
	3	1	**146-1589**	4	LATCH	
	4	1	**146-1590**	4	LATCH	
	5	1	**188-3953**	2	PAD	
B	6	1	**9R-0109**	12	WASHER (41X64X3-MM THK)	
	7	1	**318-8228**	2	PLATE AS	
	8	1	**5P-4116**	2	WASHER-HARD (8.8X20.5X2-MM THK)	
	9	1	**6V-5729**	4	LOCKNUT (7/16-14-THD)	
	10	1	**7X-0310**	4	BOLT (7/16-14X2-IN)	
M	11	1	**7X-2537**	2	BOLT (M8X1.25X35-MM)	
	12	1	**8T-5360**	8	WASHER (12X22.5X2.5-MM THK)	

B-USE AS REQUIRED
M-METRIC PART

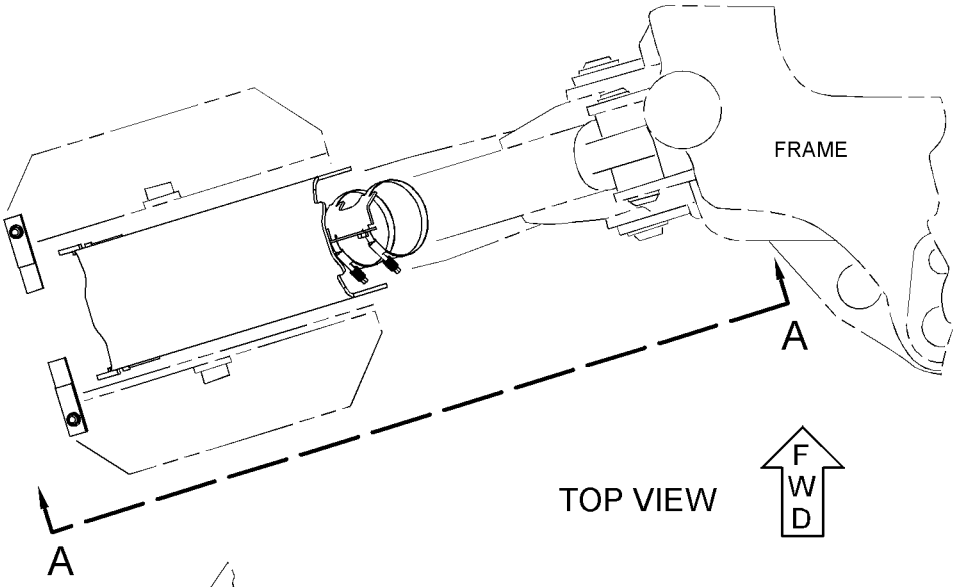

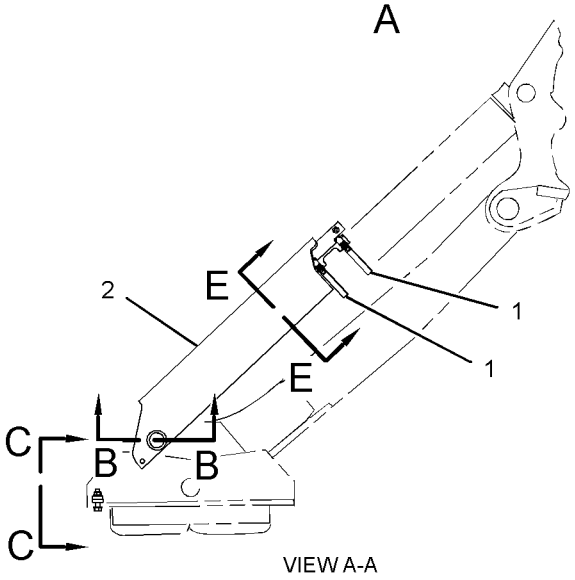

VIEW A-A

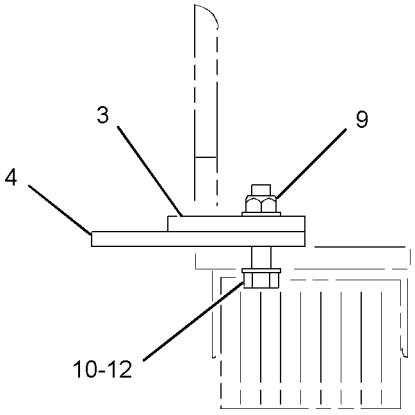

VIEW C-C

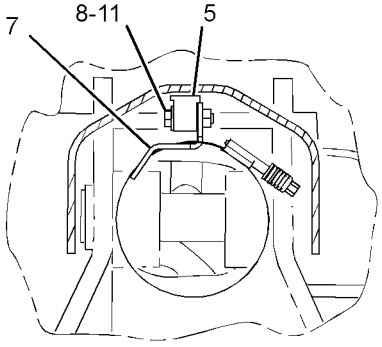

SECTION E-E

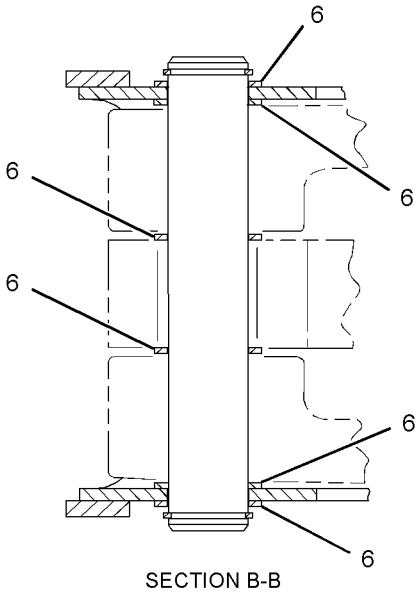

SECTION B-B

GRAPHIC #1 **<END>** g02117036

355-5861 GUARD GP-CYLINDER—STABILIZER

S/N: LMS1-UP

PART OF 133-3362, 133-3363, 133-3366 PAD & GUARD GP-STABILIZER

AN ATTACHMENT

SMCS-7164 **i03869690**

NOTE	REF NO	GRAPHIC REF	PART NUMBER	QTY	PART NAME 1 2 3 4 5 6 (PRODUCT LEVEL)	SEE PAGE
	1	1	**3S-8536**	2	SPACER (0.406X0.656X0.38-IN THK)	
	2	1	**8T-4986**	4	CLAMP-HOSE	
	3	1	**130-1638**	2	PIN	
	4	1	**188-3953**	2	PAD	
	5	1	**194-9487**	2	BUMPER AS	
	6	1	**241-0888**	2	PLATE	
	7	1	**241-0889**	2	GUARD AS	
					(EACH INCLUDES)	
M		1	**8T-3490**	2	NUT-WELD (M10X1.5-THD)	
	8	1	**318-8228**	2	PLATE AS	
	9	1	**5P-4116**	2	WASHER-HARD (8.8X20.5X2-MM THK)	
M	10	1	**7X-2537**	2	BOLT (M8X1.25X35-MM)	
	11	1	**7X-7729**	2	WASHER (11X25X3-MM THK)	
M	12	1	**8T-4195**	2	BOLT (M10X1.5X30-MM)	
	13	1	**9R-0109**	4	WASHER (41X64X3-MM THK)	

M-METRIC PART

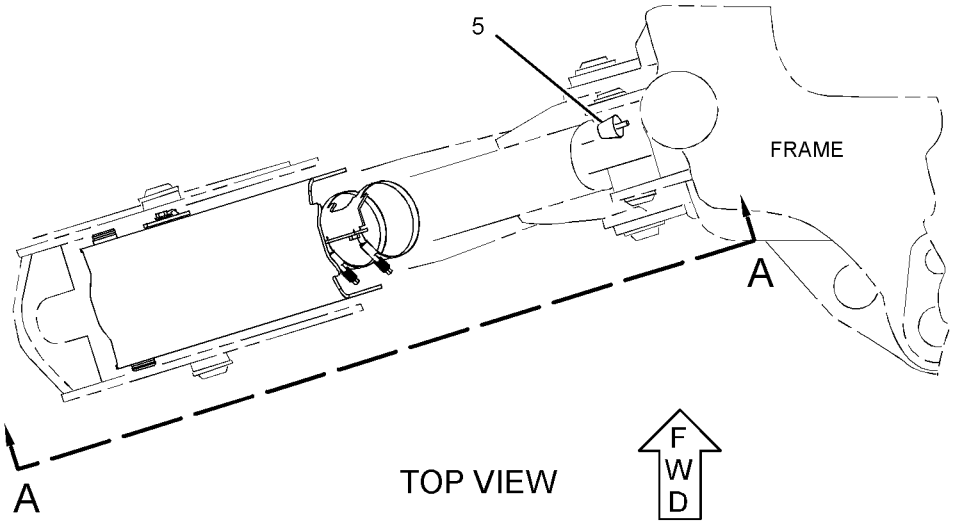

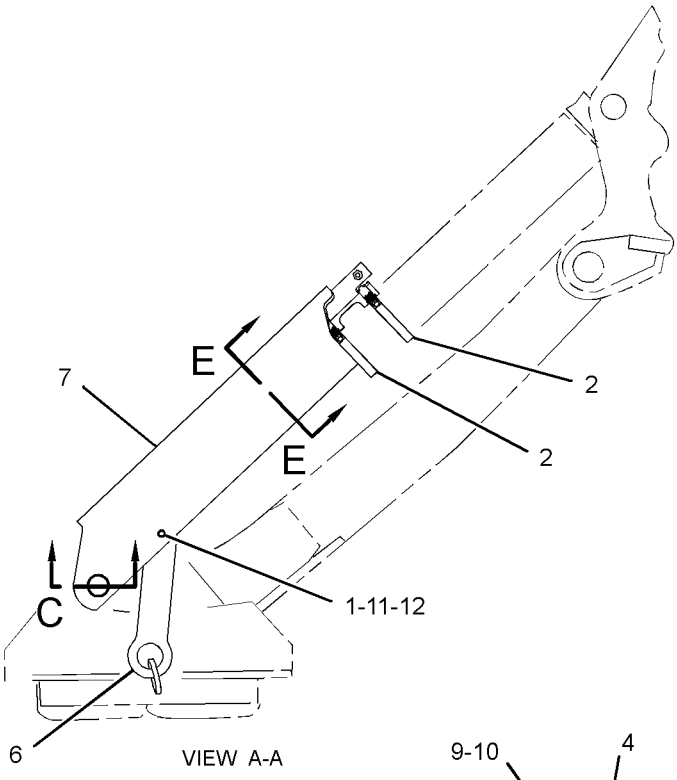

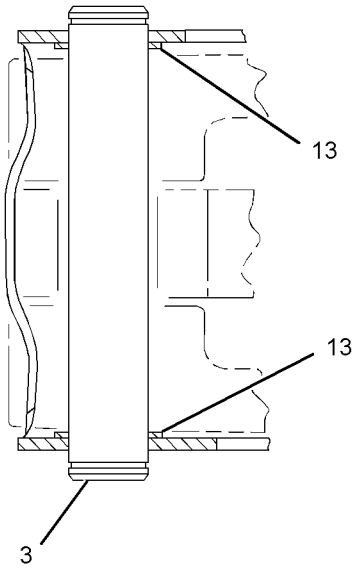

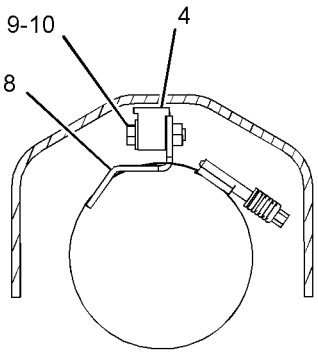

GRAPHIC #1

<END>

g02118116

217-9672 GUARD GP-DRIVE SHAFT

S/N: LMS1-UP
PART OF 317-1454 DRIVE AR-BACKHOE LOADER
AN ATTACHMENT

SMCS-7153 **i02531164**

NOTE	REF NO	GRAPHIC REF	PART NUMBER	QTY	PART NAME 1 2 3 4 5 6 (PRODUCT LEVEL)	SEE PAGE
	1	1	**216-5981**	1	GUARD AS	
M	2	1	**290-3347**	4	BOLT-CARRIAGE (M16X2X40-MM)	
	3	1	**8T-4122**	4	WASHER-HARD (17X32X3.5-MM THK)	
M	4	1	**8T-4132**	4	NUT (M16X2-THD)	

M-METRIC PART

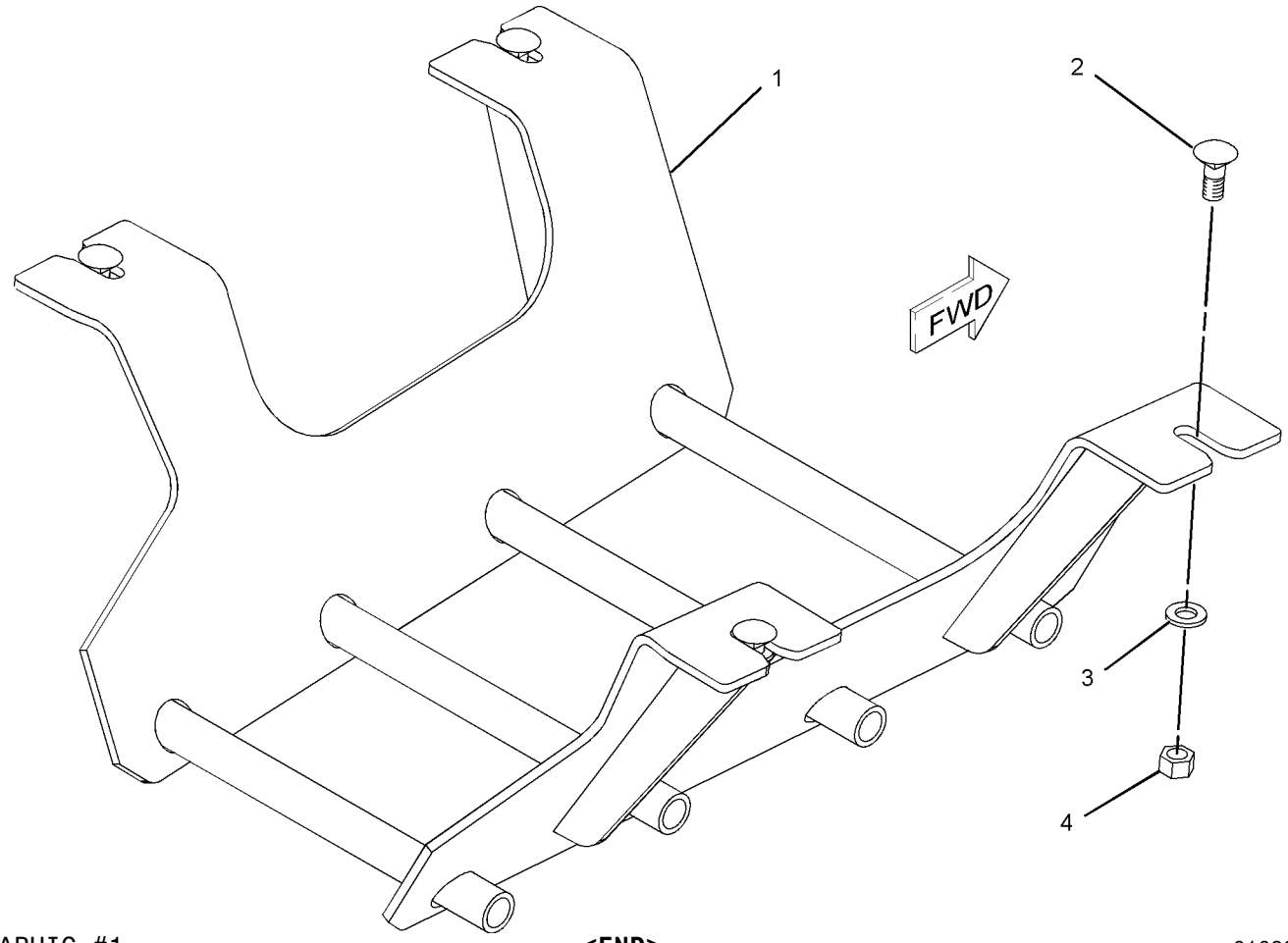

GRAPHIC #1 **<END>** g01083443

256-0324 GUARD GP-RADIATOR

S/N: LMS1-UP

AN ATTACHMENT

SMCS-7155 **i02162026**

NOTE	REF NO	GRAPHIC REF	PART NUMBER	QTY	PART NAME 1 2 3 4 5 6 (PRODUCT LEVEL)	SEE PAGE
	1	1	**256-0323**	1	COVER	
M	2	1	**7X-2572**	2	BOLT (M24X3X35-MM)	
	3	1	**8T-4167**	2	WASHER-HARD (26X44X4-MM THK)	

M-METRIC PART

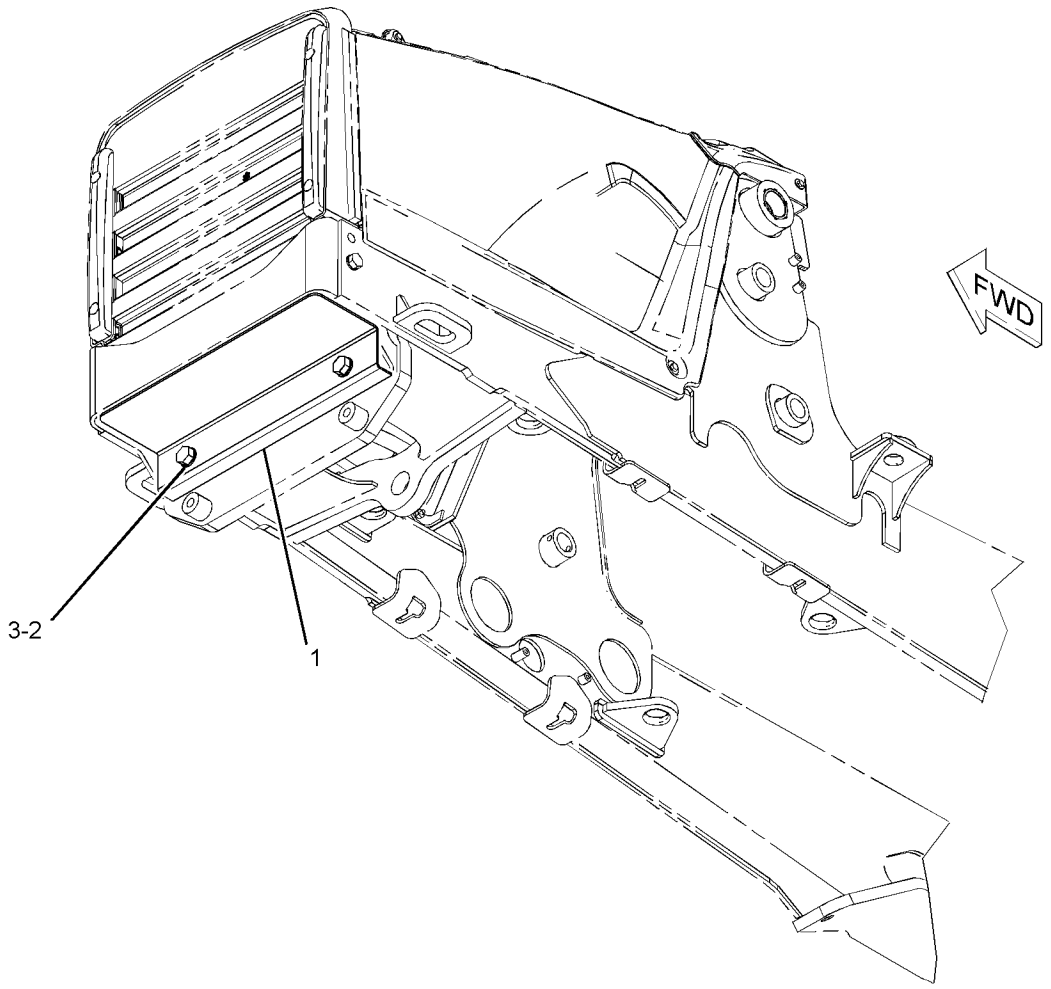

GRAPHIC #1 **<END>** g01096781

297-5300 HOOD & GUARD GP

S/N: LMS1-UP

PART OF 291-9190 CHASSIS AR

SMCS-7150, 7170, 7251, 7263 **i03894530**

NOTE	REF NO	GRAPHIC REF	PART NUMBER	QTY	PART NAME 1 2 3 4 5 6 (PRODUCT LEVEL)	SEE PAGE
	1	1	**9X-7114**	4	SPACER (8.5X10.15X5.6-MM THK)	
	2	1	**123-0428**	2	BAR	
	3	1	**317-7313**	1	ENCLOSURE AS (RH)	
		1	**317-7181**	1	ENCLOSURE (RH)	
		1	**275-0002**	1	INSULATION	
	4	1	**317-7180**	1	ENCLOSURE (LH)	
	5	1	**247-1080**	2	BUMPER AS	
	6	1	**325-5483**	1	GRILL	
	7	1	**244-2041**	1	COWLING	
Y	8	1	*297-5301*	1	HOOD GP-ENGINE	235
	9	1	**325-3639**	1	GUARD AS	
	10	1	**325-1969**	1	BRACE	
	11	1	**7X-0579**	8	WASHER-HARD (8.8X25.5X2-MM THK)	
	12	1	**8T-4121**	8	WASHER-HARD (11X21X2.5-MM THK)	
	13	1	**8T-4123**	2	WASHER (22X35X3.5-MM THK)	
M	14	1	**8T-4136**	2	BOLT (M10X1.5X25-MM)	
M	15	1	**8T-4137**	6	BOLT (M10X1.5X20-MM)	
M	16	1	**8T-4139**	2	BOLT (M12X1.75X30-MM)	
M	17	1	**8T-4141**	2	BOLT (M20X2.5X70-MM)	
M	18	1	**8T-4189**	10	BOLT (M8X1.25X20-MM)	
	19	1	**8T-4223**	2	WASHER-HARD (13.5X25.5X3-MM THK)	
	20	1	**8T-4224**	6	WASHER-HARD (8.8X16X2-MM THK)	
M	21	1	**8T-7547**	4	BOLT (M8X1.25X30-MM)	

M-METRIC PART
Y-SEPARATE ILLUSTRATION

297-5300 **HOOD & GUARD GP** *(contd.)* **i03894530**

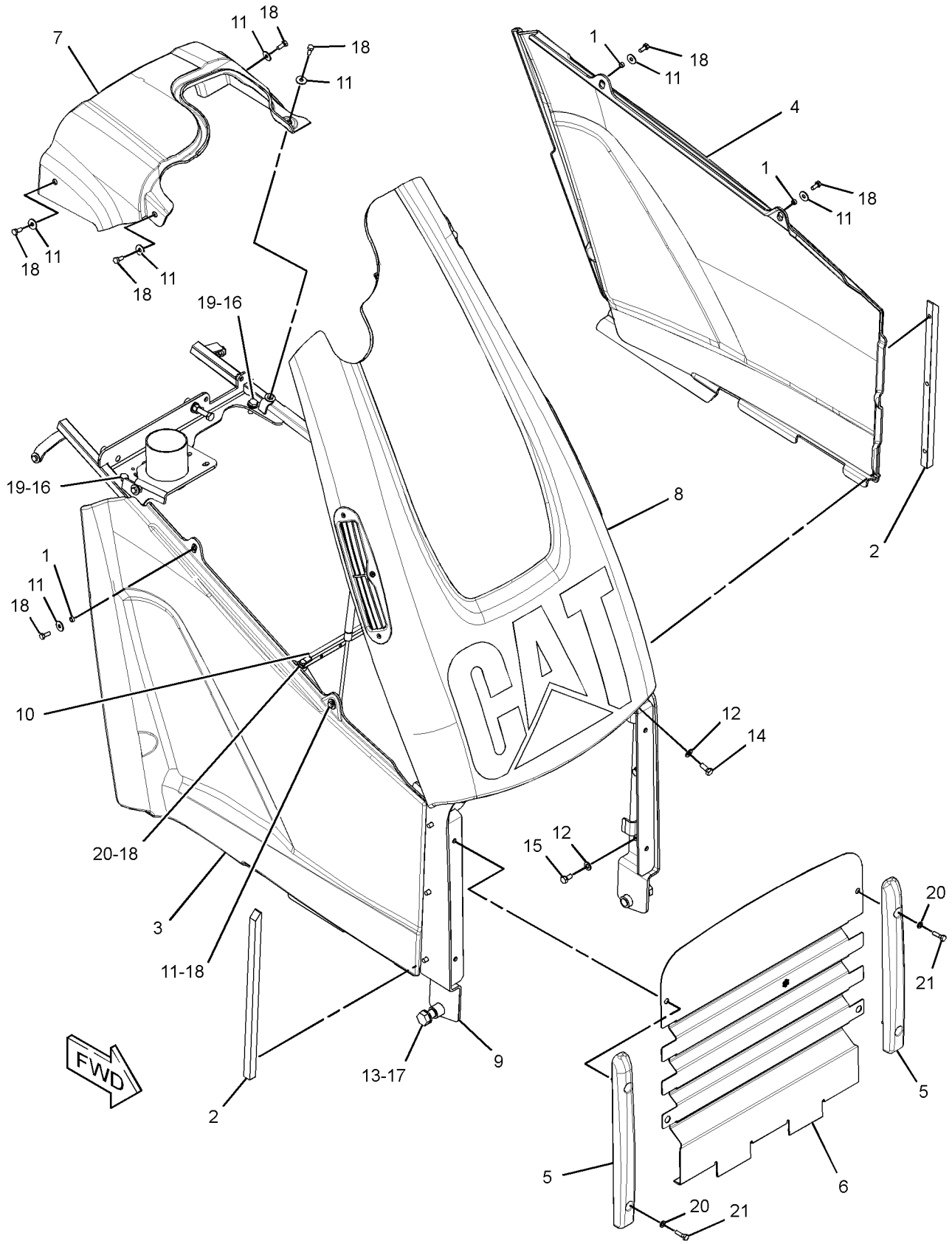

GRAPHIC #1 **<END>** g02138148

FRAME AND BODY

297-5301 HOOD GP-ENGINE

S/N: LMS1-UP

PART OF 297-5300 HOOD & GUARD GP

SMCS-7251 **i03893449**

NOTE	REF NO	GRAPHIC REF	PART NUMBER	QTY	PART NAME 1 2 3 4 5 6 (PRODUCT LEVEL)	SEE PAGE
J	1	1	**250-5881**	1	SPRING AS-GAS (ENGINE)	
J	2	1	**254-9301**	1	SPRING AS-GAS (LOCKABLE)	
	3	1	**288-1157**	1	FILM-INSTRUCTION (UNLOCK)	
Y	4	1	*297-5310*	1	HOOD GP-ENGINE	236
	5	1	**311-8060**	1	FRAME AS-HOOD	
	6	1	**3B-4505**	2	LOCKWASHER	
	7	1	**8T-4223**	2	WASHER-HARD (13.5X25.5X3-MM THK)	
	8	1	**8T-4224**	4	WASHER-HARD (8.8X16X2-MM THK)	
M	9	1	**8T-4244**	2	NUT (M12X1.75-THD)	
M	10	1	**8T-4648**	1	BOLT (M12X1.75X70-MM)	
M	11	1	**8T-6869**	2	BOLT (M8X1.25X60-MM)	
					AVAILABLE REPAIR KIT(S):	
J			**275-0001**	2	KIT-GAS SPRING	
					(EACH KIT INCLUDES BALL STUDS & CLIPS)	

J-KIT MARKED J SERVICES PARTS MARKED J
M-METRIC PART
Y-SEPARATE ILLUSTRATION

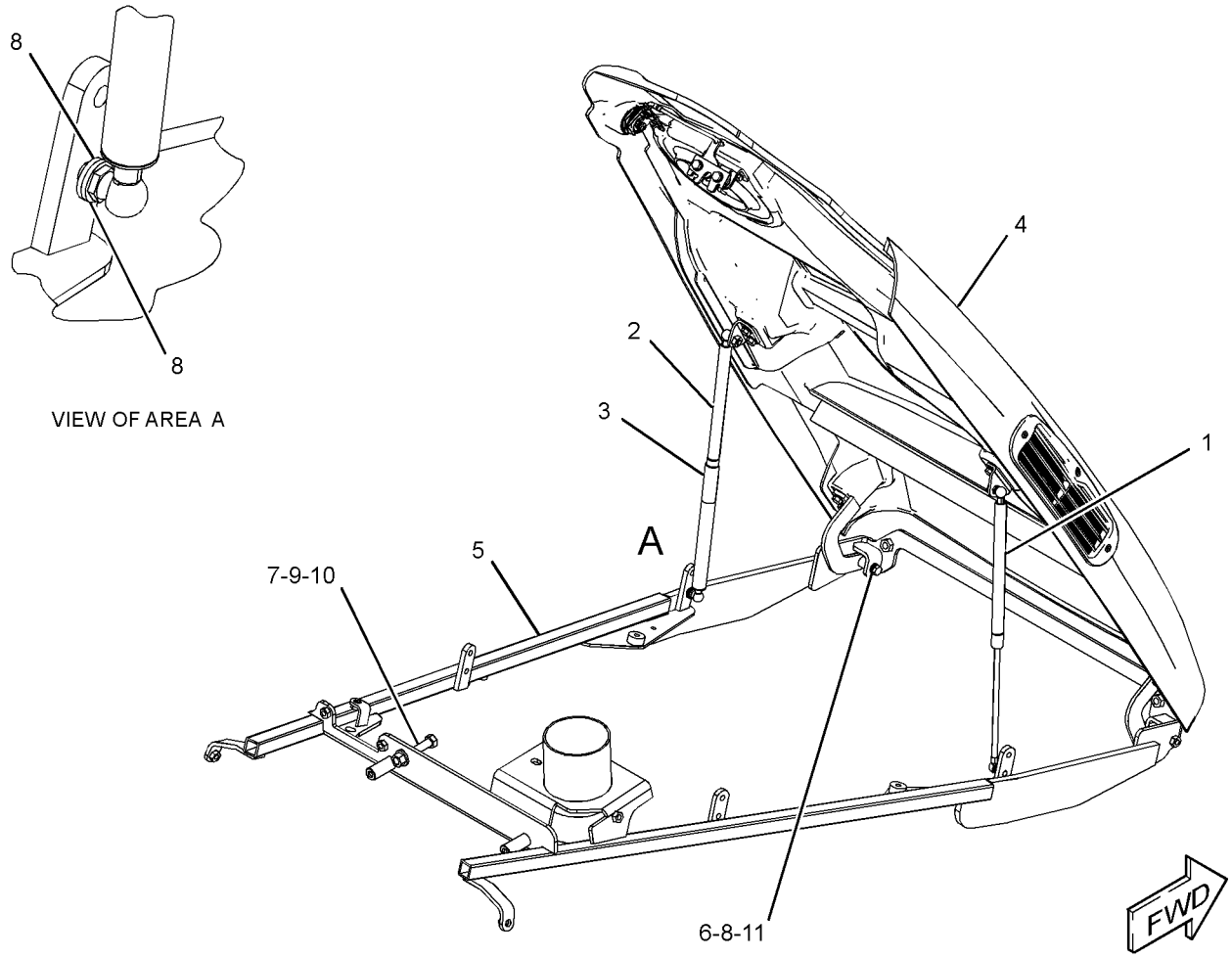

GRAPHIC #1 **<END>** g02137577

297-5310 HOOD GP-ENGINE

S/N: LMS1-UP

PART OF 297-5301 HOOD GP-ENGINE

SMCS-7251 **i03893469**

NOTE	REF NO	GRAPHIC REF	PART NUMBER	QTY	PART NAME 1 2 3 4 5 6 (PRODUCT LEVEL)	SEE PAGE
	1	1	**5E-8557**	1	CLIP	
	2	1	**250-1878**	1	FILM-IDENTIFICATION (CAT)	
	3	1	**250-6850**	2	BRACKET AS	
	4	1	**250-6858**	1	LATCH AS (HOOD)	
	5	1	**251-4375**	1	ROD	
	6	1	**292-3995**	1	HINGE AS	
	7	1	**292-3996**	1	HINGE AS	
	8	1	**297-5311**	1	HOOD AS	
J	9	1	**312-1671**		SEAL (7-DM)	
	10	1	**313-1457**	1	GRILL AS	
	11	1	**313-1458**	1	GRILL AS	
	12	1	**313-7109**	1	LOCK AS (HOOD)	
	13	1	**341-9304**	1	BRACKET AS	
M	14	1	**7X-2537**	2	BOLT (M8X1.25X35-MM)	
M	15	1	**8C-6428**	6	SCREW-FLAT HEAD (M5X0.8X30-MM)	
M	16	1	**8T-4189**	10	BOLT (M8X1.25X20-MM)	
	17	1	**8T-4224**	12	WASHER-HARD (8.8X16X2-MM THK)	

J-ORDER BY THE DECIMETER
M-METRIC PART

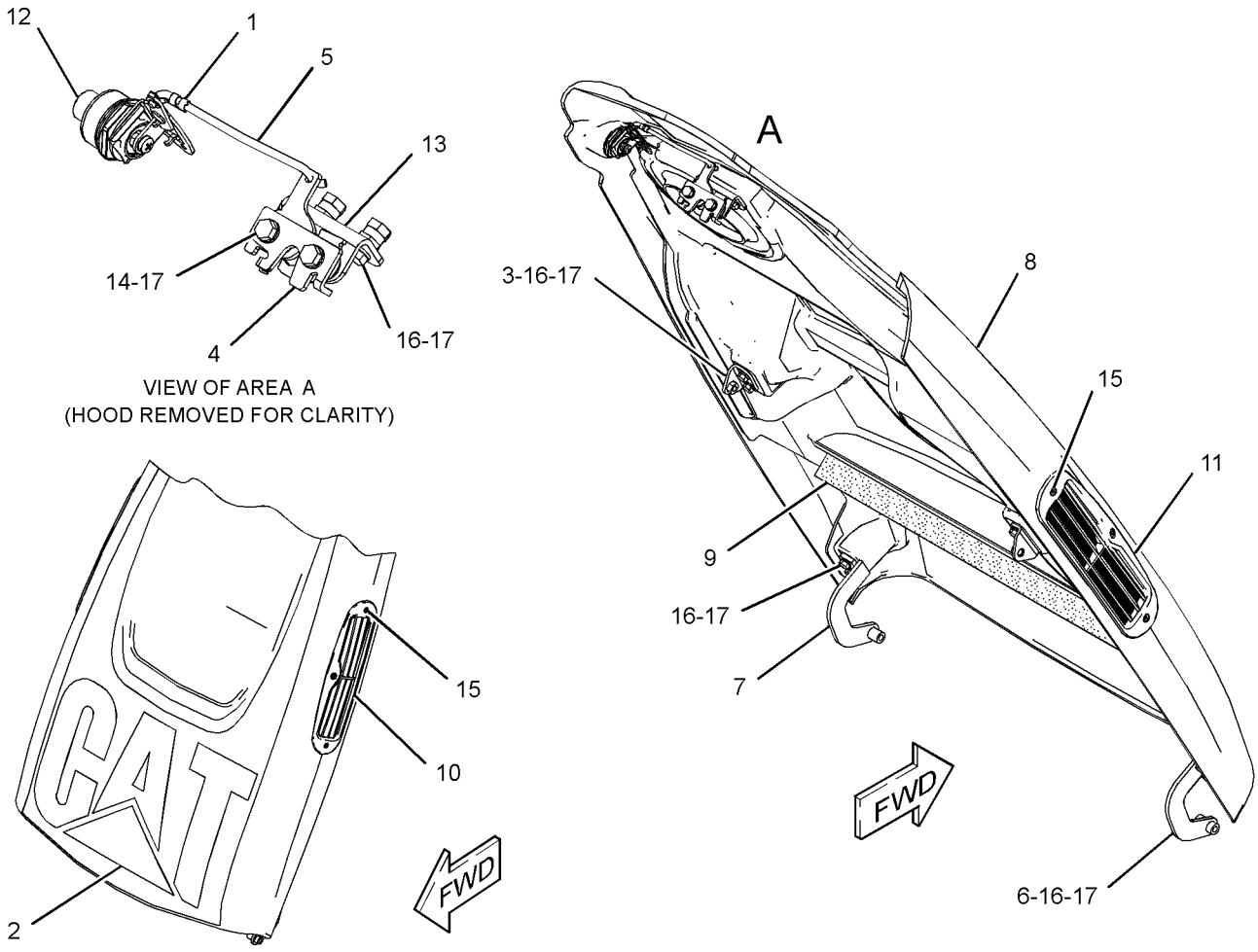

VIEW OF AREA A
(HOOD REMOVED FOR CLARITY)

GRAPHIC #1 **<END>** g02137814

162-3960 ACCUMULATOR GP-RIDE CONTROL–CHARGED

S/N: LMS1-UP

PART OF 162-3961 ACCUMULATOR GP-RIDE CONTROL, 246-9802 LINES GP-RIDE CONTROL

FIELD REPLACEMENT ORDER 162-3961–PAGE 238

AN ATTACHMENT

SMCS-5077 **i03889069**

NOTE	REF NO	GRAPHIC REF	PART NUMBER	QTY	PART NAME 1 2 3 4 5 6 (PRODUCT LEVEL)	SEE PAGE
	1	1	**158-2306**	1	VALVE-GAS (ACCUMULATOR)	
	2	1	**241-0037**	1	FILM-WARNING (HIGH PRESSURE, READ OMM)	
	3	1	**170-0503**	1	FILM-WARNING (ACCUM, HIGH PRESS, READ OMM)	
					AVAILABLE REPAIR KIT(S):	
			160-0496	1	KIT-SEAL (ACCUMULATOR)	
					(INCLUDES SEALS)	

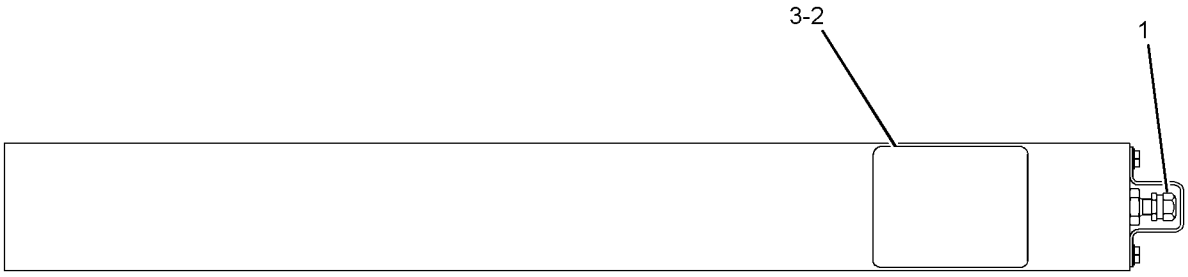

GRAPHIC #1 **<END>** g01220710

162-3961 ACCUMULATOR GP-RIDE CONTROL—UNCHARGED

S/N: LMS1-UP
PART OF 317-1456 KIT-RIDE CONTROL
FIELD REPLACEMENT FOR 162-3960—PAGE 237
AN ATTACHMENT

SMCS-5077 **i03548010**

NOTE	PART NUMBER	QTY	PART NAME 1 2 3 4 5 6 (PRODUCT LEVEL)	SEE PAGE
Y	*162-3960*	1	ACCUMULATOR GP-RIDE CONTROL (CHARGED)	237

Y-SEPARATE ILLUSTRATION

<END>

332-7131 CONTROL AR-RIDE

S/N: LMS1-UP
PART OF 357-0408 OPTION AR-CAB
AN ATTACHMENT

SMCS-5004 **i03865278**

NOTE	PART NUMBER	QTY	PART NAME 1 2 3 4 5 6 (PRODUCT LEVEL)	SEE PAGE
Y	*246-9802*	1	LINES GP-RIDE CONTROL	311
Y	*290-6783*	1	WIRING GP-RIDE CONTROL	125

Y-SEPARATE ILLUSTRATION

<END>

282-9956 CONVERSION AR-CUSHION SWING–KIT

S/N: LMS1-UP
AN ATTACHMENT

SMCS-5057, 5105, 5454 **i03865261**

NOTE	REF NO	GRAPHIC REF	PART NUMBER	QTY	PART NAME 1 2 3 4 5 6 (PRODUCT LEVEL)	SEE PAGE
	1	1	*187-2120*	2	ELBOW AS	
					(EACH INCLUDES)	
		1	**4J-5477**	1	SEAL-O-RING	
		1	**8C-8408**	1	ELBOW	
	2	1	**206-3685**	1	VALVE GP-CUSHION CROSSOVER RLF	
		1	**7I-8084**	2	PLUG	
	3	1	**226-5634**	2	CONNECTOR AS	
					(EACH INCLUDES)	
		1	**3J-1907**	1	SEAL-O-RING	
		1	**4J-5477**	1	SEAL-O-RING	
		1	**167-0566**	1	CARTRIDGE	
		1	**226-5633**	1	CONNECTOR	
I	4	1	**269-0471**	1	HOSE AS	
I	5	1	**269-0472**	1	HOSE AS	
	6	1	*148-8428*	2	TEE AS	
					(EACH INCLUDES)	
		1	**3K-0360**	1	SEAL-O-RING	
		1	**6V-8398**	2	SEAL-O-RING	
		1	**6V-8782**	1	TEE	
	7	1	**8T-4224**	2	WASHER-HARD (8.8X16X2-MM THK)	
M	8	1	**8T-6870**	2	BOLT (M8X1.25X70-MM)	

I-REFER TO HYDRAULIC INFORMATION SYSTEM
M-METRIC PART

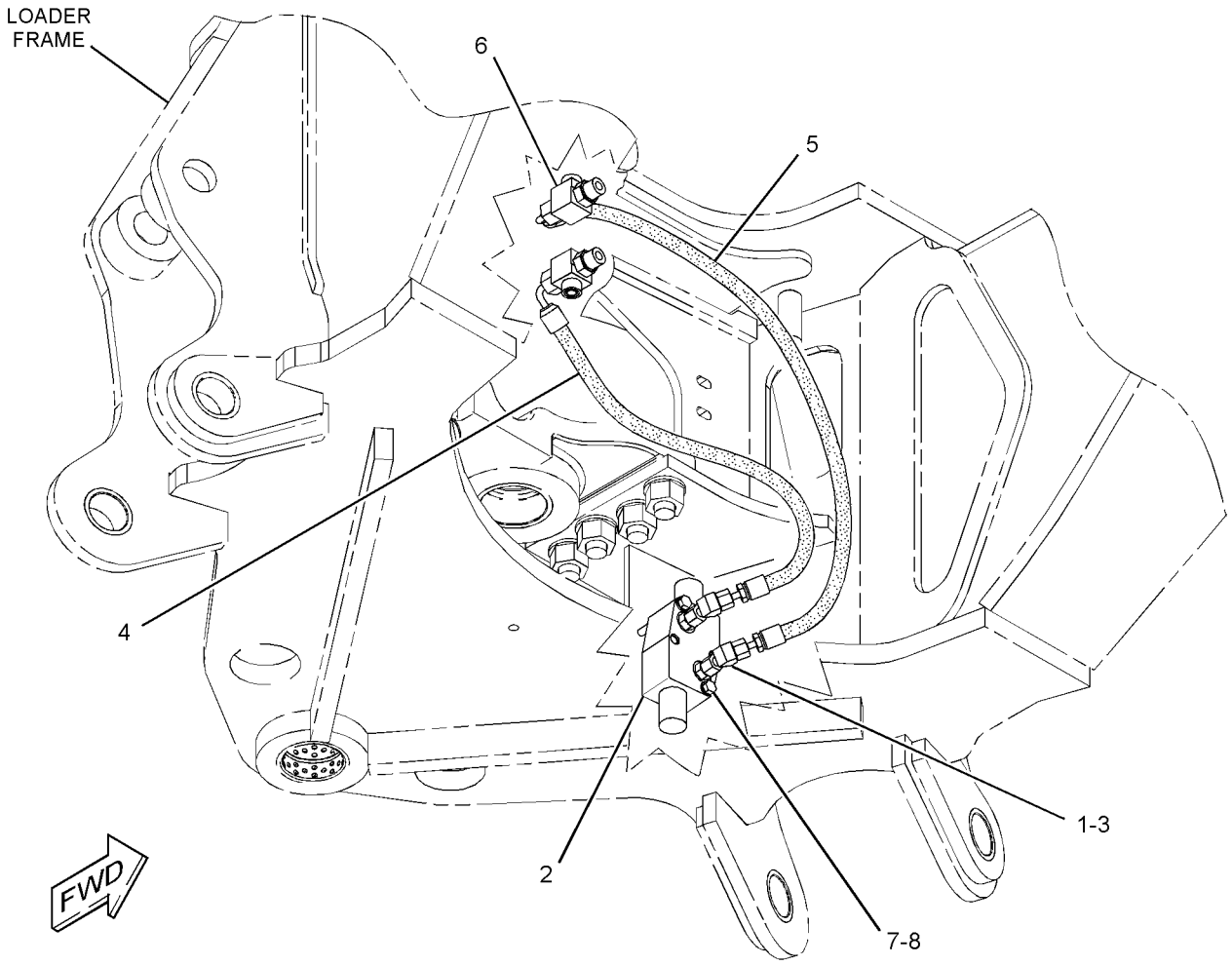

GRAPHIC #1 **<END>** g01807273

HYDRAULIC SYSTEM

258-8347 CONVERSION GP-HYD HAND CONTROL–
KIT, 4-FUNCTION, EXCAVATOR
S/N: LMS1-UP
AN ATTACHMENT

SMCS-5063 **i03865254**

NOTE	REF NO	GRAPHIC REF	PART NUMBER	QTY	PART NAME 1 2 3 4 5 6 (PRODUCT LEVEL)	SEE PAGE
	1	1	**142-7405**	2	COLLAR	
	2	1	**164-1361**	2	BOOT	
	3	1	**164-1371**	2	PLATE	
	4	1	**164-1399**	2	KNOB	
	5	1	**164-1409**	1	LEVER AS (RH)	
	6	1	**164-1411**	1	LEVER AS (LH)	
	7	1	**164-1421**	1	PLATE	
	8	1	**164-1422**	1	SHAFT AS	
	9	1	**164-1425**	1	COUPLER AS	
	10	1	**164-1429**	1	COUPLER AS	
	11	1	**164-1435**	2	PLATE	
	12	1	**164-1438**	2	ROD	
	13	1	**170-6312**	4	BEARING	
	14	1	**190-5128**	1	FILM-INSTRUCTION (EXCAVATOR CONTROL)	
	15	1	**206-1672**	1	CONSOLE	
	16	1	**206-1673**	1	CONSOLE AS	
		1	**172-8591**	2	NUT-SPRING	
	17	1	**209-3349**	2	ROD	
	18	1	**209-3350**	2	ROD	
	19	1	**209-3353**	1	TOWER AS	
	20	1	**231-2878**	1	GASKET	
	21	1	**164-1402**	2	SLEEVE	
	22	1	**164-1404**	2	SPACER (10.67X16.95X23-MM THK)	
M	23	1	**6V-7744**	14	LOCKNUT (M10X1.5-THD)	
M	24	1	**6V-8932**	2	SETSCREW-SOCKET (M6X1X10-MM)	
	25	1	**7X-7729**	8	WASHER (11X25X3-MM THK)	
	26	1	**8T-4121**	20	WASHER-HARD (11X21X2.5-MM THK)	
M	27	1	**8T-4133**	16	NUT (M10X1.5-THD)	
M	28	1	**8T-4138**	6	BOLT (M6X1X20-MM)	
M	29	1	**8T-4172**	2	BOLT (M10X1.5X80-MM)	
M	30	1	**8T-4195**	6	BOLT (M10X1.5X30-MM)	
	31	1	**8T-4773**	10	BALL JOINT	
	32	1	**8T-4815**	2	ROD END	
M	33	1	**8T-6466**	2	BOLT (M10X1.5X60-MM)	
	34	1	**9R-2806**	2	PIN	
	35	1	**9R-2807**	2	CLIP	
	36	1	**9R-9901**	6	FASTENER (CLIP)	
	37	1	**9X-2038**	4	WASHER (7X19X2-MM THK)	
M	38	1	**9X-2045**	6	SCREW-TRUSS HEAD (M6X1X20-MM)	
	39	1	**9X-8256**	6	WASHER (6.6X12X2-MM THK)	

M-METRIC PART

258-8347 CONVERSION GP-HYD HAND CONTROL *(contd.)* i03865254

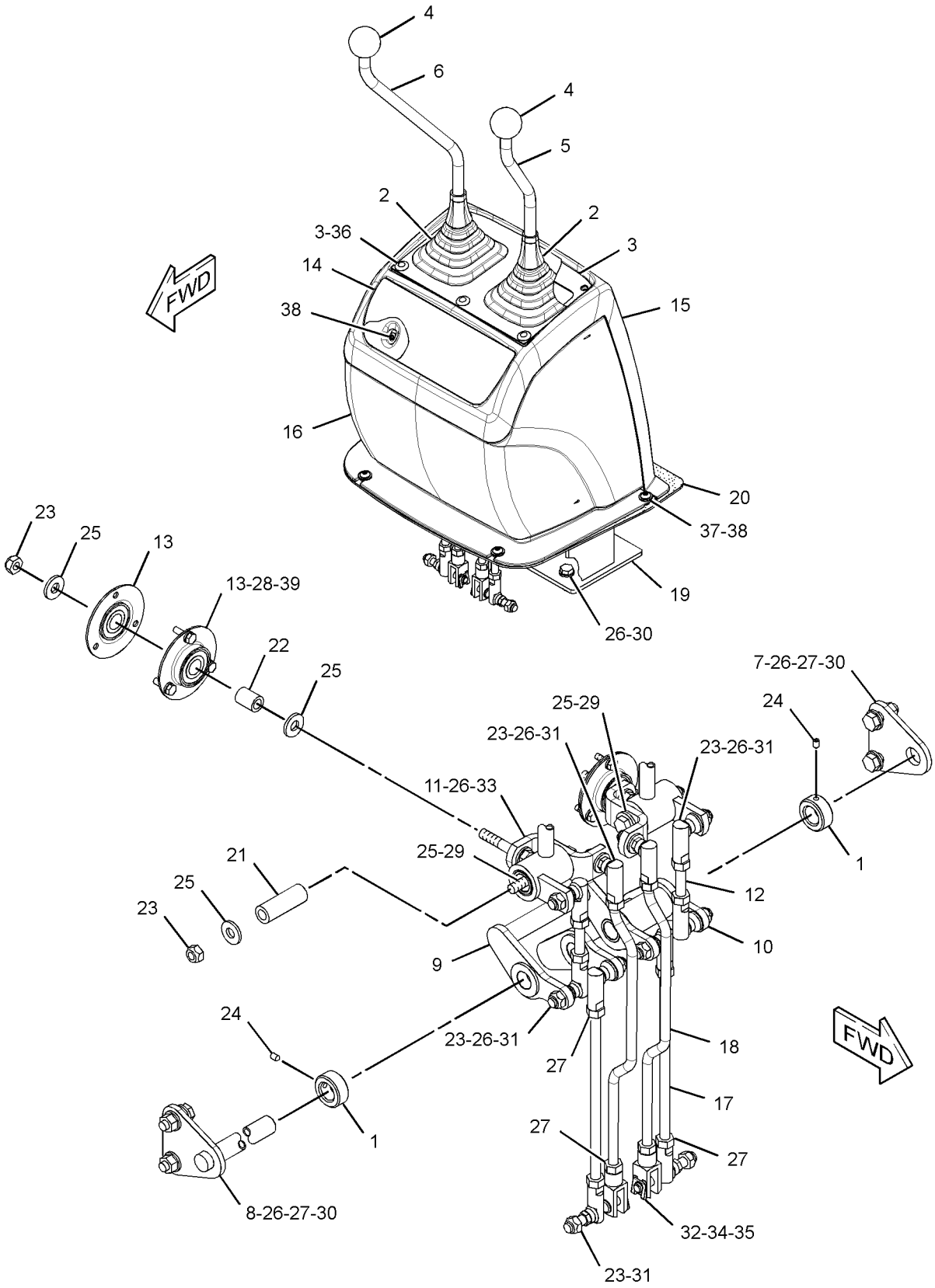

(PARTS REMOVED FOR CLARITY)

GRAPHIC #1 **<END>** g01807155

304-7847 COOLER GP-HYD & XMSN OIL

S/N: LMS1-UP

PART OF 304-4023 RADIATOR & HYD OIL COOLER GP

SMCS-1374, 1375 **i03325889**

NOTE	REF NO	GRAPHIC REF	PART NUMBER	QTY	PART NAME 1 2 3 4 5 6 (PRODUCT LEVEL)	SEE PAGE
M	1	1	**8T-7547**	2	BOLT (M8X1.25X30-MM)	
	2	1	**9M-5733**	32	RIVET-POP	
	3	1	**214-4746**	1	CORE AS-OIL COOLER (HYDRAULIC) (18 PLATE)	
	4	1	**304-7849**	1	CORE AS-OIL COOLER (11 PLATE)	
M	5	1	**5C-7261**	2	NUT (M8X1.25-THD)	
	6	1	**9N-0869**	6	WASHER-HARD (8.8X25.5X2-MM THK)	
	7	1	**9W-4216**	2	SPACER (9X18X7-MM THK)	

M-METRIC PART

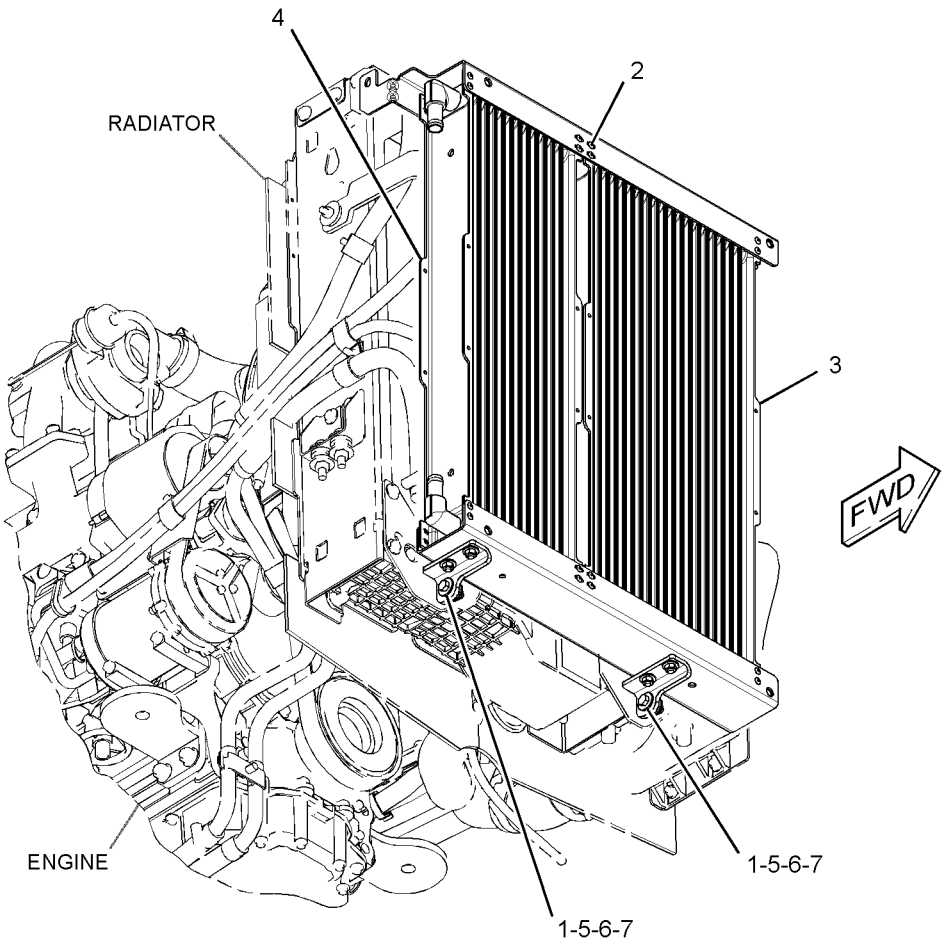

GRAPHIC #1 **<END>** g01597733

HYDRAULIC SYSTEM

224-6237 CYLINDER & LINES GP-THUMB

S/N: LMS1-UP

PART OF 271-3024, 271-3025, 271-3026, 271-3027, 281-6716, 282-0887 THUMB AR AN ATTACHMENT

SMCS-5057, 5362 **i03848354**

NOTE	REF NO	GRAPHIC REF	PART NUMBER	QTY	PART NAME 1 2 3 4 5 6 (PRODUCT LEVEL)	SEE PAGE
I	1	1	**221-4314**	2	HOSE AS	
	2	1	**270-3409**	2	SPACER (45.24X63.5X10-MM THK)	
Y	3	1	**275-4243**	1	CYLINDER GP-THUMB	258
	4	1	**280-2652**	2	VALVE-BALL	
	5	1	**294-0973**	1	TOOL	
	6	1	*148-8340*	2	CONNECTOR AS	
					(EACH INCLUDES)	
		1	**3K-0360**	1	SEAL-O-RING	
		1	**6V-8398**	1	SEAL-O-RING	
		1	**6V-8639**	1	CONNECTOR	
	7	1	*148-8392*	2	ELBOW AS	
					(EACH INCLUDES)	
		1	**6V-9746**	1	SEAL-O-RING	
		1	**6V-9853**	1	ELBOW	
	8	1	**3K-0360**	2	SEAL-O-RING	
	9	1	**6V-8398**	2	SEAL-O-RING	
	10	1	**6V-1889**	2	CLIP	
	11	1	**7I-1036**	2	COUPLING AS	
	12	1	**8T-4121**	4	WASHER-HARD (11X21X2.5-MM THK)	
M	13	1	**8T-4133**	2	NUT (M10X1.5-THD)	
M	14	1	**8T-4195**	2	BOLT (M10X1.5X30-MM)	

I-REFER TO HYDRAULIC INFORMATION SYSTEM
M-METRIC PART
Y-SEPARATE ILLUSTRATION

224-6237 **CYLINDER & LINES GP-THUMB** *(contd.)* **i03848354**

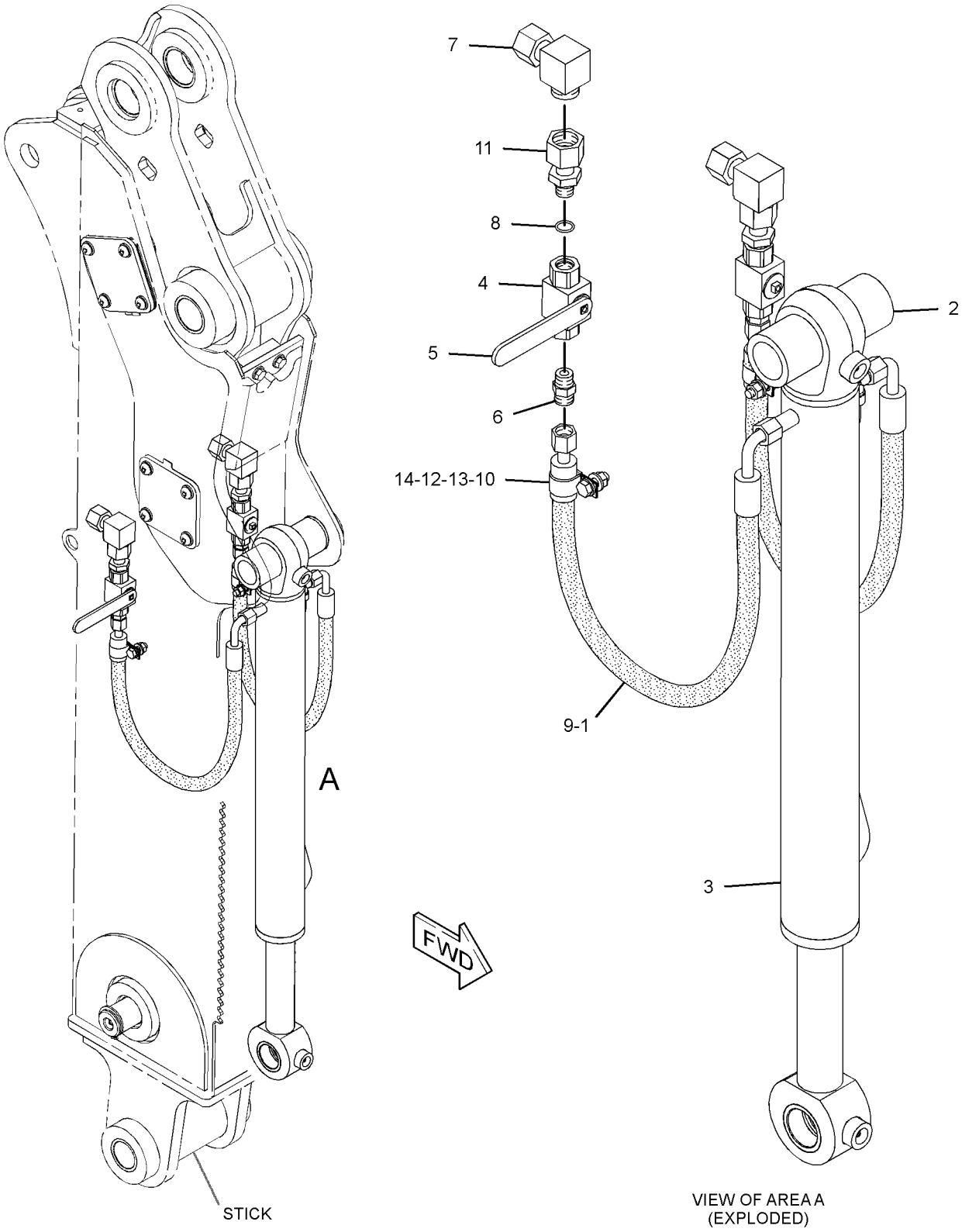

GRAPHIC #1 **<END>** g01515190

HYDRAULIC SYSTEM

210-7088 CYLINDER GP-BACKHOE BUCKET

S/N: LMS1-UP

89-MM (3.5-IN) BORE X 852-MM (33.5-IN) STROKE

PART OF 209-9929 BACKHOE AR-EXTENDABLE STICK, 209-9924 BACKHOE AR-STANDARD STICK

AN ATTACHMENT

SMCS-5457 **i03845932**

NOTE	REF NO	GRAPHIC REF	PART NUMBER	QTY	PART NAME 1 2 3 4 5 6 (PRODUCT LEVEL)	SEE PAGE
	1	1	**187-3510**	1	HEAD	
	2	1	**213-4616**	1	ROD AS	
	2A	1	**9R-0162**	2	BEARING-SLEEVE	
	3	1	**213-4620**	1	CYLINDER AS	
	3A	1	**9R-0139**	2	BEARING-SLEEVE	
	3B	1	**6V-8398**	1	SEAL-O-RING	
	4	1	**223-3356**	1	RING-WEAR	
	5	1	**228-9572**	1	PISTON	
	6	1	**167-2201**	1	SEAL AS-BUFFER	
	7	1	**167-2312**	1	SEAL-U-CUP	
M	8	1	**173-9683**	1	BOLT (M30X3.5X90-MM)	
	9	1	**6V-6707**	1	SEAL-O-RING	
	10	1	**2H-4145**	1	SEAL-O-RING	
	11	1	**4J-9224**	1	RING-BACKUP	
	12	1	**5J-7011**	1	SEAL	
	13	1	**5J-7012**	1	RING-EXPANDER	
	14	1	**5J-8156**	1	WIPER-ROD	
	15	1	**8T-0785**	1	RING-WEAR	
	16	1	**9X-8399**	1	WASHER (33X56X6-MM THK)	

M-METRIC PART

210-7088 CYLINDER GP-BACKHOE BUCKET *(contd.)* i03845932

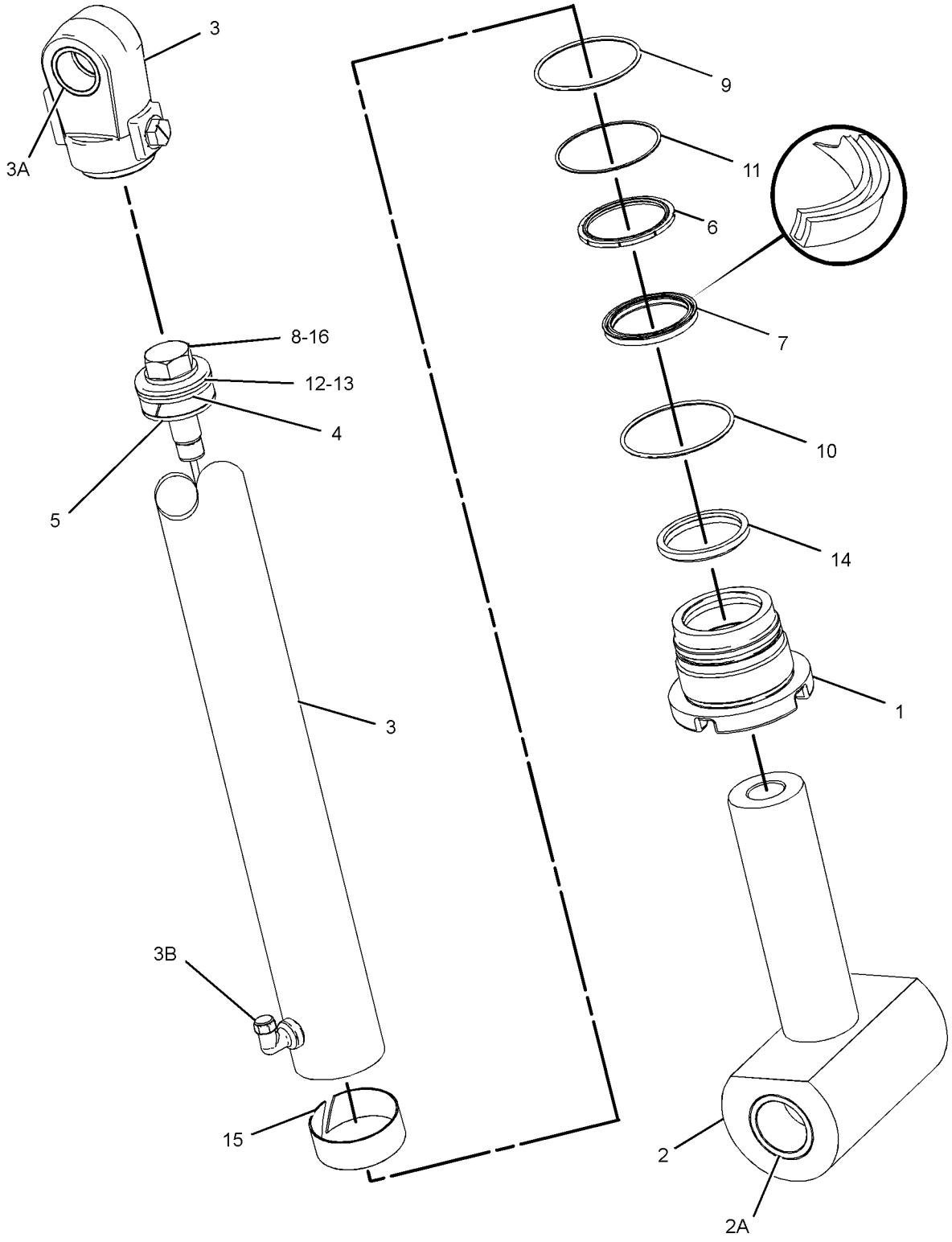

GRAPHIC #1 **<END>** g02093517

HYDRAULIC SYSTEM

210-7074 CYLINDER GP-BOOM

S/N: LMS1-UP
114.3-MM (4.5-IN) BORE X 943-MM (37.13-IN) STROKE
PART OF 209-9929 BACKHOE AR-EXTENDABLE STICK, 209-9924 BACKHOE AR-STANDARD STICK
AN ATTACHMENT

SMCS-5456 **i03592836**

NOTE	REF NO	GRAPHIC REF	PART NUMBER	QTY	PART NAME 1 2 3 4 5 6 (PRODUCT LEVEL)	SEE PAGE
	1	1	**276-3859**	1	HEAD	
	2	1	**214-3850**	1	ROD AS	
		1	**276-6142**	1	PLUNGER	
		1	**2Y-5821**	1	RING	
		1	**326-3362**	1	BEARING-SLEEVE	
		1	**9T-2178**	1	SPRING	
	3	1	**276-4005**	1	CYLINDER AS	
		1	*214-3853*	1	CAP AS	
		1	**214-3855**	2	BEARING	
		1	**6V-9746**	1	SEAL-O-RING	
	4	1	**228-4136**	1	PISTON	
	5	1	**167-2200**	1	SEAL AS	
	6	1	**167-2307**	1	SEAL-U-CUP	
	7	1	**175-7902**	1	SEAL-O-RING	
	8	1	**231-3538**	1	SEAL-WIPER	
	9	1	**4J-9220**	1	RING-BACKUP	
	10	1	**4M-0189**	1	SEAL-O-RING	
	11	1	**5J-4986**	1	SEAL AS	
	12	1	**5J-5731**	1	LOCKNUT (1-3/4-12-THD)	
	13	1	**8T-4958**	1	RING-WEAR	
	14	1	**226-4162**	1	RING-WEAR	

REPARO 2959891

210-7074 CYLINDER GP-BOOM *(contd.)* i03592836

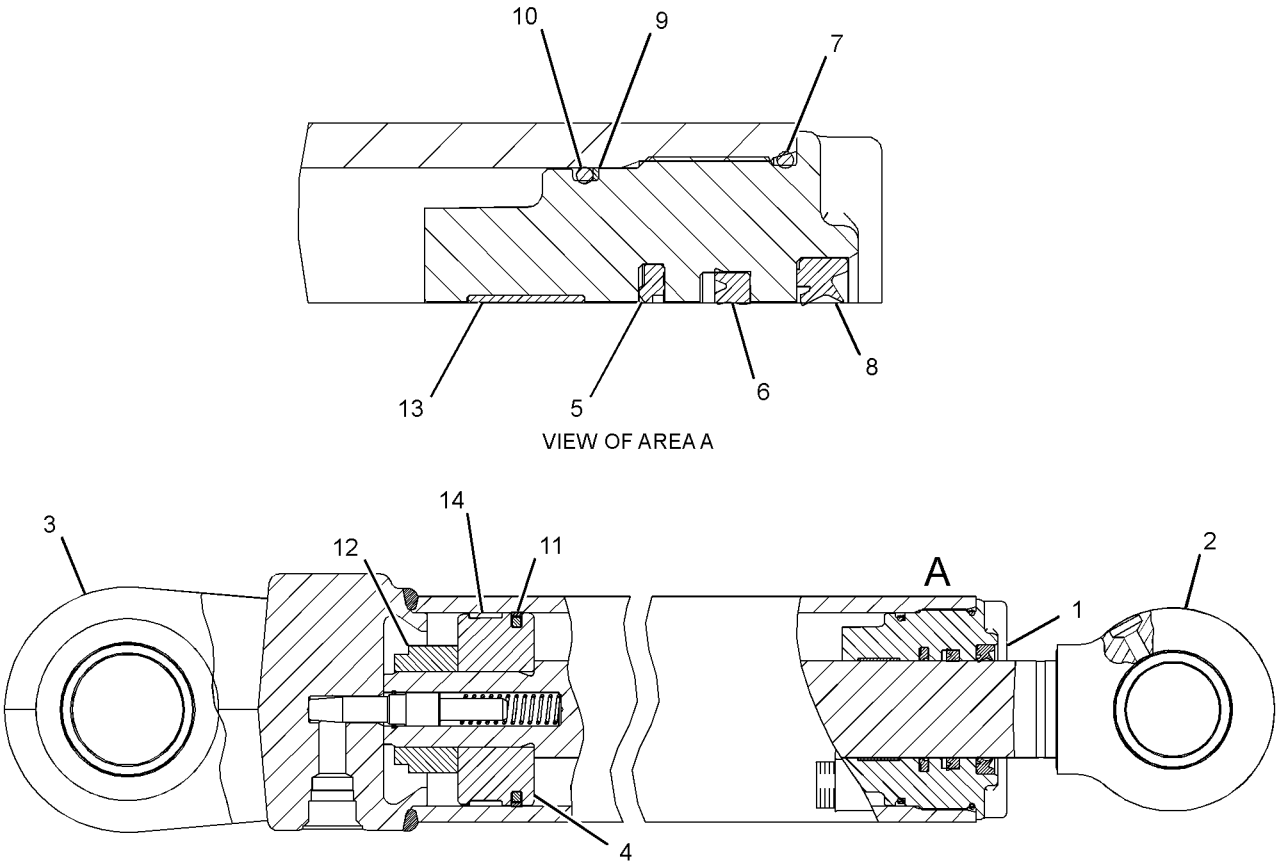

GRAPHIC #1 **<END>** g01198473

269-0381 CYLINDER GP-HYDRAULIC–RH

S/N: LMS1-UP
100-MM (3.9-IN) BORE X 254-MM (10-IN) STROKE
PART OF 297-0165 HYDRAULIC AR

SMCS-7562 **i03833689**

NOTE	REF NO	GRAPHIC REF	PART NUMBER	QTY	PART NAME 1 2 3 4 5 6 (PRODUCT LEVEL)	SEE PAGE
	1	1	**3B-8489**	1	FITTING-GREASE	
	2	1	**3N-5739**	1	SPRING	
	3	1	**6E-1478**	1	PLUNGER	
	4	1	**102-3582**	1	WASHER (11X19.5X2.5-MM THK)	
	5	1	**233-0619**	1	SEAL-WIPER	
	6	1	**233-2589**	1	RING-WEAR	
	7	1	**233-2613**	1	BEARING	
	8	1	**269-0382**	1	CYLINDER AS-HYDRAULIC	
	8A	1	**9T-2883**	2	BEARING	
	9	1	**269-0386**	1	ROD AS	
	9A	1	**274-4274**	1	BEARING-SLEEVE	
	10	1	**269-0388**	1	HEAD	
	11	1	**269-0389**	1	PISTON	
	12	1	**140-7649**	1	SEAL-PISTON	
	13	1	**167-2183**	1	SEAL AS-BUFFER	
	14	1	**167-2303**	1	SEAL-U-CUP	
	15	1	**2K-6830**	1	RING-BACKUP	
	16	1	**2Y-5821**	1	RING	
	17	1	**3E-6735**	1	SEAL-O-RING	
	18	1	**9X-4611**	1	SEAL-O-RING	
M	19	1	**9X-6611**	1	SETSCREW-SOCKET (M10X1.5X16-MM)	

M-METRIC PART

269-0381 CYLINDER GP-HYDRAULIC *(contd.)* **i03833689**

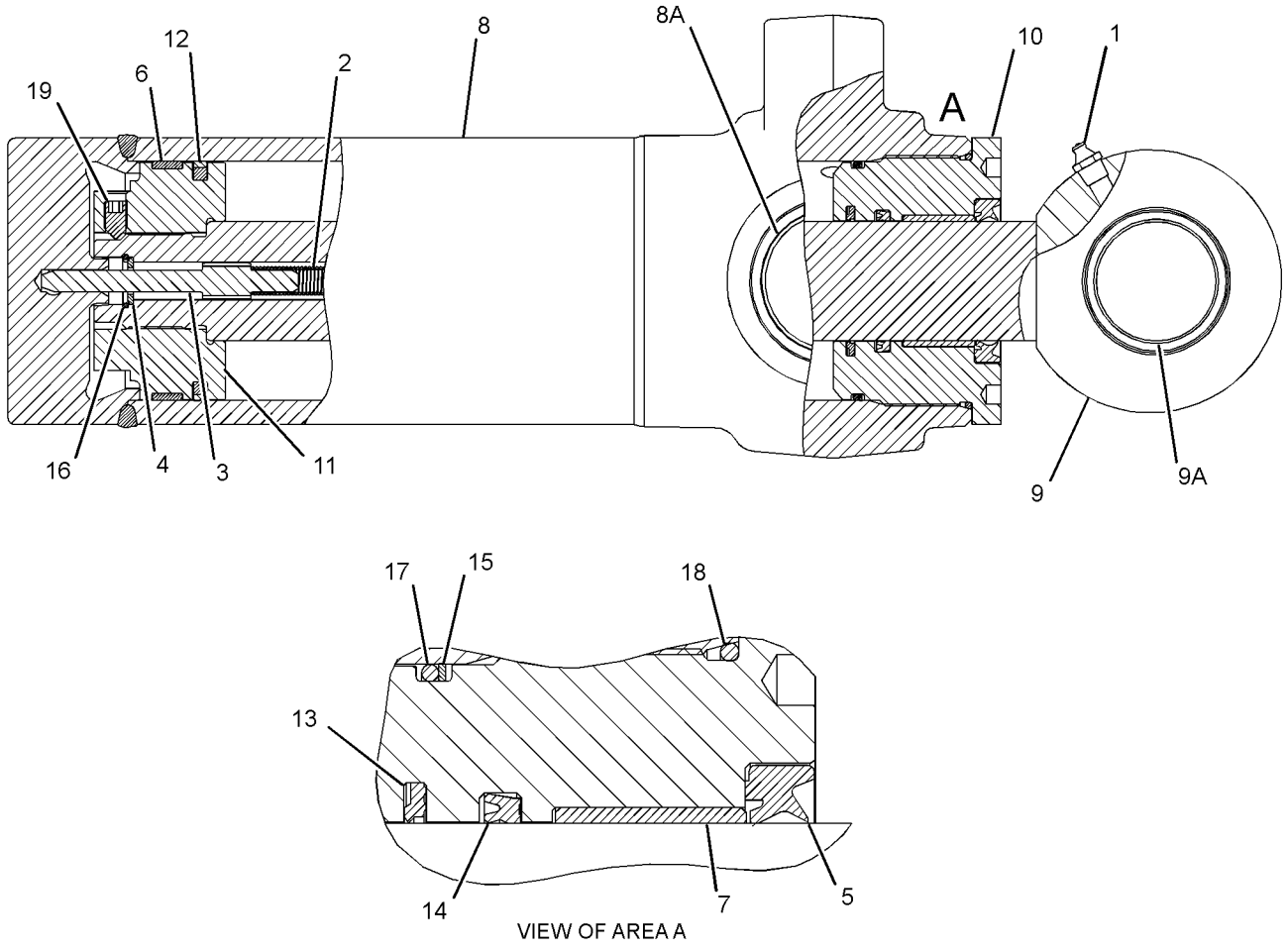

VIEW OF AREA A

GRAPHIC #1 **<END>** g02096053

HYDRAULIC SYSTEM

215-7298 CYLINDER GP-LIFT

S/N: LMS1-UP
82.5-MM (3.3-IN) BORE X 705.4-MM (27.8-IN) STROKE
PART OF 318-9555 LOADER AR

SMCS-5102 **i02378015**

NOTE	REF NO	GRAPHIC REF	PART NUMBER	QTY	PART NAME 1 2 3 4 5 6 (PRODUCT LEVEL)	SEE PAGE
	1	1	**215-7297**	1	CYLINDER AS	
		1	**7J-9108**	1	SEAL-O-RING	
	2	1	**5B-9385**	1	BOLT (1-14X2.5-IN)	
	3	1	**5P-8250**	1	WASHER (28X49X5-MM THK)	
	4	1	**8J-6371**	1	RING-WEAR	
	5	1	**6J-0793**	1	SEAL AS	
		1	**6J-0789**	1	RING-EXPANDER	
		1	**6J-0790**	1	SEAL	
	6	1	**4T-7010**	1	PISTON	
	7	1	**191-6112**	1	HEAD	
	8	1	**167-2302**	1	SEAL-U-CUP	
	9	1	**2H-3931**	1	SEAL-O-RING	
	10	1	**8J-2574**	1	RING-BACKUP	
R	11	1	**9T-0661**	1	ROD AS	
		1	**9R-0321**	2	BEARING-SLEEVE	
	12	1	**227-1143**	1	SEAL-WIPER	
	13	1	**167-2192**	1	SEAL AS-BUFFER	
	14	1	**4T-6779**	1	RING	
	15	1	**1H-7339**	1	SEAL-O-RING	

R-REMFG PART MAY BE AVAILABLE

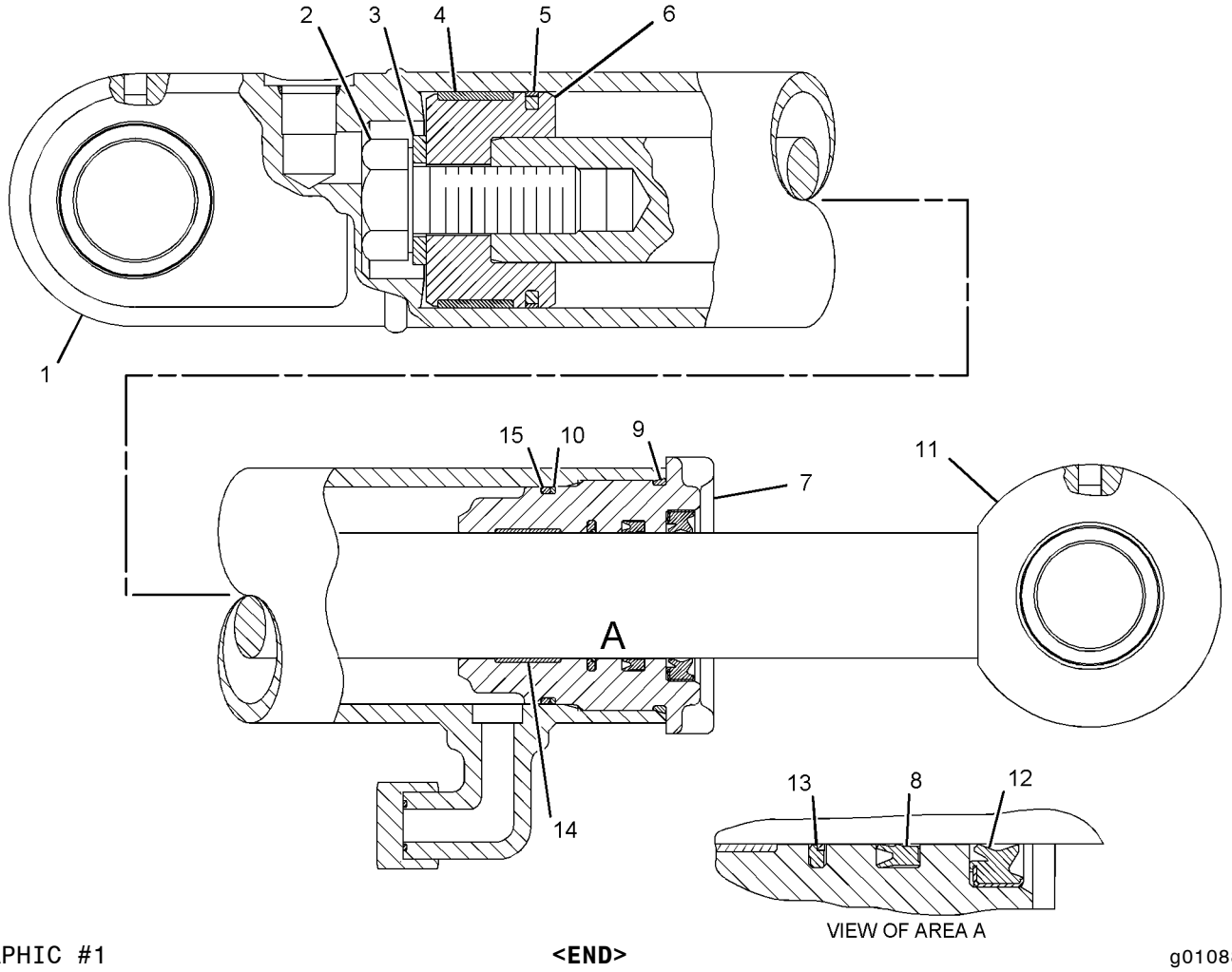

GRAPHIC #1 **<END>** g01088407

226-5540 CYLINDER GP-MULTIPURPOSE BUKT

S/N: LMS1-UP
76-MM (2.99-IN) BORE X 262-MM (10.31-IN) STROKE
PART OF 216-8800, 216-8801 BUCKET GP-MULTIPURPOSE
AN ATTACHMENT

SMCS-5457 **i02983289**

NOTE	REF NO	GRAPHIC REF	PART NUMBER	QTY	PART NAME 1 2 3 4 5 6 (PRODUCT LEVEL)	SEE PAGE
	1	1	**3B-8489**	2	FITTING-GREASE	
	2	1	**9S-8004**	2	PLUG-O-RING	
	3	1	**3J-1907**	2	SEAL-O-RING	
	4	1	**9T-4007**	2	BEARING	
					AVAILABLE REPAIR KIT(S):	
			230-9357	1	KIT-SEAL (BUCKET CYLINDER)	
					(INCLUDES WIPER SEAL, O-RINGS, MOISTURE EXCLUDER & POLYPAK)	

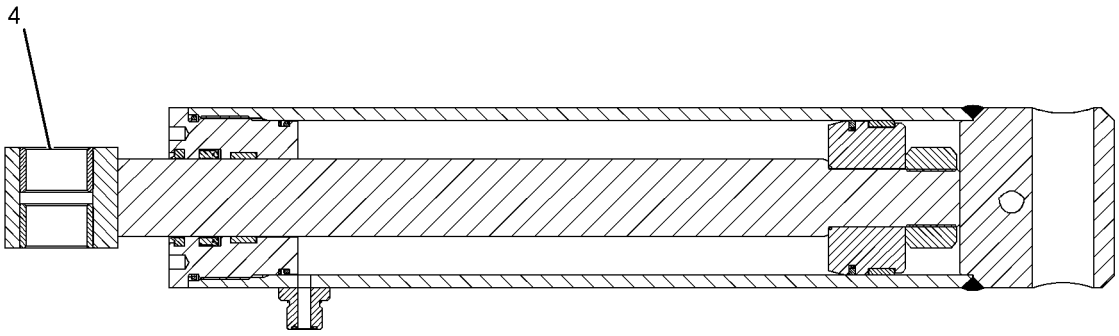

SECTION A-A



GRAPHIC #1

<END>

g01086486

HYDRAULIC SYSTEM

291-2681 CYLINDER GP-STABILIZER–LH

S/N: LMS1-UP
100-MM (3.9-IN) BORE X 541-MM (21.3-IN) STROKE
PART OF 297-0165 HYDRAULIC AR

SMCS-5468 **i03879891**

NOTE	REF NO	GRAPHIC REF	PART NUMBER	QTY	PART NAME 1 2 3 4 5 6 (PRODUCT LEVEL)	SEE PAGE
	1	1	**3B-8489**	2	FITTING-GREASE	
	2	1	**140-7649**	1	SEAL-PISTON	
	3	1	**233-0625**	1	SEAL-WIPER	
	4	1	**233-2614**	1	RING-WEAR	
	5	1	**291-2684**	1	CYLINDER AS	
	5A	1	**9R-0321**	2	BEARING-SLEEVE	
	6	1	**291-2691**	1	ROD AS	
	6A	1	**9R-0321**	2	BEARING-SLEEVE	
	7	1	**291-2695**	1	PISTON	
	8	1	**291-2696**	1	HEAD	
	9	1	**140-7656**	1	RING-WEAR	
	10	1	**167-2306**	1	SEAL-U-CUP	
	11	1	**1H-8128**	1	SEAL-O-RING	
	12	1	**291-1559**	1	SEAL AS-BUFFER	
	13	1	**294-9507**	1	RING-BACKUP	
	14	1	**3E-6735**	1	SEAL-O-RING	
	15	1	**4J-0526**	1	SEAL-O-RING	
M	16	1	**9X-6611**	1	SETSCREW-SOCKET (M10X1.5X16-MM)	

M-METRIC PART

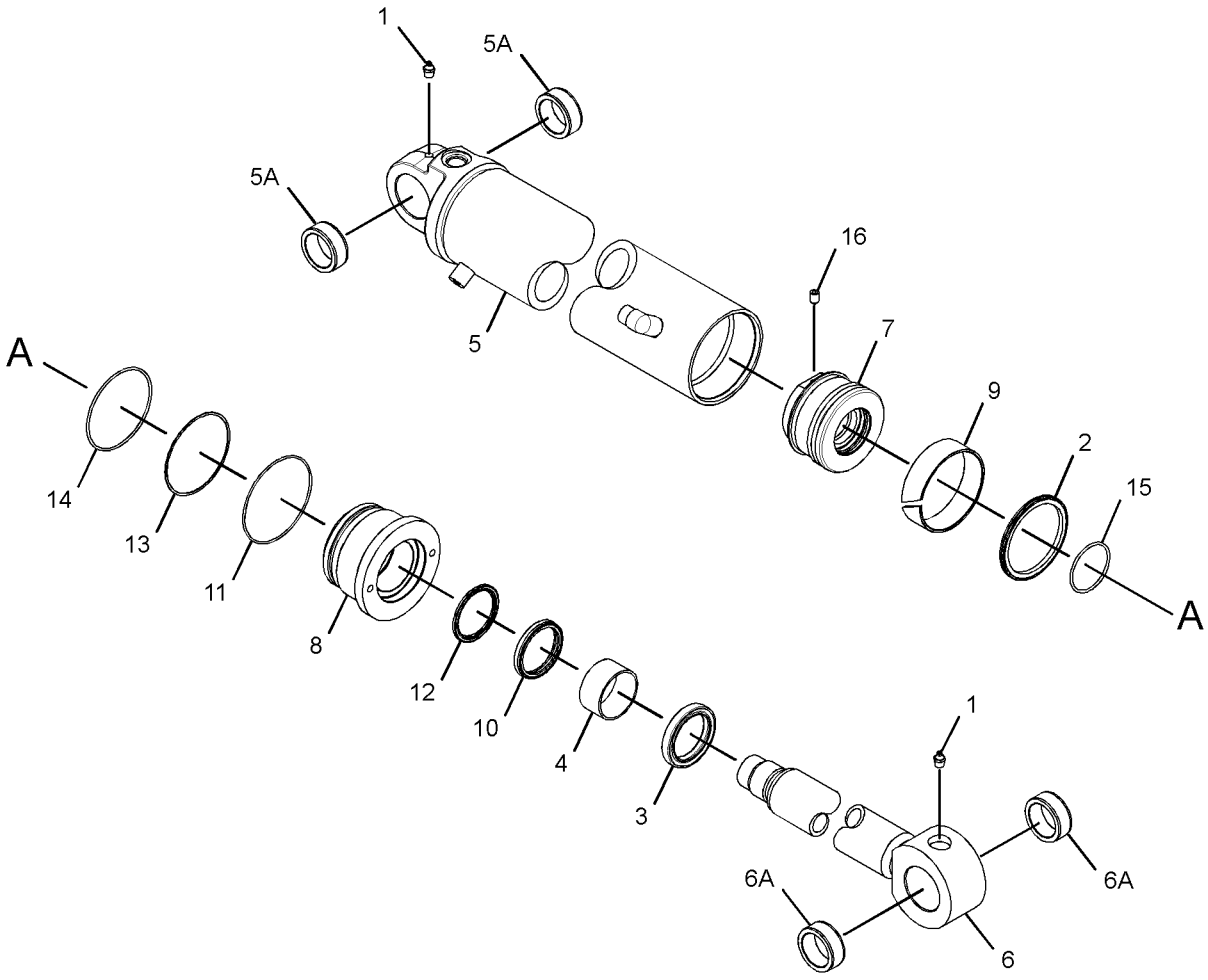

GRAPHIC #1 **<END>** g02097204

HYDRAULIC SYSTEM

291-2682 CYLINDER GP-STABILIZER–RH

S/N: LMS1-UP
100-MM (3.9-IN) BORE X 541-MM (21.3-IN) STROKE
PART OF 297-0165 HYDRAULIC AR

SMCS-5468 **i03879312**

NOTE	REF NO	GRAPHIC REF	PART NUMBER	QTY	PART NAME 1 2 3 4 5 6 (PRODUCT LEVEL)	SEE PAGE
	1	1	**3B-8489**	2	FITTING-GREASE	
	2	1	**140-7649**	1	SEAL-PISTON	
	3	1	**233-0625**	1	SEAL-WIPER	
	4	1	**233-2614**	1	RING-WEAR	
	5	1	**291-2683**	1	CYLINDER AS	
	5A	1	**9R-0321**	2	BEARING-SLEEVE	
	6	1	**291-2691**	1	ROD AS	
	6A	1	**9R-0321**	2	BEARING-SLEEVE	
	7	1	**291-2695**	1	PISTON	
	8	1	**291-2696**	1	HEAD	
	9	1	**140-7656**	1	RING-WEAR	
	10	1	**167-2306**	1	SEAL-U-CUP	
	11	1	**1H-8128**	1	SEAL-O-RING	
	12	1	**291-1559**	1	SEAL AS-BUFFER	
	13	1	**294-9507**	1	RING-BACKUP	
	14	1	**3E-6735**	1	SEAL-O-RING	
	15	1	**4J-0526**	1	SEAL-O-RING	
M	16	1	**9X-6611**	1	SETSCREW-SOCKET (M10X1.5X16-MM)	

M-METRIC PART

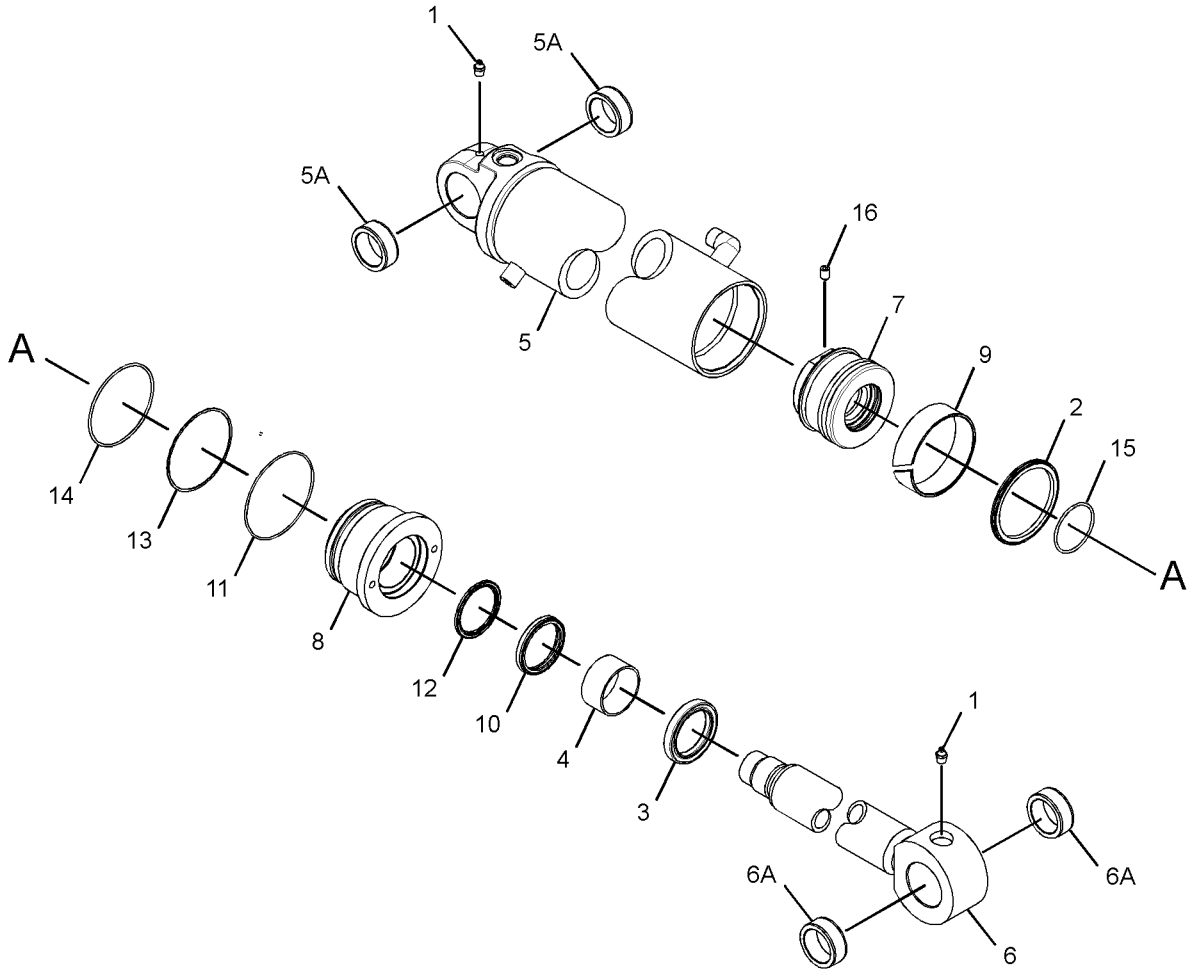

GRAPHIC #1 **<END>** g02097273

HYDRAULIC SYSTEM

210-7078 CYLINDER GP-STICK

S/N: LMS1-UP
108-MM (4.3-IN) BORE X 679-MM (26.7-IN) STROKE
PART OF 209-9929 BACKHOE AR-EXTENDABLE STICK, 209-9924 BACKHOE AR-STANDARD STICK
AN ATTACHMENT

SMCS-5458 **i03869595**

NOTE	REF NO	GRAPHIC REF	PART NUMBER	QTY	PART NAME 1 2 3 4 5 6 (PRODUCT LEVEL)	SEE PAGE
	1	1	**214-2249**	1	HEAD	
	2	1	**214-2250**	1	PISTON	
	3	1	**214-3729**	1	CYLINDER AS	
	3A	1	**214-2255**	2	BEARING-SLEEVE	
		1	**6V-8398**	1	SEAL-O-RING	
	4	1	**228-6061**	1	ROD AS	
	4A	1	**9R-3092**	2	BEARING-SLEEVE	
	5	1	**167-2200**	1	SEAL AS	
	6	1	**167-2307**	1	SEAL-U-CUP	
	7	1	**1H-6227**	1	SEAL-O-RING	
	8	1	**225-9524**	1	RING-WEAR	
	9	1	**231-3538**	1	SEAL-WIPER	
	10	1	**4M-0189**	1	SEAL-O-RING	
	11	1	**5J-5731**	1	LOCKNUT (1-3/4-12-THD)	
	12	1	**5J-7854**	1	SEAL AS	
	13	1	**5J-7865**	1	RING-BACKUP	
	14	1	**8T-4958**	1	RING-WEAR	

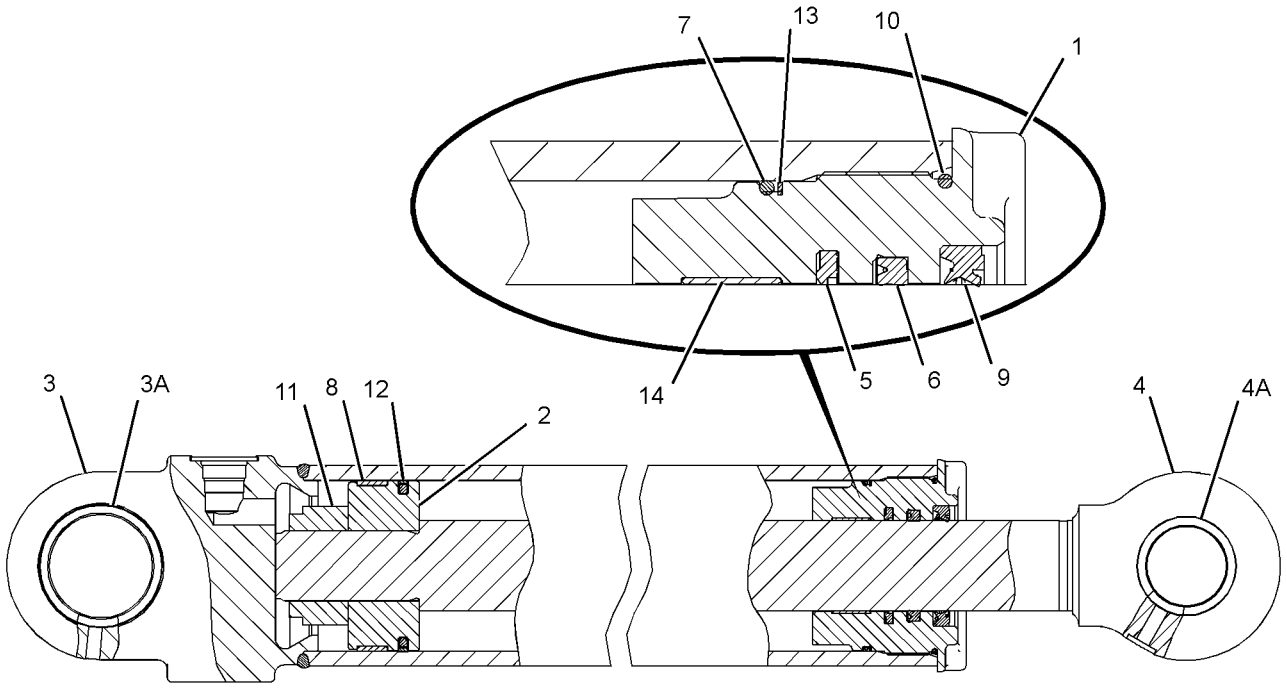

GRAPHIC #1 **<END>** g02113381

210-7098 CYLINDER GP-STICK–EXTENDABLE

S/N: LMS1-UP
76.2-MM (3.0-IN) BORE X 1164-MM (45.8-IN) STROKE
PART OF 271-1404 STICK GP
AN ATTACHMENT

SMCS-5458 **i03532122**

NOTE	REF NO	GRAPHIC REF	PART NUMBER	QTY	PART NAME 1 2 3 4 5 6 (PRODUCT LEVEL)	SEE PAGE
	1	1	**215-7457**	1	ROD AS	
	2	1	**215-7460**	1	CYLINDER AS	
		1	**6V-8398**	1	SEAL-O-RING	
	3	1	**4T-6780**	1	RING-WEAR	
	4	1	**191-6159**	1	HEAD	
	5	1	**229-8911**	1	PISTON	
	6	1	**167-2186**	1	SEAL AS-BUFFER	
	7	1	**167-2294**	1	SEAL-U-CUP	
M	8	1	**173-9779**	1	BOLT (M24X3X80-MM)	
	9	1	**1H-7339**	1	SEAL-O-RING	
	10	1	**223-3353**	1	RING-WEAR	
	11	1	**6J-2680**	1	SEAL-O-RING	
	12	1	**226-8202**	1	SEAL-WIPER	
	13	1	**6J-1972**	1	SEAL AS	
	14	1	**6J-5731**	1	RING-BACKUP	
	15	1	**6V-8237**	1	WASHER (26X44X4-MM THK)	

M-METRIC PART

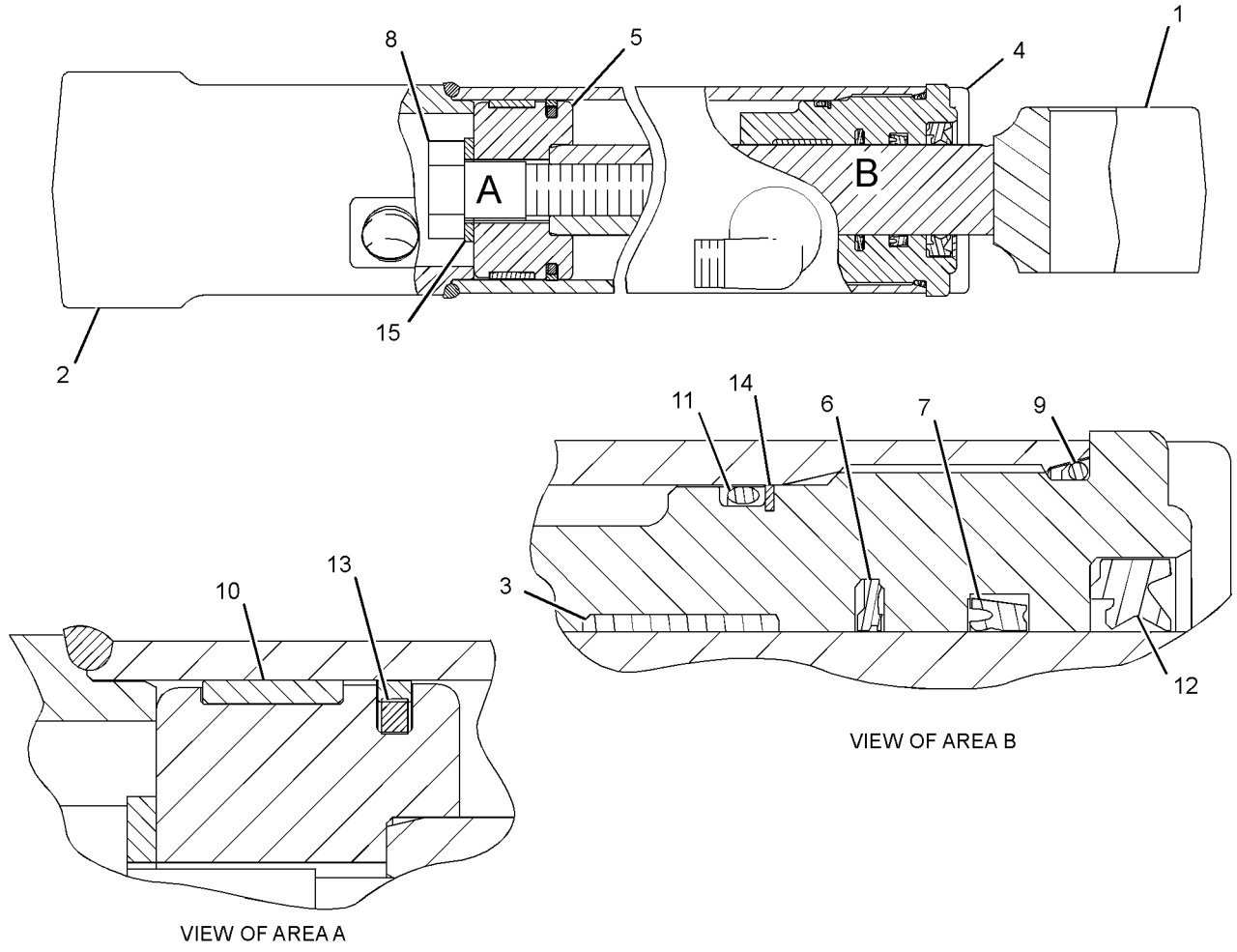

GRAPHIC #1 **<END>** g01865342

275-4243 CYLINDER GP-THUMB

S/N: LMS1-UP
70-MM (2.75-IN) BORE X 595-MM (23.4-IN) STROKE
PART OF 224-6237 CYLINDER & LINES GP-THUMB
AN ATTACHMENT

SMCS-5362 **i03848355**

NOTE	REF NO	GRAPHIC REF	PART NUMBER	QTY	PART NAME 1 2 3 4 5 6 (PRODUCT LEVEL)	SEE PAGE
	1	1	**276-4168**	1	CYLINDER AS	
	2	1	**276-4169**	1	ROD AS	
	3	1	**276-4170**	1	PISTON	
	4	1	**276-4171**	1	HEAD	
	5	1	**282-6836**	1	STOP	
	6	1	**3B-8489**	2	FITTING-GREASE	
	7	1	**9R-0320**	4	BEARING-SLEEVE	
					AVAILABLE REPAIR KIT(S):	
			276-4172	1	KIT-SEAL	
					(INCLUDES SEALS, RINGS & SETSCREW)	

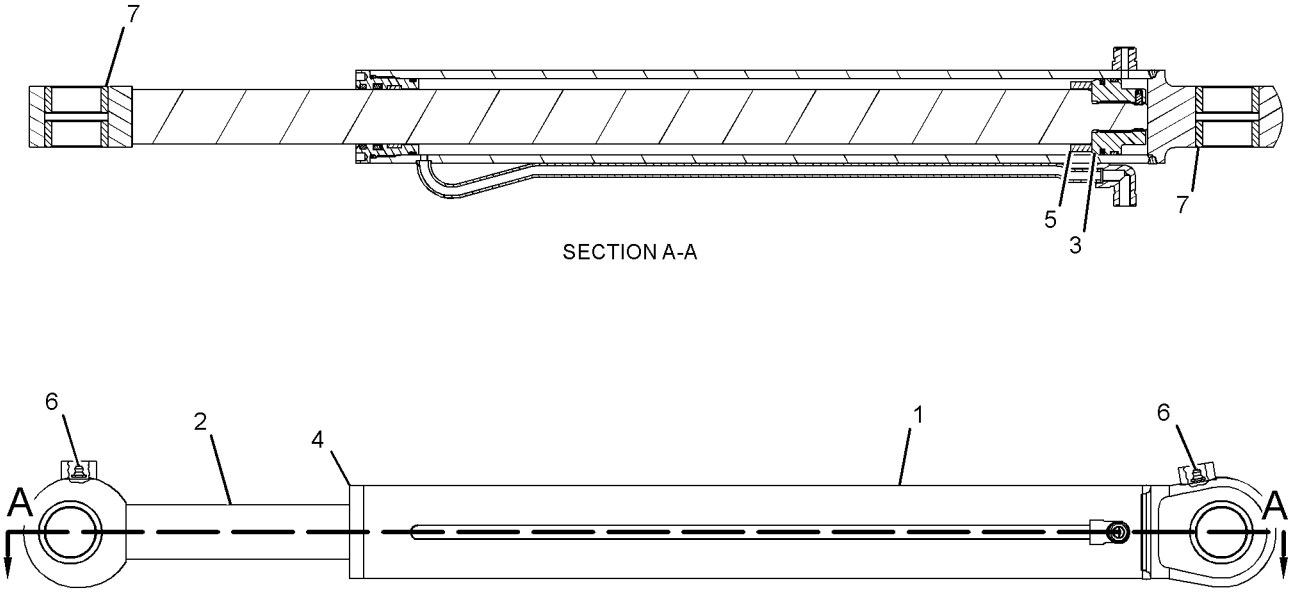

GRAPHIC #1 **<END>** g01234167

HYDRAULIC SYSTEM

206-3553 CYLINDER GP-TILT

S/N: LMS1-UP
82.55MM (3.3-IN) BORE X 642.1MM (25.6-IN) STROKE
PART OF 318-9555 LOADER AR

SMCS-5104 **i02360285**

NOTE	REF NO	GRAPHIC REF	PART NUMBER	QTY	PART NAME 1 2 3 4 5 6 (PRODUCT LEVEL)	SEE PAGE
	1	1	**4T-7010**	1	PISTON	
R	2	1	**9T-3948**	1	ROD AS	
	2A	1	**9R-0320**	2	BEARING-SLEEVE	
	3	1	**206-3552**	1	CYLINDER AS	
		1	**7J-9108**	1	SEAL-O-RING	
		1	**9T-0766**	2	BEARING	
	4	1	**167-2192**	1	SEAL AS-BUFFER	
	5	1	**167-2302**	1	SEAL-U-CUP	
	6	1	**227-1143**	1	SEAL-WIPER	
	7	1	**191-6112**	1	HEAD	
	8	1	**1H-7339**	1	SEAL-O-RING	
	9	1	**2H-3931**	1	SEAL-O-RING	
	10	1	**4T-6779**	1	RING	
	11	1	**5P-8250**	1	WASHER (28X49X5-MM THK)	
	12	1	**6J-0793**	1	SEAL AS	
		1	**6J-0789**	1	RING-EXPANDER	
		1	**6J-0790**	1	SEAL	
	13	1	**5B-9385**	1	BOLT (1-14X2.5-IN)	
	14	1	**8J-2574**	1	RING-BACKUP	
	15	1	**8J-6371**	1	RING-WEAR	

R-REMFG PART MAY BE AVAILABLE

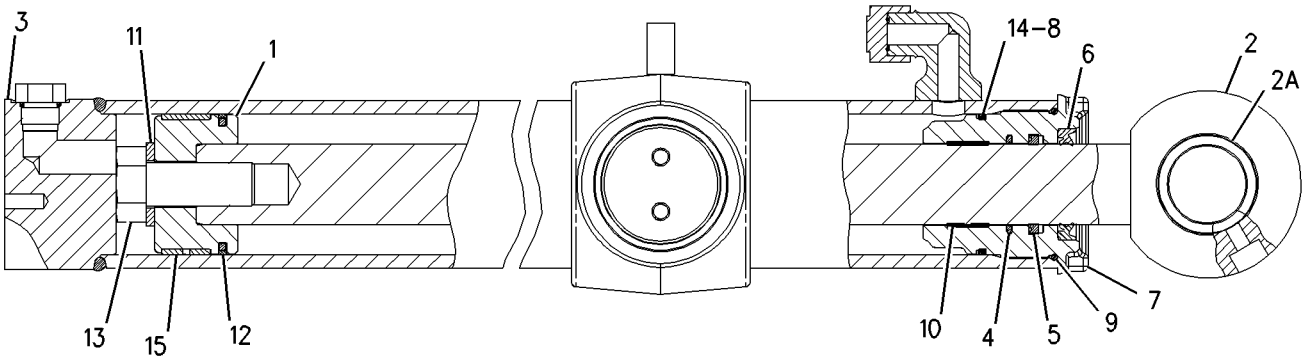

GRAPHIC #1 **<END>** g00983574

112-1826 DRIVE & MTG GP-PUMP

S/N: LMS1-UP
PART OF 291-9186, 291-9187 POWER TRAIN AR
AN ATTACHMENT

SMCS-3108, 5070 **i03458260**

NOTE	REF NO	GRAPHIC REF	PART NUMBER	QTY	PART NAME 1 2 3 4 5 6 (PRODUCT LEVEL)	SEE PAGE
M	1	1	**8T-9405**	4	BOLT-SOCKET HEAD (M4X0.7X16-MM)	
	2	1	**9U-8886**	1	RING-SEAL	
	3	1	**115-1918**	1	PLATE	
	4	1	**117-3534**	1	ADAPTER	
	5	1	**274-4555**	1	HUB	
Y	6	1	**128-5596**	1	SHAFT GP-PUMP DRIVE	332
	7	1	**175-7904**	1	SEAL-O-RING	
	8	1	**8T-4122**	2	WASHER-HARD (17X32X3.5-MM THK)	
M	9	1	**8T-7338**	2	BOLT (M16X2X45-MM)	

M-METRIC PART
Y-SEPARATE ILLUSTRATION

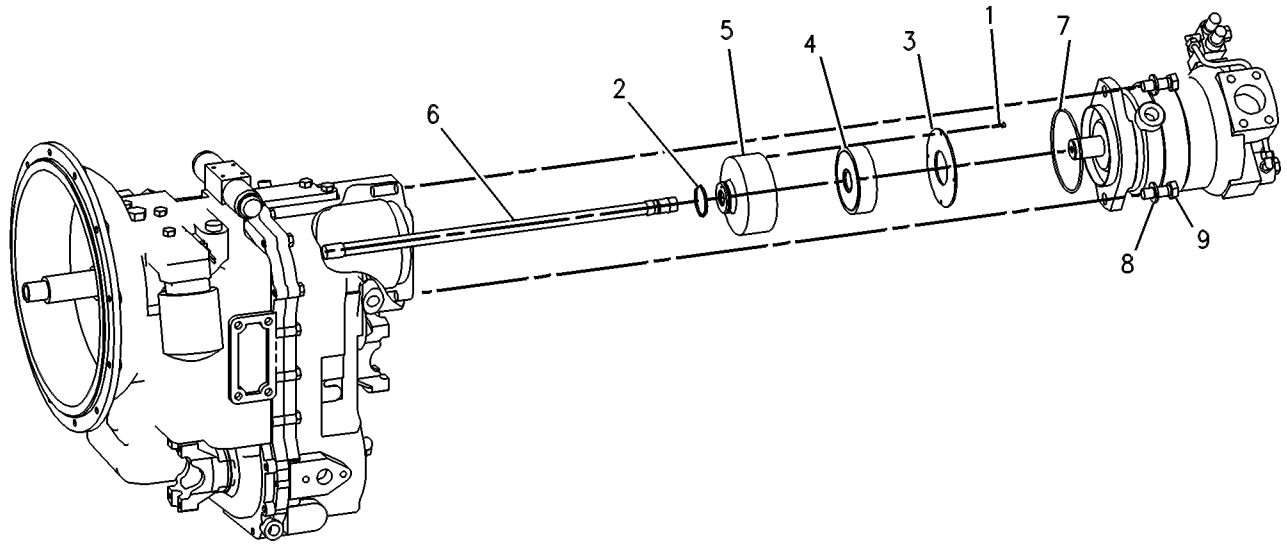

GRAPHIC #1 **<END>** g00131524

219-8566 FASTENER GP-VALVE–BANK

S/N: LMS1-UP
PART OF 209-9943 VALVE AR-BANK 2, 317-1463 VALVE AR-BANK 3
AN ATTACHMENT

SMCS-5051 **i03029101**

NOTE	REF NO	GRAPHIC REF	PART NUMBER	QTY	PART NAME 1 2 3 4 5 6 (PRODUCT LEVEL)	SEE PAGE
	1	1	**8T-4121**	3	WASHER-HARD (11X21X2.5-MM THK)	
M	2	1	**8T-4195**	3	BOLT (M10X1.5X30-MM)	

M-METRIC PART

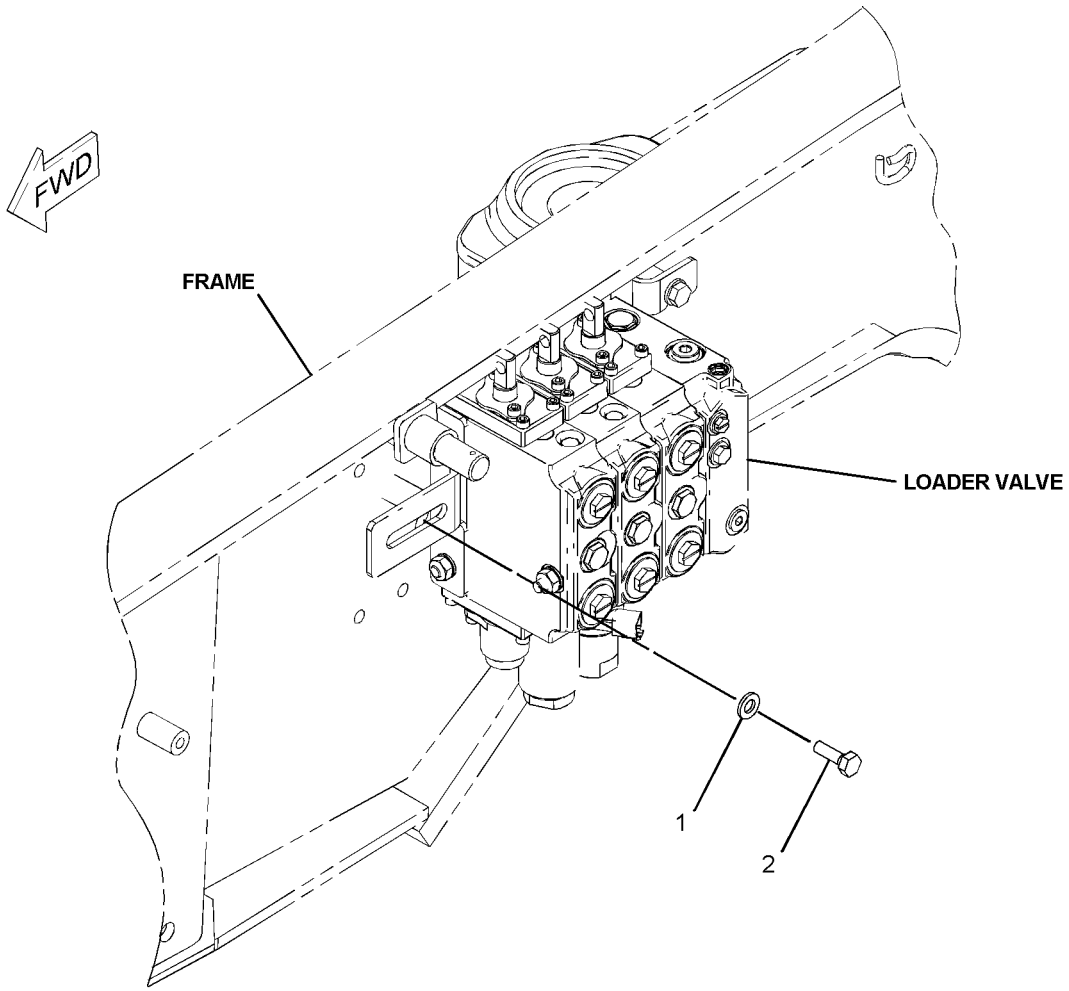

GRAPHIC #1 **<END>** g01082895

210-6243 FILTER GP-OIL–HYDRAULIC

S/N: LMS1-UP

PART OF 297-0165 HYDRAULIC AR

SMCS-5068 **i03018367**

NOTE	REF NO	GRAPHIC REF	PART NUMBER	QTY	PART NAME 1 2 3 4 5 6 (PRODUCT LEVEL)	SEE PAGE
	1	1	*148-8407*	1	PLUG AS	
		1	**3J-1907**	1	SEAL-O-RING	
		1	**9S-4191**	1	PLUG-O-RING	
	2	1	*148-8335*	1	CONNECTOR AS	
		1	**5K-9090**	1	SEAL-O-RING	
		1	**6V-8635**	1	CONNECTOR	
		1	**7M-8485**	1	SEAL-O-RING	
	3	1	**6V-9830**	1	CAP AS	
	4	1	**6V-9833**	1	CAP AS	
	5	1	**126-1817**	1	FILTER-OIL (ULTRA HIGH EFFICIENCY)	

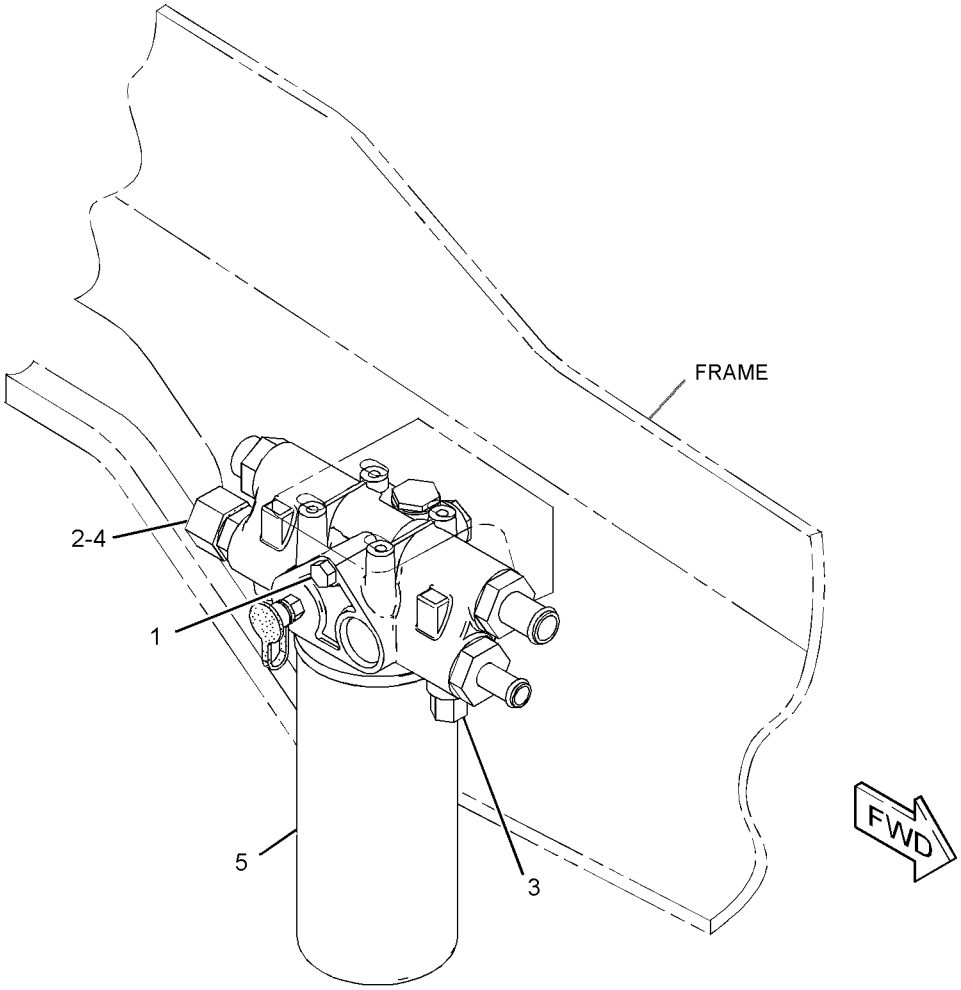

GRAPHIC #1 **<END>** g01573275

132-8769 FITTING GP-HYDRAULIC–QUICK DISCONNECT

S/N: LMS1-UP

AN ATTACHMENT

SMCS-5057 **i01499420**

NOTE	REF NO	GRAPHIC REF	PART NUMBER	QTY	PART NAME 1 2 3 4 5 6 (PRODUCT LEVEL)	SEE PAGE
	1	1	**106-0406**	1	FITTING (QUICK DISCONNECT, MALE)	
	2	1	**106-0401**	1	FITTING (QUICK DISCONNECT, FEMALE)	

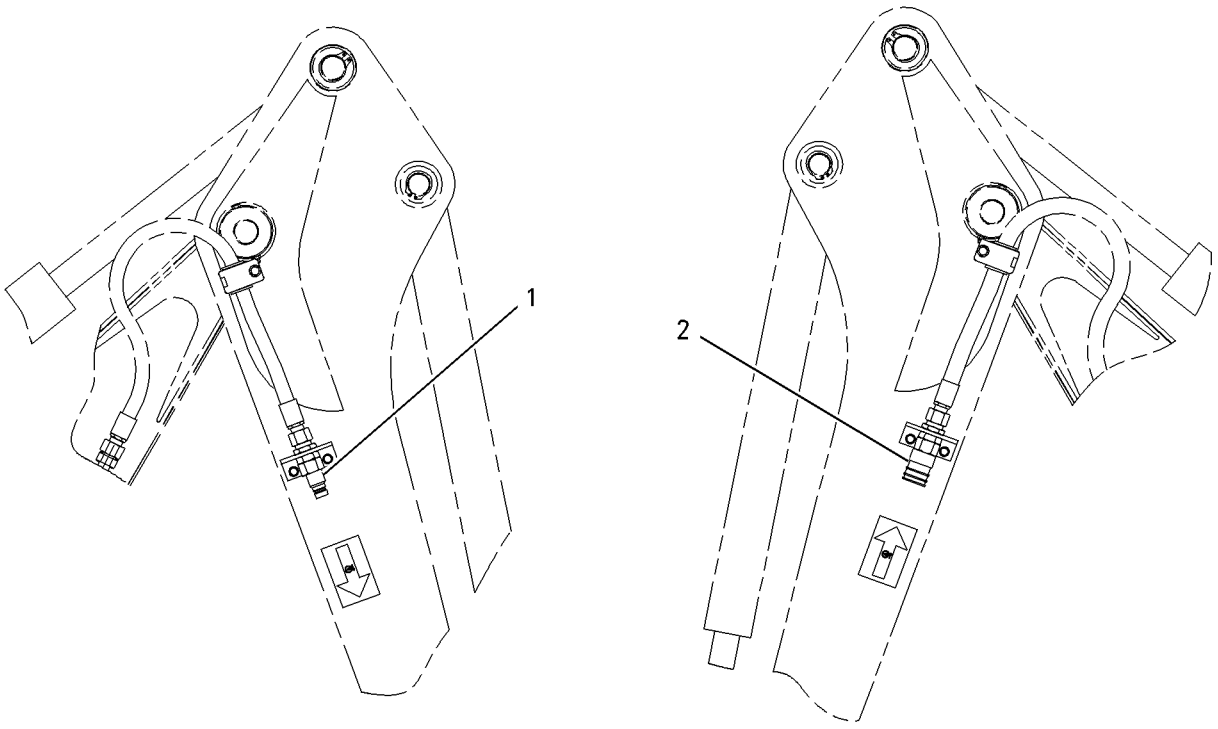

GRAPHIC #1 **<END>** g00778121

HYDRAULIC SYSTEM

297-0165 HYDRAULIC AR

S/N: LMS1-UP

PART OF 291-9185 COMMON AR

SMCS-5050 **i03879309**

NOTE	PART NUMBER	QTY	PART NAME 1 2 3 4 5 6 (PRODUCT LEVEL)	SEE PAGE
Y	**269-0381**	2	CYLINDER GP-HYDRAULIC	250
Y	**291-2681**	1	CYLINDER GP-STABILIZER (LH)	254
Y	**291-2682**	1	CYLINDER GP-STABILIZER (RH)	255
Y	**210-6243**	1	FILTER GP-OIL (HYDRAULIC)	263
Y	*216-5332*	1	LINES GP-DRAIN	294
Y	*343-4096*	1	LINES GP-HYDRAULIC OIL COOLER	297
Y	*219-8568*	1	LINES GP-PILOT (SIGNAL)	307
Y	*219-8567*	1	LINES GP-PUMP	309
Y	*232-1248*	1	LINES GP-SWING	319
Y	**247-7868**	1	PUMP GP-METERING (HMU)	208
Y	**350-0666**	1	PUMP GP-PISTON	331
Y	*297-1232*	1	TANK & MTG GP-HYDRAULIC	333

Y-SEPARATE ILLUSTRATION

<END>

HYDRAULIC SYSTEM

220-5973 KICKOUT & POSITIONER GP

S/N: LMS1-UP

PART OF 318-9555 LOADER AR

SMCS-5109, 5112 **i03498540**

NOTE	REF NO	GRAPHIC REF	PART NUMBER	QTY	PART NAME 1 2 3 4 5 6 (PRODUCT LEVEL)	SEE PAGE
	1	1	**290-8140**	1	LEVER AS	
		1	**7Y-0336**	1	SPACER (24.5X44X24-MM THK)	
		1	**9R-2614**	1	BEARING	
M	2	1	**8T-4189**	2	BOLT (M8X1.25X20-MM)	
	3	1	**268-5689**	1	FILM-IDENTIFICATION (BUCKET LEVEL)	
	4	1	**8T-0706**	1	RING-RETAINING	
	5	1	**8T-5063**	1	ROD END	
	6	1	**9R-3255**	1	LEVER	
	7	1	**9R-5301**	2	PIN-COTTER	
	8	1	**128-7902**	1	SPACER (60.25X75X6-MM THK)	
B	9	1	**128-7903**	1	SPACER (61X114.3X3-MM THK)	
B	10	1	**128-7905**	1	SPACER (61X114.3X1-MM THK)	
	11	1	**279-6052**	1	LINK AS	
	12	1	**130-5891**	1	LEVER AS	
		1	**7Y-0336**	1	SPACER (24.5X44X24-MM THK)	
		1	**9R-2614**	1	BEARING	
		1	**9R-3135**	1	PIN	
	13	1	**130-7952**	1	PLATE	
	14	1	**140-6009**	1	LEVER AS	
	15	1	**141-6343**	1	SPRING	
	16	1	**290-8139**	1	PLATE AS	
		1	**220-5974**	1	PLATE	
	17	1	**106-7301**	1	ROD AS	
C	18	1	**297-2831**	1	PIPE AS	
	19	1	**272-0555**	1	PIVOT AS	
	20	1	**1B-8736**	1	KEY-WOODRUFF	
	21	1	**3B-8489**	2	FITTING-GREASE	
	22	1	**272-0557**	1	PLATE AS	
	23	1	**8C-6955**	1	END-YOKE ROD	
	24	1	**8T-4123**	8	WASHER (22X35X3.5-MM THK)	
M	25	1	**8T-4133**	2	NUT (M10X1.5-THD)	
M	26	1	**8T-4182**	1	BOLT (M10X1.5X45-MM)	
	27	1	**9R-2806**	2	PIN	
	28	1	**9R-2807**	4	CLIP	
	29	1	**8T-4224**	2	WASHER-HARD (8.8X16X2-MM THK)	

B-USE AS REQUIRED
C-CHANGE FROM PREVIOUS TYPE
M-METRIC PART

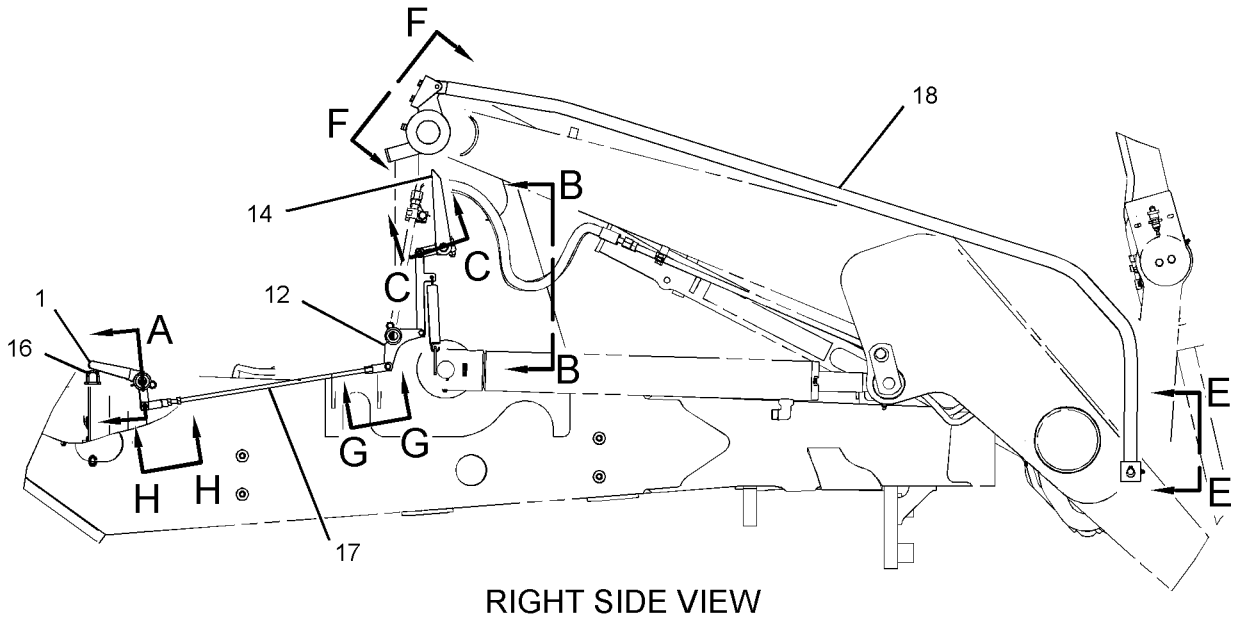

RIGHT SIDE VIEW

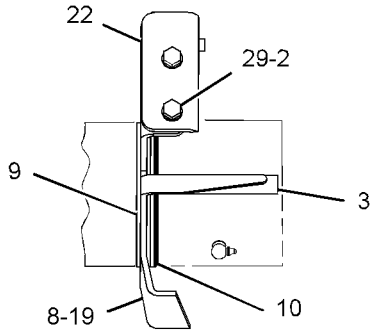

VIEW F-F

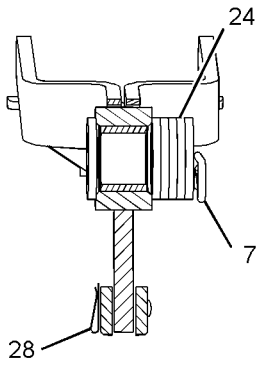

SECTION A

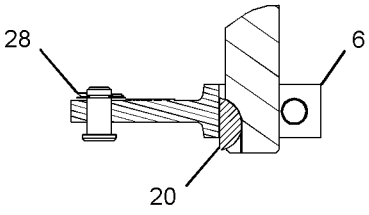

SECTION C-C

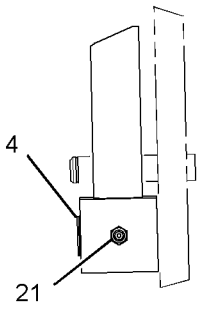

VIEW E-E

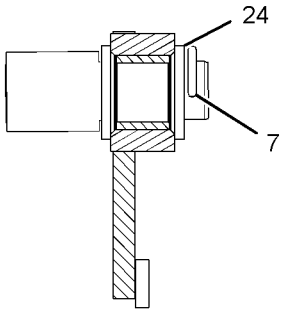

SECTION D-D

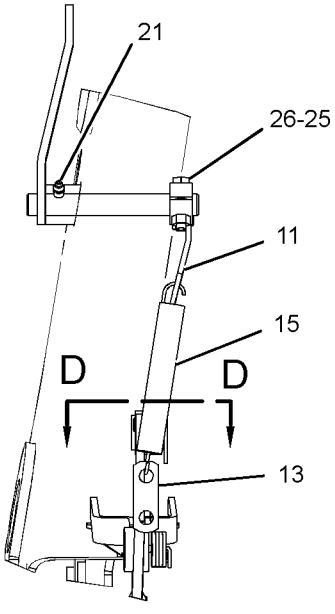

VIEW B-B

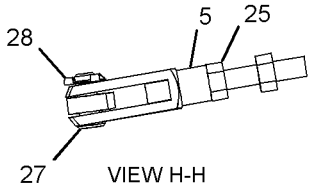

VIEW H-H

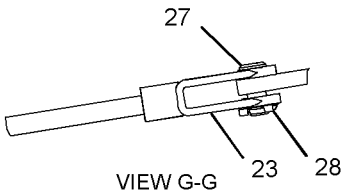

VIEW G-G

GRAPHIC #1

<END>

g01398339

HYDRAULIC SYSTEM

317-1456 KIT-RIDE CONTROL

S/N: LMS1-UP

AN ATTACHMENT

SMCS-5004 **i03889209**

NOTE	REF NO	GRAPHIC REF	PART NUMBER	QTY	PART NAME 1 2 3 4 5 6 (PRODUCT LEVEL)	SEE PAGE
	1	1	**7K-1181**	3	STRAP-CABLE	
	2	1	**146-9439**	1	RELAY AS (12-VOLT) (RIDE CONTROL)	
Y	3	1	**162-3961**	1	ACCUMULATOR GP-RIDE CONTROL (UNCHARGED)	238
	4	1	**189-3158**	1	SUPPRESSOR-ARC	
I	5	1	**194-4334**	1	HOSE AS	
	6	1	**213-6085**	1	HARNESS AS-RIDE CONTROL (FRONT CONSOLE)	
		1	**228-5856**	1	CONNECTOR	
		1	**9X-3401**	4	PIN-CONNECTOR (16-GA TO 18-GA)	
		1	**8T-8737**	2	PLUG-SEAL	
		1	**102-8805**	1	KIT-RECEPTACLE (6-PIN)	
					(INCLUDES RECEPTACLE AS & WEDGE)	
		1	**8L-8413**	6	STRAP-CABLE	
		1	**091-2436**	4	TERMINAL-BLADE (18-GA TO 22-GA)	
	7	1	**214-4719**	1	SWITCH AS-ROCKER (RIDE CONTROL)	
		1	**111-7899**	1	GASKET	
	8	1	**243-1353**	1	SPACER (11X20X35-MM THK)	
Y	9	1	**245-8780**	1	MANIFOLD GP-RIDE CONTROL	324
	10	1	**246-8038**	1	HARNESS AS-RIDE CONTROL (PLATFORM)	
		1	**186-3735**	2	PIN-CONNECTOR (16-GA TO 18-GA)	
		1	**9X-3401**	2	PIN-CONNECTOR (16-GA TO 18-GA)	
		1	**155-2260**	1	KIT-CONNECTING PLUG (3-PIN)	
		1	**155-2270**	3	KIT-CONNECTING PLUG (2-PIN)	
					(EACH PLUG KIT INCLUDES PLUG AS, WEDGE & INTERFACE SEAL)	
		1	**8T-8737**	1	PLUG-SEAL	
		1	**102-8804**	1	KIT-RECEPTACLE (4-PIN)	
					(INCLUDES RECEPTACLE AS & WEDGE)	
		1	**186-3736**	8	SOCKET-CONNECTOR (16-GA TO 18-GA)	
		1	**8L-8413**	4	STRAP-CABLE	
E		1	**125-7874**		TUBE-HEAT SHRINK (5.72-MM DIA) (10-CM)	
	11	1	**247-0320**	1	BRACKET AS	
I	12	1	**252-1221**	1	HOSE AS	
I	13	1	**265-0868**	1	HOSE AS	
	14	1	**276-2334**	1	FILM-WARNING (HIGH PRESSURE, READ OMM, INTL)	
					—OR—	
	15	1	**279-5016**	1	FILM-WARNING (HIGH PRESS CYLINDER, READ OMM) (U.S.)	
	16	1	**292-8222**	1	TUBE AS	
	17	1	**304-5696**	1	SWITCH AS-PRESSURE (RIDE CONTROL)	
E		1	**9X-1813**		SLEEVE (23-CM)	
		1	**102-8803**	2	KIT-RECEPTACLE (3-PIN)	
					(EACH INCLUDES RECEPTACLE AS & WEDGE)	
		1	**8T-8729**	3	PIN-CONNECTOR (16-GA TO 18-GA)	
		1	**186-3735**	3	PIN-CONNECTOR (16-GA TO 18-GA)	
M	18	1	**096-5866**	2	BOLT (M8X1.25X75-MM)	
	19	1	**109-1633**	2	CLIP (SLOT)	
	20	1	**109-1634**	2	CLIP (TAB)	
	21	1	*148-8340*	1	CONNECTOR AS	
		1	**3K-0360**	1	SEAL-O-RING	
		1	**6V-8398**	1	SEAL-O-RING	
		1	**6V-8639**	1	CONNECTOR	
	22	1	*148-8354*	1	ELBOW AS	
		1	**3K-0360**	1	SEAL-O-RING	
		1	**6V-8398**	1	SEAL-O-RING	
		1	**6V-9002**	1	ELBOW	

317-1456 **KIT-RIDE CONTROL** ***(contd.)*** **i03889209**

NOTE	REF NO	GRAPHIC REF	PART NUMBER	QTY	PART NAME 1 2 3 4 5 6 (PRODUCT LEVEL)	SEE PAGE
	23	1	*148-8358*	2	ELBOW AS	
					(EACH INCLUDES)	
		1	**2M-9780**	1	SEAL-O-RING	
		1	**6V-8398**	1	SEAL-O-RING	
		1	**6V-8624**	1	ELBOW	
	24	1	*148-8365*	1	ELBOW AS	
		1	**3J-1907**	1	SEAL-O-RING	
		1	**6V-8398**	1	SEAL-O-RING	
		1	**8T-6876**	1	ELBOW	
	25	1	*148-8370*	1	ELBOW AS	
		1	**6V-8398**	1	SEAL-O-RING	
		1	**6V-9851**	1	ELBOW	
	26	1	*153-6241*	1	ELBOW AS	
		1	**6V-8398**	1	SEAL-O-RING	
		1	**8C-8989**	1	ELBOW	
	27	1	**3J-1907**	1	SEAL-O-RING	
	28	1	**3S-2093**	3	STRAP-CABLE	
	29	1	**4P-7581**	1	CLIP	
	30	1	**8T-4121**	4	WASHER-HARD (11X21X2.5-MM THK)	
M	31	1	**8T-4137**	3	BOLT (M10X1.5X20-MM)	
M	32	1	**8T-4139**	2	BOLT (M12X1.75X30-MM)	
M	33	1	**8T-4185**	1	BOLT (M10X1.5X50-MM)	
	34	1	**8T-4223**	2	WASHER-HARD (13.5X25.5X3-MM THK)	
	35	1	**8T-4224**	2	WASHER-HARD (8.8X16X2-MM THK)	

E-ORDER BY THE CENTIMETER
I-REFER TO HYDRAULIC INFORMATION SYSTEM
M-METRIC PART
Y-SEPARATE ILLUSTRATION

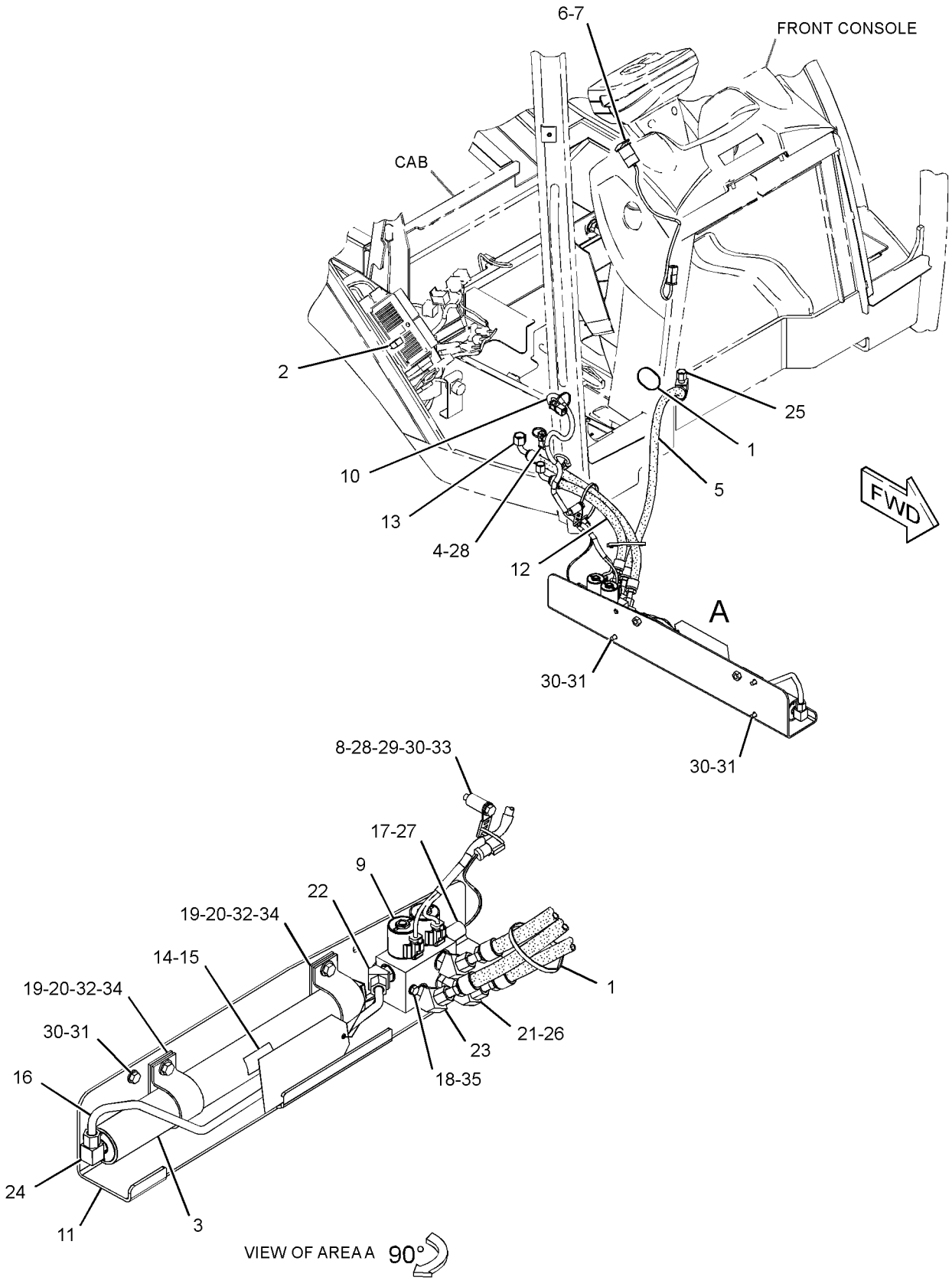

GRAPHIC #1 **<END>** g01698153

HYDRAULIC SYSTEM

249-7912 LINES GP-BACKHOE AUXILIARY

S/N: LMS1-UP

FOR USE WITH 209-9929—PAGE 1, 209-9935—PAGE 336, 212-0206—PAGE 336

AN ATTACHMENT

SMCS-5057 **i03896093**

NOTE	REF NO	GRAPHIC REF	PART NUMBER	QTY	PART NAME 1 2 3 4 5 6 (PRODUCT LEVEL)	SEE PAGE
	1	1	**106-0401**	1	FITTING (QUICK DISCONNECT, FEMALE)	
	2	1	**106-0406**	1	FITTING (QUICK DISCONNECT, MALE)	
	3	1	**109-1260**	2	BRACKET	
	4	1	**144-8344**	1	SPACER (11X19X20-MM THK)	
	5	1	**217-2617**	1	TUBE AS	
I	6	1	**217-2699**	1	HOSE AS	
	7	1	*241-6226*	1	TEE AS	
		1	**6V-8398**	1	SEAL-O-RING	
		1	**6V-9746**	1	SEAL-O-RING	
		1	**7J-9108**	1	SEAL-O-RING	
		1	**241-6225**	1	TEE	
B	8	1	**241-8448**	2	FILM-WARNING (HYD PRESS, READ OMM, U.S.)	
					—OR—	
B		1	**241-8450**	2	FILM-WARNING (HYD PRESS, READ OMM, INTL)	
	9	1	**251-9360**	1	TUBE AS	
	10	1	**277-4543**	1	BRACKET AS	
	11	1	**281-4726**	2	FILM-INSTRUCTION (OIL FLOW DIRECTION)	
I	12	1	**290-6711**	1	HOSE AS	
I	13	1	**312-2598**	1	HOSE AS	
I	14	1	**312-2599**	1	HOSE AS	
	15	1	*148-8392*	1	ELBOW AS	
		1	**6V-9746**	1	SEAL-O-RING	
		1	**6V-9853**	1	ELBOW	
	16	1	*150-3053*	2	CONNECTOR AS	
					(EACH INCLUDES)	
		1	**6V-9746**	1	SEAL-O-RING	
		1	**7M-8485**	1	SEAL-O-RING	
		1	**108-3872**	1	CONNECTOR	
	17	1	*155-2026*	1	UNION AS	
		1	**5K-9090**	2	SEAL-O-RING	
		1	**6V-8998**	1	UNION	
	18	1	**2P-1293**	2	LOCKNUT (1-3/16-12-THD)	
	19	1	**5K-9090**	2	SEAL-O-RING	
	20	1	**5P-7466**	2	CLIP (SLOT)	
	21	1	**5P-7467**	2	CLIP (TAB)	
	22	1	**5P-8112**	2	GROMMET	
	23	1	**6V-9170**	1	NUT-BULKHEAD (1-14-THD)	
	24	1	**6V-9172**	1	NUT (1-7/16-12-THD)	
	25	1	**6V-9746**	1	SEAL-O-RING	
	26	1	**8S-0023**	1	CLIP (SLOT)	
	27	1	**8S-0024**	1	CLIP (TAB)	
	28	1	**8T-1889**	3	CLIP (SLOT)	
	29	1	**8T-1890**	3	CLIP (TAB)	
	30	1	**8T-4121**	10	WASHER-HARD (11X21X2.5-MM THK)	
M	31	1	**8T-4133**	1	NUT (M10X1.5-THD)	
M	32	1	**8T-4136**	5	BOLT (M10X1.5X25-MM)	
M	33	1	**8T-4185**	1	BOLT (M10X1.5X50-MM)	
M	34	1	**8T-4196**	2	BOLT (M10X1.5X35-MM)	

B-USE AS REQUIRED
I-REFER TO HYDRAULIC INFORMATION SYSTEM
M-METRIC PART

249-7912 **LINES GP-BACKHOE AUXILIARY** *(contd.)* **i03896093**

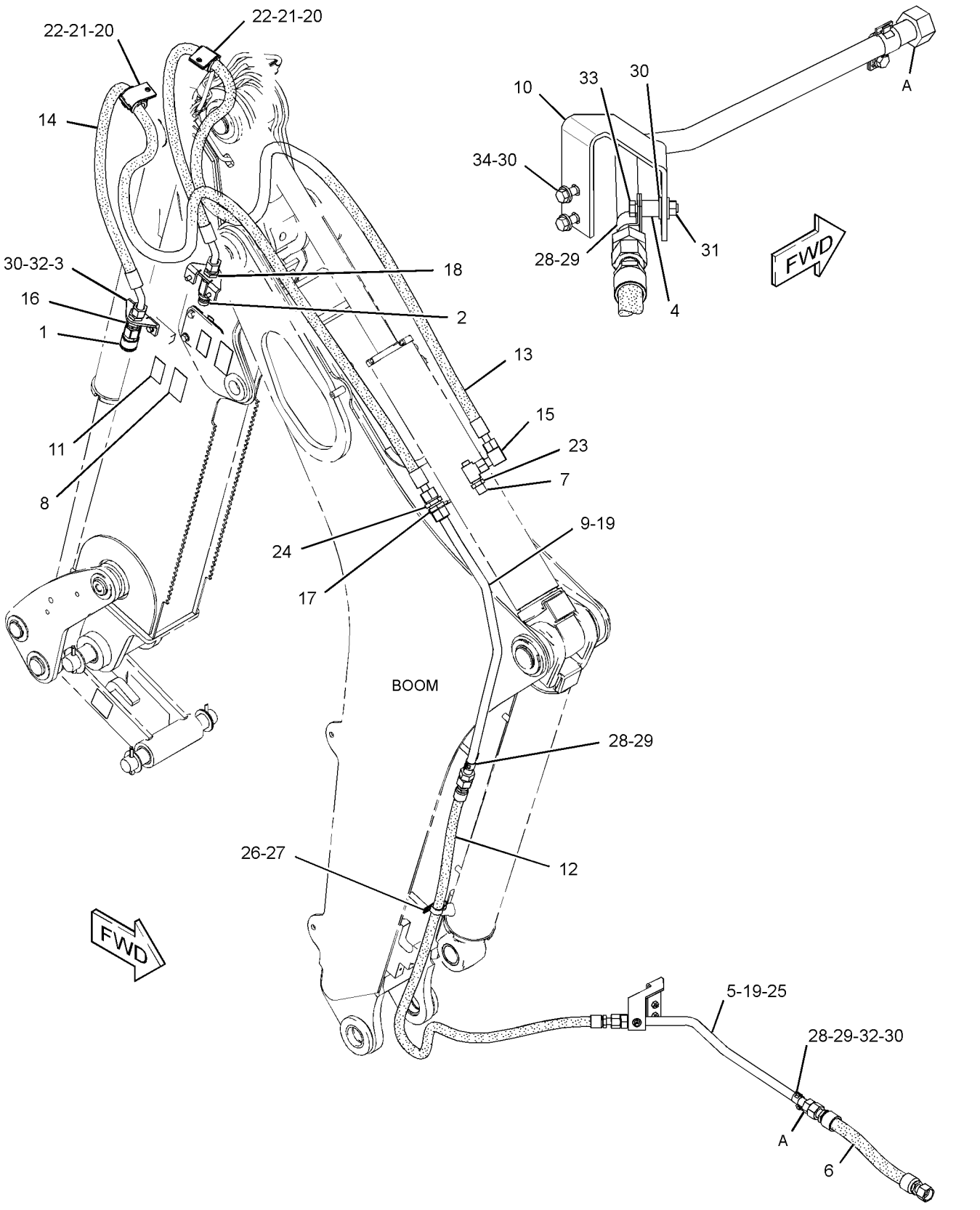

GRAPHIC #1 **<END>** g02140180

HYDRAULIC SYSTEM

258-8355 LINES GP-BACKHOE AUXILIARY–KIT

S/N: LMS1-UP

FOR USE WITH 209-9935–PAGE 336, 212-0206–PAGE 336, 209-9929–PAGE 1

AN ATTACHMENT

SMCS-5057 **i03865255**

NOTE	REF NO	GRAPHIC REF	PART NUMBER	QTY	PART NAME 1 2 3 4 5 6 (PRODUCT LEVEL)	SEE PAGE
	1	1	**4W-3753**	2	SPACER (13.5X25X38.1-MM THK)	
	2	1	**106-0401**	1	FITTING (QUICK DISCONNECT, FEMALE)	
	3	1	**106-0406**	1	FITTING (QUICK DISCONNECT, MALE)	
	4	1	**109-1260**	2	BRACKET	
	5	1	**144-8344**	1	SPACER (11X19X20-MM THK)	
	6	1	*155-2026*	1	UNION AS	
		1	**5K-9090**	2	SEAL-O-RING	
		1	**6V-8998**	1	UNION	
	7	1	**217-2617**	1	TUBE AS	
I	8	1	**217-2699**	1	HOSE AS	
	9	1	*241-6226*	1	TEE AS	
		1	**6V-8398**	1	SEAL-O-RING	
		1	**6V-9746**	1	SEAL-O-RING	
		1	**7J-9108**	1	SEAL-O-RING	
		1	**241-6225**	1	TEE	
	10	1	**241-8448**	2	FILM-WARNING (HYD PRESS, READ OMM, U.S.)	
	11	1	**251-9360**	1	TUBE AS	
I	12	1	**252-0200**	1	HOSE AS	
	13	1	**277-4543**	1	BRACKET AS	
	14	1	**281-4726**	2	FILM-INSTRUCTION (OIL FLOW DIRECTION)	
	15	1	*148-8392*	1	ELBOW AS	
		1	**6V-9746**	1	SEAL-O-RING	
		1	**6V-9853**	1	ELBOW	
	16	1	*150-3053*	2	CONNECTOR AS	
					(EACH INCLUDES)	
		1	**6V-9746**	1	SEAL-O-RING	
		1	**7M-8485**	1	SEAL-O-RING	
		1	**108-3872**	1	CONNECTOR	
I	17	1	**262-4459**	1	HOSE AS	
I	18	1	**290-6711**	1	HOSE AS	
	19	1	**2P-1293**	2	LOCKNUT (1-3/16-12-THD)	
	20	1	**5K-9090**	2	SEAL-O-RING	
	21	1	**5P-7466**	4	CLIP (SLOT)	
	22	1	**5P-7467**	4	CLIP (TAB)	
	23	1	**5P-8112**	4	GROMMET	
	24	1	**6V-9170**	1	NUT-BULKHEAD (1-14-THD)	
	25	1	**6V-9172**	1	NUT (1-7/16-12-THD)	
	26	1	**6V-9746**	1	SEAL-O-RING	
M	27	1	**7X-2549**	2	BOLT (M12X1.75X100-MM)	
	28	1	**7X-7729**	2	WASHER (11X25X3-MM THK)	
	29	1	**8S-0023**	1	CLIP (SLOT)	
	30	1	**8S-0024**	1	CLIP (TAB)	
	31	1	**8T-1889**	3	CLIP (SLOT)	
	32	1	**8T-1890**	3	CLIP (TAB)	
	33	1	**8T-4121**	8	WASHER-HARD (11X21X2.5-MM THK)	
M	34	1	**8T-4133**	1	NUT (M10X1.5-THD)	
M	35	1	**8T-4136**	5	BOLT (M10X1.5X25-MM)	
M	36	1	**8T-4185**	1	BOLT (M10X1.5X50-MM)	
M	37	1	**8T-4196**	2	BOLT (M10X1.5X35-MM)	
	38	1	**8T-4223**	2	WASHER-HARD (13.5X25.5X3-MM THK)	

I-REFER TO HYDRAULIC INFORMATION SYSTEM
M-METRIC PART

258-8355 LINES GP-BACKHOE AUXILIARY *(contd.)* i03865255

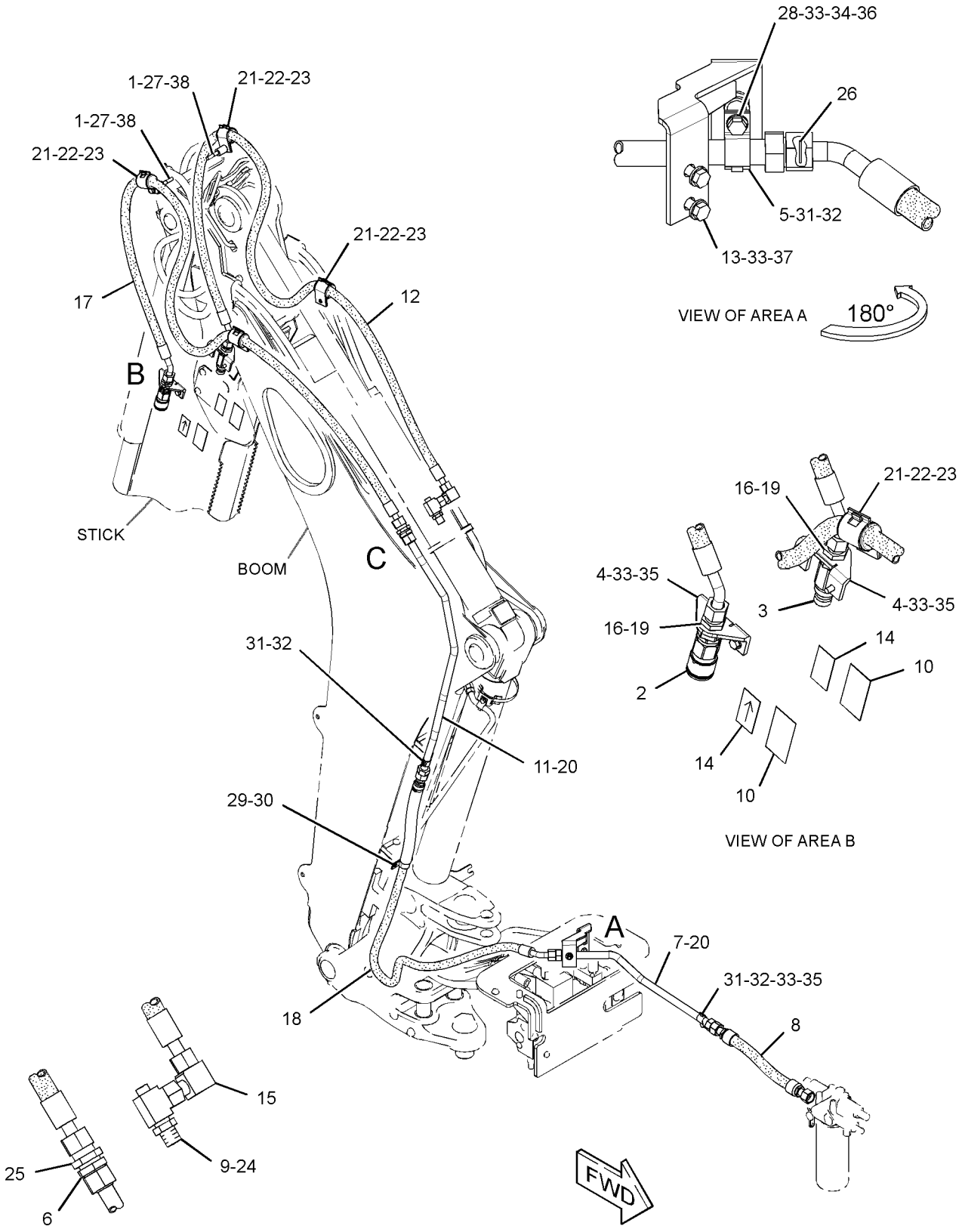

GRAPHIC #1 **<END>** g01807595

HYDRAULIC SYSTEM

262-4212 LINES GP-BACKHOE AUXILIARY–

STANDARD STICK, 1-WAY

S/N: LMS1-UP

PART OF 357-0415 OPTION AR-BACKHOE

FOR USE WITH 209-9924–PAGE 1, 209-9935–PAGE 336, 212-0206–PAGE 336

AN ATTACHMENT

SMCS-5057 **i03866695**

NOTE	REF NO	GRAPHIC REF	PART NUMBER	QTY	PART NAME 1 2 3 4 5 6 (PRODUCT LEVEL)	SEE PAGE
	1	1	**106-0401**	1	FITTING (QUICK DISCONNECT, FEMALE)	
	2	1	**106-0406**	1	FITTING (QUICK DISCONNECT, MALE)	
	3	1	**278-4497**	2	BRACKET	
	4	1	**144-8344**	1	SPACER (11X19X20-MM THK)	
	5	1	*155-2026*	2	UNION AS	
					(EACH INCLUDES)	
		1	**5K-9090**	2	SEAL-O-RING	
		1	**6V-8998**	1	UNION	
	6	1	**235-5729**	1	VALVE AS-MANUAL (DIRECTIONAL FLOW)	
		1	**6V-9746**	2	SEAL-O-RING	
		1	**281-4022**	1	HANDLE AS	
B	7	1	**241-8448**	2	FILM-WARNING (HYD PRESS, READ OMM, U.S.)	
					-OR-	
B		1	**241-8450**	2	FILM-WARNING (HYD PRESS, READ OMM, INTL)	
	8	1	**251-9360**	1	TUBE AS	
	9	1	**262-3036**	1	BRACKET	
I	10	1	**262-3038**	1	HOSE AS	
I	11	1	**262-4203**	2	HOSE AS	
	12	1	**262-4217**	1	TUBE AS	
	13	1	**304-8129**	1	TUBE AS	
	14	1	**277-4543**	1	BRACKET AS	
	15	1	**286-0689**	1	TUBE AS	
	16	1	**109-5825**	1	ELBOW	
	17	1	*148-8327*	1	CONNECTOR AS	
		1	**3D-2824**	1	SEAL-O-RING	
		1	**6V-8637**	1	CONNECTOR	
		1	**6V-9746**	1	SEAL-O-RING	
	18	1	*148-8335*	1	CONNECTOR AS	
		1	**5K-9090**	1	SEAL-O-RING	
		1	**6V-8635**	1	CONNECTOR	
		1	**7M-8485**	1	SEAL-O-RING	
	19	1	*148-8347*	1	ELBOW AS	
		1	**3D-2824**	1	SEAL-O-RING	
		1	**6V-9007**	1	ELBOW	
		1	**6V-9746**	1	SEAL-O-RING	
	20	1	*150-3053*	2	CONNECTOR AS	
					(EACH INCLUDES)	
		1	**6V-9746**	1	SEAL-O-RING	
		1	**7M-8485**	1	SEAL-O-RING	
		1	**108-3872**	1	CONNECTOR	
	21	1	*260-9143*	1	ELBOW AS	
		1	**6V-9746**	1	SEAL-O-RING	
		1	**109-5825**	1	ELBOW	
I	22	1	**290-6711**	1	HOSE AS	
I	23	1	**290-6712**	1	HOSE AS	
	24	1	**2P-1293**	2	LOCKNUT (1-3/16-12-THD)	
	25	1	**5K-9090**	2	SEAL-O-RING	
	26	1	**5P-4116**	2	WASHER-HARD (8.8X20.5X2-MM THK)	
	27	1	**5P-7466**	2	CLIP (SLOT)	
	28	1	**5P-7467**	2	CLIP (TAB)	
	29	1	**5P-8112**	2	GROMMET	
	30	1	**6V-9172**	2	NUT (1-7/16-12-THD)	
	31	1	**6V-9746**	2	SEAL-O-RING	

262-4212 LINES GP-BACKHOE AUXILIARY *(contd.)* i03866695

NOTE	REF NO	GRAPHIC REF	PART NUMBER	QTY	PART NAME 1 2 3 4 5 6 (PRODUCT LEVEL)	SEE PAGE
	32	1	**8S-0023**	1	CLIP (SLOT)	
	33	1	**8S-0024**	1	CLIP (TAB)	
	34	1	**8T-1887**	1	CLIP (SLOT)	
	35	1	**8T-1888**	1	CLIP (TAB)	
	36	1	**8T-1889**	2	CLIP (SLOT)	
	37	1	**8T-1890**	2	CLIP (TAB)	
	38	1	**8T-4121**	12	WASHER-HARD (11X21X2.5-MM THK)	
M	39	1	**8T-4133**	1	NUT (M10X1.5-THD)	
M	40	1	**8T-4136**	4	BOLT (M10X1.5X25-MM)	
M	41	1	**8T-4137**	2	BOLT (M10X1.5X20-MM)	
M	42	1	**8T-4185**	1	BOLT (M10X1.5X50-MM)	
M	43	1	**8T-4189**	2	BOLT (M8X1.25X20-MM)	
M	44	1	**8T-4196**	2	BOLT (M10X1.5X35-MM)	
BM	45	1	**8T-4910**	2	BOLT (M12X1.75X60-MM)	
	46	1	**204-2281**	2	STRAP-CABLE	
	47	1	**278-4498**	2	BRACKET	
	48	1	*148-8449*	2	TEE AS-SWIVEL	
					(EACH INCLUDES)	
		1	**6V-9746**	2	SEAL-O-RING	
		1	**6V-9839**	1	TEE-SWIVEL	
	49	1	**6V-9832**	2	CAP AS	

B-USE AS REQUIRED
I-REFER TO HYDRAULIC INFORMATION SYSTEM
M-METRIC PART

262-4212 **LINES GP-BACKHOE AUXILIARY** *(contd.)* **i03866695**

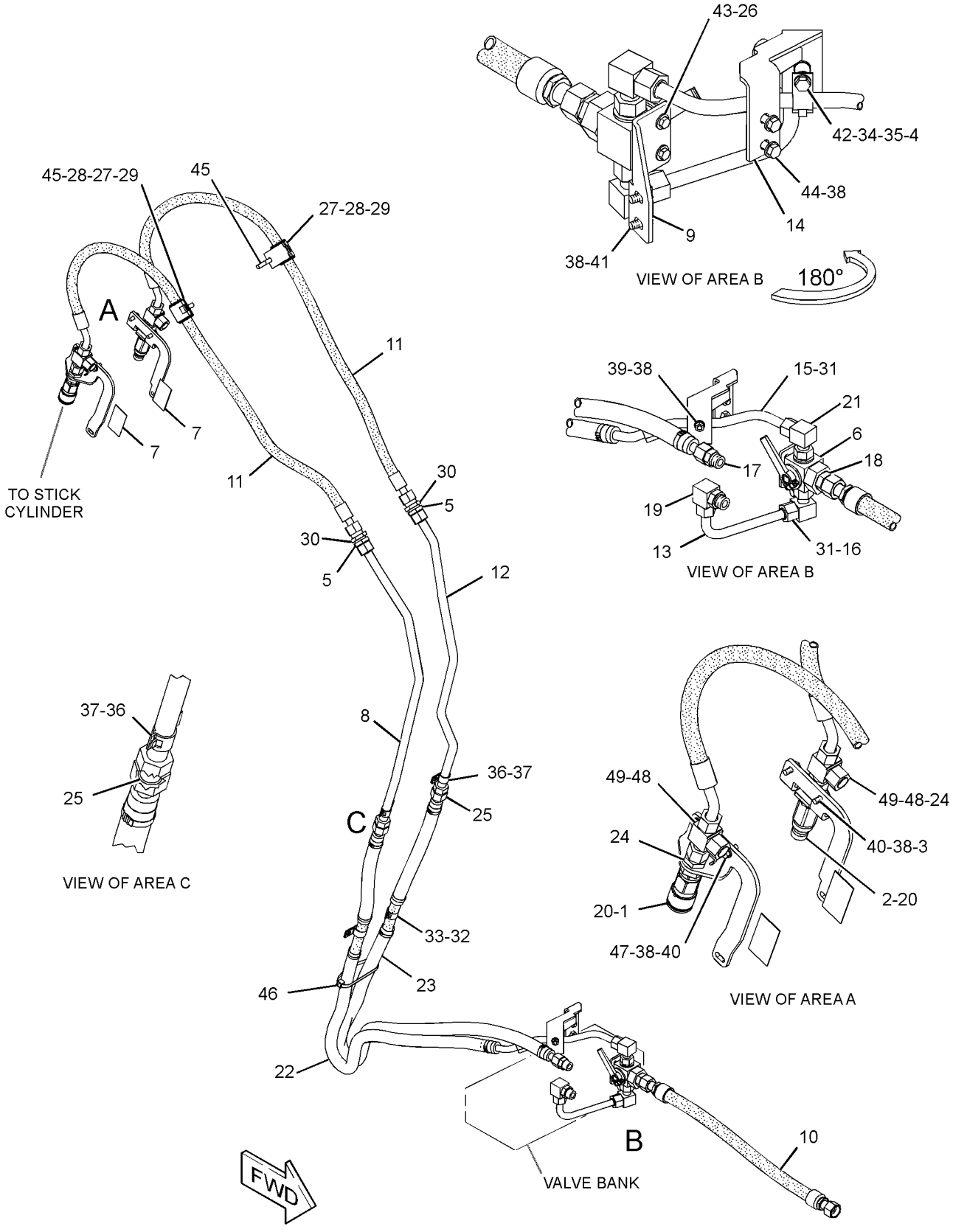

GRAPHIC #1 **<END>** g02120893

HYDRAULIC SYSTEM

262-4213 LINES GP-BACKHOE AUXILIARY–EXTENDABLE STICK, 1-WAY

S/N: LMS1-UP

PART OF 357-0417 OPTION AR-BACKHOE

FOR USE WITH 212-0206–PAGE 336, 209-9929–PAGE 1

AN ATTACHMENT

SMCS-5057 **i03866692**

NOTE	REF NO	GRAPHIC REF	PART NUMBER	QTY	PART NAME 1 2 3 4 5 6 (PRODUCT LEVEL)	SEE PAGE
	1	1	**4W-3753**	2	SPACER (13.5X25X38.1-MM THK)	
	2	1	**106-0401**	1	FITTING (QUICK DISCONNECT, FEMALE)	
	3	1	**106-0406**	1	FITTING (QUICK DISCONNECT, MALE)	
	4	1	*106-8715*	1	ELBOW AS	
		1	**8C-8400**	1	ELBOW	
		1	**6V-9746**	1	SEAL-O-RING	
		1	**3D-2824**	1	SEAL-O-RING	
	5	1	**144-8344**	1	SPACER (11X19X20-MM THK)	
	6	1	**204-2281**	1	STRAP-CABLE	
	7	1	**235-5729**	1	VALVE AS-MANUAL (DIRECTIONAL FLOW)	
		1	**6V-9746**	2	SEAL-O-RING	
		1	**281-4022**	1	HANDLE AS	
B	8	1	**241-8448**	2	FILM-WARNING (HYD PRESS, READ OMM, U.S.)	
					-OR-	
B		1	**241-8450**	2	FILM-WARNING (HYD PRESS, READ OMM, INTL)	
	10	1	**251-9360**	1	TUBE AS	
	11	1	**262-3036**	1	BRACKET	
I	12	1	**262-3038**	1	HOSE AS	
	13	1	**262-4217**	1	TUBE AS	
	14	1	**277-4543**	1	BRACKET AS	
	15	1	**278-4497**	1	BRACKET	
	16	1	**278-4498**	1	BRACKET	
	17	1	**286-0689**	1	TUBE AS	
I	18	1	**290-6711**	1	HOSE AS	
I	19	1	**290-6712**	1	HOSE AS	
	20	1	**304-8130**	1	TUBE AS	
	21	1	**109-5825**	1	ELBOW	
	22	1	*148-8327*	1	CONNECTOR AS	
		1	**3D-2824**	1	SEAL-O-RING	
		1	**6V-8637**	1	CONNECTOR	
		1	**6V-9746**	1	SEAL-O-RING	
	23	1	*148-8335*	1	CONNECTOR AS	
		1	**5K-9090**	1	SEAL-O-RING	
		1	**6V-8635**	1	CONNECTOR	
		1	**7M-8485**	1	SEAL-O-RING	
	24	1	*148-8449*	2	TEE AS-SWIVEL	
					(EACH INCLUDES)	
		1	**6V-9746**	2	SEAL-O-RING	
		1	**6V-9839**	1	TEE-SWIVEL	
	25	1	*150-3053*	2	CONNECTOR AS	
					(EACH INCLUDES)	
		1	**6V-9746**	1	SEAL-O-RING	
		1	**7M-8485**	1	SEAL-O-RING	
		1	**108-3872**	1	CONNECTOR	
	26	1	*155-2026*	2	UNION AS	
					(EACH INCLUDES)	
		1	**5K-9090**	2	SEAL-O-RING	
		1	**6V-8998**	1	UNION	
	27	1	*260-9143*	1	ELBOW AS	
		1	**6V-9746**	1	SEAL-O-RING	
		1	**109-5825**	1	ELBOW	
I	28	1	**262-4459**	2	HOSE AS	
	29	1	**330-9416**	2	CLIP (TAB)	

262-4213 **LINES GP-BACKHOE AUXILIARY** *(contd.)* **i03866692**

NOTE	REF NO	GRAPHIC REF	PART NUMBER	QTY	PART NAME 1 2 3 4 5 6 (PRODUCT LEVEL)	SEE PAGE
	30	1	**2P-1293**	2	LOCKNUT (1-3/16-12-THD)	
	31	1	**5K-9090**	2	SEAL-O-RING	
	32	1	**5P-4116**	2	WASHER-HARD (8.8X20.5X2-MM THK)	
	33	1	**5P-7466**	4	CLIP (SLOT)	
	34	1	**5P-7467**	2	CLIP (TAB)	
	35	1	**5P-8112**	4	GROMMET	
	36	1	**6V-9172**	2	NUT (1-7/16-12-THD)	
	37	1	**6V-9746**	2	SEAL-O-RING	
	38	1	**6V-9832**	2	CAP AS	
BM	39	1	**7X-2549**	2	BOLT (M12X1.75X100-MM)	
	40	1	**8S-0023**	2	CLIP (SLOT)	
	41	1	**8S-0024**	2	CLIP (TAB)	
	42	1	**8T-1887**	1	CLIP (SLOT)	
	43	1	**8T-1888**	1	CLIP (TAB)	
	44	1	**8T-1889**	2	CLIP (SLOT)	
	45	1	**8T-1890**	2	CLIP (TAB)	
	46	1	**8T-4121**	12	WASHER-HARD (11X21X2.5-MM THK)	
M	47	1	**8T-4133**	1	NUT (M10X1.5-THD)	
M	48	1	**8T-4136**	4	BOLT (M10X1.5X25-MM)	
M	49	1	**8T-4137**	2	BOLT (M10X1.5X20-MM)	
M	50	1	**8T-4185**	1	BOLT (M10X1.5X50-MM)	
M	51	1	**8T-4189**	2	BOLT (M8X1.25X20-MM)	
M	52	1	**8T-4196**	2	BOLT (M10X1.5X35-MM)	
	53	1	**8T-4223**	2	WASHER-HARD (13.5X25.5X3-MM THK)	

B-USE AS REQUIRED
I-REFER TO HYDRAULIC INFORMATION SYSTEM
M-METRIC PART

262-4213 **LINES GP-BACKHOE AUXILIARY** *(contd.)* **i03866692**

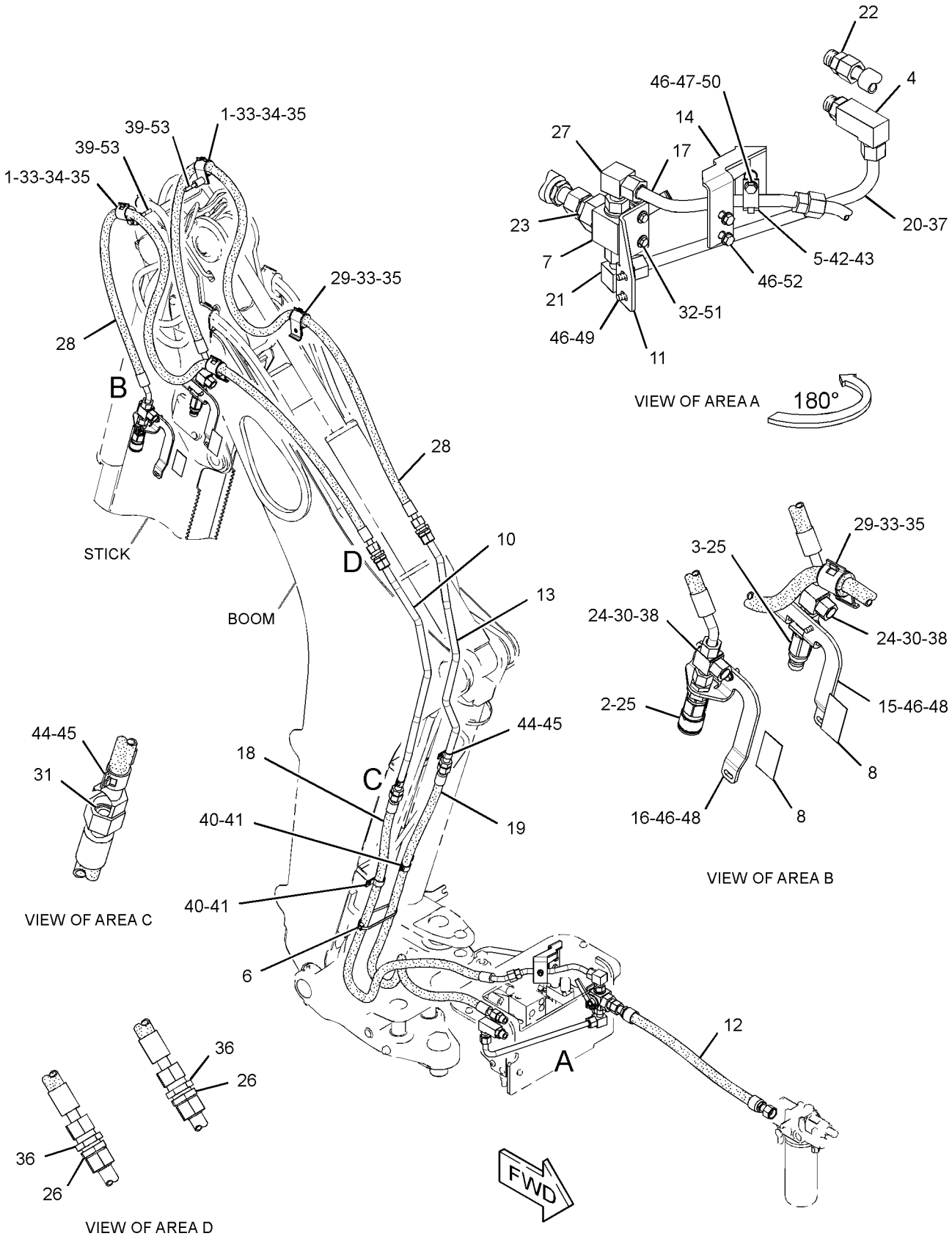

GRAPHIC #1 **<END>** g02120873

HYDRAULIC SYSTEM

266-2407 LINES GP-BACKHOE AUXILIARY–KIT

S/N: LMS1-UP

AN ATTACHMENT

SMCS-5057 **i03865258**

NOTE	REF NO	GRAPHIC REF	PART NUMBER	QTY	PART NAME 1 2 3 4 5 6 (PRODUCT LEVEL)	SEE PAGE
	1	1	**106-0401**	1	FITTING (QUICK DISCONNECT, FEMALE)	
	2	1	**106-0406**	1	FITTING (QUICK DISCONNECT, MALE)	
	3	2	**144-8344**	1	SPACER (11X19X20-MM THK)	
	4	1	**204-2281**	1	STRAP-CABLE	
	5	2	**235-5729**	1	VALVE AS-MANUAL (DIRECTIONAL FLOW)	
		2	**6V-9746**	2	SEAL-O-RING	
		2	**281-4022**	1	HANDLE AS	
	6	1	**241-8448**	2	FILM-WARNING (HYD PRESS, READ OMM, U.S.)	
	7	1	**251-9360**	1	TUBE AS	
	8	2	**262-3036**	1	BRACKET	
I	9	1	**262-3038**	1	HOSE AS	
I	10	1	**262-4203**	2	HOSE AS	
	11	1	**262-4217**	1	TUBE AS	
	12	2	**262-4220**	1	TUBE AS	
	13	2	**277-4543**	1	BRACKET AS	
	14	1	**278-4497**	1	BRACKET	
	15	1	**278-4498**	1	BRACKET	
	16	2	**286-0689**	1	TUBE AS	
I	17	1	**290-6711**	1	HOSE AS	
I	18	1	**290-6712**	1	HOSE AS	
	19	2	**109-5825**	1	ELBOW	
	20	2	*148-8327*	1	CONNECTOR AS	
		2	**3D-2824**	1	SEAL-O-RING	
		2	**6V-8637**	1	CONNECTOR	
		2	**6V-9746**	1	SEAL-O-RING	
	21	2	*148-8335*	1	CONNECTOR AS	
		2	**5K-9090**	1	SEAL-O-RING	
		2	**6V-8635**	1	CONNECTOR	
		2	**7M-8485**	1	SEAL-O-RING	
	22	2	*148-8347*	1	ELBOW AS	
		2	**3D-2824**	1	SEAL-O-RING	
		2	**6V-9007**	1	ELBOW	
		2	**6V-9746**	1	SEAL-O-RING	
	23	1	*148-8449*	2	TEE AS-SWIVEL	
					(EACH INCLUDES)	
		1	**6V-9746**	2	SEAL-O-RING	
		1	**6V-9839**	1	TEE-SWIVEL	
	24	1	*150-3053*	2	CONNECTOR AS	
					(EACH INCLUDES)	
		1	**6V-9746**	1	SEAL-O-RING	
		1	**7M-8485**	1	SEAL-O-RING	
		1	**108-3872**	1	CONNECTOR	
	25	1	*155-2026*	2	UNION AS	
					(EACH INCLUDES)	
		1	**5K-9090**	2	SEAL-O-RING	
		1	**6V-8998**	1	UNION	
	26	2	*260-9143*	1	ELBOW AS	
		2	**6V-9746**	1	SEAL-O-RING	
		2	**109-5825**		ELBOW	
	27	1	**2P-1293**	2	LOCKNUT (1-3/16-12-THD)	
	28	1	**5K-9090**	2	SEAL-O-RING	
	29	2	**5P-4116**	2	WASHER-HARD (8.8X20.5X2-MM THK)	
	30	1	**5P-7466**	2	CLIP (SLOT)	
	31	1	**5P-7467**	2	CLIP (TAB)	
	32	1	**5P-8112**	2	GROMMET	
	33	1	**6V-9172**	2	NUT (1-7/16-12-THD)	

266-2407 **LINES GP-BACKHOE AUXILIARY** *(contd.)* **i03865258**

NOTE	REF NO	GRAPHIC REF	PART NUMBER	QTY	PART NAME 1 2 3 4 5 6 (PRODUCT LEVEL)	SEE PAGE
	34	2	**6V-9746**	2	SEAL-O-RING	
	35	1	**6V-9832**	2	CAP AS	
	36	1	**8S-0023**	2	CLIP (SLOT)	
	37	1	**8S-0024**	2	CLIP (TAB)	
	38	2	**8T-1887**	1	CLIP (SLOT)	
	39	2	**8T-1888**	1	CLIP (TAB)	
	40	1	**8T-1889**	2	CLIP (SLOT)	
	41	1	**8T-1890**	2	CLIP (TAB)	
	42	1,2	**8T-4121**	12	WASHER-HARD (11X21X2.5-MM THK)	
M	43	2	**8T-4133**	1	NUT (M10X1.5-THD)	
M	44	1	**8T-4136**	4	BOLT (M10X1.5X25-MM)	
M	45	2	**8T-4137**	2	BOLT (M10X1.5X20-MM)	
M	46	2	**8T-4185**	1	BOLT (M10X1.5X50-MM)	
M	47	2	**8T-4189**	2	BOLT (M8X1.25X20-MM)	
M	48	2	**8T-4196**	2	BOLT (M10X1.5X35-MM)	
BM	49	1	**8T-4910**	2	BOLT (M12X1.75X60-MM)	

B-USE AS REQUIRED
I-REFER TO HYDRAULIC INFORMATION SYSTEM
M-METRIC PART

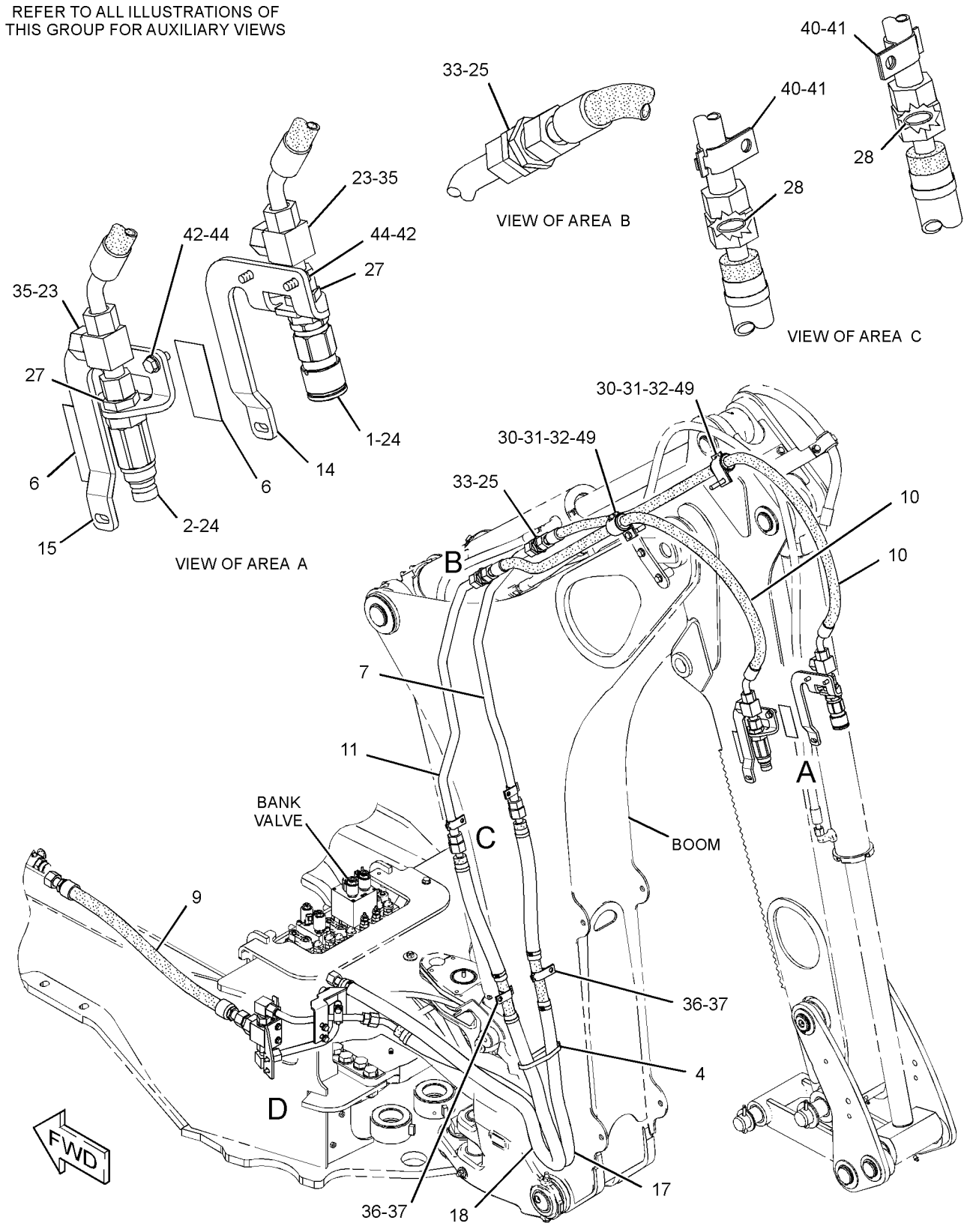

GRAPHIC #1

g01806335

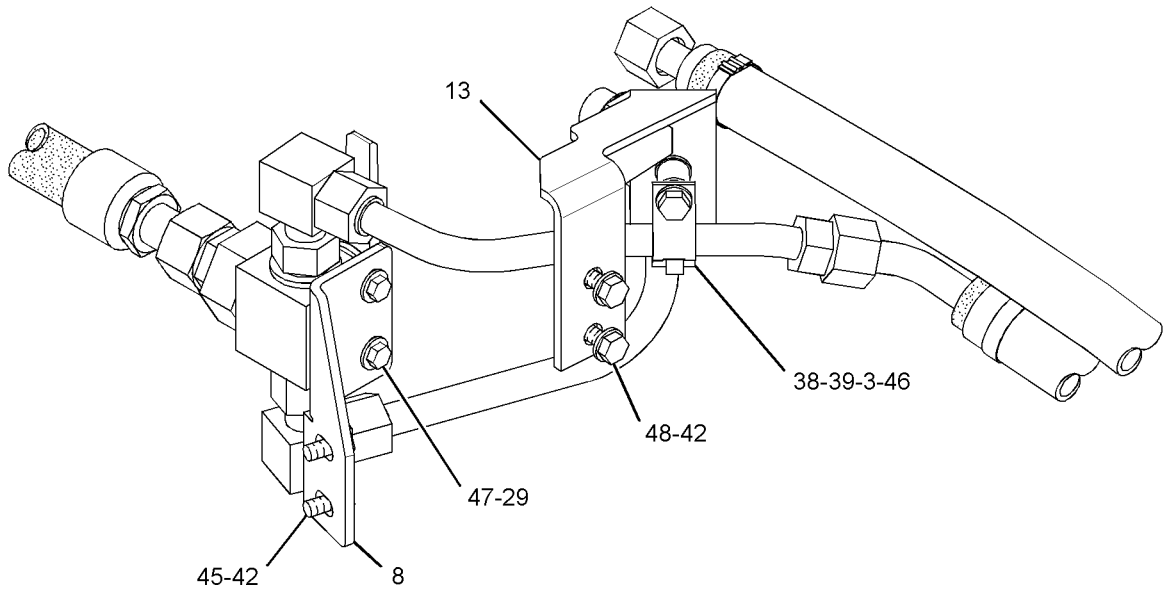

VIEW OF AREA D

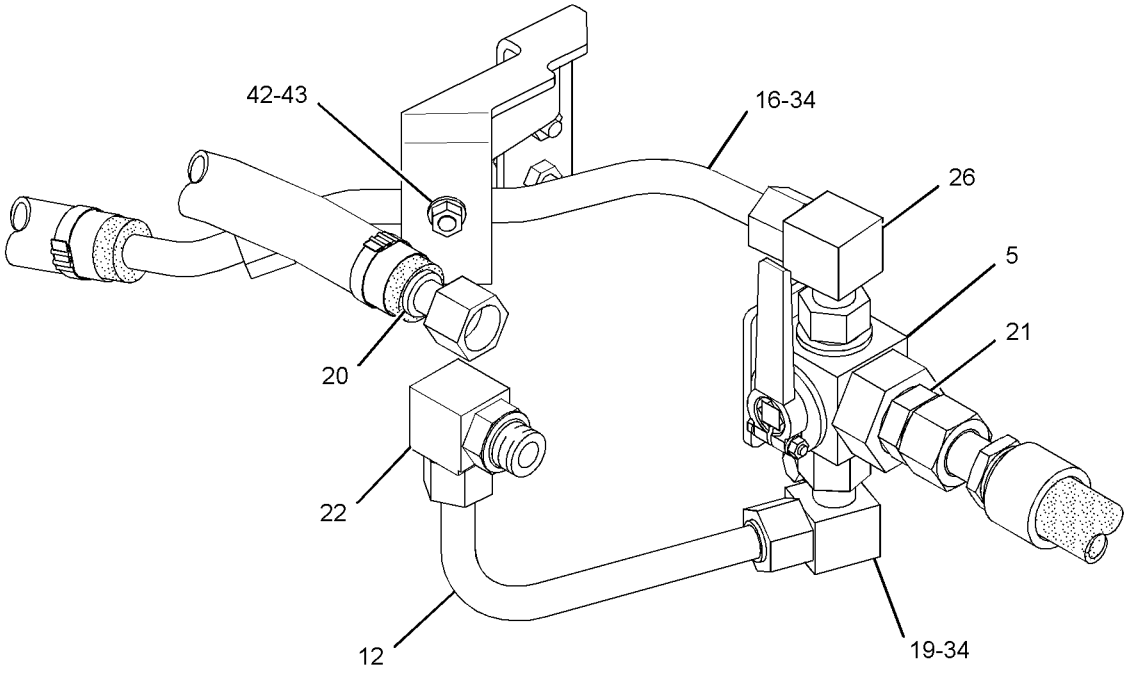

VIEW OF AREA D 180°

GRAPHIC #2 **<END>** g01806336

HYDRAULIC SYSTEM

266-2408 LINES GP-BACKHOE AUXILIARY–KIT, EXTENDABLE STICK

S/N: LMS1-UP

AN ATTACHMENT

SMCS-5057 **i03865259**

NOTE	REF NO	GRAPHIC REF	PART NUMBER	QTY	PART NAME 1 2 3 4 5 6 (PRODUCT LEVEL)	SEE PAGE
	1	1	**4W-3753**	2	SPACER (13.5X25X38.1-MM THK)	
	2	1	**106-0401**	1	FITTING (QUICK DISCONNECT, FEMALE)	
	3	1	**106-0406**	1	FITTING (QUICK DISCONNECT, MALE)	
	4	1	*106-8715*	1	ELBOW AS	
		1	**3D-2824**	1	SEAL-O-RING	
		1	**6V-9746**	1	SEAL-O-RING	
		1	**8C-8400**	1	ELBOW	
	5	1	**144-8344**	1	SPACER (11X19X20-MM THK)	
	6	1	**204-2281**	1	STRAP-CABLE	
	7	1	**235-5729**	1	VALVE AS-MANUAL (DIRECTIONAL FLOW)	
		1	**6V-9746**	2	SEAL-O-RING	
		1	**281-4022**	1	HANDLE AS	
	8	1	**241-8448**	2	FILM-WARNING (HYD PRESS, READ OMM, U.S.)	
	9	1	**251-9360**	1	TUBE AS	
	10	1	**262-3036**	1	BRACKET	
I	11	1	**262-3038**	1	HOSE AS	
	12	1	**262-4217**	1	TUBE AS	
	13	1	**262-4462**	1	TUBE AS	
	14	1	**277-4543**	1	BRACKET AS	
	15	1	**278-4497**	1	BRACKET	
	16	1	**278-4498**	1	BRACKET	
	17	1	**286-0689**	1	TUBE AS	
I	18	1	**290-6711**	1	HOSE AS	
I	19	1	**290-6712**	1	HOSE AS	
	20	1	**109-5825**	1	ELBOW	
	21	1	*148-8327*	1	CONNECTOR AS	
		1	**3D-2824**	1	SEAL-O-RING	
		1	**6V-8637**	1	CONNECTOR	
		1	**6V-9746**	1	SEAL-O-RING	
	22	1	*148-8335*	1	CONNECTOR AS	
		1	**5K-9090**	1	SEAL-O-RING	
		1	**6V-8635**	1	CONNECTOR	
		1	**7M-8485**	1	SEAL-O-RING	
	23	1	*148-8449*	2	TEE AS-SWIVEL	
					(EACH INCLUDES)	
		1	**6V-9746**	2	SEAL-O-RING	
		1	**6V-9839**	1	TEE-SWIVEL	
	24	1	*150-3053*	2	CONNECTOR AS	
					(EACH INCLUDES)	
		1	**6V-9746**	1	SEAL-O-RING	
		1	**7M-8485**	1	SEAL-O-RING	
		1	**108-3872**	1	CONNECTOR	
	25	1	*155-2026*	2	UNION AS	
					(EACH INCLUDES)	
		1	**5K-9090**	2	SEAL-O-RING	
		1	**6V-8998**	1	UNION	
	26	1	*260-9143*	1	ELBOW AS	
		1	**6V-9746**	1	SEAL-O-RING	
		1	**109-5825**	1	ELBOW	
I	27	1	**262-4459**	2	HOSE AS	
	28	1	**2P-1293**	2	LOCKNUT (1-3/16-12-THD)	
	29	1	**5K-9090**	2	SEAL-O-RING	
	30	1	**5P-4116**	2	WASHER-HARD (8.8X20.5X2-MM THK)	
	31	1	**5P-7466**	4	CLIP (SLOT)	
	32	1	**5P-7467**	4	CLIP (TAB)	

266-2408 **LINES GP-BACKHOE AUXILIARY** *(contd.)* **i03865259**

NOTE	REF NO	GRAPHIC REF	PART NUMBER	QTY	PART NAME 1 2 3 4 5 6 (PRODUCT LEVEL)	SEE PAGE
	33	1	**5P-8112**	4	GROMMET	
	34	1	**6V-9172**	2	NUT (1-7/16-12-THD)	
	35	1	**6V-9746**	2	SEAL-O-RING	
	36	1	**6V-9832**	2	CAP AS	
BM	37	1	**7X-2549**	2	BOLT (M12X1.75X100-MM)	
	38	1	**8S-0023**	2	CLIP (SLOT)	
	39	1	**8S-0024**	2	CLIP (TAB)	
	40	1	**8T-1887**	1	CLIP (SLOT)	
	41	1	**8T-1888**	1	CLIP (TAB)	
	42	1	**8T-1889**	2	CLIP (SLOT)	
	43	1	**8T-1890**	2	CLIP (TAB)	
	44	1	**8T-4121**	12	WASHER-HARD (11X21X2.5-MM THK)	
M	45	1	**8T-4133**	1	NUT (M10X1.5-THD)	
M	46	1	**8T-4136**	4	BOLT (M10X1.5X25-MM)	
M	47	1	**8T-4137**	2	BOLT (M10X1.5X20-MM)	
M	48	1	**8T-4185**	1	BOLT (M10X1.5X50-MM)	
M	49	1	**8T-4189**	2	BOLT (M8X1.25X20-MM)	
M	50	1	**8T-4196**	2	BOLT (M10X1.5X35-MM)	
	51	1	**8T-4223**	2	WASHER-HARD (13.5X25.5X3-MM THK)	

B-USE AS REQUIRED
I-REFER TO HYDRAULIC INFORMATION SYSTEM
M-METRIC PART

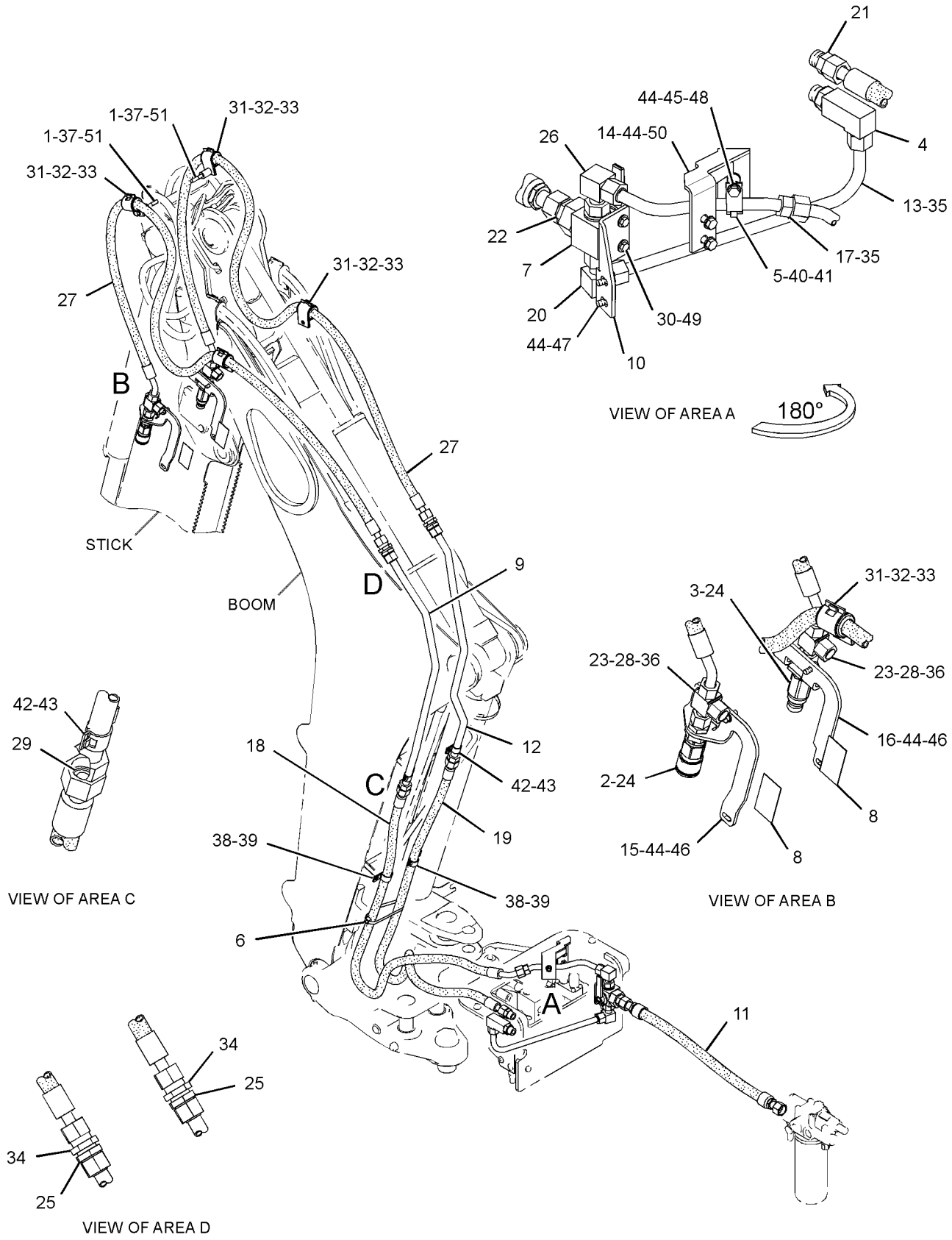

GRAPHIC #1 **<END>** g01806053

HYDRAULIC SYSTEM

211-7601 LINES GP-BOOM

S/N: LMS1-UP

PART OF 209-9929 BACKHOE AR-EXTENDABLE STICK, 209-9924 BACKHOE AR-STANDARD STICK

AN ATTACHMENT

SMCS-5057, 5456 **i03908689**

NOTE	REF NO	GRAPHIC REF	PART NUMBER	QTY	PART NAME 1 2 3 4 5 6 (PRODUCT LEVEL)	SEE PAGE
	1	1	**5P-0599**	1	CLAMP-BAND	
	2	1	**9R-4619**	1	SUPPORT AS	
M		1	**6V-8224**	1	NUT-WELD (M10X1.5-THD)	
I	3	1	**142-1072**	1	HOSE AS	
	4	1	**7K-1181**	1	STRAP-CABLE	
	5	1	**250-0658**	1	TUBE AS	
I	6	1	**311-2505**	1	HOSE AS	
	7	1	**6U-0456**	4	STRAP	
	8	1	*148-8341*	2	CONNECTOR AS	
					(EACH INCLUDES)	
		1	**3D-2824**	1	SEAL-O-RING	
		1	**6V-8713**	1	CONNECTOR	
		1	**7J-9108**	1	SEAL-O-RING	
	9	1	*148-8382*	1	ELBOW AS	
		1	**3D-2824**	1	SEAL-O-RING	
		1	**7J-9108**	1	SEAL-O-RING	
		1	**8T-0404**	1	ELBOW	
	10	1	**7J-9108**	3	SEAL-O-RING	
	11	1	**8T-1887**	1	CLIP (SLOT)	
	12	1	**8T-1888**	1	CLIP (TAB)	
	13	1	**8T-4121**	1	WASHER-HARD (11X21X2.5-MM THK)	
M	14	1	**8T-4137**	1	BOLT (M10X1.5X20-MM)	
I	15	1	**311-2501**	2	HOSE AS	

I-REFER TO HYDRAULIC INFORMATION SYSTEM
M-METRIC PART

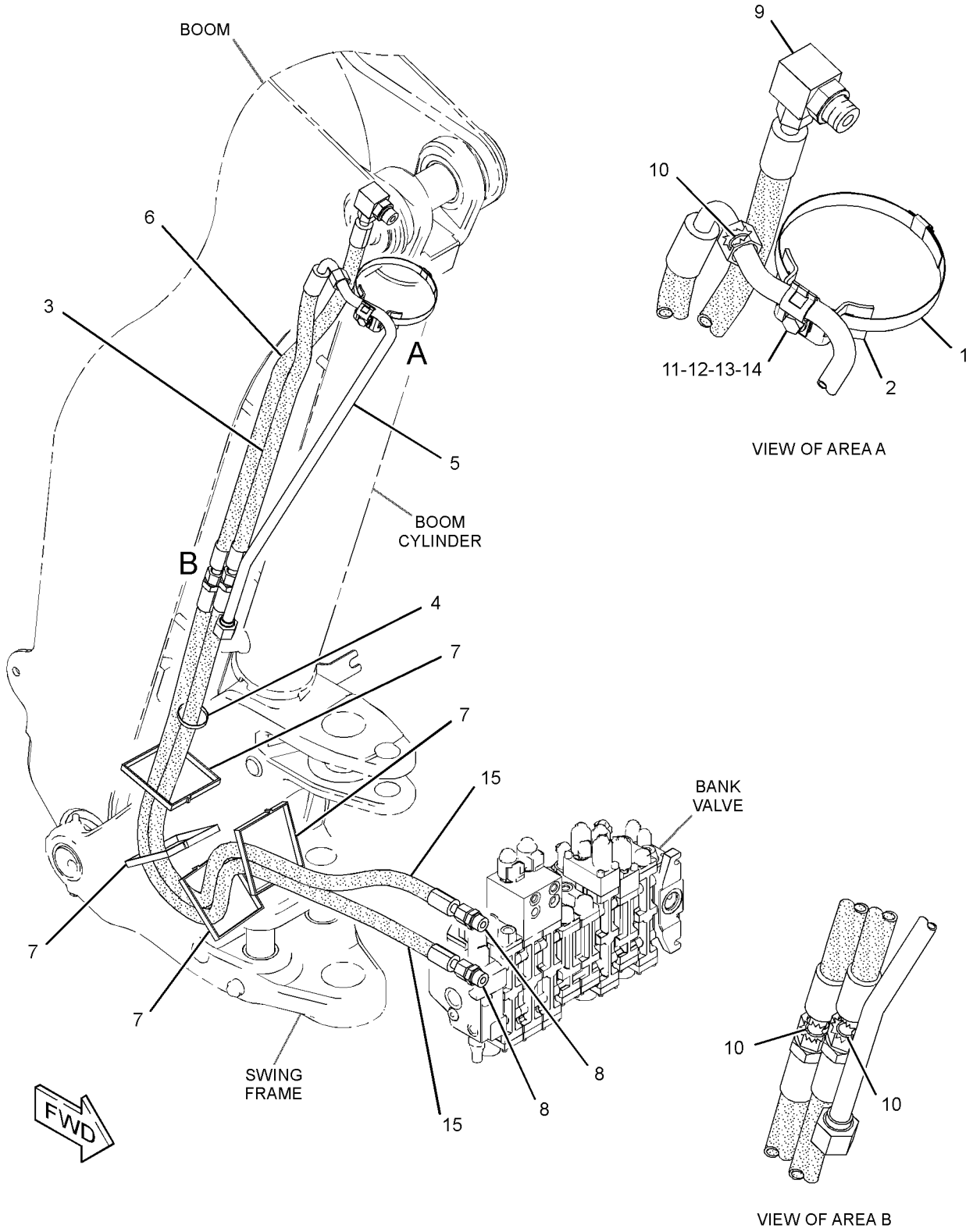

GRAPHIC #1 **<END>** g02149829

HYDRAULIC SYSTEM

246-9311 LINES GP-BUCKET—STANDARD STICK

S/N: LMS1-UP

PART OF 209-9924 BACKHOE AR-STANDARD STICK

AN ATTACHMENT

SMCS-5057, 5457 **i03869591**

NOTE	REF NO	GRAPHIC REF	PART NUMBER	QTY	PART NAME 1 2 3 4 5 6 (PRODUCT LEVEL)	SEE PAGE
	1	1	**5P-0599**	1	CLAMP-BAND	
	2	1	**9R-5948**	1	BLOCK	
I	3	1	**311-2498**	1	HOSE AS	
I	4	1	**266-4326**	1	HOSE AS	
	5	1	**251-1541**	1	PLATE AS	
	6	1	**248-5547**	2	PLATE	
I	7	1	**231-0215**	1	HOSE AS	
I	8	1	**252-0165**	1	HOSE AS	
	9	1	*311-2510*	1	LINES GP-HYDRAULIC (BUCKET)	
I		1	**311-2501**	1	HOSE AS	
I		1	**311-2519**	1	HOSE AS	
	10	1	*148-8341*	2	CONNECTOR AS	
					(EACH INCLUDES)	
		1	**3D-2824**	1	SEAL-O-RING	
		1	**6V-8713**	1	CONNECTOR	
		1	**7J-9108**	1	SEAL-O-RING	
	11	1	*148-8382*	1	ELBOW AS	
		1	**3D-2824**	2	SEAL-O-RING	
		1	**7J-9108**	1	SEAL-O-RING	
		1	**8T-0404**	1	ELBOW	
	12	1	*268-1548*	1	CONNECTOR AS	
		1	**6V-8398**	1	SEAL-O-RING	
		1	**268-1547**	1	CONNECTOR	
		1	**7J-9108**	1	SEAL-O-RING	
	13	1	*169-7409*	1	UNION AS	
		1	**6V-8996**	1	UNION	
		1	**7J-9108**	2	SEAL-O-RING	
	14	1	**5P-7464**	4	CLIP (SLOT)	
	15	1	**5P-7465**	4	CLIP (TAB)	
	16	1	**6V-1249**	2	GROMMET	
	17	1	**6V-1889**	1	CLIP	
	18	1	**6V-7359**	2	GROMMET	
	19	1	**7J-9108**	2	SEAL-O-RING	
	20	1	**6V-9170**	2	NUT-BULKHEAD (1-14-THD)	
	21	1	**7X-7729**	4	WASHER (11X25X3-MM THK)	
	22	1	**8T-4121**	2	WASHER-HARD (11X21X2.5-MM THK)	
M	23	1	**8T-4136**	2	BOLT (M10X1.5X25-MM)	
M	24	1	**8T-4139**	4	BOLT (M12X1.75X30-MM)	
	25	1	**8T-4223**	8	WASHER-HARD (13.5X25.5X3-MM THK)	
M	26	1	**8T-4244**	2	NUT (M12X1.75-THD)	
M	27	1	**8T-4183**	2	BOLT (M12X1.75X40-MM)	
	28	1	**7C-4354**	1	CLIP	
M	29	1	**8T-4195**	4	BOLT (M10X1.5X30-MM)	
	30	1	**7K-1181**	1	STRAP-CABLE	

I-REFER TO HYDRAULIC INFORMATION SYSTEM
M-METRIC PART

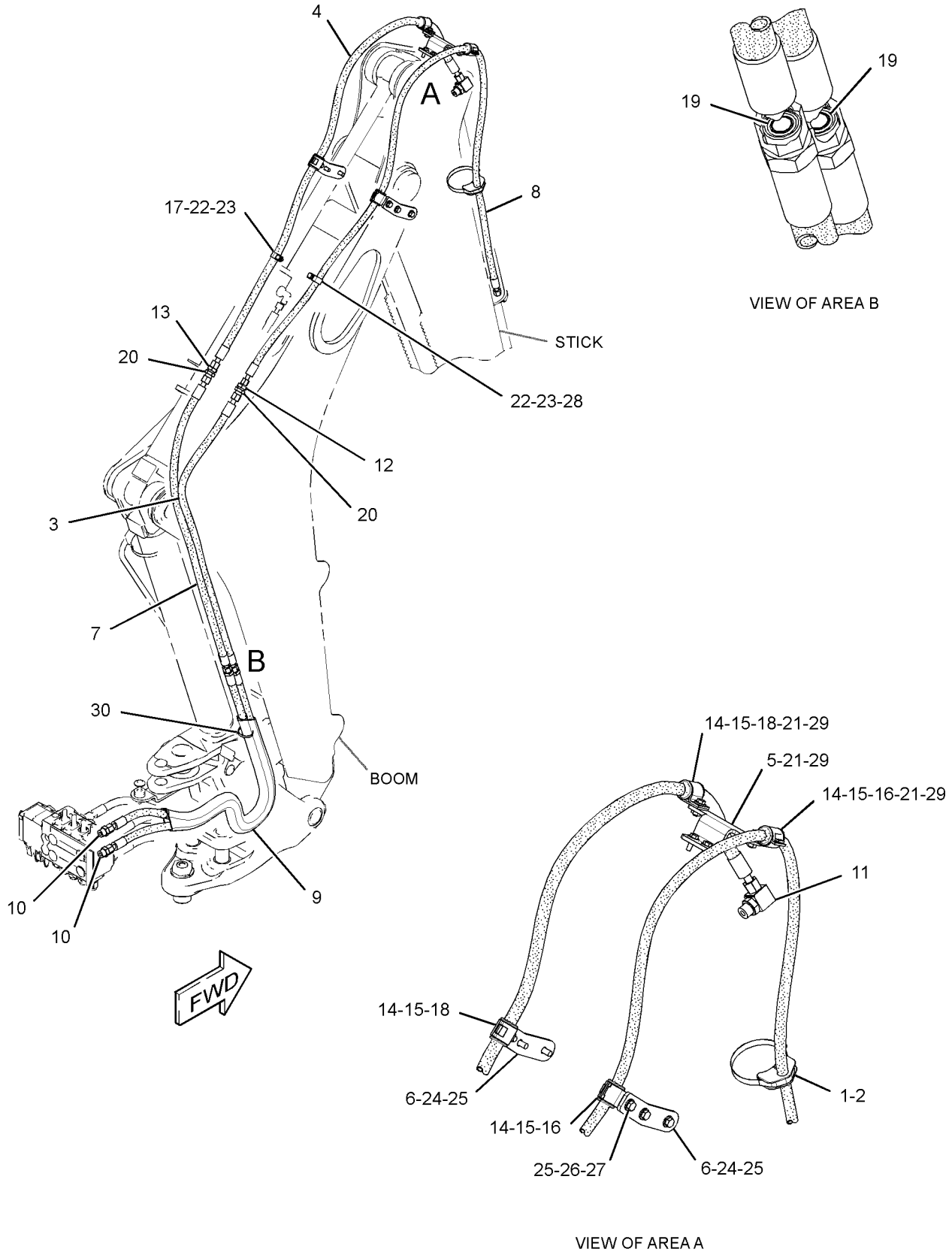

GRAPHIC #1 **<END>** g02106358

HYDRAULIC SYSTEM

246-9318 LINES GP-BUCKET—EXTENDABLE STICK

S/N: LMS1-UP

PART OF 209-9929 BACKHOE AR-EXTENDABLE STICK

AN ATTACHMENT

SMCS-5057, 5457 **i03869694**

NOTE	REF NO	GRAPHIC REF	PART NUMBER	QTY	PART NAME 1 2 3 4 5 6 (PRODUCT LEVEL)	SEE PAGE
	1	1	**5P-0599**	1	CLAMP-BAND	
	2	1	**3G-8057**	2	CLIP (SLOT)	
	3	1	**9R-5948**	1	BLOCK	
	4	1	**6V-9990**	1	GROMMET	
M	6	1	**8T-4194**	4	BOLT (M12X1.75X50-MM)	
M	7	1	**8T-4183**	2	BOLT (M12X1.75X40-MM)	
	8	1	**262-1315**	1	PLATE	
	9	1	**323-7311**	2	PLATE	
I	10	1	**266-4571**	1	HOSE AS	
	11	1	*268-1548*	3	CONNECTOR AS	
					(EACH INCLUDES)	
		1	**6V-8398**	1	SEAL-O-RING	
		1	**7J-9108**	1	SEAL-O-RING	
		1	**268-1547**	1	CONNECTOR	
I	12	1	**250-5462**	1	HOSE AS	
I	13	1	**231-0215**	2	HOSE AS	
I	14	1	**311-2498**	2	HOSE AS	
I	15	1	**266-4570**	2	HOSE AS	
	16	1	*311-2510*	2	LINES GP-HYDRAULIC (BUCKET)	
					(EACH INCLUDES)	
I		1	**311-2501**	1	HOSE AS	
I		1	**311-2519**	1	HOSE AS	
	17	1	*148-8341*	4	CONNECTOR AS	
					(EACH INCLUDES)	
		1	**3D-2824**	1	SEAL-O-RING	
		1	**6V-8713**	1	CONNECTOR	
		1	**7J-9108**	1	SEAL-O-RING	
	18	1	*148-8382*	1	ELBOW AS	
		1	**3D-2824**	1	SEAL-O-RING	
		1	**7J-9108**	1	SEAL-O-RING	
		1	**8T-0404**	1	ELBOW	
	20	1	**3G-8047**	1	GROMMET	
	21	1	*169-7409*	1	UNION AS	
		1	**6V-8996**	1	UNION	
		1	**7J-9108**	2	SEAL-O-RING	
	22	1	**5P-7464**	2	CLIP (SLOT)	
	23	1	**5P-7465**	2	CLIP (TAB)	
	24	1	**6V-1249**	1	GROMMET	
	25	1	**6V-1889**	1	CLIP	
	26	1	**6V-7359**	1	GROMMET	
	27	1	**7J-9108**	4	SEAL-O-RING	
	28	1	**6V-9170**	4	NUT-BULKHEAD (1-14-THD)	
	29	1	**3G-8054**	2	CLIP (TAB)	
	30	1	**7C-4354**	3	CLIP	
	31	1	**8T-4121**	2	WASHER-HARD (11X21X2.5-MM THK)	
M	32	1	**8T-4136**	2	BOLT (M10X1.5X25-MM)	
M	33	1	**8T-4139**	7	BOLT (M12X1.75X30-MM)	
	34	1	**8T-4223**	19	WASHER-HARD (13.5X25.5X3-MM THK)	
M	35	1	**8T-4244**	6	NUT (M12X1.75-THD)	
	36	1	**7K-1181**	2	STRAP-CABLE	

I-REFER TO HYDRAULIC INFORMATION SYSTEM
M-METRIC PART

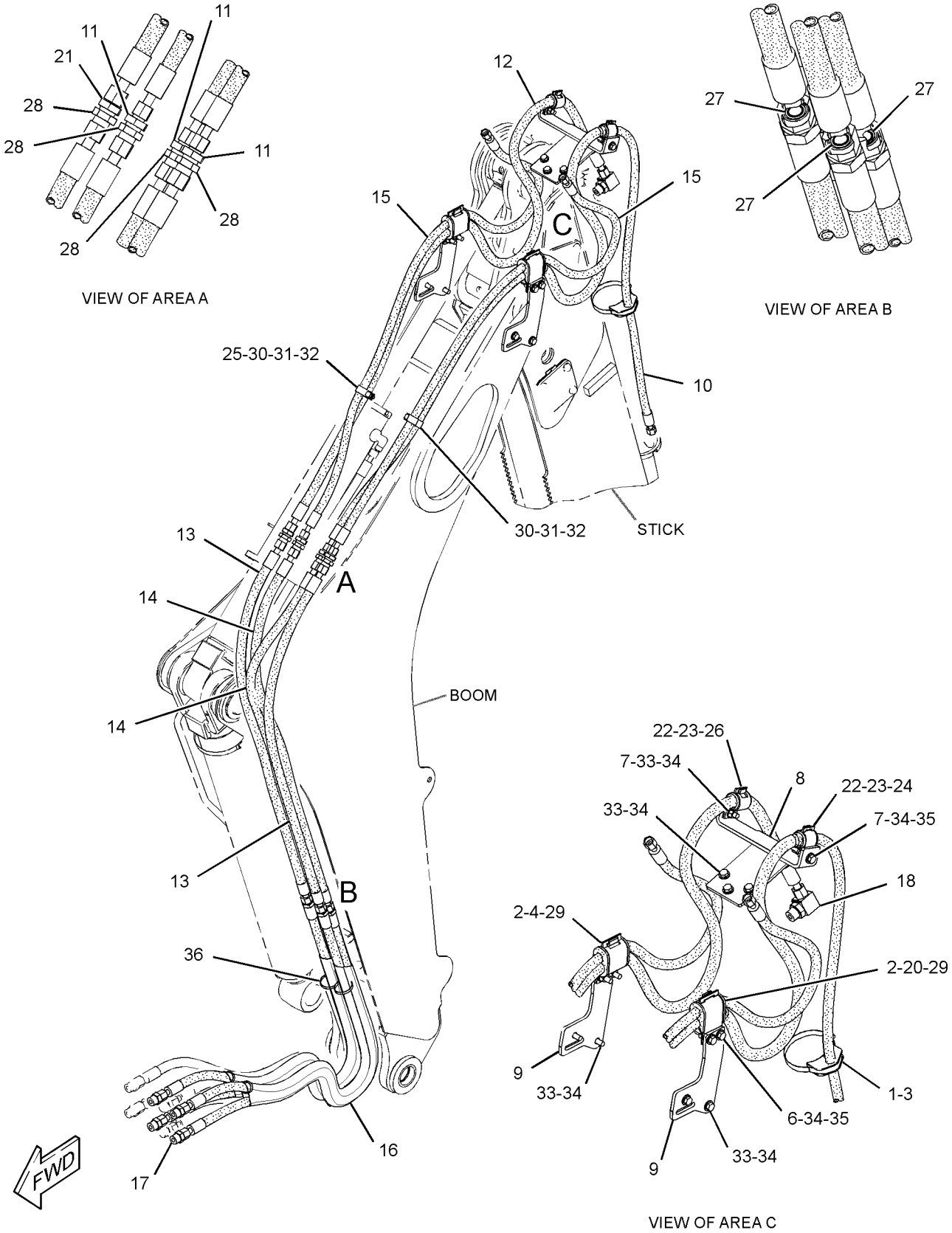

GRAPHIC #1 **<END>** g02106256

HYDRAULIC SYSTEM

216-5332 LINES GP-DRAIN

S/N: LMS1-UP

PART OF 297-0165 HYDRAULIC AR

SMCS-5057 **i03920826**

NOTE	REF NO	GRAPHIC REF	PART NUMBER	QTY	PART NAME 1 2 3 4 5 6 (PRODUCT LEVEL)	SEE PAGE
	1	1	**8T-0154**	1	CLAMP-HOSE	
	2	1	*165-2273*	1	VALVE GP-SHUTOFF (HYDRAULIC TANK DRAIN)	
		1	**3K-0360**	1	SEAL-O-RING	
		1	**6V-7238**	1	VALVE-SHUTOFF (HYDRAULIC TANK)	
E	3	1	**5P-0743**		HOSE (35-CM)	

E-ORDER BY THE CENTIMETER

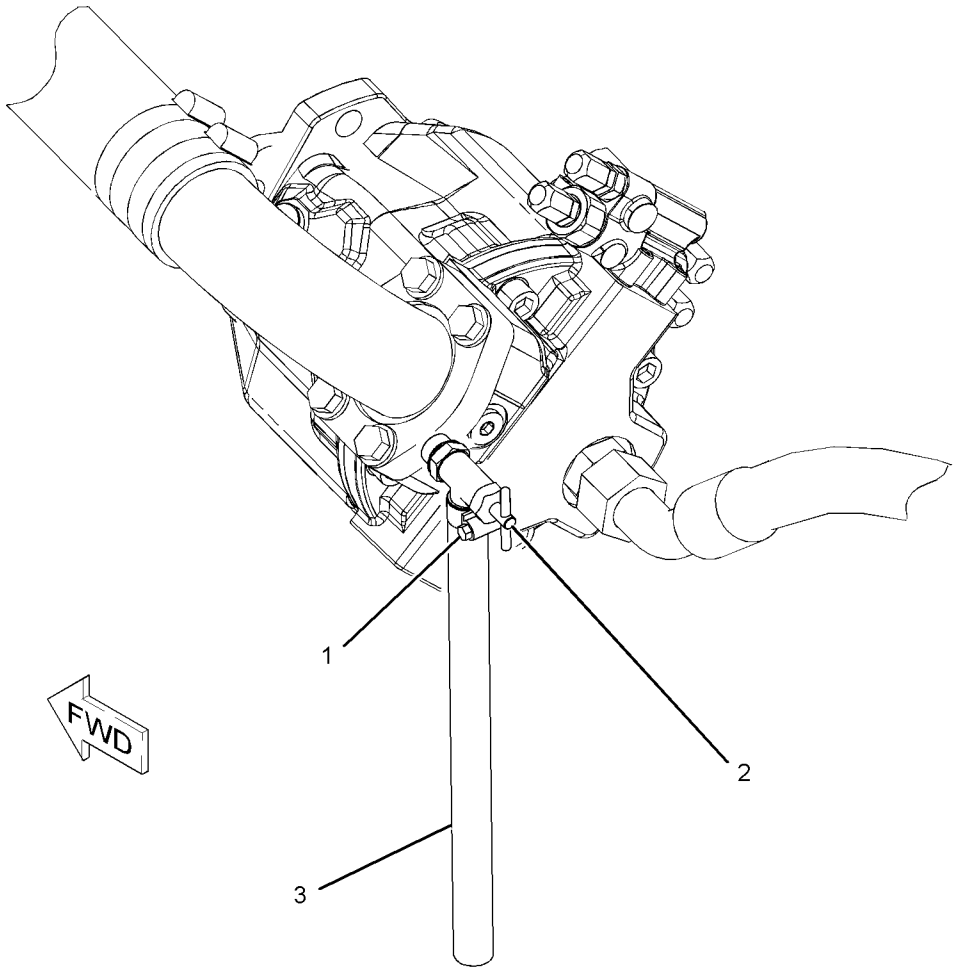

GRAPHIC #1 **<END>** g01087946

331-0096 LINES GP-EXTENDABLE STICK

S/N: LMS1-UP
PART OF 271-1404 STICK GP
AN ATTACHMENT

SMCS-5057 **i03464300**

NOTE	REF NO	GRAPHIC REF	PART NUMBER	QTY	PART NAME 1 2 3 4 5 6 (PRODUCT LEVEL)	SEE PAGE
	1	1	**7K-1181**	4	STRAP-CABLE	
	2	1	**8T-6726**	3	CLAMP-HOSE	
	3	1	**206-2423**	2	SADDLE	
I	4	1	**221-3234**	1	HOSE AS	
I	5	1	**290-6023**	1	HOSE AS	
	6	1	**329-7970**	1	PLATE AS	
	7	1	**329-8017**	1	TUBE AS	
	8	1	**330-8297**	1	TUBE AS	
	9	1	*148-8364*	1	ELBOW AS	
		1	**3K-0360**	1	SEAL-O-RING	
		1	**6V-8398**	1	SEAL-O-RING	
		1	**6V-8625**	1	ELBOW	
	10	1	**6V-8398**	4	SEAL-O-RING	
	11	1	**8T-1885**	2	CLIP (SLOT)	
	12	1	**8T-1886**	2	CLIP (TAB)	
	13	1	**8T-1891**	2	CLIP (SLOT)	
	14	1	**8T-1892**	2	CLIP (TAB)	
	15	1	**8T-4121**	8	WASHER-HARD (11X21X2.5-MM THK)	
M	16	1	**8T-4133**	2	NUT (M10X1.5-THD)	
M	17	1	**8T-4136**	2	BOLT (M10X1.5X25-MM)	
M	18	1	**8T-4172**	2	BOLT (M10X1.5X80-MM)	
M	19	1	**8T-4195**	2	BOLT (M10X1.5X30-MM)	
	20	1	**9R-2053**	3	BLOCK	

I-REFER TO HYDRAULIC INFORMATION SYSTEM
M-METRIC PART

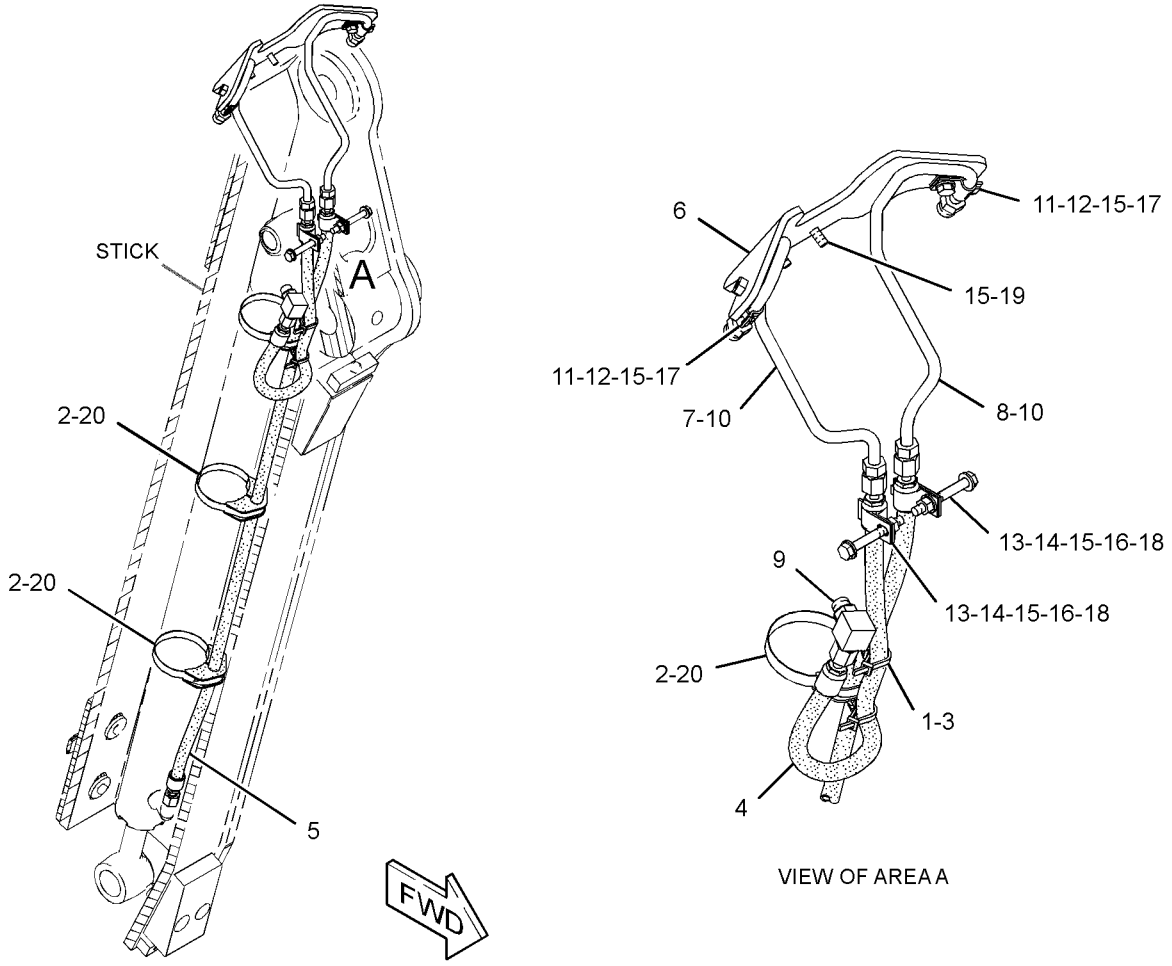

GRAPHIC #1 **<END>** g01809594

HYDRAULIC SYSTEM

343-4096 LINES GP-HYDRAULIC OIL COOLER

S/N: LMS1-UP

PART OF 297-0165 HYDRAULIC AR

SMCS-1374, 5057 **i03879313**

NOTE	REF NO	GRAPHIC REF	PART NUMBER	QTY	PART NAME 1 2 3 4 5 6 (PRODUCT LEVEL)	SEE PAGE
E	1	1	**5P-1506**		HOSE (92-CM)	
G	2	1	**160-2248**		SLEEVE-ABRASION (21.7-IN)	
	3	1	**7K-1181**	12	STRAP-CABLE	
E	4	1	**149-7372**		SLEEVE-ABRASION (213-CM)	
E	4A	1	**149-7372**		SLEEVE-ABRASION (122-CM)	
	5	1	**159-1503**	4	CLAMP-HOSE	
	6	1	**232-0252**	1	TEE	
E	7	1	**262-8088**		HOSE (220-CM)	
E	7A	1	**262-8088**		HOSE (126-CM)	
	8	1	**300-6062**	1	HOSE	
	9	1	**4P-7581**	2	CLIP	
M	10	1	**5C-7261**	2	NUT (M8X1.25-THD)	
	11	1	**5P-4116**	2	WASHER-HARD (8.8X20.5X2-MM THK)	
	12	1	**7D-7233**	2	CLIP	
	13	1	**7X-7958**	4	CLAMP-HOSE	
	14	1	**8T-4121**	3	WASHER-HARD (11X21X2.5-MM THK)	
M	15	1	**8T-4136**	2	BOLT (M10X1.5X25-MM)	
M	16	1	**8T-4137**	1	BOLT (M10X1.5X20-MM)	
	17	1	**8T-7529**	3	CLIP	

E-ORDER BY THE CENTIMETER
G-ORDER BY THE INCH
M-METRIC PART

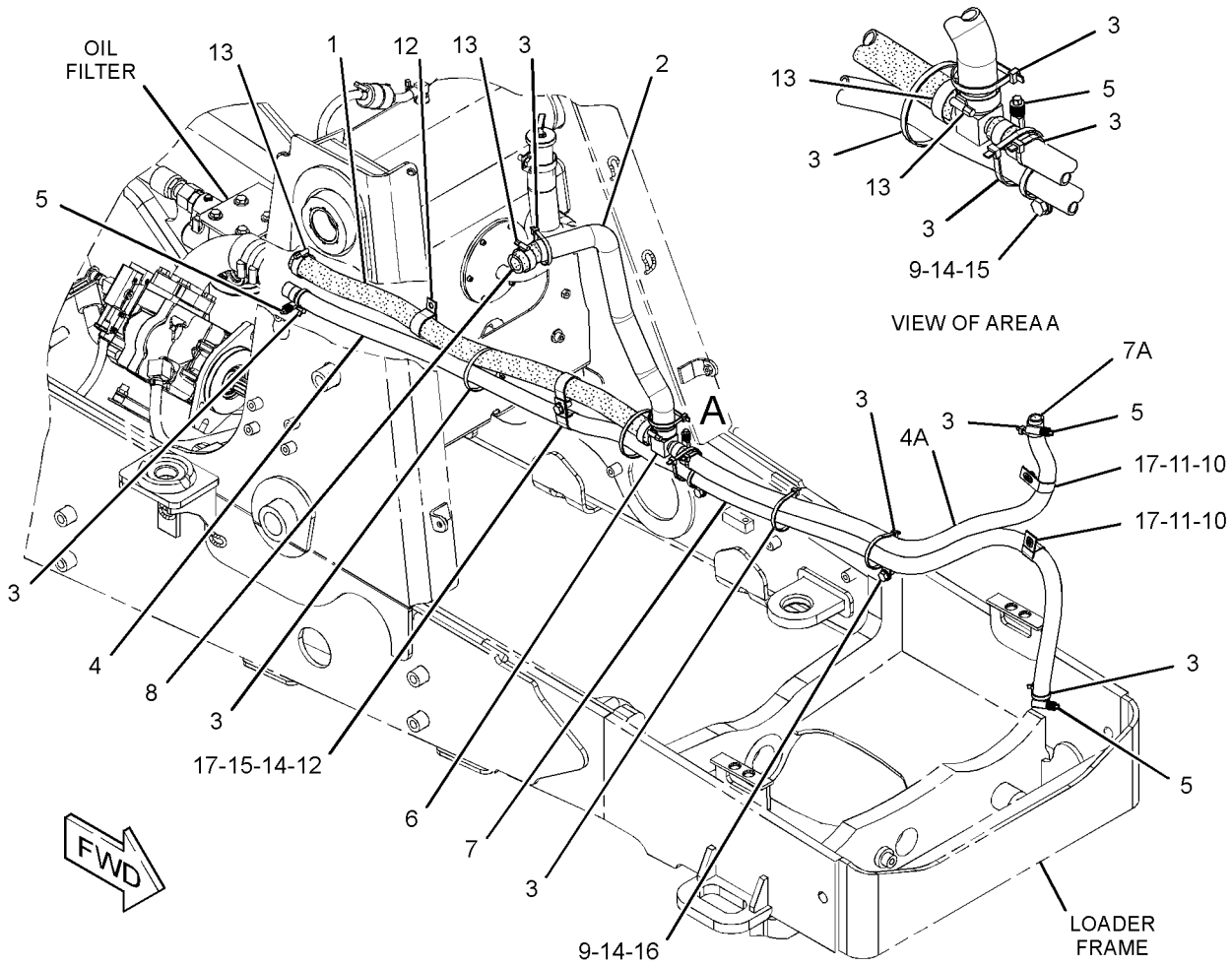

GRAPHIC #1 **<END>** g01891538

315-1554 LINES GP-LIFT CYLINDER

S/N: LMS1-UP

PART OF 318-9555 LOADER AR

SMCS-5057, 5102 **i03845906**

NOTE	REF NO	GRAPHIC REF	PART NUMBER	QTY	PART NAME 1 2 3 4 5 6 (PRODUCT LEVEL)	SEE PAGE
	1	1	**7K-1181**	2	STRAP-CABLE	
	2	1	**8T-6726**	4	CLAMP-HOSE	
	3	1	**143-0777**	1	PLATE AS	
	4	1	**143-0779**	1	PLATE AS	
					(EACH PLATE AS INCLUDES)	
M		1	**8T-3490**	1	NUT-WELD (M10X1.5-THD)	
	5	1	**151-4841**	2	BLOCK	
	6	1	**158-3412**	10	CLIP (SLOT)	
	7	1	**211-3207**	1	TUBE AS	
	8	1	**211-3208**	1	TUBE AS	
	9	1	**231-2808**	1	TUBE AS	
	10	1	**231-2809**	1	TUBE AS	
I	11	1	**231-4784**	2	HOSE AS	
I	12	1	**231-4785**	2	HOSE AS	
	13	1	**249-4020**	1	TUBE AS	
	14	1	**249-4021**	1	TUBE AS	
	15	1	**249-4023**	1	TUBE AS	
	16	1	**315-1558**	1	TUBE AS	
	17	1	**315-1559**	1	TUBE AS	
	18	1	*148-8341*	1	CONNECTOR AS	
		1	**3D-2824**	1	SEAL-O-RING	
		1	**6V-8713**	1	CONNECTOR	
		1	**7J-9108**	1	SEAL-O-RING	
	19	1	*148-8390*	2	ELBOW AS	
					(EACH INCLUDES)	
		1	**2M-9780**	1	SEAL-O-RING	
		1	**6V-8626**	1	ELBOW	
		1	**7J-9108**	1	SEAL-O-RING	
	20	1	*148-8446*	2	TEE AS-SWIVEL	
					(EACH INCLUDES)	
		1	**6V-9838**	1	TEE-SWIVEL	
		1	**7J-9108**	2	SEAL-O-RING	
	21	1	*150-3063*	1	TEE AS	
		1	**3D-2824**	1	SEAL-O-RING	
		1	**7J-9108**	2	SEAL-O-RING	
		1	**120-9809**	1	TEE	
	22	1	*222-4732*	1	TEE AS	
		1	**6V-8398**	1	SEAL-O-RING	
		1	**6V-9031**	1	TEE-UNION	
		1	**7J-9108**	2	SEAL-O-RING	
	23	1	**6V-8398**	8	SEAL-O-RING	
	24	1	**6V-9830**	1	CAP AS	
	25	1	**6V-9831**	1	CAP AS	
	26	1	**8T-4121**	6	WASHER-HARD (11X21X2.5-MM THK)	
M	27	1	**8T-4133**	1	NUT (M10X1.5-THD)	
M	28	1	**8T-4136**	5	BOLT (M10X1.5X25-MM)	
	29	1	**9R-7803**	5	CLIP (TAB)	

I-REFER TO HYDRAULIC INFORMATION SYSTEM
M-METRIC PART

315-1554 **LINES GP-LIFT CYLINDER** *(contd.)* **i03845906**

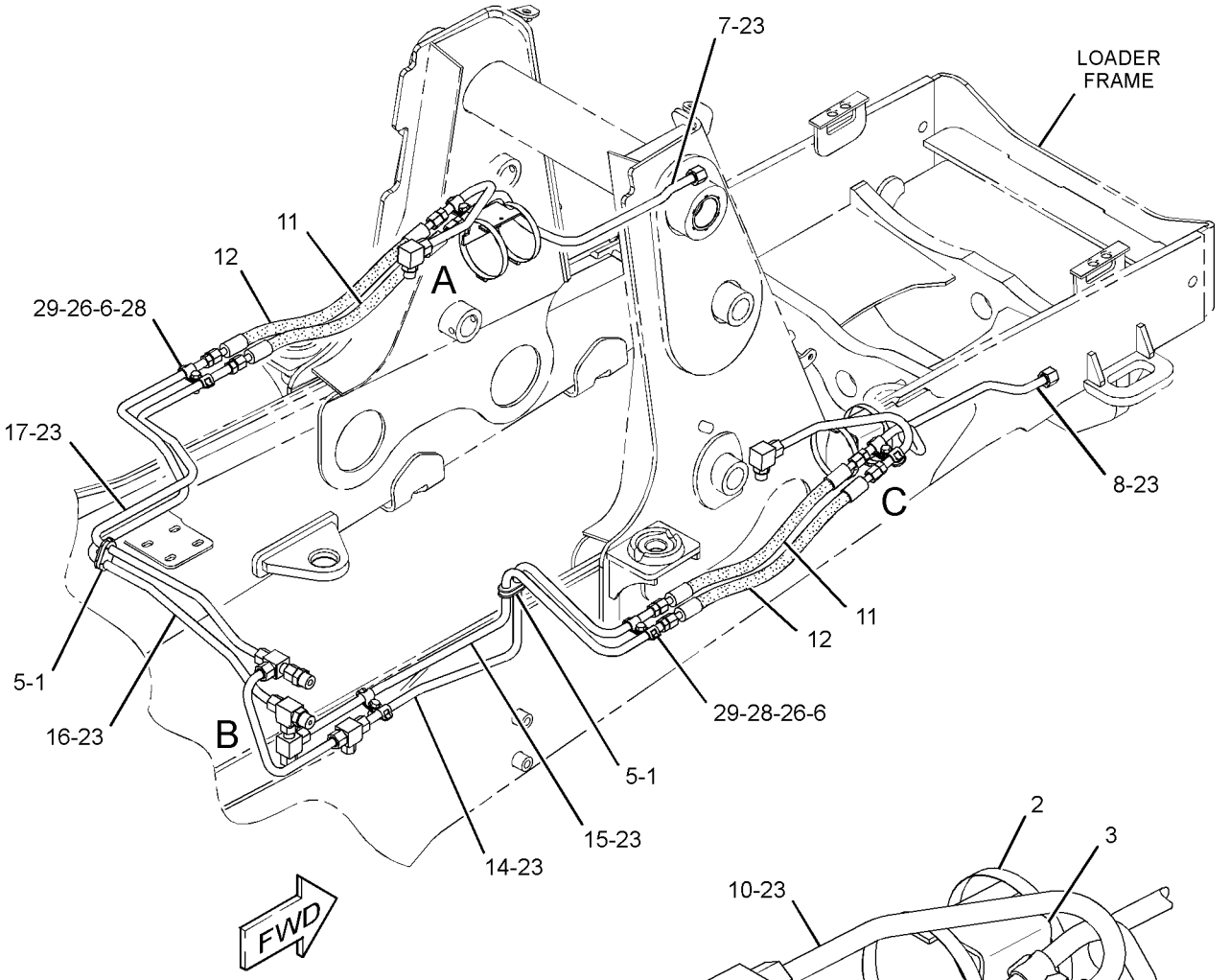

VIEW OF AREA C

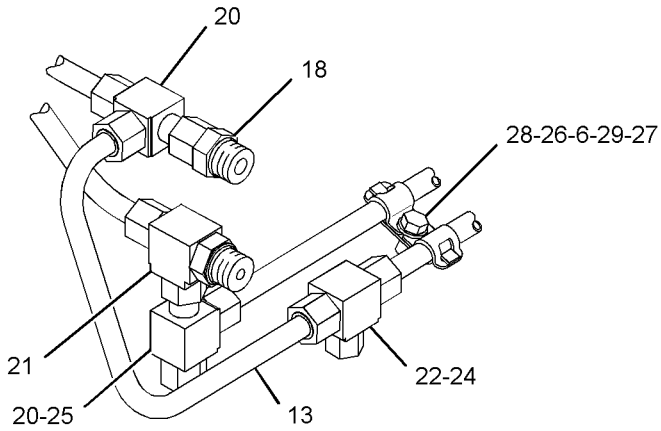

VIEW OF AREA B

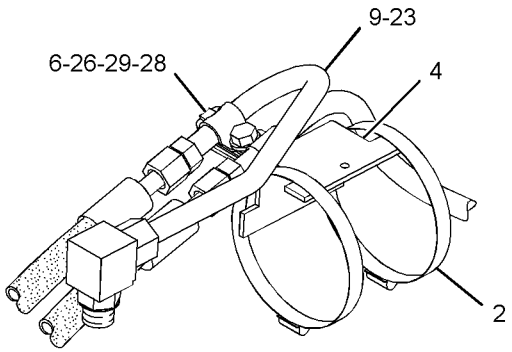

VIEW OF AREA A

GRAPHIC #1 **<END>** g01514520

HYDRAULIC SYSTEM

315-1555 LINES GP-LOADER AUXILIARY

S/N: LMS1-UP

PART OF 317-1463 VALVE AR-BANK 3

AN ATTACHMENT

SMCS-5057 **i03847944**

NOTE	REF NO	GRAPHIC REF	PART NUMBER	QTY	PART NAME 1 2 3 4 5 6 (PRODUCT LEVEL)	SEE PAGE
	1	1	**7K-1181**	1	STRAP-CABLE	
	2	1	**151-4841**	1	BLOCK	
	3	1	**158-3412**	8	CLIP (SLOT)	
I	4	1	**215-7453**	2	HOSE AS	
	5	1	**215-7454**	1	TUBE AS	
	6	1	**215-7619**	1	TUBE AS	
	7	1	**231-3528**	1	BRACKET AS	
	8	1	**254-7271**	1	PLATE AS	
	9	1	**315-1563**	1	TUBE AS	
	10	1	**315-1564**	1	TUBE AS	
	11	1	*148-8382*	2	ELBOW AS	
					(EACH INCLUDES)	
		1	**3D-2824**	1	SEAL-O-RING	
		1	**7J-9108**	1	SEAL-O-RING	
		1	**8T-0404**	1	ELBOW	
	12	1	**6V-8398**	6	SEAL-O-RING	
	13	1	**6V-9830**	2	CAP AS	
	14	1	**8T-4121**	6	WASHER-HARD (11X21X2.5-MM THK)	
M	15	1	**8T-4136**	5	BOLT (M10X1.5X25-MM)	
M	16	1	**8T-4137**	1	BOLT (M10X1.5X20-MM)	
	17	1	**9R-7803**	4	CLIP (TAB)	

I-REFER TO HYDRAULIC INFORMATION SYSTEM
M-METRIC PART

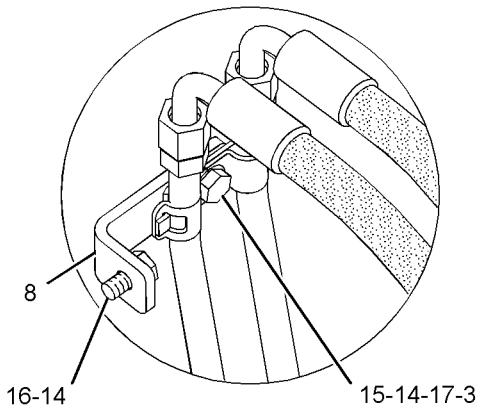

VIEW OF AREA C

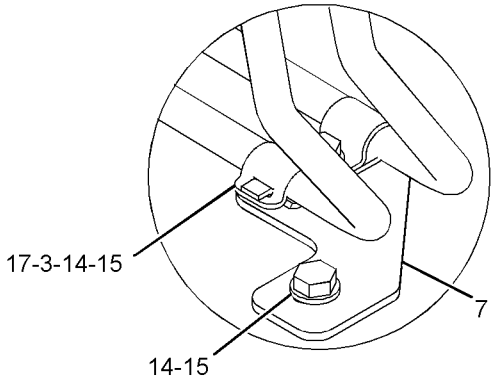

VIEW OF AREA B

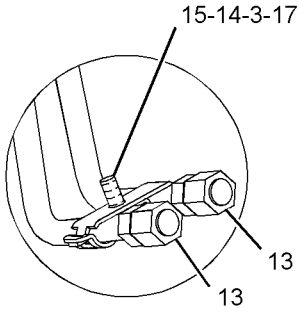

VIEW OF AREA A

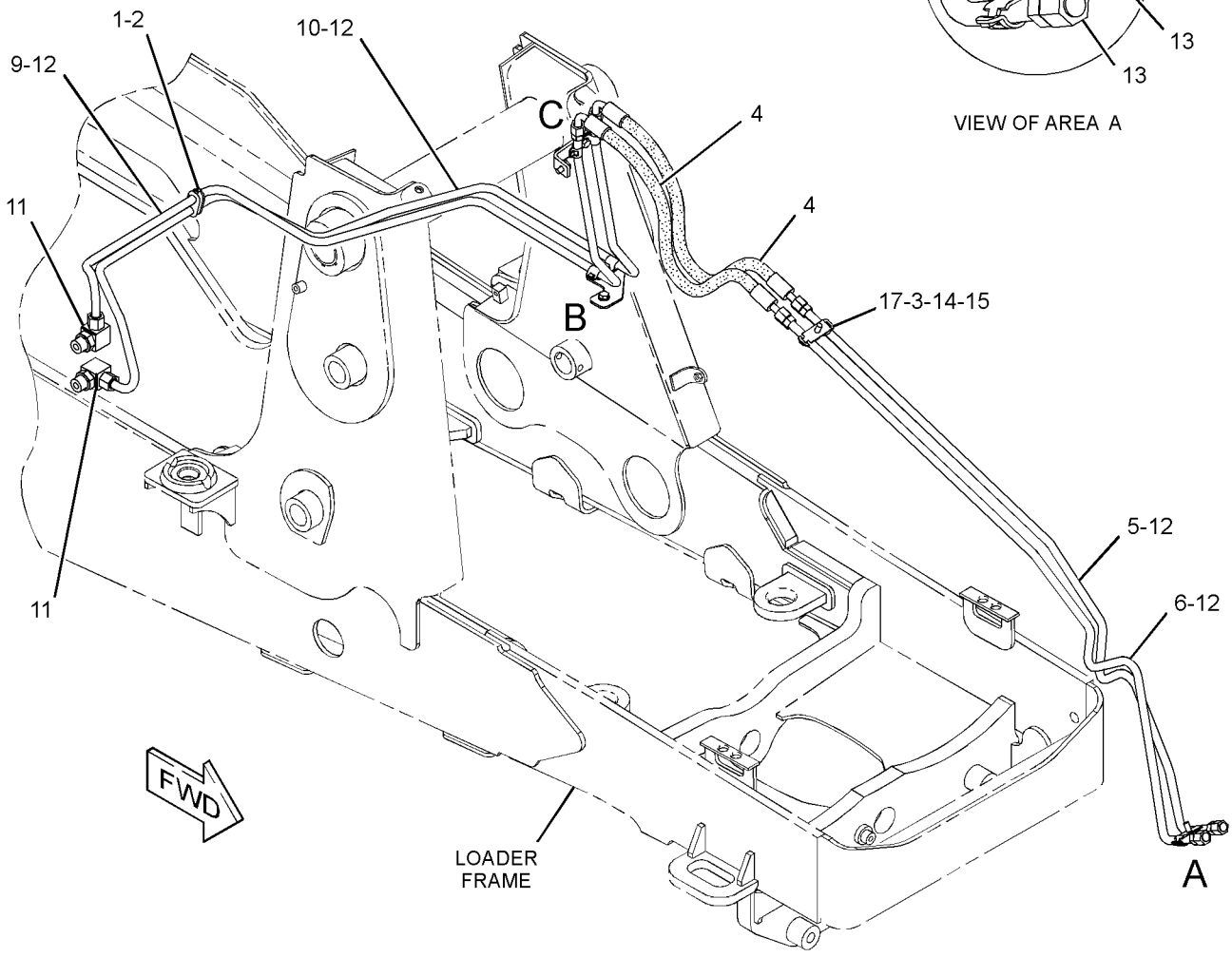

GRAPHIC #1 **<END>** g01512463

HYDRAULIC SYSTEM

251-5854 LINES GP-MULTIPURPOSE BUCKET

S/N: LMS1-UP

PART OF 216-8801 BUCKET GP-MULTIPURPOSE

AN ATTACHMENT

SMCS-5057 **i03849808**

NOTE	REF NO	GRAPHIC REF	PART NUMBER	QTY	PART NAME 1 2 3 4 5 6 (PRODUCT LEVEL)	SEE PAGE
	1	1	**8T-6726**	2	CLAMP-HOSE	
I	2	1	**8W-9230**	1	HOSE AS	
I	3	1	**9R-0418**	2	HOSE AS	
	4	1	**9R-8870**	2	BLOCK	
I	5	1	**122-0668**	1	HOSE AS	
I	6	1	**152-0816**	1	HOSE AS	
I	7	1	**251-5859**	1	HOSE AS	
	8	1	*148-8378*	2	ELBOW AS	
					(EACH INCLUDES)	
		1	**3J-1907**	1	SEAL-O-RING	
		1	**6V-8397**	1	SEAL-O-RING	
		1	**6V-8724**	1	ELBOW	
	9	1	*150-3060*	2	TEE AS	
					(EACH INCLUDES)	
		1	**6V-8397**	2	SEAL-O-RING	
		1	**6V-8398**	1	SEAL-O-RING	
		1	**8T-3444**	1	TEE-UNION	
	10	1	**6V-3341**	2	GROMMET	
	11	1	**6V-8397**	2	SEAL-O-RING	
	12	1	**121-8004**	8	CLAMP	
	13	1	**4V-0612**	4	PLATE	
	14	1	**8T-1899**	2	CLIP (SLOT)	
	15	1	**8T-1900**	2	CLIP (TAB)	
	16	1	**8T-4121**	2	WASHER-HARD (11X21X2.5-MM THK)	
M	17	1	**8T-4136**	2	BOLT (M10X1.5X25-MM)	
	18	1	**7X-0440**	4	BOLT (5/16-18X1.75-IN)	

I-REFER TO HYDRAULIC INFORMATION SYSTEM
M-METRIC PART

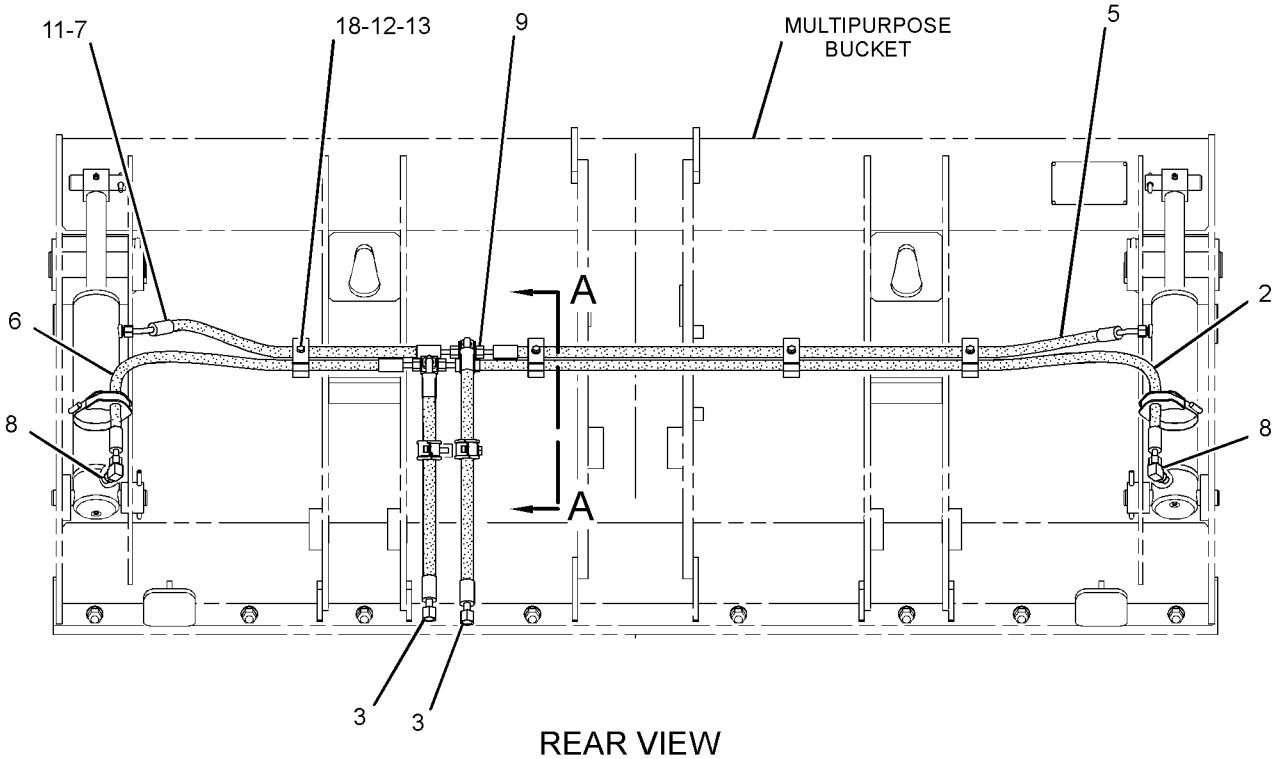

REAR VIEW

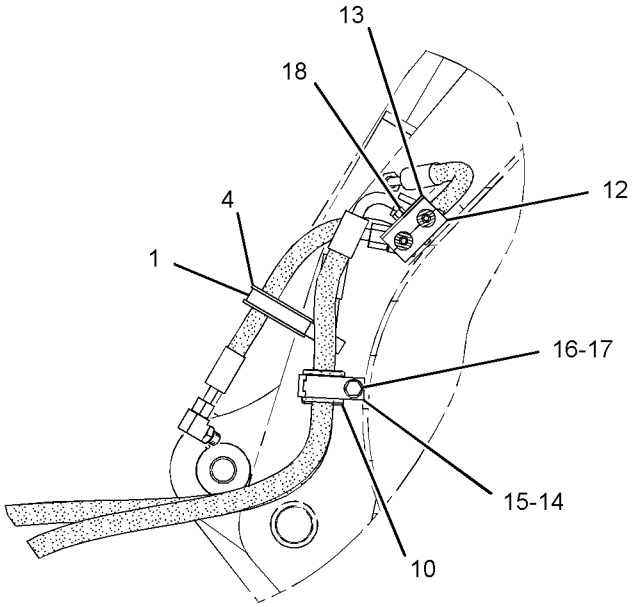

SECTION A-A

GRAPHIC #1 **<END>** g01476453

HYDRAULIC SYSTEM

337-7467 LINES GP-MULTIPURPOSE BUCKET

S/N: LMS1-UP

PART OF 216-8800 BUCKET GP-MULTIPURPOSE

AN ATTACHMENT

SMCS-5057 **i03894529**

NOTE	REF NO	GRAPHIC REF	PART NUMBER	QTY	PART NAME 1 2 3 4 5 6 (PRODUCT LEVEL)	SEE PAGE
	1	1	**4V-0611**	8	CLAMP	
	2	1	**4V-0612**	4	PLATE	
	3	1	**8T-6726**	2	CLAMP-HOSE	
I	4	1	**9R-0418**	2	HOSE AS	
	5	1	**9R-8870**	2	BLOCK	
I	6	1	**317-6266**	1	HOSE AS	
I	7	1	**320-9943**	1	HOSE AS	
I	8	1	**320-9944**	1	HOSE AS	
I	9	1	**337-7471**	1	HOSE AS	
	10	1	*148-8378*	2	ELBOW AS	
					(EACH INCLUDES)	
		1	**3J-1907**	1	SEAL-O-RING	
		1	**6V-8397**	1	SEAL-O-RING	
		1	**6V-8724**	1	ELBOW	
	11	1	*150-3060*	2	TEE AS	
					(EACH INCLUDES)	
		1	**6V-8397**	2	SEAL-O-RING	
		1	**6V-8398**	1	SEAL-O-RING	
		1	**8T-3444**	1	TEE-UNION	
	12	1	**6V-3341**	2	GROMMET	
	13	1	**6V-8397**	2	SEAL-O-RING	
	14	1	**7X-0440**	4	BOLT (5/16-18X1.75-IN)	
	15	1	**8T-1899**	2	CLIP (SLOT)	
	16	1	**8T-1900**	2	CLIP (TAB)	
	17	1	**8T-4121**	2	WASHER-HARD (11X21X2.5-MM THK)	
M	18	1	**8T-4136**	2	BOLT (M10X1.5X25-MM)	

I-REFER TO HYDRAULIC INFORMATION SYSTEM
M-METRIC PART

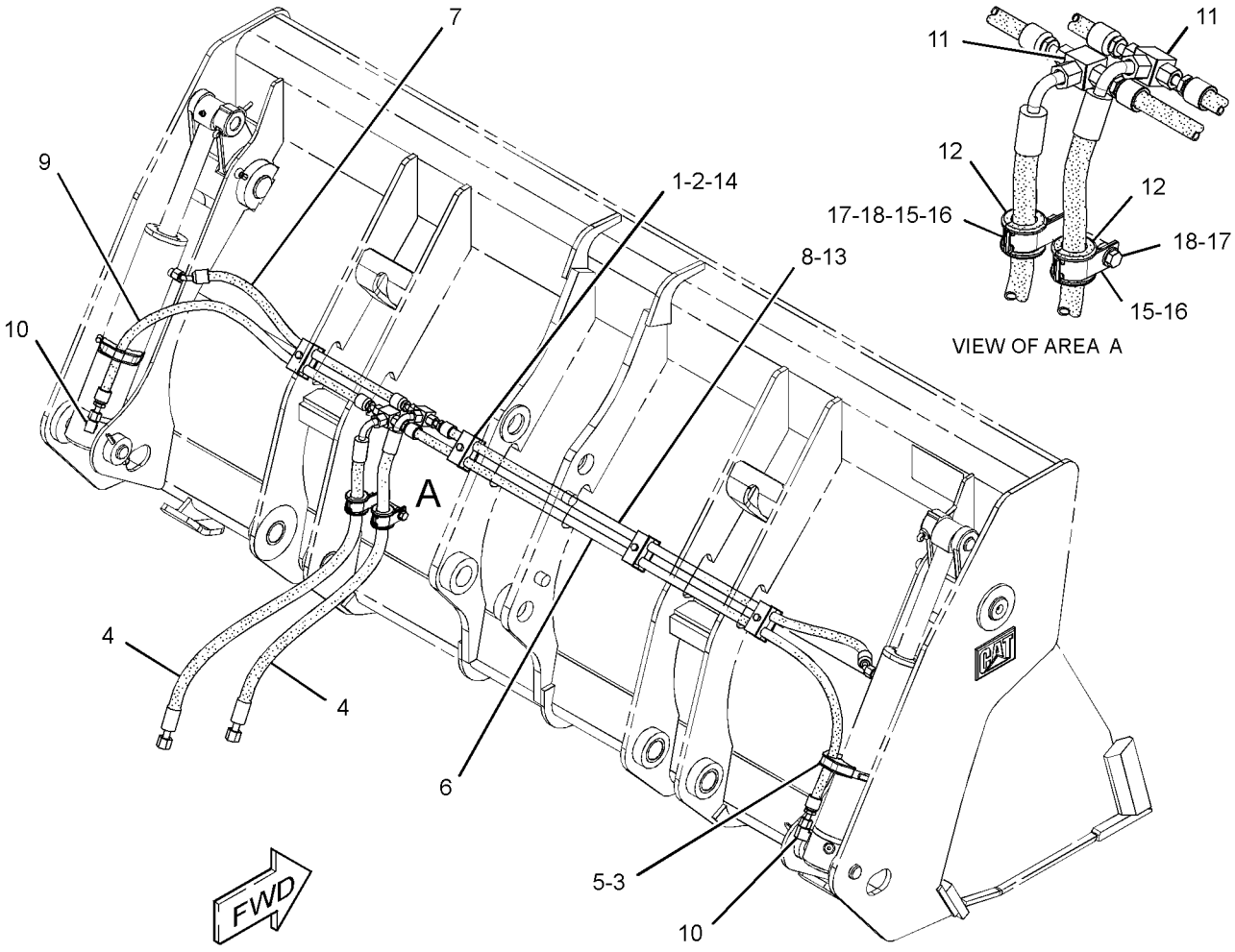

GRAPHIC #1 **<END>** g02138214

HYDRAULIC SYSTEM

219-8568 LINES GP-PILOT–SIGNAL

S/N: LMS1-UP

PART OF 297-0165 HYDRAULIC AR

SMCS-5057, 5059 **i02531172**

NOTE	REF NO	GRAPHIC REF	PART NUMBER	QTY	PART NAME 1 2 3 4 5 6 (PRODUCT LEVEL)	SEE PAGE
E	1	1	**5P-1505**		HOSE (61-CM)	
	2	1	**5D-1026**	2	CLAMP-BAND	
	3	1	**6V-0852**	2	CAP-DUST	
	4	1	**8J-6875**	1	VALVE GP-SHUTTLE	
		1	**2M-9780**	2	SEAL-O-RING	
		1	**4B-9784**	1	BALL	
		1	**4T-9905**	2	ADAPTER	
I	5	1	**285-3582**	1	HOSE AS	
I	6	1	**222-1216**	1	HOSE AS	
I	7	1	**222-2257**	1	HOSE AS	
I	8	1	**222-2258**	1	HOSE AS	
	9	1	*250-1418*	1	CONNECTOR AS	
		1	**3J-1907**	1	SEAL-O-RING	
		1	**6V-8397**	1	SEAL-O-RING	
		1	**089-7702**	1	CONNECTOR	
I	10	1	**252-8684**	1	HOSE AS	
	11	1	*148-8336*	6	CONNECTOR AS	
					(EACH INCLUDES)	
		1	**3J-1907**	1	SEAL-O-RING	
		1	**6V-8397**	1	SEAL-O-RING	
		1	**6V-8636**	1	CONNECTOR	
	12	1	*148-8374*	1	ELBOW AS	
		1	**3K-0360**	1	SEAL-O-RING	
		1	**6V-8397**	1	SEAL-O-RING	
		1	**6V-8723**	1	ELBOW	
	13	1	*148-8433*	1	TEE AS	
		1	**6V-8397**	2	SEAL-O-RING	
		1	**6V-9836**	1	TEE-SWIVEL	
M	14	1	**8T-4137**	1	BOLT (M10X1.5X20-MM)	
	15	1	*150-3027*	2	ELBOW AS	
					(EACH INCLUDES)	
		1	**2M-9780**	1	SEAL-O-RING	
		1	**6V-5653**	1	ELBOW	
	16	1	*150-3062*	1	TEE AS	
		1	**3J-7354**	1	SEAL-O-RING	
		1	**4J-5477**	1	SEAL-O-RING	
		1	**101-1787**	1	TEE AS	
	17	1	*164-5567*	2	COUPLER AS-QUICK DISCONNECT (MALE)	
					(EACH INCLUDES)	
		1	**3J-1907**	1	SEAL-O-RING	
		1	**6V-3965**	1	FITTING (QUICK DISCONNECT)	
	18	1	**6V-9168**	1	NUT (11/16-16-THD)	
	19	1	**8T-4121**	1	WASHER-HARD (11X21X2.5-MM THK)	
	20	1	**5P-4295**	1	CLIP	
	21	1	**7K-1181**	1	STRAP-CABLE	
	22	1	*165-4931*	1	ELBOW AS	
		1	**3J-1907**	1	SEAL-O-RING	
		1	**6V-8077**	1	ELBOW	
	23	1	**9X-8257**	2	WASHER (17.5X30X3.5-MM THK)	

E-ORDER BY THE CENTIMETER
I-REFER TO HYDRAULIC INFORMATION SYSTEM
M-METRIC PART

219-8568 **LINES GP-PILOT** *(contd.)* **i02531172**

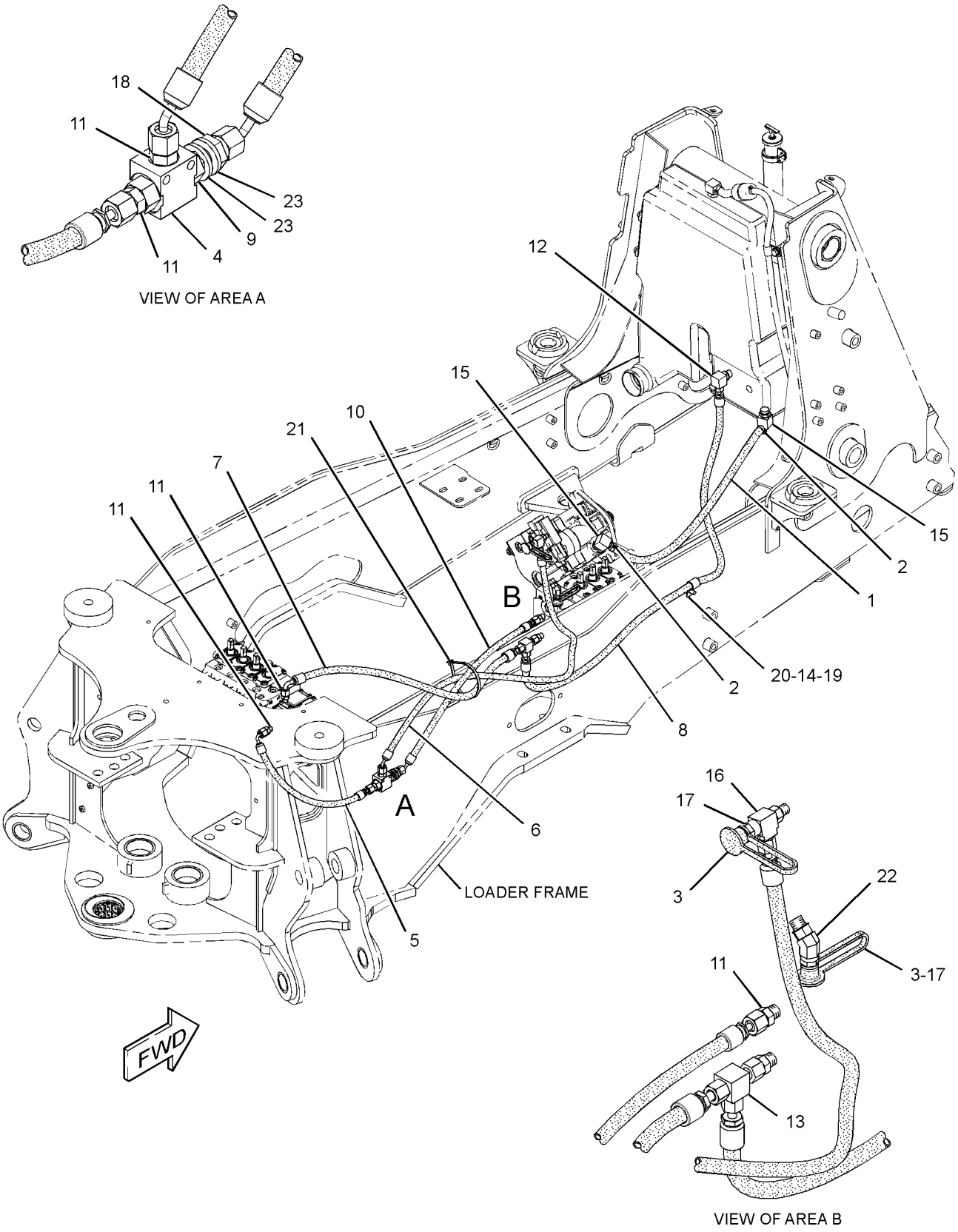

GRAPHIC #1 **<END>** g01342788

HYDRAULIC SYSTEM

219-8567 LINES GP-PUMP

S/N: LMS1-UP

PART OF 297-0165 HYDRAULIC AR

SMCS-5057 **i02531169**

NOTE	REF NO	GRAPHIC REF	PART NUMBER	QTY	PART NAME 1 2 3 4 5 6 (PRODUCT LEVEL)	SEE PAGE
	1	1	**5P-4868**	2	CLAMP-HOSE	
	2	1	**144-0367**	1	CLAMP-HOSE	
I	3	1	**255-9107**	1	HOSE AS	
	4	1	**211-4348**	1	ELBOW AS	
I	5	1	**285-3581**	1	HOSE AS	
I	6	1	**213-2279**	1	HOSE AS	
I	7	1	**221-9352**	1	HOSE AS	
	8	1	**235-8528**	1	HOSE	
	9	1	*148-8317*	3	CONNECTOR AS	
					(EACH INCLUDES)	
		1	**3D-2824**	1	SEAL-O-RING	
		1	**5K-9090**	1	SEAL-O-RING	
		1	**6V-8714**	1	CONNECTOR	
	10	1	*148-8335*	4	CONNECTOR AS	
					(EACH INCLUDES)	
		1	**5K-9090**	1	SEAL-O-RING	
		1	**6V-8635**	1	CONNECTOR	
		1	**7M-8485**		SEAL-O-RING	
	11	1	**1P-4584**	2	FLANGE-HALF	
	12	1	**6J-2680**	1	SEAL-O-RING	
	13	1	**7X-7729**	4	WASHER (11X25X3-MM THK)	
M	14	1	**8T-4136**	4	BOLT (M10X1.5X25-MM)	
M	15	1	**8T-4183**	4	BOLT (M12X1.75X40-MM)	
	16	1	**8T-4223**	4	WASHER-HARD (13.5X25.5X3-MM THK)	

I-REFER TO HYDRAULIC INFORMATION SYSTEM
M-METRIC PART

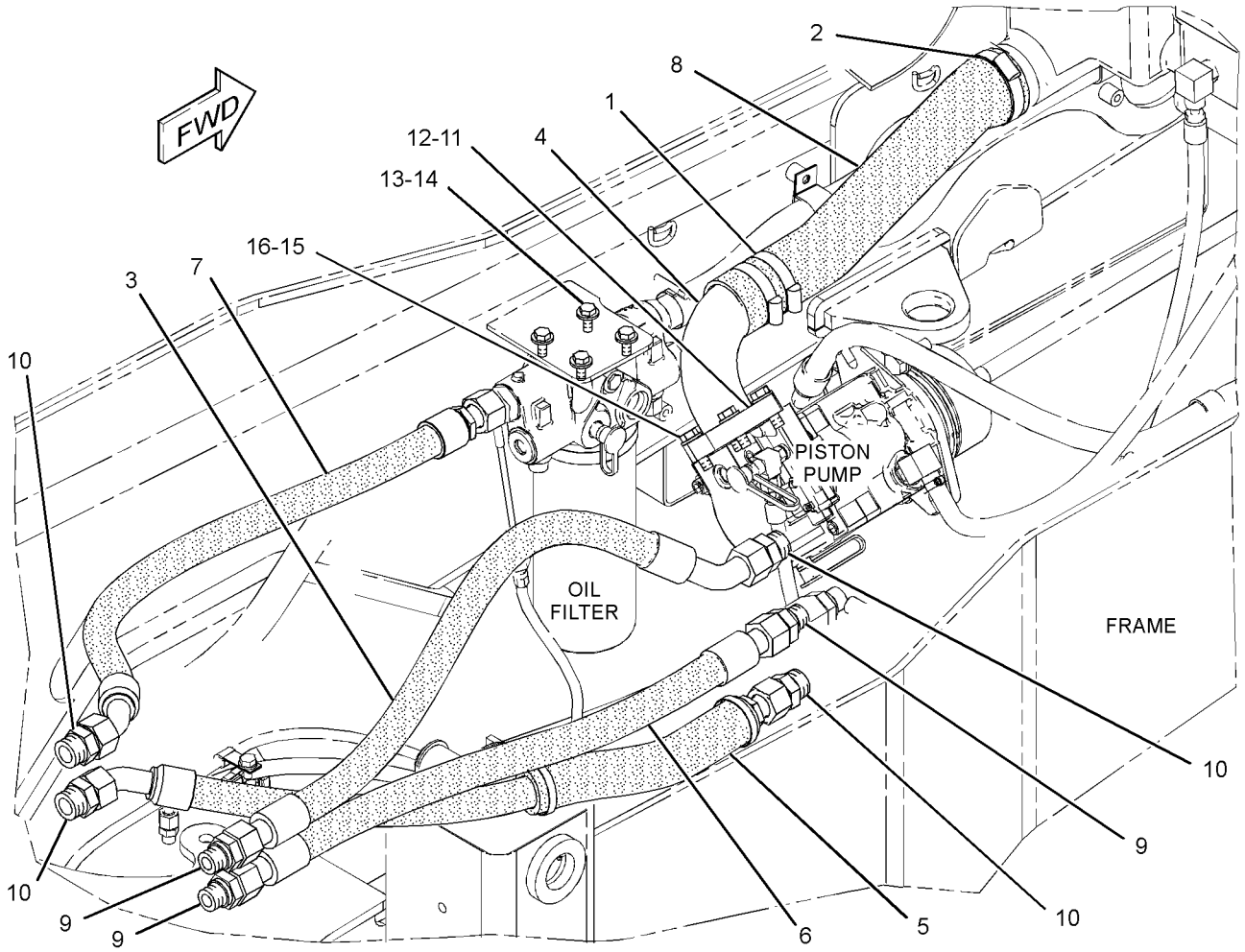

GRAPHIC #1 **<END>** g01290750

HYDRAULIC SYSTEM

246-9802 LINES GP-RIDE CONTROL

S/N: LMS1-UP
PART OF 332-7131 CONTROL AR-RIDE
AN ATTACHMENT

SMCS-5057, 5077, 5264 **i03845814**

NOTE	REF NO	GRAPHIC REF	PART NUMBER	QTY	PART NAME 1 2 3 4 5 6 (PRODUCT LEVEL)	SEE PAGE
	1	1	**7K-1181**	3	STRAP-CABLE	
Y	2	1	*162-3960*	1	ACCUMULATOR GP-RIDE CONTROL (CHARGED)	237
B	3	1	**279-5016**	1	FILM-WARNING (HIGH PRESS CYLINDER, READ OMM)	
Y	4	1	**245-8780**	1	MANIFOLD GP-RIDE CONTROL	324
	5	1	**247-0320**	1	BRACKET AS	
I	6	1	**252-1221**	1	HOSE AS	
I	7	1	**265-0868**	1	HOSE AS	
M	8	1	**096-5866**	2	BOLT (M8X1.25X75-MM)	
	9	1	**109-1633**	2	CLIP (SLOT)	
	10	1	**109-1634**	2	CLIP (TAB)	
B	11	1	**276-2334**	1	FILM-WARNING (HIGH PRESSURE, READ OMM, INTL)	
	12	1	*148-8340*	1	CONNECTOR AS	
		1	**3K-0360**	1	SEAL-O-RING	
		1	**6V-8398**	1	SEAL-O-RING	
		1	**6V-8639**	1	CONNECTOR	
	13	1	*148-8358*	2	ELBOW AS	
					(EACH INCLUDES)	
		1	**2M-9780**	1	SEAL-O-RING	
		1	**6V-8398**	1	SEAL-O-RING	
		1	**6V-8624**	1	ELBOW	
	14	1	*153-6241*	1	ELBOW AS	
		1	**6V-8398**	1	SEAL-O-RING	
		1	**8C-8989**	1	ELBOW	
	16	1	**8T-4121**	3	WASHER-HARD (11X21X2.5-MM THK)	
M	17	1	**8T-4137**	3	BOLT (M10X1.5X20-MM)	
M	18	1	**8T-4139**	2	BOLT (M12X1.75X30-MM)	
	19	1	**8T-4223**	2	WASHER-HARD (13.5X25.5X3-MM THK)	
	20	1	**8T-4224**	2	WASHER-HARD (8.8X16X2-MM THK)	
	21	1	**292-8222**	1	TUBE AS	
	22	1	*148-8365*	1	ELBOW AS	
		1	**3J-1907**	1	SEAL-O-RING	
		1	**6V-8398**	1	SEAL-O-RING	
		1	**8T-6876**	1	ELBOW	
	23	1	*148-8354*	1	ELBOW AS	
		1	**3K-0360**	1	SEAL-O-RING	
		1	**6V-8398**	1	SEAL-O-RING	
		1	**6V-9002**	1	ELBOW	
	24	1	*148-8370*	1	ELBOW AS	
		1	**6V-8398**	1	SEAL-O-RING	
		1	**6V-9851**	1	ELBOW	
I	25	1	**194-4334**	1	HOSE AS	

B-USE AS REQUIRED
I-REFER TO HYDRAULIC INFORMATION SYSTEM
M-METRIC PART
Y-SEPARATE ILLUSTRATION

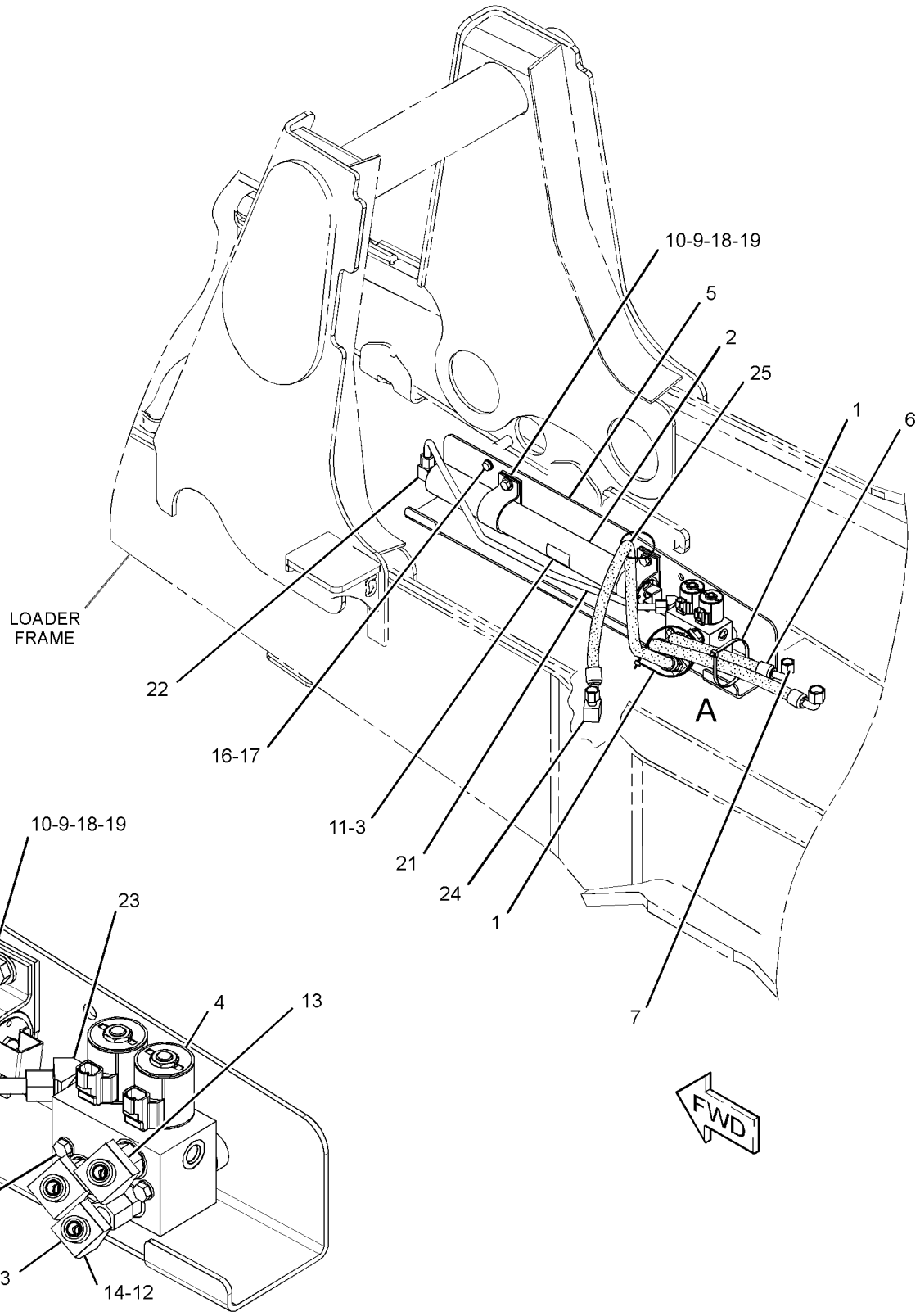

VIEW OF AREA A
(HOSES REMOVED FOR CLARITY)

GRAPHIC #1 **<END>** g01805193

HYDRAULIC SYSTEM

211-7568 LINES GP-STABILIZER

S/N: LMS1-UP
PART OF 212-0206 VALVE AR-BANK 8
AN ATTACHMENT

SMCS-5057, 5468 **i03866775**

NOTE	REF NO	GRAPHIC REF	PART NUMBER	QTY	PART NAME 1 2 3 4 5 6 (PRODUCT LEVEL)	SEE PAGE
	1	1	**201-3621**	1	TUBE AS	
	2	1	**201-3622**	1	TUBE AS	
	3	1	**201-3623**	1	TUBE AS	
	4	1	**201-3624**	1	TUBE AS	
I	5	1	**289-8744**	1	HOSE AS	
I	6	1	**289-8745**	1	HOSE AS	
I	7	1	**289-8746**	1	HOSE AS	
I	8	1	**289-8747**	1	HOSE AS	
	9	1	*148-8345*	3	CONNECTOR AS	
					(EACH INCLUDES)	
		1	**2M-9780**	1	SEAL-O-RING	
		1	**6V-8398**	1	SEAL-O-RING	
		1	**6V-8638**	1	CONNECTOR	
	10	1	*148-8372*	2	ELBOW AS	
					(EACH INCLUDES)	
		1	**2M-9780**	1	SEAL-O-RING	
		1	**6V-8398**	1	SEAL-O-RING	
		1	**6V-8721**	1	ELBOW	
	11	1	*164-5557*	1	CONNECTOR AS	
		1	**2M-9780**	1	SEAL-O-RING	
		1	**5I-4370**	1	CONNECTOR	
		1	**6V-8398**	1	SEAL-O-RING	
	12	1	**5P-7462**	4	CLIP (SLOT)	
	13	1	**5P-7463**	4	CLIP (TAB)	
	14	1	**6V-0683**	4	GROMMET	
	15	1	**6V-8397**	4	SEAL-O-RING	
	16	1	**8T-1885**	4	CLIP (SLOT)	
	17	1	**8T-1886**	4	CLIP (TAB)	
	18	1	**8T-4121**	6	WASHER-HARD (11X21X2.5-MM THK)	
M	19	1	**8T-4137**	4	BOLT (M10X1.5X20-MM)	
M	20	1	**8T-4196**	2	BOLT (M10X1.5X35-MM)	

I-REFER TO HYDRAULIC INFORMATION SYSTEM
M-METRIC PART

211-7568 **LINES GP-STABILIZER** *(contd.)* **i03866775**

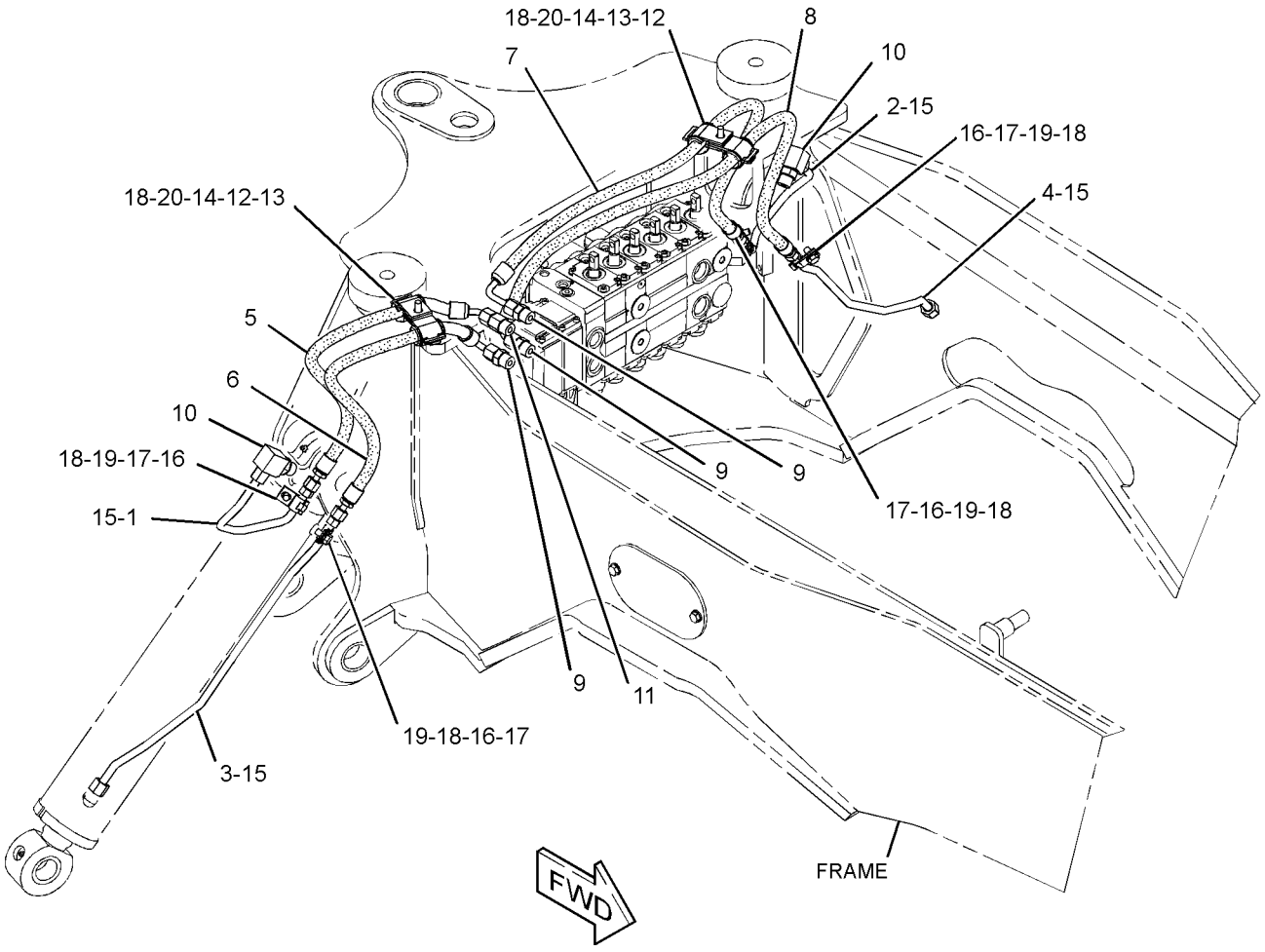

GRAPHIC #1 **<END>** g01286060

HYDRAULIC SYSTEM

228-3974 LINES GP-STABILIZER

S/N: LMS1-UP

PART OF 209-9934 VALVE AR-BANK 6, 209-9935 VALVE AR-BANK 7

AN ATTACHMENT

SMCS-5057, 5468 **i03866691**

NOTE	REF NO	GRAPHIC REF	PART NUMBER	QTY	PART NAME 1 2 3 4 5 6 (PRODUCT LEVEL)	SEE PAGE
	1	1	**201-3621**	1	TUBE AS	
	2	1	**201-3622**	1	TUBE AS	
	3	1	**201-3623**	1	TUBE AS	
	4	1	**201-3624**	1	TUBE AS	
I	5	1	**289-8740**	1	HOSE AS	
I	6	1	**289-8741**	1	HOSE AS	
I	7	1	**289-8742**	1	HOSE AS	
I	8	1	**289-8743**	1	HOSE AS	
	9	1	*148-8345*	3	CONNECTOR AS	
					(EACH INCLUDES)	
		1	**2M-9780**	1	SEAL-O-RING	
		1	**6V-8398**	1	SEAL-O-RING	
		1	**6V-8638**	1	CONNECTOR	
	10	1	*148-8372*	2	ELBOW AS	
					(EACH INCLUDES)	
		1	**2M-9780**	1	SEAL-O-RING	
		1	**6V-8398**	1	SEAL-O-RING	
		1	**6V-8721**	1	ELBOW	
	11	1	*164-5557*	1	CONNECTOR AS	
		1	**2M-9780**	1	SEAL-O-RING	
		1	**5I-4370**	1	CONNECTOR	
		1	**6V-8398**	1	SEAL-O-RING	
	12	1	**5P-7462**	4	CLIP (SLOT)	
	13	1	**5P-7463**	4	CLIP (TAB)	
	14	1	**6V-0683**	4	GROMMET	
	15	1	**6V-8397**	4	SEAL-O-RING	
	16	1	**8T-1885**	4	CLIP (SLOT)	
	17	1	**8T-1886**	4	CLIP (TAB)	
	18	1	**8T-4121**	6	WASHER-HARD (11X21X2.5-MM THK)	
M	19	1	**8T-4137**	4	BOLT (M10X1.5X20-MM)	
M	20	1	**8T-4196**	2	BOLT (M10X1.5X35-MM)	

I-REFER TO HYDRAULIC INFORMATION SYSTEM
M-METRIC PART

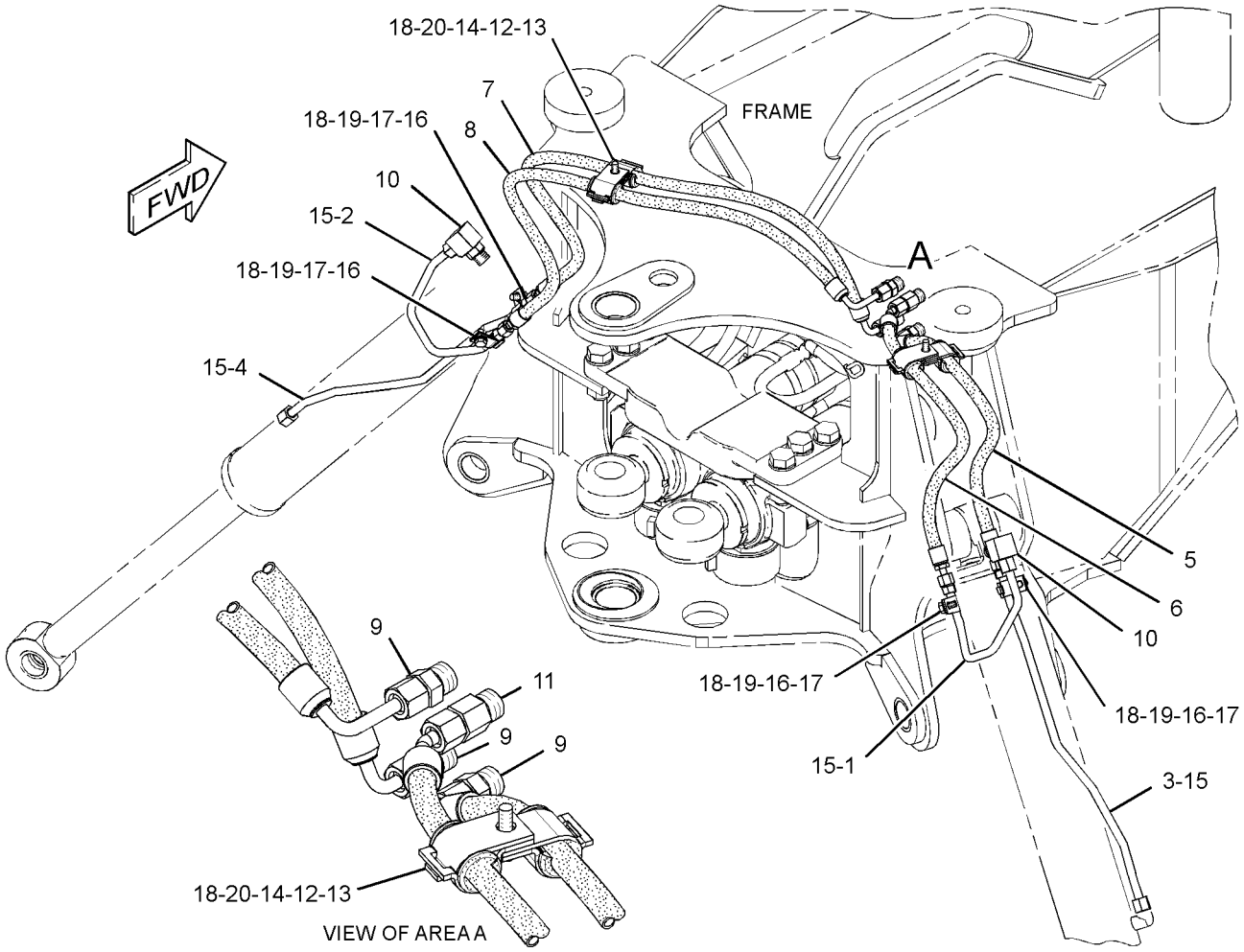

GRAPHIC #1 **<END>** g01298716

HYDRAULIC SYSTEM

211-7564 LINES GP-STICK

S/N: LMS1-UP

PART OF 209-9929 BACKHOE AR-EXTENDABLE STICK, 209-9924 BACKHOE AR-STANDARD STICK

AN ATTACHMENT

SMCS-5057 **i03869669**

NOTE	REF NO	GRAPHIC REF	PART NUMBER	QTY	PART NAME 1 2 3 4 5 6 (PRODUCT LEVEL)	SEE PAGE
	1	1	**5P-3860**	1	CLAMP-HOSE	
	2	1	**9R-5948**	1	BLOCK	
I	3	1	**229-5124**	1	HOSE AS	
I	4	1	**278-1170**	1	HOSE AS	
	5	1	*148-8328*	1	CONNECTOR AS	
		1	**3D-2824**	1	SEAL-O-RING	
		1	**6V-8398**	1	SEAL-O-RING	
		1	**6V-8633**	1	CONNECTOR	
	6	1	*148-8341*	1	CONNECTOR AS	
		1	**3D-2824**	1	SEAL-O-RING	
		1	**6V-8713**	1	CONNECTOR	
		1	**7J-9108**	1	SEAL-O-RING	
	7	1	*153-6232*	1	ELBOW AS	
		1	**3D-2824**	1	SEAL-O-RING	
		1	**7J-9108**	1	SEAL-O-RING	
		1	**8T-0120**	1	ELBOW	
	9	1	*311-2511*	1	LINES GP-STICK	
I		1	**278-7793**	1	HOSE AS	
I		1	**311-2519**	1	HOSE AS	
	10	1	**6V-8398**	1	SEAL-O-RING	
	11	1	**7J-9108**	1	SEAL-O-RING	
	12	1	**7K-1181**	1	STRAP-CABLE	

I-REFER TO HYDRAULIC INFORMATION SYSTEM

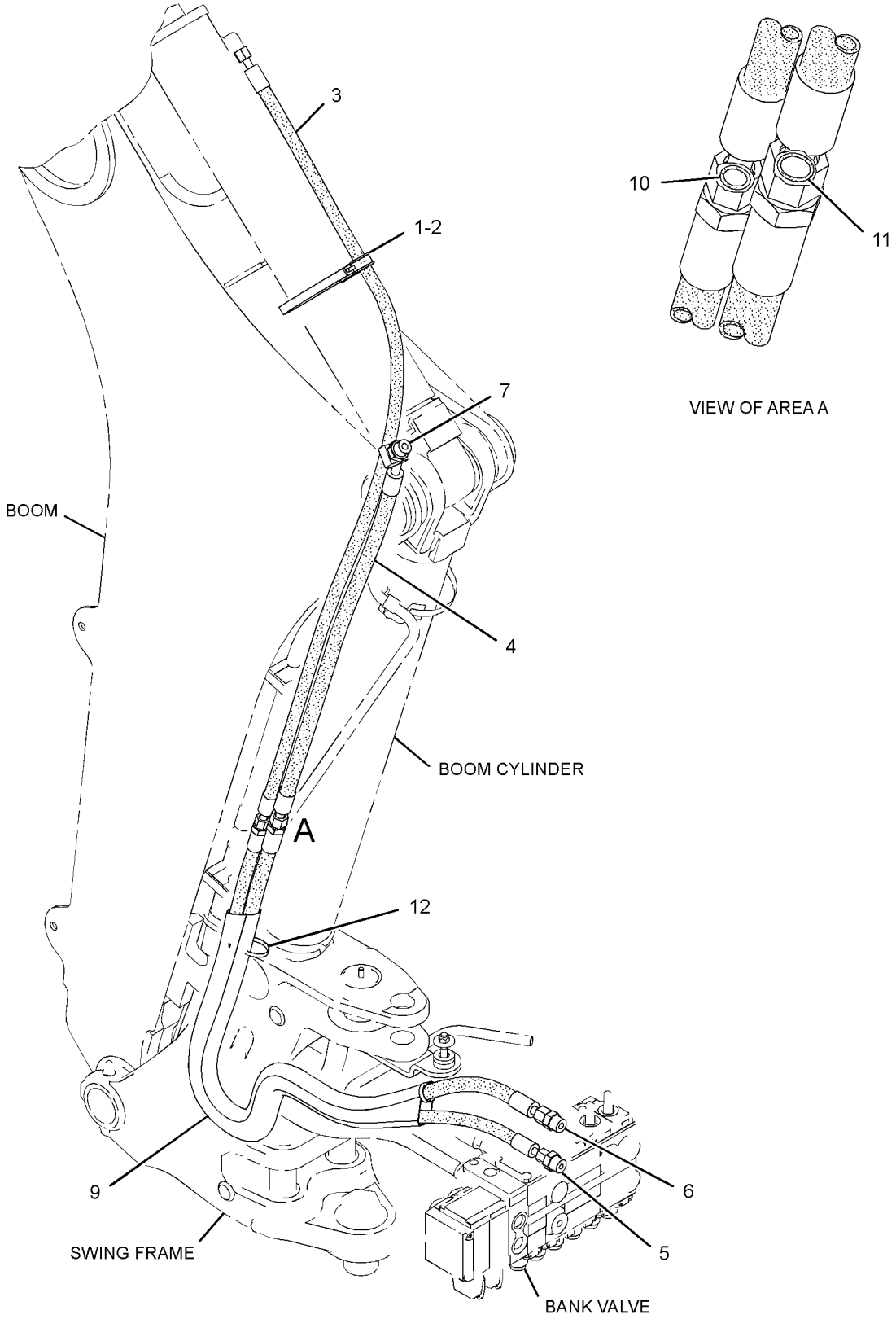

GRAPHIC #1 **<END>** g02106483

HYDRAULIC SYSTEM

232-1248 LINES GP-SWING

S/N: LMS1-UP

PART OF 297-0165 HYDRAULIC AR

SMCS-5057, 5105 **i03879310**

NOTE	REF NO	GRAPHIC REF	PART NUMBER	QTY	PART NAME 1 2 3 4 5 6 (PRODUCT LEVEL)	SEE PAGE
	1	1	**5P-0599**	2	CLAMP-BAND	
	2	1	**9R-2053**	2	BLOCK	
I	3	1	**9R-9005**	2	HOSE AS	
	4	1	*155-7321*	2	ADAPTER AS	
					(EACH INCLUDES)	
		1	**3D-2824**	1	SEAL-O-RING	
		1	**6V-1722**	1	ADAPTER-O-RING	
I	5	1	**216-2777**	1	HOSE AS	
I	6	1	**233-1488**	1	HOSE AS	
	7	1	*148-8340*	4	CONNECTOR AS	
					(EACH INCLUDES)	
		1	**3K-0360**	1	SEAL-O-RING	
		1	**6V-8398**	1	SEAL-O-RING	
		1	**6V-8639**	1	CONNECTOR	
	8	1	*148-8364*	4	ELBOW AS	
					(EACH INCLUDES)	
		1	**3K-0360**	1	SEAL-O-RING	
		1	**6V-8398**	1	SEAL-O-RING	
		1	**6V-8625**	1	ELBOW	

I-REFER TO HYDRAULIC INFORMATION SYSTEM

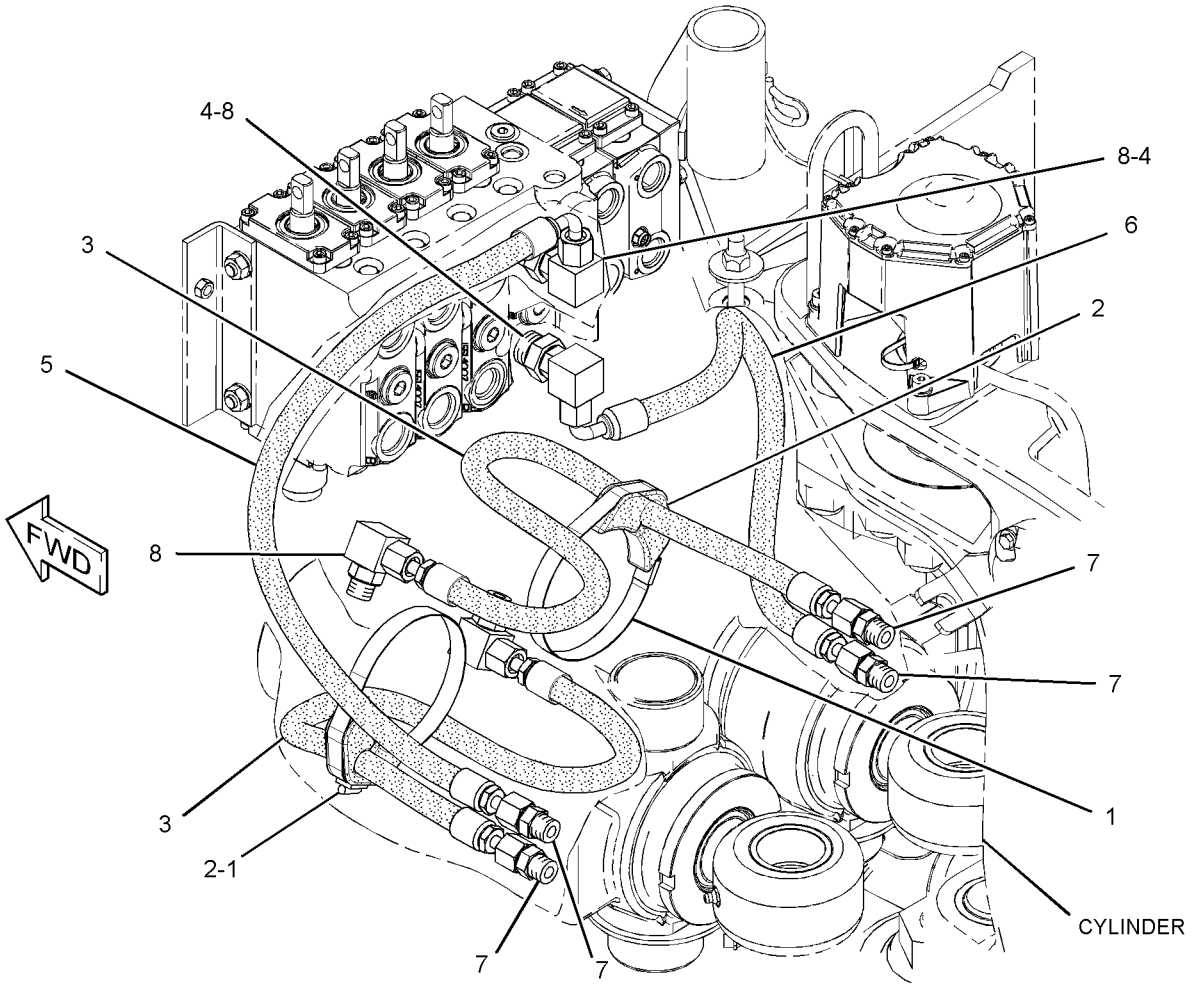

GRAPHIC #1 **<END>** g01372112

HYDRAULIC SYSTEM

246-5292 LINES GP-TILT CYLINDER

S/N: LMS1-UP

PART OF 318-9555 LOADER AR

SMCS-5057, 5104 **i03500120**

NOTE	REF NO	GRAPHIC REF	PART NUMBER	QTY	PART NAME 1 2 3 4 5 6 (PRODUCT LEVEL)	SEE PAGE
I	1	1	**9R-1034**	2	HOSE AS	
	2	1	**156-3837**	4	CLIP (SLOT)	
	3	1	**156-3838**	2	CLIP (TAB)	
	4	1	**158-3412**	8	CLIP (SLOT)	
	5	1	**187-3164**	1	TUBE AS	
	6	1	**187-3166**	1	TUBE AS	
I	7	1	**215-7453**	2	HOSE AS	
	8	1	**232-3244**	1	TUBE AS	
	9	1	**187-4329**	1	TUBE AS	
	10	1	**232-3277**	1	BRACKET AS	
	11	1	**207-7581**	1	TUBE AS	
	12	1	**249-4032**	1	TUBE AS	
	13	1	**151-4841**	1	BLOCK	
	14	1	**254-7271**	1	PLATE AS	
	15	1	*148-8341*	2	CONNECTOR AS	
					(EACH INCLUDES)	
		1	**3D-2824**	1	SEAL-O-RING	
		1	**6V-8713**	1	CONNECTOR	
		1	**7J-9108**	1	SEAL-O-RING	
	16	1	*148-8390*	1	ELBOW AS	
		1	**2M-9780**	1	SEAL-O-RING	
		1	**6V-8626**	1	ELBOW	
		1	**7J-9108**	1	SEAL-O-RING	
	17	1	*148-8393*	2	ELBOW AS	
					(EACH INCLUDES)	
		1	**6V-9852**	1	ELBOW	
		1	**7J-9108**	1	SEAL-O-RING	
	18	1	**6V-8398**	8	SEAL-O-RING	
	19	1	**8T-4121**	8	WASHER-HARD (11X21X2.5-MM THK)	
M	20	1	**8T-4136**	6	BOLT (M10X1.5X25-MM)	
M	21	1	**8T-4137**	2	BOLT (M10X1.5X20-MM)	
	22	1	**7K-1181**	1	STRAP-CABLE	
	23	1	**9R-7803**	4	CLIP (TAB)	

I-REFER TO HYDRAULIC INFORMATION SYSTEM
M-METRIC PART

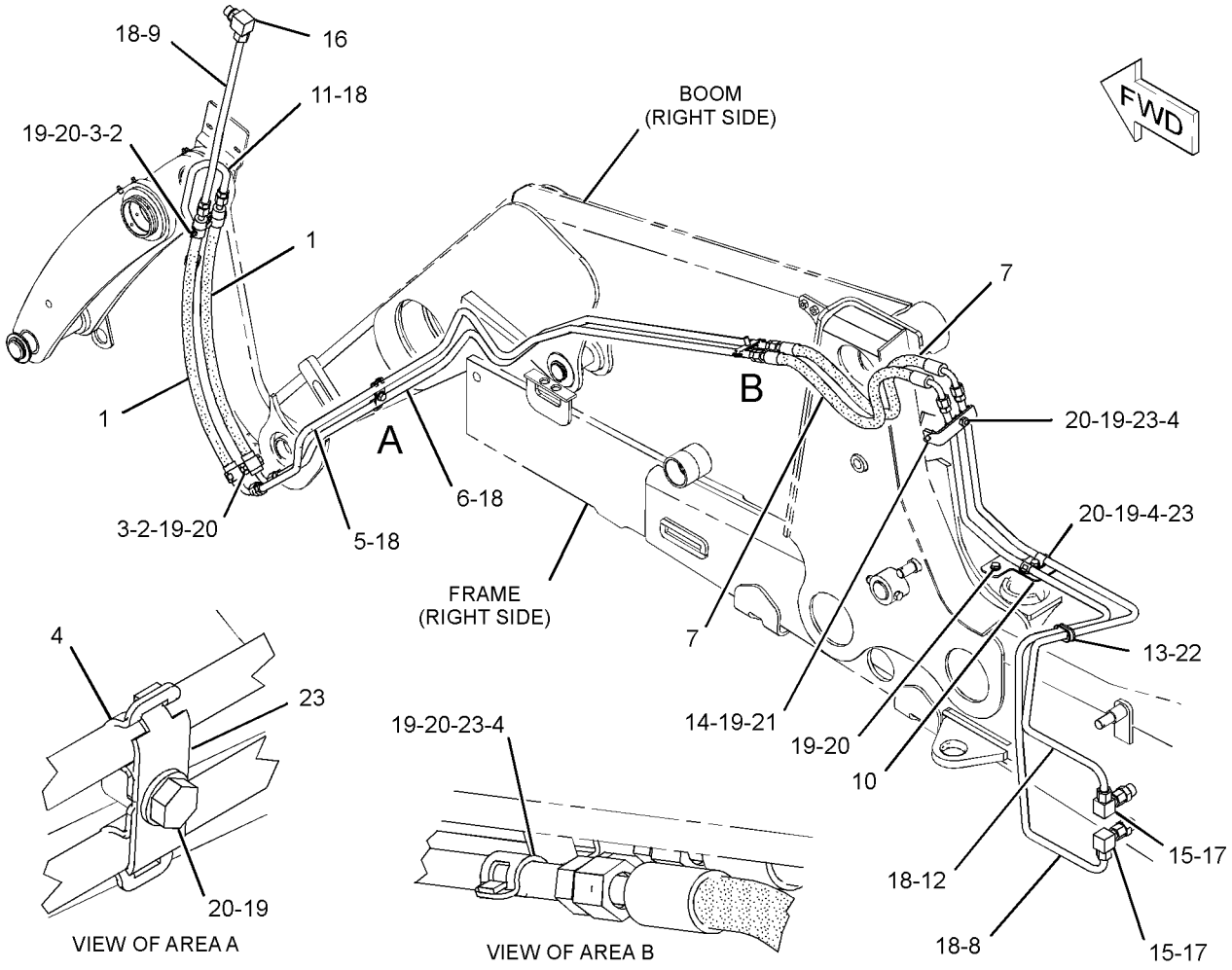

GRAPHIC #1 **<END>** g01321697

259-6742 MANIFOLD GP-CONTROL–INLET

S/N: LMS1-UP
PART OF 248-0483 VALVE GP-BANK 6, 248-0484 VALVE GP-BANK 7, 248-0485 VALVE GP-BANK 8
AN ATTACHMENT

SMCS-5264 **i03911320**

NOTE	REF NO	GRAPHIC REF	PART NUMBER	QTY	PART NAME 1 2 3 4 5 6 (PRODUCT LEVEL)	SEE PAGE
	1	1	**259-6758**	1	VALVE GP-RELIEF (DIRECT OPERATED)	
	2	1	**192-7515**	1	SEAL-O-RING	
	3	1	**6V-5138**	1	SEAL-O-RING	

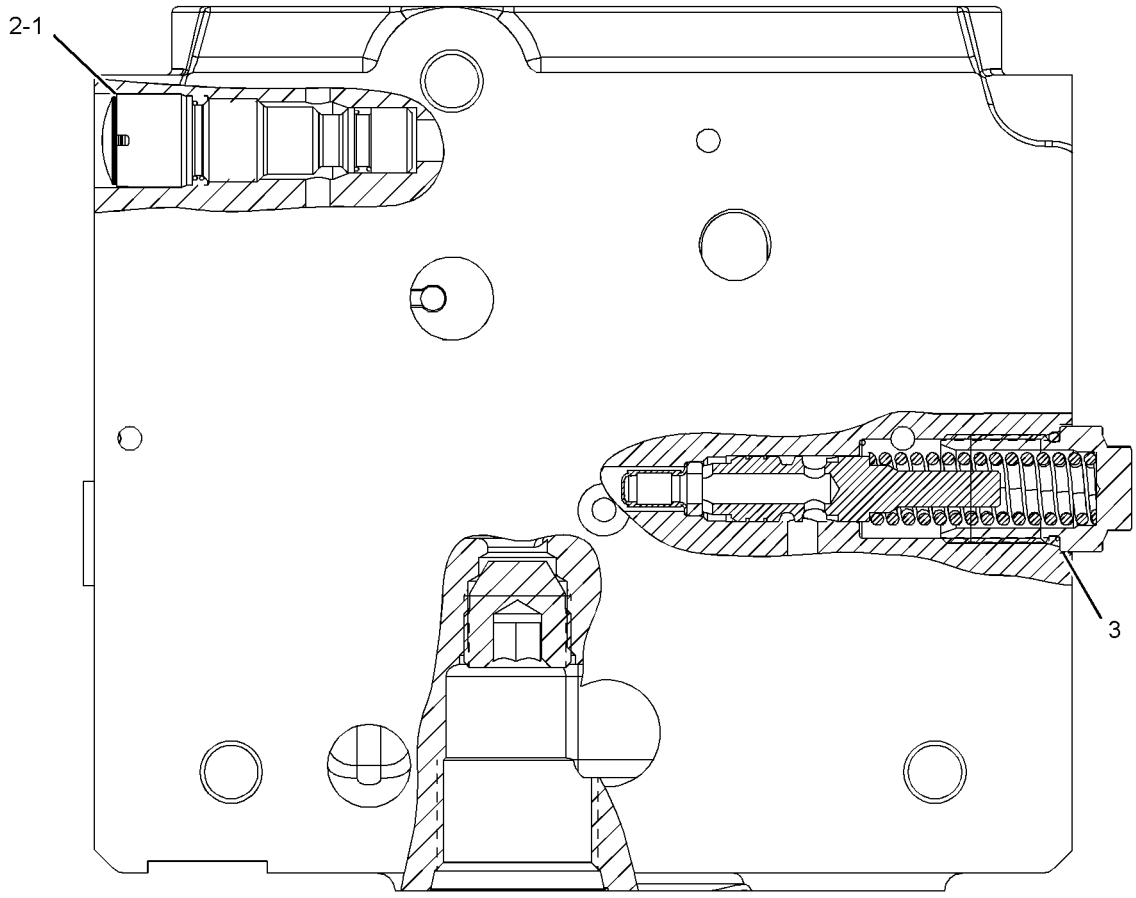

GRAPHIC #1 **<END>** g01140755

259-6745 MANIFOLD GP-CONTROL–INLET

S/N: LMS1-UP

PART OF 248-0481 VALVE GP-BANK 2, 248-0482 VALVE GP-BANK 3

AN ATTACHMENT

SMCS-5264 **i03327725**

NOTE	REF NO	GRAPHIC REF	PART NUMBER	QTY	PART NAME 1 2 3 4 5 6 (PRODUCT LEVEL)	SEE PAGE
	1	1	**259-6758**	1	VALVE GP-RELIEF (DIRECT OPERATED)	
	2	1	**4J-7533**	1	SEAL-O-RING	
	3	1	**6V-7970**	1	SEAL-O-RING	
	4	1	**7M-8485**	1	SEAL-O-RING	
	5	1	**192-7515**	1	SEAL-O-RING	
	6	1	**9S-8001**	1	PLUG-O-RING	

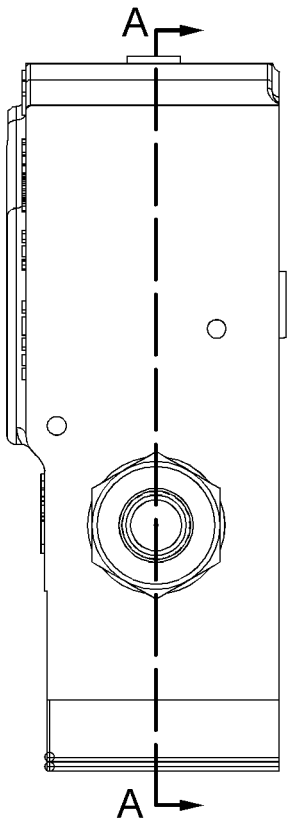

RIGHT SIDE VIEW

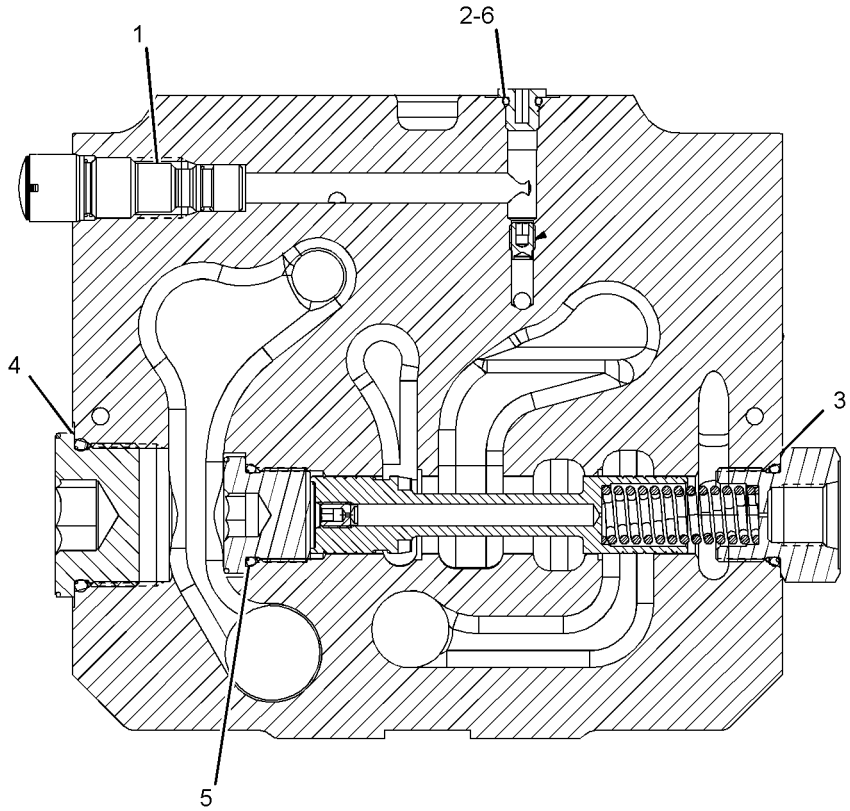

SECTION A-A

GRAPHIC #1 **<END>** g01119446

HYDRAULIC SYSTEM

245-8780 MANIFOLD GP-RIDE CONTROL

S/N: LMS1-UP

PART OF 317-1456 KIT-RIDE CONTROL, 246-9802 LINES GP-RIDE CONTROL AN ATTACHMENT

SMCS-5264 **i03904325**

NOTE	REF NO	GRAPHIC REF	PART NUMBER	QTY	PART NAME 1 2 3 4 5 6 (PRODUCT LEVEL)	SEE PAGE
J	1	1	**249-3124**	1	VALVE GP-SOLENOID (RIDE CONTROL, SWITCH)	
L	2	1	**249-3125**	1	VALVE GP-SOLENOID (ACCUMULATOR)	
	3	1	**238-4628**	1	COIL AS	
					AVAILABLE REPAIR KIT(S):	
J			**141-0888**	1	KIT-SEAL (RIDE CONTROL, SWITCH)	
					(INCLUDES O-RING SEALS AND BACK-UP RING)	
L			**227-5509**	1	KIT-SEAL (ACCUMULATOR)	

J-KIT MARKED J SERVICES PART MARKED J
L-KIT MARKED L SERVICES PART MARKED L

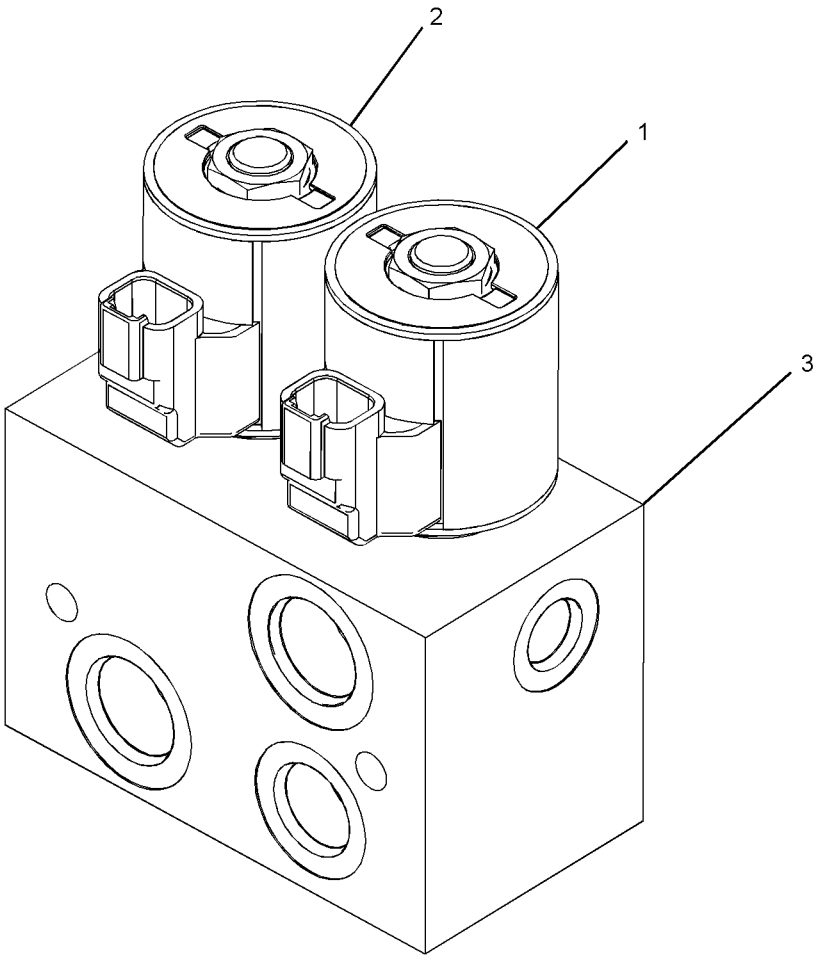

GRAPHIC #1 **<END>** g01646794

219-8564 MOUNTING GP-BANK VALVE

S/N: LMS1-UP

PART OF 209-9935 VALVE AR-BANK 7, 212-0206 VALVE AR-BANK 8

AN ATTACHMENT

SMCS-5051 **i03866749**

NOTE	REF NO	GRAPHIC REF	PART NUMBER	QTY	PART NAME 1 2 3 4 5 6 (PRODUCT LEVEL)	SEE PAGE
	1	1	**301-9664**	1	BRACKET AS	
M	2	1	**165-7019**	1	BOLT (M12X1.75X45-MM)	
M	3	1	**8T-4183**	2	BOLT (M12X1.75X40-MM)	
M	4	1	**8T-4192**	3	BOLT (M12X1.75X25-MM)	
	5	1	**8T-4223**	6	WASHER-HARD (13.5X25.5X3-MM THK)	

M-METRIC PART

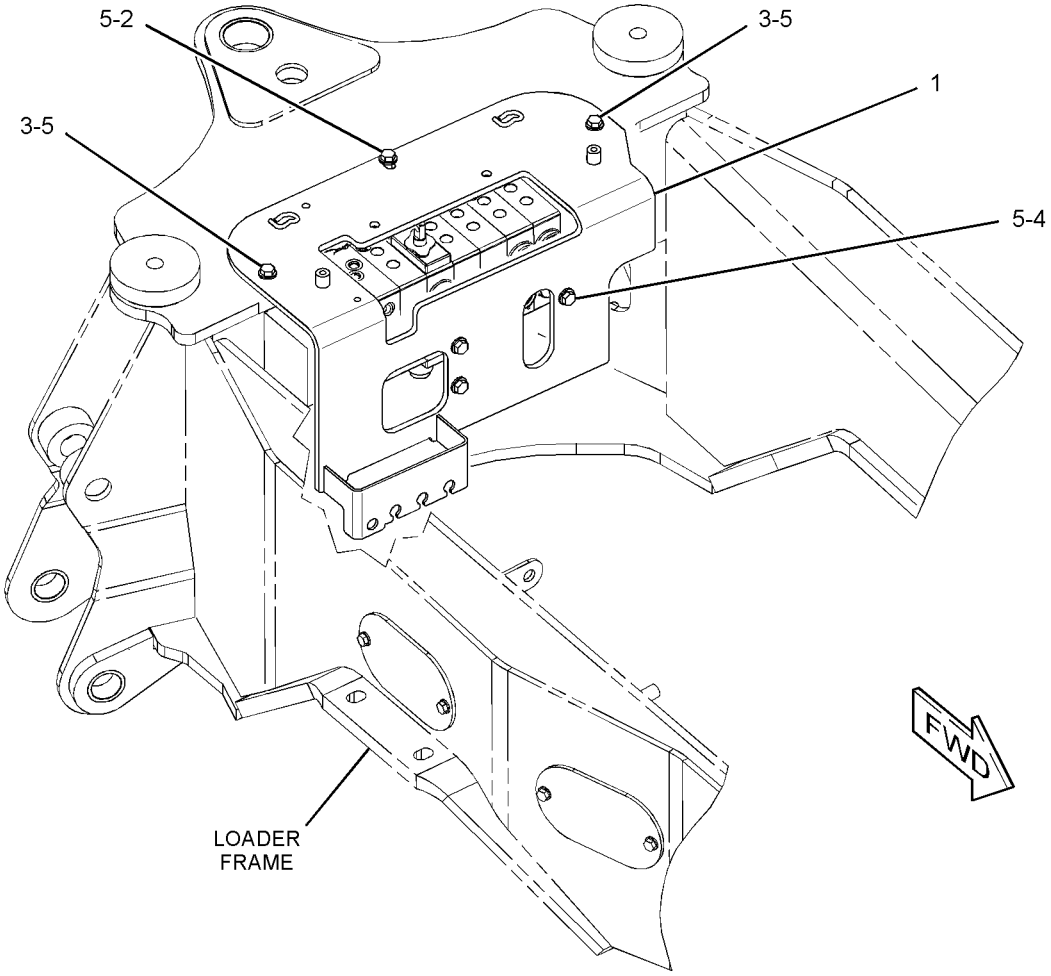

GRAPHIC #1 **<END>** g01805514

HYDRAULIC SYSTEM

290-8077 MOUNTING GP-BANK VALVE

S/N: LMS1-UP
PART OF 209-9934 VALVE AR-BANK 6
AN ATTACHMENT

SMCS-5051 **i03866713**

NOTE	REF NO	GRAPHIC REF	PART NUMBER	QTY	PART NAME 1 2 3 4 5 6 (PRODUCT LEVEL)	SEE PAGE
	1	1	**301-9664**	1	BRACKET AS	
M	2	1	**165-7019**	1	BOLT (M12X1.75X45-MM)	
M	3	1	**8T-4183**	3	BOLT (M12X1.75X40-MM)	
M	4	1	**8T-4192**	2	BOLT (M12X1.75X25-MM)	
	5	1	**8T-4223**	6	WASHER-HARD (13.5X25.5X3-MM THK)	

M-METRIC PART

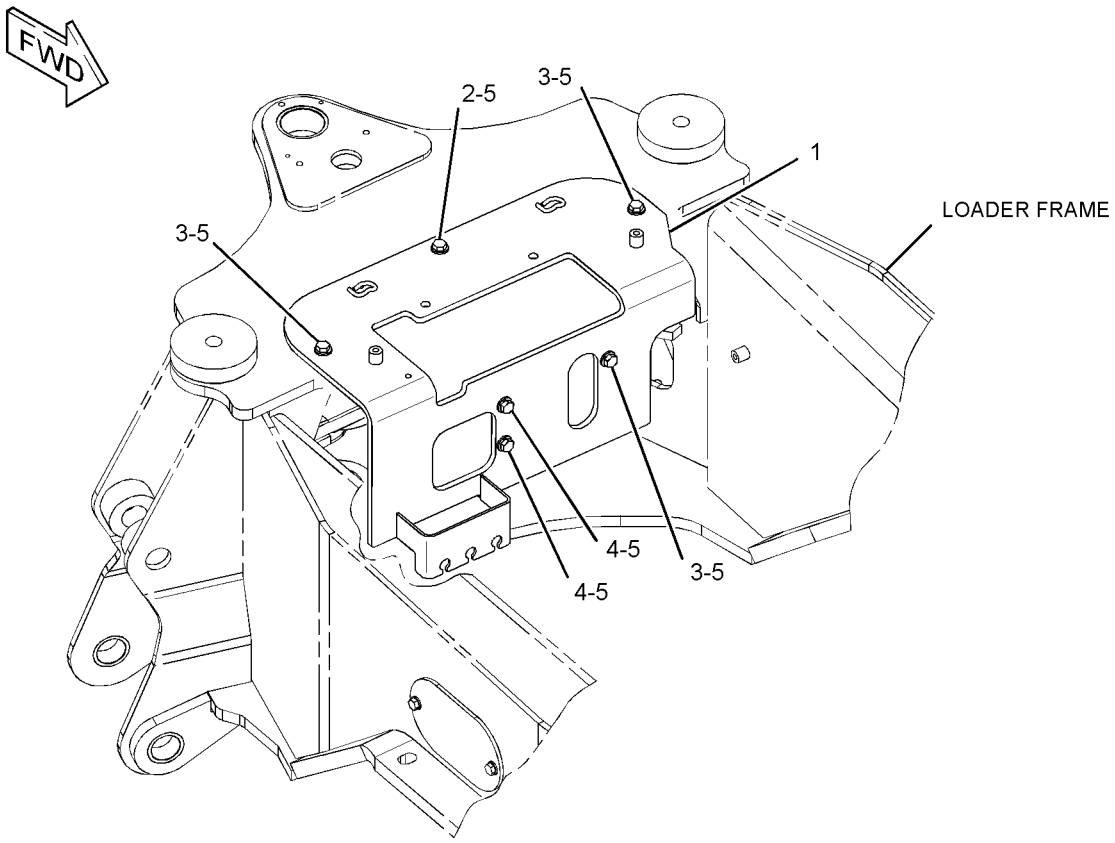

GRAPHIC #1 **<END>** g01321704

263-8577 MOUNTING GP-CYLINDER–THUMB

S/N: LMS1-UP
PART OF 271-3023 THUMB GP
AN ATTACHMENT

SMCS-5102, 6068, 7562 **i03848413**

NOTE	REF NO	GRAPHIC REF	PART NUMBER	QTY	PART NAME 1 2 3 4 5 6 (PRODUCT LEVEL)	SEE PAGE
B	1	1	**9R-1510**	24	WASHER (51X82X4-MM THK)	
	2	1	**221-4295**	1	PIN	
	3	1	**221-4296**	1	PIN	
	4	1	**270-3410**	1	PIN	
	5	1	**3B-5319**	2	PIN-COTTER	
	6	1	**6V-3213**	4	RING-RETAINING (EXTERNAL)	
BM	7	1	**6V-7744**	1	LOCKNUT (M10X1.5-THD)	
BM	8	1	**8T-6685**	1	BOLT (M10X1.5X110-MM)	
B	9	1	**9R-0158**	6	WASHER (46X69X3-MM THK)	

B-USE AS REQUIRED
M-METRIC PART

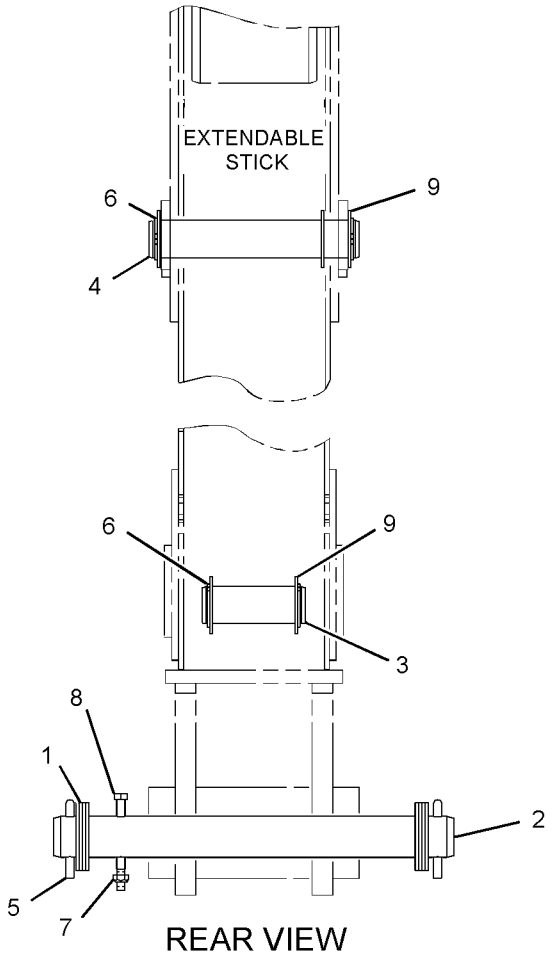

GRAPHIC #1 **<END>** g01445039

246-9309 MOUNTING GP-LINES

S/N: LMS1-UP

PART OF 209-9929 BACKHOE AR-EXTENDABLE STICK, 209-9924 BACKHOE AR-STANDARD STICK

AN ATTACHMENT

SMCS-5057 **i03382684**

NOTE	REF NO	GRAPHIC REF	PART NUMBER	QTY	PART NAME 1 2 3 4 5 6 (PRODUCT LEVEL)	SEE PAGE
C	1	1	**248-4277**	2	PLATE	
					(NOT REQUIRED WITH EUROPEAN MACHINES)	
					—OR—	
C		1	**339-7689**	2	PLATE AS	
					(REQUIRED WITH EUROPEAN MACHINES)	
	2	1	**303-4230**	2	BLOCK	
	3	1	**304-3551**	2	BLOCK	
	4	1	**304-3552**	2	BLOCK	
	5	1	**8T-4121**	4	WASHER-HARD (11X21X2.5-MM THK)	
M	6	1	**8T-4196**	4	BOLT (M10X1.5X35-MM)	
C	7	1	**5P-5148**	2	STRAP-TIE	

C-CHANGE FROM PREVIOUS TYPE
M-METRIC PART

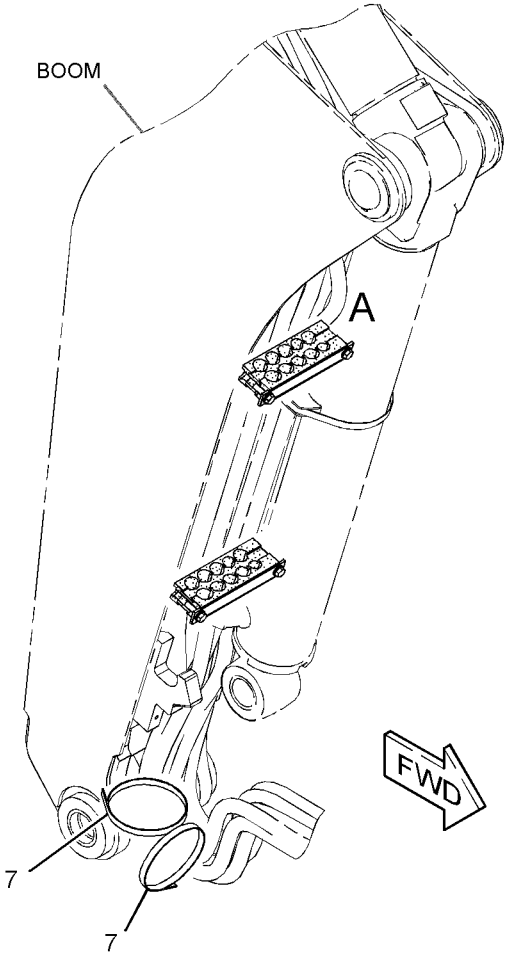

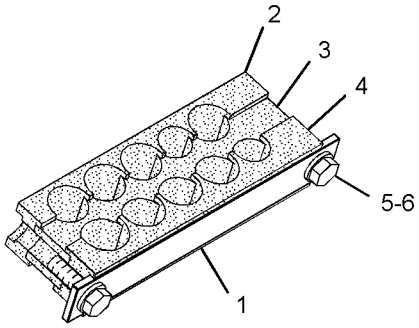

VIEW OF AREA A

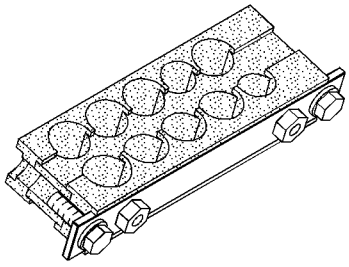

VIEW OF AREA A
(ALTERNATE VIEW FOR EUROPEAN MACHINES)

GRAPHIC #1 **<END>** g01817535

HYDRAULIC SYSTEM

335-8197 PUMP GP-PISTON

S/N: LMS1-UP

PART OF 350-0666 PUMP GP-PISTON

SMCS-5070 **i03871654**

NOTE	REF NO	GRAPHIC REF	PART NUMBER	QTY	PART NAME 1 2 3 4 5 6 (PRODUCT LEVEL)	SEE PAGE
	1	1	**335-8198**	1	ROTATING GP-PUMP	
	2	1	**335-8209**	1	PISTON-CONTROL	
	3	1	**335-8210**	1	PISTON ROD	
	6	1	**335-8213**	1	SWASHPLATE AS	
	7	1	**335-8214**	1	SHAFT-PUMP	
	8	1	**335-8215**	1	PLUG	
	9	1	**335-8216**	1	SPRING	
	10	1	**335-8217**	1	SHIM	
	11	1	**335-8218**	1	RING-STOP	
	12	1	**335-8219**	1	BEARING-ROLLER	
	13	1	**335-8220**	1	BEARING-ROLLER	
	14	1	**335-8221**	1	LINER-BEARING	
	15	1	**335-8222**	1	LINER-BEARING	
	16	1	**335-8226**	1	RETAINING RING	
M	17	1	**8T-2503**	4	BOLT-SOCKET HEAD (M14X2X35-MM)	
	18	1	**335-8228**	2	PIN	
	19	1	**335-8229**	1	PIN	
	20	1	**335-8230**	1	PLUG	
M	21	1	**8C-8580**	2	BOLT-SOCKET HEAD (M5X0.8X16-MM)	
					PARTS SHOWN IN GRAPHIC(S) WITHOUT A REFERENCE NUMBER ARE NOT SERVICED SEPARATELY	
					AVAILABLE REPAIR KIT(S):	
			336-4682	1	KIT-SEAL (PISTON PUMP)	
					(INCLUDES SHAFT RING SEAL & SEAL-O-RINGS)	

M-METRIC PART

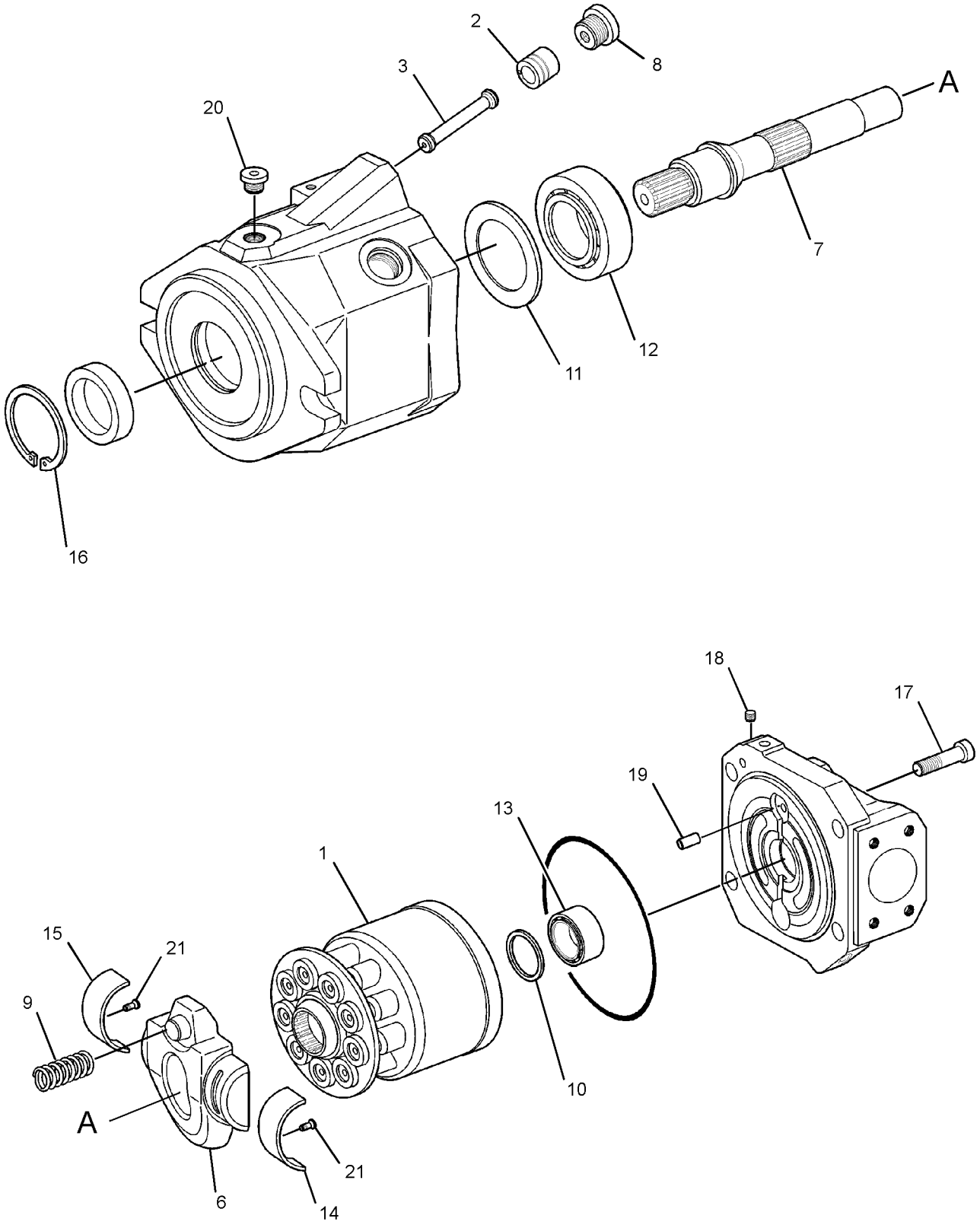

GRAPHIC #1 **<END>** g02138307

HYDRAULIC SYSTEM

350-0666 PUMP GP-PISTON

S/N: LMS1-UP

PART OF 297-0165 HYDRAULIC AR

SMCS-5070 **i03872832**

NOTE	REF NO	GRAPHIC REF	PART NUMBER	QTY	PART NAME 1 2 3 4 5 6 (PRODUCT LEVEL)	SEE PAGE
Y	1	1	*335-8197*	1	PUMP GP-PISTON	329
Y	2	1	**285-5240**	1	VALVE GP-PUMP CONTROL (PRESSURE, FLOW COMPENSATOR)	360

Y-SEPARATE ILLUSTRATION

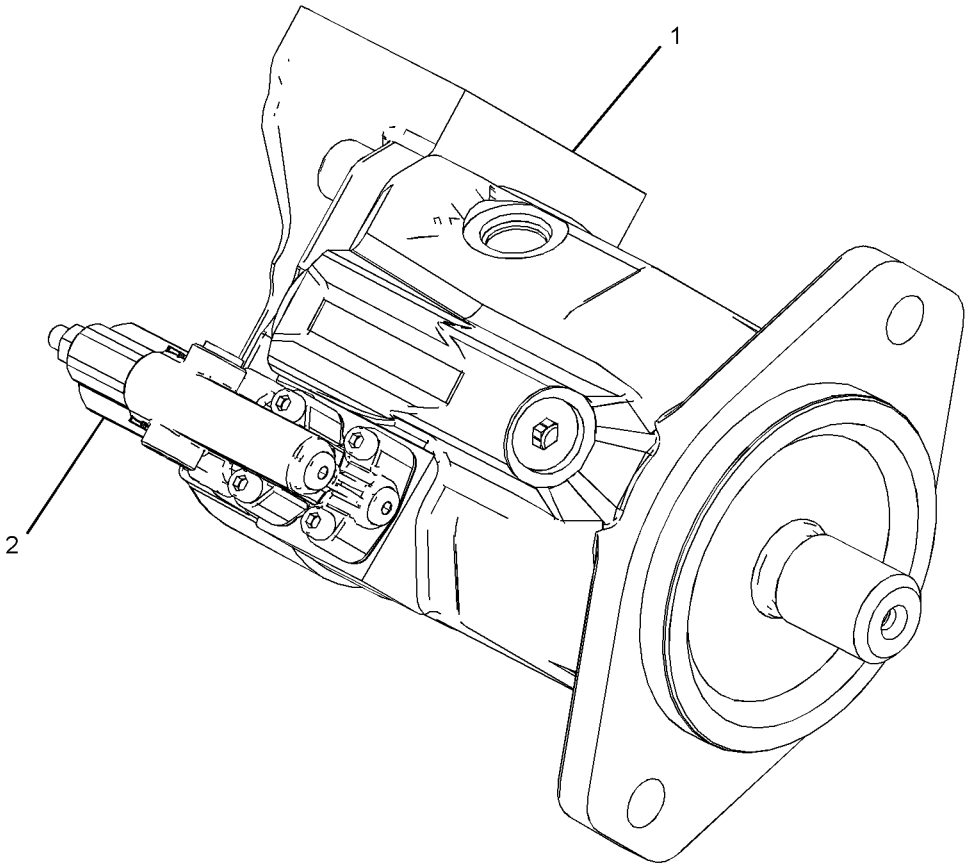

GRAPHIC #1 **<END>** g02131853

HYDRAULIC SYSTEM

128-5596 SHAFT GP-PUMP DRIVE

S/N: LMS1-UP
PART OF 112-1826 DRIVE & MTG GP-PUMP
AN ATTACHMENT

SMCS-3108 **i00535584**

NOTE	REF NO	GRAPHIC REF	PART NUMBER	QTY	PART NAME 1 2 3 4 5 6 (PRODUCT LEVEL)	SEE PAGE
	1	1	**130-8150**	1	RING-RETAINING	

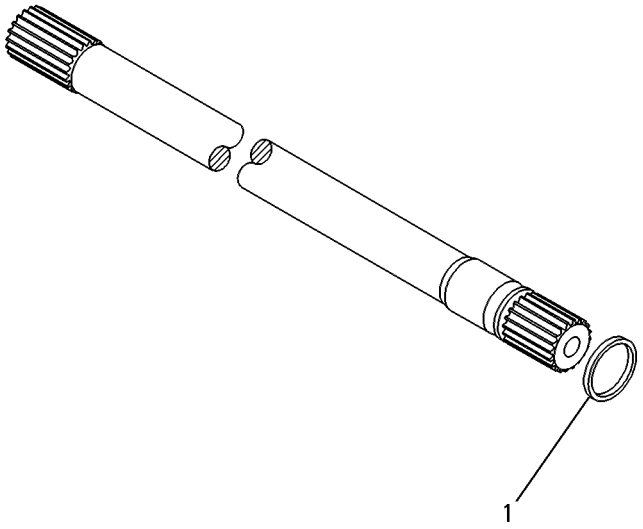

GRAPHIC #1 **<END>** g00131851

297-1232 TANK & MTG GP-HYDRAULIC

S/N: LMS1-UP

PART OF 297-0165 HYDRAULIC AR

SMCS-5056 **i03845891**

NOTE	REF NO	GRAPHIC REF	PART NUMBER	QTY	PART NAME 1 2 3 4 5 6 (PRODUCT LEVEL)	SEE PAGE
	1	1	**5P-4961**	3	CLAMP-HOSE	
E	2	1	**5P-1442**		HOSE (124-CM)	
E	2A	1	**5P-1442**		HOSE (8-CM)	
	3	1	**9M-0164**	1	CLAMP-HOSE	
	4	1	**9R-9925**	1	FILTER ELEMENT-BREATHER (HYDRAULIC TANK)	
	5	1	**127-4471**	1	CLAMP-HOSE	
	6	1	*217-8185*	1	ELBOW AS	
		1	**3K-0360**	1	SEAL-O-RING	
		1	**9X-3982**	1	ELBOW	
	7	1	**222-4067**	6	BOLT-SOCKET HEAD (M5X0.8X14-MM)	
	8	1	**234-8815**	1	TUBE AS	
	9	1	**237-3797**	1	CAP-FILL (HYDRAULIC OIL)	
	10	1	*297-1233*	1	TANK GP-HYDRAULIC	
		1	**297-1234**	1	TANK-HYDRAULIC	
		1	**253-8295**	1	GAUGE-SIGHT (FLUID LEVEL)	
	11	1	**297-4400**	1	HOSE	
	12	1	**299-9015**	1	BRACKET AS	
	13	1	**300-6061**	1	DIFFUSER AS	
M	14	1	**105-3488**	4	BOLT-SOCKET HEAD (M10X1.5X16-MM)	
	15	1	**132-3056**	1	SEAL-O-RING	
	16	1	**6D-3479**	1	CLIP	
	17	1	**7X-7729**	4	WASHER (11X25X3-MM THK)	
	18	1	**8T-4121**	2	WASHER-HARD (11X21X2.5-MM THK)	
M	19	1	**8T-4137**	2	BOLT (M10X1.5X20-MM)	
M	20	1	**8T-4139**	1	BOLT (M12X1.75X30-MM)	
M	21	1	**8T-4179**	3	BOLT (M12X1.75X20-MM)	
	22	1	**8T-4223**	4	WASHER-HARD (13.5X25.5X3-MM THK)	
	23	1	**8T-0328**	6	WASHER-HARD (5.5X10X1-MM THK)	

E-ORDER BY THE CENTIMETER
M-METRIC PART

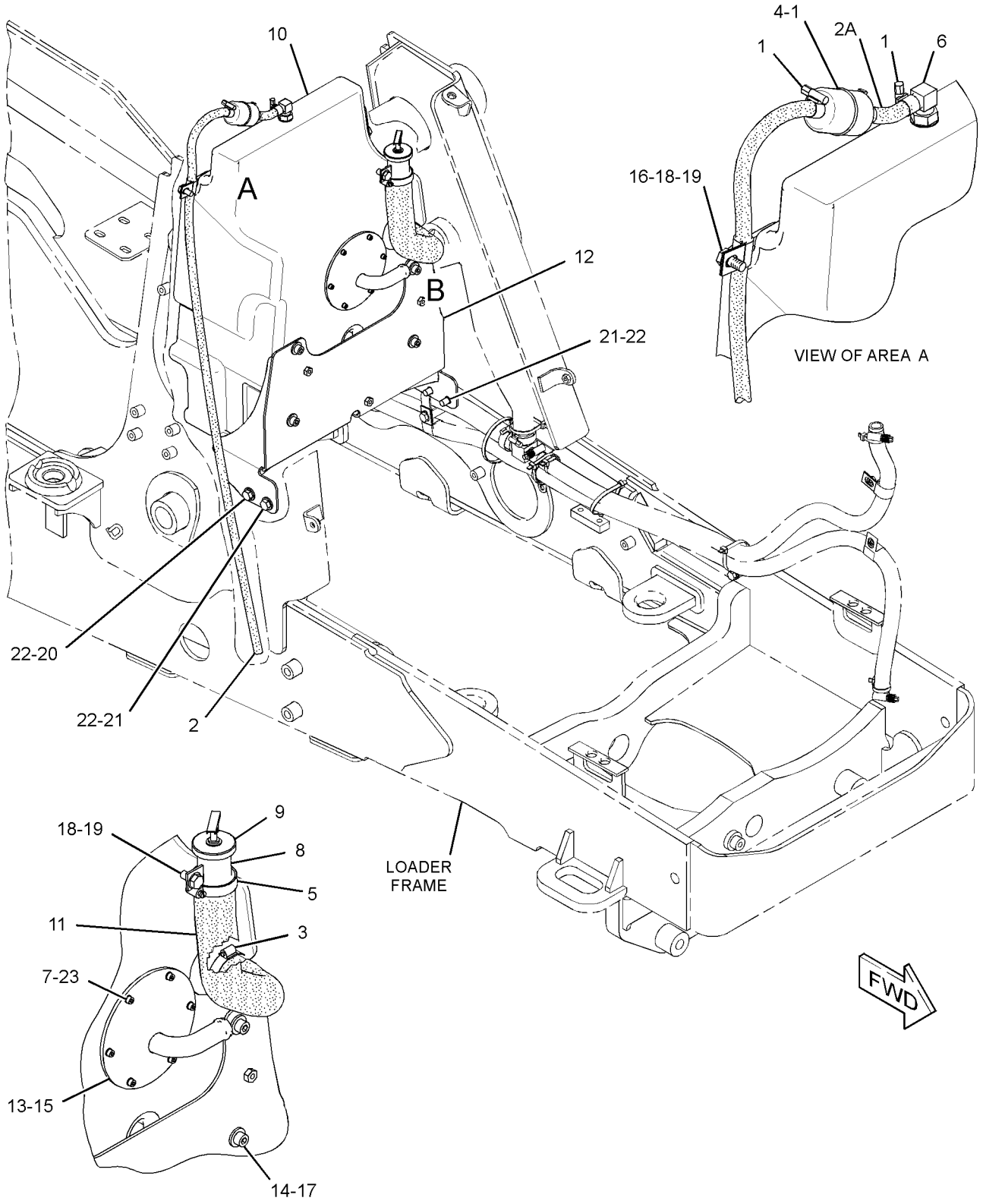

GRAPHIC #1 **<END>** g01824715

209-9943 VALVE AR-BANK 2

S/N: LMS1-UP
PART OF 357-0395, 357-0398 OPTION AR-MACHINE
AN ATTACHMENT

SMCS-5051 **i03865272**

NOTE	PART NUMBER	QTY	PART NAME 1 2 3 4 5 6 (PRODUCT LEVEL)	SEE PAGE
Y	*206-1645*	1	CONTROL GP-HYDRAULIC HAND (LOADER)	515
Y	*219-8566*	1	FASTENER GP-VALVE (BANK)	262
Y	**248-0481**	1	VALVE GP-BANK 2	337
	251-5625	1	FILM-INSTRUCTION (BUCKET CONTROL)	
			(ON RH CONSOLE)	

Y-SEPARATE ILLUSTRATION

<END>

317-1463 VALVE AR-BANK 3

S/N: LMS1-UP
PART OF 357-0399 OPTION AR-MACHINE
AN ATTACHMENT

SMCS-5051 **i03865277**

NOTE	PART NUMBER	QTY	PART NAME 1 2 3 4 5 6 (PRODUCT LEVEL)	SEE PAGE
Y	*209-3364*	1	CONTROL GP-HYDRAULIC HAND (LOADER)	517
Y	*219-8566*	1	FASTENER GP-VALVE (BANK)	262
Y	*315-1555*	1	LINES GP-LOADER AUXILIARY	301
Y	**248-0482**	1	VALVE GP-BANK 3	338
	251-5626	1	FILM-INSTRUCTION (BUCKET CONTROL)	
			(ON RH CONSOLE)	

Y-SEPARATE ILLUSTRATION

<END>

209-9934 VALVE AR-BANK 6

S/N: LMS1-UP
PART OF 357-0413 OPTION AR-BACKHOE
FOR USE WITH 209-9924—PAGE 1
AN ATTACHMENT

SMCS-5051 **i03865270**

NOTE	PART NUMBER	QTY	PART NAME 1 2 3 4 5 6 (PRODUCT LEVEL)	SEE PAGE
Y	*228-3974*	1	LINES GP-STABILIZER	315
Y	*290-8077*	1	MOUNTING GP-BANK VALVE	326
Y	**248-0483**	1	VALVE GP-BANK 6	339

Y-SEPARATE ILLUSTRATION

<END>

HYDRAULIC SYSTEM

209-9935 VALVE AR-BANK 7

S/N: LMS1-UP
PART OF 357-0414, 357-0415, 357-0416 OPTION AR-BACKHOE
FOR USE WITH 209-9924—PAGE 1, 209-9929—PAGE 1
AN ATTACHMENT

SMCS-5051 **i03865271**

NOTE	PART NUMBER	QTY	PART NAME 1 2 3 4 5 6 (PRODUCT LEVEL)	SEE PAGE
Y	*209-3375*	1	CONTROL GP-HYDRAULIC PEDAL (SINGLE FUNCTION, RH)	533
Y	*228-3974*	1	LINES GP-STABILIZER	315
Y	*219-8564*	1	MOUNTING GP-BANK VALVE	325
Y	**248-0484**	1	VALVE GP-BANK 7	341
B	**6V-9831**	2	CAP AS	
			(USE WHEN EXTRA VALVE BANK IS NOT USED)	
B	*148-8341*	2	CONNECTOR AS	
			(USE WHEN EXTRA VALVE BANK IS NOT USED)	
			(EACH INCLUDES)	
	3D-2824	1	SEAL-O-RING	
	6V-8713	1	CONNECTOR	
	7J-9108	1	SEAL-O-RING	

B-USE AS REQUIRED
Y-SEPARATE ILLUSTRATION

<END>

212-0206 VALVE AR-BANK 8

S/N: LMS1-UP
PART OF 357-0417 OPTION AR-BACKHOE
FOR USE WITH 209-9924—PAGE 1, 209-9929—PAGE 1
AN ATTACHMENT

SMCS-5051 **i03865273**

NOTE	PART NUMBER	QTY	PART NAME 1 2 3 4 5 6 (PRODUCT LEVEL)	SEE PAGE
Y	*209-3365*	1	CONTROL GP-HYDRAULIC PEDAL (SINGLE FUNCTION, LH)	532
Y	*209-3375*	1	CONTROL GP-HYDRAULIC PEDAL (SINGLE FUNCTION, RH)	533
Y	*211-7568*	1	LINES GP-STABILIZER	313
Y	*219-8564*	1	MOUNTING GP-BANK VALVE	325
Y	**248-0485**	1	VALVE GP-BANK 8	343
B	**6V-9831**	4	CAP AS	
			(USE WHEN EXTRA VALVE BANK IS NOT USED)	
B	*148-8341*	4	CONNECTOR AS	
			(USE WHEN EXTRA VALVE BANK IS NOT USED)	
			(EACH INCLUDES)	
	3D-2824	1	SEAL-O-RING	
	6V-8713	1	CONNECTOR	
	7J-1908	1	SEAL	

B-USE AS REQUIRED
Y-SEPARATE ILLUSTRATION

<END>

248-0481 VALVE GP-BANK 2

S/N: LMS1-UP
PART OF 209-9943 VALVE AR-BANK 2
AN ATTACHMENT

SMCS-5051 **i02478945**

NOTE	REF NO	GRAPHIC REF	PART NUMBER	QTY	PART NAME 1 2 3 4 5 6 (PRODUCT LEVEL)	SEE PAGE
	1	1	**259-6747**	1	KIT-BRACKET (INLET MANIFOLD)	
					(INCLUDES BRACKET, BOLTS & WASHERS)	
	2	1	**259-6748**	1	KIT-BRACKET (VALVE)	
					(INCLUDES BRACKET, NUTS & WASHERS)	
Y	3	1	**259-6745**	1	MANIFOLD GP-CONTROL (INLET)	323
Y	4	1	**259-6732**	1	VALVE GP-CONTROL (LIFT)	348
Y	5	1	**259-6731**	1	VALVE GP-CONTROL (TILT)	347
	6	1	**259-6749**	1	KIT-FASTENER	
					(INCLUDES RODS, NUTS & WASHERS)	
	7	1	**259-6754**	2	KIT-SEAL	
					(EACH INCLUDES SEAL-O-RINGS)	
	8	1	**8T-4121**	2	WASHER-HARD (11X21X2.5-MM THK)	
M	9	1	**8T-4137**	2	BOLT (M10X1.5X20-MM)	

M-METRIC PART
Y-SEPARATE ILLUSTRATION

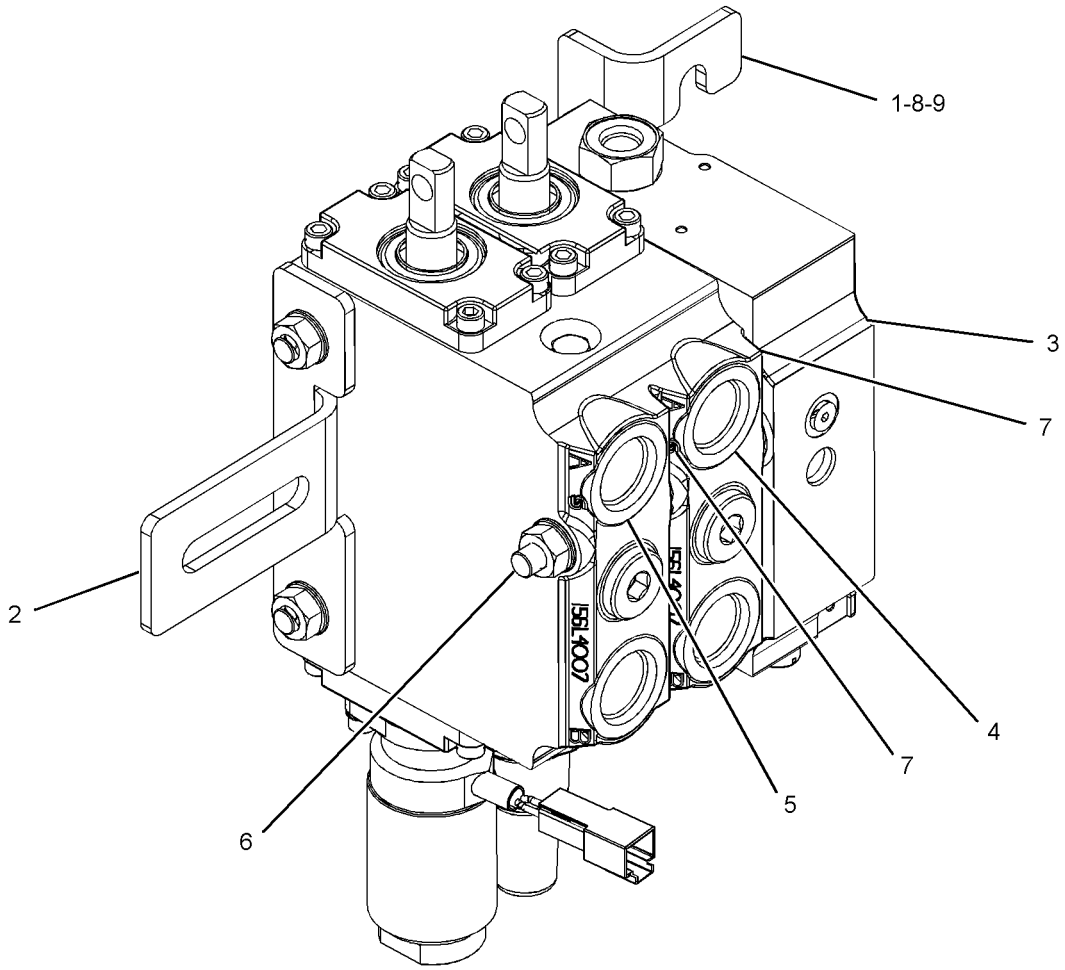

GRAPHIC #1 **<END>** g01122328

HYDRAULIC SYSTEM

248-0482 VALVE GP-BANK 3

S/N: LMS1-UP
PART OF 317-1463 VALVE AR-BANK 3
AN ATTACHMENT

SMCS-5051 **i02532738**

NOTE	REF NO	GRAPHIC REF	PART NUMBER	QTY	PART NAME 1 2 3 4 5 6 (PRODUCT LEVEL)	SEE PAGE
	1	1	**259-6747**	1	KIT-BRACKET (INLET MANIFOLD)	
					(INCLUDES WASHERS, BOLTS & BRACKET)	
	2	1	**259-6748**	1	KIT-BRACKET (VALVE)	
					(INCLUDES NUTS, WASHERS & BRACKET)	
Y	3	1	**259-6745**	1	MANIFOLD GP-CONTROL (INLET)	323
Y	4	1	**259-6732**	1	VALVE GP-CONTROL (LIFT)	348
Y	5	1	**259-6730**	1	VALVE GP-CONTROL (TILT)	346
Y	6	1	**259-6729**	1	VALVE GP-CONTROL (AUXILIARY)	345
	7	1	**259-6754**	3	KIT-SEAL (VALVES)	
					(EACH INCLUDES SEALS)	
	8	1	**259-6750**	1	KIT-FASTENER (3-BANK)	
					(INCLUDES RODS, WASHERS & NUTS)	
	9	1	**8T-4121**	2	WASHER-HARD (11X21X2.5-MM THK)	
M	10	1	**8T-4137**	2	BOLT (M10X1.5X20-MM)	

M-METRIC PART
Y-SEPARATE ILLUSTRATION

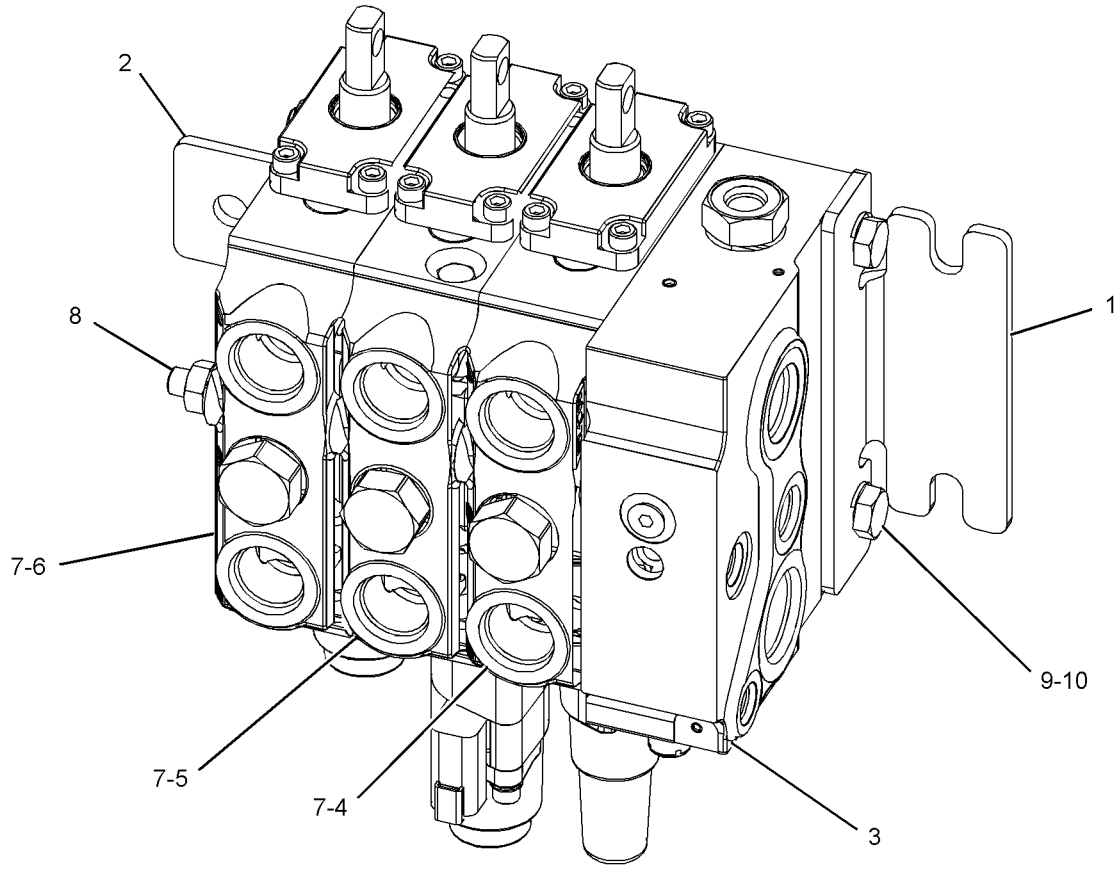

GRAPHIC #1 **<END>** g01263561

248-0483 VALVE GP-BANK 6

S/N: LMS1-UP

PART OF 209-9934 VALVE AR-BANK 6

AN ATTACHMENT

SMCS-5051 **i03866693**

NOTE	REF NO	GRAPHIC REF	PART NUMBER	QTY	PART NAME 1 2 3 4 5 6 (PRODUCT LEVEL)	SEE PAGE
	1	1	**259-6757**	1	KIT-BRACKET	
					(INCLUDES WASHERS, NUTS & BRACKET)	
Y	2	1	**259-6746**	2	VALVE GP-CONTROL (STABILIZER)	358
Y	3	1	**259-6742**	1	MANIFOLD GP-CONTROL (INLET)	322
Y	4	1	**259-6739**	1	VALVE GP-CONTROL (BOOM)	356
Y	5	1	**259-6738**	1	VALVE GP-CONTROL (SWING)	354
Y	6	1	**259-6737**	1	VALVE GP-CONTROL (BUCKET)	353
Y	7	1	**259-6736**	1	VALVE GP-CONTROL (STICK)	352
	8	1	**259-6751**	1	KIT-FASTENER (4-BANK)	
					(INCLUDES RODS, WASHERS & NUTS)	
	9	1	**259-6754**	4	KIT-SEAL	
					(EACH KIT INCLUDES SEAL-O-RINGS)	
	10	1	**259-6755**	1	KIT-COVER	
					(INCLUDES SEALS & COVER)	
	11	1	**259-6756**	1	KIT-FASTENER (2-BANK)	
					(INCLUDES RODS, WASHERS & NUTS)	
	12	1	**192-7506**	12	SEAL-O-RING	
	13	1	**192-7511**	1	SEAL	
	14	1	**192-7508**	10	SEAL-O-RING	
	15	1	**192-7509**	2	SEAL-O-RING	

Y-SEPARATE ILLUSTRATION

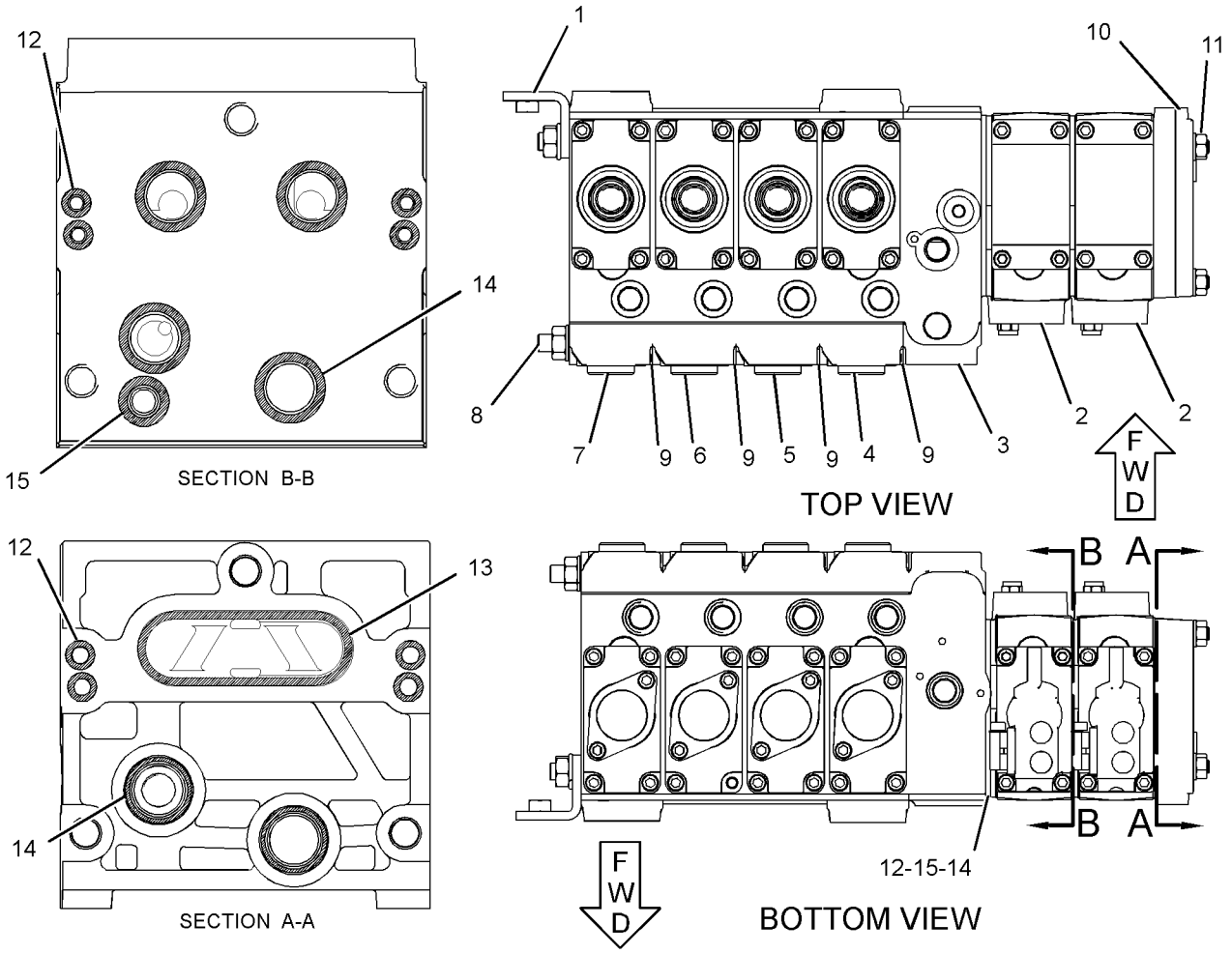

GRAPHIC #1

<END>

g01230751

248-0484 VALVE GP-BANK 7

S/N: LMS1-UP
PART OF 209-9935 VALVE AR-BANK 7
AN ATTACHMENT

SMCS-5051 **i03866750**

NOTE	REF NO	GRAPHIC REF	PART NUMBER	QTY	PART NAME 1 2 3 4 5 6 (PRODUCT LEVEL)	SEE PAGE
Y	1	1	**259-6746**	2	VALVE GP-CONTROL (STABILIZER)	358
Y	2	1	**259-6742**	1	MANIFOLD GP-CONTROL (INLET)	322
Y	3	1	**259-6739**	1	VALVE GP-CONTROL (BOOM)	356
Y	4	1	**259-6738**	1	VALVE GP-CONTROL (SWING)	354
Y	5	1	**259-6737**	1	VALVE GP-CONTROL (BUCKET)	353
Y	6	1	**259-6735**	1	VALVE GP-CONTROL (STICK)	351
Y	7	1	**259-6734**	1	VALVE GP-CONTROL (EXTENDABLE STICK)	350
	8	1	**259-6754**	5	KIT-SEAL	
					(EACH KIT INCLUDES SEAL-O-RINGS)	
	9	1	**259-6755**	1	KIT-COVER	
					(INCLUDES SEALS)	
	10	1	**259-6756**	1	KIT-FASTENER (2-BANK)	
					(INCLUDES RODS, WASHERS & NUTS)	
	11	1	**259-6752**	1	KIT-FASTENER (5-BANK)	
					(INCLUDES RODS, WASHERS & NUTS)	
	12	1	**192-7506**	12	SEAL-O-RING	
	13	1	**192-7511**	1	SEAL	
	14	1	**192-7508**	10	SEAL-O-RING	
	15	1	**192-7509**	2	SEAL-O-RING	

Y-SEPARATE ILLUSTRATION

248-0484 VALVE GP-BANK 7 *(contd.)* i03866750

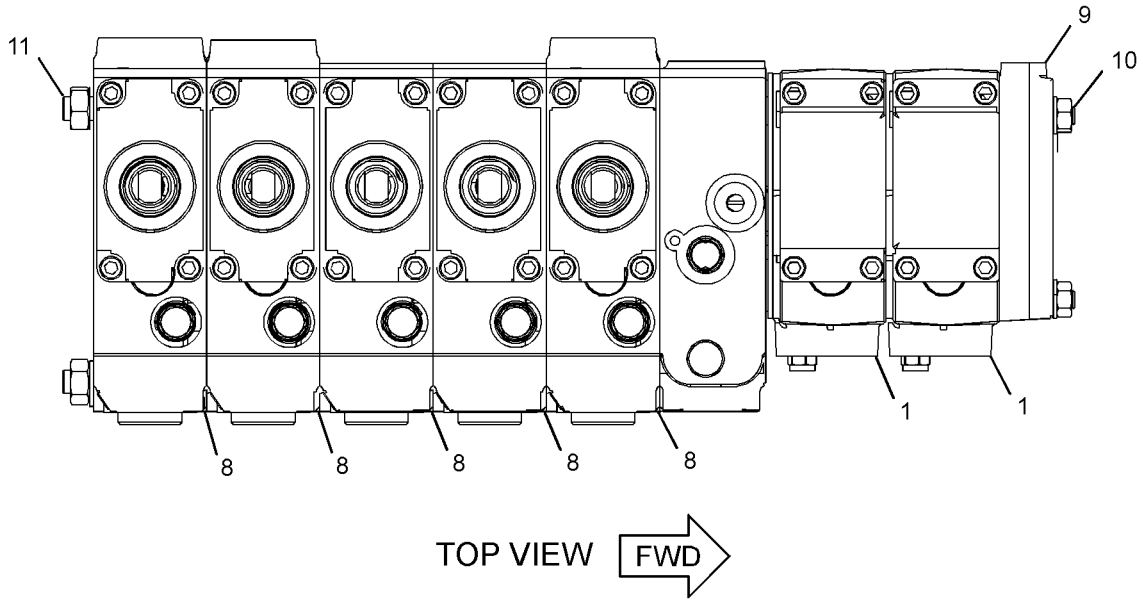

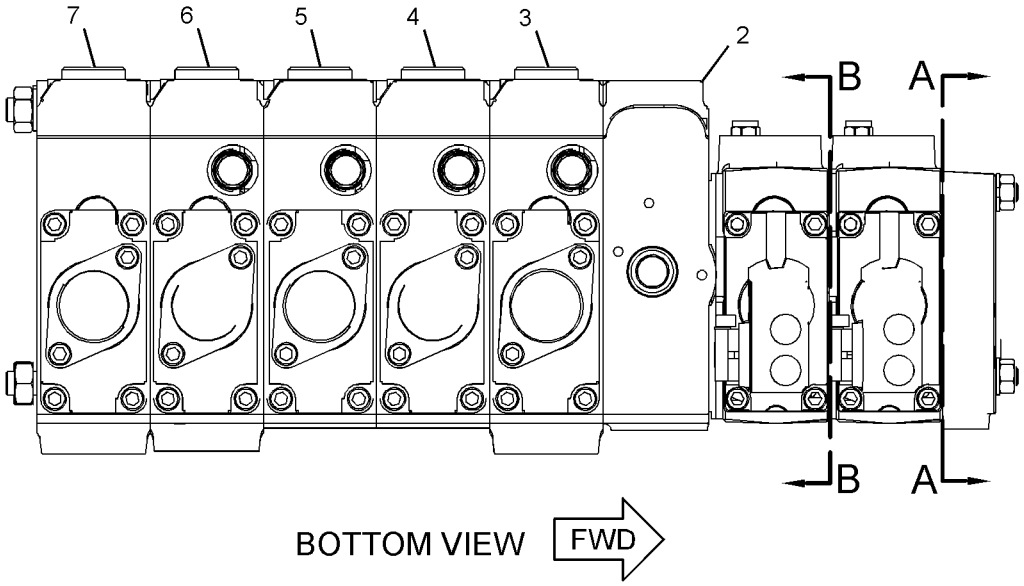

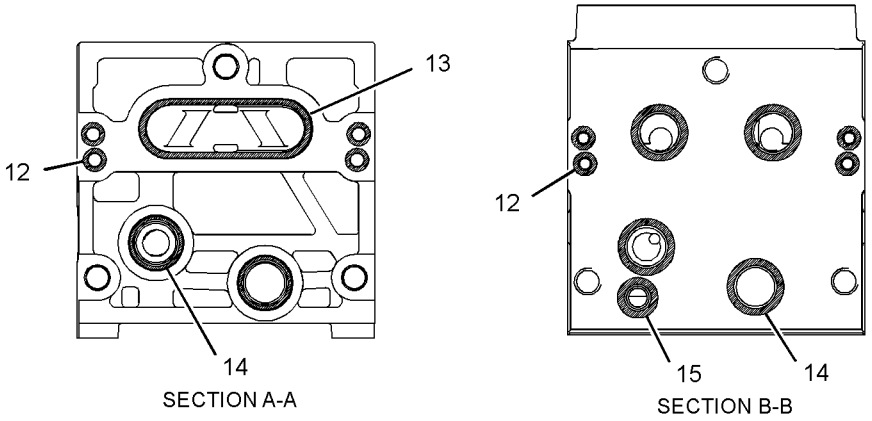

GRAPHIC #1 **<END>** g01230930

248-0485 VALVE GP-BANK 8

S/N: LMS1-UP
PART OF 212-0206 VALVE AR-BANK 8
AN ATTACHMENT

SMCS-5051 **i03866776**

NOTE	REF NO	GRAPHIC REF	PART NUMBER	QTY	PART NAME 1 2 3 4 5 6 (PRODUCT LEVEL)	SEE PAGE
Y	1	1	**259-6746**	2	VALVE GP-CONTROL (STABILIZER)	358
Y	2	1	**259-6742**	1	MANIFOLD GP-CONTROL (INLET)	322
Y	3	1	**259-6733**	1	VALVE GP-CONTROL (AUXILIARY)	349
Y	4	1	**259-6739**	1	VALVE GP-CONTROL (BOOM)	356
Y	5	1	**259-6738**	1	VALVE GP-CONTROL (SWING)	354
Y	6	1	**259-6737**	1	VALVE GP-CONTROL (BUCKET)	353
Y	7	1	**259-6735**	1	VALVE GP-CONTROL (STICK)	351
Y	8	1	**259-6734**	1	VALVE GP-CONTROL (EXTENDABLE STICK)	350
	9	1	**259-6756**	1	KIT-FASTENER (2-BANK)	
					(INCLUDES RODS, WASHERS & NUTS)	
	10	1	**259-6753**	1	KIT-FASTENER (6-BANK)	
					(INCLUDES RODS, WASHERS & NUTS)	
	11	1	**259-6755**	1	KIT-COVER	
					(INCLUDES RINGS & BODY)	
	12	1	**259-6754**	6	KIT-SEAL	
					(EACH KIT INCLUDES SEAL-O-RINGS)	
	13	1	**192-7506**	12	SEAL-O-RING	
	14	1	**192-7511**	1	SEAL	
	15	1	**192-7508**	10	SEAL-O-RING	
	16	1	**192-7509**	2	SEAL-O-RING	

Y-SEPARATE ILLUSTRATION

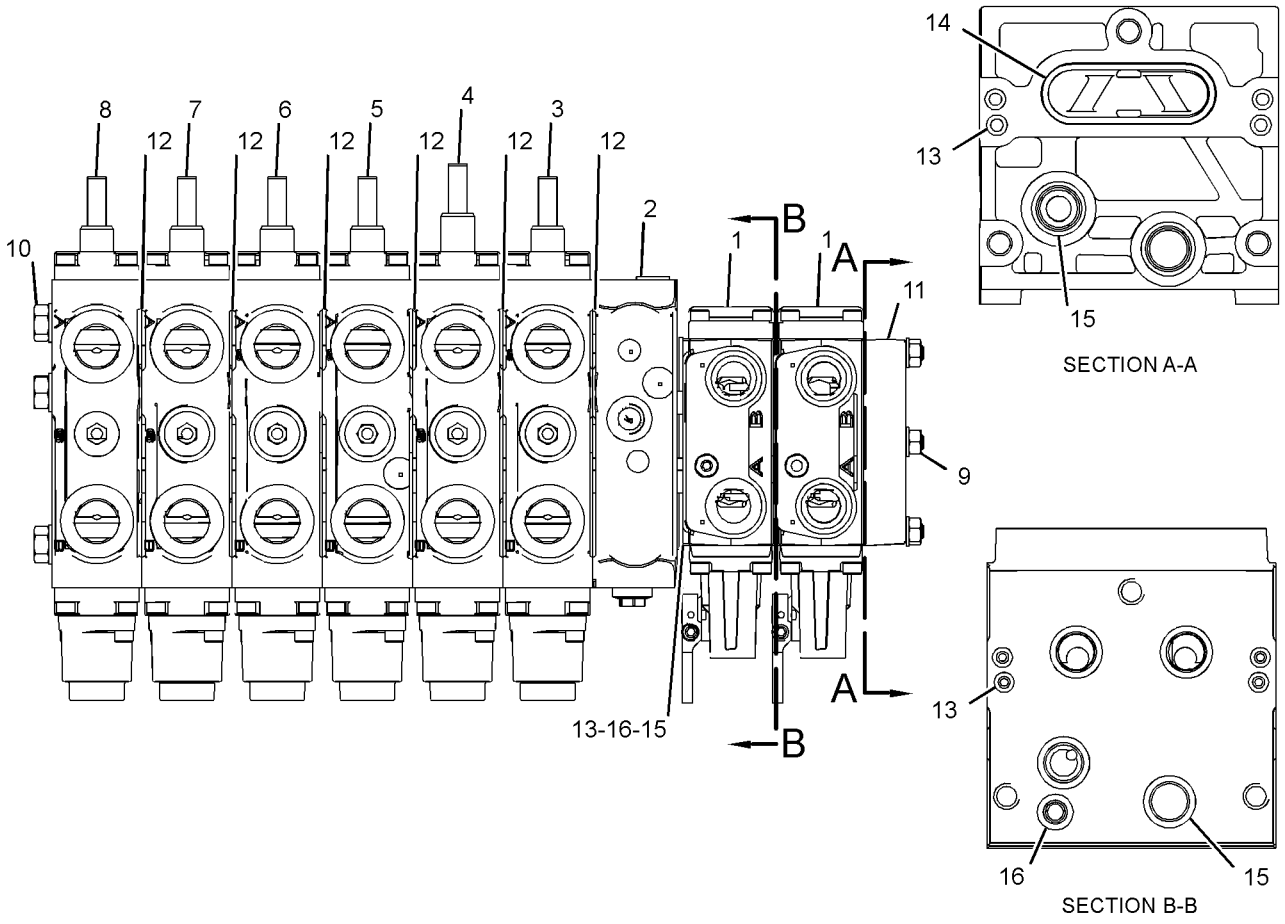

GRAPHIC #1 **<END>** g01168887

259-6729 VALVE GP-CONTROL–AUXILIARY

S/N: LMS1-UP
PART OF 248-0482 VALVE GP-BANK 3
AN ATTACHMENT

SMCS-5051 **i03325905**

NOTE	REF NO	GRAPHIC REF	PART NUMBER	QTY	PART NAME 1 2 3 4 5 6 (PRODUCT LEVEL)	SEE PAGE
	1	1	**260-3005**	1	VALVE GP-RELIEF (AUX, BUCKET CYL HEAD END)	
	2	1	**260-3010**	1	KIT-SEAL	
					(INCLUDES HOUSINGS, SEALS & SCREWS)	
	3	1	**6V-7970**	1	SEAL-O-RING	
	4	1	**260-3009**	1	KIT-SEAL	
					(INCLUDES HOUSING, SEALS, WIPER & SCREWS)	
	5	1	**260-3011**	1	KIT-COVER	
					(INCLUDES SCREWS, WASHER, SPRINGS & END CAP)	
	6	1	**192-7863**	1	PLUG	
	7	1	**192-7864**	2	PLUG	
	8	1	**192-7510**	2	SEAL-O-RING	

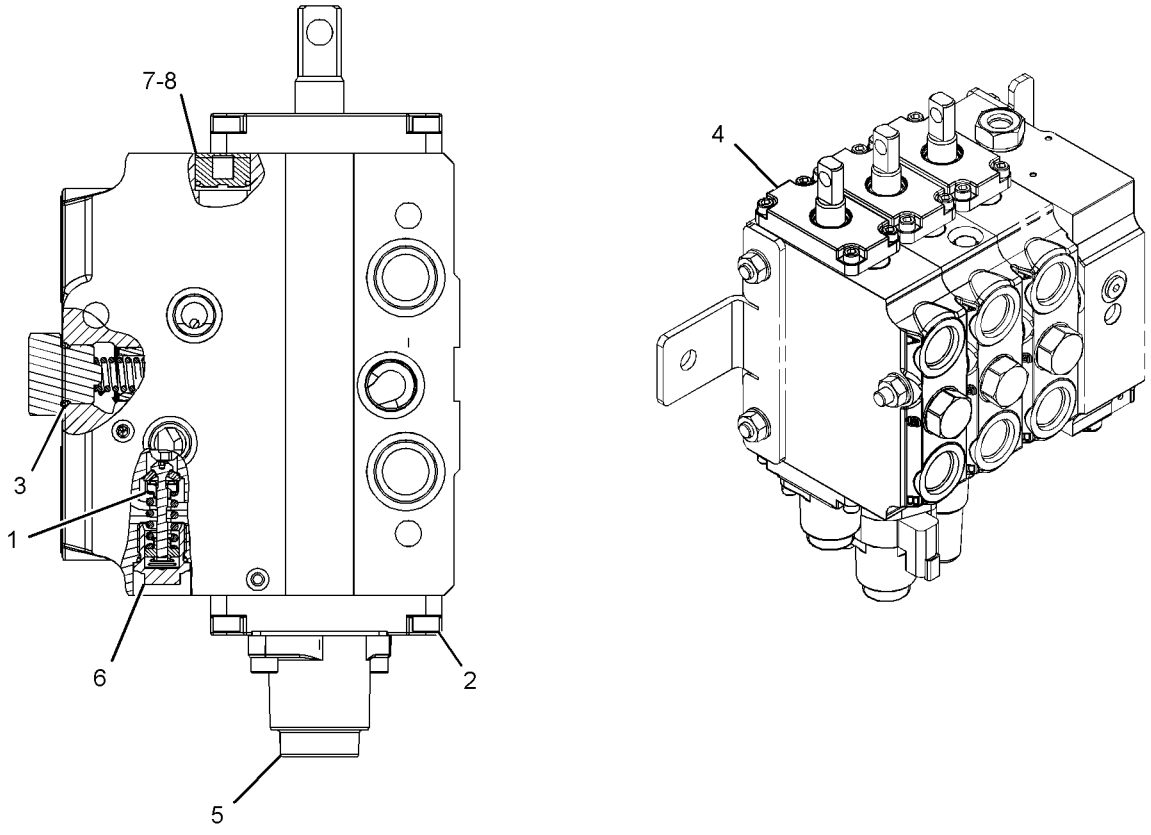

GRAPHIC #1 **<END>** g01214255

HYDRAULIC SYSTEM

259-6730 VALVE GP-CONTROL–TILT

S/N: LMS1-UP
PART OF 248-0482 VALVE GP-BANK 3
AN ATTACHMENT

SMCS-5051 **i02424944**

NOTE	REF NO	GRAPHIC REF	PART NUMBER	QTY	PART NAME 1 2 3 4 5 6 (PRODUCT LEVEL)	SEE PAGE
	1	1	**260-3005**	1	VALVE GP-RELIEF (TILT CYLINDER HEAD END)	
	2	1	**260-3002**	1	VALVE GP-RELIEF (TILT CYLINDER ROD END)	
	3	1	**260-3012**	1	KIT-DETENT	
					(INCLUDES SEAL, GASKETS, E-CLIP, PLATE, SCREWS, COIL, END CAP, STEM, MAGNET, SPINGS, WASHERS & HOUSING)	
	4	1	**260-3009**	1	KIT-SEAL	
					(INCLUDES HOUSING, SEALS, WIPER, & SCREWS)	
	5	1	**6V-5138**	2	SEAL-O-RING	
	6	1	**6V-7970**	1	SEAL-O-RING	
	7	1	**260-3010**	1	KIT-SEAL	
					(INCLUDES SEALS, HOUSING, & SCREWS)	
	8	1	**192-7863**	2	PLUG	
	9	1	**192-7864**	2	PLUG	
	10	1	**192-7510**	2	SEAL-O-RING	

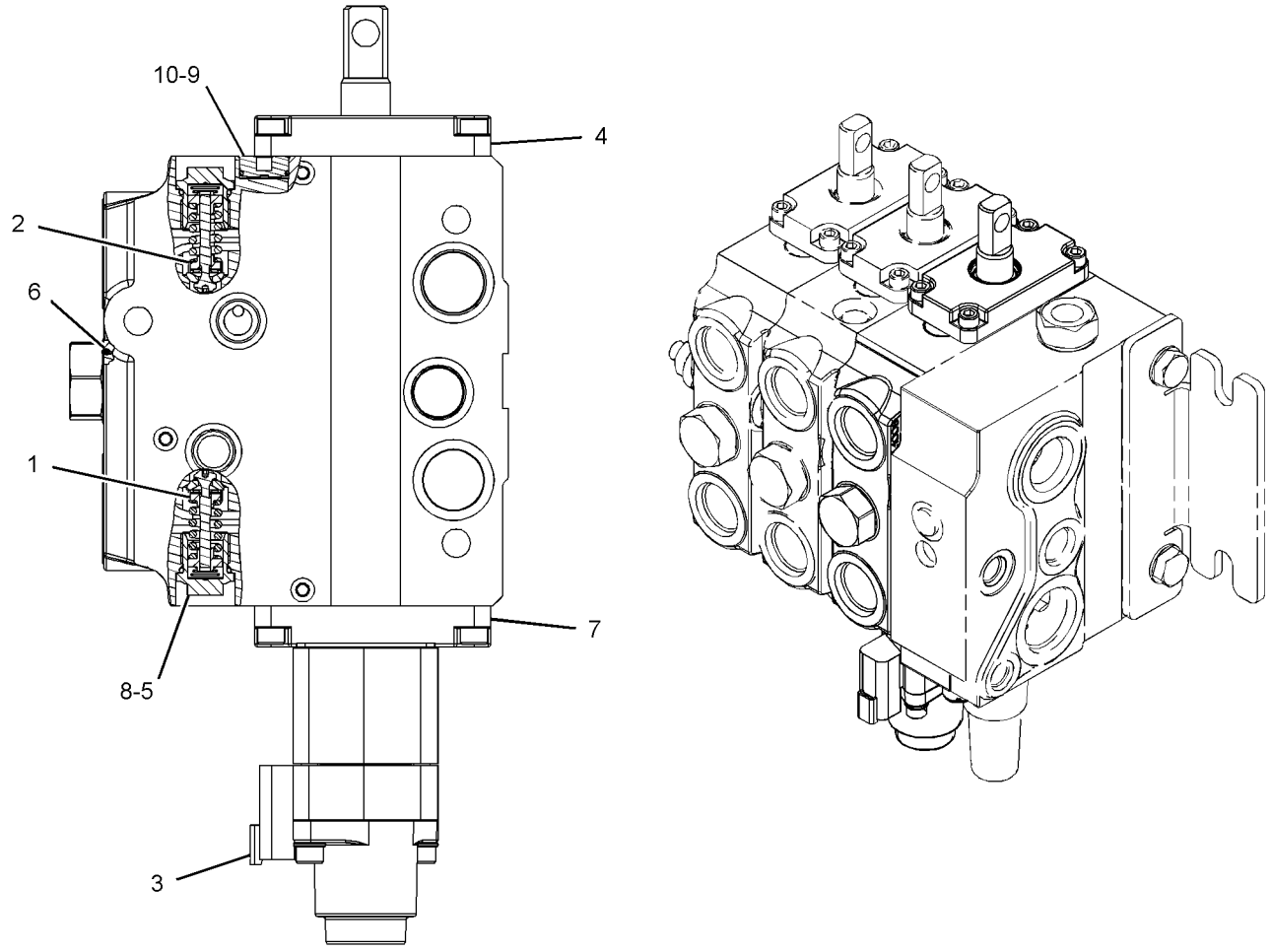

GRAPHIC #1 **<END>** g01213218

259-6731 VALVE GP-CONTROL–TILT

S/N: LMS1-UP
PART OF 248-0481 VALVE GP-BANK 2
AN ATTACHMENT

SMCS-5051 **i02425394**

NOTE	REF NO	GRAPHIC REF	PART NUMBER	QTY	PART NAME 1 2 3 4 5 6 (PRODUCT LEVEL)	SEE PAGE
	1	1	**260-3005**	1	VALVE GP-RELIEF (TILT CYLINDER HEAD END)	
	2	1	**260-3002**	1	VALVE GP-RELIEF (TILT CYLINDER ROD END)	
	3	1	**260-3012**	1	KIT-DETENT	
					(INCLUDES SEAL-O-RING, GASKETS, E-CLIP, END PLATE, END CAP, SCREWS, COIL, STEM, MAGNET, SPRINGS, WASHERS, & HOUSING)	
	4	1	**260-3009**	1	KIT-SEAL	
					(INCLUDES HOUSING, SEALS, WIPER, & SCREWS)	
	5	1	**6V-5138**	2	SEAL-O-RING	
	6	1	**6V-7970**	1	SEAL-O-RING	
	7	1	**260-3010**	1	KIT-SEAL	
					(INCLUDES HOUSING, SEALS, & SCREWS)	
	8	1	**192-7863**	2	PLUG	
	9	1	**192-7864**	2	PLUG	
	10	1	**192-7510**	2	SEAL-O-RING	

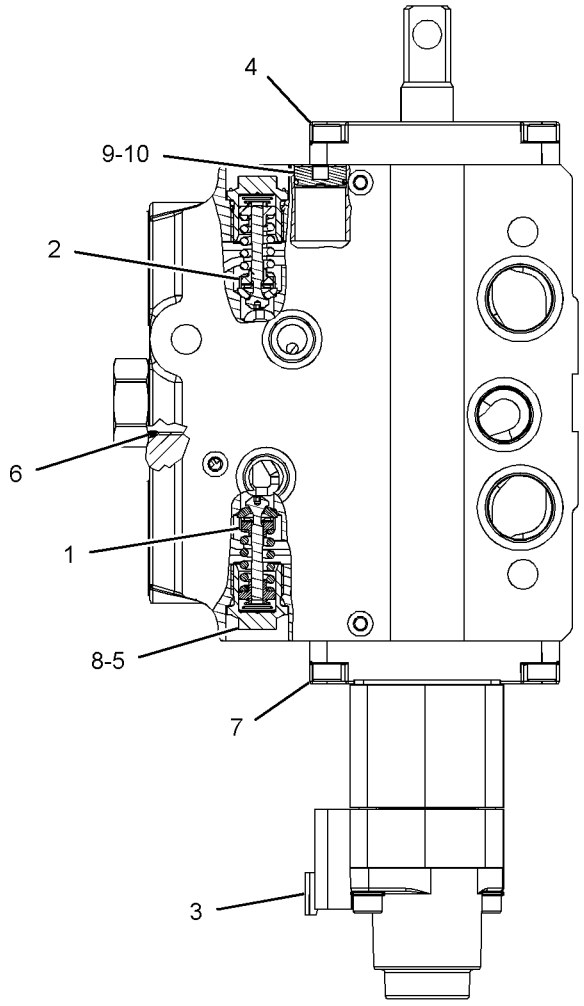

GRAPHIC #1 **<END>** g01214254

HYDRAULIC SYSTEM

259-6732 VALVE GP-CONTROL–LIFT

S/N: LMS1-UP

PART OF 248-0481 VALVE GP-BANK 2, 248-0482 VALVE GP-BANK 3

AN ATTACHMENT

SMCS-5051 **i03325918**

NOTE	REF NO	GRAPHIC REF	PART NUMBER	QTY	PART NAME 1 2 3 4 5 6 (PRODUCT LEVEL)	SEE PAGE
	1	1	**260-3010**	1	KIT-SEAL	
					(INCLUDES HOUSING, SEALS & SCREWS)	
	2	1	**260-3009**	1	KIT-SEAL	
					(INCLUDES HOUSING, SEALS, WIPER & SCREWS)	
	3	1	**6V-7970**	1	SEAL-O-RING	
	4	1	**260-3013**	1	KIT-DETENT	
					(INCLUDES WASHERS, END CAP, SCREWS, SPACER, SPRINGS & SLEEVE)	
	5	1	**192-7864**	2	PLUG	
	6	1	**192-7510**	2	SEAL-O-RING	

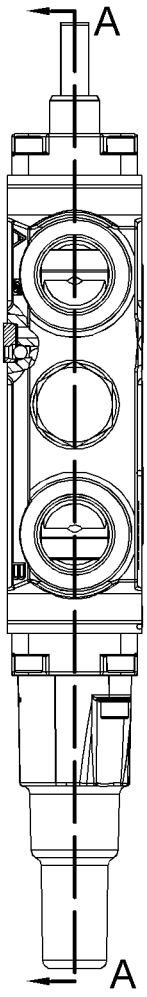

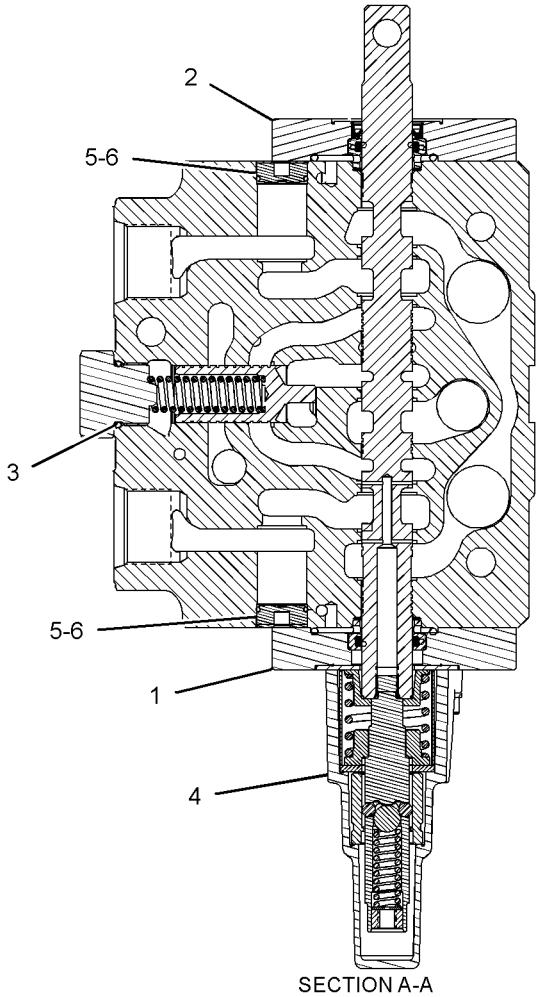

SECTION A-A

GRAPHIC #1 **<END>** g01214247

259-6733 VALVE GP-CONTROL–AUXILIARY

S/N: LMS1-UP
PART OF 248-0485 VALVE GP-BANK 8
AN ATTACHMENT

SMCS-5051 **i02471765**

NOTE	REF NO	GRAPHIC REF	PART NUMBER	QTY	PART NAME 1 2 3 4 5 6 (PRODUCT LEVEL)	SEE PAGE
	1	1	**260-3004**	2	VALVE GP-RELIEF	
	2	1	**260-3010**	1	KIT-SEAL	
					(INCLUDES HOUSING, SEALS & SCREWS)	
	3	1	**260-3009**	1	KIT-SEAL	
					(INCLUDES HOUSING, SEALS, WIPER & SCREWS)	
	4	1	**6V-7970**	1	SEAL-O-RING	
	5	1	**6V-5138**	2	SEAL-O-RING	
	6	1	**260-3011**	1	KIT-COVER	
					(INCLUDES SCREWS, WASHERS, RETAINER, SPRING & END CAP)	
	7	1	**192-7863**	2	PLUG	
	8	1	**192-7864**	2	PLUG	
	9	1	**192-7510**	2	SEAL-O-RING	

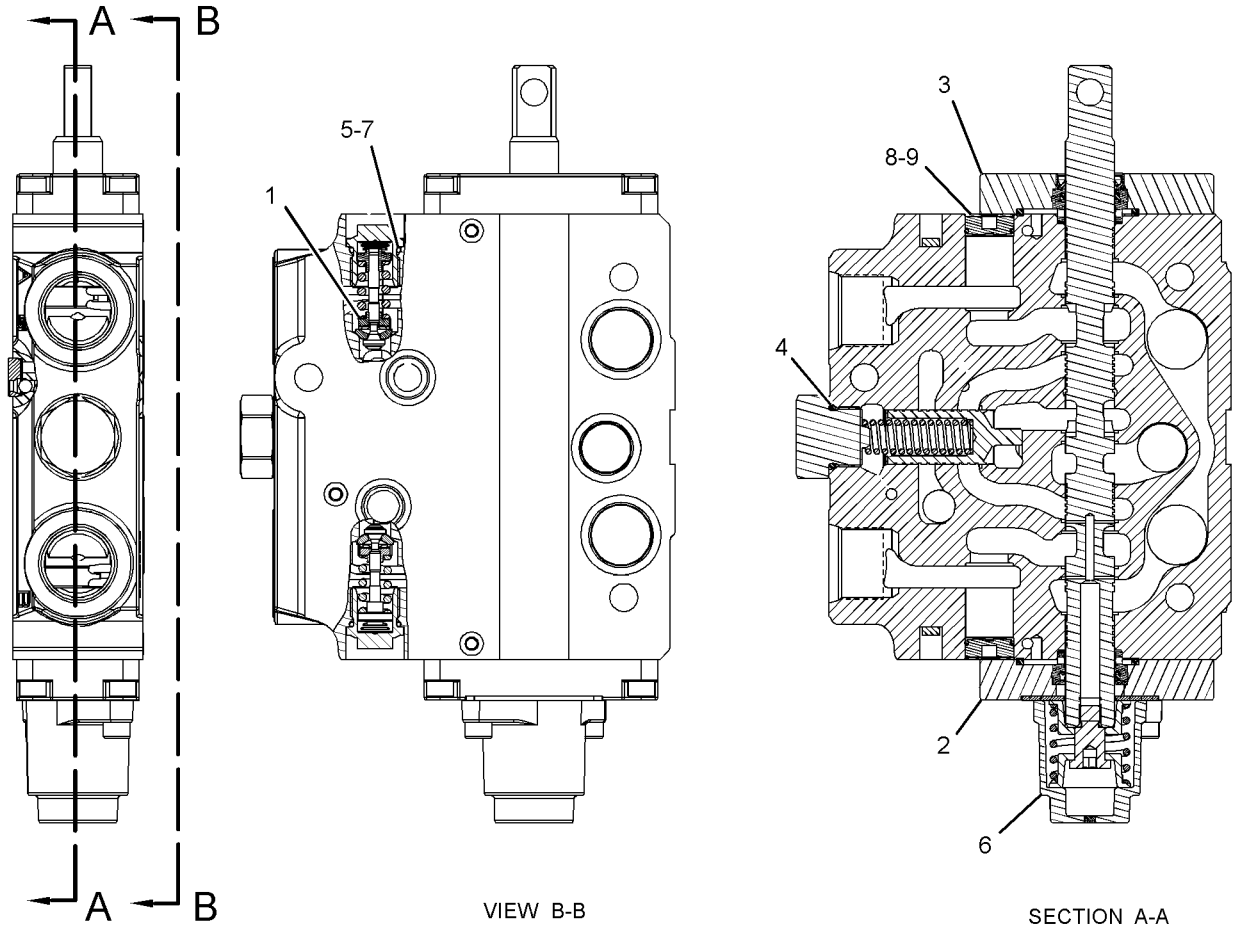

VIEW B-B

SECTION A-A

GRAPHIC #1

<END>

g01228296

HYDRAULIC SYSTEM

259-6734 VALVE GP-CONTROL–EXTENDABLE STICK

S/N: LMS1-UP

PART OF 248-0484 VALVE GP-BANK 7, 248-0485 VALVE GP-BANK 8

AN ATTACHMENT

SMCS-5051 **i02545731**

NOTE	REF NO	GRAPHIC REF	PART NUMBER	QTY	PART NAME 1 2 3 4 5 6 (PRODUCT LEVEL)	SEE PAGE
	1	1	**260-3005**	2	VALVE GP-RELIEF	
	2	1	**260-3010**	1	KIT-SEAL	
					(INCLUDES SEALS & SCREWS)	
	3	1	**260-3009**	1	KIT-SEAL	
					(INCLUDES SEALS, WIPER & SCREWS)	
	4	1	**6V-5138**	2	SEAL-O-RING	
	5	1	**6V-7970**	1	SEAL-O-RING	
	6	1	**260-3011**	1	KIT-COVER	
					(INCLUDES SCREWS, WASHER, RETAINER, SPRING & END CAP)	
	7	1	**192-7510**	2	SEAL-O-RING	
	8	1	**192-7863**	2	PLUG	
	9	1	**192-7864**	2	PLUG	

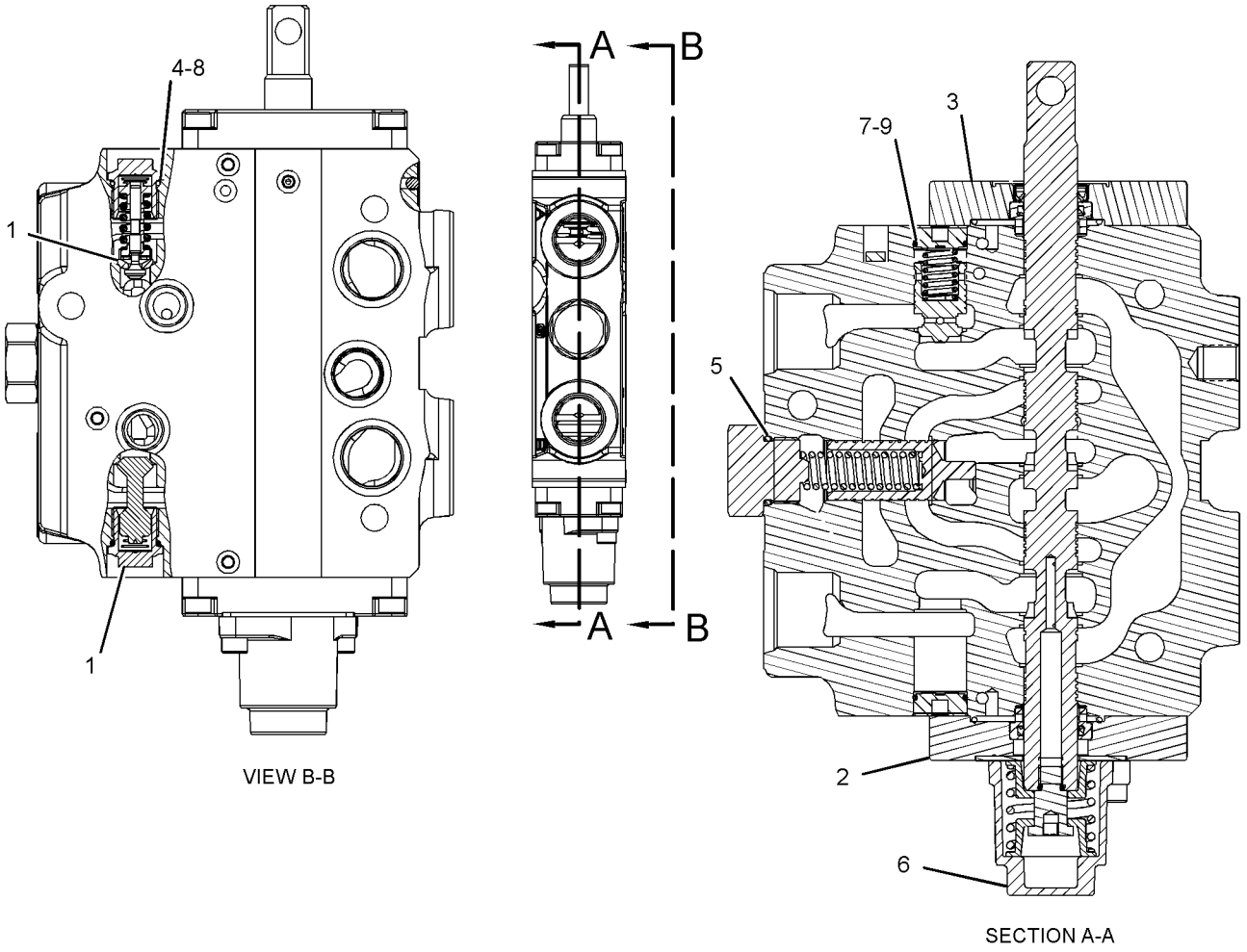

GRAPHIC #1 **<END>** g01340005

259-6735 VALVE GP-CONTROL–STICK

S/N: LMS1-UP

PART OF 248-0484 VALVE GP-BANK 7, 248-0485 VALVE GP-BANK 8

AN ATTACHMENT

SMCS-5051 **i03527928**

NOTE	REF NO	GRAPHIC REF	PART NUMBER	QTY	PART NAME 1 2 3 4 5 6 (PRODUCT LEVEL)	SEE PAGE
	1	1	**260-3004**	2	VALVE GP-RELIEF (STICK CYL, HEAD END, ROD END)	
	2	1	**260-3009**	1	KIT-SEAL	
					(INCLUDES SEAL, WIPER & SCREWS)	
	3	1	**260-3010**	1	KIT-SEAL	
					(INCLUDES SEALS & SCREWS)	
	4	1	**6V-5138**	2	SEAL-O-RING	
	5	1	**6V-7970**	1	SEAL-O-RING	
	6	1	**260-3011**	1	KIT-COVER	
					(INCLUDES SCREWS, WASHER, SPRINGS & END CAP)	
	7	1	**192-7510**	2	SEAL-O-RING	
	8	1	**192-7863**	2	PLUG	
	9	1	**192-7864**	2	PLUG	

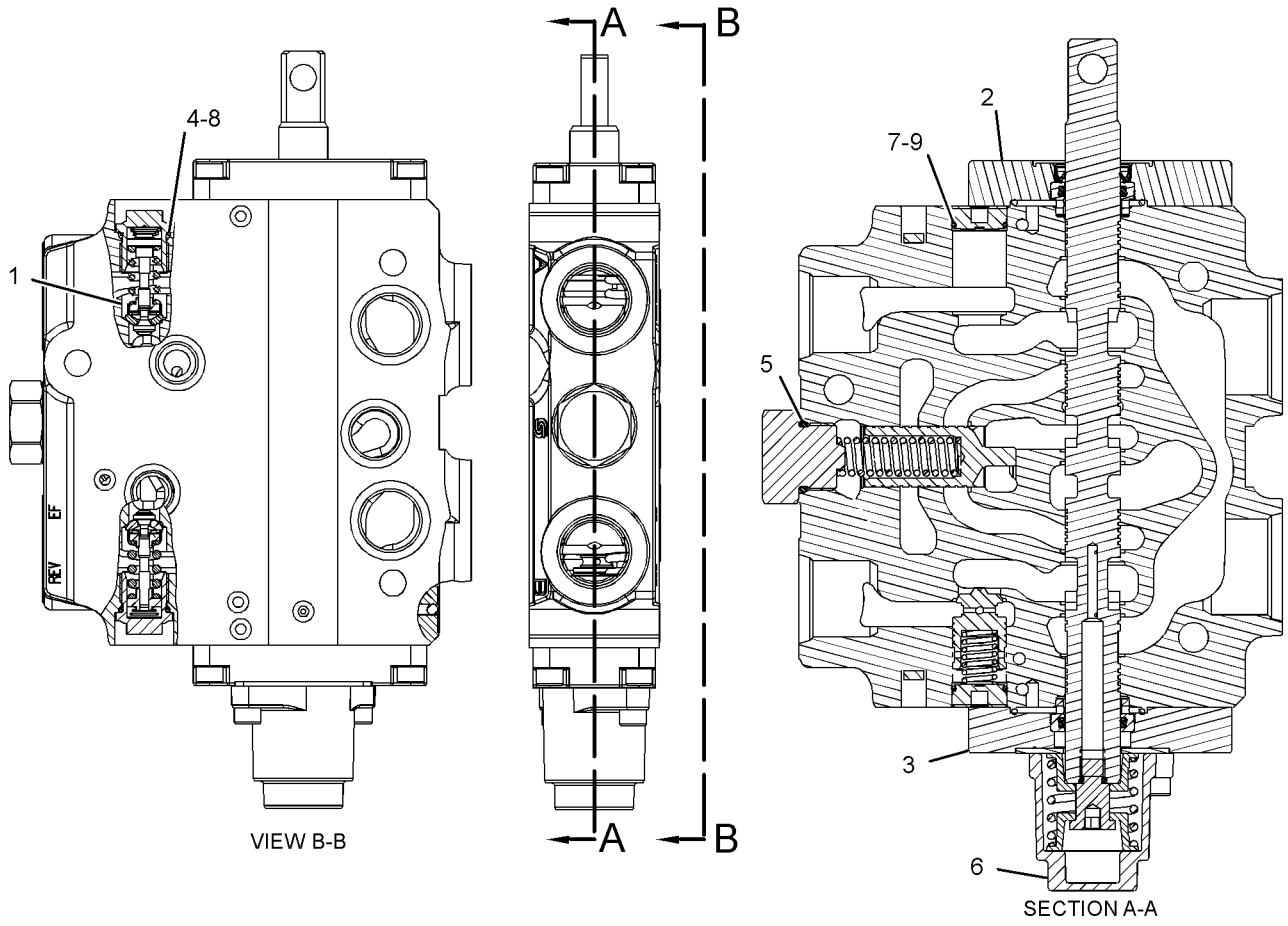

GRAPHIC #1 **<END>** g01169174

HYDRAULIC SYSTEM

259-6736 VALVE GP-CONTROL–STICK

S/N: LMS1-UP
PART OF 248-0483 VALVE GP-BANK 6
AN ATTACHMENT

SMCS-5051 **i02221381**

NOTE	REF NO	GRAPHIC REF	PART NUMBER	QTY	PART NAME 1 2 3 4 5 6 (PRODUCT LEVEL)	SEE PAGE
	1	1	**260-3004**	2	VALVE GP-RELIEF (STICK CYL, HEAD END, ROD END)	
	2	1	**6V-5138**	2	SEAL-O-RING	
	3	1	**260-3010**	1	KIT-SEAL	
					(INCLUDES HOUSING, SEALS & SCREWS)	
	4	1	**260-3009**	1	KIT-SEAL	
					(INCLUDES HOUSING, SEALS, WIPER & SCREWS)	
	5	1	**6V-7970**	1	SEAL-O-RING	
	6	1	**260-3011**	1	KIT-COVER	
					(INCLUDES SCREWS, WASHERS, RETAINER, SPRING & END CAP)	
	7	1	**192-7510**	2	SEAL-O-RING	
	8	1	**192-7863**	2	PLUG	
	9	1	**192-7864**	2	PLUG	

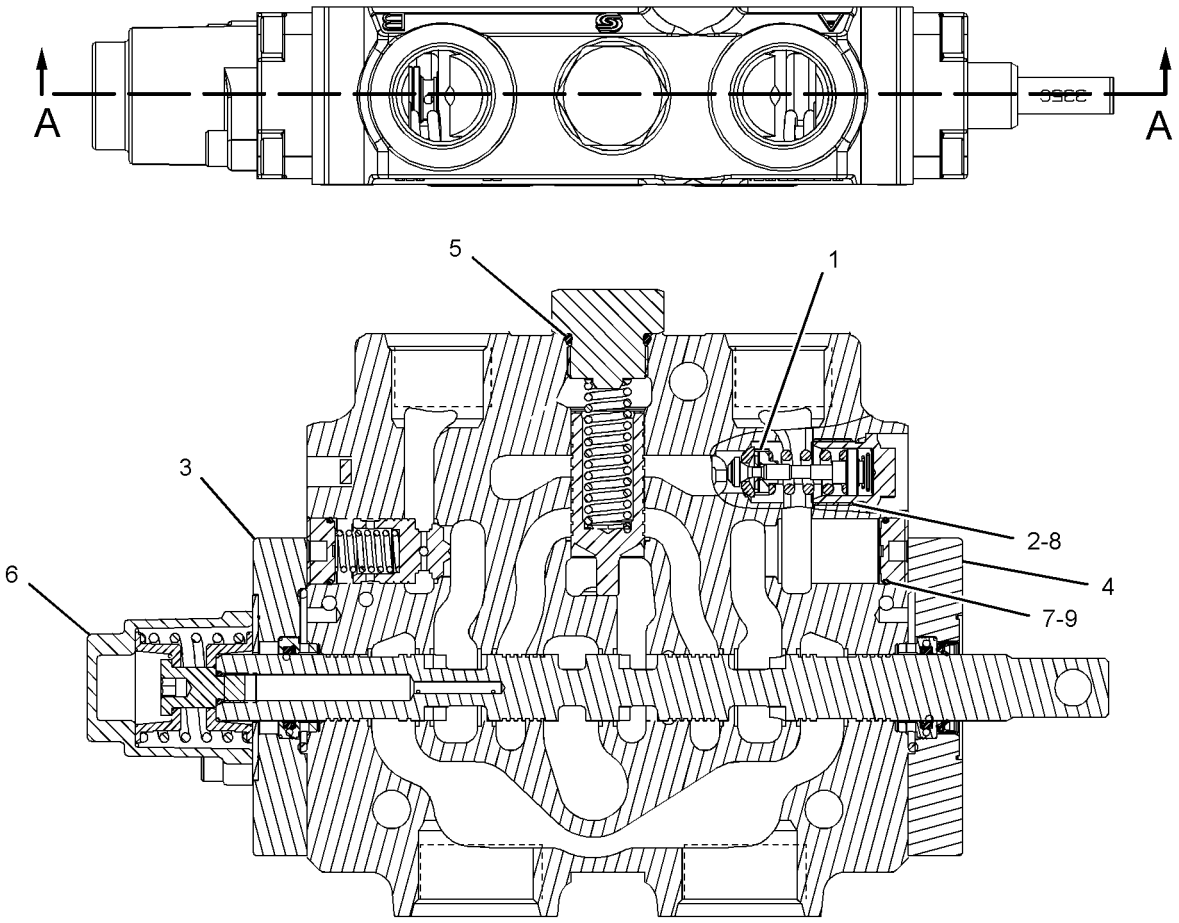

SECTION A-A

GRAPHIC #1 **<END>** g01121531

259-6737 VALVE GP-CONTROL–BUCKET

S/N: LMS1-UP

PART OF 248-0483 VALVE GP-BANK 6, 248-0484 VALVE GP-BANK 7, 248-0485 VALVE GP-BANK 8

AN ATTACHMENT

SMCS-5051 **i02426220**

NOTE	REF NO	GRAPHIC REF	PART NUMBER	QTY	PART NAME 1 2 3 4 5 6 (PRODUCT LEVEL)	SEE PAGE
	1	1	**260-3006**	2	VALVE GP-RELIEF	
	2	1	**260-3010**	1	KIT-SEAL	
					(INCLUDES HOUSING, SEALS & SCREWS)	
	3	1	**260-3009**	1	KIT-SEAL	
					(INCLUDES HOUSING, SEALS, WIPERS & SCREWS)	
	4	1	**6V-7970**	2	SEAL-O-RING	
	5	1	**6V-5138**	1	SEAL-O-RING	
	6	1	**260-3011**	1	KIT-COVER	
					(INCLUDES SCREWS, WASHERS, RETAINER, SPRING & END CAP)	
	7	1	**192-7863**	2	PLUG	
	8	1	**192-7864**	2	PLUG	
	9	1	**192-7510**	2	SEAL-O-RING	

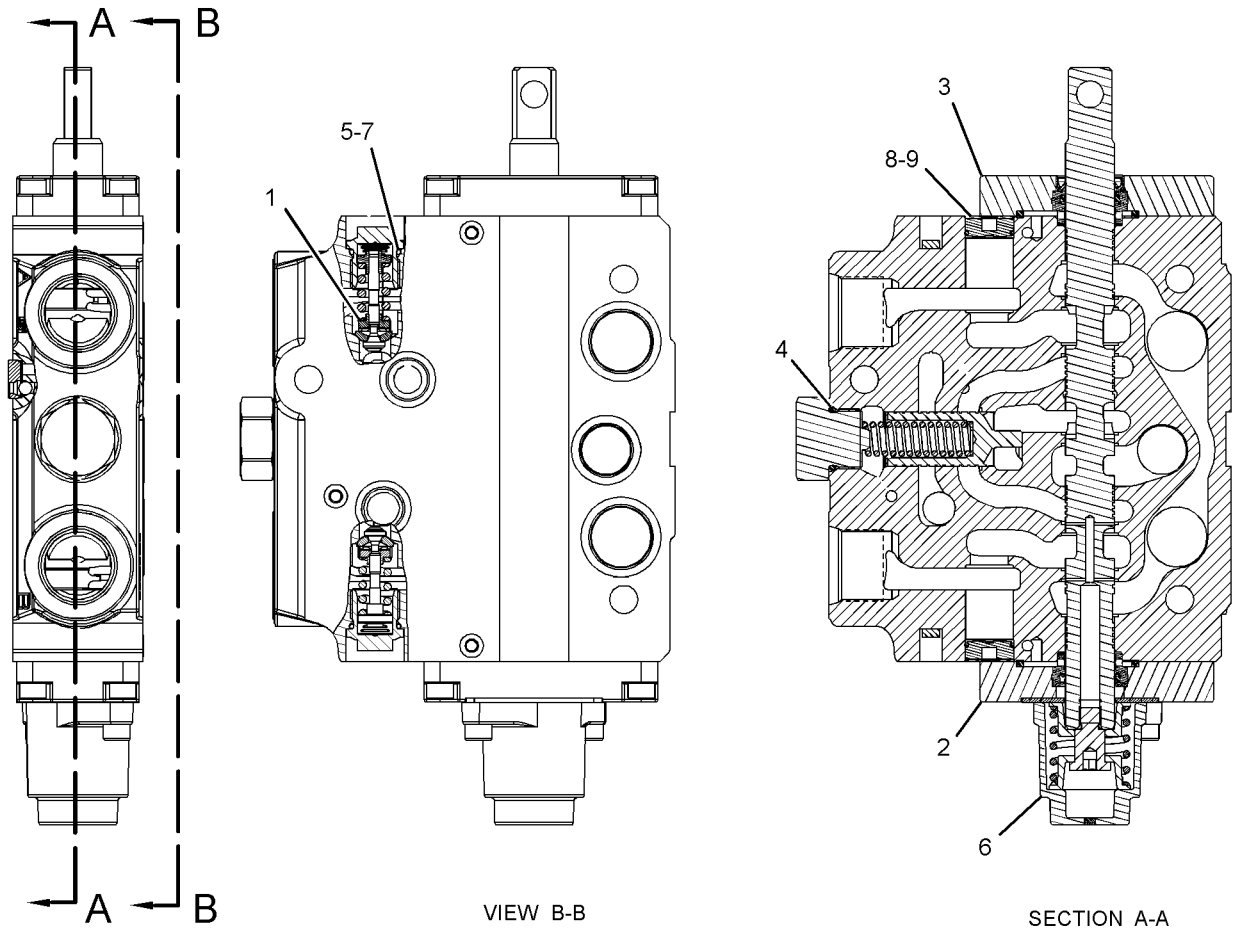

VIEW B-B

SECTION A-A

GRAPHIC #1

<END>

g01228296

HYDRAULIC SYSTEM

259-6738 VALVE GP-CONTROL–SWING

S/N: LMS1-UP

PART OF 248-0483 VALVE GP-BANK 6, 248-0484 VALVE GP-BANK 7, 248-0485 VALVE GP-BANK 8

AN ATTACHMENT

SMCS-5051 **i02426221**

NOTE	REF NO	GRAPHIC REF	PART NUMBER	QTY	PART NAME 1 2 3 4 5 6 (PRODUCT LEVEL)	SEE PAGE
	1	1	**260-3007**	2	VALVE GP-RELIEF	
	2	1	**260-3010**	1	KIT-SEAL	
					(INCLUDES SEALS, SCREWS & HOUSING)	
	3	1	**260-3009**	1	KIT-SEAL	
					(INCLUDES SEALS, SCREWS, WIPER & HOUSING)	
	4	1	**6V-7970**	1	SEAL-O-RING	
	5	1	**6V-5138**	1	SEAL-O-RING	
	6	1	**260-3011**	1	KIT-COVER	
					(INCLUDES SCREWS, SPRINGS, & END CAP)	
	7	1	**192-7863**	2	PLUG	
	8	1	**192-7864**	2	PLUG	
	9	1	**192-7510**	2	SEAL-O-RING	

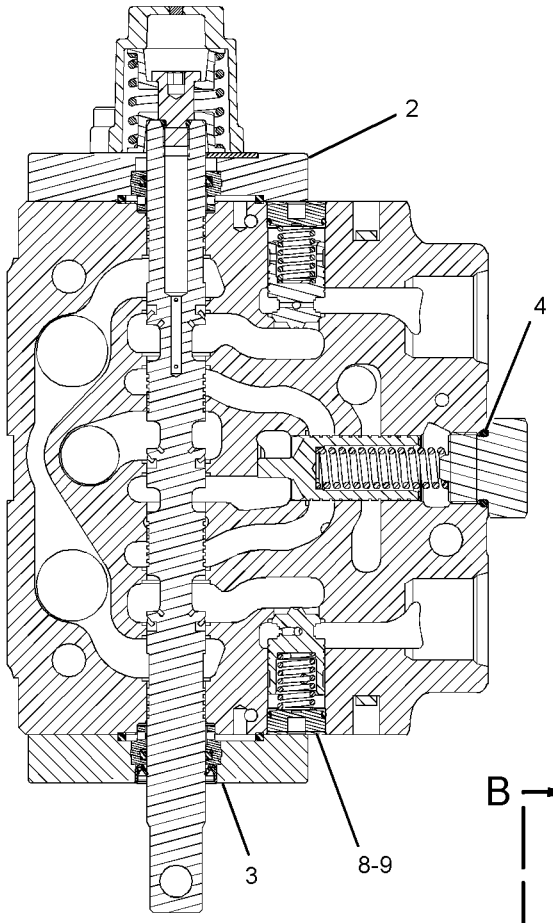

SECTION A-A

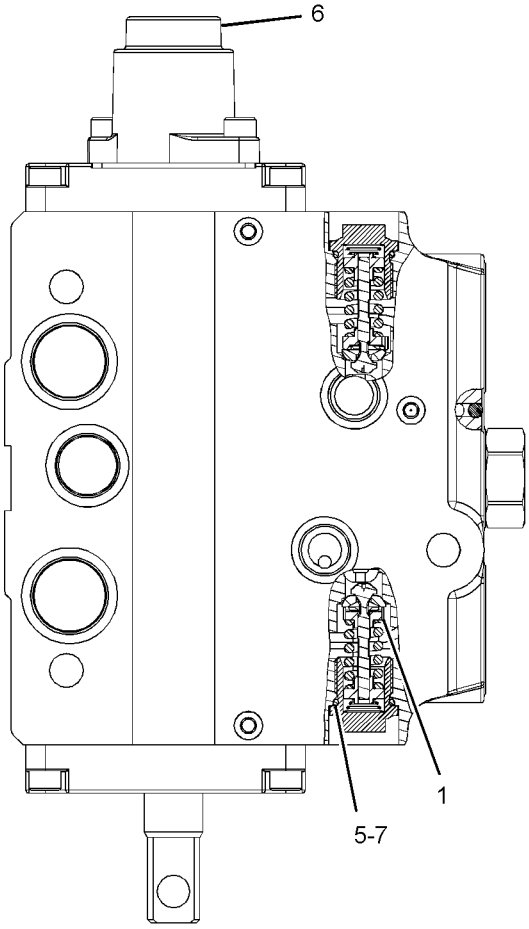

VIEW B-B

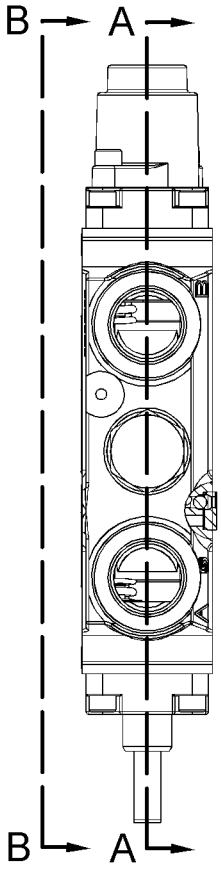

GRAPHIC #1

<END>

g01228165

HYDRAULIC SYSTEM

259-6739 VALVE GP-CONTROL–BOOM

S/N: LMS1-UP

PART OF 248-0483 VALVE GP-BANK 6, 248-0484 VALVE GP-BANK 7, 248-0485 VALVE GP-BANK 8

AN ATTACHMENT

SMCS-5051 **i03527922**

NOTE	REF NO	GRAPHIC REF	PART NUMBER	QTY	PART NAME 1 2 3 4 5 6 (PRODUCT LEVEL)	SEE PAGE
	1	1	**260-3003**	1	VALVE GP-RELIEF (160-BAR) (2321-PSI) (BOOM CYLINDER HEAD END)	
	2	1	**260-3006**	1	VALVE GP-RELIEF (BOOM CYLINDER ROD END)	
	3	1	**260-3010**	1	KIT-SEAL	
					(INCLUDES SEALS & SCREWS)	
	4	1	**6V-7970**	1	SEAL-O-RING	
	5	1	**6V-5138**	2	SEAL-O-RING	
	6	1	**192-7510**	2	SEAL-O-RING	
	7	1	**260-3009**	1	KIT-SEAL	
					(INCLUDES SEALS, WIPER & SCREWS)	
	8	1	**260-3011**	1	KIT-COVER	
					(INCLUDES SCREWS, WASHERS, SPRINGS & END CAP)	
	9	1	**192-7863**	2	PLUG	
	10	1	**192-7864**	2	PLUG	

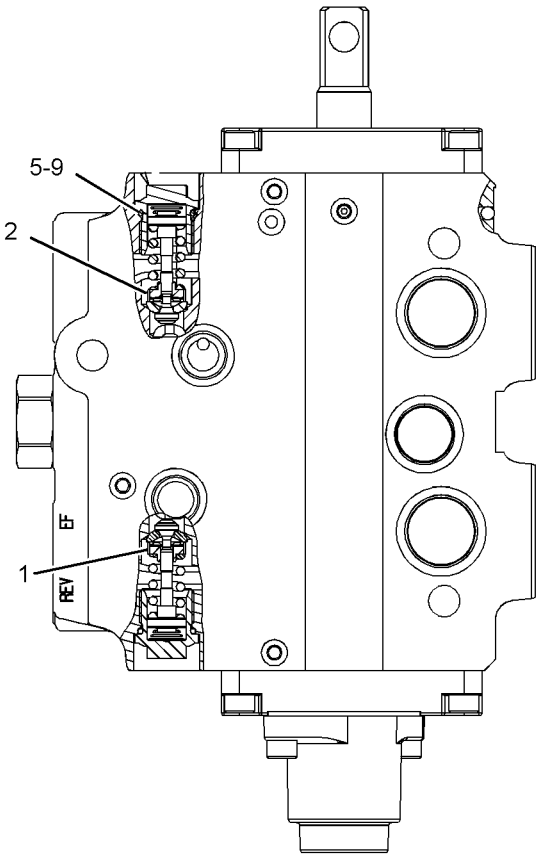

REAR VIEW

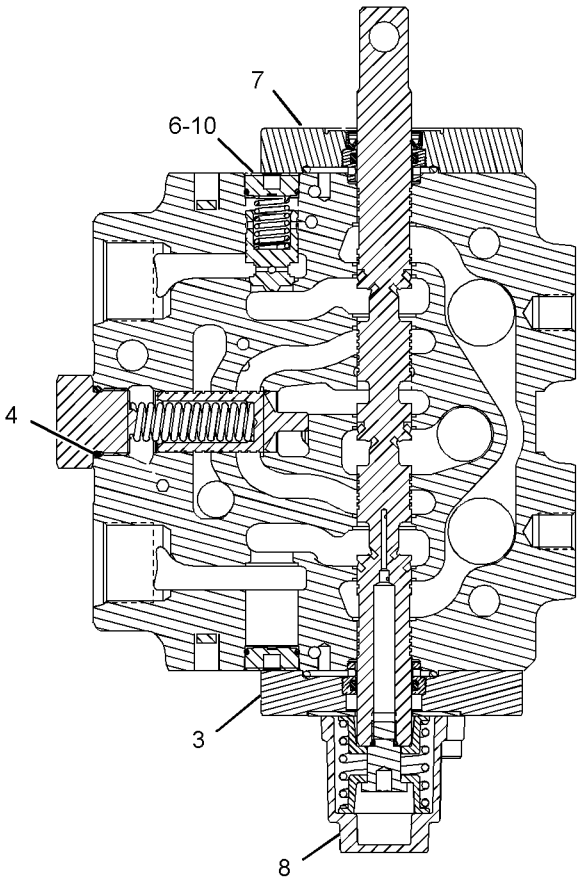

SECTION A-A

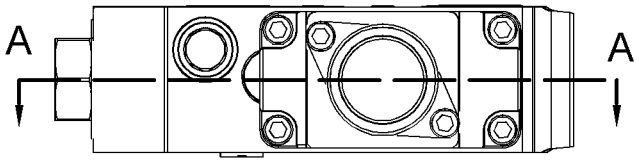

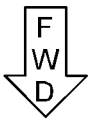

BOTTOM VIEW

GRAPHIC #1 **<END>** g01165684

HYDRAULIC SYSTEM

259-6746 VALVE GP-CONTROL–STABILIZER

S/N: LMS1-UP

PART OF 248-0483 VALVE GP-BANK 6, 248-0484 VALVE GP-BANK 7, 248-0485 VALVE GP-BANK 8

AN ATTACHMENT

SMCS-5051 **i03309679**

NOTE	REF NO	GRAPHIC REF	PART NUMBER	QTY	PART NAME 1 2 3 4 5 6 (PRODUCT LEVEL)	SEE PAGE
	1	1	**192-7512**	2	SEAL-O-RING	
	2	1	**250-7836**	1	COVER AS	
		1	**192-7506**	2	SEAL-O-RING	
		1	**192-7516**	1	SEAL	
	3	1	**192-7864**	2	PLUG	
	4	1	**192-7510**	2	SEAL-O-RING	
	5	1	**192-2081**	2	SPRING	
	6	1	**192-4490**	2	VALVE GP-CHECK	
	7	1	**192-2082**	2	SPRING	
	8	1	**192-7513**	2	SEAL-O-RING	
	9	1	**192-4488**	2	RING	
	10	1	**192-4487**	2	RING	
	11	1	**192-7514**	2	SEAL-O-RING	
	12	1	**192-4491**	1	DISC	
	13	1	**192-4492**	1	BALL	
	14	1	**192-0828**	1	VALVE GP-COMPENSATING	
		1	**192-4488**	1	RING	
		1	**192-7512**	1	SEAL-O-RING	
		1	**192-7515**	1	SEAL-O-RING	
	15	1	**214-6350**	2	PISTON	
	16	1	**210-8917**	1	LEVER GP-CONTROL VALVE (STABILIZER)	
		1	**8T-0328**	1	WASHER-HARD (5.5X10X1-MM THK)	
M		1	**134-1374**	1	BOLT-SOCKET HEAD (M5X0.8X20-MM)	
M		1	**136-0155**	1	SETSCREW (M4X0.7X8-MM)	
	17	1	**252-4444**	1	VALVE GP-CONTROL	
		1	**192-7507**	1	SEAL-O-RING	
	18	1	**250-7837**	1	COVER AS	
		1	**192-7506**	1	SEAL-O-RING	
		1	**252-4837**	1	SEAL	
M	19	1	**149-4311**	8	BOLT-SOCKET HEAD (M6X1X16-MM)	

M-METRIC PART

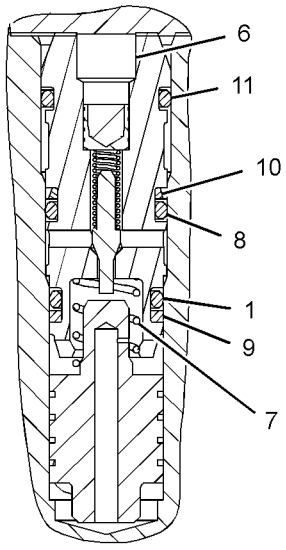

SECTION D-D

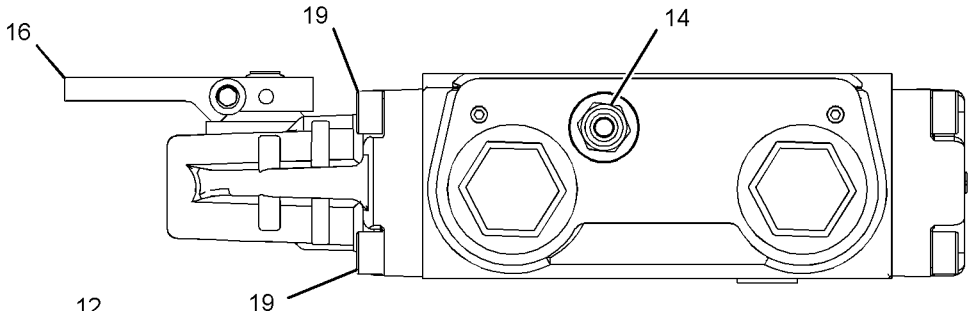

VIEW A-A

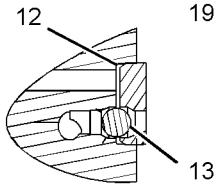

SECTION E-E

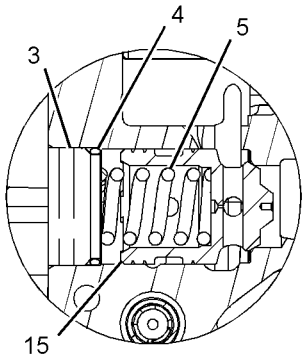

VIEW OF AREA H

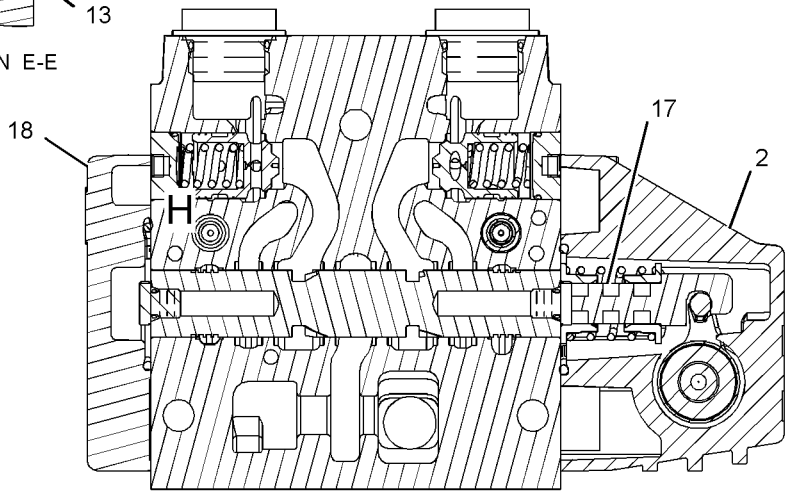

SECTION C-C

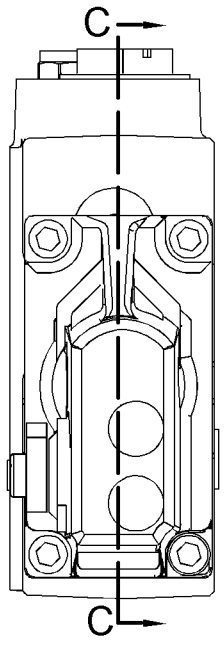

VIEW B-B

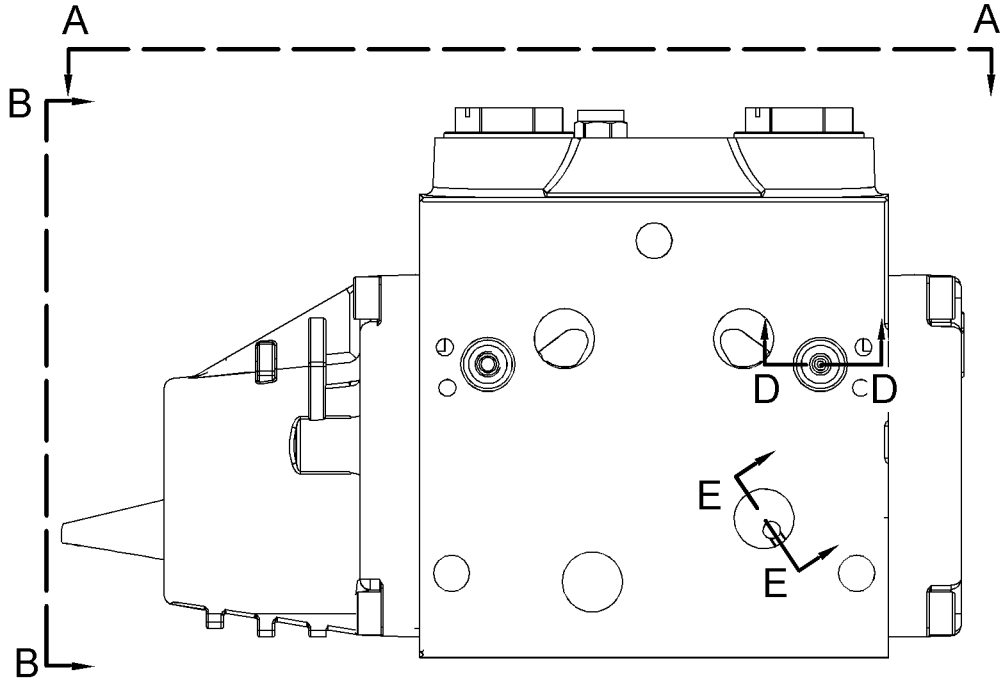

GRAPHIC #1

<END>

g01710555

HYDRAULIC SYSTEM

285-5240 VALVE GP-PUMP CONTROL–
PRESSURE, FLOW COMPENSATOR
S/N: LMS1-UP
PART OF 350-0666 PUMP GP-PISTON

SMCS-5086, 5455 **i03871669**

NOTE	REF NO	GRAPHIC REF	PART NUMBER	QTY	PART NAME 1 2 3 4 5 6 (PRODUCT LEVEL)	SEE PAGE
M	1	1	**8T-8442**	4	BOLT-SOCKET HEAD (M6X1X30-MM)	
	2	1	**280-7870**	1	GASKET	
J	3	1	**6E-6528**	2	SEAL	
	4	1	**9S-8002**	1	PLUG-O-RING	
	5	1	**3J-7354**	1	SEAL-O-RING	
J	6	1	**033-6043**	1	SEAL-O-RING	
J	7	1	**6V-6339**	1	SEAL-O-RING	
					PARTS SHOWN IN GRAPHIC(S) WITHOUT A REFERENCE NUMBER ARE NOT SERVICED SEPARATELY	
					AVAILABLE REPAIR KIT(S):	
J			**293-8350**	1	KIT-SEAL (FLOW COMPENSATOR)	
					(INCLUDES O-RING SEALS & BACK-UP RINGS)	

J-KIT MARKED J SERVICES PARTS MARKED J
M-METRIC PART

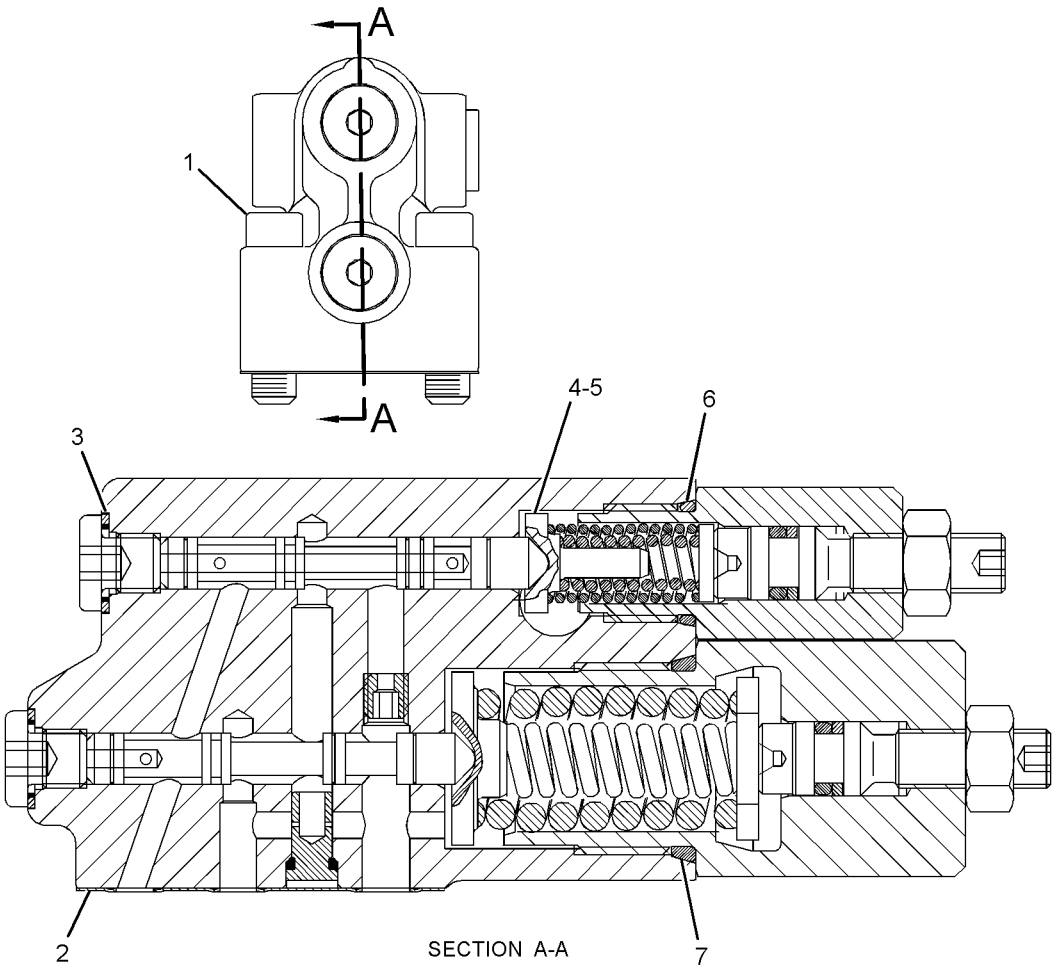

GRAPHIC #1 **<END>** g01297140

227-8378 ARM GP-LIFT

S/N: LMS1-UP

PART OF 318-9555 LOADER AR

SMCS-6118, 6119 **i03845902**

NOTE	REF NO	GRAPHIC REF	PART NUMBER	QTY	PART NAME 1 2 3 4 5 6 (PRODUCT LEVEL)	SEE PAGE
B	1	1	**9R-0109**	10	WASHER (41X64X3-MM THK)	
	2	1	**9R-0158**	2	WASHER (46X69X3-MM THK)	
	3	1	**9R-3182**	2	PIN	
B	4	1	**9R-4066**	2	WASHER (61X98X4-MM THK)	
B	5	1	**9R-8390**	2	SPACER (61X98X1-MM THK)	
	6	1	**9R-9373**	1	PIN AS	
	7	1	**127-8987**	2	RING-RETAINING	
	8	1	**128-5010**	1	PIN	
B	9	1	**128-7903**	2	SPACER (61X114.3X3-MM THK)	
B	10	1	**128-7905**	2	SPACER (61X114.3X1-MM THK)	
	11	1	**130-5451**	2	PIN	
	12	1	**132-6496**	1	PIN AS	
	13	1	**248-2257**	1	ARM AS-LIFT	
	13A	1	**9R-0111**	4	BEARING-SLEEVE	
	13B	1	**9R-6690**	4	BEARING-SLEEVE	
	13C	1	**9R-0320**	2	BEARING-SLEEVE	
	14	1	**3B-8488**	4	FITTING-GREASE	
	15	1	**3B-8489**	5	FITTING-GREASE	
	16	1	**6V-3213**	2	RING-RETAINING	
M	17	1	**6V-7687**	2	LOCKNUT (M12X1.75-THD)	
	18	1	**6V-8144**	6	RING-RETAINING	
M	19	1	**8T-4176**	2	BOLT (M12X1.75X90-MM)	
B	20	1	**111-4337**	6	WASHER (46X70X1-MM THK)	
B	21	1	**119-4594**	4	WASHER (41X64X1-MM THK)	

B-USE AS REQUIRED
M-METRIC PART

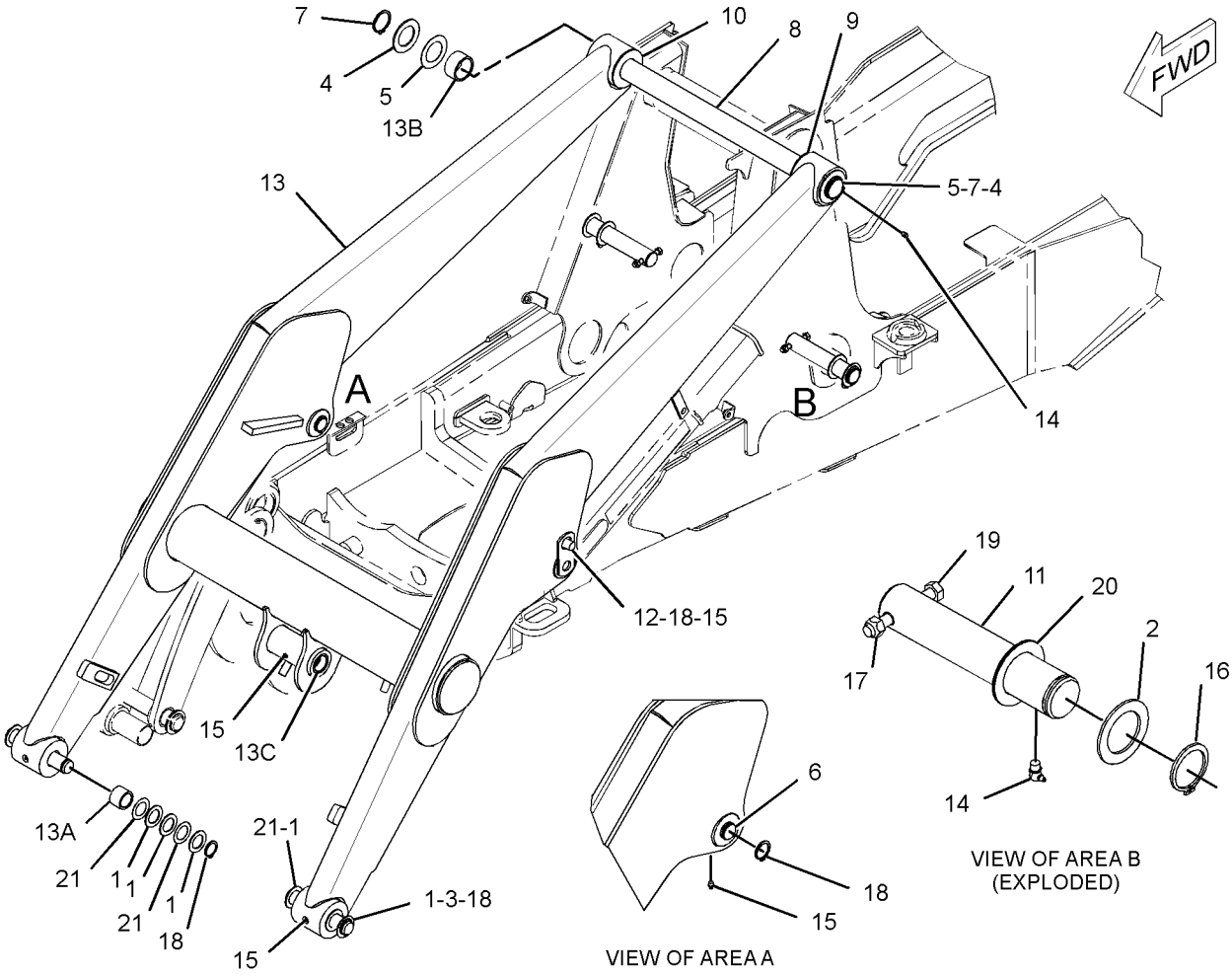

GRAPHIC #1 **<END>** g01975946

209-9928 BOOM GP

S/N: LMS1-UP

PART OF 209-9929 BACKHOE AR-EXTENDABLE STICK, 209-9924 BACKHOE AR-STANDARD STICK

AN ATTACHMENT

SMCS-6501 **i02816398**

NOTE	REF NO	GRAPHIC REF	PART NUMBER	QTY	PART NAME 1 2 3 4 5 6 (PRODUCT LEVEL)	SEE PAGE
B	1	1	**176-0626**	4	WASHER (67.5X120X3-MM THK)	
	2	1	**213-6726**	1	PIN	
	3	1	**305-0611**	1	BOOM AS	
	3A	1	**9R-0413**	2	BEARING-SLEEVE	
	3B	1	**209-6181**	2	BEARING-SLEEVE	
	4	1	**095-0929**	2	RING-RETAINING	
	5	1	**3B-8488**	3	FITTING-GREASE	
	6	1	**3B-8489**	1	FITTING-GREASE	

B-USE AS REQUIRED

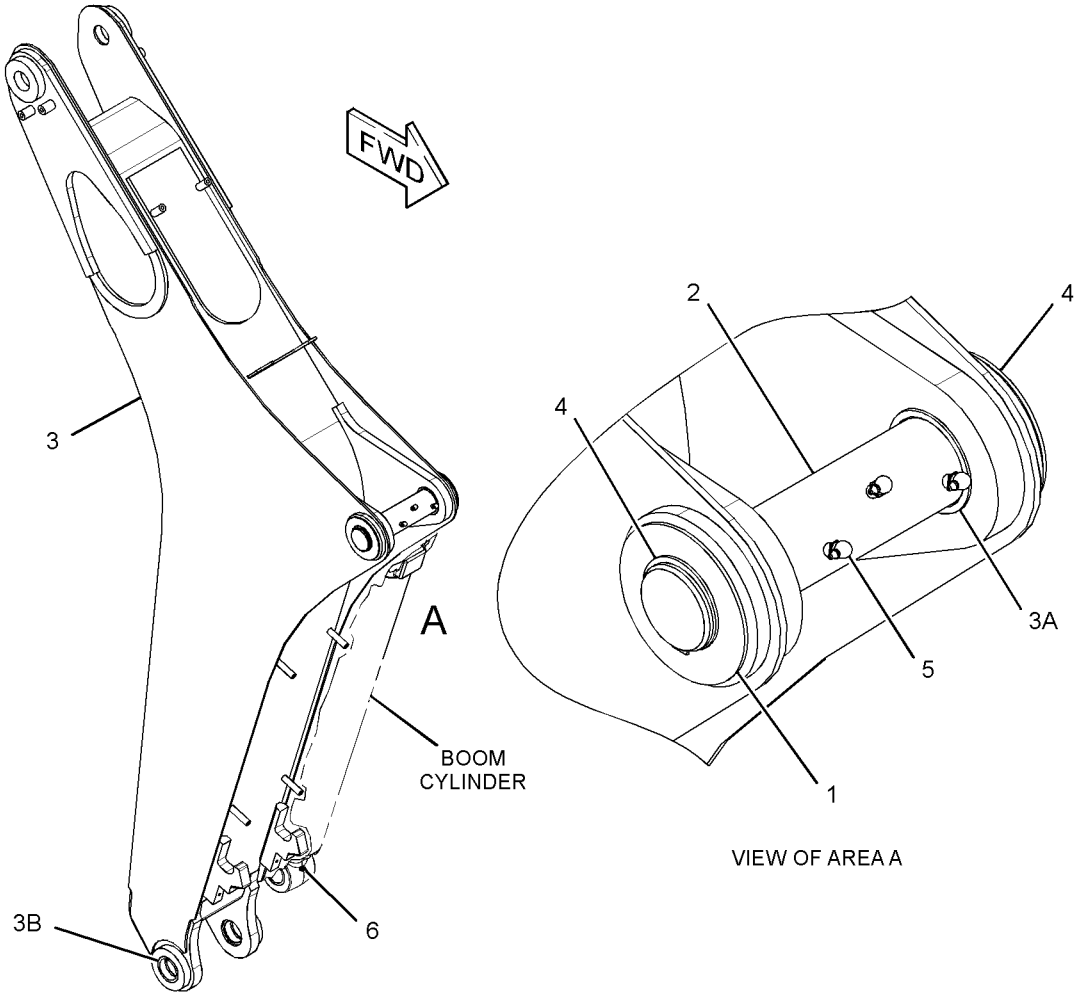

GRAPHIC #1 **<END>** g01513782

218-0745 BRACE GP-LIFT CYLINDER

S/N: LMS1-UP

PART OF 318-9555 LOADER AR

SMCS-7507 **i03500142**

NOTE	REF NO	GRAPHIC REF	PART NUMBER	QTY	PART NAME 1 2 3 4 5 6 (PRODUCT LEVEL)	SEE PAGE
	1	1	**9R-0109**	1	WASHER (41X64X3-MM THK)	
	2	1	**9R-0189**	1	PIN	
	3	1	**132-6497**	1	BRACE AS (LIFT CYLINDER)	
	4	1	**9R-5301**	1	PIN-COTTER	

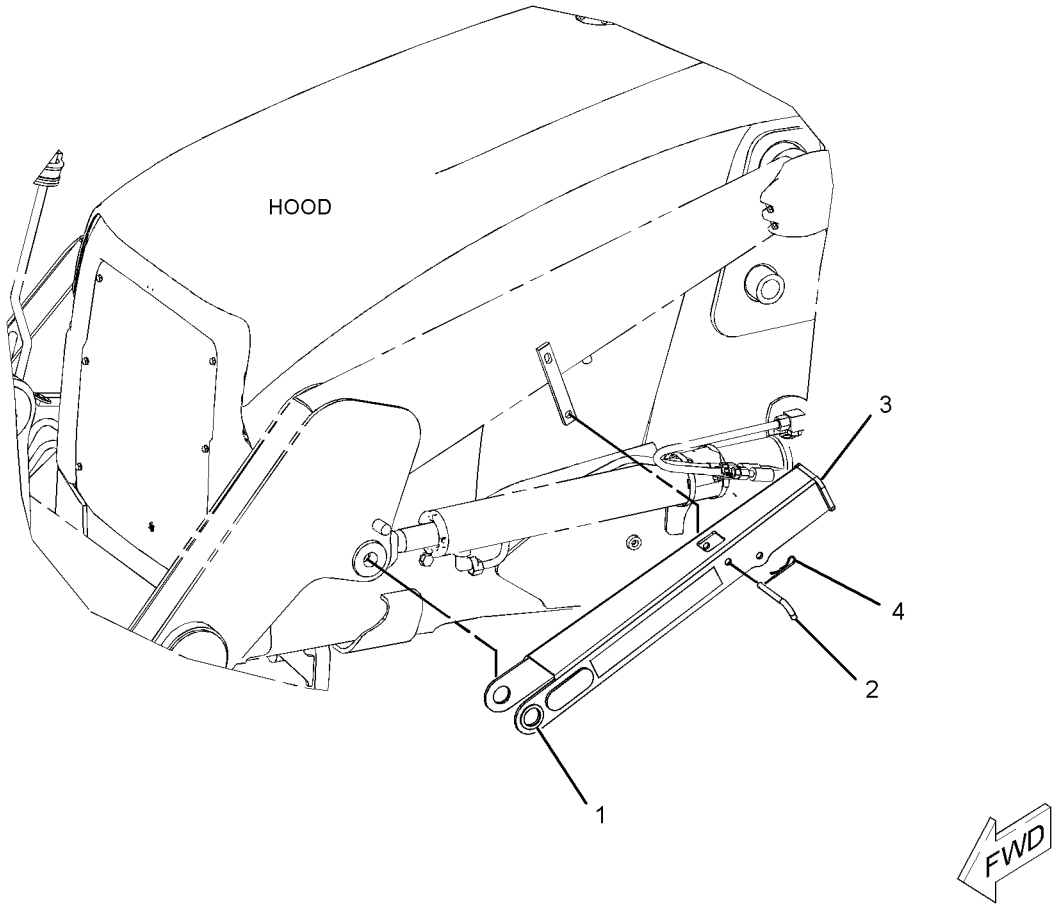

GRAPHIC #1 **<END>** g01183429

270-3204 GUARD GP-BOOM

S/N: LMS1-UP
AN ATTACHMENT

SMCS-7150 **i03848349**

NOTE	REF NO	GRAPHIC REF	PART NUMBER	QTY	PART NAME 1 2 3 4 5 6 (PRODUCT LEVEL)	SEE PAGE
	1	1	**294-5792**	1	PLATE AS	
M	2	1	**8T-4139**	4	BOLT (M12X1.75X30-MM)	
	3	1	**8T-4223**	4	WASHER-HARD (13.5X25.5X3-MM THK)	

M-METRIC PART

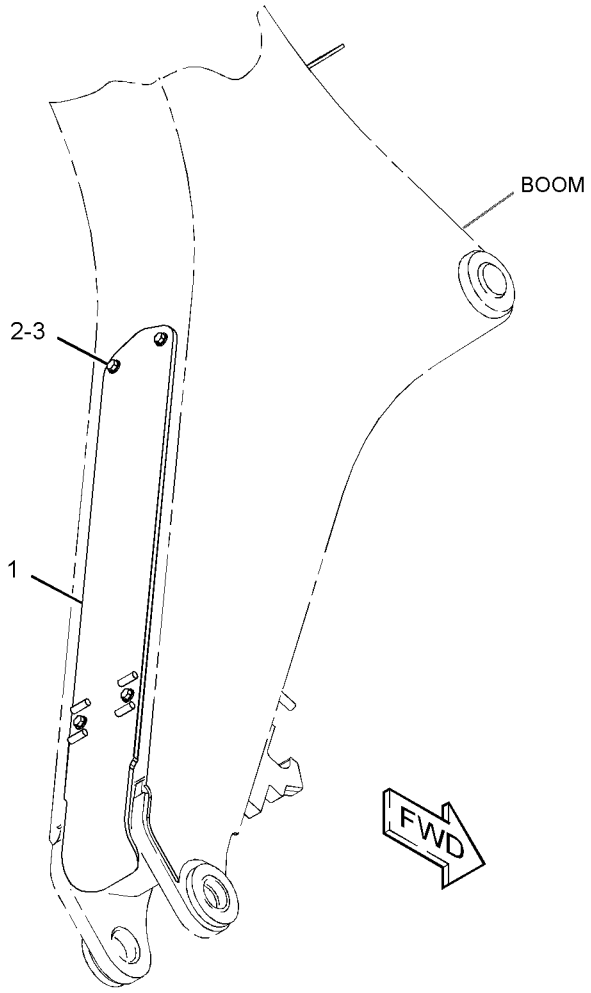

GRAPHIC #1 **<END>** g01514060

213-6692 LINKAGE GP-BACKHOE BUCKET

S/N: LMS1-UP

PART OF 209-9929 BACKHOE AR-EXTENDABLE STICK, 209-9924 BACKHOE AR-STANDARD STICK

AN ATTACHMENT

SMCS-6513 **i03865283**

NOTE	REF NO	GRAPHIC REF	PART NUMBER	QTY	PART NAME 1 2 3 4 5 6 (PRODUCT LEVEL)	SEE PAGE
	1	1	**239-9435**	1	FILM-INSTRUCTION (LINK)	
B	2	1	**9R-0158**	5	WASHER (46X69X3-MM THK)	
B	3	1	**9R-1502**	4	WASHER (56X90X4-MM THK)	
B	4	1	**9R-1510**	9	WASHER (51X82X4-MM THK)	
	5	1	**154-5278**	1	PIN	
	6	1	**154-5279**	1	PIN	
	7	1	**154-5280**	1	PIN	
	8	1	**6V-8344**	2	RING-RETAINING	
	9	1	**213-6690**	1	GUIDE AS (RH)	
	10	1	**213-6691**	1	GUIDE AS (LH)	
					(EACH GUIDE AS INCLUDES)	
		1	**9R-0162**	1	BEARING-SLEEVE	
		1	**9R-0170**	1	BEARING-SLEEVE	
		1	**213-6687**	1	BEARING-SLEEVE	
	11	1	**213-6698**	1	PIN	
	12	1	**213-6723**	1	LINK AS	
		1	**9R-0170**	2	BEARING-SLEEVE	
	13	1	**3B-5319**	4	PIN-COTTER	
	14	1	**3B-8489**	3	FITTING-GREASE	
	15	1	**6V-4364**	2	RING-RETAINING	

B-USE AS REQUIRED

213-6692 **LINKAGE GP-BACKHOE BUCKET** *(contd.)* **i03865283**

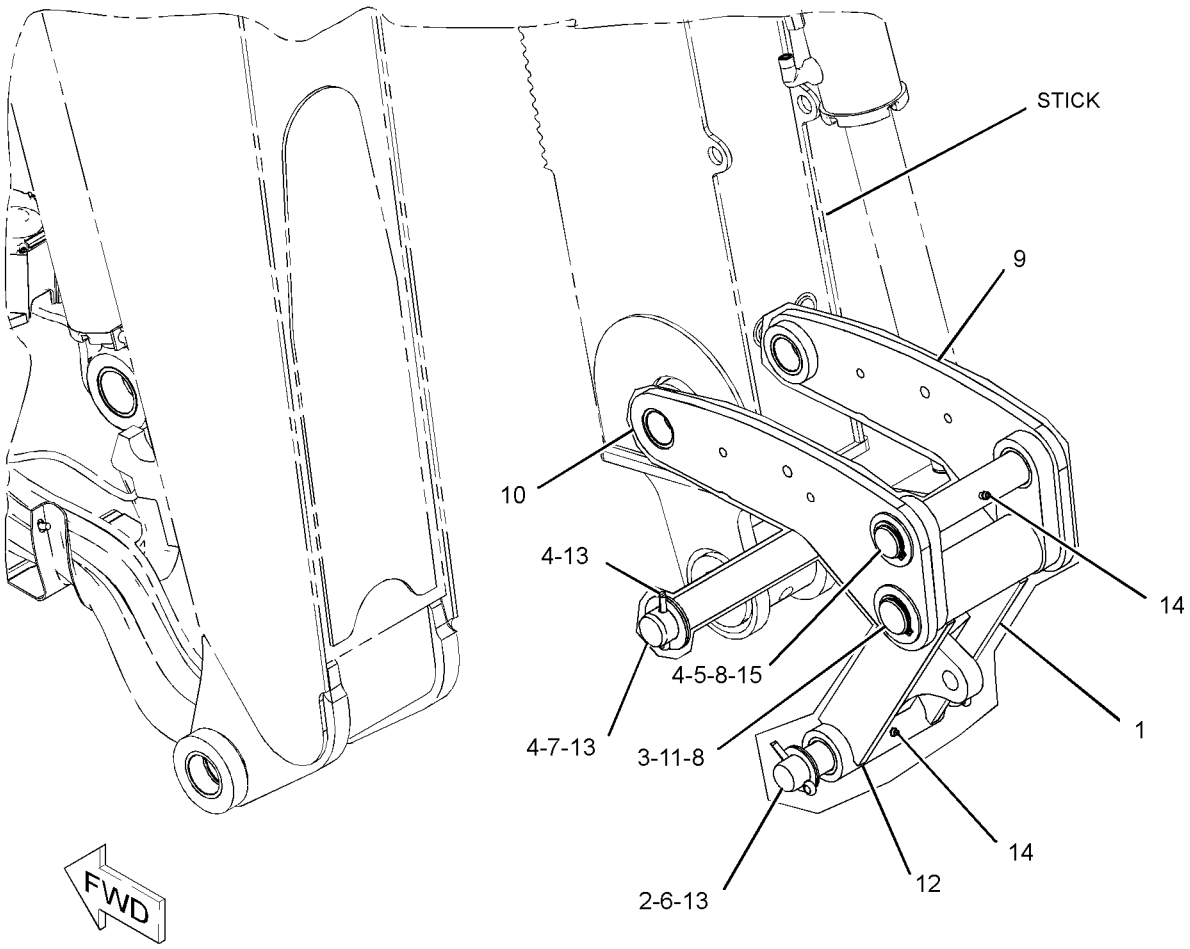

GRAPHIC #1 **<END>** g02110153

IMPLEMENTS

297-2834 LINKAGE GP-LOADER BUCKET

S/N: LMS1-UP

PART OF 318-9555 LOADER AR

SMCS-6513 **i02909693**

NOTE	REF NO	GRAPHIC REF	PART NUMBER	QTY	PART NAME 1 2 3 4 5 6 (PRODUCT LEVEL)	SEE PAGE
	1	1	**9R-4482**	1	SPACER (52.7X60.3X99-MM THK)	
	2	1	**9R-4494**	3	PIN AS	
	3	1	**9R-5063**	1	GUIDE AS	
		1	**9R-1104**	1	BEARING	
	4	1	**9R-5834**	1	LINK AS (RH)	
	5	1	**9R-5835**	1	LINK AS (LH)	
	6	1	**101-0117**	1	PLATE	
B	7	1	**111-4337**	10	WASHER (46X70X1-MM THK)	
	8	1	**118-7789**	1	PLATE	
	9	1	**297-2833**	1	GUIDE AS (RH)	
		1	**9R-1104**	1	BEARING	
		1	**200-8313**	1	PIN	
	10	1	**3B-8489**	7	FITTING-GREASE	
	11	1	**6V-3213**	3	RING-RETAINING	
	12	1	**8T-4121**	4	WASHER-HARD (11X21X2.5-MM THK)	
M	13	1	**8T-4137**	4	BOLT (M10X1.5X20-MM)	
B	14	1	**9R-0158**	8	WASHER (46X69X3-MM THK)	

B-USE AS REQUIRED
M-METRIC PART

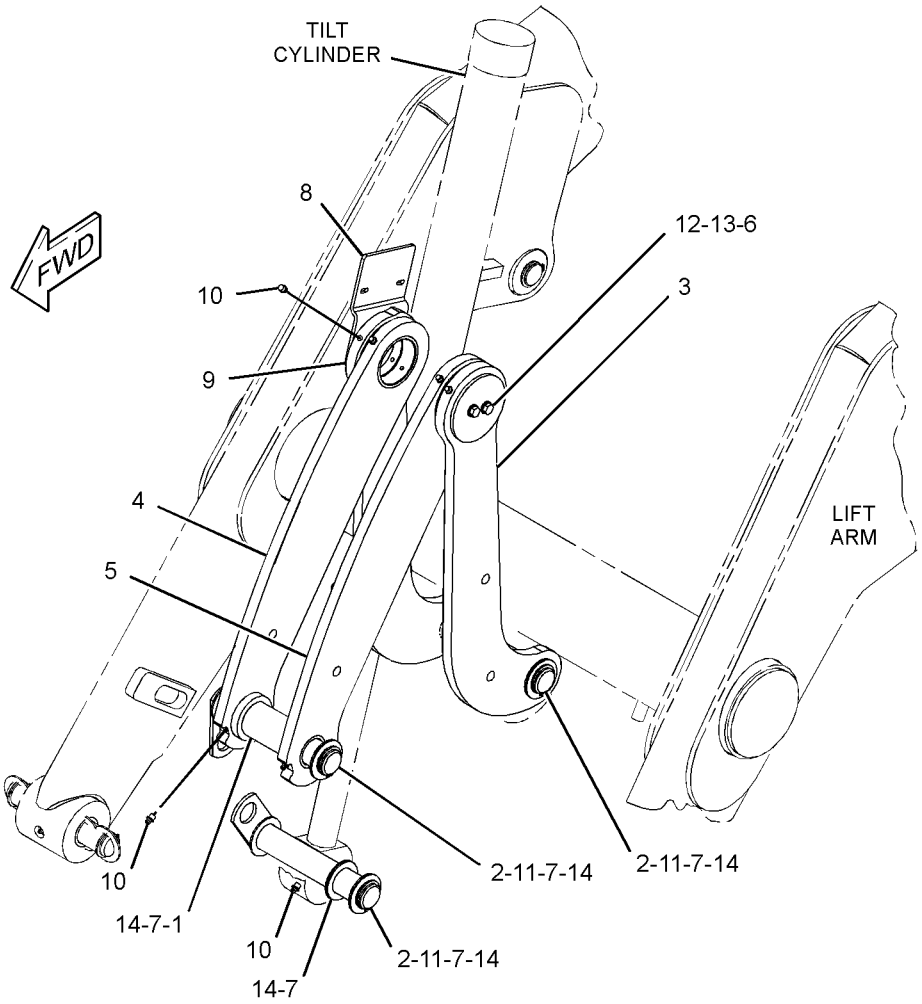

GRAPHIC #1 **<END>** g01406938

211-5182 LOCK GP-TRANSPORT–BOOM

S/N: LMS1-UP

PART OF 291-9190 CHASSIS AR

SMCS-7505 **i03845850**

NOTE	REF NO	GRAPHIC REF	PART NUMBER	QTY	PART NAME 1 2 3 4 5 6 (PRODUCT LEVEL)	SEE PAGE
	1	1	**5P-7958**	1	SLEEVE-CABLE SPLICE	
	2	1	**9R-8594**	1	PIN AS	
	3	1	**131-8775**	1	BRACKET AS	
	4	1	**134-0143**	1	CABLE	
	5	1	**214-4285**	2	PAD AS	
	6	1	**214-6999**	1	HOOK	
	7	1	**214-7043**	1	SPACER (6.15X7.94X10-MM THK)	
	8	1	**225-8227**	1	HOOK	
	9	1	**276-2353**	1	CABLE AS	
		1	**2R-0364**	1	RING-RETAINING	
		1	**4D-9517**	1	CLIP	
		1	**6V-0826**	1	GROMMET	
		1	**279-9452**	1	CLIP	
	10	1	**3B-8489**	2	FITTING-GREASE	
M	11	1	**5A-3604**	2	BOLT-SOCKET HEAD (M8X1.25X25-MM)	
M	12	1	**5C-9553**	1	BOLT (M6X1X16-MM)	
	13	1	**6E-1135**	2	PIN	
	14	1	**8T-4121**	3	WASHER-HARD (11X21X2.5-MM THK)	
M	15	1	**8T-4137**	1	BOLT (M10X1.5X20-MM)	
M	16	1	**8T-4195**	2	BOLT (M10X1.5X30-MM)	
	17	1	**214-4281**	1	PIN	
	18	1	**8T-4224**	1	WASHER-HARD (8.8X16X2-MM THK)	
M	19	1	**8T-4908**	1	BOLT (M8X1.25X25-MM)	
	20	1	**7K-1181**	1	STRAP-CABLE	

M-METRIC PART

211-5182 **LOCK GP-TRANSPORT** *(contd.)* **i03845850**

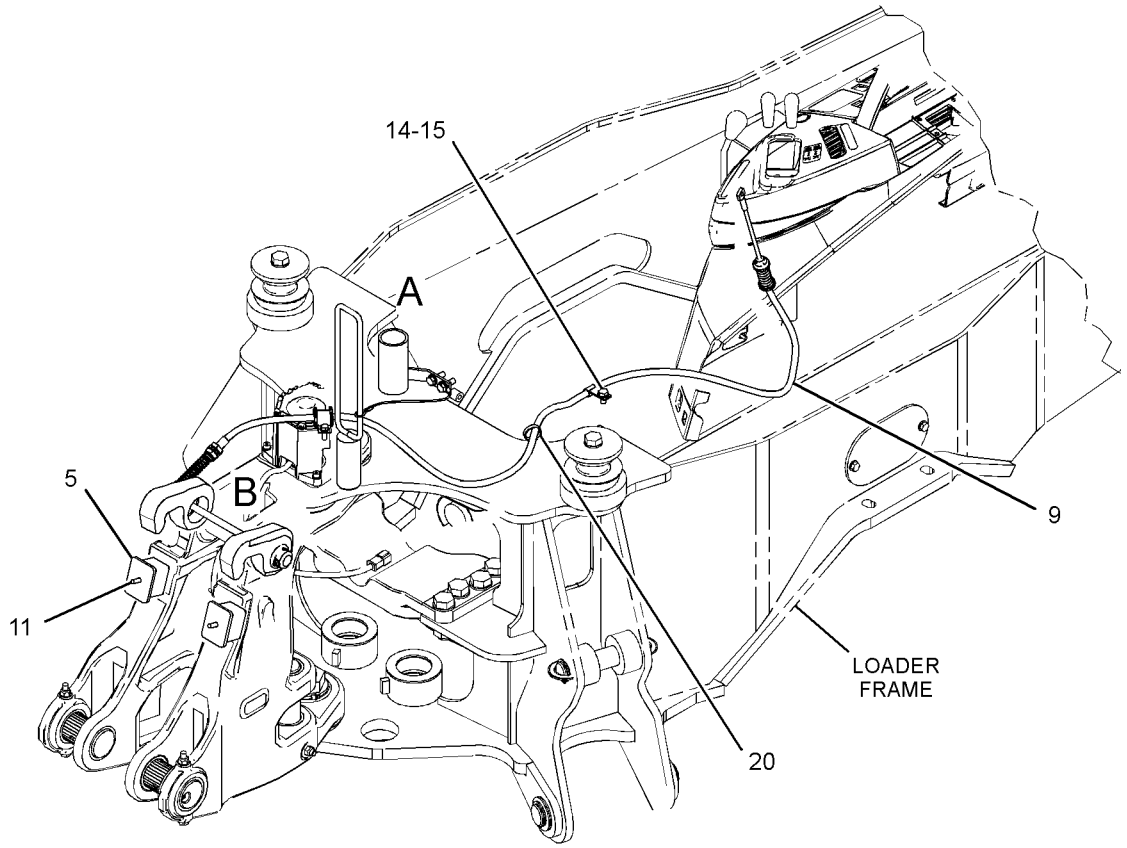



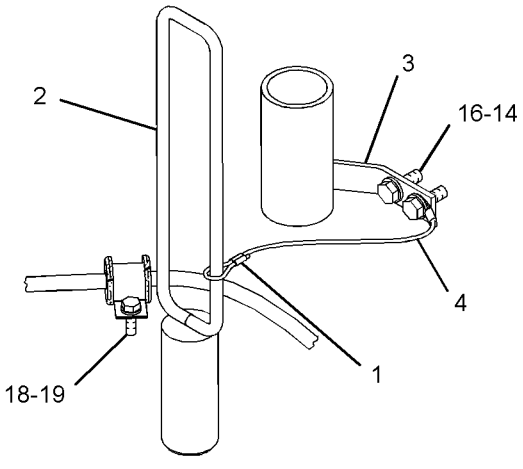

VIEW OF AREA A

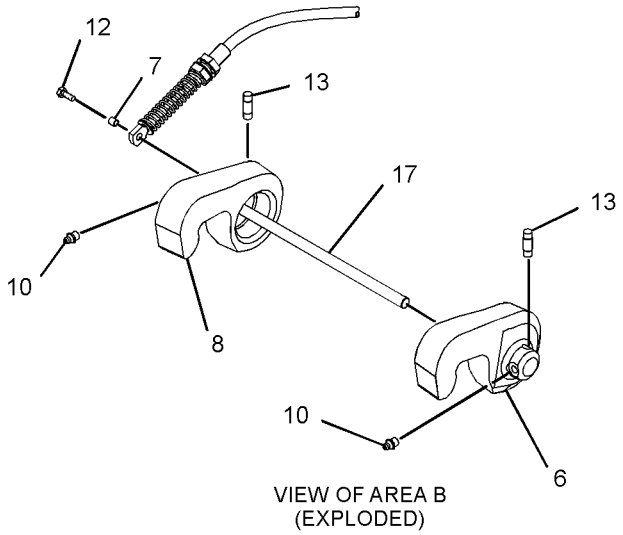

VIEW OF AREA B
(EXPLODED)

GRAPHIC #1 **<END>** g01805480

252-4660 LOCK GP-TRANSPORT—BACKHOE BUCKET

S/N: LMS1-UP

AN ATTACHMENT

SMCS-7505 **i02210128**

NOTE	REF NO	GRAPHIC REF	PART NUMBER	QTY	PART NAME 1 2 3 4 5 6 (PRODUCT LEVEL)	SEE PAGE
	1	1	**9R-9028**	1	PIN	
	2	1	**252-4659**	1	CABLE AS	
	3	1	**9R-5301**	2	PIN-COTTER	

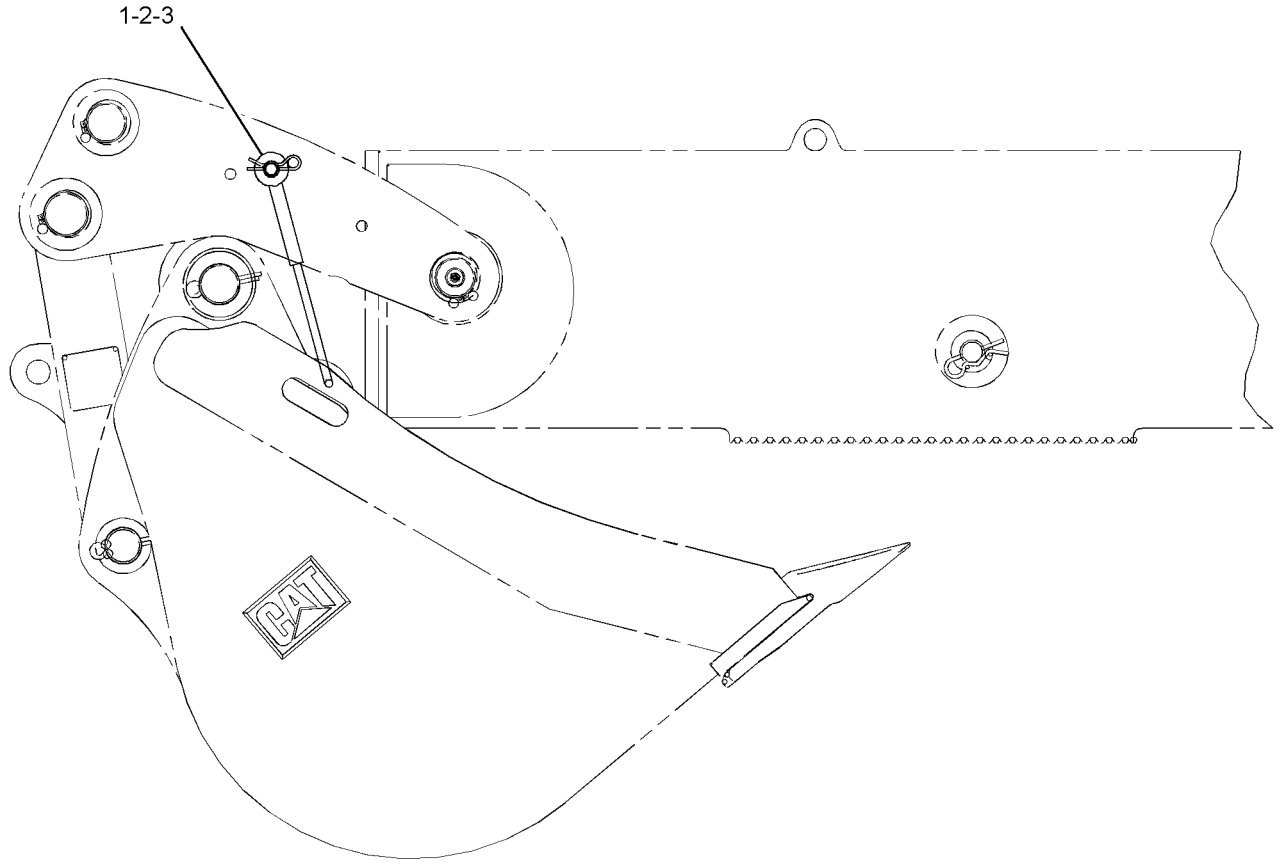

RIGHT SIDE VIEW

GRAPHIC #1 **<END>** g01116719

209-9938 MOUNTING GP-STICK

S/N: LMS1-UP
PART OF 209-9929 BACKHOE AR-EXTENDABLE STICK
AN ATTACHMENT

SMCS-6502 **i02531009**

NOTE	REF NO	GRAPHIC REF	PART NUMBER	QTY	PART NAME 1 2 3 4 5 6 (PRODUCT LEVEL)	SEE PAGE
B	1	1	**9R-5238**	6	SPACER (56X110X3-MM THK)	
B	2	1	**9R-1510**	7	WASHER (51X82X4-MM THK)	
B	3	1	**286-3086**	3	SPACER (56X130X1-MM THK)	
	4	1	**213-6710**	1	PIN AS	
	5	1	**213-6714**	1	PIN	
	6	1	**220-1019**	1	PIN	
	7	1	**3B-8488**	1	FITTING-GREASE	
	8	1	**3B-8489**	1	FITTING-GREASE	
	9	1	**6V-4364**	2	RING-RETAINING	
	10	1	**6V-8344**	2	RING-RETAINING	

B-USE AS REQUIRED

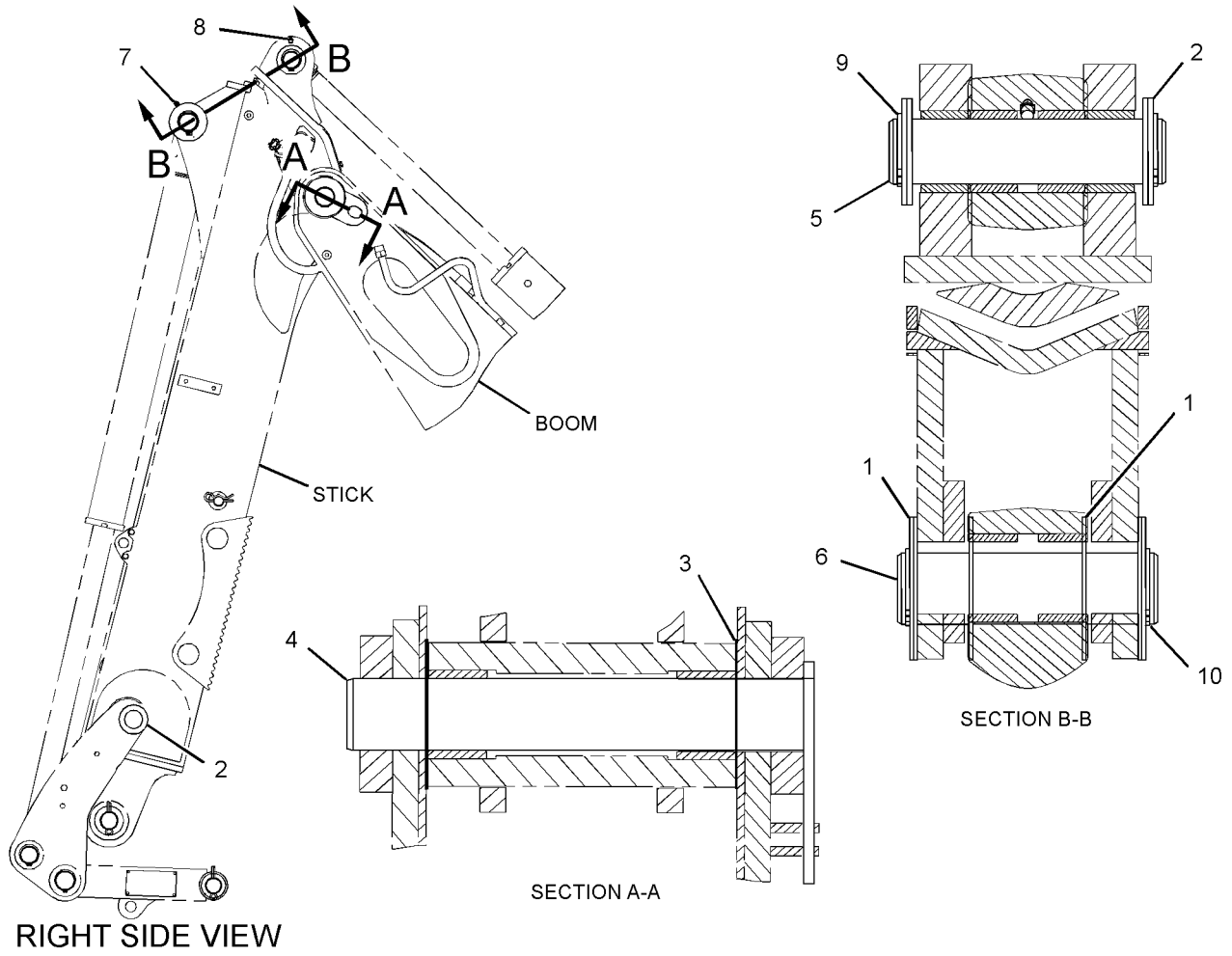

GRAPHIC #1 **<END>** g01198453

133-3362 PAD & GUARD GP-STABILIZER–STREET

S/N: LMS1-UP
AN ATTACHMENT

SMCS-7222 **i03875225**

NOTE	REF NO	GRAPHIC REF	PART NUMBER	QTY	PART NAME 1 2 3 4 5 6 (PRODUCT LEVEL)	SEE PAGE
Y	1	1	*9R-6007*	1	PAD & MTG GP-STABILIZER (STREET)	379
Y	2	1	*355-5861*	1	GUARD GP-CYLINDER (STABILIZER)	229

Y-SEPARATE ILLUSTRATION

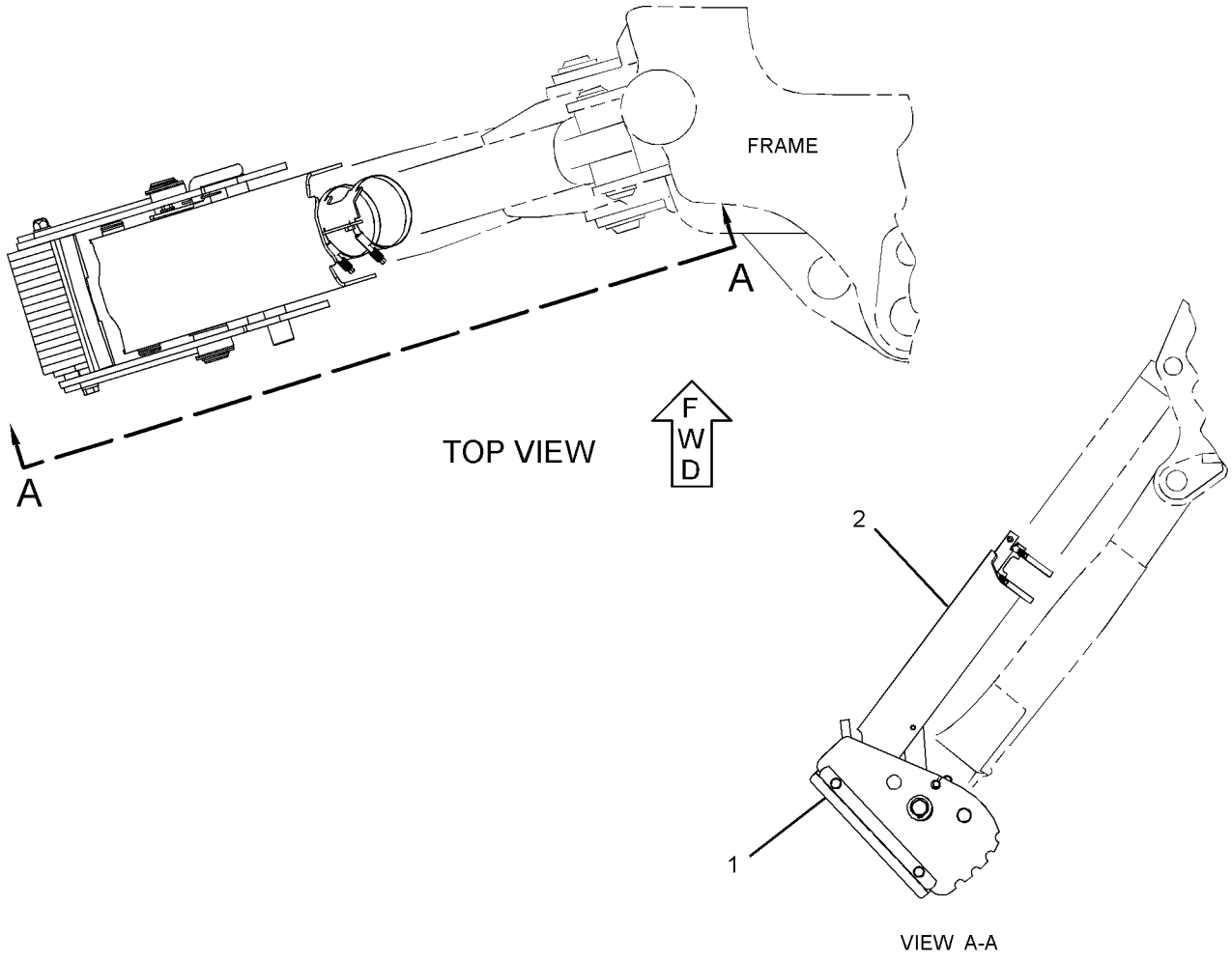

GRAPHIC #1 **<END>** g02117580

133-3363 PAD & GUARD GP-STABILIZER

S/N: LMS1-UP

AN ATTACHMENT

SMCS-7222 **i03872859**

NOTE	REF NO	GRAPHIC REF	PART NUMBER	QTY	PART NAME 1 2 3 4 5 6 (PRODUCT LEVEL)	SEE PAGE
Y	1	1	*116-4942*	1	PAD & MTG GP-STABILIZER	380
Y	2	1	*355-5861*	1	GUARD GP-CYLINDER (STABILIZER)	229

Y-SEPARATE ILLUSTRATION

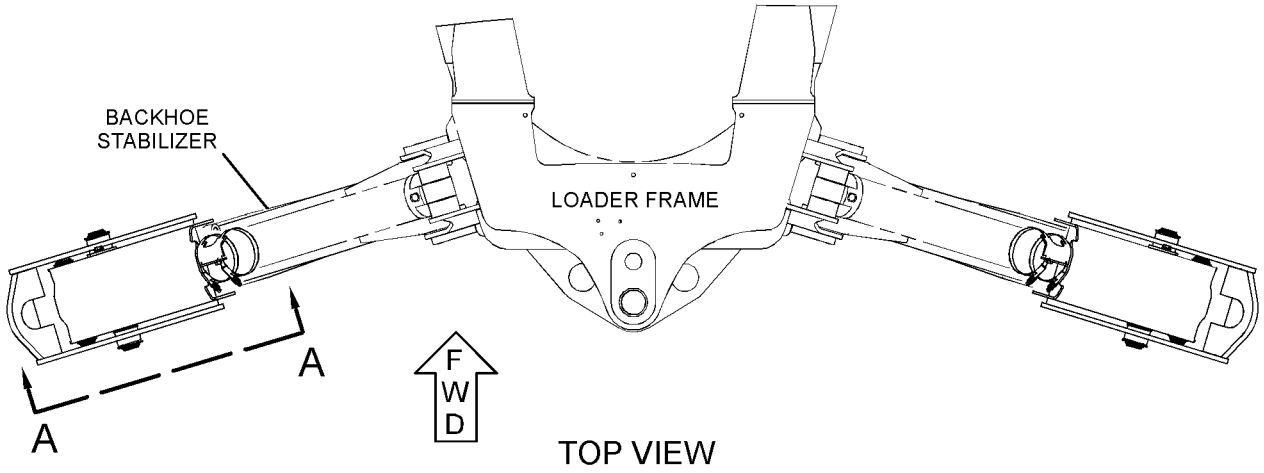

TOP VIEW

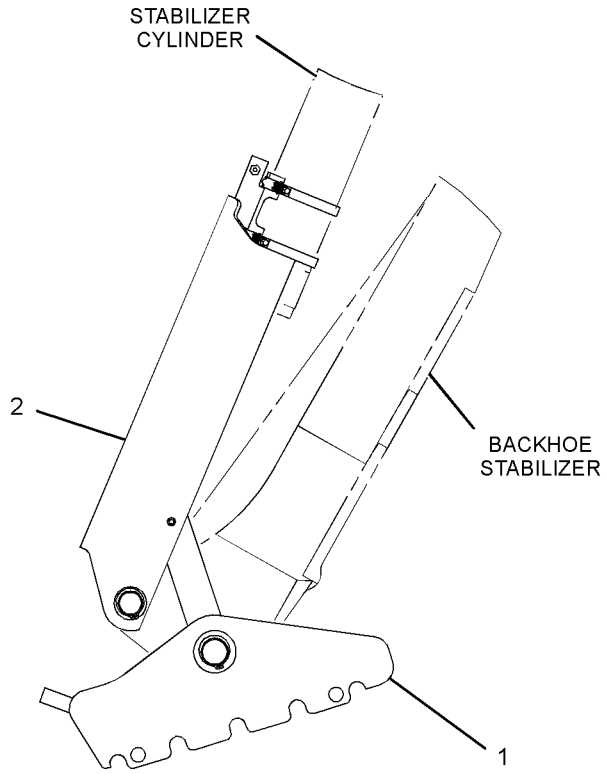

VIEW A-A

GRAPHIC #1 **<END>** g02114555

IMPLEMENTS

133-3366 PAD & GUARD GP-STABILIZER—STREET

S/N: LMS1-UP

AN ATTACHMENT

SMCS-7222 **i03872968**

NOTE	REF NO	GRAPHIC REF	PART NUMBER	QTY	PART NAME 1 2 3 4 5 6 (PRODUCT LEVEL)	SEE PAGE
Y	1	1	*9R-1085*	1	PAD & MTG GP-STABILIZER (STREET)	378
Y	2	1	*355-5861*	1	GUARD GP-CYLINDER (STABILIZER)	229

Y-SEPARATE ILLUSTRATION

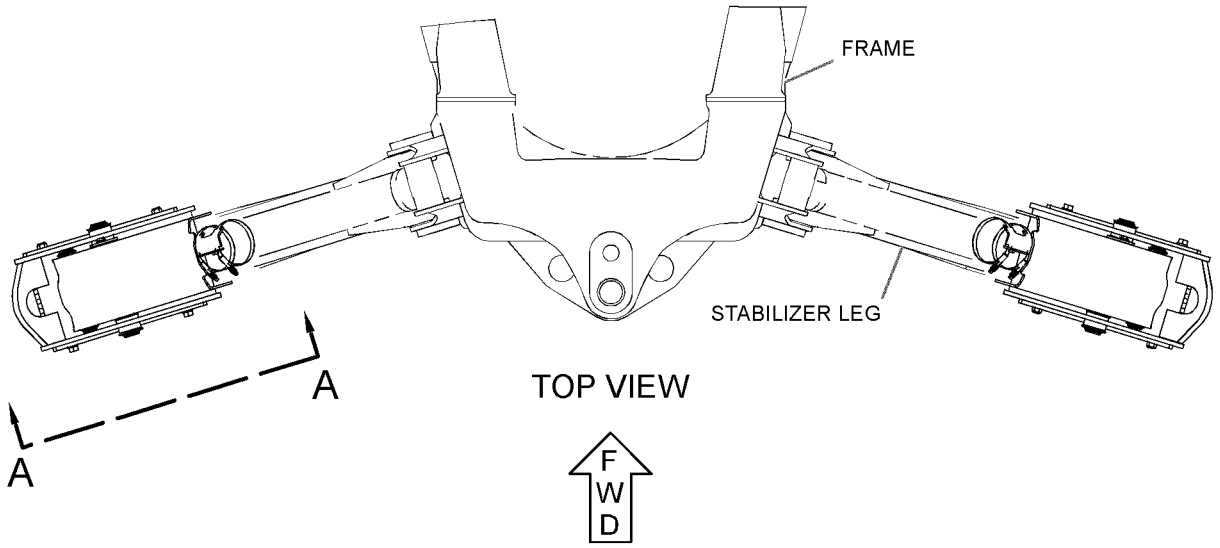

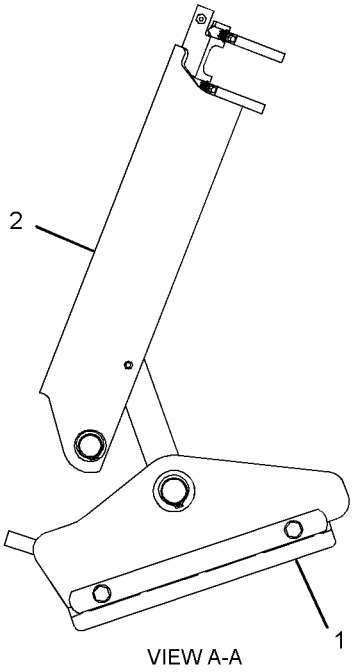

GRAPHIC #1 **<END>** g02116056

9R-1085 PAD & MTG GP-STABILIZER–STREET

S/N: LMS1-UP
PART OF 133-3366 PAD & GUARD GP-STABILIZER
AN ATTACHMENT

SMCS-7222 **i03869570**

NOTE	REF NO	GRAPHIC REF	PART NUMBER	QTY	PART NAME 1 2 3 4 5 6 (PRODUCT LEVEL)	SEE PAGE
BC	1	1	**9R-0158**	16	WASHER (46X69X3-MM THK)	
C	2	1	**238-9546**	2	SHAFT	
CY	3	1	*247-7555*	2	PAD GP-STABILIZER (STREET)	382
	4	1	**6V-3213**	4	RING-RETAINING	

B-USE AS REQUIRED
C-CHANGE FROM PREVIOUS TYPE
Y-SEPARATE ILLUSTRATION

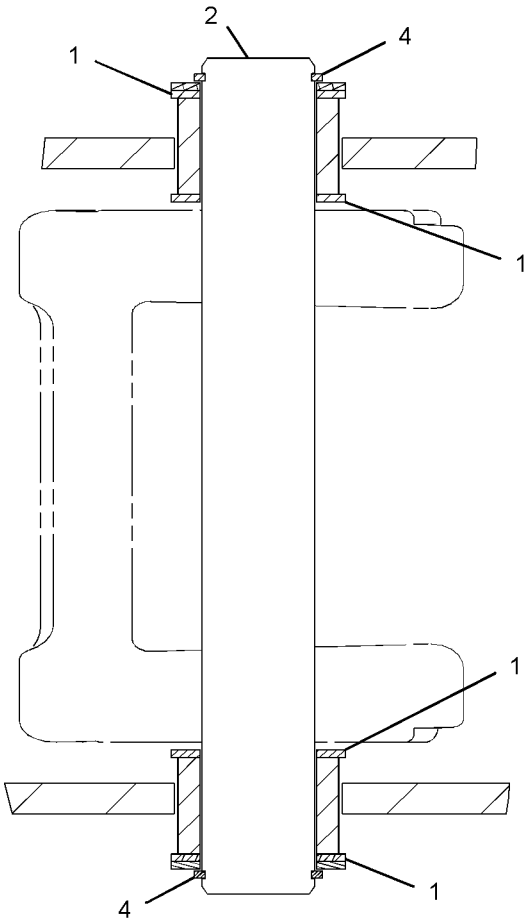

SECTION A-A

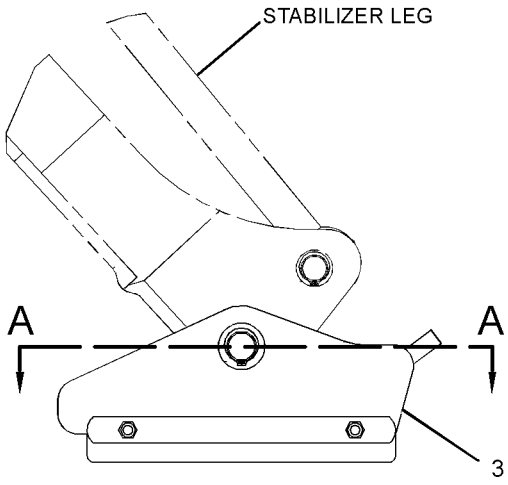

GRAPHIC #1 **<END>** g02112213

9R-6007 PAD & MTG GP-STABILIZER—STREET

S/N: LMS1-UP
PART OF 133-3362 PAD & GUARD GP-STABILIZER
AN ATTACHMENT

SMCS-7222 **i03866869**

NOTE	REF NO	GRAPHIC REF	PART NUMBER	QTY	PART NAME 1 2 3 4 5 6 (PRODUCT LEVEL)	SEE PAGE
B	1	1	**9R-0158**	16	WASHER (46X69X3-MM THK)	
	2	1	**238-9546**	2	SHAFT	
Y	3	1	*238-9547*	2	PAD GP-STABILIZER (STREET)	381
	4	1	**6V-3213**	4	RING-RETAINING	

B-USE AS REQUIRED
Y-SEPARATE ILLUSTRATION

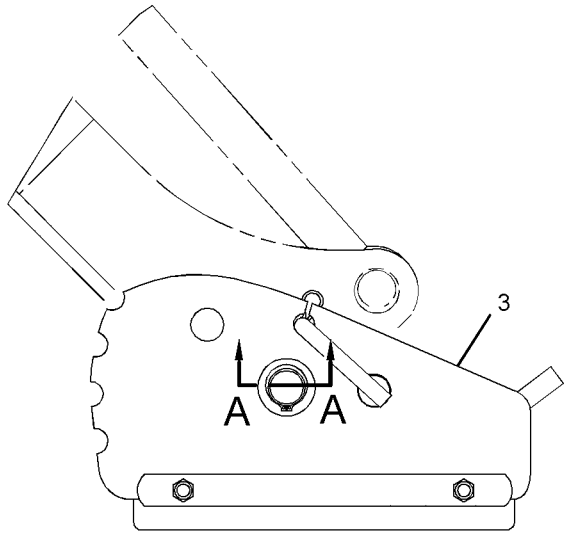

REAR VIEW

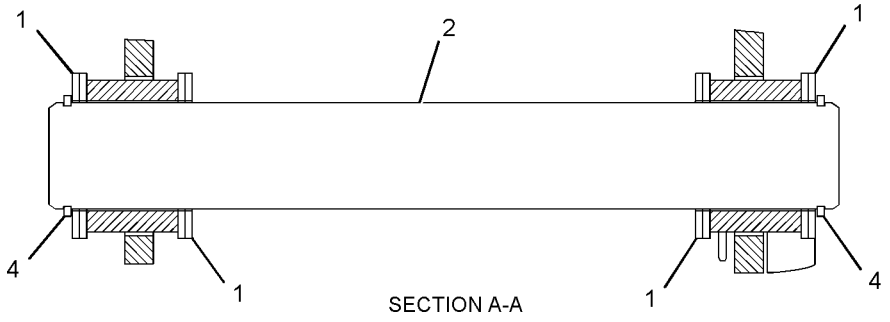

SECTION A-A

GRAPHIC #1 **<END>** g02116475

116-4942 PAD & MTG GP-STABILIZER

S/N: LMS1-UP
PART OF 133-3363 PAD & GUARD GP-STABILIZER
AN ATTACHMENT

SMCS-7222 **i03875207**

NOTE	REF NO	GRAPHIC REF	PART NUMBER	QTY	PART NAME 1 2 3 4 5 6 (PRODUCT LEVEL)	SEE PAGE
B	1	1	**9R-0158**	14	WASHER (46X69X3-MM THK)	
C	2	1	**238-9546**	2	SHAFT	
C	3	1	**239-1416**	2	PAD AS	
	4	1	**6V-3213**	4	RING-RETAINING	

B-USE AS REQUIRED
C-CHANGE FROM PREVIOUS TYPE

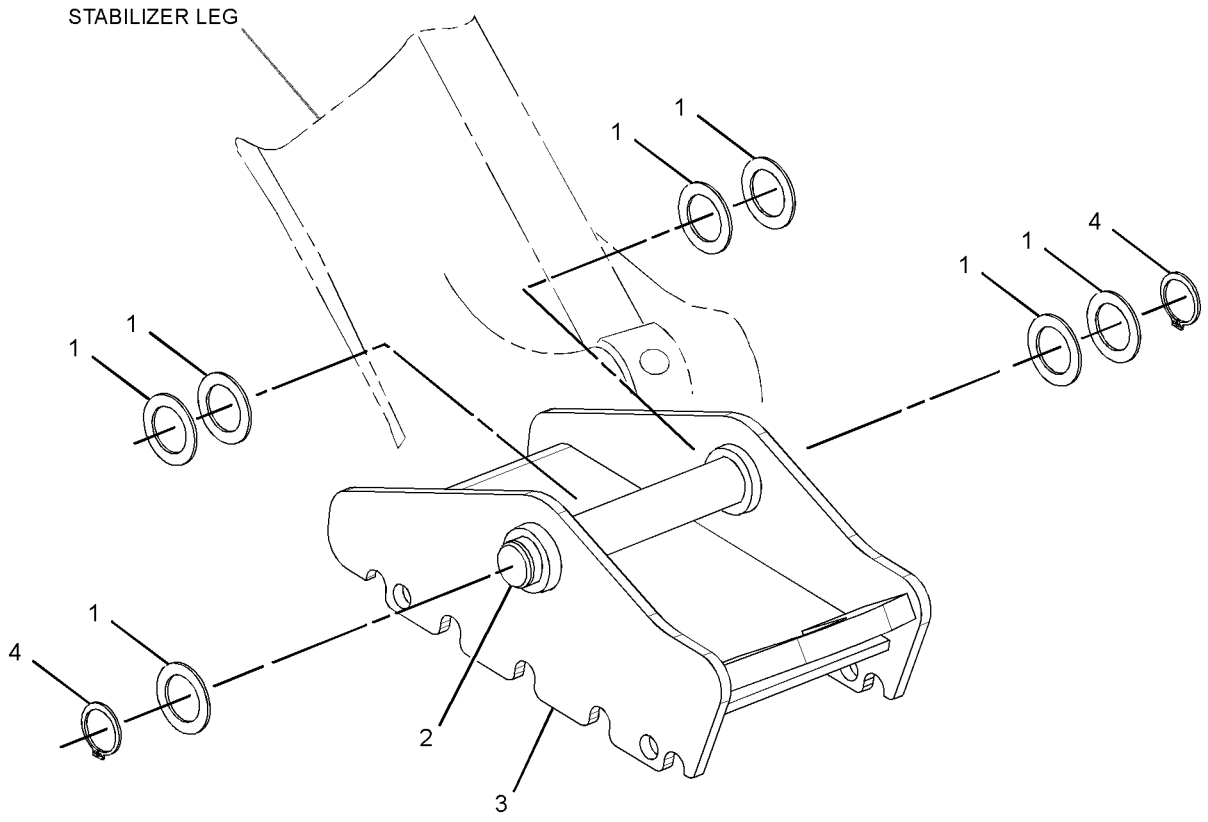

GRAPHIC #1 **<END>** g02117894

238-9547 PAD GP-STABILIZER–STREET

S/N: LMS1-UP
PART OF 9R-6007 PAD & MTG GP-STABILIZER
AN ATTACHMENT

SMCS-7222 **i03868309**

NOTE	REF NO	GRAPHIC REF	PART NUMBER	QTY	PART NAME 1 2 3 4 5 6 (PRODUCT LEVEL)	SEE PAGE
	1	1	**237-9349**	1	PAD AS	
	2	1	**237-9355**	1	PIN AS	
	3	1	**237-9356**	1	PAD AS	
	4	1	**241-0890**	2	SPACER (16.7X22.2X22.2-MM THK)	
	5	1	**241-0891**	2	PLATE	
	6	1	**241-0892**	1	PLATE	
	7	1	**5P-7971**	2	BOLT (5/8-11X12-IN)	
	8	1	**5P-0370**	1	LOCK PIN	
	9	1	**3K-2889**	2	LOCKNUT (5/8-11-THD)	
	10	1	**9X-8257**	2	WASHER (17.5X30X3.5-MM THK)	

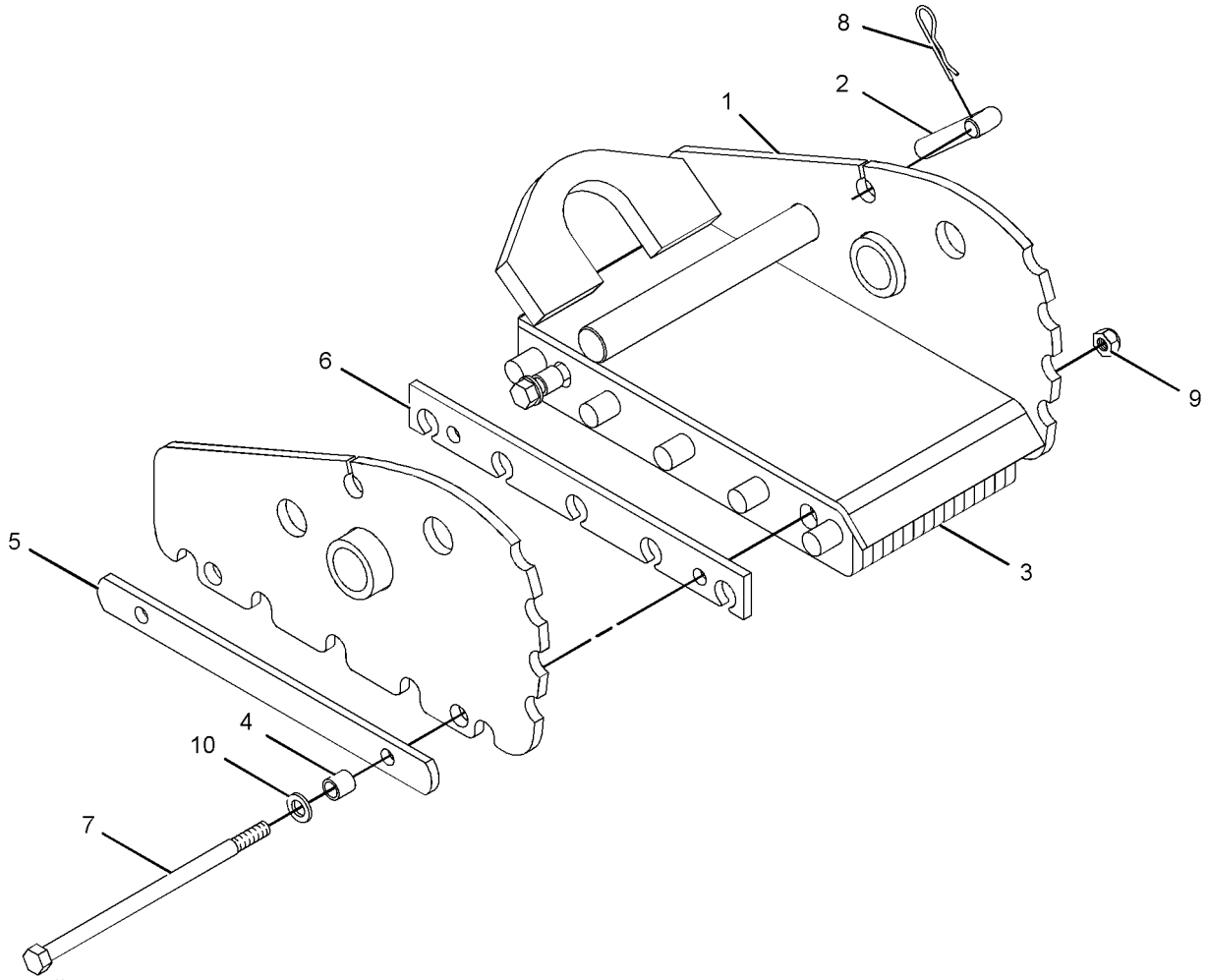

GRAPHIC #1 **<END>** g01084456

247-7555 PAD GP-STABILIZER—STREET

S/N: LMS1-UP
PART OF 9R-1085 PAD & MTG GP-STABILIZER
AN ATTACHMENT

SMCS-7222 **i03869689**

NOTE	REF NO	GRAPHIC REF	PART NUMBER	QTY	PART NAME 1 2 3 4 5 6 (PRODUCT LEVEL)	SEE PAGE
	1	1	**237-9356**	1	PAD AS	
	2	1	**239-1416**	1	PAD AS	
	3	1	**241-0890**	2	SPACER (16.7X22.2X22.2-MM THK)	
	4	1	**241-0891**	2	PLATE	
	5	1	**241-0892**	1	PLATE	
	6	1	**3K-2889**	2	LOCKNUT (5/8-11-THD)	
	7	1	**5P-7971**	2	BOLT (5/8-11X12-IN)	
	8	1	**9X-8257**	2	WASHER (17.5X30X3.5-MM THK)	

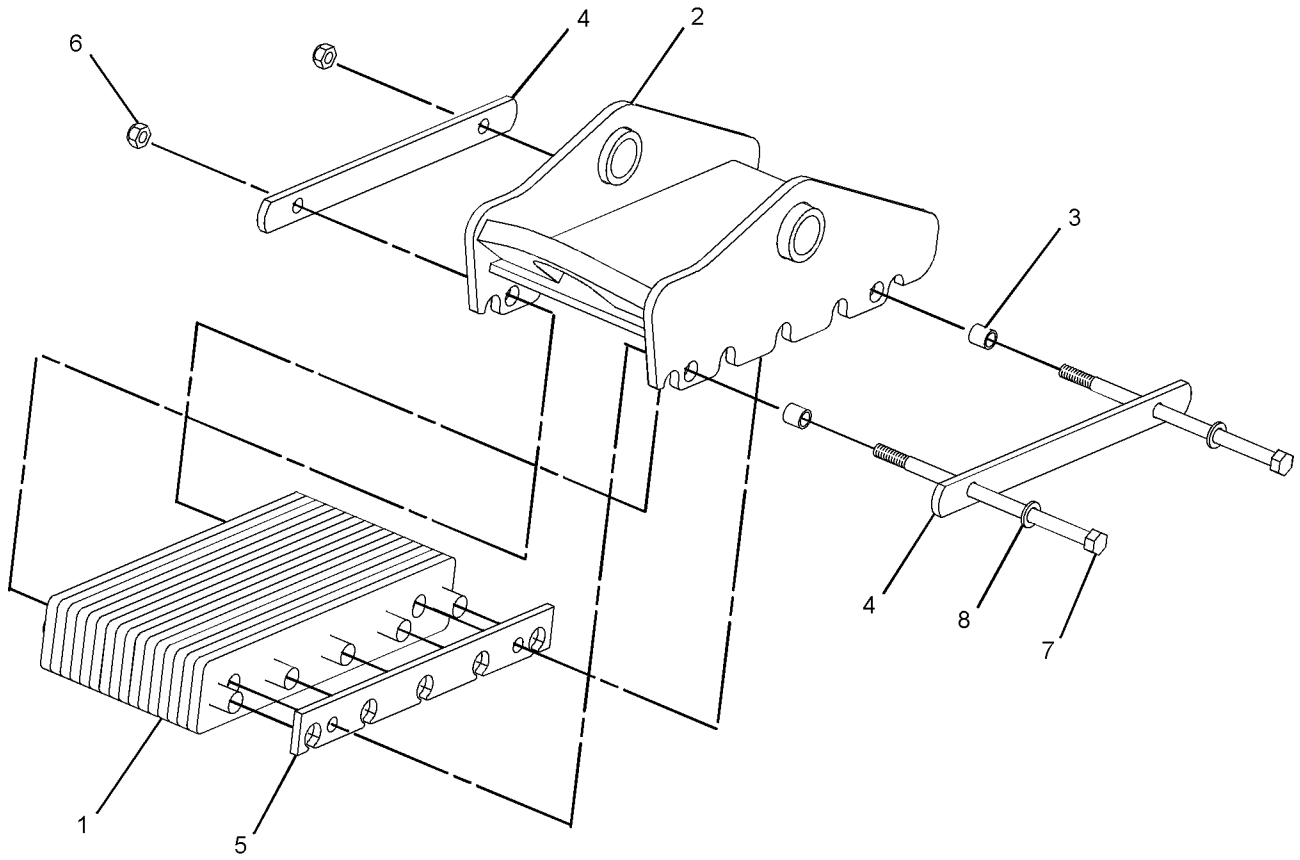

GRAPHIC #1 **<END>** g01113818

266-5834 STABILIZER GP-BACKHOE

S/N: LMS1-UP

PART OF 291-9190 CHASSIS AR

SMCS-7222 **i03852069**

NOTE	REF NO	GRAPHIC REF	PART NUMBER	QTY	PART NAME 1 2 3 4 5 6 (PRODUCT LEVEL)	SEE PAGE
	1	1	**9R-0422**	2	PIN	
B	2	1	**111-4337**	2	WASHER (46X70X1-MM THK)	
B	3	1	**119-4594**	2	WASHER (41X64X1-MM THK)	
	4	1	**130-0777**	2	STABILIZER AS	
	4A	1	**9R-0411**	2	BEARING-SLEEVE	
	5	1	**261-6703**	2	PIN	
	6	1	**293-7383**	2	PIN	
	7	1	**6V-3213**	4	RING-RETAINING	
	8	1	**6V-8144**	8	RING-RETAINING	
B	9	1	**9R-0109**	16	WASHER (41X64X3-MM THK)	
B	10	1	**9R-0158**	14	WASHER (46X69X3-MM THK)	

B-USE AS REQUIRED

266-5834 **STABILIZER GP-BACKHOE** *(contd.)* **i03852069**

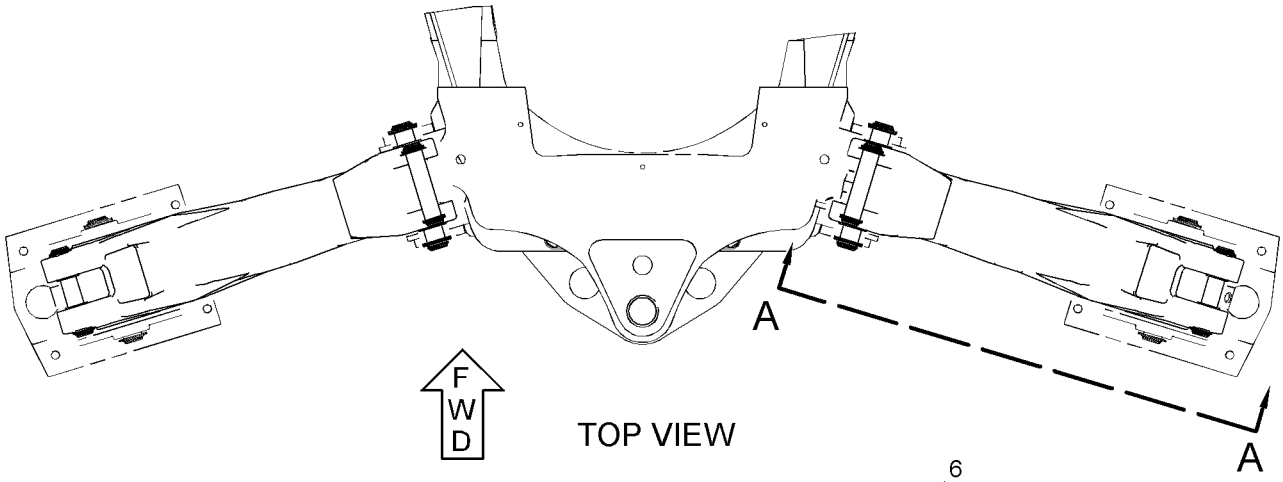

TOP VIEW

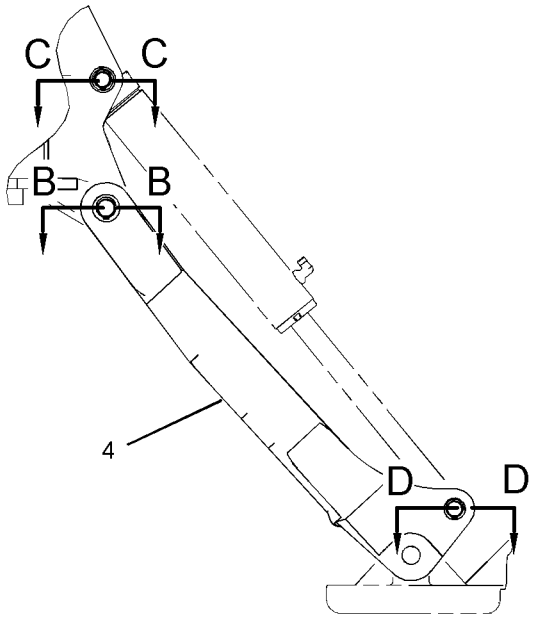

VIEW A-A

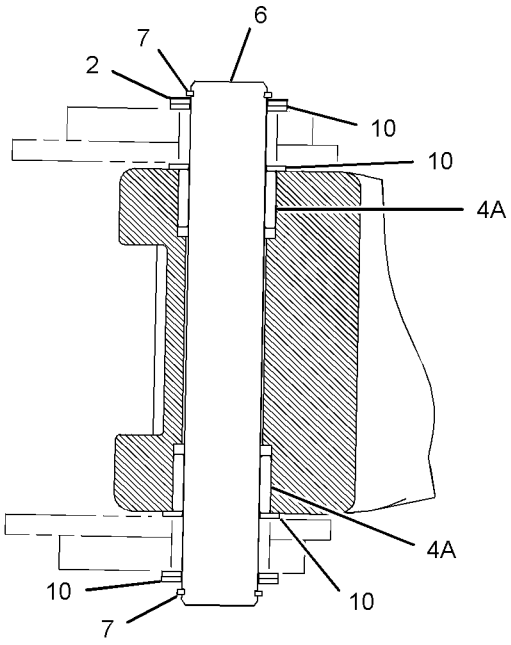

SECTION B-B

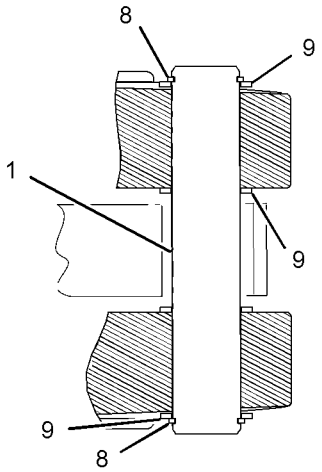

SECTION D-D

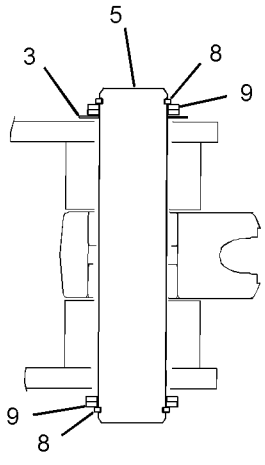

SECTION C-C

GRAPHIC #1 **<END>** g02098793

IMPLEMENTS

271-8669 STICK AS

S/N: LMS1-UP
PART OF 271-8666 STICK GP-HOE
AN ATTACHMENT

SMCS-6502 **i03875226**

NOTE	REF NO	GRAPHIC REF	PART NUMBER	QTY	PART NAME 1 2 3 4 5 6 (PRODUCT LEVEL)	SEE PAGE
	1	1	**9R-0162**	4	BEARING-SLEEVE	
	2	1	**9R-0170**	2	BEARING-SLEEVE	
M	3	1	**8Y-3795**	2	BOSS (M10X1.5X39-MM)	
	4	1	**9R-3092**	2	BEARING-SLEEVE	
	5	1	**107-6711**	2	BLOCK	
	6	1	**221-4315**	1	STOP AS	

M-METRIC PART

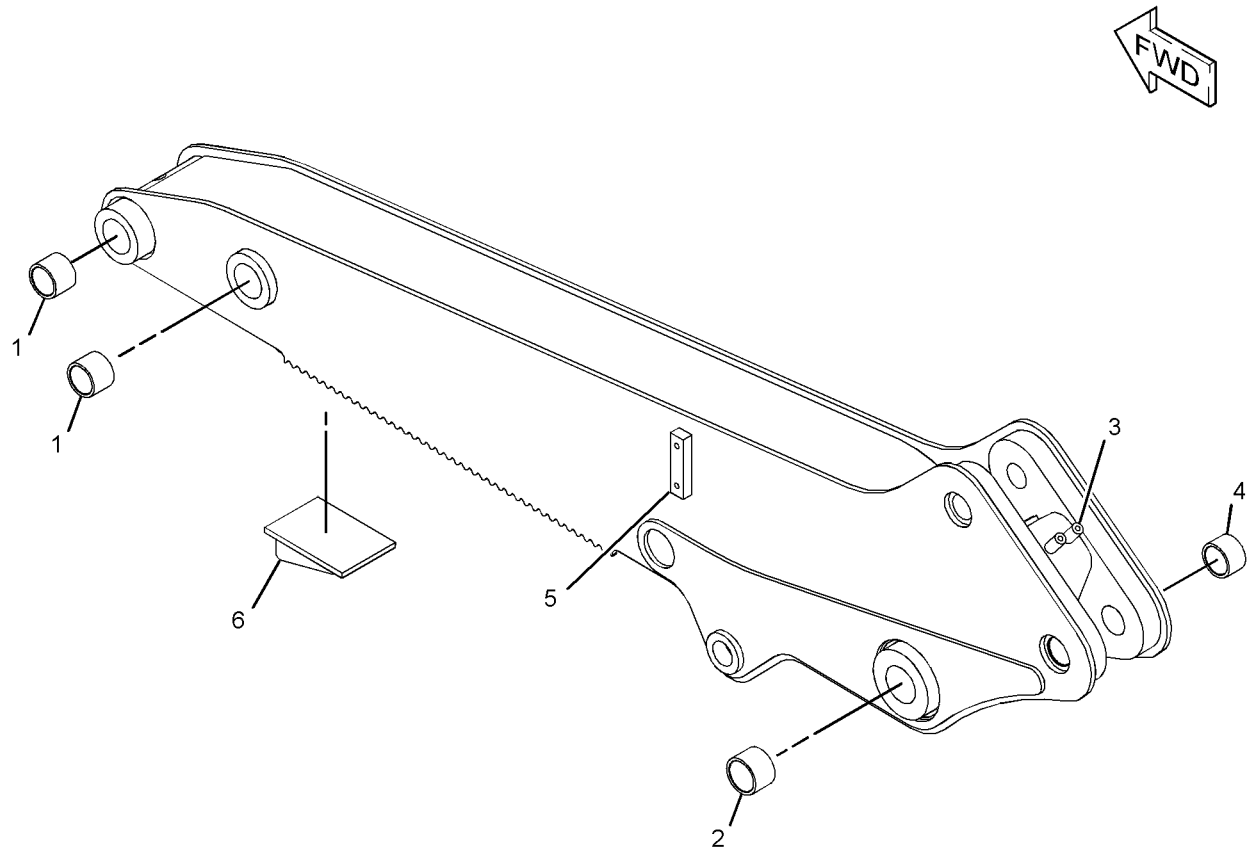

GRAPHIC #1 **<END>** g01694759

IMPLEMENTS

271-1404 STICK GP

S/N: LMS1-UP
PART OF 209-9929 BACKHOE AR-EXTENDABLE STICK
AN ATTACHMENT

SMCS-6502 **i03896107**

NOTE	REF NO	GRAPHIC REF	PART NUMBER	QTY	PART NAME 1 2 3 4 5 6 (PRODUCT LEVEL)	SEE PAGE
	1	1,2	**3B-8489**	4	FITTING-GREASE	
	2	1	**9R-2959**	2	CLIP	
	3	1	**209-2435**	2	BLOCK	
Y	4	1	**210-7098**	1	CYLINDER GP-STICK	257
	5	2	**214-6143**	1	PIN	
	6	2	**216-6295**	1	PLATE	
	7	1	**217-0055**	1	PIN	
	8	1	**217-1577**	2	PAD AS	
	9	1	**305-7426**	1	STICK AS (INNER)	
	9A	1	**9R-0170**	2	BEARING-SLEEVE	
	9B	1	**9R-3092**	1	BEARING-SLEEVE	
	10	2	**220-1018**	1	PIN	
	11	1	**222-5171**	2	SCREW AS (ADJUSTER)	
	12	1	**223-3926**	1	PLATE	
	13	1	**226-9764**	2	PAD AS	
	14	1	**311-8075**	4	PLATE	
B	15	1	**233-5166**	4	SHIM (1-MM THK)	
B	16	1	**233-5167**	12	SHIM (2-MM THK)	
	17	2	**233-5169**	4	PAD	
Y	18	1	*331-0096*	1	LINES GP-EXTENDABLE STICK	295
	19	1	**271-1408**	1	STICK AS (OUTER)	
	19A	2	**286-7166**	1	BEARING-SLEEVE	
	19B	1	**9R-0162**	2	BEARING-SLEEVE	
	20	2	**1L-3768**	2	RING-RETAINING	
	21	1	**4F-8711**	2	BUTTON-PLUG	
	22	1,2	**5V-7190**	4	WASHER-HARD (10.5X45.2X6-MM THK)	
	23	2	**6V-4364**	2	RING-RETAINING	
B	24	1,2	**8T-4121**	12	WASHER-HARD (11X21X2.5-MM THK)	
M	25	2	**8T-4136**	2	BOLT (M10X1.5X25-MM)	
M	26	2	**8T-4139**	2	BOLT (M12X1.75X30-MM)	
M	27	1	**8T-4183**	2	BOLT (M12X1.75X40-MM)	
M	28	1	**8T-4194**	2	BOLT (M12X1.75X50-MM)	
M	29	1	**8T-4195**	2	BOLT (M10X1.5X30-MM)	
	30	1,2	**8T-4223**	26	WASHER-HARD (13.5X25.5X3-MM THK)	
M	31	1	**8T-4910**	4	BOLT (M12X1.75X60-MM)	
M	32	1	**297-5510**	16	SCREW-HEX SOCKET (M12X1.75X30-MM)	
	33	1	**287-5667**	6	SHIM (1-MM THK)	
	34	2	**7X-0603**	2	WASHER-HARD (9.9X35X2.5-MM THK)	
B	35	1	**293-9882**	4	SHIM (1-MM THK)	
B	36	1	**293-9884**	4	SHIM (0.25-MM THK)	

B-USE AS REQUIRED
M-METRIC PART
Y-SEPARATE ILLUSTRATION

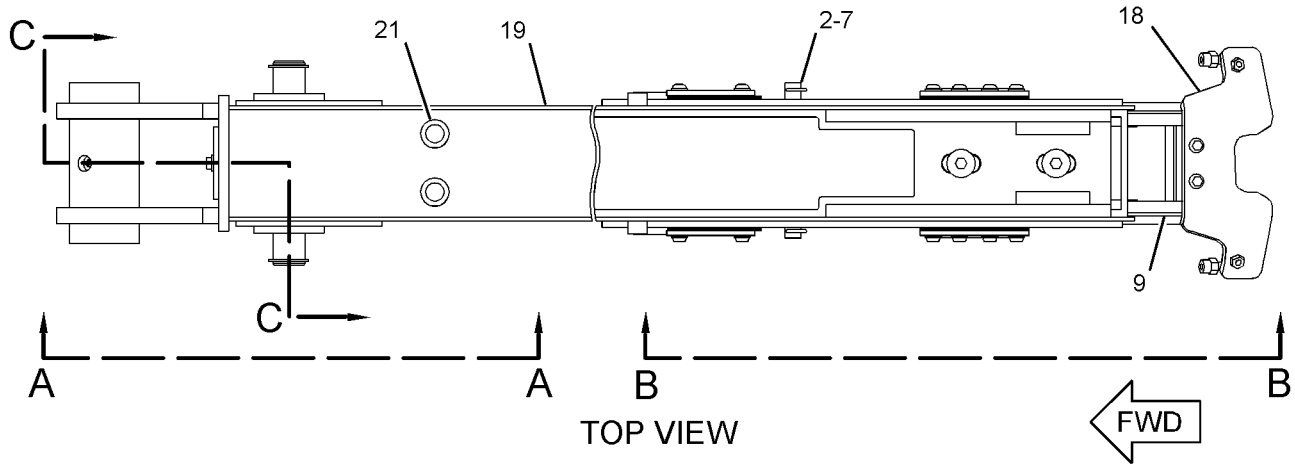

TOP VIEW

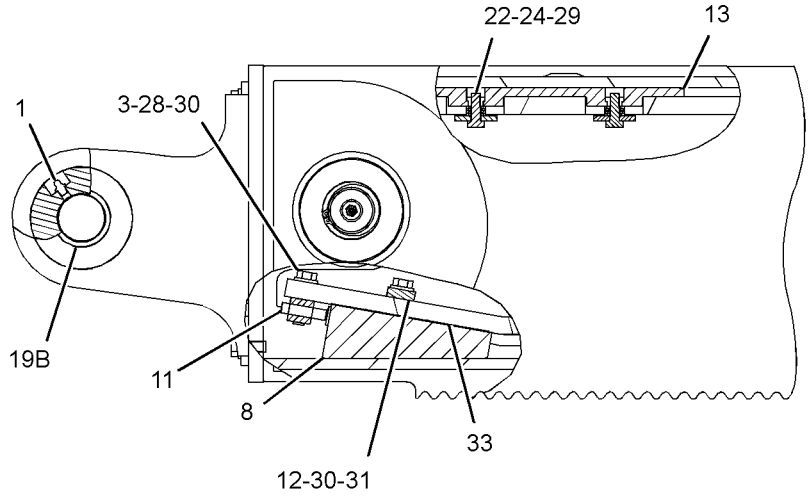

VIEW A-A

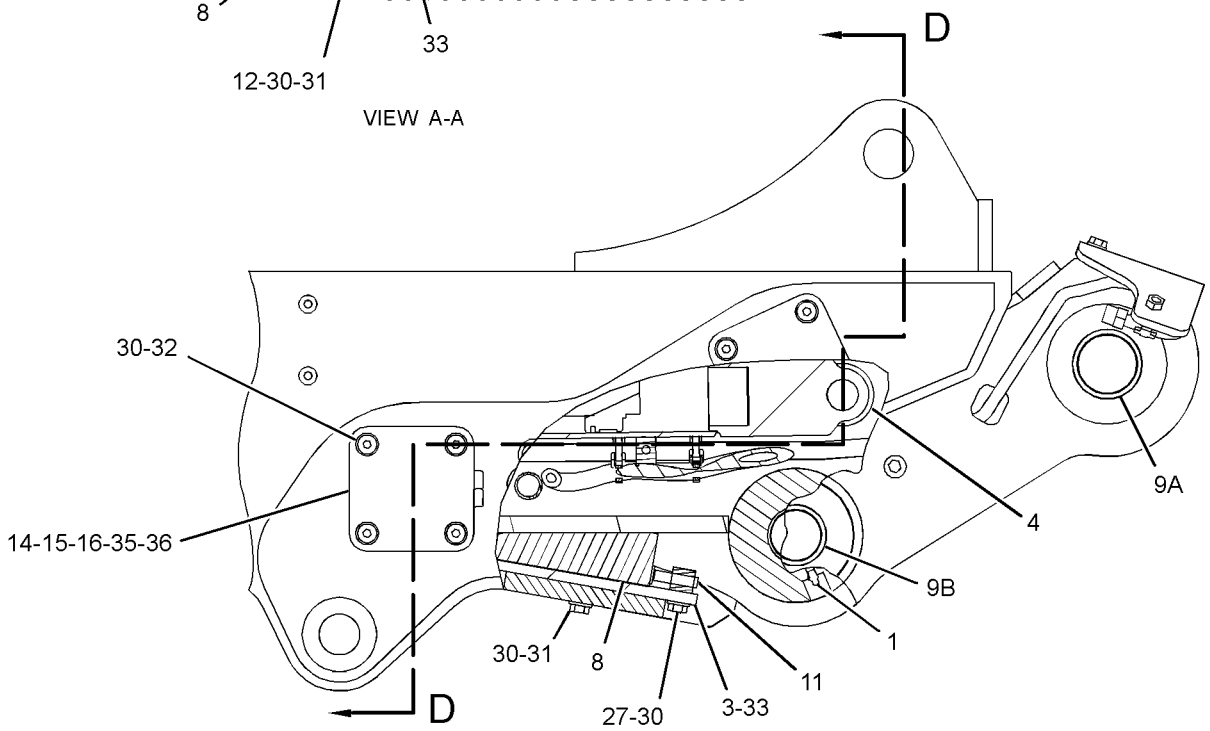

VIEW B-B

REFER TO ALL ILLUSTRATIONS OF THIS GROUP FOR AUXILIARY VIEWS

GRAPHIC #1

g02140422

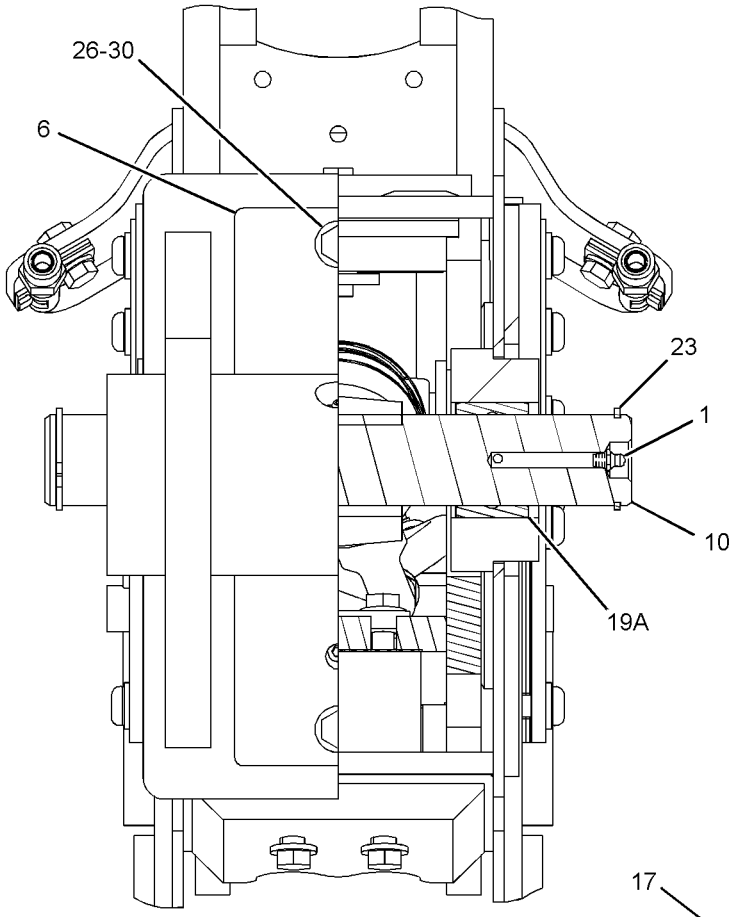

SECTION C-C

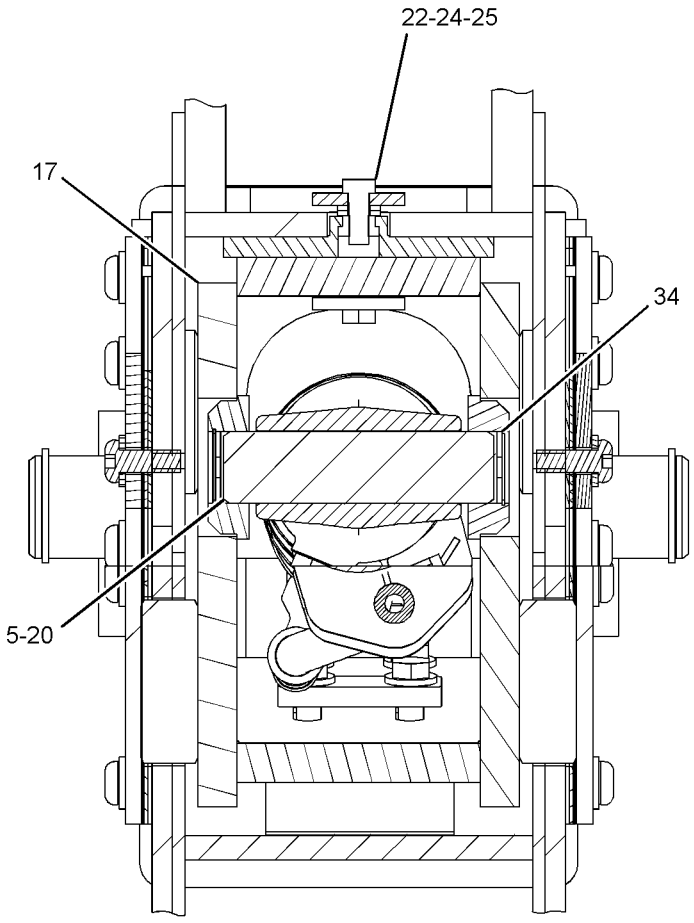

SECTION D-D

GRAPHIC #2 **<END>** g02140423

271-8666 STICK GP-HOE

S/N: LMS1-UP

PART OF 209-9924 BACKHOE AR-STANDARD STICK

AN ATTACHMENT

SMCS-6502 **i03869594**

NOTE	REF NO	GRAPHIC REF	PART NUMBER	QTY	PART NAME 1 2 3 4 5 6 (PRODUCT LEVEL)	SEE PAGE
B	1	1	**9R-1510**	8	WASHER (51X82X4-MM THK)	
B	2	1	**286-3086**	3	SPACER (56X130X1-MM THK)	
	3	1	**213-6696**	1	PIN	
	4	1	**213-6697**	1	PIN	
	5	1	**213-6710**	1	PIN AS	
	6	1	**213-6714**	1	PIN	
Y	7	1	**271-8669**	1	STICK AS	385
	8	1	**3B-8488**	1	FITTING-GREASE	
	9	1	**3B-8489**	5	FITTING-GREASE	
	10	1	**6V-4364**	4	RING-RETAINING	
	11	1	**6V-8344**	2	RING-RETAINING	
B	12	1	**9R-1502**	6	WASHER (56X90X4-MM THK)	

B-USE AS REQUIRED
Y-SEPARATE ILLUSTRATION

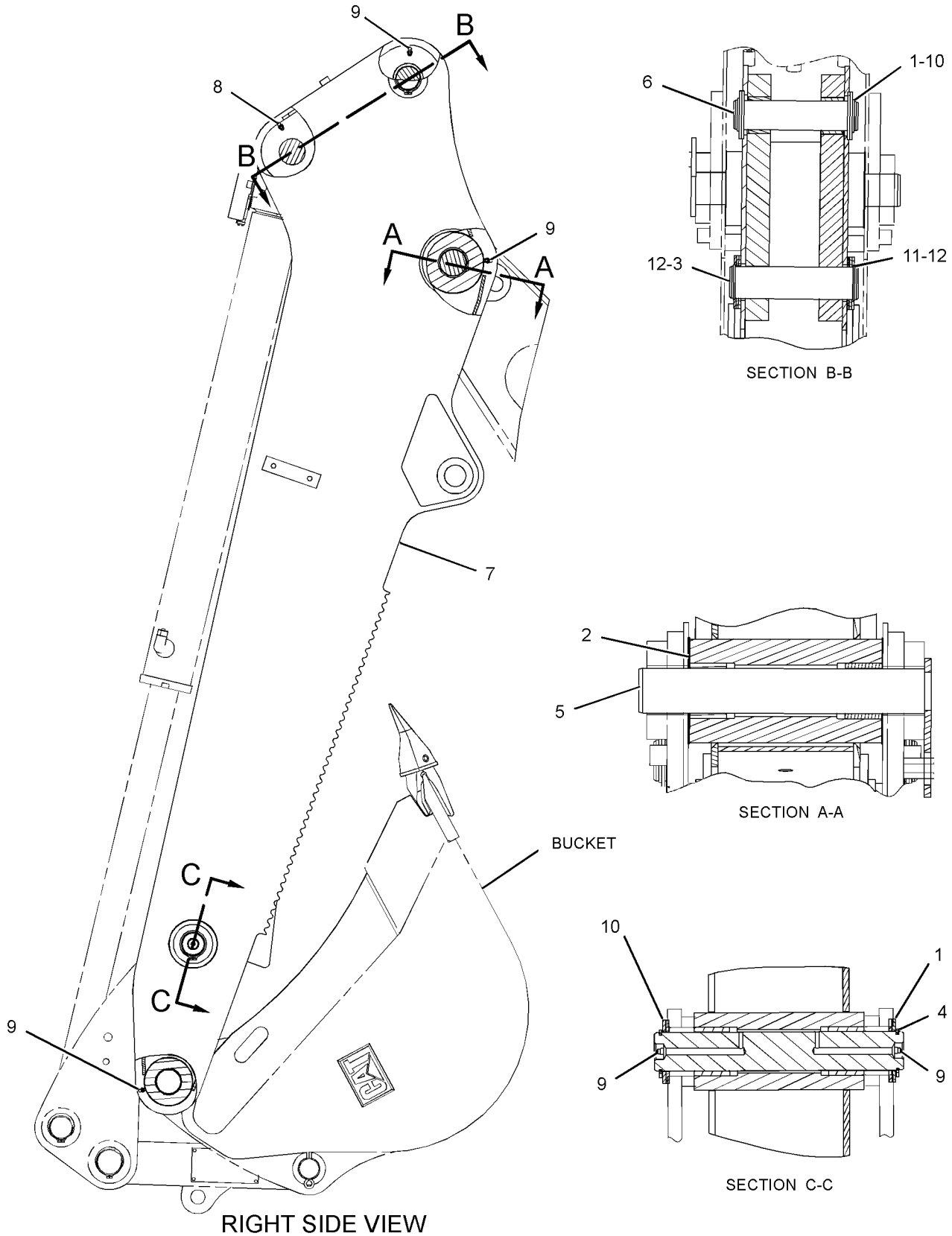

GRAPHIC #1 **<END>** g01239378

WORK TOOLS

232-2685 BUCKET AR-MULTIPURPOSE

S/N: LMS1-UP

AN ATTACHMENT

SMCS-6104 **i03849802**

NOTE	PART NUMBER	QTY	PART NAME 1 2 3 4 5 6 (PRODUCT LEVEL)	SEE PAGE
Y	**216-8801**	1	BUCKET GP-MULTIPURPOSE	464
Y	**104-6310**	1	FORK GP	479

Y-SEPARATE ILLUSTRATION

<END>

251-1157 BUCKET AS-GENERAL PURPOSE

S/N: LMS1-UP
0.8-CU M (1-CU YD) CAPACITY
PART OF 251-1780 BUCKET GP-GENERAL PURPOSE
AN ATTACHMENT

SMCS-6101 **i03865389**

NOTE	REF NO	GRAPHIC REF	PART NUMBER	QTY	PART NAME 1 2 3 4 5 6 (PRODUCT LEVEL)	SEE PAGE
	1	1	*251-1172*	2	BRACKET AS-LIFT (RH)	
					(EACH INCLUDES)	
	1A	1	**9R-0111**	1	BEARING-SLEEVE	
	2	1	*251-1173*	2	BRACKET AS-LIFT (LH)	
					(EACH INCLUDES)	
	2A	1	**9R-0111**	1	BEARING-SLEEVE	
	3	1	**9R-0347**	2	EDGE	
	4	1	**9R-4672**	1	EDGE	
	5	1	**9R-5205**	1	EDGE (LH)	
	6	1	**9R-5206**	1	EDGE (RH)	

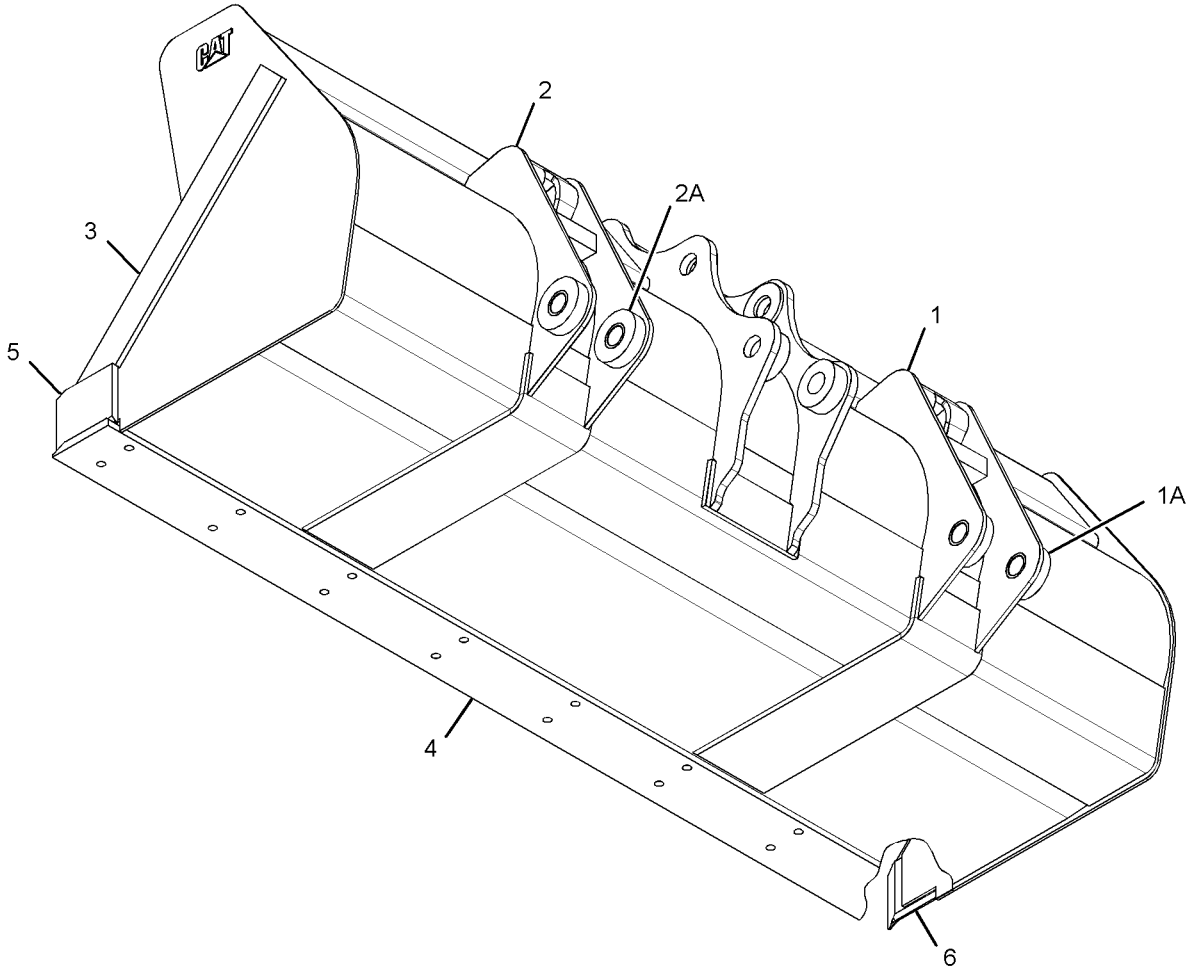

GRAPHIC #1 **<END>** g01342321

WORK TOOLS

251-1160 BUCKET AS-GENERAL PURPOSE

S/N: LMS1-UP
0.96-CU M (1.25-CU YD)
PART OF 251-1789 BUCKET GP-GENERAL PURPOSE
AN ATTACHMENT

SMCS-6101 **i03850232**

NOTE	REF NO	GRAPHIC REF	PART NUMBER	QTY	PART NAME 1 2 3 4 5 6 (PRODUCT LEVEL)	SEE PAGE
	1	1	*251-1172*	2	BRACKET AS-LIFT (RH)	
					(EACH INCLUDES)	
	1A	1	**9R-0111**	1	BEARING-SLEEVE	
	2	1	*251-1173*	2	BRACKET AS-LIFT (LH)	
					(EACH INCLUDES)	
	2A	1	**9R-0111**	1	BEARING-SLEEVE	
	3	1	**9R-0376**	2	EDGE	
	4	1	**9R-4672**	1	EDGE	
	5	1	**9R-5205**	1	EDGE (LH)	
	6	1	**9R-5206**	1	EDGE (RH)	

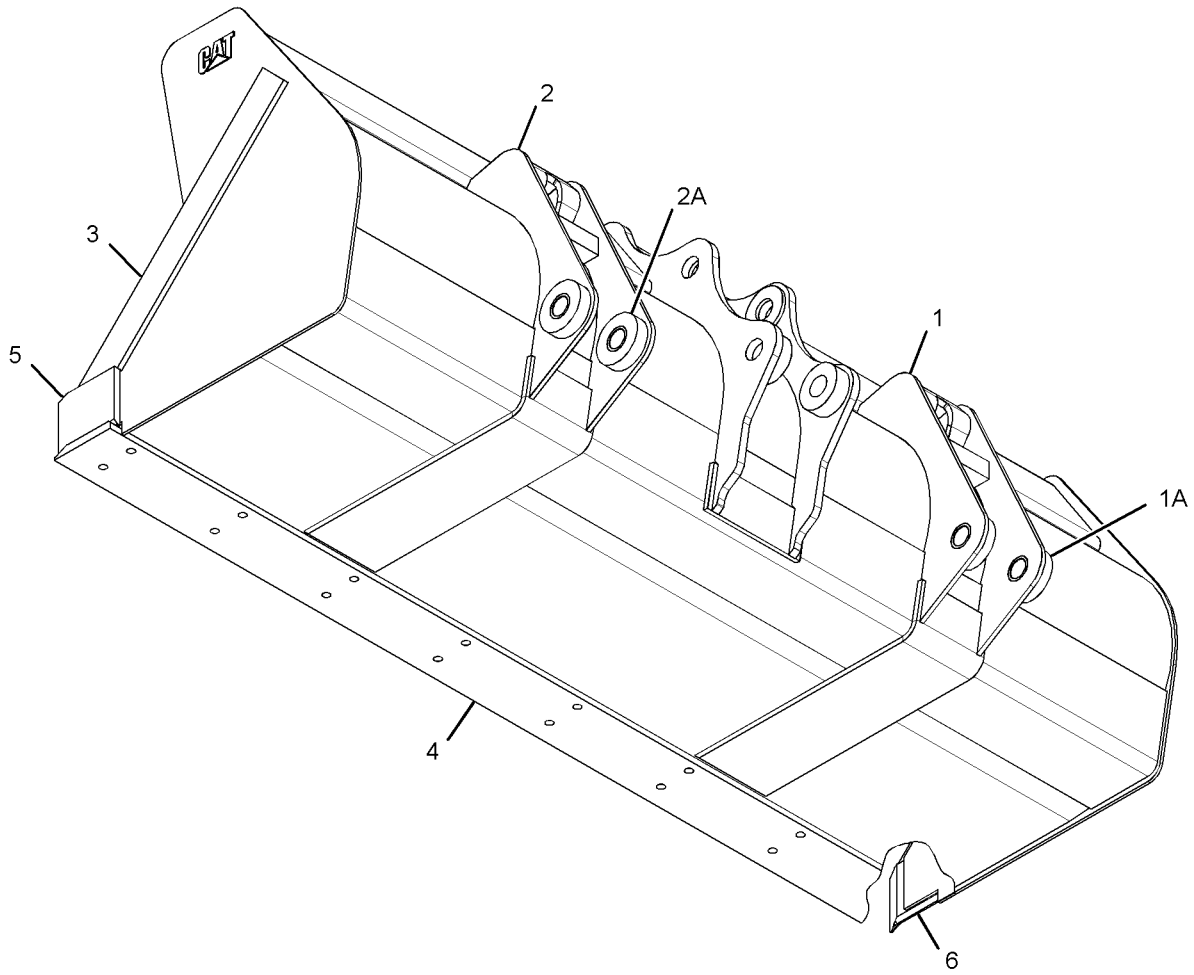

GRAPHIC #1 **<END>** g01342321

WORK TOOLS

219-3355 BUCKET AS-HOE

S/N: LMS1-UP
305-MM (12-IN)
PART OF 219-3379 BUCKET GP-HOE
AN ATTACHMENT

SMCS-6503 **i02655056**

NOTE	REF NO	GRAPHIC REF	PART NUMBER	QTY	PART NAME 1 2 3 4 5 6 (PRODUCT LEVEL)	SEE PAGE
	1	1	*151-7929*	1	BRACKET AS (LH)	
	1A	1	**9R-0320**	1	BEARING-SLEEVE	
	1B	1	**154-5257**	1	BEARING-SLEEVE	
	3	1	*151-7930*	1	BRACKET AS (RH)	
	3A	1	**9R-0320**	1	BEARING-SLEEVE	
	3B	1	**154-5257**	1	BEARING-SLEEVE	
	4	1	**161-4130**	2	PLATE-IDENTIFICATION (CAT)	
	5	1	**201-1235**	3	ADAPTER (2-STRAP)	
	6	1	**219-9494**	1	EDGE	

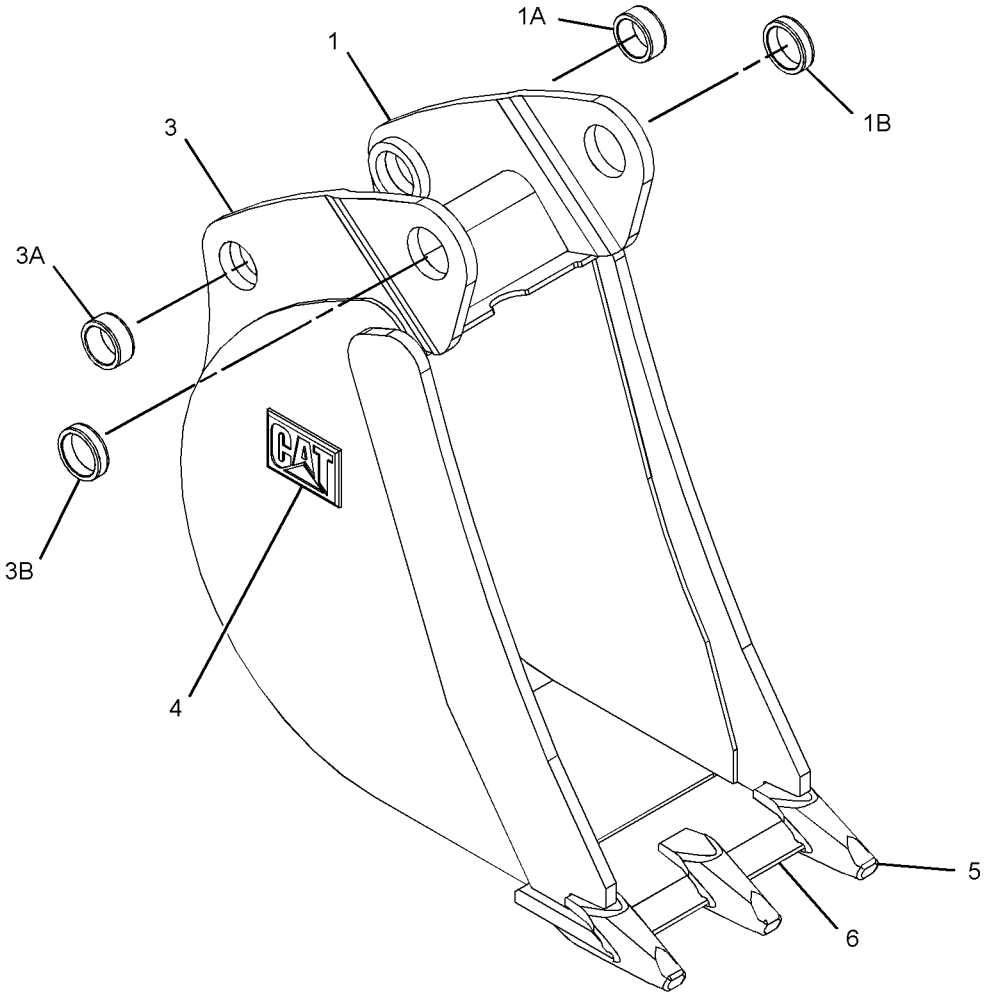

GRAPHIC #1 **<END>** g01341909

219-3356 BUCKET AS-HOE

S/N: LMS1-UP
458-MM (18-IN)
PART OF 219-3380 BUCKET GP-HOE
AN ATTACHMENT

SMCS-6503 **i02673289**

NOTE	REF NO	GRAPHIC REF	PART NUMBER	QTY	PART NAME 1 2 3 4 5 6 (PRODUCT LEVEL)	SEE PAGE
	1	1	*151-7902*	1	BRACKET AS (LH)	
	1A	1	**9R-0162**	1	BEARING-SLEEVE	
	1B	1	**168-0480**	1	BEARING-SLEEVE	
	2	1	*151-7903*	1	BRACKET AS (RH)	
	2A	1	**9R-0162**	1	BEARING-SLEEVE	
	2B	1	**168-0480**	1	BEARING-SLEEVE	
	3	1	**161-4130**	2	PLATE-IDENTIFICATION (CAT)	
	4	1	**201-1235**	4	ADAPTER (2-STRAP)	
	5	1	**219-9487**	1	EDGE	

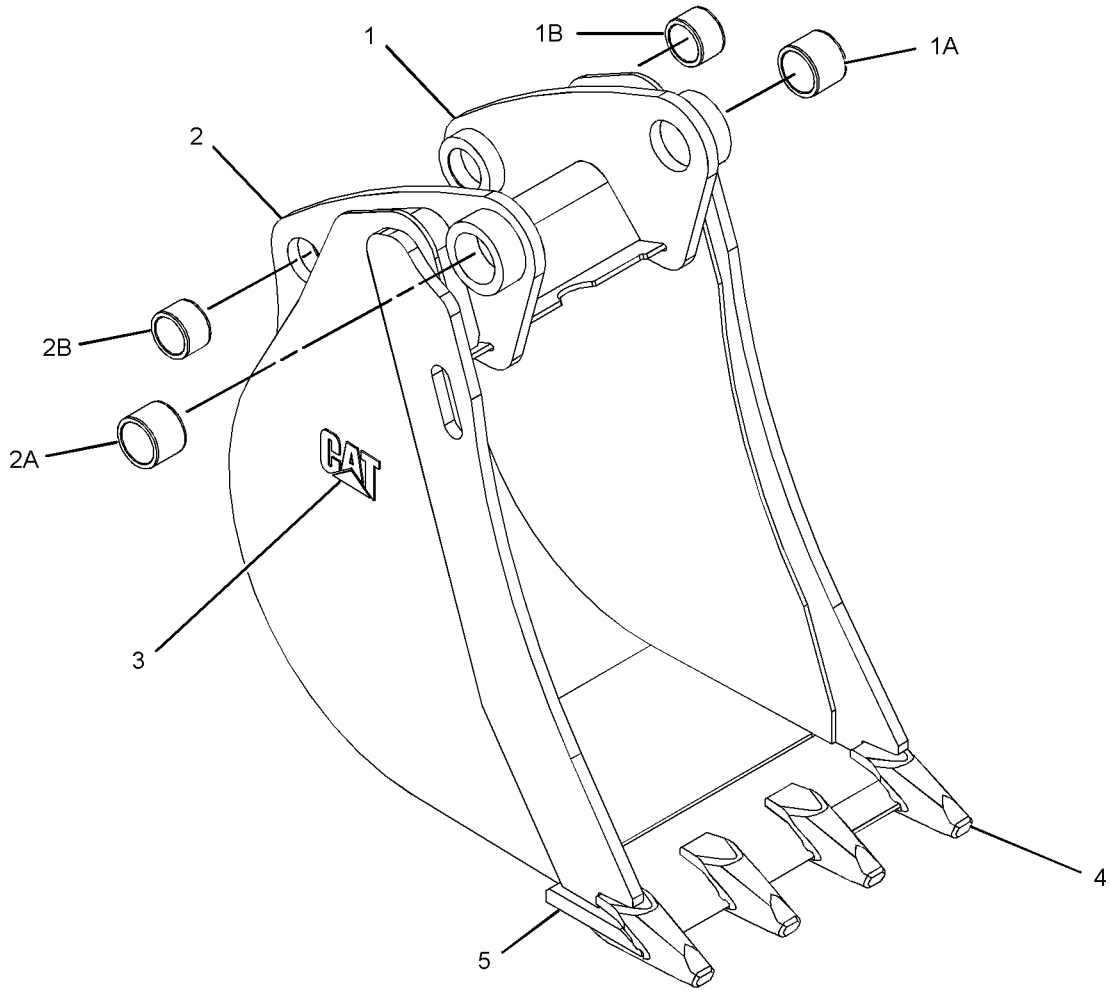

GRAPHIC #1 **<END>** g01335125

WORK TOOLS

219-3357 BUCKET AS-HOE

S/N: LMS1-UP
610-MM (24-IN)
PART OF 219-3381 BUCKET GP-HOE
AN ATTACHMENT

SMCS-6503 **i02659640**

NOTE	REF NO	GRAPHIC REF	PART NUMBER	QTY	PART NAME 1 2 3 4 5 6 (PRODUCT LEVEL)	SEE PAGE
	1	1	*151-7902*	1	BRACKET AS (LH)	
	1A	1	**9R-0162**	1	BEARING-SLEEVE	
	1B	1	**168-0480**	1	BEARING-SLEEVE	
	2	1	*151-7903*	1	BRACKET AS (RH)	
	2A	1	**9R-0162**	1	BEARING-SLEEVE	
	2B	1	**168-0480**	1	BEARING-SLEEVE	
	3	1	**161-4130**	2	PLATE-IDENTIFICATION (CAT)	
	4	1	**201-1235**	5	ADAPTER (2-STRAP)	
	5	1	**219-9488**	1	EDGE	

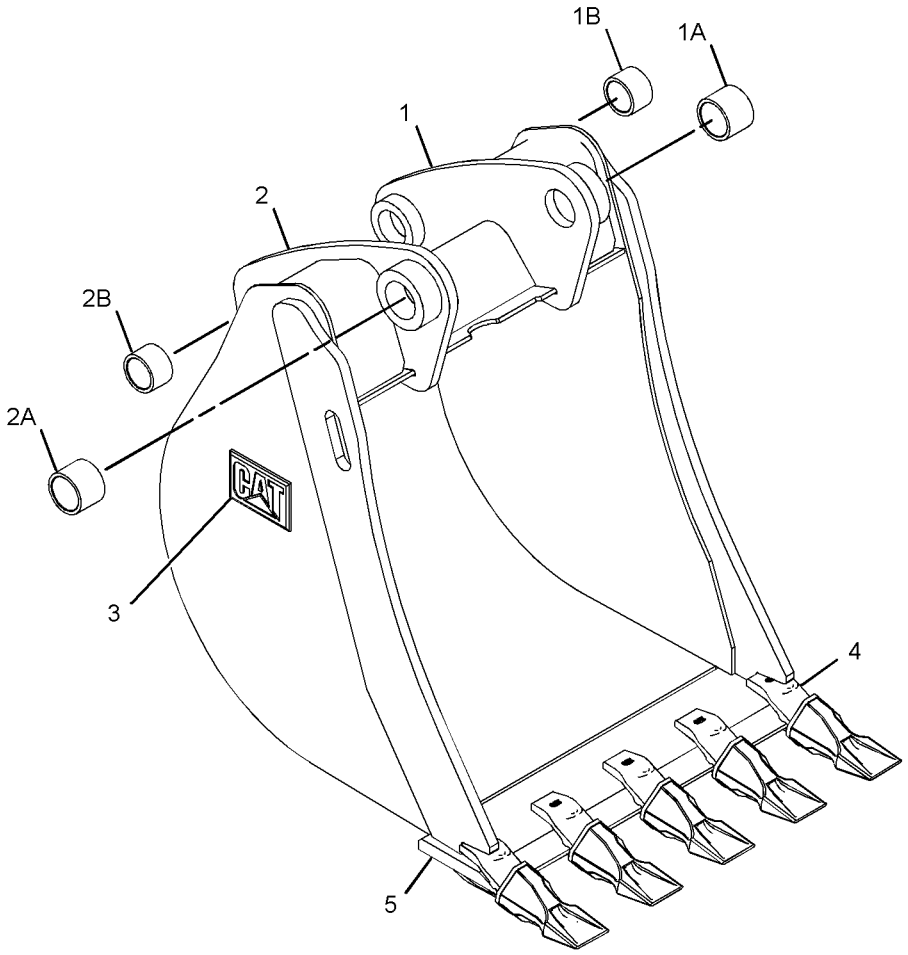

GRAPHIC #1 **<END>** g01336103

WORK TOOLS

219-3358 BUCKET AS-HOE

S/N: LMS1-UP
762-MM (30-IN)
PART OF 219-3382 BUCKET GP-HOE
AN ATTACHMENT

SMCS-6503 **i02651240**

NOTE	REF NO	GRAPHIC REF	PART NUMBER	QTY	PART NAME 1 2 3 4 5 6 (PRODUCT LEVEL)	SEE PAGE
	1	1	*151-7902*	1	BRACKET AS (LH)	
	1A	1	**9R-0162**	1	BEARING-SLEEVE	
	1B	1	**168-0480**	1	BEARING-SLEEVE	
	2	1	*151-7903*	1	BRACKET AS (RH)	
	2A	1	**9R-0162**	1	BEARING-SLEEVE	
	2B	1	**168-0480**	1	BEARING-SLEEVE	
	3	1	**161-4130**	2	PLATE-IDENTIFICATION (CAT)	
	4	1	**201-1235**	5	ADAPTER (2-STRAP)	
	5	1	**219-9489**	1	EDGE	

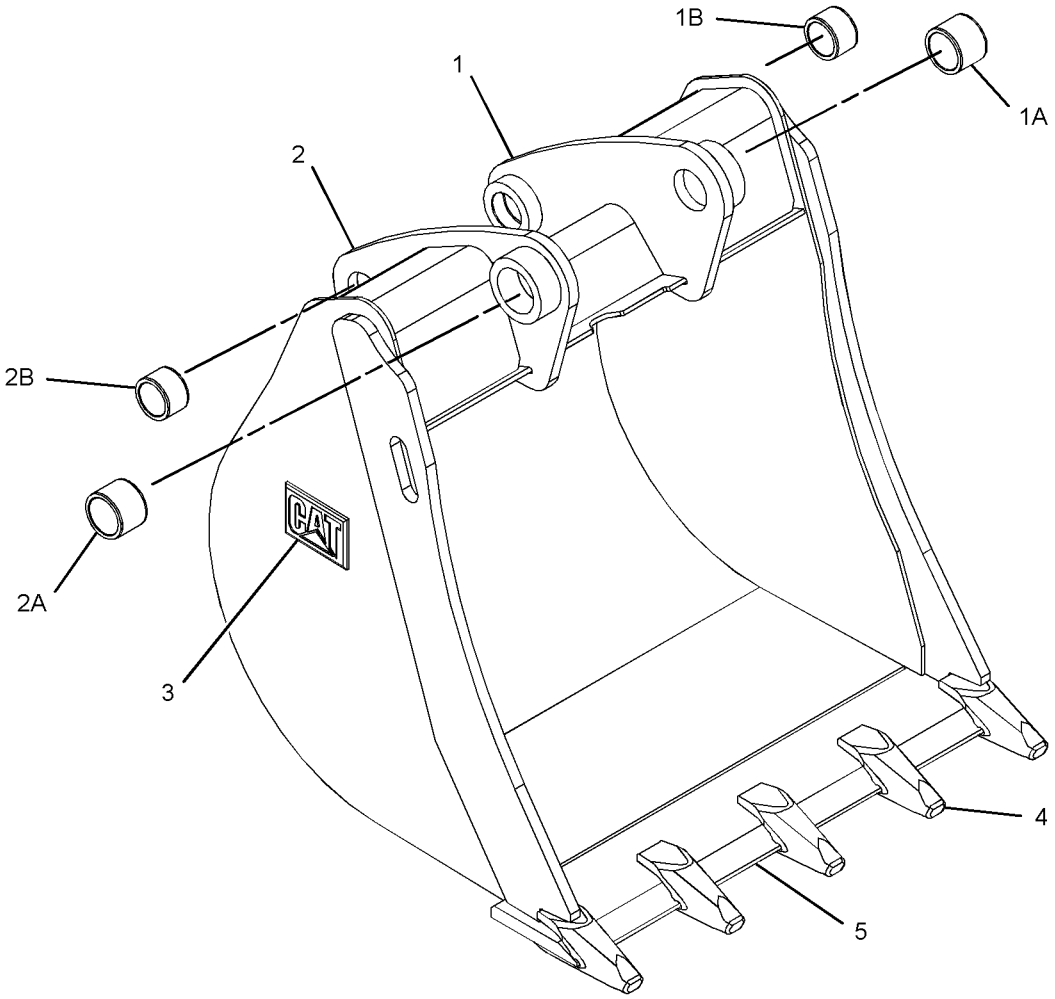

GRAPHIC #1 **<END>** g01341875

WORK TOOLS

219-3359 BUCKET AS-HOE

S/N: LMS1-UP
914-MM (36-IN)
PART OF 219-3383 BUCKET GP-HOE
AN ATTACHMENT

SMCS-6503 **i02651457**

NOTE	REF NO	GRAPHIC REF	PART NUMBER	QTY	PART NAME 1 2 3 4 5 6 (PRODUCT LEVEL)	SEE PAGE
	1	1	*151-7902*	1	BRACKET AS (LH)	
	1A	1	**9R-0162**	1	BEARING-SLEEVE	
	1B	1	**168-0480**	1	BEARING-SLEEVE	
	2	1	*151-7903*	1	BRACKET AS (RH)	
	2A	1	**9R-0162**	1	BEARING-SLEEVE	
	2B	1	**168-0480**	1	BEARING-SLEEVE	
	3	1	**161-4130**	2	PLATE-IDENTIFICATION (CAT)	
	4	1	**201-1235**	6	ADAPTER (2-STRAP)	
	5	1	**219-9490**	1	EDGE	

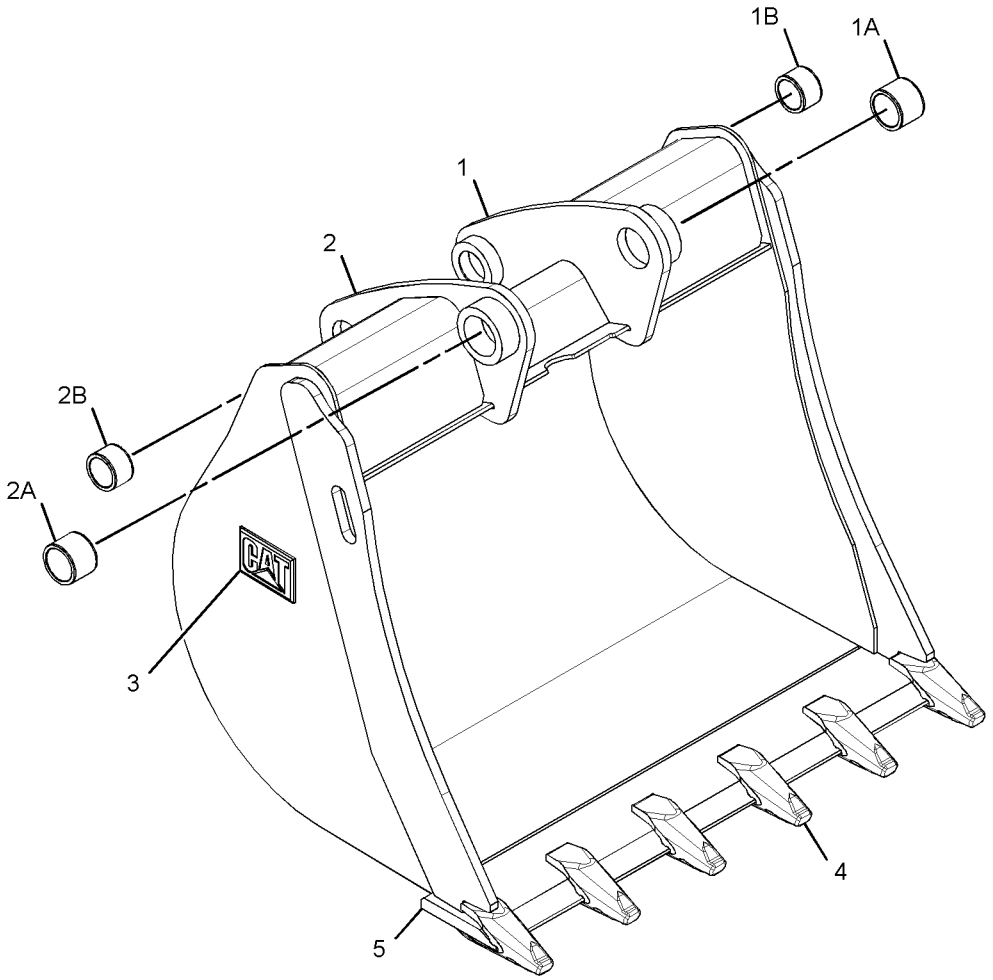

GRAPHIC #1 **<END>** g01341811

219-3360 BUCKET AS-HOE—HEAVY-DUTY

S/N: LMS1-UP
305-MM (12-IN)
PART OF 219-3384 BUCKET GP-HOE
AN ATTACHMENT

SMCS-6503 **i02651460**

NOTE	REF NO	GRAPHIC REF	PART NUMBER	QTY	PART NAME 1 2 3 4 5 6 (PRODUCT LEVEL)	SEE PAGE
	1	1	**134-5884**	1	EDGE (LH)	
	2	1	**134-5885**	1	EDGE (RH)	
	3	1	**151-7927**	2	PLATE	
	4	1	*151-7929*	1	BRACKET AS (LH)	
	4A	1	**9R-0320**	1	BEARING-SLEEVE	
	4B	1	**154-5257**	1	BEARING-SLEEVE	
	5	1	*151-7930*	1	BRACKET AS (RH)	
	5A	1	**9R-0320**	1	BEARING-SLEEVE	
	5B	1	**154-5257**	1	BEARING-SLEEVE	
	6	1	**161-4130**	2	PLATE-IDENTIFICATION (CAT)	
	7	1	**201-1234**	3	ADAPTER (2-STRAP)	
	8	1	**219-9493**	1	EDGE	

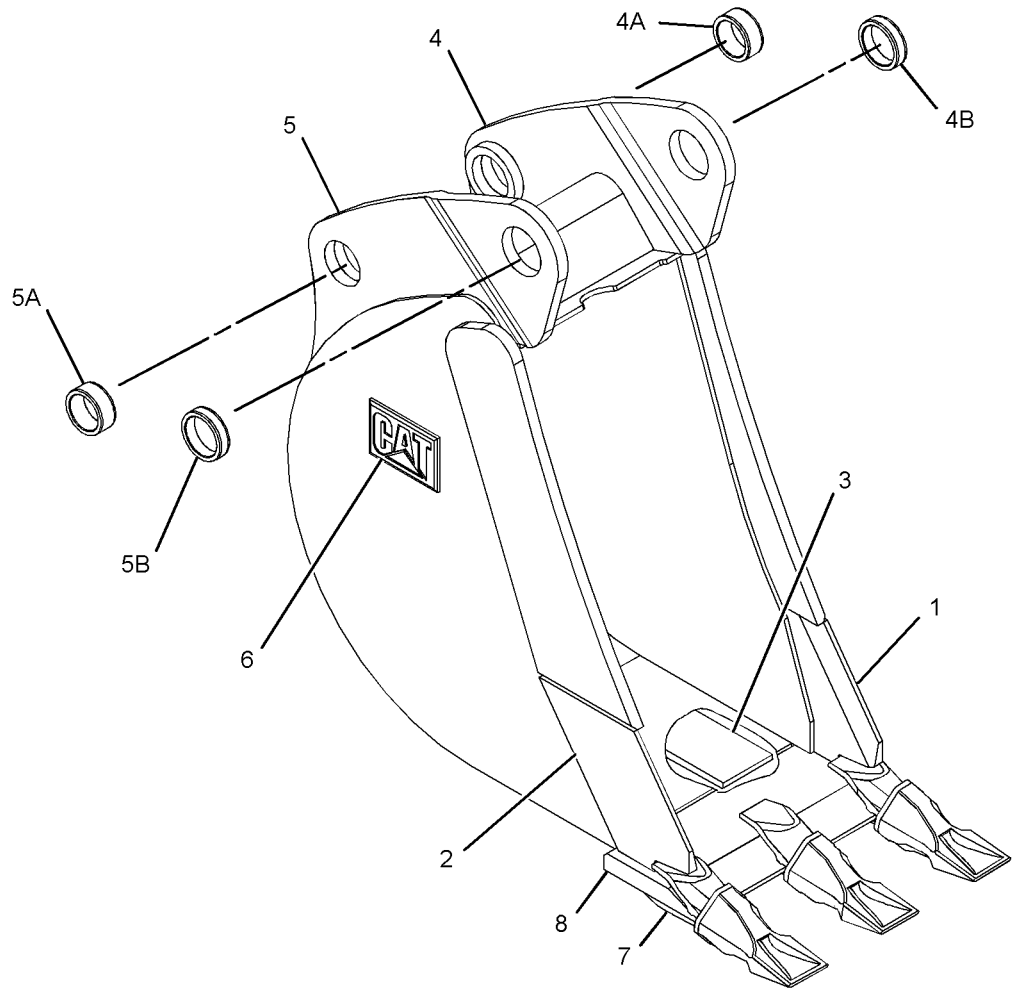

GRAPHIC #1 **<END>** g01335502

219-3361 BUCKET AS-HOE—HEAVY-DUTY

S/N: LMS1-UP
407-MM (16-IN)
PART OF 219-3385 BUCKET GP-HOE
AN ATTACHMENT

SMCS-6503 **i02651468**

NOTE	REF NO	GRAPHIC REF	PART NUMBER	QTY	PART NAME 1 2 3 4 5 6 (PRODUCT LEVEL)	SEE PAGE
	1	1	**134-5884**	1	EDGE (LH)	
	2	1	**134-5885**	1	EDGE (RH)	
	3	1	*151-7902*	1	BRACKET AS (LH)	
	3A	1	**9R-0162**	1	BEARING-SLEEVE	
	3B	1	**168-0480**	1	BEARING-SLEEVE	
	4	1	*151-7903*	1	BRACKET AS (RH)	
	4A	1	**9R-0162**	1	BEARING-SLEEVE	
	4B	1	**168-0480**	1	BEARING-SLEEVE	
	5	1	**151-7927**	3	PLATE	
	6	1	**161-4130**	2	PLATE-IDENTIFICATION (CAT)	
	7	1	**201-1234**	3	ADAPTER (2-STRAP)	
	8	1	**219-9482**	1	EDGE	

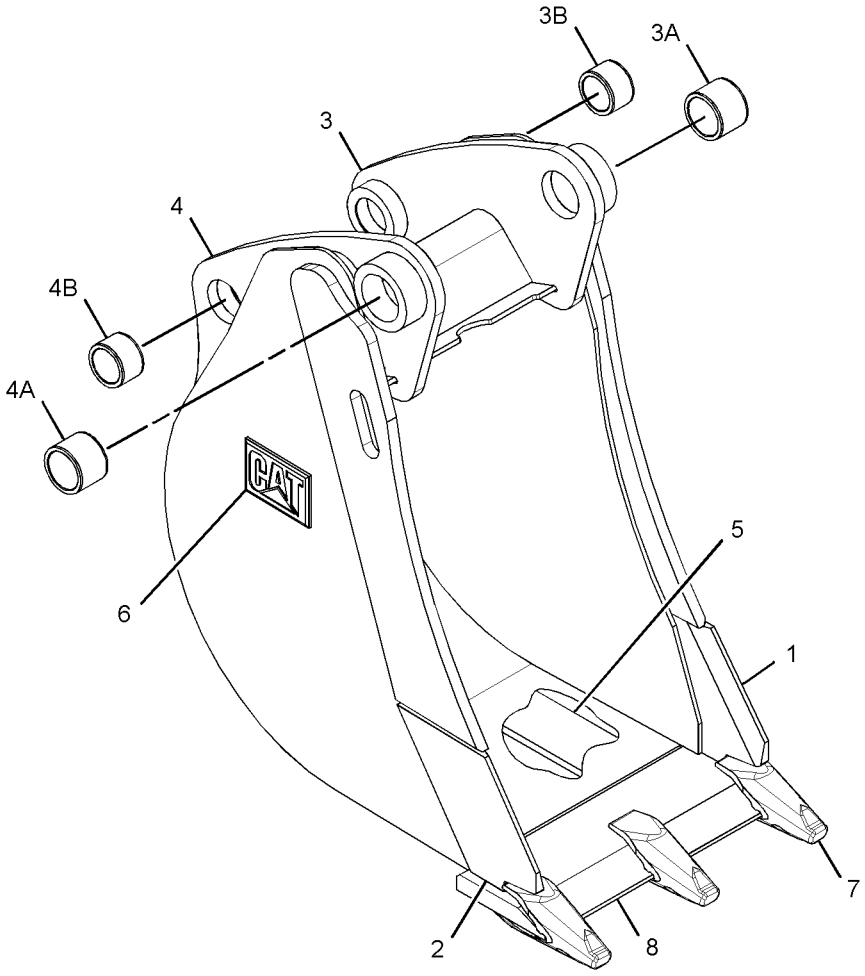

GRAPHIC #1 **<END>** g01341887

219-3362 BUCKET AS-HOE—HEAVY-DUTY

S/N: LMS1-UP
458-MM (18-IN)
PART OF 219-3386 BUCKET GP-HOE
AN ATTACHMENT

SMCS-6503 **i02655175**

NOTE	REF NO	GRAPHIC REF	PART NUMBER	QTY	PART NAME 1 2 3 4 5 6 (PRODUCT LEVEL)	SEE PAGE
	1	1	**134-5884**	1	EDGE (LH)	
	2	1	**134-5885**	1	EDGE (RH)	
	3	1	*151-7902*	1	BRACKET AS (LH)	
	3A	1	**9R-0162**	1	BEARING-SLEEVE	
	3B	1	**168-0480**	1	BEARING-SLEEVE	
	4	1	*151-7903*	1	BRACKET AS (RH)	
	4A	1	**9R-0162**	1	BEARING-SLEEVE	
	4B	1	**168-0480**	1	BEARING-SLEEVE	
	5	1	**151-7927**	3	PLATE	
	6	1	**161-4130**	2	PLATE-IDENTIFICATION (CAT)	
	7	1	**201-1234**	4	ADAPTER (2-STRAP)	
	8	1	**219-9483**	1	EDGE	

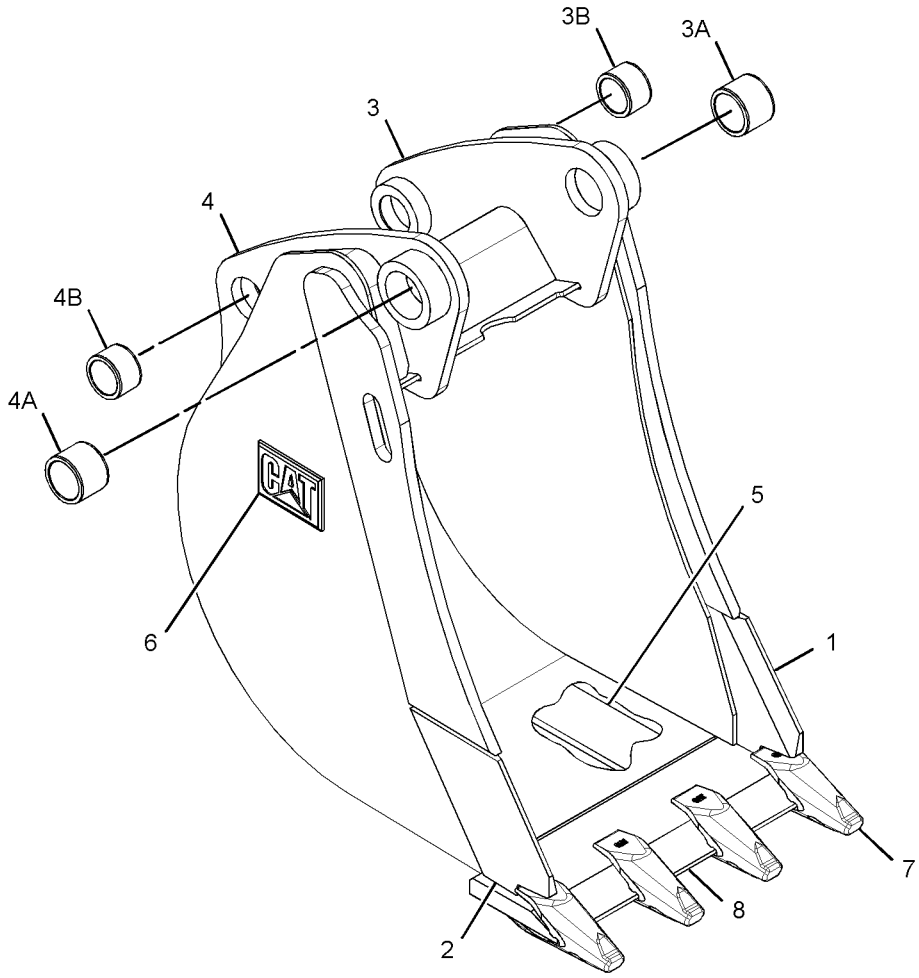

GRAPHIC #1 **<END>** g01341856

WORK TOOLS

219-3363 BUCKET AS-HOE—HEAVY-DUTY

S/N: LMS1-UP
610-MM (24-IN)
PART OF 219-3387 BUCKET GP-HOE
AN ATTACHMENT

SMCS-6503 **i02655227**

NOTE	REF NO	GRAPHIC REF	PART NUMBER	QTY	PART NAME 1 2 3 4 5 6 (PRODUCT LEVEL)	SEE PAGE
	1	1	**134-5884**	1	EDGE (LH)	
	2	1	**134-5885**	1	EDGE (RH)	
	3	1	*151-7902*	1	BRACKET AS (LH)	
	3A	1	**9R-0162**	1	BEARING-SLEEVE	
	3B	1	**168-0480**	1	BEARING-SLEEVE	
	4	1	*151-7903*	1	BRACKET AS (RH)	
	4A	1	**9R-0162**	1	BEARING-SLEEVE	
	4B	1	**168-0480**	1	BEARING-SLEEVE	
	5	1	**151-7927**	4	PLATE	
	6	1	**161-4130**	2	PLATE-IDENTIFICATION (CAT)	
	7	1	**201-1234**	5	ADAPTER (2-STRAP)	
	8	1	**219-9484**	1	EDGE	

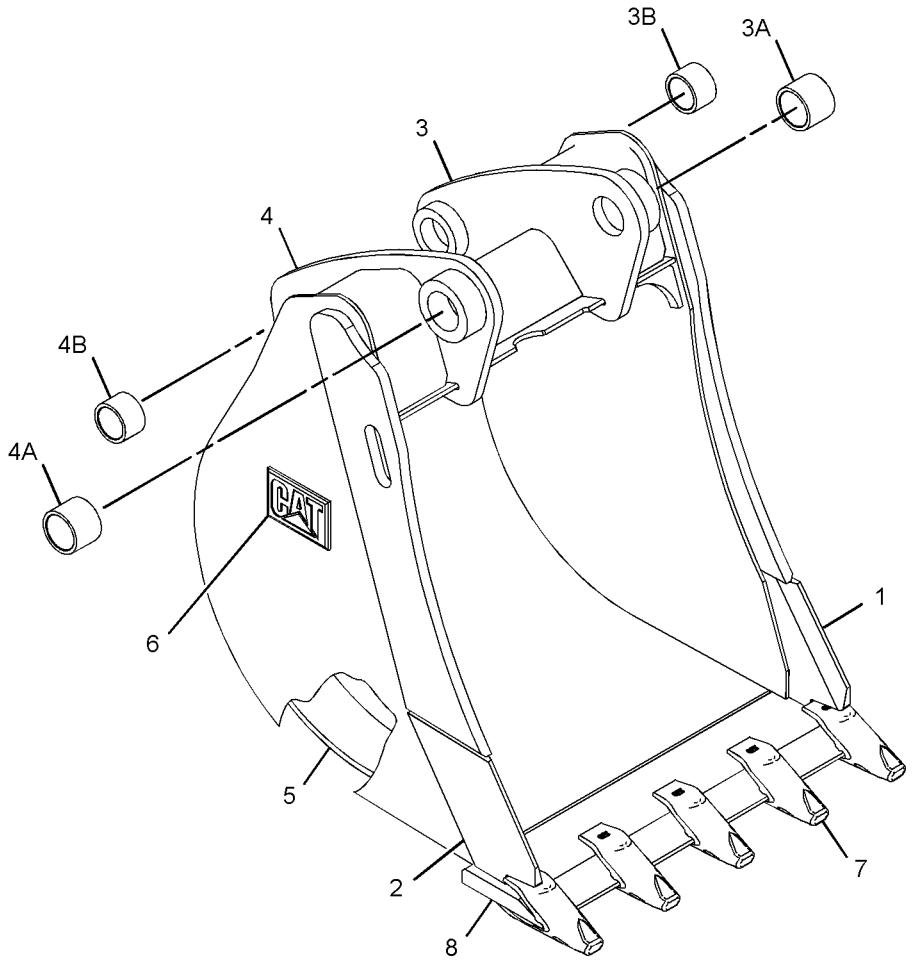

GRAPHIC #1 **<END>** g01335129

219-3364 BUCKET AS-HOE—HEAVY-DUTY

S/N: LMS1-UP
762-MM (30-IN)
PART OF 219-3388 BUCKET GP-HOE
AN ATTACHMENT

SMCS-6503 **i02651475**

NOTE	REF NO	GRAPHIC REF	PART NUMBER	QTY	PART NAME 1 2 3 4 5 6 (PRODUCT LEVEL)	SEE PAGE
	1	1	**134-5884**	1	EDGE (LH)	
	2	1	**134-5885**	1	EDGE (RH)	
	3	1	*151-7902*	1	BRACKET AS (LH)	
	3A	1	**9R-0162**	1	BEARING-SLEEVE	
	3B	1	**168-0480**	1	BEARING-SLEEVE	
	4	1	*151-7903*	1	BRACKET AS (RH)	
	4A	1	**9R-0162**	1	BEARING-SLEEVE	
	4B	1	**168-0480**	1	BEARING-SLEEVE	
	5	1	**151-7927**	4	PLATE	
	6	1	**161-4130**	2	PLATE-IDENTIFICATION (CAT)	
	7	1	**201-1234**	5	ADAPTER (2-STRAP)	
	8	1	**219-9485**	1	EDGE	

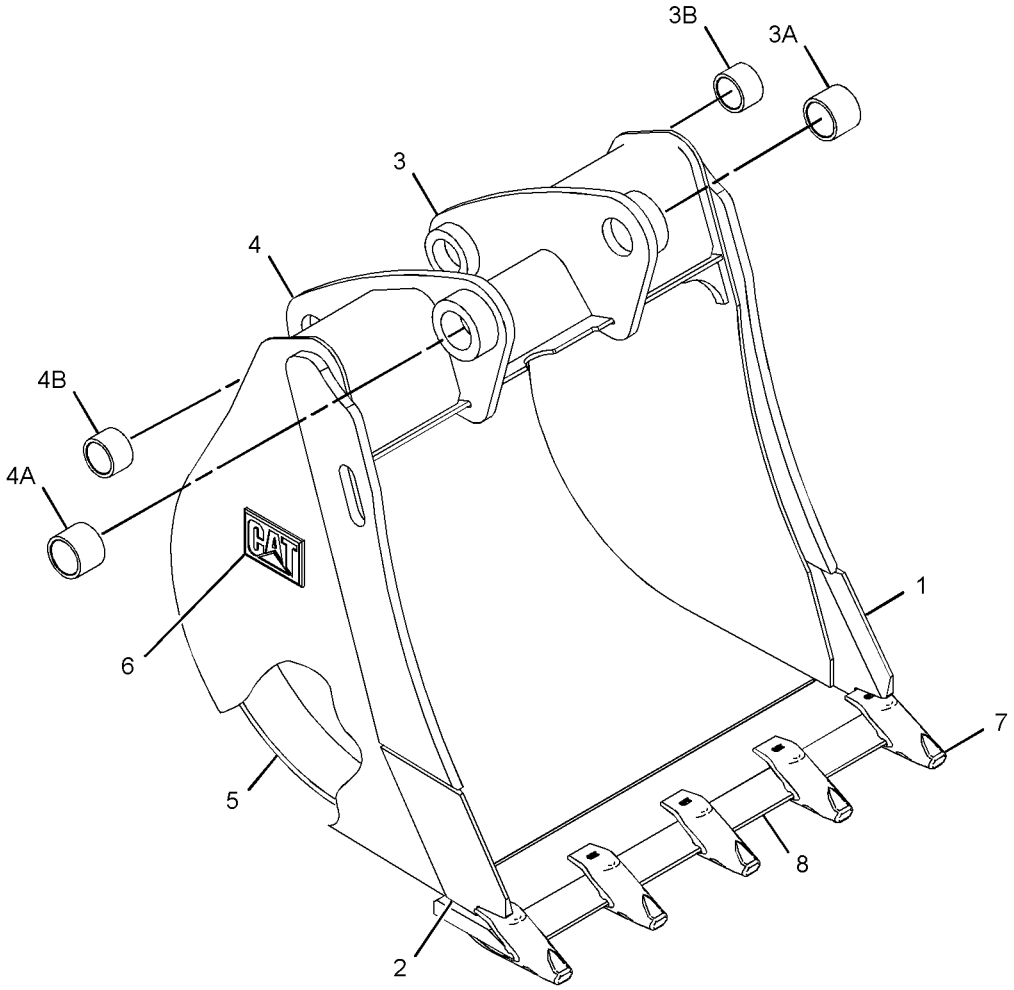

GRAPHIC #1 **<END>** g01337591

WORK TOOLS

219-3365 BUCKET AS-HOE—HEAVY-DUTY

S/N: LMS1-UP
914-MM (36-IN)
PART OF 219-3389 BUCKET GP-HOE
AN ATTACHMENT

SMCS-6503 **i02655246**

NOTE	REF NO	GRAPHIC REF	PART NUMBER	QTY	PART NAME 1 2 3 4 5 6 (PRODUCT LEVEL)	SEE PAGE
	1	1	**134-5884**	1	EDGE (LH)	
	2	1	**134-5885**	1	EDGE (RH)	
	3	1	*151-7902*	1	BRACKET AS (LH)	
	3A	1	**9R-0162**	1	BEARING-SLEEVE	
	3B	1	**168-0480**	1	BEARING-SLEEVE	
	4	1	*151-7903*	1	BRACKET AS (RH)	
	4A	1	**9R-0162**	1	BEARING-SLEEVE	
	4B	1	**168-0480**	1	BEARING-SLEEVE	
	5	1	**151-7927**	5	PLATE	
	6	1	**161-4130**	2	PLATE-IDENTIFICATION (CAT)	
	7	1	**201-1234**	6	ADAPTER (2-STRAP)	
	8	1	**219-9486**	1	EDGE	

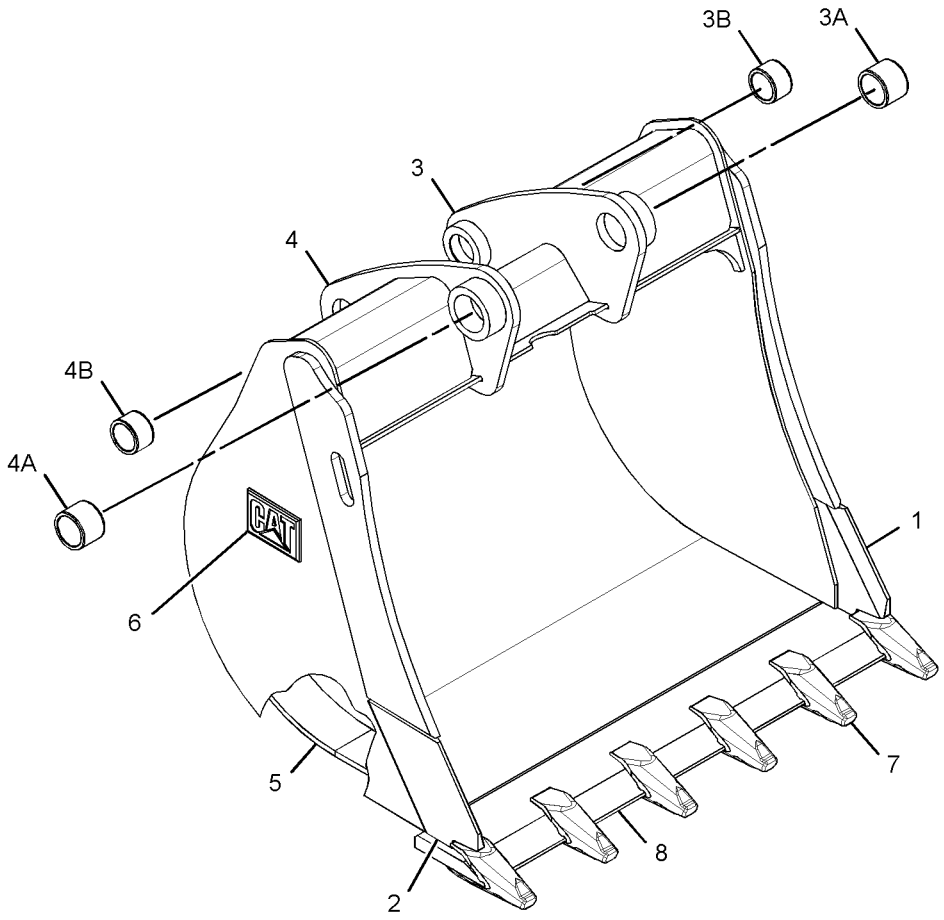

GRAPHIC #1 **<END>** g01341948

219-3370 BUCKET AS-HOE–ROCK

S/N: LMS1-UP
305-MM (12-IN)
PART OF 219-3394 BUCKET GP-HOE
AN ATTACHMENT

SMCS-6503 **i02659960**

NOTE	REF NO	GRAPHIC REF	PART NUMBER	QTY	PART NAME 1 2 3 4 5 6 (PRODUCT LEVEL)	SEE PAGE
	1	1	*151-7929*	1	BRACKET AS (LH)	
	1A	1	**9R-0320**	1	BEARING-SLEEVE	
	1B	1	**154-5257**	1	BEARING-SLEEVE	
	2	1	*151-7930*	1	BRACKET AS (RH)	
	2A	1	**9R-0320**	1	BEARING-SLEEVE	
	2B	1	**154-5257**	1	BEARING-SLEEVE	
	3	1	**161-4130**	2	PLATE-IDENTIFICATION (CAT)	
	4	1	**174-3949**	2	PLATE	
	5	1	**174-3950**	3	PLATE	
	6	1	**197-6258**	1	EDGE-RH	
	7	1	**197-6259**	1	EDGE-LH	
	8	1	**201-1234**	3	ADAPTER (2-STRAP)	
	9	1	**219-9493**	1	EDGE	

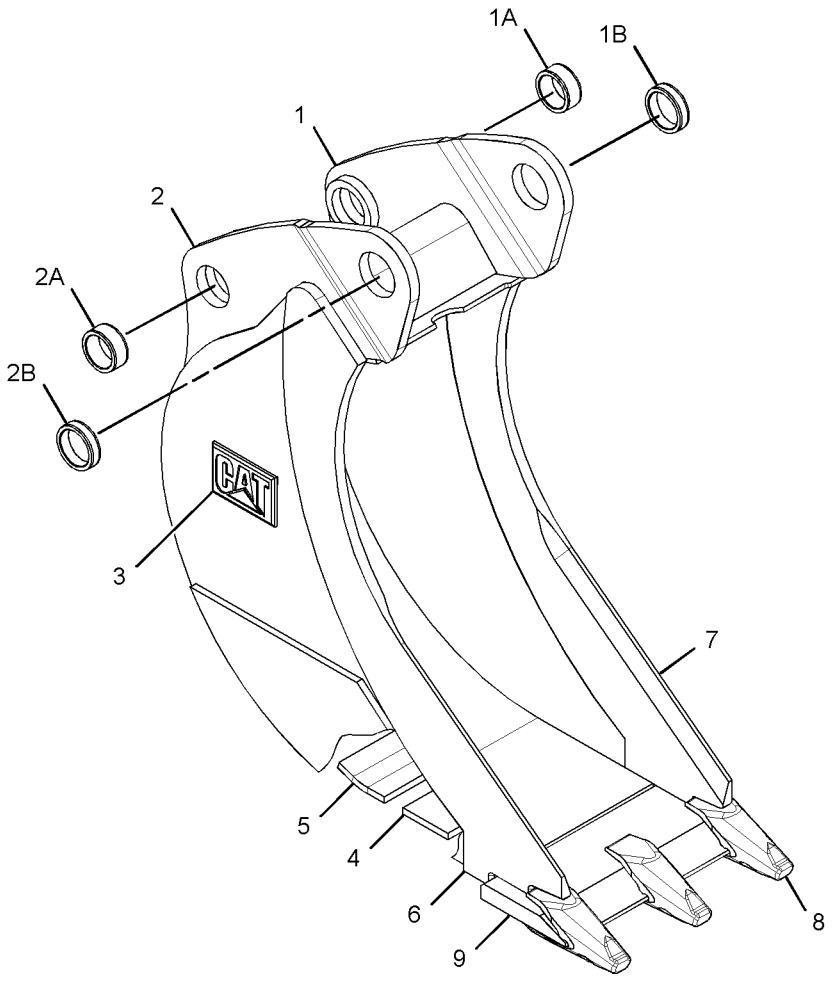

GRAPHIC #1 **<END>** g01342082

WORK TOOLS

219-3371 BUCKET AS-HOE—ROCK

S/N: LMS1-UP
458-MM (18-IN)
PART OF 219-3395 BUCKET GP-HOE
AN ATTACHMENT

SMCS-6503 **i02651996**

NOTE	REF NO	GRAPHIC REF	PART NUMBER	QTY	PART NAME 1 2 3 4 5 6 (PRODUCT LEVEL)	SEE PAGE
	1	1	*151-7902*	1	BRACKET AS (LH)	
	1A	1	**9R-0162**	1	BEARING-SLEEVE	
	1B	1	**168-0480**	1	BEARING-SLEEVE	
	2	1	*151-7903*	1	BRACKET AS (RH)	
	2A	1	**9R-0162**	1	BEARING-SLEEVE	
	2B	1	**168-0480**	1	BEARING-SLEEVE	
	3	1	**161-4130**	2	PLATE-IDENTIFICATION (CAT)	
	4	1	**172-8276**	2	PLATE	
	5	1	**172-8279**	4	PLATE	
	6	1	**196-8921**	1	EDGE (RH)	
	7	1	**196-8922**	1	EDGE (LH)	
	8	1	**201-1234**	4	ADAPTER (2-STRAP)	
	9	1	**219-9483**	1	EDGE	

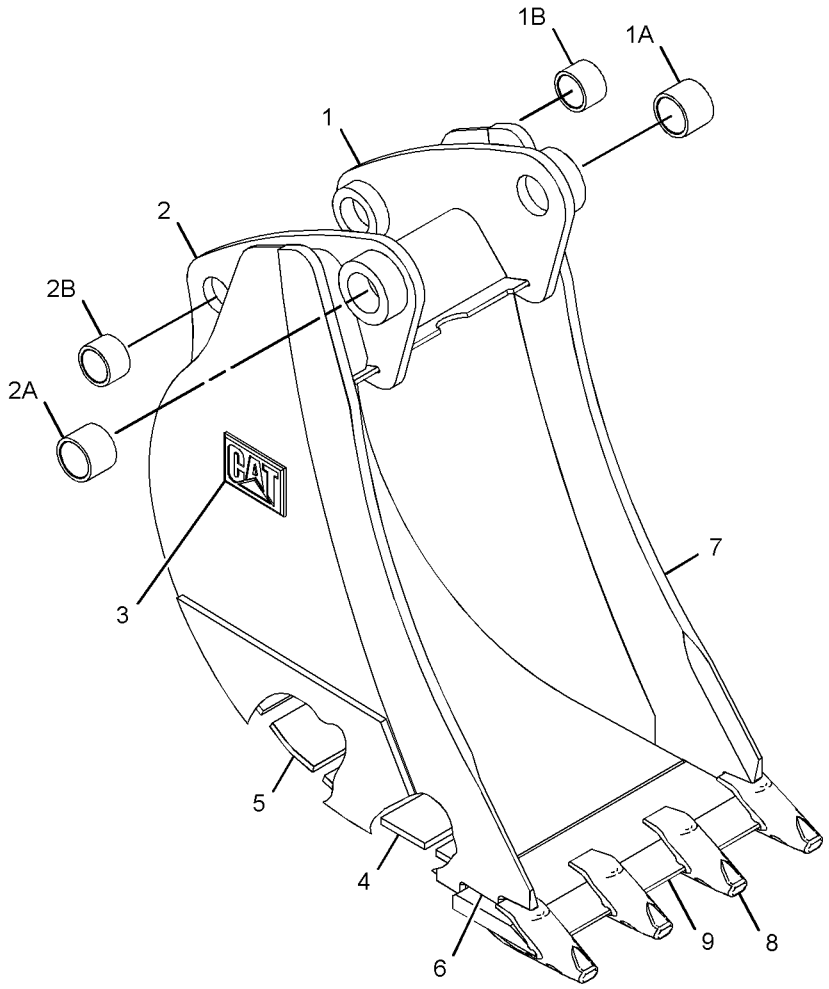

GRAPHIC #1 **<END>** g01340727

219-3372 BUCKET AS-HOE–ROCK

S/N: LMS1-UP
610-MM (24-IN)
PART OF 219-3396 BUCKET GP-HOE
AN ATTACHMENT

SMCS-6503 **i02652011**

NOTE	REF NO	GRAPHIC REF	PART NUMBER	QTY	PART NAME 1 2 3 4 5 6 (PRODUCT LEVEL)	SEE PAGE
	1	1	*151-7902*	1	BRACKET AS (LH)	
	1A	1	**168-0480**	1	BEARING-SLEEVE	
	1B	1	**9R-0162**	1	BEARING-SLEEVE	
	2	1	*151-7903*	1	BRACKET AS (RH)	
	2A	1	**168-0480**	1	BEARING-SLEEVE	
	2B	1	**9R-0162**	1	BEARING-SLEEVE	
	3	1	**161-4130**	2	PLATE-IDENTIFICATION (CAT)	
	4	1	**172-8277**	2	PLATE	
	5	1	**172-8280**	4	PLATE	
	6	1	**196-8921**	1	EDGE (RH)	
	7	1	**196-8922**	1	EDGE (LH)	
	8	1	**201-1234**	5	ADAPTER (2-STRAP)	
	9	1	**219-9484**	1	EDGE	

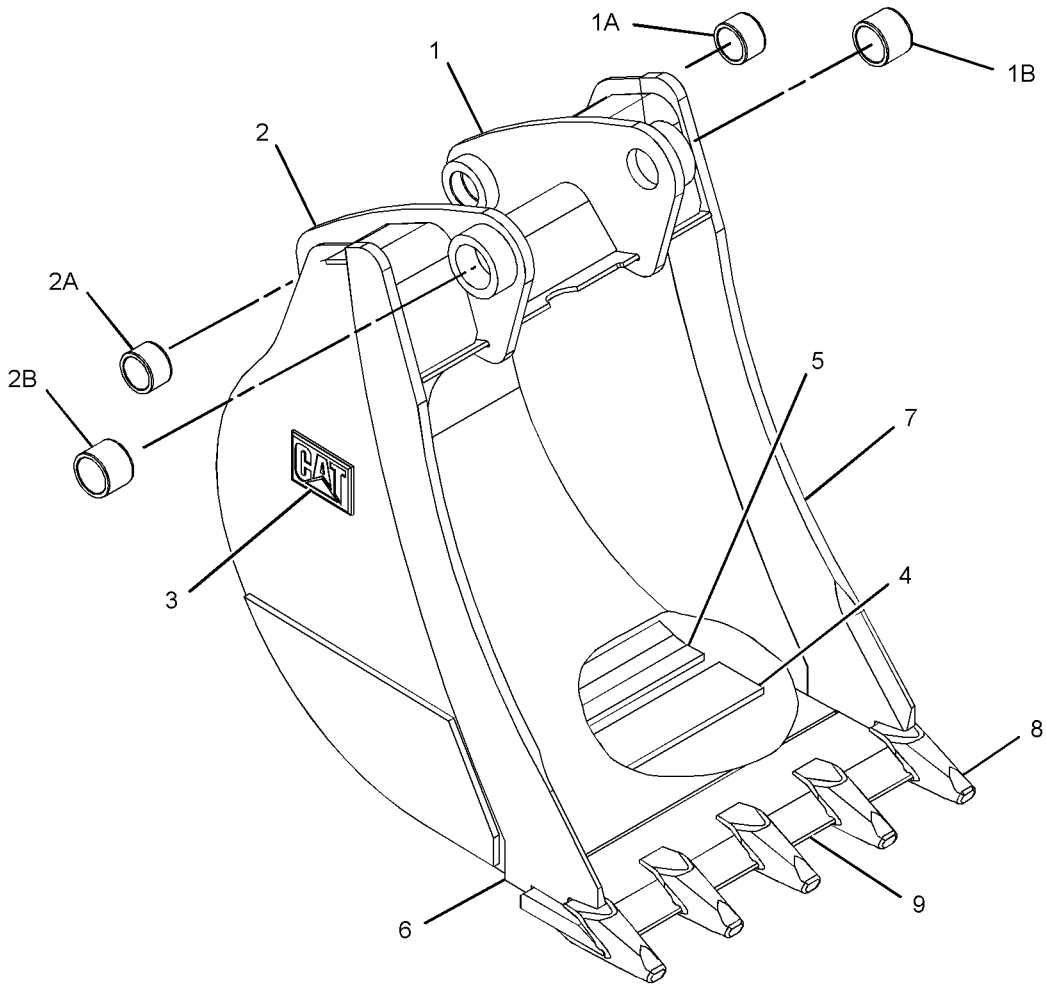

GRAPHIC #1 **<END>** g01341830

WORK TOOLS

219-3373 BUCKET AS-HOE—ROCK

S/N: LMS1-UP
762-MM (30-IN)
PART OF 219-3397 BUCKET GP-HOE
AN ATTACHMENT

SMCS-6503 **i02652014**

NOTE	REF NO	GRAPHIC REF	PART NUMBER	QTY	PART NAME 1 2 3 4 5 6 (PRODUCT LEVEL)	SEE PAGE
	1	1	*151-7902*	1	BRACKET AS (LH)	
	1A	1	**9R-0162**	1	BEARING-SLEEVE	
	1B	1	**168-0480**	1	BEARING-SLEEVE	
	2	1	*151-7903*	1	BRACKET AS (RH)	
	2A	1	**9R-0162**	1	BEARING-SLEEVE	
	2B	1	**168-0480**	1	BEARING-SLEEVE	
	3	1	**161-4130**	2	PLATE-IDENTIFICATION (CAT)	
	4	1	**172-8278**	2	PLATE	
	5	1	**174-4765**	4	PLATE	
	6	1	**196-8921**	1	EDGE (RH)	
	7	1	**196-8922**	1	EDGE (LH)	
	8	1	**201-1234**	5	ADAPTER (2-STRAP)	
	9	1	**219-9485**	1	EDGE	

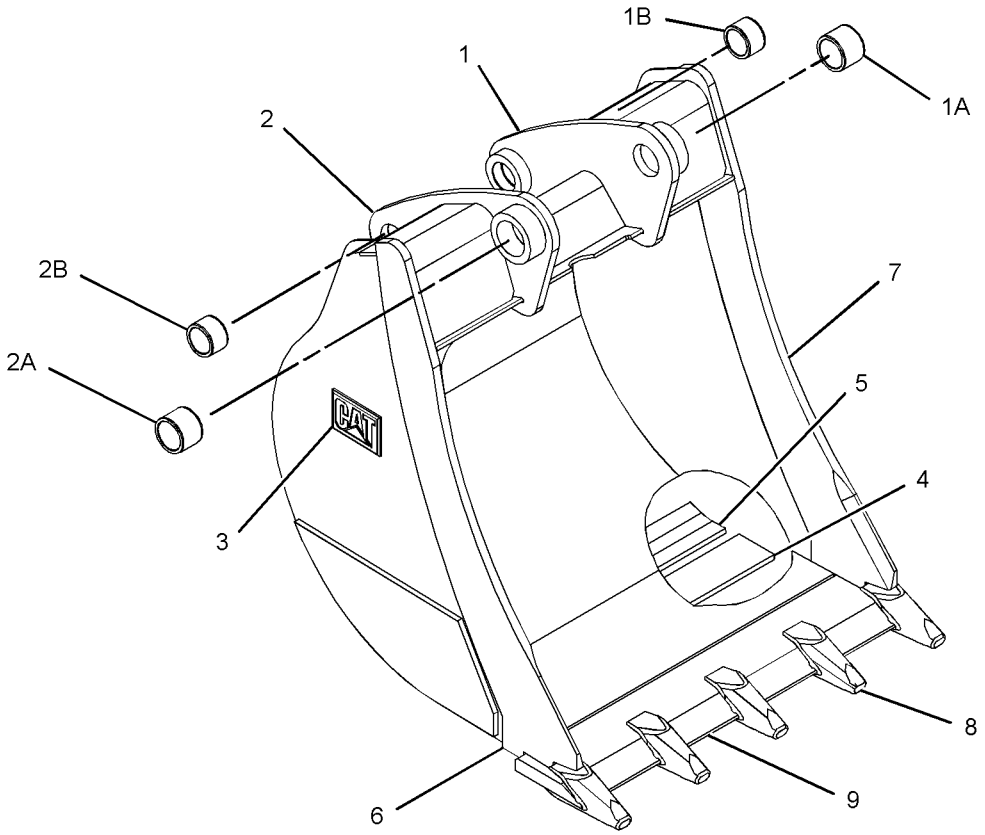

GRAPHIC #1 **<END>** g01334366

WORK TOOLS

219-3374 BUCKET AS-HOE–ROCK

S/N: LMS1-UP
914-MM(36-IN)
PART OF 219-3398 BUCKET GP-HOE
AN ATTACHMENT

SMCS-6503 **i02660336**

NOTE	REF NO	GRAPHIC REF	PART NUMBER	QTY	PART NAME 1 2 3 4 5 6 (PRODUCT LEVEL)	SEE PAGE
	1	1	*151-7902*	1	BRACKET AS (LH)	
	1A	1	**9R-0162**	1	BEARING-SLEEVE	
	1B	1	**168-0480**	1	BEARING-SLEEVE	
	2	1	*151-7903*	1	BRACKET AS (RH)	
	2A	1	**9R-0162**	1	BEARING-SLEEVE	
	2B	1	**168-0480**	1	BEARING-SLEEVE	
	3	1	**161-4130**	2	PLATE-IDENTIFICATION (CAT)	
	4	1	**196-8921**	1	EDGE (RH)	
	5	1	**196-8922**	1	EDGE (LH)	
	6	1	**201-1234**	6	ADAPTER (2-STRAP)	
	7	1	**219-9486**	1	EDGE	

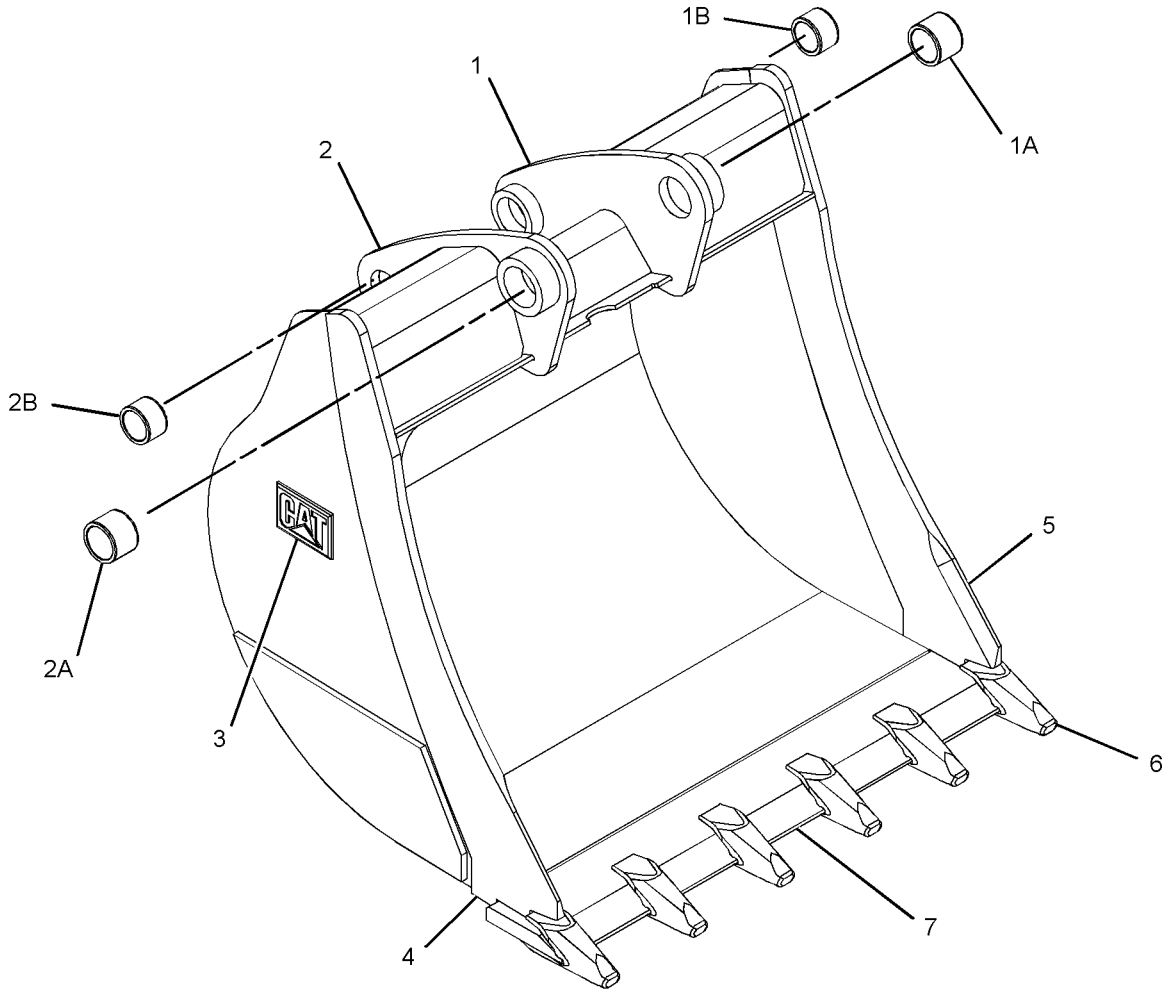

GRAPHIC #1 **<END>** g01342084

232-2752 BUCKET AS-HOE—HEAVY-DUTY, PIN-LOCK

S/N: LMS1-UP
305-MM (12-IN) WIDE
PART OF 247-1947 BUCKET GP-HOE
AN ATTACHMENT

SMCS-6503 **i03848129**

NOTE	REF NO	GRAPHIC REF	PART NUMBER	QTY	PART NAME 1 2 3 4 5 6 (PRODUCT LEVEL)	SEE PAGE
	1	1	**201-1234**	3	ADAPTER	
	2	1	**248-2574**	1	EDGE	
	3	1	**9R-0431**	2	BEARING-SLEEVE	

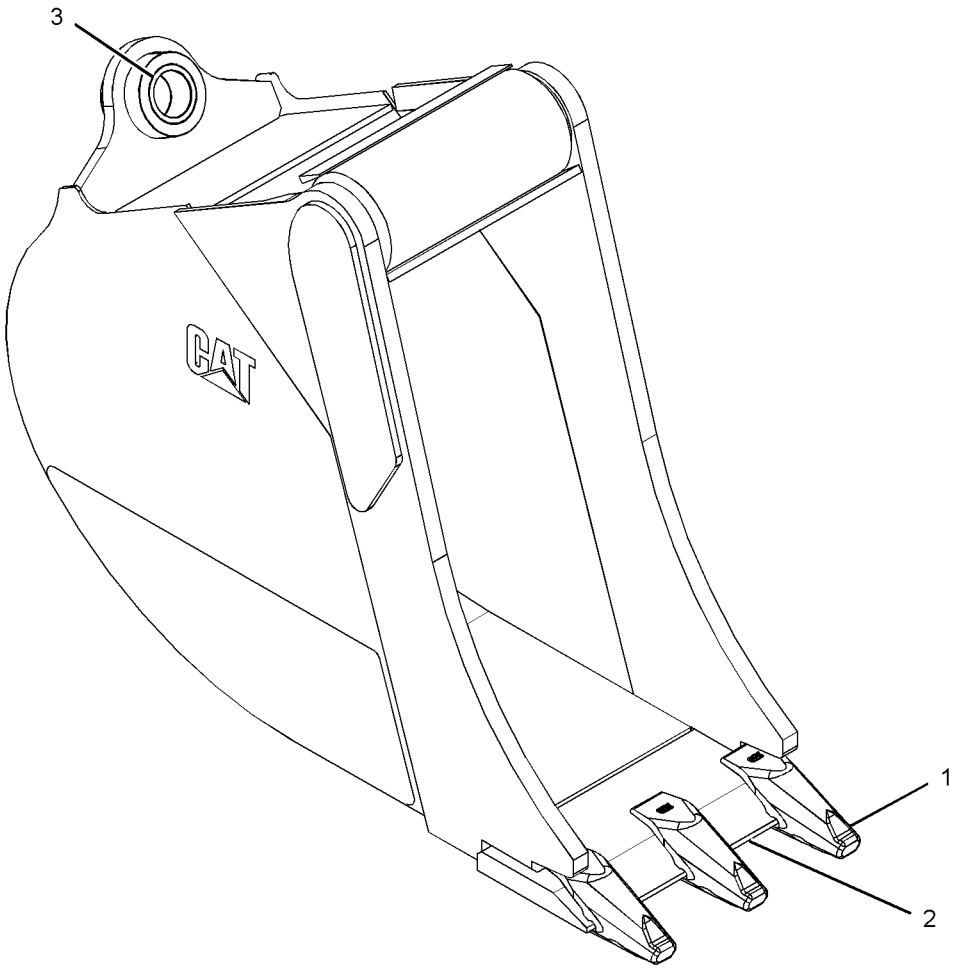

GRAPHIC #1 **<END>** g02095113

WORK TOOLS

232-2753 BUCKET AS-HOE—HEAVY-DUTY, PIN-LOCK

S/N: LMS1-UP
406-MM (16-IN)
PART OF 247-1948 BUCKET GP-HOE
AN ATTACHMENT

SMCS-6503 **i03849791**

NOTE	REF NO	GRAPHIC REF	PART NUMBER	QTY	PART NAME 1 2 3 4 5 6 (PRODUCT LEVEL)	SEE PAGE
	1	1	**201-1234**	3	ADAPTER	
	2	1	**9R-0431**	2	BEARING-SLEEVE	
	3	1	**248-2575**	1	EDGE	

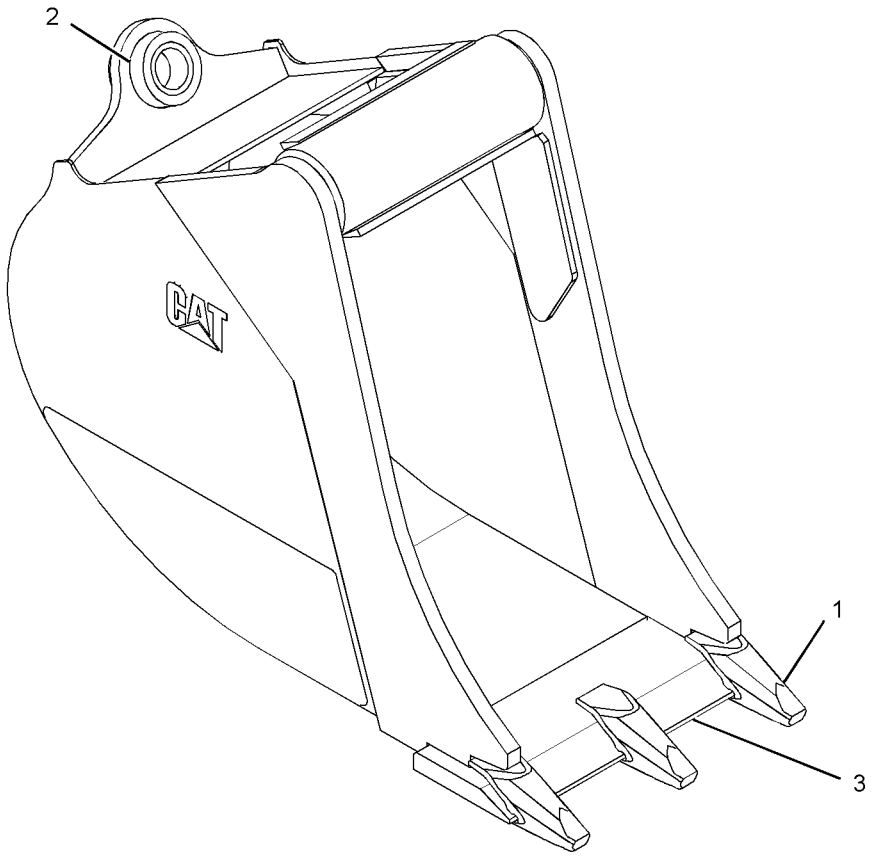

GRAPHIC #1 **<END>** g01943818

232-2754 BUCKET AS-HOE—HEAVY-DUTY, PIN-LOCK

S/N: LMS1-UP
458-MM (18-IN)
PART OF 247-1949 BUCKET GP-HOE
AN ATTACHMENT

SMCS-6503 **i03849797**

NOTE	REF NO	GRAPHIC REF	PART NUMBER	QTY	PART NAME 1 2 3 4 5 6 (PRODUCT LEVEL)	SEE PAGE
	1	1	**201-1234**	4	ADAPTER	
	2	1	**9R-0431**	2	BEARING-SLEEVE	
	3	1	**219-9483**	1	EDGE	

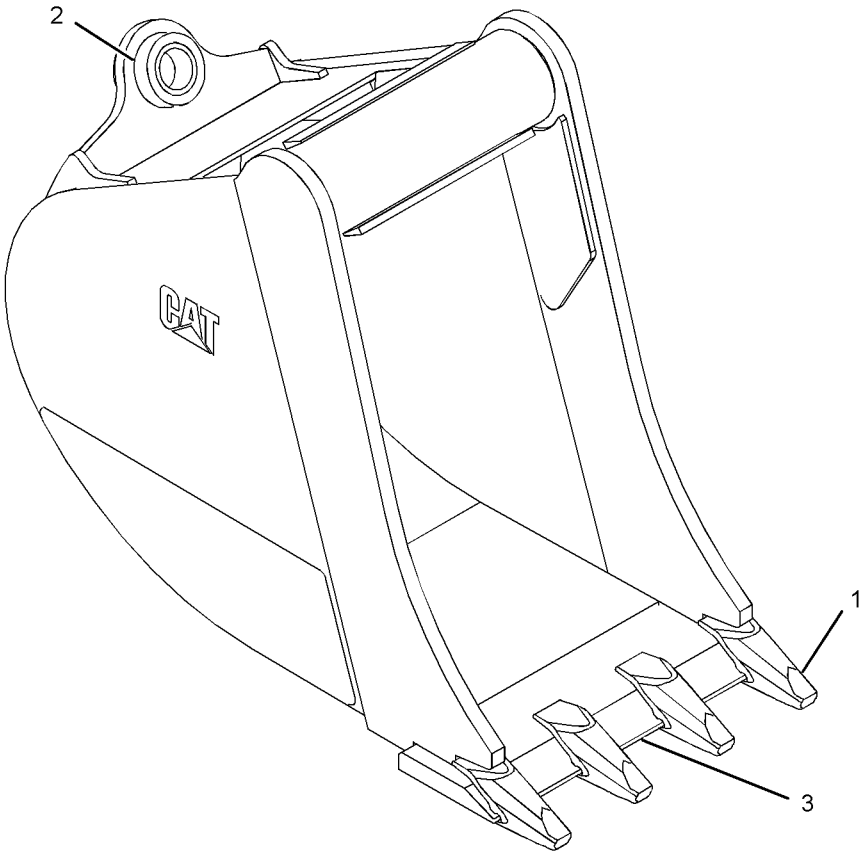

GRAPHIC #1 **<END>** g01943838

WORK TOOLS

232-2755 BUCKET AS-HOE—HEAVY-DUTY, PIN-LOCK

S/N: LMS1-UP
610-MM (24-IN)
PART OF 247-1950 BUCKET GP-HOE
AN ATTACHMENT

SMCS-6503 **i03849801**

NOTE	REF NO	GRAPHIC REF	PART NUMBER	QTY	PART NAME 1 2 3 4 5 6 (PRODUCT LEVEL)	SEE PAGE
	1	1	**201-1234**	5	ADAPTER	
	2	1	**219-9484**	1	EDGE	
	3	1	**9R-0431**	2	BEARING-SLEEVE	

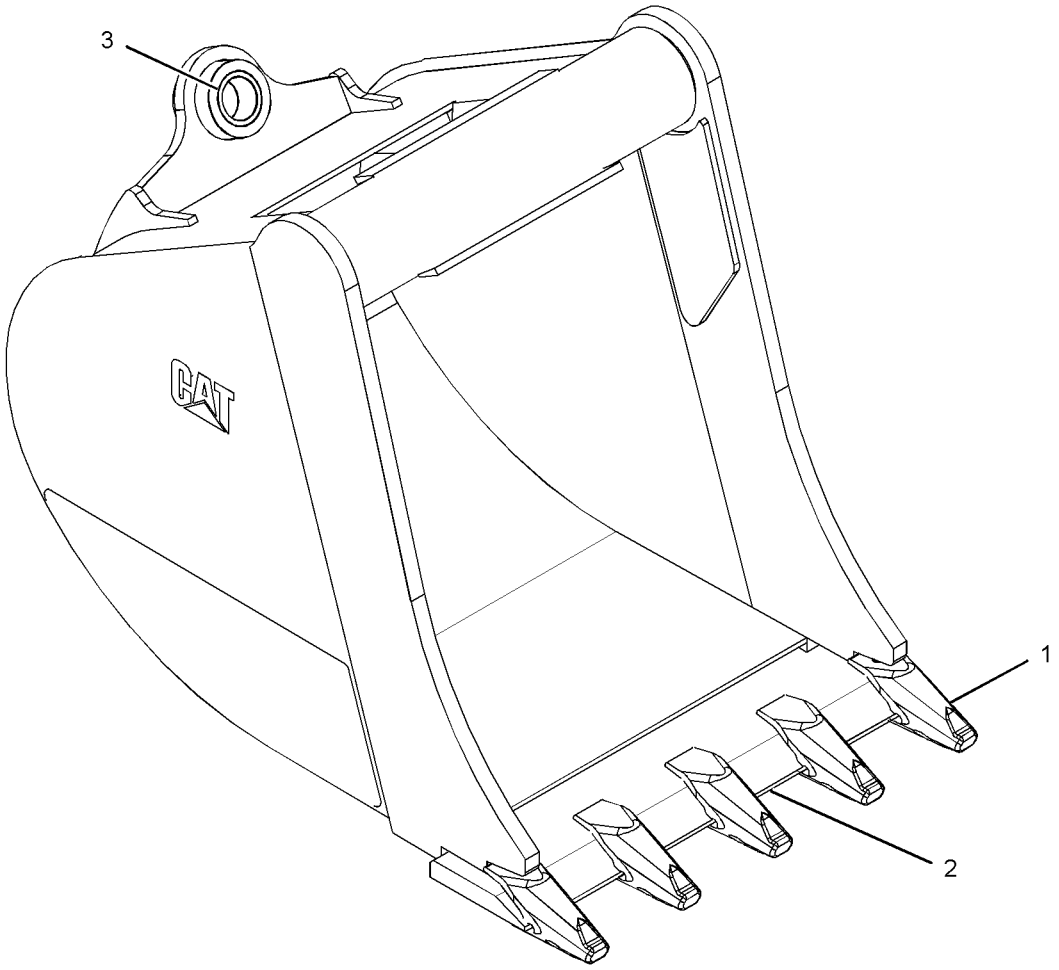

GRAPHIC #1 **<END>** g02095253

232-2756 BUCKET AS-HOE—HEAVY-DUTY, PIN-LOCK

S/N: LMS1-UP
762-MM (30-IN)
PART OF 247-1951 BUCKET GP-HOE
AN ATTACHMENT

SMCS-6503 **i03849805**

NOTE	REF NO	GRAPHIC REF	PART NUMBER	QTY	PART NAME 1 2 3 4 5 6 (PRODUCT LEVEL)	SEE PAGE
	1	1	**201-1234**	5	ADAPTER	
	2	1	**219-9485**	1	EDGE	
	3	1	**9R-0431**	2	BEARING-SLEEVE	

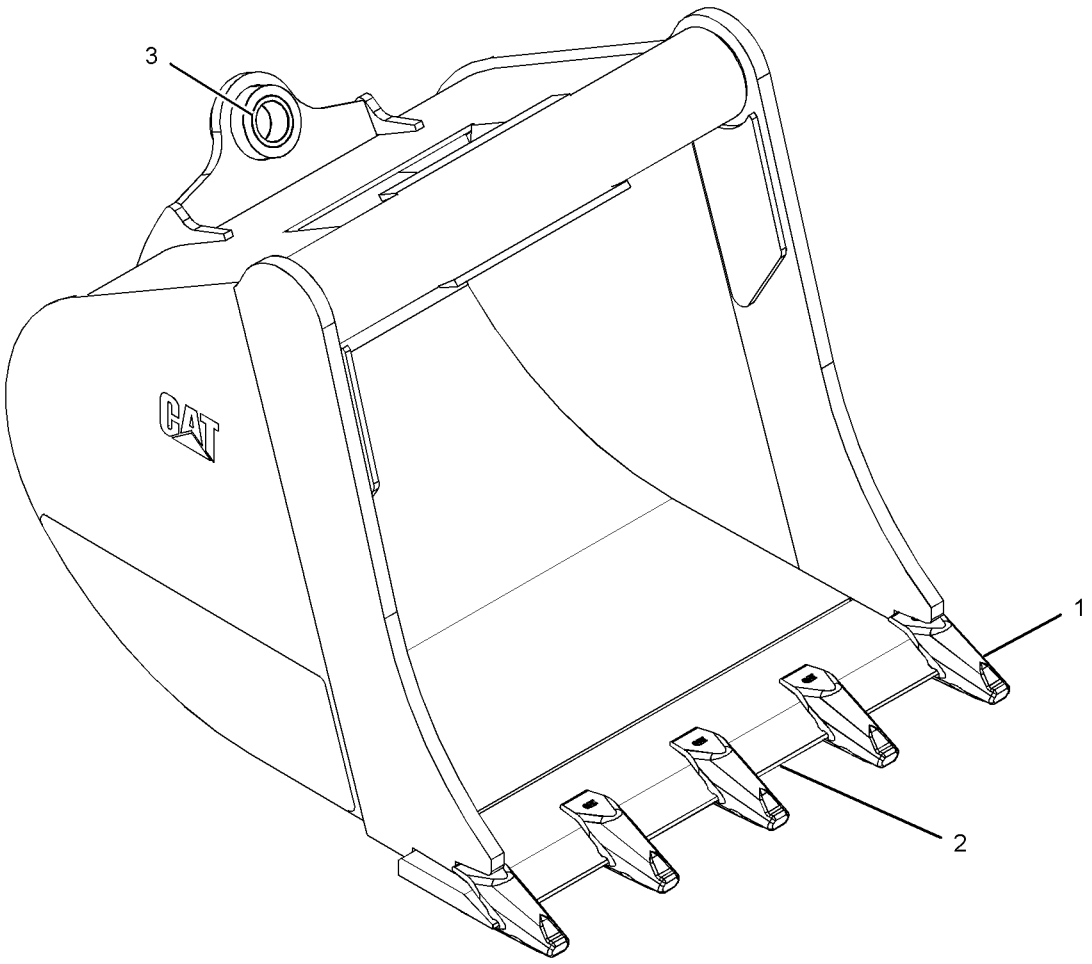

GRAPHIC #1 **<END>** g02095273

WORK TOOLS

232-2757 BUCKET AS-HOE—HEAVY-DUTY, PIN-LOCK

S/N: LMS1-UP
914-MM (36-IN)
PART OF 247-1952 BUCKET GP-HOE
AN ATTACHMENT

SMCS-6503 **i03849811**

NOTE	REF NO	GRAPHIC REF	PART NUMBER	QTY	PART NAME 1 2 3 4 5 6 (PRODUCT LEVEL)	SEE PAGE
	1	1	**201-1234**	6	ADAPTER	
	2	1	**219-9486**	1	EDGE	
	3	1	**9R-0431**	2	BEARING-SLEEVE	

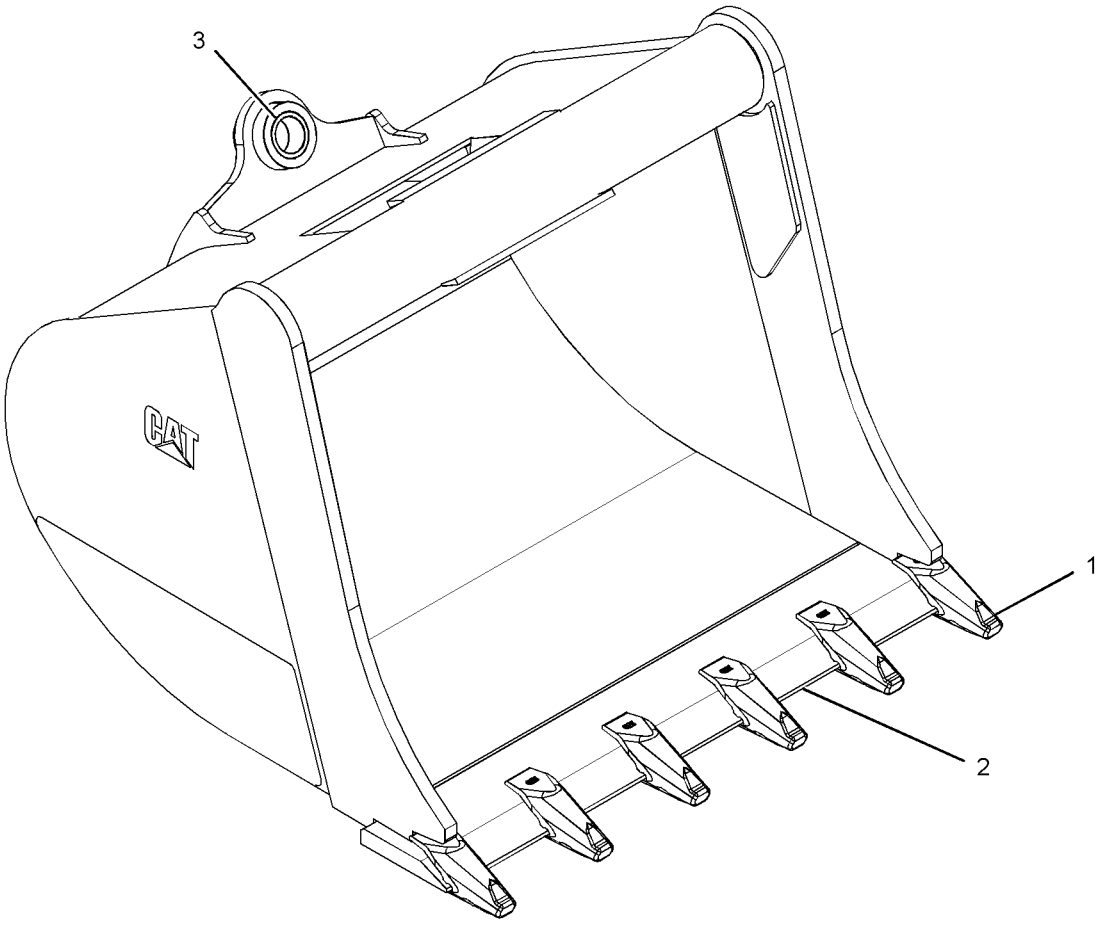

GRAPHIC #1 **<END>** g02094893

232-2758 BUCKET AS-HOE—HIGH CAPACITY, PIN-LOCK

S/N: LMS1-UP
305-MM (12-IN)
PART OF 247-1953 BUCKET GP-HOE
AN ATTACHMENT

SMCS-6503 **i03849814**

NOTE	REF NO	GRAPHIC REF	PART NUMBER	QTY	PART NAME 1 2 3 4 5 6 (PRODUCT LEVEL)	SEE PAGE
	1	1	**201-1234**	3	ADAPTER	
	2	1	**248-2574**	1	EDGE	
	3	1	**9R-0431**	2	BEARING-SLEEVE	

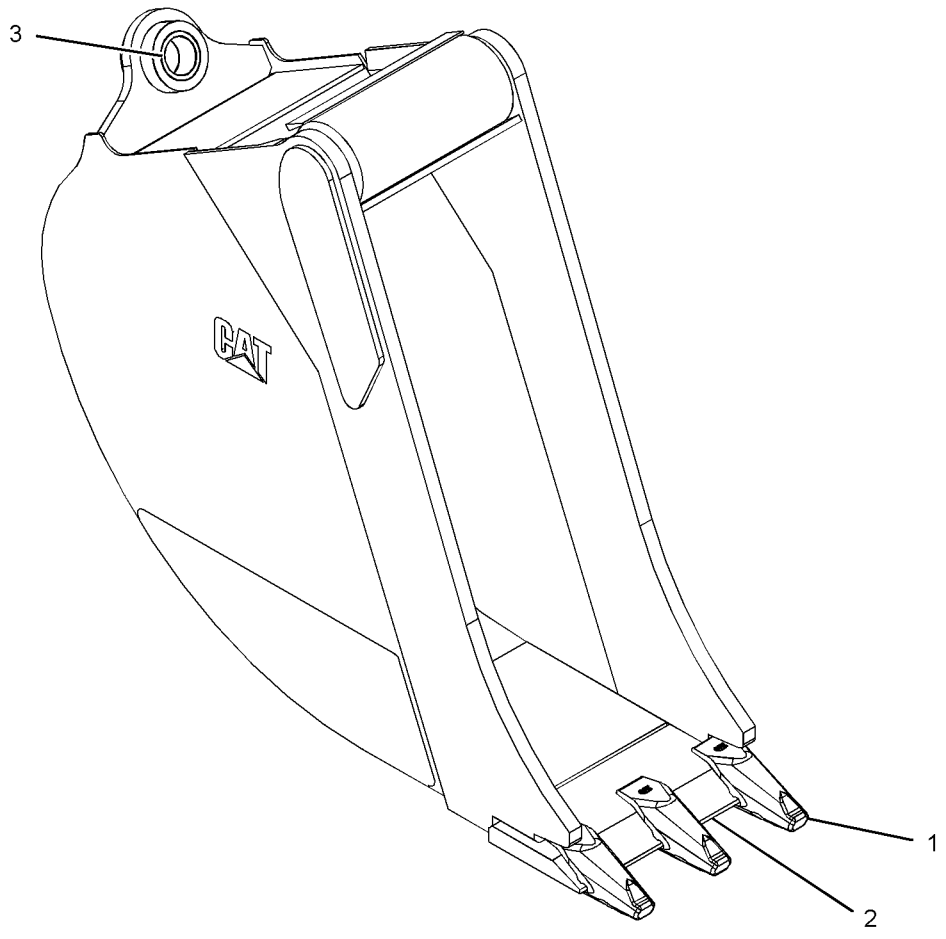

GRAPHIC #1 **<END>** g02095293

232-2759 BUCKET AS-HOE—HIGH CAPACITY, PIN-LOCK

S/N: LMS1-UP
406-MM (16-IN)
PART OF 247-1954 BUCKET GP-HOE
AN ATTACHMENT

SMCS-6503 **i03849819**

NOTE	REF NO	GRAPHIC REF	PART NUMBER	QTY	PART NAME 1 2 3 4 5 6 (PRODUCT LEVEL)	SEE PAGE
	1	1	**201-1234**	3	ADAPTER	
	2	1	**248-2575**	1	EDGE	
	3	1	**9R-0431**	2	BEARING-SLEEVE	

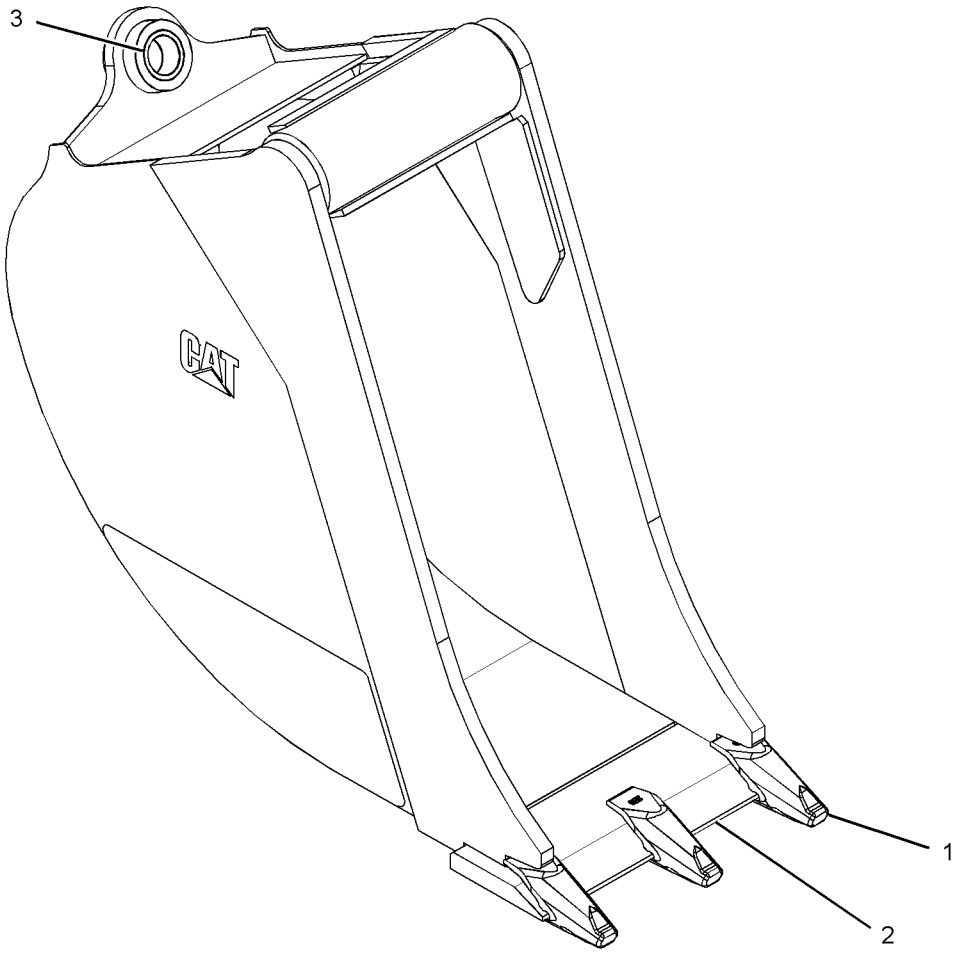

GRAPHIC #1 **<END>** g02095295

232-2760 BUCKET AS-HOE—HIGH CAPACITY, PIN-LOCK

S/N: LMS1-UP
458-MM (18-IN)
PART OF 247-1955 BUCKET GP-HOE
AN ATTACHMENT

SMCS-6503 **i03849822**

NOTE	REF NO	GRAPHIC REF	PART NUMBER	QTY	PART NAME 1 2 3 4 5 6 (PRODUCT LEVEL)	SEE PAGE
	1	1	**201-1234**	4	ADAPTER	
	2	1	**9R-0431**	2	BEARING-SLEEVE	
	3	1	**219-9483**	1	EDGE	

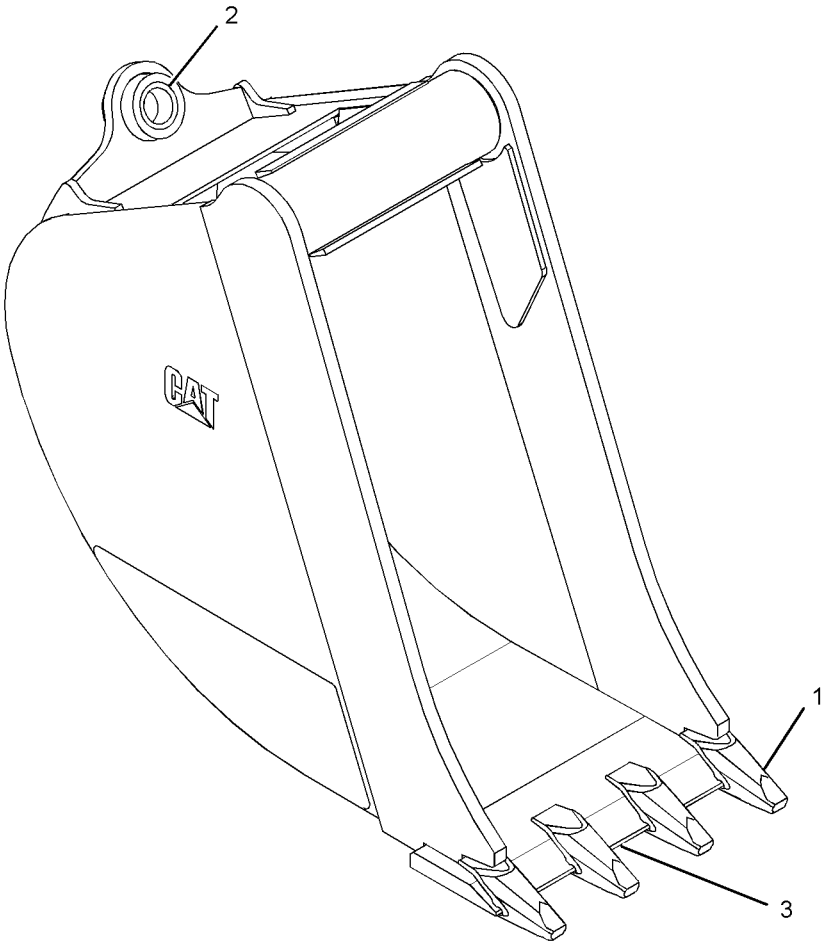

GRAPHIC #1 **<END>** g01944557

232-2761 BUCKET AS-HOE—HIGH CAPACITY, PIN-LOCK

S/N: LMS1-UP
610-MM (24-IN)
PART OF 247-1956 BUCKET GP-HOE
AN ATTACHMENT

SMCS-6503 **i03849910**

NOTE	REF NO	GRAPHIC REF	PART NUMBER	QTY	PART NAME 1 2 3 4 5 6 (PRODUCT LEVEL)	SEE PAGE
	1	1	**201-1234**	5	ADAPTER	
	2	1	**9R-0431**	2	BEARING-SLEEVE	
	3	1	**219-9484**	1	EDGE	

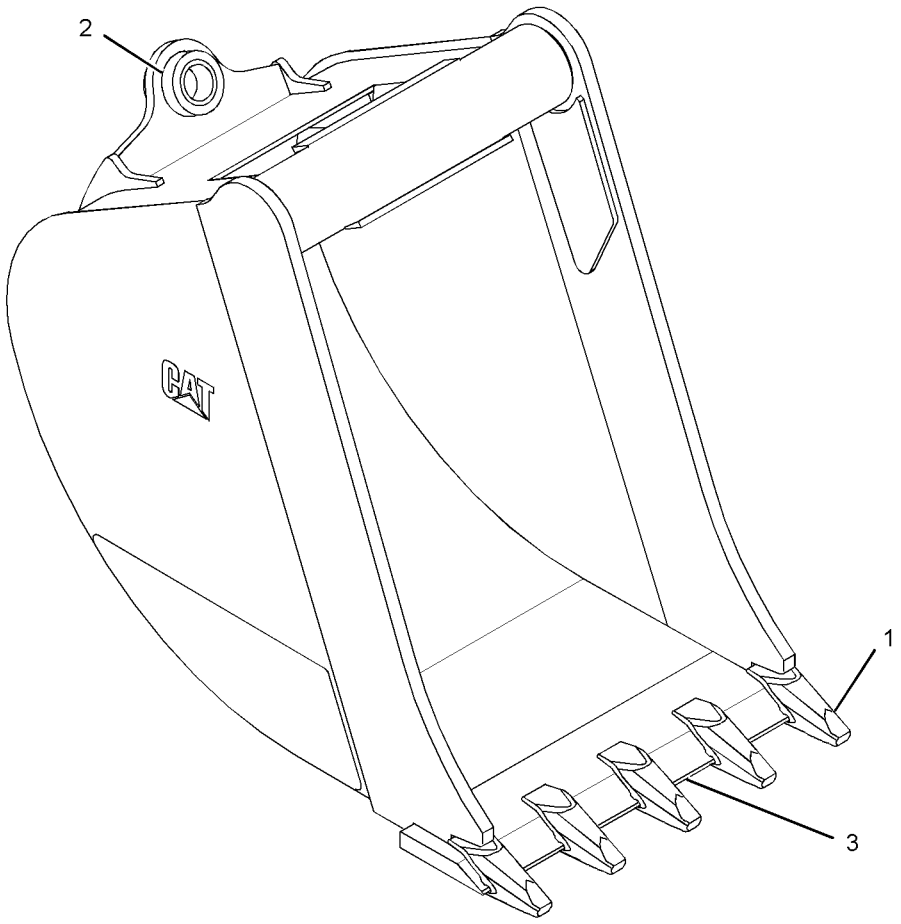

GRAPHIC #1 **<END>** g01944056

232-2762 BUCKET AS-HOE—HIGH CAPACITY, PIN-LOCK

S/N: LMS1-UP
762-MM (30-IN)
PART OF 247-1957 BUCKET GP-HOE
AN ATTACHMENT

SMCS-6503 **i03849912**

NOTE	REF NO	GRAPHIC REF	PART NUMBER	QTY	PART NAME 1 2 3 4 5 6 (PRODUCT LEVEL)	SEE PAGE
	1	1	**201-1234**	5	ADAPTER	
	2	1	**9R-0431**	2	BEARING-SLEEVE	
	3	1	**219-9485**	1	EDGE	

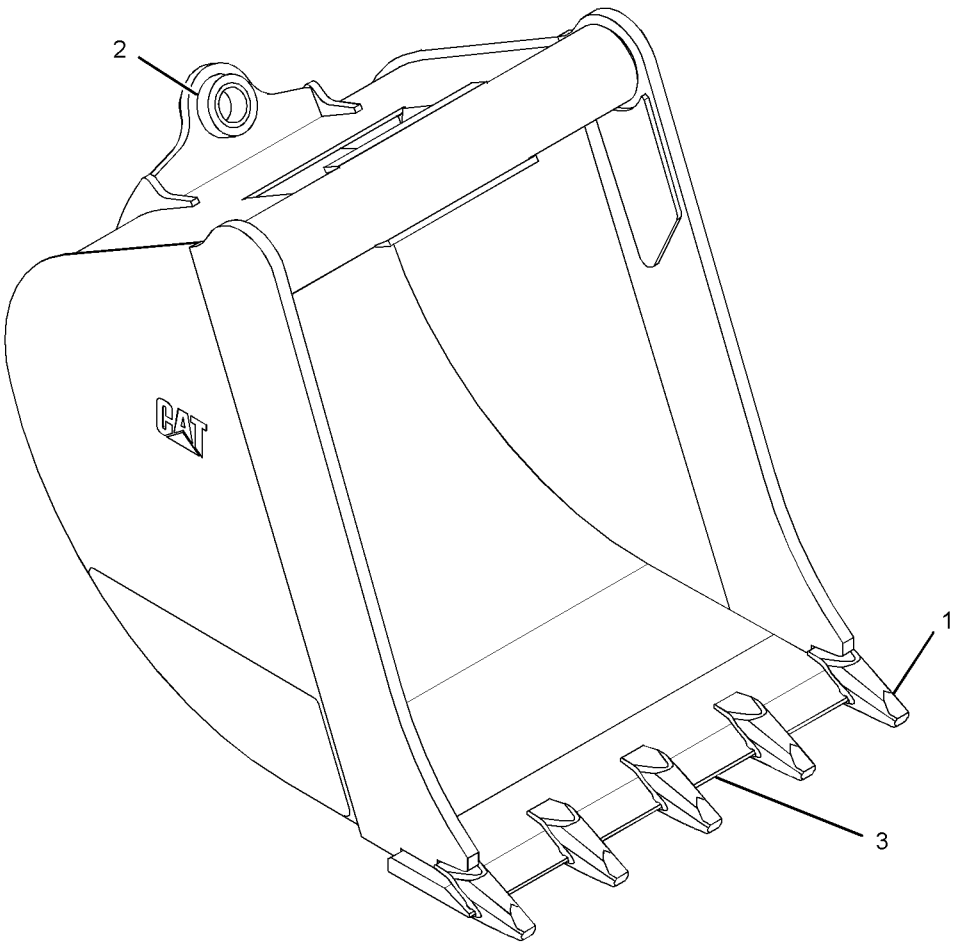

GRAPHIC #1 **<END>** g01944079

232-2763 BUCKET AS-HOE—HIGH CAPACITY, PIN-LOCK

S/N: LMS1-UP
914-MM (36-IN)
PART OF 247-1958 BUCKET GP-HOE
AN ATTACHMENT

SMCS-6503 **i03849914**

NOTE	REF NO	GRAPHIC REF	PART NUMBER	QTY	PART NAME 1 2 3 4 5 6 (PRODUCT LEVEL)	SEE PAGE
	1	1	**201-1234**	6	ADAPTER	
	2	1	**9R-0431**	2	BEARING-SLEEVE	
	3	1	**219-9486**	1	EDGE	

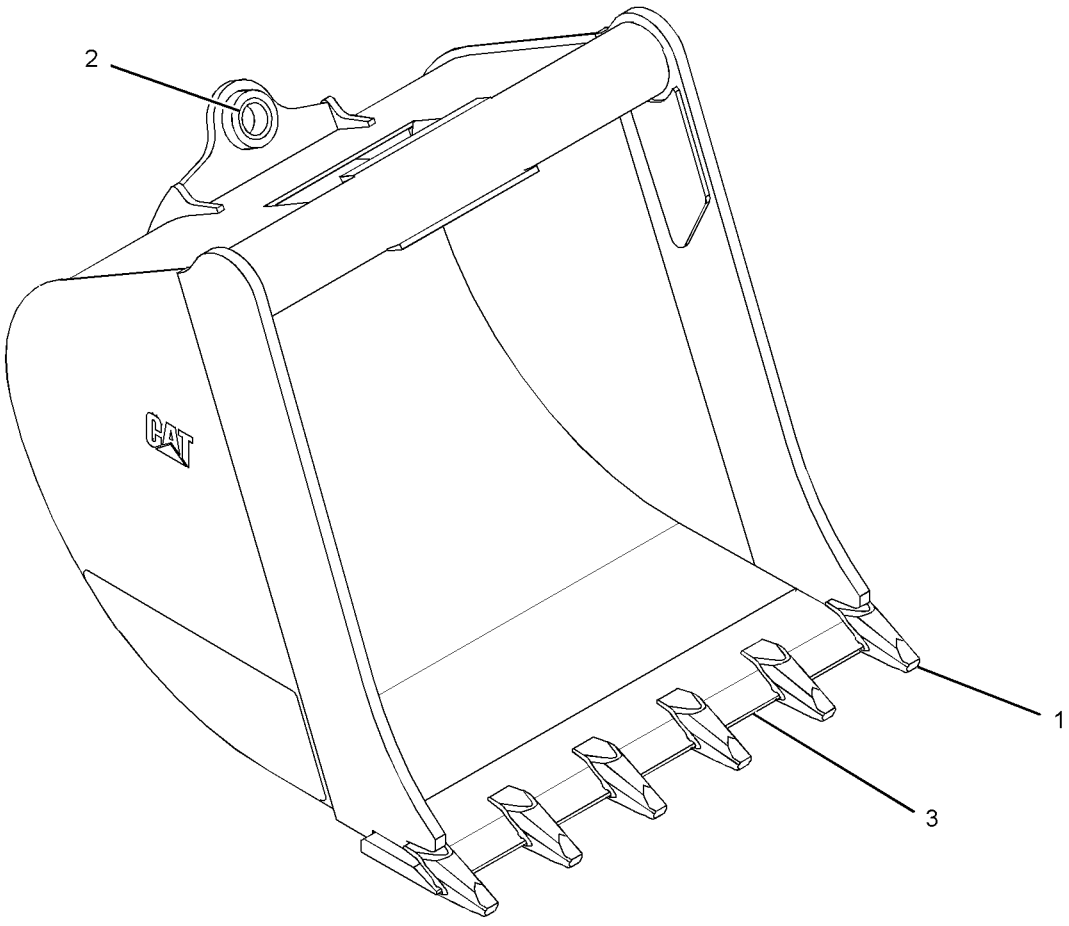

GRAPHIC #1 **<END>** g01943754

254-8939 BUCKET AS-HOE—HIGH CAPACITY, PIN-LOCK

S/N: LMS1-UP
458-MM (18-IN)
PART OF 254-8940 BUCKET GP-HOE
AN ATTACHMENT

SMCS-6503 **i03849916**

NOTE	REF NO	GRAPHIC REF	PART NUMBER	QTY	PART NAME 1 2 3 4 5 6 (PRODUCT LEVEL)	SEE PAGE
	1	1	**172-8279**	5	PLATE	
	2	1	*286-9336*	1	BRACKET AS (RH)	
	2A	1	**9R-0162**	1	BEARING-SLEEVE	
	2B	1	**168-0480**	1	BEARING-SLEEVE	
	3	1	*286-9337*	1	BRACKET AS (LH)	
	3A	1	**9R-0162**	1	BEARING-SLEEVE	
	3B	1	**168-0480**	1	BEARING-SLEEVE	
	4	1	*299-3346*	1	EDGE AS	
		1	**219-9483**	1	EDGE	
		1	**253-0234**	4	ADAPTER	
	5	1	*300-7054*	1	PLATE AS	
		1	**134-5885**	1	EDGE (RH)	
	6	1	*300-7055*	1	PLATE AS	
		1	**134-5884**	1	EDGE (LH)	

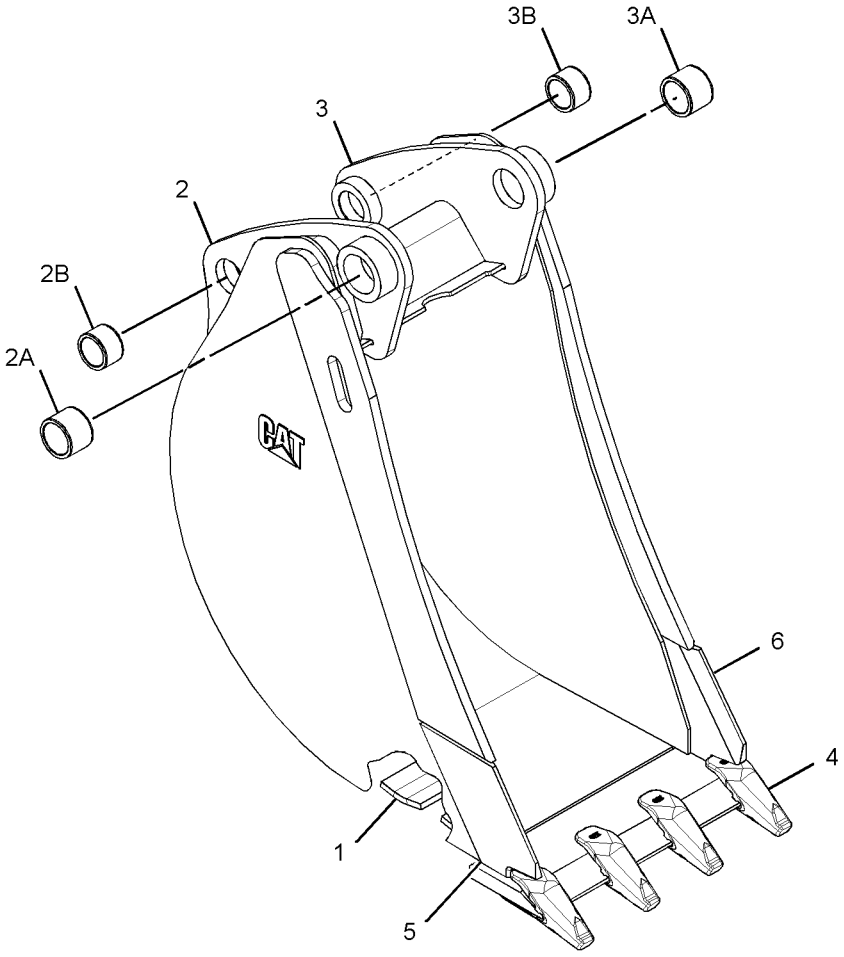

GRAPHIC #1 **<END>** g01382177

WORK TOOLS

254-8944 BUCKET AS-HOE—HIGH CAPACITY, PIN-LOCK

S/N: LMS1-UP
610-MM (24-IN)
PART OF 254-8941 BUCKET GP-HOE
AN ATTACHMENT

SMCS-6503 **i03849918**

NOTE	REF NO	GRAPHIC REF	PART NUMBER	QTY	PART NAME 1 2 3 4 5 6 (PRODUCT LEVEL)	SEE PAGE
	1	1	**172-8280**	5	PLATE	
	2	1	*286-9336*	1	BRACKET AS (RH)	
	2A	1	**9R-0162**	1	BEARING-SLEEVE	
	2B	1	**168-0480**	1	BEARING-SLEEVE	
	3	1	*286-9337*	1	BRACKET AS (LH)	
	3A	1	**9R-0162**	1	BEARING-SLEEVE	
	3B	1	**168-0480**	1	BEARING-SLEEVE	
	4	1	*299-3350*	1	EDGE AS	
			219-9484	1	EDGE	
			253-0234	5	ADAPTER	
	5	1	*300-7054*	1	PLATE AS	
			134-5885	1	EDGE (RH)	
	6	1	*300-7055*	1	PLATE AS	
			134-5884	1	EDGE (LH)	

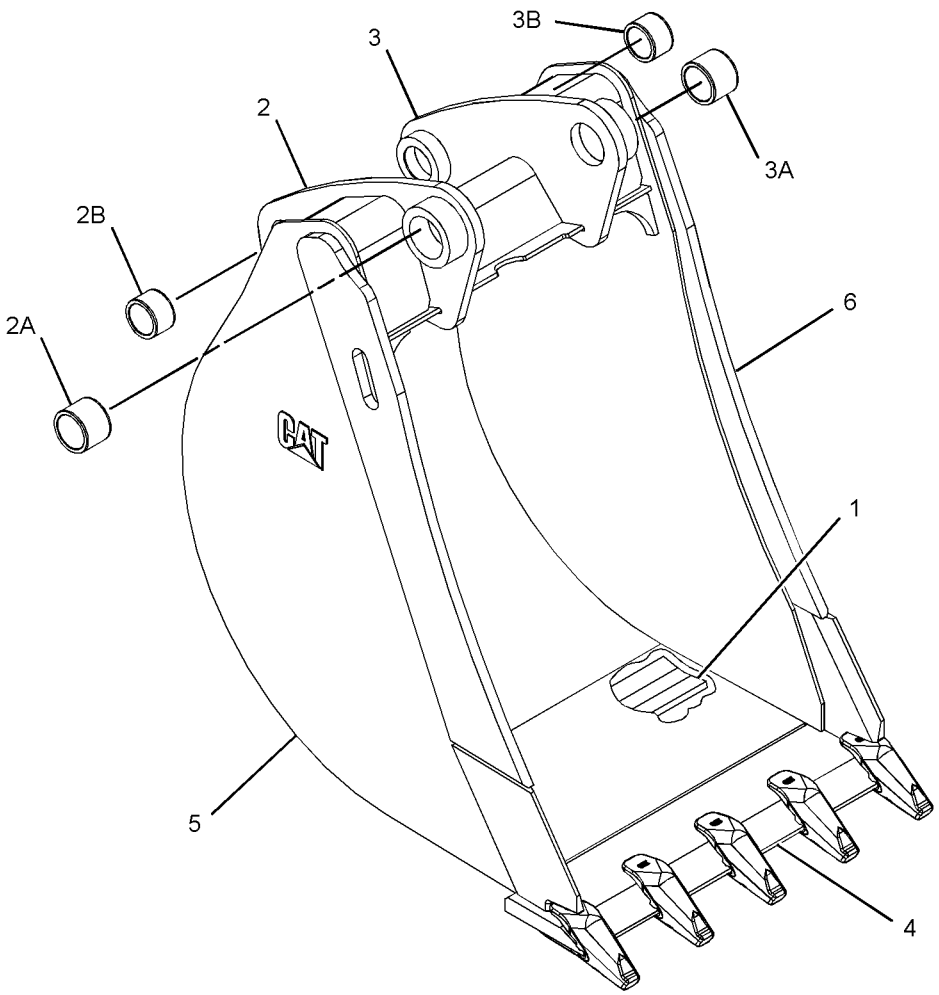

GRAPHIC #1 **<END>** g01382158

254-8945 BUCKET AS-HOE—HIGH CAPACITY, PIN-LOCK

S/N: LMS1-UP
762-MM (30-IN)
PART OF 254-8942 BUCKET GP-HOE
AN ATTACHMENT

SMCS-6503 **i03849920**

NOTE	REF NO	GRAPHIC REF	PART NUMBER	QTY	PART NAME 1 2 3 4 5 6 (PRODUCT LEVEL)	SEE PAGE
	1	1	*300-7055*	1	PLATE AS	
		1	**134-5884**	1	EDGE (LH)	
	2	1	*300-7054*	1	PLATE AS	
		1	**134-5885**	1	EDGE (RH)	
	3	1	*286-9337*	1	BRACKET AS (LH)	
	3A	1	**9R-0162**	1	BEARING-SLEEVE	
	3B	1	**168-0480**	1	BEARING-SLEEVE	
	4	1	*286-9336*	1	BRACKET AS (RH)	
	4A	1	**9R-0162**	1	BEARING-SLEEVE	
	4B	1	**168-0480**	1	BEARING-SLEEVE	
	5	1	*300-4153*	5	EDGE AS	
					(EACH INCLUDES)	
		1	**219-9485**	1	EDGE	
		1	**253-0234**	5	ADAPTER	
	6	1	**174-4765**	5	PLATE	

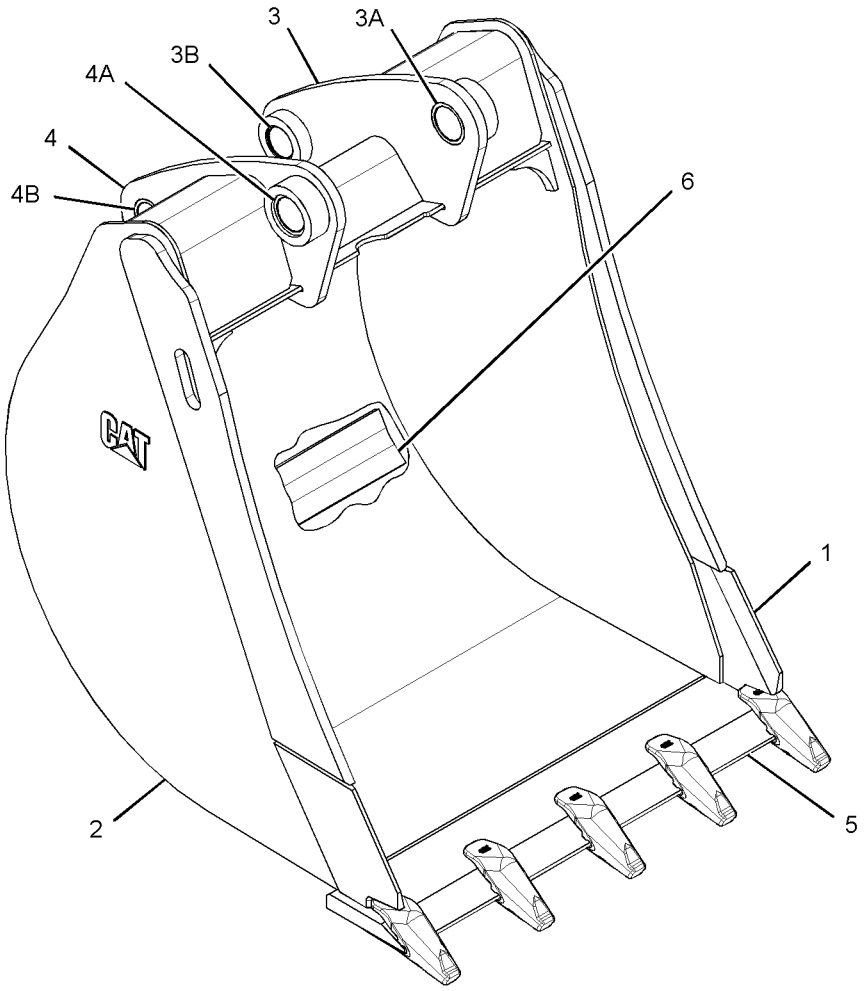

GRAPHIC #1 **<END>** g01877434

254-8946 BUCKET AS-HOE—HIGH CAPACITY, PIN-LOCK

S/N: LMS1-UP
914-MM (36-IN)
PART OF 254-8943 BUCKET GP-HOE
AN ATTACHMENT

SMCS-6503 **i03849922**

NOTE	REF NO	GRAPHIC REF	PART NUMBER	QTY	PART NAME 1 2 3 4 5 6 (PRODUCT LEVEL)	SEE PAGE
	1	1	**193-5416**	5	PLATE	
	2	1	*286-9336*	1	BRACKET AS (RH)	
	2A	1	**9R-0162**	1	BEARING-SLEEVE	
	2B	1	**168-0480**	1	BEARING-SLEEVE	
	3	1	*286-9337*	1	BRACKET AS (LH)	
	3A	1	**9R-0162**	1	BEARING-SLEEVE	
	3B	1	**168-0480**	1	BEARING-SLEEVE	
	4	1	*300-4156*	1	EDGE AS	
		1	**219-9486**	1	EDGE	
		1	**253-0234**	6	ADAPTER	
	5	1	*300-7054*	1	PLATE AS	
		1	**134-5885**	1	EDGE (RH)	
	6	1	*300-7055*	1	PLATE AS	
		1	**134-5884**	1	EDGE (LH)	

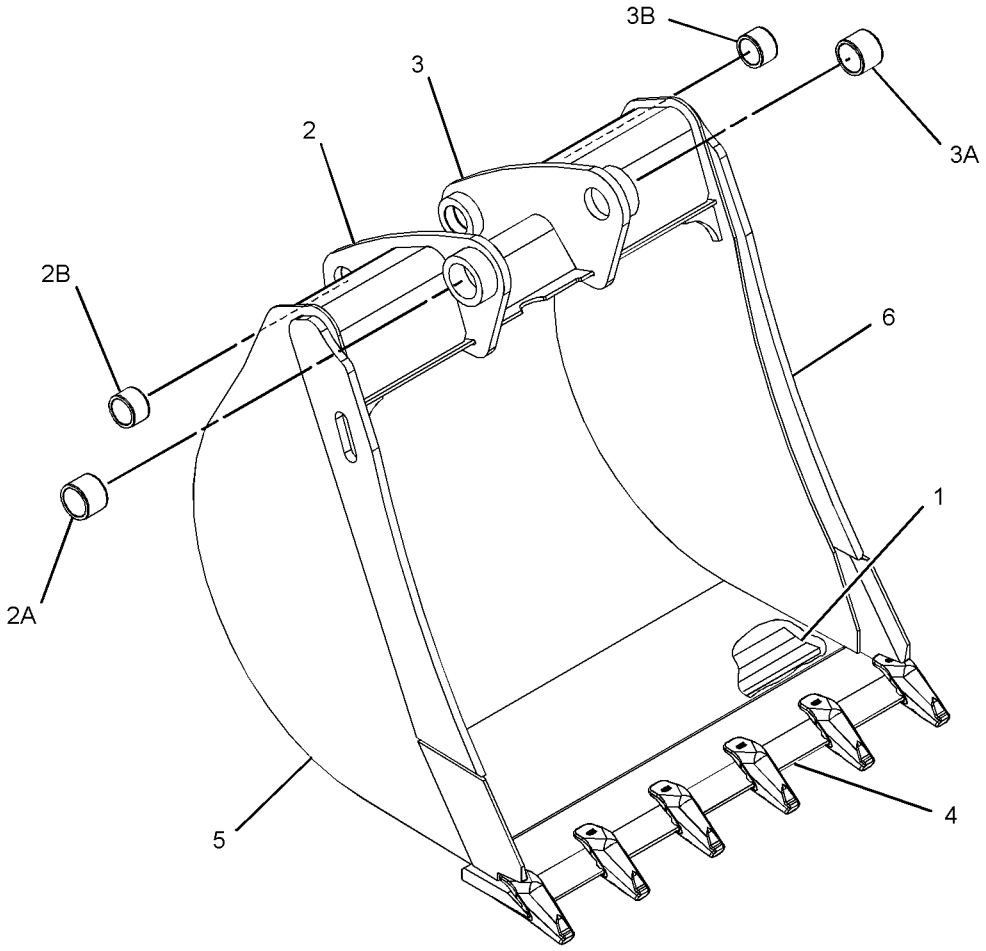

GRAPHIC #1 **<END>** g01382156

WORK TOOLS

251-1780 BUCKET GP-GENERAL PURPOSE

S/N: LMS1-UP

AN ATTACHMENT

SMCS-6101 **i03865252**

NOTE	REF NO	GRAPHIC REF	PART NUMBER	QTY	PART NAME 1 2 3 4 5 6 (PRODUCT LEVEL)	SEE PAGE
	1	1	**137-4234**	1	PLATE-IDENTIFICATION (WORK TOOL)	
	2	1	**168-8389**	4	TACK-FASTENER	
Y	3	1	*251-1157*	1	BUCKET AS-GENERAL PURPOSE	392

Y-SEPARATE ILLUSTRATION

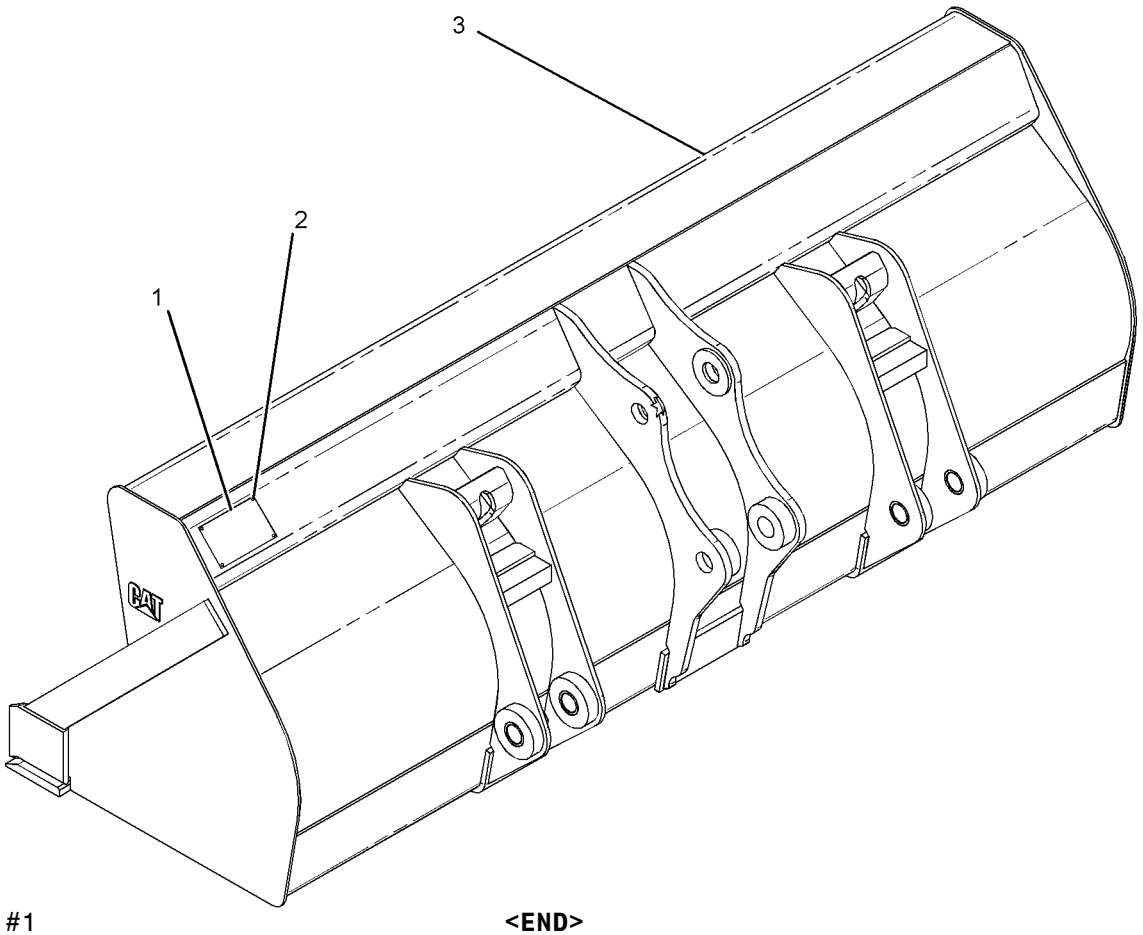

GRAPHIC #1 **<END>** g01114180

WORK TOOLS

251-1789 BUCKET GP-GENERAL PURPOSE

S/N: LMS1-UP

AN ATTACHMENT

SMCS-6101 **i03850189**

NOTE	REF NO	GRAPHIC REF	PART NUMBER	QTY	PART NAME 1 2 3 4 5 6 (PRODUCT LEVEL)	SEE PAGE
	1	1	**137-4234**	1	PLATE-IDENTIFICATION (WORK TOOL)	
	2	1	**168-8389**	4	TACK-FASTENER	
Y	3	1	*251-1160*	1	BUCKET AS-GENERAL PURPOSE	393

Y-SEPARATE ILLUSTRATION

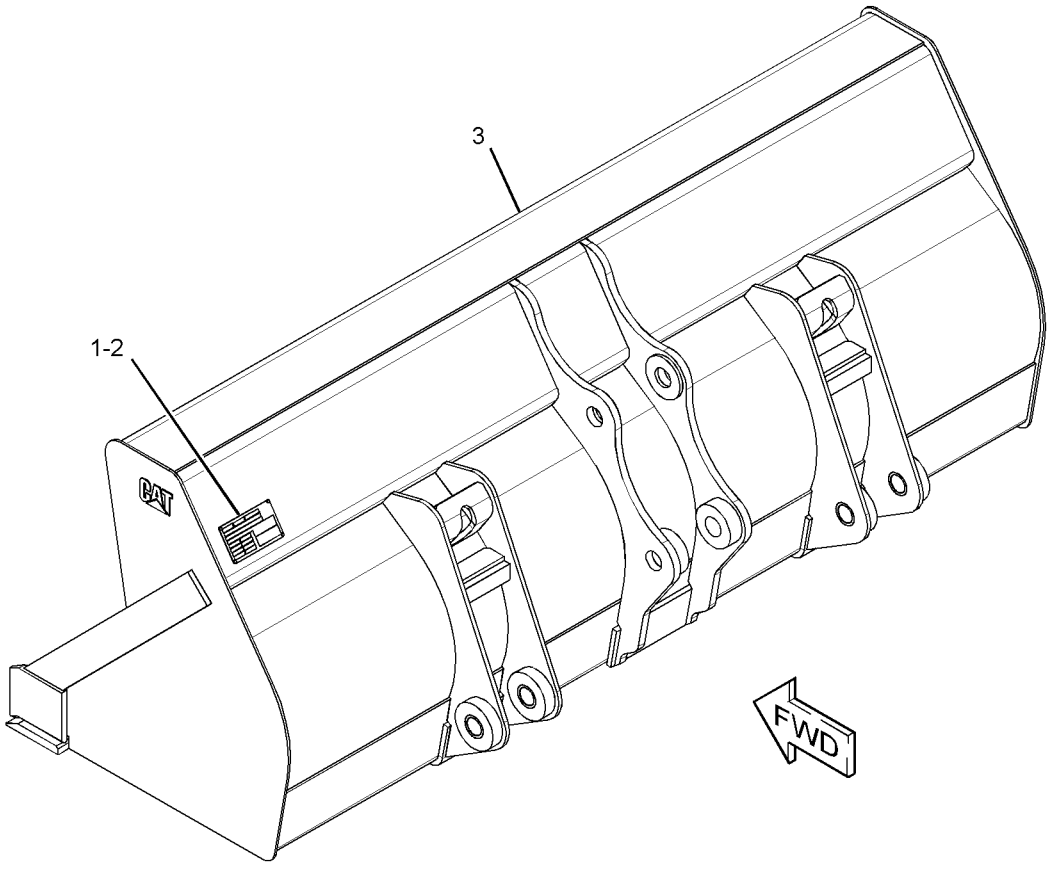

GRAPHIC #1 **<END>** g02108149

WORK TOOLS

219-3379 BUCKET GP-HOE

S/N: LMS1-UP
PART OF 219-3410 BUCKET GP-HOE
AN ATTACHMENT

SMCS-6503 **i03712395**

NOTE	REF NO	GRAPHIC REF	PART NUMBER	QTY	PART NAME 1 2 3 4 5 6 (PRODUCT LEVEL)	SEE PAGE
	1	1	**137-4234**	1	PLATE-IDENTIFICATION (WORK TOOL)	
	2	1	**168-8389**	1	TACK-FASTENER	
	3	1	*208-5245*	3	TIP GP-PENETRATION	
					(EACH INCLUDES)	
		1	**201-1238**	1	PIN	
		1	**201-1239**	1	RETAINER AS	
		1	**208-5235**	1	TIP-PENETRATION	
Y	4	1	*219-3355*	1	BUCKET AS-HOE	394

Y-SEPARATE ILLUSTRATION

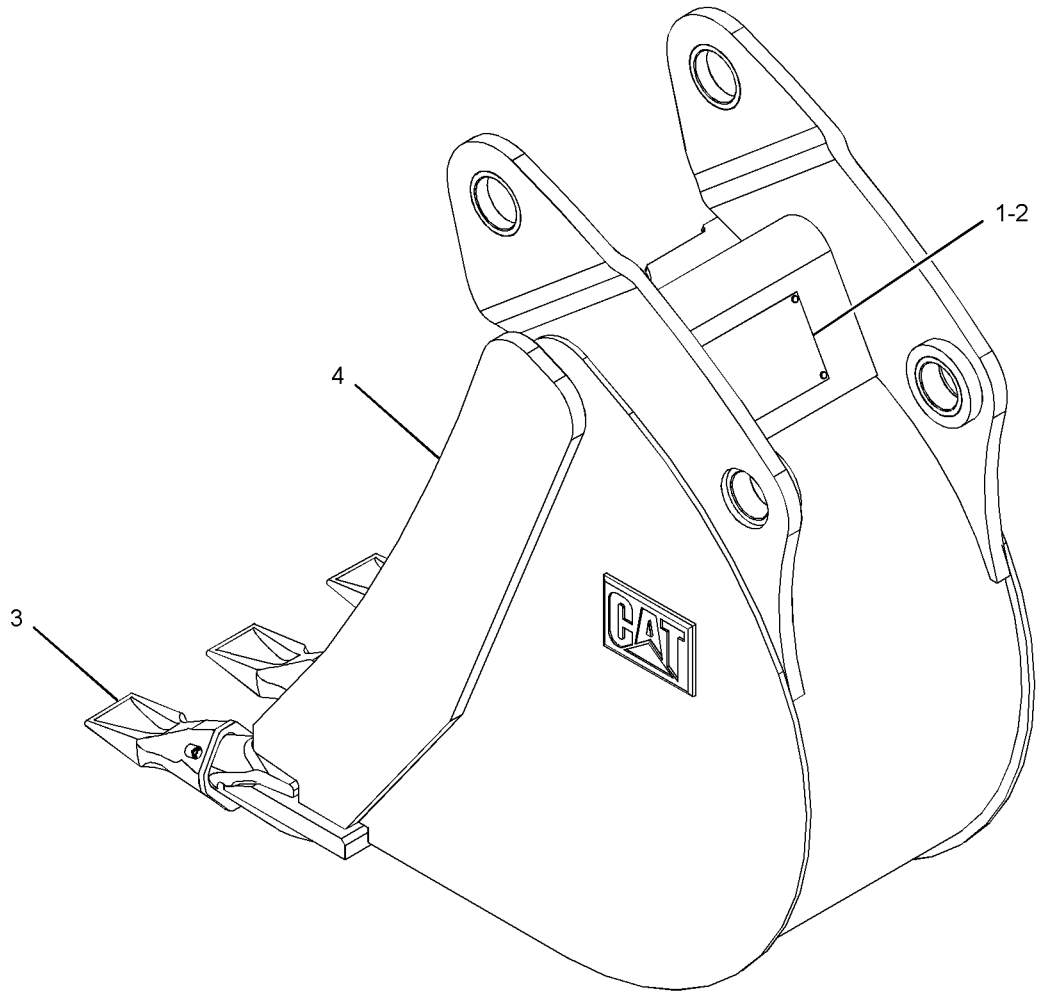

GRAPHIC #1 **<END>** g01341882

WORK TOOLS

219-3380 BUCKET GP-HOE

S/N: LMS1-UP

AN ATTACHMENT

SMCS-6503 **i02655103**

NOTE	REF NO	GRAPHIC REF	PART NUMBER	QTY	PART NAME 1 2 3 4 5 6 (PRODUCT LEVEL)	SEE PAGE
	1	1	**137-4234**	1	PLATE-IDENTIFICATION (WORK TOOL)	
	2	1	**168-8389**	4	TACK-FASTENER	
	3	1	*208-5245*	4	TIP GP-PENETRATION	
					(EACH INCLUDES)	
		1	**201-1238**	1	PIN	
		1	**201-1239**	1	RETAINER AS	
		1	**208-5235**	1	TIP-PENETRATION	
Y	4	1	*219-3356*	1	BUCKET AS-HOE	395

Y-SEPARATE ILLUSTRATION

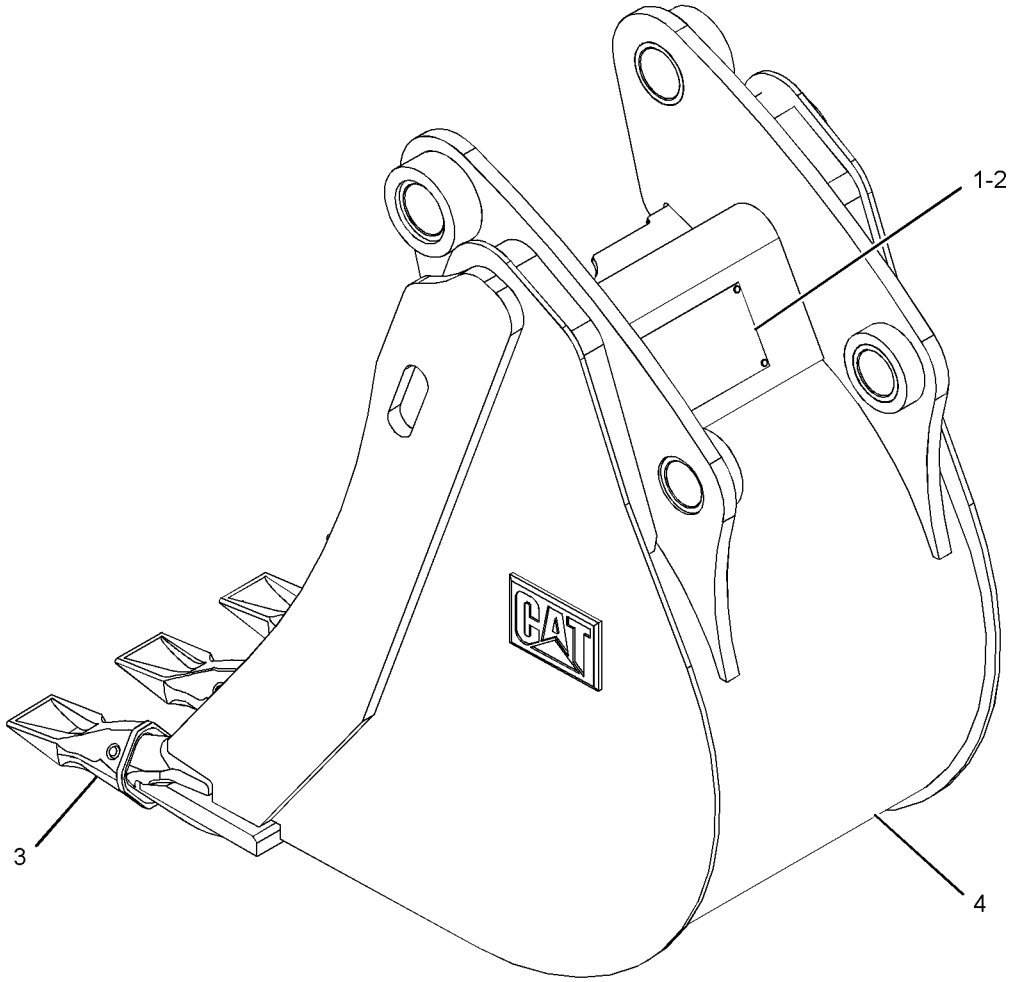

GRAPHIC #1 **<END>** g01339842

WORK TOOLS

219-3381 BUCKET GP-HOE

S/N: LMS1-UP

AN ATTACHMENT

SMCS-6503 **i02651118**

NOTE	REF NO	GRAPHIC REF	PART NUMBER	QTY	PART NAME 1 2 3 4 5 6 (PRODUCT LEVEL)	SEE PAGE
	1	1	**137-4234**	1	PLATE-IDENTIFICATION (WORK TOOL)	
	2	1	**168-8389**	4	TACK-FASTENER	
	3		*208-5245*	5	TIP GP-PENETRATION	
					(EACH INCLUDES)	
		1	**201-1238**	1	PIN	
		1	**201-1239**	1	RETAINER AS	
		1	**208-5235**	1	TIP-PENETRATION	
Y	4	1	*219-3357*	1	BUCKET AS-HOE	396

Y-SEPARATE ILLUSTRATION

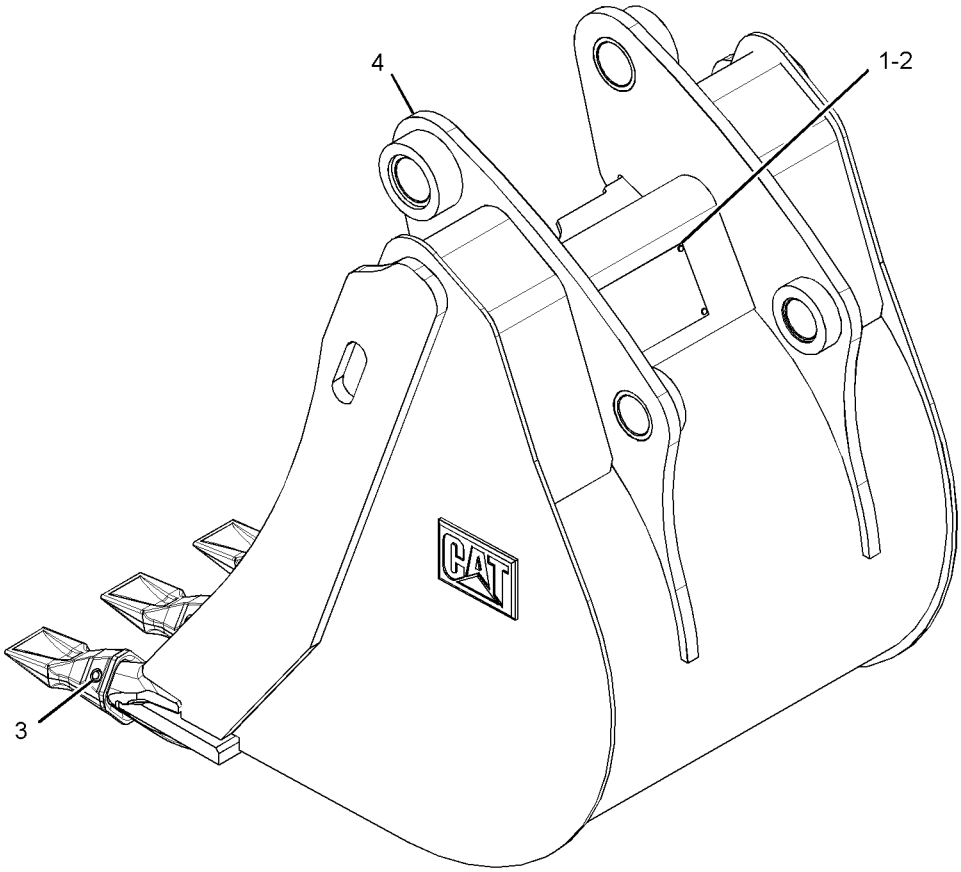

GRAPHIC #1 **<END>** g01340268

WORK TOOLS

219-3382 BUCKET GP-HOE

S/N: LMS1-UP

AN ATTACHMENT

SMCS-6503 **i03712396**

NOTE	REF NO	GRAPHIC REF	PART NUMBER	QTY	PART NAME 1 2 3 4 5 6 (PRODUCT LEVEL)	SEE PAGE
	1	1	**137-4234**	1	PLATE-IDENTIFICATION (WORK TOOL)	
	2	1	**168-8389**	4	TACK-FASTENER	
	3	1	*208-5245*	5	TIP GP-PENETRATION	
					(EACH INCLUDES)	
		1	**201-1238**	5	PIN	
		1	**201-1239**	5	RETAINER AS	
		1	**208-5235**	5	TIP-PENETRATION	
Y	4	1	*219-3358*	1	BUCKET AS-HOE	397

Y-SEPARATE ILLUSTRATION

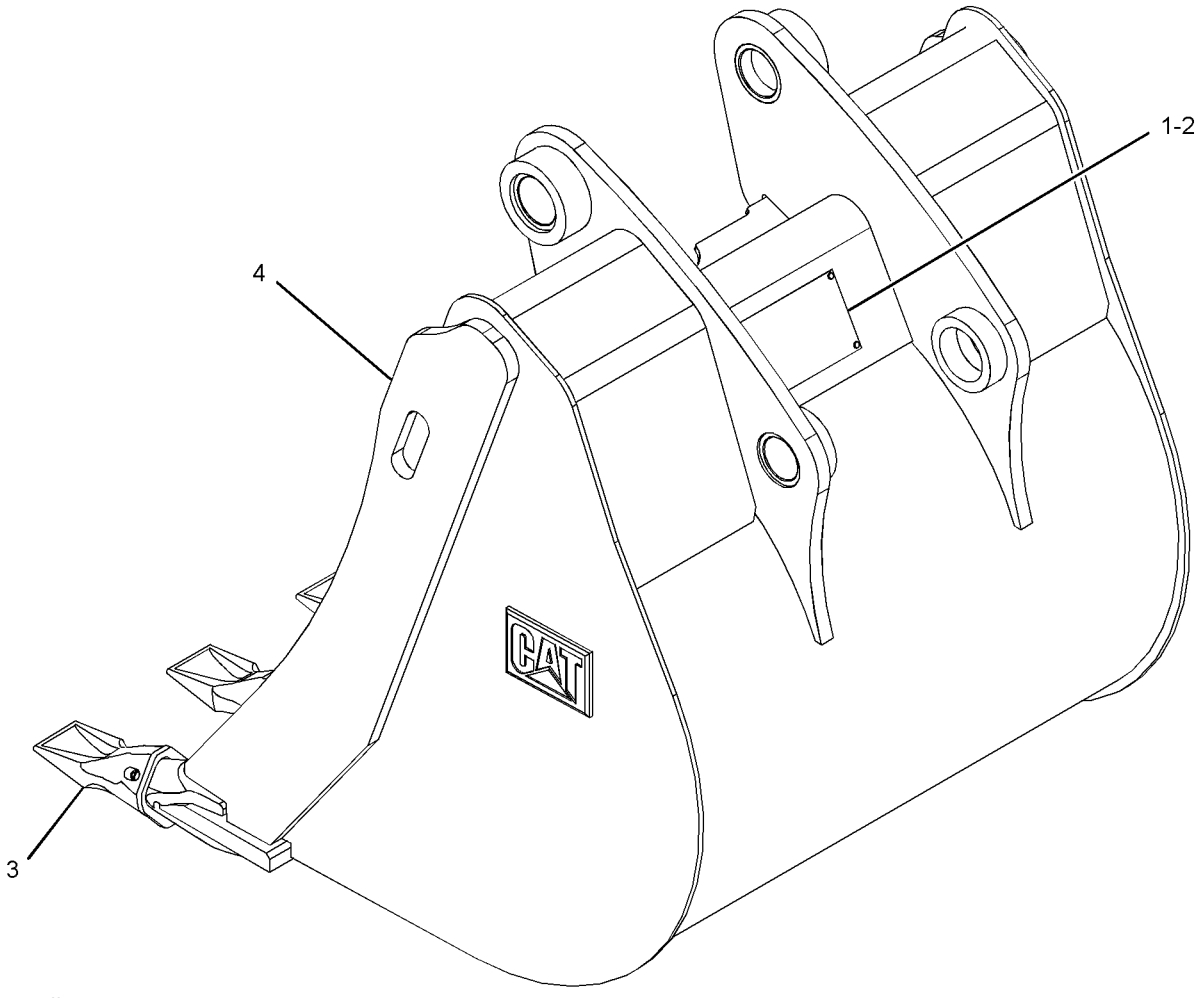

GRAPHIC #1 **<END>** g01341854

WORK TOOLS

219-3383 BUCKET GP-HOE

S/N: LMS1-UP

AN ATTACHMENT

SMCS-6503 **i02651286**

NOTE	REF NO	GRAPHIC REF	PART NUMBER	QTY	PART NAME 1 2 3 4 5 6 (PRODUCT LEVEL)	SEE PAGE
	1	1	**137-4234**	1	PLATE-IDENTIFICATION (WORK TOOL)	
	2	1	**168-8389**	4	TACK-FASTENER	
	3	1	*208-5245*	6	TIP GP-PENETRATION	
					(EACH INCLUDES)	
		1	**201-1238**	1	PIN	
		1	**201-1239**	1	RETAINER AS	
		1	**208-5235**	1	TIP-PENETRATION	
Y	4	1	*219-3359*	1	BUCKET AS-HOE	398

Y-SEPARATE ILLUSTRATION

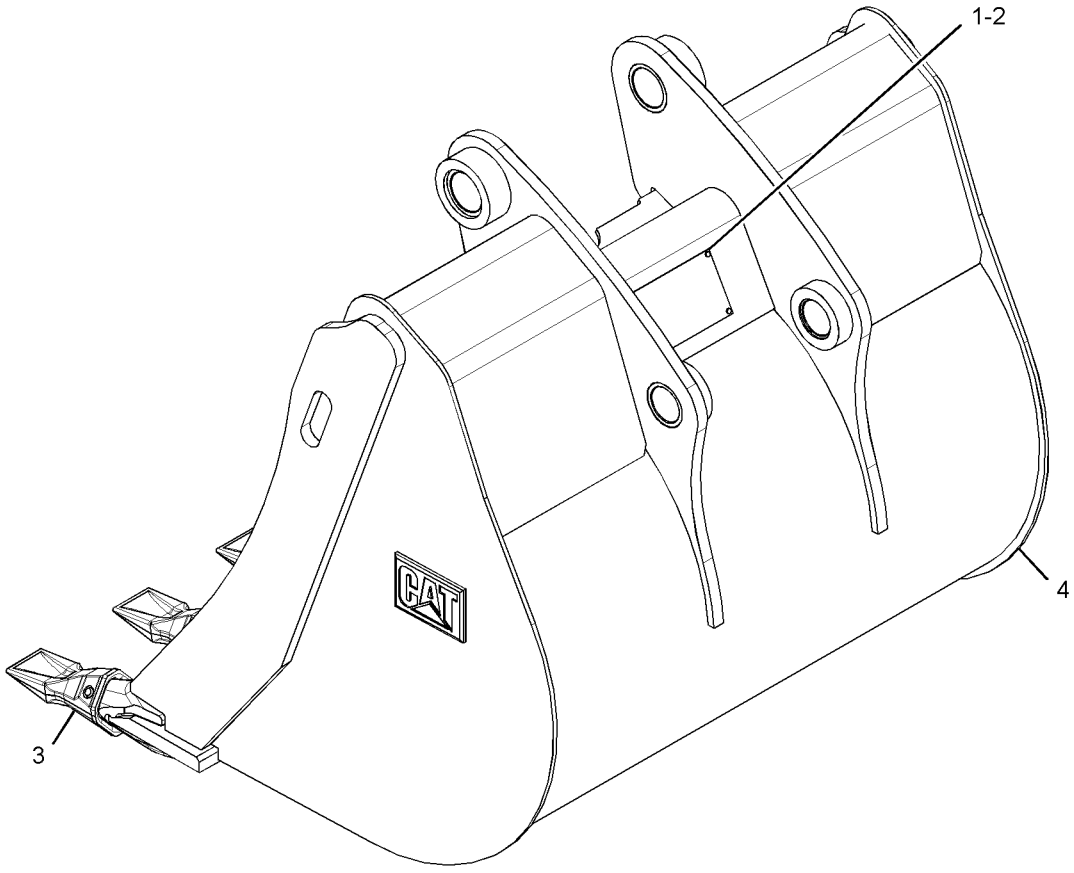

GRAPHIC #1 **<END>** g01341780

219-3384 BUCKET GP-HOE—HEAVY-DUTY

S/N: LMS1-UP
PART OF 219-3411 BUCKET GP-HOE
AN ATTACHMENT

SMCS-6503 **i02651327**

NOTE	REF NO	GRAPHIC REF	PART NUMBER	QTY	PART NAME 1 2 3 4 5 6 (PRODUCT LEVEL)	SEE PAGE
	1	1	**137-4234**	1	PLATE-IDENTIFICATION (WORK TOOL)	
	2	1	**168-8389**	4	TACK-FASTENER	
	3	1	*208-5245*	3	TIP GP-PENETRATION	
					(EACH INCLUDES)	
		1	**201-1238**	1	PIN	
		1	**201-1239**	1	RETAINER AS	
		1	**208-5235**	1	TIP-PENETRATION	
Y	4	1	*219-3360*	1	BUCKET AS-HOE	399

Y-SEPARATE ILLUSTRATION

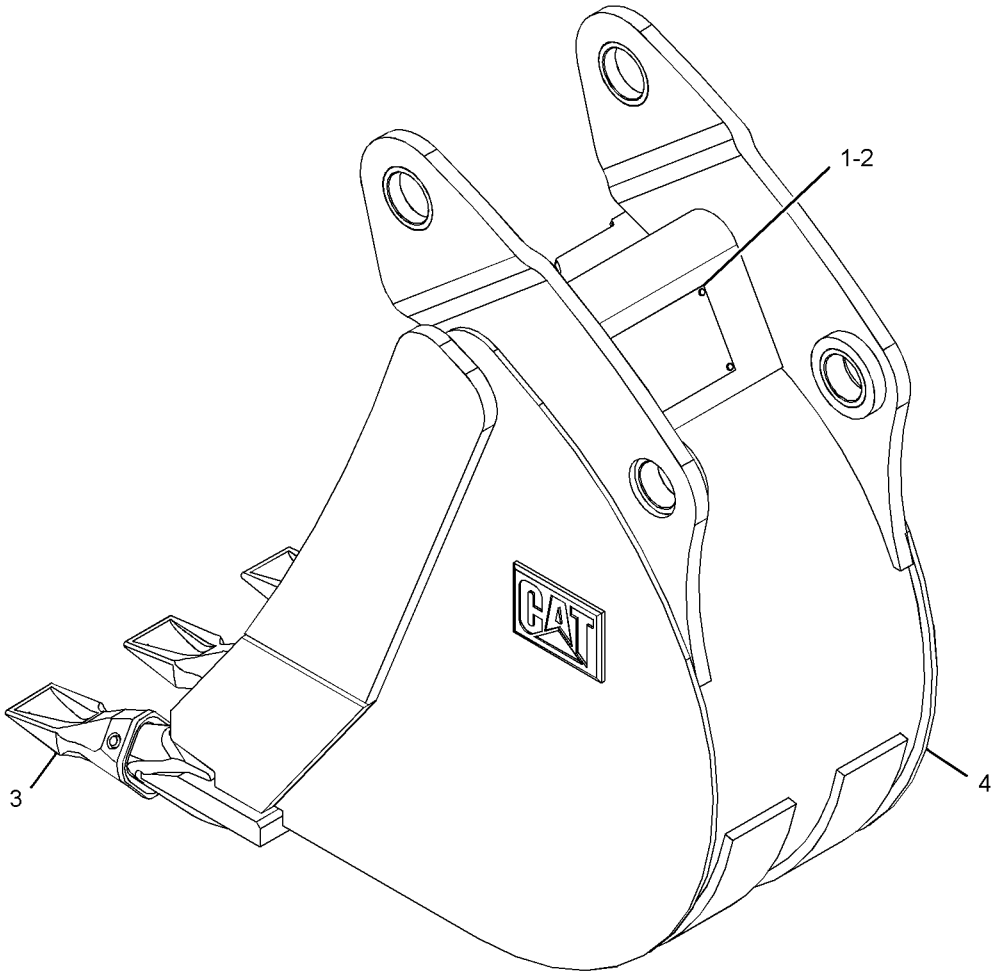

GRAPHIC #1 **<END>** g01335483

219-3385 BUCKET GP-HOE—HEAVY-DUTY

S/N: LMS1-UP

AN ATTACHMENT

SMCS-6503 **i02651378**

NOTE	REF NO	GRAPHIC REF	PART NUMBER	QTY	PART NAME 1 2 3 4 5 6 (PRODUCT LEVEL)	SEE PAGE
	1	1	**137-4234**	1	PLATE-IDENTIFICATION (WORK TOOL)	
	2	1	**168-8389**	4	TACK-FASTENER	
	3	1	*208-5245*	3	TIP GP-PENETRATION	
					(EACH INCLUDES)	
		1	**201-1238**	1	PIN	
		1	**201-1239**	1	RETAINER AS	
		1	**208-5235**	1	TIP-PENETRATION	
Y	4	1	*219-3361*	1	BUCKET AS-HOE	400

Y-SEPARATE ILLUSTRATION

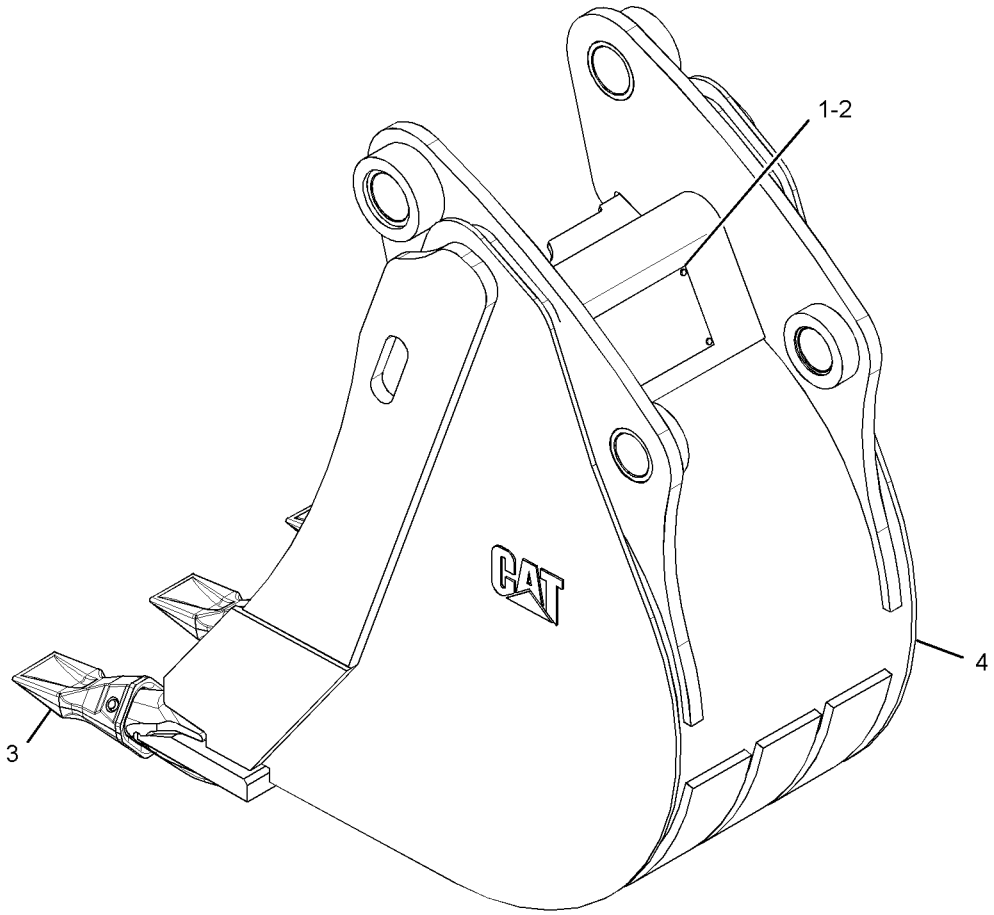

GRAPHIC #1 **<END>** g01341891

WORK TOOLS

219-3386 BUCKET GP-HOE—HEAVY-DUTY

S/N: LMS1-UP

AN ATTACHMENT

SMCS-6503 **i02655167**

NOTE	REF NO	GRAPHIC REF	PART NUMBER	QTY	PART NAME 1 2 3 4 5 6 (PRODUCT LEVEL)	SEE PAGE
	1	1	**137-4234**	1	PLATE-IDENTIFICATION (WORK TOOL)	
	2	1	**168-8389**	4	TACK-FASTENER	
	3	1	*208-5245*	4	TIP GP-PENETRATION	
					(EACH INCLUDES)	
		1	**201-1238**	1	PIN	
		1	**201-1239**	1	RETAINER AS	
		1	**208-5235**	1	TIP-PENETRATION	
Y	4	1	*219-3362*	1	BUCKET AS-HOE	401

Y-SEPARATE ILLUSTRATION

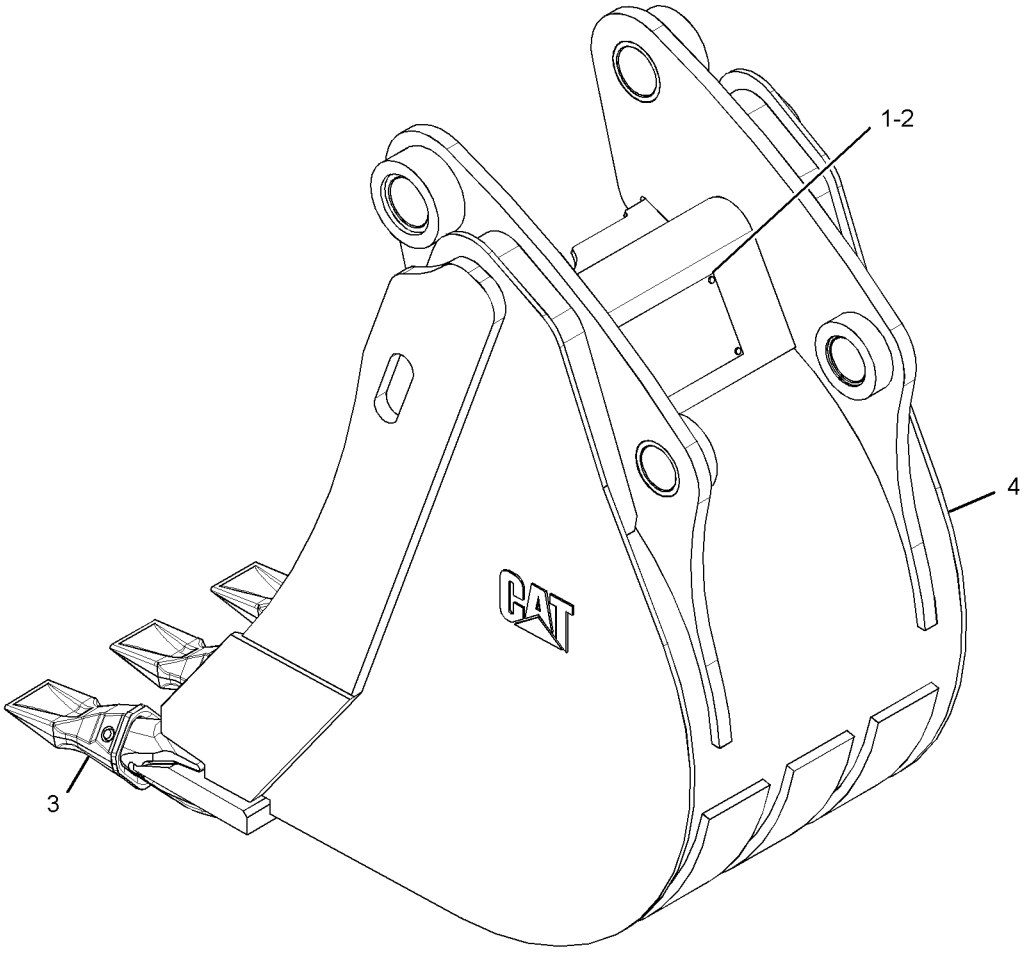

GRAPHIC #1 **<END>** g01341827

219-3387 BUCKET GP-HOE—HEAVY-DUTY

S/N: LMS1-UP

AN ATTACHMENT

SMCS-6503 **i02655211**

NOTE	REF NO	GRAPHIC REF	PART NUMBER	QTY	PART NAME 1 2 3 4 5 6 (PRODUCT LEVEL)	SEE PAGE
	1	1	**137-4234**	1	PLATE-IDENTIFICATION (WORK TOOL)	
	2	1	**168-8389**	4	TACK-FASTENER	
	3		*208-5245*	5	TIP GP-PENETRATION	
					(EACH INCLUDES)	
		1	**201-1238**	1	PIN	
		1	**201-1239**	1	RETAINER AS	
		1	**208-5235**	1	TIP-PENETRATION	
Y	4	1	*219-3363*	1	BUCKET AS-HOE	402

Y-SEPARATE ILLUSTRATION

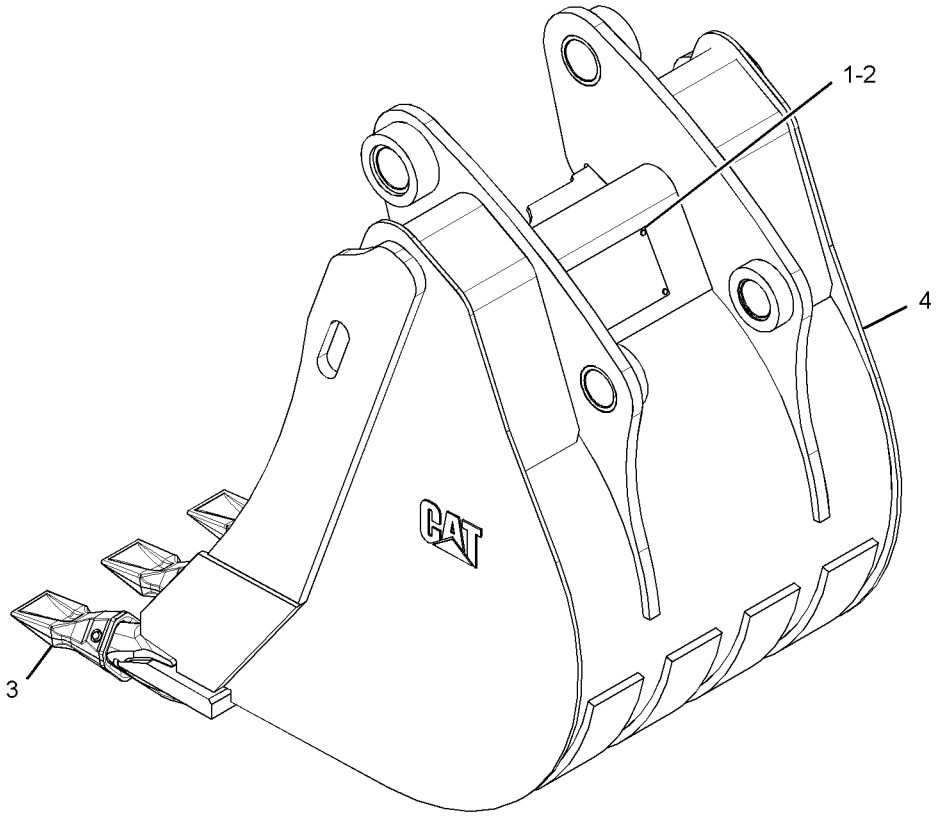

GRAPHIC #1 **<END>** g01336850

WORK TOOLS

219-3388 BUCKET GP-HOE—HEAVY-DUTY

S/N: LMS1-UP

AN ATTACHMENT

SMCS-6503 **i02651413**

NOTE	REF NO	GRAPHIC REF	PART NUMBER	QTY	PART NAME 1 2 3 4 5 6 (PRODUCT LEVEL)	SEE PAGE
	1	1	**137-4234**	1	PLATE-IDENTIFICATION (WORK TOOL)	
	2	1	**168-8389**	4	TACK-FASTENER	
	3	1	*208-5245*	5	TIP GP-PENETRATION	
					(EACH INCLUDES)	
		1	**201-1238**	1	PIN	
		1	**201-1239**	1	RETAINER AS	
		1	**208-5235**	1	TIP-PENETRATION	
Y	4	1	*219-3364*	1	BUCKET AS-HOE	403

Y-SEPARATE ILLUSTRATION

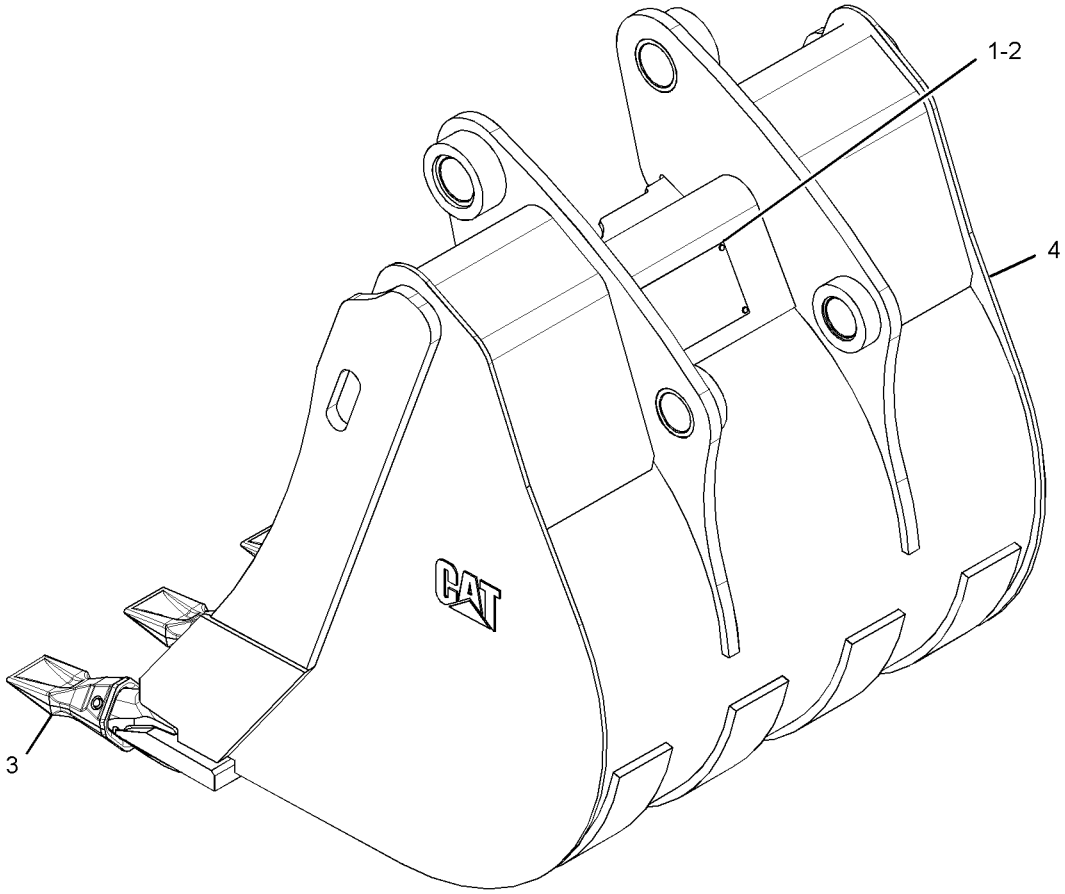

GRAPHIC #1 **<END>** g01337564

WORK TOOLS

219-3389 BUCKET GP-HOE—HEAVY-DUTY

S/N: LMS1-UP

AN ATTACHMENT

SMCS-6503 **i02655233**

NOTE	REF NO	GRAPHIC REF	PART NUMBER	QTY	PART NAME 1 2 3 4 5 6 (PRODUCT LEVEL)	SEE PAGE
	1	1	**137-4234**	1	PLATE-IDENTIFICATION (WORK TOOL)	
	2	1	**168-8389**	4	TACK-FASTENER	
	3	1	*208-5245*	6	TIP GP-PENETRATION	
					(EACH INCLUDES)	
		1	**201-1238**	1	PIN	
		1	**201-1239**	1	RETAINER AS	
		1	**208-5235**	1	TIP-PENETRATION	
Y	4	1	*219-3365*	1	BUCKET AS-HOE	404

Y-SEPARATE ILLUSTRATION

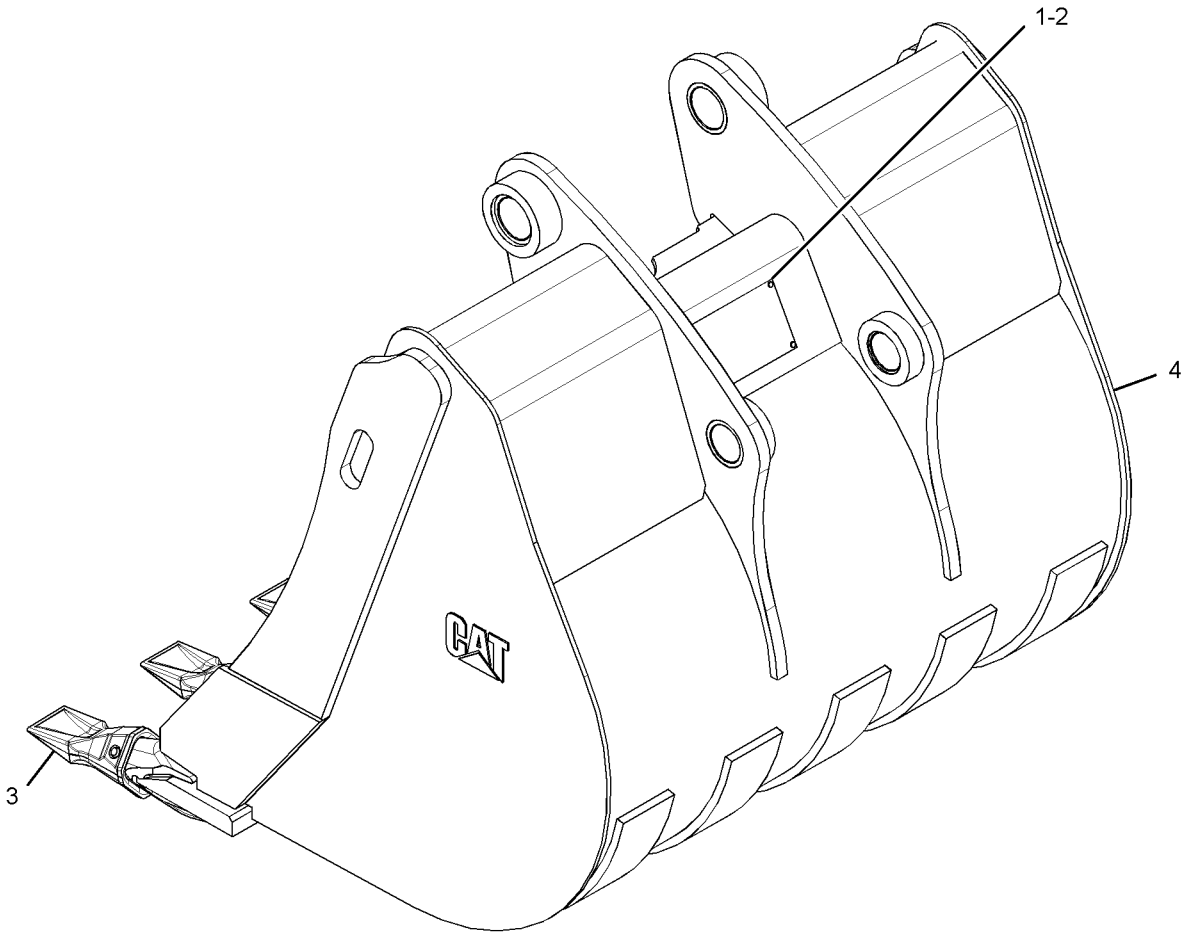

GRAPHIC #1 **<END>** g01341913

219-3394 BUCKET GP-HOE–ROCK

S/N: LMS1-UP
PART OF 219-3412 BUCKET GP-HOE
AN ATTACHMENT

SMCS-6503 **i02659876**

NOTE	REF NO	GRAPHIC REF	PART NUMBER	QTY	PART NAME 1 2 3 4 5 6 (PRODUCT LEVEL)	SEE PAGE
	1	1	**137-4234**	1	PLATE-IDENTIFICATION (WORK TOOL)	
	2	1	**168-8389**	4	TACK-FASTENER	
	3	1	*208-5245*	3	TIP GP-PENETRATION	
					(EACH INCLUDES)	
		1	**201-1238**	1	PIN	
		1	**201-1239**	1	RETAINER AS	
		1	**208-5235**	1	TIP-PENETRATION	
Y	4	1	*219-3370*	1	BUCKET AS-HOE (ROCK)	405

Y-SEPARATE ILLUSTRATION

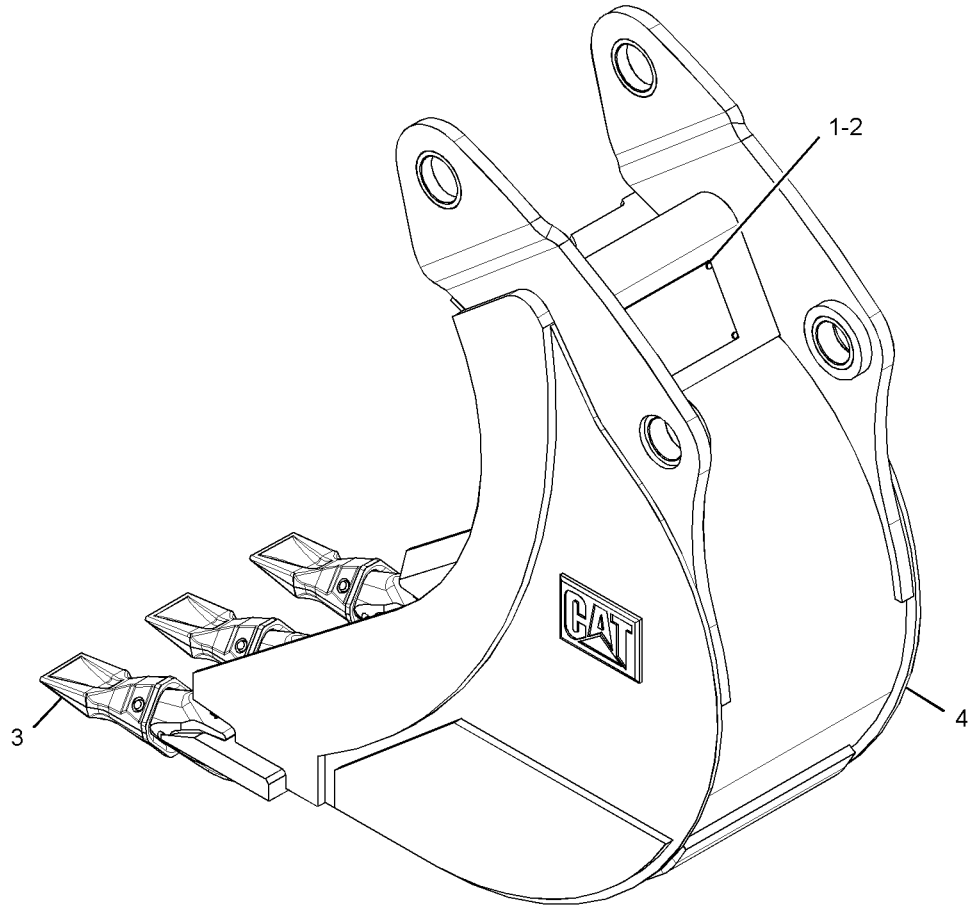

GRAPHIC #1 **<END>** g01342095

WORK TOOLS

219-3395 BUCKET GP-HOE–ROCK

S/N: LMS1-UP

AN ATTACHMENT

SMCS-6503 **i02651590**

NOTE	REF NO	GRAPHIC REF	PART NUMBER	QTY	PART NAME 1 2 3 4 5 6 (PRODUCT LEVEL)	SEE PAGE
	1	1	**137-4234**	1	PLATE-IDENTIFICATION (WORK TOOL)	
	2	1	**168-8389**	4	TACK-FASTENER	
	3	1	*208-5245*	4	TIP GP-PENETRATION	
					(EACH INCLUDES)	
		1	**201-1238**	1	PIN	
		1	**201-1239**	1	RETAINER AS	
		1	**208-5235**	1	TIP-PENETRATION	
Y	4	1	*219-3371*	1	BUCKET AS-HOE (ROCK)	406

Y-SEPARATE ILLUSTRATION

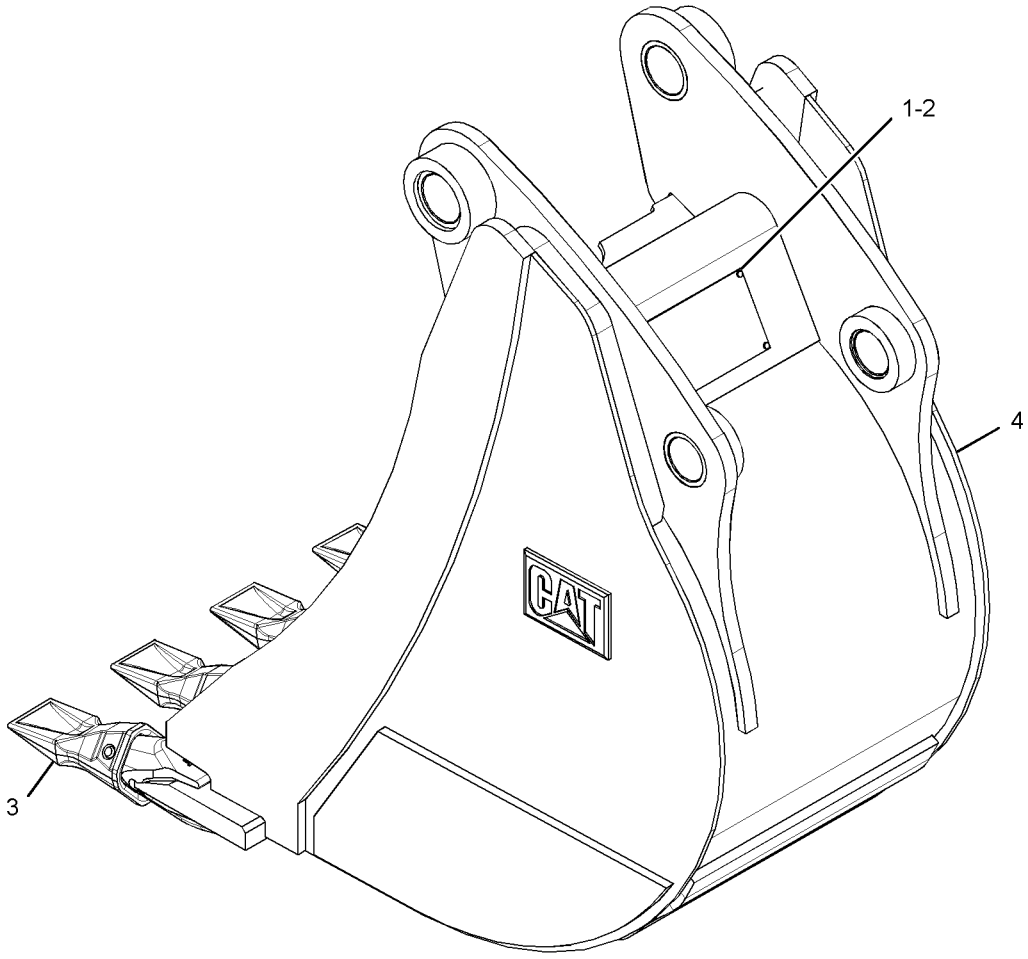

GRAPHIC #1 **<END>** g01340728

WORK TOOLS

219-3396 BUCKET GP-HOE–ROCK

S/N: LMS1-UP

AN ATTACHMENT

SMCS-6503 **i02651592**

NOTE	REF NO	GRAPHIC REF	PART NUMBER	QTY	PART NAME 1 2 3 4 5 6 (PRODUCT LEVEL)	SEE PAGE
	1	1	**137-4234**	1	PLATE-IDENTIFICATION (WORK TOOL)	
	2	1	**168-8389**	4	TACK-FASTENER	
	3	1	*208-5245*	5	TIP GP-PENETRATION	
					(EACH INCLUDES)	
		1	**201-1238**	1	PIN	
		1	**201-1239**	1	RETAINER AS	
		1	**208-5235**	1	TIP-PENETRATION	
Y	4	1	*219-3372*	1	BUCKET AS-HOE (ROCK)	407

Y-SEPARATE ILLUSTRATION

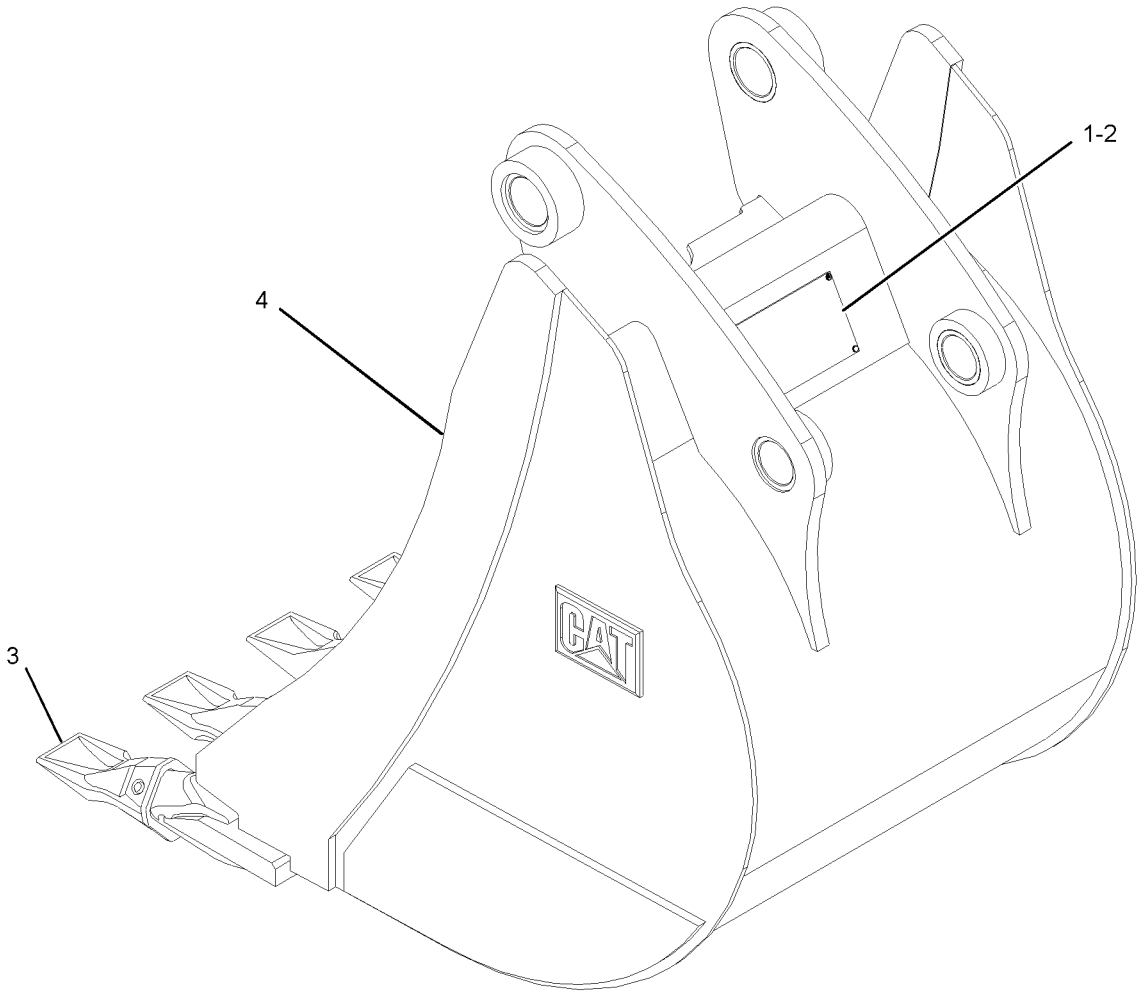

GRAPHIC #1 **<END>** g01341821

WORK TOOLS

219-3397 BUCKET GP-HOE–ROCK

S/N: LMS1-UP

AN ATTACHMENT

SMCS-6503 **i02651593**

NOTE	REF NO	GRAPHIC REF	PART NUMBER	QTY	PART NAME 1 2 3 4 5 6 (PRODUCT LEVEL)	SEE PAGE
	1	1	**137-4234**	1	PLATE-IDENTIFICATION (WORK TOOL)	
	2	1	**168-8389**	4	TACK-FASTENER	
	3	1	*208-5245*	5	TIP GP-PENETRATION	
					(EACH INCLUDES)	
		1	**201-1238**	1	PIN	
		1	**201-1239**	1	RETAINER AS	
		1	**208-5235**	1	TIP-PENETRATION	
Y	4		*219-3373*	1	BUCKET AS-HOE (ROCK)	408

Y-SEPARATE ILLUSTRATION

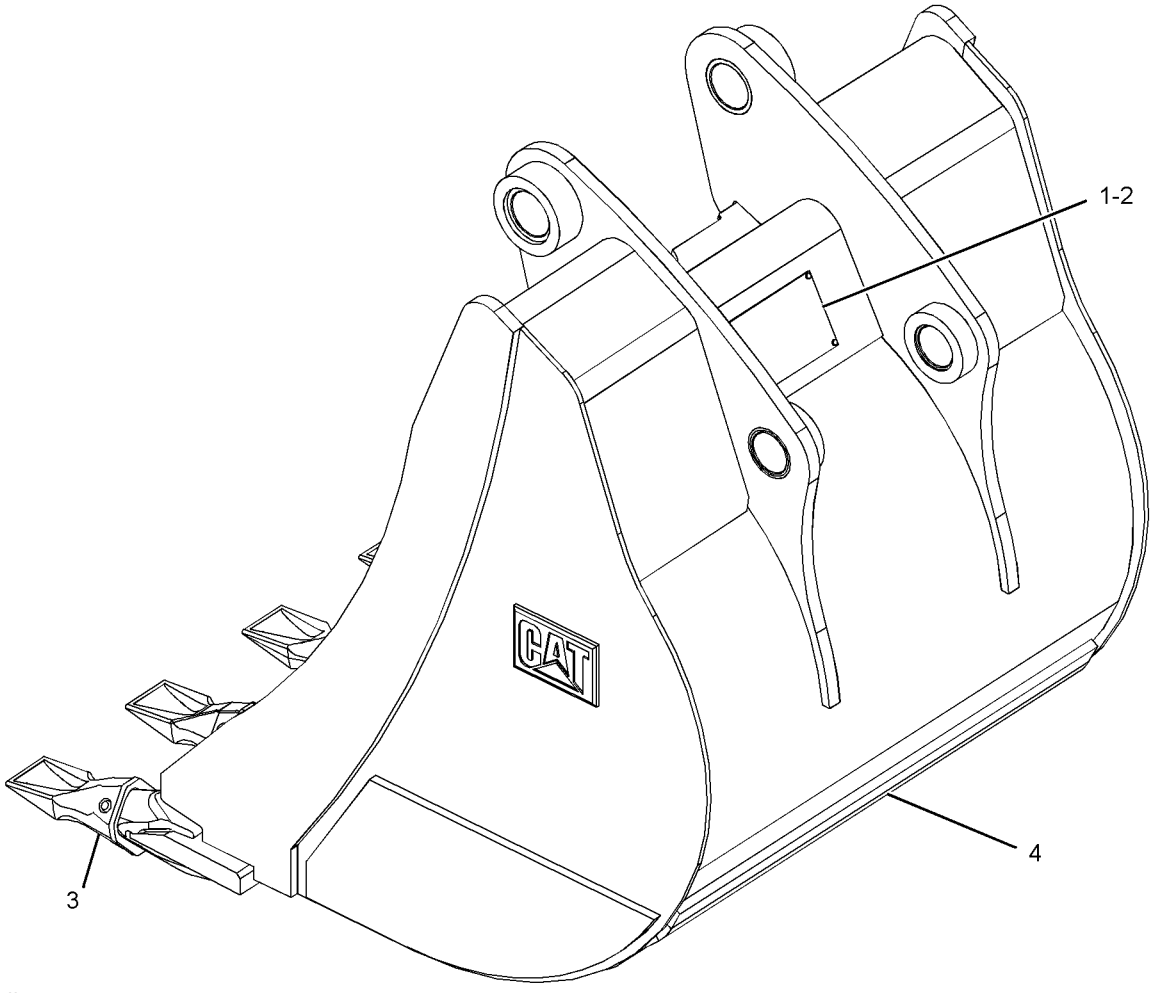

GRAPHIC #1 **<END>** g01341885

WORK TOOLS

219-3398 BUCKET GP-HOE–ROCK

S/N: LMS1-UP

AN ATTACHMENT

SMCS-6503 **i02660344**

NOTE	REF NO	GRAPHIC REF	PART NUMBER	QTY	PART NAME 1 2 3 4 5 6 (PRODUCT LEVEL)	SEE PAGE
	1	1	**137-4234**	1	PLATE-IDENTIFICATION (WORK TOOL)	
	2	1	**168-8389**	4	TACK-FASTENER	
	3	1	*208-5245*	6	TIP GP-PENETRATION	
					(EACH INCLUDES)	
		1	**201-1238**	1	PIN	
		1	**201-1239**	1	RETAINER AS	
		1	**208-5235**	1	TIP-PENETRATION	
Y	4	1	*219-3374*	1	BUCKET AS-HOE (ROCK)	409

Y-SEPARATE ILLUSTRATION

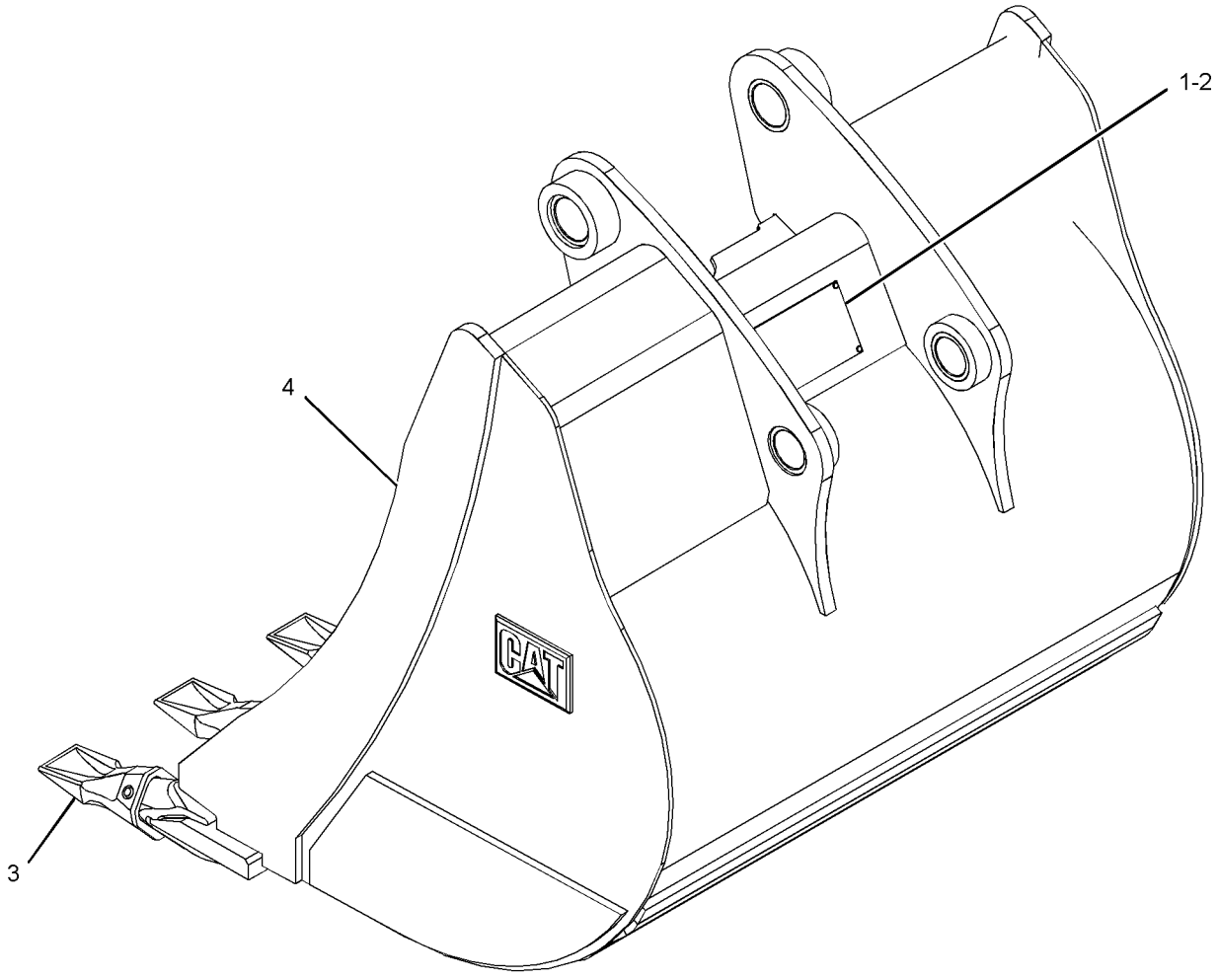

GRAPHIC #1 **<END>** g01342103

WORK TOOLS

219-3410 BUCKET GP-HOE

S/N: LMS1-UP

AN ATTACHMENT

SMCS-6503 **i01942147**

NOTE	REF NO	GRAPHIC REF	PART NUMBER	QTY	PART NAME 1 2 3 4 5 6 (PRODUCT LEVEL)	SEE PAGE
	1	1	**6V-3213**	2	RING-RETAINING	
	2	1	**6V-4364**	2	RING-RETAINING	
	3	1	**9R-0158**	5	WASHER (46X69X3-MM THK)	
	4	1	**9R-1510**	3	WASHER (51X82X4-MM THK)	
	5	1	**168-0443**	1	PIN	
	6	1	**168-0444**	1	PIN	
Y	7	1	**219-3379**	1	BUCKET GP-HOE	428

Y-SEPARATE ILLUSTRATION

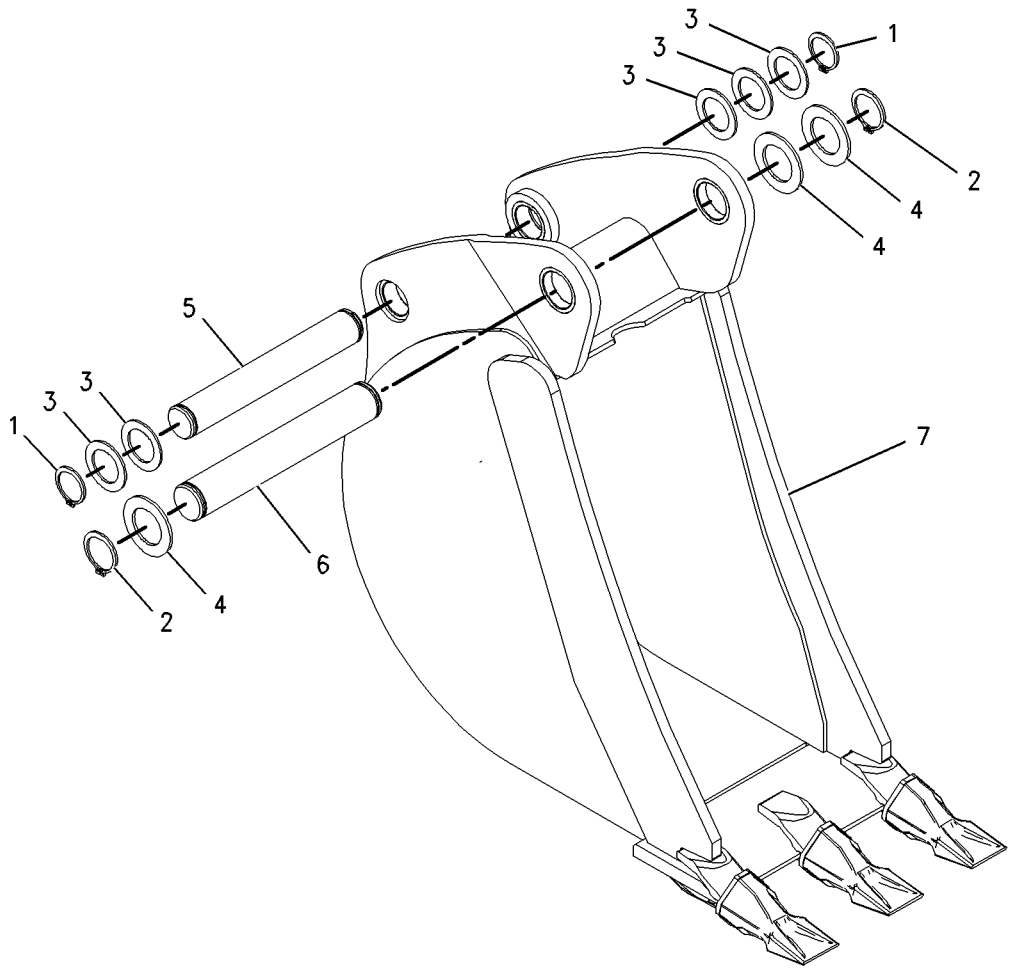

GRAPHIC #1 **<END>** g01001892

WORK TOOLS

219-3411 BUCKET GP-HOE—HEAVY-DUTY

S/N: LMS1-UP

AN ATTACHMENT

SMCS-6503 **i01942150**

NOTE	REF NO	GRAPHIC REF	PART NUMBER	QTY	PART NAME 1 2 3 4 5 6 (PRODUCT LEVEL)	SEE PAGE
	1	1	**6V-3213**	2	RING-RETAINING	
	2	1	**6V-4364**	2	RING-RETAINING	
	3	1	**9R-0158**	5	WASHER (46X69X3-MM THK)	
	4	1	**9R-1510**	3	WASHER (51X82X4-MM THK)	
	5	1	**168-0443**	1	PIN	
	6	1	**168-0444**	1	PIN	
Y	7	1	**219-3384**	1	BUCKET GP-HOE (HEAVY-DUTY)	433

Y-SEPARATE ILLUSTRATION

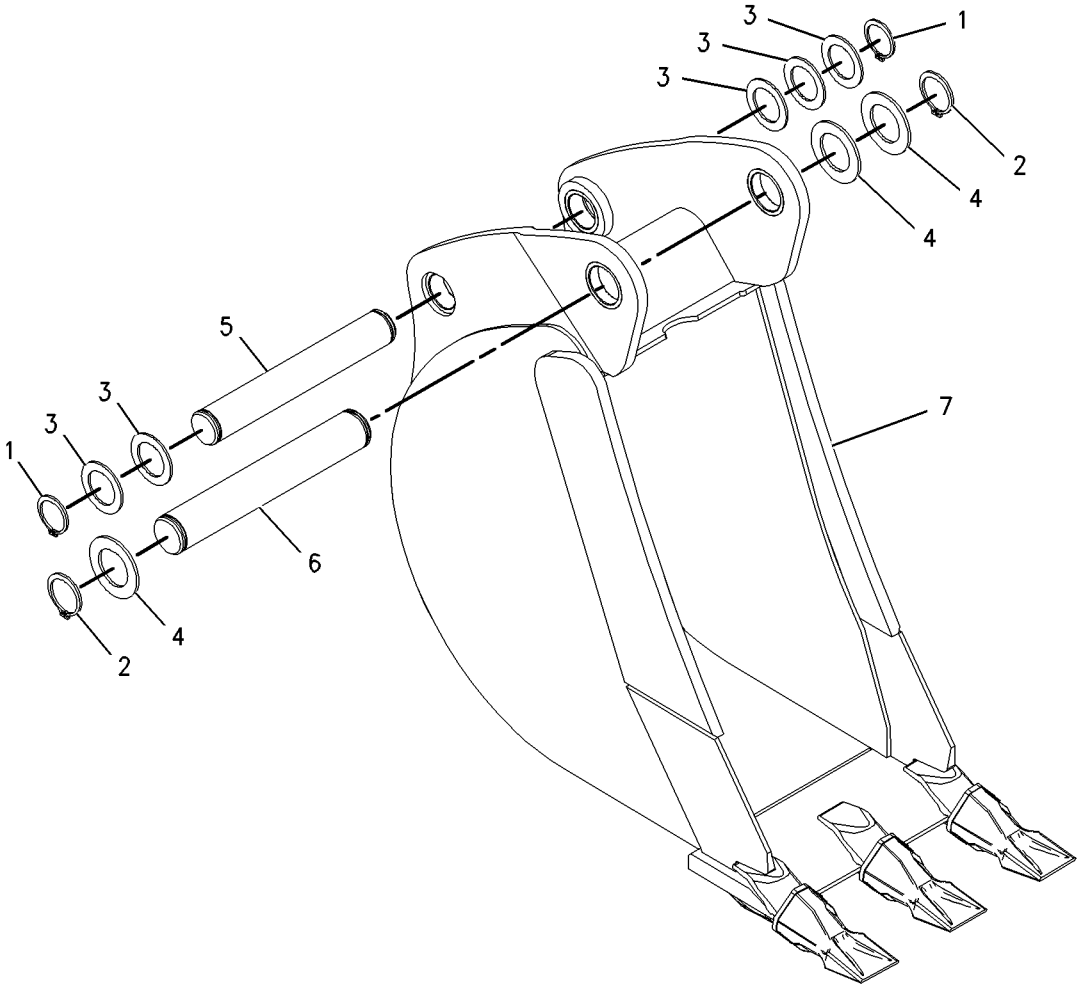

GRAPHIC #1 **<END>** g01001906

WORK TOOLS

219-3412 BUCKET GP-HOE–ROCK

S/N: LMS1-UP

AN ATTACHMENT

SMCS-6503 **i01942151**

NOTE	REF NO	GRAPHIC REF	PART NUMBER	QTY	PART NAME 1 2 3 4 5 6 (PRODUCT LEVEL)	SEE PAGE
	1	1	**6V-3213**	2	RING-RETAINING	
	2	1	**6V-4364**	2	RING-RETAINING	
	3	1	**9R-0158**	4	WASHER (46X69X3-MM THK)	
	4	1	**9R-1510**	3	WASHER (51X82X4-MM THK)	
	5	1	**168-0443**	1	PIN	
	6	1	**168-0444**	1	PIN	
Y	7	1	**219-3394**	1	BUCKET GP-HOE (ROCK)	439

Y-SEPARATE ILLUSTRATION

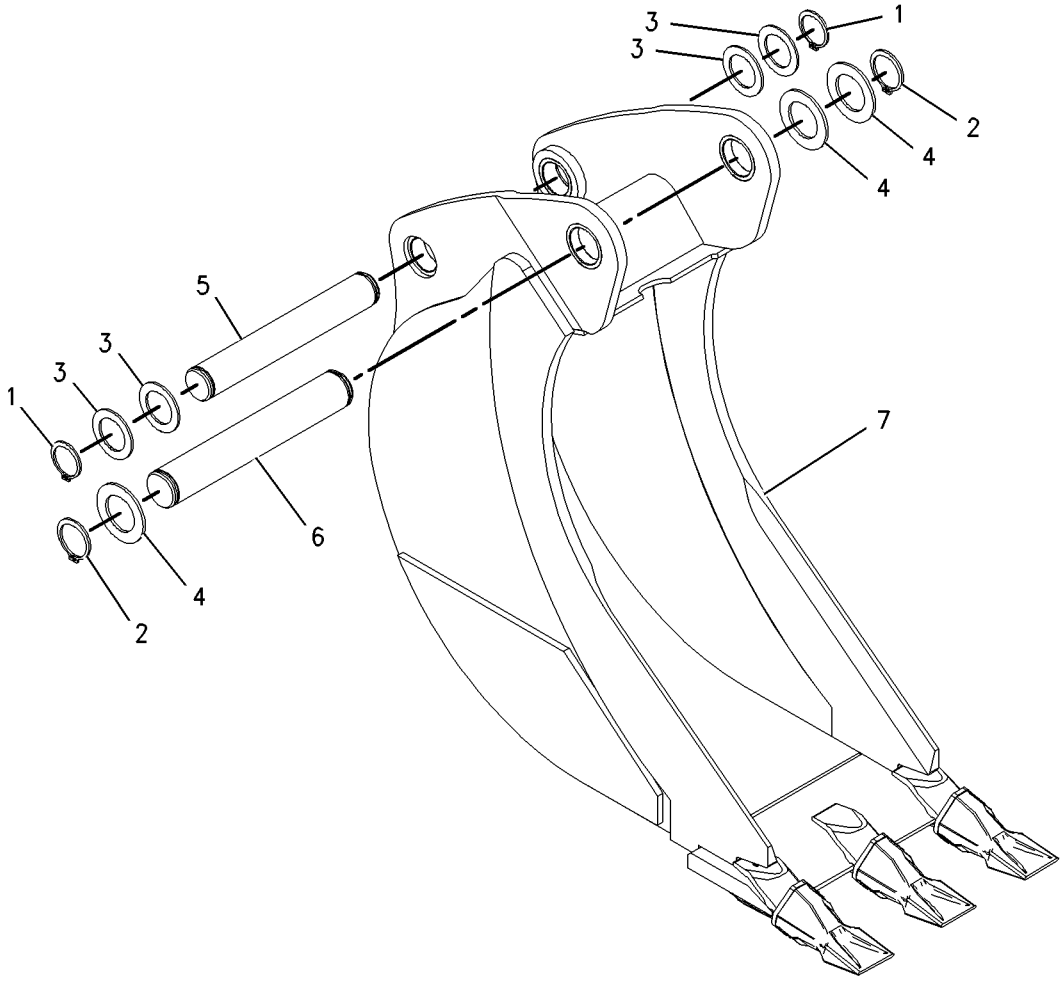

GRAPHIC #1 **<END>** g01001913

WORK TOOLS

247-1947 BUCKET GP-HOE—HEAVY-DUTY, PIN-LOCK

S/N: LMS1-UP

AN ATTACHMENT

SMCS-6503 **i03848112**

NOTE	REF NO	GRAPHIC REF	PART NUMBER	QTY	PART NAME 1 2 3 4 5 6 (PRODUCT LEVEL)	SEE PAGE
	1	1	**137-4234**	1	PLATE-IDENTIFICATION (WORK TOOL)	
	2	1	**168-8389**	4	TACK-FASTENER	
	3	1	*208-5245*	3	TIP GP-PENETRATION	
					(EACH INCLUDES)	
		1	**201-1238**	1	PIN	
		1	**201-1239**	1	RETAINER AS	
		1	**208-5235**	1	TIP-PENETRATION	
Y	4	1	*232-2752*	1	BUCKET AS-HOE (HEAVY-DUTY, PIN-LOCK)	410

Y-SEPARATE ILLUSTRATION

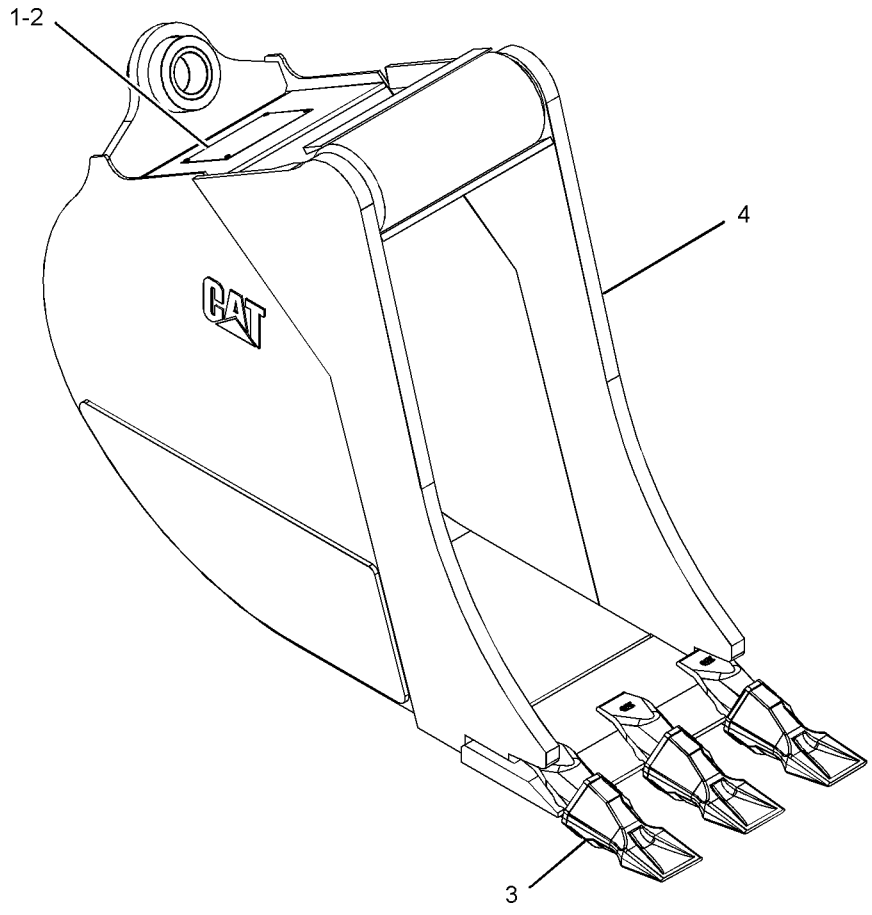

GRAPHIC #1 **<END>** g02108319

WORK TOOLS

247-1948 BUCKET GP-HOE—HEAVY-DUTY, PIN-LOCK

S/N: LMS1-UP

AN ATTACHMENT

SMCS-6503 **i03849789**

NOTE	REF NO	GRAPHIC REF	PART NUMBER	QTY	PART NAME 1 2 3 4 5 6 (PRODUCT LEVEL)	SEE PAGE
	1	1	**137-4234**	1	PLATE-IDENTIFICATION (WORK TOOL)	
	2	1	**168-8389**	4	TACK-FASTENER	
	3	1	*208-5245*	3	TIP GP-PENETRATION	
					(EACH INCLUDES)	
		1	**201-1238**	1	PIN	
		1	**201-1239**	1	RETAINER AS	
		1	**208-5235**	1	TIP-PENETRATION	
Y	4	1	*232-2753*	1	BUCKET AS-HOE (HEAVY-DUTY, PIN-LOCK)	411

Y-SEPARATE ILLUSTRATION

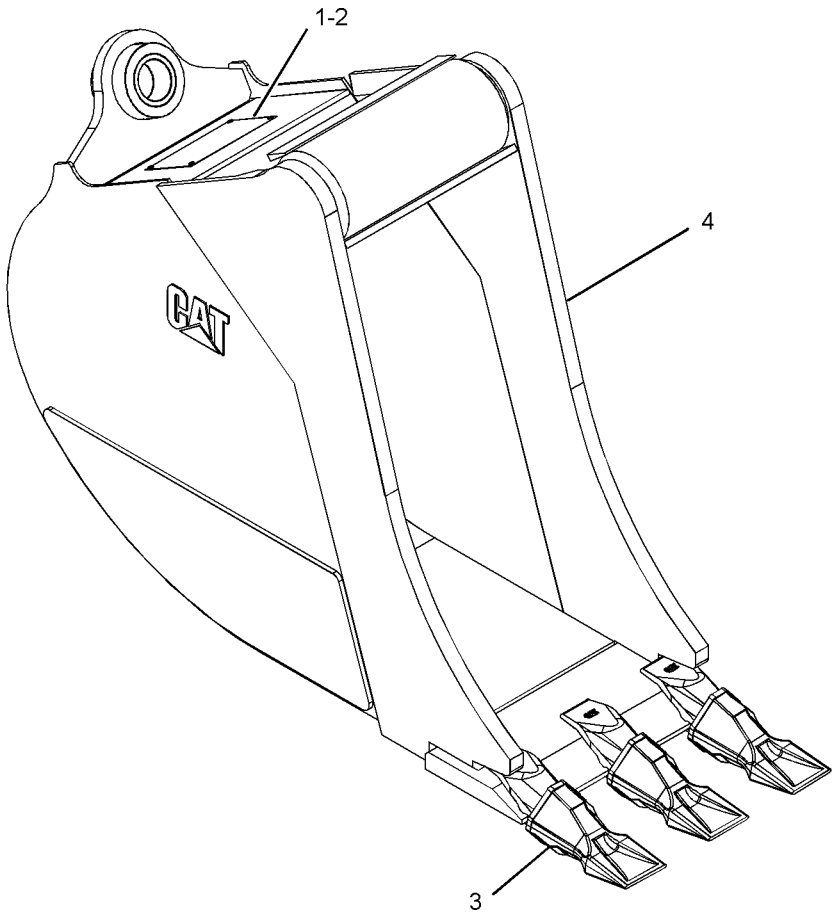

GRAPHIC #1 **<END>** g02109216

WORK TOOLS

247-1949 BUCKET GP-HOE—HEAVY-DUTY, PIN-LOCK

S/N: LMS1-UP

AN ATTACHMENT

SMCS-6503 **i03849796**

NOTE	REF NO	GRAPHIC REF	PART NUMBER	QTY	PART NAME 1 2 3 4 5 6 (PRODUCT LEVEL)	SEE PAGE
	1	1	**137-4234**	1	PLATE-IDENTIFICATION (WORK TOOL)	
	2	1	**168-8389**	4	TACK-FASTENER	
	3	1	*208-5245*	4	TIP GP-PENETRATION	
					(EACH INCLUDES)	
		1	**201-1238**	1	PIN	
		1	**201-1239**	1	RETAINER AS	
		1	**208-5235**	1	TIP-PENETRATION	
Y	4	1	*232-2754*	1	BUCKET AS-HOE (HEAVY-DUTY, PIN-LOCK)	412

Y-SEPARATE ILLUSTRATION

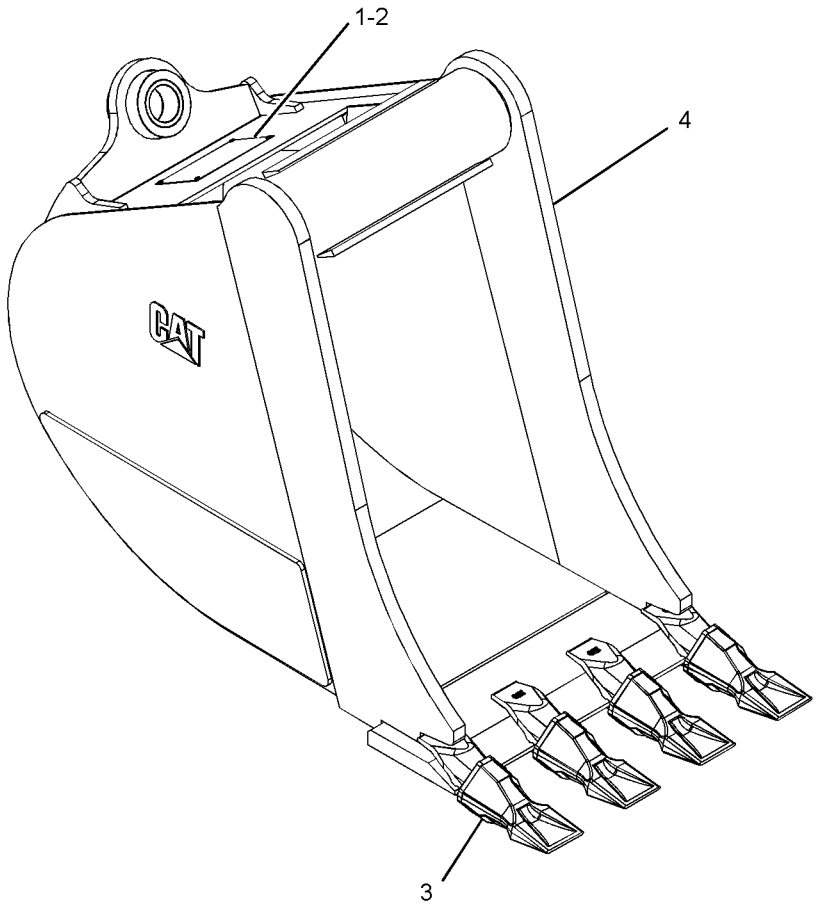

GRAPHIC #1 **<END>** g02109233

WORK TOOLS

247-1950 BUCKET GP-HOE—HEAVY-DUTY, PIN-LOCK

S/N: LMS1-UP

AN ATTACHMENT

SMCS-6503 **i03849800**

NOTE	REF NO	GRAPHIC REF	PART NUMBER	QTY	PART NAME 1 2 3 4 5 6 (PRODUCT LEVEL)	SEE PAGE
	1	1	**137-4234**	1	PLATE-IDENTIFICATION (WORK TOOL)	
	2	1	**168-8389**	4	TACK-FASTENER	
	3	1	*208-5245*	5	TIP GP-PENETRATION	
					(EACH INCLUDES)	
		1	**201-1238**	1	PIN	
		1	**201-1239**	1	RETAINER AS	
		1	**208-5235**	1	TIP-PENETRATION	
Y	4	1	*232-2755*	1	BUCKET AS-HOE (HEAVY-DUTY, PIN-LOCK)	413

Y-SEPARATE ILLUSTRATION

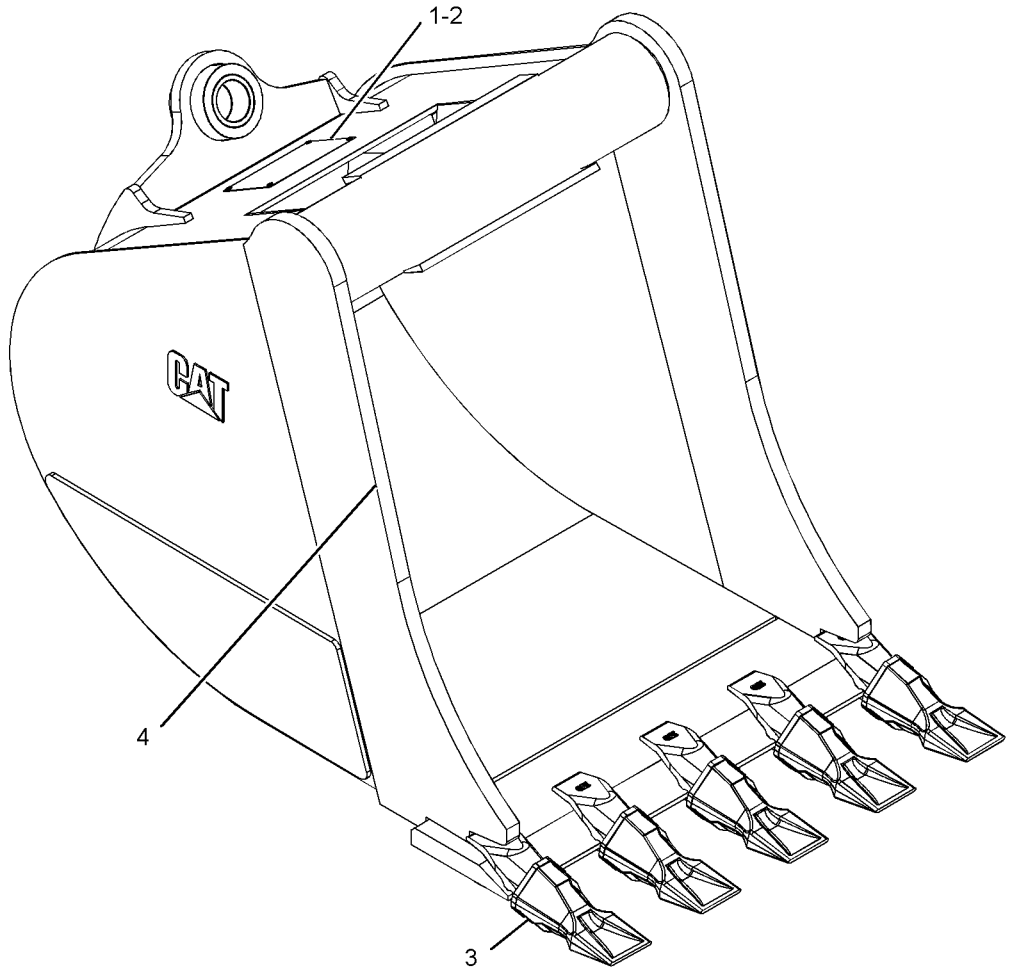

GRAPHIC #1 **<END>** g02111414

WORK TOOLS

247-1951 BUCKET GP-HOE—HEAVY-DUTY, PIN-LOCK

S/N: LMS1-UP

AN ATTACHMENT

SMCS-6503 **i03849803**

NOTE	REF NO	GRAPHIC REF	PART NUMBER	QTY	PART NAME 1 2 3 4 5 6 (PRODUCT LEVEL)	SEE PAGE
	1	1	**137-4234**	1	PLATE-IDENTIFICATION (WORK TOOL)	
	2	1	**168-8389**	4	TACK-FASTENER	
	3	1	*208-5245*	5	TIP GP-PENETRATION	
					(EACH INCLUDES)	
		1	**201-1238**	1	PIN	
		1	**201-1239**	1	RETAINER AS	
		1	**208-5235**	1	TIP-PENETRATION	
Y	4	1	*232-2756*	1	BUCKET AS-HOE (HEAVY-DUTY, PIN-LOCK)	414

Y-SEPARATE ILLUSTRATION

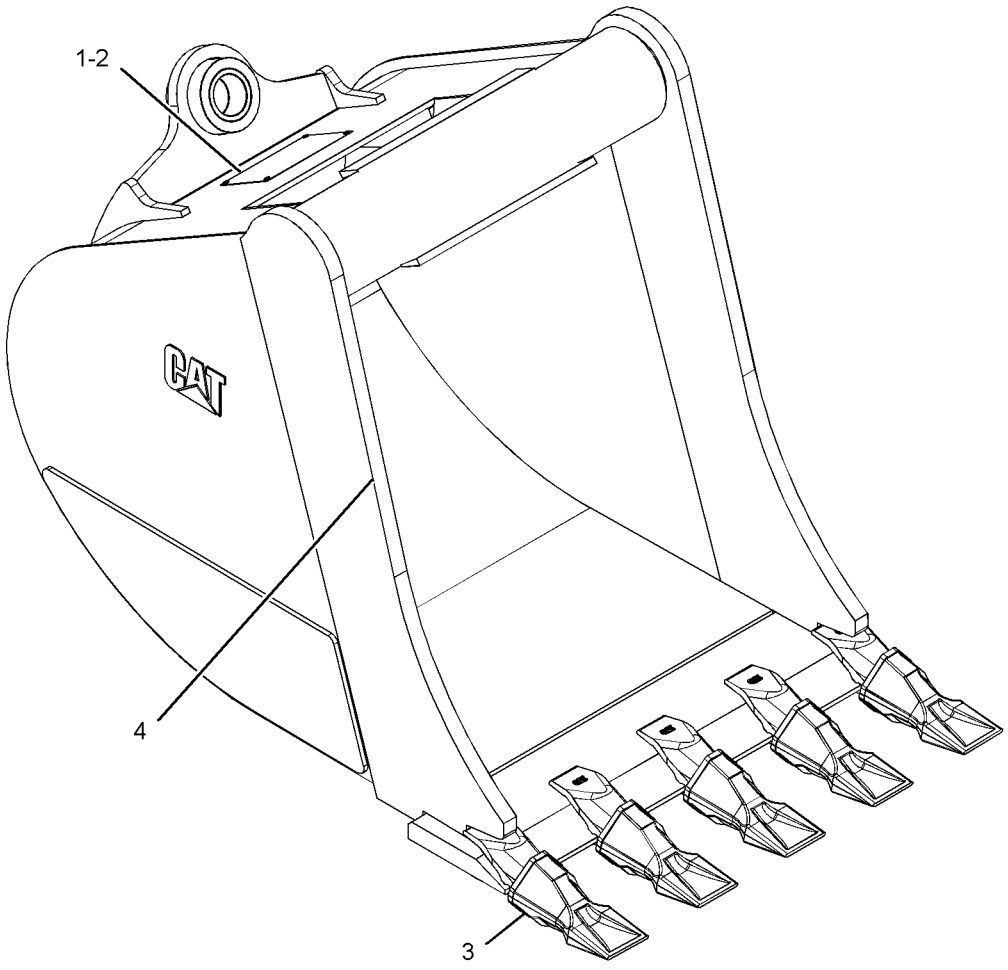

GRAPHIC #1 **<END>** g02111413

WORK TOOLS

247-1952 BUCKET GP-HOE—HEAVY-DUTY, PIN-LOCK

S/N: LMS1-UP

AN ATTACHMENT

SMCS-6503 **i03849810**

NOTE	REF NO	GRAPHIC REF	PART NUMBER	QTY	PART NAME 1 2 3 4 5 6 (PRODUCT LEVEL)	SEE PAGE
	1	1	**137-4234**	1	PLATE-IDENTIFICATION (WORK TOOL)	
	2	1	**168-8389**	4	TACK-FASTENER	
	3	1	*208-5245*	6	TIP GP-PENETRATION	
					(EACH INCLUDES)	
		1	**201-1238**	1	PIN	
		1	**201-1239**	1	RETAINER AS	
		1	**208-5235**	1	TIP-PENETRATION	
Y	4	1	*232-2757*	1	BUCKET AS-HOE (HEAVY-DUTY, PIN-LOCK)	415

Y-SEPARATE ILLUSTRATION

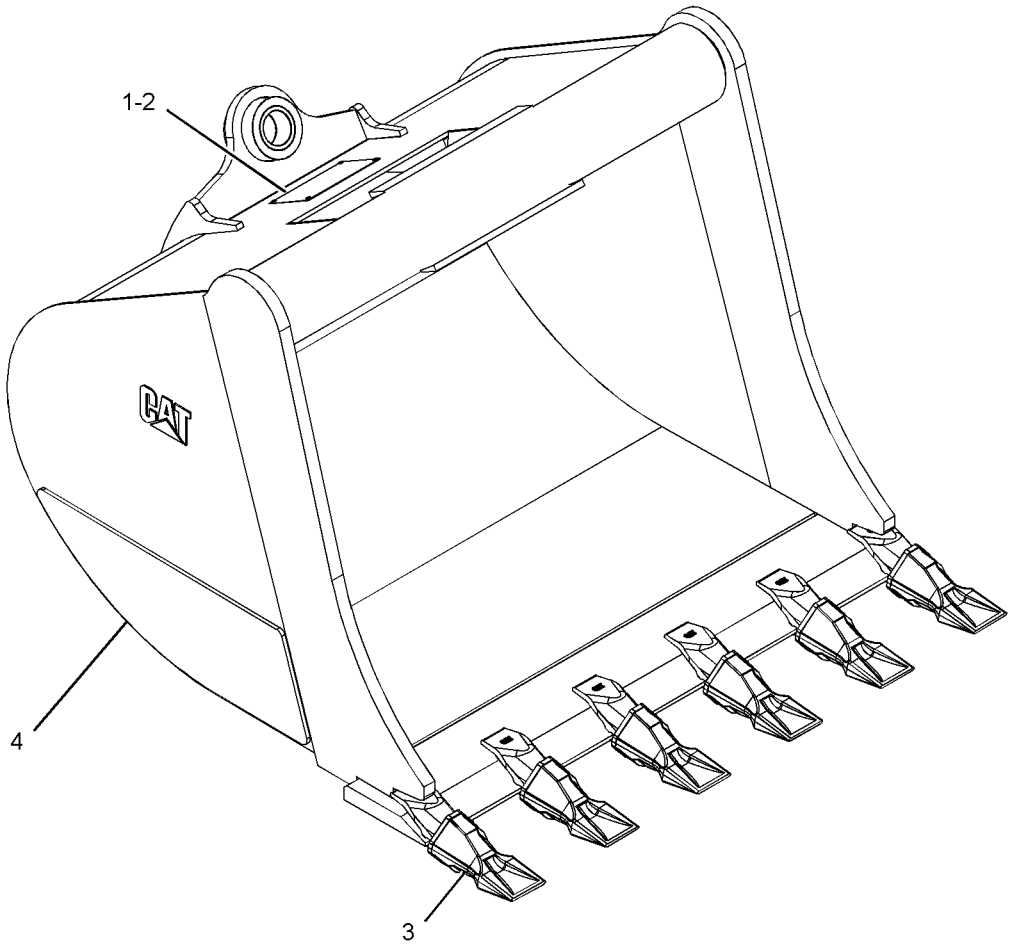

GRAPHIC #1 **<END>** g02109273

WORK TOOLS

247-1953 BUCKET GP-HOE—HIGH CAPACITY, PIN-LOCK

S/N: LMS1-UP

AN ATTACHMENT

SMCS-6503 **i03849813**

NOTE	REF NO	GRAPHIC REF	PART NUMBER	QTY	PART NAME 1 2 3 4 5 6 (PRODUCT LEVEL)	SEE PAGE
	1	1	**137-4234**	1	PLATE-IDENTIFICATION (WORK TOOL)	
	2	1	**168-8389**	4	TACK-FASTENER	
	3	1	*208-5245*	3	TIP GP-PENETRATION	
					(EACH INCLUDES)	
		1	**201-1238**	1	PIN	
		1	**201-1239**	1	RETAINER AS	
		1	**208-5235**	1	TIP-PENETRATION	
Y	4	1	*232-2758*	1	BUCKET AS-HOE (HEAVY-DUTY, PIN-LOCK)	416

Y-SEPARATE ILLUSTRATION

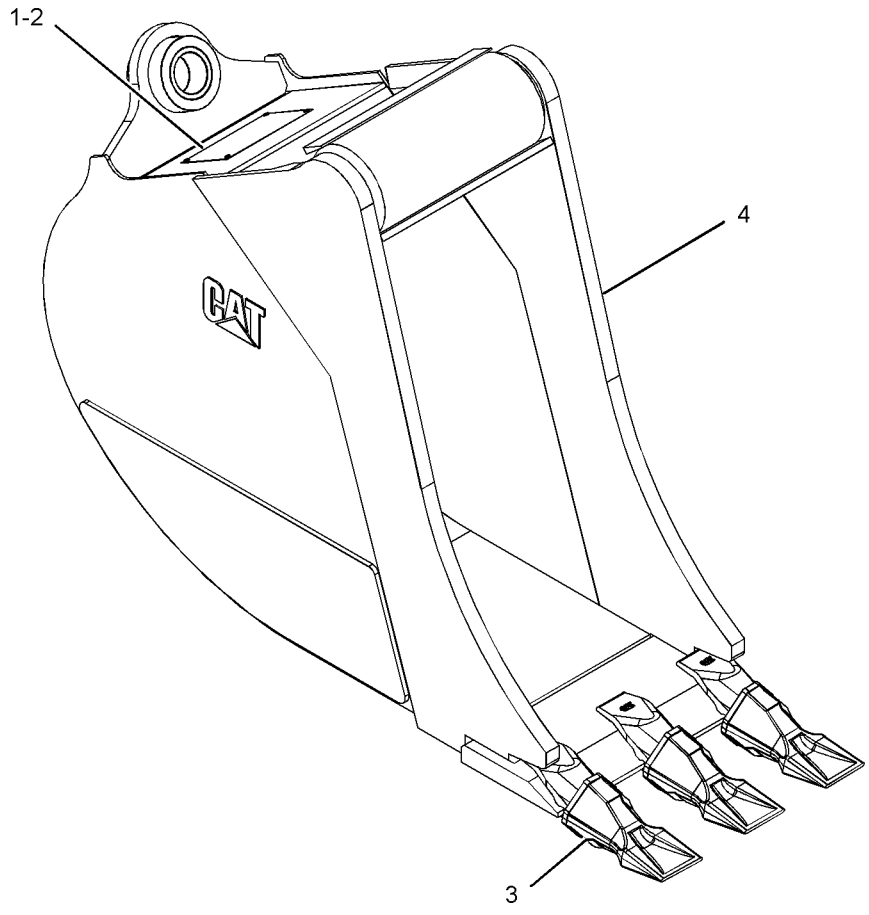

GRAPHIC #1 **<END>** g02109274

WORK TOOLS

247-1954 BUCKET GP-HOE—HIGH CAPACITY, PIN-LOCK

S/N: LMS1-UP

AN ATTACHMENT

SMCS-6503 **i03849818**

NOTE	REF NO	GRAPHIC REF	PART NUMBER	QTY	PART NAME 1 2 3 4 5 6 (PRODUCT LEVEL)	SEE PAGE
	1	1	**137-4234**	1	PLATE-IDENTIFICATION (WORK TOOL)	
	2	1	**168-8389**	4	TACK-FASTENER	
	3	1	*208-5245*	3	TIP GP-PENETRATION	
					(EACH INCLUDES)	
		1	**201-1238**	1	PIN	
		1	**201-1239**	1	RETAINER AS	
		1	**208-5235**	1	TIP-PENETRATION	
Y	4	1	*232-2759*	1	BUCKET AS-HOE (HIGH CAPACITY, PIN-LOCK)	417

Y-SEPARATE ILLUSTRATION

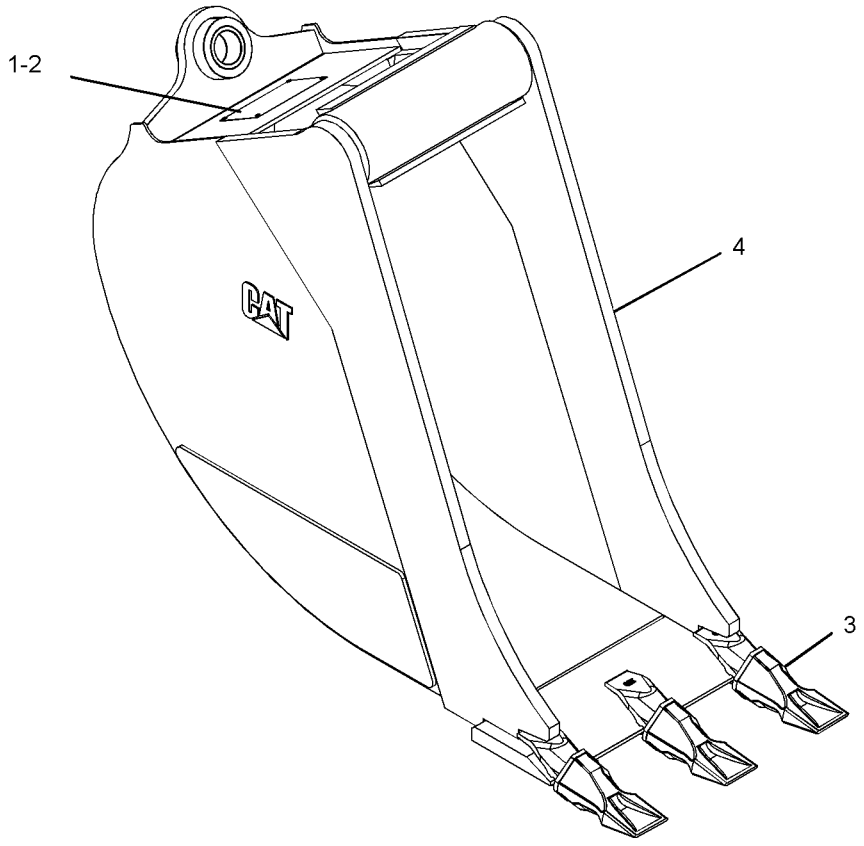

GRAPHIC #1 **<END>** g02111393

WORK TOOLS

247-1955 BUCKET GP-HOE—HIGH CAPACITY, PIN-LOCK

S/N: LMS1-UP

AN ATTACHMENT

SMCS-6503 **i03849820**

NOTE	REF NO	GRAPHIC REF	PART NUMBER	QTY	PART NAME 1 2 3 4 5 6 (PRODUCT LEVEL)	SEE PAGE
	1	1	**137-4234**	1	PLATE-IDENTIFICATION (WORK TOOL)	
	2	1	**168-8389**	4	TACK-FASTENER	
	3	1	*208-5245*	4	TIP GP-PENETRATION	
					(EACH INCLUDES)	
		1	**201-1238**	1	PIN	
		1	**201-1239**	1	RETAINER AS	
		1	**208-5235**	1	TIP-PENETRATION	
Y	4	1	*232-2760*	1	BUCKET AS-HOE (HEAVY-DUTY, PIN-LOCK)	418

Y-SEPARATE ILLUSTRATION

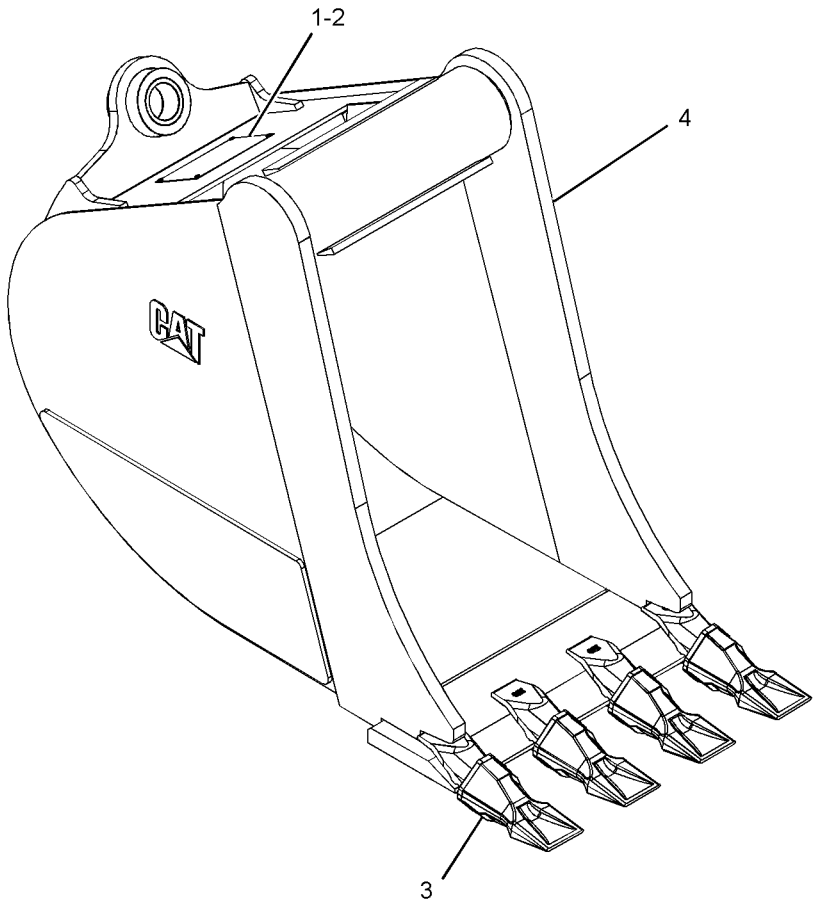

GRAPHIC #1 **<END>** g02109275

247-1956 BUCKET GP-HOE—HIGH CAPACITY, PIN-LOCK

S/N: LMS1-UP

AN ATTACHMENT

SMCS-6503 **i03849909**

NOTE	REF NO	GRAPHIC REF	PART NUMBER	QTY	PART NAME 1 2 3 4 5 6 (PRODUCT LEVEL)	SEE PAGE
	1	1	**137-4234**	1	PLATE-IDENTIFICATION (WORK TOOL)	
	2	1	**168-8389**	4	TACK-FASTENER	
	3	1	*208-5245*	5	TIP GP-PENETRATION	
					(EACH INCLUDES)	
	3A	1	**201-1238**	1	PIN	
	3B	1	**201-1239**	1	RETAINER AS	
	3C	1	**208-5235**	1	TIP-PENETRATION	
Y	4	1	*232-2761*	1	BUCKET AS-HOE (24-IN)	419

Y-SEPARATE ILLUSTRATION

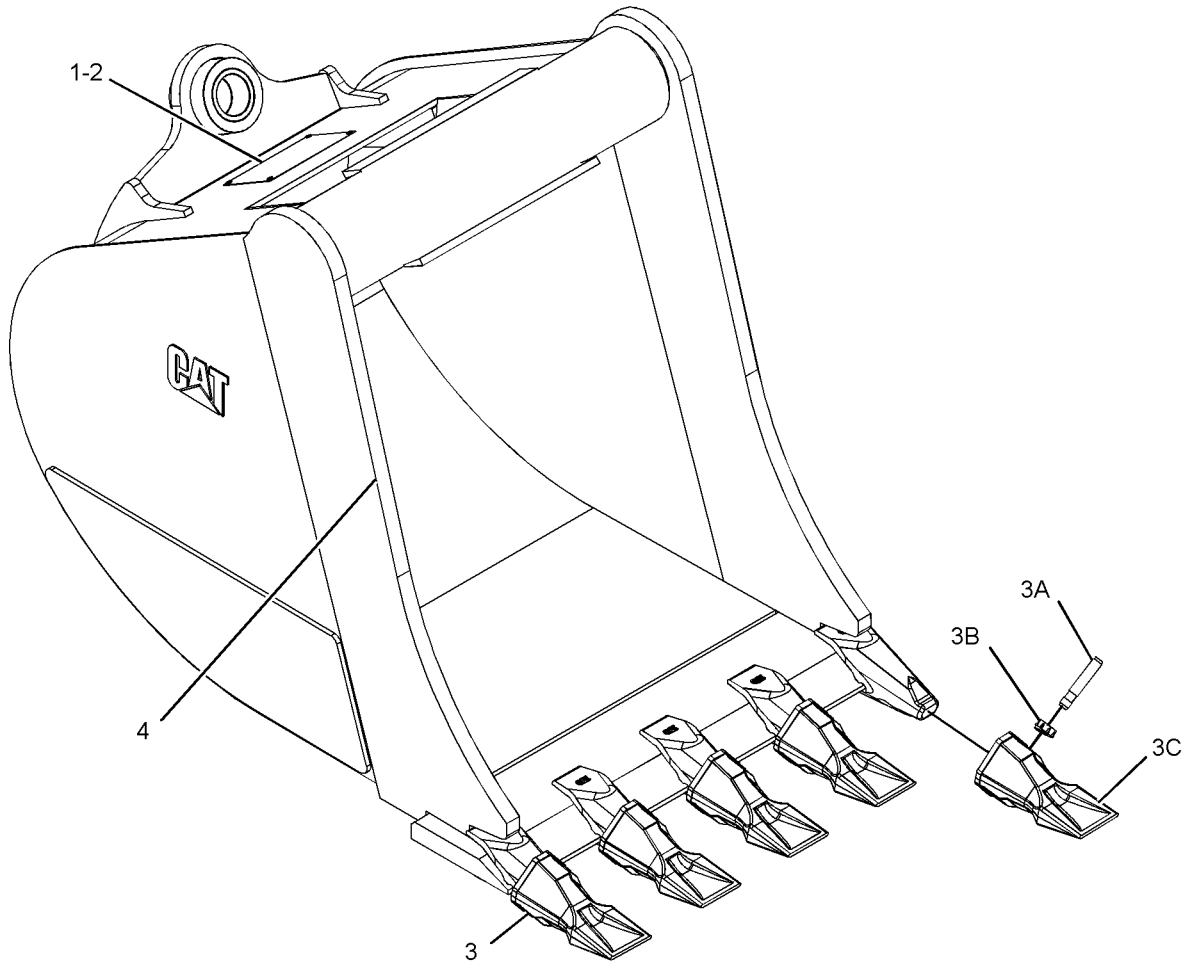

GRAPHIC #1 **<END>** g01955793

247-1957 BUCKET GP-HOE—HIGH CAPACITY, PIN-LOCK

S/N: LMS1-UP

AN ATTACHMENT

SMCS-6503 **i03849911**

NOTE	REF NO	GRAPHIC REF	PART NUMBER	QTY	PART NAME 1 2 3 4 5 6 (PRODUCT LEVEL)	SEE PAGE
	1	1	**137-4234**	1	PLATE-IDENTIFICATION (WORK TOOL)	
	2	1	**168-8389**	4	TACK-FASTENER	
	3	1	*208-5245*	5	TIP GP-PENETRATION	
					(EACH INCLUDES)	
	3A	1	**201-1238**	1	PIN	
	3B	1	**201-1239**	1	RETAINER AS	
	3C	1	**208-5235**	1	TIP-PENETRATION	
Y	4	1	*232-2762*	1	BUCKET AS-HOE (30-IN)	420

Y-SEPARATE ILLUSTRATION

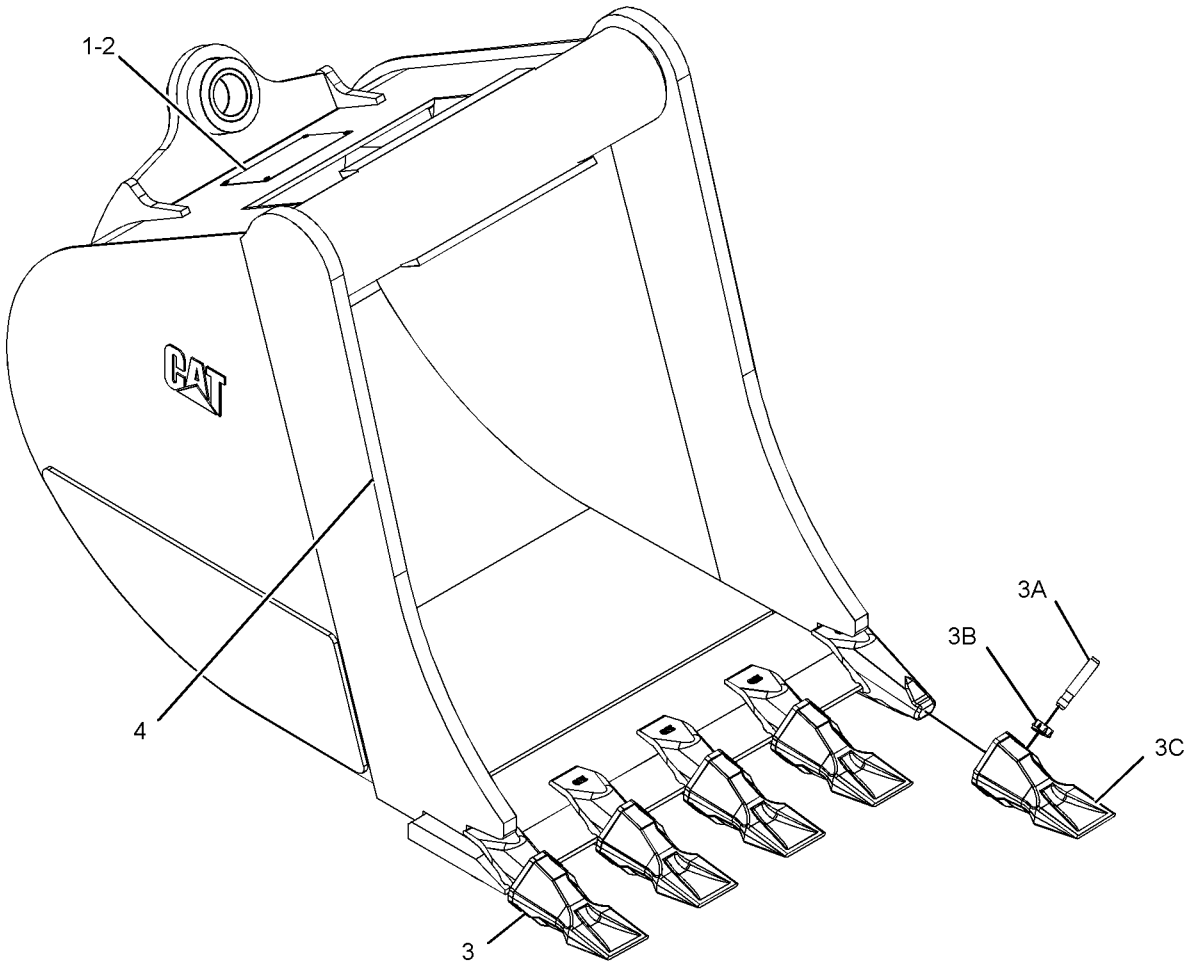

GRAPHIC #1 **<END>** g01955796

WORK TOOLS

247-1958 BUCKET GP-HOE—HIGH CAPACITY, PIN-LOCK

S/N: LMS1-UP

AN ATTACHMENT

SMCS-6503 **i03849913**

NOTE	REF NO	GRAPHIC REF	PART NUMBER	QTY	PART NAME 1 2 3 4 5 6 (PRODUCT LEVEL)	SEE PAGE
	1	1	**137-4234**	1	PLATE-IDENTIFICATION (WORK TOOL)	
	2	1	**168-8389**	4	TACK-FASTENER	
	3	1	*208-5245*	6	TIP GP-PENETRATION	
					(EACH INCLUDES)	
	3A	1	**201-1238**	1	PIN	
	3B	1	**201-1239**	1	RETAINER AS	
	3C	1	**208-5235**	1	TIP-PENETRATION	
Y	4	1	*232-2763*	1	BUCKET AS-HOE (36-IN)	421

Y-SEPARATE ILLUSTRATION

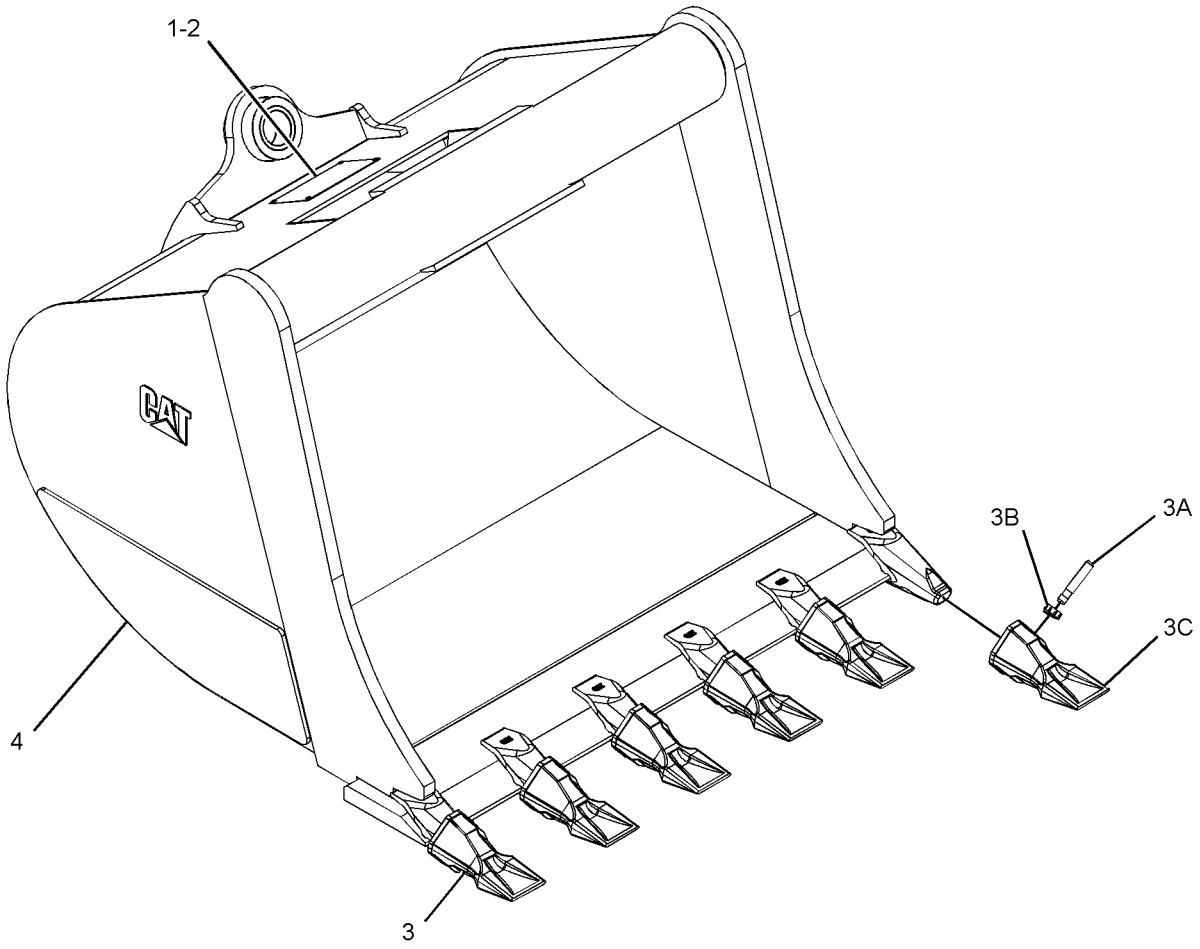

GRAPHIC #1 **<END>** g01955798

254-8940 BUCKET GP-HOE—HIGH CAPACITY, PIN-LOCK

S/N: LMS1-UP

AN ATTACHMENT

SMCS-6503 **i03849915**

NOTE	REF NO	GRAPHIC REF	PART NUMBER	QTY	PART NAME 1 2 3 4 5 6 (PRODUCT LEVEL)	SEE PAGE
	1	1	**137-4234**	1	PLATE-IDENTIFICATION (WORK TOOL)	
	2	1	**168-8389**	4	TACK-FASTENER	
	3	1	*208-5244*	4	TIP GP-BUCKET (SOIL)	
					(EACH INCLUDES)	
		1	**201-1238**	1	PIN	
		1	**201-1239**	1	RETAINER AS	
		1	**208-5234**	1	TIP-BUCKET (SOIL)	
Y	4	1	*254-8939*	1	BUCKET AS-HOE (HIGH CAPACITY, PIN-LOCK)	422

Y-SEPARATE ILLUSTRATION

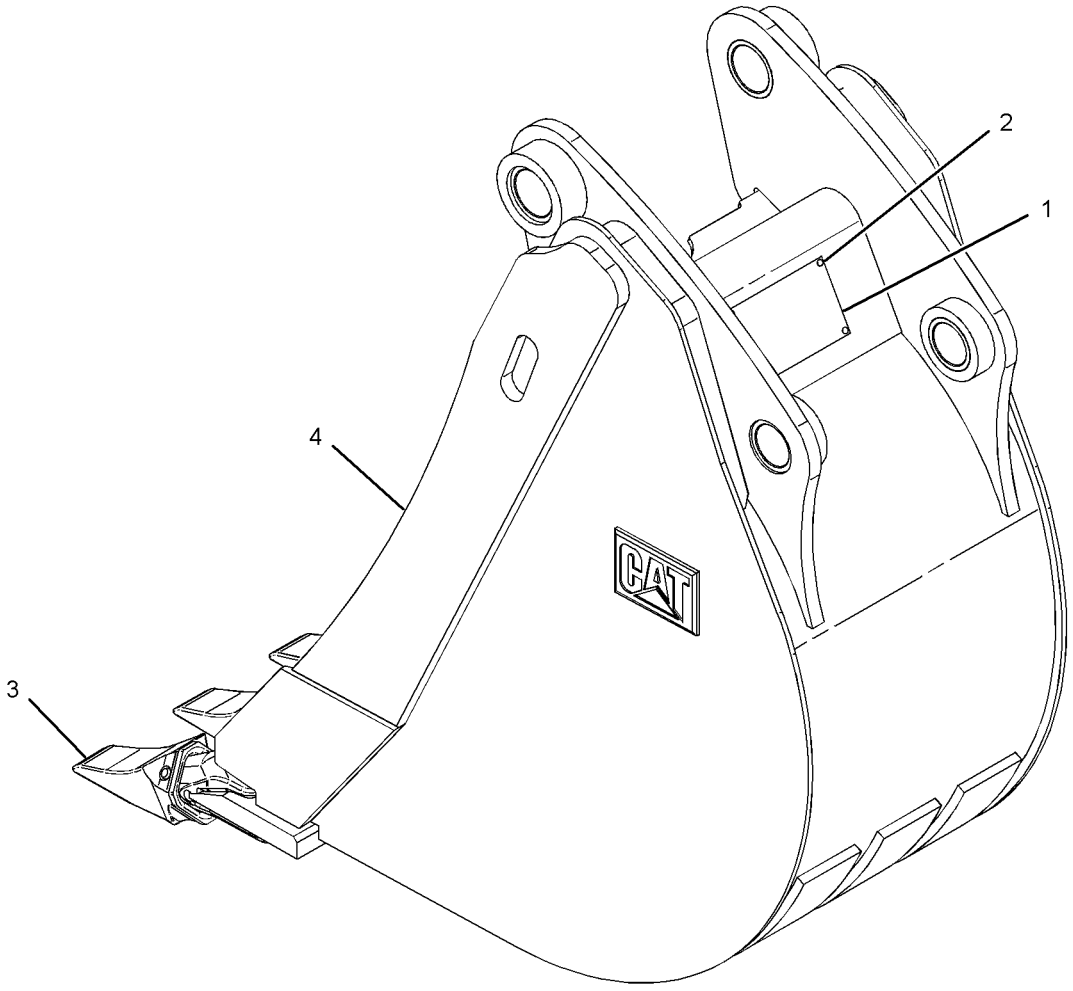

GRAPHIC #1 **<END>** g01150288

WORK TOOLS

254-8941 BUCKET GP-HOE—HIGH CAPACITY, PIN-LOCK

S/N: LMS1-UP

AN ATTACHMENT

SMCS-6503 **i03849917**

NOTE	REF NO	GRAPHIC REF	PART NUMBER	QTY	PART NAME 1 2 3 4 5 6 (PRODUCT LEVEL)	SEE PAGE
	1	1	**137-4234**	1	PLATE-IDENTIFICATION (WORK TOOL)	
	2	1	**168-8389**	4	TACK-FASTENER	
	3	1	*208-5244*	5	TIP GP-BUCKET (SOIL)	
					(EACH INCLUDES)	
		1	**201-1238**	1	PIN	
		1	**201-1239**	1	RETAINER AS	
		1	**208-5234**	1	TIP-BUCKET (SOIL)	
Y	4	1	*254-8944*	1	BUCKET AS-HOE (HIGH CAPACITY, PIN-LOCK)	423

Y-SEPARATE ILLUSTRATION

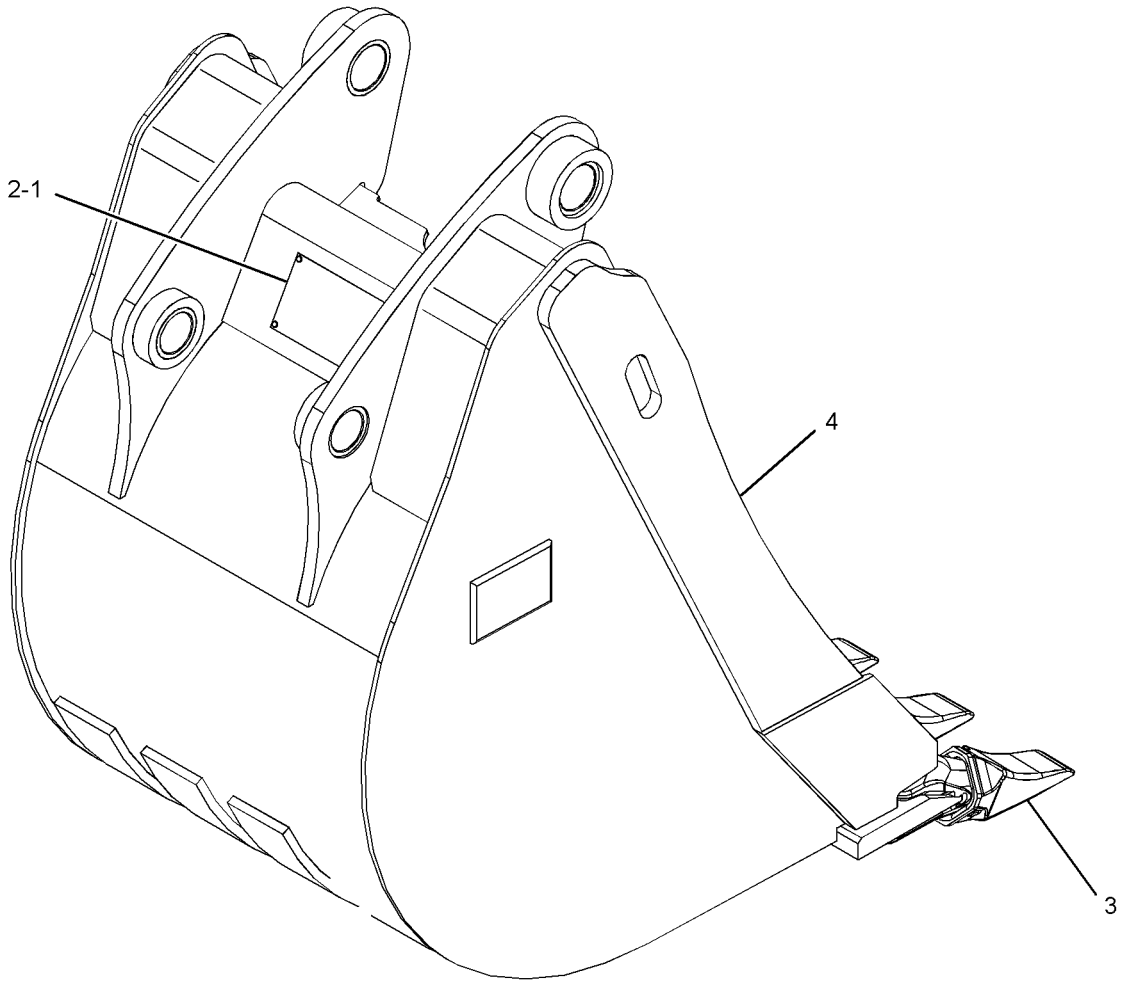

GRAPHIC #1 **<END>** g01150193

254-8942 BUCKET GP-HOE—HIGH CAPACITY, PIN-LOCK

S/N: LMS1-UP

AN ATTACHMENT

SMCS-6503 **i03849919**

NOTE	REF NO	GRAPHIC REF	PART NUMBER	QTY	PART NAME 1 2 3 4 5 6 (PRODUCT LEVEL)	SEE PAGE
	1	1	**137-4234**	1	PLATE-IDENTIFICATION (WORK TOOL)	
	2	1	**168-8389**	4	TACK-FASTENER	
	3	1	*208-5244*	5	TIP GP-BUCKET (SOIL)	
					(EACH INCLUDES)	
		1	**201-1238**	1	PIN	
		1	**201-1239**	1	RETAINER AS	
		1	**208-5234**	1	TIP-BUCKET (SOIL)	
Y	4	1	*254-8945*	1	BUCKET AS-HOE (HIGH CAPACITY, PIN-LOCK)	424

Y-SEPARATE ILLUSTRATION

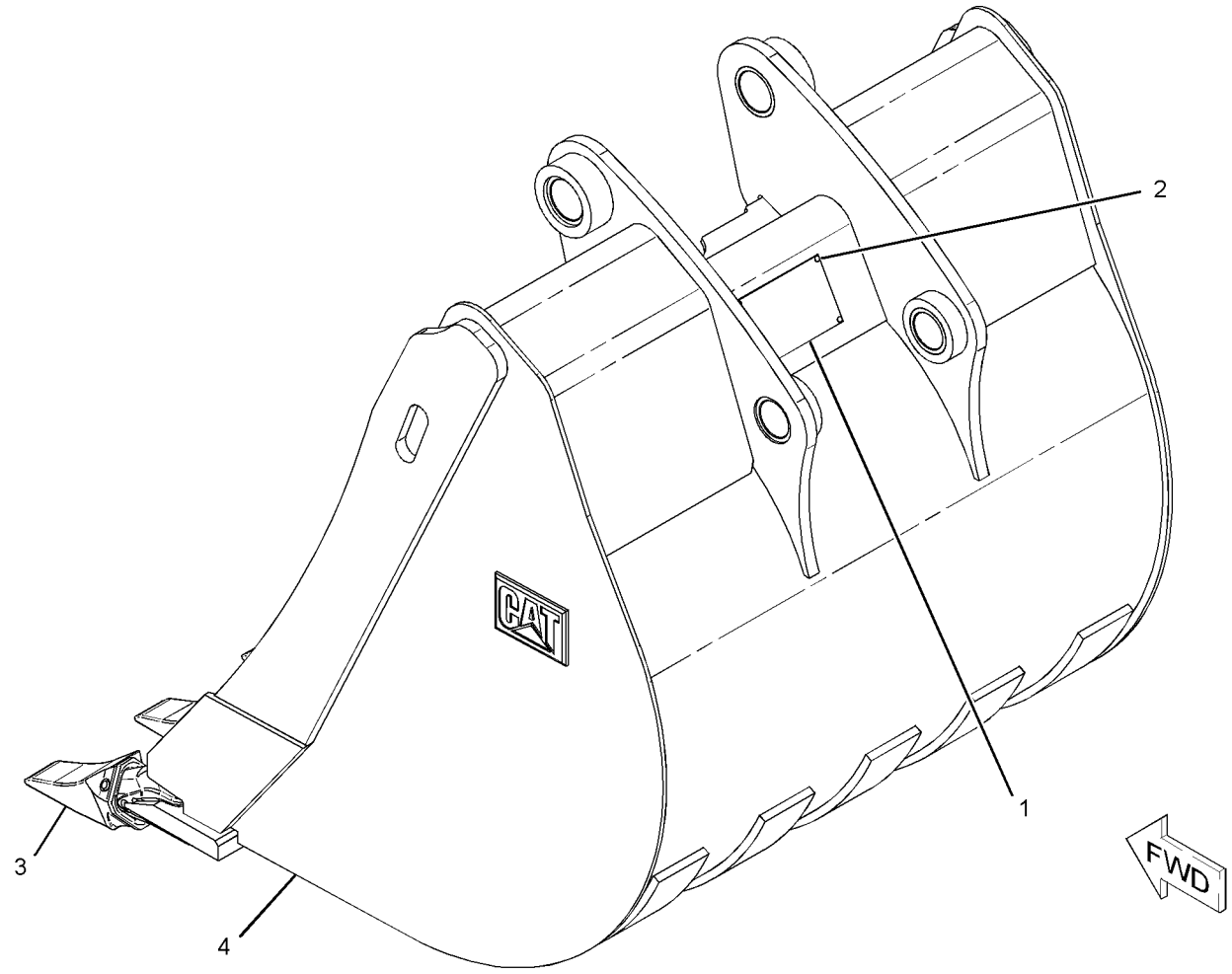

GRAPHIC #1 **<END>** g01144833

254-8943 BUCKET GP-HOE—HIGH CAPACITY, PIN-LOCK

S/N: LMS1-UP

AN ATTACHMENT

SMCS-6503 **i03849921**

NOTE	REF NO	GRAPHIC REF	PART NUMBER	QTY	PART NAME 1 2 3 4 5 6 (PRODUCT LEVEL)	SEE PAGE
	1	1	**137-4234**	1	PLATE-IDENTIFICATION (WORK TOOL)	
	2	1	**168-8389**	4	TACK-FASTENER	
	3	1	*208-5244*	6	TIP GP-BUCKET (SOIL)	
					(EACH INCLUDES)	
		1	**201-1238**		PIN	
		1	**201-1239**	1	RETAINER AS	
		1	**208-5234**	1	TIP-BUCKET (SOIL)	
Y	4	1	*254-8946*	1	BUCKET AS-HOE (HIGH CAPACITY, PIN-LOCK)	425

Y-SEPARATE ILLUSTRATION

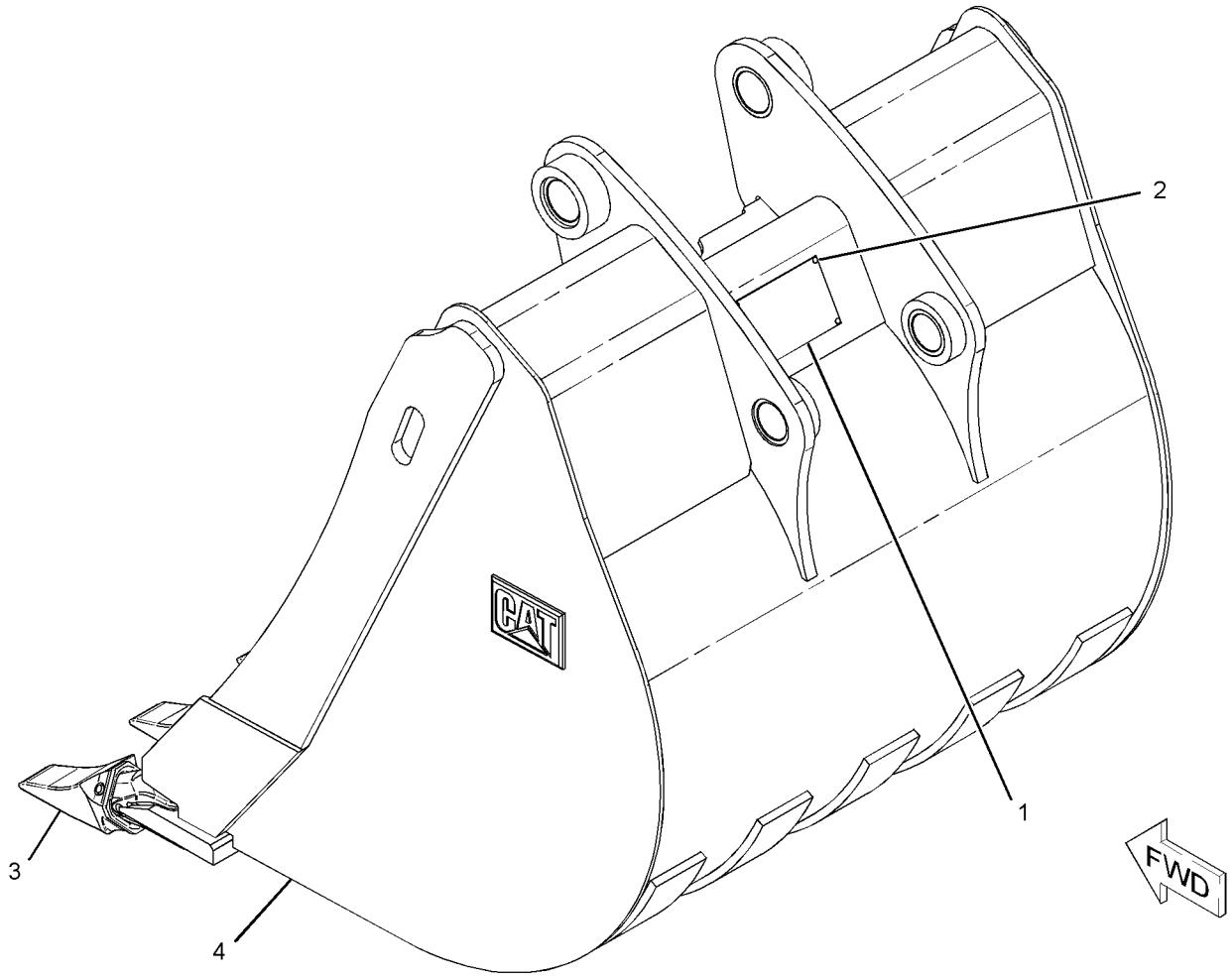

GRAPHIC #1 **<END>** g01144797

WORK TOOLS

216-8800 BUCKET GP-MULTIPURPOSE

S/N: LMS1-UP
2279-MM (90-IN) WIDTH X 1-CU M (1.3-CU YD) CAPACITY
FOR USE WITH 317-1463—PAGE 335
AN ATTACHMENT

SMCS-6104 **i03894528**

NOTE	REF NO	GRAPHIC REF	PART NUMBER	QTY	PART NAME 1 2 3 4 5 6 (PRODUCT LEVEL)	SEE PAGE
	1	1	**9R-4676**	2	PIN	
	2	1	**9R-4677**	2	PIN	
	3	1	**9R-4678**	2	PIN	
	4	1	**095-0865**	4	PIN-COTTER	
	5	1	**096-1820**	2	PIN-COTTER	
	6	1	**137-4234**	1	PLATE-IDENTIFICATION (WORK TOOL)	
	7	1	**168-8389**	4	TACK-FASTENER	
Y	8	1	*216-8802*	1	BULLDOZER AS	465
Y	9	1	**216-8803**	1	CLAM AS-MULTIPURPOSE BUCKET	467
Y	10	1	**226-5540**	2	CYLINDER GP-MULTIPURPOSE BUKT	253
	11	1	**233-3757**	1	EDGE	
Y	12	1	*337-7467*	1	LINES GP-MULTIPURPOSE BUCKET	305
	13	1	**3B-8489**	2	FITTING-GREASE	
	14	1	**3F-5108**	8	BOLT-PLOW (5/8-11X2.25-IN)	
	15	1	**4K-0367**	8	NUT-FULL (5/8-11-THD)	
	16	1	**8T-4122**	8	WASHER-HARD (17X32X3.5-MM THK)	

Y-SEPARATE ILLUSTRATION

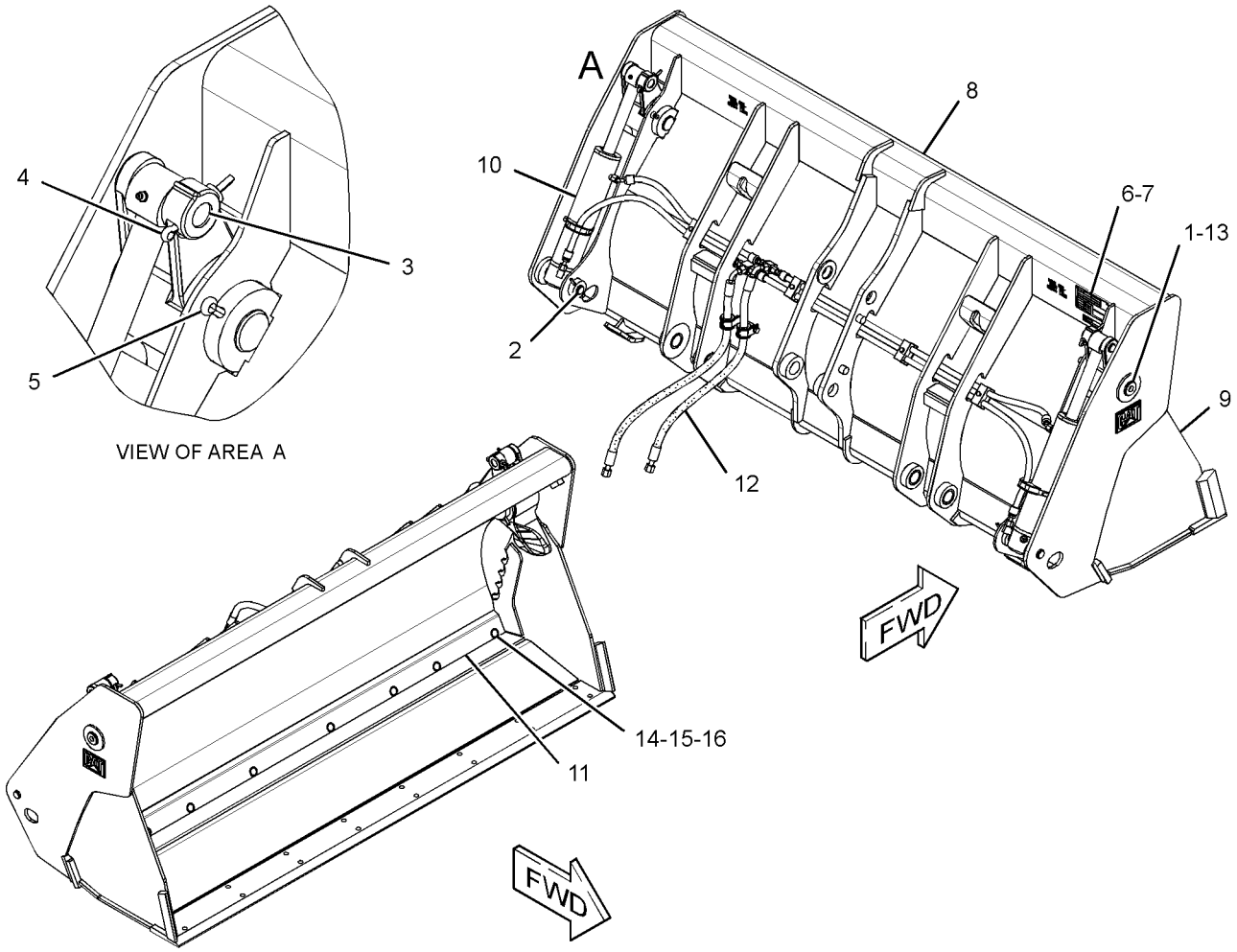

GRAPHIC #1 **<END>** g02138189

WORK TOOLS

216-8801 BUCKET GP-MULTIPURPOSE

S/N: LMS1-UP
2279-MM (90-IN) WIDE X 1-CU M (1.3-CU YD) CAPACITY
PART OF 232-2685 BUCKET AR-MULTIPURPOSE
AN ATTACHMENT

SMCS-6104 **i03849804**

NOTE	REF NO	GRAPHIC REF	PART NUMBER	QTY	PART NAME 1 2 3 4 5 6 (PRODUCT LEVEL)	SEE PAGE
	1	1	**9R-4676**	2	PIN	
	2	1	**137-4234**	1	PLATE-IDENTIFICATION (WORK TOOL)	
	3	1	**168-8389**	4	TACK-FASTENER	
Y	4	1	**216-8803**	1	CLAM AS-MULTIPURPOSE BUCKET	467
Y	5	1	**216-8811**	1	BULLDOZER AS	466
Y	6	1	**226-5540**	2	CYLINDER GP-MULTIPURPOSE BUKT	253
	7	1	**233-3757**	1	EDGE	
Y	8	1	*251-5854*	1	LINES GP-MULTIPURPOSE BUCKET	303
	9	1	**095-0865**	4	PIN-COTTER	
	10	1	**096-1820**	2	PIN-COTTER	
	11	1	**3B-8489**	2	FITTING-GREASE	
	12	1	**3F-5108**	8	BOLT-PLOW (5/8-11X2.25-IN)	
	13	1	**4K-0367**	8	NUT-FULL (5/8-11-THD)	
	14	1	**8T-4122**	8	WASHER-HARD (17X32X3.5-MM THK)	
	15	1	**9R-4677**	2	PIN	
	16	1	**9R-4678**	2	PIN	
Y	17	1	*263-8591*	1	PLATE & FILM GP	608

Y-SEPARATE ILLUSTRATION

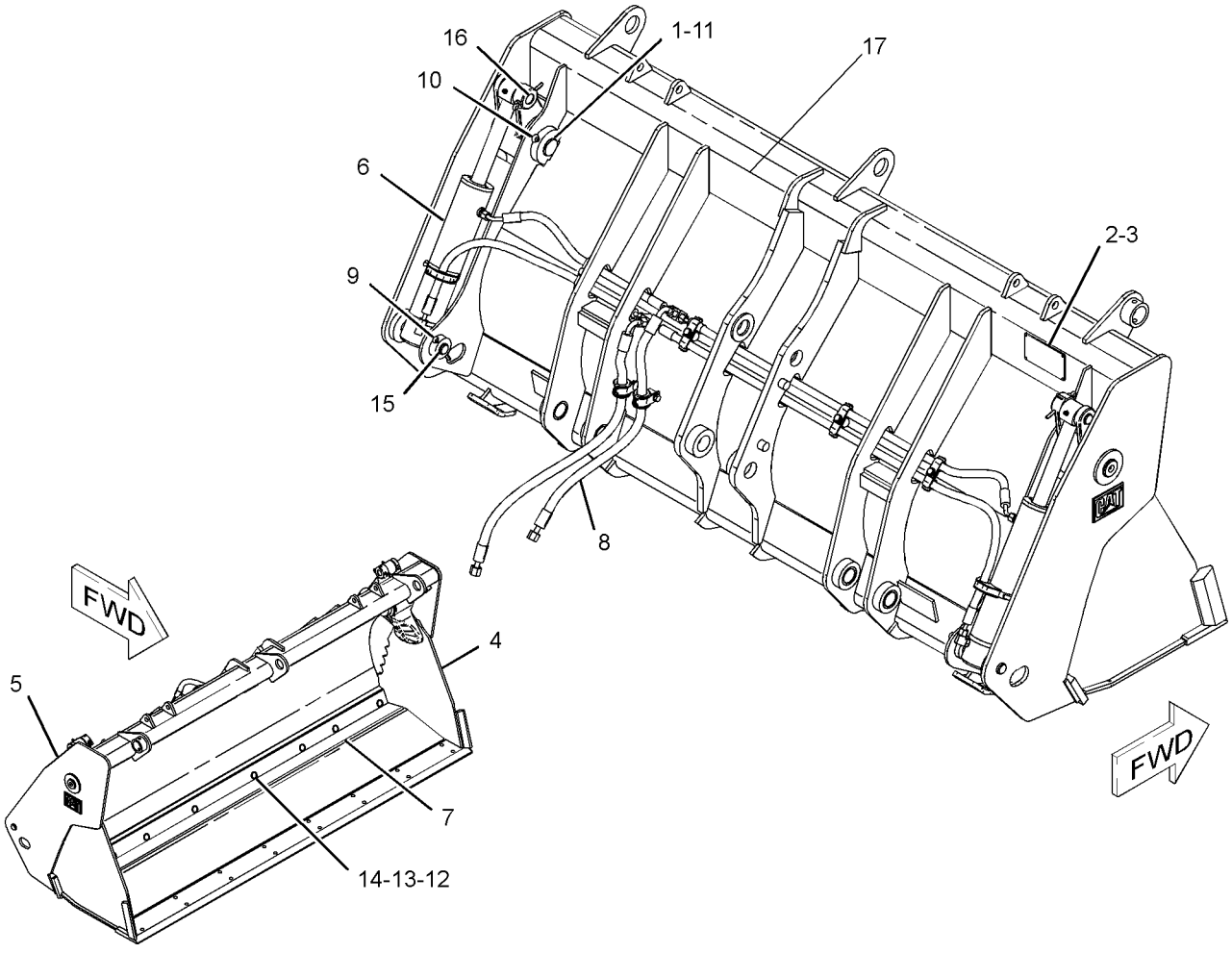

GRAPHIC #1 **<END>** g01239509

216-8802 BULLDOZER AS

S/N: LMS1-UP
1-CU M (1.4-CU YD) CAPACITY
PART OF 216-8800 BUCKET GP-MULTIPURPOSE, 216-8811 BULLDOZER AS
AN ATTACHMENT

SMCS-6050 **i03849807**

NOTE	REF NO	GRAPHIC REF	PART NUMBER	QTY	PART NAME 1 2 3 4 5 6 (PRODUCT LEVEL)	SEE PAGE
	1	1	**9R-0111**	4	BEARING-SLEEVE	
	2	1	*216-8794*	1	BRACKET AS (LH)	
	2A	1	**161-4130**	1	PLATE-IDENTIFICATION (CAT)	
	3	1	*216-8796*	1	BRACKET AS (RH)	
	3A	1	**161-4130**	1	PLATE-IDENTIFICATION (CAT)	
M	4	1	**9R-5271**	2	BOSS (M10X1.5X25-MM)	

M-METRIC PART

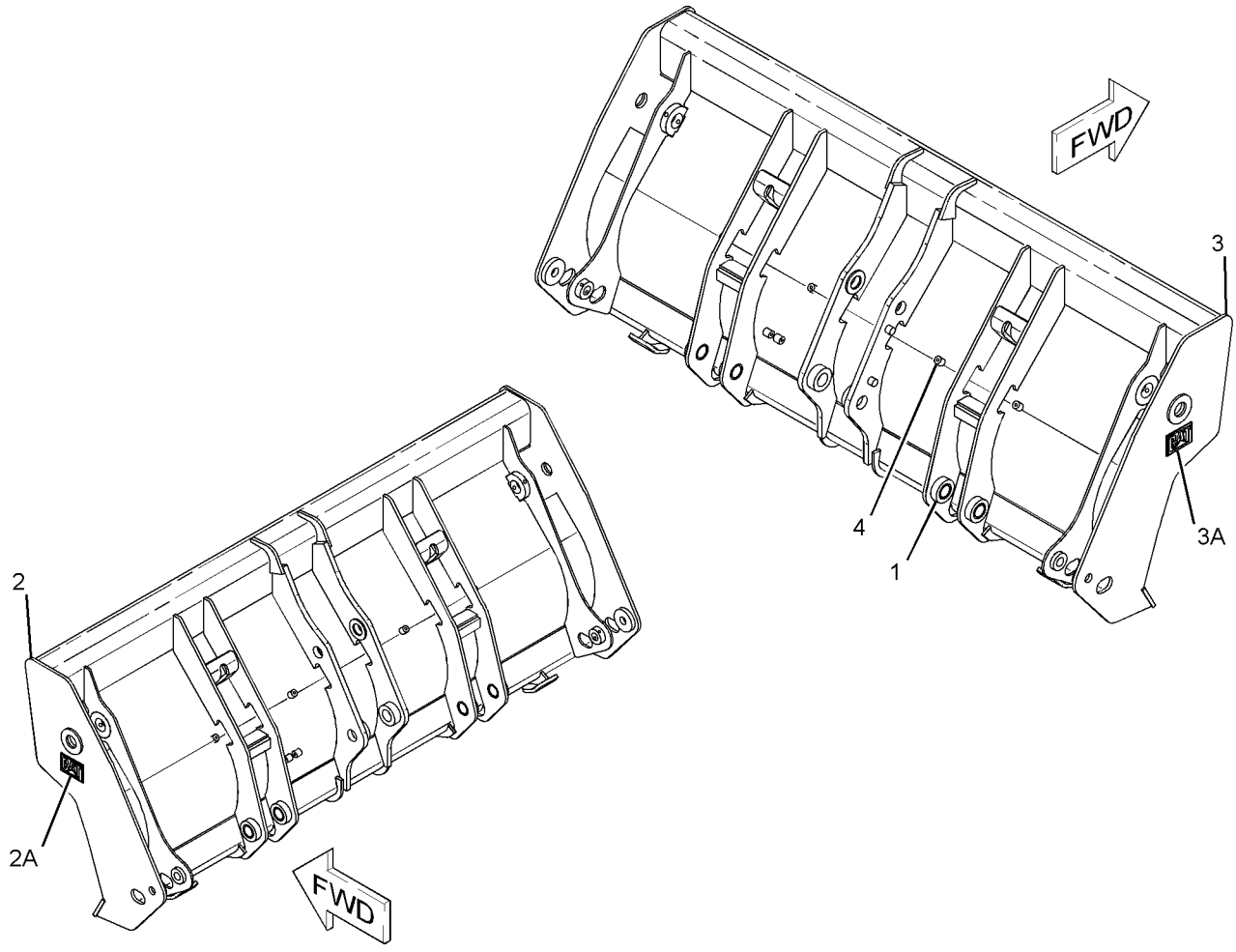

GRAPHIC #1 **<END>** g01134456

216-8811 BULLDOZER AS

S/N: LMS1-UP
PART OF 216-8801 BUCKET GP-MULTIPURPOSE
AN ATTACHMENT

SMCS-6050 **i03849806**

NOTE	REF NO	GRAPHIC REF	PART NUMBER	QTY	PART NAME 1 2 3 4 5 6 (PRODUCT LEVEL)	SEE PAGE
	1	1	**216-8778**	2	BRACKET	
	2	1	**216-8780**	1	BRACKET AS	
	3	1	**216-8781**	4	BRACKET	
Y	4	1	**216-8802**	1	BULLDOZER AS	465
	5	1	**224-6250**	2	PLATE	

Y-SEPARATE ILLUSTRATION

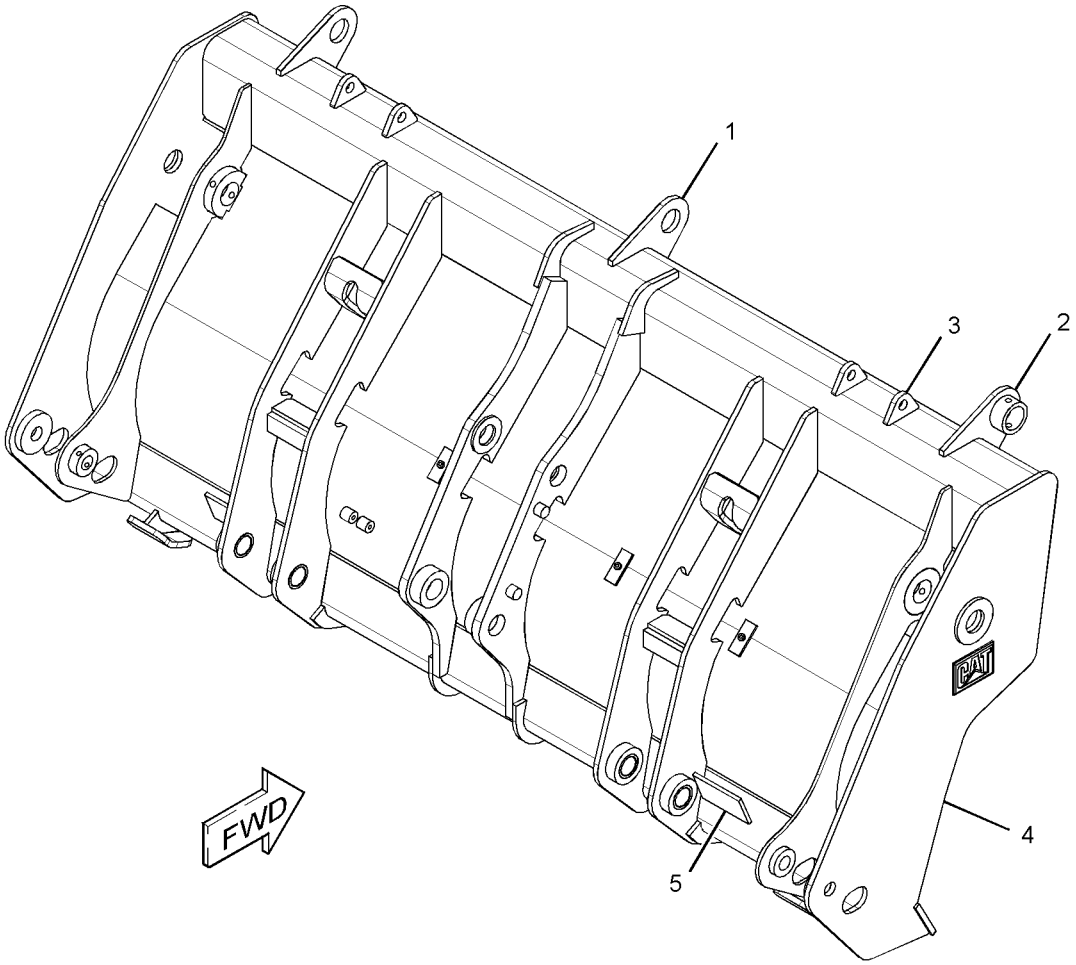

GRAPHIC #1 **<END>** g01385103

216-8803 CLAM AS-MULTIPURPOSE BUCKET

S/N: LMS1-UP

PART OF 216-8800, 216-8801 BUCKET GP-MULTIPURPOSE

AN ATTACHMENT

SMCS-6104 **i03845656**

NOTE	REF NO	GRAPHIC REF	PART NUMBER	QTY	PART NAME 1 2 3 4 5 6 (PRODUCT LEVEL)	SEE PAGE
	1	1	**9R-4672**	1	EDGE	

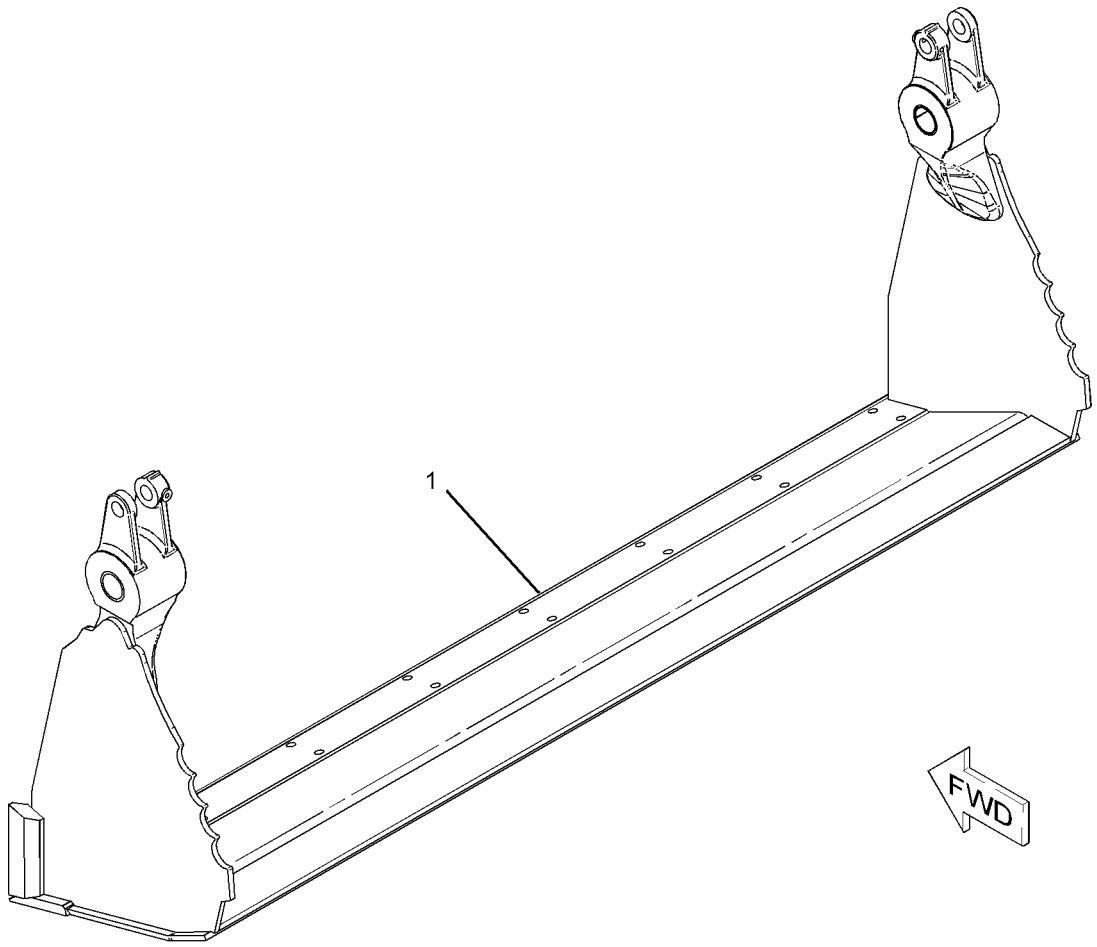

GRAPHIC #1 **<END>** g01134490

WORK TOOLS

222-7379 COUPLER AR-QUICK–PIN-LOCK

S/N: LMS1-UP

AN ATTACHMENT

SMCS-6129 **i03849751**

NOTE	PART NUMBER	QTY	PART NAME 1 2 3 4 5 6 (PRODUCT LEVEL)	SEE PAGE
Y	*222-7464*	1	COUPLER GP-QUICK (PIN-LOCK)	473
Y	*215-9478*	1	PIN GP-COUPLER (MACHINE)	481
Y	*216-0928*	1	PIN GP-COUPLER (PIN-LOCK)	482

Y-SEPARATE ILLUSTRATION

<END>

WORK TOOLS

176-6247 COUPLER GP-QUICK–BACKHOE

S/N: LMS1-UP

PART OF 178-8849 COUPLER GP-QUICK

AN ATTACHMENT

SMCS-6129 **i01984111**

NOTE	REF NO	GRAPHIC REF	PART NUMBER	QTY	PART NAME 1 2 3 4 5 6 (PRODUCT LEVEL)	SEE PAGE
	1	1	**176-6248**	1	COUPLER	
	2	1	**200-5921**	1	HOOK	
	3	1	**132-3725**	1	SPRING	
	4	1	**132-3721**	1	PIN AS (HOOK)	
	5	1	**132-3723**	1	LOCK PIN	
	6	1	**8T-0144**	1	PIN-SPRING	
	7	1	**091-5928**	1	FITTING-GREASE	
F			**132-3821**	1	LEVER-ACTUATING	

F-NOT SHOWN

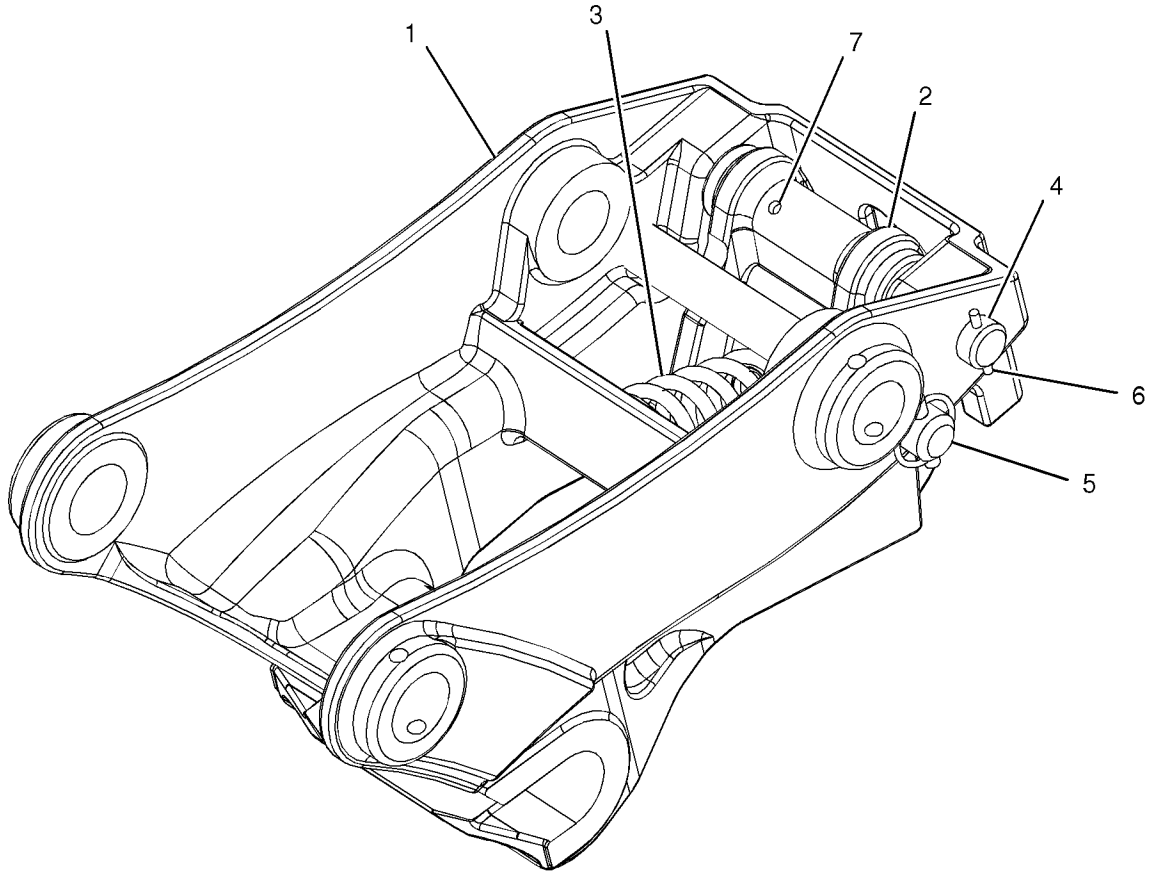

GRAPHIC #1 **<END>** g01028364

WORK TOOLS

176-6251 COUPLER GP-QUICK–BACKHOE

S/N: LMS1-UP

PART OF 178-8850, 318-9901 COUPLER GP-QUICK

AN ATTACHMENT

SMCS-6129 **i03505443**

NOTE	REF NO	GRAPHIC REF	PART NUMBER	QTY	PART NAME 1 2 3 4 5 6 (PRODUCT LEVEL)	SEE PAGE
	1	1	**176-6252**	1	COUPLER	
	2	1	**200-5921**	1	HOOK	
	3	1	**216-7377**	1	SPRING	
	4	1	**132-3721**	1	PIN AS (HOOK)	
	5	1	**132-3723**	1	LOCK PIN	
C	6	1	**091-5928**	1	FITTING-GREASE	
	7	1	**8T-0144**	1	PIN-SPRING	
F			**132-3821**	1	LEVER-ACTUATING	

C-CHANGE FROM PREVIOUS TYPE
F-NOT SHOWN

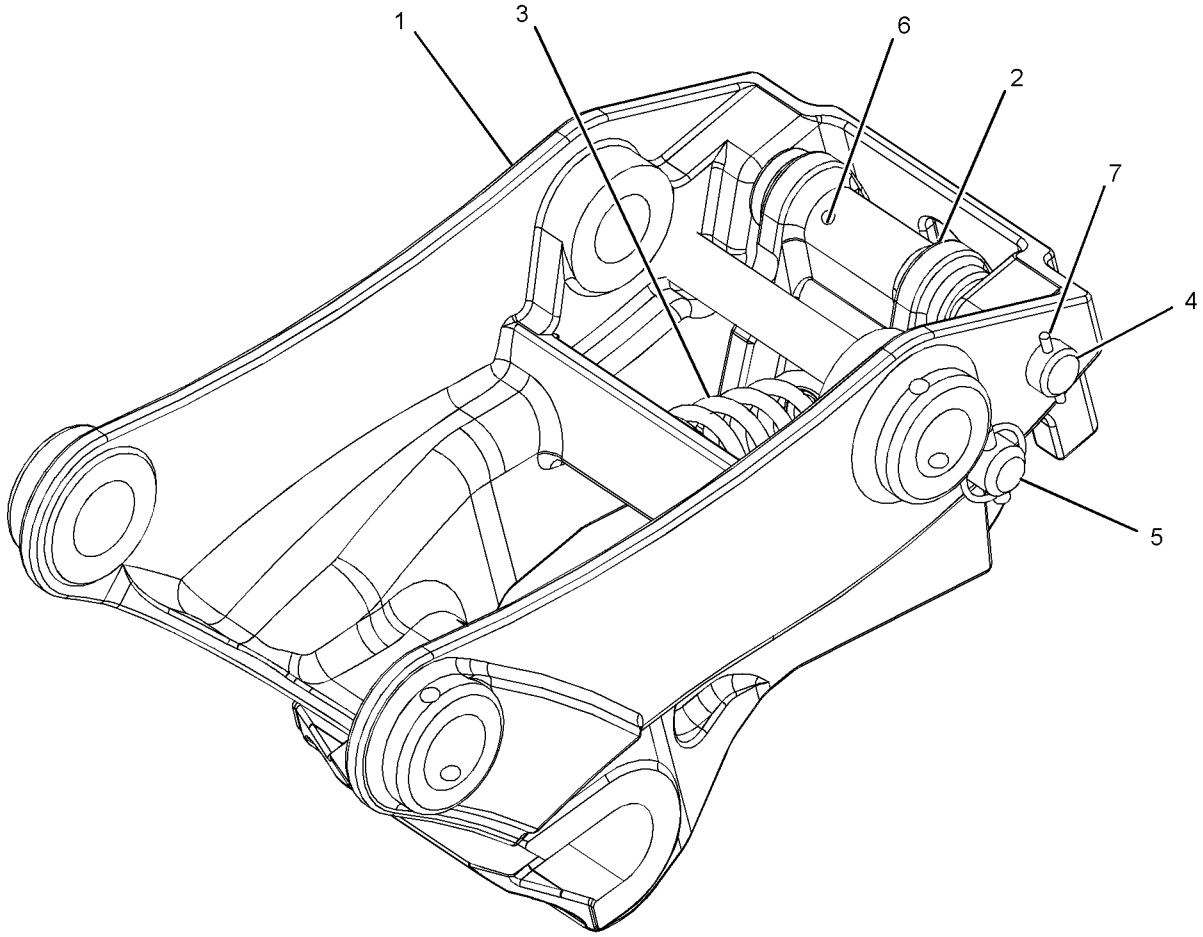

GRAPHIC #1 **<END>** g01017414

WORK TOOLS

178-8849 COUPLER GP-QUICK–BACKHOE

S/N: LMS1-UP

AN ATTACHMENT

SMCS-6129 **i03332283**

NOTE	REF NO	GRAPHIC REF	PART NUMBER	QTY	PART NAME 1 2 3 4 5 6 (PRODUCT LEVEL)	SEE PAGE
	1	1	**4J-1888**	2	PIN-COTTER	
	2	1	**132-3777**	1	PIN	
	3	1	**132-3778**	1	PIN	
Y	4	1	**176-6247**	1	COUPLER GP-QUICK (BACKHOE)	469

Y-SEPARATE ILLUSTRATION

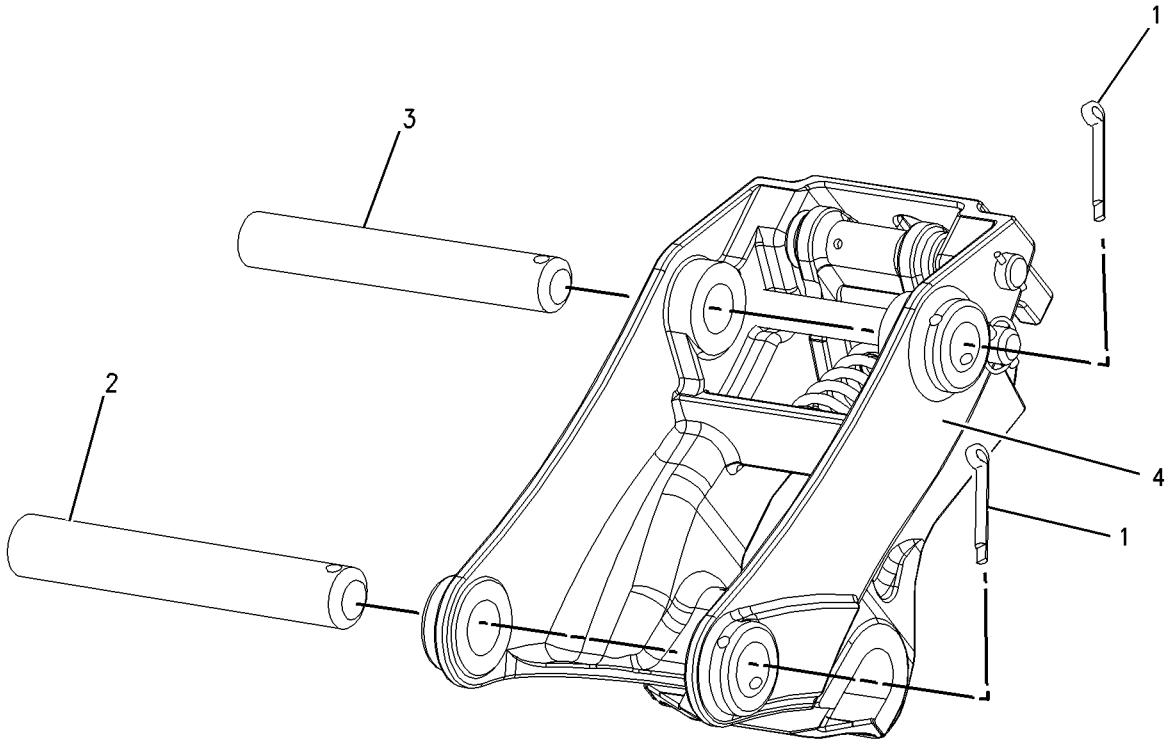

GRAPHIC #1 **<END>** g00864958

178-8850 COUPLER GP-QUICK–BACKHOE

S/N: LMS1-UP

FOR USE WITH 178-3593–PAGE 480

AN ATTACHMENT

SMCS-6129 **i03332282**

NOTE	REF NO	GRAPHIC REF	PART NUMBER	QTY	PART NAME 1 2 3 4 5 6 (PRODUCT LEVEL)	SEE PAGE
	1	1	**4J-1888**	2	PIN-COTTER	
	2	1	**132-3777**	1	PIN	
	3	1	**132-3778**	1	PIN	
Y	4	1	**176-6251**	1	COUPLER GP-QUICK (BACKHOE)	470

Y-SEPARATE ILLUSTRATION

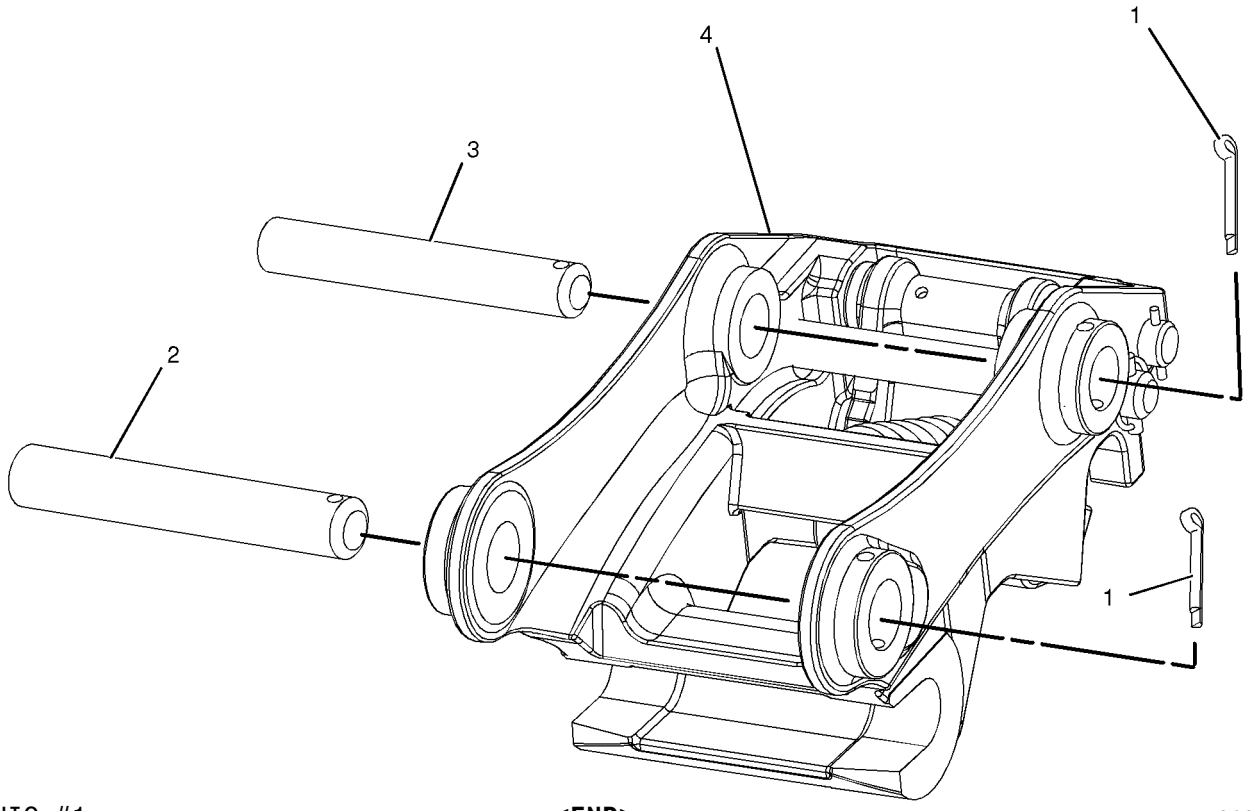

GRAPHIC #1 **<END>** g01036330

222-7464 COUPLER GP-QUICK–PIN-LOCK

S/N: LMS1-UP

PART OF 222-7379 COUPLER AR-QUICK

AN ATTACHMENT

SMCS-6129 **i03849754**

NOTE	REF NO	GRAPHIC REF	PART NUMBER	QTY	PART NAME 1 2 3 4 5 6 (PRODUCT LEVEL)	SEE PAGE
	1	1	**154-2704**	1	PLATE-INSTRUCTION (BUCKET SPECIFICATIONS)	
	2	1	**168-8389**	4	TACK-FASTENER	
	3	1	**276-1368**	2	BEARING-SLEEVE	
	4	1	*232-2735*	1	COUPLER AS	
	4A	1	**161-4130**	2	PLATE-IDENTIFICATION (CAT)	
	5	1	**3B-8489**	1	FITTING-GREASE	
	6	1	**9R-0320**	2	BEARING-SLEEVE	
	7	1	**9R-3700**	2	BEARING-SLEEVE	

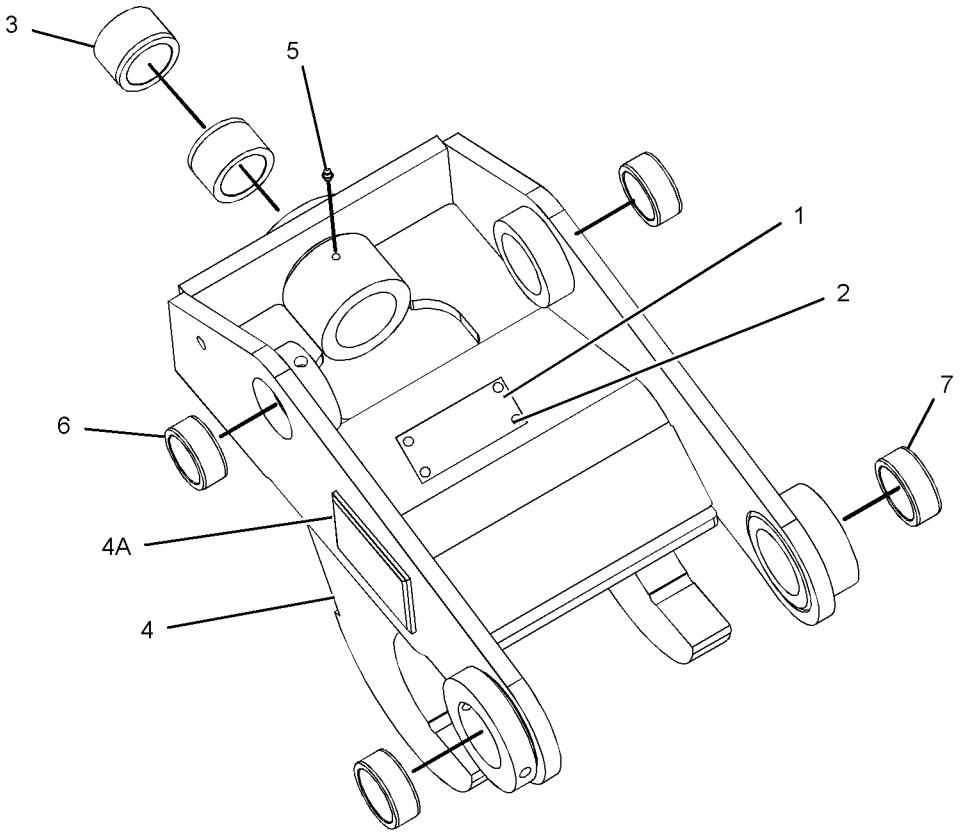

GRAPHIC #1 **<END>** g01072399

WORK TOOLS

229-7226 COUPLER GP-QUICK–CAT, CASE

S/N: LMS1-UP

AN ATTACHMENT

SMCS-6129 **i03848076**

NOTE	REF NO	GRAPHIC REF	PART NUMBER	QTY	PART NAME 1 2 3 4 5 6 (PRODUCT LEVEL)	SEE PAGE
B	1	1	**9R-0158**	15	WASHER (46X69X3-MM THK)	
	2	1	**145-8348**	1	PIN AS	
	3	1	**168-0425**	1	PIN	
	4	1	**168-0446**	1	PIN	
	5	1	**168-0475**	1	PIN AS	
B	6	1	**188-9592**	7	WASHER-THRUST (39X75X2.3-MM THK)	
	7	1	**229-5535**	1	COUPLER AS	
		1	**154-2704**	1	PLATE-INSTRUCTION (BUCKET SPECIFICATIONS)	
		1	**168-8389**	4	TACK-FASTENER	
	8	1	**096-1820**	1	PIN-COTTER	
	9	1	**3B-5319**	2	PIN-COTTER	
	10	1	**6V-3213**	2	RING-RETAINING	

B-USE AS REQUIRED

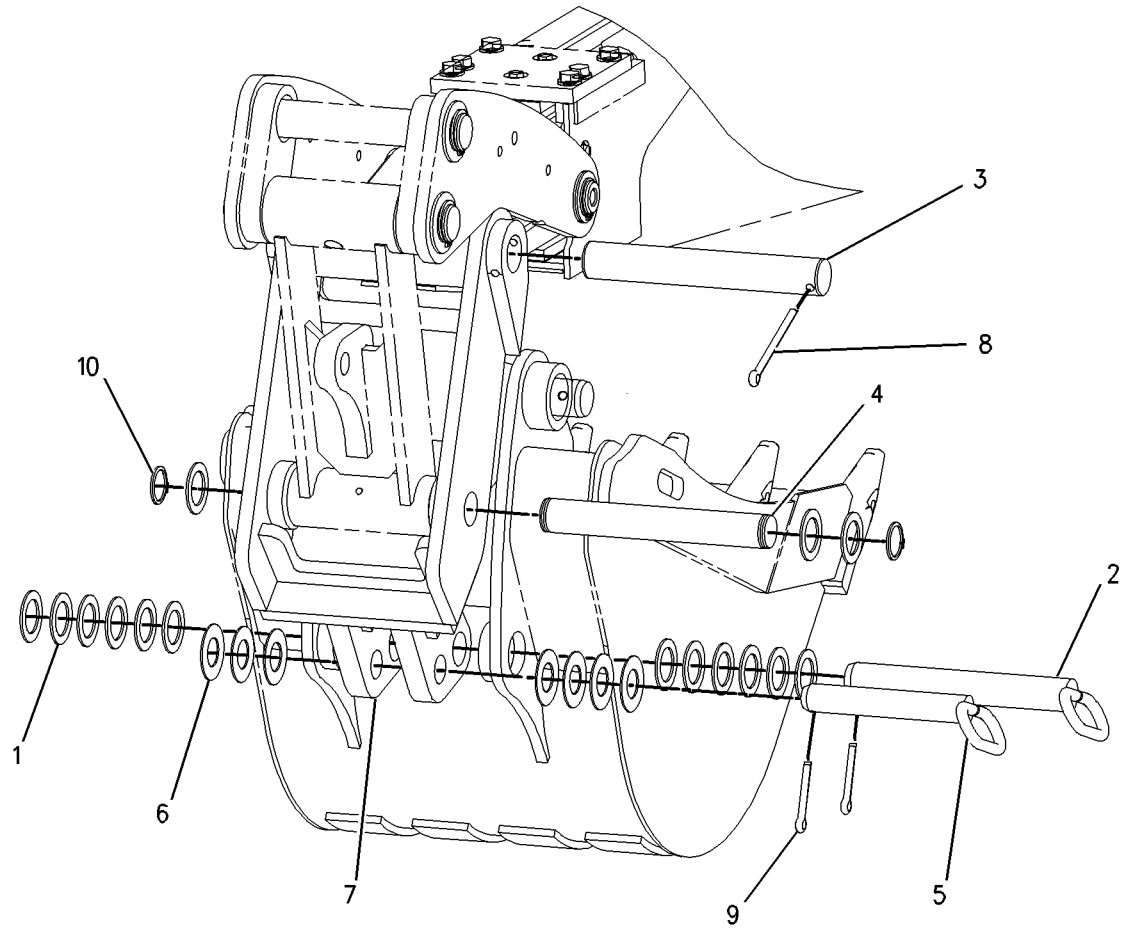

GRAPHIC #1 **<END>** g00981049

WORK TOOLS

229-7227 COUPLER GP-QUICK–CAT, DEERE

S/N: LMS1-UP

AN ATTACHMENT

SMCS-6129 **i03848081**

NOTE	REF NO	GRAPHIC REF	PART NUMBER	QTY	PART NAME 1 2 3 4 5 6 (PRODUCT LEVEL)	SEE PAGE
B	1	1	**9R-0158**	15	WASHER (46X69X3-MM THK)	
	2	1	**145-8348**	1	PIN AS	
	3	1	**168-0425**	1	PIN	
	4	1	**168-0446**	1	PIN	
	5	1	**168-0445**	1	PIN AS	
B	6	1	**9R-1510**	4	WASHER (51X82X4-MM THK)	
	7	1	**229-8253**	1	COUPLER AS	
	7A	1	**154-2704**	1	PLATE-INSTRUCTION (BUCKET SPECIFICATIONS)	
	7B	1	**168-8389**	4	TACK-FASTENER	
	8	1	**096-1820**	1	PIN-COTTER	
	9	1	**3B-5319**	2	PIN-COTTER	
	10	1	**6V-3213**	2	RING-RETAINING	

B-USE AS REQUIRED

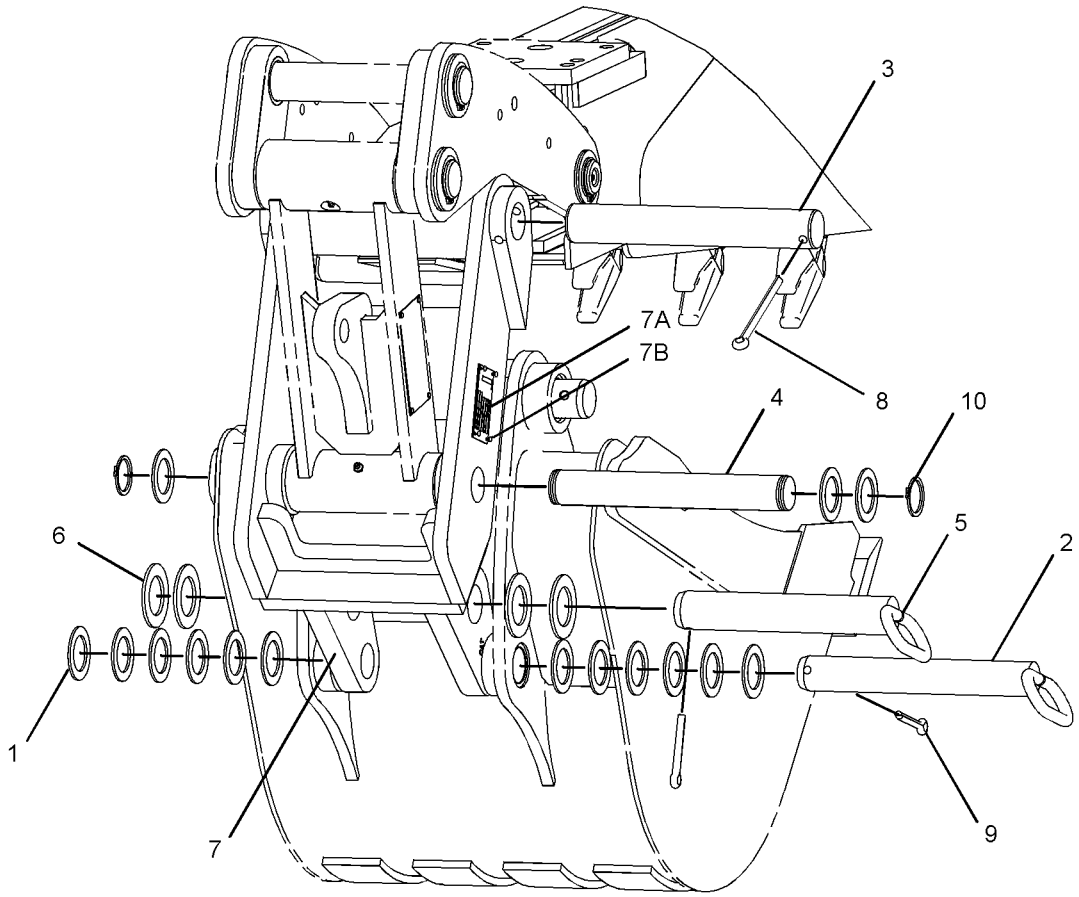

GRAPHIC #1 **<END>** g01425318

WORK TOOLS

318-9901 COUPLER GP-QUICK—BACKHOE

S/N: LMS1-UP

FOR USE WITH 318-9902—PAGE 480

AN ATTACHMENT

SMCS-6129 **i02990480**

NOTE	PART NUMBER	QTY	PART NAME 1 2 3 4 5 6 (PRODUCT LEVEL)	SEE PAGE
Y	**176-6251**	1	COUPLER GP-QUICK (BACKHOE)	470
	132-3777	1	PIN	
	132-3778	1	PIN	
	4J-1888	2	PIN-COTTER	

Y-SEPARATE ILLUSTRATION

<END>

WORK TOOLS

9R-5321 EDGE GP-CUTTING

S/N: LMS1-UP

FOR USE WITH 232-2685—PAGE 391, 251-1789—PAGE 427, 216-8800—PAGE 463. CANNOT BE USED WITH 9R-5866—PAGE 491

AN ATTACHMENT

SMCS-6801 **i00530701**

NOTE	REF NO	GRAPHIC REF	PART NUMBER	QTY	PART NAME 1 2 3 4 5 6 (PRODUCT LEVEL)	SEE PAGE
	1	1	**9W-8215**	2	EDGE-CUTTING	
	2	1	**3F-5108**	8	BOLT-PLOW (5/8-11X2.25-IN)	
	3	1	**4K-0367**	8	NUT-FULL (5/8-11-THD)	
	4	1	**8T-4122**	8	WASHER-HARD (17X32X3.5-MM THK)	

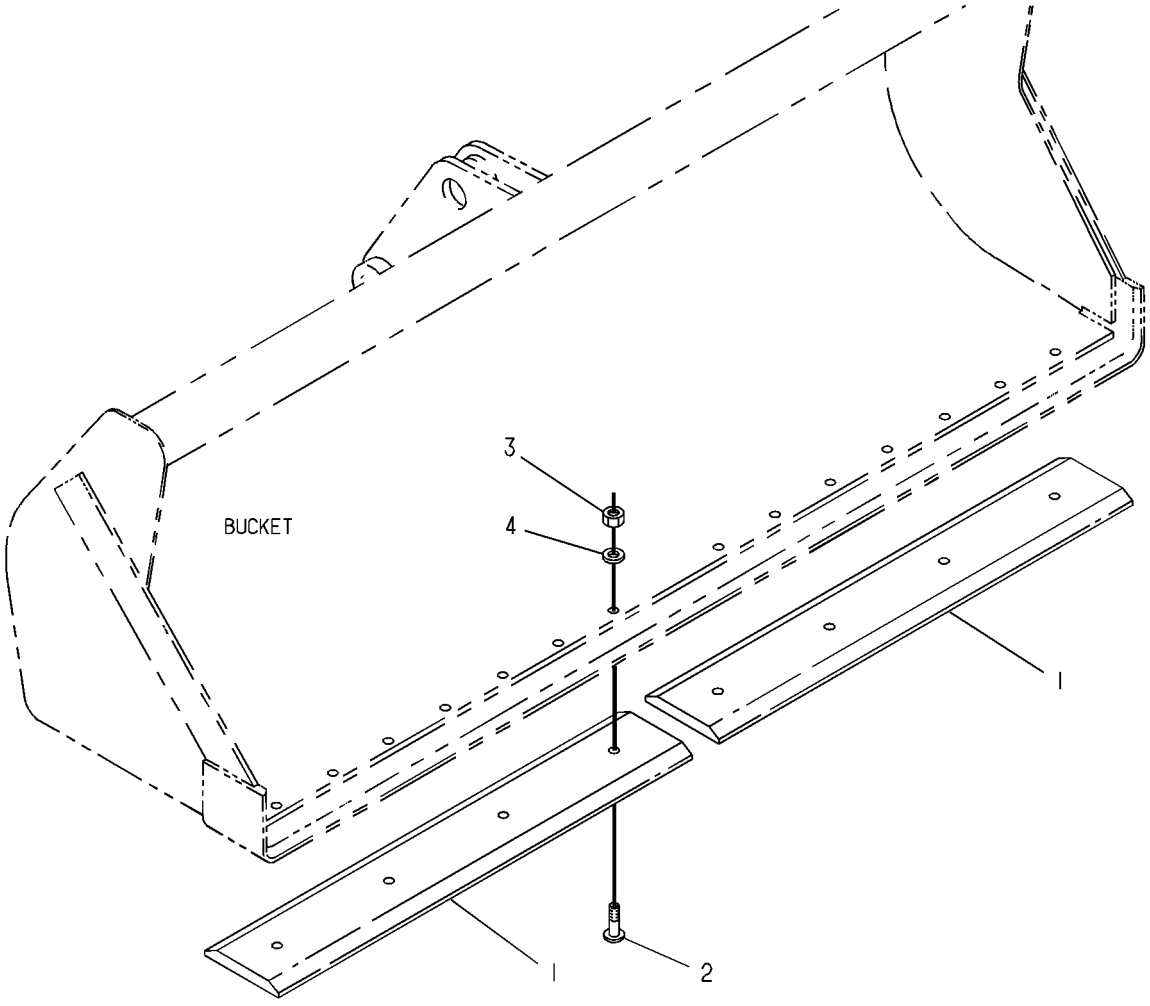

GRAPHIC #1 **<END>** g00130834

WORK TOOLS

104-6310 FORK GP

S/N: LMS1-UP
PART OF 232-2685 BUCKET AR-MULTIPURPOSE
AN ATTACHMENT

SMCS-6405 **i01114480**

NOTE	REF NO	GRAPHIC REF	PART NUMBER	QTY	PART NAME 1 2 3 4 5 6 (PRODUCT LEVEL)	SEE PAGE
	1	1	**104-6311**	2	BRACKET AS	
	2	1	**104-6312**	2	FORK AS	
	3	1	**104-6316**	1	PIN	
	4	1	**104-6317**	2	PIN	
	5	1	**4J-1888**	1	PIN-COTTER	
	6	1	**9R-0109**	4	WASHER (41X64X3-MM THK)	
	7	1	**112-1776**	2	PIN AS	
	8	1	**6V-8144**	4	RING-RETAINING	
	9	1	**5D-8159**	2	PIN AS	

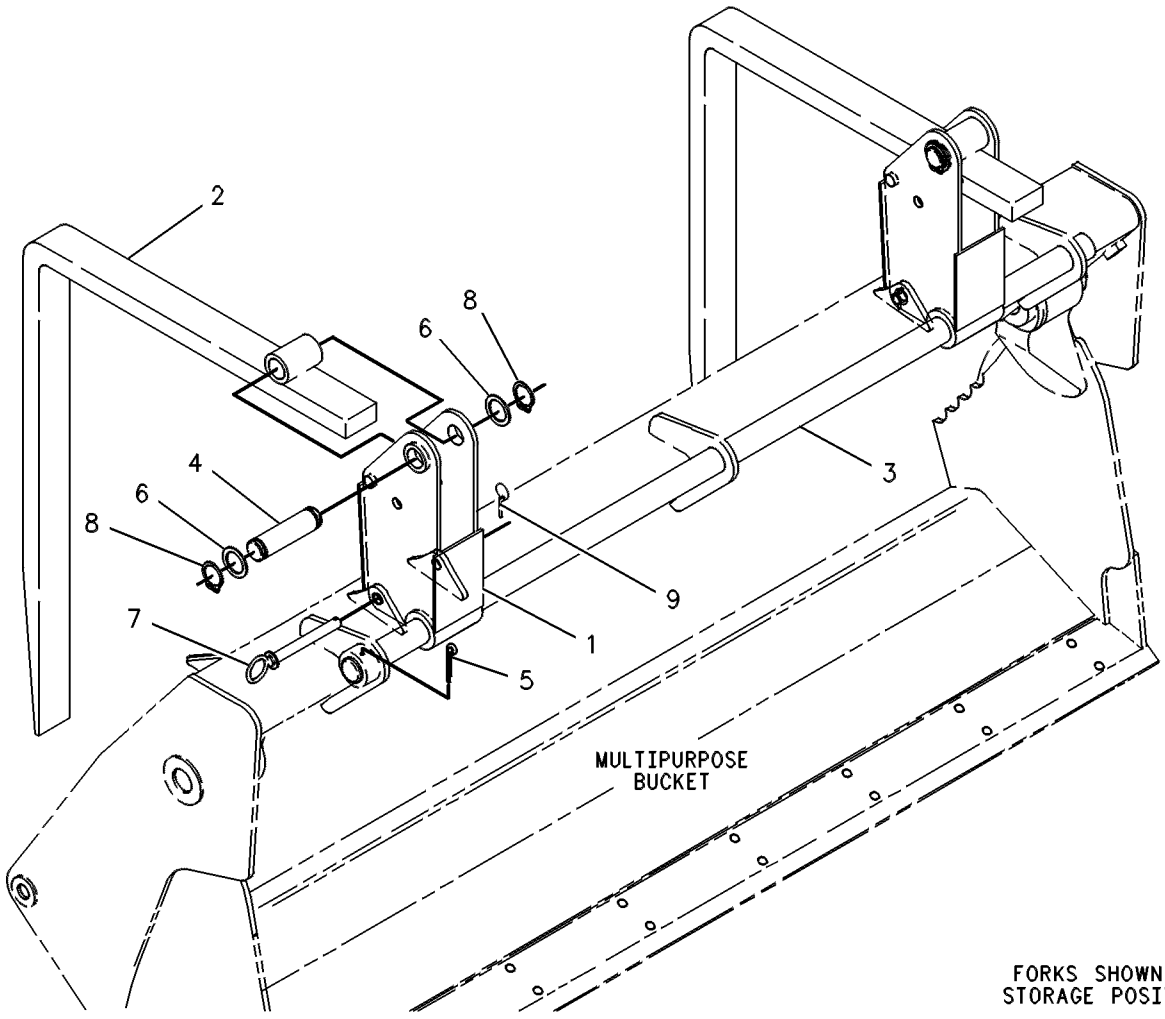

GRAPHIC #1 **<END>** g00131084

178-3593 MOUNTING GP-BUCKET—BACKHOE, QUICK COUPLER

S/N: LMS1-UP
FOR USE WITH 178-8850—PAGE 472
AN ATTACHMENT

SMCS-6101 **i03920817**

NOTE	PART NUMBER	QTY	PART NAME 1 2 3 4 5 6 (PRODUCT LEVEL)	SEE PAGE
	154-5279	1	PIN	
	154-5280	1	PIN	
	3B-5319	4	PIN-COTTER	
B	**9R-0158**	5	WASHER (46X69X3-MM THK)	
B	**9R-1510**	5	WASHER (51X82X4-MM THK)	

B-USE AS REQUIRED

<END>

318-9902 MOUNTING GP-BUCKET—BACKHOE, QUICK COUPLER

S/N: LMS1-UP
FOR USE WITH 318-9901—PAGE 477
AN ATTACHMENT

SMCS-6101 **i02990524**

NOTE	PART NUMBER	QTY	PART NAME 1 2 3 4 5 6 (PRODUCT LEVEL)	SEE PAGE
	154-5279	1	PIN	
	154-5280	1	PIN	
	3B-5319	4	PIN-COTTER	
B	**9R-0158**	5	WASHER (46X69X3-MM THK)	
B	**9R-1510**	5	WASHER (51X82X4-MM THK)	

B-USE AS REQUIRED

<END>

215-9478 PIN GP-COUPLER—MACHINE

S/N: LMS1-UP
PART OF 222-7379 COUPLER AR-QUICK
AN ATTACHMENT

SMCS-6129 **i03849752**

NOTE	REF NO	GRAPHIC REF	PART NUMBER	QTY	PART NAME 1 2 3 4 5 6 (PRODUCT LEVEL)	SEE PAGE
	1	1	**215-3373**	1	PIN	
	2	1	**168-0425**	1	PIN	
M	3	1	**6V-7744**	2	LOCKNUT (M10X1.5-THD)	
M	4	1	**8T-4198**	2	BOLT (M10X1.5X100-MM)	

M-METRIC PART

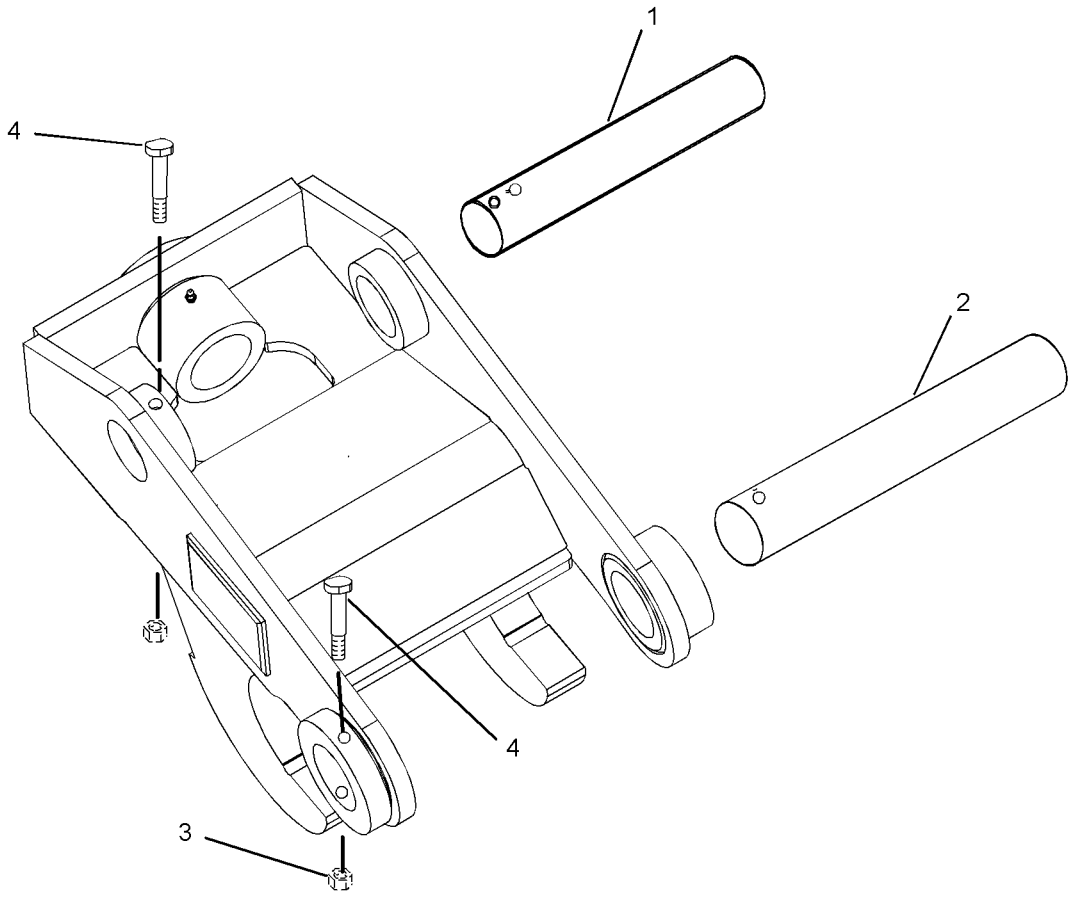

GRAPHIC #1 **<END>** g01224240

WORK TOOLS

216-0928 PIN GP-COUPLER—PIN-LOCK

S/N: LMS1-UP
PART OF 222-7379 COUPLER AR-QUICK
AN ATTACHMENT

SMCS-6129 **i03849753**

NOTE	REF NO	GRAPHIC REF	PART NUMBER	QTY	PART NAME 1 2 3 4 5 6 (PRODUCT LEVEL)	SEE PAGE
	1	1	**222-7411**	1	PIN AS	
	2	1	**216-3712**	1	PIN	

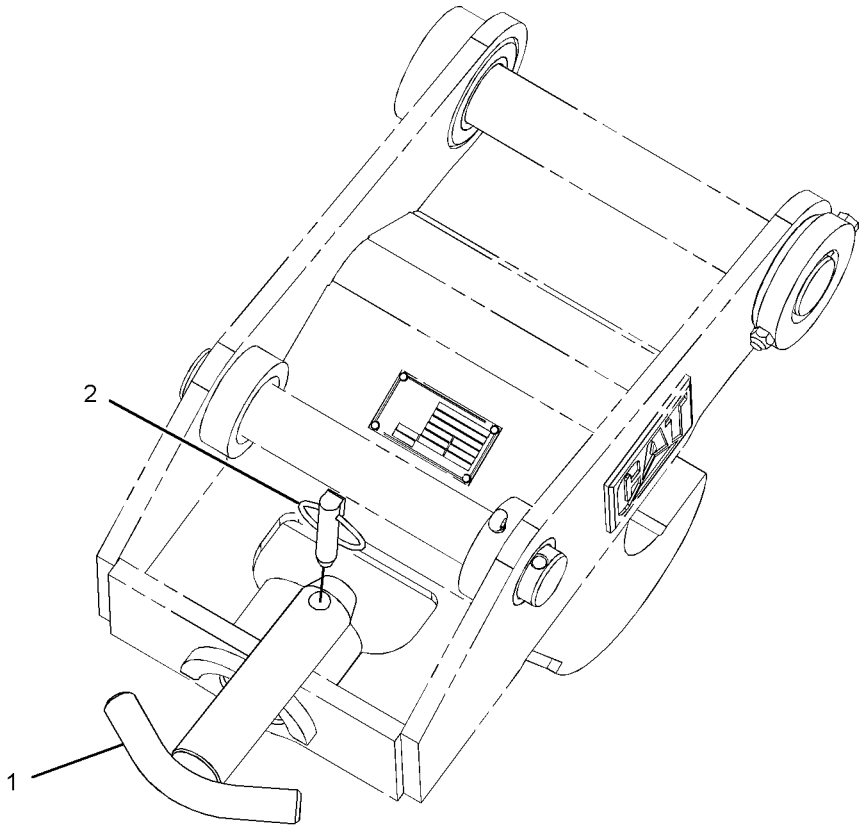

GRAPHIC #1 **<END>** g01239833

271-3024 THUMB AR—24-IN, HYD, HEAVY-DUTY

S/N: LMS1-UP

AN ATTACHMENT

SMCS-6547 **i03848351**

NOTE	REF NO	GRAPHIC REF	PART NUMBER	QTY	PART NAME 1 2 3 4 5 6 (PRODUCT LEVEL)	SEE PAGE
	1	1	**221-4282**	1	TINE AS-THUMB (24-IN)	
Y	2	1	*224-6237*	1	CYLINDER & LINES GP-THUMB	244
Y	3	1	*271-3023*	1	THUMB GP (BACKHOE, COMMON)	490

Y-SEPARATE ILLUSTRATION

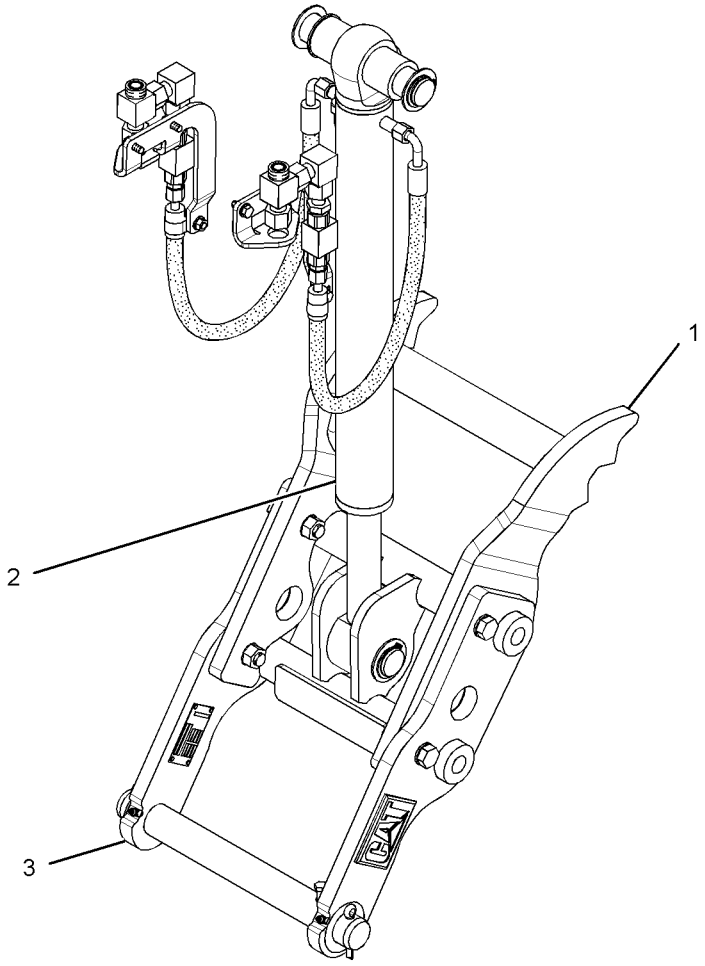

GRAPHIC #1 **<END>** g01383761

271-3025 THUMB AR—24-IN, HYD, HEAVY-DUTY, WITH COUPLER

S/N: LMS1-UP

AN ATTACHMENT

SMCS-6547 **i03848420**

NOTE	REF NO	GRAPHIC REF	PART NUMBER	QTY	PART NAME 1 2 3 4 5 6 (PRODUCT LEVEL)	SEE PAGE
	1	1	**221-4283**	1	TINE AS-THUMB (24-IN)	
Y	2	1	*224-6237*	1	CYLINDER & LINES GP-THUMB	244
Y	3	1	*271-3023*	1	THUMB GP (BACKHOE, COMMON)	490

Y-SEPARATE ILLUSTRATION

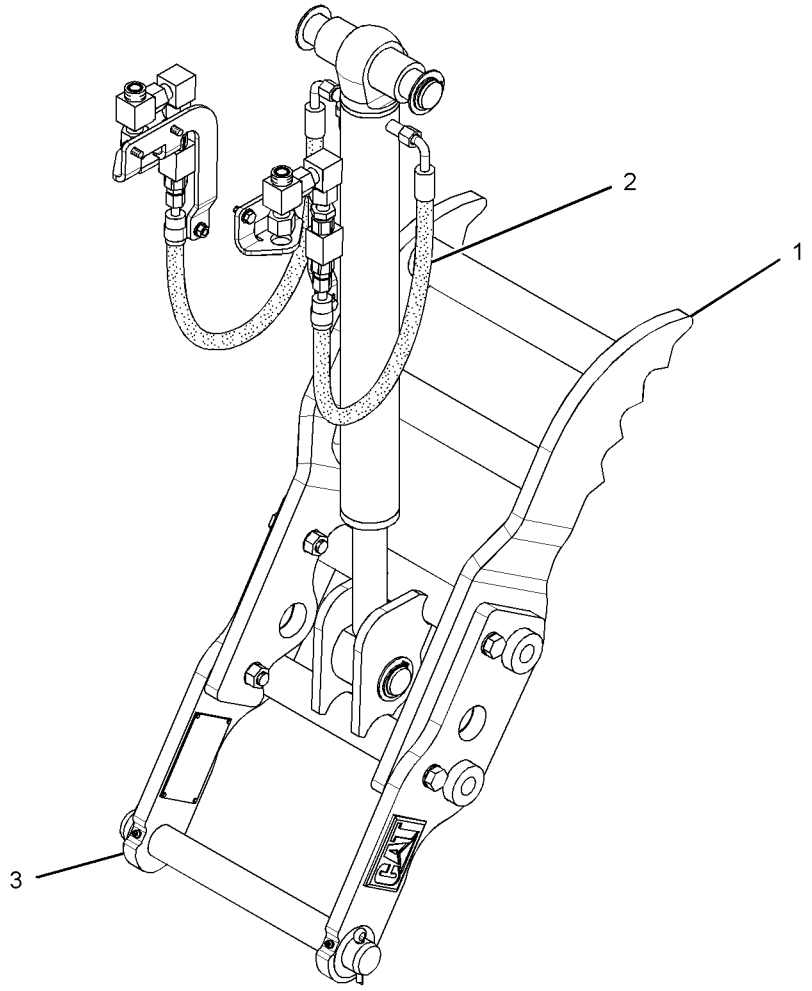

GRAPHIC #1 **<END>** g01384135

271-3026 THUMB AR—24-IN, HYD, ROCK

S/N: LMS1-UP

AN ATTACHMENT

SMCS-6547 **i03848449**

NOTE	REF NO	GRAPHIC REF	PART NUMBER	QTY	PART NAME 1 2 3 4 5 6 (PRODUCT LEVEL)	SEE PAGE
	1	1	**221-4284**	1	TINE AS-THUMB (24-IN, ROCK)	
Y	2	1	*224-6237*	1	CYLINDER & LINES GP-THUMB	244
Y	3	1	*271-3023*	1	THUMB GP (BACKHOE, COMMON)	490

Y-SEPARATE ILLUSTRATION

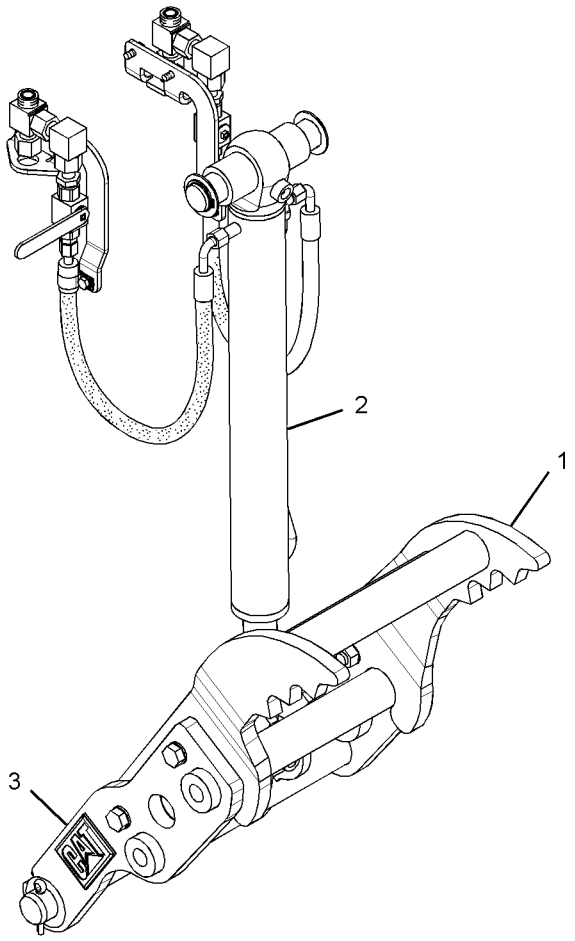

GRAPHIC #1 **<END>** g01370673

271-3027 THUMB AR—24-IN, HYD, ROCK, WITH COUPLER

S/N: LMS1-UP

AN ATTACHMENT

SMCS-6547 **i03848470**

NOTE	REF NO	GRAPHIC REF	PART NUMBER	QTY	PART NAME 1 2 3 4 5 6 (PRODUCT LEVEL)	SEE PAGE
	1	1	**221-4285**	1	TINE AS-THUMB (24-IN, ROCK)	
Y	2	1	*224-6237*	1	CYLINDER & LINES GP-THUMB	244
Y	3	1	*271-3023*	1	THUMB GP (BACKHOE, COMMON)	490

Y-SEPARATE ILLUSTRATION

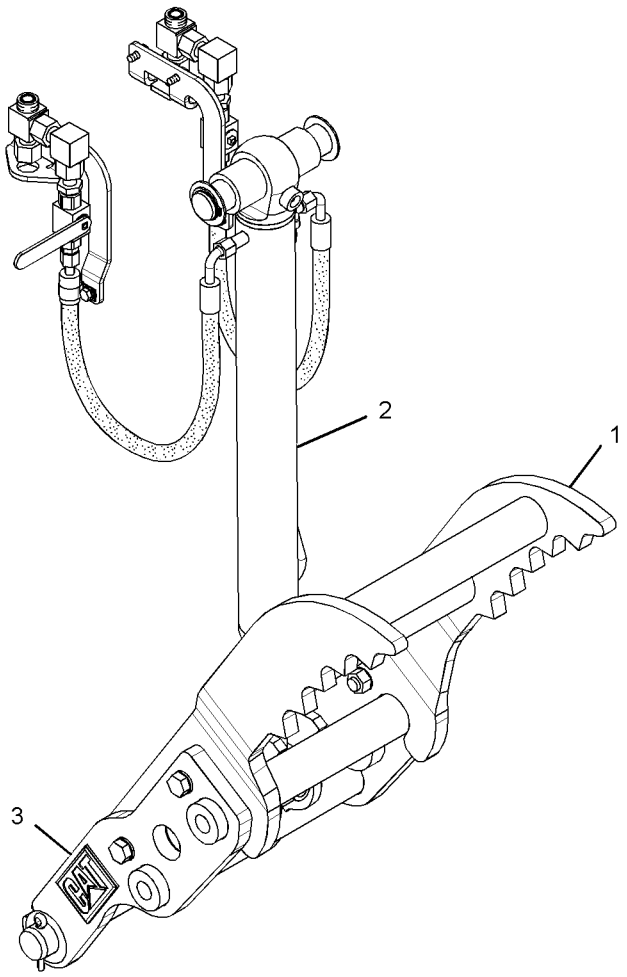

GRAPHIC #1 **<END>** g01370638

WORK TOOLS

281-6716 THUMB AR–24-IN, HYD, WITH COUPLER

S/N: LMS1-UP

AN ATTACHMENT

SMCS-6547 **i03848489**

NOTE	REF NO	GRAPHIC REF	PART NUMBER	QTY	PART NAME 1 2 3 4 5 6 (PRODUCT LEVEL)	SEE PAGE
Y	1	1	*224-6237*	1	CYLINDER & LINES GP-THUMB	244
Y	2	1	*271-3023*	1	THUMB GP (BACKHOE, COMMON)	490
	3	1	**281-6708**	1	TINE AS-THUMB (24-IN)	

Y-SEPARATE ILLUSTRATION

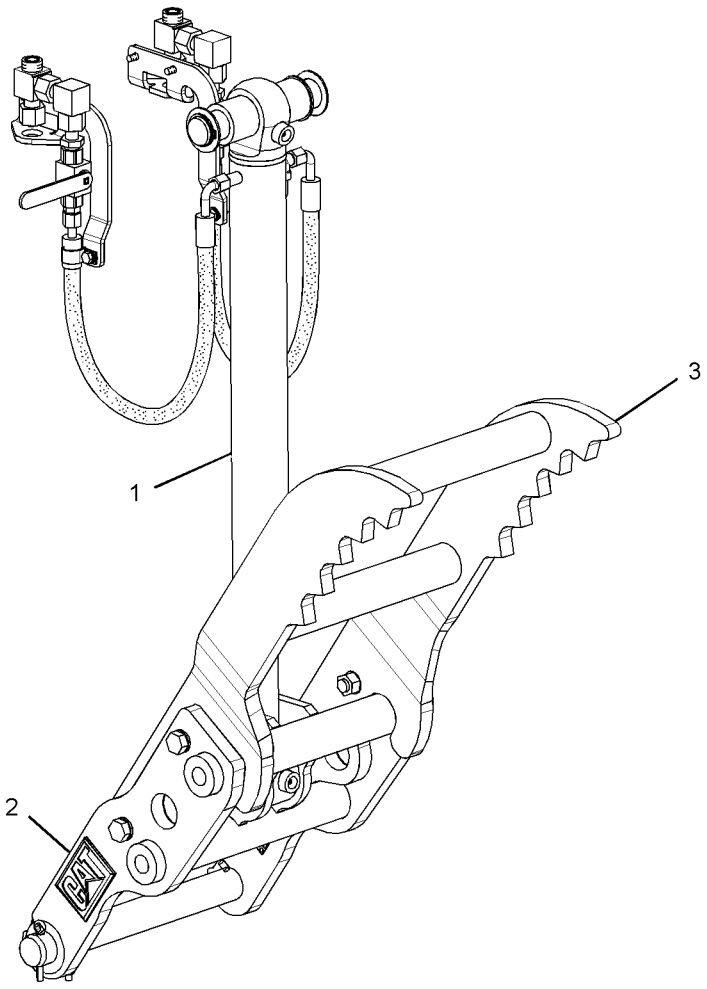

GRAPHIC #1 **<END>** g01370594

WORK TOOLS

282-0887 THUMB AR—30-IN, HYD, HEAVY-DUTY

S/N: LMS1-UP

AN ATTACHMENT

SMCS-6547 **i03848490**

NOTE	REF NO	GRAPHIC REF	PART NUMBER	QTY	PART NAME 1 2 3 4 5 6 (PRODUCT LEVEL)	SEE PAGE
Y	1	1	*224-6237*	1	CYLINDER & LINES GP-THUMB	244
Y	2	1	*271-3023*	1	THUMB GP (BACKHOE, COMMON)	490
	3	1	**274-5819**	1	TINE AS-THUMB (30-IN)	

Y-SEPARATE ILLUSTRATION

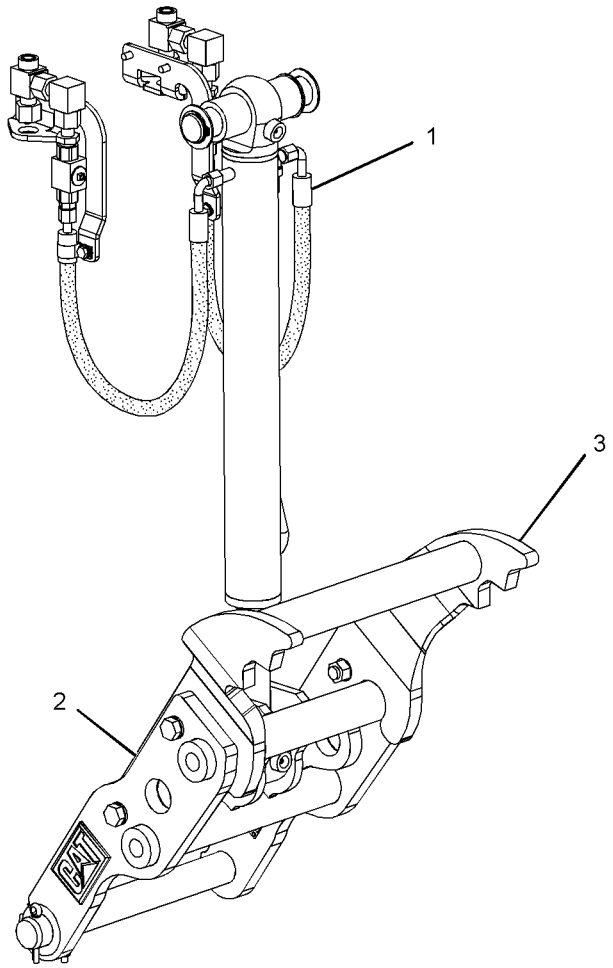

GRAPHIC #1 **<END>** g01370522

WORK TOOLS

221-4267 THUMB GP–BACKHOE

S/N: LMS1-UP
PART OF 271-3023 THUMB GP
AN ATTACHMENT

SMCS-6547 **i03848411**

NOTE	REF NO	GRAPHIC REF	PART NUMBER	QTY	PART NAME 1 2 3 4 5 6 (PRODUCT LEVEL)	SEE PAGE
	1	1	**221-4263**	1	LINK AS	
	1A	1	**154-2704**	1	PLATE-INSTRUCTION (BUCKET SPECIFICATIONS)	
	1B	1	**168-8389**	4	TACK-FASTENER	
	2	1	**3B-8489**	2	FITTING-GREASE	
	3	1	**8T-4123**	8	WASHER (22X35X3.5-MM THK)	
M	4	1	**8T-4131**	4	NUT (M20X2.5-THD)	
M	5	1	**8T-4187**	4	BOLT (M20X2.5X80-MM)	

M-METRIC PART

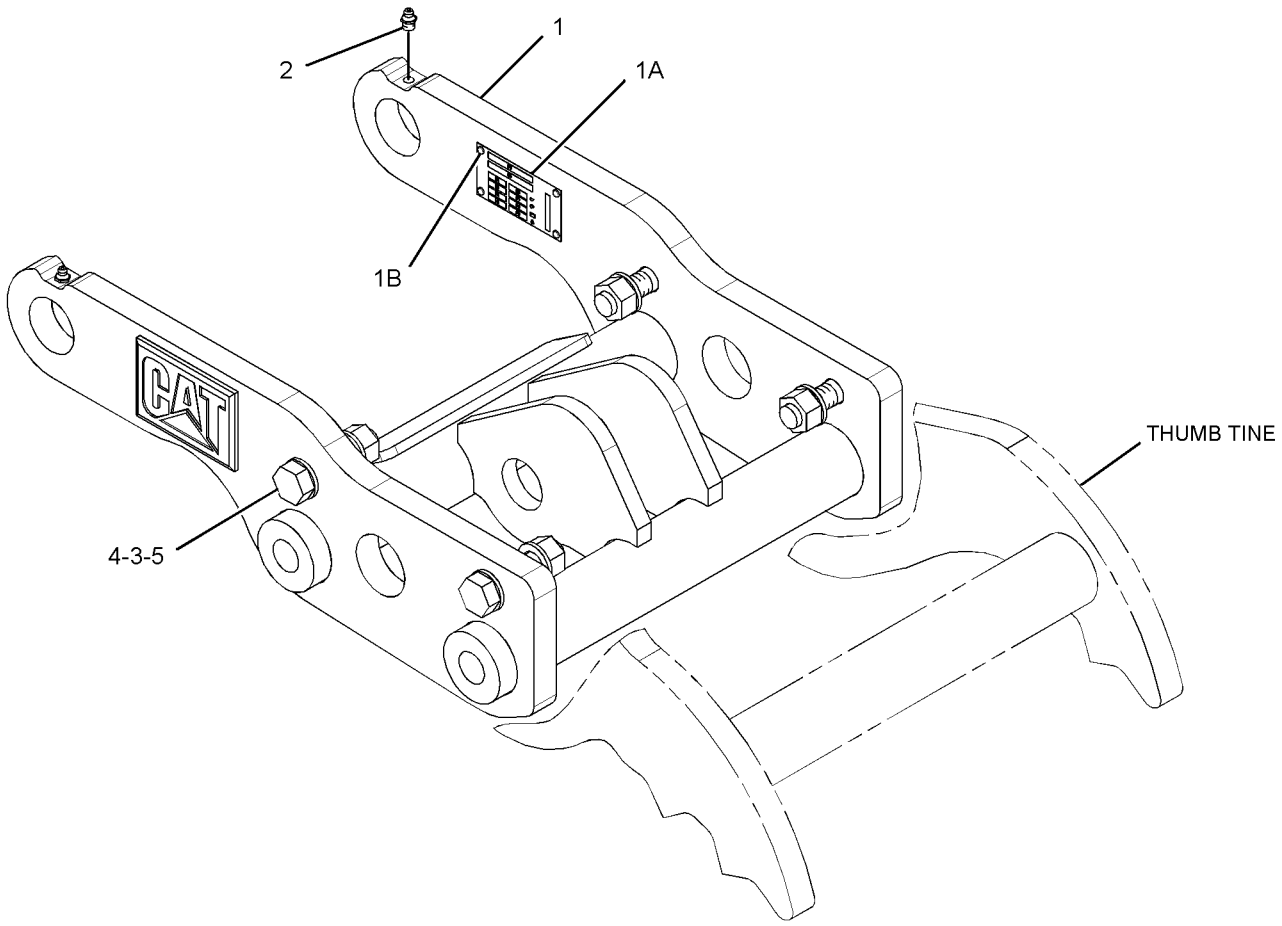

GRAPHIC #1 **<END>** g01335201

271-3023 THUMB GP—BACKHOE, COMMON

S/N: LMS1-UP

PART OF 271-3024, 271-3025, 271-3026, 271-3027, 281-6716, 282-0887 THUMB AR AN ATTACHMENT

SMCS-6547 **i03848372**

NOTE	REF NO	GRAPHIC REF	PART NUMBER	QTY	PART NAME 1 2 3 4 5 6 (PRODUCT LEVEL)	SEE PAGE
Y	1	1	*221-4267*	1	THUMB GP (BACKHOE)	489
Y	2	1	*263-8577*	1	MOUNTING GP-CYLINDER (THUMB)	327

Y-SEPARATE ILLUSTRATION

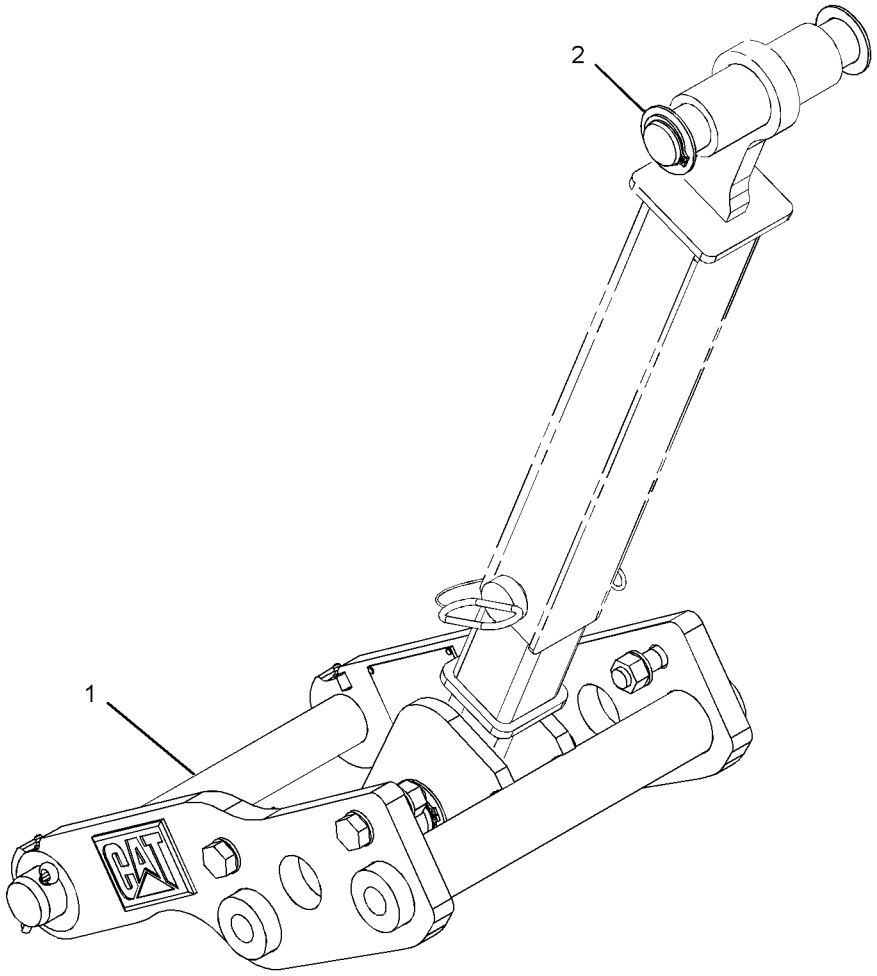

GRAPHIC #1 **<END>** g01234131

WORK TOOLS

9R-5866 TOOTH GP-UNI

S/N: LMS1-UP

FOR USE WITH LOADER BUCKETS. CANNOT BE USED WITH 9R-5321—PAGE 478 AN ATTACHMENT

SMCS-6822 **i01789850**

NOTE	REF NO	GRAPHIC REF	PART NUMBER	QTY	PART NAME 1 2 3 4 5 6 (PRODUCT LEVEL)	SEE PAGE
	1	1	**135-8203**	8	TOOTH-UNI	
	2	1	**4F-3657**	16	BOLT-PLOW (5/8-11X2.75 IN)	
	3	1	**4K-0367**	16	NUT-FULL (5/8-11 THD)	

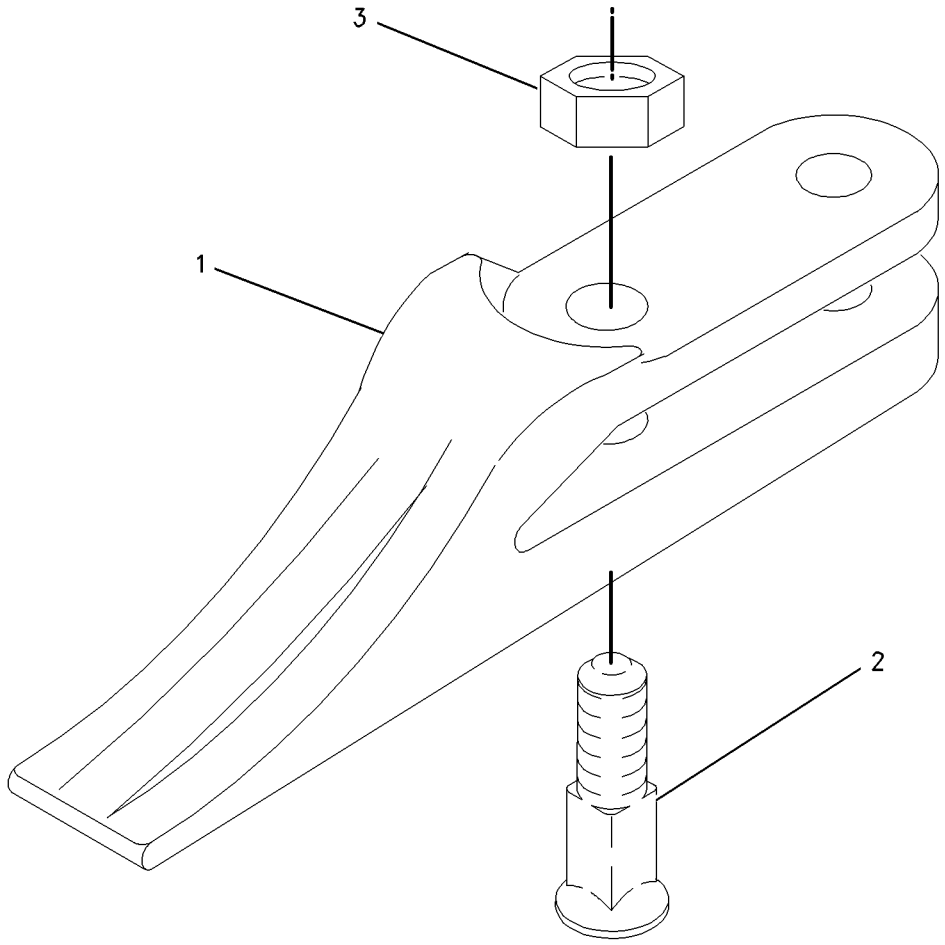

GRAPHIC #1 **<END>** g00915931

OPERATOR STATION

206-1801 AIR CONDITIONER & MOUNTING GP

S/N: LMS1-UP
PART OF 291-9195 CAB AR-ENCLOSED ROPS
AN ATTACHMENT

SMCS-7320 **i03887450**

NOTE	REF NO	GRAPHIC REF	PART NUMBER	QTY	PART NAME 1 2 3 4 5 6 (PRODUCT LEVEL)	SEE PAGE
	1	1	**221-2420**	2	HOSE-AIR	
E	2	1	**6V-6813**		HOSE (28-CM)	
	3	1	**6L-4725**	2	CLAMP-HOSE	
	4	1	**8Y-5737**	1	CLAMP	
	5	1	**8Y-6967**	6	LOUVER AS-VENT	
	6	1	**9M-7959**	4	CLAMP-HOSE	
	7	1	**9N-2231**	1	GROMMET AS	
	8	1	**110-6109**	1	KNOB-CONTROL (A/C)	
	9	1	**130-4832**	2	SCREW (8-18X10-MM)	
	10	1	**206-1684**	1	COVER (CAB FILTER)	
	11	1	**164-1368**	4	FASTENER-PANEL	
	12	1	**164-8474**	2	LOUVER AS-VENT	
	13	1	**189-0881**	1	CONTROL AS	
		1	**129-1831**	1	CLAMP	
	14	1	**193-3356**	1	CABLE AS	
	15	1	**194-5622**	1	VALVE AS-WATER (AIR CONDITIONER)	
		1	**6V-6717**	1	SCREW-WASHER HEAD (8-32X9.52-MM)	
		1	**124-0312**	2	SCREW-PAN HEAD (8-16X0.32-IN)	
	16	1	**206-1648**	1	LOUVER	
	17	1	**206-1653**	4	GASKET	
	18	1	**206-1682**	1	PANEL-CONTROL	
	19	1	**206-1803**	2	GASKET	
	20	1	**206-1804**	1	GASKET	
	21	1	**206-1805**	1	GASKET	
E	22	1	**220-0738**		SEAL (87-CM)	
	23	1	**206-1807**	1	GASKET	
	24	1	**206-1808**	1	PLATE	
	25	1	**206-1809**	1	ROD AS	
	26	1	**206-1810**	1	DUCT-AIR	
	27	1	**206-1812**	1	DUCT-AIR	
	28	1	**206-1814**	1	DUCT-AIR	
	29	1	**206-1815**	1	DUCT-AIR	
	30	1	**206-1816**	1	DUCT-AIR	
	31	1	**206-1817**	2	DUCT-AIR	
	32	1	**206-1818**	1	DUCT AS-AIR	
	33	1	**206-1846**	1	INSULATION	
	34	1	**206-1847**	1	INSULATION	
Y	35	1	*210-8363*	1	HEATER GP-CAB	549
	36	1	**211-2661**	1	FILTER ELEMENT AS-AIR (CAB HEATER)	
	37	1	**218-0666**	6	LOUVER AS	
D	38	1	**5P-6129**		TUBE (0.55-M EACH)	
	39	1	**255-0795**	1	FILM (TEMPERATURE CONTROL)	
	40	1	**5P-4116**	1	WASHER-HARD (8.8X20.5X2-MM THK)	
M	41	1	**111-4627**	3	SCREW-MACHINE (M6X1X30-MM)	
	42	1	**8Y-6352**	1	LOUVER AS	
	43	1	**7X-0579**	1	WASHER-HARD (8.8X25.5X2-MM THK)	
M	44	1	**8T-4200**	1	BOLT (M8X1.25X16-MM)	
	45	1	**9X-2038**	4	WASHER (7X19X2-MM THK)	
M	46	1	**9X-2045**	8	SCREW-TRUSS HEAD (M6X1X20-MM)	
	47	1	**3S-2093**	2	STRAP-CABLE	
	48	1	**4H-2558**	2	GROMMET	
	49	1	**8T-4205**	4	WASHER-HARD (7.2X14.5X2-MM THK)	

D-ORDER BY THE METER
E-ORDER BY THE CENTIMETER
M-METRIC PART
Y-SEPARATE ILLUSTRATION

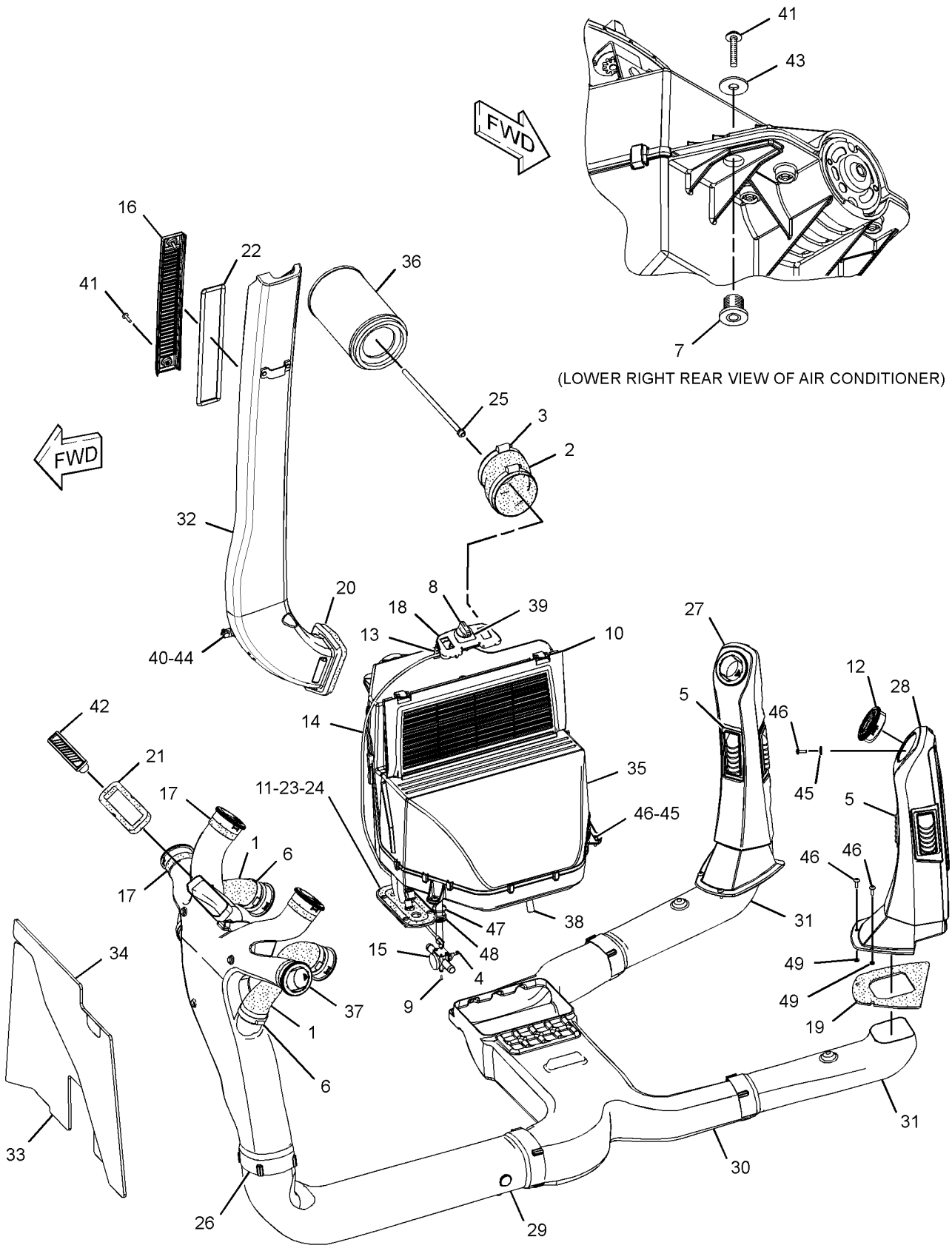

GRAPHIC #1 **<END>** g01576933

OPERATOR STATION

291-9194 CAB AR-ENCLOSED ROPS—DOUBLE DOOR, WITHOUT A/C

S/N: LMS1-UP

AN ATTACHMENT

SMCS-7301, 7325 **i03880399**

NOTE	PART NUMBER	QTY	PART NAME 1 2 3 4 5 6 (PRODUCT LEVEL)	SEE PAGE
Y	**353-3020**	1	CAB GP	497
Y	*206-1700*	1	CONSOLE GP-OPERATOR (RH)	507
Y	*206-1702*	1	CONSOLE GP-OPERATOR (LH)	509
Y	*206-1703*	1	CONSOLE GP-OPERATOR (FRONT)	511
Y	*221-3002*	1	CONTROL & MTG GP-STABILIZER	513
Y	*218-4453*	1	CONTROL GP-STEERING (TILT)	537
Y	*299-4729*	1	FAN GP-SUCTION (WITHOUT AIR CONDITIONER)	46
Y	*213-1891*	1	FENDER GP-REAR	217
Y	*206-1618*	1	FLOOR MAT GP	545
Y	*206-1841*	1	FLOORPLATE GP	220
Y	*206-1800*	1	HEATER GP-CAB	547
Y	*211-4277*	1	LIGHTING GP-FLOOD & SIGNAL (NACD, OPTIONAL)	93
Y	*317-5543*	1	LINER GP-CAB	558
Y	*297-5251*	1	LINES GP-HEATER	560
Y	*259-6276*	1	MIRROR GP-REAR VIEW (INTERIOR)	564
Y	*205-9560*	1	MOUNTING GP-CAB	567
Y	*205-9569*	1	ROOF GP-CAB	572
Y	*280-7365*	1	SEAT GP-SUSPENSION (CLOTH)	580
Y	*206-1727*	1	WASHER GP-WINDOW	586
Y	*206-1725*	1	WIPER GP-WINDOW	602
Y	*290-6737*	1	WIRING GP-CONSOLE (SIDE)	109
Y	*290-6769*	1	WIRING GP-HEATER	115
Y	*290-6722*	1	WIRING GP-PLATFORM	119
	250-7912	1	FILM-IDENTIFICATION (CATERPILLAR, FRONT)	
			(ON FRONT WINDSHIELD)	
	251-5628	1	FILM-IDENTIFICATION (STABILIZER CONTROL)	
			(ON RH CONSOLE NEXT TO STABILIZER CONTROLS)	
	285-1207	1	MAT-PROTECTIVE	
	5P-9768	1	PLUG-HOLE	
	227-1057	1	PLUG-HOLE	

Y-SEPARATE ILLUSTRATION

<END>

OPERATOR STATION

291-9195 CAB AR-ENCLOSED ROPS—DOUBLE DOOR, WITH A/C

S/N: LMS1-UP

PART OF 357-0407, 357-0408 OPTION AR-CAB

AN ATTACHMENT

SMCS-7301, 7325 **i03880400**

NOTE	PART NUMBER	QTY	PART NAME 1 2 3 4 5 6 (PRODUCT LEVEL)	SEE PAGE
Y	*206-1801*	1	AIR CONDITIONER & MOUNTING GP	492
Y	**353-3020**	1	CAB GP	497
Y	*321-7038*	1	COMPRESSOR GP-REFRIGERANT	505
Y	*301-9725*	1	CONDENSER & MTG GP-REFRIGERANT	506
Y	*206-1700*	1	CONSOLE GP-OPERATOR (RH)	507
Y	*206-1702*	1	CONSOLE GP-OPERATOR (LH)	509
Y	*206-1703*	1	CONSOLE GP-OPERATOR (FRONT)	511
Y	*221-3002*	1	CONTROL & MTG GP-STABILIZER	513
Y	*218-4453*	1	CONTROL GP-STEERING (TILT)	537
Y	*299-4716*	1	FAN GP-SUCTION (WITH AIR CONDITIONER)	45
Y	*213-1891*	1	FENDER GP-REAR	217
Y	*206-1618*	1	FLOOR MAT GP	545
Y	*206-1841*	1	FLOORPLATE GP	220
Y	*211-4277*	1	LIGHTING GP-FLOOD & SIGNAL (NACD, OPTIONAL)	93
Y	*317-5543*	1	LINER GP-CAB	558
Y	*297-5250*	1	LINES GP-HEATER & AIR COND	561
Y	*259-6276*	1	MIRROR GP-REAR VIEW (INTERIOR)	564
Y	*205-9560*	1	MOUNTING GP-CAB	567
Y	*205-9569*	1	ROOF GP-CAB	572
Y	*280-7365*	1	SEAT GP-SUSPENSION (CLOTH)	580
Y	*206-1727*	1	WASHER GP-WINDOW	586
Y	*206-1725*	1	WIPER GP-WINDOW	602
Y	*290-6732*	1	WIRING GP-AIR CONDITIONER	106
Y	*290-6737*	1	WIRING GP-CONSOLE (SIDE)	109
Y	*290-6722*	1	WIRING GP-PLATFORM	119
	250-7912	1	FILM-IDENTIFICATION (CATERPILLAR, FRONT)	
	251-5628	1	FILM-IDENTIFICATION (STABILIZER CONTROL)	
	285-1207	1	MAT-PROTECTIVE	

Y-SEPARATE ILLUSTRATION

<END>

OPERATOR STATION

353-3020 CAB GP–DELUXE

S/N: LMS1-UP

PART OF 291-9194, 291-9195 CAB AR-ENCLOSED ROPS

AN ATTACHMENT

SMCS-7301 **i03863636**

NOTE	REF NO	GRAPHIC REF	PART NUMBER	QTY	PART NAME 1 2 3 4 5 6 (PRODUCT LEVEL)	SEE PAGE
	1	1	**129-3738**	2	GUARD-STRIKER	
	2	1	**129-5256**	12	BUSHING	
	3	1	**129-5257**	8	BUSHING	
	4	1	**159-4945**	2	KEEPER	
B	5	1	**177-4877**	4	SHIM (1-MM THK)	
B	6	1	**205-9605**	1	GLASS (FRONT, LH)	
B	7	1	**205-9606**	1	GLASS (FRONT, RH)	
B	8	1	**205-9607**	1	GLASS (WINDSHIELD)	
B	9	1	**205-9622**	1	GLASS (LOWER, LH)	
B	10	1	**205-9631**	1	GLASS (LOWER, RH)	
	11	1	**206-1590**	4	PIN	
	12	1	**206-1647**	1	PLATE	
	13	1	**210-6475**	2	PLATE	
	14	1	**215-2913**	1	GROMMET	
Y	15	1	*229-0300*	1	WINDOW GP-CAB (REAR)	592
Y	17	1	**327-7601**	1	WINDOW GP-CAB (LH)	594
Y	18	1	**327-7637**	1	WINDOW GP-CAB (RH)	596
Y	19	1	**329-1167**	1	DOOR GP-CAB (RH)	541
Y	20	1	**329-1168**	1	DOOR GP-CAB (LH)	543
	21	1	**338-3328**	2	BOLT-STRIKER	
	22	1	**353-3016**	1	CAB AS	
M	23	1	**131-3987**	8	SCREW (M4X0.7X12-MM)	
	24	1	**159-4946**	2	KEEPER	
	25	1	**5P-4116**	11	WASHER-HARD (8.8X20.5X2-MM THK)	
	26	1	**7X-0618**	2	WASHER-HARD (13.5X40X5-MM THK)	
	27	1	**8S-7803**	8	RING-RETAINING	
M	28	1	**8T-4200**	11	BOLT (M8X1.25X16-MM)	
	29	1	**9R-5616**	2	PLUG	
M	30	1	**9X-2043**	4	SCREW-TRUSS HEAD (M6X1X14-MM)	
	31	1	**322-8414**		SEAL-CAB (258-CM EACH)	
	31A	1	**322-8414**		SEAL-CAB (339-CM EACH)	

B-USE AS REQUIRED
M-METRIC PART
Y-SEPARATE ILLUSTRATION

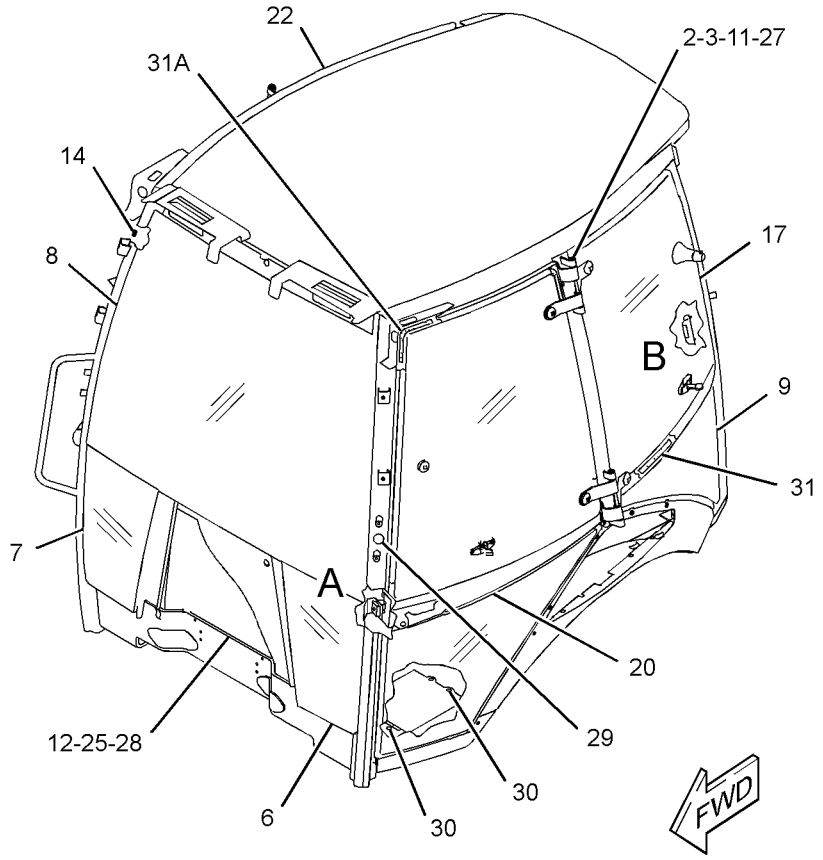

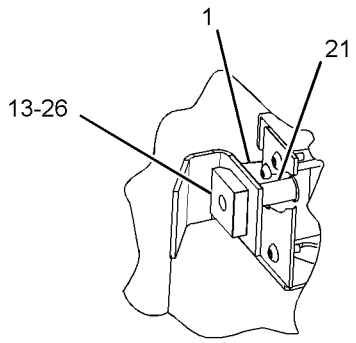

VIEW OF AREA A

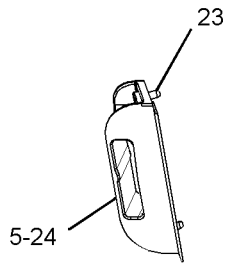

VIEW OF AREA B

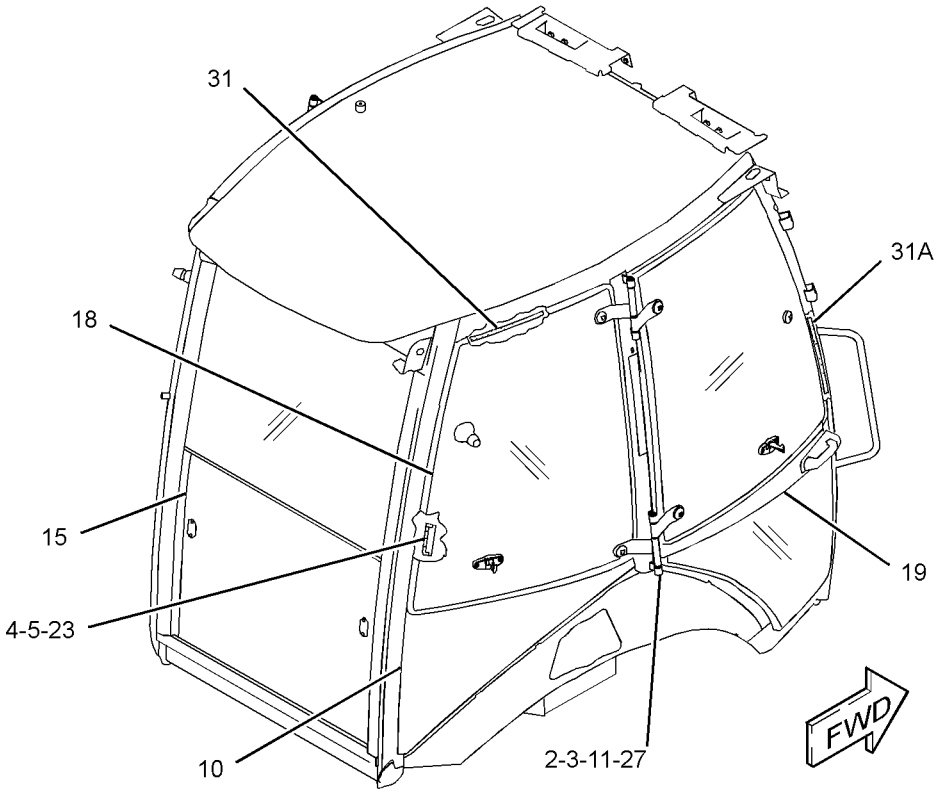

GRAPHIC #1

<END>

g02115933

OPERATOR STATION

291-9192 CANOPY AR-OPEN ROPS—WITH FRONT WINDOW

S/N: LMS1-UP

AN ATTACHMENT

SMCS-7302, 7323 **i03894549**

NOTE	PART NUMBER	QTY	PART NAME 1 2 3 4 5 6 (PRODUCT LEVEL)	SEE PAGE
Y	**353-3018**	1	CANOPY GP-OPEN ROPS	502
Y	*206-1700*	1	CONSOLE GP-OPERATOR (RH)	507
Y	*206-1702*	1	CONSOLE GP-OPERATOR (LH)	509
Y	*206-1703*	1	CONSOLE GP-OPERATOR (FRONT)	511
Y	*221-3002*	1	CONTROL & MTG GP-STABILIZER	513
Y	*218-4453*	1	CONTROL GP-STEERING (TILT)	537
Y	*220-3785*	1	COVER GP-WIPER MOTOR	540
Y	*299-4729*	1	FAN GP-SUCTION (WITHOUT AIR CONDITIONER)	46
Y	*213-1891*	1	FENDER GP-REAR	217
Y	*206-1618*	1	FLOOR MAT GP	545
Y	*206-1840*	1	FLOORPLATE GP	219
Y	*211-4277*	1	LIGHTING GP-FLOOD & SIGNAL (NACD, OPTIONAL)	93
Y	*259-6276*	1	MIRROR GP-REAR VIEW (INTERIOR)	564
Y	*205-9560*	1	MOUNTING GP-CAB	567
Y	*206-1701*	1	PROTECTION GP-VANDALISM (ROTATING GUARD)	613
Y	*205-9569*	1	ROOF GP-CAB	572
Y	*280-7364*	1	SEAT GP-SUSPENSION (VINYL)	580
Y	*206-1704*	1	TRIM GP-CAB (OPEN ROPS)	584
Y	*206-1728*	1	WIPER & WASHER GP-WINDOW	600
Y	*290-6737*	1	WIRING GP-CONSOLE (SIDE)	109
Y	*290-6722*	1	WIRING GP-PLATFORM	119
	250-7912	1	FILM-IDENTIFICATION (CATERPILLAR, FRONT)	
	251-5628	1	FILM-IDENTIFICATION (STABILIZER CONTROL)	
	285-1207	1	MAT-PROTECTIVE	
	5P-9768	1	PLUG-HOLE	
	227-1057	1	PLUG-HOLE	
	273-1474	1	SEAL (CONSOLE, LH)	

Y-SEPARATE ILLUSTRATION

<END>

OPERATOR STATION

291-9191 CANOPY GP-OPEN ROPS

S/N: LMS1-UP
PART OF 357-0406 OPTION AR-CAB
AN ATTACHMENT

SMCS-7302, 7323 **i03880398**

NOTE	PART NUMBER	QTY	PART NAME 1 2 3 4 5 6 (PRODUCT LEVEL)	SEE PAGE
Y	**353-3017**	1	CANOPY GP-OPEN ROPS (WITHOUT FRONT WINDOW)	501
Y	*248-2720*	1	COMPARTMENT GP-LITERATURE (STORAGE BOX)	503
Y	*206-1700*	1	CONSOLE GP-OPERATOR (RH)	507
Y	*206-1703*	1	CONSOLE GP-OPERATOR (FRONT)	511
Y	*221-3002*	1	CONTROL & MTG GP-STABILIZER	513
Y	*206-1630*	1	CONTROL GP-STEERING	536
Y	*299-4729*	1	FAN GP-SUCTION (WITHOUT AIR CONDITIONER)	46
Y	*213-1891*	1	FENDER GP-REAR	217
Y	*206-1620*	1	FLOOR MAT GP	546
Y	*206-1840*	1	FLOORPLATE GP	219
Y	*211-4276*	1	LIGHTING GP-FLOOD & SIGNAL (CAB, NACD)	91
Y	*259-6276*	1	MIRROR GP-REAR VIEW (INTERIOR)	564
Y	*205-9560*	1	MOUNTING GP-CAB	567
Y	*206-1701*	1	PROTECTION GP-VANDALISM (ROTATING GUARD)	613
Y	*205-9568*	1	ROOF GP-CAB	570
Y	*280-7364*	1	SEAT GP-SUSPENSION (VINYL)	580
Y	*206-1704*	1	TRIM GP-CAB (OPEN ROPS)	584
Y	*290-6737*	1	WIRING GP-CONSOLE (SIDE)	109
Y	*290-6722*	1	WIRING GP-PLATFORM	119
	256-5299	1	FILM-IDENTIFICATION (CATERPILLAR)	
			(ON TOP OF CAB CENTERED HORIZONTALLY & VERTICALLY)	
	251-5628	1	FILM-IDENTIFICATION (STABILIZER CONTROL)	
			(ON RH CONSOLE NEXT TO STABILIZER CONTROLS)	
	285-1207	1	MAT-PROTECTIVE	
	227-1057	1	PLUG-HOLE	

Y-SEPARATE ILLUSTRATION

<END>

OPERATOR STATION

353-3017 CANOPY GP-OPEN ROPS—WITHOUT FRONT WINDOW

S/N: LMS1-UP

PART OF 291-9191 CANOPY GP-OPEN ROPS

AN ATTACHMENT

SMCS-7302, 7323 **i03863635**

NOTE	REF NO	GRAPHIC REF	PART NUMBER	QTY	PART NAME 1 2 3 4 5 6 (PRODUCT LEVEL)	SEE PAGE
B	1	1	**205-9605**	1	GLASS (FRONT, LH)	
B	2	1	**205-9606**	1	GLASS (FRONT, RH)	
	3	1	**206-1647**	1	PLATE	
	4	1	**215-2913**	1	GROMMET	
	5	1	**219-0302**	1	FILM-WARNING (NO WELD, NO DRILL, READ OMM)	
E	6	1	**9X-2092**		TRIM-EDGE (40-CM EACH)	
	7	1	**325-9310**	1	FILM-CERTIFICATION (OPS, READ OMM)	
	8	1	*353-3013*	1	CANOPY AS-OPEN ROPS	
		1	**5D-9629**	2	ROD	
M		1	**6V-9632**	4	NUT-WELD (M6X1-THD)	
		1	**7T-1099**	2	LINK	
M		1	**8T-3612**	10	NUT-WELD (M8X1.25-THD)	
	9	1	**5P-4116**	11	WASHER-HARD (8.8X20.5X2-MM THK)	
M	10	1	**8T-4200**	11	BOLT (M8X1.25X16-MM)	
	11	1	**9R-5616**	2	PLUG	
M	12	1	**9X-2043**	4	SCREW-TRUSS HEAD (M6X1X14-MM)	

B-USE AS REQUIRED
E-ORDER BY THE CENTIMETER
M-METRIC PART

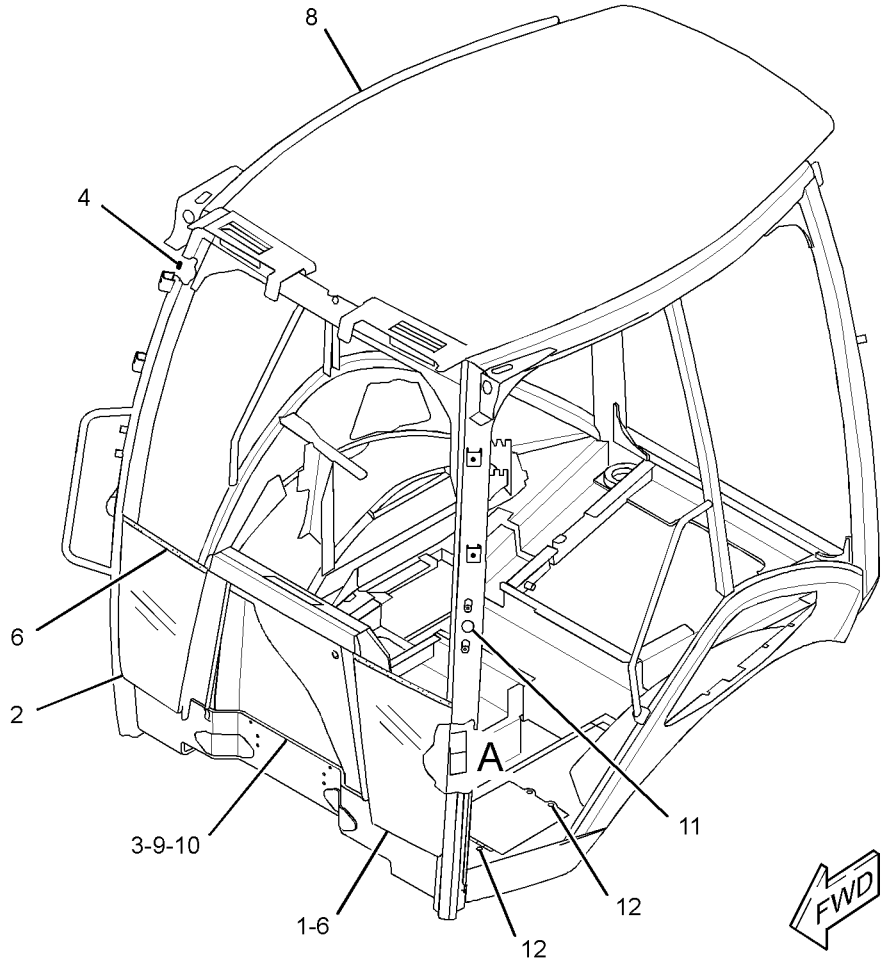

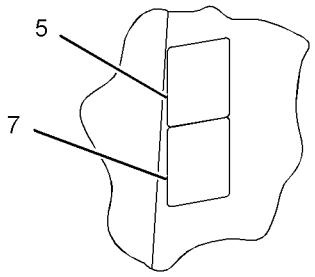

VIEW OF AREA A
(APPLIED INSIDE CAB)

GRAPHIC #1 **<END>** g02116775

OPERATOR STATION

353-3018 CANOPY GP-OPEN ROPS

S/N: LMS1-UP
PART OF 291-9192 CANOPY AR-OPEN ROPS
AN ATTACHMENT

SMCS-7302, 7323 **i03863632**

NOTE	REF NO	GRAPHIC REF	PART NUMBER	QTY	PART NAME 1 2 3 4 5 6 (PRODUCT LEVEL)	SEE PAGE
B	1	1	**205-9605**	1	GLASS (FRONT, LH)	
B	2	1	**205-9606**	1	GLASS (FRONT, RH)	
B	3	1	**205-9607**	1	GLASS (WINDSHIELD)	
	4	1	**206-1647**	1	PLATE	
	5	1	**215-2913**	1	GROMMET	
	6	1	**219-0302**	1	FILM-WARNING (NO WELD, NO DRILL, READ OMM)	
M	7	1	**9X-2043**	4	SCREW-TRUSS HEAD (M6X1X14-MM)	
	8	1	**325-9310**	1	FILM-CERTIFICATION (OPS, READ OMM)	
	9	1	**353-3014**	1	CANOPY AS-OPEN ROPS	
	10	1	**5P-4116**	11	WASHER-HARD (8.8X20.5X2-MM THK)	
M	11	1	**8T-4200**	11	BOLT (M8X1.25X16-MM)	
	12	1	**9R-5616**	2	PLUG	

B-USE AS REQUIRED
M-METRIC PART

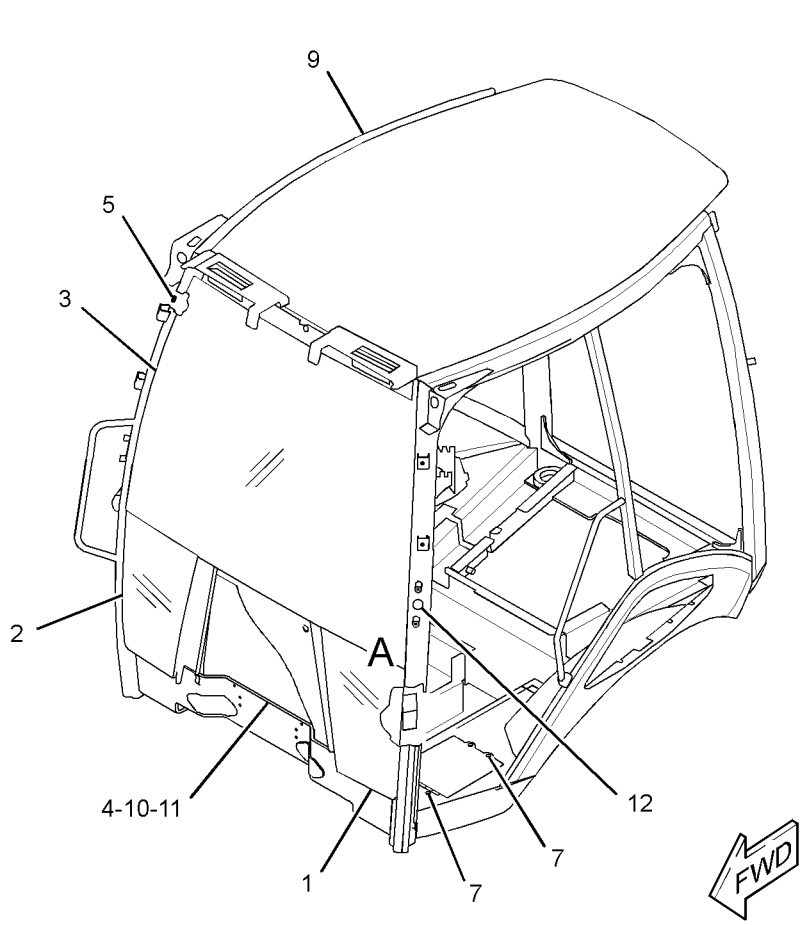

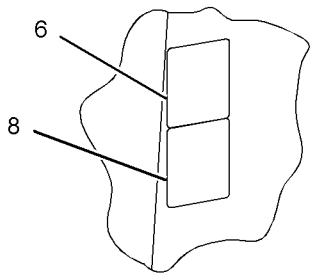

VIEW OF AREA A

GRAPHIC #1 **<END>** g02116618

OPERATOR STATION

248-2720 COMPARTMENT GP-LITERATURE–STORAGE BOX

S/N: LMS1-UP

PART OF 291-9191 CANOPY GP-OPEN ROPS

AN ATTACHMENT

SMCS-7268 **i02697252**

NOTE	REF NO	GRAPHIC REF	PART NUMBER	QTY	PART NAME 1 2 3 4 5 6 (PRODUCT LEVEL)	SEE PAGE
	1	1	**206-1706**	1	BOX AS-STORAGE	
J	2	1	**206-1708**	1	LOCK AS	
	3	1	**261-9639**	6	SCREW-PAN HEAD (12X0.5-IN)	
	4	1	**232-4454**	2	HINGE-DOOR	
	5	1	**223-2035**	1	COVER AS (STORAGE)	
	6	1	**252-5218**	1	LANYARD (371-MM)	
	7	1	**252-5219**	1	LANYARD (281-MM)	
M	8	1	**9X-2043**	2	SCREW-TRUSS HEAD (M6X1X14-MM)	
M	9	1	**9X-2044**	10	SCREW-TRUSS HEAD (M6X1X16-MM)	
E	10	1	**220-0738**		SEAL (88-CM)	
D	11	1	**5P-5927**		SEAL (1.7-M)	

D-ORDER BY THE METER
E-ORDER BY THE CENTIMETER
J-REQUIRES 5P8500 KEY
M-METRIC PART

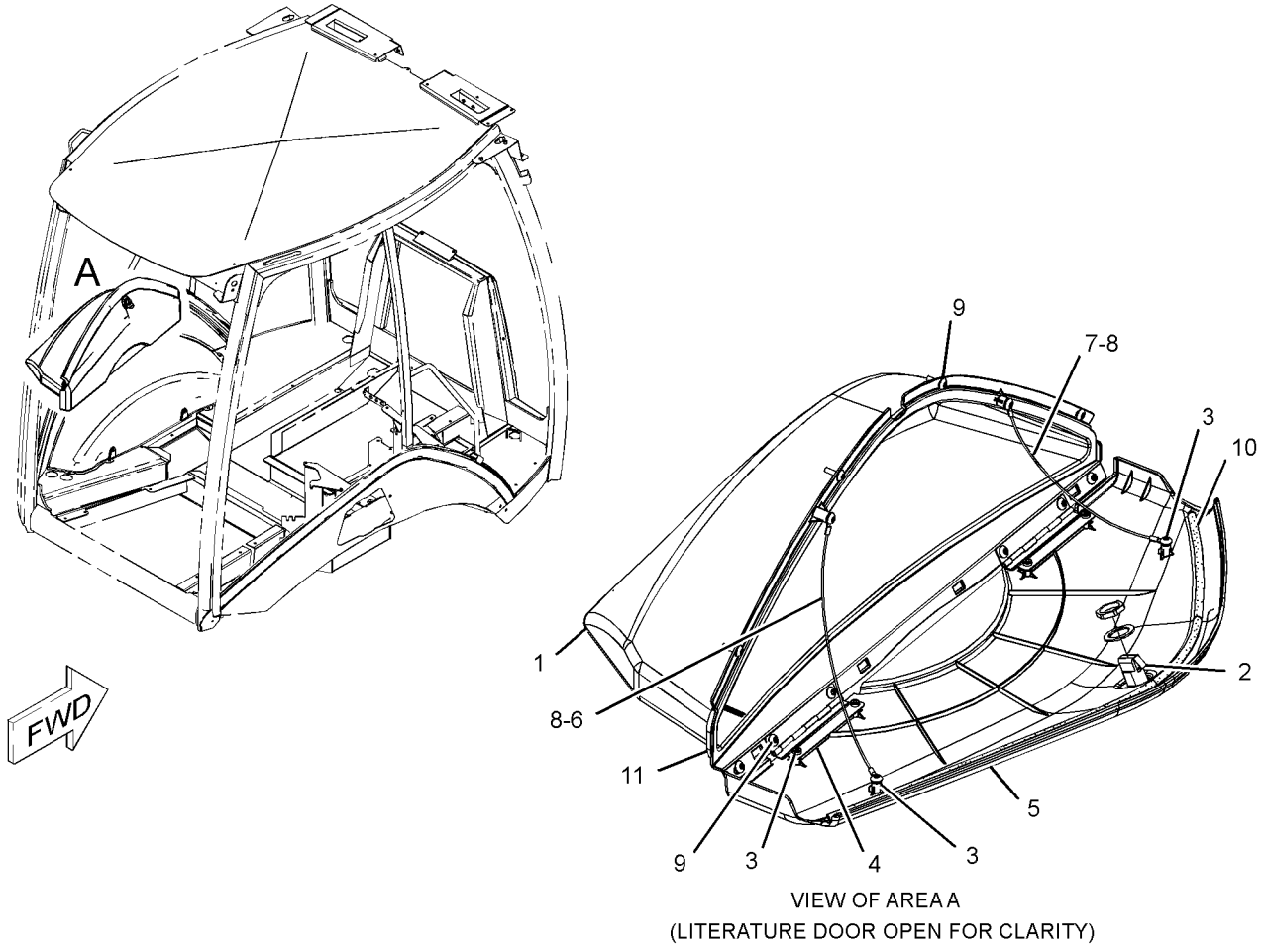

VIEW OF AREA A
(LITERATURE DOOR OPEN FOR CLARITY)

GRAPHIC #1 **<END>** g01283737

OPERATOR STATION

299-2212 COMPRESSOR GP-REFRIGERANT

S/N: LMS1-UP

PART OF 321-7038 COMPRESSOR GP-REFRIGERANT

AN ATTACHMENT

SMCS-1802 **i03729560**

NOTE	REF NO	GRAPHIC REF	PART NUMBER	QTY	PART NAME 1 2 3 4 5 6 (PRODUCT LEVEL)	SEE PAGE
	1	1	**126-1767**	2	PIN-CONNECTOR (14-GA)	
	2	1	**102-8802**	1	KIT-RECEPTACLE (2-PIN)	
					(INCLUDES RECEPTACLE AS & WEDGE)	
	3	1	**314-4018**	1	VALVE AS-PRESSURE RELIEF (REFRIGERANT COMPRESSOR)	
	4	1	**7T-4532**	1	PLUG AS	
	5	1	**9X-7385**	2	SEAL-O-RING	

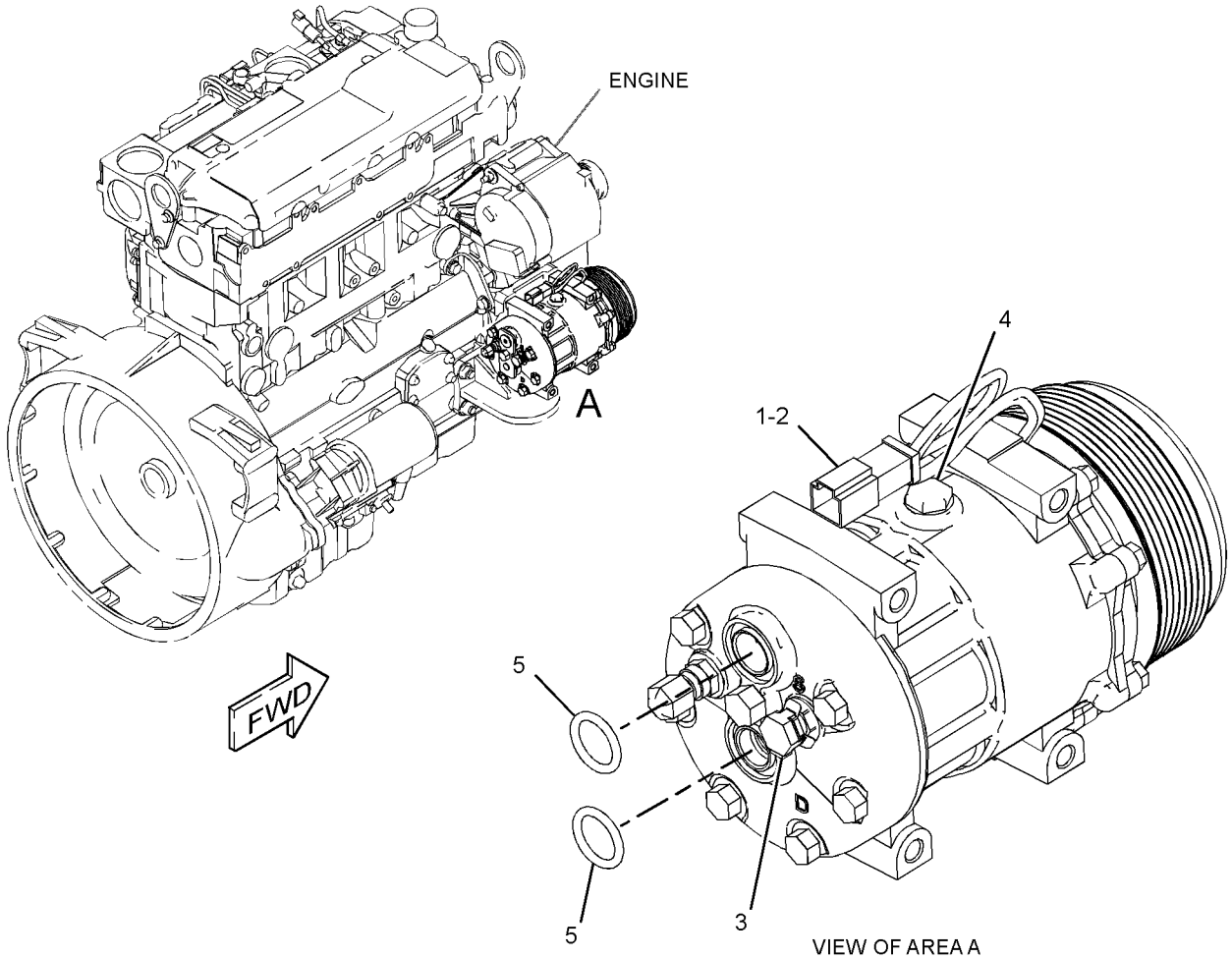

GRAPHIC #1 **<END>** g01513535

OPERATOR STATION

321-7038 COMPRESSOR GP-REFRIGERANT

S/N: LMS1-UP
PART OF 291-9195 CAB AR-ENCLOSED ROPS
AN ATTACHMENT

SMCS-1802 **i03035509**

NOTE	REF NO	GRAPHIC REF	PART NUMBER	QTY	PART NAME 1 2 3 4 5 6 (PRODUCT LEVEL)	SEE PAGE
	1	1	**288-9734**	1	BRACKET	
	2	1	**290-7831**	1	BRACKET	
Y	3	1	**299-2212**	1	COMPRESSOR GP-REFRIGERANT	504
M	4	1	**7X-2538**	4	BOLT (M8X1.25X100-MM)	
M	5	1	**7X-2553**	2	BOLT (M16X2X40-MM)	
	6	1	**8T-4121**	2	WASHER-HARD (11X21X2.5-MM THK)	
M	7	1	**8T-4136**	2	BOLT (M10X1.5X25-MM)	
	8	1	**8T-4224**	4	WASHER-HARD (8.8X16X2-MM THK)	
	9	1	**9X-8257**	2	WASHER (17.5X30X3.5-MM THK)	

M-METRIC PART
Y-SEPARATE ILLUSTRATION

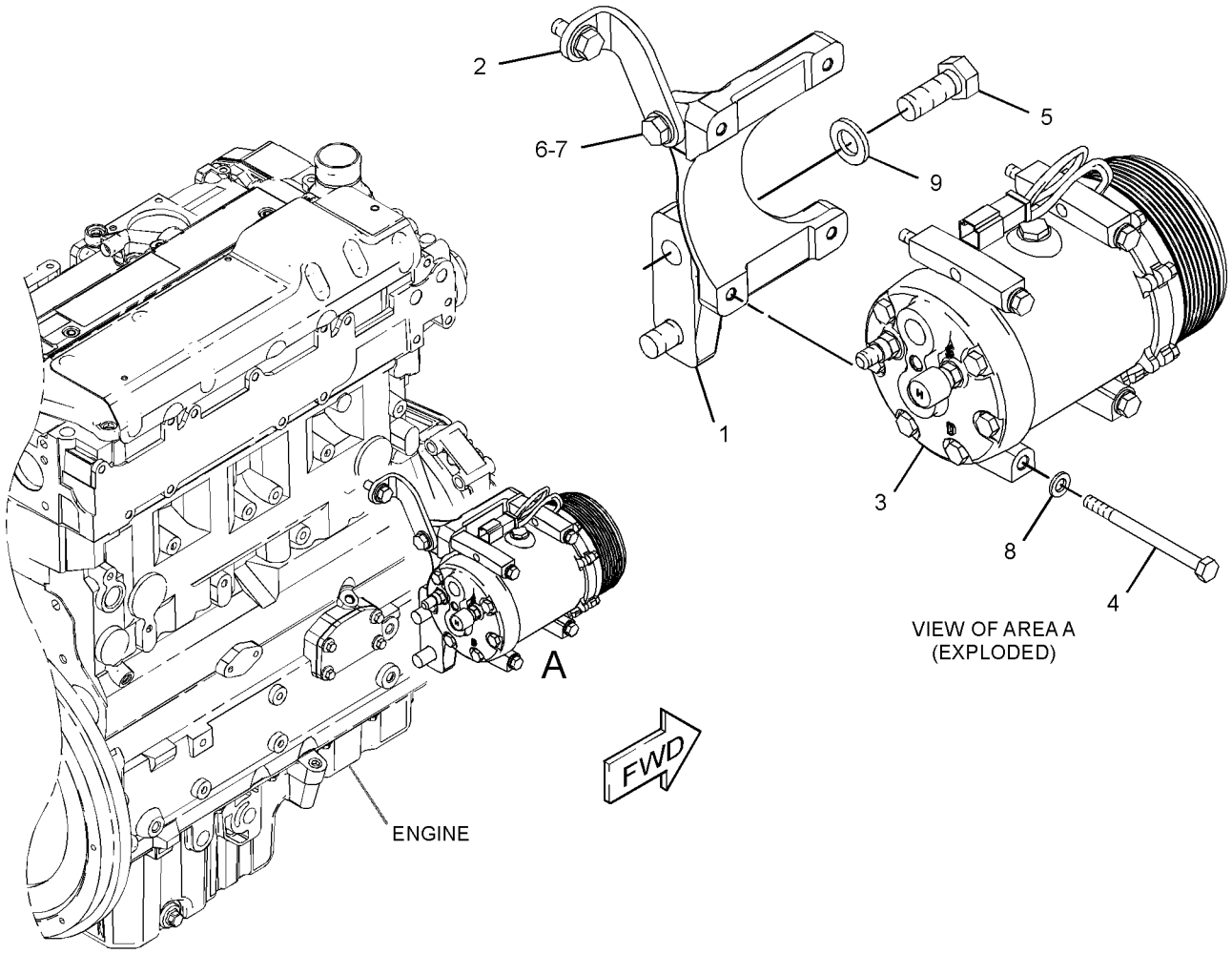

GRAPHIC #1 **<END>** g01570153

OPERATOR STATION

301-9725 CONDENSER & MTG GP-REFRIGERANT

S/N: LMS1-UP
PART OF 291-9195 CAB AR-ENCLOSED ROPS
AN ATTACHMENT

SMCS-1805 **i03852050**

NOTE	REF NO	GRAPHIC REF	PART NUMBER	QTY	PART NAME 1 2 3 4 5 6 (PRODUCT LEVEL)	SEE PAGE
	1	1	**353-8584**	1	CORE AS-CONDENSER	
		1	**317-8141**	4	MOUNT	
	2	1	**8C-9987**	4	WASHER (8.3X28X2.5-MM THK)	
M	3	1	**8T-4908**	4	BOLT (M8X1.25X25-MM)	

M-METRIC PART

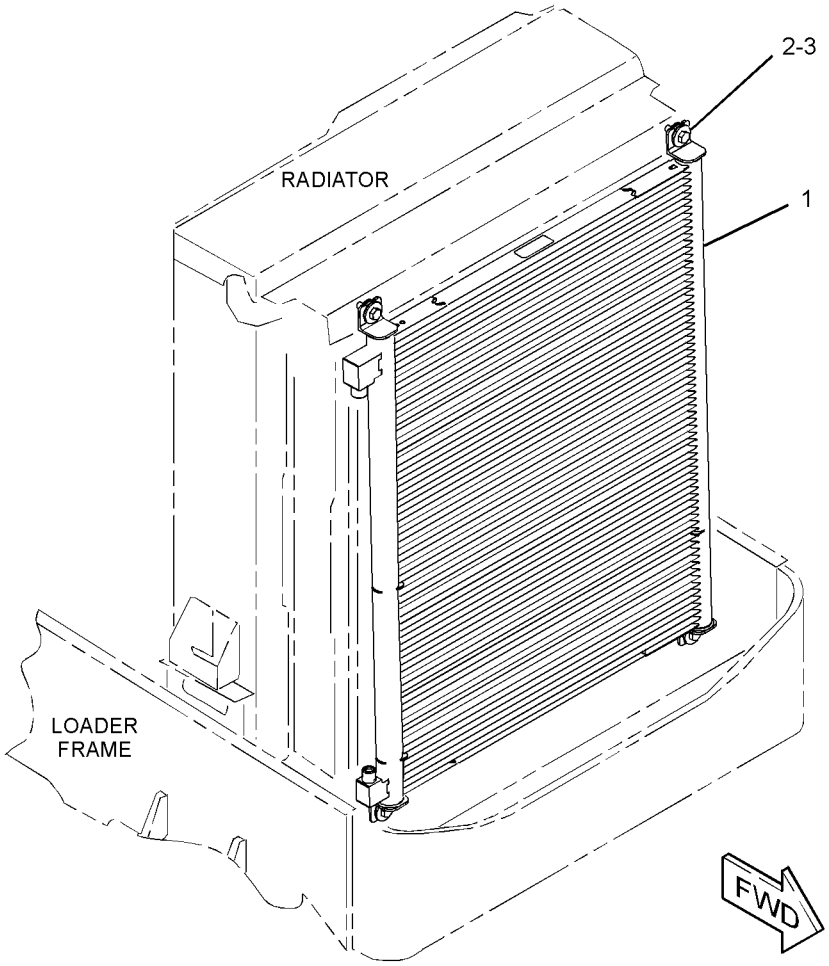

GRAPHIC #1 **<END>** g02099593

OPERATOR STATION

206-1700 CONSOLE GP-OPERATOR—RH

S/N: LMS1-UP

PART OF 291-9194, 291-9195 CAB AR-ENCLOSED ROPS, 291-9192 CANOPY AR-OPEN ROPS, 291-9191 CANOPY GP-OPEN ROPS

AN ATTACHMENT

SMCS-5258, 7451 **i02700054**

NOTE	REF NO	GRAPHIC REF	PART NUMBER	QTY	PART NAME 1 2 3 4 5 6 (PRODUCT LEVEL)	SEE PAGE
B	1	1	**2S-3163**	1	PLUG	
	2	1	**164-1178**	1	CLIP	
	3	1	**167-8251**	1	FASTENER	
	4	1	**206-1678**	1	HOUSING AS (UPPER)	
	5	1	**206-1679**	1	PANEL AS (UPPER)	
	6	1	**206-1681**	1	PANEL AS (LOWER)	
	7	1	**261-9645**	1	COVER AS (CONTROLS, FRONT, UPPER)	
		1	**206-1667**	4	CLIP	
	8	1	**261-9644**	1	COVER AS (CONTROLS, FRONT, LOWER)	
		1	**206-1667**	1	CLIP	
	9	1	**269-9115**	1	COVER AS (FENDER, FRONT)	
		1	**172-8591**	1	NUT-SPRING	
	10	1	**206-1690**	1	COVER (FENDER, REAR)	
	11	1	**206-1692**	1	COVER AS (CONTROLS, REAR)	
		1	**206-1667**	3	CLIP	
E	12	1	**293-1980**		SEAL (73-CM)	
E	12A	1	**293-1980**		SEAL (78-CM)	
B	13	1	**248-2709**	2	PLUG	
	14	1	**9X-2038**	5	WASHER (7X19X2-MM THK)	
	15	1	**206-1687**	1	COVER-FUSE	
M	16	1	**9X-2045**	16	SCREW-TRUSS HEAD (M6X1X20-MM)	

B-USE AS REQUIRED
E-ORDER BY THE CENTIMETER
M-METRIC PART

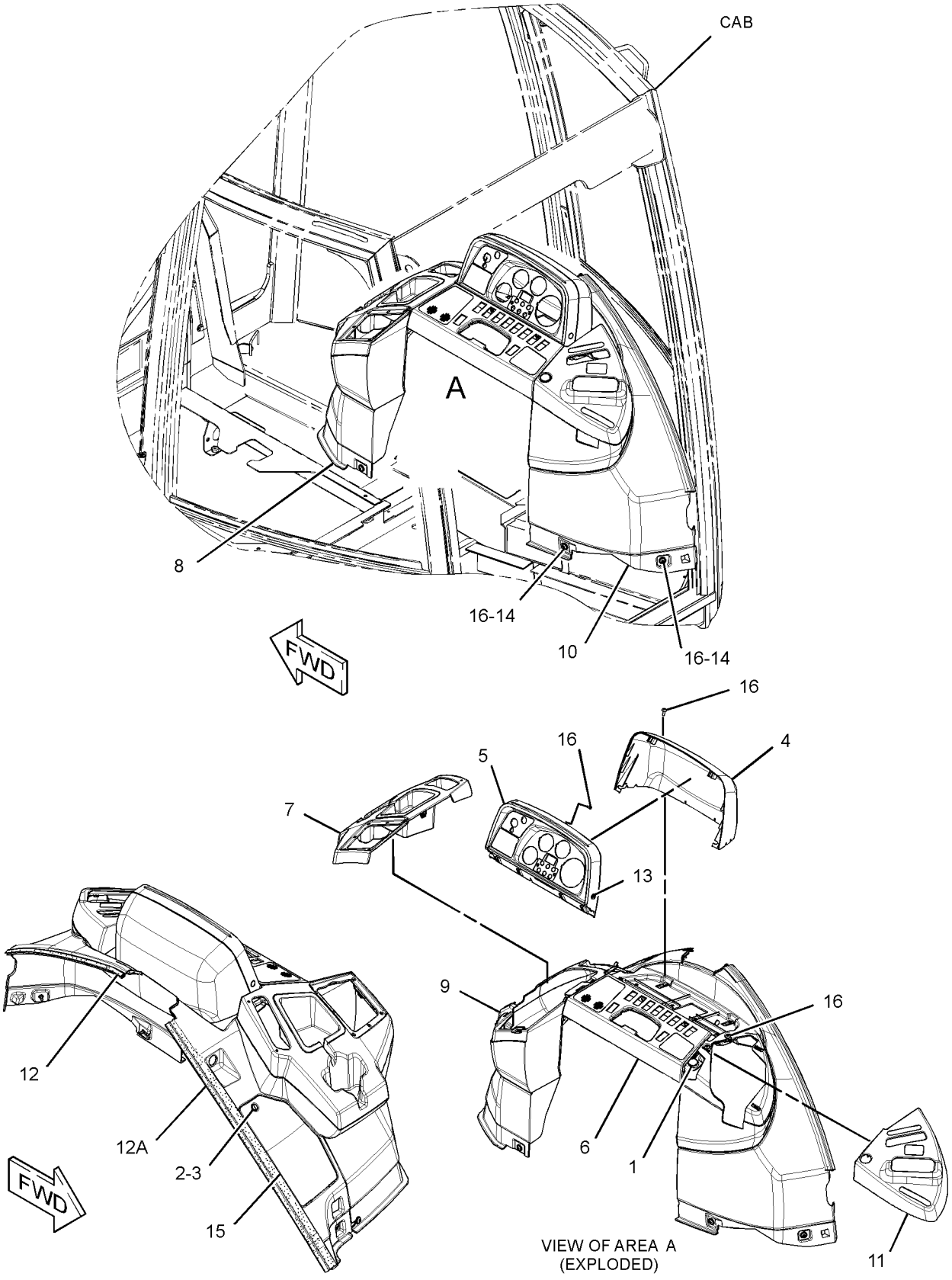

GRAPHIC #1 **<END>** g01390479

OPERATOR STATION

206-1702 CONSOLE GP-OPERATOR–LH

S/N: LMS1-UP

PART OF 291-9194, 291-9195 CAB AR-ENCLOSED ROPS, 291-9192 CANOPY AR-OPEN ROPS

AN ATTACHMENT

SMCS-5258, 7451 **i03126124**

NOTE	REF NO	GRAPHIC REF	PART NUMBER	QTY	PART NAME 1 2 3 4 5 6 (PRODUCT LEVEL)	SEE PAGE
E	1	1	**3E-6600**		SEAL (34-CM)	
D	2	1	**5P-5927**		SEAL (1.7-M)	
	3	1	**206-1696**	1	CONSOLE AS (LH)	
	4	1	**206-1698**	1	DOOR-STORAGE	
	5	1	**206-1699**	1	CUP HOLDER	
	6	1	**206-1706**	1	BOX AS-STORAGE	
J	7	1	**206-1708**	1	LOCK AS	
	8	1	**206-1712**	1	HINGE-DOOR	
	9	1	**210-6491**	1	CUP HOLDER	
	10	1	**249-2482**	1	PLATE	
	11	1	**261-9636**	1	BRACKET-SUPPORT	
	12	1	**261-9637**	2	BRACKET AS	
	13	1	**261-9639**	3	SCREW-PAN HEAD (12X0.5-IN)	
E	14	1	**293-1980**		SEAL (71-CM)	
E	14A	1	**293-1980**		SEAL (77-CM)	
M	15	1	**5C-2890**	3	NUT (M6X1-THD)	
	16	1	**8T-4205**	3	WASHER-HARD (7.2X14.5X2-MM THK)	
	17	1	**9X-2038**	6	WASHER (7X19X2-MM THK)	
M	18	1	**9X-2044**	19	SCREW-TRUSS HEAD (M6X1X16-MM)	

D-ORDER BY THE METER
E-ORDER BY THE CENTIMETER
J-REQUIRES CORPORATE KEY
M-METRIC PART

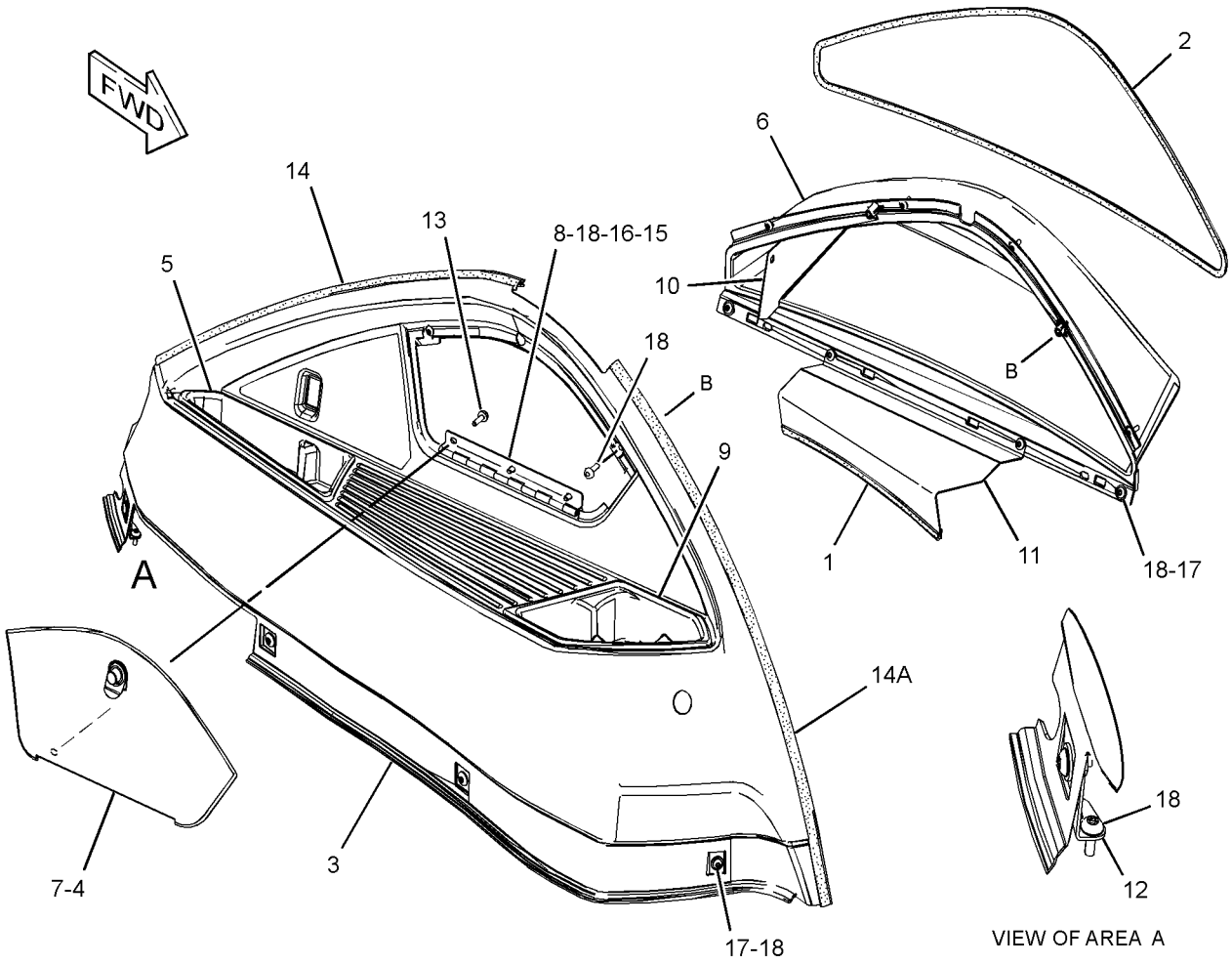

GRAPHIC #1 **<END>** g01520782

OPERATOR STATION

206-1703 CONSOLE GP-OPERATOR–FRONT

S/N: LMS1-UP

PART OF 291-9194, 291-9195 CAB AR-ENCLOSED ROPS, 291-9192 CANOPY AR-OPEN ROPS, 291-9191 CANOPY GP-OPEN ROPS

AN ATTACHMENT

SMCS-5258, 7451 **i02959351**

NOTE	REF NO	GRAPHIC REF	PART NUMBER	QTY	PART NAME 1 2 3 4 5 6 (PRODUCT LEVEL)	SEE PAGE
B	1	1	**184-5293**	1	PLUG	
	2	1	**206-1658**	1	COVER AS-STEERING COLUMN (UPPER)	
		1	**206-1667**	2	CLIP	
	3	1	**206-1659**	1	DOOR-STORAGE	
	4	1	**206-1660**	1	COVER AS-STEERING COLUMN (FRONT)	
		1	**206-1667**	4	CLIP	
	5	1	**206-1661**	1	COVER AS-STEERING COLUMN (REAR)	
		1	**206-1667**	4	CLIP	
	6	1	**206-1662**	1	CONSOLE AS-FRONT (UPPER)	
		1	**206-1667**	8	CLIP	
	7	1	**206-1663**	1	CONSOLE-FRONT (MIDDLE)	
J	8	1	**206-1708**	1	LOCK AS	
	9	1	**261-9639**	10	SCREW-PAN HEAD (NO 12X0.5-IN)	
E	10	1	**220-0738**		SEAL (22-CM)	
	11	1	**224-2147**	1	CONSOLE AS-FRONT (LOWER, LH)	
	12	1	**224-2149**	1	CONSOLE AS-FRONT (LOWER, RH)	
	13	1	**233-5260**	2	LANYARD	
M	14	1	**120-9027**	2	SCREW-PAN HEAD (M3X0.5X16-MM)	
	15	1	**206-1854**	1	HINGE	
M	16	1	**8T-2658**	2	LOCKNUT (M3X0.5-THD)	
M	17	1	**9X-2044**	2	SCREW-TRUSS HEAD (M6X1X16-MM)	
M	18	1	**9X-2045**	16	SCREW-TRUSS HEAD (M6X1X20-MM)	
	19	1	**258-2354**	1	BRACKET-LATCH	
	20	1	**9X-2038**	3	WASHER (7X19X2-MM THK)	
	21	1	**4I-3038**	2	WASHER (3.3X8X0.5-MM THK)	
D	22	1	**5P-7070**		INSULATION-STRIP (0.03-M EACH)	

B-USE AS REQUIRED
D-ORDER BY THE METER
E-ORDER BY THE CENTIMETER
J-REQUIRES CORPORATE KEY
M-METRIC PART

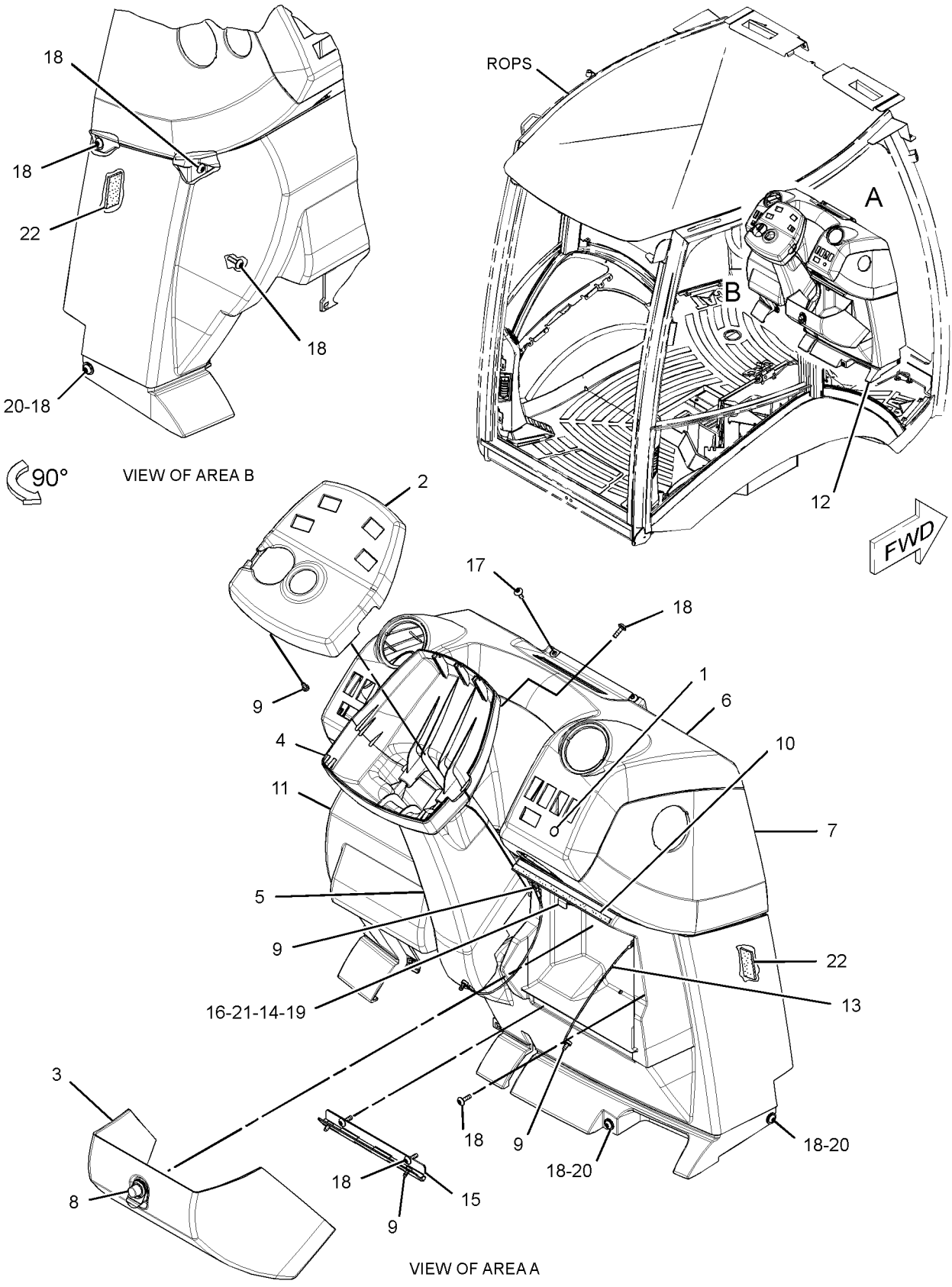

GRAPHIC #1 **<END>** g01522089

OPERATOR STATION

221-3002 CONTROL & MTG GP-STABILIZER

S/N: LMS1-UP

PART OF 291-9194, 291-9195 CAB AR-ENCLOSED ROPS, 291-9192 CANOPY AR-OPEN ROPS, 291-9191 CANOPY GP-OPEN ROPS

AN ATTACHMENT

SMCS-7222 **i03885629**

NOTE	REF NO	GRAPHIC REF	PART NUMBER	QTY	PART NAME 1 2 3 4 5 6 (PRODUCT LEVEL)	SEE PAGE
	1	1	**8T-6902**	1	CLIP	
	2	1	**9R-8165**	1	BEARING	
	3	1	**183-6084**	1	BEARING	
	4	1	**206-1874**	1	LEVER AS	
Y	5	1	**221-3006**	2	CONTROL GP-HYDRAULIC HAND	524
	6	1	**296-7593**	1	PLATE AS	
	7	1	**229-5745**	1	SPACER (8X15.875X11.6-MM THK)	
	8	1	**232-1542**	1	SEAL	
	9	1	**248-2708**	1	GROMMET	
	10	1	**248-2710**	1	GROMMET	
	11	1	**164-1395**	1	KNOB	
	12	1	**5P-4116**	6	WASHER-HARD (8.8X20.5X2-MM THK)	
B	13	1	**6E-5431**	1	SHIM (0.5-MM THK)	
M	14	1	**7X-0465**	3	BOLT (M6X1X100-MM)	
M	15	1	**8T-4189**	4	BOLT (M8X1.25X20-MM)	
M	16	1	**8T-7547**	1	BOLT (M8X1.25X30-MM)	
	17	1	**9X-8256**	7	WASHER (6.6X12X2-MM THK)	
M	18	1	**8T-4138**	1	BOLT (M6X1X20-MM)	
M	19	1	**129-3178**	3	LOCKNUT (M6X1-THD)	

B-USE AS REQUIRED
M-METRIC PART
Y-SEPARATE ILLUSTRATION

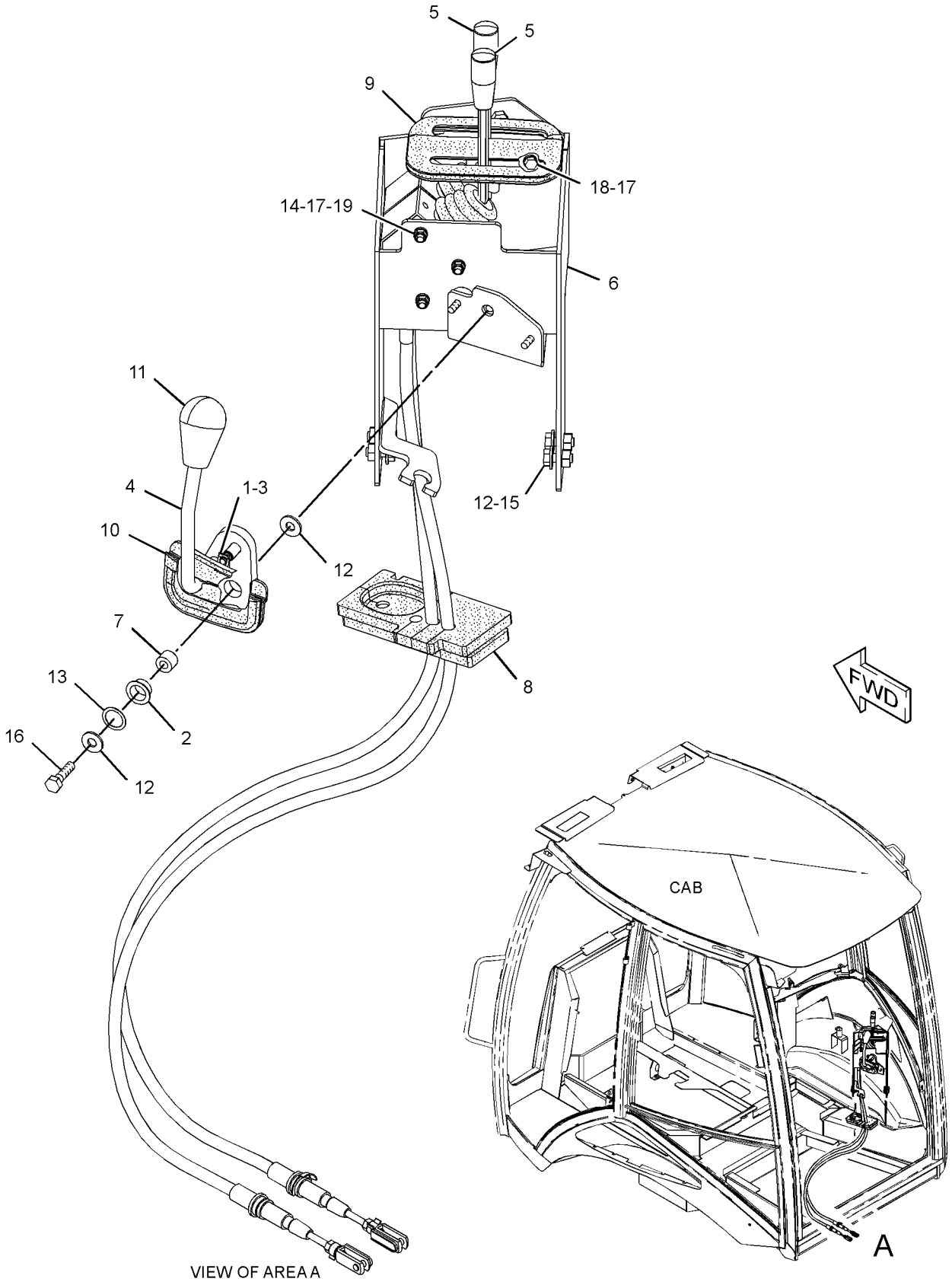

GRAPHIC #1 **<END>** g01407908

OPERATOR STATION

206-1645 CONTROL GP-HYDRAULIC HAND–LOADER

S/N: LMS1-UP
PART OF 209-9943 VALVE AR-BANK 2
AN ATTACHMENT

SMCS-5063 **i03500265**

NOTE	REF NO	GRAPHIC REF	PART NUMBER	QTY	PART NAME 1 2 3 4 5 6 (PRODUCT LEVEL)	SEE PAGE
B	1	1	**1K-0502**	7	WASHER (16.3X25.4X1.2-MM THK)	
	2	1	**2R-0364**	3	RING-RETAINING	
M	3	1	**8T-4137**	2	BOLT (M10X1.5X20-MM)	
	4	1	**5H-3193**	1	PIN-SPRING	
	5	1	**9R-1765**	1	COVER-TOP (TOP)	
	6	1	**9R-1766**	1	COVER-BOTTOM	
	7	1	**9R-1767**	1	BOOT	
	8	1	**9R-9868**	1	SWITCH GP-PUSH BUTTON (NEUTRALIZER, DOWNSHIFT)	
		1	**9W-0625**	1	SWITCH AS-PUSH BUTTON (PUSH BUTTON)	
		1	**9X-3401**	2	PIN-CONNECTOR (16-GA TO 18-GA)	
M	9	1	**9X-2065**	2	NUT (M10X1.5-THD, LH)	
	10	1	**107-5591**	1	NUT-JAM (3/4-16-THD)	
M	11	1	**134-0453**	2	TURNBUCKLE	
	12	1	**164-1368**	12	FASTENER-PANEL	
	13	1	**183-3135**	1	JOINT AS	
	14	1	**183-3137**	1	PIN	
	15	1	**206-1695**	1	BOOT	
	16	1	**209-3363**	1	ROD	
	17	1	**291-5108**	1	GASKET	
	18	1	**216-3358**	1	DAMPER AS (SPRING)	
		1	**095-9230**	1	PIN-SPRING	
		1	**183-3132**	1	CYLINDER	
	19	1	**216-3351**	1	ROD	
	20	1	**220-0269**	1	SHAFT	
	21	1	**230-2510**	1	LEVER AS	
	22	1	**269-8129**	1	BRACKET AS	
	23	1	**269-8817**	1	PLATE	
	24	1	**270-2795**	1	PLATE	
	25	1	**272-7104**	1	ROD	
	26	1	**275-8869**	1	BRACKET AS	
	27	1	**179-8235**	1	LOCK PIN	
	28	1	**102-8802**	1	KIT-RECEPTACLE (2-PIN)	
					(INCLUDES RECEPTACLE AS & WEDGE)	
M	29	1	**6V-7744**	4	LOCKNUT (M10X1.5-THD)	
	30	1	**7X-7729**	4	WASHER (11X25X3-MM THK)	
	31	1	**8C-4987**	1	PIN-CLEVIS	
	32	1	**8T-4121**	1	WASHER-HARD (11X21X2.5-MM THK)	
M	33	1,1	**8T-4133**	6	NUT (M10X1.5-THD)	
M	34	1	**8T-4136**	1	BOLT (M10X1.5X25-MM)	
M	35	1	**8T-4189**	4	BOLT (M8X1.25X20-MM)	
	36	1	**5P-4116**	4	WASHER-HARD (8.8X20.5X2-MM THK)	
	37	1	**8T-4773**	2	BALL JOINT	
	38	1	**8T-4815**	2	ROD END	
	39	1	**8T-9501**	2	SCREW (10-16X0.75-IN)	
	40	1	**9R-2807**	1	CLIP	
	41	1	**9R-3067**	1	PIN	
M	42	1	**9X-2040**	2	SCREW-TRUSS HEAD (M10X1.5X25-MM)	
E	43	1	**3E-6600**		SEAL (70-CM)	

B-USE AS REQUIRED
E-ORDER BY THE CENTIMETER
M-METRIC PART

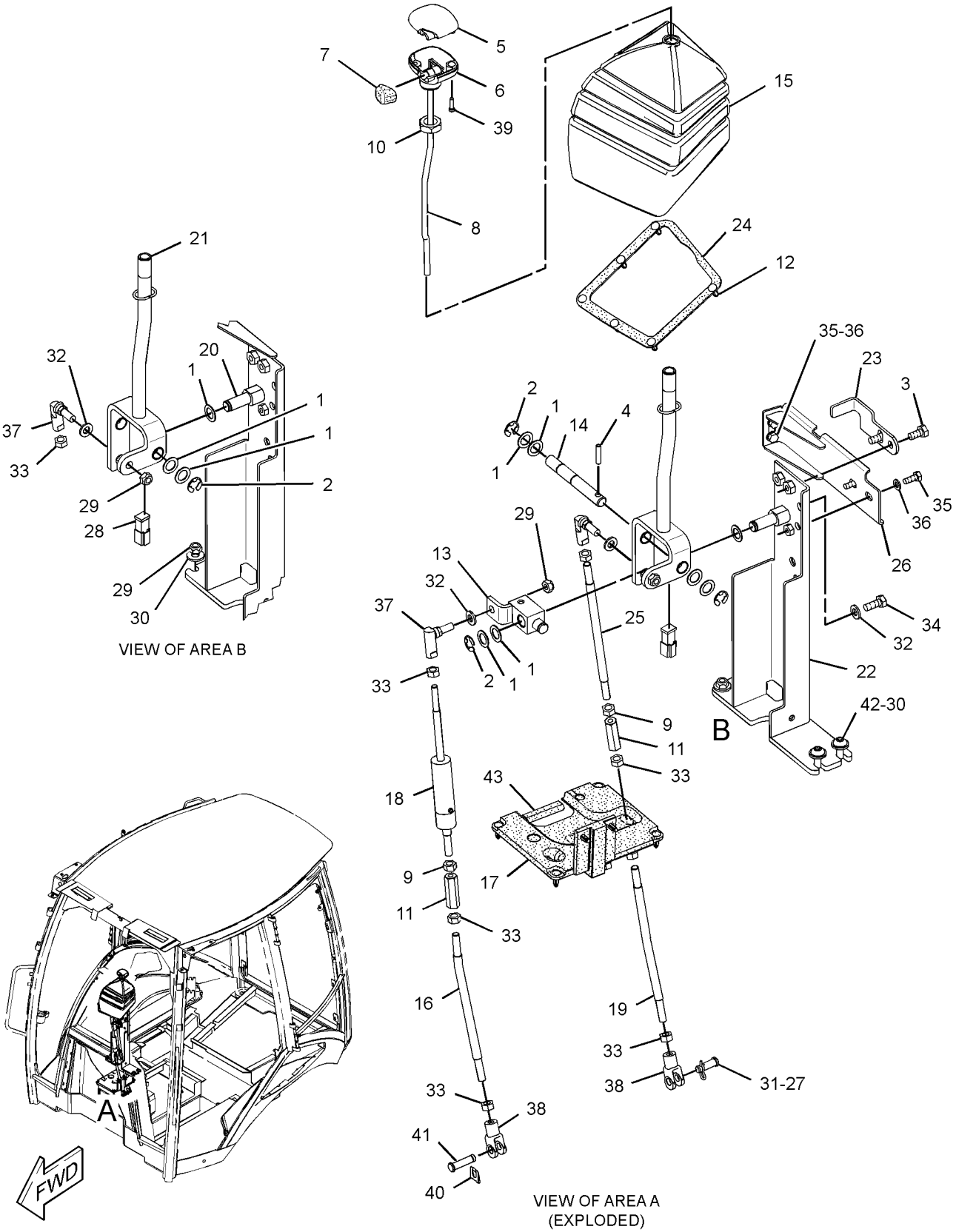

GRAPHIC #1

<END>

g01300494

OPERATOR STATION

209-3364 CONTROL GP-HYDRAULIC HAND–LOADER

S/N: LMS1-UP

PART OF 317-1463 VALVE AR-BANK 3

AN ATTACHMENT

SMCS-5063 **i03318831**

NOTE	REF NO	GRAPHIC REF	PART NUMBER	QTY	PART NAME 1 2 3 4 5 6 (PRODUCT LEVEL)	SEE PAGE
B	1	1	**1K-0502**	10	WASHER (16.3X25.4X1.2-MM THK)	
	2	1	**2R-0364**	4	RING-RETAINING	
M	3	1	**9X-2040**	2	SCREW-TRUSS HEAD (M10X1.5X25-MM)	
	4	1	**5H-3193**	1	PIN-SPRING	
	5	1	**9R-1765**	1	COVER-TOP (TOP)	
	6	1	**9R-1766**	1	COVER-BOTTOM	
	7	1	**9R-1767**	1	BOOT	
	8	1	**9R-9868**	1	SWITCH GP-PUSH BUTTON (NEUTRALIZER, DOWNSHIFT)	
BD		1	**6V-2689**		TUBE-HEAT SHRINK (6.35-MM DIA)	
		1	**9W-0625**	1	SWITCH AS-PUSH BUTTON (PUSH BUTTON)	
M	9	1	**9X-2065**	3	NUT (M10X1.5-THD, LH)	
	10	1	**107-5591**	1	NUT-JAM (3/4-16-THD)	
M	11	1	**134-0453**	3	TURNBUCKLE	
	12	1	**164-1368**	12	FASTENER-PANEL	
	13	1	**183-3135**	1	JOINT AS	
	14	1	**183-3137**	1	PIN	
	15	1	**206-1668**	1	BOOT	
	16	1	**209-3363**	1	ROD	
	17	1	**216-3350**	1	ROD	
	18	1	**216-3351**	1	ROD	
	19	1	**216-3358**	1	DAMPER AS (SPRING)	
		1	**095-9230**	1	PIN-SPRING	
		1	**183-3132**	1	CYLINDER	
	20	1	**291-5108**	1	GASKET	
	21	1	**220-0269**	1	SHAFT	
	22	1	**220-3251**	1	ROD	
	23	1	**230-2510**	1	LEVER AS	
	24	1	**230-3038**	1	LEVER AS	
	25	1	**269-8129**	1	BRACKET AS	
	26	1	**269-8817**	1	PLATE	
	27	1	**270-2795**	1	PLATE	
	28	1	**272-7104**	1	ROD	
	29	1	**275-8869**	1	BRACKET AS	
	30	1	**164-1395**	1	KNOB	
	31	1	**179-8235**	2	LOCK PIN	
	32	1	**102-8802**	1	KIT-RECEPTACLE (2-PIN) (INCLUDES RECEPTACLE AS & WEDGE)	
M	33	1	**6V-7744**	4	LOCKNUT (M10X1.5-THD)	
	34	1	**7X-7729**	4	WASHER (11X25X3-MM THK)	
	35	1	**8C-4987**	2	PIN-CLEVIS	
	36	1	**8T-4121**	4	WASHER-HARD (11X21X2.5-MM THK)	
M	37	1	**8T-4133**	9	NUT (M10X1.5-THD)	
M	38	1	**8T-4136**	1	BOLT (M10X1.5X25-MM)	
M	39	1	**8T-4137**	2	BOLT (M10X1.5X20-MM)	
M	40	1	**8T-4189**	4	BOLT (M8X1.25X20-MM)	
	41	1	**5P-4116**	4	WASHER-HARD (8.8X20.5X2-MM THK)	
	42	1	**8T-4773**	3	BALL JOINT	
	43	1	**8T-4815**	3	ROD END	
	44	1	**8T-9501**	2	SCREW (10-16X0.75-IN)	
	45	1	**9R-2807**	1	CLIP	
	46	1	**9R-3067**	1	PIN	
E	47	1	**3E-6600**		SEAL (7-CM)	

B-USE AS REQUIRED
D-ORDER BY THE METER
E-ORDER BY THE CENTIMETER
M-METRIC PART

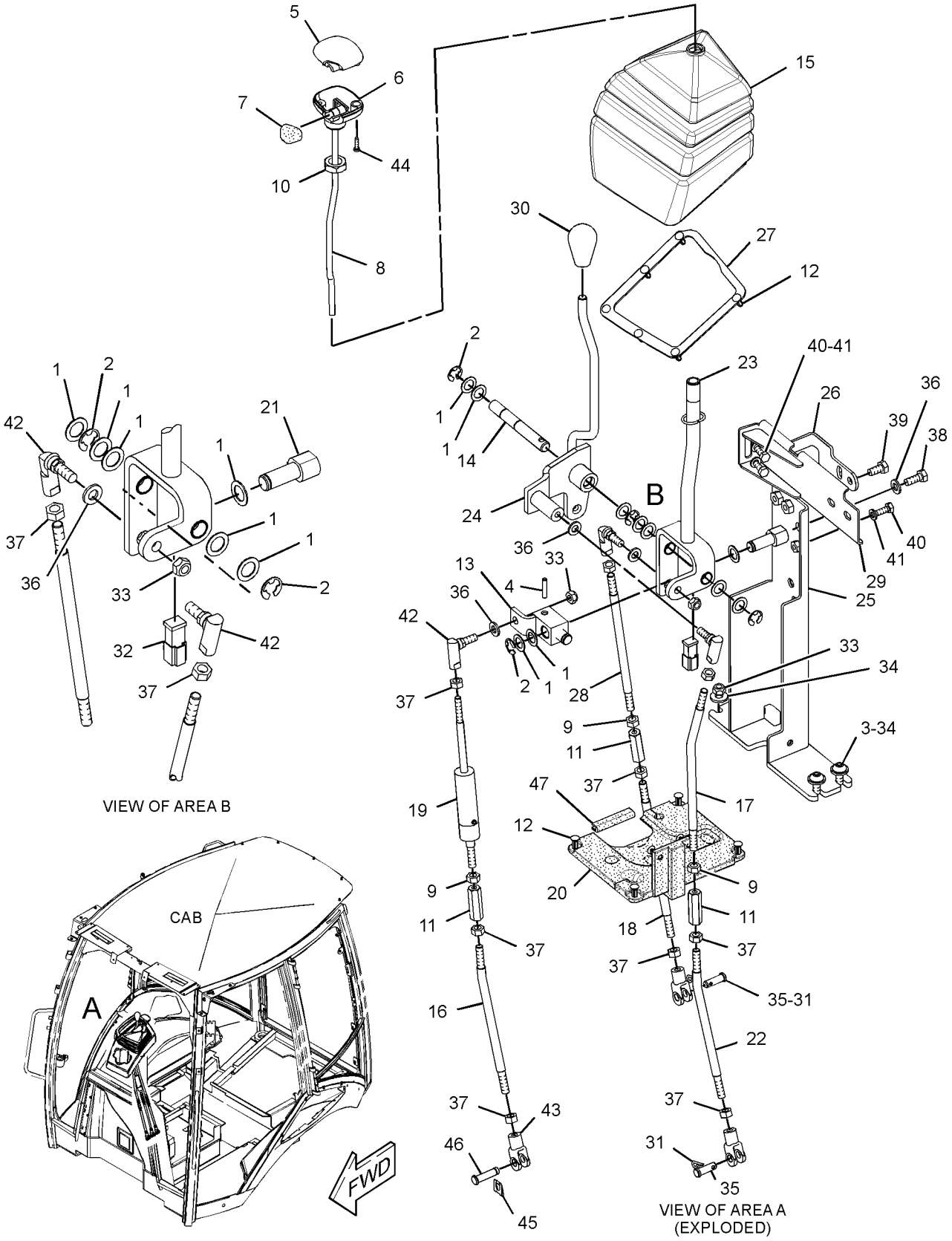

GRAPHIC #1

<END>

g01314431

OPERATOR STATION

209-3370 CONTROL GP-HYDRAULIC HAND–STANDARD

S/N: LMS1-UP

PART OF 357-0413, 357-0414, 357-0415, 357-0416, 357-0417 OPTION AR-BACKHOE AN ATTACHMENT

SMCS-5063 **i03866771**

NOTE	REF NO	GRAPHIC REF	PART NUMBER	QTY	PART NAME 1 2 3 4 5 6 (PRODUCT LEVEL)	SEE PAGE
	1	1	**164-1361**	2	BOOT	
	2	1	**164-1371**	2	PLATE	
	3	1	**164-1399**	2	KNOB	
	4	1	**164-1409**	1	LEVER AS (RH)	
	5	1	**164-1411**	1	LEVER AS (LH)	
	6	1	**164-1435**	2	PLATE	
	7	1	**170-6312**	4	BEARING	
	8	1	**190-5130**	1	FILM-INSTRUCTION (BACKHOE)	
	9	1	**206-1672**	1	CONSOLE	
	10	1	**206-1673**	1	CONSOLE AS	
		1	**172-8591**	2	NUT-SPRING	
	11	1	**303-9307**	4	ROD	
	12	1	**209-3353**	1	TOWER AS	
	13	1	**209-3368**	1	GASKET	
	14	1	**164-1402**	2	SLEEVE	
	15	1	**164-1404**	2	SPACER (10.67X16.95X23-MM THK)	
	16	1	**179-8235**	4	LOCK PIN	
M	17	1	**6V-7744**	8	LOCKNUT (M10X1.5-THD)	
	18	1	**7X-7729**	8	WASHER (11X25X3-MM THK)	
	19	1	**8C-4987**	4	PIN-CLEVIS	
	20	1	**8T-4121**	8	WASHER-HARD (11X21X2.5-MM THK)	
M	21	1	**8T-4133**	8	NUT (M10X1.5-THD)	
M	22	1	**8T-4138**	6	BOLT (M6X1X20-MM)	
M	23	1	**8T-4172**	2	BOLT (M10X1.5X80-MM)	
M	24	1	**8T-4195**	2	BOLT (M10X1.5X30-MM)	
	25	1	**8T-4773**	4	BALL JOINT	
	26	1	**8T-4815**	4	ROD END	
M	27	1	**8T-6466**	2	BOLT (M10X1.5X60-MM)	
	28	1	**9R-9901**	6	FASTENER (CLIP)	
	29	1	**9X-2038**	4	WASHER (7X19X2-MM THK)	
M	30	1	**9X-2045**	6	SCREW-TRUSS HEAD (M6X1X20-MM)	
	31	1	**9X-8256**	6	WASHER (6.6X12X2-MM THK)	

M-METRIC PART

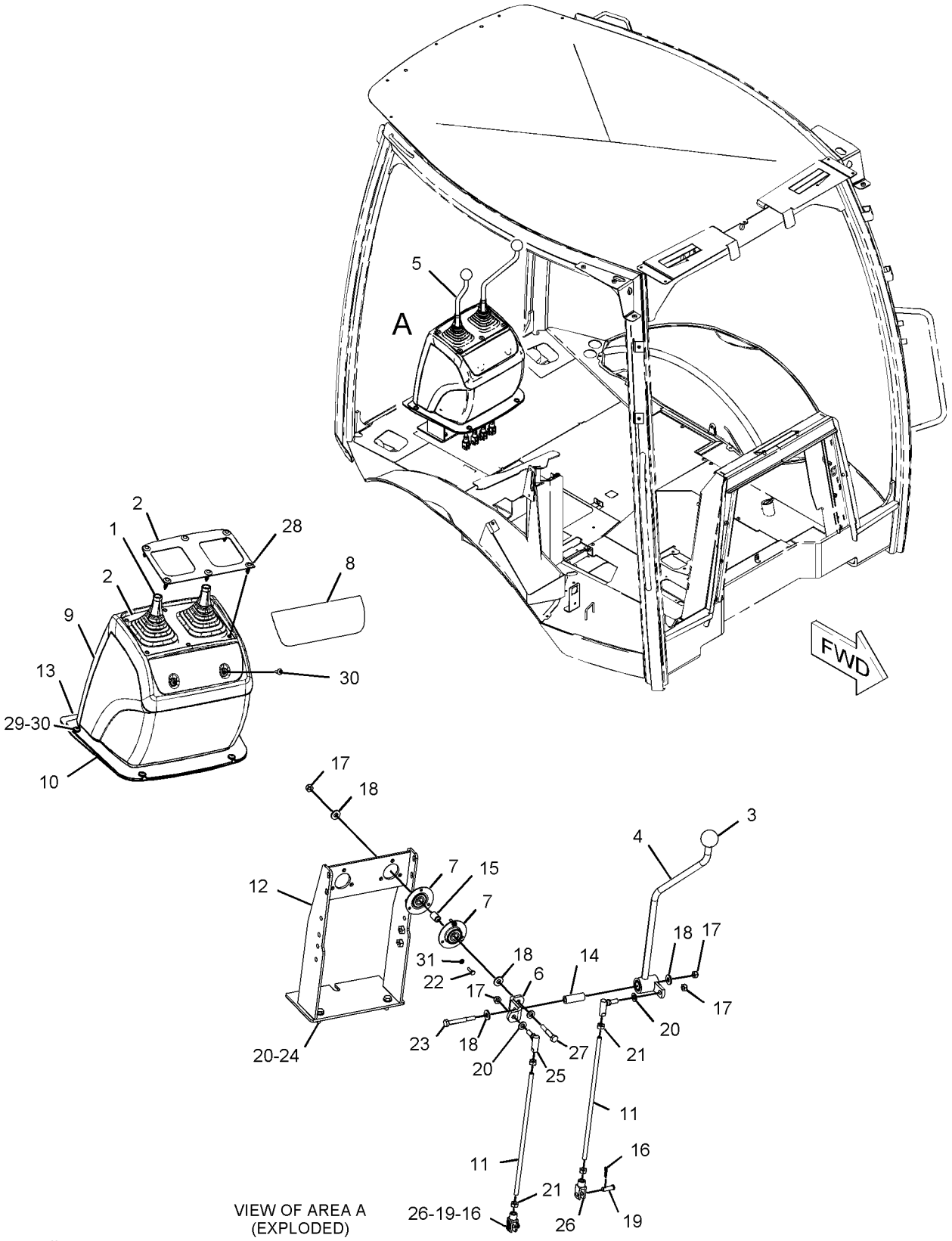

VIEW OF AREA A
(EXPLODED)

GRAPHIC #1

<END>

g01080443

OPERATOR STATION

209-3371 CONTROL GP-HYDRAULIC HAND–

4-FUNCTION, EXCAVATOR

S/N: LMS1-UP

AN ATTACHMENT

SMCS-5063 **i03866772**

NOTE	REF NO	GRAPHIC REF	PART NUMBER	QTY	PART NAME 1 2 3 4 5 6 (PRODUCT LEVEL)	SEE PAGE
	1	1	**142-7405**	2	COLLAR	
	2	1	**164-1361**	2	BOOT	
	3	1	**164-1371**	2	PLATE	
	4	1	**164-1399**	2	KNOB	
	5	1	**164-1409**	1	LEVER AS (RH)	
	6	1	**164-1411**	1	LEVER AS (LH)	
	7	1	**164-1421**	1	PLATE	
	8	1	**164-1422**	1	SHAFT AS	
	9	1	**164-1425**	1	COUPLER AS	
	10	1	**164-1429**	1	COUPLER AS	
	11	1	**164-1435**	2	PLATE	
	12	1	**164-1438**	2	ROD	
	13	1	**170-6312**	4	BEARING	
	14	1	**190-5128**	1	FILM-INSTRUCTION (EXCAVATOR CONTROL)	
	15	1	**206-1672**	1	CONSOLE	
	16	1	**206-1673**	1	CONSOLE AS	
		1	**172-8591**	2	NUT-SPRING	
	17	1	**303-9308**	2	ROD	
	18	1	**303-9309**	2	ROD	
	19	1	**209-3353**	1	TOWER AS	
	20	1	**231-2878**	1	GASKET	
	21	1	**164-1402**	2	SLEEVE	
	22	1	**164-1404**	2	SPACER (10.67X16.95X23-MM THK)	
M	23	1	**6V-7744**	14	LOCKNUT (M10X1.5-THD)	
M	24	1	**6V-8932**	2	SETSCREW-SOCKET (M6X1X10-MM)	
	25	1	**7X-7729**	8	WASHER (11X25X3-MM THK)	
	26	1	**8T-4121**	20	WASHER-HARD (11X21X2.5-MM THK)	
M	27	1	**8T-4133**	16	NUT (M10X1.5-THD)	
M	28	1	**8T-4138**	6	BOLT (M6X1X20-MM)	
M	29	1	**8T-4172**	2	BOLT (M10X1.5X80-MM)	
M	30	1	**8T-4195**	6	BOLT (M10X1.5X30-MM)	
	31	1	**8T-4773**	10	BALL JOINT	
	32	1	**8T-4815**	2	ROD END	
M	33	1	**8T-6466**	2	BOLT (M10X1.5X60-MM)	
	34	1	**9R-2806**	2	PIN	
	35	1	**9R-2807**	2	CLIP	
	36	1	**9R-9901**	6	FASTENER (CLIP)	
	37	1	**9X-2038**	4	WASHER (7X19X2-MM THK)	
M	38	1	**9X-2045**	6	SCREW-TRUSS HEAD (M6X1X20-MM)	
	39	1	**9X-8256**	6	WASHER (6.6X12X2-MM THK)	

M-METRIC PART

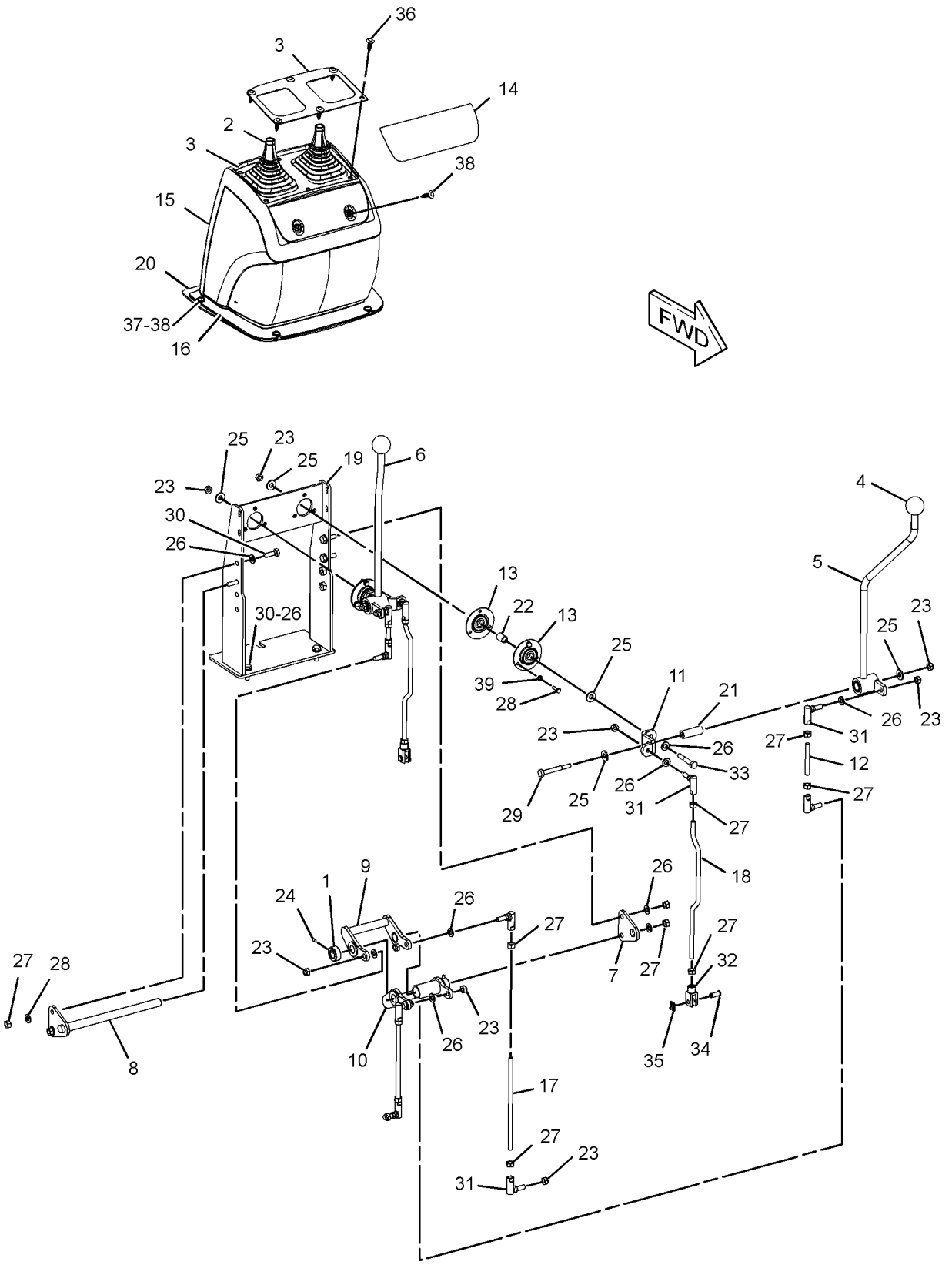

GRAPHIC #1 **<END>** g01167264

OPERATOR STATION

221-3006 CONTROL GP-HYDRAULIC HAND–STABILIZER

S/N: LMS1-UP
PART OF 221-3002 CONTROL & MTG GP-STABILIZER
AN ATTACHMENT

SMCS-5063 **i02736354**

NOTE	REF NO	GRAPHIC REF	PART NUMBER	QTY	PART NAME 1 2 3 4 5 6 (PRODUCT LEVEL)	SEE PAGE
	1	1	**228-4592**	1	KNOB	
	2	1	**228-4593**	1	GAITER	
	3	1	**228-4597**	1	CLIP	
	4	1	**232-3072**	1	CABLE AS	
M	5	1	**5C-2890**	1	NUT (M6X1-THD)	

M-METRIC PART

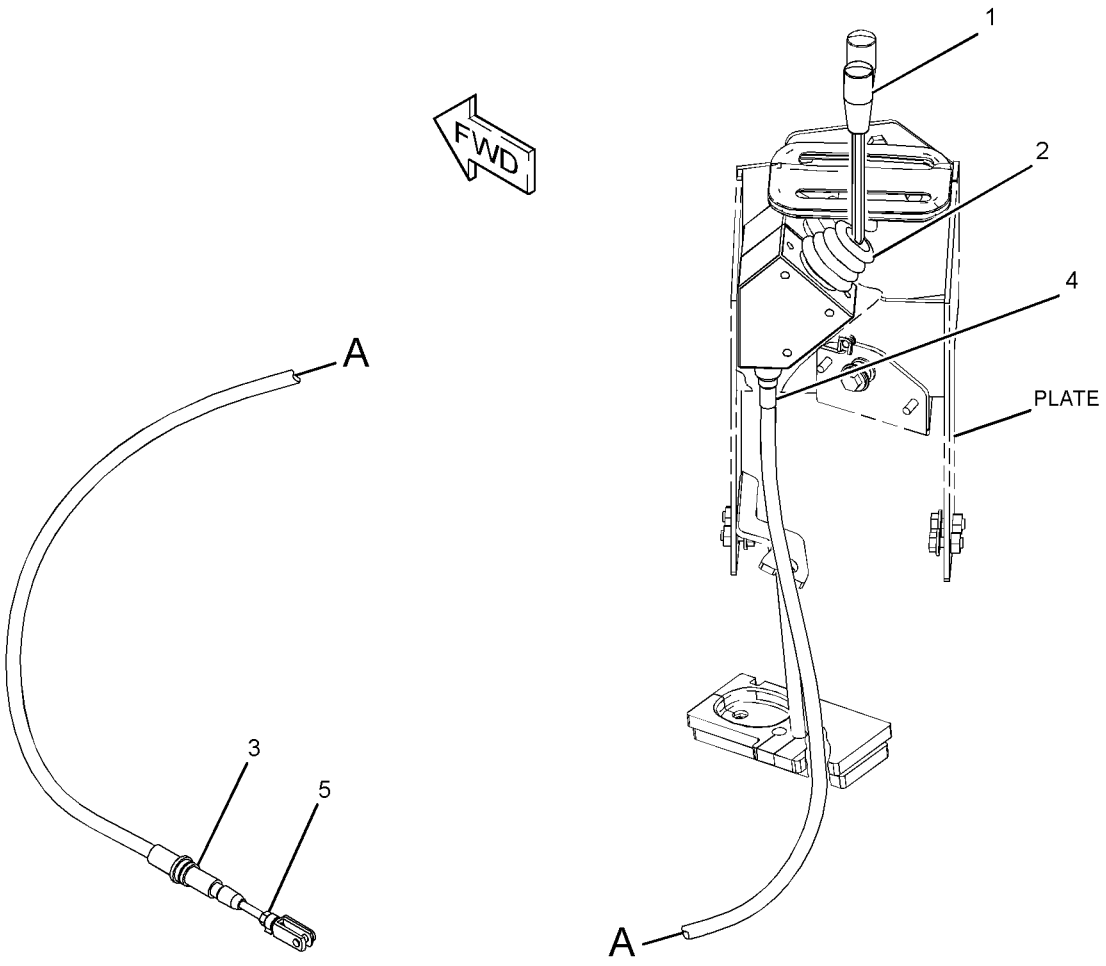

GRAPHIC #1 **<END>** g01390516

OPERATOR STATION

258-8346 CONTROL GP-HYDRAULIC HAND–KIT, BACKHOE

S/N: LMS1-UP

AN ATTACHMENT

SMCS-5063 **i03865253**

NOTE	REF NO	GRAPHIC REF	PART NUMBER	QTY	PART NAME 1 2 3 4 5 6 (PRODUCT LEVEL)	SEE PAGE
	1	1	**164-1361**	2	BOOT	
	2	1	**164-1371**	2	PLATE	
	3	1	**164-1399**	2	KNOB	
	4	1	**164-1409**	1	LEVER AS (RH)	
	5	1	**164-1411**	1	LEVER AS (LH)	
	6	1	**164-1435**	2	PLATE	
	7	1	**170-6312**	4	BEARING	
	8	1	**190-5130**	1	FILM-INSTRUCTION (BACKHOE)	
	9	1	**206-1672**	1	CONSOLE (REAR)	
	10	1	**206-1673**	1	CONSOLE AS (REAR)	
		1	**172-8591**	2	NUT-SPRING	
	11	1	**209-3348**	4	ROD	
	12	1	**209-3353**	1	TOWER AS	
	13	1	**209-3368**	1	GASKET	
	14	1	**164-1402**	2	SLEEVE	
	15	1	**164-1404**	2	SPACER (10.67X16.95X23-MM THK)	
	16	1	**179-8235**	4	LOCK PIN	
M	17	1	**6V-7744**	8	LOCKNUT (M10X1.5-THD)	
	18	1	**7X-7729**	8	WASHER (11X25X3-MM THK)	
	19	1	**8C-4987**	4	PIN-CLEVIS	
	20	1	**8T-4121**	8	WASHER-HARD (11X21X2.5-MM THK)	
M	21	1	**8T-4133**	8	NUT (M10X1.5-THD)	
M	22	1	**8T-4138**	6	BOLT (M6X1X20-MM)	
M	23	1	**8T-4172**	2	BOLT (M10X1.5X80-MM)	
M	24	1	**8T-4195**	2	BOLT (M10X1.5X30-MM)	
	25	1	**8T-4773**	4	BALL JOINT	
	26	1	**8T-4815**	4	ROD END	
M	27	1	**8T-6466**	2	BOLT (M10X1.5X60-MM)	
	28	1	**9R-9901**	6	FASTENER (CLIP)	
	29	1	**9X-2038**	4	WASHER (7X19X2-MM THK)	
M	30	1	**9X-2045**	6	SCREW-TRUSS HEAD (M6X1X20-MM)	
	31	1	**9X-8256**	6	WASHER (6.6X12X2-MM THK)	

M-METRIC PART

258-8346 CONTROL GP-HYDRAULIC HAND *(contd.)* i03865253

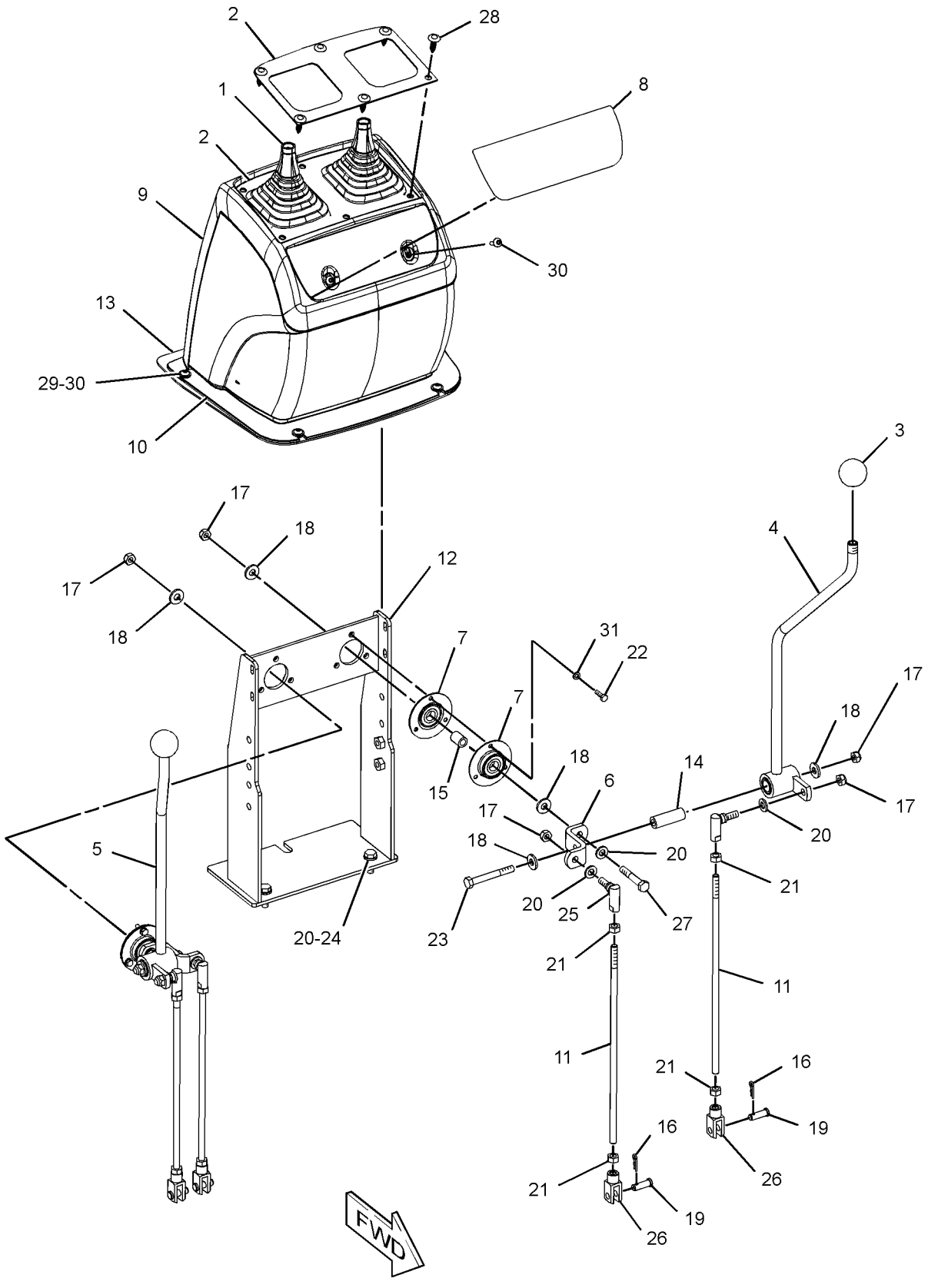

GRAPHIC #1 **<END>** g01807120

OPERATOR STATION

303-8311 CONTROL GP-HYDRAULIC HAND

S/N: LMS1-UP

AN ATTACHMENT

SMCS-5063 **i03901050**

NOTE	REF NO	GRAPHIC REF	PART NUMBER	QTY	PART NAME 1 2 3 4 5 6 (PRODUCT LEVEL)	SEE PAGE
	1	1	**8T-4773**	4	BALL JOINT	
	2	1	**8T-4815**	4	ROD END	
	3	1	**9R-9901**	6	FASTENER (CLIP)	
	4	1	**164-1361**	2	BOOT	
	5	1	**164-1371**	2	PLATE	
	6	1	**164-1399**	2	KNOB	
	7	1	**164-1409**	1	LEVER AS (RH)	
	8	1	**164-1411**	1	LEVER AS (LH)	
	9	1	**164-1435**	2	PLATE	
	10	1	**170-6312**	4	BEARING	
	11	1	**179-8235**	4	LOCK PIN	
	12	1	**190-5130**	1	FILM-INSTRUCTION (BACKHOE)	
	13	1	**206-1672**	1	CONSOLE	
	14	1	**206-1673**	1	CONSOLE AS	
		1	**172-8591**	2	NUT-SPRING	
	15	1	**209-3353**	1	TOWER AS	
	16	1	**209-3368**	1	GASKET	
	17	1	**303-9307**	4	ROD	
	18	1	**164-1402**	2	SLEEVE	
	19	1	**164-1404**	2	SPACER (10.67X16.95X23-MM THK)	
M	20	1	**6V-7744**	8	LOCKNUT (M10X1.5-THD)	
	21	1	**7X-7729**	8	WASHER (11X25X3-MM THK)	
	22	1	**8C-4987**	4	PIN-CLEVIS	
	23	1	**8T-4121**	8	WASHER-HARD (11X21X2.5-MM THK)	
M	24	1	**8T-4133**	8	NUT (M10X1.5-THD)	
M	25	1	**8T-4138**	6	BOLT (M6X1X20-MM)	
M	26	1	**8T-4172**	2	BOLT (M10X1.5X80-MM)	
M	27	1	**8T-4195**	2	BOLT (M10X1.5X30-MM)	
M	28	1	**8T-6466**	2	BOLT (M10X1.5X60-MM)	
	29	1	**9X-2038**	4	WASHER (7X19X2-MM THK)	
M	30	1	**9X-2045**	6	SCREW-TRUSS HEAD (M6X1X20-MM)	
	31	1	**9X-8256**	6	WASHER (6.6X12X2-MM THK)	

M-METRIC PART

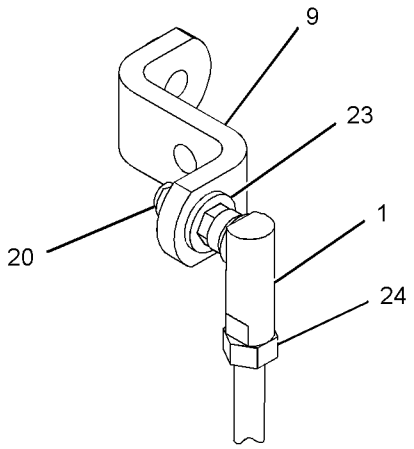

VIEW OF AREA B
(LEVER AND BEARING REMOVED FOR CLARITY)

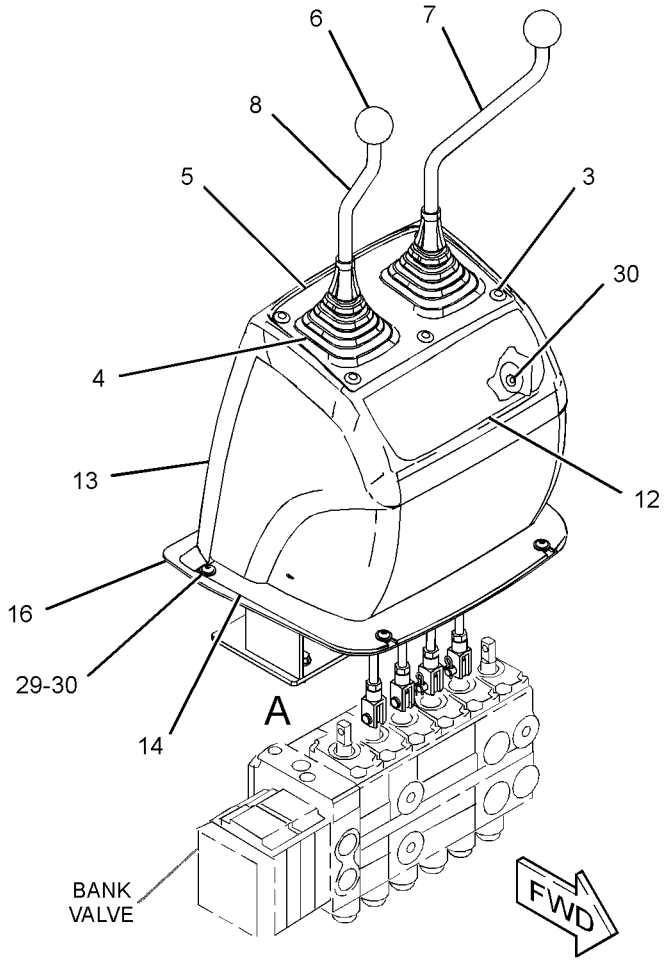

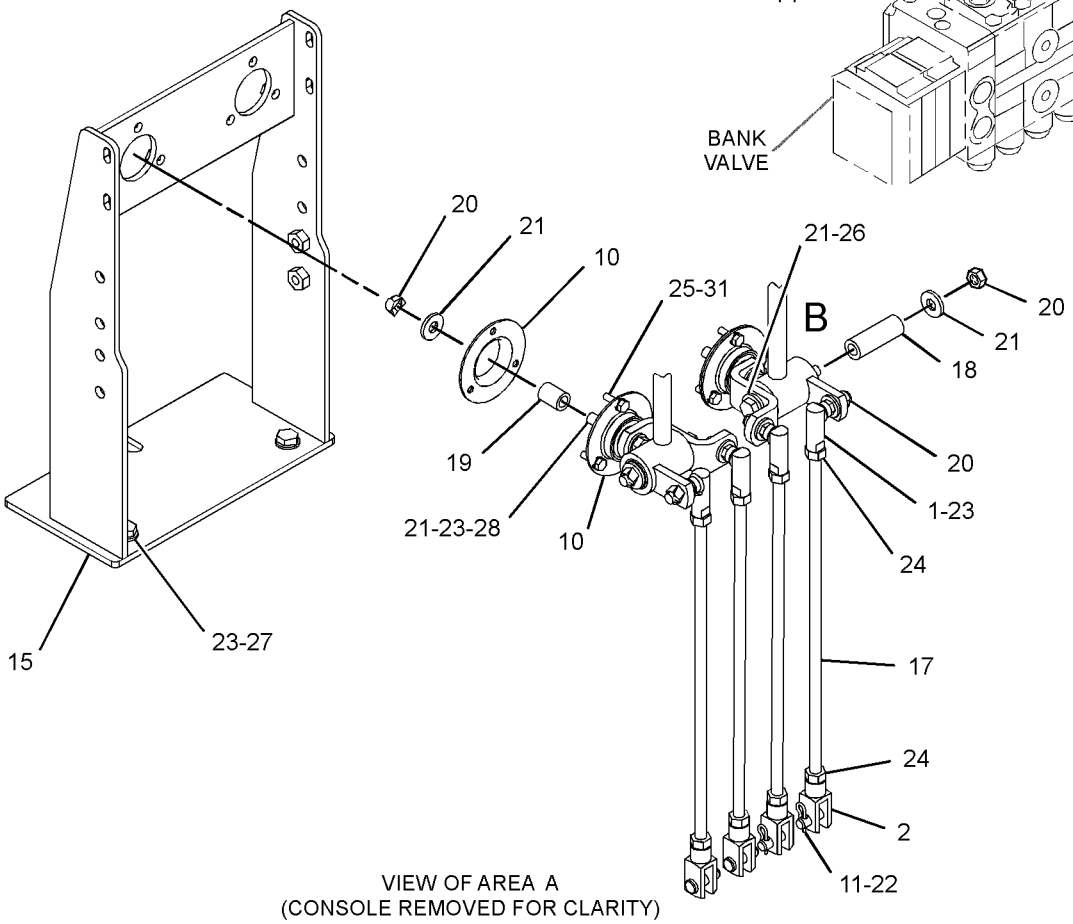

VIEW OF AREA A
(CONSOLE REMOVED FOR CLARITY)

GRAPHIC #1 **<END>** g02145557

OPERATOR STATION

303-8312 CONTROL GP-HYDRAULIC HAND

S/N: LMS1-UP

AN ATTACHMENT

SMCS-5063 **i03901051**

NOTE	REF NO	GRAPHIC REF	PART NUMBER	QTY	PART NAME 1 2 3 4 5 6 (PRODUCT LEVEL)	SEE PAGE
	1	1	**8T-4773**	10	BALL JOINT	
	2	1	**8T-4815**	2	ROD END	
	3	1	**9R-9901**	6	FASTENER (CLIP)	
	4	1	**142-7405**	2	COLLAR	
	5	1	**164-1361**	2	BOOT	
	6	1	**164-1371**	2	PLATE	
	7	1	**164-1399**	2	KNOB	
	8	1	**164-1409**	1	LEVER AS (RH)	
	9	1	**164-1411**	1	LEVER AS (LH)	
	10	1	**164-1421**	1	PLATE	
	11	1	**164-1422**	1	SHAFT AS	
	12	1	**164-1425**	1	COUPLER AS	
	13	1	**164-1429**	1	COUPLER AS	
	14	1	**164-1435**	2	PLATE	
	15	1	**164-1438**	2	ROD	
	16	1	**170-6312**	4	BEARING	
	17	1	**190-5128**	1	FILM-INSTRUCTION (EXCAVATOR CONTROL)	
	18	1	**206-1672**	1	CONSOLE	
	19	1	**206-1673**	1	CONSOLE AS	
		1	**172-8591**	2	NUT-SPRING	
	20	1	**209-3353**	1	TOWER AS	
	21	1	**231-2878**	1	GASKET	
	22	1	**303-9308**	2	ROD	
	23	1	**303-9309**	2	ROD	
	24	1	**164-1402**	2	SLEEVE	
	25	1	**164-1404**	2	SPACER (10.67X16.95X23-MM THK)	
M	26	1	**6V-7744**	14	LOCKNUT (M10X1.5-THD)	
M	27	1	**6V-8932**	2	SETSCREW-SOCKET (M6X1X10-MM)	
	28	1	**7X-7729**	8	WASHER (11X25X3-MM THK)	
	29	1	**8T-4121**	20	WASHER-HARD (11X21X2.5-MM THK)	
M	30	1	**8T-4133**	16	NUT (M10X1.5-THD)	
M	31	1	**8T-4138**	6	BOLT (M6X1X20-MM)	
M	32	1	**8T-4172**	2	BOLT (M10X1.5X80-MM)	
M	33	1	**8T-4195**	6	BOLT (M10X1.5X30-MM)	
M	34	1	**8T-6466**	2	BOLT (M10X1.5X60-MM)	
	35	1	**9R-2806**	2	PIN	
	36	1	**9R-2807**	2	CLIP	
	37	1	**9X-2038**	4	WASHER (7X19X2-MM THK)	
M	38	1	**9X-2045**	6	SCREW-TRUSS HEAD (M6X1X20-MM)	
	39	1	**9X-8256**	6	WASHER (6.6X12X2-MM THK)	

M-METRIC PART

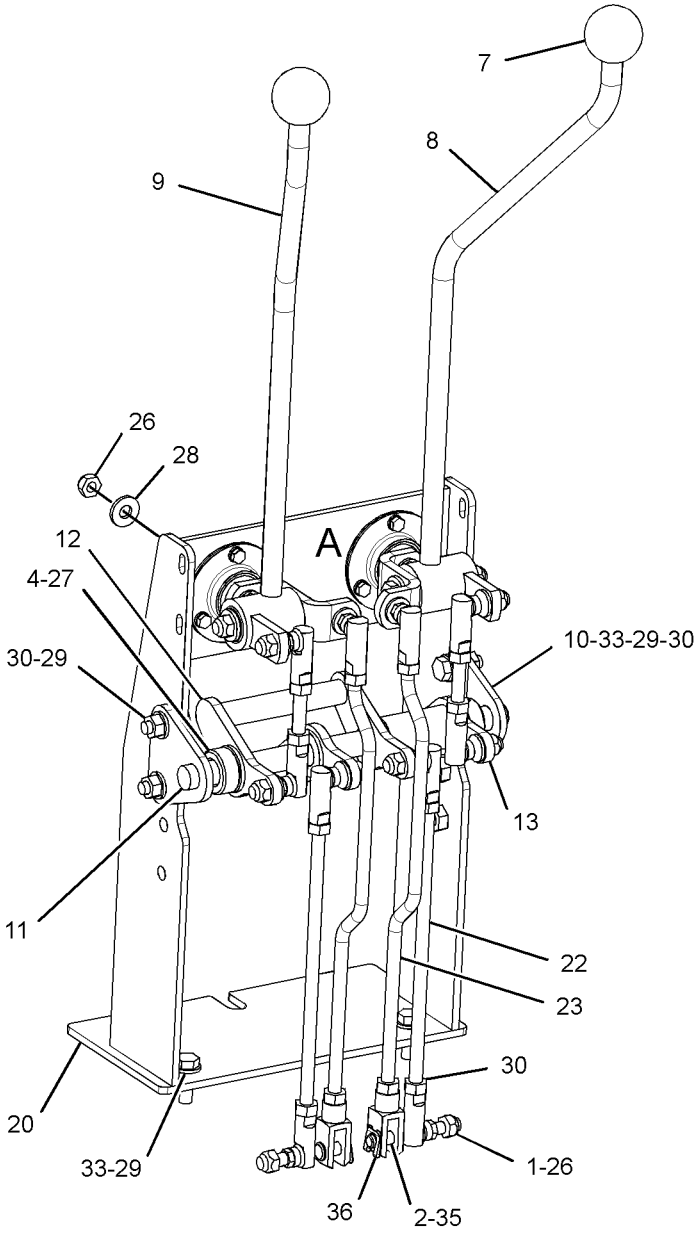

(CONSOLE REMOVED FOR CLARITY)

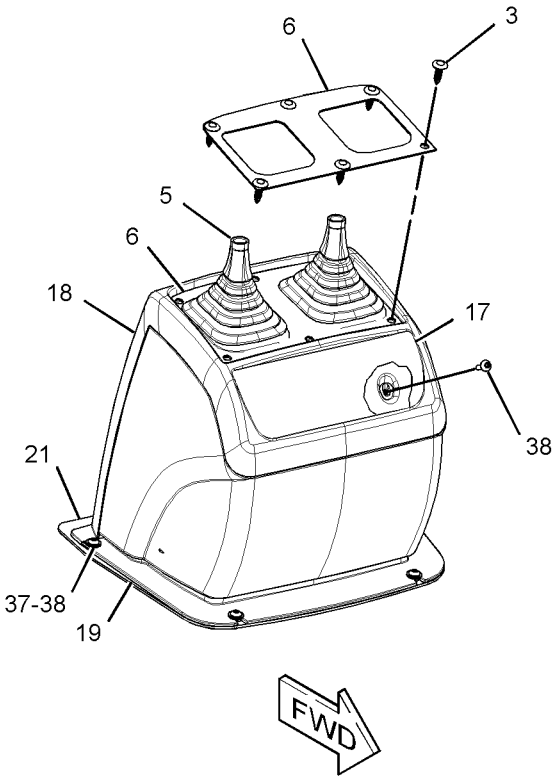

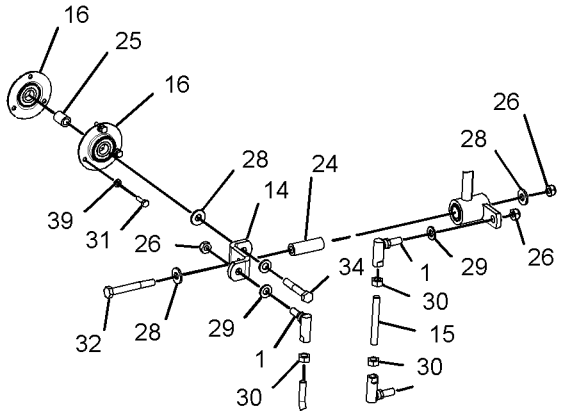

VIEW OF AREA A
(EXPLODED)

GRAPHIC #1 **<END>** g02144718

OPERATOR STATION

106-2404 CONTROL GP-HYDRAULIC LOCKOUT

S/N: LMS1-UP

AN ATTACHMENT

SMCS-5001 **i00535073**

NOTE	REF NO	GRAPHIC REF	PART NUMBER	QTY	PART NAME 1 2 3 4 5 6 (PRODUCT LEVEL)	SEE PAGE
	1	1	**106-2405**	1	PLATE AS	
	2	1	**106-2409**	1	PIN	
M	3	1	**8T-4136**	2	BOLT (M10X1.5X25-MM)	
	4	1	**8T-4223**	2	WASHER-HARD (13.5X25.5X3-MM THK)	

M-METRIC PART

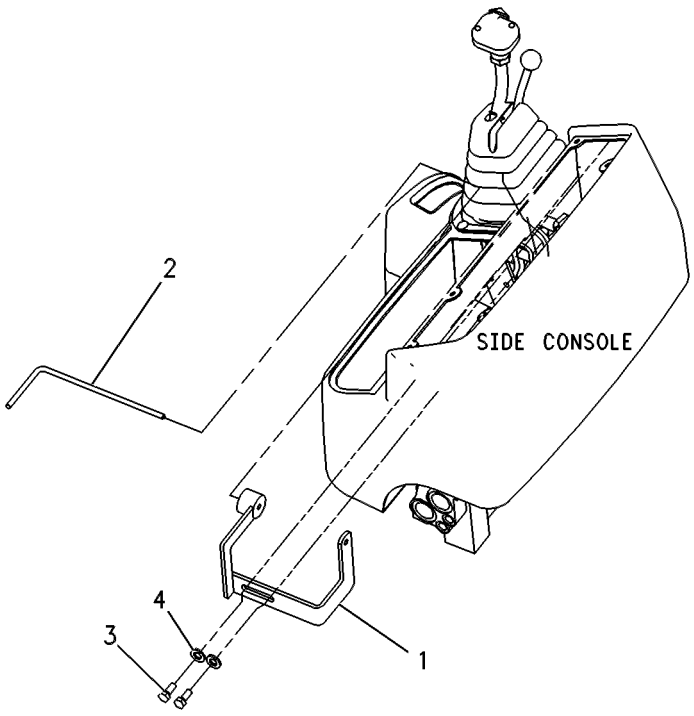

GRAPHIC #1 **<END>** g00131793

OPERATOR STATION

209-3365 CONTROL GP-HYDRAULIC PEDAL–

SINGLE FUNCTION, LH

S/N: LMS1-UP

PART OF 212-0206 VALVE AR-BANK 8

AN ATTACHMENT

SMCS-5063 **i03866773**

NOTE	REF NO	GRAPHIC REF	PART NUMBER	QTY	PART NAME 1 2 3 4 5 6 (PRODUCT LEVEL)	SEE PAGE
	1	1	**8T-4815**	1	ROD END (YOKE)	
	2	1	**8T-6431**	1	ROD END (BEARING)	
	3	1	**164-1547**	1	SHAFT AS	
	4	1	**179-8235**	1	LOCK PIN	
	5	1	**303-9310**	1	ROD	
	6	1	**231-2877**	1	PEDAL AS (LH)	
	7	1	**232-1536**	1	SUPPORT AS	
	8	1	**232-1540**	1	SEAL	
M	9	1	**6V-7744**	1	LOCKNUT (M10X1.5-THD)	
M	10	1	**161-7632**	1	BOLT-SELF-LOCKING (M10X1.5X40-MM)	
	11	1	**8C-4987**	1	PIN-CLEVIS	
	12	1	**8M-3175**	1	WASHER-HARD (10.2X16X3-MM THK)	
	13	1	**8T-4121**	6	WASHER-HARD (11X21X2.5-MM THK)	
M	14	1	**8T-4133**	4	NUT (M10X1.5-THD)	
M	15	1	**8T-4186**	1	BOLT (M10X1.5X40-MM)	
M	16	1	**8T-4195**	2	BOLT (M10X1.5X30-MM)	
	17	1	**198-0098**	1	FILM-INSTRUCTION (AUXILIARY)	

M-METRIC PART

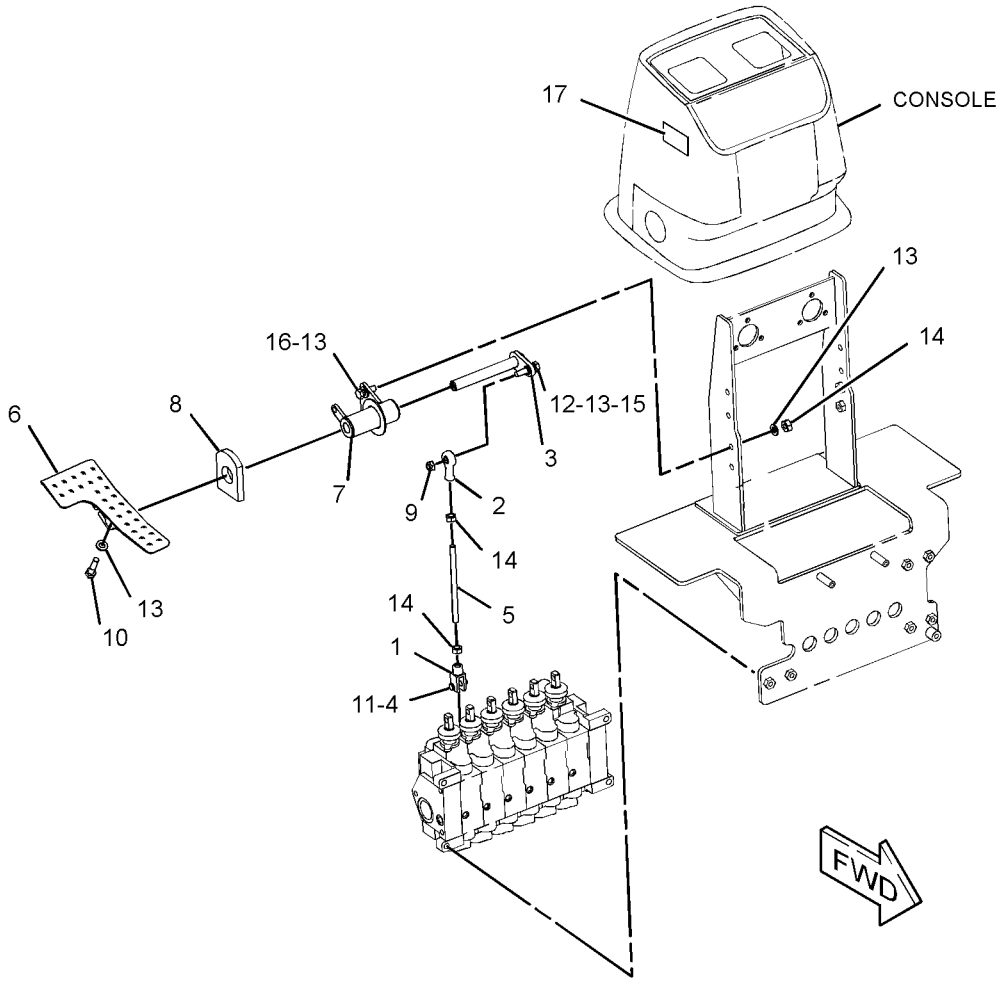

GRAPHIC #1 **<END>** g01305508

OPERATOR STATION

209-3375 CONTROL GP-HYDRAULIC PEDAL–
SINGLE FUNCTION, RH
S/N: LMS1-UP

PART OF 209-9935 VALVE AR-BANK 7, 212-0206 VALVE AR-BANK 8 AN ATTACHMENT

SMCS-5063 **i03911312**

NOTE	REF NO	GRAPHIC REF	PART NUMBER	QTY	PART NAME 1 2 3 4 5 6 (PRODUCT LEVEL)	SEE PAGE
	1	1	**8T-4815**	1	ROD END (YOKE)	
	2	1	**8T-6431**	1	ROD END (BEARING)	
B	3	1	**133-8916**	1	FILM-INSTRUCTION (EXTENDABLE STICK)	
	4	1	**164-1547**	1	SHAFT AS	
	5	1	**179-8235**	1	LOCK PIN	
B	6	1	**198-0098**	1	FILM-INSTRUCTION (AUXILIARY)	
	7	1	**303-9310**	1	ROD	
	8	1	**231-2875**	1	SUPPORT AS (RH)	
	9	1	**231-2876**	1	PEDAL AS (RH)	
	10	1	**232-1540**	1	SEAL	
M	11	1	**6V-7744**	1	LOCKNUT (M10X1.5-THD)	
M	12	1	**161-7632**	1	BOLT-SELF-LOCKING (M10X1.5X40-MM)	
	13	1	**8C-4987**	1	PIN-CLEVIS	
	14	1	**8M-3175**	1	WASHER-HARD (10.2X16X3-MM THK)	
	15	1	**8T-4121**	4	WASHER-HARD (11X21X2.5-MM THK)	
M	16	1	**8T-4133**	2	NUT (M10X1.5-THD)	
M	17	1	**8T-4186**	1	BOLT (M10X1.5X40-MM)	
M	18	1	**8T-4195**	2	BOLT (M10X1.5X30-MM)	

B-USE AS REQUIRED
M-METRIC PART

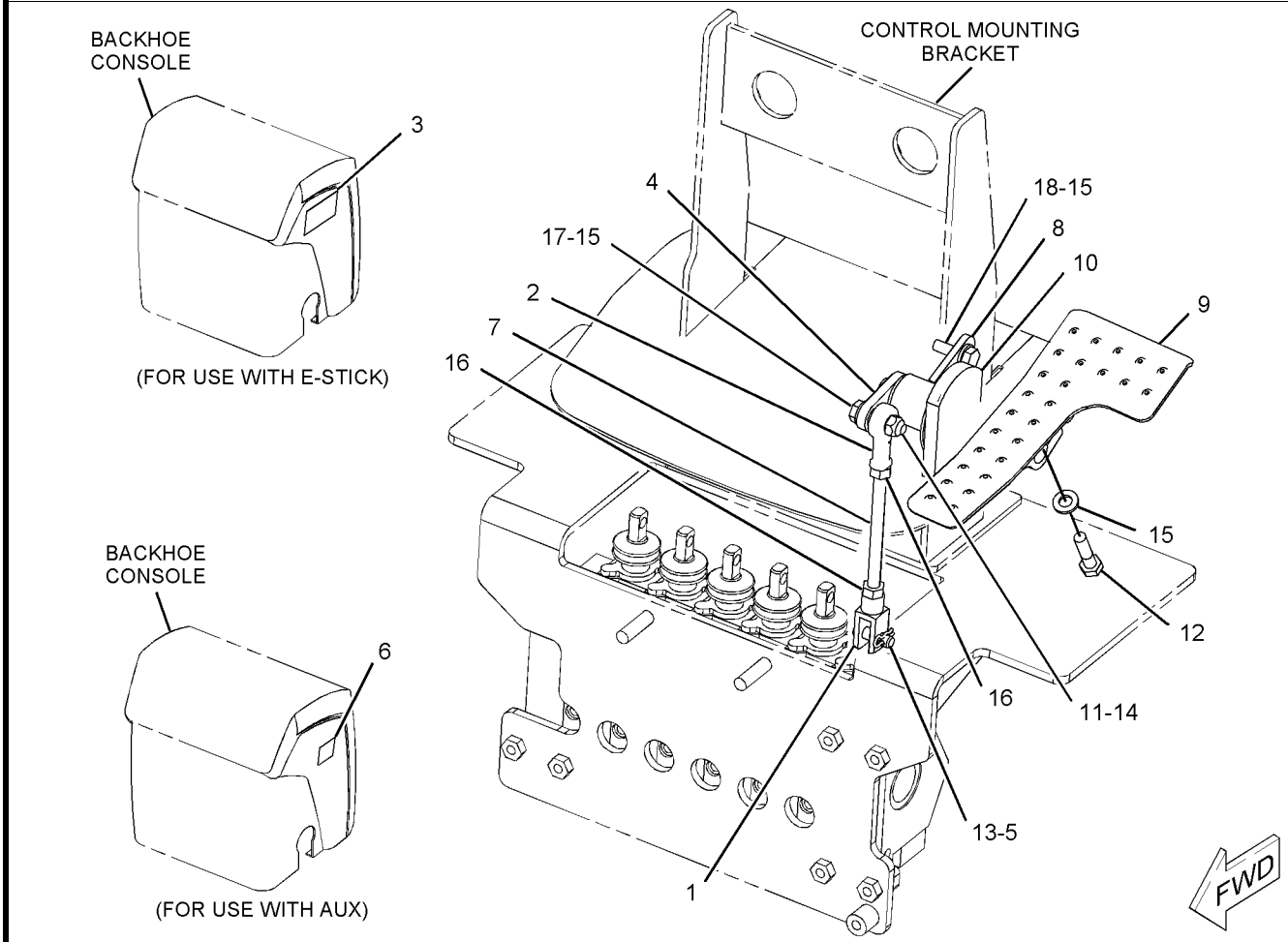

GRAPHIC #1 **<END>** g01080154

OPERATOR STATION

303-8313 CONTROL GP-HYDRAULIC PEDAL–AUXILIARY

S/N: LMS1-UP

AN ATTACHMENT

SMCS-5063 **i03911310**

NOTE	REF NO	GRAPHIC REF	PART NUMBER	QTY	PART NAME 1 2 3 4 5 6 (PRODUCT LEVEL)	SEE PAGE
	1	1	**8T-4815**	1	ROD END (YOKE)	
	2	1	**8T-6431**	1	ROD END (BEARING)	
	3	1	**179-8235**	1	LOCK PIN	
	4	1	**198-0098**	1	FILM-INSTRUCTION (AUXILIARY)	
	5	1	**231-2877**	1	PEDAL AS (LH)	
	6	1	**232-1536**	1	SUPPORT AS	
	7	1	**232-1540**	1	SEAL	
	8	1	**303-9310**	1	ROD	
	9	1	**164-1547**	1	SHAFT AS	
M	10	1	**6V-7744**	1	LOCKNUT (M10X1.5-THD)	
M	11	1	**6V-8335**	1	BOLT-SELF-LOCKING (M10X1.5X40-MM)	
	12	1	**8C-4987**	1	PIN-CLEVIS	
	13	1	**8M-3175**	1	WASHER-HARD (10.2X16X3-MM THK)	
	14	1	**8T-4121**	6	WASHER-HARD (11X21X2.5-MM THK)	
M	15	1	**8T-4133**	4	NUT (M10X1.5-THD)	
M	16	1	**8T-4186**	1	BOLT (M10X1.5X40-MM)	
M	17	1	**8T-4195**	2	BOLT (M10X1.5X30-MM)	

M-METRIC PART

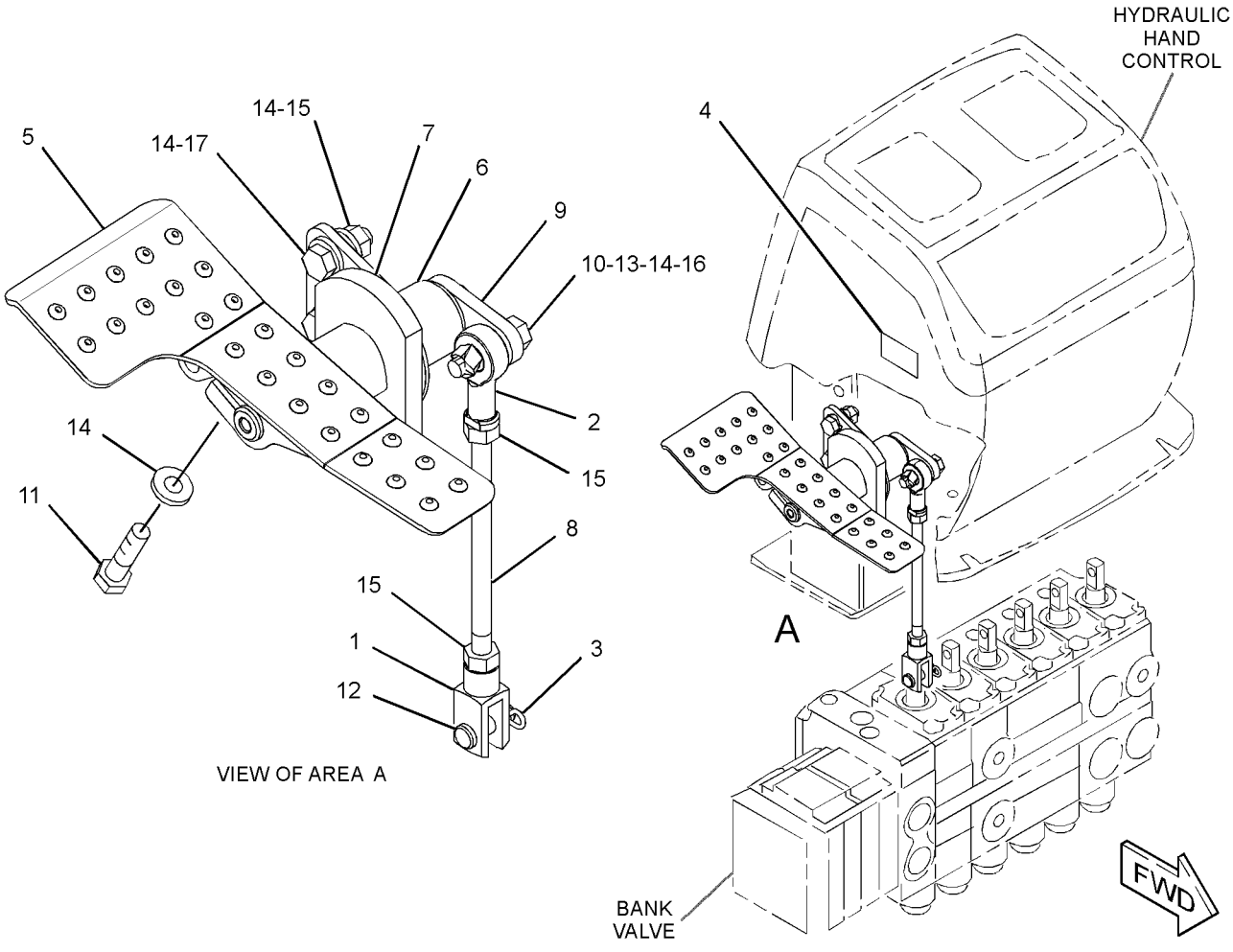

GRAPHIC #1 **<END>** g02144220

OPERATOR STATION

303-8314 CONTROL GP-HYDRAULIC PEDAL–
EXTENDABLE STICK, AUXILIARY
S/N: LMS1-UP
AN ATTACHMENT

SMCS-5063 **i03901054**

NOTE	REF NO	GRAPHIC REF	PART NUMBER	QTY	PART NAME 1 2 3 4 5 6 (PRODUCT LEVEL)	SEE PAGE
	1	1	**8T-4815**	1	ROD END (YOKE)	
	2	1	**8T-6431**	1	ROD END (BEARING)	
B	3	1	**133-8916**	1	FILM-INSTRUCTION (EXTENDABLE STICK)	
	4	1	**179-8235**	1	LOCK PIN	
B	5	1	**198-0098**	1	FILM-INSTRUCTION (AUXILIARY)	
	6	1	**231-2875**	1	SUPPORT AS (RH)	
	7	1	**231-2876**	1	PEDAL AS (RH)	
	8	1	**232-1540**	1	SEAL	
	9	1	**303-9310**	1	ROD	
	10	1	**164-1547**	1	SHAFT AS	
M	11	1	**6V-7744**	1	LOCKNUT (M10X1.5-THD)	
M	12	1	**6V-8335**	1	BOLT-SELF-LOCKING (M10X1.5X40-MM)	
	13	1	**8C-4987**	1	PIN-CLEVIS	
	14	1	**8M-3175**	1	WASHER-HARD (10.2X16X3-MM THK)	
	15	1	**8T-4121**	4	WASHER-HARD (11X21X2.5-MM THK)	
M	16	1	**8T-4133**	2	NUT (M10X1.5-THD)	
M	17	1	**8T-4186**	1	BOLT (M10X1.5X40-MM)	
M	18	1	**8T-4195**	2	BOLT (M10X1.5X30-MM)	

B-USE AS REQUIRED
M-METRIC PART

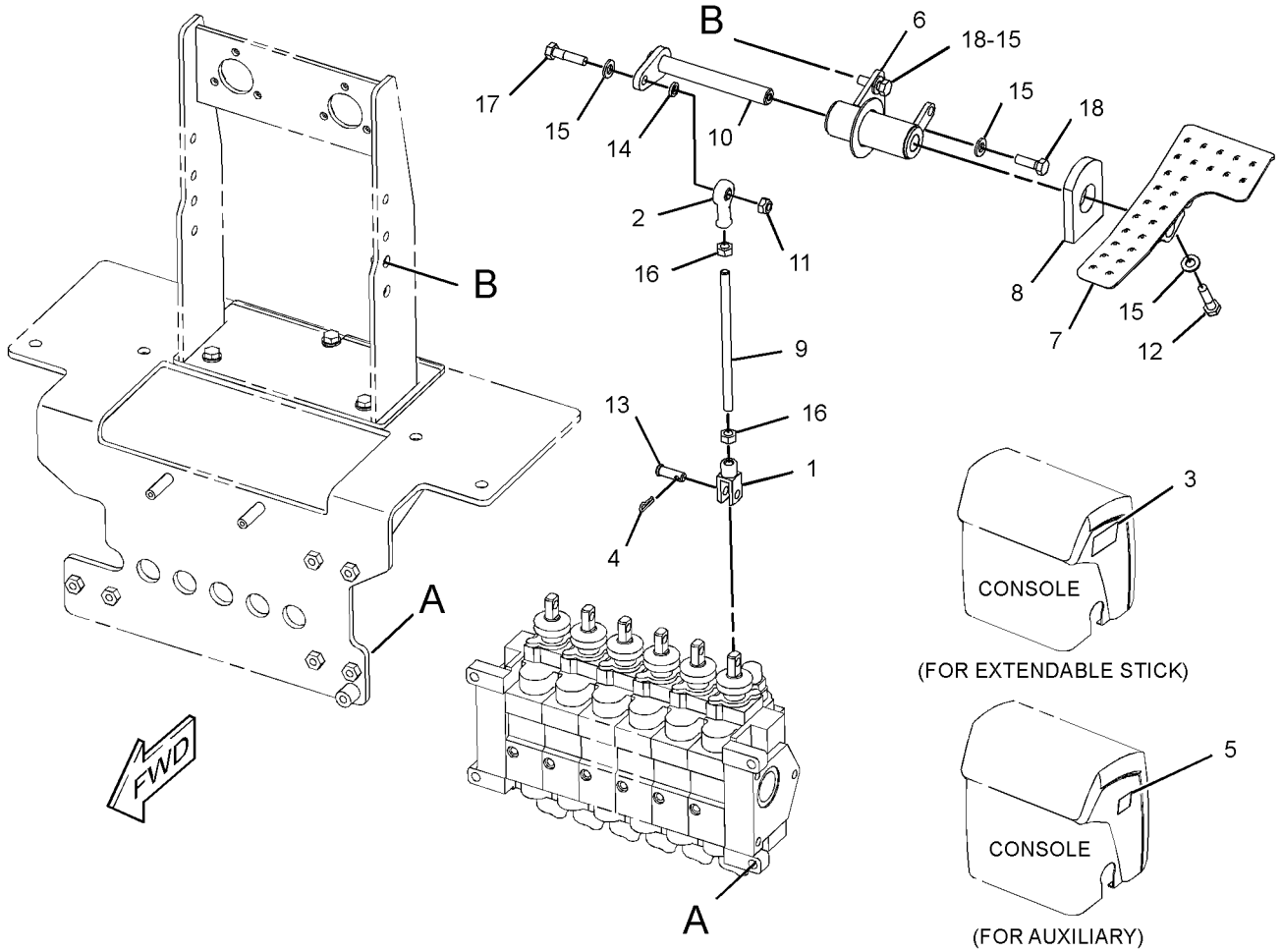

GRAPHIC #1 **<END>** g02144665

OPERATOR STATION

206-1630 CONTROL GP-STEERING

S/N: LMS1-UP
PART OF 291-9191 CANOPY GP-OPEN ROPS
AN ATTACHMENT

SMCS-4309, 4310, 4338 **i03176591**

NOTE	REF NO	GRAPHIC REF	PART NUMBER	QTY	PART NAME 1 2 3 4 5 6 (PRODUCT LEVEL)	SEE PAGE
	1	1	**1V-9385**	1	COVER-EMBLEM	
	2	1	**032-1557**	1	STEERING WHEEL	
	3	1	**330-9710**	1	COLUMN AS-STEERING	
	4	1	**206-1632**	1	PLATE AS	
	5	1	**214-4701**	1	SWITCH AS-ROCKER (HORN)	
	6	1	**7X-7729**	6	WASHER (11X25X3-MM THK)	
	7	1	**8T-4121**	4	WASHER-HARD (11X21X2.5-MM THK)	
M	8	1	**8T-4133**	2	NUT (M10X1.5-THD)	
M	9	1	**8T-4136**	4	BOLT (M10X1.5X25-MM)	
M	10	1	**8T-4195**	4	BOLT (M10X1.5X30-MM)	
M	11	1	**8T-8894**	1	BOLT-SOCKET HEAD (M10X1.5X20-MM)	
	12	1	**9K-5635**	3	SCREW-TAPPING (8-18X1-IN)	

M-METRIC PART

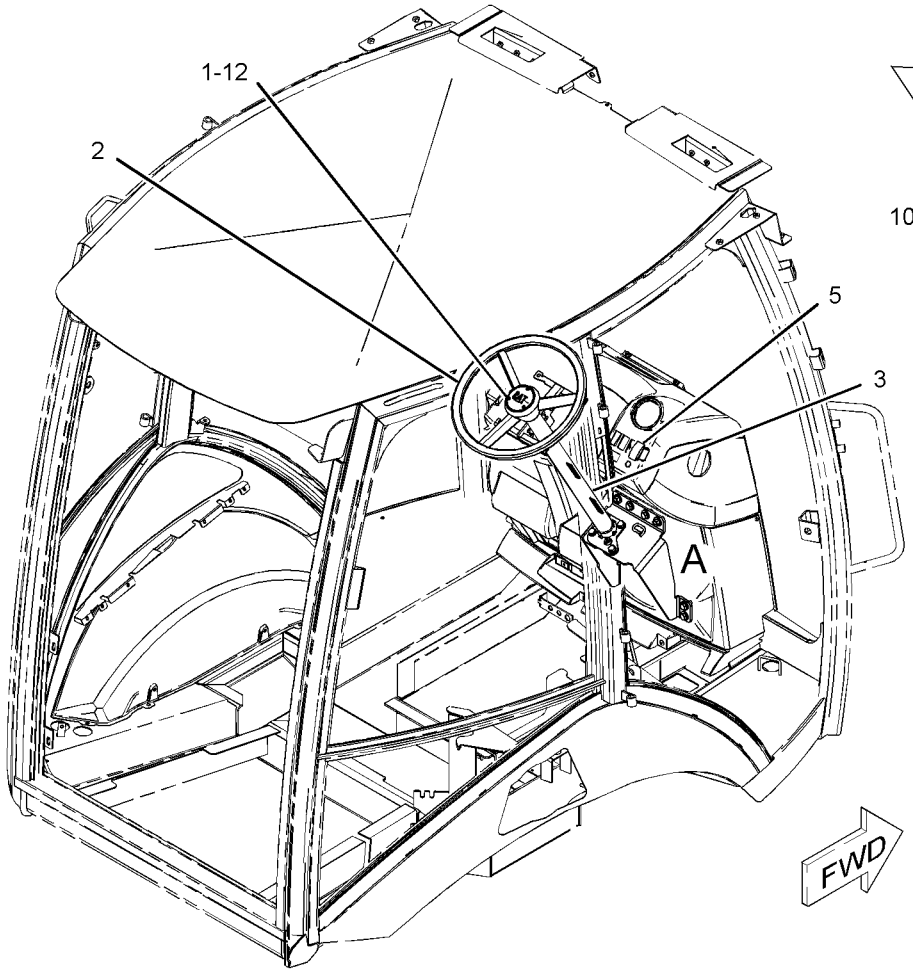

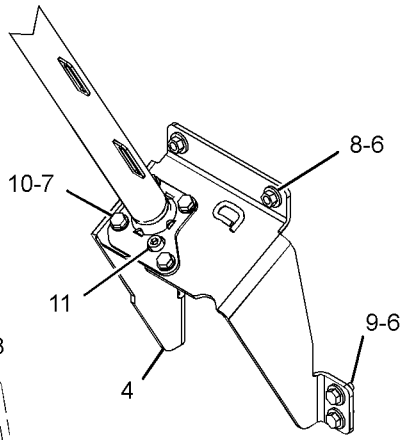

VIEW OF AREA A

GRAPHIC #1 **<END>** g01202748

OPERATOR STATION

218-4453 CONTROL GP-STEERING–TILT

S/N: LMS1-UP

PART OF 291-9194, 291-9195 CAB AR-ENCLOSED ROPS, 291-9192 CANOPY AR-OPEN ROPS

AN ATTACHMENT

SMCS-4309, 4310, 4338 **i02392089**

NOTE	REF NO	GRAPHIC REF	PART NUMBER	QTY	PART NAME 1 2 3 4 5 6 (PRODUCT LEVEL)	SEE PAGE
	1	1	**153-7368**	1	PLUG	
Y	2	1	**153-7369**	1	KNOB GP-STEERING	202
	3	1	**206-1632**	1	PLATE AS	
	4	1	**214-4701**	1	SWITCH AS-ROCKER (HORN)	
		1	**111-7899**	1	GASKET	
Y	5	1	**218-4454**	1	STEERING COLUMN GP (TILT)	209
	6	1	**145-9291**	1	STEERING WHEEL AS	
	7	1	**7X-7729**	6	WASHER (11X25X3-MM THK)	
	8	1	**8R-2916**	1	COVER AS (CAT STEERING WHEEL)	
	9	1	**8T-4121**	4	WASHER-HARD (11X21X2.5-MM THK)	
M	10	1	**8T-4133**	2	NUT (M10X1.5-THD)	
M	11	1	**8T-4136**	4	BOLT (M10X1.5X25-MM)	
M	12	1	**8T-4195**	4	BOLT (M10X1.5X30-MM)	
M	13	1	**8T-8894**	1	BOLT-SOCKET HEAD (M10X1.5X20-MM)	

M-METRIC PART
Y-SEPARATE ILLUSTRATION

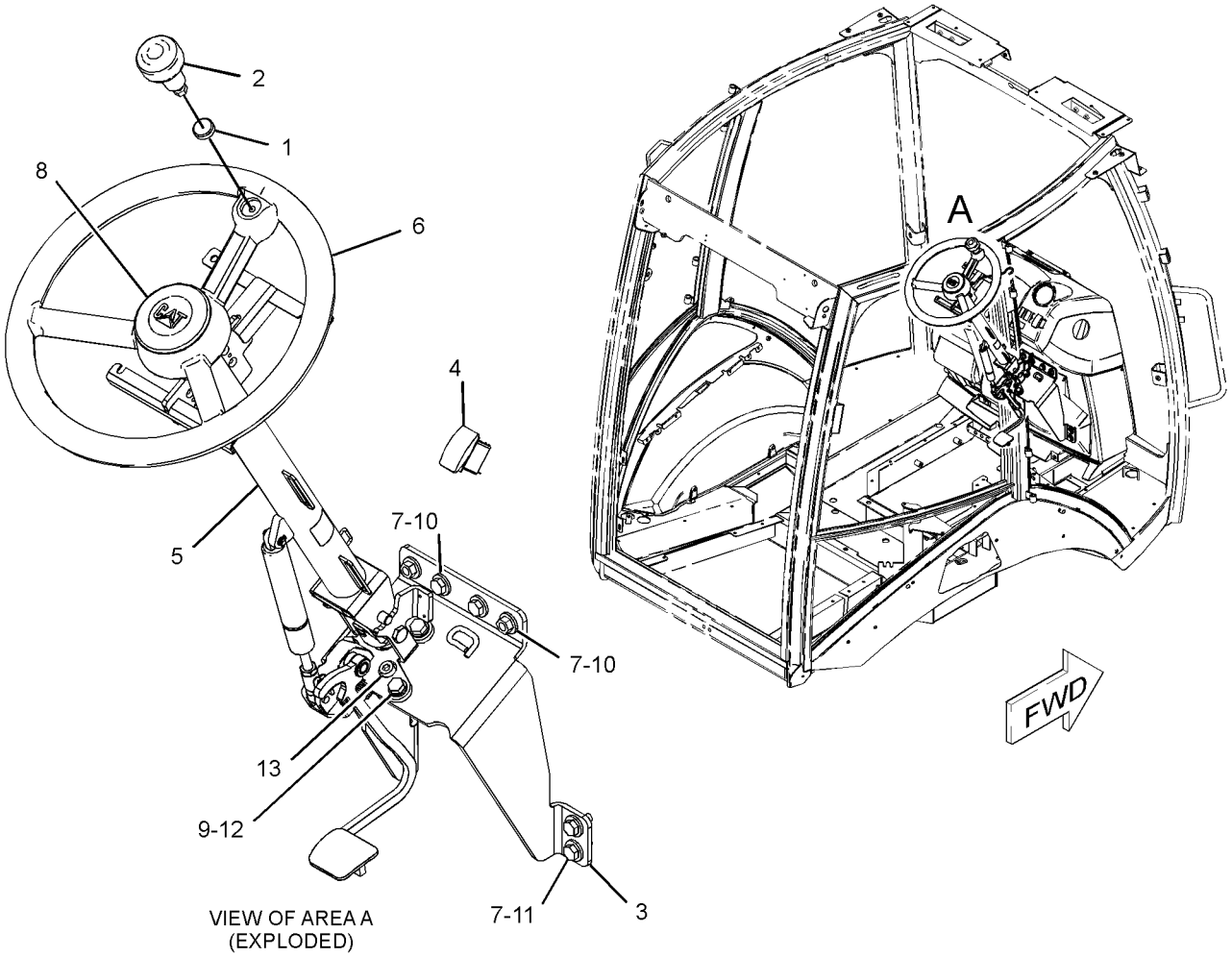

VIEW OF AREA A
(EXPLODED)

GRAPHIC #1 **<END>** g01197935

OPERATOR STATION

206-1643 CONTROL GP-TRANSMISSION

S/N: LMS1-UP
PART OF 291-9186, 291-9187 POWER TRAIN AR
AN ATTACHMENT

SMCS-3065, 3168 **i03926172**

NOTE	REF NO	GRAPHIC REF	PART NUMBER	QTY	PART NAME 1 2 3 4 5 6 (PRODUCT LEVEL)	SEE PAGE
	1	1	**102-8802**	1	KIT-RECEPTACLE (2-PIN)	
					(INCLUDES RECEPTACLE AS & WEDGE)	
	2	1	**9R-1766**	1	COVER-BOTTOM	
	3	1	**9R-1767**	1	BOOT	
	4	1	**107-5591**	1	NUT-JAM (3/4-16-THD)	
	5	1	**164-1153**	1	KNOB (UPPER)	
	6	1	**164-1368**	16	FASTENER-PANEL	
	7	1	**206-1669**	1	BOOT	
	8	1	**328-3211**	1	ROD AS	
	9	1	**220-3470**	2	BOOT-SEAL	
	10	1	**230-2389**	2	PLATE	
	11	1	**230-2390**	2	PLATE	
	12	1	**261-2207**	1	CONTROL GP-TRANSMISSION (FORWARD, NEUTRAL, REVERSE)	
	13	1	**263-7261**	1	SWITCH GP-PUSH BUTTON (NEUTRALIZER, DOWNSHIFT)	
		1	**9X-3401**	2	PIN-CONNECTOR (16-GA TO 18-GA)	
BD		1	**5P-5677**		WIRE (18-GA, BLACK)	
D		1	**6V-2689**		TUBE-HEAT SHRINK (6.35-MM DIA) (1.3-M)	
		1	**9W-0625**	1	SWITCH AS-PUSH BUTTON	
M	14	1	**095-0756**	4	SCREW-MACHINE (M5X0.8X16-MM)	
	15	1	**8T-4223**	1	WASHER-HARD (13.5X25.5X3-MM THK)	
M	16	1	**8T-4956**	1	BOLT (M12X1.75X35-MM)	
	17	1	**8T-9501**	2	SCREW (10-16X0.75-IN)	

B-USE AS REQUIRED
D-ORDER BY THE METER
M-METRIC PART

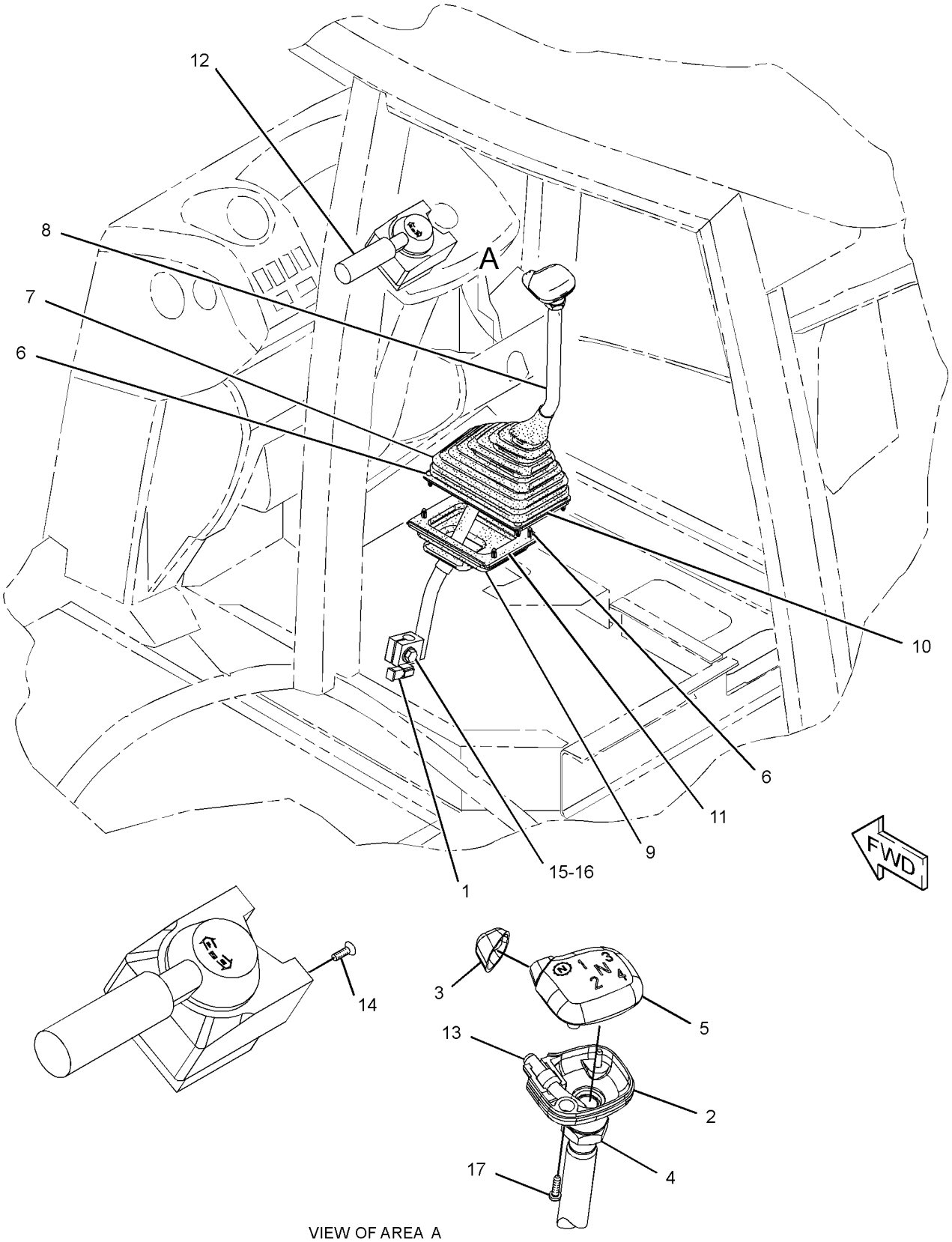

GRAPHIC #1 **<END>** g02150988

OPERATOR STATION

220-3785 COVER GP-WIPER MOTOR

S/N: LMS1-UP
PART OF 291-9192 CANOPY AR-OPEN ROPS
AN ATTACHMENT

SMCS-7305 **i02532495**

NOTE	REF NO	GRAPHIC REF	PART NUMBER	QTY	PART NAME 1 2 3 4 5 6 (PRODUCT LEVEL)	SEE PAGE
	1	1	**226-5635**	1	COVER	
M	2	1	**9X-2043**	3	SCREW-TRUSS HEAD (M6X1X14-MM)	
	3	1	**282-7835**	1	PLATE	
M	4	1	**8C-3798**	2	BOLT-LOCKING (M6X1X30)	
	5	1	**282-7833**	1	GROMMET	
	6	1	**9X-8256**	2	WASHER (6.6X12X2-MM THK)	
	7	1	**9X-2038**	3	WASHER (7X19X2-MM THK)	

M-METRIC PART

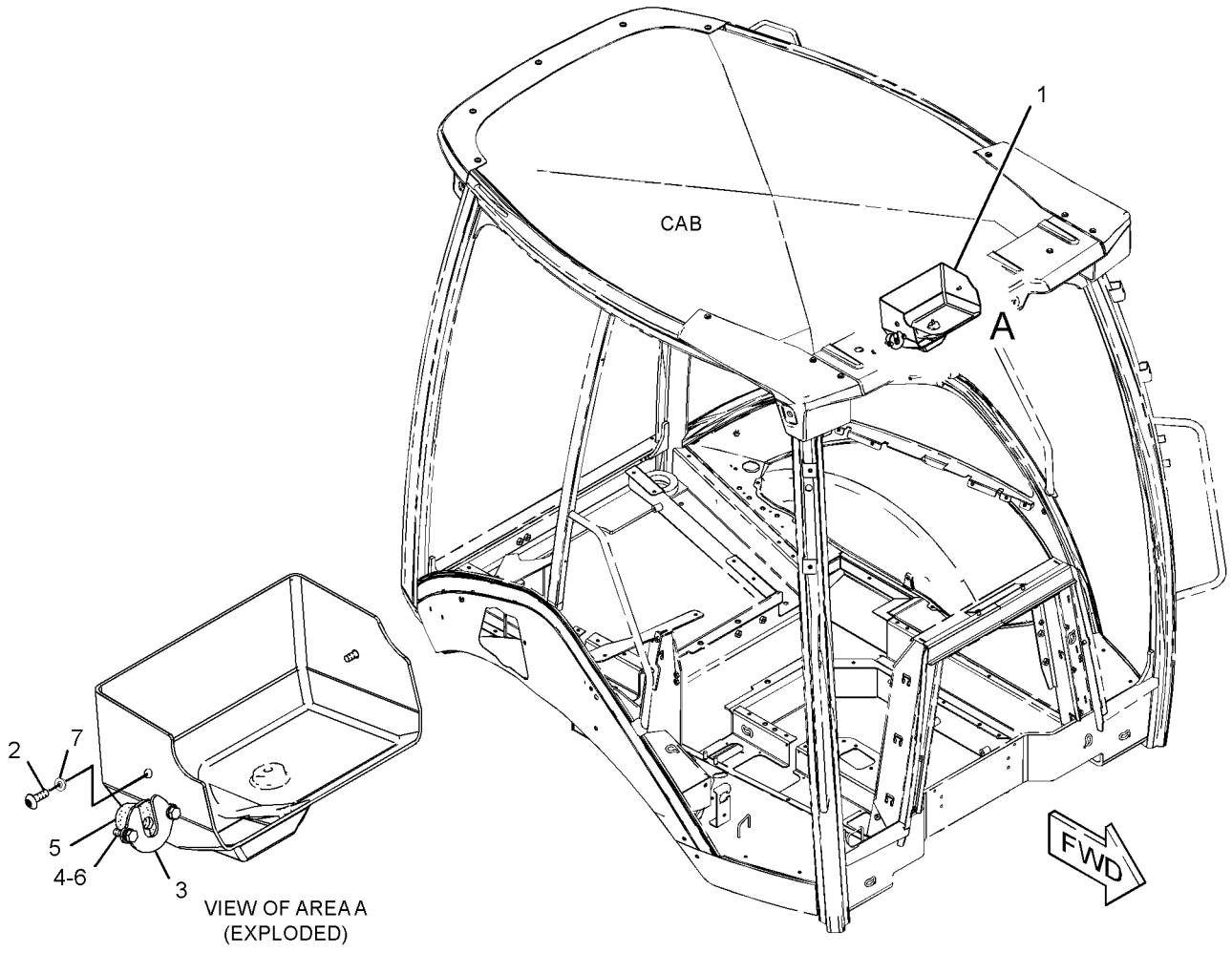

GRAPHIC #1 **<END>** g01328104

OPERATOR STATION

329-1167 DOOR GP-CAB–RH

S/N: LMS1-UP
PART OF 353-3020 CAB GP
AN ATTACHMENT

SMCS-7308 **i03628846**

NOTE	REF NO	GRAPHIC REF	PART NUMBER	QTY	PART NAME 1 2 3 4 5 6 (PRODUCT LEVEL)	SEE PAGE
	1	1	**132-2249**	2	SPACER (7.4X12.7X24-MM THK)	
J	2	1	**159-4269**	1	SPRING GP-GAS (CAB DOOR)	
	3	1	**159-4945**	1	KEEPER	
B	4	1	**177-4877**	1	SHIM (1-MM THK)	
	5	1	**205-9598**	1	GLASS (RH)	
	6	1	**248-2714**	2	NUT-ACORN	
N	7	1	**252-1862**	1	HANDLE AS (PULL)	
	8	1	**252-1863**	1	GASKET	
	9	1	**252-1865**	1	LATCH AS (RH)	
	10	1	**253-1817**	1	SPACER (6.5X14.5X12-MM THK)	
	11	1	**253-1857**	1	PLATE	
	12	1	**253-1858**	1	COVER (LATCH)	
	13	1	**254-1126**	1	PLATE	
	14	1	**254-1127**	1	PLATE	
	15	1	**258-3697**	2	WASHER-NYLON (7X20X2-MM THK)	
	16	1	**329-1169**	1	DOOR AS (RH)	
Y	17	1	*333-9902*	1	WINDOW GP-DOOR (RH)	599
	18	1	**223-2029**	1	SEAL AS (RH)	
M	19	1	**131-3987**	2	SCREW (M4X0.7X12-MM)	
	20	1	**197-5107**	2	SCREW-TRUSS HEAD (M6X1X60-MM)	
	21	1	**205-7048**	2	INSERT-THREADED (M6X1-THD)	
M	22	1	**5C-9553**	3	BOLT (M6X1X16-MM)	
M	23	1	**8T-6974**	1	BOLT (M6X1X80-MM)	
	24	1	**9X-2038**	4	WASHER (7X19X2-MM THK)	
M	25	1	**9X-2045**	4	SCREW-TRUSS HEAD (M6X1X20-MM)	
E	26	1	**322-8414**		SEAL-CAB (347-CM)	
					PARTS SHOWN IN GRAPHIC(S) WITHOUT A REFERENCE NUMBER ARE NOT SERVICED SEPARATELY	
					AVAILABLE REPAIR KIT(S):	
J			**161-9044**	1	KIT-FITTING	
					(INCLUDES FITTING AS & NUT)	

B-USE AS REQUIRED
E-ORDER BY THE CENTIMETER
J-KIT MARKED J SERVICES PART MARKED J
M-METRIC PART
N-REQUIRES CORPORATE KEY
Y-SEPARATE ILLUSTRATION

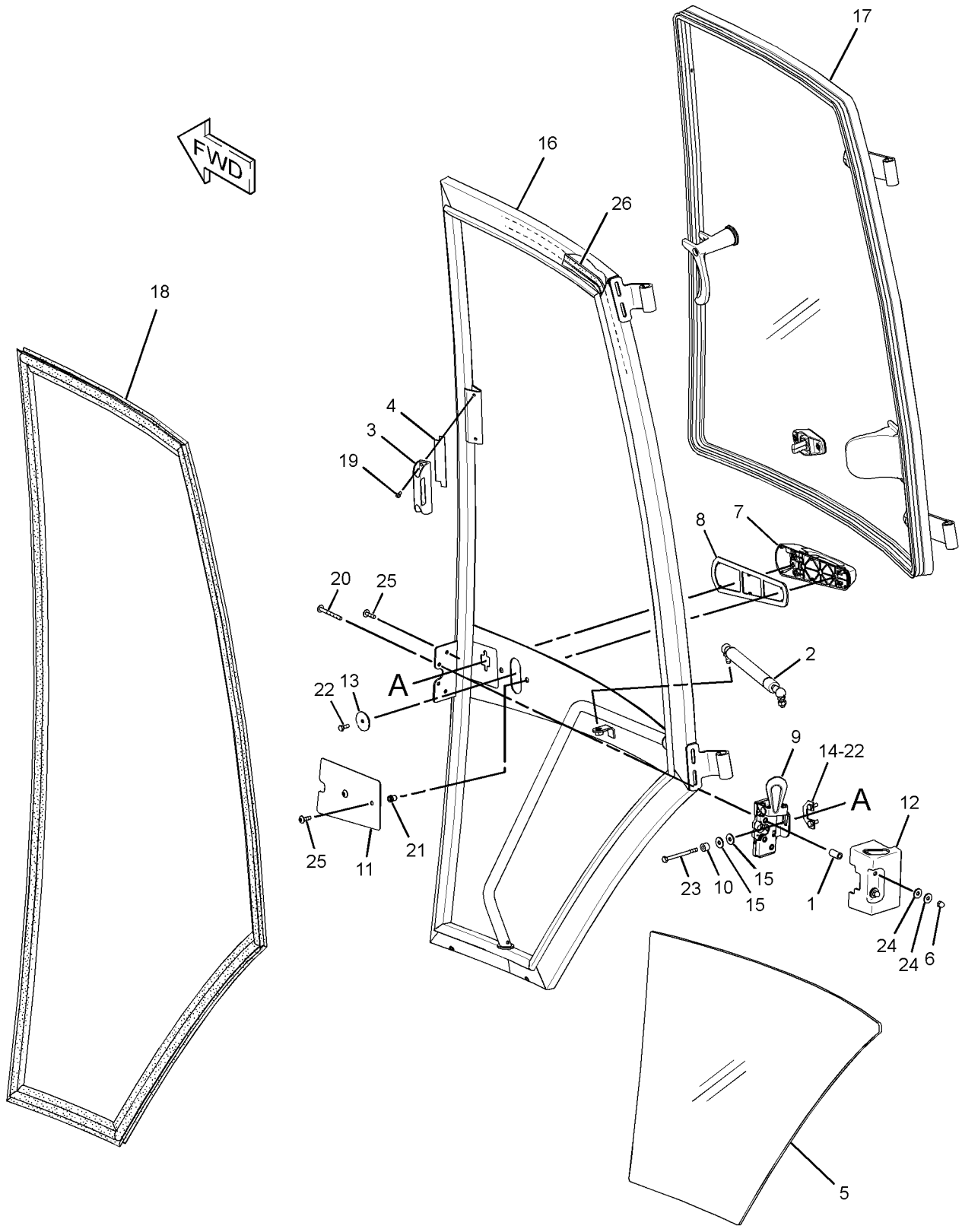

GRAPHIC #1 **<END>** g01819794

OPERATOR STATION

329-1168 DOOR GP-CAB–LH

S/N: LMS1-UP
PART OF 353-3020 CAB GP
AN ATTACHMENT

SMCS-7308 **i03628663**

NOTE	REF NO	GRAPHIC REF	PART NUMBER	QTY	PART NAME 1 2 3 4 5 6 (PRODUCT LEVEL)	SEE PAGE
	1	1	**132-2249**	2	SPACER (7.4X12.7X24-MM THK)	
J	2	1	**159-4269**	1	SPRING GP-GAS (CAB DOOR)	
B	3	1	**177-4877**	1	SHIM (1-MM THK)	
	4	1	**205-9588**	1	GLASS (LH)	
	5	1	**248-2714**	2	NUT-ACORN	
N	6	1	**252-1862**	1	HANDLE AS (PULL)	
	7	1	**252-1863**	1	GASKET	
	8	1	**252-1864**	1	LATCH AS (LH)	
	9	1	**253-1817**	1	SPACER (6.5X14.5X12-MM THK)	
	10	1	**253-1857**	1	PLATE	
	11	1	**253-1858**	1	COVER (LATCH)	
	12	1	**254-1126**	1	PLATE	
	13	1	**254-1127**	1	PLATE	
	14	1	**258-3697**	2	WASHER-NYLON (7X20X2-MM THK)	
	15	1	**329-1170**	1	DOOR AS (LH)	
Y	16	1	*333-9901*	1	WINDOW GP-DOOR (LH)	598
	17	1	**223-2028**	1	SEAL AS (LH)	
M	18	1	**131-3987**	2	SCREW (M4X0.7X12-MM)	
	19	1	**159-4946**	1	KEEPER	
	20	1	**197-5107**	2	SCREW-TRUSS HEAD (M6X1X60-MM)	
	21	1	**205-7048**	2	INSERT-THREADED (M6X1-THD)	
M	22	1	**5C-9553**	3	BOLT (M6X1X16-MM)	
M	23	1	**8T-6974**	1	BOLT (M6X1X80-MM)	
	24	1	**9X-2038**	4	WASHER (7X19X2-MM THK)	
M	25	1	**9X-2045**	4	SCREW-TRUSS HEAD (M6X1X20-MM)	
E	26	1	**322-8414**		SEAL-CAB (347-CM)	
					PARTS SHOWN IN GRAPHIC(S) WITHOUT A REFERENCE NUMBER ARE NOT SERVICED SEPARATELY	
					AVAILABLE REPAIR KIT(S):	
J			**161-9044**	1	KIT-FITTING	
					(INCLUDES NUT & FITTING AS)	

B-USE AS REQUIRED
E-ORDER BY THE CENTIMETER
J-KIT MARKED J SERVICES PART MARKED J
M-METRIC PART
N-REQUIRES CORPORATE KEY
Y-SEPARATE ILLUSTRATION

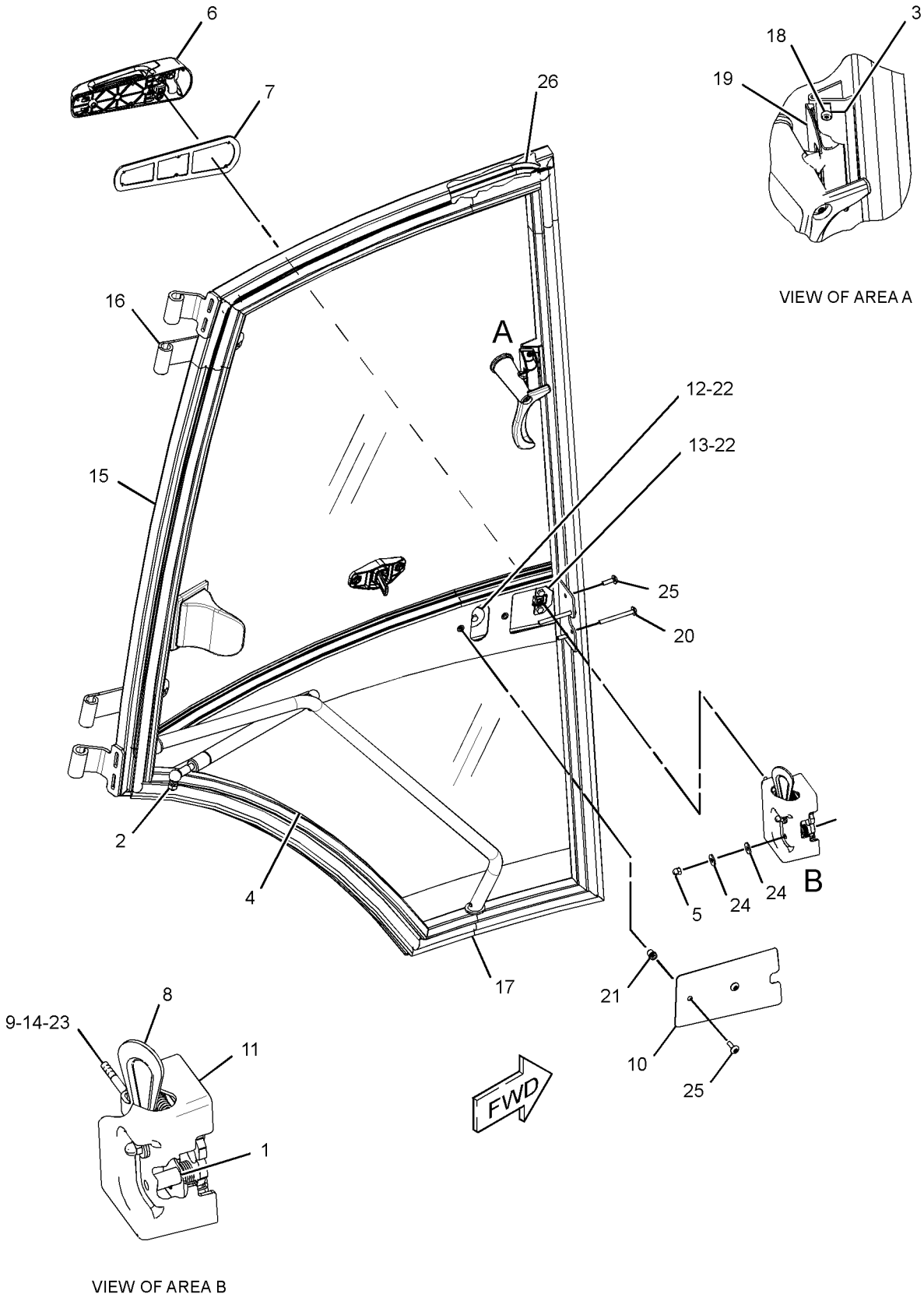

GRAPHIC #1 **<END>** g01811576

206-1618 FLOOR MAT GP

S/N: LMS1-UP

PART OF 291-9194, 291-9195 CAB AR-ENCLOSED ROPS, 291-9192 CANOPY AR-OPEN ROPS

AN ATTACHMENT

SMCS-7265 **i02454744**

NOTE	REF NO	GRAPHIC REF	PART NUMBER	QTY	PART NAME 1 2 3 4 5 6 (PRODUCT LEVEL)	SEE PAGE
	1	1	**247-8179**	2	PLATE	
	2	1	**284-1602**	1	FLOOR MAT	
	3	1	**1H-3244**	4	LOCKWASHER	
M	4	1	**9X-2045**	4	SCREW-TRUSS HEAD (M6X1X20-MM)	

M-METRIC PART

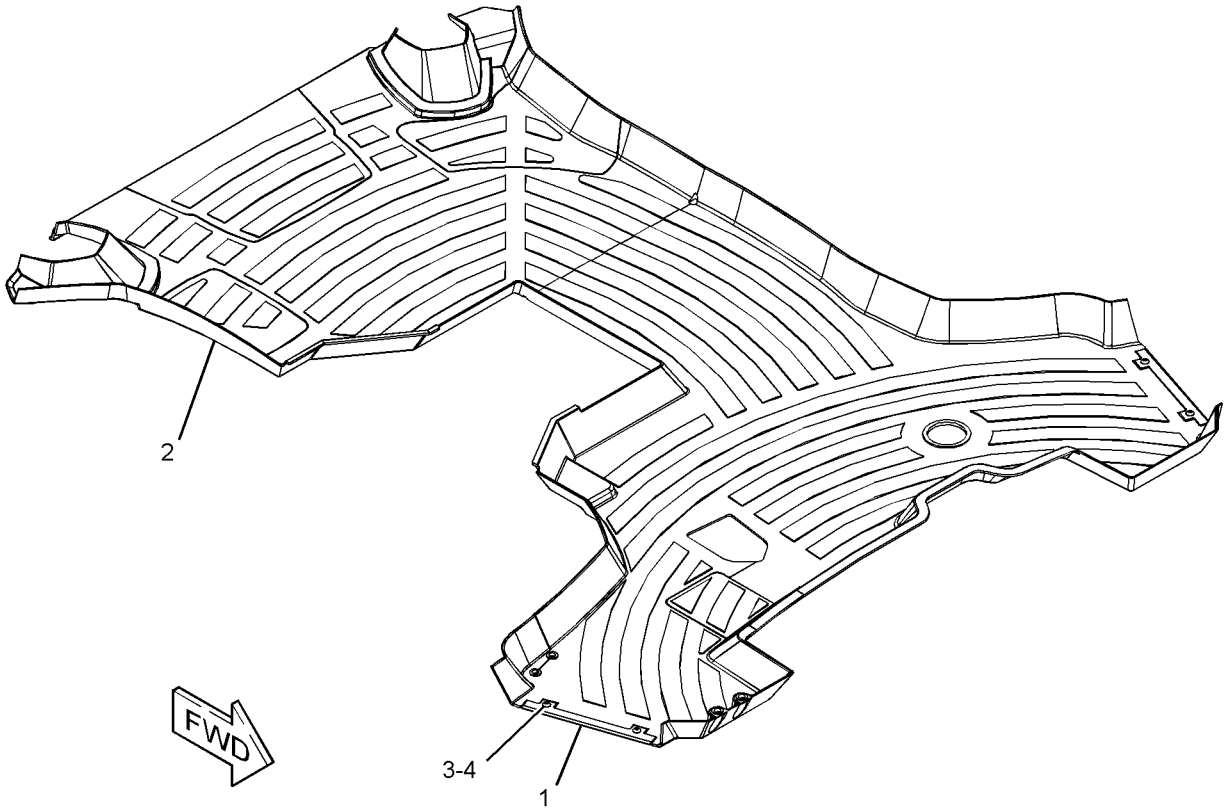

GRAPHIC #1 **<END>** g01228081

OPERATOR STATION

206-1620 FLOOR MAT GP

S/N: LMS1-UP
PART OF 291-9191 CANOPY GP-OPEN ROPS
AN ATTACHMENT

SMCS-7265 **i02142922**

NOTE	REF NO	GRAPHIC REF	PART NUMBER	QTY	PART NAME 1 2 3 4 5 6 (PRODUCT LEVEL)	SEE PAGE
	1	1	**206-1621**	1	FLOOR MAT	
	2	1	**247-8179**	2	PLATE	
	3	1	**1H-3244**	4	LOCKWASHER	
M	4	1	**9X-2045**	4	SCREW-TRUSS HEAD (M6X1X20-MM)	

M-METRIC PART

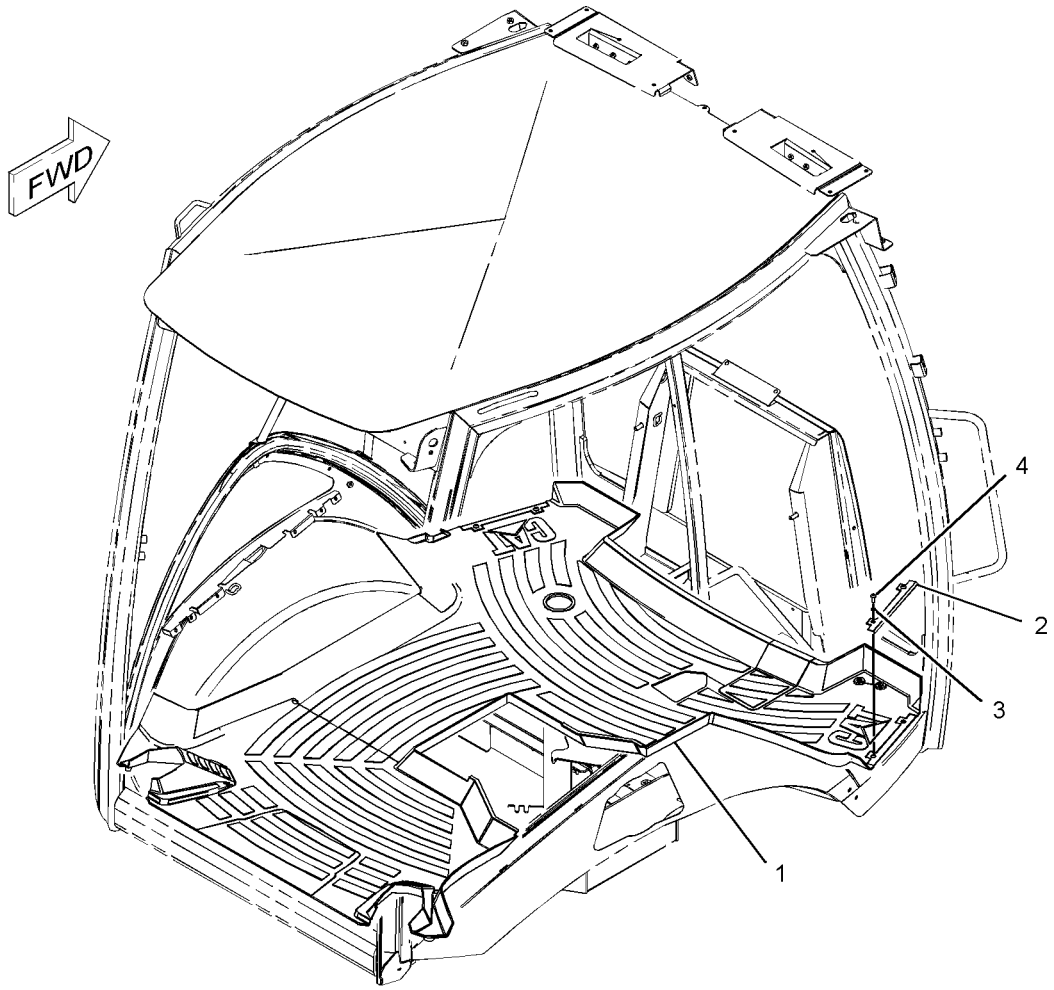

GRAPHIC #1 **<END>** g01080493

OPERATOR STATION

206-1800 HEATER GP-CAB

S/N: LMS1-UP
PART OF 291-9194 CAB AR-ENCLOSED ROPS
AN ATTACHMENT

SMCS-7304 **i03887451**

NOTE	REF NO	GRAPHIC REF	PART NUMBER	QTY	PART NAME 1 2 3 4 5 6 (PRODUCT LEVEL)	SEE PAGE
	1	1	**221-2420**	2	HOSE-AIR	
E	2	1	**6V-6813**		HOSE (28-CM)	
	3	1	**6L-4725**	2	CLAMP-HOSE	
	4	1	**8Y-5737**	1	CLAMP	
	5	1	**8Y-6967**	6	LOUVER AS-VENT	
	6	1	**9M-7959**	4	CLAMP-HOSE	
	7	1	**9N-2231**	1	GROMMET AS	
	8	1	**110-6109**	1	KNOB-CONTROL (TEMPERATURE)	
	9	1	**130-4832**	2	SCREW (8-18X10-MM)	
	10	1	**164-1368**	4	FASTENER-PANEL	
	11	1	**164-8474**	2	LOUVER AS-VENT	
	12	1	**189-0881**	1	CONTROL AS (PANEL)	
	13	1	**193-3356**	1	CABLE AS	
	14	1	**194-5622**	1	VALVE AS-WATER (AIR CONDITIONER)	
		1	**6V-6717**	1	SCREW-WASHER HEAD (8-32X9.52-MM)	
		1	**124-0312**	2	SCREW-PAN HEAD (8-16X0.32-IN)	
	15	1	**206-1648**	1	LOUVER	
	16	1	**206-1653**	4	GASKET	
	17	1	**206-1682**	1	PANEL-CONTROL (INSERT)	
	18	1	**206-1684**	1	COVER (CAB FILTER)	
	19	1	**206-1803**	2	GASKET	
	20	1	**206-1804**	1	GASKET	
	21	1	**206-1805**	1	GASKET	
E	22	1	**220-0738**		SEAL (87-CM)	
	23	1	**206-1807**	1	GASKET	
	24	1	**206-1808**	1	PLATE	
	25	1	**206-1809**	1	ROD AS	
	26	1	**206-1810**	1	DUCT-AIR	
	27	1	**206-1812**	1	DUCT-AIR	
	28	1	**206-1814**	1	DUCT-AIR	
	29	1	**206-1815**	1	DUCT-AIR	
	30	1	**206-1816**	1	DUCT-AIR	
	31	1	**206-1817**	2	DUCT-AIR	
	32	1	**206-1818**	1	DUCT AS-AIR	
Y	33	1	*210-8364*	1	HEATER GP-CAB	551
	34	1	**211-2661**	1	FILTER ELEMENT AS-AIR (CAB HEATER)	
	35	1	**218-0666**	6	LOUVER AS	
	36	1	**255-0795**	1	FILM (TEMPERATURE CONTROL)	
M	37	1	**111-4627**	3	SCREW-MACHINE (M6X1X30-MM)	
	38	1	**5P-4116**	1	WASHER-HARD (8.8X20.5X2-MM THK)	
	39	1	**7X-0579**	1	WASHER-HARD (8.8X25.5X2-MM THK)	
M	40	1	**8T-4200**	1	BOLT (M8X1.25X16-MM)	
	41	1	**8Y-6352**	1	LOUVER AS	
	42	1	**9X-2038**	4	WASHER (7X19X2-MM THK)	
M	43	1	**9X-2045**	8	SCREW-TRUSS HEAD (M6X1X20-MM)	
	44	1	**8T-4205**	4	WASHER-HARD (7.2X14.5X2-MM THK)	

E-ORDER BY THE CENTIMETER
M-METRIC PART
Y-SEPARATE ILLUSTRATION

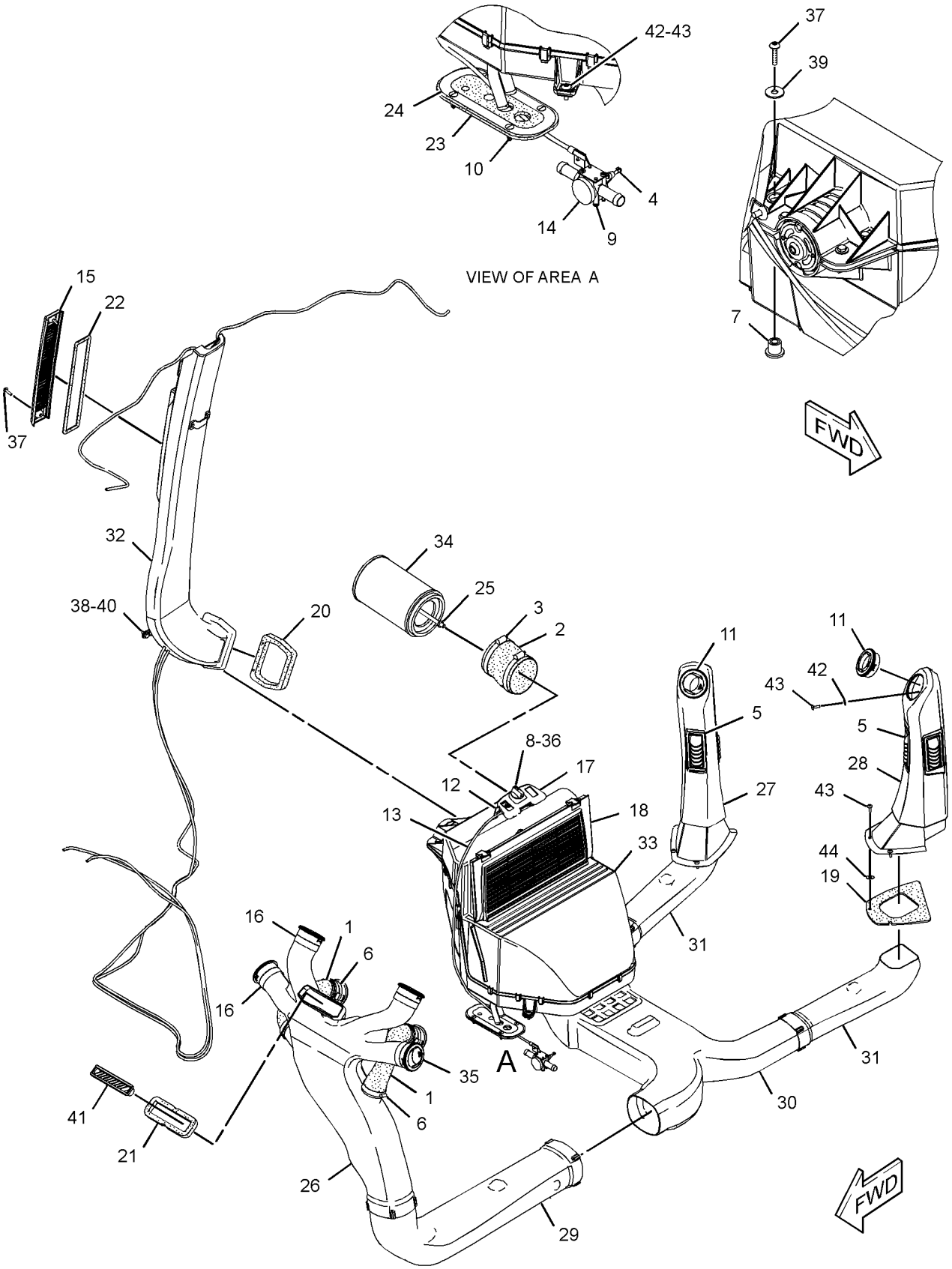

GRAPHIC #1

<END>

g01379893

OPERATOR STATION

210-8363 HEATER GP-CAB

S/N: LMS1-UP

PART OF 206-1801 AIR CONDITIONER & MOUNTING GP

AN ATTACHMENT

SMCS-7304 **i03887550**

NOTE	REF NO	GRAPHIC REF	PART NUMBER	QTY	PART NAME 1 2 3 4 5 6 (PRODUCT LEVEL)	SEE PAGE
	1	1	**8C-3756**	1	FILM-IDENTIFICATION (GROUP NO., SEQUENCE NO.)	
	2	1	**119-9631**	1	SWITCH-TEMPERATURE (AIR CONDITIONER)	
	3	1	**304-8965**	1	BLOWER GP-CAB (HEATER)	
		1	**177-9645**	1	KIT-RECEPTACLE (2-PIN)	
					(INCLUDES RECEPTACLE AS & WEDGE)	
		1	**7T-0093**	2	PIN-CONNECTOR (12-GA TO 14-GA)	
	4	1	**185-4015**	11	CLIP	
	5	1	**204-9921**	1	RESISTOR AS (HEATER)	
	6	1	**210-7665**	1	HOUSING-TOP	
	7	1	**210-7666**	1	BAFFLE	
	8	1	**210-8401**	1	COIL AS-EVAPORATOR	
J		1	**219-6288**	1	GASKET	
DJ		1	**5P-5688**		SEAL (1-M)	
	9	1	**211-2660**	1	FILTER ELEMENT-AIR (RECIRCULATION)	
	10	1	**212-3416**	3	SCREW-PAN HEAD (8-16X0.5-IN)	
	11	1	**219-6281**	1	COVER AS	
		1	**219-6283**	1	LATCH	
		1	**6C-3680**	1	RIVET-POP	
J	12	1	**219-6284**	2	GASKET	
J	13	1	**219-6285**	1	GASKET	
J	14	1	**219-6286**	1	GASKET	
J	15	1	**219-6287**	2	GASKET	
	16	1	**219-6292**	1	HOUSING AS	
		1	**7H-3937**	4	LOCKWASHER (EXTERNAL TOOTH)	
M		1	**129-3178**	4	LOCKNUT (M6X1-THD)	
	18	1	**220-3762**	1	HARNESS AS-HEATER & AIR COND	
		1	**192-2112**	5	SOCKET-TERMINAL	
		1	**128-7716**	1	CONNECTOR	
		1	**7T-6739**	1	HOUSING-PLUG	
		1	**7T-0093**	3	PIN-CONNECTOR (12-GA TO 14-GA)	
		1	**155-2270**	1	KIT-CONNECTING PLUG (2-PIN)	
					(INCLUDES PLUG AS, WEDGE & INTERFACE SEAL)	
		1	**8T-8737**	1	PLUG-SEAL	
		1	**177-9653**	1	KIT-RECEPTACLE (4-PIN)	
					(INCLUDES RECEPTACLE AS & WEDGE)	
		1	**8T-8730**	2	SOCKET-CONNECTOR (16-GA TO 18-GA)	
	19	1	**253-9510**	1	GUARD	
	20	1	**2S-3745**	4	SCREW-TAPPING (10-16X0.5-IN)	
M	21	1	**6V-7357**	4	BOLT (M6X1X25-MM)	
	22	1	**8T-4205**	5	WASHER-HARD (7.2X14.5X2-MM THK)	
D	23	1	**5P-5655**		SEAL (0.5-M)	
DJ	24	1	**5P-5637**		SEAL (0.8-M)	
EJ	25	1	**8C-7524**		SEAL (35-CM)	
					AVAILABLE REPAIR KIT(S):	
J			**285-9109**	1	KIT-SEAL (HVAC)	
					(INCLUDES GASKETS & SEALS)	

D-ORDER BY THE METER
E-ORDER BY THE CENTIMETER
J-KIT MARKED J SERVICES PARTS MARKED J
M-METRIC PART

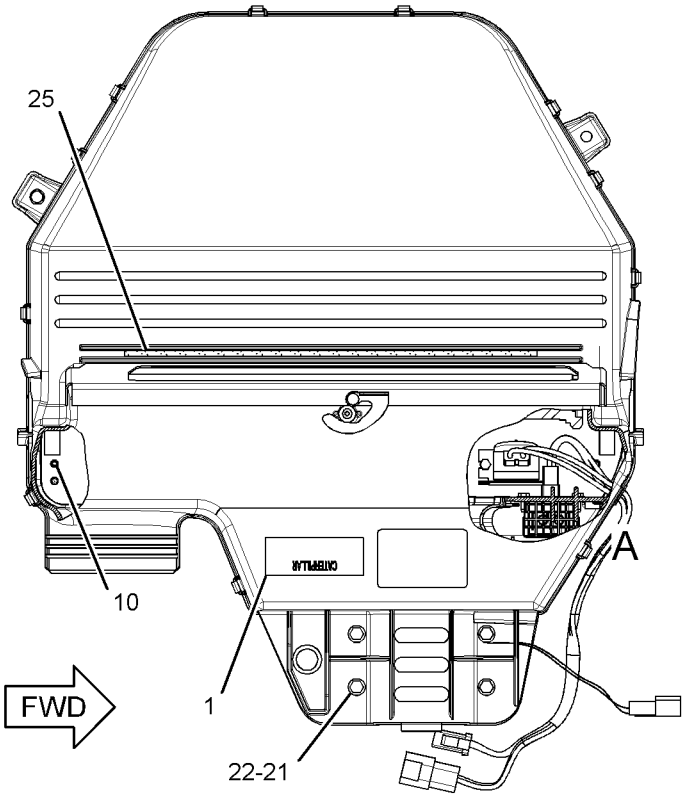

TOP VIEW

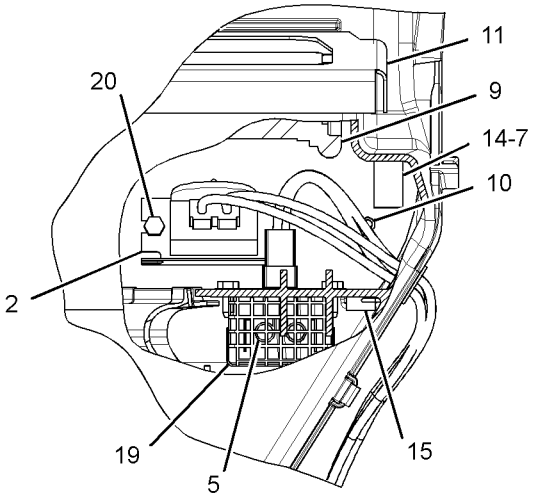

VIEW OF AREA A

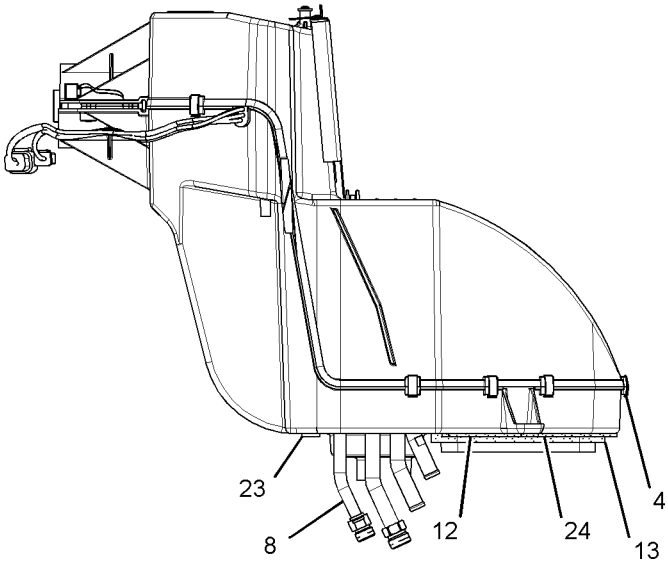

FRONT VIEW

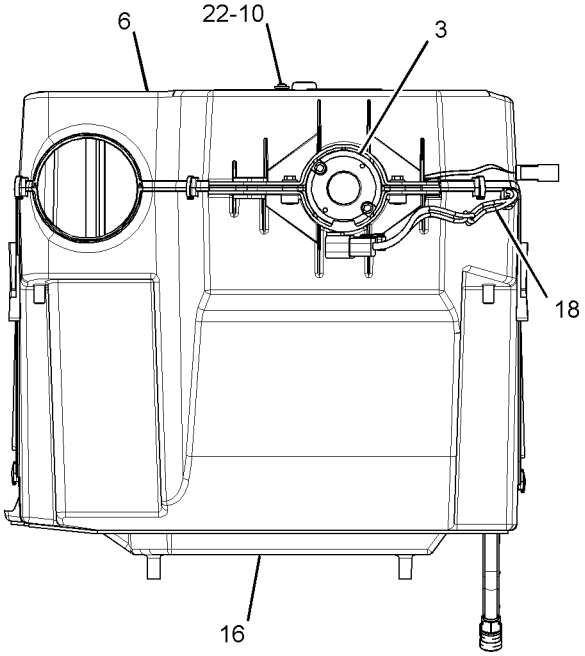

RIGHT SIDE VIEW

GRAPHIC #1 **<END>** g01460871

OPERATOR STATION

210-8364 HEATER GP-CAB

S/N: LMS1-UP
PART OF 206-1800 HEATER GP-CAB
AN ATTACHMENT

SMCS-7304 **i03889371**

NOTE	REF NO	GRAPHIC REF	PART NUMBER	QTY	PART NAME 1 2 3 4 5 6 (PRODUCT LEVEL)	SEE PAGE
	1	1	**8C-3756**	1	FILM-IDENTIFICATION (GROUP NO., SEQUENCE NO.)	
	2	1	**304-8965**	1	BLOWER GP-CAB (HEATER)	
		1	**177-9645**	1	KIT-RECEPTACLE (2-PIN)	
					(INCLUDES RECEPTACLE AS & WEDGE)	
		1	**7T-0093**	2	PIN-CONNECTOR (12-GA TO 14-GA)	
	3	1	**185-4015**	11	CLIP	
	4	1	**204-9921**	1	RESISTOR AS (HEATER)	
	5	1	**210-7665**	1	HOUSING-TOP	
	6	1	**210-7666**	1	BAFFLE	
	7	1	**210-8402**	1	COIL AS-HEATER	
DJ		1	**5P-5688**		SEAL (1-M)	
J		1	**219-6288**	1	GASKET	
	8	1	**211-2660**	1	FILTER ELEMENT-AIR (CAB HEATER, AIR CONDITIONER)	
	9	1	**212-3416**	3	SCREW-PAN HEAD (8-16XO.5-IN)	
	10	1	**219-6281**	1	COVER AS	
		1	**219-6283**	1	LATCH	
		1	**6C-3680**	1	RIVET-POP	
J	11	1	**219-6284**	2	GASKET	
J	12	1	**219-6285**	1	GASKET	
J	13	1	**219-6286**	1	GASKET	
J	14	1	**219-6287**	2	GASKET	
	15	1	**219-6292**	1	HOUSING AS	
		1	**7H-3937**	4	LOCKWASHER (EXTERNAL TOOTH)	
M		1	**129-3178**	4	LOCKNUT (M6X1-THD)	
	17	1	**253-2470**	1	HARNESS AS-HEATER	
		1	**192-2112**	3	SOCKET-TERMINAL	
		1	**128-7716**	1	CONNECTOR	
		1	**220-5725**	1	GROMMET	
		1	**7T-0093**	3	PIN-CONNECTOR (12-GA TO 14-GA)	
		1	**8T-8737**	1	PLUG-SEAL	
		1	**177-9653**	1	KIT-RECEPTACLE (4-PIN)	
					(INCLUDES RECEPTACLE AS & WEDGE)	
	18	1	**253-9510**	1	GUARD	
	19	1	**2S-3745**	2	SCREW-TAPPING (10-16XO.5-IN)	
M	20	1	**6V-7357**	4	BOLT (M6X1X25-MM)	
	21	1	**8T-4205**	5	WASHER-HARD (7.2X14.5X2-MM THK)	
D	22	1	**5P-5655**		SEAL (O.5-M)	
DJ	23	1	**5P-5637**		SEAL (O.8-M)	
EJ	24	1	**8C-7524**		SEAL (35-CM)	
					AVAILABLE REPAIR KIT(S):	
J			**285-9109**	1	KIT-SEAL (HVAC)	
					(INCLUDES SEALS & GASKETS)	

D-ORDER BY THE METER
E-ORDER BY THE CENTIMETER
J-KIT MARKED J SERVICES PARTS MARKED J
M-METRIC PART

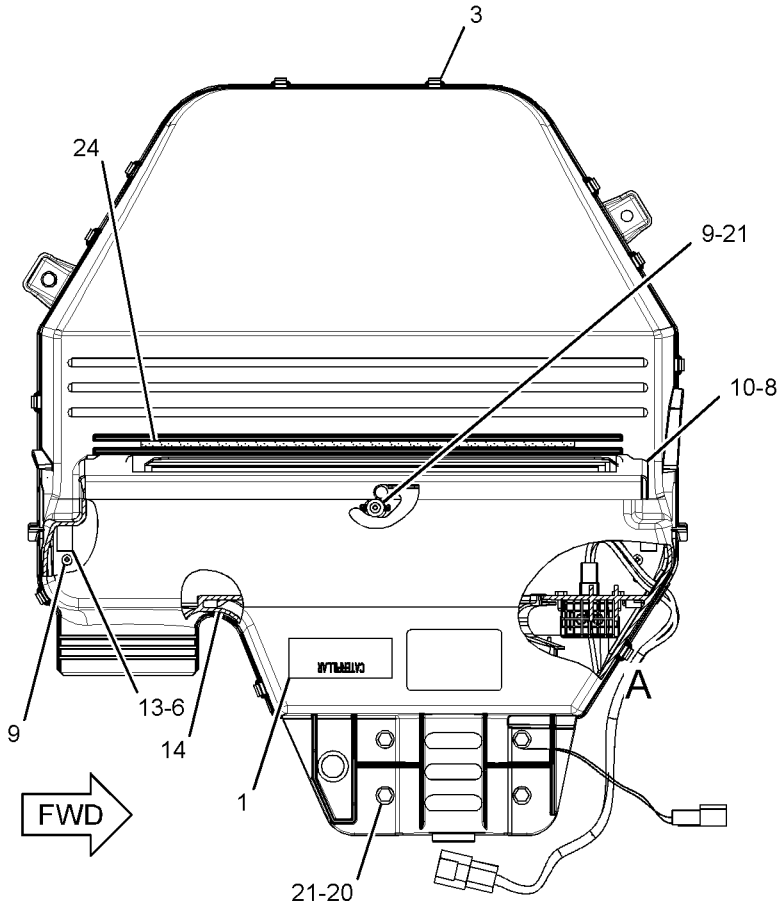

TOP VIEW

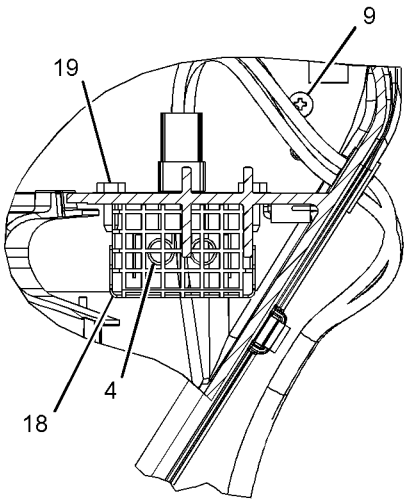

VIEW OF AREA A

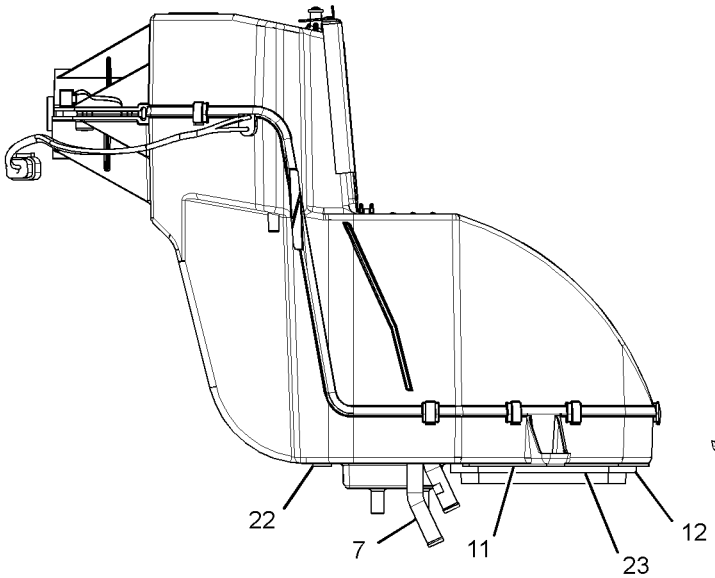

FRONT VIEW

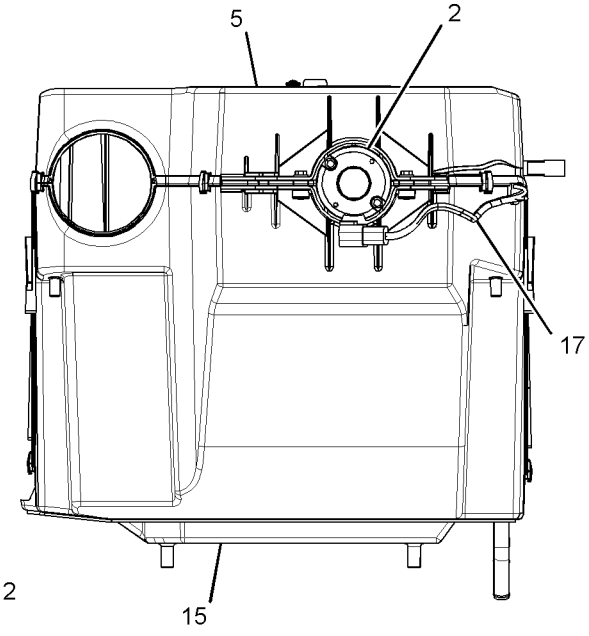

RIGHT SIDE VIEW

GRAPHIC #1 **<END>** g01460989

OPERATOR STATION

281-7219 KIT-CAB WINDOW—REAR

S/N: LMS1-UP

AN ATTACHMENT

SMCS-7310 **i03849767**

NOTE	REF NO	GRAPHIC REF	PART NUMBER	QTY	PART NAME 1 2 3 4 5 6 (PRODUCT LEVEL)	SEE PAGE
	1	1	**8S-7803**	2	RING-RETAINING	
	2	1	**172-4211**	8	SPACER (10.5X22X50.8-MM THK)	
Y	3	1	*229-0300*	1	WINDOW GP-CAB (REAR)	592
	4	1	**129-5256**	4	BUSHING	
	5	1	**129-5257**	8	BUSHING	
M	6	1	**131-3987**	8	SCREW (M4X0.7X12-MM)	
	7	1	**159-4945**	2	KEEPER	
Y	8	1	**205-9619**	1	WINDOW GP-CAB (UPPER, LH)	588
	9	1	**205-9622**	1	GLASS (LOWER, LH)	
Y	10	1	**205-9628**	1	WINDOW GP-CAB (UPPER, RH)	590
	11	1	**205-9631**	1	GLASS (LOWER, RH)	
	12	1	**206-1590**	4	PIN	
	13	1	**159-4946**	2	KEEPER	

M-METRIC PART
Y-SEPARATE ILLUSTRATION

281-7219 **KIT-CAB WINDOW** *(contd.)* **i03849767**

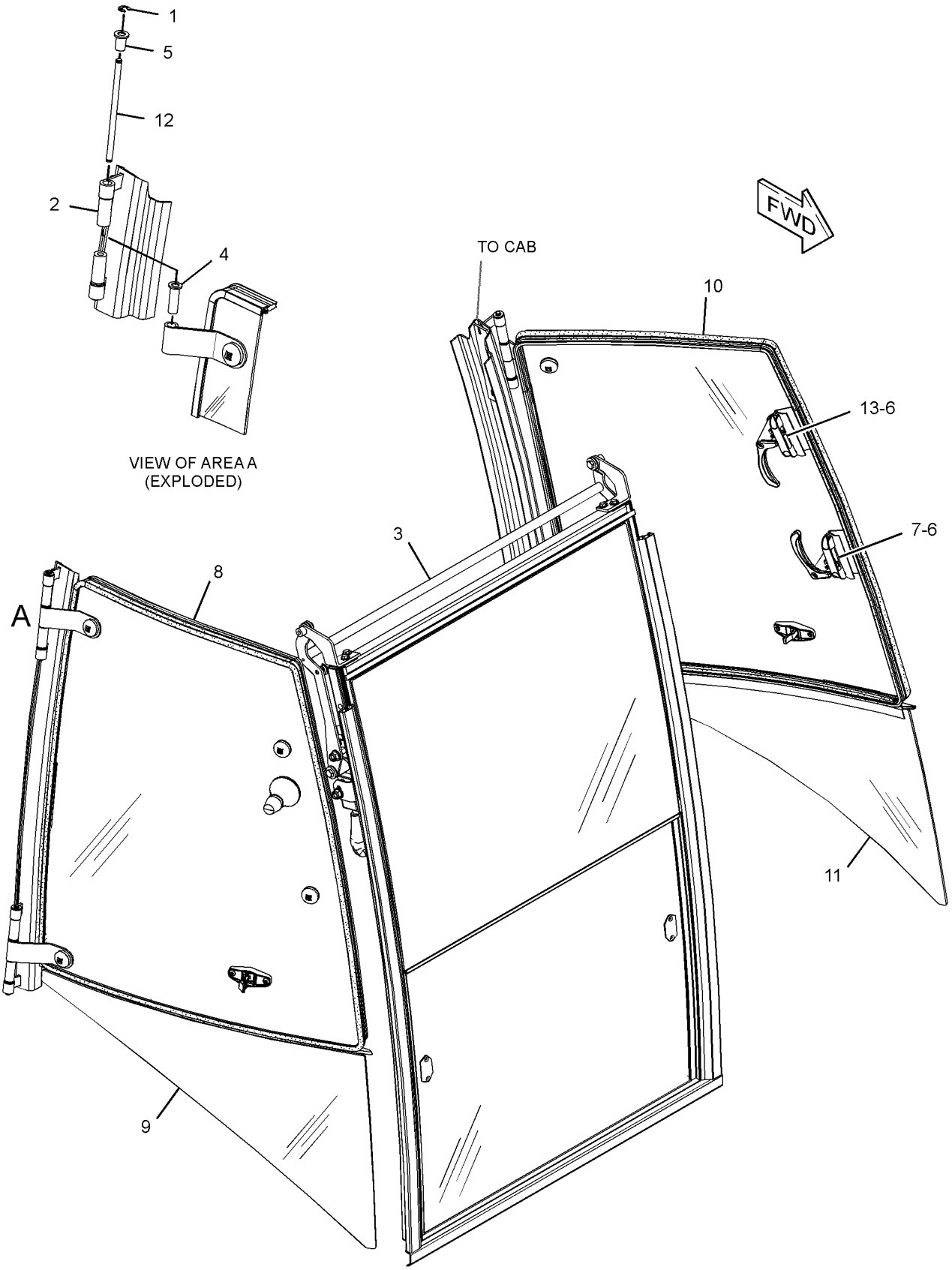

GRAPHIC #1 **<END>** g01861653

299-6985 LATCH GP-CAB DOOR & WINDOW

S/N: LMS1-UP
PART OF 205-9619, 205-9628, 327-7601, 327-7637 WINDOW GP-CAB, 333-9902 WINDOW GP-DOOR
AN ATTACHMENT

SMCS-7308, 7310 **i02693060**

NOTE	REF NO	GRAPHIC REF	PART NUMBER	QTY	PART NAME 1 2 3 4 5 6 (PRODUCT LEVEL)	SEE PAGE
M	1	1	**161-6984**	1	SCREW-TRUSS HEAD (M5X0.8X20-MM)	
	2	1	**161-6987**	1	WASHER-HARD (5.2X16X1.5-MM THK)	
	3	1	**161-9294**	1	SPRING-FLAT WIRE	
M	4	1	**162-6556**	1	LOCKNUT (M6X1-THD)	
M	5	1	**5C-2874**	1	NUT (M5X0.8-THD)	

M-METRIC PART

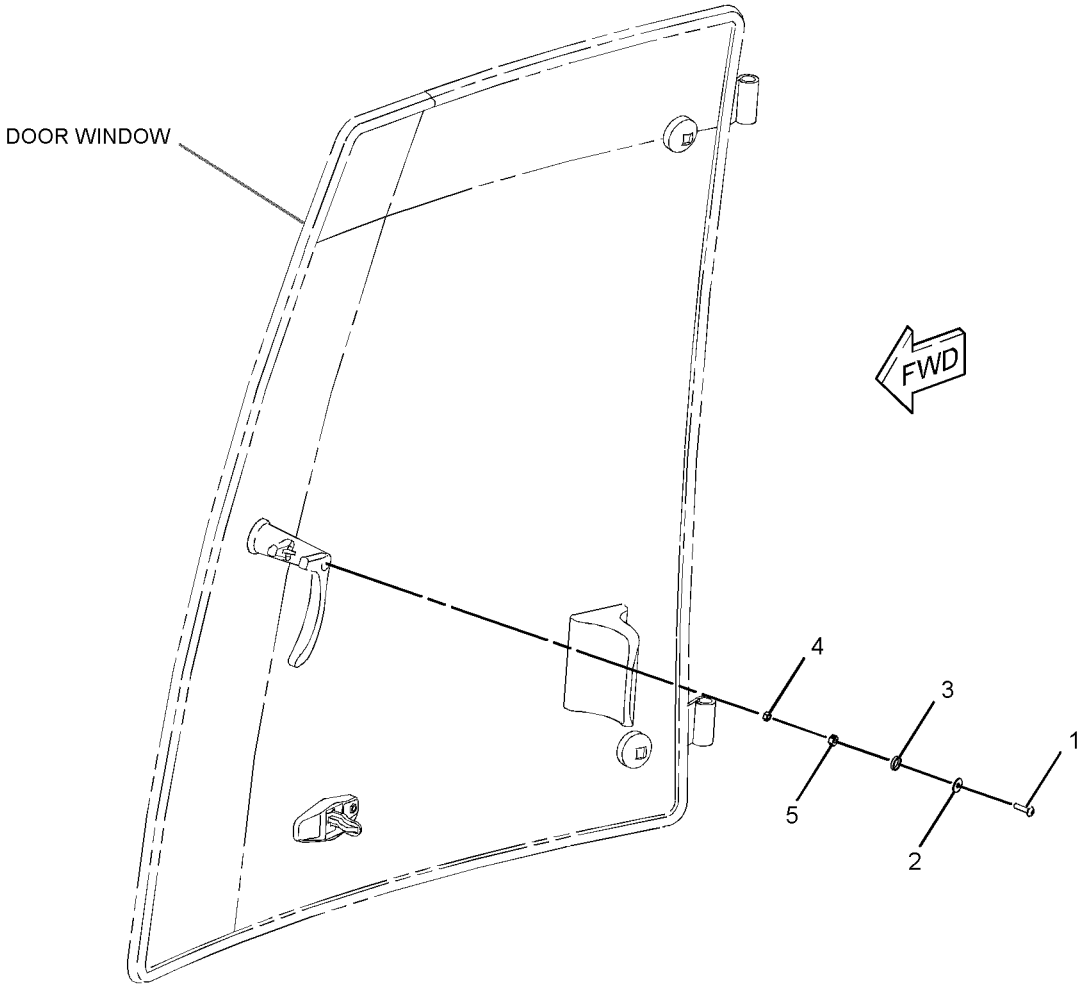

GRAPHIC #1 **<END>** g01353996

299-6986 LATCH GP-CAB DOOR & WINDOW

S/N: LMS1-UP
PART OF 205-9619, 205-9628, 327-7601, 327-7637 WINDOW GP-CAB, 333-9901 WINDOW GP-DOOR
AN ATTACHMENT

SMCS-7308, 7310 **i02693061**

NOTE	REF NO	GRAPHIC REF	PART NUMBER	QTY	PART NAME 1 2 3 4 5 6 (PRODUCT LEVEL)	SEE PAGE
M	1	1	**161-6984**	1	SCREW-TRUSS HEAD (M5X0.8X20-MM)	
	2	1	**161-6987**	1	WASHER-HARD (5.2X16X1.5-MM THK)	
	3	1	**161-9294**	1	SPRING-FLAT WIRE	
M	4	1	**162-6556**	1	LOCKNUT (M6X1-THD)	
M	5	1	**5C-2874**	1	NUT (M5X0.8-THD)	

M-METRIC PART

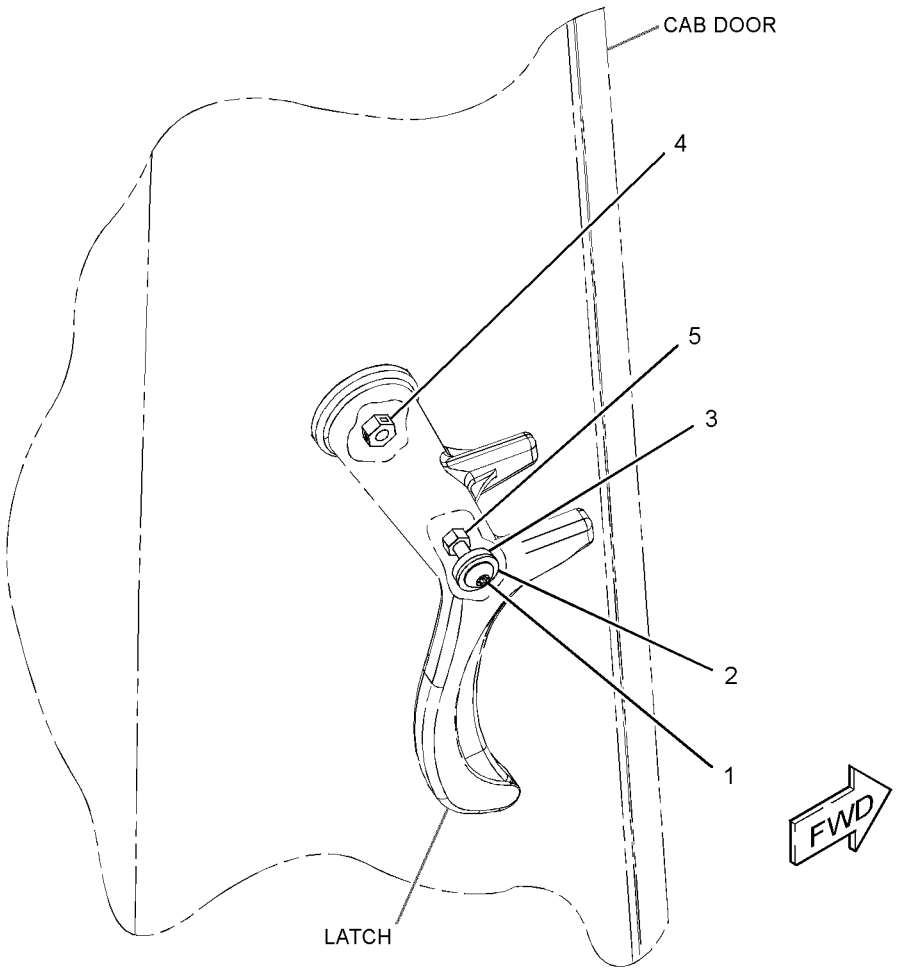

GRAPHIC #1 **<END>** g01354326

OPERATOR STATION

209-3367 LEVER GP-GOVERNOR–HANDHELD

S/N: LMS1-UP

PART OF 206-1640 CONTROL GP-GOVERNOR

SMCS-1265 **i02159826**

NOTE	REF NO	GRAPHIC REF	PART NUMBER	QTY	PART NAME 1 2 3 4 5 6 (PRODUCT LEVEL)	SEE PAGE
	1	1	**209-3366**	1	CABLE AS	
	2	1	**219-0343**	1	LEVER AS	
	3	1	**8T-4742**	1	END-YOKE ROD	
	4	1	**8T-4744**	1	PIN AS-SPRING	
M	5	1	**8T-4971**	1	BOLT (M6X1X30-MM)	
M	6	1	**129-3178**	1	LOCKNUT (M6X1-THD)	

M-METRIC PART

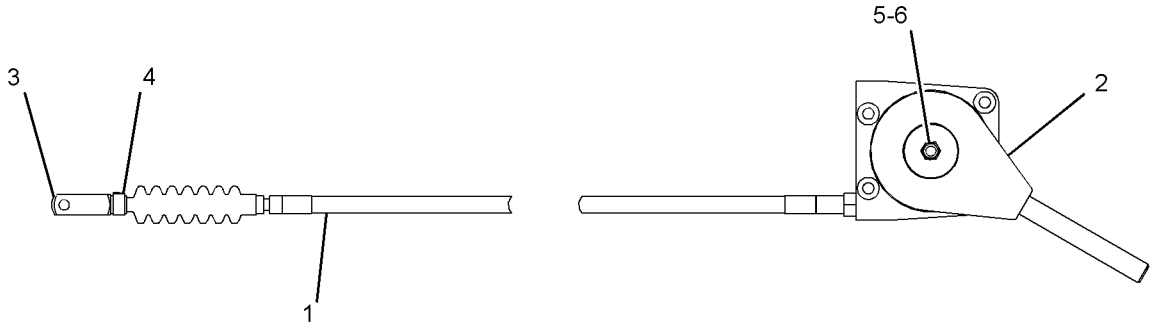

GRAPHIC #1 **<END>** g01096744

OPERATOR STATION

317-5543 LINER GP-CAB

S/N: LMS1-UP

PART OF 291-9194, 291-9195 CAB AR-ENCLOSED ROPS

AN ATTACHMENT

SMCS-7329 **i03737980**

NOTE	REF NO	GRAPHIC REF	PART NUMBER	QTY	PART NAME 1 2 3 4 5 6 (PRODUCT LEVEL)	SEE PAGE
	1	1	**325-9311**	3	FASTENER	
	2	1	**5G-2003**	2	SPACER (6.8X13X10-MM THK)	
	3	1	**8E-1118**	1	ANTENNA AS	
	4	1	**8R-6111**	1	CABLE AS-COAXIAL	
	5	1	**9U-8263**	1	COVER	
	6	1	**084-4277**	1	LAMP GP-DOME (12-VOLT)	
		1	**210-8754**	1	LAMP (12-VOLT)	
	7	1	**132-2249**	1	SPACER (7.4X12.7X24-MM THK)	
	8	1	**145-0981**	2	SPACER (8.5X12.7X18-MM)	
	9	1	**169-7291**	2	COVER-SPEAKER	
	10	1	**209-4716**	2	PLATE	
	11	1	**262-9567**	2	SPEAKER	
M	12	1	**8C-4982**	8	BOLT-SOCKET HEAD (M4X0.7X20-MM)	
	13	1	**9X-2038**	3	WASHER (7X19X2-MM THK)	
	14	1	**292-5773**	1	COVER	
	15	1	**317-5542**	1	LINER AS-CAB	
		1	**263-5781**	2	PLATE AS	
					(EACH INCLUDES)	
		1	**205-7047**	8	INSERT-THREADED (M4X0.7-THD)	
M	16	1	**113-0920**	8	BOLT-SOCKET HEAD (M4X0.7X35-MM)	
M	17	1	**121-9870**	5	SCREW-MACHINE (M6X1X40-MM)	

M-METRIC PART

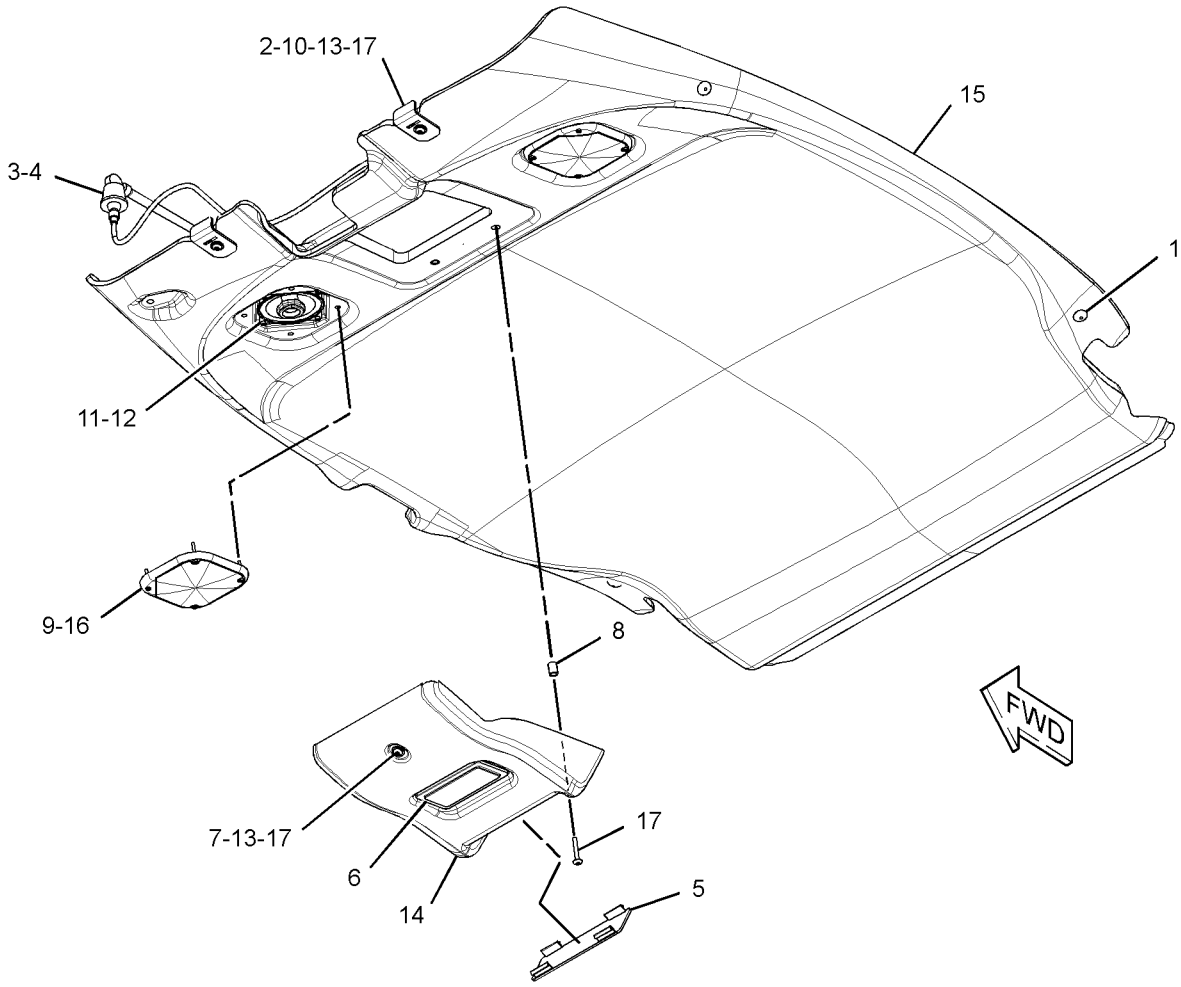

GRAPHIC #1 **<END>** g02020914

OPERATOR STATION

297-5251 LINES GP-HEATER

S/N: LMS1-UP
PART OF 291-9194 CAB AR-ENCLOSED ROPS
AN ATTACHMENT

SMCS-1812 **i03853793**

NOTE	REF NO	GRAPHIC REF	PART NUMBER	QTY	PART NAME 1 2 3 4 5 6 (PRODUCT LEVEL)	SEE PAGE
	1	1	**5D-1026**	8	CLAMP-BAND	
E	2	1	**5P-0767**		HOSE (22-CM)	
E	2A	1	**5P-0767**		HOSE (78-CM)	
E	2B	1	**5P-0767**		HOSE (278-CM)	
E	2C	1	**5P-0767**		HOSE (212-CM)	
	3	1	**6P-8855**	1	TUBE	
	4	1	**7K-1181**	3	STRAP-CABLE	
	5	1	**9M-4814**	1	CONNECTOR-HOSE	
	6	1	**6V-0675**	1	ELBOW	
	7	1	**3E-4321**	6	CLIP	
	8	1	**5D-0718**	1	CLIP	
	9	1	**5P-4116**	3	WASHER-HARD (8.8X20.5X2-MM THK)	
	10	1	**8T-4121**	1	WASHER-HARD (11X21X2.5-MM THK)	
M	11	1	**8T-4137**	1	BOLT (M10X1.5X20-MM)	
M	12	1	**8T-4189**	3	BOLT (M8X1.25X20-MM)	
M	13	1	**8T-4192**	1	BOLT (M12X1.75X25-MM)	
	14	1	**8T-4223**	1	WASHER-HARD (13.5X25.5X3-MM THK)	

E-ORDER BY THE CENTIMETER
M-METRIC PART

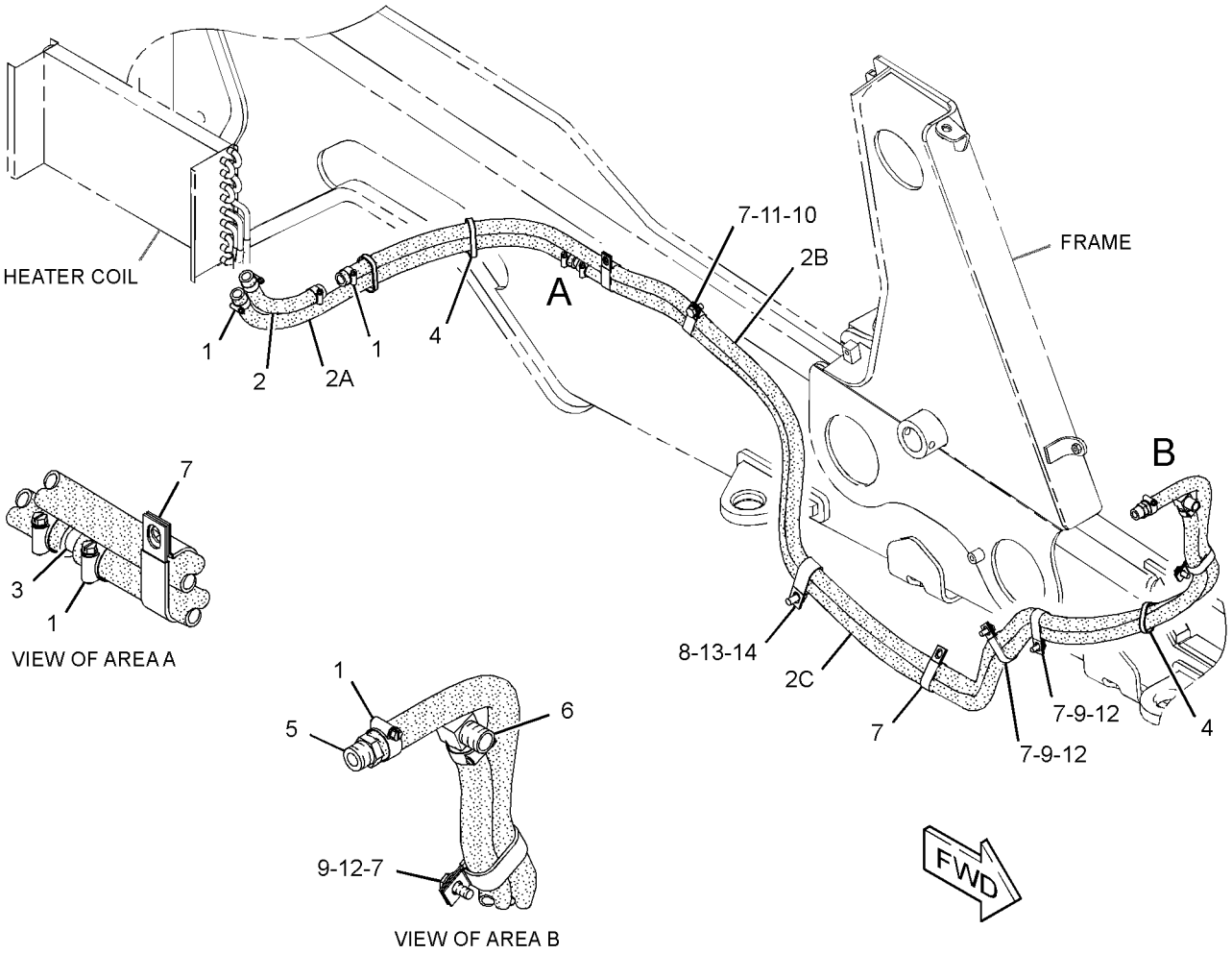

GRAPHIC #1 **<END>** g01513156

OPERATOR STATION

297-5250 LINES GP-HEATER & AIR COND

S/N: LMS1-UP

PART OF 291-9195 CAB AR-ENCLOSED ROPS

AN ATTACHMENT

SMCS-1380, 1808, 1812 **i03852171**

NOTE	REF NO	GRAPHIC REF	PART NUMBER	QTY	PART NAME 1 2 3 4 5 6 (PRODUCT LEVEL)	SEE PAGE
	1	1	**9X-7383**	2	SEAL-O-RING	
	2	1	**3S-2093**	1	STRAP-CABLE	
	3	1	**5D-1026**	8	CLAMP-BAND	
E	4	1	**5P-0767**		HOSE (22-CM)	
E	4A	1	**5P-0767**		HOSE (78-CM)	
E	4B	1	**5P-0767**		HOSE (212-CM)	
E	4C	1	**5P-0767**		HOSE (278-CM)	
	5	1	**6P-8855**	1	TUBE	
	6	1	**7K-1181**	6	STRAP-CABLE	
	7	1	**9M-4814**	1	CONNECTOR-HOSE	
	8	1	**315-7790**	1	PLATE	
	9	1	**114-0063**	1	PLATE-INSTRUCTION	
	10	1	**130-9984**	4	CLIP	
	11	1	**6V-0675**	1	ELBOW	
	12	1	**151-4841**	2	BLOCK	
	13	1	**170-0235**	1	ACCUMULATOR-REFRIGERANT (AIR CONDITIONER)	
I	14	1	**214-3736**	1	HOSE AS	
I	15	1	**214-3737**	1	HOSE AS	
	16	1	**283-4237**	1	RECEIVER-REFRIGERANT DRYER (AIR CONDITIONER)	
		1	**3E-0068**	1	TUBE AS-REFRIGERANT ORIFICE	
	17	1	**289-6018**	2	U-BOLT	
	18	1	**289-6021**	1	PLATE	
	19	1	**297-5252**	1	HOSE AS	
I	20	1	**297-5253**	1	HOSE AS	
	21	1	**297-5254**	1	HOSE AS	
	22	1	**317-4270**	1	BRACKET AS	
	23	1	**109-1633**	1	CLIP (SLOT)	
	24	1	**109-1634**	1	CLIP (TAB)	
M	25	1	**208-9293**	2	BOLT-FLANGE HEAD (M10X1.5X30-MM)	
	26	1	**2K-4973**	4	LOCKNUT (3/8-16-THD)	
	27	1	**3E-4321**	6	CLIP	
	28	1	**5D-0718**	1	CLIP	
	29	1	**5K-5338**	2	CLIP	
	30	1	**5P-4116**	4	WASHER-HARD (8.8X20.5X2-MM THK)	
M	31	1	**5C-7261**	1	NUT (M8X1.25-THD)	
	32	1	**8T-4121**	8	WASHER-HARD (11X21X2.5-MM THK)	
M	33	1	**8T-4195**	1	BOLT (M10X1.5X30-MM)	
M	34	1	**8T-4137**	3	BOLT (M10X1.5X20-MM)	
M	35	1	**8T-4139**	1	BOLT (M12X1.75X30-MM)	
M	36	1	**8T-4189**	3	BOLT (M8X1.25X20-MM)	
M	37	1	**8T-4192**	1	BOLT (M12X1.75X25-MM)	
	38	1	**8T-4223**	2	WASHER-HARD (13.5X25.5X3-MM THK)	
	39	1	**9X-7380**	2	SEAL-O-RING	
	40	1	**9X-7381**	3	SEAL-O-RING	
	41	1	**9X-7382**	1	SEAL-O-RING	

E-ORDER BY THE CENTIMETER
I-REFER TO HYDRAULIC INFORMATION SYSTEM
M-METRIC PART

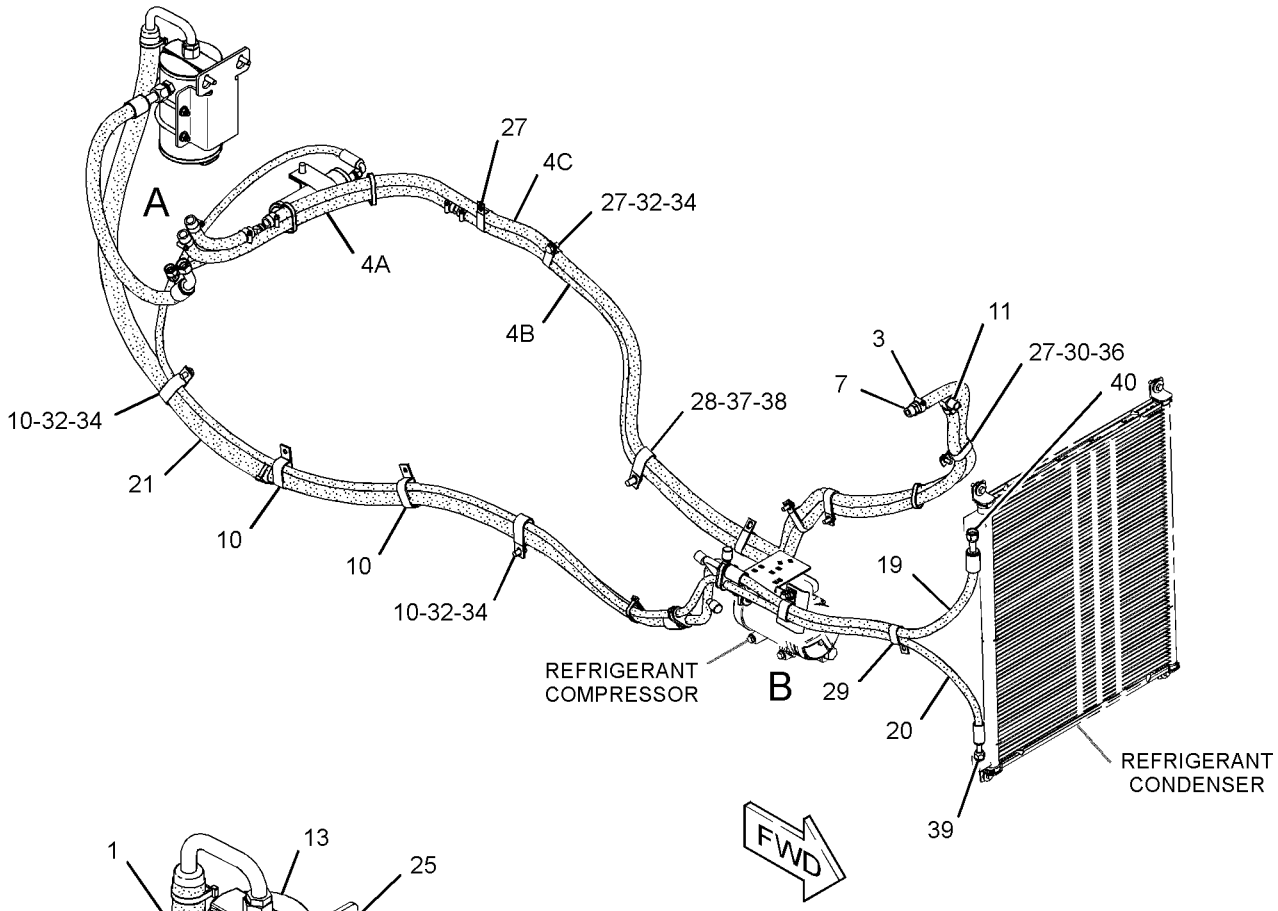

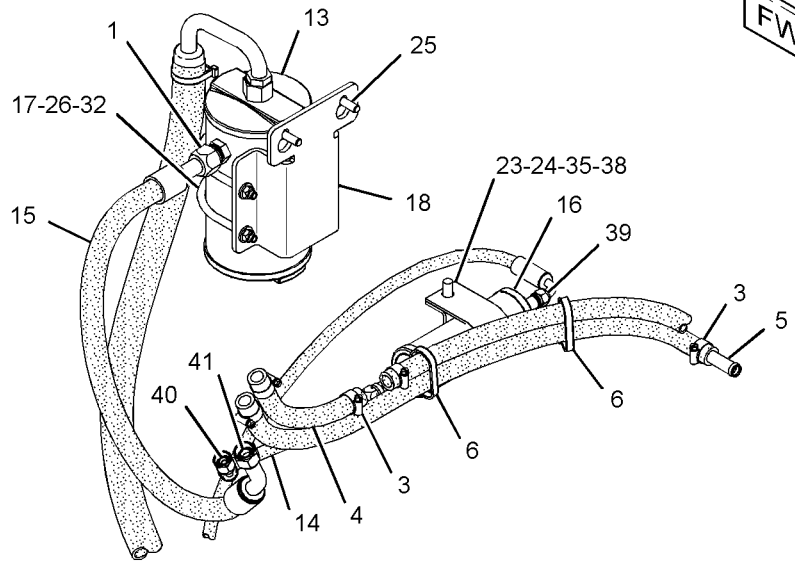

VIEW OF AREA A

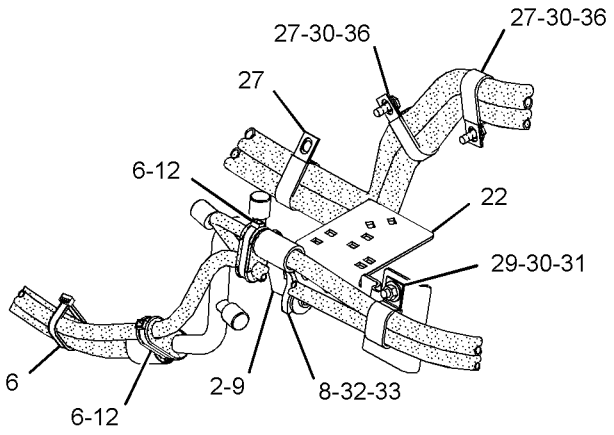

VIEW OF AREA B

GRAPHIC #1 **<END>** g01783893

OPERATOR STATION

205-9580 MIRROR GP-REAR VIEW–EXTERIOR

S/N: LMS1-UP

AN ATTACHMENT

SMCS-7319 **i02142941**

NOTE	REF NO	GRAPHIC REF	PART NUMBER	QTY	PART NAME 1 2 3 4 5 6 (PRODUCT LEVEL)	SEE PAGE
	1	1	**123-6620**	2	MIRROR AS	
	2	1	**159-7105**	1	BRACKET & MOUNTING AS (LH)	
	3	1	**159-7106**	1	BRACKET & MOUNTING AS (RH)	
	4	1	**8T-4224**	4	WASHER-HARD (8.8X16X2-MM THK)	
M	5	1	**8T-4908**	4	BOLT (M8X1.25X25-MM)	

M-METRIC PART

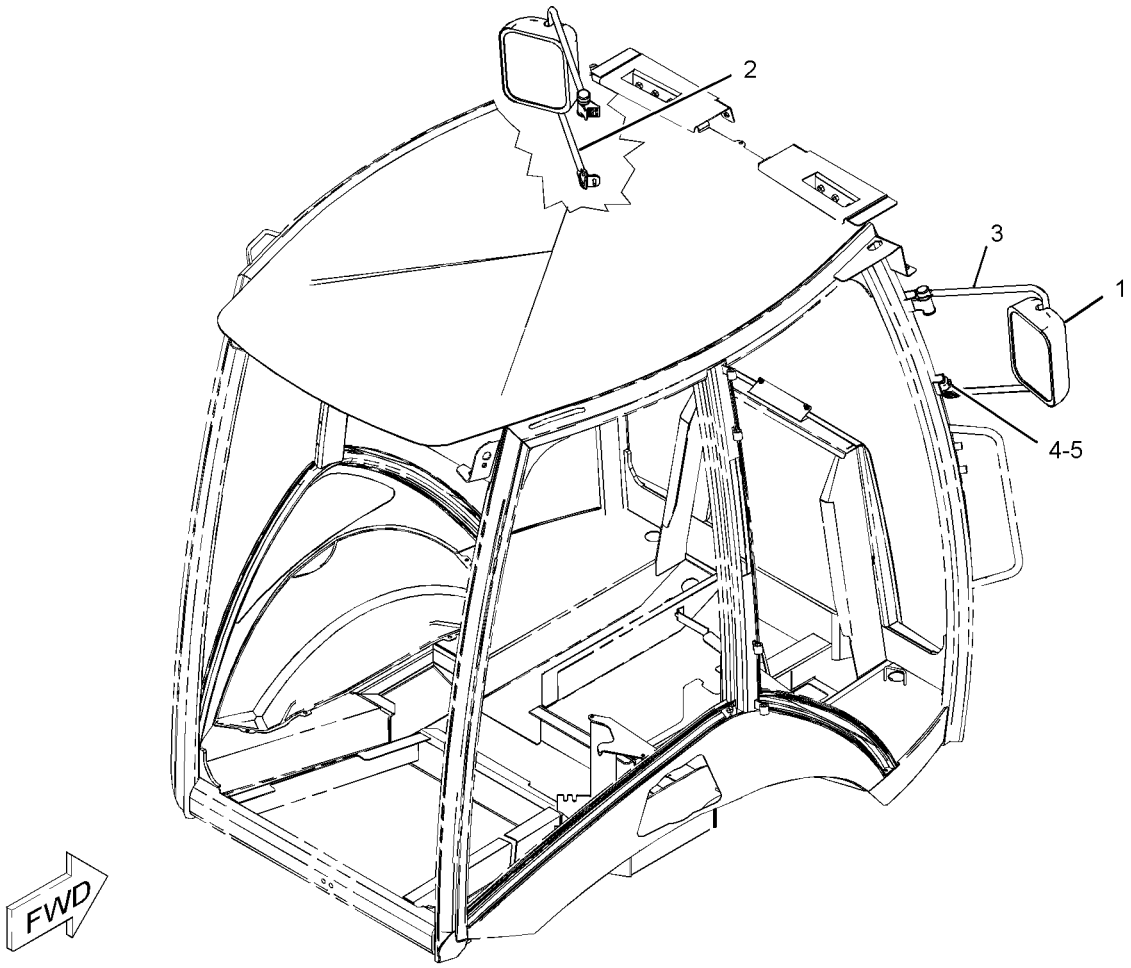

GRAPHIC #1 **<END>** g01090966

OPERATOR STATION

259-6276 MIRROR GP-REAR VIEW—INTERIOR

S/N: LMS1-UP
PART OF 291-9194, 291-9195 CAB AR-ENCLOSED ROPS, 291-9192 CANOPY AR-OPEN ROPS, 291-9191 CANOPY GP-OPEN ROPS
AN ATTACHMENT

SMCS-7319 **i02403099**

NOTE	REF NO	GRAPHIC REF	PART NUMBER	QTY	PART NAME 1 2 3 4 5 6 (PRODUCT LEVEL)	SEE PAGE
M	1	1	**8C-4982**	2	BOLT-SOCKET HEAD (M4X0.7X20-MM)	
	2	1	**199-0929**	1	MIRROR AS	
	3	1	**096-6166**	2	WASHER-HARD (4.5X9X1-MM THK)	

M-METRIC PART

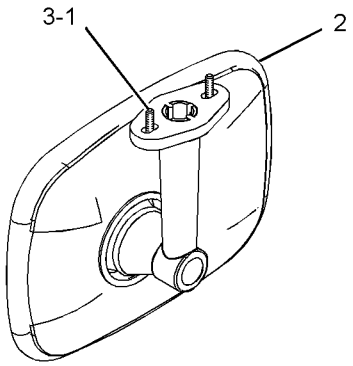

VIEW OF AREA A

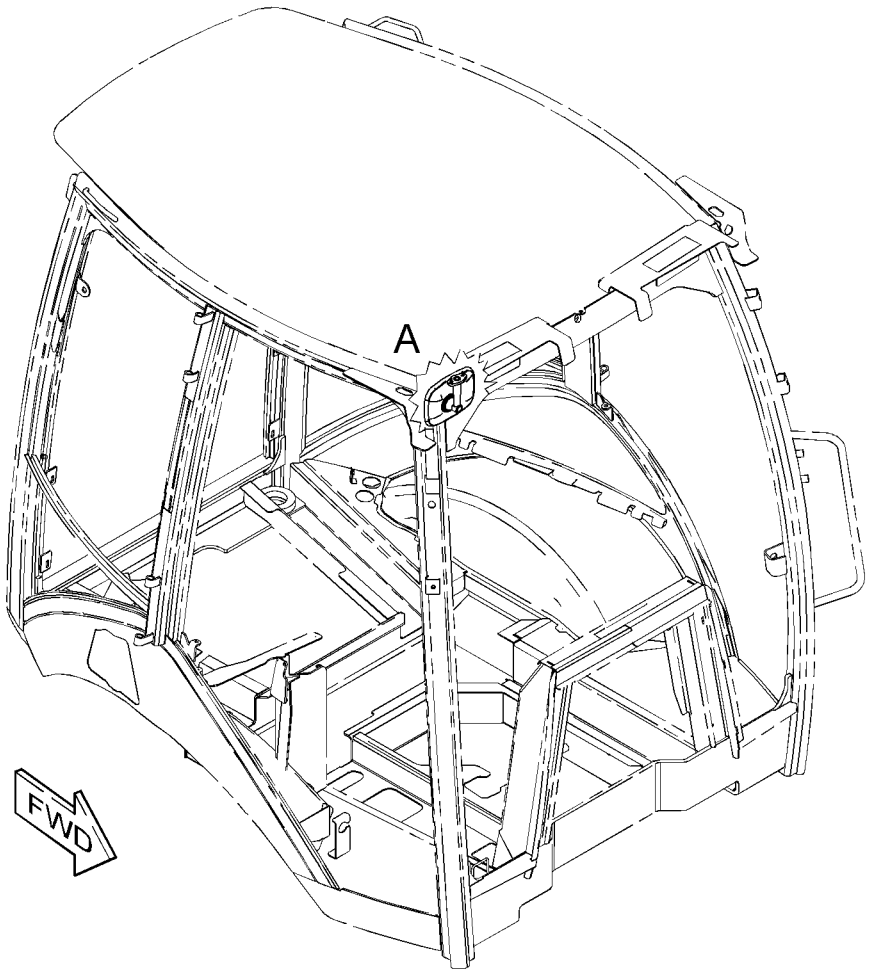

GRAPHIC #1 **<END>** g01214241

186-2589 MOTOR GP-WINDOW WIPER—FRONT

S/N: LMS1-UP

PART OF 206-1728 WIPER & WASHER GP-WINDOW, 206-1725 WIPER GP-WINDOW

AN ATTACHMENT

SMCS-7305 **i02218671**

NOTE	REF NO	GRAPHIC REF	PART NUMBER	QTY	PART NAME 1 2 3 4 5 6 (PRODUCT LEVEL)	SEE PAGE
M	1	1	**5C-7261**	1	NUT (M8X1.25-THD)	
	2	1	**3F-9556**	1	LOCKWASHER	
	3	1	**152-7691**	1	MOTOR GP-WINDOW WIPER	
		1	**9G-3695**	1	PLUG-SEAL	
		1	**102-8805**	1	KIT-RECEPTACLE (6-PIN)	
					(INCLUDES RECEPTACLE AS & WEDGE)	
		1	**186-3735**	5	PIN-CONNECTOR (16-GA TO 18-GA)	
	4	1	**206-5823**	1	CAP	

M-METRIC PART

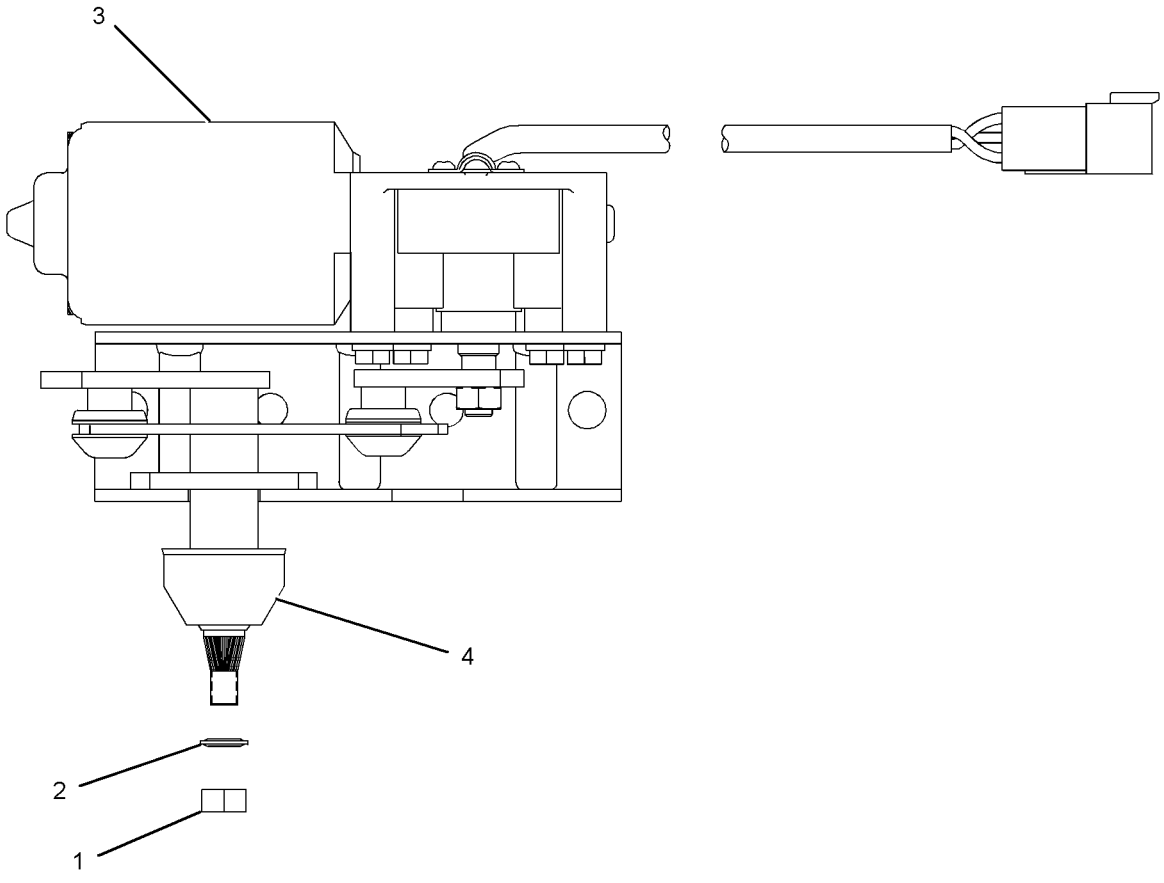

GRAPHIC #1 **<END>** g01120206

OPERATOR STATION

330-5010 MOTOR GP-WINDOW WIPER–REAR

S/N: LMS1-UP
PART OF 206-1725 WIPER GP-WINDOW
AN ATTACHMENT

SMCS-7305 **i03889151**

NOTE	REF NO	GRAPHIC REF	PART NUMBER	QTY	PART NAME 1 2 3 4 5 6 (PRODUCT LEVEL)	SEE PAGE
	1	1	**102-8804**	1	KIT-RECEPTACLE (4-PIN)	
					(INCLUDES RECEPTACLE AS & WEDGE)	
	2	1	**263-3823**	1	CAP-WIPER	
	3	1	**3F-9556**	1	LOCKWASHER	
M	4	1	**5C-7261**	1	NUT (M8X1.25-THD)	
	5	1	**186-3735**	4	PIN-CONNECTOR (16-GA TO 18-GA)	

M-METRIC PART

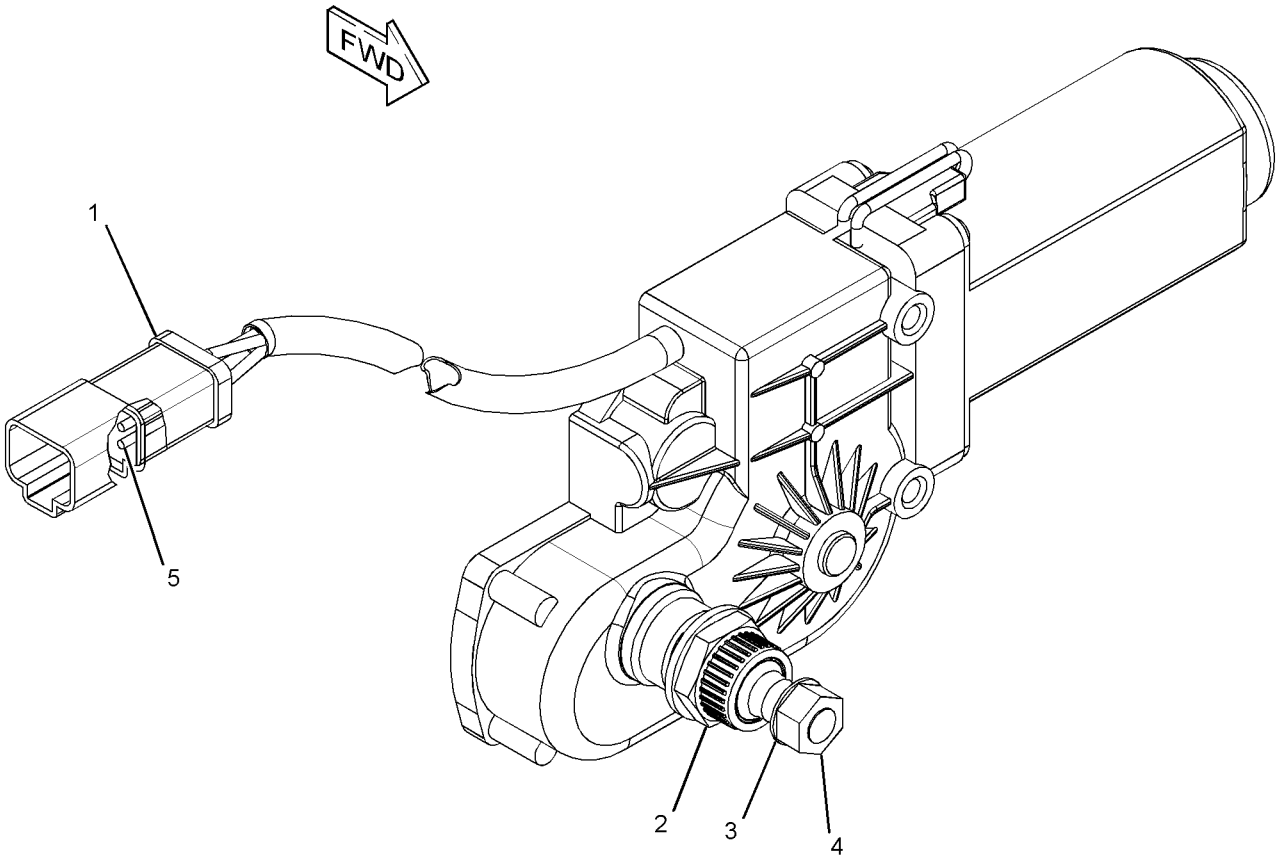

GRAPHIC #1 **<END>** g02133753

205-9560 MOUNTING GP-CAB

S/N: LMS1-UP

PART OF 291-9194, 291-9195 CAB AR-ENCLOSED ROPS, 291-9192 CANOPY AR-OPEN ROPS, 291-9191 CANOPY GP-OPEN ROPS

AN ATTACHMENT

SMCS-7301 **i03845646**

NOTE	REF NO	GRAPHIC REF	PART NUMBER	QTY	PART NAME 1 2 3 4 5 6 (PRODUCT LEVEL)	SEE PAGE
	1	1	**6Y-9930**	2	MOUNT AS	
	2	1	**118-2990**	2	MOUNT AS	
	3	1	**9W-6582**	2	SLEEVE	
M	4	1	**7X-2568**	2	BOLT (M20X2.5X180-MM)	
	5	1	**297-5849**	2	WASHER-HARD (17X75X10-MM THK)	
	6	1	**8T-4123**	4	WASHER (22X35X3.5-MM THK)	
M	7	1	**8T-4131**	2	NUT (M20X2.5-THD)	
M	8	1	**8T-4132**	2	NUT (M16X2-THD)	
M	9	1	**8T-4173**	2	BOLT (M16X2X110-MM)	
	10	1	**9W-6584**	2	WASHER (20.5X114X10-MM THK)	
	11	1	**9X-8257**	4	WASHER (17.5X30X3.5-MM THK)	
	12	1	**1L-6377**	2	BUTTON-PLUG	

M-METRIC PART

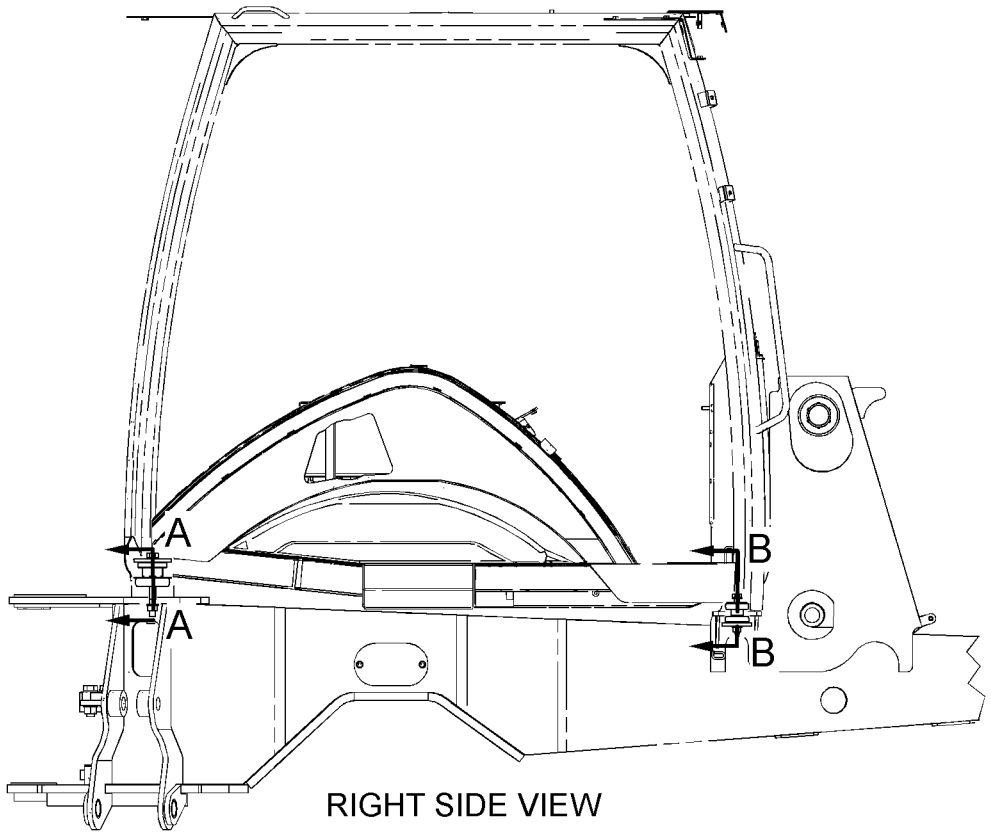

RIGHT SIDE VIEW

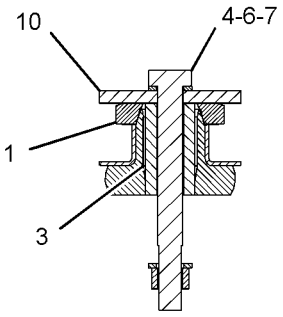

SECTION A-A

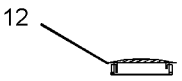

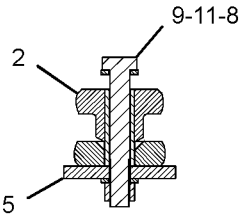

SECTION B-B

GRAPHIC #1 **<END>** g01189655

OPERATOR STATION

209-3378 PEDAL GP-GOVERNOR

S/N: LMS1-UP

PART OF 206-1640 CONTROL GP-GOVERNOR

SMCS-1265 **i03592816**

NOTE	REF NO	GRAPHIC REF	PART NUMBER	QTY	PART NAME 1 2 3 4 5 6 (PRODUCT LEVEL)	SEE PAGE
M	1	1	**129-3178**	1	LOCKNUT (M6X1-THD)	
M	2	1	**5C-7261**	1	NUT (M8X1.25-THD)	
M	3	1	**5C-9553**	1	BOLT (M6X1X16-MM)	
	4	1	**8T-4205**	1	WASHER-HARD (7.2X14.5X2-MM THK)	
M	5	1	**095-0641**	4	BOLT-SOCKET HEAD (M4X0.7X10-MM)	
	6	1	**243-0063**	1	BOOT	
	7	1	**3F-9556**	2	LOCKWASHER	
	8	1	**6V-8186**	2	NUT-FULL (5/16-24-THD)	
	9	1	**8T-6902**	3	CLIP	
M	10	1	**9X-2842**	1	BOLT (M8X1.25X45-MM)	
					AVAILABLE REPAIR KIT(S):	
			164-1154	1	KIT-SERVICE	
					(INCLUDES CLAMP & SCREWS)	
			243-0062	1	KIT-REPAIR (GOVERNOR PEDAL)	
					(INCLUDES SHAFT, CLIPS & BEARINGS)	

M-METRIC PART

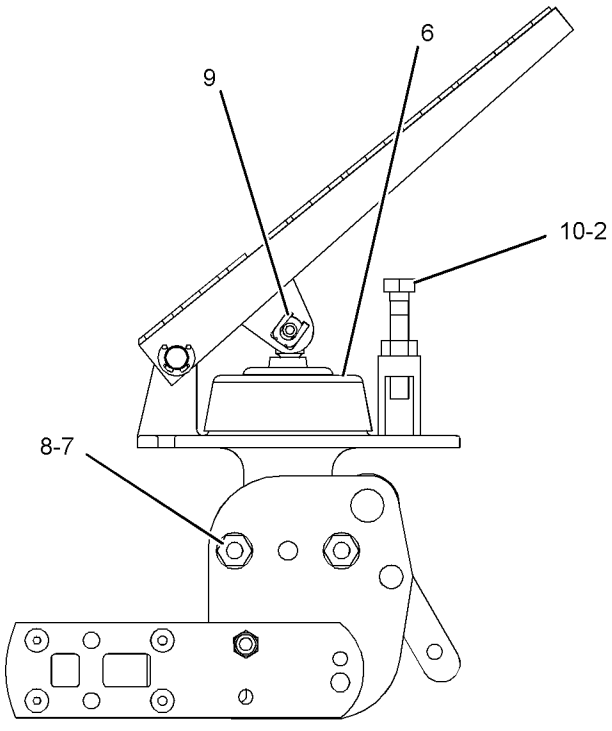

RIGHT SIDE VIEW

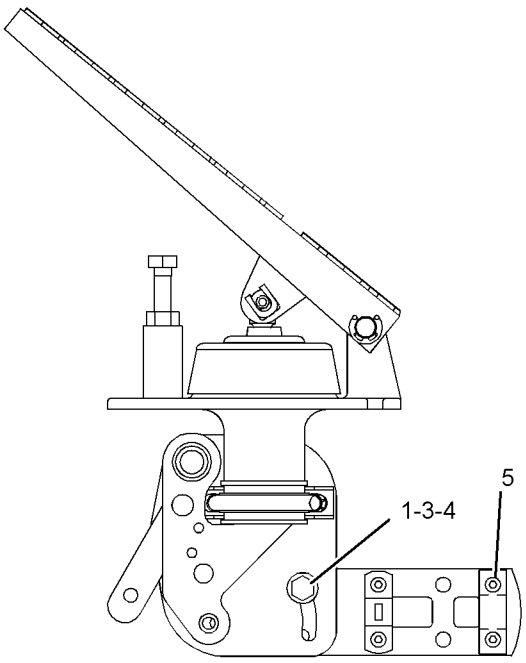

LEFT SIDE VIEW

GRAPHIC #1 **<END>** g01081364

OPERATOR STATION

263-9088 RADIO GP-COMMUNICATION–PRODUCT LINK 121SR

S/N: LMS1-UP

PART OF 225-7994 INSTALLATION GP-COMMUNICATION

AN ATTACHMENT

SMCS-733T **i03473241**

NOTE	PART NUMBER	QTY	PART NAME 1 2 3 4 5 6 (PRODUCT LEVEL)	SEE PAGE
	330-3408	1	SOFTWARE GP-COMMUNICATION (PRODUCT LINK 121SR)	

<END>

OPERATOR STATION

205-9568 ROOF GP-CAB

S/N: LMS1-UP

PART OF 291-9191 CANOPY GP-OPEN ROPS

AN ATTACHMENT

SMCS-7301 **i03880837**

NOTE	REF NO	GRAPHIC REF	PART NUMBER	QTY	PART NAME 1 2 3 4 5 6 (PRODUCT LEVEL)	SEE PAGE
	1	1	**205-9570**	1	COVER-ROOF (CENTER)	
	2	1	**205-9576**	1	COVER-ROOF (LH)	
	3	1	**205-9577**	1	COVER-ROOF (RH)	
	4	1	**220-3786**	1	COVER-ROOF (REAR)	
	5	1	**9X-6165**	16	WASHER (6.5X22X2.5-MM THK)	
M	6	1	**9X-2045**	9	SCREW-TRUSS HEAD (M6X1X20-MM)	
M	7	1	**8T-4138**	16	BOLT (M6X1X20-MM)	
	8	1	**9X-2038**	7	WASHER (7X19X2-MM THK)	

M-METRIC PART

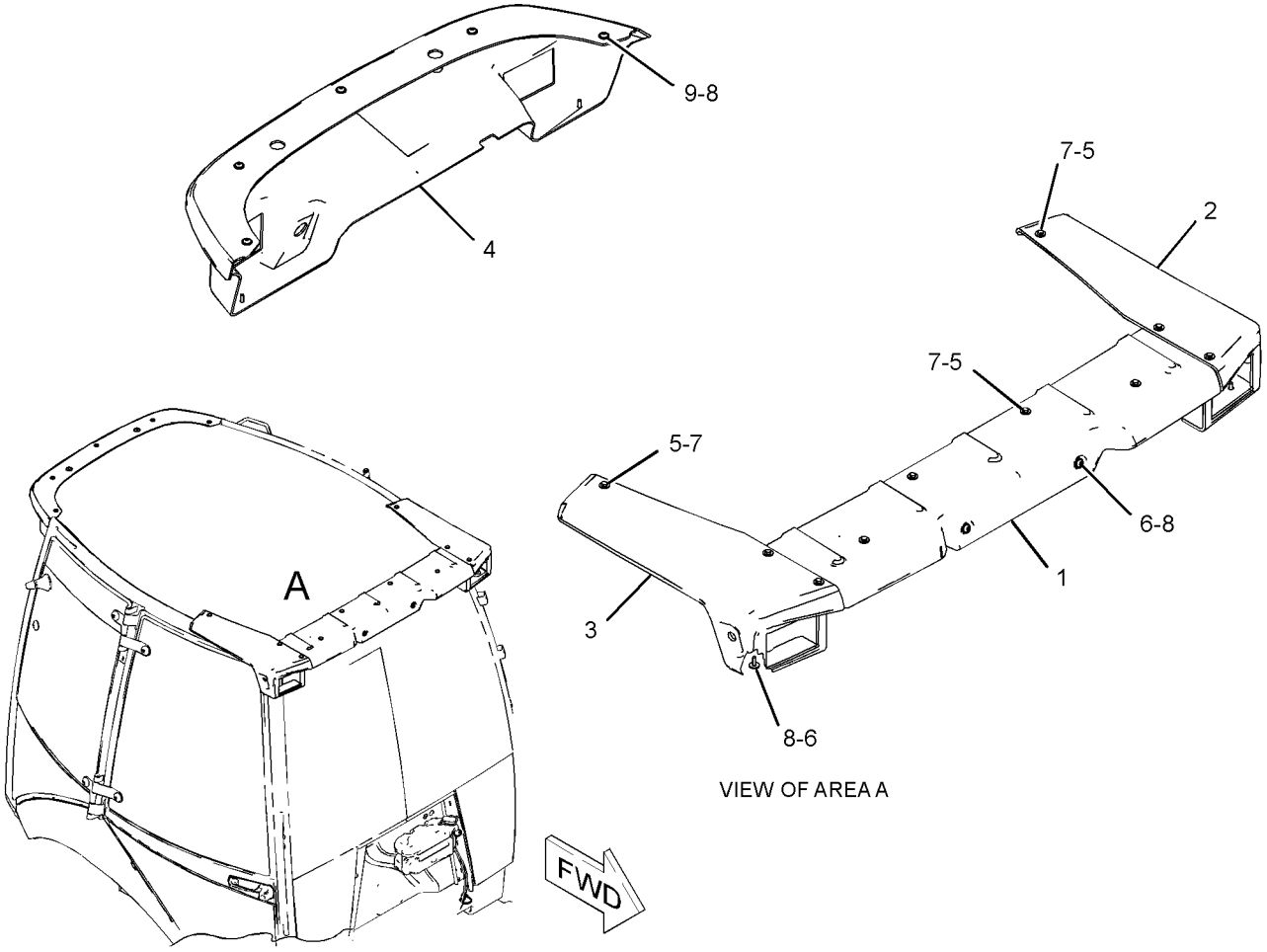

VIEW OF AREA A

GRAPHIC #1 **<END>** g01267607

OPERATOR STATION

205-9569 ROOF GP-CAB

S/N: LMS1-UP
NACD
PART OF 291-9194, 291-9195 CAB AR-ENCLOSED ROPS, 291-9192 CANOPY AR-OPEN ROPS
AN ATTACHMENT

SMCS-7301 **i03852118**

NOTE	REF NO	GRAPHIC REF	PART NUMBER	QTY	PART NAME 1 2 3 4 5 6 (PRODUCT LEVEL)	SEE PAGE
	1	1	**205-9570**	1	COVER-ROOF (CENTER)	
	2	1	**205-9571**	1	COVER-ROOF (REAR)	
	3	1	**205-9576**	1	COVER-ROOF (LH)	
	4	1	**205-9577**	1	COVER-ROOF (RH)	
	5	1	**9X-6165**	16	WASHER (6.5X22X2.5-MM THK)	
M	6	1	**8T-4138**	16	BOLT (M6X1X20-MM)	
	7	1	**9X-2038**	7	WASHER (7X19X2-MM THK)	
M	8	1	**9X-2045**	9	SCREW-TRUSS HEAD (M6X1X20-MM)	

M-METRIC PART

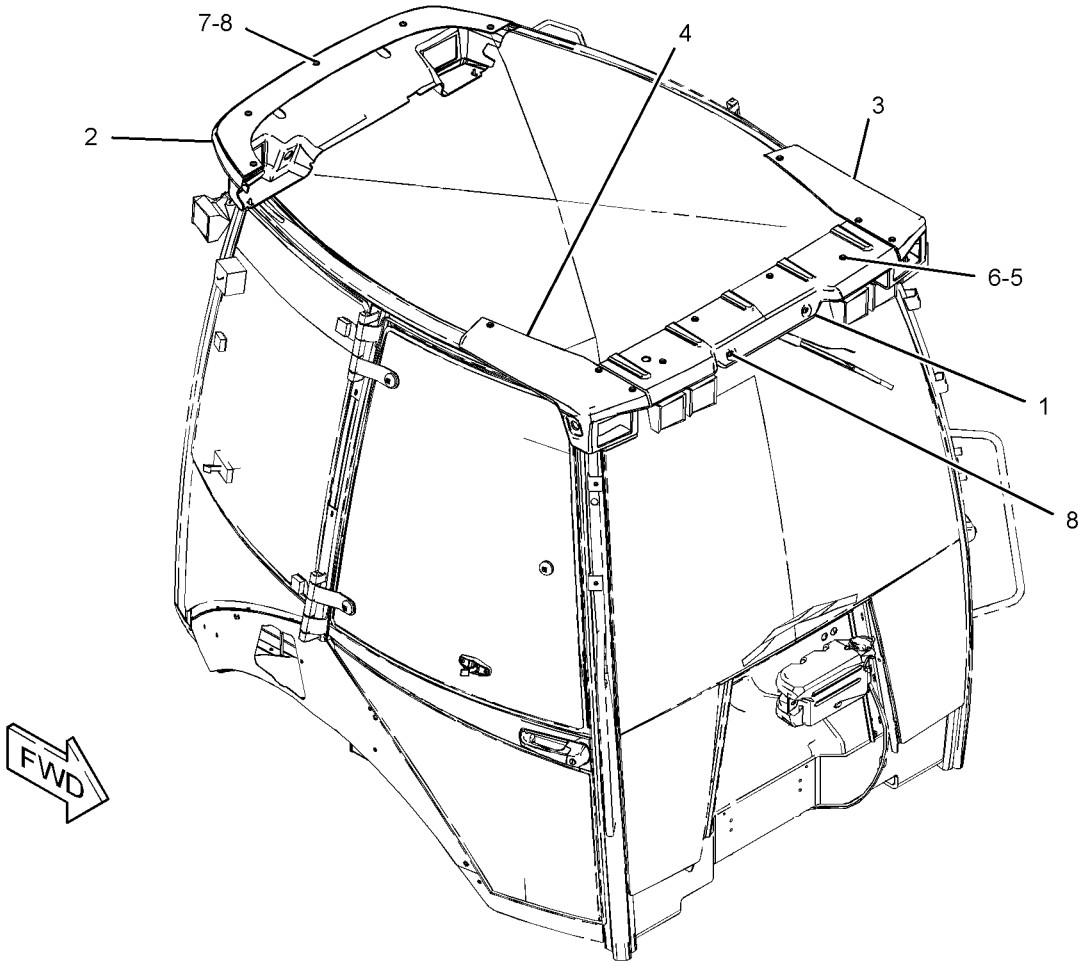

GRAPHIC #1 **<END>** g01233481

OPERATOR STATION

206-1747 SEAT BELT GP—RETRACTABLE, 2-IN

S/N: LMS1-UP

AN ATTACHMENT

SMCS-7327 **i02150894**

NOTE	REF NO	GRAPHIC REF	PART NUMBER	QTY	PART NAME 1 2 3 4 5 6 (PRODUCT LEVEL)	SEE PAGE
	1	1	**206-1749**	1	SEAT BELT (2-IN)	
	2	1	**8T-4223**	4	WASHER-HARD (13.5X25.5X3-MM THK)	
M	3	1	**8T-4956**	2	BOLT (M12X1.75X35-MM)	

M-METRIC PART

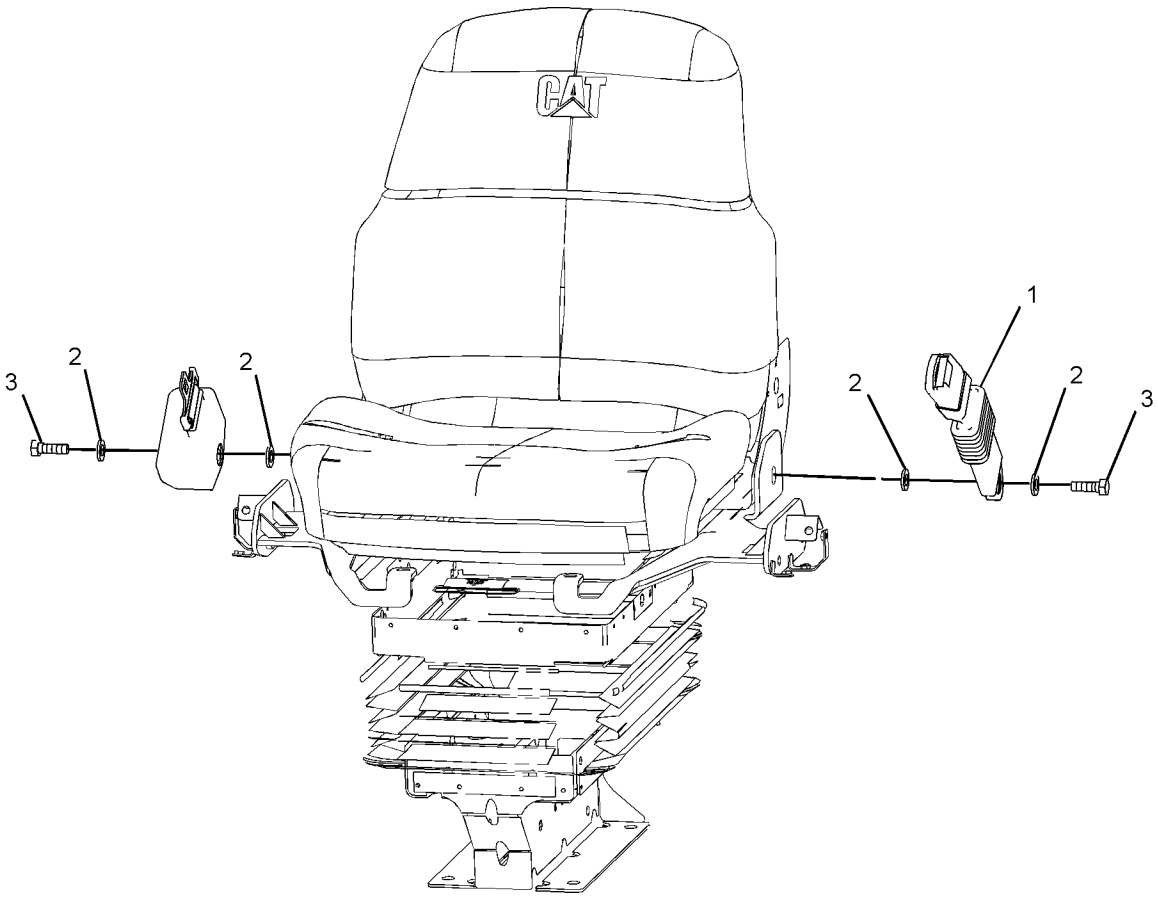

FRONT VIEW
(TOP LEFT)

GRAPHIC #1 **<END>** g01078751

OPERATOR STATION

206-1748 SEAT BELT GP–RETRACTABLE, 3-IN

S/N: LMS1-UP
FOR USE WITH IN CALIFORNIA, WASHINGTON, AND OREGON
AN ATTACHMENT

SMCS-7327 **i02209491**

NOTE	REF NO	GRAPHIC REF	PART NUMBER	QTY	PART NAME 1 2 3 4 5 6 (PRODUCT LEVEL)	SEE PAGE
	1	1	**206-1750**	1	SEAT BELT (3-IN)	
	2	1	**8T-4223**	4	WASHER-HARD (13.5X25.5X3-MM THK)	
M	3	1	**8T-4956**	2	BOLT (M12X1.75X35-MM)	

M-METRIC PART

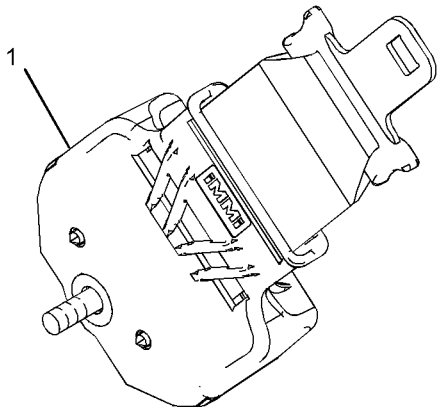

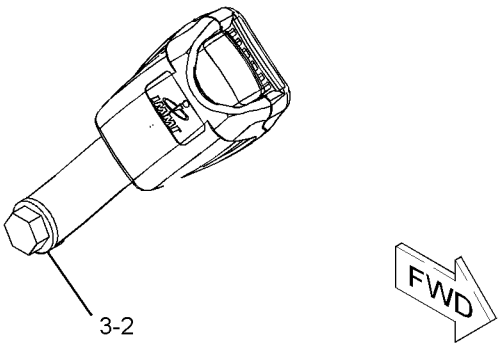

GRAPHIC #1 **<END>** g01117311

OPERATOR STATION

273-5905 SEAT GP–VINYL

S/N: LMS1-UP

PART OF 206-1791 SEAT GP-SUSPENSION

AN ATTACHMENT

SMCS-7312, 7321, 7324, 7336 **i03889150**

NOTE	PART NUMBER	QTY	PART NAME 1 2 3 4 5 6 (PRODUCT LEVEL)	SEE PAGE
	164-1258	1	BRACKET AS (RH)	
	164-1259	1	BRACKET AS (LH)	
	164-1266	1	CUSHION AS-BACK	
	260-0058	1	CUSHION AS-SEAT	
	164-1249	1	LEVER AS (RECLINER CONTROL)	
	164-1263	1	PAN AS	
	180-5797	1	PAN AS	
M	**8T-4189**	2	BOLT (M8X1.25X20-MM)	
	8T-8917	2	BOLT (1/2-13X1.25-IN)	
	164-1265	1	BOLT (3/8-16X1.1-IN)	
	260-0045	1	BOLT-SPECIAL	
M	**105-3481**	2	BOLT-SOCKET HEAD (M8X1.25X20-MM)	
	260-0027	1	KNOB-SLIDE	
	260-0028	1	LEVER-TILT (BOTTOM)	
M	**3T-0852**	8	LOCKNUT (M8X1.25-THD)	
M	**9X-6620**	1	LOCKNUT (M10X1.5-THD)	
M	**129-3180**	2	LOCKNUT (M12X1.75-THD)	
	260-0029	1	PAN	
	260-0040	1	PAN	
	180-5781	1	ROD	
	8T-9501	2	SCREW (10-16X0.75-IN)	
M	**8T-6412**	2	SCREW-MACHINE (M6X1X20-MM)	
	195-9223	2	SCREW-PAN HEAD	
	164-1256	2	SPACER (19X25.4X12.5-MM THK)	
	164-1251	1	SPRING	
	164-1252	1	SPRING	
	164-1273	1	SPRING-EXTENSION	
	161-9283	1	WASHER (19.8X31.8X1.6-MM THK)	
	5P-8245	2	WASHER-HARD (13.5X25.5X3-MM THK)	

M-METRIC PART

<END>

OPERATOR STATION

273-6036 SEAT GP–CLOTH

S/N: LMS1-UP

PART OF 206-1792 SEAT GP-SUSPENSION

AN ATTACHMENT

SMCS-7312, 7321, 7324, 7336 **i03889109**

NOTE	REF NO	GRAPHIC REF	PART NUMBER	QTY	PART NAME 1 2 3 4 5 6 (PRODUCT LEVEL)	SEE PAGE
M	1	1	**105-3481**	2	BOLT-SOCKET HEAD (M8X1.25X20-MM)	
	2	1	**161-9283**	3	WASHER (19.8X31.8X1.6-MM THK)	
	3	1	**164-1244**	1	CUSHION AS-BACK	
	4	1	**164-1249**	1	LEVER AS (RECLINER CONTROL)	
	5	1	**164-1250**	1	HANDLE	
	6	1	**164-1251**	1	SPRING	
	7	1	**164-1252**	1	SPRING	
	8	1	**164-1253**	1	PLATE	
	9	1	**164-1254**	1	SECTOR	
	10	1	**164-1255**	1	SECTOR	
	11	1	**164-1258**	1	BRACKET AS (RH)	
	12	1	**164-1259**	1	BRACKET AS (LH)	
	13	1	**180-5789**	1	NUT	
	14	1	**180-5796**	1	CUSHION AS-SEAT	
	15	1	**180-5797**	1	PAN AS	
	16	1	**195-9223**	2	SCREW-PAN HEAD	
	17	1	**260-0029**	1	PAN	
	18	1	**260-0045**	1	BOLT-SPECIAL	
M	19	1	**3T-0852**	8	LOCKNUT (M8X1.25-THD)	
M	20	1	**129-3180**	2	LOCKNUT (M12X1.75-THD)	
	21	1	**5P-8245**	2	WASHER-HARD (13.5X25.5X3-MM THK)	
M	22	1	**8T-4189**	2	BOLT (M8X1.25X20-MM)	
	23	1	**8T-9501**	2	SCREW (10-16X0.75-IN)	
M	24	1	**9X-6620**	1	LOCKNUT (M10X1.5-THD) (M10X1.5-THD)	

M-METRIC PART

273-6036 SEAT GP *(contd.)* **i03889109**

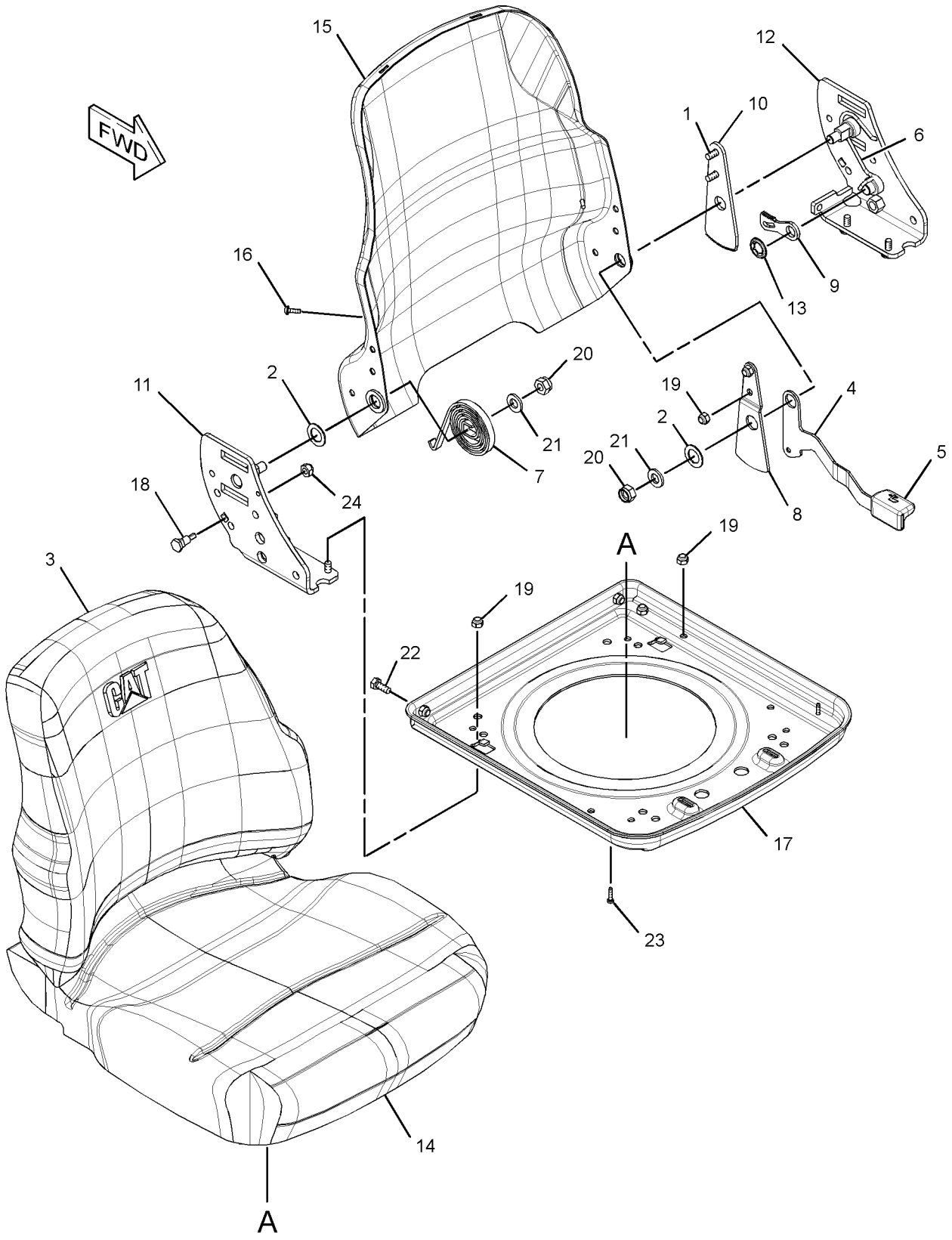

GRAPHIC #1 **<END>** g02133413

OPERATOR STATION

206-1791 SEAT GP-SUSPENSION—VINYL

S/N: LMS1-UP
PART OF 280-7364 SEAT GP-SUSPENSION
AN ATTACHMENT

SMCS-7324, 7336 **i03887952**

NOTE	REF NO	GRAPHIC REF	PART NUMBER	QTY	PART NAME 1 2 3 4 5 6 (PRODUCT LEVEL)	SEE PAGE
	1	1	**2K-4973**	4	LOCKNUT (3/8-16-THD)	
	2	1	**4L-6454**	4	BOLT (3/8-16X1-IN)	
	3	1	**195-7055**	4	WASHER-HARD (9.9X28.5X3.2-MM THK)	
Y	4	1	**273-5905**	1	SEAT GP (VINYL)	575
Y	5	1	**273-6372**	1	SUSPENSION GP-SEAT	580
	6	1	**164-1265**	4	BOLT (3/8-16X1.1-IN)	
	7	1	**4B-5271**	4	WASHER (25.5X11.2X2-MM THK)	
	8	1	**5T-7870**	4	KNOB (ARMREST ADJUSTMENT)	
	9	1	**164-1247**	1	BRACKET AS (RH)	
	10	1	**220-3790**	1	ARMREST AS (RH)	
M		1	**6A-9083**	1	SCREW-MACHINE (M6X1X15-MM)	
	11	1	**164-1261**	1	BRACKET AS (LH)	
	12	1	**220-3791**	1	ARMREST AS (LH)	
M		1	**6A-9083**	1	SCREW-MACHINE (M6X1X15-MM)	
	13	1	**1K-6872**	2	LOCKNUT (1/2-13-THD)	
	14	1	**0S-1595**	2	BOLT (1/2-13X1.25-IN)	
	15	1	**5P-8245**	2	WASHER-HARD (13.5X25.5X3-MM THK)	

M-METRIC PART
Y-SEPARATE ILLUSTRATION

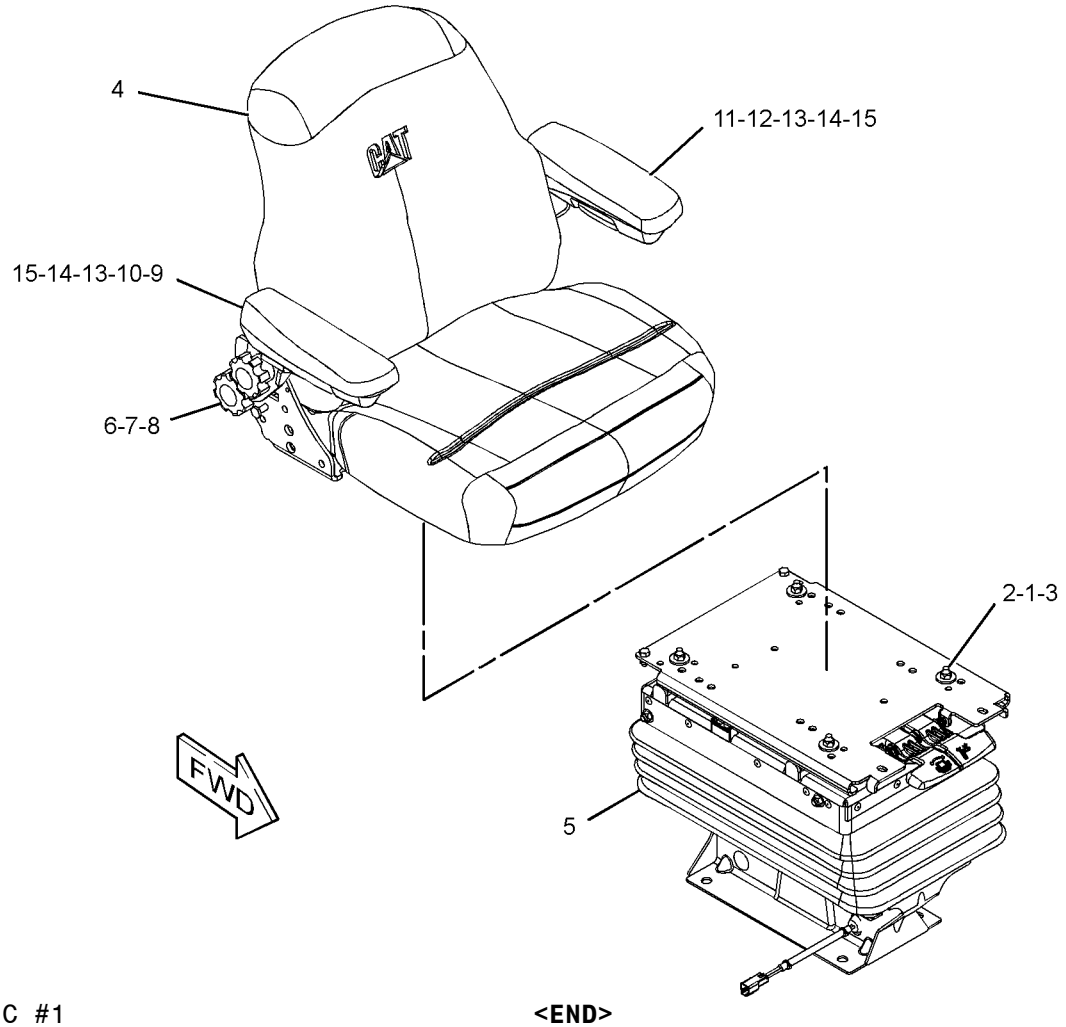

GRAPHIC #1 **<END>** g01298418

OPERATOR STATION

206-1792 SEAT GP-SUSPENSION—CLOTH

S/N: LMS1-UP
PART OF 280-7365 SEAT GP-SUSPENSION
AN ATTACHMENT

SMCS-7324, 7336 **i03887976**

NOTE	REF NO	GRAPHIC REF	PART NUMBER	QTY	PART NAME 1 2 3 4 5 6 (PRODUCT LEVEL)	SEE PAGE
	1	1	**2K-4973**	4	LOCKNUT (3/8-16-THD)	
	2	1	**4L-6454**	4	BOLT (3/8-16X1-IN)	
	3	1	**195-7055**	4	WASHER-HARD (9.9X28.5X3.2-MM THK)	
Y	4	1	**273-6036**	1	SEAT GP (CLOTH)	576
Y	5	1	**273-6372**	1	SUSPENSION GP-SEAT	580
	6	1	**164-1265**	4	BOLT (3/8-16X1.1-IN)	
	7	1	**4B-5271**	4	WASHER (25.5X11.2X2-MM THK)	
	8	1	**5T-7870**	4	KNOB (ARMREST ADJUSTMENT)	
	9	1	**164-1247**	1	BRACKET AS (RH)	
	10	1	**220-3790**	1	ARMREST AS (RH)	
M		1	**6A-9083**	1	SCREW-MACHINE (M6X1X15-MM)	
	11	1	**164-1261**	1	BRACKET AS (LH)	
	12	1	**220-3791**	1	ARMREST AS (LH)	
M		1	**6A-9083**	1	SCREW-MACHINE (M6X1X15-MM)	
	13	1	**1K-6872**	2	LOCKNUT (1/2-13-THD)	
	14	1	**0S-1595**	2	BOLT (1/2-13X1.25-IN)	
	15	1	**5P-8245**	2	WASHER-HARD (13.5X25.5X3-MM THK)	

M-METRIC PART
Y-SEPARATE ILLUSTRATION

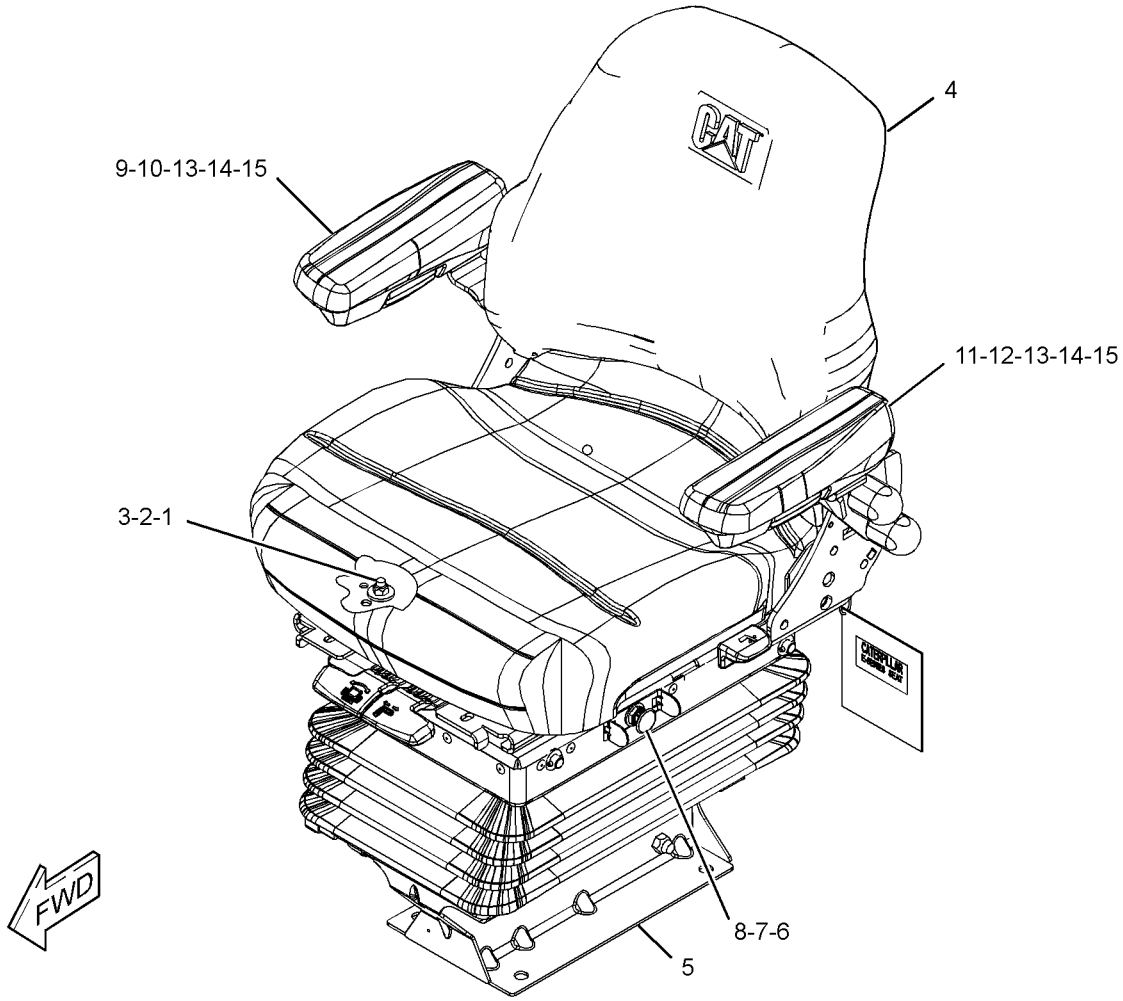

GRAPHIC #1 **<END>** g01225777

OPERATOR STATION

280-7364 SEAT GP-SUSPENSION—VINYL

S/N: LMS1-UP
PART OF 291-9192 CANOPY AR-OPEN ROPS, 291-9191 CANOPY GP-OPEN ROPS
AN ATTACHMENT

SMCS-7324, 7336 **i02415763**

NOTE	PART NUMBER	QTY	PART NAME 1 2 3 4 5 6 (PRODUCT LEVEL)	SEE PAGE
Y	**206-1791**	1	SEAT GP-SUSPENSION (VINYL)	578
	3S-2093	1	STRAP-CABLE	
M	**8T-4139**	4	BOLT (M12X1.75X30-MM)	
	8T-4223	4	WASHER-HARD (13.5X25.5X3-MM THK)	

M-METRIC PART
Y-SEPARATE ILLUSTRATION

<END>

280-7365 SEAT GP-SUSPENSION—CLOTH

S/N: LMS1-UP
PART OF 291-9194, 291-9195 CAB AR-ENCLOSED ROPS
AN ATTACHMENT

SMCS-7324, 7336 **i02424993**

NOTE	PART NUMBER	QTY	PART NAME 1 2 3 4 5 6 (PRODUCT LEVEL)	SEE PAGE
Y	**206-1792**	1	SEAT GP-SUSPENSION (CLOTH)	579
M	**8T-4139**	4	BOLT (M12X1.75X30-MM)	
	3S-2093	1	STRAP-CABLE	
	8T-4223	4	WASHER-HARD (13.5X25.5X3-MM THK)	

M-METRIC PART
Y-SEPARATE ILLUSTRATION

<END>

273-6372 SUSPENSION GP-SEAT

S/N: LMS1-UP
PART OF 206-1791, 206-1792 SEAT GP-SUSPENSION
AN ATTACHMENT

SMCS-7312, 7324 **i03911309**

NOTE	PART NUMBER	QTY	PART NAME 1 2 3 4 5 6 (PRODUCT LEVEL)	SEE PAGE
	260-0059	1	AIR COMPRESSOR GP (SUSPENSION SEAT)	
	164-1215	1	ABSORBER AS-SHOCK (SEAT)	
	164-1218	2	ARM AS-SUSPENSION (OUTER)	
	260-0060	1	ARM AS-SUSPENSION (INNER)	
	164-1219	1	BRACKET AS (FRONT)	
	164-1220	1	BRACKET AS (REAR)	
	260-0036	1	HARNESS AS-RIDE CONTROL	
	260-0057	1	LATCH AS-SLIDE	
	260-0052	1	PLATE AS-SLIDE	
	260-0051	1	PLATE AS-UPPER	
	102-8804	1	KIT-RECEPTACLE (4-PIN)	
			(INCLUDES RECEPTACLE AS & WEDGE)	
	260-0047	2	SHAFT AS	
	218-0235	2	SWITCH AS-LIMIT (SUSPENSION SEAT)	
			(EACH INCLUDES)	
	102-8803	1	KIT-RECEPTACLE (3-PIN)	
			(INCLUDES RECEPTACLE AS & WEDGE)	

273-6372 SUSPENSION GP-SEAT *(contd.)* i03911309

NOTE	PART NUMBER	QTY	PART NAME 1 2 3 4 5 6 (PRODUCT LEVEL)	SEE PAGE
	8T-8729	3	PIN-CONNECTOR (16-GA TO 18-GA)	
	4B-9784	8	BALL	
	260-0063	1	BASE-SEAT	
	164-1230	12	BEARING	
	260-0067	2	BEARING	
	260-0042	1	BEARING-FLANGED	
	161-9289	2	BLOCK-SLIDER	
	260-0043	1	BLOCK-STOP	
	0S-0509	1	BOLT (3/8-16X0.75-IN)	
	1H-3337	4	BOLT (1/4-20X0.875-IN)	
	4M-0061	2	BOLT (5/16-18X0.75-IN)	
	7X-0481	1	BOLT (1/2-13X8-IN)	
	260-0041	1	BOLT (3/4-10X1.42-IN)	
M	**197-6657**	1	BOLT-ROUND HEAD (M12X1.75X80-MM)	
	164-1240	1	BOOT	
	237-3943	1	BRACKET	
	164-1229	4	BUMPER	
	164-1237	1	BUSHING	
	111-5042	34	FASTENER	
	260-0046	1	HOUSING-UPPER	
	149-4745	2	KIT-SLIDER BLOCK (SUSPENSION SEAT)	
			(INCLUDES BOLT & BLOCKS)	
	260-0031	1	LEVER	
	260-0032	1	LEVER	
	1K-6872	1	LOCKNUT (1/2-13-THD)	
	2D-6235	4	LOCKNUT (1/4-20-THD)	
	2K-4973	8	LOCKNUT (3/8-16-THD)	
M	**6V-7687**	1	LOCKNUT (M12X1.75-THD)	
M	**096-4882**	2	LOCKNUT (M8X1.25-THD)	
	142-2928	4	LOCKNUT (4-40-THD)	
	3B-4505	2	LOCKWASHER	
	3J-4818	2	LOCKWASHER	
	6V-8185	2	NUT (1/4-20-THD)	
	2L-5893	1	PIN-SPRING	
	4H-8380	4	PIN-SPRING	
	164-1232	1	PLATE	
	260-0044	1	PLATE-LATCH	
	5V-1497	2	RETAINER	
	215-1242	1	RING	
	8S-7803	3	RING-RETAINING	
	130-8343	1	SCREW-BUTTON HEAD (3/8-16X0.625-IN)	
	6L-7155	2	SCREW-MACHINE (1/4-20X0.5-IN)	
	173-5787	2	SETSCREW (1/4-20-THD)	
	164-1226	2	SHAFT	
	260-0049	2	SHAFT-LOWER	
	161-9288	1	SHAFT-PIVOT	
	260-0030	1	SHAFT-PIVOT	
	164-1233	2	SPACER (13X25.4X20.5-MM THK)	
	164-1238	1	SPACER (12.8X22.2X3.1-MM THK)	
	164-1239	2	SPACER (13.5X19X61.9-MM THK)	
	163-1135	1	SPRING	
	260-0034	1	SPRING-RETURN	
	260-0035	1	SPRING-RETURN	
	260-0033	1	SPRING-TORSION	
	7X-0622	6	WASHER (13X24X2.5-MM THK)	
	9X-1481	2	WASHER (13X25.4X1.6-MM THK)	

273-6372 SUSPENSION GP-SEAT *(contd.)* **i03911309**

M-METRIC PART

<END>

OPERATOR STATION

239-1080 TACHOMETER GP-ELECTRIC

S/N: LMS1-UP
PART OF 290-6737 WIRING GP-CONSOLE
AN ATTACHMENT

SMCS-7462 **i01986579**

NOTE	REF NO	GRAPHIC REF	PART NUMBER	QTY	PART NAME 1 2 3 4 5 6 (PRODUCT LEVEL)	SEE PAGE
	1	1	**4B-2043**	7	NUT (8-32-THD)	
	2	1	**9B-7233**	7	LOCKWASHER	
	3	1	**122-7137**	1	LAMP (12-VOLT)	
	4	1	**131-1424**	1	SEAL	

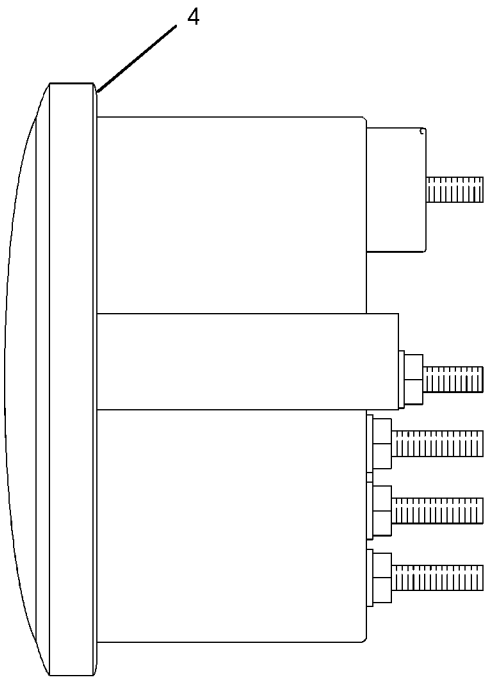

LEFT SIDE VIEW

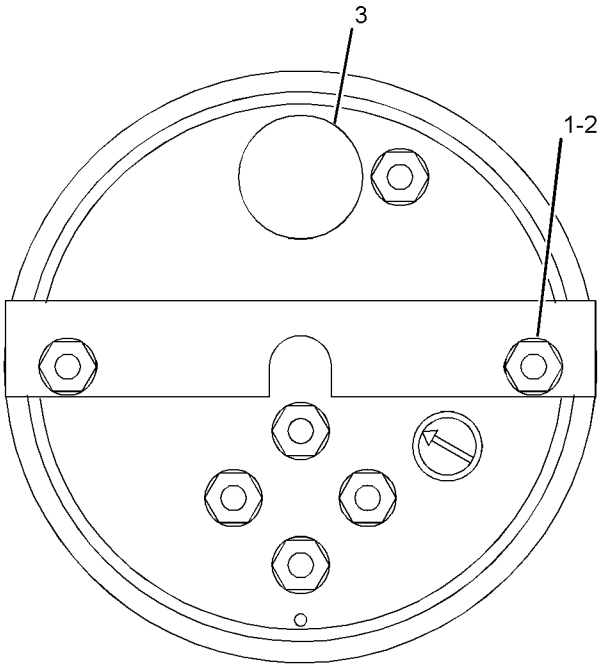

REAR VIEW

GRAPHIC #1 **<END>** g01030656

OPERATOR STATION

206-1704 TRIM GP-CAB—OPEN ROPS

S/N: LMS1-UP

PART OF 291-9192 CANOPY AR-OPEN ROPS, 291-9191 CANOPY GP-OPEN ROPS

AN ATTACHMENT

SMCS-7329, 7451 **i03532221**

NOTE	REF NO	GRAPHIC REF	PART NUMBER	QTY	PART NAME 1 2 3 4 5 6 (PRODUCT LEVEL)	SEE PAGE
E	1	1	**8C-7524**		SEAL (40-CM)	
	2	1	**9C-4457**	4	FASTENER	
	3	1	**141-1762**	1	SPACER (21.2X25.4X20-MM THK)	
	4	1	**206-1623**	1	INSERT (LH)	
	5	1	**206-1625**	1	INSERT (RH)	
	6	1	**206-1637**	1	CONSOLE-STORAGE	
	7	1	**206-1665**	2	PLUG	
	8	1	**206-1666**	1	PLUG	
	9	1	**206-1683**	1	INSERT	
	10	1	**206-1798**	1	COVER-POST	
	11	1	**206-1799**	4	PLUG	
	12	1	**213-1888**	1	COVER-FENDER	
	13	1	**261-9632**	1	COVER AS	
		1	**206-1684**	1	COVER (CAB FILTER)	
	14	1	**282-7833**	1	GROMMET	
	15	1	**282-7835**	1	PLATE	
M	16	1	**6V-7744**	1	LOCKNUT (M10X1.5-THD)	
	17	1	**8T-4222**	1	WASHER-PLATED (11X32X2.5-MM THK)	
M	18	1	**8T-4178**	1	BOLT (M10X1.5X90-MM)	
M	19	1	**8C-3798**	2	BOLT-LOCKING (M6X1X30-MM)	
	20	1	**9X-2038**	3	WASHER (7X19X2-MM THK)	
M	21	1	**9X-2044**	7	SCREW-TRUSS HEAD (M6X1X16-MM)	
	22	1	**9X-8256**	2	WASHER (6.6X12X2-MM THK)	

E-ORDER BY THE CENTIMETER
M-METRIC PART

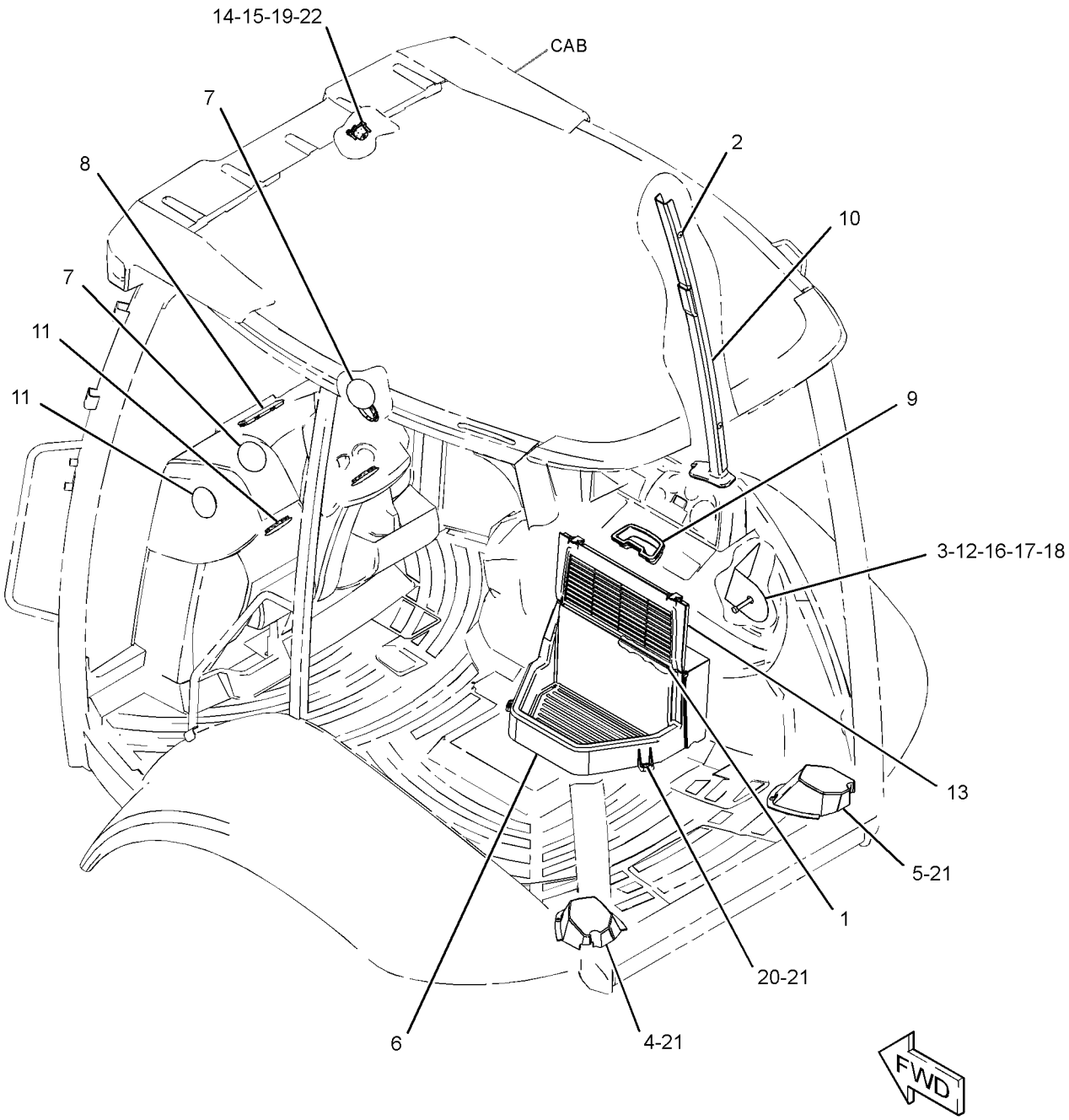

GRAPHIC #1 **<END>** g01870813

OPERATOR STATION

206-1727 WASHER GP-WINDOW

S/N: LMS1-UP
PART OF 291-9194, 291-9195 CAB AR-ENCLOSED ROPS
AN ATTACHMENT

SMCS-7306 **i02940309**

NOTE	REF NO	GRAPHIC REF	PART NUMBER	QTY	PART NAME 1 2 3 4 5 6 (PRODUCT LEVEL)	SEE PAGE
E	1	1	**144-0195**		HOSE (17-CM)	
E	1A	1	**144-0195**		HOSE (21-CM EACH)	
E	1B	1	**144-0195**		HOSE (81-CM)	
D	2	1	**6V-0505**		SEAL (0.5-M)	
	3	1	**3S-2093**	6	STRAP-CABLE	
	4	1	**8T-1118**	1	NOZZLE AS-WASHER	
	5	1	**9R-3469**	2	DIAPHRAGM	
	6	1	**9X-8372**	1	FILM-INSTRUCTION (WASHER FILL)	
	7	1	**121-6936**	1	CONNECTOR	
	8	1	**214-3763**	1	TANK GP-WINDOW WASHER	
		1	**254-5683**	1	CAP	
		1	**8E-8293**	2	GROMMET	
		1	**6T-1375**	2	PUMP AS-WASHER	
		1	**214-3742**	1	TANK-WASHER	
	9	1	**276-8791**	1	CLIP	
	10	1	**282-7833**	1	GROMMET	
	11	1	**282-7835**	1	PLATE	
	12	1	**283-3451**	2	CONNECTOR AS	
	13	1	**156-0283**	2	WASHER-HARD (8.4X35X2.5-MM THK)	
M	14	1	**8C-3798**	2	BOLT-LOCKING (M6X1X30-MM)	
M	15	1	**8T-5093**	1	BOLT-LOCKING (M8X1.25X25-MM)	
	16	1	**9X-8256**	2	WASHER (6.6X12X2-MM THK)	

D-ORDER BY THE METER
E-ORDER BY THE CENTIMETER
M-METRIC PART

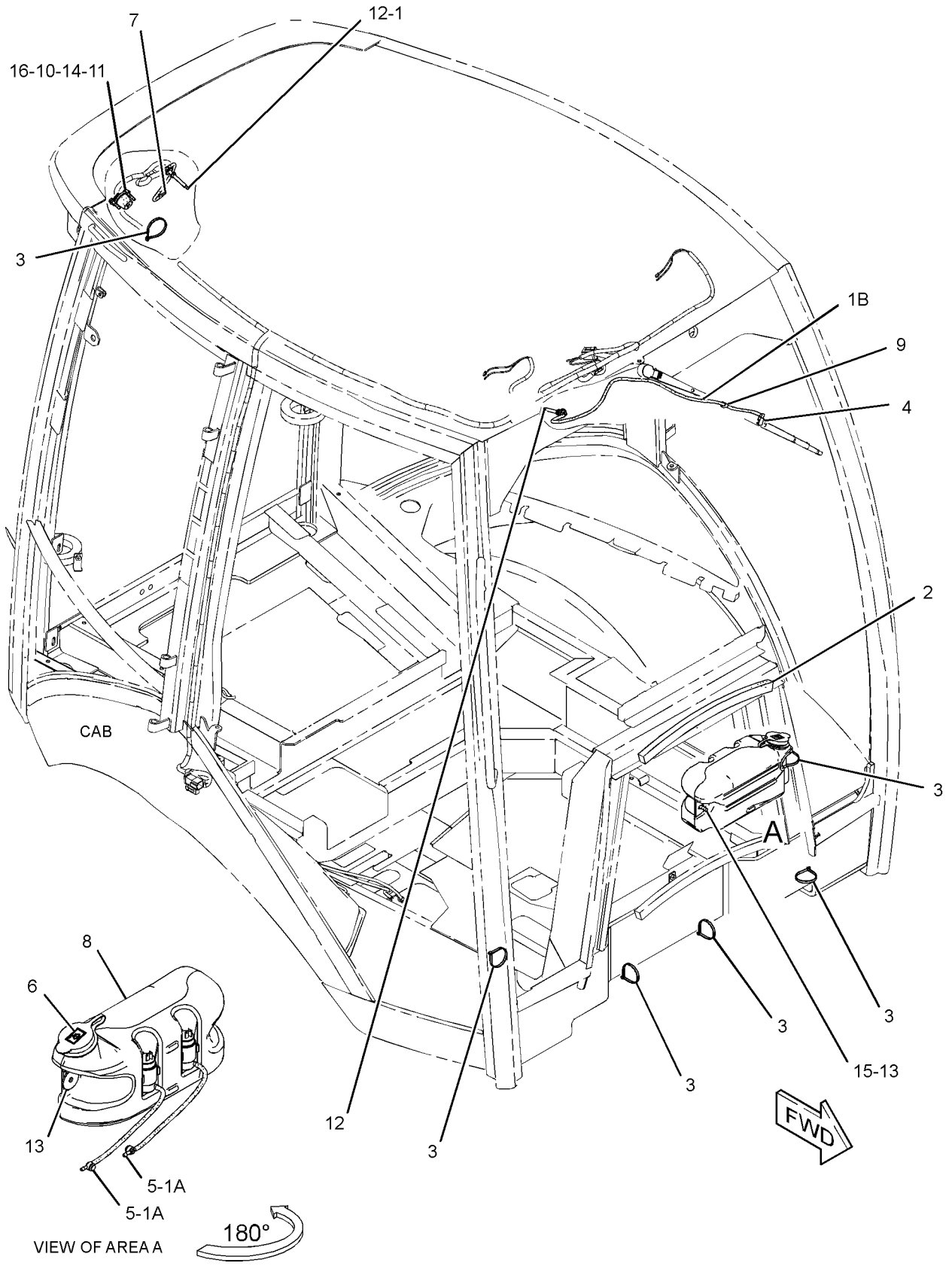

GRAPHIC #1

<END>

g01525173

OPERATOR STATION

205-9619 WINDOW GP-CAB—UPPER, LH

S/N: LMS1-UP
PART OF 281-7219 KIT-CAB WINDOW
AN ATTACHMENT

SMCS-7310 **i03887710**

NOTE	REF NO	GRAPHIC REF	PART NUMBER	QTY	PART NAME 1 2 3 4 5 6 (PRODUCT LEVEL)	SEE PAGE
E	1	1	**148-5353**		SEAL (342-CM)	
	2	1	**8Y-7309**	1	RETAINER	
	3	1	**100-7608**	1	HANDLE (LH)	
	4	1	**129-8542**	6	RETAINER (MOUNT)	
	5	1	**129-8545**	8	WASHER (13X40X3-MM THK)	
M	6	1	**136-4192**	4	BOLT (M6X1X35-MM)	
	7	1	**154-5423**	2	SPACER (6.6X12.7X17-MM THK)	
Y	8	1	**299-6986**	1	LATCH GP-CAB DOOR & WINDOW (LH)	556
Y	9	1	**299-6985**	1	LATCH GP-CAB DOOR & WINDOW (RH)	555
	10	1	**205-9621**	1	GLASS (UPPER, LH)	
	11	1	**205-9623**	1	HINGE (LOWER, LH)	
	12	1	**205-9624**	1	HINGE (UPPER, LH)	
	13	1	**223-2030**	1	LATCH AS (HOLD OPEN)	
M		1	**6V-7743**	2	LOCKNUT (M6X1-THD)	
M		1	**9X-2045**	2	SCREW-TRUSS HEAD (M6X1X20-MM)	
		1	**143-2827**	1	SPRING	
M	14	1	**5C-7261**	1	NUT (M8X1.25-THD)	
M	15	1	**6V-7743**	2	LOCKNUT (M6X1-THD)	
	16	1	**7X-2393**	1	BUMPER-CONICAL	

E-ORDER BY THE CENTIMETER
M-METRIC PART
Y-SEPARATE ILLUSTRATION

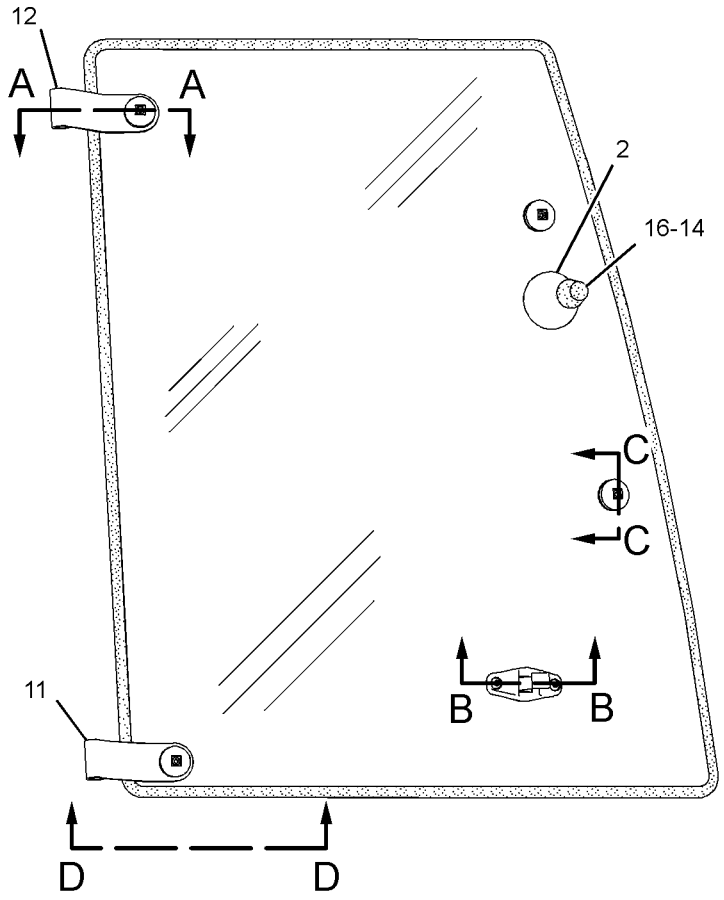

LEFT SIDE VIEW

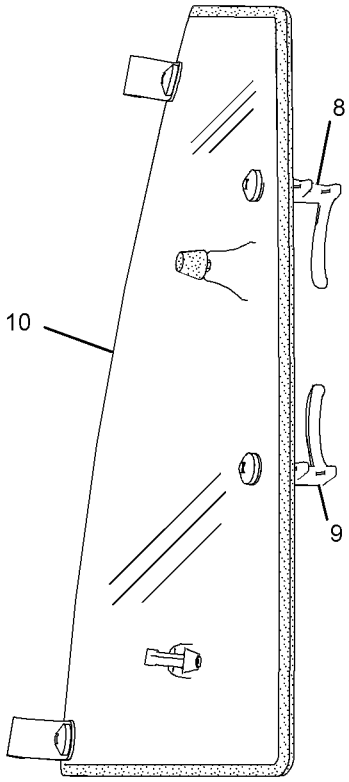

REAR VIEW

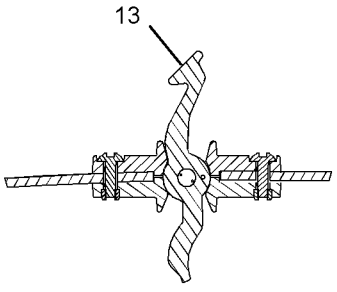

SECTION B-B

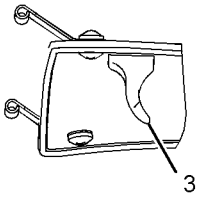

VIEW D-D

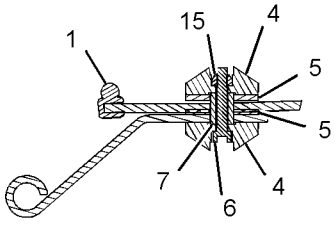

SECTION A-A

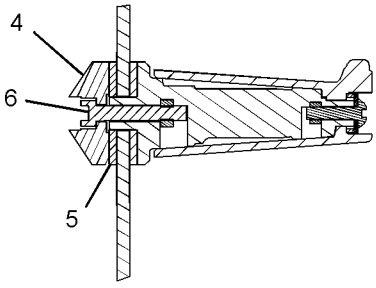

SECTION C-C

GRAPHIC #1 **<END>** g01225815

OPERATOR STATION

205-9628 WINDOW GP-CAB—UPPER, RH

S/N: LMS1-UP

PART OF 281-7219 KIT-CAB WINDOW

AN ATTACHMENT

SMCS-7310 **i03887689**

NOTE	REF NO	GRAPHIC REF	PART NUMBER	QTY	PART NAME 1 2 3 4 5 6 (PRODUCT LEVEL)	SEE PAGE
E	1	1	**148-5353**		SEAL (342-CM)	
	2	1	**8Y-7309**	1	RETAINER	
	3	1	**100-7608**	1	HANDLE (RH)	
	4	1	**129-8542**	6	RETAINER (MOUNT)	
	5	1	**129-8545**	8	WASHER (13X40X3-MM THK)	
M	6	1	**136-4192**	4	BOLT (M6X1X35-MM)	
	7	1	**154-5423**	2	SPACER (6.6X12.7X17-MM THK)	
Y	8	1	**299-6985**	1	LATCH GP-CAB DOOR & WINDOW (RH)	555
Y	9	1	**299-6986**	1	LATCH GP-CAB DOOR & WINDOW (LH)	556
	10	1	**205-9630**	1	GLASS (UPPER, RH)	
	11	1	**205-9633**	1	HINGE (LOWER, RH)	
	12	1	**205-9634**	1	HINGE (UPPER, RH)	
	13	1	**223-2030**	1	LATCH AS (HOLD OPEN)	
M		1	**6V-7743**	2	LOCKNUT (M6X1-THD)	
M		1	**9X-2045**	2	SCREW-TRUSS HEAD (M6X1X20-MM)	
		1	**143-2827**	1	SPRING	
M	14	1	**5C-7261**	1	NUT (M8X1.25-THD)	
M	15	1	**6V-7743**	2	LOCKNUT (M6X1-THD)	
	16	1	**7X-2393**	1	BUMPER-CONICAL	

E-ORDER BY THE CENTIMETER
M-METRIC PART
Y-SEPARATE ILLUSTRATION

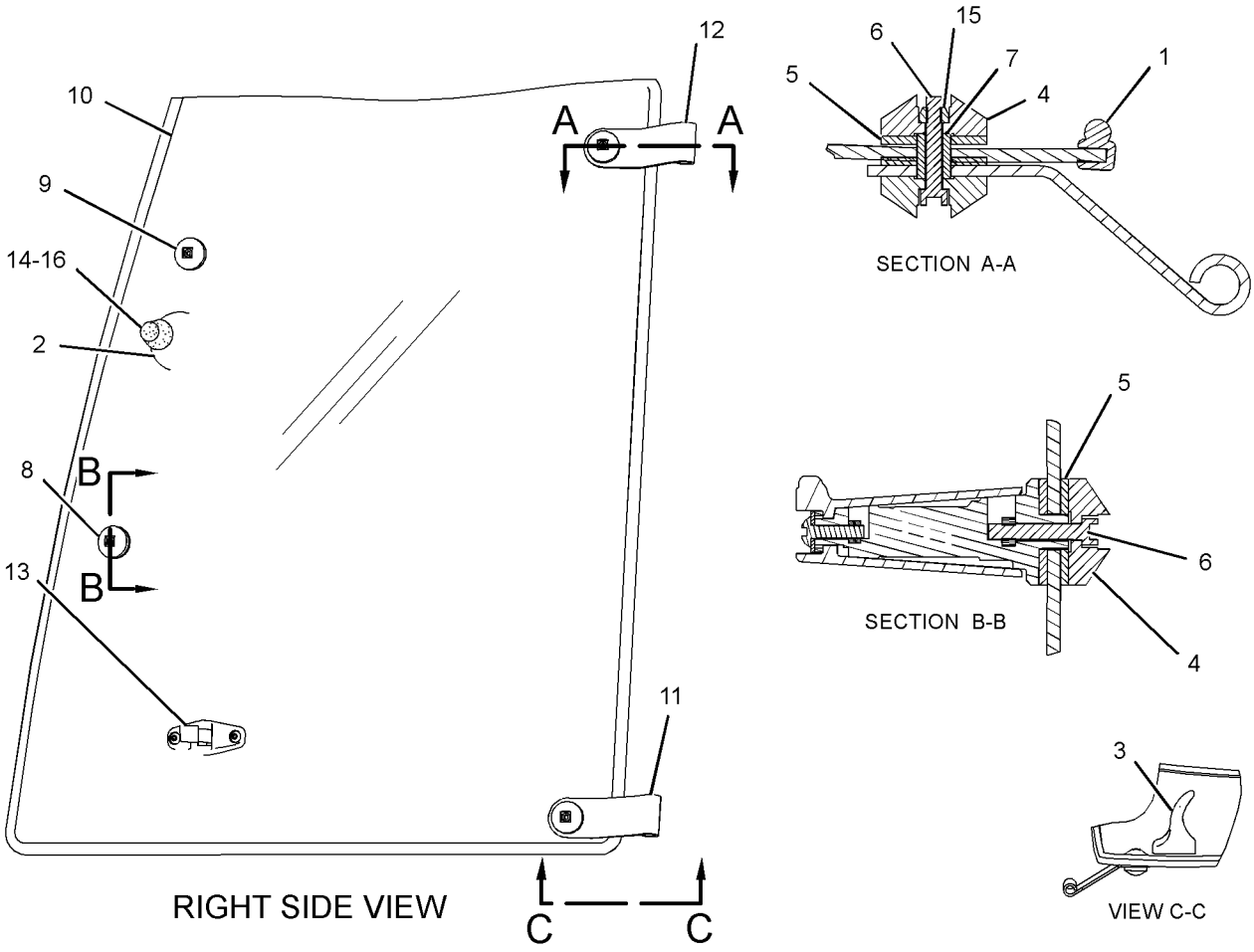

GRAPHIC #1 **<END>** g01225801

OPERATOR STATION

229-0300 WINDOW GP-CAB—REAR

S/N: LMS1-UP
PART OF 353-3020 CAB GP, 281-7219 KIT-CAB WINDOW
AN ATTACHMENT

SMCS-7310 **i03891190**

NOTE	REF NO	GRAPHIC REF	PART NUMBER	QTY	PART NAME 1 2 3 4 5 6 (PRODUCT LEVEL)	SEE PAGE
	1	1	**5P-4115**	6	WASHER-HARD (7.2X19X2-MM THK)	
M	2	1	**9X-2044**	4	SCREW-TRUSS HEAD (M6X1X16-MM)	
	3	1	**9X-2132**	4	RETAINER	
	4	1	**110-5602**	2	KNOB	
	5	1	**119-8349**	2	CAP	
	6	1	**308-1273**	1	SEAL	
M	7	1	**129-3180**	4	LOCKNUT (M12X1.75-THD)	
M	8	1	**179-7262**	4	SCREW-FLAT HEAD (M8X1.25X40-MM)	
	9	1	**146-7744**	1	KIT-LATCH (RH)	
	10	1	**146-7745**	1	KIT-LATCH (LH)	
	11	1	**164-1308**	2	ROLLER	
	12	1	**164-1328**	2	SPRING-GAS	
	13	1	**164-1342**	4	BOLT-SPECIAL	
	14	1	**164-1343**	4	WASHER-THRUST (13.6X30X5.1-MM THK)	
	15	1	**164-1344**	4	WASHER-THRUST (13.6X30X2.1-MM THK)	
	16	1	**164-1345**	4	BEARING	
	17	1	**164-1346**	4	STRIKER	
	18	1	**164-1351**	2	PIN	
	19	1	**164-1352**	1	LATCH AS (LH)	
	20	1	**164-1353**	1	LATCH AS (RH)	
	21	1	**167-8182**	2	BUMPER	
	22	1	**171-2870**	2	SPACER (7X10X5.4-MM THK)	
B	23	1	**201-9465**	4	SHIM (1-MM THK)	
	24	1	**359-3107**	1	PLATE AS (RH)	
	25	1	**359-3106**	1	PLATE AS (LH)	
	26	1	**229-0298**	1	LINKAGE AS	
	27	1	**290-1273**	1	FRAME AS	
	28	1	**229-0308**	1	GLASS	
	29	1	**229-0310**	1	WINDOW AS	
		1	**229-0309**	1	GLASS	
M	30	1	**5C-2890**	2	NUT (M6X1-THD)	
	31	1	**5P-4116**	4	WASHER-HARD (8.8X20.5X2-MM THK)	
M	32	1	**8T-4200**	4	BOLT (M8X1.25X16-MM)	
	33	1	**8T-4223**	2	WASHER-HARD (13.5X25.5X3-MM THK)	
D	34	1	**5P-5637**		SEAL (1-M)	
E	35	1	**9X-6383**		SEAL (88-CM)	
E	36	1	**164-1314**		SEAL-BULK (153-CM EACH)	
E	37	1	**164-1354**		CHANNEL-WINDOW (90-CM)	
E	37A	1	**164-1354**		CHANNEL-WINDOW (75-CM EACH)	
E	37B	1	**164-1354**		CHANNEL-WINDOW (74-CM EACH)	
	38	1	**150-8015**	2	GASKET	
	39	1	**8T-2970**	4	WASHER (13X28X1.6-MM THK)	

B-USE AS REQUIRED
D-ORDER BY THE METER
E-ORDER BY THE CENTIMETER
M-METRIC PART

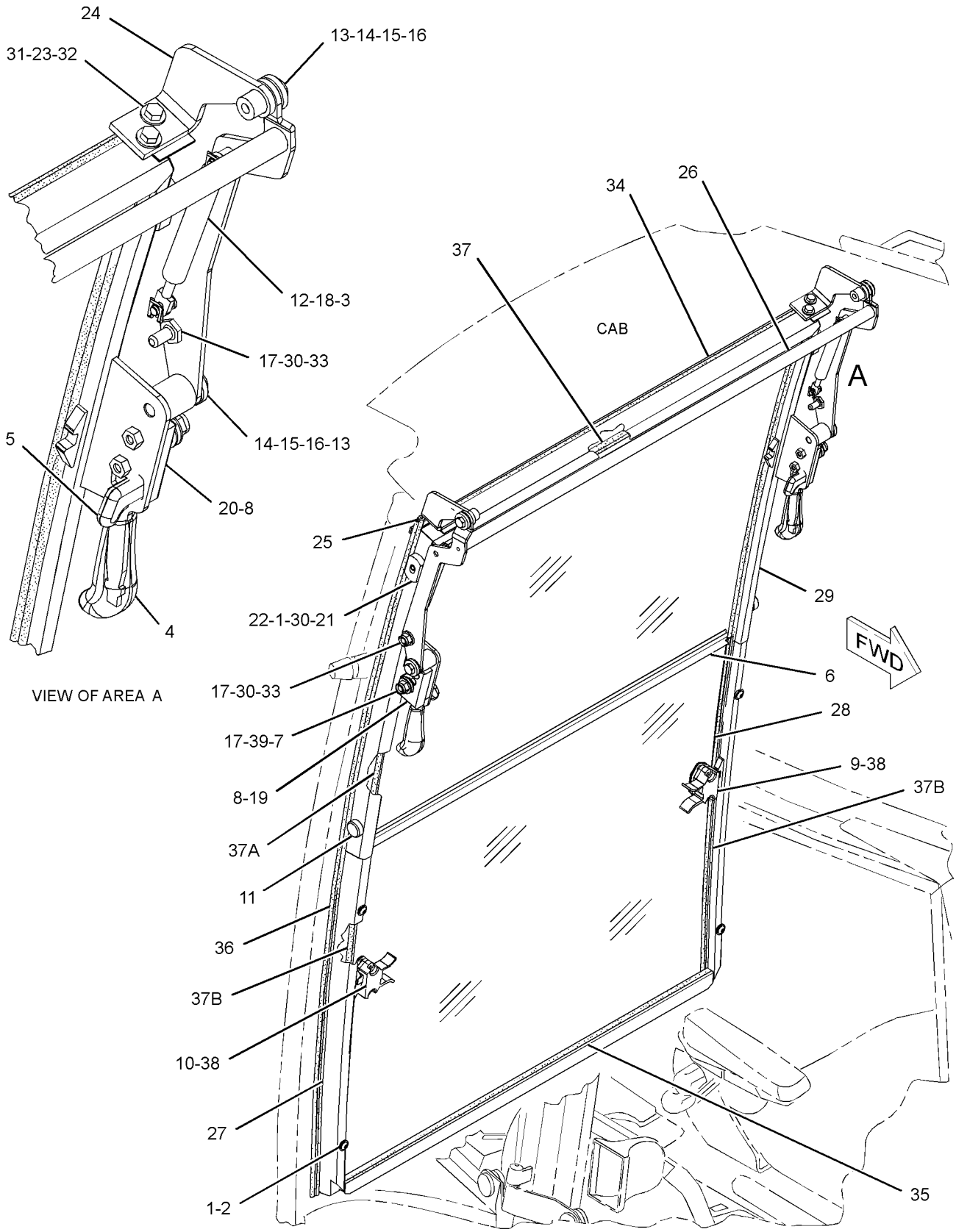

GRAPHIC #1 **<END>** g02136116

OPERATOR STATION

327-7601 WINDOW GP-CAB—LH

S/N: LMS1-UP
PART OF 353-3020 CAB GP
AN ATTACHMENT

SMCS-7310 **i03712338**

NOTE	REF NO	GRAPHIC REF	PART NUMBER	QTY	PART NAME 1 2 3 4 5 6 (PRODUCT LEVEL)	SEE PAGE
	1	1	**8Y-7309**	1	RETAINER	
	2	1	**100-7608**	1	HANDLE (LH)	
	3	1	**129-8542**	6	RETAINER	
	4	1	**129-8545**	8	WASHER (13X40X3-MM THK)	
M	5	1	**136-4192**	4	BOLT (M6X1X35-MM)	
	6	1	**154-5423**	2	SPACER (6.6X12.7X17-MM THK)	
	7	1	**205-9623**	1	HINGE (LOWER, LH)	
	8	1	**205-9624**	1	HINGE (UPPER, LH)	
Y	9	1	**299-6985**	1	LATCH GP-CAB DOOR & WINDOW (LOWER)	555
Y	10	1	**299-6986**	1	LATCH GP-CAB DOOR & WINDOW (UPPER)	556
	11	1	**325-9300**	1	GLASS (REAR, LH)	
	12	1	**223-2030**	1	LATCH AS (HOLD OPEN)	
M		1	**6V-7743**	2	LOCKNUT (M6X1-THD)	
M		1	**9X-2045**	2	SCREW-TRUSS HEAD (M6X1X20-MM)	
		1	**143-2827**	1	SPRING	
M	13	1	**5C-7261**	1	NUT (M8X1.25-THD)	
M	14	1	**6V-7743**	2	LOCKNUT (M6X1-THD)	
	15	1	**7X-2393**	1	BUMPER-CONICAL	
E	16	1	**148-5353**		SEAL (342-CM)	

E-ORDER BY THE CENTIMETER
M-METRIC PART
Y-SEPARATE ILLUSTRATION

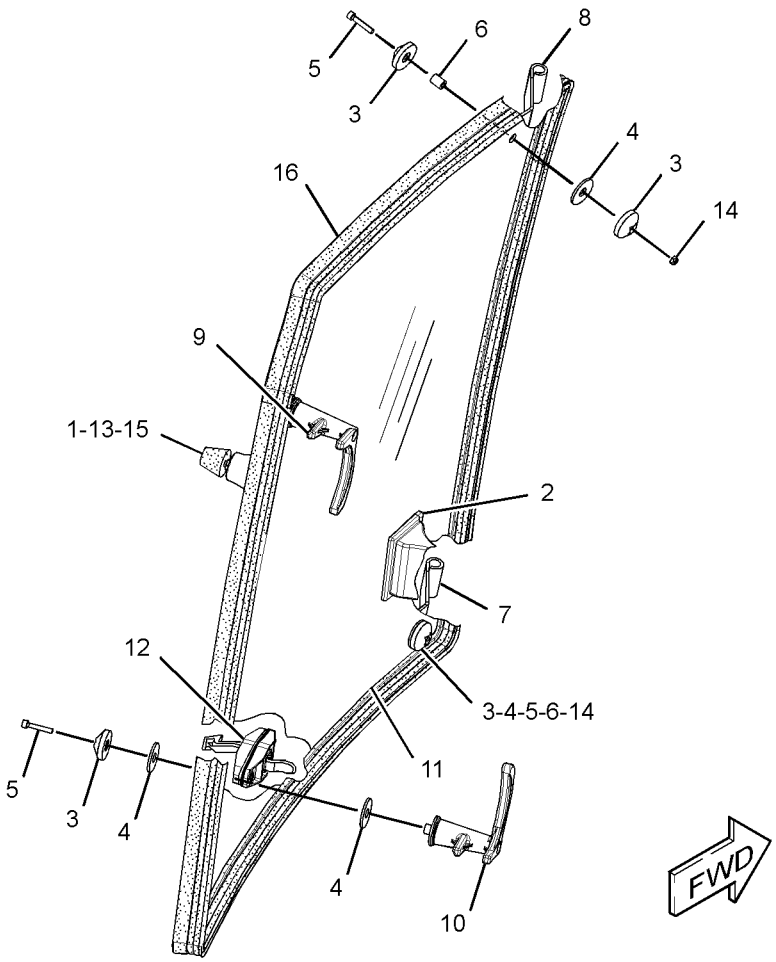

GRAPHIC #1 **<END>** g01971456

OPERATOR STATION

327-7637 WINDOW GP-CAB—RH

S/N: LMS1-UP
PART OF 353-3020 CAB GP
AN ATTACHMENT

SMCS-7310 **i03712339**

NOTE	REF NO	GRAPHIC REF	PART NUMBER	QTY	PART NAME 1 2 3 4 5 6 (PRODUCT LEVEL)	SEE PAGE
	1	1	**8Y-7309**	1	RETAINER	
	2	1	**100-7608**	1	HANDLE (RH)	
	3	1	**129-8542**	6	RETAINER	
	4	1	**129-8545**	8	WASHER (13X40X3-MM THK)	
M	5	1	**136-4192**	4	BOLT (M6X1X35-MM)	
	6	1	**154-5423**	2	SPACER (6.6X12.7X17-MM THK)	
	7	1	**205-9633**	1	HINGE (LOWER, RH)	
	8	1	**205-9634**	1	HINGE (UPPER, RH)	
Y	9	1	**299-6985**	1	LATCH GP-CAB DOOR & WINDOW (LOWER)	555
Y	10	1	**299-6986**	1	LATCH GP-CAB DOOR & WINDOW (UPPER)	556
	11	1	**325-9301**	1	GLASS (REAR, RH)	
	12	1	**223-2030**	1	LATCH AS (HOLD OPEN)	
M		1	**6V-7743**	2	LOCKNUT (M6X1-THD)	
M		1	**9X-2045**	2	SCREW-TRUSS HEAD (M6X1X20-MM)	
		1	**143-2827**	1	SPRING	
M	13	1	**5C-7261**	1	NUT (M8X1.25-THD)	
M	14	1	**6V-7743**	2	LOCKNUT (M6X1-THD)	
	15	1	**7X-2393**	1	BUMPER-CONICAL	
E	16	1	**148-5353**		SEAL (342-CM)	

E-ORDER BY THE CENTIMETER
M-METRIC PART
Y-SEPARATE ILLUSTRATION

327-7637 WINDOW GP-CAB *(contd.)* **i03712339**

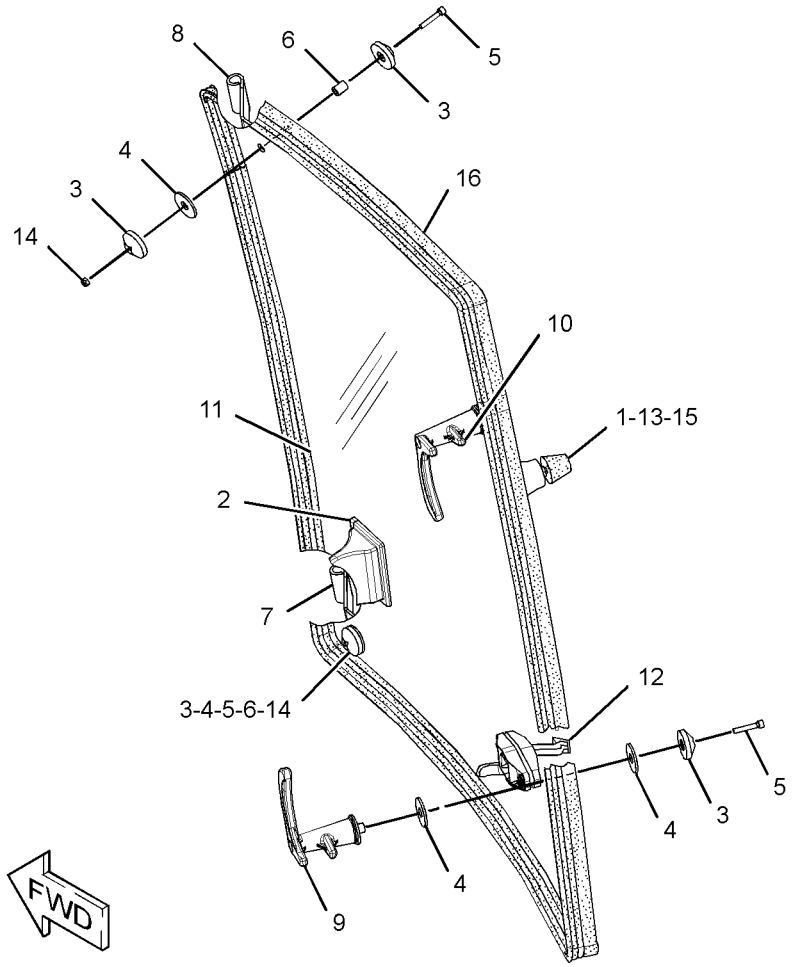

GRAPHIC #1 **<END>** g01971659

OPERATOR STATION

333-9901 WINDOW GP-DOOR–LH

S/N: LMS1-UP
PART OF 329-1168 DOOR GP-CAB
AN ATTACHMENT

SMCS-7308, 7310 **i03564760**

NOTE	REF NO	GRAPHIC REF	PART NUMBER	QTY	PART NAME 1 2 3 4 5 6 (PRODUCT LEVEL)	SEE PAGE
E	1	1	**148-5353**		SEAL (354-CM)	
	2	1	**100-7608**	1	HANDLE (LH)	
	3	1	**129-8542**	5	RETAINER	
	4	1	**129-8545**	6	WASHER (13X40X3-MM THK)	
M	5	1	**136-4192**	3	BOLT (M6X1X35-MM)	
	6	1	**154-5423**	2	SPACER (6.6X12.7X17-MM THK)	
	7	1	**205-9587**	1	GLASS (LH)	
	8	1	**205-9590**	1	HINGE (UPPER)	
	9	1	**205-9591**	1	HINGE (LOWER)	
Y	10	1	**299-6986**	1	LATCH GP-CAB DOOR & WINDOW (LH)	556
	11	1	**223-2030**	1	LATCH AS (HOLD OPEN) (LH)	
M		1	**6V-7743**	2	LOCKNUT (M6X1-THD)	
M		1	**9X-2045**	2	SCREW-TRUSS HEAD (M6X1X20-MM)	
		1	**143-2827**	1	SPRING	
M	12	1	**6V-7743**	2	LOCKNUT (M6X1-THD)	

E-ORDER BY THE CENTIMETER
M-METRIC PART
Y-SEPARATE ILLUSTRATION

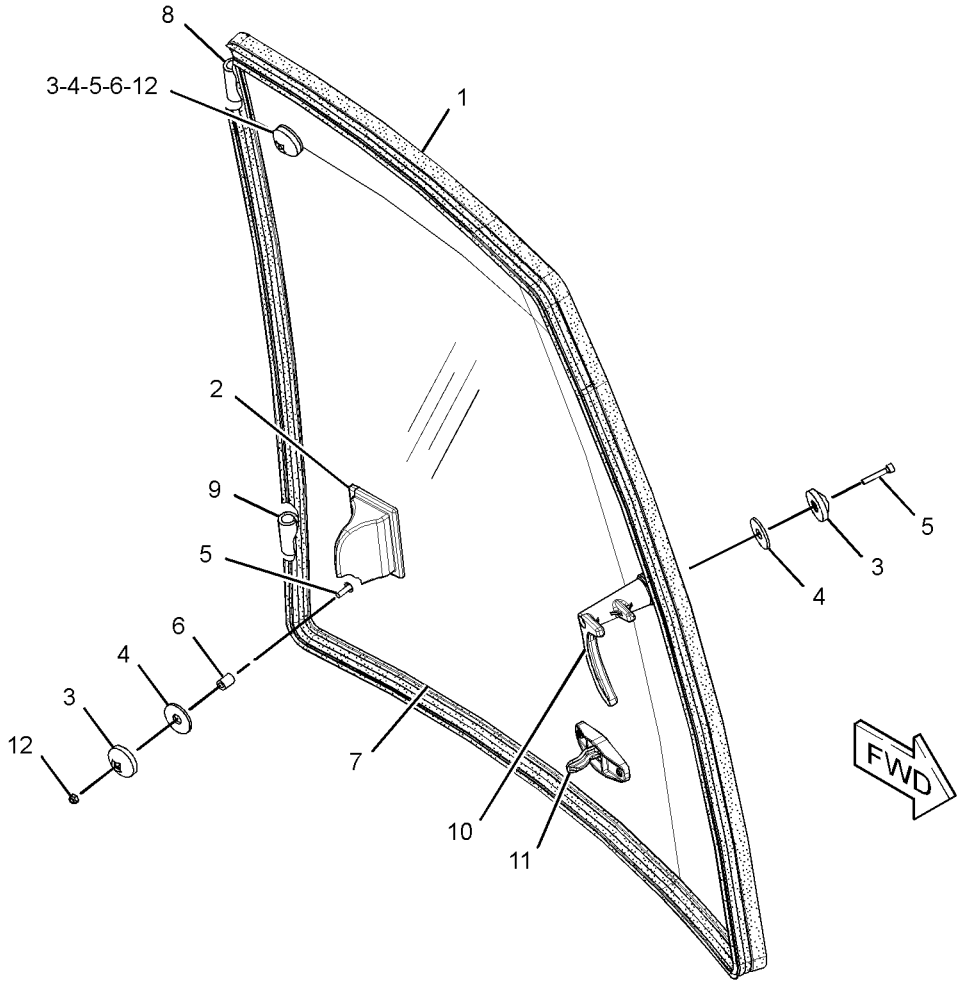

GRAPHIC #1 **<END>** g01890354

OPERATOR STATION

333-9902 WINDOW GP-DOOR–RH

S/N: LMS1-UP
PART OF 329-1167 DOOR GP-CAB
AN ATTACHMENT

SMCS-7308, 7310 **i03564761**

NOTE	REF NO	GRAPHIC REF	PART NUMBER	QTY	PART NAME 1 2 3 4 5 6 (PRODUCT LEVEL)	SEE PAGE
E	1	1	**148-5353**		SEAL (354-CM)	
	2	1	**100-7608**	1	HANDLE (RH)	
	3	1	**129-8542**	5	RETAINER	
	4	1	**129-8545**	6	WASHER (13X40X3-MM THK)	
M	5	1	**136-4192**	3	BOLT (M6X1X35-MM)	
	6	1	**154-5423**	2	SPACER (6.6X12.7X17-MM THK)	
	7	1	**205-9597**	1	GLASS (RH)	
	8	1	**205-9614**	1	HINGE (LOWER)	
	9	1	**205-9615**	1	HINGE (UPPER)	
Y	10	1	**299-6985**	1	LATCH GP-CAB DOOR & WINDOW (RH)	555
	11	1	**223-2030**	1	LATCH AS (HOLD OPEN) (RH)	
M		1	**6V-7743**	2	LOCKNUT (M6X1-THD)	
M		1	**9X-2045**	2	SCREW-TRUSS HEAD (M6X1X20-MM)	
		1	**143-2827**	1	SPRING	
M	12	1	**6V-7743**	2	LOCKNUT (M6X1-THD)	

E-ORDER BY THE CENTIMETER
M-METRIC PART
Y-SEPARATE ILLUSTRATION

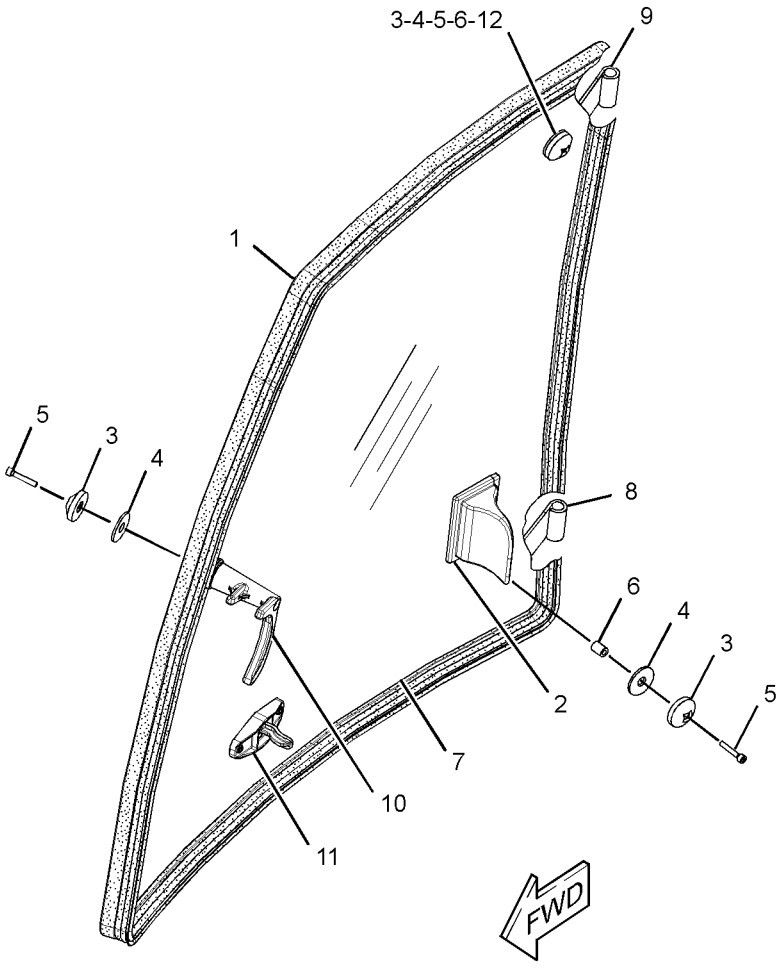

GRAPHIC #1 **<END>** g01890418

OPERATOR STATION

206-1728 WIPER & WASHER GP-WINDOW

S/N: LMS1-UP
PART OF 291-9192 CANOPY AR-OPEN ROPS
AN ATTACHMENT

SMCS-7305, 7306 **i02940310**

NOTE	REF NO	GRAPHIC REF	PART NUMBER	QTY	PART NAME 1 2 3 4 5 6 (PRODUCT LEVEL)	SEE PAGE
E	1	1	**144-0195**		HOSE (100-CM EACH)	
E	1A	1	**144-0195**		HOSE (513.8-CM)	
E	1B	1	**144-0195**		HOSE (78.8-CM)	
D	2	1	**6V-0505**		SEAL (0.5-M)	
	3	1	**3S-2093**	10	STRAP-CABLE	
	4	1	**6K-9632**	1	TEE	
	5	1	**8T-1118**	1	NOZZLE AS-WASHER	
	6	1	**9R-3469**	2	DIAPHRAGM	
	7	1	**9X-8372**	1	FILM-INSTRUCTION (WASHER FILL)	
	8	1	**101-0745**	1	BLADE AS-WIPER (600-MM) (FRONT)	
	9	1	**154-5410**	1	ARM-WINDOW WIPER (FRONT)	
Y	10	1	**186-2589**	1	MOTOR GP-WINDOW WIPER (FRONT)	565
	11	1	**214-3763**	1	TANK GP-WINDOW WASHER	
		1	**6T-1375**	2	PUMP AS-WASHER	
		1	**8E-8293**	2	GROMMET	
		1	**214-3742**	1	TANK-WASHER	
		1	**254-5683**	1	CAP	
	12	1	**276-8791**	1	CLIP	
	13	1	**283-3451**	1	CONNECTOR AS	
	14	1	**156-0283**	2	WASHER-HARD (8.4X35X2.5-MM THK)	
M	15	1	**6V-7357**	1	BOLT (M6X1X25-MM)	
	16	1	**8T-4205**	1	WASHER-HARD (7.2X14.5X2-MM THK)	
M	17	1	**8T-5093**	1	BOLT-LOCKING (M8X1.25X25-MM)	

D-ORDER BY THE METER
E-ORDER BY THE CENTIMETER
M-METRIC PART
Y-SEPARATE ILLUSTRATION

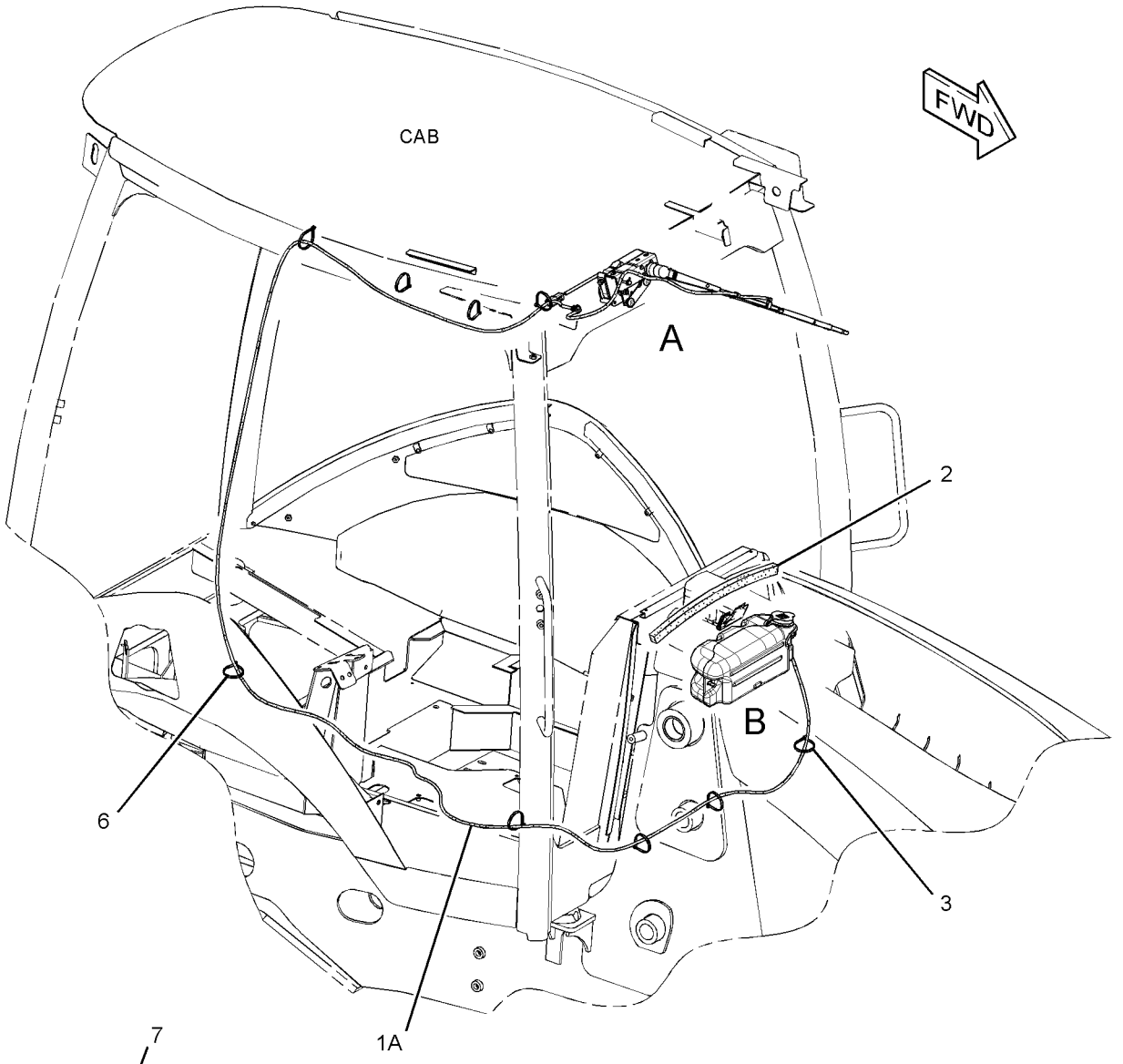

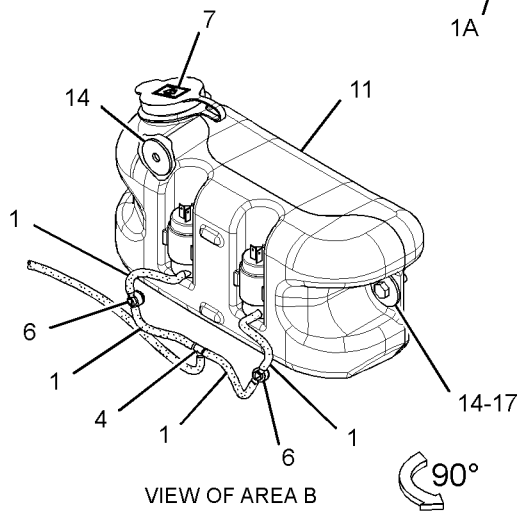

VIEW OF AREA B

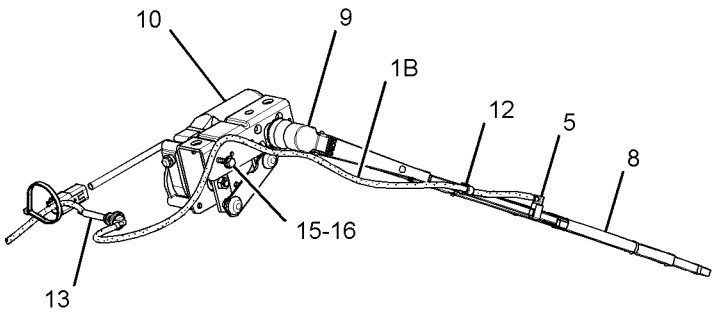

VIEW OF AREA A

GRAPHIC #1 **<END>** g01515061

OPERATOR STATION

206-1725 WIPER GP-WINDOW

S/N: LMS1-UP
PART OF 291-9194, 291-9195 CAB AR-ENCLOSED ROPS
AN ATTACHMENT

SMCS-7305 **i03889149**

NOTE	REF NO	GRAPHIC REF	PART NUMBER	QTY	PART NAME 1 2 3 4 5 6 (PRODUCT LEVEL)	SEE PAGE
	1	1	**5C-8811**	1	BLADE AS-WIPER (500-MM) (REAR)	
	2	1	**101-0745**	1	BLADE AS-WIPER (600-MM) (FRONT)	
	3	1	**154-5410**	1	ARM-WINDOW WIPER (FRONT)	
	4	1	**160-2169**	2	SPACER (7X11X8.4-MM THK)	
Y	5	1	**186-2589**	1	MOTOR GP-WINDOW WIPER (FRONT)	565
	6	1	**214-4709**	1	SWITCH AS-ROCKER (WIPER, WASHER, REAR)	
		1	**111-7899**	1	GASKET	
Y	7	1	**330-5010**	1	MOTOR GP-WINDOW WIPER (REAR)	566
	8	1	**220-2001**	1	ARM AS-WIPER (REAR)	
E		1	**194-5171**		HOSE (35-CM)	
		1	**305-9190**	1	NOZZLE AS-WASHER	
	9	1	**223-8263**	1	PLATE	
	10	1	**229-0306**	1	PLATE	
M	11	1	**6V-7357**	1	BOLT (M6X1X25-MM)	
M	12	1	**8T-4138**	2	BOLT (M6X1X20-MM)	
M	13	1	**8T-4171**	4	BOLT (M6X1X12-MM)	
	14	1	**8T-4205**	9	WASHER-HARD (7.2X14.5X2-MM THK)	
M	15	1	**5C-2890**	1	NUT (M6X1-THD)	
M	16	1	**8T-4971**	1	BOLT (M6X1X30-MM)	

E-ORDER BY THE CENTIMETER
M-METRIC PART
Y-SEPARATE ILLUSTRATION

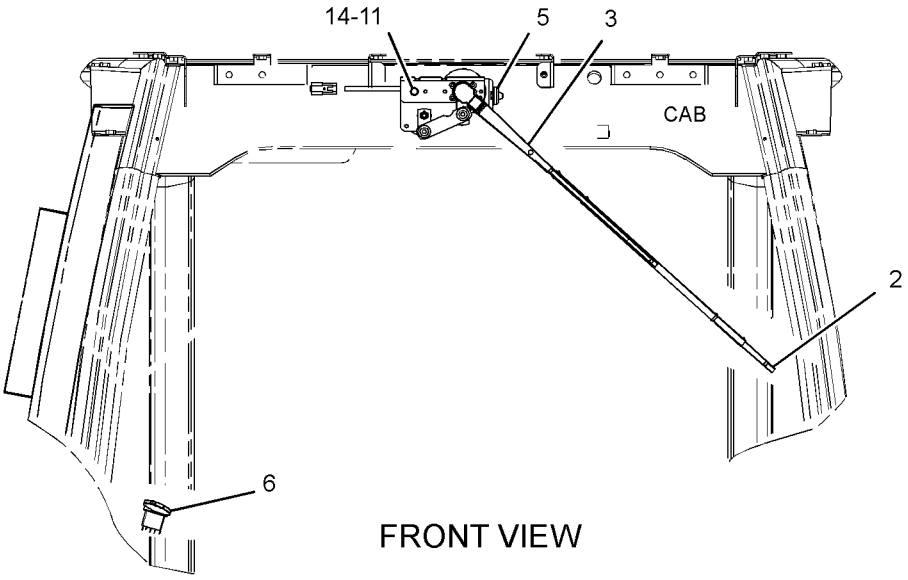

FRONT VIEW

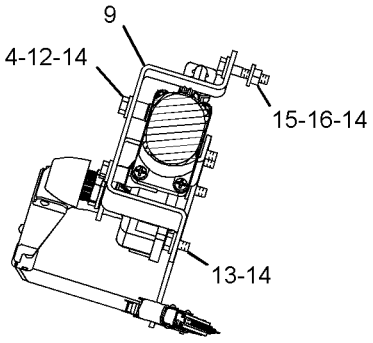

SECTION A-A

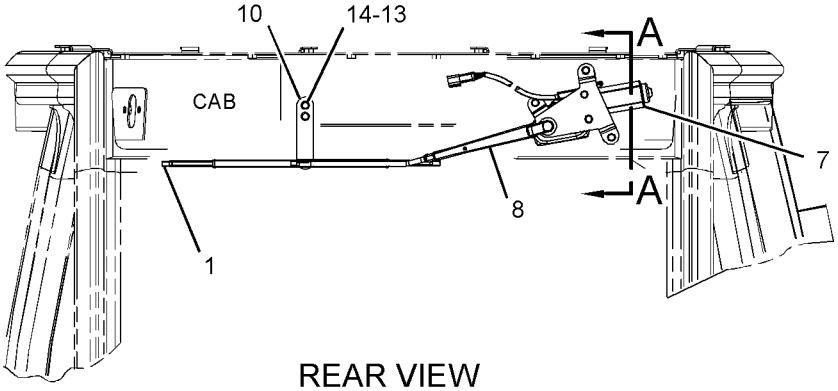

REAR VIEW

GRAPHIC #1

<END>

g02133833

SERVICE EQUIPMENT AND SUPPLIES

306-7466 FILM GP

S/N: LMS1-UP

PART OF 291-9190 CHASSIS AR

SMCS-7405, 7557 **i03879284**

NOTE	REF NO	GRAPHIC REF	PART NUMBER	QTY	PART NAME 1 2 3 4 5 6 (PRODUCT LEVEL)	SEE PAGE
	1	1	**294-4955**	1	FILM-IDENTIFICATION (416E, RH)	
	2	1	**292-2833**	1	FILM-IDENTIFICATION (BOOM, RH)	
	3	1	**294-4954**	1	FILM-IDENTIFICATION (416E, LH)	
	4	1	**292-2834**	1	FILM-IDENTIFICATION (BOOM, LH)	

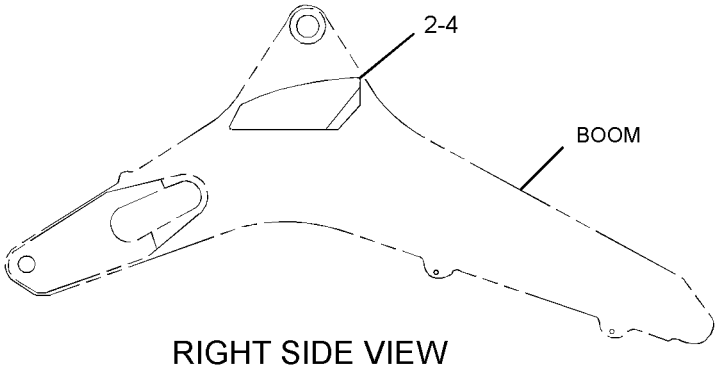

RIGHT SIDE VIEW

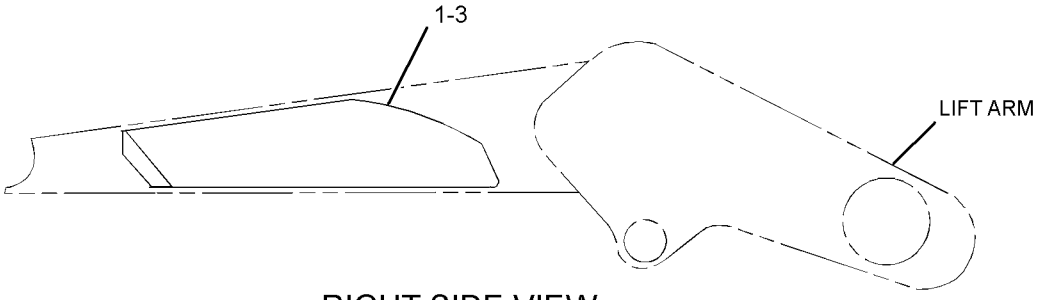

RIGHT SIDE VIEW

GRAPHIC #1 **<END>** g01874637

SERVICE EQUIPMENT AND SUPPLIES

113-0018 INSTALLATION AR-WHEEL CHOCK

S/N: LMS1-UP

AN ATTACHMENT

SMCS-7000 **i01127632**

NOTE	REF NO	GRAPHIC REF	PART NUMBER	QTY	PART NAME 1 2 3 4 5 6 (PRODUCT LEVEL)	SEE PAGE
	1	1	**114-9342**	2	CHOCK GP-WHEEL	
	2	1	**130-7452**	2	PLATE	

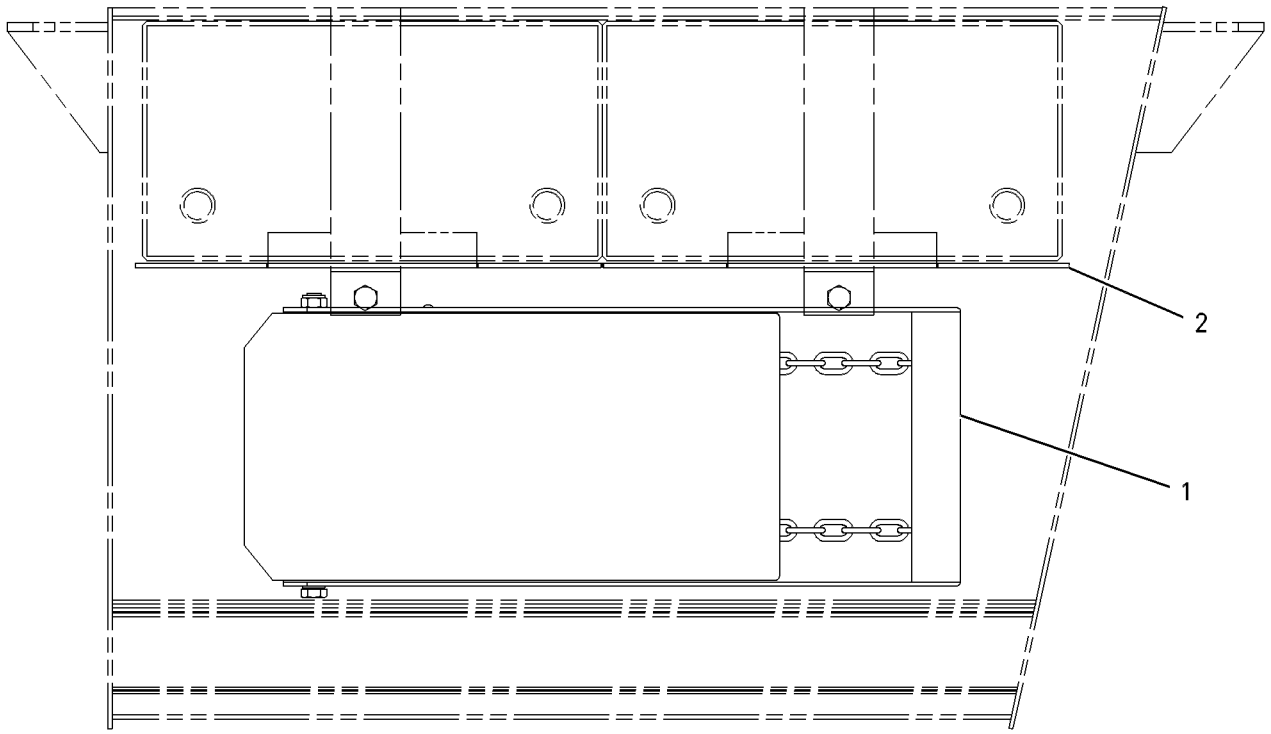

GRAPHIC #1 **<END>** g00307295

SERVICE EQUIPMENT AND SUPPLIES

175-7877 LINK GP-SHIPPING

S/N: LMS1-UP

AN ATTACHMENT

SMCS-6513 **i01190768**

NOTE	PART NUMBER	QTY	PART NAME 1 2 3 4 5 6 (PRODUCT LEVEL)	SEE PAGE
	120-9286	1	PLATE	

<END>

SERVICE EQUIPMENT AND SUPPLIES

216-0909 LOCK GP-VANDALISM

S/N: LMS1-UP

AN ATTACHMENT

SMCS-7315 **i02162054**

NOTE	REF NO	GRAPHIC REF	PART NUMBER	QTY	PART NAME 1 2 3 4 5 6 (PRODUCT LEVEL)	SEE PAGE
	1	1	**246-2641**	2	PADLOCK GP	
					(EACH INCLUDES)	
		1	**5P-8500**	1	KEY	
					(WITH PLASTIC OVERMOLD)	
					—OR—	
		1	**199-6309**	1	KEY (CORPORATE)	
					(OPTIONAL SERVICE REPLACEMENT)(PLAIN KEY WITHOUT PLASTIC OVERMOLD)	

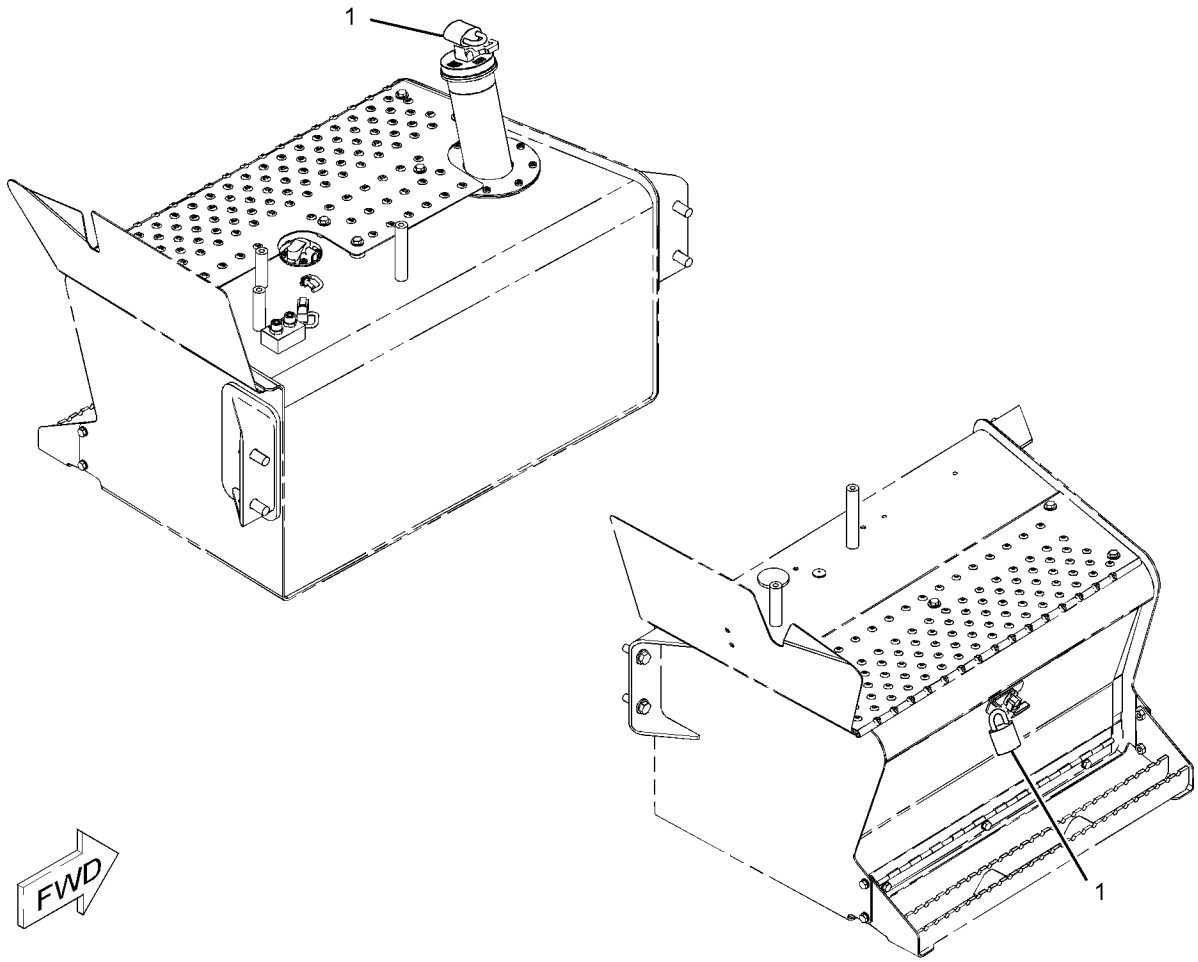

GRAPHIC #1 **<END>** g01096994

SERVICE EQUIPMENT AND SUPPLIES

263-8591 PLATE & FILM GP

S/N: LMS1-UP

PART OF 216-8801 BUCKET GP-MULTIPURPOSE

AN ATTACHMENT

SMCS-7405 **i03849809**

NOTE	REF NO	GRAPHIC REF	PART NUMBER	QTY	PART NAME 1 2 3 4 5 6 (PRODUCT LEVEL)	SEE PAGE
	1	1	**247-6118**	2	FILM-WARNING (CRUSH HAZARD, STAY BACK)	

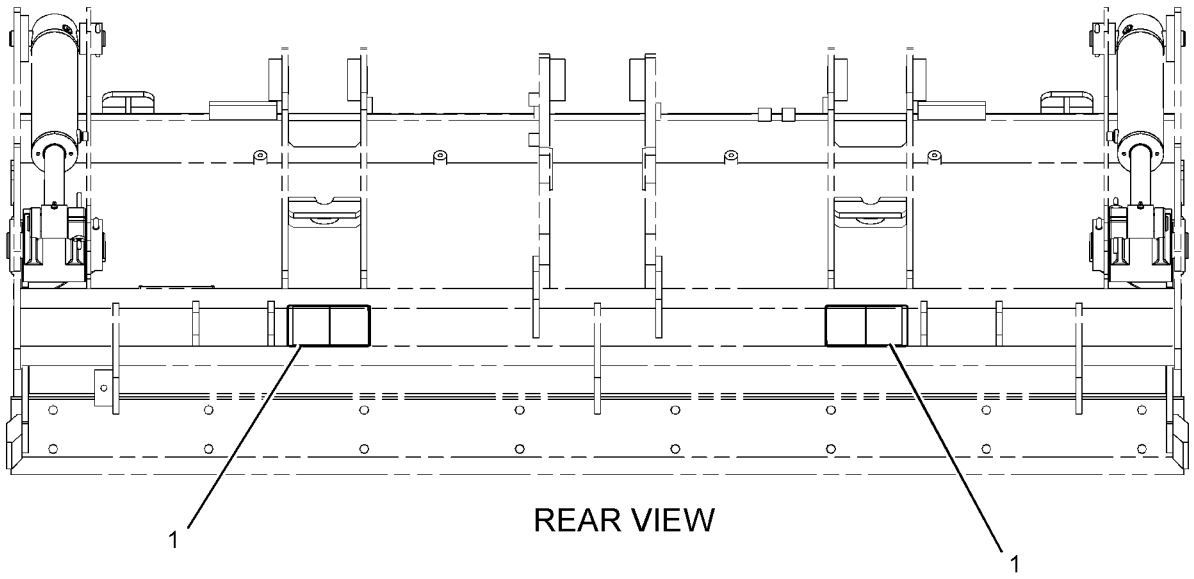

GRAPHIC #1 **<END>** g01231780

SERVICE EQUIPMENT AND SUPPLIES

291-9200 PLATE & FILM GP–NACD

S/N: LMS1-UP

AN ATTACHMENT

SMCS-7405 **i03848090**

NOTE	PART NUMBER	QTY	PART NAME 1 2 3 4 5 6 (PRODUCT LEVEL)	SEE PAGE
	239-6989	1	PLATE-SERIAL NUMBER (MACHINE)	
			(ON UPPER RH SIDE OF FRAME RAIL)	
	225-4150	1	PLATE-SERVICE INFORMATION (MACHINE)	
			(ON UPPER LH SIDE OF FRAME RAIL)	
	193-5913	6	PLUG	
	250-7910	1	FILM-INSTRUCTION (BOOM LOCK)	
			(NEXT TO BOOM LOCK ON RH CONSOLE)	
	250-7911	1	FILM-INSTRUCTION (VARIABLE SPEED)	
			(ON RH CONSOLE NEXT TO GOV CONTROL HANDLE)	
	252-8435	1	FILM-IDENTIFICATION (START SWITCH, READ OMM)	
			(ON RH CONSOLE AROUND KEYSWITCH)	
	258-9999	4	FILM (LIFT EYE LOCATION)	
			(2-ON THE FRONT SIDE OF THE FRONT AXLE BETWEEN THE CHASSIS & WHEEL ASSEMBLY	
			ON THE LH & RH SIDE OF THE MACHINE	
			2-ON THE STABILIZER PAD CENTERED UNDER THE LIFTINGHOLE ORIENTED WITH THE ARROW POINTING UP	
			WHEN THE STABILIZER IS IN THE UPPERWARD POSITION)	
	289-3412	1	FILM-COVER (PROTECT)	
			(IN THE BATTERY BOX ON THE LH SIDE 150-MM UP FROM THE BOTTOM OF THE BOX & LEVEL WITH THE BOTTOM OF BOX	
			CENTERED FROM SIDE TO SIDE)	
	159-8033	1	FILM-IDENTIFICATION (12-VOLT)	
			(INSIDE BATTERY BOX DOOR CENTERED FROM SIDE TO SIDE ABOVE THE JUMP START WARNING FILM &	
			CENTERED FROM TOP TO BOTTOM BETWEEN THE JUMP START FILM & THE BEND IN THE DOOR)	
	309-9657	1	FILM-IDENTIFICATION (FUSE PANEL)	
			(INSIDE RH CONSOLE ACCESS PANEL SUCH THAT IT CAN BE READ WHILE STANDING ON THE GROUND WITH THE ACCESS DOOR OPEN	
			& VIEWING FILM)	
	134-7258	1	FILM-INFORMATION (EXTENDED LIFE COOLANT)	
			(ON SHUNT TANK NEXT TO RADIATOR CAP SUCH THAT IT CAN BE READ FROM THE LEFT SIDE OF THE MACHINE)	
	330-4411	1	FILM-CERTIFICATION (OPS, READ OMM)	
			(ON LH A-POST 350-MM FROM THE FLOOR. THE UPPER FILM SHOULD BE THE NO WELD/NO DRILL & THE ROPS/FOPS FILM IN THE	
			LOWER POSITION)	
	252-2157	4	FILM-INFORMATION (TIE-DOWN)	
			(2-ON EACH SIDE OF MACHINE ON THE MAIN FRAME ABOVE THE FRONT AXLE, ABOVE TIE DOWN MOUNTING PLATE,	
			CENTERED TOP TO BOTTOM AND RIGHT TO LEFT	
			2-ON THE REAR OF THE MACHINE ON THE MAIN FRAME NEXT TO THE TIE DOWN HOLES UNDER THE SWING CULINDERS)	
	124-2456	1	FILM-INSTRUCTION (NO STEP)	
			(INSIDE BATTERY BOX DOOR 75-MM FROM THE RIGHT EDGE & THE TOP EDGE IS EVEN WITH 12V FILM)	
	308-3454	1	FILM-INSTRUCTION (LUBRICATION POINTS)	

291-9200 **PLATE & FILM GP** *(contd.)* **i03848090**

NOTE	PART NUMBER	QTY	PART NAME 1 2 3 4 5 6 (PRODUCT LEVEL)	SEE PAGE
			(UNDER HOOD ON PRE-CLEANER SUCH THAT IT CAN BE READ FROM THE LEFT SIDE OF MACHINE)	
	219-0302	1	FILM-WARNING (NO WELD, NO DRILL, READ OMM)	
			(ON LH A-POST 350-MM FROM THE FLOOR. THE UPPER FILM SHOULD BE THE NO WELD/NO DRILL & THE ROPS/FOPS FILM IN THE	
			LOWER POSITION)	
	224-8945	1	FILM-WARNING (DO NOT USE ETHER, U.S)	
			(UNDER HOOD ON THE PRE-CLEANER UNDER THE SERVICE FILM SUCH THAT IT CAN BE READ FROM THE LEFT SIDE OF THE MACHINE)	
	225-0313	1	FILM-WARNING (JUMP START, READ OMM, U.S.)	
			(INSIDE OF BATTERY BOX DOOR CENTERED ABOVE DOOR LATCH & 75-MM UP FROM THE EDGE OF DOOR)	
	226-1242	2	FILM-WARNING (CRUSH HAZARD, STAY BACK, U.S.)	
			(ON BOOM 700-MM UP FROM CENTER LINE OF SWING & BOOM LOWER FOOT PIN & 65-MM OVER FROM INSIDE OF THE REAR EDGE OF	
			BOOM WRAPPER PLATE)	
	239-9429	1	FILM-WARNING (ARM BRACE, READ OMM)	
			(ON LH SIDE OF MACHINE ON SAFETY BRACE CENTERED FROM TOP TO BOTTOM & FROM SIDE TO SIDE)	
	240-7094	2	FILM-WARNING (NO ENTRANCE, EXIT, READ OMM)	
			(ON REAR OF CAB STRUCTURE AT BOTTOM 50-MM FROM THE RED REFLECTOR TOWARD CENTER OF MACHINE FOR BOTH FILMS. CENTERED	
			FROM TOP TO BOTTOM)	
	255-0791	1	FILM-WARNING (READ OMM)	
			(ON RH CONSOLE UNDER KEYSWITCH IN AREA PROVIDED. UNIVERSAL FILM IS LOCATED ON UPPER HALF AND THE SEATBELT IS ON THE	
			LOWER HALF)	
	255-0792	1	FILM-WARNING (SEAT BELT)	
			(ON RH CONSOLE UNDER KEYSWITCH IN AREA PROVIDED. UNIVERSAL FILM IS LOCATED ON UPPER HALF AND THE SEATBELT IS ON THE	
			LOWER HALF)	
	259-4401	1	FILM-WARNING (HOT FLUID UND PRESS, READ OMM)	
			(ON RADIATOR CAP SO THAT IT CAN BE READ FROM THE LH SIDE OF MACHINE)	

<END>

291-9201 PLATE & FILM GP—OUTSIDE NACD

S/N: LMS1-UP

AN ATTACHMENT

SMCS-7405 **i03848089**

NOTE	PART NUMBER	QTY	PART NAME 1 2 3 4 5 6 (PRODUCT LEVEL)	SEE PAGE
	239-6989	1	PLATE-SERIAL NUMBER (MACHINE)	
			(ON UPPER RH SIDE OF FRAME RAIL)	
	225-4150	1	PLATE-SERVICE INFORMATION (MACHINE)	
			(ON UPPER LH SIDE OF FRAME RAIL)	
	193-5913	4	PLUG	
	250-7910	1	FILM-INSTRUCTION (BOOM LOCK)	
			(NEXT TO BOOM LOCK ON RH CONSOLE)	
	250-7911	1	FILM-INSTRUCTION (VARIABLE SPEED)	

291-9201 **PLATE & FILM GP** ***(contd.)*** **i03848089**

NOTE	PART NUMBER	QTY	PART NAME 1 2 3 4 5 6 (PRODUCT LEVEL)	SEE PAGE
			(ON RH CONSOLE NEXT TO GOV CONTROL HANDLE)	
	252-8435	1	FILM-IDENTIFICATION (START SWITCH, READ OMM)	
			(ON RH CONSOLE AROUND KEYSWITCH)	
	258-9999	4	FILM (LIFT EYE LOCATION)	
			(2-ON THE FRONT SIDE OF THE FRONT AXLE BETWEEN THE CHASSIS	
			& WHEEL ASSEMBLY ON THE LH & RH SIDE OF THE MACHINE	
			2-ON THE STABILIZER PAD CENTERED UNDER THE LIFTING HOLE ORIENTED WITH THE ARROW POINTING UP	
			WHEN THE STABILIZER IS IN THE UPPERWARD POSITION)	
	330-4411	1	FILM-CERTIFICATION (OPS, READ OMM)	
			(ON LH A-POST 350-MM FROM THE FLOOR. THE UPPER FILM SHOULD BE THE NO WELD/NO DRILL & THE ROPS/FOPS FILM IN THE	
			LOWER POSITION)	
	289-3412	1	FILM-COVER (PROTECT)	
			(ON THE BATTERY BOX ON LH SIDE, SHOULD BE 150-MM UP FROM THE BOTTOM OF THE BOX & LEVEL WITH THE BOTTOM OF BOX	
			CENTERED FROM SIDE TO SIDE)	
	159-8033	1	FILM-IDENTIFICATION (12-VOLT)	
			(INSIDE BATTERY BOX DOOR CENTERED FROM SIDE TO SIDE ABOVE THE JUMP START WARNING FILM & CENTERED FROM TOP TO BOTTOM	
			BETWEEN THE JUMP START FILM & THE BEND IN DOOR)	
	309-9657	1	FILM-IDENTIFICATION (FUSE PANEL)	
			(INSIDE RH CONSOLE ACCESS PANEL SUCH THAT IT CAN BE READ WHILE STANDING ON THE GROUND WITH THE ACCESS DOOR	
			OPEN & VIEWING FILM)	
	134-7258	1	FILM-INFORMATION (EXTENDED LIFE COOLANT)	
			(ON SHUNT TANK NEXT TO RADIATOR CAP SUCH THAT IT CAN BE READ FROM THE LH SIDE OF THE MACHINE)	
	252-2157	4	FILM-INFORMATION (TIE-DOWN)	
			(2-ON EACH SIDE OF THE MACHINE ON THE MAIN FRAME ABOVE THE FRONT AXLE, ABOVE THE TIE DOWN MOUNTING	
			PLATE CENTERED TOP TO BOTTOM & LEFT TO RIGHT	
			2-ON THE REAR OF THE MACHINE ON THE MAIN FRAME NEXT TO THE TIE DOWN HOLES UNDER THE SWING CYLINDERS)	
	124-2456	1	FILM-INSTRUCTION (NO STEP)	
			(INSIDE BATTERY BOX DOOR 75-MM FROM THE RIGHT EDGE & THE TOP EDGE IS EVEN WITH THE 12V FILM)	
	308-3454	1	FILM-INSTRUCTION (LUBRICATION POINTS)	
			(UNDER THE HOOD ON PRE-CLEANER, REMOVE SUPPLIER FILM & ORIENT FILM SUCH THAT IT CAN BE READ FROM THE LEFT SIDE OF THE	
			MACHINE)	
	219-0302	1	FILM-WARNING (NO WELD, NO DRILL, READ OMM)	
			(ON LH A-POST 350-MM FROM THE FLOOR. THE UPPER FILM SHOULD BE THE NO WELD/NO DRILL & THE ROPS/FOPS FILM IN THE	
			LOWER POSITION)	
	224-8946	1	FILM-WARNING (NO ETHER SPRAY/AIR INTK, INTL)	
			(UNDER HOOD ON THE PRE-CLEANER UNDER THE SERVICE FILM SUCH THAT IT CAN BE READ FROM THE LEFT SIDE OF THE MACHINE)	

291-9201 **PLATE & FILM GP** ***(contd.)*** **i03848089**

NOTE	PART NUMBER	QTY	PART NAME 1 2 3 4 5 6 (PRODUCT LEVEL)	SEE PAGE
	225-0312	1	FILM-WARNING (JUMP START, READ OMM, INTL)	
			(INSIDE OF BATTERY BOX DOOR CENTERED ABOVE DOOR LATCH & 75-MM UP FROM THE EDGE OF DOOR)	
	226-1240	2	FILM-WARNING (CRUSH HAZARD, STAY BACK, INTL)	
			(ON BOOM 700-MM UP FROM CENTER LINE OF SWING & BOOM LOWER FOOT PIN & 65-MM OVER FROM INSIDE OF THE REAR EDGE OF	
			BOOM WRAPPER PLATE)	
	239-9430	1	FILM-WARNING (ARM BRACE, READ OMM)	
			(ON LH SIDE OF THE MACHINE ON SAFETY BRACE CENTERED FROM TOP TO BOTTOM & FROM SIDE TO SIDE)	
	240-7095	2	FILM-WARNING (NO ENTRANCE, EXIT, READ OMM)	
			(ON THE REAR OF THE CAB STRUCTURE AT THE BOTTOM 50-MM FROM THE RED REFLECTOR TOWARD THE CENTER OF THE MACHINE FOR	
			BOTH FILMS, CENTERED FROM TOP TO BOTTOM)	
	255-0793	1	FILM-WARNING (READ OMM)	
			(ON RH CONSOLE UNDER KEYSWITCH IN AREA PROVIDED. UNIVERSAL FILM IS ON THE UPPER HALF	
			& THE SEATBELT IS ON THE LOWER HALF)	
	255-0794	1	FILM-WARNING (SEAT BELT)	
			(ON RH CONSOLE UNDER KEYSWITCH IN AREA PROVIDED. UNIVERSAL FILM IS ON THE UPPER HALF & THE SEATBELT IS ON THE LOWER	
			HALF)	
	259-4402	1	FILM-WARNING (HOT FLUID UNDER PRESSURE)	
			(ON RADIATOR CAP ORIENTED SUCH THAT IT CAN BE READ FROM THE LH SIDE OF THE MACHINE)	

<END>

SERVICE EQUIPMENT AND SUPPLIES

206-1701 PROTECTION GP-VANDALISM—ROTATING GUARD

S/N: LMS1-UP

PART OF 291-9192 CANOPY AR-OPEN ROPS, 291-9191 CANOPY GP-OPEN ROPS AN ATTACHMENT

SMCS-7315 **i03500322**

NOTE	REF NO	GRAPHIC REF	PART NUMBER	QTY	PART NAME 1 2 3 4 5 6 (PRODUCT LEVEL)	SEE PAGE
	1	1	**206-1852**	1	COVER-VANDALISM	
	2	1	**206-1853**	2	BUSHING	
	3	1	**206-1855**	1	PLATE	
	4	1	**206-1856**	1	BRACKET	
J	5	1	**226-0291**	1	LOCK AS	
M	6	1	**129-3178**	2	LOCKNUT (M6X1-THD)	
M	7	1	**174-8131**	1	SCREW-TRUSS HEAD (M4X0.7X12-MM)	
	8	1	**232-4636**	2	BOLT-CARRIAGE (M6X1-THD)	
	9	1	**8C-9660**	1	WASHER (4.6X7.9X0.8-MM THK)	
M	10	1	**8T-2659**	1	LOCKNUT (M4X0.7-THD)	
	11	1	**9X-2038**	2	WASHER (7X19X2-MM THK)	

J-REQUIRES 5P-8500 KEY
M-METRIC PART

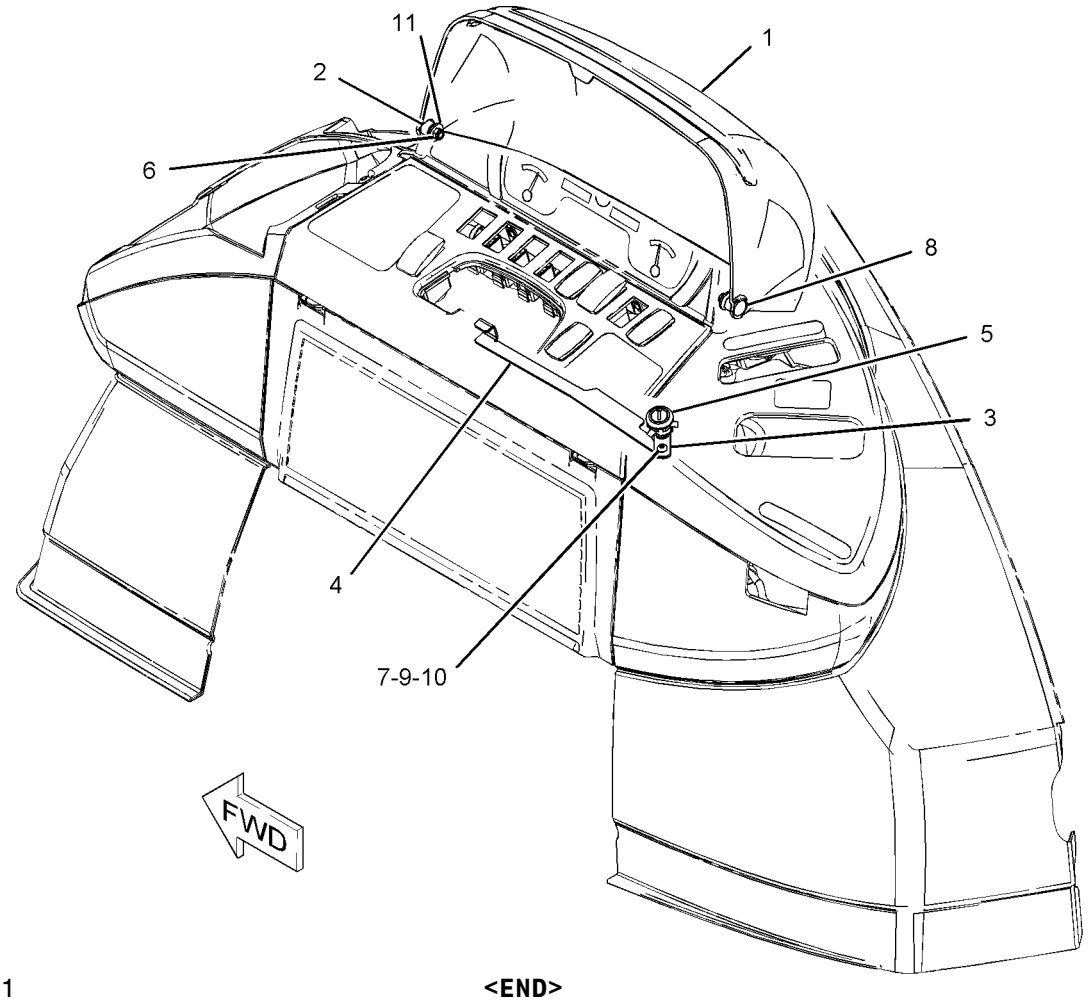

GRAPHIC #1 **<END>** g01083362

SERVICE EQUIPMENT AND SUPPLIES

325-5100 TRANSPORT AR-MACHINE—WITHOUT BUCKET

S/N: LMS1-UP
FOR USE WITH SINGLE TILT MACHINES
AN ATTACHMENT

SMCS-0355 **i03849970**

NOTE	REF NO	GRAPHIC REF	PART NUMBER	QTY	PART NAME 1 2 3 4 5 6 (PRODUCT LEVEL)	SEE PAGE
	1	1	**3B-5322**	2	PIN-COTTER	
	2	1	**9R-0109**	2	WASHER (41X64X3-MM THK)	
	3	1	**034-1432**	2	STRAP-CABLE	
	4	1	**120-9333**	1	TUBE	

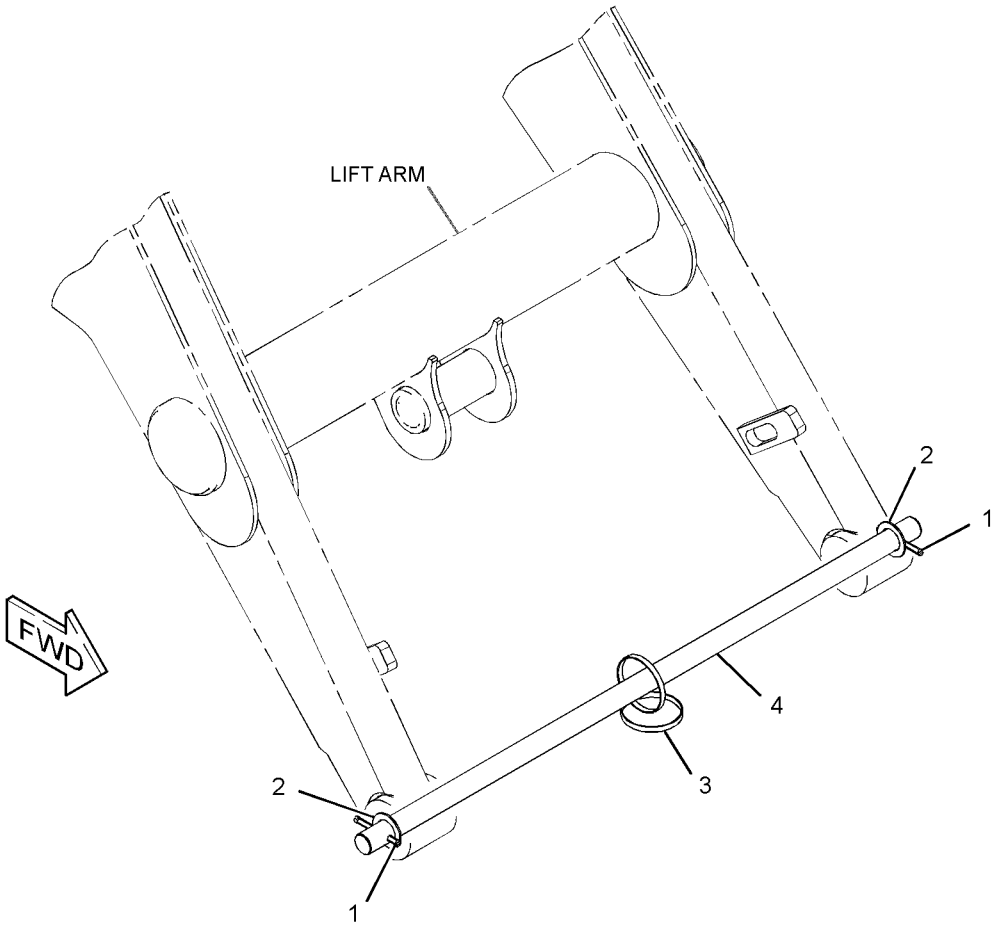

GRAPHIC #1 **<END>** g01584873

PART NUMBER INDEX

Part	Page
0	
0S-0509	581
0S-1595	578
	579
0S-1603	22
1	
1A-0621	192
1B-8736	10
	13
	266
1H-3244	98
	99
	100
	545
	546
1H-3337	581
1H-6227	256
1H-7339	252
	257
	259
1H-8128	254
	255
1K-0502	515
	517
1K-6872	578
	579
	581
1K-7082	155
1L-3768	386
1L-6377	121
	567
1M-6119	79
	81
1M-6120	79
	81
1P-0810	81
	91
	93
	112
1P-4584	309
1R-5396	195
	196
1S-7251	81
	112
1S-7252	79
1U-8846	129
	152
1V-9385	536
2	
2B-0858	19
	33
2B-0941	143
	144
2D-2628	181
2D-2629	181
2D-2630	181
2D-2631	181
2D-2633	181
2D-6235	581
2H-3922	104
	117
2H-3931	252
	259
2H-4145	246
2K-4973	561
	578
	579
	581
2K-5986	192
2K-6830	250
2L-5893	581
2L-8067	106
	115
	119
	121
2L-8068	119
2L-8069	91
	93
	106
	115
	121
2L-8075	106
	109
2L-8077	121
2L-8079	112
	121
2M-9780	203
	205
	269
	299
	307
	311
	313
	315
	320
2P-1293	271
	273
	275
	279
	281
	285
2R-0364	369
	515
	517
2S-3163	507
2S-3745	549
	551
2T-3019	67
2W-9710	49
2Y-5821	248
	250
3	
3B-4505	235
	581
3B-4610	197
3B-5319	327
	366
	474
	475
	480
3B-5322	614
3B-8486	222
	223
3B-8488	222
	361
	363
	372
	389
3B-8489	222
	223
	250
	253
	254
	255
	258
	266
	361
	363
	366
	368
	369
	372
	386
	389
	463
	464
	473
	489
3C-4883	91
	93
3D-2824	275
	278
	281
	285
	288
	290
	292
	299
	301
	309
	317
	319
	320
	336
3E-0068	561
3E-4321	67
	560
	561
3E-6600	91
	93
	509
	515
	517
3E-6735	250
	254
	255
3E-8320	81
3E-9362	106
3F-5108	463
	464
	478
3F-9556	565
	566
	568
3G-8047	292
3G-8054	292
3G-8057	292
3J-1907	67
	125
	129
	144
	154
	171
	176
	192
	203
	205
	239
	253
	263
	269
	303
	305
	307
	311
3J-4818	113
	581
3J-7354	192
	203
	205
	307
	360
3K-0360	203
	205
	239
	244
	268
	294
	295
	307
	311
	319
	333
3K-2889	381
	382
3K-8460	67
3K-8782	90
3N-5739	250
3S-2093	79
	81
	84
	91
	93
	107
	109
	112
	113
	115
	117
	119
	121
	124
	125
	170
	176
	269
	492
	561
	580
	586
	600

► **PRIMARY REFERENCE**

PART NUMBER INDEX

Part	Page
3S-6049	79
3S-6050	79
3S-8536	229
3T-0852	575
	576
4	
4B-2043	109
	583
4B-4863	56
	121
4B-5271	578
	579
4B-9784	307
	581
4D-7388	49
4D-9517	369
4E-8619	▶198
	199
4F-3657	491
4F-8711	386
4F-9029	129
4H-0408	23
4H-2558	492
4H-8380	581
4I-3038	119
	511
4J-0520	138
4J-0522	134
	135
	143
	144
4J-0526	254
	255
4J-1888	471
	472
	477
	479
4J-5477	154
	192
	203
	205
	239
	307
4J-7533	323
4J-9220	248
4J-9224	246
4K-0367	463
	464
	478
	491
4L-6454	129
	578
	579
4M-0061	581
4M-0189	248
	256
4P-7428	113
4P-7581	81
	113
	121
	269
	297
4P-8134	81
	113
	121
4T-6779	252
	259
4T-6780	257
4T-7010	252
	259
4T-9905	307
4V-0611	305
4V-0612	303
	305
4W-3753	273
	278
	285
4W-9972	171
	176
5	
5A-3604	369
5B-9385	252
	259
5C-2874	113
	555
	556
5C-2890	65
	81
	98
	99
	100
	107
	115
	121
	124
	192
	509
	524
	592
	602
5C-7261	47
	49
	54
	97
	98
	99
	100
	107
	115
	121
	192
	202
	210
	217
	243
	297
	561
	565
	566
	568
	588
	590
	594
	596
5C-8312	56
5C-8811	602
5C-9553	81
	121
	369
	541
	543
	568
5D-0718	560
	561
5D-1026	38
	49
	67
	203
	205
	307
	560
	561
5D-8159	479
5D-9629	501
5E-8557	236
5G-2003	558
5H-3193	515
	517
5H-4909	129
5I-3978	67
5I-4370	313
	315
5J-4986	248
5J-5731	248
	256
5J-7011	246
5J-7012	246
5J-7854	256
5J-7865	256
5J-8156	246
5K-5338	192
	561
5K-9090	263
	271
	273
	275
	278
	279
	281
	285
	309
5P-0370	381
5P-0599	288
	290
	292
	319
5P-0743	294
5P-0747	79
	112
5P-0761	79
	81
5P-0767	560
	561
5P-0805	217
5P-1076	223
5P-1420	67
5P-1442	67
	192
	333
5P-1476	117
5P-1478	112
5P-1505	67
	203
	205
	307
5P-1506	297
5P-3860	317
5P-4115	592
5P-4116	38
	45
	46
	47
	53
	56
	76
	113
	143
	144
	192
	210
	225
	227
	229
	275
	279
	281
	285
	297
	492
	497
	501
	502
	513
	515
	517
	547
	560
	561
	592
5P-4295	203
	205
	307
5P-4571	91
	93
5P-4868	309
5P-4961	333
5P-5148	328
5P-5623	124
5P-5637	549
	551
	592
5P-5655	549
	551
5P-5677	538
5P-5688	549
	551
5P-5927	503
	509
5P-6006	119
5P-6129	492
5P-6459	113
5P-6718	175
5P-7070	121
	511

▶ **PRIMARY REFERENCE**

PART NUMBER INDEX

Part	Page
5P-7462	205
	313
	315
5P-7463	205
	313
	315
5P-7464	290
	292
5P-7465	290
	292
5P-7466	271
	273
	275
	279
	281
	285
5P-7467	271
	273
	275
	279
	281
	285
5P-7814	67
5P-7958	119
	369
5P-7971	381
	382
5P-8066	171
	175
5P-8112	271
	273
	275
	279
	281
	286
5P-8245	22
	575
	576
	578
	579
5P-8250	252
	259
5P-8500	607
5P-9297	40
5P-9768	495
	499
5T-5439	187
5T-6374	81
5T-7870	578
	579
5V-1497	581
5V-2545	160
5V-7190	386

6

Part	Page
6A-9083	578
	579
6C-3680	549
	551
6D-0337	▶181
	182
6D-0443	181
6D-3479	333
6D-4636	67
6E-1135	369
6E-1478	250
6E-5431	513
6E-6528	360
6F-7045	104
6H-3592	119
6H-3616	27
6I-0217	24
	29
	51
	63
	72
6I-0254	51
6I-0260	29
	39
	42
	43
	72
	78
6I-0289	29
6I-0291	72
6I-0363	29
6I-0364	62
	101
6I-0423	23
6I-0563	62
	63
6I-0572	17
	29
	44
6I-0594	101
6I-0645	24
	44
6I-0646	17
	34
6I-0650	24
	78
6I-0846	11
6I-0847	23
6I-0917	11
6I-1497	38
	40
6I-4374	43
6J-0789	252
	259
6J-0790	252
	259
6J-0793	252
	259
6J-1972	257
6J-2680	257
	309
6J-5731	257
6K-0806	106
	117
	170
	176
6K-9632	600
6L-4725	492
	547
6L-7155	581
6N-6984	49
6P-6591	85
6P-8855	560
	561
6S-8620	67
	192
6T-0465	81
6T-1375	586
	600
6T-5017	65
6T-9142	132
	136
6T-9143	132
	136
6T-9144	132
	136
6T-9145	132
	136
6T-9146	132
	136
6T-9147	132
	136
6T-9160	165
	167
6T-9163	132
	136
6T-9164	132
	136
6T-9165	132
	136
6T-9166	132
	136
6T-9196	161
	166
6U-0456	288
6V-0491	112
6V-0505	586
	600
6V-0675	560
	561
6V-0683	205
	313
	315
6V-0826	369
6V-0852	144
	176
	307
6V-1195	77
6V-1249	290
	292
6V-1363	56
6V-1722	319
6V-1889	244
	290
	292
6V-2315	195
	196
6V-2689	517
	538
6V-2722	117
6V-3213	327
	361
	368
	378
	379
	380
	383
	444
6V-3341	303
	305
6V-3507	110
6V-3940	129
6V-3965	144
	175
	307
6V-4248	192
6V-4292	203
	205
6V-4364	366
	372
	386
	389
	444
	445
	446
6V-4589	170
	175
6V-5100	161
	166
6V-5138	322
	346
	347
	349
	350
	351
	352
	353
	354
	356
6V-5215	134
	135
6V-5653	203
	205
	307
6V-5729	227
6V-6228	127
	138
6V-6339	360
6V-6707	246
6V-6717	492
	547
6V-6813	492
	547
6V-7238	294
6V-7357	85
	192
	549
	551
	600
	602
6V-7359	113
	290
	292
6V-7687	223
	361
	581
6V-7731	170
	176
6V-7743	210

▶ **PRIMARY REFERENCE**

PART NUMBER INDEX

Part	Page
	588
	590
	594
	596
	598
	599
6V-7744	216
	241
	327
	481
	515
	517
	520
	522
	525
	527
	529
	532
	533
	534
	535
	584
6V-7970	323
	345
	346
	347
	348
	349
	350
	351
	352
	353
	354
	356
6V-8077	144
	307
6V-8097	170
	175
6V-8144	225
	361
	383
	479
6V-8185	581
6V-8186	568
6V-8224	288
6V-8227	209
6V-8237	257
6V-8335	170
	175
	534
	535
6V-8344	366
	372
	389
6V-8363	117
6V-8370	117
6V-8378	171
	176
6V-8397	203
	205
	303
	305
	307
	313
	315
6V-8398	239
	244
	246
	256
	257
	268
	269
	271
	273
	290
	292
	295
	299
	301
	303
	305
	311
	313
	315
	317
	319
	320
6V-8455	142
6V-8500	165
	167
6V-8523	117
6V-8624	269
	311
6V-8625	295
	319
6V-8626	299
	320
6V-8627	154
6V-8628	203
	205
6V-8633	317
6V-8634	203
	205
6V-8635	263
	275
	278
	281
	285
	309
6V-8636	203
	205
	307
6V-8637	275
	278
	281
	285
6V-8638	313
	315
6V-8639	244
	268
	311
	319
6V-8641	154
6V-8713	288
	290
	292
	299
	317
	320
	336
6V-8714	309
6V-8716	47
6V-8721	313
	315
6V-8723	203
	307
6V-8724	303
	305
6V-8757	161
	163
6V-8759	191
6V-8782	239
6V-8932	241
	522
	529
6V-8996	290
	292
6V-8998	271
	273
	275
	278
	281
	285
6V-9000	193
6V-9002	268
	311
6V-9007	275
	281
6V-9023	119
6V-9031	299
6V-9168	307
6V-9170	271
	273
	290
	292
6V-9172	271
	273
	275
	279
	281
	286
6V-9178	180
6V-9182	47
6V-9632	192
	501
6V-9746	47
	244
	248
	271
	273
	275
	276
	278
	279
	281
	282
	285
6V-9830	263
	299
	301
6V-9831	299
	336
6V-9832	276
	279
	282
	286
6V-9833	263
6V-9836	307
6V-9838	299
6V-9839	276
	278
	281
	285
6V-9850	203
	205
6V-9851	269
	311
6V-9852	320
6V-9853	244
	271
	273
6V-9990	292
6Y-1341	170
	175
6Y-1896	171
	175
6Y-2035	170
	175
6Y-2736	165
	167
6Y-2737	134
	135
6Y-7929	163
6Y-7957	161
	166
6Y-9930	567
7	
7C-0351	29
7C-1224	29
7C-4354	67
	81
	290
	292
7C-4616	24
7D-7233	297
7E-3870	60
7H-3937	549
	551
7I-1036	244
7I-8084	239
7J-1908	336
7J-9108	252
	259
	271
	273
	288
	290
	292
	299
	301
	317
	320
	336
7K-1181	65
	67
	81

PART NUMBER INDEX

Part	Page	Part	Page	Part	Page	Part	Page
	85		167	7X-2568	567	8C-6712	192
	106	7T-3034	132	7X-2572	232	8C-6955	266
	112		136	7X-4741	175	8C-7505	129
	117	7T-3051	134	7X-4744	180	8C-7524	549
	119		135	7X-7729	45		551
	154	7T-3109	170		46		584
	190		175		62	8C-8400	278
	193	7T-3111	170		79		285
	203		176		81	8C-8408	239
	205	7T-3119	170		121	8C-8522	210
	268		175		193	8C-8580	329
	288	7T-3195	170		229	8C-8989	269
	290		175		241		311
	292	7T-3249	170		273	8C-9660	613
	295		175		290	8C-9987	506
	297	7T-3251	170		309	8D-2707	181
	299		175		333	8D-9671	113
	301	7T-3253	134		515	8E-1118	558
	307		135		517	8E-5707	161
	311	7T-4532	504		520		163
	317	7T-4848	119		522		166
	320	7T-6739	549		525	8E-8293	586
	369	7T-6799	109		527		600
	560	7T-9987	79		529	8F-1434	113
	561	7W-1176	23		536		117
7M-8485	47	7W-2326	40		537		171
	263	7W-4642	23	7X-7958	297		176
	271	7X-0310	227	7X-9065	109	8F-3590	91
	273	7X-0440	303	7X-9866	208		93
	275		305	7X-9873	208		121
	278	7X-0465	513	7Y-0336	266	8H-5303	104
	281	7X-0481	581	7Y-3883	112	8H-5306	104
	285	7X-0579	49	7Y-9099	217	8J-2574	252
	309		54				259
	323		233			8J-6371	252
7N-0718	81		492	**8**			259
	▶104		547			8J-6875	307
7N-5274	79	7X-0586	56	8C-3290	211	8L-2746	170
7N-7221	109	7X-0603	49		213		175
	112		386		214	8L-2779	170
	121	7X-0608	97	8C-3398	121		175
7N-7779	112	7X-0618	155	8C-3681	49	8L-8413	77
	198		497	8C-3756	549		91
7N-7780	112	7X-0622	581		551		93
	198	7X-0818	65	8C-3798	38		103
7N-9017	112		143		91		106
7N-9737	198		144		93		107
7N-9738	112	7X-2393	588		540		112
7R-2750	120		590		584		115
7R-2751	120		594		586		125
7R-8239	197		596	8C-4982	558		268
7T-0093	549	7X-2476	214		564	8M-3175	532
	551	7X-2537	225	8C-4987	515		533
7T-1099	192		227		517		534
	501		229		520		535
7T-2646	132		236		525	8M-6678	40
	136	7X-2538	505		527	8N-0869	81
7T-2651	134	7X-2540	45		532	8R-2916	537
	135		46		533	8R-6111	558
7T-3017	165	7X-2549	273		534	8R-6263	198
	167		279		535	8S-0023	143
7T-3018	165		286	8C-5748	170		144
7T-3021	165	7X-2553	156		175		271
	167		505	8C-6354	119		273
7T-3022	165	7X-2559	129	8C-6428	236		276

▶ **PRIMARY REFERENCE**

PART NUMBER INDEX

Part	Page
	279
	282
	286
8S-0024	143
	144
	271
	273
	276
	279
	282
	286
8S-3020	79
	81
8S-7803	497
	553
	581
8T-0076	203
	205
8T-0120	317
8T-0144	469
	470
8T-0154	294
8T-0164	192
8T-0292	129
8T-0328	113
	171
	176
	333
	358
8T-0352	121
8T-0389	87
	88
	89
8T-0404	288
	290
	292
	301
8T-0706	266
8T-0785	246
8T-1118	586
	600
8T-1159	67
8T-1580	134
	135
8T-1581	170
	175
8T-1683	205
8T-1885	295
	313
	315
8T-1886	295
	313
	315
8T-1887	81
	276
	279
	282
	286
	288
8T-1888	81
	276
	279
	282
	286
	288
8T-1889	271
	273
	276
	279
	282
	286
8T-1890	271
	273
	276
	279
	282
	286
8T-1891	295
8T-1892	295
8T-1899	303
	305
8T-1900	303
	305
8T-2223	49
8T-2503	329
8T-2658	511
8T-2659	110
	613
8T-2970	592
8T-3444	303
	305
8T-3490	47
	229
	299
8T-3612	49
	65
	210
	501
8T-3652	223
8T-4001	212
	214
	222
8T-4121	28
	40
	45
	46
	47
	62
	67
	81
	87
	88
	89
	91
	93
	113
	121
	125
	143
	144
	193
	203
	205
	216
	233
	241
	244
	262
	269
	271
	273
	276
	279
	282
	286
	288
	290
	292
	295
	297
	299
	301
	303
	305
	307
	311
	313
	315
	320
	328
	333
	337
	338
	368
	369
	386
	505
	515
	517
	520
	522
	525
	527
	529
	532
	533
	534
	535
	536
	537
8T-4122	28
	76
	216
	231
	261
	463
	464
	478
8T-4123	233
	266
	489
	567
8T-4131	155
	489
	567
8T-4132	28
	231
	567
8T-4133	49
	62
	79
	81
	91
	93
	121
	193
	210
	241
	244
	266
	271
	273
	276
	279
	282
	286
	299
	515
	517
	520
	522
	525
	527
	529
	532
	533
	534
	535
	536
	537
8T-4136	40
	47
	62
	67
	113
	143
	144
	193
	205
	233
	271
	273
	276
	279
	282
	286
	290
	292
	295
	297
	299
	301
	303
	305
	309
	320
	386
	505
	515
	517
	531
	536
	537
8T-4137	79
	81
	113
	121

► **PRIMARY REFERENCE**

PART NUMBER INDEX

Part	Page	Part	Page	Part	Page	Part	Page
	203		203		67		98
	205		205		113		99
	233		241		155		100
	269		295		325		107
	276		520		326		115
	279		522		560		117
	282		525		561		121
	286		527	8T-4194	144		193
	288		529		292		210
	297	8T-4173	567		386		492
	301	8T-4176	143	8T-4195	62		509
	307		144		67		547
	311		361		121		549
	313	8T-4178	584		203		551
	315	8T-4179	333		205		568
	320	8T-4182	125		216		600
	333		266		229		602
	337	8T-4183	210		241	8T-4222	49
	338		290		244		216
	368		292		262		222
	369		309		290		584
	515		325		295	8T-4223	47
	517		326		369		67
	560		386		386		113
	561	8T-4185	79		520		143
8T-4138	38		81		522		144
	65		269		525		156
	117		271		527		210
	121		273		529		233
	193		276		532		235
	241		279		533		269
	513		282		534		273
	520		286		535		279
	522	8T-4186	532		536		286
	525		533		537		290
	527		534		561		292
	529		535	8T-4196	28		309
	570	8T-4187	489		45		311
	572	8T-4189	38		46		325
	602		40		222		326
8T-4139	200		49		271		333
	223		53		273		365
	233		54		276		386
	269		56		279		531
	290		67		282		538
	292		76		286		560
	311		84		313		561
	333		113		315		573
	365		199		328		574
	386		210	8T-4198	481		580
	561		233	8T-4200	49		592
	580		236		53	8T-4224	40
8T-4140	76		266		76		45
8T-4141	233		276		121		46
8T-4167	211		279		142		65
	212		282		492		67
	213		286		497		76
	214		513		501		84
	222		515		502		98
	232		517		547		99
8T-4171	107		560		592		100
	115		561	8T-4205	38		107
	602		575		65		113
8T-4172	45		576		81		115
	46	8T-4192	47		85		121

► **PRIMARY REFERENCE**

PART NUMBER INDEX

Part	Page
	142
	190
	193
	197
	199
	202
	233
	235
	236
	239
	266
	269
	311
	369
	505
	563
8T-4244	235
	290
	292
8T-4648	235
8T-4742	65
	557
8T-4744	65
	557
8T-4773	241
	515
	517
	520
	522
	525
	527
	529
8T-4778	216
8T-4815	241
	515
	517
	520
	522
	525
	527
	529
	532
	533
	534
	535
8T-4821	223
8T-4837	223
8T-4908	45
	46
	49
	56
	65
	192
	193
	369
	506
	563
8T-4910	276
	282
	386
8T-4956	143
	156
	538
	573
	574
8T-4958	248
	256
8T-4971	557
	602
8T-4984	49
8T-4986	225
	227
	229
8T-5063	266
8T-5091	217
8T-5093	113
	217
	586
	600
8T-5360	227
8T-5439	155
	183
	184
	185
	186
	188
8T-6412	575
8T-6431	532
	533
	534
	535
8T-6466	81
	241
	520
	522
	525
	527
	529
8T-6685	327
8T-6703	49
8T-6726	56
	295
	299
	303
	305
8T-6868	223
8T-6869	202
	235
8T-6870	239
8T-6876	269
	311
8T-6902	513
	568
8T-6912	190
8T-6974	541
	543
8T-7338	261
8T-7529	38
	47
	297
8T-7547	49
	193
	233
	243
	513
8T-7876	69
	105
8T-7930	223
8T-7934	81
8T-8442	360
8T-8729	85
	124
	125
	268
	581
8T-8730	85
	121
	549
8T-8737	85
	91
	93
	106
	109
	112
	115
	117
	120
	124
	125
	268
	549
	551
8T-8799	106
	115
	119
8T-8894	536
	537
8T-8917	575
8T-9402	38
8T-9405	56
	261
8T-9501	515
	517
	538
	575
	576
8T-9534	107
	115
	121
8W-9230	303
8X-5489	81
8Y-3795	385
8Y-5737	492
	547
8Y-6352	492
	547
8Y-6967	492
	547
8Y-7309	588
	590
	594
	596
8Y-8081	79
	81

9

Part	Page
9B-7233	109
	583
9C-4457	584
9F-5644	97
	100
	104
	121
9G-3695	565
9G-4191	81
9K-5635	536
9M-0164	333
9M-1974	170
	175
9M-4814	560
	561
9M-5733	243
9M-7958	40
	49
9M-7959	492
	547
9M-8406	67
	203
	206
9N-0869	243
9N-2231	492
	547
9P-9150	170
	175
9R-0109	225
	227
	229
	361
	364
	383
	479
	614
9R-0111	361
	392
	393
	465
9R-0139	246
9R-0158	327
	361
	366
	368
	378
	379
	380
	383
	444
	445
	446
	474
	475
	480
9R-0162	246
	366
	385
	386
	395
	396
	397
	398
	400
	401
	402
	403
	404
	406
	407
	408
	409

► **PRIMARY REFERENCE**

PART NUMBER INDEX

Part	Page	Part	Page	Part	Page	Part	Page
	422	9R-2053	295	9R-7240	77	9W-9953	28
	423		319	9R-7803	299	9X-0199	117
	424	9R-2614	266		301	9X-1054	106
	425	9R-2806	190		320		115
9R-0170	366		241	9R-7882	223		120
	385		266	9R-8165	513	9X-1055	106
	386		522	9R-8291	223		115
9R-0189	364		529	9R-8390	361		121
9R-0320	258	9R-2807	190	9R-8594	369	9X-1481	581
	259		193	9R-8870	303	9X-1813	125
	361		241		305		268
	394		266	9R-9005	319	9X-2038	219
	399		515	9R-9028	371		220
	405		517	9R-9373	361		241
	473		522	9R-9702	155		492
9R-0321	252		529	9R-9868	515		507
	254	9R-2959	386		517		509
	255	9R-3067	515	9R-9901	241		511
9R-0347	392		517		520		520
9R-0366	221	9R-3092	256		522		522
9R-0376	393		385		525		525
9R-0411	383		386		527		527
9R-0413	363	9R-3135	266		529		529
9R-0418	303	9R-3182	361	9R-9925	333		540
	305	9R-3255	266	9S-4191	67		541
9R-0422	383	9R-3469	586		170		543
9R-0431	222		600		175		547
	410	9R-3700	473		263		558
	411	9R-4066	361	9S-8001	323		570
	412	9R-4110	222	9S-8002	360		572
	413	9R-4482	368	9S-8004	129		584
	414	9R-4494	368		253		613
	415	9R-4619	288	9T-0661	252	9X-2040	515
	416	9R-4672	392	9T-0766	259		517
	417		393	9T-2178	248	9X-2042	77
	418		467	9T-2883	250	9X-2043	219
	419	9R-4676	463	9T-3948	259		220
	420		464	9T-4007	253		497
	421	9R-4677	463	9U-2277	124		501
9R-0481	222		464	9U-8263	558		502
9R-1034	320	9R-4678	463	9U-8875	161		503
9R-1085	376		464		163		540
	▶378	9R-5063	368	9U-8886	161	9X-2044	193
9R-1104	368	9R-5205	392		163		503
9R-1499	91		393		261		509
	93	9R-5206	392	9W-0607	87		511
9R-1502	366		393		88		584
	389	9R-5238	372		89		592
9R-1510	327	9R-5271	465	9W-0625	515	9X-2045	192
	366	9R-5301	266		517		241
	372		364		538		492
	389		371	9W-0844	112		507
	444	9R-5321	▶478		120		511
	445	9R-5616	497	9W-0852	120		520
	446		501	9W-1951	120		522
	475		502	9W-3326	91		525
	480	9R-5834	368		93		527
9R-1765	515	9R-5835	368	9W-4216	243		529
	517	9R-5866	▶491	9W-5460	134		541
9R-1766	515	9R-5948	290		135		543
	517		292	9W-6582	567		545
	538		317	9W-6584	567		546
9R-1767	515	9R-6007	373	9W-8215	478		547
	517		▶379	9W-9915	28		570
	538	9R-6690	361	9W-9952	28		572

▶ **PRIMARY REFERENCE**

PART NUMBER INDEX

Part	Page
	588
	590
	594
	596
	598
	599
9X-2065	515
	517
9X-2092	501
9X-2132	592
9X-2842	568
9X-3401	103
	106
	112
	115
	120
	124
	125
	268
	515
	538
9X-3402	120
9X-3982	333
9X-4244	87
	88
	89
9X-4611	250
9X-4813	120
9X-6165	124
	570
	572
9X-6378	129
9X-6383	592
9X-6611	250
	254
	255
9X-6615	170
	175
9X-6620	575
	576
9X-7114	233
9X-7344	117
9X-7378	107
9X-7380	561
9X-7381	561
9X-7382	561
9X-7383	561
9X-7385	504
9X-7684	129
9X-8118	90
9X-8121	90
9X-8139	90
9X-8256	91
	93
	241
	513
	520
	522
	525
	527
	529
	540
	584
	586
9X-8257	156
9X-8372	586
	600
9X-8399	246
9X-9882	119
9Y-5015	19
0	
005-0469	132
	134
	135
	136
005-0471	170
	175
014-5645	170
	175
030-1705	81
031-5644	49
	96
032-1557	536
032-9090	13
032-9091	13
033-6043	360
033-7687	22
034-1432	614
035-8017	69
035-8063	17
	105
035-8068	17
038-9317	79
	81
039-9133	197
054-6733	208
054-6882	208
067-6002	17
067-6006	17
	19
067-6043	17
067-6179	24
067-6213	29
067-6264	69
067-6265	69
067-6873	13
067-6874	13
067-6999	69
069-4080	67
069-4707	127
084-4277	558
084-4348	91
	93
089-7702	307
089-7990	155
091-2436	106
	109
	115
	121
	268
091-5928	469
	470
092-3635	203
	205
093-8828	152
095-0641	568
095-0674	152
095-0756	538
095-0865	463
	464
095-0924	157
095-0927	166
095-0929	363
095-1041	152
095-9230	515
	517
096-1820	463
	464
	474
	475
096-4882	581
096-5516	165
	167
096-5866	268
	311
096-6166	564
1	
100-3751	24
	51
100-4461	41
100-4830	26
	72
100-4838	11
100-4841	11
	17
100-5041	106
	115
	121
100-5805	120
100-6674	103
	106
	112
100-7608	588
	590
	594
	596
	598
	599
101-0117	368
101-0333	192
101-0745	600
	602
101-1787	307
101-2987	27
101-3771	29
101-3895	24
	43
102-3582	250
102-8801	85
	109
	112
	120
102-8802	77
	85
	91
	93
	103
	106
	112
	115
	117
	120
	124
	504
	515
	517
	538
102-8803	106
	115
	117
	125
	268
	580
102-8804	91
	93
	109
	120
	125
	268
	566
	580
102-8805	91
	93
	120
	124
	268
	565
102-8806	91
	93
102-9941	35
103-2543	121
104-1995	106
	109
	115
	121
104-3288	132
104-6310	391
	▶479
104-6311	479
104-6312	479
104-6316	479
104-6317	479
105-3481	575
	576
105-3488	333
105-8034	192
106-0401	264
	271
	273
	275
	278
	281
	285
106-0406	264
	271
	273
	275
	278
	281

▶ **PRIMARY REFERENCE**

PART NUMBER INDEX

Part	Page	Part	Page	Part	Page	Part	Page
	285		268	121-2060	132	123-8906	132
106-2404	▶531		537	121-2061	132		134
106-2405	531		602	121-2500	161		135
106-2409	531	111-7906	142		163	123-8907	165
106-7301	266	111-7907	▶142	121-6936	586		167
106-8715	278		169	121-7385	170		170
	285	111-8222	58		175		175
106-8916	63	112-1776	479	121-7389	170	123-8908	132
106-9586	180	112-1826	159		175		136
106-9861	134		▶261	121-7390	170	123-8909	161
	135	113-0018	▶605		175		163
107-5591	515	113-0920	558	121-7391	170	123-8910	132
	517	113-6349	78		175		136
	538	113-8129	51	121-7396	170	123-8912	166
107-6711	385	113-8490	97		175	124-0312	492
107-6826	160	113-8491	97	121-7398	132		547
108-3872	271	113-8492	97		136	124-2456	609
	273	114-0063	561	121-7399	132		611
	275	114-2579	58		136	124-3536	31
	278	114-4363	23	121-7400	132	124-3815	24
	281	114-6099	222		136		58
	285	114-9342	605	121-7401	132		72
109-1260	271	115-1615	107		136	124-5640	107
	273		115	121-7402	132		112
109-1633	268		121		136	124-6259	56
	311	115-1918	261	121-7403	170	125-7874	91
	561	116-4942	374		175		93
109-1634	268		▶380	121-7404	170		106
	311	116-5763	217		175		107
	561	117-3534	261	121-8004	303		109
109-5825	275	117-9713	142	121-9870	558		112
	278	117-9887	160	121-9875	170		115
	281	118-2990	567	122-0668	303		117
	285	118-6854	210	122-1876	171		121
110-0203	120	118-7286	47	122-1877	166		125
110-2445	56	118-7789	368	122-1878	166		268
110-5602	592	118-7790	117	122-1879	132	125-7875	93
110-6109	492	118-8118	67	122-1883	171		112
	547		75	122-1884	166		121
110-7887	109	118-8119	67	122-1886	161	125-7876	81
111-0859	21	119-3662	91		163		91
111-3422	71		93	122-3652	134	126-1767	504
111-3423	71		106		135	126-1817	263
111-4337	361		109	122-4401	106	127-3017	170
	368		112		109		175
	383		115		115	127-4471	40
111-4627	124		121	122-6785	176		333
	492	119-4594	361	122-6787	171	127-4834	212
	547		383		175	127-8987	361
111-5042	581	119-4740	159	122-7137	583	128-4123	120
111-6792	106	119-5025	65	123-0428	233	128-4168	119
	121	119-8349	592	123-0714	161	128-4178	119
111-6793	121	119-9631	549		163	128-5010	361
111-6795	106	120-9027	511	123-1377	171	128-5016	120
	120	120-9286	606		175	128-5596	261
111-6816	106	120-9333	614	123-2920	134		▶332
	120	120-9762	134		135	128-7716	549
111-7899	91		135		161		551
	93	120-9809	299		163	128-7902	266
	102	121-0697	166	123-4065	54	128-7903	266
	106	121-0714	166	123-6620	563		361
	109	121-0883	23	123-7615	112	128-7905	266
	115	121-0885	166	123-8905	161		361
	119	121-0904	166		163	129-1831	492
	125	121-2059	132		166	129-3178	56

▶ **PRIMARY REFERENCE**

PART NUMBER INDEX

Part	Page
	85
	513
	549
	551
	557
	568
	613
129-3180	575
	576
	592
129-3738	497
129-4741	210
129-5256	497
	553
129-5257	497
	553
129-8542	588
	590
	594
	596
	598
	599
129-8545	588
	590
	594
	596
	598
	599
130-0165	84
130-0777	383
130-1638	225
	229
130-1640	225
	227
130-4832	492
	547
130-5451	361
130-5891	266
130-7282	129
130-7452	605
130-7881	45
	46
130-7952	266
130-8150	332
130-8343	581
130-9984	47
	561
131-0232	77
131-1424	109
	583
131-3987	497
	541
	543
	553
131-8775	369
132-1806	119
132-2249	541
	543
	558
132-3056	333
132-3721	469
	470
132-3723	469
	470
132-3725	469
132-3777	471
	472
	477
132-3778	471
	472
	477
132-3821	469
	470
132-5789	113
	125
132-6496	361
132-6497	364
132-8769	▶264
133-1011	24
133-3361	▶225
133-3362	▶373
133-3363	▶374
133-3366	▶376
133-3413	84
133-6517	84
133-6934	125
133-8916	533
	535
134-0143	369
134-0453	515
	517
134-1374	358
134-2540	120
134-5884	399
	400
	401
	402
	403
	404
	422
	423
	424
	425
134-5885	399
	400
	401
	402
	403
	404
	422
	423
	424
	425
134-7258	609
	611
135-4744	▶227
135-5009	81
135-8203	491
136-0155	358
136-1955	38
136-3112	144
136-4192	588
	590
	594
	596
	598
	599
136-7440	223
136-7808	138
137-4234	426
	427
	428
	429
	430
	431
	432
	433
	434
	435
	436
	437
	438
	439
	440
	441
	442
	443
	447
	448
	449
	450
	451
	452
	453
	454
	455
	456
	457
	458
	459
	460
	461
	462
	463
	464
138-8454	121
140-3640	49
140-6009	266
140-7649	250
	254
	255
140-7656	254
	255
140-8714	72
140-8718	72
140-8783	78
141-0888	324
141-1667	61
141-1762	584
141-6343	266
141-8061	109
	121
142-0485	192
142-1072	288
142-2928	581
142-3391	45
	46
142-7405	241
	522
	529
143-0777	299
143-0779	299
143-2827	588
	590
	594
	596
	598
	599
144-0195	586
	600
144-0367	309
144-6734	140
144-8344	271
	273
	275
	278
	281
	285
145-0981	558
145-2350	53
145-8348	474
	475
145-9291	537
146-1589	227
146-1590	227
146-6347	209
146-7744	592
146-7745	592
146-9439	102
	119
	125
	268
147-0203	161
	163
147-0209	170
	175
	▶180
147-0227	161
147-0238	161
	163
147-5553	63
148-5353	588
	590
	594
	596
	598
	599
148-8317	309
148-8318	203
	205
148-8325	154
148-8327	275
	278
	281
	285
148-8328	317
148-8335	263
	275
	278
	281
	285
	309
148-8336	203
	205
	307
148-8339	47
148-8340	244
	268
	311
	319

▶ **PRIMARY REFERENCE**

PART NUMBER INDEX

Part	Page	Part	Page	Part	Page	Part	Page
148-8341	288		273	153-6232	317	156-0283	217
	290		275	153-6241	269		586
	292		278		311		600
	299		281	153-7368	537	156-1200	67
	317		285	153-7369	▶202	156-3837	320
	320	150-3060	303		537	156-3838	320
	336		305	154-2704	473	156-6175	81
148-8345	313	150-3062	307		474		85
	315	150-3063	299		475		121
148-8347	275	150-3757	165		489	157-1669	67
	281		167	154-5257	394	158-2306	237
148-8354	268	150-8015	592		399	158-3412	299
	311	151-1975	67		405		301
148-8358	269	151-4841	65	154-5278	366		320
	311		154	154-5279	366	159-1503	47
148-8360	47		192		480		297
148-8364	295		299	154-5280	366	159-4269	541
	319		301		480		543
148-8365	269		320	154-5404	127	159-4945	497
	311		561		200		541
148-8367	203	151-7902	395	154-5410	600		553
	205		396		602	159-4946	497
148-8368	154		397	154-5416	190		543
148-8369	203		398	154-5423	588		553
	205		400		590	159-7105	563
148-8370	269		401		594	159-7106	563
	311		402		596	159-7907	198
148-8372	313		403		598	159-8033	609
	315		404		599		611
148-8374	203		406	154-5428	124	159-8049	81
	307		407	155-2026	271	159-8050	81
148-8378	303		408		273	160-0496	237
	305		409		275	160-2169	602
148-8382	288	151-7903	395		278	160-2243	67
	290		396		281	160-2244	67
	292		397		285	160-2246	117
	301		398	155-2255	85	160-2248	297
148-8383	205		400		109	161-3249	166
148-8385	192		401		120	161-4130	394
148-8390	299		402	155-2260	112		395
	320		403		117		396
148-8392	244		404		120		397
	271		406		125		398
	273		407		268		399
148-8393	320		408	155-2265	120		400
148-8407	263		409	155-2270	85		401
148-8428	239	151-7927	399		91		402
148-8433	307		400		93		403
148-8446	299		401		106		404
148-8449	276		402		112		405
	278		403		115		406
	281		404		117		407
	285	151-7929	394		120		408
149-3516	67		399		124		409
149-4311	358		405		125		465
149-4745	581	151-7930	394		190		473
149-7372	297		399		268	161-6984	555
149-9954	75		405		549		556
150-3026	203	152-0816	303	155-2271	91	161-6987	555
	205	152-3968	71		93		556
150-3027	203	152-5532	119		109	161-7632	532
	205	152-6144	127		120		533
	307		129	155-2274	109	161-9044	541
150-3033	192		138		120		543
150-3053	271	152-7691	565	155-7321	319	161-9283	575

▶ **PRIMARY REFERENCE**

PART NUMBER INDEX

Part	Page
	576
161-9288	581
161-9289	581
161-9294	555
	556
161-9820	78
162-3960	▶237
	238
	311
162-3961	▶238
	268
162-4004	216
162-6556	555
	556
163-0753	191
	▶197
163-1135	581
164-1153	538
164-1154	568
164-1178	507
164-1215	580
164-1218	580
164-1219	580
164-1220	580
164-1226	581
164-1229	581
164-1230	581
164-1232	581
164-1233	581
164-1237	581
164-1238	581
164-1239	581
164-1240	581
164-1244	576
164-1247	578
	579
164-1249	575
	576
164-1250	576
164-1251	575
	576
164-1252	575
	576
164-1253	576
164-1254	576
164-1255	576
164-1256	575
164-1258	575
	576
164-1259	575
	576
164-1261	578
	579
164-1263	575
164-1265	575
	578
	579
164-1266	575
164-1273	575
164-1308	592
164-1314	592
164-1328	592
164-1342	592
164-1343	592
164-1344	592
164-1345	592
164-1346	592
164-1351	592
164-1352	592
164-1353	592
164-1354	592
164-1361	241
	520
	522
	525
	527
	529
164-1368	190
	492
	515
	517
	538
	547
164-1371	241
	520
	522
	525
	527
	529
164-1395	65
	513
	517
164-1399	241
	520
	522
	525
	527
	529
164-1402	241
	520
	522
	525
	527
	529
164-1404	143
	241
	520
	522
	525
	527
	529
164-1409	241
	520
	522
	525
	527
	529
164-1411	241
	520
	522
	525
	527
	529
164-1421	241
	522
	529
164-1422	241
	522
	529
164-1425	241
	522
	529
164-1429	241
	522
	529
164-1435	241
	520
	522
	525
	527
	529
164-1438	241
	522
	529
164-1547	532
	533
	534
	535
164-3876	210
164-5557	313
	315
164-5567	144
	307
164-5605	203
	205
164-7556	87
	88
	89
164-8474	492
	547
164-9425	112
164-9598	197
164-9599	197
165-2273	294
165-4021	38
165-4931	144
	307
165-6595	192
165-7019	325
	326
165-7951	67
165-8357	84
165-8996	155
166-9413	130
167-0566	239
167-2183	250
167-2186	257
167-2192	252
	259
167-2200	248
	256
167-2201	246
167-2294	257
167-2302	252
	259
167-2303	250
167-2306	254
	255
167-2307	248
	256
167-2312	246
167-3692	120
167-3693	109
	112
167-8182	592
167-8251	507
168-0425	474
	475
	481
168-0443	444
	445
	446
168-0444	444
	445
	446
168-0445	475
168-0446	474
	475
168-0475	474
168-0480	395
	396
	397
	398
	400
	401
	402
	403
	404
	406
	407
	408
	409
	422
	423
	424
	425
168-8389	426
	427
	428
	429
	430
	431
	432
	433
	434
	435
	436
	437
	438
	439
	440
	441
	442
	443
	447
	448
	449
	450
	451
	452
	453
	454
	455
	456
	457
	458
	459
	460
	461
	462

▶ **PRIMARY REFERENCE**

PART NUMBER INDEX

Part	Page	Part	Page	Part	Page	Part	Page
	463		175		109		529
	464	175-7877	▶606		112	190-5130	520
	473	175-7902	248		115		525
	474	175-7904	261		120		527
	475	176-0348	91		124	190-7634	77
	489		93	180-9900	119	190-9767	166
169-5326	72	176-0626	223	183-3132	515	191-6112	252
169-5861	67		363		517		259
169-5862	192	176-1477	112	183-3135	515	191-6159	257
169-7291	558	176-1521	112		517	192-0828	358
169-7409	290	176-6219	71	183-3137	515	192-2081	358
	292	176-6247	▶469		517	192-2082	358
170-0235	561		471	183-6084	513	192-2112	549
170-0503	237	176-6248	469	184-0982	77		551
170-6305	109	176-6251	▶470	184-5293	511	192-4487	358
170-6312	241		472	185-0882	19	192-4488	358
	520		477	185-0884	17	192-4490	358
	522	176-6252	470	185-1861	112	192-4491	358
	525	177-4877	497	185-4015	549	192-4492	358
	527		541		551	192-7506	339
	529		543	185-6627	58		341
170-6542	109	177-9645	120	185-6643	38		343
170-9360	85		549	185-7016	90		358
171-2870	592		551	186-2589	▶565	192-7507	358
172-4211	553	177-9648	106		600	192-7508	339
172-5317	161		112		602		341
	163		115	186-3735	77		343
172-6050	161	177-9653	549		91	192-7509	339
	163		551		93		341
	166	177-9656	106		109		343
172-6489	91		115		112	192-7510	345
	93	178-3336	53		117		346
172-6490	91	178-3593	▶480		120		347
	93	178-7539	91		125		348
172-8276	406		93		268		349
172-8277	407		119		565		350
172-8278	408	178-8214	165		566		351
172-8279	406		167	186-3736	91		352
	422	178-8465	112		93		353
172-8280	407	178-8849	▶471		109		354
	423	178-8850	▶472		112		356
172-8591	241	178-9566	166		117		358
	507	179-5434	90		120	192-7511	339
	520	179-6401	119		125		341
	522	179-7262	592		268		343
	525	179-8235	515	187-2120	239	192-7512	358
	527		517	187-3164	320	192-7513	358
	529		520	187-3166	320	192-7514	358
173-5787	581		525	187-3510	246	192-7515	322
173-9683	246		527	187-4329	320		323
173-9779	257		532	188-3953	225		358
174-3949	405		533		227	192-7516	358
174-3950	405		534		229	192-7863	345
174-4643	127		535	188-9592	474		346
174-4647	129	179-9392	119	189-0881	492		347
174-4650	129	180-3664	▶90		547		349
174-4671	127		96	189-3158	102		350
174-4765	408	180-3730	77		106		351
	424	180-5781	575		112		352
174-8131	613	180-5789	576		117		353
174-9194	53	180-5796	576		121		354
174-9638	63	180-5797	575		125		356
174-9711	170		576		268	192-7864	345
	175	180-9340	106	190-5128	241		346
175-0054	170		107		522		347

▶ **PRIMARY REFERENCE**

PART NUMBER INDEX

Part	Page
	348
	349
	350
	351
	352
	353
	354
	356
	358
193-0618	75
193-3356	492
	547
193-5416	425
193-5913	609
	610
193-9055	217
194-4334	268
	311
194-5171	602
194-5390	63
194-5622	492
	547
194-9487	229
195-2132	27
195-2134	27
195-2136	27
195-2221	27
195-6341	184
195-6344	185
	189
195-7055	578
	579
195-9223	575
	576
196-2384	120
196-2385	120
196-2386	120
196-2412	120
196-2413	120
196-8921	406
	407
	408
	409
196-8922	406
	407
	408
	409
197-5107	541
	543
197-6258	405
197-6259	405
197-6657	581
197-7499	109
197-9155	129
198-0098	532
	533
	534
	535
198-7811	129
	152
198-7814	150
	151
198-7823	127
	200
198-7825	127
198-7838	127
	200
198-7841	127
	200
198-7842	127
	200
198-7843	127
	200
199-0639	127
199-0648	150
	151
	200
199-0652	129
199-0653	158
199-0656	152
199-0659	141
199-0663	152
199-0668	129
199-0670	129
199-0672	195
	196
199-0673	141
199-0675	152
199-0676	129
199-0678	152
199-0679	129
199-0680	152
199-0681	195
	196
199-0683	127
	200
199-0684	152
199-0685	152
199-0686	152
199-0687	152
199-0688	152
199-0689	152
199-0690	152
199-0691	152
199-0692	152
199-0693	152
199-0694	141
199-0695	138
	152
199-0697	152
199-0700	195
	196
199-0701	195
	196
199-0702	195
	196
199-0703	195
	196
199-0706	129
199-0752	195
	196
199-0756	141
199-0759	195
	196
199-0760	158
199-0778	129
199-0783	216
199-0784	141
199-0785	152
199-0786	129
199-0787	129
199-0807	141
199-0808	141
199-0858	138
	152
199-0929	564
199-6309	607
199-9267	105
199-9751	19
	32
	113
200-5921	469
	470
200-6345	112
200-8313	368
201-1024	119
201-1234	399
	400
	401
	402
	403
	404
	405
	406
	407
	408
	409
	410
	411
	412
	413
	414
	415
	416
	417
	418
	419
	420
	421
201-1235	394
	395
	396
	397
	398
201-1238	428
	429
	430
	431
	432
	433
	434
	435
	436
	437
	438
	439
	440
	441
	442
	443
201-1239	428
	429
	430
	431
	432
	433
	434
	435
	436
	437
	438
	439
	440
	441
	442
	443
	447
	448
	449
	450
	451
	452
	453
	454
	455
	456
	457
	458
	459
	460
	461
	462
201-1915	183
	185
	187
201-1916	184
	186
	188
201-1919	183
	184
	185
	186
	187
	188
201-1920	▶182
	184
	185
	186
	187

2

▶ PRIMARY REFERENCE

PART NUMBER INDEX

Part	Page
	188
	189
201-3304	81
201-3621	313
	315
201-3622	313
	315
201-3623	313
	315
201-3624	313
	315
201-3954	▶216
201-9459	103
201-9465	592
202-5909	38
202-5993	192
202-6010	▶103
	159
202-6029	192
202-6108	106
202-6186	186
	188
202-6611	88
	89
202-6614	87
204-0317	203
	205
204-0775	103
204-2281	276
	278
	281
	285
204-3080	127
	200
204-9921	549
	551
205-1627	56
205-6298	103
205-7047	558
205-7048	541
	543
205-9163	176
205-9362	103
205-9560	495
	496
	499
	500
	▶567
205-9568	500
	▶570
205-9569	495
	496
	499
	▶572
205-9570	570
	572
205-9571	572
205-9576	570
	572
205-9577	570
	572
205-9580	▶563
205-9587	598
205-9588	543
205-9590	598
205-9591	598
205-9597	599
205-9598	541
205-9605	497
	501
	502
205-9606	497
	501
	502
205-9607	497
	502
205-9614	599
205-9615	599
205-9619	553
	▶588
205-9621	588
205-9622	497
	553
205-9623	588
	594
205-9624	588
	594
205-9628	553
	▶590
205-9630	590
205-9631	497
	553
205-9633	590
	596
205-9634	590
	596
206-1345	109
	119
206-1486	117
206-1590	497
	553
206-1618	495
	496
	499
	▶545
206-1620	500
	▶546
206-1621	546
206-1623	584
206-1625	584
206-1630	500
	▶536
206-1632	536
	537
206-1634	192
206-1637	584
206-1638	159
	▶192
206-1640	8
	▶65
206-1642	159
	▶190
206-1643	159
	▶538
206-1645	335
	▶515
206-1647	497
	501
	502
206-1648	492
	547
206-1652	203
	205
206-1653	492
	547
206-1658	511
206-1659	511
206-1660	511
206-1661	511
206-1662	511
206-1663	511
206-1665	584
206-1666	584
206-1667	507
	511
206-1668	517
206-1669	538
206-1672	241
	520
	522
	525
	527
	529
206-1673	241
	520
	522
	525
	527
	529
206-1678	507
206-1679	507
206-1681	507
206-1682	492
	547
206-1683	584
206-1684	492
	547
206-1687	507
206-1690	507
206-1692	507
206-1695	515
206-1696	509
206-1698	509
206-1699	509
206-1700	495
	496
	499
	500
	▶507
206-1701	499
	500
	▶613
206-1702	495
	496
	499
	▶509
206-1703	495
	496
	499
	500
	▶511
206-1704	499
	500
	▶584
206-1706	503
	509
206-1708	503
	509
206-1712	509
206-1718	119
206-1725	495
	496
	▶602
206-1727	495
	496
	▶586
206-1728	499
	▶600
206-1747	▶573
206-1748	▶574
206-1749	573
206-1750	574
206-1760	192
206-1766	192
206-1769	192
206-1791	▶578
	580
206-1792	▶579
	580
206-1798	584
206-1799	584
206-1800	495
	▶547
206-1801	▶492
	496
206-1803	492
	547
206-1804	492
	547
206-1805	492
	547
206-1807	492
	547
206-1808	492
	547
206-1809	492
	547
206-1810	492
	547
206-1812	492
	547
206-1814	492
	547
206-1815	492
	547
206-1816	492
	547
206-1817	492
	547
206-1818	492
	547
206-1835	219
	220
206-1840	▶219
	499
	500
206-1841	▶220
	495

▶ **PRIMARY REFERENCE**

PART NUMBER INDEX

Part	Page	Part	Page	Part	Page	Part	Page
	496	208-5244	459		▶568	210-7074	1
206-1846	492		460	209-4157	157		▶248
206-1847	492		461	209-4716	558	210-7078	1
206-1852	613		462	209-4777	222		▶256
206-1853	613	208-5245	428	209-6181	363	210-7088	1
206-1854	511		429	209-6850	223		▶246
206-1855	613		430	209-6855	223	210-7098	▶257
206-1856	613		431	209-7454	138		386
206-1874	513		432	209-7456	127	210-7302	129
206-2423	295		433	209-7460	150	210-7305	129
206-3552	259		434		151	210-7665	549
206-3553	4		435	209-7462	138		551
	▶259		436	209-7463	138	210-7666	549
206-3685	239		437	209-7464	127		551
206-5823	565		438	209-7465	150	210-8363	492
207-4254	127		439		151		▶549
	200		440	209-7466	157	210-8364	547
207-4255	200		441	209-7472	138		▶551
207-4257	158		442	209-7473	138	210-8401	549
207-4258	127		443	209-9219	16	210-8402	551
	200		447	209-9875	127	210-8754	558
207-4260	200		448	209-9882	127	210-8917	358
207-4262	200		449		▶138	211-0052	120
207-4263	147		450	209-9883	127	211-2660	549
207-4266	200		451	209-9884	127		551
207-4267	147		452		▶148	211-2661	492
207-4268	200		453	209-9885	127		547
207-4271	200		454		▶149	211-3207	299
207-4272	200		455	209-9886	127	211-3208	299
207-5962	158		456	209-9887	127	211-3649	▶211
207-7581	320		457	209-9924	▶1	211-3783	217
208-0321	127		458		5	211-4262	4
208-0322	138	208-8240	175	209-9928	1		▶117
208-5234	459		176		▶363	211-4276	▶91
	460	208-9281	61	209-9929	▶1		500
	461	208-9293	561		6	211-4277	▶93
	462	209-2435	386	209-9934	5		495
208-5235	428	209-3348	525		▶335		496
	429	209-3349	241	209-9935	5		499
	430	209-3350	241		6	211-4283	2
	431	209-3353	241		▶336		▶124
	432		520	209-9938	1	211-4286	7
	433		522		▶372		▶79
	434		525	209-9943	7	211-4292	▶96
	435		527		▶335	211-4348	309
	436		529	210-3098	129	211-5182	2
	437	209-3363	515	210-3099	129		▶369
	438		517	210-3100	129	211-6735	127
	439	209-3364	335	210-3106	129	211-7564	1
	440		▶517	210-5924	127		▶317
	441	209-3365	336		▶157	211-7568	▶313
	442		▶532	210-5931	157		336
	443	209-3366	557	210-5932	146	211-7601	1
	447	209-3367	65		148		▶288
	448		▶557		149	211-9286	155
	449	209-3368	520	210-5937	127	212-0206	6
	450		525	210-5942	127		▶336
	451		527	210-5946	127	212-3416	549
	452	209-3370	5	210-5947	127		551
	453		6	210-6243	▶263	212-5702	152
	454		▶520		265	212-5712	195
	455	209-3371	▶522	210-6475	497		196
	456	209-3375	336	210-6491	509	212-5713	129
	457		▶533	210-6807	8	212-9353	45
	458	209-3378	65		▶60	213-0139	106

▶ **PRIMARY REFERENCE**

PART NUMBER INDEX

Part	Page	Part	Page	Part	Page	Part	Page
	112		537	216-3358	515	217-2914	129
	115	214-4702	119		517	217-8185	333
213-1881	217	214-4703	115	216-3712	482	217-8196	205
213-1884	217	214-4709	602	216-4457	138	217-8198	205
213-1887	217	214-4716	119	216-4458	138	217-8199	203
213-1888	584	214-4717	119	216-4459	200		205
213-1889	217	214-4718	106	216-4461	138	217-8200	203
213-1891	▶217	214-4719	125	216-4464	138		205
	495		268	216-4465	138	217-9672	4
	496	214-4722	109	216-4466	138		▶231
	499	214-4723	119	216-4475	4	217-9920	192
	500	214-4746	243		▶160		▶199
213-2279	309	214-5097	127	216-4476	159	218-0235	580
213-4222	158		200		▶160	218-0666	492
213-4616	246	214-6143	386	216-4983	61		547
213-4620	246	214-6350	358	216-5332	265	218-0745	4
213-6043	124	214-6999	369		▶294		▶364
213-6055	106	214-7043	369	216-5981	231	218-4453	495
	115	214-7469	208	216-6295	386		496
213-6060	103	215-1242	581	216-7377	470		499
213-6085	268	215-2023	127	216-7473	127		▶537
213-6091	79		200	216-8314	15	218-4454	▶209
213-6092	79	215-2913	497	216-8634	24		537
213-6687	366		501	216-8687	140	219-0302	501
213-6690	366		502	216-8689	140		502
213-6691	366	215-3373	481	216-8700	140		610
213-6692	1	215-3882	203	216-8778	466		611
	▶366	215-3883	203	216-8780	466	219-0343	557
213-6696	389	215-4012	61	216-8781	466	219-3273	84
213-6697	389	215-7066	192	216-8794	465	219-3355	▶394
213-6698	366	215-7067	192	216-8796	465		428
213-6702	221	215-7297	252	216-8800	▶463	219-3356	▶395
213-6710	372	215-7298	4	216-8801	391		429
	389		▶252		▶464	219-3357	▶396
213-6714	372	215-7453	301	216-8802	463		430
	389		320		▶465	219-3358	▶397
213-6723	366	215-7454	301		466		431
213-6726	363	215-7457	257	216-8803	463	219-3359	▶398
214-2249	256	215-7460	257		464		432
214-2250	256	215-7619	301		▶467	219-3360	▶399
214-2255	256	215-9478	468	216-8811	464		433
214-3203	17		▶481		▶466	219-3361	▶400
	34	215-9513	67	216-9498	138		434
214-3254	211	215-9515	67		▶140	219-3362	▶401
	214	216-0909	▶607	217-0055	386		435
214-3255	212	216-0928	468	217-1577	386	219-3363	▶402
214-3729	256		▶482	217-2345	152		436
214-3736	561	216-1600	152	217-2347	195	219-3364	▶403
214-3737	561	216-1601	158		196		437
214-3740	▶143	216-1602	146	217-2349	195	219-3365	▶404
	159	216-1606	158		196		438
214-3742	586	216-1608	129	217-2617	271	219-3370	▶405
	600	216-1609	129		273		439
214-3763	586		▶146	217-2699	271	219-3371	▶406
	600	216-1610	129		273		440
214-3850	248		▶158	217-2876	152	219-3372	▶407
214-3853	248	216-1612	152	217-2877	148		441
214-3855	248		▶195		▶150	219-3373	▶408
214-4281	369	216-1613	152	217-2878	149		442
214-4285	369		▶196		▶151	219-3374	▶409
214-4692	102	216-2267	170	217-2879	148		443
214-4693	109	216-2777	319		149	219-3379	▶428
214-4695	106	216-3350	517	217-2883	127		444
	115	216-3351	515	217-2885	127	219-3380	▶429
214-4701	536		517		200	219-3381	▶430

▶ **PRIMARY REFERENCE**

PART NUMBER INDEX

Part	Page
219-3382	▶431
219-3383	▶432
219-3384	▶433
	445
219-3385	▶434
219-3386	▶435
219-3387	▶436
219-3388	▶437
219-3389	▶438
219-3394	▶439
	446
219-3395	▶440
219-3396	▶441
219-3397	▶442
219-3398	▶443
219-3410	▶444
219-3411	▶445
219-3412	▶446
219-6281	549
	551
219-6283	549
	551
219-6284	549
	551
219-6285	549
	551
219-6286	549
	551
219-6287	549
	551
219-6288	549
	551
219-6292	549
	551
219-8564	▶325
	336
219-8566	▶262
	335
219-8567	265
	▶309
219-8568	265
	▶307
219-8751	138
219-8752	138
219-8753	138
219-8754	138
219-8755	138
219-8756	138
219-8757	138
219-8758	138
219-8759	138
219-8783	157
219-8795	127
	129
219-8798	127
	200
219-8834	195
219-8835	196
219-8836	152
219-8839	129
219-9482	400
219-9483	401
	406
	412
	418
219-9484	422
	402
	407
	413
	419
	423
219-9485	403
	408
	414
	420
	424
219-9486	404
	409
	415
	421
	425
219-9487	395
219-9488	396
219-9489	397
219-9490	398
219-9493	399
	405
219-9494	394
220-0269	515
	517
220-0738	217
	492
	503
	511
	547
220-1018	386
220-1019	372
220-2001	602
220-3251	517
220-3470	538
220-3762	549
220-3785	499
	▶540
220-3786	570
220-3790	578
	579
220-3791	578
	579
220-5725	551
220-5973	4
	▶266
220-5974	266
220-8631	23
221-0811	4
	▶155
221-2420	492
	547
221-3002	495
	496
	499
	500
	▶513
221-3006	513
	▶524
221-3234	295
221-4263	489
221-4267	▶489
	490
221-4282	483
221-4283	484
221-4284	485
221-4285	486
221-4295	327
221-4296	327
221-4314	244
221-4315	385
221-9352	309
222-1216	307
222-1801	216
222-1802	216
222-2257	307
222-2258	307
222-2690	65
222-4067	333
222-4732	299
222-5171	386
222-7379	▶468
222-7411	482
222-7464	468
	▶473
222-9824	176
223-2028	543
223-2029	541
223-2030	588
	590
	594
	596
	598
	599
223-2035	503
223-3353	257
223-3356	246
223-3926	386
223-4546	219
	220
223-8263	602
223-8267	219
	220
224-2147	511
224-2149	511
224-5917	67
224-6237	▶244
	483
	484
	485
	612
	486
	610
	487
	488
224-6250	466
224-8945	610
224-8946	611
225-0060	217
225-0312	612
225-0313	610
225-4150	609
	610
225-4287	53
225-5438	31
225-5439	31
225-5441	31
225-5451	31
225-5453	31
225-5454	31
225-5458	31
225-5459	31
225-5501	20
225-5502	20
225-5629	36
225-5634	36
225-5638	36
225-5959	36
225-5960	36
225-5961	36
225-5962	36
225-6005	29
225-6041	29
225-6451	11
225-6456	11
225-6461	11
225-6464	11
225-6477	11
225-6478	11
225-6479	11
225-6522	39
225-6817	43
225-6818	43
225-7738	51
225-7739	51
225-7741	51
225-7772	13
225-7941	105
225-7944	17
	44
225-7994	▶85
225-8019	51
225-8227	369
225-8287	24
225-8329	41
225-8524	63
225-8526	63
225-8533	63
225-8534	63
225-8536	63
225-8848	26
225-8858	17
225-9524	256
226-0291	217
	613
226-0449	56
226-1240	612
226-1242	610
226-4162	248
226-4346	146
	148
	149
226-4364	129
226-4365	129
	148
	149
226-4366	129
	148
	149
226-4367	129
226-4370	129
	148
	149
226-5540	▶253
	463
	464
226-5633	239

▶ **PRIMARY REFERENCE**

PART NUMBER INDEX

Part	Page	Part	Page	Part	Page	Part	Page
226-5634	239	230-4011	120	232-1323	72	232-7596	17
226-5635	540	230-5739	4	232-1328	72	232-7597	17
226-7164	109		▶129	232-1536	532	232-7599	17
226-8202	257	230-5743	4		534	233-0619	250
226-9764	386		▶127	232-1540	532	233-0625	254
227-1057	109	230-5745	4		533		255
	119		▶200		534	233-1488	319
	495	230-6368	79		535	233-2589	250
	499		81	232-1542	513	233-2613	250
	500	230-8094	29	232-1793	72	233-2614	254
227-1143	252	230-8989	72	232-1794	72		255
	259	230-8995	72	232-2685	▶391	233-3757	463
227-5509	324	230-8996	72	232-2725	72		464
227-5556	217	230-8997	72	232-2726	72	233-3784	13
227-7449	55	230-8998	72	232-2735	473	233-3785	13
227-8378	4	230-9127	11	232-2752	▶410	233-3786	13
	▶361	230-9357	253		447	233-5166	386
228-3974	▶315	231-0215	290	232-2753	▶411	233-5167	386
	335		292		448	233-5169	386
	336	231-0670	141	232-2754	▶412	233-5260	511
228-4136	248	231-0671	141		449	233-7977	117
228-4592	524	231-0683	▶147	232-2755	▶413	234-1981	▶55
228-4593	524		200		450		56
228-4597	524	231-0684	200	232-2756	▶414	234-3030	61
228-5856	106	231-0685	200		451	234-4328	▶87
	109	231-0686	147	232-2757	▶415		91
	115	231-0687	147		452		93
	120	231-0688	147	232-2758	▶416	234-4329	▶88
	268	231-0692	▶141		453		93
228-6061	256		152	232-2759	▶417	234-7730	87
228-9129	67	231-0693	141		454		88
	▶75	231-0694	141	232-2760	▶418		89
228-9130	75	231-0695	141		455	234-7731	87
228-9132	75	231-0696	141	232-2761	▶419		88
228-9572	246	231-0697	141		456		89
229-0298	592	231-0698	129	232-2762	▶420	234-8815	333
229-0300	497	231-0699	129		457	235-0128	65
	553	231-0700	150	232-2763	▶421	235-5363	62
	▶592	231-0701	151		458	235-5729	275
229-0306	602	231-0703	148	232-2865	219		278
229-0308	592		149		220		281
229-0309	592	231-2808	299	232-2869	219		285
229-0310	592	231-2809	299		220	235-8528	309
229-5085	148	231-2875	533	232-2870	219	235-8747	112
	149		535		220	236-1583	143
229-5092	146	231-2876	533	232-3072	524		144
229-5093	140		535	232-3126	69		203
229-5124	317	231-2877	532		72		205
229-5535	474		534	232-3149	72	236-2144	69
229-5745	513	231-2878	241	232-3157	72	236-6651	40
229-7226	▶474		522	232-3244	320	236-6923	106
229-7227	▶475		529	232-3274	72	237-0769	11
229-8253	475	231-3052	84	232-3277	320	237-0944	221
229-8911	257	231-3054	84	232-3657	24	237-0975	62
229-9855	81	231-3528	301	232-3666	24	237-3794	63
230-2389	538	231-3538	248	232-3751	17	237-3797	333
230-2390	538		256		44	237-3921	63
230-2510	515	231-4784	299	232-4454	503	237-3943	581
	517	231-4785	299	232-4636	613	237-4157	55
230-2610	143	231-9357	109	232-4706	109	237-4894	105
	144	232-0252	297	232-6662	83	237-5188	134
230-3038	517	232-1248	265	232-7400	▶13		135
230-3809	129		▶319		15	237-5330	223
230-3810	130	232-1322	19	232-7440	17	237-9349	381
230-3811	130		32	232-7449	16	237-9355	381

▶ **PRIMARY REFERENCE**

PART NUMBER INDEX

Part	Page
237-9356	381
	382
238-4628	324
238-5228	147
238-5254	127
	200
238-5255	127
	200
238-5256	148
	149
238-5289	129
	▶152
238-5290	152
238-5291	129
238-5292	129
238-5293	129
238-5294	129
238-7492	106
238-8671	72
238-9397	112
238-9546	378
	379
	380
238-9547	379
	▶381
239-1080	109
	▶583
239-1416	380
	382
239-1434	65
239-2270	60
239-6989	609
	610
239-9429	610
239-9430	612
239-9435	366
240-4639	79
	81
240-5571	72
240-7094	610
240-7095	612
241-0037	237
241-0888	229
241-0889	229
241-0890	381
	382
241-0891	381
	382
241-0892	381
	382
241-6225	271
	273
241-6226	271
	273
241-8448	271
	273
	275
	278
	281
	285
241-8450	271
	275
	278
242-6114	120
242-6116	120
242-6118	120
242-6120	120
242-9751	45
	46
243-0062	568
243-0063	568
243-1353	268
243-5027	81
244-2041	233
244-3106	112
244-3113	217
245-4827	156
245-6109	210
245-8780	268
	311
	▶324
245-9828	22
246-2622	67
246-2641	607
246-2671	119
246-5292	4
	▶320
246-7854	222
246-8038	125
	268
246-8053	81
246-9309	1
	▶328
246-9311	1
	▶290
246-9318	1
	▶292
246-9802	238
	▶311
247-0320	268
	311
247-1080	233
247-1385	49
247-1947	▶447
247-1948	▶448
247-1949	▶449
247-1950	▶450
247-1951	▶451
247-1952	▶452
247-1953	▶453
247-1954	▶454
247-1955	▶455
247-1956	▶456
247-1957	▶457
247-1958	▶458
247-4001	62
247-4884	69
247-6118	608
247-7555	378
	▶382
247-7868	▶208
	265
247-8179	545
	546
247-8199	▶97
	119
247-8222	212
247-9730	56
248-0481	335
	▶337
248-0482	335
	▶338
248-0483	335
	▶339
248-0484	336
	▶341
248-0485	336
	▶343
248-2214	7
	▶84
248-2257	361
248-2574	410
	416
248-2575	411
	417
248-2707	65
248-2708	513
248-2709	507
248-2710	513
248-2714	541
	543
248-2720	500
	▶503
248-3231	56
248-3290	170
248-4277	328
248-5547	290
249-0974	44
249-2482	509
249-3124	324
249-3125	324
249-4020	299
249-4021	299
249-4023	299
249-4032	320
249-5512	56
249-7912	▶271
249-9076	85
249-9328	▶215
249-9329	215
249-9330	215
250-0658	288
250-0741	223
250-1418	307
250-1878	236
250-2314	49
250-5462	292
250-5881	235
250-6850	236
250-6858	236
250-7836	358
250-7837	358
250-7910	609
	610
250-7911	609
	610
250-7912	495
	496
	499
251-1157	▶392
	426
251-1160	▶393
	427
251-1172	392
	393
251-1173	392
	393
251-1541	290
251-1780	▶426
251-1789	▶427
251-2437	21
251-3227	49
251-3231	77
251-4375	236
251-4519	2
	▶223
251-4889	215
251-4890	215
251-4891	215
251-5625	335
251-5626	335
251-5628	495
	496
	499
	500
251-5854	▶303
	464
251-5859	303
251-6352	159
	▶169
251-6353	159
	▶169
251-9360	271
	273
	275
	278
	281
	285
252-0165	290
252-0200	273
252-1221	268
	311
252-1862	541
	543
252-1863	541
	543
252-1864	543
252-1865	541
252-2157	609
	611
252-4444	358
252-4659	371
252-4660	▶371
252-4837	358
252-5218	503
252-5219	503
252-6438	19
252-8435	609
	611
252-8684	307
252-9983	▶212
	213
252-9984	5
	6
	▶213
252-9985	214
252-9986	5
	▶214
253-0234	422
	423

▶ **PRIMARY REFERENCE**

PART NUMBER INDEX

Part	Page
	424
	425
253-0784	2
	▶210
253-1549	192
253-1817	541
	543
253-1857	541
	543
253-1858	541
	543
253-2470	551
253-4137	56
253-4138	56
253-5022	158
253-5024	127
253-8295	333
253-9510	549
	551
254-1126	541
	543
254-1127	541
	543
254-2187	62
254-2267	42
254-2270	42
254-3954	19
254-4418	38
254-5303	199
254-5683	586
	600
254-7271	301
	320
254-8939	▶422
	459
254-8940	▶459
254-8941	▶460
254-8942	▶461
254-8943	▶462
254-8944	▶423
	460
254-8945	▶424
	461
254-8946	▶425
	462
254-9301	235
254-9926	209
254-9927	209
255-0791	610
255-0792	610
255-0793	612
255-0794	612
255-0795	492
	547
255-3447	63
255-4692	56
255-9107	309
256-0323	232
256-0324	▶232
256-0546	▶154
	159
256-0550	154
256-0551	▶144
	159
256-5299	500
256-6803	85
258-2354	511
258-3697	541
	543
258-4946	20
258-8346	▶525
258-8347	▶241
258-8355	▶273
258-9999	609
	611
259-1802	1
259-1831	165
259-1832	167
259-2940	188
259-4401	610
259-4402	612
259-6276	495
	496
	499
	500
	▶564
259-6729	338
	▶345
259-6730	338
	▶346
259-6731	337
	▶347
259-6732	337
	338
	▶348
259-6733	343
	▶349
259-6734	341
	343
	▶350
259-6735	341
	343
	▶351
259-6736	339
	▶352
259-6737	339
	341
	343
	▶353
259-6738	339
	341
	343
	▶354
259-6739	339
	341
	343
	▶356
259-6742	▶322
	339
	341
	343
259-6745	▶323
	337
	338
259-6746	339
	341
	343
	▶358
259-6747	337
	338
259-6748	337
	338
259-6749	337
259-6750	338
259-6751	339
259-6752	341
259-6753	343
259-6754	337
	338
	339
	341
	343
259-6755	339
	341
	343
259-6756	339
	341
	343
259-6757	339
259-6758	322
	323
260-0027	575
260-0028	575
260-0029	575
	576
260-0030	581
260-0031	581
260-0032	581
260-0033	581
260-0034	581
260-0035	581
260-0036	580
260-0040	575
260-0041	581
260-0042	581
260-0043	581
260-0044	581
260-0045	575
	576
260-0046	581
260-0047	580
260-0049	581
260-0051	580
260-0052	580
260-0057	580
260-0058	575
260-0059	580
260-0060	580
260-0063	581
260-0067	581
260-0634	56
260-1393	56
260-3002	346
	347
260-3003	356
260-3004	349
	351
	352
260-3005	345
	346
	347
	350
260-3006	353
	356
260-3007	354
260-3009	345
	346
	347
	348
	349
	350
	351
	352
	353
	354
	356
260-3010	345
	346
	347
	348
	349
	350
	351
	352
	353
	354
	356
260-3011	345
	349
	350
	351
	352
	353
	354
	356
260-3012	346
	347
260-3013	348
260-7652	85
260-9143	275
	278
	281
	285
261-0376	45
261-0406	46
261-0428	45
261-2207	538
261-5517	190
	▶191
261-5519	191
261-6703	383
261-9632	584
261-9635	190
261-9636	509
261-9637	509
261-9639	503
	509
	511
261-9644	507
261-9645	507
262-1315	292
262-3036	275
	278
	281
	285
262-3038	275
	278
	281
	285
262-4080	192

▶ **PRIMARY REFERENCE**

PART NUMBER INDEX

Part	Page
262-4082	192
262-4084	192
262-4203	275
	281
262-4212	5
	▶275
262-4213	6
	▶278
262-4217	275
	278
	281
	285
262-4220	281
262-4459	273
	278
	285
262-4462	285
262-7043	221
262-7044	222
262-8088	47
	297
262-9567	558
262-9786	55
263-3823	566
263-5376	61
263-5781	558
263-7261	538
263-8577	▶327
	490
263-8591	464
	▶608
263-9088	85
	▶569
264-7029	120
265-0868	268
	311
265-8182	97
266-2407	▶281
266-2408	▶285
266-4326	290
266-4570	292
266-4571	292
266-5834	2
	▶383
267-2701	99
	100
	119
267-2809	91
	93
267-5211	98
	99
	100
267-5213	98
	99
	100
268-1547	290
	292
268-1548	290
	292
268-1709	169
268-5689	266
268-7759	119
269-0381	▶250
	265
269-0382	250
269-0386	250
269-0388	250
269-0389	250
269-0471	239
269-0472	239
269-7680	112
269-8129	515
	517
269-8817	515
	517
269-9115	507
270-2728	109
270-2795	515
	517
270-3204	▶365
270-3409	244
270-3410	327
270-5290	223
271-1404	1
	▶386
271-1408	386
271-2404	▶168
	169
271-2408	168
	▶170
271-3023	483
	484
	485
	486
	487
	488
	▶490
271-3024	▶483
271-3025	▶484
271-3026	▶485
271-3027	▶486
271-4487	▶156
	168
	169
271-7167	143
	144
271-7309	156
271-8666	1
	▶389
271-8669	▶385
	389
272-0555	266
272-0557	266
272-2265	43
272-5111	187
272-5116	187
272-7104	515
	517
273-1474	499
273-5905	▶575
	578
273-6036	▶576
	579
273-6372	578
	579
	▶580
274-3774	91
	93
	112
	119
274-3775	120
274-3776	120
274-3777	120
274-3779	120
274-3780	120
274-4274	250
274-4553	161
	163
	166
274-4555	261
274-4557	170
274-4560	170
274-4716	15
274-5819	488
274-8034	175
274-8614	170
	175
274-8616	161
	163
274-8617	161
	163
274-8620	165
	167
274-8621	165
	167
274-8623	170
	175
274-8625	170
	175
274-8628	161
	163
274-8629	161
	163
274-8631	132
274-8632	136
274-8636	161
	163
274-8637	165
	167
275-0001	235
275-0002	233
275-0467	▶132
	170
275-0468	▶134
	170
275-0469	134
275-0471	135
275-0472	▶135
	175
275-0474	▶136
	175
275-0475	170
	175
275-0476	▶161
	170
275-0477	170
	175
275-0478	▶165
	170
275-0553	119
275-0570	107
	115
275-0652	192
275-0653	192
275-1038	72
275-4243	244
	▶258
275-8869	515
	517
275-9883	29
276-1368	473
276-2334	268
	311
276-2353	369
276-3859	248
276-4005	248
276-4168	258
276-4169	258
276-4170	258
276-4171	258
276-4172	258
276-5337	▶166
	170
276-5339	▶167
	175
276-5605	17
276-6142	248
276-6820	185
276-7287	▶98
	107
	115
276-7290	▶99
	119
276-7476	31
276-8086	184
276-8791	586
	600
277-1873	81
277-3012	24
277-4543	271
	273
	275
	278
	281
	285
278-0205	170
278-0215	165
	167
278-0216	165
	167
278-0217	165
	167
278-0218	165
	167
278-1170	317
278-4497	275
	278
	281
	285
278-4498	276
	278
	281
	285
278-5113	36
278-5126	10
278-5454	221
278-6377	98
	100
278-7066	222
278-7695	222

▶ **PRIMARY REFERENCE**

PART NUMBER INDEX

Part	Page	Part	Page	Part	Page	Part	Page
278-7793	317		584	290-1273	592		255
279-5016	268		586	290-3347	231	291-2696	254
	311	282-9956	▶239	290-3972	192		255
279-6052	266	283-3451	586	290-5760	▶89	291-5108	515
279-9452	369		600		93		517
280-2652	244	283-4237	561	290-6023	295	291-8378	192
280-7009	170	284-1602	545	290-6711	271	291-9185	▶2
	175	284-3425	78		273	291-9186	7
280-7012	175	284-8531	85		275		▶159
280-7364	499	284-9039	77		278	291-9187	7
	500	285-1207	495		281		▶159
	▶580		496		285	291-9188	2
280-7365	495		499	290-6712	275		▶8
	496		500		278	291-9190	▶2
	▶580	285-3581	309		281	291-9191	6
280-7870	360	285-3582	307		285		▶500
281-4022	275	285-3583	192	290-6722	▶119	291-9192	▶499
	278	285-3584	192		495	291-9194	▶495
	281	285-5098	67		496	291-9195	6
	285	285-5240	331		499		7
281-4726	271		▶360		500		▶496
	273	285-9109	549	290-6723	119	291-9200	▶609
281-6708	487		551	290-6732	▶106	291-9201	▶610
281-6716	▶487	286-0689	275		496	292-2833	604
281-7219	▶553		278	290-6737	▶109	292-2834	604
282-0887	▶488		281		495	292-3995	236
282-3853	7		285		496	292-3996	236
	▶182	286-3086	372		499	292-5773	558
282-3854	7		389		500	292-8222	268
	▶182	286-4880	83	290-6738	109		311
282-3855	▶182	286-7166	386	290-6739	121	293-1980	507
282-3862	182	286-7848	35	290-6745	81		509
	▶183	286-9087	186	290-6746	81	293-2147	176
282-3863	183	286-9336	422	290-6752	8	293-4053	55
	▶184		423		▶112	293-4671	40
282-3864	183		424	290-6753	112	293-5308	222
	▶184		425	290-6769	▶115	293-5309	2
282-3865	182	286-9337	422		495		▶222
	183		423	290-6783	▶125	293-5352	56
	▶184		424		238	293-7383	383
282-3866	184		425	290-6784	4	293-8350	360
	▶185	287-5667	386		▶102	293-8761	165
282-3867	184	287-8573	11	290-6789	2	293-9289	155
	▶185	287-8597	23		▶81	293-9882	386
282-3868	182	288-0422	24	290-6791	81	293-9884	386
	▶185	288-1157	235	290-6792	81	294-0288	24
282-3869	185	288-9734	505	290-6799	91	294-0973	244
	▶186	289-3412	609		93	294-4954	604
282-3870	185		611	290-6801	117	294-4955	604
	▶186	289-6018	561	290-7831	505	294-5792	365
282-3871	182	289-6021	561	290-8077	▶326	294-9507	254
	▶186	289-8740	315		335		255
282-3872	186	289-8741	315	290-8139	266	294-9812	163
	▶187	289-8742	315	290-8140	266	294-9814	169
282-3873	186	289-8743	315	291-1559	254		▶175
	▶187	289-8744	313		255	294-9821	161
282-6836	258	289-8745	313	291-2681	▶254		163
282-7833	91	289-8746	313		265	295-8472	210
	93	289-8747	313	291-2682	▶255	296-3744	67
	540	289-9871	219		265	296-7593	513
	584		220	291-2683	255	297-0165	2
	586	289-9872	219	291-2684	254		▶265
282-7835	91	289-9873	220	291-2691	254	297-1232	265
	93	289-9875	219		255		▶333
	540		220	291-2695	254	297-1233	333

▶ **PRIMARY REFERENCE**

PART NUMBER INDEX

Part	Page
297-1234	333
297-2831	266
297-2833	368
297-2834	4
	▶368
297-4400	333
297-5250	496
	▶561
297-5251	495
	▶560
297-5252	561
297-5253	561
297-5254	561
297-5257	113
297-5260	2
	▶76
297-5261	76
	▶77
297-5266	76
297-5268	76
297-5278	76
297-5300	2
	▶233
297-5301	233
	▶235
297-5310	235
	▶236
297-5311	236
297-5510	386
297-5849	567
297-7964	67
297-8488	8
	▶67
298-0663	113
	121
298-3599	192
298-5112	9
	▶41
298-5129	9
	▶32
298-5131	9
	▶33
298-5629	8
	▶62
298-5661	8
	▶56
299-2212	▶504
	505
299-3346	422
299-3350	423
299-4716	▶45
	496
299-4729	▶46
	495
	499
	500
299-4732	45
	46
299-4777	220
299-6985	▶555
	588
	590
	594
	596
	598
299-9015	333
299-6986	▶556
	588
	590
	594
	596
	598
299-9015	333

3

Part	Page
300-1702	65
300-4153	424
300-4156	425
300-4995	93
300-4996	93
300-5440	223
300-6061	333
300-6062	297
300-7054	422
	423
	424
	425
300-7055	422
	423
	424
	425
301-0589	85
301-7292	119
301-9664	325
	326
301-9725	496
	▶506
301-9765	61
301-9766	61
302-8432	176
303-0418	183
	▶187
303-0428	187
	▶188
303-0429	187
	▶188
303-4230	328
303-5149	91
303-5154	91
303-5767	9
	▶23
303-5768	9
	▶22
303-5769	9
	▶101
303-5770	9
	▶21
303-5778	9
	▶27
303-5795	101
303-8311	▶527
303-8312	▶529
303-8313	▶534
303-8314	▶535
303-9307	520
	527
303-9308	522
	529
303-9309	522
	529
303-9310	532
	533
	534
	535
304-3266	160
304-3269	160
304-3551	328
304-3552	328
304-4022	8
	▶49
304-4023	▶53
	54
304-5696	125
	268
304-7621	67
304-7847	53
	▶243
304-7848	49
304-7849	243
304-7850	53
304-7851	53
304-8129	275
304-8130	278
304-8760	9
	▶24
304-8761	9
	▶34
304-8764	29
304-8965	549
	551
304-9460	67
305-0611	363
305-3423	175
305-3429	▶163
	175
305-3431	163
305-6917	61
305-6918	54
305-7426	386
305-7881	78
305-9190	602
306-7466	2
	▶604
307-2242	45
308-1273	592
308-1792	11
308-3454	609
	611
309-7555	9
	▶39
309-9106	8
	▶54
309-9657	609
	611
310-0674	121
310-7304	53
311-2498	290
	292
311-2501	288
	290
	292
311-2505	288
311-2510	290
	292
311-2511	317
311-2519	290
	292
	317
311-2768	61
311-6094	38
311-6184	81
311-7567	▶100
	121
311-8060	235
311-8075	386
312-1671	236
312-2598	271
312-2599	271
312-6455	81
313-1457	236
313-1458	236
313-7109	236
314-4018	504
314-7618	77
315-0033	53
315-1369	8
	▶47
315-1554	4
	▶299
315-1555	▶301
	335
315-1558	299
315-1559	299
315-1563	301
315-1564	301
315-3381	72
315-3384	10
315-3385	▶36
	37
315-3386	36
315-3387	36
315-3388	36
315-3390	19
315-3391	19
315-3392	19
315-3393	19
315-3394	19
315-3395	31
315-3411	9
	▶51
315-3418	9
	▶83
315-5401	47
315-5496	38
315-7790	561
315-9721	63
316-1079	▶221
	223
316-6941	9
	▶42
316-7896	▶19
	20
317-1454	▶4
	159
317-1456	▶268
317-1463	7
	▶335
317-3769	39
317-3778	39

PART NUMBER INDEX

Part	Page
317-4270	561
317-5502	61
317-5542	558
317-5543	495
	496
	▶558
317-6266	305
317-7120	222
317-7180	233
317-7181	233
317-7313	233
317-8141	506
317-9776	9
	▶78
318-8228	225
	227
	229
318-9555	2
	▶4
318-9901	▶477
318-9902	▶480
320-2384	▶183
320-2385	▶183
320-9213	69
320-9943	305
320-9944	305
321-2559	210
321-7038	496
	▶505
321-7782	9
322-0590	8
	▶9
322-4571	183
	▶188
322-4572	188
	▶189
322-4573	188
	▶189
322-4574	189
322-5799	8
	▶28
322-8414	497
	541
	543
322-9476	9
	▶29
322-9615	63
322-9616	63
322-9663	19
322-9664	19
322-9761	54
323-4142	77
323-4145	77
323-7311	292
323-9153	9
	▶44
323-9307	8
	▶38
324-0444	24
324-2578	175
324-3408	46
324-3851	54
324-9741	4
	▶203
324-9742	4
	▶205
324-9744	▶4
	159
324-9745	121
325-1969	233
325-3639	233
325-5100	▶614
325-5483	233
325-5855	49
325-9300	594
325-9301	596
325-9310	501
	502
325-9311	558
326-1880	21
326-3185	8
	▶40
326-3186	40
326-3188	40
326-3362	248
326-8993	▶71
	72
326-8999	9
	▶16
326-9000	9
	▶15
326-9002	9
	▶31
326-9003	9
	▶20
326-9004	9
	▶37
326-9005	9
	▶10
326-9006	9
	▶72
326-9008	9
	▶11
326-9010	9
	▶63
326-9012	9
	▶69
326-9013	9
	▶26
326-9896	9
	▶105
327-7601	497
	▶594
327-7637	497
	▶596
328-3211	538
328-8776	223
329-0129	9
	▶58
329-1167	497
	▶541
329-1168	497
	▶543
329-1169	541
329-1170	543
329-5700	49
329-7970	295
329-8017	295
329-8803	56
330-3408	569
330-4411	609
	611
330-5010	▶566
	602
330-6734	56
330-8297	295
330-9416	278
330-9710	536
331-0096	▶295
	386
331-8538	148
	149
332-7131	7
	▶238
332-7333	56
332-7541	47
332-7542	47
333-9901	543
	▶598
333-9902	541
	▶599
334-9334	35
335-1584	16
	▶17
335-1836	28
335-8197	▶329
	331
335-8198	329
335-8209	329
335-8210	329
335-8213	329
335-8214	329
335-8215	329
335-8216	329
335-8217	329
335-8218	329
335-8219	329
335-8220	329
335-8221	329
335-8222	329
335-8226	329
335-8228	329
335-8229	329
335-8230	329
335-8523	67
335-8529	67
335-9162	8
	▶61
335-9163	61
336-4682	329
337-7467	▶305
	463
337-7471	305
338-1508	209
338-3328	497
339-7689	328
341-8233	40
341-9304	236
343-1820	61
343-4096	265
	▶297
343-6821	61
344-8938	199
344-8939	199
346-0407	24
346-0408	24
346-9825	78
348-8149	45
349-2856	193
349-3261	46
349-3650	210
350-0666	265
	▶331
350-2666	10
353-2205	13
353-2206	13
353-2207	13
353-2208	13
353-3013	501
353-3014	502
353-3016	497
353-3017	500
	▶501
353-3018	499
	▶502
353-3020	495
	496
	▶497
353-8584	506
354-1274	▶43
	44
355-2252	51
355-5861	▶229
	373
	374
	376
357-0395	▶7
357-0398	2
	3
	▶7
357-0399	▶7
357-0406	2
	3
	▶6
357-0407	▶6
357-0408	▶7
357-0413	▶5
357-0414	3
	▶5
357-0415	2
	3
	▶5
357-0416	3
	▶6
357-0417	▶6
357-1656	▶2
357-1658	▶3
357-1659	▶3
357-1660	▶3
359-0750	35
359-3106	592
359-3107	592
359-9666	78
360-7347	9
	▶35

▶ **PRIMARY REFERENCE**

MEMORANDA



© 2010 CATERPILLAR
ALL RIGHTS
RESERVED

CAT, CATERPILLAR, THEIR RESPECTIVE LOGOS, “CATERPILLAR YELLOW” AND THE POWER EDGE TRADE DRESS, AS WELL AS CORPORATE AND PRODUCT IDENTITY USED HEREIN, ARE TRADEMARKS OF CATERPILLAR AND MAY NOT BE USED WITHOUT PERMISSION.

PRINTED IN
U.S.A.