CATERPILLAR®

SEBP3706-30
September 2011

RUTHZIL TRATOR COMERCIAL DE PEÇAS LTDA 11 97083-6812 ROLANDO

Parts Manual

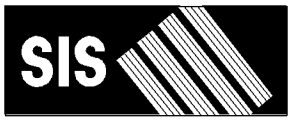

See "General Information" for New Parts Manual Features.

416E Backhoe Loader
Single Tilt, Center Pivot

CBD1-Up (Machine)
MFG1-Up (Machine)
C4Z1-Up (Engine)
CRS1-Up (Engine)
G4D1-Up (Engine)

Powered By 3054C and C4.4 Engine

Product and Dealer Information

Note: For product identification plate locations, see the section “Product Identification Information” in the Operation and Maintenance Manual.

Delivery Date: _____

Product Information

Model: _____

Product Identification Number: _____

Engine Serial Number: _____

Transmission Serial Number: _____

Generator Serial Number: _____

Attachment Serial Numbers: _____

Attachment Information: _____

Customer Equipment Number: _____

Dealer Equipment Number: _____

Dealer Information

Name: _____ Branch: _____

Address: _____

_____

_____

	Dealer Contact	Phone Number	Hours
Sales:	_____	_____	_____
Parts:	_____	_____	_____
Service:	_____	_____	_____

MEMORANDA

TABLE OF CONTENTS

Name	Page
GENERAL INFORMATION	A5
REPAIR ALTERNATIVES	A8
SUPPLEMENTAL COOLANT ADDITIVES	A9
MAINTENANCE PARTS	A10
INDEX	A14
MACHINE ARRANGEMENT	1
BACKHOE AR-EXTENDABLE STICK	1
BACKHOE AR-STANDARD STICK	1
CHASSIS AR	2
COMMON AR	3
DISTRIBUTION AR	4
DISTRIBUTION AR	9
DISTRIBUTION AR	10
DRIVE AR-BACKHOE LOADER	16
LOADER AR	17
ENGINE ARRANGEMENT	19
ENGINE AR	19
ENGINE AR-PRIMARY	23
BASIC ENGINE	27
CAMSHAFT GP	27
COVER GP-VALVE MECHANISM	29
CRANKSHAFT GP	41
CYLINDER BLOCK GP	50
CYLINDER HEAD GP	57
DRIVE GP-FAN	63
FLYWHEEL GP	65
HOUSING GP-FLYWHEEL	67
HOUSING GP-FRONT	69
LIFTING GP-ENGINE	73
MOUNTING GP-ENGINE	75
MOUNTING GP-ENGINE & XMSN	77
PAN GP-OIL	79
PISTON & ROD GP	85
PLUG GP-CYLINDER HEAD	93
PLUG GP-ENGINE	94
PULLEY GP-CRANKSHAFT	99
ROCKER ARM GP	102
VALVE MECHANISM GP	104
LUBRICATION SYSTEM	107
BREATHER GP	107
FILLER GP-ENGINE OIL	110
GAUGE GP-OIL LEVEL & FILLER	111
PUMP GP-ENGINE OIL	113
COOLING SYSTEM	115
CONNECTION GP-WATER	115
COOLER AS-OIL	118
COOLER GP-ENGINE OIL	119
COOLER GP-FLTR BASE & ENG OIL	122
FAN GP-SUCTION	128
LINES GP-POWER TRAIN COOLER	134
LINES GP-RADIATOR	136
LINES GP-TRANSMISSION COOLER	138
MOUNTING & LINES GP-RADIATOR	140
MOUNTING GP-RAD & OIL COOLER	141
PUMP GP-WATER	143
RADIATOR & HYD OIL COOLER GP	149
RADIATOR & OIL COOLER GP	151
TANK GP-EXPANSION	155
AIR INLET AND EXHAUST SYSTEM	156
AIR CLEANER GP	156
CONNECTION GP-INLET	167
COVER GP-INLET MANIFOLD	168
EXTENSION GP-EXHAUST	171
INDICATOR GP-AIR FILTER CHANGE	172
LINES GP-AIR	174
MANIFOLD GP-EXHAUST	175
MUFFLER & CONVERTER	176
MUFFLER GP	177
TURBOCHARGER GP	180
FUEL SYSTEM	184
CONTROL GP-GOVERNOR	184
FILTER GP-WATER SEP & FUEL	192
LINES GP-FUEL	193
LINES GP-FUEL FILTER	203
PUMP GP-FUEL INJECTION	204
PUMP GP-FUEL PRM & PRIM FILTER	214
TANK & MTG GP-FUEL	218
TANK GP-FUEL	219
ELECTRICAL AND STARTING SYSTEM	223
ALTERNATOR GP-CHARGING	223
BATTERY & WIRING GP	226
ELECTRONICS GP-COMMUNICATION	246
GLOW PLUG GP	247
HEATER GP-JACKET WATER	249
INSTALLATION GP-COMMUNICATION	250
LAMP GP-FLOOD	254
LAMP GP-WARNING BEACON	257
LIGHTING GP-FLOOD & SIGNAL	259
LIGHTING GP-WARNING BEACON	266
PANEL GP-FUSE	268
RELAY GP	269
STARTING MOTOR GP-ELECTRIC	273
SWITCH GP-ALL WHEEL DRIVE	277
SWITCH GP-DIFFERENTIAL LOCK	278
SWITCH GP-DISCONNECT	279
SWITCH GP-PRESSURE	280
WIRING GP-AIR CONDITIONER	282

TABLE OF CONTENTS

Name	Page
WIRING GP-CONSOLE	291
WIRING GP-ENGINE	299
WIRING GP-HEATER	313
WIRING GP-KICKOUT & POSITIONER	317
WIRING GP-PLATFORM	323
WIRING GP-REAR	344
WIRING GP-RIDE CONTROL	345
POWER TRAIN	347
AXLE GP-DRIVE & STEERING	347
AXLE GP-REAR	350
CASE AS-TRANSMISSION	353
CASE GP-TRANSMISSION	360
DIFFERENTIAL & BEVEL GEAR GP	363
DIFFERENTIAL GP	365
DRIVE GP-FLEXIBLE COUPLING	367
FILLER GP-POWER TRAIN OIL	368
FLANGE GP-WHEEL	375
HOUSING & FLANGE GP-AXLE	377
HOUSING GP-AXLE	381
LINES GP-POWER TRAIN OIL	383
MOUNTING GP-AXLE	384
MOUNTING GP-TRANSMISSION	385
PLANETARY GP-FINAL DRIVE	386
POWER TRAIN AR	388
SHAFT GP-DRIVE	392
SHAFT GP-INPUT	393
SHAFT GP-OUTPUT	397
TRANSMISSION & MOUNTING GP	401
TRANSMISSION AR-DIRECT DRIVE	403
TRANSMISSION GP-DIRECT DRIVE	404
VALVE GP-RELIEF	424
VALVE GP-TIRE	425
WHEEL & TIRE AR	426
WHEEL & TIRE GP	428
BRAKING SYSTEM	440
CONTROL GP-PARKING BRAKE	440
CONTROL GP-SERVICE BRAKE	442
CYLINDER GP-BRAKE	448
LEVER GP-HAND CONTROL	450
RESERVOIR GP-BRAKE	451
STEERING SYSTEM	453
AXLE GP-FRONT	453
KNOB GP-STEERING	455
LINES GP-STEERING	456
PUMP GP-METERING	464
FRAME AND BODY	465
BOX GP-BATTERY	465
COUNTERWEIGHT GP	468
DOOR GP-BATTERY	471
DRAWBAR GP	472
EXTENSION GP-FENDER	473
FENDER GP-FRONT	474
FENDER GP-REAR	475
FLOORPLATE GP	480
FRAME AS-SWING	483
FRAME GP-LOADER	484
FRAME GP-SWING	494
GUARD GP-CYLINDER	500
GUARD GP-DRIVE SHAFT	502
GUARD GP-RADIATOR	503
HOOD & GUARD GP	504
HOOD GP-ENGINE	512
HYDRAULIC SYSTEM	520
ACCUMULATOR GP-RIDE CONTROL	520
CONTROL AR-RIDE	524
CONVERSION AR-CUSHION SWING	525
COOLER GP-HYD & XMSN OIL	527
CYLINDER & LINES GP-THUMB	528
CYLINDER GP-BACKHOE BUCKET	531
CYLINDER GP-BOOM	535
CYLINDER GP-HYDRAULIC	537
CYLINDER GP-LIFT	541
CYLINDER GP-MULTIPURPOSE BUKT	544
CYLINDER GP-STABILIZER	547
CYLINDER GP-STICK	553
CYLINDER GP-THUMB	555
CYLINDER GP-TILT	556
DRIVE & MTG GP-PUMP	558
FASTENER GP-VALVE	559
FILTER GP-OIL	560
FITTING GP-HYDRAULIC	561
HYDRAULIC AR	562
KICKOUT & POSITIONER GP	563
LINES GP-BACKHOE AUXILIARY	569
LINES GP-BOOM	599
LINES GP-BUCKET	605
LINES GP-CONNECTING	620
LINES GP-DRAIN	621
LINES GP-EXTENDABLE STICK	622
LINES GP-HYDRAULIC OIL COOLER	626
LINES GP-LIFT CYLINDER	630
LINES GP-LOADER AUXILIARY	634
LINES GP-MULTIPURPOSE BUCKET	638
LINES GP-PILOT	648
LINES GP-PUMP	652
LINES GP-RIDE CONTROL	654
LINES GP-STABILIZER	660
LINES GP-STICK	664
LINES GP-SWING	667
LINES GP-TILT CYLINDER	668
MANIFOLD GP-CONTROL	672
MANIFOLD GP-RIDE CONTROL	674
MOUNTING GP-BANK VALVE	675
MOUNTING GP-CYLINDER	679

TABLE OF CONTENTS

Name	Page
MOUNTING GP-LINES	681
PUMP GP-PISTON	684
SHAFT GP-PUMP DRIVE	691
TANK & MTG GP-HYDRAULIC	692
VALVE AR-BANK 2	696
VALVE AR-BANK 3	696
VALVE AR-BANK 6	696
VALVE AR-BANK 7	697
VALVE AR-BANK 8	697
VALVE GP-BANK 2	698
VALVE GP-BANK 3	699
VALVE GP-BANK 6	700
VALVE GP-BANK 7	702
VALVE GP-BANK 8	704
VALVE GP-CONTROL	706
VALVE GP-PUMP CONTROL	720
VALVE GP-SHUTTLE	721
IMPLEMENTS	722
ARM GP-LIFT	722
BOOM & BEARING AS	724
BOOM GP	725
BRACE GP-LIFT CYLINDER	726
GUARD GP-BOOM	727
LINKAGE GP-BACKHOE BUCKET	729
LINKAGE GP-LOADER BUCKET	731
LOCK GP-TRANSPORT	734
MOUNTING GP-STICK	738
PAD & GUARD GP-STABILIZER	739
PAD & MTG GP-STABILIZER	762
PAD GP-STABILIZER	769
STABILIZER GP-BACKHOE	771
STICK AS	773
STICK GP	774
STICK GP-HOE	778
WORK TOOLS	780
ADJUSTER GP-MANUAL	780
BUCKET AR-MULTIPURPOSE	781
BUCKET AS-GENERAL PURPOSE	783
BUCKET AS-HOE	788
BUCKET GP-GENERAL PURPOSE	827
BUCKET GP-HOE	832
BUCKET GP-MULTIPURPOSE	855
BULLDOZER AS	865
CLAM AS-MULTIPURPOSE BUCKET	869
COUPLER AR-QUICK	872
COUPLER GP-QUICK	873
EDGE GP-CUTTING	878
FORK GP	879
MOUNTING GP-BUCKET	880
PIN GP-COUPLER	881
THUMB AR	883
THUMB GP	894
TOOTH GP-UNI	896
OPERATOR STATION	897
ADJUSTER GP-SEAT	897
AIR CONDITIONER & MOUNTING GP	898
CAB AR-ENCLOSED ROPS	901
CAB AS	905
CAB GP-ENCLOSED ROPS	908
CANOPY AR-OPEN ROPS	922
CANOPY AS	926
CANOPY GP-OPEN ROPS	927
COMPARTMENT GP-LITERATURE	932
COMPRESSOR & MTG GP-REFRIG	933
COMPRESSOR GP-REFRIGERANT	937
CONDENSER & MTG GP-REFRIGERANT	940
CONSOLE GP-OPERATOR	942
CONTROL & MTG GP-STABILIZER	948
CONTROL GP-HYDRAULIC HAND	954
CONTROL GP-HYDRAULIC PEDAL	968
CONTROL GP-STEERING	974
CONTROL GP-TRANSMISSION	979
COVER GP-CAB	981
COVER GP-WIPER MOTOR	982
DOOR GP-CAB	983
FLOOR MAT GP	991
HEATER & AIR CONDITIONER GP	993
HEATER GP-CAB	995
LATCH GP-CAB DOOR & WINDOW	1003
LEVER GP-GOVERNOR	1005
LINER GP-CAB	1006
LINES GP-HEATER	1010
LINES GP-HEATER & AIR COND	1011
MIRROR GP-REAR VIEW	1015
MOTOR GP-WINDOW WIPER	1018
MOUNTING GP-CAB	1020
PEDAL GP-GOVERNOR	1021
RADIO GP-COMMUNICATION	1023
ROOF GP-CAB	1024
SEAT BELT GP	1027
SEAT GP	1029
SEAT GP-STATIC	1032
SEAT GP-SUSPENSION	1034
SUSPENSION GP-SEAT	1036
SWIVEL & SLIDE GP-SEAT	1043
SWIVEL GP-SEAT	1045
TACHOMETER GP-ELECTRIC	1046
TRIM GP-CAB	1047
WASHER GP-WINDOW	1049
WINDOW GP-CAB	1053
WINDOW GP-DOOR	1062
WIPER & WASHER GP-WINDOW	1064
WIPER GP-WINDOW	1068
SERVICE EQUIPMENT AND SUPPLIES	1072
FILM GP	1072
LINK GP-SHIPPING	1074

TABLE OF CONTENTS

Name	Page	Name	Page
LOCK GP-VANDALISM	1075		
PLATE & FILM GP	1075		
PROTECTION GP-VANDALISM	1081		
TRANSPORT AR-MACHINE	1082		
TRANSPORT GP-MACHINE	1083		
PART NUMBER INDEX	B1		

GENERAL INFORMATION

1. MACHINE IDENTIFICATION

Caterpillar machines are identified by Product Identification Numbers (PIN). Some components included in a machine may be identified by Serial Numbers (S/N). Typical components that will be serialized include engines, transmissions, bulldozers, and rippers. The machine and engine are further identified by arrangement numbers and in some cases modification numbers. These numbers are shown on the product identification plate(s) and on the master plate in the operator's compartment.

Caterpillar dealers need all of these numbers to determine accurate parts identification.

SIS *New Feature*

Effective First Quarter 2001 the Caterpillar Product Identification Number (PIN) changed from 8 to 17 characters. In an effort to provide uniform equipment identification, Caterpillar and other construction equipment manufacturers are moving to comply with the latest version of the product identification numbering standard. Non-road machine PINs are defined by ISO 10261. The new PIN format will apply to all Caterpillar machines and generator sets. The PIN plates and frame marking will display the 17 character PIN. The new format will look like the following:

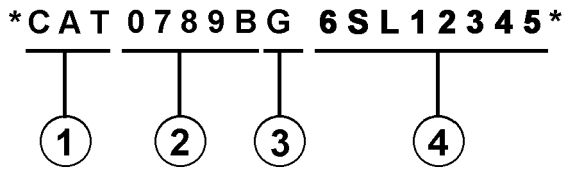

Where:

1. Caterpillar's World Manufacturing Code (characters 1-3)

2. Machine Descriptor (characters 4-8)

3. Check Character (character 9)

4. Machine Indicator Section (MIS) or Product Sequence Number (characters 10-17). These were previously referred to as the Serial Number.

Machines and generator sets produced before First Quarter 2001 will maintain their 8 character PIN format.

Components such as engines, transmissions, axles, etc. and work tools will continue to use an 8 character Serial Number (S/N).

2. ORDERING PARTS

WARNING

When replacement parts are required for this product Caterpillar recommends using Caterpillar replacement parts or parts with equivalent specifications including, but not limited to, physical dimensions, type, strength and material.

Failure to heed this warning can lead to premature failures, product damage, personal injury or death.

Quality Caterpillar replacement parts are available from Caterpillar dealers throughout the world. Their parts inventories are up to date and include all parts normally required to protect your investment in Caterpillar machines. Dealers may offer repair kits or remanufactured parts to allow selection of the most effective repair alternative for a particular situation. When ordering parts, your order should specify the quantity, part number, part name, and the serial number/product identification number of the machine for which the parts are needed.

3. PARTS MANUAL ORGANIZATION

Product information in this manual is presented as "information elements" that represent all of the components for the specific model. Engine Arrangement and Seat Group are examples of information elements. The information elements are organized alphabetically by part name and secondarily by part number within each major section of the manual.

4. TABLE OF CONTENTS

A table of contents (TOC) is found at the beginning of the manual. The TOC lists each section of the manual with a complete list of all information elements organized as they appear in the manual. Page numbers are provided for quick reference to detailed parts identification illustrations and serviceable consist lists.

5. MAINTENANCE PARTS INDEX

The Maintenance Parts Index, located near the beginning of the manual, references most frequently used maintenance part numbers, providing description, quantity, usage and page number. This information is organized alphabetically by part description.

6. INDEX

The index located near the front of the manual is an alphabetical listing of all information elements included in the manual. Page numbers are provided for quick reference to detailed parts identification illustrations and serviceable consist lists.

7. PART NUMBER INDEX

A numerical index listing all part numbers and the corresponding page number(s) appears at the back of the manual.

8. CAPTIONS

Captions located at the beginning of each information element identify the part number and part name along with additional descriptive information. PIN and S/N information found in each caption should be used to select correct information for a specific machine. Field replacement options, identification of optional attachment components, and where used ("part of") information is also provided.

The first line of a caption is shown in larger type font to indicate the beginning of an information element. Captions for additional pages that may be required to illustrate an information element will be shown in standard type font and will include the term *(contd.)* .

9. NON-SERVICED PARTS

In some instances it is necessary to display non-serviced parts that are a link to a lower level serviceable consist lists. These non-serviced part numbers are shown in *italic* type indicating that they are not available.

10. PARTS LIST REFERENCE NUMBERS

Numbers shown in the Ref No column correspond to numbers used in the associated graphic(s). An alphabetic suffix may be added to a reference number to identify lower level consist items. Numbers shown in the Graphic Ref column refer to the graphic number identifier displayed in the lower left corner of each illustration. The Graphic Ref number may be used in combination with the item Ref No to determine the correct part number. There may be intentional omission of a Ref No in a consist list as information is updated to reflect the latest serviceable part numbers.

11. INDENTED PART NAMES

When a part name is indented in a parts list, it is part of (included in) the group or assembly under which it is indented.

12. ILLUSTRATION REFERENCE LETTERS

When necessary, illustrations contain reference letters (A, B, C etc.) that are intended to track lines and harnesses from one point to another. They are also used to show where to reconnect illustrations that have been separated.

13. ABBREVIATIONS AND SYMBOLS

O.D. – Outside Diameter
I.D. – Inside Diameter
A – Not Part Of This Group
B – Use As Required
C – Change From Previous Type
D – Order By The Meter
E – Order By The Centimeter
F – Not Shown
G – Order By The Inch
I – Refer To Hydraulic Information System
M – Metric Part
R – Remfg Part May Be Available
Y – Separate Illustration
Z – Not Serviced Separately

SIS *New Feature*

14. DESCRIPTION OF TYPE CHANGES

Type - A type is defined as any configuration change that requires an additional Information Element for an Arrangement, Group, or Assembly. If serial number breaks for types are not available, a type # (Type 1, Type 2, etc.) will be displayed in the caption. These "type" changes are identified with a "C" note (change from previous type) in the Parts List. Only the "types" that apply to this Parts Manual will be included. Additional types may exist causing "C" notes to appear on an Information Element when no other types are shown.

15.<END>

This symbol indicates the end of an information element.

NOTE:

Continuing improvement and advancement of product design may cause changes to your machine which may not be included in this publication. Whenever a question arises regarding your Caterpillar product or this publication, please consult your Caterpillar dealer for the latest available information.

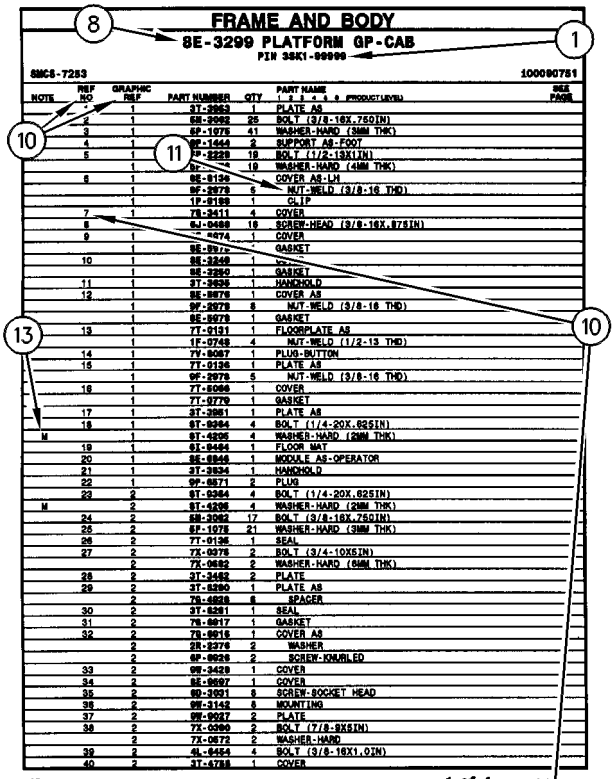
FRAME AND BODY
8E-3299 PLATFORM GP-CAB
PIN 3SK1-09999
SMCS-7253
100090751
NOTE REF NO GRAPHIC REF PART NUMBER QTY PART NAME SEE PAGE
1 1 3T-2953 1 PLATE AS
2 1 6E-2992 25 BOLT (3/8-16X.750IN)
3 1 6P-1076 41 WASHER-HARD (38MM THK)
4 1 9P-1444 2 SUPPORT AS-FOOT
5 1 7P-2229 18 BOLT (1/2-13X1IN)
1 19 WASHER-HARD (44MM THK)
6 1 8E-6136 COVER AS-LH
1 9F-2978 5 NUT-WELD (3/8-16 THD)
1 1P-0188 1 CLIP
7 1 7S-2411 4 COVER
8 9J-0498 18 SCREW-HEAD (3/8-16X.875IN)
9 1 1 COVER
1 GASKET
1 10
1 GASKET
11 1 3T-2638 1 HANDHOLD
12 1 8E-9978 1 COVER AS
1 9F-2978 8 NUT-WELD (3/8-16 THD)
1 GASKET
13 1 7T-0131 1 FLOORPLATE AS
1 1F-0748 4 NUT-WELD (1/2-13 THD)
14 1 7V-8067 1 PLUG-BUTTON
15 1 7T-0136 1 PLATE AS
1 9F-2978 5 NUT-WELD (3/8-16 THD)
16 1 7T-8066 1 COVER
1 7T-9779 1 GASKET
17 1 3T-3861 1 PLATE AS
18 1 6T-8264 4 BOLT (1/4-20X.625IN)
M 1 9T-4205 4 WASHER-HARD (26MM THK)
19 1 6L-8494 1 FLOOR MAT
20 1 8E-8846 1 MODULE AS-OPERATOR
21 1 3T-3834 1 HANDHOLD
22 1 9P-8671 2 PLUG
23 2 6T-8264 4 BOLT (1/4-20X.625IN)
M 2 9T-4205 4 WASHER-HARD (26MM THK)
24 2 6B-3062 17 BOLT (3/8-16X.750IN)
26 2 6P-1076 21 WASHER-HARD (38MM THK)
26 2 7T-0135 1 SEAL
27 2 7X-0975 2 BOLT (3/4-10X5IN)
2 7X-0682 2 WASHER-HARD (64MM THK)
28 2 3T-3462 2 PLATE
29 2 3T-8290 1 PLATE AS
2 7S-4828 8 SPACER
30 2 3T-8281 1 SEAL
31 2 7S-8817 1 GASKET
32 2 7S-8816 1 COVER AS
2 2R-2276 2 WASHER
2 6P-9926 2 SCREW-KNURLED
33 2 9W-3429 1 COVER
34 2 8E-9697 1 COVER
35 2 6D-3931 8 SCREW-SOCKET HEAD
36 2 9W-3142 8 MOUNTING
37 2 9W-9027 2 PLATE
38 2 7X-0990 2 BOLT (7/8-9X5IN)
2 7X-0672 2 WASHER-HARD
39 2 4L-8454 4 BOLT (3/8-16X1.0IN)
40 2 3T-4788 1 COVER
12 FRAME AND BODY
1 of 4
SELP4570-01

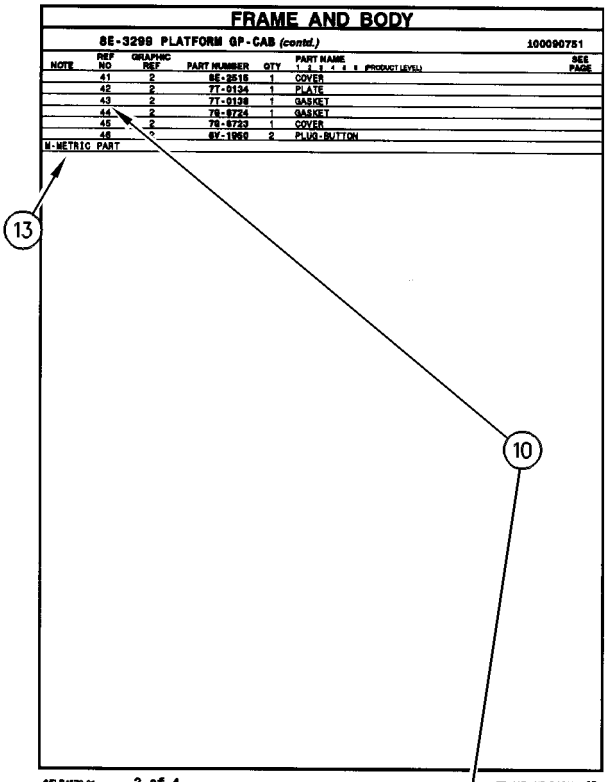
FRAME AND BODY
8E-3299 PLATFORM GP-CAB (contd.)
100090751
NOTE REF NO GRAPHIC REF PART NUMBER QTY PART NAME SEE PAGE
41 2 8E-2516 1 COVER
42 2 7T-0134 1 PLATE
43 2 7T-0138 1 GASKET
44 2 7S-9724 1 GASKET
45 2 7S-8723 1 COVER
46 2 6V-1950 2 PLUG-BUTTON
M-METRIC PART
SELP4570-01
2 of 4
FRAME AND BODY 13

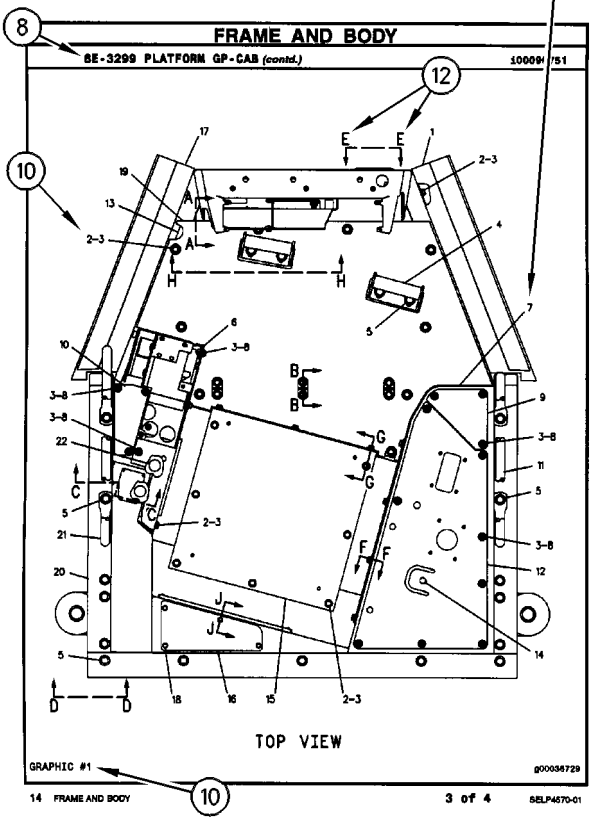
FRAME AND BODY
8E-3299 PLATFORM GP-CAB (contd.)
100090751
TOP VIEW
GRAPHIC #1
g00036729
14 FRAME AND BODY
3 of 4
SELP4570-01

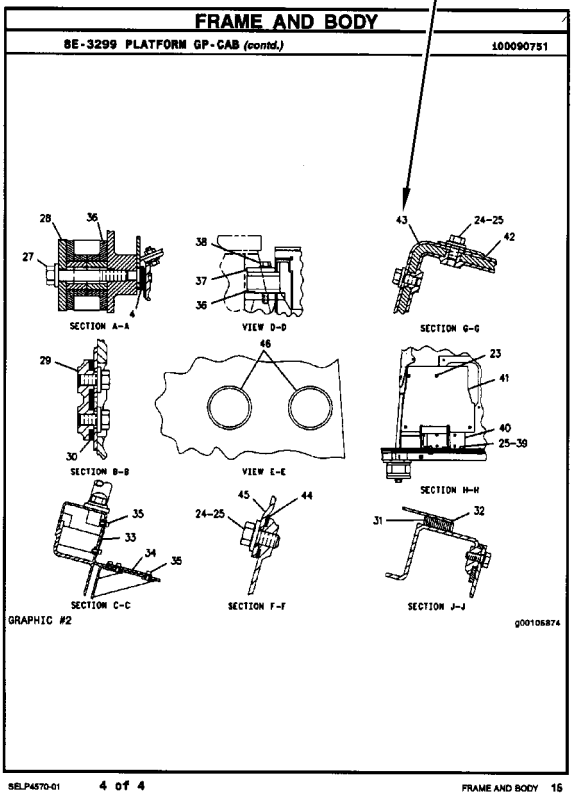
FRAME AND BODY
8E-3299 PLATFORM GP-CAB (contd.)
100090751
SECTION A-A
VIEW D-D
SECTION G-G
SECTION B-B
VIEW E-E
SECTION H-H
SECTION C-C
SECTION F-F
SECTION J-J
GRAPHIC #2
g00105874
SELP4570-01
4 of 4
FRAME AND BODY 15

REPAIR ALTERNATIVES

REMANUFACTURED COMPONENTS

As an option when making repairs consider Caterpillar Remanufactured Components. Components that are available through the Caterpillar Remanufactured Program are identified three ways in the parts book:

- with the letter R in the note field of the parts list
- with an R* at the beginning of the first line of the caption
- with an *R at the end of the first line of the caption

Typical components included in the Remanufacturing Program include:

ALTERNATORS
CONNECTING RODS
CRANKSHAFTS - UNDERSIZE
CRANKSHAFTS - UPGRADE TO NEW
CYLINDER HEADS
ELECTRONIC CONTROL MODULES (ECM)
ELECTRONIC SENSORS
FUEL INJECTORS
FUEL NOZZLES
FUEL PUMPS
GOVERNORS
OIL PUMPS
PISTONS
SHORT BLOCKS
STARTERS
TURBOCHARGERS - COMPLETE
TURBOCHARGER CARTRIDGES
WATER PUMPS

Caterpillar Remanufactured engines for many engine arrangements are also available.

SUPPLEMENTAL COOLANT ADDITIVES

CUSTOMER BENEFITS:

Protects against cavitation, foam, erosion, corrosion, and scale buildup in cooling systems.

- Provides measured coolant conditioner.

DESCRIPTION:

Additives deplete from the coolant with normal operation. For this reason, Supplemental Coolant Additives (SCA) must be added to all heavy duty coolants at regular intervals. In addition, when not using a fully formulated, pre-charged antifreeze, like Caterpillar's DEAC, an initial charge of SCA must be added to the cooling system. The amount of SCA added to the system is dependent on the capacity of the system.

The SCA for initial fill is provided as a liquid. SCA's for maintenance intervals are available in liquid form and as a spin-on element. (No Spin-on available for 3600 Family of Engines)

NOTE:

The amount of SCA added at initial fill is not the same as the amount added at maintenance intervals.

The coolant additive elements can be used with any ethylene or propylene glycol type antifreeze which meets ASTM D4985 or ASTM D5345 Specifications.

NOTE:

For use with standard heavy duty coolant only, not for use with Extended Life Coolant.

PARTS NEEDED:

Cooling System Capacity		Liquid SCA at Initial Fill	Liquid SCA at Maintenance*	Spin-on SCA Maintenance Element*
Liters	Gallons			
22-30	(6-8)	3P-2044 (1)	6V-3542 (1)	111-2370 (1)
30-38	(8-10)	3P-2044 (1) 6V-3542 (1)	111-2372 (1)	111-2369 (1)
38-49	(10-13)	3P-2044 (1) 8T-1589 (1)	111-2372 (1)	111-2369 (1)
49-64	(13-17)	3P-2044 (2)	8T-1589 (1)	9N-3368 (1)
64-83	(17-22)	3P-2044 (2) 8T-1589 (1)	111-2372 (1) 6V-3542 (1)	111-2371 (1)
83-114	(22-30)	3P-2044 (3) 8T-1589 (1)	3P-2044 (1)	9N-3718 (1)
114-163	(30-43)	3P-2044 (5)	3P-2044 (1) 6V-3542 (1)	111-2371 (2)
163-242	(43-64)	3P-2044 (8)	3P-2044 (2)	9N-3718 (2)

** Normal maintenance period is 250 hrs. See your Operation and Maintenance Manual for complete coolant maintenance instructions.*

( ) Indicates quantity required.

MAINTENANCE PARTS

DESCRIPTION	PART NUMBER	QTY	WHERE USED	PAGE
AIR INLET AND EXHAUST SYSTEM				
FILTER ELEMENT-AIR (PRIMARY)	293-4053	1	AIR CLEANER GP	164
FILTER ELEMENT-AIR (SECONDARY)	227-7449	1	AIR CLEANER GP	164
BASIC ENGINE				
GASKET (VALVE COVER)	225-6451	1	COVER GP-VALVE MECHANISM	29
		1	COVER GP-VALVE MECHANISM	31
		1	COVER GP-VALVE MECHANISM	33
		1	COVER GP-VALVE MECHANISM	35
		1	COVER GP-VALVE MECHANISM	37
		1	COVER GP-VALVE MECHANISM	39
PLUG-DRAIN (ENGINE OIL)	7C-0351	2	PAN GP-OIL	79
		2	PAN GP-OIL	81
		2	PAN GP-OIL	83
COOLING SYSTEM				
BELT-SERPENTINE	212-9353	1	FAN GP-SUCTION	133
CAP AS-COOLANT TANK	251-3227	1	LINES GP-RADIATOR	136
CAP AS-COOLANT TANK (RADIATOR)	251-3227	1	TANK GP-EXPANSION	155
HOSE-RADIATOR (LOWER)	210-6139	1	MOUNTING GP-RAD & OIL COOLER	141
HOSE-RADIATOR (UPPER)	210-6141	1	MOUNTING GP-RAD & OIL COOLER	141
	325-5855	1	LINES GP-RADIATOR	136
REGULATOR GP-TEMPERATURE (INCLUDES CONNECTOR)	254-2267	1	CONNECTION GP-WATER	115
REGULATOR GP-TEMPERATURE (INCLUDES CONNECTOR) (WATER)	254-2267	1	CONNECTION GP-WATER	117
V-BELT (AIR CONDITIONER)	1P-4334	1	FAN GP-SUCTION	131
	3P-0130	1	FAN GP-SUCTION	129
V-BELT SET (INCLUDES 2-BELTS)	130-3216	1	FAN GP-SUCTION	128
V-BELT SET (INCLUDES 2-BELTS) (ALTERNATOR)	130-3216	1	FAN GP-SUCTION	129
		1	FAN GP-SUCTION	131
ELECTRICAL AND STARTING SYSTEM				
BATTERY (12-VOLT, MAINTENANCE FREE)	230-6368	1	BATTERY & WIRING GP	226
		1	BATTERY & WIRING GP	228
		1	BATTERY & WIRING GP	233
		1	BATTERY & WIRING GP	236
		1	BATTERY & WIRING GP	238
		1	BATTERY & WIRING GP	240
BATTERY (12-VOLT, MAINTENANCE FREE, WET)	3T-5760	1	BATTERY & WIRING GP	229
		1	BATTERY & WIRING GP	231
		1	BATTERY & WIRING GP	242
		1	BATTERY & WIRING GP	244
BELT-DRIVE	9X-8139	1	LAMP GP-WARNING BEACON	257
		1	LAMP GP-WARNING BEACON	258
FLASHER AS (12-VOLT)	7T-4848	1	WIRING GP-PLATFORM	323
		1	WIRING GP-PLATFORM	327
		1	WIRING GP-PLATFORM	330
		1	WIRING GP-PLATFORM	334
FLASHER AS (12-VOLT) (HAZARD)	7T-4848	1	WIRING GP-PLATFORM	339
FUSE (10-AMPERE)	113-8490	11	PANEL GP-FUSE	268

MAINTENANCE PARTS

DESCRIPTION	PART NUMBER	QTY	WHERE USED	PAGE
	3K-8782	1	LAMP GP-WARNING BEACON	257
FUSE (15-AMPERE)	113-8491	13	PANEL GP-FUSE	268
FUSE (20-AMPERE)	113-8492	10	PANEL GP-FUSE	268
FUSE (40-AMPERE)	278-6377	1	RELAY GP	269
		1	RELAY GP	272
FUSE (60-AMPERE)	267-2701	2	RELAY GP	270
		1	RELAY GP	271
		1	RELAY GP	272
		1	WIRING GP-PLATFORM	324
		1	WIRING GP-PLATFORM	327
		1	WIRING GP-PLATFORM	330
		1	WIRING GP-PLATFORM	335
		1	WIRING GP-PLATFORM	339
GLOW PLUG (12-VOLT)	232-6662	4	GLOW PLUG GP	247
		4	GLOW PLUG GP	248
KEY (BATTERY DISCONNECT)	8H-5306	1	SWITCH GP-DISCONNECT	279
LAMP (12-VOLT)	7X-9065	1	WIRING GP-CONSOLE	291
		1	WIRING GP-CONSOLE	292
LAMP (12-VOLT) (COOLANT TEMPERATURE)	7X-9065	1	WIRING GP-CONSOLE	296
LAMP (12-VOLT) (FUEL LEVEL INDICATOR)	7X-9065	1	WIRING GP-CONSOLE	296
LAMP (12-VOLT) (OIL TEMPERATURE)	7X-9065	1	WIRING GP-CONSOLE	296
LAMP (12-VOLT, 21-WATT)	3C-4883	1	LIGHTING GP-FLOOD & SIGNAL	259
		1	LIGHTING GP-FLOOD & SIGNAL	263
	9W-3326	1	LIGHTING GP-FLOOD & SIGNAL	259
		1	LIGHTING GP-FLOOD & SIGNAL	263
LAMP (12-VOLT, 5-WATT)	084-4348	1	LIGHTING GP-FLOOD & SIGNAL	259
		1	LIGHTING GP-FLOOD & SIGNAL	263
LAMP (12-VOLT, 55-WATT)	9W-0607	1	LAMP GP-FLOOD	254
		1	LAMP GP-FLOOD	255
		1	LAMP GP-FLOOD	256
	9X-8118	1	LAMP GP-WARNING BEACON	257
		1	LAMP GP-WARNING BEACON	258
LAMP GP (12-VOLT)	270-2728	1	WIRING GP-CONSOLE	291
LAMP GP (12-VOLT) (FAULT INDICATOR)	270-2728	1	WIRING GP-CONSOLE	296
ENGINE ARRANGEMENT				
FILTER AS-ENGINE OIL	7W-2326	1	ENGINE AR-PRIMARY	23
FUEL SYSTEM				
CAP-FUEL	284-9039	1	TANK GP-FUEL	220
CAP-FUEL (LOCKABLE, VENTED)	284-9039	1	TANK GP-FUEL	222
ELEMENT-WATER SEPARATOR (FUEL FILTER)	361-9554	1	PUMP GP-FUEL PRM & PRIM FILTER	217
FILTER AS-WATER SEP & FUEL	228-9130	1	PUMP GP-FUEL PRM & PRIM FILTER	214
FILTER ELEMENT-FUEL (WATER SEPARATOR)	156-1200	1	FILTER GP-WATER SEP & FUEL	192
		1	LINES GP-FUEL	200
STRAINER-FUEL (FILLER NECK SCREEN)	180-3730	1	TANK GP-FUEL	220
		1	TANK GP-FUEL	222

MAINTENANCE PARTS

DESCRIPTION	PART NUMBER	QTY	WHERE USED	PAGE
HYDRAULIC SYSTEM				
CAP AS	6V-9830	1	FILTER GP-OIL	560
		1	LINES GP-LIFT CYLINDER	630
		1	LINES GP-LIFT CYLINDER	632
		2	LINES GP-LOADER AUXILIARY	634
		2	LINES GP-LOADER AUXILIARY	636
	6V-9832	2	LINES GP-BACKHOE AUXILIARY	587
		2	LINES GP-BACKHOE AUXILIARY	590
CAP-FILL (HYDRAULIC OIL)	237-3797	1	TANK & MTG GP-HYDRAULIC	692
		1	TANK & MTG GP-HYDRAULIC	694
FILTER ELEMENT-BREATHER (HYDRAULIC TANK)	9R-9925	1	TANK & MTG GP-HYDRAULIC	692
		1	TANK & MTG GP-HYDRAULIC	694
FILTER-OIL (ULTRA HIGH EFFICIENCY) (HYDRAULIC)	126-1817	1	FILTER GP-OIL	560
LUBRICATION SYSTEM				
CAP AS-FILLER (ENGINE OIL FILLER)	236-6651	1	GAUGE GP-OIL LEVEL & FILLER	111
		1	GAUGE GP-OIL LEVEL & FILLER	112
FILTER AS-ENGINE OIL	7W-2326	1	GAUGE GP-OIL LEVEL & FILLER	111
		1	GAUGE GP-OIL LEVEL & FILLER	112
MACHINE ARRANGEMENT				
SEAT BELT GP (RETRACTABLE, 51-MM)	206-1747	1	DISTRIBUTION AR	4
		1	DISTRIBUTION AR	5
		1	DISTRIBUTION AR	6
		1	DISTRIBUTION AR	7
		1	DISTRIBUTION AR	8
		1	DISTRIBUTION AR	10
		1	DISTRIBUTION AR	11
		1	DISTRIBUTION AR	12
		1	DISTRIBUTION AR	13
		1	DISTRIBUTION AR	14
		1	DISTRIBUTION AR	15
		1	DISTRIBUTION AR	16
		1	DISTRIBUTION AR.	9

MAINTENANCE PARTS

DESCRIPTION	PART NUMBER	QTY	WHERE USED	PAGE
OPERATOR STATION				
BLADE AS-WIPER (500-MM) (REAR)	5C-8811	1	WIPER GP-WINDOW	1068
		1	WIPER GP-WINDOW	1070
BLADE AS-WIPER (600-MM) (FRONT)	101-0745	1	WIPER & WASHER GP-WINDOW	1064
		1	WIPER & WASHER GP-WINDOW	1066
		1	WIPER GP-WINDOW	1068
		1	WIPER GP-WINDOW	1070
DRYER-REFRIGERANT (IN-LINE)	283-4237	1	LINES GP-HEATER & AIR COND	1011
DRYER-REFRIGERANT (IN-LINE) (AIR CONDITIONER)	283-4237	1	LINES GP-HEATER & AIR COND	1013
FILTER ELEMENT AS-AIR (CAB HEATER)	211-2661	1	AIR CONDITIONER & MOUNTING GP	898
		1	HEATER GP-CAB	995
		1	HEATER GP-CAB	997
FILTER ELEMENT-AIR (CAB HEATER)	211-2660	1	HEATER GP-CAB	1001
FILTER ELEMENT-AIR (CAB HEATER, AIR CONDITIONER)	211-2660	1	HEATER & AIR CONDITIONER GP	993
FILTER ELEMENT-AIR (RECIRCULATION)	211-2660	1	HEATER GP-CAB	999
LAMP (12-VOLT)	122-7137	1	TACHOMETER GP-ELECTRIC	1046
	210-8754	1	LINER GP-CAB	1006
		1	LINER GP-CAB	1008
SEAT BELT (2-IN)	206-1749	1	SEAT BELT GP	1027
SEAT BELT (3-IN)	206-1750	1	SEAT BELT GP	1028
POWER TRAIN				
BREATHER (AXLE, REAR)	197-9155	1	AXLE GP-REAR	350
BREATHER (FRONT AXLE)	253-5024	1	AXLE GP-DRIVE & STEERING	347
BREATHER (TRANSMISSION)	7T-3251	1	TRANSMISSION GP-DIRECT DRIVE	404
		1	TRANSMISSION GP-DIRECT DRIVE	410
		1	TRANSMISSION GP-DIRECT DRIVE	414
		1	TRANSMISSION GP-DIRECT DRIVE	420
BREATHER AS (TRANSMISSION)	293-2147	1	TRANSMISSION GP-DIRECT DRIVE	415
		1	TRANSMISSION GP-DIRECT DRIVE	419
	294-9822	1	TRANSMISSION GP-DIRECT DRIVE	409
FILTER-OIL (STANDARD EFFICIENCY)	119-4740	1	POWER TRAIN AR	388
		1	POWER TRAIN AR	389
		1	POWER TRAIN AR	391
FILTER-OIL (STANDARD EFFICIENCY) (HYDRAULIC)	119-4740	1	POWER TRAIN AR	390
FILTER-OIL (STANDARD EFFICIENCY) (POWER TRAIN)	119-4740	1	POWER TRAIN AR	390
		1	POWER TRAIN AR	391
PLUG AS-DRAIN	6Y-1896	1	TRANSMISSION GP-DIRECT DRIVE	404
		1	TRANSMISSION GP-DIRECT DRIVE	410
PLUG AS-DRAIN (DRAIN)	6Y-1896	1	TRANSMISSION GP-DIRECT DRIVE	420
PLUG AS-DRAIN (MAGNETIC)	152-6144	1	DIFFERENTIAL & BEVEL GEAR GP	363
PLUG AS-DRAIN (MAGNETIC) (AXLE,REAR)	152-6144	4	AXLE GP-REAR	350
PLUG AS-DRAIN (MAGNETIC) (DIFFERENTIAL)	152-6144	4	AXLE GP-DRIVE & STEERING	347
STRAINER-SUCTION (SUCTION)	7T-2651	1	CASE AS-TRANSMISSION	355
		1	CASE GP-TRANSMISSION	360

INDEX

Name	Page
A	
ACCUMULATOR GP-RIDE CONTROL–CHARGED	520, 522
ACCUMULATOR GP-RIDE CONTROL–UNCHARGED	521, 523
ACCUMULATOR-REFRIGERANT (AIR CONDITIONER)	1011, 1013
ADJUSTER GP-MANUAL	780
ADJUSTER GP-SEAT	897
AFTERCOOLER GP-AIR	149
AIR CLEANER GP	156, 158, 160, 162, 164
AIR CLEANER GP–TURBO	165
AIR COMPRESSOR GP (SUSPENSION SEAT)	1036, 1039
AIR CONDITIONER & MOUNTING GP	898
ALTERNATOR GP-CHARGING	223, 224, 225
ALTERNATOR GP-CHARGING (100-AMPERE, WITH MOUNTING)	23, 25
ALTERNATOR GP-CHARGING–100-AMPERE, WITH MOUNTING	224
ALTERNATOR GP-CHARGING–120-AMPERE, WITH MOUNTING	223
ARM GP-LIFT	722
ARMREST AS (LH)	1034
ARMREST AS (RH)	1034
AXLE GP-DRIVE & STEERING–FRONT	347
AXLE GP-FRONT	453
AXLE GP-REAR	350
B	
BACKHOE AR-EXTENDABLE STICK	1
BACKHOE AR-STANDARD STICK	1
BATTERY & WIRING GP	236, 238, 240, 242, 244
BATTERY & WIRING GP–DISCONNECT	233
BATTERY & WIRING GP–HEAVY-DUTY	228, 231
BATTERY & WIRING GP–STANDARD	226, 229
BATTERY (12-VOLT, MAINTENANCE FREE)	226, 228, 233, 236, 238, 240
BATTERY (12-VOLT, MAINTENANCE FREE, WET)	229, 231, 242, 244
BELT-DRIVE	257, 258
BELT-SERPENTINE	133
BLADE AS-WIPER (500-MM) (REAR)	1068, 1070
BLADE AS-WIPER (600-MM) (FRONT)	1064, 1066, 1068, 1070
BLOWER GP-CAB	999
BLOWER GP-CAB (HEATER)	993, 1001
BOOM & BEARING AS	724
BOOM GP	725
BOX GP-BATTERY–WITH STORAGE	465, 466
BRACE GP-LIFT CYLINDER	726
BRAKE GP-MECH CALIPER PARKING	350
BREATHER (AXLE, REAR)	350
BREATHER (FRONT AXLE)	347
BREATHER (TRANSMISSION)	404, 410, 414, 420
BREATHER AS (TRANSMISSION)	409, 415, 419
BREATHER GP	107
BREATHER GP–CRANKCASE	109
BUCKET AR-MULTIPURPOSE	781, 782
BUCKET AS-GENERAL PURPOSE	783, 784, 785, 786, 787
BUCKET AS-HOE	788, 789, 790, 791, 792, 793, 794, 795

INDEX

Name	Page
	796
	797
BUCKET AS-HOE–HEAVY-DUTY	798
	799
	800
	801
	802
	803
	804
	805
	806
	807
	808
	809
BUCKET AS-HOE–HIGH CAPACITY	810
	811
	812
	813
	814
	815
	816
	817
BUCKET AS-HOE–ROCK	818
	819
	820
	821
	822
	823
	824
	825
	826
BUCKET GP-GENERAL PURPOSE	827
	828
	829
	830
	831
BUCKET GP-HOE	832
	833
	834
	835
	836
	837
	838
	839
	840
	841
	842
	843
	844
	845
	846
	847
	851
	852
BUCKET GP-HOE–HEAVY-DUTY	853
BUCKET GP-HOE–ROCK	848
	849
	850
	854
BUCKET GP-MULTIPURPOSE	855
	856
	858
	859
	860
	861
	862
	863
	864
BULLDOZER AS	865
	867
	868
BULLDOZER AS–FORKS	866

C

CAB AR-ENCLOSED ROPS–DOUBLE DOOR, WITH A/C	903
	904
CAB AR-ENCLOSED ROPS–DOUBLE DOOR, WITHOUT A/C	902
CAB AR-ENCLOSED ROPS–SINGLE DOOR, WITHOUT A/C	901
CAB AS	905
	906
CAB GP-ENCLOSED ROPS	920
CAB GP-ENCLOSED ROPS–DOUBLE DOOR	912
	915
CAB GP-ENCLOSED ROPS–SINGLE DOOR	908
	910
	918
CAMSHAFT GP	27
	28
CANOPY AR-OPEN ROPS–WITH FRONT WINDOW	923
	924
CANOPY AR-OPEN ROPS–WITHOUT FRONT WINDOW	922
	925
CANOPY AS	926
CANOPY GP-OPEN ROPS–WITH FRONT WINDOW	929
	931
CANOPY GP-OPEN ROPS–WITHOUT FRONT WINDOW	927
	930
CAP AS	560
	587
	590
	630
	632

INDEX

Name	Page
	634
	636
CAP AS-COOLANT TANK	136
CAP AS-COOLANT TANK (RADIATOR)	155
CAP AS-FILLER (ENGINE OIL FILLER)	111
	112
CAP-FILL (HYDRAULIC OIL)	692
	694
CAP-FUEL	220
CAP-FUEL (LOCKABLE, VENTED)	222
CARRIER AS-DIFFERENTIAL	363
CASE AS-TRANSMISSION–FRONT	355
CASE AS-TRANSMISSION–REAR	353
	356
	358
CASE GP-TRANSMISSION–FRONT	360
CASE GP-TRANSMISSION–REAR	361
CHASSIS AR	2
CHASSIS AR–NACD	3
CLAM AS-MULTIPURPOSE BUCKET	869
	870
	871
COMMON AR	3
COMMON AR–NACD	4
COMPARTMENT GP-LITERATURE–STORAGE BOX	932
COMPRESSOR & MTG GP-REFRIG	933
	935
COMPRESSOR GP-REFRIGERANT	937
	938
	939
CONDENSER & MTG GP-REFRIGERANT	940
	941
CONNECTION GP-INLET	167
CONNECTION GP-WATER	115
	117
CONSOLE GP-OPERATOR–FRONT	946
CONSOLE GP-OPERATOR–LH	944
CONSOLE GP-OPERATOR–RH	942
CONTROL & MTG GP-STABILIZER	948
	950
	952
CONTROL AR-RIDE	524
CONTROL GP-GOVERNOR	184
	186
	188
	190
CONTROL GP-HYDRAULIC HAND	948
CONTROL GP-HYDRAULIC HAND–4-FUNCTION, EXCAVATOR	963
	965
CONTROL GP-HYDRAULIC HAND–BACKHOE	959
	961
CONTROL GP-HYDRAULIC HAND–LOADER	954
	957
CONTROL GP-HYDRAULIC HAND–STABILIZER	967
CONTROL GP-HYDRAULIC PEDAL–SINGLE FUNCTION, LH	968
	969
CONTROL GP-HYDRAULIC PEDAL–SINGLE FUNCTION, RH	970
	972
CONTROL GP-PARKING BRAKE	440
	441
CONTROL GP-SERVICE BRAKE	442
	445
CONTROL GP-STEERING	974
CONTROL GP-STEERING–TILT	975
	977
CONTROL GP-TRANSMISSION	979
CONTROL GP-TRANSMISSION (FORWARD, NEUTRAL, REVERSE)	979
CONVERSION AR-CUSHION SWING–KIT	525
COOLER AS-OIL–HYDRAULIC, TRANSMISSION	118
COOLER GP-ENGINE OIL	119
	120
	121
	122
COOLER GP-FLTR BASE & ENG OIL	122
	123
	124
	126
COOLER GP-HYD & XMSN OIL	527
CORE AS-OIL COOLER (HYDRAULIC)	118
	527
CORE AS-OIL COOLER (TRANSMISSION)	118
	527
CORE AS-OIL COOLER (TRANSMISSION, 9-ROW)	153
COUNTERWEIGHT GP	468
	469
	470
COUPLER AR-QUICK–PIN-LOCK	872
COUPLER GP-QUICK	874
	876
	877
COUPLER GP-QUICK–HOE	873
COUPLER GP-QUICK–PIN-LOCK	875
COVER GP-CAB	981
COVER GP-INLET MANIFOLD	168
	169
COVER GP-VALVE MECHANISM	29
	31
	33
	35
	37
	39

INDEX

Name	Page
COVER GP-WIPER MOTOR	982
COWLING AS	506
CRANKSHAFT GP	41
	43
	45
	46
	47
	48
	49
CYLINDER & LINES GP-THUMB	528
	529
CYLINDER BLOCK GP	50
	52
	53
	54
	55
CYLINDER GP-BACKHOE BUCKET	531
	533
CYLINDER GP-BOOM	535
CYLINDER GP-BRAKE	448
	449
CYLINDER GP-HYDRAULIC	537
	539
CYLINDER GP-LIFT	541
	543
CYLINDER GP-MULTIPURPOSE BUKT	544
	546
CYLINDER GP-STABILIZER–LH	547
	551
CYLINDER GP-STABILIZER–RH	549
	552
CYLINDER GP-STEERING	347
	453
CYLINDER GP-STICK	553
CYLINDER GP-STICK–EXTENDABLE	554
CYLINDER GP-THUMB	555
CYLINDER GP-TILT	556
CYLINDER HEAD GP	57
	58
	59
	60
	61
	62

D

DIAPHRAGM (CRANKCASE PRESSURE CONTACTOR)	35
DIFFERENTIAL & BEVEL GEAR GP	363
	365
DIFFERENTIAL GP	365
	366
DISTRIBUTION AR	4
	5
	6
	7
	8
	10
	11
	12
	13
	14
	15
	16
DISTRIBUTION AR	9
DOOR GP-BATTERY	471
DOOR GP-CAB–LH	983
	985
DOOR GP-CAB–RH	987
	989
DRAWBAR GP	472
DRIVE & MTG GP-PUMP	558
DRIVE AR-BACKHOE LOADER– 2-WHEEL DRIVE, 2-WHEEL STEER	16
DRIVE AR-BACKHOE LOADER– ALL WHEEL DRIVE, 2-WHEEL STEER	17
DRIVE GP-FAN	63
	64
DRIVE GP-FLEXIBLE COUPLING	367
DRYER-REFRIGERANT (IN-LINE)	1011
DRYER-REFRIGERANT (IN-LINE) (AIR CONDITIONER)	1013

E

EDGE GP-CUTTING	878
ELECTRONICS GP-COMMUNICATION– PRODUCT LINK 121SR	246
ELEMENT-WATER SEPARATOR (FUEL FILTER)	217
ENGINE AR	19
	20
	21
	22
ENGINE AR-PRIMARY	23
	24
	25
	26
EXTENSION GP-EXHAUST	171
EXTENSION GP-FENDER	473

F

FAN GP-SUCTION–WITH AIR CONDITIONER	129
	131
	133
FAN GP-SUCTION– WITHOUT AIR CONDITIONER	128
FASTENER GP-VALVE (BANK)	696
FASTENER GP-VALVE–BANK	559

INDEX

Name	Page
FENDER GP-FRONT	474
FENDER GP-REAR	475
	477
FILLER GP-ENGINE OIL	37
	110
FILLER GP-ENGINE OIL (ENGINE)	33
FILLER GP-POWER TRAIN OIL– 2-WHEEL DRIVE, STANDARD SHIFT	371
	373
FILLER GP-POWER TRAIN OIL– ALL WHEEL DRIVE, STANDARD SHIFT	368
	370
FILM GP	1072
	1073
FILM-COVER (PROTECT) (BATTERY BOX)	1075
FILM-IDENTIFICATION (12-VOLT)	1076
FILM-IDENTIFICATION (BOOM, LH)	1072
FILM-IDENTIFICATION (BOOM, RH)	1072
FILM-IDENTIFICATION (CAT)	513
	514
	516
	518
FILM-IDENTIFICATION (CATERPILLAR)	922
	925
FILM-IDENTIFICATION (CATERPILLAR, FRONT)	901
	902
	903
	904
	923
	924
FILM-IDENTIFICATION (FUSE, RELAY)	341
	1075
FILM-IDENTIFICATION (GROUP NO., SEQUENCE NO.)	993
	999
	1001
FILM-IDENTIFICATION (HYDRAULIC OIL)	442
	445
FILM-IDENTIFICATION (STABILIZER CONTROL)	901
	902
	903
	904
	922
	923
	924
	925
FILM-IDENTIFICATION (START SWITCH, READ OMM)	1075
FILM-IDENTIFICATION (TEMPERATURE CONTROL)	898
	995
	997
FILM-INSTRUCTION (AUXILIARY)	968
	969
	970
	972
FILM-INSTRUCTION (BACKHOE)	959
	961
FILM-INSTRUCTION (BUCKET CONTROL)	696
FILM-INSTRUCTION (EXCAVATOR CONTROL)	963
	965
FILM-INSTRUCTION (EXTENDABLE STICK PIN, READ OMM)	1
FILM-INSTRUCTION (EXTENDABLE STICK)	970
	972
FILM-INSTRUCTION (LINK)	729
FILM-INSTRUCTION (NO STEP)	1076
FILM-INSTRUCTION (OIL FLOW DIRECTION)	569
	571
FILM-INSTRUCTION (PRESSURE WASHER)	446
FILM-INSTRUCTION (UNLOCK)	512
	515
FILM-INSTRUCTION (WASHER FILL)	1049
	1051
	1064
FILM-STRIPE (YELLOW)	504
	506
	513
FILM-WARNING (ACCUM, HIGH PRESS, READ OMM)	520
FILM-WARNING (ARM BRACE, READ OMM, INTL)	1076
FILM-WARNING (HIGH PRESS CYLINDER, READ OMM)	654
FILM-WARNING (HIGH PRESS CYLINDER, READ OMM) (INTL)	656
	658
FILM-WARNING (HIGH PRESS CYLINDER, READ OMM) (U.S.)	656
	658
FILM-WARNING (HIGH PRESSURE, READ OMM)	520
	522
	523
FILM-WARNING (HYD PRESS, READ OMM, INTL)	571
	586
	589
FILM-WARNING (HYD PRESS, READ OMM, U.S.)	569
	571
	574
	577
	580
	583

INDEX

Name	Page
	586
	589
	592
	596
FILM-WARNING (PRODUCT LINK 300, INTL)	252
FILM-WARNING (PRODUCT LINK 300, U.S.)	250
	252
FILM-WARNING (READ OMM)	1076
FILM-WARNING (SEAT BELT)	1076
FILTER AS-ENGINE OIL	23
	111
	112
FILTER AS-WATER SEP & FUEL	214
FILTER BASE & ENG OIL COOLER	122
	123
	124
	126
FILTER ELEMENT AS-AIR (CAB HEATER)	898
	995
	997
FILTER ELEMENT-AIR (CAB HEATER)	1001
FILTER ELEMENT-AIR (CAB HEATER, AIR CONDITIONER)	993
FILTER ELEMENT-AIR (PRIMARY)	164
FILTER ELEMENT-AIR (RECIRCULATION)	999
FILTER ELEMENT-AIR (SECONDARY)	164
FILTER ELEMENT-BREATHER (HYDRAULIC TANK)	692
	694
FILTER ELEMENT-FUEL (WATER SEPARATOR)	192
	200
FILTER GP-FUEL	192
FILTER GP-FUEL (WATER SEPARATOR)	200
FILTER GP-OIL–HYDRAULIC	560
FILTER GP-WATER SEP & FUEL	192
FILTER-OIL (STANDARD EFFICIENCY)	388
	389
	391
FILTER-OIL (STANDARD EFFICIENCY) (HYDRAULIC)	390
FILTER-OIL (STANDARD EFFICIENCY) (POWER TRAIN)	390
	391
FILTER-OIL (ULTRA HIGH EFFICIENCY) (HYDRAULIC)	560
FINAL DRIVE GP	387
FITTING GP-HYDRAULIC	561
FLANGE GP-WHEEL	375
	376
FLASHER AS (12-VOLT)	323
	327
	330
	334
FLASHER AS (12-VOLT) (HAZARD)	339
FLOOR MAT	991
	992
FLOOR MAT GP	991
	992
FLOORPLATE GP	482
FLOORPLATE GP–CAB	481
FLOORPLATE GP–CANOPY	480
FLYWHEEL GP	65
	66
FORK GP	879
FRAME AS-SWING	483
FRAME GP-LOADER	484
	486
	488
FRAME GP-LOADER–SINGLE TILT	490
	492
FRAME GP-SWING	494
	496
	498
FUSE (10-AMPERE)	257
	268
FUSE (15-AMPERE)	268
FUSE (20-AMPERE)	268
FUSE (40-AMPERE)	269
	272
FUSE (60-AMPERE)	270
	271
	272
	324
	327
	330
	335
	339

G

GASKET (VALVE COVER)	29
	31
	33
	35
	37
	39
GAUGE GP-COOLANT TEMPERATURE	291
GAUGE GP-COOLANT TEMPERATURE (ENGINE)	296
GAUGE GP-FUEL LEVEL	292
	296
GAUGE GP-OIL LEVEL & FILLER–ENGINE	112
GAUGE GP-OIL LEVEL & FILLER–WITH FILTER	111
GAUGE GP-OIL TEMPERATURE (TORQUE CONVERTER)	292
	296
GAUGE-OIL LEVEL (DIPSTICK)	368
	371

INDEX

Name	Page
GAUGE-OIL LEVEL (DIPSTICK) (ENGINE)	111
	112
GAUGE-OIL LEVEL (DIPSTICK) (POWER TRAIN)	370
	373
GAUGE-SIGHT (FLUID LEVEL)	692
GAUGE-SIGHT (HYDRAULIC OIL LEVEL)	694
GEAR GP-BEVEL & PINION	363
GEAR GP-RING	377
GEAR GP-RING (REAR AXLE)	350
GLOW PLUG (12-VOLT)	247
	248
GLOW PLUG GP	247
	248
GUARD GP-BOOM	727
	728
GUARD GP-CYLINDER–STABILIZER	500
GUARD GP-DRIVE SHAFT	502
GUARD GP-RADIATOR	503

H

Name	Page
HARNESS AS-CAB	323
	327
	330
	334
	1049
	1064
HARNESS AS-CAB (WINDOW WASHER)	1051
HARNESS AS-CAB (WIPER MOTOR)	1066
HARNESS AS-CONSOLE	294
	296
HARNESS AS-CONSOLE (SIDE CONSOLE)	291
HARNESS AS-ENGINE	299
	302
	306
	310
HARNESS AS-FUEL TANK (FUEL SHUTOFF)	20
	22
	310
HARNESS AS-HEATER	999
HARNESS AS-HEATER & AIR COND	282
	313
	993
HARNESS AS-HEATER & AIR COND (COMPRESSOR)	282
	285
	288
HARNESS AS-HEATER & AIR COND (PLATFORM)	285
	288
	315
HARNESS AS-HEATER & AIR COND (POWER)	282
	285
	288
HARNESS AS-HEATER (CAB)	1001
HARNESS AS-LIGHTING (ROOF)	259
	261
	263
HARNESS AS-PLATFORM	339
HARNESS AS-POWER	324
	327
	330
	335
HARNESS AS-POWER (DISTRIBUTION)	339
HARNESS AS-RADIO (PRODUCT LINK)	250
	252
HARNESS AS-REAR (BACKUP ALARM)	344
HARNESS AS-RIDE CONTROL	345
	1036
	1039
HARNESS AS-WIRING (DIFFERENTIAL LOCK)	278
HARNESS AS-WIRING (KICKOUT, POSITIONER)	317
	319
	321
HARNESS AS-WIRING (RETURN TO DIG)	321
HEATER & AIR CONDITIONER GP	993
HEATER GP-CAB	995
	997
	999
	1001
HEATER GP-JACKET WATER	249
HEATER GP-JACKET WATER–120-VOLT	249
HOOD & GUARD GP	504
	506
	508
	510
HOOD GP-ENGINE	512
	513
	514
	515
	516
	518
HOSE GP-RADIATOR	136
HOSE-RADIATOR (LOWER)	141
HOSE-RADIATOR (UPPER)	136
	141
HOUSING & FLANGE GP-AXLE–LH	379
HOUSING & FLANGE GP-AXLE–RH	377
HOUSING GP-AXLE	381
HOUSING GP-FLYWHEEL	67
	68
HOUSING GP-FRONT	69
	71
HYDRAULIC AR	562

INDEX

Name	Page
I	
INDICATOR AS	451
INDICATOR AS (LH TURN SIGNAL, PARKING BRAKE)	323 327 330 334 339
INDICATOR AS (RH TURN SIGNAL, HIGH BEAM)	323 327 330 334 339
INDICATOR AS-AIR FILTER CHANGE	173
INDICATOR GP-AIR FILTER CHANGE	165 172 173
INDICATOR-AIR FILTER SERVICE	172
INSTALLATION GP-COMMUNICATION–PRODUCT LINK 121SR	250 252
K	
KEY (BATTERY DISCONNECT)	279
KICKOUT & POSITIONER GP	563 565 567
KIT-BEVEL GEAR & PINION (KIT)	363
KNOB GP-STEERING	455
L	
LAMP (12-VOLT)	291 292 1006 1008 1046
LAMP (12-VOLT) (COOLANT TEMPERATURE)	296
LAMP (12-VOLT) (FUEL LEVEL INDICATOR)	296
LAMP (12-VOLT) (OIL TEMPERATURE)	296
LAMP (12-VOLT, 21-WATT)	259 263
LAMP (12-VOLT, 5-WATT)	259 263
LAMP (12-VOLT, 55-WATT)	254 255 256 257 258
LAMP GP (12-VOLT)	291
LAMP GP (12-VOLT) (FAULT INDICATOR)	296
LAMP GP-DOME	1006
LAMP GP-DOME (12-VOLT)	1008
LAMP GP-FLOOD	254 255
LAMP GP-FLOOD–REAR OUTER	256
LAMP GP-HEAD & SIGNAL (DIRECTIONAL)	259 261
LAMP GP-HEAD & SIGNAL (FRONT, LH)	263
LAMP GP-HEAD & SIGNAL (FRONT, RH)	263
LAMP GP-SIGNAL (REAR, LH)	263
LAMP GP-SIGNAL (REAR, RH)	263
LAMP GP-SIGNAL (STOP, TAIL, TURN)	259 261
LAMP GP-WARNING BEACON	257
LAMP GP-WARNING BEACON–12-VOLT, AMBER	258
LATCH GP-CAB DOOR & WINDOW	1003 1004
LEVER GP-CONTROL VALVE (STABILIZER)	700 702 704
LEVER GP-GOVERNOR–HANDHELD	1005
LEVER GP-HAND CONTROL	450
LIFTING GP-ENGINE	73 74
LIGHTING GP-FLOOD & SIGNAL–NACD, 4-LAMP, CAB	259
LIGHTING GP-FLOOD & SIGNAL–NACD, OPTIONAL, 8-LAMP, CAB	261 263
LIGHTING GP-WARNING BEACON	267
LIGHTING GP-WARNING BEACON–AMBER, MAGNETIC MOUNT, ROTATING	266
LINER GP-CAB	1006 1008
LINES GP-AIR	174
LINES GP-BACKHOE AUXILIARY	569 571 574 577 580 583 586 589
LINES GP-BACKHOE AUXILIARY–KIT	592
LINES GP-BACKHOE AUXILIARY–KIT, EXTENDABLE STICK	596
LINES GP-BOOM	599 601 603
LINES GP-BUCKET–EXTENDABLE STICK	611 614 616 618
LINES GP-BUCKET–STANDARD STICK	605

INDEX

Name	Page
	607
	609
LINES GP-CONNECTING	620
LINES GP-DRAIN	621
LINES GP-EXTENDABLE STICK	622
	624
LINES GP-FUEL	193
	195
	197
	198
	200
LINES GP-FUEL FILTER	203
LINES GP-HEATER	1010
LINES GP-HEATER & AIR COND	1011
	1013
LINES GP-HYDRAULIC	601
	607
LINES GP-HYDRAULIC (BUCKET)	616
LINES GP-HYDRAULIC (WATER LINES)	614
LINES GP-HYDRAULIC OIL COOLER	626
	628
LINES GP-LIFT CYLINDER	630
	632
LINES GP-LOADER AUXILIARY	634
	636
LINES GP-MULTIPURPOSE BUCKET	638
	640
	642
	644
	646
LINES GP-PILOT	648
	650
LINES GP-POWER TRAIN COOLER	134
LINES GP-POWER TRAIN OIL–DIFFERENTIAL LOCK	383
LINES GP-PUMP	652
LINES GP-RADIATOR	136
LINES GP-RIDE CONTROL	654
	656
	658
LINES GP-STABILIZER	660
	662
LINES GP-STEERING–2-WHEEL DRIVE	456
	458
LINES GP-STEERING–ALL WHEEL DRIVE	460
	462
LINES GP-STICK	664
	665
LINES GP-SWING	667
LINES GP-TILT CYLINDER	668
	670
LINES GP-TRANSMISSION COOLER	138
LINK GP-SHIPPING	1074
LINKAGE GP-BACKHOE BUCKET	729
LINKAGE GP-LOADER BUCKET	731
	733
LITERATURE GP	925
LOADER AR	17
	18
LOCK GP-MECHANICAL	877
LOCK GP-TRANSPORT–BOOM	734
	736
LOCK GP-VANDALISM	1075

M

MANIFOLD GP-CONTROL–INLET	672
	673
MANIFOLD GP-EXHAUST	175
MANIFOLD GP-RIDE CONTROL	674
MIRROR GP-REAR VIEW–EXTERIOR	1016
MIRROR GP-REAR VIEW–INTERIOR	1015
	1017
MOTOR GP-WINDOW WIPER	1018
	1019
MOTOR GP-WINDOW WIPER (FRONT)	1068
MOTOR GP-WINDOW WIPER (REAR)	1068
MOTOR GP-WINDOW WIPER–FRONT	1018
MOUNTING & LINES GP-RADIATOR–TRANSMISSION, HYDRAULIC OIL	140
MOUNTING GP-AXLE	384
MOUNTING GP-BANK VALVE	675
	676
	677
	678
MOUNTING GP-BUCKET–BACKHOE, QUICK COUPLER	880
MOUNTING GP-CAB	1020
MOUNTING GP-CYLINDER	679
	680
MOUNTING GP-ENGINE	75
	76
MOUNTING GP-ENGINE & XMSN	77
	78
MOUNTING GP-LINES–BACKHOE	681
	683
MOUNTING GP-RAD & OIL COOLER–TRANSMISSION, HYDRAULIC OIL	141
MOUNTING GP-STICK	738
MOUNTING GP-TRANSMISSION	385
MOUNTING GP-WHEEL	431
	432
	433
	435
MOUNTING GP-WHEEL (FRONT)	428
	429
	430
	436
	438
MOUNTING GP-WHEEL (REAR)	439

INDEX

Name	Page
MUFFLER & CONVERTER	176
MUFFLER GP	177
	178
	179

P

PAD & GUARD GP-STABILIZER	746
	748
	750
	752
PAD & GUARD GP-STABILIZER–STREET	739
	741
	743
	745
	754
	756
	758
	760
PAD & MTG GP-STABILIZER	767
	768
PAD & MTG GP-STABILIZER–STREET	762
	763
	764
	766
PAD GP-STABILIZER–STREET	769
	770
PADLOCK GP (VANDALISM GUARD)	1075
PAN GP-OIL	79
	81
	83
PANEL GP-FUSE	268
PEDAL GP-GOVERNOR	1021
	1022
PIN GP-COUPLER (PIN-LOCK)	872
PIN GP-COUPLER–MACHINE	881
PIN GP-COUPLER–PIN-LOCK	882
PISTON & ROD GP	85
	86
	88
	90
	92
PLANETARY GP-FINAL DRIVE	386
	387
PLATE	824
PLATE & FILM GP	1075
	1078
	1079
PLATE-IDENTIFICATION (CAT)	788
	790
	792
	794
	796
	798
	800
	802
	804
	806
	808
	810
	812
	814
	816
	825
PLATE-IDENTIFICATION (WORK TOOL)	783
	827
	829
	831
	832
	833
	834
	835
	836
	837
	838
	839
	840
	841
	842
	843
	844
	845
	846
	847
	851
PLUG AS-DRAIN	404
	410
PLUG AS-DRAIN (DRAIN)	420
PLUG AS-DRAIN (MAGNETIC)	363
PLUG AS-DRAIN (MAGNETIC) (AXLE,REAR)	350
PLUG AS-DRAIN (MAGNETIC) (DIFFERENTIAL)	347
PLUG GP-CYLINDER HEAD	93
PLUG GP-ENGINE	94
	95
	96
	97
	98
PLUG-DRAIN (ENGINE OIL)	79
	81
	83
POWER TRAIN AR	391
POWER TRAIN AR–2-WHEEL DRIVE, 2-WHEEL STEER	390
POWER TRAIN AR–2-WHEEL DRIVE, 2-WHEEL STEER, STD SHIFT	388
	389
POWER TRAIN AR–ALL WHEEL DRIVE, 2-WHEEL STEER	391

INDEX

Name	Page
POWER TRAIN AR–ALL WHEEL DRIVE, 2-WHEEL STEER, STD SHIFT	388
	389
PROTECTION GP-VANDALISM–ROTATING GUARD	1081
PULLEY GP-CRANKSHAFT	99
	100
	101
PUMP GP-ENGINE OIL	113
	114
PUMP GP-FUEL INJECTION	204
	207
	210
	211
PUMP GP-FUEL PRM & PRIM FILTER–WITH MOUNTING	215
	216
PUMP GP-FUEL PRM & PRIM FILTER–WITH WATER SEPARATOR	214
	217
PUMP GP-METERING–HMU	464
PUMP GP-PISTON	684
	686
	688
	690
PUMP GP-TRANSMISSION	404
	409
	419
PUMP GP-TRANSMISSION (DIRECT DRIVE)	414
PUMP GP-WATER	143
	145
	147

R

RADIATOR & HYD OIL COOLER GP	150
RADIATOR & HYD OIL COOLER GP–INCLUDES AFTCLR, XMSN COOLER	149
RADIATOR & OIL COOLER GP	154
RADIATOR & OIL COOLER GP–HYDRAULIC, TRANSMISSION	151
	152
	153
RADIATOR GP	149
	153
RADIATOR GP (OIL COOLER)	151
RADIO GP-COMMUNICATION–PRODUCT LINK 121SR	1023
REGULATOR GP-TEMPERATURE (INCLUDES CONNECTOR)	115
REGULATOR GP-TEMPERATURE (INCLUDES CONNECTOR) (WATER)	117
RELAY AS (12-VOLT)	277
	282
	313
	323
	327
	345
RELAY AS (12-VOLT) (AIR CONDITIONER)	286
	315
RELAY AS (12-VOLT) (BACKUP ALARM)	330
	334
	339
RELAY AS (12-VOLT) (BLOWER)	289
RELAY AS (12-VOLT) (FUEL PUMP)	306
RELAY AS (12-VOLT) (HEATER, A/C POWER)	285
	288
RELAY AS (12-VOLT) (HORN)	330
	334
	339
RELAY AS (12-VOLT) (IMPLEMENT DISABLE)	339
RELAY AS (12-VOLT) (POSITION LAMP)	330
	334
	339
RELAY AS (12-VOLT) (START AID)	306
RELAY AS (12-VOLT) (START)	306
	341
RELAY AS (12-VOLT) (STARTING AID)	299
	302
RELAY GP	269
RELAY GP–12-VOLT	270
	271
RELAY GP–POWER, 1	272
RESERVOIR GP-BRAKE	451
	452
ROCKER ARM GP	102
	103
ROOF GP-CAB	1024
	1026
ROTATING GP-PUMP	688

S

SEAT BELT (2-IN)	1027
SEAT BELT (3-IN)	1028
SEAT BELT GP (RETRACTABLE, 51-MM)	4
	5
	6
	7
	8
	9
	10
	11
	12
	13
	14
	15
	16
SEAT BELT GP–RETRACTABLE, 2-IN	1027
SEAT BELT GP–RETRACTABLE, 3-IN	1028

INDEX

Name	Page
SEAT GP	1029
SEAT GP–CLOTH	1031
SEAT GP–VINYL	1030
SEAT GP-STATIC	1032 1033
SEAT GP-SUSPENSION–CLOTH	1035 1036
SEAT GP-SUSPENSION–VINYL	1034 1036
SENDER AS-FUEL LEVEL	219 222
SENDER AS-TEMPERATURE (12-VOLT) (TORQUE CONVERTER OIL)	420
SENDER AS-TEMPERATURE (12-VOLT) (TRANSMISSION OIL)	404 410 415
SENDER AS-TEMPERATURE (ENGINE COOLANT)	299 302 306 310
SENSOR GP-MOISTURE (WATER SEPARATOR)	214 217
SHAFT GP-AXLE	347
SHAFT GP-COUNTER (TRANSMISSION)	404 409 414 419
SHAFT GP-DRIVE–FRONT	392
SHAFT GP-DRIVE–REAR	392
SHAFT GP-IDLER (TRANSMISSION)	404 409 414 419
SHAFT GP-INPUT	393 395
SHAFT GP-OUTPUT–FRONT	398 400
SHAFT GP-OUTPUT–REAR	397 399
SHAFT GP-PUMP DRIVE	691
SOFTWARE GP-COMMUNICATION	246
SOFTWARE GP-COMMUNICATION (PRODUCT LINK 121SR)	1023
SPRING AS-GAS (LOCKABLE) (LH)	512 515
SPRING AS-GAS (RH)	512 515
SPRING GP-GAS	983 987
SPRING GP-GAS (CAB DOOR)	985 989
STABILIZER GP-BACKHOE	771
STARTING MOTOR GP-ELECTRIC	273
STARTING MOTOR GP-ELECTRIC–12-VOLT	275 276
STEERING COLUMN GP (TILT)	977
STICK AS	773
STICK GP	774 776
STICK GP-HOE	778
STRAINER-FUEL (FILLER NECK SCREEN)	220 222
STRAINER-SUCTION (SUCTION)	355 360
SUSPENSION GP-SEAT	1036 1039
SWITCH AS	440
SWITCH AS (STARTING MOTOR, 12-VOLT)	273
SWITCH AS-FOOT (DIFFERENTIAL LOCK ON, OFF)	278
SWITCH AS-LIMIT (SERVICE BRAKE)	442 445
SWITCH AS-LIMIT (SUSPENSION SEAT)	1036
SWITCH AS-MULTIFUNCTION (HD LIGHT, TURN SIG, WDO WIPER)	323 327 330 334 339
SWITCH AS-PRESSURE (ENGINE OIL)	280 281
SWITCH AS-PRESSURE (REFRIGERANT COMPR, HIGH SIDE)	288
SWITCH AS-PRESSURE (REFRIGERANT)	282 285
SWITCH AS-PRESSURE (RIDE CONTROL)	345
SWITCH AS-PUSH BUTTON	954 957
SWITCH AS-PUSH BUTTON (NEUTRALIZER)	979
SWITCH AS-ROCKER (AIR CONDITIONER, HEATER SELECT)	282 285 288
SWITCH AS-ROCKER (ALL WHEEL DRIVE)	277
SWITCH AS-ROCKER (BLOWER FAN SPEED)	282 285 288 313 315
SWITCH AS-ROCKER (FLOODLIGHT, FRONT)	263
SWITCH AS-ROCKER (FLOODLIGHT, REAR)	259 263
SWITCH AS-ROCKER (FLOODLIGHTS, FRONT)	259 261

INDEX

Name	Page
SWITCH AS-ROCKER (FLOODLIGHTS, REAR)	261
SWITCH AS-ROCKER (HAZARD WARNING LIGHTS)	323 327 330 334 339
SWITCH AS-ROCKER (HEATER)	313 315
SWITCH AS-ROCKER (HORN)	974 977
SWITCH AS-ROCKER (RIDE CONTROL)	345
SWITCH AS-ROCKER (STARTING AID)	291 296
SWITCH AS-ROCKER (TRANSMISSION NEUTRAL LOCK)	294 339
SWITCH AS-ROCKER (WARNING BEACON)	291 296
SWITCH AS-ROCKER (WIPER, WASHER, REAR)	1068 1070
SWITCH AS-ROLLER (KICKOUT, POSITIONER)	317 319 321
SWITCH AS-START (KEY)	291 296
SWITCH GP-ALL WHEEL DRIVE–INCLUDES RELAY	277
SWITCH GP-DIFFERENTIAL LOCK–CENTER PIVOT MACHINE	278
SWITCH GP-DISCONNECT (BATTERY)	233 236 238 240 242 244
SWITCH GP-DISCONNECT–BATTERY	279
SWITCH GP-PRESSURE	280
SWITCH GP-PRESSURE–ENGINE OIL	281
SWITCH GP-PUSH BUTTON (NEUTRALIZER, DOWNSHIFT)	954 957 979
SWITCH-TEMPERATURE (ENGINE COOLANT)	299 302 306 310
SWITCH-TEMPERATURE (FUEL)	204 207 211
SWITCH-TEMPERATURE (HVAC)	993
SWIVEL & SLIDE GP-SEAT	1043
SWIVEL GP-SEAT	1045
SYNCHRONIZER GP	397 399

T

TACHOMETER GP-ELECTRIC	1046
TANK & MTG GP-FUEL–INCLUDES STEP	218
TANK & MTG GP-HYDRAULIC	692 694
TANK GP-EXPANSION (COOLANT)	136 155
TANK GP-EXPANSION–COOLANT	155
TANK GP-FUEL	219 220 222
TANK GP-FUEL–INCLUDES STEP	221
TANK GP-HYDRAULIC	694
TANK GP-WINDOW WASHER	1049 1051 1064 1066
THUMB AR–24-IN, HYD, HEAVY-DUTY, WITH COUPLER	883 884
THUMB AR–24-IN, HYD, ROCK	885 886
THUMB AR–24-IN, HYD, WITH COUPLER	887
THUMB AR–30-IN, HYD, HEAVY-DUTY	888 889
THUMB AR–30-IN, HYD, HEAVY-DUTY, WITH COUPLER	890 891
THUMB AR–30-IN, HYD, ROCK	892 893
THUMB GP–BACKHOE	894
THUMB GP–BACKHOE, COMMON	895
TIE ROD GP	347
TIE ROD GP (FRONT AXLE)	453
TIP GP-PENETRATION	832 833 834 835 836 837 838 839 840 841 842 843 844 845 846

INDEX

Name	Page
	847
	848
	849
	850
	851
TOOTH GP-UNI	896
TRANSMISSION & MOUNTING GP	401
	402
TRANSMISSION AR-DIRECT DRIVE–2-WHEEL DRIVE	403
TRANSMISSION AR-DIRECT DRIVE–ALL WHEEL DRIVE	403
TRANSMISSION GP-DIRECT DRIVE–2-WHEEL DRIVE, STANDARD SHIFT	404
TRANSMISSION GP-DIRECT DRIVE–2WD	414
TRANSMISSION GP-DIRECT DRIVE–ALL WHEEL DRIVE	419
TRANSMISSION GP-DIRECT DRIVE–ALL WHEEL DRIVE, STANDARD SHIFT	409
TRANSPORT AR-MACHINE	1082
TRANSPORT GP-MACHINE	1083
TRIM GP-CAB–OPEN ROPS	1047
TURBOCHARGER GP	180
	182

V

V-BELT (AIR CONDITIONER)	129
	131
V-BELT SET (INCLUDES 2-BELTS)	128
V-BELT SET (INCLUDES 2-BELTS) (ALTERNATOR)	129
	131
VALVE AR-BANK 2	696
VALVE AR-BANK 3	696
VALVE AR-BANK 6	696
VALVE AR-BANK 7	697
VALVE AR-BANK 8	697
VALVE AS-MANUAL (DIRECTIONAL FLOW)	574
	583
VALVE AS-PRESSURE RELIEF (REFRIGERANT COMPRESSOR)	939
VALVE AS-RELIEF	937
VALVE GP-BANK 2	698
VALVE GP-BANK 3	699
VALVE GP-BANK 6	700
VALVE GP-BANK 7	702
VALVE GP-BANK 8	704
VALVE GP-BRAKE CONTROL	442
VALVE GP-BRAKE CONTROL (SERVICE)	445
VALVE GP-CONTROL	706
VALVE GP-CONTROL (STABILIZER)	700
	702
	704
VALVE GP-CONTROL–AUXILIARY	707
	711
VALVE GP-CONTROL–BOOM	718
VALVE GP-CONTROL–BUCKET	715
VALVE GP-CONTROL–EXTENDABLE STICK	712
VALVE GP-CONTROL–LIFT	710
VALVE GP-CONTROL–STICK	713
	714
VALVE GP-CONTROL–SWING	716
VALVE GP-CONTROL–TILT	708
	709
VALVE GP-CUSHION CROSSOVER RLF	525
VALVE GP-PILOT RELIEF	712
VALVE GP-PUMP CONTROL–PRESSURE, FLOW COMPENSATOR	720
VALVE GP-RADIATOR DRAIN	149
VALVE GP-RELIEF	707
	715
VALVE GP-RELIEF (160-BAR (2321-PSI)) (BOOM CYLINDER HEAD END)	718
VALVE GP-RELIEF (BOOM CYLINDER ROD END)	718
VALVE GP-RELIEF (LOAD SENSING)	672
	673
VALVE GP-RELIEF (LOWER)	709
VALVE GP-RELIEF (STICK CYL, HEAD END, ROD END)	711
	713
	714
VALVE GP-RELIEF (SWING CYLINDER ROD END)	716
VALVE GP-RELIEF (TILT CYLINDER HEAD END)	708
	712
VALVE GP-RELIEF (TILT CYLINDER ROD END)	708
VALVE GP-RELIEF (TORQUE CONVERTER INLET)	404
	409
	414
	419
VALVE GP-RELIEF (UPPER)	709
VALVE GP-RELIEF–PRESSURE REGULATOR	424
VALVE GP-SHUTOFF	621
VALVE GP-SHUTTLE	721
VALVE GP-SOLENOID (12-VDC)	404
VALVE GP-SOLENOID (12-VOLT)	204
VALVE GP-SOLENOID (12-VOLT) (DIFFERENTIAL LOCK)	414
	419
VALVE GP-SOLENOID (12-VOLT) (FORWARD, REVERSE)	419
VALVE GP-SOLENOID (ACCUMULATOR)	674
VALVE GP-SOLENOID (ALL WHEEL DRIVE, CLUTCH ONE)	409

INDEX

Name	Page
VALVE GP-SOLENOID (FORWARD, REVERSE)	404, 409, 414
VALVE GP-SOLENOID (RIDE CONTROL, SWITCH)	674
VALVE GP-TIRE	425, 426, 437
VALVE MECHANISM GP	104, 105, 106
VALVE-SHUTOFF	153

W

Name	Page
WASHER GP-WINDOW	1049, 1051
WHEEL & TIRE AR–2-WHEEL DRIVE, BIAS	427
WHEEL & TIRE AR–2WD, BIAS	426, 427
WHEEL & TIRE AR–4-WHEEL DRIVE	428
WHEEL & TIRE AR–4-WHEEL DRIVE, BIAS	428
WHEEL & TIRE AR–ALL WHEEL DRIVE, BIAS	426, 427
WHEEL & TIRE AR–ALL WHEEL DRIVE, RADIAL	426
WHEEL & TIRE AR–ALL WHEEL DRIVE, RADIAL, BIAS	427
WHEEL & TIRE GP	432
WHEEL & TIRE GP–FRONT	428, 429, 430, 434, 436, 438
WHEEL & TIRE GP–FRONT, LH	434, 438
WHEEL & TIRE GP–FRONT, RH	434, 438
WHEEL & TIRE GP–LH	428, 429, 431, 432, 433, 435, 436, 439
WHEEL & TIRE GP–REAR	431, 432, 433, 435, 437, 439
WHEEL & TIRE GP–REAR, LH	437
WHEEL & TIRE GP–REAR, RH	437
WHEEL & TIRE GP–RH	429, 430, 431, 433, 435, 436, 439
WINDOW GP-CAB–REAR	1058, 1060
WINDOW GP-CAB–RH	1053
WINDOW GP-CAB–UPPER, LH	1054
WINDOW GP-CAB–UPPER, RH	1056
WINDOW GP-DOOR–LH	1062
WINDOW GP-DOOR–RH	1063
WIPER & WASHER GP-WINDOW	1064, 1066
WIPER GP-WINDOW	1068, 1070
WIRING GP-AIR CONDITIONER	282, 285, 288
WIRING GP-CONSOLE–FRONT	294
WIRING GP-CONSOLE–SIDE	291, 296
WIRING GP-ENGINE	299, 302, 306, 310
WIRING GP-HEATER	313, 315
WIRING GP-KICKOUT & POSITIONER	317, 319, 321
WIRING GP-PLATFORM	323, 327, 330, 334, 339
WIRING GP-REAR–BACKUP ALARM	344
WIRING GP-RIDE CONTROL	345

MACHINE ARRANGEMENT

209-9929 BACKHOE AR-EXTENDABLE STICK

S/N: CBD1-UP; MFG1-UP
AN ATTACHMENT

SMCS-6504, 6533 **i03710503**

NOTE	PART NUMBER	QTY	PART NAME 1 2 3 4 5 6 (PRODUCT LEVEL)	SEE PAGE
Y	*209-9928*	1	BOOM GP	725
Y	**210-7086**	1	CYLINDER GP-BACKHOE BUCKET	531
			—OR—	
Y	**210-7088**	1	CYLINDER GP-BACKHOE BUCKET	533
Y	**210-7074**	1	CYLINDER GP-BOOM	535
Y	**210-7078**	1	CYLINDER GP-STICK	553
Y	*211-7601*	1	LINES GP-BOOM	599
Y	*246-9318*	1	LINES GP-BUCKET	611
Y	*211-7564*	1	LINES GP-STICK	664
Y	*213-6692*	1	LINKAGE GP-BACKHOE BUCKET	729
Y	*246-9309*	1	MOUNTING GP-LINES	681
Y	*209-9938*	1	MOUNTING GP-STICK	738
Y	*271-1404*	1	STICK GP	774
	259-1802	2	FILM-INSTRUCTION (EXTENDABLE STICK PIN, READ OMM)	
			(ON THE RH & LH SIDE OF THE MACHINE E-STICK)	

Y-SEPARATE ILLUSTRATION

<END>

209-9924 BACKHOE AR-STANDARD STICK

S/N: CBD1-UP; MFG1-UP
PART OF 356-0067, 356-0068, 356-0069, 374-3517, 374-3518, 374-3519, 374-3521, 374-3529, 374-6532, 374-6533, 374-6534, 374-6535, 374-6536
DISTRIBUTION AR
AN ATTACHMENT

SMCS-6502, 6504 **i03710462**

NOTE	PART NUMBER	QTY	PART NAME 1 2 3 4 5 6 (PRODUCT LEVEL)	SEE PAGE
Y	*209-9928*	1	BOOM GP	725
Y	**210-7086**	1	CYLINDER GP-BACKHOE BUCKET	531
			—OR—	
Y	**210-7088**	1	CYLINDER GP-BACKHOE BUCKET	533
Y	**210-7074**	1	CYLINDER GP-BOOM	535
Y	**210-7078**	1	CYLINDER GP-STICK	553
Y	*211-7601*	1	LINES GP-BOOM	599
Y	*246-9311*	1	LINES GP-BUCKET	605
Y	*211-7564*	1	LINES GP-STICK	664
Y	*213-6692*	1	LINKAGE GP-BACKHOE BUCKET	729
Y	*246-9309*	1	MOUNTING GP-LINES	681
Y	*271-8666*	1	STICK GP-HOE	778

Y-SEPARATE ILLUSTRATION

<END>

MACHINE ARRANGEMENT

213-9284 CHASSIS AR

S/N: CBD1-UP

PART OF 213-9271 COMMON AR

SMCS-7000 **i03580902**

NOTE	PART NUMBER	QTY	PART NAME 1 2 3 4 5 6 (PRODUCT LEVEL)	SEE PAGE
Y	*211-4285*	1	BATTERY & WIRING GP (STANDARD)	226
Y	*253-0784*	1	BOX GP-BATTERY (WITH STORAGE)	465
Y	*250-7914*	1	FILM GP	1072
Y	*209-9922*	1	FRAME GP-LOADER	484
Y	*251-4519*	1	FRAME GP-SWING	494
Y	*211-3546*	1	HOOD & GUARD GP	504
			S/N: CBD1-4629	
Y	*297-5300*	1	HOOD & GUARD GP	508
			S/N: CBD4630-UP	
Y	*211-5182*	1	LOCK GP-TRANSPORT (BOOM)	734
Y	*248-5712*	1	PLATE & FILM GP	1075
Y	*266-5834*	1	STABILIZER GP-BACKHOE	771
Y	*245-6098*	1	TANK & MTG GP-FUEL (INCLUDES STEP)	218
Y	*211-4283*	1	WIRING GP-REAR (BACKUP ALARM)	344

Y-SEPARATE ILLUSTRATION

<END>

291-9190 CHASSIS AR

S/N: MFG1-UP

PART OF 291-9185 COMMON AR

SMCS-7000 **i03858971**

NOTE	PART NUMBER	QTY	PART NAME 1 2 3 4 5 6 (PRODUCT LEVEL)	SEE PAGE
Y	*290-6789*	1	BATTERY & WIRING GP (DISCONNECT)	233
Y	*253-0784*	1	BOX GP-BATTERY (WITH STORAGE)	465
Y	*306-7466*	1	FILM GP	1073
Y	*293-5309*	1	FRAME GP-LOADER	490
Y	*251-4519*	1	FRAME GP-SWING	494
Y	*297-5300*	1	HOOD & GUARD GP	508
Y	*211-5182*	1	LOCK GP-TRANSPORT (BOOM)	734
Y	*266-5834*	1	STABILIZER GP-BACKHOE	771
Y	*297-5260*	1	TANK GP-FUEL (INCLUDES STEP)	221
Y	*211-4283*	1	WIRING GP-REAR (BACKUP ALARM)	344

Y-SEPARATE ILLUSTRATION

<END>

MACHINE ARRANGEMENT

372-5176 CHASSIS AR–NACD

S/N: MFG1-UP

PART OF 372-5174 COMMON AR

SMCS-7000 **i04527154**

NOTE	PART NUMBER	QTY	PART NAME 1 2 3 4 5 6 (PRODUCT LEVEL)	SEE PAGE
Y	*253-0784*	1	BOX GP-BATTERY	465
Y	*250-7914*	1	FILM GP	1072
Y	*372-5175*	1	FRAME GP-LOADER	492
Y	*251-4519*	1	FRAME GP-SWING	494
Y	*297-5300*	1	HOOD & GUARD GP	508
Y	*211-5182*	1	LOCK GP-TRANSPORT (BOOM)	734
Y	*372-5182*	1	PLATE & FILM GP	1079
Y	*266-5834*	1	STABILIZER GP-BACKHOE	771
Y	*245-6098*	1	TANK & MTG GP-FUEL (INCLUDES STEP)	218
Y	*211-4283*	1	WIRING GP-REAR (BACKUP ALARM)	344

Y-SEPARATE ILLUSTRATION

<END>

213-9271 COMMON AR

S/N: CBD1-UP

SMCS-7000 **i04418653**

NOTE	PART NUMBER	QTY	PART NAME 1 2 3 4 5 6 (PRODUCT LEVEL)	SEE PAGE
Y	*213-9284*	1	CHASSIS AR	2
Y	*214-2198*	1	HYDRAULIC AR	562
Y	*213-9298*	1	LOADER AR	17
Y	*214-2202*	1	MOUNTING & LINES GP-RADIATOR (TRANSMISSION, HYDRAULIC OIL)	140

Y-SEPARATE ILLUSTRATION

<END>

291-9185 COMMON AR

S/N: MFG1-UP

SMCS-7000 **i03858631**

NOTE	PART NUMBER	QTY	PART NAME 1 2 3 4 5 6 (PRODUCT LEVEL)	SEE PAGE
Y	*291-9190*	1	CHASSIS AR	2
Y	*291-9188*	1	ENGINE AR	22
Y	*297-0165*	1	HYDRAULIC AR	562
Y	*318-9555*	1	LOADER AR	18

Y-SEPARATE ILLUSTRATION

<END>

MACHINE ARRANGEMENT

372-5174 COMMON AR–NACD

S/N: MFG1-UP

SMCS-7000 **i04527153**

NOTE	PART NUMBER	QTY	PART NAME 1 2 3 4 5 6 (PRODUCT LEVEL)	SEE PAGE
Y	*372-5176*	1	CHASSIS AR	3
Y	*214-2198*	1	HYDRAULIC AR	562
Y	*213-9298*	1	LOADER AR	17
Y	*214-2202*	1	MOUNTING & LINES GP-RADIATOR (TRANSMISSION, HYDRAULIC OIL)	140

Y-SEPARATE ILLUSTRATION

<END>

356-0067 DISTRIBUTION AR

S/N: CBD1-UP

AN ATTACHMENT

SMCS-7000 **i03898619**

NOTE	PART NUMBER	QTY	PART NAME 1 2 3 4 5 6 (PRODUCT LEVEL)	SEE PAGE
Y	*209-9924*	1	BACKHOE AR-STANDARD STICK	1
Y	*290-6830*	1	BATTERY & WIRING GP	242
Y	*250-7963*	1	BREATHER GP	107
Y	**251-1789**	1	BUCKET GP-GENERAL PURPOSE	831
Y	**219-3388**	1	BUCKET GP-HOE (HEAVY-DUTY)	841
Y	*204-4164*	1	CANOPY AR-OPEN ROPS	923
Y	*209-3371*	1	CONTROL GP-HYDRAULIC HAND (4-FUNCTION, EXCAVATOR)	963
Y	*211-3652*	1	COUNTERWEIGHT GP	469
Y	*9R-5321*	1	EDGE GP-CUTTING	878
Y	**323-5725**	1	ENGINE AR-PRIMARY	26
Y	*201-3954*	1	FENDER GP-FRONT	474
Y	*216-0909*	1	LOCK GP-VANDALISM	1075
Y	*205-9580*	1	MIRROR GP-REAR VIEW (EXTERIOR)	1016
Y	*9R-1085*	1	PAD & MTG GP-STABILIZER (STREET)	762
Y	*323-3628*	1	POWER TRAIN AR (2-WHEEL DRIVE, 2-WHEEL STEER)	390
Y	*211-1018*	1	RADIATOR & OIL COOLER GP (HYDRAULIC, TRANSMISSION)	152
Y	*206-1747*	1	SEAT BELT GP (RETRACTABLE, 51-MM)	1027
Y	*209-9943*	1	VALVE AR-BANK 2	696
Y	*209-9935*	1	VALVE AR-BANK 7	697
Y	*201-1925*	1	WHEEL & TIRE AR (2-WHEEL DRIVE, BIAS)	426

Y-SEPARATE ILLUSTRATION

<END>

MACHINE ARRANGEMENT

356-0068 DISTRIBUTION AR

S/N: CBD1-UP

AN ATTACHMENT

SMCS-7000 **i03898233**

NOTE	PART NUMBER	QTY	PART NAME 1 2 3 4 5 6 (PRODUCT LEVEL)	SEE PAGE
Y	*209-9924*	1	BACKHOE AR-STANDARD STICK	1
Y	*290-6830*	1	BATTERY & WIRING GP	242
Y	*250-7963*	1	BREATHER GP	107
Y	**251-1789**	1	BUCKET GP-GENERAL PURPOSE	831
Y	**219-3388**	1	BUCKET GP-HOE (HEAVY-DUTY)	841
Y	*204-4164*	1	CANOPY AR-OPEN ROPS	923
Y	*209-3371*	1	CONTROL GP-HYDRAULIC HAND (4-FUNCTION, EXCAVATOR)	963
Y	*211-3649*	1	COUNTERWEIGHT GP (115-KG (250-LB))	468
Y	**323-5725**	1	ENGINE AR-PRIMARY	26
Y	*201-3954*	1	FENDER GP-FRONT	474
Y	*216-0909*	1	LOCK GP-VANDALISM	1075
Y	*205-9580*	1	MIRROR GP-REAR VIEW (EXTERIOR)	1016
Y	*9R-1085*	1	PAD & MTG GP-STABILIZER (STREET)	762
Y	*323-3630*	1	POWER TRAIN AR (4-WHEEL DRIVE, 2-WHEEL STEER)	391
Y	*211-1018*	1	RADIATOR & OIL COOLER GP (HYDRAULIC, TRANSMISSION)	152
Y	*206-1747*	1	SEAT BELT GP (RETRACTABLE, 51-MM)	1027
Y	*9R-5866*	1	TOOTH GP-UNI	896
Y	*209-9943*	1	VALVE AR-BANK 2	696
Y	*209-9935*	1	VALVE AR-BANK 7	697
Y	*201-1918*	1	WHEEL & TIRE AR (4-WHEEL DRIVE, BIAS)	426

Y-SEPARATE ILLUSTRATION

<END>

MACHINE ARRANGEMENT

356-0069 DISTRIBUTION AR

S/N: CBD1-UP

AN ATTACHMENT

SMCS-7000 **i03922731**

NOTE	PART NUMBER	QTY	PART NAME 1 2 3 4 5 6 (PRODUCT LEVEL)	SEE PAGE
Y	*209-9924*	1	BACKHOE AR-STANDARD STICK	1
Y	*242-3197*	1	BATTERY & WIRING GP	231
Y	*250-7963*	1	BREATHER GP	107
Y	**251-1789**	1	BUCKET GP-GENERAL PURPOSE	831
Y	**219-3388**	1	BUCKET GP-HOE (HEAVY-DUTY)	841
Y	*228-4602*	1	CAB AR-ENCLOSED ROPS (DOUBLE DOOR, WITH A/C)	903
Y	*209-3371*	1	CONTROL GP-HYDRAULIC HAND (4-FUNCTION, EXCAVATOR)	963
Y	*211-3649*	1	COUNTERWEIGHT GP (115-KG (250-LB))	468
Y	**323-5725**	1	ENGINE AR-PRIMARY	26
Y	*201-3954*	1	FENDER GP-FRONT	474
Y	*216-0909*	1	LOCK GP-VANDALISM	1075
Y	*205-9580*	1	MIRROR GP-REAR VIEW (EXTERIOR)	1016
Y	*9R-1085*	1	PAD & MTG GP-STABILIZER (STREET)	762
Y	*323-3630*	1	POWER TRAIN AR (4-WHEEL DRIVE, 2-WHEEL STEER)	391
Y	*211-1018*	1	RADIATOR & OIL COOLER GP (HYDRAULIC, TRANSMISSION)	152
Y	*206-1747*	1	SEAT BELT GP (RETRACTABLE, 51-MM)	1027
Y	*9R-5866*	1	TOOTH GP-UNI	896
Y	*209-9943*	1	VALVE AR-BANK 2	696
Y	*209-9935*	1	VALVE AR-BANK 7	697
Y	*201-1918*	1	WHEEL & TIRE AR (4-WHEEL DRIVE, BIAS)	426
Y	*290-6830*	1	BATTERY & WIRING GP	242

Y-SEPARATE ILLUSTRATION

<END>

MACHINE ARRANGEMENT

374-3517 DISTRIBUTION AR

S/N: MFG1-UP

AN ATTACHMENT

SMCS-7000 **i04461707**

NOTE	PART NUMBER	QTY	PART NAME 1 2 3 4 5 6 (PRODUCT LEVEL)	SEE PAGE
Y	*209-9924*	1	BACKHOE AR-STANDARD STICK	1
Y	*290-6830*	1	BATTERY & WIRING GP	242
Y	*250-7963*	1	BREATHER GP	107
Y	**251-1789**	1	BUCKET GP-GENERAL PURPOSE	831
Y	**219-3388**	1	BUCKET GP-HOE (HEAVY-DUTY)	841
Y	*204-4164*	1	CANOPY AR-OPEN ROPS	923
Y	*209-3371*	1	CONTROL GP-HYDRAULIC HAND (4-FUNCTION, EXCAVATOR)	963
Y	*211-3652*	1	COUNTERWEIGHT GP	469
Y	*9R-5321*	1	EDGE GP-CUTTING	878
Y	*252-4641*	1	ENGINE AR	20
Y	*201-3954*	1	FENDER GP-FRONT	474
Y	*216-0909*	1	LOCK GP-VANDALISM	1075
Y	*205-9580*	1	MIRROR GP-REAR VIEW (EXTERIOR)	1016
Y	*9R-1085*	1	PAD & MTG GP-STABILIZER (STREET)	762
Y	*323-3627*	1	POWER TRAIN AR (2-WHEEL DRIVE, 2-WHEEL STEER)	390
Y	*211-1018*	1	RADIATOR & OIL COOLER GP (HYDRAULIC, TRANSMISSION)	152
Y	*206-1747*	1	SEAT BELT GP (RETRACTABLE, 51-MM)	1027
Y	*209-9943*	1	VALVE AR-BANK 2	696
Y	*209-9935*	1	VALVE AR-BANK 7	697
Y	*201-1925*	1	WHEEL & TIRE AR (2-WHEEL DRIVE, BIAS)	426

Y-SEPARATE ILLUSTRATION

<END>

MACHINE ARRANGEMENT

374-3518 DISTRIBUTION AR

S/N: MFG1-UP

AN ATTACHMENT

SMCS-7000 **i04461736**

NOTE	PART NUMBER	QTY	PART NAME 1 2 3 4 5 6 (PRODUCT LEVEL)	SEE PAGE
Y	*209-9924*	1	BACKHOE AR-STANDARD STICK	1
Y	*290-6830*	1	BATTERY & WIRING GP	242
Y	*250-7963*	1	BREATHER GP	107
Y	**251-1789**	1	BUCKET GP-GENERAL PURPOSE	831
Y	**219-3388**	1	BUCKET GP-HOE (HEAVY-DUTY)	841
Y	*204-4164*	1	CANOPY AR-OPEN ROPS	923
Y	*209-3371*	1	CONTROL GP-HYDRAULIC HAND (4-FUNCTION, EXCAVATOR)	963
Y	*211-3649*	1	COUNTERWEIGHT GP (115-KG (250-LB))	468
Y	*252-4641*	1	ENGINE AR	20
Y	*201-3954*	1	FENDER GP-FRONT	474
Y	*216-0909*	1	LOCK GP-VANDALISM	1075
Y	*205-9580*	1	MIRROR GP-REAR VIEW (EXTERIOR)	1016
Y	*9R-1085*	1	PAD & MTG GP-STABILIZER (STREET)	762
Y	*323-3629*	1	POWER TRAIN AR (ALL WHEEL DRIVE, 2-WHEEL STEER)	391
Y	*211-1018*	1	RADIATOR & OIL COOLER GP (HYDRAULIC, TRANSMISSION)	152
Y	*206-1747*	1	SEAT BELT GP (RETRACTABLE, 51-MM)	1027
Y	*9R-5866*	1	TOOTH GP-UNI	896
Y	*209-9943*	1	VALVE AR-BANK 2	696
Y	*209-9935*	1	VALVE AR-BANK 7	697
Y	*201-1918*	1	WHEEL & TIRE AR (4-WHEEL DRIVE, BIAS)	426

Y-SEPARATE ILLUSTRATION

<END>

MACHINE ARRANGEMENT

374-3519 DISTRIBUTION AR.

S/N: MFG1-UP

AN ATTACHMENT

SMCS-7000 **i04528791**

NOTE	PART NUMBER	QTY	PART NAME 1 2 3 4 5 6 (PRODUCT LEVEL)	SEE PAGE
Y	*209-9924*	1	BACKHOE AR-STANDARD STICK	1
Y	*242-3197*	1	BATTERY & WIRING GP (HEAVY-DUTY)	231
Y	*290-6830*	1	BATTERY & WIRING GP (STANDARD)	242
Y	*250-7963*	1	BREATHER GP (TURBO)	107
Y	**251-1789**	1	BUCKET GP-GENERAL PURPOSE	831
Y	**219-3388**	1	BUCKET GP-HOE (HEAVY-DUTY)	841
Y	*228-4602*	1	CAB AR-ENCLOSED ROPS (DOUBLE DOOR, WITH A/C)	903
Y	*209-3371*	1	CONTROL GP-HYDRAULIC HAND (4-FUNCTION, EXCAVATOR)	963
Y	*211-3649*	1	COUNTERWEIGHT GP (115-KG (250-LB))	468
Y	*252-4641*	1	ENGINE AR	20
Y	*201-3954*	1	FENDER GP-FRONT	474
Y	*216-0909*	1	LOCK GP-VANDALISM	1075
Y	*205-9580*	1	MIRROR GP-REAR VIEW (EXTERIOR)	1016
Y	*9R-1085*	1	PAD & MTG GP-STABILIZER (STREET)	762
Y	*323-3629*	1	POWER TRAIN AR (ALL WHEEL DRIVE, 2-WHEEL STEER)	391
Y	*211-1018*	1	RADIATOR & OIL COOLER GP (HYDRAULIC, TRANSMISSION)	152
Y	*206-1747*	1	SEAT BELT GP (RETRACTABLE, 51-MM)	1027
Y	*9R-5866*	1	TOOTH GP-UNI	896
Y	*209-9943*	1	VALVE AR-BANK 2	696
Y	*209-9935*	1	VALVE AR-BANK 7	697
Y	*201-1918*	1	WHEEL & TIRE AR (4-WHEEL DRIVE, BIAS)	426

Y-SEPARATE ILLUSTRATION

<END>

MACHINE ARRANGEMENT

374-3521 DISTRIBUTION AR

S/N: MFG1-UP

AN ATTACHMENT

SMCS-7000 **i04461737**

NOTE	PART NUMBER	QTY	PART NAME 1 2 3 4 5 6 (PRODUCT LEVEL)	SEE PAGE
Y	*209-9924*	1	BACKHOE AR-STANDARD STICK	1
Y	*290-6790*	1	BATTERY & WIRING GP (STANDARD)	236
Y	*250-7963*	1	BREATHER GP	107
Y	**251-1789**	1	BUCKET GP-GENERAL PURPOSE	831
Y	**219-3387**	1	BUCKET GP-HOE (HEAVY-DUTY)	840
Y	*204-4160*	1	CANOPY AR-OPEN ROPS	922
Y	*209-3370*	1	CONTROL GP-HYDRAULIC HAND (STANDARD)	959
Y	*211-3649*	1	COUNTERWEIGHT GP (115-KG (250-LB))	468
Y	*252-4641*	1	ENGINE AR	20
Y	*201-3954*	1	FENDER GP-FRONT	474
Y	*216-0909*	1	LOCK GP-VANDALISM	1075
Y	*205-9580*	1	MIRROR GP-REAR VIEW (EXTERIOR)	1016
Y	*9R-1085*	1	PAD & MTG GP-STABILIZER (STREET)	762
Y	*323-3629*	1	POWER TRAIN AR	391
Y	*211-1018*	1	RADIATOR & OIL COOLER GP (HYDRAULIC, TRANSMISSION)	152
Y	*206-1747*	1	SEAT BELT GP (RETRACTABLE, 51-MM)	1027
Y	*9R-5866*	1	TOOTH GP-UNI	896
Y	*209-9943*	1	VALVE AR-BANK 2	696
Y	*209-9935*	1	VALVE AR-BANK 7	697
Y	*201-1918*	1	WHEEL & TIRE AR (4-WHEEL DRIVE, BIAS)	426

Y-SEPARATE ILLUSTRATION

<END>

MACHINE ARRANGEMENT

374-3529 DISTRIBUTION AR

S/N: MFG1-UP

AN ATTACHMENT

SMCS-7000 **i04501054**

NOTE	PART NUMBER	QTY	PART NAME 1 2 3 4 5 6 (PRODUCT LEVEL)	SEE PAGE
Y	*209-9924*	1	BACKHOE AR-STANDARD STICK	1
Y	*211-4286*	1	BATTERY & WIRING GP (HEAVY-DUTY)	228
Y	*290-6790*	1	BATTERY & WIRING GP (STANDARD)	236
Y	*250-7963*	1	BREATHER GP	107
Y	**251-1789**	1	BUCKET GP-GENERAL PURPOSE	831
Y	**219-3387**	1	BUCKET GP-HOE (HEAVY-DUTY)	840
Y	*228-4602*	1	CAB AR-ENCLOSED ROPS (DOUBLE DOOR, WITH A/C)	903
Y	*209-3370*	1	CONTROL GP-HYDRAULIC HAND (STANDARD)	959
Y	*211-3649*	1	COUNTERWEIGHT GP (115-KG (250-LB))	468
Y	*252-4641*	1	ENGINE AR	20
Y	*201-3954*	1	FENDER GP-FRONT	474
Y	*216-0909*	1	LOCK GP-VANDALISM	1075
Y	*205-9580*	1	MIRROR GP-REAR VIEW (EXTERIOR)	1016
Y	*9R-1085*	1	PAD & MTG GP-STABILIZER (STREET)	762
Y	*323-3629*	1	POWER TRAIN AR (ALL WHEEL DRIVE, 2-WHEEL STEER)	391
Y	*211-1018*	1	RADIATOR & OIL COOLER GP (HYDRAULIC, TRANSMISSION)	152
Y	*206-1747*	1	SEAT BELT GP (RETRACTABLE, 51-MM)	1027
Y	*9R-5866*	1	TOOTH GP-UNI	896
Y	*209-9943*	1	VALVE AR-BANK 2	696
Y	*209-9935*	1	VALVE AR-BANK 7	697
Y	*201-1918*	1	WHEEL & TIRE AR (4-WHEEL DRIVE, BIAS)	426

Y-SEPARATE ILLUSTRATION

<END>

MACHINE ARRANGEMENT

374-6532 DISTRIBUTION AR

S/N: CBD1-UP

AN ATTACHMENT

SMCS-7000 **i04461744**

NOTE	PART NUMBER	QTY	PART NAME 1 2 3 4 5 6 (PRODUCT LEVEL)	SEE PAGE
Y	*209-9924*	1	BACKHOE AR-STANDARD STICK	1
Y	*290-6830*	1	BATTERY & WIRING GP	242
Y	*250-7963*	1	BREATHER GP	107
Y	**251-1789**	1	BUCKET GP-GENERAL PURPOSE	831
Y	**219-3388**	1	BUCKET GP-HOE (HEAVY-DUTY)	841
Y	*204-4164*	1	CANOPY AR-OPEN ROPS	923
Y	*209-3371*	1	CONTROL GP-HYDRAULIC HAND (4-FUNCTION, EXCAVATOR)	963
Y	*211-3652*	1	COUNTERWEIGHT GP	469
Y	*9R-5321*	1	EDGE GP-CUTTING	878
Y	*252-4641*	1	ENGINE AR	20
Y	*201-3954*	1	FENDER GP-FRONT	474
Y	*216-0909*	1	LOCK GP-VANDALISM	1075
Y	*205-9580*	1	MIRROR GP-REAR VIEW (EXTERIOR)	1016
Y	*9R-1085*	1	PAD & MTG GP-STABILIZER (STREET)	762
Y	*323-3627*	1	POWER TRAIN AR (2-WHEEL DRIVE, 2-WHEEL STEER)	390
Y	*211-1018*	1	RADIATOR & OIL COOLER GP (HYDRAULIC, TRANSMISSION)	152
Y	*206-1747*	1	SEAT BELT GP (RETRACTABLE, 51-MM)	1027
Y	*209-9943*	1	VALVE AR-BANK 2	696
Y	*209-9935*	1	VALVE AR-BANK 7	697
Y	*201-1925*	1	WHEEL & TIRE AR (2-WHEEL DRIVE, BIAS)	426

Y-SEPARATE ILLUSTRATION

<END>

MACHINE ARRANGEMENT

374-6533 DISTRIBUTION AR

S/N: CBD1-UP

AN ATTACHMENT

SMCS-7000 **i04461752**

NOTE	PART NUMBER	QTY	PART NAME 1 2 3 4 5 6 (PRODUCT LEVEL)	SEE PAGE
Y	*209-9924*	1	BACKHOE AR-STANDARD STICK	1
Y	*290-6830*	1	BATTERY & WIRING GP	242
Y	*250-7963*	1	BREATHER GP	107
Y	**251-1789**	1	BUCKET GP-GENERAL PURPOSE	831
Y	**219-3388**	1	BUCKET GP-HOE (HEAVY-DUTY)	841
Y	*204-4164*	1	CANOPY AR-OPEN ROPS	923
Y	*209-3371*	1	CONTROL GP-HYDRAULIC HAND (4-FUNCTION, EXCAVATOR)	963
Y	*211-3649*	1	COUNTERWEIGHT GP (115-KG (250-LB))	468
Y	*252-4641*	1	ENGINE AR	20
Y	*201-3954*	1	FENDER GP-FRONT	474
Y	*216-0909*	1	LOCK GP-VANDALISM	1075
Y	*205-9580*	1	MIRROR GP-REAR VIEW (EXTERIOR)	1016
Y	*9R-1085*	1	PAD & MTG GP-STABILIZER (STREET)	762
Y	*323-3629*	1	POWER TRAIN AR (ALL WHEEL DRIVE, 2-WHEEL STEER)	391
Y	*211-1018*	1	RADIATOR & OIL COOLER GP (HYDRAULIC, TRANSMISSION)	152
Y	*206-1747*	1	SEAT BELT GP (RETRACTABLE, 51-MM)	1027
Y	*9R-5866*	1	TOOTH GP-UNI	896
Y	*209-9943*	1	VALVE AR-BANK 2	696
Y	*209-9935*	1	VALVE AR-BANK 7	697
Y	*201-1918*	1	WHEEL & TIRE AR (4-WHEEL DRIVE, BIAS)	426

Y-SEPARATE ILLUSTRATION

<END>

MACHINE ARRANGEMENT

374-6534 DISTRIBUTION AR

S/N: CBD1-UP

AN ATTACHMENT

SMCS-7000 **i04461853**

NOTE	PART NUMBER	QTY	PART NAME 1 2 3 4 5 6 (PRODUCT LEVEL)	SEE PAGE
Y	*209-9924*	1	BACKHOE AR-STANDARD STICK	1
Y	*242-3197*	1	BATTERY & WIRING GP (HEAVY-DUTY)	231
Y	*290-6830*	1	BATTERY & WIRING GP (STANDARD)	242
Y	*250-7963*	1	BREATHER GP	107
Y	**251-1789**	1	BUCKET GP-GENERAL PURPOSE	831
Y	**219-3388**	1	BUCKET GP-HOE (HEAVY-DUTY)	841
Y	*228-4602*	1	CAB AR-ENCLOSED ROPS (DOUBLE DOOR, WITH A/C)	903
Y	*209-3371*	1	CONTROL GP-HYDRAULIC HAND (4-FUNCTION, EXCAVATOR)	963
Y	*211-3649*	1	COUNTERWEIGHT GP (115-KG (250-LB))	468
Y	*252-4641*	1	ENGINE AR	20
Y	*201-3954*	1	FENDER GP-FRONT	474
Y	*216-0909*	1	LOCK GP-VANDALISM	1075
Y	*205-9580*	1	MIRROR GP-REAR VIEW (EXTERIOR)	1016
Y	*9R-1085*	1	PAD & MTG GP-STABILIZER (STREET)	762
Y	*323-3629*	1	POWER TRAIN AR (ALL WHEEL DRIVE, 2-WHEEL STEER)	391
Y	*211-1018*	1	RADIATOR & OIL COOLER GP (HYDRAULIC, TRANSMISSION)	152
Y	*206-1747*	1	SEAT BELT GP (RETRACTABLE, 51-MM)	1027
Y	*9R-5866*	1	TOOTH GP-UNI	896
Y	*209-9943*	1	VALVE AR-BANK 2	696
Y	*209-9935*	1	VALVE AR-BANK 7	697
Y	*201-1918*	1	WHEEL & TIRE AR (4-WHEEL DRIVE, BIAS)	426

Y-SEPARATE ILLUSTRATION

<END>

MACHINE ARRANGEMENT

374-6535 DISTRIBUTION AR

S/N: CBD1-UP

AN ATTACHMENT

SMCS-7000 **i04461854**

NOTE	PART NUMBER	QTY	PART NAME 1 2 3 4 5 6 (PRODUCT LEVEL)	SEE PAGE
Y	*209-9924*	1	BACKHOE AR-STANDARD STICK	1
Y	*290-6790*	1	BATTERY & WIRING GP (STANDARD)	236
Y	*250-7963*	1	BREATHER GP	107
Y	**251-1789**	1	BUCKET GP-GENERAL PURPOSE	831
Y	**219-3387**	1	BUCKET GP-HOE (HEAVY-DUTY)	840
Y	*204-4160*	1	CANOPY AR-OPEN ROPS	922
Y	*209-3370*	1	CONTROL GP-HYDRAULIC HAND (STANDARD)	959
Y	*211-3649*	1	COUNTERWEIGHT GP (115-KG (250-LB))	468
Y	*252-4641*	1	ENGINE AR	20
Y	*201-3954*	1	FENDER GP-FRONT	474
Y	*216-0909*	1	LOCK GP-VANDALISM	1075
Y	*205-9580*	1	MIRROR GP-REAR VIEW (EXTERIOR)	1016
Y	*9R-1085*	1	PAD & MTG GP-STABILIZER (STREET)	762
Y	*323-3629*	1	POWER TRAIN AR (ALL WHEEL DRIVE, 2-WHEEL STEER)	391
Y	*211-1018*	1	RADIATOR & OIL COOLER GP (HYDRAULIC, TRANSMISSION)	152
Y	*206-1747*	1	SEAT BELT GP (RETRACTABLE, 51-MM)	1027
Y	*9R-5866*	1	TOOTH GP-UNI	896
Y	*209-9943*	1	VALVE AR-BANK 2	696
Y	*209-9935*	1	VALVE AR-BANK 7	697
Y	*201-1918*	1	WHEEL & TIRE AR (4-WHEEL DRIVE, BIAS)	426

Y-SEPARATE ILLUSTRATION

<END>

MACHINE ARRANGEMENT

374-6536 DISTRIBUTION AR

S/N: CBD1-UP

AN ATTACHMENT

SMCS-7000 **i04461855**

NOTE	PART NUMBER	QTY	PART NAME 1 2 3 4 5 6 (PRODUCT LEVEL)	SEE PAGE
Y	*209-9924*	1	BACKHOE AR-STANDARD STICK	1
Y	*211-4286*	1	BATTERY & WIRING GP (HEAVY-DUTY)	228
Y	*290-6790*	1	BATTERY & WIRING GP (STANDARD)	236
Y	*250-7963*	1	BREATHER GP	107
Y	**251-1789**	1	BUCKET GP-GENERAL PURPOSE	831
Y	**219-3387**	1	BUCKET GP-HOE (HEAVY-DUTY)	840
Y	*228-4602*	1	CAB AR-ENCLOSED ROPS (DOUBLE DOOR, WITH A/C)	903
Y	*209-3370*	1	CONTROL GP-HYDRAULIC HAND (STANDARD)	959
Y	*211-3649*	1	COUNTERWEIGHT GP (115-KG (250-LB))	468
Y	*252-4641*	1	ENGINE AR	20
Y	*201-3954*	1	FENDER GP-FRONT	474
Y	*216-0909*	1	LOCK GP-VANDALISM	1075
Y	*205-9580*	1	MIRROR GP-REAR VIEW (EXTERIOR)	1016
Y	*9R-1085*	1	PAD & MTG GP-STABILIZER (STREET)	762
Y	*323-3629*	1	POWER TRAIN AR (ALL WHEEL DRIVE, 2-WHEEL STEER)	391
Y	*211-1018*	1	RADIATOR & OIL COOLER GP (HYDRAULIC, TRANSMISSION)	152
Y	*206-1747*	1	SEAT BELT GP (RETRACTABLE, 51-MM)	1027
Y	*9R-5866*	1	TOOTH GP-UNI	896
Y	*209-9943*	1	VALVE AR-BANK 2	696
Y	*209-9935*	1	VALVE AR-BANK 7	697
Y	*201-1918*	1	WHEEL & TIRE AR (4-WHEEL DRIVE, BIAS)	426

Y-SEPARATE ILLUSTRATION

<END>

220-9182 DRIVE AR-BACKHOE LOADER–

2-WHEEL DRIVE, 2-WHEEL STEER

S/N: CBD1-UP; MFG1-UP

PART OF 214-6910, 214-6912, 323-3627, 323-3628 POWER TRAIN AR

AN ATTACHMENT

SMCS-3268, 3278, 3282, 4304, 4313, 4334 **i02496776**

NOTE	PART NUMBER	QTY	PART NAME 1 2 3 4 5 6 (PRODUCT LEVEL)	SEE PAGE
Y	**230-5745**	1	AXLE GP-FRONT	453
Y	**230-5739**	1	AXLE GP-REAR	350
Y	*219-5752*	1	LINES GP-STEERING	456
Y	*221-0811*	1	MOUNTING GP-AXLE	384
Y	*216-4475*	1	SHAFT GP-DRIVE (REAR)	392

Y-SEPARATE ILLUSTRATION

<END>

MACHINE ARRANGEMENT

220-9183 DRIVE AR-BACKHOE LOADER–

ALL WHEEL DRIVE, 2-WHEEL STEER

S/N: CBD1-UP; MFG1-UP

PART OF 214-6911, 214-6913, 323-3629, 323-3630 POWER TRAIN AR

AN ATTACHMENT

SMCS-3268, 3278, 3282, 4304, 4313, 4334 **i02496822**

NOTE	PART NUMBER	QTY	PART NAME 1 2 3 4 5 6 (PRODUCT LEVEL)	SEE PAGE
Y	**230-5743**	1	AXLE GP-DRIVE & STEERING (FRONT)	347
Y	**230-5739**	1	AXLE GP-REAR (BACKHOE)	350
Y	*217-9672*	1	GUARD GP-DRIVE SHAFT (BACKHOE)	502
Y	*219-5753*	1	LINES GP-STEERING (2-WHEEL DRIVE, ALL WHEEL DRIVE)	460
Y	*221-0811*	1	MOUNTING GP-AXLE (BACKHOE)	384
Y	*216-4475*	1	SHAFT GP-DRIVE (REAR)	392
Y	*211-4267*	1	SWITCH GP-ALL WHEEL DRIVE (INCLUDES RELAY)	277

Y-SEPARATE ILLUSTRATION

<END>

213-9298 LOADER AR

S/N: CBD1-UP; MFG1-UP

PART OF 213-9271, 372-5174 COMMON AR

SMCS-6100 **i03833371**

NOTE	PART NUMBER	QTY	PART NAME 1 2 3 4 5 6 (PRODUCT LEVEL)	SEE PAGE
Y	*227-8378*	1	ARM GP-LIFT	722
Y	*218-0745*	1	BRACE GP-LIFT CYLINDER	726
Y	**228-3508**	2	CYLINDER GP-LIFT	543
			S/N: CBD1-5759	
Y	**215-7298**	2	CYLINDER GP-LIFT	541
			S/N: CBD5760-UP	
Y	**206-3553**	1	CYLINDER GP-TILT	556
Y	*220-5973*	1	KICKOUT & POSITIONER GP	563
Y	*246-5293*	1	LINES GP-LIFT CYLINDER	630
Y	*246-5292*	1	LINES GP-TILT CYLINDER	668
Y	*9R-9140*	1	LINKAGE GP-LOADER BUCKET	731
			S/N: CBD1-2257	
Y	*297-2834*	1	LINKAGE GP-LOADER BUCKET	733
			S/N: CBD2258-UP	
Y	*211-4262*	1	WIRING GP-KICKOUT & POSITIONER	317

Y-SEPARATE ILLUSTRATION

<END>

MACHINE ARRANGEMENT

318-9555 LOADER AR

S/N: MFG1-UP

PART OF 291-9185 COMMON AR

SMCS-6100 **i03860122**

NOTE	PART NUMBER	QTY	PART NAME 1 2 3 4 5 6 (PRODUCT LEVEL)	SEE PAGE
Y	*227-8378*	1	ARM GP-LIFT	722
Y	*218-0745*	1	BRACE GP-LIFT CYLINDER	726
Y	**228-3508**	2	CYLINDER GP-LIFT	543
Y	**206-3553**	1	CYLINDER GP-TILT	556
Y	*220-5973*	1	KICKOUT & POSITIONER GP	563
Y	*315-1554*	1	LINES GP-LIFT CYLINDER	632
Y	*246-5292*	1	LINES GP-TILT CYLINDER	668
Y	*297-2834*	1	LINKAGE GP-LOADER BUCKET	733
Y	*211-4262*	1	WIRING GP-KICKOUT & POSITIONER	317

Y-SEPARATE ILLUSTRATION

<END>

ENGINE ARRANGEMENT

252-4640 ENGINE AR

S/N: CBD1-UP; MFG1-UP
PART OF 214-6910, 214-6911, 323-3627, 323-3629 POWER TRAIN AR
AN ATTACHMENT

SMCS-1000 **i04491657**

NOTE	PART NUMBER	QTY	PART NAME 1 2 3 4 5 6 (PRODUCT LEVEL)	SEE PAGE
Y	*210-6803*	1	AIR CLEANER GP	156
Y	*251-3802*	1	CONTROL GP-GOVERNOR	188
Y	**245-6841**	1	ENGINE AR-PRIMARY	23
			S/N: CBD1-2924	
Y	**323-5724**	1	ENGINE AR-PRIMARY	25
			S/N: CBD8763-UP	
Y	*210-6807*	1	EXTENSION GP-EXHAUST	171
Y	*285-3605*	1	FILTER GP-WATER SEP & FUEL	192
Y	*222-7091*	1	GAUGE GP-OIL LEVEL & FILLER (WITH FILTER)	111
Y	*261-2320*	1	INDICATOR GP-AIR FILTER CHANGE	173
Y	*247-5360*	1	LINES GP-FUEL	193
Y	*214-0973*	1	MOUNTING GP-ENGINE & XMSN	77
Y	*210-6813*	1	MUFFLER GP	177
Y	*253-0352*	1	PUMP GP-FUEL PRM & PRIM FILTER (WITH MOUNTING)	215
Y	*235-0336*	1	WIRING GP-ENGINE	299
			S/N: CBD8763-UP	
	246-0568	1	WIRE AS	

Y-SEPARATE ILLUSTRATION

ENGINE ARRANGEMENT

252-4641 ENGINE AR

S/N: CBD1-UP; MFG1-UP
PART OF 374-3517, 374-3518, 374-3519, 374-3521, 374-3529, 374-6532, 374-6533, 374-6534, 374-6535, 374-6536 DISTRIBUTION AR, 214-6912, 214-6913, 323-3628, 323-3630 POWER TRAIN AR
AN ATTACHMENT

SMCS-1000 **i04421067**

NOTE	PART NUMBER	QTY	PART NAME 1 2 3 4 5 6 (PRODUCT LEVEL)	SEE PAGE
Y	*224-9473*	1	AIR CLEANER GP	158
Y	*206-1640*	1	CONTROL GP-GOVERNOR	184
Y	**273-3610**	1	ENGINE AR	21
			S/N: CBD1-3019	
Y	**323-5725**	1	ENGINE AR-PRIMARY	26
			S/N: CBD3020-UP; MFG152-UP	
Y	*210-6807*	1	EXTENSION GP-EXHAUST	171
Y	*285-3605*	1	FILTER GP-WATER SEP & FUEL	192
Y	*222-7091*	1	GAUGE GP-OIL LEVEL & FILLER (WITH FILTER)	111
Y	*255-2279*	1	INDICATOR GP-AIR FILTER CHANGE	172
Y	*247-5361*	1	LINES GP-FUEL	195
Y	*214-0973*	1	MOUNTING GP-ENGINE & XMSN	77
Y	*223-4960*	1	MUFFLER GP	178
Y	*253-0352*	1	PUMP GP-FUEL PRM & PRIM FILTER (WITH MOUNTING)	215
Y	*235-0336*	1	WIRING GP-ENGINE	299
			S/N: CBD3020-UP; MFG152-UP	
	178-8465	1	HARNESS AS-FUEL TANK (FUEL SHUTOFF)	
	9X-3401	2	PIN-CONNECTOR (16-GA TO 18-GA)	
	176-1477	1	PLUG AS (2-PIN)	
	102-8802	1	KIT-RECEPTACLE (2-PIN)	
			(INCLUDES RECEPTACLE AS & WEDGE)	
	185-1861	2	SEAL-WIRE	
	8L-8413	2	STRAP-CABLE	
	176-1521	2	TERMINAL	

Y-SEPARATE ILLUSTRATION

ENGINE ARRANGEMENT

273-3610 ENGINE AR

S/N: G4D1-UP; CRS1-UP
PART OF 252-4641 ENGINE AR
AN ATTACHMENT

SMCS-1000 **i03893120**

NOTE	PART NUMBER	QTY	PART NAME 1 2 3 4 5 6 (PRODUCT LEVEL)	SEE PAGE
Y	*252-6256*	1	ALTERNATOR GP-CHARGING (120-AMPERE, WITH MOUNTING)	223
Y	*231-0033*	1	CONNECTION GP-WATER	115
Y	*238-2799*	1	COOLER GP-FLTR BASE & ENG OIL	122
Y	*231-0149*	1	COVER GP-INLET MANIFOLD	168
Y	*246-2582*	1	COVER GP-VALVE MECHANISM	29
Y	*308-4729*	1	CRANKSHAFT GP	43
Y	*308-4728*	1	CYLINDER BLOCK GP	52
Y	*308-4731*	1	CYLINDER HEAD GP	59
Y	*251-2432*	1	DRIVE GP-FAN	63
Y	*230-7300*	1	FLYWHEEL GP	65
Y	*232-6661*	1	GLOW PLUG GP	247
Y	*236-8238*	1	HOUSING GP-FLYWHEEL	67
Y	*313-1380*	1	HOUSING GP-FRONT	71
Y	*233-7432*	1	LIFTING GP-ENGINE	73
Y	*247-4885*	1	LINES GP-FUEL FILTER	203
Y	*237-3658*	1	MOUNTING GP-ENGINE	75
Y	*237-0025*	1	PAN GP-OIL	79
Y	*308-4730*	1	PISTON & ROD GP	85
Y	*225-4317*	1	PLUG GP-ENGINE (FRONT HOUSING, CYLINDER HEAD)	94
Y	*230-7569*	1	PLUG GP-ENGINE (OIL FILL)	95
Y	*232-6204*	1	PLUG GP-ENGINE (CYLINDER HEAD)	96
Y	*230-7353*	1	PULLEY GP-CRANKSHAFT	99
Y	*230-7578*	1	PUMP GP-ENGINE OIL	113
Y	*313-1375*	1	PUMP GP-FUEL INJECTION	207
Y	*230-7355*	1	PUMP GP-WATER	143
Y	*237-0024*	1	STARTING MOTOR GP-ELECTRIC	275
Y	*237-4896*	1	SWITCH GP-PRESSURE (ENGINE OIL)	280
Y	*317-3111*	1	TURBOCHARGER GP	180
Y	*308-4732*	1	VALVE MECHANISM GP	104
	268-0867	1	CYLINDER BLOCK GP-SHORT	
			AVAILABLE REPAIR KIT(S):	
	272-2232	1	KIT-GASKET (BOTTOM)	
	277-5156	1	KIT-GASKET (TOP) (TOP)	

Y-SEPARATE ILLUSTRATION

ENGINE ARRANGEMENT

291-9188 ENGINE AR

S/N: MFG1-UP
92 BHP @ 70 BRAKE KW
PART OF 291-9185 COMMON AR

SMCS-1000 **i04528873**

NOTE	PART NUMBER	QTY	PART NAME 1 2 3 4 5 6 (PRODUCT LEVEL)	SEE PAGE
Y	*332-6587*	1	AIR CLEANER GP (TURBO)	165
Y	*323-9307*	1	BREATHER GP	109
Y	*206-1640*	1	CONTROL GP-GOVERNOR	184
Y	**321-7704**	1	ENGINE AR-PRIMARY	24
Y	*210-6807*	1	EXTENSION GP-EXHAUST	171
Y	*307-2033*	1	GAUGE GP-OIL LEVEL & FILLER (ENGINE)	112
Y	*335-9162*	1	LINES GP-AIR	174
Y	*361-6877*	1	LINES GP-FUEL	200
Y	*315-1369*	1	LINES GP-POWER TRAIN COOLER	134
Y	*304-4022*	1	LINES GP-RADIATOR	136
Y	*322-5799*	1	MOUNTING GP-ENGINE & XMSN	78
Y	*298-5629*	1	MUFFLER GP (TURBOCHARGER)	179
Y	*309-9106*	1	RADIATOR & HYD OIL COOLER GP	150
Y	*290-6752*	1	WIRING GP-ENGINE	310
	178-8465	1	HARNESS AS-FUEL TANK (FUEL SHUTOFF)	
	9X-3401	1	PIN-CONNECTOR (16-GA TO 18-GA)	
	176-1477	1	PLUG AS (2-PIN)	
	102-8802	1	KIT-RECEPTACLE (2-PIN)	
			(INCLUDES RECEPTACLE AS & WEDGE)	
	185-1861	2	SEAL-WIRE	
	8L-8413	2	STRAP-CABLE	
	176-1521	2	TERMINAL	

Y-SEPARATE ILLUSTRATION

ENGINE ARRANGEMENT

245-6841 ENGINE AR-PRIMARY

S/N: G4D1-2924; CRS1-2924
56 BRAKE KW (75 BHP) AT 2200 RPM
PART OF 252-4640 ENGINE AR
AN ATTACHMENT

SMCS-1000 **i03900511**

NOTE	PART NUMBER	QTY	PART NAME 1 2 3 4 5 6 (PRODUCT LEVEL)	SEE PAGE
Y	*256-7736*	1	ALTERNATOR GP-CHARGING (100-AMPERE, WITH MOUNTING)	224
Y	*313-3363*	1	CAMSHAFT GP	27
Y	*238-8290*	1	CONNECTION GP-INLET	167
Y	*231-0033*	1	CONNECTION GP-WATER	115
Y	*253-2472*	1	COOLER GP-FLTR BASE & ENG OIL	124
Y	*246-2583*	1	COVER GP-VALVE MECHANISM	35
Y	*313-3357*	1	CRANKSHAFT GP	46
Y	*313-3355*	1	CYLINDER BLOCK GP	53
Y	*313-3360*	1	CYLINDER HEAD GP	60
Y	*251-2432*	1	DRIVE GP-FAN	63
Y	*230-7300*	1	FLYWHEEL GP	65
Y	*232-6661*	1	GLOW PLUG GP	247
Y	*236-8238*	1	HOUSING GP-FLYWHEEL	67
Y	*313-1380*	1	HOUSING GP-FRONT	71
Y	*233-7432*	1	LIFTING GP-ENGINE	73
Y	*267-7069*	1	LINES GP-FUEL	197
Y	*237-5408*	1	MANIFOLD GP-EXHAUST	175
Y	*237-3658*	1	MOUNTING GP-ENGINE	75
Y	*237-0025*	1	PAN GP-OIL	79
Y	*313-3359*	1	PISTON & ROD GP	88
Y	*225-4317*	1	PLUG GP-ENGINE	94
Y	*230-7569*	1	PLUG GP-ENGINE	95
Y	*232-6204*	1	PLUG GP-ENGINE	96
Y	*230-7353*	1	PULLEY GP-CRANKSHAFT	99
Y	*230-7578*	1	PUMP GP-ENGINE OIL	113
Y	*313-1333*	1	PUMP GP-FUEL INJECTION	204
Y	*230-7355*	1	PUMP GP-WATER	143
Y	*237-0024*	1	STARTING MOTOR GP-ELECTRIC	275
Y	*237-4896*	1	SWITCH GP-PRESSURE	280
Y	*313-3362*	1	VALVE MECHANISM GP	105
	7W-2326	1	FILTER AS-ENGINE OIL	
			AVAILABLE GASKET KIT(S):	
	277-5156	1	KIT-GASKET (TOP)	
	272-2232	1	KIT-GASKET (BOTTOM)	

Y-SEPARATE ILLUSTRATION

ENGINE ARRANGEMENT

321-7704 ENGINE AR-PRIMARY

S/N: C4Z1-UP
70 BRAKE KW (94 BHP) AT 2200 RPM
PART OF 291-9188 ENGINE AR

SMCS-1000 **i04129570**

NOTE	PART NUMBER	QTY	PART NAME 1 2 3 4 5 6 (PRODUCT LEVEL)	SEE PAGE
Y	*317-9776*	1	ALTERNATOR GP-CHARGING	225
Y	*326-9005*	1	CAMSHAFT GP	28
Y	*316-6941*	1	CONNECTION GP-WATER	117
Y	*316-6899*	1	COOLER GP-ENGINE OIL	120
Y	*329-0129*	1	COVER GP-INLET MANIFOLD	169
Y	*326-9008*	1	COVER GP-VALVE MECHANISM	39
Y	*326-9000*	1	CRANKSHAFT GP	48
Y	*326-8999*	1	CYLINDER BLOCK GP	54
Y	*326-9003*	1	CYLINDER HEAD GP	62
Y	*303-5770*	1	DRIVE GP-FAN	64
Y	*309-7555*	1	FILLER GP-ENGINE OIL	110
Y	*303-5768*	1	FLYWHEEL GP	66
Y	*315-3418*	1	GLOW PLUG GP	248
Y	*303-5767*	1	HOUSING GP-FLYWHEEL	68
Y	*304-8760*	1	HOUSING GP-FRONT	69
Y	*326-9013*	1	LIFTING GP-ENGINE	74
Y	*326-9012*	1	LINES GP-FUEL	198
Y	*303-5778*	1	MOUNTING GP-ENGINE	76
Y	*322-9476*	1	PAN GP-OIL	83
Y	*326-9002*	1	PISTON & ROD GP	92
Y	*298-5129*	1	PLUG GP-CYLINDER HEAD	93
Y	*298-5131*	1	PLUG GP-ENGINE (THREADED)	97
Y	*304-8761*	1	PLUG GP-ENGINE	98
Y	*360-7347*	1	PULLEY GP-CRANKSHAFT	100
Y	*298-5112*	1	PUMP GP-ENGINE OIL	114
Y	*326-9006*	1	PUMP GP-FUEL INJECTION	211
Y	*315-3411*	1	PUMP GP-WATER	147
Y	*303-5769*	1	STARTING MOTOR GP-ELECTRIC	276
Y	*316-6925*	1	SWITCH GP-PRESSURE	281
Y	*326-9010*	1	TURBOCHARGER GP	182
Y	*326-9004*	1	VALVE MECHANISM GP	106
	359-0744		CYLINDER BLOCK GP-SHORT	

Y-SEPARATE ILLUSTRATION

ENGINE ARRANGEMENT

323-5724 ENGINE AR-PRIMARY

S/N: G4D1-UP; CRS1-UP
56 BRAKE KW (75 BHP) AT 2200 RPM
PART OF 252-4640 ENGINE AR
AN ATTACHMENT

SMCS-1000 **i04390629**

NOTE	PART NUMBER	QTY	PART NAME 1 2 3 4 5 6 (PRODUCT LEVEL)	SEE PAGE
Y	*256-7736*	1	ALTERNATOR GP-CHARGING (100-AMPERE, WITH MOUNTING)	224
Y	*313-3363*	1	CAMSHAFT GP	27
Y	*238-8290*	1	CONNECTION GP-INLET	167
Y	*231-0033*	1	CONNECTION GP-WATER	115
Y	*253-2472*	1	COOLER GP-FLTR BASE & ENG OIL	124
Y	*246-2583*	1	COVER GP-VALVE MECHANISM	35
Y	*313-3357*	1	CRANKSHAFT GP	46
Y	*313-3355*	1	CYLINDER BLOCK GP	53
Y	*313-3360*	1	CYLINDER HEAD GP	60
Y	*251-2432*	1	DRIVE GP-FAN	63
Y	*230-7300*	1	FLYWHEEL GP	65
Y	*232-6661*	1	GLOW PLUG GP	247
Y	*236-8238*	1	HOUSING GP-FLYWHEEL	67
Y	*313-1380*	1	HOUSING GP-FRONT	71
Y	*233-7432*	1	LIFTING GP-ENGINE	73
Y	*267-7069*	1	LINES GP-FUEL	197
Y	*237-5408*	1	MANIFOLD GP-EXHAUST	175
Y	*237-3658*	1	MOUNTING GP-ENGINE	75
Y	*237-0025*	1	PAN GP-OIL	79
Y	*313-3359*	1	PISTON & ROD GP	88
Y	*225-4317*	1	PLUG GP-ENGINE	94
Y	*230-7569*	1	PLUG GP-ENGINE	95
Y	*232-6204*	1	PLUG GP-ENGINE	96
Y	*230-7353*	1	PULLEY GP-CRANKSHAFT	99
			S/N: CRS1-59947	
Y	*360-7351*	1	PULLEY GP-CRANKSHAFT	101
			S/N: CRS59948-UP	
Y	*230-7578*	1	PUMP GP-ENGINE OIL	113
Y	*313-1333*	1	PUMP GP-FUEL INJECTION	204
Y	*230-7355*	1	PUMP GP-WATER	143
Y	*237-0024*	1	STARTING MOTOR GP-ELECTRIC	275
Y	*237-4896*	1	SWITCH GP-PRESSURE	280
Y	*313-3362*	1	VALVE MECHANISM GP	105
	359-0731	1	CYLINDER BLOCK GP-SHORT	
			AVAILABLE GASKET KIT(S):	
	272-2232	1	KIT-GASKET (BOTTOM)	
	277-5156	1	KIT-GASKET (TOP)	

Y-SEPARATE ILLUSTRATION

ENGINE ARRANGEMENT

323-5725 ENGINE AR-PRIMARY

S/N: G4D1-UP; CRS1-UP
68 BRAKE KW (91 BHP) AT 2200 RPM
PART OF 356-0067, 356-0068, 356-0069 DISTRIBUTION AR, 252-4641 ENGINE AR
AN ATTACHMENT

SMCS-1000 **i04402689**

NOTE	PART NUMBER	QTY	PART NAME 1 2 3 4 5 6 (PRODUCT LEVEL)	SEE PAGE
Y	*252-6256*	1	ALTERNATOR GP-CHARGING (120-AMPERE, WITH MOUNTING)	223
Y	*231-0033*	1	CONNECTION GP-WATER	115
Y	*238-2799*	1	COOLER GP-FLTR BASE & ENG OIL	122
Y	*231-0149*	1	COVER GP-INLET MANIFOLD	168
Y	*246-2582*	1	COVER GP-VALVE MECHANISM	29
Y	*308-4729*	1	CRANKSHAFT GP	43
Y	*308-4728*	1	CYLINDER BLOCK GP	52
Y	*308-4731*	1	CYLINDER HEAD GP	59
Y	*251-2432*	1	DRIVE GP-FAN	63
Y	*230-7300*	1	FLYWHEEL GP	65
Y	*232-6661*	1	GLOW PLUG GP	247
Y	*236-8238*	1	HOUSING GP-FLYWHEEL	67
Y	*313-1380*	1	HOUSING GP-FRONT	71
Y	*233-7432*	1	LIFTING GP-ENGINE	73
Y	*247-4885*	1	LINES GP-FUEL FILTER	203
Y	*237-3658*	1	MOUNTING GP-ENGINE	75
Y	*237-0025*	1	PAN GP-OIL	79
Y	*308-4730*	1	PISTON & ROD GP	85
Y	*225-4317*	1	PLUG GP-ENGINE	94
Y	*230-7569*	1	PLUG GP-ENGINE	95
Y	*232-6204*	1	PLUG GP-ENGINE	96
Y	*230-7353*	1	PULLEY GP-CRANKSHAFT	99
			S/N: CRS1-59947	
Y	*360-7351*	1	PULLEY GP-CRANKSHAFT	101
			S/N: CRS59948-UP	
Y	*230-7578*	1	PUMP GP-ENGINE OIL	113
Y	*313-1375*	1	PUMP GP-FUEL INJECTION	207
Y	*230-7355*	1	PUMP GP-WATER	143
Y	*237-0024*	1	STARTING MOTOR GP-ELECTRIC	275
Y	*237-4896*	1	SWITCH GP-PRESSURE	280
Y	*317-3111*	1	TURBOCHARGER GP	180
Y	*308-4732*	1	VALVE MECHANISM GP	104
	359-0734	1	CYLINDER BLOCK GP-SHORT	
			AVAILABLE GASKET KIT(S):	
	272-2232	1	KIT-GASKET (BOTTOM)	
	276-3420	1	KIT-GASKET (TOP)	

Y-SEPARATE ILLUSTRATION

313-3363 CAMSHAFT GP

S/N: G4D1-UP; CRS1-UP
PART OF 245-6841, 323-5724 ENGINE AR-PRIMARY
AN ATTACHMENT

SMCS-1210, 1211, 1212 **i03653885**

NOTE	REF NO	GRAPHIC REF	PART NUMBER	QTY	PART NAME 1 2 3 4 5 6 (PRODUCT LEVEL)	SEE PAGE
	1	1	**067-6095**	8	ROD	
	2	1	**138-2053**	8	TAPPET	
	3	1	**350-1846**	1	CAMSHAFT AS	
	3A	1	**1B-8736**	1	KEY-WOODRUFF	

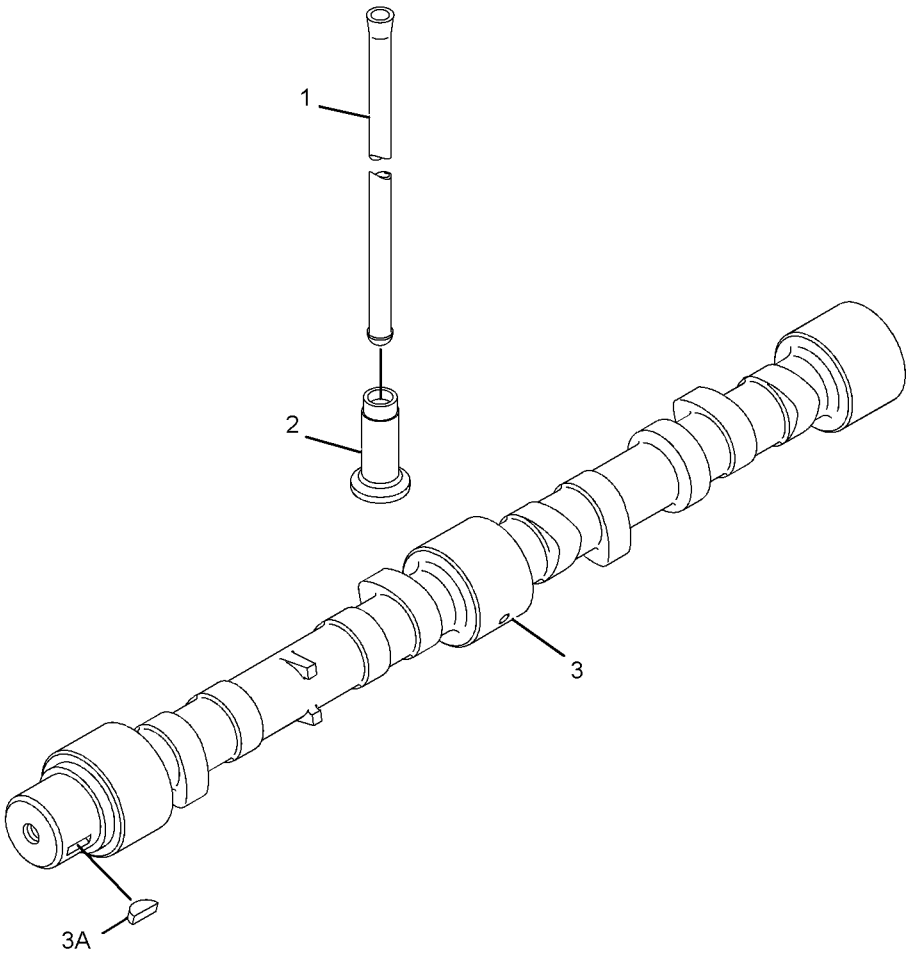

GRAPHIC #1 **<END>** g01964680

326-9005 CAMSHAFT GP

S/N: C4Z1-UP

PART OF 321-7704 ENGINE AR-PRIMARY

SMCS-1210, 1211, 1212 **i04443635**

NOTE	REF NO	GRAPHIC REF	PART NUMBER	QTY	PART NAME 1 2 3 4 5 6 (PRODUCT LEVEL)	SEE PAGE
	1	1	**278-5126**	8	PUSHROD	
	2	1	**315-3384**	8	TAPPET	
	3	1	**380-2601**	1	CAMSHAFT AS	
	3A	1	**1B-8736**	1	KEY-WOODRUFF	

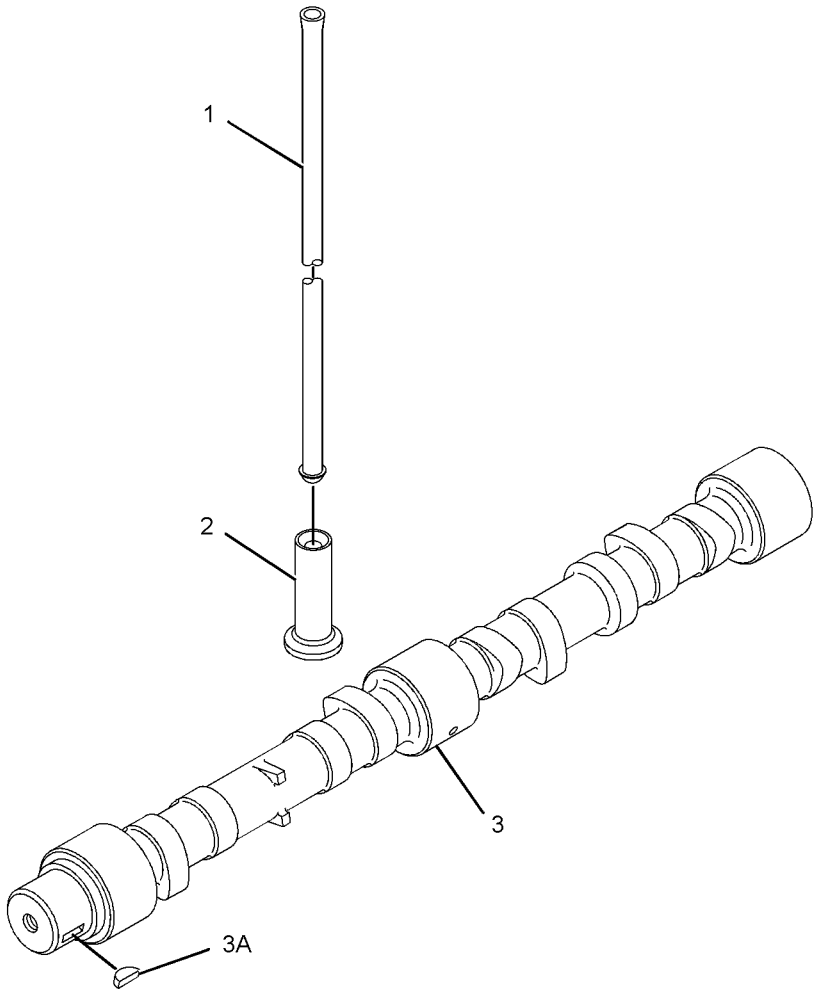

GRAPHIC #1 **<END>** g01611455

246-2582 COVER GP-VALVE MECHANISM

S/N: G4D1-UP; CRS1-UP
PART OF 273-3610 ENGINE AR
AN ATTACHMENT
TYPE 1

SMCS-1107, 1120 **i02529556**

NOTE	REF NO	GRAPHIC REF	PART NUMBER	QTY	PART NAME 1 2 3 4 5 6 (PRODUCT LEVEL)	SEE PAGE
M	1	1	**6I-0260**	2	BOLT (M8X1.25X25-MM)	
	2	1	**6I-0846**	3	BOLT (M6X1X14-MM)	
	3	1	**6I-0917**	1	BOLT (M6X1X25-MM)	
	4	1	**7C-1281**	1	BRACKET	
M	5	1	**100-4841**	2	BOLT (M6X1X10-MM)	
	6	1	**5D-1026**	1	CLAMP-BAND	
	7	1	**162-1565**	1	SPRING (CRANKCASE BREATHER HOSE)	
	8	1	**198-8645**	1	HOSE (CRANKCASE BREATHER)	
	9	1	**225-6522**	1	PLUG-CUP	
	10	1	**230-9127**	1	COVER (INJECTOR)	
C	11	1	**287-8573**	1	PIPE-BREATHER (BREATHER)	
	12	1	**237-0769**	1	SHIELD-HEAT	
	13	1	**246-1163**	1	FILLER AS-OIL	
	13A	1	**229-4896**	1	SEAL-O-RING	
	14	1	**247-7798**	1	COVER AS	
	14A	1	**225-6451**	1	GASKET (VALVE COVER)	
	14B	1	**225-6455**	10	BOLT (ISOLATOR)	
	14C	1	**225-6456**	1	SPRING (BREATHER VALVE)	
	14D	1	**225-6461**	1	CAP (BREATHER VALVE)	
	14E	1	**225-6464**	1	DIAPHRAGM (CRANKCASE PRESSURE CONTACTOR)	
	14F	1	**225-6477**	1	PLATE	
	14G	1	**225-6478**	4	SCREW-MACHINE	
	14H	1	**225-6479**	1	CAP (BREATHER VALVE)	
C	15	1	**100-4838**	2	BOLT (M6X20-MM)	
F			**237-0022**	1	PLATE	

C-CHANGE FROM PREVIOUS TYPE
F-NOT SHOWN
M-METRIC PART

246-2582 **COVER GP-VALVE MECHANISM** *(contd.)* **i02529556**

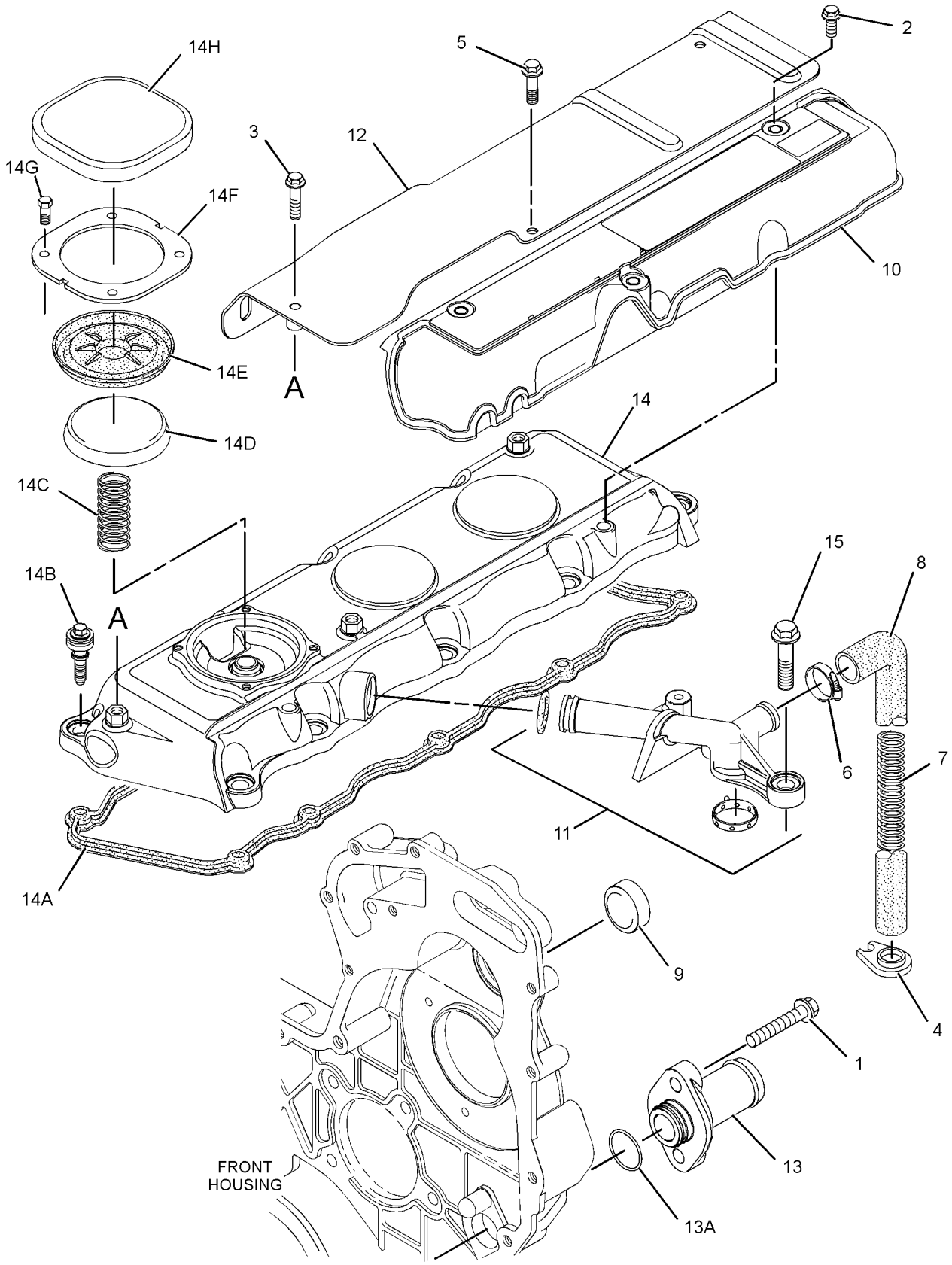

GRAPHIC #1 **<END>** g01265857

246-2582 COVER GP-VALVE MECHANISM

S/N: G4D1-UP; CRS1-UP
PART OF 273-3610 ENGINE AR, 323-5725 ENGINE AR-PRIMARY
AN ATTACHMENT
TYPE 2

SMCS-1107, 1120 **i02702308**

NOTE	REF NO	GRAPHIC REF	PART NUMBER	QTY	PART NAME 1 2 3 4 5 6 (PRODUCT LEVEL)	SEE PAGE
M	1	1	**6I-0260**	2	BOLT (M8X1.25X25-MM)	
	2	1	**6I-0846**	3	BOLT (M6X1X14-MM)	
	3	1	**6I-0917**	1	BOLT (M6X1X25-MM)	
	4	1	**7C-1281**	1	BRACKET	
M	5	1	**100-4841**	2	BOLT (M6X1X10-MM)	
	6	1	**5D-1026**	1	CLAMP-BAND	
	7	1	**162-1565**	1	SPRING (CRANKCASE BREATHER HOSE)	
	8	1	**198-8645**	1	HOSE (CRANKCASE BREATHER)	
	9	1	**225-6522**	1	PLUG-CUP	
	10	1	**230-9127**	1	COVER (INJECTOR)	
	11	1	**287-8573**	1	PIPE-BREATHER (BREATHER)	
	12	1	**237-0769**	1	SHIELD-HEAT	
	13	1	**246-1163**	1	FILLER AS-OIL (ENGINE)	
	13A	1	**229-4896**	1	SEAL-O-RING	
C	14	1	**308-1792**	1	COVER GP-VALVE MECHANISM	
	14A	1	**225-6451**	1	GASKET (VALVE COVER)	
	14B	1	**225-6456**	1	SPRING (BREATHER VALVE)	
	14C	1	**225-6461**	1	CAP (BREATHER VALVE)	
	14D	1	**225-6464**	1	DIAPHRAGM (CRANKCASE PRESSURE CONTACTOR)	
	14E	1	**225-6477**	1	PLATE	
	14F	1	**225-6478**	4	SCREW-MACHINE	
	14G	1	**225-6479**	1	CAP (BREATHER VALVE)	
	15	1	**100-4838**	2	BOLT (M6X20-MM)	
F			**237-0022**	1	PLATE	

C-CHANGE FROM PREVIOUS TYPE
F-NOT SHOWN
M-METRIC PART

246-2582 **COVER GP-VALVE MECHANISM** *(contd.)* **i02702308**

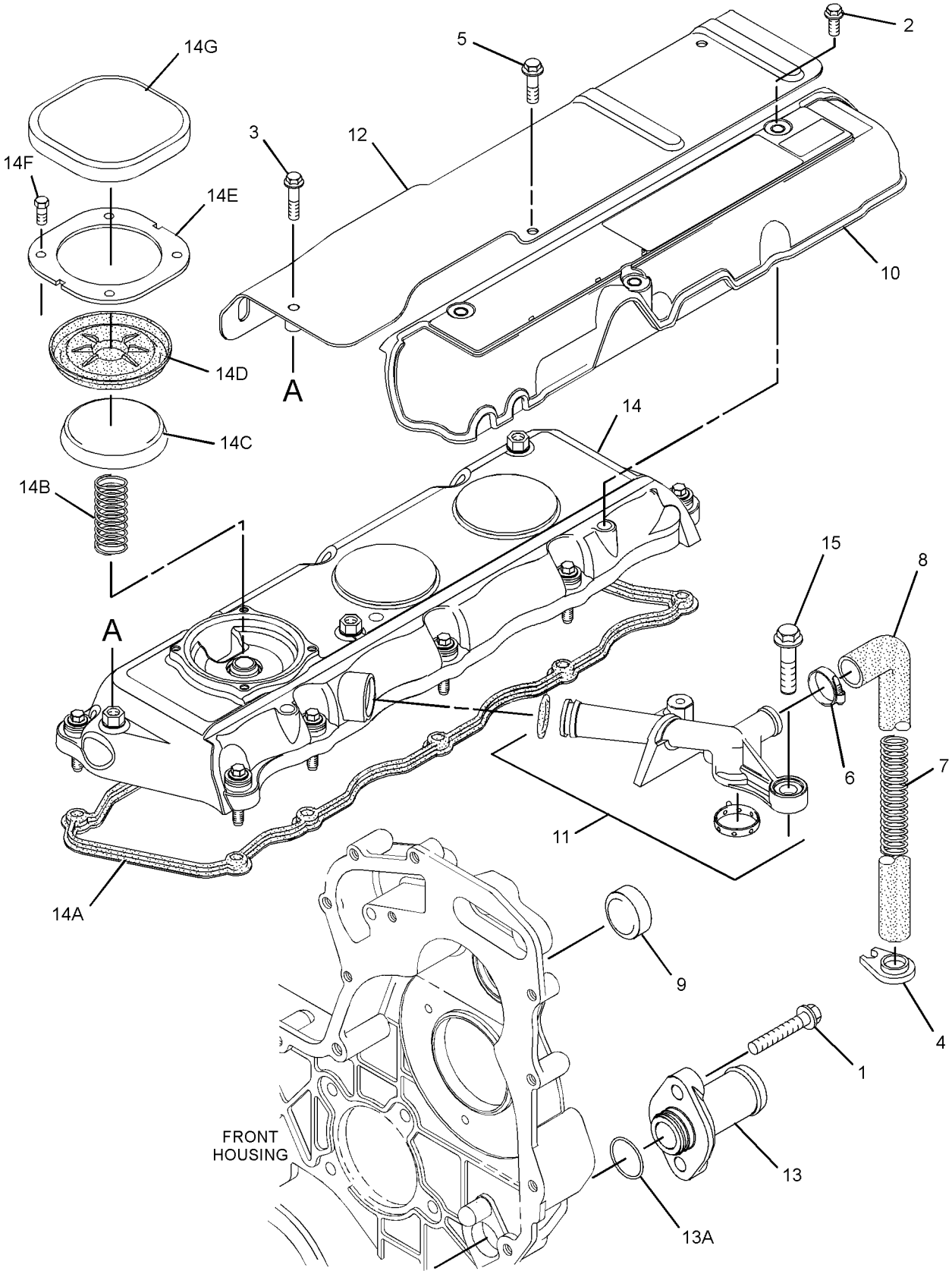

GRAPHIC #1 **<END>** g01397742

246-2582 COVER GP-VALVE MECHANISM

S/N: G4D1-UP; CRS1-UP
PART OF 323-5725 ENGINE AR-PRIMARY
AN ATTACHMENT
TYPE 3

SMCS-1107, 1120 **i04420749**

NOTE	REF NO	GRAPHIC REF	PART NUMBER	QTY	PART NAME 1 2 3 4 5 6 (PRODUCT LEVEL)	SEE PAGE
M	1	1	**6I-0260**	2	BOLT (M8X1.25X25-MM)	
	2	1	**6I-0846**	3	BOLT (M6X1X14-MM)	
	3	1	**6I-0917**	1	BOLT (M6X1X25-MM)	
	4	1	**7C-1281**	1	BRACKET	
M	5	1	**100-4841**	2	BOLT (M6X1X10-MM)	
	6	1	**5D-1026**	1	CLAMP-BAND	
	7	1	**162-1565**	1	SPRING (CRANKCASE BREATHER HOSE)	
	8	1	**198-8645**	1	HOSE (CRANKCASE BREATHER)	
	9	1	**225-6522**	1	PLUG-CUP	
	10	1	**230-9127**	1	COVER (INJECTOR)	
	11	1	**287-8573**	1	PIPE-BREATHER (BREATHER)	
	12	1	**237-0769**	1	SHIELD-HEAT	
C	13	1	**317-3769**	1	FILLER GP-ENGINE OIL (ENGINE)	
C	13A	1	**317-3778**	1	SEAL-O-RING	
	14	1	**308-1792**	1	COVER GP-VALVE MECHANISM	
	14A	1	**225-6451**	1	GASKET (VALVE COVER)	
	14B	1	**225-6456**	1	SPRING (BREATHER VALVE)	
	14C	1	**225-6461**	1	CAP (BREATHER VALVE)	
	14D	1	**225-6464**	1	DIAPHRAGM (CRANKCASE PRESSURE CONTACTOR)	
	14E	1	**225-6477**	1	PLATE	
	14F	1	**225-6478**	4	SCREW-MACHINE	
	14G	1	**225-6479**	1	CAP (BREATHER VALVE)	
	15	1	**100-4838**	2	BOLT (M6X20-MM)	
F			**237-0022**	1	PLATE	

C-CHANGE FROM PREVIOUS TYPE
F-NOT SHOWN
M-METRIC PART

246-2582 **COVER GP-VALVE MECHANISM** *(contd.)* **i04420749**

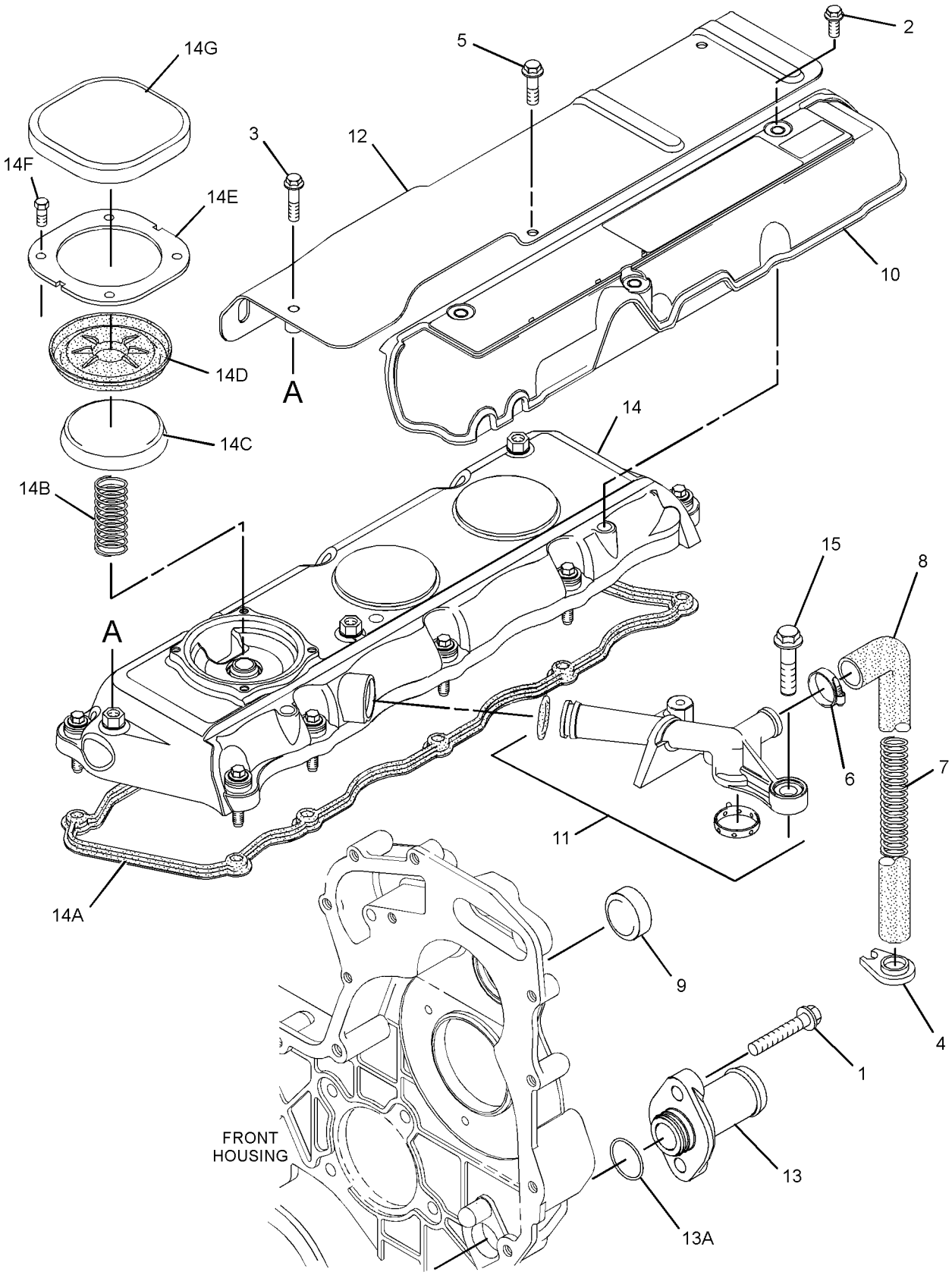

GRAPHIC #1 **<END>** g01397742

246-2583 COVER GP-VALVE MECHANISM

S/N: G4D1-UP; CRS1-UP
PART OF 245-6841 ENGINE AR-PRIMARY
AN ATTACHMENT
TYPE 1

SMCS-1107, 1120 **i02529557**

NOTE	REF NO	GRAPHIC REF	PART NUMBER	QTY	PART NAME 1 2 3 4 5 6 (PRODUCT LEVEL)	SEE PAGE
M	1	1	**6I-0260**	2	BOLT (M8X1.25X25-MM)	
	2	1	**6I-0846**	3	BOLT (M6X1X14-MM)	
	3	1	**6I-0917**	1	BOLT (M6X1X25-MM)	
M	4	1	**100-4841**	2	BOLT (M6X1X10-MM)	
	5	1	**225-6522**	1	PLUG-CUP	
C	6	1	**286-3029**	1	PIPE-BREATHER (CONNECTOR)	
	6A	1	**150-7732**	1	SEAL-O-RING (19.5MM ID)	
	6B	1	**286-3030**	1	RING-SEAL (ISOLATOR)	
	7	1	**230-9127**	1	COVER (INJECTOR)	
C	8	1	**247-7798**	1	COVER AS (VALVE)	
	8A	1	**225-6451**	1	GASKET (VALVE COVER)	
	8B	1	**225-6455**	10	BOLT	
	8C	1	**225-6456**	1	SPRING	
	8D	1	**225-6461**	1	CAP	
	8E	1	**225-6464**	1	DIAPHRAGM (CRANKCASE PRESSURE CONTACTOR)	
	8F	1	**225-6477**	1	PLATE	
	8G	1	**225-6478**	4	SCREW-MACHINE	
	8H	1	**225-6479**	1	CAP	
	9	1	**237-0769**	1	SHIELD-HEAT	
	10	1	**246-1163**	1	FILLER AS-OIL	
	10A	1	**229-4896**	1	SEAL-O-RING (O21.8MM ID)	
C	11	1	**100-4838**	2	BOLT (M6X20-MM)	

C-CHANGE FROM PREVIOUS TYPE
M-METRIC PART

246-2583 **COVER GP-VALVE MECHANISM** *(contd.)* **i02529557**

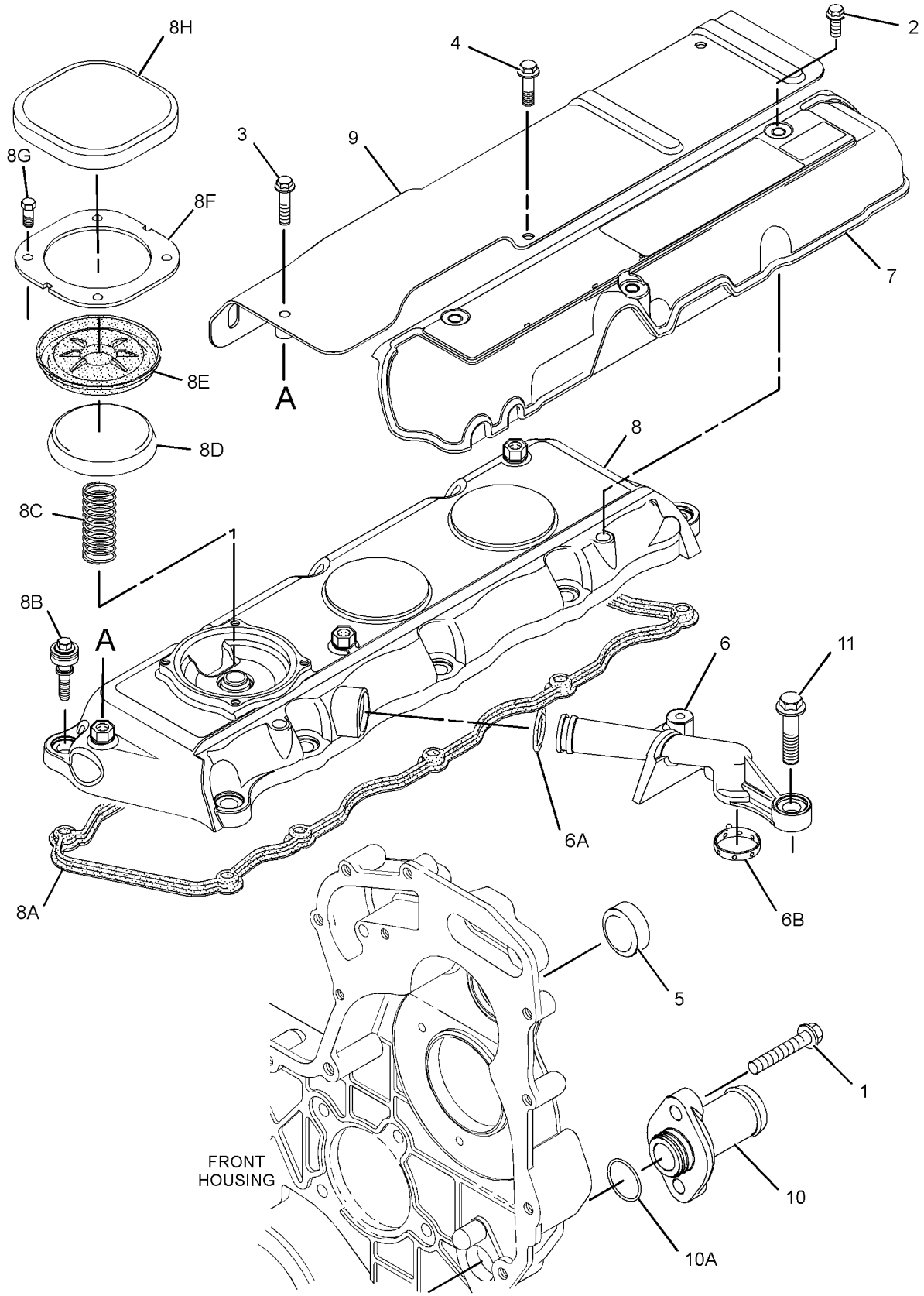

GRAPHIC #1 **<END>** g01265769

246-2583 COVER GP-VALVE MECHANISM

S/N: G4D1-UP; CRS1-UP
PART OF 245-6841, 323-5724 ENGINE AR-PRIMARY
AN ATTACHMENT
TYPE 2

SMCS-1107, 1120 **i04329813**

NOTE	REF NO	GRAPHIC REF	PART NUMBER	QTY	PART NAME 1 2 3 4 5 6 (PRODUCT LEVEL)	SEE PAGE
M	1	1	**6I-0260**	2	BOLT (M8X1.25X25-MM)	
	2	1	**6I-0846**	3	BOLT (M6X1X14-MM)	
	3	1	**6I-0917**	1	BOLT (M6X1X25-MM)	
M	4	1	**100-4841**	2	BOLT (M6X1X10-MM)	
	5	1	**225-6522**	1	PLUG-CUP	
	6	1	**286-3029**	1	PIPE-BREATHER (CONNECTOR)	
	6A	1	**150-7732**	1	SEAL-O-RING (19.5MM ID)	
	6B	1	**286-3030**	1	RING-SEAL (ISOLATOR)	
	7	1	**230-9127**	1	COVER (INJECTOR)	
C	8	1	**308-1792**	1	COVER GP-VALVE MECHANISM	
	8A	1	**225-6451**	1	GASKET (VALVE COVER)	
	8B	1	**225-6456**	1	SPRING (BREATHER VALVE)	
	8C	1	**225-6461**	1	CAP (VALVE COVER)	
	8D	1	**225-6464**	1	DIAPHRAGM (CRANKCASE PRESSURE CONTACTOR)	
	8E	1	**225-6477**	1	PLATE	
	8F	1	**225-6478**	4	SCREW-MACHINE	
	8G	1	**225-6479**	1	CAP (BREATHER VALVE)	
	9	1	**237-0769**	1	SHIELD-HEAT	
	10	1	**317-3769**	1	FILLER GP-ENGINE OIL	
	11	1	**100-4838**	2	BOLT (M6X20-MM)	

C-CHANGE FROM PREVIOUS TYPE
M-METRIC PART

246-2583 **COVER GP-VALVE MECHANISM** *(contd.)* **i04329813**

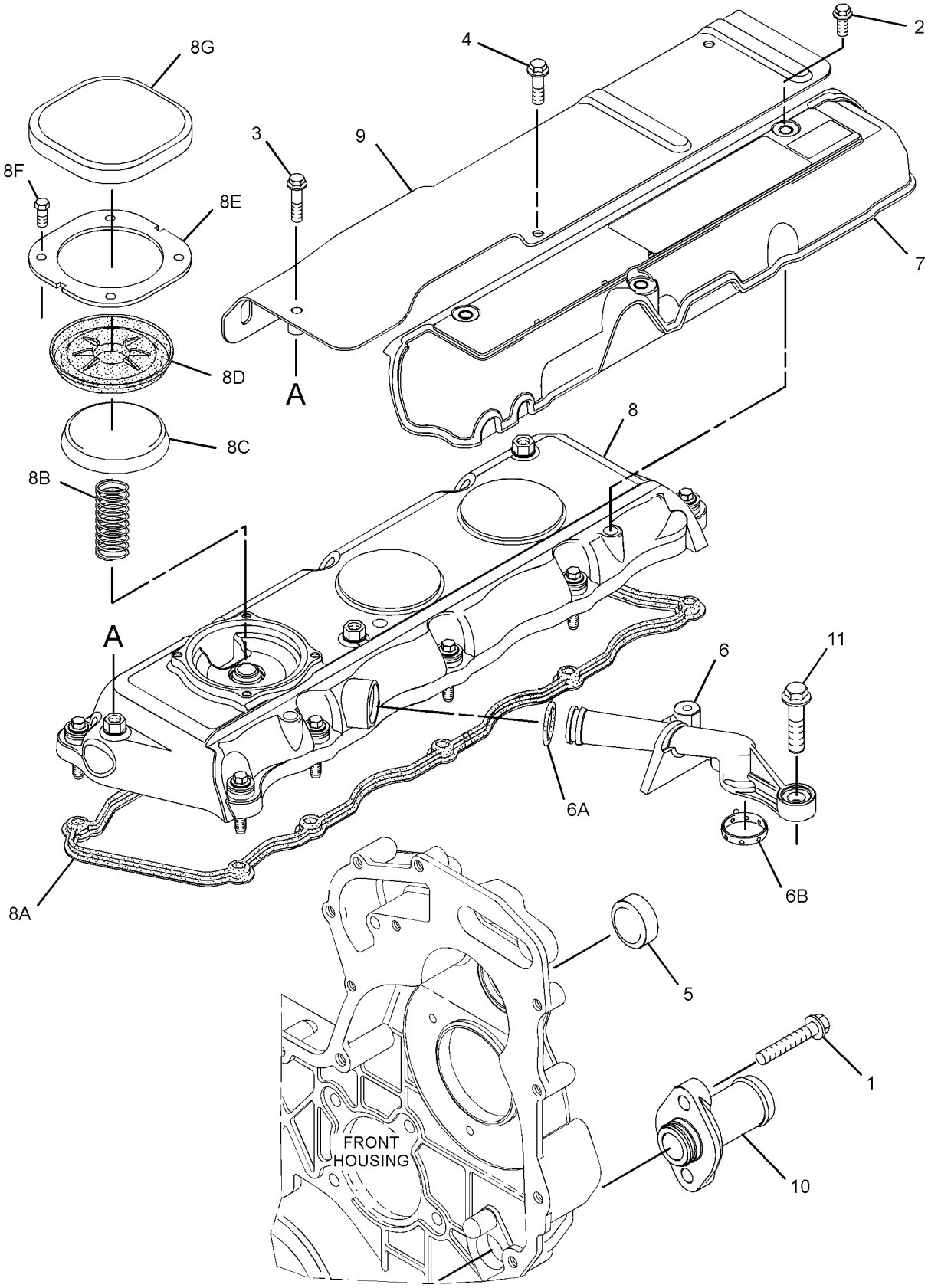

GRAPHIC #1 **<END>** g02489058

326-9008 COVER GP-VALVE MECHANISM

S/N: C4Z1-UP

PART OF 321-7704 ENGINE AR-PRIMARY

SMCS-1107, 1120 **i03301246**

NOTE	REF NO	GRAPHIC REF	PART NUMBER	QTY	PART NAME 1 2 3 4 5 6 (PRODUCT LEVEL)	SEE PAGE
	1	1	**6I-0846**	3	BOLT (M6X1X14-MM)	
	2	1	**6I-0917**	1	BOLT (M6X1X25-MM)	
	3	1	**100-4838**	2	BOLT (M6X20-MM)	
M	4	1	**100-4841**	2	BOLT (M6X1X10-MM)	
	5	1	**230-9127**	1	COVER	
	6	1	**237-0769**	1	SHIELD-HEAT	
	7	1	**287-8573**	1	PIPE-BREATHER	
	8	1	**308-1792**	1	COVER GP-VALVE MECHANISM	
	8A	1	**225-6451**	1	GASKET (VALVE COVER)	
	8B	1	**225-6456**	1	SPRING	
	8C	1	**225-6461**	1	CAP	
	8D	1	**225-6464**	1	DIAPHRAGM (CRANKCASE PRESSURE CONTACTOR)	
	8E	1	**225-6477**	1	PLATE	
	8F	1	**225-6478**	4	SCREW-MACHINE	
	8G	1	**225-6479**	1	CAP	

M-METRIC PART

326-9008 **COVER GP-VALVE MECHANISM** *(contd.)* **i03301246**

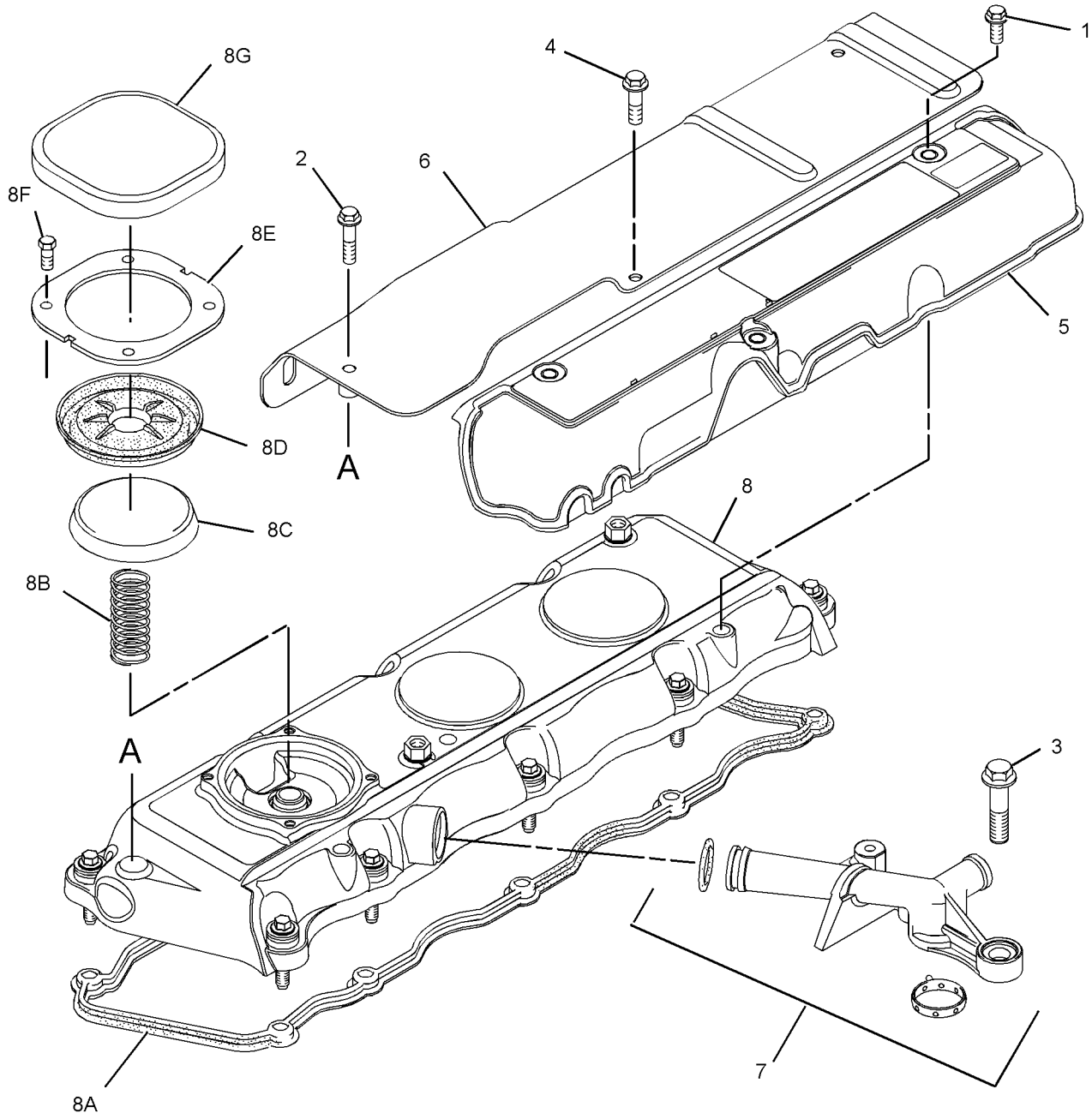

GRAPHIC #1 **<END>** g01615434

BASIC ENGINE

232-7400 CRANKSHAFT GP

S/N: G4D1-UP; CRS1-59947
PART OF 313-3357 CRANKSHAFT GP
AN ATTACHMENT

SMCS-1202, 1203, 1204, 1230, 1231, 1232 **i03775499**

NOTE	REF NO	GRAPHIC REF	PART NUMBER	QTY	PART NAME 1 2 3 4 5 6 (PRODUCT LEVEL)	SEE PAGE
	1	1	**1B-8736**	1	KEY-WOODRUFF	
	2	1	**225-7772**	1	BEARING SET-MAIN (STANDARD)	
AB		1	**233-3785**		KIT-CRANKSHAFT BEARING (0.020-IN US)	
AB		1	**233-3784**		KIT-CRANKSHAFT BEARING (0.010-IN US)	
AB		1	**233-3786**		KIT-CRANKSHAFT BEARING (0.030-IN US)	
	3	1	**032-9090**	2	WASHER-THRUST (STANDARD-UPPER)	
AB		1	**067-6873**		WASHER-THRUST (0.18-MM OS)	
	4	1	**032-9091**	2	WASHER-THRUST (STANDARD-LOWER)	
AB		1	**067-6874**		WASHER-THRUST (0.18-MM OS)	
	5	1	**353-2205**	1	KIT-ROD BEARING	
AB		1	**353-2206**		KIT-ROD BEARING (0.25-MM US)	
AB		1	**353-2207**		KIT-ROD BEARING (0.5-MM US)	
AB		1	**353-2208**		KIT-ROD BEARING (0.75-MM US)	

A-NOT PART OF THIS GROUP
B-USE AS REQUIRED

232-7400 CRANKSHAFT GP *(contd.)* **i03775499**

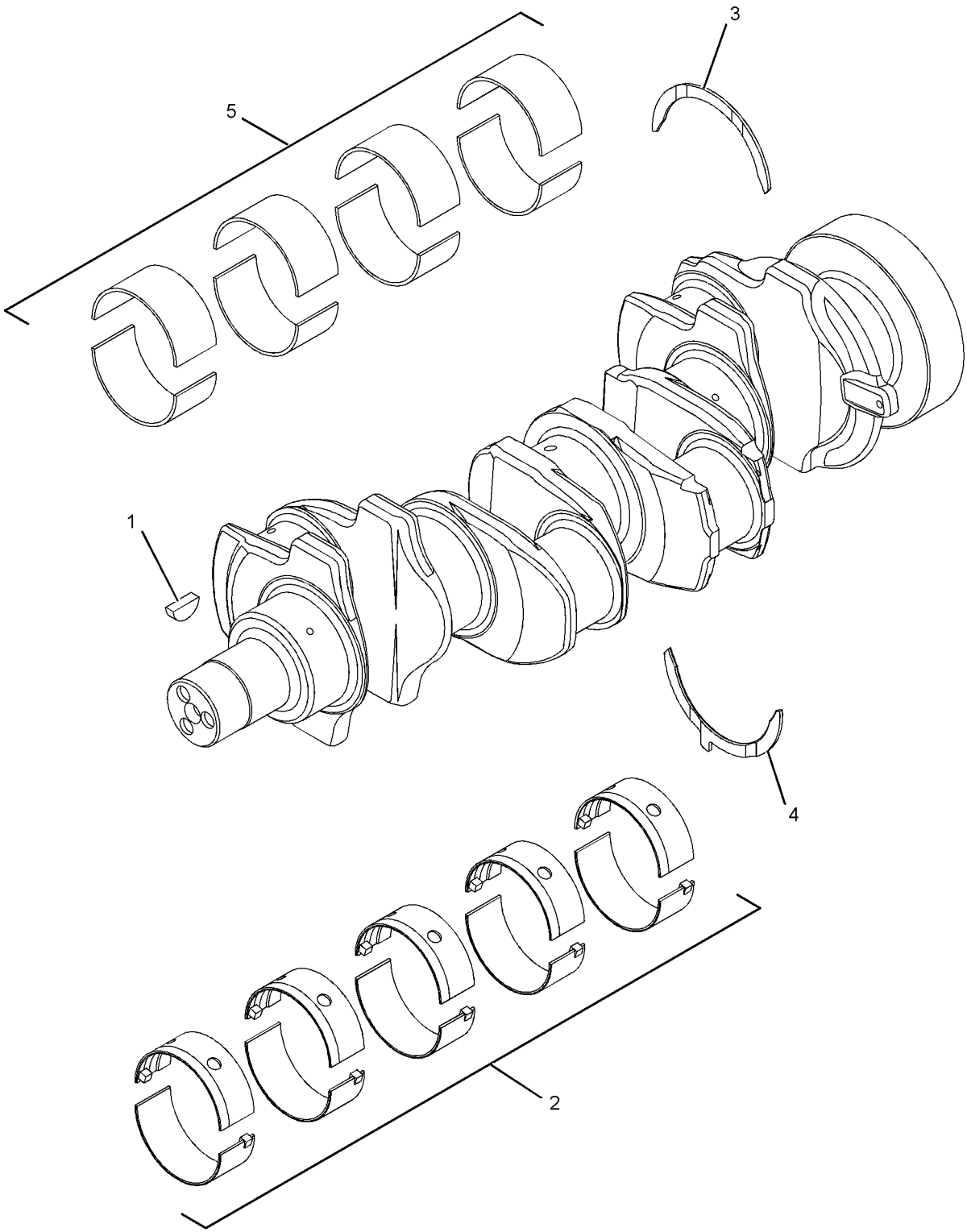

GRAPHIC #1 **<END>** g01369317

308-4729 CRANKSHAFT GP

S/N: G4D1-UP; CRS1-59947
PART OF 273-3610 ENGINE AR, 323-5725 ENGINE AR-PRIMARY
AN ATTACHMENT

SMCS-1202, 1203, 1204, 1230, 1231, 1232 **i02719053**

NOTE	REF NO	GRAPHIC REF	PART NUMBER	QTY	PART NAME 1 2 3 4 5 6 (PRODUCT LEVEL)	SEE PAGE
	1	1	**216-8314**	1	GEAR-CRANKSHAFT (34-TEETH)	
	3	1	**232-7400**	1	CRANKSHAFT GP	
	4	1	**225-7772**	1	BEARING SET-MAIN (STANDARD)	
AB		1	**233-3784**		KIT-CRANKSHAFT BEARING (0.010-IN US ID)	
AB		1	**233-3785**		KIT-CRANKSHAFT BEARING (0.020-IN US ID)	
AB		1	**233-3786**		KIT-CRANKSHAFT BEARING (0.030-IN US ID)	
	5	1	**225-7781**	1	BEARING SET-ROD (STANDARD)	
AB		1	**233-3788**		KIT-ROD BEARING (0.25-MM OS)	
AB		1	**233-3789**		KIT-ROD BEARING (0.51-MM OS)	
AB		1	**233-3790**		KIT-ROD BEARING	
	6	1	**032-9090**	2	WASHER-THRUST (STANDARD-UPPER)	
AB		1	**067-6873**		WASHER-THRUST (0.18-MM OS) (UPPER)	
	7	1	**032-9091**	2	WASHER-THRUST (STANDARD-LOWER)	
AB		1	**067-6874**		WASHER-THRUST (0.18-MM OS) (LOWER)	
	8	1	**1B-8736**	1	KEY-WOODRUFF	

A-NOT PART OF THIS GROUP
B-USE AS REQUIRED

308-4729 **CRANKSHAFT GP** *(contd.)* **i02719053**

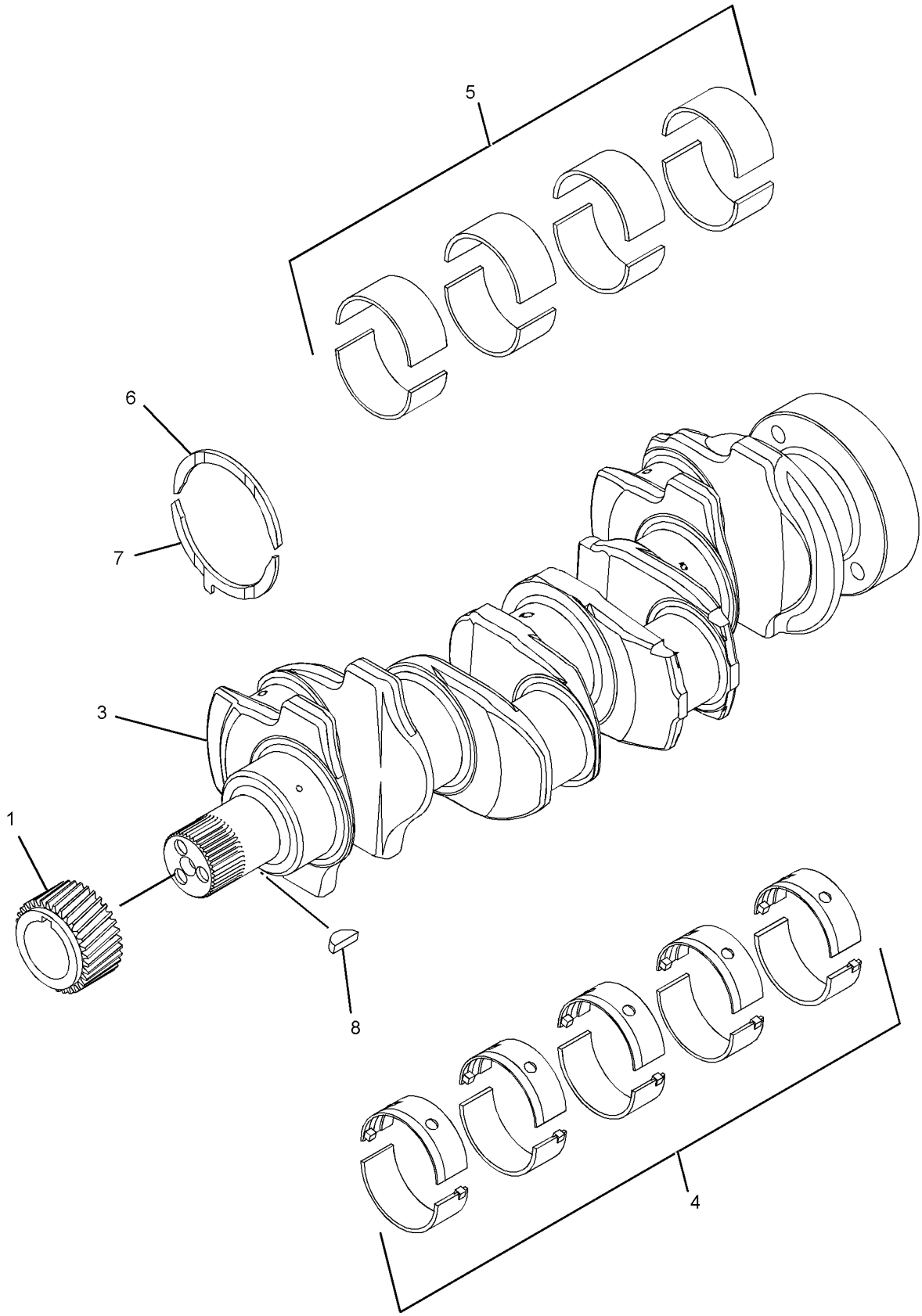

GRAPHIC #1 **<END>** g01367628

308-4729 CRANKSHAFT GP

S/N: G4D1-UP; CRS1-UP
PART OF 323-5725 ENGINE AR-PRIMARY
AN ATTACHMENT

SMCS-1202, 1203, 1204, 1230, 1231, 1232 **i04010251**

NOTE	REF NO	GRAPHIC REF	PART NUMBER	QTY	PART NAME 1 2 3 4 5 6 (PRODUCT LEVEL)	SEE PAGE
	1	1	**216-8314**	1	GEAR-CRANKSHAFT (34-TEETH)	
CY	2	1	**359-0715**	1	CRANKSHAFT GP	49
C	3	1	**1B-8736**	1	KEY-WOODRUFF	
					AVAILABLE REPAIR KIT(S):	
			274-4716	1	KIT-CRANKSHAFT	

C-CHANGE FROM PREVIOUS TYPE
Y-SEPARATE ILLUSTRATION

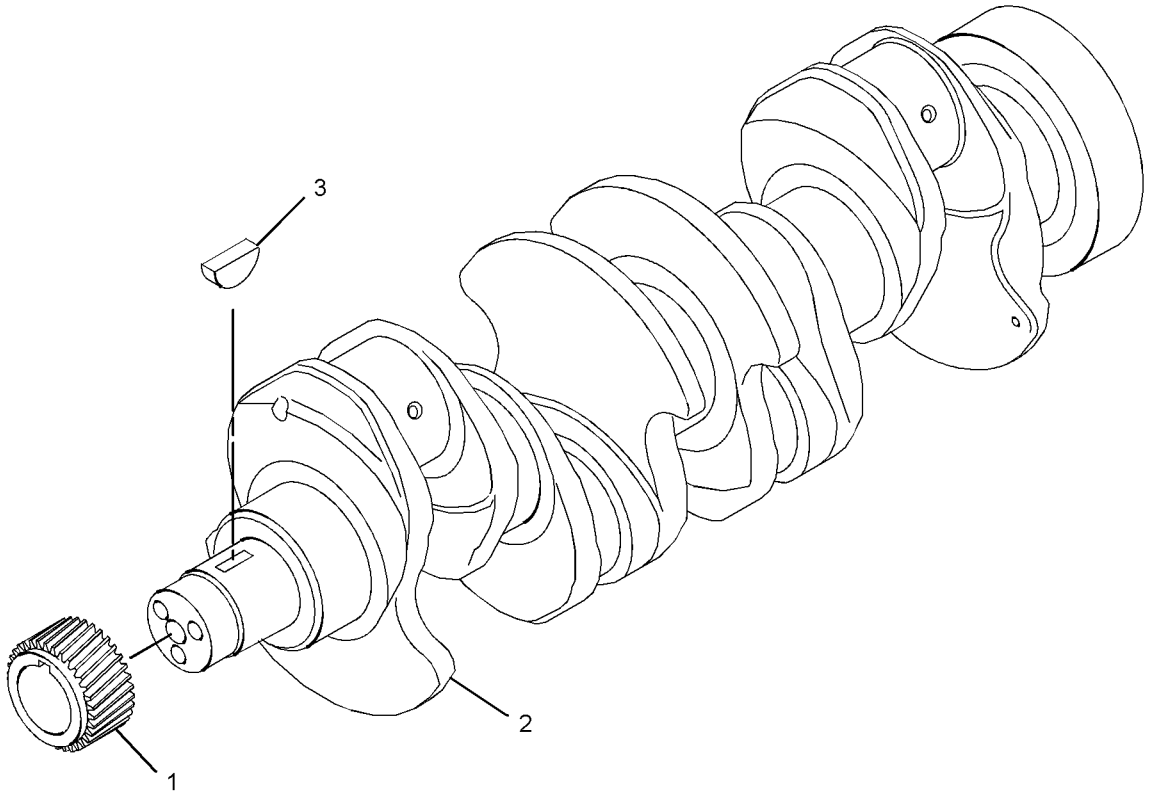

GRAPHIC #1 **<END>** g02163313

BASIC ENGINE

313-3357 CRANKSHAFT GP

S/N: G4D1-UP; CRS1-59947
PART OF 245-6841, 323-5724 ENGINE AR-PRIMARY
AN ATTACHMENT

SMCS-1202, 1203, 1204, 1230, 1231, 1232 **i02811103**

NOTE	REF NO	GRAPHIC REF	PART NUMBER	QTY	PART NAME 1 2 3 4 5 6 (PRODUCT LEVEL)	SEE PAGE
	1	1	**216-8314**	1	GEAR-CRANKSHAFT (34-TEETH)	
Y	2	1	**232-7400**	1	CRANKSHAFT GP	41

Y-SEPARATE ILLUSTRATION

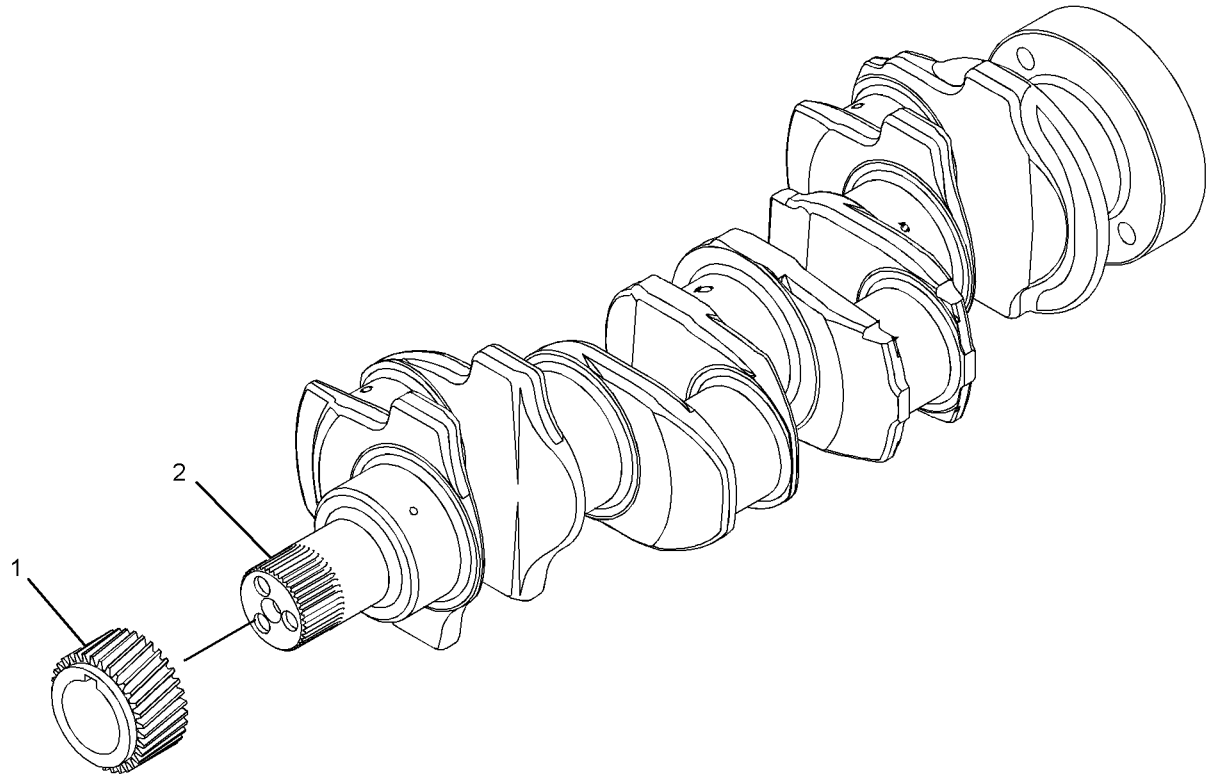

GRAPHIC #1 **<END>** g01424864

313-3357 CRANKSHAFT GP

S/N: G4D1-UP; CRS1-UP
PART OF 323-5724 ENGINE AR-PRIMARY
AN ATTACHMENT

SMCS-1202, 1203, 1204, 1230, 1231, 1232 **i04006455**

NOTE	REF NO	GRAPHIC REF	PART NUMBER	QTY	PART NAME 1 2 3 4 5 6 (PRODUCT LEVEL)	SEE PAGE
	1	1	**216-8314**	1	GEAR-CRANKSHAFT (34-TEETH)	
CY	2	1	**359-0715**	1	CRANKSHAFT GP	49
C	3	1	**1B-8736**	1	KEY-WOODRUFF	

C-CHANGE FROM PREVIOUS TYPE
Y-SEPARATE ILLUSTRATION

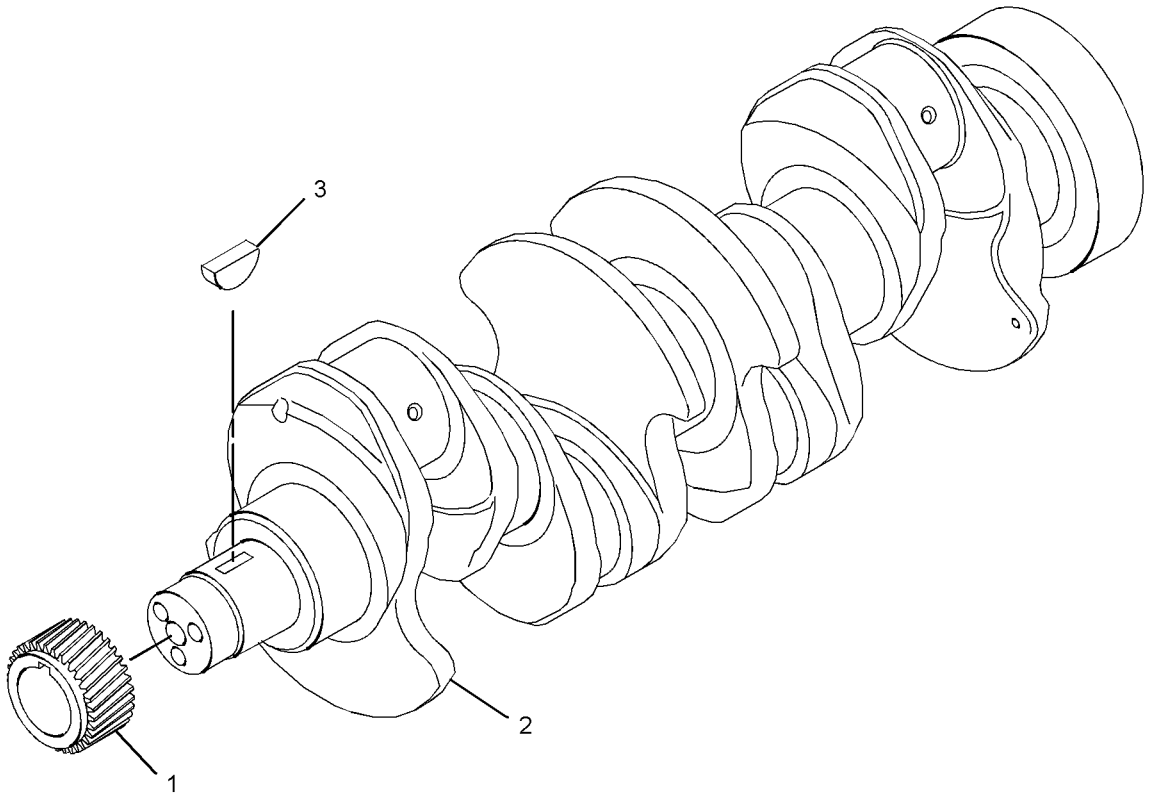

GRAPHIC #1 **<END>** g02163313

BASIC ENGINE

326-9000 CRANKSHAFT GP

S/N: C4Z1-UP

PART OF 321-7704 ENGINE AR-PRIMARY

SMCS-1202, 1203, 1204, 1230, 1231, 1232 **i04130012**

NOTE	REF NO	GRAPHIC REF	PART NUMBER	QTY	PART NAME 1 2 3 4 5 6 (PRODUCT LEVEL)	SEE PAGE
	1	1	**216-8314**	1	GEAR-CRANKSHAFT (34-TEETH)	
CY	2	1	**359-0715**	1	CRANKSHAFT GP	49
C	3	1	**1B-8736**	1	KEY-WOODRUFF	
					AVAILABLE REPAIR KIT(S):	
			274-4716	1	KIT-CRANKSHAFT	

C-CHANGE FROM PREVIOUS TYPE
Y-SEPARATE ILLUSTRATION

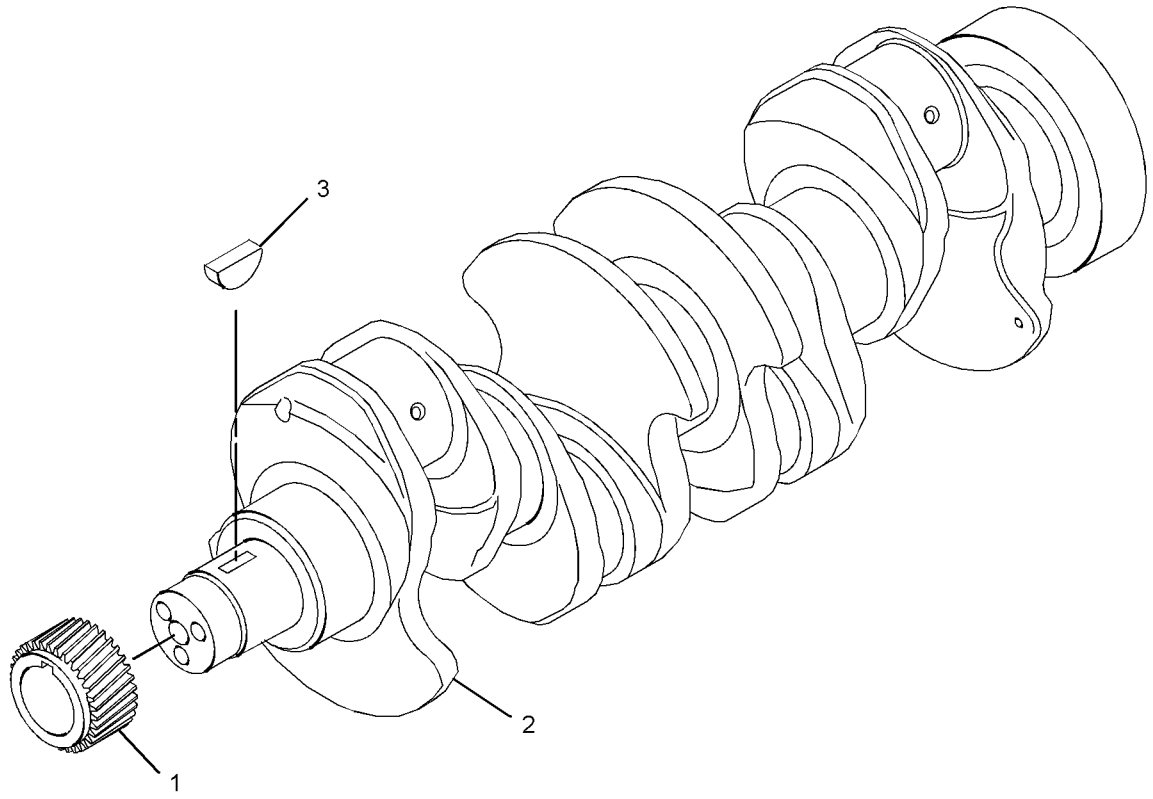

GRAPHIC #1 **<END>** g02163313

359-0715 CRANKSHAFT GP

S/N: G4D1-UP; CRS1-UP; C4Z1-UP
PART OF 308-4729, 313-3357, 326-9000 CRANKSHAFT GP
ALSO AN ATTACHMENT

SMCS-1202, 1203, 1204, 1230, 1231, 1232 **i03959729**

NOTE	REF NO	GRAPHIC REF	PART NUMBER	QTY	PART NAME 1 2 3 4 5 6 (PRODUCT LEVEL)	SEE PAGE
	1	1	**032-9090**	2	WASHER-THRUST (STANDARD-UPPER)	
AB		1	**067-6873**		WASHER-THRUST (0.18-MM OS)	
	2	1	**032-9091**	2	WASHER-THRUST (STANDARD-LOWER)	
AB		1	**067-6874**		WASHER-THRUST (0.18-MM OS)	
	3	1	**353-7423**	1	KIT-BEARING (MAIN)	
AB		1	**233-3786**		KIT-CRANKSHAFT BEARING (0.030-IN US)	
AB		1	**353-7424**		KIT-BEARING (0.25-MM US)	
AB		1	**353-7425**		KIT-BEARING (0.50-MM US)	
	4	1	**353-9667**	1	KIT-ROD BEARING (STANDARD)	

A-NOT PART OF THIS GROUP
B-USE AS REQUIRED

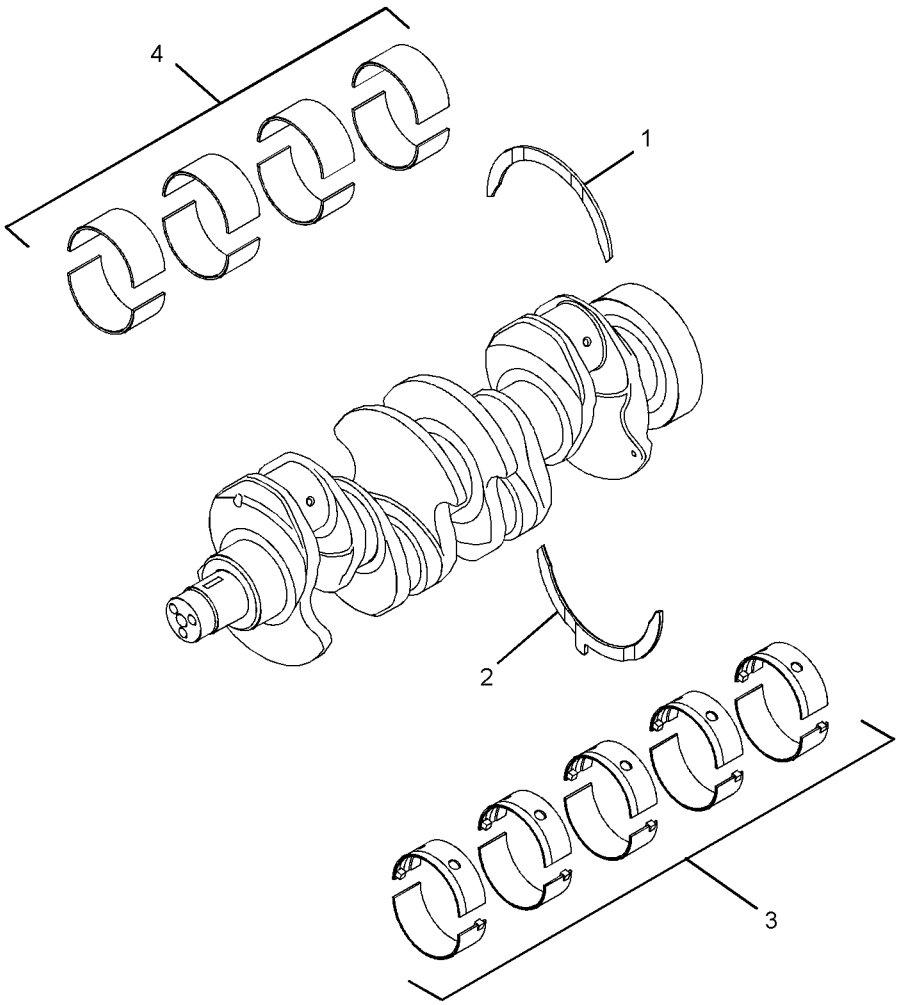

GRAPHIC #1 **<END>** g02174712

232-7604 CYLINDER BLOCK GP

S/N: G4D1-UP; CRS1-UP
PART OF 308-4728, 313-3355 CYLINDER BLOCK GP
AN ATTACHMENT

SMCS-1201 **i03251703**

NOTE	REF NO	GRAPHIC REF	PART NUMBER	QTY	PART NAME 1 2 3 4 5 6 (PRODUCT LEVEL)	SEE PAGE
	1	1	**6I-0572**	4	BOLT (M8X1.25X20-MM)	
	2	1	**035-8068**	10	BOLT (5/8-18X3.75-IN)	
	3	1	**067-6002**	10	DOWEL	
	4	1	**067-6006**	1	PLUG	
	5	1	**067-6043**	1	PLUG-SIDE	
M	6	1	**100-4841**	4	BOLT (M6X1X10-MM)	
	7	1	**185-0884**	2	DOWEL	
	8	1	**225-7944**	1	GASKET (ENGINE OIL FILTER BASE)	
	9	1	**225-8858**	2	PLUG	
	10	1	**232-3751**	1	PLATE	
	11	1	**232-7440**	1	BEARING	
	12	1	**276-5605**	4	JET AS-PISTON COOLING	
	13	1	**232-7596**	1	PLUG	
	14	1	**232-7597**	2	PLUG	
	15	1	**232-7599**	1	PLUG	
	16	1	**232-7600**	1	PLUG-CUP	
	17	1	**232-7603**	1	PLUG	

M-METRIC PART

232-7604 CYLINDER BLOCK GP *(contd.)* **i03251703**

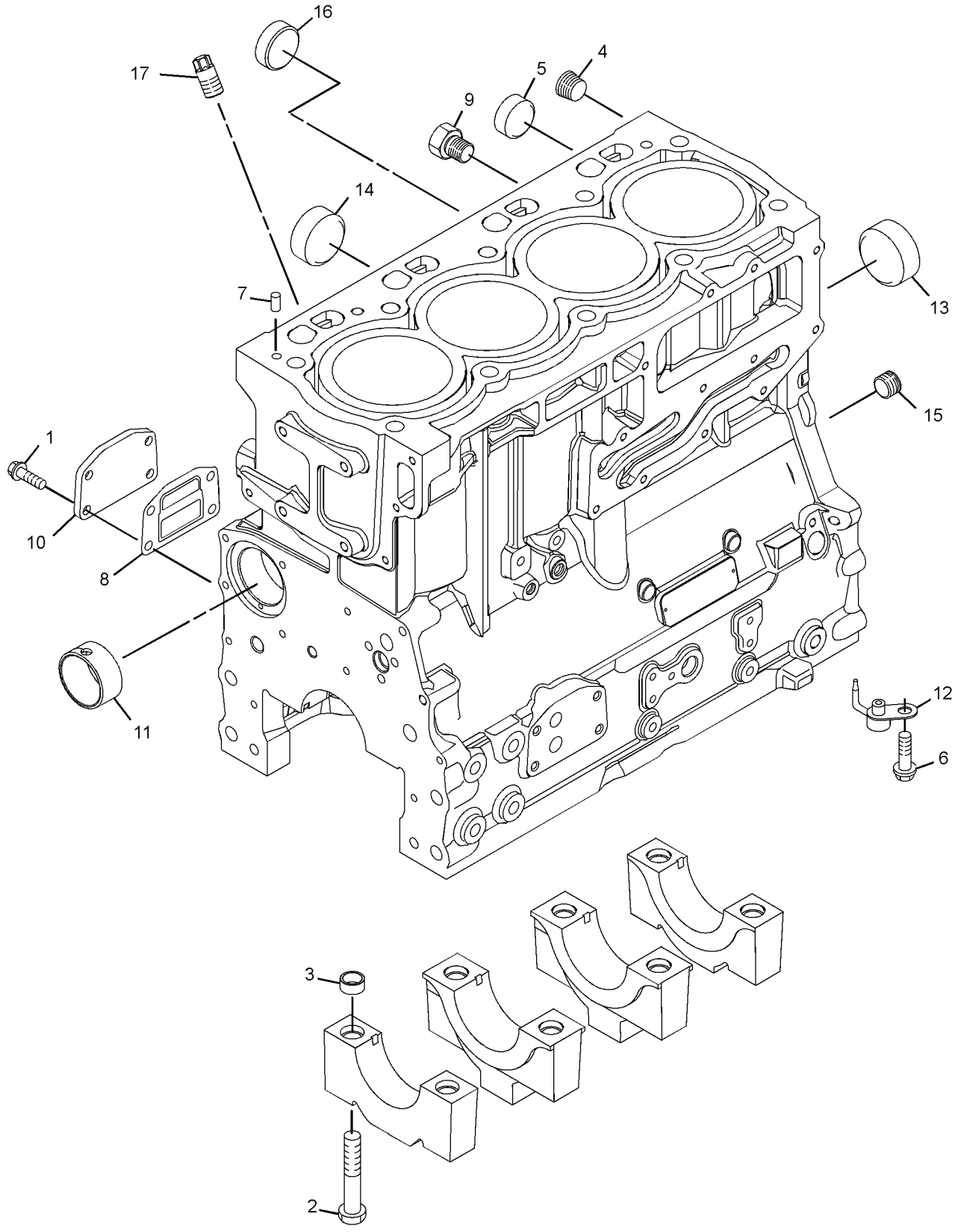

GRAPHIC #1 **<END>** g01652625

BASIC ENGINE

308-4728 CYLINDER BLOCK GP

S/N: G4D1-UP; CRS1-UP
PART OF 273-3610 ENGINE AR, 323-5725 ENGINE AR-PRIMARY
AN ATTACHMENT

SMCS-1201 **i02719090**

NOTE	REF NO	GRAPHIC REF	PART NUMBER	QTY	PART NAME 1 2 3 4 5 6 (PRODUCT LEVEL)	SEE PAGE
M	1	1	**209-9219**	10	BOLT (M8X1.25X16-MM)	
	2	1	**232-7449**	1	HOUSING AS	
Y	3	1	**232-7604**	1	CYLINDER BLOCK GP	50

M-METRIC PART
Y-SEPARATE ILLUSTRATION

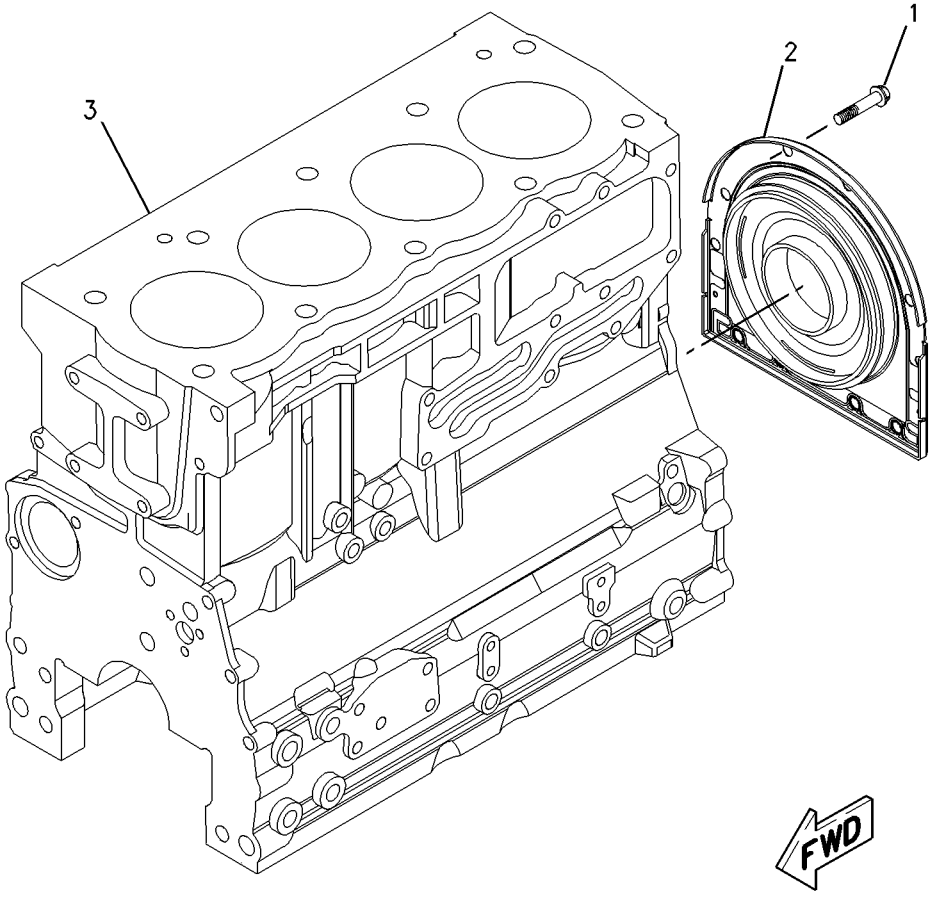

GRAPHIC #1 **<END>** g00952056

313-3355 CYLINDER BLOCK GP

S/N: G4D1-UP; CRS1-UP
PART OF 245-6841, 323-5724 ENGINE AR-PRIMARY
AN ATTACHMENT

SMCS-1201 **i02811089**

NOTE	REF NO	GRAPHIC REF	PART NUMBER	QTY	PART NAME 1 2 3 4 5 6 (PRODUCT LEVEL)	SEE PAGE
M	1	1	**209-9219**	10	BOLT (M8X1.25X16-MM)	
	2	1	**232-7449**	1	HOUSING AS	
Y	3	1	**232-7604**	1	CYLINDER BLOCK GP	50

M-METRIC PART
Y-SEPARATE ILLUSTRATION

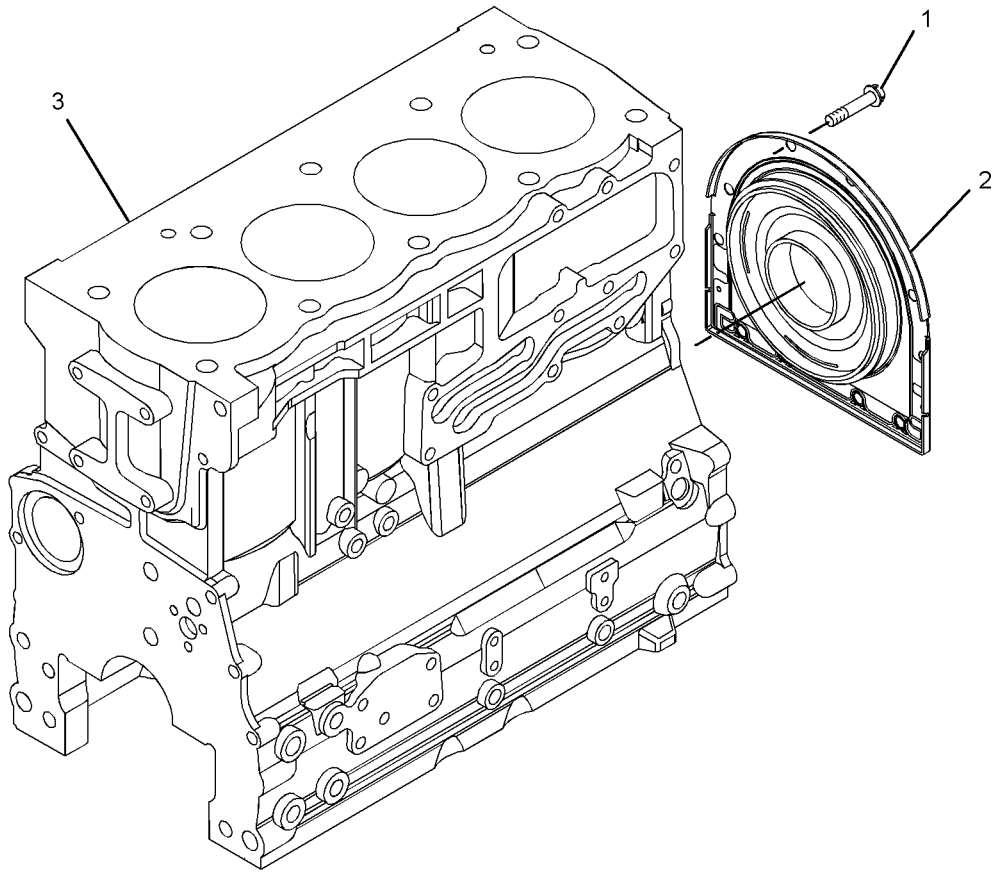

GRAPHIC #1 **<END>** g01424948

BASIC ENGINE

326-8999 CYLINDER BLOCK GP

S/N: C4Z1-UP

PART OF 321-7704 ENGINE AR-PRIMARY

SMCS-1201 **i04130209**

NOTE	REF NO	GRAPHIC REF	PART NUMBER	QTY	PART NAME 1 2 3 4 5 6 (PRODUCT LEVEL)	SEE PAGE
M	1	1	**209-9219**	10	BOLT (M8X1.25X16-MM)	
	2	1	**232-7449**	1	HOUSING AS	
Y	3	1	**335-1584**	1	CYLINDER BLOCK GP	55

M-METRIC PART
Y-SEPARATE ILLUSTRATION

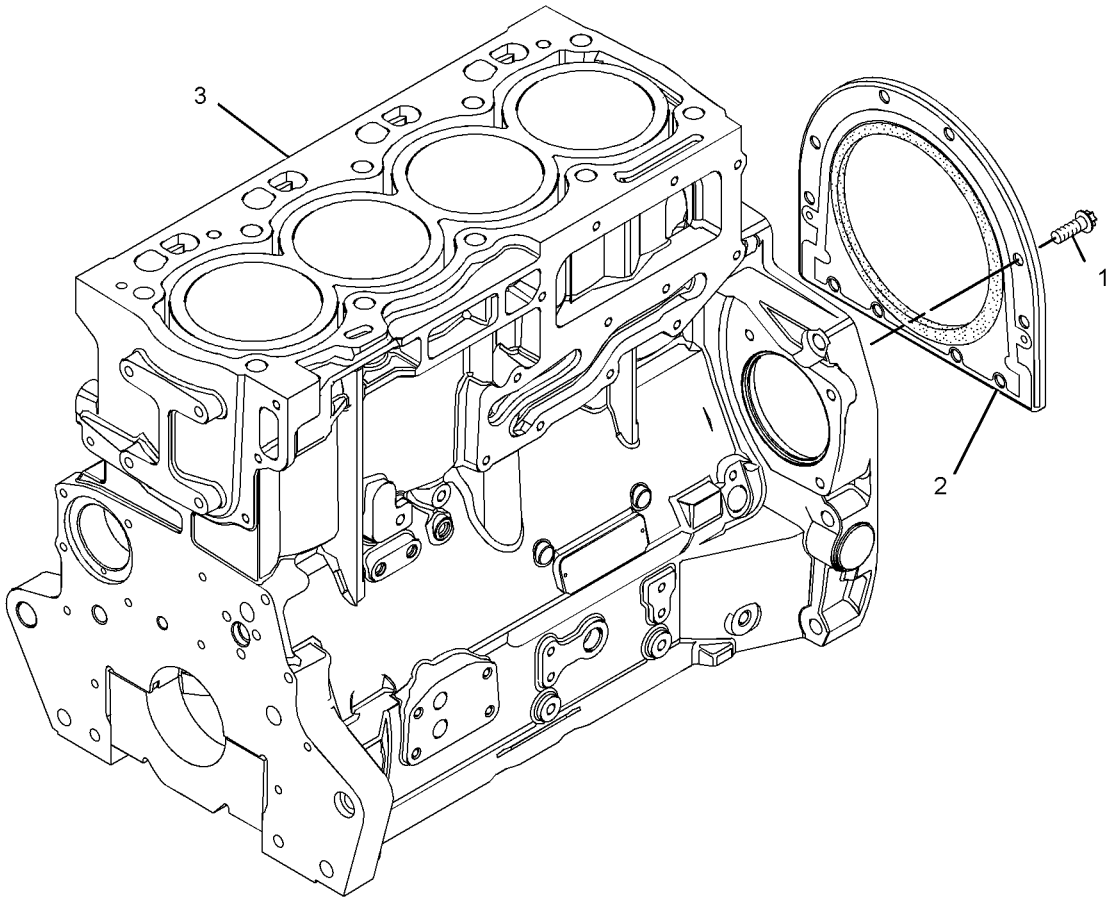

GRAPHIC #1 **<END>** g01770793

BASIC ENGINE

335-1584 CYLINDER BLOCK GP

S/N: C4Z1-UP

PART OF 326-8999 CYLINDER BLOCK GP

SMCS-1201 **i03609183**

NOTE	REF NO	GRAPHIC REF	PART NUMBER	QTY	PART NAME 1 2 3 4 5 6 (PRODUCT LEVEL)	SEE PAGE
	1	1	**6I-0572**	4	BOLT (M8X1.25X20-MM)	
	2	1	**6I-0646**	1	BOLT (M10X1.5X14-MM)	
	3	1	**035-8063**	1	PLUG	
	4	1	**035-8068**	10	BOLT (5/8-18X3.75-IN)	
	5	1	**067-6002**	10	DOWEL	
	6	1	**067-6006**	1	PLUG	
	7	1	**067-6043**	1	PLUG-SIDE	
M	8	1	**100-4841**	4	BOLT (M6X1X10-MM)	
	9	1	**185-0884**	2	DOWEL	
	10	1	**214-3203**	1	WASHER (SEALING)	
	11	1	**225-7944**	1	GASKET	
	12	1	**225-8858**	2	PLUG	
	13	1	**232-3751**	1	PLATE	
	14	1	**232-7440**	1	BEARING	
	15	1	**232-7596**	1	PLUG	
	16	1	**232-7597**	2	PLUG	
	17	1	**232-7599**	1	PLUG	
	18	1	**276-5605**	4	JET AS-PISTON COOLING	

M-METRIC PART

335-1584 **CYLINDER BLOCK GP** *(contd.)* **i03609183**

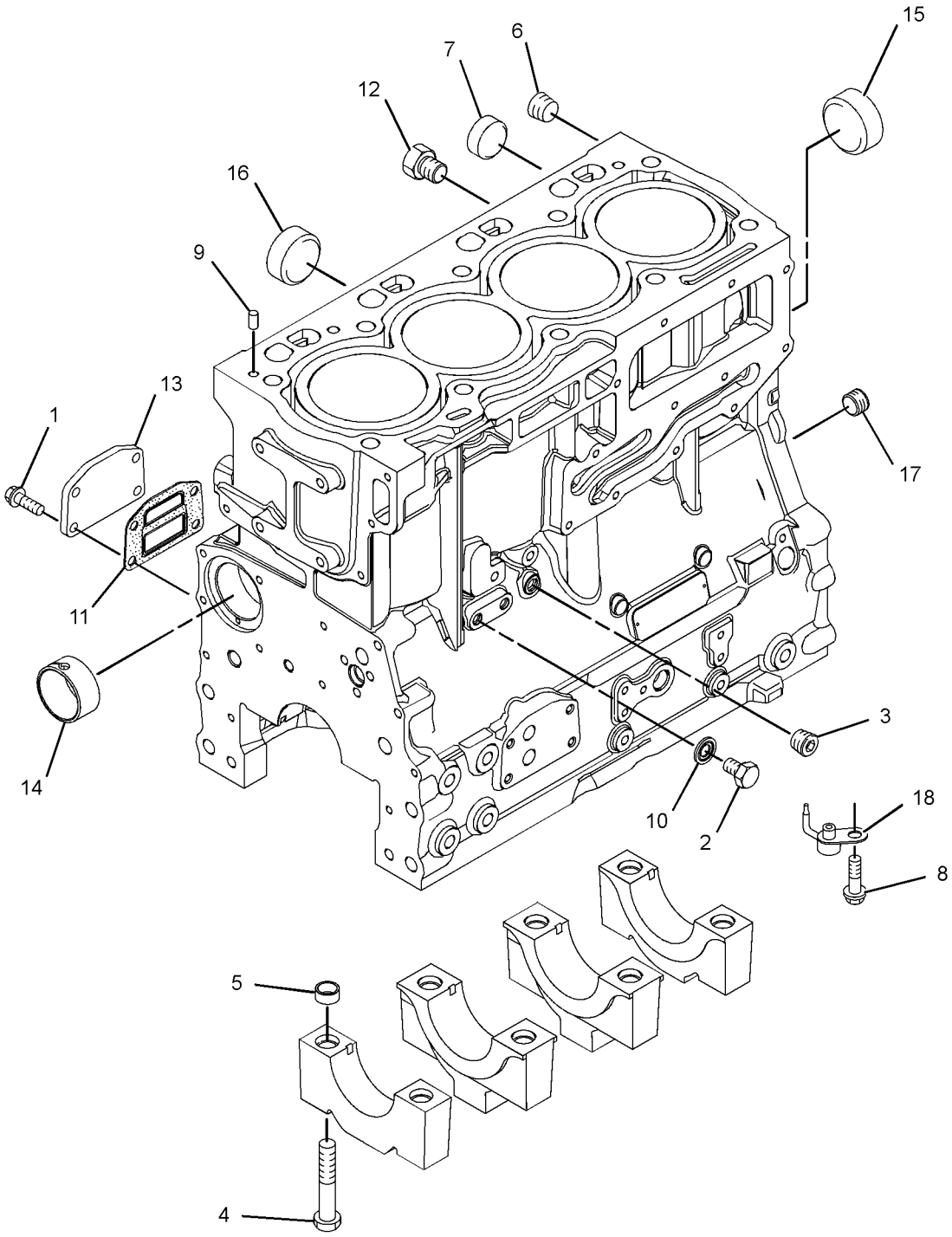

GRAPHIC #1 **<END>** g01769514

232-7519 CYLINDER HEAD GP

S/N: G4D1-3019; CRS1-UP
PART OF 308-4731 CYLINDER HEAD GP
AN ATTACHMENT

SMCS-1100, 1101, 1103, 1104, 1105, 1106, 1108, 1109, 1115, 1117, 1121, 1124, 1125

i03286650

NOTE	REF NO	GRAPHIC REF	PART NUMBER	QTY	PART NAME 1 2 3 4 5 6 (PRODUCT LEVEL)	SEE PAGE
	1	1	**2B-0858**	1	PLUG-PIPE	
	2	1	**9Y-5015**	2	PLUG-FREEZE	
	3	1	**067-6006**	4	PLUG	
	4	1	**147-1979**	16	RETAINER-VALVE SPRING	
	5	1	**185-0882**	8	GUIDE-VALVE (INTAKE)	
	6	1	**199-9751**	1	SEAL-O-RING	
	7	1	**329-6655**	4	INSERT-VALVE SEAT	
	8	1	**322-9663**	4	INSERT-VALVE SEAT (EXHAUST)	
	9	1	**225-5495**	4	VALVE-INLET	
	10	1	**225-5496**	8	SPRING-VALVE	
	11	1	**252-6438**	4	SEAL-INLET VALVE	
	12	1	**225-5498**	8	CAP	
	13	1	**225-5499**	4	VALVE-EXHAUST	
	14	1	**232-1322**	1	PLUG	
	15	1	**254-3954**	4	SEAL-EXHAUST VALVE	

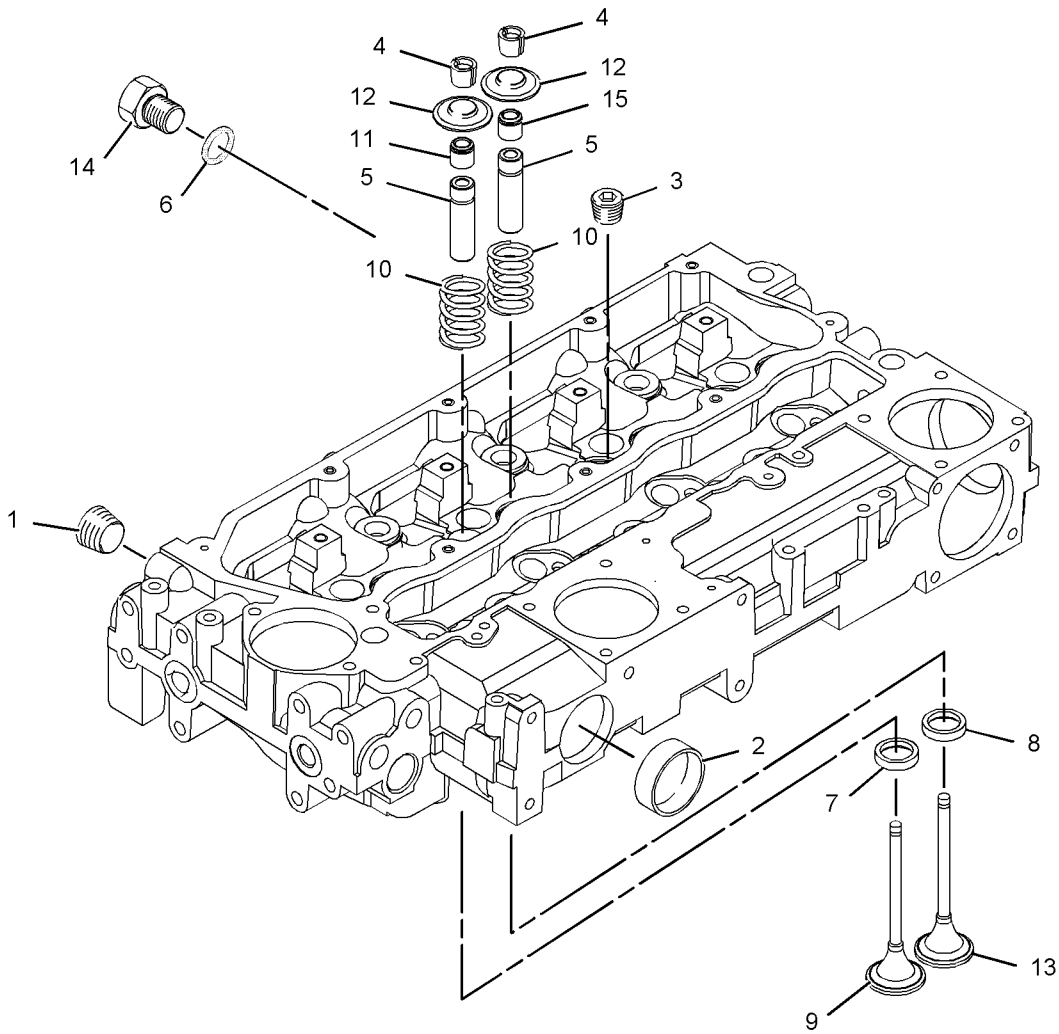

GRAPHIC #1

<END>

g01095382

247-4868 CYLINDER HEAD GP

S/N: G4D1-UP; CRS1-UP
PART OF 313-3360 CYLINDER HEAD GP
AN ATTACHMENT

SMCS-1100, 1101, 1103, 1104, 1105, 1106, 1108, 1109, 1115, 1117, 1121, 1124, 1125

i03900427

NOTE	REF NO	GRAPHIC REF	PART NUMBER	QTY	PART NAME 1 2 3 4 5 6 (PRODUCT LEVEL)	SEE PAGE
	1	1	**2B-0858**	1	PLUG-PIPE	
	2	1	**9Y-5015**	2	PLUG-FREEZE	
	3	1	**067-6006**	4	PLUG	
	4	1	**147-1979**	16	RETAINER-VALVE SPRING	
	5	1	**185-0882**	8	GUIDE-VALVE	
	6	1	**199-9751**	1	SEAL-O-RING	
	7	1	**329-6655**	4	INSERT-VALVE SEAT	
	8	1	**322-9663**	4	INSERT-VALVE SEAT (EXHAUST)	
	9	1	**225-5495**	4	VALVE-INLET	
	10	1	**225-5496**	8	SPRING-VALVE	
	11	1	**225-5498**	8	CAP	
	12	1	**225-5499**	4	VALVE-EXHAUST	
	13	1	**232-1322**	1	PLUG	
	14	1	**252-6438**	4	SEAL-INLET VALVE	
	15	1	**254-3954**	4	SEAL-EXHAUST VALVE (EXHAUST VALVE)	

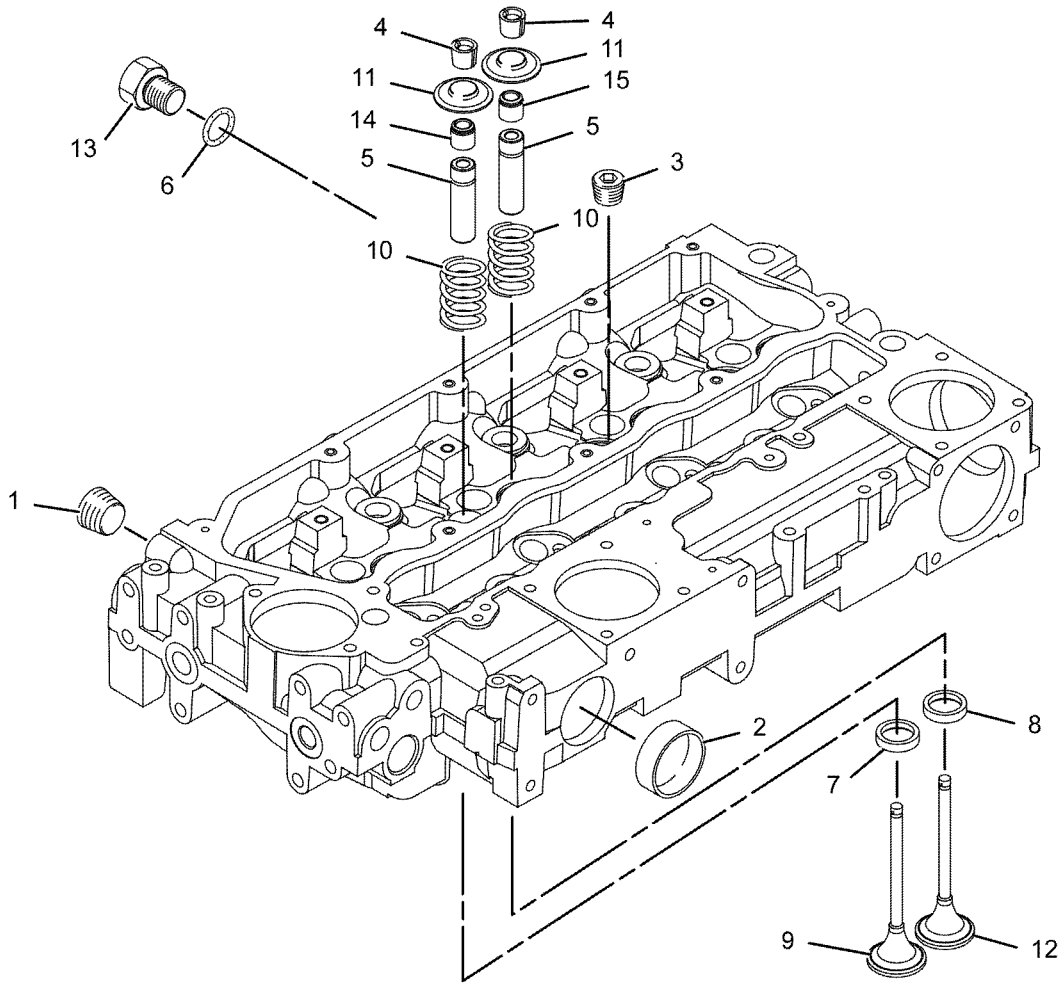

GRAPHIC #1

<END>

g01078948

308-4731 CYLINDER HEAD GP

S/N: G4D1-UP; CRS1-UP
PART OF 273-3610 ENGINE AR, 323-5725 ENGINE AR-PRIMARY
AN ATTACHMENT

SMCS-1100, 1101, 1103, 1104, 1105, 1106, 1108, 1109, 1115, 1117, 1121, 1124, 1125 **i02719203**

NOTE	REF NO	GRAPHIC REF	PART NUMBER	QTY	PART NAME 1 2 3 4 5 6 (PRODUCT LEVEL)	SEE PAGE
	1	1	**225-5501**	7	BOLT (M15X1.5X137-MM)	
	2	1	**225-5502**	3	BOLT (M15X1.5X162-MM)	
Y	3	1	**232-7519**	1	CYLINDER HEAD GP	57
	4	1	**258-4946**	1	GASKET-HEAD	

Y-SEPARATE ILLUSTRATION

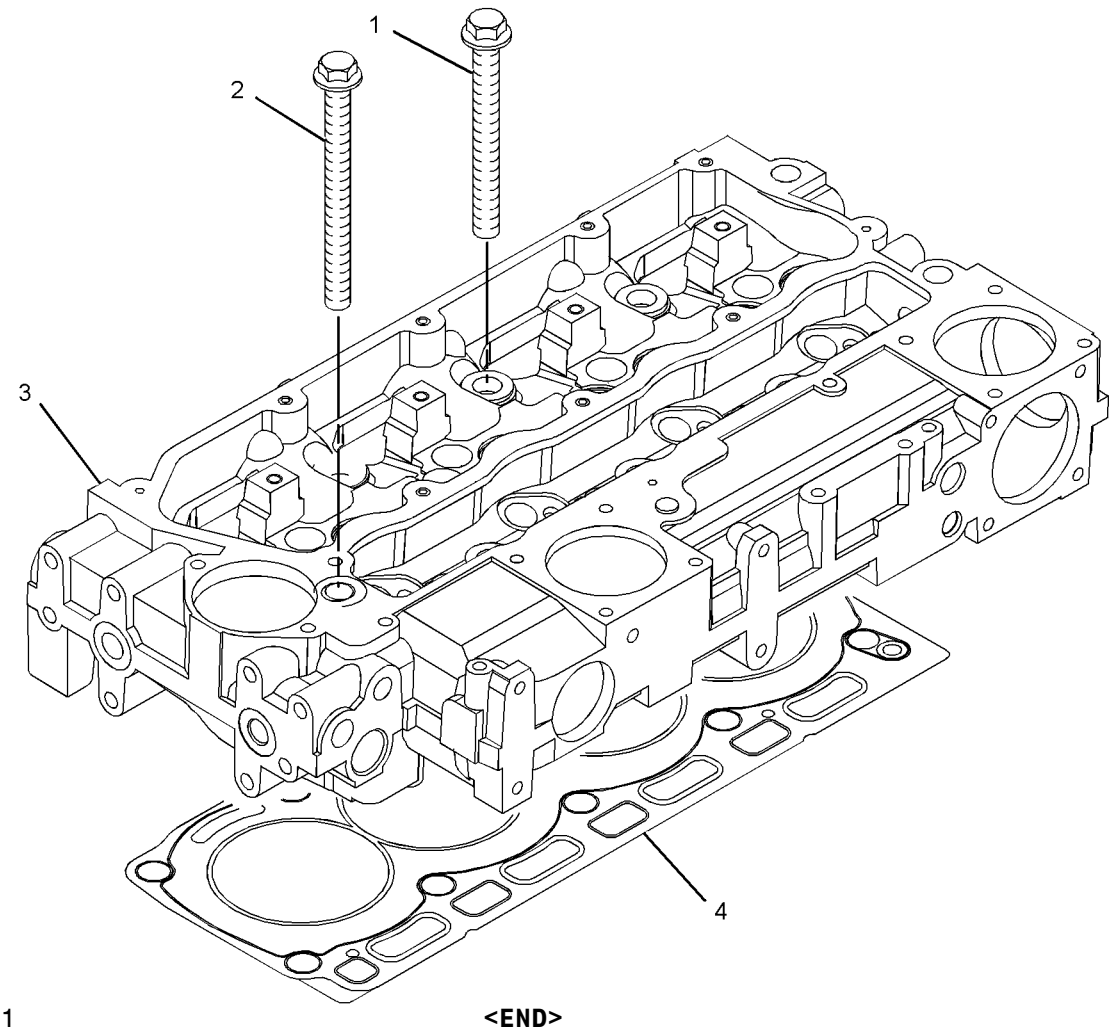

GRAPHIC #1 **<END>** g01367488

313-3360 CYLINDER HEAD GP

S/N: G4D1-UP; CRS1-UP
PART OF 245-6841, 323-5724 ENGINE AR-PRIMARY
AN ATTACHMENT

SMCS-1100, 1101, 1103, 1104, 1105, 1106, 1108, 1109, 1115, 1117, 1121, 1124, 1125 **i02811147**

NOTE	REF NO	GRAPHIC REF	PART NUMBER	QTY	PART NAME 1 2 3 4 5 6 (PRODUCT LEVEL)	SEE PAGE
	1	1	**225-5501**	7	BOLT (M15X1.5X137-MM)	
	2	1	**225-5502**	3	BOLT (M15X1.5X162-MM)	
	3	1	**258-4946**	1	GASKET-HEAD	
Y	4	1	**247-4868**	1	CYLINDER HEAD GP	58

Y-SEPARATE ILLUSTRATION

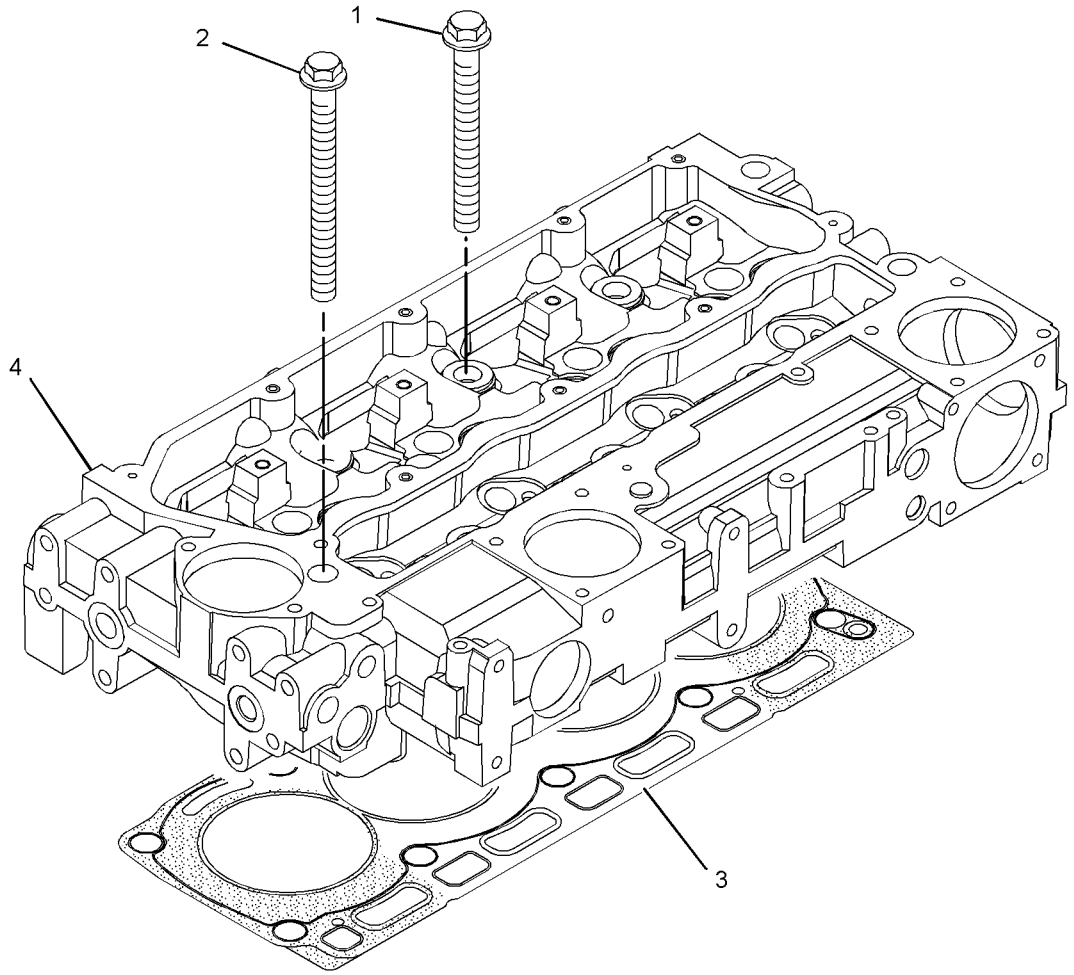

GRAPHIC #1 **<END>** g01269653

316-7896 CYLINDER HEAD GP

S/N: C4Z1-UP

PART OF 326-9003 CYLINDER HEAD GP

SMCS-1100, 1101, 1103, 1104, 1105, 1106, 1108, 1109, 1115, 1117, 1121, 1124, 1125

i04536098

NOTE	REF NO	GRAPHIC REF	PART NUMBER	QTY	PART NAME 1 2 3 4 5 6 (PRODUCT LEVEL)	SEE PAGE
	1	1	**2B-0858**	2	PLUG-PIPE	
	2	1	**9Y-5015**	2	PLUG-FREEZE	
	3	1	**067-6006**	4	PLUG	
	4	1	**185-0882**	8	GUIDE-VALVE	
	5	1	**199-9751**	1	SEAL-O-RING	
	6	1	**232-1322**	1	PLUG	
	7	1	**315-3390**	4	VALVE-INLET	
	8	1	**315-3391**	8	SPRING	
	9	1	**315-3392**	8	CAP	
	10	1	**315-3393**	16	COLLET	
	11	1	**315-3394**	4	VALVE-EXHAUST	
	12	1	**252-6438**	4	SEAL-INLET VALVE (GREEN)	
	13	1	**254-3954**	4	SEAL-EXHAUST VALVE (BROWN)	
	14	1	**322-9663**	4	INSERT-VALVE SEAT	
	15	1	**322-9664**	4	SEAT-VALVE	

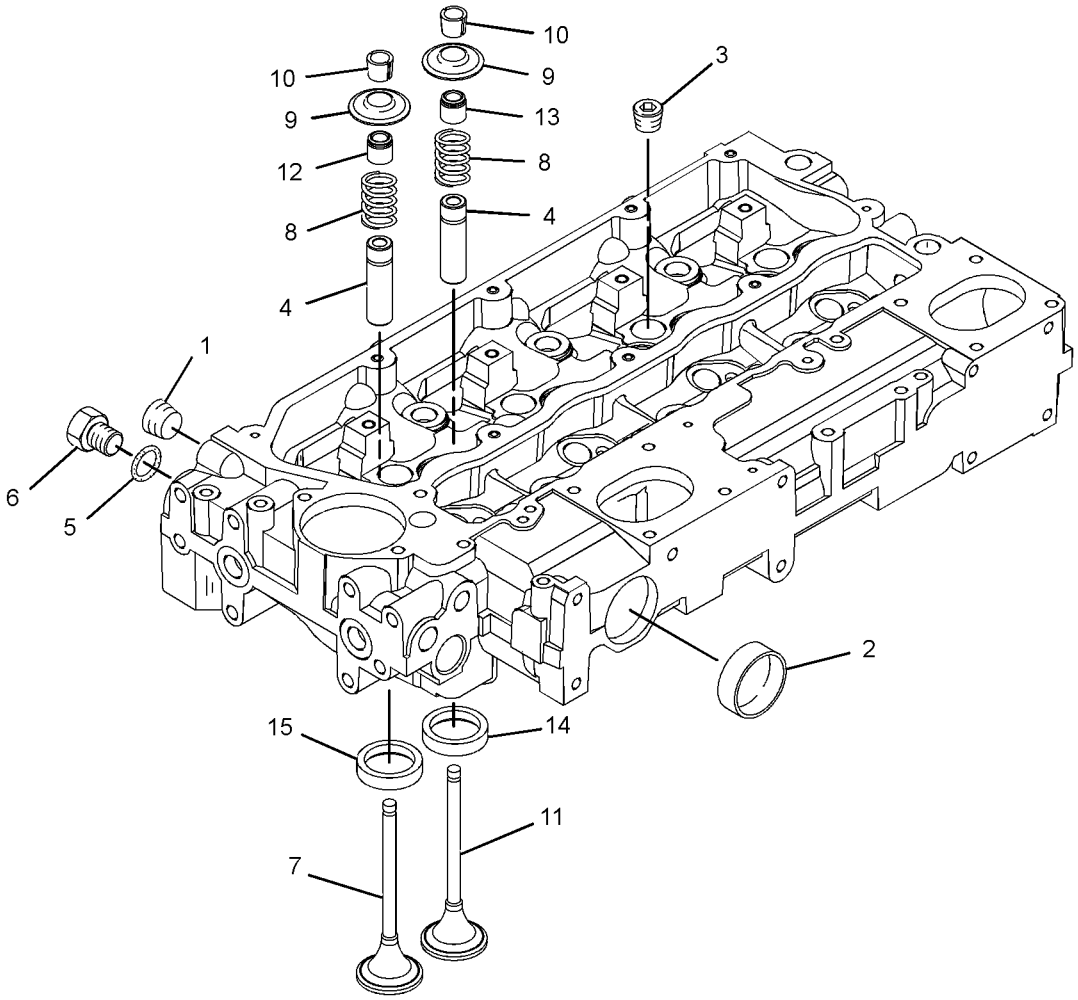

GRAPHIC #1 **<END>** g01542313

326-9003 CYLINDER HEAD GP

S/N: C4Z1-UP

PART OF 321-7704 ENGINE AR-PRIMARY

SMCS-1100, 1101, 1103, 1104, 1105, 1106, 1108, 1109, 1115, 1117, 1121, 1124, 1125 **i04131490**

NOTE	REF NO	GRAPHIC REF	PART NUMBER	QTY	PART NAME 1 2 3 4 5 6 (PRODUCT LEVEL)	SEE PAGE
	1	1	**225-5501**	7	BOLT (M15X1.5X137-MM)	
	2	1	**225-5502**	3	BOLT (M15X1.5X162-MM)	
	3	1	**258-4946**	1	GASKET-HEAD	
Y	4	1	**316-7896**	1	CYLINDER HEAD GP	61

Y-SEPARATE ILLUSTRATION

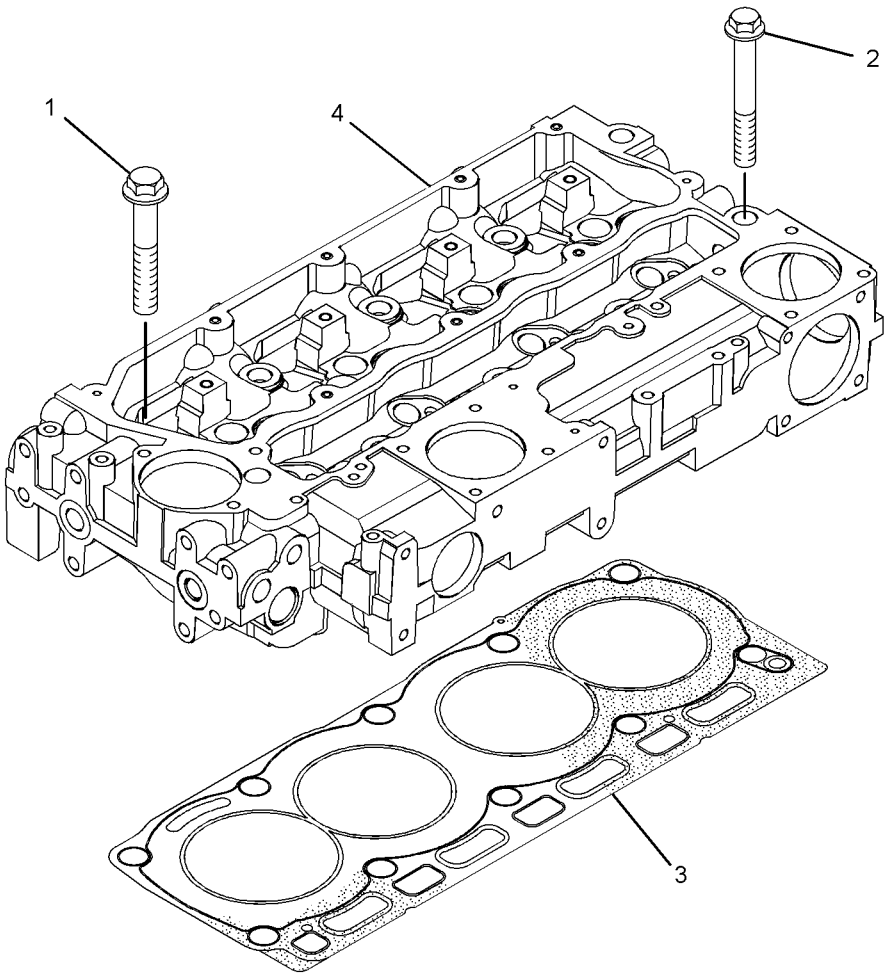

GRAPHIC #1 **<END>** g01523242

BASIC ENGINE

251-2432 DRIVE GP-FAN

S/N: G4D1-UP; CRS1-UP

PART OF 273-3610 ENGINE AR, 245-6841, 323-5724, 323-5725 ENGINE AR-PRIMARY AN ATTACHMENT

SMCS-1357, 1358, 1359, 1390 **i03668749**

NOTE	REF NO	GRAPHIC REF	PART NUMBER	QTY	PART NAME 1 2 3 4 5 6 (PRODUCT LEVEL)	SEE PAGE
	1	1	**111-0859**	4	BOLT (M10X1.5X35-MM)	
	2	1	**123-2899**	4	BOLT (M10X1.5X40-MM)	
	3	1	**251-2436**	1	HOUSING AS	
	3A	1	**225-5959**	1	CLIP	
	4	1	**251-2437**	1	PLATE	

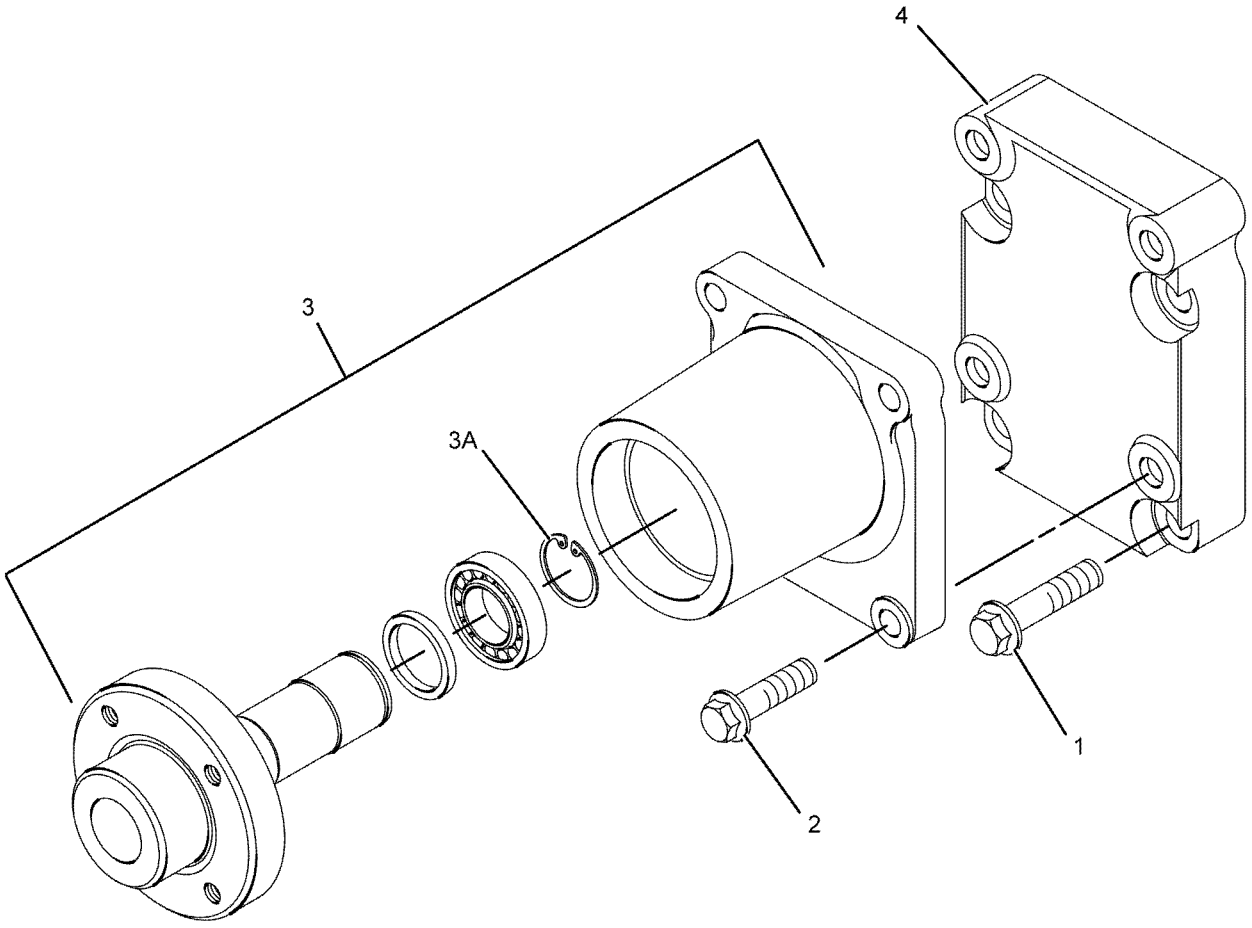

GRAPHIC #1 **<END>** g01085998

303-5770 DRIVE GP-FAN

S/N: C4Z1-UP

PART OF 321-7704 ENGINE AR-PRIMARY

SMCS-1357, 1358, 1359, 1390 **i04130011**

NOTE	REF NO	GRAPHIC REF	PART NUMBER	QTY	PART NAME 1 2 3 4 5 6 (PRODUCT LEVEL)	SEE PAGE
	1	1	**326-1880**	1	HOUSING-FAN DRIVE	
	2	1	**251-2437**	1	PLATE	
	3	1	**111-0859**	8	BOLT (M10X1.5X35-MM)	

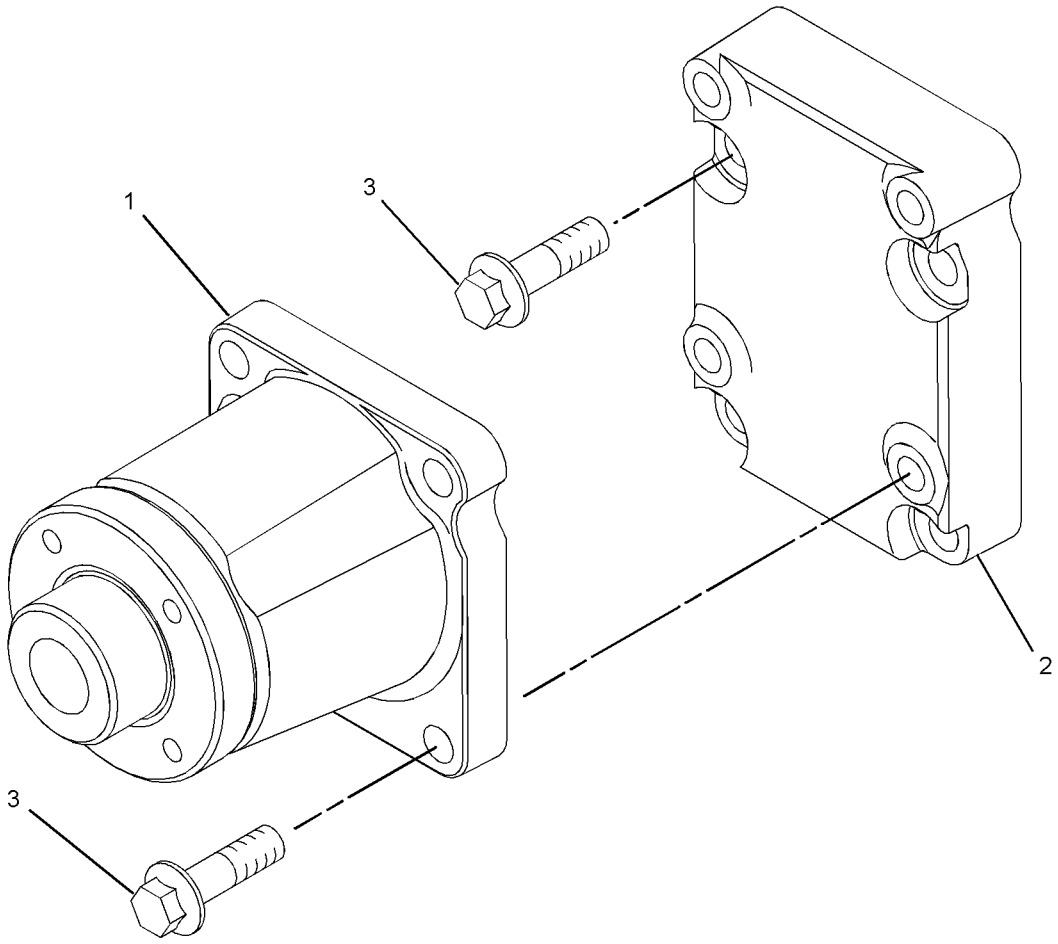

GRAPHIC #1 **<END>** g01340877

BASIC ENGINE

230-7300 FLYWHEEL GP

S/N: G4D1-UP; CRS1-UP

PART OF 273-3610 ENGINE AR, 245-6841, 323-5724, 323-5725 ENGINE AR-PRIMARY AN ATTACHMENT

SMCS-1156, 1158 **i02052069**

NOTE	REF NO	GRAPHIC REF	PART NUMBER	QTY	PART NAME 1 2 3 4 5 6 (PRODUCT LEVEL)	SEE PAGE
	1	1	**0S-1603**	6	BOLT (1/2-20X1.5-IN)	
	2	1	**5P-8245**	6	WASHER-HARD (13.5X25.5X3-MM THK)	
	3	1	**245-9828**	1	FLYWHEEL AS	
	4	1	**033-7687**	1	RING-STARTING MOTOR (126-TEETH)	

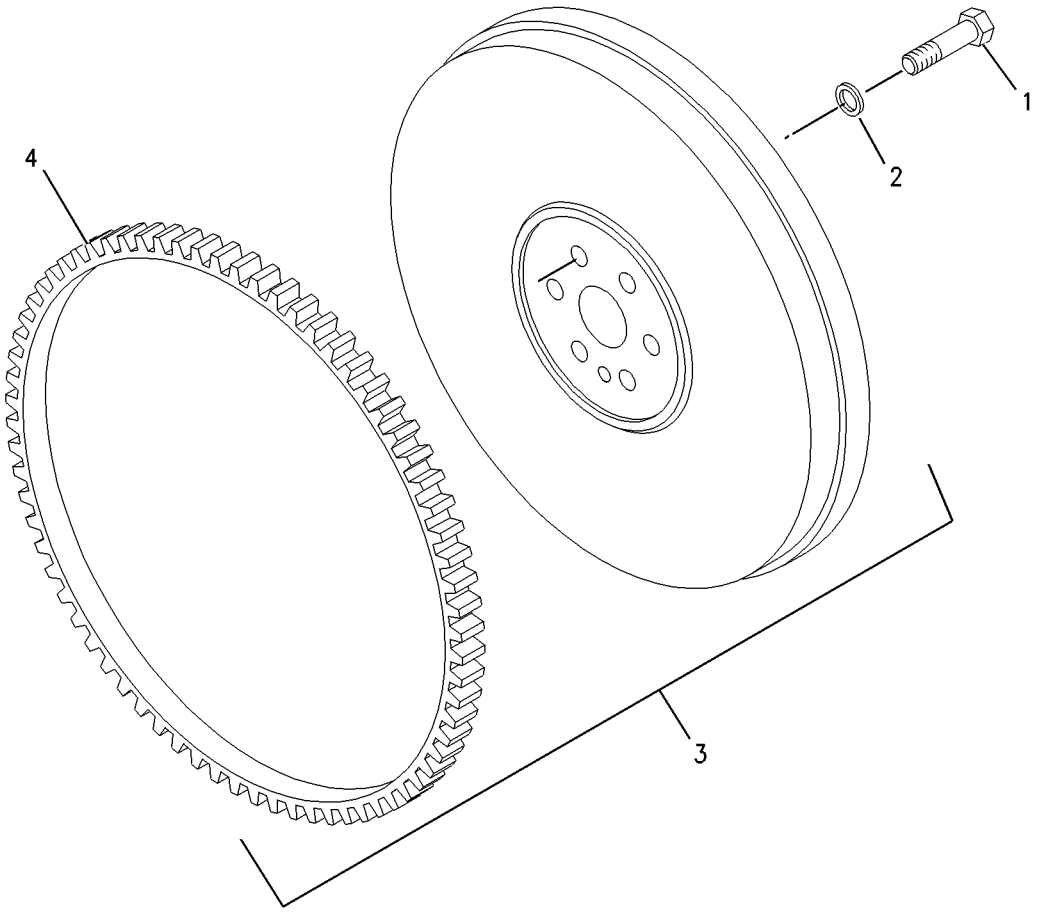

GRAPHIC #1 **<END>** g00955555

BASIC ENGINE

303-5768 FLYWHEEL GP

S/N: C4Z1-UP

PART OF 321-7704 ENGINE AR-PRIMARY

SMCS-1156, 1158 **i04130010**

NOTE	REF NO	GRAPHIC REF	PART NUMBER	QTY	PART NAME 1 2 3 4 5 6 (PRODUCT LEVEL)	SEE PAGE
	1	1	**245-9828**	1	FLYWHEEL AS	
	1A	1	**033-7687**	1	RING-STARTING MOTOR (126-TEETH)	
	2	1	**0S-1603**	10	BOLT (1/2-20X1.5-IN)	
	3	1	**5P-8245**	10	WASHER-HARD (13.5X25.5X3-MM THK)	

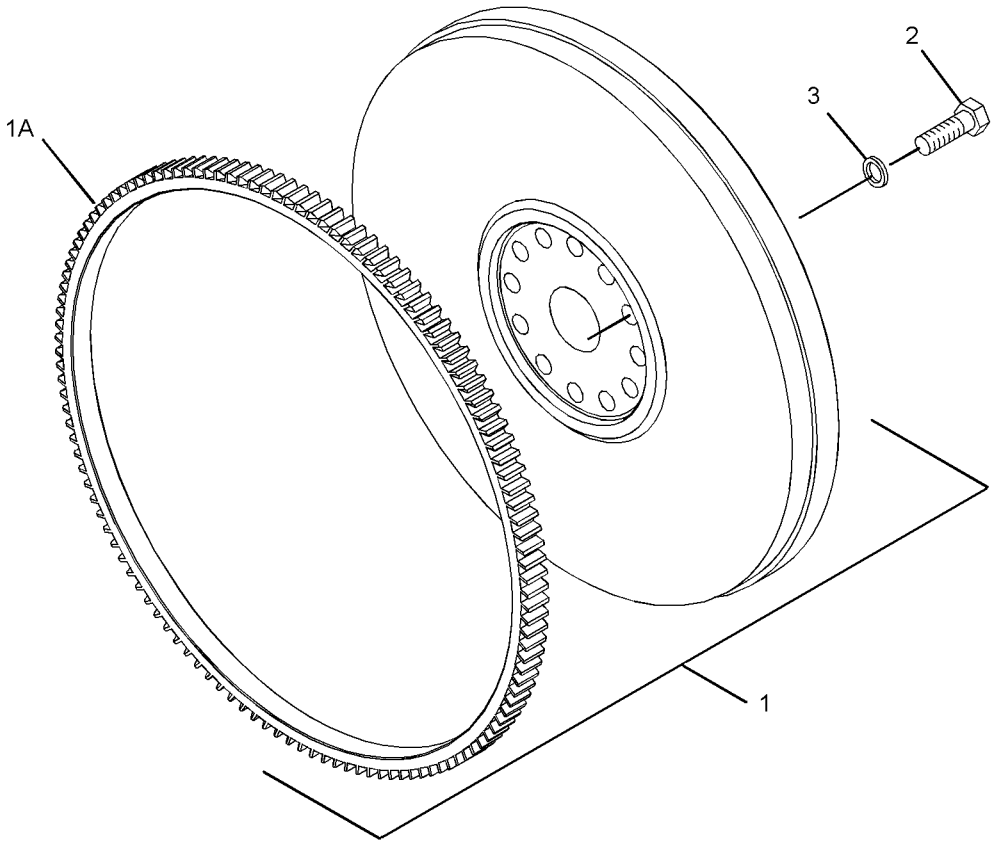

GRAPHIC #1 **<END>** g01372699

236-8238 HOUSING GP-FLYWHEEL

S/N: G4D1-UP; CRS1-UP

PART OF 273-3610 ENGINE AR, 245-6841, 323-5724, 323-5725 ENGINE AR-PRIMARY AN ATTACHMENT

SMCS-1157 **i02527251**

NOTE	REF NO	GRAPHIC REF	PART NUMBER	QTY	PART NAME 1 2 3 4 5 6 (PRODUCT LEVEL)	SEE PAGE
M	1	1	**6I-0423**	2	BOLT (M12X1.75X30-MM)	
	2	1	**6I-0847**	2	PLUG	
	3	1	**7W-1176**	1	PLATE-COVER	
	4	1	**7W-4642**	1	SHIELD-DUST	
	5	1	**287-8597**	2	DOWEL	
	6	1	**114-4363**	2	BOLT (M8X1.25X12-MM)	
	7	1	**101-3617**	3	PLUG	
M	8	1	**121-0883**	6	BOLT (M10X1.5X30-MM)	
	9	1	**220-8631**	1	HOUSING-FLYWHEEL	

M-METRIC PART

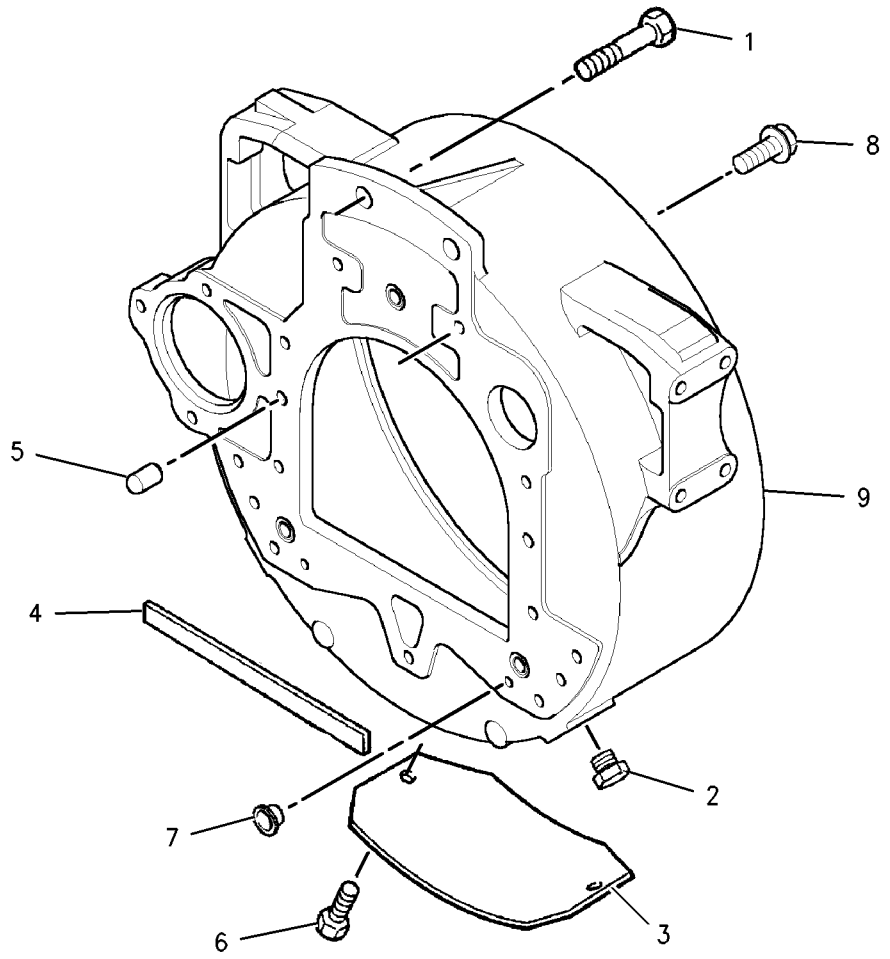

GRAPHIC #1 **<END>** g00902549

BASIC ENGINE

303-5767 HOUSING GP-FLYWHEEL

S/N: C4Z1-UP

PART OF 321-7704 ENGINE AR-PRIMARY

SMCS-1157 **i03301264**

NOTE	REF NO	GRAPHIC REF	PART NUMBER	QTY	PART NAME 1 2 3 4 5 6 (PRODUCT LEVEL)	SEE PAGE
M	1	1	**6I-0423**	2	BOLT (M12X1.75X30-MM)	
	2	1	**6I-0847**	2	PLUG	
	3	1	**7W-1176**	1	PLATE-COVER	
	4	1	**7W-4642**	1	SHIELD-DUST	
	5	1	**287-8597**	2	DOWEL	
	6	1	**114-4363**	2	BOLT (M8X1.25X12-MM)	
	7	1	**101-3617**	3	PLUG	
M	8	1	**121-0883**	6	BOLT (M10X1.5X30-MM)	
	9	1	**220-8631**	1	HOUSING-FLYWHEEL	

M-METRIC PART

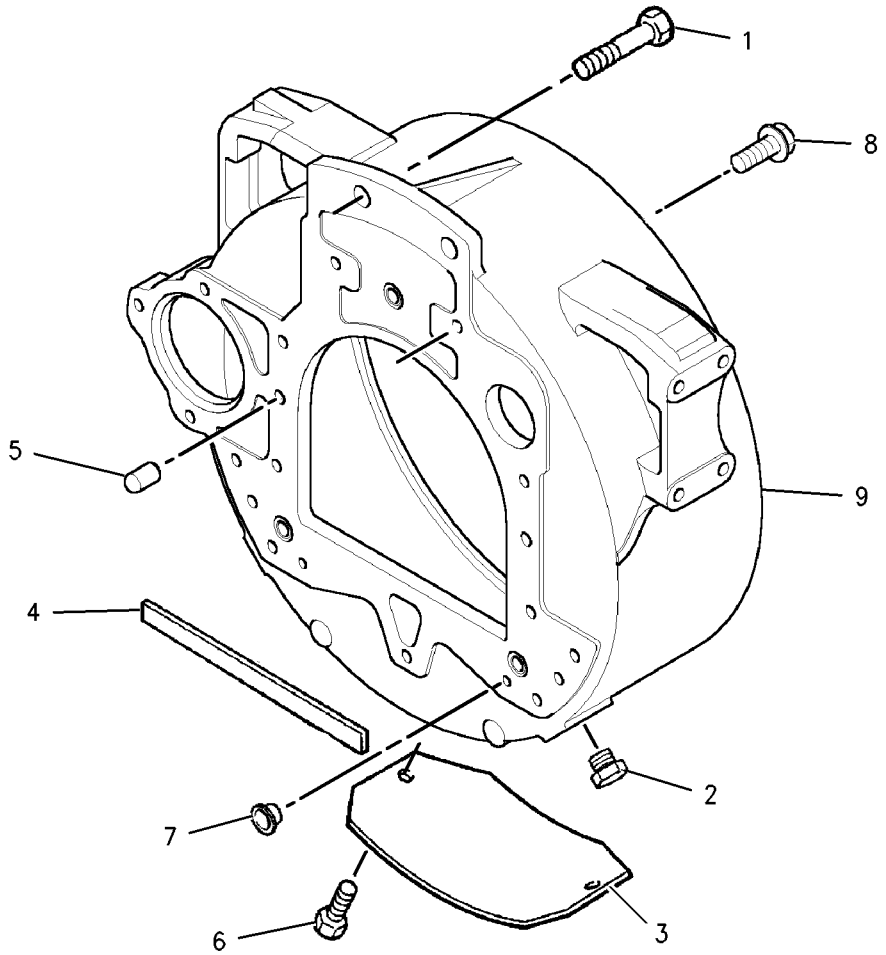

GRAPHIC #1 **<END>** g00902549

BASIC ENGINE

304-8760 HOUSING GP-FRONT

S/N: C4Z1-UP

PART OF 321-7704 ENGINE AR-PRIMARY

SMCS-1151, 1162, 1166, 1206 **i03569717**

NOTE	REF NO	GRAPHIC REF	PART NUMBER	QTY	PART NAME 1 2 3 4 5 6 (PRODUCT LEVEL)	SEE PAGE
	1	1	**294-0288**	1	HOUSING-FRONT	
	2	1	**277-3012**	1	GASKET-COVER	
	3	1	**288-0422**	1	SEAL-OIL (FRONT)	
M	4	1	**6I-0217**	6	BOLT (M8X1.25X20-MM)	
M	5	1	**101-3895**	2	BOLT (M8X1.25X35-MM)	
M	6	1	**6I-0645**	4	BOLT (M8X1.25X25-MM)	
CJ	7	1	**346-0407**	1	GEAR-IDLER (73-TEETH)	
	8	1	**324-0444**	1	HUB-IDLER GEAR	
C	9	1	**346-0408**	1	PLATE	
M	10	1	**6I-0650**	3	BOLT (M10X1.5X65-MM)	
	11	1	**216-8634**	1	GEAR-CAMSHAFT (68-TEETH)	
	12	1	**133-1011**	1	WASHER	
	13	1	**067-6179**	1	DOWEL	
	14	1	**232-3666**	1	WASHER-THRUST	
	15	1	**7C-4616**	1	BOLT (M12X1.75X45-MM)	
	16	1	**232-3657**	1	COVER AS-FRONT	
	16A	1	**225-8287**	1	GASKET	
M	17	1	**124-3815**	10	BOLT (M8X16X1.25-MM)	
M	18	1	**100-3751**	5	BOLT (M8X1.25X65-MM)	

C-CHANGE FROM PREVIOUS TYPE
J-CAN ONLY BE USED IN CONJUNCTION WITH 346-0408 & 324-0444
M-METRIC PART

304-8760 **HOUSING GP-FRONT** *(contd.)* **i03569717**

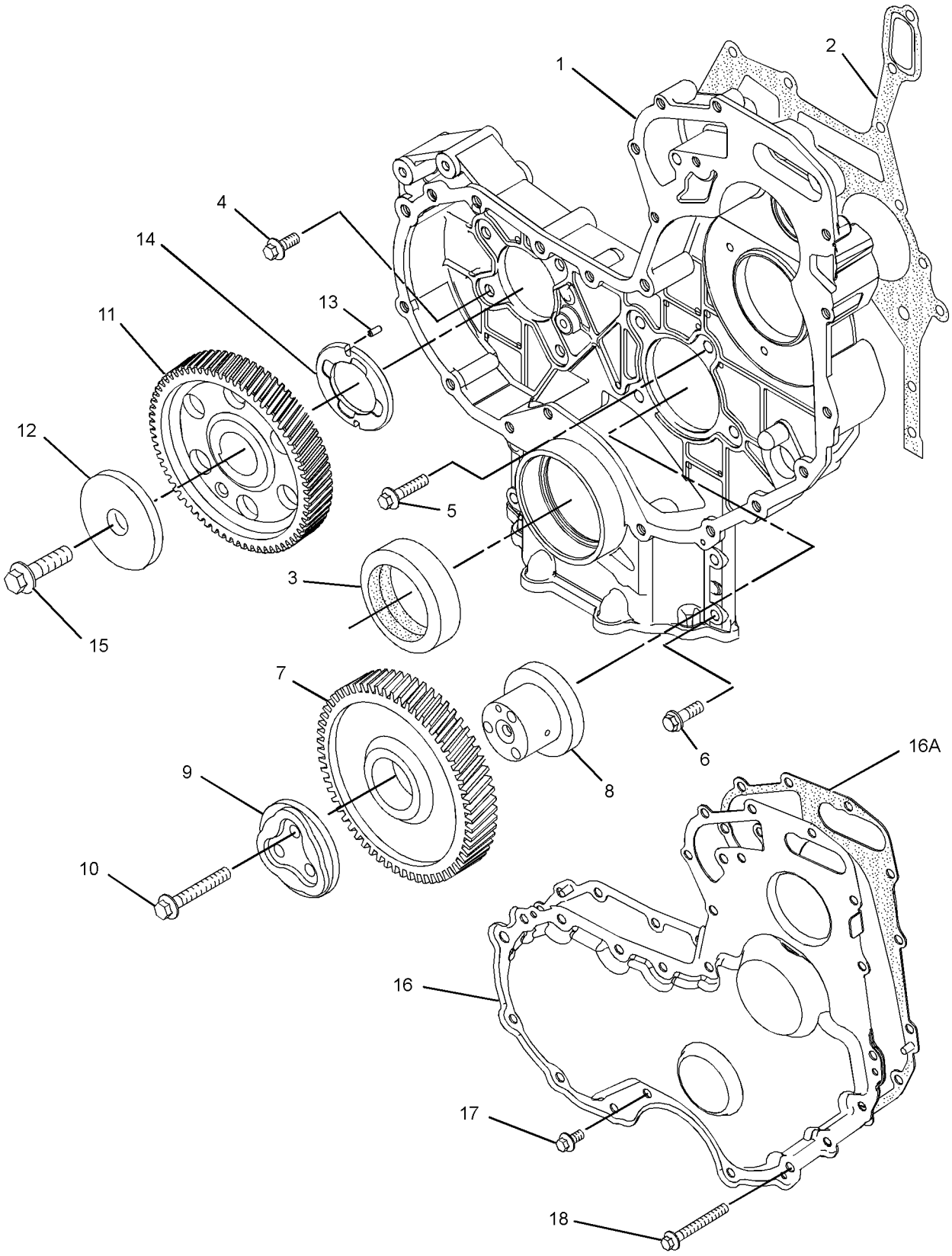

GRAPHIC #1 **<END>** g01900827

BASIC ENGINE

313-1380 HOUSING GP-FRONT

S/N: G4D1-UP; CRS1-UP

PART OF 273-3610 ENGINE AR, 245-6841, 323-5724, 323-5725 ENGINE AR-PRIMARY AN ATTACHMENT

SMCS-1151, 1162, 1166, 1206 **i04003826**

NOTE	REF NO	GRAPHIC REF	PART NUMBER	QTY	PART NAME 1 2 3 4 5 6 (PRODUCT LEVEL)	SEE PAGE
	1	1	**295-1711**	1	PLATE-RETAINING	
M	2	1	**6I-0217**	6	BOLT (M8X1.25X20-MM)	
M	3	1	**6I-0645**	4	BOLT (M8X1.25X25-MM)	
M	4	1	**6I-0650**	3	BOLT (M10X1.5X65-MM)	
	5	1	**7C-4616**	1	BOLT (M12X1.75X45-MM)	
	6	1	**067-6179**	1	DOWEL	
M	7	1	**100-3751**	5	BOLT (M8X1.25X65-MM)	
M	8	1	**124-3815**	10	BOLT (M8X1.25X16-MM)	
	9	1	**133-1011**	1	WASHER	
	10	1	**216-8634**	1	GEAR-CAMSHAFT (68-TEETH)	
	11	1	**232-3657**	1	COVER AS-FRONT	
	11A	1	**225-8287**	1	GASKET	
	12	1	**232-3666**	1	WASHER-THRUST	
	13	1	**251-4336**	1	GEAR AS-IDLER (73-TEETH)	
	14	1	**277-3012**	1	GASKET-COVER (HOUSING)	
	15	1	**324-0444**	1	HUB-IDLER GEAR	
	16	1	**288-0422**	1	SEAL-OIL	
	17	1	**294-0288**	1	HOUSING-FRONT	
M	18	1	**101-3895**	2	BOLT (M8X1.25X35-MM)	

M-METRIC PART

313-1380 **HOUSING GP-FRONT** *(contd.)* **i04003826**

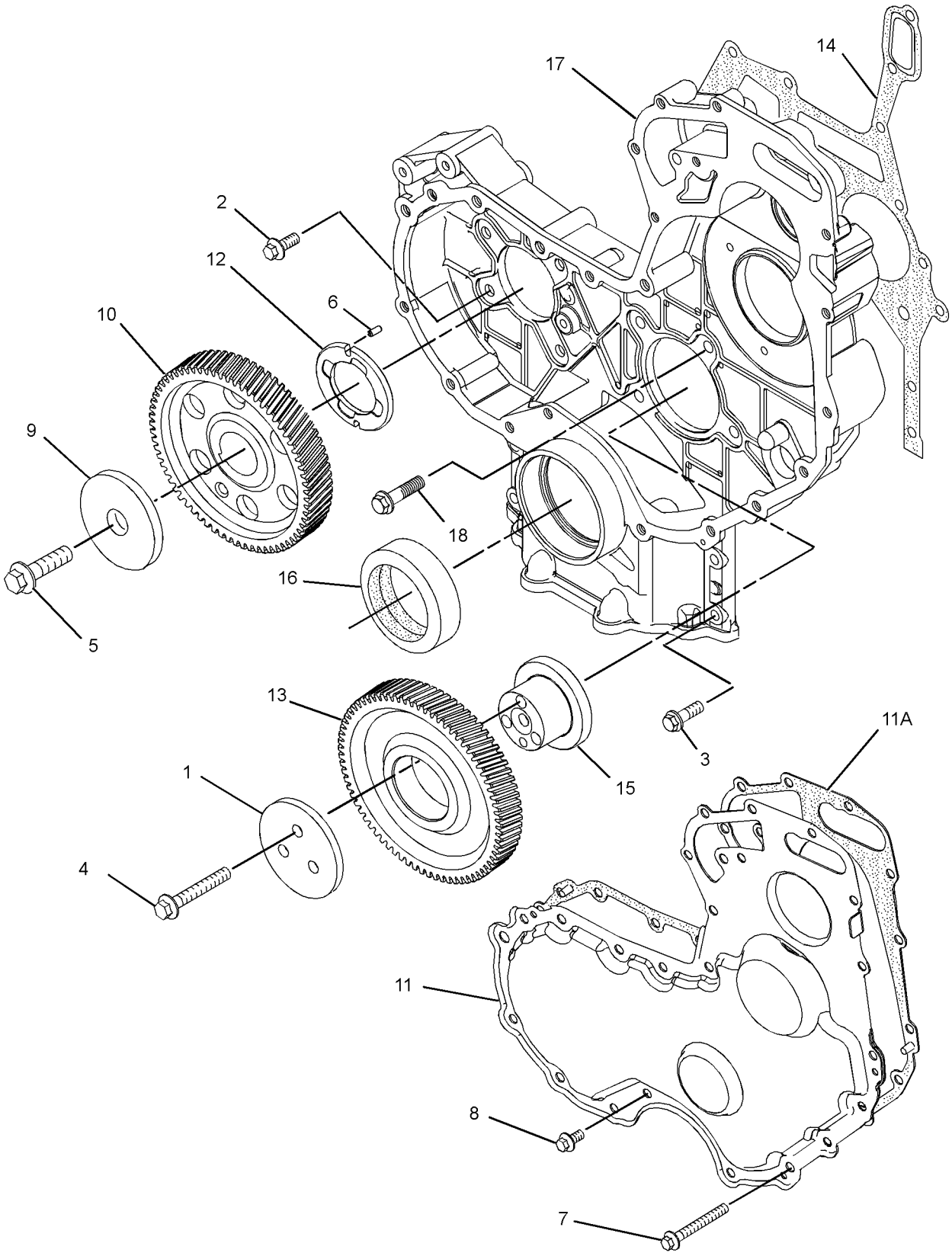

GRAPHIC #1 **<END>** g02204593

233-7432 LIFTING GP-ENGINE

S/N: G4D1-UP; CRS1-UP
PART OF 273-3610 ENGINE AR, 245-6841, 323-5724, 323-5725 ENGINE AR-PRIMARY
AN ATTACHMENT

SMCS-1122 **i02052220**

NOTE	REF NO	GRAPHIC REF	PART NUMBER	QTY	PART NAME 1 2 3 4 5 6 (PRODUCT LEVEL)	SEE PAGE
M	1	1	**100-4830**	4	BOLT (M10X1.5X20-MM)	
	2	1	**225-8848**	2	PLATE-LIFTING	

M-METRIC PART

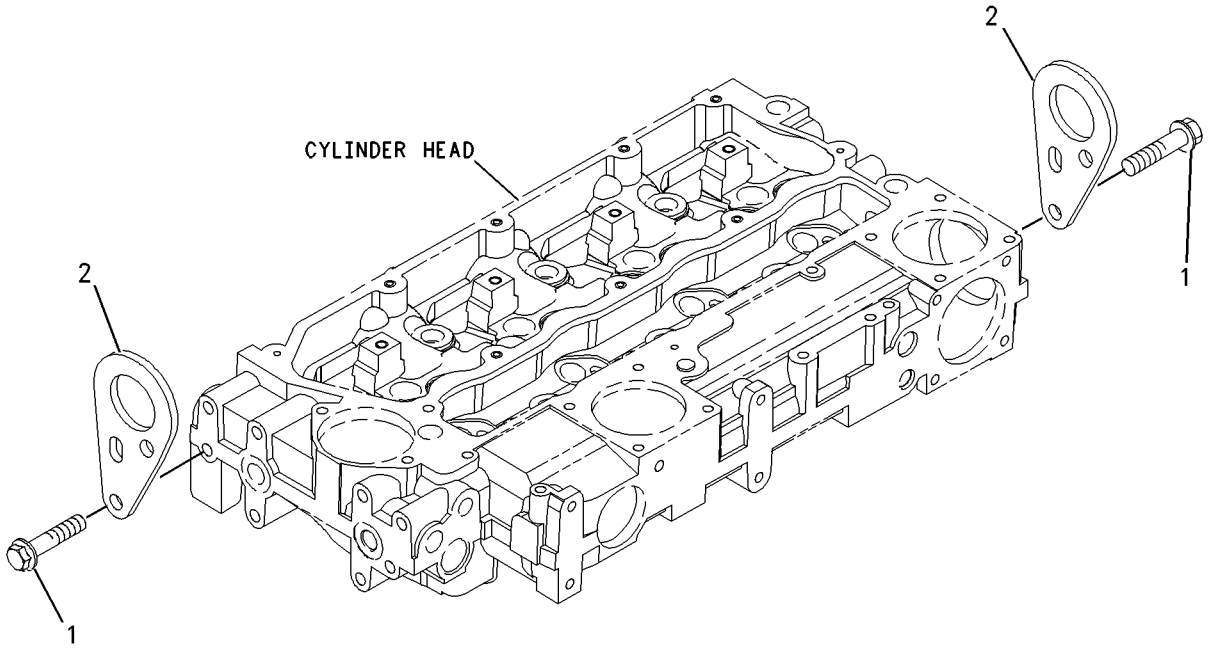

GRAPHIC #1 **<END>** g00955299

BASIC ENGINE

326-9013 LIFTING GP-ENGINE

S/N: C4Z1-UP

PART OF 321-7704 ENGINE AR-PRIMARY

SMCS-1122 **i04130289**

NOTE	REF NO	GRAPHIC REF	PART NUMBER	QTY	PART NAME 1 2 3 4 5 6 (PRODUCT LEVEL)	SEE PAGE
M	1	1	**100-4830**	4	BOLT (M10X1.5X20-MM)	
	2	1	**225-8848**	2	PLATE-LIFTING	

M-METRIC PART

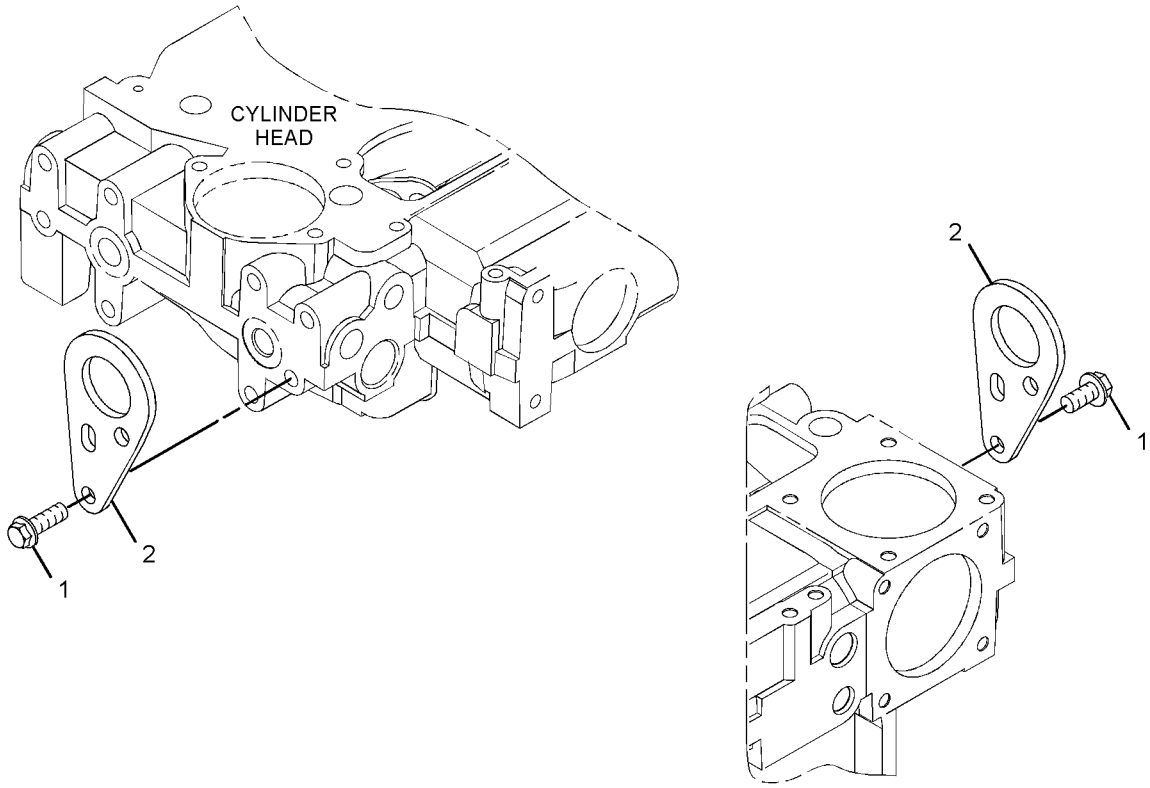

GRAPHIC #1 **<END>** g01636462

237-3658 MOUNTING GP-ENGINE

S/N: G4D1-UP; CRS1-UP

PART OF 273-3610 ENGINE AR, 245-6841, 323-5724, 323-5725 ENGINE AR-PRIMARY AN ATTACHMENT

SMCS-1152, 1153, 1154 **i02052133**

NOTE	REF NO	GRAPHIC REF	PART NUMBER	QTY	PART NAME 1 2 3 4 5 6 (PRODUCT LEVEL)	SEE PAGE
	1	1	**101-2987**	6	PLUG	
	2	1	**6H-3616**	3	PLUG-PROTECTION	
	3	1	**195-2132**	1	SUPPORT-FRONT	
	4	1	**195-2134**	1	SUPPORT-FRONT	
	5	1	**195-2136**	8	STUD	
	6	1	**195-2221**	8	NUT	

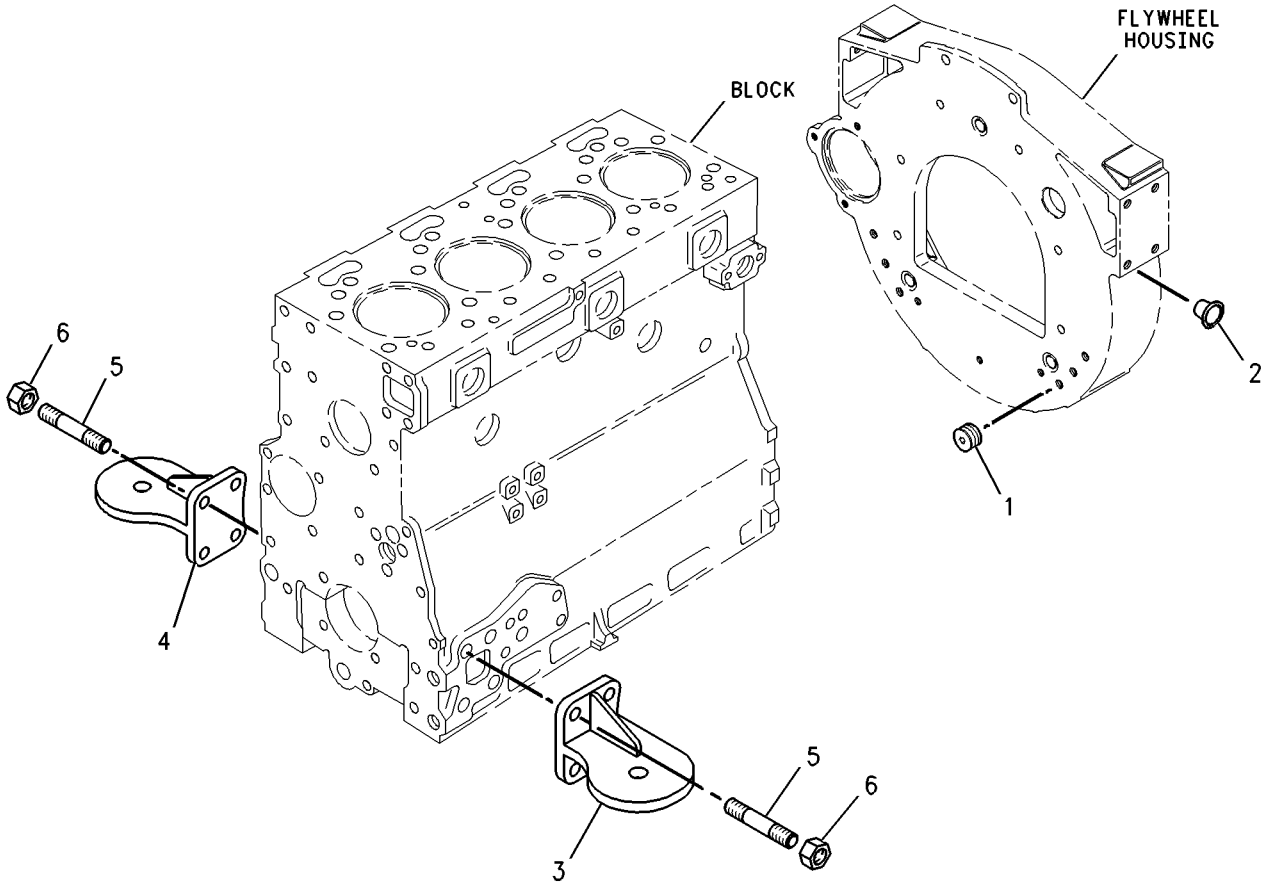

GRAPHIC #1 **<END>** g00738284

BASIC ENGINE

303-5778 MOUNTING GP-ENGINE

S/N: C4Z1-UP

PART OF 321-7704 ENGINE AR-PRIMARY

SMCS-1152, 1153, 1154 **i03301263**

NOTE	REF NO	GRAPHIC REF	PART NUMBER	QTY	PART NAME 1 2 3 4 5 6 (PRODUCT LEVEL)	SEE PAGE
	1	1	**6H-3616**	3	PLUG-PROTECTION	
	2	1	**101-2987**	6	PLUG	
	3	1	**195-2132**	1	SUPPORT-FRONT	
	4	1	**195-2134**	1	SUPPORT-FRONT	
	5	1	**195-2136**	8	STUD	
	6	1	**195-2221**	8	NUT (M12X1.75-THD)	

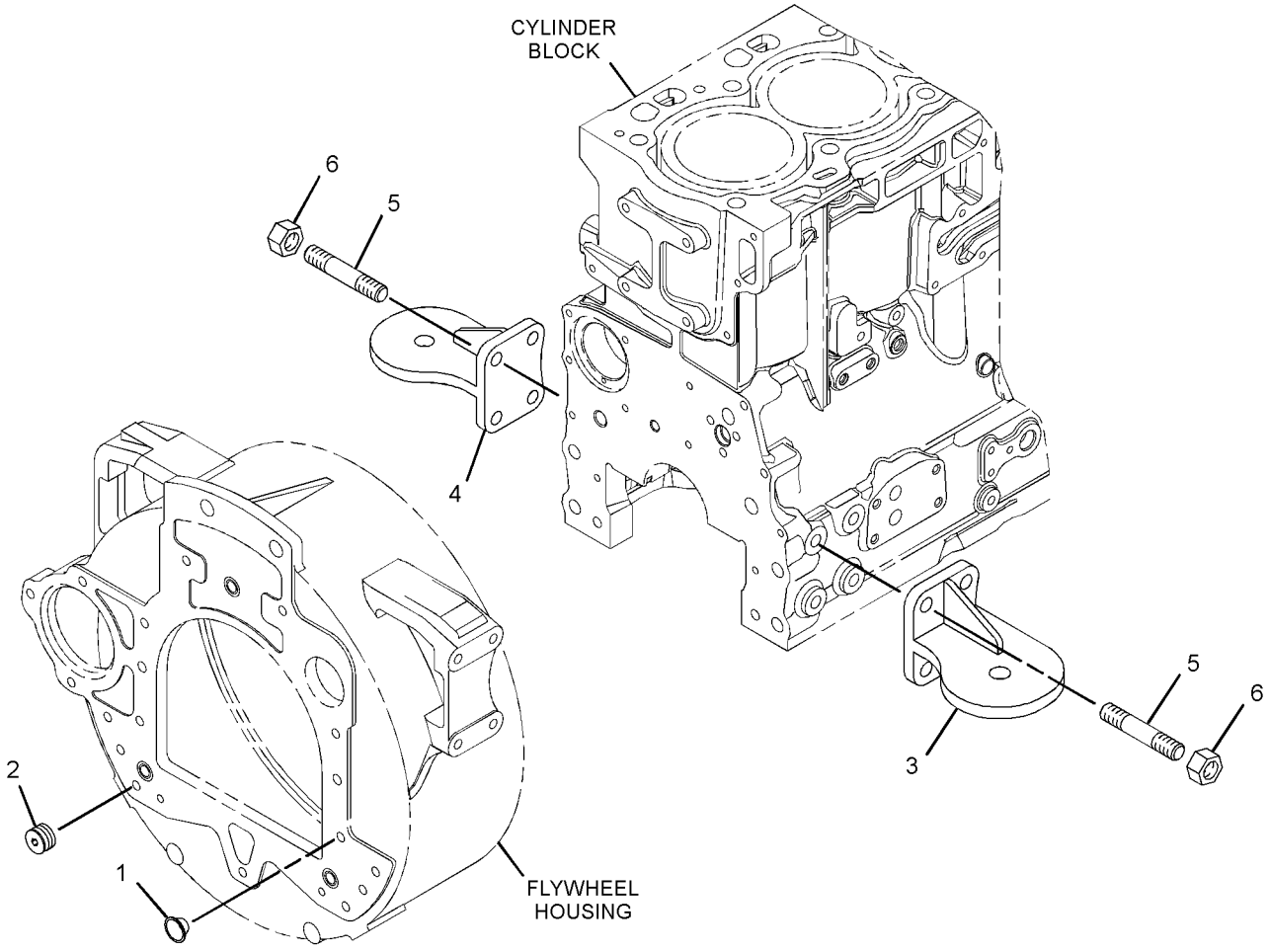

GRAPHIC #1 **<END>** g01378883

214-0973 MOUNTING GP-ENGINE & XMSN

S/N: CBD1-UP; MFG1-UP
PART OF 252-4640, 252-4641 ENGINE AR
AN ATTACHMENT

SMCS-1152, 1153, 1154 **i02496932**

NOTE	REF NO	GRAPHIC REF	PART NUMBER	QTY	PART NAME 1 2 3 4 5 6 (PRODUCT LEVEL)	SEE PAGE
	1	1	**9W-9910**	2	MOUNT AS	
	2	1	**9W-9915**	2	MOUNT AS	
	3	1	**9W-9953**	4	SLEEVE	
	4	1	**8T-4121**	12	WASHER-HARD (11X21X2.5-MM THK)	
	5	1	**8T-4122**	8	WASHER-HARD (17.0X32.0X3.5-MM THK)	
M	6	1	**8T-4132**	4	NUT (M16X2-THD)	
M	7	1	**8T-4174**	4	BOLT (M16X2X120-MM)	
M	8	1	**8T-4196**	12	BOLT (M10X1.5X35-MM)	
	9	1	**9W-9952**	4	WASHER (16.75X86.0X8.0-MM THK)	

M-METRIC PART

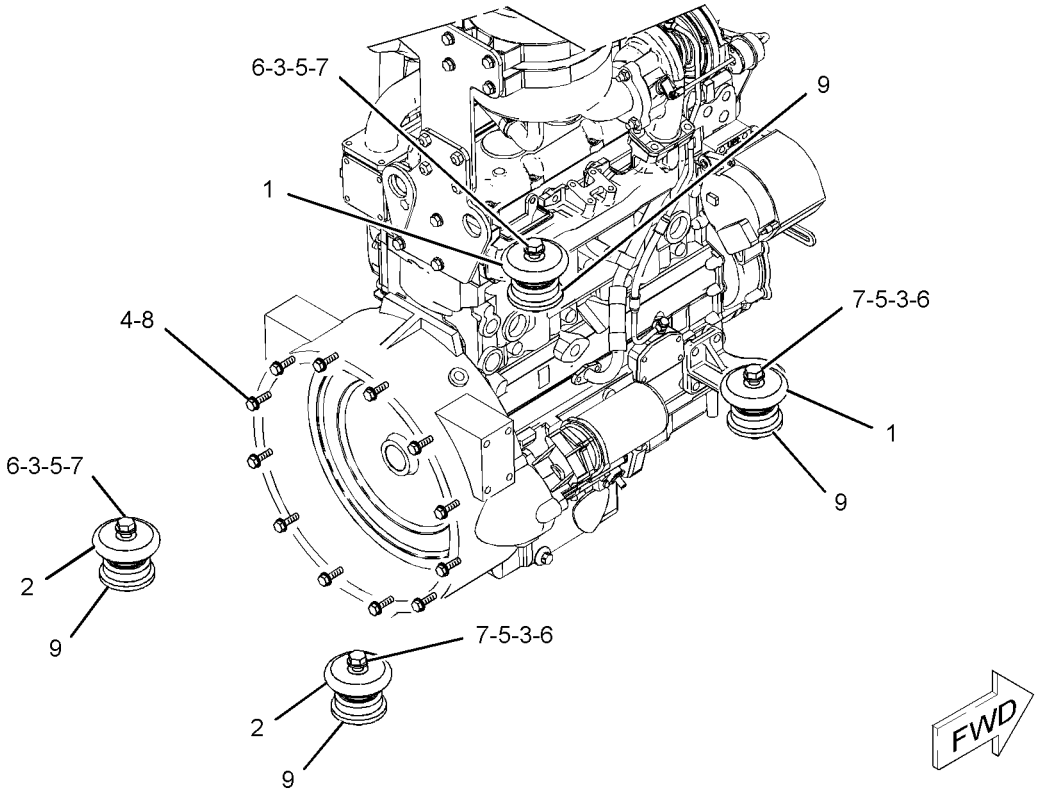

GRAPHIC #1 **<END>** g01079533

BASIC ENGINE

322-5799 MOUNTING GP-ENGINE & XMSN

S/N: MFG1-UP

PART OF 291-9188 ENGINE AR

SMCS-1152, 1153, 1154 **i03858961**

NOTE	REF NO	GRAPHIC REF	PART NUMBER	QTY	PART NAME 1 2 3 4 5 6 (PRODUCT LEVEL)	SEE PAGE
	1	1	**9W-9915**	4	MOUNT AS	
	2	1	**9W-9953**	4	SLEEVE	
	3	1	**8T-4121**	12	WASHER-HARD (11X21X2.5-MM THK)	
	4	1	**8T-4122**	8	WASHER-HARD (17X32X3.5-MM THK)	
M	5	1	**8T-4132**	4	NUT (M16X2-THD)	
	6	1	**335-1836**	4	BOLT-SPECIAL	
M	7	1	**8T-4196**	12	BOLT (M10X1.5X35-MM)	
	8	1	**9W-9952**	4	WASHER (16.75X86X8-MM THK)	

M-METRIC PART

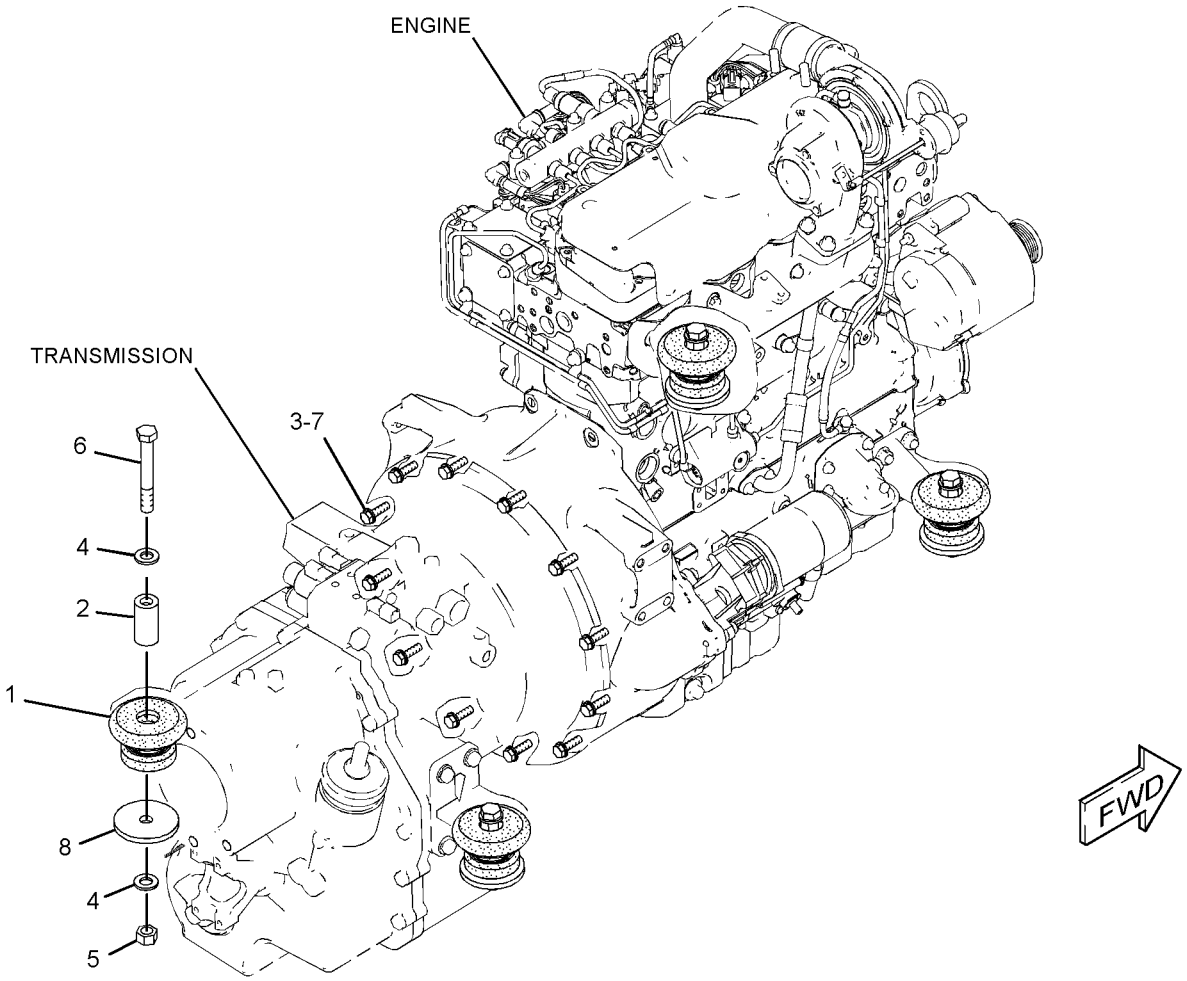

GRAPHIC #1 **<END>** g01520115

BASIC ENGINE

237-0025 PAN GP-OIL

S/N: G4D1-UP; CRS1-UP
PART OF 273-3610 ENGINE AR, 245-6841, 323-5724, 323-5725 ENGINE AR-PRIMARY
AN ATTACHMENT
TYPE 1

SMCS-1302 **i03886552**

NOTE	REF NO	GRAPHIC REF	PART NUMBER	QTY	PART NAME 1 2 3 4 5 6 (PRODUCT LEVEL)	SEE PAGE
	1	1	**275-9883**	2	SEAL (ENGINE OIL DRAIN)	
M	2	1	**6I-0217**	14	BOLT (M8X1.25X20-MM)	
M	3	1	**6I-0260**	2	BOLT (M8X1.25X25-MM)	
	4	1	**6I-0289**	1	PLUG	
M	5	1	**6I-0363**	2	BOLT (M6X1X20-MM)	
	6	1	**6I-0572**	2	BOLT (M8X1.25X20-MM)	
	7	1	**7C-0351**	2	PLUG-DRAIN (ENGINE OIL)	
	8	1	**067-6213**	1	GASKET	
	9	1	**101-3771**	4	BOLT	
	10	1	**304-8764**	1	PAN AS-OIL (ENGINE) (ENGINE)	
	10A	1	**7C-1224**	2	INSERT	
	11	1	**225-6005**	1	GASKET	
	12	1	**225-6041**	1	TUBE	
	13	1	**230-8094**	1	BRIDGE	

M-METRIC PART

237-0025 **PAN GP-OIL** *(contd.)* **i03886552**

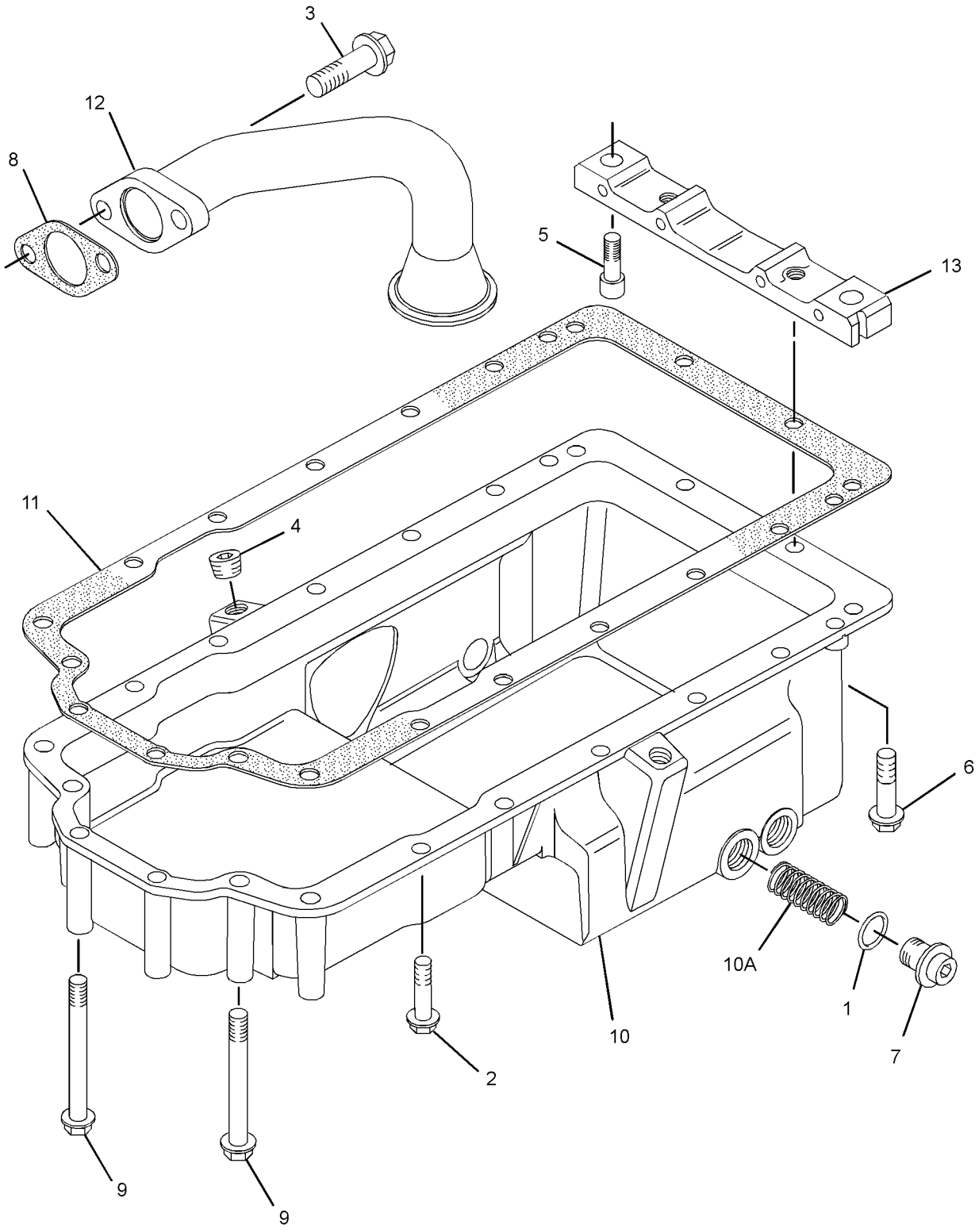

GRAPHIC #1 **<END>** g01382092

237-0025 PAN GP-OIL

S/N: G4D1-UP; CRS1-UP
PART OF 323-5724, 323-5725 ENGINE AR-PRIMARY
AN ATTACHMENT
TYPE 2

SMCS-1302 **i04331169**

NOTE	REF NO	GRAPHIC REF	PART NUMBER	QTY	PART NAME 1 2 3 4 5 6 (PRODUCT LEVEL)	SEE PAGE
	1	1	**275-9883**	2	SEAL (ENGINE OIL DRAIN)	
M	2	1	**6I-0217**	14	BOLT (M8X1.25X20-MM)	
M	3	1	**6I-0260**	2	BOLT (M8X1.25X25-MM)	
	4	1	**6I-0289**	1	PLUG	
M	5	1	**6I-0363**	2	BOLT (M6X1X20-MM)	
	6	1	**6I-0572**	2	BOLT (M8X1.25X20-MM)	
	7	1	**7C-0351**	2	PLUG-DRAIN (ENGINE OIL)	
	8	1	**067-6213**	1	GASKET	
	9	1	**101-3771**	4	BOLT	
C	10	1	**372-3537**	1	PAN-OIL (ENGINE)	
	11	1	**225-6005**	1	GASKET	
	12	1	**225-6041**	1	TUBE	
	13	1	**230-8094**	1	BRIDGE	

C-CHANGE FROM PREVIOUS TYPE
M-METRIC PART

237-0025 **PAN GP-OIL** *(contd.)* **i04331169**

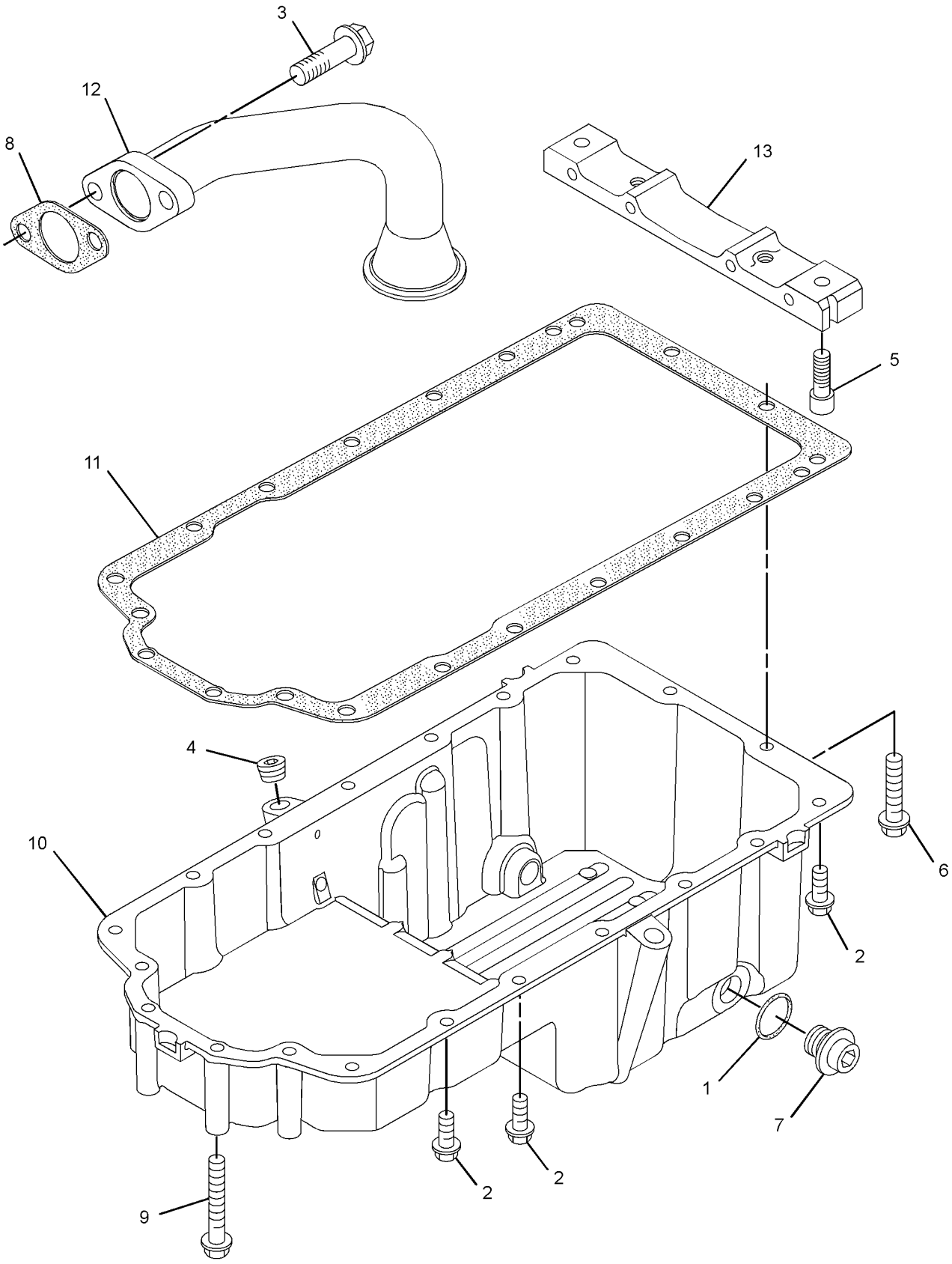

GRAPHIC #1 **<END>** g02497936

BASIC ENGINE

322-9476 PAN GP-OIL

S/N: C4Z1-UP

PART OF 321-7704 ENGINE AR-PRIMARY

SMCS-1302 **i03728723**

NOTE	REF NO	GRAPHIC REF	PART NUMBER	QTY	PART NAME 1 2 3 4 5 6 (PRODUCT LEVEL)	SEE PAGE
M	1	1	**6I-0217**	14	BOLT (M8X1.25X20-MM)	
M	2	1	**6I-0260**	2	BOLT (M8X1.25X25-MM)	
	3	1	**6I-0289**	2	PLUG	
M	4	1	**6I-0363**	2	BOLT (M6X1X20-MM)	
	5	1	**6I-0572**	2	BOLT (M8X1.25X20-MM)	
	6	1	**7C-0351**	2	PLUG-DRAIN (ENGINE OIL)	
	7	1	**067-6213**	1	GASKET	
	8	1	**101-3771**	4	BOLT	
	9	1	**225-6005**	1	GASKET	
	10	1	**225-6041**	1	TUBE	
	11	1	**230-8094**	1	BRIDGE	
	12	1	**275-9883**	2	SEAL (DRAIN PLUG)	
	13	1	**304-8764**	1	PAN AS-OIL (ENGINE)	
	13A	1	**7C-1224**	2	INSERT	

M-METRIC PART

322-9476 **PAN GP-OIL** *(contd.)* **i03728723**

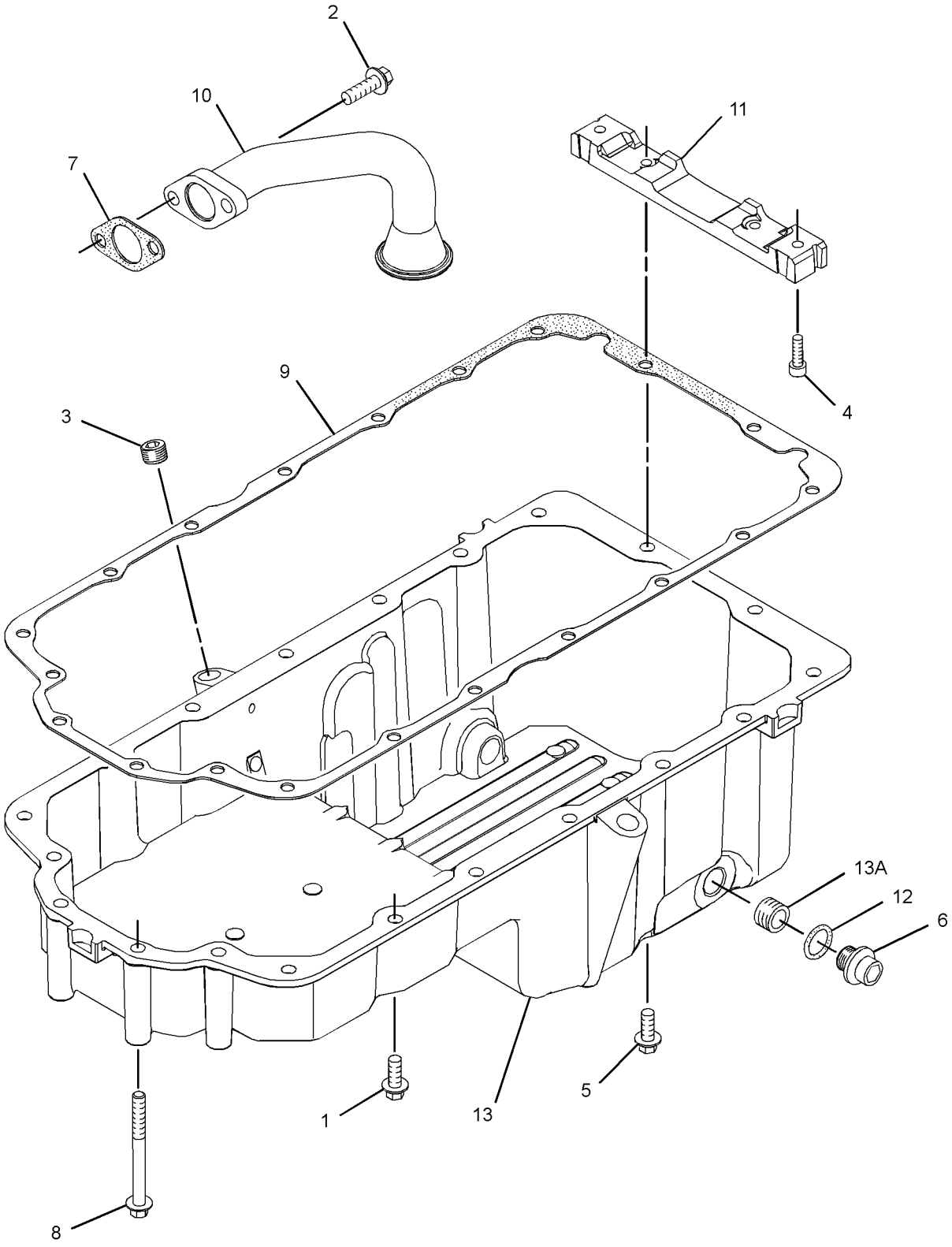

GRAPHIC #1 **<END>** g01442277

308-4730 PISTON & ROD GP

S/N: G4D1-UP; CRS1-59947
PART OF 273-3610 ENGINE AR, 323-5725 ENGINE AR-PRIMARY
AN ATTACHMENT

SMCS-1213, 1214, 1215, 1218, 1219, 1225, 1239 **i02719132**

NOTE	REF NO	GRAPHIC REF	PART NUMBER	QTY	PART NAME 1 2 3 4 5 6 (PRODUCT LEVEL)	SEE PAGE
	1	1	**225-5437**	4	PISTON AS	
					(EACH PISTON AS INCLUDES)	
	1A	1	**124-3536**	2	RING-RETAINING	
	1B	1	**225-5436**	1	KIT-PISTON RING	
BJ	2	1	**225-5441**	4	ROD AS-CONNECTING (L-GRADE)	
					—OR—	
BJ		1	**225-5451**	4	ROD AS-CONNECTING (GRADE K)	
					—OR—	
BJ		1	**225-5453**	4	ROD AS-CONNECTING (J-GRADE)	
					—OR—	
BJ		1	**225-5454**	4	ROD AS-CONNECTING (GRADE H)	
					—OR—	
BJ		1	**225-5458**	4	ROD AS-CONNECTING (GRADE G)	
					—OR—	
BJ		1	**225-5459**	4	ROD AS-CONNECTING (F-GRADE)	
					(EACH ROD AS INCLUDES)	
	2A	1	**225-5438**	1	BUSHING	
	2B	1	**225-5439**	2	BOLT-SPECIAL (CONNECTING ROD)	

B-USE AS REQUIRED
J-ENSURE THAT CORRECT ROD LENGTH IS FITTED

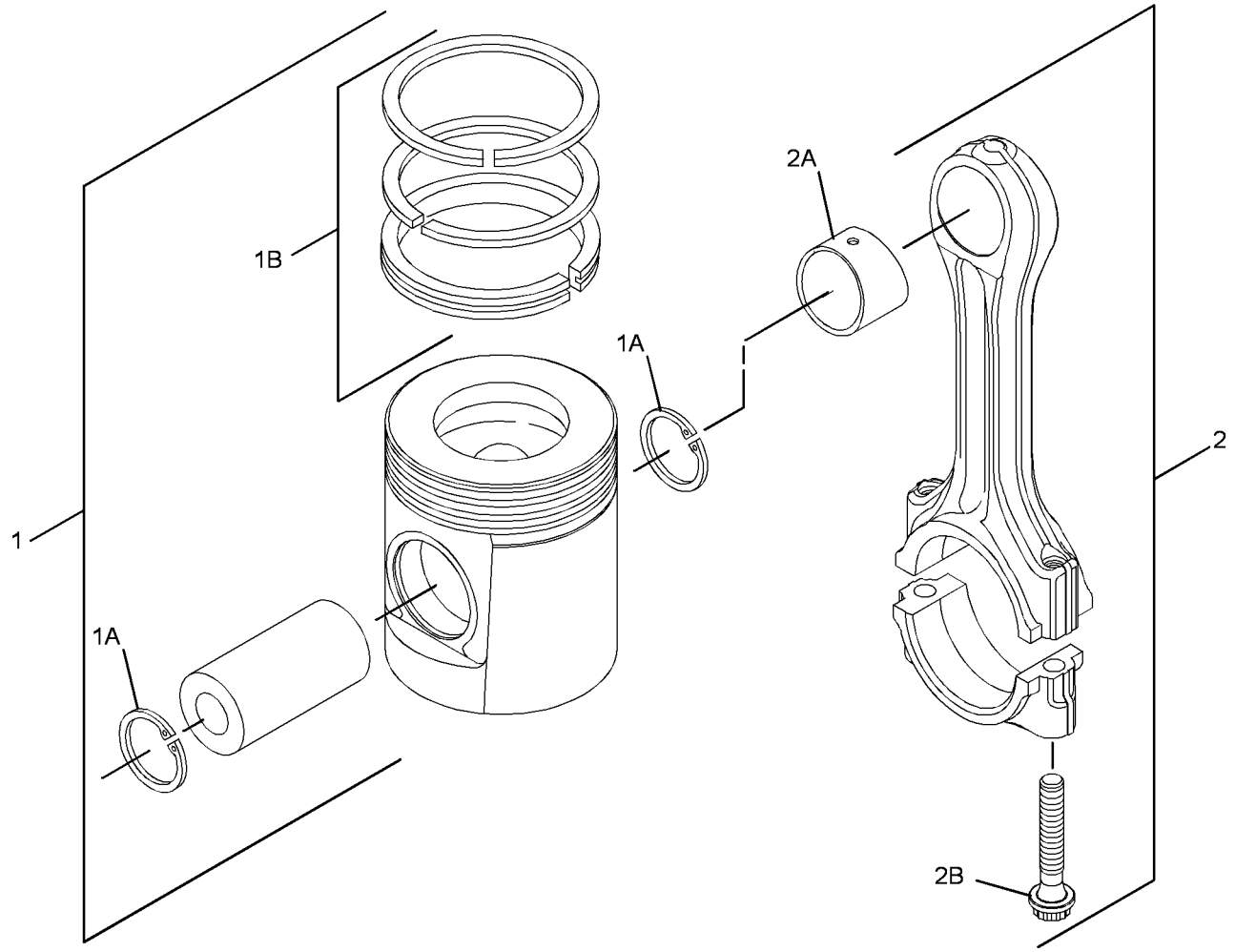

GRAPHIC #1 **<END>** g01374535

BASIC ENGINE

308-4730 PISTON & ROD GP

S/N: G4D1-UP; CRS1-UP
PART OF 323-5725 ENGINE AR-PRIMARY
AN ATTACHMENT

SMCS-1213, 1214, 1215, 1218, 1219, 1225, 1239 **i04018010**

NOTE	REF NO	GRAPHIC REF	PART NUMBER	QTY	PART NAME 1 2 3 4 5 6 (PRODUCT LEVEL)	SEE PAGE
	1	1	**225-5437**	4	PISTON AS	
					(EACH PISTON AS INCLUDES)	
	1A	1	**124-3536**	2	RING-RETAINING	
	1B	1	**225-5436**	1	KIT-PISTON RING	
AB		1	**334-2318**		KIT-PISTON RING	
AB		1	**334-2319**		KIT-PISTON RING	
AB		1	**288-1394**		PISTON AS (0.5-MM OS)	
AB		1	**288-1395**		PISTON AS (1.0-MM OS)	
BCJ	2	1	**359-0724**	4	ROD AS-CONNECTING (GRADE B)	
					—OR—	
BCJ		1	**359-0723**	4	ROD AS-CONNECTING (GRADE P)	
					—OR—	
BCJ		1	**359-0722**	4	ROD AS-CONNECTING (GRADE G)	
					—OR—	
BCJ		1	**359-0721**	4	ROD AS-CONNECTING (GRADE W)	
					—OR—	
BCJ		1	**359-0720**	4	ROD AS-CONNECTING (GRADE O)	
					—OR—	
BCJ		1	**359-0719**	4	ROD AS-CONNECTING (GRADE R)	
					(EACH ROD AS INCLUDES)	
	2A	1	**225-5438**	1	BUSHING	
	2B	1	**323-9312**	2	BOLT	

A-NOT PART OF THIS GROUP
B-USE AS REQUIRED
C-CHANGE FROM PREVIOUS TYPE
J-ENSURE THAT CORRECT ROD LENGTH IS FITTED

308-4730 **PISTON & ROD GP** *(contd.)* **i04018010**

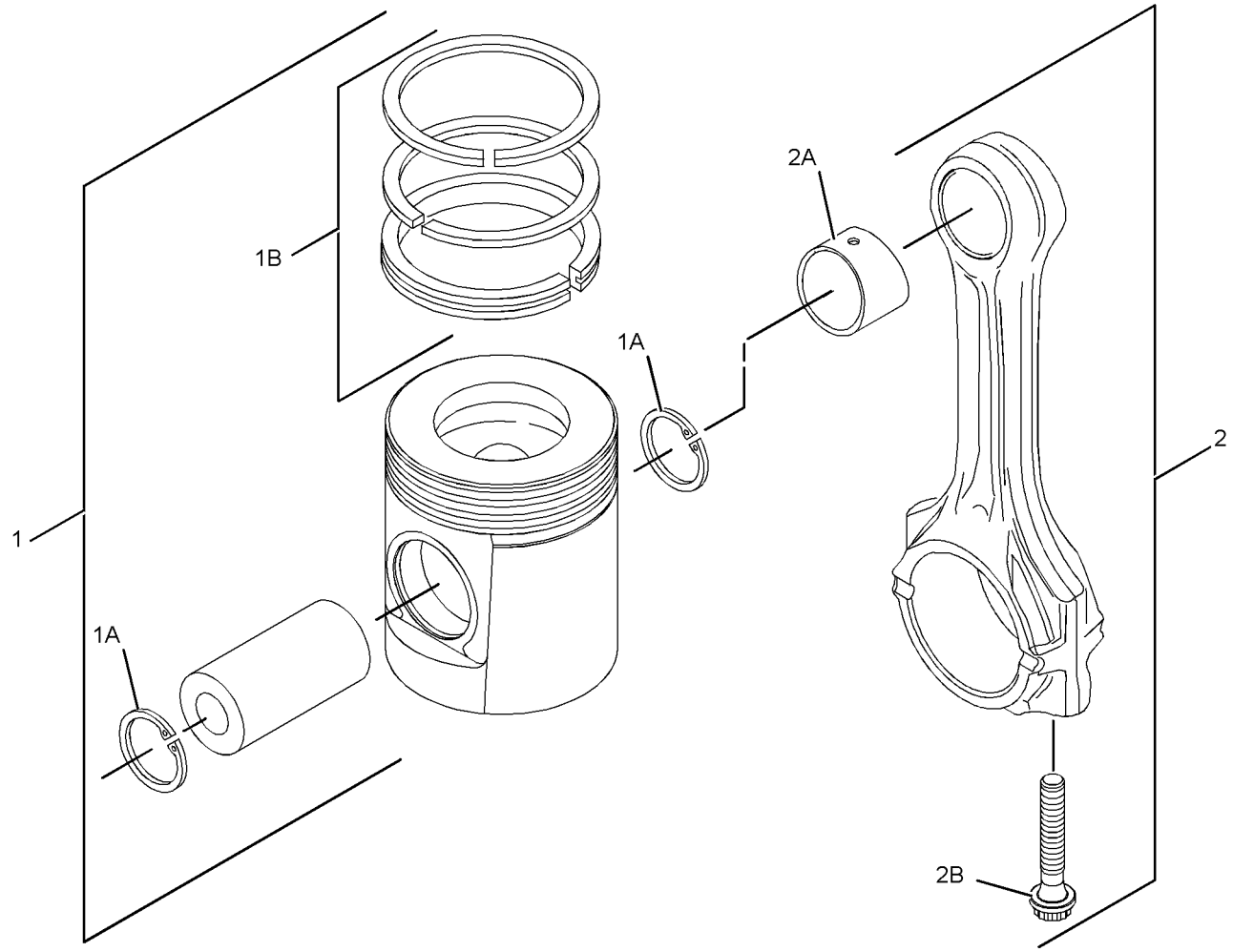

GRAPHIC #1 **<END>** g02201617

BASIC ENGINE

313-3359 PISTON & ROD GP

S/N: G4D1-UP; CRS1-59914
PART OF 245-6841, 323-5724 ENGINE AR-PRIMARY
AN ATTACHMENT

SMCS-1213, 1214, 1215, 1218, 1219, 1225, 1239 **i02811132**

NOTE	REF NO	GRAPHIC REF	PART NUMBER	QTY	PART NAME 1 2 3 4 5 6 (PRODUCT LEVEL)	SEE PAGE
BJ	1	1	**225-5441**	4	ROD AS-CONNECTING (L-GRADE)	
					—OR—	
BJ		1	**225-5451**	4	ROD AS-CONNECTING (GRADE K)	
					—OR—	
BJ		1	**225-5453**	4	ROD AS-CONNECTING (J-GRADE)	
					—OR—	
BJ		1	**225-5454**	4	ROD AS-CONNECTING (GRADE H)	
					—OR—	
BJ		1	**225-5458**	4	ROD AS-CONNECTING (GRADE G)	
					—OR—	
BJ		1	**225-5459**	4	ROD AS-CONNECTING (F-GRADE)	
					(EACH INCLUDES)	
	1A	1	**225-5438**	1	BUSHING	
	1B	1	**225-5439**	2	BOLT-SPECIAL (CONNECTING ROD)	
	2	1	**233-7232**	4	PISTON AS	
					(EACH INCLUDES)	
	2A	1	**124-3536**	2	RING-RETAINING	
	2B	1	**233-7231**	1	RING GP-PISTON	
F		1	**288-9942**	1	PISTON AS (0.5-MM OS)	
		1	**124-3536**	2	RING-RETAINING	
F		1	**288-9943**	1	PISTON AS (1-MM OS)	
		1	**124-3536**	2	RING-RETAINING	

B-USE AS REQUIRED
F-NOT SHOWN
J-ENSURE THAT CORRECT ROD LENGTH IS FITTED

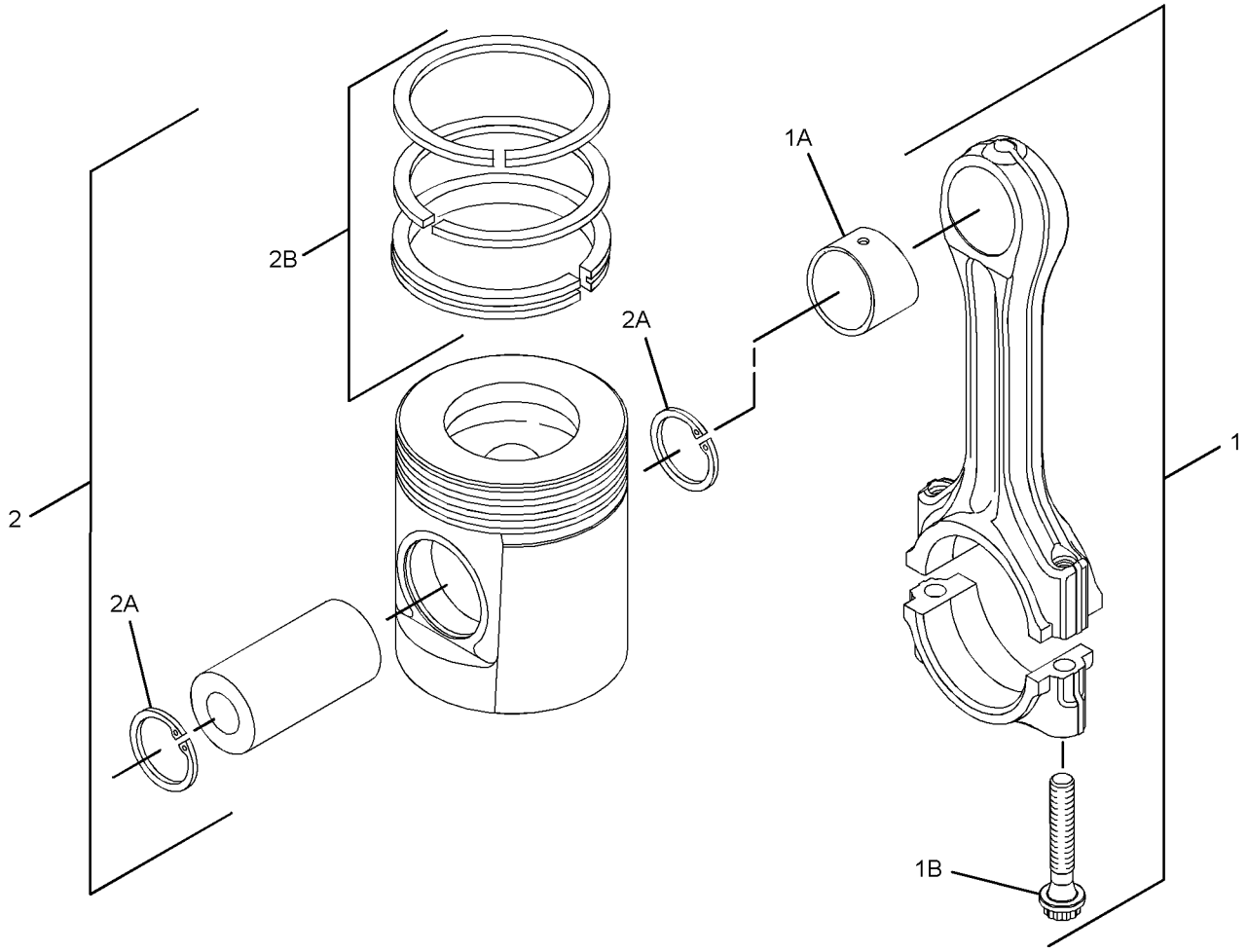

GRAPHIC #1 **<END>** g01425161

BASIC ENGINE

313-3359 PISTON & ROD GP

S/N: G4D1-UP; CRS1-UP
PART OF 323-5724 ENGINE AR-PRIMARY
AN ATTACHMENT

SMCS-1213, 1214, 1215, 1218, 1219, 1225, 1239 **i04011962**

NOTE	REF NO	GRAPHIC REF	PART NUMBER	QTY	PART NAME 1 2 3 4 5 6 (PRODUCT LEVEL)	SEE PAGE
BCJ	1	1	**359-0724**	4	ROD AS-CONNECTING (GRADE B)	
					—OR—	
BCJ		1	**359-0723**	4	ROD AS-CONNECTING (GRADE P)	
					—OR—	
BCJ		1	**359-0722**	4	ROD AS-CONNECTING (GRADE G)	
					—OR—	
BCJ		1	**359-0721**	4	ROD AS-CONNECTING (GRADE W)	
					—OR—	
BCJ		1	**359-0720**	4	ROD AS-CONNECTING (GRADE O)	
					—OR—	
BCJ		1	**359-0719**	4	ROD AS-CONNECTING (GRADE R)	
					(EACH INCLUDES)	
	1A	1	**225-5438**	1	BUSHING	
	1B	1	**323-9312**	2	BOLT	
	2	1	**233-7232**	4	PISTON AS	
					(EACH INCLUDES)	
	2A	1	**124-3536**	2	RING-RETAINING	
	2B	1	**233-7231**	1	RING GP-PISTON	
AB		1	**334-1996**		KIT-PISTON RING	
AB		1	**334-1997**		KIT-PISTON RING	
AB		1	**288-9942**		PISTON AS (0.5-MM OS)	
AB		1	**288-9943**		PISTON AS (1.0-MM OS)	

A-NOT PART OF THIS GROUP
B-USE AS REQUIRED
C-CHANGE FROM PREVIOUS TYPE
J-ENSURE THAT CORRECT ROD LENGTH IS FITTED

313-3359 **PISTON & ROD GP** *(contd.)* **i04011962**

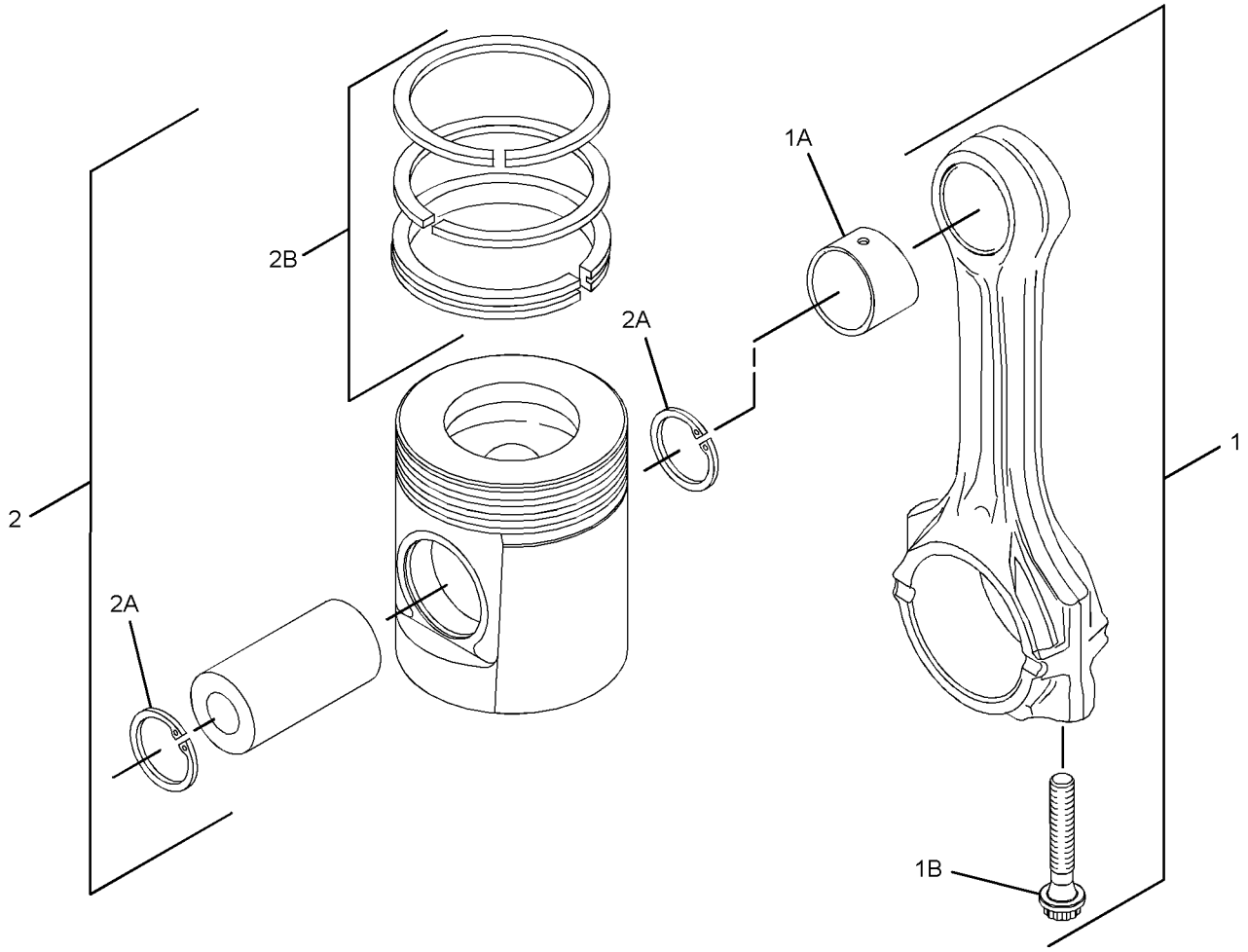

GRAPHIC #1 **<END>** g02205453

BASIC ENGINE

326-9002 PISTON & ROD GP

S/N: C4Z1-UP

PART OF 321-7704 ENGINE AR-PRIMARY

SMCS-1213, 1214, 1215, 1218, 1219, 1225, 1239 **i04130210**

NOTE	REF NO	GRAPHIC REF	PART NUMBER	QTY	PART NAME 1 2 3 4 5 6 (PRODUCT LEVEL)	SEE PAGE
	1	1	**315-3395**	4	PISTON AS	
					(EACH INCLUDES)	
	1A	1	**124-3536**	2	RING-RETAINING	
	1B	1	**276-7476**	1	KIT-PISTON RING	
BJ	2	1	**359-0724**	4	ROD AS-CONNECTING	
					—OR—	
BJ		1	**359-0723**	4	ROD AS-CONNECTING	
					—OR—	
BJ		1	**359-0722**	4	ROD AS-CONNECTING	
					—OR—	
BJ		1	**359-0721**	4	ROD AS-CONNECTING	
					—OR—	
BJ		1	**359-0720**	4	ROD AS-CONNECTING	
					—OR—	
BJ		1	**359-0719**	4	ROD AS-CONNECTING	
					(EACH INCLUDES)	
	2A	1	**225-5438**	1	BUSHING	
	2B	1	**323-9312**	2	BOLT	

B-USE AS REQUIRED
J-ENSURE THAT CORRECT ROD LENGTH IS FITTED

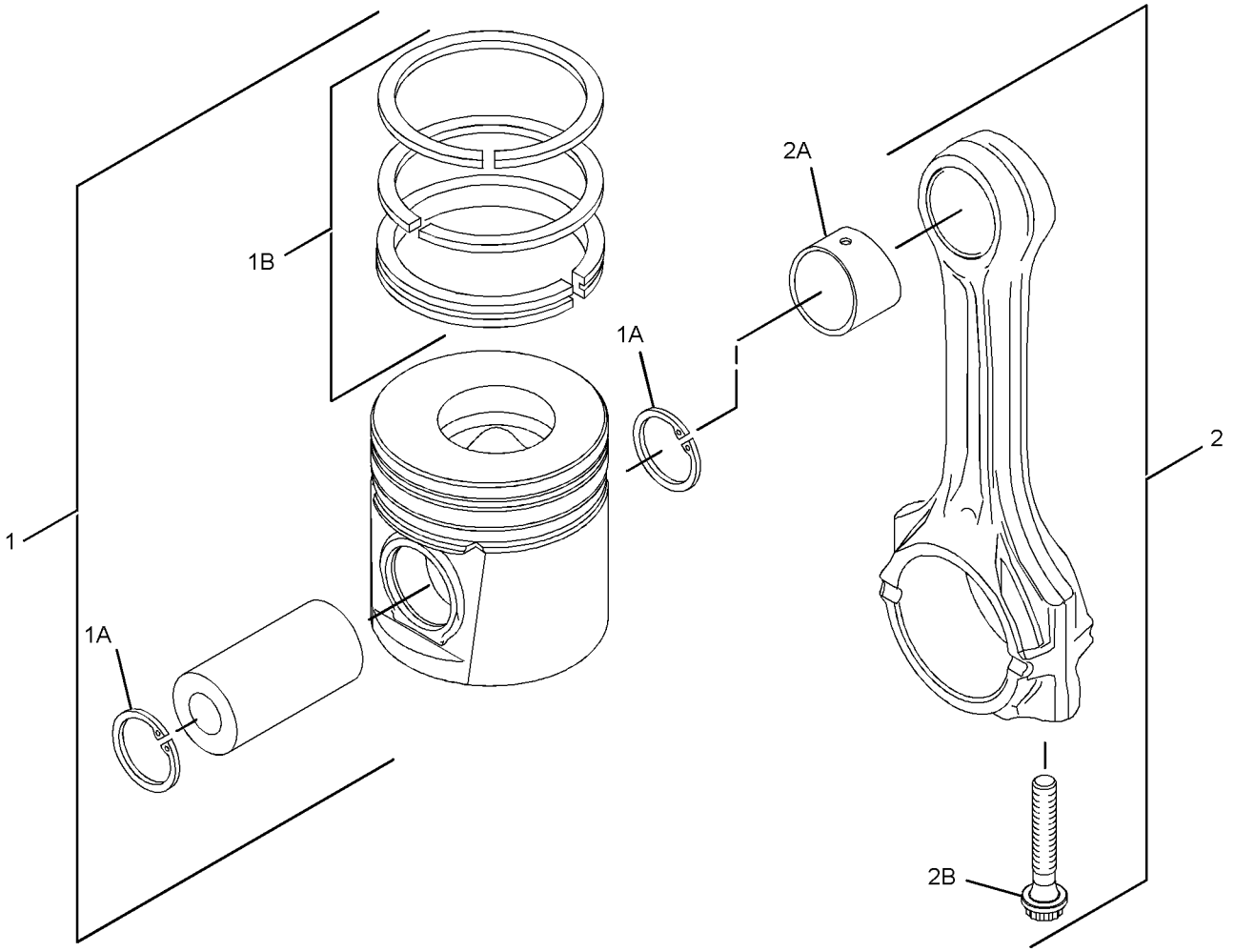

GRAPHIC #1 **<END>** g02178226

298-5129 PLUG GP-CYLINDER HEAD

S/N: C4Z1-UP

PART OF 321-7704 ENGINE AR-PRIMARY

SMCS-1100 **i03025245**

NOTE	REF NO	GRAPHIC REF	PART NUMBER	QTY	PART NAME 1 2 3 4 5 6 (PRODUCT LEVEL)	SEE PAGE
	1	1	**232-1322**	1	PLUG	
	2	1	**199-9751**	1	SEAL-O-RING	

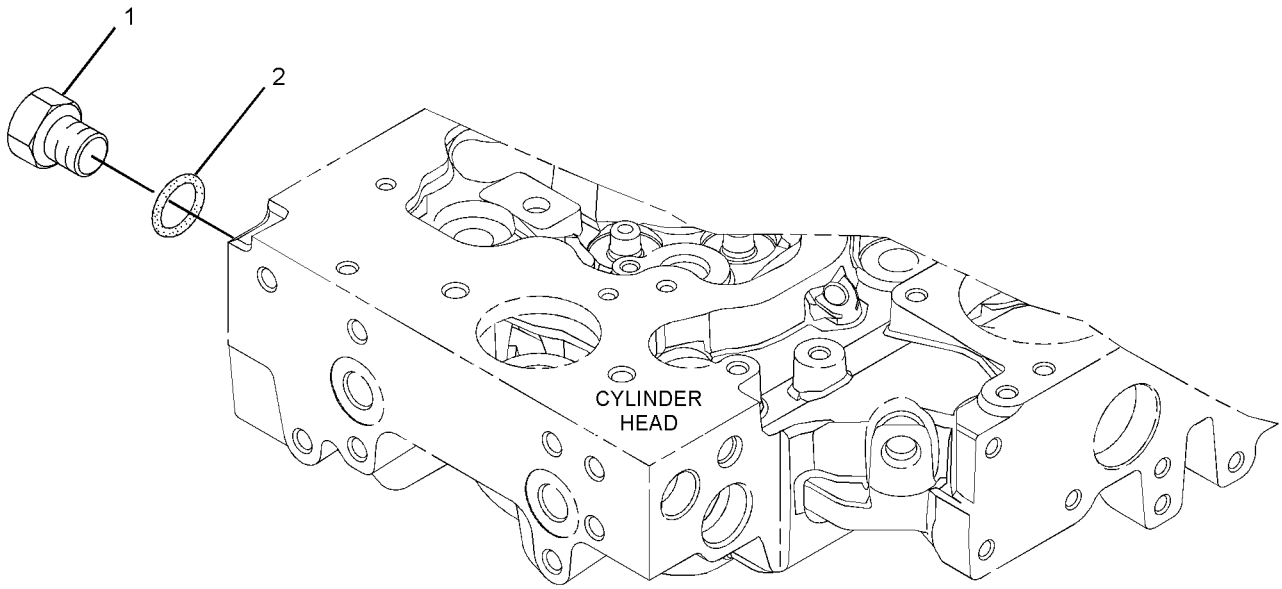

GRAPHIC #1 **<END>** g01305536

225-4317 PLUG GP-ENGINE

S/N: G4D1-UP; CRS1-UP
FRONT HOUSING, CYLINDER HEAD
PART OF 273-3610 ENGINE AR, 245-6841, 323-5724, 323-5725 ENGINE AR-PRIMARY
AN ATTACHMENT

SMCS-1000 **i02052065**

NOTE	REF NO	GRAPHIC REF	PART NUMBER	QTY	PART NAME 1 2 3 4 5 6 (PRODUCT LEVEL)	SEE PAGE
	1	1	**2B-0858**	3	PLUG-PIPE	

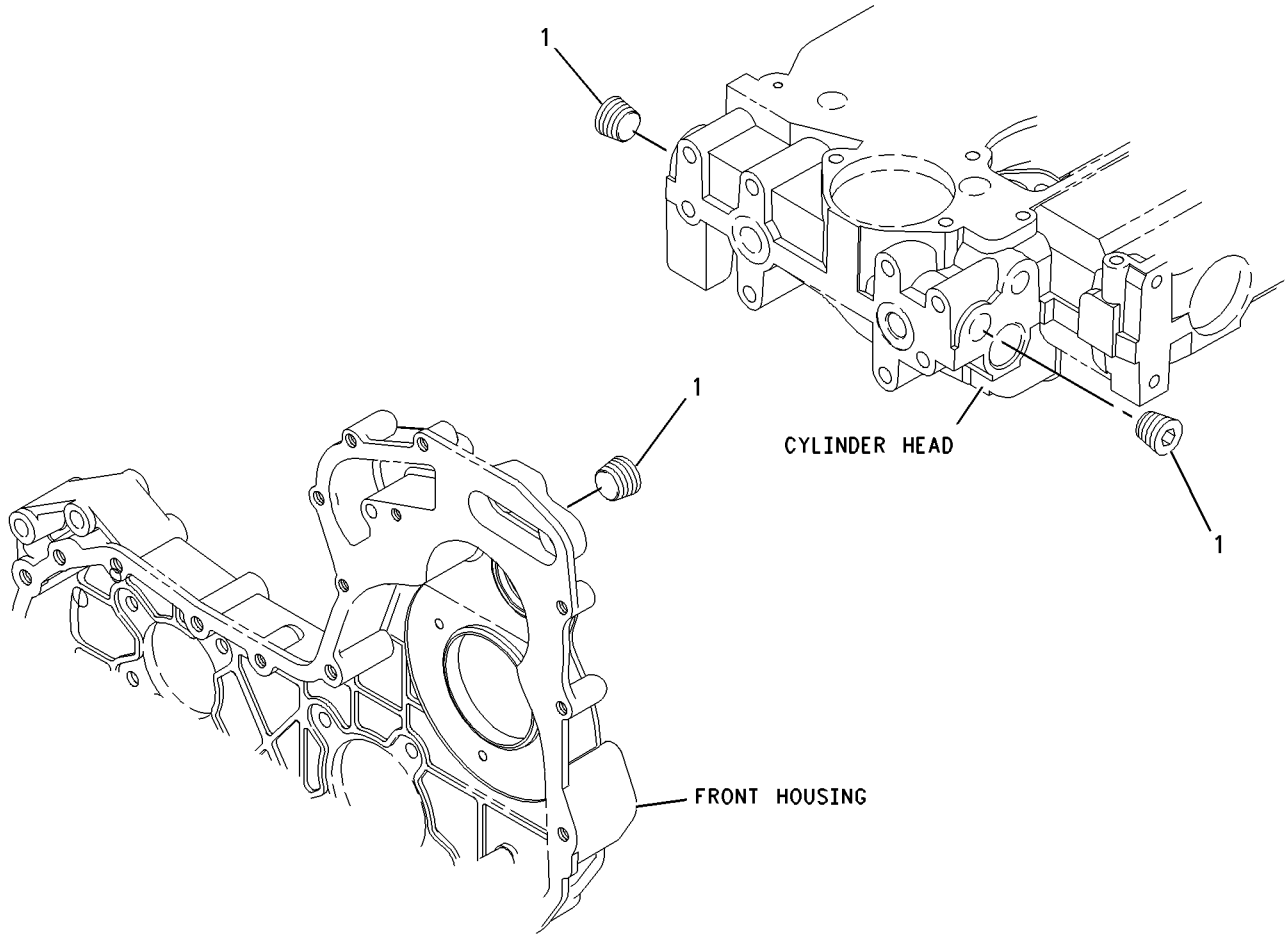

GRAPHIC #1 **<END>** g00911937

230-7569 PLUG GP-ENGINE

S/N: G4D1-UP; CRS1-UP

PART OF 273-3610 ENGINE AR, 245-6841, 323-5724, 323-5725 ENGINE AR-PRIMARY

AN ATTACHMENT

SMCS-1000 **i02052073**

NOTE	REF NO	GRAPHIC REF	PART NUMBER	QTY	PART NAME 1 2 3 4 5 6 (PRODUCT LEVEL)	SEE PAGE
	1	1	**231-0046**	1	PLUG	

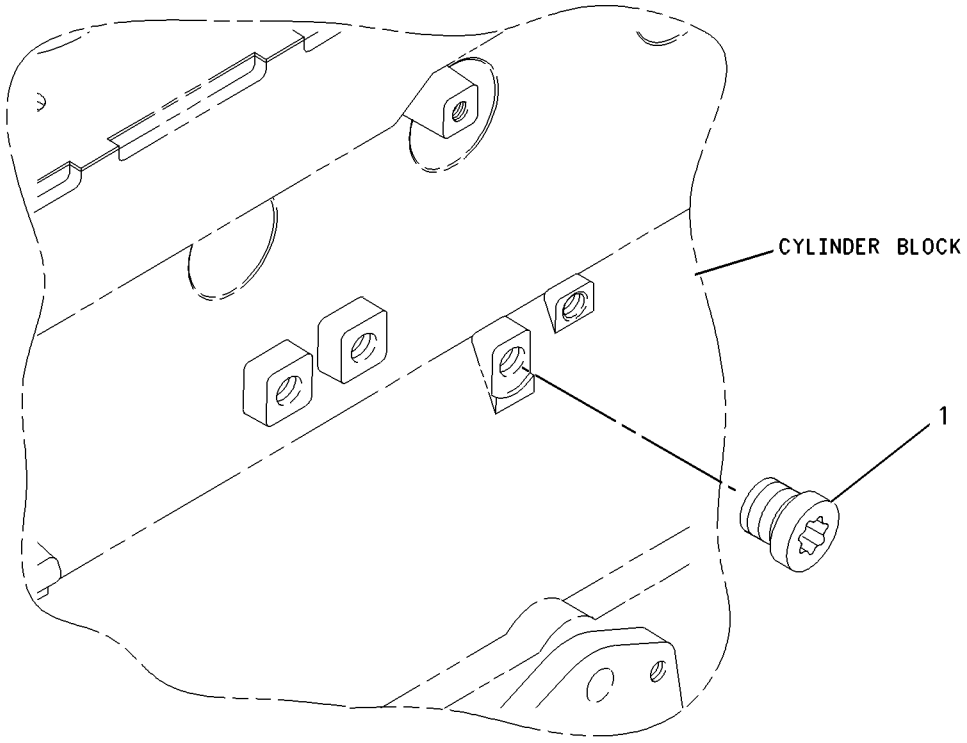

GRAPHIC #1 **<END>** g00911955

232-6204 PLUG GP-ENGINE

S/N: G4D1-UP; CRS1-UP

PART OF 273-3610 ENGINE AR, 245-6841, 323-5724, 323-5725 ENGINE AR-PRIMARY AN ATTACHMENT

SMCS-1000 **i02089627**

NOTE	REF NO	GRAPHIC REF	PART NUMBER	QTY	PART NAME 1 2 3 4 5 6 (PRODUCT LEVEL)	SEE PAGE
	1	1	**199-9751**	1	SEAL-O-RING	
	2	1	**232-1322**	1	PLUG	

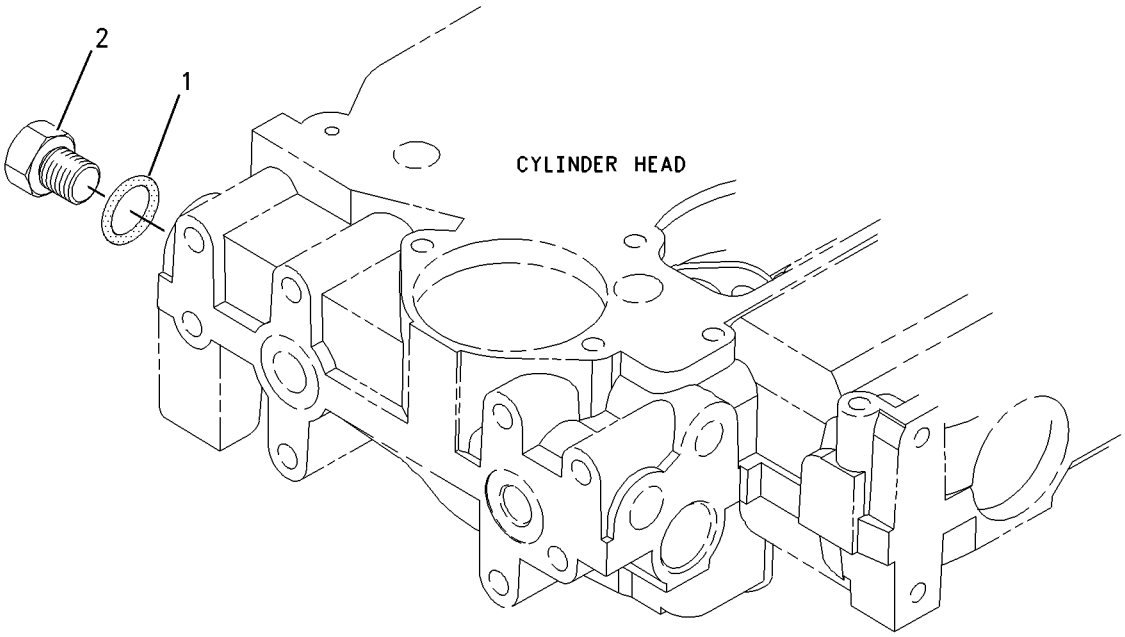

GRAPHIC #1 **<END>** g00950934

298-5131 PLUG GP-ENGINE

S/N: C4Z1-UP

PART OF 321-7704 ENGINE AR-PRIMARY

SMCS-1000 **i03025247**

NOTE	REF NO	GRAPHIC REF	PART NUMBER	QTY	PART NAME 1 2 3 4 5 6 (PRODUCT LEVEL)	SEE PAGE
	1	1	**2B-0858**	3	PLUG-PIPE	

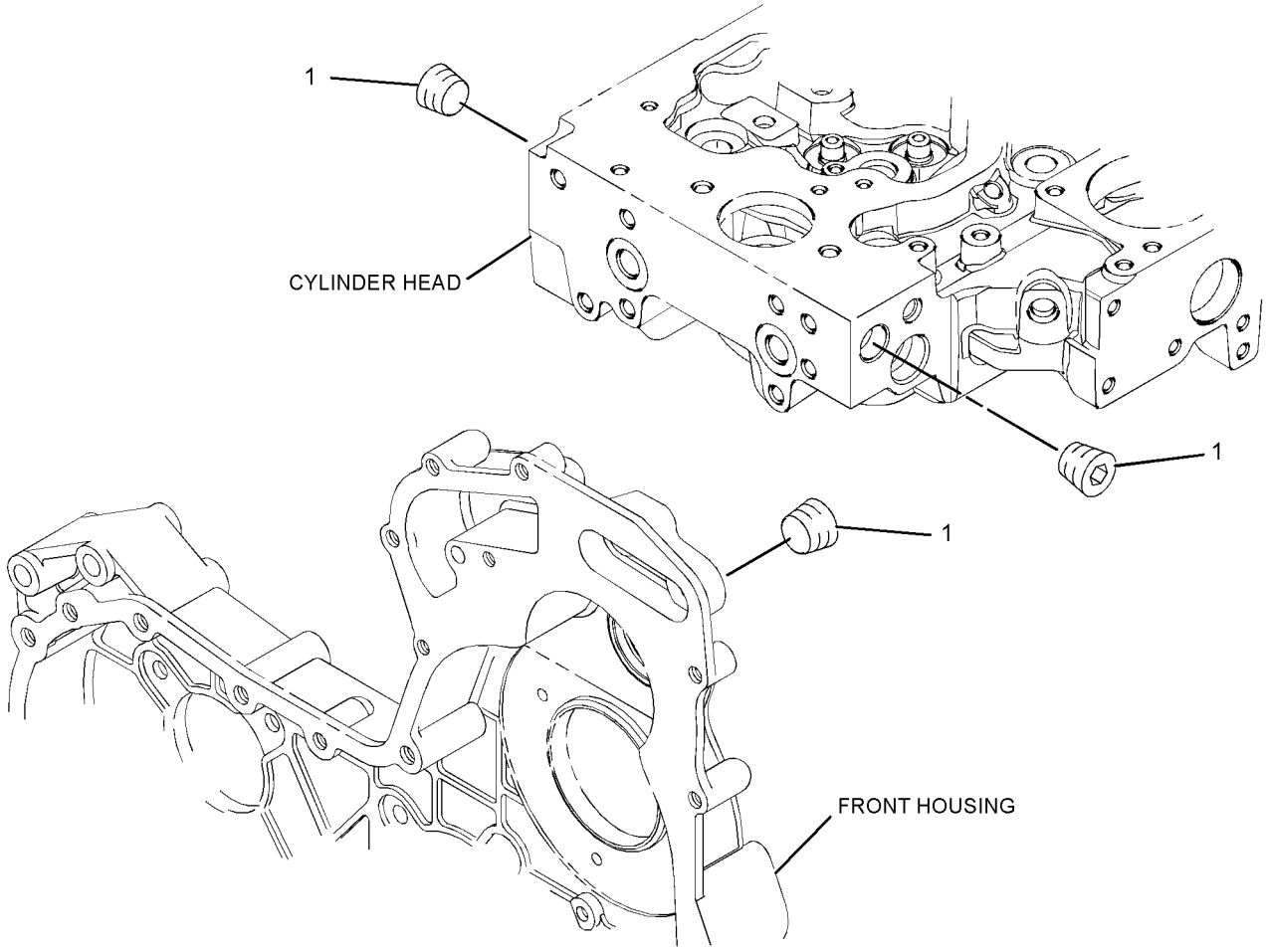

GRAPHIC #1 **<END>** g01305448

BASIC ENGINE

304-8761 PLUG GP-ENGINE

S/N: C4Z1-UP

PART OF 321-7704 ENGINE AR-PRIMARY

SMCS-1000 **i03301261**

NOTE	REF NO	GRAPHIC REF	PART NUMBER	QTY	PART NAME 1 2 3 4 5 6 (PRODUCT LEVEL)	SEE PAGE
	1	1	**6I-0646**	1	BOLT (M10X1.5X14-MM)	
	2	1	**214-3203**	1	WASHER (SEALING)	

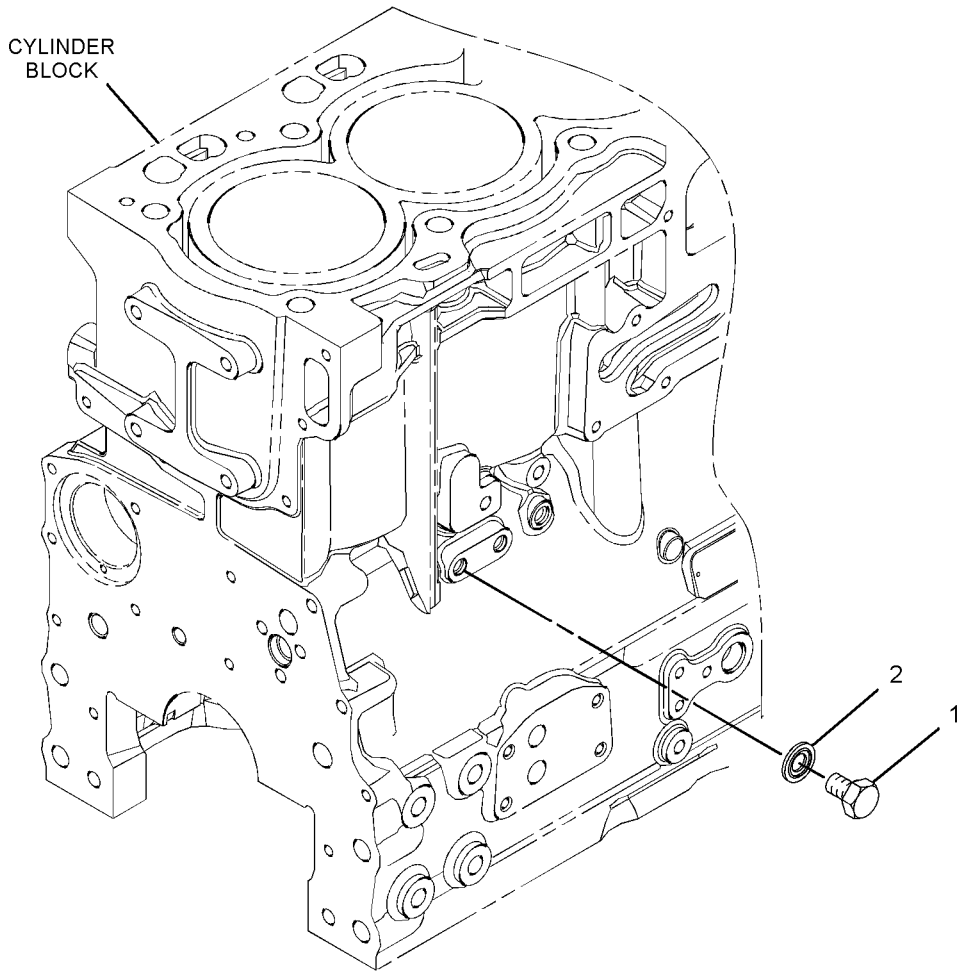

GRAPHIC #1 **<END>** g01373022

230-7353 PULLEY GP-CRANKSHAFT

S/N: G4D1-UP; CRS1-UP

PART OF 273-3610 ENGINE AR, 245-6841, 323-5724, 323-5725 ENGINE AR-PRIMARY AN ATTACHMENT

SMCS-1205 **i02053125**

NOTE	REF NO	GRAPHIC REF	PART NUMBER	QTY	PART NAME 1 2 3 4 5 6 (PRODUCT LEVEL)	SEE PAGE
	1	1	**6I-0501**	1	BLOCK	
	2	1	**6I-0502**	1	PULLEY	
	3	1	**7W-4634**	3	BOLT (7/16-20X1.5-IN)	

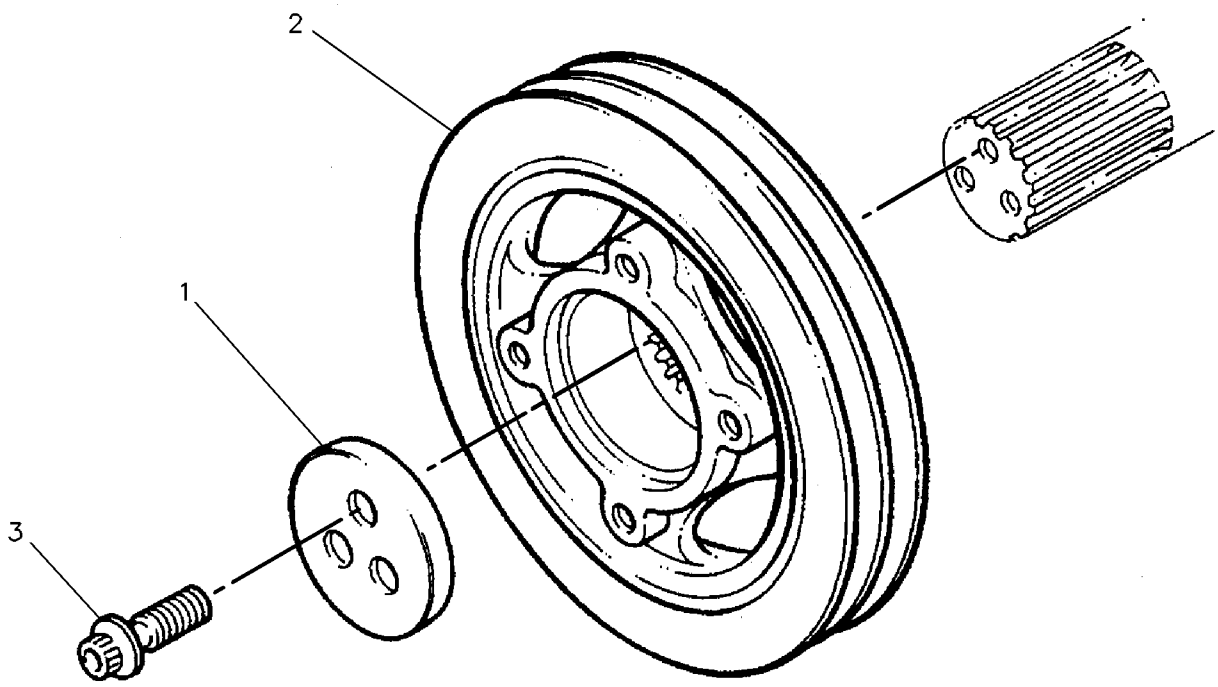

GRAPHIC #1 **<END>** g00130941

BASIC ENGINE

360-7347 PULLEY GP-CRANKSHAFT

S/N: C4Z1-UP

PART OF 321-7704 ENGINE AR-PRIMARY

SMCS-1205 **i04132036**

NOTE	REF NO	GRAPHIC REF	PART NUMBER	QTY	PART NAME 1 2 3 4 5 6 (PRODUCT LEVEL)	SEE PAGE
M	1	1	**102-9941**	3	BOLT (M12X1.75X25-MM)	
	2	1	**286-7848**	1	PULLEY GP-ENGINE	
	3	1	**334-9334**	3	BOLT	
	4	1	**359-0750**	1	PULLEY-CRANKSHAFT	

M-METRIC PART

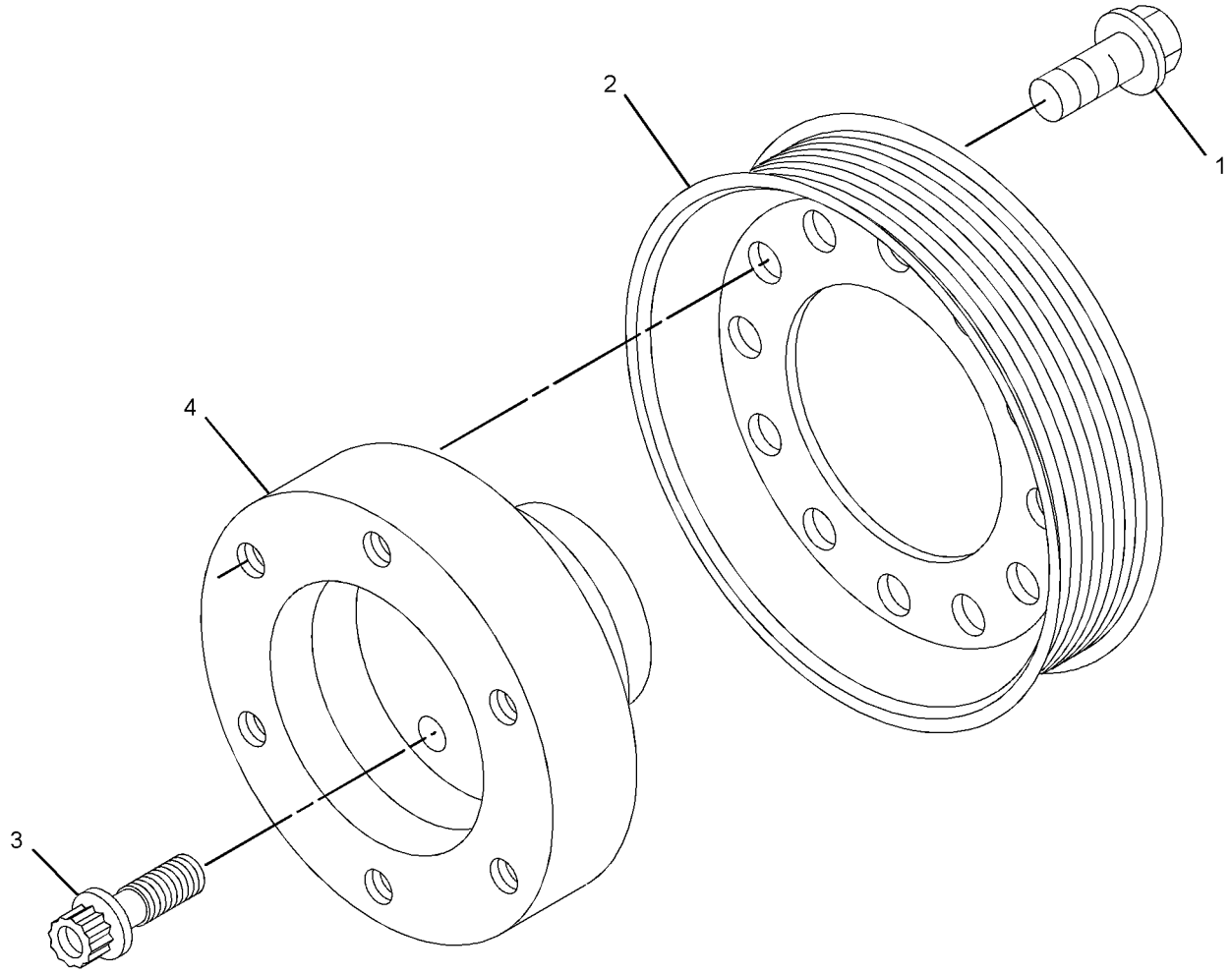

GRAPHIC #1 **<END>** g02232714

360-7351 PULLEY GP-CRANKSHAFT

S/N: G4D1-UP; CRS1-UP
PART OF 323-5724, 323-5725 ENGINE AR-PRIMARY
AN ATTACHMENT

SMCS-1205 **i04003700**

NOTE	REF NO	GRAPHIC REF	PART NUMBER	QTY	PART NAME 1 2 3 4 5 6 (PRODUCT LEVEL)	SEE PAGE
	1	1	**334-9334**	3	BOLT	
	2	1	**359-0747**	1	PULLEY-CRANKSHAFT	

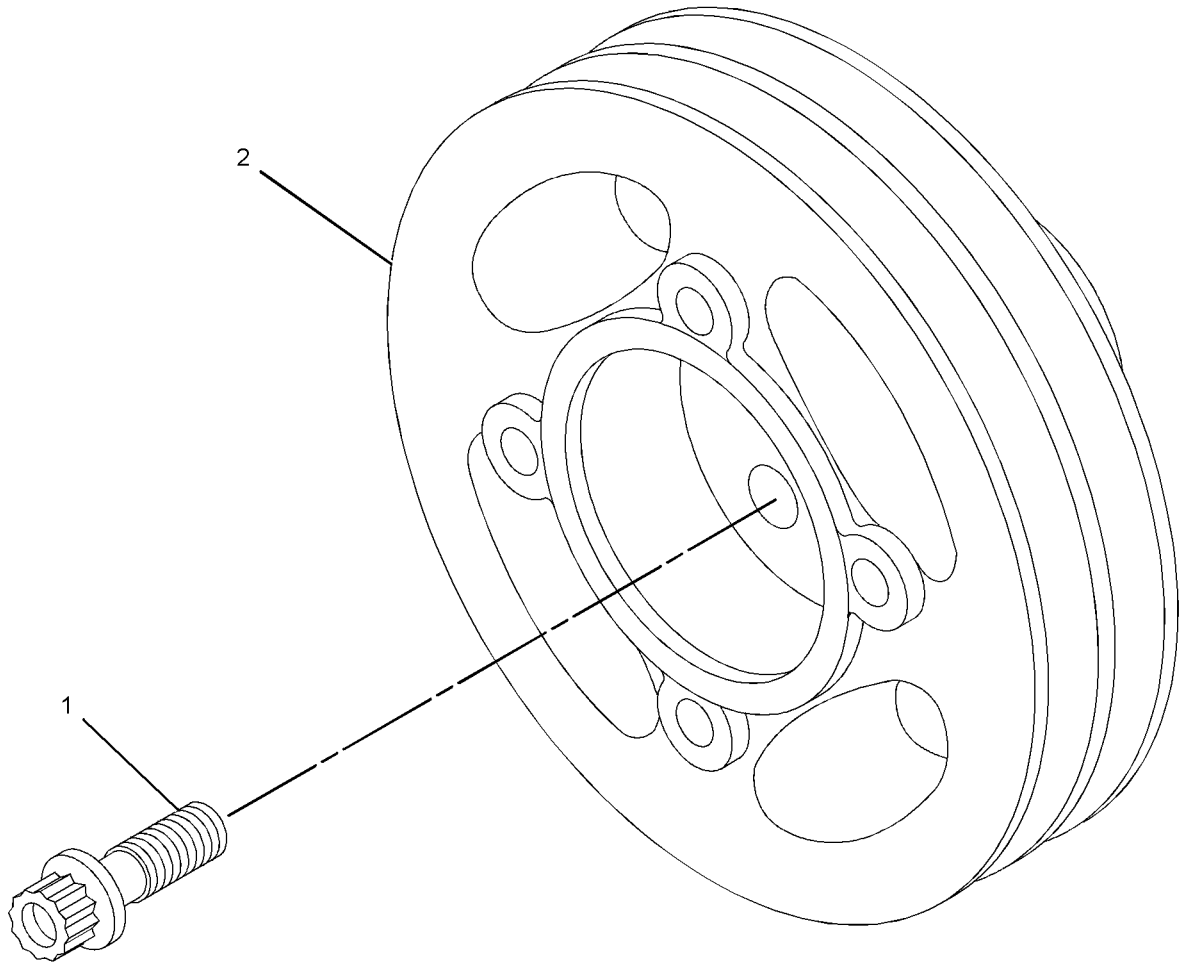

GRAPHIC #1 **<END>** g02154837

BASIC ENGINE

225-5963 ROCKER ARM GP

S/N: G4D1-UP; CRS1-UP
PART OF 308-4732, 313-3362 VALVE MECHANISM GP
AN ATTACHMENT

SMCS-1102, 1123 **i03469127**

NOTE	REF NO	GRAPHIC REF	PART NUMBER	QTY	PART NAME 1 2 3 4 5 6 (PRODUCT LEVEL)	SEE PAGE
	1	1	**225-5625**	4	LEVER AS (INLET)	
					(EACH INCLUDES)	
	1A	1	**5B-9079**	1	NUT-JAM (3/8-24-THD)	
	1B	1	**185-1546**	1	SCREW	
	2	1	**225-5634**	1	SHAFT AS	
	2A	1	**225-5629**	2	PLUG	
	3	1	**225-5638**	3	SPRING	
	4	1	**225-5640**	4	LEVER AS (EXHAUST)	
					(EACH INCLUDES)	
	4A	1	**5B-9079**	1	NUT-JAM (3/8-24-THD)	
	4B	1	**185-1546**	1	SCREW	
	5	1	**225-5959**	2	CLIP	
	6	1	**225-5960**	1	BOLT (M8X1.25X60-MM)	
	7	1	**225-5961**	2	WASHER (26.7X34.32X0.38-MM THK)	
	8	1	**225-5962**	3	BOLT (M8X1.25X30-MM)	

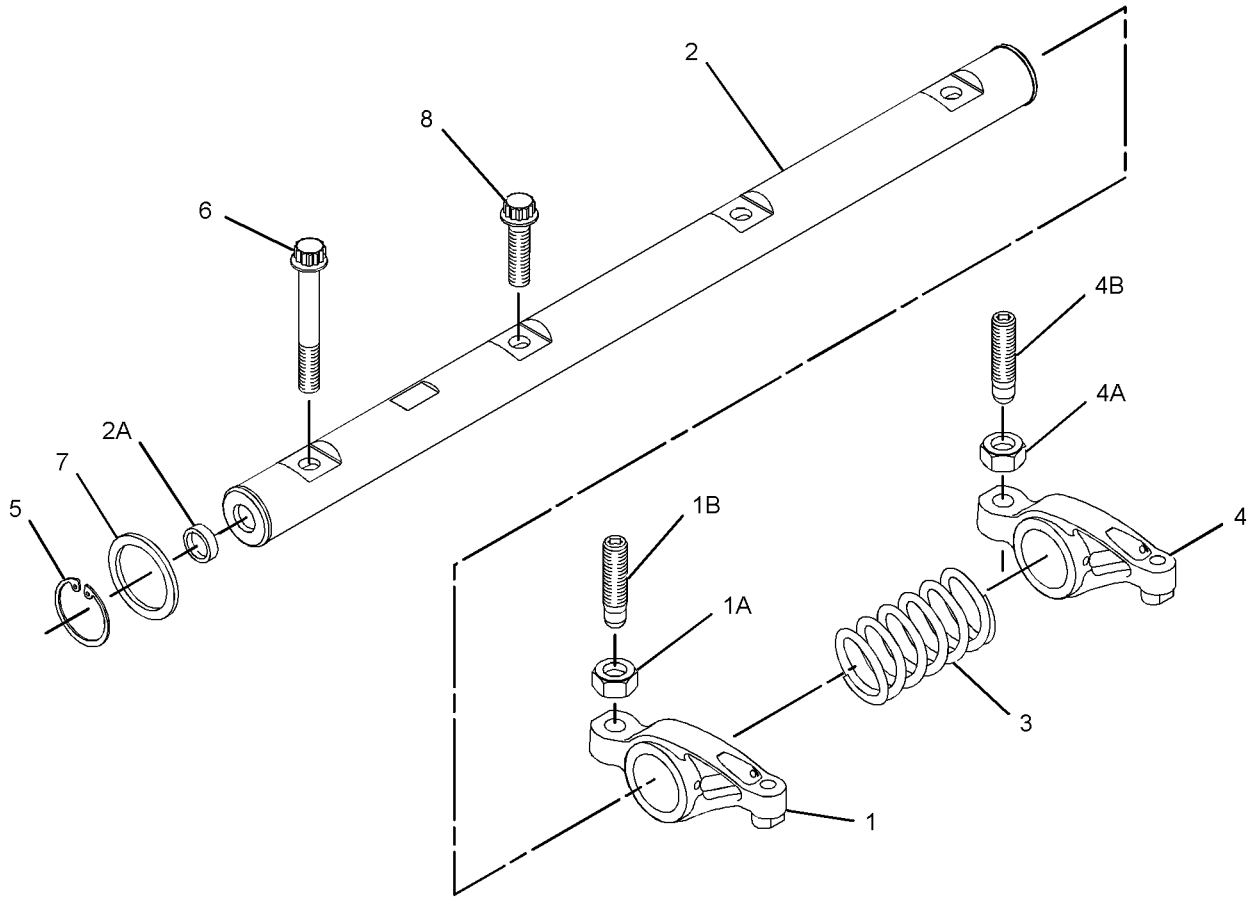

GRAPHIC #1 **<END>** g01368510

315-3385 ROCKER ARM GP

S/N: C4Z1-UP

PART OF 326-9004 VALVE MECHANISM GP

SMCS-1102, 1123 **i03301983**

NOTE	REF NO	GRAPHIC REF	PART NUMBER	QTY	PART NAME 1 2 3 4 5 6 (PRODUCT LEVEL)	SEE PAGE
	1	1	**225-5634**	1	SHAFT AS	
	1A	1	**225-5629**	2	PLUG	
	2	1	**225-5638**	3	SPRING	
	3	1	**225-5959**	2	CLIP	
	4	1	**225-5960**	1	BOLT (M8X1.25X60-MM)	
	5	1	**225-5961**	2	WASHER (26.7X34.32X0.38-MM THK)	
	6	1	**225-5962**	3	BOLT (M8X1.25X30-MM)	
	7	1	**315-3386**	4	ROCKER ARM AS	
					(EACH INCLUDES)	
	7A	1	**278-5113**	1	ADJUSTING SCREW (TORX)	
	7B	1	**315-3387**	1	NUT	
	8	1	**315-3388**	4	ROCKER ARM AS	
					(EACH INCLUDES)	
	8A	1	**278-5113**	1	ADJUSTING SCREW (TORX)	
	8B	1	**315-3387**	1	NUT	

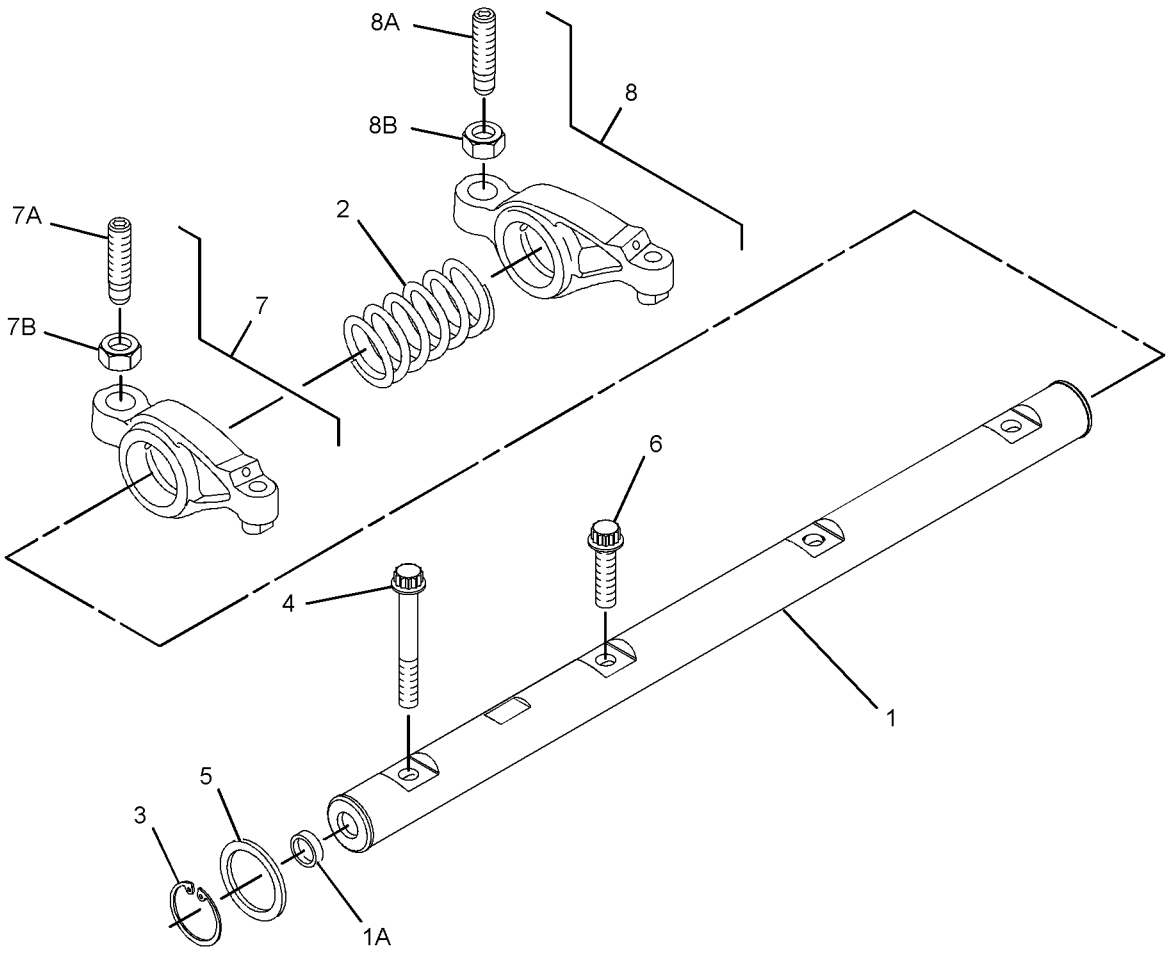

GRAPHIC #1 **<END>** g01399975

308-4732 VALVE MECHANISM GP

S/N: G4D1-UP; CRS1-UP
PART OF 273-3610 ENGINE AR, 323-5725 ENGINE AR-PRIMARY
AN ATTACHMENT

SMCS-1102, 1112, 1121, 1123, 1208, 1209 **i03796498**

NOTE	REF NO	GRAPHIC REF	PART NUMBER	QTY	PART NAME 1 2 3 4 5 6 (PRODUCT LEVEL)	SEE PAGE
	1	1	**067-6095**	8	ROD	
	2	1	**138-2053**	8	TAPPET	
Y	3	1	**225-5963**	1	ROCKER ARM GP	102
	4	1	**350-2374**	1	CAMSHAFT AS	
	4A	1	**1B-8736**	1	KEY-WOODRUFF	

Y-SEPARATE ILLUSTRATION

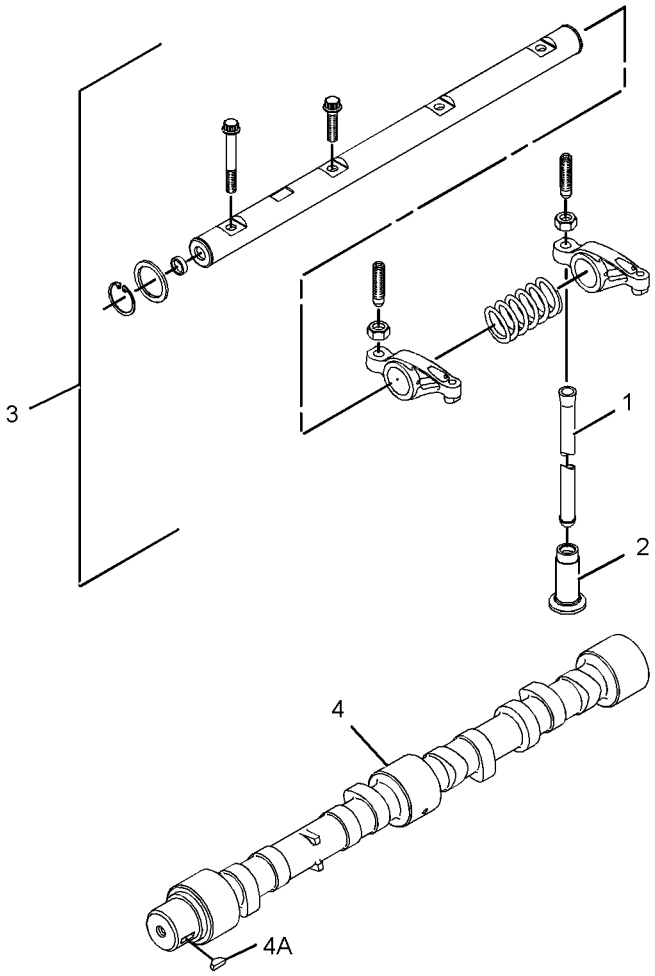

GRAPHIC #1 **<END>** g02068355

313-3362 VALVE MECHANISM GP

S/N: G4D1-UP; CRS1-UP
PART OF 245-6841, 323-5724 ENGINE AR-PRIMARY
AN ATTACHMENT

SMCS-1102, 1112, 1121, 1123, 1208, 1209 **i02811255**

NOTE	REF NO	GRAPHIC REF	PART NUMBER	QTY	PART NAME 1 2 3 4 5 6 (PRODUCT LEVEL)	SEE PAGE
Y	1	1	**225-5963**	1	ROCKER ARM GP	102

Y-SEPARATE ILLUSTRATION

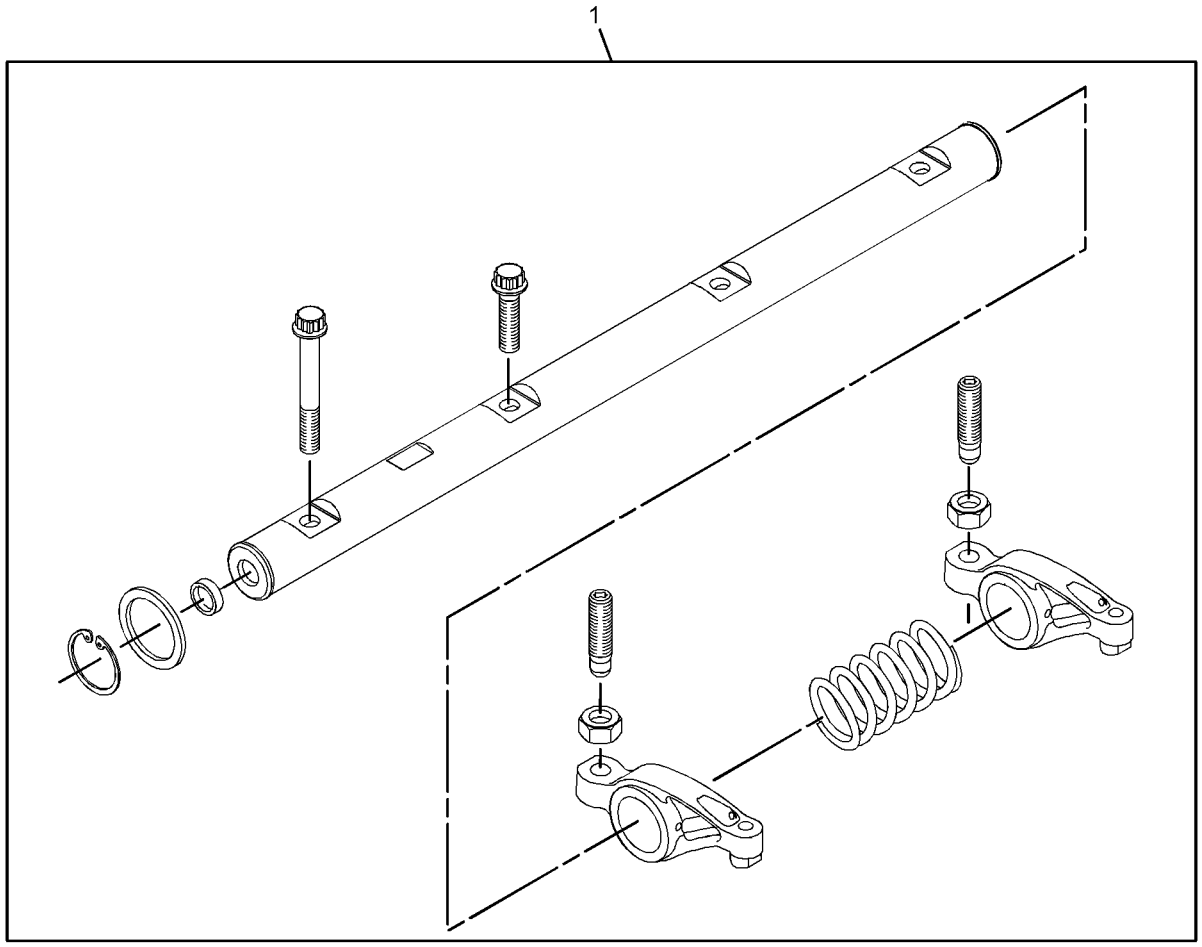

GRAPHIC #1 **<END>** g01419866

BASIC ENGINE

326-9004 VALVE MECHANISM GP

S/N: C4Z1-UP

PART OF 321-7704 ENGINE AR-PRIMARY

SMCS-1102, 1112, 1121, 1123, 1208, 1209 **i04130254**

NOTE	REF NO	GRAPHIC REF	PART NUMBER	QTY	PART NAME 1 2 3 4 5 6 (PRODUCT LEVEL)	SEE PAGE
Y	1	1	**315-3385**	1	ROCKER ARM GP	103

Y-SEPARATE ILLUSTRATION

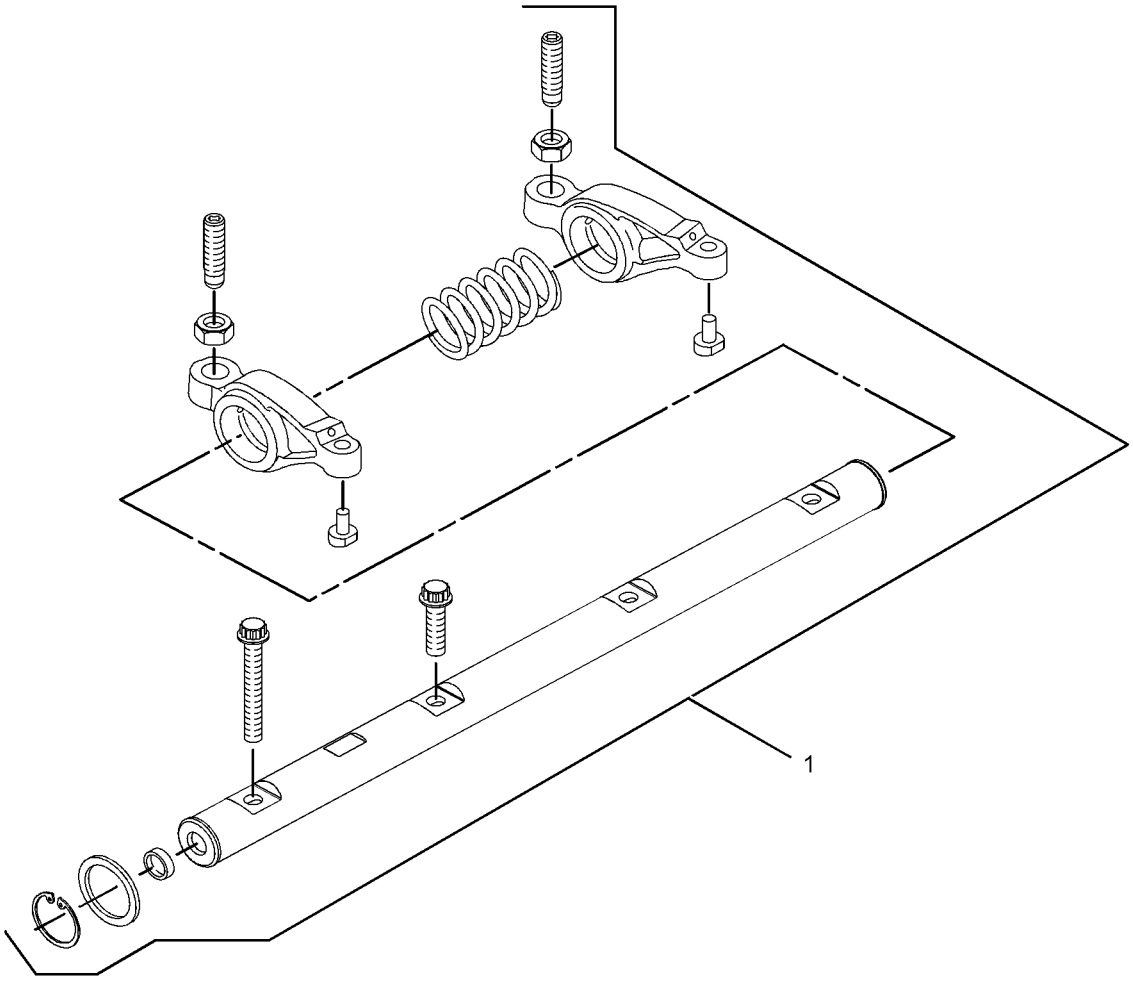

GRAPHIC #1 **<END>** g01611483

250-7963 BREATHER GP

S/N: CBD1-UP; MFG1-UP
PART OF 356-0067, 356-0068, 356-0069, 374-3517, 374-3518, 374-3519, 374-3521, 374-3529, 374-6532, 374-6533, 374-6534, 374-6535, 374-6536
DISTRIBUTION AR
AN ATTACHMENT

SMCS-1317 **i03825231**

NOTE	REF NO	GRAPHIC REF	PART NUMBER	QTY	PART NAME 1 2 3 4 5 6 (PRODUCT LEVEL)	SEE PAGE
	1	1	**6G-2263**	1	SPACER (10.5X19X28.5-MM THK)	
	2	1	**6I-1497**	1	SEAL	
	3	1	**6S-8620**	2	CLAMP-HOSE	
	4	1	**8T-9402**	3	CLAMP-HOSE	
	5	1	**165-4021**	1	CANISTER AS-BREATHER (CRANKCASE)	
		1	**185-6643**	1	SEAL (BREATHER)	
	6	1	**202-5909**	1	TUBE AS-OIL	
	7	1	**254-4418**	1	HOSE	
	8	1	**311-6094**	1	PLATE AS	
	9	1	**5P-4116**	2	WASHER-HARD (8.8X20.5X2-MM THK)	
	10	1	**6D-4246**	1	CLIP	
M	11	1	**8C-3798**	2	BOLT-LOCKING (M6X1X30-MM)	
	12	1	**8T-4121**	1	WASHER-HARD (11X21X2.5-MM THK)	
M	13	1	**8T-4138**	2	BOLT (M6X1X20-MM)	
M	14	1	**8T-4185**	1	BOLT (M10X1.5X50-MM)	
M	15	1	**8T-4189**	2	BOLT (M8X1.25X20-MM)	
	16	1	**8T-4205**	4	WASHER-HARD (7.2X14.5X2-MM THK)	
	17	1	**8T-7529**	2	CLIP	
E	18	1	**136-1955**		HOSE (82-CM)	
E	19	1	**5P-1505**		HOSE (71-CM)	

E-ORDER BY THE CENTIMETER
M-METRIC PART

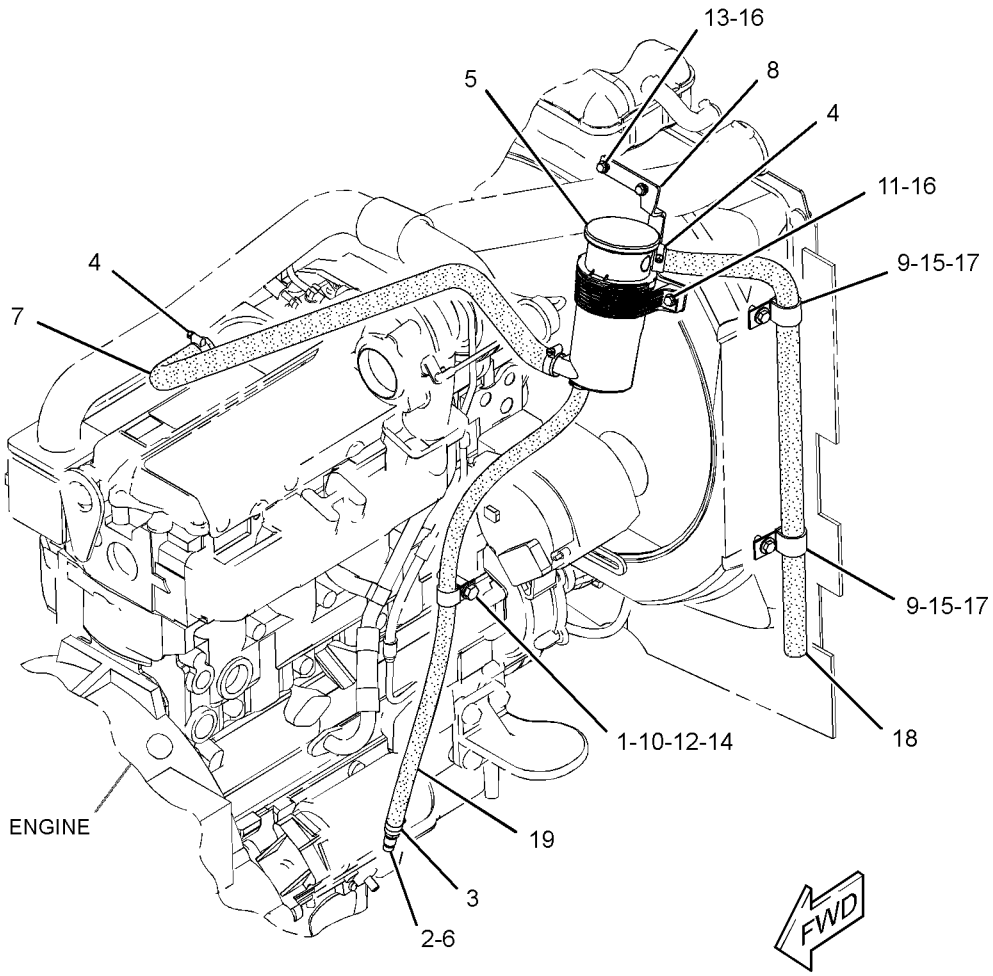

GRAPHIC #1 **<END>** g01876723

323-9307 BREATHER GP–CRANKCASE

S/N: MFG1-UP

PART OF 291-9188 ENGINE AR

SMCS-1317 **i03858963**

NOTE	REF NO	GRAPHIC REF	PART NUMBER	QTY	PART NAME 1 2 3 4 5 6 (PRODUCT LEVEL)	SEE PAGE
	1	1	**6I-1497**	1	SEAL	
	2	1	**8T-9402**	3	CLAMP-HOSE	
	3	1	**165-4021**	1	CANISTER AS-BREATHER (CRANKCASE)	
		1	**185-6643**	1	SEAL (BREATHER)	
	4	1	**202-5909**	1	TUBE AS-OIL	
	5	1	**254-4418**	1	HOSE	
	6	1	**311-6094**	1	PLATE AS	
	7	1	**315-5496**	1	HOSE	
	8	1	**5D-1026**	2	CLAMP-BAND	
	9	1	**5P-4116**	2	WASHER-HARD (8.8X20.5X2-MM THK)	
M	10	1	**8C-3798**	2	BOLT-LOCKING (M6X1X30-MM)	
M	11	1	**8T-4138**	2	BOLT (M6X1X20-MM)	
M	12	1	**8T-4189**	2	BOLT (M8X1.25X20-MM)	
	13	1	**8T-4205**	4	WASHER-HARD (7.2X14.5X2-MM THK)	
	14	1	**8T-7529**	2	CLIP	
E	15	1	**136-1955**		HOSE (82-CM)	

E-ORDER BY THE CENTIMETER
M-METRIC PART

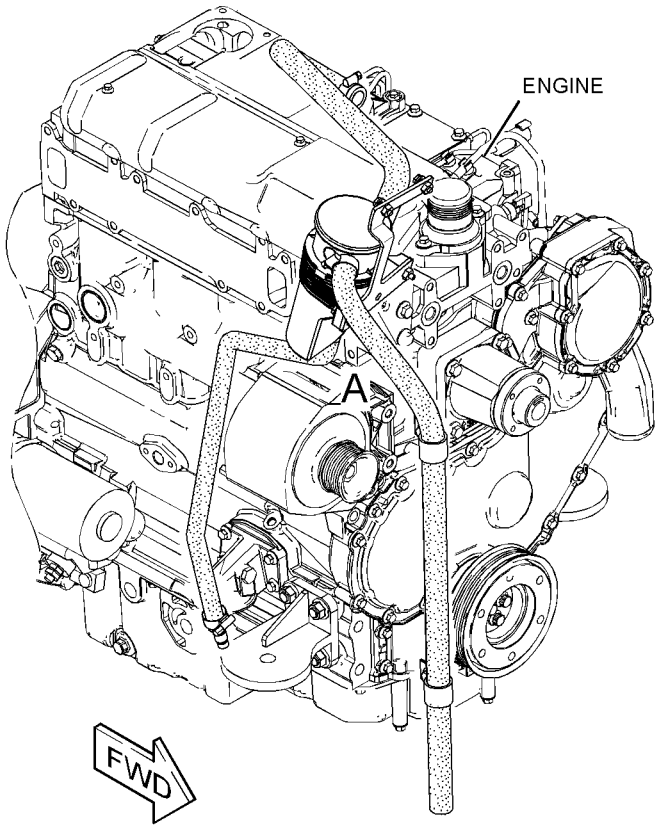

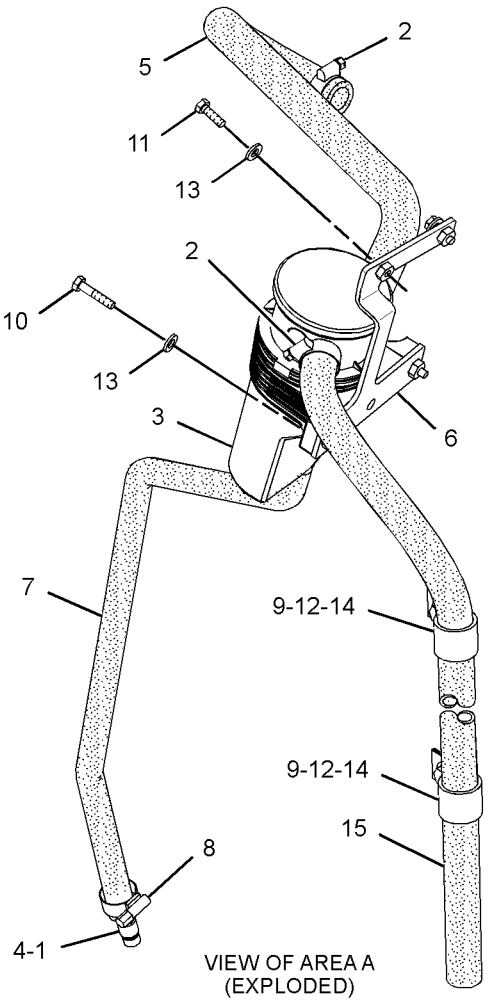

VIEW OF AREA A
(EXPLODED)

GRAPHIC #1 **<END>** g01934613

309-7555 FILLER GP-ENGINE OIL

S/N: C4Z1-UP

PART OF 321-7704 ENGINE AR-PRIMARY

SMCS-1316 **i03301258**

NOTE	REF NO	GRAPHIC REF	PART NUMBER	QTY	PART NAME 1 2 3 4 5 6 (PRODUCT LEVEL)	SEE PAGE
M	1	1	**6I-0260**	2	BOLT (M8X1.25X25-MM)	
	2	1	**225-6522**	1	PLUG-CUP	
	3	1	**317-3769**	1	FILLER GP-ENGINE OIL	
	3A	1	**317-3778**	1	SEAL-O-RING	

M-METRIC PART

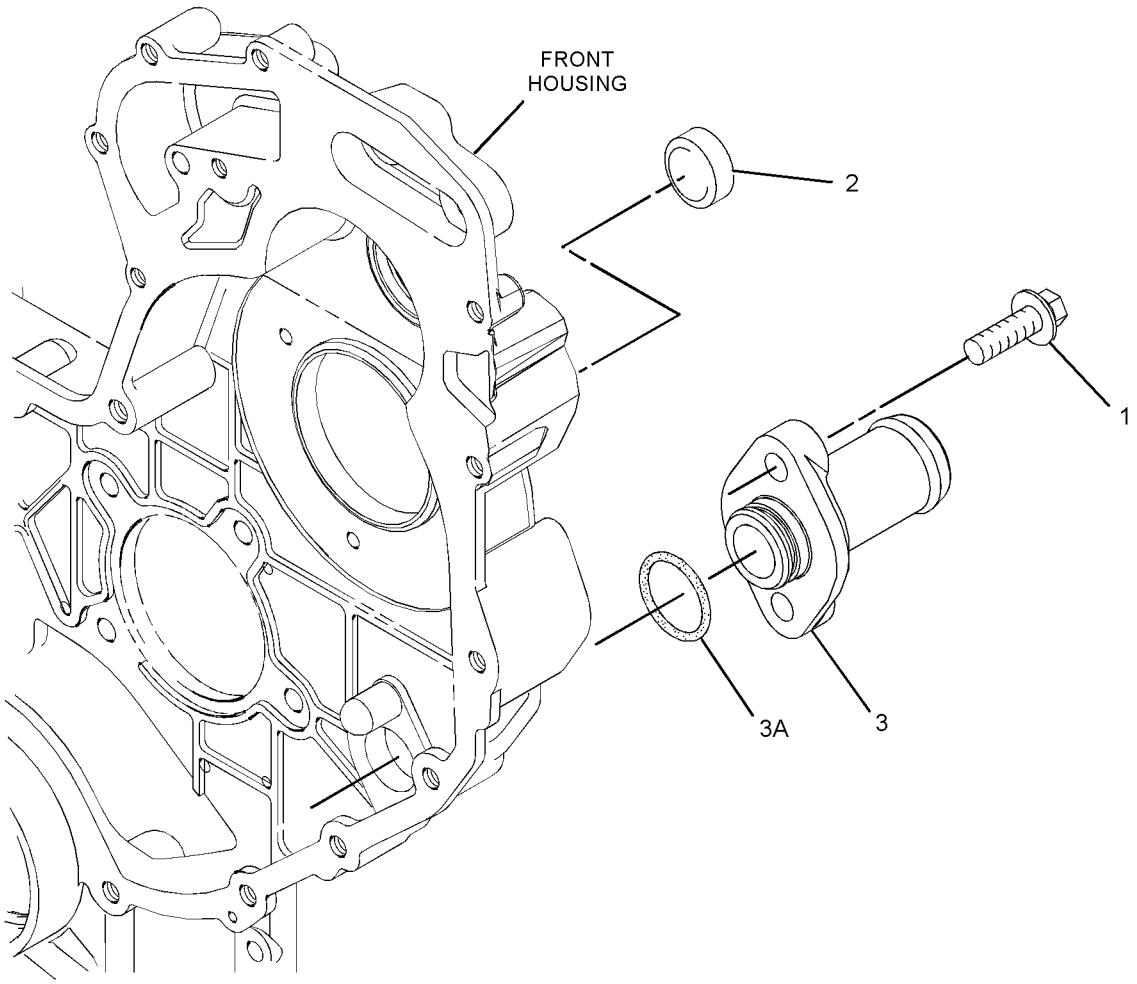

GRAPHIC #1 **<END>** g01378834

222-7091 GAUGE GP-OIL LEVEL & FILLER—WITH FILTER

S/N: CBD1-UP; MFG1-UP
PART OF 252-4640, 252-4641 ENGINE AR
AN ATTACHMENT

SMCS-1316, 1326 **i03908675**

NOTE	REF NO	GRAPHIC REF	PART NUMBER	QTY	PART NAME 1 2 3 4 5 6 (PRODUCT LEVEL)	SEE PAGE
	1	1	**6I-1497**	1	SEAL	
	2	1	**7W-2326**	1	FILTER AS-ENGINE OIL	
	3	1	**9M-7958**	1	CLAMP-HOSE	
	4	1	**127-4471**	1	CLAMP-HOSE	
	5	1	**236-6651**	1	CAP AS-FILLER (ENGINE OIL FILLER)	
	6	1	**249-5046**	1	TUBE AS	
	7	1	**249-5295**	1	HOSE (OIL FILLER)	
	8	1	**249-5297**	1	BRACKET AS	
M	9	1	**8T-4195**	2	BOLT (M10X1.5X30-MM)	
	10	1	**256-0143**	1	TUBE AS	
	11	1	**341-8235**	1	GAUGE-OIL LEVEL (DIPSTICK) (ENGINE)	
	12	1	**033-8248**	2	CLIP	
	13	1	**7D-7233**	1	CLIP	
	14	1	**7X-7729**	3	WASHER (11X25X3-MM THK)	
	15	1	**8T-4121**	5	WASHER-HARD (11X21X2.5-MM THK)	
M	16	1	**8T-4133**	2	NUT (M10X1.5-THD)	
M	17	1	**8T-4136**	1	BOLT (M10X1.5X25-MM)	
M	18	1	**8T-4196**	3	BOLT (M10X1.5X35-MM)	

M-METRIC PART

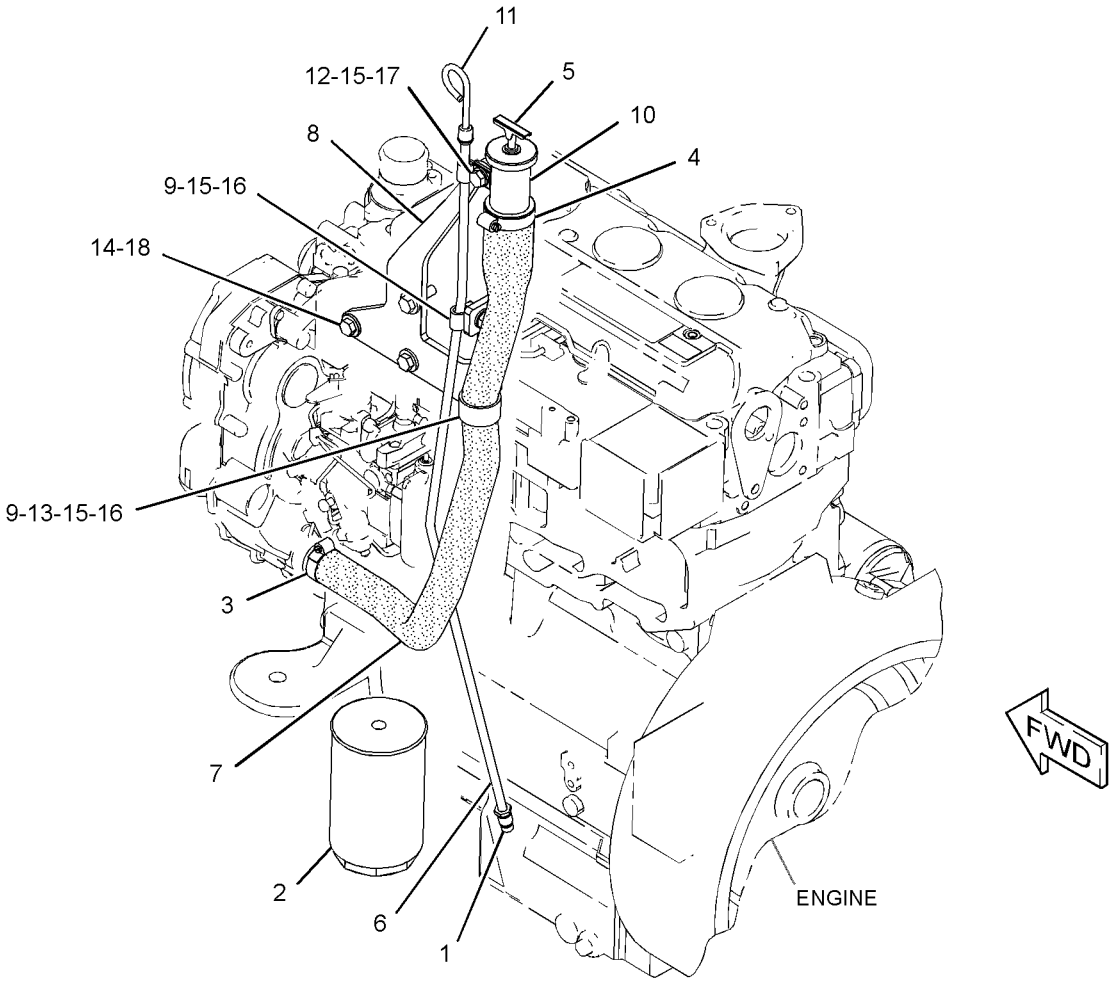

GRAPHIC #1 **<END>** g02188633

307-2033 GAUGE GP-OIL LEVEL & FILLER—ENGINE

S/N: MFG1-UP

PART OF 291-9188 ENGINE AR

SMCS-1316, 1326 **i04528850**

NOTE	REF NO	GRAPHIC REF	PART NUMBER	QTY	PART NAME 1 2 3 4 5 6 (PRODUCT LEVEL)	SEE PAGE
	1	1	**6I-1497**	1	SEAL	
	2	1	**9M-7958**	1	CLAMP-HOSE	
	3	1	**127-4471**	1	CLAMP-HOSE	
	4	1	**236-6651**	1	CAP AS-FILLER (ENGINE OIL FILLER)	
	5	1	**293-4671**	1	TUBE AS	
	6	1	**299-4684**	1	TUBE AS	
	7	1	**341-8236**	1	GAUGE-OIL LEVEL (DIPSTICK) (ENGINE)	
	8	1	**304-9457**	1	BRACKET AS	
	9	1	**321-7031**	1	HOSE (OIL FILLER)	
	10	1	**119-5708**	1	CLIP	
	11	1	**7D-7233**	1	CLIP	
	12	1	**7W-2326**	1	FILTER AS-ENGINE OIL	
	13	1	**8T-4121**	3	WASHER-HARD (11X21X2.5-MM THK)	
M	14	1	**8T-4136**	3	BOLT (M10X1.5X25-MM)	
M	15	1	**8T-4970**	2	BOLT (M6X1X14-MM)	
	16	1	**9X-8256**	2	WASHER (6.6X12X2-MM THK)	

M-METRIC PART

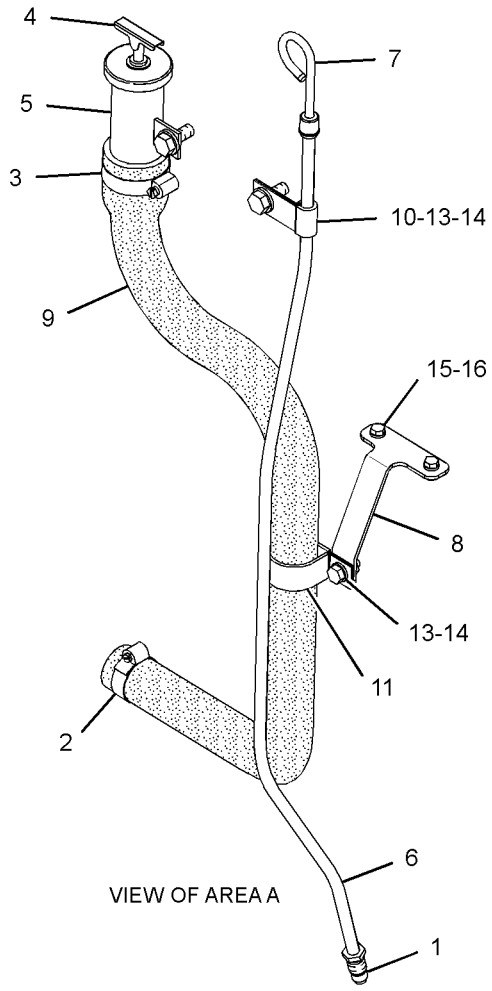

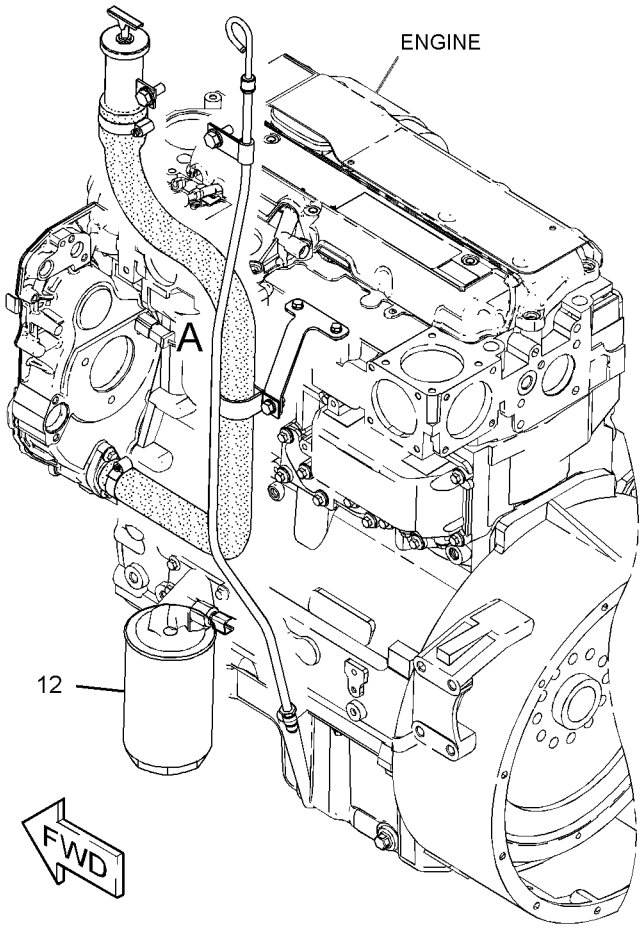

GRAPHIC #1 **<END>** g01607355

230-7578 PUMP GP-ENGINE OIL

S/N: G4D1-UP; CRS1-UP
PART OF 273-3610 ENGINE AR, 245-6841, 323-5724, 323-5725 ENGINE AR-PRIMARY
AN ATTACHMENT

SMCS-1304, 1315 **i02052081**

NOTE	REF NO	GRAPHIC REF	PART NUMBER	QTY	PART NAME 1 2 3 4 5 6 (PRODUCT LEVEL)	SEE PAGE
M	1	1	**100-4461**	5	BOLT (M10X1.50X50-MM)	
	2	1	**225-8329**	1	PUMP AS-ENGINE OIL	

M-METRIC PART

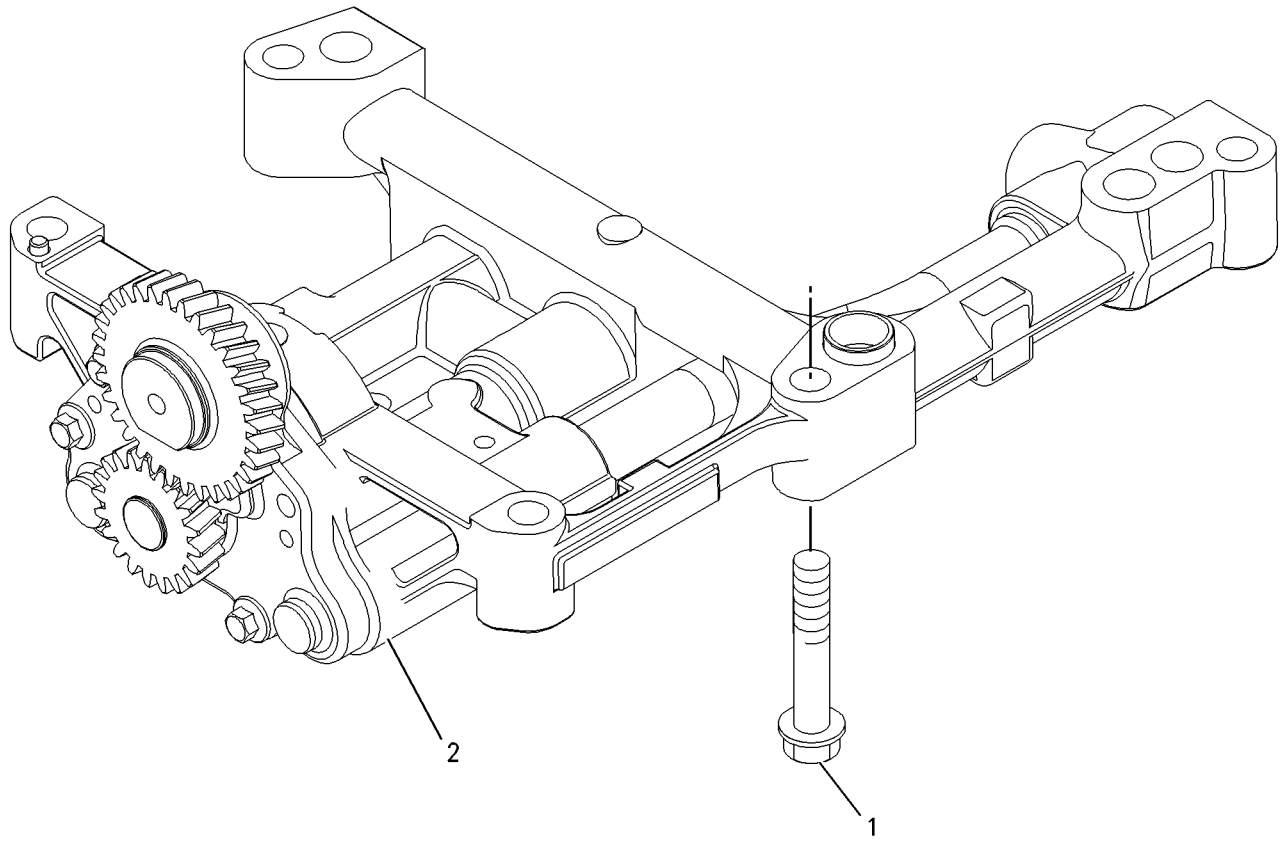

GRAPHIC #1 **<END>** g00911993

LUBRICATION SYSTEM

298-5112 PUMP GP-ENGINE OIL

S/N: C4Z1-UP

PART OF 321-7704 ENGINE AR-PRIMARY

SMCS-1304, 1315 **i03025232**

NOTE	REF NO	GRAPHIC REF	PART NUMBER	QTY	PART NAME 1 2 3 4 5 6 (PRODUCT LEVEL)	SEE PAGE
	1	1	**225-8329**	1	PUMP AS-ENGINE OIL	
M	2	1	**100-4461**	5	BOLT (M10X1.50X50-MM)	

M-METRIC PART

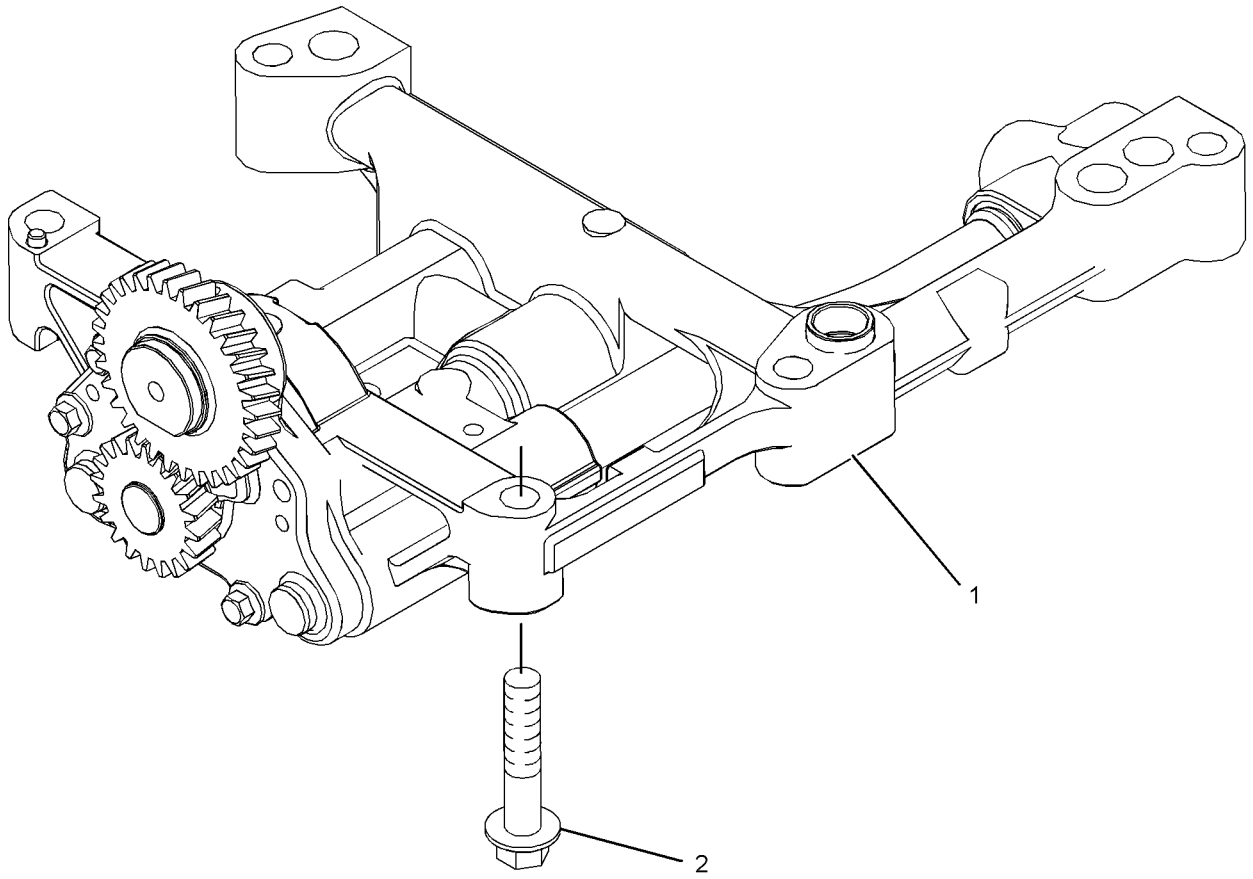

GRAPHIC #1 **<END>** g01304952

231-0033 CONNECTION GP-WATER

S/N: G4D1-UP; CRS1-UP

PART OF 273-3610 ENGINE AR, 245-6841, 323-5724, 323-5725 ENGINE AR-PRIMARY AN ATTACHMENT

SMCS-1380 **i02529206**

NOTE	REF NO	GRAPHIC REF	PART NUMBER	QTY	PART NAME 1 2 3 4 5 6 (PRODUCT LEVEL)	SEE PAGE
M	1	1	**6I-0260**	2	BOLT (M8X1.25X25-MM)	
	2	1	**254-2267**	1	REGULATOR GP-TEMPERATURE (INCLUDES CONNECTOR)	
					(INCLUDES REGULATOR)	
	2A	1	**254-2270**	1	SEAL-O-RING (WATER TEMPERATURE REGULATOR)	

M-METRIC PART

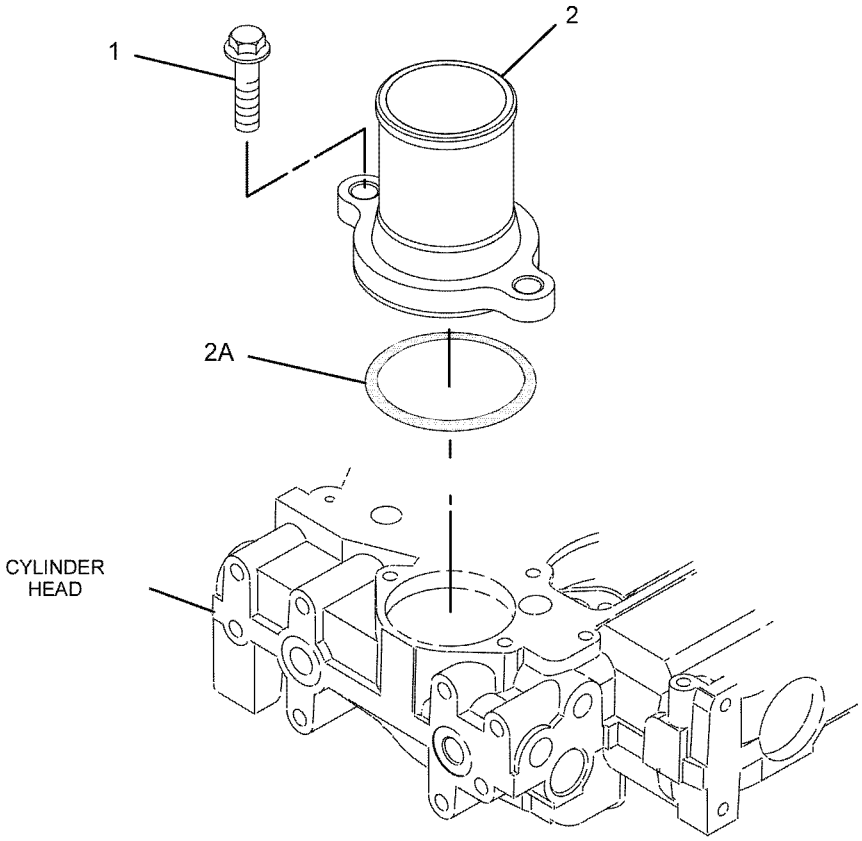

GRAPHIC #1 **<END>** g01081626

316-6941 CONNECTION GP-WATER

S/N: C4Z1-UP

PART OF 321-7704 ENGINE AR-PRIMARY

SMCS-1380 **i03301249**

NOTE	REF NO	GRAPHIC REF	PART NUMBER	QTY	PART NAME 1 2 3 4 5 6 (PRODUCT LEVEL)	SEE PAGE
	1	1	**254-2267**	1	REGULATOR GP-TEMPERATURE (INCLUDES CONNECTOR) (WATER)	
	1A	1	**254-2270**	1	SEAL-O-RING	
M	2	1	**6I-0260**	2	BOLT (M8X1.25X25-MM)	

M-METRIC PART

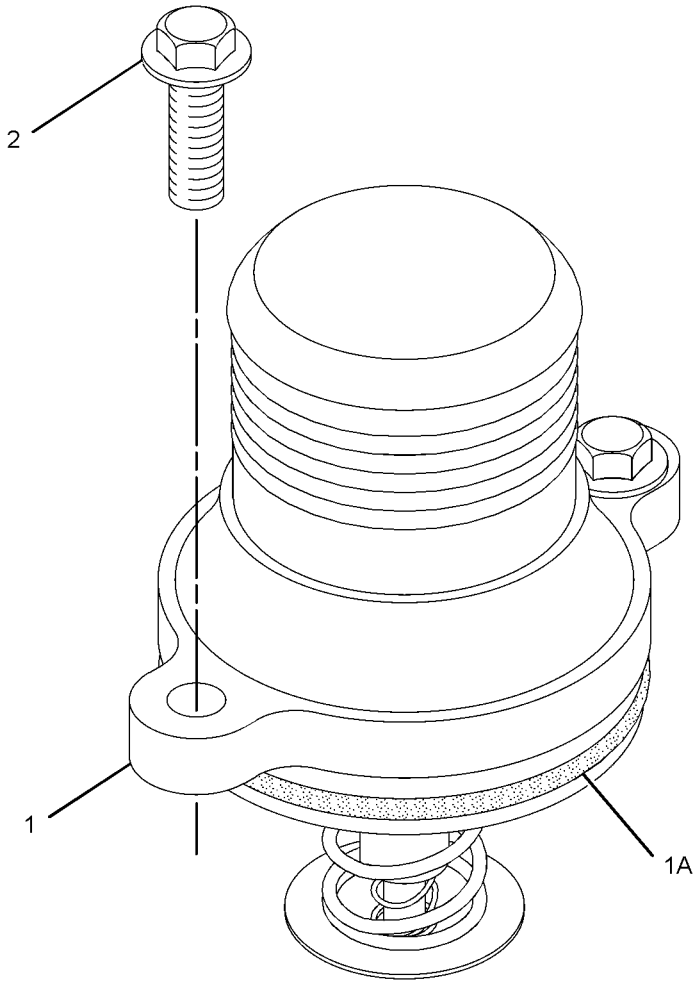

GRAPHIC #1 **<END>** g01319398

210-5953 COOLER AS-OIL—HYDRAULIC, TRANSMISSION

S/N: CBD1-UP; MFG152-UP

PART OF 210-5949 RADIATOR & OIL COOLER GP

AN ATTACHMENT

SMCS-1376, 3320 **i04241300**

NOTE	REF NO	GRAPHIC REF	PART NUMBER	QTY	PART NAME 1 2 3 4 5 6 (PRODUCT LEVEL)	SEE PAGE
	1	1	**210-5954**	1	CORE AS-OIL COOLER (HYDRAULIC)	
	2	1	**210-5955**	1	CORE AS-OIL COOLER (TRANSMISSION)	
M	3	1	**5C-7261**	2	NUT (M8X1.25-THD)	
M	4	1	**8T-7547**	2	BOLT (M8X1.25X30-MM)	
	5	1	**9M-5733**	24	RIVET-POP	
	6	1	**9N-0869**	6	WASHER-HARD (8.8X25.5X2-MM THK)	
	7	1	**9W-4216**	2	SPACER (9X18X7-MM THK)	

M-METRIC PART

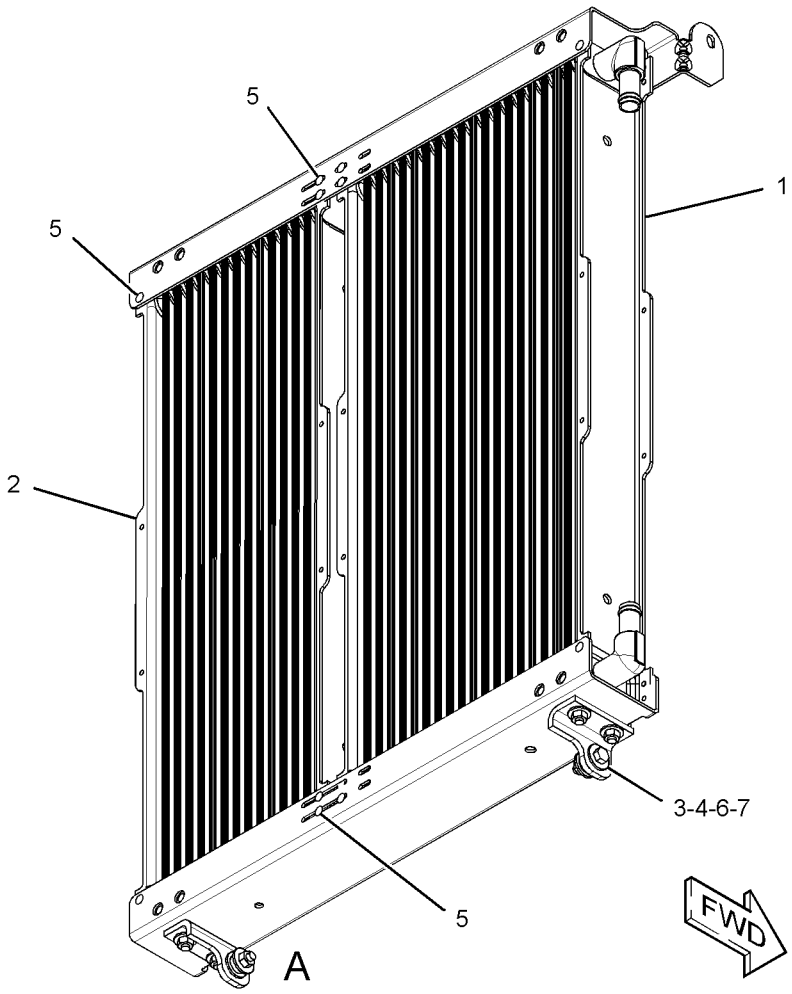

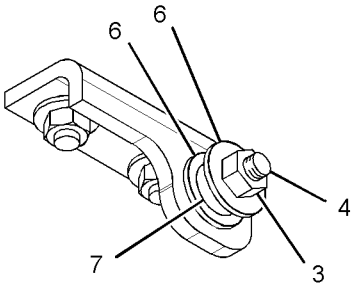

VIEW OF AREA A

GRAPHIC #1 **<END>** g02022864

232-3722 COOLER GP-ENGINE OIL

S/N: G4D1-UP; CRS1-UP
PART OF 238-2799 COOLER GP-FLTR BASE & ENG OIL
AN ATTACHMENT

SMCS-1378 **i02534916**

NOTE	REF NO	GRAPHIC REF	PART NUMBER	QTY	PART NAME 1 2 3 4 5 6 (PRODUCT LEVEL)	SEE PAGE
M	1	1	**6I-0260**	10	BOLT (M8X1.25X25-MM)	
	2	1	**6I-4374**	3	BOLT (M8X1.25X60-MM)	
M	3	1	**101-3895**	4	BOLT (M8X1.25X35-MM)	
	4	1	**225-6817**	1	COOLER-OIL (ENGINE)	
	5	1	**225-6818**	2	SEAL	
	6	1	**272-2265**	1	SEAL	

M-METRIC PART

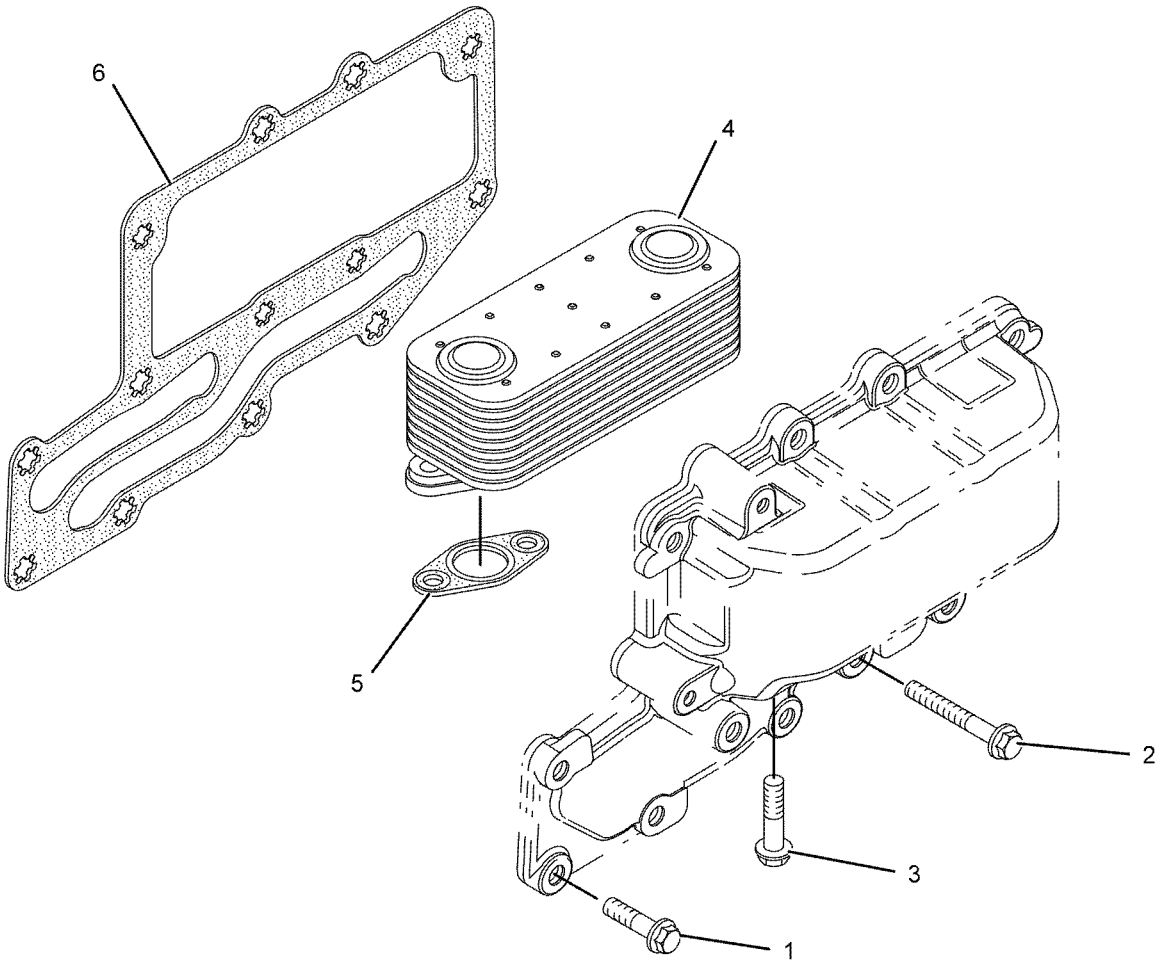

GRAPHIC #1 **<END>** g01111678

316-6899 COOLER GP-ENGINE OIL

S/N: C4Z1-UP

PART OF 321-7704 ENGINE AR-PRIMARY

SMCS-1378 **i03919096**

NOTE	REF NO	GRAPHIC REF	PART NUMBER	QTY	PART NAME 1 2 3 4 5 6 (PRODUCT LEVEL)	SEE PAGE
	1	1	**6I-0572**	4	BOLT (M8X1.25X20-MM)	
M	2	1	**6I-0645**	4	BOLT (M8X1.25X25-MM)	
	3	1	**225-7944**	2	GASKET (ENGINE OIL FILTER BASE)	
	4	1	**232-3751**	1	PLATE	
	5	1	**249-0974**	1	HEAD AS-OIL FILTER	
Y	6	1	**354-1274**	1	COOLER GP-ENGINE OIL	121

M-METRIC PART
Y-SEPARATE ILLUSTRATION

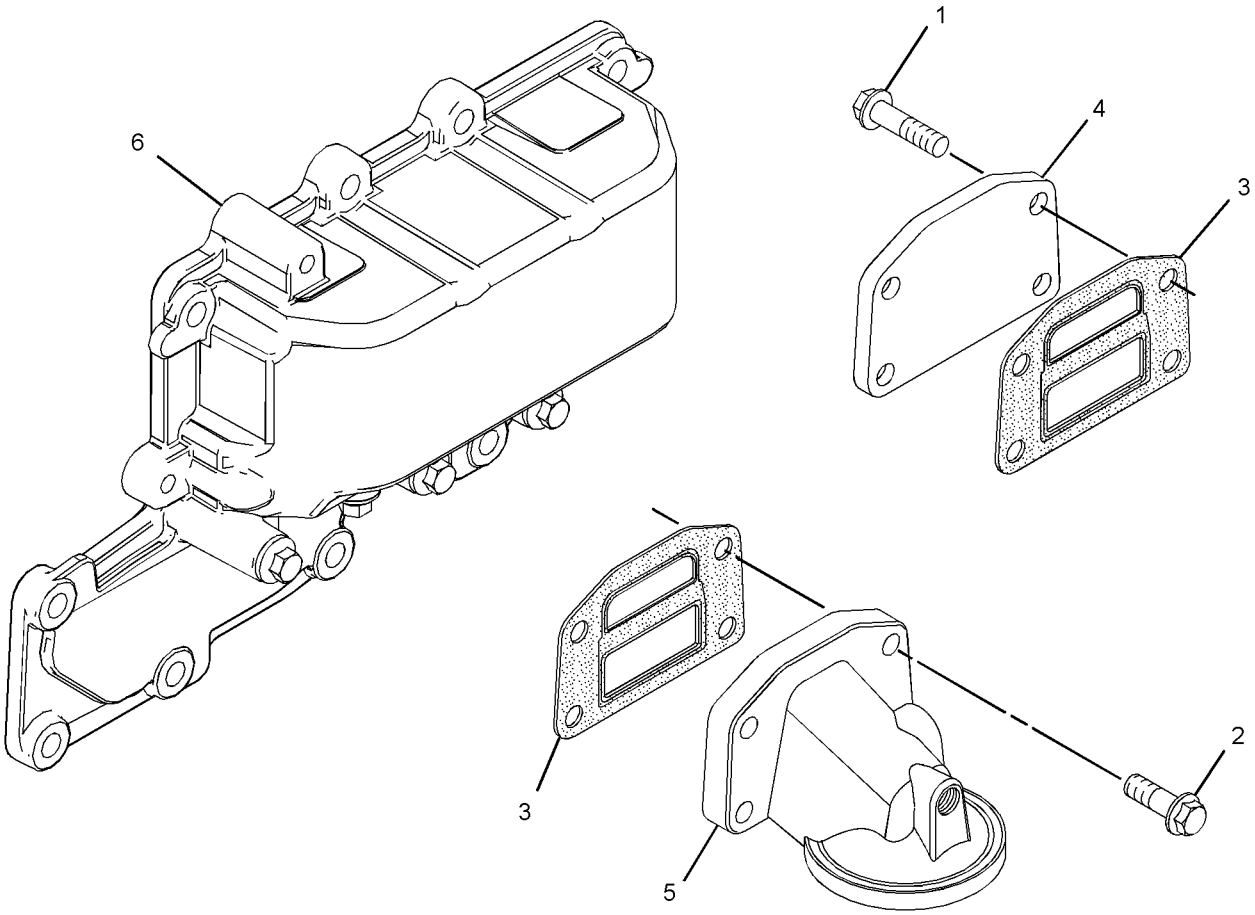

GRAPHIC #1 **<END>** g02151330

354-1274 COOLER GP-ENGINE OIL

S/N: G4D1-UP; CRS1-UP; C4Z1-UP
PART OF 316-6899 COOLER GP-ENGINE OIL, 238-2799 COOLER GP-FLTR BASE & ENG OIL
ALSO AN ATTACHMENT

SMCS-1378 **i03894669**

NOTE	REF NO	GRAPHIC REF	PART NUMBER	QTY	PART NAME 1 2 3 4 5 6 (PRODUCT LEVEL)	SEE PAGE
M	1	1	**6I-0260**	10	BOLT (M8X1.25X25-MM)	
	2	1	**6I-4374**	3	BOLT (M8X1.25X60-MM)	
M	3	1	**101-3895**	4	BOLT (M8X1.25X35-MM)	
	4	1	**225-6817**	1	COOLER-OIL	
	5	1	**225-6818**	2	SEAL	
	6	1	**272-2265**	1	SEAL	

M-METRIC PART

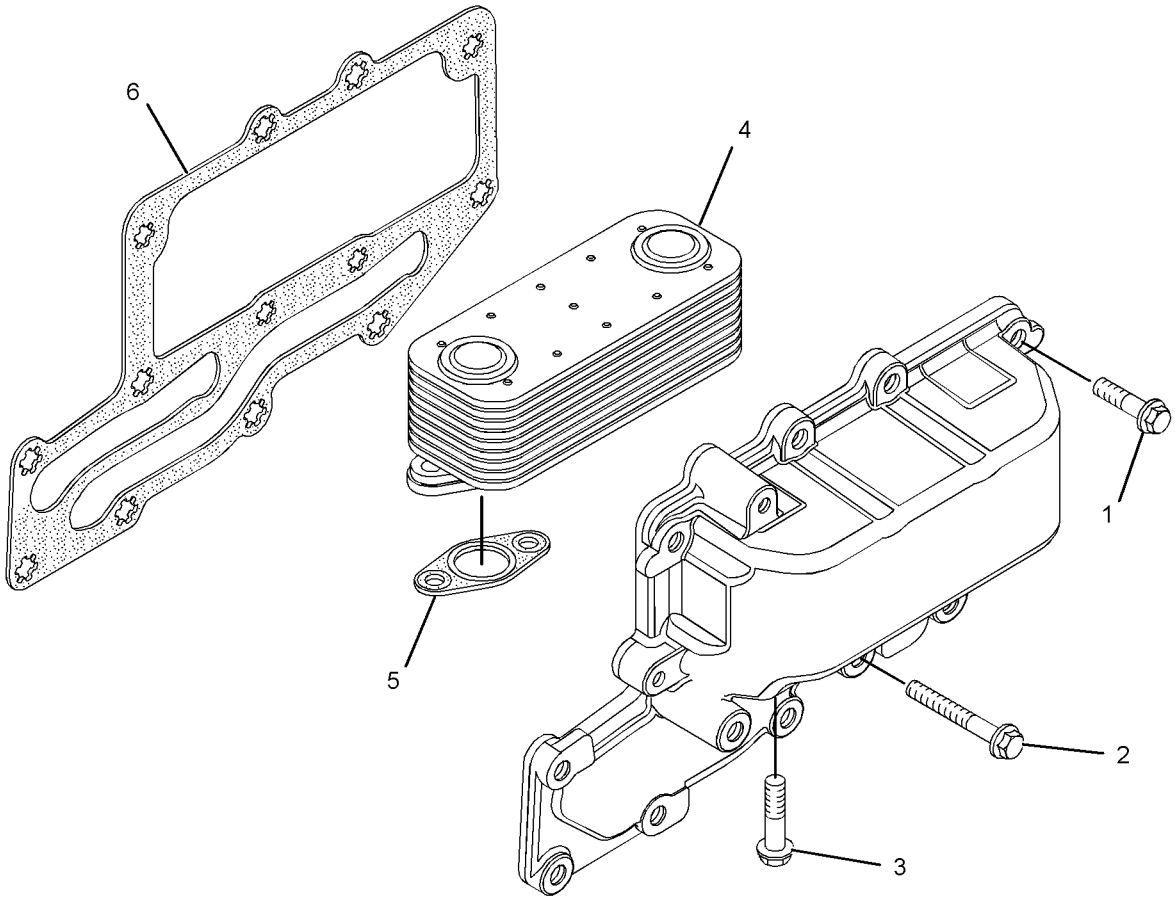

GRAPHIC #1 **<END>** g02140458

238-2799 COOLER GP-FLTR BASE & ENG OIL

S/N: G4D1-UP; CRS1-UP
PART OF 273-3610 ENGINE AR, 323-5725 ENGINE AR-PRIMARY
AN ATTACHMENT
TYPE 1

SMCS-1306, 1378 **i02574321**

NOTE	REF NO	GRAPHIC REF	PART NUMBER	QTY	PART NAME 1 2 3 4 5 6 (PRODUCT LEVEL)	SEE PAGE
	1	1	**6I-0572**	4	BOLT (M8X1.25X20-MM)	
M	2	1	**6I-0645**	4	BOLT (M8X1.25X25-MM)	
	3	1	**8T-7876**	1	SEAL-O-RING	
	4	1	**225-7941**	1	PLUG	
	5	1	**225-7944**	2	GASKET	
	6	1	**249-0974**	1	HEAD AS-OIL FILTER	
Y	7	1	**232-3722**	1	COOLER GP-ENGINE OIL	119
	8	1	**232-3751**	1	PLATE	

M-METRIC PART
Y-SEPARATE ILLUSTRATION

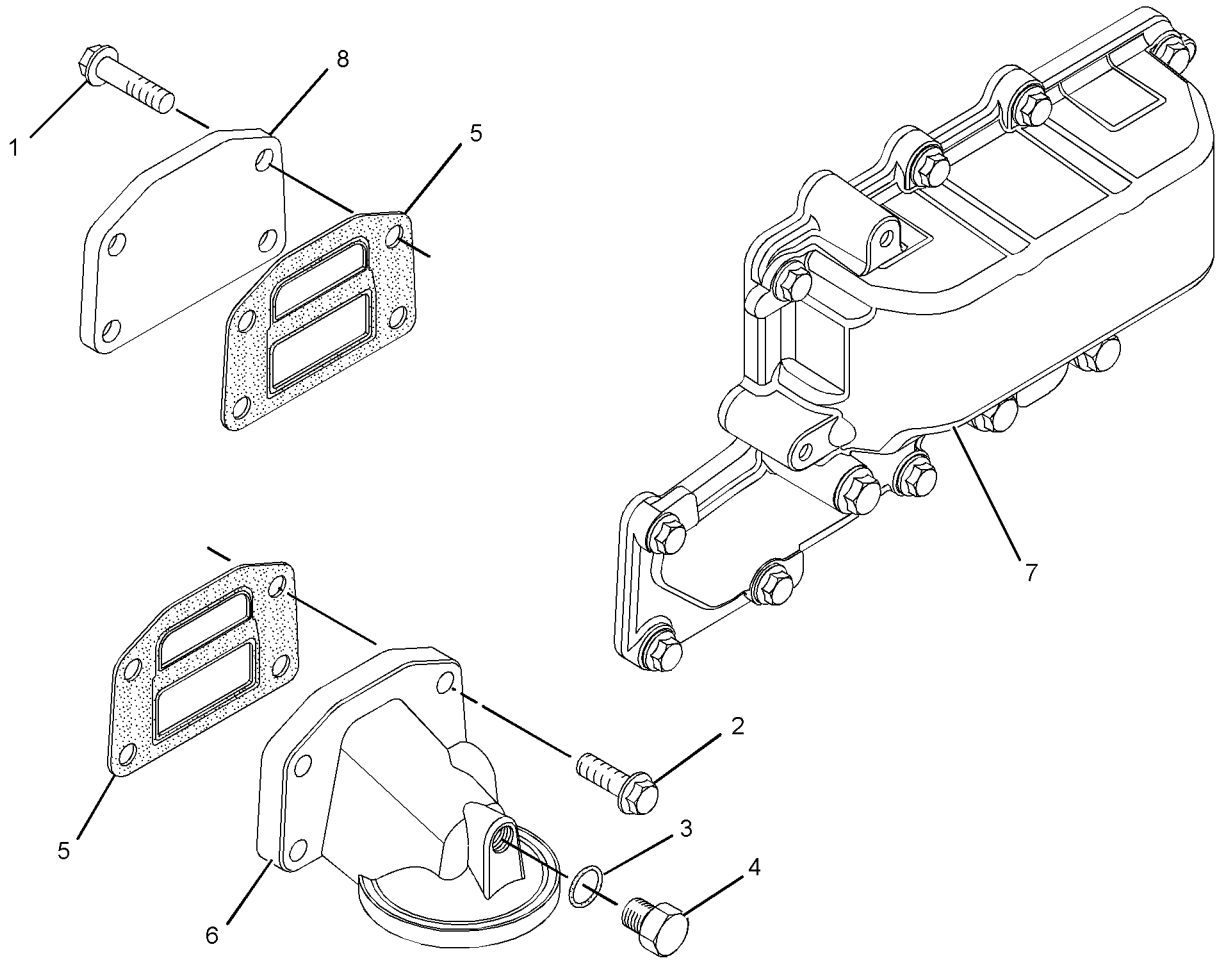

GRAPHIC #1 **<END>** g01289551

238-2799 COOLER GP-FLTR BASE & ENG OIL

S/N: G4D1-UP; CRS1-UP
PART OF 323-5725 ENGINE AR-PRIMARY
AN ATTACHMENT
TYPE 2

SMCS-1306, 1378 **i03890789**

NOTE	REF NO	GRAPHIC REF	PART NUMBER	QTY	PART NAME 1 2 3 4 5 6 (PRODUCT LEVEL)	SEE PAGE
	1	1	**6I-0572**	4	BOLT (M8X1.25X20-MM)	
M	2	1	**6I-0645**	4	BOLT (M8X1.25X25-MM)	
	3	1	**8T-7876**	1	SEAL-O-RING	
	4	1	**225-7941**	1	PLUG	
	5	1	**225-7944**	2	GASKET	
	6	1	**249-0974**	1	HEAD AS-OIL FILTER	
Y	7	1	**354-1274**	1	COOLER GP-ENGINE OIL	121
	8	1	**232-3751**	1	PLATE	

M-METRIC PART
Y-SEPARATE ILLUSTRATION

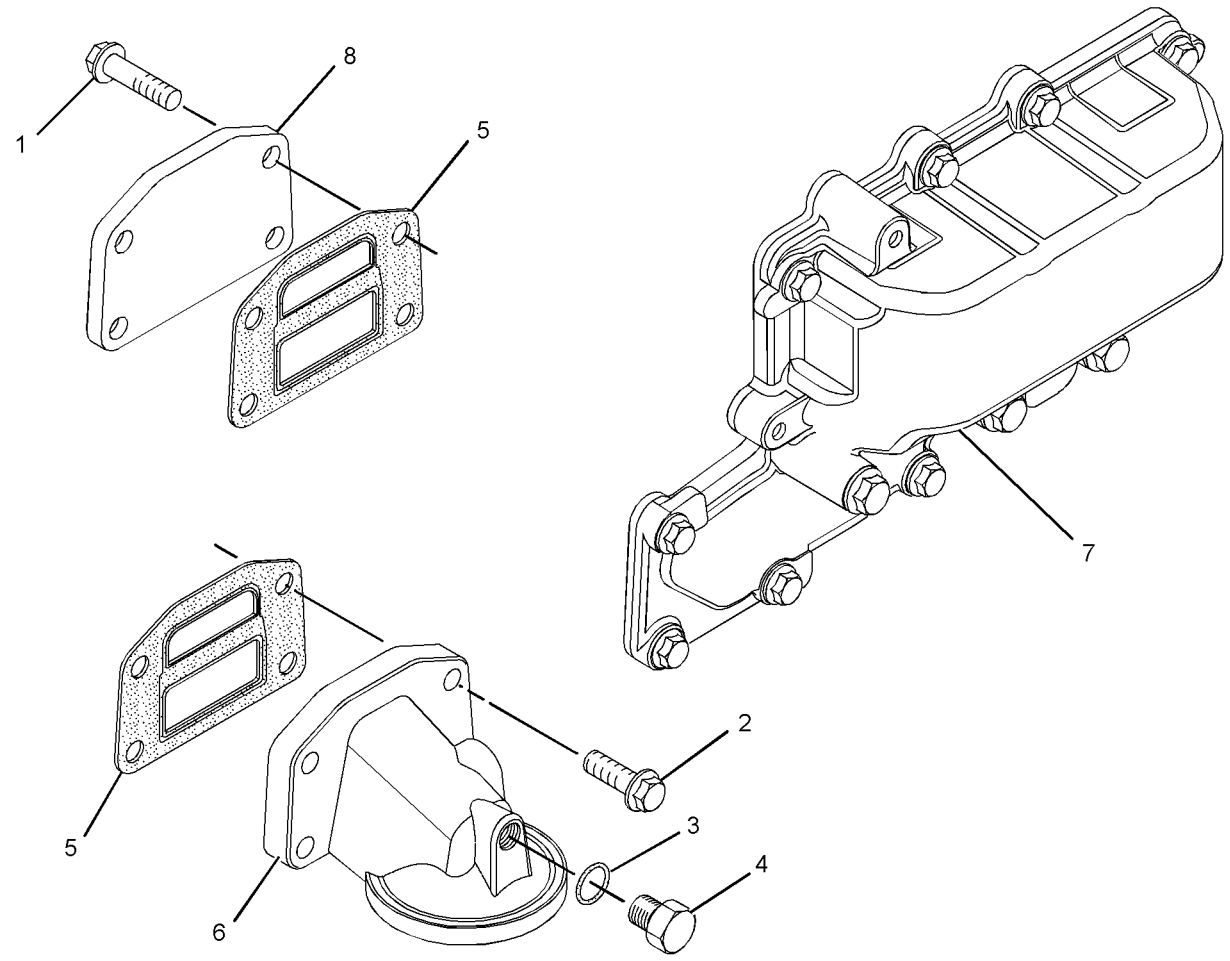

GRAPHIC #1 **<END>** g02140432

253-2472 COOLER GP-FLTR BASE & ENG OIL

S/N: G4D1-UP; CRS1-UP
PART OF 245-6841 ENGINE AR-PRIMARY
AN ATTACHMENT
TYPE 1

SMCS-1306, 1378 **i02578009**

NOTE	REF NO	GRAPHIC REF	PART NUMBER	QTY	PART NAME 1 2 3 4 5 6 (PRODUCT LEVEL)	SEE PAGE
	1	1	**6I-0572**	4	BOLT (M8X1.25X20-MM)	
M	2	1	**6I-0645**	4	BOLT (M8X1.25X25-MM)	
	3	1	**8T-7876**	1	SEAL-O-RING	
	4	1	**225-7941**	1	PLUG	
	5	1	**225-7944**	2	GASKET	
	6	1	**249-0974**	1	HEAD AS-OIL FILTER (ENGINE)	
	7	1	**232-3751**	1	PLATE	
	8	1	**233-7223**	1	COOLER AS-OIL (ENGINE)	
M	8A	1	**6I-0260**	10	BOLT (M8X1.25X25-MM)	
	8B	1	**6I-4374**	3	BOLT (M8X1.25X60-MM)	
M	8C	1	**101-3895**	4	BOLT (M8X1.25X35-MM)	
	8D	1	**225-6818**	2	SEAL	
	8E	1	**225-6820**	1	GASKET	
	8F	1	**233-7222**	1	COOLER-OIL (ENGINE)	

M-METRIC PART

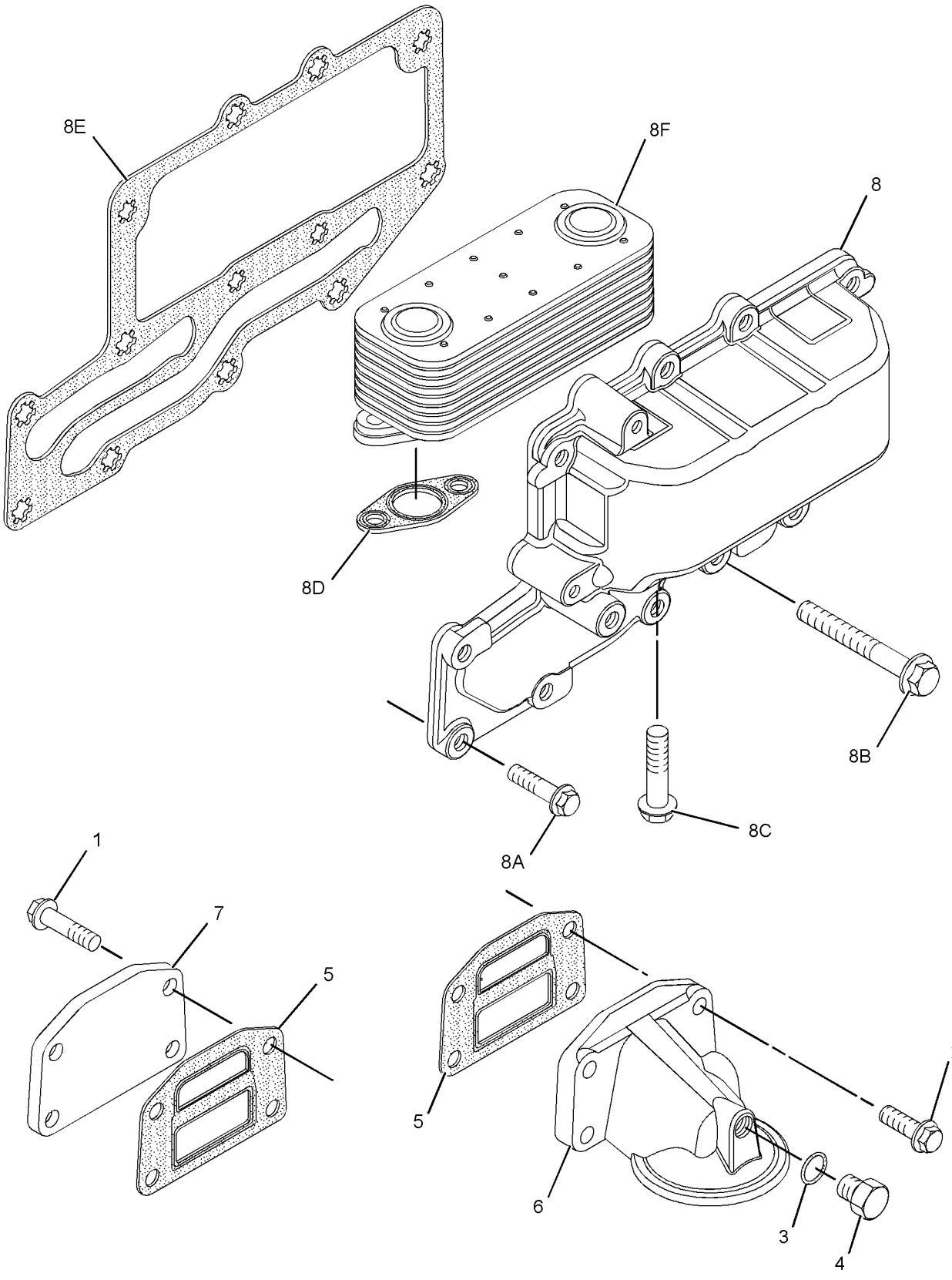

GRAPHIC #1 **<END>** g01300525

253-2472 COOLER GP-FLTR BASE & ENG OIL

S/N: G4D1-UP; CRS1-UP
PART OF 245-6841, 323-5724 ENGINE AR-PRIMARY
AN ATTACHMENT
TYPE 2

SMCS-1306, 1378 **i04025653**

NOTE	REF NO	GRAPHIC REF	PART NUMBER	QTY	PART NAME 1 2 3 4 5 6 (PRODUCT LEVEL)	SEE PAGE
	1	1	**6I-0572**	4	BOLT (M8X1.25X20-MM)	
M	2	1	**6I-0645**	4	BOLT (M8X1.25X25-MM)	
	3	1	**8T-7876**	1	SEAL-O-RING	
	4	1	**225-7941**	1	PLUG	
	5	1	**225-7944**	2	GASKET	
	6	1	**249-0974**	1	HEAD AS-OIL FILTER	
	7	1	**232-3751**	1	PLATE	
C	8	1	*355-6224*	1	COOLER AS-OIL (ENGINE)	
	8A	1	**272-2265**	1	SEAL	
M	8B	1	**6I-0260**	10	BOLT (M8X1.25X25-MM)	
	8C	1	**6I-4374**	3	BOLT (M8X1.25X60-MM)	
M	8D	1	**101-3895**	4	BOLT (M8X1.25X35-MM)	
	8E	1	**225-6818**	2	SEAL	
	8F	1	**233-7222**	1	COOLER-OIL (ENGINE)	

C-CHANGE FROM PREVIOUS TYPE
M-METRIC PART

253-2472 **COOLER GP-FLTR BASE & ENG OIL** *(contd.)* **i04025653**

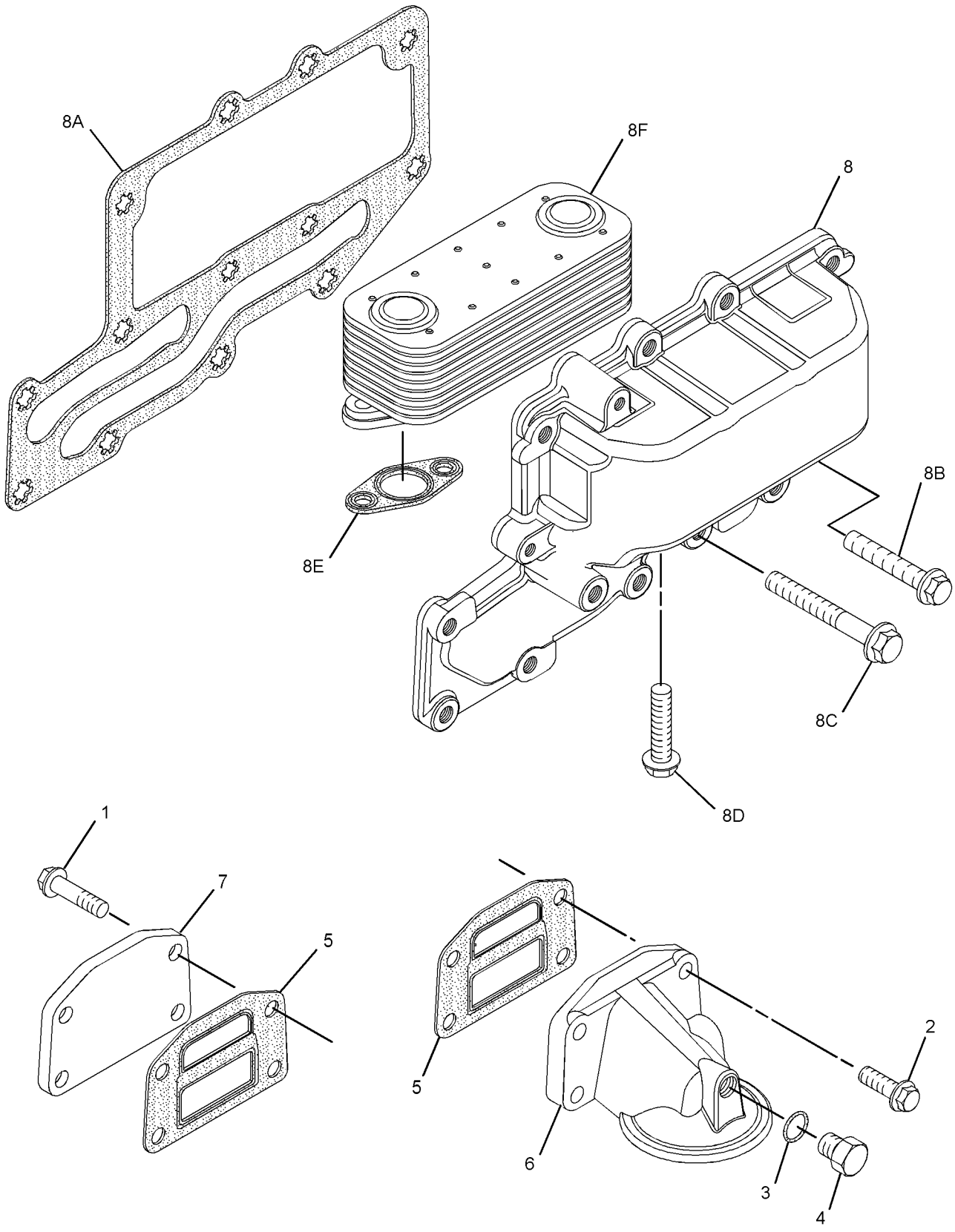

GRAPHIC #1 **<END>** g02208493

213-9311 FAN GP-SUCTION—WITHOUT AIR CONDITIONER

S/N: CBD1-UP; MFG1-UP
0.85:1 RATIO
PART OF 204-4161, 204-4162 CAB AR-ENCLOSED ROPS, 204-4160, 204-4164, 292-9690, 292-9691 CANOPY AR-OPEN ROPS
AN ATTACHMENT

SMCS-1356, 1360 **i02837533**

NOTE	REF NO	GRAPHIC REF	PART NUMBER	QTY	PART NAME 1 2 3 4 5 6 (PRODUCT LEVEL)	SEE PAGE
	1	1	**130-3216**	1	V-BELT SET (INCLUDES 2-BELTS)	
	2	1	**130-3880**	1	PULLEY-FAN DRIVE	
	3	1	**142-3388**	1	SPACER-FAN	
	4	1	**142-3391**	1	SPIDER AS (9-BLADE)	
	5	1	**242-9751**	1	GUARD AS	
M	6	1	**153-3061**	4	BOLT (M8X1.25X130-MM)	
	7	1	**5P-4116**	4	WASHER-HARD (8.8X20.5X2-MM THK)	
	8	1	**8T-4224**	4	WASHER-HARD (8.8X16X2-MM THK)	
M	9	1	**8T-4908**	4	BOLT (M8X1.25X25-MM)	

M-METRIC PART

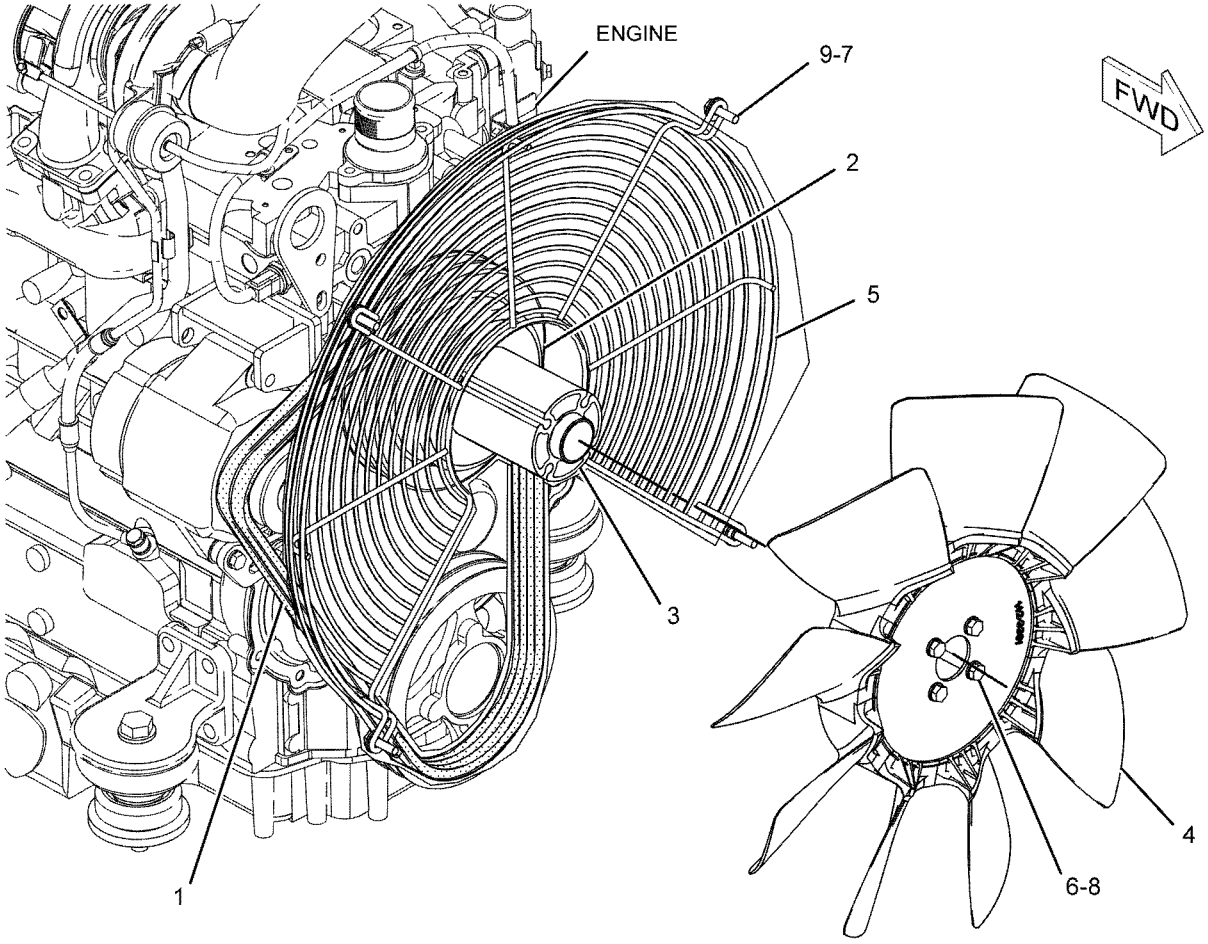

GRAPHIC #1 **<END>** g01078693

266-2234 FAN GP-SUCTION—WITH AIR CONDITIONER

S/N: CBD1-UP
0.85:1 RATIO
PART OF 228-4602 CAB AR-ENCLOSED ROPS
AN ATTACHMENT

SMCS-1356, 1360 **i02498178**

NOTE	REF NO	GRAPHIC REF	PART NUMBER	QTY	PART NAME 1 2 3 4 5 6 (PRODUCT LEVEL)	SEE PAGE
	1	1	**3P-0130**	1	V-BELT (AIR CONDITIONER)	
	2	1	**130-3216**	1	V-BELT SET (INCLUDES 2-BELTS) (ALTERNATOR)	
	3	1	**142-3388**	1	SPACER-FAN	
	4	1	**142-3391**	1	SPIDER AS (9-BLADE)	
	5	1	**242-9751**	1	GUARD AS (FAN)	
	6	1	**266-2235**	1	PULLEY-FAN	
M	7	1	**153-3061**	4	BOLT (M8X1.25X130-MM)	
	8	1	**5P-4116**	4	WASHER-HARD (8.8X20.5X2-MM THK)	
	9	1	**8T-4224**	4	WASHER-HARD (8.8X16X2-MM THK)	
M	10	1	**8T-4908**	4	BOLT (M8X1.25X25-MM)	

M-METRIC PART

266-2234 **FAN GP-SUCTION** *(contd.)* **i02498178**

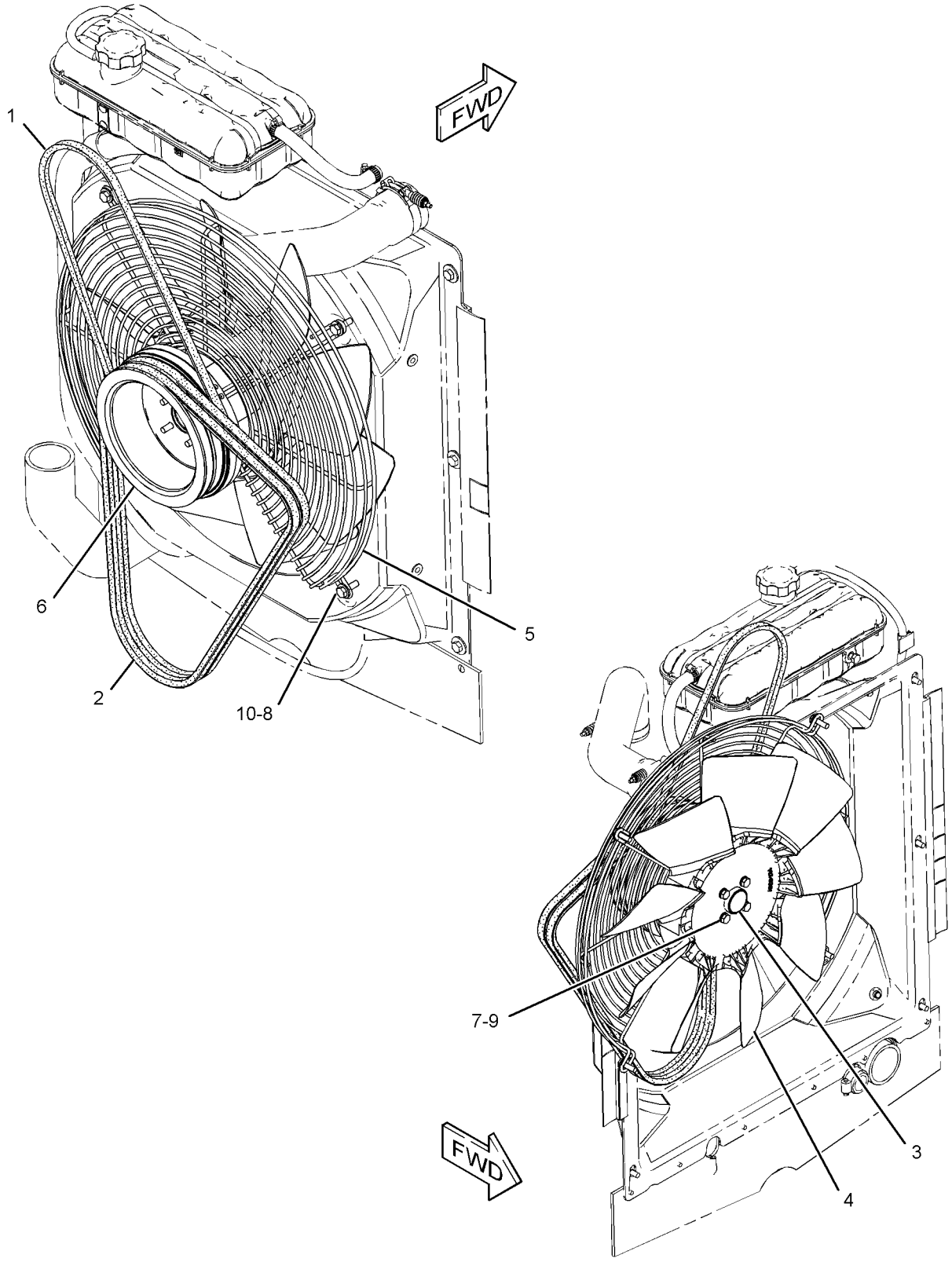

GRAPHIC #1 **<END>** g01198502

266-2234 FAN GP-SUCTION—WITH AIR CONDITIONER

S/N: CBD1-UP; MFG1-UP
0.85:1 RATIO
PART OF 228-4602 CAB AR-ENCLOSED ROPS
AN ATTACHMENT

SMCS-1356, 1360 **i02987840**

NOTE	REF NO	GRAPHIC REF	PART NUMBER	QTY	PART NAME 1 2 3 4 5 6 (PRODUCT LEVEL)	SEE PAGE
C	1	1	**1P-4334**	1	V-BELT (AIR CONDITIONER)	
	2	1	**130-3216**	1	V-BELT SET (INCLUDES 2-BELTS) (ALTERNATOR)	
	3	1	**142-3388**	1	SPACER-FAN	
	4	1	**142-3391**	1	SPIDER AS (9-BLADE)	
	5	1	**242-9751**	1	GUARD AS	
	6	1	**266-2235**	1	PULLEY-FAN	
M	7	1	**153-3061**	4	BOLT (M8X1.25X130-MM)	
	8	1	**5P-4116**	4	WASHER-HARD (8.8X20.5X2-MM THK)	
	9	1	**8T-4224**	4	WASHER-HARD (8.8X16X2-MM THK)	
M	10	1	**8T-4908**	4	BOLT (M8X1.25X25-MM)	

C-CHANGE FROM PREVIOUS TYPE
M-METRIC PART

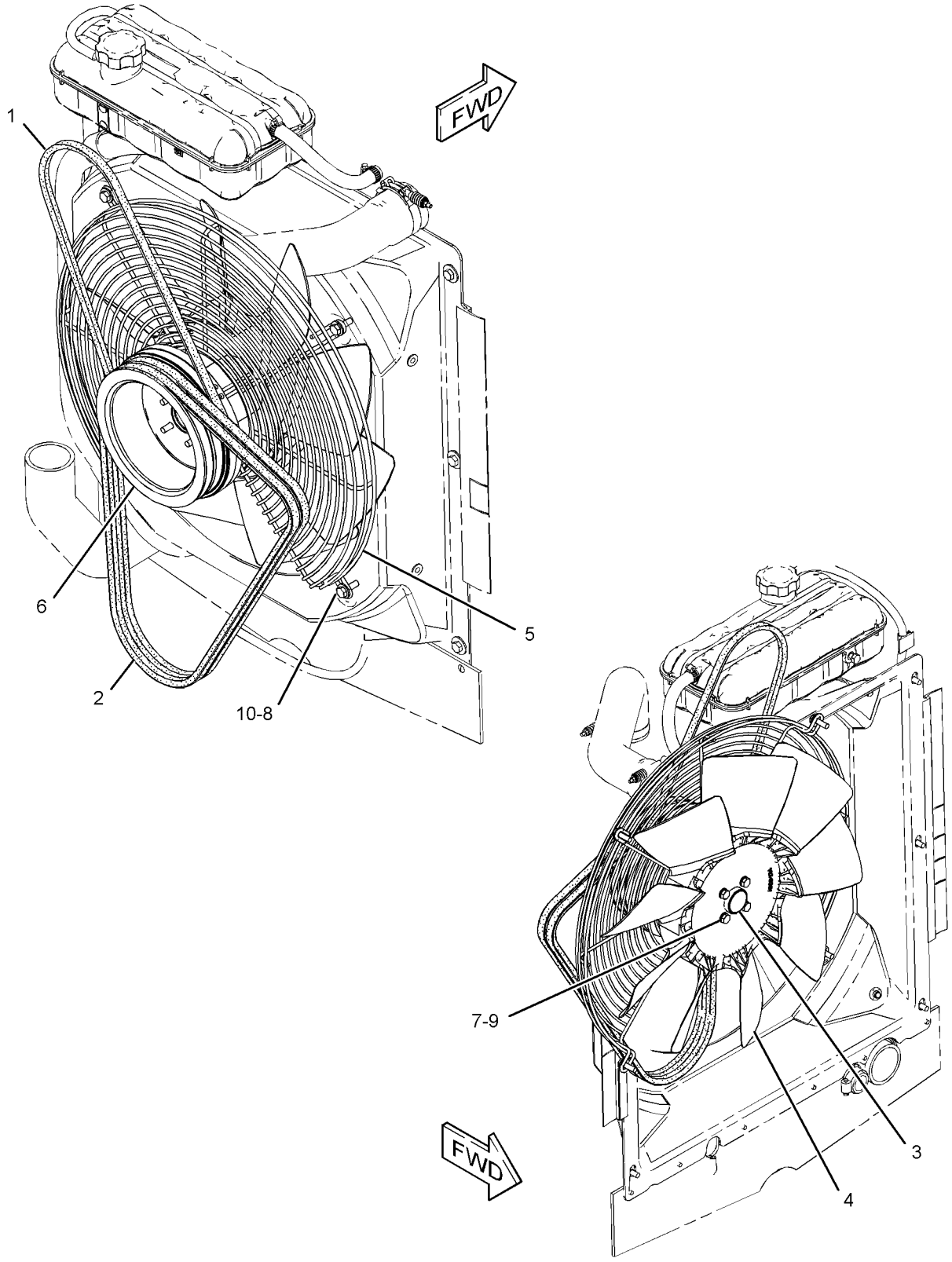

GRAPHIC #1 **<END>** g01198502

299-4716 FAN GP-SUCTION—WITH AIR CONDITIONER

S/N: MFG1-UP
PART OF 291-9195 CAB AR-ENCLOSED ROPS
AN ATTACHMENT

SMCS-1356, 1360 **i03857282**

NOTE	REF NO	GRAPHIC REF	PART NUMBER	QTY	PART NAME 1 2 3 4 5 6 (PRODUCT LEVEL)	SEE PAGE
	1	1	**130-7881**	1	SPACER	
	2	1	**142-3391**	1	SPIDER AS (9-BLADE)	
	3	1	**212-9353**	1	BELT-SERPENTINE	
	4	1	**242-9751**	1	GUARD AS	
	5	1	**261-0376**	1	BELT TENSIONER	
	6	1	**348-8149**	1	PLATE-MOUNTING	
	7	1	**261-0428**	1	PULLEY AS-IDLER	
M		1	**307-2242**	1	BOLT (M10X1.5X45-MM)	
	8	1	**299-4732**	1	PULLEY	
	9	1	**5P-4116**	4	WASHER-HARD (8.8X20.5X2-MM THK)	
M	10	1	**7X-2540**	4	BOLT (M8X1.25X120-MM)	
	11	1	**7X-7729**	1	WASHER (11X25X3-MM THK)	
	12	1	**8T-4121**	3	WASHER-HARD (11X21X2.5-MM THK)	
M	13	1	**8T-4172**	1	BOLT (M10X1.5X80-MM)	
M	14	1	**8T-4196**	3	BOLT (M10X1.5X35-MM)	
	15	1	**8T-4224**	4	WASHER-HARD (8.8X16X2-MM THK)	
M	16	1	**8T-4908**	4	BOLT (M8X1.25X25-MM)	

M-METRIC PART

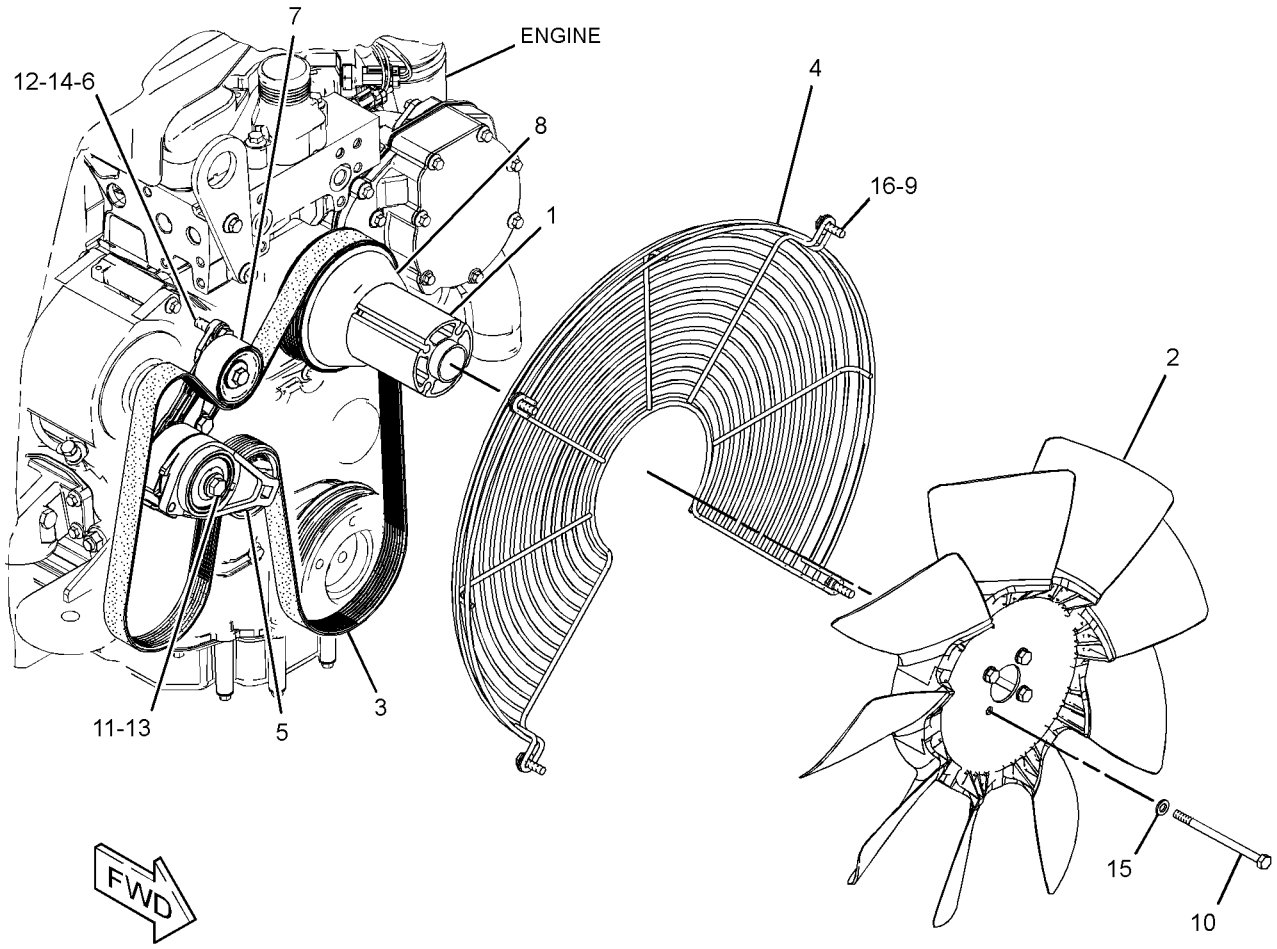

GRAPHIC #1 **<END>** g01520651

COOLING SYSTEM

315-1369 LINES GP-POWER TRAIN COOLER

S/N: MFG1-UP

PART OF 291-9188 ENGINE AR

SMCS-1375, 3016 **i04528852**

NOTE	REF NO	GRAPHIC REF	PART NUMBER	QTY	PART NAME 1 2 3 4 5 6 (PRODUCT LEVEL)	SEE PAGE
	1	1	**118-7286**	1	BRACKET AS	
M		1	**8T-3490**	1	NUT-WELD (M10X1.5-THD)	
	2	1	**130-9984**	1	CLIP	
	3	1	**332-7541**	1	HOSE AS	
	4	1	**332-7542**	1	HOSE AS	
	5	1	**315-5401**	1	TUBE AS	
	6	1	*148-8339*	1	CONNECTOR AS	
		1	**6V-8716**	1	CONNECTOR	
		1	**6V-9746**	1	SEAL-O-RING	
		1	**7M-8485**	1	SEAL-O-RING	
	7	1	*148-8360*	1	ELBOW AS	
		1	**6V-9182**	1	ELBOW	
		1	**6V-9746**	1	SEAL-O-RING	
		1	**7M-8485**	1	SEAL-O-RING	
	8	1	**159-1503**	6	CLAMP-HOSE	
	9	1	**8T-4121**	2	WASHER-HARD (11X21X2.5-MM THK)	
M	10	1	**5C-7261**	2	NUT (M8X1.25-THD)	
M	11	1	**8T-4136**	1	BOLT (M10X1.5X25-MM)	
M	12	1	**8T-4192**	2	BOLT (M12X1.75X25-MM)	
	13	1	**8T-4223**	2	WASHER-HARD (13.5X25.5X3-MM THK)	
	14	1	**8T-7529**	3	CLIP	
E	15	1	**262-8088**		HOSE (80-CM)	
E	15A	1	**262-8088**		HOSE (70-CM)	
	16	1	**5P-4116**	2	WASHER-HARD (8.8X20.5X2-MM THK)	
M	17	1	**8T-4137**	1	BOLT (M10X1.5X20-MM)	

E-ORDER BY THE CENTIMETER
M-METRIC PART

315-1369 **LINES GP-POWER TRAIN COOLER** *(contd.)* **i04528852**

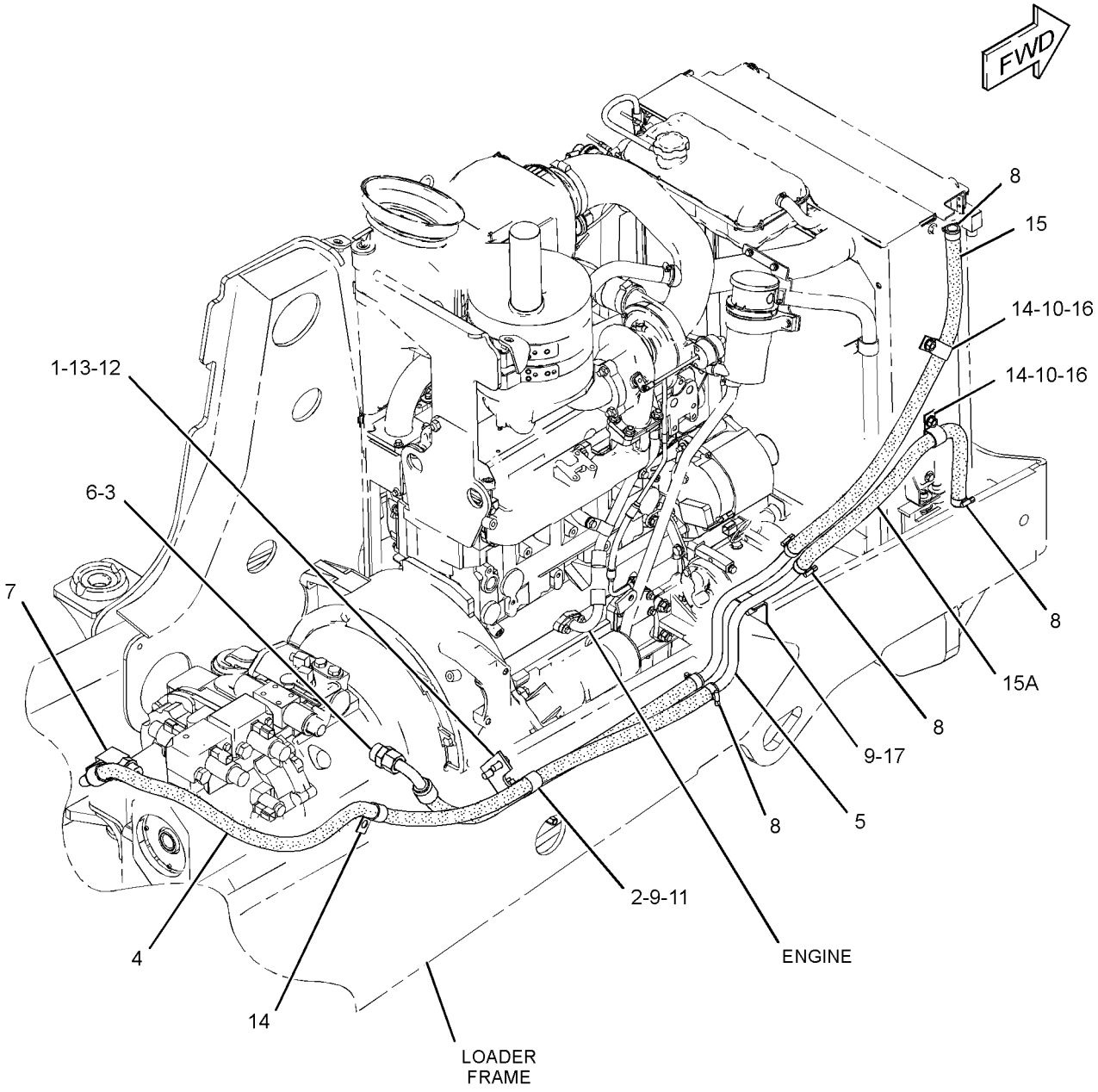

GRAPHIC #1 **<END>** g02155819

COOLING SYSTEM

304-4022 LINES GP-RADIATOR

S/N: MFG1-UP

PART OF 291-9188 ENGINE AR

SMCS-1353, 1380 **i04528830**

NOTE	REF NO	GRAPHIC REF	PART NUMBER	QTY	PART NAME 1 2 3 4 5 6 (PRODUCT LEVEL)	SEE PAGE
	1	1	**2W-9710**	4	MOUNT AS	
	2	1	**5D-1026**	2	CLAMP-BAND	
	3	1	**6N-6984**	2	MOUNT-RUBBER	
	4	1	**9M-7958**	1	CLAMP-HOSE	
	5	1	**031-5644**	2	CLIP	
	6	1	**140-3640**	2	PLATE	
	7	1	**247-1385**	1	TANK GP-EXPANSION (COOLANT)	
		1	**251-3227**	1	CAP AS-COOLANT TANK	
	8	1	**250-2314**	1	BRACKET AS	
M		1	**8T-3612**	2	NUT-WELD (M8X1.25-THD)	
	9	1	**304-7848**	1	HOSE GP-RADIATOR	
	10	1	**325-5855**	1	HOSE-RADIATOR (UPPER)	
	11	1	**329-5700**	1	HOSE	
	12	1	**4D-7388**	1	CLIP	
M	13	1	**5C-7261**	2	NUT (M8X1.25-THD)	
	14	1	**7X-0579**	7	WASHER-HARD (8.8X25.5X2-MM THK)	
	15	1	**7X-0603**	4	WASHER-HARD (9.9X35X2.5-MM THK)	
M	16	1	**8T-2223**	4	BOLT-SOCKET HEAD (M10X1.5X45-MM)	
M	17	1	**8T-4133**	4	NUT (M10X1.5-THD)	
M	18	1	**8T-4189**	2	BOLT (M8X1.25X20-MM)	
M	19	1	**8T-4200**	4	BOLT (M8X1.25X16-MM)	
	20	1	**8T-4222**	8	WASHER-PLATED (11X32X2.5-MM THK)	
	21	1	**8T-4984**	3	CLAMP-HOSE	
	22	1	**8T-6703**	1	CLAMP-HOSE	
M	23	1	**8T-7547**	2	BOLT (M8X1.25X30-MM)	
E	24	1	**8C-3681**		HOSE (110.5-CM)	
E	24A	1	**8C-3681**		HOSE (30.2-CM)	
M	25	1	**8T-4908**	1	BOLT (M8X1.25X25-MM)	

E-ORDER BY THE CENTIMETER
M-METRIC PART

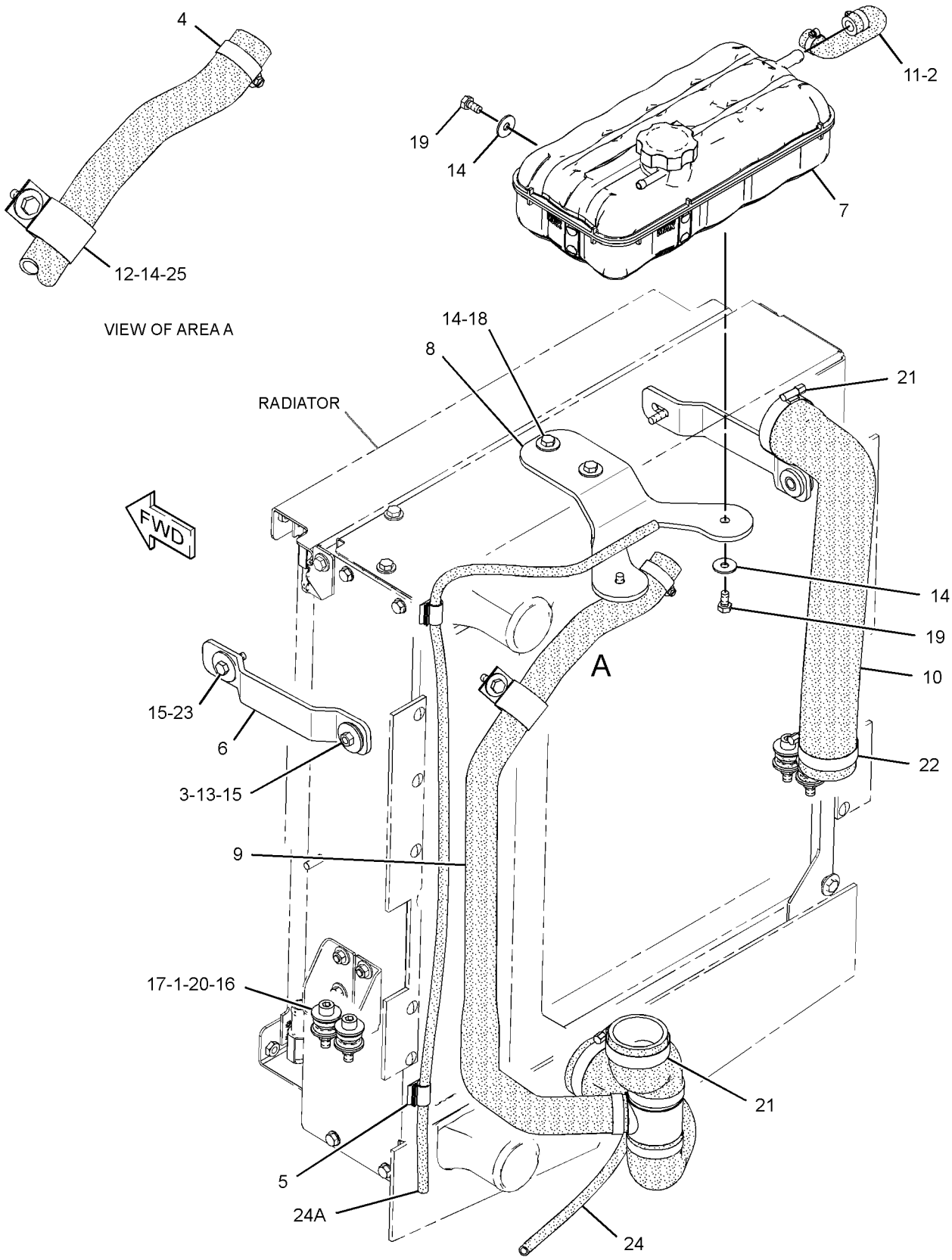

GRAPHIC #1 **<END>** g01869628

214-3751 LINES GP-TRANSMISSION COOLER

S/N: CBD1-UP; MFG1-UP

PART OF 214-2202 MOUNTING & LINES GP-RADIATOR

SMCS-1375 **i02869782**

NOTE	REF NO	GRAPHIC REF	PART NUMBER	QTY	PART NAME 1 2 3 4 5 6 (PRODUCT LEVEL)	SEE PAGE
	1	1	**118-7286**	1	BRACKET AS	
	2	1	**130-9984**	2	CLIP	
	3	1	**159-1503**	2	CLAMP-HOSE	
I	4	1	**214-3753**	1	HOSE AS	
	5	1	**250-4337**	1	HOSE AS	
	6	1	*148-8339*	1	CONNECTOR AS	
		1	**6V-8716**	1	CONNECTOR	
		1	**6V-9746**	1	SEAL-O-RING	
		1	**7M-8485**	1	SEAL-O-RING	
	7	1	*148-8360*	1	ELBOW AS	
		1	**6V-9182**	1	ELBOW	
		1	**6V-9746**	1	SEAL-O-RING	
		1	**7M-8485**	1	SEAL-O-RING	
	8	1	**5P-4116**	2	WASHER-HARD (8.8X20.5X2-MM THK)	
	9	1	**8T-4121**	2	WASHER-HARD (11X21X2.5-MM THK)	
M	10	1	**8T-4136**	2	BOLT (M10X1.5X25-MM)	
M	11	1	**8T-4189**	2	BOLT (M8X1.25X20-MM)	
M	12	1	**8T-4192**	2	BOLT (M12X1.75X25-MM)	
	13	1	**8T-4223**	2	WASHER-HARD (13.5X25.5X3-MM THK)	
	14	1	**8T-7529**	3	CLIP	

I-REFER TO HYDRAULIC INFORMATION SYSTEM
M-METRIC PART

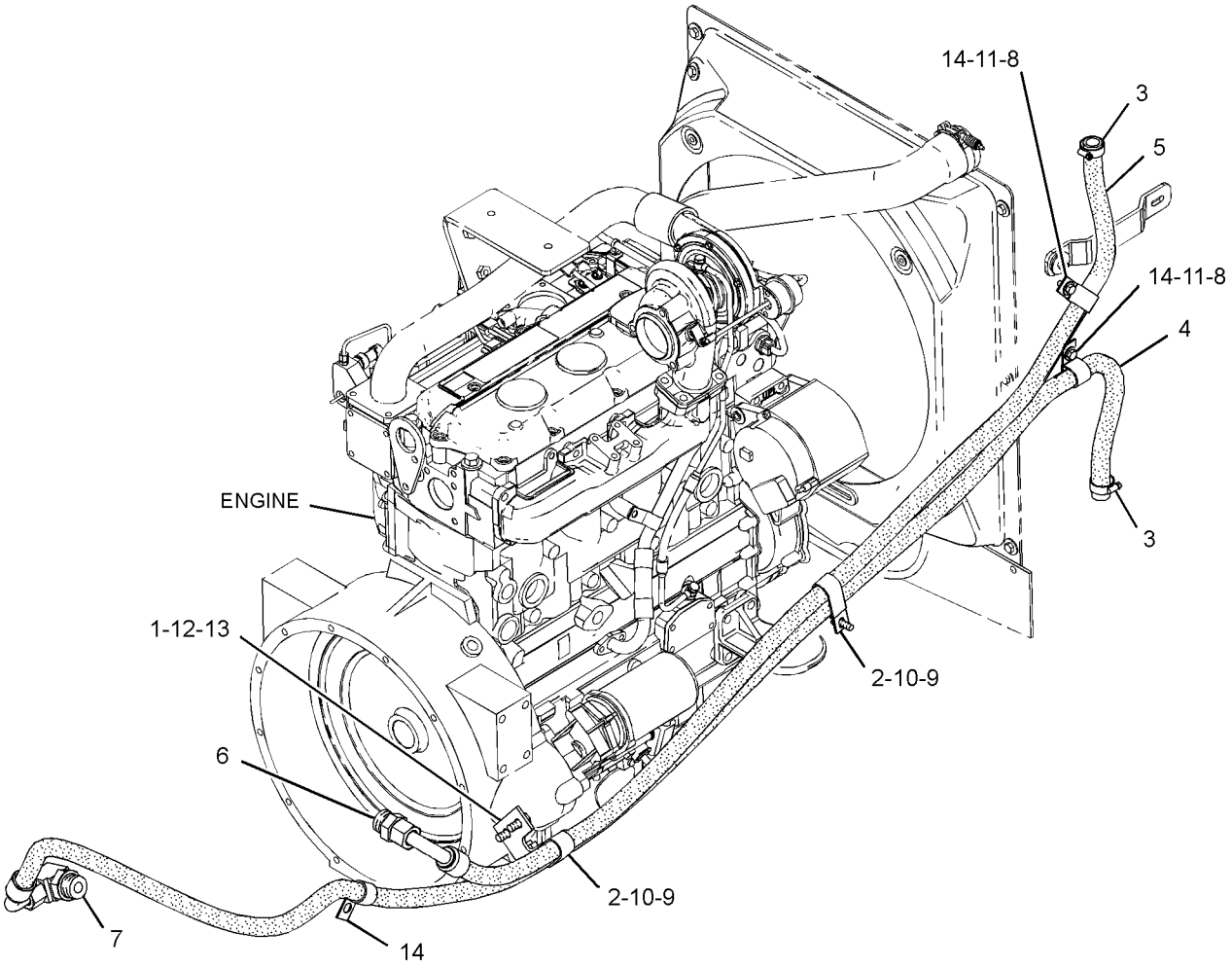

GRAPHIC #1 **<END>** g01447584

214-2202 MOUNTING & LINES GP-RADIATOR–TRANSMISSION, HYDRAULIC OIL

S/N: CBD1-UP; MFG1-UP

PART OF 213-9271, 372-5174 COMMON AR

FOR USE WITH AIR CONDITIONER

SMCS-1353, 1354, 1375 **i02359909**

NOTE	PART NUMBER	QTY	PART NAME 1 2 3 4 5 6 (PRODUCT LEVEL)	SEE PAGE
Y	*214-3751*	1	LINES GP-TRANSMISSION COOLER	138
Y	*210-5951*	1	MOUNTING GP-RAD & OIL COOLER (TRANSMISSION, HYDRAULIC OIL)	141

Y-SEPARATE ILLUSTRATION

<END>

210-5951 MOUNTING GP-RAD & OIL COOLER–
TRANSMISSION, HYDRAULIC OIL
S/N: CBD1-UP; MFG1-UP
PART OF 214-2202 MOUNTING & LINES GP-RADIATOR

SMCS-1353, 1374 **i03811610**

NOTE	REF NO	GRAPHIC REF	PART NUMBER	QTY	PART NAME 1 2 3 4 5 6 (PRODUCT LEVEL)	SEE PAGE
	1	1	**2W-9710**	4	MOUNT AS	
	2	1	**6N-6984**	2	MOUNT-RUBBER	
	3	1	**140-3640**	2	PLATE	
	4	1	**210-6139**	1	HOSE-RADIATOR (LOWER)	
	5	1	**210-6141**	1	HOSE-RADIATOR (UPPER)	
	6	1	**214-3647**	1	BAFFLE	
Y	7	1	*214-7407*	1	TANK GP-EXPANSION (COOLANT)	155
	8	1	**214-7457**	1	CLAMP	
	9	1	**214-7458**	1	CLAMP-HOSE	
	10	1	**215-4013**	2	CLAMP	
	11	1	**322-9761**	1	SHROUD AS-RADIATOR	
	12	1	**324-3851**	2	SKIRT	
	13	1	**123-4065**	16	RIVET-POP	
	14	1	**5P-4116**	2	WASHER-HARD (8.8X20.5X2-MM THK)	
	15	1	**7X-0579**	14	WASHER-HARD (8.8X25.5X2-MM THK)	
	16	1	**7X-0603**	4	WASHER-HARD (9.9X35X2.5-MM THK)	
M	17	1	**8T-4133**	4	NUT (M10X1.5-THD)	
M	18	1	**8T-4182**	4	BOLT (M10X1.5X45-MM)	
M	19	1	**8T-4189**	8	BOLT (M8X1.25X20-MM)	
M	20	1	**8T-4200**	4	BOLT (M8X1.25X16-MM)	
	21	1	**8T-4222**	8	WASHER-PLATED (11X32X2.5-MM THK)	
M	22	1	**8T-4908**	2	BOLT (M8X1.25X25-MM)	
M	23	1	**8T-7547**	4	BOLT (M8X1.25X30-MM)	
E	24	1	**8C-3681**		HOSE (36-CM)	

E-ORDER BY THE CENTIMETER
M-METRIC PART
Y-SEPARATE ILLUSTRATION

210-5951 **MOUNTING GP-RAD & OIL COOLER** *(contd.)* **i03811610**

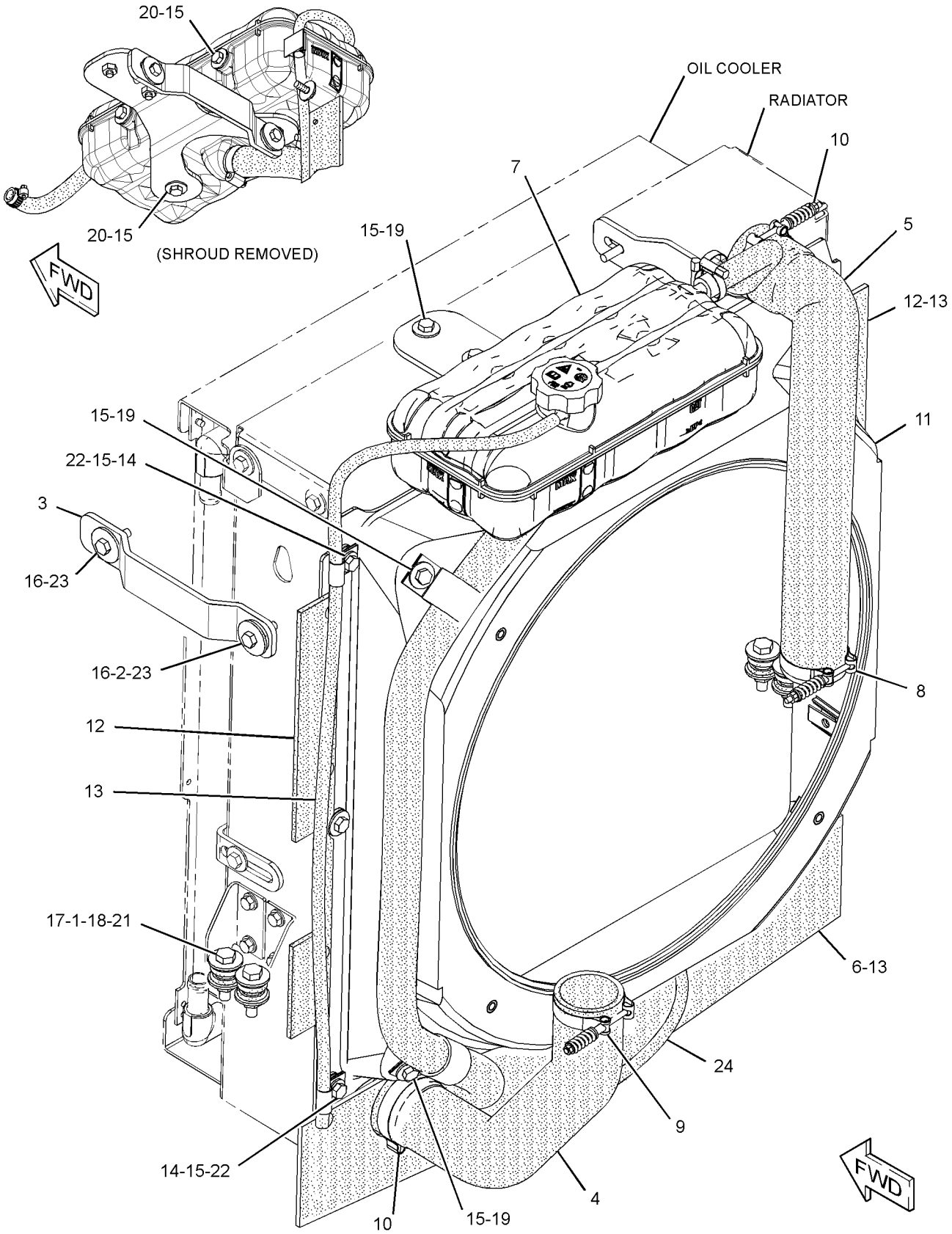

GRAPHIC #1 **<END>** g02143773

230-7355 PUMP GP-WATER

S/N: G4D1-UP; CRS1-UP
PART OF 273-3610 ENGINE AR, 245-6841, 323-5724, 323-5725 ENGINE AR-PRIMARY
AN ATTACHMENT
TYPE 1

SMCS-1361 **i03568516**

NOTE	REF NO	GRAPHIC REF	PART NUMBER	QTY	PART NAME 1 2 3 4 5 6 (PRODUCT LEVEL)	SEE PAGE
M	1	1	**6I-0217**	2	BOLT (M8X1.25X20-MM)	
M	2	1	**6I-0254**	2	BOLT (M8X1.25X30-MM)	
M	3	1	**100-3751**	5	BOLT (M8X1.25X65-MM)	
	4	1	**113-8129**	2	BOLT (M8X1.25X75-MM)	
	5	1	**225-7741**	1	CONNECTION AS	
	6	1	**225-7738**	1	SEAL-O-RING	
	7	1	**225-7739**	1	SEAL-O-RING	
	8	1	**225-8016**	1	PUMP GP-WATER	
	8A	1	**225-8019**	1	GASKET	
	8B	1	**286-3592**	1	GEAR-WATER PUMP	
					AVAILABLE REPAIR KIT(S):	
			247-0144	1	KIT-WATER PUMP	
					(INCLUDES 2 DIFFERENT GASKETS)	

M-METRIC PART

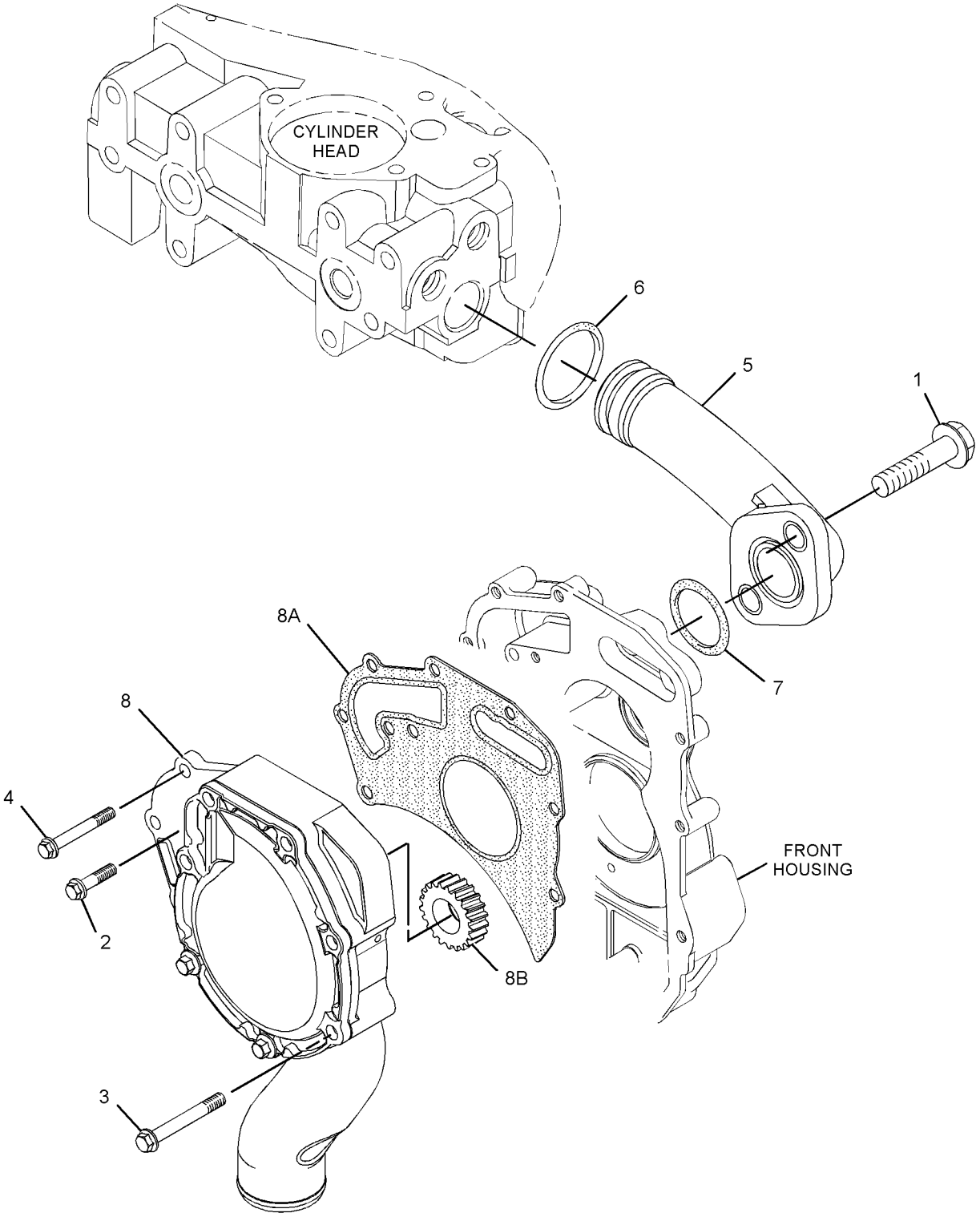

GRAPHIC #1 **<END>** g01897273

230-7355 PUMP GP-WATER

S/N: G4D1-UP; CRS1-UP
PART OF 323-5724, 323-5725 ENGINE AR-PRIMARY
AN ATTACHMENT
TYPE 2

SMCS-1361 **i03886707**

NOTE	REF NO	GRAPHIC REF	PART NUMBER	QTY	PART NAME 1 2 3 4 5 6 (PRODUCT LEVEL)	SEE PAGE
M	1	1	**6I-0217**	2	BOLT (M8X1.25X20-MM)	
M	2	1	**6I-0254**	2	BOLT (M8X1.25X30-MM)	
M	3	1	**100-3751**	5	BOLT (M8X1.25X65-MM)	
	4	1	**113-8129**	2	BOLT (M8X1.25X75-MM)	
	5	1	**225-7741**	1	CONNECTION AS	
	5A	1	**225-7738**	1	SEAL-O-RING	
	5B	1	**225-7739**	1	SEAL-O-RING	
C	6	1	**354-1672**	1	PUMP GP-WATER	
	6A	1	**225-8019**	1	GASKET	
					AVAILABLE REPAIR KIT(S):	
			247-0144	1	KIT-WATER PUMP	
					(INCLUDES 2 DIFFERENT GASKETS)	

C-CHANGE FROM PREVIOUS TYPE
M-METRIC PART

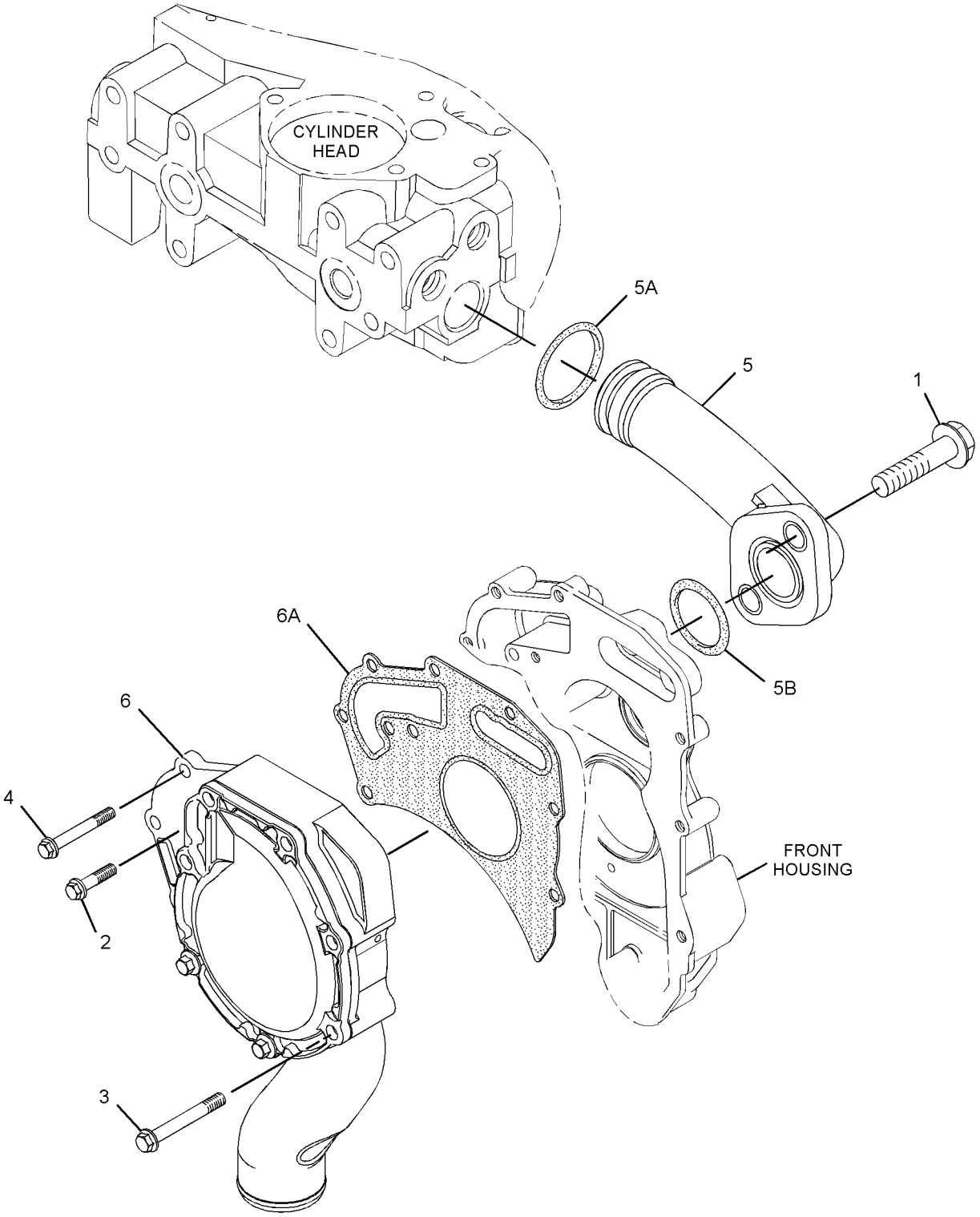

GRAPHIC #1 **<END>** g02137998

315-3411 PUMP GP-WATER

S/N: C4Z1-UP

PART OF 321-7704 ENGINE AR-PRIMARY

SMCS-1361 **i03965792**

NOTE	REF NO	GRAPHIC REF	PART NUMBER	QTY	PART NAME 1 2 3 4 5 6 (PRODUCT LEVEL)	SEE PAGE
M	1	1	**6I-0217**	2	BOLT (M8X1.25X20-MM)	
M	2	1	**6I-0254**	2	BOLT (M8X1.25X30-MM)	
M	3	1	**100-3751**	5	BOLT (M8X1.25X65-MM)	
	4	1	**113-8129**	2	BOLT (M8X1.25X75-MM)	
	5	1	**225-7741**	1	CONNECTION AS	
	5A	1	**225-7738**	1	SEAL-O-RING	
	5B	1	**225-7739**	1	SEAL-O-RING	
	6	1	**355-2252**	1	PUMP GP-WATER	
	6A	1	**225-8019**	1	GASKET	

M-METRIC PART

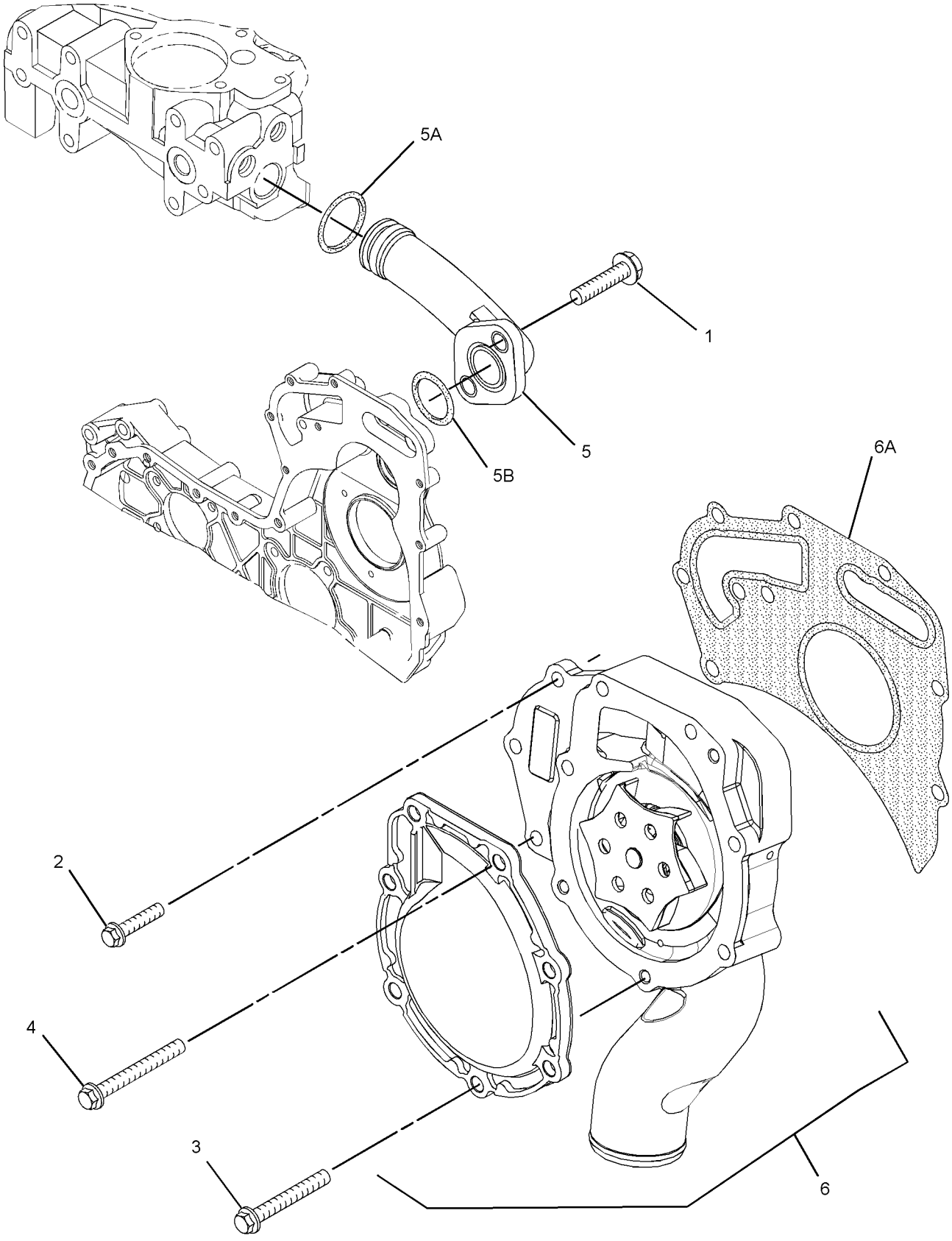

GRAPHIC #1 **<END>** g02146895

304-4023 RADIATOR & HYD OIL COOLER GP–

INCLUDES AFTCLR, XMSN COOLER

S/N: MFG1-UP

PART OF 309-9106 RADIATOR & HYD OIL COOLER GP

SMCS-1353, 1374 **i03874424**

NOTE	REF NO	GRAPHIC REF	PART NUMBER	QTY	PART NAME 1 2 3 4 5 6 (PRODUCT LEVEL)	SEE PAGE
Y	1	1	**304-7847**	1	COOLER GP-HYD & XMSN OIL	527
	2	1	**304-7850**	1	AFTERCOOLER GP-AIR	
	3	1	**304-7851**	1	RADIATOR GP	
		1	**225-4287**	1	VALVE GP-RADIATOR DRAIN	
		1	**315-0033**	2	GASKET	
	4	1	**310-7304**	1	PLATE	
M	5	1	**178-3336**	4	NUT-HEX FLANGE (M8X1.25-THD)	
	6	1	**5P-4116**	6	WASHER-HARD (8.8X20.5X2-MM THK)	
M	7	1	**8T-4189**	2	BOLT (M8X1.25X20-MM)	
M	8	1	**8T-4200**	4	BOLT (M8X1.25X16-MM)	
M	9	1	**174-9194**	4	BOLT (M8X1.25X16-MM)	
E	10	1	**145-2350**		SEAL (68-CM)	

E-ORDER BY THE CENTIMETER
M-METRIC PART
Y-SEPARATE ILLUSTRATION

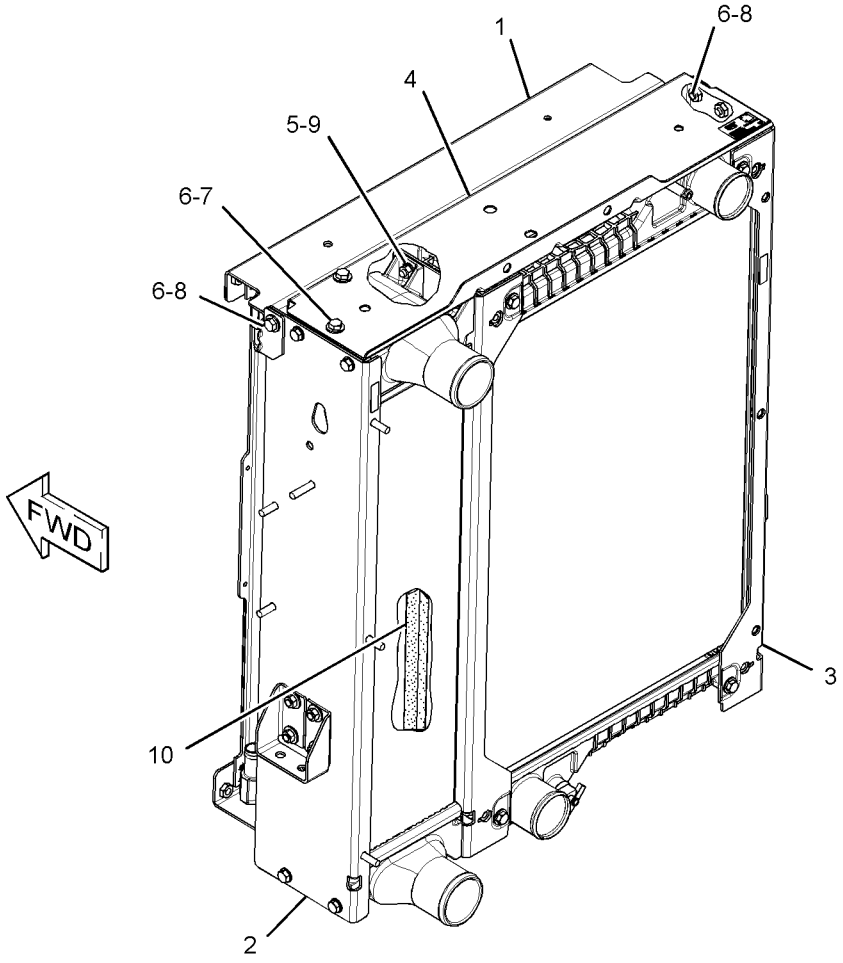

GRAPHIC #1 **<END>** g01618115

309-9106 RADIATOR & HYD OIL COOLER GP

S/N: MFG1-UP

PART OF 291-9188 ENGINE AR

SMCS-1353, 1374 **i04528851**

NOTE	REF NO	GRAPHIC REF	PART NUMBER	QTY	PART NAME 1 2 3 4 5 6 (PRODUCT LEVEL)	SEE PAGE
Y	1	1	**304-4023**	1	RADIATOR & HYD OIL COOLER GP	149
	2	1	**305-6918**	1	BAFFLE (LOWER)	
	3	1	**322-9761**	1	SHROUD AS-RADIATOR	
	4	1	**324-3851**	2	SKIRT	
	5	1	**123-4065**	16	RIVET-POP	
M	6	1	**5C-7261**	3	NUT (M8X1.25-THD)	
	7	1	**7X-0579**	6	WASHER-HARD (8.8X25.5X2-MM THK)	
M	8	1	**8T-4189**	3	BOLT (M8X1.25X20-MM)	

M-METRIC PART
Y-SEPARATE ILLUSTRATION

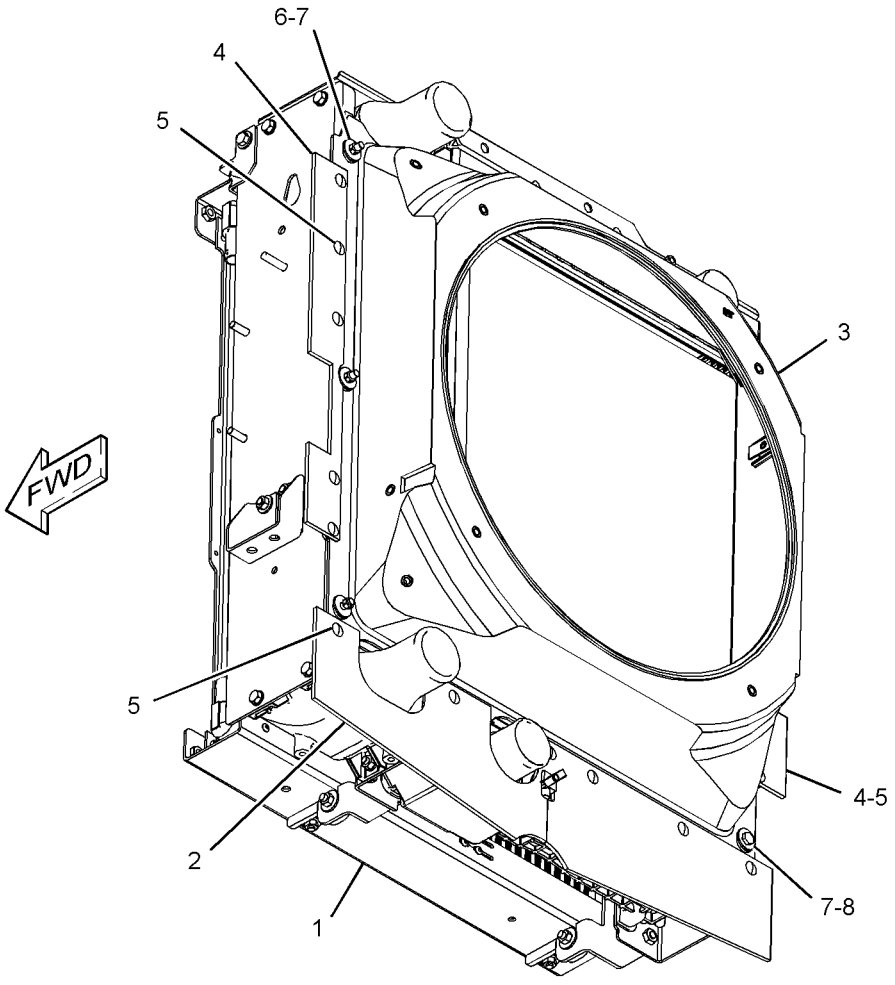

GRAPHIC #1 **<END>** g01599896

210-5949 RADIATOR & OIL COOLER GP–
HYDRAULIC, TRANSMISSION
S/N: CBD1-UP; MFG152-UP
PART OF 211-1018, 282-9630 RADIATOR & OIL COOLER GP
AN ATTACHMENT

SMCS-1351 **i04238349**

NOTE	REF NO	GRAPHIC REF	PART NUMBER	QTY	PART NAME 1 2 3 4 5 6 (PRODUCT LEVEL)	SEE PAGE
	1	1	**210-5948**	1	RADIATOR GP (OIL COOLER)	
		1	**1V-6585**	1	VALVE-SHUTOFF	
Y	2	1	**210-5953**	1	COOLER AS-OIL (HYDRAULIC, TRANSMISSION)	118
	3	1	**8C-0572**	2	WASHER (8.8X25.5X2-MM THK)	
M	4	1	**8T-4200**	2	BOLT (M8X1.25X16-MM)	

M-METRIC PART
Y-SEPARATE ILLUSTRATION

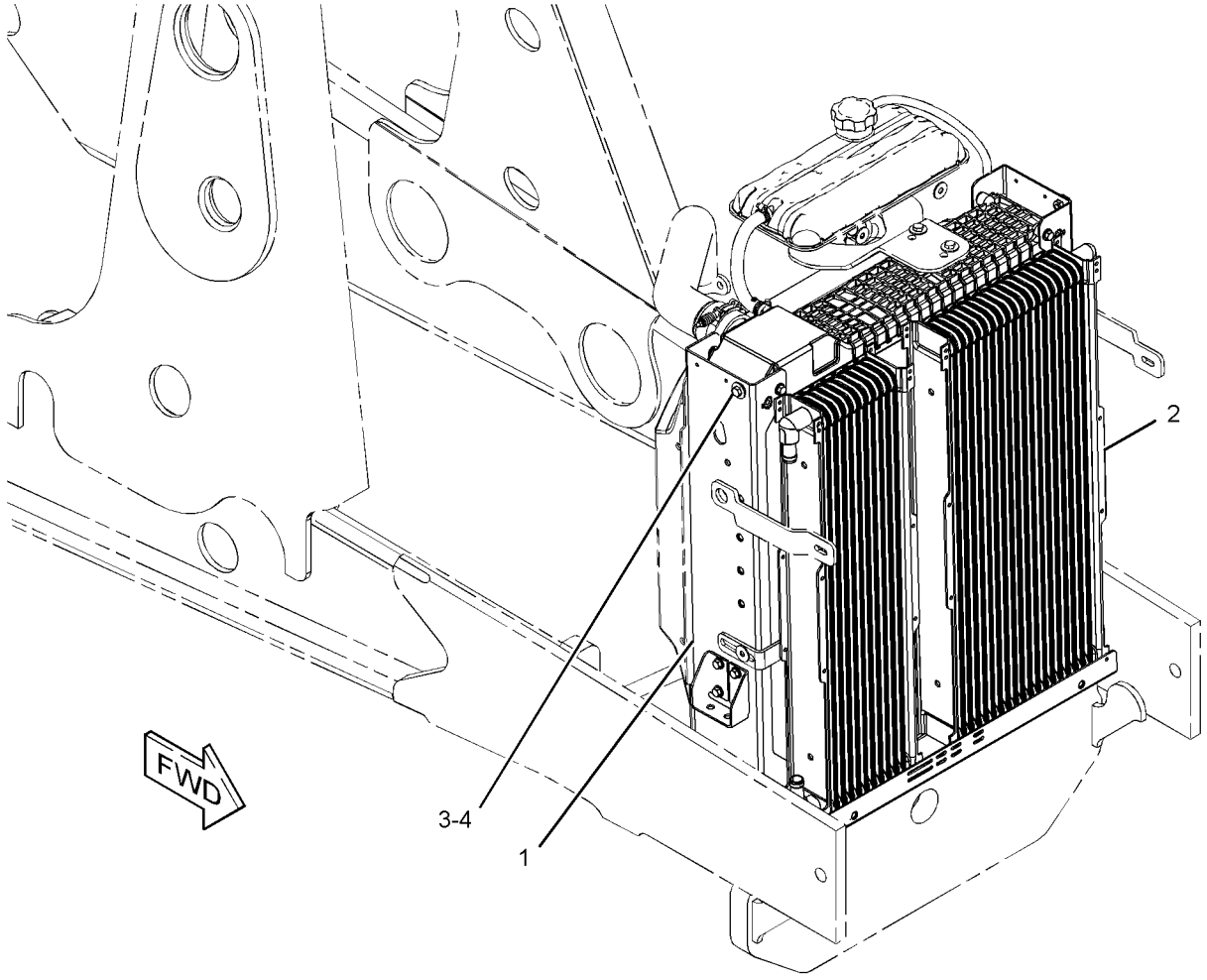

GRAPHIC #1 **<END>** g01195436

COOLING SYSTEM

211-1018 RADIATOR & OIL COOLER GP–

HYDRAULIC, TRANSMISSION

S/N: CBD1-UP; MFG1-UP

PART OF 356-0067, 356-0068, 356-0069, 374-3517, 374-3518, 374-3519, 374-3521, 374-3529, 374-6532, 374-6533, 374-6534, 374-6535, 374-6536

DISTRIBUTION AR

AN ATTACHMENT

SMCS-1351 **i02908578**

NOTE	PART NUMBER	QTY	PART NAME 1 2 3 4 5 6 (PRODUCT LEVEL)	SEE PAGE
Y	**210-5949**	1	RADIATOR & OIL COOLER GP (HYDRAULIC, TRANSMISSION)	151
			–OR–	
Y	*282-9630*	1	RADIATOR & OIL COOLER GP (HYDRAULIC, TRANSMISSION)	154
Y-SEPARATE ILLUSTRATION				

<END>

211-1019 RADIATOR & OIL COOLER GP–
HYDRAULIC, TRANSMISSION
S/N: CBD1-UP; MFG1-UP
AN ATTACHMENT

SMCS-1351 **i02560064**

NOTE	REF NO	GRAPHIC REF	PART NUMBER	QTY	PART NAME 1 2 3 4 5 6 (PRODUCT LEVEL)	SEE PAGE
	1	1	**210-5948**	1	RADIATOR GP	
		1	**1V-6585**	1	VALVE-SHUTOFF	
	2	1	**211-3461**	1	COOLER AS-OIL (HYDRAULIC, TRANSMISSION)	
		1	**211-3462**	1	CORE AS-OIL COOLER (HYDRAULIC, 15-ROW)	
		1	**211-3463**	1	CORE AS-OIL COOLER (TRANSMISSION, 9-ROW)	
	3	1	**8C-0572**	2	WASHER (8.8X25.5X2-MM THK)	
M	4	1	**8T-4200**	2	BOLT (M8X1.25X16-MM)	

M-METRIC PART

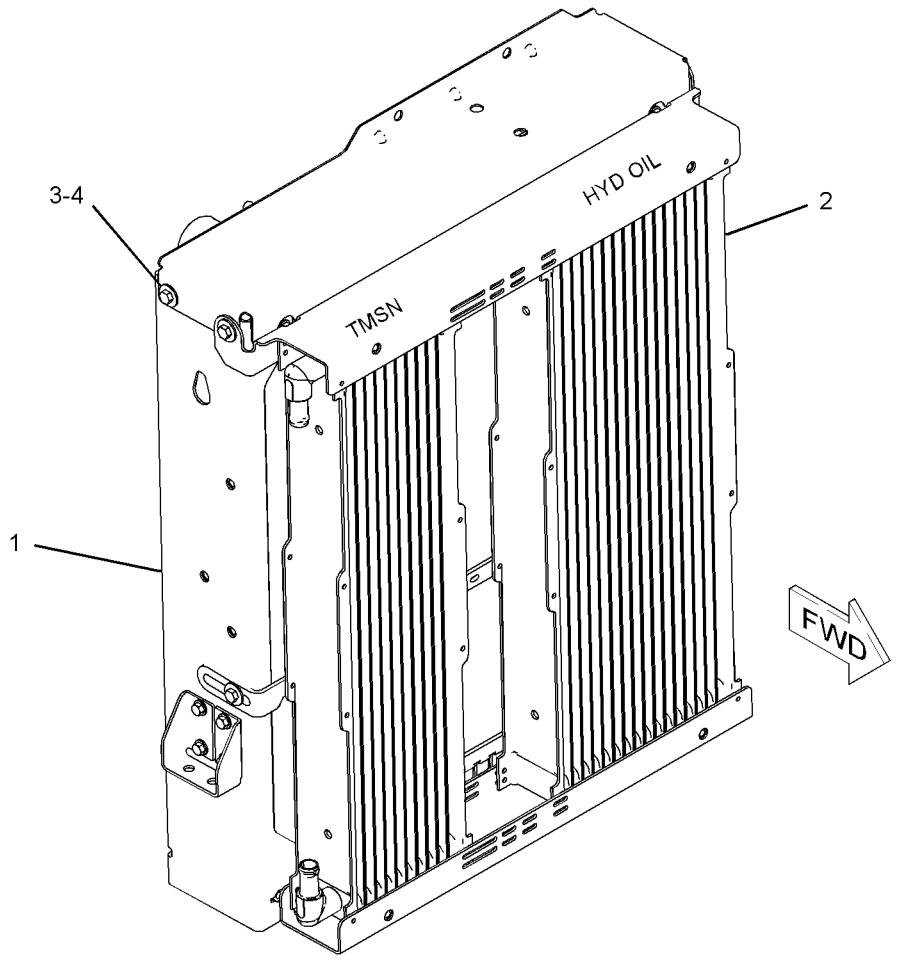

GRAPHIC #1 **<END>** g01177176

COOLING SYSTEM

282-9630 RADIATOR & OIL COOLER GP

S/N: CBD1-UP; MFG1-UP
PART OF 211-1018 RADIATOR & OIL COOLER GP
AN ATTACHMENT

SMCS-1351 **i02908582**

NOTE	REF NO	GRAPHIC REF	PART NUMBER	QTY	PART NAME 1 2 3 4 5 6 (PRODUCT LEVEL)	SEE PAGE
	1	1	**123-4065**	16	RIVET-POP	
Y	2	1	**210-5949**	1	RADIATOR & OIL COOLER GP (HYDRAULIC, TRANSMISSION)	151
	3	1	**211-5779**	1	SHROUD AS-RADIATOR	
	4	1	**214-3647**	1	BAFFLE	
	5	1	**282-5079**	1	SKIRT	
	6	1	**282-5081**	1	SKIRT	
	7	1	**7X-0579**	6	WASHER-HARD (8.8X25.5X2-MM THK)	
M	8	1	**8T-4200**	6	BOLT (M8X1.25X16-MM)	

M-METRIC PART
Y-SEPARATE ILLUSTRATION

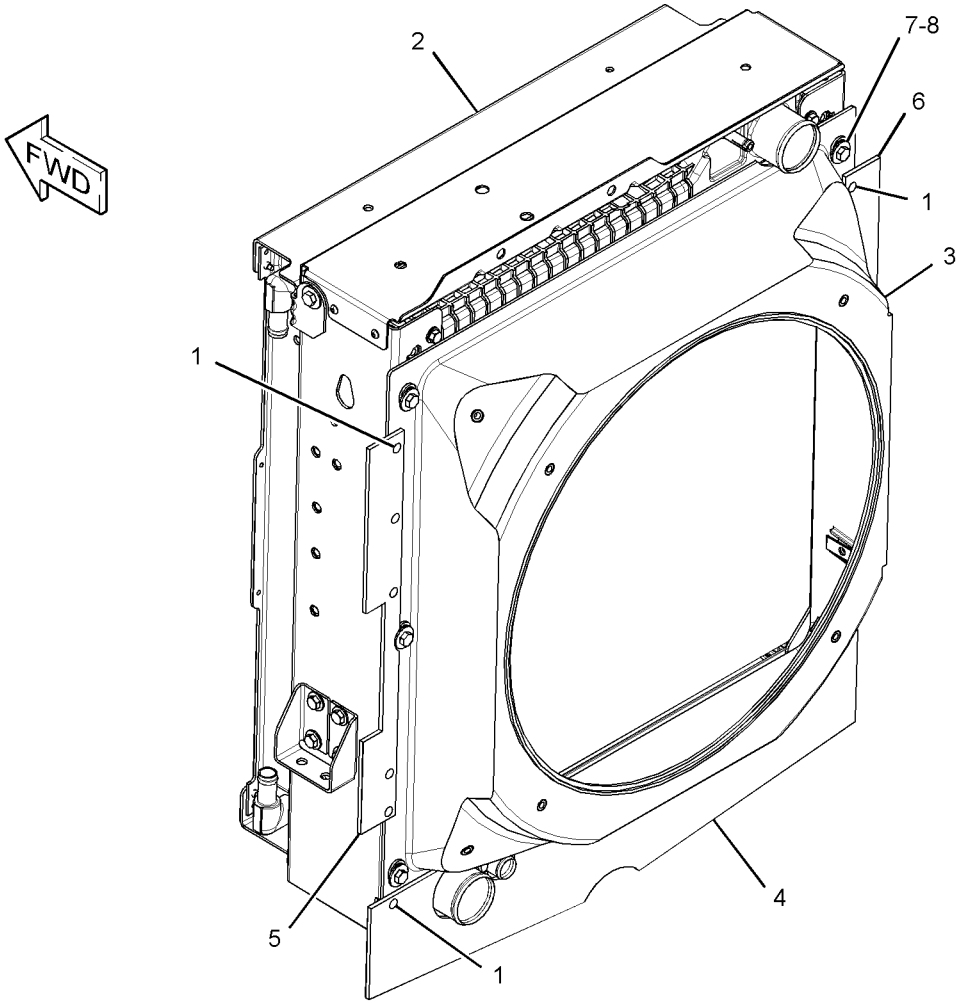

GRAPHIC #1 **<END>** g01458309

214-7407 TANK GP-EXPANSION–COOLANT

S/N: CBD1-UP; MFG1-UP

PART OF 210-5951 MOUNTING GP-RAD & OIL COOLER

SMCS-1354 **i03698582**

NOTE	REF NO	GRAPHIC REF	PART NUMBER	QTY	PART NAME 1 2 3 4 5 6 (PRODUCT LEVEL)	SEE PAGE
	1	1	**5V-9155**	2	CLAMP-HOSE	
	2	1	**9M-7958**	2	CLAMP-HOSE	
	3	1	**4B-0418**	2	CLIP	
	4	1	**247-1385**	1	TANK GP-EXPANSION (COOLANT)	
		1	**251-3227**	1	CAP AS-COOLANT TANK (RADIATOR)	
	5	1	**250-2314**	1	BRACKET AS	
M		1	**8T-3612**	2	NUT-WELD (M8X1.25-THD)	
	6	1	**4D-7388**	2	CLIP	
	7	1	**329-5699**	1	HOSE	
E	8	1	**8C-3681**		HOSE (96-CM)	
	9	1	**259-8417**	1	HOSE	

E-ORDER BY THE CENTIMETER
M-METRIC PART

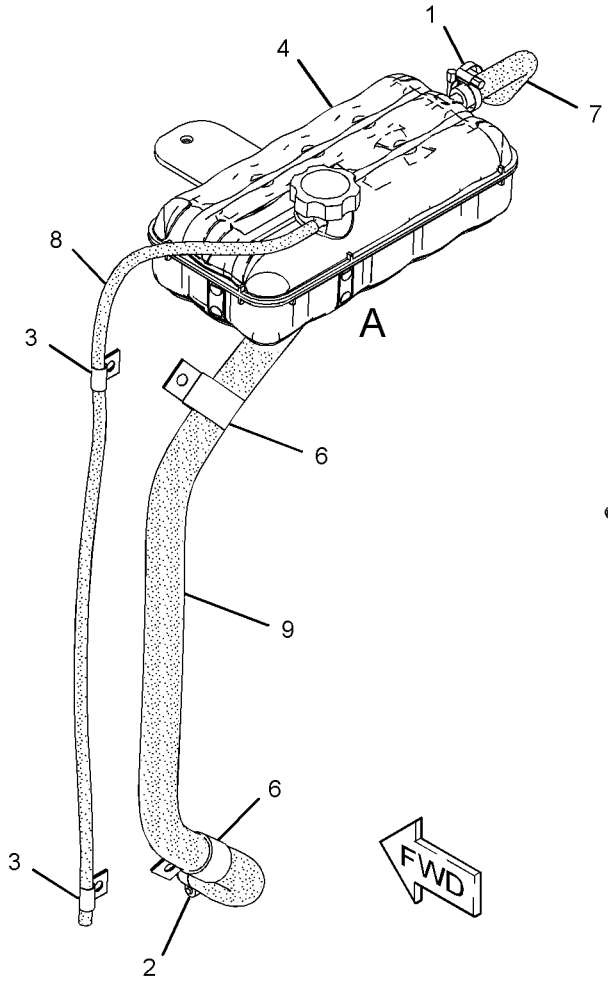

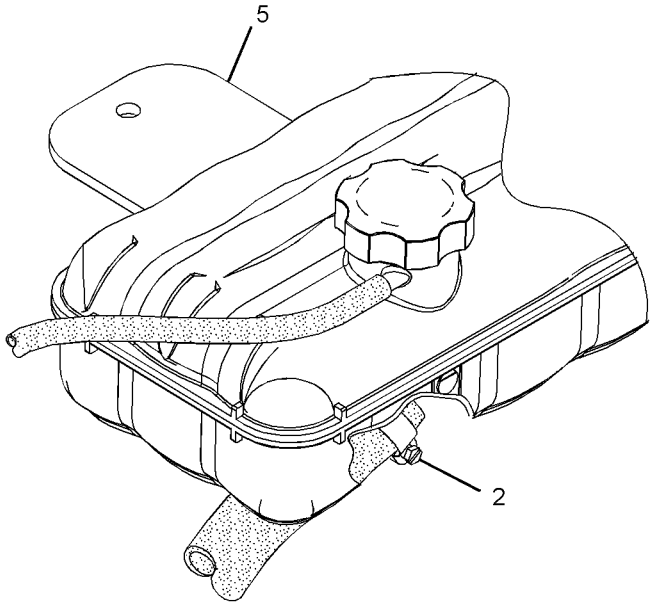

VIEW OF AREA A

GRAPHIC #1 **<END>** g02022379

AIR INLET AND EXHAUST SYSTEM

210-6803 AIR CLEANER GP

S/N: CBD1-UP; MFG1-UP
PART OF 252-4640 ENGINE AR
AN ATTACHMENT

SMCS-1051, 1054 **i04533543**

NOTE	REF NO	GRAPHIC REF	PART NUMBER	QTY	PART NAME 1 2 3 4 5 6 (PRODUCT LEVEL)	SEE PAGE
	1	1	**6V-3582**	1	CLAMP-HOSE	
	2	1	**8T-6726**	1	CLAMP-HOSE	
	3	1	**110-2445**	1	CLAMP-HOSE	
Y	4	1	**234-1981**	1	AIR CLEANER GP	164
	5	1	**247-9730**	1	VALVE AS-CHECK (AIR CLEANER)	
	6	1	**248-3231**	1	DUCT-AIR	
	7	1	**249-5512**	1	SEAL	
	8	1	**252-0315**	1	HOSE-AIR	
	9	1	**253-4138**	1	STUD	
	10	1	**260-0634**	1	TUBE	
	11	1	**260-1392**	1	HOSE	
	12	1	**260-1393**	1	HOSE	
	13	1	**288-6954**	1	PLATE AS	
M		1	**8T-3490**	3	NUT-WELD (M10X1.5-THD)	
		1	**2K-7069**	3	SPACER (0.406X0.75X2-IN THK)	
M		1	**9R-2672**	1	BOSS-THREADED (M10X1.5-THD)	
M	14	1	**096-5866**	3	BOLT (M8X1.25X75-MM)	
	15	1	**124-6259**	3	CLAMP-HOSE	
M	16	1	**129-3178**	1	LOCKNUT (M6X1-THD)	
	17	1	**7X-0586**	2	WASHER-HARD (7.2X32X2-MM THK)	
M	18	1	**8T-4189**	2	BOLT (M8X1.25X20-MM)	
	19	1	**8T-4224**	5	WASHER-HARD (8.8X16X2-MM THK)	
E	20	1	**7X-7898**		TRIM (62-CM)	

E-ORDER BY THE CENTIMETER
M-METRIC PART
Y-SEPARATE ILLUSTRATION

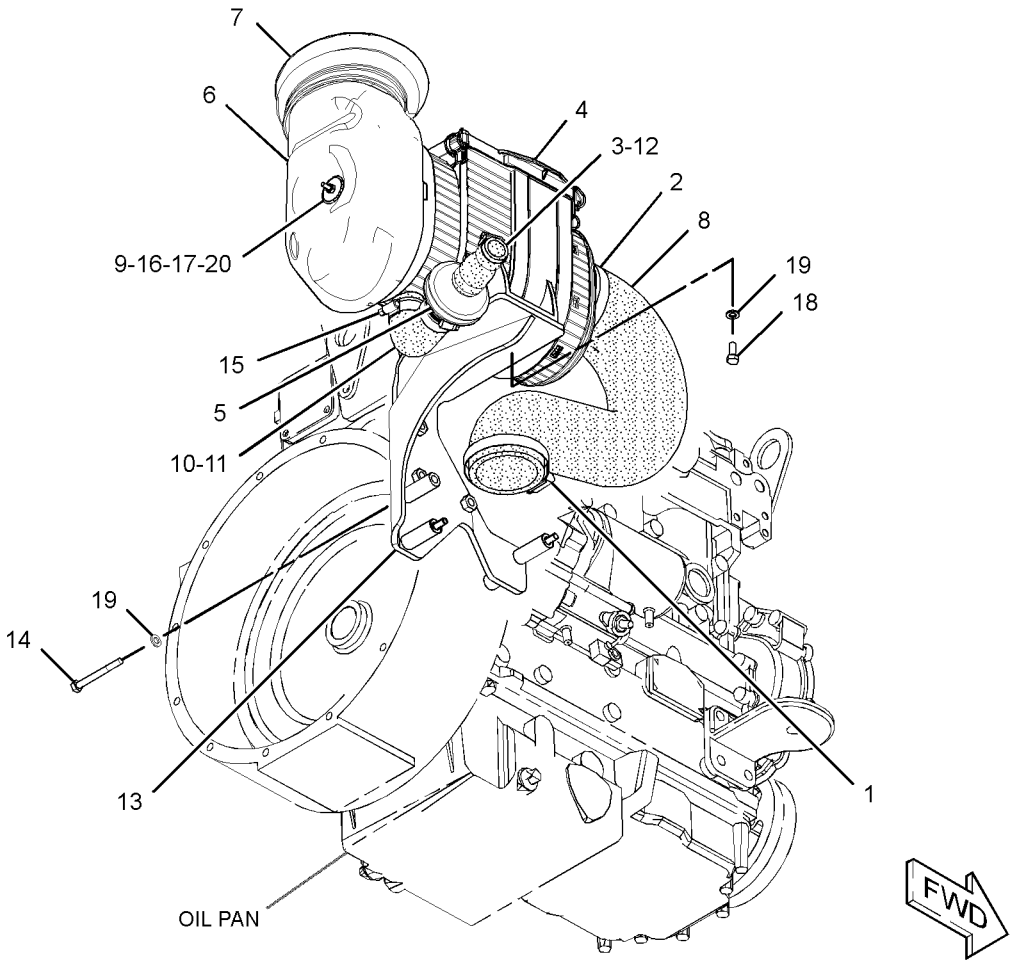

GRAPHIC #1 **<END>** g02701077

AIR INLET AND EXHAUST SYSTEM

224-9473 AIR CLEANER GP

S/N: CBD1-3148
PART OF 252-4641 ENGINE AR
AN ATTACHMENT

SMCS-1051, 1054 **i02995509**

NOTE	REF NO	GRAPHIC REF	PART NUMBER	QTY	PART NAME 1 2 3 4 5 6 (PRODUCT LEVEL)	SEE PAGE
	1	1	**8T-6726**	1	CLAMP-HOSE	
	2	1	**110-2445**	1	CLAMP-HOSE	
	3	1	**127-4471**	1	CLAMP-HOSE	
	4	1	**223-8995**	1	HOSE	
Y	5	1	**234-1981**	1	AIR CLEANER GP	164
	6	1	**234-2622**	1	HOSE-AIR	
	7	1	**288-6954**	1	PLATE AS	
M		1	**8T-3490**	3	NUT-WELD (M10X1.5-THD)	
		1	**2K-7069**	3	SPACER (0.406X0.75X2-IN THK)	
M		1	**9R-2672**	1	BOSS-THREADED (M10X1.5-THD)	
	8	1	**248-3231**	1	DUCT-AIR	
	9	1	**249-5512**	1	SEAL	
	10	1	**253-4137**	1	SEAL	
	11	1	**253-4138**	1	STUD	
M	12	1	**096-5866**	3	BOLT (M8X1.25X75-MM)	
M	13	1	**129-3178**	1	LOCKNUT (M6X1-THD)	
	14	1	**295-5550**	1	CLAMP-BAND (CONSTANT TENSION)	
	15	1	**7X-0586**	2	WASHER-HARD (7.2X32X2-MM THK)	
M	16	1	**8T-4189**	2	BOLT (M8X1.25X20-MM)	
	17	1	**8T-4224**	5	WASHER-HARD (8.8X16X2-MM THK)	
	18	1	**7X-1443**	1	PROTECTOR	

M-METRIC PART
Y-SEPARATE ILLUSTRATION

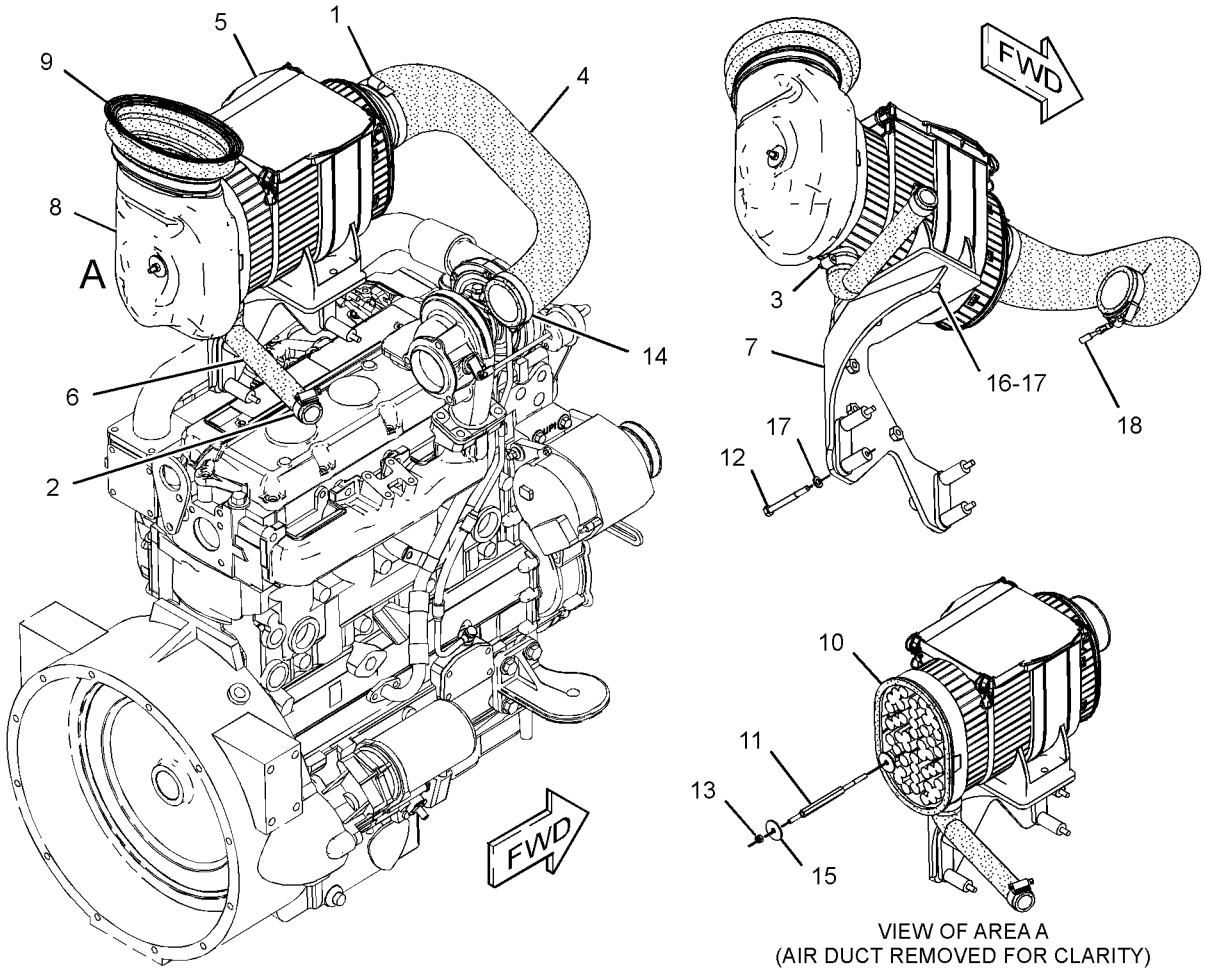

VIEW OF AREA A
(AIR DUCT REMOVED FOR CLARITY)

GRAPHIC #1 **<END>** g01326968

AIR INLET AND EXHAUST SYSTEM

224-9473 AIR CLEANER GP

S/N: CBD3149-UP
PART OF 252-4641 ENGINE AR
AN ATTACHMENT

SMCS-1051, 1054 **i03014977**

NOTE	REF NO	GRAPHIC REF	PART NUMBER	QTY	PART NAME 1 2 3 4 5 6 (PRODUCT LEVEL)	SEE PAGE
	1	1	**8T-6726**	1	CLAMP-HOSE	
	2	1	**110-2445**	1	CLAMP-HOSE	
C	3	1	**124-6259**	1	CLAMP-HOSE	
	4	1	**223-8995**	1	HOSE	
Y	5	1	**234-1981**	1	AIR CLEANER GP	164
	6	1	**234-2622**	1	HOSE-AIR	
	7	1	**288-6954**	1	PLATE AS	
M		1	**8T-3490**	3	NUT-WELD (M10X1.5-THD)	
		1	**2K-7069**	3	SPACER (0.406X0.75X2-IN THK)	
M		1	**9R-2672**	1	BOSS-THREADED (M10X1.5-THD)	
	8	1	**248-3231**	1	DUCT-AIR	
	9	1	**249-5512**	1	SEAL	
CE	10	1	**7X-7898**		TRIM (63-CM)	
	11	1	**253-4138**	1	STUD	
M	12	1	**096-5866**	3	BOLT (M8X1.25X75-MM)	
M	13	1	**129-3178**	1	LOCKNUT (M6X1-THD)	
C	14	1	**226-0449**	1	CLAMP-HOSE	
	15	1	**7X-0586**	2	WASHER-HARD (7.2X32X2-MM THK)	
M	16	1	**8T-4189**	2	BOLT (M8X1.25X20-MM)	
	17	1	**8T-4224**	5	WASHER-HARD (8.8X16X2-MM THK)	
	18	1	**7X-1443**	1	PROTECTOR	

C-CHANGE FROM PREVIOUS TYPE
E-ORDER BY THE CENTIMETER
M-METRIC PART
Y-SEPARATE ILLUSTRATION

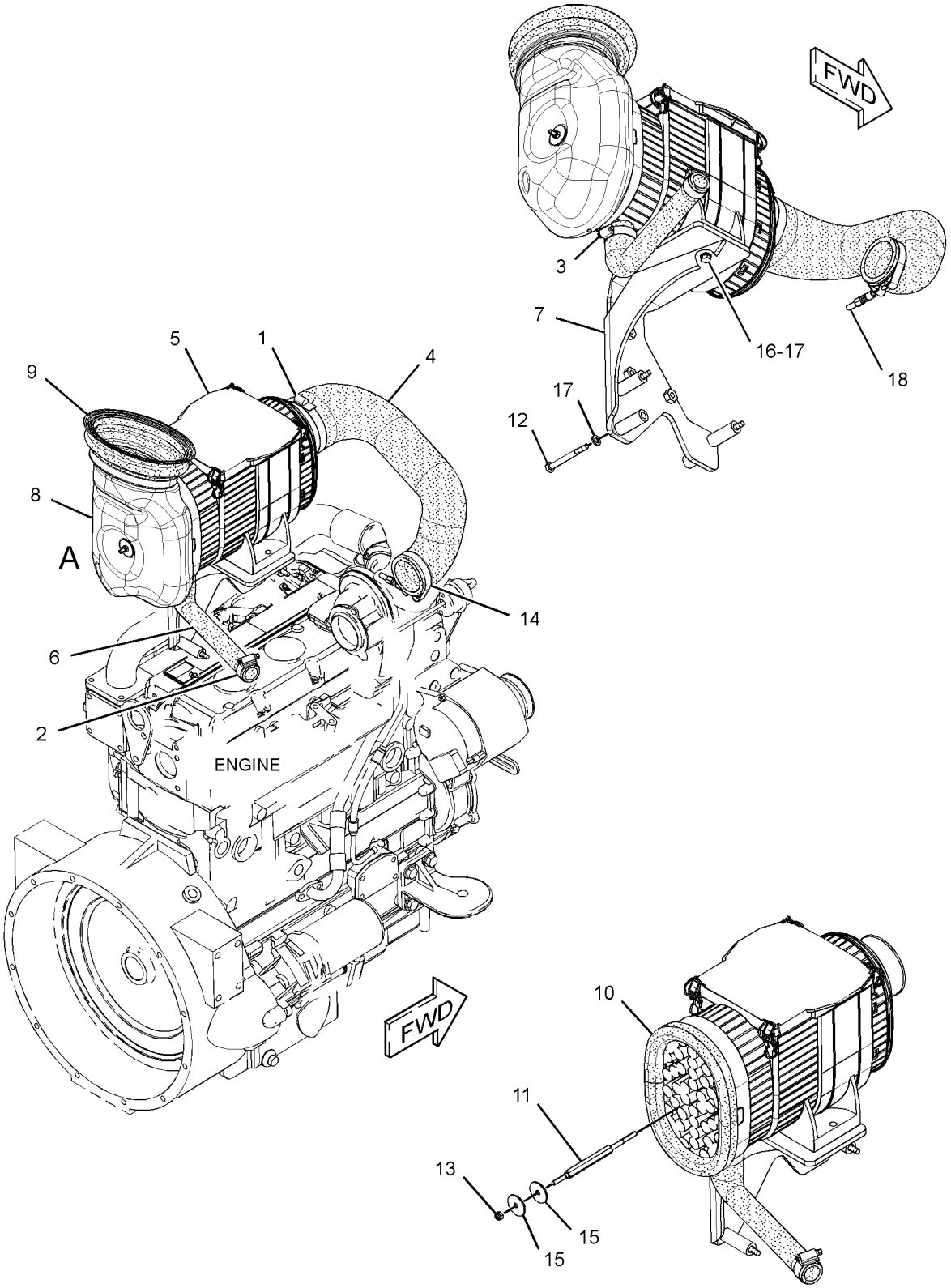

VIEW OF AREA A
(AIR DUCT REMOVED FOR CLARITY)

GRAPHIC #1 **<END>** g01605774

AIR INLET AND EXHAUST SYSTEM

224-9473 AIR CLEANER GP

S/N: CBD3149-8758; MFG1-UP
PART OF 252-4641 ENGINE AR
AN ATTACHMENT

SMCS-1051, 1054 **i04533545**

NOTE	REF NO	GRAPHIC REF	PART NUMBER	QTY	PART NAME 1 2 3 4 5 6 (PRODUCT LEVEL)	SEE PAGE
	1	1	**7X-1443**	1	PROTECTOR	
	2	1	**8T-6726**	1	CLAMP-HOSE	
	3	1	**110-2445**	1	CLAMP-HOSE	
	4	1	**223-8995**	1	HOSE	
Y	5	1	**234-1981**	1	AIR CLEANER GP	164
	6	1	**247-9730**	1	VALVE AS-CHECK (AIR CLEANER)	
	7	1	**248-3231**	1	DUCT-AIR	
	8	1	**249-5512**	1	SEAL	
	9	1	**253-4138**	1	STUD	
	10	1	**260-0634**	1	TUBE	
	11	1	**260-1392**	1	HOSE	
I	12	1	**260-7393**	1	HOSE AS	
	13	1	**288-6954**	1	PLATE AS	
M		1	**8T-3490**	3	NUT-WELD (M10X1.5-THD)	
		1	**2K-7069**	3	SPACER (0.406X0.75X2-IN THK)	
M		1	**9R-2672**	1	BOSS-THREADED (M10X1.5-THD)	
M	14	1	**096-5866**	3	BOLT (M8X1.25X75-MM)	
	15	1	**124-6259**	3	CLAMP-HOSE	
M	16	1	**129-3178**	1	LOCKNUT (M6X1-THD)	
	17	1	**226-0449**	1	CLAMP-HOSE	
	18	1	**7X-0586**	2	WASHER-HARD (7.2X32X2-MM THK)	
M	19	1	**8T-4189**	2	BOLT (M8X1.25X20-MM)	
	20	1	**8T-4224**	5	WASHER-HARD (8.8X16X2-MM THK)	
CE	21	1	**7X-7898**		TRIM (62-CM)	

C-CHANGE FROM PREVIOUS TYPE
E-ORDER BY THE CENTIMETER
I-REFER TO HYDRAULIC INFORMATION SYSTEM
M-METRIC PART
Y-SEPARATE ILLUSTRATION

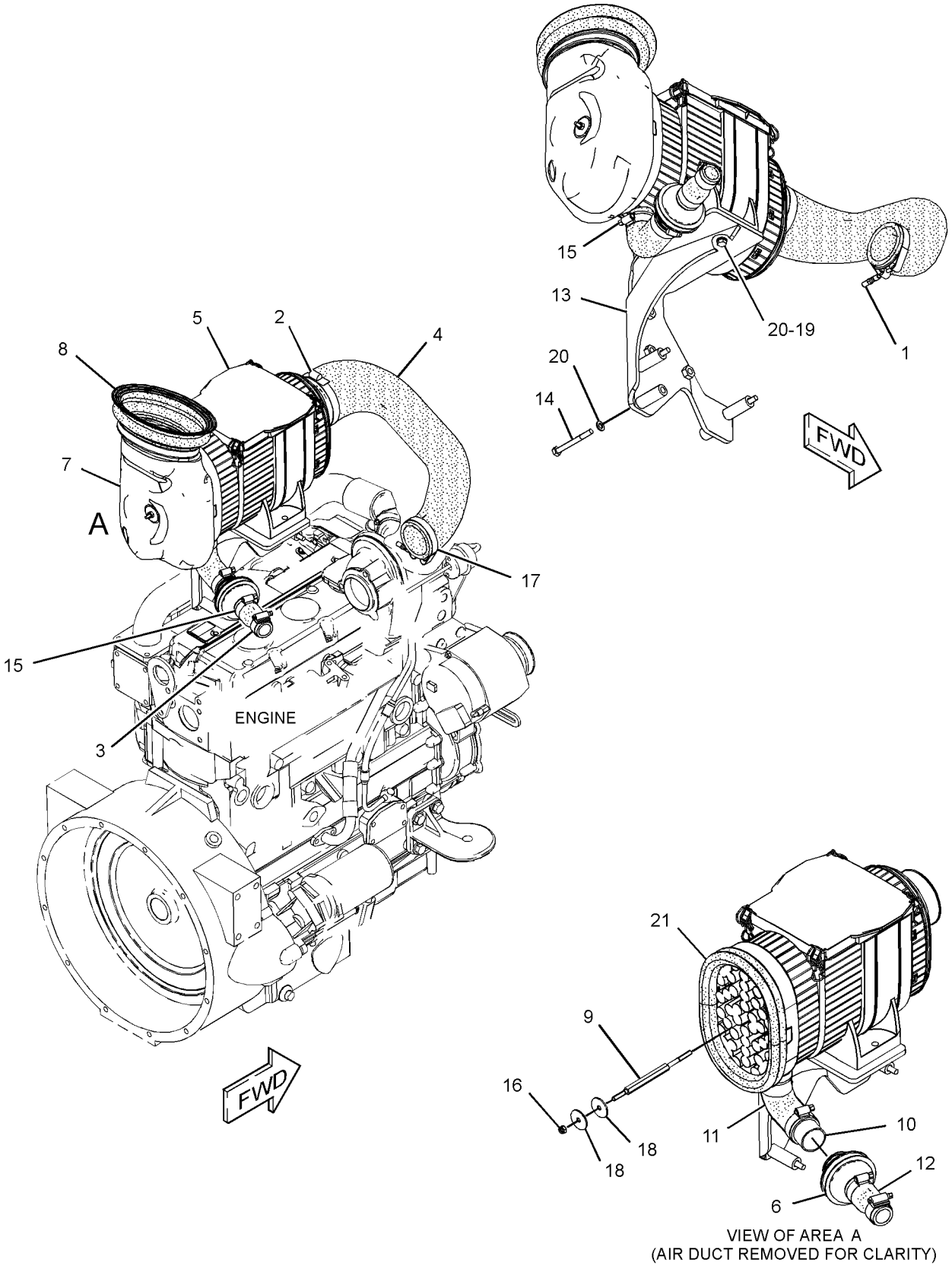

VIEW OF AREA A
(AIR DUCT REMOVED FOR CLARITY)

GRAPHIC #1 **<END>** g02701177

234-1981 AIR CLEANER GP

S/N: CBD1-UP; MFG1-UP
PART OF 210-6803, 224-9473, 332-6587 AIR CLEANER GP
ALSO AN ATTACHMENT

SMCS-1051, 1054 **i03514534**

NOTE	REF NO	GRAPHIC REF	PART NUMBER	QTY	PART NAME 1 2 3 4 5 6 (PRODUCT LEVEL)	SEE PAGE
	1	1	**262-9786**	1	FRAME	
	2	1	**293-4053**	1	FILTER ELEMENT-AIR (PRIMARY)	
	3	1	**227-7449**	1	FILTER ELEMENT-AIR (SECONDARY)	
	4	1	**237-4157**	1	COVER	

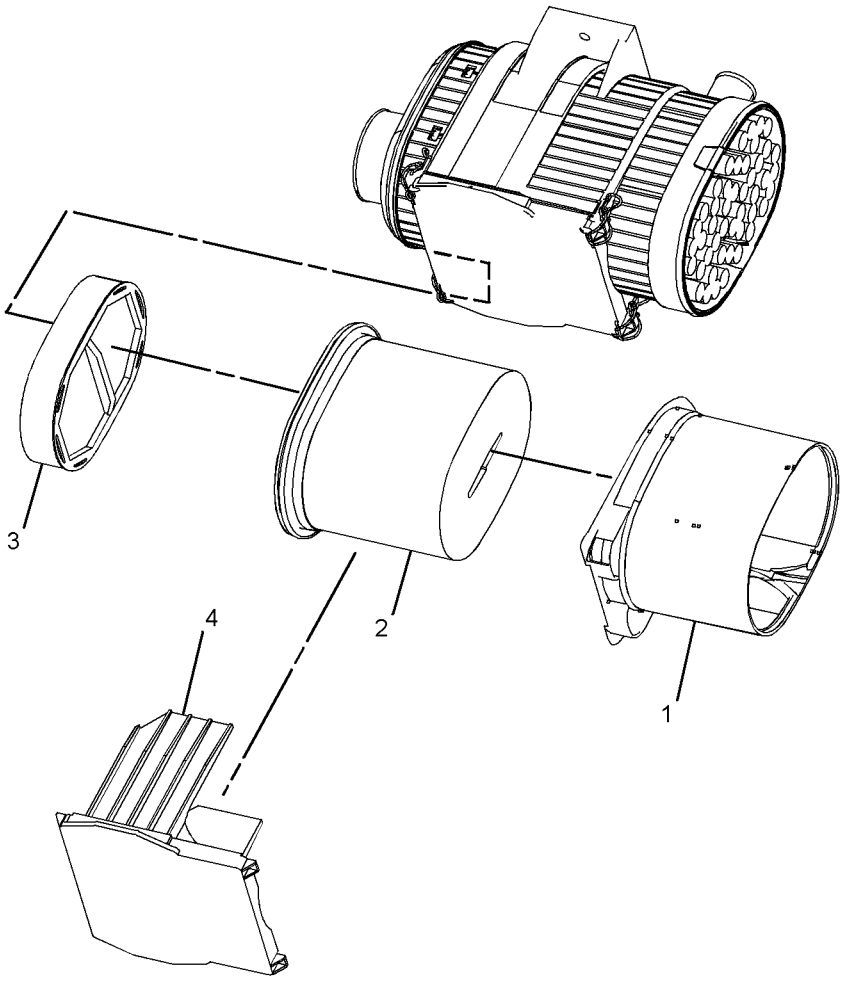

GRAPHIC #1 **<END>** g01376131

AIR INLET AND EXHAUST SYSTEM

332-6587 AIR CLEANER GP–TURBO

S/N: MFG1-UP

PART OF 291-9188 ENGINE AR

SMCS-1051, 1054 **i04528853**

NOTE	REF NO	GRAPHIC REF	PART NUMBER	QTY	PART NAME 1 2 3 4 5 6 (PRODUCT LEVEL)	SEE PAGE
	1	1	**8T-6726**	1	CLAMP-HOSE	
	2	1	**110-2445**	1	CLAMP-HOSE	
	3	1	**124-6259**	3	CLAMP-HOSE	
Y	4	1	**234-1981**	1	AIR CLEANER GP (BASIC)	164
	5	1	**247-9730**	1	VALVE AS-CHECK (AIR CLEANER)	
	6	1	**248-3231**	1	DUCT-AIR	
	7	1	**249-5512**	1	SEAL	
	8	1	**253-4137**	1	SEAL	
	9	1	**253-4138**	1	STUD	
	10	1	**255-4692**	1	CONNECTOR-FILTER	
	11	1	**260-0634**	1	TUBE	
	12	1	**260-1393**	1	HOSE	
	13	1	**293-5352**	1	HOSE-AIR	
	14	1	**298-5901**	1	PLATE AS	
	15	1	**330-6734**	1	HOSE	
	16	1	**332-7333**	1	INDICATOR GP-AIR FILTER CHANGE	
		1	**205-1627**	1	BRACKET	
M	17	1	**129-3178**	1	LOCKNUT (M6X1-THD)	
	18	1	**295-5550**	1	CLAMP-BAND (CONSTANT TENSION)	
	19	1	**4B-4863**	4	WASHER (4.7X11X1.2-MM THK)	
M	20	1	**5C-8312**	2	NUT (M4X0.7-THD)	
	21	1	**5P-4116**	6	WASHER-HARD (8.8X20.5X2-MM THK)	
	22	1	**7X-0586**	2	WASHER-HARD (7.2X32X2-MM THK)	
M	23	1	**8T-4189**	2	BOLT (M8X1.25X20-MM)	
M	24	1	**8T-4908**	4	BOLT (M8X1.25X25-MM)	
M	25	1	**8T-9405**	2	BOLT-SOCKET HEAD (M4X0.7X16-MM)	
D	26	1	**6V-1363**		HOSE (0.3-M)	

D-ORDER BY THE METER
M-METRIC PART
Y-SEPARATE ILLUSTRATION

332-6587 **AIR CLEANER GP** ***(contd.)*** **i04528853**

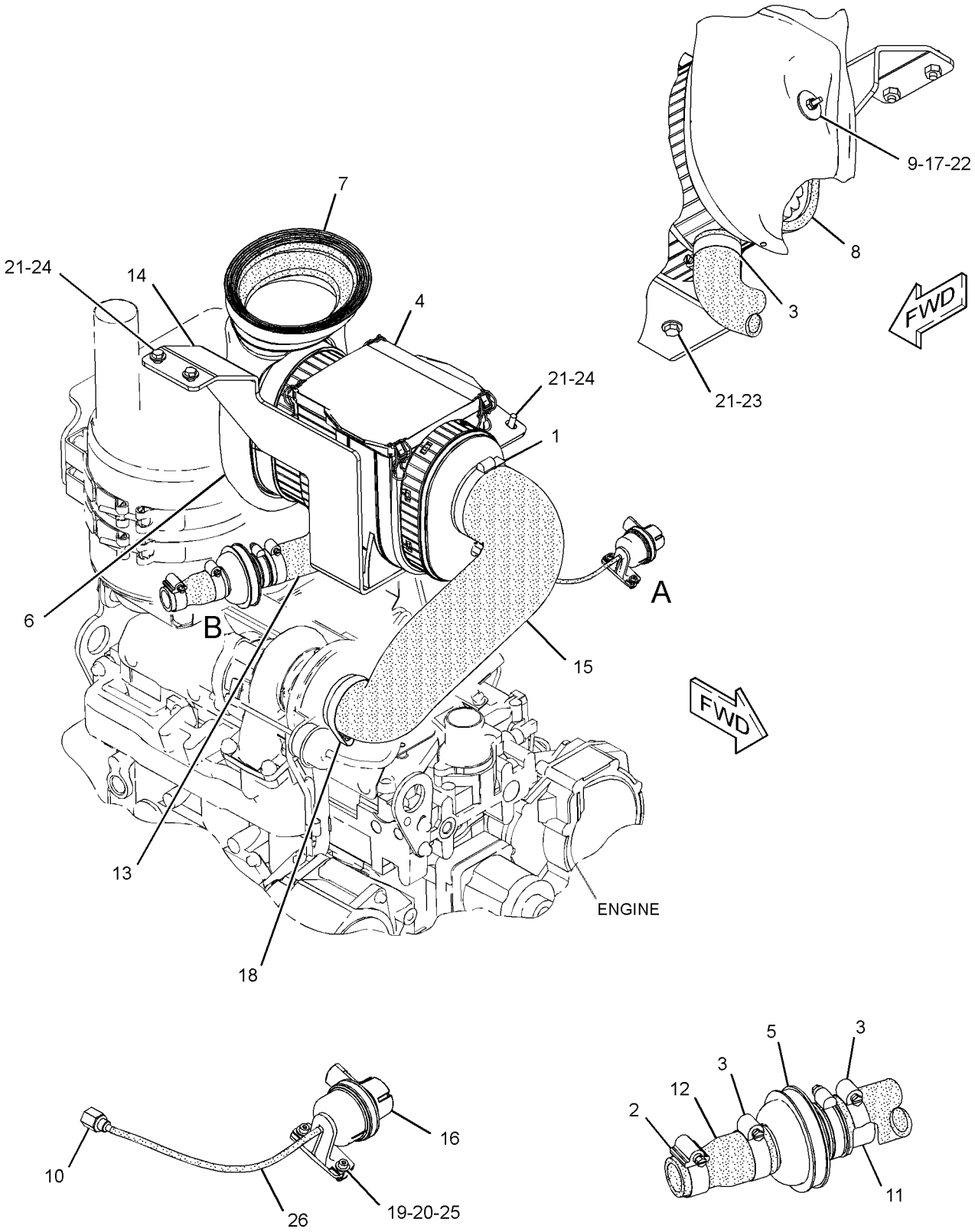

GRAPHIC #1 **<END>** g01625273

AIR INLET AND EXHAUST SYSTEM

238-8290 CONNECTION GP-INLET

S/N: G4D1-UP; CRS1-UP
PART OF 245-6841, 323-5724 ENGINE AR-PRIMARY
AN ATTACHMENT

SMCS-1087 **i03821189**

NOTE	REF NO	GRAPHIC REF	PART NUMBER	QTY	PART NAME 1 2 3 4 5 6 (PRODUCT LEVEL)	SEE PAGE
	1	1	**111-8222**	12	BOLT (M8X16-MM)	
M	2	1	**6I-0645**	4	BOLT (M8X1.25X25-MM)	
	3	1	**114-2579**	3	GASKET	
	4	1	**185-6627**	3	PLATE	
	5	1	**238-8289**	1	PIPE AS	
	5A	1	**238-8288**	1	GASKET-INLET	

M-METRIC PART

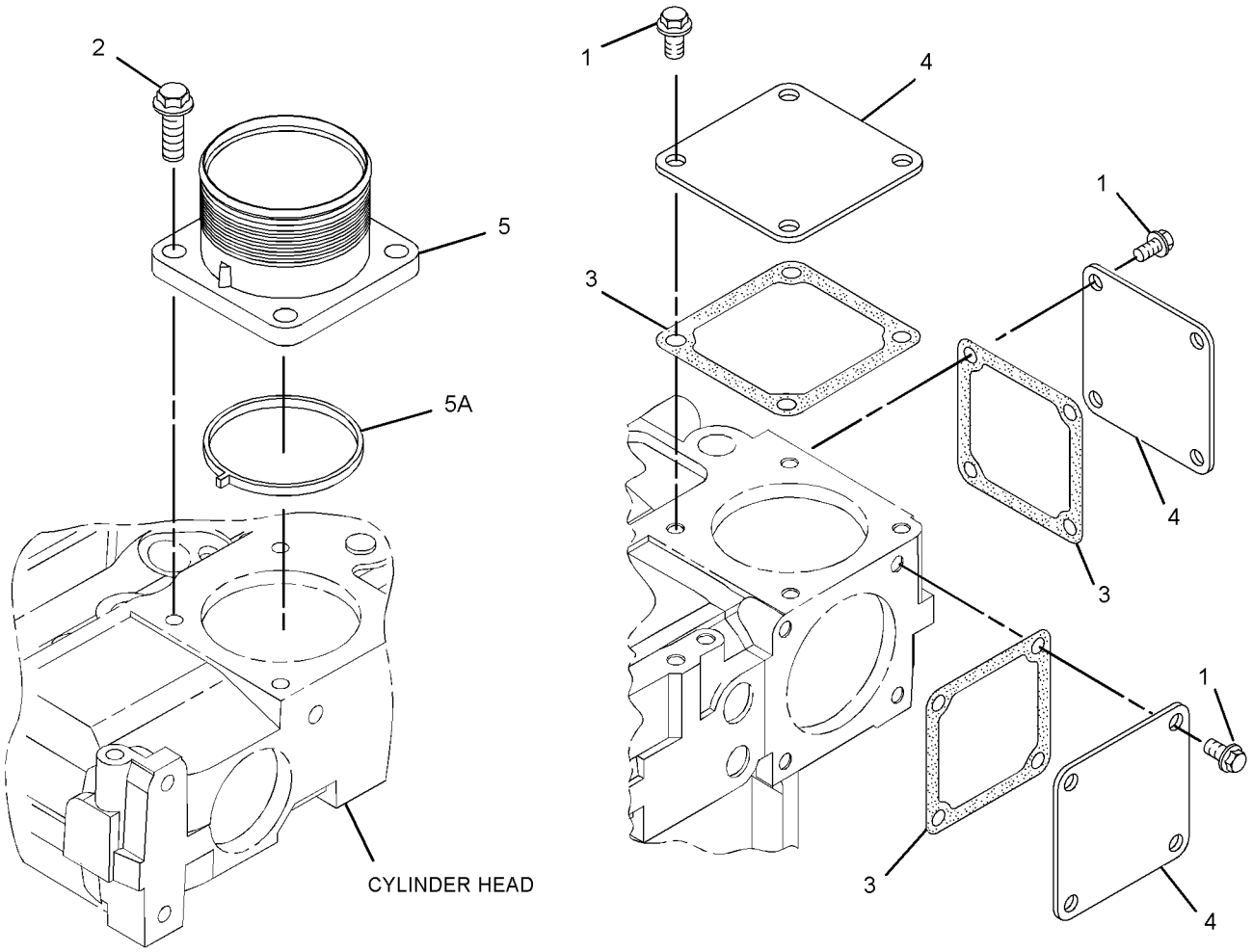

GRAPHIC #1 **<END>** g02133734

AIR INLET AND EXHAUST SYSTEM

231-0149 COVER GP-INLET MANIFOLD

S/N: G4D1-UP; CRS1-UP
PART OF 273-3610 ENGINE AR, 323-5725 ENGINE AR-PRIMARY
AN ATTACHMENT

SMCS-1058 **i03821234**

NOTE	REF NO	GRAPHIC REF	PART NUMBER	QTY	PART NAME 1 2 3 4 5 6 (PRODUCT LEVEL)	SEE PAGE
	1	1	**111-8222**	12	BOLT (M8X16-MM)	
	2	1	**114-2579**	3	GASKET	
	3	1	**185-6627**	3	PLATE	

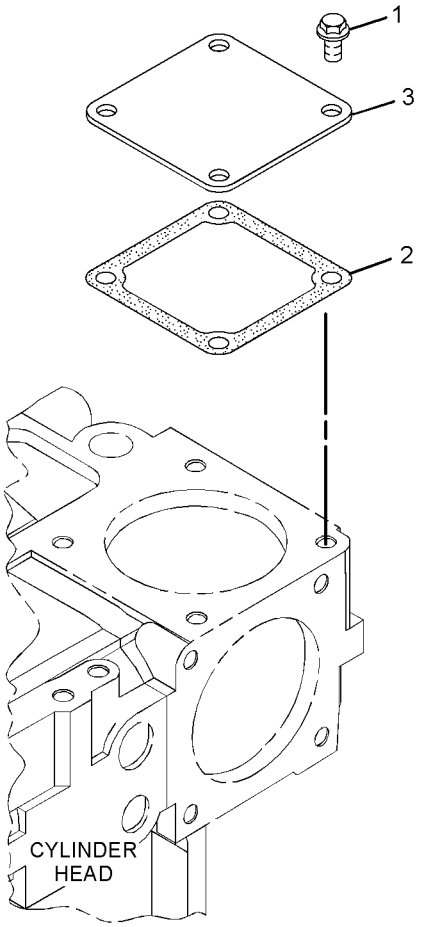

GRAPHIC #1 **<END>** g02090293

AIR INLET AND EXHAUST SYSTEM

329-0129 COVER GP-INLET MANIFOLD

S/N: C4Z1-UP

PART OF 321-7704 ENGINE AR-PRIMARY

SMCS-1058 **i04130312**

NOTE	REF NO	GRAPHIC REF	PART NUMBER	QTY	PART NAME 1 2 3 4 5 6 (PRODUCT LEVEL)	SEE PAGE
	1	1	**111-8222**	4	BOLT (M8X16-MM)	
	2	1	**114-2579**	3	GASKET	
M	3	1	**124-3815**	8	BOLT (M8X1.25X16-MM)	
	4	1	**185-6627**	3	PLATE	

M-METRIC PART

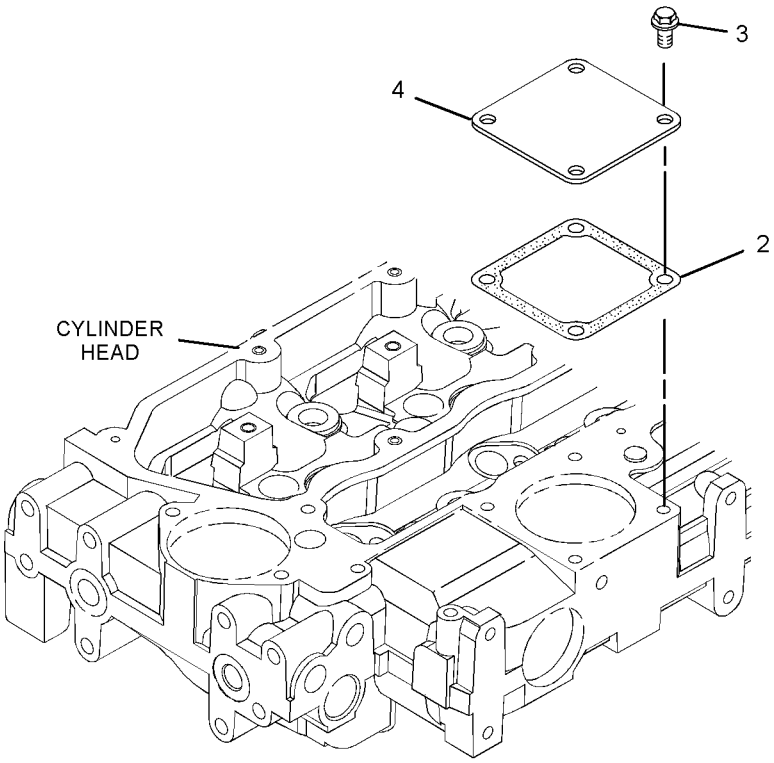

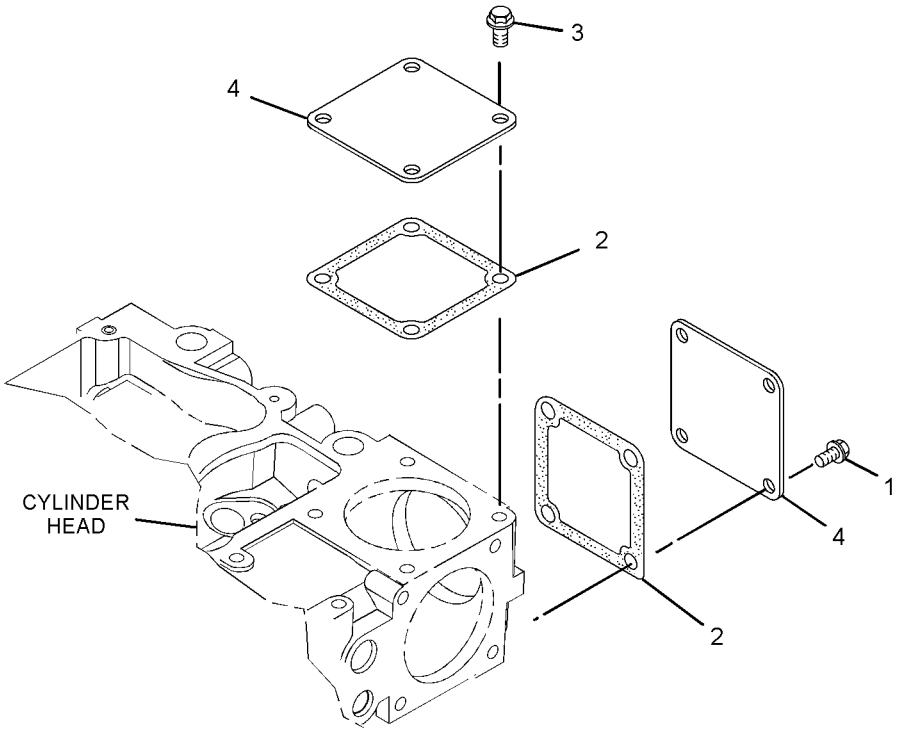

GRAPHIC #1 **<END>** g01619466

AIR INLET AND EXHAUST SYSTEM

210-6807 EXTENSION GP-EXHAUST

S/N: CBD2925-UP; MFG1-UP
PART OF 252-4640, 252-4641, 291-9188 ENGINE AR
ALSO AN ATTACHMENT

SMCS-1061 **i03247535**

NOTE	REF NO	GRAPHIC REF	PART NUMBER	QTY	PART NAME 1 2 3 4 5 6 (PRODUCT LEVEL)	SEE PAGE
	1	1	**7E-3870**	1	CLAMP-MUFFLER	
	2	1	**239-2270**	1	PIPE-EXTENSION	

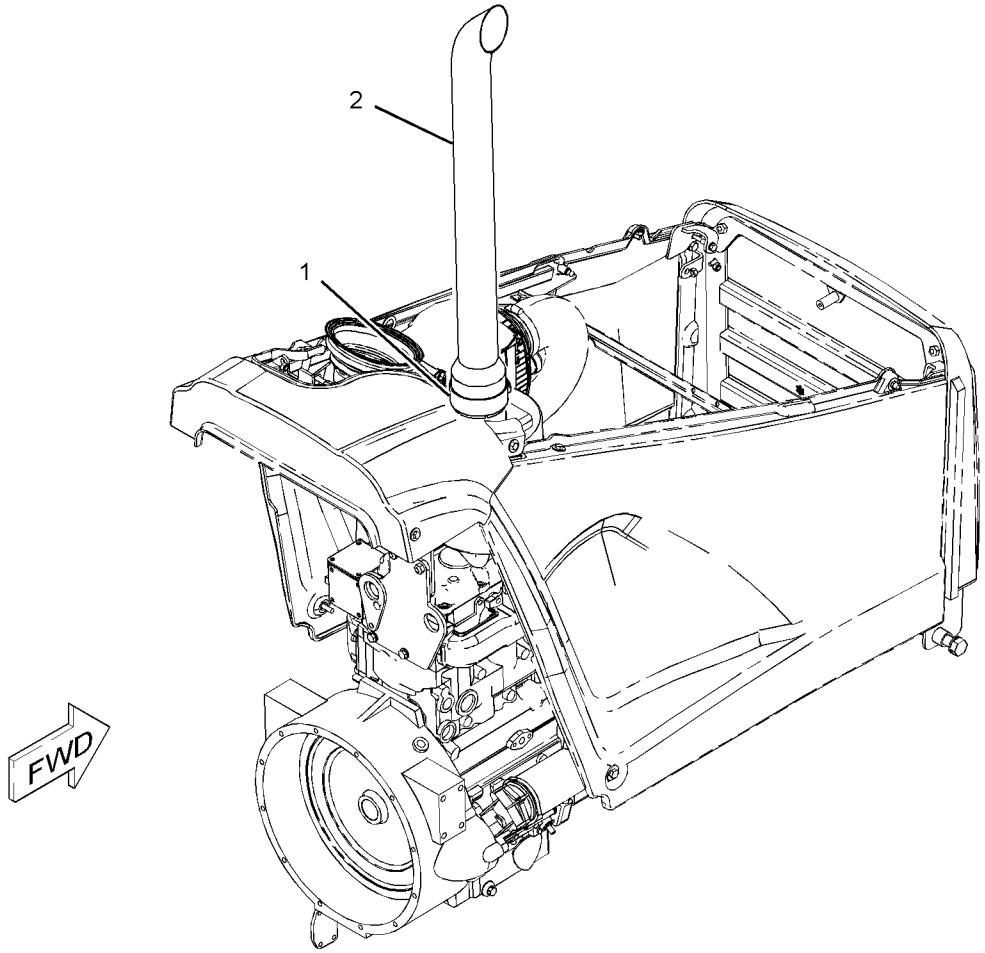

GRAPHIC #1 **<END>** g01098165

255-2279 INDICATOR GP-AIR FILTER CHANGE

S/N: CBD1-UP; MFG1-UP
PART OF 252-4641 ENGINE AR
AN ATTACHMENT

SMCS-7452 **i02496994**

NOTE	REF NO	GRAPHIC REF	PART NUMBER	QTY	PART NAME 1 2 3 4 5 6 (PRODUCT LEVEL)	SEE PAGE
	1	1	**255-4692**	1	CONNECTOR-FILTER	
	2	1	**260-1336**	1	INDICATOR GP-AIR FILTER CHANGE	
		1	**205-1627**	1	BRACKET	
		1	**260-3122**	1	INDICATOR-AIR FILTER SERVICE	
	3	1	**4B-4863**	4	WASHER (4.7X11X1.2-MM THK)	
M	4	1	**5C-8312**	2	NUT (M4X0.7-THD)	
M	5	1	**8T-9405**	2	BOLT-SOCKET HEAD (M4X0.7X16-MM)	
D	6	1	**6V-1363**		HOSE (0.3-M)	

D-ORDER BY THE METER
M-METRIC PART

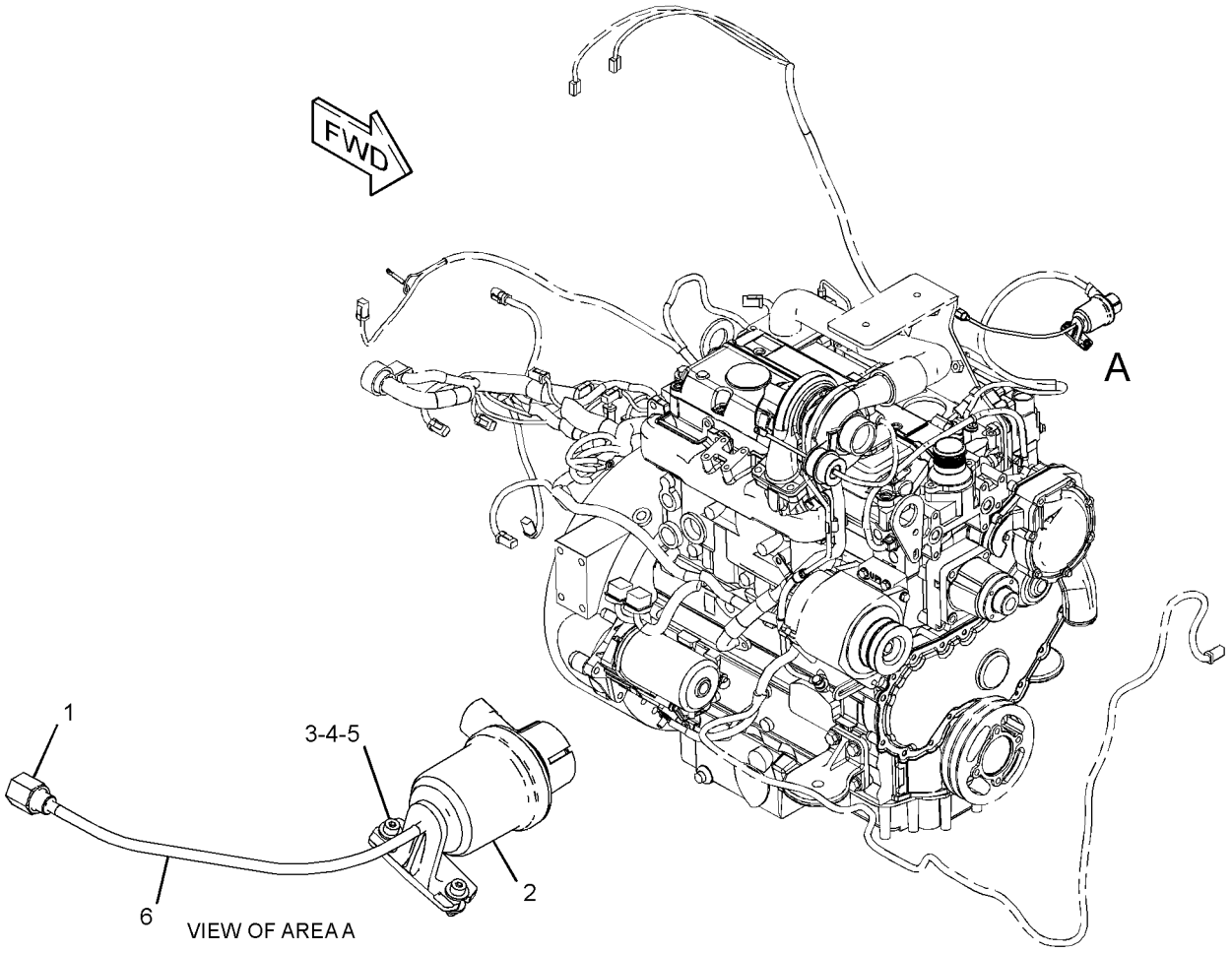

GRAPHIC #1 **<END>** g01233668

AIR INLET AND EXHAUST SYSTEM

261-2320 INDICATOR GP-AIR FILTER CHANGE

S/N: CBD1-UP; MFG1-UP
PART OF 252-4640 ENGINE AR
AN ATTACHMENT

SMCS-7452 **i02658783**

NOTE	REF NO	GRAPHIC REF	PART NUMBER	QTY	PART NAME 1 2 3 4 5 6 (PRODUCT LEVEL)	SEE PAGE
	1	1	**187-2866**	1	INDICATOR AS-AIR FILTER CHANGE	
		1	**102-8802**	1	KIT-RECEPTACLE (2-PIN)	
					(INCLUDES RECEPTACLE AS & WEDGE)	
		1	**186-3735**	2	PIN-CONNECTOR (16-GA TO 18-GA)	
	2	1	**255-4692**	1	CONNECTOR-FILTER	
	3	1	**4B-4863**	4	WASHER (4.7X11X1.2-MM THK)	
M	4	1	**5C-8312**	2	NUT (M4X0.7-THD)	
M	5	1	**8T-9405**	2	BOLT-SOCKET HEAD (M4X0.7X16-MM)	
D	6	1	**6V-1363**		HOSE (0.3-M)	

D-ORDER BY THE METER
M-METRIC PART

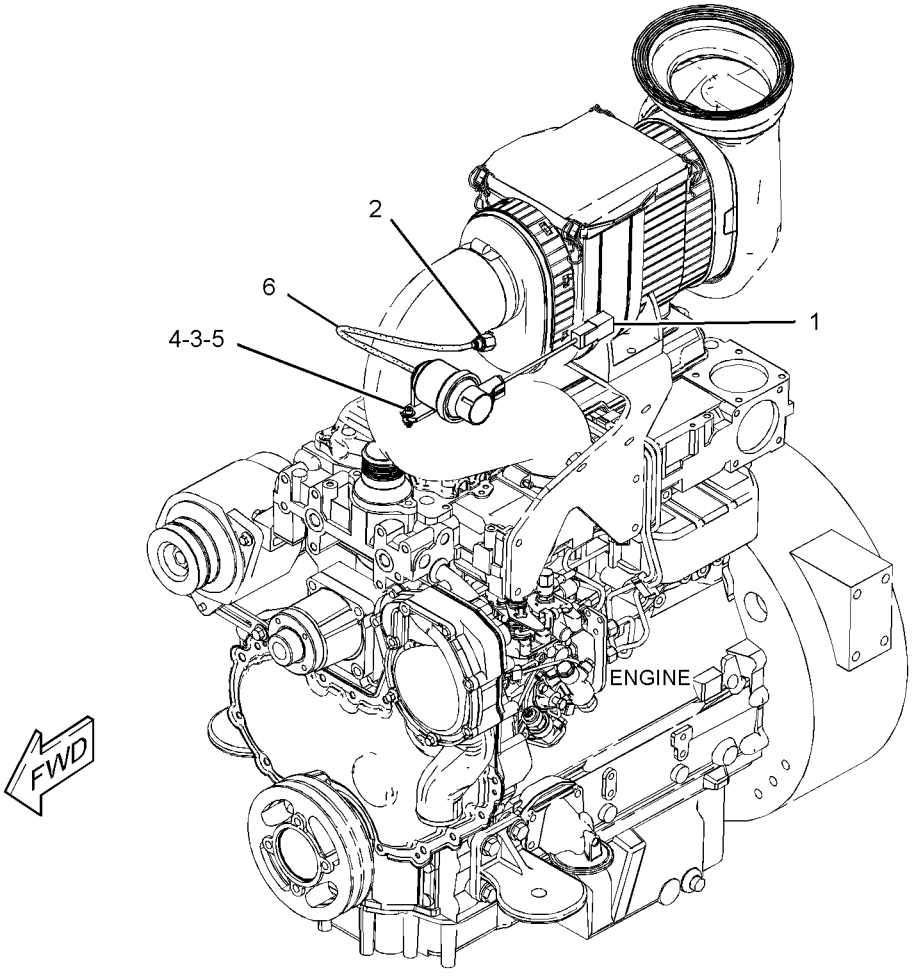

GRAPHIC #1 **<END>** g01321786

AIR INLET AND EXHAUST SYSTEM

335-9162 LINES GP-AIR

S/N: MFG1-UP

PART OF 291-9188 ENGINE AR

SMCS-1071 **i03858969**

NOTE	REF NO	GRAPHIC REF	PART NUMBER	QTY	PART NAME 1 2 3 4 5 6 (PRODUCT LEVEL)	SEE PAGE
	1	1	**141-1667**	2	CLAMP-HOSE	
	2	1	**234-3030**	1	GASKET	
	3	1	**263-5376**	1	HOSE	
	4	1	**301-9765**	1	TUBE	
	5	1	**301-9766**	1	HOSE	
	6	1	**305-6917**	1	TUBE AS	
	7	1	**311-2768**	1	HOSE	
	8	1	**317-5502**	1	HOSE	
	9	1	**335-9163**	1	TUBE	
	10	1	**208-9281**	5	BOLT-FLANGE HEAD (M8X1.25X20-MM)	
	11	1	**343-1820**	2	CLAMP-BAND	
	12	1	**343-6821**	2	CLAMP-BAND	
	13	1	**215-4012**	1	CLAMP	
	14	1	**216-4983**	1	CLAMP	

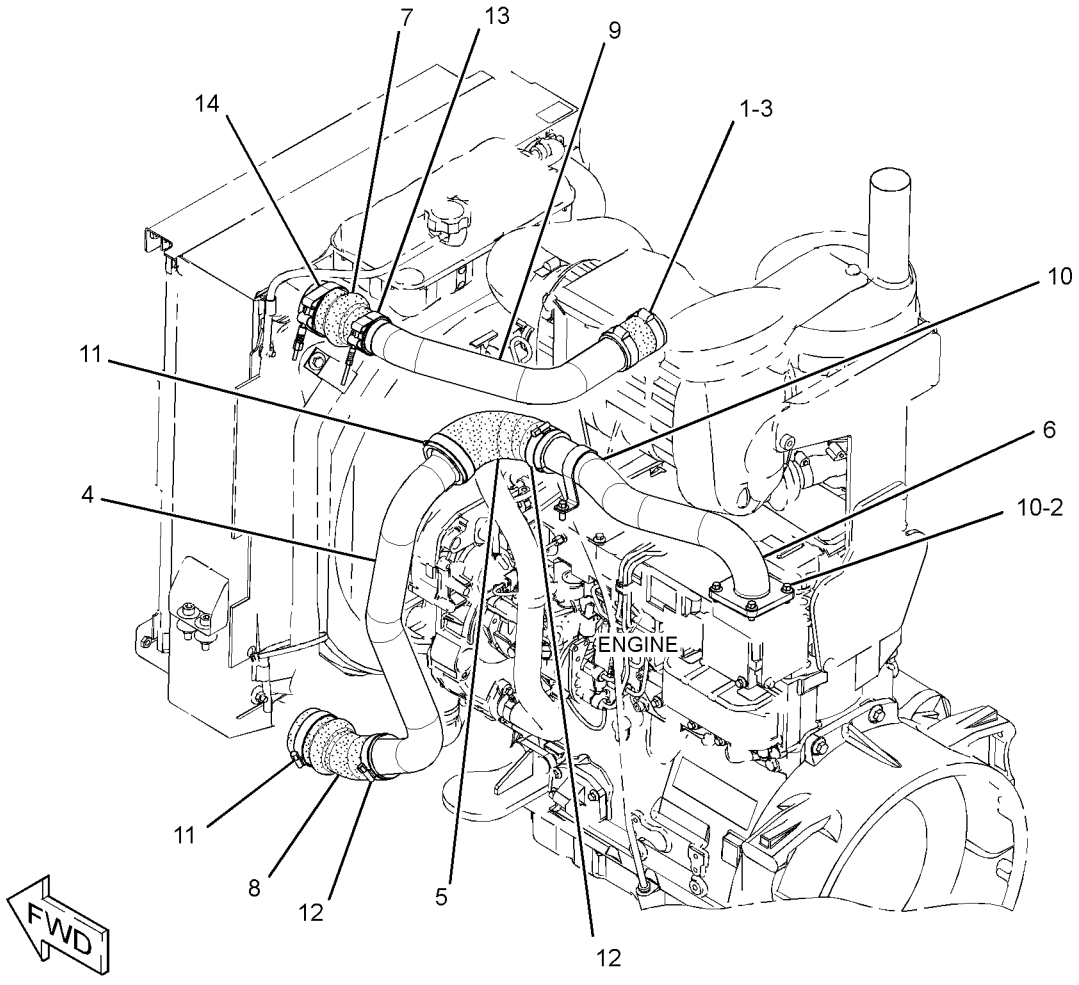

GRAPHIC #1 **<END>** g01932776

AIR INLET AND EXHAUST SYSTEM

237-5408 MANIFOLD GP-EXHAUST

S/N: G4D1-UP; CRS1-UP
PART OF 245-6841, 323-5724 ENGINE AR-PRIMARY
AN ATTACHMENT

SMCS-1059 **i02527246**

NOTE	REF NO	GRAPHIC REF	PART NUMBER	QTY	PART NAME 1 2 3 4 5 6 (PRODUCT LEVEL)	SEE PAGE
	1	1	**174-9638**	1	BOLT	
	2	1	**225-8536**	1	GASKET	
	3	1	**252-9612**	1	MANIFOLD-EXHAUST	

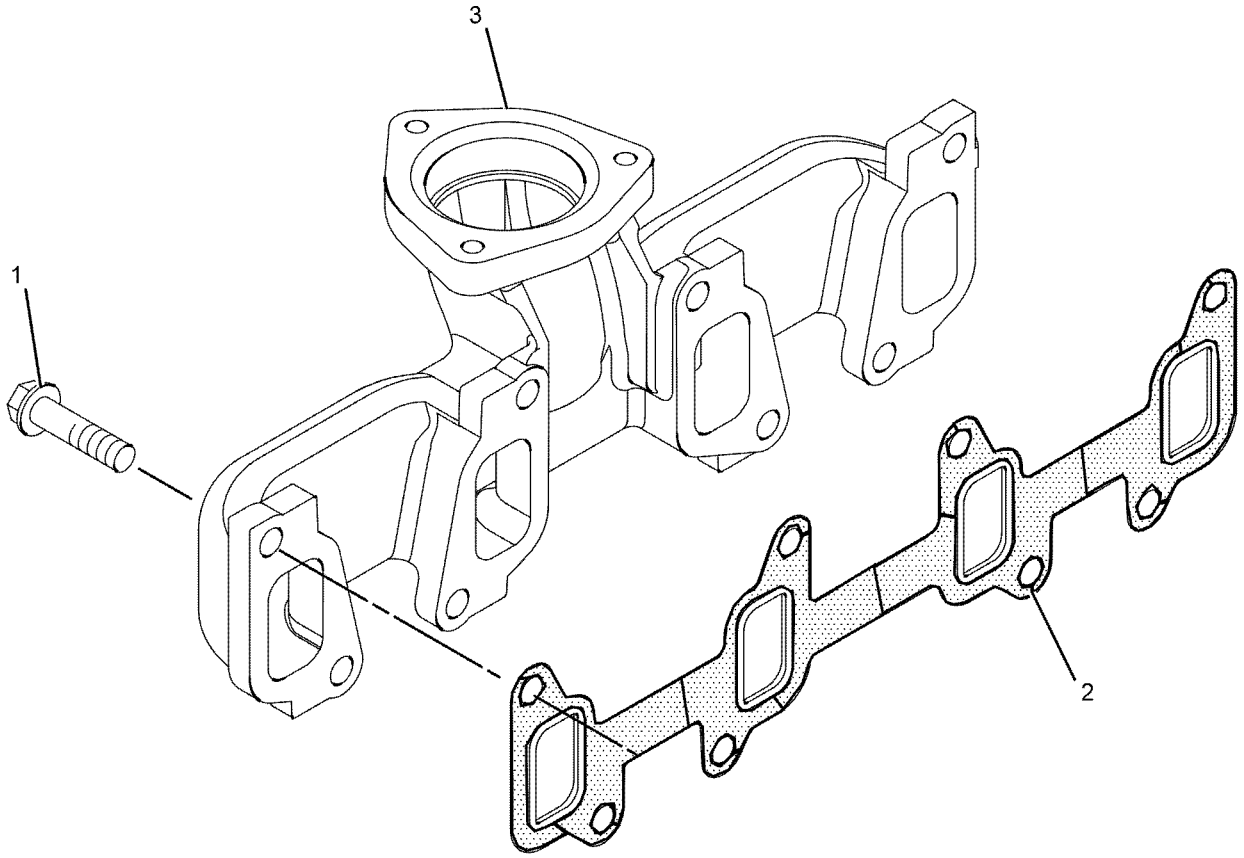

GRAPHIC #1 **<END>** g01084131

AIR INLET AND EXHAUST SYSTEM

261-8051 MUFFLER & CONVERTER

S/N: CBD1-UP

228 X 406 X 533-MM, 9 X 16 X 21-IN. PROVIDE AN OPTIONAL AFTERTREATMENT CATALYST MUFFLER FOR THE 420E BACKHOE LOADER FIELD INSTALLATION

SMCS-1062, 1091, 1092 **i03852897**

NOTE	PART NUMBER	QTY	PART NAME 1 2 3 4 5 6 (PRODUCT LEVEL)	SEE PAGE
			(NO SERVICED PARTS)	

<END>

AIR INLET AND EXHAUST SYSTEM

210-6813 MUFFLER GP

S/N: CBD1-UP; MFG1-UP
PART OF 252-4640 ENGINE AR
AN ATTACHMENT

SMCS-1062 **i02496924**

NOTE	REF NO	GRAPHIC REF	PART NUMBER	QTY	PART NAME 1 2 3 4 5 6 (PRODUCT LEVEL)	SEE PAGE
	1	1	**6I-0364**	3	STUD (M10X1.5X30-MM)	
	2	1	**6I-0563**	3	NUT (M10X1.5-THD)	
	3	1	**6I-4039**	1	GASKET	
	4	1	**235-5364**	1	MUFFLER AS	
	5	1	**237-0975**	1	PLATE AS	
M		1	**8T-3490**	4	NUT-WELD (M10X1.5-THD)	
	6	1	**247-4001**	1	PLATE AS	
	7	1	**254-2187**	2	CLAMP AS (MUFFLER)	
	8	1	**8T-4121**	16	WASHER-HARD (11X21X2.5-MM THK)	
M	9	1	**8T-4133**	4	NUT (M10X1.5-THD)	
M	10	1	**8T-4136**	4	BOLT (M10X1.5X25-MM)	
M	11	1	**8T-4195**	8	BOLT (M10X1.5X30-MM)	

M-METRIC PART

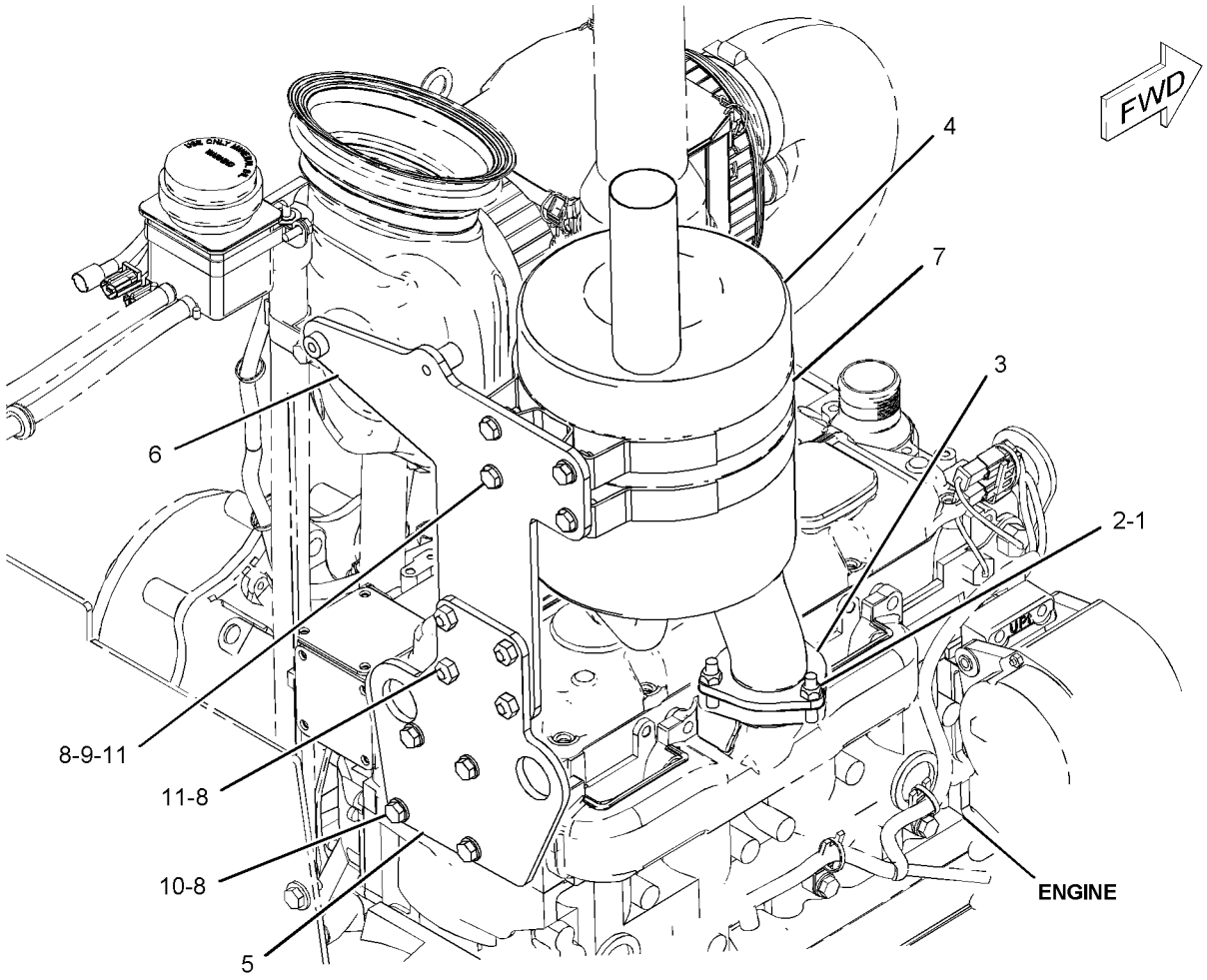

GRAPHIC #1 **<END>** g01081261

AIR INLET AND EXHAUST SYSTEM

223-4960 MUFFLER GP

S/N: CBD1-UP; MFG1-UP
PART OF 252-4641 ENGINE AR
FOR USE WITH TURBOCHARGER
AN ATTACHMENT

SMCS-1062 **i02496991**

NOTE	REF NO	GRAPHIC REF	PART NUMBER	QTY	PART NAME 1 2 3 4 5 6 (PRODUCT LEVEL)	SEE PAGE
	1	1	**6I-0364**	3	STUD (M10X1.5X30-MM)	
	2	1	**6I-0563**	3	NUT (M10X1.5-THD)	
	3	1	**235-5363**	1	MUFFLER AS (TURBOCHARGED)	
	4	1	**237-0975**	1	PLATE AS	
M		1	**8T-3490**	4	NUT-WELD (M10X1.5-THD)	
	5	1	**247-4001**	1	PLATE AS	
	6	1	**254-2187**	2	CLAMP AS	
	7	1	**8T-4121**	16	WASHER-HARD (11X21X2.5-MM THK)	
M	8	1	**8T-4133**	4	NUT (M10X1.5-THD)	
M	9	1	**8T-4136**	4	BOLT (M10X1.5X25-MM)	
M	10	1	**8T-4195**	8	BOLT (M10X1.5X30-MM)	

M-METRIC PART

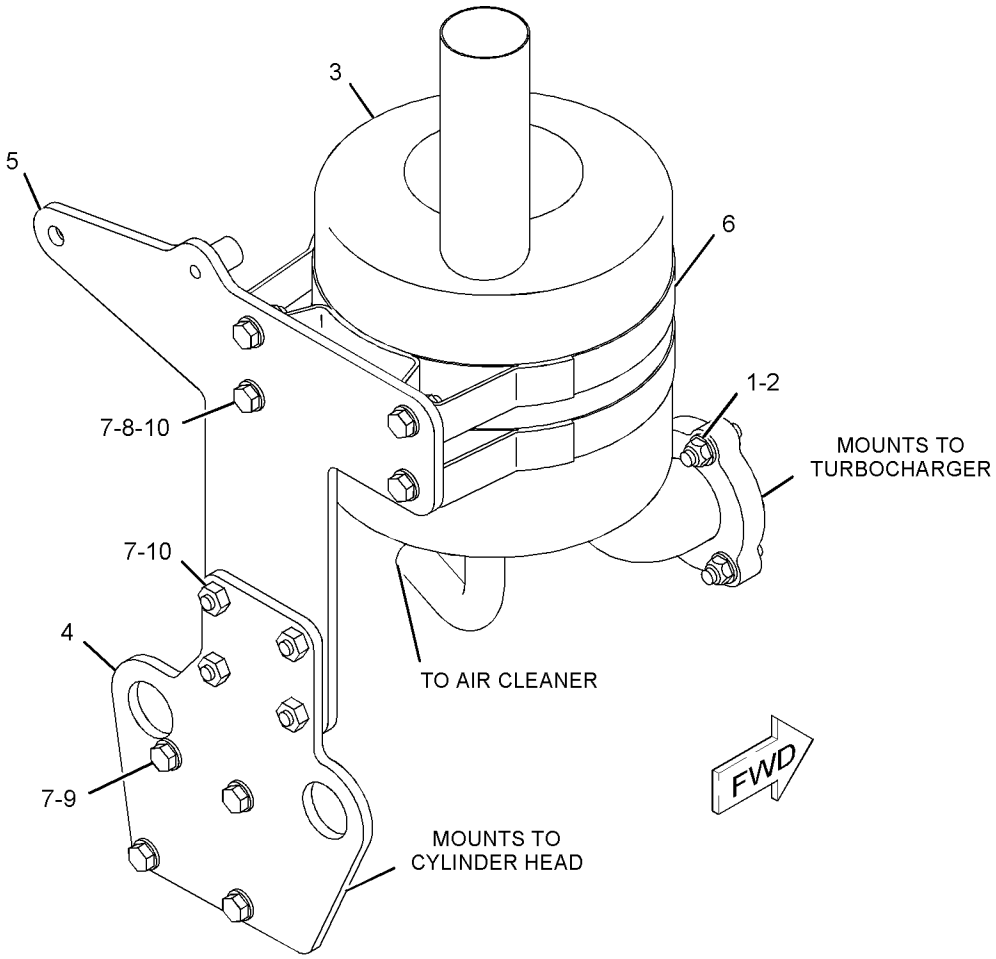

GRAPHIC #1 **<END>** g01078673

AIR INLET AND EXHAUST SYSTEM

298-5629 MUFFLER GP

S/N: MFG1-UP

PART OF 291-9188 ENGINE AR

SMCS-1062 **i03858789**

NOTE	REF NO	GRAPHIC REF	PART NUMBER	QTY	PART NAME 1 2 3 4 5 6 (PRODUCT LEVEL)	SEE PAGE
	1	1	**6I-0364**	3	STUD (M10X1.5X30-MM)	
	2	1	**6I-0563**	3	NUT (M10X1.5-THD)	
	3	1	**235-5363**	1	MUFFLER AS	
	4	1	**237-0975**	1	PLATE AS	
M		1	**8T-3490**	4	NUT-WELD (M10X1.5-THD)	
	5	1	**247-4001**	1	PLATE AS	
	6	1	**254-2187**	2	CLAMP AS	
	7	1	**7X-7729**	4	WASHER (11X25X3-MM THK)	
	8	1	**8T-4121**	12	WASHER-HARD (11X21X2.5-MM THK)	
M	9	1	**8T-4133**	4	NUT (M10X1.5-THD)	
M	10	1	**8T-4136**	4	BOLT (M10X1.5X25-MM)	
M	11	1	**8T-4195**	8	BOLT (M10X1.5X30-MM)	

M-METRIC PART

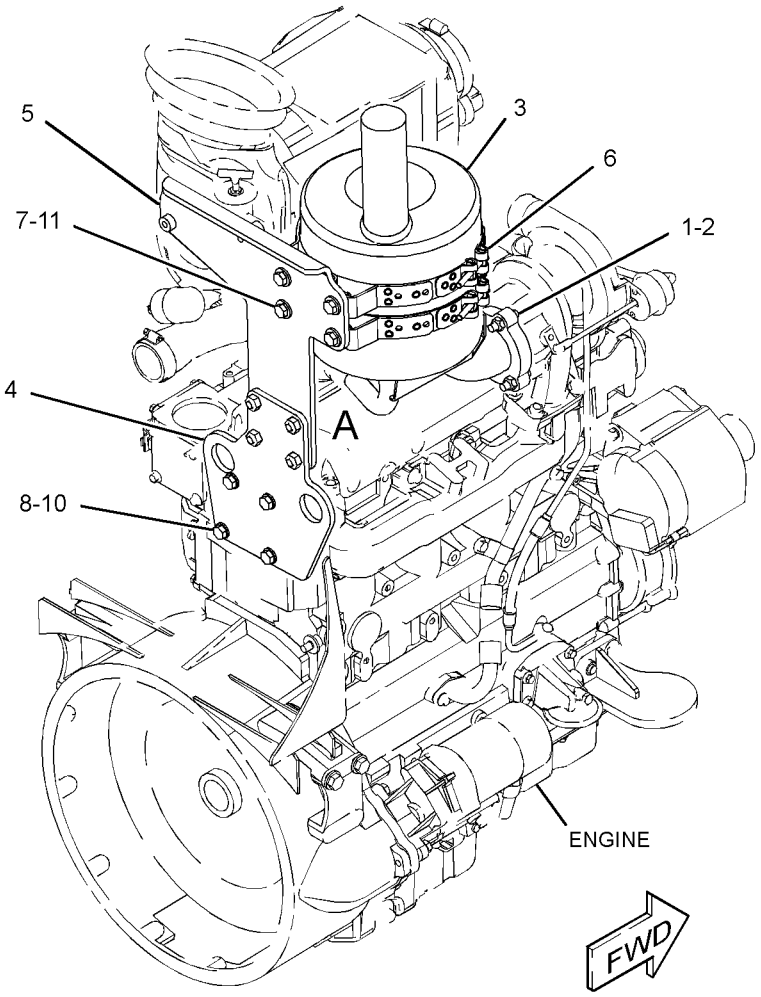

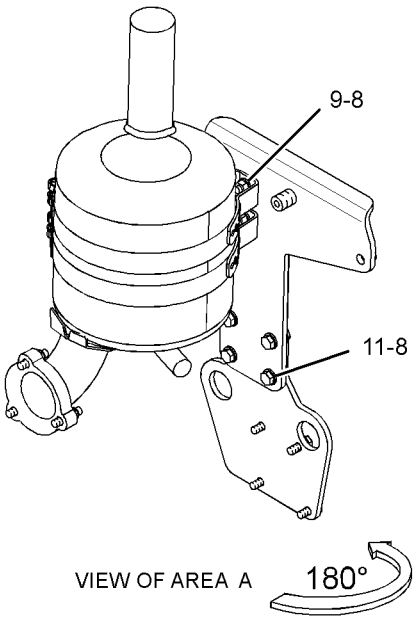

GRAPHIC #1

<END>

g01778896

AIR INLET AND EXHAUST SYSTEM

317-3111 TURBOCHARGER GP

S/N: G4D1-UP; CRS1-UP

PART OF 273-3610 ENGINE AR, 323-5725 ENGINE AR-PRIMARY

AN ATTACHMENT

SMCS-1052, 1053 **i03076870**

NOTE	REF NO	GRAPHIC REF	PART NUMBER	QTY	PART NAME 1 2 3 4 5 6 (PRODUCT LEVEL)	SEE PAGE
M	1	1	**6I-0217**	2	BOLT (M8X1.25X20-MM)	
	2	1	**6I-0563**	4	NUT (M10X1.5-THD)	
	3	1	**6I-0572**	4	BOLT (M8X1.25X20-MM)	
	4	1	**106-8916**	2	BOLT (M6X16-MM)	
	5	1	**141-1667**	2	CLAMP-HOSE	
	6	1	**147-5553**	4	STUD	
	7	1	**174-9638**	8	BOLT	
	8	1	**194-5390**	1	GASKET-MANIFOLD	
	10	1	**225-8533**	1	GASKET (TURBOCHARGER)	
	11	1	**225-8534**	1	GASKET (TURBOCHARGER)	
	12	1	**225-8536**	1	GASKET (MANIFOLD)	
	13	1	**263-5376**	1	HOSE	
	14	1	**234-3030**	1	GASKET-INLET	
	15	1	**322-9616**	1	TUBE AS-TURBOCHARGER	
	15A	1	**225-8524**	2	BOLT-SPECIAL (BANJO)	
	15B	1	**225-8526**	4	WASHER (10.4X13.75X1.37-MM THK)	
	16	1	**237-3786**	1	TURBOCHARGER GP	
	17	1	**322-9615**	1	TUBE-TURBOCHARGER	
	18	1	**237-3794**	1	BOLT	
	19	1	**237-3921**	1	CLIP	
	20	1	**237-3922**	1	TUBE	
	21	1	**255-3447**	1	MANIFOLD-EXHAUST	

M-METRIC PART

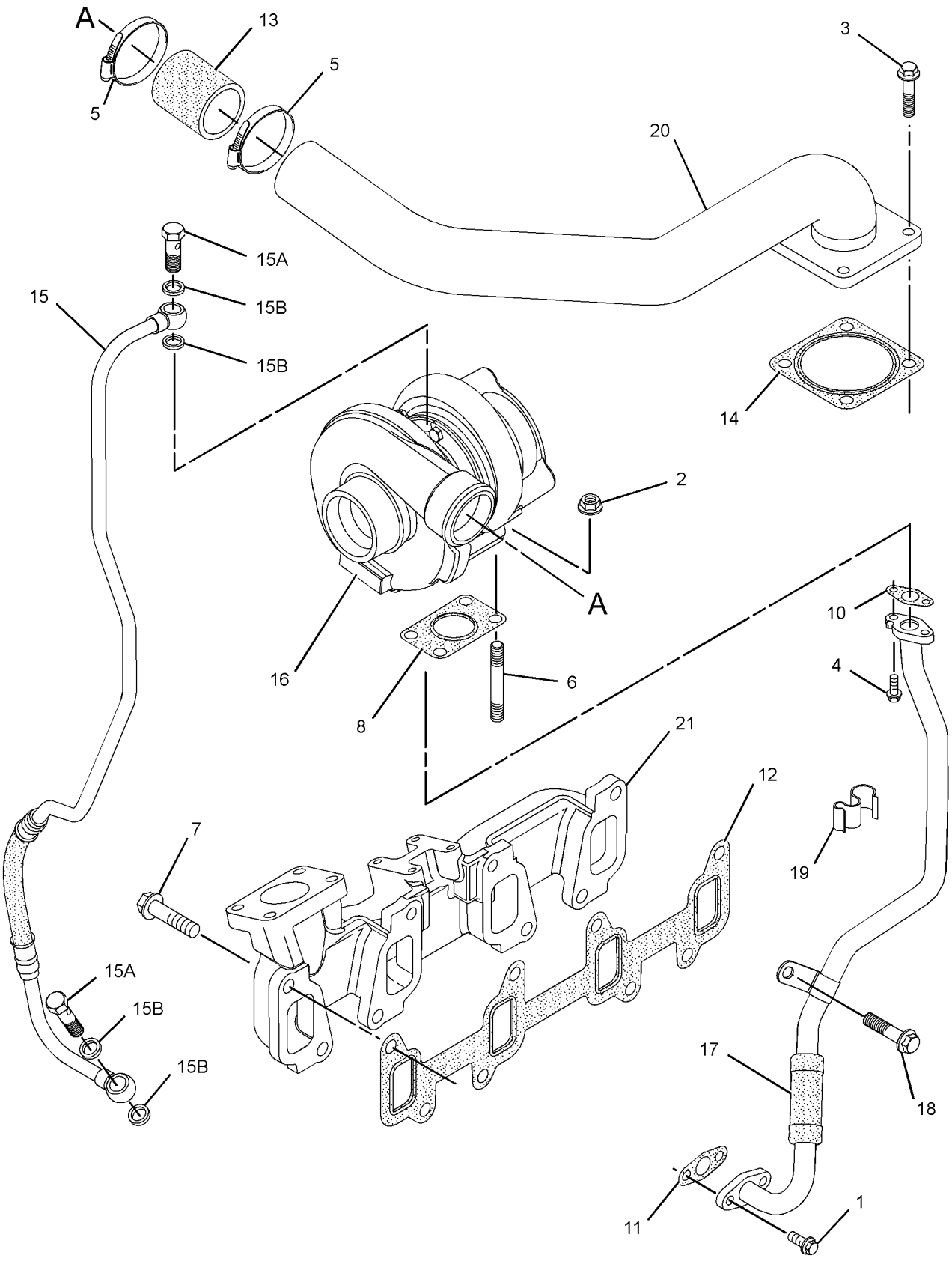

GRAPHIC #1 **<END>** g01450880

AIR INLET AND EXHAUST SYSTEM

326-9010 TURBOCHARGER GP

S/N: C4Z1-UP

PART OF 321-7704 ENGINE AR-PRIMARY

SMCS-1052, 1053 **i04130013**

NOTE	REF NO	GRAPHIC REF	PART NUMBER	QTY	PART NAME 1 2 3 4 5 6 (PRODUCT LEVEL)	SEE PAGE
M	1	1	**6I-0217**	2	BOLT (M8X1.25X20-MM)	
	2	1	**6I-0563**	4	NUT (M10X1.5-THD)	
	3	1	**106-8916**	2	BOLT (M6X16-MM)	
	4	1	**147-5553**	4	STUD	
	5	1	**174-9638**	8	BOLT	
	6	1	**194-5390**	1	GASKET-MANIFOLD	
	7	1	**225-8533**	1	GASKET	
	8	1	**225-8534**	1	GASKET	
	9	1	**225-8536**	1	GASKET	
	10	1	**237-3794**	1	BOLT	
	11	1	**237-3921**	1	CLIP	
	12	1	**255-3447**	1	MANIFOLD-EXHAUST	
	13	1	**315-9721**	1	TURBOCHARGER	
	14	1	**322-9615**	1	TUBE-TURBOCHARGER	
	15	1	**322-9616**	1	TUBE AS-TURBOCHARGER	
	15A	1	**225-8524**	2	BOLT-SPECIAL (BANJO)	
	15B	1	**225-8526**	4	WASHER (10.4X13.75X1.37-MM THK)	

M-METRIC PART

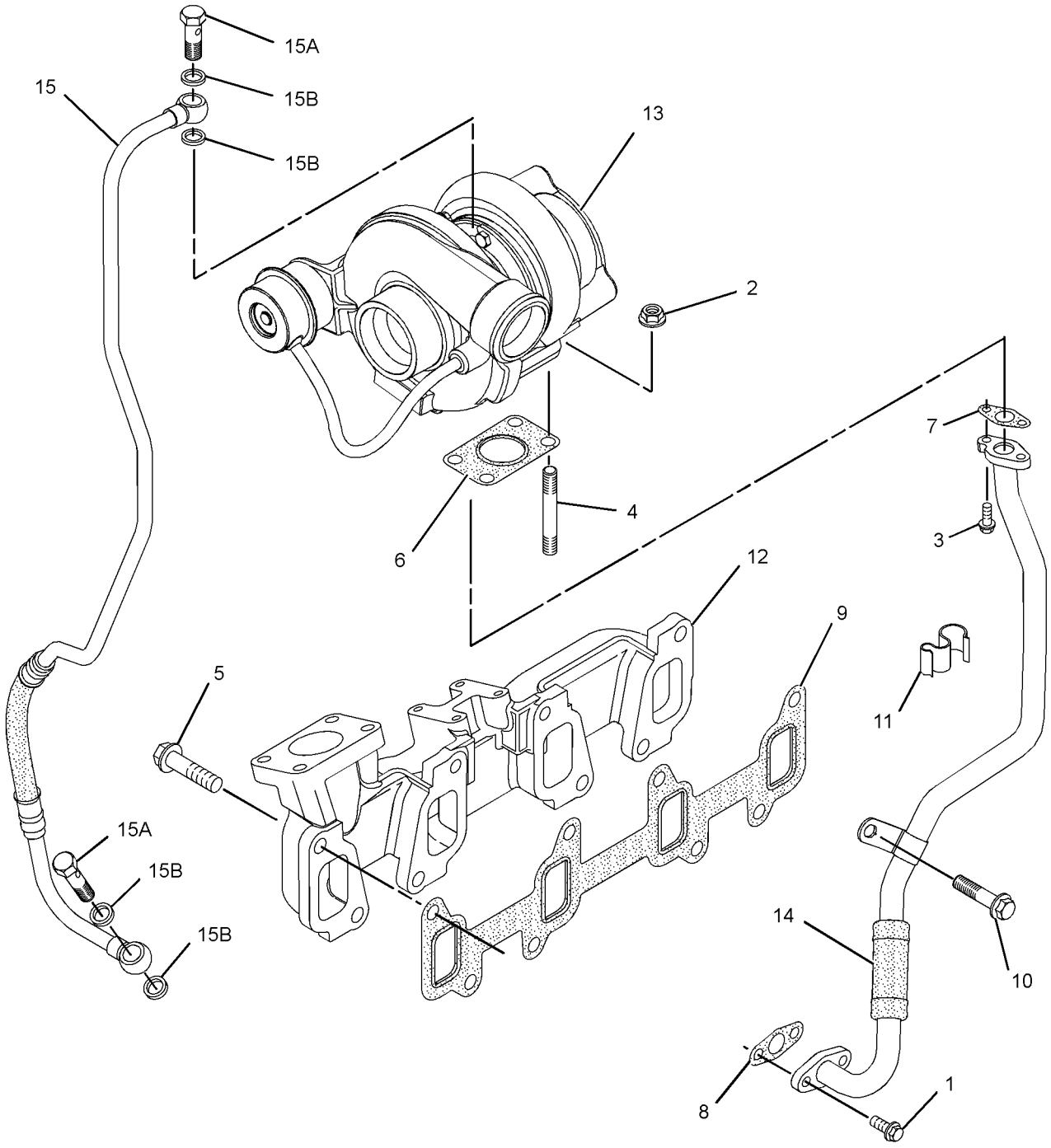

GRAPHIC #1 **<END>** g01615204

FUEL SYSTEM

206-1640 CONTROL GP-GOVERNOR

S/N: CBD1-UP
PART OF 252-4641 ENGINE AR
AN ATTACHMENT

SMCS-1265 **i02837691**

NOTE	REF NO	GRAPHIC REF	PART NUMBER	QTY	PART NAME 1 2 3 4 5 6 (PRODUCT LEVEL)	SEE PAGE
	1	1	**151-4841**	3	BLOCK	
Y	2	1	**209-3378**	1	PEDAL GP-GOVERNOR (MECHANICAL)	1021
	3	1	**235-0128**	1	CABLE AS	
		1	**8T-4742**	2	END-YOKE ROD	
		1	**8T-4744**	2	PIN AS-SPRING	
		1	**222-2690**	1	CLIP	
M		1	**5C-2890**	2	NUT (M6X1-THD)	
	4	1	**239-1434**	1	PLATE	
	5	1	**239-1435**	1	BRACKET AS	
	6	1	**248-2707**	1	GROMMET	
M	7	1	**119-5025**	3	SCREW-FLAT HEAD (M6X1X25-MM)	
	8	1	**164-1395**	1	KNOB (GOVERNOR CONTROL)	
Y	9	1	**209-3367**	1	LEVER GP-GOVERNOR (HANDHELD)	1005
	10	1	**3S-2093**	1	STRAP-CABLE	
	11	1	**7K-1181**	3	STRAP-CABLE	
M	12	1	**8T-4138**	3	BOLT (M6X1X20-MM)	
	13	1	**8T-4205**	3	WASHER-HARD (7.2X14.5X2-MM THK)	
	14	1	**8T-4224**	4	WASHER-HARD (8.8X16X2-MM THK)	
M	15	1	**8T-4908**	4	BOLT (M8X1.25X25-MM)	

M-METRIC PART
Y-SEPARATE ILLUSTRATION

206-1640 **CONTROL GP-GOVERNOR** *(contd.)* **i02837691**

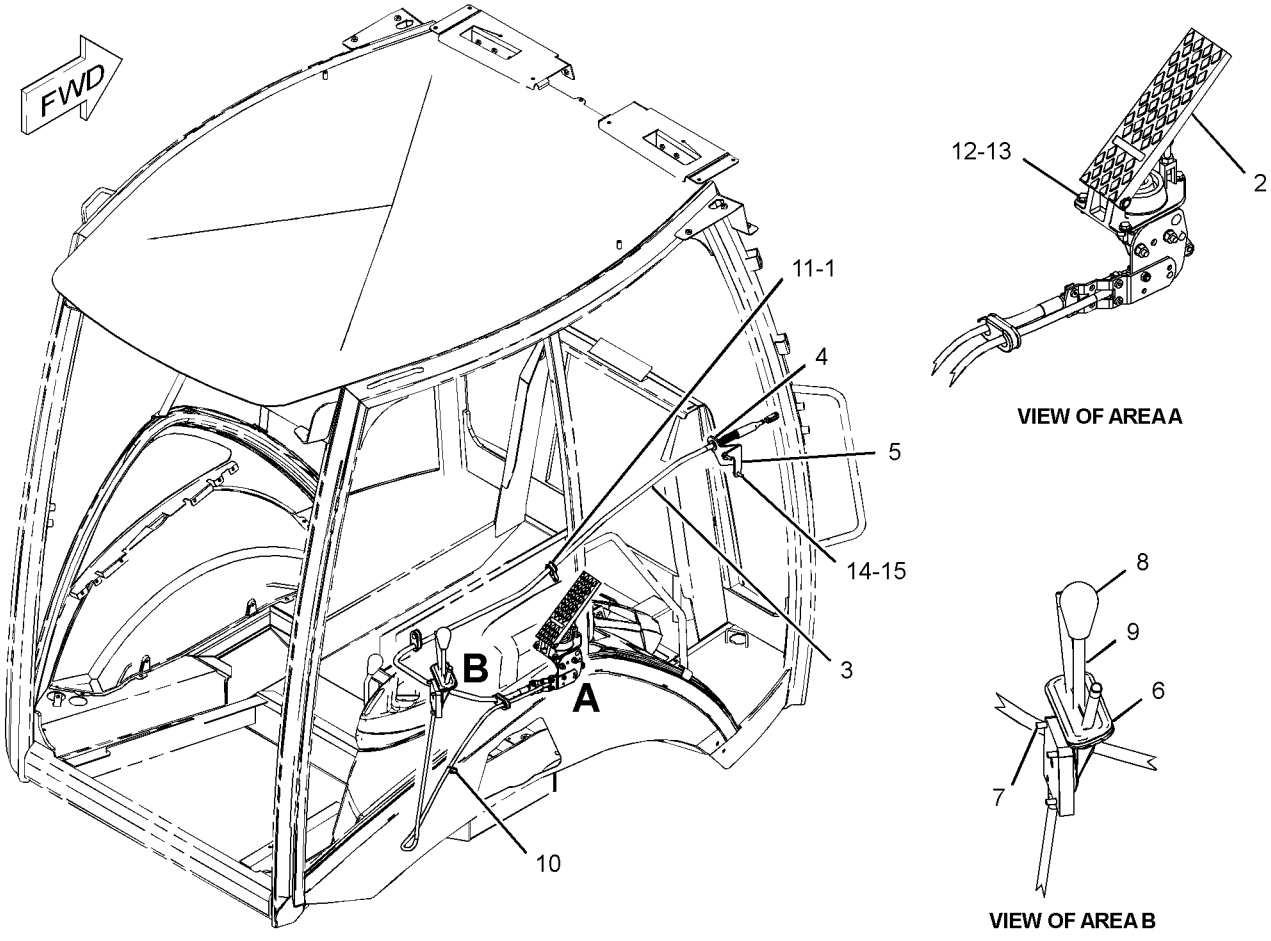

GRAPHIC #1 **<END>** g01183916

206-1640 CONTROL GP-GOVERNOR

S/N: CBD1-UP; MFG1-UP
PART OF 252-4641, 291-9188 ENGINE AR
ALSO AN ATTACHMENT

SMCS-1265 **i02837693**

NOTE	REF NO	GRAPHIC REF	PART NUMBER	QTY	PART NAME 1 2 3 4 5 6 (PRODUCT LEVEL)	SEE PAGE
	1	1	**151-4841**	3	BLOCK	
Y	2	1	**209-3378**	1	PEDAL GP-GOVERNOR	1021
	3	1	**235-0128**	1	CABLE AS	
		1	**8T-4742**	2	END-YOKE ROD	
		1	**8T-4744**	2	PIN AS-SPRING	
		1	**222-2690**	1	CLIP	
M		1	**5C-2890**	2	NUT (M6X1-THD)	
	4	1	**239-1434**	1	PLATE	
C	5	1	**300-1702**	1	BRACKET AS	
	6	1	**248-2707**	1	GROMMET	
M	7	1	**119-5025**	3	SCREW-FLAT HEAD (M6X1X25-MM)	
	8	1	**164-1395**	1	KNOB	
Y	9	1	**209-3367**	1	LEVER GP-GOVERNOR (HANDHELD)	1005
C	11	1	**7K-1181**	4	STRAP-CABLE	
M	12	1	**8T-4138**	3	BOLT (M6X1X20-MM)	
	13	1	**8T-4205**	3	WASHER-HARD (7.2X14.5X2-MM THK)	
	14	1	**8T-4224**	4	WASHER-HARD (8.8X16X2-MM THK)	
CM	15	1	**8T-4908**	3	BOLT (M8X1.25X25-MM)	
CM	16	1	**7X-0818**	1	BOLT (M8X1.25X45-MM)	

C-CHANGE FROM PREVIOUS TYPE
M-METRIC PART
Y-SEPARATE ILLUSTRATION

206-1640 **CONTROL GP-GOVERNOR** *(contd.)* **i02837693**

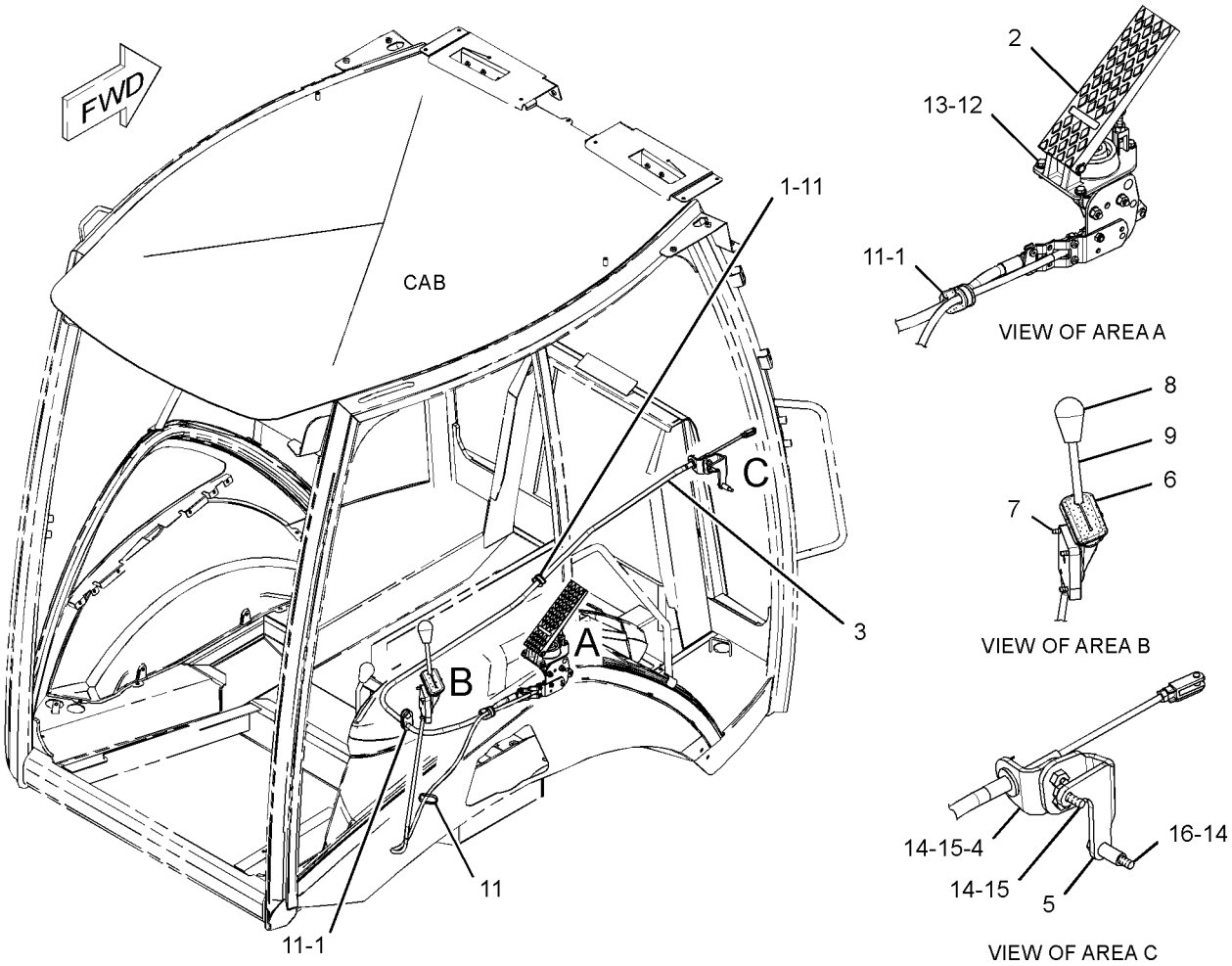

GRAPHIC #1 **<END>** g01347506

251-3802 CONTROL GP-GOVERNOR

S/N: CBD1-UP
PART OF 252-4640 ENGINE AR
AN ATTACHMENT

SMCS-1265 **i02837695**

NOTE	REF NO	GRAPHIC REF	PART NUMBER	QTY	PART NAME 1 2 3 4 5 6 (PRODUCT LEVEL)	SEE PAGE
	1	1	**151-4841**	3	BLOCK	
	2	1	**239-1435**	1	BRACKET AS	
	3	1	**235-0128**	1	CABLE AS	
Y	4	1	**243-0059**	1	PEDAL GP-GOVERNOR	1022
	5	1	**248-2707**	1	GROMMET	
	6	1	**249-0403**	1	PLATE	
M	7	1	**119-5025**	3	SCREW-FLAT HEAD (M6X1X25-MM)	
	8	1	**164-1395**	1	KNOB	
Y	9	1	**209-3367**	1	LEVER GP-GOVERNOR (HANDHELD)	1005
	10	1	**3S-2093**	1	STRAP-CABLE	
	11	1	**7K-1181**	3	STRAP-CABLE	
M	12	1	**8T-4138**	3	BOLT (M6X1X20-MM)	
	13	1	**8T-4205**	3	WASHER-HARD (7.2X14.5X2-MM THK)	
	14	1	**8T-4224**	4	WASHER-HARD (8.8X16X2-MM THK)	
M	15	1	**8T-4908**	4	BOLT (M8X1.25X25-MM)	

M-METRIC PART
Y-SEPARATE ILLUSTRATION

251-3802 **CONTROL GP-GOVERNOR** *(contd.)* **i02837695**

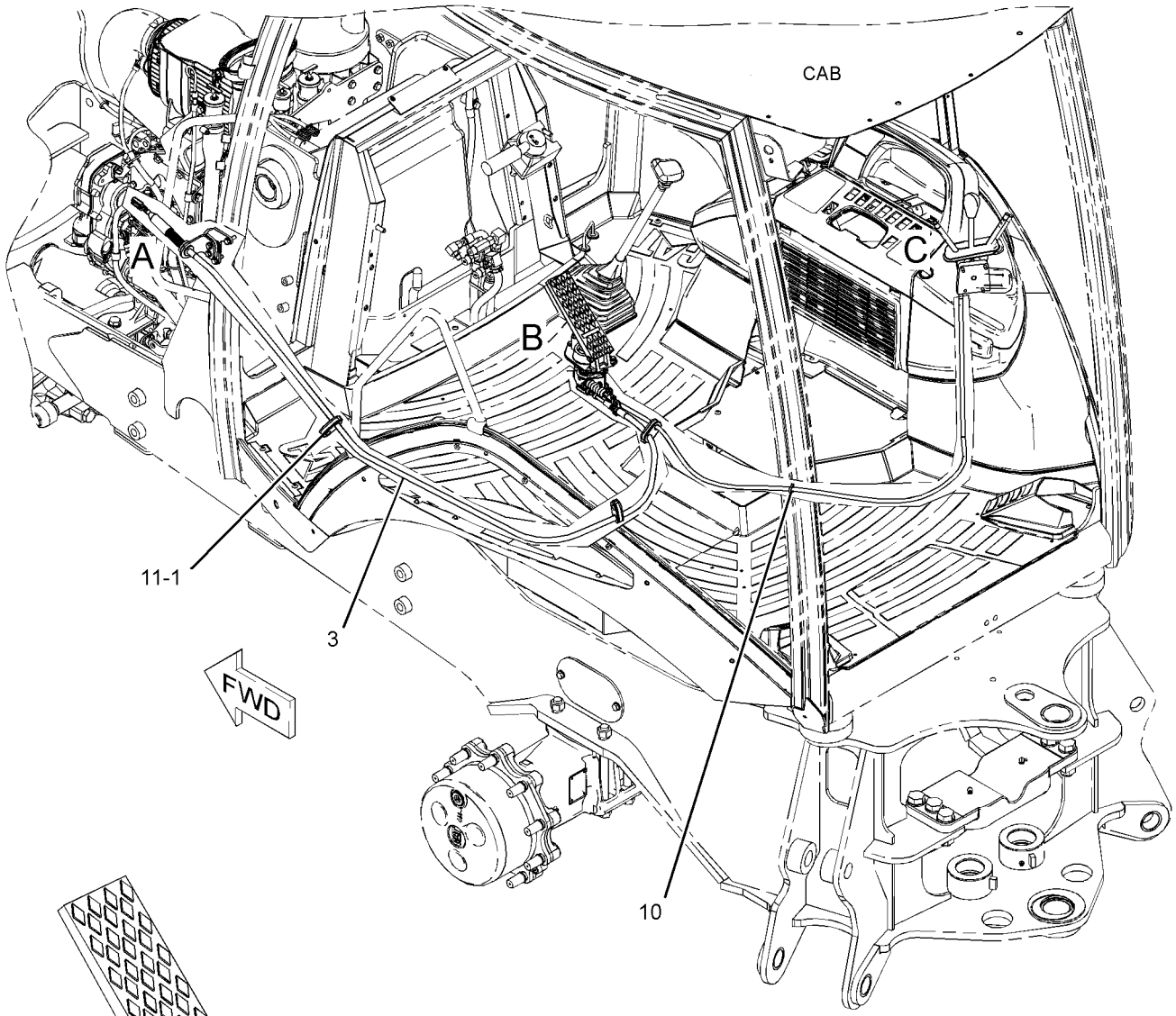

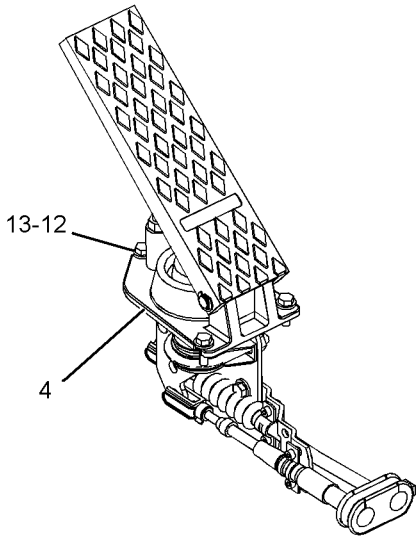

VIEW OF AREA B

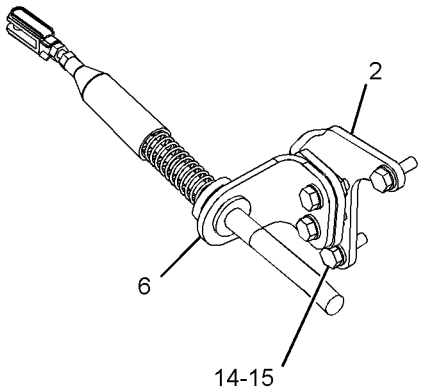

VIEW OF AREA A

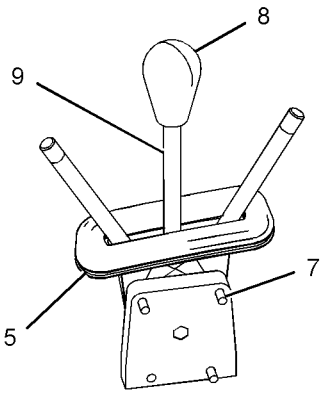

VIEW OF AREA C

GRAPHIC #1 **<END>** g01233662

251-3802 CONTROL GP-GOVERNOR

S/N: CBD1-UP; MFG1-UP
PART OF 252-4640 ENGINE AR
AN ATTACHMENT

SMCS-1265 **i02837696**

NOTE	REF NO	GRAPHIC REF	PART NUMBER	QTY	PART NAME 1 2 3 4 5 6 (PRODUCT LEVEL)	SEE PAGE
	1	1	**151-4841**	3	BLOCK	
C	2	1	**300-1702**	1	BRACKET AS	
	3	1	**235-0128**	1	CABLE AS	
Y	4	1	**243-0059**	1	PEDAL GP-GOVERNOR	1022
	5	1	**248-2707**	1	GROMMET	
	6	1	**249-0403**	1	PLATE	
M	7	1	**119-5025**	3	SCREW-FLAT HEAD (M6X1X25-MM)	
	8	1	**164-1395**	1	KNOB	
Y	9	1	**209-3367**	1	LEVER GP-GOVERNOR (HANDHELD)	1005
C	11	1	**7K-1181**	4	STRAP-CABLE	
M	12	1	**8T-4138**	3	BOLT (M6X1X20-MM)	
	13	1	**8T-4205**	3	WASHER-HARD (7.2X14.5X2-MM THK)	
	14	1	**8T-4224**	4	WASHER-HARD (8.8X16X2-MM THK)	
CM	15	1	**8T-4908**	3	BOLT (M8X1.25X25-MM)	
CM	16	1	**7X-0818**	1	BOLT (M8X1.25X45-MM)	

C-CHANGE FROM PREVIOUS TYPE
M-METRIC PART
Y-SEPARATE ILLUSTRATION

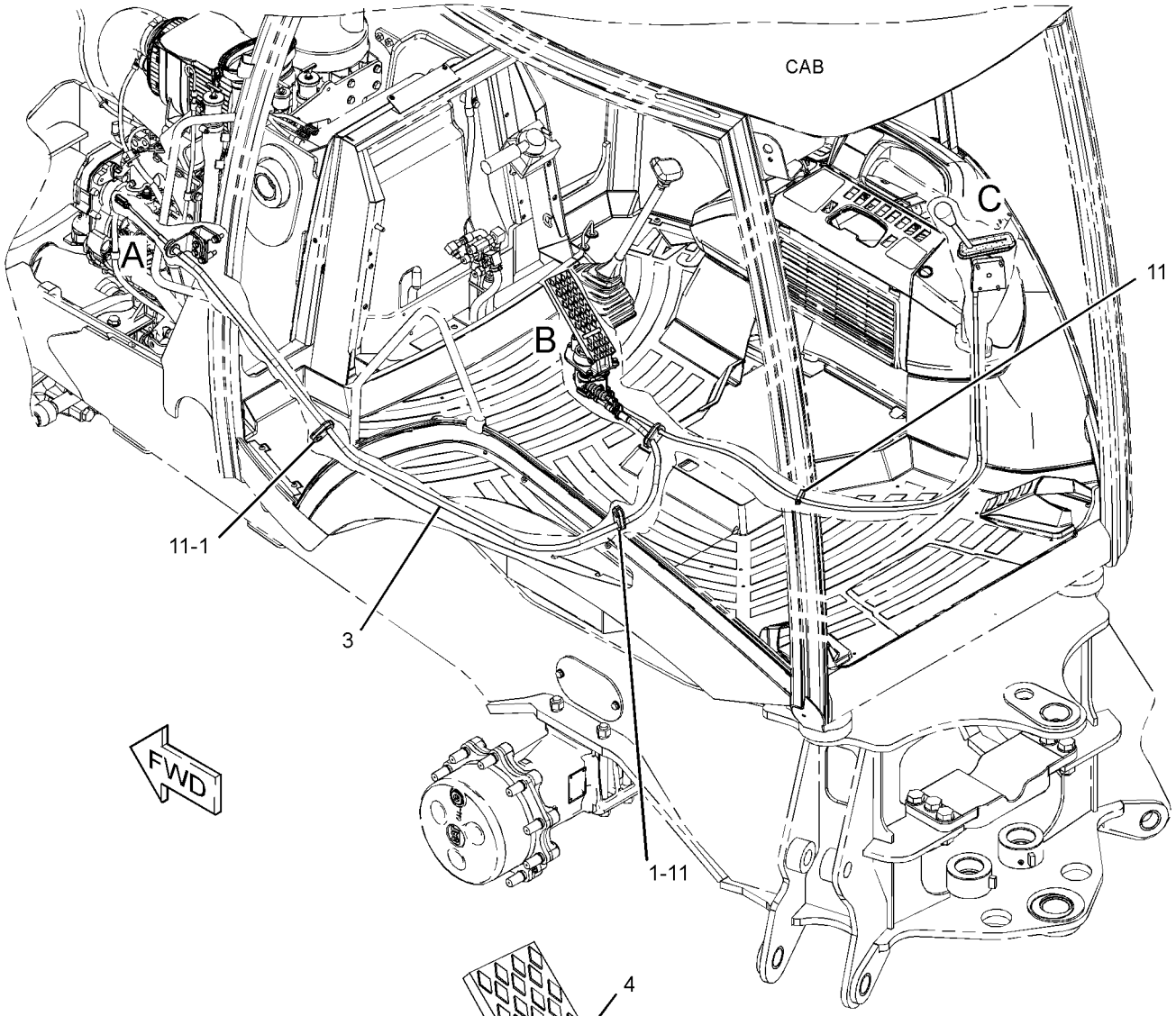

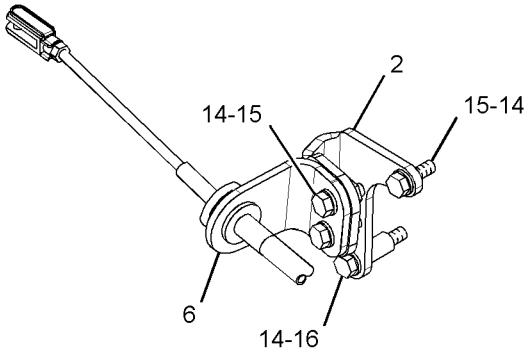

VIEW OF AREA A

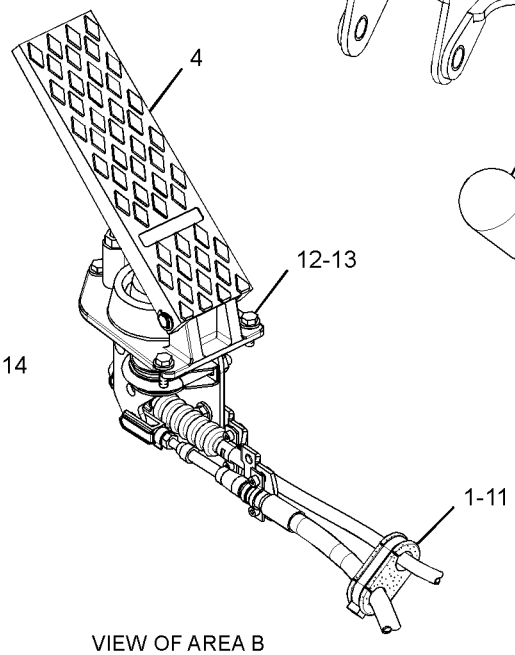

VIEW OF AREA B

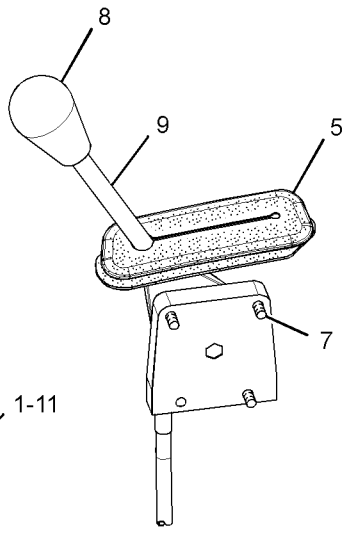

VIEW OF AREA C

GRAPHIC #1

<END>

g01341689

285-3605 FILTER GP-WATER SEP & FUEL

S/N: CBD1-UP; MFG1-UP
PART OF 252-4640, 252-4641 ENGINE AR
AN ATTACHMENT

SMCS-1261, 1263 **i02496926**

NOTE	REF NO	GRAPHIC REF	PART NUMBER	QTY	PART NAME 1 2 3 4 5 6 (PRODUCT LEVEL)	SEE PAGE
	1	1	**151-1975**	2	CONNECTOR	
	2	1	**285-5098**	1	FILTER GP-FUEL	
		1	**118-8118**	1	RING-RETAINING	
		1	**118-8119**	1	NUT	
		1	**149-3516**	1	BASE AS	
		1	**156-1200**	1	FILTER ELEMENT-FUEL (WATER SEPARATOR)	
	3	1	*169-5861*	2	PLUG AS	
					(EACH INCLUDES)	
		1	**3K-8460**	1	PLUG	
		1	**5P-7814**	1	SEAL-O-RING	
	4	1	**5P-7814**	2	SEAL-O-RING	
	5	1	**8T-4121**	2	WASHER-HARD (11X21X2.5-MM THK)	
M	6	1	**8T-4195**	2	BOLT (M10X1.5X30-MM)	

M-METRIC PART

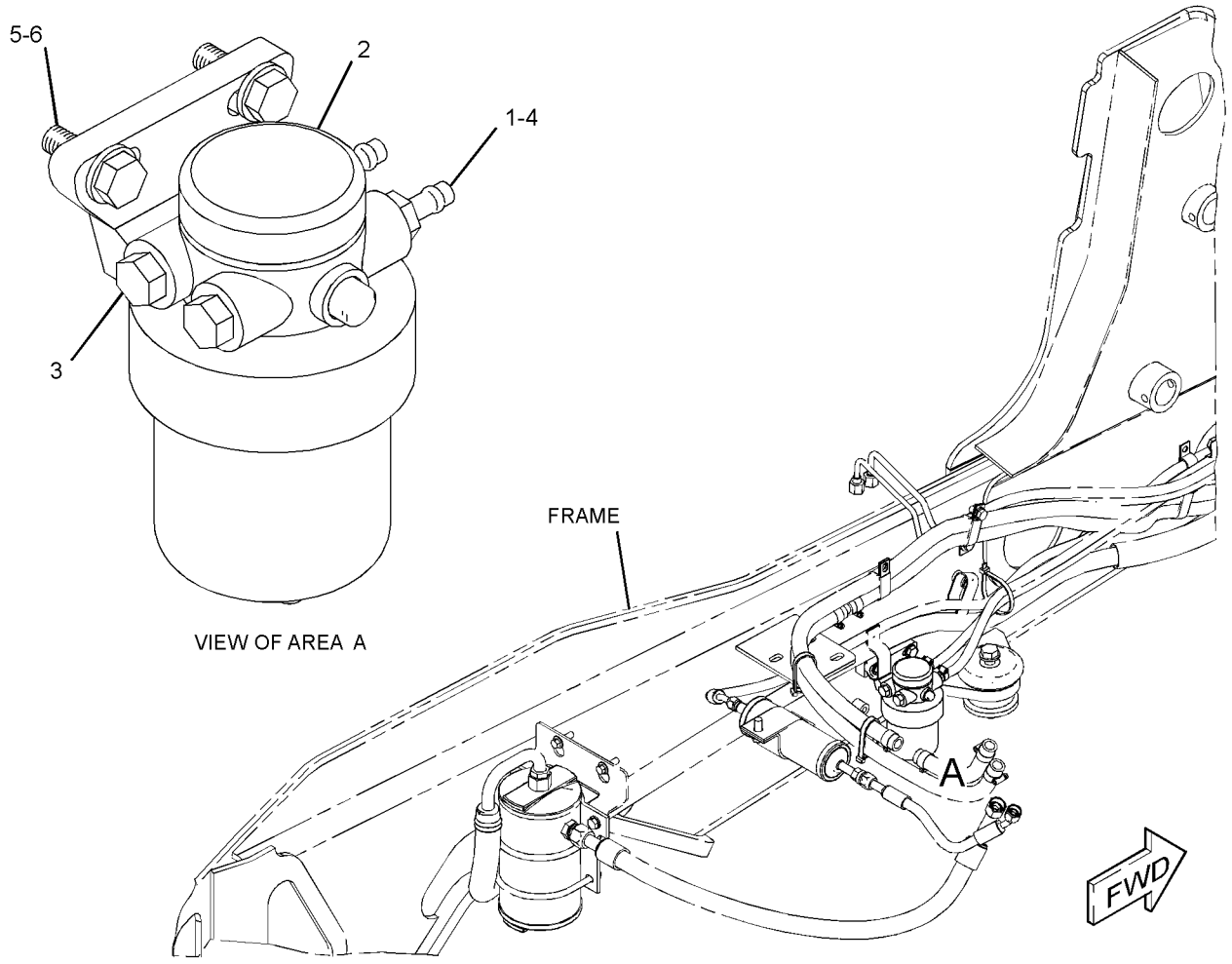

GRAPHIC #1 **<END>** g01257030

FUEL SYSTEM

247-5360 LINES GP-FUEL

S/N: CBD1-UP; MFG1-UP
PART OF 252-4640 ENGINE AR
AN ATTACHMENT

SMCS-1274 **i02532744**

NOTE	REF NO	GRAPHIC REF	PART NUMBER	QTY	PART NAME 1 2 3 4 5 6 (PRODUCT LEVEL)	SEE PAGE
	1	1	**1P-4278**	12	CLAMP-HOSE	
	2	1	**7S-1912**	2	CLIP	
	3	1	**215-9515**	1	CONNECTOR-HOSE (QUICK DISCONNECT)	
	4	1	**216-6891**	1	TUBE AS	
	5	1	**216-6892**	1	TUBE AS	
	6	1	**241-4275**	1	TEE-SPECIAL	
	7	1	**259-6918**	1	CONNECTOR-HOSE (QUICK DISCONNECT)	
	8	1	**1P-7009**	1	CLIP	
	9	1	**5P-9085**	1	CLIP	
	10	1	**7N-3718**	1	CLIP	
	11	1	**7X-7729**	1	WASHER (11X25X3-MM THK)	
M	12	1	**8T-4136**	1	BOLT (M10X1.5X25-MM)	
M	13	1	**8T-4192**	1	BOLT (M12X1.75X25-MM)	
M	14	1	**8T-4189**	1	BOLT (M8X1.25X20-MM)	
	15	1	**8T-4223**	1	WASHER-HARD (13.5X25.5X3-MM THK)	
	16	1	**8T-4224**	1	WASHER-HARD (8.8X16X2-MM THK)	
	17	1	**9M-8406**	1	CLIP	
E	18	1	**5P-1442**		HOSE (87-CM)	
E	19	1	**5P-1420**		HOSE (77-CM)	
E	20	1	**5P-1420**		HOSE (146-CM)	
E	21	1	**5P-1420**		HOSE (29-CM)	
E	22	1	**5P-1420**		HOSE (13-CM)	
	23	1	**5P-1420**		HOSE (91-CM)	
	24	1	**7K-1181**	1	STRAP-CABLE	

E-ORDER BY THE CENTIMETER
M-METRIC PART

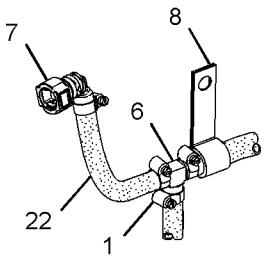

VIEW OF AREA A

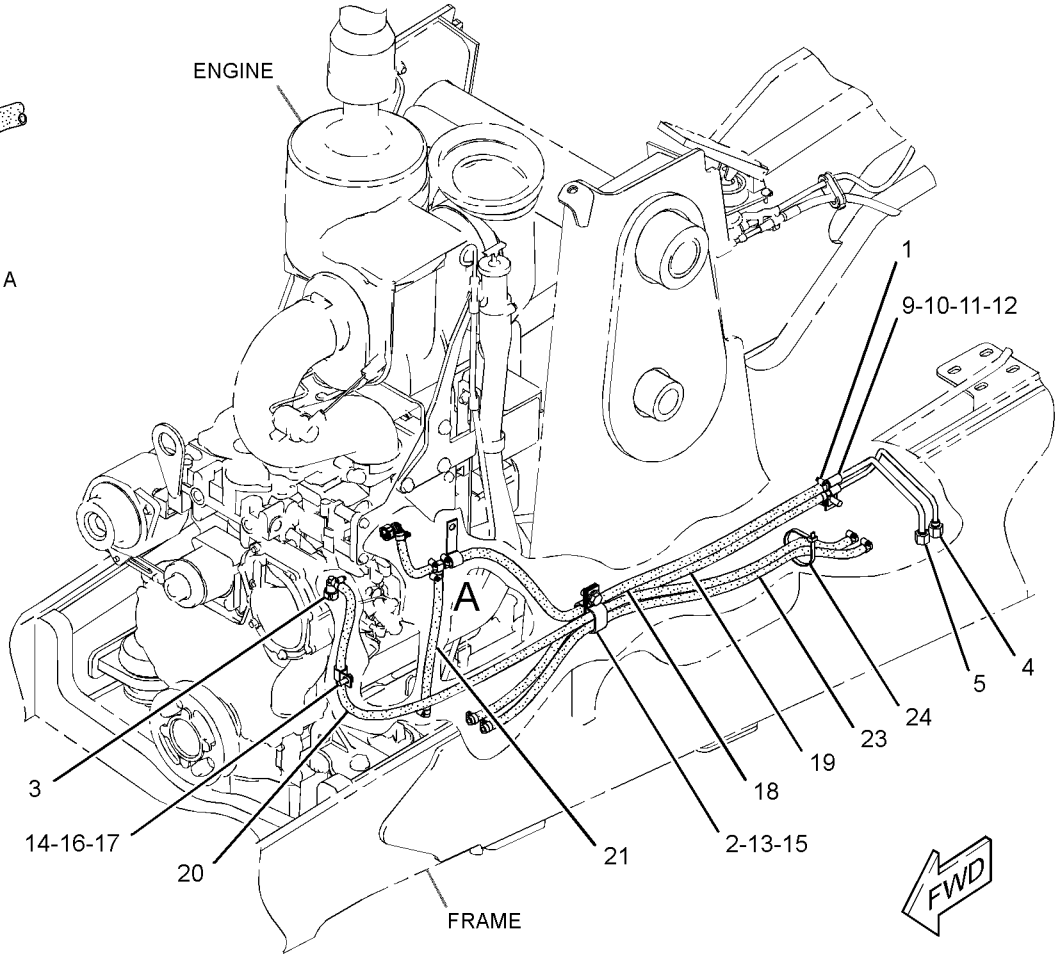

GRAPHIC #1 **<END>** g01284015

FUEL SYSTEM

247-5361 LINES GP-FUEL

S/N: CBD1-UP; MFG1-UP
PART OF 252-4641 ENGINE AR
AN ATTACHMENT

SMCS-1274 **i02888729**

NOTE	REF NO	GRAPHIC REF	PART NUMBER	QTY	PART NAME 1 2 3 4 5 6 (PRODUCT LEVEL)	SEE PAGE
	1	1	**1P-4278**	12	CLAMP-HOSE	
	2	1	**7S-1912**	2	CLIP	
	3	1	**215-9515**	1	CONNECTOR-HOSE (QUICK DISCONNECT)	
	4	1	**216-6891**	1	TUBE AS	
	5	1	**216-6892**	1	TUBE AS	
	6	1	**224-5917**	1	CONNECTOR-SPECIAL	
	7	1	**241-4275**	1	TEE-SPECIAL	
	8	1	**5P-9085**	1	CLIP	
	9	1	**6K-8178**	1	CLIP	
	10	1	**7C-4354**	1	CLIP	
	11	1	**7N-3718**	1	CLIP	
	12	1	**7X-7729**	1	WASHER (11X25X3-MM THK)	
	13	1	**8M-2773**	1	CLIP	
	14	1	**8T-4121**	2	WASHER-HARD (11X21X2.5-MM THK)	
M	15	1	**8T-4133**	1	NUT (M10X1.5-THD)	
M	16	1	**8T-4136**	2	BOLT (M10X1.5X25-MM)	
M	17	1	**8T-4192**	1	BOLT (M12X1.75X25-MM)	
M	18	1	**8T-4189**	1	BOLT (M8X1.25X20-MM)	
	19	1	**8T-4223**	1	WASHER-HARD (13.5X25.5X3-MM THK)	
	20	1	**8T-4224**	1	WASHER-HARD (8.8X16X2-MM THK)	
	21	1	**9M-8406**	1	CLIP	
E	22	1	**5P-1442**		HOSE (76-CM)	
E	23	1	**5P-1420**		HOSE (49-CM)	
E	23A	1	**5P-1420**		HOSE (12-CM)	
E	23B	1	**5P-1420**		HOSE (114-CM)	
E	23C	1	**5P-1420**		HOSE (91-CM)	
E	23D	1	**5P-1420**		HOSE (76-CM)	
	24	1	**7K-1181**	1	STRAP-CABLE	

E-ORDER BY THE CENTIMETER
M-METRIC PART

247-5361 **LINES GP-FUEL** *(contd.)* **i02888729**

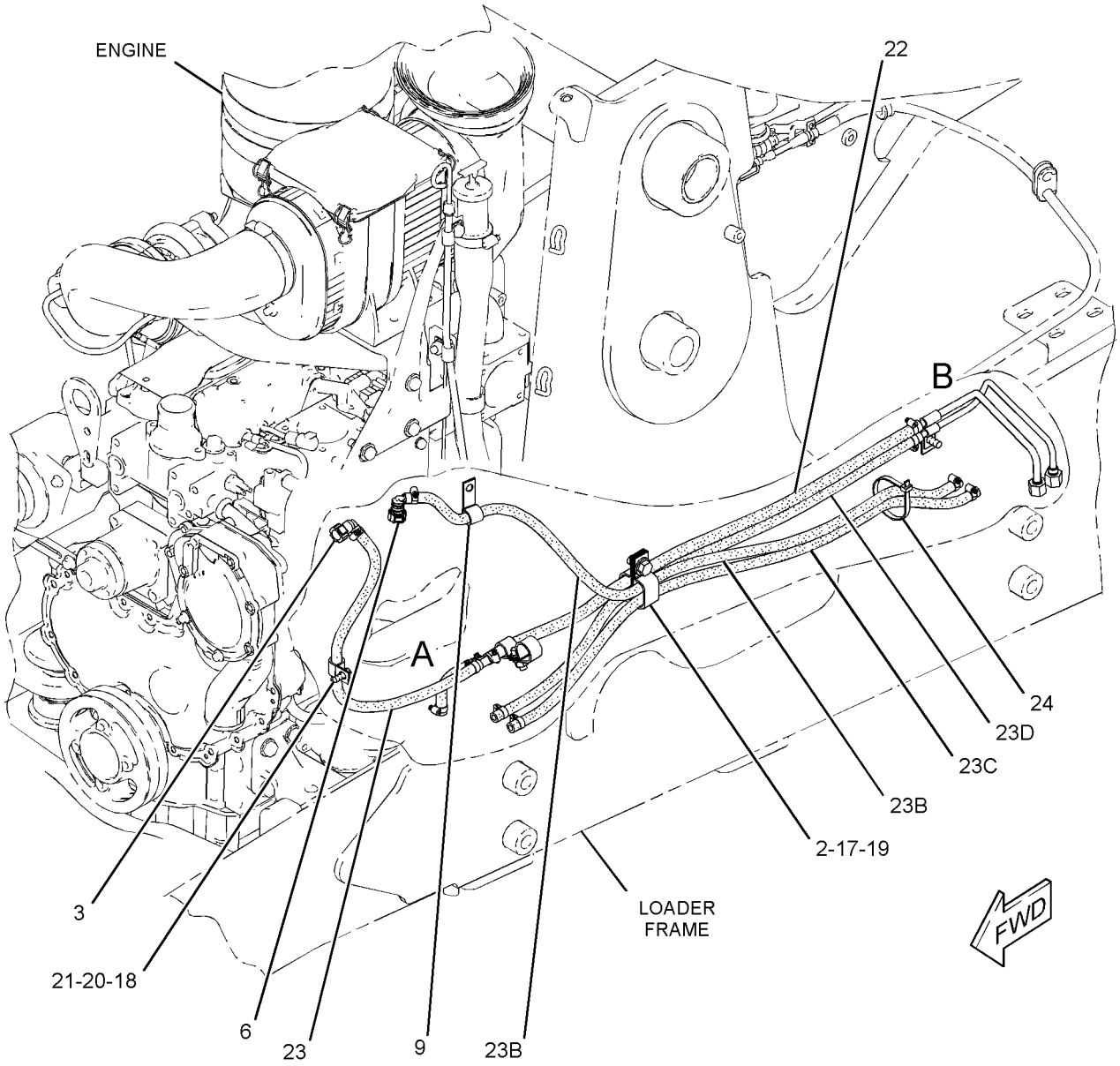

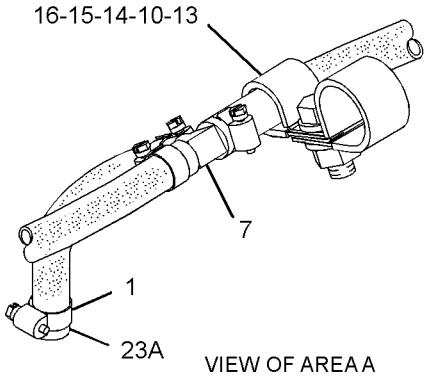

VIEW OF AREA A

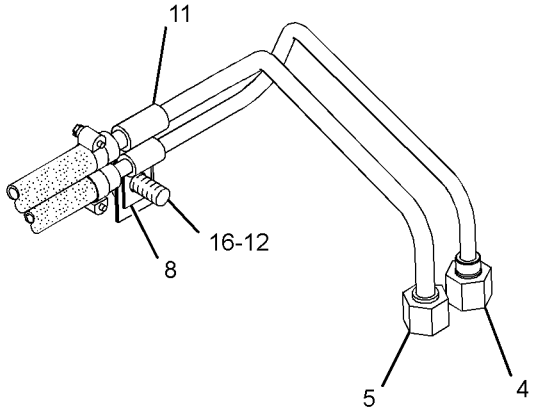

VIEW OF AREA B

GRAPHIC #1 **<END>** g01447244

267-7069 LINES GP-FUEL

S/N: G4D1-UP; CRS1-UP
PART OF 245-6841, 323-5724 ENGINE AR-PRIMARY
AN ATTACHMENT

SMCS-1274 **i02546560**

NOTE	REF NO	GRAPHIC REF	PART NUMBER	QTY	PART NAME 1 2 3 4 5 6 (PRODUCT LEVEL)	SEE PAGE
	1	1	**235-6281**	1	TIE-CABLE	
	2	1	**267-7065**	1	TUBE	

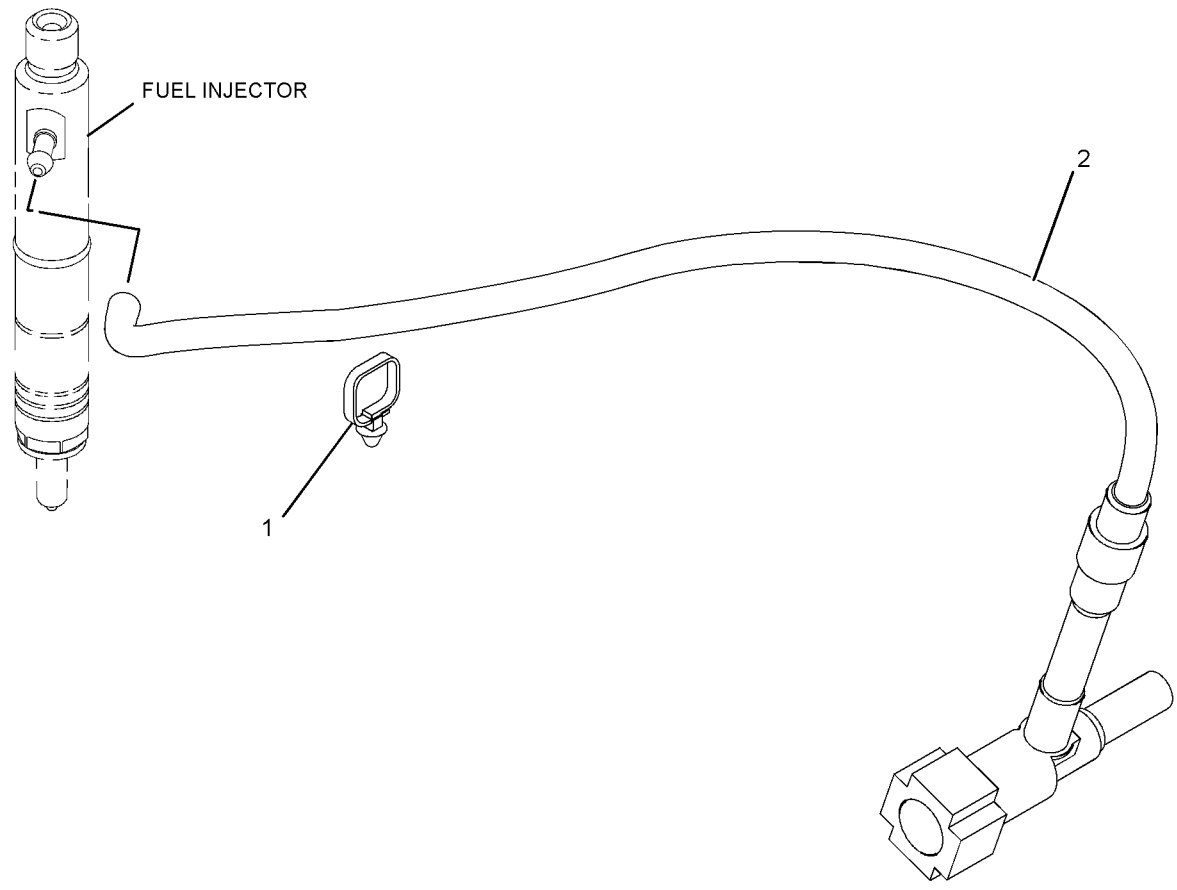

GRAPHIC #1 **<END>** g01160595

326-9012 LINES GP-FUEL

S/N: C4Z1-UP

PART OF 321-7704 ENGINE AR-PRIMARY

SMCS-1274 **i03301241**

NOTE	REF NO	GRAPHIC REF	PART NUMBER	QTY	PART NAME 1 2 3 4 5 6 (PRODUCT LEVEL)	SEE PAGE
	1	1	**8T-7876**	1	SEAL-O-RING	
	2	1	**035-8017**	1	UNION	
	3	1	**067-6264**	1	FITTING-FLARED	
	4	1	**067-6265**	1	FITTING-BRASS	
	5	1	**232-3126**	1	CLIP	
	6	1	**236-2144**	1	TUBE AS	
	6A	1	**067-6999**	1	FERRULE	
	7	1	**247-4884**	1	TUBE AS	
	8	1	**320-9213**	1	CONNECTION	

326-9012 **LINES GP-FUEL** *(contd.)* **i03301241**

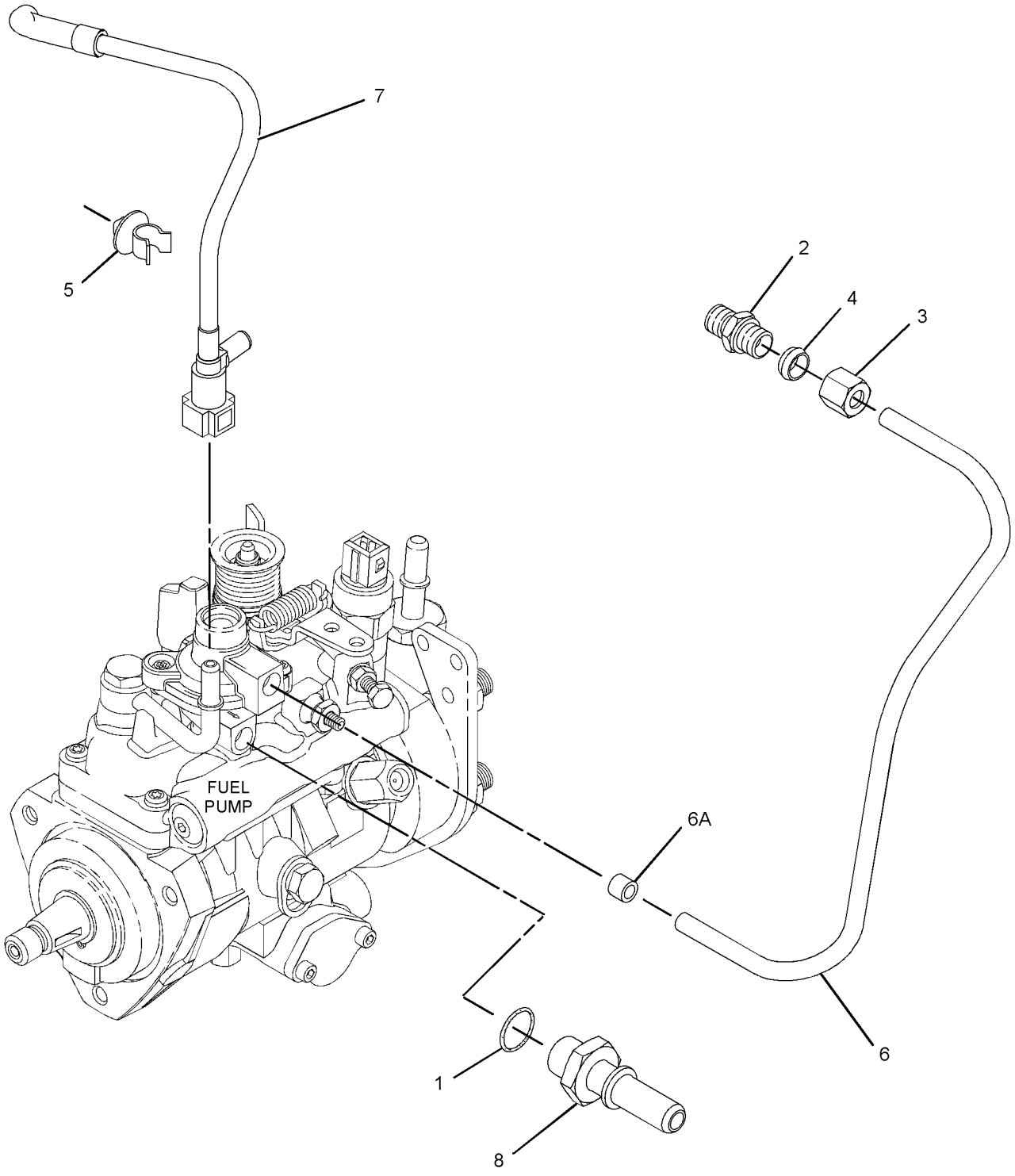

GRAPHIC #1 **<END>** g01613613

FUEL SYSTEM

361-6877 LINES GP-FUEL

S/N: MFG1-UP

PART OF 291-9188 ENGINE AR

SMCS-1274 **i04528854**

NOTE	REF NO	GRAPHIC REF	PART NUMBER	QTY	PART NAME 1 2 3 4 5 6 (PRODUCT LEVEL)	SEE PAGE
	1	1	**1P-4278**	10	CLAMP-HOSE	
	2	1	**3S-2093**	4	STRAP-CABLE	
	3	1	**6S-8620**	4	CLAMP-HOSE	
	4	1	**7K-1181**	1	STRAP-CABLE	
	5	1	**069-4080**	1	FITTING	
	6	1	**151-1975**	1	CONNECTOR	
	7	1	*165-7951*	1	CONNECTOR AS	
		1	**3J-1907**	1	SEAL-O-RING	
		1	**157-1669**	1	CONNECTOR	
	8	1	**215-9515**	2	CONNECTOR-HOSE (QUICK DISCONNECT)	
	9	1	**222-3518**	1	TEE	
	10	1	**224-5917**	1	CONNECTOR-SPECIAL	
	11	1	**241-4275**	1	TEE-SPECIAL	
	12	1	**246-2622**	1	ELBOW	
	13	1	**285-5098**	1	FILTER GP-FUEL (WATER SEPARATOR)	
		1	**118-8118**	1	RING-RETAINING	
		1	**118-8119**	1	NUT	
		1	**149-3516**	1	BASE AS	
		1	**156-1200**	1	FILTER ELEMENT-FUEL (WATER SEPARATOR)	
	14	1	**296-3744**	1	BRACKET AS	
	15	1	**297-7964**	1	CONNECTOR	
	16	1	**335-8529**	1	HOSE	
Y	17	1	**349-1063**	1	PUMP GP-FUEL PRM & PRIM FILTER (WITH WATER SEPARATOR)	217
	18	1	**5D-1026**	2	CLAMP-BAND	
	19	1	*169-5861*	2	PLUG AS	
					(EACH INCLUDES)	
		1	**3K-8460**	1	PLUG	
		1	**5P-7814**	1	SEAL-O-RING	
	20	1	*244-3712*	2	PLUG AS	
					(EACH INCLUDES)	
		1	**9S-4191**	1	PLUG-O-RING	
		1	**214-7568**	1	SEAL-O-RING	
	21	1	**3J-1907**	1	SEAL-O-RING	
	22	1	**5P-7814**	1	SEAL-O-RING	
	23	1	**6K-8178**	1	CLIP	
	24	1	**7C-4354**	2	CLIP	
	25	1	**7S-1912**	2	CLIP	
	26	1	**8M-2773**	2	CLIP	
M	27	1	**8T-1159**	2	BOLT-SOCKET HEAD (M10X1.5X25-MM)	
	28	1	**8T-4121**	9	WASHER-HARD (11X21X2.5-MM THK)	
M	29	1	**8T-4133**	1	NUT (M10X1.5-THD)	
M	30	1	**8T-4136**	2	BOLT (M10X1.5X25-MM)	
M	31	1	**8T-4179**	1	BOLT (M12X1.75X20-MM)	
M	32	1	**8T-4189**	1	BOLT (M8X1.25X20-MM)	
M	33	1	**101-7404**	4	BOLT-SOCKET HEAD (M10X1.5X30-MM)	
	34	1	**8T-4223**	1	WASHER-HARD (13.5X25.5X3-MM THK)	
	35	1	**8T-4224**	1	WASHER-HARD (8.8X16X2-MM THK)	
E	36	1	**5P-1442**		HOSE (104-CM)	
E	37	1	**5P-1505**		HOSE (132-CM)	
E	38	1	**5P-1420**		HOSE (59-CM)	
E	38A	1	**5P-1420**		HOSE (8.5-CM)	
E	38B	1	**5P-1420**		HOSE (13.5-CM)	
E	38C	1	**5P-1420**		HOSE (32-CM)	
E	38D	1	**5P-1420**		HOSE (45-CM)	
G	39	1	**160-2243**		SLEEVE-ABRASION (22.5-IN)	
G	40	1	**160-2244**		SLEEVE-ABRASION (32.3-IN)	

E-ORDER BY THE CENTIMETER
G-ORDER BY THE INCH
M-METRIC PART
Y-SEPARATE ILLUSTRATION

361-6877 **LINES GP-FUEL** *(contd.)* **i04528854**

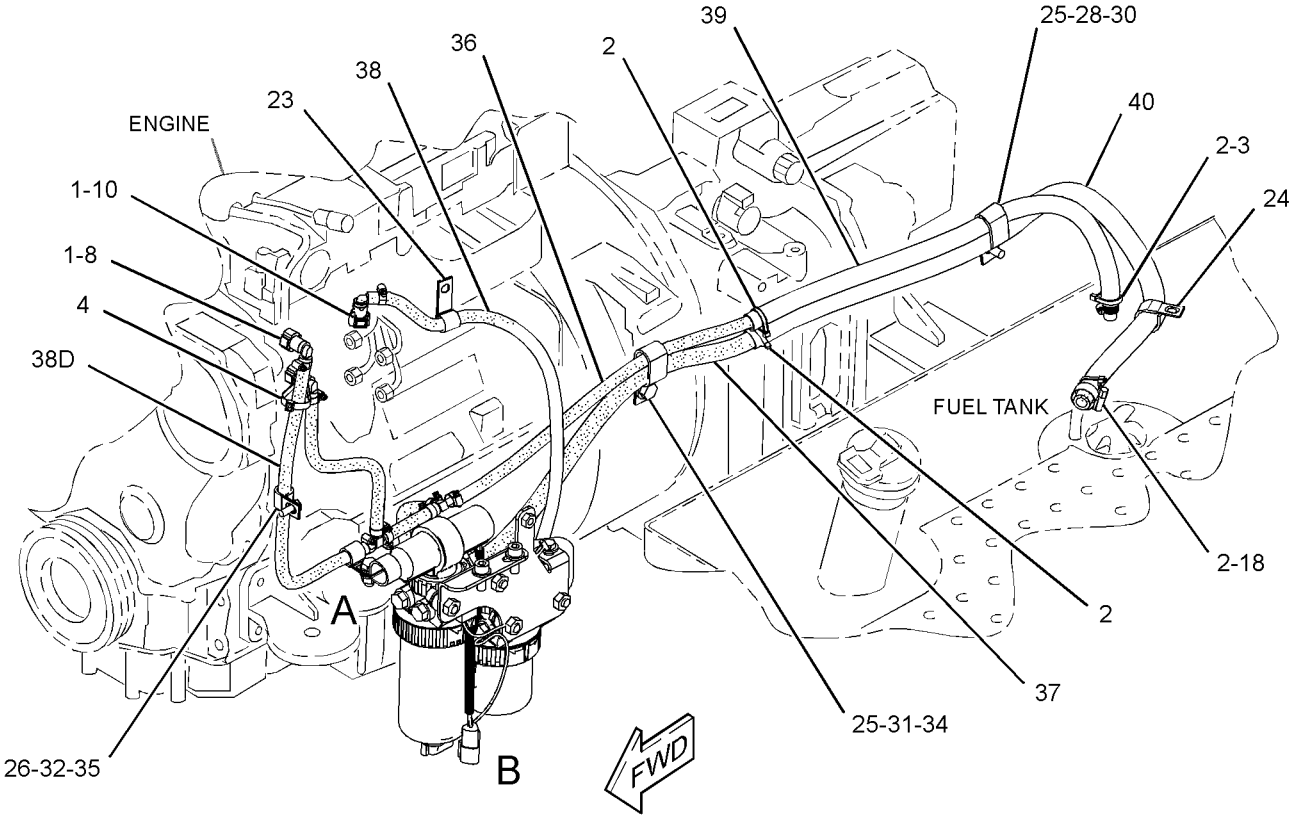

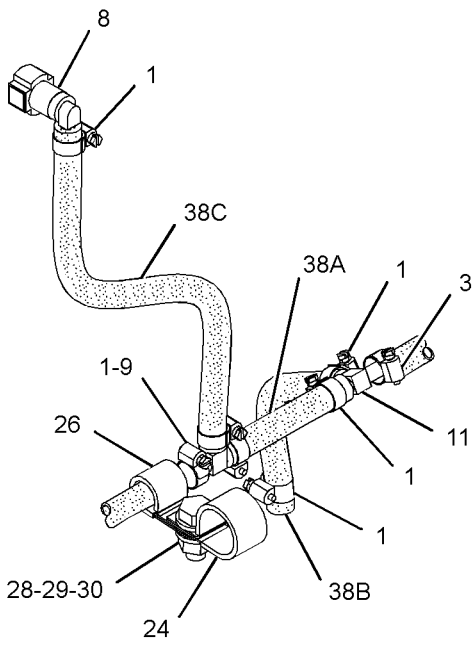

VIEW OF AREA A

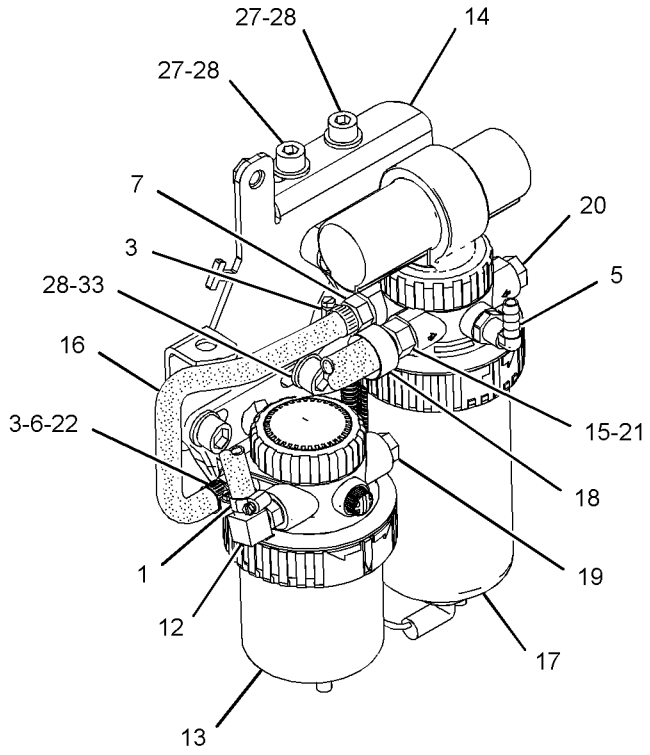

VIEW OF AREA B



GRAPHIC #1 **<END>** g02665496

247-4885 LINES GP-FUEL FILTER

S/N: G4D1-UP; CRS1-UP
PART OF 273-3610 ENGINE AR, 323-5725 ENGINE AR-PRIMARY
AN ATTACHMENT

SMCS-1261, 1274 **i02439293**

NOTE	REF NO	GRAPHIC REF	PART NUMBER	QTY	PART NAME 1 2 3 4 5 6 (PRODUCT LEVEL)	SEE PAGE
	1	1	**247-4884**	1	TUBE AS	
	2	1	**232-3126**	1	CLIP	

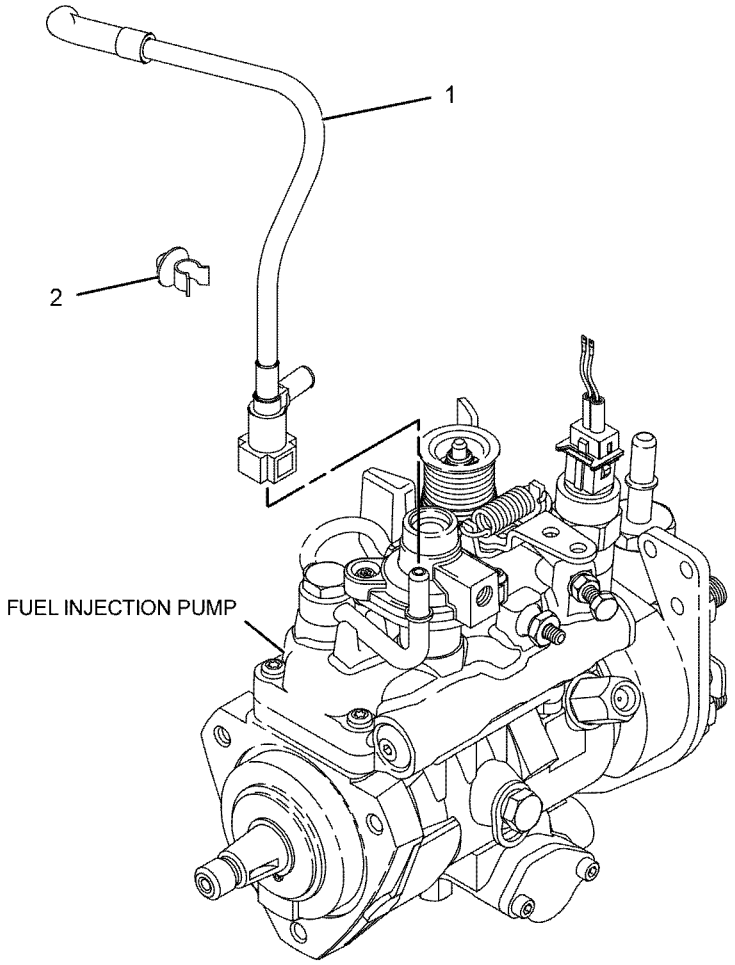

GRAPHIC #1 **<END>** g01123693

FUEL SYSTEM

313-1333 PUMP GP-FUEL INJECTION

S/N: G4D1-UP; CRS1-UP
PART OF 245-6841, 323-5724 ENGINE AR-PRIMARY
AN ATTACHMENT

SMCS-1251, 1290 **i03232727**

NOTE	REF NO	GRAPHIC REF	PART NUMBER	QTY	PART NAME 1 2 3 4 5 6 (PRODUCT LEVEL)	SEE PAGE
M	1	1	**6I-0217**	1	BOLT (M8X1.25X20-MM)	
M	2	1	**6I-0260**	3	BOLT (M8X1.25X25-MM)	
	3	1	**6I-0291**	1	NUT (M8X1.25-THD)	
M	4	1	**100-4830**	1	BOLT (M10X1.5X20-MM)	
M	5	2	**124-3815**	1	BOLT (M8X1.25X16-MM)	
	6	1	**140-8714**	1	CLIP	
	7	1	**155-8804**	1	CAP	
	8	2	**232-1323**	1	PLUG-CUP	
	9	1	**232-1328**	1	CAP (FUEL INJECTOR)	
	10	2	**232-1793**	1	CABLE	
	11	1	**232-1794**	3	HOSE	
	12	1	**232-2720**	1	TUBE AS (CYL NO. 1)	
	13	1	**232-2721**	1	TUBE AS (CYL NO. 2)	
	14	1	**232-2722**	1	TUBE AS (CYL NO. 3)	
	15	1	**232-2723**	1	TUBE AS (CYL NO. 4)	
	16	1	**232-2725**	2	CLIP	
	17	1	**232-2726**	1	CLIP	
	18	1	**232-3149**	3	WASHER (8.35X16.85X1.55-MM THK)	
	19	1	**232-3157**	1	BRACKET	
	20	1	**232-3274**	4	BOLT (M8X1.25X48.1-MM)	
	21	1	**233-7104**	1	GEAR-PUMP (FUEL)	
	22	2	**235-1790**	1	SWITCH-TEMPERATURE (FUEL)	
	23	1	**238-8671**	4	CLAMP-INJECTOR	
	24	2	**240-5571**	1	BRACKET	
	25	1	**266-3712**	1	PUMP GP-FUEL INJECTION	
		1	**208-5029**		VALVE GP-SOLENOID (12-VOLT)	
	26	1	**266-6830**	4	INJECTOR AS-FUEL	
					(EACH INCLUDES)	
	26A	1	**140-8718**	1	WASHER	
	26B	1	**234-0387**	1	NOZZLE	
	26C	1	**275-1038**	1	SEAL-O-RING	
	27	1	**332-7549**	1	SEAL-O-RING	

M-METRIC PART

313-1333 **PUMP GP-FUEL INJECTION** *(contd.)* **i03232727**

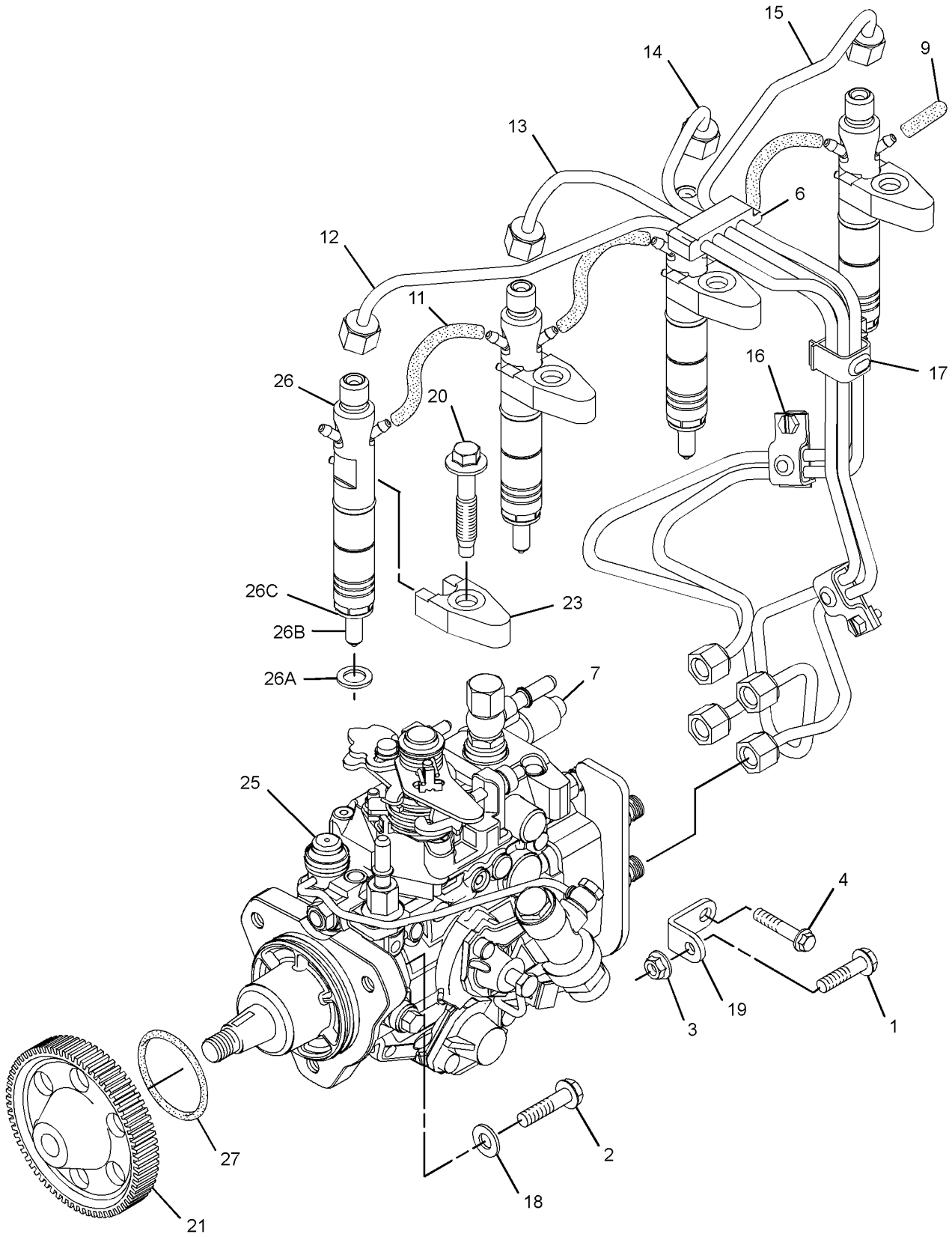

GRAPHIC #1 g01830675

313-1333 **PUMP GP-FUEL INJECTION** *(contd.)* **i03232727**

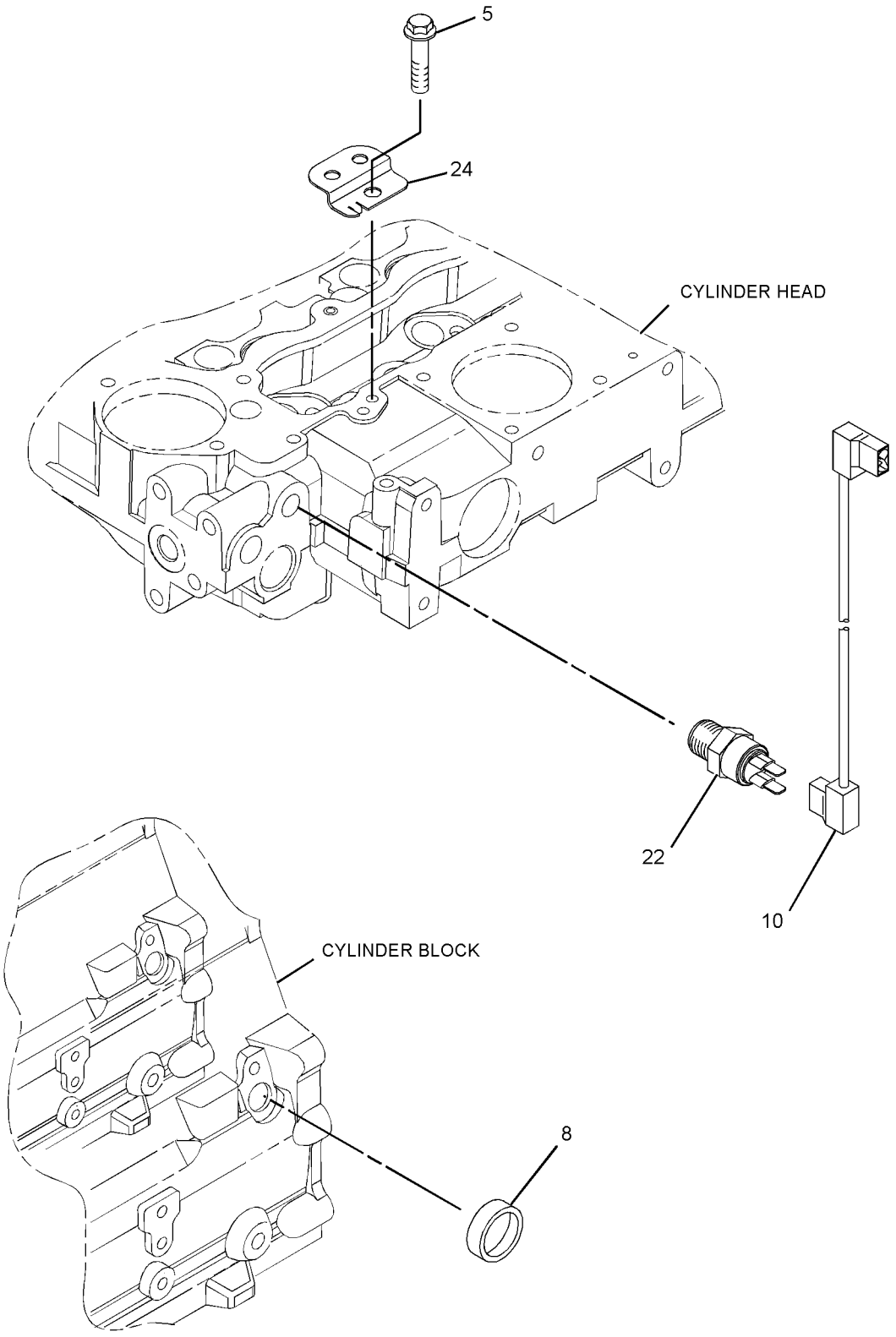

GRAPHIC #2 **<END>** g01830676

313-1375 PUMP GP-FUEL INJECTION

S/N: G4D1-UP; CRS1-UP
PART OF 273-3610 ENGINE AR, 323-5725 ENGINE AR-PRIMARY
AN ATTACHMENT

SMCS-1251, 1290 **i03258382**

NOTE	REF NO	GRAPHIC REF	PART NUMBER	QTY	PART NAME 1 2 3 4 5 6 (PRODUCT LEVEL)	SEE PAGE
M	1	1	**6I-0217**	1	BOLT (M8X1.25X20-MM)	
M	2	1	**6I-0260**	3	BOLT (M8X1.25X25-MM)	
	3	1	**6I-0291**	1	NUT (M8X1.25-THD)	
M	4	1	**100-4830**	1	BOLT (M10X1.5X20-MM)	
M	5	1	**124-3815**	1	BOLT (M8X1.25X16-MM)	
	6	1	**140-8714**	1	CLIP	
	7	1	**230-8989**	1	GEAR-FUEL PUMP (68-TEETH)	
	8	1	**230-8995**	1	TUBE AS (CYL NO. 1)	
	9	1	**230-8996**	1	TUBE AS (CYL NO. 2)	
	10	1	**230-8997**	1	TUBE AS (CYL NO. 3)	
	11	1	**230-8998**	1	TUBE AS (CYL NO. 4)	
	12	2	**232-1323**	1	PLUG-CUP	
	13	1	**232-1328**	1	CAP	
	14	2	**232-1793**	1	CABLE	
	15	1	**232-1794**	3	HOSE	
	16	1	**232-2725**	2	CLIP	
	17	1	**232-2726**	1	CLIP	
	18	1	**232-3149**	3	WASHER (8.35X16.85X1.55-MM THK)	
	19	1	**232-3157**	1	BRACKET	
	20	1	**232-3274**	4	BOLT (M8X1.25X48.1-MM)	
	21	2	**235-1790**	1	SWITCH-TEMPERATURE (FUEL)	
	22	1	**236-1674**	4	INJECTOR AS-FUEL	
					(EACH INCLUDES)	
		1	**236-1673**	1	NOZZLE	
		1	**275-1038**	1	SEAL-O-RING	
	22A	1	**140-8718**	1	WASHER	
	23	1	**238-8671**	4	CLAMP-INJECTOR	
	24	1	**240-5571**	1	BRACKET	
	25	1	**274-4962**	1	PUMP GP-FUEL INJECTION	
		1	**9F-2247**	1	PLUG-PIPE	

M-METRIC PART

313-1375 **PUMP GP-FUEL INJECTION** *(contd.)* **i03258382**

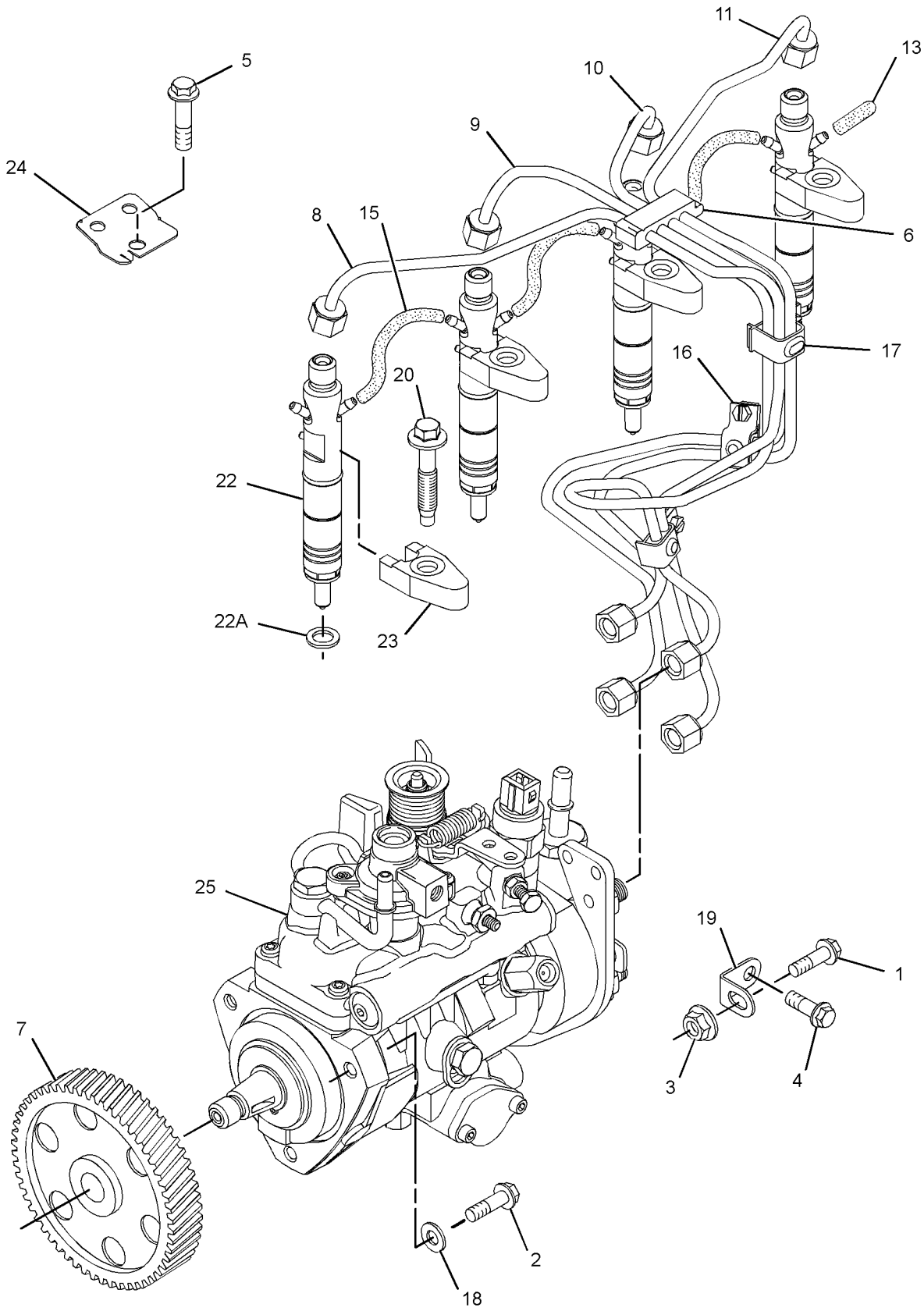

GRAPHIC #1 g01394437

313-1375 **PUMP GP-FUEL INJECTION** *(contd.)* **i03258382**

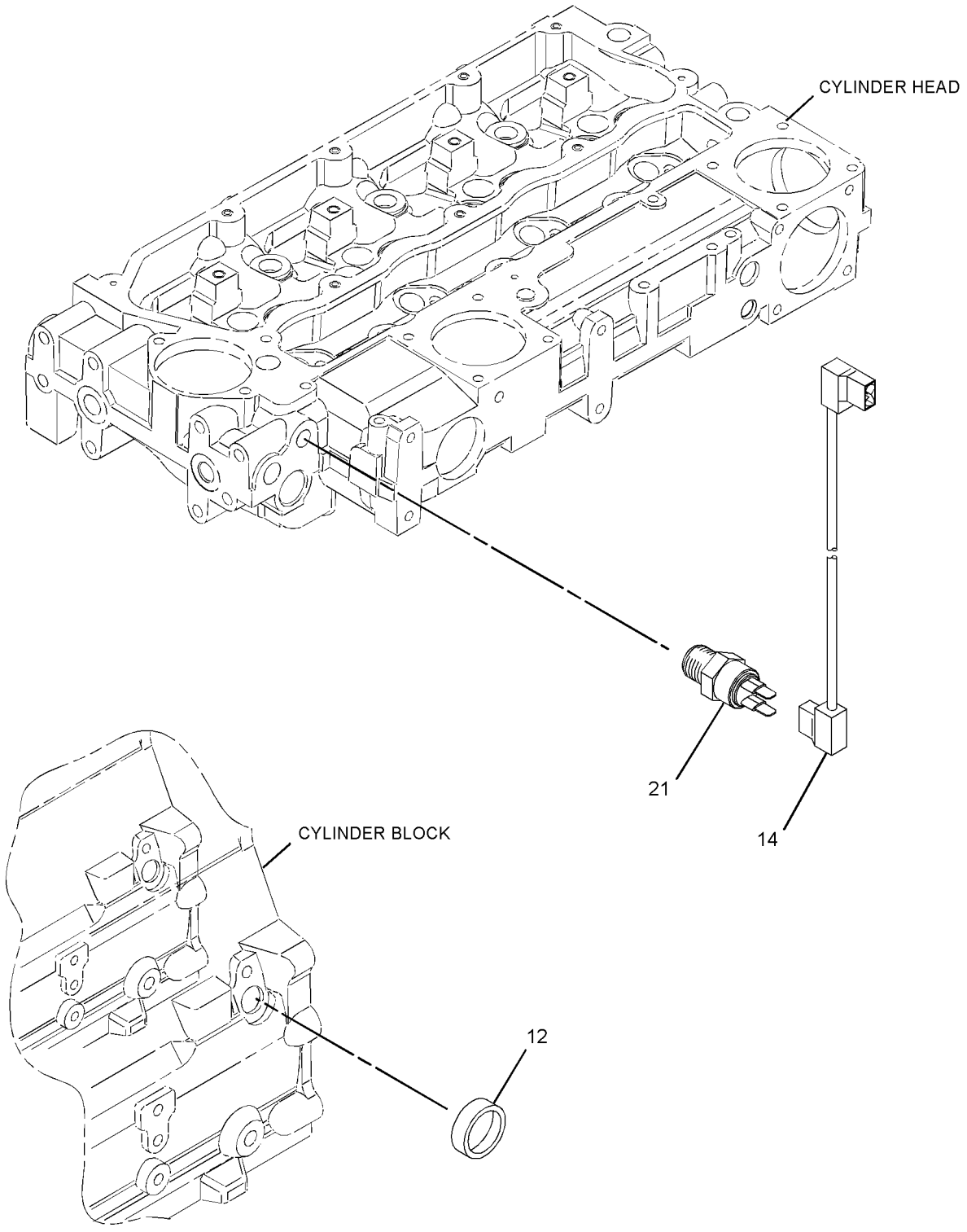

GRAPHIC #2 **<END>** g01394438

326-8993 PUMP GP-FUEL INJECTION

S/N: C4Z1-UP

PART OF 326-9006 PUMP GP-FUEL INJECTION

SMCS-1251, 1290 **i04536108**

NOTE	REF NO	GRAPHIC REF	PART NUMBER	QTY	PART NAME 1 2 3 4 5 6 (PRODUCT LEVEL)	SEE PAGE
	1	1	**111-3422**	1	NUT	
	2	1	**111-3423**	1	WASHER	
	3	1	**152-3968**	1	SEAL-O-RING	
	4	1	**176-6219**	1	VALVE GP-SOLENOID (12-VOLT)	

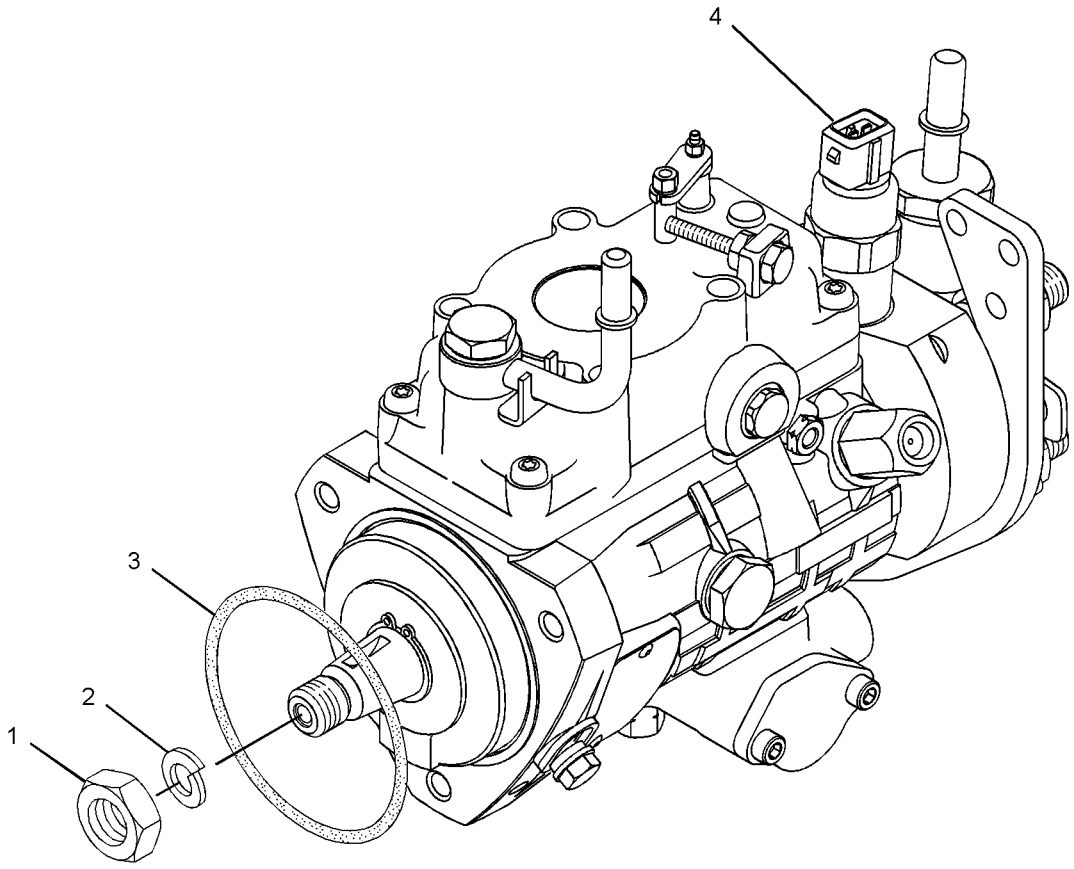

GRAPHIC #1 **<END>** g01615399

326-9006 PUMP GP-FUEL INJECTION

S/N: C4Z1-UP

PART OF 321-7704 ENGINE AR-PRIMARY

SMCS-1251, 1290 **i04132039**

NOTE	REF NO	GRAPHIC REF	PART NUMBER	QTY	PART NAME 1 2 3 4 5 6 (PRODUCT LEVEL)	SEE PAGE
M	1	1	**6I-0217**	1	BOLT (M8X1.25X20-MM)	
M	2	1	**6I-0260**	3	BOLT (M8X1.25X25-MM)	
	3	1	**6I-0291**	1	NUT (M8X1.25-THD)	
M	4	1	**100-4830**	1	BOLT (M10X1.5X20-MM)	
M	5	1	**124-3815**	1	BOLT (M8X1.25X16-MM)	
	6	1	**140-8714**	1	CLIP	
	7	2	**169-5326**	1	SWITCH-TEMPERATURE (FUEL)	
	8	1	**230-8989**	1	GEAR-FUEL PUMP (68-TEETH)	
	9	1	**230-8995**	1	TUBE AS (CYL NO. 1)	
	10	1	**230-8996**	1	TUBE AS (CYL NO. 2)	
	11	1	**230-8997**	1	TUBE AS (CYL NO. 3)	
	12	1	**230-8998**	1	TUBE AS (CYL NO. 4)	
	13	2	**232-1323**	1	PLUG-CUP	
	14	1	**232-1328**	1	CAP	
	15	2	**232-1793**	1	CABLE	
	16	1	**232-1794**	3	HOSE	
	17	1	**232-2725**	2	CLIP	
	18	1	**232-2726**	1	CLIP	
	19	1	**232-3126**	1	CLIP	
	20	1	**232-3149**	3	WASHER (8.35X16.85X1.55-MM THK)	
	21	1	**232-3157**	1	BRACKET	
	22	1	**232-3274**	4	BOLT (M8X1.25X48.1-MM)	
	23	1	**238-8671**	4	CLAMP-INJECTOR	
	24	1	**240-5571**	1	BRACKET	
	25	1	**315-3381**	4	ATOMIZER AS	
					(EACH INCLUDES)	
	25A	1	**140-8718**	1	WASHER	
	25B	1	**275-1038**	1	SEAL-O-RING	
Y	26	1	**326-8993**	1	PUMP GP-FUEL INJECTION	210

M-METRIC PART
Y-SEPARATE ILLUSTRATION

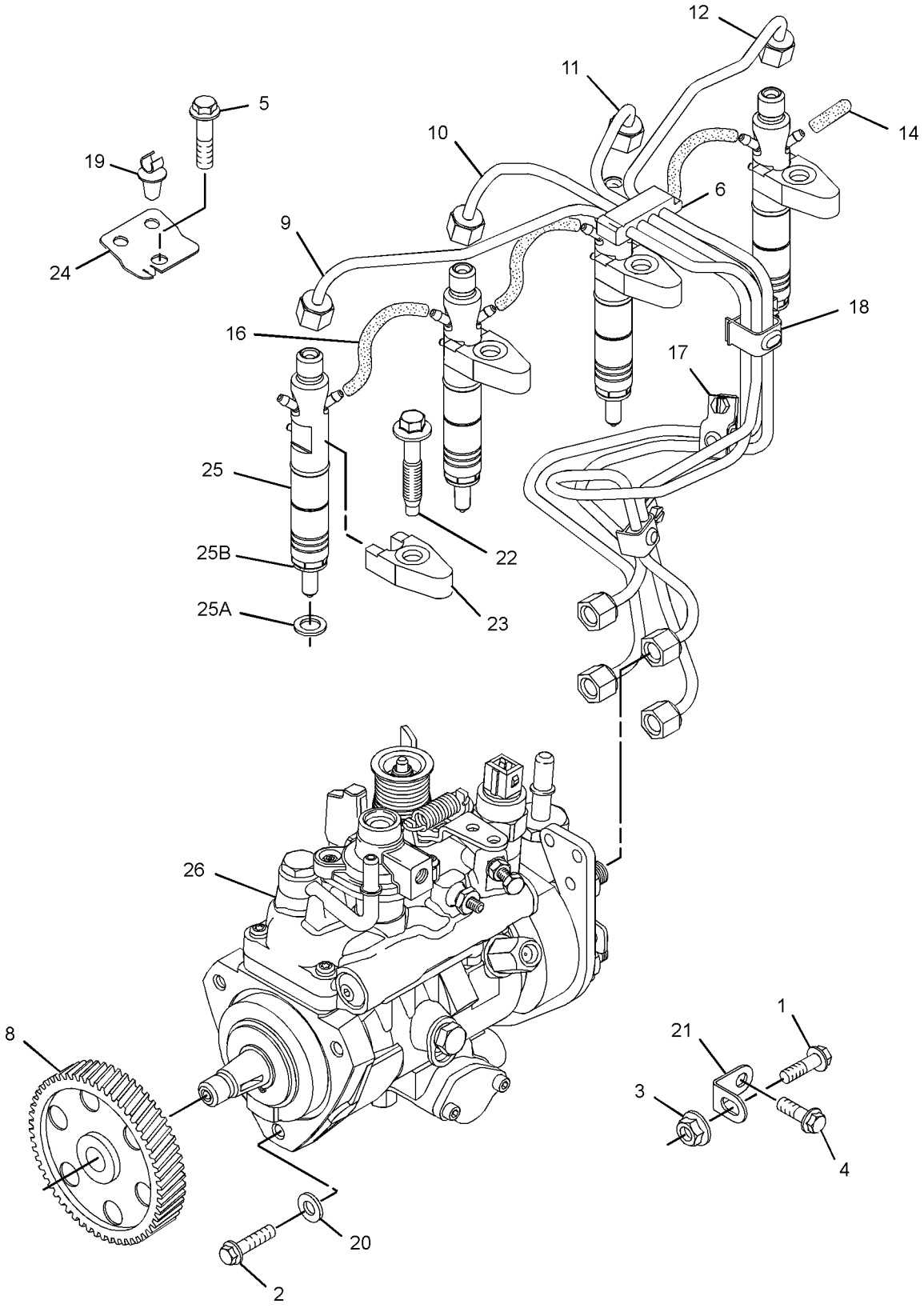

GRAPHIC #1 g01613834

326-9006 **PUMP GP-FUEL INJECTION** *(contd.)* **i04132039**

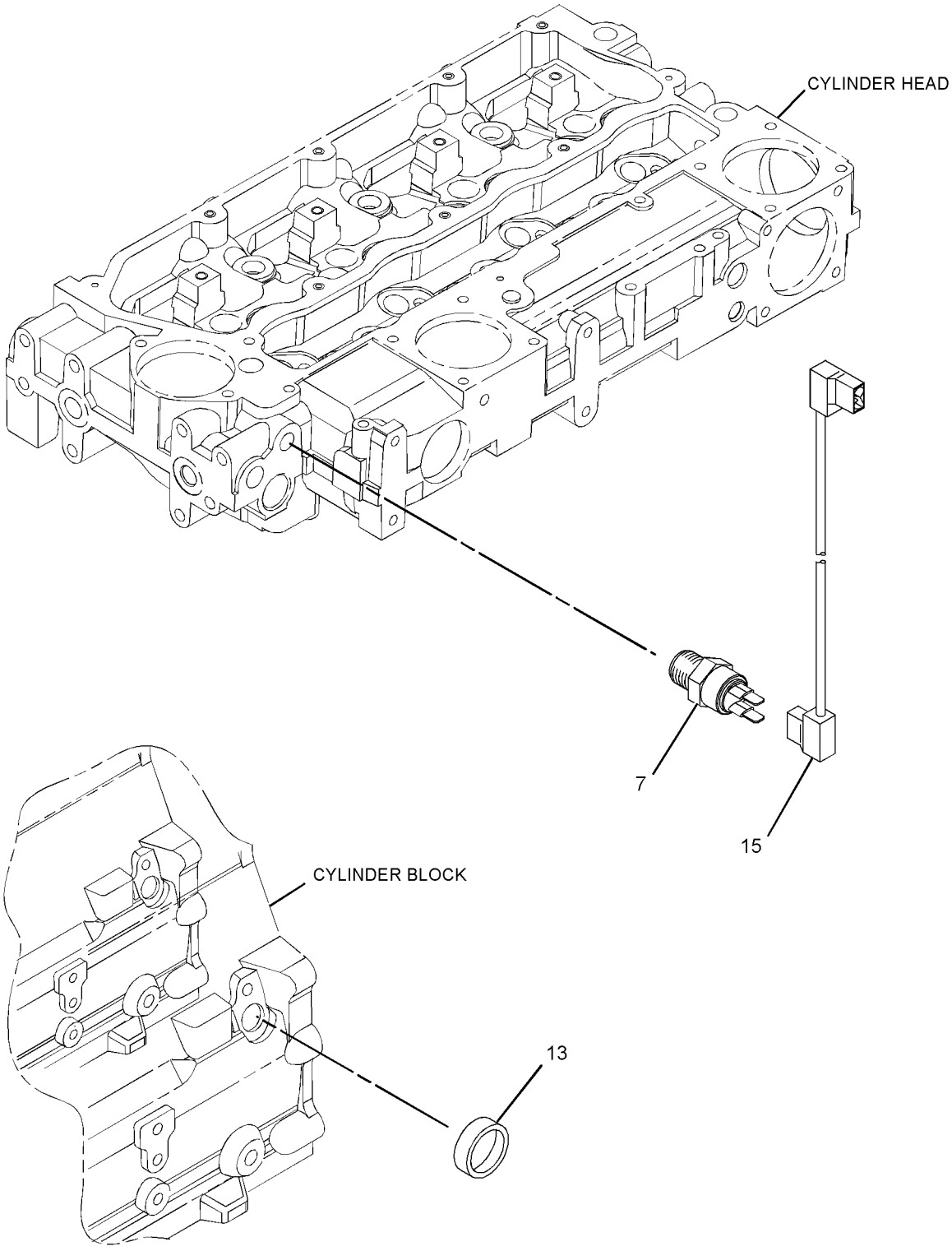

GRAPHIC #2 **<END>** g01611701

228-9129 PUMP GP-FUEL PRM & PRIM FILTER–
WITH WATER SEPARATOR
S/N: CBD1-7445
PART OF 253-0352 PUMP GP-FUEL PRM & PRIM FILTER
AN ATTACHMENT

SMCS-1258, 1260, 1261 **i03465822**

NOTE	REF NO	GRAPHIC REF	PART NUMBER	QTY	PART NAME 1 2 3 4 5 6 (PRODUCT LEVEL)	SEE PAGE
	1	1	**118-8118**	1	RING-RETAINING	
	2	1	**228-9130**	1	FILTER AS-WATER SEP & FUEL	
	3	1	**228-9132**	1	FITTING (FUEL PUMP)	
	4	1	**193-0618**	1	SENSOR GP-MOISTURE (WATER SEPARATOR)	
	5	1	**149-9954**	1	DRAIN AS	

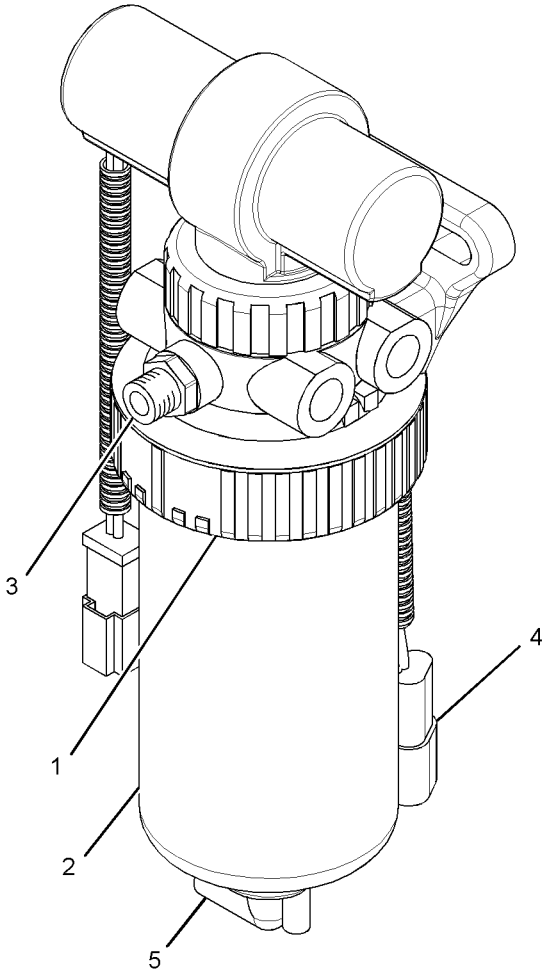

GRAPHIC #1 **<END>** g01846221

253-0352 PUMP GP-FUEL PRM & PRIM FILTER–

WITH MOUNTING

S/N: CBD1-7445

PART OF 252-4640, 252-4641 ENGINE AR

AN ATTACHMENT

SMCS-1258, 1260, 1261 **i04389635**

NOTE	REF NO	GRAPHIC REF	PART NUMBER	QTY	PART NAME 1 2 3 4 5 6 (PRODUCT LEVEL)	SEE PAGE
	1	1	**3S-2093**	2	STRAP-CABLE	
	2	1	**069-4080**	1	FITTING	
	3	1	*165-7951*	2	CONNECTOR AS	
					(EACH INCLUDES)	
		1	**3J-1907**	1	SEAL-O-RING	
		1	**157-1669**	1	CONNECTOR	
Y	4	1	**228-9129**	1	PUMP GP-FUEL PRM & PRIM FILTER (WITH WATER SEPARATOR)	214
	5	1	**253-0354**	1	BRACKET AS	
	6	1	**3J-1907**	2	SEAL-O-RING	
	7	1	**8T-4121**	4	WASHER-HARD (11X21X2.5-MM THK)	
M	8	1	**8T-4195**	2	BOLT (M10X1.5X30-MM)	
M	9	1	**8T-8894**	2	BOLT-SOCKET HEAD (M10X1.5X20-MM)	
	10	1	**9S-4191**	2	PLUG-O-RING	

M-METRIC PART
Y-SEPARATE ILLUSTRATION

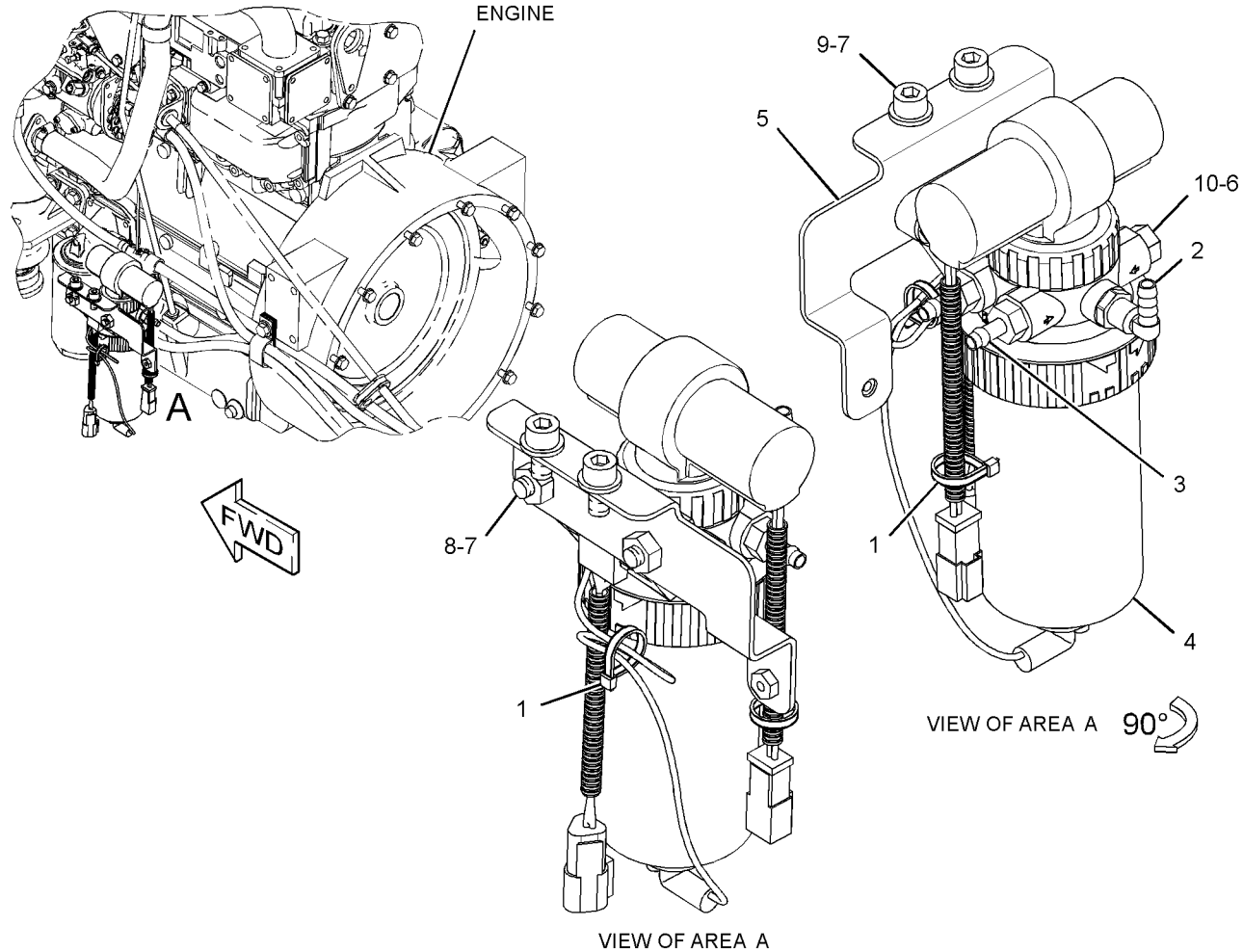

GRAPHIC #1 **<END>** g01662794

253-0352 PUMP GP-FUEL PRM & PRIM FILTER–

WITH MOUNTING

S/N: CBD7446-UP; MFG1-UP

PART OF 252-4640, 252-4641 ENGINE AR

AN ATTACHMENT

SMCS-1258, 1260, 1261 **i04389623**

NOTE	REF NO	GRAPHIC REF	PART NUMBER	QTY	PART NAME 1 2 3 4 5 6 (PRODUCT LEVEL)	SEE PAGE
	1	1	**3S-2093**	2	STRAP-CABLE	
	2	1	**069-4080**	1	FITTING	
	3	1	*165-7951*	2	CONNECTOR AS	
					(EACH INCLUDES)	
		1	**3J-1907**	1	SEAL-O-RING	
		1	**157-1669**	1	CONNECTOR	
CY	4	1	**349-1063**	1	PUMP GP-FUEL PRM & PRIM FILTER (WITH WATER SEPARATOR)	217
	5	1	**253-0354**	1	BRACKET AS	
	6	1	**3J-1907**	2	SEAL-O-RING	
	7	1	**8T-4121**	4	WASHER-HARD (11X21X2.5-MM THK)	
M	8	1	**8T-4195**	2	BOLT (M10X1.5X30-MM)	
M	9	1	**8T-8894**	2	BOLT-SOCKET HEAD (M10X1.5X20-MM)	
	10	1	**9S-4191**	2	PLUG-O-RING	

C-CHANGE FROM PREVIOUS TYPE
M-METRIC PART
Y-SEPARATE ILLUSTRATION

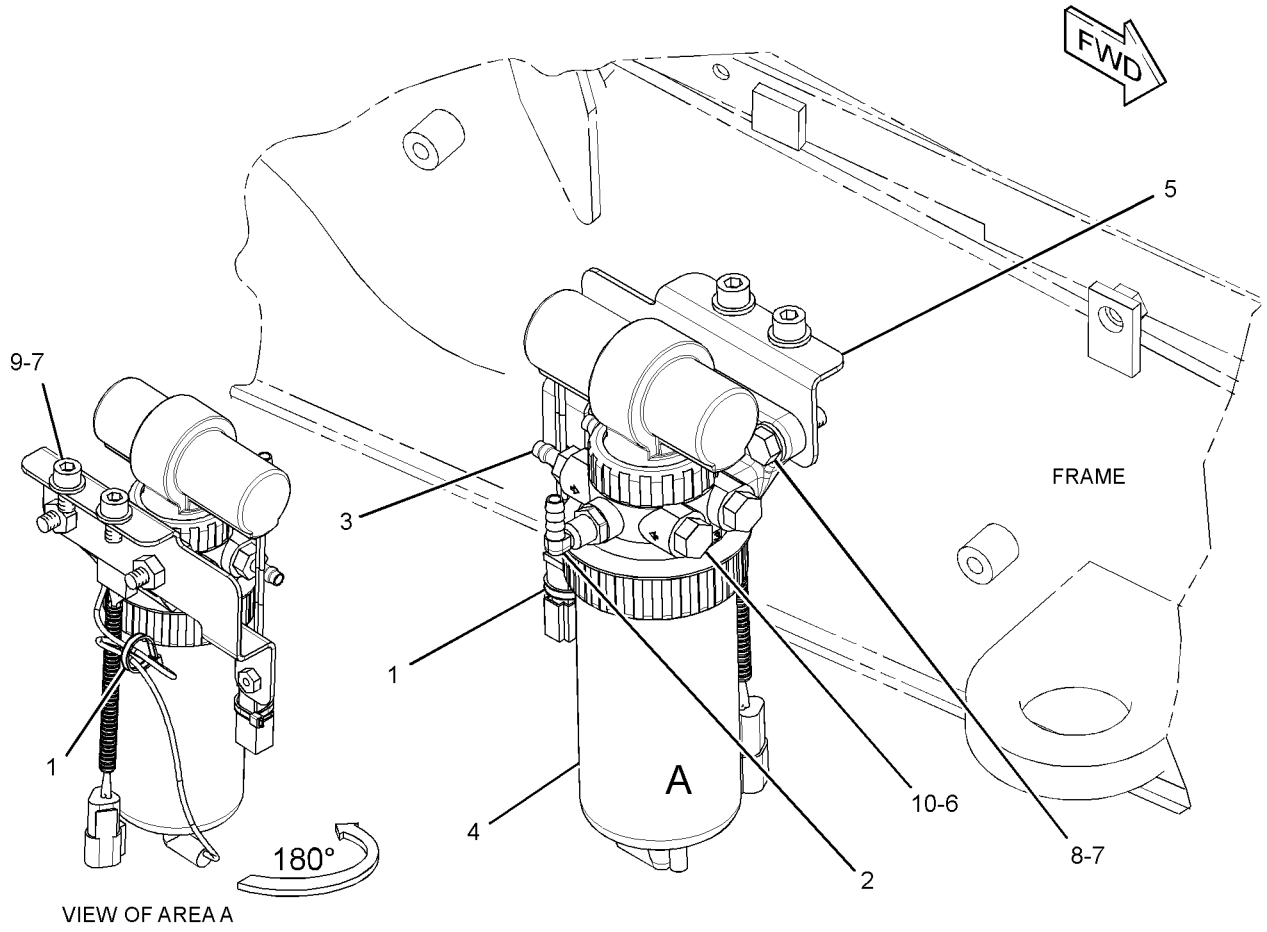

GRAPHIC #1 **<END>** g01852116

349-1063 PUMP GP-FUEL PRM & PRIM FILTER–
WITH WATER SEPARATOR
S/N: CBD7446-UP; MFG1-UP
PART OF 361-6877 LINES GP-FUEL, 253-0352 PUMP GP-FUEL PRM & PRIM FILTER
ALSO AN ATTACHMENT

SMCS-1258, 1260, 1261 **i04127950**

NOTE	REF NO	GRAPHIC REF	PART NUMBER	QTY	PART NAME 1 2 3 4 5 6 (PRODUCT LEVEL)	SEE PAGE
	1	1	**118-8118**	1	RING-RETAINING	
	2	1	**149-9954**	1	DRAIN AS	
	3	1	**193-0618**	1	SENSOR GP-MOISTURE (WATER SEPARATOR)	
		1	**192-7876**	1	SCREW-MOUNTING	
	4	1	**361-9554**	1	ELEMENT-WATER SEPARATOR (FUEL FILTER)	
	5	1	**228-9132**	1	FITTING	

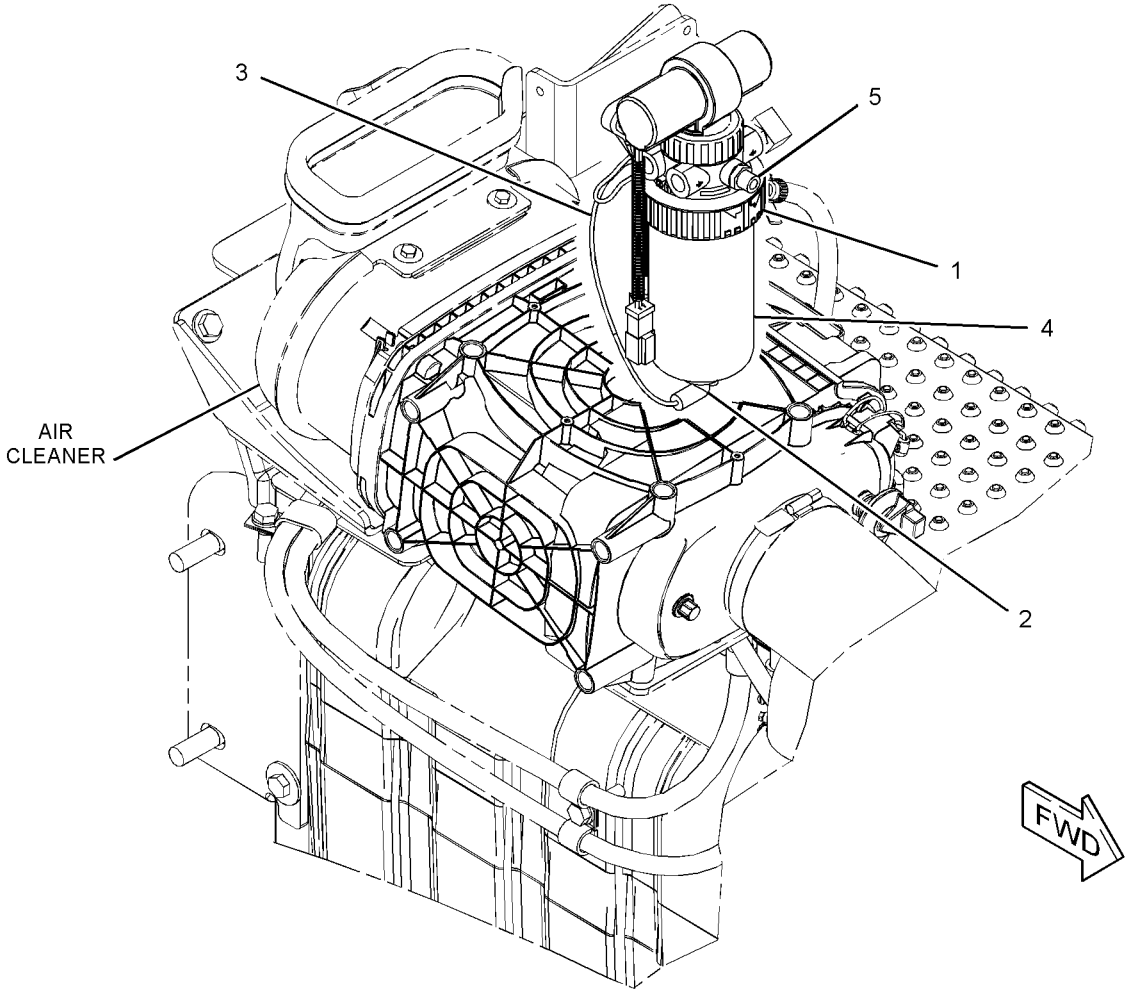

GRAPHIC #1 **<END>** g02177755

FUEL SYSTEM

245-6098 TANK & MTG GP-FUEL—INCLUDES STEP

S/N: CBD1-UP; MFG1-UP

PART OF 213-9284, 372-5176 CHASSIS AR

SMCS-1273 **i02430979**

NOTE	REF NO	GRAPHIC REF	PART NUMBER	QTY	PART NAME 1 2 3 4 5 6 (PRODUCT LEVEL)	SEE PAGE
	1	1	**245-6101**	1	TREAD	
	2	1	**245-6103**	1	STEP AS	
Y	3	1	*245-6104*	1	TANK GP-FUEL	219
	4	1	**245-6108**	1	PLATE AS	
	5	1	**5P-4116**	7	WASHER-HARD (8.8X20.5X2-MM THK)	
M	6	1	**8T-4193**	4	BOLT (M16X2X50-MM)	
	7	1	**8T-4122**	4	WASHER-HARD (17X32X3.5-MM THK)	
M	8	1	**8T-4189**	7	BOLT (M8X1.25X20-MM)	
M	9	1	**8T-4200**	4	BOLT (M8X1.25X16-MM)	
	10	1	**8T-4224**	4	WASHER-HARD (8.8X16X2-MM THK)	

M-METRIC PART
Y-SEPARATE ILLUSTRATION

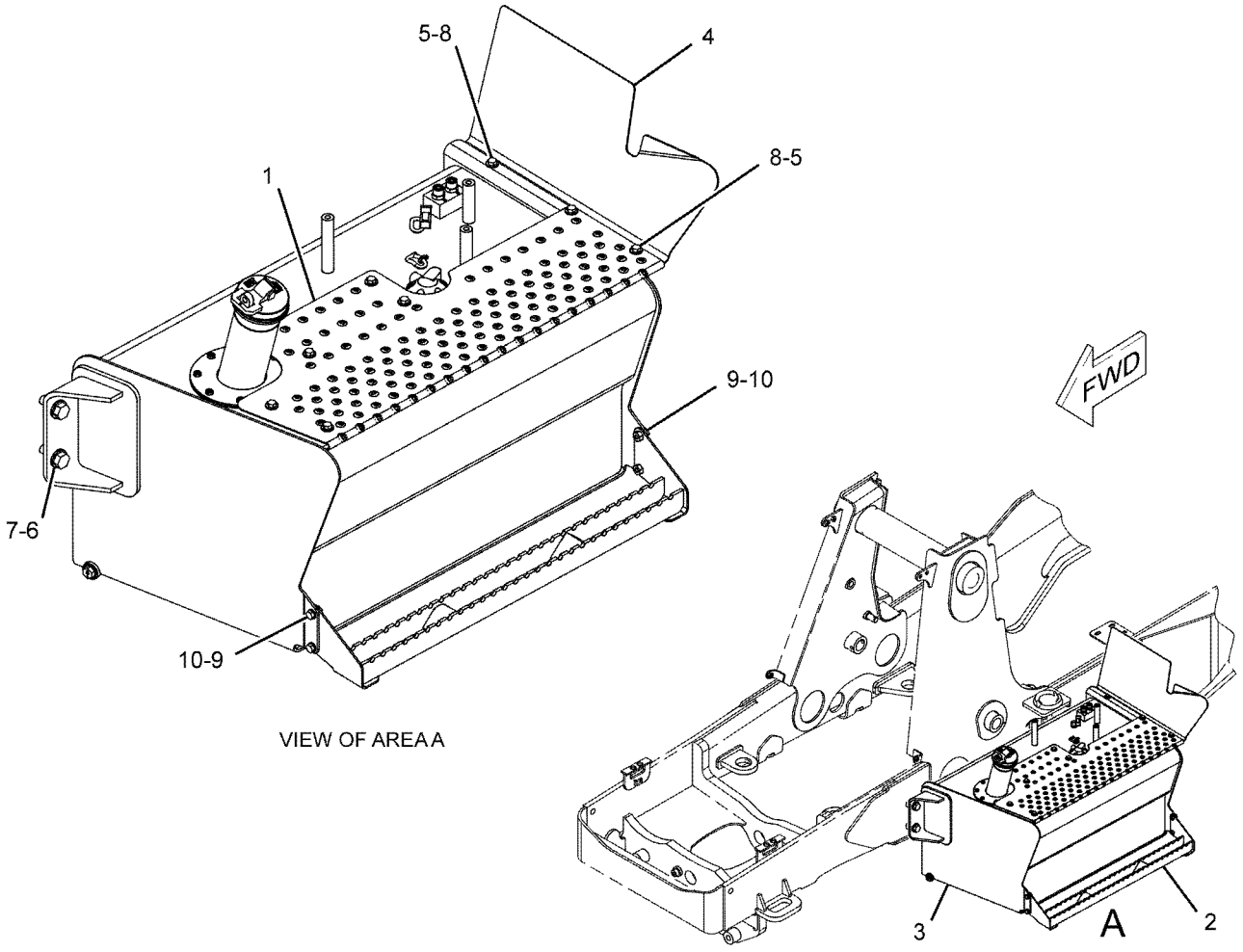

GRAPHIC #1 **<END>** g01077507

FUEL SYSTEM

245-6104 TANK GP-FUEL

S/N: CBD1-UP; MFG1-UP

PART OF 245-6098 TANK & MTG GP-FUEL

SMCS-1273 **i02962200**

NOTE	REF NO	GRAPHIC REF	PART NUMBER	QTY	PART NAME 1 2 3 4 5 6 (PRODUCT LEVEL)	SEE PAGE
	1	1	**8L-8413**	1	STRAP-CABLE	
	2	1	**9R-7240**	1	GASKET	
	3	1	**131-0232**	1	COVER	
	4	1	**251-3231**	1	SENDER AS-FUEL LEVEL	
		1	**186-3735**	2	PIN-CONNECTOR (16-GA TO 18-GA)	
		1	**102-8802**	1	KIT-RECEPTACLE (2-PIN)	
					(INCLUDES RECEPTACLE AS & WEDGE)	
Y	5	1	**245-6105**	1	TANK GP-FUEL	220
M	6	1	**184-0982**	5	SCREW-PAN HEAD (M6X1X16-MM)	

M-METRIC PART
Y-SEPARATE ILLUSTRATION

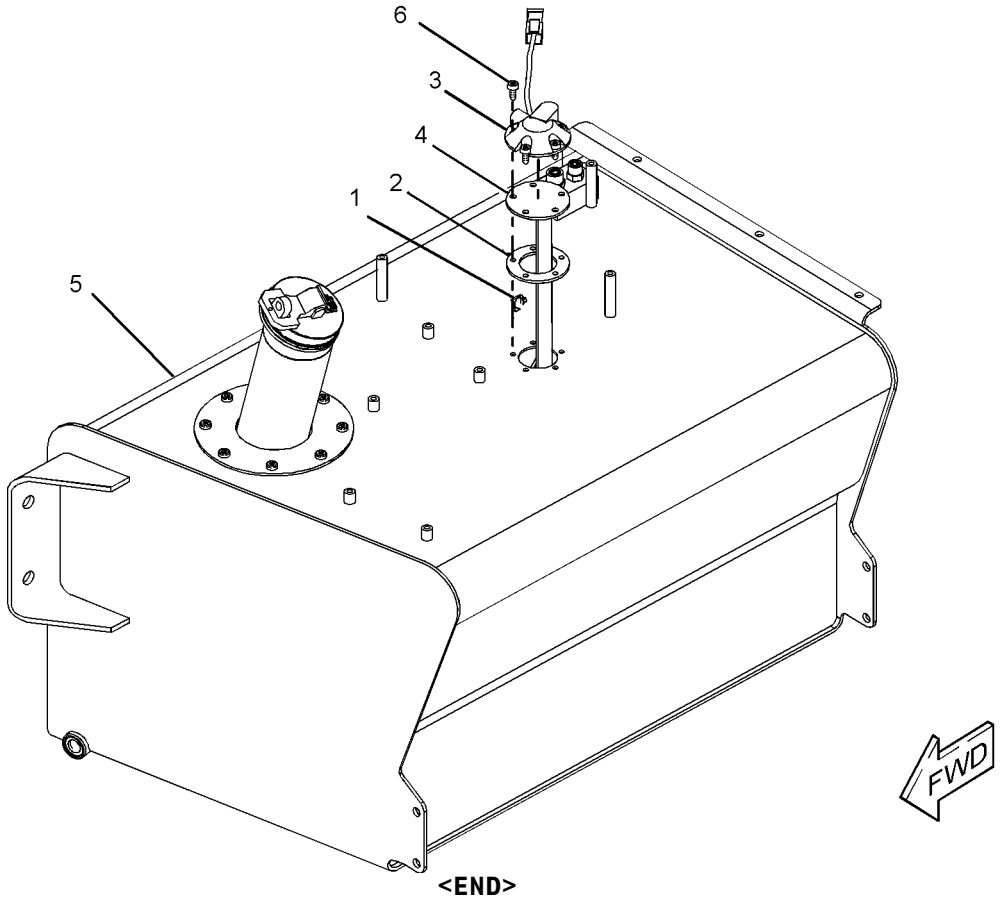

GRAPHIC #1 **<END>** g01089650

FUEL SYSTEM

245-6105 TANK GP-FUEL

S/N: CBD1-UP; MFG1-UP

PART OF 245-6104 TANK GP-FUEL

SMCS-1273 **i02962210**

NOTE	REF NO	GRAPHIC REF	PART NUMBER	QTY	PART NAME 1 2 3 4 5 6 (PRODUCT LEVEL)	SEE PAGE
	1	1	**284-9039**	1	CAP-FUEL	
	2	1	**201-1835**	1	TUBE AS	
	3	1	**272-0537**	1	PLUG AS	
	4	1	**245-6107**	1	TANK AS-FUEL	
	5	1	**106-8020**	1	GASKET	
M	6	1	**184-0982**	8	SCREW-PAN HEAD (M6X1X16-MM)	
	7	1	*148-8326*	2	CONNECTOR AS	
					(EACH INCLUDES)	
		1	**3J-7354**	1	SEAL-O-RING	
		1	**6V-8397**	1	SEAL-O-RING	
		1	**6V-9872**	1	CONNECTOR	
F			**180-3730**	1	STRAINER-FUEL (FILLER NECK SCREEN)	

F-NOT SHOWN
M-METRIC PART

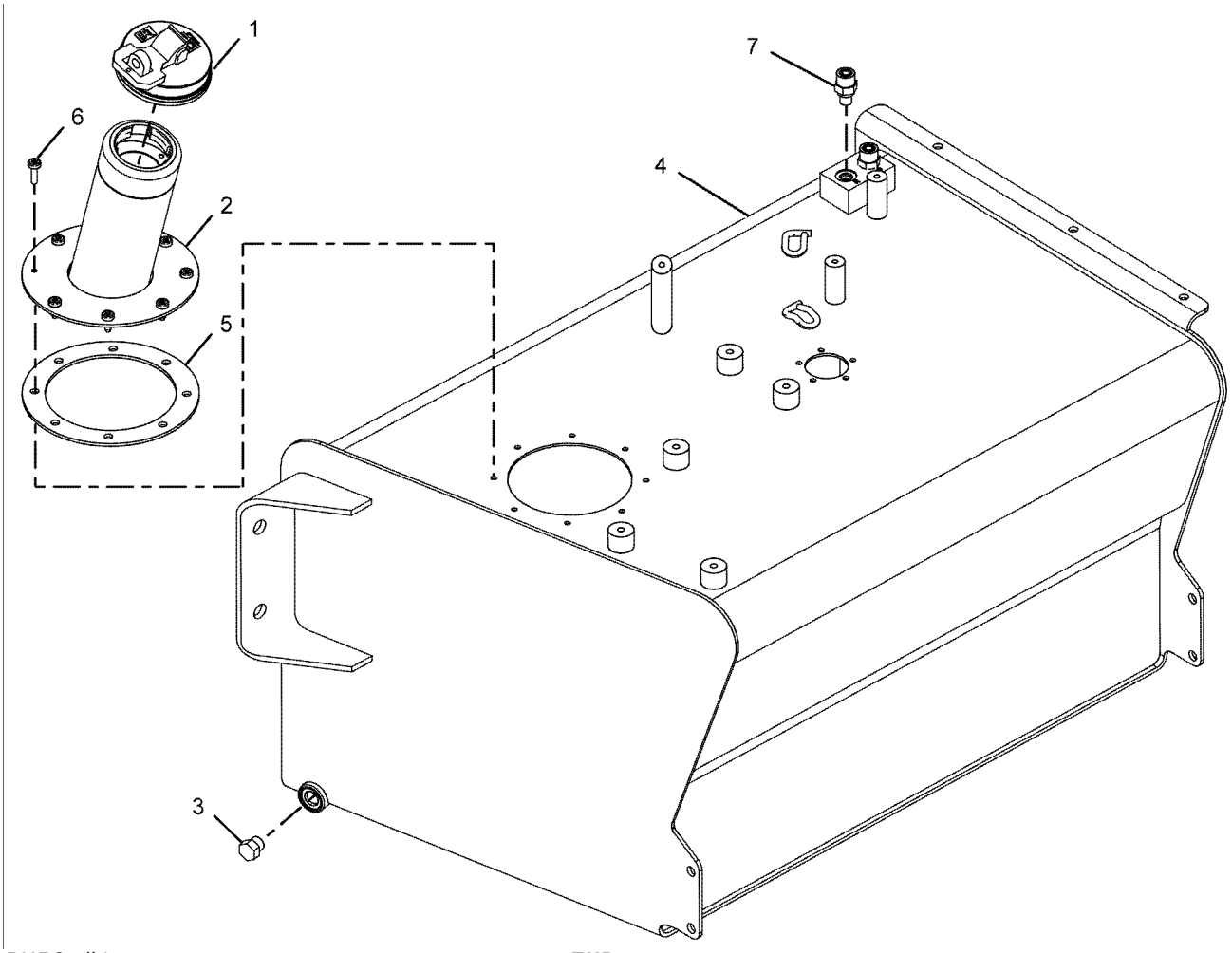

GRAPHIC #1 **<END>** g01086993

FUEL SYSTEM

297-5260 TANK GP-FUEL—INCLUDES STEP

S/N: MFG1-UP
170-LITERS(45-US GAL)
PART OF 291-9190 CHASSIS AR

SMCS-1273 **i03859030**

NOTE	REF NO	GRAPHIC REF	PART NUMBER	QTY	PART NAME 1 2 3 4 5 6 (PRODUCT LEVEL)	SEE PAGE
Y	1	1	*297-5261*	1	TANK GP-FUEL	222
	2	1	**297-5266**	1	STEP AS	
	3	1	**297-5268**	1	TREAD	
	4	1	**297-5278**	1	PLATE AS	
	5	1	**5P-4116**	7	WASHER-HARD (8.8X20.5X2-MM THK)	
	6	1	**8T-4122**	4	WASHER-HARD (17X32X3.5-MM THK)	
M	7	1	**8T-4140**	4	BOLT (M16X2X60-MM)	
M	8	1	**8T-4189**	7	BOLT (M8X1.25X20-MM)	
M	9	1	**8T-4200**	4	BOLT (M8X1.25X16-MM)	
	10	1	**8T-4224**	4	WASHER-HARD (8.8X16X2-MM THK)	

M-METRIC PART
Y-SEPARATE ILLUSTRATION

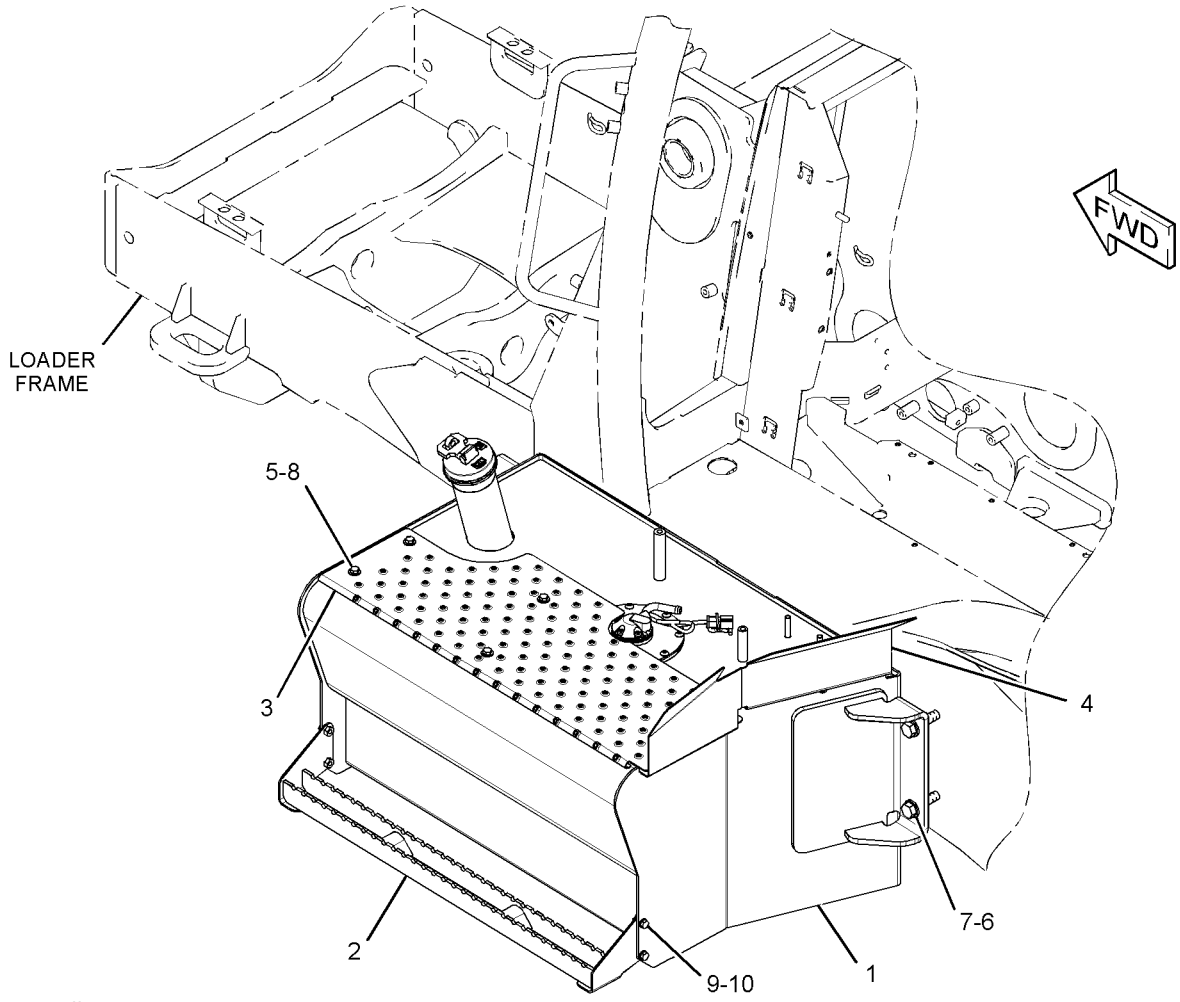

GRAPHIC #1 **<END>** g01520076

FUEL SYSTEM

297-5261 TANK GP-FUEL

S/N: MFG1-UP

PART OF 297-5260 TANK GP-FUEL

SMCS-1273 **i03859032**

NOTE	REF NO	GRAPHIC REF	PART NUMBER	QTY	PART NAME 1 2 3 4 5 6 (PRODUCT LEVEL)	SEE PAGE
	1	1	**8L-8413**	1	STRAP-CABLE	
	2	1	**9R-7240**	1	GASKET	
	3	1	**131-0232**	1	COVER	
	4	1	**180-3730**	1	STRAINER-FUEL (FILLER NECK SCREEN)	
M	5	1	**184-0982**	5	SCREW-PAN HEAD (M6X1X16-MM)	
	6	1	**251-3231**	1	SENDER AS-FUEL LEVEL	
		1	**102-8802**	1	KIT-RECEPTACLE (2-PIN)	
					(INCLUDES RECEPTACLE AS & WEDGE)	
		1	**186-3735**	2	PIN-CONNECTOR (16-GA TO 18-GA)	
	7	1	**284-9039**	1	CAP-FUEL (LOCKABLE, VENTED)	
	8	1	**314-7618**	1	PLUG AS	
		1	**190-7634**	1	SEAL-O-RING	
	9	1	**323-4142**	1	TANK AS-FUEL	
	10	1	**323-4145**	1	PLATE AS	
	11	1	**6V-1195**	1	SEAL-O-RING	
M	12	1	**9X-2042**	8	SCREW-TRUSS HEAD (M6X1X12-MM)	

M-METRIC PART

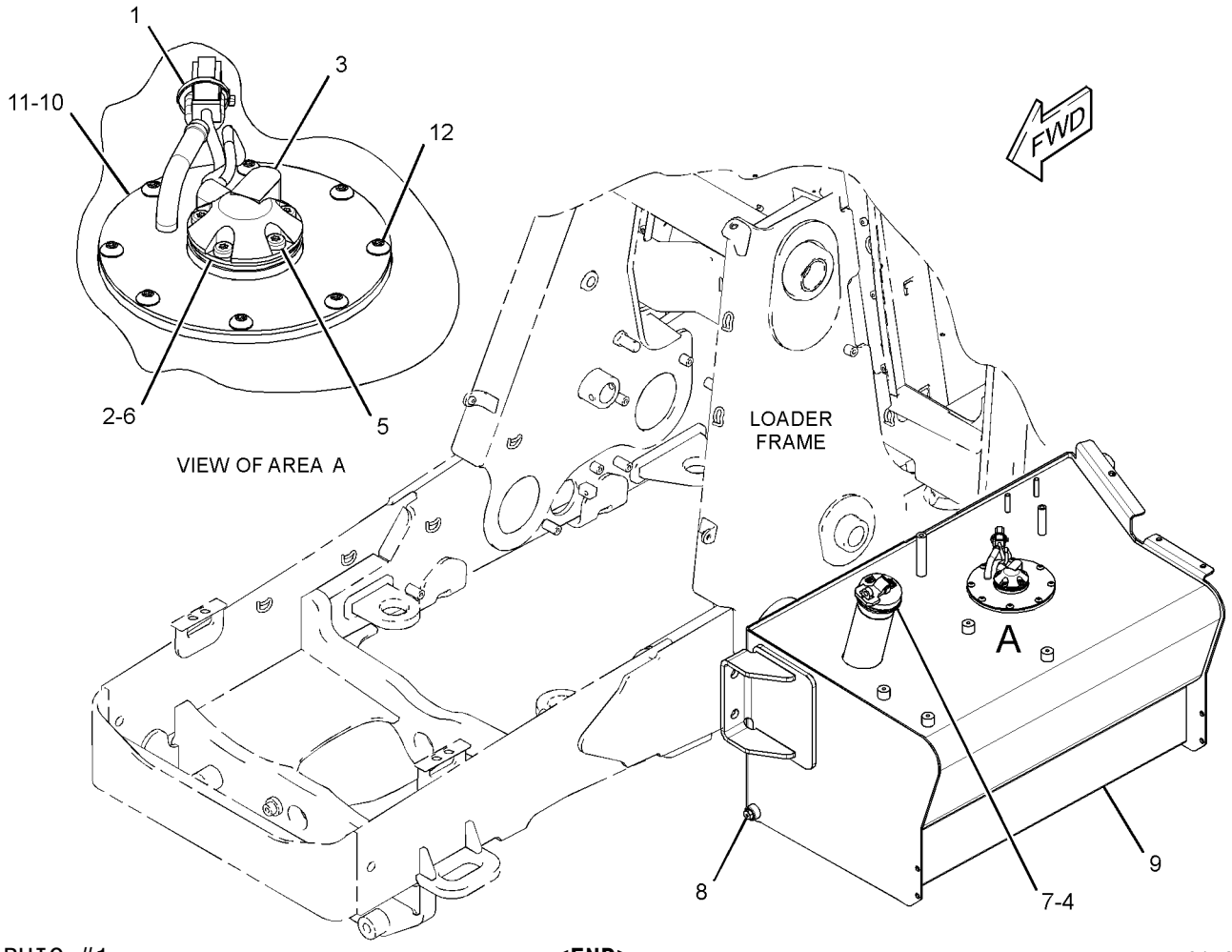

GRAPHIC #1 **<END>** g01520093

252-6256 ALTERNATOR GP-CHARGING–

120-AMPERE, WITH MOUNTING

S/N: G4D1-UP; CRS1-UP

PART OF 273-3610 ENGINE AR, 323-5725 ENGINE AR-PRIMARY

AN ATTACHMENT

SMCS-1405, 1425 **i03948024**

NOTE	REF NO	GRAPHIC REF	PART NUMBER	QTY	PART NAME 1 2 3 4 5 6 (PRODUCT LEVEL)	SEE PAGE
	1	1	**6B-0933**	1	SPACER (10.31X19.05X6.35-MM THK)	
M	2	1	**6I-0260**	1	BOLT (M8X1.25X25-MM)	
M	3	1	**6I-0454**	1	BOLT (M10X1.5X70-MM)	
	4	1	**6I-0594**	1	NUT (M10X1.5-THD)	
	5	1	**228-7391**	1	PULLEY-ALTERNATOR	
	6	1	**067-6366**	1	WASHER	
	7	1	**359-9666**	1	BOLT-FLANGE HEAD	
	8	1	**113-6349**	1	NUT (M12X1.75X93-MM)	
M	9	1	**140-8783**	2	BOLT (M10X1.5X45-MM)	
	10	1	**346-9825**	1	ALTERNATOR GP-CHARGING	
	11	1	**233-9530**	1	BRACKET	
	12	1	**233-9531**	1	LEVER-ADJUSTING	

M-METRIC PART

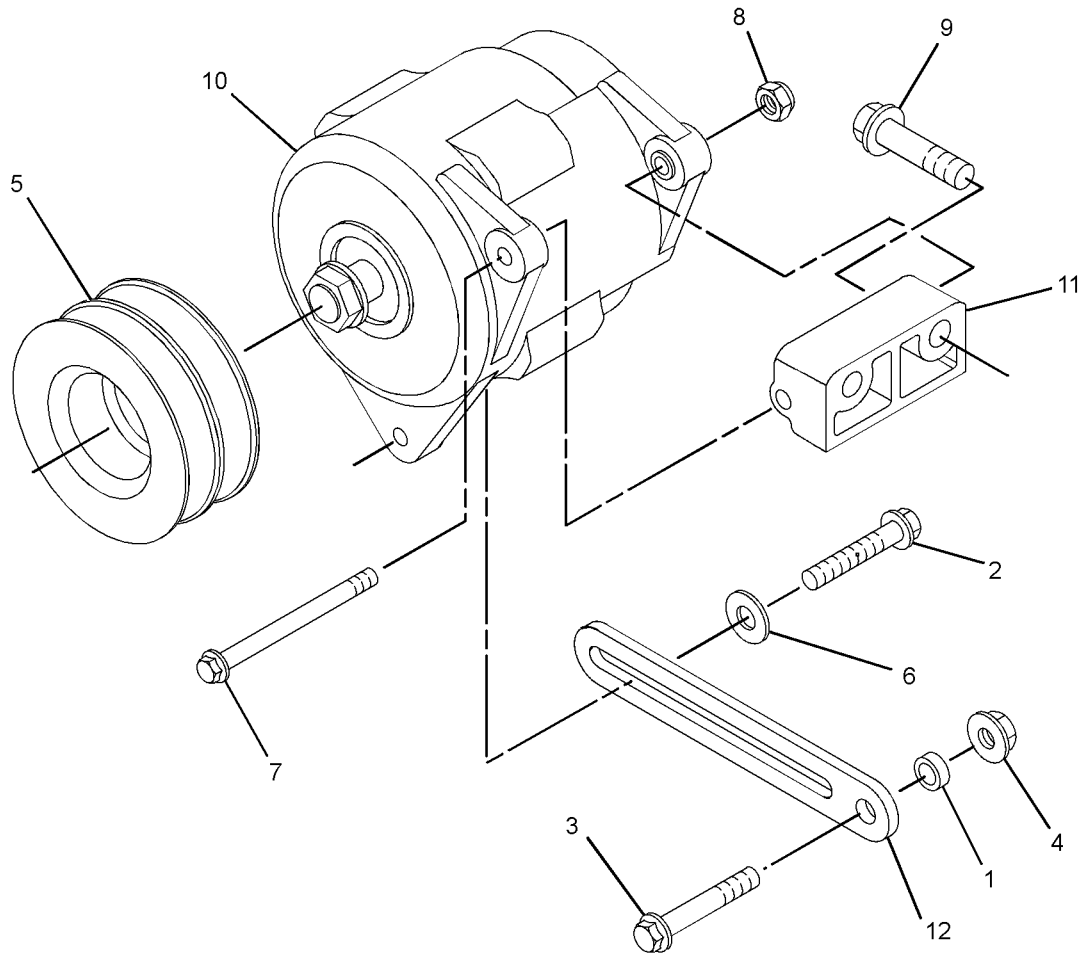

GRAPHIC #1 **<END>** g01828414

256-7736 ALTERNATOR GP-CHARGING–

100-AMPERE, WITH MOUNTING

S/N: G4D1-UP; CRS1-UP

PART OF 245-6841, 323-5724 ENGINE AR-PRIMARY

AN ATTACHMENT

SMCS-1405, 1425 **i03948028**

NOTE	REF NO	GRAPHIC REF	PART NUMBER	QTY	PART NAME 1 2 3 4 5 6 (PRODUCT LEVEL)	SEE PAGE
	1	1	**6B-0933**	1	SPACER (10.31X19.05X6.35-MM THK)	
M	2	1	**6I-0260**	1	BOLT (M8X1.25X25-MM)	
M	3	1	**6I-0454**	1	BOLT (M10X1.5X70-MM)	
	4	1	**6I-0594**	1	NUT (M10X1.5-THD)	
	6	1	**067-6366**	1	WASHER	
	7	1	**359-9666**	1	BOLT-FLANGE HEAD	
	8	1	**113-6349**	1	NUT (M12X1.75X93-MM)	
M	9	1	**140-8783**	2	BOLT (M10X1.5X45-MM)	
	10	1	**346-9824**	1	ALTERNATOR GP-CHARGING	
	11	1	**228-7391**	1	PULLEY-ALTERNATOR	
	12	1	**233-9530**	1	BRACKET	
	13	1	**233-9531**	1	LEVER-ADJUSTING	

M-METRIC PART

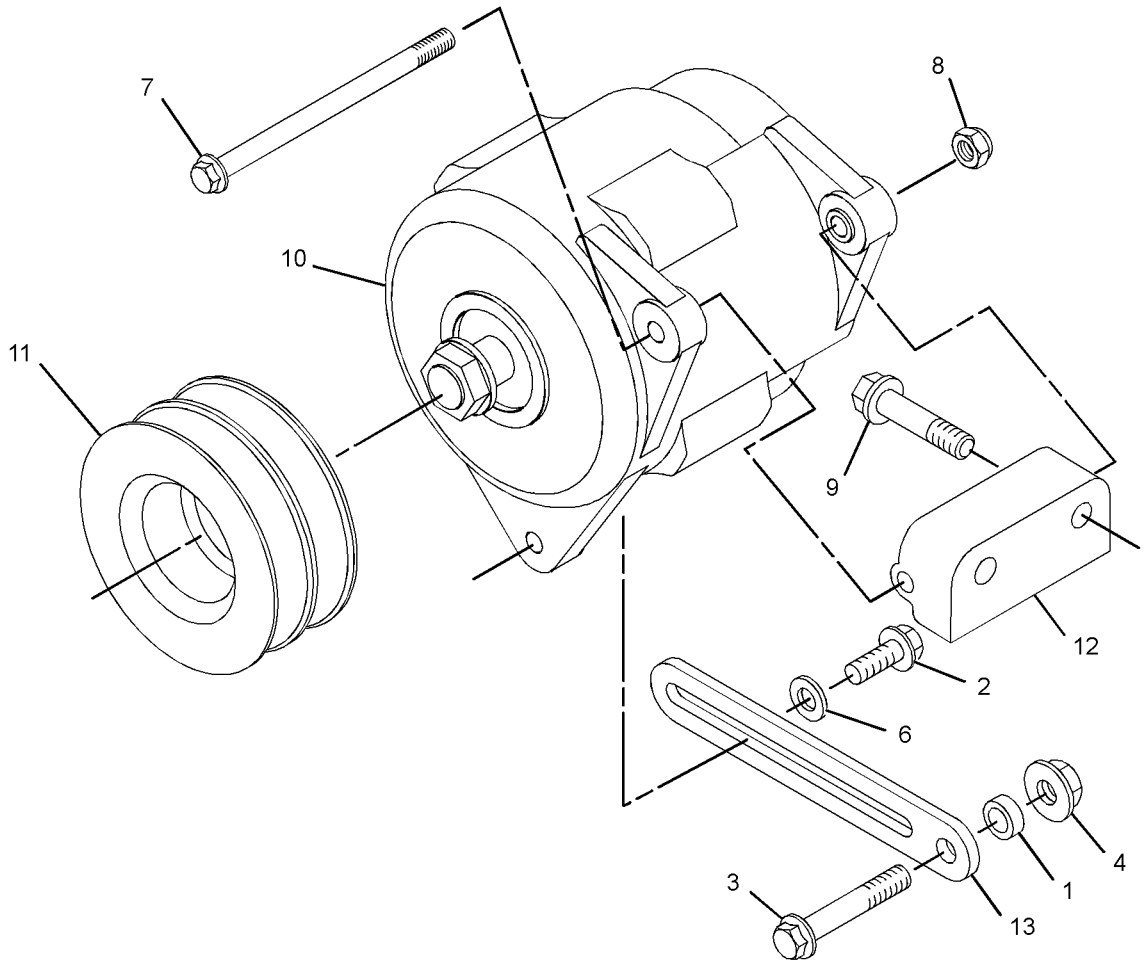

GRAPHIC #1 **<END>** g01953426

317-9776 ALTERNATOR GP-CHARGING

S/N: C4Z1-UP

PART OF 321-7704 ENGINE AR-PRIMARY

SMCS-1405, 1425 **i04130137**

NOTE	REF NO	GRAPHIC REF	PART NUMBER	QTY	PART NAME 1 2 3 4 5 6 (PRODUCT LEVEL)	SEE PAGE
M	1	1	**6I-0260**	1	BOLT (M8X1.25X25-MM)	
M	2	1	**6I-0650**	1	BOLT (M10X1.5X65-MM)	
	3	1	**359-9666**	1	BOLT-FLANGE HEAD	
	4	1	**113-6349**	1	NUT (M12X1.75X93-MM)	
M	5	1	**140-8783**	2	BOLT (M10X1.5X45-MM)	
	7	1	**346-9825**	1	ALTERNATOR GP-CHARGING	
	8	1	**284-3425**	1	PULLEY-ALTERNATOR	
	9	1	**305-7881**	1	BRACKET AS-ALTERNATOR	
	9A	1	**161-9820**	1	PIN	

M-METRIC PART

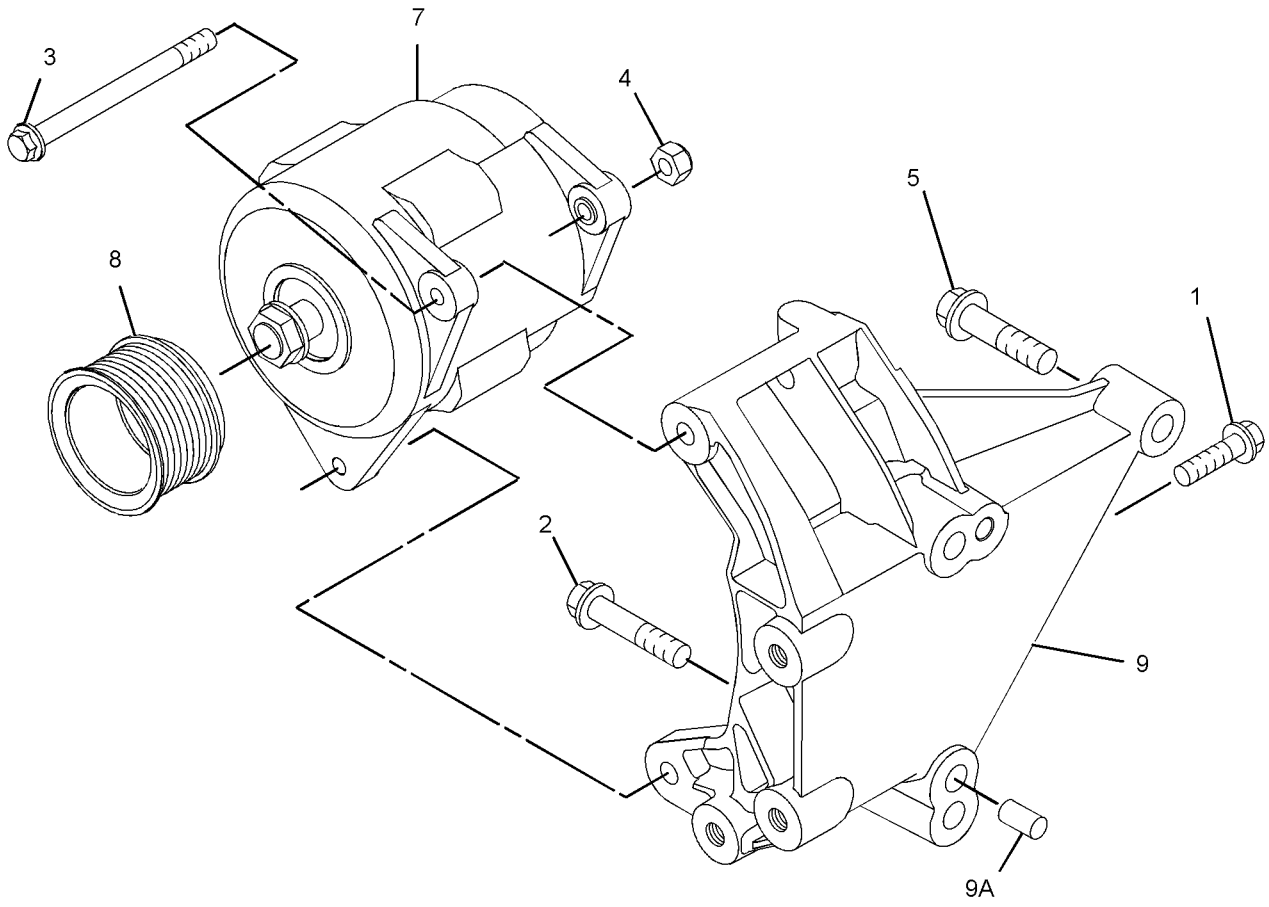

GRAPHIC #1 **<END>** g01953021

ELECTRICAL AND STARTING SYSTEM

211-4285 BATTERY & WIRING GP–STANDARD

S/N: CBD1-UP
PART OF 213-9284 CHASSIS AR
ALSO AN ATTACHMENT

SMCS-1401, 1402, 1408, 1411 **i02746356**

NOTE	REF NO	GRAPHIC REF	PART NUMBER	QTY	PART NAME 1 2 3 4 5 6 (PRODUCT LEVEL)	SEE PAGE
	1	1	**6T-0465**	1	COVER-TERMINAL (BLACK)	
	2	1	**7K-1181**	7	STRAP-CABLE	
	3	1	**038-9317**	1	TREAD-NONSKID	
	4	1	**178-1781**	1	CLIP	
	5	1	**213-6088**	1	CABLE AS-BATTERY (NEGATIVE)	
		1	**1S-7251**	1	TERMINAL-CABLE (00-GA, 1/2-IN SCREW)	
E		1	**5P-0747**		CABLE (00-GA, BLACK) (61-CM)	
	6	1	**213-6089**	1	CABLE AS-POWER	
E		1	**8Y-8080**		TUBE-CONVOLUTED (230-CM)	
E		1	**8C-3056**		CABLE (2-GA, RED) (240-CM)	
		1	**8T-8799**	1	BOOT	
	7	1	**213-6094**	1	CABLE AS (ALTERNATOR AIR)	
	8	1	**230-6368**	1	BATTERY (12-VOLT, MAINTENANCE FREE)	
	9	1	**240-4639**	1	BRACKET AS	
	10	1	**246-8053**	1	CABLE AS-BATTERY (POSITIVE)	
		1	**1S-7251**	1	TERMINAL-CABLE (00-GA, 1/2-IN SCREW)	
E		1	**5P-0761**		CABLE (00-GA, RED) (94-CM)	
		1	**8L-8413**	2	STRAP-CABLE	
		1	**8N-0869**	1	COVER-TERMINAL (RED)	
E		1	**8Y-8081**		TUBE-CONVOLUTED (94-CM)	
	11	1	**243-5027**	1	NUT AS (M6X1-THD)	
	12	1	**156-6175**	2	CLIP	
	13	1	**4D-6466**	2	CLIP	
	14	1	**8T-4224**	1	WASHER-HARD (8.8X16X2-MM THK)	
	15	1	**4P-7581**	1	CLIP	
M	16	1	**5C-2890**	2	NUT (M6X1-THD)	
M	17	1	**5C-7261**	1	NUT (M8X1.25-THD)	
	18	1	**7X-7729**	2	WASHER (11X25X3-MM THK)	
	19	1	**8T-4121**	3	WASHER-HARD (11X21X2.5-MM THK)	
M	20	1	**8T-4133**	1	NUT (M10X1.5-THD)	
M	21	1	**8T-4137**	4	BOLT (M10X1.5X20-MM)	
M	22	1	**5C-9553**	2	BOLT (M6X1X16-MM)	
M	23	1	**8T-4185**	1	BOLT (M10X1.5X50-MM)	
	24	1	**8T-4205**	4	WASHER-HARD (7.2X14.5X2-MM THK)	
	25	1	**9G-4191**	1	GROMMET	
	26	1	**4P-8134**	1	CLIP	

E-ORDER BY THE CENTIMETER
M-METRIC PART

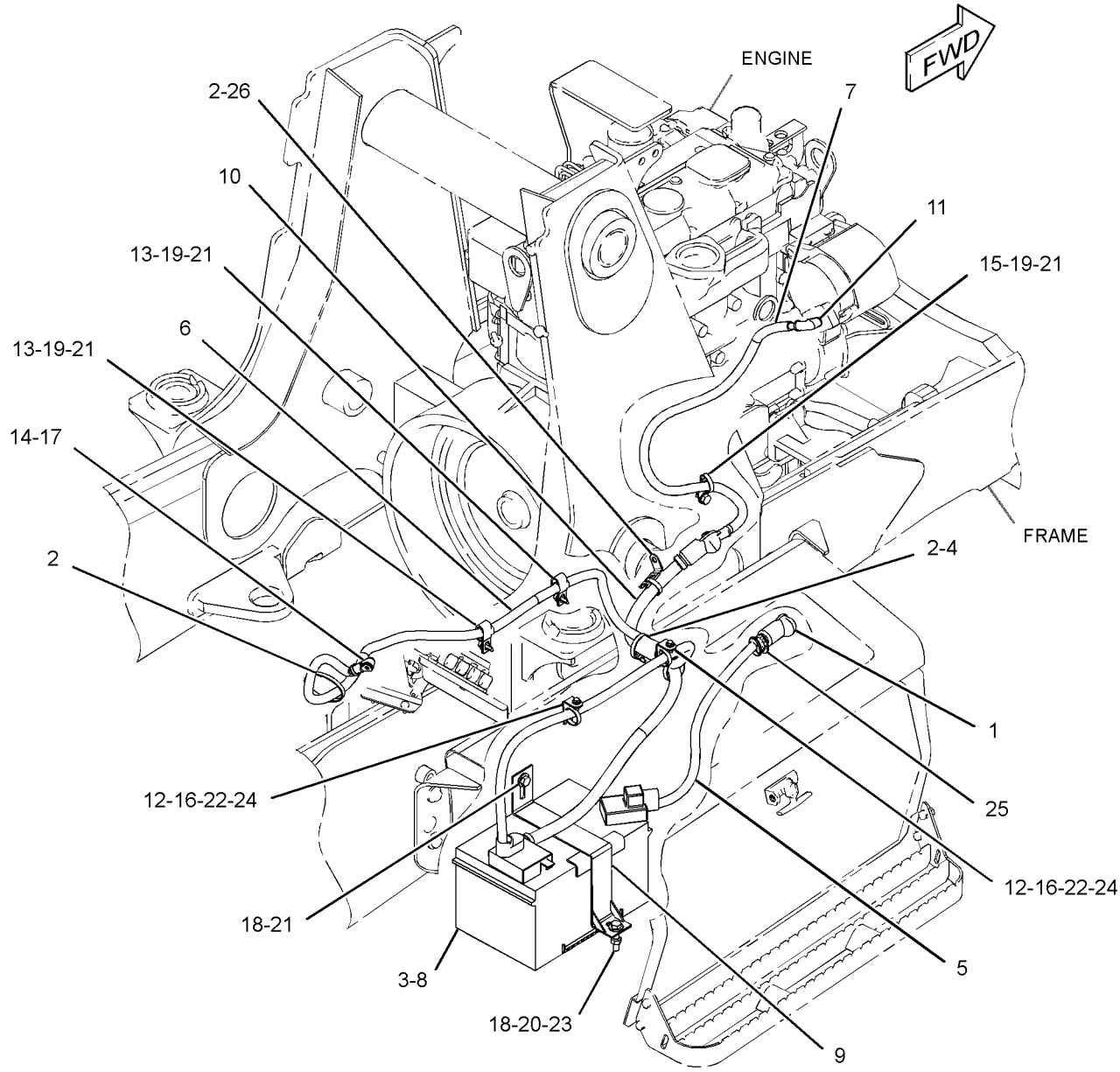

GRAPHIC #1 **<END>** g01386954

211-4286 BATTERY & WIRING GP–HEAVY-DUTY

S/N: CBD1-UP; MFG1-UP
PART OF 374-3529, 374-6536 DISTRIBUTION AR
AN ATTACHMENT

SMCS-1401, 1402, 1408, 1411 **i02496221**

NOTE	REF NO	GRAPHIC REF	PART NUMBER	QTY	PART NAME 1 2 3 4 5 6 (PRODUCT LEVEL)	SEE PAGE
	1	1	**038-9317**	1	TREAD-NONSKID	
	2	1	**213-6091**	1	CABLE AS-BATTERY (POSITIVE)	
E		1	**5P-0761**		CABLE (00-GA, RED) (35-CM)	
		1	**7T-9987**	1	COVER AS-TERMINAL (RED)	
		1	**8L-8413**	2	STRAP-CABLE	
		1	**8N-0869**	1	COVER-TERMINAL (RED)	
		1	**8S-3020**	1	TERMINAL-CABLE (00-GA, 3/8-IN SCREW)	
E		1	**8Y-8081**		TUBE-CONVOLUTED (35-CM)	
	3	1	**213-6092**	1	CABLE AS-BATTERY (NEGATIVE)	
		1	**1S-7252**	1	TERMINAL-CABLE (00-GA, 3/8-IN SCREW)	
E		1	**5P-0747**		CABLE (00-GA, BLACK) (43-CM)	
		1	**7N-5274**	1	COVER AS-TERMINAL (BLACK)	
		1	**8L-8413**	1	STRAP-CABLE	
	4	1	**230-6368**	1	BATTERY (12-VOLT, MAINTENANCE FREE)	
	5	1	**240-4639**	1	BRACKET AS	
	6	1	**7X-7729**	2	WASHER (11X25X3-MM THK)	
M	7	1	**8T-4133**	1	NUT (M10X1.5-THD)	
M	8	1	**8T-4137**	1	BOLT (M10X1.5X20-MM)	
M	9	1	**8T-4185**	1	BOLT (M10X1.5X50-MM)	

E-ORDER BY THE CENTIMETER
M-METRIC PART

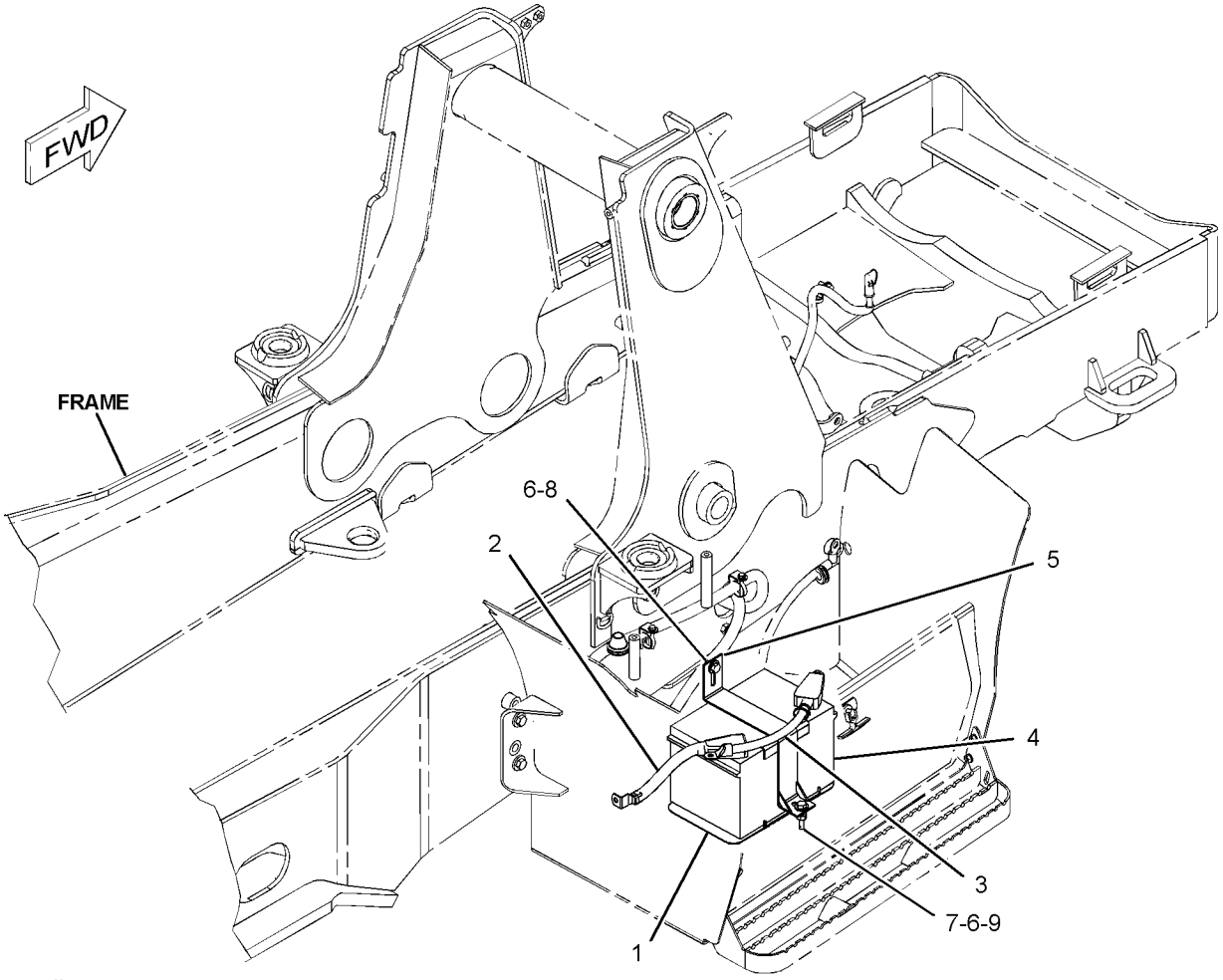

GRAPHIC #1 **<END>** g01082047

242-3196 BATTERY & WIRING GP–STANDARD

S/N: CBD1-UP

AN ATTACHMENT

SMCS-1401, 1402, 1408, 1411 **i02548981**

NOTE	REF NO	GRAPHIC REF	PART NUMBER	QTY	PART NAME 1 2 3 4 5 6 (PRODUCT LEVEL)	SEE PAGE
	1	1	**6T-0465**	1	COVER-TERMINAL (BLACK)	
	2	1	**7K-1181**	9	STRAP-CABLE	
	3	1	**038-9317**	1	TREAD-NONSKID	
	4	1	**178-1781**	1	CLIP	
	5	1	**178-9242**	1	BRACKET AS	
	6	1	**228-5089**	1	CABLE AS (NEGATIVE)	
		1	**1S-7251**	1	TERMINAL-CABLE (00-GA, 1/2-IN SCREW)	
E		1	**5P-0747**		CABLE (00-GA, BLACK) (58-CM)	
		1	*229-9855*	1	TERMINAL AS-BATTERY (NEGATIVE)	
		1	**1M-6119**	1	BOLT (5/16-18X1.375-IN)	
		1	**1M-6120**	2	NUT (5/16-18-THD)	
	7	1	**213-6089**	1	CABLE AS-POWER	
		1	**6T-5598**	1	TERMINAL-RING (1-GA TO 2-GA, 5/16-IN SCREW)	
E		1	**8C-3056**		CABLE (2-GA, RED) (240-CM)	
		1	**8T-8799**	1	BOOT	
E		1	**8Y-8080**		TUBE-CONVOLUTED (230-CM)	
	8	1	**246-8053**	1	CABLE AS-BATTERY (POSITIVE)	
		1	**1S-7251**	1	TERMINAL-CABLE (00-GA, 1/2-IN SCREW)	
E		1	**5P-0761**		CABLE (00-GA, RED) (94-CM)	
		1	**8L-8413**	2	STRAP-CABLE	
		1	**8N-0869**	1	COVER-TERMINAL (RED)	
E		1	**8Y-8081**		TUBE-CONVOLUTED (94-CM)	
		1	*235-8634*	1	TERMINAL AS-BATTERY (POSITIVE)	
		1	**1M-6119**	1	BOLT (5/16-18X1.375-IN)	
		1	**1M-6120**	1	NUT (5/16-18-THD)	
		1	**6V-8801**	2	NUT (3/8-16-THD)	
	9	1	**246-8058**	1	CABLE AS (ALTERNATOR AIR)	
E		1	**8C-3056**		CABLE (2-GA, RED) (67-CM)	
		1	*242-3294*	1	TERMINAL AS	
E		1	**8C-3056**		CABLE (2-GA, RED) (15-CM)	
E		1	**125-7876**		TUBE-HEAT SHRINK (17.78-MM DIA) (5-CM)	
	10	1	**243-5027**	1	NUT AS (M6X1-THD)	
	11	1	**132-5789**	2	CLIP (LADDER)	
	12	1	**156-6175**	2	CLIP (LADDER)	
	13	1	**3T-5760**	1	BATTERY (12-VOLT, MAINTENANCE FREE, WET)	
	14	1	**4D-6466**	2	CLIP	
M	15	1	**5C-2890**	2	NUT (M6X1-THD)	
M	16	1	**5C-7261**	1	NUT (M8X1.25-THD)	
	17	1	**7X-7729**	2	WASHER (11X25X3-MM THK)	
	18	1	**8T-4121**	4	WASHER-HARD (11X21X2.5-MM THK)	
M	19	1	**8T-4133**	1	NUT (M10X1.5-THD)	
M	20	1	**8T-4137**	5	BOLT (M10X1.5X20-MM)	
M	21	1	**8T-4138**	2	BOLT (M6X1X20-MM)	
	22	1	**8T-4205**	4	WASHER-HARD (7.2X14.5X2-MM THK)	
	23	1	**8T-4224**	1	WASHER-HARD (8.8X16X2-MM THK)	
M	24	1	**8T-5005**	1	BOLT (M10X1.5X70-MM)	

E-ORDER BY THE CENTIMETER
M-METRIC PART

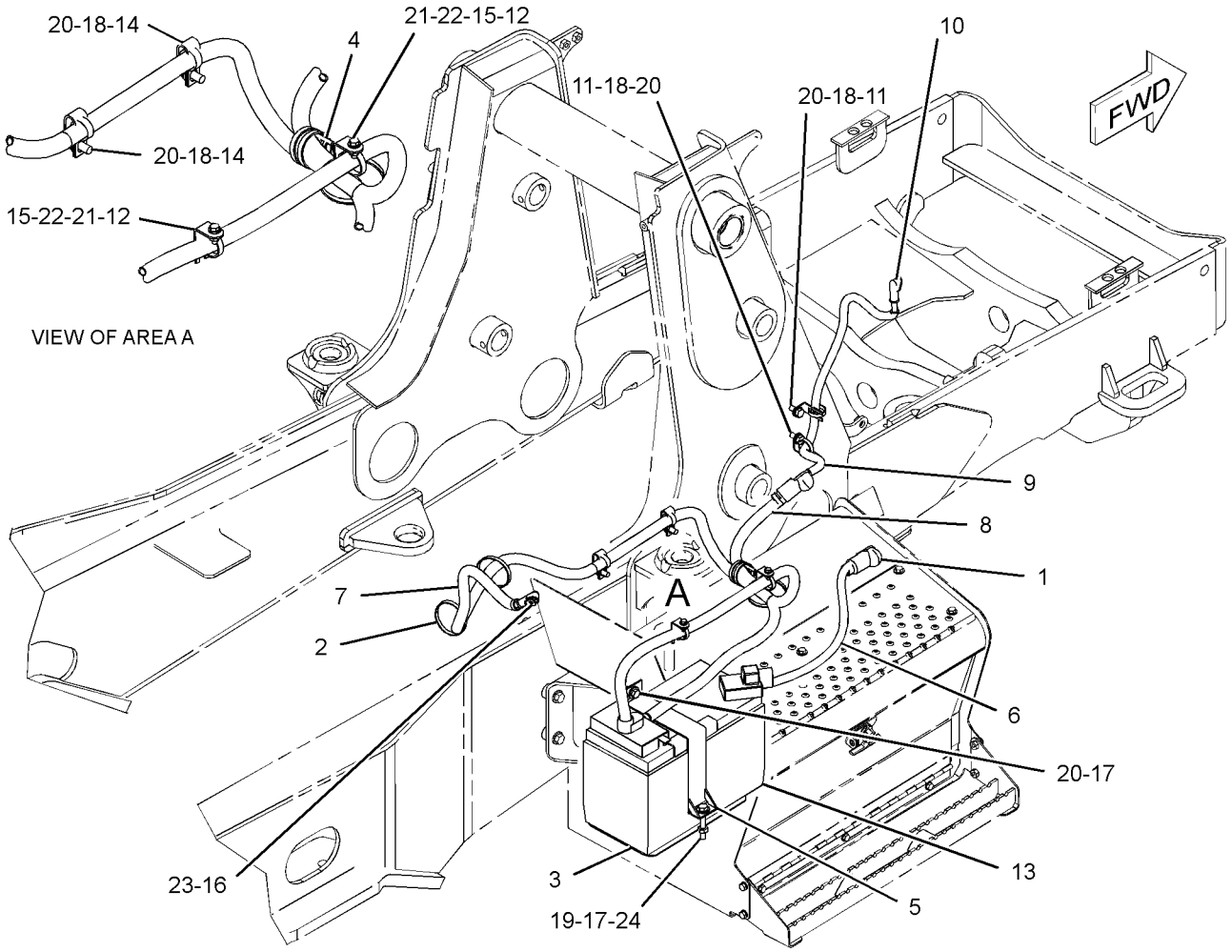

GRAPHIC #1 **<END>** g01276464

242-3197 BATTERY & WIRING GP—HEAVY-DUTY

S/N: CBD1-UP; MFG1-UP
PART OF 356-0069, 374-3519, 374-6534 DISTRIBUTION AR
AN ATTACHMENT

SMCS-1401, 1402, 1408, 1411 **i02548982**

NOTE	REF NO	GRAPHIC REF	PART NUMBER	QTY	PART NAME 1 2 3 4 5 6 (PRODUCT LEVEL)	SEE PAGE
	1	1	**038-9317**	1	TREAD-NONSKID	
	2	1	**178-9242**	1	BRACKET AS	
	3	1	**213-6091**	1	CABLE AS-BATTERY (POSITIVE)	
E		1	**5P-0761**		CABLE (00-GA, RED) (36-CM)	
		1	**7T-9987**	1	COVER AS-TERMINAL (RED)	
		1	**8S-3020**	1	TERMINAL-CABLE (00-GA, 3/8-IN SCREW)	
E		1	**8Y-8081**		TUBE-CONVOLUTED (36-CM)	
		1	**3S-6049**	1	TERMINAL AS-BATTERY (POSITIVE)	
		1	**1M-6119**	1	BOLT (5/16-18X1.375-IN)	
		1	**1M-6120**	1	NUT (5/16-18-THD)	
	4	1	**213-6092**	1	CABLE AS-BATTERY (NEGATIVE)	
		1	**1S-7252**	1	TERMINAL-CABLE (00-GA, 3/8-IN SCREW)	
E		1	**5P-0747**		CABLE (00-GA, BLACK) (43-CM)	
		1	**7N-5274**	1	COVER AS-TERMINAL (BLACK)	
		1	**8L-8413**	1	STRAP-CABLE	
		1	**3S-6050**	1	TERMINAL AS-BATTERY (NEGATIVE)	
		1	**1M-6119**	1	BOLT (5/16-18X1.375-IN)	
		1	**1M-6120**	1	NUT (5/16-18-THD)	
	5	1	**3T-5760**	1	BATTERY (12-VOLT, MAINTENANCE FREE, WET)	
	6	1	**7X-7729**	2	WASHER (11X25X3-MM THK)	
M	7	1	**8T-4133**	1	NUT (M10X1.5-THD)	
M	8	1	**8T-4137**	1	BOLT (M10X1.5X20-MM)	
M	9	1	**8T-5005**	1	BOLT (M10X1.5X70-MM)	
	10	1	**8T-4224**	1	WASHER-HARD (8.8X16X2-MM THK)	

E-ORDER BY THE CENTIMETER
M-METRIC PART

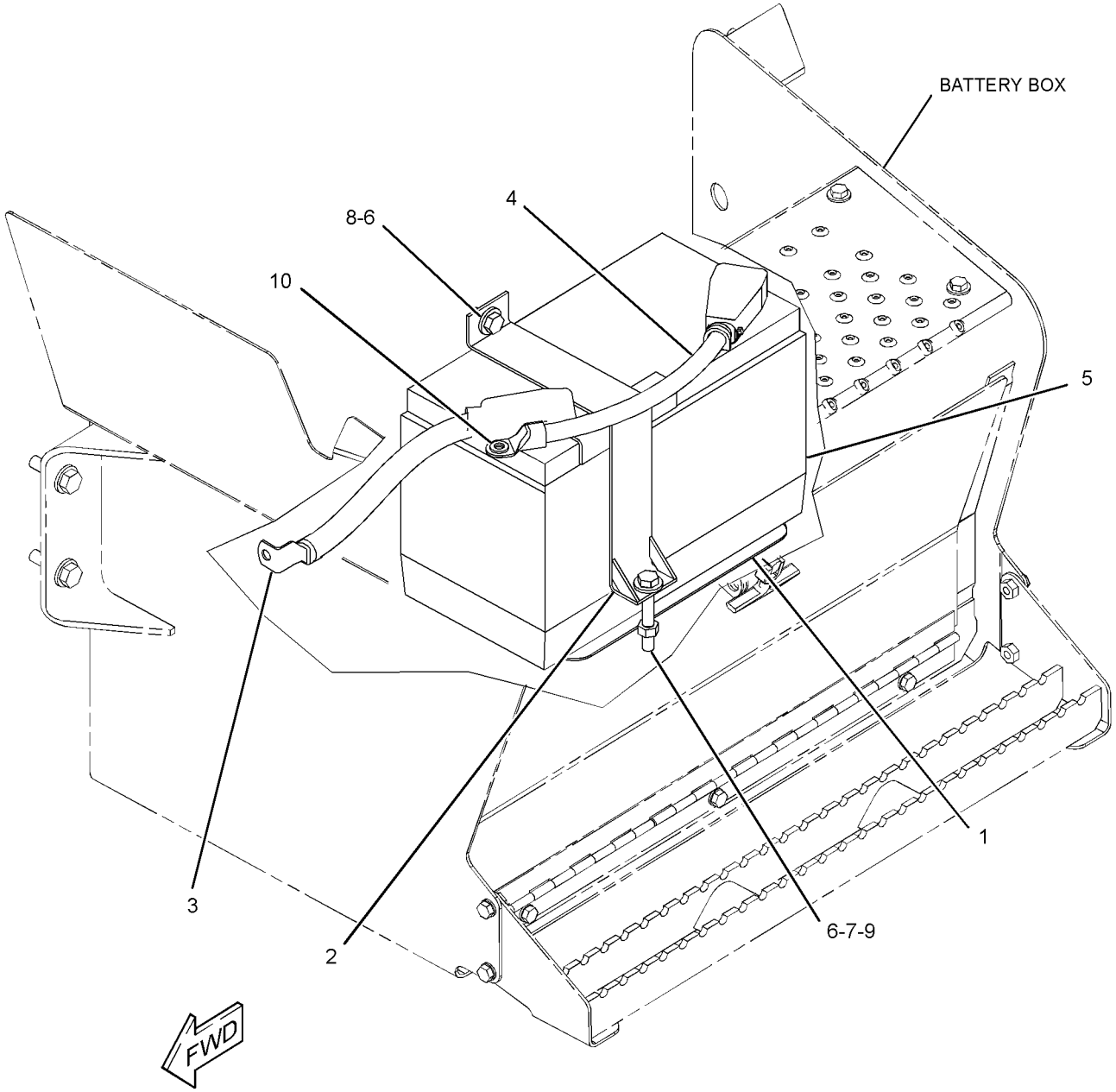

GRAPHIC #1 **<END>** g01277309

ELECTRICAL AND STARTING SYSTEM

290-6789 BATTERY & WIRING GP–DISCONNECT

S/N: MFG1-UP

PART OF 291-9190 CHASSIS AR

SMCS-1401, 1402, 1408, 1411 **i03859013**

NOTE	REF NO	GRAPHIC REF	PART NUMBER	QTY	PART NAME 1 2 3 4 5 6 (PRODUCT LEVEL)	SEE PAGE
	1	1	**3E-8320**	1	PLATE-INSTRUCTION (BATTERY)	
	2	1	**6T-0465**	1	COVER-TERMINAL (BLACK)	
	3	1	**7K-1181**	6	STRAP-CABLE	
	4	1	**038-9317**	1	TREAD-NONSKID	
	5	1	**230-6368**	1	BATTERY (12-VOLT, MAINTENANCE FREE)	
	6	1	**240-4639**	1	BRACKET AS	
	7	1	**243-5027**	1	NUT AS (M6X1-THD)	
	8	1	**246-8053**	1	CABLE AS-BATTERY (POSITIVE)	
		1	**1S-7251**	1	TERMINAL-CABLE (00-GA, 1/2-IN SCREW)	
		1	**8N-0869**	1	COVER-TERMINAL (RED)	
		1	**3S-2093**	2	STRAP-CABLE	
E		1	**5P-0761**		CABLE (00-GA, RED) (110-CM)	
E		1	**8Y-8081**		TUBE-CONVOLUTED (105-CM)	
		1	*235-8634*		TERMINAL AS-BATTERY (POSITIVE)	
		1	**1M-6119**	1	BOLT (5/16-18X1.375-IN)	
		1	**1M-6120**	1	NUT (5/16-18-THD)	
		1	**6V-8801**	2	NUT (3/8-16-THD)	
	9	1	**290-6745**	1	CABLE AS-POWER	
		1	**8N-0869**	1	COVER-TERMINAL (RED)	
		1	**8S-3020**	1	TERMINAL-CABLE (00-GA, 3/8-IN SCREW)	
		1	**030-1705**	1	TERMINAL-CABLE (00-GA, 5/16-IN SCREW)	
E		1	**135-5009**		TUBE-HEAT SHRINK (32-MM DIA) (5-CM)	
E		1	**159-8049**		CABLE (00-GA, RED) (221-CM)	
B		1	**1P-0810**		TAPE-ELECTRICAL	
E		1	**201-3304**		CONDUIT (221-CM)	
	10	1	**290-6746**	1	CABLE AS (ALTERNATOR)	
		1	**311-6184**	1	TERMINAL-RING (2-GA, 3/8-IN SCREW)	
		1	**312-6455**	1	TERMINAL AS	
		1	**312-6442**	1	TERMINAL-RING	
E		1	**125-7876**		TUBE-HEAT SHRINK (17.78-MM DIA) (5-CM)	
E		1	**125-7876**		TUBE-HEAT SHRINK (17.78-MM DIA) (7-CM)	
	11	1	**290-6791**	1	CABLE AS (NEGATIVE)	
		1	**8S-3020**	1	TERMINAL-CABLE (00-GA, 3/8-IN SCREW)	
E		1	**159-8050**		CABLE (00-GA, BLACK) (44-CM)	
		1	*229-9855*	1	TERMINAL AS-BATTERY (NEGATIVE)	
		1	**1M-6119**	1	BOLT (5/16-18X1.375-IN)	
		1	**1M-6120**	2	NUT (5/16-18-THD)	
	12	1	**290-6792**	1	CABLE AS (NEGATIVE)	
		1	**1S-7251**	1	TERMINAL-CABLE (00-GA, 1/2-IN SCREW)	
		1	**8S-3020**	1	TERMINAL-CABLE (00-GA, 3/8-IN SCREW)	
E		1	**159-8050**		CABLE (00-GA, BLACK) (6-CM)	
	13	1	**156-6175**	2	CLIP	
	14	1	**277-1873**	2	CLIP	
	15	1	**4P-7581**	1	CLIP	
	16	1	**4P-8134**	1	CLIP	
M	17	1	**5C-2890**	2	NUT (M6X1-THD)	
M	18	1	**5C-9553**	2	BOLT (M6X1X16-MM)	
	19	1	**5T-6374**	1	SPACER (10.5X20X40-MM THK)	
	20	1	**7C-4354**	2	CLIP	
Y	21	1	**7N-0718**	1	SWITCH GP-DISCONNECT (BATTERY)	279
	22	1	**7X-7729**	2	WASHER (11X25X3-MM THK)	
	23	1	**8T-1887**	1	CLIP (SLOT)	
	24	1	**8T-1888**	1	CLIP (TAB)	
	25	1	**8T-4121**	8	WASHER-HARD (11X21X2.5-MM THK)	
M	26	1	**8T-4133**	1	NUT (M10X1.5-THD)	
M	27	1	**8T-4137**	6	BOLT (M10X1.5X20-MM)	

290-6789 **BATTERY & WIRING GP** *(contd.)* **i03859013**

NOTE	REF NO	GRAPHIC REF	PART NUMBER	QTY	PART NAME 1 2 3 4 5 6 (PRODUCT LEVEL)	SEE PAGE
M	28	1	**8T-4185**	1	BOLT (M10X1.5X50-MM)	
	29	1	**8T-4205**	4	WASHER-HARD (7.2X14.5X2-MM THK)	
M	30	1	**8T-6466**	1	BOLT (M10X1.5X60-MM)	
	31	1	**8T-7934**	2	WASHER-HARD (11X21X5-MM THK)	
	32	1	**8X-5489**	1	SLEEVE	
	33	1	**9G-4191**	1	GROMMET	

B-USE AS REQUIRED
E-ORDER BY THE CENTIMETER
M-METRIC PART
Y-SEPARATE ILLUSTRATION

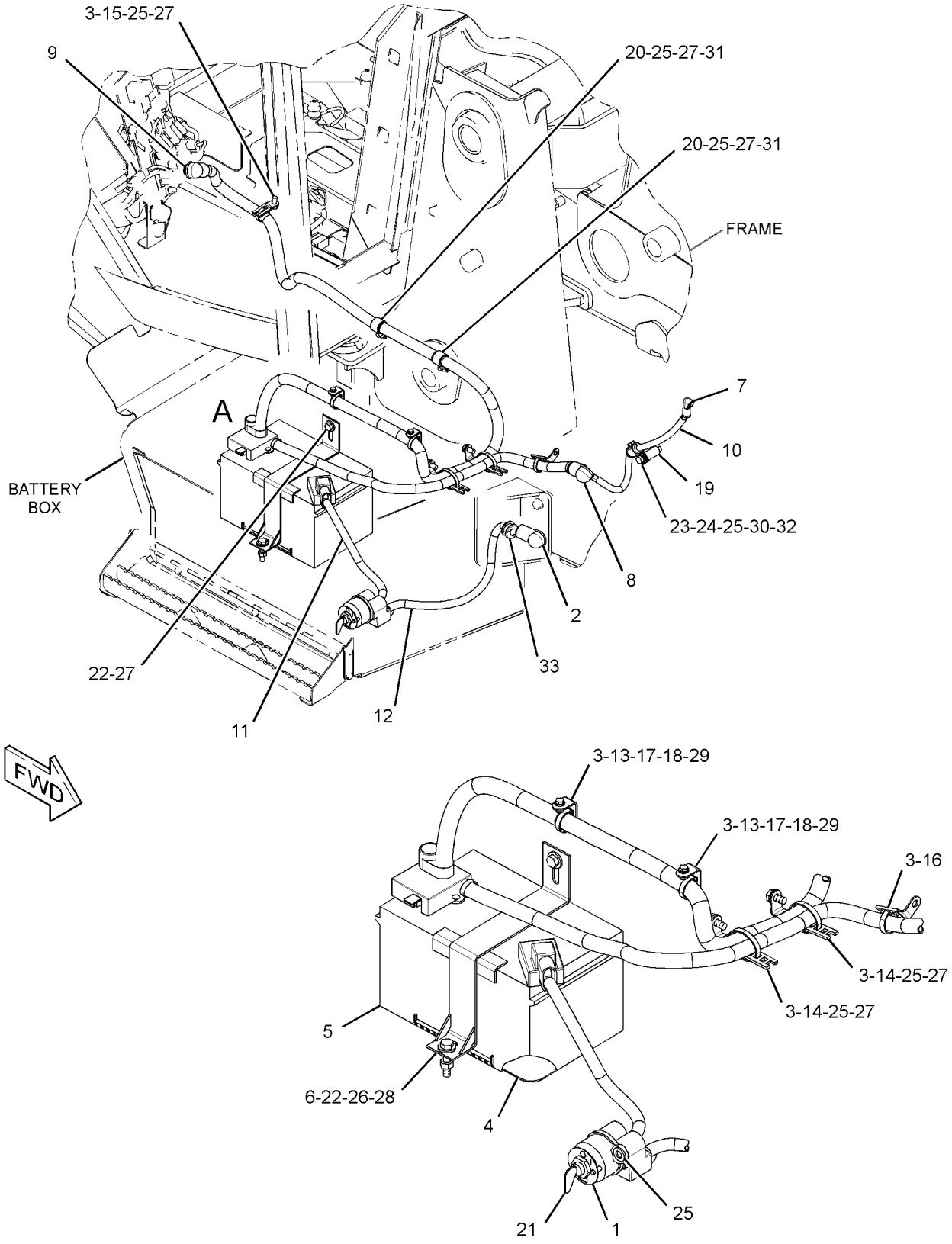

VIEW OF AREA A

GRAPHIC #1 **<END>** g01675149

ELECTRICAL AND STARTING SYSTEM

290-6790 BATTERY & WIRING GP

S/N: CBD1-2711
AN ATTACHMENT

SMCS-1401, 1402, 1408, 1411 **i02835600**

NOTE	REF NO	GRAPHIC REF	PART NUMBER	QTY	PART NAME 1 2 3 4 5 6 (PRODUCT LEVEL)	SEE PAGE
	1	1	**3E-8320**	1	PLATE-INSTRUCTION (BATTERY)	
M	2	1	**5C-9553**	2	BOLT (M6X1X16-MM)	
	3	1	**6T-0465**	1	COVER-TERMINAL (BLACK)	
	4	1	**7K-1181**	6	STRAP-CABLE	
Y	5	1	**7N-0718**	1	SWITCH GP-DISCONNECT (BATTERY)	279
	6	1	**038-9317**	1	TREAD-NONSKID	
	7	1	**178-1781**	1	CLIP	
	8	1	**213-6089**	1	CABLE AS-POWER (CAB)	
		1	**6T-5598**	1	TERMINAL-RING (1-GA TO 2-GA, 5/16-IN SCREW)	
		1	**8L-8413**	2	STRAP-CABLE	
E		1	**8C-3056**		CABLE (2-GA, RED) (230-CM)	
		1	**8T-8799**	1	BOOT	
E		1	**8Y-8080**		TUBE-CONVOLUTED (230-CM)	
	9	1	**213-6094**	1	CABLE AS (ALTERNATOR AIR) (ALTERNATOR)	
E		1	**125-7876**		TUBE-HEAT SHRINK (17.78-MM DIA) (7-CM)	
		1	**8T-8799**	1	BOOT	
	10	1	**230-6368**	1	BATTERY (12-VOLT, MAINTENANCE FREE)	
	11	1	**240-4639**	1	BRACKET AS	
	12	1	**243-5027**	1	NUT AS (M6X1-THD)	
	13	1	**246-8053**	1	CABLE AS-BATTERY (POSITIVE)	
E		1	**8Y-8081**		TUBE-CONVOLUTED (94-CM)	
		1	**1S-7251**	1	TERMINAL-CABLE (00-GA, 1/2-IN SCREW)	
		1	**3S-2093**	2	STRAP-CABLE	
E		1	**5P-0761**		CABLE (00-GA, RED) (94-CM)	
		1	**8N-0869**	1	COVER-TERMINAL (RED)	
	14	1	**290-6791**	1	CABLE AS (NEGATIVE)	
					(BATTERY TO SWITCH)	
		1	**8S-3020**	1	TERMINAL-CABLE (00-GA, 3/8-IN SCREW)	
E		1	**159-8050**		CABLE (00-GA, BLACK) (44-CM)	
	15	1	**290-6792**	1	CABLE AS (NEGATIVE)	
					(SWITCH TO FRAME)	
		1	**1S-7251**	1	TERMINAL-CABLE (00-GA, 1/2-IN SCREW)	
		1	**8S-3020**	1	TERMINAL-CABLE (00-GA, 3/8-IN SCREW)	
E		1	**159-8050**		CABLE (00-GA, BLACK) (6-CM)	
	16	1	**156-6175**	2	CLIP	
	17	1	**4D-6466**	2	CLIP	
	18	1	**4P-7581**	1	CLIP	
M	19	1	**5C-2890**	2	NUT (M6X1-THD)	
	20	1	**7X-7729**	2	WASHER (11X25X3-MM THK)	
	21	1	**8T-4121**	5	WASHER-HARD (11X21X2.5-MM THK)	
M	22	1	**8T-4133**	1	NUT (M10X1.5-THD)	
M	23	1	**8T-4137**	4	BOLT (M10X1.5X20-MM)	
M	24	1	**8T-4185**	1	BOLT (M10X1.5X50-MM)	
	25	1	**8T-4205**	4	WASHER-HARD (7.2X14.5X2-MM THK)	
	26	1	**9G-4191**	1	GROMMET	
E	27	1	**3E-8299**		SEAL (11-CM)	
E	27A	1	**3E-8299**		SEAL (2-CM)	
E	27B	1	**3E-8299**		SEAL (7-CM)	

E-ORDER BY THE CENTIMETER
M-METRIC PART
Y-SEPARATE ILLUSTRATION

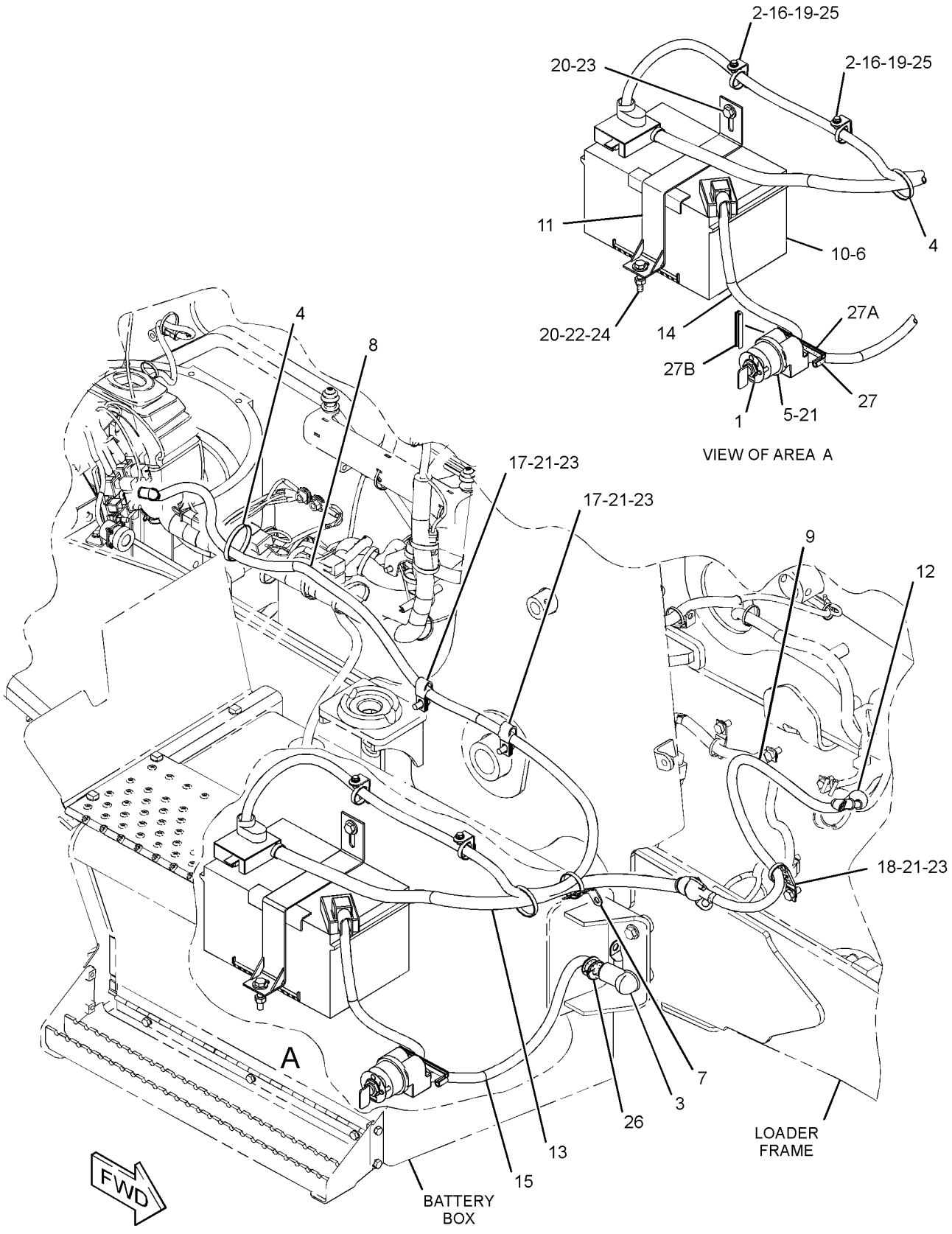

GRAPHIC #1

<END>

g01411909

ELECTRICAL AND STARTING SYSTEM

290-6790 BATTERY & WIRING GP

S/N: CBD2712-3181
AN ATTACHMENT

SMCS-1401, 1402, 1408, 1411 **i02933755**

NOTE	REF NO	GRAPHIC REF	PART NUMBER	QTY	PART NAME 1 2 3 4 5 6 (PRODUCT LEVEL)	SEE PAGE
	1	1	**3E-8320**	1	PLATE-INSTRUCTION (BATTERY) (DISCONNECT SWITCH)	
M	2	1	**5C-9553**	2	BOLT (M6X1X16-MM)	
	3	1	**6T-0465**	1	COVER-TERMINAL (BLACK)	
C	4	1	**7K-1181**	8	STRAP-CABLE	
Y	5	1	**7N-0718**	1	SWITCH GP-DISCONNECT (BATTERY)	279
	6	1	**038-9317**	1	TREAD-NONSKID	
C	7	1	**277-1873**	2	CLIP	
	8	1	**213-6089**	1	CABLE AS-POWER (CAB)	
B		1	**1P-0810**		TAPE-ELECTRICAL	
		1	**6T-5598**	1	TERMINAL-RING (1-GA TO 2-GA, 5/16-IN SCREW)	
E		1	**135-5009**		TUBE-HEAT SHRINK (32-MM DIA) (5-CM)	
E		1	**8C-3056**		CABLE (2-GA, RED) (230-CM)	
		1	**8T-8799**	1	BOOT	
E		1	**319-0755**		TUBE-CONVOLUTED (225-CM)	
	9	1	**213-6094**	1	CABLE AS (ALTERNATOR AIR) (ALTERNATOR)	
E		1	**125-7876**		TUBE-HEAT SHRINK (17.78-MM DIA) (7-CM)	
		1	**8T-8799**	1	BOOT	
	10	1	**230-6368**	1	BATTERY (12-VOLT, MAINTENANCE FREE)	
	11	1	**240-4639**	1	BRACKET AS	
	12	1	**243-5027**	1	NUT AS (M6X1-THD)	
	13	1	**246-8053**	1	CABLE AS-BATTERY (POSITIVE)	
E		1	**8Y-8081**		TUBE-CONVOLUTED (105-CM)	
		1	**1S-7251**	1	TERMINAL-CABLE (00-GA, 1/2-IN SCREW)	
		1	**3S-2093**	2	STRAP-CABLE	
E		1	**5P-0761**		CABLE (00-GA, RED) (110-CM)	
		1	**8N-0869**	1	COVER-TERMINAL (RED)	
	14	1	**290-6791**	1	CABLE AS (NEGATIVE)	
					(BATTERY TO SWITCH)	
		1	**8S-3020**	1	TERMINAL-CABLE (00-GA, 3/8-IN SCREW)	
E		1	**159-8050**		CABLE (00-GA, BLACK) (44-CM)	
	15	1	**290-6792**	1	CABLE AS (NEGATIVE)	
					(SWITCH TO FRAME)	
		1	**1S-7251**	1	TERMINAL-CABLE (00-GA, 1/2-IN SCREW)	
		1	**8S-3020**	1	TERMINAL-CABLE (00-GA, 3/8-IN SCREW)	
E		1	**159-8050**		CABLE (00-GA, BLACK) (6-CM)	
	16	1	**156-6175**	2	CLIP	
	17	1	**4D-6466**	2	CLIP	
	18	1	**4P-7581**	1	CLIP	
M	19	1	**5C-2890**	2	NUT (M6X1-THD)	
	20	1	**7X-7729**	2	WASHER (11X25X3-MM THK)	
C	21	1	**8T-4121**	7	WASHER-HARD (11X21X2.5-MM THK)	
M	22	1	**8T-4133**	1	NUT (M10X1.5-THD)	
CM	23	1	**8T-4137**	6	BOLT (M10X1.5X20-MM)	
M	24	1	**8T-4185**	1	BOLT (M10X1.5X50-MM)	
	25	1	**8T-4205**	4	WASHER-HARD (7.2X14.5X2-MM THK)	
	26	1	**9G-4191**	1	GROMMET	
E	27	1	**3E-8299**		SEAL (11-CM)	
E	27A	1	**3E-8299**		SEAL (2-CM)	
E	27B	1	**3E-8299**		SEAL (7-CM)	
C	28	1	**4P-8134**	1	CLIP	

B-USE AS REQUIRED
C-CHANGE FROM PREVIOUS TYPE
E-ORDER BY THE CENTIMETER
M-METRIC PART
Y-SEPARATE ILLUSTRATION

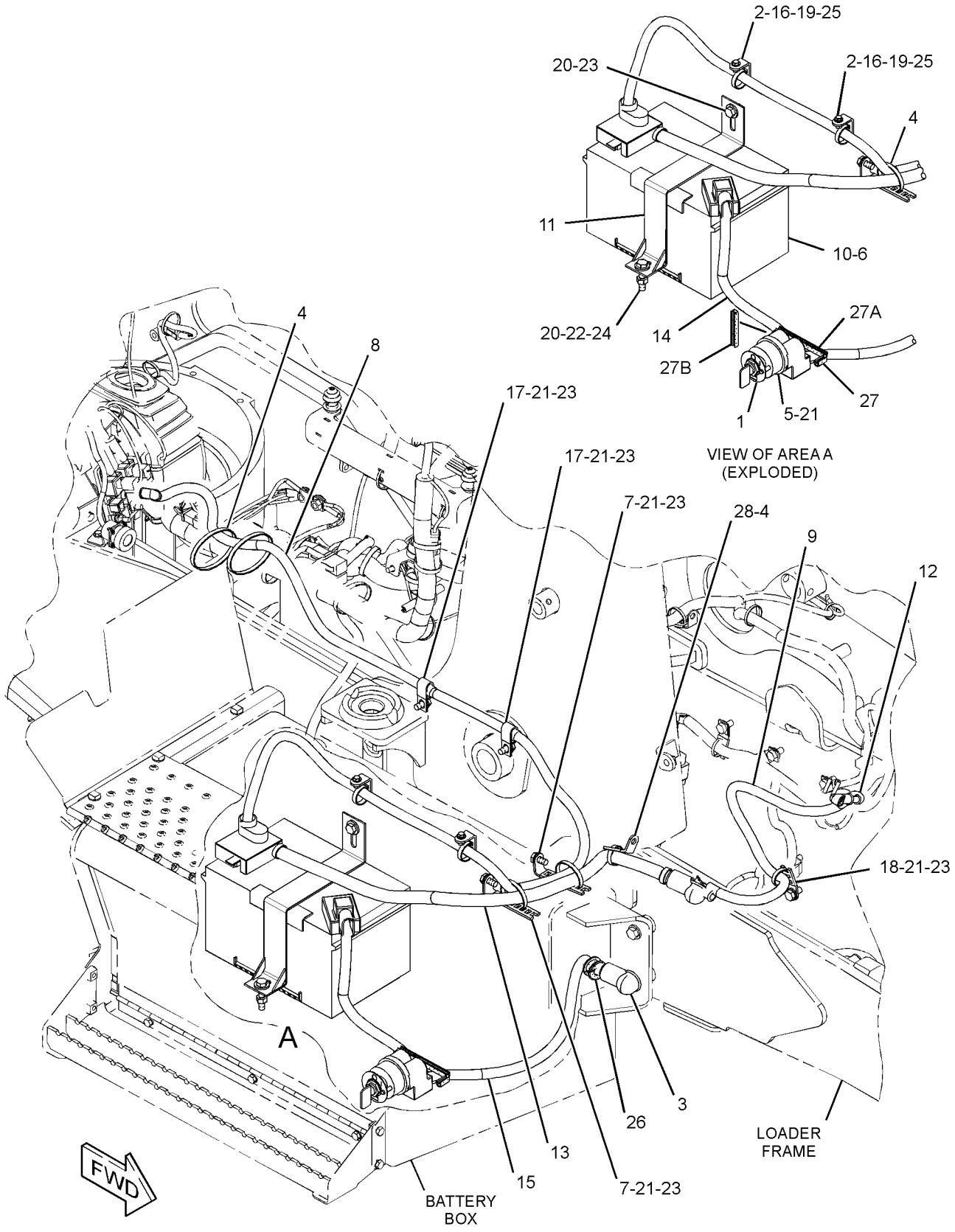

GRAPHIC #1 **<END>** g01547073

ELECTRICAL AND STARTING SYSTEM

290-6790 BATTERY & WIRING GP

S/N: CBD1-UP; MFG1-UP

PART OF 374-3521, 374-3529, 374-6535, 374-6536 DISTRIBUTION AR

AN ATTACHMENT

SMCS-1401, 1402, 1408, 1411 **i03089601**

NOTE	REF NO	GRAPHIC REF	PART NUMBER	QTY	PART NAME 1 2 3 4 5 6 (PRODUCT LEVEL)	SEE PAGE
	1	1	**3E-8320**	1	PLATE-INSTRUCTION (BATTERY) (DISCONNECT SWITCH)	
M	2	1	**5C-9553**	2	BOLT (M6X1X16-MM)	
	3	1	**6T-0465**	1	COVER-TERMINAL (BLACK)	
	4	1	**7K-1181**	8	STRAP-CABLE	
Y	5	1	**7N-0718**	1	SWITCH GP-DISCONNECT (BATTERY)	279
	6	1	**038-9317**	1	TREAD-NONSKID	
	7	1	**277-1873**	2	CLIP	
	8	1	**213-6089**	1	CABLE AS-POWER (CAB)	
B		1	**1P-0810**		TAPE-ELECTRICAL (42-CM)	
		1	**6T-5598**	1	TERMINAL-RING (1-GA TO 2-GA, 5/16-IN SCREW)	
E		1	**135-5009**		TUBE-HEAT SHRINK (32-MM DIA) (5-CM)	
E		1	**8C-3056**		CABLE (2-GA, RED) (230-CM)	
		1	**8T-8799**	1	BOOT	
E		1	**319-0755**		TUBE-CONVOLUTED (225-CM)	
	9	1	**213-6094**	1	CABLE AS (ALTERNATOR AIR)	
E		1	**125-7876**		TUBE-HEAT SHRINK (17.78-MM DIA) (7-CM)	
		1	**8T-8799**	1	BOOT	
	10	1	**230-6368**	1	BATTERY (12-VOLT, MAINTENANCE FREE)	
	11	1	**240-4639**	1	BRACKET AS	
	12	1	**243-5027**	1	NUT AS (M6X1-THD)	
	13	1	**246-8053**	1	CABLE AS-BATTERY (POSITIVE)	
E		1	**8Y-8081**		TUBE-CONVOLUTED (105-CM)	
		1	**1S-7251**	1	TERMINAL-CABLE (00-GA, 1/2-IN SCREW)	
		1	**3S-2093**	2	STRAP-CABLE	
E		1	**5P-0761**		CABLE (00-GA, RED) (110-CM)	
		1	**8N-0869**	1	COVER-TERMINAL (RED)	
	14	1	**290-6791**	1	CABLE AS (NEGATIVE) (BATTERY TO SWITCH)	
		1	**8S-3020**	1	TERMINAL-CABLE (00-GA, 3/8-IN SCREW)	
E		1	**159-8050**		CABLE (00-GA, BLACK) (44-CM)	
	15	1	**290-6792**	1	CABLE AS (NEGATIVE) (SWITCH TO FRAME)	
		1	**1S-7251**	1	TERMINAL-CABLE (00-GA, 1/2-IN SCREW)	
		1	**8S-3020**	1	TERMINAL-CABLE (00-GA, 3/8-IN SCREW)	
E		1	**159-8050**		CABLE (00-GA, BLACK) (6-CM)	
	16	1	**156-6175**	2	CLIP	
	17	1	**4D-6466**	2	CLIP	
	18	1	**4P-7581**	1	CLIP	
M	19	1	**5C-2890**	2	NUT (M6X1-THD)	
	20	1	**7X-7729**	2	WASHER (11X25X3-MM THK)	
	21	1	**8T-4121**	7	WASHER-HARD (11X21X2.5-MM THK)	
M	22	1	**8T-4133**	1	NUT (M10X1.5-THD)	
M	23	1	**8T-4137**	6	BOLT (M10X1.5X20-MM)	
M	24	1	**8T-4185**	1	BOLT (M10X1.5X50-MM)	
	25	1	**8T-4205**	4	WASHER-HARD (7.2X14.5X2-MM THK)	
	26	1	**9G-4191**	1	GROMMET	
	27	1	**4P-8134**	1	CLIP	

B-USE AS REQUIRED
E-ORDER BY THE CENTIMETER
M-METRIC PART
Y-SEPARATE ILLUSTRATION

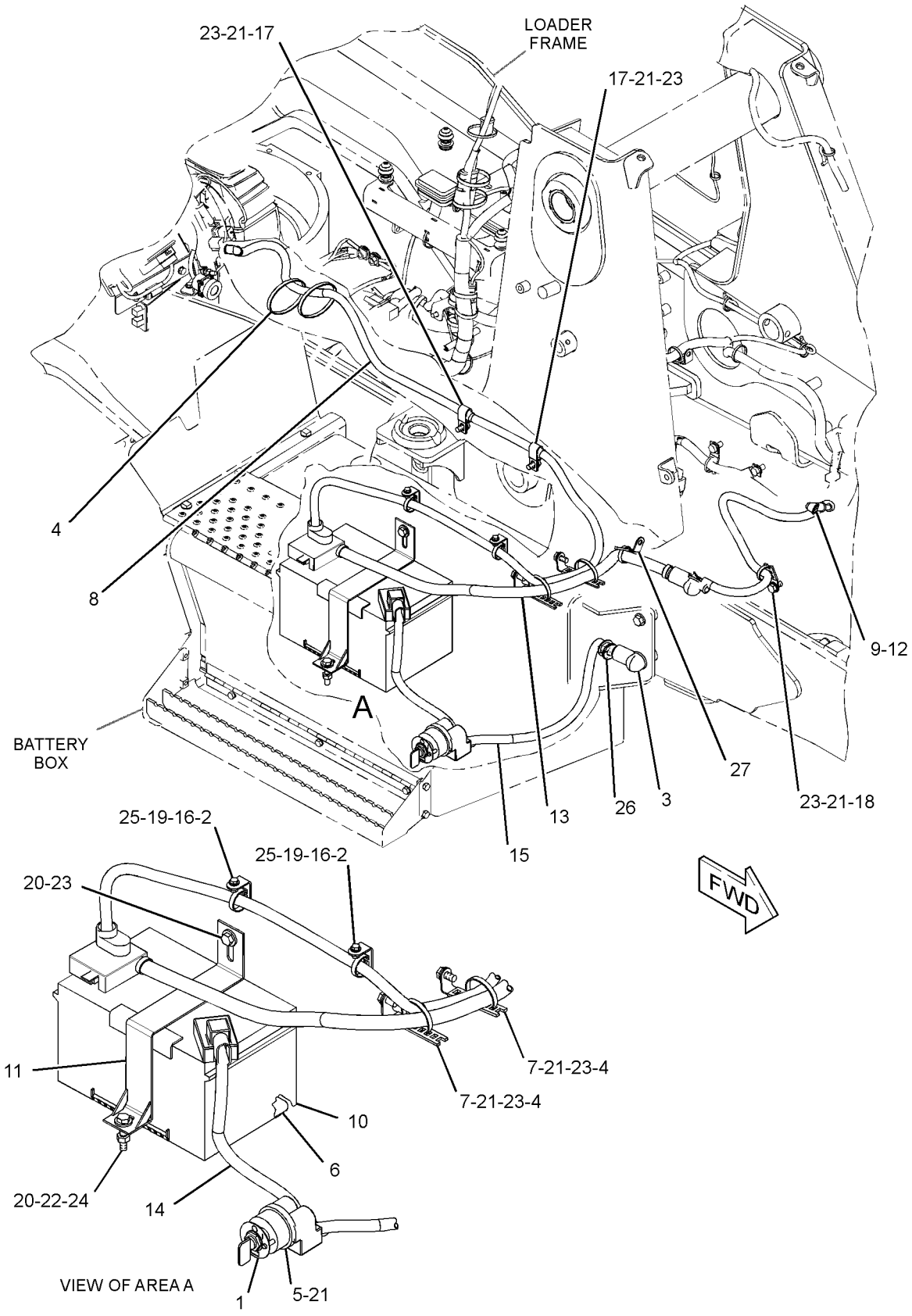

GRAPHIC #1 **<END>** g01446074

ELECTRICAL AND STARTING SYSTEM

290-6830 BATTERY & WIRING GP

S/N: CBD1-4293
AN ATTACHMENT

SMCS-1401, 1402, 1408, 1411 **i02816389**

NOTE	REF NO	GRAPHIC REF	PART NUMBER	QTY	PART NAME 1 2 3 4 5 6 (PRODUCT LEVEL)	SEE PAGE
	1	1	**3E-8320**	1	PLATE-INSTRUCTION (BATTERY)	
	2	1	**6T-0465**	1	COVER-TERMINAL (BLACK)	
	3	1	**7K-1181**	9	STRAP-CABLE	
Y	4	1	**7N-0718**	1	SWITCH GP-DISCONNECT (BATTERY)	279
	5	1	**038-9317**	1	TREAD-NONSKID	
	6	1	**178-9242**	1	BRACKET AS	
	7	1	**213-6089**	1	CABLE AS-POWER (CAB)	
		1	**6T-5598**	1	TERMINAL-RING (1-GA TO 2-GA, 5/16-IN SCREW)	
E		1	**8C-3056**		CABLE (2-GA, RED) (230-CM)	
		1	**8T-8799**	1	BOOT	
E		1	**8Y-8080**		TUBE-CONVOLUTED (225-CM)	
B		1	**8L-8413**	2	STRAP-CABLE	
	8	1	**243-5027**	1	NUT AS (M6X1-THD)	
	9	1	**246-8053**	1	CABLE AS-BATTERY (POSITIVE)	
		1	**1S-7251**	1	TERMINAL-CABLE (00-GA, 1/2-IN SCREW)	
		1	**3S-2093**	2	STRAP-CABLE	
E		1	**5P-0761**		CABLE (00-GA, RED) (94-CM)	
		1	**8N-0869**	1	COVER-TERMINAL (RED)	
E		1	**8Y-8081**		TUBE-CONVOLUTED (94-CM)	
	10	1	**246-8058**	1	CABLE AS (ALTERNATOR AIR)	
		1	**125-7876**		TUBE-HEAT SHRINK (17.78-MM DIA) (7-CM)	
	11	1	**290-6791**	1	CABLE AS (NEGATIVE)	
					(BATTERY TO SWITCH)	
		1	**8S-3020**	1	TERMINAL-CABLE (00-GA, 3/8-IN SCREW)	
E		1	**159-8050**		CABLE (00-GA, BLACK) (44-CM)	
	12	1	**290-6792**	1	CABLE AS (NEGATIVE)	
					(SWITCH TO FRAME)	
		1	**1S-7251**	1	TERMINAL-CABLE (00-GA, 1/2-IN SCREW)	
		1	**8S-3020**	1	TERMINAL-CABLE (00-GA, 3/8-IN SCREW)	
E		1	**159-8050**		CABLE (00-GA, BLACK) (6-CM)	
	13	1	**132-5789**	2	CLIP	
	14	1	**156-6175**	2	CLIP	
	15	1	**277-1873**	2	CLIP	
	16	1	**3T-5760**	1	BATTERY (12-VOLT, MAINTENANCE FREE, WET)	
	17	1	**4D-6466**	2	CLIP	
	18	1	**4P-8134**	1	CLIP	
M	19	1	**5C-2890**	2	NUT (M6X1-THD)	
M	20	1	**5C-7261**	1	NUT (M8X1.25-THD)	
	21	1	**7X-7729**	2	WASHER (11X25X3-MM THK)	
	22	1	**8T-4121**	8	WASHER-HARD (11X21X2.5-MM THK)	
M	23	1	**8T-4133**	1	NUT (M10X1.5-THD)	
M	24	1	**8T-4137**	7	BOLT (M10X1.5X20-MM)	
M	25	1	**8T-4138**	2	BOLT (M6X1X20-MM)	
	26	1	**8T-4205**	4	WASHER-HARD (7.2X14.5X2-MM THK)	
	27	1	**8T-4224**	1	WASHER-HARD (8.8X16X2-MM THK)	
M	28	1	**8T-5005**	1	BOLT (M10X1.5X70-MM)	
	29	1	**9G-4191**	1	GROMMET	
E	30	1	**3E-8299**		SEAL (7-CM)	
E	30A	1	**3E-8299**		SEAL (2-CM)	
E	30B	1	**3E-8299**		SEAL (11-CM)	

B-USE AS REQUIRED
E-ORDER BY THE CENTIMETER
M-METRIC PART
Y-SEPARATE ILLUSTRATION

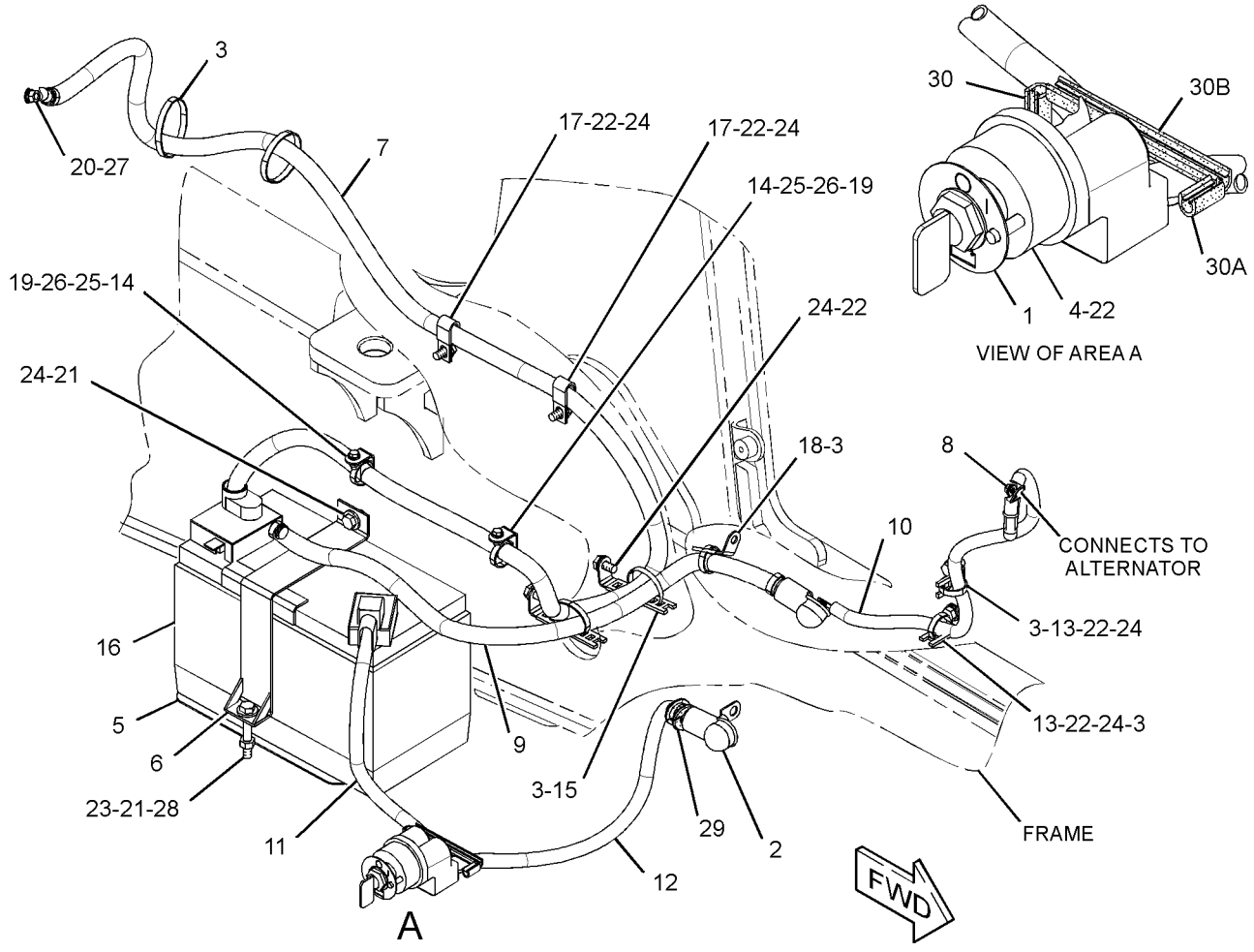

GRAPHIC #1 **<END>** g01412574

ELECTRICAL AND STARTING SYSTEM

290-6830 BATTERY & WIRING GP

S/N: CBD1-UP; MFG1-UP
PART OF 356-0067, 356-0068, 356-0069, 374-3517, 374-3518, 374-3519, 374-6532, 374-6533, 374-6534 DISTRIBUTION AR
AN ATTACHMENT

SMCS-1401, 1402, 1408, 1411 **i03385281**

NOTE	REF NO	GRAPHIC REF	PART NUMBER	QTY	PART NAME 1 2 3 4 5 6 (PRODUCT LEVEL)	SEE PAGE
	1	1	**3E-8320**	1	PLATE-INSTRUCTION (BATTERY)	
	2	1	**6T-0465**	1	COVER-TERMINAL (BLACK)	
	3	1	**7K-1181**	9	STRAP-CABLE	
Y	4	1	**7N-0718**	1	SWITCH GP-DISCONNECT (BATTERY)	279
	5	1	**038-9317**	1	TREAD-NONSKID	
	6	1	**178-9242**	1	BRACKET AS	
	7	1	**213-6089**	1	CABLE AS-POWER (CAB)	
		1	**6T-5598**	1	TERMINAL-RING (1-GA TO 2-GA, 5/16-IN SCREW)	
E		1	**8C-3056**		CABLE (2-GA, RED) (230-CM)	
		1	**8T-8799**	1	BOOT	
E		1	**319-0755**		TUBE-CONVOLUTED (225-CM)	
E		1	**135-5009**		TUBE-HEAT SHRINK (32-MM DIA) (5-CM)	
	8	1	**243-5027**	1	NUT AS (M6X1-THD)	
	9	1	**246-8053**	1	CABLE AS-BATTERY (POSITIVE)	
		1	**1S-7251**	1	TERMINAL-CABLE (00-GA, 1/2-IN SCREW)	
		1	**3S-2093**	2	STRAP-CABLE	
E		1	**5P-0761**		CABLE (00-GA, RED) (110-CM)	
		1	**8N-0869**	1	COVER-TERMINAL (RED)	
E		1	**8Y-8081**		TUBE-CONVOLUTED (105-CM)	
	10	1	**246-8058**	1	CABLE AS (ALTERNATOR AIR)	
		1	**125-7876**		TUBE-HEAT SHRINK (17.78-MM DIA) (7-CM)	
	11	1	**290-6791**	1	CABLE AS (NEGATIVE)	
					(BATTERY TO SWITCH)	
		1	**8S-3020**	1	TERMINAL-CABLE (00-GA, 3/8-IN SCREW)	
E		1	**159-8050**		CABLE (00-GA, BLACK) (44-CM)	
	12	1	**290-6792**	1	CABLE AS (NEGATIVE)	
					(SWITCH TO FRAME)	
		1	**1S-7251**	1	TERMINAL-CABLE (00-GA, 1/2-IN SCREW)	
		1	**8S-3020**	1	TERMINAL-CABLE (00-GA, 3/8-IN SCREW)	
E		1	**159-8050**		CABLE (00-GA, BLACK) (6-CM)	
	13	1	**132-5789**	2	CLIP	
	14	1	**156-6175**	2	CLIP	
	15	1	**277-1873**	2	CLIP	
	16	1	**3T-5760**	1	BATTERY (12-VOLT, MAINTENANCE FREE, WET)	
	17	1	**4D-6466**	2	CLIP	
	18	1	**4P-8134**	1	CLIP	
M	19	1	**5C-2890**	2	NUT (M6X1-THD)	
M	20	1	**5C-7261**	1	NUT (M8X1.25-THD)	
	21	1	**7X-7729**	2	WASHER (11X25X3-MM THK)	
	22	1	**8T-4121**	8	WASHER-HARD (11X21X2.5-MM THK)	
M	23	1	**8T-4133**	1	NUT (M10X1.5-THD)	
M	24	1	**8T-4137**	7	BOLT (M10X1.5X20-MM)	
M	25	1	**8T-4138**	2	BOLT (M6X1X20-MM)	
	26	1	**8T-4205**	4	WASHER-HARD (7.2X14.5X2-MM THK)	
	27	1	**8T-4224**	1	WASHER-HARD (8.8X16X2-MM THK)	
M	28	1	**8T-5005**	1	BOLT (M10X1.5X70-MM)	
	29	1	**9G-4191**	1	GROMMET	

E-ORDER BY THE CENTIMETER
M-METRIC PART
Y-SEPARATE ILLUSTRATION

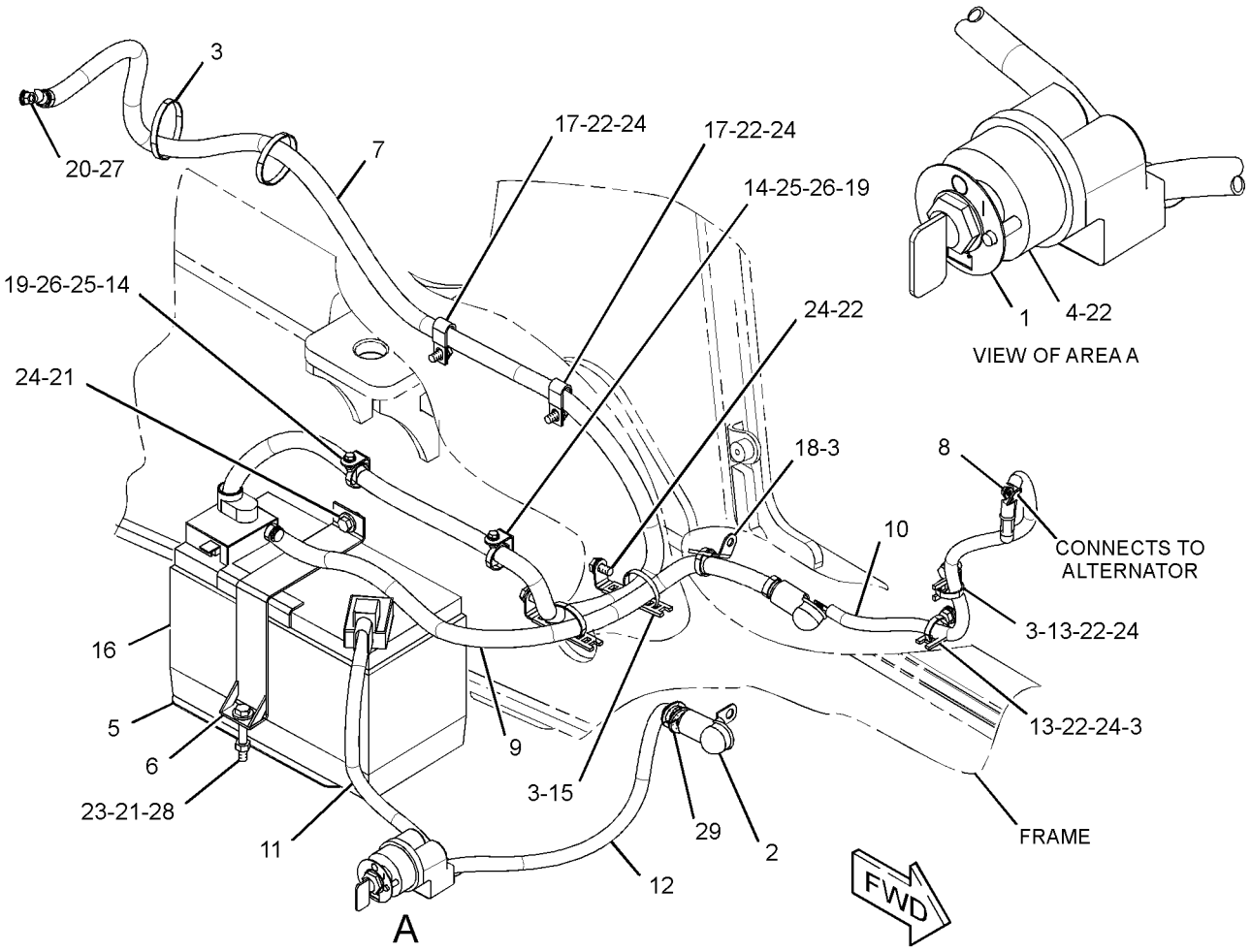

GRAPHIC #1 **<END>** g01821594

336-3545 ELECTRONICS GP-COMMUNICATION–

PRODUCT LINK 121SR

S/N: CBD1-UP; MFG1-UP

PART OF 225-7994 INSTALLATION GP-COMMUNICATION

AN ATTACHMENT

SMCS-7606, 7610, 7620 **i04515790**

NOTE	PART NUMBER	QTY	PART NAME 1 2 3 4 5 6 (PRODUCT LEVEL)	SEE PAGE
	377-4844	1	SOFTWARE GP-COMMUNICATION	

<END>

232-6661 GLOW PLUG GP

S/N: G4D1-UP; CRS1-UP

PART OF 273-3610 ENGINE AR, 245-6841, 323-5724, 323-5725 ENGINE AR-PRIMARY AN ATTACHMENT

SMCS-1412 **i02757179**

NOTE	REF NO	GRAPHIC REF	PART NUMBER	QTY	PART NAME 1 2 3 4 5 6 (PRODUCT LEVEL)	SEE PAGE
	1	1	**286-4880**	1	BUS BAR AS	
	2	1	**232-6662**	4	GLOW PLUG (12-VOLT)	
	3	1	**232-3126**	1	CLIP	

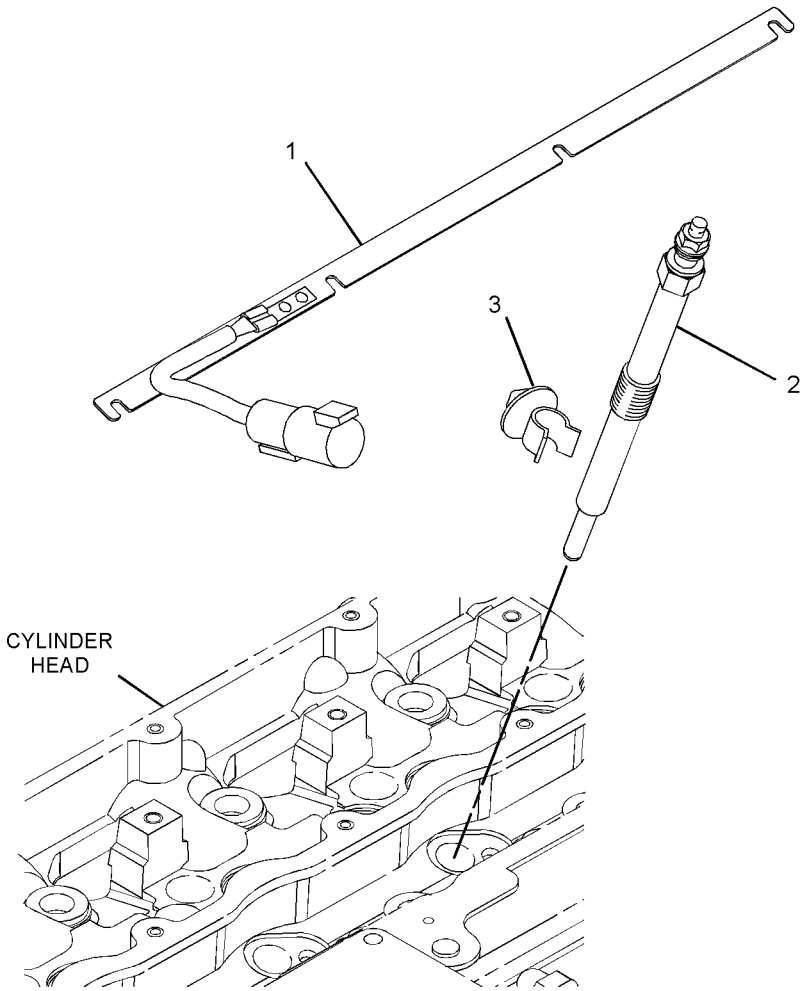

GRAPHIC #1 **<END>** g01392990

315-3418 GLOW PLUG GP

S/N: C4Z1-UP

PART OF 321-7704 ENGINE AR-PRIMARY

SMCS-1412 **i03301253**

NOTE	REF NO	GRAPHIC REF	PART NUMBER	QTY	PART NAME 1 2 3 4 5 6 (PRODUCT LEVEL)	SEE PAGE
	1	1	**286-4880**	1	BUS BAR AS	
	2	1	**232-6662**	4	GLOW PLUG (12-VOLT)	

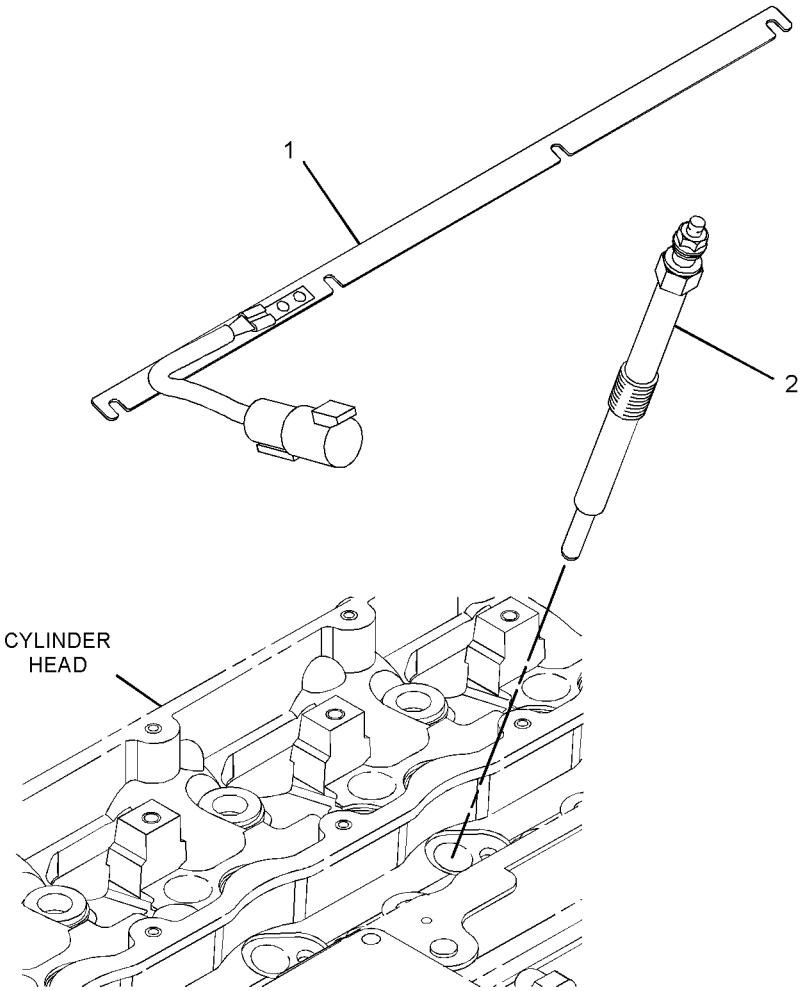

GRAPHIC #1 **<END>** g01398213

248-2214 HEATER GP-JACKET WATER–120-VOLT

S/N: CBD1-UP; MFG1-UP
AN ATTACHMENT

SMCS-1383 **i02498288**

NOTE	REF NO	GRAPHIC REF	PART NUMBER	QTY	PART NAME 1 2 3 4 5 6 (PRODUCT LEVEL)	SEE PAGE
	1	1	**3S-2093**	2	STRAP-CABLE	
	2	1	**130-0165**	1	RECEPTACLE AS (FLUSH MOUNT)	
	3	1	**165-8357**	1	BRACKET AS	
M		1	**8T-3612**	2	NUT-WELD (M8X1.25-THD)	
	4	1	*231-3054*	1	HEATER GP-JACKET WATER	
		1	**219-3273**	1	ELEMENT AS-JACKET WATER HEATER (120-VOLT, 1000-WATT)	
		1	**133-3413**	1	KIT-SEAL (WATER JACKET)	
					(INCLUDES SEAL, SPACER & RINGS)	
		1	**133-6517**		CAP AS-DUST	
		1	**231-3052**	1	CORD AS (WATER JACKET)	
M	5	1	**8T-4189**	2	BOLT (M8X1.25X20-MM)	
	6	1	**8T-4224**	2	WASHER-HARD (8.8X16X2-MM THK)	

M-METRIC PART

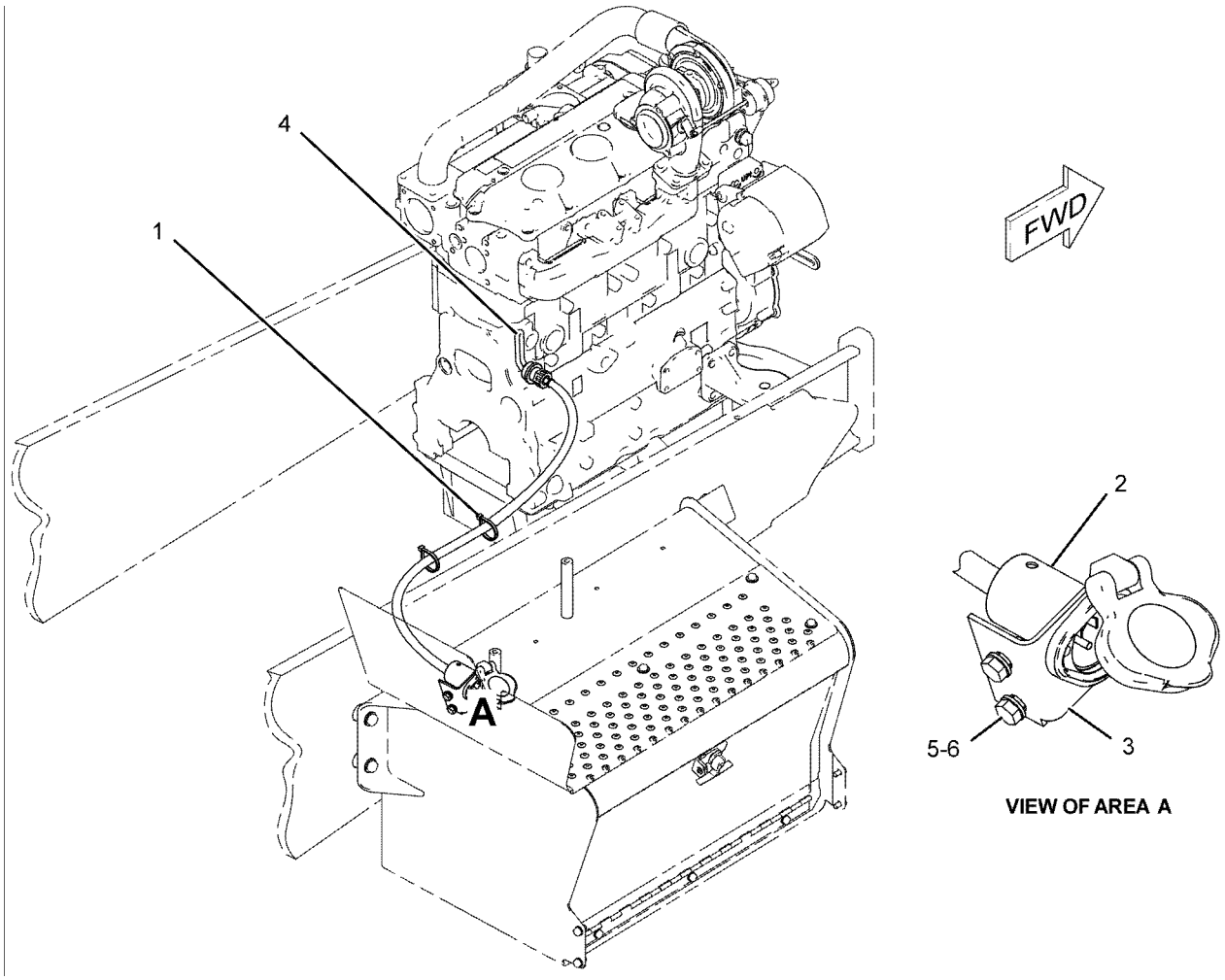

GRAPHIC #1 **<END>** g01083542

225-7994 INSTALLATION GP-COMMUNICATION–
PRODUCT LINK 121SR
S/N: CBD1-UP
AN ATTACHMENT

SMCS-7606 **i02905342**

NOTE	REF NO	GRAPHIC REF	PART NUMBER	QTY	PART NAME 1 2 3 4 5 6 (PRODUCT LEVEL)	SEE PAGE
	1	1	**7K-1181**	10	STRAP-CABLE	
	2	1	**249-9076**	4	CLIP	
	3	1	**256-6803**	1	HARNESS AS-RADIO (PRODUCT LINK)	
		1	**102-8801**	1	KIT-RECEPTACLE (12-PIN)	
		1	**102-8802**	1	KIT-RECEPTACLE (2-PIN)	
					(EACH RECEPTACLE KIT INCLUDES RECEPTACLE AS & WEDGE)	
		1	**155-2255**	1	KIT-CONNECTING PLUG (12-PIN)	
		1	**155-2270**	1	KIT-CONNECTING PLUG (2-PIN)	
					(EACH PLUG KIT INCLUDES PLUG AS, WEDGE & INTERFACE SEAL)	
	4	1	**260-7652**	1	FILM-WARNING (PRODUCT LINK 300, U.S.)	
Y	5	1	**263-9088**	1	RADIO GP-COMMUNICATION (PRODUCT LINK 121SR)	1023
	6	1	**284-8531**	1	ANTENNA AS (MAGNETIC MOUNT, PRODUCT LINK)	
		1	**301-0589**	1	ANTENNA (FLEXIBLE)	
M	7	1	**129-3178**	4	LOCKNUT (M6X1-THD)	
	8	1	**156-6175**	2	CLIP	
	9	1	**170-9360**	1	GROMMET	
	10	1	**6P-6591**	1	GROMMET	
M	11	1	**6V-7357**	4	BOLT (M6X1X25-MM)	
	12	1	**8T-4205**	6	WASHER-HARD (7.2X14.5X2-MM THK)	

M-METRIC PART
Y-SEPARATE ILLUSTRATION

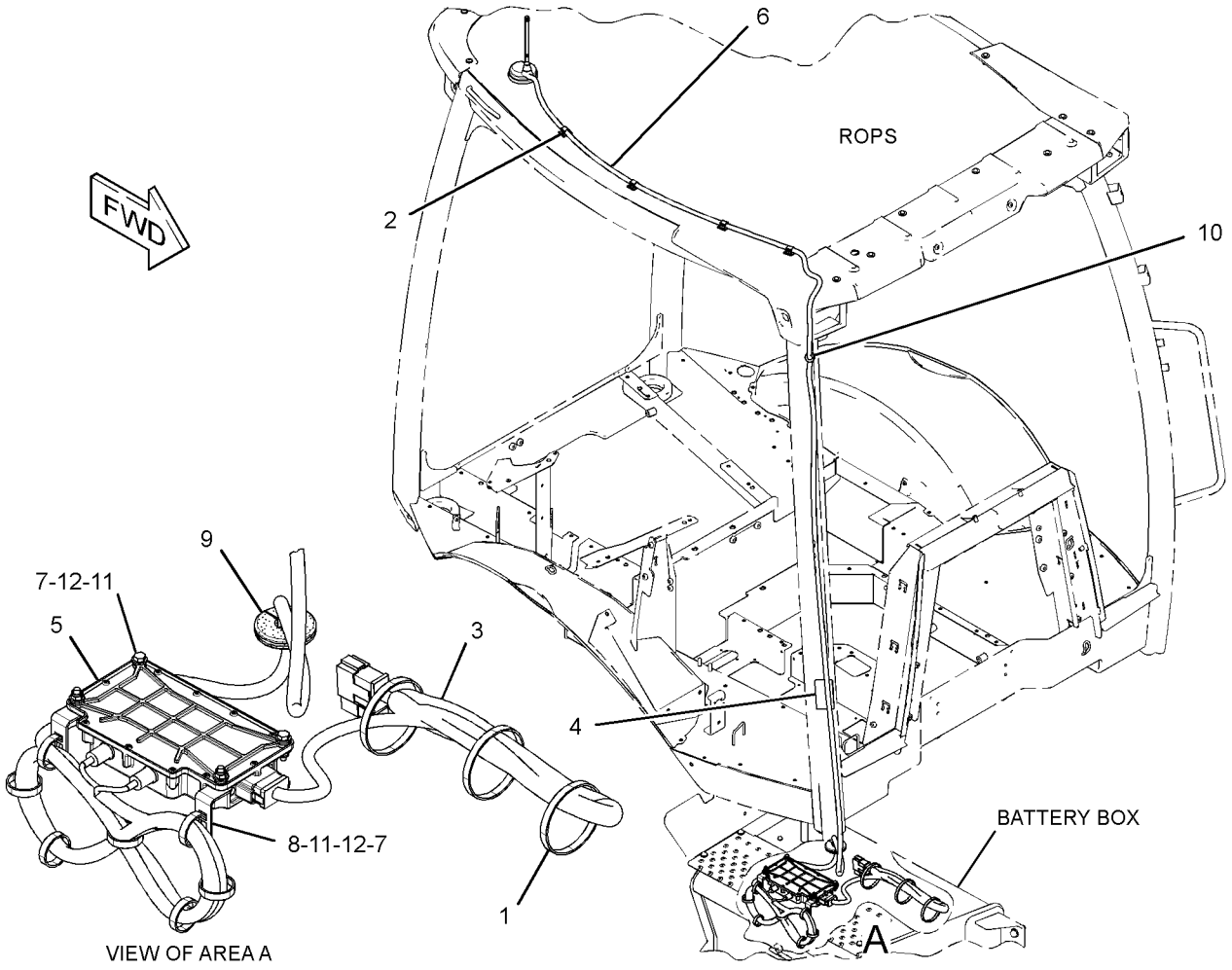

GRAPHIC #1 **<END>** g01457315

225-7994 INSTALLATION GP-COMMUNICATION–
PRODUCT LINK 121SR
S/N: CBD1-UP; MFG1-UP
AN ATTACHMENT

SMCS-7606 **i04130710**

NOTE	REF NO	GRAPHIC REF	PART NUMBER	QTY	PART NAME 1 2 3 4 5 6 (PRODUCT LEVEL)	SEE PAGE
	1	1	**7K-1181**	10	STRAP-CABLE	
	2	1	**249-9076**	4	CLIP	
	3	1	**256-6803**	1	HARNESS AS-RADIO (PRODUCT LINK)	
		1	**8T-8729**	9	PIN-CONNECTOR (16-GA TO 18-GA)	
		1	**155-2255**	1	KIT-CONNECTING PLUG (12-PIN)	
		1	**155-2270**	1	KIT-CONNECTING PLUG (2-PIN)	
					(EACH PLUG KIT INCLUDES PLUG AS, WEDGE & INTERFACE SEAL)	
		1	**8T-8737**	10	PLUG-SEAL	
		1	**102-8802**	1	KIT-RECEPTACLE (2-PIN)	
		1	**102-8801**	1	KIT-RECEPTACLE (12-PIN)	
					(EACH RECEPTACLE KIT INCLUDES RECEPTACLE AS & WEDGE)	
		1	**8T-8730**	9	SOCKET-CONNECTOR (16-GA TO 18-GA)	
	4	1	**260-7652**	1	FILM-WARNING (PRODUCT LINK 300, U.S.)	
					–OR–	
		1	**260-7653**	1	FILM-WARNING (PRODUCT LINK 300, INTL)	
CY	5	1	**336-3545**	1	ELECTRONICS GP-COMMUNICATION (PRODUCT LINK 121SR)	246
	6	1	**284-8531**	1	ANTENNA AS (MAGNETIC MOUNT, PRODUCT LINK)	
		1	**301-0589**	1	ANTENNA (FLEXIBLE)	
M	7	1	**129-3178**	4	LOCKNUT (M6X1-THD)	
	8	1	**156-6175**	2	CLIP	
	9	1	**170-9360**	1	GROMMET	
	10	1	**6P-6591**	1	GROMMET	
M	11	1	**6V-7357**	4	BOLT (M6X1X25-MM)	
	12	1	**8T-4205**	6	WASHER-HARD (7.2X14.5X2-MM THK)	

C-CHANGE FROM PREVIOUS TYPE
M-METRIC PART
Y-SEPARATE ILLUSTRATION

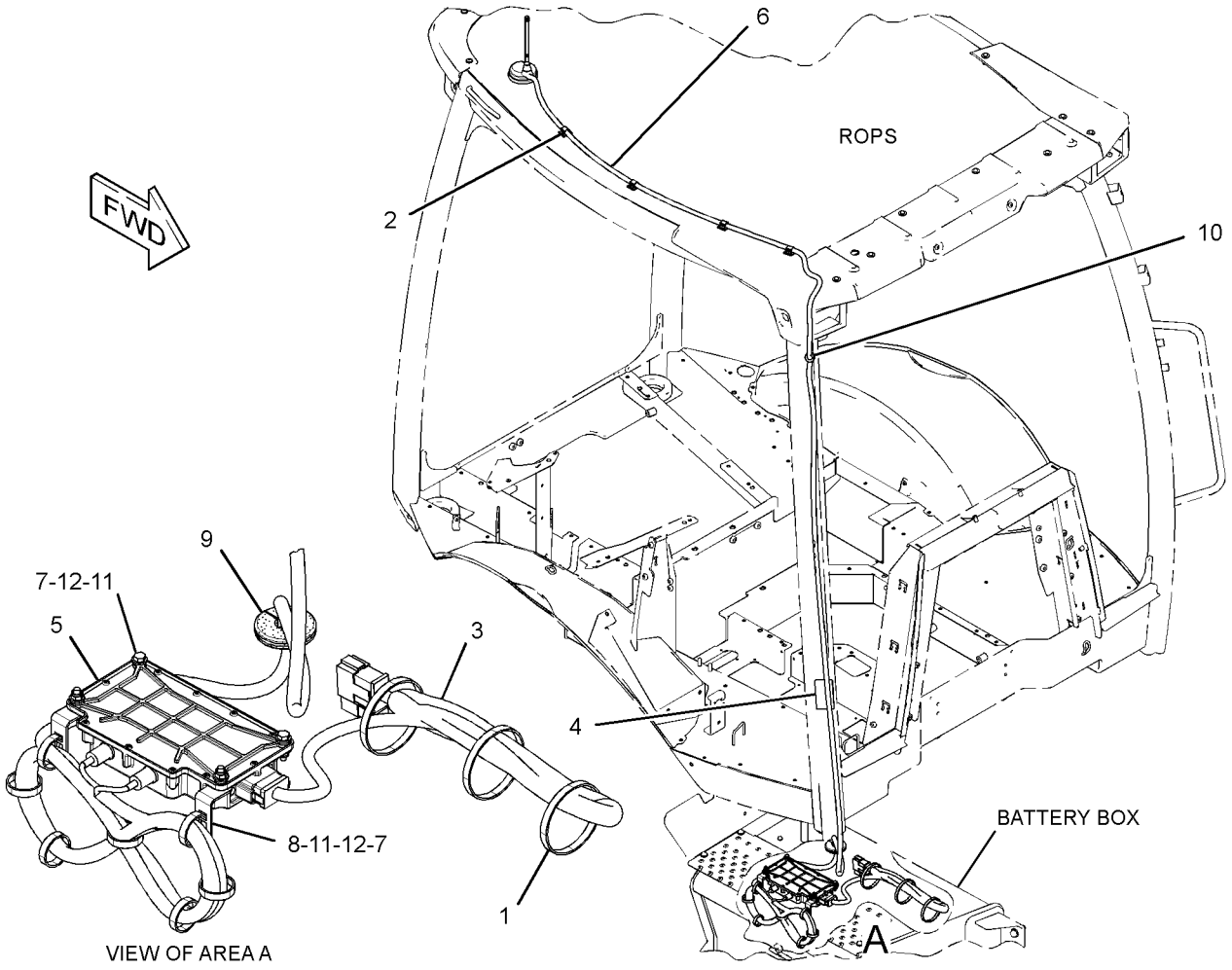

GRAPHIC #1 **<END>** g01457315

234-4328 LAMP GP-FLOOD

S/N: CBD1-UP; MFG1-UP
PART OF 211-4276, 211-4277 LIGHTING GP-FLOOD & SIGNAL
AN ATTACHMENT

SMCS-1429, 1434 **i02545870**

NOTE	REF NO	GRAPHIC REF	PART NUMBER	QTY	PART NAME 1 2 3 4 5 6 (PRODUCT LEVEL)	SEE PAGE
	1	1	**9W-0607**	1	LAMP (12-VOLT, 55-WATT)	
M	2	1	**8T-0389**	1	LOCKNUT (M10X1.5-THD)	
	3	1	**9X-4244**	2	SCREW-SPECIAL	
	4	1	**202-6614**	1	LENS AS	
	5	1	**234-7730**	1	BODY AS	
	6	1	**164-7556**	1	BRACKET (LAMP RETAINING)	
	7	1	**234-7731**	1	BRACKET AS	
	8	1	**8T-4121**	1	WASHER-HARD (11X21X2.5-MM THK)	

M-METRIC PART

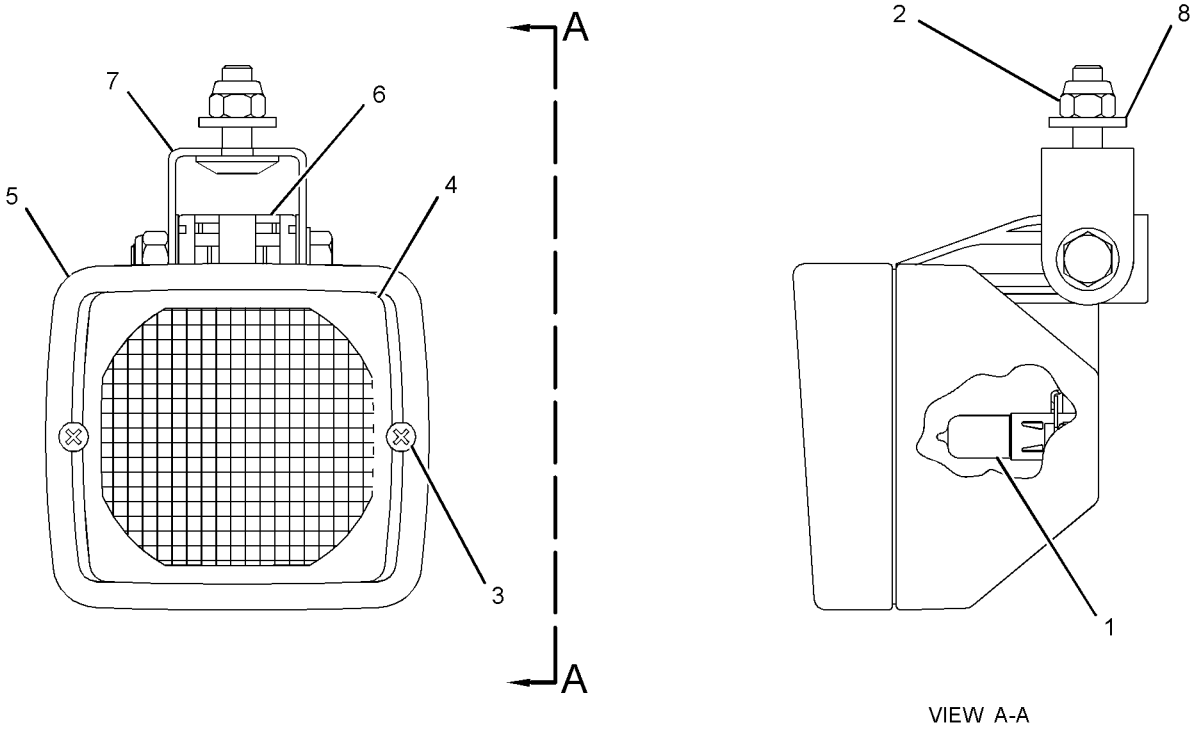

VIEW A-A

GRAPHIC #1 **<END>** g01283627

234-4329 LAMP GP-FLOOD

S/N: CBD1-UP; MFG1-UP
PART OF 211-4277 LIGHTING GP-FLOOD & SIGNAL
AN ATTACHMENT

SMCS-1429, 1434 **i02499756**

NOTE	REF NO	GRAPHIC REF	PART NUMBER	QTY	PART NAME 1 2 3 4 5 6 (PRODUCT LEVEL)	SEE PAGE
	1	1	**9W-0607**	1	LAMP (12-VOLT, 55-WATT)	
M	2	1	**8T-0389**	1	LOCKNUT (M10X1.5-THD)	
	3	1	**9X-4244**	2	SCREW-SPECIAL	
	4	1	**202-6611**	1	LENS AS	
	5	1	**234-7730**	1	BODY AS	
	6	1	**164-7556**	1	BRACKET (LAMP RETAINING)	
	7	1	**234-7731**	1	BRACKET AS	
	8	1	**8T-4121**	1	WASHER-HARD (11X21X2.5-MM THK)	

M-METRIC PART

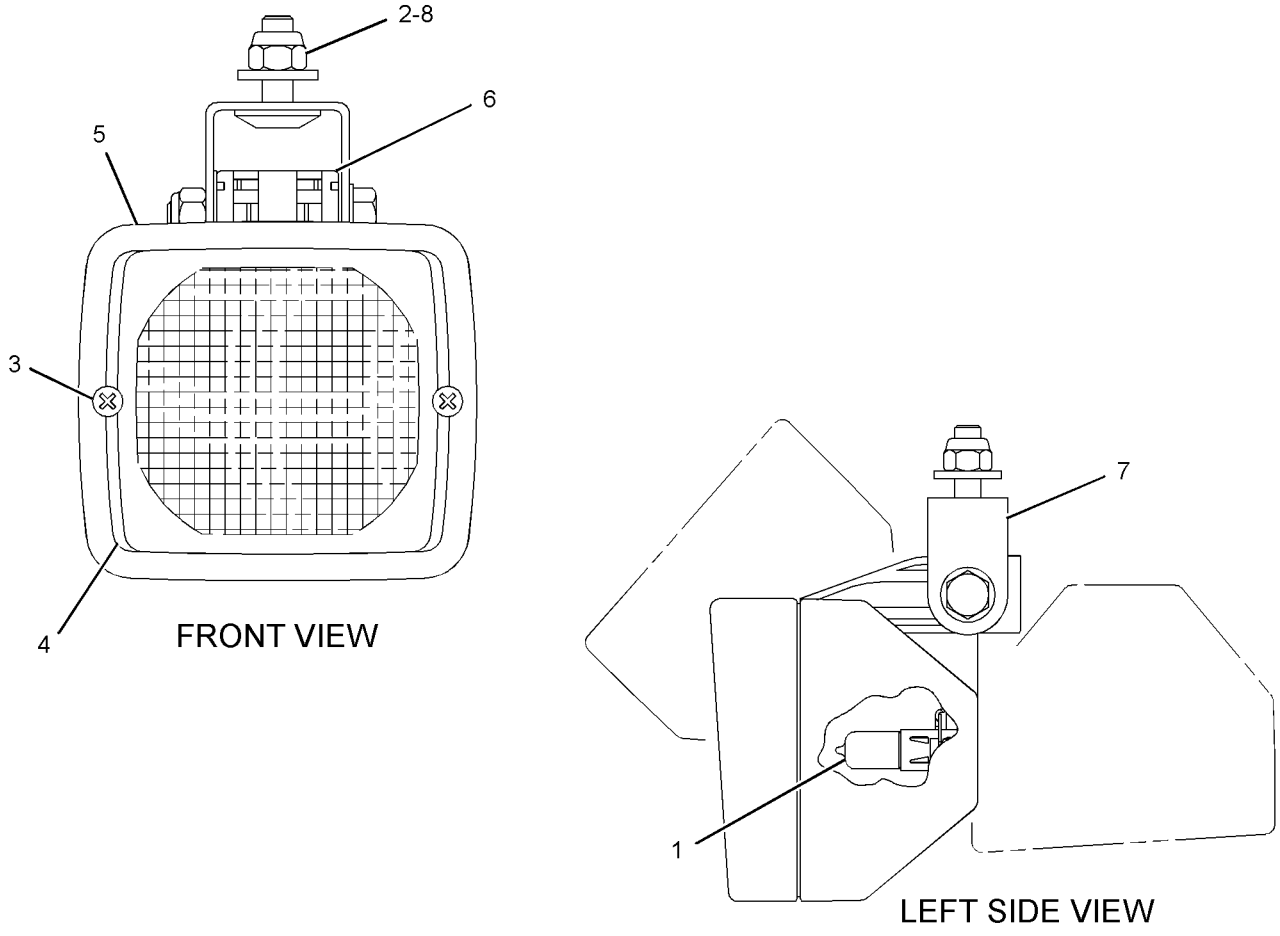

GRAPHIC #1 **<END>** g01254669

290-5760 LAMP GP-FLOOD–REAR OUTER

S/N: CBD1-UP; MFG1-UP
PART OF 211-4277 LIGHTING GP-FLOOD & SIGNAL
AN ATTACHMENT

SMCS-1429, 1434 **i02657354**

NOTE	REF NO	GRAPHIC REF	PART NUMBER	QTY	PART NAME 1 2 3 4 5 6 (PRODUCT LEVEL)	SEE PAGE
	1	1	**9W-0607**	1	LAMP (12-VOLT, 55-WATT)	
	2	1	**9X-4244**	2	SCREW-SPECIAL	
	3	1	**202-6611**	1	LENS AS	
	4	1	**234-7730**	1	BODY AS (FLOODLIGHT)	
	5	1	**164-7556**	1	BRACKET (LAMP RETAINING)	
M	6	1	**8T-0389**	1	LOCKNUT (M10X1.5-THD)	
	7	1	**234-7731**	1	BRACKET AS	
	8	1	**8T-4121**	1	WASHER-HARD (11X21X2.5-MM THK)	

M-METRIC PART

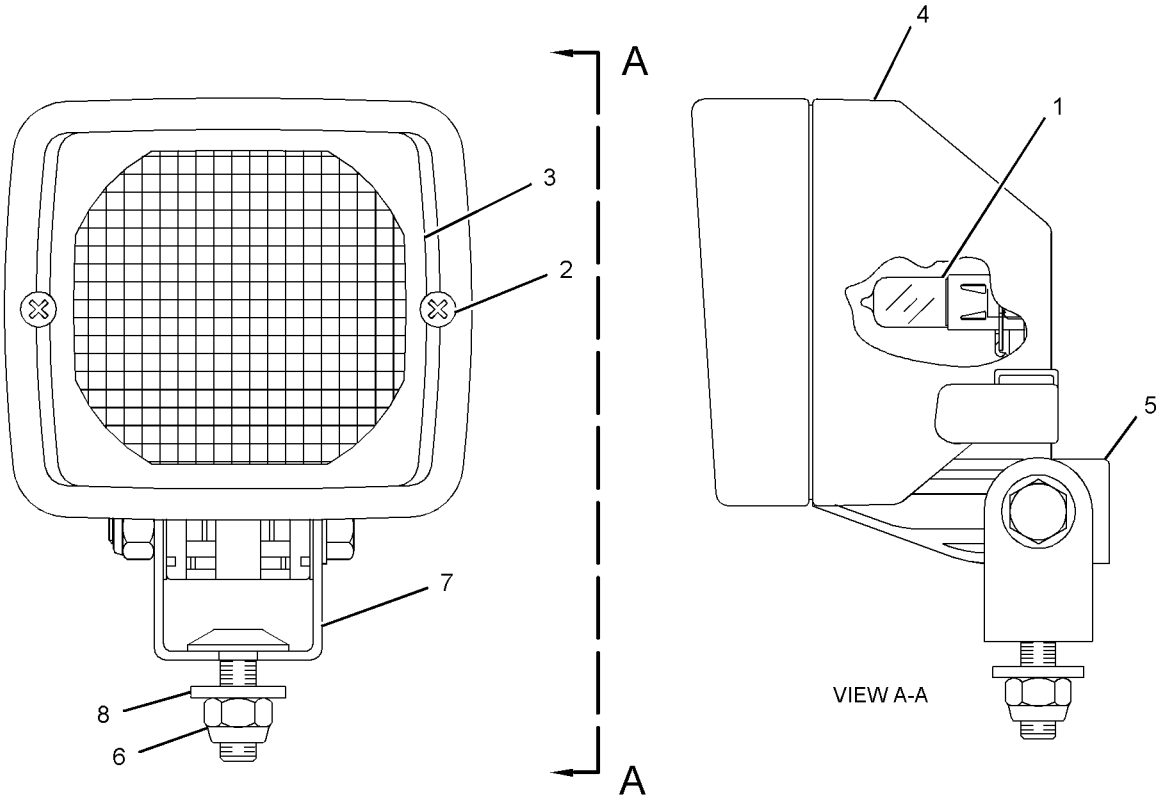

GRAPHIC #1 **<END>** g01349258

180-3664 LAMP GP-WARNING BEACON

S/N: CBD1-UP
PART OF 211-4292 LIGHTING GP-WARNING BEACON
AN ATTACHMENT

SMCS-1431 **i02837558**

NOTE	REF NO	GRAPHIC REF	PART NUMBER	QTY	PART NAME 1 2 3 4 5 6 (PRODUCT LEVEL)	SEE PAGE
	1	1	**272-9800**	1	LENS (AMBER)	
	2	1	**179-5434**	1	PLUG AS (WARNING BEACON)	
		1	**3K-8782**	1	FUSE (10-AMPERE)	
	3	1	**9X-8118**	1	LAMP (12-VOLT, 55-WATT)	
	4	1	**9X-8139**	1	BELT-DRIVE	
	5	1	**3K-8782**	1	FUSE (10-AMPERE)	

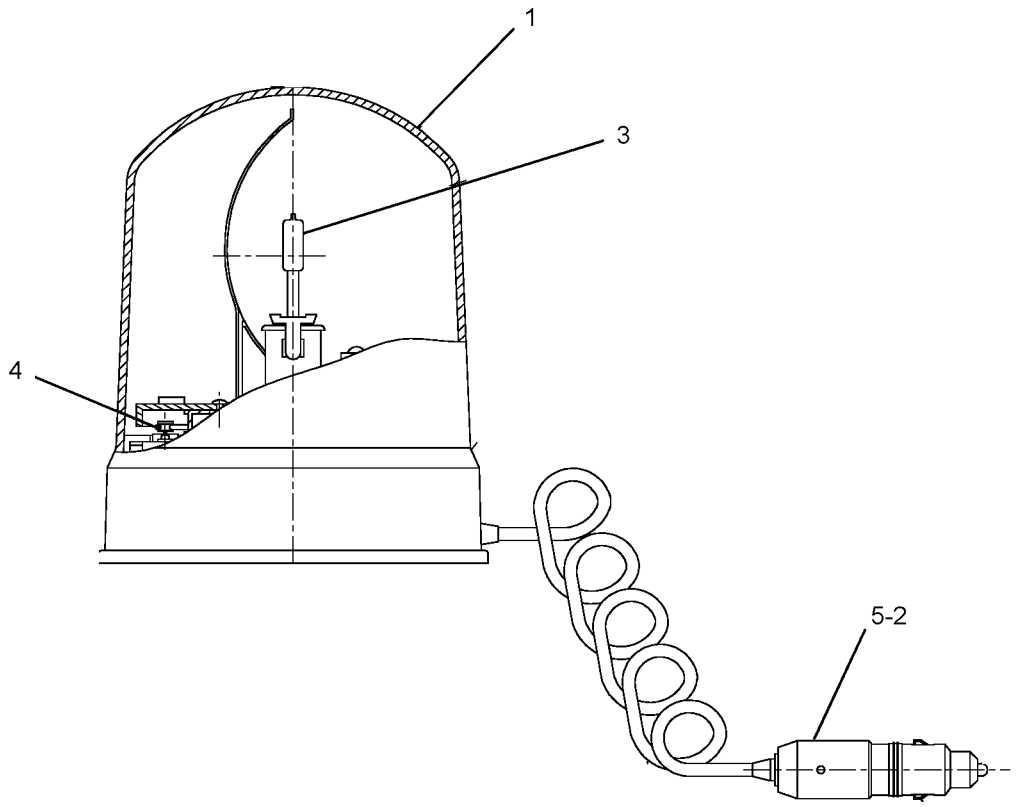

GRAPHIC #1 **<END>** g01230468

309-1325 LAMP GP-WARNING BEACON–12-VOLT, AMBER

S/N: CBD1-UP

PART OF 211-4291 LIGHTING GP-WARNING BEACON

AN ATTACHMENT

SMCS-1431 **i02965832**

NOTE	REF NO	GRAPHIC REF	PART NUMBER	QTY	PART NAME 1 2 3 4 5 6 (PRODUCT LEVEL)	SEE PAGE
	1	1	**272-9800**	1	LENS (AMBER)	
	2	1	**9X-8118**	1	LAMP (12-VOLT, 55-WATT)	
	3	1	**9X-8139**	1	BELT-DRIVE	
	4	1	**9R-7958**	1	CORD AS	
	4A	1	**9R-7942**	1	PLUG AS	

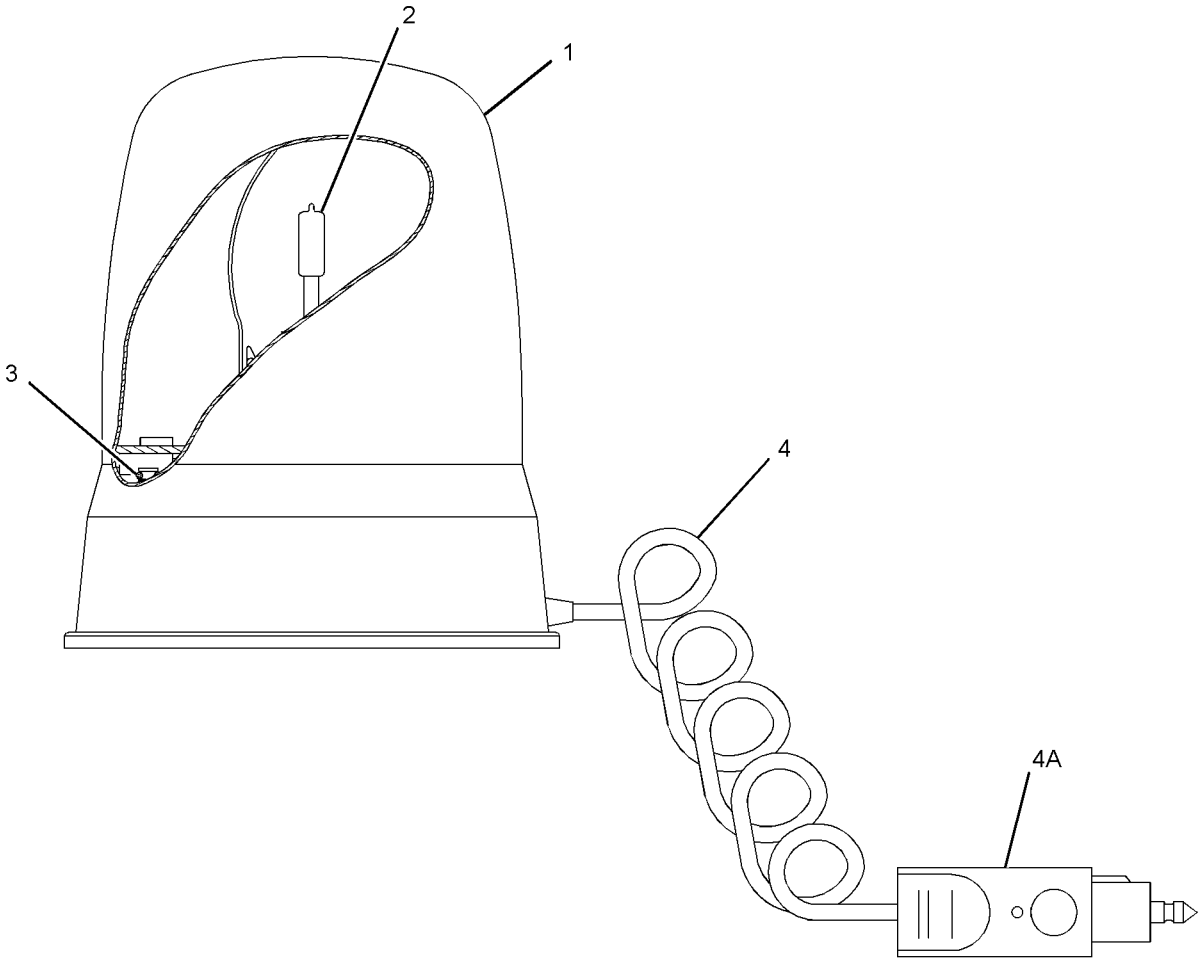

GRAPHIC #1 **<END>** g01382357

211-4276 LIGHTING GP-FLOOD & SIGNAL–

NACD, 4-LAMP, CAB

S/N: CBD1-UP; MFG1-UP

PART OF 204-4161 CAB AR-ENCLOSED ROPS, 204-4160, 292-9691 CANOPY AR-OPEN ROPS

AN ATTACHMENT

SMCS-1429, 1430, 1432, 1434 **i03882110**

NOTE	REF NO	GRAPHIC REF	PART NUMBER	QTY	PART NAME 1 2 3 4 5 6 (PRODUCT LEVEL)	SEE PAGE
	1	1	**9R-1499**	2	REFLECTOR	
	2	1	**178-7539**	1	RECEPTACLE AS (POWER SUPPLY)	
	3	1	**282-7835**	1	PLATE	
	4	1	**290-6799**	1	HARNESS AS-LIGHTING (ROOF)	
		1	**274-3774**	4	CAP-CONNECTOR	
		1	**186-3735**	10	PIN-CONNECTOR (16-GA TO 18-GA)	
		1	**155-2270**	10	KIT-CONNECTING PLUG (2-PIN)	
		1	**155-2271**	2	KIT-CONNECTING PLUG (4-PIN)	
					(EACH PLUG KIT INCLUDES PLUG AS, WEDGE & INTERFACE SEAL)	
		1	**8T-8737**	4	PLUG-SEAL	
		1	**102-8805**	1	KIT-RECEPTACLE (6-PIN)	
		1	**102-8806**	1	KIT-RECEPTACLE (8-PIN)	
					(EACH RECEPTACLE KIT INCLUDES RECEPTACLE AS & WEDGE)	
		1	**186-3736**	28	SOCKET-CONNECTOR (16-GA TO 18-GA)	
		1	**8L-8413**	15	STRAP-CABLE	
B		1	**1P-0810**	1	TAPE-ELECTRICAL	
		1	**2L-8069**	2	TERMINAL-RING (2-GA TO 10-GA, 3/8-IN SCREW)	
		1	**5P-4571**	2	TERMINAL-BLADE (14-GA TO 16-GA)	
E		1	**119-3662**		TUBE-HEAT SHRINK (10.85-MM DIA) (13-CM)	
E		1	**125-7874**		TUBE-HEAT SHRINK (5.72-MM DIA) (35-CM)	
E		1	**125-7876**		TUBE-HEAT SHRINK (17.78-MM DIA) (20-CM)	
	5	1	**303-5149**	1	SWITCH AS-ROCKER (FLOODLIGHTS, FRONT)	
	6	1	**303-5154**	1	SWITCH AS-ROCKER (FLOODLIGHT, REAR)	
					(EACH SWITCH AS INCLUDES)	
		1	**111-7899**	1	GASKET	
Y	7	1	**234-4328**	4	LAMP GP-FLOOD (12-VOLT)	254
	8	1	**282-7833**	1	GROMMET	
	9	1	**172-6489**	2	LAMP GP-HEAD & SIGNAL (DIRECTIONAL)	
					(EACH INCLUDES)	
		1	**102-8802**	1	KIT-RECEPTACLE (2-PIN)	
					(INCLUDES RECEPTACLE AS & WEDGE)	
		1	**3C-4883**	1	LAMP (12-VOLT, 21-WATT)	
		1	**176-0348**	1	LENS	
	10	1	**172-6490**	2	LAMP GP-SIGNAL (STOP, TAIL, TURN)	
					(EACH INCLUDES)	
		1	**102-8804**	1	KIT-RECEPTACLE (4-PIN)	
					(INCLUDES RECEPTACLE AS & WEDGE)	
		1	**267-2809**	1	LENS	
		1	**9W-3326**	1	LAMP (12-VOLT, 21-WATT)	
		1	**084-4348**	1	LAMP (12-VOLT, 5-WATT)	
		1	**186-3735**	4	PIN-CONNECTOR (16-GA TO 18-GA)	
M	11	1	**8C-3798**	2	BOLT-LOCKING (M6X1X30-MM)	
	12	1	**3S-2093**	20	STRAP-CABLE	
	13	1	**8T-4121**	6	WASHER-HARD (11X21X2.5-MM THK)	
M	14	1	**8T-4133**	5	NUT (M10X1.5-THD)	
	15	1	**9X-8256**	2	WASHER (6.6X12X2-MM THK)	
	16	1	**8F-3590**	1	LOCKWASHER	
E	17	1	**3E-6600**		SEAL (5-CM)	

B-USE AS REQUIRED
E-ORDER BY THE CENTIMETER
M-METRIC PART
Y-SEPARATE ILLUSTRATION

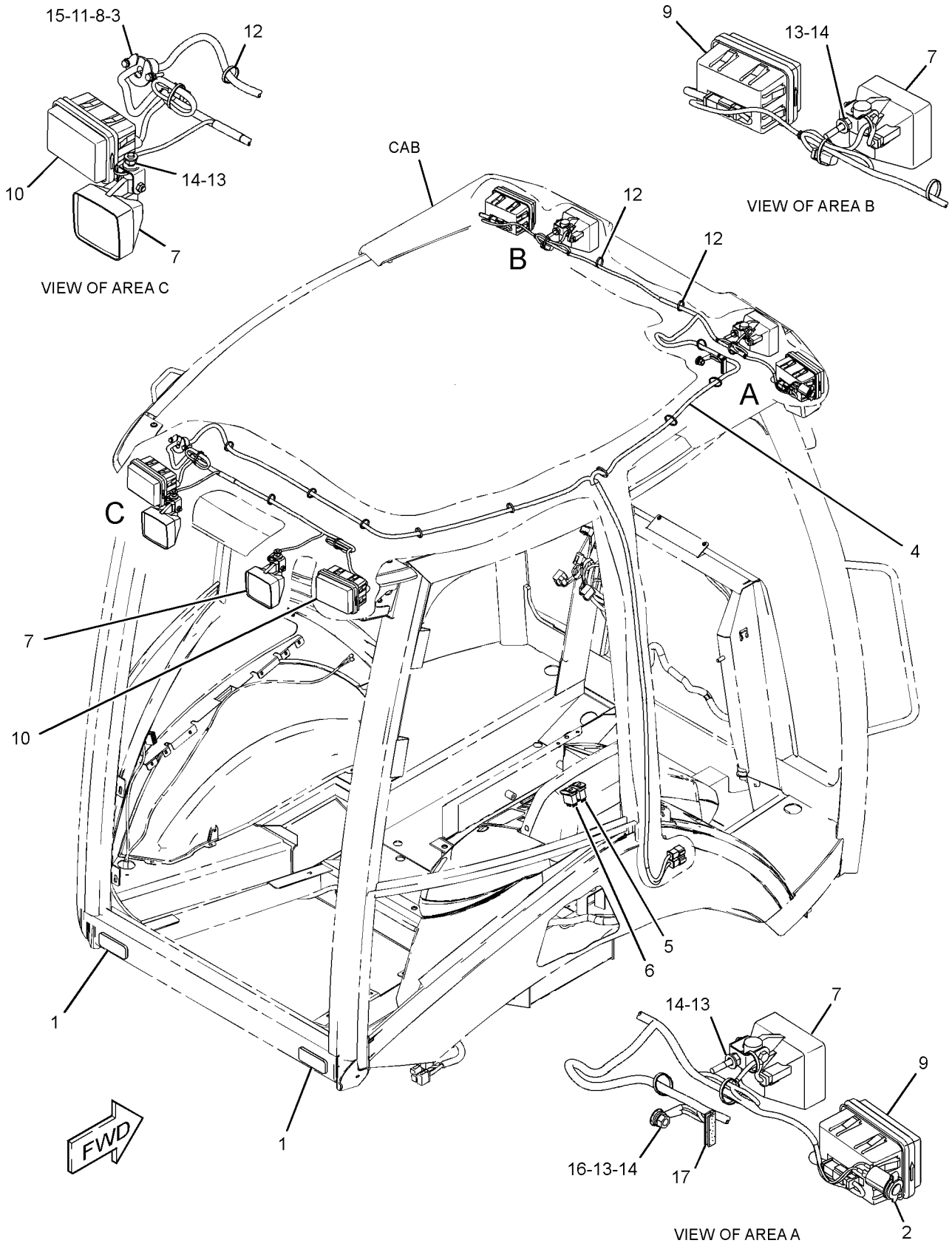

GRAPHIC #1 **<END>** g01689093

211-4277 LIGHTING GP-FLOOD & SIGNAL–

NACD, OPTIONAL, 8-LAMP, CAB

S/N: CBD1-UP

PART OF 204-4162, 228-4602 CAB AR-ENCLOSED ROPS, 204-4164, 292-9690 CANOPY AR-OPEN ROPS AN ATTACHMENT

SMCS-1429, 1430, 1432, 1434 **i02586873**

NOTE	REF NO	GRAPHIC REF	PART NUMBER	QTY	PART NAME 1 2 3 4 5 6 (PRODUCT LEVEL)	SEE PAGE
	1	1	**9R-1499**	2	REFLECTOR	
	2	1	**178-7539**	1	RECEPTACLE AS (POWER SUPPLY)	
	3	1	**213-6049**	1	HARNESS AS-LIGHTING (ROOF)	
		1	**8L-8413**	19	STRAP-CABLE	
E		1	**125-7874**		TUBE-HEAT SHRINK (5.72-MM DIA) (35-CM)	
E		1	**125-7875**		TUBE-HEAT SHRINK (7.44-MM DIA) (15-CM)	
		1	**155-2271**	2	KIT-CONNECTING PLUG (4-PIN)	
		1	**155-2270**	10	KIT-CONNECTING PLUG (2-PIN)	
					(EACH PLUG KIT INCLUDES PLUG AS, WEDGE & INTERFACE SEAL)	
		1	**102-8805**	1	KIT-RECEPTACLE (6-PIN)	
		1	**102-8806**	1	KIT-RECEPTACLE (8-PIN)	
					(EACH RECEPTACLE KIT INCLUDES RECEPTACLE AS & WEDGE)	
	4	1	**214-4698**	1	SWITCH AS-ROCKER (FLOODLIGHTS, FRONT)	
	5	1	**214-4700**	1	SWITCH AS-ROCKER (FLOODLIGHTS, REAR)	
Y	6	1	**234-4328**	4	LAMP GP-FLOOD (12-VOLT) (FRONT, REAR, WIDE RANGE)	254
Y	7	1	**234-4329**	4	LAMP GP-FLOOD (12-VOLT) (FRONT, SIDE, LONG RANGE)	255
	8	1	**282-7833**	1	GROMMET	
	9	1	**282-7835**	1	PLATE	
	10	1	**172-6489**	2	LAMP GP-HEAD & SIGNAL (DIRECTIONAL)	
	11	1	**172-6490**	2	LAMP GP-SIGNAL (STOP, TAIL, TURN)	
	12	1	**3S-2093**	25	STRAP-CABLE	
	13	1	**8T-4121**	10	WASHER-HARD (11X21X2.5-MM THK)	
M	14	1	**8T-4133**	9	NUT (M10X1.5-THD)	
M	15	1	**8T-4181**	2	BOLT (M6X1X20-MM)	
	16	1	**9X-8256**	2	WASHER (6.6X12X2-MM THK)	

E-ORDER BY THE CENTIMETER
M-METRIC PART
Y-SEPARATE ILLUSTRATION

211-4277 **LIGHTING GP-FLOOD & SIGNAL** *(contd.)* **i02586873**

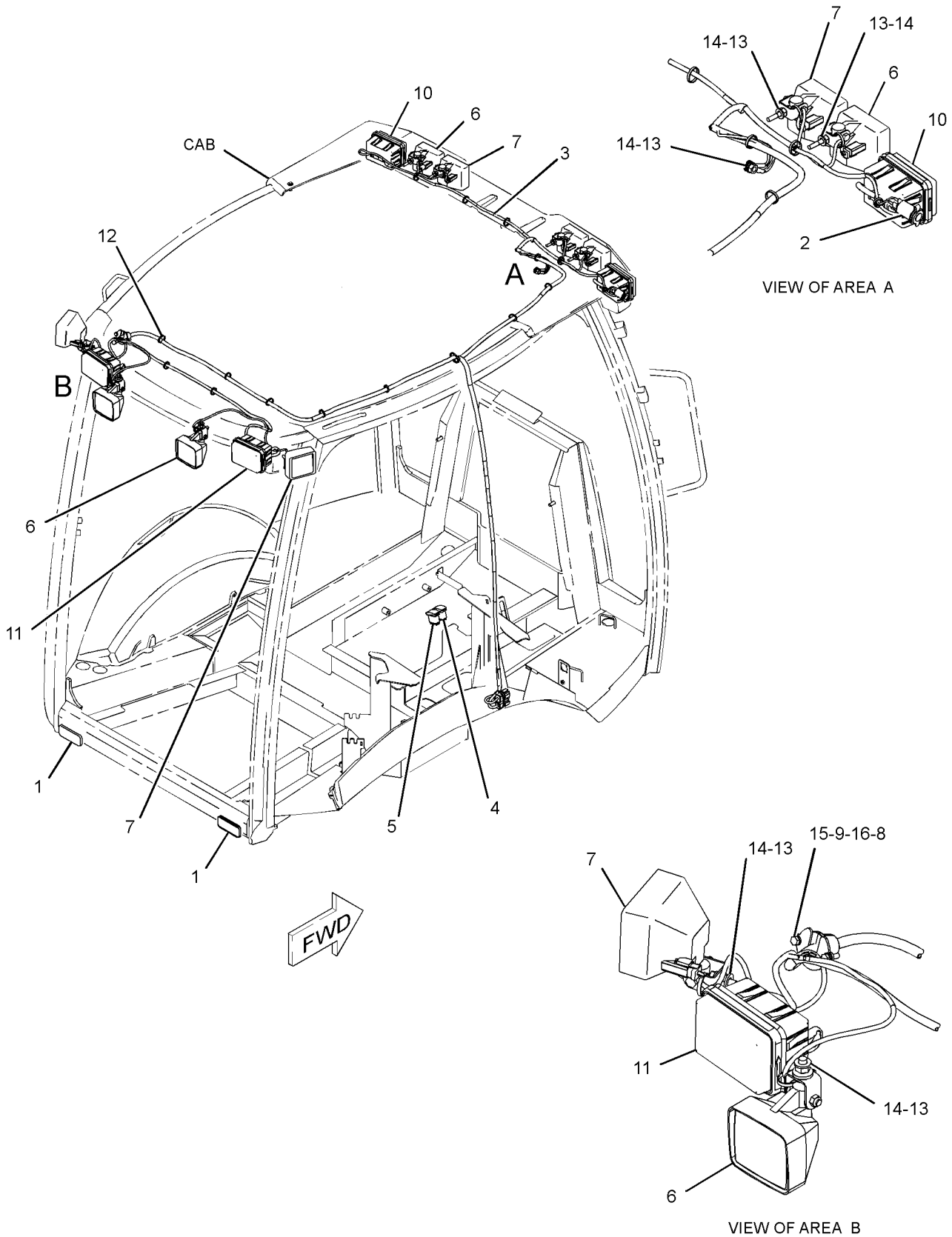

GRAPHIC #1 **<END>** g01279962

ELECTRICAL AND STARTING SYSTEM

211-4277 LIGHTING GP-FLOOD & SIGNAL–

NACD, OPTIONAL, 8-LAMP, CAB

S/N: CBD1-UP; MFG1-UP

PART OF 204-4162, 228-4602, 291-9195 CAB AR-ENCLOSED ROPS, 204-4164, 292-9690 CANOPY AR-OPEN ROPS

AN ATTACHMENT

SMCS-1429, 1430, 1432, 1434 **i04130709**

NOTE	REF NO	GRAPHIC REF	PART NUMBER	QTY	PART NAME 1 2 3 4 5 6 (PRODUCT LEVEL)	SEE PAGE
	1	1	**9R-1499**	2	REFLECTOR	
	2	1	**178-7539**	1	RECEPTACLE AS (POWER SUPPLY)	
	3	1	**290-6799**	1	HARNESS AS-LIGHTING (ROOF)	
		1	**274-3774**	4	CAP-CONNECTOR	
		1	**8T-8729**	10	PIN-CONNECTOR (16-GA TO 18-GA)	
		1	**155-2270**	10	KIT-CONNECTING PLUG (2-PIN)	
		1	**155-2271**	2	KIT-CONNECTING PLUG (4-PIN)	
					(EACH PLUG KIT INCLUDES PLUG AS, WEDGE & INTERFACE SEAL)	
		1	**8T-8737**	4	PLUG-SEAL	
		1	**102-8805**	1	KIT-RECEPTACLE (6-PIN)	
		1	**102-8806**	1	KIT-RECEPTACLE (8-PIN)	
					(EACH RECEPTACLE KIT INCLUDES RECEPTACLE AS & WEDGE)	
		1	**8T-8730**	28	SOCKET-CONNECTOR (16-GA TO 18-GA)	
		1	**8L-8413**	15	STRAP-CABLE	
B		1	**1P-0810**		TAPE-ELECTRICAL	
		1	**2L-8069**	2	TERMINAL-RING (2-GA TO 10-GA, 3/8-IN SCREW)	
		1	**5P-4571**	2	TERMINAL-BLADE (14-GA TO 16-GA)	
E		1	**119-3662**		TUBE-HEAT SHRINK (10.85-MM DIA) (13-CM)	
E		1	**125-7874**		TUBE-HEAT SHRINK (5.72-MM DIA) (35-CM)	
E		1	**125-7876**		TUBE-HEAT SHRINK (17.78-MM DIA) (20-CM)	
	4	1	**300-4995**	1	SWITCH AS-ROCKER (FLOODLIGHT, FRONT)	
	5	1	**300-4996**	1	SWITCH AS-ROCKER (FLOODLIGHT, REAR)	
					(EACH SWITCH AS INCLUDES)	
		1	**111-7899**	1	GASKET	
Y	6	1	**234-4328**	4	LAMP GP-FLOOD (12-VOLT)	254
CY	7	1	**234-4329**	2	LAMP GP-FLOOD (12-VOLT)	255
	8	1	**282-7833**	1	GROMMET	
	9	1	**282-7835**	1	PLATE	
	10	1	**172-6489**	1	LAMP GP-HEAD & SIGNAL (FRONT, RH)	
	10A	1	**172-6489**	1	LAMP GP-HEAD & SIGNAL (FRONT, LH)	
					(EACH LAMP GP INCLUDES)	
		1	**102-8802**	1	KIT-RECEPTACLE (2-PIN)	
					(INCLUDES RECEPTACLE AS & WEDGE)	
		1	**3C-4883**	1	LAMP (12-VOLT, 21-WATT)	
		1	**176-0348**	1	LENS	
	11	1	**172-6490**	1	LAMP GP-SIGNAL (REAR, RH)	
	11A	1	**172-6490**	1	LAMP GP-SIGNAL (REAR, LH)	
					(EACH LAMP GP INCLUDES)	
		1	**102-8804**	1	KIT-RECEPTACLE (4-PIN)	
					(INCLUDES RECEPTACLE AS & WEDGE)	
		1	**8T-8729**	4	PIN-CONNECTOR (16-GA TO 18-GA)	
		1	**9W-3326**	1	LAMP (12-VOLT, 21-WATT)	
		1	**084-4348**	1	LAMP (12-VOLT, 5-WATT)	
		1	**363-8597**	1	LENS	
	12	1	**3S-2093**	24	STRAP-CABLE	
	13	1	**8T-4121**	10	WASHER-HARD (11X21X2.5-MM THK)	
M	14	1	**8T-4133**	9	NUT (M10X1.5-THD)	
CM	15	1	**8T-4181**	2	BOLT (M6X1X20-MM)	
	16	1	**9X-8256**	2	WASHER (6.6X12X2-MM THK)	
CY	17	1	**290-5760**	2	LAMP GP-FLOOD (12-VOLT)	256
C	18	1	**8F-3590**	1	LOCKWASHER	

211-4277 **LIGHTING GP-FLOOD & SIGNAL** *(contd.)* **i04130709**

NOTE	REF NO	GRAPHIC REF	PART NUMBER	QTY	PART NAME 1 2 3 4 5 6 (PRODUCT LEVEL)	SEE PAGE
E	19	1	**3E-6600**		SEAL (5-CM)	

B-USE AS REQUIRED
C-CHANGE FROM PREVIOUS TYPE
E-ORDER BY THE CENTIMETER
M-METRIC PART
Y-SEPARATE ILLUSTRATION

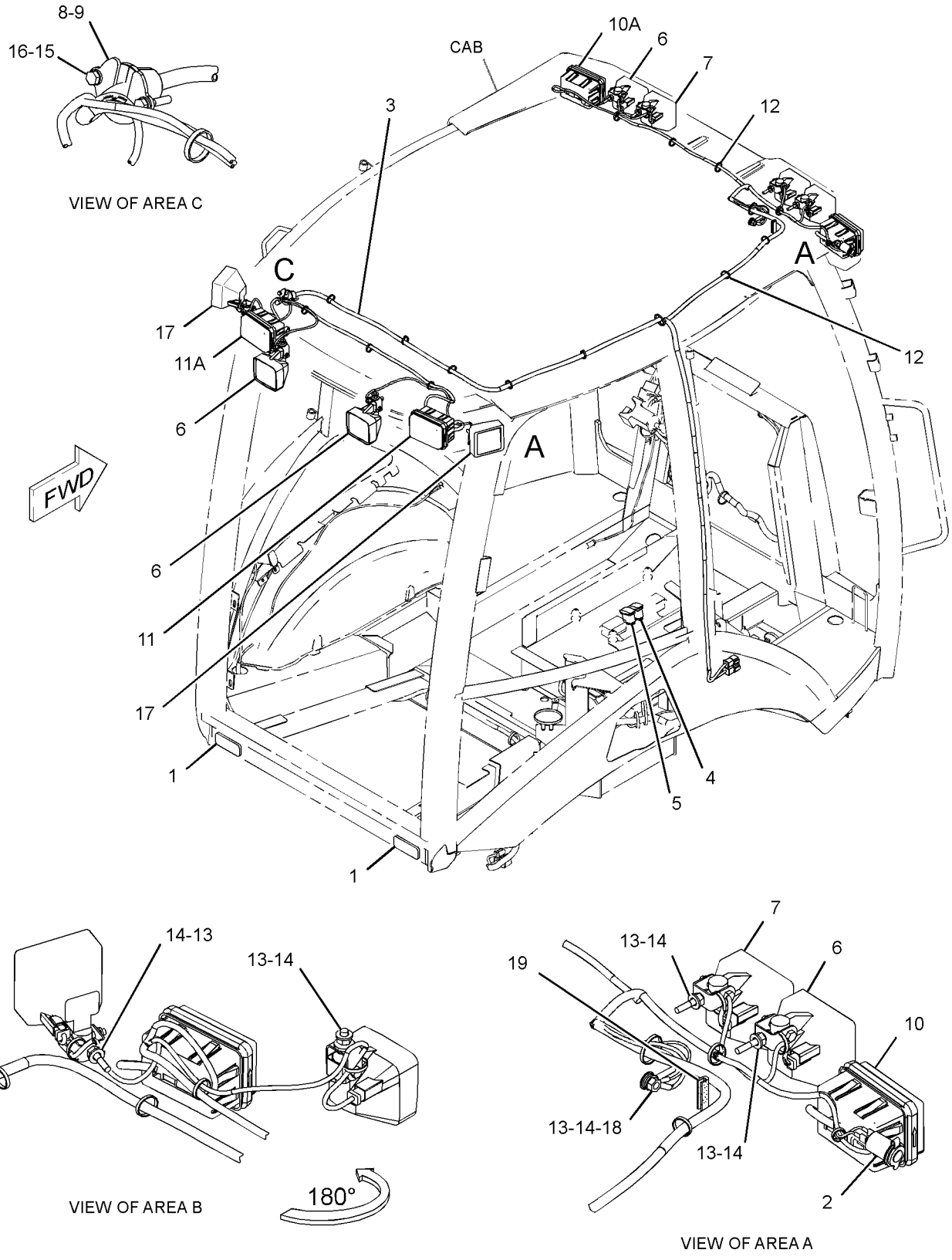

GRAPHIC #1 **<END>** g02328653

211-4291 LIGHTING GP-WARNING BEACON–
AMBER, MAGNETIC MOUNT, ROTATING
S/N: CBD1-UP
AN ATTACHMENT

SMCS-1431 **i02965799**

NOTE	REF NO	GRAPHIC REF	PART NUMBER	QTY	PART NAME 1 2 3 4 5 6 (PRODUCT LEVEL)	SEE PAGE
Y	1	1	**309-1325**	1	LAMP GP-WARNING BEACON (12-VOLT, AMBER)	258
	2	1	**031-5644**	2	CLIP	

Y-SEPARATE ILLUSTRATION

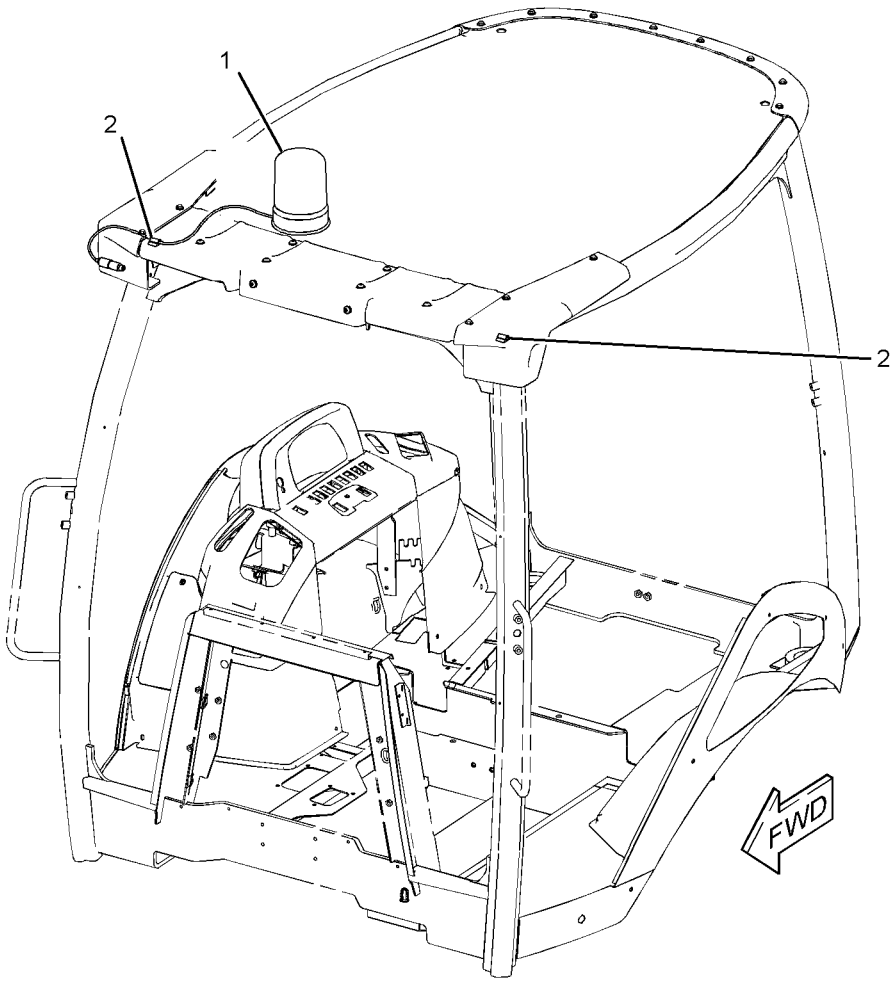

GRAPHIC #1 **<END>** g01228059

211-4292 LIGHTING GP-WARNING BEACON

S/N: CBD1-UP

AN ATTACHMENT

SMCS-1431 **i02526698**

NOTE	REF NO	GRAPHIC REF	PART NUMBER	QTY	PART NAME 1 2 3 4 5 6 (PRODUCT LEVEL)	SEE PAGE
	1	1	**031-5644**	1	CLIP	
Y	2	1	**180-3664**	1	LAMP GP-WARNING BEACON (12-VOLT, AMBER)	257

Y-SEPARATE ILLUSTRATION

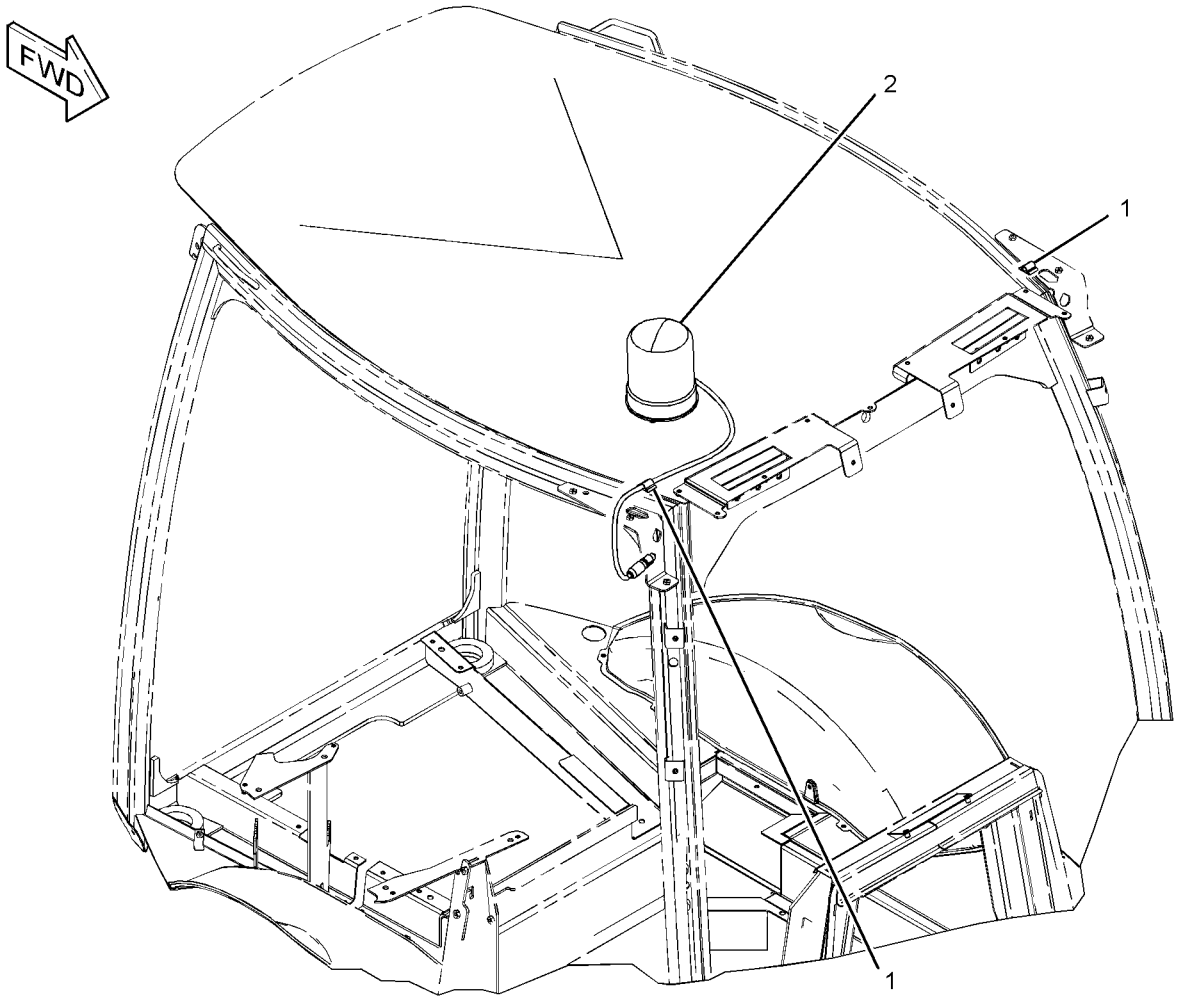

GRAPHIC #1 **<END>** g01233454

247-8199 PANEL GP-FUSE

S/N: CBD1-UP; MFG1-UP
PART OF 211-4242, 290-6722 WIRING GP-PLATFORM
AN ATTACHMENT

SMCS-1417, 1422 **i03567590**

NOTE	REF NO	GRAPHIC REF	PART NUMBER	QTY	PART NAME 1 2 3 4 5 6 (PRODUCT LEVEL)	SEE PAGE
	1	1	**113-8490**	11	FUSE (10-AMPERE)	
	2	1	**113-8491**	13	FUSE (15-AMPERE)	
	3	1	**113-8492**	10	FUSE (20-AMPERE)	
	4	1	**265-8182**	1	COVER-FUSE BLOCK	
M	6	1	**5C-7261**	4	NUT (M8X1.25-THD)	
	7	1	**9F-5644**	4	LOCKWASHER	
	8	1	**7X-0608**	4	WASHER-HARD (10.2X16X2-MM THK)	

M-METRIC PART

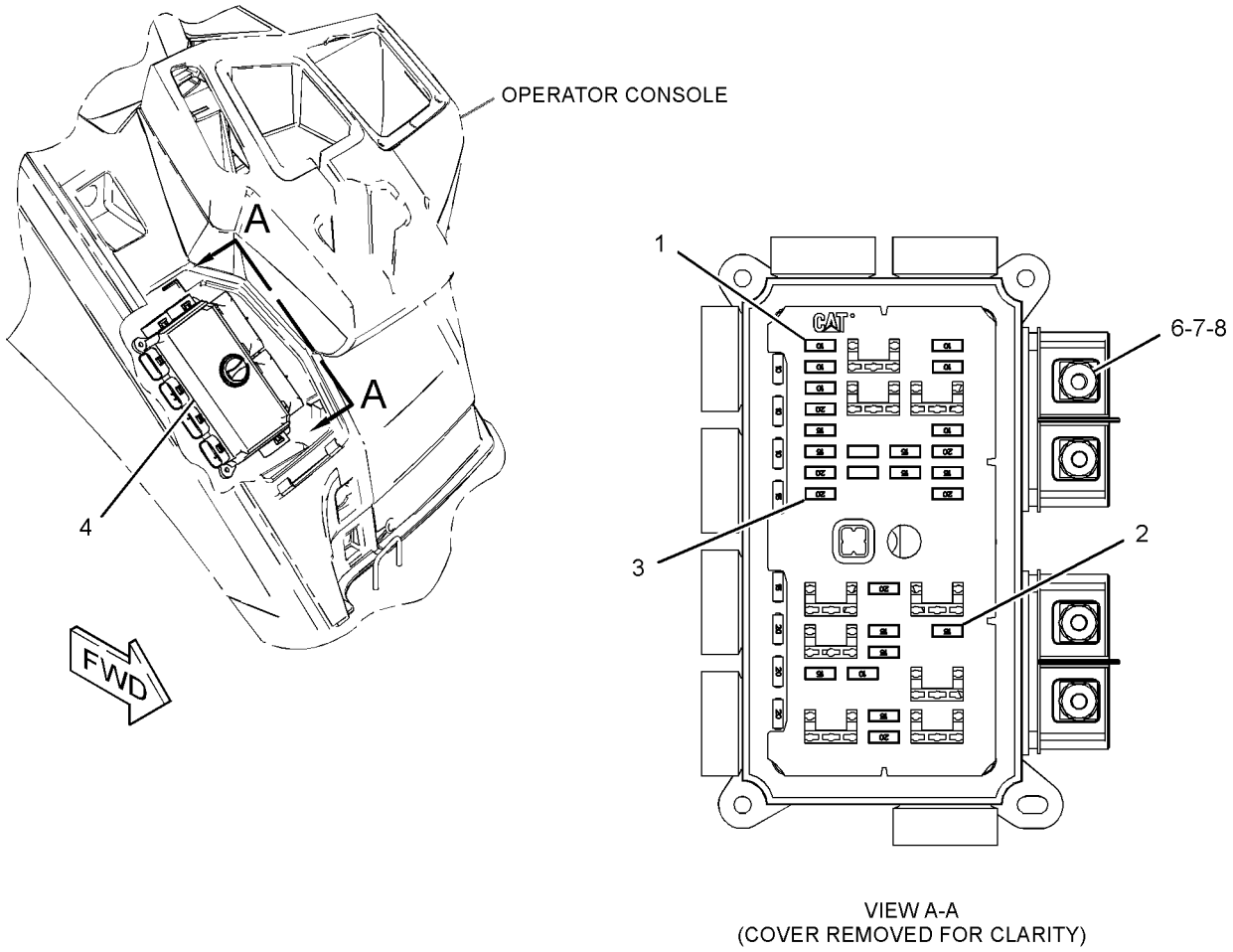

VIEW A-A
(COVER REMOVED FOR CLARITY)

GRAPHIC #1 **<END>** g01331615

276-7287 RELAY GP

S/N: CBD1-UP; MFG1-UP
PART OF 211-4268, 290-6732 WIRING GP-AIR CONDITIONER, 211-4269 WIRING GP-HEATER
AN ATTACHMENT

SMCS-1422, 4493 **i03922730**

NOTE	REF NO	GRAPHIC REF	PART NUMBER	QTY	PART NAME 1 2 3 4 5 6 (PRODUCT LEVEL)	SEE PAGE
M	1	1	**5C-2890**	2	NUT (M6X1-THD)	
	2	1	**8T-4205**	2	WASHER-HARD (7.2X14.5X2-MM THK)	
	3	1	**1H-3244**	2	LOCKWASHER	
M	4	1	**5C-7261**	1	NUT (M8X1.25-THD)	
	5	1	**8T-4224**	1	WASHER-HARD (8.8X16X2-MM THK)	
	6	1	**267-5213**	1	COVER	
	7	1	**267-5211**	1	SEAL	
	8	1	**278-6377**	1	FUSE (40-AMPERE)	
	9	1	**9F-5644**	1	LOCKWASHER	

M-METRIC PART

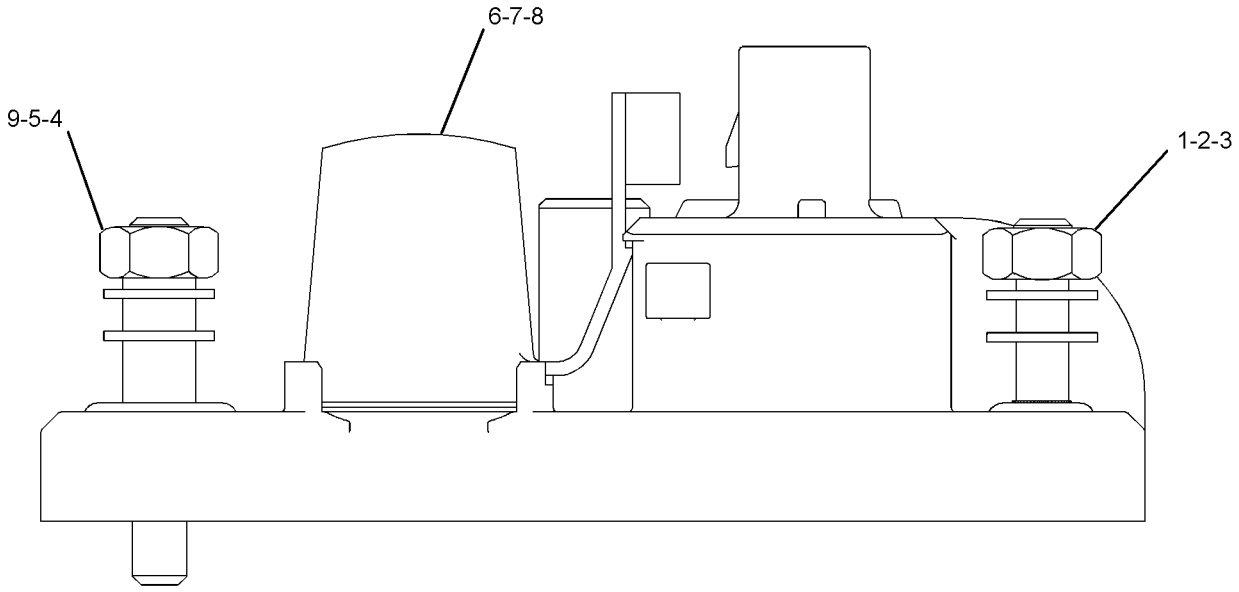

GRAPHIC #1 **<END>** g02202014

276-7290 RELAY GP–12-VOLT

S/N: CBD1-UP; MFG1-UP
PART OF 211-4242, 290-6722 WIRING GP-PLATFORM
AN ATTACHMENT

SMCS-1422, 4493 **i02548986**

NOTE	REF NO	GRAPHIC REF	PART NUMBER	QTY	PART NAME 1 2 3 4 5 6 (PRODUCT LEVEL)	SEE PAGE
M	1	1	**5C-2890**	2	NUT (M6X1-THD)	
	2	1	**8T-4205**	2	WASHER-HARD (7.2X14.5X2-MM THK)	
	3	1	**1H-3244**	2	LOCKWASHER	
M	4	1	**5C-7261**	1	NUT (M8X1.25-THD)	
	5	1	**8T-4224**	1	WASHER-HARD (8.8X16X2-MM THK)	
	6	1	**267-5213**	1	COVER	
	7	1	**267-5211**	1	SEAL	
	8	1	**267-2701**	2	FUSE (60-AMPERE)	

M-METRIC PART

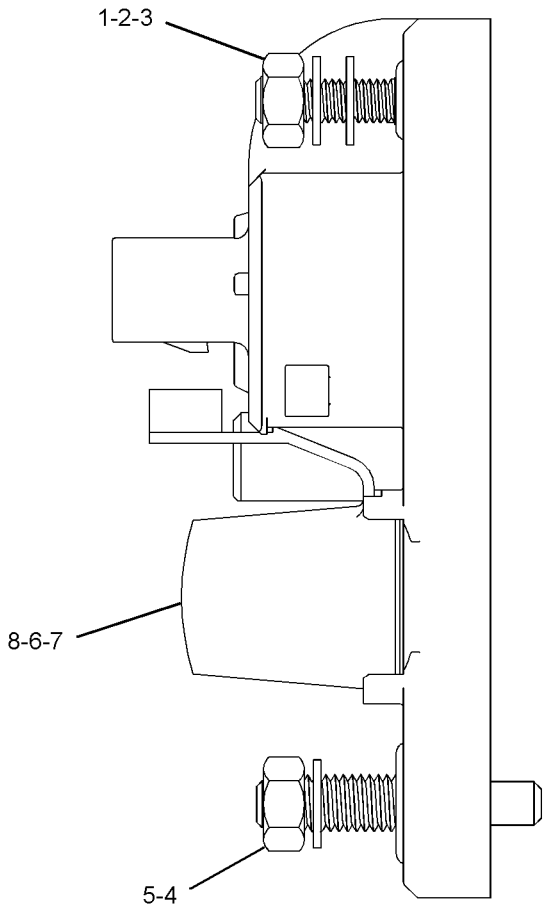

GRAPHIC #1 **<END>** g01278211

276-7291 RELAY GP–12-VOLT

S/N: CBD1-UP; MFG1-UP
PART OF 211-4242 WIRING GP-PLATFORM
AN ATTACHMENT

SMCS-1422, 4493 **i02548988**

NOTE	REF NO	GRAPHIC REF	PART NUMBER	QTY	PART NAME 1 2 3 4 5 6 (PRODUCT LEVEL)	SEE PAGE
M	1	1	**5C-2890**	2	NUT (M6X1-THD)	
	2	1	**8T-4205**	2	WASHER-HARD (7.2X14.5X2-MM THK)	
	3	1	**1H-3244**	2	LOCKWASHER	
M	4	1	**5C-7261**	1	NUT (M8X1.25-THD)	
	5	1	**8T-4224**	1	WASHER-HARD (8.8X16X2-MM THK)	
	6	1	**267-5213**	1	COVER	
	7	1	**267-5211**	1	SEAL	
	8	1	**267-2701**	1	FUSE (60-AMPERE)	

M-METRIC PART

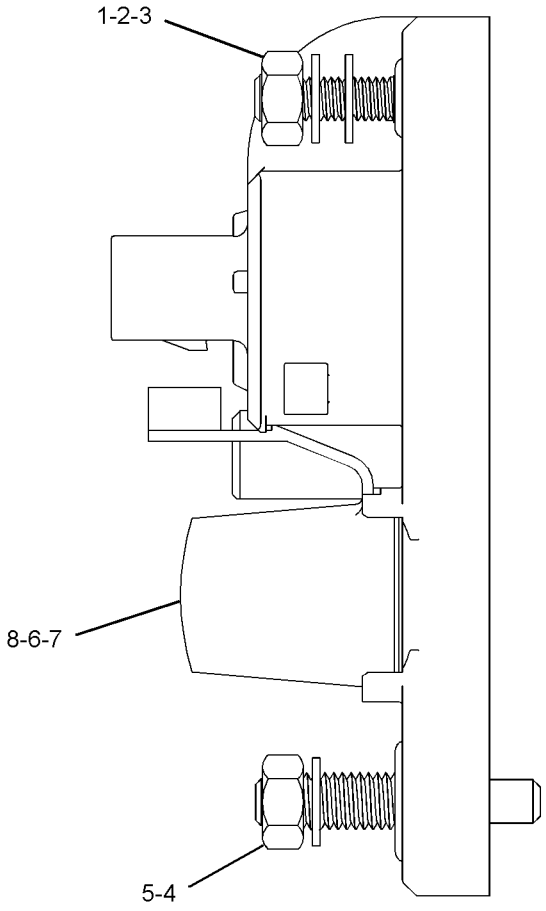

GRAPHIC #1 **<END>** g01278256

311-7567 RELAY GP–POWER, 1

S/N: MFG1-UP
12-VOLT
PART OF 290-6722 WIRING GP-PLATFORM
AN ATTACHMENT

SMCS-1422, 4493 **i03857271**

NOTE	REF NO	GRAPHIC REF	PART NUMBER	QTY	PART NAME 1 2 3 4 5 6 (PRODUCT LEVEL)	SEE PAGE
	1	1	**278-6377**	1	FUSE (40-AMPERE)	
	2	1	**267-2701**	1	FUSE (60-AMPERE)	
	3	1	**267-5213**	1	COVER	
	4	1	**267-5211**	1	SEAL	
M	5	1	**5C-2890**	2	NUT (M6X1-THD)	
	6	1	**8T-4205**	2	WASHER-HARD (7.2X14.5X2-MM THK)	
	7	1	**1H-3244**	2	LOCKWASHER	
M	8	1	**5C-7261**	1	NUT (M8X1.25-THD)	
	9	1	**8T-4224**	1	WASHER-HARD (8.8X16X2-MM THK)	
	10	1	**9F-5644**	1	LOCKWASHER	

M-METRIC PART

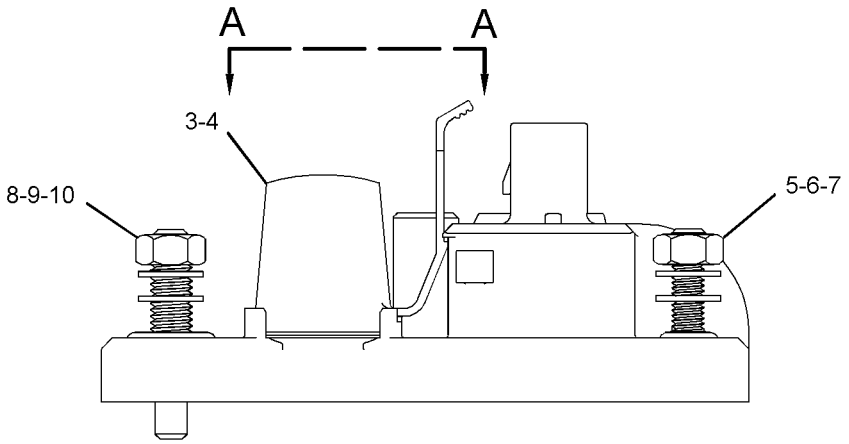

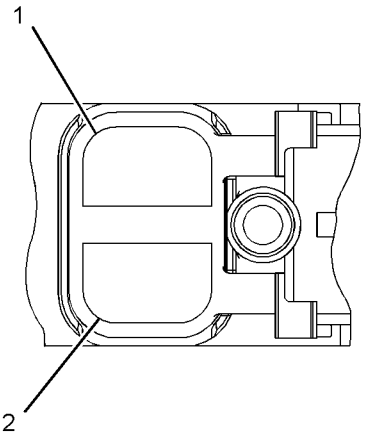

VIEW A-A
(COVER REMOVED FOR CLARITY)

GRAPHIC #1 **<END>** g01522285

143-0539 STARTING MOTOR GP-ELECTRIC*R

S/N: G4D1-UP; CRS1-UP
12-VOLT
PART OF 237-0024 STARTING MOTOR GP-ELECTRIC
AN ATTACHMENT

SMCS-1453 **i02603751**

NOTE	REF NO	GRAPHIC REF	PART NUMBER	QTY	PART NAME 1 2 3 4 5 6 (PRODUCT LEVEL)	SEE PAGE
	1	1	**8C-9778**	1	PLUNGER AS	
	2	1	**8C-9783**	1	GASKET	
	3	1	**2P-8104**	1	BEARING	
	4	1	**7T-6092**	1	HOLDER AS-BRUSH	
M	5	1	**8T-4133**	2	NUT (M10X1.5-THD)	
	6	1	**7T-6088**	1	BEARING AS	
	7	1	**7T-6087**	1	WASHER (15.2X40X0.5-MM THK)	
	8	1	**7T-6093**	1	CLUTCH AS	
	9	1	**8J-4455**	1	BALL	
	10	1	**7T-6090**	1	SPRING	
	11	1	**8T-4121**	2	WASHER-HARD (11X21X2.5-MM THK)	
	12	1	**3E-5153**	1	COVER-STARTING MOTOR	
M	13	1	**9X-2036**	1	SCREW-PAN HEAD	
	14	1	**8F-1434**	1	LOCKWASHER	
	15	1	**100-4113**	1	SWITCH AS (STARTING MOTOR, 12-VOLT)	
	16	1	**100-4119**	1	ARMATURE AS	
	17	1	**100-4118**	1	CASE AS-STARTING MOTOR	
	18	1	**100-4115**	1	HOUSING-STARTING MOTOR	
	19	1	**143-1344**	1	FRAME-STARTER	
	20	1	**100-3685**	1	CAP	
	21	1	**3E-5154**	1	BUSHING-STARTING MOTOR	
					AVAILABLE REPAIR KIT(S):	
			7T-6099	1	KIT-GEAR (STARTING MOTOR)	
					(INCLUDES RETAINER, PINION & ROLLERS)	
			146-6729	1	KIT-HARDWARE (STARTING MOTOR)	
					(INCLUDES BOLTS, SCREWS, SCREW ASSEMBLIES & PLATE)	
			100-4112	1	KIT-CONTACT (STARTING MOTOR)	
					(INCLUDES NUT, WASHERS, SEAL, BUSHINGS, PLATE & BOLT)	

M-METRIC PART

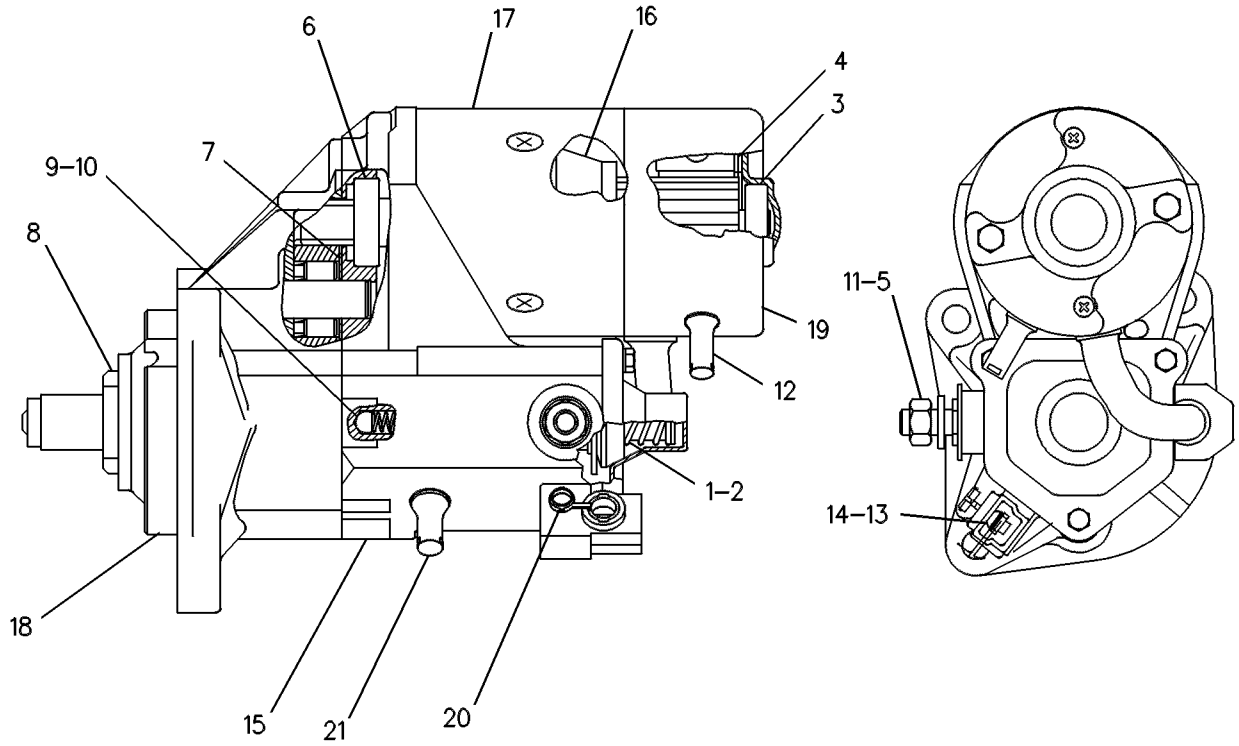

GRAPHIC #1 **<END>** g00131126

237-0024 STARTING MOTOR GP-ELECTRIC—12-VOLT

S/N: G4D1-UP; CRS1-UP

PART OF 273-3610 ENGINE AR, 245-6841, 323-5724, 323-5725 ENGINE AR-PRIMARY AN ATTACHMENT

SMCS-1453 **i01991976**

NOTE	REF NO	GRAPHIC REF	PART NUMBER	QTY	PART NAME 1 2 3 4 5 6 (PRODUCT LEVEL)	SEE PAGE
	1	1	**6I-0364**	3	STUD (M10X1.5X30-MM)	
	2	1	**6I-0594**	3	NUT (M10X1.5-THD)	
YR	3	1	**143-0539**	1	STARTING MOTOR GP-ELECTRIC	273

R-REMFG PART MAY BE AVAILABLE
Y-SEPARATE ILLUSTRATION

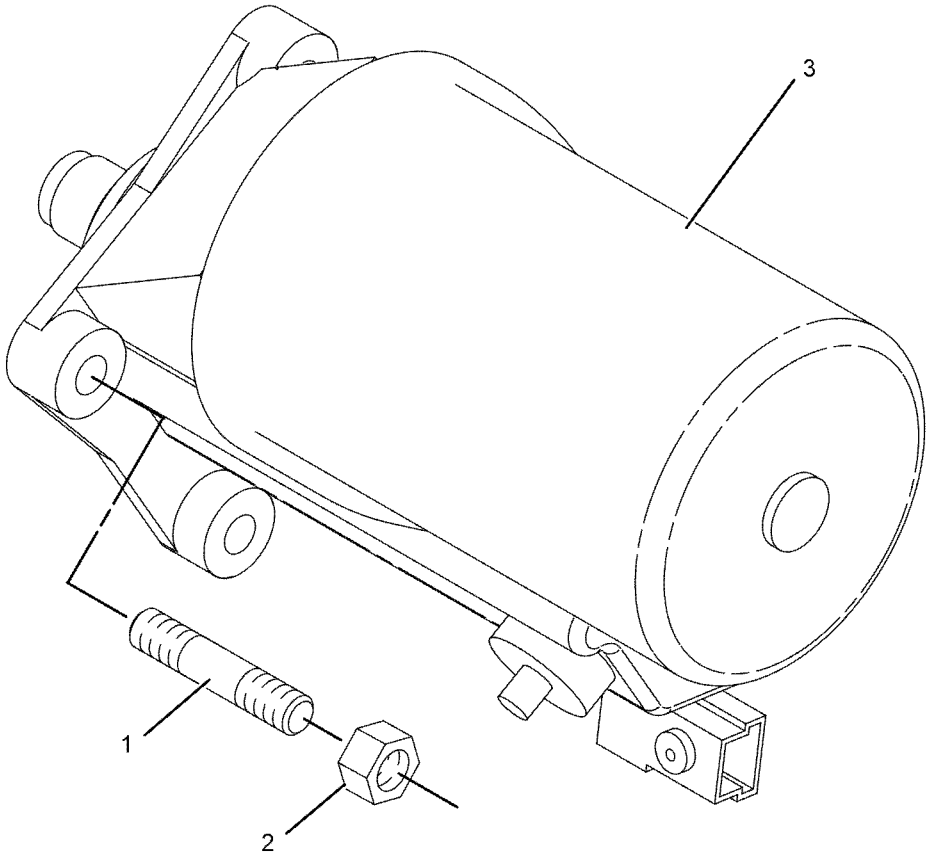

GRAPHIC #1 **<END>** g01039910

303-5769 STARTING MOTOR GP-ELECTRIC–12-VOLT

S/N: C4Z1-UP

PART OF 321-7704 ENGINE AR-PRIMARY

SMCS-1453 **i03301240**

NOTE	REF NO	GRAPHIC REF	PART NUMBER	QTY	PART NAME 1 2 3 4 5 6 (PRODUCT LEVEL)	SEE PAGE
	1	1	**6I-0364**	3	STUD (M10X1.5X30-MM)	
	2	1	**6I-0594**	3	NUT (M10X1.5-THD)	
	3	1	**303-5795**	1	STARTING MOTOR-ELECTRIC	

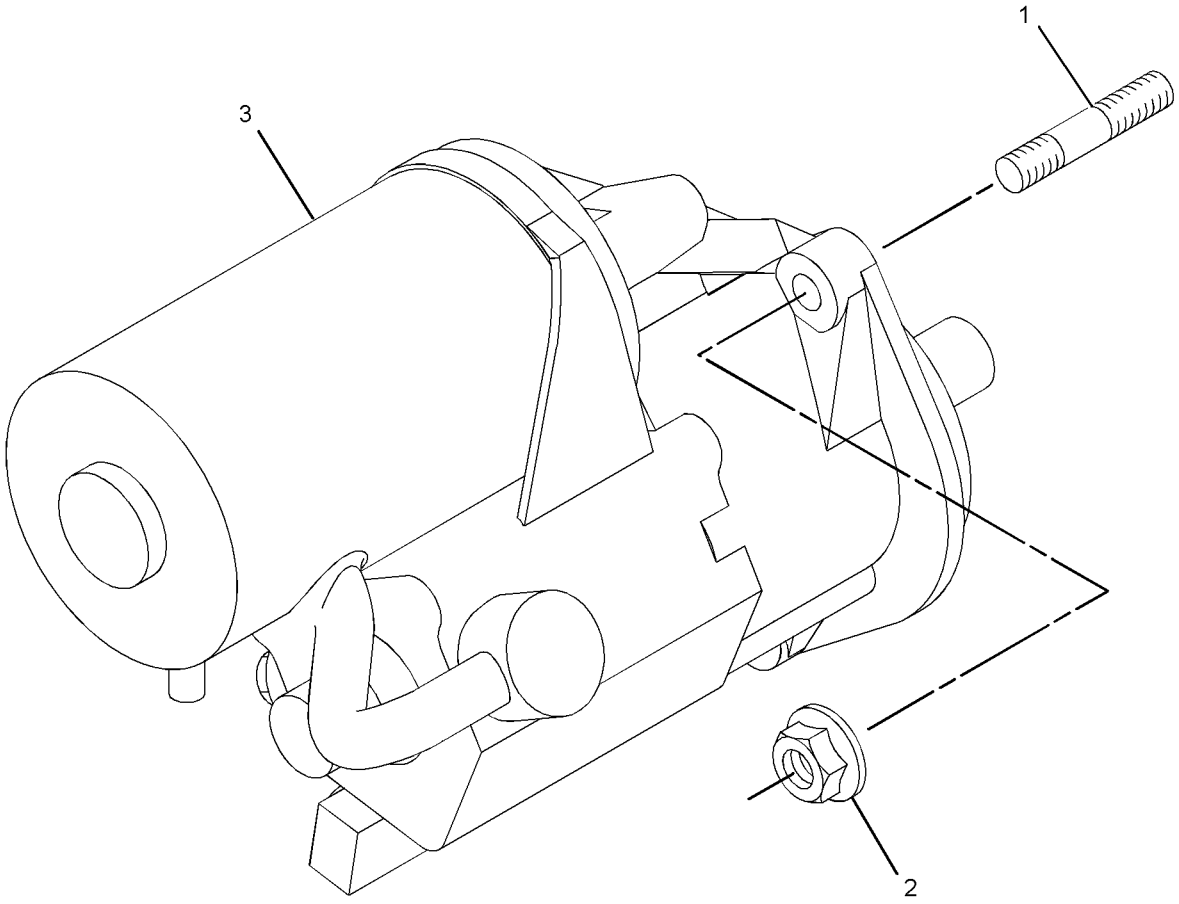

GRAPHIC #1 **<END>** g01376189

211-4267 SWITCH GP-ALL WHEEL DRIVE–INCLUDES RELAY

S/N: CBD1-UP; MFG1-UP
PART OF 220-9183 DRIVE AR-BACKHOE LOADER
AN ATTACHMENT

SMCS-1435, 4493 **i02496817**

NOTE	REF NO	GRAPHIC REF	PART NUMBER	QTY	PART NAME 1 2 3 4 5 6 (PRODUCT LEVEL)	SEE PAGE
	1	1	**146-9439**	1	RELAY AS (12-VOLT)	
	2	1	**214-4692**	1	SWITCH AS-ROCKER (ALL WHEEL DRIVE)	

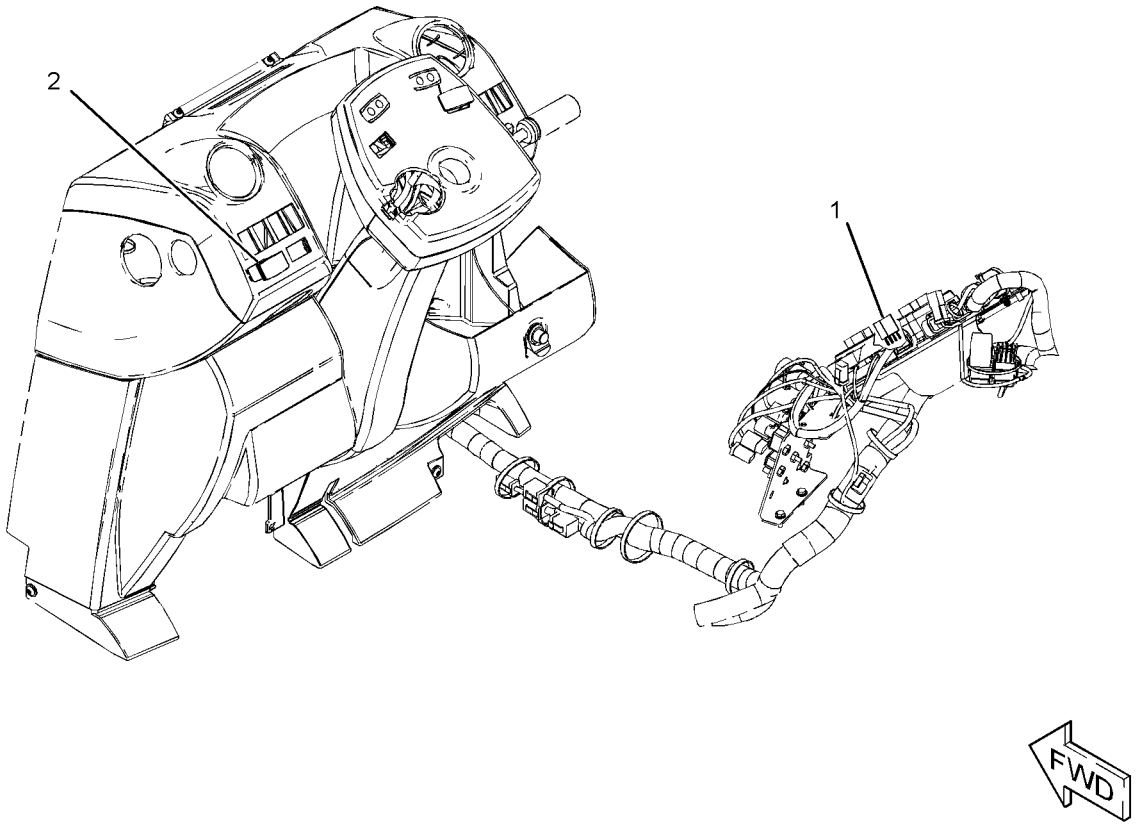

GRAPHIC #1 **<END>** g01211965

202-6010 SWITCH GP-DIFFERENTIAL LOCK–

CENTER PIVOT MACHINE
S/N: CBD1-UP; MFG1-UP
PART OF 214-6910, 214-6911, 214-6912, 214-6913, 323-3627, 323-3628, 323-3629, 323-3630 POWER TRAIN AR
AN ATTACHMENT

SMCS-1435, 3264 **i02837552**

NOTE	REF NO	GRAPHIC REF	PART NUMBER	QTY	PART NAME 1 2 3 4 5 6 (PRODUCT LEVEL)	SEE PAGE
	1	1	**201-9459**	1	BOOT	
	2	1	**204-0775**	1	SWITCH AS-FOOT (DIFFERENTIAL LOCK ON, OFF)	
	3	1	**205-6298**	1	ACTUATOR	
	4	1	**213-6060**	1	HARNESS AS-WIRING (DIFFERENTIAL LOCK)	
		1	**102-8802**	1	KIT-RECEPTACLE (2-PIN)	
					(INCLUDES RECEPTACLE AS & WEDGE)	
		1	**205-9362**	1	PLUG AS	

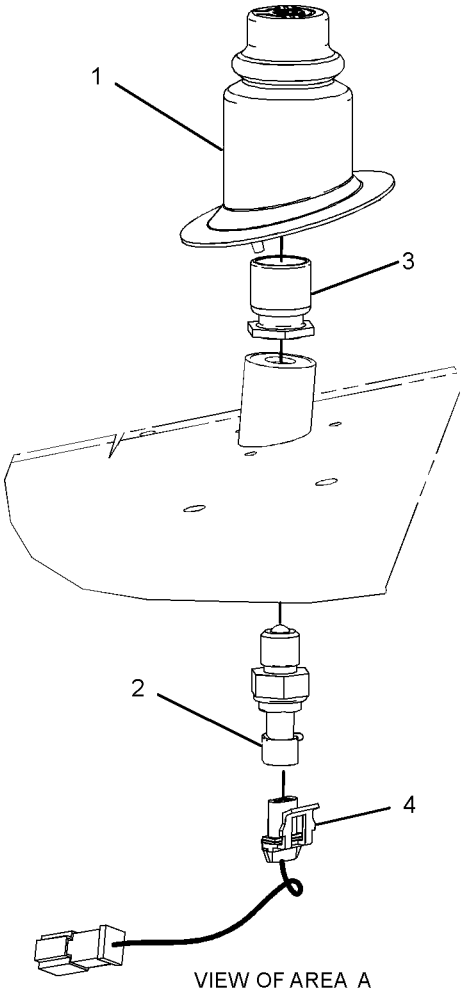

VIEW OF AREA A

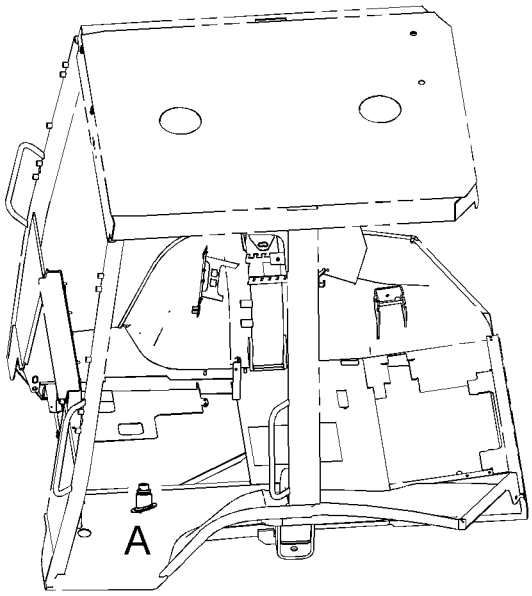

LEFT SIDE VIEW
(UPPER FRONT)

GRAPHIC #1 **<END>** g01230746

7N-0718 SWITCH GP-DISCONNECT–BATTERY

S/N: CBD1-UP; MFG1-UP
12-VOLT
PART OF 290-6789, 290-6790, 290-6830 BATTERY & WIRING GP
ALSO AN ATTACHMENT

SMCS-1411 **i02587657**

NOTE	REF NO	GRAPHIC REF	PART NUMBER	QTY	PART NAME 1 2 3 4 5 6 (PRODUCT LEVEL)	SEE PAGE
	1	1	**8H-5306**	1	KEY (BATTERY DISCONNECT)	
	2	1	**8H-5303**	1	NUT (3/4-16-THD)	
	3	1	**2H-3922**	2	LOCKWASHER	
	4	1	**9F-5644**	2	LOCKWASHER	
	5	1	**6F-7045**	2	NUT-FULL (3/8-24-THD)	

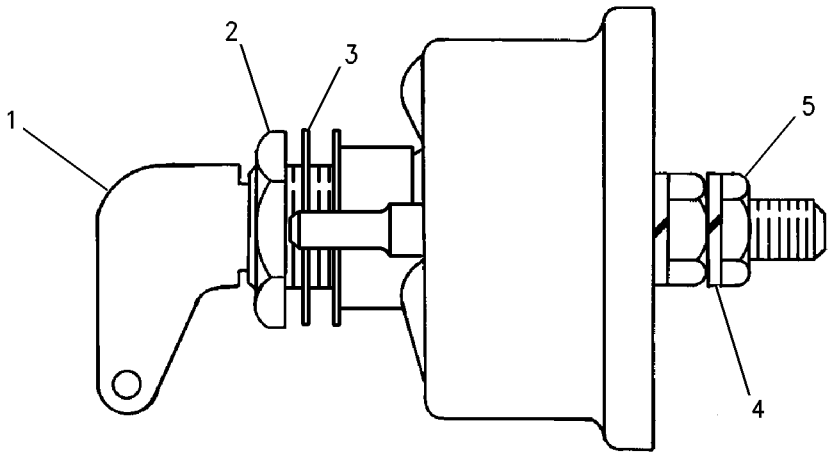

GRAPHIC #1 **<END>** g00715584

237-4896 SWITCH GP-PRESSURE

S/N: G4D1-UP; CRS1-UP

PART OF 273-3610 ENGINE AR, 245-6841, 323-5724, 323-5725 ENGINE AR-PRIMARY AN ATTACHMENT

SMCS-1435 **i02270979**

NOTE	REF NO	GRAPHIC REF	PART NUMBER	QTY	PART NAME 1 2 3 4 5 6 (PRODUCT LEVEL)	SEE PAGE
	1	1	**237-4894**	1	SWITCH AS-PRESSURE (ENGINE OIL) MOTOR	
	2	1	**199-9267**	1	SEAL-O-RING	

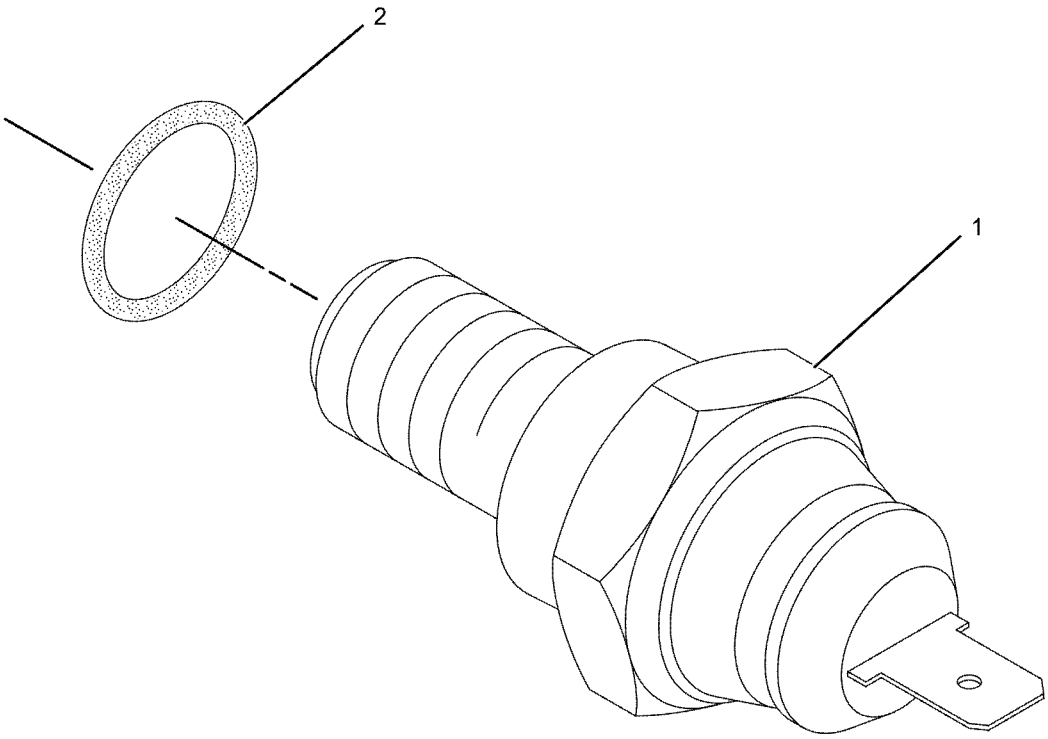

GRAPHIC #1 **<END>** g01138232

316-6925 SWITCH GP-PRESSURE–ENGINE OIL

S/N: C4Z1-UP

PART OF 321-7704 ENGINE AR-PRIMARY

SMCS-1435 **i03301182**

NOTE	REF NO	GRAPHIC REF	PART NUMBER	QTY	PART NAME 1 2 3 4 5 6 (PRODUCT LEVEL)	SEE PAGE
	1	1	**035-8063**	1	PLUG	
	2	1	**199-9267**	1	SEAL-O-RING	
	3	1	**225-7941**	1	PLUG	
	4	1	**237-4894**	1	SWITCH AS-PRESSURE (ENGINE OIL)	

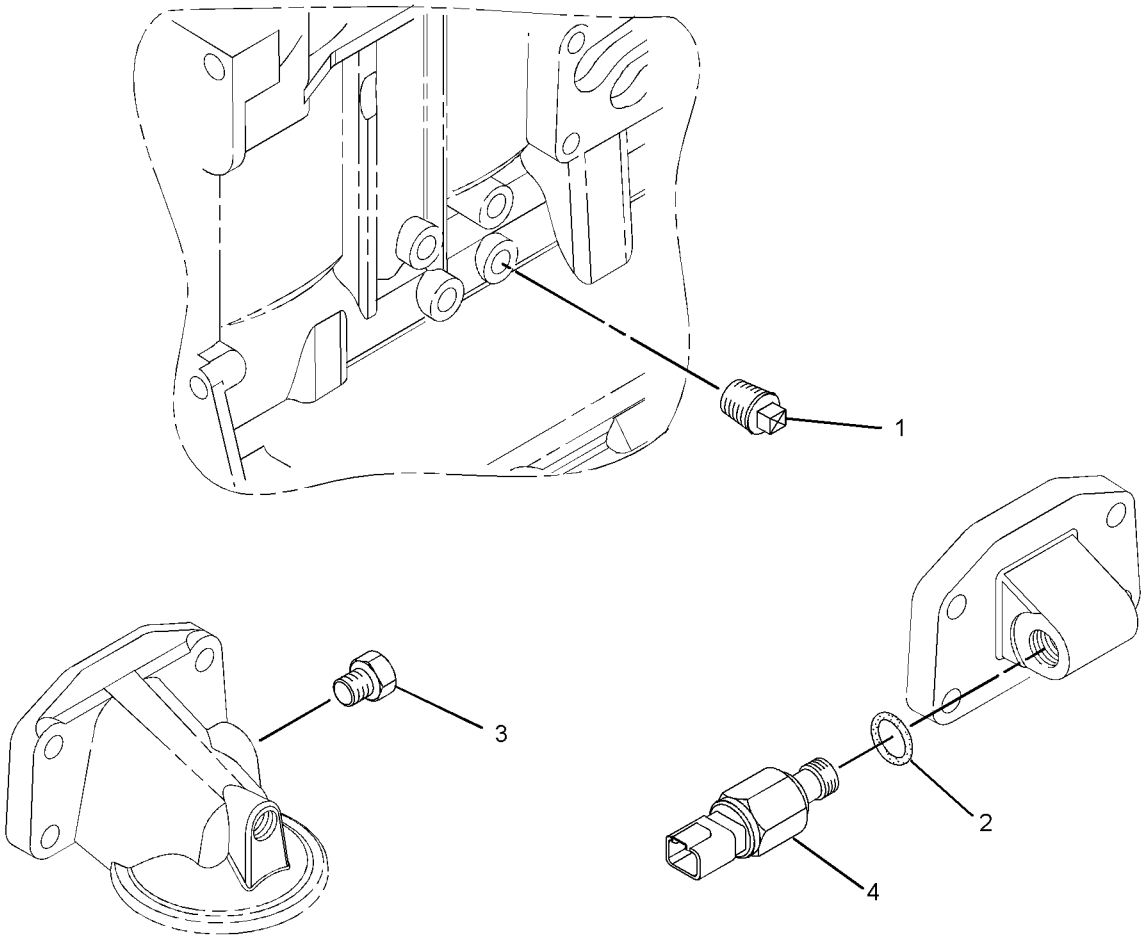

GRAPHIC #1 **<END>** g01400195

ELECTRICAL AND STARTING SYSTEM

211-4268 WIRING GP-AIR CONDITIONER

S/N: CBD1-UP
PART OF 228-4602 CAB AR-ENCLOSED ROPS
AN ATTACHMENT

SMCS-1408, 7320 **i02559989**

NOTE	REF NO	GRAPHIC REF	PART NUMBER	QTY	PART NAME 1 2 3 4 5 6 (PRODUCT LEVEL)	SEE PAGE
	1	1	**3E-9362**	1	RELAY AS (12-VOLT)	
	2	1	**6K-0806**	2	STRAP-CABLE	
	3	1	**9X-7378**	1	SEAL-O-RING	
	4	1	**106-8704**	1	SUPPRESSOR AS-ARC	
		1	**102-8802**	1	KIT-RECEPTACLE (2-PIN)	
					(INCLUDES RECEPTACLE AS & WEDGE)	
		1	**186-3735**	2	PIN-CONNECTOR (16-GA TO 18-GA)	
	5	1	**202-6108**	1	HARNESS AS-HEATER & AIR COND (POWER)	
		1	**111-6792**	1	TERMINAL-RECEPTACLE (18-GA TO 20-GA)	
		1	**102-8802**	1	KIT-RECEPTACLE (2-PIN)	
					(INCLUDES RECEPTACLE AS & WEDGE)	
		1	**8L-8413**	11	STRAP-CABLE	
		1	**111-6795**	1	HOUSING-RELAY	
		1	**111-6816**	1	LOCK	
	6	1	**213-6055**	1	HARNESS AS-HEATER & AIR COND	
		1	**9X-1055**	2	TERMINAL-RECEPTACLE (12-GA)	
		1	**091-2436**	7	TERMINAL-BLADE (18-GA TO 22-GA)	
		1	**100-5041**	2	TERMINAL-RECEPTACLE (18-GA TO 20-GA)	
		1	**104-1995**	11	TERMINAL-BLADE (14-GA TO 18-GA)	
		1	**122-4401**	1	TERMINAL	
		1	**8L-8413**	29	STRAP-CABLE	
		1	**213-0139**	5	PIN	
E		1	**119-3662**		TUBE-HEAT SHRINK (10.85-MM DIA) (20-CM)	
E		1	**125-7874**		TUBE-HEAT SHRINK (5.72-MM DIA) (10-CM)	
		1	**9X-1054**	1	PLUG AS-CONNECTOR (4-PIN)	
		1	**102-8802**	1	KIT-RECEPTACLE (2-PIN)	
		1	**102-8803**	1	KIT-RECEPTACLE (3-PIN)	
					(EACH RECEPTACLE KIT INCLUDES RECEPTACLE AS & WEDGE)	
		1	**177-9648**	1	KIT-CONNECTING PLUG (2-PIN)	
		1	**177-9656**	1	KIT-CONNECTING PLUG (4-PIN)	
					(EACH PLUG KIT INCLUDES PLUG AS & WEDGE)	
		1	**155-2270**	1	KIT-CONNECTING PLUG (2-PIN)	
					(INCLUDES PLUG AS, WEDGE & INTERFACE SEAL)	
	7	1	**214-4695**	1	SWITCH AS-ROCKER (BLOWER FAN SPEED)	
	8	1	**214-4718**	1	SWITCH AS-ROCKER (AIR CONDITIONER, HEATER SELECT)	
	9	1	**236-6923**	1	SWITCH AS-PRESSURE (REFRIGERANT)	
	10	1	**238-7492**	1	HARNESS AS-HEATER & AIR COND (COMPRESSOR)	
		1	**8L-8413**	1	STRAP-CABLE	
E		1	**125-7874**		TUBE-HEAT SHRINK (5.72-MM DIA) (10-CM)	
		1	**100-6674**	2	SEAL-CONNECTOR	
		1	**124-5640**	2	TERMINAL-SOCKET	
		1	**102-8802**	1	KIT-RECEPTACLE (2-PIN)	
					(INCLUDES RECEPTACLE AS & WEDGE)	
		1	**155-2270**	2	KIT-CONNECTING PLUG (2-PIN)	
					(EACH INCLUDES PLUG AS, WEDGE & INTERFACE SEAL)	
	11	1	**275-0570**	1	BAR-BUS	
Y	12	1	**276-7287**	1	RELAY GP (12-VOLT)	269
	13	1	**115-1615**	1	RELAY AS (12-VOLT)	
	14	1	**4P-8134**	2	CLIP	
	15	1	**3S-2093**	11	STRAP-CABLE	
M	16	1	**5C-2890**	1	NUT (M6X1-THD)	
M	17	1	**5C-7261**	1	NUT (M8X1.25-THD)	

211-4268 WIRING GP-AIR CONDITIONER *(contd.)* i02559989

NOTE	REF NO	GRAPHIC REF	PART NUMBER	QTY	PART NAME 1 2 3 4 5 6 (PRODUCT LEVEL)	SEE PAGE
M	18	1	**7X-2534**	1	BOLT (M6X1X50-MM)	
	19	1	**8T-4205**	1	WASHER-HARD (7.2X14.5X2-MM THK)	
	20	1	**8T-4224**	1	WASHER-HARD (8.8X16X2-MM THK)	
	21	1	**7K-1181**	1	STRAP-CABLE	
	22	1	**8T-8799**	1	BOOT	

E-ORDER BY THE CENTIMETER
M-METRIC PART
Y-SEPARATE ILLUSTRATION

211-4268 **WIRING GP-AIR CONDITIONER** *(contd.)* **i02559989**

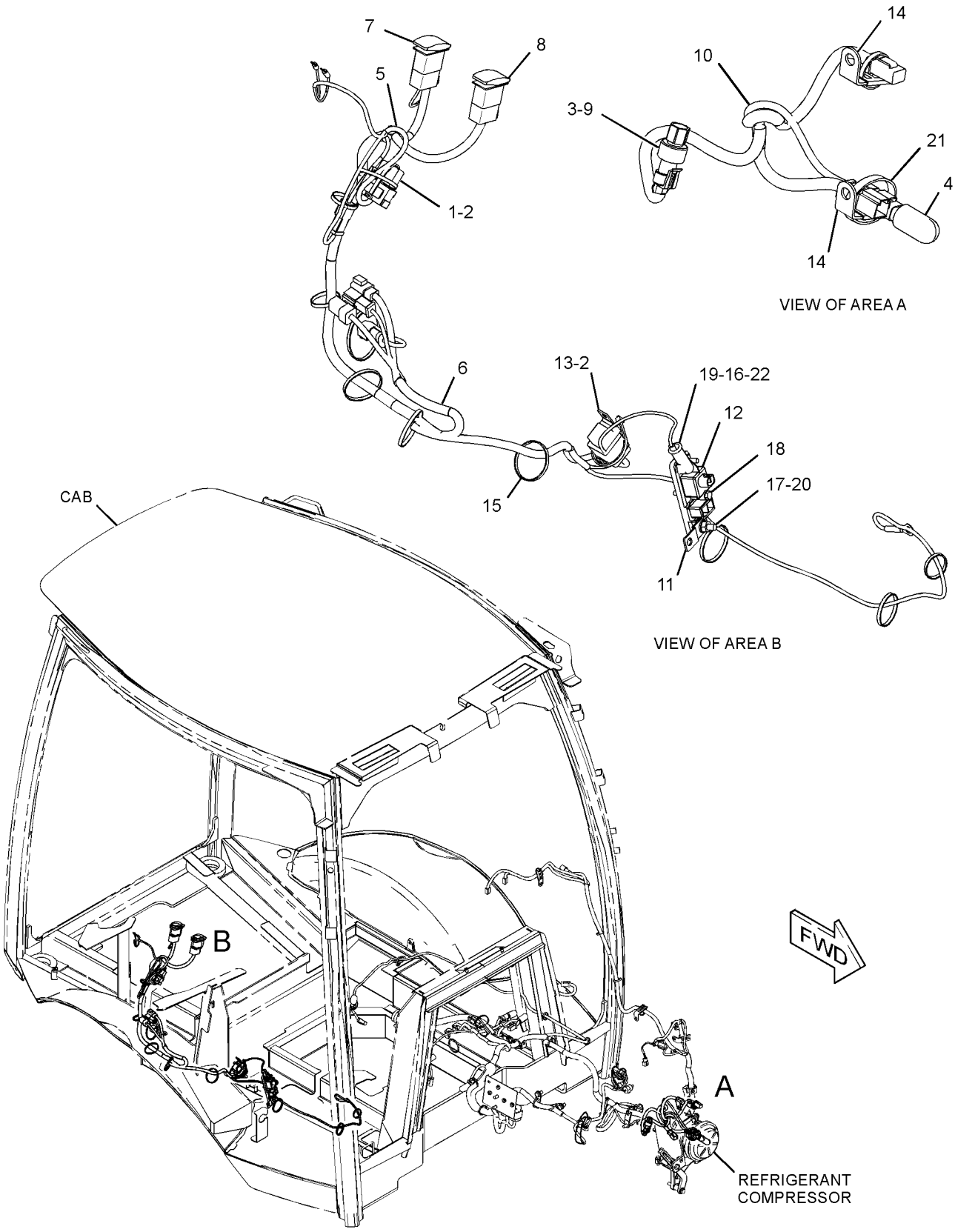

GRAPHIC #1 **<END>** g01282625

211-4268 WIRING GP-AIR CONDITIONER

S/N: CBD1-UP; MFG1-UP
PART OF 228-4602 CAB AR-ENCLOSED ROPS
AN ATTACHMENT

SMCS-1408, 7320 **i03901074**

NOTE	REF NO	GRAPHIC REF	PART NUMBER	QTY	PART NAME 1 2 3 4 5 6 (PRODUCT LEVEL)	SEE PAGE
	1	1	**3E-9362**	1	RELAY AS (12-VOLT) (HEATER, A/C POWER)	
C	2	1	**6K-0806**	1	STRAP-CABLE	
	3	1	**9X-7378**	1	SEAL-O-RING	
C	4	1	**189-3158**	1	SUPPRESSOR-ARC	
	5	1	**202-6108**	1	HARNESS AS-HEATER & AIR COND (POWER)	
		1	**102-8802**	1	KIT-RECEPTACLE (2-PIN)	
					(INCLUDES RECEPTACLE AS & WEDGE)	
		1	**8L-8413**	11	STRAP-CABLE	
		1	**111-6795**	1	HOUSING-RELAY	
		1	**111-6816**	1	LOCK	
		1	**2L-8075**	2	TERMINAL-RING (14-GA TO 16-GA, NO. 8 SCREW)	
		1	**111-6792**	4	TERMINAL-RECEPTACLE (18-GA TO 20-GA)	
		1	**9X-3401**	2	PIN-CONNECTOR (16-GA TO 18-GA)	
	6	1	**213-6055**	1	HARNESS AS-HEATER & AIR COND (PLATFORM)	
		1	**9X-3401**	5	PIN-CONNECTOR (16-GA TO 18-GA)	
		1	**102-8802**	1	KIT-RECEPTACLE (2-PIN)	
		1	**102-8803**	1	KIT-RECEPTACLE (3-PIN)	
					(EACH RECEPTACLE KIT INCLUDES RECEPTACLE AS & WEDGE)	
		1	**8L-8413**	29	STRAP-CABLE	
		1	**8T-8737**	1	PLUG-SEAL	
		1	**9X-1054**	1	PLUG AS-CONNECTOR (4-PIN)	
		1	**155-2270**	1	KIT-CONNECTING PLUG (2-PIN)	
		1	**177-9648**	1	KIT-CONNECTING PLUG (2-PIN)	
		1	**177-9656**	1	KIT-CONNECTING PLUG (4-PIN)	
					(EACH PLUG KIT INCLUDES PLUG AS, WEDGE & INTERFACE SEAL)	
		1	**180-9340**	2	SOCKET-CONNECTOR (14-GA TO 18-GA)	
		1	**213-0139**	5	PIN	
		1	**228-5856**	2	CONNECTOR	
		1	**122-4401**	1	TERMINAL	
		1	*128-4179*	1	TERMINAL AS	
		1	**2L-8069**	1	TERMINAL-RING (2-GA TO 10-GA, 3/8-IN SCREW)	
D		1	**5P-6006**		TUBE-HEAT SHRINK (9.52-MM DIA) (0.1-M)	
		1	*131-1496*	1	TERMINAL AS	
		1	**2L-8067**	1	TERMINAL-RING (10-GA TO 12-GA, 1/4-IN SCREW)	
E		1	**125-7875**		TUBE-HEAT SHRINK (7.44-MM DIA) (4-CM)	
		1	**091-2436**	7	TERMINAL-BLADE (18-GA TO 22-GA)	
		1	**104-1995**	11	TERMINAL-BLADE (14-GA TO 18-GA)	
		1	**9X-1055**	2	TERMINAL-RECEPTACLE (12-GA)	
		1	**100-5041**	2	TERMINAL-RECEPTACLE (18-GA TO 20-GA)	
E		1	**119-3662**		TUBE-HEAT SHRINK (10.85-MM DIA) (20-CM)	
E		1	**125-7874**		TUBE-HEAT SHRINK (5.72-MM DIA) (10-CM)	
	7	1	**214-4695**	1	SWITCH AS-ROCKER (BLOWER FAN SPEED)	
	8	1	**214-4718**	1	SWITCH AS-ROCKER (AIR CONDITIONER, HEATER SELECT)	
					(EACH SWITCH AS INCLUDES)	
		1	**111-7899**	1	GASKET	
	9	1	**236-6923**	1	SWITCH AS-PRESSURE (REFRIGERANT)	
	10	1	**238-7492**	1	HARNESS AS-HEATER & AIR COND (COMPRESSOR)	
		1	**124-5640**	2	TERMINAL-SOCKET	
		1	**3S-2093**	1	STRAP-CABLE	
		1	**102-8802**	1	KIT-RECEPTACLE (2-PIN)	
					(INCLUDES RECEPTACLE AS & WEDGE)	

211-4268 **WIRING GP-AIR CONDITIONER** *(contd.)* **i03901074**

NOTE	REF NO	GRAPHIC REF	PART NUMBER	QTY	PART NAME 1 2 3 4 5 6 (PRODUCT LEVEL)	SEE PAGE
		1	**8L-8413**	1	STRAP-CABLE	
		1	**100-6674**	2	SEAL-CONNECTOR	
E		1	**125-7874**		TUBE-HEAT SHRINK (5.72-MM DIA) (10-CM)	
		1	**155-2270**	2	KIT-CONNECTING PLUG (2-PIN)	
					(EACH INCLUDES PLUG AS, WEDGE & INTERFACE SEAL)	
		1	**9X-3401**	2	PIN-CONNECTOR (16-GA TO 18-GA)	
		1	**180-9340**	4	SOCKET-CONNECTOR (14-GA TO 18-GA)	
	11	1	**275-0570**	1	BAR-BUS	
Y	12	1	**276-7287**	1	RELAY GP (12-VOLT) (POWER DISTRIBUTION)	269
	13	1	**115-1615**	1	RELAY AS (12-VOLT) (AIR CONDITIONER)	
	14	1	**4P-8134**	2	CLIP	
	15	1	**3S-2093**	11	STRAP-CABLE	
M	16	1	**5C-2890**	1	NUT (M6X1-THD)	
M	17	1	**5C-7261**	1	NUT (M8X1.25-THD)	
CM	18	1	**8T-4171**	1	BOLT (M6X1X12-MM)	
C	19	1	**8T-4205**	2	WASHER-HARD (7.2X14.5X2-MM THK)	
	20	1	**8T-4224**	1	WASHER-HARD (8.8X16X2-MM THK)	
	21	1	**7K-1181**	1	STRAP-CABLE	
	22	1	**8T-8799**	1	BOOT	
CM	23	1	**8T-9534**	1	BOLT (M6X1X50-MM)	

C-CHANGE FROM PREVIOUS TYPE
D-ORDER BY THE METER
E-ORDER BY THE CENTIMETER
M-METRIC PART
Y-SEPARATE ILLUSTRATION

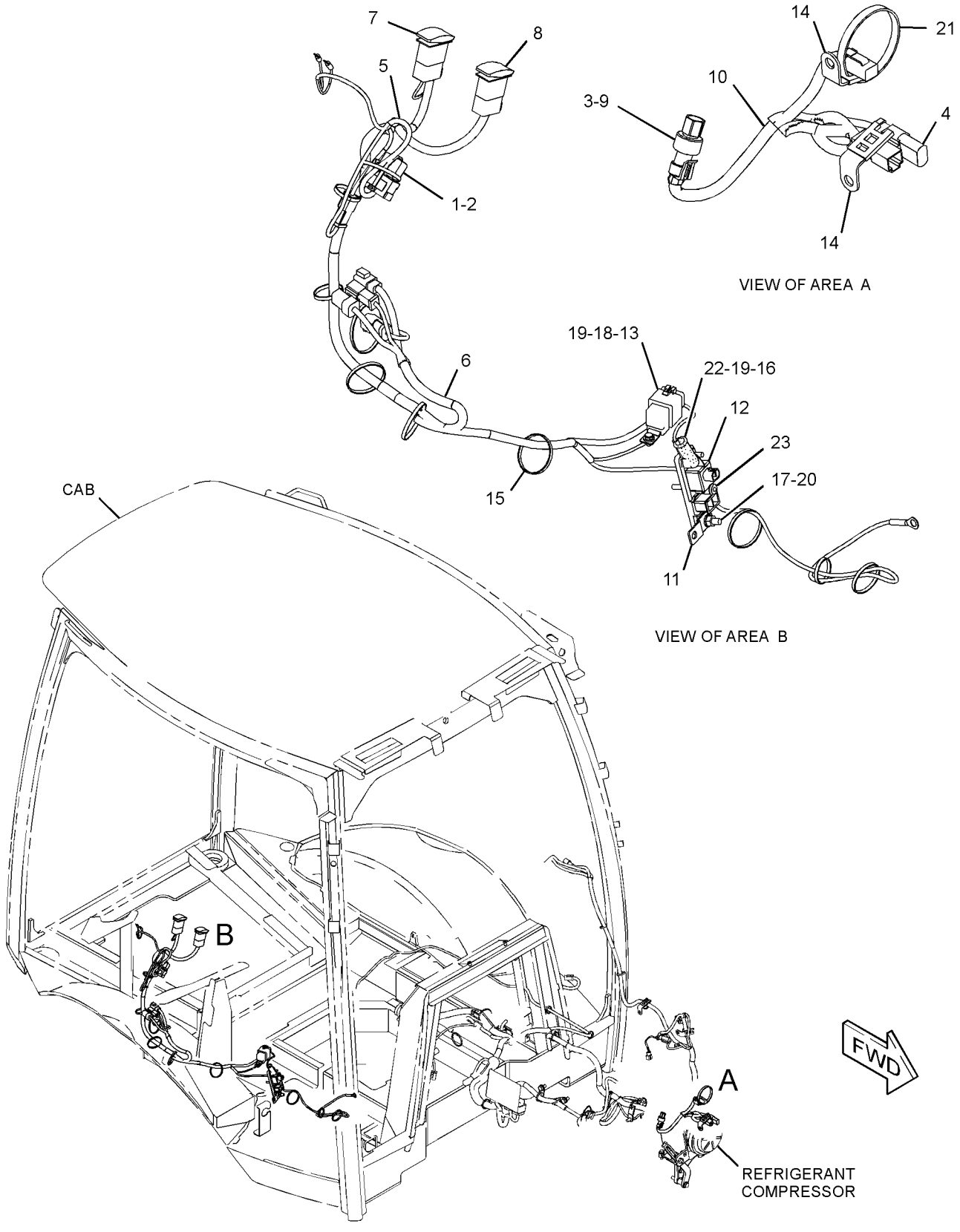

GRAPHIC #1 **<END>** g02104100

ELECTRICAL AND STARTING SYSTEM

290-6732 WIRING GP-AIR CONDITIONER

S/N: MFG1-UP
PART OF 291-9195 CAB AR-ENCLOSED ROPS
AN ATTACHMENT

SMCS-1408, 7320 **i04052969**

NOTE	REF NO	GRAPHIC REF	PART NUMBER	QTY	PART NAME 1 2 3 4 5 6 (PRODUCT LEVEL)	SEE PAGE
	1	1	**3E-9362**	1	RELAY AS (12-VOLT) (HEATER, A/C POWER)	
C	2	1	**6K-0806**	2	STRAP-CABLE	
	3	1	**7K-1181**	3	STRAP-CABLE	
	4	1	**8T-8799**	1	BOOT	
	5	1	**189-3158**	1	SUPPRESSOR-ARC	
C	6	1	**338-5731**	1	HARNESS AS-HEATER & AIR COND (POWER)	
		1	**111-6795**	1	HOUSING-RELAY	
		1	**111-6816**	1	LOCK	
		1	**8T-8729**	4	PIN-CONNECTOR (16-GA TO 18-GA)	
		1	**102-8802**	2	KIT-RECEPTACLE (2-PIN)	
					(EACH INCLUDES RECEPTACLE AS & WEDGE)	
		1	**111-6792**	4	TERMINAL-RECEPTACLE (18-GA TO 20-GA)	
	7	1	**213-6055**	1	HARNESS AS-HEATER & AIR COND (PLATFORM)	
		1	**228-5856**	2	CONNECTOR	
		1	**213-0139**	5	PIN	
		1	**9X-3401**	5	PIN-CONNECTOR (16-GA TO 18-GA)	
		1	**9X-1054**	1	PLUG AS-CONNECTOR (4-PIN)	
		1	**155-2270**	1	KIT-CONNECTING PLUG (2-PIN)	
		1	**177-9648**	1	KIT-CONNECTING PLUG (2-PIN)	
		1	**177-9656**	1	KIT-CONNECTING PLUG (4-PIN)	
					(EACH PLUG KIT INCLUDES PLUG AS, WEDGE & INTERFACE SEAL)	
		1	**8T-8737**	1	PLUG-SEAL	
		1	**102-8802**	1	KIT-RECEPTACLE (2-PIN)	
		1	**102-8803**	1	KIT-RECEPTACLE (3-PIN)	
					(EACH RECEPTACLE KIT INCLUDES RECEPTACLE AS & WEDGE)	
		1	**180-9340**	2	SOCKET-CONNECTOR (14-GA TO 18-GA)	
		1	**8L-8413**	29	STRAP-CABLE	
		1	**122-4401**	1	TERMINAL	
		1	**2L-8069**	1	TERMINAL-RING (2-GA TO 10-GA, 3/8-IN SCREW)	
		1	**2L-8067**	1	TERMINAL-RING (10-GA TO 12-GA, 1/4-IN SCREW)	
		1	**091-2436**	7	TERMINAL-BLADE (18-GA TO 22-GA)	
		1	**104-1995**	11	TERMINAL-BLADE (14-GA TO 18-GA)	
		1	**9X-1055**	2	TERMINAL-RECEPTACLE (12-GA)	
		1	**100-5041**	2	TERMINAL-RECEPTACLE (18-GA TO 20-GA)	
E		1	**119-3662**		TUBE-HEAT SHRINK (10.85-MM DIA) (20-CM)	
E		1	**125-7874**		TUBE-HEAT SHRINK (5.72-MM DIA) (10-CM)	
	8	1	**214-4695**	1	SWITCH AS-ROCKER (BLOWER FAN SPEED)	
	9	1	**214-4718**	1	SWITCH AS-ROCKER (AIR CONDITIONER, HEATER SELECT)	
					(EACH SWITCH AS INCLUDES)	
		1	**111-7899**	1	GASKET	
	10	1	**236-6923**	1	SWITCH AS-PRESSURE (REFRIGERANT COMPR, HIGH SIDE)	
	11	1	**238-7492**	1	HARNESS AS-HEATER & AIR COND (COMPRESSOR)	
		1	**9X-3401**	2	PIN-CONNECTOR (16-GA TO 18-GA)	
		1	**155-2270**	2	KIT-CONNECTING PLUG (2-PIN)	
					(EACH INCLUDES PLUG AS, WEDGE & INTERFACE SEAL)	
		1	**102-8802**	1	KIT-RECEPTACLE (2-PIN)	
					(INCLUDES RECEPTACLE AS & WEDGE)	
		1	**100-6674**	2	SEAL-CONNECTOR	
		1	**180-9340**	4	SOCKET-CONNECTOR (14-GA TO 18-GA)	
		1	**124-5640**	2	TERMINAL-SOCKET	

290-6732 **WIRING GP-AIR CONDITIONER** *(contd.)* **i04052969**

NOTE	REF NO	GRAPHIC REF	PART NUMBER	QTY	PART NAME 1 2 3 4 5 6 (PRODUCT LEVEL)	SEE PAGE
		1	**8L-8413**	1	STRAP-CABLE	
E		1	**125-7874**		TUBE-HEAT SHRINK (5.72-MM DIA) (10-CM)	
	12	1	**275-0570**	1	BAR-BUS	
	13	1	**115-1615**	1	RELAY AS (12-VOLT) (BLOWER)	
M	14	1	**8T-9534**	1	BOLT (M6X1X50-MM)	
Y	15	1	**276-7287**	1	RELAY GP (12-VOLT) (POWER DISTRIBUTION)	269
C	16	1	**3S-2093**	11	STRAP-CABLE	
M	17	1	**5C-2890**	1	NUT (M6X1-THD)	
M	18	1	**5C-7261**	1	NUT (M8X1.25-THD)	
M	19	1	**8T-4171**	1	BOLT (M6X1X12-MM)	
	20	1	**8T-4205**	2	WASHER-HARD (7.2X14.5X2-MM THK)	
	21	1	**8T-4224**	1	WASHER-HARD (8.8X16X2-MM THK)	
	22	1	**9X-7378**	1	SEAL-O-RING	

C-CHANGE FROM PREVIOUS TYPE
E-ORDER BY THE CENTIMETER
M-METRIC PART
Y-SEPARATE ILLUSTRATION

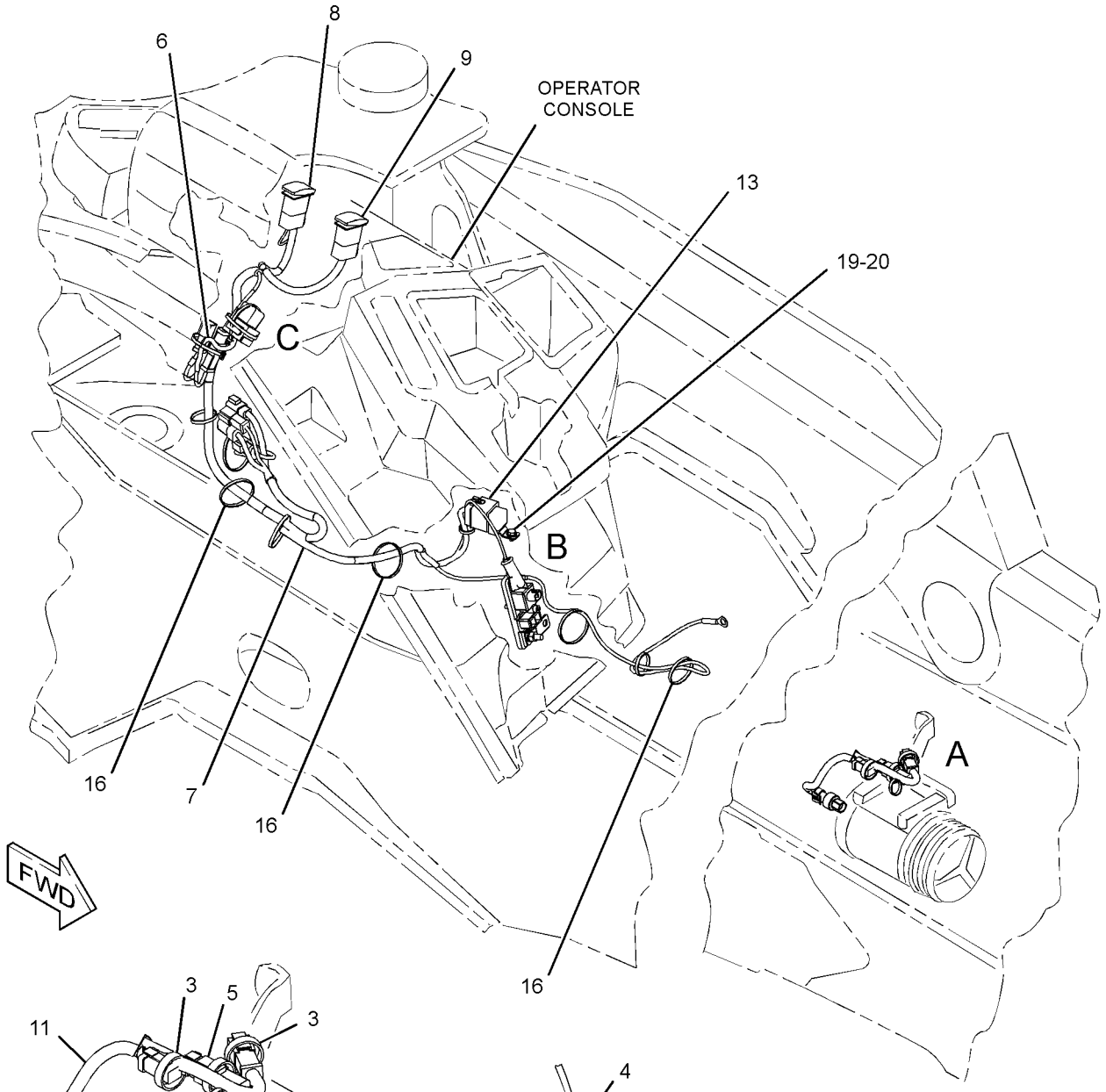

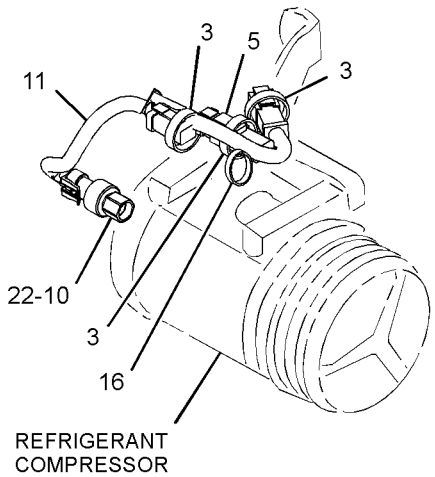

VIEW OF AREA A

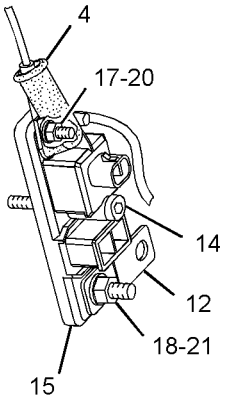

VIEW OF AREA B

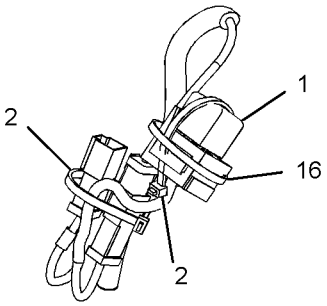

VIEW OF AREA C

GRAPHIC #1 **<END>** g02711617

211-4243 WIRING GP-CONSOLE–SIDE

S/N: CBD1-UP; MFG1-UP

PART OF 204-4161, 204-4162, 228-4602 CAB AR-ENCLOSED ROPS, 204-4160, 204-4164, 292-9690, 292-9691 CANOPY AR-OPEN ROPS AN ATTACHMENT

SMCS-1408 **i03111266**

NOTE	REF NO	GRAPHIC REF	PART NUMBER	QTY	PART NAME 1 2 3 4 5 6 (PRODUCT LEVEL)	SEE PAGE
J	1	1	**110-7887**	1	SWITCH AS-START (KEY)	
		1	**7T-6799**	1	NUT-MOUNTING (1-32-THD)	
		1	**102-8804**	1	KIT-RECEPTACLE (4-PIN)	
					(INCLUDES RECEPTACLE AS & WEDGE)	
		1	**186-3735**	4	PIN-CONNECTOR (16-GA TO 18-GA)	
	2	1	**165-0312**	1	WIRE AS	
M	3	1	**197-7499**	2	BOLT (M4X0.7X25-MM)	
	4	1	**206-1345**	3	STRAP-CABLE	
	5	1	**6V-3507**	3	SEAL-RECTANGULAR	
M	6	1	**8T-2659**	2	LOCKNUT (M4X0.7-THD)	
	7	1	**214-4693**	1	SWITCH AS-ROCKER (WARNING BEACON)	
	8	1	**214-4722**	1	SWITCH AS-ROCKER (STARTING AID)	
					(EACH SWITCH AS INCLUDES)	
		1	**111-7899**	1	GASKET	
	9	1	**3S-2093**	5	STRAP-CABLE	
	10	1	**226-7164**	1	GAUGE GP-COOLANT TEMPERATURE	
		1	**4B-2043**	6	NUT (8-32-THD)	
		1	**7X-9065**	1	LAMP (12-VOLT)	
		1	**9B-7233**	3	LOCKWASHER	
B	11	1	**227-1057**	7	PLUG-HOLE	
	12	1	**231-9357**	1	FILM-IDENTIFICATION (CONSOLE, RH) (CONSOLE, RH)	
	13	1	**268-7758**	1	HARNESS AS-CONSOLE (SIDE CONSOLE)	
		1	**228-5856**	10	CONNECTOR	
		1	**9X-3401**	2	PIN-CONNECTOR (16-GA TO 18-GA)	
					–OR–	
		1	**126-1767**	2	PIN-CONNECTOR (14-GA TO 16-GA)	
		1	**155-2255**	2	KIT-CONNECTING PLUG (12-PIN)	
		1	**155-2271**	1	KIT-CONNECTING PLUG (4-PIN)	
		1	**155-2274**	1	KIT-CONNECTING PLUG (6-PIN)	
					(EACH PLUG KIT INCLUDES PLUG AS, WEDGE & INTERFACE SEAL)	
		1	**167-3693**	1	PLUG AS-CONNECTOR (31-PIN)	
		1	**8T-8737**	5	PLUG-SEAL	
		1	**102-8802**	1	KIT-RECEPTACLE (2-PIN)	
					(INCLUDES RECEPTACLE AS & WEDGE)	
		1	**180-9340**	60	SOCKET-CONNECTOR (14-GA TO 18-GA)	
		1	**8L-8413**	56	STRAP-CABLE	
		1	**122-4401**	1	TERMINAL	
		1	**2L-8076**	1	TERMINAL-RING (14-GA TO 16-GA, NO. 10 SCREW)	
		1	**5P-4571**	2	TERMINAL-BLADE (14-GA TO 16-GA)	
		1	**7N-7221**	3	TERMINAL-BLADE (18-GA TO 22-GA)	
		1	**091-2436**	48	TERMINAL-BLADE (18-GA TO 22-GA)	
		1	**104-1995**	14	TERMINAL-BLADE (14-GA TO 18-GA)	
E		1	**119-3662**		TUBE-HEAT SHRINK (10.85-MM DIA) (20-CM)	
E		1	**125-7874**		TUBE-HEAT SHRINK (5.72-MM DIA) (25-CM)	
	14	1	**270-2728**	1	LAMP GP (12-VOLT)	
		1	**8T-8737**	2	PLUG-SEAL	
		1	**102-8801**	1	KIT-RECEPTACLE (12-PIN)	
					(INCLUDES RECEPTACLE AS & WEDGE)	
		1	**186-3735**	10	PIN-CONNECTOR (16-GA TO 18-GA)	
		1	**232-4706**	1	GASKET	
	15	1	**131-1424**	1	SEAL	

211-4243 **WIRING GP-CONSOLE** *(contd.)* **i03111266**

NOTE	REF NO	GRAPHIC REF	PART NUMBER	QTY	PART NAME 1 2 3 4 5 6 (PRODUCT LEVEL)	SEE PAGE
	16	1	**170-6305**	1	GAUGE GP-FUEL LEVEL	
	17	1	**170-6542**	1	GAUGE GP-OIL TEMPERATURE (TORQUE CONVERTER)	
					(EACH GAUGE GP INCLUDES)	
		1	**4B-2043**	3	NUT (8-32-THD)	
		1	**7X-9065**	1	LAMP (12-VOLT)	
		1	**9B-7233**	3	LOCKWASHER	
Y	18	1	**239-1080**	1	TACHOMETER GP-ELECTRIC (12-VOLT)	1046

B-USE AS REQUIRED
E-ORDER BY THE CENTIMETER
J-REQUIRES 5P-8500 KEY
M-METRIC PART
Y-SEPARATE ILLUSTRATION

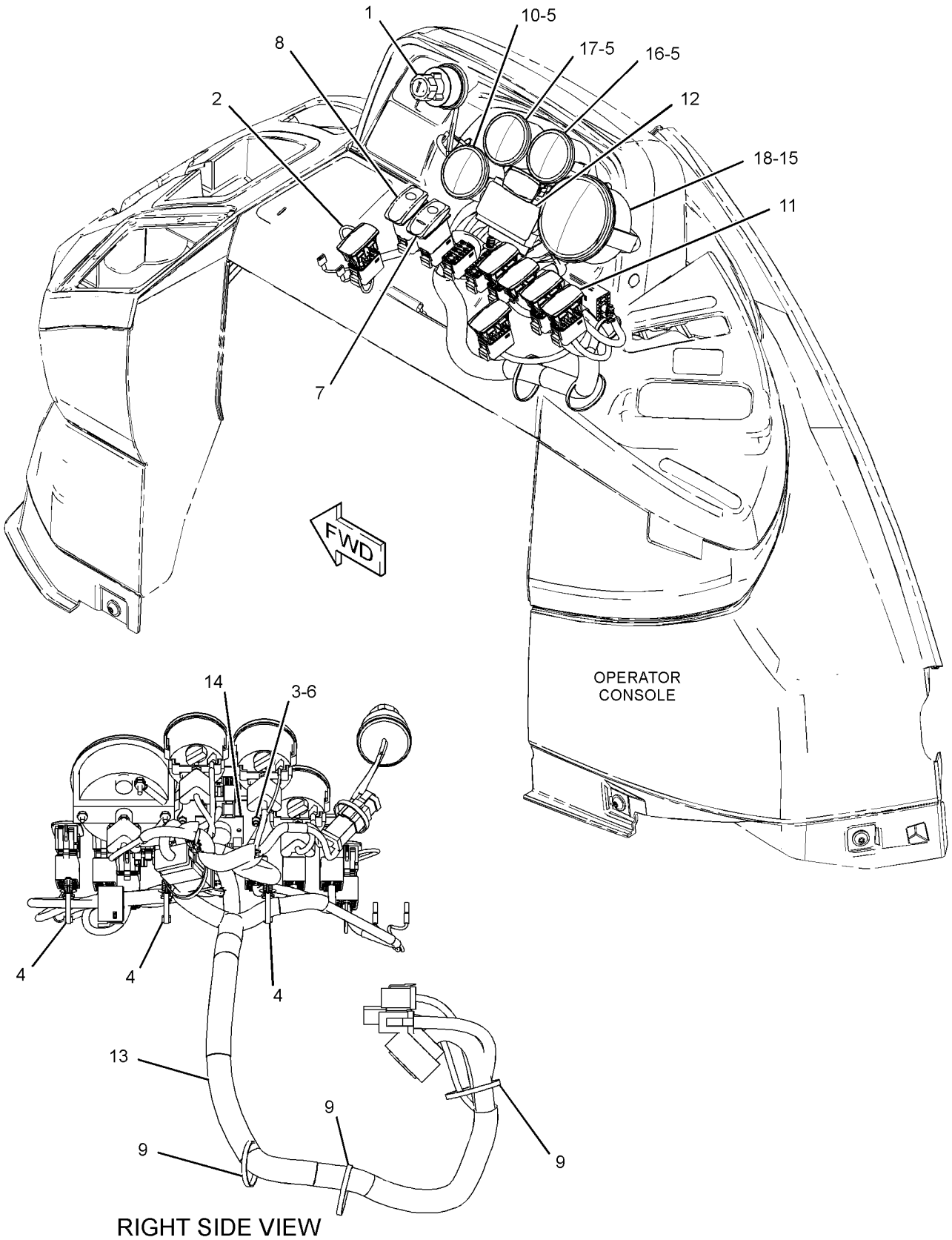

GRAPHIC #1 **<END>** g01948656

211-4245 WIRING GP-CONSOLE–FRONT

S/N: CBD1-UP; MFG1-UP

PART OF 204-4161, 204-4162, 228-4602 CAB AR-ENCLOSED ROPS, 204-4160, 204-4164, 292-9690, 292-9691 CANOPY AR-OPEN ROPS AN ATTACHMENT

SMCS-1408 **i02548971**

NOTE	REF NO	GRAPHIC REF	PART NUMBER	QTY	PART NAME 1 2 3 4 5 6 (PRODUCT LEVEL)	SEE PAGE
	1	1	**7K-1181**	3	STRAP-CABLE	
	2	1	**268-1964**	1	KIT-SERVICE METER	
					(INCLUDES METER & FILM)	
	3	1	**213-6040**	1	HARNESS AS-CONSOLE	
		1	**102-8802**	1	KIT-RECEPTACLE (2-PIN)	
					(INCLUDES RECEPTACLE AS & WEDGE)	
		1	**130-6791**	3	TERMINAL AS	
					(EACH INCLUDES)	
		1	**7N-7221**	1	TERMINAL-BLADE (18-GA TO 22-GA)	
		1	**6V-2689**		TUBE-HEAT SHRINK (6.35-MM DIA)	
		1	**155-2270**	1	KIT-CONNECTING PLUG (2-PIN)	
					(INCLUDES PLUG AS, INTERFACE SEAL & WEDGE)	
		1	**091-2436**	28	TERMINAL-BLADE (18-GA TO 22-GA)	
		1	**104-1995**	3	TERMINAL-BLADE (14-GA TO 18-GA)	
		1	**122-4401**	1	TERMINAL	
E		1	**125-7874**	20	TUBE-HEAT SHRINK (5.72-MM DIA)	
E		1	**125-7875**	5	TUBE-HEAT SHRINK (7.44-MM DIA)	
		1	**8L-8413**	26	STRAP-CABLE	
		1	**167-3693**	1	PLUG AS-CONNECTOR (31-PIN)	
	4	1	**214-4716**	1	SWITCH AS-ROCKER (TRANSMISSION NEUTRAL LOCK)	
		1	**111-7899**	1	GASKET	
B	5	1	**227-1057**	10	PLUG-HOLE	
	6	1	**3S-2093**	4	STRAP-CABLE	

B-USE AS REQUIRED
E-ORDER BY THE CENTIMETER

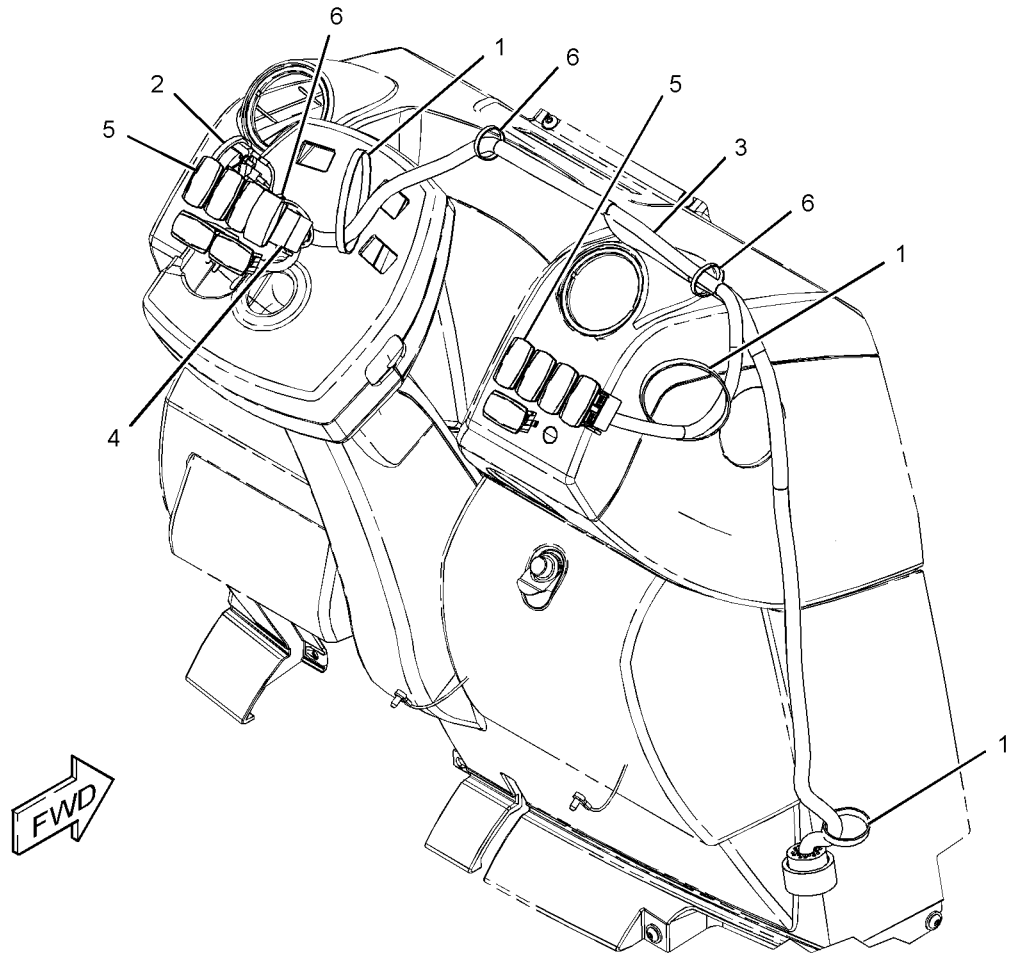

GRAPHIC #1 **<END>** g01190392

ELECTRICAL AND STARTING SYSTEM

290-6737 WIRING GP-CONSOLE–SIDE

S/N: MFG1-UP

PART OF 291-9195 CAB AR-ENCLOSED ROPS

AN ATTACHMENT

SMCS-1408 **i03857274**

NOTE	REF NO	GRAPHIC REF	PART NUMBER	QTY	PART NAME 1 2 3 4 5 6 (PRODUCT LEVEL)	SEE PAGE
	1	1	**110-7887**	1	SWITCH AS-START (KEY)	
		1	**7T-6799**	1	NUT-MOUNTING (1-32-THD)	
		1	**102-8804**	1	KIT-RECEPTACLE (4-PIN)	
					(INCLUDES RECEPTACLE AS & WEDGE)	
		1	**186-3735**	4	PIN-CONNECTOR (16-GA TO 18-GA)	
	2	1	**131-1424**	1	SEAL	
	3	1	**170-6542**	1	GAUGE GP-OIL TEMPERATURE (TORQUE CONVERTER)	
		1	**4B-2043**	3	NUT (8-32-THD)	
		1	**7X-9065**	1	LAMP (12-VOLT) (OIL TEMPERATURE)	
		1	**9B-7233**	3	LOCKWASHER	
M	4	1	**197-7499**	2	BOLT (M4X0.7X25-MM)	
	5	1	**206-1345**	3	STRAP-CABLE	
	6	1	**214-4693**	1	SWITCH AS-ROCKER (WARNING BEACON)	
	7	1	**214-4722**	1	SWITCH AS-ROCKER (STARTING AID)	
					(EACH SWITCH AS INCLUDES)	
		1	**111-7899**	1	GASKET	
	8	1	**226-7164**	1	GAUGE GP-COOLANT TEMPERATURE (ENGINE)	
		1	**4B-2043**	6	NUT (8-32-THD)	
		1	**7X-9065**	1	LAMP (12-VOLT) (COOLANT TEMPERATURE)	
		1	**9B-7233**	3	LOCKWASHER	
B	9	1	**227-1057**	7	PLUG-HOLE	
	10	1	**231-9357**	1	FILM-IDENTIFICATION (CONSOLE, RH)	
Y	11	1	**239-1080**	1	TACHOMETER GP-ELECTRIC	1046
	12	1	**270-2728**	1	LAMP GP (12-VOLT) (FAULT INDICATOR)	
		1	**102-8801**	1	KIT-RECEPTACLE (12-PIN)	
					(INCLUDES RECEPTACLE AS & WEDGE)	
		1	**232-4706**	1	GASKET	
		1	**186-3735**	10	PIN-CONNECTOR (16-GA TO 18-GA)	
		1	**8T-8737**	2	PLUG-SEAL	
	13	1	**290-6738**	1	HARNESS AS-CONSOLE	
		1	**228-5856**	6	CONNECTOR	
		1	**155-2255**	2	KIT-CONNECTING PLUG (12-PIN)	
		1	**155-2271**	1	KIT-CONNECTING PLUG (4-PIN)	
		1	**155-2274**	1	KIT-CONNECTING PLUG (6-PIN)	
					(EACH PLUG KIT INCLUDES PLUG AS, WEDGE & INTERFACE SEAL)	
		1	**167-3693**	1	PLUG AS-CONNECTOR (31-PIN)	
		1	**8T-8737**	17	PLUG-SEAL	
		1	**180-9340**	18	SOCKET-CONNECTOR (14-GA TO 18-GA)	
		1	**186-3736**	30	SOCKET-CONNECTOR (16-GA TO 18-GA)	
		1	**3S-2093**	17	STRAP-CABLE	
B		1	**141-8061**		TAPE	
		1	**122-4401**	1	TERMINAL	
		1	**2L-8075**	1	TERMINAL-RING (14-GA TO 16-GA, NO. 8 SCREW)	
		1	**7N-7221**	5	TERMINAL-BLADE (18-GA TO 22-GA)	
		1	**091-2436**	19	TERMINAL-BLADE (18-GA TO 22-GA)	
		1	**104-1995**	13	TERMINAL-BLADE (14-GA TO 18-GA)	
E		1	**125-7874**		TUBE-HEAT SHRINK (5.72-MM DIA) (10-CM)	
E		1	**119-3662**		TUBE-HEAT SHRINK (10.85-MM DIA) (13-CM)	
	14	1	**170-6305**	1	GAUGE GP-FUEL LEVEL	
		1	**4B-2043**	3	NUT (8-32-THD)	
		1	**7X-9065**	1	LAMP (12-VOLT) (FUEL LEVEL INDICATOR)	
		1	**9B-7233**	3	LOCKWASHER	
	15	1	**3S-2093**	5	STRAP-CABLE	
	16	1	**6V-3507**	3	SEAL-RECTANGULAR	

290-6737 **WIRING GP-CONSOLE** *(contd.)* **i03857274**

NOTE	REF NO	GRAPHIC REF	PART NUMBER	QTY	PART NAME 1 2 3 4 5 6 (PRODUCT LEVEL)	SEE PAGE
M	17	1	**8T-2659**	2	LOCKNUT (M4X0.7-THD)	

B-USE AS REQUIRED
E-ORDER BY THE CENTIMETER
M-METRIC PART
Y-SEPARATE ILLUSTRATION

290-6737 **WIRING GP-CONSOLE** *(contd.)* **i03857274**

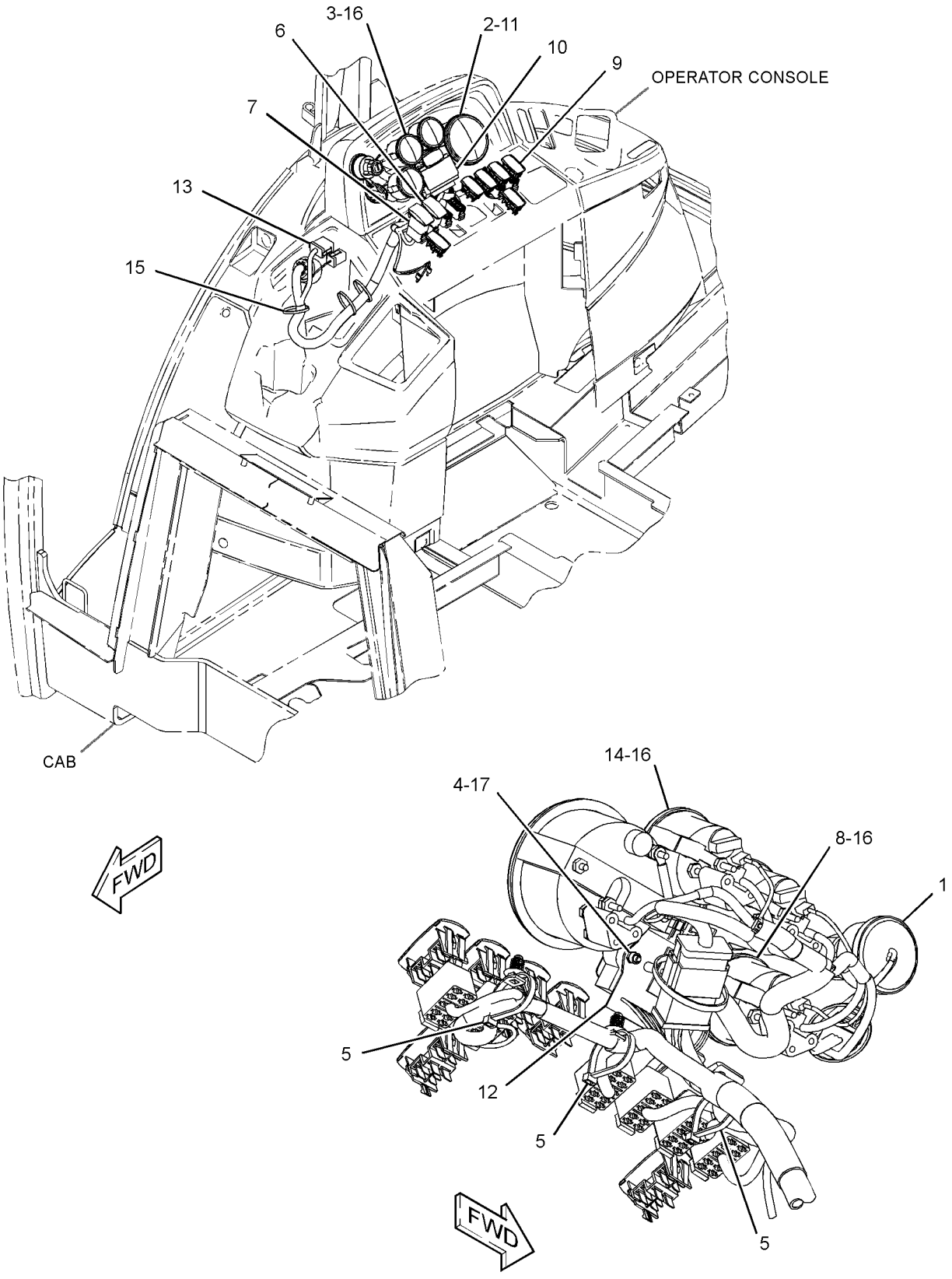

GRAPHIC #1 **<END>** g01728636

235-0336 WIRING GP-ENGINE

S/N: CBD3020-UP
PART OF 252-4641 ENGINE AR
AN ATTACHMENT
TYPE 1

SMCS-1408 **i02934731**

NOTE	REF NO	GRAPHIC REF	PART NUMBER	QTY	PART NAME 1 2 3 4 5 6 (PRODUCT LEVEL)	SEE PAGE
	1	1	**3J-4818**	1	LOCKWASHER	
	2	1,2	**7K-1181**	16	STRAP-CABLE	
	3	1	**7Y-3883**	1	CABLE AS	
		1	**1S-7251**	2	TERMINAL-CABLE (00-GA, 1/2-IN SCREW)	
E		1	**5P-0747**		CABLE (00-GA, BLACK) (40-CM)	
	4	1	**189-3158**	3	SUPPRESSOR-ARC	
	5	1	**164-9425**	1	HORN AS (12-VOLT, LOW TONE)	
	6	2	**235-8747**	1	SWITCH-TEMPERATURE (ENGINE COOLANT)	
	7	2	**238-9397**	1	RESISTOR AS	
	8	2	**244-3106**	1	SENDER AS-TEMPERATURE (ENGINE COOLANT)	
		2	**186-3735**	2	PIN-CONNECTOR (16-GA TO 18-GA)	
		2	**102-8802**	1	KIT-RECEPTACLE (2-PIN)	
					(INCLUDES RECEPTACLE AS & WEDGE)	
	9	1	**246-8051**	1	HARNESS AS-ENGINE	
	10	2	**251-9570**	1	PLATE AS (RELAY)	
	11	1,2	**274-3774**	5	CAP-CONNECTOR	
	12	2	**115-1615**	3	RELAY AS (12-VOLT) (STARTING AID)	
	13	2	**199-9751**	1	SEAL-O-RING	
	14	1,2	**3S-2093**	22	STRAP-CABLE	
	15	1,2	**4P-7581**	8	CLIP (LADDER)	
	16	1,2	**4P-8134**	7	CLIP (LADDER)	
M	17	2	**5C-2874**	2	NUT (M5X0.8-THD)	
	18	2	**8F-1434**	2	LOCKWASHER	
	19	1	**8F-3590**	1	LOCKWASHER	
	20	2	**8T-0328**	2	WASHER-HARD (5.5X10X1-MM THK)	
	21	1,2	**8T-4121**	10	WASHER-HARD (11X21X2.5-MM THK)	
M	22	1	**8T-4136**	2	BOLT (M10X1.5X25-MM)	
M	23	1,2	**8T-4137**	7	BOLT (M10X1.5X20-MM)	
M	24	1	**8T-4139**	1	BOLT (M12X1.75X30-MM)	
M	25	2	**8T-4171**	3	BOLT (M6X1X12-MM)	
M	26	1,2	**8T-4189**	3	BOLT (M8X1.25X20-MM)	
	27	2	**8T-4205**	3	WASHER-HARD (7.2X14.5X2-MM THK)	
	28	1	**8T-4223**	2	WASHER-HARD (13.5X25.5X3-MM THK)	
	29	1,2	**8T-4224**	4	WASHER-HARD (8.8X16X2-MM THK)	
M	30	1	**8T-5093**	1	BOLT-LOCKING (M8X1.25X25-MM)	

E-ORDER BY THE CENTIMETER
M-METRIC PART

REFER TO ALL ILLUSTRATIONS OF
THIS GROUP FOR AUXILIARY VIEWS

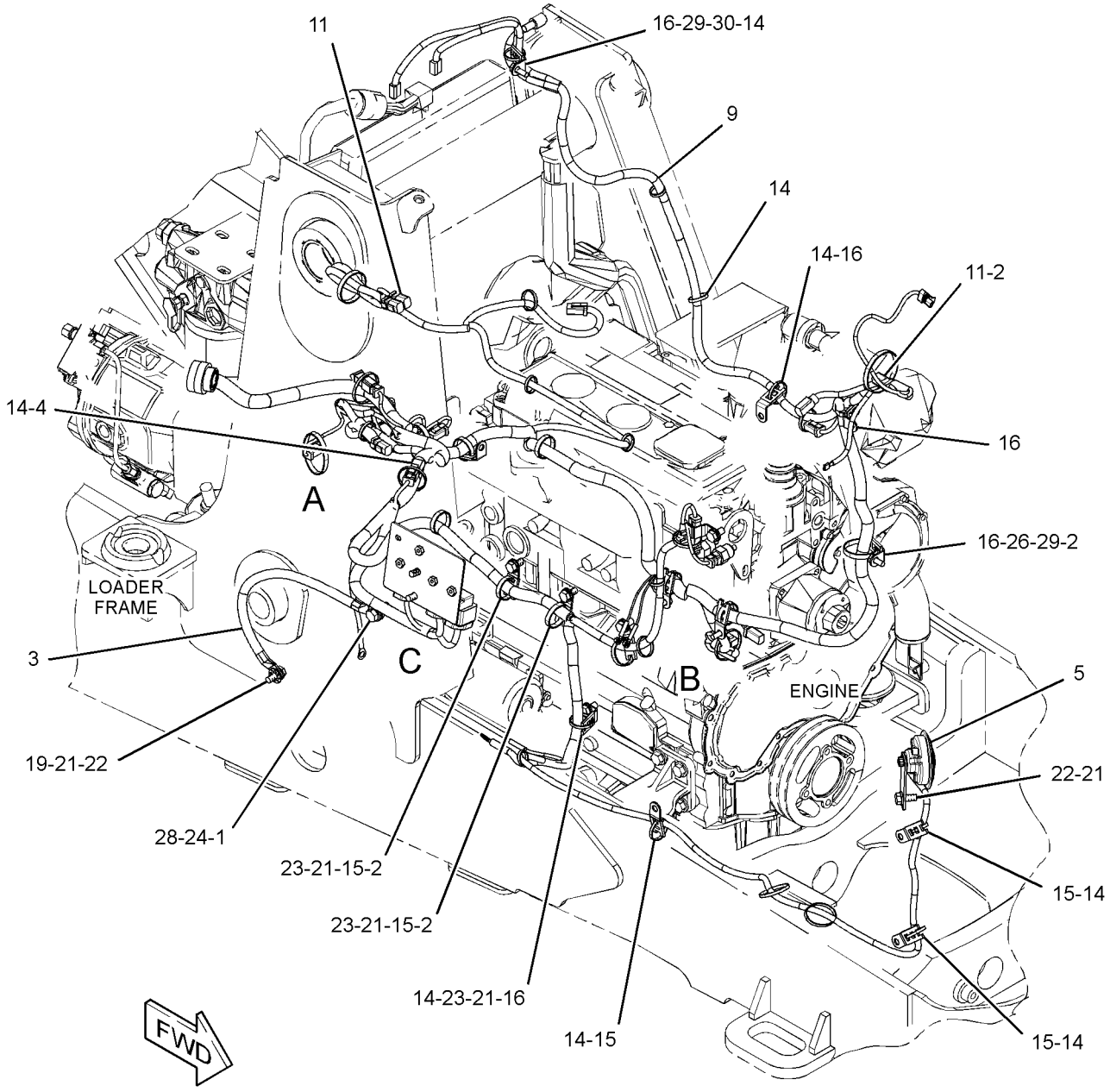

GRAPHIC #1 g01507762

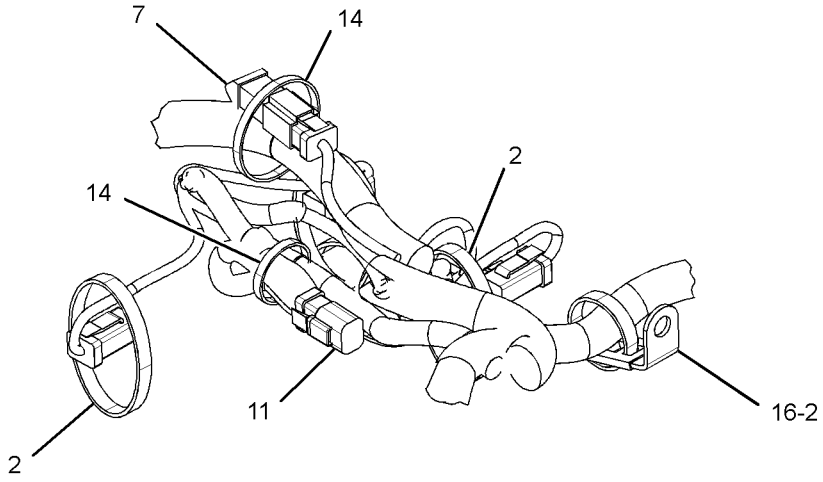

VIEW OF AREA A

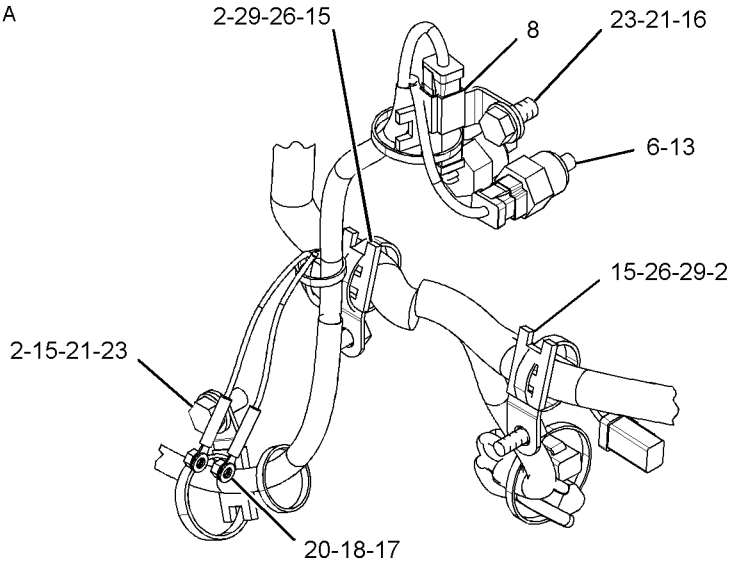

VIEW OF AREA B

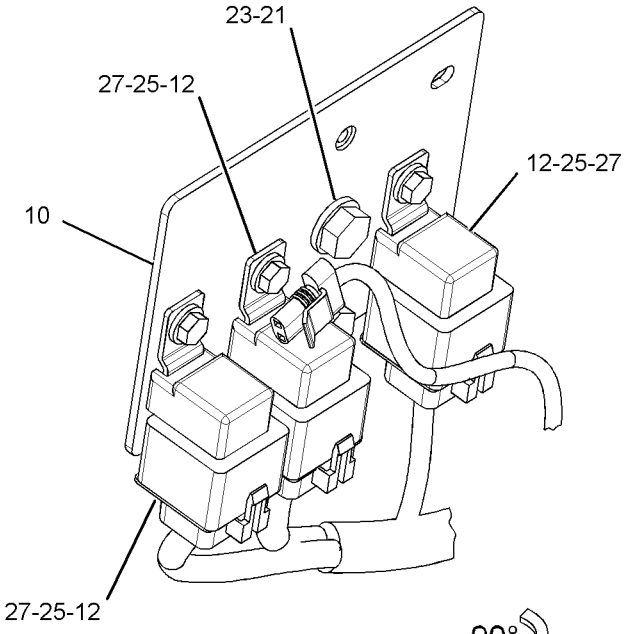

VIEW OF AREA C

GRAPHIC #2 **<END>** g01507763

ELECTRICAL AND STARTING SYSTEM

235-0336 WIRING GP-ENGINE

S/N: CBD3020-UP
PART OF 252-4641 ENGINE AR
AN ATTACHMENT
TYPE 2

SMCS-1408 **i03670330**

NOTE	REF NO	GRAPHIC REF	PART NUMBER	QTY	PART NAME 1 2 3 4 5 6 (PRODUCT LEVEL)	SEE PAGE
C	1	1,2	**7K-1181**	14	STRAP-CABLE	
	2	1	**7Y-3883**	1	CABLE AS	
		1	**1S-7251**	2	TERMINAL-CABLE (00-GA, 1/2-IN SCREW)	
E		1	**5P-0747**		CABLE (00-GA, BLACK) (40-CM)	
	3	1	**164-9425**	1	HORN AS (12-VOLT, LOW TONE)	
	4	2	**235-8747**	1	SWITCH-TEMPERATURE (ENGINE COOLANT)	
	5	2	**244-3106**	1	SENDER AS-TEMPERATURE (ENGINE COOLANT)	
		2	**186-3735**	2	PIN-CONNECTOR (16-GA TO 18-GA)	
		2	**102-8802**	1	KIT-RECEPTACLE (2-PIN)	
					(INCLUDES RECEPTACLE AS & WEDGE)	
	6	1	**246-8051**	1	HARNESS AS-ENGINE	
		1	**274-3774**	5	CAP-CONNECTOR	
		1	**123-7615**	2	CONNECTOR	
		1	**7N-9738**	1	HOUSING-RECEPTACLE (14-GA TO 18-GA)	
		1	**7N-7780**	1	PIN-CONNECTOR (14-GA TO 18-GA)	
		1	**9X-1054**	3	PLUG AS-CONNECTOR (4-PIN)	
		1	**155-2260**	1	KIT-CONNECTING PLUG (3-PIN)	
		1	**155-2270**	19	KIT-CONNECTING PLUG (2-PIN)	
					(EACH PLUG KIT INLCUDES PLUG AS, WEDGE & INTERFACE SEAL)	
		1	**238-9397**	1	RESISTOR AS	
		1	**8T-8729**	2	PIN-CONNECTOR (16-GA TO 18-GA)	
		1	**102-8802**	1	KIT-RECEPTACLE (2-PIN)	
					(INCLUDES RECEPTACLE AS & WEDGE)	
		1	**167-3693**	1	PLUG AS-CONNECTOR (31-PIN)	
		1	**8T-8737**	2	PLUG-SEAL	
		1	**167-3693**	1	PLUG AS-CONNECTOR (31-PIN)	
		1	**100-6674**	2	SEAL-CONNECTOR	
		1	**7N-7779**	1	SOCKET-CONNECTOR (14-GA TO 18-GA)	
		1	**9W-0844**	1	SOCKET-CONNECTOR (14-GA TO 16-GA)	
		1	**189-3158**	3	SUPPRESSOR-ARC	
		1	**3S-2093**	41	STRAP-CABLE	
		1	**180-9340**	69	SOCKET-CONNECTOR (14-GA TO 18-GA)	
		1	**124-5640**	2	TERMINAL-SOCKET	
		1	**5P-1478**	1	TERMINAL-FORK (10-GA TO 12-GA, NO. 10 SCREW)	
		1	**2L-8079**	1	TERMINAL-RING (14-GA TO 16-GA, 3/8-IN SCREW)	
		1	**7N-7221**	1	TERMINAL-BLADE (18-GA TO 22-GA)	
		1	**5P-1478**	1	TERMINAL-FORK (10-GA TO 12-GA, NO. 10 SCREW)	
		1	*128-4172*	1	TERMINAL AS-RING (6-GA TO 8-GA)	
E		1	**6V-9023**		TUBE-HEAT SHRINK (12.7-MM DIA) (4-CM)	
		1	**7N-9017**	3	TERMINAL-RING (18-GA TO 22-GA, NO. 10 SCREW)	
		1	**6V-0491**	4	TERMINAL-BLADE (14-GA TO 18-GA)	
		1	**9X-1055**	6	TERMINAL-RECEPTACLE (12-GA)	
		1	**100-5041**	6	TERMINAL-RECEPTACLE (18-GA TO 20-GA)	
E		1	**119-3662**		TUBE-HEAT SHRINK (10.85-MM DIA) (13-CM)	
E		1	**125-7874**		TUBE-HEAT SHRINK (5.72-MM DIA) (20-CM)	
E		1	**125-7875**		TUBE-HEAT SHRINK (7.44-MM DIA) (15-CM)	
	7	2	**251-9570**	1	PLATE AS (RELAY)	
	8	2	**115-1615**	3	RELAY AS (12-VOLT) (STARTING AID)	
	9	2	**199-9751**	1	SEAL-O-RING	
	10	1	**3J-4818**	2	LOCKWASHER	

235-0336 **WIRING GP-ENGINE** *(contd.)* **i03670330**

NOTE	REF NO	GRAPHIC REF	PART NUMBER	QTY	PART NAME 1 2 3 4 5 6 (PRODUCT LEVEL)	SEE PAGE
C	11	1,2	**3S-2093**	26	STRAP-CABLE	
	12	1,2	**4P-7581**	8	CLIP	
	13	1,2	**4P-8134**	7	CLIP	
M	14	2	**5C-2874**	2	NUT (M5X0.8-THD)	
	15	2	**8F-1434**	2	LOCKWASHER	
	16	1	**8F-3590**	1	LOCKWASHER	
	17	2	**8T-0328**	2	WASHER-HARD (5.5X10X1-MM THK)	
	18	1,2	**8T-4121**	11	WASHER-HARD (11X21X2.5-MM THK)	
M	19	1	**8T-4136**	2	BOLT (M10X1.5X25-MM)	
M	20	1,2	**8T-4137**	7	BOLT (M10X1.5X20-MM)	
M	21	1	**8T-4139**	1	BOLT (M12X1.75X30-MM)	
M	22	2	**8T-4171**	3	BOLT (M6X1X12-MM)	
M	23	1,2	**8T-4189**	3	BOLT (M8X1.25X20-MM)	
	24	2	**8T-4205**	3	WASHER-HARD (7.2X14.5X2-MM THK)	
	25	1	**8T-4223**	2	WASHER-HARD (13.5X25.5X3-MM THK)	
	26	1,2	**8T-4224**	4	WASHER-HARD (8.8X16X2-MM THK)	
M	27	1	**8T-5093**	1	BOLT-LOCKING (M8X1.25X25-MM)	

C-CHANGE FROM PREVIOUS TYPE
E-ORDER BY THE CENTIMETER
M-METRIC PART

REFER TO ALL ILLUSTRATIONS OF
THIS GROUP FOR AUXILIARY VIEWS

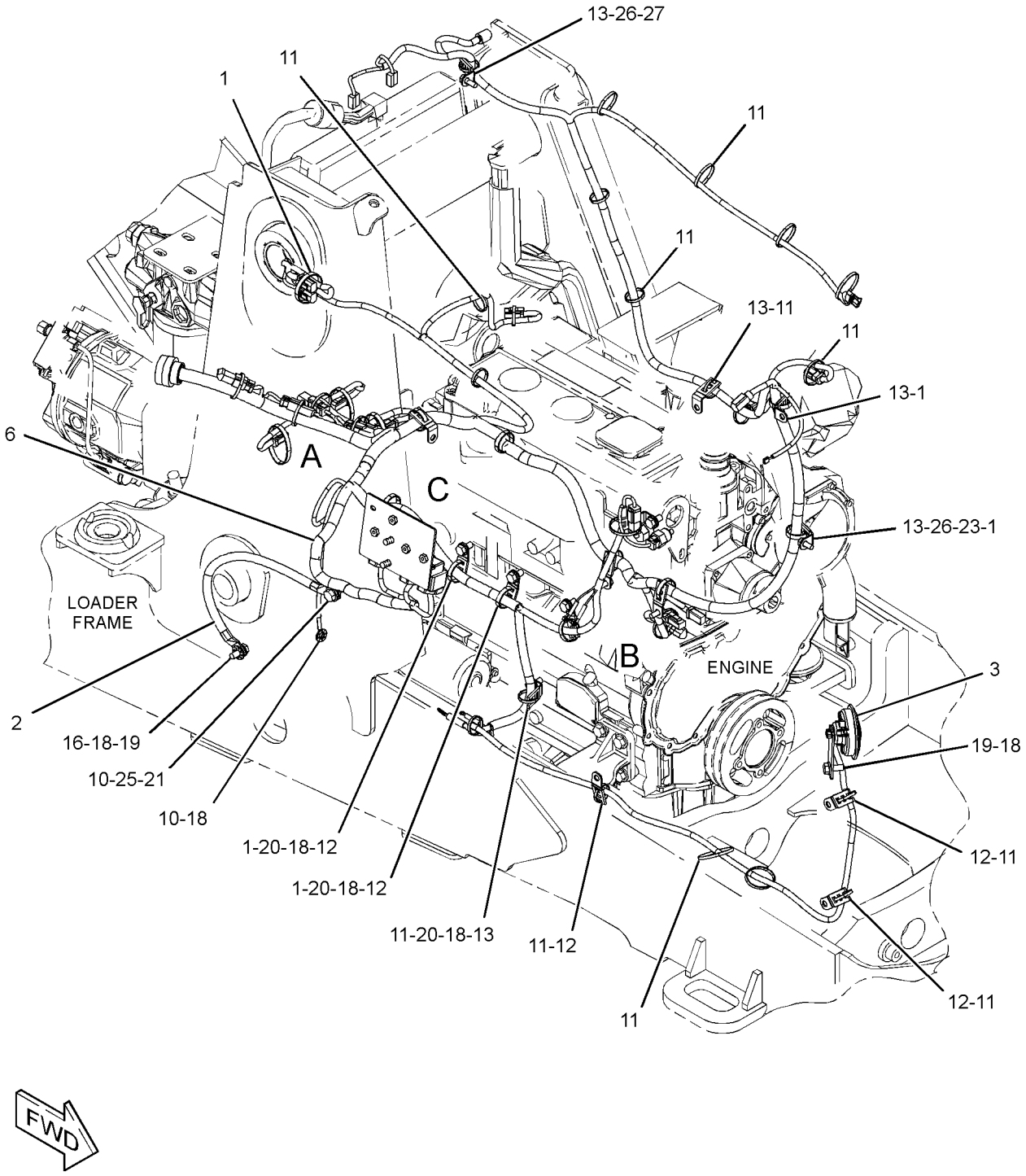

GRAPHIC #1

g01824817

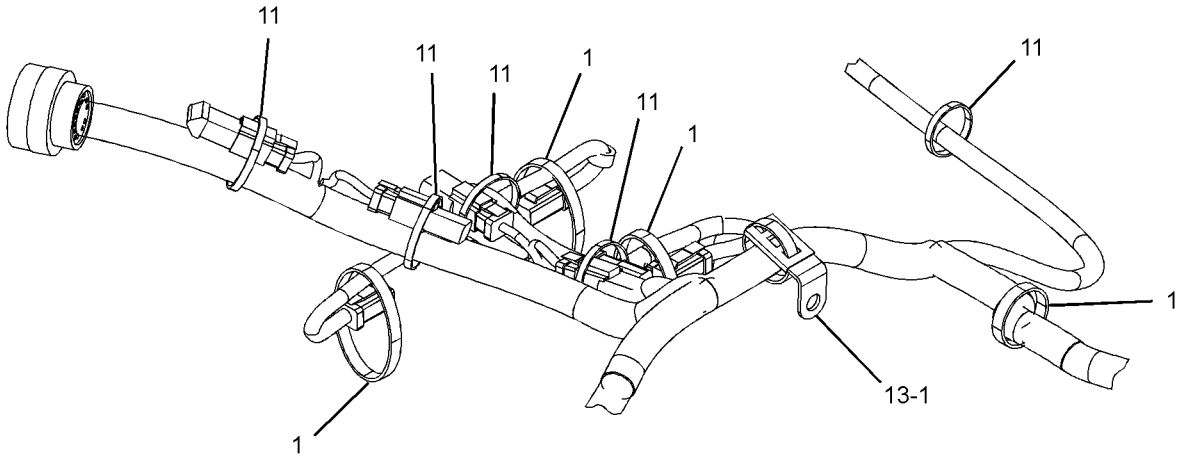

VIEW OF AREA A

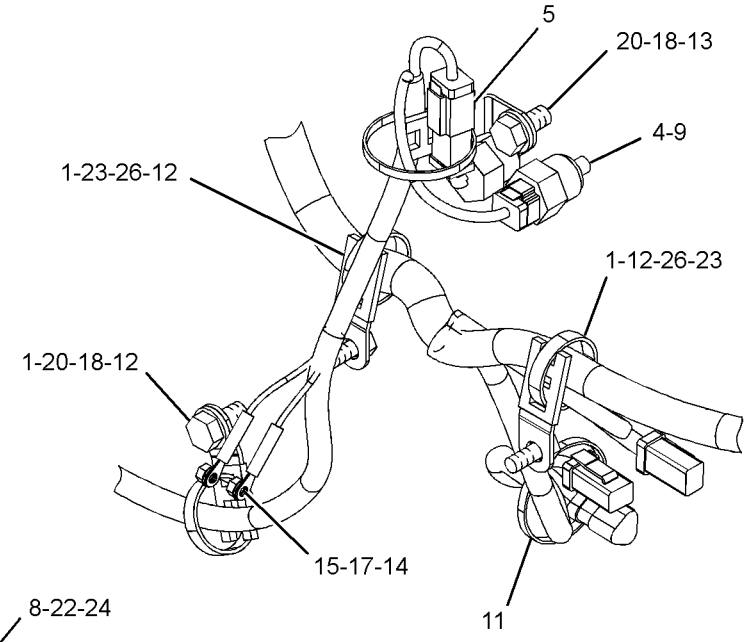

VIEW OF AREA B

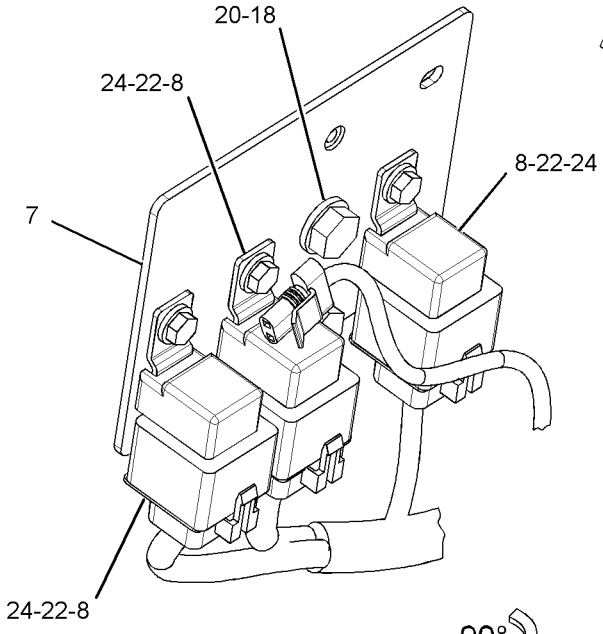

VIEW OF AREA C

GRAPHIC #2 **<END>** g01824819

ELECTRICAL AND STARTING SYSTEM

235-0336 WIRING GP-ENGINE

S/N: CBD3020-UP; MFG1-UP
PART OF 252-4640, 252-4641 ENGINE AR
AN ATTACHMENT

SMCS-1408 **i04035796**

NOTE	REF NO	GRAPHIC REF	PART NUMBER	QTY	PART NAME 1 2 3 4 5 6 (PRODUCT LEVEL)	SEE PAGE
	1	1,2	**7K-1181**	14	STRAP-CABLE	
	2	1	**7Y-3883**	1	CABLE AS	
		1	**1S-7251**	2	TERMINAL-CABLE (00-GA, 1/2-IN SCREW)	
E		1	**5P-0747**		CABLE (00-GA, BLACK) (40-CM)	
	3	1	**164-9425**	1	HORN AS (12-VOLT, LOW TONE)	
	4	2	**235-8747**	1	SWITCH-TEMPERATURE (ENGINE COOLANT)	
	5	2	**244-3106**	1	SENDER AS-TEMPERATURE (ENGINE COOLANT)	
		2	**186-3735**	2	PIN-CONNECTOR (16-GA TO 18-GA)	
		2	**102-8802**	1	KIT-RECEPTACLE (2-PIN)	
					(INCLUDES RECEPTACLE AS & WEDGE)	
C	6	1	**331-5615**	1	HARNESS AS-ENGINE	
		1	**274-3774**	5	CAP-CONNECTOR	
		1	**123-7615**	2	CONNECTOR	
		1	**7N-9738**	1	HOUSING-RECEPTACLE (14-GA TO 18-GA)	
		1	**7N-7780**	1	PIN-CONNECTOR (14-GA TO 18-GA)	
		1	**9X-1054**	3	PLUG AS-CONNECTOR (4-PIN)	
		1	**155-2260**	1	KIT-CONNECTING PLUG (3-PIN)	
		1	**155-2270**	17	KIT-CONNECTING PLUG (2-PIN)	
					(EACH PLUG KIT INLCUDES PLUG AS, WEDGE & INTERFACE SEAL)	
		1	**167-3693**	1	PLUG AS-CONNECTOR (31-PIN)	
		1	**8T-8737**	2	PLUG-SEAL	
		1	**238-9397**	1	RESISTOR AS	
		1	**8T-8729**	2	PIN-CONNECTOR (16-GA TO 18-GA)	
		1	**102-8802**	1	KIT-RECEPTACLE (2-PIN)	
					(INCLUDES RECEPTACLE AS & WEDGE)	
		1	**100-6674**	2	SEAL-CONNECTOR	
		1	**7N-7779**	1	SOCKET-CONNECTOR (14-GA TO 18-GA)	
		1	**9W-0844**	1	SOCKET-CONNECTOR (14-GA TO 16-GA)	
		1	**180-9340**	65	SOCKET-CONNECTOR (14-GA TO 18-GA)	
		1	**124-5640**	2	TERMINAL-SOCKET	
		1	**3S-2093**	41	STRAP-CABLE	
		1	**189-3158**	1	SUPPRESSOR-ARC	
		1	**122-4401**	2	TERMINAL	
		1	**5P-1478**	1	TERMINAL-FORK (10-GA TO 12-GA, NO. 10 SCREW)	
		1	**128-4172**	1	TERMINAL AS-RING (6-GA TO 8-GA)	
E		1	**6V-9023**		TUBE-HEAT SHRINK (12.7-MM DIA) (4-CM)	
		1	**2L-8079**	1	TERMINAL-RING (14-GA TO 16-GA, 3/8-IN SCREW)	
		1	**7N-7221**	1	TERMINAL-BLADE (18-GA TO 22-GA)	
		1	**7N-9017**	3	TERMINAL-RING (18-GA TO 22-GA, NO. 10 SCREW)	
		1	**104-1995**	2	TERMINAL-BLADE (14-GA TO 18-GA)	
		1	**9X-1055**	6	TERMINAL-RECEPTACLE (12-GA)	
		1	**100-5041**	6	TERMINAL-RECEPTACLE (18-GA TO 20-GA)	
E		1	**119-3662**		TUBE-HEAT SHRINK (10.85-MM DIA) (13-CM)	
E		1	**125-7874**		TUBE-HEAT SHRINK (5.72-MM DIA) (10-CM)	
E		1	**125-7875**		TUBE-HEAT SHRINK (7.44-MM DIA) (15-CM)	
	7	2	**251-9570**	1	PLATE AS (RELAY)	
	8	2	**115-1615**	1	RELAY AS (12-VOLT) (START)	
	8A	2	**115-1615**	1	RELAY AS (12-VOLT) (START AID)	
	8B	2	**115-1615**	1	RELAY AS (12-VOLT) (FUEL PUMP)	
	9	2	**199-9751**	1	SEAL-O-RING	
	10	1	**3J-4818**	2	LOCKWASHER	
	11	1,2	**3S-2093**	26	STRAP-CABLE	

235-0336 **WIRING GP-ENGINE** ***(contd.)*** **i04035796**

NOTE	REF NO	GRAPHIC REF	PART NUMBER	QTY	PART NAME 1 2 3 4 5 6 (PRODUCT LEVEL)	SEE PAGE
	12	1,2	**4P-7581**	8	CLIP	
	13	1,2	**4P-8134**	7	CLIP	
M	14	2	**5C-2874**	2	NUT (M5X0.8-THD)	
	15	2	**8F-1434**	2	LOCKWASHER	
	16	1	**8F-3590**	1	LOCKWASHER	
	17	2	**8T-0328**	2	WASHER-HARD (5.5X10X1-MM THK)	
C	18	1,2	**8T-4121**	10	WASHER-HARD (11X21X2.5-MM THK)	
CM	19	1	**8T-4136**	1	BOLT (M10X1.5X25-MM)	
M	20	1,2	**8T-4137**	7	BOLT (M10X1.5X20-MM)	
M	21	1	**8T-4139**	1	BOLT (M12X1.75X30-MM)	
M	22	2	**8T-4171**	3	BOLT (M6X1X12-MM)	
CM	23	1,2	**8T-4189**	4	BOLT (M8X1.25X20-MM)	
	24	2	**8T-4205**	3	WASHER-HARD (7.2X14.5X2-MM THK)	
	25	1	**8T-4223**	2	WASHER-HARD (13.5X25.5X3-MM THK)	
	26	1,2	**8T-4224**	4	WASHER-HARD (8.8X16X2-MM THK)	
M	27	1	**8T-5093**	1	BOLT-LOCKING (M8X1.25X25-MM)	
C	28	1	**5P-4116**	1	WASHER-HARD (8.8X20.5X2-MM THK)	

C-CHANGE FROM PREVIOUS TYPE
E-ORDER BY THE CENTIMETER
M-METRIC PART

REFER TO ALL ILLUSTRATIONS OF
THIS GROUP FOR AUXILIARY VIEWS

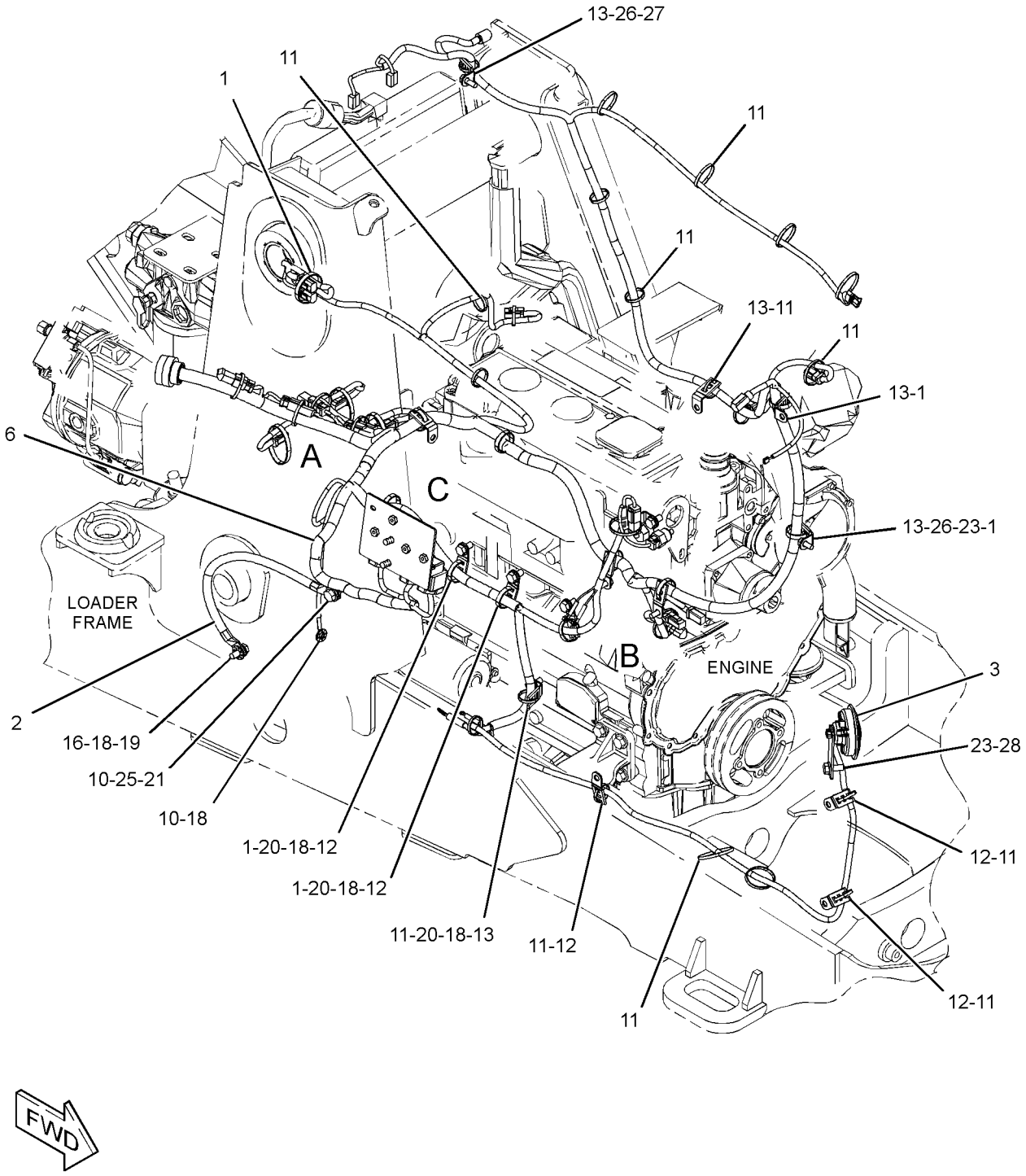

GRAPHIC #1

g02313225

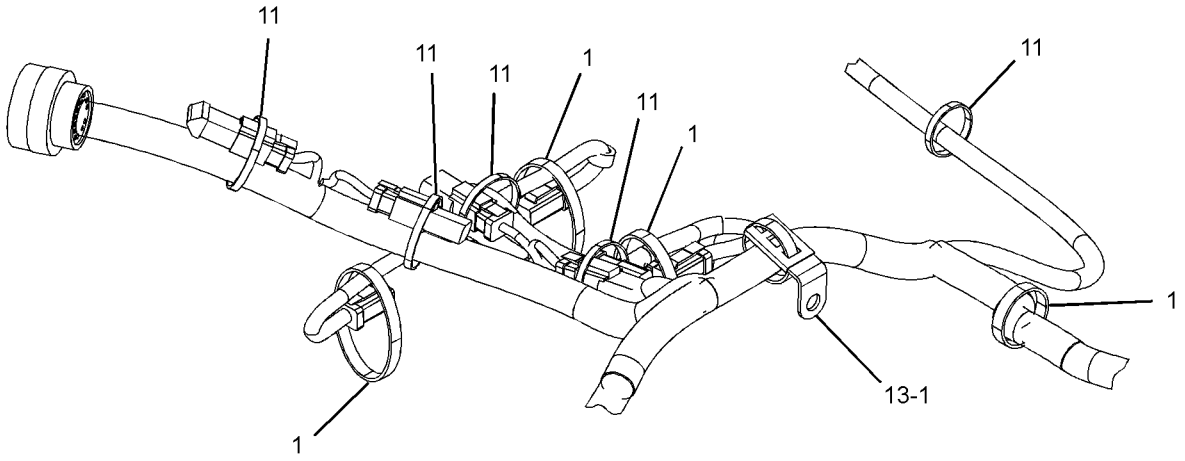

VIEW OF AREA A

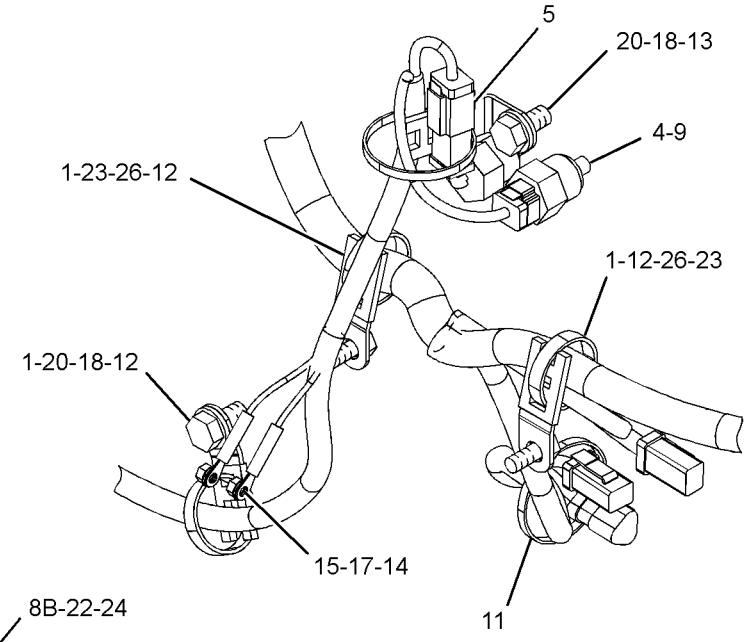

VIEW OF AREA B

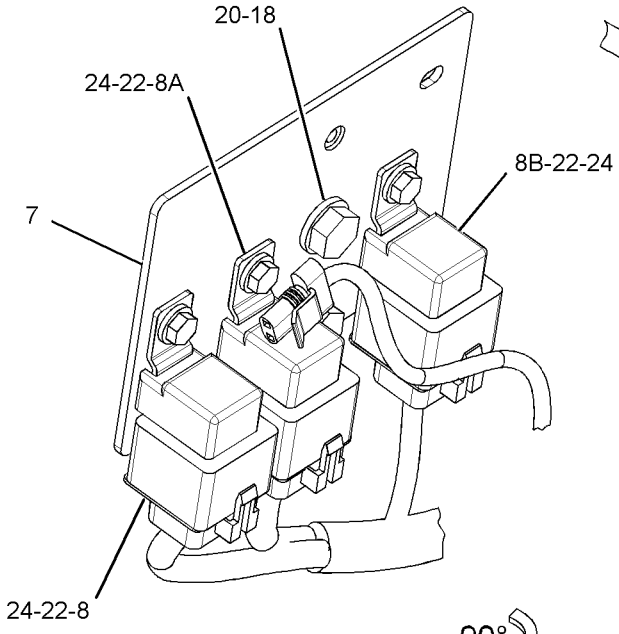

VIEW OF AREA C

GRAPHIC #2 **<END>** g02313226

ELECTRICAL AND STARTING SYSTEM

290-6752 WIRING GP-ENGINE

S/N: MFG1-UP

PART OF 291-9188 ENGINE AR

SMCS-1408 **i03858650**

NOTE	REF NO	GRAPHIC REF	PART NUMBER	QTY	PART NAME 1 2 3 4 5 6 (PRODUCT LEVEL)	SEE PAGE
	1	1	**7K-1181**	26	STRAP-CABLE	
	2	1	**7Y-3883**	1	CABLE AS	
		1	**1S-7251**	2	TERMINAL-CABLE (00-GA, 1/2-IN SCREW)	
E		1	**5P-0747**		CABLE (00-GA, BLACK) (40-CM)	
	3	1	**164-9425**	1	HORN AS (12-VOLT, LOW TONE)	
	4	1	**178-8465**	1	HARNESS AS-FUEL TANK (FUEL SHUTOFF)	
		1	**9X-3401**	2	PIN-CONNECTOR (16-GA TO 18-GA)	
		1	**176-1477**	1	PLUG AS (2-PIN)	
		1	**102-8802**	1	KIT-RECEPTACLE (2-PIN)	
					(INCLUDES RECEPTACLE AS & WEDGE)	
		1	**176-1522**	2	SEAL	
		1	**8L-8413**	2	STRAP-CABLE	
	5	1	**200-6345**	2	MOUNT (DUAL SWIVEL)	
	7	1	**235-8747**	1	SWITCH-TEMPERATURE (ENGINE COOLANT)	
	8	1	**244-3106**	1	SENDER AS-TEMPERATURE (ENGINE COOLANT)	
		1	**102-8802**	1	KIT-RECEPTACLE (2-PIN)	
					(INCLUDES RECEPTACLE AS & WEDGE)	
		1	**186-3735**	2	PIN-CONNECTOR (16-GA TO 18-GA)	
	9	1	**269-7680**	1	CLIP	
	10	1	**290-6753**	1	HARNESS AS-ENGINE	
		1	**274-3774**	3	CAP-CONNECTOR	
		1	**123-7615**	2	CONNECTOR	
		1	**7N-9738**	1	HOUSING-RECEPTACLE (14-GA TO 18-GA)	
		1	**213-0139**	2	PIN	
		1	**186-3735**	5	PIN-CONNECTOR (16-GA TO 18-GA)	
		1	**7N-7780**	1	PIN-CONNECTOR (14-GA TO 18-GA)	
		1	**155-2270**	17	KIT-CONNECTING PLUG (2-PIN)	
		1	**155-2260**	1	KIT-CONNECTING PLUG (3-PIN)	
		1	**177-9648**	1	KIT-CONNECTING PLUG (2-PIN)	
					(EACH PLUG KIT INCLUDES PLUG AS, WEDGE & INTERFACE SEAL)	
		1	**167-3693**	1	PLUG AS-CONNECTOR (31-PIN)	
		1	**8T-8737**	19	PLUG-SEAL	
		1	**102-8801**	1	KIT-RECEPTACLE (12-PIN)	
					(INCLUDES RECEPTACLE AS & WEDGE)	
		1	**238-9397**	1	RESISTOR AS	
		1	**102-8802**	1	KIT-RECEPTACLE (2-PIN)	
					(INCLUDES RECEPTACLE AS & WEDGE)	
		1	**8T-8729**	2	PIN-CONNECTOR (16-GA TO 18-GA)	
		1	**100-6674**	2	SEAL-CONNECTOR	
		1	**180-9340**	17	SOCKET-CONNECTOR (14-GA TO 18-GA)	
		1	**186-3736**	35	SOCKET-CONNECTOR (16-GA TO 18-GA)	
		1	**9W-0844**	4	SOCKET-CONNECTOR (14-GA TO 16-GA)	
		1	**7N-7779**	1	SOCKET-CONNECTOR (14-GA TO 18-GA)	
		1	**124-5640**	2	TERMINAL-SOCKET	
		1	**3S-2093**	12	STRAP-CABLE	
		1	**189-3158**	3	SUPPRESSOR-ARC	
B		1	**1P-0810**		TAPE-ELECTRICAL	
		1	**5P-1478**	1	TERMINAL-FORK (10-GA TO 12-GA, NO. 10 SCREW)	
		1	**2L-8079**	2	TERMINAL-RING (14-GA TO 16-GA, 3/8-IN SCREW)	
		1	**7N-7221**	1	TERMINAL-BLADE (18-GA TO 22-GA)	
		1	**7N-9017**	3	TERMINAL-RING (18-GA TO 22-GA, NO. 10 SCREW)	
		1	**6V-0491**	4	TERMINAL-BLADE (14-GA TO 18-GA)	
E		1	**119-3662**		TUBE-HEAT SHRINK (10.85-MM DIA) (7-CM)	

290-6752 **WIRING GP-ENGINE** *(contd.)* **i03858650**

NOTE	REF NO	GRAPHIC REF	PART NUMBER	QTY	PART NAME 1 2 3 4 5 6 (PRODUCT LEVEL)	SEE PAGE
E		1	**125-7874**		TUBE-HEAT SHRINK (5.72-MM DIA) (20-CM)	
E		1	**125-7875**		TUBE-HEAT SHRINK (7.44-MM DIA) (10-CM)	
	11	1	**297-5257**	1	BRACKET AS	
	12	1	**298-0663**	4	CLIP	
	13	1	**132-5789**	6	CLIP	
	14	1	**199-9751**	1	SEAL-O-RING	
	15	1	**3J-4818**	3	LOCKWASHER	
	16	1	**3S-2093**	19	STRAP-CABLE	
	17	1	**4P-7428**	1	CLIP	
	18	1	**4P-7581**	2	CLIP	
	19	1	**4P-8134**	1	CLIP	
M	20	1	**5C-2874**	2	NUT (M5X0.8-THD)	
	21	1	**5P-4116**	1	WASHER-HARD (8.8X20.5X2-MM THK)	
	22	1	**5P-6459**	1	GROMMET	
	23	1	**6V-7359**	1	GROMMET	
	24	1	**8D-9671**	1	CLIP	
	25	1	**8F-1434**	2	LOCKWASHER	
	26	1	**8T-0328**	2	WASHER-HARD (5.5X10X1-MM THK)	
	27	1	**8T-4121**	7	WASHER-HARD (11X21X2.5-MM THK)	
M	28	1	**8T-4136**	1	BOLT (M10X1.5X25-MM)	
M	29	1	**8T-4137**	4	BOLT (M10X1.5X20-MM)	
M	30	1	**8T-4189**	3	BOLT (M8X1.25X20-MM)	
M	31	1	**8T-4192**	4	BOLT (M12X1.75X25-MM)	
	32	1	**8T-4223**	5	WASHER-HARD (13.5X25.5X3-MM THK)	
	33	1	**8T-4224**	3	WASHER-HARD (8.8X16X2-MM THK)	
M	34	1	**8T-5093**	1	BOLT-LOCKING (M8X1.25X25-MM)	

B-USE AS REQUIRED
E-ORDER BY THE CENTIMETER
M-METRIC PART

290-6752 **WIRING GP-ENGINE** *(contd.)* **i03858650**

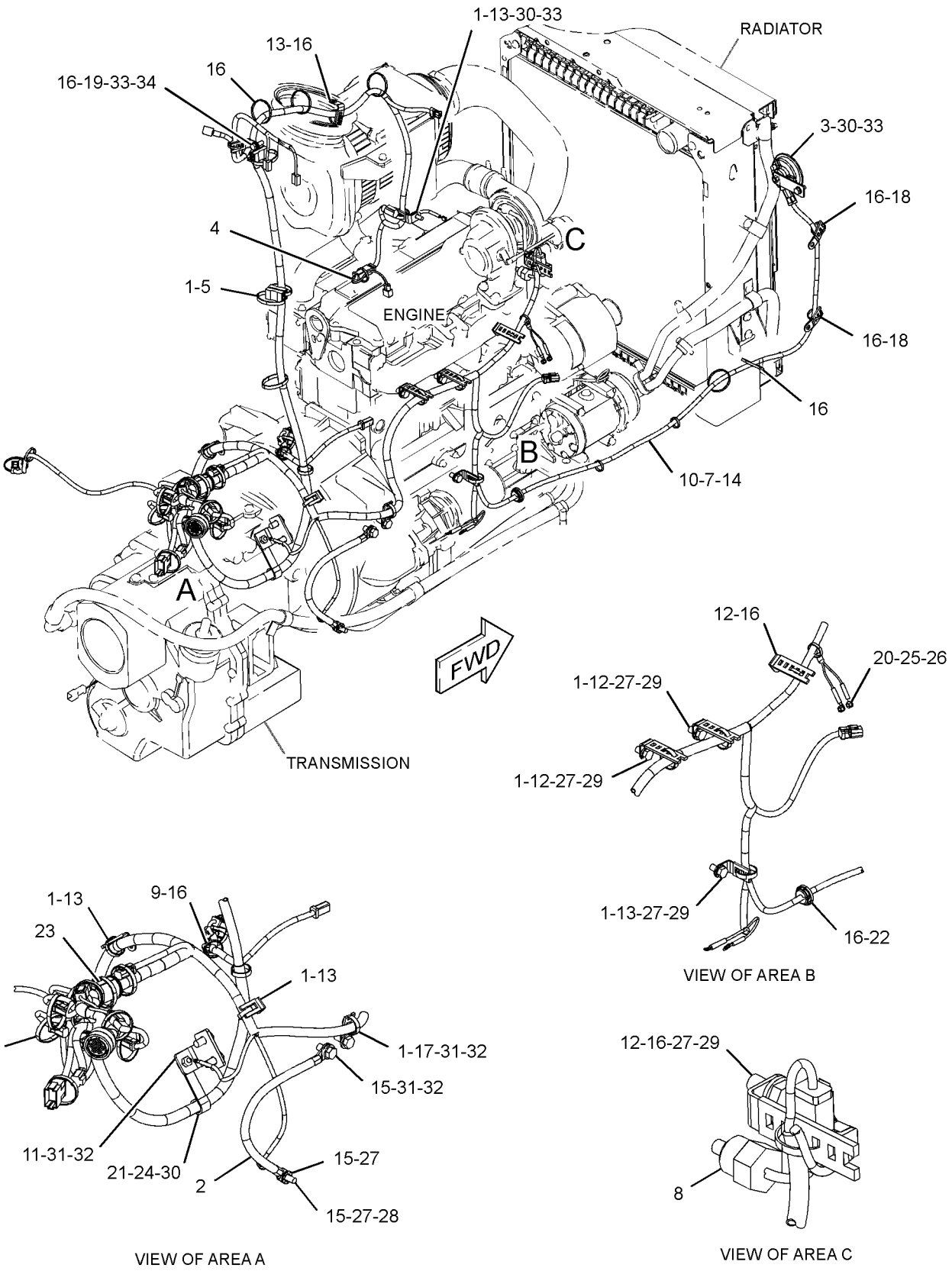

GRAPHIC #1 **<END>** g01943454

211-4269 WIRING GP-HEATER

S/N: CBD1-UP
PART OF 204-4161, 204-4162 CAB AR-ENCLOSED ROPS
AN ATTACHMENT

SMCS-1408, 7304 **i02559993**

NOTE	REF NO	GRAPHIC REF	PART NUMBER	QTY	PART NAME 1 2 3 4 5 6 (PRODUCT LEVEL)	SEE PAGE
	1	1	**213-6055**	1	HARNESS AS-HEATER & AIR COND	
E		1	**119-3662**		TUBE-HEAT SHRINK (10.85-MM DIA) (20-CM)	
E		1	**125-7874**		TUBE-HEAT SHRINK (5.72-MM DIA) (10-CM)	
		1	**9X-1055**	2	TERMINAL-RECEPTACLE (12-GA)	
		1	**091-2436**	7	TERMINAL-BLADE (18-GA TO 22-GA)	
		1	**100-5041**	2	TERMINAL-RECEPTACLE (18-GA TO 20-GA)	
		1	**104-1995**	11	TERMINAL-BLADE (14-GA TO 18-GA)	
		1	**122-4401**	1	TERMINAL	
		1	**102-8802**	1	KIT-RECEPTACLE (2-PIN)	
		1	**102-8803**	1	KIT-RECEPTACLE (3-PIN)	
					(EACH RECEPTACLE KIT INCLUDES RECEPTACLE AS & WEDGE)	
		1	**8L-8413**	29	STRAP-CABLE	
		1	**9X-1054**	1	PLUG AS-CONNECTOR (4-PIN)	
		1	**155-2270**	1	KIT-CONNECTING PLUG (2-PIN)	
					(INCLUDES PLUG AS, WEDGE & INTERFACE SEAL)	
		1	**177-9648**	1	KIT-CONNECTING PLUG (2-PIN)	
		1	**177-9656**	1	KIT-CONNECTING PLUG (4-PIN)	
					(EACH PLUG KIT INCLUDES PLUG AS & WEDGE)	
	2	1	**214-4695**	1	SWITCH AS-ROCKER (BLOWER FAN SPEED)	
	3	1	**214-4703**	1	SWITCH AS-ROCKER (HEATER)	
	4	1	**275-0570**	1	BAR-BUS	
Y	5	1	**276-7287**	1	RELAY GP (12-VOLT)	269
	6	1	**115-1615**	1	RELAY AS (12-VOLT)	
	7	1	**3S-2093**	9	STRAP-CABLE	
M	8	1	**5C-2890**	1	NUT (M6X1-THD)	
M	9	1	**5C-7261**	1	NUT (M8X1.25-THD)	
M	10	1	**7X-2534**	1	BOLT (M6X1X50-MM)	
	11	1	**8T-4205**	1	WASHER-HARD (7.2X14.5X2-MM THK)	
	12	1	**8T-4224**	1	WASHER-HARD (8.8X16X2-MM THK)	
	13	1	**8T-8799**	1	BOOT	

E-ORDER BY THE CENTIMETER
M-METRIC PART
Y-SEPARATE ILLUSTRATION

211-4269 **WIRING GP-HEATER** *(contd.)* **i02559993**

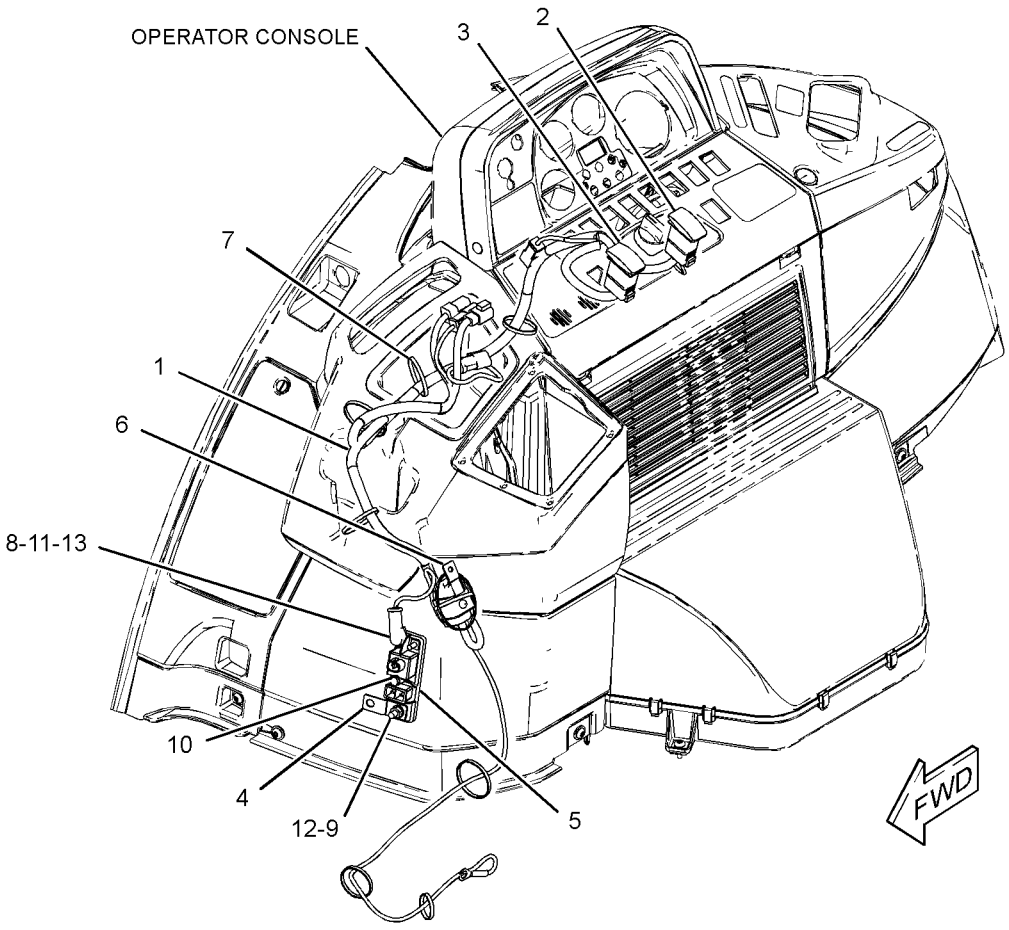

GRAPHIC #1 **<END>** g01282800

211-4269 WIRING GP-HEATER

S/N: CBD1-UP; MFG1-UP
PART OF 204-4161, 204-4162 CAB AR-ENCLOSED ROPS
AN ATTACHMENT

SMCS-1408, 7304 **i03901075**

NOTE	REF NO	GRAPHIC REF	PART NUMBER	QTY	PART NAME 1 2 3 4 5 6 (PRODUCT LEVEL)	SEE PAGE
	1	1	**213-6055**	1	HARNESS AS-HEATER & AIR COND (PLATFORM)	
		1	**228-5856**	2	CONNECTOR	
		1	**213-0139**	5	PIN	
		1	**9X-3401**	5	PIN-CONNECTOR (16-GA TO 18-GA)	
		1	**9X-1054**	1	PLUG AS-CONNECTOR (4-PIN)	
		1	**155-2270**	1	KIT-CONNECTING PLUG (2-PIN)	
		1	**177-9648**	1	KIT-CONNECTING PLUG (2-PIN)	
		1	**177-9656**	1	KIT-CONNECTING PLUG (4-PIN)	
					(EACH PLUG KIT INCLUDES PLUG AS, WEDGE & INTERFACE SEAL)	
		1	**8T-8737**	1	PLUG-SEAL	
		1	**102-8802**	1	KIT-RECEPTACLE (2-PIN)	
		1	**102-8803**	1	KIT-RECEPTACLE (3-PIN)	
					(EACH RECEPTACLE KIT INCLUDES RECEPTACLE AS & WEDGE)	
		1	**180-9340**	2	SOCKET-CONNECTOR (14-GA TO 18-GA)	
		1	**8L-8413**	29	STRAP-CABLE	
		1	**122-4401**	1	TERMINAL	
		1	**2L-8069**	1	TERMINAL-RING (2-GA TO 10-GA, 3/8-IN SCREW)	
		1	**2L-8067**	1	TERMINAL-RING (10-GA TO 12-GA, 1/4-IN SCREW)	
		1	**091-2436**	7	TERMINAL-BLADE (18-GA TO 22-GA)	
		1	**104-1995**	11	TERMINAL-BLADE (14-GA TO 18-GA)	
		1	**9X-1055**	2	TERMINAL-RECEPTACLE (12-GA)	
		1	**100-5041**	2	TERMINAL-RECEPTACLE (18-GA TO 20-GA)	
E		1	**119-3662**		TUBE-HEAT SHRINK (10.85-MM DIA) (20-CM)	
E		1	**125-7874**		TUBE-HEAT SHRINK (5.72-MM DIA) (10-CM)	
	2	1	**214-4695**	1	SWITCH AS-ROCKER (BLOWER FAN SPEED)	
	3	1	**214-4703**	1	SWITCH AS-ROCKER (HEATER)	
					(EACH SWITCH AS INCLUDES)	
		1	**111-7899**	1	GASKET	
	4	1	**275-0570**	1	BAR-BUS	
Y	5	1	**276-7287**	1	RELAY GP (12-VOLT) (POWER DISTRIBUTION)	269
	6	1	**115-1615**	1	RELAY AS (12-VOLT) (AIR CONDITIONER)	
	7	1	**3S-2093**	8	STRAP-CABLE	
M	8	1	**5C-2890**	1	NUT (M6X1-THD)	
M	9	1	**5C-7261**	1	NUT (M8X1.25-THD)	
M	10	1	**8T-9534**	1	BOLT (M6X1X50-MM)	
	11	1	**8T-4205**	2	WASHER-HARD (7.2X14.5X2-MM THK)	
	12	1	**8T-4224**	1	WASHER-HARD (8.8X16X2-MM THK)	
	13	1	**8T-8799**	1	BOOT	
M	14	1	**8T-4171**	1	BOLT (M6X1X12-MM)	

E-ORDER BY THE CENTIMETER
M-METRIC PART
Y-SEPARATE ILLUSTRATION

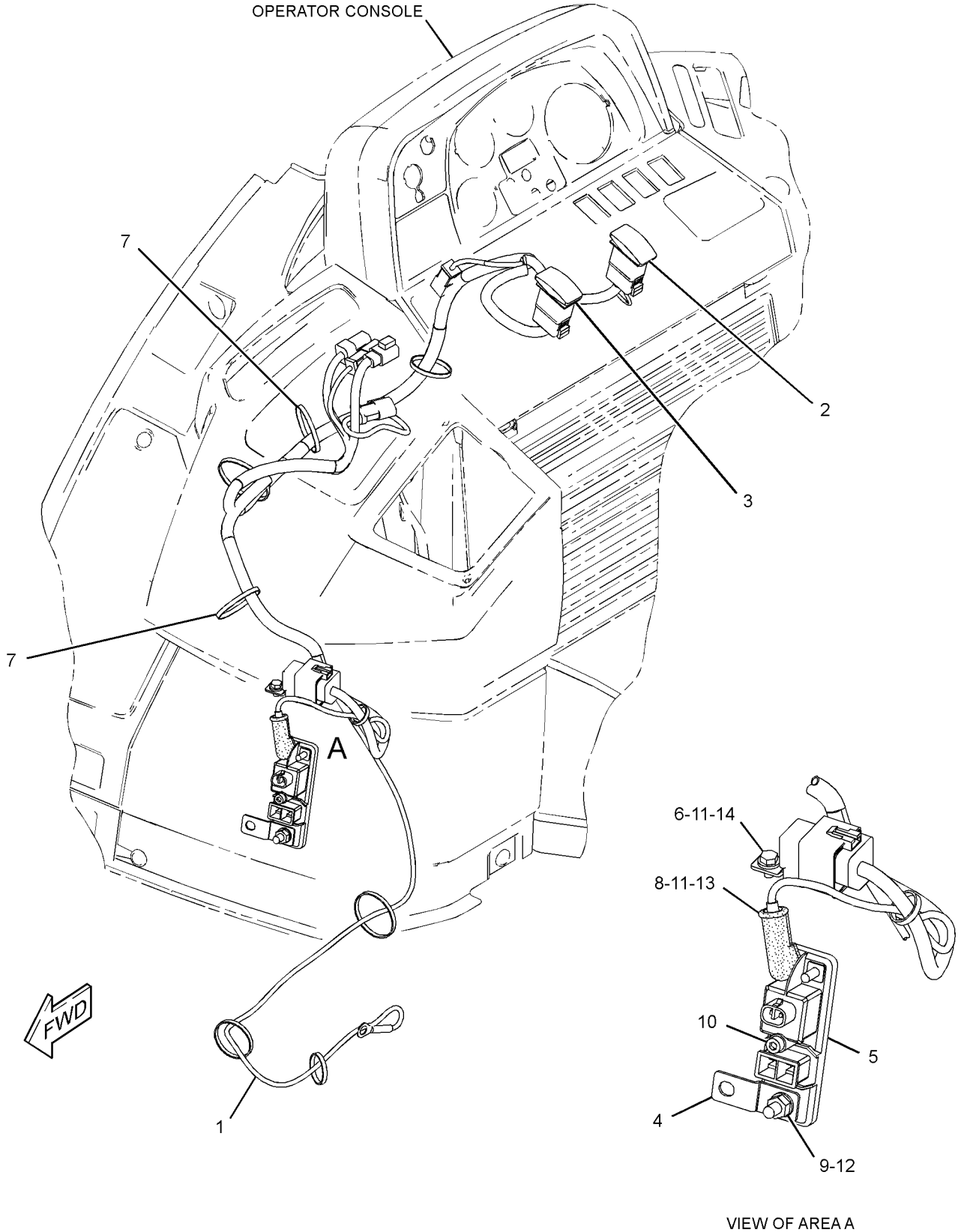

GRAPHIC #1 **<END>** g02105315

211-4262 WIRING GP-KICKOUT & POSITIONER

S/N: CBD1-UP
PART OF 213-9298 LOADER AR
TYPE 1

SMCS-5109, 5112, 5734 **i02360020**

NOTE	REF NO	GRAPHIC REF	PART NUMBER	QTY	PART NAME 1 2 3 4 5 6 (PRODUCT LEVEL)	SEE PAGE
	1	1	**118-7790**	1	BRACKET AS	
	2	1	**206-1486**	1	SWITCH AS-ROLLER (KICKOUT, POSITIONER)	
		1	**2H-3922**	1	LOCKWASHER	
		1	**6V-8363**	2	SCREW (10-32X0.312-IN)	
		1	**6V-8370**	1	NUT-HEX (3/4-32-THD)	
		1	**8F-1434**	2	LOCKWASHER	
		1	**9X-0199**	1	BOOT-SWITCH	
	3	1	**233-7977**	1	HARNESS AS-WIRING (KICKOUT, POSITIONER)	
		1	**6V-8523**		HOSE (453-CM)	
		1	**5P-1476**	2	TERMINAL-FORK (14-GA TO 16-GA, NO. 10 SCREW)	
		1	**102-8803**	1	KIT-RECEPTACLE (3-PIN)	
					(INCLUDES RECEPTACLE AS & WEDGE)	
	4	1	**3S-2093**	31	STRAP-CABLE	
M	5	1	**8T-4138**	2	BOLT (M6X1X20-MM)	
	6	1	**8T-4205**	2	WASHER-HARD (7.2X14.5X2-MM THK)	
	7	1	**225-7992**	1	HARNESS AS-WIRING (KICKOUT, POSITIONER)	
		1	**8L-8413**	2	STRAP-CABLE	
		1	**102-8802**	1	KIT-RECEPTACLE (2-PIN)	
					(INCLUDES RECEPTACLE AS & WEDGE)	
		1	**155-2270**	2	KIT-CONNECTING PLUG (2-PIN)	
		1	**155-2260**	1	KIT-CONNECTING PLUG (3-PIN)	
					(EACH PLUG KIT INCLUDES PLUG AS, WEDGE & INTERFACE SEAL)	
	8	1	**9X-7344**	1	GROMMET	
G	9	1	**160-2245**		SLEEVE-ABRASION (12-IN)	

G-ORDER BY THE INCH
M-METRIC PART

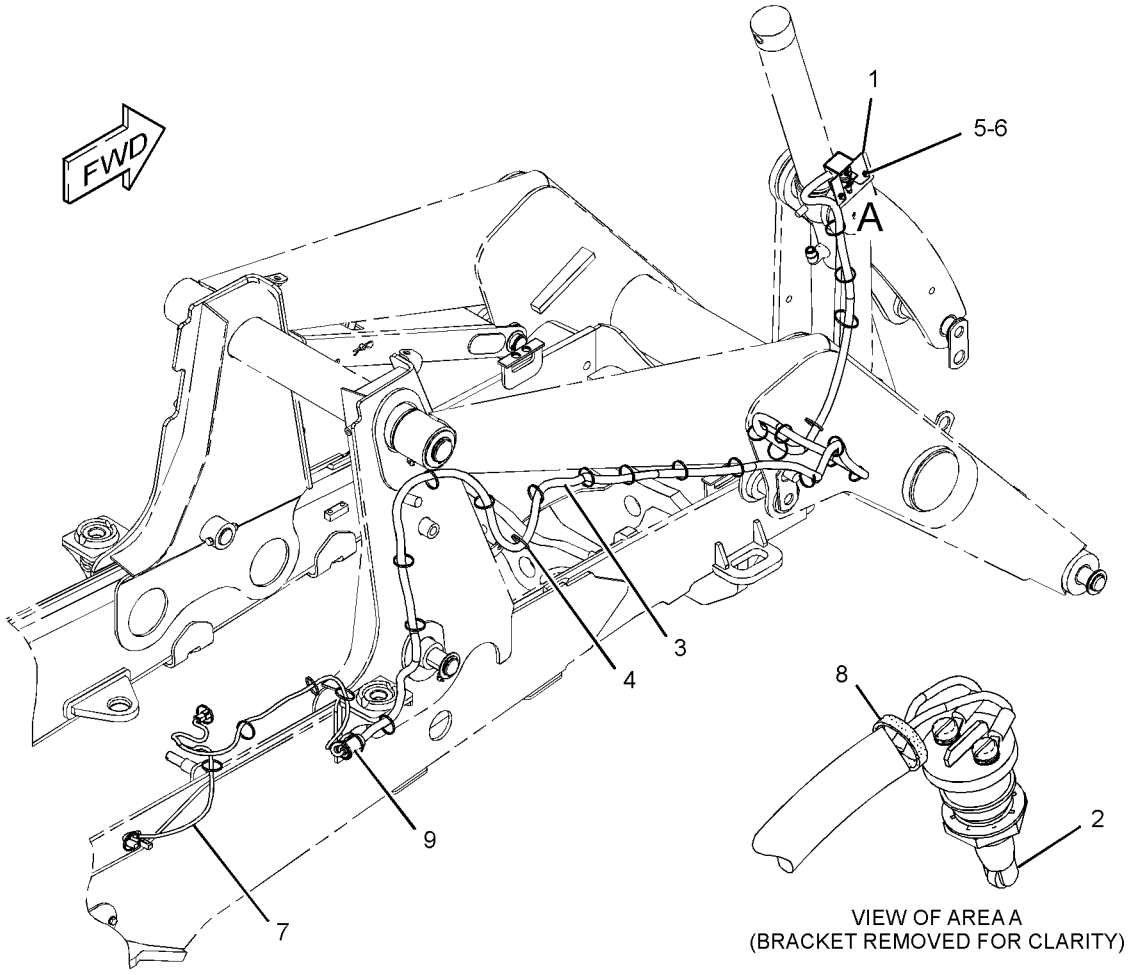

GRAPHIC #1 **<END>** g01233398

211-4262 WIRING GP-KICKOUT & POSITIONER

S/N: CBD1-UP
PART OF 213-9298 LOADER AR
TYPE 2

SMCS-5109, 5112, 5734 **i02561524**

NOTE	REF NO	GRAPHIC REF	PART NUMBER	QTY	PART NAME 1 2 3 4 5 6 (PRODUCT LEVEL)	SEE PAGE
	1	1	**118-7790**	1	BRACKET AS	
	2	1	**206-1486**	1	SWITCH AS-ROLLER (KICKOUT, POSITIONER)	
		1	**2H-3922**	1	LOCKWASHER	
		1	**6V-8363**	2	SCREW (10-32X0.312-IN)	
		1	**6V-8370**	1	NUT-HEX (3/4-32-THD)	
		1	**8F-1434**	2	LOCKWASHER	
		1	**9X-0199**	1	BOOT-SWITCH	
	3	1	**233-7977**	1	HARNESS AS-WIRING (KICKOUT, POSITIONER)	
E		1	**6V-8523**		HOSE (453-CM)	
E		1	**8T-6885**		TUBE-HEAT SHRINK (19.05-MM DIA) (10-CM)	
		1	**5P-1476**	2	TERMINAL-FORK (14-GA TO 16-GA, NO. 10 SCREW)	
		1	**102-8803**	1	KIT-RECEPTACLE (3-PIN)	
					(INCLUDES RECEPTACLE AS & WEDGE)	
	4	1	**3S-2093**	31	STRAP-CABLE	
M	5	1	**8T-4138**	2	BOLT (M6X1X20-MM)	
	6	1	**8T-4205**	2	WASHER-HARD (7.2X14.5X2-MM THK)	
	7	1	**225-7992**	1	HARNESS AS-WIRING (KICKOUT, POSITIONER)	
E		1	**125-7874**		TUBE-HEAT SHRINK (5.72-MM DIA) (15-CM)	
		1	**8L-8413**	2	STRAP-CABLE	
		1	**102-8802**	1	KIT-RECEPTACLE (2-PIN)	
					(INCLUDES RECEPTACLE AS & WEDGE)	
		1	**155-2270**	2	KIT-CONNECTING PLUG (2-PIN)	
		1	**155-2274**	1	KIT-CONNECTING PLUG (6-PIN)	
					(EACH PLUG KIT INCLUDES PLUG AS, WEDGE & INTERFACE SEAL)	
		1	**155-2260**	1	KIT-CONNECTING PLUG (3-PIN)	
					(INCLUDES PLUG AS, WEDGES & INTERFACE SEAL)	
	8	1	**9X-7344**	1	GROMMET	
G	9	1	**160-2246**		SLEEVE-ABRASION (12-IN)	

E-ORDER BY THE CENTIMETER
G-ORDER BY THE INCH
M-METRIC PART

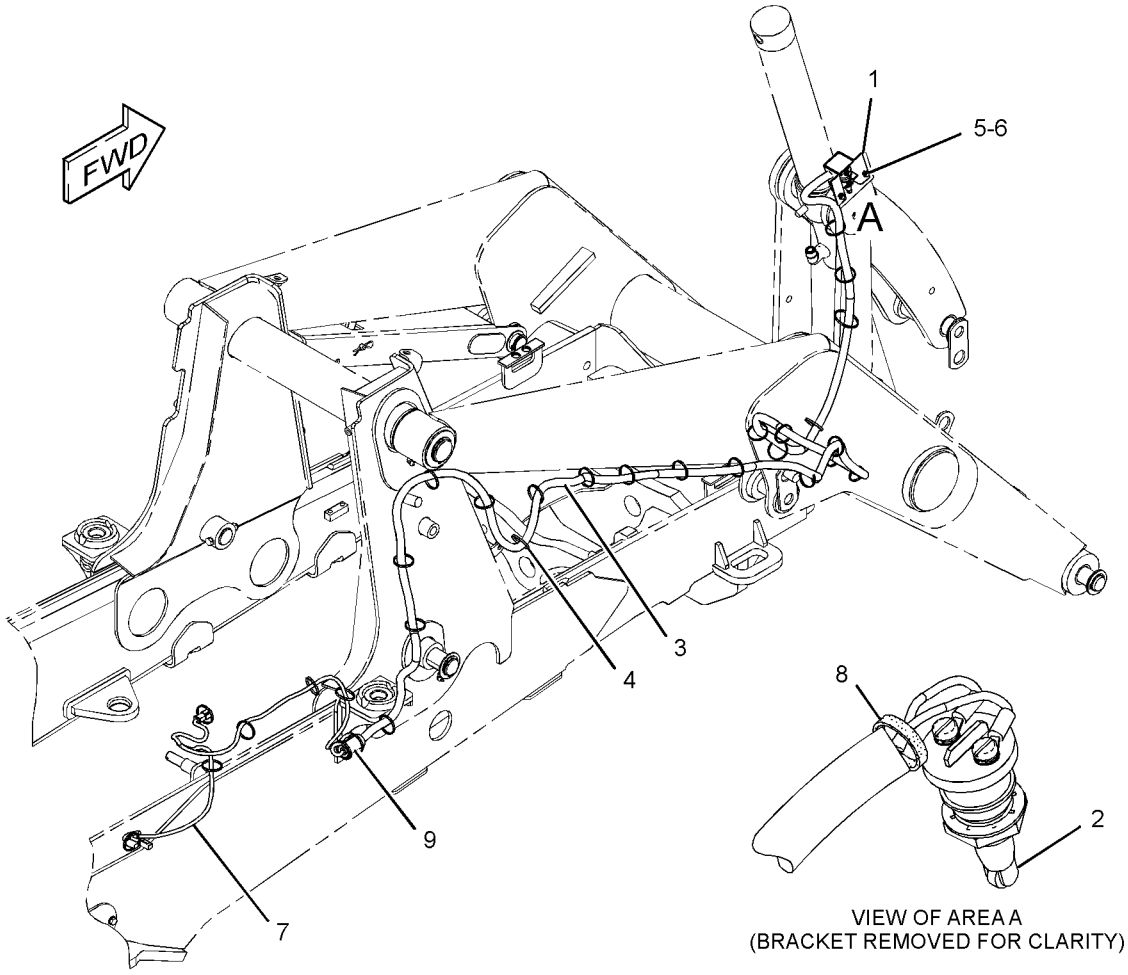

GRAPHIC #1 **<END>** g01233398

211-4262 WIRING GP-KICKOUT & POSITIONER

S/N: CBD1-UP; MFG1-UP

PART OF 213-9298, 318-9555 LOADER AR

SMCS-5109, 5112, 5734 **i04343309**

NOTE	REF NO	GRAPHIC REF	PART NUMBER	QTY	PART NAME 1 2 3 4 5 6 (PRODUCT LEVEL)	SEE PAGE
	1	1	**118-7790**	1	BRACKET AS	
	2	1	**206-1486**	1	SWITCH AS-ROLLER (KICKOUT, POSITIONER)	
		1	**2H-3922**	1	LOCKWASHER	
		1	**6V-8363**	2	SCREW (10-32X0.312-IN)	
		1	**6V-8370**	1	NUT-HEX (3/4-32-THD)	
		1	**8F-1434**	2	LOCKWASHER	
		1	**9X-0199**	1	BOOT-SWITCH	
	3	1	**233-7977**	1	HARNESS AS-WIRING (KICKOUT, POSITIONER)	
E		1	**6V-8523**		HOSE (453-CM)	
		1	**8T-8729**	2	PIN-CONNECTOR (16-GA TO 18-GA)	
		1	**8T-8737**	1	PLUG-SEAL	
		1	**102-8803**	1	KIT-RECEPTACLE (3-PIN)	
					(INCLUDES RECEPTACLE AS & WEDGE)	
		1	**5P-1476**	2	TERMINAL-FORK (14-GA TO 16-GA, NO. 10 SCREW)	
D		1	**6V-2722**		TUBE-HEAT SHRINK (25.4-MM DIA) (0.1-M)	
	4	1	**3S-2093**	35	STRAP-CABLE	
M	5	1	**8T-4138**	2	BOLT (M6X1X20-MM)	
	6	1	**8T-4205**	2	WASHER-HARD (7.2X14.5X2-MM THK)	
C	7	1	**290-6801**	1	HARNESS AS-WIRING (RETURN TO DIG)	
		1	**8T-8729**	2	PIN-CONNECTOR (16-GA TO 18-GA)	
		1	**155-2260**	1	KIT-CONNECTING PLUG (3-PIN)	
		1	**155-2270**	2	KIT-CONNECTING PLUG (2-PIN)	
					(EACH PLUG KIT INCLUDES PLUG AS, WEGDE & INTERFACE SEAL)	
		1	**8T-8737**	1	PLUG-SEAL	
		1	**102-8802**	1	KIT-RECEPTACLE (2-PIN)	
					(INCLUDES RECEPTACLE AS & WEDGE)	
		1	**8T-8730**	6	SOCKET-CONNECTOR (16-GA TO 18-GA)	
		1	**189-3158**	1	SUPPRESSOR-ARC	
E		1	**125-7874**		TUBE-HEAT SHRINK (5.72-MM DIA) (10-CM)	
	8	1	**9X-7344**	1	GROMMET	
G	9	1	**160-2246**		SLEEVE-ABRASION (11.9-IN)	
C	10	1	**7K-1181**	1	STRAP-CABLE	
	11	1	**6K-0806**	2	STRAP-CABLE	
M	12	1	**8T-4196**	1	BOLT (M10X1.5X35-MM)	
	13	1	**205-9920**	1	STRAP-CABLE	
	14	1	**8T-4121**	1	WASHER-HARD (11X21X2.5-MM THK)	
	15	1	**4P-7429**	1	CLIP	

C-CHANGE FROM PREVIOUS TYPE
D-ORDER BY THE METER
E-ORDER BY THE CENTIMETER
G-ORDER BY THE INCH
M-METRIC PART

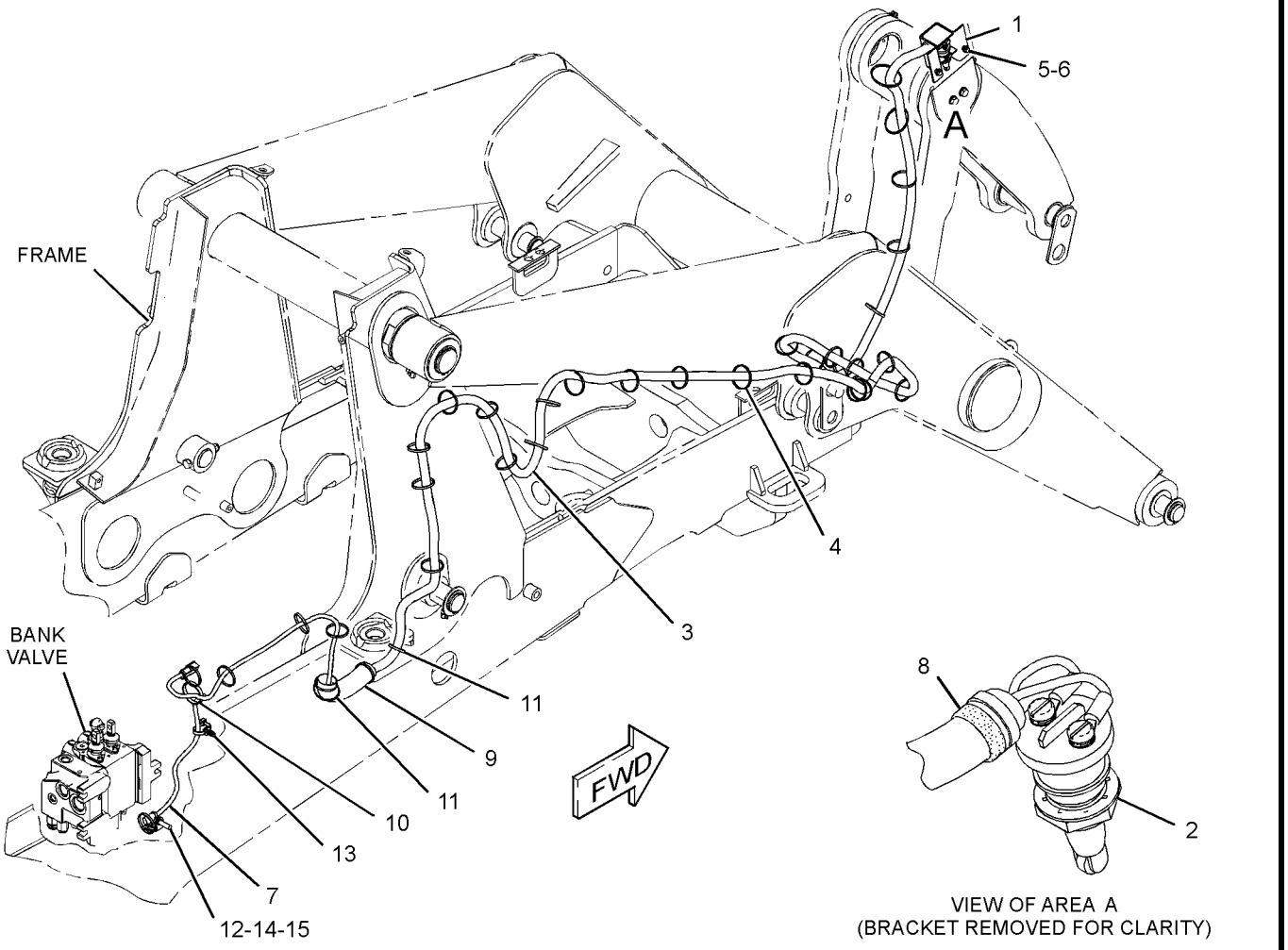

GRAPHIC #1 **<END>** g02640301

211-4242 WIRING GP-PLATFORM

S/N: CBD1-3739
PART OF 204-4161, 204-4162, 228-4602 CAB AR-ENCLOSED ROPS, 204-4160, 204-4164, 292-9690, 292-9691 CANOPY AR-OPEN ROPS
AN ATTACHMENT
TYPE 1

SMCS-1408 **i03567595**

NOTE	REF NO	GRAPHIC REF	PART NUMBER	QTY	PART NAME 1 2 3 4 5 6 (PRODUCT LEVEL)	SEE PAGE
E	1	1	**103-2543**		SEAL (1-CM)	
	2	2	**4B-4863**	1	WASHER (4.7X11X1.2-MM THK)	
	3	1	**4I-3038**	8	WASHER (3.3X8X0.5-MM THK)	
	4	1	**4P-8134**	1	CLIP	
	5	2	**7G-1060**	1	STRAP AS-GROUND	
	6	2	**7K-1181**	21	STRAP-CABLE	
	7	2	**7T-4848**	1	FLASHER AS (12-VOLT)	
	8	1	**8T-8799**	3	BOOT	
	9	2	**6K-0806**	1	STRAP-CABLE	
	10	1	**8C-6354**	1	CAP-RECEPTACLE	
	11	1	**206-1345**	3	STRAP-CABLE	
	12	2	**106-8704**	3	SUPPRESSOR AS-ARC	
					(EACH INCLUDES)	
		2	**186-3735**	2	PIN-CONNECTOR (16-GA TO 18-GA)	
		2	**102-8802**	1	KIT-RECEPTACLE (2-PIN)	
					(INCLUDES RECEPTACLE AS & WEDGE)	
	14	1,2	**146-9439**	5	RELAY AS (12-VOLT)	
	15	2	**178-7539**	1	RECEPTACLE AS (POWER SUPPLY)	
	16	1	**179-6401**	5	SCREW-PAN HEAD (6-32X0.5-IN)	
	17	2	**201-1024**	2	BRACKET	
	18	1	**206-1718**	1	BRACKET AS	
	19	2	**214-4702**	1	SWITCH AS-ROCKER (HAZARD WARNING LIGHTS)	
	20	2	**214-4717**	1	INDICATOR AS (LH TURN SIGNAL, PARKING BRAKE)	
	21	2	**214-4723**	1	INDICATOR AS (RH TURN SIGNAL, HIGH BEAM)	
	22	1	**225-7970**	1	BRACKET AS	
	23	2	**227-1057**	1	PLUG-HOLE	
	24	2	**246-2671**	1	SWITCH AS-MULTIFUNCTION (HD LIGHT, TURN SIG, WDO WIPER)	
	25	2	**246-8030**	1	HARNESS AS-CAB	
		1	**7N-7221**	3	TERMINAL-BLADE (18-GA TO 22-GA)	
		1	**134-2540**	1	RESISTOR AS-CONNECTION (3-PIN)	
		2	**091-2436**	13	TERMINAL-BLADE (18-GA TO 22-GA)	
		2	**111-6792**	2	TERMINAL-RECEPTACLE (18-GA TO 20-GA)	
		2	**111-6793**	1	TERMINAL-RECEPTACLE	
		2	**155-2255**	6	KIT-CONNECTING PLUG (12-PIN)	
		2	**155-2265**	2	KIT-CONNECTING PLUG (8-PIN)	
		2	**155-2260**	3	KIT-CONNECTING PLUG (3-PIN)	
		2	**155-2270**	10	KIT-CONNECTING PLUG (2-PIN)	
		2	**155-2271**	2	KIT-CONNECTING PLUG (4-PIN)	
		2	**155-2274**	4	KIT-CONNECTING PLUG (6-PIN)	
					(EACH PLUG KIT INCLUDES PLUG AS, WEDGE & INTERFACE SEAL)	
		2	**196-2384**	1	KIT-CONNECTING PLUG (8-PIN)	
		2	**196-2385**	1	KIT-CONNECTING PLUG (8-PIN)	
		2	**196-2386**	1	KIT-CONNECTING PLUG (8-PIN)	
		2	**242-6114**	1	KIT-CONNECTING PLUG (8-PIN)	
		2	**242-6116**	1	KIT-CONNECTING PLUG (8-PIN)	
		2	**242-6118**	1	KIT-CONNECTING PLUG (8-PIN)	
		2	**242-6120**	1	KIT-CONNECTING PLUG (8-PIN)	
					(EACH PLUG KIT INCLUDES PLUG AS-CONNECTOR, LOCK-CONNECTOR & TERMINAL ASSEMBLIES)	
		2	**102-8802**	1	KIT-RECEPTACLE (2-PIN)	

211-4242 **WIRING GP-PLATFORM** *(contd.)* **i03567595**

NOTE	REF NO	GRAPHIC REF	PART NUMBER	QTY	PART NAME 1 2 3 4 5 6 (PRODUCT LEVEL)	SEE PAGE
		2	**102-8804**	3	KIT-RECEPTACLE (4-PIN)	
		2	**102-8805**	1	KIT-RECEPTACLE (6-PIN)	
		2	**102-8801**	2	KIT-RECEPTACLE (12-PIN)	
					(EACH RECEPTACLE KIT INCLUDES RECEPTACLE AS & WEDGE)	
		2	**9W-1951**	1	RECEPTACLE-CONNECTOR (9-PIN)	
		2	**9X-4813**	1	RECEPTACLE AS-CONNECTOR (3-PIN)	
		2	**134-2540**	1	RESISTOR AS-CONNECTION (3-PIN)	
		2	**167-3692**	3	RECEPTACLE AS-CONNECTOR (31-PIN)	
		2	**230-4011**	3	PLUG AS-CONNECTOR (2-PIN)	
		2	**111-6795**	1	HOUSING-RELAY	
		2	**128-4249**	3	LOCKWASHER	
		2	**211-0052**	3	NUT (1-11/16-18-THD)	
		2	**8L-8413**	195	STRAP-CABLE	
		2	**128-4123**	4	SEAL	
E		2	**119-3662**		TUBE-HEAT SHRINK (10.85-MM DIA) (26-CM)	
E		2	**125-7874**		TUBE-HEAT SHRINK (5.72-MM DIA) (175-CM)	
E		2	**125-7875**		TUBE-HEAT SHRINK (7.44-MM DIA) (25-CM)	
D		2	**141-8061**		TAPE (3-M)	
	26	1	**267-2701**	1	FUSE (60-AMPERE)	
	27	1	**268-7759**	1	HARNESS AS-POWER	
		1	**8L-8413**	7	STRAP-CABLE	
	28	1	**275-0553**	1	BAR-BUS	
Y	29	1	**276-7290**	1	RELAY GP (12-VOLT) (12-VDC)	270
Y	30	1	**276-7291**	1	RELAY GP (12-VOLT) (12-VDC)	271
	31	2	**156-6175**	1	CLIP	
	32	2	**1L-6377**	1	BUTTON-PLUG	
Y	33	1	**247-8199**	1	PANEL GP-FUSE (INCLUDES RELAY)	268
	34	2	**3S-2093**	25	STRAP-CABLE	
M	35	1,2	**5C-2890**	4	NUT (M6X1-THD)	
M	36	1	**5C-7261**	6	NUT (M8X1.25-THD)	
M	37	1	**7X-2534**	2	BOLT (M6X1X50-MM)	
	38	2	**7X-7729**	2	WASHER (11X25X3-MM THK)	
	39	2	**8C-3398**	1	LOCKWASHER	
M	40	2	**8T-0352**	2	BOLT (M5X0.8X45-MM)	
	41	2	**8T-4121**	4	WASHER-HARD (11X21X2.5-MM THK)	
M	42	2	**8T-4133**	2	NUT (M10X1.5-THD)	
M	43	2	**8T-4136**	2	BOLT (M10X1.5X25-MM)	
M	44	1,2	**8T-4138**	7	BOLT (M6X1X20-MM)	
M	45	1,2	**8T-4200**	5	BOLT (M8X1.25X16-MM)	
	46	1,2	**8T-4205**	14	WASHER-HARD (7.2X14.5X2-MM THK)	
	47	1,2	**8T-4224**	11	WASHER-HARD (8.8X16X2-MM THK)	
E	48	1	**3E-8299**		SEAL (3-CM)	
E	49	1	**3E-8299**		SEAL (3-CM)	
E	50	1	**3E-8299**		SEAL (3-CM)	
F		1	**235-4752**	1	WIRE AS	

D-ORDER BY THE METER
E-ORDER BY THE CENTIMETER
F-NOT SHOWN
M-METRIC PART
Y-SEPARATE ILLUSTRATION

211-4242 **WIRING GP-PLATFORM** *(contd.)* **i03567595**

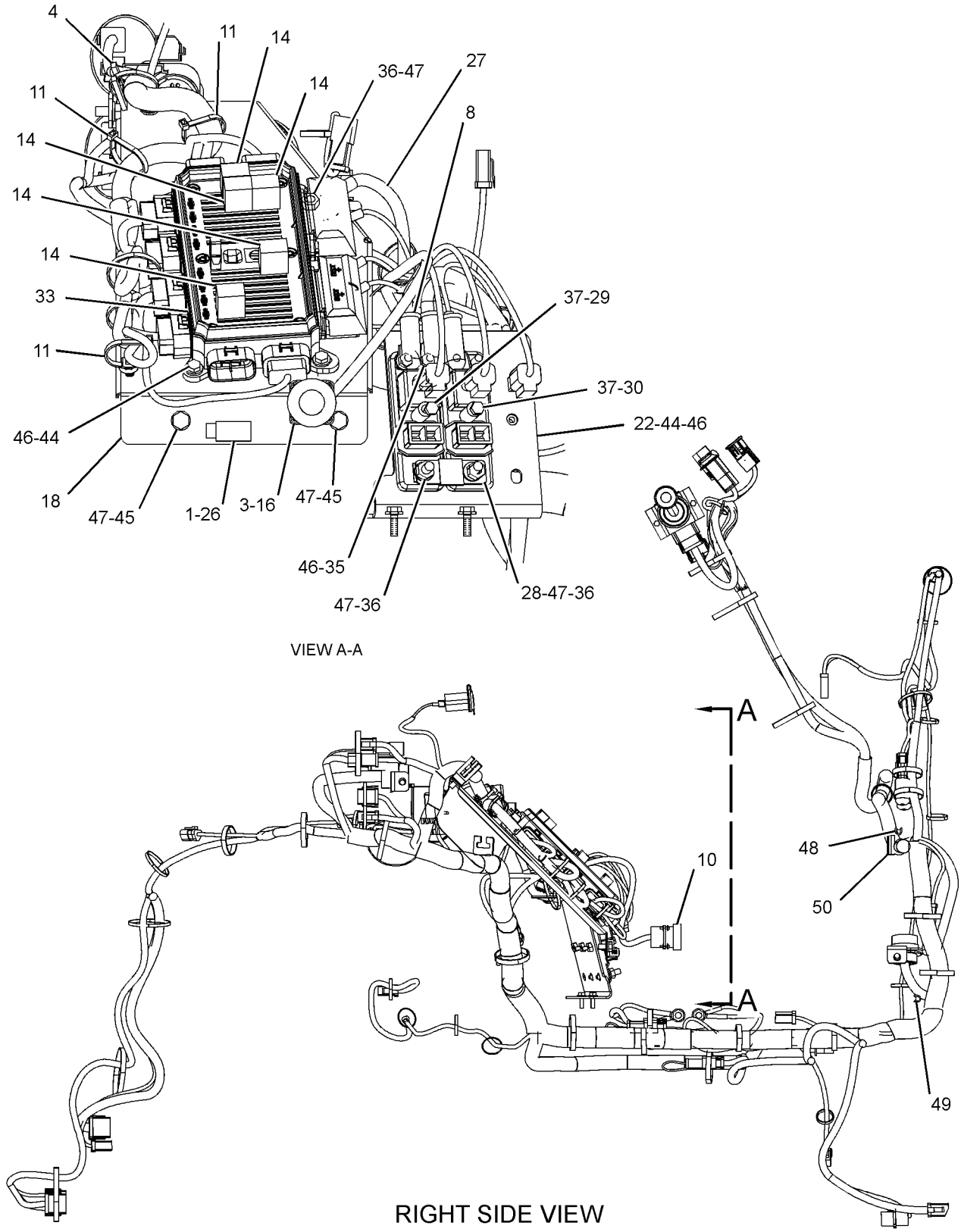

GRAPHIC #1 g01260469

211-4242 **WIRING GP-PLATFORM** *(contd.)* **i03567595**

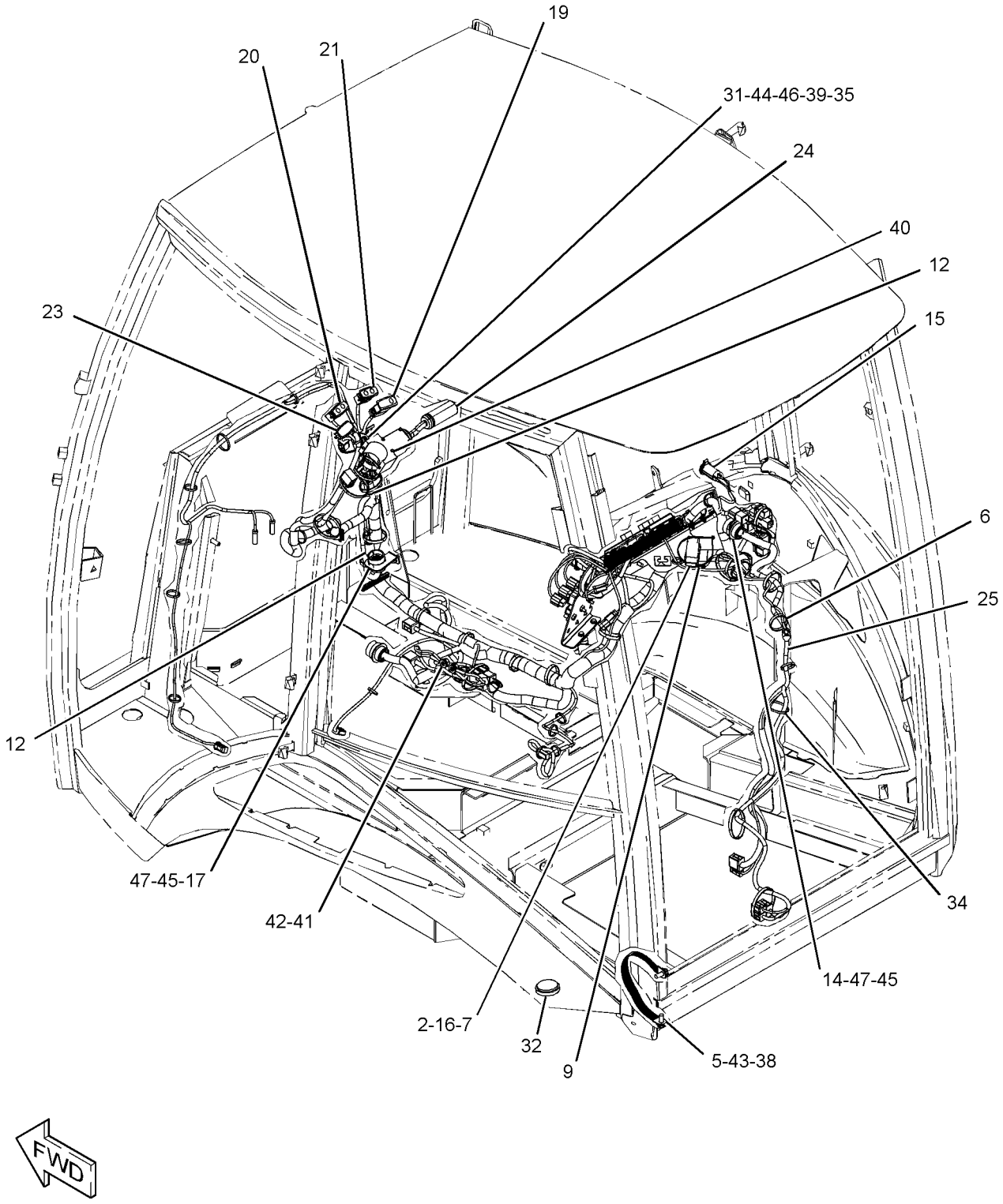

GRAPHIC #2 **<END>** g01281842

211-4242 WIRING GP-PLATFORM

S/N: CBD1-3739
PART OF 204-4161, 204-4162, 228-4602 CAB AR-ENCLOSED ROPS, 204-4160, 204-4164, 292-9690, 292-9691 CANOPY AR-OPEN ROPS
AN ATTACHMENT
TYPE 2

SMCS-1408 **i03567593**

NOTE	REF NO	GRAPHIC REF	PART NUMBER	QTY	PART NAME 1 2 3 4 5 6 (PRODUCT LEVEL)	SEE PAGE
E	1	2	**103-2543**		SEAL (1-CM)	
	2	1	**4B-4863**	1	WASHER (4.7X11X1.2-MM THK)	
	3	2	**4I-3038**	8	WASHER (3.3X8X0.5-MM THK)	
	4	2	**4P-8134**	1	CLIP	
	5	1	**7G-1060**	1	STRAP AS-GROUND	
	6	1	**7K-1181**	21	STRAP-CABLE	
	7	1	**7T-4848**	1	FLASHER AS (12-VOLT)	
	8	2	**8T-8799**	3	BOOT	
	9	1	**6K-0806**	1	STRAP-CABLE	
	10	2	**8C-6354**	1	CAP-RECEPTACLE	
	11	2	**206-1345**	3	STRAP-CABLE	
	12	1	**106-8704**	3	SUPPRESSOR AS-ARC	
	14	1,2	**146-9439**	5	RELAY AS (12-VOLT)	
	15	1	**178-7539**	1	RECEPTACLE AS (POWER SUPPLY)	
	16	1,2	**179-6401**	5	SCREW-PAN HEAD (6-32X0.5-IN)	
	17	1	**201-1024**	2	BRACKET	
	18	2	**206-1718**	1	BRACKET AS	
	19	1	**214-4702**	1	SWITCH AS-ROCKER (HAZARD WARNING LIGHTS)	
	20	1	**214-4717**	1	INDICATOR AS (LH TURN SIGNAL, PARKING BRAKE)	
	21	1	**214-4723**	1	INDICATOR AS (RH TURN SIGNAL, HIGH BEAM)	
	22	2	**225-7970**	1	BRACKET AS	
	23	1	**227-1057**	1	PLUG-HOLE	
C	24	1	**246-2671**	1	SWITCH AS-MULTIFUNCTION (HD LIGHT, TURN SIG, WDO WIPER)	
	25	1	**246-8030**	1	HARNESS AS-CAB	
	26	2	**267-2701**	1	FUSE (60-AMPERE)	
	27	2	**268-7759**	1	HARNESS AS-POWER	
	28	2	**275-0553**	1	BAR-BUS	
Y	29	2	**276-7290**	1	RELAY GP (12-VOLT) (12-VDC)	270
Y	30	2	**276-7291**	1	RELAY GP (12-VOLT) (12-VDC)	271
	31	1	**156-6175**	1	CLIP	
	32	1	**1L-6377**	1	BUTTON-PLUG	
Y	33	2	**247-8199**	1	PANEL GP-FUSE (INCLUDES RELAY)	268
	34	1	**3S-2093**	25	STRAP-CABLE	
M	35	1,2	**5C-2890**	4	NUT (M6X1-THD)	
M	36	2	**5C-7261**	6	NUT (M8X1.25-THD)	
M	37	2	**7X-2534**	2	BOLT (M6X1X50-MM)	
	38	1	**7X-7729**	2	WASHER (11X25X3-MM THK)	
	39	1	**8C-3398**	1	LOCKWASHER	
M	40	1	**8T-0352**	2	BOLT (M5X0.8X45-MM)	
	41	1	**8T-4121**	4	WASHER-HARD (11X21X2.5-MM THK)	
M	42	1	**8T-4133**	2	NUT (M10X1.5-THD)	
M	43	1	**8T-4136**	2	BOLT (M10X1.5X25-MM)	
M	44	1,2	**8T-4138**	7	BOLT (M6X1X20-MM)	
M	45	1,2	**8T-4200**	5	BOLT (M8X1.25X16-MM)	
	46	1,2	**8T-4205**	14	WASHER-HARD (7.2X14.5X2-MM THK)	
	47	1,2	**8T-4224**	11	WASHER-HARD (8.8X16X2-MM THK)	
E	48	2	**3E-8299**		SEAL (3-CM EACH)	

C-CHANGE FROM PREVIOUS TYPE
E-ORDER BY THE CENTIMETER
M-METRIC PART
Y-SEPARATE ILLUSTRATION

211-4242 **WIRING GP-PLATFORM** *(contd.)* **i03567593**

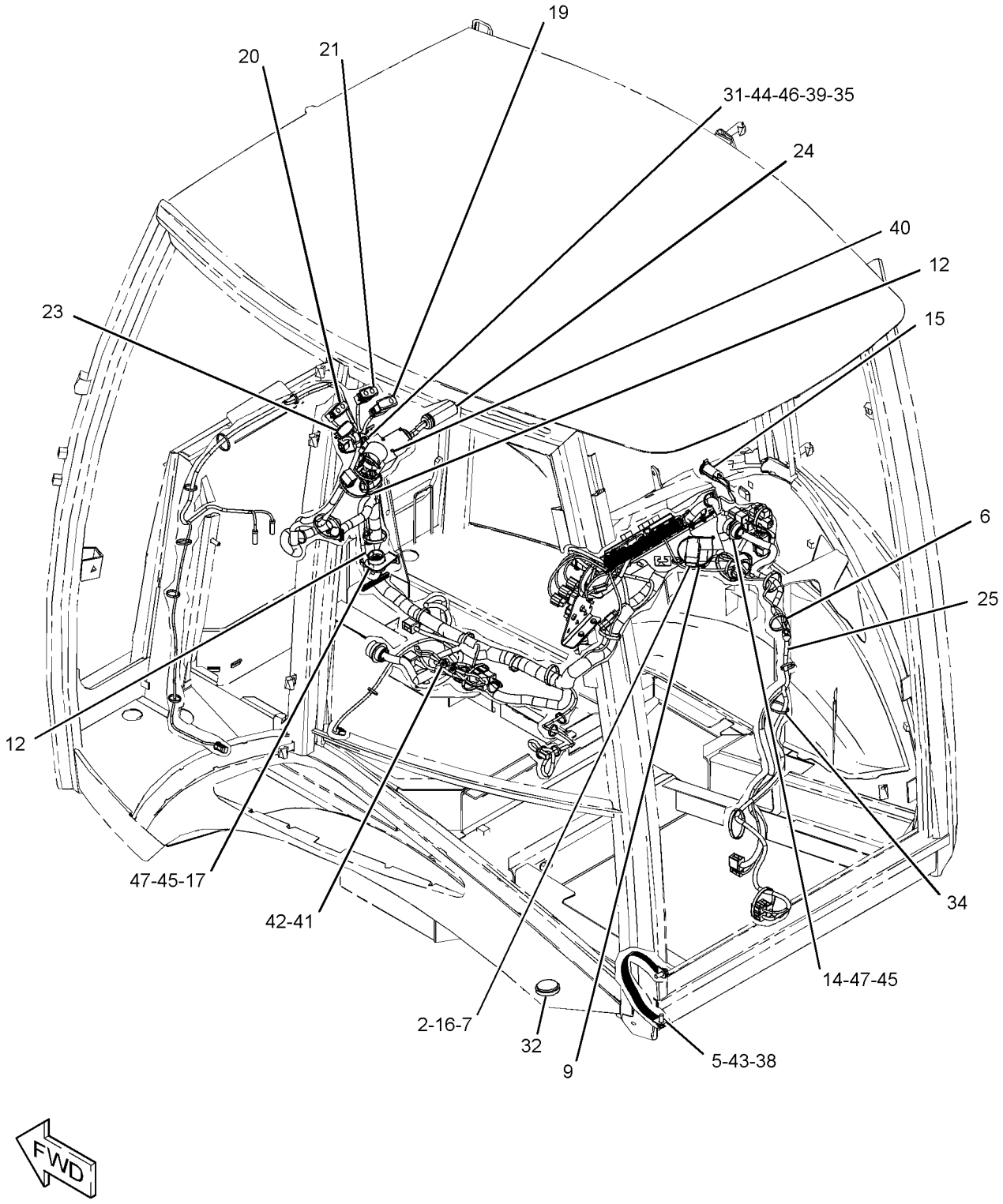

GRAPHIC #1 g01281842

211-4242 **WIRING GP-PLATFORM** *(contd.)* **i03567593**

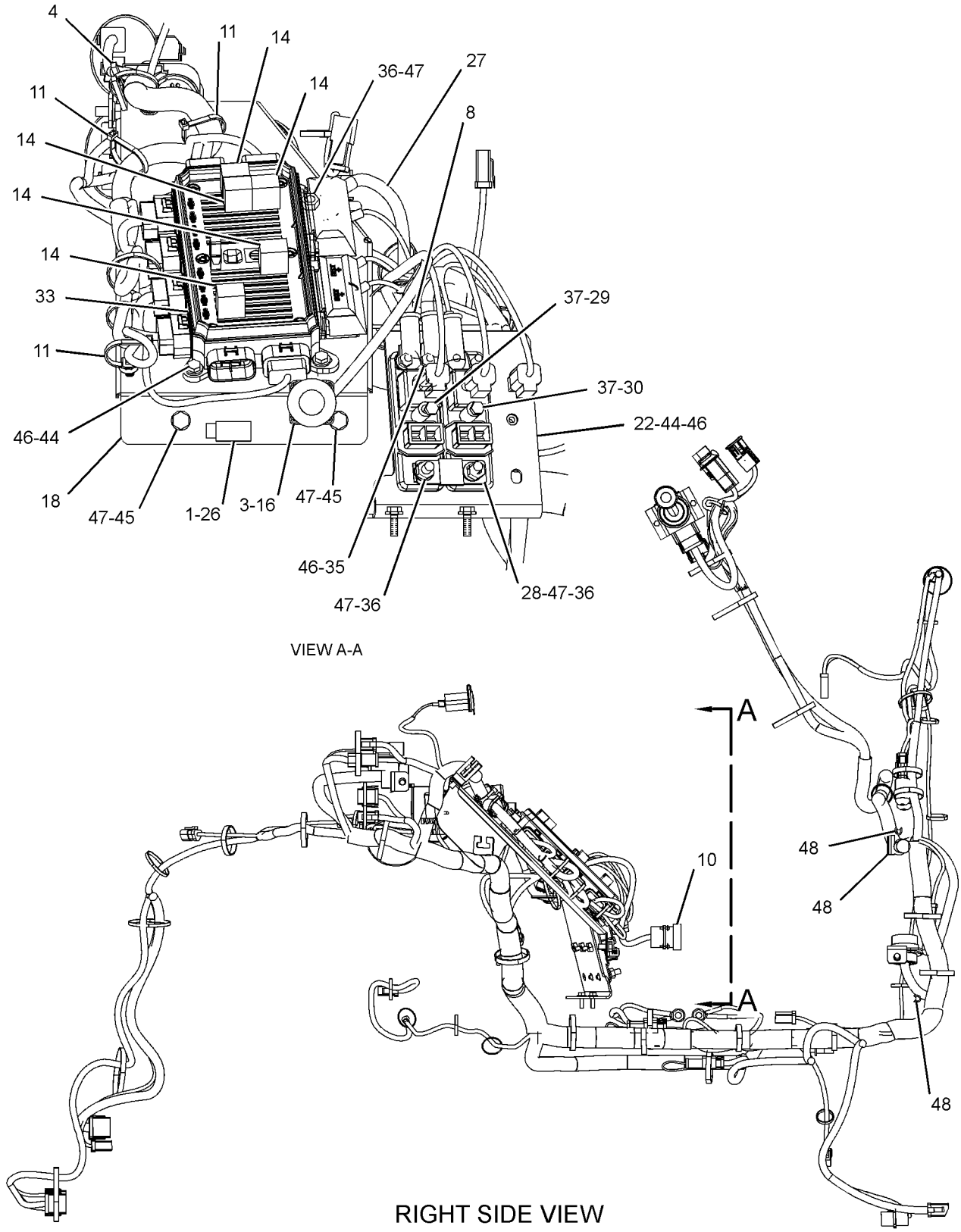

GRAPHIC #2 **<END>** g01407038

ELECTRICAL AND STARTING SYSTEM

211-4242 WIRING GP-PLATFORM

S/N: CBD1-3739

PART OF 204-4161, 204-4162, 228-4602 CAB AR-ENCLOSED ROPS, 204-4160, 204-4164, 292-9690, 292-9691 CANOPY AR-OPEN ROPS

AN ATTACHMENT

TYPE 3

SMCS-1408 **i03567594**

NOTE	REF NO	GRAPHIC REF	PART NUMBER	QTY	PART NAME 1 2 3 4 5 6 (PRODUCT LEVEL)	SEE PAGE
E	1	2	**103-2543**		SEAL (1-CM)	
	2	1	**4B-4863**	1	WASHER (4.7X11X1.2-MM THK)	
	3	1	**4P-8134**	1	CLIP	
	4	1	**6K-0806**	1	STRAP-CABLE	
	5	1	**7G-1060**	1	STRAP AS-GROUND	
C	6	1	**7K-1181**	24	STRAP-CABLE	
	7	1	**7T-4848**	1	FLASHER AS (12-VOLT)	
	8	2	**8C-6354**	1	CAP-RECEPTACLE	
	9	2	**8T-8799**	3	BOOT	
C	10	2	**096-6166**	8	WASHER-HARD (4.5X9X1-MM THK)	
C	11	1	**100-5805**	1	CAP-RECEPTACLE	
	12	2	**106-8704**	3	SUPPRESSOR AS-ARC	
C	13	2	**146-9439**	1	RELAY AS (12-VOLT) (POSITION LAMP)	
C	13A	2	**146-9439**	1	RELAY AS (12-VOLT) (HORN)	
C	13B	2	**146-9439**	1	RELAY AS (12-VOLT) (BACKUP ALARM)	
	14	1	**178-7539**	1	RECEPTACLE AS (POWER SUPPLY)	
	15	1,2	**179-6401**	5	SCREW-PAN HEAD (6-32X0.5-IN)	
	16	1,2	**201-1024**	2	BRACKET	
	17	2	**206-1345**	3	STRAP-CABLE	
	18	2	**206-1718**	1	BRACKET AS	
	19	2	**214-4702**	1	SWITCH AS-ROCKER (HAZARD WARNING LIGHTS)	
	20	2	**214-4717**	1	INDICATOR AS (LH TURN SIGNAL, PARKING BRAKE)	
	21	2	**214-4723**	1	INDICATOR AS (RH TURN SIGNAL, HIGH BEAM)	
	22	1	**225-7970**	1	BRACKET AS	
M		1	**6V-9632**	4	NUT-WELD (M6X1-THD)	
M		1	**9X-2032**	3	NUT-WELD (M4X0.7-THD)	
	23	2	**227-1057**	1	PLUG-HOLE	
	24	2	**246-2671**	1	SWITCH AS-MULTIFUNCTION (HD LIGHT, TURN SIG, WDO WIPER)	
	25	1	**246-8030**	1	HARNESS AS-CAB	
Y	26	2	**247-8199**	1	PANEL GP-FUSE (INCLUDES RELAY)	268
	27	2	**267-2701**	1	FUSE (60-AMPERE)	
	28	1	**268-7759**	1	HARNESS AS-POWER	
C	29	1	**274-3774**	2	CAP-CONNECTOR	
C	30	1	**274-3775**	2	CAP-CONNECTOR	
C	31	1	**274-3776**	1	CAP-SEAL	
C	32	1,2	**274-3777**	2	CAP-CONNECTOR	
C	33	1	**274-3778**	1	CAP-SEAL	
C	34	1	**274-3779**	3	CAP-SEAL	
C	35	1	**274-3780**	1	CAP-SEAL	
	36	2	**275-0553**	1	BAR-BUS	
Y	37	2	**276-7290**	1	RELAY GP (12-VOLT) (POWER, 1)	270
Y	38	2	**276-7291**	1	RELAY GP (12-VOLT) (POWER, 2)	271
C	39	2	**297-6899**	1	CHAIN AS	
		2	**297-6898**	1	RING	
C	40	1	**155-2271**	1	KIT-CONNECTING PLUG (4-PIN) (INCLUDES PLUG AS, WEDGE & INTERFACE SEAL)	
	41	2	**156-6175**	1	CLIP	
C	42	2	**197-5107**	2	SCREW-TRUSS HEAD (M6X1X60-MM)	
	43	1	**1L-6377**	1	BUTTON-PLUG	
C	44	1	**3S-2093**	21	STRAP-CABLE	
M	45	2	**5C-2890**	4	NUT (M6X1-THD)	
M	46	2	**5C-7261**	6	NUT (M8X1.25-THD)	

211-4242 **WIRING GP-PLATFORM** *(contd.)* **i03567594**

NOTE	REF NO	GRAPHIC REF	PART NUMBER	QTY	PART NAME 1 2 3 4 5 6 (PRODUCT LEVEL)	SEE PAGE
C	47	1	**7X-7729**	4	WASHER (11X25X3-MM THK)	
	48	2	**8C-3398**	1	LOCKWASHER	
C	49	1	**8F-3590**	4	LOCKWASHER	
M	50	2	**8T-0352**	2	BOLT (M5X0.8X45-MM)	
	51	1	**8T-4121**	4	WASHER-HARD (11X21X2.5-MM THK)	
M	52	1	**8T-4133**	2	NUT (M10X1.5-THD)	
M	53	1	**8T-4136**	2	BOLT (M10X1.5X25-MM)	
M	54	2	**8T-4138**	7	BOLT (M6X1X20-MM)	
M	55	1,2	**8T-4200**	5	BOLT (M8X1.25X16-MM)	
	56	2	**8T-4205**	14	WASHER-HARD (7.2X14.5X2-MM THK)	
	57	1,2	**8T-4224**	11	WASHER-HARD (8.8X16X2-MM THK)	
CE	58	2	**3E-8299**		SEAL (3-CM EACH)	
CE	58A	2	**3E-8299**		SEAL (9-CM)	
C	59	1	**8T-8737**	4	PLUG-SEAL	

C-CHANGE FROM PREVIOUS TYPE
E-ORDER BY THE CENTIMETER
M-METRIC PART
Y-SEPARATE ILLUSTRATION

211-4242 **WIRING GP-PLATFORM** *(contd.)* **i03567594**

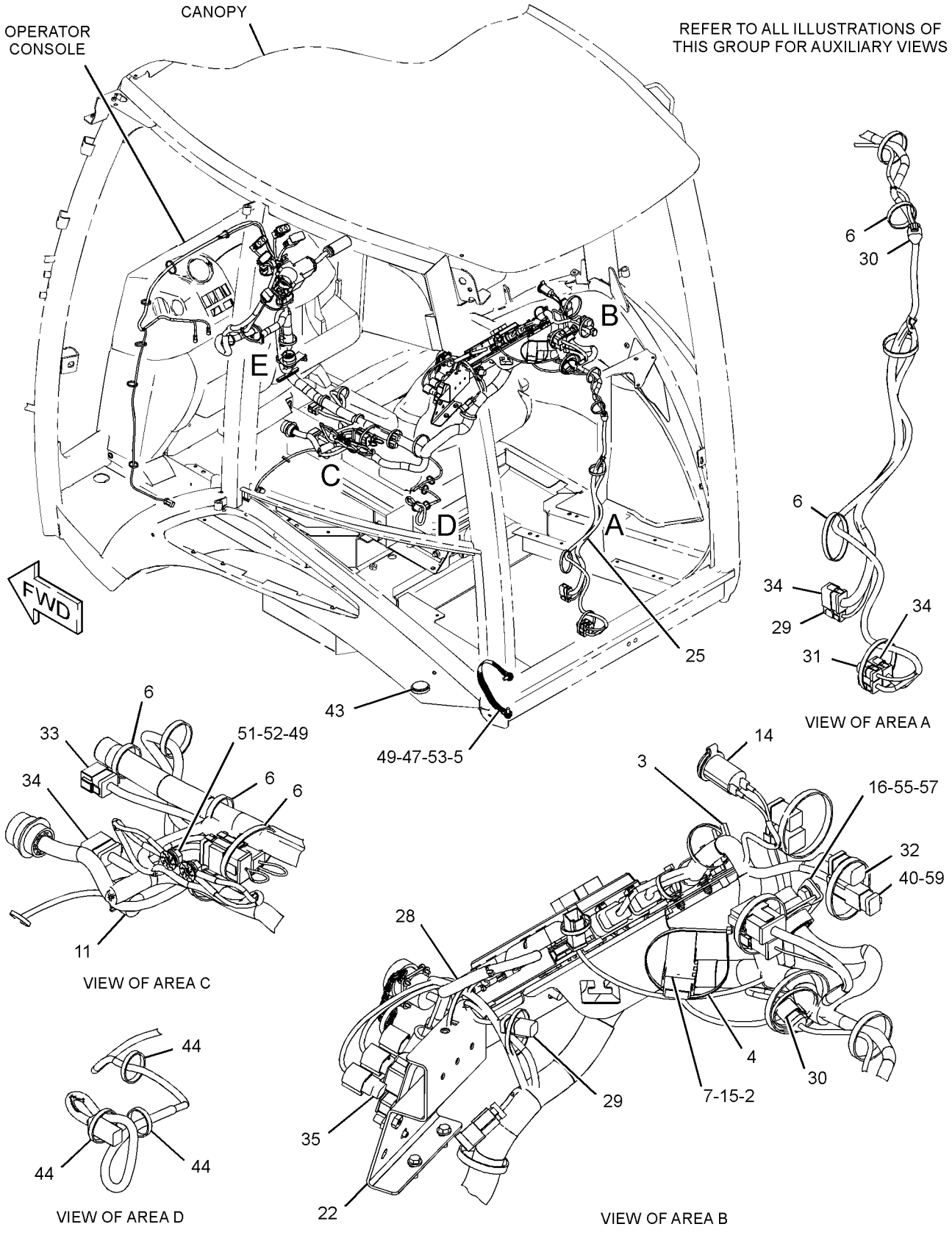

GRAPHIC #1 g01547555

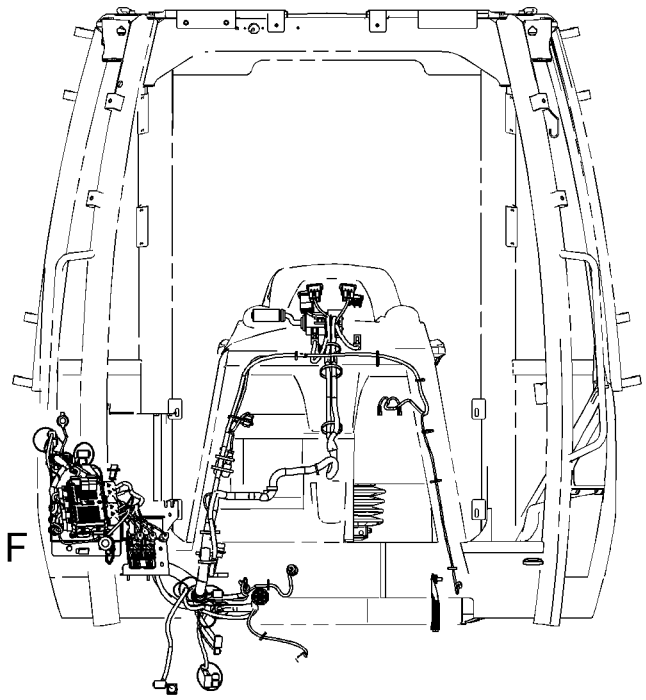

FRONT VIEW

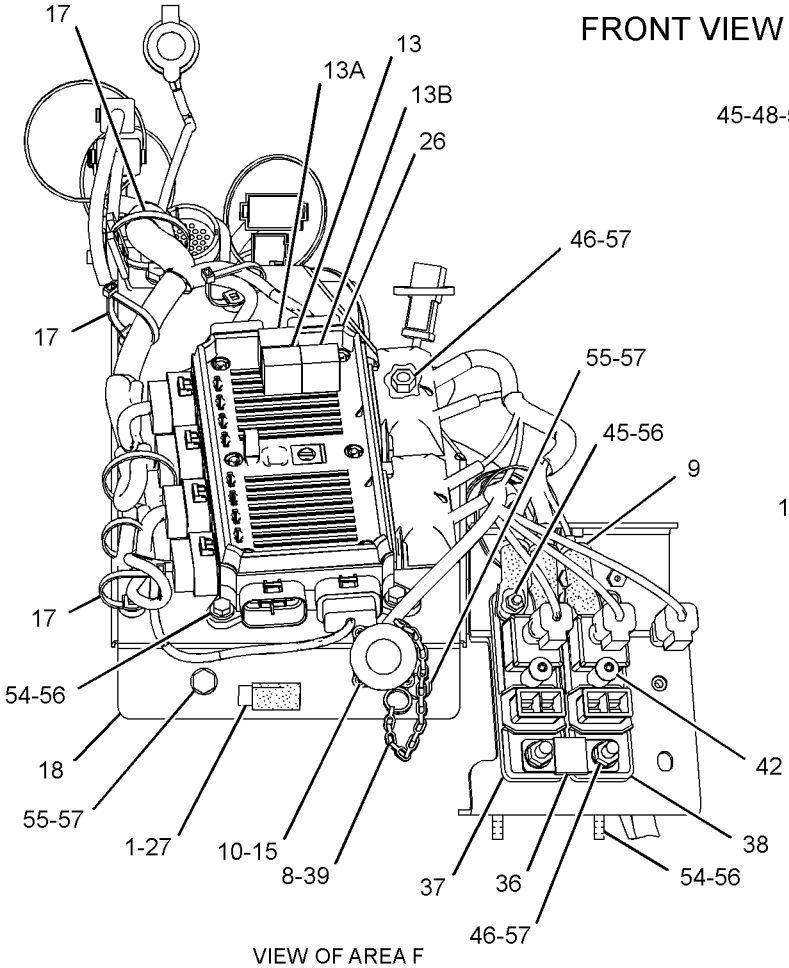

VIEW OF AREA F

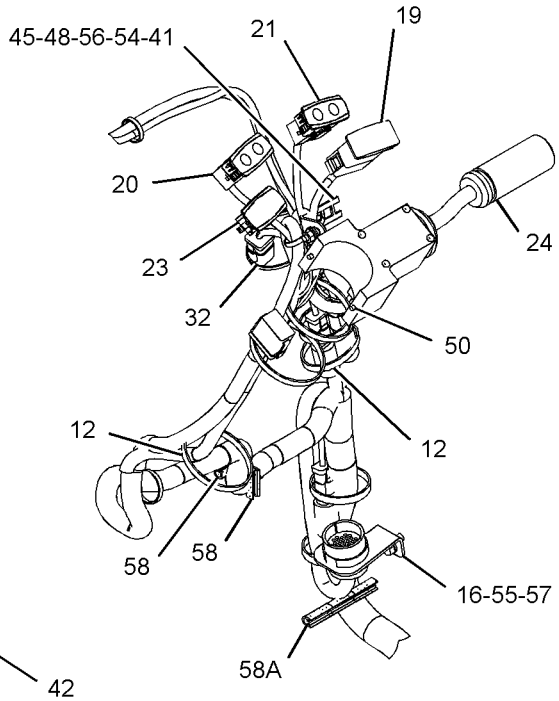

VIEW OF AREA E

GRAPHIC #2 **<END>** g01547558

ELECTRICAL AND STARTING SYSTEM

211-4242 WIRING GP-PLATFORM

S/N: CBD3740-UP; MFG1-UP

PART OF 204-4161, 204-4162, 228-4602 CAB AR-ENCLOSED ROPS, 204-4160, 204-4164, 292-9690, 292-9691 CANOPY AR-OPEN ROPS AN ATTACHMENT

SMCS-1408 **i03837397**

NOTE	REF NO	GRAPHIC REF	PART NUMBER	QTY	PART NAME 1 2 3 4 5 6 (PRODUCT LEVEL)	SEE PAGE
E	1	2	**103-2543**		SEAL (1-CM)	
	2	1	**6K-0806**	1	STRAP-CABLE	
	3	1	**132-1806**	1	STRAP AS-GROUND	
	4	1	**7K-1181**	30	STRAP-CABLE	
	5	1	**7T-4848**	1	FLASHER AS (12-VOLT)	
	6	2	**8T-8799**	3	BOOT	
	7	1	**100-5805**	1	CAP-RECEPTACLE	
	8	2	**146-9439**	1	RELAY AS (12-VOLT) (POSITION LAMP)	
	8A	2	**146-9439**	1	RELAY AS (12-VOLT) (HORN)	
	8B	2	**146-9439**	1	RELAY AS (12-VOLT) (BACKUP ALARM)	
	9	1	**178-7539**	1	RECEPTACLE AS (POWER SUPPLY)	
	10	1,2	**179-6401**	5	SCREW-PAN HEAD (6-32X0.5-IN)	
	11	2	**180-9900**	1	CAP AS	
		2	**5P-7958**	1	SLEEVE-CABLE SPLICE	
		2	**8C-6354**	1	CAP-RECEPTACLE	
		2	**179-9392**	1	LANYARD	
C	12	2	**189-3158**	3	SUPPRESSOR-ARC	
	13	1,2	**201-1024**	2	BRACKET	
	14	1,2	**206-1345**	3	STRAP-CABLE	
	15	2	**206-1718**	1	BRACKET AS	
	16	2	**214-4702**	1	SWITCH AS-ROCKER (HAZARD WARNING LIGHTS)	
		2	**111-7899**	1	GASKET	
	17	2	**214-4717**	1	INDICATOR AS (LH TURN SIGNAL, PARKING BRAKE)	
	18	2	**214-4723**	1	INDICATOR AS (RH TURN SIGNAL, HIGH BEAM)	
					(EACH INDICATOR AS INCLUDES)	
		2	**111-7899**	1	GASKET	
	19	1	**225-7970**	1	BRACKET AS	
	20	2	**227-1057**	1	PLUG-HOLE	
	21	2	**246-2671**	1	SWITCH AS-MULTIFUNCTION (HD LIGHT, TURN SIG, WDO WIPER)	
	22	1	**246-8030**	1	HARNESS AS-CAB	
		1	**110-0203**	10	CONNECTOR AS	
		1	**111-6795**	1	HOUSING-RELAY	
		1	**111-6816**	1	LOCK	
		1	**9W-0852**	3	PIN-CONNECTOR (14-GA TO 16-GA)	
		1	**155-2255**	6	KIT-CONNECTING PLUG (12-PIN)	
					(EACH INCLUDES PLUG AS, WEDGE & INTERFACE SEAL)	
		1	**7R-2751**	20	PLUG-CONNECTOR	
		1	**8T-8737**	65	PLUG-SEAL	
		1	**102-8802**	1	KIT-RECEPTACLE (2-PIN)	
		1	**102-8804**	3	KIT-RECEPTACLE (4-PIN)	
		1	**102-8801**	2	KIT-RECEPTACLE (12-PIN)	
		1	**102-8805**	1	KIT-RECEPTACLE (6-PIN)	
					(EACH RECEPTACLE KIT INCLUDES REEPTACLE AS & WEDGE)	
		1	**9X-4813**	1	RECEPTACLE AS-CONNECTOR (3-PIN)	
		1	**134-2540**	1	RESISTOR AS-CONNECTION (3-PIN)	
		1	**9W-1951**	1	RECEPTACLE-CONNECTOR (9-PIN)	
		1	**128-4123**	3	SEAL	
		1	**128-5016**	30	SEAL-CABLE	
		1	**7R-2750**	2	SEAL-CONNECTOR	
		1	**196-2412**	31	TERMINAL AS	
					(EACH INCLUDES)	

211-4242 **WIRING GP-PLATFORM** *(contd.)* **i03837397**

NOTE	REF NO	GRAPHIC REF	PART NUMBER	QTY	PART NAME 1 2 3 4 5 6 (PRODUCT LEVEL)	SEE PAGE
		1	**7R-2750**	1	SEAL-CONNECTOR	
		1	**9X-3402**	6	SOCKET-CONNECTOR (16-GA TO 18-GA)	
					-OR-	
		1	**126-1768**	6	SOCKET-CONNECTOR (14-GA TO 16-GA)	
		1	**9W-0844**	8	SOCKET-CONNECTOR (14-GA TO 16-GA)	
		1	**186-3736**	8	SOCKET-CONNECTOR (16-GA TO 18-GA)	
		1	**9W-0844**	4	SOCKET-CONNECTOR (14-GA TO 16-GA)	
		1	**3S-2093**	67	STRAP-CABLE	
B		1	**141-8061**		TAPE	
		1	**2L-8069**	2	TERMINAL-RING (2-GA TO 10-GA, 3/8-IN SCREW)	
		1	**2L-8077**	1	TERMINAL-RING (14-GA TO 16-GA, 1/4-IN SCREW)	
		1	**2L-8079**	2	TERMINAL-RING (14-GA TO 16-GA, 3/8-IN SCREW)	
		1	**7N-7221**	3	TERMINAL-BLADE (18-GA TO 22-GA)	
		1	**091-2436**	15	TERMINAL-BLADE (18-GA TO 22-GA)	
		1	**111-6792**	2	TERMINAL-RECEPTACLE (18-GA TO 20-GA)	
		1	**111-6793**	1	TERMINAL-RECEPTACLE	
E		1	**119-3662**		TUBE-HEAT SHRINK (10.85-MM DIA) (26-CM)	
E		1	**125-7874**		TUBE-HEAT SHRINK (5.72-MM DIA) (170-CM)	
E		1	**125-7875**		TUBE-HEAT SHRINK (7.44-MM DIA) (25-CM)	
Y	23	2	**247-8199**	1	PANEL GP-FUSE (INCLUDES RELAY)	268
	24	2	**267-2701**	1	FUSE (60-AMPERE)	
	25	2	**268-7759**	1	HARNESS AS-POWER	
		2	**3S-2093**	1	STRAP-CABLE	
		2	**2L-8067**	1	TERMINAL-RING (10-GA TO 12-GA, 1/4-IN SCREW)	
		2	**128-4178**	3	TERMINAL AS	
					(EACH INCLUDES)	
D		2	**5P-6006**		TUBE-HEAT SHRINK (9.52-MM DIA) (0.1-M)	
		2	**128-4168**	1	TERMINAL AS	
E		2	**6V-9023**		TUBE-HEAT SHRINK (12.7-MM DIA) (4-CM)	
		2	**152-5532**	2	TERMINAL AS	
					(EACH INCLUDES)	
D		2	**5P-6006**		TUBE-HEAT SHRINK (9.52-MM DIA) (0.1-M)	
	26	1	**274-3774**	2	CAP-CONNECTOR	
	27	1	**274-3775**	2	CAP-CONNECTOR	
	28	1	**274-3776**	1	CAP-SEAL	
	29	1,2	**274-3777**	2	CAP-CONNECTOR	
	30	1	**274-3778**	1	CAP-SEAL	
	31	1	**274-3779**	3	CAP-SEAL	
	32	1	**274-3780**	1	CAP-SEAL	
	33	2	**275-0553**	1	BAR-BUS	
Y	34	2	**276-7290**	1	RELAY GP (12-VOLT) (POWER, 1)	270
Y	35	2	**276-7291**	1	RELAY GP (12-VOLT) (POWER, 2)	271
	36	2	**096-6166**	8	WASHER-HARD (4.5X9X1-MM THK)	
	37	1	**155-2271**	1	KIT-CONNECTING PLUG (4-PIN)	
					(INCLUDES PLUG AS, WEDGE & INTERFACE SEAL)	
	38	2	**156-6175**	1	CLIP	
M	39	2	**8T-9534**	2	BOLT (M6X1X50-MM)	
	40	1	**1L-6377**	1	BUTTON-PLUG	
C	41	1	**3S-2093**	18	STRAP-CABLE	
	42	1	**4B-4863**	1	WASHER (4.7X11X1.2-MM THK)	
	43	1	**4P-8134**	1	CLIP	
M	44	2	**5C-2890**	4	NUT (M6X1-THD)	
M	45	2	**5C-7261**	6	NUT (M8X1.25-THD)	
	46	1	**7X-7729**	4	WASHER (11X25X3-MM THK)	
	47	2	**8C-3398**	1	LOCKWASHER	
	48	1	**8F-3590**	4	LOCKWASHER	
M	49	2	**8T-0352**	2	BOLT (M5X0.8X45-MM)	

211-4242 **WIRING GP-PLATFORM** *(contd.)* **i03837397**

NOTE	REF NO	GRAPHIC REF	PART NUMBER	QTY	PART NAME 1 2 3 4 5 6 (PRODUCT LEVEL)	SEE PAGE
	50	1	**8T-4121**	5	WASHER-HARD (11X21X2.5-MM THK)	
M	51	1	**8T-4133**	2	NUT (M10X1.5-THD)	
M	52	1	**8T-4136**	2	BOLT (M10X1.5X25-MM)	
M	53	1,2	**8T-4138**	7	BOLT (M6X1X20-MM)	
M	54	1,2	**8T-4200**	5	BOLT (M8X1.25X16-MM)	
	55	1,2	**8T-4205**	14	WASHER-HARD (7.2X14.5X2-MM THK)	
	56	1,2	**8T-4224**	11	WASHER-HARD (8.8X16X2-MM THK)	
C	57	2	**9F-5644**	4	LOCKWASHER	
CE	58	2	**3E-6600**		SEAL (3-CM EACH)	
CE	58A	2	**3E-6600**		SEAL (9-CM)	
	59	1	**8T-8737**	4	PLUG-SEAL	
M	60	1	**8T-4137**	1	BOLT (M10X1.5X20-MM)	
	61	1	**269-7680**	1	CLIP	

B-USE AS REQUIRED
C-CHANGE FROM PREVIOUS TYPE
D-ORDER BY THE METER
E-ORDER BY THE CENTIMETER
M-METRIC PART
Y-SEPARATE ILLUSTRATION

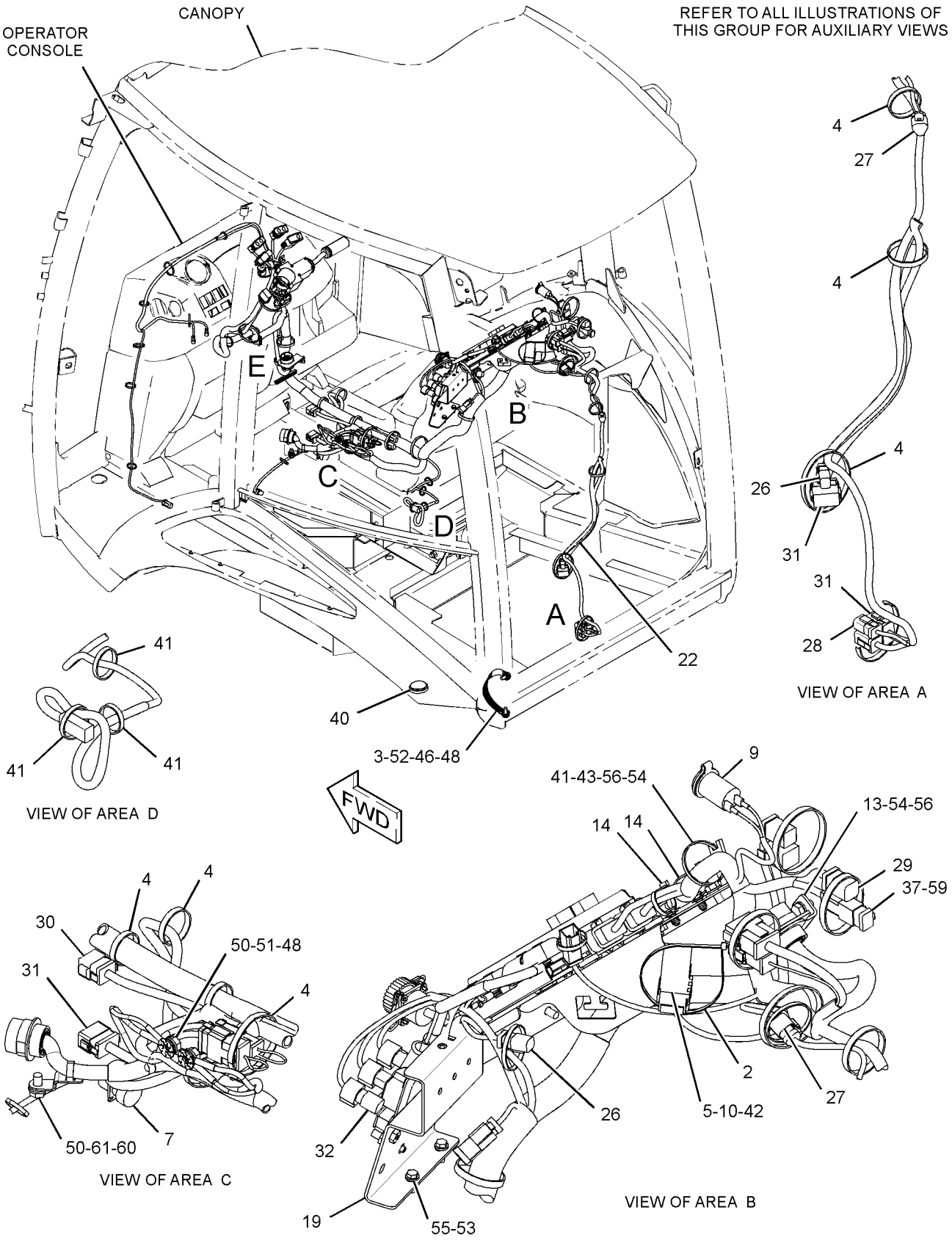

GRAPHIC #1 g01955498

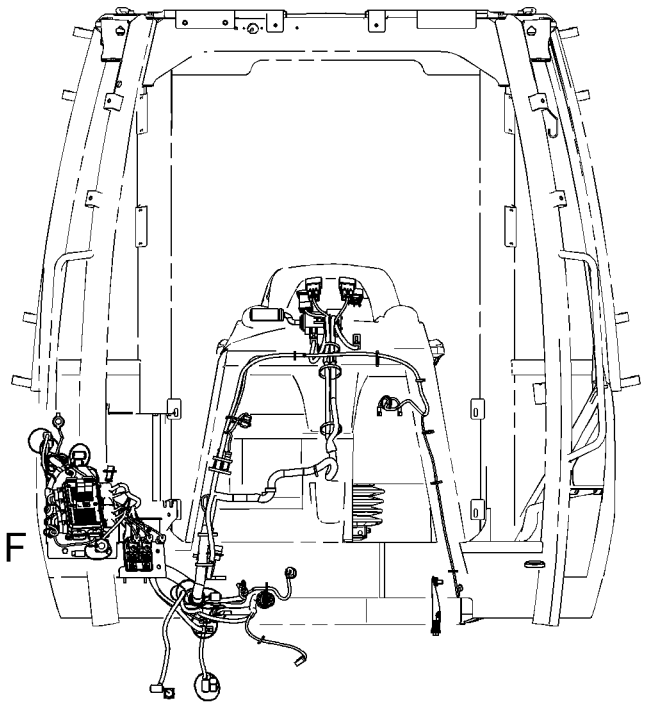

FRONT VIEW

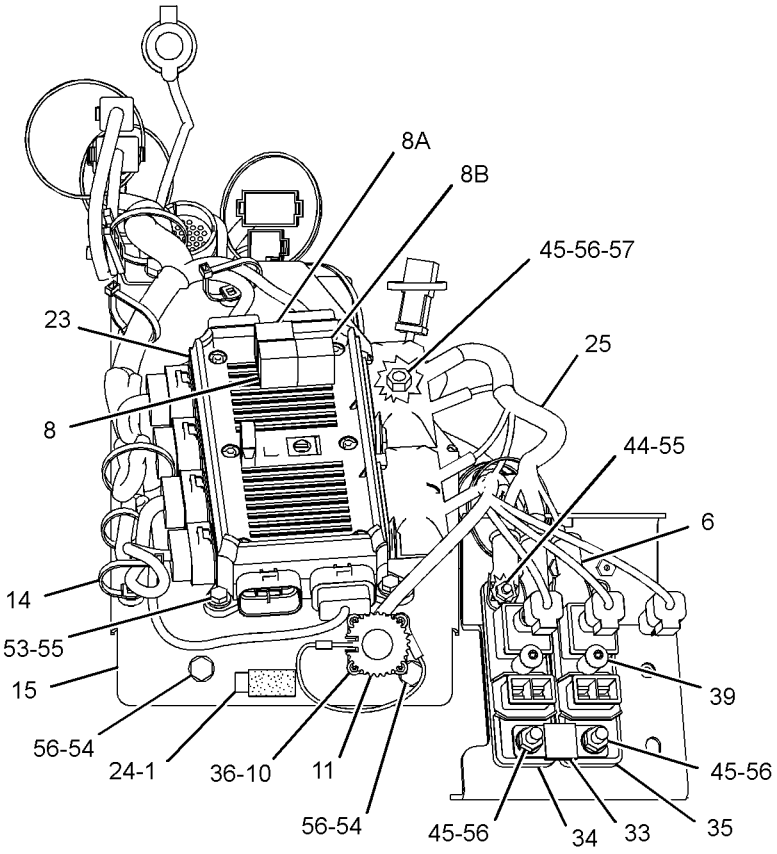

VIEW OF AREA F

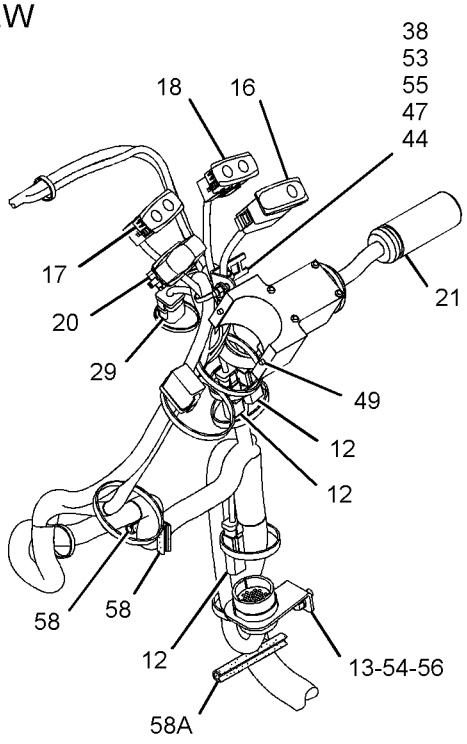

VIEW OF AREA E

GRAPHIC #2 **<END>** g01446143

290-6722 WIRING GP-PLATFORM

S/N: MFG1-UP

PART OF 291-9195 CAB AR-ENCLOSED ROPS

AN ATTACHMENT

SMCS-1408 **i03857270**

NOTE	REF NO	GRAPHIC REF	PART NUMBER	QTY	PART NAME 1 2 3 4 5 6 (PRODUCT LEVEL)	SEE PAGE
	1	2	**4I-3038**	8	WASHER (3.3X8X0.5-MM THK)	
	2	1,2	**7K-1181**	33	STRAP-CABLE	
	3	2	**7T-4848**	1	FLASHER AS (12-VOLT) (HAZARD)	
	4	2	**8T-8799**	4	BOOT	
	5	1	**132-1806**	1	STRAP AS-GROUND	
	6	2	**146-9439**	1	RELAY AS (12-VOLT) (HORN)	
	6A	2	**146-9439**	1	RELAY AS (12-VOLT) (POSITION LAMP)	
	6B	2	**146-9439**	1	RELAY AS (12-VOLT) (BACKUP ALARM)	
	6C	2	**146-9439**	1	RELAY AS (12-VOLT) (IMPLEMENT DISABLE)	
	7	1	**301-7292**	1	KIT-SERVICE METER	
					(INCLUDES FILM & METER)	
	8	1	**178-7539**	1	RECEPTACLE AS (POWER SUPPLY)	
	9	2	**179-6401**	4	SCREW-PAN HEAD (6-32X0.5-IN)	
	10	2	**180-9900**	1	CAP AS	
		2	**5P-7958**	1	SLEEVE-CABLE SPLICE	
		2	**8C-6354**	1	CAP-RECEPTACLE	
		2	**179-9392**	1	LANYARD	
	11	1	**201-1024**	1	BRACKET	
	12	2	**206-1345**	3	STRAP-CABLE	
	13	2	**206-1718**	1	BRACKET AS	
	14	1	**214-4702**	1	SWITCH AS-ROCKER (HAZARD WARNING LIGHTS)	
	15	1	**214-4716**	1	SWITCH AS-ROCKER (TRANSMISSION NEUTRAL LOCK)	
					(EACH SWITCH AS-ROCKER INCLUDES)	
		1	**111-7899**	1	GASKET	
	16	1	**214-4717**	1	INDICATOR AS (LH TURN SIGNAL, PARKING BRAKE)	
	17	1	**214-4723**	1	INDICATOR AS (RH TURN SIGNAL, HIGH BEAM)	
					(EACH INDICATOR AS INCLUDES)	
		1	**111-7899**	1	GASKET	
	18	1	**227-1057**	10	PLUG-HOLE	
	19	1	**246-2671**	1	SWITCH AS-MULTIFUNCTION (HD LIGHT, TURN SIG, WDO WIPER)	
Y	20	2	**247-8199**	1	PANEL GP-FUSE (INCLUDES RELAY)	268
	21	2	**267-2701**	1	FUSE (60-AMPERE)	
	22	2	**268-7759**	1	HARNESS AS-POWER (DISTRIBUTION)	
		2	**3S-2093**	1	STRAP-CABLE	
		2	**2L-8067**	1	TERMINAL-RING (10-GA TO 12-GA, 1/4-IN SCREW)	
		2	*128-4178*	3	TERMINAL AS	
					(EACH INCLUDES)	
		2	**2L-8068**	1	TERMINAL-RING (10-GA TO 12-GA, 5/16-IN SCREW)	
D		2	**5P-6006**		TUBE-HEAT SHRINK (9.52-MM DIA) (0.1-M)	
		2	*128-4168*	1	TERMINAL AS	
		2	**6H-3592**	1	TERMINAL-RING (6-GA TO 8-GA, 5/16-IN SCREW)	
E		2	**6V-9023**		TUBE-HEAT SHRINK (12.7-MM DIA) (4-CM)	
		2	*152-5532*	2	TERMINAL AS	
					(EACH INCLUDES)	
		2	**9X-9882**	1	TERMINAL-RING (6-GA TO 8-GA, 1/4-IN SCREW)	
D		2	**5P-6006**		TUBE-HEAT SHRINK (9.52-MM DIA) (0.1-M)	
	23	2	**275-0553**	1	BAR-BUS	
Y	24	2	**276-7290**	1	RELAY GP (12-VOLT) (POWER, 1)	270
	25	1	**290-6723**	1	HARNESS AS-PLATFORM	
		1	**274-3774**	1	CAP-CONNECTOR	
		1	**274-3775**	1	CAP-CONNECTOR	

290-6722 **WIRING GP-PLATFORM** ***(contd.)*** **i03857270**

NOTE	REF NO	GRAPHIC REF	PART NUMBER	QTY	PART NAME 1 2 3 4 5 6 (PRODUCT LEVEL)	SEE PAGE
		1	**274-3777**	1	CAP-CONNECTOR	
		1	**228-5856**	4	CONNECTOR	
		1	**211-0052**	2	NUT (1-11/16-18-THD)	
		1	**9X-3401**	23	PIN-CONNECTOR (16-GA TO 18-GA)	
		1	**274-3776**	1	CAP-SEAL	
		1	**274-3779**	2	CAP-SEAL	
		1	**274-3780**	1	CAP-SEAL	
		1	**100-5805**	1	CAP-RECEPTACLE	
		1	**110-0203**	10	CONNECTOR AS	
		1	**111-6795**	1	HOUSING-RELAY	
		1	**111-6816**	1	LOCK	
		1	**186-3735**	45	PIN-CONNECTOR (16-GA TO 18-GA)	
		1	**9W-0852**	2	PIN-CONNECTOR (14-GA TO 16-GA)	
		1	**155-2255**	5	KIT-CONNECTING PLUG (12-PIN)	
		1	**155-2270**	9	KIT-CONNECTING PLUG (2-PIN)	
		1	**155-2271**	2	KIT-CONNECTING PLUG (4-PIN)	
		1	**155-2265**	1	KIT-CONNECTING PLUG (8-PIN)	
		1	**155-2260**	2	KIT-CONNECTING PLUG (3-PIN)	
		1	**155-2274**	3	KIT-CONNECTING PLUG (6-PIN)	
					(EACH PLUG KIT INCLUDES PLUG AS, WEDGE & INTERFACE SEAL)	
		1	**196-2384**	1	KIT-CONNECTING PLUG (8-PIN)	
		1	**196-2385**	1	KIT-CONNECTING PLUG (8-PIN)	
		1	**196-2386**	1	KIT-CONNECTING PLUG (8-PIN)	
		1	**242-6114**	1	KIT-CONNECTING PLUG (8-PIN)	
		1	**242-6116**	1	KIT-CONNECTING PLUG (8-PIN)	
		1	**242-6118**	1	KIT-CONNECTING PLUG (8-PIN)	
		1	**242-6120**	1	KIT-CONNECTING PLUG (8-PIN)	
					(EACH PLUG KIT INCLUDES PLUG AS, TERMINAL AS & LOCK CONNECTOR)	
		1	**9X-1054**	3	PLUG AS-CONNECTOR (4-PIN)	
		1	**230-4011**	3	PLUG AS-CONNECTOR (2-PIN)	
					(EACH INCLUDES)	
		1	**264-7029**	1	SEAL-CONNECTOR	
		1	**7R-2751**	21	PLUG-CONNECTOR	
		1	**8T-8737**	54	PLUG-SEAL	
		1	**102-8802**	1	KIT-RECEPTACLE (2-PIN)	
		1	**102-8804**	1	KIT-RECEPTACLE (4-PIN)	
		1	**102-8801**	1	KIT-RECEPTACLE (12-PIN)	
		1	**102-8805**	1	KIT-RECEPTACLE (6-PIN)	
		1	**177-9645**	1	KIT-RECEPTACLE (2-PIN)	
					(EACH RECEPTACLE KIT INCLUDES RECEPTACLE AS & WEDGE)	
		1	**9X-4813**	1	RECEPTACLE AS-CONNECTOR (3-PIN)	
		1	**134-2540**	1	RESISTOR AS-CONNECTION (3-PIN)	
		1	**167-3692**	2	RECEPTACLE AS-CONNECTOR (31-PIN)	
		1	**9W-1951**	1	RECEPTACLE-CONNECTOR (9-PIN)	
		1	**128-4123**	4	SEAL	
		1	**128-5016**	31	SEAL-CABLE	
		1	**196-2412**	31	TERMINAL AS	
					(EACH INCLUDES)	
		1	**7R-2750**	1	SEAL-CONNECTOR	
		1	**9X-3402**	6	SOCKET-CONNECTOR (16-GA TO 18-GA)	
		1	**180-9340**	29	SOCKET-CONNECTOR (14-GA TO 18-GA)	
		1	**186-3736**	51	SOCKET-CONNECTOR (16-GA TO 18-GA)	
		1	**9W-0844**	4	SOCKET-CONNECTOR (14-GA TO 16-GA)	
		1	**196-2413**	4	TERMINAL AS	
					(EACH INCLUDES)	
		1	**128-4123**	1	SEAL	
		1	**8T-8730**	8	SOCKET-CONNECTOR (16-GA TO 18-GA)	

290-6722 **WIRING GP-PLATFORM** *(contd.)* **i03857270**

NOTE	REF NO	GRAPHIC REF	PART NUMBER	QTY	PART NAME 1 2 3 4 5 6 (PRODUCT LEVEL)	SEE PAGE
		1	**3S-2093**	8	STRAP-CABLE	
		1	**189-3158**	3	SUPPRESSOR-ARC	
B		1	**141-8061**		TAPE	
		1	**2L-8067**	2	TERMINAL-RING (10-GA TO 12-GA, 1/4-IN SCREW)	
		1	**2L-8069**	2	TERMINAL-RING (2-GA TO 10-GA, 3/8-IN SCREW)	
		1	**2L-8077**	1	TERMINAL-RING (14-GA TO 16-GA, 1/4-IN SCREW)	
		1	**2L-8079**	2	TERMINAL-RING (14-GA TO 16-GA, 3/8-IN SCREW)	
		1	**7N-7221**	6	TERMINAL-BLADE (18-GA TO 22-GA)	
		1	**091-2436**	34	TERMINAL-BLADE (18-GA TO 22-GA)	
		1	**104-1995**	1	TERMINAL-BLADE (14-GA TO 18-GA)	
		1	**9X-1055**	6	TERMINAL-RECEPTACLE (12-GA)	
		1	**100-5041**	6	TERMINAL-RECEPTACLE (18-GA TO 20-GA)	
		1	**111-6792**	2	TERMINAL-RECEPTACLE (18-GA TO 20-GA)	
		1	**111-6793**	1	TERMINAL-RECEPTACLE	
E		1	**119-3662**		TUBE-HEAT SHRINK (10.85-MM DIA) (26-CM)	
E		1	**125-7874**		TUBE-HEAT SHRINK (5.72-MM DIA) (135-CM)	
E		1	**125-7875**		TUBE-HEAT SHRINK (7.44-MM DIA) (20-CM)	
		1	**310-0674**	2	LOCKWASHER	
	26	1	**298-0663**	1	CLIP	
	27	2	**290-6739**	1	BRACKET AS	
Y	28	2	**311-7567**	1	RELAY GP (12-VOLT) (POWER, 1)	272
	29	1	**324-9745**	1	FILM-IDENTIFICATION (FUSE, RELAY)	
	30	2	**115-1615**	3	RELAY AS (12-VOLT) (START)	
M	31	2	**138-8454**	1	SCREW-TRUSS HEAD (M4X0.7X10-MM)	
	32	1,2	**156-6175**	2	CLIP	
M	33	2	**8T-9534**	2	BOLT (M6X1X50-MM)	
	34	1	**1L-6377**	1	BUTTON-PLUG	
	35	1,2	**3S-2093**	22	STRAP-CABLE	
	36	2	**4B-4863**	1	WASHER (4.7X11X1.2-MM THK)	
	37	2	**4P-7581**	1	CLIP	
	38	2	**4P-8134**	1	CLIP	
M	39	1,2	**5C-2890**	5	NUT (M6X1-THD)	
M	40	2	**5C-7261**	6	NUT (M8X1.25-THD)	
M	41	2	**5C-9553**	4	BOLT (M6X1X16-MM)	
	42	1	**7X-7729**	4	WASHER (11X25X3-MM THK)	
	43	1,2	**8C-3398**	5	LOCKWASHER	
	44	1	**8F-3590**	4	LOCKWASHER	
M	45	1	**8T-0352**	2	BOLT (M5X0.8X45-MM)	
	46	1,2	**8T-4121**	6	WASHER-HARD (11X21X2.5-MM THK)	
M	47	1	**8T-4133**	2	NUT (M10X1.5-THD)	
M	48	1,2	**8T-4137**	2	BOLT (M10X1.5X20-MM)	
M	49	1,2	**8T-4138**	7	BOLT (M6X1X20-MM)	
M	50	1	**8T-4195**	2	BOLT (M10X1.5X30-MM)	
M	51	1,2	**8T-4200**	4	BOLT (M8X1.25X16-MM)	
	52	1,2	**8T-4205**	19	WASHER-HARD (7.2X14.5X2-MM THK)	
	53	1,2	**8T-4224**	10	WASHER-HARD (8.8X16X2-MM THK)	
	54	2	**9F-5644**	4	LOCKWASHER	
D	55	1	**5P-7070**		INSULATION-STRIP (0.1-M)	
D	55A	1,2	**5P-7070**		INSULATION-STRIP (0.05-M EACH)	
E	56	2	**103-2543**		SEAL (1-CM)	

B-USE AS REQUIRED
D-ORDER BY THE METER
E-ORDER BY THE CENTIMETER
M-METRIC PART
Y-SEPARATE ILLUSTRATION

290-6722 **WIRING GP-PLATFORM** *(contd.)* **i03857270**

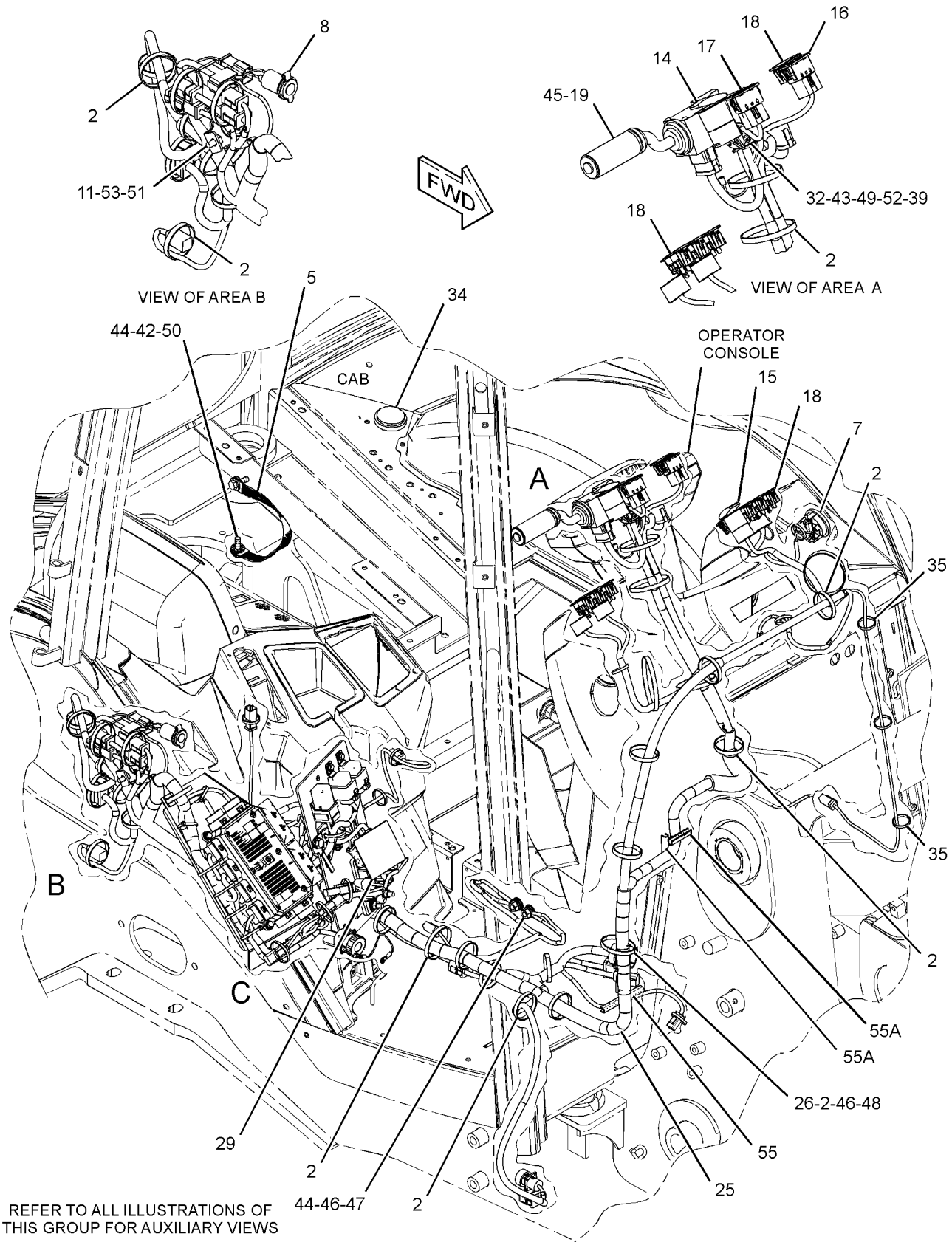

REFER TO ALL ILLUSTRATIONS OF THIS GROUP FOR AUXILIARY VIEWS

GRAPHIC #1 g02025335

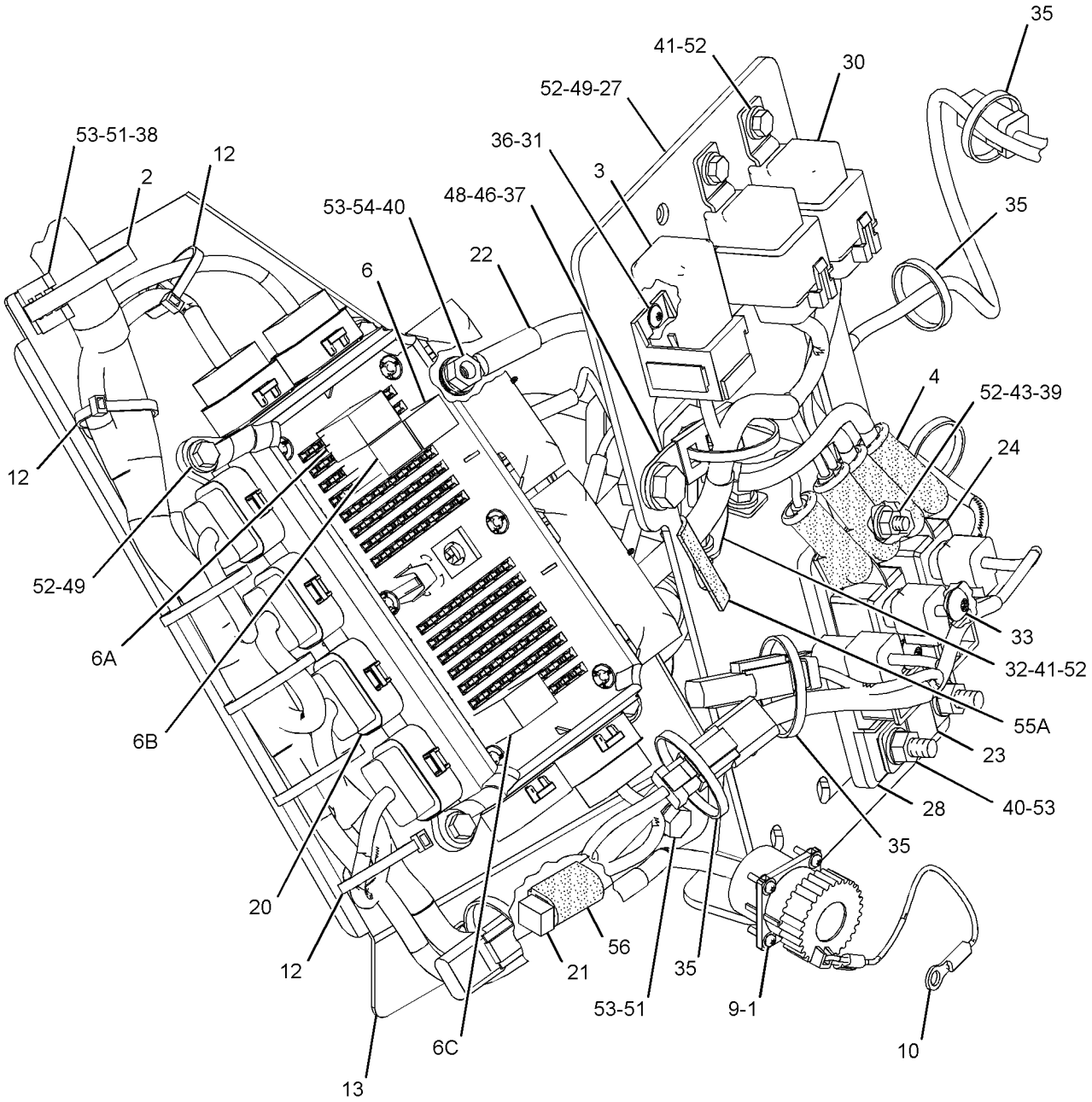

VIEW OF AREA C

GRAPHIC #2 **<END>** g02025336

211-4283 WIRING GP-REAR–BACKUP ALARM

S/N: CBD1-UP; MFG1-UP

PART OF 213-9284, 291-9190, 372-5176 CHASSIS AR

SMCS-1408 **i03879911**

NOTE	REF NO	GRAPHIC REF	PART NUMBER	QTY	PART NAME 1 2 3 4 5 6 (PRODUCT LEVEL)	SEE PAGE
	1	1	**3S-2093**	4	STRAP-CABLE	
	2	1	**9U-2277**	1	CLIP AS	
	3	1	**154-5428**	1	ALARM AS (BACKUP)	
D		1	**5P-5623**		WIRE-ELECTRICAL (16-GA, BLACK) (0.2-M EACH)	
		1	**102-8802**	1	KIT-RECEPTACLE (2-PIN)	
					(INCLUDES RECEPTACLE AS & WEDGE)	
		1	**8T-8729**	2	PIN-CONNECTOR (16-GA TO 18-GA)	
	4	1	**213-6043**	1	HARNESS AS-REAR (BACKUP ALARM)	
		1	**9X-3401**	4	PIN-CONNECTOR (16-GA TO 18-GA)	
		1	**155-2270**	1	KIT-CONNECTING PLUG (2-PIN)	
					(INCLUDES PLUG AS, WEDGE & INTERFACE SEAL)	
		1	**8T-8737**	2	PLUG-SEAL	
		1	**102-8805**	1	KIT-RECEPTACLE (6-PIN)	
					(INCLUDES RECEPTACLE AS & WEDGE)	
		1	**180-9340**	2	SOCKET-CONNECTOR (14-GA TO 18-GA)	
M	5	1	**111-4627**	2	SCREW-MACHINE (M6X1X30-MM)	
M	6	1	**5C-2890**	1	NUT (M6X1-THD)	
	7	1	**9X-6165**	1	WASHER (6.5X22X2.5-MM THK)	

D-ORDER BY THE METER
M-METRIC PART

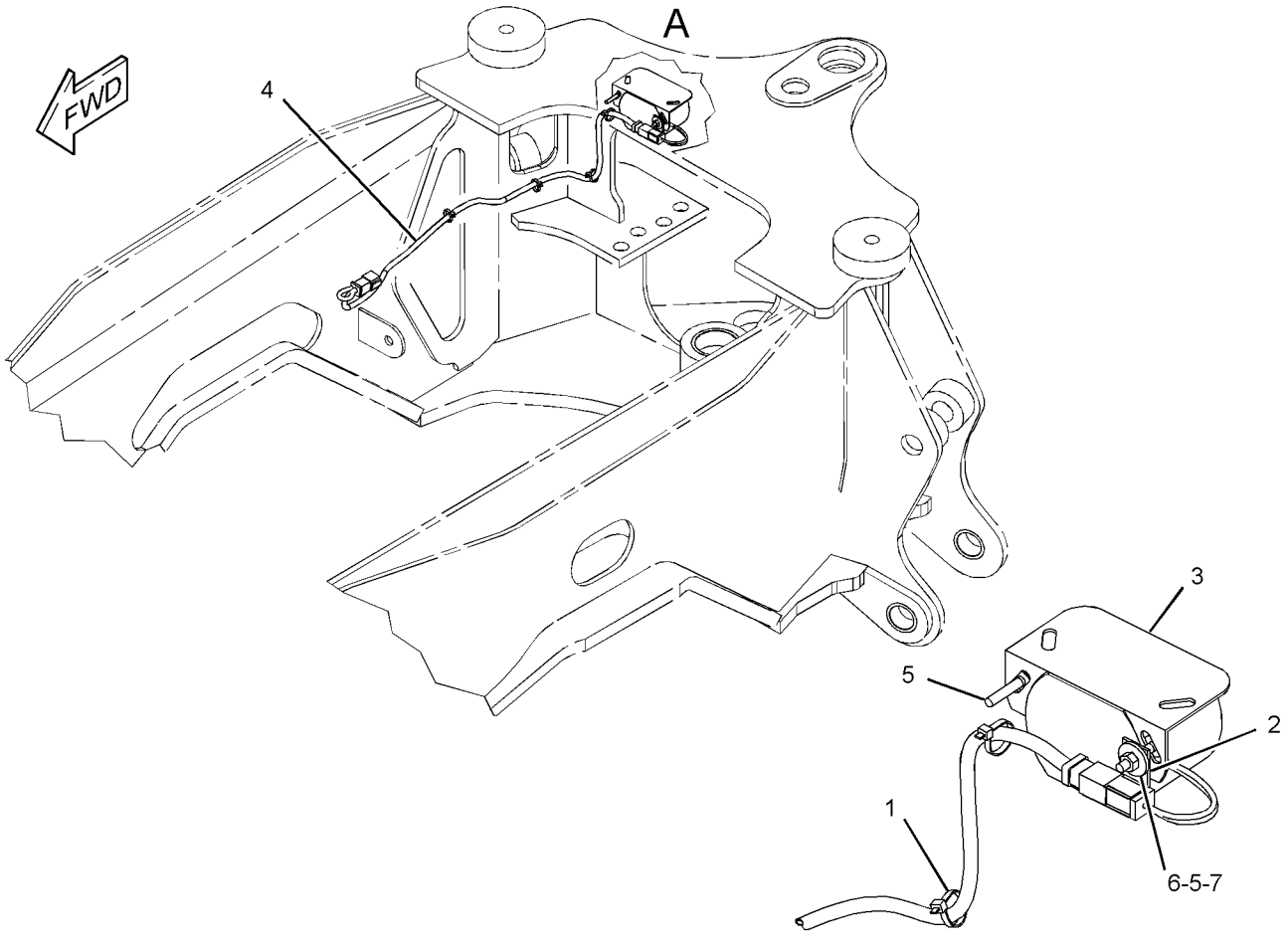

VIEW OF AREA A

GRAPHIC #1 **<END>** g01183295

211-4264 WIRING GP-RIDE CONTROL

S/N: CBD1-UP; MFG1-UP
PART OF 220-9179 CONTROL AR-RIDE
AN ATTACHMENT

SMCS-1408 **i02763502**

NOTE	REF NO	GRAPHIC REF	PART NUMBER	QTY	PART NAME 1 2 3 4 5 6 (PRODUCT LEVEL)	SEE PAGE
	1	1	**3J-1907**	1	SEAL-O-RING	
	2	1	**106-8704**	1	SUPPRESSOR AS-ARC	
	3	1	**146-9439**	1	RELAY AS (12-VOLT)	
	4	1	**246-8038**	1	HARNESS AS-RIDE CONTROL	
	5	1	**213-6085**	1	HARNESS AS-RIDE CONTROL	
	6	1	**214-4719**	1	SWITCH AS-ROCKER (RIDE CONTROL)	
	7	1	**304-5696**	1	SWITCH AS-PRESSURE (RIDE CONTROL)	
		1	**102-8803**	1	KIT-RECEPTACLE (3-PIN)	
					(INCLUDES RECEPTACLE AS & WEDGE)	
		1	**186-3735**	3	PIN-CONNECTOR (16-GA TO 18-GA)	
	8	1	**3S-2093**	4	STRAP-CABLE	
	9	1	**4P-7581**	1	CLIP	

211-4264 **WIRING GP-RIDE CONTROL** *(contd.)* **i02763502**

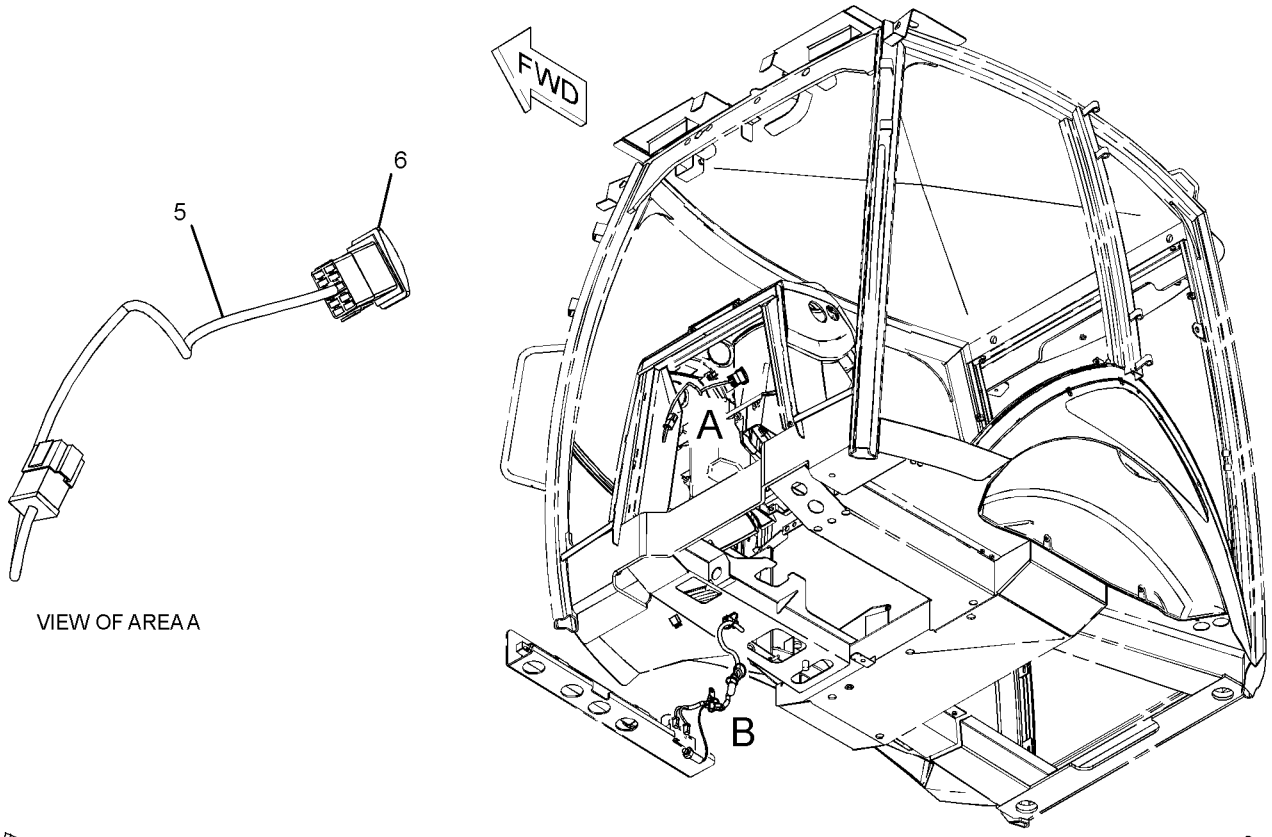

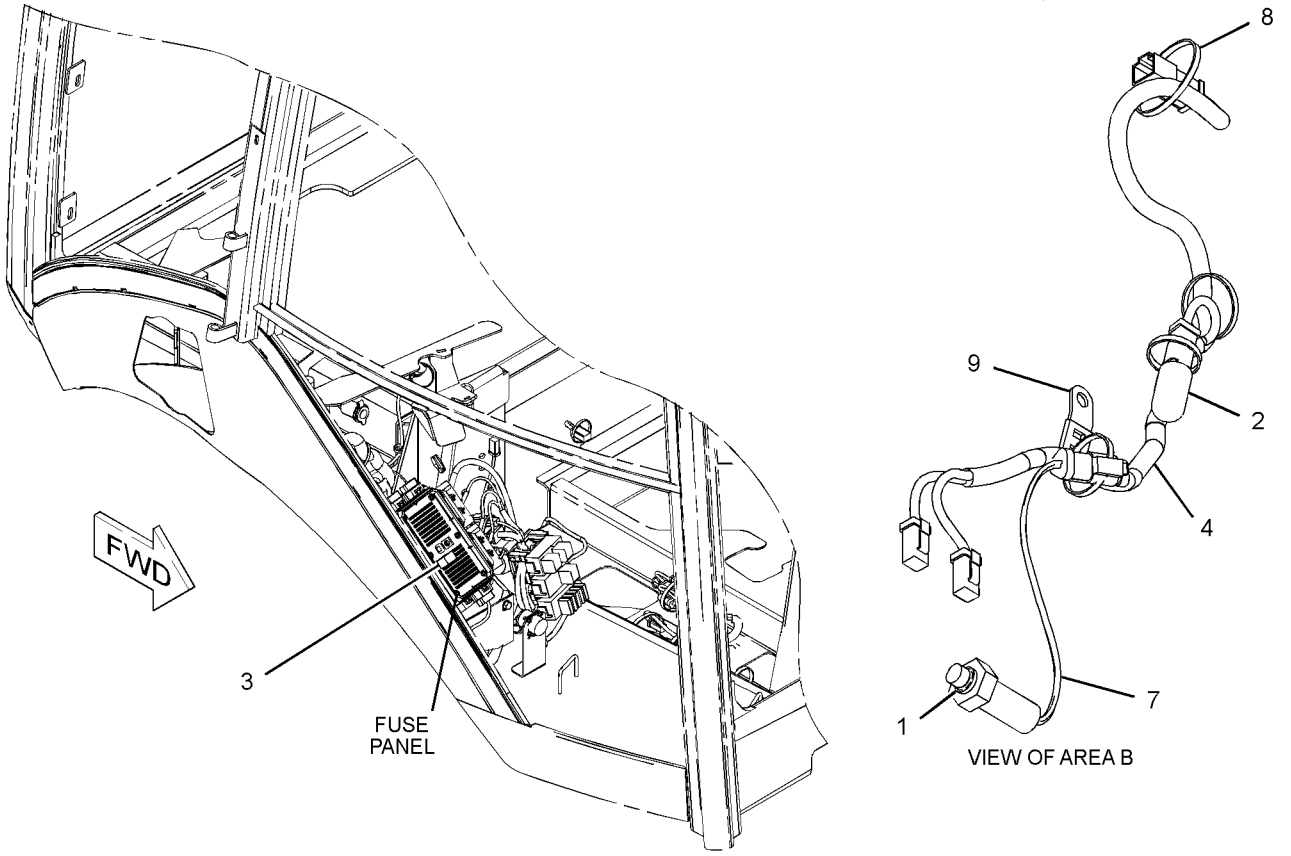

GRAPHIC #1 **<END>** g01173098

230-5743 AXLE GP-DRIVE & STEERING—FRONT

S/N: CBD1-UP; MFG1-UP
PART OF 220-9183 DRIVE AR-BACKHOE LOADER
AN ATTACHMENT

SMCS-3020, 3250, 3258, 3259, 3260, 3264, 3278, 4050, 4303, 4313

i03630816

NOTE	REF NO	GRAPHIC REF	PART NUMBER	QTY	PART NAME 1 2 3 4 5 6 (PRODUCT LEVEL)	SEE PAGE
M	1	1	**8C-7505**	4	SCREW-FLAT HEAD (M8X1.25X20-MM)	
	2	1	**290-4164**	6	BOLT (M20X1.5X80-MM)	
	3	1	**207-4258**	2	NUT (M20X1.5-THD)	
	4	1	**219-8798**	2	SEAL-LIP TYPE	
	5	1	**219-8795**	1	CAP	
	6	1	**209-9875**	2	DOWEL	
	7	1	**209-7456**	2	BUSHING	
	8	1	**152-6144**	4	PLUG AS-DRAIN (MAGNETIC) (DIFFERENTIAL)	
					(EACH INCLUDES)	
		1	**6V-6228**	1	SEAL-O-RING	
	9	1	**208-0321**	11	BOLT-FLANGE HEAD (M12X1.75X33-MM)	
	10	1	**209-7464**	2	SEAL	
M	11	1	**199-0683**	16	BOLT (M16X2X38-MM)	
	12	1	**210-5937**	2	WASHER (46X66X3-MM THK)	
Y	13	1	**209-9882**	1	DIFFERENTIAL & BEVEL GEAR GP	363
	14	1	**210-5942**	2	RING	
	15	1	**209-9883**	1	HOUSING	
J	16	1	**210-5946**	2	SHAFT GP-AXLE	
					(EACH INCLUDES)	
		1	**174-4671**	1	YOKE	
	17	1	**209-9886**	2	TIE ROD GP	
					(EACH INCLUDES)	
		1	**204-3080**	1	BALL JOINT	
		1	**217-2883**	1	TIE ROD	
		1	**243-5026**	1	NUT-SPECIAL	
	18	1	**209-9887**	1	BUSHING	
	19	1	**210-5947**	2	WASHER-THRUST (44.6X58X7-MM THK)	
	20	1	*216-7473*	4	PIN AS (UPPER)	
					(EACH INCLUDES)	
		1	**198-7823**	1	BEARING AS	
		1	**198-7825**	1	SEAL	
		1	**198-7838**	1	PIN	
Y	21	1	**210-5924**	2	PLANETARY GP-FINAL DRIVE	386
Y	22	1	**209-9884**	1	HOUSING & FLANGE GP-AXLE (RH)	377
Y	23	1	**209-9885**	1	HOUSING & FLANGE GP-AXLE (LH)	379
	24	1	**1H-8278**	2	SEAL-O-RING	
L	25	1	**214-5097**	1	CYLINDER GP-STEERING	
		1	**238-5254**	1	ROD	
		1	**238-5255**	2	CYLINDER HEAD	
	26	1	**253-5024**	1	BREATHER (FRONT AXLE)	
	27	1	**1U-8846**		SEALANT-GASKET	
	28	1	**154-5404**	2	BEARING	
B	29	1	**198-7841**	8	SHIM (0.15-MM THK)	
B	30	1	**198-7842**	4	SHIM (0.2-MM THK)	
B	31	1	**198-7843**	4	SHIM (0.5-MM THK)	
	32	1	**5P-2931**	1	SEAL-O-RING	
					AVAILABLE REPAIR KIT(S):	
J			**174-4643**	2	KIT-SPIDER (AXLE)	
					(INCLUDES SPIDER & RINGS)	
L			**215-2023**	1	KIT-SEAL (STEERING CYLINDER)	
					(INCLUDES RINGS, SEALS, WIPERS & WASHERS)	

230-5743 AXLE GP-DRIVE & STEERING *(contd.)* i03630816

B-USE AS REQUIRED
J-KIT MARKED J SERVICES PART(S) MARKED J
L-KIT MARKED L SERVICES PART(S) MARKED L
M-METRIC PART
Y-SEPARATE ILLUSTRATION

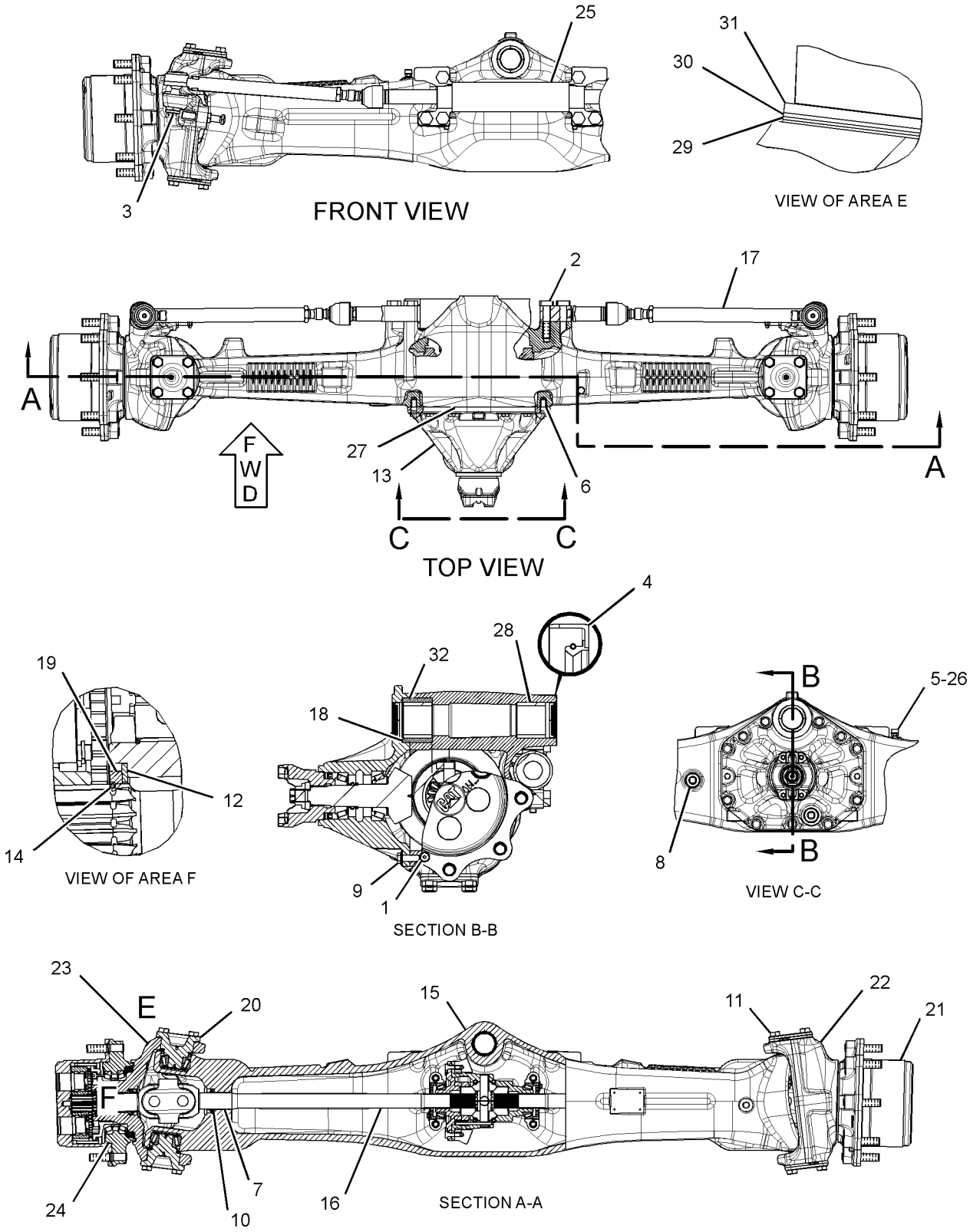

GRAPHIC #1 **<END>** g01772293

POWER TRAIN

230-5739 AXLE GP-REAR

S/N: CBD1-UP; MFG1-UP
PART OF 220-9182, 220-9183 DRIVE AR-BACKHOE LOADER
AN ATTACHMENT

SMCS-3278, 3282 **i04412877**

NOTE	REF NO	GRAPHIC REF	PART NUMBER	QTY	PART NAME 1 2 3 4 5 6 (PRODUCT LEVEL)	SEE PAGE
M	1	2	**8C-7505**	4	SCREW-FLAT HEAD (M8X1.25X20-MM)	
M	2	2	**6V-3940**	2	BOLT (M8X1.25X25-MM)	
	3	2	**199-0652**	2	CLIP-PIN	
	4	2	**9X-6378**	2	RING-RETAINING	
	5	2	**210-3098**	2	SEAL	
	6	2	**199-0668**	2	BUSHING	
	7	1	**197-9155**	1	BREATHER (AXLE, REAR)	
	9	1	**198-7811**	2	DOWEL	
	10	2	**152-6144**	4	PLUG AS-DRAIN (MAGNETIC) (AXLE,REAR)	
					(EACH INCLUDES)	
		2	**6V-6228**	1	SEAL-O-RING	
	11	2	**199-0676**	2	SPRING	
M	12	2	**199-0679**	2	BOLT (M16X2X95-MM)	
	13	2	**210-3099**	2	SLEEVE	
	14	2	**210-3100**	2	BUSHING	
	15	2	**199-0706**	1	PISTON	
	18	2	**210-7305**	2	SHAFT	
	19	1	**210-3106**	1	BRACKET	
	20	1	**212-5713**	2	PLUG AS	
					(EACH INCLUDES)	
		1	**033-6041**	1	SEAL-O-RING	
	21	2	*216-1608*	2	GEAR GP-RING (REAR AXLE)	
					(EACH INCLUDES)	
		2	**199-0778**	1	RING-SNAP	
		2	**210-7302**	1	GEAR-RING (81-TEETH)	
		2	**226-4364**	1	HUB	
Y	22	2	*216-1609*	2	FLANGE GP-WHEEL	375
Y	23	2	**216-1610**	2	PLANETARY GP-FINAL DRIVE (AXLE)	387
	24	2	**217-2914**	1	COVER (DIFFERENTIAL LOCK)	
	25	2	**231-0699**	1	COVER (DIFFERENTIAL LOCK)	
	26	2	**219-8839**	1	ROD	
	27	2	**174-4647**	1	BUSHING	
	28	2	**174-4650**	1	SPACER (20X32X8-MM THK)	
	29	1	**231-0698**	2	SHAFT-AXLE	
	30	2	**226-4366**	2	NUT-SPANNER	
	31	2	**226-4365**	2	WASHER-TAB	
	32	2	**226-4367**	2	SPACER (110X123X22.99-MM THK)	
	33	2	**226-4370**	6	BOLT-SELF-LOCKING	
	36	1	**238-5293**	1	HOUSING-AXLE (LH)	
	37	1	**238-5294**	1	HOUSING-AXLE (RH)	
Y	38	1	*238-5289*	1	HOUSING GP-AXLE (REAR)	381
	39	2	**4F-9029**	2	SEAL	
	40	2	**9X-7684**	2	SEAL-O-RING	
	41	2	**5H-4909**	2	SEAL-O-RING	
M	42	2	**8T-0292**	2	BOLT (M8X1.25X90-MM)	
	43	2	**130-7282**	1	BRACKET	
M	44	1	**7X-2559**	26	BOLT (M16X2X160-MM)	
B	47	1	**1U-8846**		SEALANT-GASKET	
JLN	48	1,2	**259-0127**	1	BRAKE GP-MECH CALIPER PARKING	
		1,2	**1B-4430**	1	NUT-JAM (1/2-20-THD)	
		1,2	**7X-3374**	1	NUT-FULL (1/2-20-THD)	
	49	2	**4L-6454**	2	BOLT (3/8-16X1-IN)	
	50	1	**219-8795**	1	CAP	
	51	2	*316-1926*	2	DISC AS-BRAKE	
					(EACH INCLUDES)	

230-5739 AXLE GP-REAR *(contd.)* i04412877

NOTE	REF NO	GRAPHIC REF	PART NUMBER	QTY	PART NAME 1 2 3 4 5 6 (PRODUCT LEVEL)	SEE PAGE
		2	**199-0786**	4	PLATE	
		2	**199-0787**	3	PIN	
		2	**238-5291**	3	DISC-BRAKE	
		2	**238-5292**	1	HUB-BRAKE	
	52	2	*162-0177*	1	PLUG AS	
		2	**3J-1907**	1	SEAL-O-RING	
		2	**9S-8004**	1	PLUG-O-RING	
					AVAILABLE REPAIR KIT(S):	
J			**259-0129**	1	KIT-BRAKE CALIPER	
					(INCLUDES SLEEVE KIT, SLEEVE PROTECTORS, LINING AS, THRUST BEARING, BOOT, SPRING, BOLT, O-RINGS, NUT, WASHERS & SPACER)	
L			**259-0128**	1	KIT-BRAKE LINING	
					(INCLUDES LINING AS & SPRING)	
N			**166-9413**	1	KIT-CAM (COUNTERCLOCKWISE)	
					(INCLUDES CAMS, BALL BEARINGS & BALL RETAINER)	

B-USE AS REQUIRED
J-KITS MARKED J SERVICES PARTS MARKED J
L-KITS MARKED L SERVICES PARTS MARKED L
M-METRIC PART
N-KITS MARKED N SERVICES PARTS MARKED N
Y-SEPARATE ILLUSTRATION

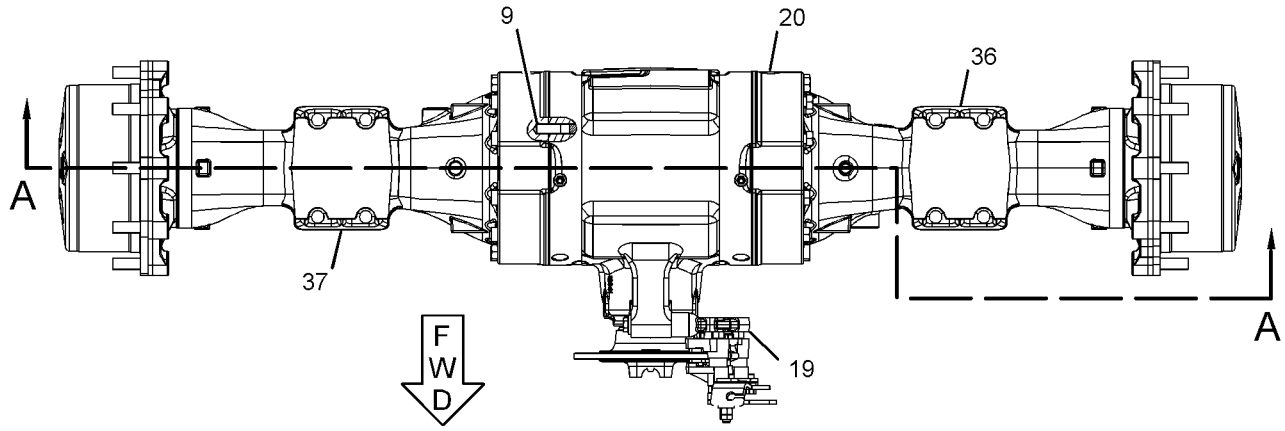

TOP VIEW

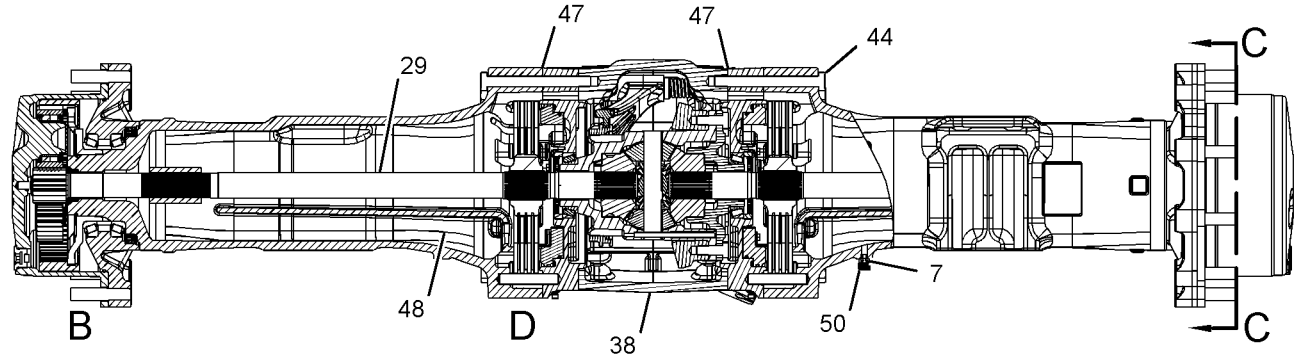

SECTION A-A

REFER TO ALL ILLUSTRATIONS OF THIS GROUP FOR AUXILIARY VIEWS

GRAPHIC #1

g02712851

230-5739 AXLE GP-REAR *(contd.)* i04412877

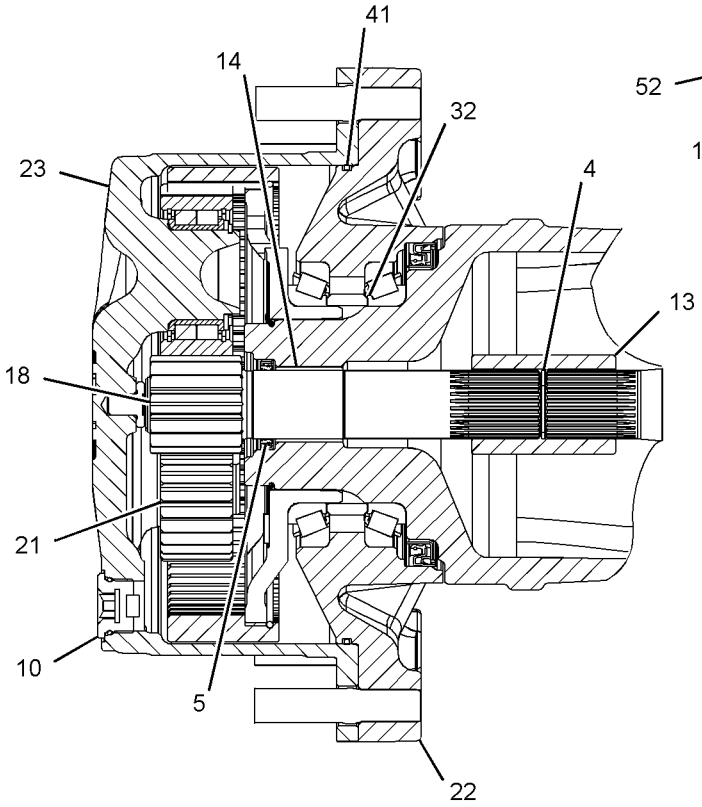

VIEW OF AREA B

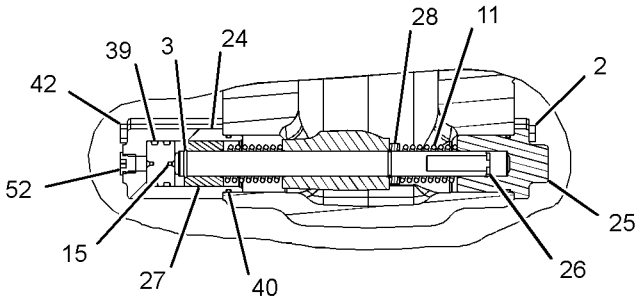

SECTION E-E

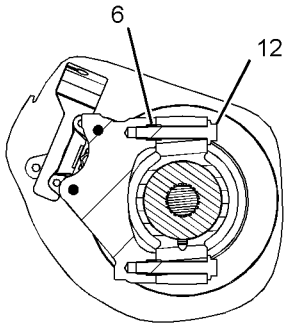

SECTION F-F

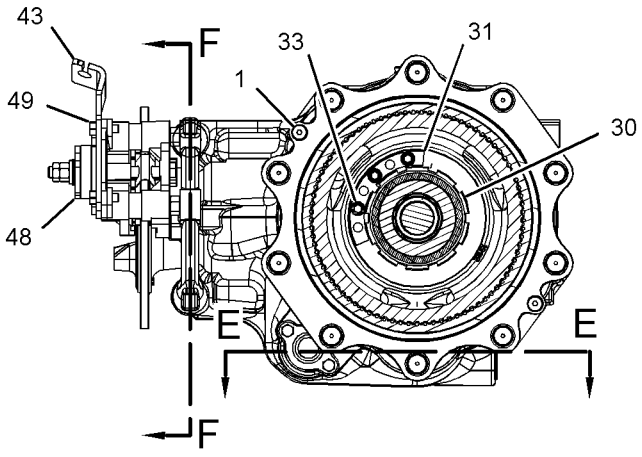

SECTION C-C

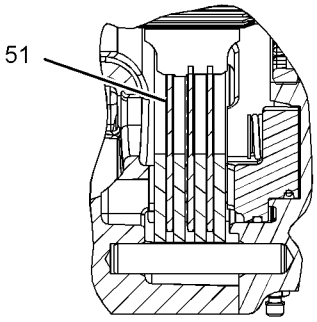

VIEW OF AREA D

GRAPHIC #2 **<END>** g02712852

275-0467 CASE AS-TRANSMISSION–REAR

S/N: CBD1-7188

PART OF 271-2408 TRANSMISSION GP-DIRECT DRIVE

AN ATTACHMENT

SMCS-3030, 3064 **i03994089**

NOTE	REF NO	GRAPHIC REF	PART NUMBER	QTY	PART NAME 1 2 3 4 5 6 (PRODUCT LEVEL)	SEE PAGE
	1	1	**123-8906**	1	CUP-TAPERED ROLLER	
B	2	1	**6T-9144**	1	SHIM (0.051-MM THK)	
B	3	1	**6T-9147**	1	SHIM (0.076-MM THK)	
B	4	1	**6T-9146**	1	SHIM (0.127-MM THK)	
B	5	1	**6T-9145**	1	SHIM (0.178-MM THK)	
B	6	1	**6T-9143**	1	SHIM (0.381-MM THK)	
B	7	1	**6T-9142**	1	SHIM (0.508-MM THK)	
	8	1	**7T-3034**	1	SPACER (56.9X64.5X1.98-MM)	
	9	1	**7T-2646**	2	SPACER (66X79.5X2.02-MM THK)	
B	10	1	**6T-9166**	2	SHIM (0.051-MM THK)	
B	11	1	**6T-9165**	2	SHIM (0.076-MM THK)	
B	12	1	**6T-9164**	2	SHIM (0.178-MM THK)	
B	13	1	**6T-9163**	2	SHIM (0.599-MM THK)	
B	14	1	**121-7399**	1	SHIM (0.05-MM THK)	
B	15	1	**121-7400**	1	SHIM (0.08-MM THK)	
B	16	1	**121-7401**	1	SHIM (0.18-MM THK)	
B	17	1	**121-7402**	1	SHIM (0.6-MM THK)	
	18	1	**121-7398**	1	SPACER (70X79.5X2-MM THK)	
	19	1	**005-0469**	1	CUP-BEARING	
	20	1	**123-8908**	2	CUP-TAPERED ROLLER	
	21	1	**123-8910**	1	CUP-TAPERED ROLLER	
	22	1	**274-8630**	1	CASE-REAR	
	23	1	**122-1879**	1	SPACER (58X67.5X2-MM THK)	
B	24	1	**104-3288**	1	SHIM (0.05-MM THK)	
B	25	1	**121-2059**	1	SHIM (0.08-MM THK)	
B	26	1	**121-2060**	1	SHIM (0.18-MM THK)	
B	27	1	**121-2061**	1	SHIM (0.6-MM THK)	
	28	1	**222-9824**	1	PLUG	
	29	1	**205-9163**	1	WASHER (16X22X3-MM THK)	

B-USE AS REQUIRED

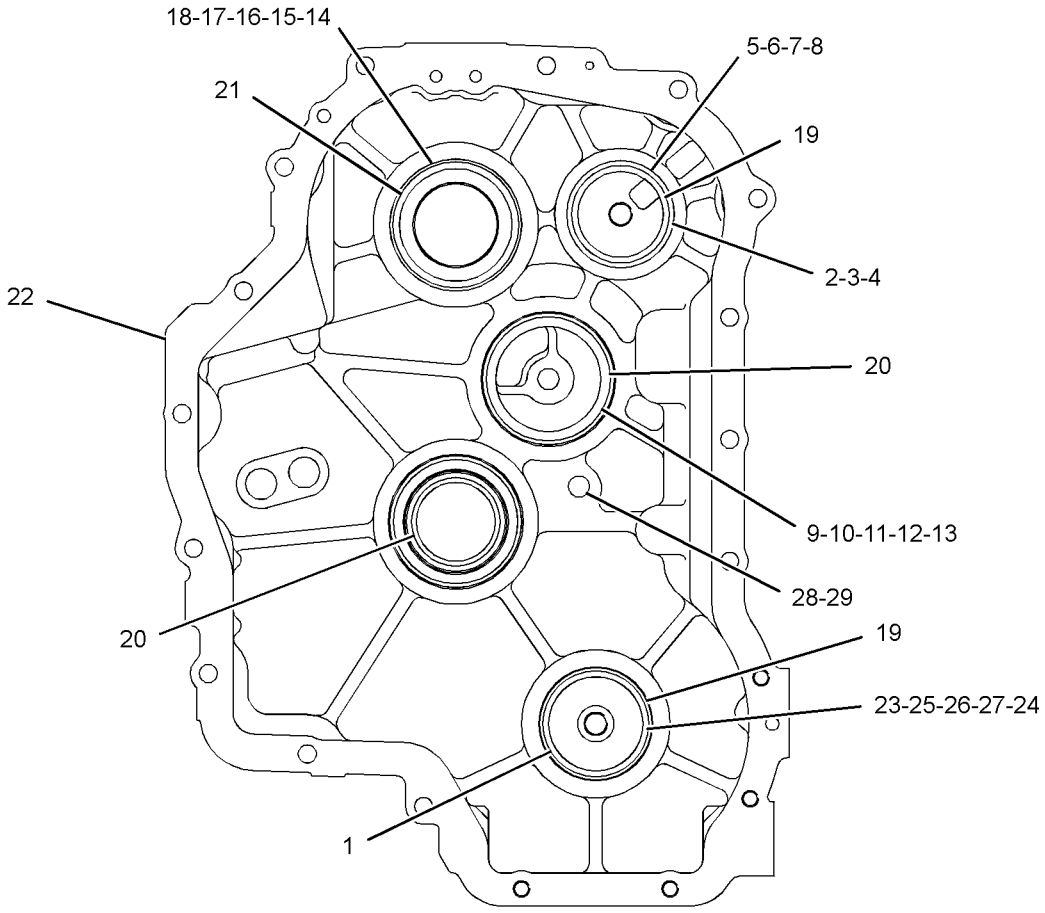

REAR VIEW

GRAPHIC #1 **<END>** g02173509

275-0468 CASE AS-TRANSMISSION–FRONT

S/N: CBD7189-UP; MFG1-UP
PART OF 294-9815 TRANSMISSION GP-DIRECT DRIVE
AN ATTACHMENT

SMCS-3030, 3064 **i02520334**

NOTE	REF NO	GRAPHIC REF	PART NUMBER	QTY	PART NAME 1 2 3 4 5 6 (PRODUCT LEVEL)	SEE PAGE
	1	1	**120-9762**	4	SEAL-O-RING	
M	2	1	**6V-8210**	2	BOLT (M8X1.25X16-MM)	
	3	1	**7T-2651**	1	STRAINER-SUCTION (SUCTION)	
	4	1	**106-9861**	1	PLATE-COVER	
	5	1	**7T-3051**	1	PLUG	
	6	1	**005-0469**	1	CUP-BEARING	
	7	1	**8T-1580**	1	CUP	
	8	1	**6Y-2737**	1	CUP-BEARING	
	9	1	**123-8906**	2	CUP-TAPERED ROLLER	
	10	1	**9W-5460**	1	RING	
	11	1	**4F-7952**	1	SEAL-O-RING	
	12	1	**275-0469**	1	CASE AS-FRONT	
	13	1	**7T-3253**	2	DOWEL	

M-METRIC PART

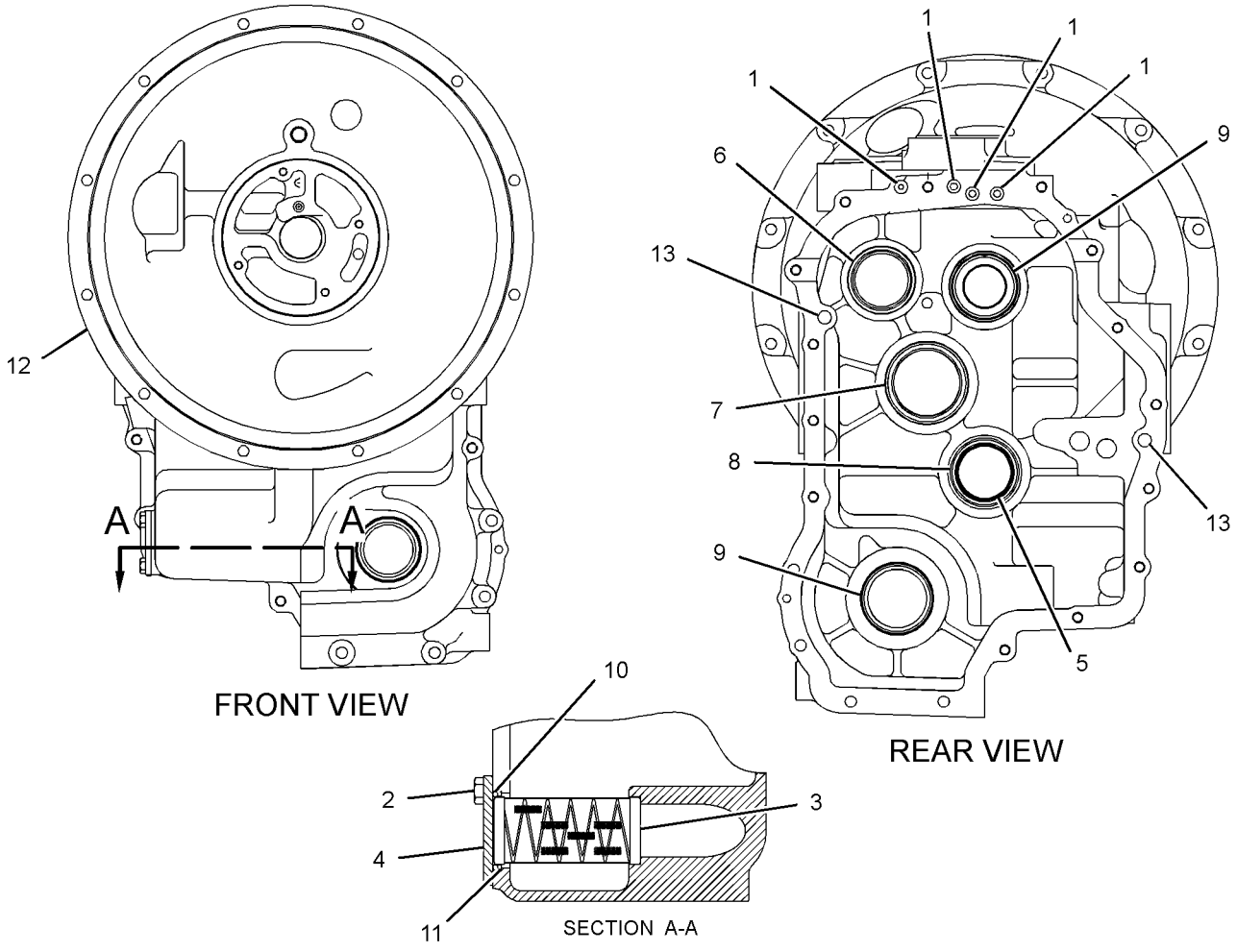

GRAPHIC #1 **<END>** g01220674

275-0470 CASE AS-TRANSMISSION–REAR

S/N: CBD7189-UP; MFG1-UP
PART OF 294-9815 TRANSMISSION GP-DIRECT DRIVE
AN ATTACHMENT

SMCS-3030, 3064 **i04041114**

NOTE	REF NO	GRAPHIC REF	PART NUMBER	QTY	PART NAME 1 2 3 4 5 6 (PRODUCT LEVEL)	SEE PAGE
	1	1	**123-8906**	1	CUP-TAPERED ROLLER	
B	2	1	**6T-9144**	1	SHIM (0.051-MM THK)	
B	3	1	**6T-9147**	1	SHIM (0.076-MM THK)	
B	4	1	**6T-9146**	1	SHIM (0.127-MM THK)	
B	5	1	**6T-9145**	1	SHIM (0.178-MM THK)	
B	6	1	**6T-9143**	1	SHIM (0.381-MM THK)	
B	7	1	**6T-9142**	1	SHIM (0.508-MM THK)	
	8	1	**7T-3034**	1	SPACER (56.9X64.5X1.98-MM)	
	9	1	**7T-2646**	2	SPACER (66X79.5X2.02-MM THK)	
B	10	1	**6T-9166**	2	SHIM (0.051-MM THK)	
B	11	1	**6T-9165**	2	SHIM (0.076-MM THK)	
B	12	1	**6T-9164**	2	SHIM (0.178-MM THK)	
B	13	1	**6T-9163**	2	SHIM (0.599-MM THK)	
B	14	1	**121-7399**	1	SHIM (0.05-MM THK)	
B	15	1	**121-7400**	1	SHIM (0.08-MM THK)	
B	16	1	**121-7401**	1	SHIM (0.18-MM THK)	
B	17	1	**121-7402**	1	SHIM (0.6-MM THK)	
	18	1	**121-7398**	1	SPACER (70X79.5X2-MM THK)	
	19	1	**005-0469**	1	CUP-BEARING	
	20	1	**123-8908**	2	CUP-TAPERED ROLLER	
	21	1	**123-8910**	1	CUP-TAPERED ROLLER	
	22	1	**274-8630**	1	CASE-REAR	
	23	1	**122-1879**	1	SPACER (58X67.5X2-MM THK)	
B	24	1	**104-3288**	1	SHIM (0.05-MM THK)	
B	25	1	**121-2059**	1	SHIM (0.08-MM THK)	
B	26	1	**121-2060**	1	SHIM (0.18-MM THK)	
B	27	1	**121-2061**	1	SHIM (0.6-MM THK)	

B-USE AS REQUIRED

275-0470 CASE AS-TRANSMISSION *(contd.)* **i04041114**

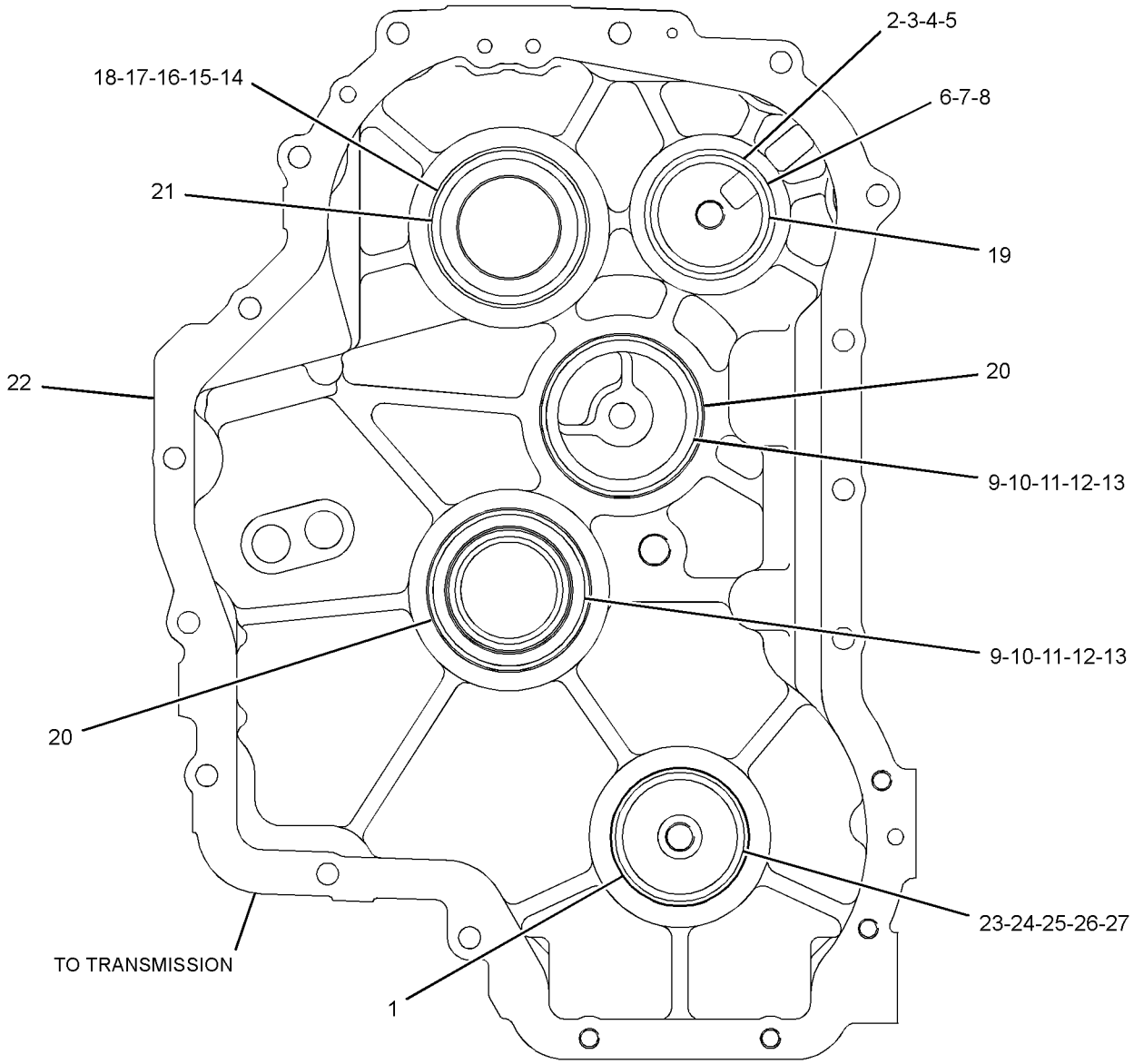

FRONT VIEW

GRAPHIC #1 **<END>** g01448510

275-0473 CASE AS-TRANSMISSION–REAR

S/N: CBD1-7133
PART OF 271-2407 TRANSMISSION GP-DIRECT DRIVE
AN ATTACHMENT

SMCS-3030, 3064 **i02520336**

NOTE	REF NO	GRAPHIC REF	PART NUMBER	QTY	PART NAME 1 2 3 4 5 6 (PRODUCT LEVEL)	SEE PAGE
	1	1	**274-8631**	1	CASE-REAR (2WD)	
B	2	1	**6T-9144**	1	SHIM (0.051-MM THK)	
B	3	1	**6T-9147**	1	SHIM (0.076-MM THK)	
B	4	1	**6T-9146**	1	SHIM (0.127-MM THK)	
B	5	1	**6T-9145**	1	SHIM (0.178-MM THK)	
B	6	1	**6T-9143**	1	SHIM (0.381-MM THK)	
B	7	1	**6T-9142**	1	SHIM (0.508-MM THK)	
	8	1	**7T-3034**	1	SPACER (56.9X64.5X1.98-MM)	
	9	1	**7T-2646**	2	SPACER (66X79.5X2.02-MM THK)	
B	10	1	**6T-9166**	2	SHIM (0.051-MM THK)	
B	11	1	**6T-9165**	2	SHIM (0.076-MM THK)	
B	12	1	**6T-9164**	2	SHIM (0.178-MM THK)	
B	13	1	**6T-9163**	2	SHIM (0.599-MM THK)	
B	14	1	**121-7399**	1	SHIM (0.05-MM THK)	
B	15	1	**121-7400**	1	SHIM (0.08-MM THK)	
B	16	1	**121-7401**	1	SHIM (0.18-MM THK)	
B	17	1	**121-7402**	1	SHIM (0.6-MM THK)	
	18	1	**121-7398**	1	SPACER (70X79.5X2-MM THK)	
	19	1	**005-0469**	1	CUP-BEARING	
	20	1	**123-8908**	2	CUP-TAPERED ROLLER	
	21	1	**123-8910**	1	CUP-TAPERED ROLLER	

B-USE AS REQUIRED

275-0473 **CASE AS-TRANSMISSION** *(contd.)* **i02520336**

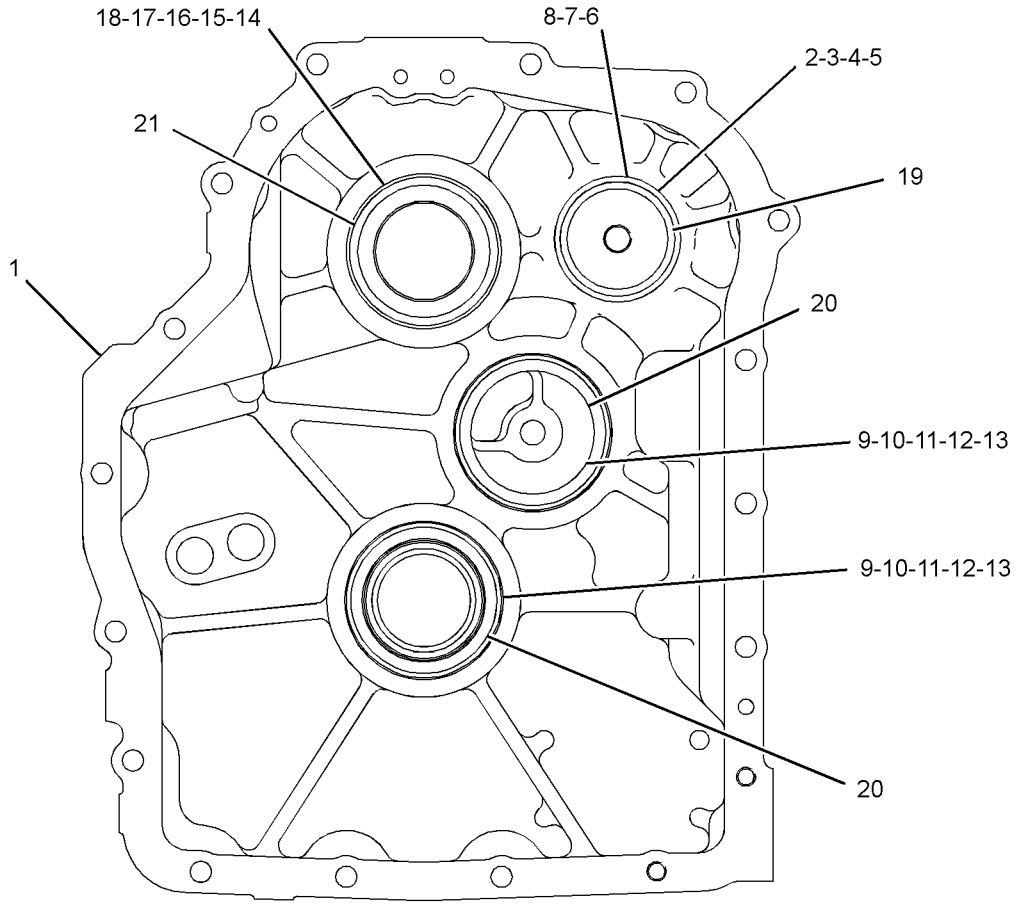

REAR VIEW

GRAPHIC #1 **<END>** g01220681

275-0472 CASE GP-TRANSMISSION–FRONT

S/N: CBD1-UP; MFG1-UP
PART OF 271-2407, 294-9814 TRANSMISSION GP-DIRECT DRIVE
AN ATTACHMENT

SMCS-3030, 3064 **i02520335**

NOTE	REF NO	GRAPHIC REF	PART NUMBER	QTY	PART NAME 1 2 3 4 5 6 (PRODUCT LEVEL)	SEE PAGE
M	1	1	**6V-8210**	2	BOLT (M8X1.25X16-MM)	
	2	1	**7T-2651**	1	STRAINER-SUCTION (SUCTION)	
	3	1	**106-9861**	1	PLATE-COVER	
	4	1	**7T-3051**	1	PLUG	
	5	1	**005-0469**	1	CUP-BEARING	
	6	1	**8T-1580**	1	CUP (TAPERED ROLLER)	
	7	1	**6Y-2737**	1	CUP-BEARING	
	8	1	**123-8906**	1	CUP-TAPERED ROLLER	
	9	1	**9W-5460**	1	RING	
	10	1	**4F-7952**	1	SEAL-O-RING	
	11	1	**275-0471**	1	CASE AS-FRONT	
	12	1	**7T-3253**	2	DOWEL	
	13	1	**120-9762**	3	SEAL-O-RING	

M-METRIC PART

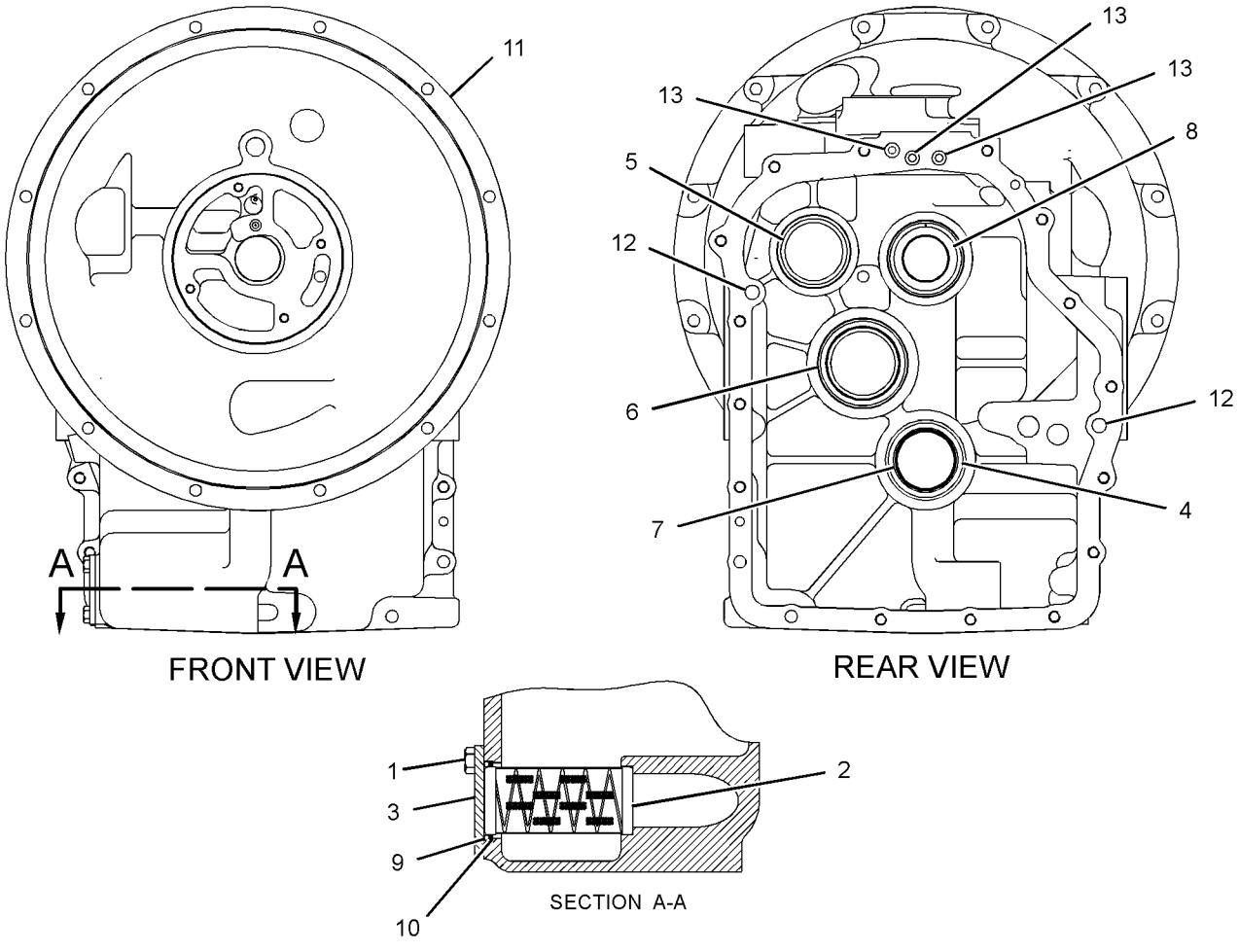

GRAPHIC #1 **<END>** g01220682

275-0474 CASE GP-TRANSMISSION–REAR

S/N: CBD7134-UP; MFG1-UP
PART OF 294-9814 TRANSMISSION GP-DIRECT DRIVE
AN ATTACHMENT

SMCS-3030, 3064 **i04035773**

NOTE	REF NO	GRAPHIC REF	PART NUMBER	QTY	PART NAME 1 2 3 4 5 6 (PRODUCT LEVEL)	SEE PAGE
	1	1	**274-8632**	1	CASE-REAR	
B	2	1	**6T-9144**	1	SHIM (0.051-MM THK)	
B	3	1	**6T-9147**	1	SHIM (0.076-MM THK)	
B	4	1	**6T-9146**	1	SHIM (0.127-MM THK)	
B	5	1	**6T-9145**	1	SHIM (0.178-MM THK)	
B	6	1	**6T-9143**	1	SHIM (0.381-MM THK)	
B	7	1	**6T-9142**	1	SHIM (0.508-MM THK)	
	8	1	**7T-3034**	1	SPACER (56.9X64.5X1.98-MM)	
	9	1	**7T-2646**	2	SPACER (66X79.5X2.02-MM THK)	
B	10	1	**6T-9166**	2	SHIM (0.051-MM THK)	
B	11	1	**6T-9165**	2	SHIM (0.076-MM THK)	
B	12	1	**6T-9164**	2	SHIM (0.178-MM THK)	
B	13	1	**6T-9163**	2	SHIM (0.599-MM THK)	
B	14	1	**121-7399**	1	SHIM (0.05-MM THK)	
B	15	1	**121-7400**	1	SHIM (0.08-MM THK)	
B	16	1	**121-7401**	1	SHIM (0.18-MM THK)	
B	17	1	**121-7402**	1	SHIM (0.6-MM THK)	
	18	1	**121-7398**	1	SPACER (70X79.5X2-MM THK)	
	19	1	**005-0469**	1	CUP-BEARING	
	20	1	**123-8908**	2	CUP-TAPERED ROLLER	
	21	1	**123-8910**	1	CUP-TAPERED ROLLER	

B-USE AS REQUIRED

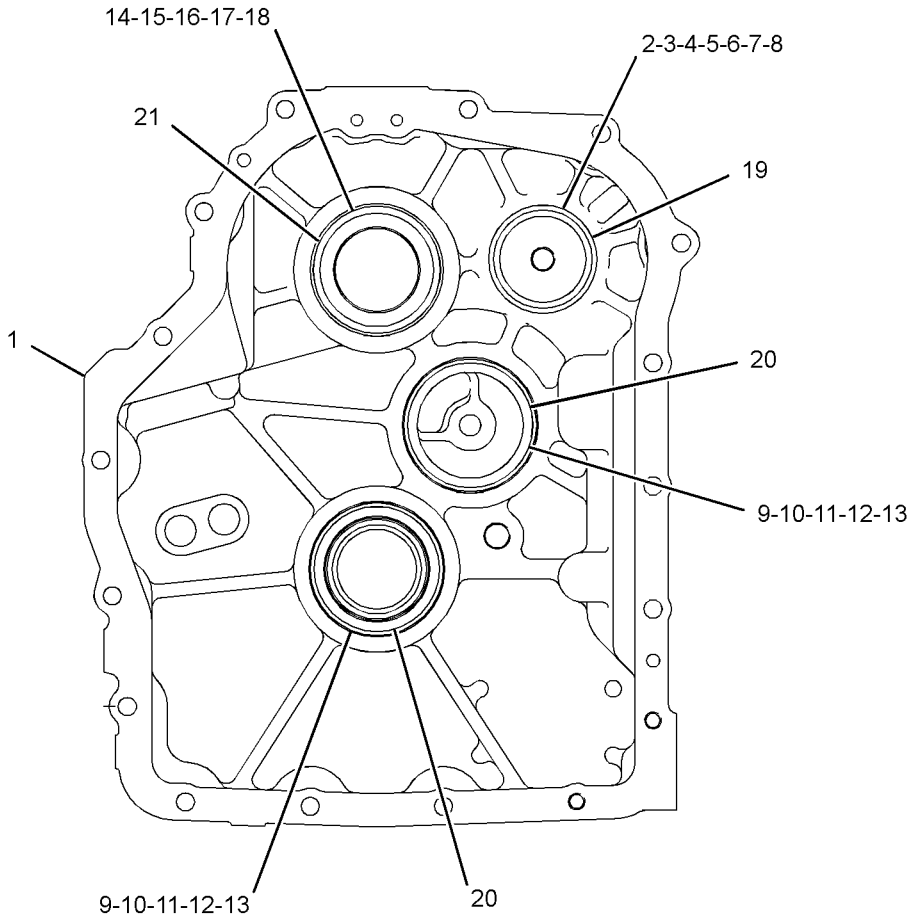

FRONT VIEW

GRAPHIC #1 **<END>** g01388814

209-9882 DIFFERENTIAL & BEVEL GEAR GP

S/N: CBD1-UP; MFG1-UP
PART OF 230-5743 AXLE GP-DRIVE & STEERING
AN ATTACHMENT

SMCS-3256, 3258, 3281, 3283, 3284 **i03358582**

NOTE	REF NO	GRAPHIC REF	PART NUMBER	QTY	PART NAME 1 2 3 4 5 6 (PRODUCT LEVEL)	SEE PAGE
	1	1	**4J-0520**	1	SEAL-O-RING	
	2	1	**216-4457**	1	SEAL	
	3	1	**216-4458**	2	BEARING	
	4	1	**136-7808**	1	BEARING AS-TAPERED ROLLER	
	5	1	**216-4461**	1	BEARING	
	6	1	**209-7454**	2	NUT (M94X2-THD)	
	7	1	**152-6144**	1	PLUG AS-DRAIN (MAGNETIC)	
		1	**6V-6228**	1	SEAL-O-RING	
	8	1	**209-7462**	2	WASHER (40X50X2-MM THK)	
	9	1	**209-7463**	1	SLEEVE (COLLAPSIBLE)	
M	10	1	**199-0695**	2	BOLT (M6X1X14-MM)	
M	11	1	**209-7472**	1	NUT (M24X1.5-THD)	
	12	1	**216-4465**	1	WASHER (24.5X52X10-MM THK)	
	13	1	**216-4464**	1	YOKE	
	14	1	**199-0858**	2	RETAINER	
Y	15	1	**216-9498**	1	DIFFERENTIAL GP	365
	16	1	*217-2868*	1	GEAR GP-BEVEL & PINION	
		1	**216-4466**	1	KIT-BEVEL GEAR & PINION (KIT)	
					(INCLUDES GEARS,WASHERS,SPACERS,NUT AND O-RING)	
	17	1	**216-5515**	1	CARRIER AS-DIFFERENTIAL	
	17A	1	**217-2880**	4	DOWEL	
	17B	1	**208-0322**	4	BOLT-FLANGE HEAD (M14X2X75-MM)	
B	18	1	**209-7473**	1	SHIM (2.5-MM THK)	
B			**219-8751**	1	SHIM (2.6-MM THK)	
B			**219-8752**	1	SHIM (2.7-MM THK)	
B			**219-8753**	1	SHIM (2.8-MM THK)	
B			**219-8754**	1	SHIM (2.9-MM THK)	
B			**219-8755**	1	SHIM (3-MM THK)	
B			**219-8756**	1	SHIM (3.1-MM THK)	
B			**219-8757**	1	SHIM (3.2-MM THK)	
B			**219-8758**	1	SHIM (3.3-MM THK)	
B			**219-8759**	1	SHIM (3.4-MM THK)	

B-USE AS REQUIRED
M-METRIC PART
Y-SEPARATE ILLUSTRATION

209-9882 DIFFERENTIAL & BEVEL GEAR GP *(contd.)* i03358582

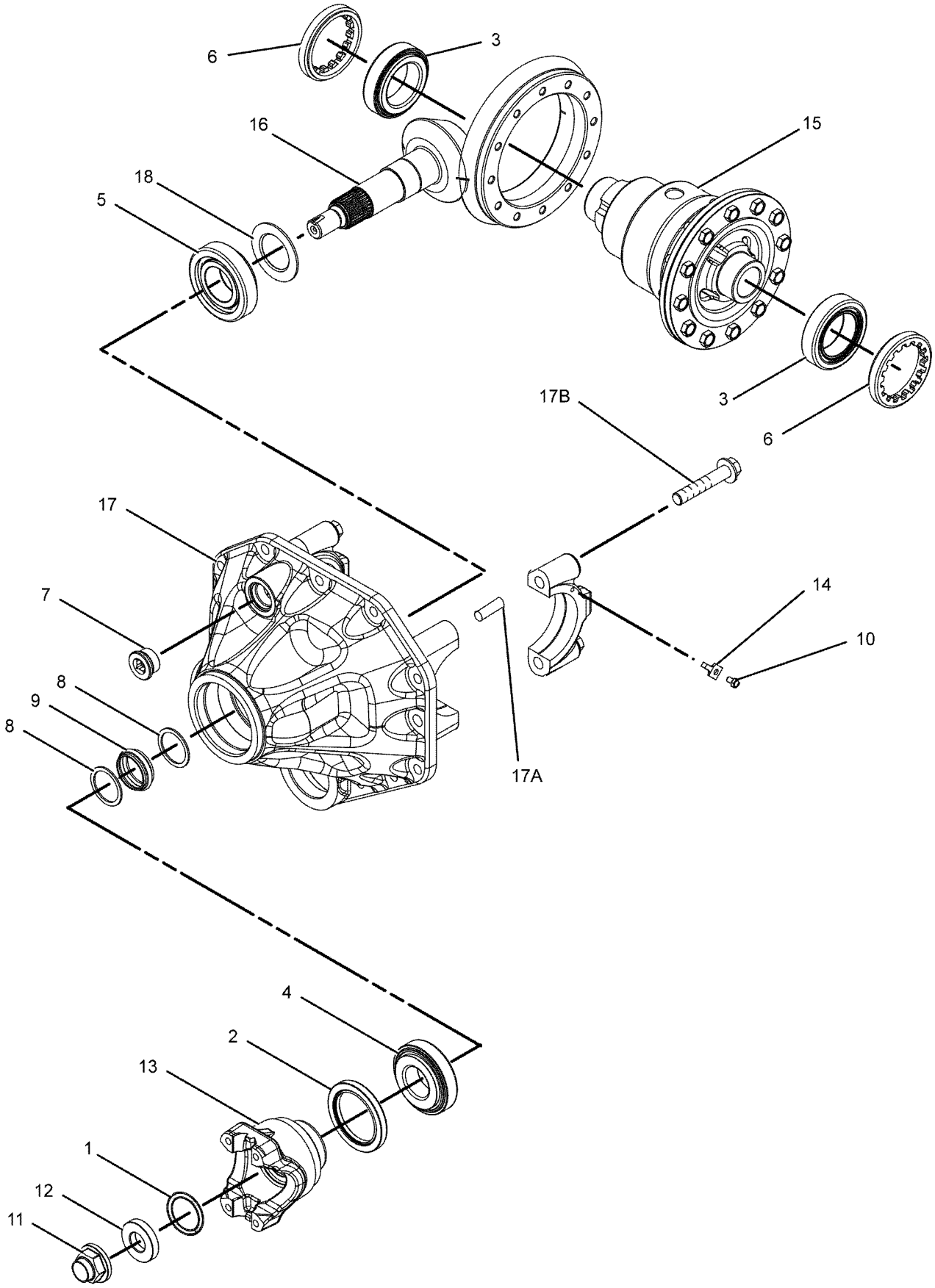

GRAPHIC #1 **<END>** g01050882

216-9498 DIFFERENTIAL GP

S/N: CBD1-UP; MFG1-UP
PART OF 209-9882 DIFFERENTIAL & BEVEL GEAR GP
AN ATTACHMENT

SMCS-3258 **i02529200**

NOTE	REF NO	GRAPHIC REF	PART NUMBER	QTY	PART NAME 1 2 3 4 5 6 (PRODUCT LEVEL)	SEE PAGE
	1	1	**216-8687**	1	COVER	
	2	1	**216-8689**	1	HOUSING-DIFFERENTIAL	
	3	1	**229-5093**	2	WASHER-THRUST (49X72X1.5-MM THK)	
M	4	1	**144-6734**	12	BOLT (M10X1.5X30-MM)	
	5	1	**211-0092**	2	WASHER-THRUST (22X42X2-MM THK)	
	6	1	**209-7455**	1	PIN	
	7	1	**216-8691**	1	RETAINER	
	8	1	**216-9497**	1	DIFFERENTIAL & BEVEL GEAR GP	
					AVAILABLE REPAIR KIT(S):	
			216-8700		KIT-DIFFERENTIAL (KIT)	
					(INCLUDES PIN,WASHERS,PIN,DISC AND GEARS)	

M-METRIC PART

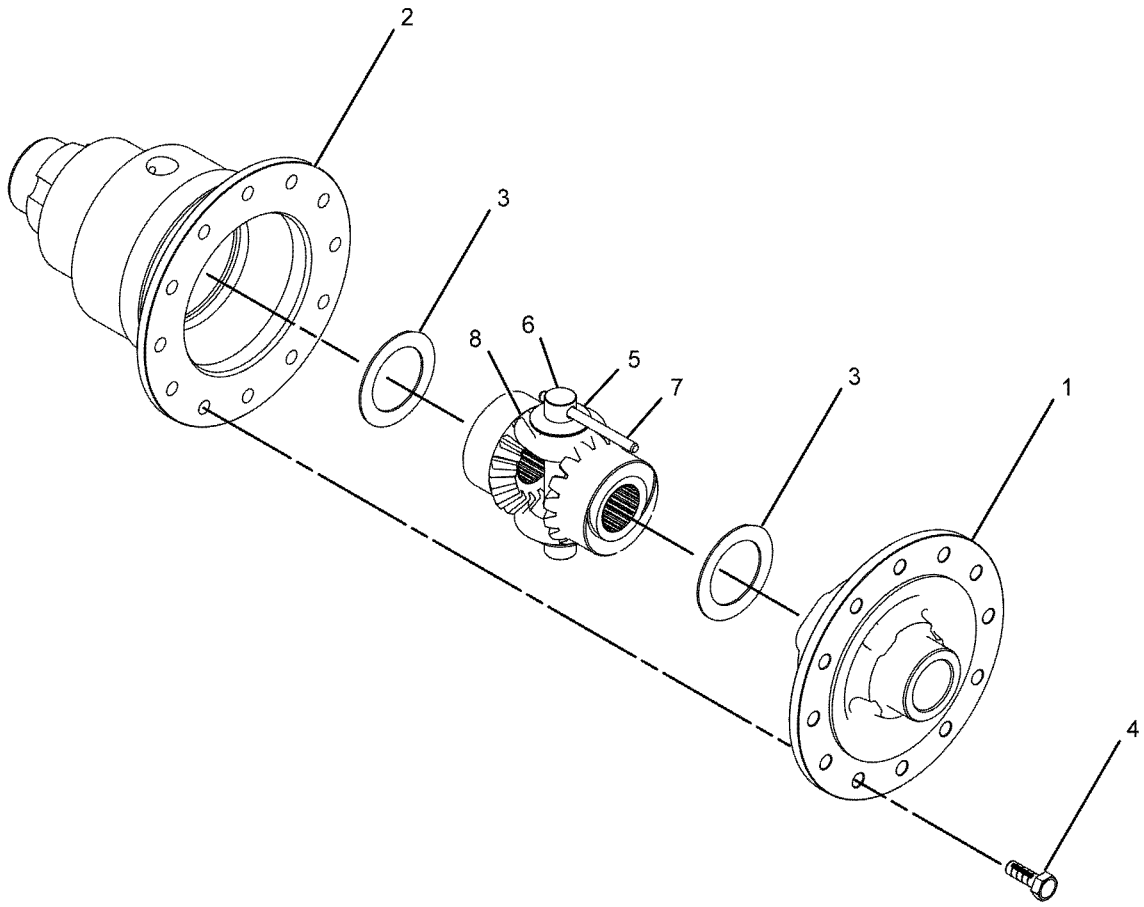

GRAPHIC #1 **<END>** g01043312

231-0692 DIFFERENTIAL GP

S/N: CBD1-UP; MFG1-UP
PART OF 238-5289 HOUSING GP-AXLE
AN ATTACHMENT

SMCS-3258 **i02520205**

NOTE	REF NO	GRAPHIC REF	PART NUMBER	QTY	PART NAME 1 2 3 4 5 6 (PRODUCT LEVEL)	SEE PAGE
	1	1	**199-0673**	2	BUSHING	
	2	1	**199-0694**	12	BOLT (M14X2X40-MM)	
	3	1	**199-0756**	1	COLLAR	
	4	1	**199-0784**	1	COVER-DIFFERENTIAL	
	5	1	**199-0807**	4	PIN	
	6	1	**199-0808**	3	PIN	
	7	1	**231-0670**	1	SHAFT	
	8	1	**231-0671**	4	WASHER-THRUST	
	9	1	**231-0695**	2	WASHER-THRUST	
	10	1	**231-0693**	1	CASE-DIFFERENTIAL	
	11	1	**231-0696**	2	SHAFT	
	12	1	**231-0697**	1	RETAINER	
	13	1	**231-0694**	1	GEAR AS	
	14	1	**199-0659**	4	SEAL-PIN	

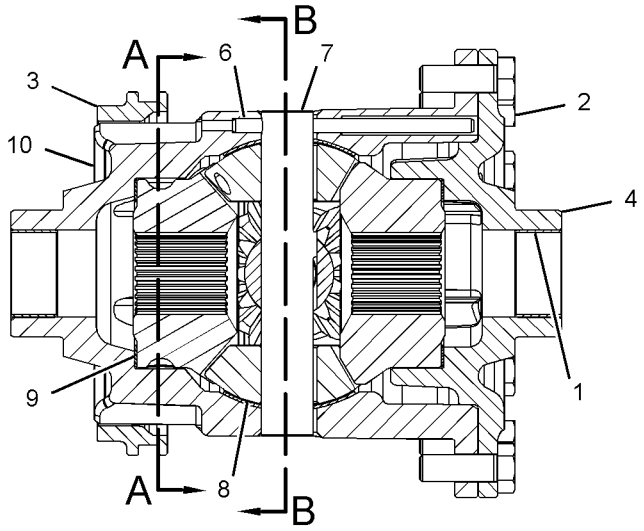

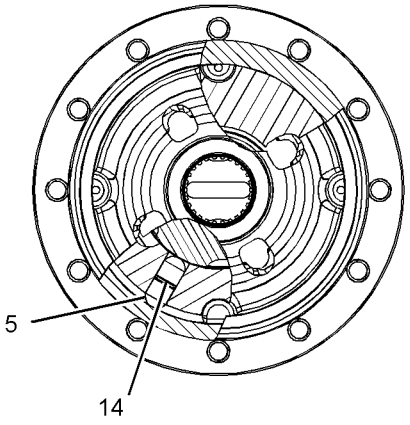

SECTION A-A

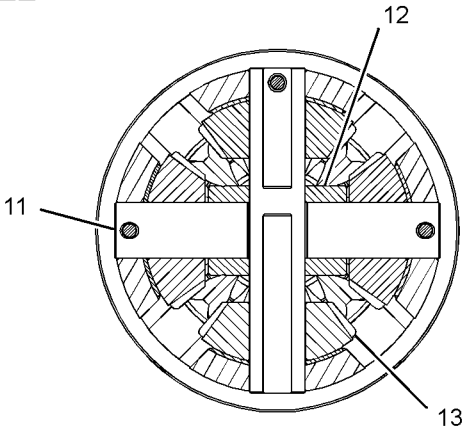

SECTION B-B

GRAPHIC #1 **<END>** g01263376

111-7907 DRIVE GP-FLEXIBLE COUPLING

S/N: CBD1-UP; MFG1-UP
PART OF 251-6352, 251-6353 TRANSMISSION AR-DIRECT DRIVE
AN ATTACHMENT

SMCS-3252 **i01500856**

NOTE	REF NO	GRAPHIC REF	PART NUMBER	QTY	PART NAME 1 2 3 4 5 6 (PRODUCT LEVEL)	SEE PAGE
M	1	1	**8T-4200**	8	BOLT (M8X1.25X16MM)	
M	2	1	**6V-8455**	6	BOLT (M10X1.5X16MM)	
	3	1	**117-9713**	1	PLATE-CONVERTER REINFORCEMENT	
	4	1	**8T-4224**	8	WASHER-HARD (8.8X16X2MM THK)	
	5	1	**111-7906**	1	PLATE-CONVERTER DRIVE	

M-METRIC PART

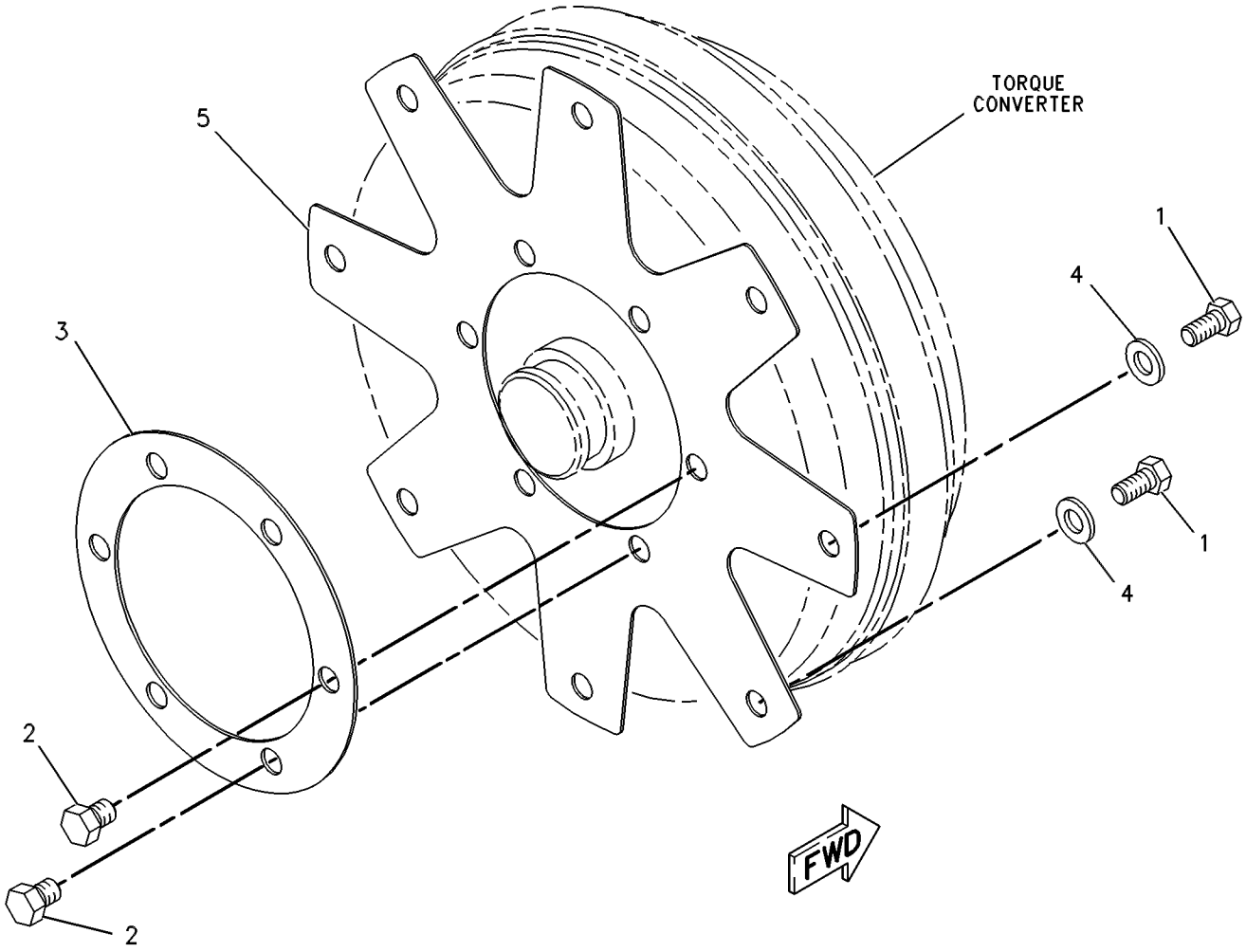

GRAPHIC #1 **<END>** g00131506

214-3740 FILLER GP-POWER TRAIN OIL–

ALL WHEEL DRIVE, STANDARD SHIFT

S/N: CBD1-7133

PART OF 214-6911, 214-6913, 323-3629, 323-3630 POWER TRAIN AR

AN ATTACHMENT

SMCS-3005, 3081 **i02880426**

NOTE	REF NO	GRAPHIC REF	PART NUMBER	QTY	PART NAME 1 2 3 4 5 6 (PRODUCT LEVEL)	SEE PAGE
	1	1	**6V-0852**	2	CAP-DUST	
	2	1	*164-5567*	2	COUPLER AS-QUICK DISCONNECT (MALE)	
					(EACH INCLUDES)	
		1	**3J-1907**	1	SEAL-O-RING	
		1	**6V-3965**	1	FITTING (QUICK DISCONNECT)	
	3	1	**2B-0941**	1	SPACER (10.5X19X19-MM THK)	
	4	1	**271-7167**	1	GAUGE-OIL LEVEL (DIPSTICK)	
	5	1	**230-2610**	1	TUBE AS	
	6	1	*165-4931*	1	ELBOW AS	
		1	**3J-1907**	1	SEAL-O-RING	
		1	**6V-8077**	1	ELBOW	
	8	1	**4J-0522**	1	SEAL-O-RING	
	9	1	**236-1583**	1	BOSS	
	10	1	**8S-0023**	3	CLIP (SLOT)	
	11	1	**8S-0024**	3	CLIP (TAB)	
	12	1	**8T-4121**	1	WASHER-HARD (11X21X2.5-MM THK)	
M	13	1	**8T-4136**	1	BOLT (M10X1.5X25-MM)	
	14	1	**8T-4223**	3	WASHER-HARD (13.5X25.5X3-MM THK)	
M	15	1	**8T-4956**	2	BOLT (M12X1.75X35-MM)	
M	16	1	**8T-4176**	1	BOLT (M12X1.75X90-MM)	
	17	1	**5P-4116**	1	WASHER-HARD (8.8X20.5X2-MM THK)	
M	18	1	**7X-0818**	1	BOLT (M8X1.25X45-MM)	

M-METRIC PART

214-3740 **FILLER GP-POWER TRAIN OIL** *(contd.)* **i02880426**

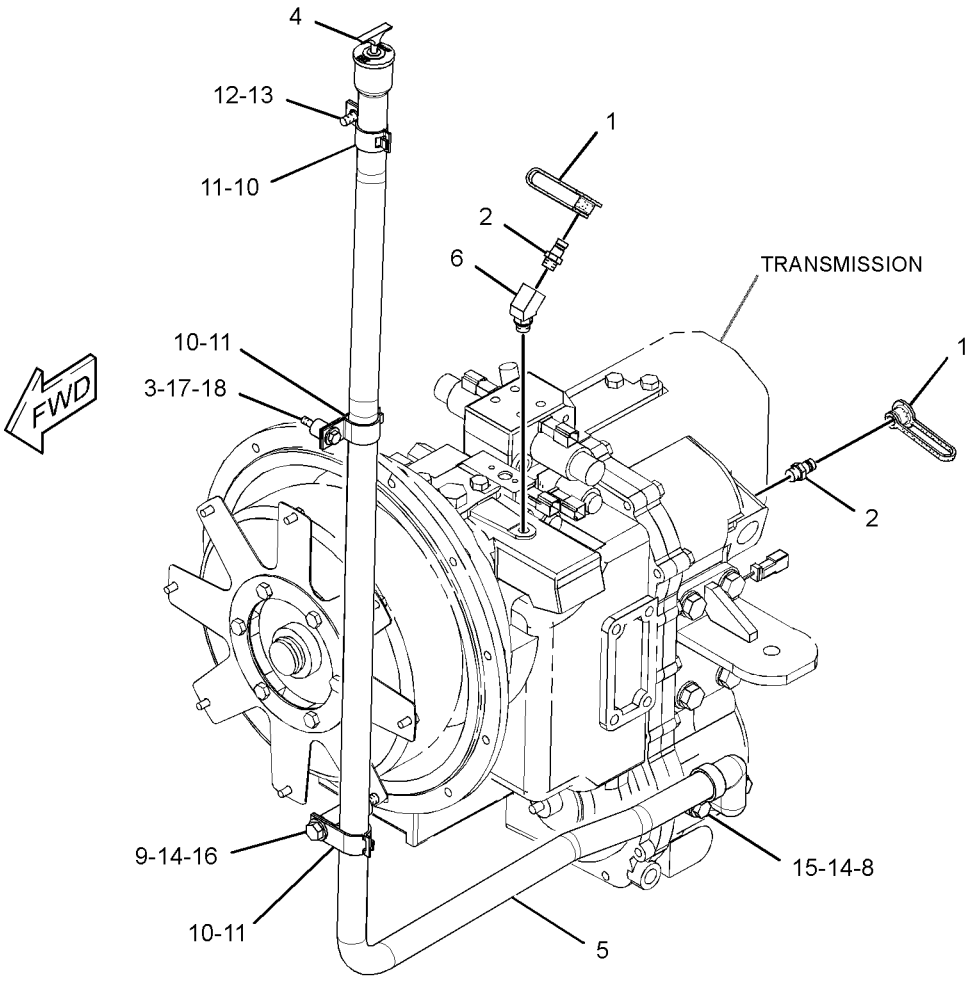

GRAPHIC #1 **<END>** g01478084

214-3740 FILLER GP-POWER TRAIN OIL–

ALL WHEEL DRIVE, STANDARD SHIFT

S/N: CBD7134-UP; MFG1-UP

PART OF 214-6911, 214-6913, 323-3629, 323-3630 POWER TRAIN AR

AN ATTACHMENT

SMCS-3005, 3081 **i04037731**

NOTE	REF NO	GRAPHIC REF	PART NUMBER	QTY	PART NAME 1 2 3 4 5 6 (PRODUCT LEVEL)	SEE PAGE
	1	1	**2B-0941**	1	SPACER (10.5X19X19-MM THK)	
	2	1	**230-2610**	1	TUBE AS	
	3	1	**236-1583**	1	BOSS	
	4	1	**271-7167**	1	GAUGE-OIL LEVEL (DIPSTICK) (POWER TRAIN)	
	5	1	**4J-0522**	1	SEAL-O-RING	
	6	1	**5P-4116**	1	WASHER-HARD (8.8X20.5X2-MM THK)	
M	7	1	**7X-0818**	1	BOLT (M8X1.25X45-MM)	
	8	1	**8S-0023**	3	CLIP (SLOT)	
	9	1	**8S-0024**	3	CLIP (TAB)	
	10	1	**8T-4121**	1	WASHER-HARD (11X21X2.5-MM THK)	
M	11	1	**8T-4136**	1	BOLT (M10X1.5X25-MM)	
M	12	1	**8T-4176**	1	BOLT (M12X1.75X90-MM)	
	13	1	**8T-4223**	3	WASHER-HARD (13.5X25.5X3-MM THK)	
M	14	1	**8T-4956**	2	BOLT (M12X1.75X35-MM)	

M-METRIC PART

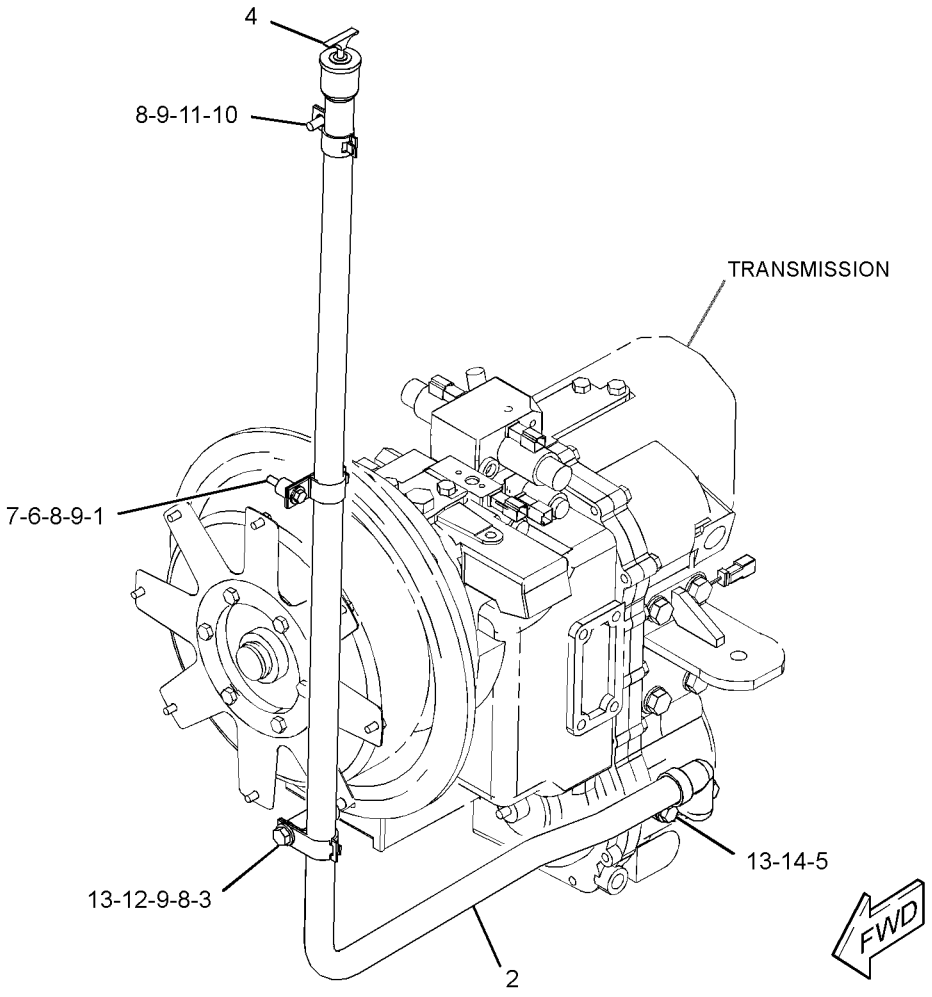

GRAPHIC #1 **<END>** g02334916

256-0551 FILLER GP-POWER TRAIN OIL–

2-WHEEL DRIVE, STANDARD SHIFT

S/N: CBD1-UP

PART OF 214-6910, 214-6912, 323-3627, 323-3628 POWER TRAIN AR

AN ATTACHMENT

SMCS-3005, 3081 **i02888555**

NOTE	REF NO	GRAPHIC REF	PART NUMBER	QTY	PART NAME 1 2 3 4 5 6 (PRODUCT LEVEL)	SEE PAGE
	1	1	**2B-0941**	1	SPACER (10.5X19X19-MM THK)	
	2	1	**6V-0852**	2	CAP-DUST	
	3	1	*164-5567*	2	COUPLER AS-QUICK DISCONNECT (MALE)	
					(EACH INCLUDES)	
		1	**6V-3965**	1	FITTING (QUICK DISCONNECT)	
		1	**3J-1907**	1	SEAL-O-RING	
	4	1	**136-3112**	1	SPACER	
	5	1	**230-2610**	1	TUBE AS	
	6	1	**236-1583**	1	BOSS	
	7	1	**271-7167**	1	GAUGE-OIL LEVEL (DIPSTICK)	
	8	1	*165-4931*	1	ELBOW AS	
		1	**3J-1907**	1	SEAL-O-RING	
		1	**6V-8077**	1	ELBOW	
	10	1	**4J-0522**	2	SEAL-O-RING	
	11	1	**5P-4116**	1	WASHER-HARD (8.8X20.5X2-MM THK)	
M	12	1	**7X-0818**	1	BOLT (M8X1.25X45-MM)	
	13	1	**8S-0023**	3	CLIP (SLOT)	
	14	1	**8S-0024**	3	CLIP (TAB)	
	15	1	**8T-4121**	1	WASHER-HARD (11X21X2.5-MM THK)	
M	16	1	**8T-4136**	1	BOLT (M10X1.5X25-MM)	
M	17	1	**8T-4176**	1	BOLT (M12X1.75X90-MM)	
M	18	1	**8T-4194**	2	BOLT (M12X1.75X50-MM)	
	19	1	**8T-4223**	3	WASHER-HARD (13.5X25.5X3-MM THK)	

M-METRIC PART

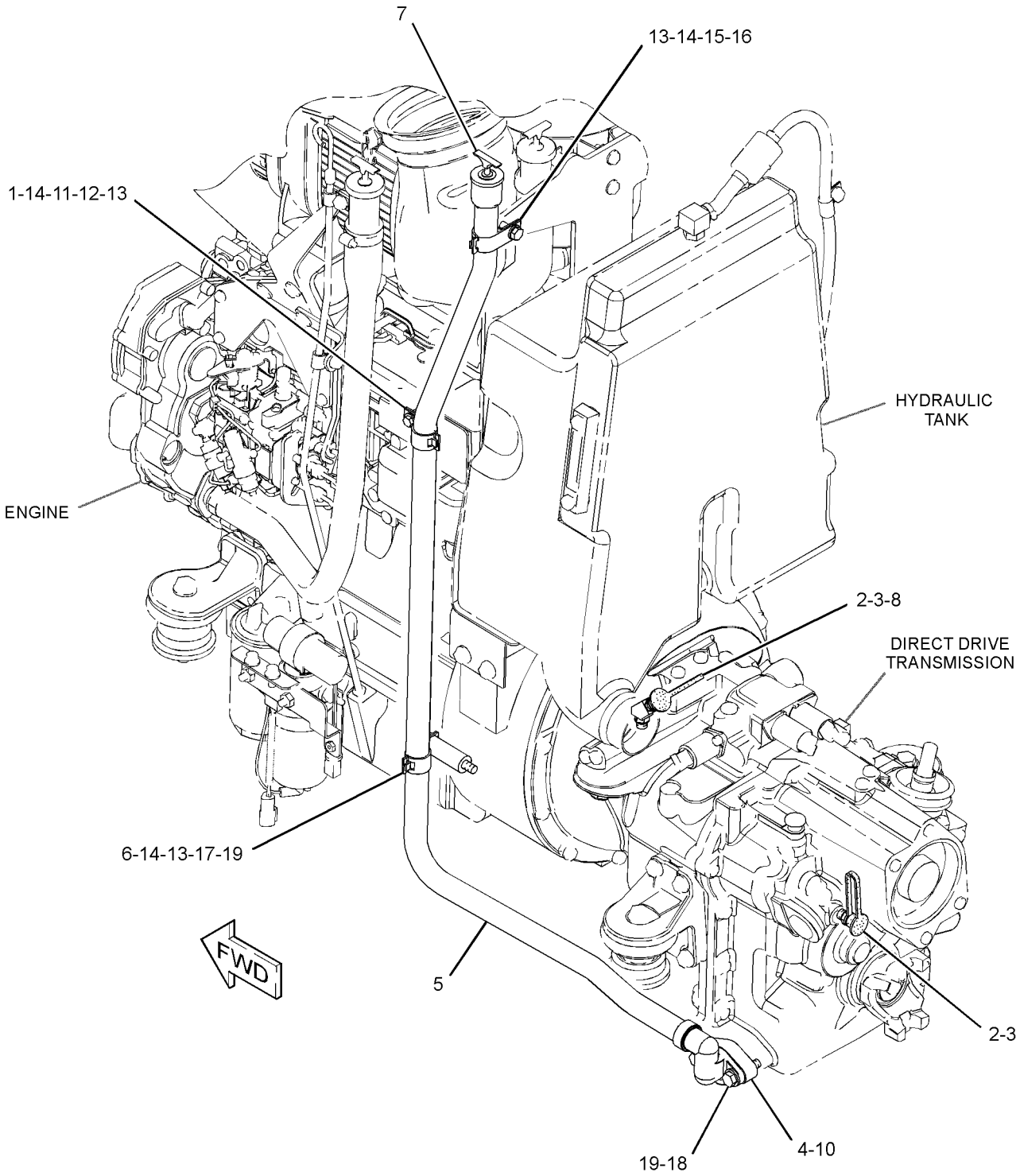

GRAPHIC #1 **<END>** g01457381

256-0551 FILLER GP-POWER TRAIN OIL–

2-WHEEL DRIVE, STANDARD SHIFT

S/N: CBD1-UP; MFG1-UP

PART OF 323-3627, 323-3628 POWER TRAIN AR

AN ATTACHMENT

SMCS-3005, 3081 **i04035819**

NOTE	REF NO	GRAPHIC REF	PART NUMBER	QTY	PART NAME 1 2 3 4 5 6 (PRODUCT LEVEL)	SEE PAGE
	1	1	**2B-0941**	1	SPACER (10.5X19X19-MM THK)	
	4	1	**136-3112**	1	SPACER	
	5	1	**230-2610**	1	TUBE AS	
	6	1	**236-1583**	1	BOSS	
	7	1	**271-7167**	1	GAUGE-OIL LEVEL (DIPSTICK) (POWER TRAIN)	
	10	1	**4J-0522**	2	SEAL-O-RING	
	11	1	**5P-4116**	1	WASHER-HARD (8.8X20.5X2-MM THK)	
M	12	1	**7X-0818**	1	BOLT (M8X1.25X45-MM)	
	13	1	**8S-0023**	3	CLIP (SLOT)	
	14	1	**8S-0024**	3	CLIP (TAB)	
	15	1	**8T-4121**	1	WASHER-HARD (11X21X2.5-MM THK)	
M	16	1	**8T-4136**	1	BOLT (M10X1.5X25-MM)	
M	17	1	**8T-4176**	1	BOLT (M12X1.75X90-MM)	
M	18	1	**8T-4194**	2	BOLT (M12X1.75X50-MM)	
	19	1	**8T-4223**	3	WASHER-HARD (13.5X25.5X3-MM THK)	

M-METRIC PART

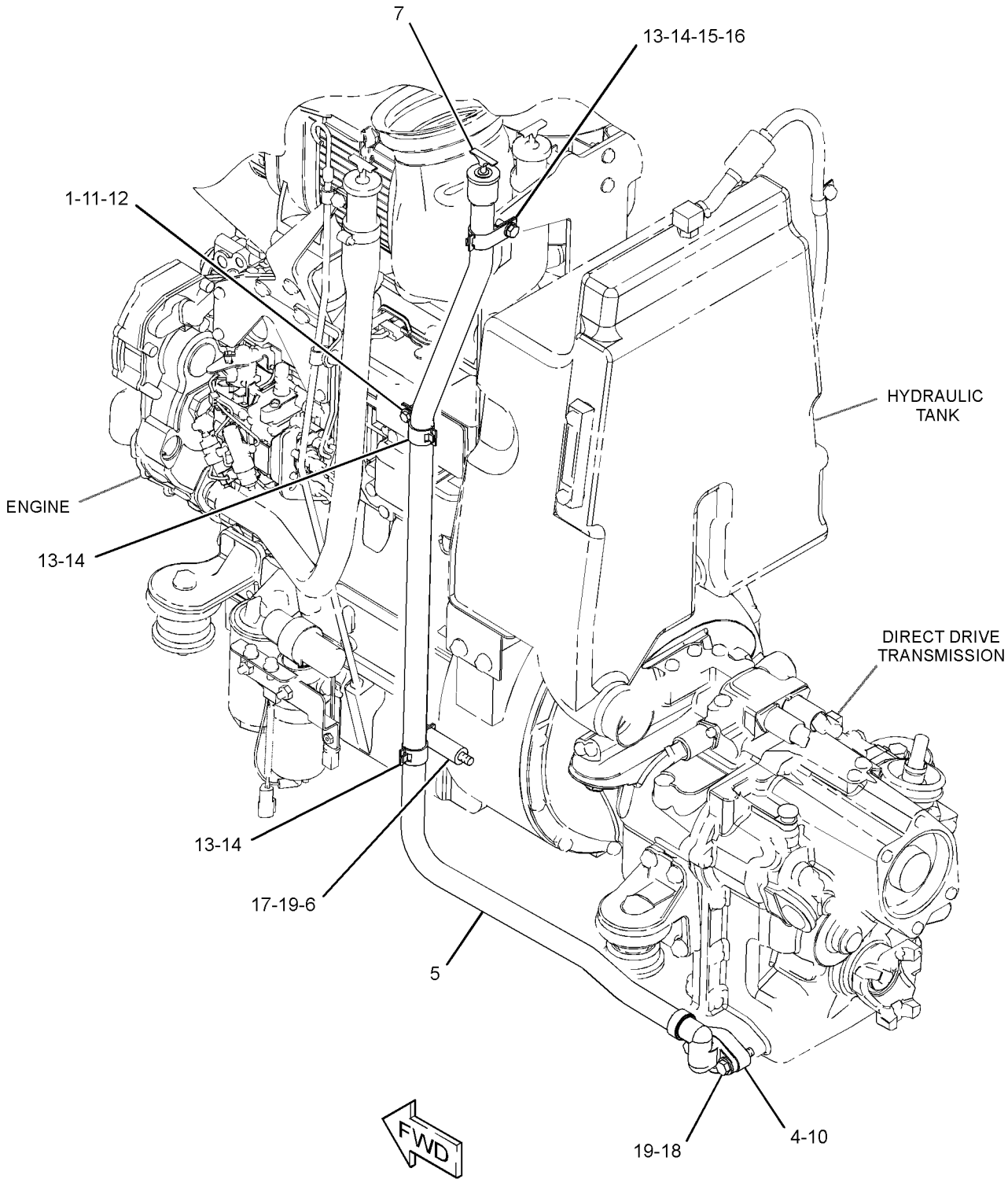

GRAPHIC #1 **<END>** g02333015

216-1609 FLANGE GP-WHEEL

S/N: CBD1-UP; MFG1-UP
PART OF 230-5739 AXLE GP-REAR
AN ATTACHMENT

SMCS-4057 **i04369630**

NOTE	REF NO	GRAPHIC REF	PART NUMBER	QTY	PART NAME 1 2 3 4 5 6 (PRODUCT LEVEL)	SEE PAGE
	1	1	**209-4232**	2	BEARING	
	2	1	**331-8538**	1	SEAL	
J	3	1	**226-4346**	10	STUD	
					AVAILABLE REPAIR KIT(S):	
			231-0719	1	KIT-WHEEL FLANGE	
					(ALSO INCLUDES FLANGE WHEEL)	

J-KIT MARKED J SERVICES PARTS MARKED J

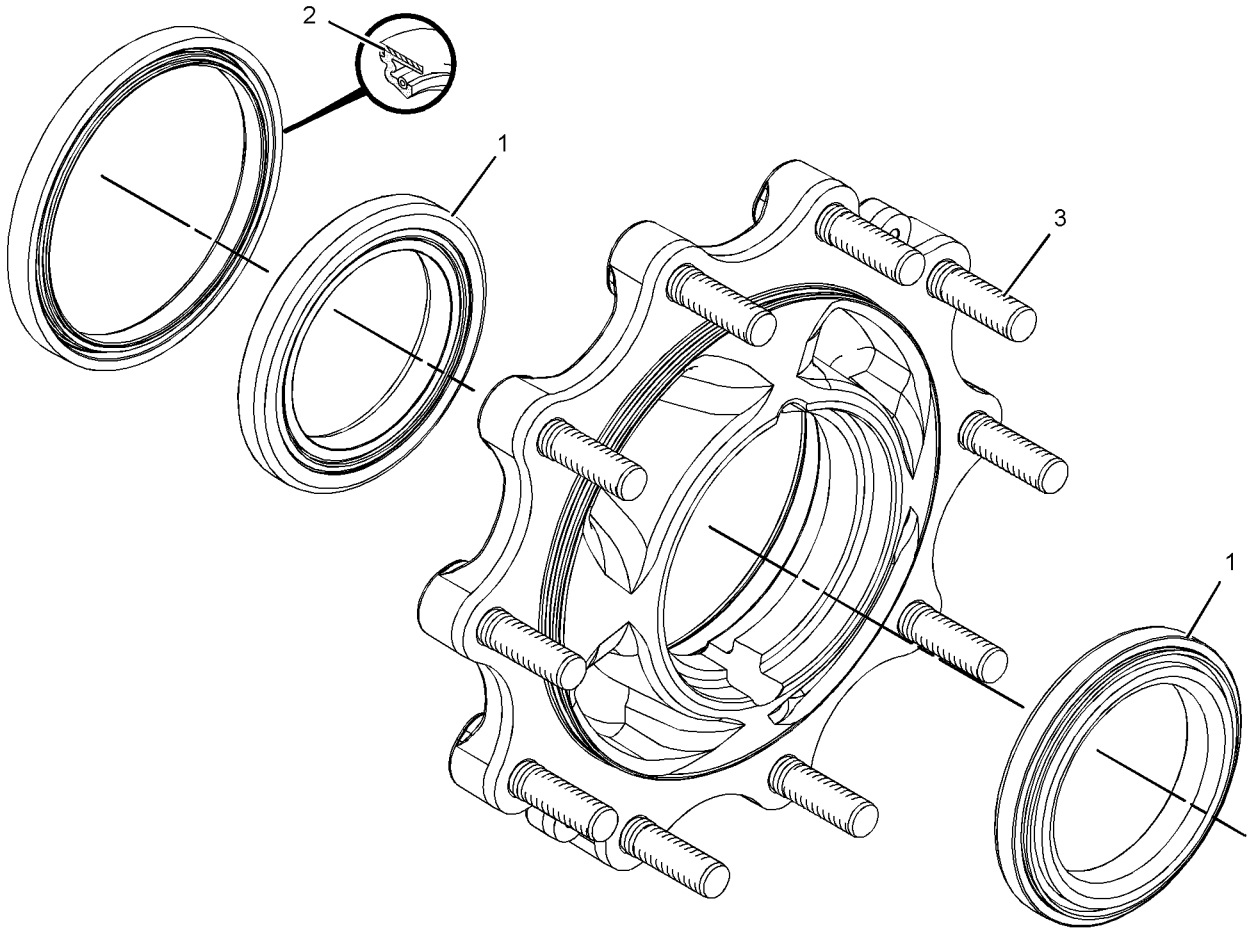

GRAPHIC #1 **<END>** g02531756

231-0683 FLANGE GP-WHEEL

S/N: CBD1-UP; MFG1-UP
PART OF 230-5745 AXLE GP-FRONT
AN ATTACHMENT

SMCS-4057 **i02336816**

NOTE	REF NO	GRAPHIC REF	PART NUMBER	QTY	PART NAME 1 2 3 4 5 6 (PRODUCT LEVEL)	SEE PAGE
	1	1	**207-4263**	1	BEARING AS	
	2	1	**207-4267**	1	BEARING AS	
	3	1	**238-5228**	1	KIT-HUB	
					(INCLUDES HUB & STUDS)	
	4	1	**231-0688**	1	SEAL	

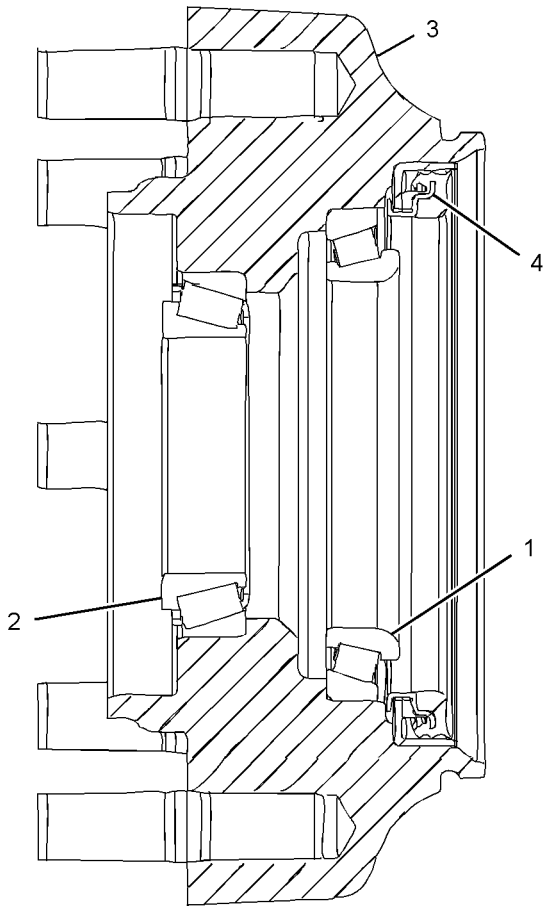

GRAPHIC #1

<END>

g01132035

209-9884 HOUSING & FLANGE GP-AXLE—RH

S/N: CBD1-UP; MFG1-UP
PART OF 230-5743 AXLE GP-DRIVE & STEERING
AN ATTACHMENT

SMCS-4057, 4234 **i03656806**

NOTE	REF NO	GRAPHIC REF	PART NUMBER	QTY	PART NAME 1 2 3 4 5 6 (PRODUCT LEVEL)	SEE PAGE
	1	1	**217-2877**	1	HOUSING GP-AXLE (RH)	
	1A	1	**199-0648**	1	NUT-JAM (M16X2-THD)	
	1B	1	**198-7814**	1	BOLT (M16X2X100-MM)	
	1C	1	**209-7460**	1	BUSHING	
	1D	1	**209-7465**	1	SEAL	
	1E	1	**231-0700**	1	HOUSING	
J	2	1	*231-0703*	1	FLANGE AS	
	2A	1	**210-5932**	2	BEARING-WHEEL	
	2B	1	**226-4346**	8	STUD	
	2C	1	**331-8538**	1	SEAL	
C	3	1	**226-4366**	1	NUT-SPANNER	
C	4	1	**226-4370**	1	BOLT-SELF-LOCKING	
	5	1	**229-5085**	1	SPACER (110X123X18.36-MM THK)	
C	6	1	**217-2879**	1	GEAR GP-RING	
C	7	1	**226-4365**	1	WASHER-TAB	
					AVAILABLE REPAIR KIT(S):	
J			**238-5256**	1	KIT-FLANGE (AXLE HOUSING)	
					(INCLUDES STUDS & WHEEL FLANGE)	

C-CHANGE FROM PREVIOUS TYPE
J-KIT MARKED J SERVICES PART MARKED J

209-9884 HOUSING & FLANGE GP-AXLE *(contd.)* **i03656806**

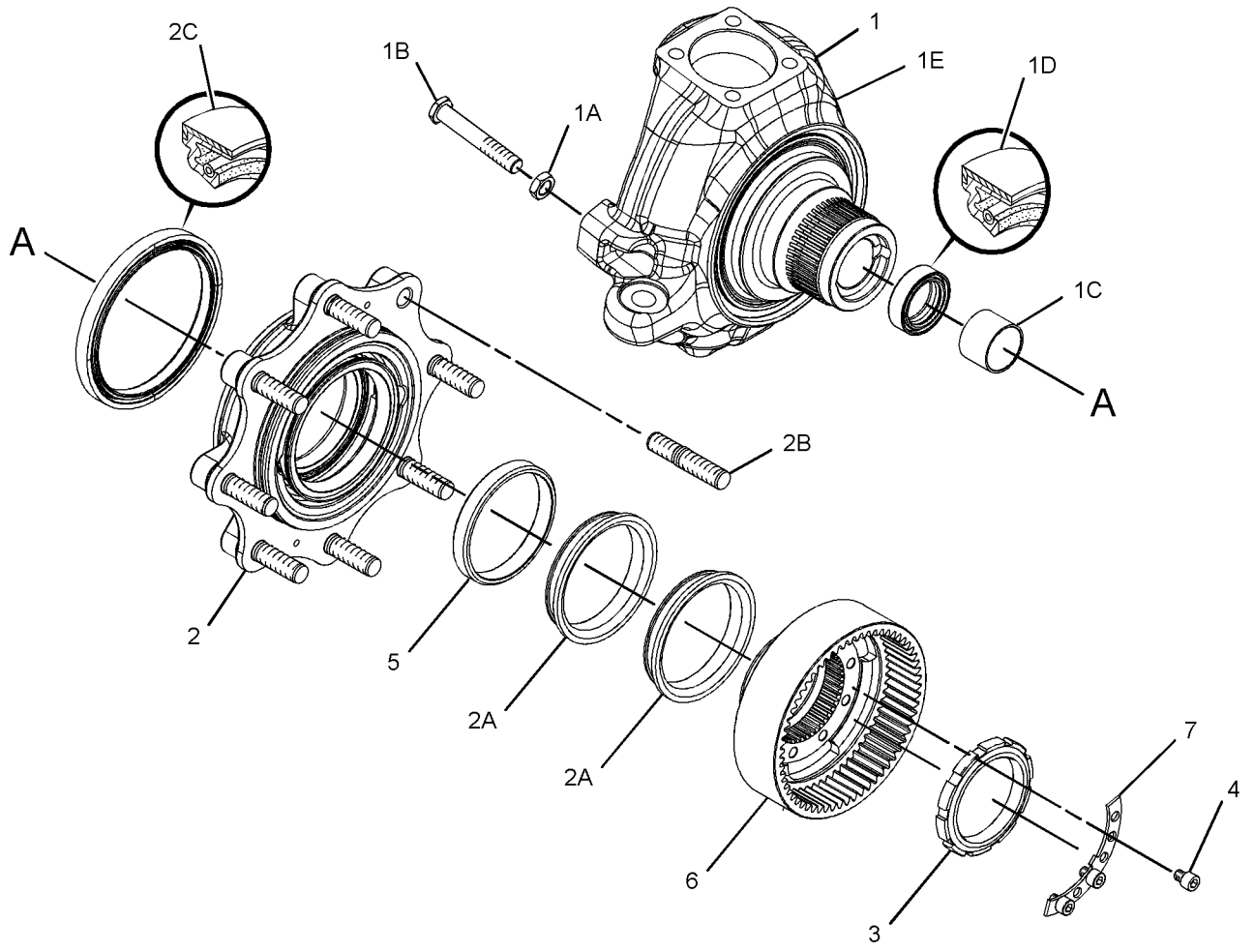

GRAPHIC #1 **<END>** g02003616

209-9885 HOUSING & FLANGE GP-AXLE–LH

S/N: CBD1-UP; MFG1-UP
PART OF 230-5743 AXLE GP-DRIVE & STEERING
AN ATTACHMENT

SMCS-4057, 4234 **i03656811**

NOTE	REF NO	GRAPHIC REF	PART NUMBER	QTY	PART NAME 1 2 3 4 5 6 (PRODUCT LEVEL)	SEE PAGE
	1	1	**217-2878**	1	HOUSING GP-AXLE (LH)	
	1A	1	**198-7814**	1	BOLT (M16X2X100-MM)	
M	1B	1	**098-5747**	1	NUT (M16X2-THD)	
	1C	1	**209-7460**	1	BUSHING	
	1D	1	**209-7465**	1	SEAL	
	1E	1	**231-0701**	1	HOUSING	
J	2	1	*231-0703*	1	FLANGE AS	
	2A	1	**210-5932**	2	BEARING-WHEEL	
	2B	1	**226-4346**	8	STUD	
	2C	1	**331-8538**	1	SEAL	
	3	1	**229-5080**	1	NUT-SPANNER	
	4	1	**229-5083**	1	PIN	
	5	1	**229-5085**	1	SPACER (110X123X18.36-MM THK)	
	6	1	**229-5088**	1	GEAR GP-RING	
	7	1	**3E-4363**	1	RING-RETAINING	
					AVAILABLE REPAIR KIT(S):	
J			**238-5256**	1	KIT-FLANGE (AXLE HOUSING)	
					(INCLUDES STUD & WHEEL FLANGE)	

J-KIT MARKED J SERVICES PART MARKED J
M-METRIC PART

209-9885 HOUSING & FLANGE GP-AXLE *(contd.)* **i03656811**

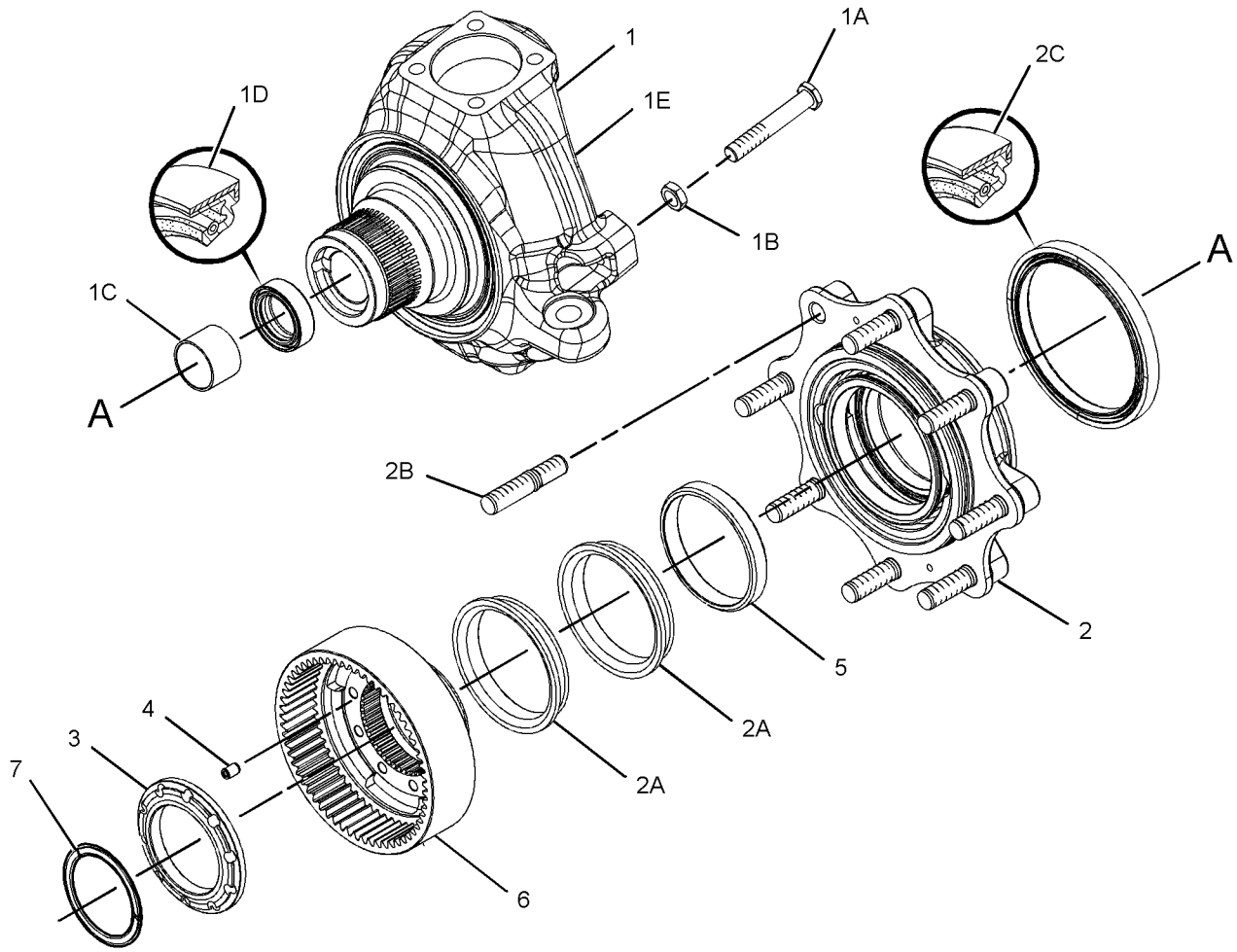

GRAPHIC #1 **<END>** g02003753

238-5289 HOUSING GP-AXLE

S/N: CBD1-UP; MFG1-UP
PART OF 230-5739 AXLE GP-REAR
AN ATTACHMENT

SMCS-3256, 3258, 3260, 4251 **i02520202**

NOTE	REF NO	GRAPHIC REF	PART NUMBER	QTY	PART NAME 1 2 3 4 5 6 (PRODUCT LEVEL)	SEE PAGE
	1	1	**199-0646**	4	BOLT	
	2	1	**199-0656**	2	CUP & CONE AS	
J	3	1	**199-0663**	1	SEAL-O-RING	
	4	1	**198-7811**	2	DOWEL	
	5	1	**199-0675**	2	NUT (M104X2-THD)	
J	6	1	**199-0678**	2	WASHER (45.5X55X2-MM THK)	
J	7	1	**199-0680**	1	SPACER (47X50X19.2-MM THK)	
M	8	1	**199-0695**	2	BOLT (M6X1X14-MM)	
	9	1	**199-0697**	1	SEAL	
J	10	1	**199-0785**	1	WASHER (30.5X58X10-MM THK)	
	11	1	**199-0858**	2	RETAINER	
J	12	1	**217-2876**	1	KIT-BEVEL GEAR & PINION	
J	13	1	**212-5702**	1	NUT (M30X2-THD)	
	14	1	**216-1600**	1	DISC-BRAKE	
	15	1	**095-1041**	1	BEARING AS	
	16	1	**093-8828**	1	BEARING AS	
Y	17	1	**216-1612**	1	CYLINDER GP-BRAKE	448
Y	18	1	**216-1613**	1	CYLINDER GP-BRAKE	449
	19	1	**219-8836**	1	FORK	
Y	20	1	**231-0692**	1	DIFFERENTIAL GP (AXLE)	366
	21	1	**238-5290**	1	HOUSING-CENTER	
	22	1	**069-4707**	1	SEALANT (GASKET)	
B	23	1	**199-0684**	1	SHIM (2.5-MM THK)	
B	24	1	**199-0685**	1	SHIM (2.6-MM THK)	
B	25	1	**199-0686**	1	SHIM (2.7-MM THK)	
B	26	1	**199-0687**	1	SHIM (2.8-MM THK)	
B	27	1	**199-0688**	1	SHIM (2.9-MM THK)	
B	28	1	**199-0689**	1	SHIM (3-MM THK)	
B	29	1	**199-0690**	1	SHIM (3.1-MM THK)	
B	30	1	**199-0691**	1	SHIM (3.2-MM THK)	
B	31	1	**199-0692**	1	SHIM (3.3-MM THK)	
B	32	1	**199-0693**	1	SHIM (3.4-MM THK)	
					AVAILABLE REPAIR KIT(S):	
			217-2345	1	KIT-DIFFERENTIAL (AXLE HOUSING)	
					(INCLUDES PIN, SHAFT & WASHERS)	
J			**217-2346**		KIT-BEVEL GEAR & PINION (AXLE HOUSING)	
					(INCLUDES BEVEL GEAR, PINION & PARTS MARKED J)	

B-USE AS REQUIRED
J-KIT MARKED J AVAILABLE FOR PART(S) MARKED J
M-METRIC PART
Y-SEPARATE ILLUSTRATION

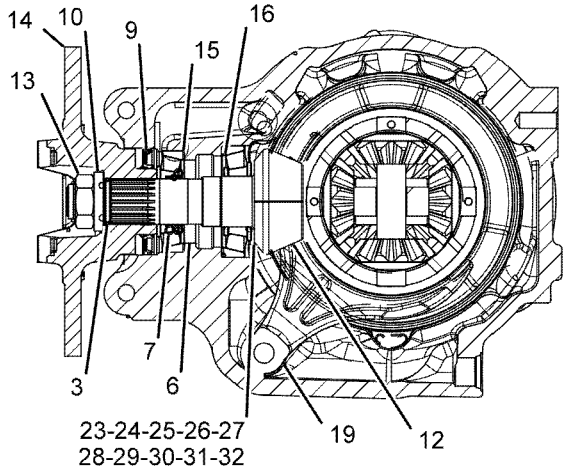

SECTION A-A

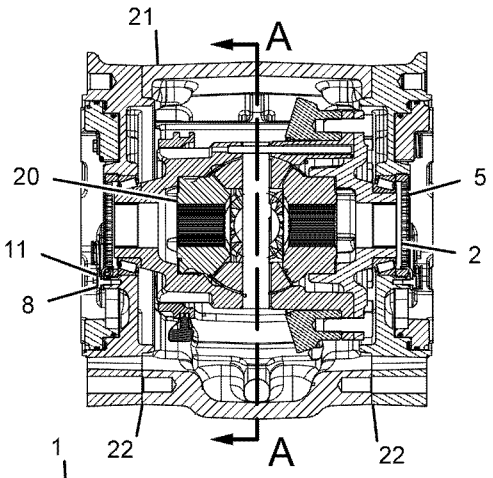

SECTION B-B

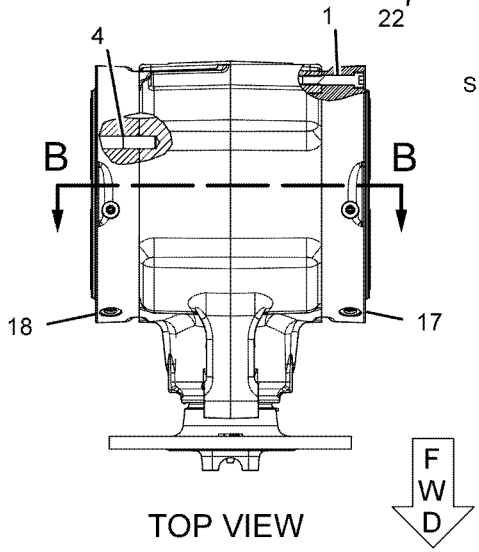

TOP VIEW

GRAPHIC #1 **<END>** g01135243

256-0546 LINES GP-POWER TRAIN OIL–DIFFERENTIAL LOCK

S/N: CBD1-UP; MFG1-UP
PART OF 214-6910, 214-6911, 214-6912, 214-6913, 323-3627, 323-3628, 323-3629, 323-3630 POWER TRAIN AR
AN ATTACHMENT

SMCS-3016, 3154 **i02497010**

NOTE	REF NO	GRAPHIC REF	PART NUMBER	QTY	PART NAME 1 2 3 4 5 6 (PRODUCT LEVEL)	SEE PAGE
	1	1	*148-8325*	1	CONNECTOR AS	
		1	**3J-1907**	1	SEAL-O-RING	
		1	**4J-5477**	1	SEAL-O-RING	
		1	**6V-8641**	1	CONNECTOR	
I	2	1	**256-0550**	1	HOSE AS	
	3	1	*148-8368*	1	ELBOW AS	
		1	**3J-1907**	1	SEAL-O-RING	
		1	**4J-5477**	1	SEAL-O-RING	
		1	**6V-8627**	1	ELBOW	
	4	1	**151-4841**	1	BLOCK	
	5	1	**7K-1181**	1	STRAP-CABLE	

I-REFER TO HYDRAULIC INFORMATION SYSTEM

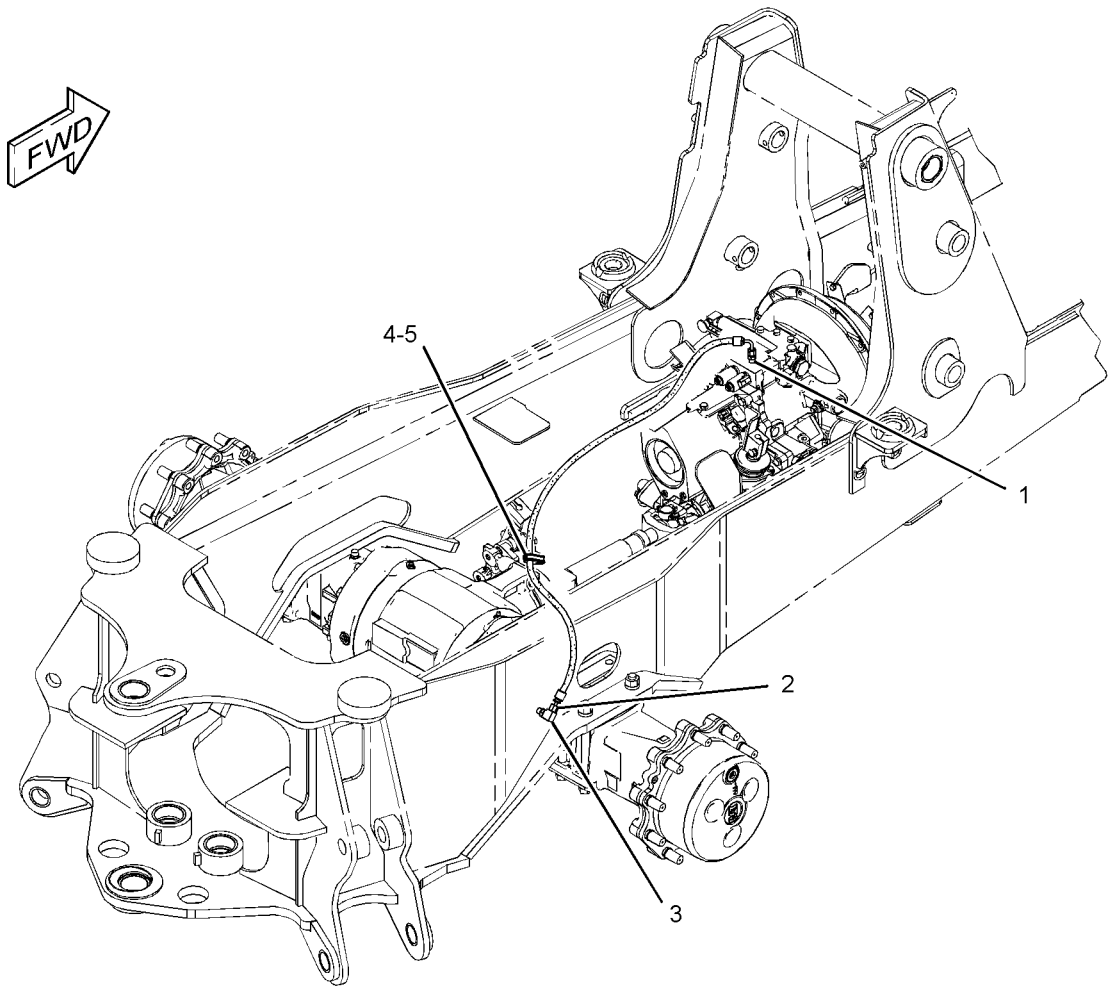

GRAPHIC #1 **<END>** g01257021

POWER TRAIN

221-0811 MOUNTING GP-AXLE

S/N: CBD1-UP; MFG1-UP
PART OF 220-9182, 220-9183 DRIVE AR-BACKHOE LOADER
AN ATTACHMENT

SMCS-3268 **i04083631**

NOTE	REF NO	GRAPHIC REF	PART NUMBER	QTY	PART NAME 1 2 3 4 5 6 (PRODUCT LEVEL)	SEE PAGE
B	1	1	**1K-7082**	1	WASHER (2.266X4X0.031-IN THK)	
B	2	1	**9R-9702**	2	WASHER (56X100X1.6-MM THK)	
	3	1	**165-8996**	2	WASHER-THRUST (55.5X100.5X5-MM THK)	
	4	1	**211-9286**	1	PIN AS	
	5	1	**293-9289**	2	BLOCK	
M	6	1	**089-7990**	8	BOLT (M20X2.5X250-MM)	
	7	1	**8T-5439**	12	WASHER-HARD (21.5X45X6-MM THK)	
	8	1	**7X-0618**	1	WASHER-HARD (13.5X40X5-MM THK)	
M	9	1	**8T-4131**	4	NUT (M20X2.5-THD)	
M	10	1	**8T-4192**	1	BOLT (M12X1.75X25-MM)	

B-USE AS REQUIRED
M-METRIC PART

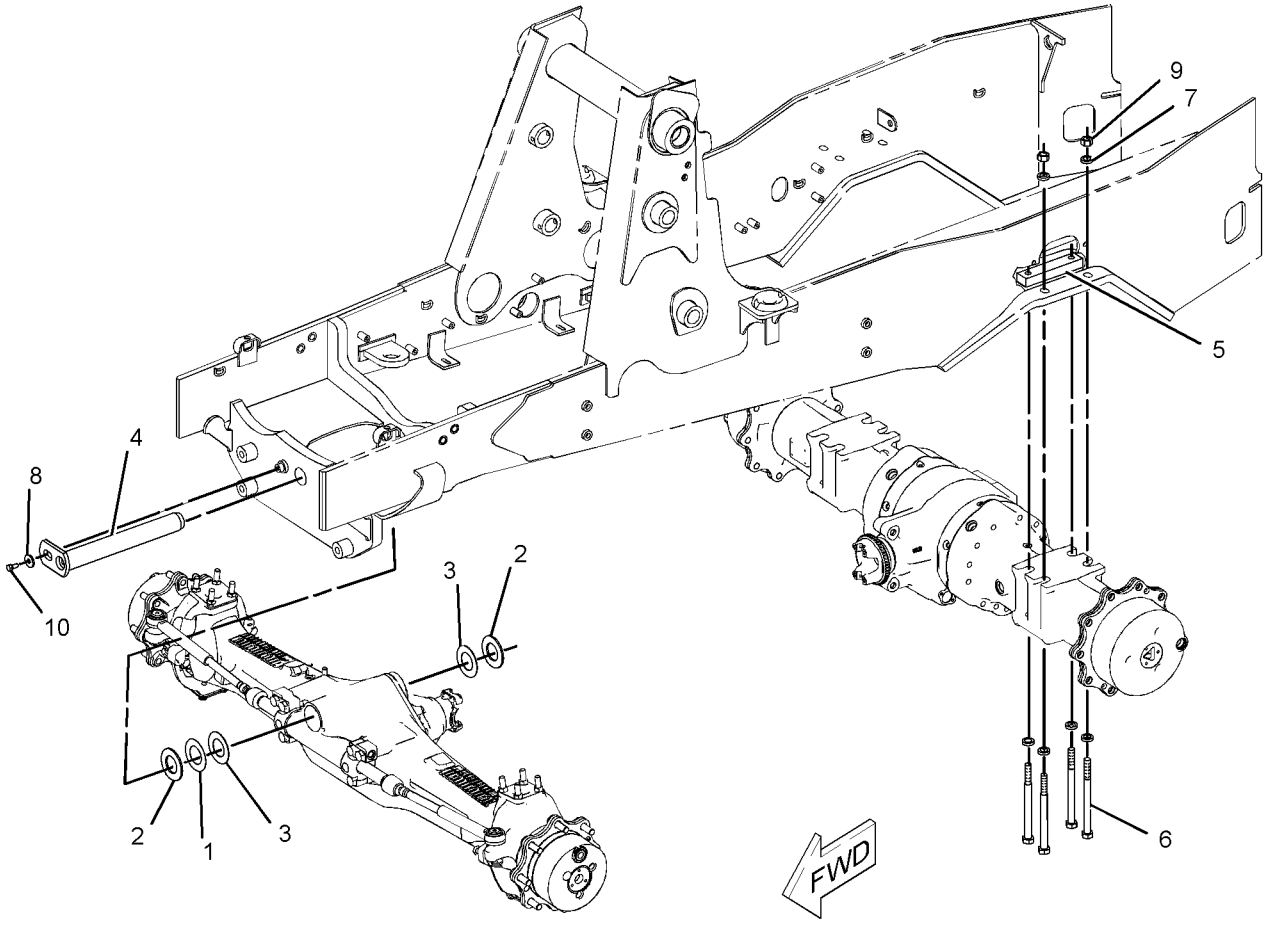

GRAPHIC #1 **<END>** g01200213

271-4487 MOUNTING GP-TRANSMISSION

S/N: CBD1-UP; MFG1-UP
PART OF 271-2403, 271-2404 TRANSMISSION & MOUNTING GP, 251-6352, 251-6353
TRANSMISSION AR-DIRECT DRIVE
AN ATTACHMENT

SMCS-3082 **i02520267**

NOTE	REF NO	GRAPHIC REF	PART NUMBER	QTY	PART NAME 1 2 3 4 5 6 (PRODUCT LEVEL)	SEE PAGE
	1	1	**245-4827**	1	SUPPORT AS (RH)	
	2	1	**271-7309**	1	SUPPORT AS (LH)	
M	3	1	**7X-2553**	4	BOLT (M16X2X40-MM)	
	4	1	**8T-4223**	4	WASHER-HARD (13.5X25.5X3-MM THK)	
M	5	1	**8T-4956**	4	BOLT (M12X1.75X35-MM)	
	6	1	**9X-8257**	4	WASHER (17.5X30X3.5-MM THK)	

M-METRIC PART

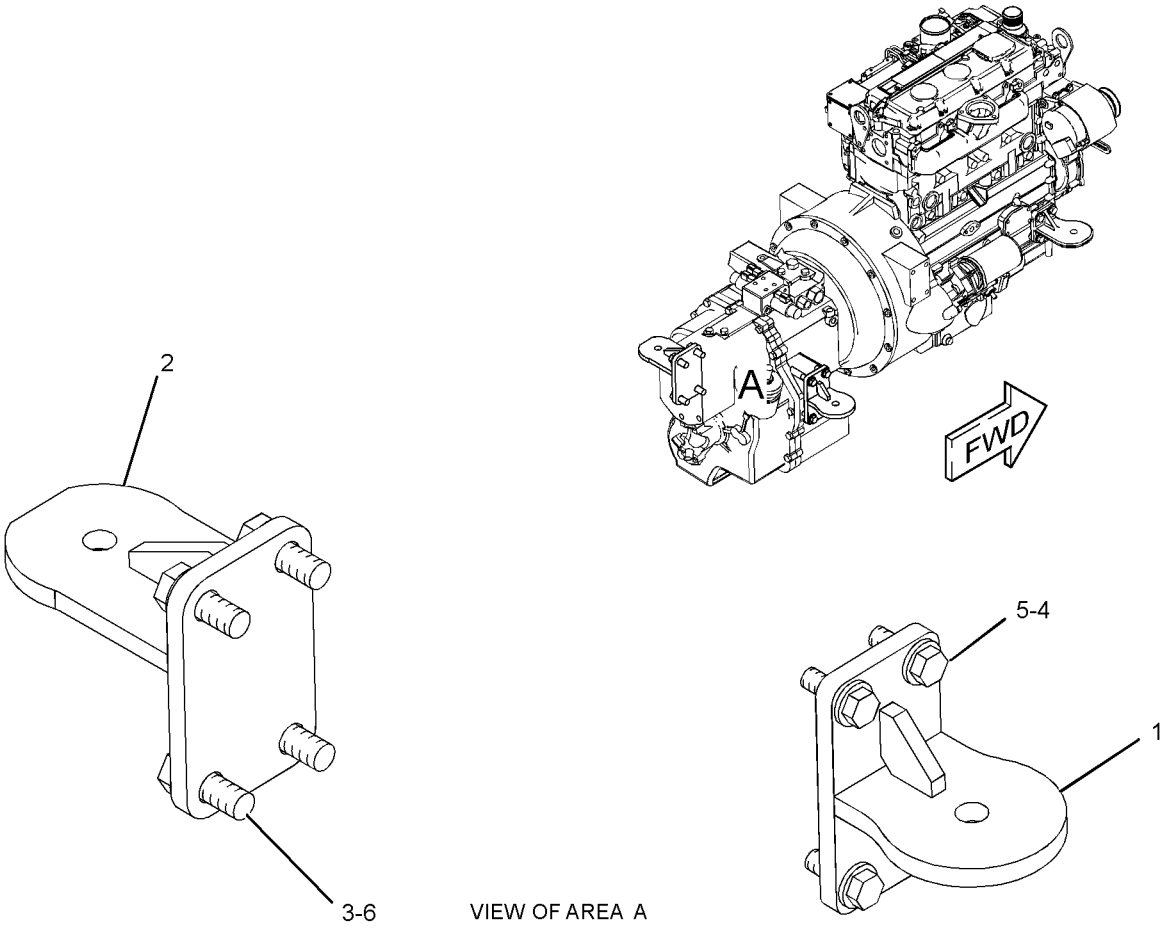

VIEW OF AREA A

GRAPHIC #1 **<END>** g01231911

210-5924 PLANETARY GP-FINAL DRIVE

S/N: CBD1-UP; MFG1-UP
PART OF 230-5743 AXLE GP-DRIVE & STEERING
AN ATTACHMENT

SMCS-4050 **i03156044**

NOTE	REF NO	GRAPHIC REF	PART NUMBER	QTY	PART NAME 1 2 3 4 5 6 (PRODUCT LEVEL)	SEE PAGE
	1	1	**210-5931**	4	RETAINER	
	2	1	**209-4157**	4	GEAR (23-TEETH)	
	3	1	**095-0924**	4	RING-RETAINING	
					AVAILABLE REPAIR KIT(S):	
			209-7466	1	KIT-PLANETARY CARRIER	
					(INCLUDES THRUST PLUG, SUN GEAR SHAFT & PLANET CARRIER)	
			219-8783	23	KIT-ROLLER BEARING	
					(EACH INCLUDES 10 NEEDLES)	
					(SERVICED IN QUANITY OF 10, EACH GEAR REQUIRES 56 ROLLERS OR 6 KITS, EACH WHEEL END AS. REQUIRES 224 ROLLERS OR 23 KITS)	

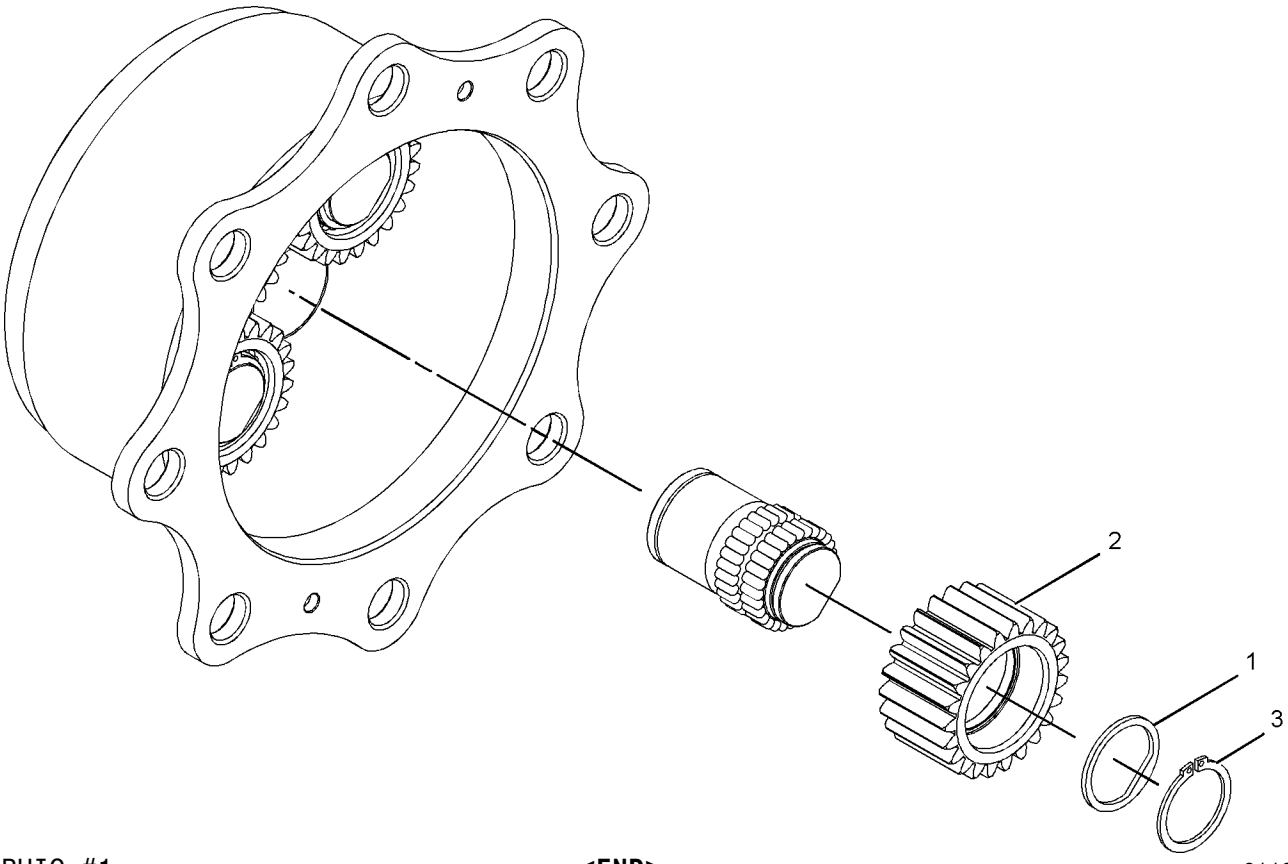

GRAPHIC #1 **<END>** g01132397

216-1610 PLANETARY GP-FINAL DRIVE

S/N: CBD1-UP; MFG1-UP
PART OF 230-5739 AXLE GP-REAR
AN ATTACHMENT

SMCS-4050 **i03898312**

NOTE	REF NO	GRAPHIC REF	PART NUMBER	QTY	PART NAME 1 2 3 4 5 6 (PRODUCT LEVEL)	SEE PAGE
	1	1	**199-0653**	3	RING-RETAINING	
	2	1	**207-4257**	6	RING-RETAINER	
	3	1	**199-0760**	3	BEARING	
	4	1	**213-4222**	3	WASHER (50.1X61X2.5-MM THK)	
	5	1	**207-5962**	6	WASHER (65X72X2-MM THK)	
	6	1	**216-1606**	3	GEAR-PLANETARY (31-TEETH)	
	7	1	**216-1601**	1	CARRIER	
	8	1	**253-5022**	1	PLUG	

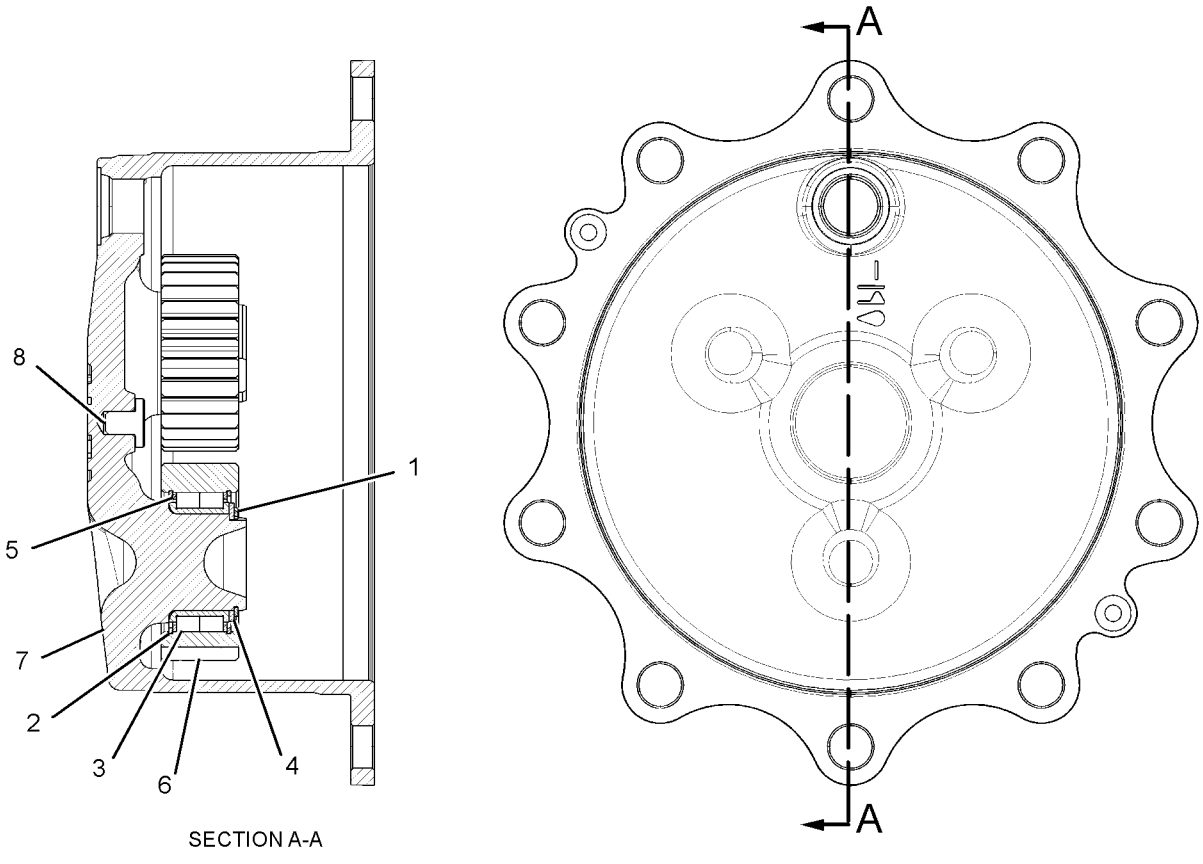

SECTION A-A

GRAPHIC #1 **<END>** g02141640

POWER TRAIN

214-6910 POWER TRAIN AR–
2-WHEEL DRIVE, 2-WHEEL STEER, STD SHIFT
S/N: CBD1-UP
AN ATTACHMENT

SMCS-3000, 4000 **i02496757**

NOTE	PART NUMBER	QTY	PART NAME 1 2 3 4 5 6 (PRODUCT LEVEL)	SEE PAGE
Y	*206-1642*	1	CONTROL GP-PARKING BRAKE	440
Y	*206-1638*	1	CONTROL GP-SERVICE BRAKE	442
Y	*206-1643*	1	CONTROL GP-TRANSMISSION	979
Y	*112-1826*	1	DRIVE & MTG GP-PUMP	558
Y	*220-9182*	1	DRIVE AR-BACKHOE LOADER (2-WHEEL DRIVE, 2-WHEEL STEER)	16
Y	*252-4640*	1	ENGINE AR	19
Y	*256-0551*	1	FILLER GP-POWER TRAIN OIL (2-WHEEL DRIVE, STANDARD SHIFT) (2-WHEEL DRIVE, STANDARD SHIFT)	371
Y	*256-0546*	1	LINES GP-POWER TRAIN OIL (DIFFERENTIAL LOCK)	383
Y	*202-6010*	1	SWITCH GP-DIFFERENTIAL LOCK (CENTER PIVOT MACHINE) (CENTER PIVOT MACHINE)	278
Y	*251-6352*	1	TRANSMISSION AR-DIRECT DRIVE (2-WHEEL DRIVE, STANDARD SHIFT)	403
	119-4740	1	FILTER-OIL (STANDARD EFFICIENCY)	

Y-SEPARATE ILLUSTRATION

<END>

214-6911 POWER TRAIN AR–
ALL WHEEL DRIVE, 2-WHEEL STEER, STD SHIFT
S/N: CBD1-UP
AN ATTACHMENT

SMCS-3000, 4000 **i02496760**

NOTE	PART NUMBER	QTY	PART NAME 1 2 3 4 5 6 (PRODUCT LEVEL)	SEE PAGE
Y	*206-1642*	1	CONTROL GP-PARKING BRAKE	440
Y	*206-1638*	1	CONTROL GP-SERVICE BRAKE	442
Y	*206-1643*	1	CONTROL GP-TRANSMISSION	979
Y	*112-1826*	1	DRIVE & MTG GP-PUMP	558
Y	*220-9183*	1	DRIVE AR-BACKHOE LOADER (ALL WHEEL DRIVE, 2-WHEEL STEER)	17
Y	*252-4640*	1	ENGINE AR	19
Y	*214-3740*	1	FILLER GP-POWER TRAIN OIL	368
Y	*256-0546*	1	LINES GP-POWER TRAIN OIL (DIFFERENTIAL LOCK)	383
Y	*216-4476*	1	SHAFT GP-DRIVE (FRONT)	392
Y	*202-6010*	1	SWITCH GP-DIFFERENTIAL LOCK (CENTER PIVOT MACHINE) (CENTER PIVOT MACHINE)	278
Y	*251-6353*	1	TRANSMISSION AR-DIRECT DRIVE (ALL WHEEL DRIVE)	403
	119-4740	1	FILTER-OIL (STANDARD EFFICIENCY)	

Y-SEPARATE ILLUSTRATION

<END>

POWER TRAIN

214-6912 POWER TRAIN AR–
2-WHEEL DRIVE, 2-WHEEL STEER, STD SHIFT
S/N: CBD1-UP
AN ATTACHMENT

SMCS-3000, 4000 **i02496761**

NOTE	PART NUMBER	QTY	PART NAME 1 2 3 4 5 6 (PRODUCT LEVEL)	SEE PAGE
Y	*206-1642*	1	CONTROL GP-PARKING BRAKE	440
Y	*206-1638*	1	CONTROL GP-SERVICE BRAKE	442
Y	*206-1643*	1	CONTROL GP-TRANSMISSION	979
Y	*112-1826*	1	DRIVE & MTG GP-PUMP	558
Y	*220-9182*	1	DRIVE AR-BACKHOE LOADER (2-WHEEL DRIVE, 2-WHEEL STEER)	16
Y	*252-4641*	1	ENGINE AR	20
Y	*256-0551*	1	FILLER GP-POWER TRAIN OIL (2-WHEEL DRIVE, STANDARD SHIFT) (2-WHEEL DRIVE, STANDARD SHIFT)	371
Y	*256-0546*	1	LINES GP-POWER TRAIN OIL (DIFFERENTIAL LOCK)	383
Y	*202-6010*	1	SWITCH GP-DIFFERENTIAL LOCK (CENTER PIVOT MACHINE) (CENTER PIVOT MACHINE)	278
Y	*251-6352*	1	TRANSMISSION AR-DIRECT DRIVE (2-WHEEL DRIVE, STANDARD SHIFT)	403
	119-4740	1	FILTER-OIL (STANDARD EFFICIENCY)	

Y-SEPARATE ILLUSTRATION

<END>

214-6913 POWER TRAIN AR–
ALL WHEEL DRIVE, 2-WHEEL STEER, STD SHIFT
S/N: CBD1-UP
AN ATTACHMENT

SMCS-3000, 4000 **i02496762**

NOTE	PART NUMBER	QTY	PART NAME 1 2 3 4 5 6 (PRODUCT LEVEL)	SEE PAGE
Y	*206-1642*	1	CONTROL GP-PARKING BRAKE	440
Y	*206-1638*	1	CONTROL GP-SERVICE BRAKE	442
Y	*206-1643*	1	CONTROL GP-TRANSMISSION	979
Y	*112-1826*	1	DRIVE & MTG GP-PUMP	558
Y	*220-9183*	1	DRIVE AR-BACKHOE LOADER (ALL WHEEL DRIVE, 2-WHEEL STEER)	17
Y	*252-4641*	1	ENGINE AR	20
Y	*214-3740*	1	FILLER GP-POWER TRAIN OIL (STANDARD SHIFT)	368
Y	*256-0546*	1	LINES GP-POWER TRAIN OIL (DIFFERENTIAL LOCK)	383
Y	*216-4476*	1	SHAFT GP-DRIVE (FRONT)	392
Y	*202-6010*	1	SWITCH GP-DIFFERENTIAL LOCK (CENTER PIVOT MACHINE) (CENTER PIVOT MACHINE)	278
Y	*251-6353*	1	TRANSMISSION AR-DIRECT DRIVE (ALL WHEEL DRIVE)	403
	119-4740	1	FILTER-OIL (STANDARD EFFICIENCY)	

Y-SEPARATE ILLUSTRATION

<END>

POWER TRAIN

323-3627 POWER TRAIN AR—2-WHEEL DRIVE, 2-WHEEL STEER

S/N: CBD1-UP; MFG1-UP
PART OF 374-3517, 374-6532 DISTRIBUTION AR
AN ATTACHMENT

SMCS-3000, 4000 **i04467031**

NOTE	PART NUMBER	QTY	PART NAME 1 2 3 4 5 6 (PRODUCT LEVEL)	SEE PAGE
Y	*206-1642*	1	CONTROL GP-PARKING BRAKE	440
Y	*206-1638*	1	CONTROL GP-SERVICE BRAKE	442
Y	*206-1643*	1	CONTROL GP-TRANSMISSION	979
Y	*112-1826*	1	DRIVE & MTG GP-PUMP	558
Y	*220-9182*	1	DRIVE AR-BACKHOE LOADER (2-WHEEL DRIVE, 2-WHEEL STEER)	16
Y	*252-4640*	1	ENGINE AR	19
			S/N: CBD1-8764	
Y	*256-0551*	1	FILLER GP-POWER TRAIN OIL (2-WHEEL DRIVE, STANDARD SHIFT)	371
Y	*256-0546*	1	LINES GP-POWER TRAIN OIL (DIFFERENTIAL LOCK)	383
Y	*202-6010*	1	SWITCH GP-DIFFERENTIAL LOCK (CENTER PIVOT MACHINE)	278
Y	*251-6352*	1	TRANSMISSION AR-DIRECT DRIVE (2-WHEEL DRIVE, STANDARD SHIFT)	403
	119-4740	1	FILTER-OIL (STANDARD EFFICIENCY) (POWER TRAIN)	

Y-SEPARATE ILLUSTRATION

<END>

323-3628 POWER TRAIN AR—2-WHEEL DRIVE, 2-WHEEL STEER

S/N: CBD1-UP
PART OF 356-0067 DISTRIBUTION AR
AN ATTACHMENT

SMCS-3000, 4000 **i02942838**

NOTE	PART NUMBER	QTY	PART NAME 1 2 3 4 5 6 (PRODUCT LEVEL)	SEE PAGE
Y	*206-1642*	1	CONTROL GP-PARKING BRAKE	440
Y	*206-1638*	1	CONTROL GP-SERVICE BRAKE	442
Y	*206-1643*	1	CONTROL GP-TRANSMISSION	979
Y	*112-1826*	1	DRIVE & MTG GP-PUMP	558
Y	*220-9182*	1	DRIVE AR-BACKHOE LOADER (2-WHEEL DRIVE, 2-WHEEL STEER)	16
Y	*252-4641*	1	ENGINE AR	20
Y	*256-0551*	1	FILLER GP-POWER TRAIN OIL (2-WHEEL DRIVE, STANDARD SHIFT)	371
Y	*256-0546*	1	LINES GP-POWER TRAIN OIL (DIFFERENTIAL LOCK)	383
Y	*202-6010*	1	SWITCH GP-DIFFERENTIAL LOCK (CENTER PIVOT MACHINE)	278
Y	*251-6352*	1	TRANSMISSION AR-DIRECT DRIVE	403
	119-4740	1	FILTER-OIL (STANDARD EFFICIENCY) (HYDRAULIC)	

Y-SEPARATE ILLUSTRATION

<END>

POWER TRAIN

323-3629 POWER TRAIN AR—ALL WHEEL DRIVE, 2-WHEEL STEER

S/N: CBD1-UP; MFG1-UP

PART OF 374-3518, 374-3519, 374-3521, 374-3529, 374-6533, 374-6534, 374-6535, 374-6536 DISTRIBUTION AR

AN ATTACHMENT

SMCS-3000, 4000 **i04467069**

NOTE	PART NUMBER	QTY	PART NAME 1 2 3 4 5 6 (PRODUCT LEVEL)	SEE PAGE
Y	*206-1642*	1	CONTROL GP-PARKING BRAKE	440
Y	*206-1638*	1	CONTROL GP-SERVICE BRAKE	442
Y	*206-1643*	1	CONTROL GP-TRANSMISSION	979
Y	*112-1826*	1	DRIVE & MTG GP-PUMP	558
Y	*220-9183*	1	DRIVE AR-BACKHOE LOADER (ALL WHEEL DRIVE, 2-WHEEL STEER)	17
Y	*252-4640*	1	ENGINE AR	19
			S/N: CBD1-8758	
Y	*214-3740*	1	FILLER GP-POWER TRAIN OIL (ALL WHEEL DRIVE, STD SHIFT)	368
Y	*256-0546*	1	LINES GP-POWER TRAIN OIL (DIFFERENTIAL LOCK)	383
Y	*216-4476*	1	SHAFT GP-DRIVE (FRONT)	392
Y	*202-6010*	1	SWITCH GP-DIFFERENTIAL LOCK (CENTER PIVOT MACHINE)	278
Y	*251-6353*	1	TRANSMISSION AR-DIRECT DRIVE (ALL WHEEL DRIVE)	403
	119-4740	1	FILTER-OIL (STANDARD EFFICIENCY) (POWER TRAIN)	

Y-SEPARATE ILLUSTRATION

<END>

323-3630 POWER TRAIN AR

S/N: CBD1-UP

PART OF 356-0068, 356-0069 DISTRIBUTION AR

AN ATTACHMENT

SMCS-3000, 4000 **i02942701**

NOTE	PART NUMBER	QTY	PART NAME 1 2 3 4 5 6 (PRODUCT LEVEL)	SEE PAGE
Y	*206-1642*	1	CONTROL GP-PARKING BRAKE	440
Y	*206-1638*	1	CONTROL GP-SERVICE BRAKE	442
Y	*206-1643*	1	CONTROL GP-TRANSMISSION	979
Y	*112-1826*	1	DRIVE & MTG GP-PUMP	558
Y	*220-9183*	1	DRIVE AR-BACKHOE LOADER (ALL WHEEL DRIVE, 2-WHEEL STEER)	17
Y	*252-4641*	1	ENGINE AR	20
Y	*214-3740*	1	FILLER GP-POWER TRAIN OIL	368
Y	*256-0546*	1	LINES GP-POWER TRAIN OIL (DIFFERENTIAL LOCK)	383
Y	*216-4476*	1	SHAFT GP-DRIVE (FRONT)	392
Y	*202-6010*	1	SWITCH GP-DIFFERENTIAL LOCK (CENTER PIVOT MACHINE)	278
Y	*251-6353*	1	TRANSMISSION AR-DIRECT DRIVE (ALL WHEEL DRIVE)	403
	119-4740	1	FILTER-OIL (STANDARD EFFICIENCY)	

Y-SEPARATE ILLUSTRATION

<END>

216-4475 SHAFT GP-DRIVE–REAR

S/N: CBD1-UP; MFG1-UP
PART OF 220-9182, 220-9183 DRIVE AR-BACKHOE LOADER
AN ATTACHMENT

SMCS-3253 **i02867062**

NOTE	PART NUMBER	QTY	PART NAME 1 2 3 4 5 6 (PRODUCT LEVEL)	SEE PAGE
J	**304-3269**	1	SHAFT AS	
M	**107-6826**	8	BOLT (M24X19.1-MM)	
	5V-2545	4	STRAP	
			AVAILABLE REPAIR KIT(S):	
J	**117-9887**	2	KIT-SPIDER & BEARING (DRIVE SHAFT)	
			(EACH INCLUDES RINGS & SPIDER)	

J-KIT MARKED J AVAILABLE FOR PART MARKED J
M-METRIC PART

<END>

216-4476 SHAFT GP-DRIVE–FRONT

S/N: CBD1-UP; MFG1-UP
PART OF 214-6911, 214-6913, 323-3629, 323-3630 POWER TRAIN AR
AN ATTACHMENT

SMCS-3253 **i03994110**

NOTE	PART NUMBER	QTY	PART NAME 1 2 3 4 5 6 (PRODUCT LEVEL)	SEE PAGE
J	**304-3266**	1	SHAFT AS (FRONT)	
M	**107-6826**	8	BOLT (5/16-24X0.75-IN)	
	5V-2545	4	STRAP	
			AVAILABLE REPAIR KIT(S):	
J	**117-9887**	2	KIT-SPIDER & BEARING (DRIVE SHAFT)	
			(EACH INCLUDES RINGS & SPIDER)	

J-KIT MARKED J AVAILABLE FOR PART MARKED J
M-METRIC PART

<END>

275-0476 SHAFT GP-INPUT

S/N: CBD1-7188

PART OF 271-2407, 271-2408 TRANSMISSION GP-DIRECT DRIVE

AN ATTACHMENT

SMCS-3053, 3063 **i02520338**

NOTE	REF NO	GRAPHIC REF	PART NUMBER	QTY	PART NAME 1 2 3 4 5 6 (PRODUCT LEVEL)	SEE PAGE
	1	1	**9U-8875**	2	RING-RETAINING	
	2	1	**6T-9196**	2	SEAL	
	3	1	**172-5317**	1	BEARING-SPECIAL	
	4	1	**172-6050**	1	BEARING-SPECIAL	
	5	1	**6V-5100**	2	SEAL-O-RING	
	6	1	**9U-8886**	4	RING-SEAL	
	7	1	**274-4553**	10	DISC-FRICTION	
	8	1	**122-1886**	1	RING-SEAL	
	9	1	**238-7567**	3	RING-RETAINING	
	10	1	**121-2500**	2	WASHER-THRUST (50X70X4-MM THK)	
	11	1	**123-8905**	1	CONE-BEARING	
	12	1	**123-8909**	1	CONE-BEARING	
	13	1	**147-0227**	2	PISTON-CLUTCH	
	14	1	**147-0238**	2	SPRING AS	
	15	1	**147-0203**	2	WASHER-THRUST (45.3X65X5-MM THK)	
	16	1	**6Y-7957**	10	DISC-FRICTION	
	17	1	**274-8616**	1	GEAR-FORWARD (24-TEETH)	
	18	1	**274-8617**	1	GEAR-REVERSE (27-TEETH)	
	19	1	**274-8628**	1	BEARING-NEEDLE	
	20	1	**274-8629**	1	BEARING-NEEDLE	
	21	1	**274-8635**	1	RING-SNAP	
	22	1	**274-8636**	1	SHAFT AS (PLUG)	
	23	1	**8E-5707**	2	PLATE-END	

275-0476 SHAFT GP-INPUT *(contd.)* i02520338

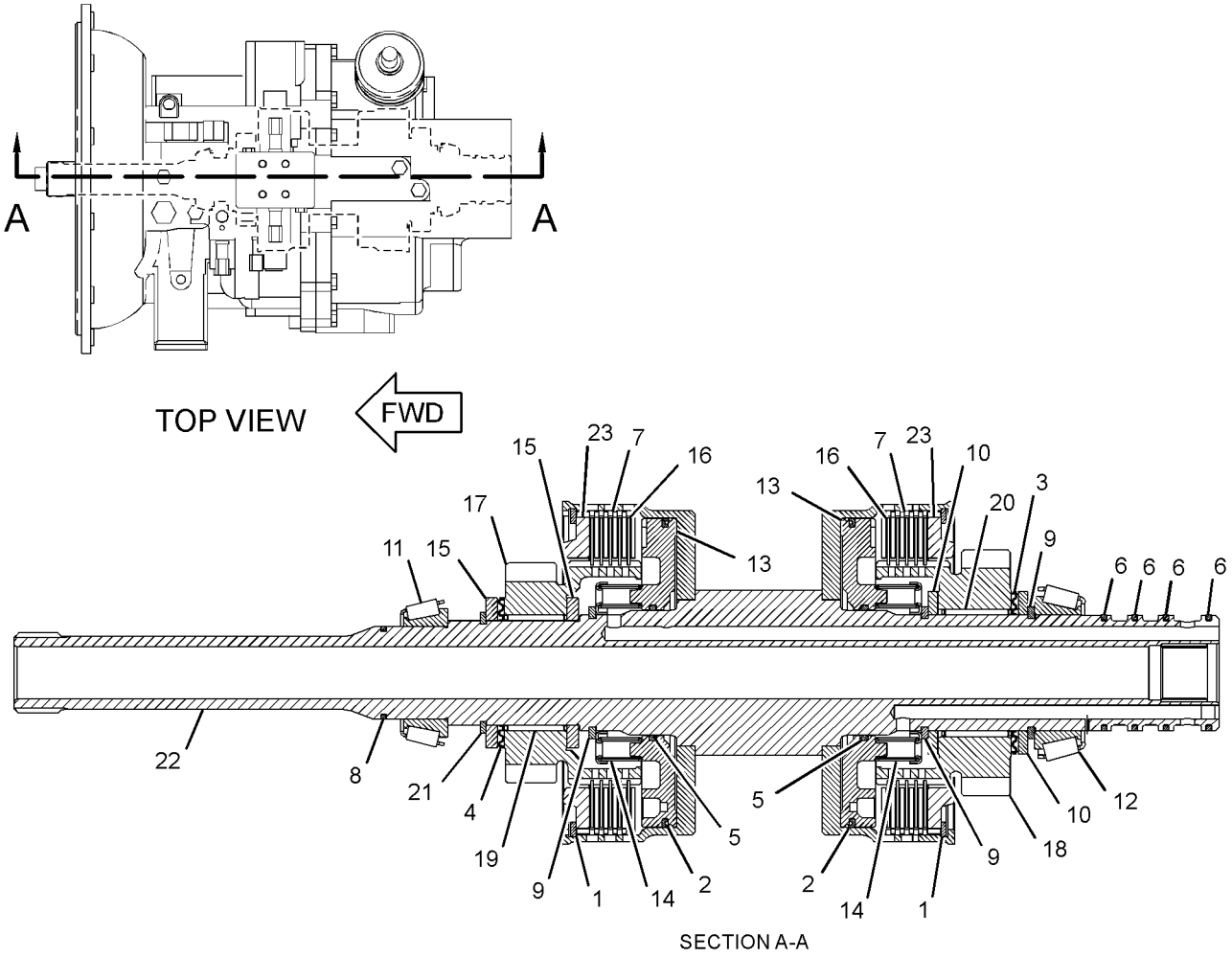

SECTION A-A

GRAPHIC #1 **<END>** g01226307

305-3429 SHAFT GP-INPUT

S/N: CBD7134-UP; MFG1-UP

PART OF 294-9814, 294-9815 TRANSMISSION GP-DIRECT DRIVE

AN ATTACHMENT

SMCS-3053, 3063 **i04035791**

NOTE	REF NO	GRAPHIC REF	PART NUMBER	QTY	PART NAME 1 2 3 4 5 6 (PRODUCT LEVEL)	SEE PAGE
	1	1	**9U-8875**	2	RING-RETAINING	
	2	1	**172-5317**	1	BEARING-SPECIAL	
	3	1	**172-6050**	1	BEARING-SPECIAL	
	4	1	**9U-8886**	4	RING-SEAL	
	5	1	**274-4553**	10	DISC-FRICTION	
	6	1	**122-1886**	1	RING-SEAL	
	7	1	**6V-8757**	3	RING-RETAINING	
	8	1	**121-2500**	2	WASHER-THRUST (50X70X4-MM THK)	
	9	1	**123-8905**	1	CUP-TAPERED ROLLER	
	10	1	**123-8909**	1	CONE-BEARING	
	11	1	**305-3431**	2	PISTON	
	12	1	**147-0238**	2	SPRING AS	
	13	1	**147-0203**	2	WASHER-THRUST (45.3X65X5-MM THK)	
	14	1	**6Y-7929**	10	DISC-FRICTION	
	15	1	**274-8616**	1	GEAR-FORWARD (24-TEETH)	
	16	1	**274-8617**	1	GEAR-REVERSE (27-TEETH)	
	17	1	**274-8628**	1	BEARING-NEEDLE	
	18	1	**274-8629**	1	BEARING-NEEDLE	
	19	1	**294-9821**	1	SPACER	
	20	1	**274-8636**	1	SHAFT AS	
		1	**123-0714**	2	BEARING	
		1	**123-2920**	3	PLUG	
	21	1	**8E-5707**	2	PLATE-END	
	22	1	**294-9812**	2	RETAINER-SPRING	

305-3429 **SHAFT GP-INPUT** *(contd.)* **i04035791**

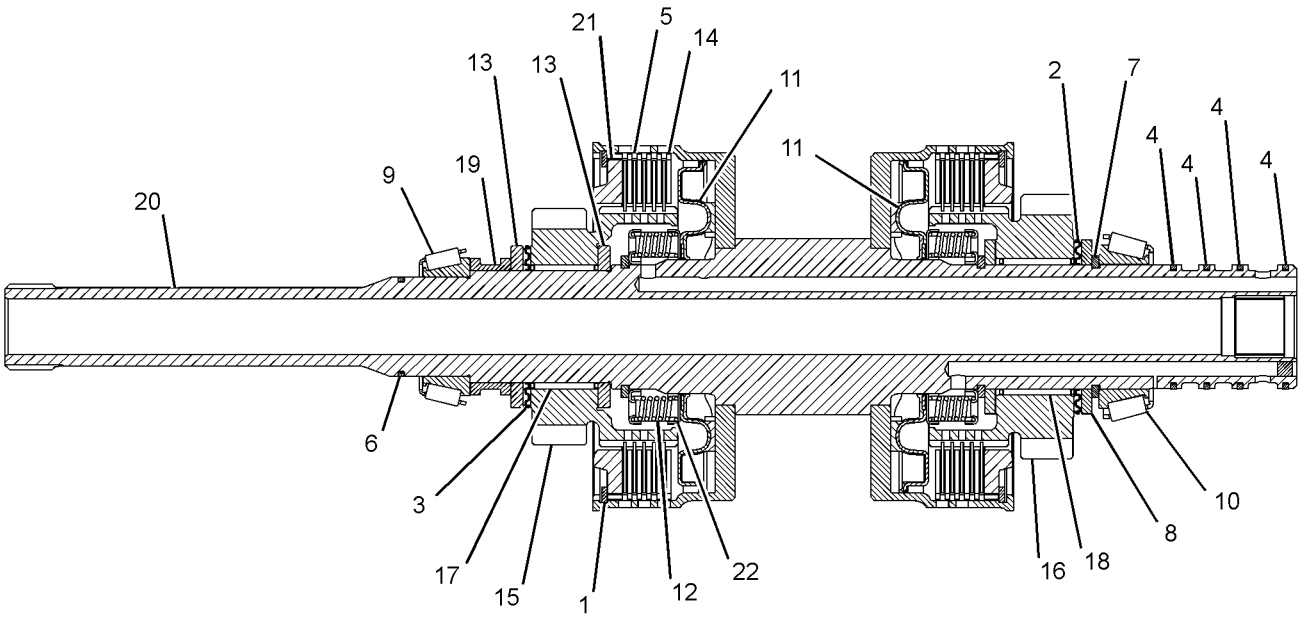

GRAPHIC #1 **<END>** g01383731

275-0478 SHAFT GP-OUTPUT–REAR

S/N: CBD1-UP; MFG1-UP
PART OF 271-2408, 294-9815 TRANSMISSION GP-DIRECT DRIVE
AN ATTACHMENT

SMCS-3053, 3063 **i02520339**

NOTE	REF NO	GRAPHIC REF	PART NUMBER	QTY	PART NAME 1 2 3 4 5 6 (PRODUCT LEVEL)	SEE PAGE
	1	1	**7T-3022**	2	SLEEVE	
	2	1	**6V-8500**	4	BEARING	
	3	1	**6T-9160**	1	GEAR (43-TEETH)	
	4	1	**7T-3017**	1	SPACER (52.5X59X9.6-MM THK)	
	5	1	**7T-3021**	2	SYNCHRONIZER GP	
	6	1	**096-5516**	1	RING-RETAINING	
	7	1	**259-1831**	1	GEAR (37-TEETH)	
	8	1	**6Y-2736**	1	CONE-BEARING	
	9	1	**123-8907**	1	CONE-BEARING	
	10	1	**274-8634**	1	SPACER	
	11	1	**274-8620**	1	GEAR-OUTPUT (37-TEETH)	
	12	1	**274-8621**	1	GEAR-OUTPUT (28-TEETH)	
	13	1	**274-8637**	1	SPACER-BEARING	
	14	1	**278-0215**	1	SHAFT-OUTPUT	
	15	1	**278-0216**	1	GEAR-OUTPUT (17-TEETH)	
	16	1	**278-0217**	2	BEARING-NEEDLE	
	17	1	**278-0218**	1	WASHER-THRUST	
	18	1	**278-0219**	1	CLIP	

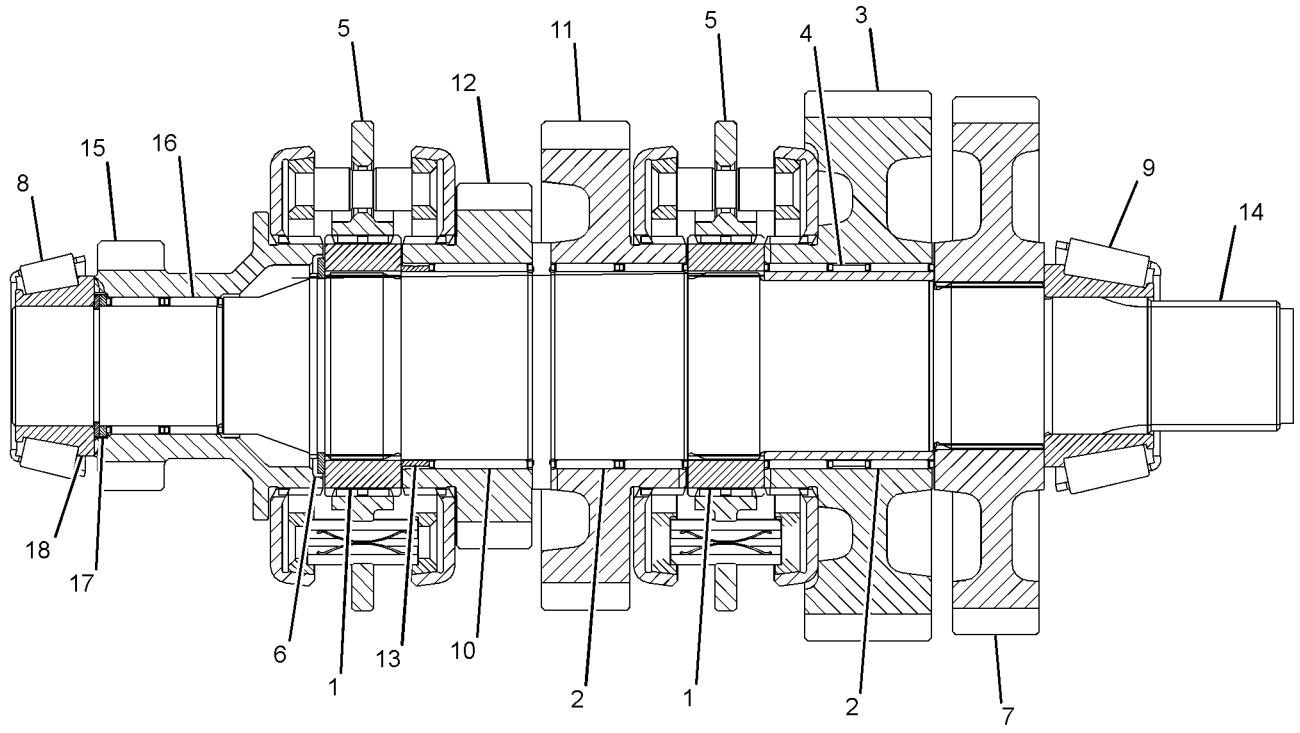

GRAPHIC #1 **<END>** g01228114

276-5337 SHAFT GP-OUTPUT–FRONT

S/N: CBD1-7188
PART OF 271-2408 TRANSMISSION GP-DIRECT DRIVE
AN ATTACHMENT

SMCS-3053, 3063 **i02520341**

NOTE	REF NO	GRAPHIC REF	PART NUMBER	QTY	PART NAME 1 2 3 4 5 6 (PRODUCT LEVEL)	SEE PAGE
	1	1	**095-0927**	1	RING-RETAINING	
	2	1	**274-4553**	8	DISC-FRICTION	
	3	1	**6T-9196**	1	SEAL	
	4	1	**6Y-7957**	8	DISC-FRICTION	
	5	1	**121-0697**	1	WASHER-THRUST (45X65X5-MM THK)	
	6	1	**172-6050**	2	BEARING-SPECIAL	
	7	1	**6V-5100**	1	SEAL-O-RING	
	8	1	**122-1878**	1	RING-SEAL	
	9	1	**122-1877**	1	WASHER-THRUST (40X65X4-MM THK)	
	10	1	**122-1884**	1	SPACER (45X49X8-MM THK)	
	11	1	**121-0885**	1	RETAINER	
	12	1	**121-0714**	1	PISTON	
	13	1	**123-8905**	2	CONE-BEARING	
	14	1	**178-9566**	1	SPRING-PISTON	
	15	1	**161-3249**	1	RING-RETAINING	
	16	1	**123-8912**	2	BEARING-ROLLER	
	17	1	**190-9767**	1	SHAFT AS (OUTPUT)	
	18	1	**121-0904**	1	GEAR AS (36-TEETH)	
	19	1	**8E-5707**	1	PLATE-END	

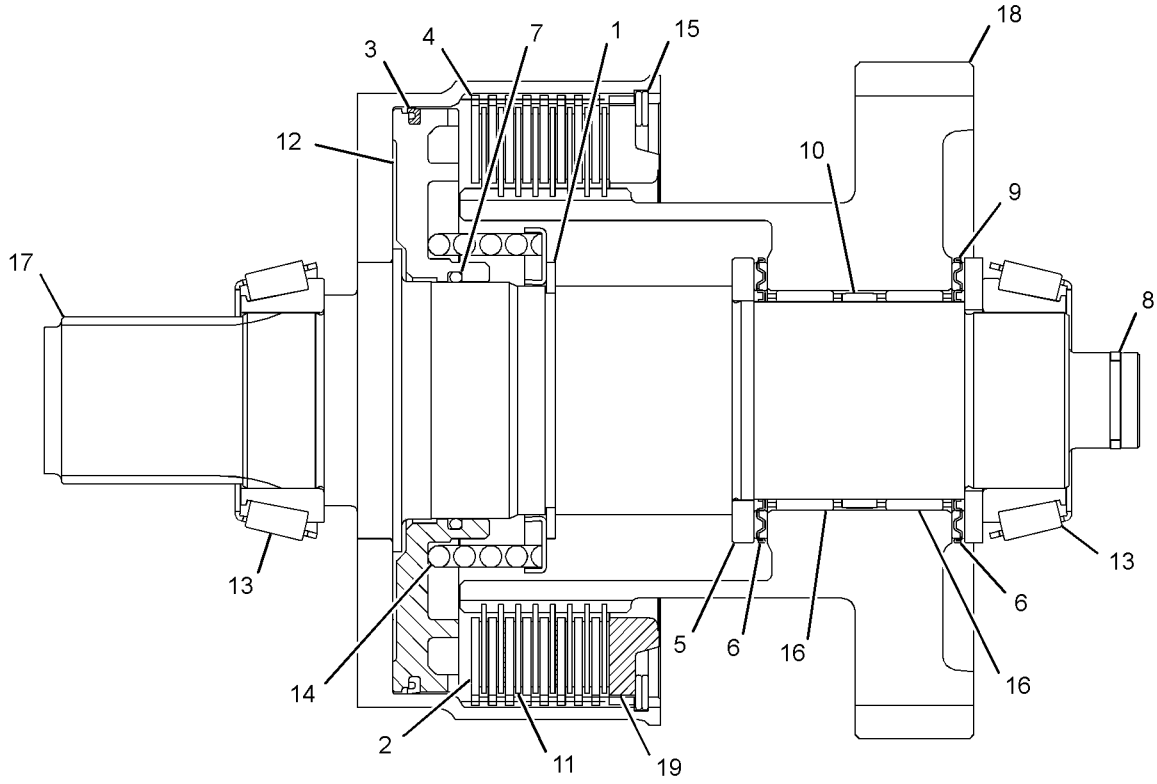

GRAPHIC #1 **<END>** g01233297

276-5339 SHAFT GP-OUTPUT–REAR

S/N: CBD1-UP; MFG1-UP
PART OF 271-2407, 294-9814 TRANSMISSION GP-DIRECT DRIVE
AN ATTACHMENT

SMCS-3053, 3063 **i02520343**

NOTE	REF NO	GRAPHIC REF	PART NUMBER	QTY	PART NAME 1 2 3 4 5 6 (PRODUCT LEVEL)	SEE PAGE
	1	1	**7T-3022**	2	SLEEVE	
	2	1	**6V-8500**	4	BEARING	
	3	1	**6T-9160**	1	GEAR (43-TEETH)	
	4	1	**259-1832**	1	SPACER-SPECIAL	
	5	1	**7T-3017**	1	SPACER (52.5X59X9.6-MM THK)	
	6	1	**7T-3021**	2	SYNCHRONIZER GP	
	7	1	**096-5516**	1	RING-RETAINING	
	8	1	**6Y-2736**	1	CONE-BEARING	
	9	1	**123-8907**	1	CONE-BEARING	
	10	1	**274-8634**	1	SPACER	
	11	1	**274-8620**	1	GEAR-OUTPUT (37-TEETH)	
	12	1	**274-8621**	1	GEAR-OUTPUT (28-TEETH)	
	13	1	**274-8637**	1	SPACER-BEARING	
	14	1	**278-0215**	1	SHAFT-OUTPUT	
	15	1	**278-0216**	1	GEAR-OUTPUT (17-TEETH)	
	16	1	**278-0217**	2	BEARING-NEEDLE	
	17	1	**278-0218**	1	WASHER-THRUST	
	18	1	**278-0219**	1	CLIP	

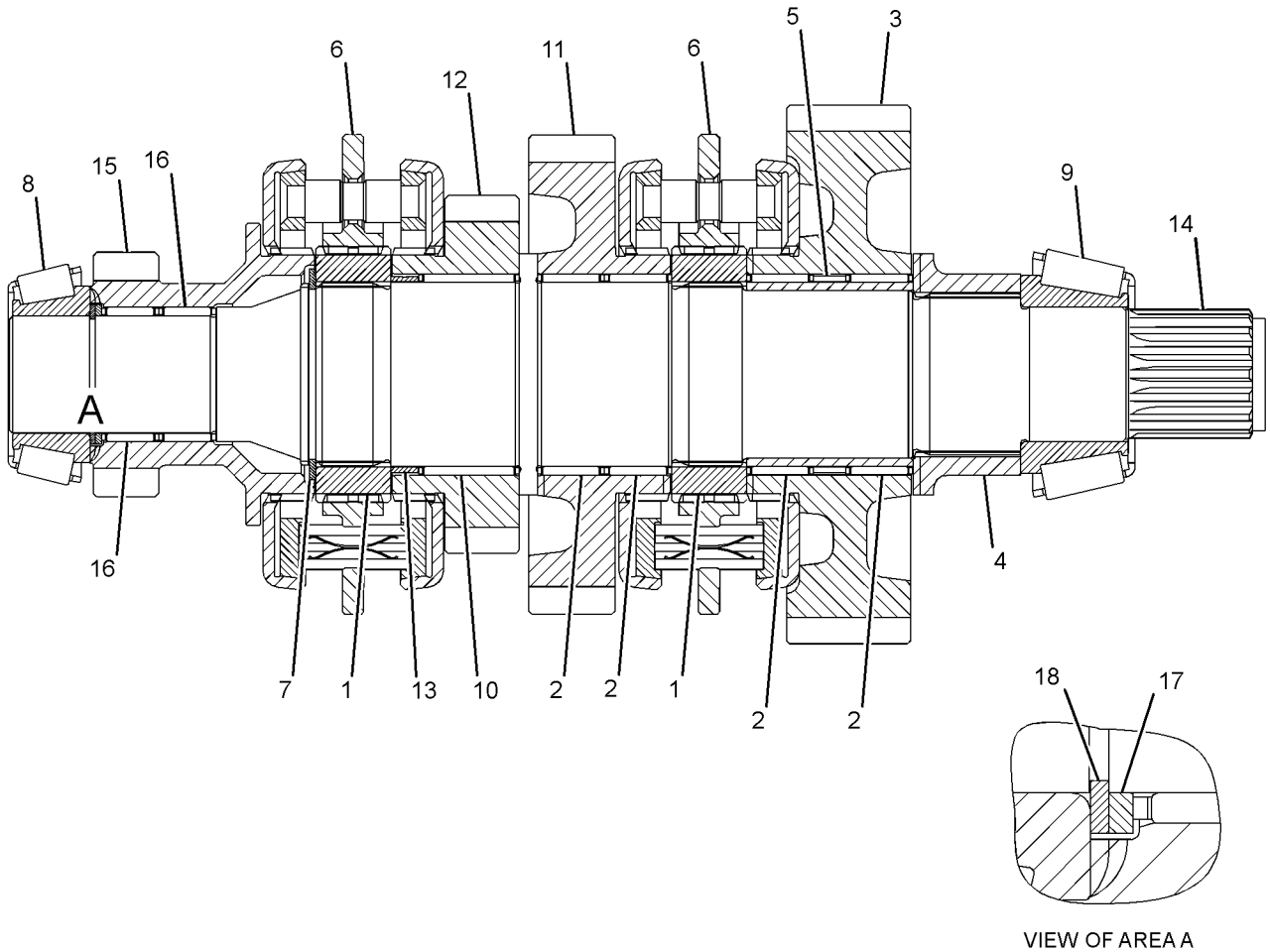

VIEW OF AREA A

GRAPHIC #1 **<END>** g01226076

305-3427 SHAFT GP-OUTPUT–FRONT

S/N: CBD7189-UP; MFG1-UP
PART OF 294-9815 TRANSMISSION GP-DIRECT DRIVE
AN ATTACHMENT

SMCS-3053, 3063 **i04041117**

NOTE	REF NO	GRAPHIC REF	PART NUMBER	QTY	PART NAME 1 2 3 4 5 6 (PRODUCT LEVEL)	SEE PAGE
	1	1	**6V-8757**	1	RING-RETAINING	
	2	1	**274-4553**	8	DISC-FRICTION	
	3	1	**6Y-7957**	8	DISC-FRICTION	
	4	1	**305-3424**	1	WASHER-THRUST	
	5	1	**172-6050**	2	BEARING-SPECIAL	
	6	1	**122-1878**	1	RING-SEAL	
	7	1	**122-1877**	1	WASHER-THRUST (40X65X4-MM THK)	
	8	1	**122-1884**	1	SPACER (45X49X8-MM THK)	
	9	1	**305-3431**	1	PISTON (CLUTCH)	
	10	1	**123-8905**	2	CONE-BEARING	
	11	1	**178-9566**	1	SPRING-PISTON	
	12	1	**161-3249**	1	RING-RETAINING	
	13	1	**123-8912**	2	BEARING-ROLLER	
	14	1	**305-3425**	1	SHAFT AS-OUTPUT	
	15	1	**121-0904**	1	GEAR AS (36-TEETH)	
	16	1	**8E-5707**	1	PLATE-END	
	17	1	**294-9812**	1	RETAINER-SPRING	

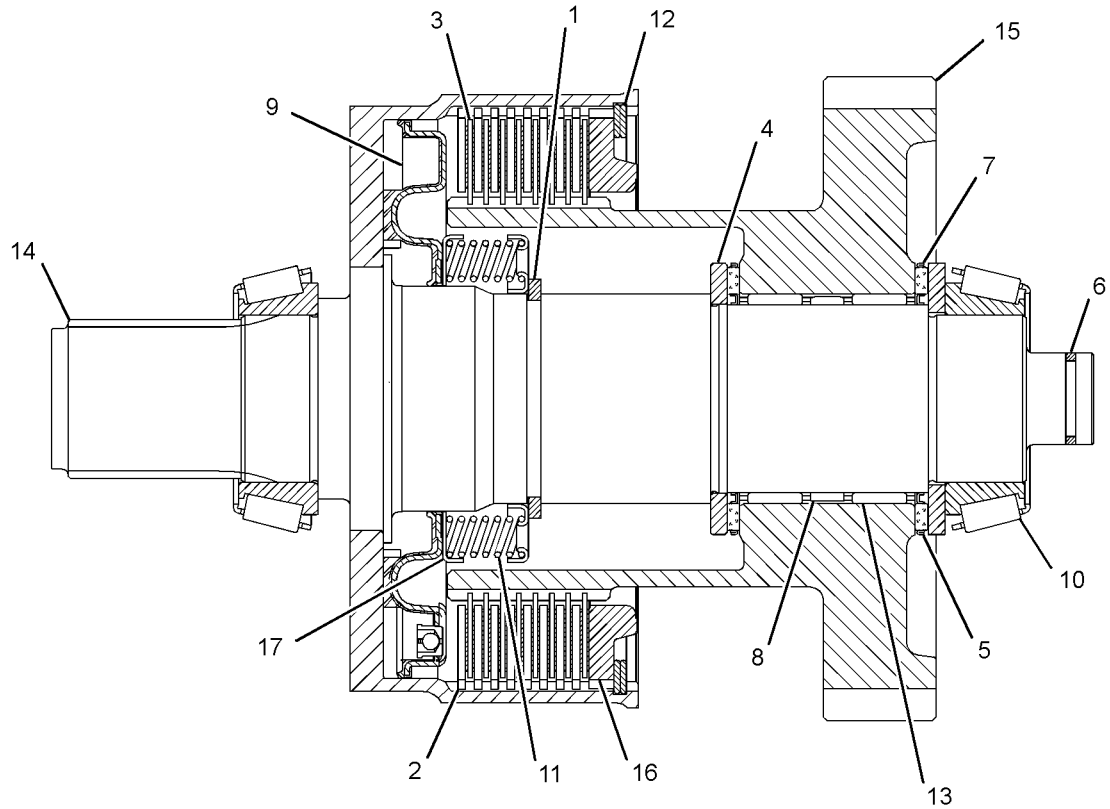

GRAPHIC #1 **<END>** g01382017

271-2403 TRANSMISSION & MOUNTING GP

S/N: CBD1-7133

PART OF 251-6352 TRANSMISSION AR-DIRECT DRIVE

AN ATTACHMENT

SMCS-3030 **i02520215**

NOTE	REF NO	GRAPHIC REF	PART NUMBER	QTY	PART NAME 1 2 3 4 5 6 (PRODUCT LEVEL)	SEE PAGE
Y	1	1	**271-2407**	1	TRANSMISSION GP-DIRECT DRIVE	404
Y	2	1	*271-4487*	1	MOUNTING GP-TRANSMISSION	385

Y-SEPARATE ILLUSTRATION

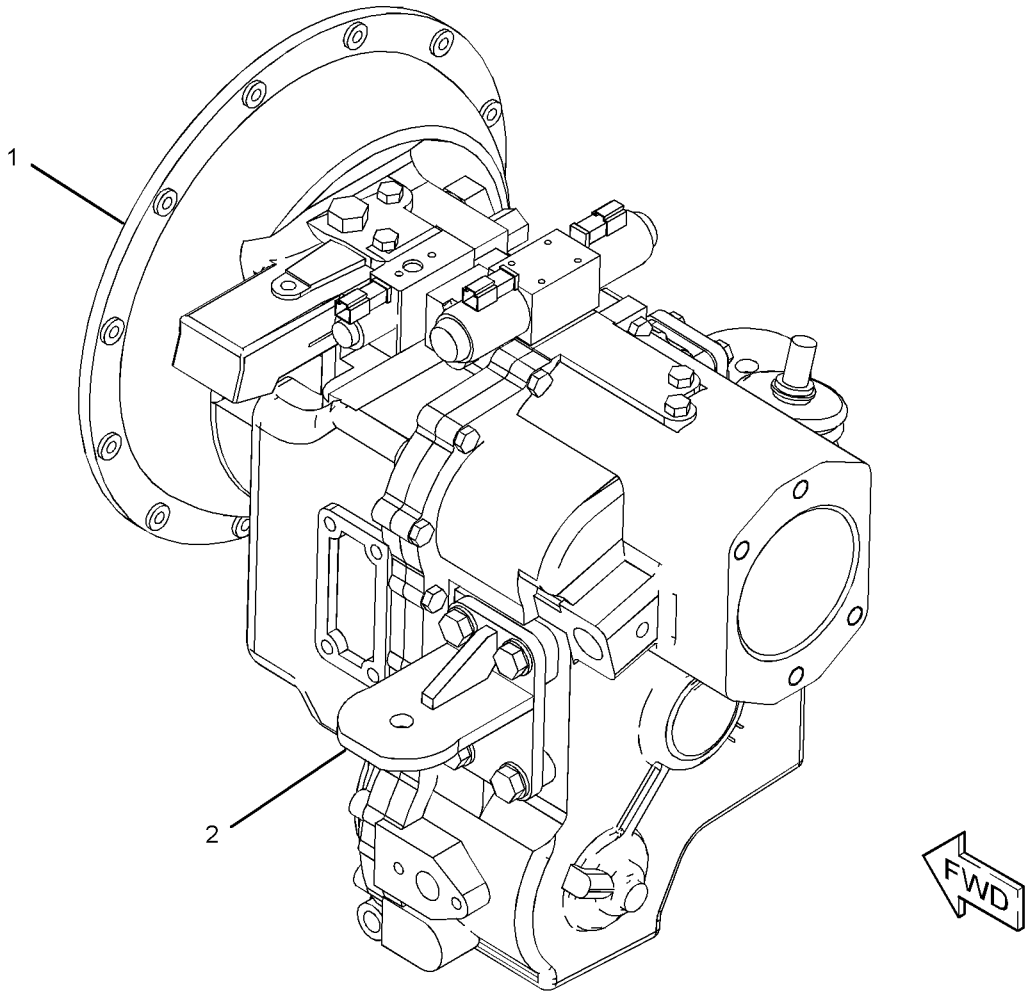

GRAPHIC #1 **<END>** g01230749

271-2404 TRANSMISSION & MOUNTING GP

S/N: CBD1-7188
PART OF 251-6353 TRANSMISSION AR-DIRECT DRIVE
AN ATTACHMENT

SMCS-3030 **i02837578**

NOTE	REF NO	GRAPHIC REF	PART NUMBER	QTY	PART NAME 1 2 3 4 5 6 (PRODUCT LEVEL)	SEE PAGE
Y	1	1	**271-2408**	1	TRANSMISSION GP-DIRECT DRIVE (ALL WHEEL DRIVE, STD SHIFT)	409
Y	2	1	*271-4487*	1	MOUNTING GP-TRANSMISSION	385

Y-SEPARATE ILLUSTRATION

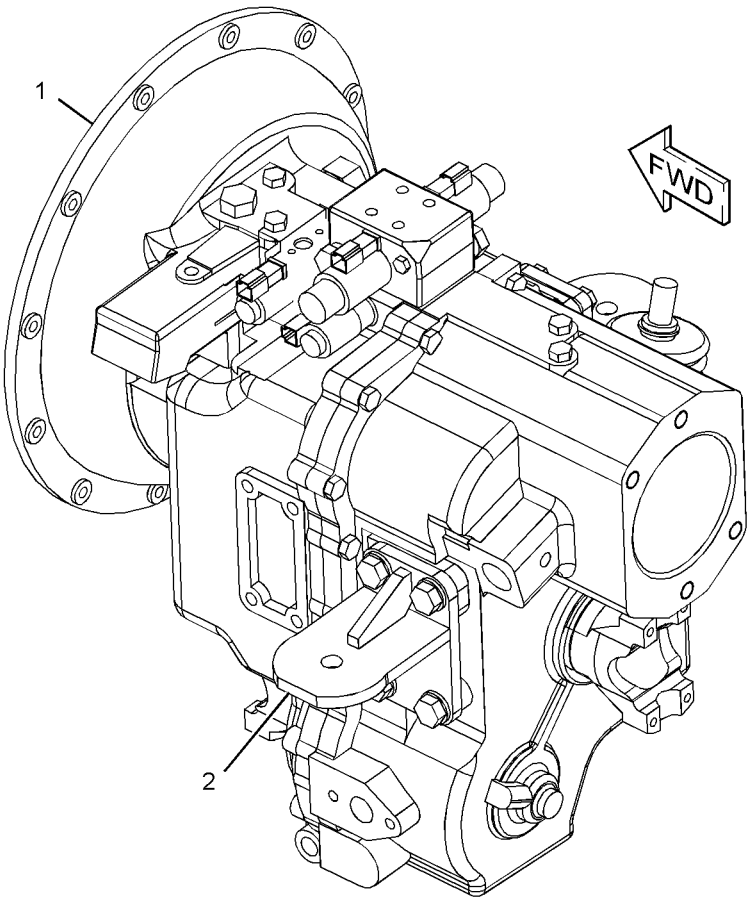

GRAPHIC #1 **<END>** g01230443

251-6352 TRANSMISSION AR-DIRECT DRIVE–2-WHEEL DRIVE

S/N: CBD1-UP; MFG1-UP

PART OF 214-6910, 214-6912, 323-3627, 323-3628 POWER TRAIN AR

AN ATTACHMENT

SMCS-3030 **i04035770**

NOTE	PART NUMBER	QTY	PART NAME 1 2 3 4 5 6 (PRODUCT LEVEL)	SEE PAGE
Y	*111-7907*	1	DRIVE GP-FLEXIBLE COUPLING	367
Y	*271-4487*	1	MOUNTING GP-TRANSMISSION	385
			S/N: CBD7134-UP	
Y	**271-2403**	1	TRANSMISSION & MOUNTING GP	401
			S/N: CBD1-7133	
Y	**294-9814**	1	TRANSMISSION GP-DIRECT DRIVE	414
			S/N: CBD7134-UP	
	268-1709	1	TORQUE CONVERTER AS	
Y-SEPARATE ILLUSTRATION				

<END>

251-6353 TRANSMISSION AR-DIRECT DRIVE–ALL WHEEL DRIVE

S/N: CBD1-UP; MFG1-UP

PART OF 214-6911, 214-6913, 323-3629, 323-3630 POWER TRAIN AR

AN ATTACHMENT

SMCS-3030 **i04040773**

NOTE	PART NUMBER	QTY	PART NAME 1 2 3 4 5 6 (PRODUCT LEVEL)	SEE PAGE
Y	*111-7907*	1	DRIVE GP-FLEXIBLE COUPLING	367
Y	*271-2404*	1	TRANSMISSION & MOUNTING GP	402
			S/N: CBD1-7188	
Y	*271-4487*	1	MOUNTING GP-TRANSMISSION	385
			S/N: CBD7189-UP	
Y	**294-9815**	1	TRANSMISSION GP-DIRECT DRIVE	419
			S/N: CBD7189-UP	
	268-1709	1	TORQUE CONVERTER AS	
Y-SEPARATE ILLUSTRATION				

<END>

271-2407 TRANSMISSION GP-DIRECT DRIVE–
2-WHEEL DRIVE, STANDARD SHIFT
S/N: CBD1-7133

PART OF 271-2403 TRANSMISSION & MOUNTING GP

AN ATTACHMENT

SMCS-3030 **i02520225**

NOTE	REF NO	GRAPHIC REF	PART NUMBER	QTY	PART NAME 1 2 3 4 5 6 (PRODUCT LEVEL)	SEE PAGE
Y	1	2	**275-0472**	1	CASE GP-TRANSMISSION (FRONT)	360
Y	2	2	**275-0473**	1	CASE AS-TRANSMISSION (REAR)	358
	3	2	**121-7385**	1	PUMP GP-TRANSMISSION	
	4	3	**121-7391**	1	LEVER	
	5	2	**216-2267**	1	SEAL-LIP TYPE	
	6	1	**9P-9150**	4	WASHER (8.25X18X0.84-MM THK)	
	7	2	**275-0475**	1	SHAFT GP-IDLER (TRANSMISSION)	
		1	**005-0471**	2	CONE-BEARING	
		1	**274-8623**	1	SHAFT-REVERSE	
Y	8	2	**275-0476**	1	SHAFT GP-INPUT (TRANSMISSION)	393
	9	2	**275-0477**	1	SHAFT GP-COUNTER (TRANSMISSION)	
		1	**8T-1581**	1	CONE	
		1	**123-8907**	1	CONE-BEARING	
		1	**274-8614**	1	GEAR-COUNTERSHAFT (37-TEETH) (37-TEETH)	
		1	**274-8625**	1	GEAR-COUNTERSHAFT (38-TEETH) (38-TEETH)	
Y	10	2	**276-5339**	1	SHAFT GP-OUTPUT (REAR) (REAR)	399
	11	3	**121-7403**	1	FORK-SHIFT (FIRST, SECOND)	
	12	3	**121-7404**	1	FORK-SHIFT (THIRD, FOURTH)	
	13	3	**121-7389**	1	ROD AS-GEARSHIFT (FIRST, SECOND)	
	14	3	**121-7390**	1	ROD AS-GEARSHIFT (THIRD, FOURTH)	
	15	3	**6Y-1341**	2	SPRING	
	16	3	**014-5645**	3	BALL	
	17	3	**9M-1974**	3	WASHER-HARD (8.8X16X2-MM THK)	
	18	3	**7T-3109**	1	PIN	
	19	3	**7T-3249**	2	SCREW (3/8-24X0.75-IN)	
	20	1,3	**9S-4191**	7	PLUG-O-RING	
	21	3	**127-3017**	1	SEAT AS (BALL)	
	22	1,3	**122-6785**	4	PLUG AS	
	23	3	**175-0054**	1	SEAL-O-RING	
	24	3	**174-9711**	1	GASKET	
	25	3	**278-0205**	1	VALVE GP-SOLENOID (FORWARD, REVERSE)	
		1	**8L-2779**	4	SEAL-O-RING	
		1	**274-4557**	1	PLUG-ORIFICE	
		1	**274-4560**	2	NUT-SELF LOCKING	
		1	**280-7009**	2	COIL AS	
M	26	3	**9X-6615**	4	BOLT (M5X0.8X30-MM)	
	27	2,3	**248-3290**	1	VALVE GP-SOLENOID (12-VDC)	
	28	2,3	**121-7396**	1	VALVE GP-RELIEF (TORQUE CONVERTER INLET)	
Y	29	2	**147-0209**	1	VALVE GP-RELIEF (PUMP PRESSURE)	424
M	30	1,3	**8C-5748**	7	BOLT (M8X1.25X55-MM)	
M	31	3	**6V-7731**	2	BOLT (M10X1.5X70-MM)	
M	32	1	**6V-8335**	17	BOLT-SELF-LOCKING (M10X1.5X40-MM)	
M	33	2	**6V-8097**	1	BOLT (M12X1.75X30-MM)	
	34	3	**7T-3251**	1	BREATHER (TRANSMISSION)	
	35	3	**7T-3119**	1	HOUSING	
	36	3	**6K-0806**	1	STRAP-CABLE	
	37	2	**7T-3195**	1	WASHER (12.3X47X6.35-MM THK)	
	38	1	**6Y-1896**	1	PLUG AS-DRAIN	
	39	3	**6Y-2035**	1	GASKET	
	40	2	**5P-8066**	1	SEAL-O-RING	
	41	2	**122-6787**	1	YOKE AS	
	42	3	**4W-9972**	1	SENDER AS-TEMPERATURE (12-VOLT) (TRANSMISSION OIL)	
	43	1,3	**3J-1907**	8	SEAL-O-RING	

271-2407 TRANSMISSION GP-DIRECT DRIVE *(contd.)* i02520225

NOTE	REF NO	GRAPHIC REF	PART NUMBER	QTY	PART NAME 1 2 3 4 5 6 (PRODUCT LEVEL)	SEE PAGE
	44	3	**7T-3111**	1	COVER	
	45	3	**3S-2093**	1	STRAP-CABLE	

M-METRIC PART
Y-SEPARATE ILLUSTRATION

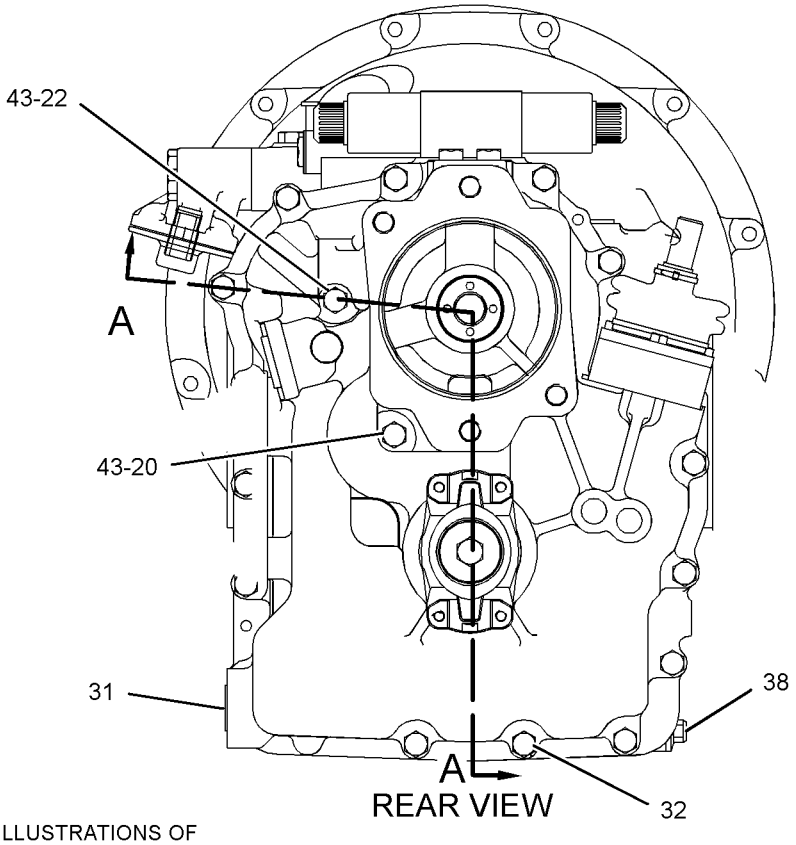

REFER TO ALL ILLUSTRATIONS OF THIS GROUP FOR AUXILIARY VIEWS

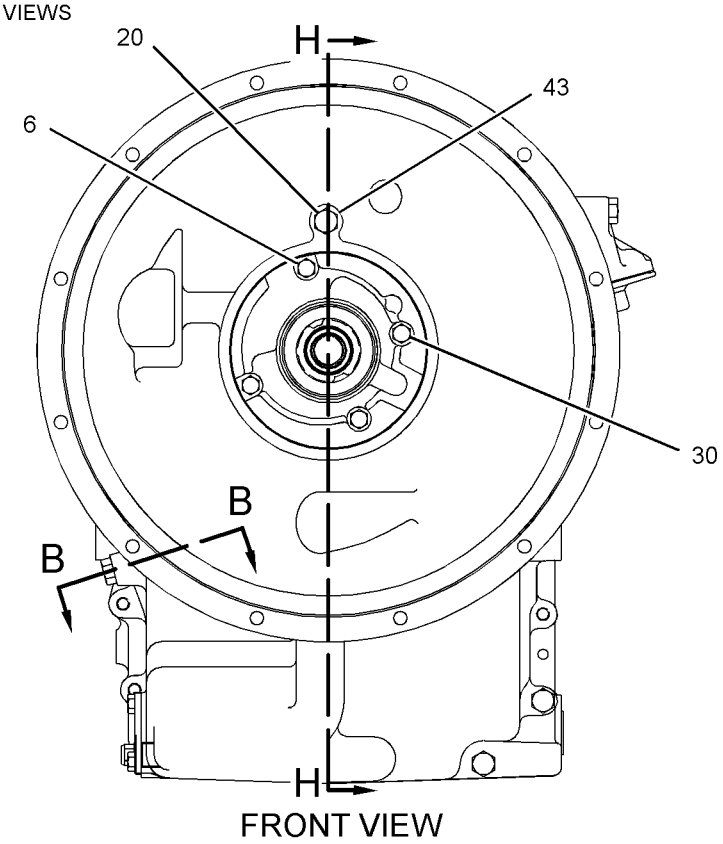

GRAPHIC #1

g01262647

271-2407 TRANSMISSION GP-DIRECT DRIVE *(contd.)* **i02520225**

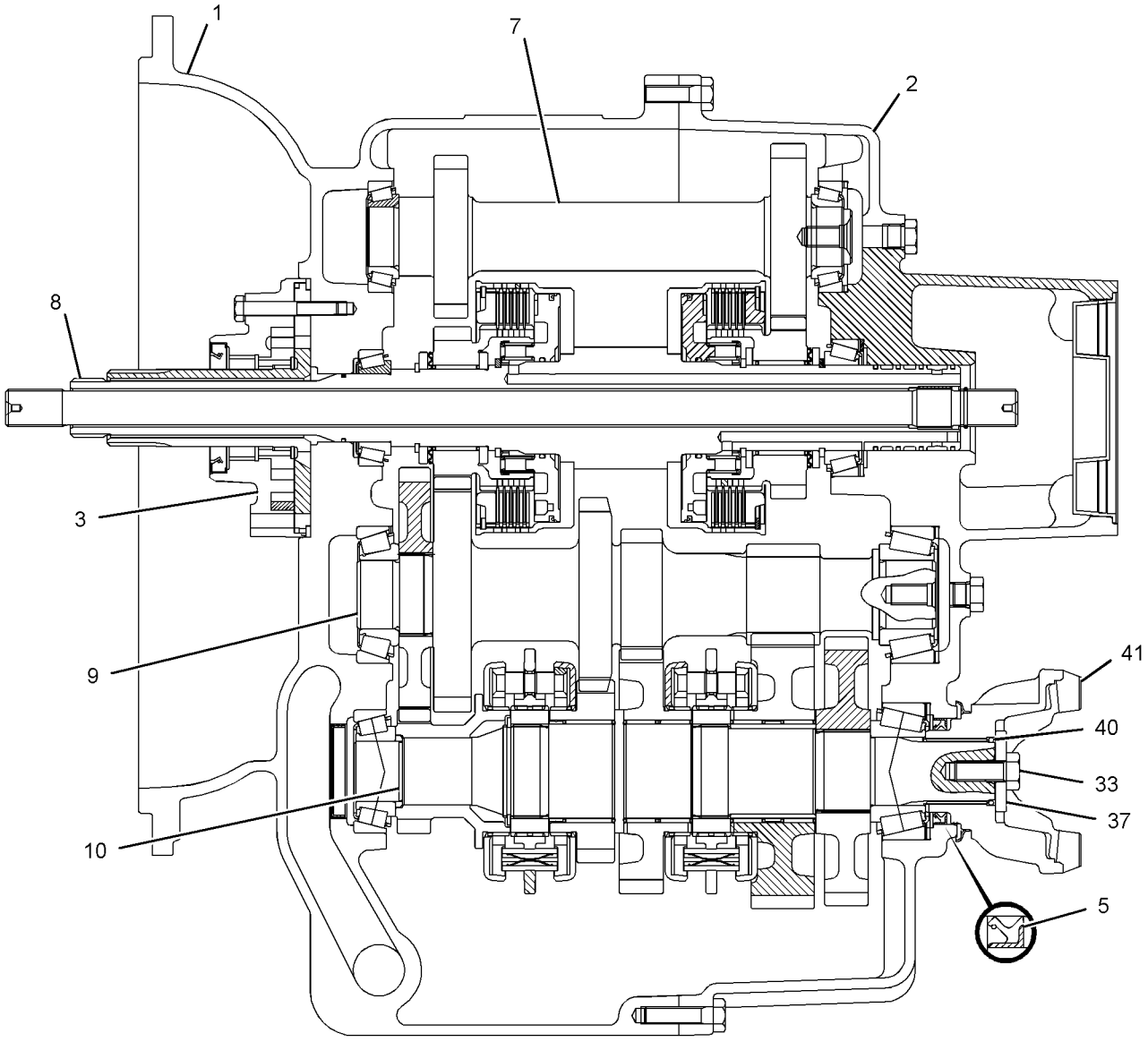

SECTION H-H

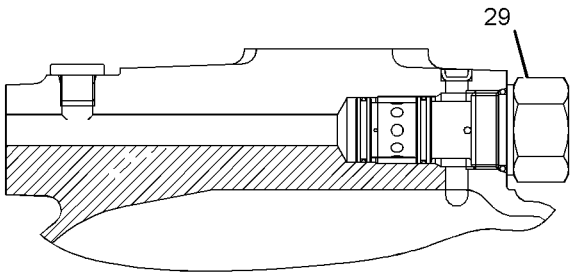

SECTION F-F

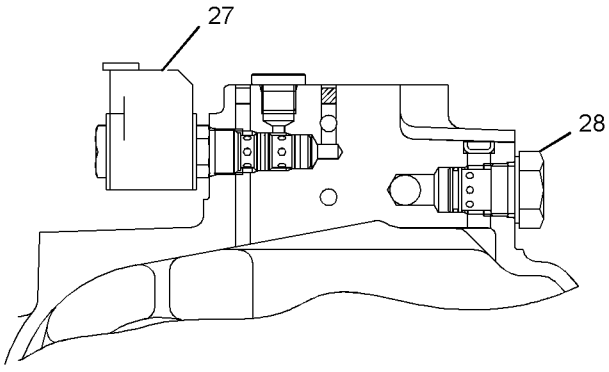

SECTION D-D

GRAPHIC #2

g01225579

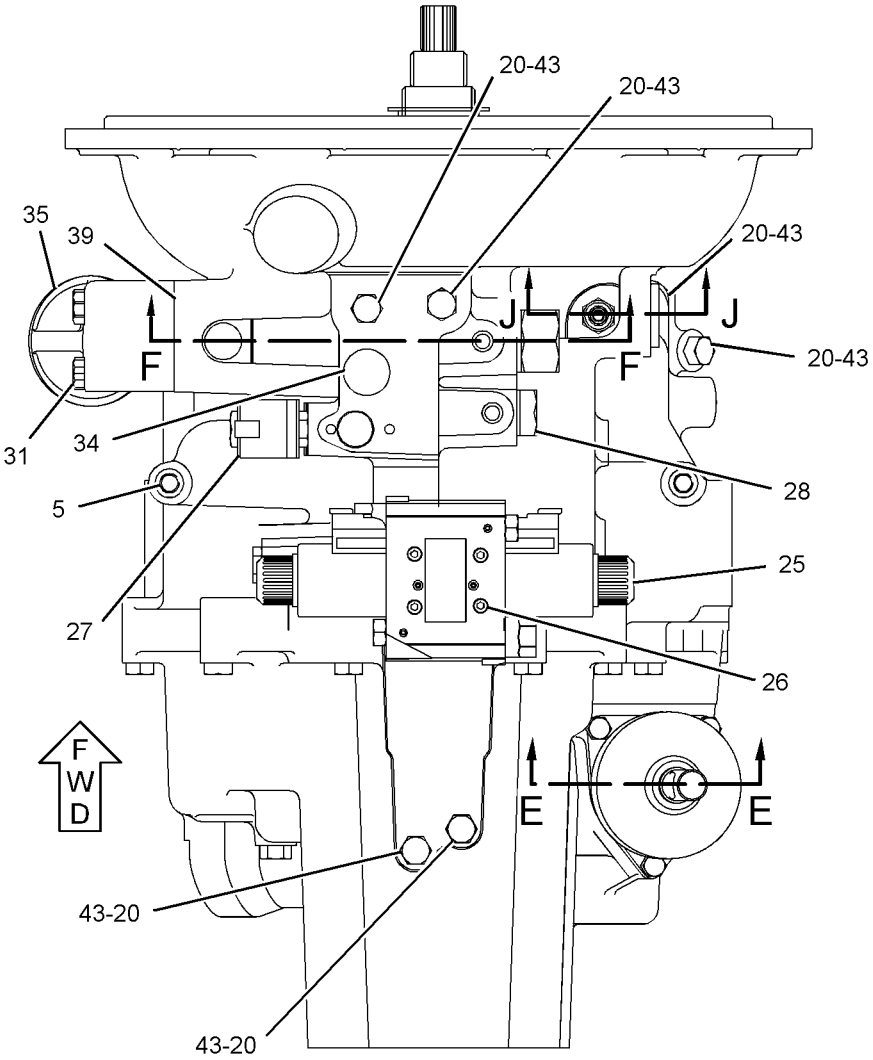

TOP VIEW

REFER TO ALL ILLUSTRATIONS OF THIS GROUP FOR AUXILIARY VIEWS

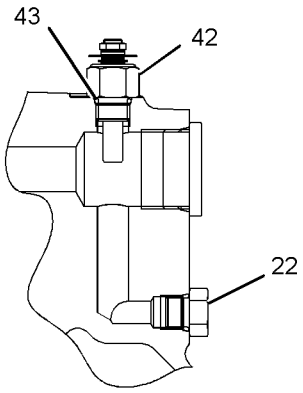

SECTION J-J

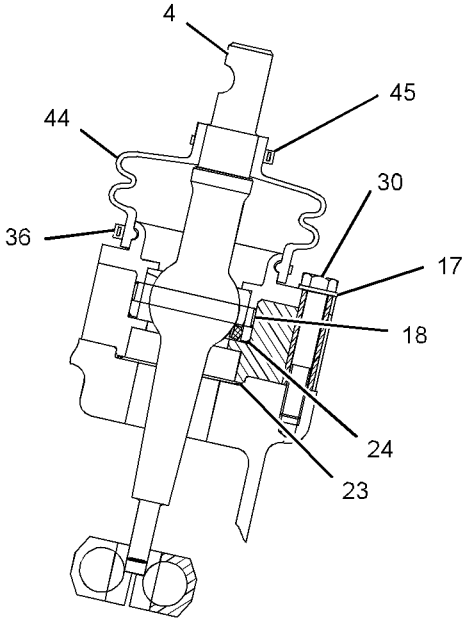

SECTION E-E

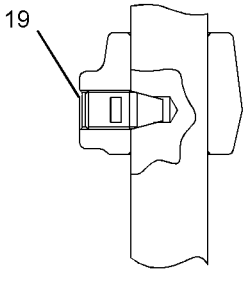

SECTION C-C

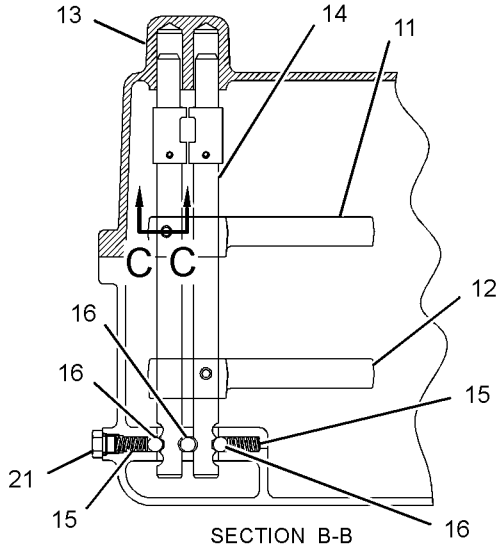

SECTION B-B

GRAPHIC #3

<END>

g01262669

271-2408 TRANSMISSION GP-DIRECT DRIVE–
ALL WHEEL DRIVE, STANDARD SHIFT
S/N: CBD1-7188
PART OF 271-2404 TRANSMISSION & MOUNTING GP
AN ATTACHMENT

SMCS-3030 **i03781671**

NOTE	REF NO	GRAPHIC REF	PART NUMBER	QTY	PART NAME 1 2 3 4 5 6 (PRODUCT LEVEL)	SEE PAGE
	1	3	**293-8753**	1	CASE AS-FRONT	
		3	**122-3652**	3	PLUG	
		3	**123-2920**	3	PLUG	
		3	**237-5188**	1	PLUG-EXPANSION	
Y	2	3	**275-0467**	1	CASE AS-TRANSMISSION (REAR)	353
	3	3	**121-7385**	1	PUMP GP-TRANSMISSION	
		3	**208-8240**	1	SEAL-LIP TYPE	
	4	3	**216-2267**	2	SEAL-LIP TYPE	
M	5	2,3	**8C-5748**	7	BOLT (M8X1.25X55-MM)	
	6	3	**7X-4741**	1	SEAL	
	7	3	**9P-9150**	4	WASHER (8.25X18X0.84-MM THK)	
	8	3	**275-0475**	1	SHAFT GP-IDLER (TRANSMISSION)	
		3	**005-0471**	2	CONE-BEARING	
		3	**274-8623**	1	SHAFT-REVERSE	
	9	3	**275-0477**	1	SHAFT GP-COUNTER (TRANSMISSION)	
		3	**8T-1581**	1	CONE	
		3	**123-8907**	1	CONE-BEARING	
		3	**274-8614**	1	GEAR-COUNTERSHAFT (37-TEETH)	
		3	**274-8625**	1	GEAR-COUNTERSHAFT (38-TEETH)	
Y	10	3	**275-0478**	1	SHAFT GP-OUTPUT (REAR)	397
Y	11	3	**276-5337**	1	SHAFT GP-OUTPUT (FRONT)	398
	12	1	**121-7403**	1	FORK-SHIFT (FIRST, SECOND)	
	13	1	**121-7404**	1	FORK-SHIFT (THIRD, FOURTH)	
	14	1	**121-7389**	1	ROD AS-GEARSHIFT (FIRST, SECOND)	
	15	1	**121-7390**	1	ROD AS-GEARSHIFT (THIRD, FOURTH)	
	16	1	**6Y-1341**	2	SPRING	
	17	1	**014-5645**	3	BALL	
	18	2	**9M-1974**	3	WASHER-HARD (8.8X16X2-MM THK)	
	19	2	**7T-3109**	1	PIN	
	20	1	**7T-3249**	2	SCREW (3/8-24X0.75-IN)	
	21	1,2	**9S-4191**	10	PLUG-O-RING	
	22	2	**127-3017**	1	SEAT AS (BALL)	
	23	2	**121-7391**	1	LEVER	
	24	2	**175-0054**	1	SEAL-O-RING	
	25	2	**174-9711**	1	GASKET	
	27	2	**278-0205**	1	VALVE GP-SOLENOID (FORWARD, REVERSE)	
		2	**280-7009**	2	COIL AS	
		2	**8L-2779**	4	SEAL-O-RING	
		2	**280-7012**	2	TUBE AS	
M	28	2	**9X-6615**	4	BOLT (M5X0.8X30-MM)	
	29	2	**248-3290**	2	VALVE GP-SOLENOID (ALL WHEEL DRIVE, CLUTCH ONE)	
					(EACH INCLUDES)	
		2	**238-4626**	1	COIL AS	
	30	2	**121-7396**	1	VALVE GP-RELIEF (TORQUE CONVERTER INLET)	
		2	**6V-4589**	1	SEAL-O-RING	
		2	**8L-2746**	1	SEAL-O-RING	
Y	31	2	**147-0209**	1	VALVE GP-RELIEF (PRESSURE REGULATOR)	424
	32	2	**6K-0806**	1	STRAP-CABLE	
M	34	1	**6V-8335**	14	BOLT-SELF-LOCKING (M10X1.5X40-MM)	
M	35	1	**121-9875**	4	BOLT (M10X1.5X55-MM)	
M	36	2	**6V-7731**	2	BOLT (M10X1.5X70-MM)	
M	37	1	**6V-8097**	2	BOLT (M12X1.75X30-MM)	
	38	1	**294-9822**	1	BREATHER AS (TRANSMISSION)	

271-2408 **TRANSMISSION GP-DIRECT DRIVE** *(contd.)* **i03781671**

NOTE	REF NO	GRAPHIC REF	PART NUMBER	QTY	PART NAME 1 2 3 4 5 6 (PRODUCT LEVEL)	SEE PAGE
		1	**7T-3251**	1	BREATHER (TRANSMISSION)	
		1	**250-6855**	2	WASHER (14.5X18X1.5-MM THK)	
		1	**294-9823**	1	PLUG-BREATHER	
		1	**294-9824**	1	TUBE-BREATHER	
	39	2	**7T-3119**	1	HOUSING	
	41	3	**7T-3195**	2	WASHER (12.3X47X6.35-MM THK)	
	42	2	**6Y-2035**	1	GASKET	
	43	3	**5P-8066**	2	SEAL-O-RING	
	44	1	**294-9820**	1	TUBE	
	45	3	**122-1883**	1	SPACER (38X45X5-MM THK)	
	46	3	**122-6787**	2	YOKE AS	
	47	1	**6Y-1896**	1	PLUG AS-DRAIN	
	48	2	**4W-9972**	1	SENDER AS-TEMPERATURE (12-VOLT) (TRANSMISSION OIL)	
		2	**6V-8378**	1	NUT (10-32-THD)	
		2	**8F-1434**	1	LOCKWASHER	
		2	**8T-0328**	1	WASHER-HARD (5.5X10X1-MM THK)	
	49	1,2	**3J-1907**	11	SEAL-O-RING	
Y	50	3	**275-0476**	1	SHAFT GP-INPUT	393
	51	2	**7T-3111**	1	COVER	
	52	2	**3S-2093**	1	STRAP-CABLE	
	53	3	**208-8240**	1	SEAL-LIP TYPE	
	54	1	**123-2918**	2	SLEEVE	
	55	1	**123-2919**	2	NUT (M11X1-THD)	

M-METRIC PART
Y-SEPARATE ILLUSTRATION

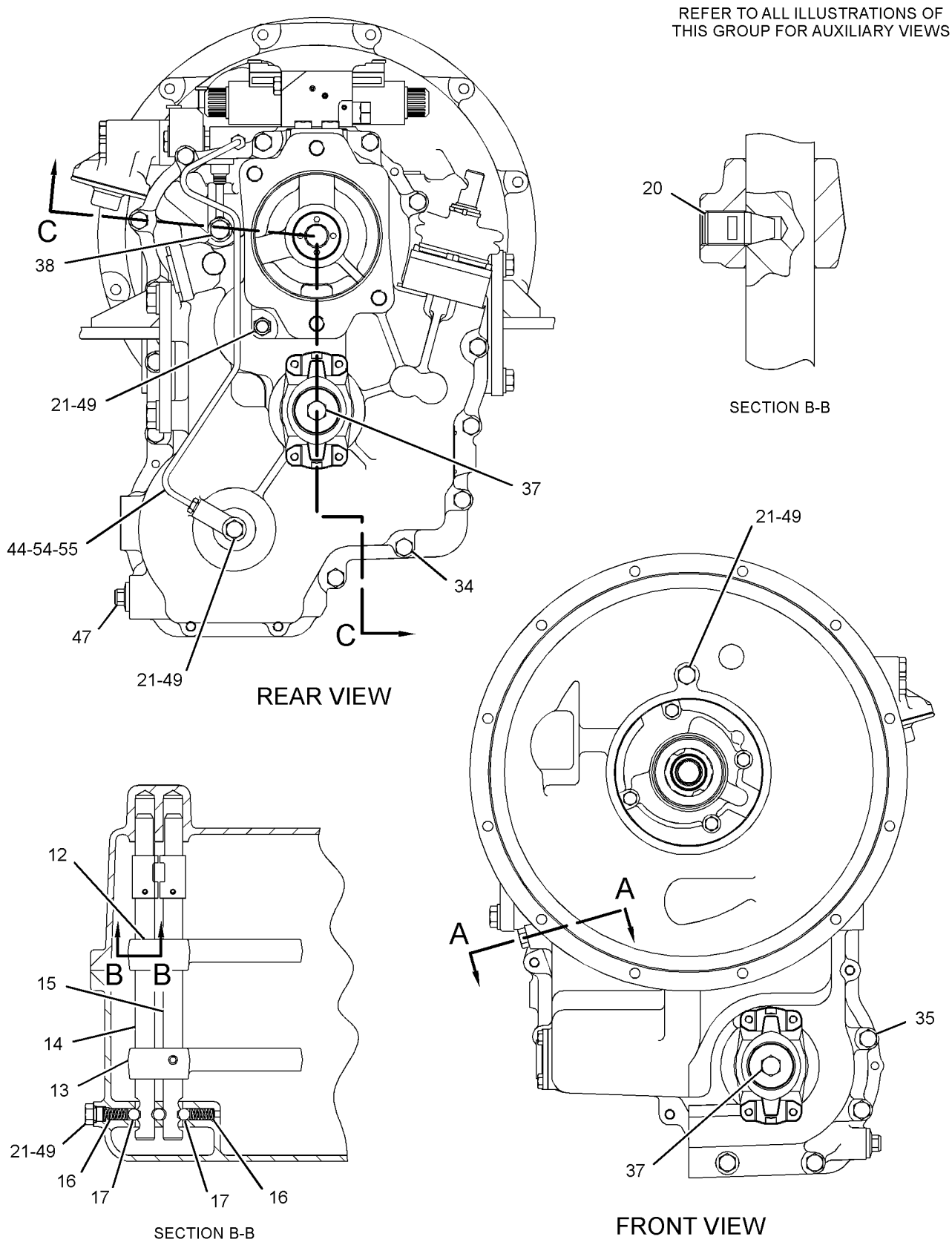

GRAPHIC #1

g02055654

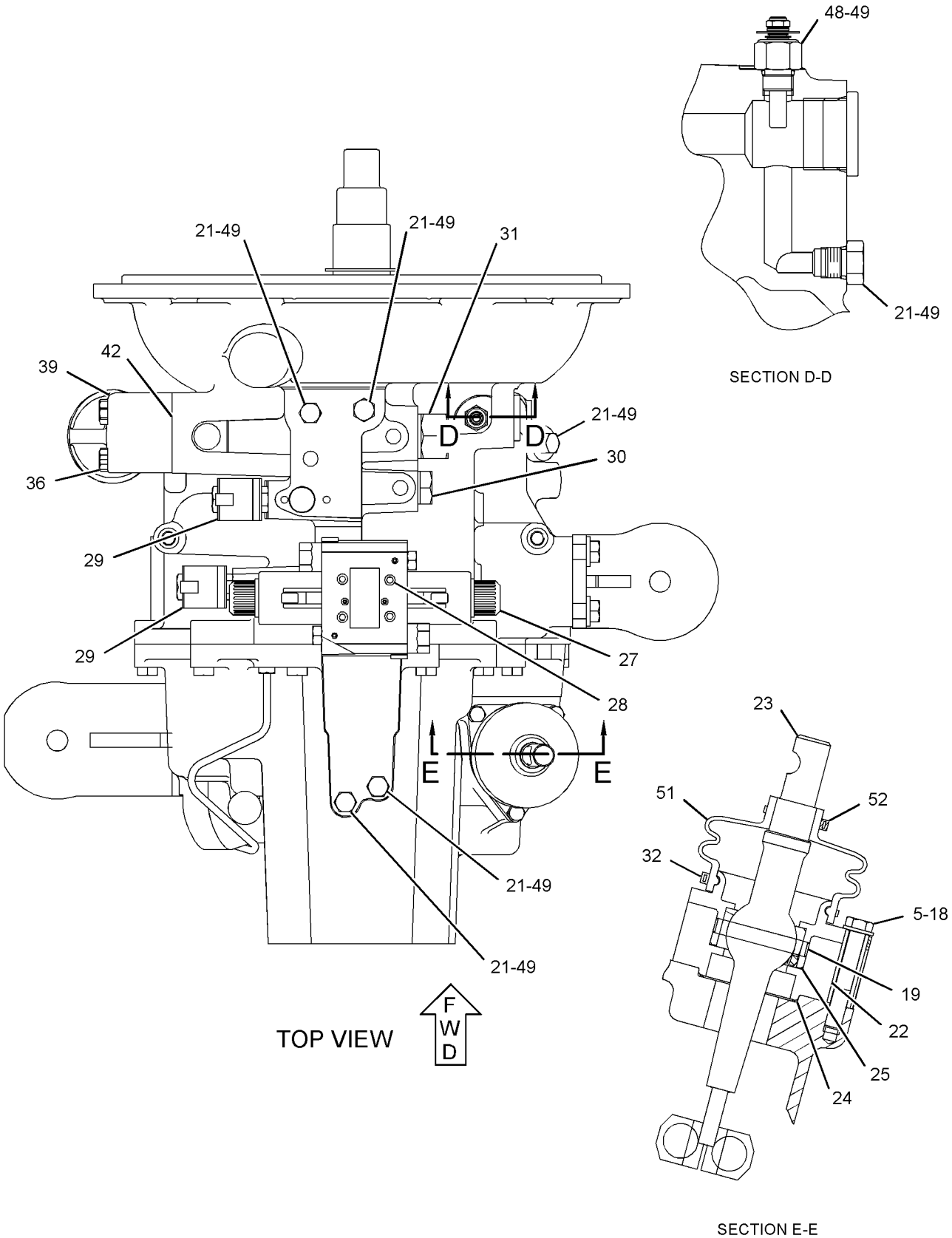

GRAPHIC #2

g02055655

271-2408 **TRANSMISSION GP-DIRECT DRIVE** *(contd.)* **i03781671**

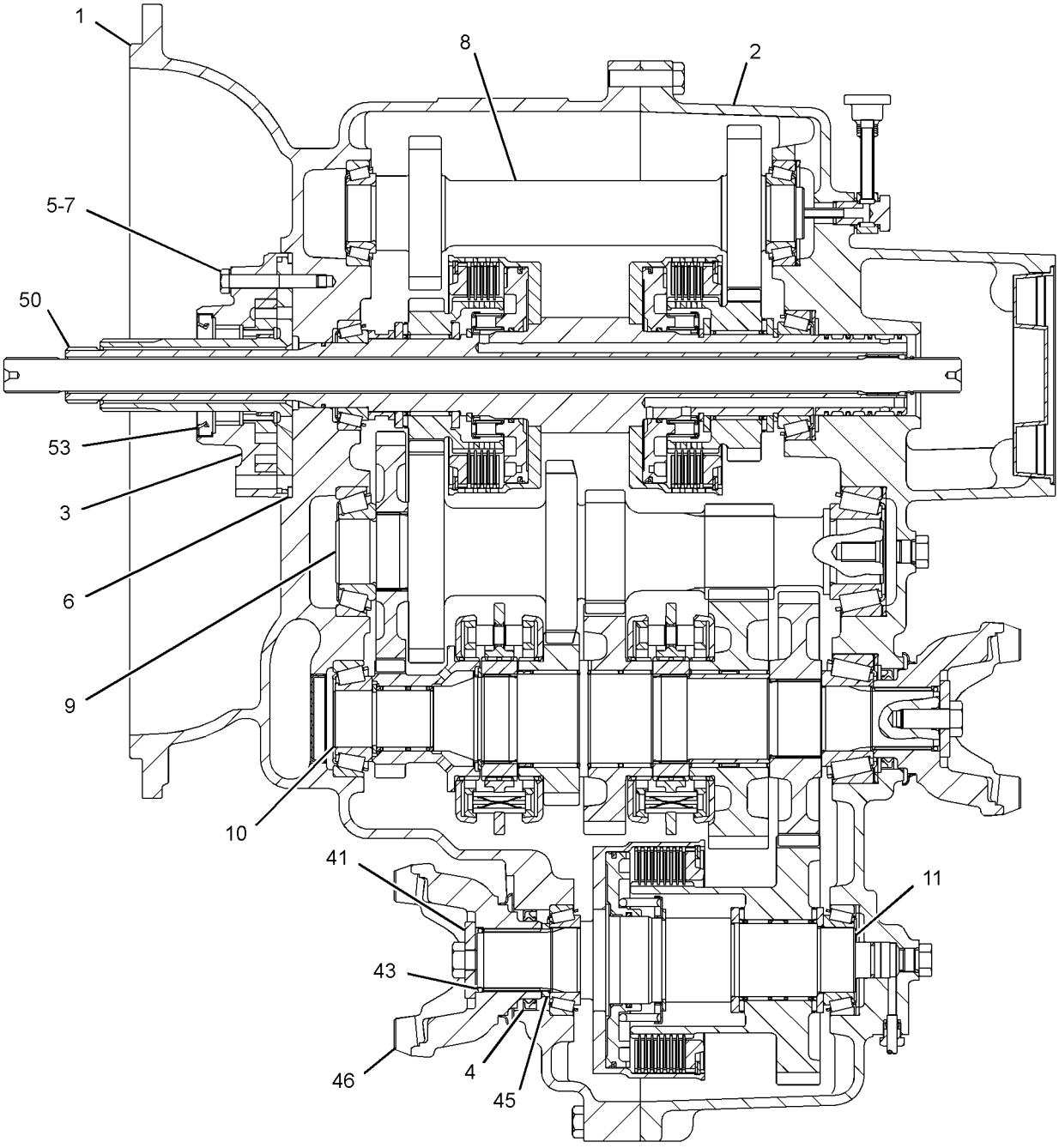

SECTION C-C

GRAPHIC #3 **<END>** g02055656

294-9814 TRANSMISSION GP-DIRECT DRIVE–2WD

S/N: CBD7134-UP; MFG1-UP

PART OF 251-6352 TRANSMISSION AR-DIRECT DRIVE

AN ATTACHMENT

SMCS-3030 **i04035772**

NOTE	REF NO	GRAPHIC REF	PART NUMBER	QTY	PART NAME 1 2 3 4 5 6 (PRODUCT LEVEL)	SEE PAGE
Y	1	2	**275-0472**	1	CASE GP-TRANSMISSION (FRONT)	360
Y	2	2	**275-0474**	1	CASE GP-TRANSMISSION (REAR)	361
	3	2	**121-7385**	1	PUMP GP-TRANSMISSION (DIRECT DRIVE)	
		1	**208-8240**	1	SEAL-LIP TYPE	
	4	3	**121-7391**	1	LEVER	
	5	2	**7X-4741**	1	SEAL	
	6	2	**9P-9150**	4	WASHER (8.25X18X0.84-MM THK)	
	7	2	**275-0475**	1	SHAFT GP-IDLER (TRANSMISSION)	
		2	**005-0471**	2	CONE-BEARING	
		2	**274-8623**	1	SHAFT-REVERSE	
Y	8	2	**305-3429**	1	SHAFT GP-INPUT (ALL WHEEL DRIVE)	395
	9	2	**275-0477**	1	SHAFT GP-COUNTER (TRANSMISSION)	
		2	**8T-1581**	1	CONE (TAPERED ROLLER BEARING)	
		2	**123-8907**	1	CONE-BEARING	
		2	**274-8614**	1	GEAR-COUNTERSHAFT (37-TEETH)	
		2	**274-8625**	1	GEAR-COUNTERSHAFT (38-TEETH)	
Y	10	2	**276-5339**	1	SHAFT GP-OUTPUT (REAR)	399
	11	1	**121-7403**	1	FORK-SHIFT (FIRST, SECOND)	
	12	1	**121-7404**	1	FORK-SHIFT (THIRD, FOURTH)	
	13	1	**121-7389**	1	ROD AS-GEARSHIFT (FIRST, SECOND)	
	14	1	**121-7390**	1	ROD AS-GEARSHIFT (THIRD, FOURTH)	
	15	1	**6Y-1341**	2	SPRING	
	16	1	**014-5645**	3	BALL	
	17	3	**9M-1974**	3	WASHER-HARD (8.8X16X2-MM THK)	
	18	3	**7T-3109**	1	PIN	
	19	1	**7T-3249**	2	SCREW (3/8-24X0.75-IN)	
	20	1,3	**9S-4191**	12	PLUG-O-RING	
	21	3	**127-3017**	1	SEAT AS (BALL)	
	22	3	**7T-3251**	1	BREATHER (TRANSMISSION)	
	23	3	**175-0054**	1	SEAL-O-RING	
	24	3	**174-9711**	1	GASKET	
	25	3	**324-2578**	1	VALVE GP-SOLENOID (FORWARD, REVERSE)	
		3	**8L-2779**	4	SEAL-O-RING	
		3	**324-2579**	2	COIL AS (12-VOLT)	
		3	**280-7012**	2	TUBE AS	
					(EACH INCLUDES)	
		3	**6V-8399**	1	SEAL-O-RING	
M	26	3	**9X-6615**	4	BOLT (M5X0.8X30-MM)	
	27	3	**305-3423**	1	VALVE GP-SOLENOID (12-VOLT) (DIFFERENTIAL LOCK)	
		3	**274-8034**	1	COIL AS (12-VOLT)	
	28	3	**121-7396**	1	VALVE GP-RELIEF (TORQUE CONVERTER INLET)	
		1	**6V-4589**	1	SEAL-O-RING	
		1	**8L-2746**	1	SEAL-O-RING	
Y	29	3	**147-0209**	1	VALVE GP-RELIEF (PUMP PRESSURE)	424
M	30	2,3	**8C-5748**	7	BOLT (M8X1.25X55-MM)	
M	32	1	**6V-8335**	17	BOLT-SELF-LOCKING (M10X1.5X40-MM)	
M	33	1	**6V-8097**	1	BOLT (M12X1.75X30-MM)	
	34	1	**6V-3965**	1	FITTING (QUICK DISCONNECT)	
	35	3	**7T-3119**	1	HOUSING (FILTER)	
	37	2	**7T-3195**	1	WASHER (12.3X47X6.35-MM THK)	
	38	1	**6Y-1896**	1	PLUG AS (TRANSMISSION DRAIN)	
		1	**5P-6718**	1	SEAL-O-RING	
	39	3	**6Y-2035**	1	GASKET	
	40	2	**5P-8066**	1	SEAL-O-RING	

294-9814 **TRANSMISSION GP-DIRECT DRIVE** *(contd.)* **i04035772**

NOTE	REF NO	GRAPHIC REF	PART NUMBER	QTY	PART NAME 1 2 3 4 5 6 (PRODUCT LEVEL)	SEE PAGE
	41	2	**122-6787**	1	YOKE AS	
		1	**123-1377**	1	GUARD	
	42	3	**4W-9972**	1	SENDER AS-TEMPERATURE (12-VOLT) (TRANSMISSION OIL)	
		3	**6V-8378**	1	NUT (10-32-THD)	
		3	**8F-1434**	1	LOCKWASHER	
		3	**8T-0328**	1	WASHER-HARD (5.5X10X1-MM THK)	
	43	1,3	**3J-1907**	13	SEAL-O-RING	
	44	3	**7T-3111**	1	COVER	
	45	3	**3S-2093**	1	STRAP-CABLE	
	46	3	**6K-0806**	1	STRAP-CABLE	
M	47	3	**6V-7731**	2	BOLT (M10X1.5X70-MM)	
	48	2	**302-8432**	1	SEAL-LIP TYPE	
	49	1	**293-2147**	1	BREATHER AS (TRANSMISSION)	
		1	**3J-1907**	1	SEAL-O-RING	
		1	**122-6785**	1	PLUG AS	
	50	2	**208-8240**	1	SEAL-LIP TYPE	
	51	1	**6V-0852**	1	CAP-DUST	
	52	1	**222-9824**	1	PLUG	
	53	1	**205-9163**	1	WASHER (16X22X3-MM THK)	

M-METRIC PART
Y-SEPARATE ILLUSTRATION

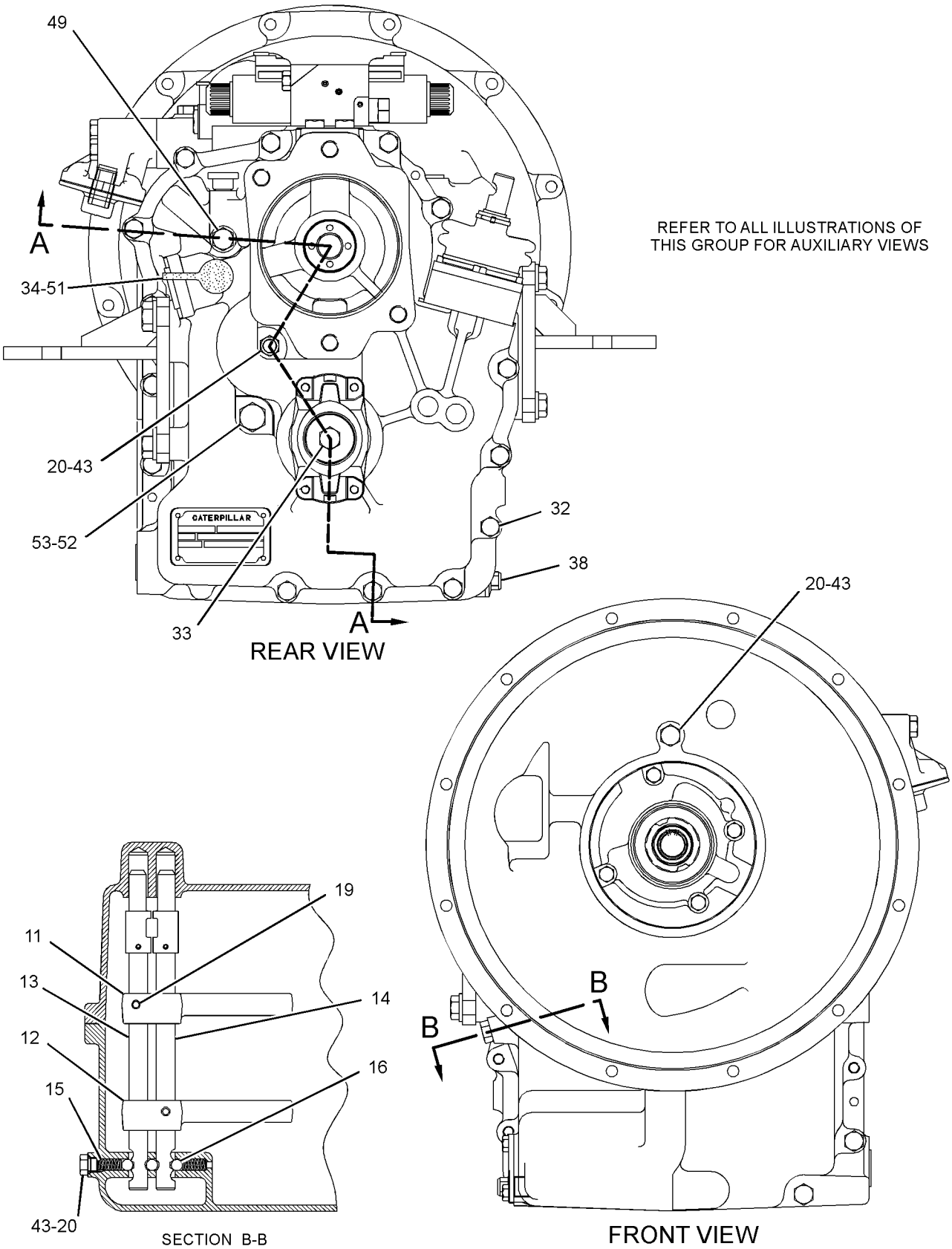

GRAPHIC #1

g01388444

294-9814 **TRANSMISSION GP-DIRECT DRIVE** *(contd.)* **i04035772**

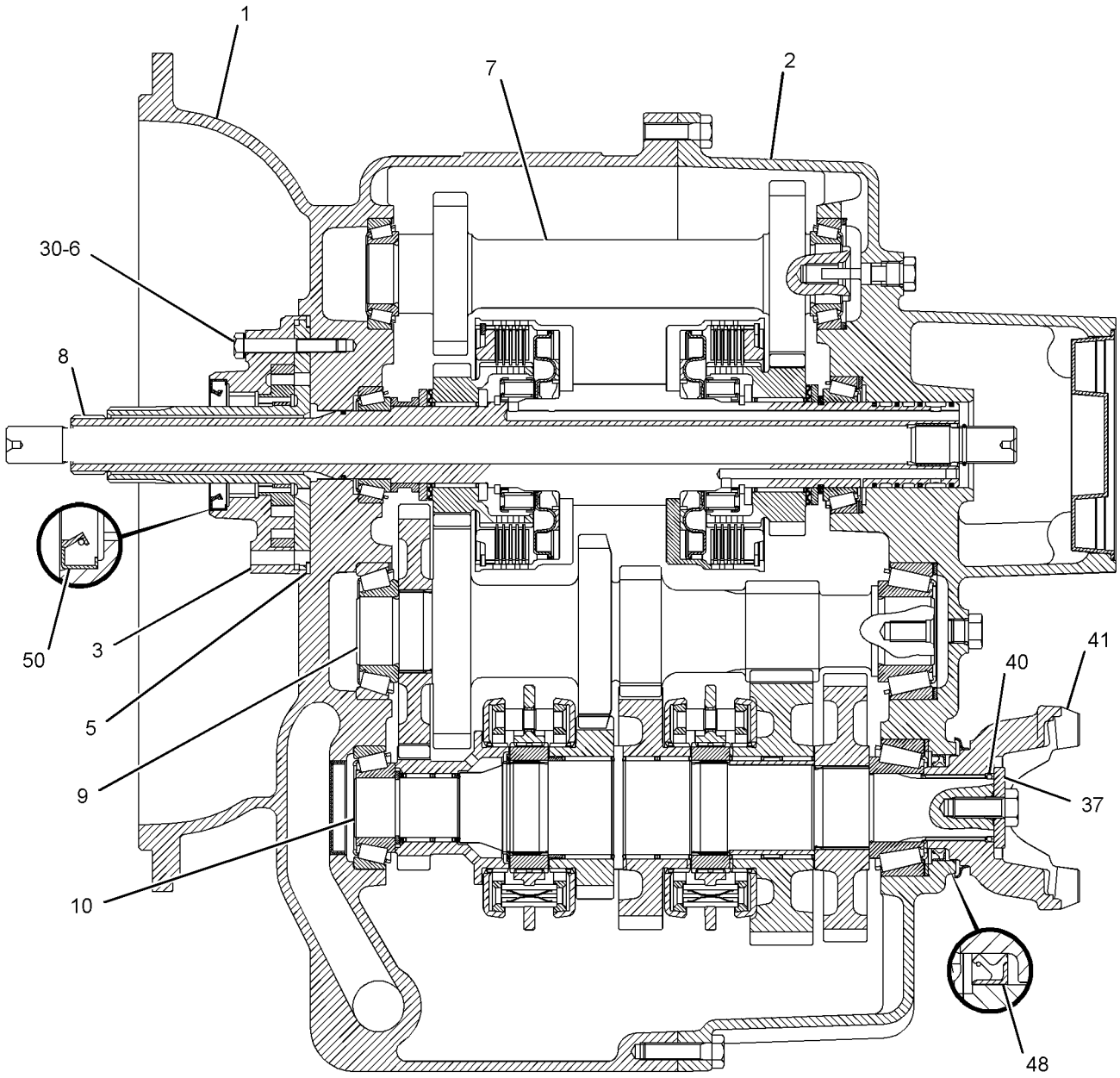

SECTION A-A

GRAPHIC #2 g01388446

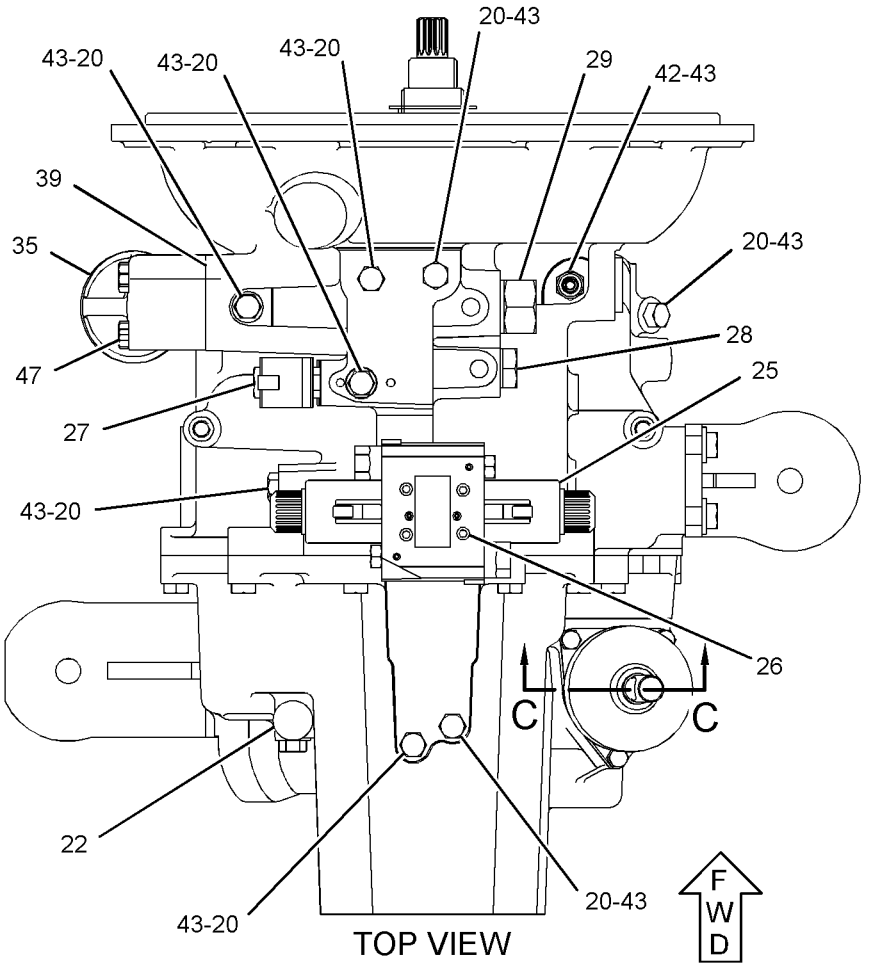

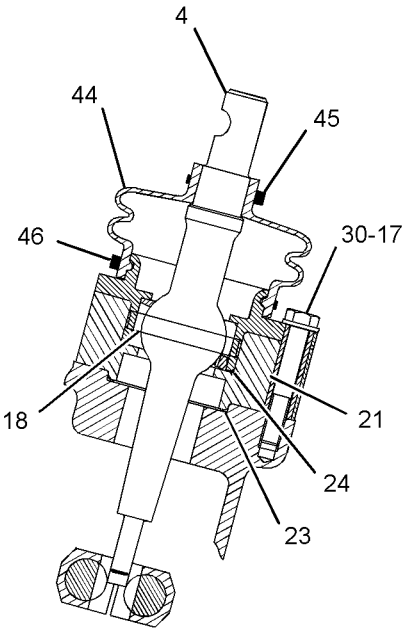

GRAPHIC #3 **<END>** g01388448

294-9815 TRANSMISSION GP-DIRECT DRIVE–
ALL WHEEL DRIVE
S/N: CBD7189-UP; MFG1-UP
PART OF 251-6353 TRANSMISSION AR-DIRECT DRIVE
AN ATTACHMENT

SMCS-3030 **i04041093**

NOTE	REF NO	GRAPHIC REF	PART NUMBER	QTY	PART NAME 1 2 3 4 5 6 (PRODUCT LEVEL)	SEE PAGE
Y	1	3	**275-0468**	1	CASE AS-TRANSMISSION (FRONT)	355
Y	2	3	**275-0470**	1	CASE AS-TRANSMISSION (REAR)	356
	3	3	**121-7385**	1	PUMP GP-TRANSMISSION	
		3	**208-8240**	1	SEAL-LIP TYPE	
	4	3	**302-8432**	2	SEAL-LIP TYPE	
M	5	2,3	**8C-5748**	7	BOLT (M8X1.25X55-MM)	
	6	3	**7X-4741**	1	SEAL	
	7	3	**9P-9150**	4	WASHER (8.25X18X0.84-MM THK)	
	8	3	**275-0475**	1	SHAFT GP-IDLER (TRANSMISSION)	
		3	**005-0471**	2	CONE-BEARING	
		3	**274-8623**	1	SHAFT-REVERSE	
	9	3	**275-0477**	1	SHAFT GP-COUNTER (TRANSMISSION)	
		3	**8T-1581**	1	CONE (TAPERED-ROLLER BEARING)	
		3	**123-8907**	1	CONE-BEARING	
		3	**274-8614**	1	GEAR-COUNTERSHAFT (37-TEETH)	
		3	**274-8625**	1	GEAR-COUNTERSHAFT (38-TEETH)	
Y	10	3	**275-0478**	1	SHAFT GP-OUTPUT (REAR)	397
Y	11	3	**305-3427**	1	SHAFT GP-OUTPUT (FRONT)	400
	12	1	**121-7403**	1	FORK-SHIFT (FIRST, SECOND)	
	13	1	**121-7404**	1	FORK-SHIFT (THIRD, FOURTH)	
	14	1	**121-7389**	1	ROD AS-GEARSHIFT (FIRST, SECOND)	
	15	1	**121-7390**	1	ROD AS-GEARSHIFT (THIRD, FOURTH)	
	16	1	**6Y-1341**	2	SPRING	
	17	1	**014-5645**	3	BALL	
	18	2	**9M-1974**	3	WASHER-HARD (8.8X16X2-MM THK)	
	19	2	**7T-3109**	1	PIN	
	20	1	**7T-3249**	2	SCREW (3/8-24X0.75-IN)	
	21	1,2	**9S-4191**	12	PLUG-O-RING	
	22	2	**127-3017**	1	SEAT AS (BALL)	
	23	2	**121-7391**	1	LEVER	
	24	2	**175-0054**	1	SEAL-O-RING	
	25	2	**174-9711**	1	GASKET	
C	27	2	**324-2578**	1	VALVE GP-SOLENOID (12-VOLT) (FORWARD, REVERSE)	
		2	**8L-2779**	4	SEAL-O-RING	
		2	**280-7009**	2	COIL AS (12-VOLT) (12-VOLT)	
		2	**280-7012**	2	TUBE AS	
M	28	2	**9X-6615**	4	BOLT (M5X0.8X30-MM)	
	29	2	**305-3423**	2	VALVE GP-SOLENOID (12-VOLT) (DIFFERENTIAL LOCK)	
					(EACH INCLUDES)	
		2	**274-8034**	1	COIL AS (12-VOLT) (12-VOLT)	
	30	2	**121-7396**	1	VALVE GP-RELIEF (TORQUE CONVERTER INLET)	
		2	**6V-4589**	1	SEAL-O-RING	
		2	**8L-2746**	1	SEAL-O-RING	
Y	31	2	**147-0209**	1	VALVE GP-RELIEF (CLUTCH PRESSURE)	424
	32	2	**6K-0806**	1	STRAP-CABLE	
M	34	1	**6V-8335**	14	BOLT-SELF-LOCKING (M10X1.5X40-MM)	
M	35	1	**121-9875**	4	BOLT (M10X1.5X55-MM)	
M	36	2	**6V-7731**	2	BOLT (M10X1.5X70-MM)	
M	37	1	**6V-8097**	2	BOLT (M12X1.75X30-MM)	
	38	1	**293-2147**	1	BREATHER AS (TRANSMISSION)	
		1	**3J-1907**	1	SEAL-O-RING	
		1	**122-6785**	1	PLUG AS	

294-9815 TRANSMISSION GP-DIRECT DRIVE *(contd.)* i04041093

NOTE	REF NO	GRAPHIC REF	PART NUMBER	QTY	PART NAME 1 2 3 4 5 6 (PRODUCT LEVEL)	SEE PAGE
	39	2	**7T-3119**	1	HOUSING (FILTER)	
	41	3	**7T-3195**	2	WASHER (12.3X47X6.35-MM THK)	
	42	2	**6Y-2035**	1	GASKET	
	43	3	**5P-8066**	2	SEAL-O-RING	
	44	1	**294-9820**	1	TUBE	
	45	3	**122-1883**	1	SPACER (38X45X5-MM THK)	
	46	3	**122-6787**	2	YOKE AS	
					(EACH INCLUDES)	
		1	**123-1377**	1	GUARD	
	47	1	**6Y-1896**	1	PLUG AS-DRAIN (DRAIN)	
		1	**5P-6718**	1	SEAL-O-RING	
	48	2	**4W-9972**	1	SENDER AS-TEMPERATURE (12-VOLT) (TORQUE CONVERTER OIL)	
		2	**6V-8378**	1	NUT (10-32-THD)	
		2	**8F-1434**	1	LOCKWASHER	
		2	**8T-0328**	1	WASHER-HARD (5.5X10X1-MM THK)	
	49	1,2	**3J-1907**	14	SEAL-O-RING	
Y	50	3	**305-3429**	1	SHAFT GP-INPUT (ALL WHEEL DRIVE)	395
	51	2	**7T-3111**	1	COVER	
	52	2	**3S-2093**	1	STRAP-CABLE	
	53	3	**208-8240**	1	SEAL-LIP TYPE	
	54	1	**123-2918**	2	SLEEVE	
	55	1	**123-2919**	2	NUT (M11X1-THD)	
	56	2	**7T-3251**	1	BREATHER (TRANSMISSION)	
	57	1	**6V-3965**	1	FITTING (QUICK DISCONNECT)	
	58	1	**6V-0852**	1	CAP-DUST	
	59	1	**222-9824**	1	PLUG	
	60	1	**205-9163**	1	WASHER (16X22X3-MM THK)	

C-CHANGE FROM PREVIOUS TYPE
M-METRIC PART
Y-SEPARATE ILLUSTRATION

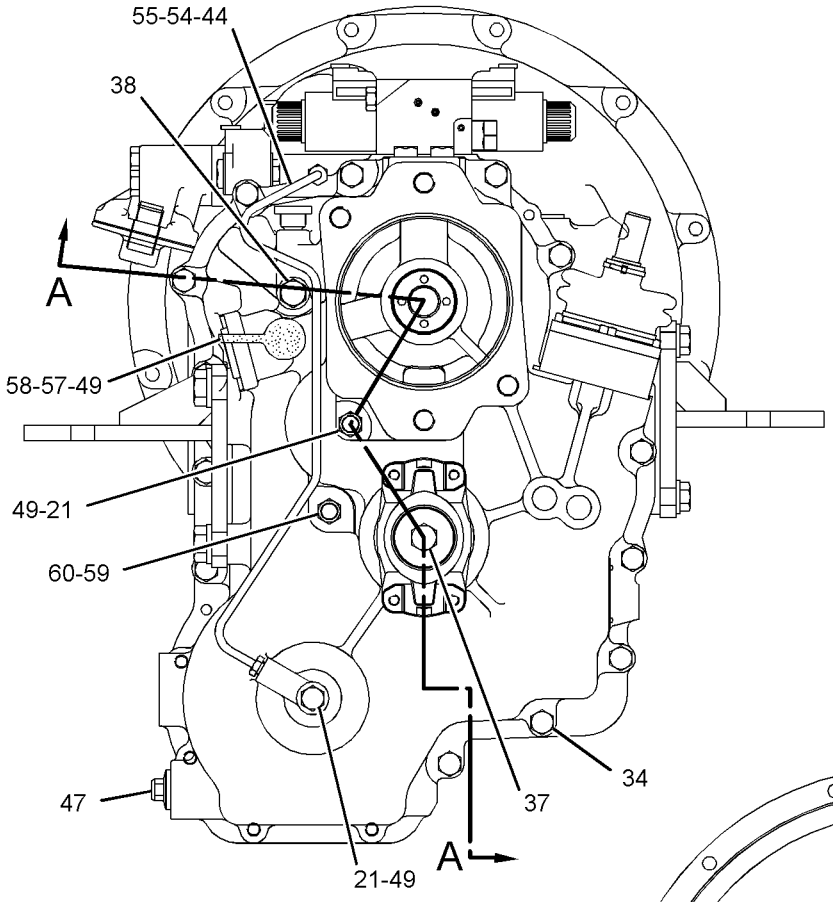

REFER TO ALL ILLUSTRATIONS OF THIS GROUP FOR AUXILIARY VIEWS

REAR VIEW

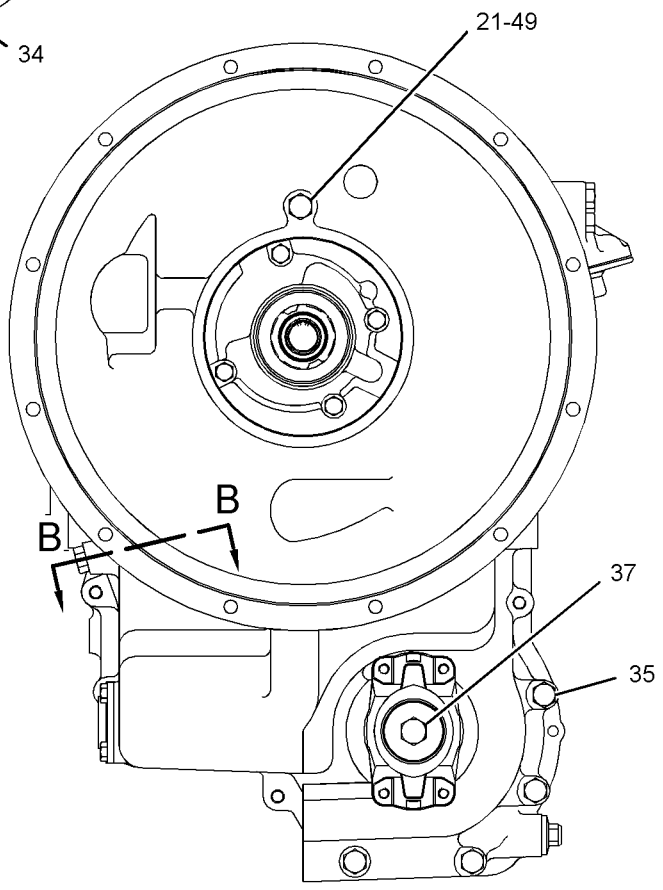

FRONT VIEW

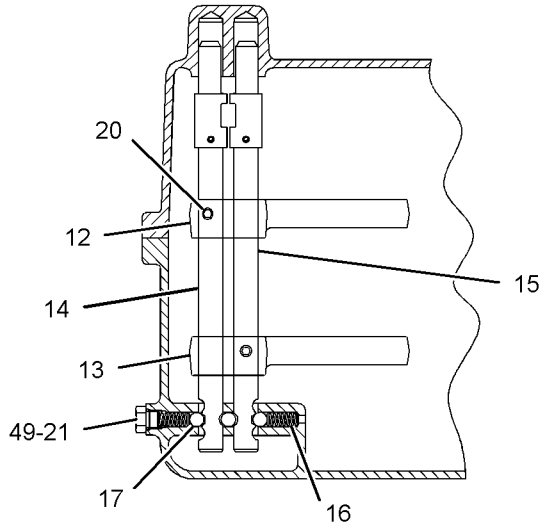

SECTION B-B

GRAPHIC #1

g01381848

REFER TO ALL ILLUSTRATIONS OF
THIS GROUP FOR AUXILIARY VIEWS

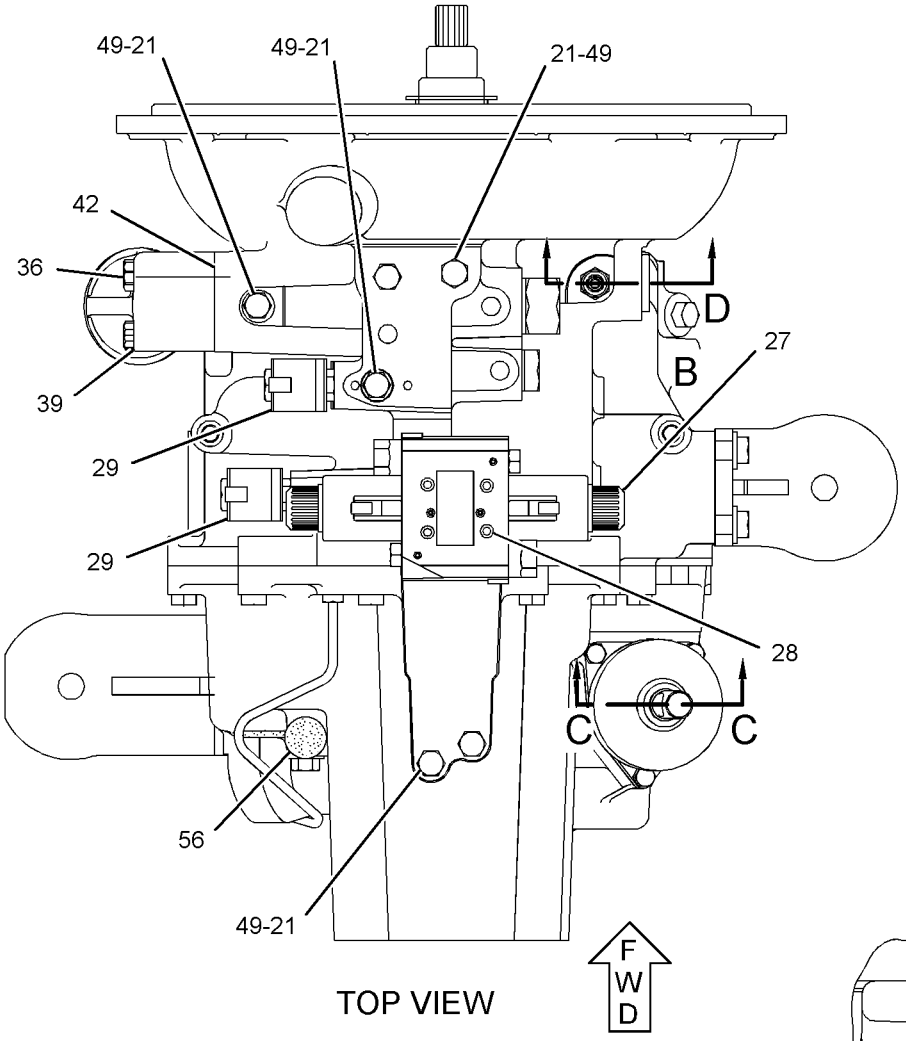

TOP VIEW

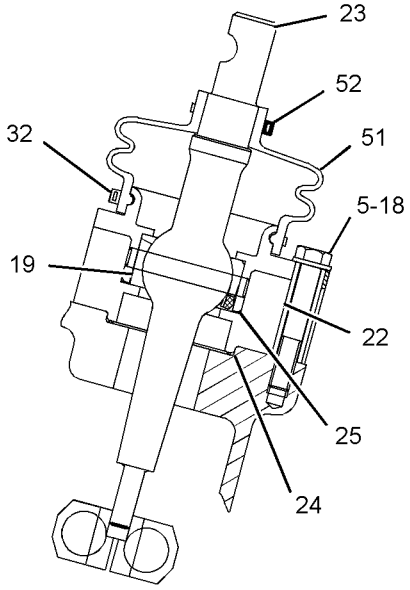

SECTION C-C

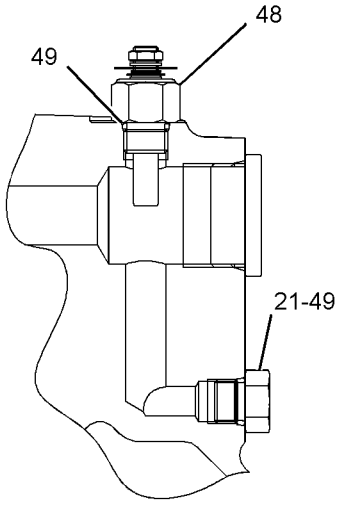

SECTION D

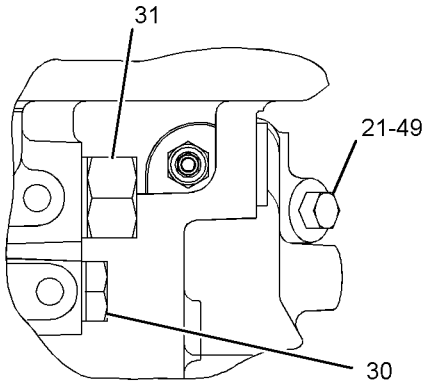

VIEW OF AREA B

GRAPHIC #2

g01381849

294-9815 TRANSMISSION GP-DIRECT DRIVE *(contd.)* i04041093

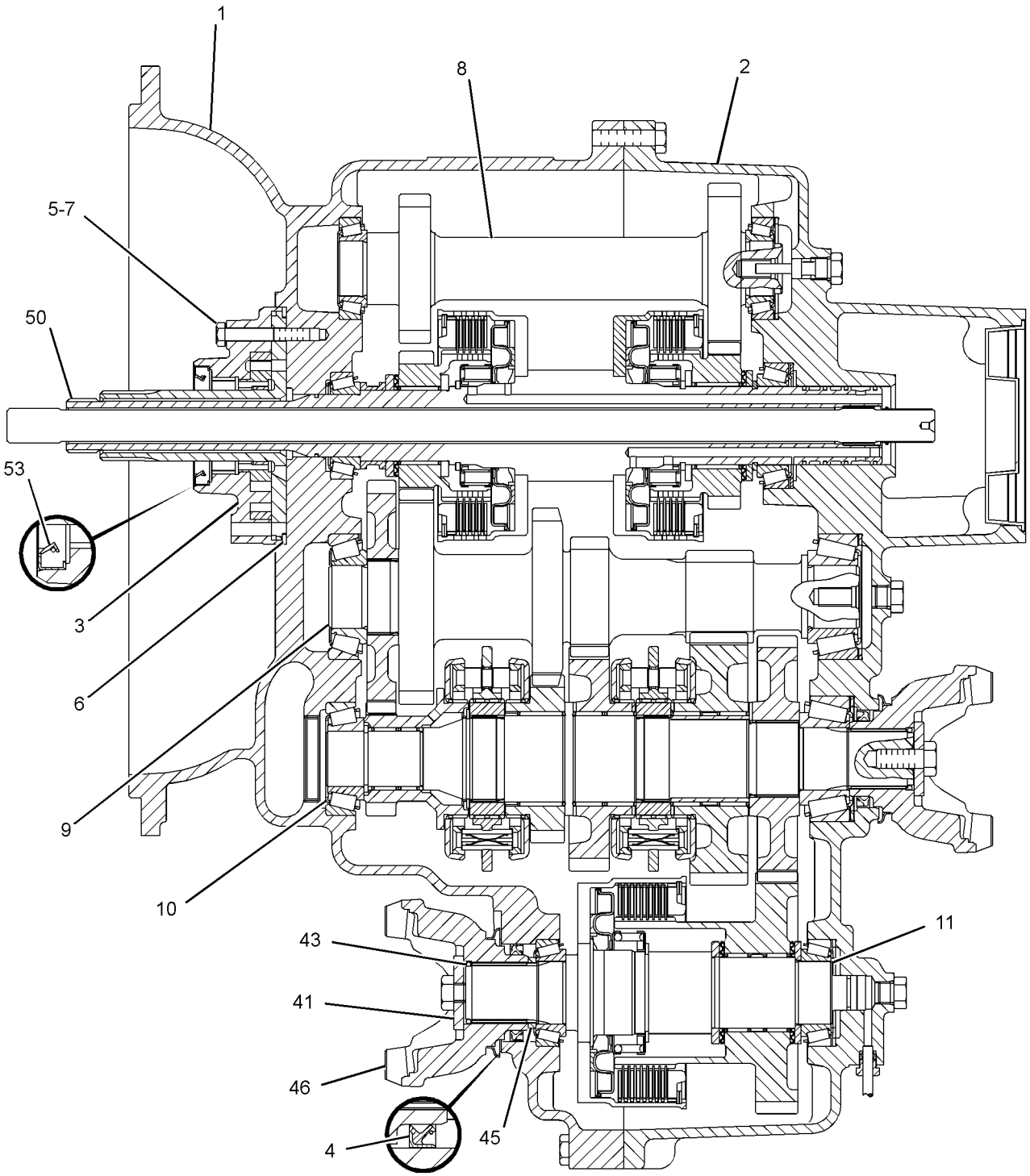

SECTION A-A

GRAPHIC #3 **<END>** g01381850

147-0209 VALVE GP-RELIEF–PRESSURE REGULATOR

S/N: CBD1-UP; MFG1-UP

PART OF 271-2407, 271-2408, 294-9814, 294-9815 TRANSMISSION GP-DIRECT DRIVE AN ATTACHMENT

SMCS-3133, 3182, 3210, 3213 **i02520292**

NOTE	REF NO	GRAPHIC REF	PART NUMBER	QTY	PART NAME 1 2 3 4 5 6 (PRODUCT LEVEL)	SEE PAGE
	1	1	**7X-4744**	1	SEAL-O-RING	
	2	1	**6V-9178**	1	SEAL-O-RING	
	3	1	**106-9586**	1	SEAL-O-RING	

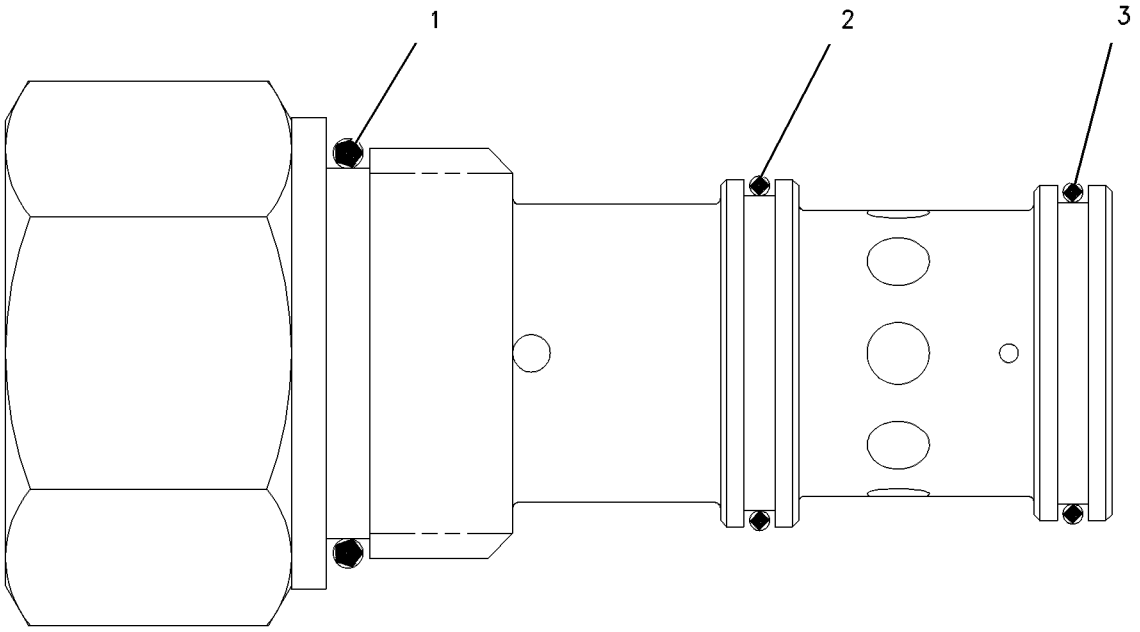

GRAPHIC #1 **<END>** g00304718

6D-0337 VALVE GP-TIRE

S/N: CBD1-UP; MFG1-UP
PART OF 201-1920 VALVE GP-TIRE
AN ATTACHMENT

SMCS-4203 **i01683950**

NOTE	REF NO	GRAPHIC REF	PART NUMBER	QTY	PART NAME 1 2 3 4 5 6 (PRODUCT LEVEL)	SEE PAGE
	1	1	**6D-0443**	1	HOUSING AS-CORE	
	2	1	**2D-2628**	1	CORE-VALVE	
	3	1	**2D-2633**	1	CAP	
	4	1	**8D-2707**	1	SPUD AS	
	5	1	**2D-2629**	1	GROMMET	
	6	1	**2D-2630**	1	WASHER	
	7	1	**2D-2631**	1	NUT (0.482-26-THD)	

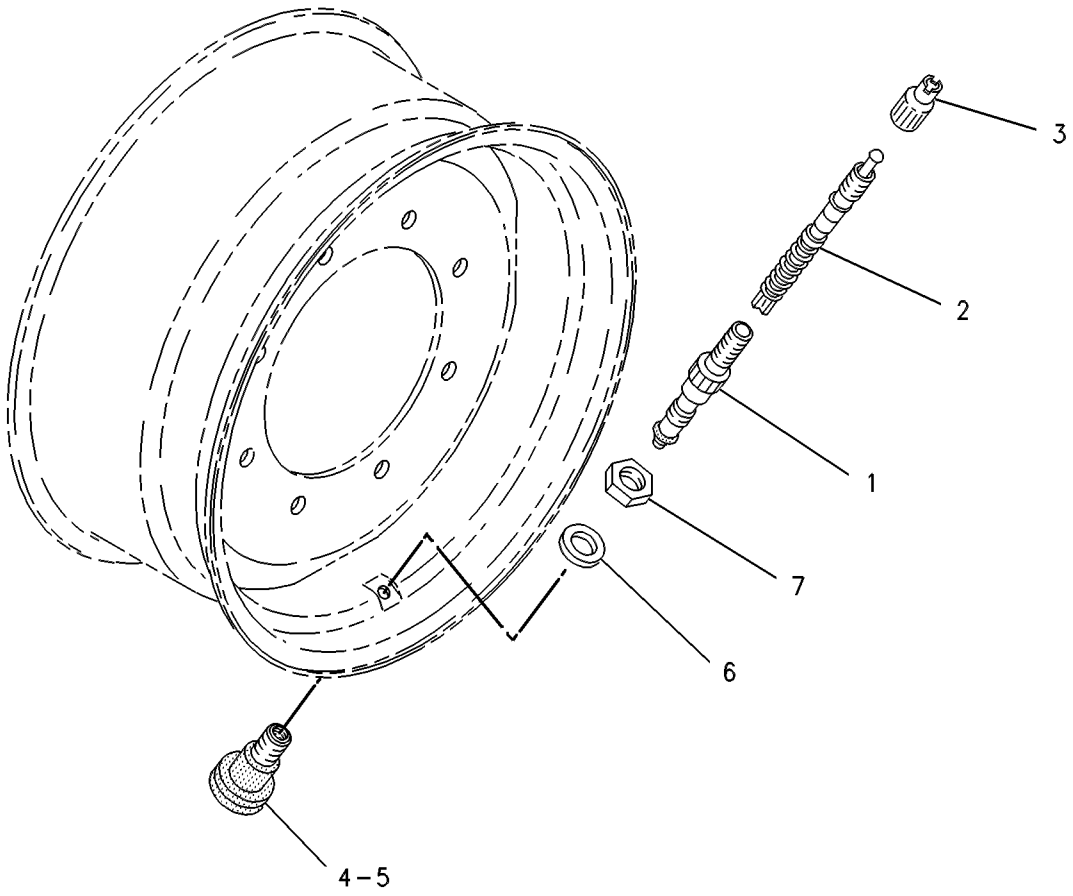

GRAPHIC #1 **<END>** g00121904

201-1920 VALVE GP-TIRE

S/N: CBD1-UP; MFG1-UP
PART OF 201-1863, 201-1864, 201-1875, 201-1876, 201-1878, 201-1882, 201-1883, 201-1911, 201-1912, 201-1932, 201-1933, 282-3863, 282-3864, 282-3866, 282-3867, 282-3869, 282-3870, 286-9084, 286-9085, 303-0428, 303-0429, 322-4572, 322-4573 WHEEL & TIRE GP
AN ATTACHMENT

SMCS-4203 **i01954499**

NOTE	PART NUMBER	QTY	PART NAME 1 2 3 4 5 6 (PRODUCT LEVEL)	SEE PAGE
Y	**6D-0337**	1	VALVE GP-TIRE	425

Y-SEPARATE ILLUSTRATION

<END>

201-1918 WHEEL & TIRE AR—ALL WHEEL DRIVE, BIAS

S/N: CBD1-UP; MFG1-UP
PART OF 356-0068, 356-0069, 374-3518, 374-3519, 374-3521, 374-3529, 374-6533, 374-6534, 374-6535, 374-6536 DISTRIBUTION AR
AN ATTACHMENT

SMCS-4201, 4202, 4203, 4208, 4209 **i02355416**

NOTE	PART NUMBER	QTY	PART NAME 1 2 3 4 5 6 (PRODUCT LEVEL)	SEE PAGE
Y	*201-1874*	1	WHEEL & TIRE GP (FRONT)	429
Y	*201-1913*	1	WHEEL & TIRE GP (REAR)	432

Y-SEPARATE ILLUSTRATION

<END>

201-1923 WHEEL & TIRE AR—ALL WHEEL DRIVE, RADIAL

S/N: CBD1-UP
AN ATTACHMENT

SMCS-4201, 4202, 4203, 4208, 4209 **i02481817**

NOTE	PART NUMBER	QTY	PART NAME 1 2 3 4 5 6 (PRODUCT LEVEL)	SEE PAGE
Y	*201-1862*	1	WHEEL & TIRE GP (FRONT)	428
Y	*201-1881*	1	WHEEL & TIRE GP (REAR)	431

Y-SEPARATE ILLUSTRATION

<END>

201-1925 WHEEL & TIRE AR—2WD, BIAS

S/N: CBD1-UP; MFG1-UP
PART OF 356-0067, 374-3517, 374-6532 DISTRIBUTION AR
AN ATTACHMENT

SMCS-4201, 4202, 4203, 4208, 4209 **i02355419**

NOTE	PART NUMBER	QTY	PART NAME 1 2 3 4 5 6 (PRODUCT LEVEL)	SEE PAGE
Y	*201-1877*	1	WHEEL & TIRE GP (FRONT)	430
Y	*201-1913*	1	WHEEL & TIRE GP (REAR)	432

Y-SEPARATE ILLUSTRATION

<END>

201-1930 WHEEL & TIRE AR—2WD, BIAS

S/N: CBD1-UP
AN ATTACHMENT

SMCS-4201, 4202, 4203, 4208, 4209 **i02494662**

NOTE	PART NUMBER	QTY	PART NAME 1 2 3 4 5 6 (PRODUCT LEVEL)	SEE PAGE
Y	*201-1877*	1	WHEEL & TIRE GP (FRONT)	430
Y	*201-1931*	1	WHEEL & TIRE GP (REAR)	433

Y-SEPARATE ILLUSTRATION

<END>

201-1954 WHEEL & TIRE AR—ALL WHEEL DRIVE, RADIAL, BIAS

S/N: CBD1-UP
AN ATTACHMENT

SMCS-4201, 4202, 4203, 4208, 4209 **i02355420**

NOTE	PART NUMBER	QTY	PART NAME 1 2 3 4 5 6 (PRODUCT LEVEL)	SEE PAGE
Y	*201-1862*	1	WHEEL & TIRE GP (FRONT)	428
Y	*201-1913*	1	WHEEL & TIRE GP (REAR)	432

Y-SEPARATE ILLUSTRATION

<END>

282-3854 WHEEL & TIRE AR—ALL WHEEL DRIVE, BIAS

S/N: CBD1-UP
AN ATTACHMENT

SMCS-4201, 4202, 4203, 4208, 4209 **i03267300**

NOTE	PART NUMBER	QTY	PART NAME 1 2 3 4 5 6 (PRODUCT LEVEL)	SEE PAGE
Y	*282-3865*	1	WHEEL & TIRE GP (REAR)	435
Y	*282-3868*	1	WHEEL & TIRE GP (FRONT)	436

Y-SEPARATE ILLUSTRATION

<END>

286-9082 WHEEL & TIRE AR—2-WHEEL DRIVE, BIAS

S/N: CBD1-UP
AN ATTACHMENT

SMCS-4201, 4202, 4203, 4208, 4209 **i04362397**

NOTE	PART NUMBER	QTY	PART NAME 1 2 3 4 5 6 (PRODUCT LEVEL)	SEE PAGE
Y	*282-3862*	1	WHEEL & TIRE GP (FRONT)	434
Y	*286-9083*	1	WHEEL & TIRE GP (REAR)	437

Y-SEPARATE ILLUSTRATION

<END>

286-9086 WHEEL & TIRE AR—4-WHEEL DRIVE, BIAS

S/N: CBD1-UP
AN ATTACHMENT

SMCS-4201, 4202, 4203, 4208, 4209 **i04381706**

NOTE	PART NUMBER	QTY	PART NAME 1 2 3 4 5 6 (PRODUCT LEVEL)	SEE PAGE
Y	*201-1874*	1	WHEEL & TIRE GP (FRONT)	429
Y	*286-9083*	1	WHEEL & TIRE GP (REAR)	437

Y-SEPARATE ILLUSTRATION

<END>

320-2384 WHEEL & TIRE AR—4-WHEEL DRIVE

S/N: CBD1-UP; MFG1-UP
AN ATTACHMENT

SMCS-4201, 4202, 4203, 4208, 4209 **i03855637**

NOTE	PART NUMBER	QTY	PART NAME 1 2 3 4 5 6 (PRODUCT LEVEL)	SEE PAGE
Y	*303-0418*	1	WHEEL & TIRE GP (FRONT)	438
Y	*322-4571*	1	WHEEL & TIRE GP (REAR)	439

Y-SEPARATE ILLUSTRATION

<END>

201-1862 WHEEL & TIRE GP—FRONT

S/N: CBD1-UP
PART OF 201-1923, 201-1954 WHEEL & TIRE AR
AN ATTACHMENT

SMCS-4201, 4202, 4203, 4208, 4209 **i02529191**

NOTE	PART NUMBER	QTY	PART NAME 1 2 3 4 5 6 (PRODUCT LEVEL)	SEE PAGE
Y	*201-1863*	1	WHEEL & TIRE GP (LH)	428
Y	*201-1864*	1	WHEEL & TIRE GP (RH)	429
	201-1915	1	MOUNTING GP-WHEEL (FRONT)	
	8T-5439	16	WASHER-HARD (21.5X45X6-MM THK)	
M	**201-1919**	16	NUT (M20X1.5-THD)	

M-METRIC PART
Y-SEPARATE ILLUSTRATION

<END>

201-1863 WHEEL & TIRE GP—LH

S/N: CBD1-UP
PART OF 201-1862 WHEEL & TIRE GP
AN ATTACHMENT

SMCS-4201, 4202, 4203, 4208, 4209 **i02051736**

NOTE	PART NUMBER	QTY	PART NAME 1 2 3 4 5 6 (PRODUCT LEVEL)	SEE PAGE
	112-9338	1	TIRE (340/80R18)	
Y	*201-1920*	1	VALVE GP-TIRE	426
	202-6186	1	WHEEL AS (FRONT)	

Y-SEPARATE ILLUSTRATION

<END>

201-1864 WHEEL & TIRE GP—RH

S/N: CBD1-UP
PART OF 201-1862 WHEEL & TIRE GP
AN ATTACHMENT

SMCS-4201, 4202, 4203, 4208, 4209 **i02051737**

NOTE	PART NUMBER	QTY	PART NAME 1 2 3 4 5 6 (PRODUCT LEVEL)	SEE PAGE
	112-9338	1	TIRE (340/80R18)	
Y	*201-1920*	1	VALVE GP-TIRE	426
	195-6339	1	WHEEL AS (FRONT)	

Y-SEPARATE ILLUSTRATION

<END>

201-1874 WHEEL & TIRE GP—FRONT

S/N: CBD1-UP; MFG1-UP
PART OF 201-1918, 286-9086 WHEEL & TIRE AR
AN ATTACHMENT

SMCS-4201, 4202, 4203, 4208, 4209 **i02529192**

NOTE	PART NUMBER	QTY	PART NAME 1 2 3 4 5 6 (PRODUCT LEVEL)	SEE PAGE
Y	*201-1875*	1	WHEEL & TIRE GP (LH)	429
Y	*201-1876*	1	WHEEL & TIRE GP (RH)	430
	201-1915	1	MOUNTING GP-WHEEL (FRONT)	
	8T-5439	16	WASHER-HARD (21.5X45X6-MM THK)	
M	**201-1919**	16	NUT (M20X1.5-THD)	

M-METRIC PART
Y-SEPARATE ILLUSTRATION

<END>

201-1875 WHEEL & TIRE GP—LH

S/N: CBD1-UP; MFG1-UP
PART OF 201-1874 WHEEL & TIRE GP
AN ATTACHMENT

SMCS-4201, 4202, 4203, 4208, 4209 **i02529199**

NOTE	PART NUMBER	QTY	PART NAME 1 2 3 4 5 6 (PRODUCT LEVEL)	SEE PAGE
Y	*201-1920*	1	VALVE GP-TIRE	426
	9R-6481	1	TIRE (12.5/80-R18)	
	202-6186	1	WHEEL AS (FRONT)	

Y-SEPARATE ILLUSTRATION

<END>

201-1876 WHEEL & TIRE GP—RH

S/N: CBD1-UP; MFG1-UP
PART OF 201-1874 WHEEL & TIRE GP
AN ATTACHMENT

SMCS-4201, 4202, 4203, 4208, 4209 **i02529198**

NOTE	PART NUMBER	QTY	PART NAME 1 2 3 4 5 6 (PRODUCT LEVEL)	SEE PAGE
Y	*201-1920*	1	VALVE GP-TIRE	426
	9R-6481	1	TIRE (12.5/80-R18)	
	202-6186	1	WHEEL AS (FRONT)	

Y-SEPARATE ILLUSTRATION

<END>

201-1877 WHEEL & TIRE GP—FRONT

S/N: CBD1-UP; MFG1-UP
PART OF 201-1925, 201-1930 WHEEL & TIRE AR
AN ATTACHMENT

SMCS-4201, 4202, 4203, 4208, 4209 **i02529196**

NOTE	PART NUMBER	QTY	PART NAME 1 2 3 4 5 6 (PRODUCT LEVEL)	SEE PAGE
Y	*201-1878*	2	WHEEL & TIRE GP (FRONT)	430
	201-1915	1	MOUNTING GP-WHEEL (FRONT)	
M	**201-1919**	16	NUT (M20X1.5-THD)	
	8T-5439	16	WASHER-HARD (21.5X45X6-MM THK)	

M-METRIC PART
Y-SEPARATE ILLUSTRATION

<END>

201-1878 WHEEL & TIRE GP—FRONT

S/N: CBD1-UP; MFG1-UP
PART OF 201-1877 WHEEL & TIRE GP
AN ATTACHMENT

SMCS-4201, 4202, 4203, 4208, 4209 **i01940994**

NOTE	PART NUMBER	QTY	PART NAME 1 2 3 4 5 6 (PRODUCT LEVEL)	SEE PAGE
	9R-1956	1	TIRE (11-R16)	
Y	*201-1920*	1	VALVE GP-TIRE	426
	195-6341	1	WHEEL AS (FRONT)	

Y-SEPARATE ILLUSTRATION

<END>

201-1881 WHEEL & TIRE GP—REAR

S/N: CBD1-UP
PART OF 201-1923 WHEEL & TIRE AR
AN ATTACHMENT

SMCS-4201, 4202, 4203, 4208, 4209 **i02481819**

NOTE	PART NUMBER	QTY	PART NAME 1 2 3 4 5 6 (PRODUCT LEVEL)	SEE PAGE
Y	*201-1882*	1	WHEEL & TIRE GP (LH)	431
Y	*201-1883*	1	WHEEL & TIRE GP (RH)	431
	201-1916	1	MOUNTING GP-WHEEL	
	8T-5439	20	WASHER-HARD (21.5X45X6-MM THK)	
M	**201-1919**	20	NUT (M20X1.5-THD)	

M-METRIC PART
Y-SEPARATE ILLUSTRATION

<END>

201-1882 WHEEL & TIRE GP—LH

S/N: CBD1-UP
PART OF 201-1881 WHEEL & TIRE GP
AN ATTACHMENT

SMCS-4201, 4202, 4203, 4208, 4209 **i02481856**

NOTE	PART NUMBER	QTY	PART NAME 1 2 3 4 5 6 (PRODUCT LEVEL)	SEE PAGE
Y	*201-1920*	1	VALVE GP-TIRE	426
	127-4293	1	TIRE (19.5-R24)	
	195-6344	1	WHEEL AS (REAR)	

Y-SEPARATE ILLUSTRATION

<END>

201-1883 WHEEL & TIRE GP—RH

S/N: CBD1-UP
PART OF 201-1881 WHEEL & TIRE GP
AN ATTACHMENT

SMCS-4201, 4202, 4203, 4208, 4209 **i02481857**

NOTE	PART NUMBER	QTY	PART NAME 1 2 3 4 5 6 (PRODUCT LEVEL)	SEE PAGE
Y	*201-1920*	1	VALVE GP-TIRE	426
	127-4293	1	TIRE (19.5-R24)	
	195-6344	1	WHEEL AS (REAR)	

Y-SEPARATE ILLUSTRATION

<END>

201-1911 WHEEL & TIRE GP–LH

S/N: CBD1-UP; MFG1-UP
PART OF 201-1913 WHEEL & TIRE GP
AN ATTACHMENT

SMCS-4201, 4202, 4203, 4208, 4209 **i02355423**

NOTE	PART NUMBER	QTY	PART NAME 1 2 3 4 5 6 (PRODUCT LEVEL)	SEE PAGE
Y	*201-1920*	1	VALVE GP-TIRE	426
	195-6344	1	WHEEL AS (REAR)	
	201-1902	1	TIRE (19.5L-24)	

Y-SEPARATE ILLUSTRATION

<END>

201-1912 WHEEL & TIRE GP

S/N: CBD1-UP; MFG1-UP
PART OF 201-1913 WHEEL & TIRE GP
AN ATTACHMENT

SMCS-4201, 4202, 4203, 4208, 4209 **i02355427**

NOTE	PART NUMBER	QTY	PART NAME 1 2 3 4 5 6 (PRODUCT LEVEL)	SEE PAGE
Y	*201-1920*	1	VALVE GP-TIRE	426
	195-6344	1	WHEEL AS (REAR)	
	201-1902	1	TIRE (19.5L-24)	

Y-SEPARATE ILLUSTRATION

<END>

201-1913 WHEEL & TIRE GP–REAR

S/N: CBD1-UP; MFG1-UP
PART OF 201-1918, 201-1925, 201-1954 WHEEL & TIRE AR
AN ATTACHMENT

SMCS-4201, 4202, 4203, 4208, 4209 **i02529213**

NOTE	PART NUMBER	QTY	PART NAME 1 2 3 4 5 6 (PRODUCT LEVEL)	SEE PAGE
Y	*201-1911*	1	WHEEL & TIRE GP (LH)	432
Y	*201-1912*	1	WHEEL & TIRE GP	432
	201-1916	1	MOUNTING GP-WHEEL	
	8T-5439	20	WASHER-HARD (21.5X45X6-MM THK)	
M	**201-1919**	20	NUT (M20X1.5-THD)	

M-METRIC PART
Y-SEPARATE ILLUSTRATION

<END>

201-1931 WHEEL & TIRE GP—REAR

S/N: CBD1-UP
PART OF 201-1930 WHEEL & TIRE AR
AN ATTACHMENT

SMCS-4201, 4202, 4203, 4208, 4209 **i02529211**

NOTE	PART NUMBER	QTY	PART NAME 1 2 3 4 5 6 (PRODUCT LEVEL)	SEE PAGE
Y	*201-1932*	1	WHEEL & TIRE GP (LH)	433
Y	*201-1933*	1	WHEEL & TIRE GP (RH)	433
	201-1916	1	MOUNTING GP-WHEEL	
	8T-5439	20	WASHER-HARD (21.5X45X6-MM THK)	
M	**201-1919**	20	NUT (M20X1.5-THD)	

M-METRIC PART
Y-SEPARATE ILLUSTRATION

<END>

201-1932 WHEEL & TIRE GP—LH

S/N: CBD1-UP
PART OF 201-1931 WHEEL & TIRE GP
AN ATTACHMENT

SMCS-4201, 4202, 4203, 4208, 4209 **i02494665**

NOTE	PART NUMBER	QTY	PART NAME 1 2 3 4 5 6 (PRODUCT LEVEL)	SEE PAGE
Y	*201-1920*	1	VALVE GP-TIRE	426
	195-6343	1	WHEEL AS (REAR)	
	9R-0601	1	TIRE (16.9-24) (16.9-24)	

Y-SEPARATE ILLUSTRATION

<END>

201-1933 WHEEL & TIRE GP—RH

S/N: CBD1-UP
PART OF 201-1931 WHEEL & TIRE GP
AN ATTACHMENT

SMCS-4201, 4202, 4203, 4208, 4209 **i02494666**

NOTE	PART NUMBER	QTY	PART NAME 1 2 3 4 5 6 (PRODUCT LEVEL)	SEE PAGE
Y	*201-1920*	1	VALVE GP-TIRE	426
	9R-0601	1	TIRE (16.9-24) (16.9-24)	
	195-6343	1	WHEEL AS (REAR)	

Y-SEPARATE ILLUSTRATION

<END>

282-3862 WHEEL & TIRE GP—FRONT

S/N: CBD1-UP
PART OF 286-9082 WHEEL & TIRE AR
AN ATTACHMENT

SMCS-4201, 4202, 4203, 4208, 4209 **i04362841**

NOTE	PART NUMBER	QTY	PART NAME 1 2 3 4 5 6 (PRODUCT LEVEL)	SEE PAGE
Y	*282-3863*	1	WHEEL & TIRE GP (FRONT, LH)	434
Y	*282-3864*	1	WHEEL & TIRE GP (FRONT, RH)	434

Y-SEPARATE ILLUSTRATION

<END>

282-3863 WHEEL & TIRE GP—FRONT, LH

S/N: CBD1-UP
(8X16)
PART OF 282-3862 WHEEL & TIRE GP
AN ATTACHMENT

SMCS-4201, 4202, 4203, 4208, 4209 **i04362927**

NOTE	PART NUMBER	QTY	PART NAME 1 2 3 4 5 6 (PRODUCT LEVEL)	SEE PAGE
Y	*201-1920*	1	VALVE GP-TIRE	426
	195-6341	1	WHEEL AS (FRONT)	
	276-8086	1	TIRE (11L-16)	

Y-SEPARATE ILLUSTRATION

<END>

282-3864 WHEEL & TIRE GP—FRONT, RH

S/N: CBD1-UP
(8X16)
PART OF 282-3862 WHEEL & TIRE GP
AN ATTACHMENT

SMCS-4201, 4202, 4203, 4208, 4209 **i04362981**

NOTE	PART NUMBER	QTY	PART NAME 1 2 3 4 5 6 (PRODUCT LEVEL)	SEE PAGE
Y	*201-1920*	1	VALVE GP-TIRE	426
	195-6341	1	WHEEL AS (FRONT)	
	276-8086	1	TIRE (11L-16)	

Y-SEPARATE ILLUSTRATION

<END>

282-3865 WHEEL & TIRE GP—REAR

S/N: CBD1-UP
PART OF 282-3854 WHEEL & TIRE AR
AN ATTACHMENT

SMCS-4201, 4202, 4203, 4208, 4209 **i03267302**

NOTE	PART NUMBER	QTY	PART NAME 1 2 3 4 5 6 (PRODUCT LEVEL)	SEE PAGE
Y	*282-3866*	1	WHEEL & TIRE GP	435
Y	*282-3867*	1	WHEEL & TIRE GP	435
	201-1916	1	MOUNTING GP-WHEEL	
M	**8T-5436**	20	BOLT (M10X1.5X130-MM)	
M	**201-1919**	20	NUT (M20X1.5-THD)	

M-METRIC PART
Y-SEPARATE ILLUSTRATION

<END>

282-3866 WHEEL & TIRE GP—LH

S/N: CBD1-UP
PART OF 282-3865 WHEEL & TIRE GP
AN ATTACHMENT

SMCS-4201, 4202, 4203, 4208, 4209 **i03267329**

NOTE	PART NUMBER	QTY	PART NAME 1 2 3 4 5 6 (PRODUCT LEVEL)	SEE PAGE
Y	*201-1920*	1	VALVE GP-TIRE	426
	195-6344	1	WHEEL AS (REAR)	
	276-6820	1	TIRE (19.5L-24)	

Y-SEPARATE ILLUSTRATION

<END>

282-3867 WHEEL & TIRE GP—RH

S/N: CBD1-UP
PART OF 282-3865 WHEEL & TIRE GP
AN ATTACHMENT

SMCS-4201, 4202, 4203, 4208, 4209 **i03267330**

NOTE	PART NUMBER	QTY	PART NAME 1 2 3 4 5 6 (PRODUCT LEVEL)	SEE PAGE
Y	*201-1920*	1	VALVE GP-TIRE	426
	195-6344	1	WHEEL AS (REAR)	
	276-6820	1	TIRE (19.5L-24)	

Y-SEPARATE ILLUSTRATION

<END>

282-3868 WHEEL & TIRE GP–FRONT

S/N: CBD1-UP
PART OF 282-3854 WHEEL & TIRE AR
AN ATTACHMENT

SMCS-4201, 4202, 4203, 4208, 4209 **i03267321**

NOTE	PART NUMBER	QTY	PART NAME 1 2 3 4 5 6 (PRODUCT LEVEL)	SEE PAGE
Y	*282-3869*	1	WHEEL & TIRE GP (LH)	436
Y	*282-3870*	1	WHEEL & TIRE GP (RH)	436
	201-1915	1	MOUNTING GP-WHEEL (FRONT)	
	8T-5439	16	WASHER-HARD (21.5X45X6-MM THK)	
M	**201-1919**	16	NUT (M20X1.5-THD)	

M-METRIC PART
Y-SEPARATE ILLUSTRATION

<END>

282-3869 WHEEL & TIRE GP–LH

S/N: CBD1-UP
PART OF 282-3868 WHEEL & TIRE GP
AN ATTACHMENT

SMCS-4201, 4202, 4203, 4208, 4209 **i03267324**

NOTE	PART NUMBER	QTY	PART NAME 1 2 3 4 5 6 (PRODUCT LEVEL)	SEE PAGE
Y	*201-1920*	1	VALVE GP-TIRE	426
	202-6186	1	WHEEL AS (FRONT)	
	286-9087	1	TIRE (12.5/80-18)	

Y-SEPARATE ILLUSTRATION

<END>

282-3870 WHEEL & TIRE GP–RH

S/N: CBD1-UP
PART OF 282-3868 WHEEL & TIRE GP
AN ATTACHMENT

SMCS-4201, 4202, 4203, 4208, 4209 **i03267326**

NOTE	PART NUMBER	QTY	PART NAME 1 2 3 4 5 6 (PRODUCT LEVEL)	SEE PAGE
Y	*201-1920*	1	VALVE GP-TIRE	426
	202-6186	1	WHEEL AS (FRONT)	
	286-9087	1	TIRE (12.5/80-18)	

Y-SEPARATE ILLUSTRATION

<END>

286-9083 WHEEL & TIRE GP–REAR

S/N: CBD1-UP
PART OF 286-9082, 286-9086 WHEEL & TIRE AR
AN ATTACHMENT

SMCS-4201, 4202, 4203, 4208, 4209 **i04367413**

NOTE	PART NUMBER	QTY	PART NAME 1 2 3 4 5 6 (PRODUCT LEVEL)	SEE PAGE
Y	*286-9084*	1	WHEEL & TIRE GP (REAR, LH)	437
Y	*286-9085*	1	WHEEL & TIRE GP (REAR, RH)	437

Y-SEPARATE ILLUSTRATION

<END>

286-9084 WHEEL & TIRE GP–REAR, LH

S/N: CBD1-UP
PART OF 286-9083 WHEEL & TIRE GP
AN ATTACHMENT

SMCS-4201, 4202, 4203, 4208, 4209 **i04380962**

NOTE	PART NUMBER	QTY	PART NAME 1 2 3 4 5 6 (PRODUCT LEVEL)	SEE PAGE
Y	*201-1920*	1	VALVE GP-TIRE	426
	195-6348	1	WHEEL AS (REAR)	
	277-3638	1	TIRE (16.9-28)	

Y-SEPARATE ILLUSTRATION

<END>

286-9085 WHEEL & TIRE GP–REAR, RH

S/N: CBD1-UP
PART OF 286-9083 WHEEL & TIRE GP
AN ATTACHMENT

SMCS-4201, 4202, 4203, 4208, 4209 **i04380974**

NOTE	PART NUMBER	QTY	PART NAME 1 2 3 4 5 6 (PRODUCT LEVEL)	SEE PAGE
Y	*201-1920*	1	VALVE GP-TIRE	426
	195-6348	1	WHEEL AS (REAR)	
	277-3638	1	TIRE (16.9-28)	

Y-SEPARATE ILLUSTRATION

<END>

303-0418 WHEEL & TIRE GP—FRONT

S/N: CBD1-UP; MFG1-UP
PART OF 320-2384 WHEEL & TIRE AR
AN ATTACHMENT

SMCS-4201, 4202, 4203, 4208, 4209 **i03856930**

NOTE	PART NUMBER	QTY	PART NAME 1 2 3 4 5 6 (PRODUCT LEVEL)	SEE PAGE
Y	*303-0428*	1	WHEEL & TIRE GP (FRONT, LH)	438
Y	*303-0429*	1	WHEEL & TIRE GP (FRONT, RH)	438
	201-1915	1	MOUNTING GP-WHEEL (FRONT)	
	8T-5439	16	WASHER-HARD (21.5X45X6-MM THK)	
M	**201-1919**	16	NUT (M20X1.5-THD)	

M-METRIC PART
Y-SEPARATE ILLUSTRATION

<END>

303-0428 WHEEL & TIRE GP—FRONT, LH

S/N: CBD1-UP; MFG1-UP
PART OF 303-0418 WHEEL & TIRE GP
AN ATTACHMENT

SMCS-4201, 4202, 4203, 4208, 4209 **i03856950**

NOTE	PART NUMBER	QTY	PART NAME 1 2 3 4 5 6 (PRODUCT LEVEL)	SEE PAGE
Y	*201-1920*	1	VALVE GP-TIRE	426
	202-6186	1	WHEEL AS (FRONT)	
	259-2940	1	TIRE (340/80-R18)	

Y-SEPARATE ILLUSTRATION

<END>

303-0429 WHEEL & TIRE GP—FRONT, RH

S/N: CBD1-UP; MFG1-UP
PART OF 303-0418 WHEEL & TIRE GP
AN ATTACHMENT

SMCS-4201, 4202, 4203, 4208, 4209 **i03856951**

NOTE	PART NUMBER	QTY	PART NAME 1 2 3 4 5 6 (PRODUCT LEVEL)	SEE PAGE
Y	*201-1920*	1	VALVE GP-TIRE	426
	202-6186	1	WHEEL AS (FRONT)	
	259-2940	1	TIRE (340/80-R18)	

Y-SEPARATE ILLUSTRATION

<END>

322-4571 WHEEL & TIRE GP–REAR

S/N: CBD1-UP; MFG1-UP
PART OF 320-2384 WHEEL & TIRE AR
AN ATTACHMENT

SMCS-4201, 4202, 4203, 4208, 4209 **i03856955**

NOTE	PART NUMBER	QTY	PART NAME 1 2 3 4 5 6 (PRODUCT LEVEL)	SEE PAGE
Y	*322-4572*	1	WHEEL & TIRE GP (LH)	439
Y	*322-4573*	1	WHEEL & TIRE GP (RH)	439
	201-1916	1	MOUNTING GP-WHEEL (REAR)	
	8T-5439	20	WASHER-HARD (21.5X45X6-MM THK)	
M	**201-1919**	20	NUT (M20X1.5-THD)	

M-METRIC PART
Y-SEPARATE ILLUSTRATION

<END>

322-4572 WHEEL & TIRE GP–LH

S/N: CBD1-UP; MFG1-UP
PART OF 322-4571 WHEEL & TIRE GP
AN ATTACHMENT

SMCS-4201, 4202, 4203, 4208, 4209 **i03856956**

NOTE	PART NUMBER	QTY	PART NAME 1 2 3 4 5 6 (PRODUCT LEVEL)	SEE PAGE
Y	*201-1920*	1	VALVE GP-TIRE	426
	195-6344	1	WHEEL AS (REAR)	
	322-4574	1	TIRE (500/70-R24)	

Y-SEPARATE ILLUSTRATION

<END>

322-4573 WHEEL & TIRE GP–RH

S/N: CBD1-UP; MFG1-UP
PART OF 322-4571 WHEEL & TIRE GP
AN ATTACHMENT

SMCS-4201, 4202, 4203, 4208, 4209 **i03856958**

NOTE	PART NUMBER	QTY	PART NAME 1 2 3 4 5 6 (PRODUCT LEVEL)	SEE PAGE
Y	*201-1920*	1	VALVE GP-TIRE	426
	195-6344	1	WHEEL AS (REAR)	
	322-4574	1	TIRE (500/70-R24)	

Y-SEPARATE ILLUSTRATION

<END>

206-1642 CONTROL GP-PARKING BRAKE

S/N: CBD1-UP; MFG1-UP
PART OF 214-6910, 214-6911, 214-6912, 214-6913, 323-3627, 323-3628, 323-3629, 323-3630 POWER TRAIN AR
AN ATTACHMENT

SMCS-4282, 4284 **i02528863**

NOTE	REF NO	GRAPHIC REF	PART NUMBER	QTY	PART NAME 1 2 3 4 5 6 (PRODUCT LEVEL)	SEE PAGE
	1	1	**7K-1181**	1	STRAP-CABLE	
	2	1	**9R-2806**	1	PIN	
	3	1	**9R-2807**	1	CLIP	
	4	1	**154-5416**	1	SWITCH AS	
Y	5	1	**261-5517**	1	CONTROL GP-PARKING BRAKE	441
	6	1	**261-9635**	1	BOOT (PARKING BRAKE)	
	7	1	**8T-4224**	2	WASHER-HARD (8.8X16X2-MM THK)	
M	8	1	**8T-6912**	2	BOLT (M8X1.25X50-MM)	
	9	1	**164-1368**	2	FASTENER-PANEL	

M-METRIC PART
Y-SEPARATE ILLUSTRATION

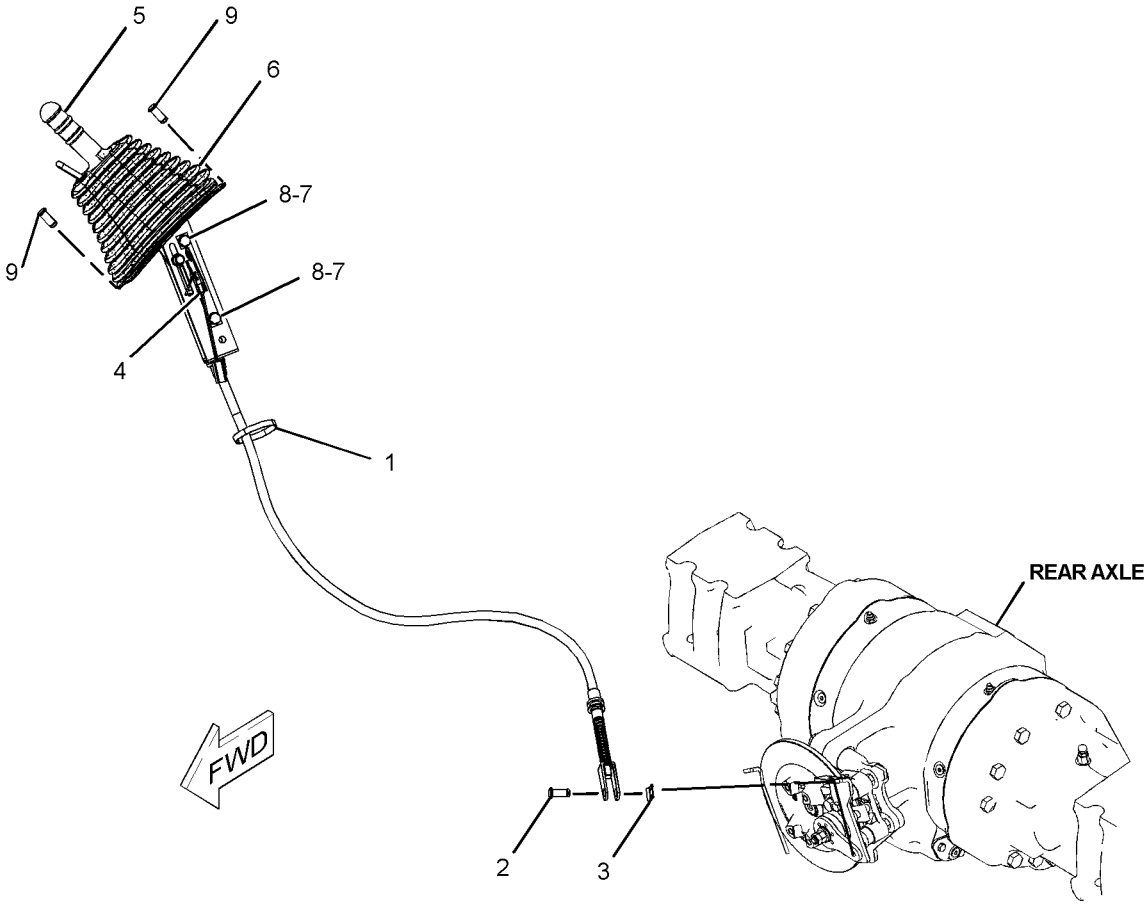

GRAPHIC #1 **<END>** g01228986

261-5517 CONTROL GP-PARKING BRAKE

S/N: CBD1-UP; MFG1-UP
PART OF 206-1642 CONTROL GP-PARKING BRAKE
AN ATTACHMENT

SMCS-4282, 4284 **i02496769**

NOTE	REF NO	GRAPHIC REF	PART NUMBER	QTY	PART NAME 1 2 3 4 5 6 (PRODUCT LEVEL)	SEE PAGE
Y	1	1	**163-0753**	1	LEVER GP-HAND CONTROL	450
	2	1	**261-5519**	1	CABLE AS	
		1	**6V-8759**	1	RING-RETAINING	

Y-SEPARATE ILLUSTRATION

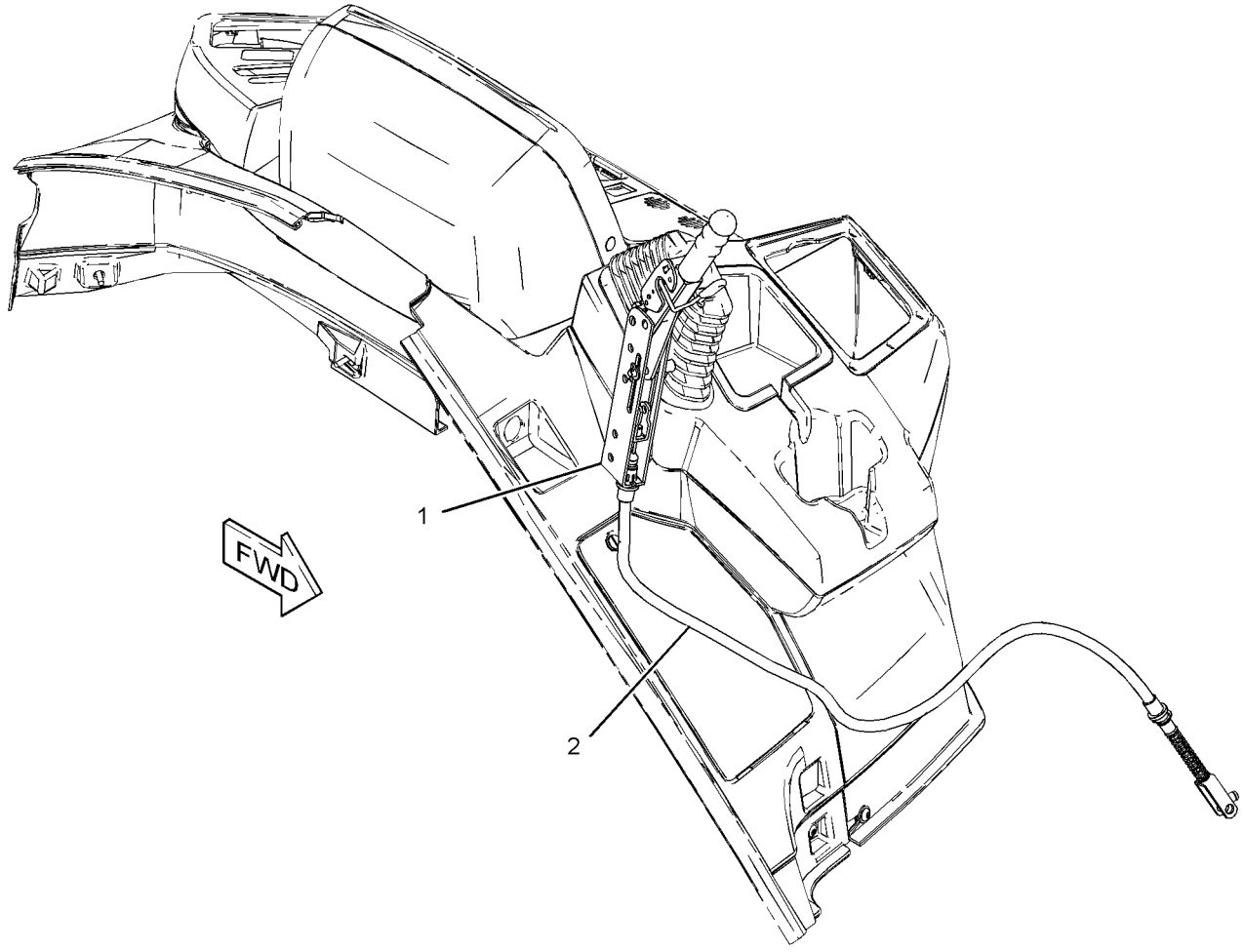

GRAPHIC #1 **<END>** g01210353

BRAKING SYSTEM

206-1638 CONTROL GP-SERVICE BRAKE

S/N: CBD1-UP
PART OF 214-6910, 214-6911, 214-6912, 214-6913, 323-3627, 323-3628, 323-3629, 323-3630 POWER TRAIN AR
AN ATTACHMENT

SMCS-4269 **i03150821**

NOTE	REF NO	GRAPHIC REF	PART NUMBER	QTY	PART NAME 1 2 3 4 5 6 (PRODUCT LEVEL)	SEE PAGE
	1	1	**1A-0621**	2	GROMMET	
	2	1	**2K-5986**	1	PIN-SPRING	
	3	1	**6S-8620**	4	CLAMP-HOSE	
	6	1	**101-0333**	1	FILM-IDENTIFICATION (HYDRAULIC OIL)	
	7	1	**105-8034**	2	SWITCH AS-LIMIT (SERVICE BRAKE)	
	8	1	**151-4841**	1	BLOCK	
	9	1	**165-6595**	1	PIN AS	
	10	1	*148-8368*	2	ELBOW AS	
					(EACH INCLUDES)	
		1	**3J-1907**	1	SEAL-O-RING	
		1	**4J-5477**	1	SEAL-O-RING	
		1	**6V-8627**	1	ELBOW (90-DEG)	
M	11	1	**9X-2045**	6	SCREW-TRUSS HEAD (M6X1X20-MM)	
	13	1	**202-5993**	1	PLATE	
	14	1	**206-1634**	1	PLATE AS (BRAKE)	
	15	1	**275-0652**	1	PEDAL AS (LH) (LH)	
	15A	1	**202-6029**	2	BUSHING	
	16	1	**275-0653**	1	PEDAL AS (RH) (RH)	
	16A	1	**202-6029**	2	BUSHING	
	17	1	**206-1760**	1	PLATE AS (BRAKE)	
	18	1	**206-1766**	2	PIN	
	19	1	**285-3583**	1	SPRING (LH)	
	20	1	**285-3584**	1	SPRING (RH)	
	21	1	**206-1769**	1	VALVE GP-BRAKE CONTROL	
		1	**262-4084**	2	BOOT	
	22	1	*215-7067*	2	ELBOW AS	
					(EACH INCLUDES)	
		1	**3J-1907**	1	SEAL-O-RING	
		1	**215-7066**	1	ELBOW	
Y	23	1	*217-9920*	1	RESERVOIR GP-BRAKE	452
I	24	1	**220-8024**	2	HOSE AS	
	25	1	**291-8378**	1	COVER-BRAKE	
	26	1	**298-3599**	1	PLATE AS	
	27	1	**262-4080**	1	GROMMET	
	28	1	**262-4082**	2	END-YOKE ROD	
M	29	1	**142-0485**	2	NUT (M10X1.5-THD)	
	30	1	*150-3033*	2	ELBOW AS (DRUM)	
					(EACH INCLUDES)	
		1	**3J-1907**	1	SEAL-O-RING	
		1	**4J-5477**	1	SEAL-O-RING	
		1	**8T-0164**	1	ELBOW (45-DEG)	
E	31	1	**103-2529**		HOSE (75-CM EACH)	
M	32	1	**5C-7261**	6	NUT (M8X1.25-THD)	
	33	1	**5K-5338**	1	CLIP	
	34	1	**5P-4116**	4	WASHER-HARD (8.8X20.5X2-MM THK)	
	36	1	**7K-1181**	1	STRAP-CABLE (PLASTIC)	
	37	1	**7X-7729**	6	WASHER (11X25X3-MM THK)	
	38	1	**8T-4121**	1	WASHER-HARD (11X21X2.5-MM THK)	
M	39	1	**8T-4133**	2	NUT (M10X1.5-THD)	
M	40	1	**8T-4136**	5	BOLT (M10X1.5X25-MM)	
M	41	1	**8T-4138**	1	BOLT (M6X1X20-MM)	
	42	1	**8T-4205**	1	WASHER-HARD (7.2X14.5X2-MM THK)	
	43	1	**8T-4224**	4	WASHER-HARD (8.8X16X2-MM THK)	
M	44	1	**8T-4908**	1	BOLT (M8X1.25X25-MM)	

206-1638 CONTROL GP-SERVICE BRAKE *(contd.)* i03150821

NOTE	REF NO	GRAPHIC REF	PART NUMBER	QTY	PART NAME 1 2 3 4 5 6 (PRODUCT LEVEL)	SEE PAGE
M	45	1	**8T-7547**	1	BOLT (M8X1.25X30-MM)	
	46	1	**9R-2807**	2	CLIP	
M	48	1	**5C-2890**	1	NUT (M6X1-THD)	
M	49	1	**6V-7357**	1	BOLT (M6X1X25-MM)	
	50	1	**4D-6466**	1	CLIP	
	51	1	**9X-2038**	4	WASHER (7X19X2-MM THK)	

E-ORDER BY THE CENTIMETER
I-REFER TO HYDRAULIC INFORMATION SYSTEM
M-METRIC PART
Y-SEPARATE ILLUSTRATION

206-1638 **CONTROL GP-SERVICE BRAKE** *(contd.)* **i03150821**

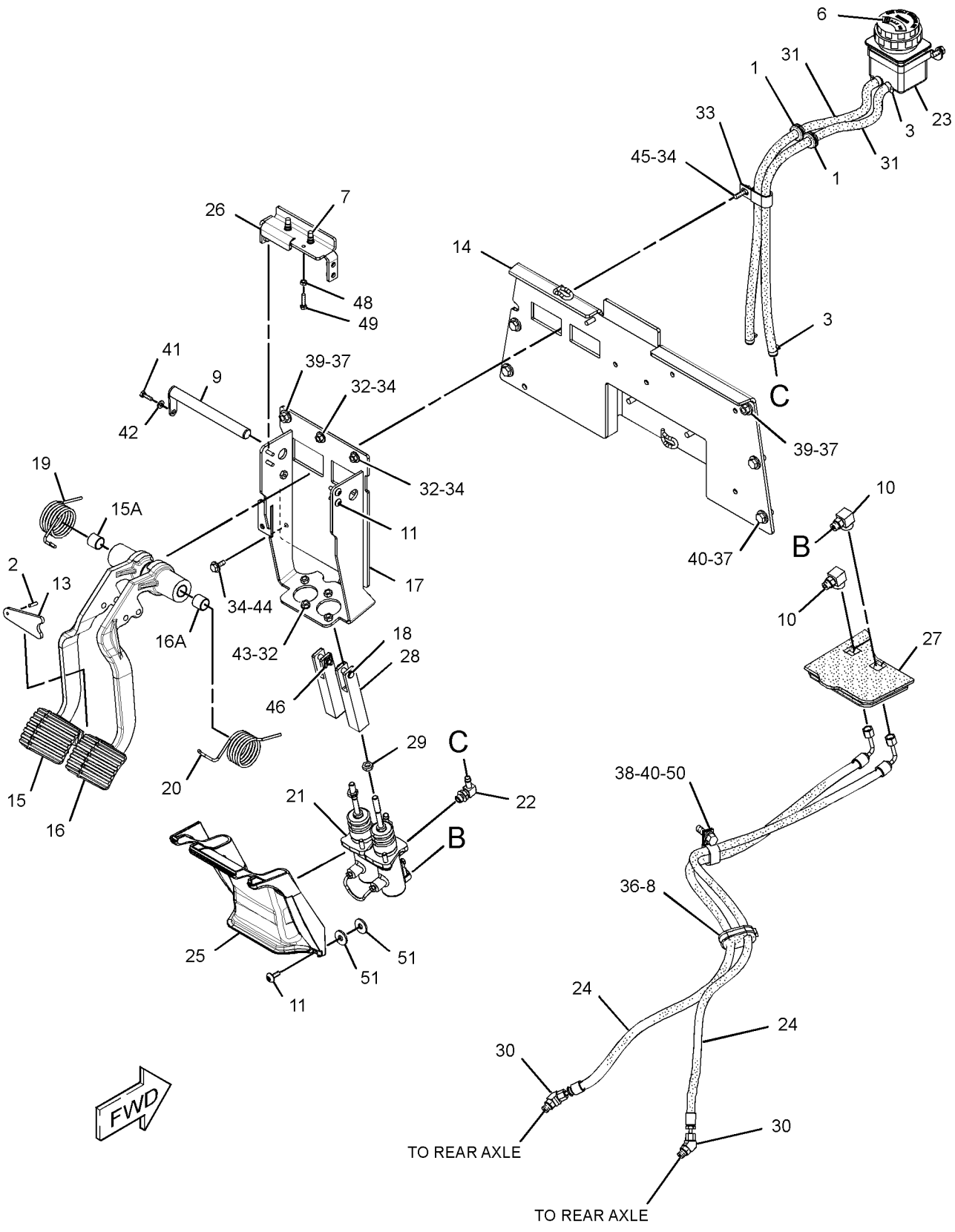

GRAPHIC #1 **<END>** g01805394

206-1638 CONTROL GP-SERVICE BRAKE

S/N: CBD1-UP; MFG1-UP
PART OF 214-6910, 214-6911, 214-6912, 214-6913, 323-3627, 323-3628, 323-3629, 323-3630 POWER TRAIN AR
AN ATTACHMENT

SMCS-4269 **i04306369**

NOTE	REF NO	GRAPHIC REF	PART NUMBER	QTY	PART NAME 1 2 3 4 5 6 (PRODUCT LEVEL)	SEE PAGE
	1	1	**1A-0621**	2	GROMMET	
	2	1	**2K-5986**	1	PIN-SPRING	
	3	1	**6S-8620**	4	CLAMP-HOSE	
	6	1	**101-0333**	1	FILM-IDENTIFICATION (HYDRAULIC OIL)	
	7	1	**105-8034**	2	SWITCH AS-LIMIT (SERVICE BRAKE)	
C	8	1	**151-4841**	2	BLOCK	
	9	1	**165-6595**	1	PIN AS	
	10	1	*148-8368*	2	ELBOW AS	
					(EACH INCLUDES)	
		1	**3J-1907**	1	SEAL-O-RING	
		1	**4J-5477**	1	SEAL-O-RING	
		1	**6V-8627**	1	ELBOW (90-DEG)	
CM	11	1	**9X-2045**	4	SCREW-TRUSS HEAD (M6X1X20-MM)	
	13	1	**202-5993**	1	PLATE	
	14	1	**206-1634**	1	PLATE AS (BRAKE)	
M		1	**6V-4248**	2	BOLT (M10X1.5X25-MM)	
M		1	**6V-9632**	5	NUT-WELD (M6X1-THD)	
		1	**7T-1099**	4	LINK	
M		1	**8T-4908**	1	BOLT (M8X1.25X25-MM)	
	15	1	**275-0652**	1	PEDAL AS (LH)	
	15A	1	**202-6029**	2	BUSHING	
	16	1	**275-0653**	1	PEDAL AS (RH)	
	16A	1	**202-6029**	2	BUSHING	
	17	1	**206-1760**	1	PLATE AS (BRAKE)	
M		1	**6V-9632**	1	NUT-WELD (M6X1-THD)	
	18	1	**206-1766**	2	PIN	
	19	1	**285-3583**	1	SPRING (LH)	
	20	1	**285-3584**	1	SPRING (RH)	
	21	1	**206-1769**	1	VALVE GP-BRAKE CONTROL (SERVICE)	
		1	**262-4084**	2	BOOT	
	22	1	*215-7067*	2	ELBOW AS	
					(EACH INCLUDES)	
		1	**3J-1907**	1	SEAL-O-RING	
		1	**5P-4924**	1	ELBOW	
Y	23	1	*217-9920*	1	RESERVOIR GP-BRAKE	452
I	24	1	**220-8024**	2	HOSE AS	
	25	1	**291-8378**	1	COVER-BRAKE	
	26	1	**298-3599**	1	PLATE AS	
	27	1	**262-4080**	1	GROMMET	
	28	1	**262-4082**	2	END-YOKE ROD	
M	29	1	**142-0485**	2	NUT (M10X1.5-THD)	
	30	1	*150-3033*	2	ELBOW AS (DRUM)	
					(EACH INCLUDES)	
		1	**3J-1907**	1	SEAL-O-RING	
		1	**4J-5477**	1	SEAL-O-RING	
		1	**8T-0164**	1	ELBOW (45-DEG)	
E	31	1	**103-2529**		HOSE (75-CM EACH)	
M	32	1	**5C-7261**	6	NUT (M8X1.25-THD)	
	33	1	**5K-5338**	1	CLIP	
	34	1	**5P-4116**	4	WASHER-HARD (8.8X20.5X2-MM THK)	
C	36	1	**7K-1181**	2	STRAP-CABLE (PLASTIC)	
	37	1	**7X-7729**	6	WASHER (11X25X3-MM THK)	
	38	1	**8T-4121**	1	WASHER-HARD (11X21X2.5-MM THK)	
M	39	1	**8T-4133**	2	NUT (M10X1.5-THD)	

206-1638 **CONTROL GP-SERVICE BRAKE** *(contd.)* **i04306369**

NOTE	REF NO	GRAPHIC REF	PART NUMBER	QTY	PART NAME 1 2 3 4 5 6 (PRODUCT LEVEL)	SEE PAGE
M	40	1	**8T-4136**	5	BOLT (M10X1.5X25-MM)	
M	41	1	**8T-4138**	1	BOLT (M6X1X20-MM)	
	42	1	**8T-4205**	1	WASHER-HARD (7.2X14.5X2-MM THK)	
	43	1	**8T-4224**	4	WASHER-HARD (8.8X16X2-MM THK)	
M	44	1	**8T-4908**	1	BOLT (M8X1.25X25-MM)	
M	45	1	**8T-7547**	1	BOLT (M8X1.25X30-MM)	
	46	1	**9R-2807**	2	CLIP	
M	48	1	**5C-2890**	1	NUT (M6X1-THD)	
M	49	1	**6V-7357**	1	BOLT (M6X1X25-MM)	
C	50	1	**290-3972**	1	PLATE	
CM	52	1	**9X-2044**	2	SCREW-TRUSS HEAD (M6X1X16-MM)	
C	53	1	**349-2856**	1	FILM-INSTRUCTION (PRESSURE WASHER)	

C-CHANGE FROM PREVIOUS TYPE
E-ORDER BY THE CENTIMETER
I-REFER TO HYDRAULIC INFORMATION SYSTEM
M-METRIC PART
Y-SEPARATE ILLUSTRATION

206-1638 **CONTROL GP-SERVICE BRAKE** *(contd.)* **i04306369**

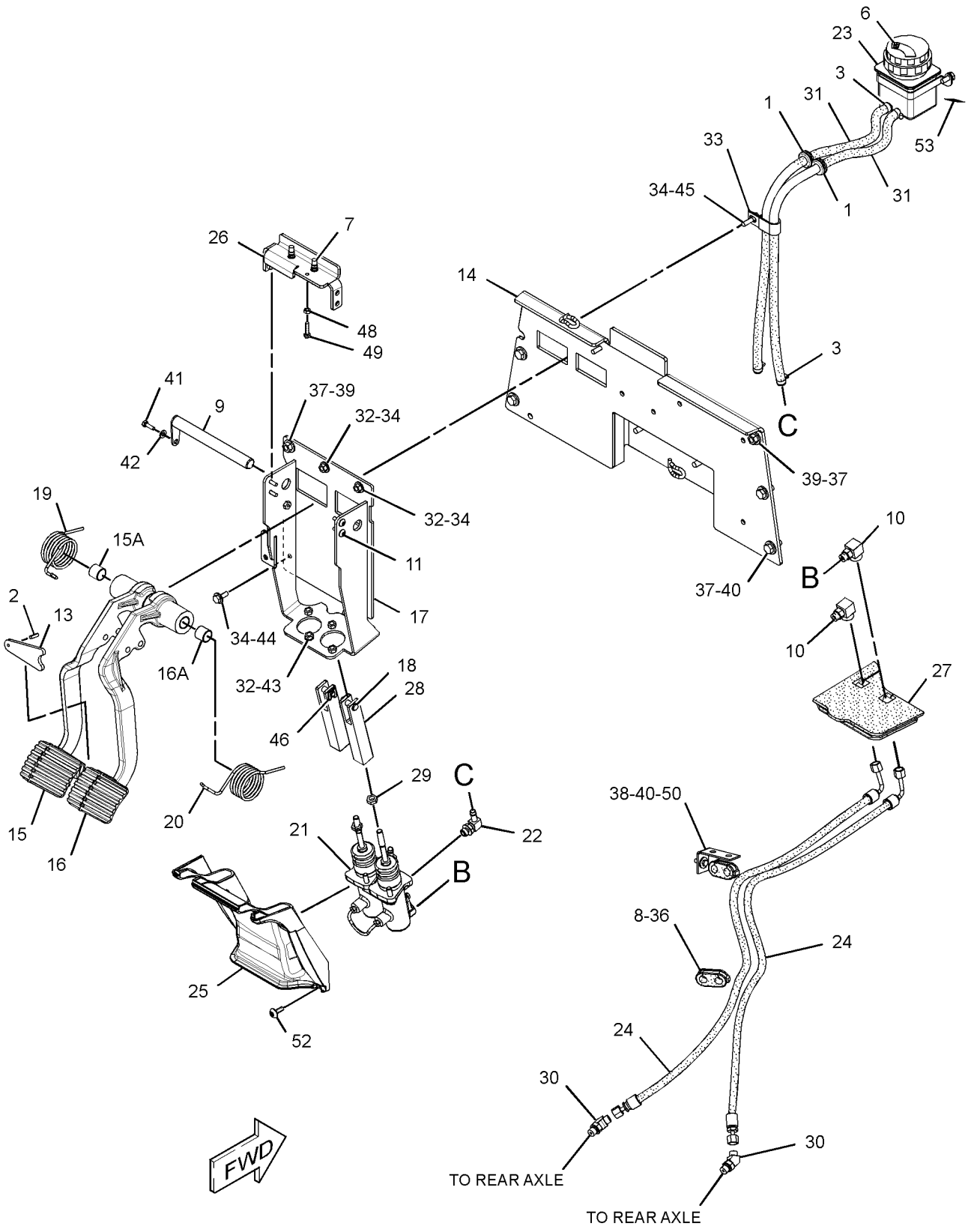

GRAPHIC #1 **<END>** g02713681

216-1612 CYLINDER GP-BRAKE

S/N: CBD1-UP; MFG1-UP
PART OF 238-5289 HOUSING GP-AXLE
AN ATTACHMENT

SMCS-4262 **i03563406**

NOTE	REF NO	GRAPHIC REF	PART NUMBER	QTY	PART NAME 1 2 3 4 5 6 (PRODUCT LEVEL)	SEE PAGE
M	1	1	**6V-2315**	3	BOLT (M6X1X35-MM)	
JLM	2	1	**1R-5396**	3	BOLT (M6X1X35-MM)	
J	3	1	**199-0672**	3	SPACER-SPECIAL	
J	4	1	**199-0681**	3	WASHER (6.2X16.5X2-MM THK)	
L	5	1	**199-0701**	3	BRAKE-COVER	
L	6	1	**199-0702**	3	SPRING (INNER)	
L	7	1	**199-0703**	3	SPRING (OUTER)	
	8	1	**199-0752**	1	PISTON-BRAKE	
	9	1	**199-0759**	1	O-RING-INNER	
JL	10	1	**212-5712**	6	BUSHING	
	11	1	**219-8834**	1	CYLINDER-BRAKE	
	12	1	**199-0700**	1	O-RING-OUTER	
					AVAILABLE REPAIR KIT(S):	
J			**217-2347**	3	KIT-BRAKE CYLINDER (ADJUSTER)	
L			**217-2349**	3	KIT-BRAKE CYLINDER (SPRING RETENTION)	

J-KIT MARKED J SERVICES PARTS MARKED J
L-KIT MARKED L SERVICES PARTS MARKED L
M-METRIC PART

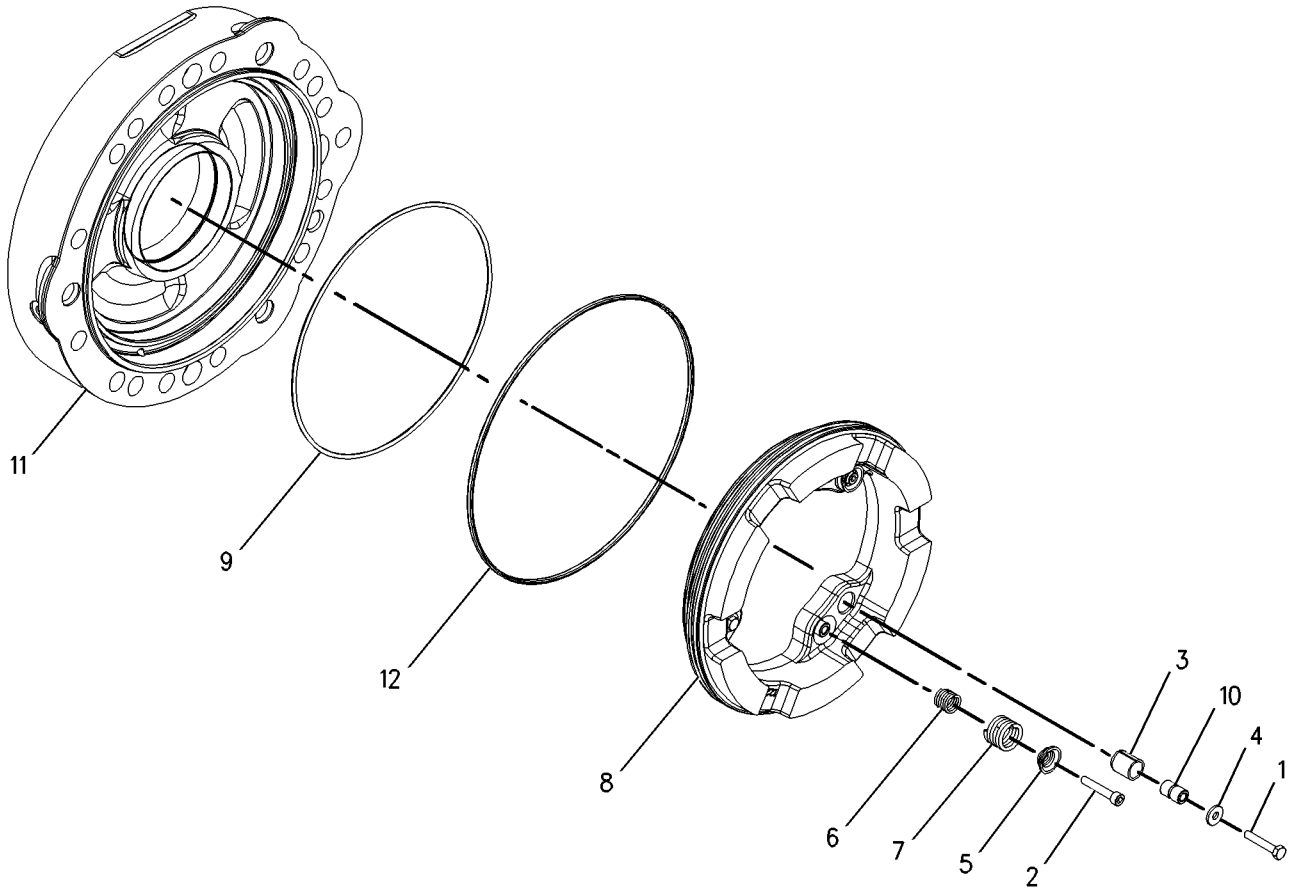

GRAPHIC #1 **<END>** g00953880

BRAKING SYSTEM

216-1613 CYLINDER GP-BRAKE

S/N: CBD1-UP; MFG1-UP
PART OF 238-5289 HOUSING GP-AXLE
AN ATTACHMENT

SMCS-4262 **i03563409**

NOTE	REF NO	GRAPHIC REF	PART NUMBER	QTY	PART NAME 1 2 3 4 5 6 (PRODUCT LEVEL)	SEE PAGE
M	1	1	**6V-2315**	3	BOLT (M6X1X35-MM)	
JLM	2	1	**1R-5396**	3	BOLT (M6X1X35-MM)	
J	3	1	**199-0672**	3	SPACER-SPECIAL	
J	4	1	**199-0681**	3	WASHER (6.2X16.5X2-MM THK)	
L	5	1	**199-0701**	3	BRAKE-COVER	
L	6	1	**199-0702**	3	SPRING (INNER)	
L	7	1	**199-0703**	3	SPRING (OUTER)	
	8	1	**199-0752**	1	PISTON-BRAKE	
	9	1	**199-0759**	1	O-RING-INNER	
JL	10	1	**212-5712**	6	BUSHING	
	11	1	**219-8835**	1	CYLINDER-BRAKE	
	12	1	**199-0700**	1	O-RING-OUTER	
					AVAILABLE REPAIR KIT(S):	
J			**217-2347**	3	KIT-BRAKE CYLINDER (ADJUSTER)	
L			**217-2349**	3	KIT-BRAKE CYLINDER (SPRING RETENTION)	

J-KIT MARKED J INCLUDES PARTS MARKED J
L-KIT MARKED L INCLUDES PARTS MARKED L
M-METRIC PART

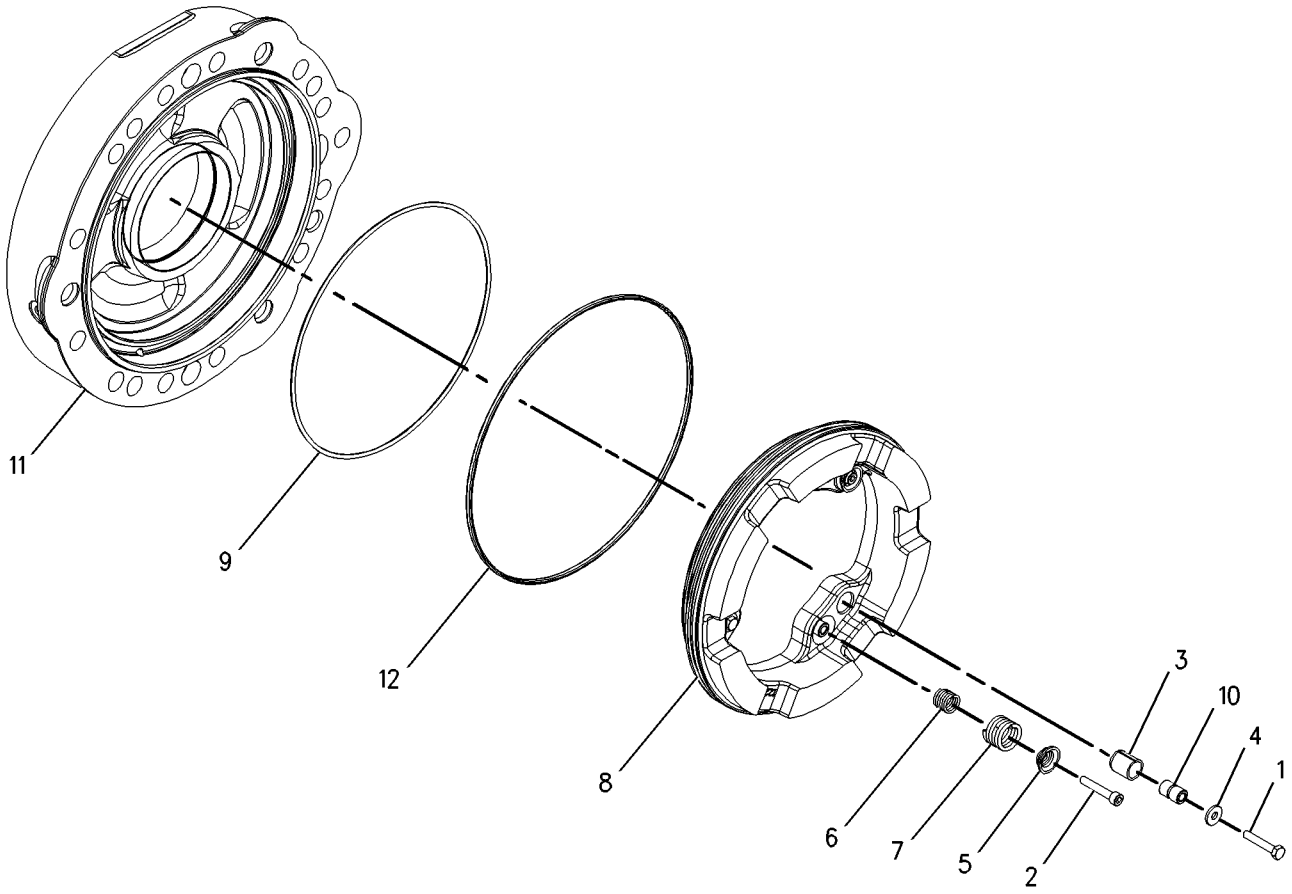

GRAPHIC #1 **<END>** g00995396

163-0753 LEVER GP-HAND CONTROL

S/N: CBD1-UP; MFG1-UP
PART OF 261-5517 CONTROL GP-PARKING BRAKE
AN ATTACHMENT

SMCS-4284 **i01524602**

NOTE	REF NO	GRAPHIC REF	PART NUMBER	QTY	PART NAME 1 2 3 4 5 6 (PRODUCT LEVEL)	SEE PAGE
	1	1	**7R-8239**	2	SPACER	
	2	1	**039-9133**	1	PIN (38.86 MM LG)	
	3	1	**164-9598**	1	GRIP	
	4	1	**164-9599**	1	COVER	
	5	1	**3B-4610**	1	COTTER	
	6	1	**8T-4224**	2	WASHER-HARD (8.8X16X2MM THK)	

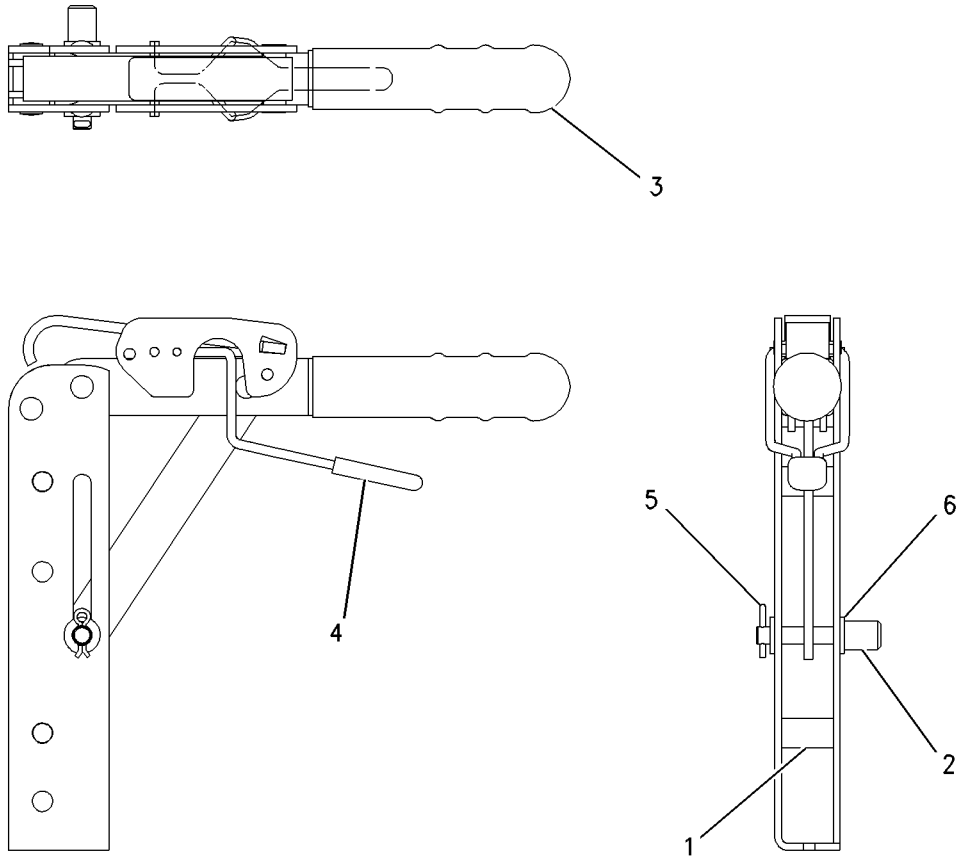

GRAPHIC #1 **<END>** g00729504

4E-8619 RESERVOIR GP-BRAKE

S/N: CBD1-UP; MFG1-UP
PART OF 217-9920 RESERVOIR GP-BRAKE
AN ATTACHMENT

SMCS-4291 **i02837876**

NOTE	REF NO	GRAPHIC REF	PART NUMBER	QTY	PART NAME 1 2 3 4 5 6 (PRODUCT LEVEL)	SEE PAGE
	1	1	**7N-7779**	1	SOCKET-CONNECTOR (14-GA TO 18-GA)	
	2	1	**7N-9737**	1	HOUSING-RECEPTACLE (14-GA TO 18-GA)	
	3	1	**7N-7780**	1	PIN-CONNECTOR (14-GA TO 18-GA)	
F			**8R-6263**		INDICATOR AS	
					AVAILABLE REPAIR KIT(S):	
			159-7907	1	KIT-BRAKE RESERVOIR	
					(INCLUDES CAP & DIAPHRAGM	

F-NOT SHOWN

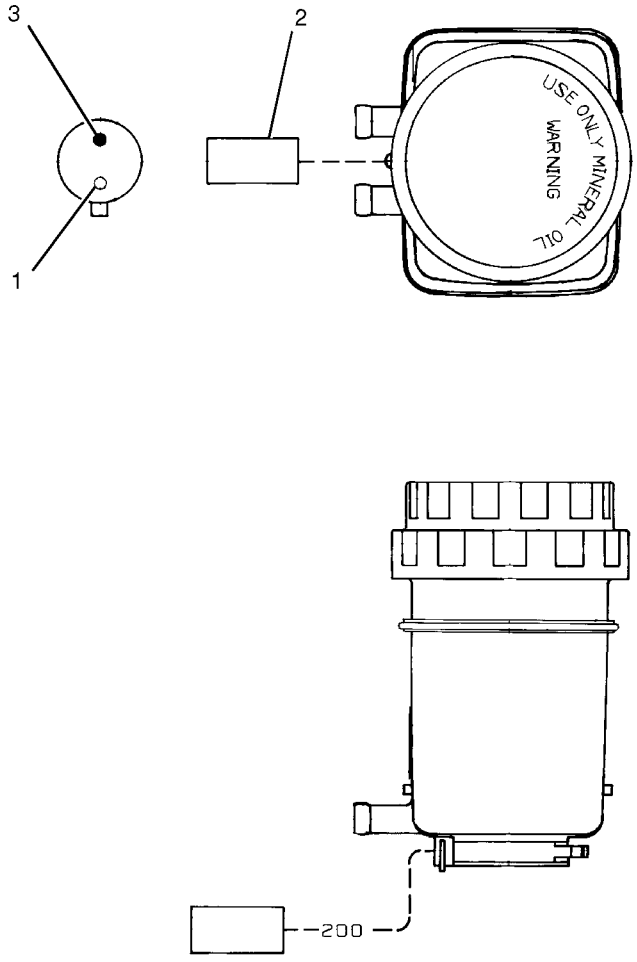

GRAPHIC #1

<END>

g01018423

217-9920 RESERVOIR GP-BRAKE

S/N: CBD1-UP; MFG1-UP
PART OF 206-1638 CONTROL GP-SERVICE BRAKE
AN ATTACHMENT

SMCS-4291 **i04473136**

NOTE	REF NO	GRAPHIC REF	PART NUMBER	QTY	PART NAME 1 2 3 4 5 6 (PRODUCT LEVEL)	SEE PAGE
Y	1	1	**4E-8619**	1	RESERVOIR GP-BRAKE	451
	2	1	**254-5303**	1	BRACKET	
M	3	1	**8T-4189**	2	BOLT (M8X1.25X20-MM)	
	4	1	**8T-4224**	2	WASHER-HARD (8.8X16X2-MM THK)	
	5	1	**344-8938**	1	RING-SEAL	
	6	1	**344-8939**	1	RING-SUPPORT	

M-METRIC PART
Y-SEPARATE ILLUSTRATION

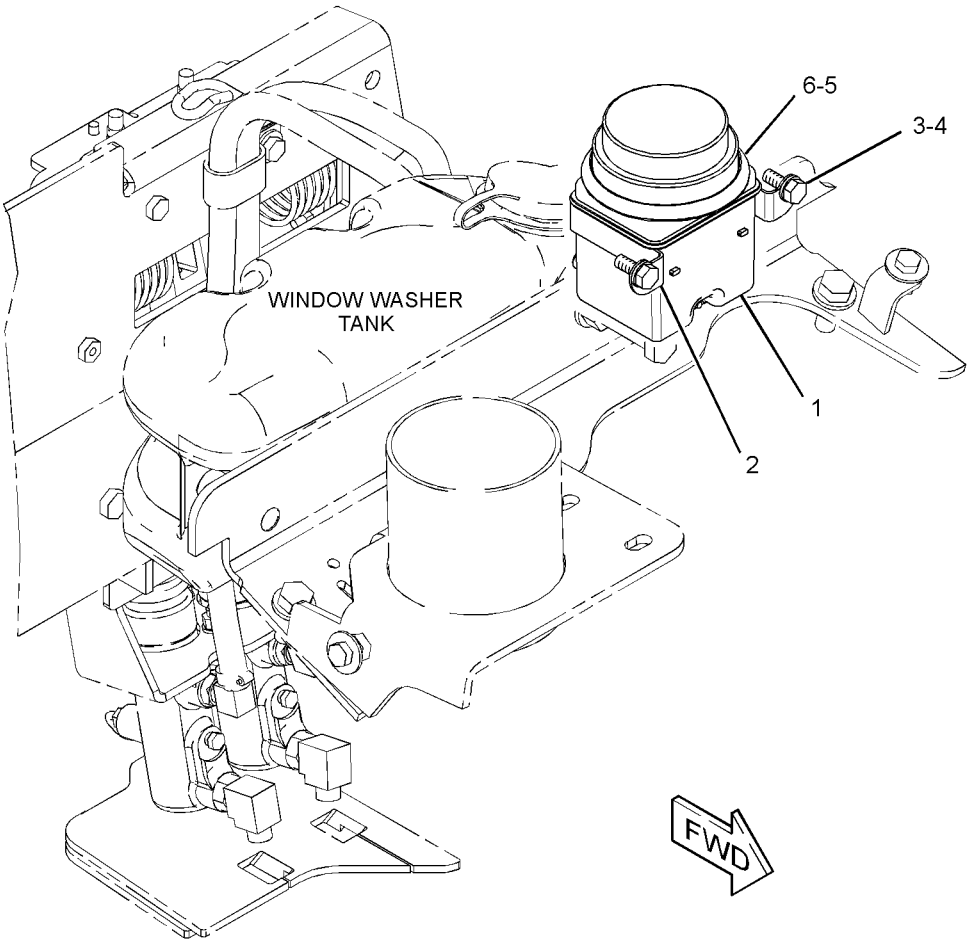

GRAPHIC #1 **<END>** g01960491

STEERING SYSTEM

230-5745 AXLE GP-FRONT

S/N: CBD1-UP; MFG1-UP
PART OF 220-9182 DRIVE AR-BACKHOE LOADER
AN ATTACHMENT

SMCS-3282, 4303 **i04467269**

NOTE	REF NO	GRAPHIC REF	PART NUMBER	QTY	PART NAME 1 2 3 4 5 6 (PRODUCT LEVEL)	SEE PAGE
	1	1	**290-4164**	6	BOLT (M20X1.5X80-MM)	
	2	1	**207-4255**	2	PLUG	
M	3	1	**098-5747**	2	NUT (M16X2-THD)	
	4	1	**207-4258**	2	NUT (M20X1.5-THD)	
	5	1	**5F-3999**	2	SEAL-O-RING	
	6	1	**219-8798**	2	SEAL-LIP TYPE	
M	7	1	**199-0683**	16	BOLT (M16X2X38-MM)	
	8	1	**207-4262**	2	BOLT (STEERING STOP)	
	9	1	**198-7825**	4	SEAL	
	10	1	**207-4266**	2	RETAINER	
	11	1	**198-7838**	4	PIN	
	12	1	**207-4268**	1	BEAM	
	13	1	**207-4271**	2	COVER	
Y	14	1	**231-0683**	2	FLANGE GP-WHEEL (FRONT AXLE)	376
	15	1	**231-0684**	1	HOUSING (RH)	
	16	1	**231-0685**	1	HOUSING (LH)	
	17	1	**207-4272**	2	TIE ROD GP (FRONT AXLE)	
					(EACH INCLUDES)	
		1	**204-3080**	1	BALL JOINT	
		1	**216-4459**	1	TIE ROD	
		1	**243-5026**	1	NUT-SPECIAL	
	18	1	**154-5404**	2	BEARING	
M	19	1	**8T-4139**	6	BOLT (M12X1.75X30-MM)	
J	20	1	**214-5097**	1	CYLINDER GP-STEERING	
		1	**238-5254**	1	ROD	
		1	**238-5255**	2	CYLINDER HEAD	
	21	1	**3N-4968**	4	CONE-BEARING	
B	22	1	**198-7841**	4	SHIM (0.15-MM THK)	
B	23	1	**198-7842**	4	SHIM (0.2-MM THK)	
B	24	1	**198-7843**	4	SHIM (0.5-MM THK)	
	25	1	**6D-1734**	4	CUP-BEARING	
					AVAILABLE REPAIR KIT(S):	
J			**215-2023**	1	KIT-SEAL (STEERING CYLINDER)	
					(INCLUDES GUIDE RINGS, DUAL RINGS, WIPER RODS, ROD SEALS, PISTON SEAL & BACKUP WASHERS)	

B-USE AS REQUIRED
J-KIT MARKED J SERVICES PARTS MARKED J
M-METRIC PART
Y-SEPARATE ILLUSTRATION

230-5745 AXLE GP-FRONT *(contd.)* i04467269

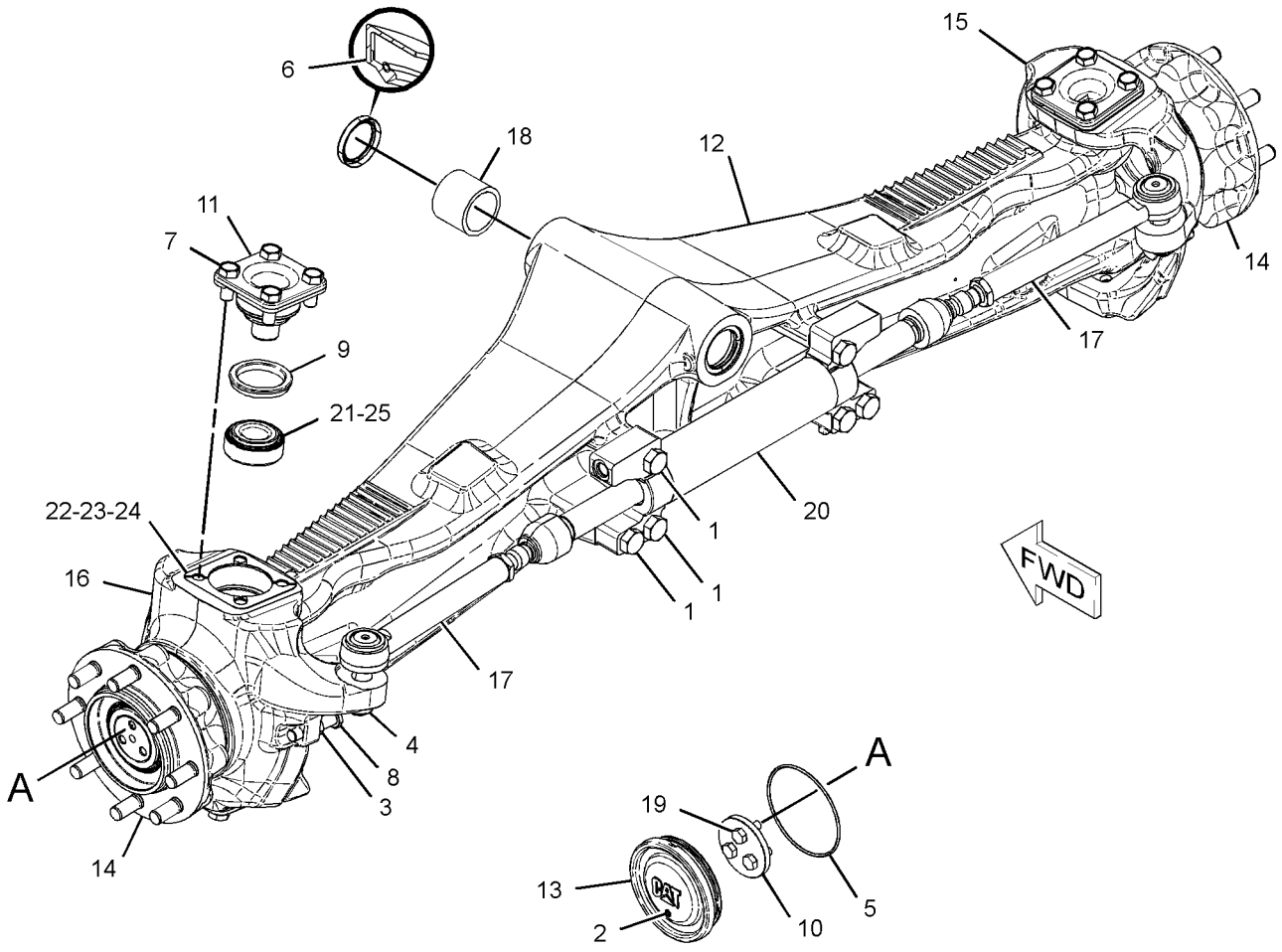

GRAPHIC #1 **<END>** g02397336

153-7369 KNOB GP-STEERING

S/N: CBD1-UP; MFG1-UP
PART OF 206-1633, 218-4453 CONTROL GP-STEERING
AN ATTACHMENT

SMCS-4309 **i01509389**

NOTE	REF NO	GRAPHIC REF	PART NUMBER	QTY	PART NAME 1 2 3 4 5 6 (PRODUCT LEVEL)	SEE PAGE
M	1	1	**8T-6869**	1	BOLT (M8X1.25X60-MM)	
	2	1	**8T-4224**	1	WASHER-HARD (8.8X16X2-MM THK)	
M	3	1	**5C-7261**	1	NUT (M8X1.25-THD)	

M-METRIC PART

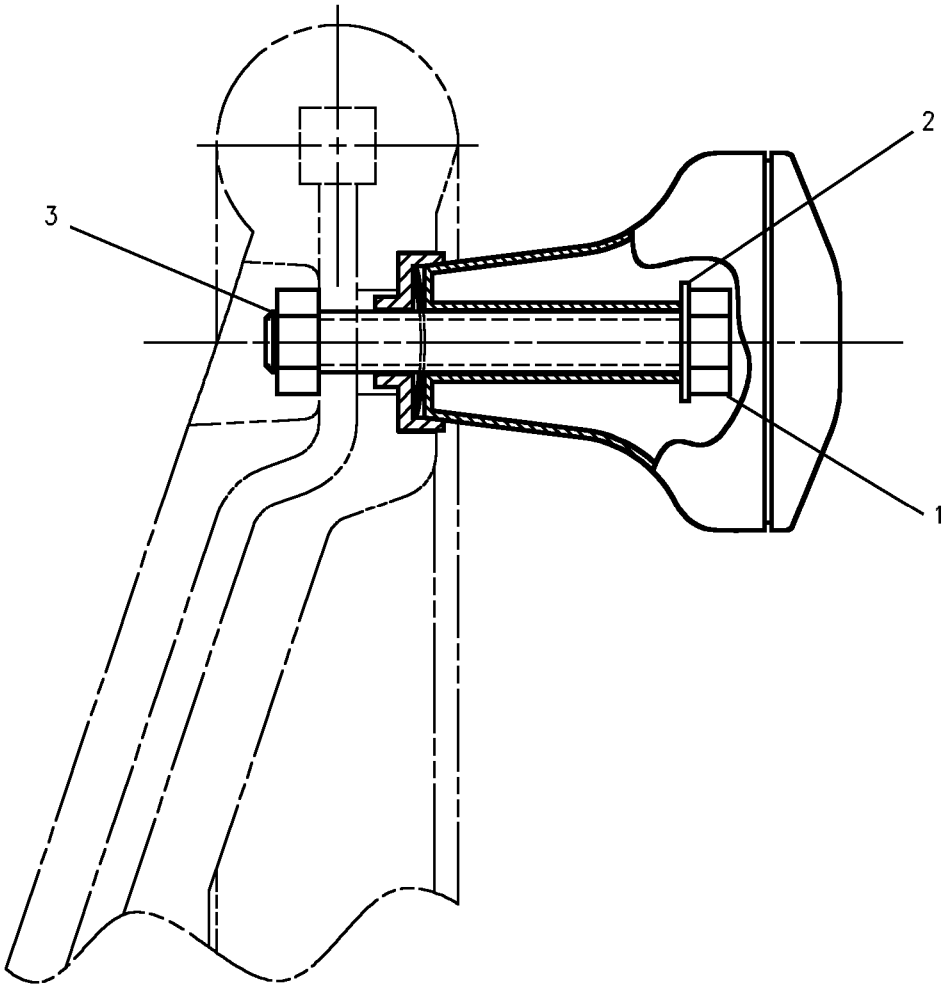

GRAPHIC #1 **<END>** g00534771

STEERING SYSTEM

219-5752 LINES GP-STEERING—2-WHEEL DRIVE

S/N: CBD1-2693

PART OF 220-9182 DRIVE AR-BACKHOE LOADER

AN ATTACHMENT

SMCS-4304 **i02696876**

NOTE	REF NO	GRAPHIC REF	PART NUMBER	QTY	PART NAME 1 2 3 4 5 6 (PRODUCT LEVEL)	SEE PAGE
E	1	1	**5P-1505**		HOSE (60-CM)	
	2	1	**5D-1026**	2	CLAMP-BAND	
	3	1	**7K-1181**	2	STRAP-CABLE	
	4	1	*204-0317*	1	CONNECTOR AS	
		1	**3K-0360**	1	SEAL-O-RING	
		1	**6V-8397**	1	SEAL-O-RING	
		1	**092-3635**	1	CONNECTOR	
	5	1	**206-1652**	1	SEAL	
I	6	1	**215-3882**	1	HOSE AS	
I	7	1	**215-3883**	1	HOSE AS	
I	8	1	**217-8199**	1	HOSE AS	
I	9	1	**217-8200**	1	HOSE AS	
	10	1	**9R-3884**	1	SPACER (13X20X45-MM THK)	
	11	1	*148-8318*	2	CONNECTOR AS	
					(EACH INCLUDES)	
		1	**3K-0360**	1	SEAL-O-RING	
		1	**6V-8397**	1	SEAL-O-RING	
		1	**6V-8634**	1	CONNECTOR	
	12	1	*148-8336*	1	CONNECTOR AS	
		1	**3J-1907**	1	SEAL-O-RING	
		1	**6V-8397**	1	SEAL-O-RING	
		1	**6V-8636**	1	CONNECTOR	
	13	1	*148-8367*	3	ELBOW AS	
					(EACH INCLUDES)	
		1	**6V-8397**	1	SEAL-O-RING	
		1	**6V-9850**	1	ELBOW	
	14	1	*148-8369*	1	ELBOW AS	
		1	**3J-7354**	1	SEAL-O-RING	
		1	**4J-5477**	1	SEAL-O-RING	
		1	**6V-8628**	1	ELBOW	
	15	1	*148-8374*	2	ELBOW AS	
					(EACH INCLUDES)	
		1	**3K-0360**	1	SEAL-O-RING	
		1	**6V-8397**	1	SEAL-O-RING	
		1	**6V-8723**	1	ELBOW	
	16	1	*150-3026*	1	ELBOW AS	
		1	**3K-0360**	1	SEAL-O-RING	
		1	**6V-4292**	1	ELBOW	
	17	1	*150-3027*	1	ELBOW AS	
		1	**2M-9780**	1	SEAL-O-RING	
		1	**6V-5653**	1	ELBOW	
M	18	1	**8T-6466**	1	BOLT (M10X1.5X60-MM)	
	19	1	*164-5605*	1	CONNECTOR AS	
		1	**3K-0360**	1	SEAL-O-RING	
		1	**6V-8397**	1	SEAL-O-RING	
		1	**8T-0076**	1	CONNECTOR	
	20	1	**5P-4295**	5	CLIP	
	21	1	**8T-4121**	3	WASHER-HARD (11X21X2.5-MM THK)	
	22	1	**9M-8406**	1	CLIP	
M	23	1	**8T-4195**	2	BOLT (M10X1.5X30-MM)	

E-ORDER BY THE CENTIMETER
I-REFER TO HYDRAULIC INFORMATION SYSTEM
M-METRIC PART

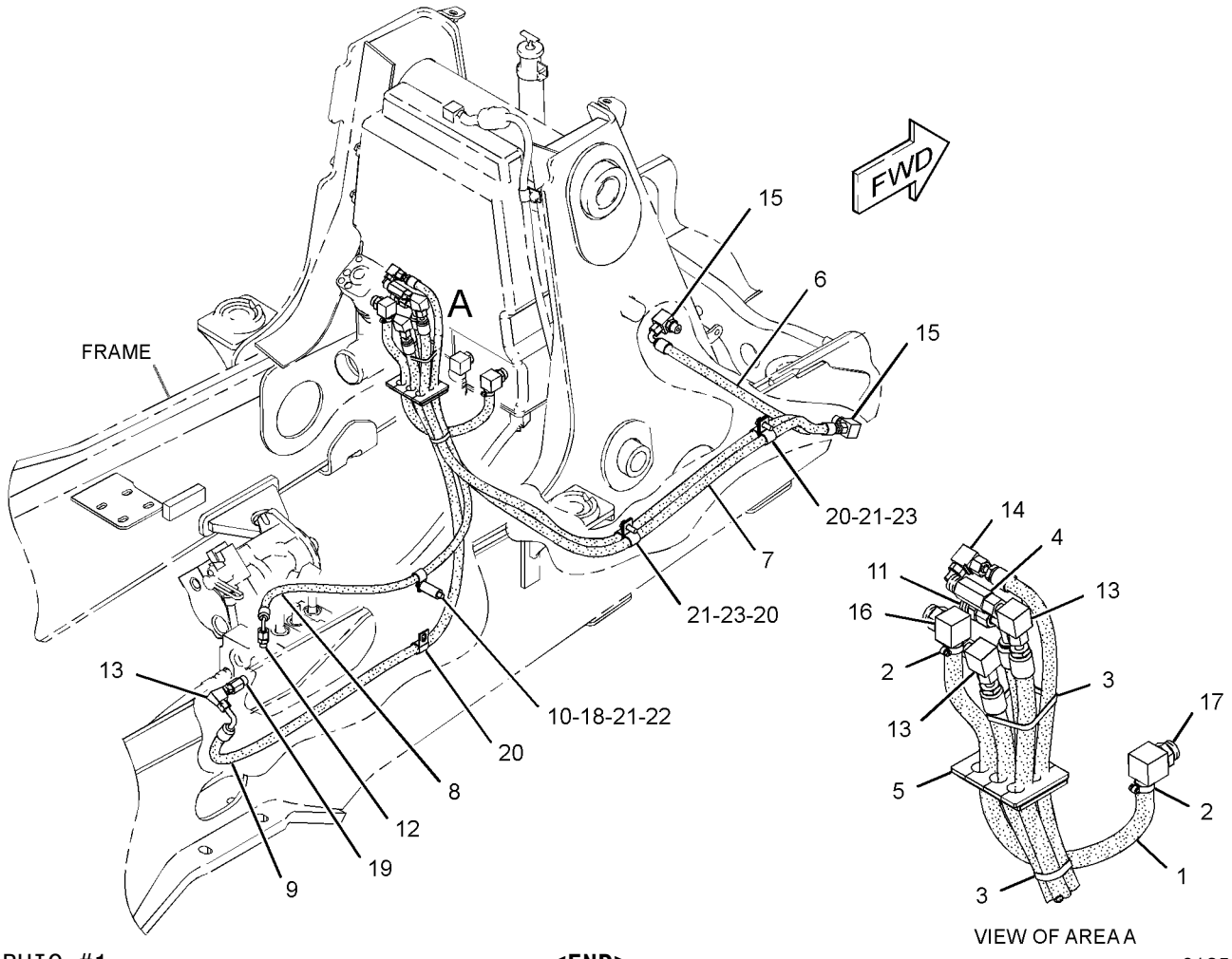

GRAPHIC #1 **<END>** g01356067

STEERING SYSTEM

219-5752 LINES GP-STEERING—2-WHEEL DRIVE

S/N: CBD2694-UP; MFG1-UP

PART OF 220-9182 DRIVE AR-BACKHOE LOADER

AN ATTACHMENT

SMCS-4304 **i02908594**

NOTE	REF NO	GRAPHIC REF	PART NUMBER	QTY	PART NAME 1 2 3 4 5 6 (PRODUCT LEVEL)	SEE PAGE
E	1	1	**5P-1505**		HOSE (60-CM)	
	2	1	**5D-1026**	2	CLAMP-BAND	
	3	1	**7K-1181**	2	STRAP-CABLE	
	4	1	*204-0317*	1	CONNECTOR AS	
		1	**3K-0360**	1	SEAL-O-RING	
		1	**6V-8397**	1	SEAL-O-RING	
		1	**092-3635**	1	CONNECTOR	
	5	1	**206-1652**	1	SEAL	
I	6	1	**215-3882**	1	HOSE AS	
I	7	1	**215-3883**	1	HOSE AS	
I	8	1	**217-8199**	1	HOSE AS	
I	9	1	**217-8200**	1	HOSE AS	
C	10	1	**236-1583**	1	BOSS	
	11	1	*148-8318*	2	CONNECTOR AS	
					(EACH INCLUDES)	
		1	**3K-0360**	1	SEAL-O-RING	
		1	**6V-8397**	1	SEAL-O-RING	
		1	**6V-8634**	1	CONNECTOR	
	12	1	*148-8336*	1	CONNECTOR AS	
		1	**3J-1907**	1	SEAL-O-RING	
		1	**6V-8397**	1	SEAL-O-RING	
		1	**6V-8636**	1	CONNECTOR	
	13	1	*148-8367*	3	ELBOW AS	
					(EACH INCLUDES)	
		1	**6V-8397**	1	SEAL-O-RING	
		1	**6V-9850**	1	ELBOW	
	14	1	*148-8369*	1	ELBOW AS	
		1	**3J-7354**	1	SEAL-O-RING	
		1	**4J-5477**	1	SEAL-O-RING	
		1	**6V-8628**	1	ELBOW	
	15	1	*148-8374*	2	ELBOW AS	
					(EACH INCLUDES)	
		1	**3K-0360**	1	SEAL-O-RING	
		1	**6V-8397**	1	SEAL-O-RING	
		1	**6V-8723**	1	ELBOW	
	16	1	*150-3026*	1	ELBOW AS	
		1	**3K-0360**	1	SEAL-O-RING	
		1	**6V-4292**	1	ELBOW	
	17	1	*150-3027*	1	ELBOW AS	
		1	**2M-9780**	1	SEAL-O-RING	
		1	**6V-5653**	1	ELBOW	
CM	18	1	**8T-4172**	1	BOLT (M10X1.5X80-MM)	
	19	1	*164-5605*	1	CONNECTOR AS	
		1	**3K-0360**	1	SEAL-O-RING	
		1	**6V-8397**	1	SEAL-O-RING	
		1	**8T-0076**	1	CONNECTOR	
	20	1	**5P-4295**	5	CLIP	
	21	1	**8T-4121**	3	WASHER-HARD (11X21X2.5-MM THK)	
	22	1	**9M-8406**	1	CLIP	
M	23	1	**8T-4195**	2	BOLT (M10X1.5X30-MM)	

C-CHANGE FROM PREVIOUS TYPE
E-ORDER BY THE CENTIMETER
I-REFER TO HYDRAULIC INFORMATION SYSTEM
M-METRIC PART

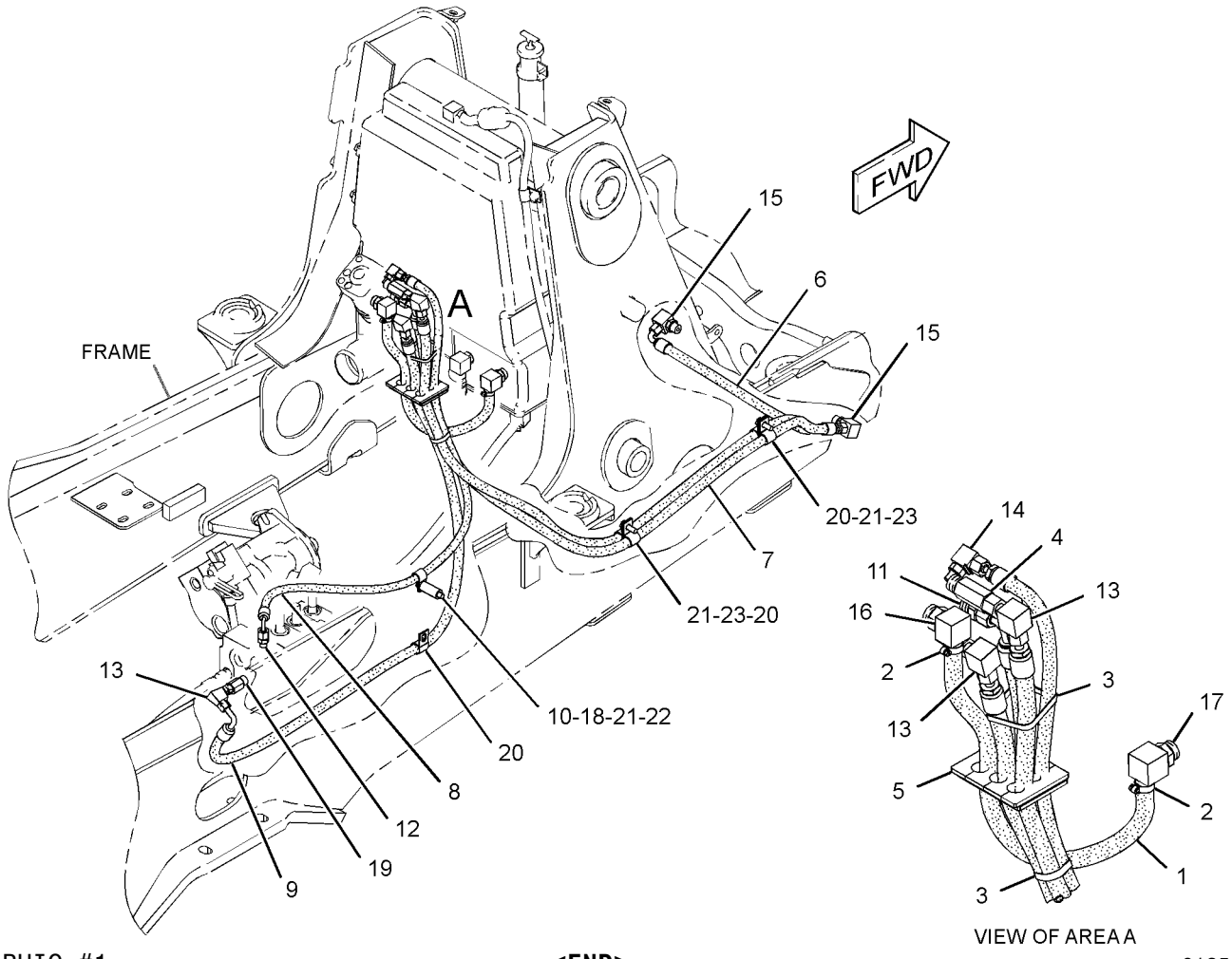

GRAPHIC #1 **<END>** g01356067

STEERING SYSTEM

219-5753 LINES GP-STEERING—ALL WHEEL DRIVE

S/N: CBD1-2693

PART OF 220-9183 DRIVE AR-BACKHOE LOADER

AN ATTACHMENT

SMCS-4304 **i02696877**

NOTE	REF NO	GRAPHIC REF	PART NUMBER	QTY	PART NAME 1 2 3 4 5 6 (PRODUCT LEVEL)	SEE PAGE
E	1	1	**5P-1505**		HOSE (60-CM)	
	2	1	**5D-1026**	2	CLAMP-BAND	
	3	1	**7K-1181**	2	STRAP-CABLE	
	4	1	*204-0317*	1	CONNECTOR AS	
		1	**3K-0360**	1	SEAL-O-RING	
		1	**6V-8397**	1	SEAL-O-RING	
		1	**092-3635**	1	CONNECTOR	
	5	1	**206-1652**	1	SEAL	
	6	1	**217-8195**	1	HOSE AS	
	7	1	**217-8197**	1	HOSE AS	
I	8	1	**217-8199**	1	HOSE AS	
I	9	1	**217-8200**	1	HOSE AS	
	10	1	**9R-3884**	1	SPACER (13X20X45-MM THK)	
	11	1	*148-8318*	2	CONNECTOR AS	
					(EACH INCLUDES)	
		1	**3K-0360**	1	SEAL-O-RING	
		1	**6V-8397**	1	SEAL-O-RING	
		1	**6V-8634**	1	CONNECTOR	
	12	1	*148-8336*	1	CONNECTOR AS	
		1	**3J-1907**	1	SEAL-O-RING	
		1	**6V-8397**	1	SEAL-O-RING	
		1	**6V-8636**	1	CONNECTOR	
	13	1	*148-8367*	4	ELBOW AS	
					(EACH INCLUDES)	
		1	**6V-8397**	1	SEAL-O-RING	
		1	**6V-9850**	1	ELBOW	
	14	1	*148-8369*	1	ELBOW AS	
		1	**3J-7354**	1	SEAL-O-RING	
		1	**4J-5477**	1	SEAL-O-RING	
		1	**6V-8628**	1	ELBOW	
	15	1	*148-8383*	2	ELBOW AS	
					(EACH INCLUDES)	
		1	**3K-0360**	1	SEAL-O-RING	
		1	**6V-8397**	1	SEAL-O-RING	
		1	**8T-1683**	1	ELBOW	
	16	1	*150-3026*	1	ELBOW AS	
		1	**3K-0360**	1	SEAL-O-RING	
		1	**6V-4292**	1	ELBOW	
	17	1	*150-3027*	1	ELBOW AS	
		1	**2M-9780**	1	SEAL-O-RING	
		1	**6V-5653**	1	ELBOW	
M	18	1	**8T-6466**	1	BOLT (M10X1.5X60-MM)	
	19	1	*164-5605*	1	CONNECTOR AS	
		1	**3K-0360**	1	SEAL-O-RING	
		1	**6V-8397**	1	SEAL-O-RING	
		1	**8T-0076**	1	CONNECTOR	
	20	1	**5P-4295**	5	CLIP	
	21	1	**5P-7462**	1	CLIP (SLOT)	
	22	1	**5P-7463**	1	CLIP (TAB)	
	23	1	**6V-0683**	1	GROMMET	
	24	1	**8T-4121**	4	WASHER-HARD (11X21X2.5-MM THK)	
M	25	1	**8T-4136**	1	BOLT (M10X1.5X25-MM)	
	26	1	**9M-8406**	1	CLIP	
M	27	1	**8T-4195**	2	BOLT (M10X1.5X30-MM)	

219-5753 **LINES GP-STEERING** *(contd.)* **i02696877**

E-ORDER BY THE CENTIMETER
I-REFER TO HYDRAULIC INFORMATION SYSTEM
M-METRIC PART

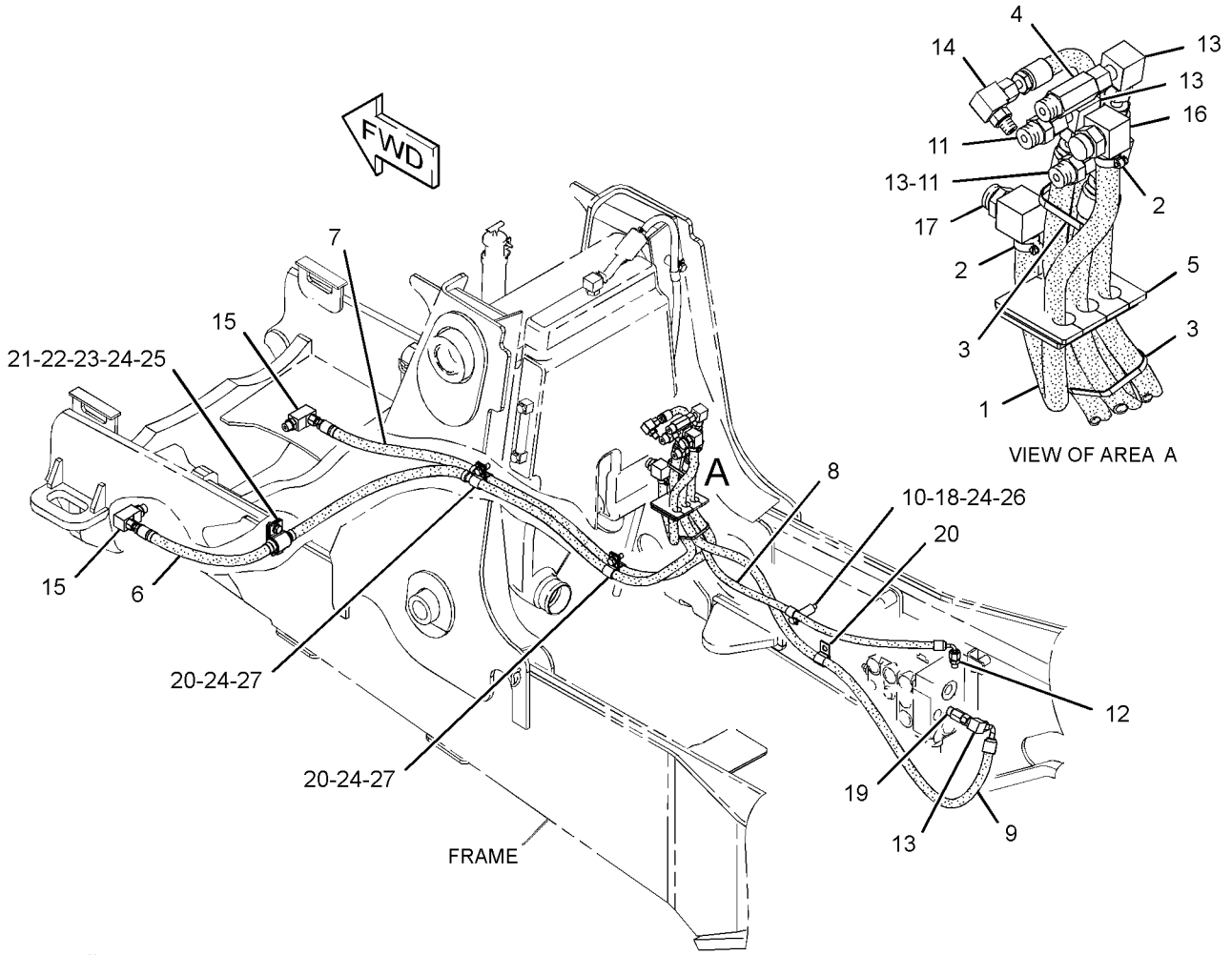

GRAPHIC #1 **<END>** g01356798

STEERING SYSTEM

219-5753 LINES GP-STEERING—ALL WHEEL DRIVE

S/N: CBD2694-UP; MFG1-UP
PART OF 220-9183 DRIVE AR-BACKHOE LOADER
AN ATTACHMENT

SMCS-4304 **i02908596**

NOTE	REF NO	GRAPHIC REF	PART NUMBER	QTY	PART NAME 1 2 3 4 5 6 (PRODUCT LEVEL)	SEE PAGE
E	1	1	**5P-1505**		HOSE (60-CM)	
	2	1	**5D-1026**	2	CLAMP-BAND	
	3	1	**7K-1181**	2	STRAP-CABLE	
	4	1	*204-0317*	1	CONNECTOR AS	
		1	**3K-0360**	1	SEAL-O-RING	
		1	**6V-8397**	1	SEAL-O-RING	
		1	**092-3635**	1	CONNECTOR	
	5	1	**206-1652**	1	SEAL	
	6	1	**217-8195**	1	HOSE AS	
	7	1	**217-8197**	1	HOSE AS	
I	8	1	**217-8199**	1	HOSE AS	
I	9	1	**217-8200**	1	HOSE AS	
C	10	1	**236-1583**	1	BOSS	
	11	1	*148-8318*	2	CONNECTOR AS	
					(EACH INCLUDES)	
		1	**3K-0360**	1	SEAL-O-RING	
		1	**6V-8397**	1	SEAL-O-RING	
		1	**6V-8634**	1	CONNECTOR	
	12	1	*148-8336*	1	CONNECTOR AS	
		1	**3J-1907**	1	SEAL-O-RING	
		1	**6V-8397**	1	SEAL-O-RING	
		1	**6V-8636**	1	CONNECTOR	
	13	1	*148-8367*	4	ELBOW AS	
					(EACH INCLUDES)	
		1	**6V-8397**	1	SEAL-O-RING	
		1	**6V-9850**	1	ELBOW	
	14	1	*148-8369*	1	ELBOW AS	
		1	**3J-7354**	1	SEAL-O-RING	
		1	**4J-5477**	1	SEAL-O-RING	
		1	**6V-8628**	1	ELBOW	
	15	1	*148-8383*	2	ELBOW AS	
					(EACH INCLUDES)	
		1	**3K-0360**	1	SEAL-O-RING	
		1	**6V-8397**	1	SEAL-O-RING	
		1	**8T-1683**	1	ELBOW	
	16	1	*150-3026*	1	ELBOW AS	
		1	**3K-0360**	1	SEAL-O-RING	
		1	**6V-4292**	1	ELBOW	
	17	1	*150-3027*	1	ELBOW AS	
		1	**2M-9780**	1	SEAL-O-RING	
		1	**6V-5653**	1	ELBOW	
CM	18	1	**8T-4172**	1	BOLT (M10X1.5X80-MM)	
	19	1	*164-5605*	1	CONNECTOR AS	
		1	**3K-0360**	1	SEAL-O-RING	
		1	**6V-8397**	1	SEAL-O-RING	
		1	**8T-0076**	1	CONNECTOR	
	20	1	**5P-4295**	5	CLIP	
	21	1	**5P-7462**	1	CLIP (SLOT)	
	22	1	**5P-7463**	1	CLIP (TAB)	
	23	1	**6V-0683**	1	GROMMET	
	24	1	**8T-4121**	4	WASHER-HARD (11X21X2.5-MM THK)	
M	25	1	**8T-4136**	1	BOLT (M10X1.5X25-MM)	
	26	1	**9M-8406**	1	CLIP	
M	27	1	**8T-4195**	2	BOLT (M10X1.5X30-MM)	

219-5753 **LINES GP-STEERING** *(contd.)* **i02908596**

C-CHANGE FROM PREVIOUS TYPE
E-ORDER BY THE CENTIMETER
I-REFER TO HYDRAULIC INFORMATION SYSTEM
M-METRIC PART

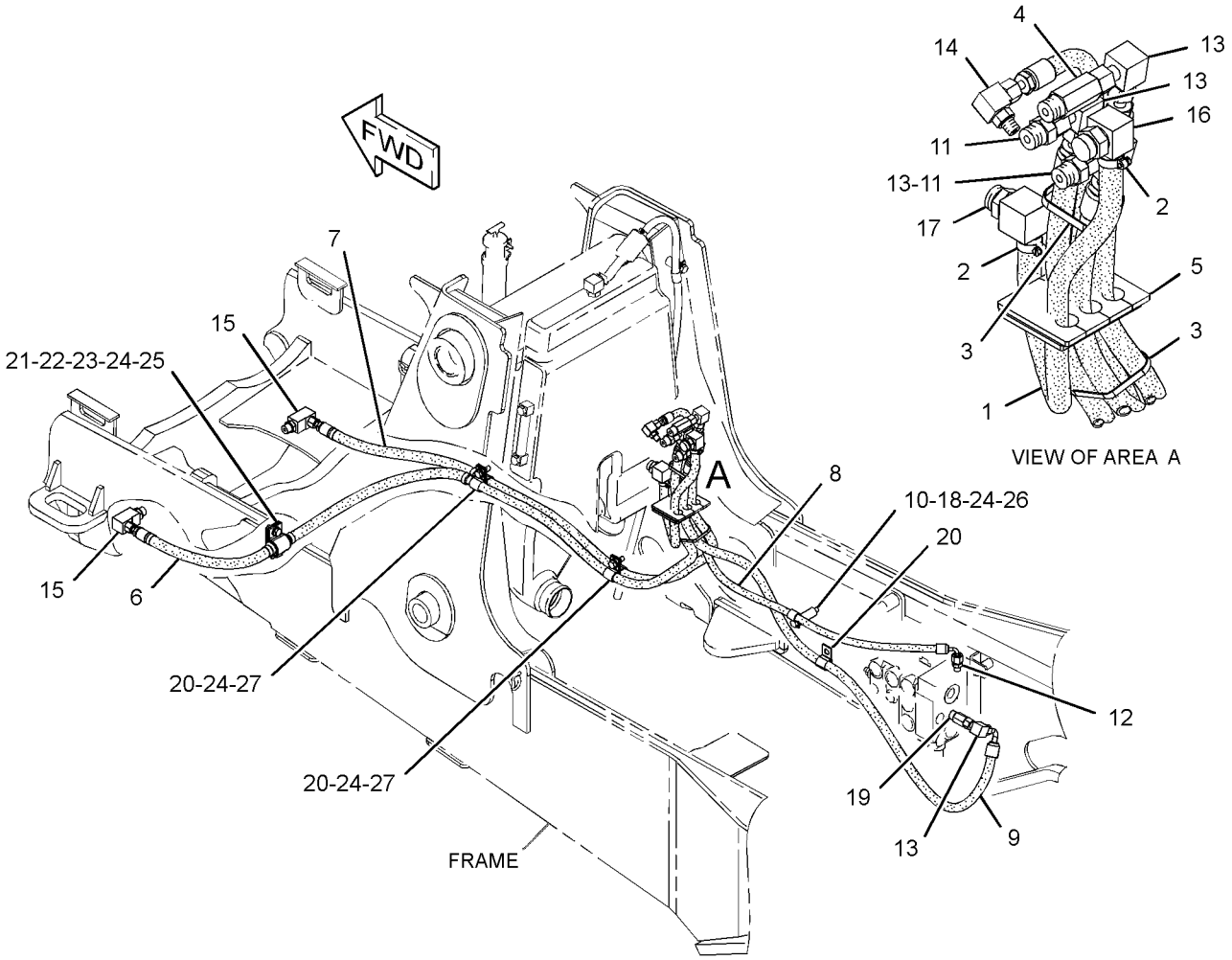

GRAPHIC #1 **<END>** g01356798

247-7868 PUMP GP-METERING–HMU

S/N: CBD1-UP; MFG1-UP

PART OF 214-2198, 297-0165 HYDRAULIC AR

SMCS-4312 **i03695255**

NOTE	REF NO	GRAPHIC REF	PART NUMBER	QTY	PART NAME 1 2 3 4 5 6 (PRODUCT LEVEL)	SEE PAGE
	1	1	**7X-9866**	1	SEAL	
	2	1	**054-6882**	1	BEARING AS	
	3	1	**054-6733**	1	RING	
	4	1	**7X-9873**	7	WASHER (8.2X11.9X1-MM THK)	
					PARTS SHOWN IN GRAPHIC(S) WITHOUT A REFERENCE NUMBER ARE NOT SERVICED SEPARATELY	
					AVAILABLE REPAIR KIT(S):	
			214-7469	1	KIT-SEAL (HMU STEERING)	
					(INCLUDES SEALS & WASHERS)	

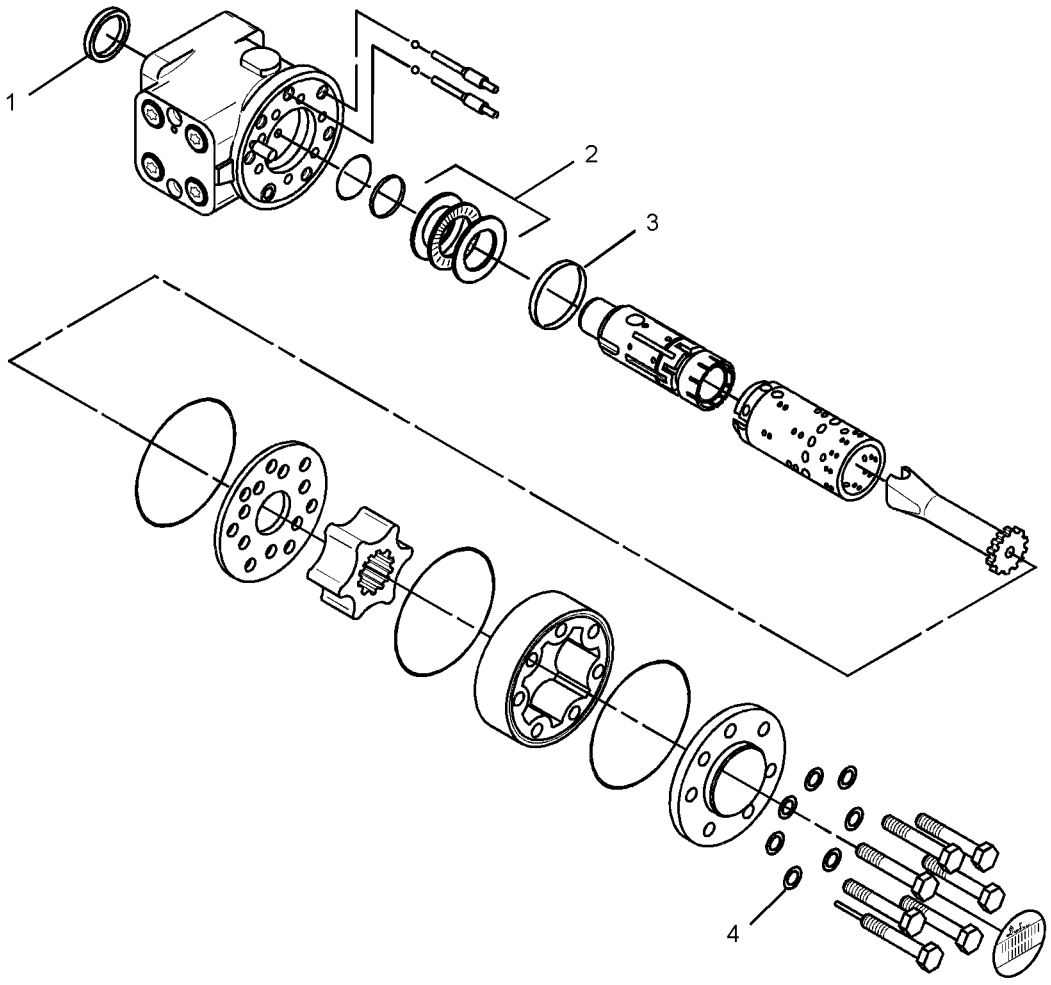

GRAPHIC #1 **<END>** g01988180

253-0784 BOX GP-BATTERY—WITH STORAGE

S/N: CBD1-UP

PART OF 213-9284 CHASSIS AR

SMCS-7257 **i02772588**

NOTE	REF NO	GRAPHIC REF	PART NUMBER	QTY	PART NAME 1 2 3 4 5 6 (PRODUCT LEVEL)	SEE PAGE
Y	1	1	**118-6842**	1	DOOR GP-BATTERY	471
	2	1	**118-6854**	1	TREAD	
	3	1	**164-3876**	1	STEP AS	
	4	1	**245-6109**	1	PLATE AS	
	5	1	**253-0783**	1	BOX AS-BATTERY	
	6	1	**5P-4116**	6	WASHER-HARD (8.8X20.5X2-MM THK)	
	7	1	**5G-2934**	1	PLUG	
M	8	1	**8T-4183**	4	BOLT (M12X1.75X40-MM)	
M	9	1	**8T-4189**	9	BOLT (M8X1.25X20-MM)	
M	10	1	**8T-4200**	7	BOLT (M8X1.25X16-MM)	
	11	1	**8T-4223**	5	WASHER-HARD (13.5X25.5X3-MM THK)	
	12	1	**8T-4224**	10	WASHER-HARD (8.8X16X2-MM THK)	
M	13	1	**8T-7963**	1	LOCKNUT (M8X1.25-THD)	
	14	1	**295-8472**	1	BRACKET AS	

M-METRIC PART
Y-SEPARATE ILLUSTRATION

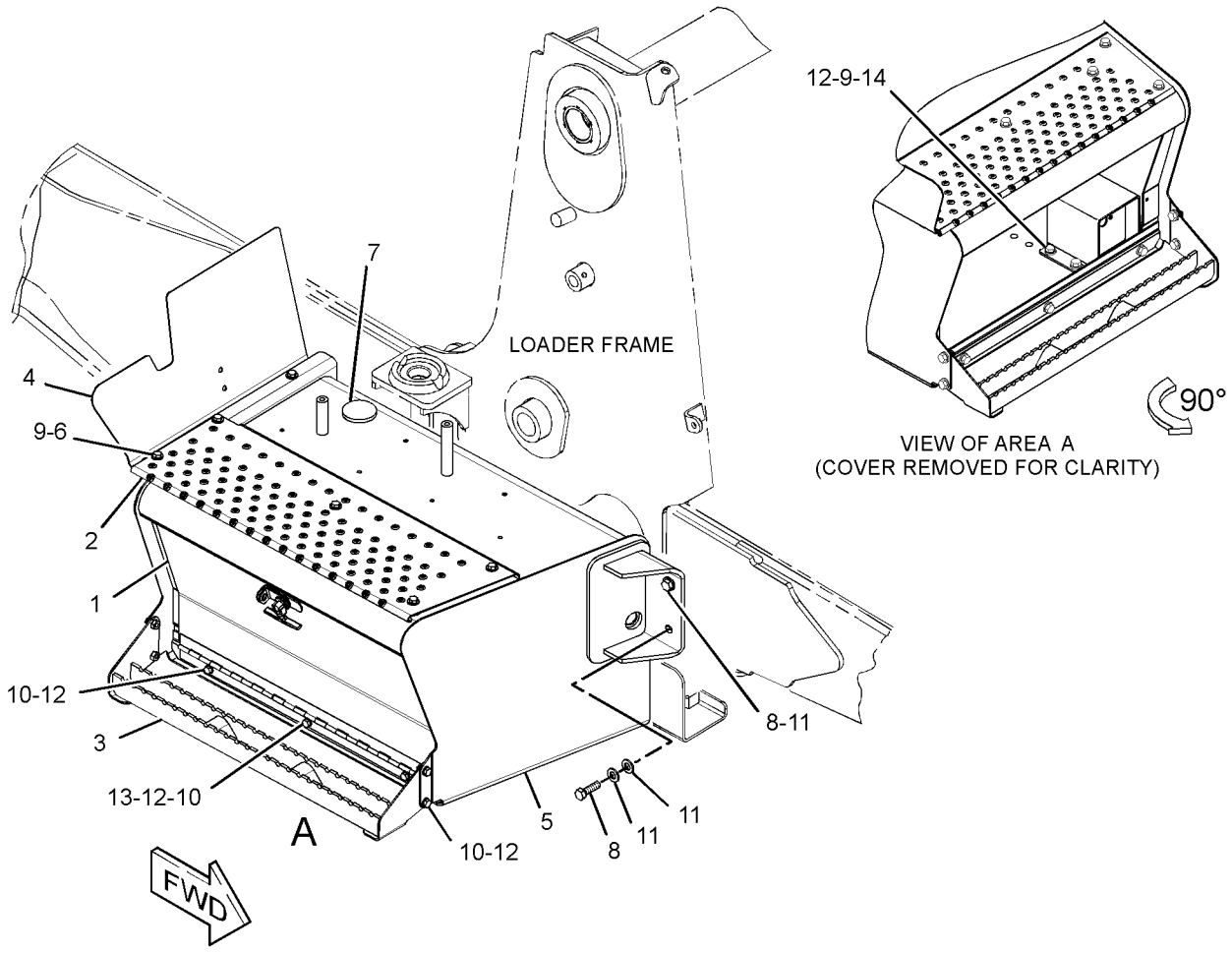

GRAPHIC #1 **<END>** g01388013

253-0784 BOX GP-BATTERY—WITH STORAGE

S/N: CBD1-UP; MFG1-UP

PART OF 213-9284, 291-9190, 372-5176 CHASSIS AR

SMCS-7257 **i04421149**

NOTE	REF NO	GRAPHIC REF	PART NUMBER	QTY	PART NAME 1 2 3 4 5 6 (PRODUCT LEVEL)	SEE PAGE
C	1	1	**8C-8522**	1	PAWL-LATCH	
	2	1	**118-6854**	1	TREAD	
C	3	1	**129-4741**	1	LATCH AS-T-BAR	
	4	1	**164-3876**	1	STEP AS	
M		1	**8T-3612**	4	NUT-WELD (M8X1.25-THD)	
	5	1	**245-6109**	1	PLATE AS	
M		1	**8T-3612**	3	NUT-WELD (M8X1.25-THD)	
	6	1	**295-8472**	1	BRACKET AS	
C	7	1	**321-2559**	1	COVER AS-ACCESS	
C	8	1	**349-3650**	1	BOX AS-BATTERY	
		1	**7T-1099**	3	LINK	
CM	9	1	**5C-7261**	3	NUT (M8X1.25-THD)	
C	10	1	**5P-4116**	16	WASHER-HARD (8.8X20.5X2-MM THK)	
CM	11	1	**6V-7743**	2	LOCKNUT (M6X1-THD)	
CM	12	1	**8T-4133**	2	NUT (M10X1.5-THD)	
M	13	1	**8T-4183**	4	BOLT (M12X1.75X40-MM)	
CM	14	1	**8T-4189**	13	BOLT (M8X1.25X20-MM)	
C	15	1	**8T-4205**	2	WASHER-HARD (7.2X14.5X2-MM THK)	
	16	1	**8T-4223**	5	WASHER-HARD (13.5X25.5X3-MM THK)	
	17	1	**5G-2934**	1	PLUG	
	18	1	**193-5913**	8	PLUG	

C-CHANGE FROM PREVIOUS TYPE
M-METRIC PART

253-0784 **BOX GP-BATTERY** *(contd.)* **i04421149**

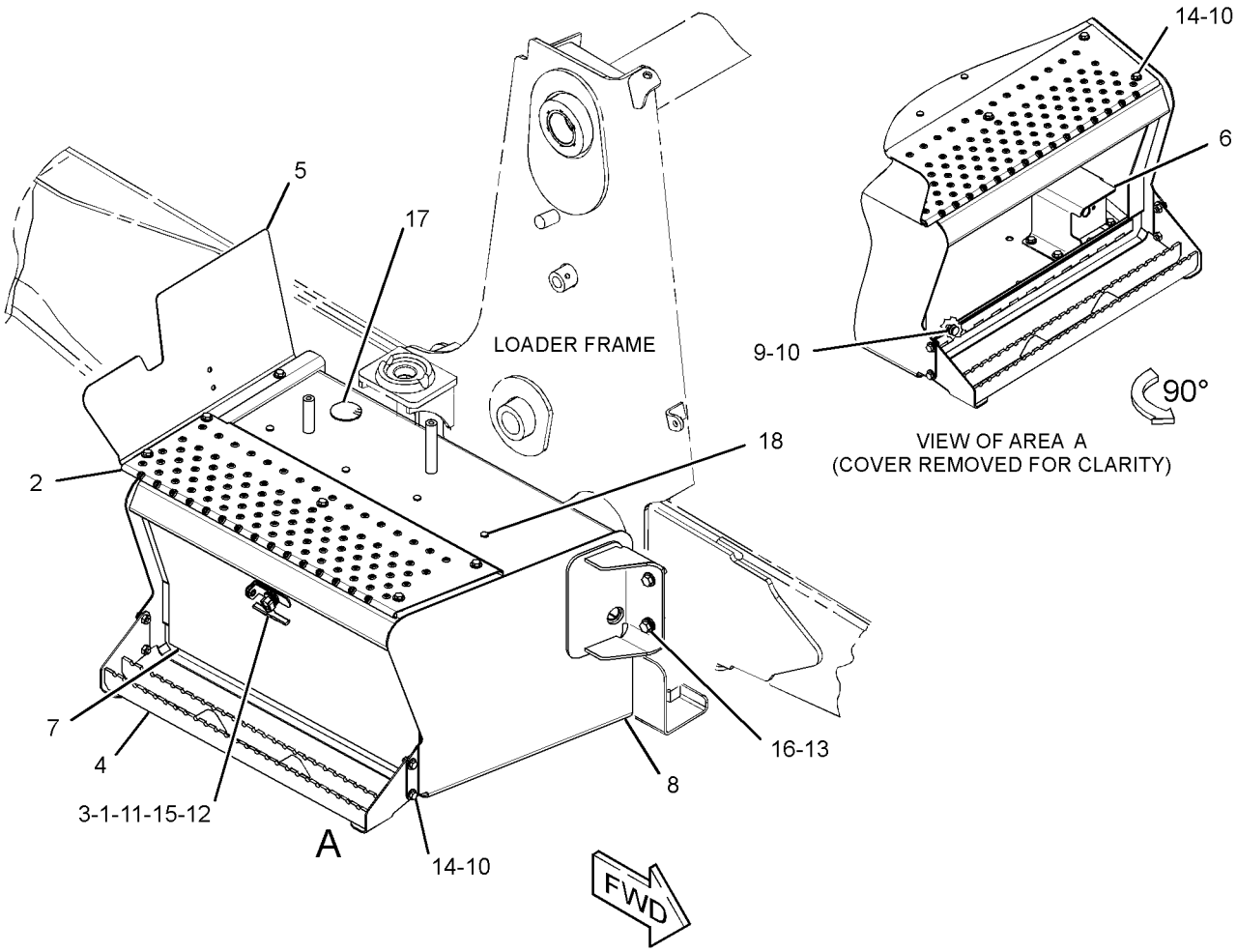

GRAPHIC #1 **<END>** g02711927

211-3649 COUNTERWEIGHT GP

S/N: CBD1-UP; MFG1-UP
115-KG (250-LB)
PART OF 356-0068, 356-0069, 374-3518, 374-3519, 374-3521, 374-3529, 374-6533, 374-6534, 374-6535, 374-6536 DISTRIBUTION AR
AN ATTACHMENT

SMCS-7056 **i02496216**

NOTE	REF NO	GRAPHIC REF	PART NUMBER	QTY	PART NAME 1 2 3 4 5 6 (PRODUCT LEVEL)	SEE PAGE
	1	1	**214-3254**	1	COUNTERWEIGHT	
M	2	1	**8C-3290**	2	BOLT (M24X3X150-MM)	
	3	1	**8T-4167**	2	WASHER-HARD (26X44X4-MM THK)	

M-METRIC PART

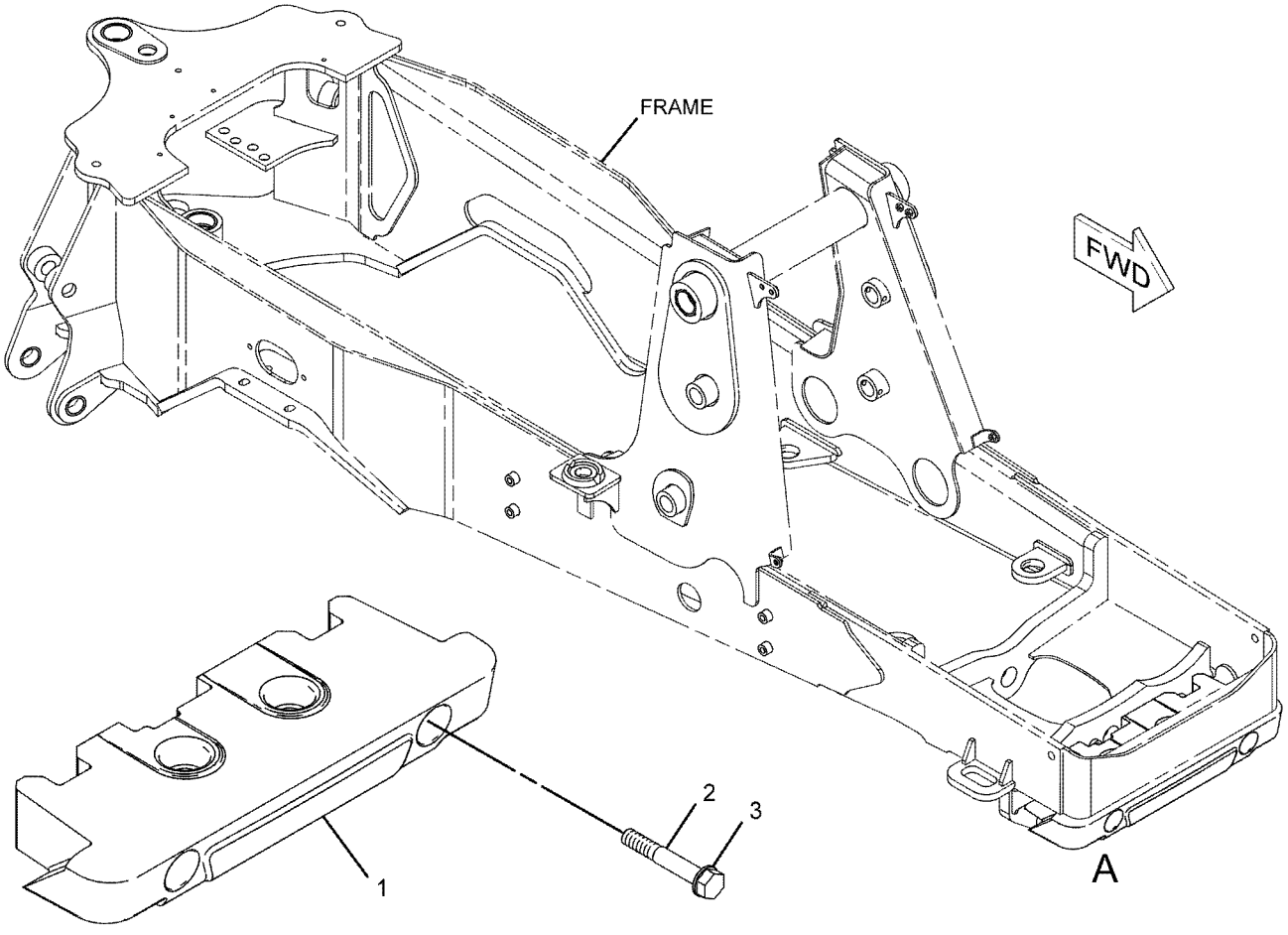

VIEW OF AREA A

GRAPHIC #1 **<END>** g01074968

211-3652 COUNTERWEIGHT GP

S/N: CBD1-UP; MFG1-UP
234-KG (515-LB)
PART OF 356-0067, 374-3517, 374-6532 DISTRIBUTION AR
AN ATTACHMENT

SMCS-7056 **i04001489**

NOTE	REF NO	GRAPHIC REF	PART NUMBER	QTY	PART NAME 1 2 3 4 5 6 (PRODUCT LEVEL)	SEE PAGE
	1	1	**214-3254**	2	COUNTERWEIGHT	
M	2	1	**7X-2579**	2	BOLT (M24X3X240-MM)	
M	3	1	**8C-3290**	4	BOLT (M24X3X150-MM)	
M	4	1	**8T-4001**	2	NUT (M24X3-THD)	
	5	1	**8T-4167**	6	WASHER-HARD (26X44X4-MM THK)	

M-METRIC PART

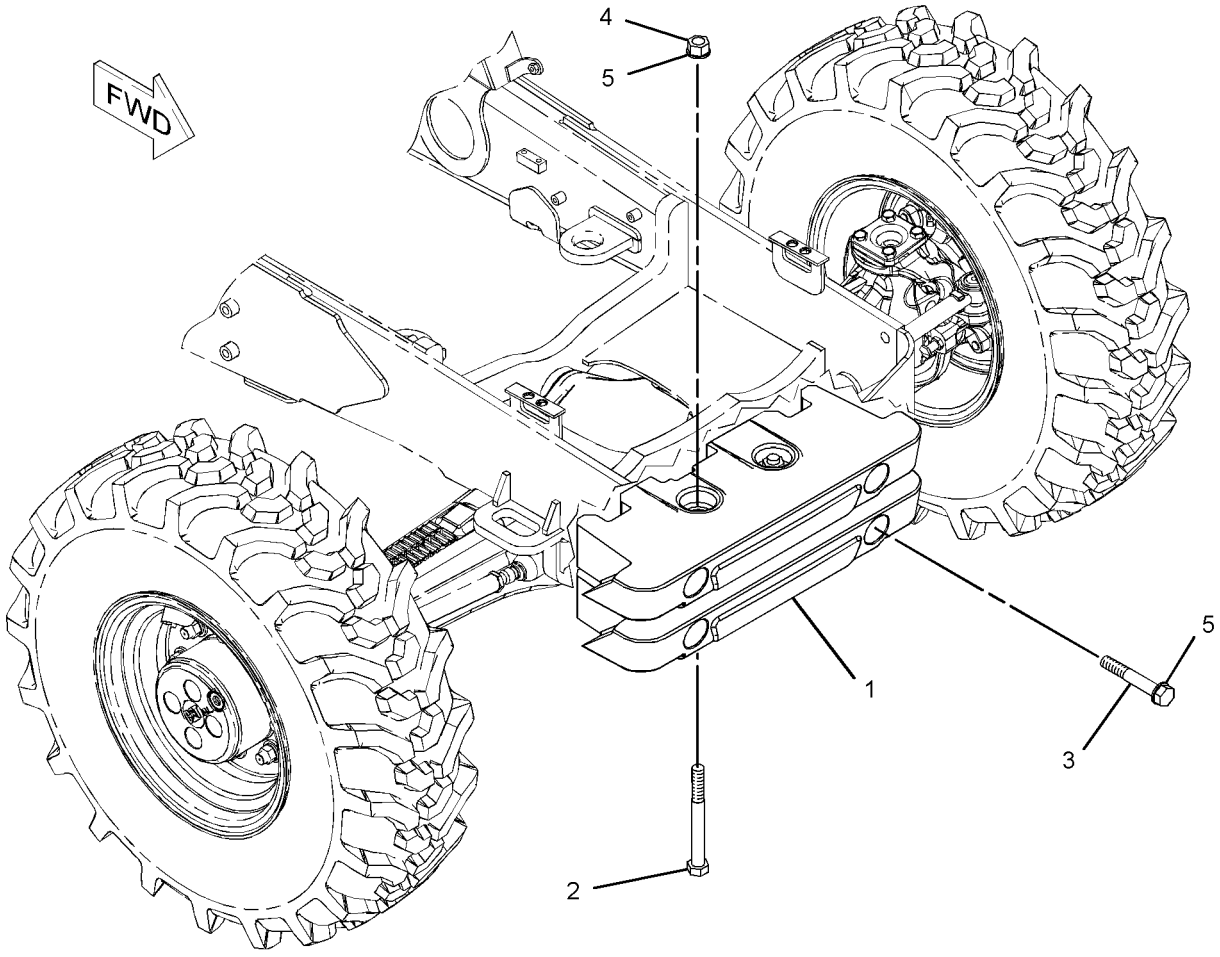

GRAPHIC #1 **<END>** g01112193

FRAME AND BODY

211-3653 COUNTERWEIGHT GP

S/N: CBD1-UP; MFG1-UP
485-KG (1070-LB)
AN ATTACHMENT

SMCS-7056 **i02496218**

NOTE	REF NO	GRAPHIC REF	PART NUMBER	QTY	PART NAME 1 2 3 4 5 6 (PRODUCT LEVEL)	SEE PAGE
	1	1	**214-3255**	1	COUNTERWEIGHT	
	2	1	**247-8222**	1	COUNTERWEIGHT	
M	3	1	**127-4834**	2	BOLT (M24X3X340-MM)	
M	4	1	**8C-3290**	4	BOLT (M24X3X150-MM)	
M	5	1	**8T-4001**	2	NUT (M24X3-THD)	
	6	1	**8T-4167**	6	WASHER-HARD (26X44X4-MM THK)	

M-METRIC PART

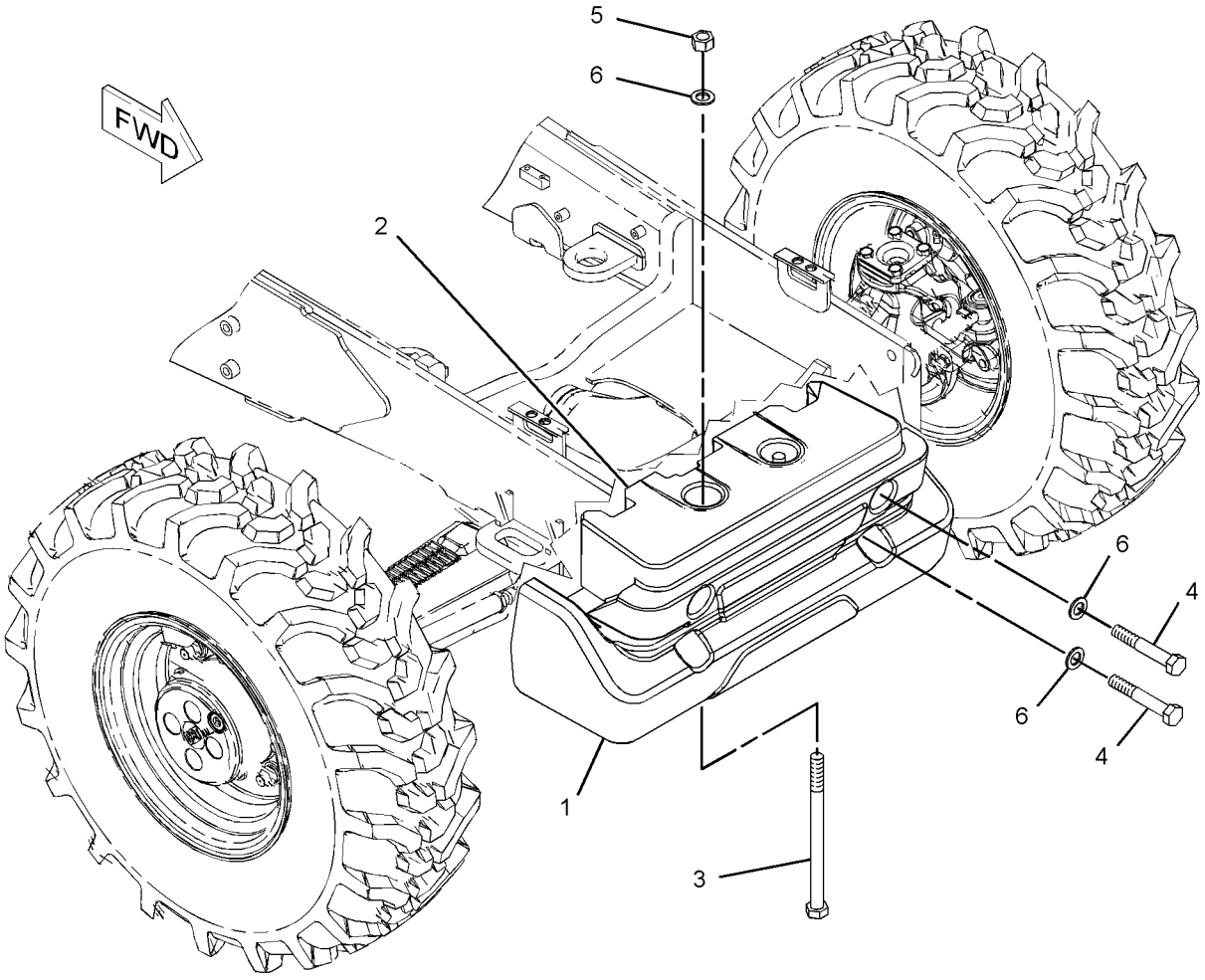

GRAPHIC #1 **<END>** g01112268

FRAME AND BODY

118-6842 DOOR GP-BATTERY

S/N: CBD1-4629

PART OF 253-0784 BOX GP-BATTERY

SMCS-7273 **i01500854**

NOTE	REF NO	GRAPHIC REF	PART NUMBER	QTY	PART NAME 1 2 3 4 5 6 (PRODUCT LEVEL)	SEE PAGE
	1	1	**8C-8522**	1	PAWL-LATCH	
	2	1	**129-4741**	1	LATCH AS-T-BAR	
	3	1	**151-2963**	1	DOOR AS	
M	4	1	**6V-7743**	2	LOCKNUT (M6X1-THD)	
M	5	1	**8T-4133**	2	NUT (M10X1.5-THD)	
	6	1	**8T-4205**	2	WASHER-HARD (7.2X14.5X2-MM THK)	

M-METRIC PART

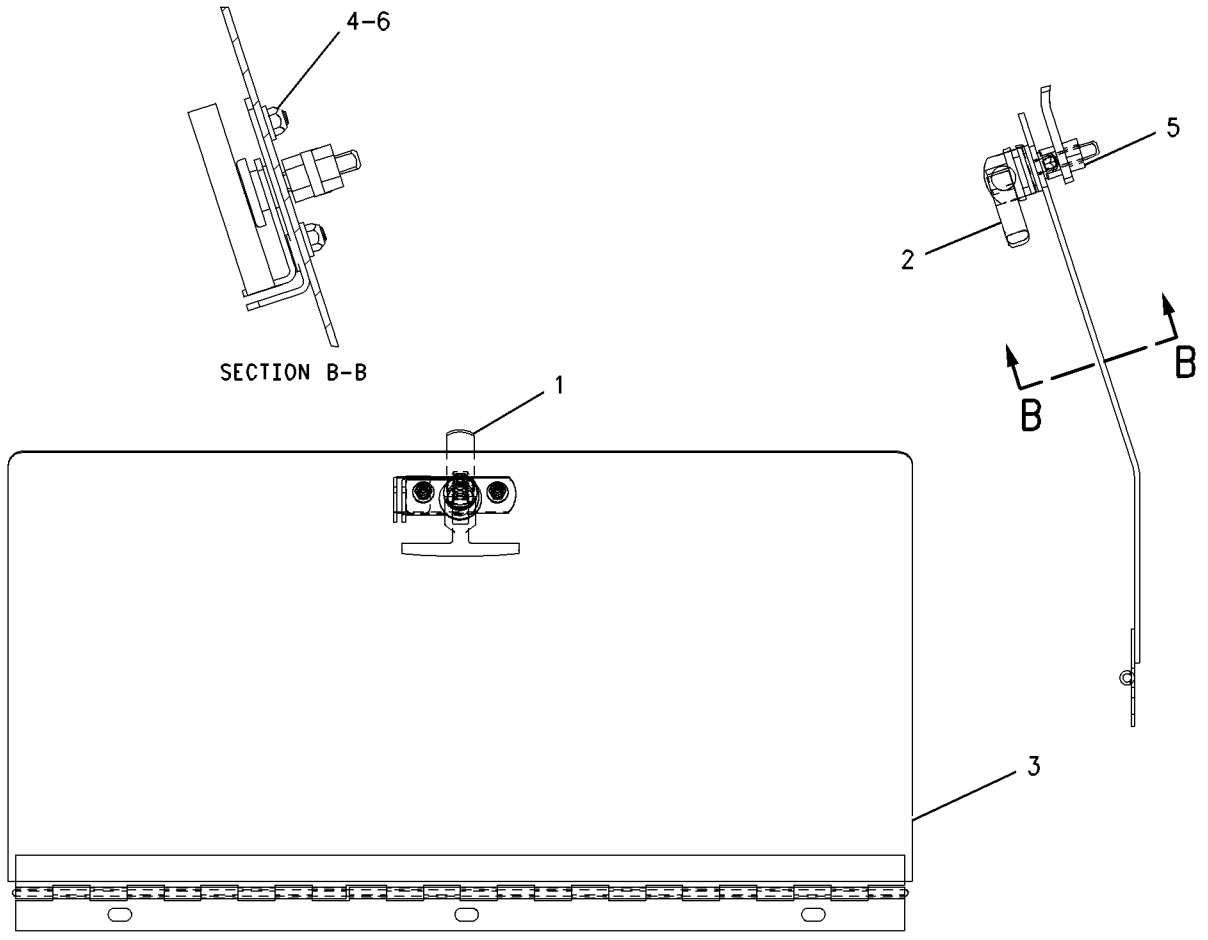

GRAPHIC #1 **<END>** g00739059

FRAME AND BODY

252-5521 DRAWBAR GP

S/N: CBD1-UP

AN ATTACHMENT

SMCS-7105, 7119 **i03839054**

NOTE	REF NO	GRAPHIC REF	PART NUMBER	QTY	PART NAME 1 2 3 4 5 6 (PRODUCT LEVEL)	SEE PAGE
	1	1	**103-5796**	1	PIN-KEEPER	
	2	1	**132-2558**	1	PIN AS	
	3	1	**252-5522**	1	BOSS	
	4	1	**252-5523**	2	BOSS	
	5	1	**252-5524**	1	BRACKET AS	
M	6	1	**7X-2559**	2	BOLT (M16X2X160-MM)	
M	7	1	**8T-6385**	1	BOLT (M16X2X180-MM)	
	8	1	**9X-8257**	3	WASHER (17.5X30X3.5-MM THK)	

M-METRIC PART

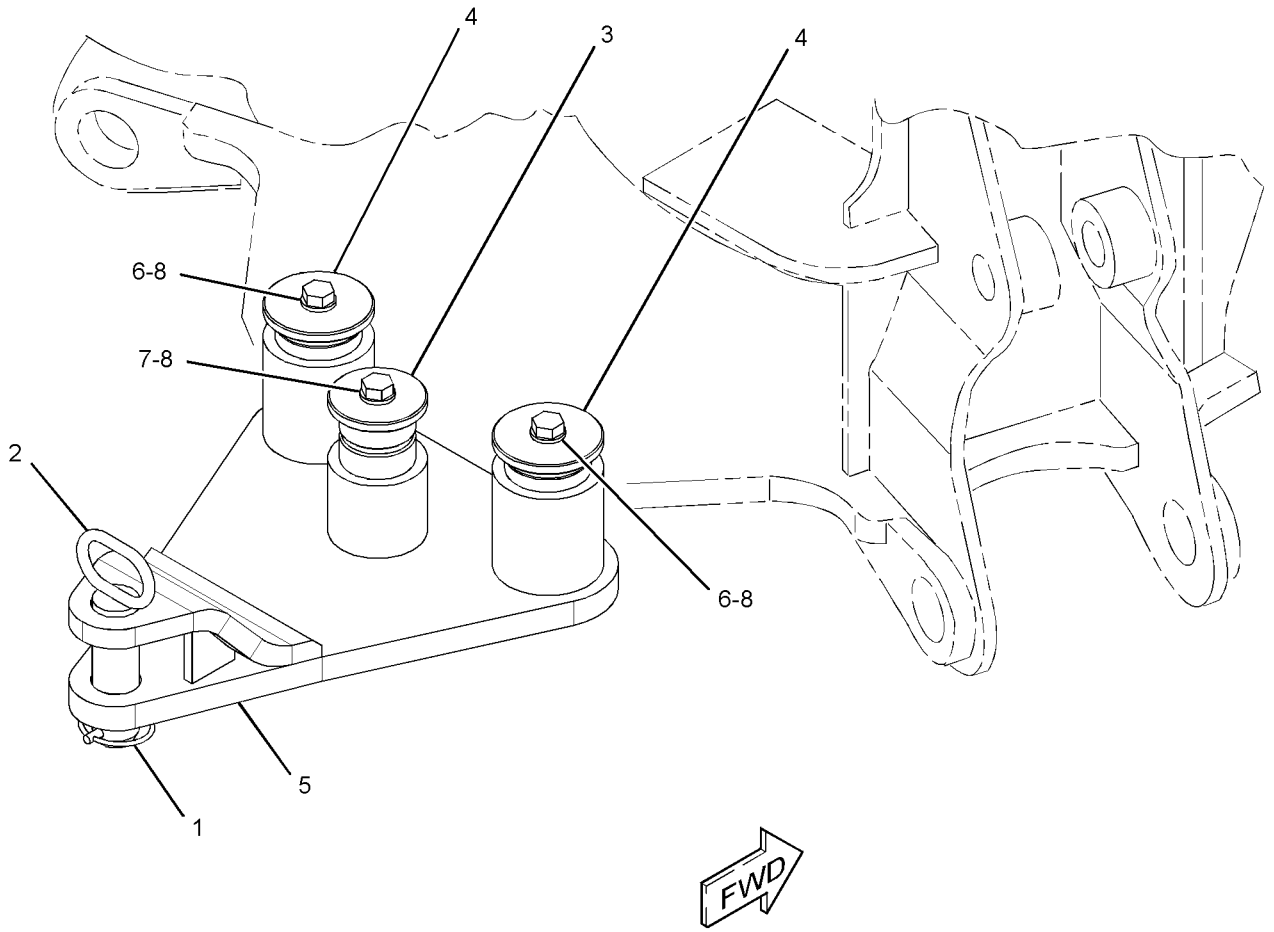

GRAPHIC #1 **<END>** g02160997

249-9328 EXTENSION GP-FENDER

S/N: MFG1-UP
AN ATTACHMENT

SMCS-7252 **i03860156**

NOTE	REF NO	GRAPHIC REF	PART NUMBER	QTY	PART NAME 1 2 3 4 5 6 (PRODUCT LEVEL)	SEE PAGE
	1	1	**249-9329**	1	EXTENSION-FENDER (LH)	
	2	1	**249-9330**	1	EXTENSION-FENDER (RH)	
	3	1	**251-4889**	8	WASHER-HARD (7.2X14.5X2-MM THK)	
	4	1	**251-4890**	4	SCREW-MACHINE (M6X1X25-MM)	
	5	1	**251-4891**	4	LOCKNUT (M6X1-THD)	

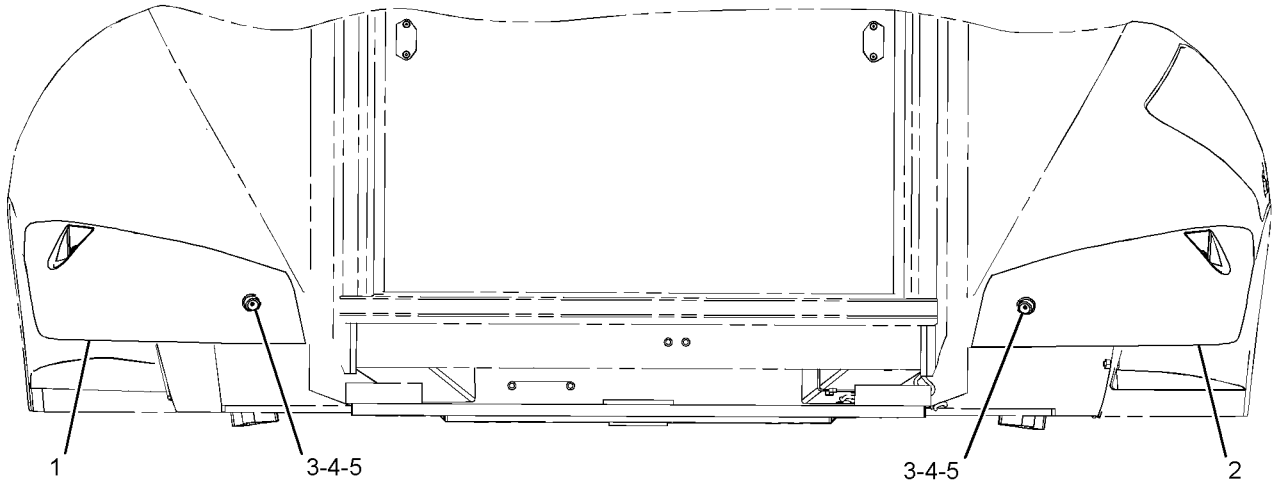

REAR VIEW

GRAPHIC #1 **<END>** g01231585

201-3954 FENDER GP-FRONT

S/N: CBD1-UP; MFG1-UP
PART OF 356-0067, 356-0068, 356-0069, 374-3517, 374-3518, 374-3519, 374-3521, 374-3529, 374-6532, 374-6533, 374-6534, 374-6535, 374-6536
DISTRIBUTION AR
AN ATTACHMENT

SMCS-7252 **i02494669**

NOTE	REF NO	GRAPHIC REF	PART NUMBER	QTY	PART NAME 1 2 3 4 5 6 (PRODUCT LEVEL)	SEE PAGE
	1	1	**162-4004**	2	FENDER (FRONT)	
M	2	1	**199-0783**	4	BOLT (M16X2X38-MM)	
	3	1	**222-1801**	1	BRACKET AS (LH)	
	4	1	**222-1802**	1	BRACKET AS (RH)	
M	5	1	**6V-7744**	4	LOCKNUT (M10X1.5-THD)	
	6	1	**8T-4121**	4	WASHER-HARD (11X21X2.5-MM THK)	
	7	1	**8T-4122**	12	WASHER-HARD (17X32X3.5-MM THK)	
M	8	1	**8T-4195**	4	BOLT (M10X1.5X30-MM)	
	9	1	**8T-4222**	4	WASHER-PLATED (11X32X2.5-MM THK)	
M	10	1	**8T-4778**	4	LOCKNUT (M16X2-THD)	

M-METRIC PART

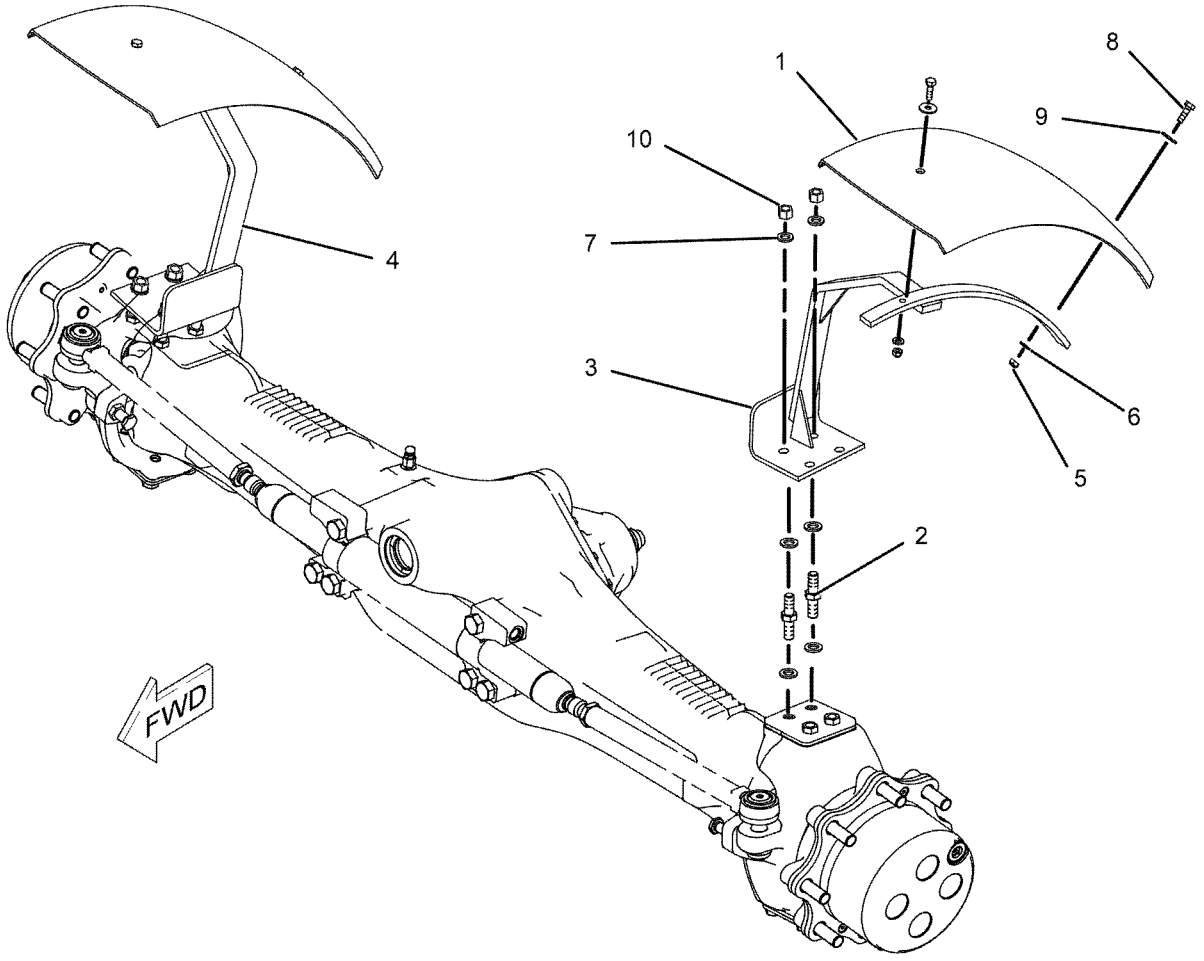

GRAPHIC #1 **<END>** g01027709

213-1891 FENDER GP-REAR

S/N: CBD1-3862
PART OF 204-4161, 204-4162, 228-4602 CAB AR-ENCLOSED ROPS, 204-4160, 204-4164, 292-9690, 292-9691 CANOPY AR-OPEN ROPS
AN ATTACHMENT

SMCS-7252 **i02815165**

NOTE	REF NO	GRAPHIC REF	PART NUMBER	QTY	PART NAME 1 2 3 4 5 6 (PRODUCT LEVEL)	SEE PAGE
M	1	1	**8T-5093**	4	BOLT-LOCKING (M8X1.25X25-MM)	
E	2	1	**244-3113**		SEAL (210-CM EACH)	
	3	1	**116-5763**	1	CLIP-SPRING	
M	4	1	**193-9055**	4	SCREW-HEX FLANGE (M4X1.79X17-MM)	
	5	1	**211-3783**	1	FENDER-REAR (LH)	
	6	1	**213-1881**	1	FENDER-REAR (RH)	
	7	1	**213-1884**	1	CLIP	
	8	1	**213-1887**	1	COVER-FENDER	
	9	1	**213-1889**	1	PLATE	
	10	1	**225-0060**	1	GUARD	
J	11	1	**226-0291**	1	LOCK AS (PROTECTION)	
	12	1	**227-5556**	1	PLATE	
M	13	1	**7Y-9099**	1	SCREW-TRUSS HEAD (M8X1.25X25-MM)	
	14	1	**156-0283**	20	WASHER-HARD (8.4X35X2.5-MM THK)	
M	15	1	**5C-7261**	4	NUT (M8X1.25-THD)	
M	16	1	**8T-5091**	12	BOLT (M8X1.25X20-MM)	
L	17	1	**5P-0805**		SEAL (8-DM)	
E	18	1	**220-0738**		SEAL (118-CM)	

E-ORDER BY THE CENTIMETER
J-REQUIRES 5P8500 KEY
L-ORDER BY THE DECIMETER
M-METRIC PART

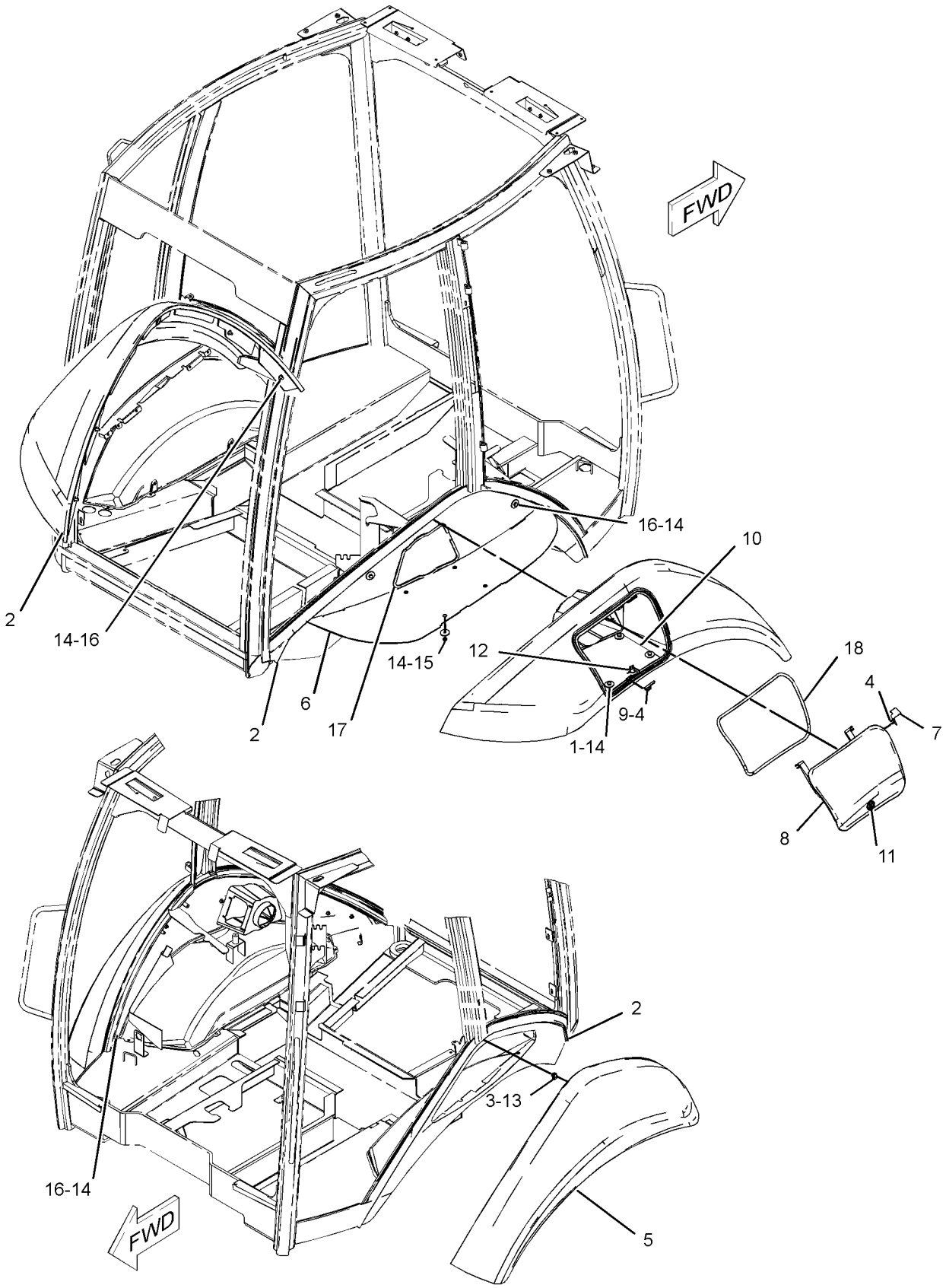

GRAPHIC #1 **<END>** g01275112

213-1891 FENDER GP-REAR

S/N: CBD3863-UP; MFG1-UP
PART OF 204-4161, 204-4162, 228-4602, 291-9195 CAB AR-ENCLOSED ROPS, 204-4160, 204-4164, 292-9690, 292-9691 CANOPY AR-OPEN ROPS
AN ATTACHMENT

SMCS-7252 **i04439893**

NOTE	REF NO	GRAPHIC REF	PART NUMBER	QTY	PART NAME 1 2 3 4 5 6 (PRODUCT LEVEL)	SEE PAGE
E	1	2	**220-0738**		SEAL (118-CM)	
E	2	1,2	**244-3113**		SEAL (219-CM EACH)	
D	3	2	**5P-5927**		SEAL (0.8-M)	
	4	1	**116-5763**	1	CLIP-SPRING	
	5	1	**129-8545**	10	WASHER (13X40X3-MM THK)	
M	6	2	**193-9055**	2	SCREW-HEX FLANGE (M4X1.79X17-MM)	
	7	1	**211-3783**	1	FENDER-REAR (LH)	
	8	2	**213-1881**	1	FENDER-REAR (RH)	
	9	2	**213-1884**	1	CLIP	
	10	2	**213-1889**	1	PLATE	
	11	2	**225-0060**	1	GUARD	
J	12	2	**226-0291**	1	LOCK AS (PROTECTION)	
	13	2	**227-5556**	1	PLATE	
	14	2	**325-1344**	4	WASHER (15X30X2-MM THK)	
	15	1,2	**156-0283**	12	WASHER-HARD (8.4X35X2.5-MM THK)	
	16	2	**213-1887**	1	COVER-FENDER	
M	17	2	**129-3178**	4	LOCKNUT (M6X1-THD)	
M	18	2	**6V-7357**	4	BOLT (M6X1X25-MM)	
	19	2	**7X-0586**	8	WASHER-HARD (7.2X32X2-MM THK)	
M	20	1	**7Y-9099**	1	SCREW-TRUSS HEAD (M8X1.25X25-MM)	
C	21	1,2	**8E-9571**	8	WASHER-HARD (8.8X16X7-MM THK)	
C	22	2	**8M-3175**	4	WASHER-HARD (10.2X16X3-MM THK)	
M	23	1,2	**8T-5091**	12	BOLT (M8X1.25X20-MM)	
	24	2	**376-2119**	2	SCREW-BUTTON HEAD	

C-CHANGE FROM PREVIOUS TYPE
D-ORDER BY THE METER
E-ORDER BY THE CENTIMETER
J-REQUIRES CORPORATE KEY
M-METRIC PART

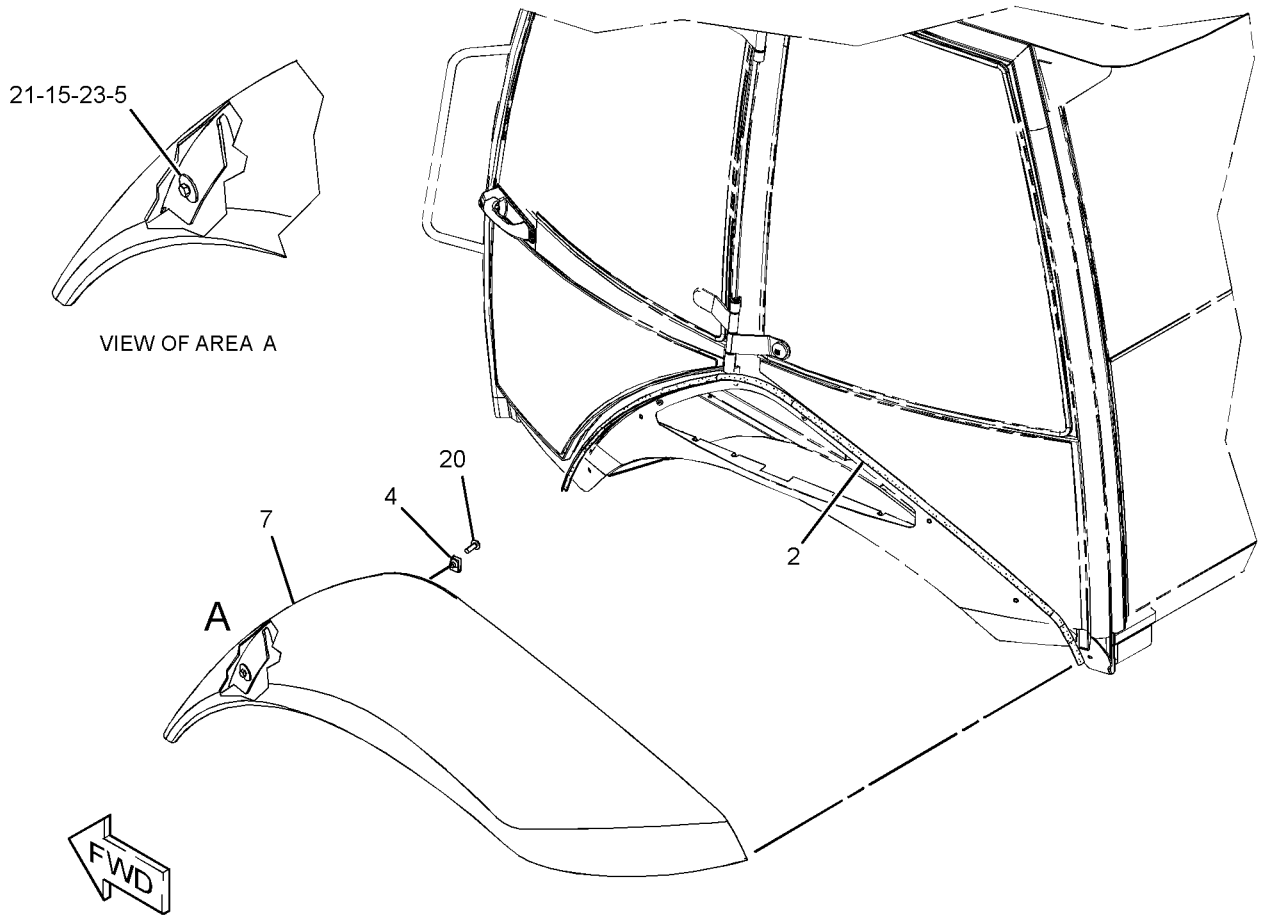

GRAPHIC #1 g02158916

213-1891 **FENDER GP-REAR** *(contd.)* **i04439893**

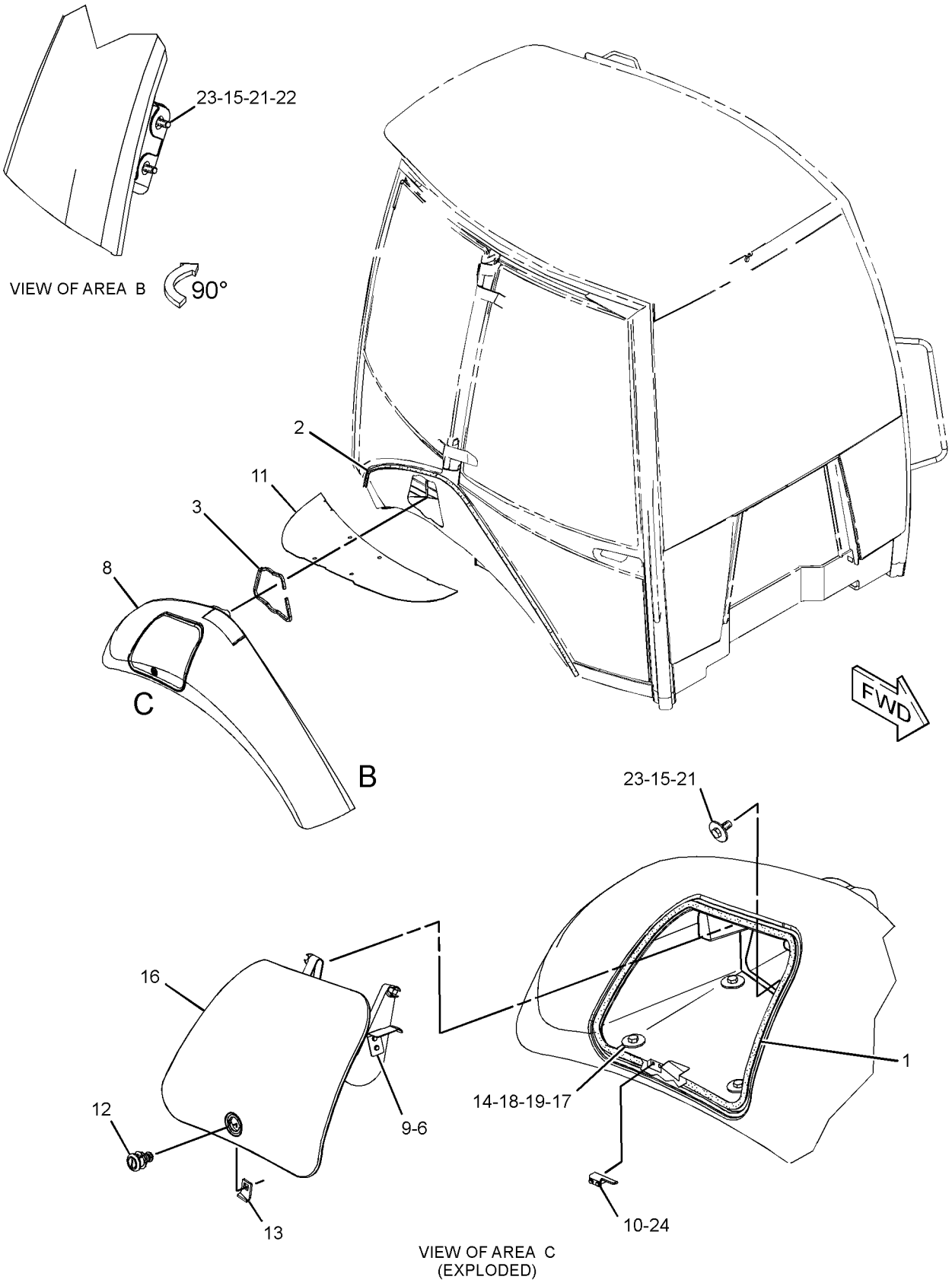

GRAPHIC #2

<END>

g02671656

223-3967 FLOORPLATE GP–CANOPY

S/N: CBD1-UP

PART OF 204-4160, 204-4164, 292-9690, 292-9691 CANOPY AR-OPEN ROPS AN ATTACHMENT

SMCS-7265 **i02495311**

NOTE	REF NO	GRAPHIC REF	PART NUMBER	QTY	PART NAME 1 2 3 4 5 6 (PRODUCT LEVEL)	SEE PAGE
	1	1	**206-1832**	1	PLATE AS	
	2	1	**206-1835**	1	PLATE AS	
	3	1	**206-1845**	1	PLATE AS	
	4	1	**223-3962**	1	PLATE AS	
	5	1	**223-4546**	1	PLATE AS	
	6	1	**223-8267**	1	PLATE AS	
	7	1	**232-2865**	1	PLATE AS	
	8	1	**232-2869**	1	PLATE AS	
	9	1	**232-2870**	1	PLATE AS	
	10	1	**9X-2038**	43	WASHER (7X19X2-MM THK)	
M	11	1	**9X-2043**	43	SCREW-TRUSS HEAD (M6X1X14-MM)	

M-METRIC PART

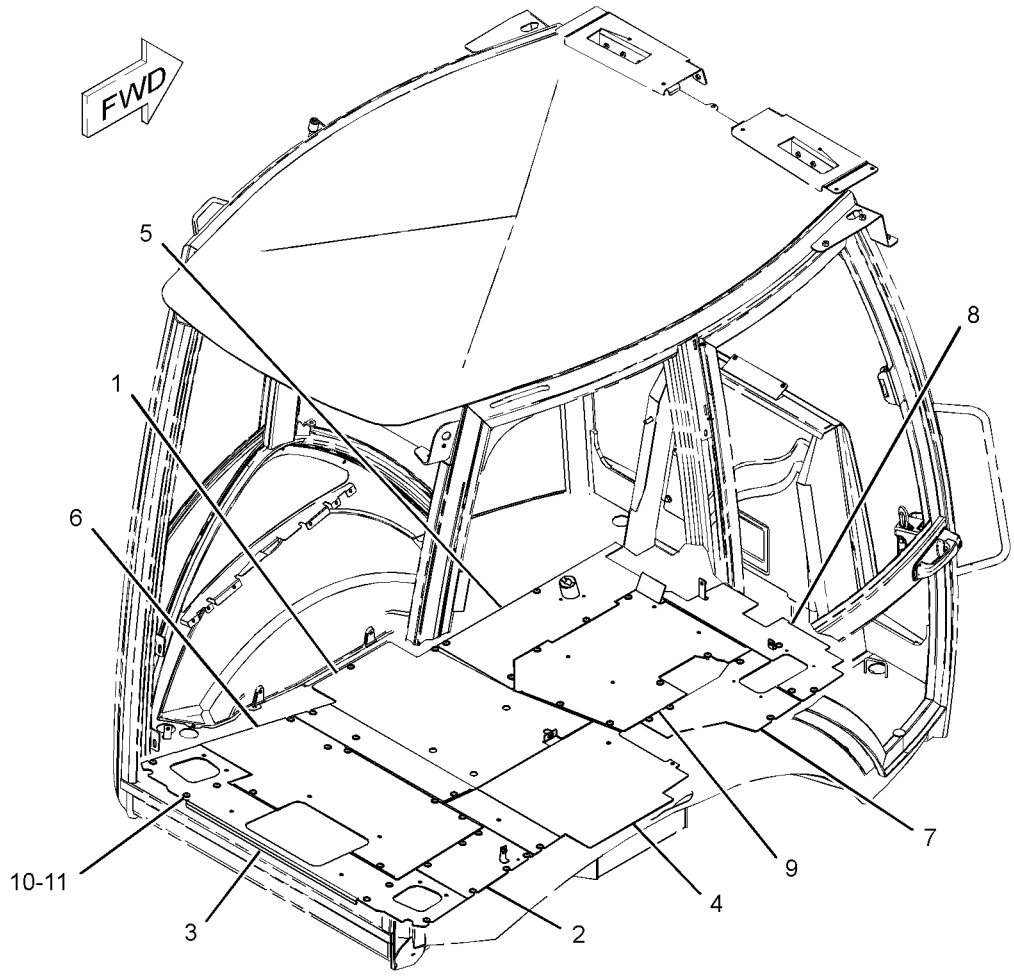

GRAPHIC #1 **<END>** g01233084

223-3968 FLOORPLATE GP–CAB

S/N: CBD1-UP

PART OF 204-4161, 204-4162, 228-4602 CAB AR-ENCLOSED ROPS

AN ATTACHMENT

SMCS-7265 **i02495306**

NOTE	REF NO	GRAPHIC REF	PART NUMBER	QTY	PART NAME 1 2 3 4 5 6 (PRODUCT LEVEL)	SEE PAGE
	1	1	**206-1832**	1	PLATE AS	
	2	1	**206-1835**	1	PLATE AS	
	3	1	**206-1845**	1	PLATE AS	
	4	1	**206-1850**	1	PLATE AS	
	5	1	**223-3964**	1	PLATE AS	
	6	1	**223-4546**	1	PLATE AS	
	7	1	**223-8267**	1	PLATE AS	
	8	1	**232-2865**	1	PLATE AS	
	9	1	**232-2869**	1	PLATE AS	
	10	1	**232-2870**	1	PLATE AS	
	11	1	**9X-2038**	43	WASHER (7X19X2-MM THK)	
M	12	1	**9X-2043**	47	SCREW-TRUSS HEAD (M6X1X14-MM)	

M-METRIC PART

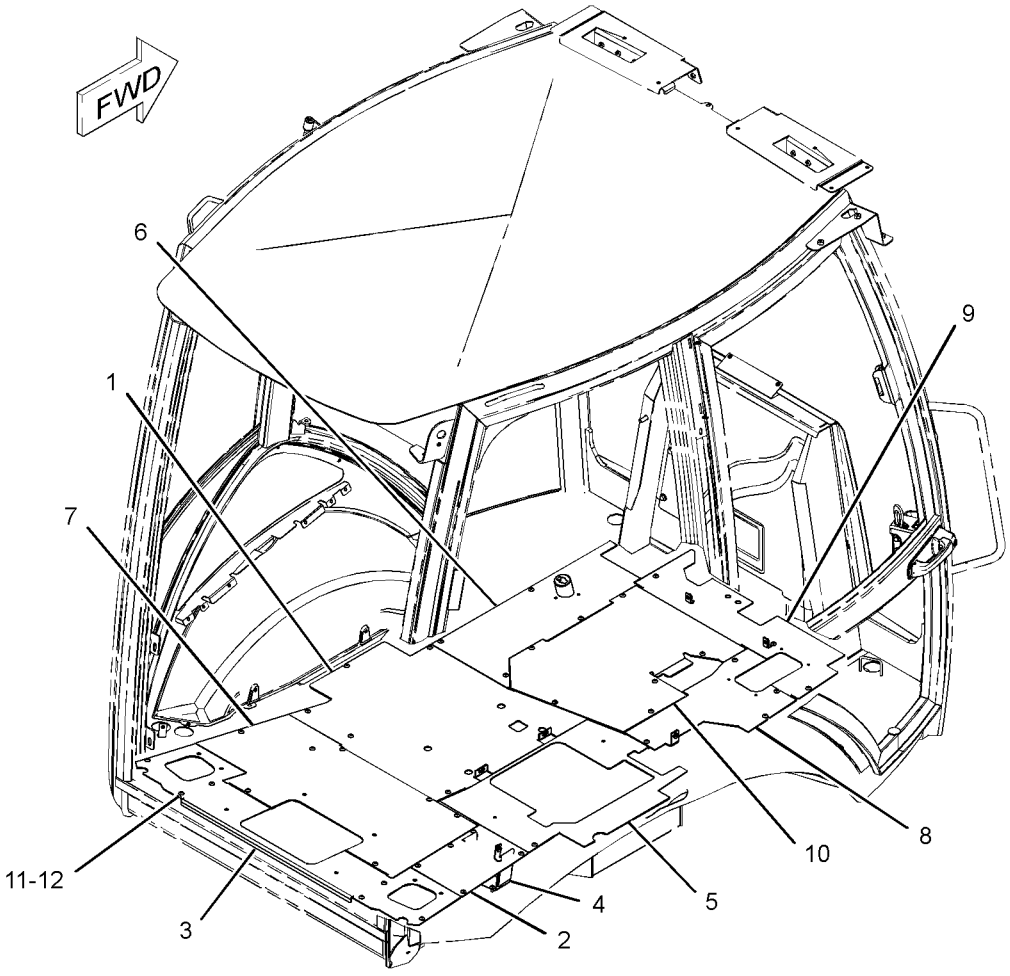

GRAPHIC #1 **<END>** g01233096

284-2753 FLOORPLATE GP

S/N: CBD1-UP; MFG1-UP
PART OF 204-4161, 204-4162, 228-4602, 291-9195 CAB AR-ENCLOSED ROPS,
204-4160, 204-4164, 292-9690, 292-9691 CANOPY AR-OPEN ROPS
AN ATTACHMENT

SMCS-7265 **i03007178**

NOTE	REF NO	GRAPHIC REF	PART NUMBER	QTY	PART NAME 1 2 3 4 5 6 (PRODUCT LEVEL)	SEE PAGE
	1	1	**206-1832**	1	PLATE AS	
	2	1	**206-1835**	1	PLATE AS	
	3	1	**223-4546**	1	PLATE AS	
	4	1	**223-8267**	1	PLATE AS	
	5	1	**232-2865**	1	PLATE AS	
	6	1	**232-2869**	1	PLATE AS	
	7	1	**232-2870**	1	PLATE AS	
	8	1	**275-9907**	1	PLATE AS	
	9	1	**299-3444**	1	PLATE AS	
	10	1	**299-4777**	1	PLATE AS	
	11	1	**9X-2038**	41	WASHER (7X19X2-MM THK)	
M	12	1	**9X-2043**	45	SCREW-TRUSS HEAD (M6X1X14-MM)	

M-METRIC PART

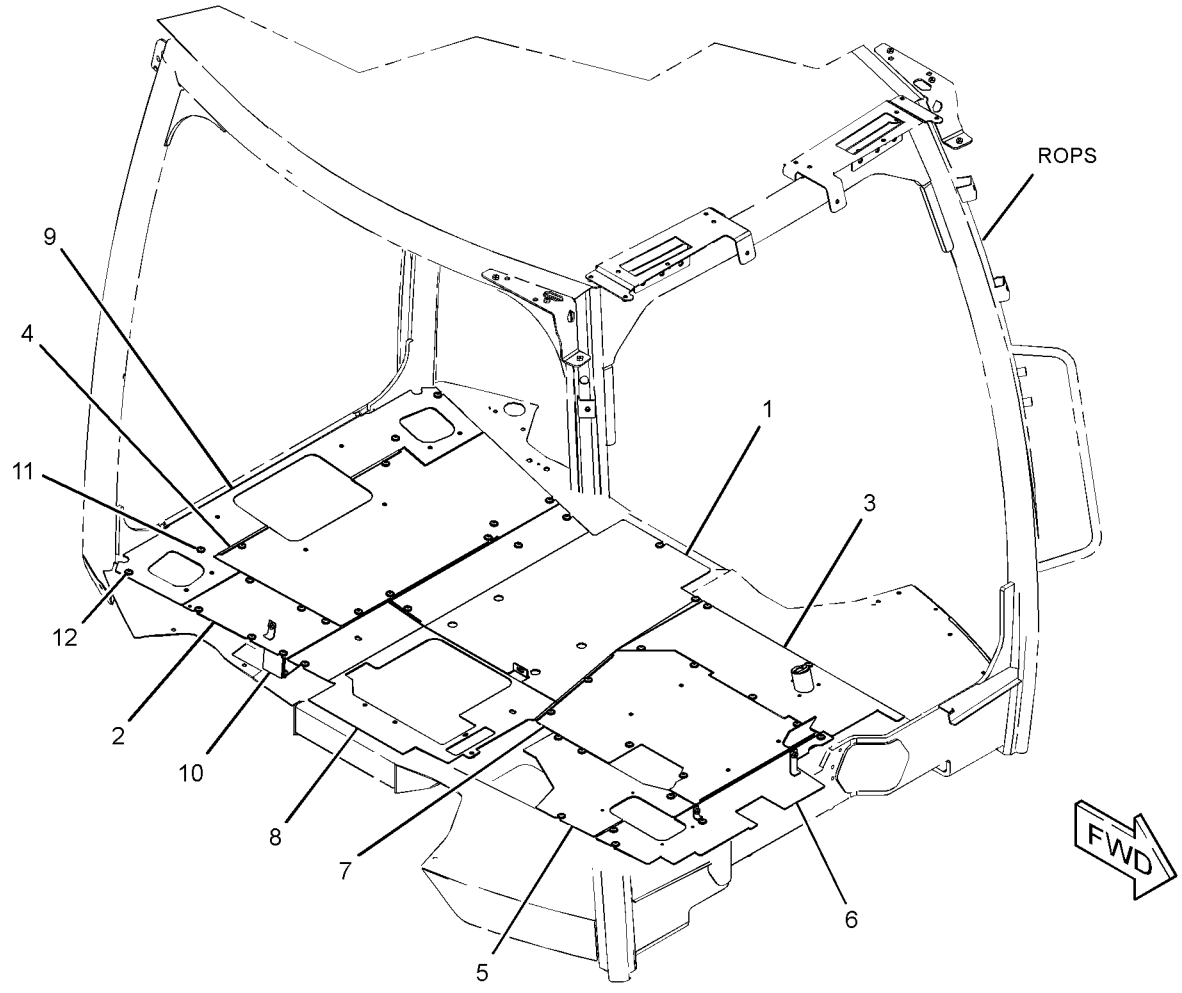

GRAPHIC #1 **<END>** g01414055

FRAME AND BODY

316-1079 FRAME AS-SWING

S/N: CBD1-UP; MFG1-UP

PART OF 251-4519 FRAME GP-SWING

SMCS-6506 **i03242891**

NOTE	REF NO	GRAPHIC REF	PART NUMBER	QTY	PART NAME 1 2 3 4 5 6 (PRODUCT LEVEL)	SEE PAGE
	1	1	**9R-0366**	1	WASHER (80X140X5-MM THK)	
	2	1	**213-6702**	4	BEARING-SLEEVE	
	3	1	**237-0944**	2	BEARING-SLEEVE	
	4	1	**262-7043**	2	BEARING	
	5	1	**278-5454**	2	BEARING-SLEEVE	

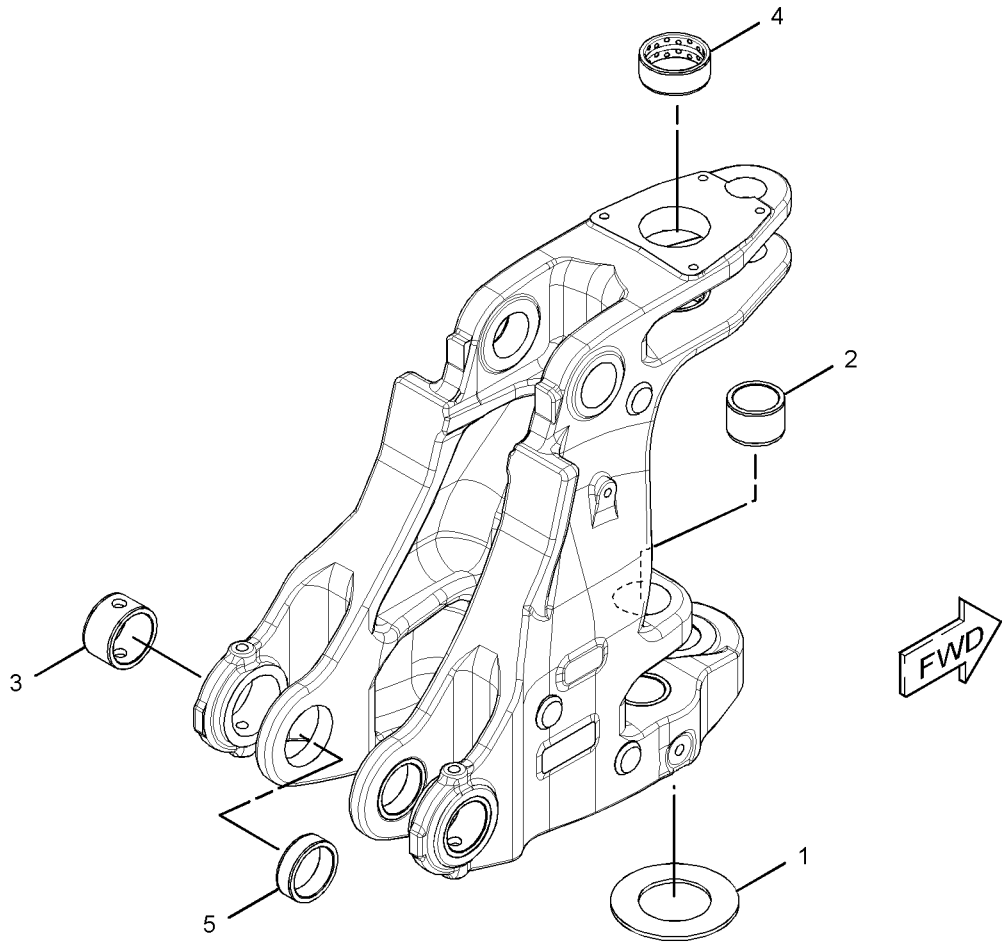

GRAPHIC #1 **<END>** g01521948

209-9922 FRAME GP-LOADER

S/N: CBD1-UP
PART OF 213-9284 CHASSIS AR
TYPE 1

SMCS-7054 **i03325888**

NOTE	REF NO	GRAPHIC REF	PART NUMBER	QTY	PART NAME 1 2 3 4 5 6 (PRODUCT LEVEL)	SEE PAGE
	1	1	**9R-0481**	2	WASHER (71X110X4-MM THK)	
	2	1	**9R-7701**	1	CAP AS	
	2A	1	**9R-4110**	2	BUSHING	
	3	1	**214-4754**	2	PLATE	
	4	1	**218-8404**	1	FRAME AS	
	4A	1	**278-7695**	1	BUSHING	
	4B	1	**9R-0431**	4	BUSHING	
	4C	1	**9R-4110**	2	BUSHING	
	4D	1	**262-7044**	1	BEARING	
M	5	1	**114-6099**	6	BOLT (M24X3X80-MM)	
	6	1	**3B-8488**	3	FITTING-GREASE	
	7	1	**3B-8489**	2	FITTING-GREASE	
M	8	1	**8T-4001**	6	NUT (M24X3-THD)	
	9	1	**8T-4121**	4	WASHER-HARD (11X21X2.5-MM THK)	
	10	1	**8T-4167**	12	WASHER-HARD (26X44X4-MM THK)	
M	11	1	**8T-4195**	4	BOLT (M10X1.5X30-MM)	

M-METRIC PART

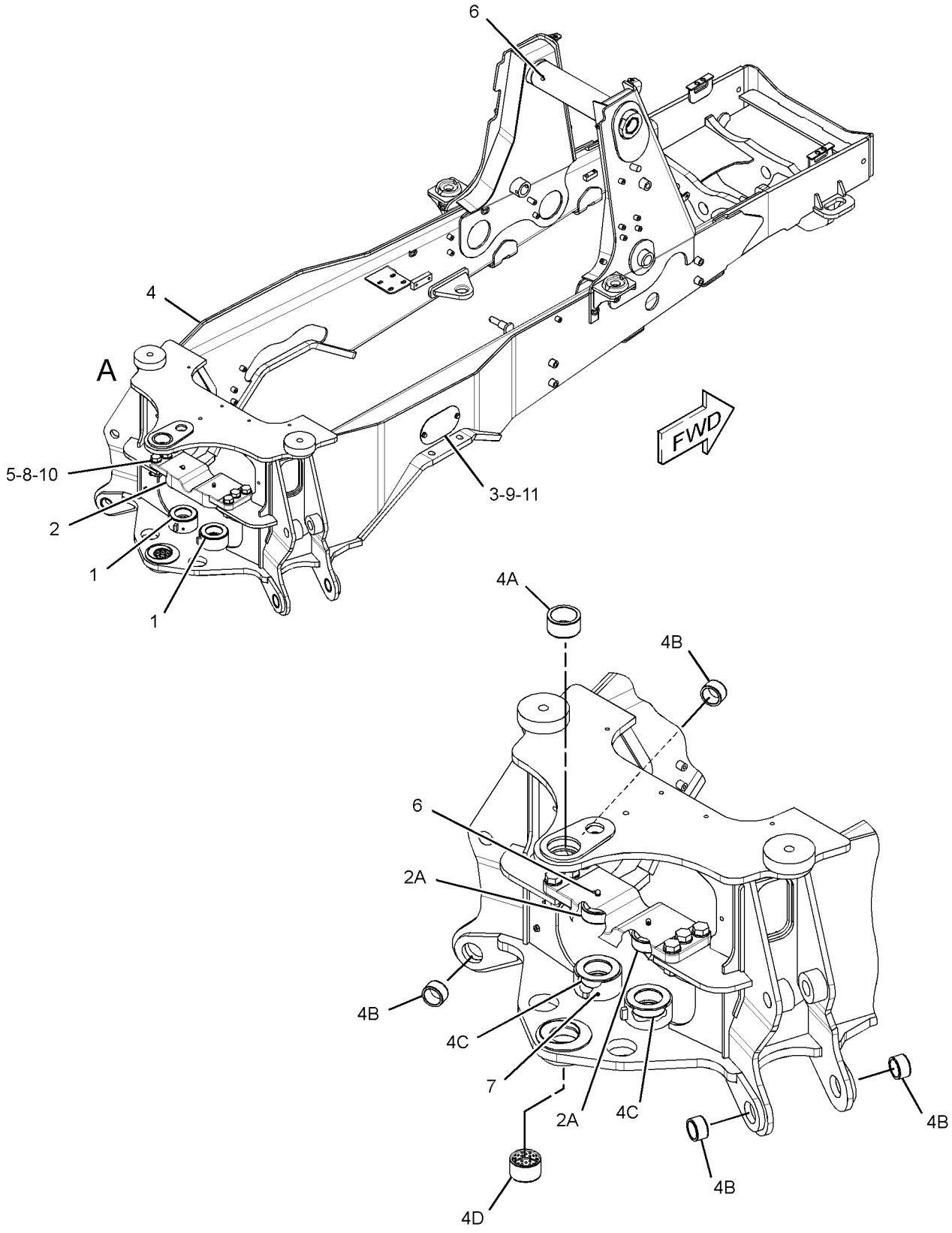

VIEW OF AREA A
(EXPLODED)

GRAPHIC #1 **<END>** g01708559

FRAME AND BODY

209-9922 FRAME GP-LOADER

S/N: CBD1-UP
PART OF 213-9284 CHASSIS AR
TYPE 2

SMCS-7054 **i03325887**

NOTE	REF NO	GRAPHIC REF	PART NUMBER	QTY	PART NAME 1 2 3 4 5 6 (PRODUCT LEVEL)	SEE PAGE
	1	1	**9R-0481**	2	WASHER (71X110X4-MM THK)	
	2	1	**9R-7701**	1	CAP AS	
	2A	1	**9R-4110**	2	BUSHING	
	3	1	**214-4754**	2	PLATE	
	4	1	**218-8404**	1	FRAME AS	
	4A	1	**278-7695**	1	BUSHING	
	4B	1	**9R-0431**	4	BUSHING	
	4C	1	**9R-4110**	2	BUSHING	
	4D	1	**262-7044**	1	BEARING	
M	5	1	**114-6099**	6	BOLT (M24X3X80-MM)	
C	6	1	**3B-8488**	2	FITTING-GREASE	
C	7	1	**3B-8489**	3	FITTING-GREASE	
M	8	1	**8T-4001**	6	NUT (M24X3-THD)	
	9	1	**8T-4121**	4	WASHER-HARD (11X21X2.5-MM THK)	
	10	1	**8T-4167**	12	WASHER-HARD (26X44X4-MM THK)	
M	11	1	**8T-4195**	4	BOLT (M10X1.5X30-MM)	
CF			**5T-9771**	1	HOSE AS	
CF			**5P-9297**	1	CLIP	
CF			**5P-4116**	1	WASHER-HARD (8.8X20.5X2-MM THK)	
CF			**3B-6769**	1	ELBOW	
CF			**3B-6552**	1	ELBOW-PIPE	

C-CHANGE FROM PREVIOUS TYPE
F-NOT SHOWN
M-METRIC PART

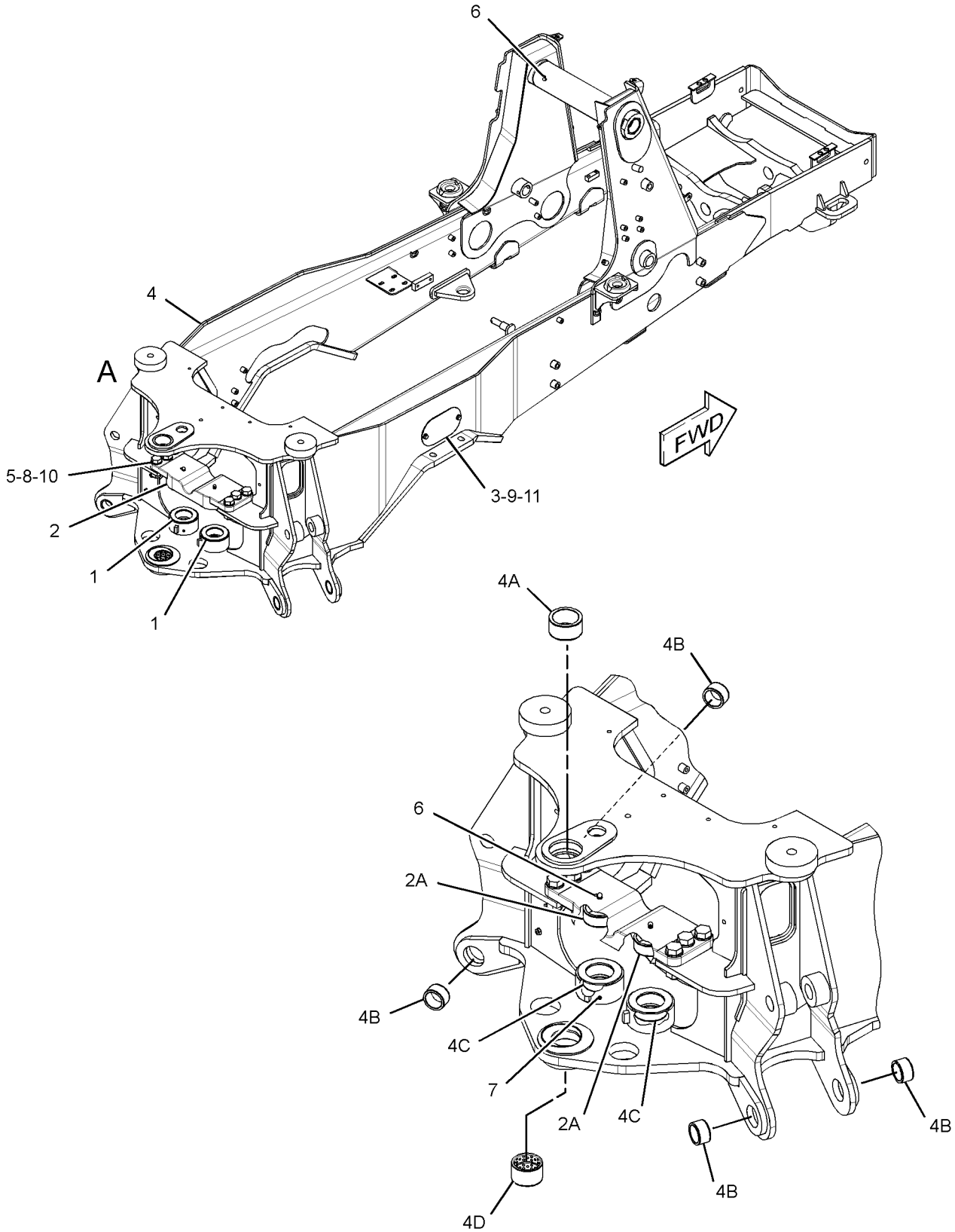

VIEW OF AREA A
(EXPLODED)

GRAPHIC #1 **<END>** g01708559

209-9922 FRAME GP-LOADER

S/N: CBD1-UP
PART OF 213-9284 CHASSIS AR
TYPE 3

SMCS-7054 **i03757598**

NOTE	REF NO	GRAPHIC REF	PART NUMBER	QTY	PART NAME 1 2 3 4 5 6 (PRODUCT LEVEL)	SEE PAGE
	1	1	**9R-0481**	2	WASHER (71X110X4-MM THK)	
	2	1	**9R-7701**	1	CAP AS	
	2A	1	**9R-4110**	2	BUSHING	
	3	1	**214-4754**	2	PLATE	
	4	1	**218-8404**	1	FRAME AS	
	4A	1	**278-7695**	1	BUSHING	
	4B	1	**9R-0431**	4	BUSHING	
	4C	1	**9R-4110**	2	BUSHING	
	4D	1	**262-7044**	1	BEARING	
M	5	1	**114-6099**	6	BOLT (M24X3X80-MM)	
C	6	1	**3B-8488**	2	FITTING-GREASE	
C	7	1	**3B-8489**	2	FITTING-GREASE	
M	8	1	**8T-4001**	6	NUT (M24X3-THD)	
	9	1	**8T-4121**	4	WASHER-HARD (11X21X2.5-MM THK)	
	10	1	**8T-4167**	12	WASHER-HARD (26X44X4-MM THK)	
M	11	1	**8T-4195**	4	BOLT (M10X1.5X30-MM)	
	12	1	**3B-8486**	1	FITTING-GREASE	

C-CHANGE FROM PREVIOUS TYPE
M-METRIC PART

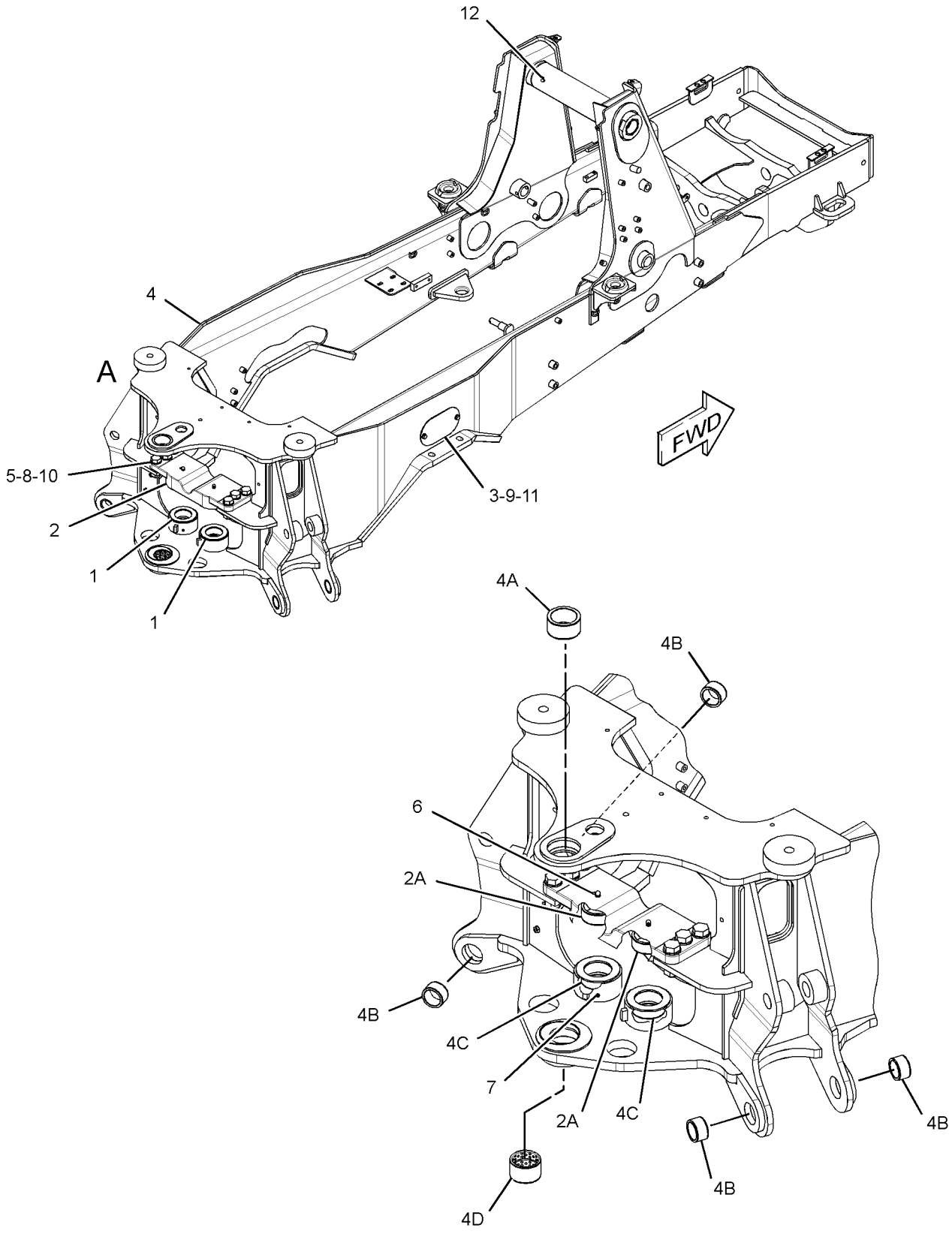

VIEW OF AREA A
(EXPLODED)

GRAPHIC #1 **<END>** g02035914

293-5309 FRAME GP-LOADER—SINGLE TILT

S/N: MFG1-UP

PART OF 291-9190 CHASSIS AR

SMCS-7054 **i04447254**

NOTE	REF NO	GRAPHIC REF	PART NUMBER	QTY	PART NAME 1 2 3 4 5 6 (PRODUCT LEVEL)	SEE PAGE
	1	1	**9R-0481**	2	WASHER (71X110X4-MM THK)	
	2	1	**209-4777**	1	CAP & BEARING AS	
	2A	1	**9R-4110**	2	BUSHING	
	3	1	**317-7120**	2	COVER	
	4	1	**293-5308**	1	FRAME AS	
	4A	1	**278-7695**	1	BUSHING	
	4B	1	**9R-0431**	4	BUSHING	
	4C	1	**9R-4110**	2	BUSHING	
	4D	1	**278-7066**	4	BEARING	
	4E	1	**262-7044**	1	BEARING	
M	5	1	**114-6099**	8	BOLT (M24X3X80-MM)	
	6	1	**3B-8488**	2	FITTING-GREASE	
	7	1	**3B-8489**	2	FITTING-GREASE	
M	8	1	**8T-4001**	8	NUT (M24X3-THD)	
	9	1	**8T-4222**	4	WASHER-PLATED (11X32X2.5-MM THK)	
	10	1	**8T-4167**	16	WASHER-HARD (26X44X4-MM THK)	
M	11	1	**8T-4196**	4	BOLT (M10X1.5X35-MM)	
	12	1	**3B-8486**	1	FITTING-GREASE	
M	13	1	**246-7854**	18	NUT-SPECIAL (M10X1.5-THD)	

M-METRIC PART

293-5309 **FRAME GP-LOADER** *(contd.)* **i04447254**

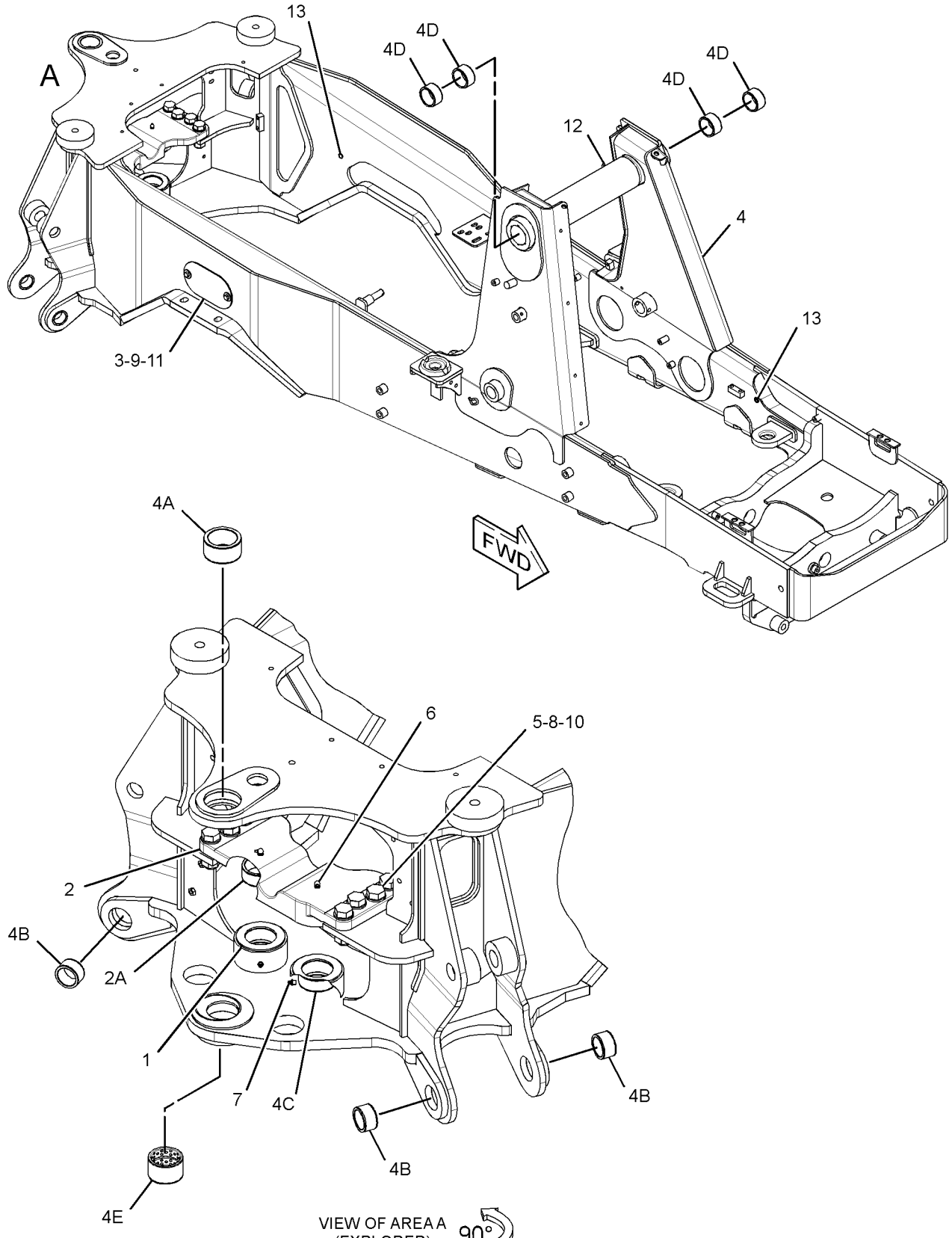

GRAPHIC #1

<END>

g02712993

372-5175 FRAME GP-LOADER—SINGLE TILT

S/N: MFG1-UP

PART OF 372-5176 CHASSIS AR

SMCS-7054 **i04523834**

NOTE	REF NO	GRAPHIC REF	PART NUMBER	QTY	PART NAME 1 2 3 4 5 6 (PRODUCT LEVEL)	SEE PAGE
	1	1	**9R-0481**	2	WASHER (71X110X4-MM THK)	
	2	1	**209-4777**	1	CAP & BEARING AS	
	2A	1	**9R-4110**	2	BUSHING	
	3	1	**214-4754**	2	PLATE	
	4	1	**372-5177**	1	FRAME AS-LOADER	
	4A	1	**9R-0431**	4	BUSHING	
	4B	1	**278-7695**	1	BUSHING	
	4C	1	**262-7044**	1	BEARING	
	4D	1	**9R-4110**	2	BUSHING	
M	5	1	**114-6099**	8	BOLT (M24X3X80-MM)	
	6	1	**3B-8488**	2	FITTING-GREASE	
	7	1	**3B-8489**	2	FITTING-GREASE	
M	8	1	**8T-4001**	8	NUT (M24X3-THD)	
	9	1	**8T-4121**	4	WASHER-HARD (11X21X2.5-MM THK)	
	10	1	**8T-4167**	16	WASHER-HARD (26X44X4-MM THK)	
M	11	1	**8T-4195**	4	BOLT (M10X1.5X30-MM)	
	12	1	**3B-8486**	1	FITTING-GREASE	

M-METRIC PART

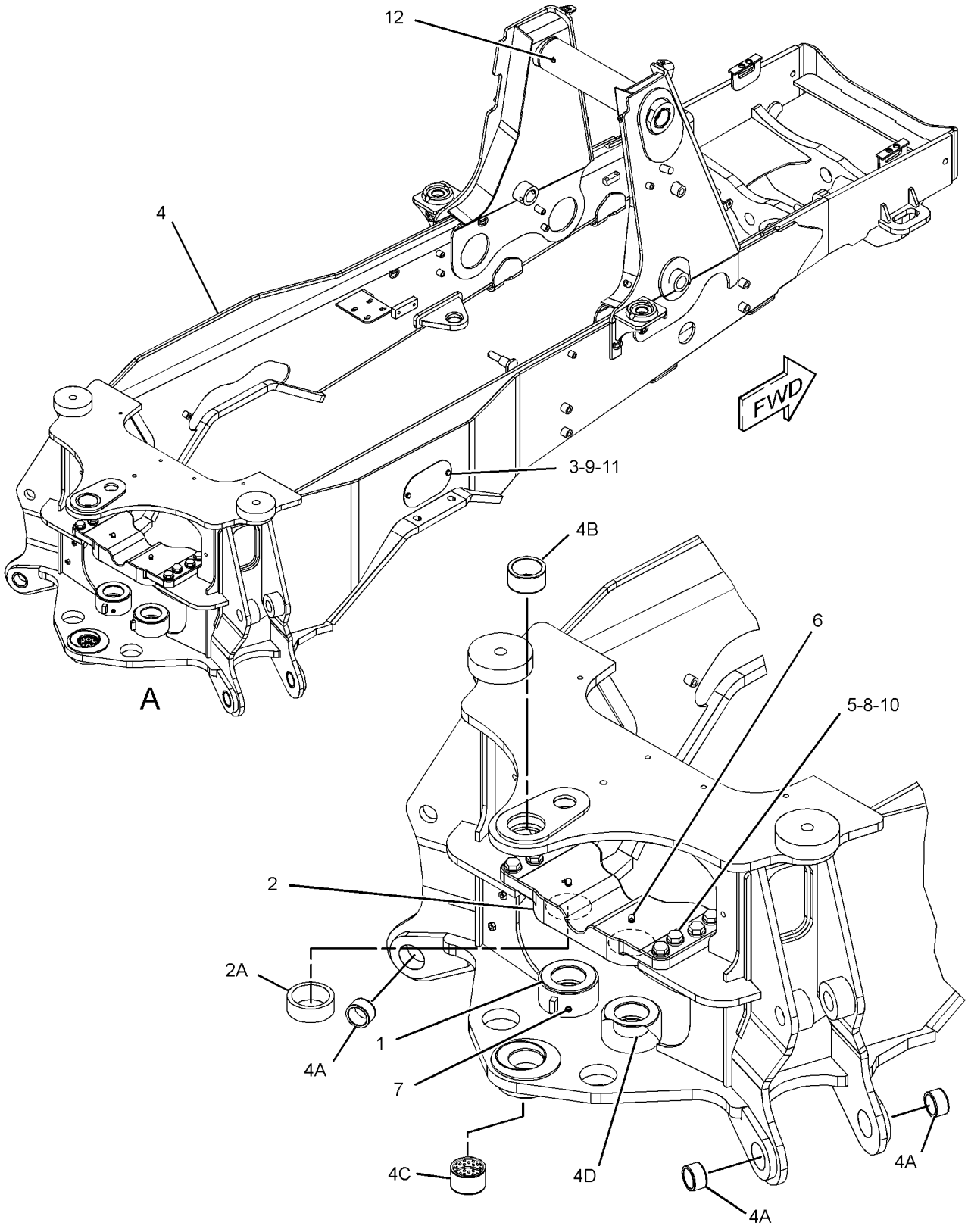

VIEW OF AREA A

GRAPHIC #1 **<END>** g02712996

FRAME AND BODY

251-4519 FRAME GP-SWING

S/N: CBD1-4401
PART OF 213-9284 CHASSIS AR
TYPE 1

SMCS-6506 **i03687374**

NOTE	REF NO	GRAPHIC REF	PART NUMBER	QTY	PART NAME 1 2 3 4 5 6 (PRODUCT LEVEL)	SEE PAGE
	1	1	**8T-4821**	1	WASHER (13.5X40X3-MM THK)	
	2	1	**8T-4837**	1	WASHER (48X85X6-MM THK)	
	3	1	**300-5440**	1	PIN	
B	4	1	**9R-5429**	2	SPACER (67.5X120X3-MM THK)	
	5	1	**9R-7882**	1	SPACER (14X25X7-MM THK)	
B	6	1	**9R-8291**	2	SPACER (66X125X1-MM THK)	
	7	1	**270-5290**	1	BOLT-SOCKET HEAD (M12X1.75X300-MM)	
	8	1	**209-6850**	1	PIN AS	
	9	1	**209-6855**	2	PIN	
	10	1	**209-6862**	1	FRAME AS-SWING	
	10A	1	**9R-0366**	1	WASHER (80X140X5-MM THK)	
	10B	1	**213-6702**	4	BUSHING	
	10C	1	**237-0944**	2	BUSHING	
	10D	1	**262-7043**	2	BEARING	
	10E	1	**278-5454**	2	BUSHING	
	11	1	**237-5330**	2	PIN	
	12	1	**290-8156**	1	PIN AS	
		1	**9F-2049**	1	DOWEL	
	13	1	**250-0741**	1	LUG	
B	14	1	**136-7440**	2	SHIM (1-MM THK)	
	15	1	**3B-8488**	1	FITTING-GREASE (HYDRAULIC)	
	16	1	**3B-8489**	3	FITTING-GREASE (HYDRAULIC)	
M	17	1	**6V-7687**	4	LOCKNUT (M12X1.75-THD)	
M	18	1	**8T-6868**	1	BOLT (M12X1.75X80-MM)	
M	19	1	**8T-3652**	1	NUT (M42X2-THD)	
M	20	1	**8T-4139**	1	BOLT (M12X1.75X30-MM)	
B	21	1	**8T-4821**	4	WASHER (13.5X40X3-MM THK)	
M	22	1	**8T-7930**	2	BOLT (M12X1.75X160-MM)	
	23	1	**5P-1076**	4	WASHER-HARD (13.5X30X4-MM THK)	

B-USE AS REQUIRED
M-METRIC PART

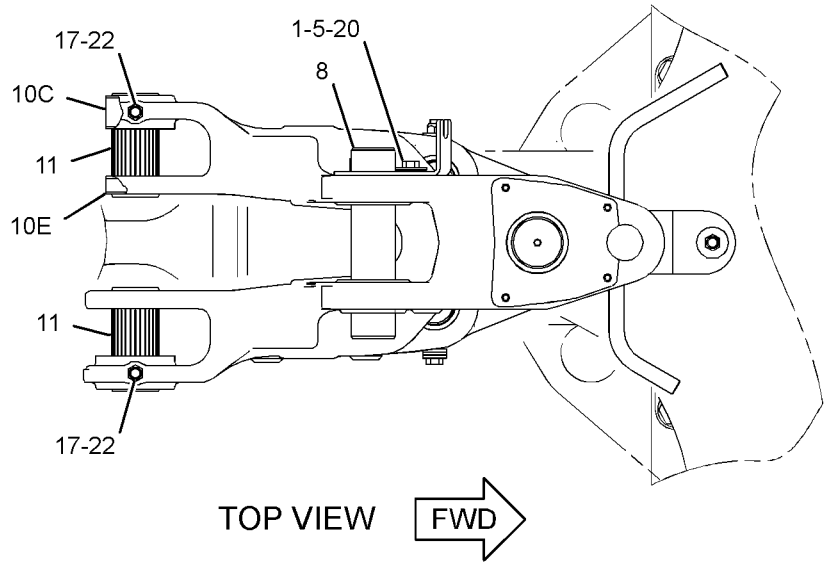

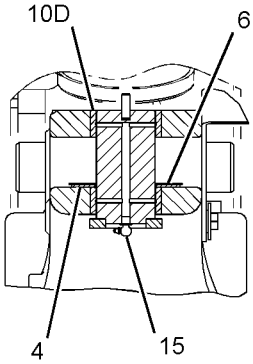

SECTION A-A

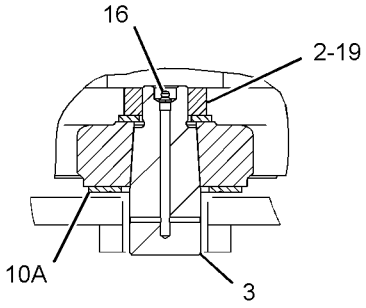

SECTION B-B

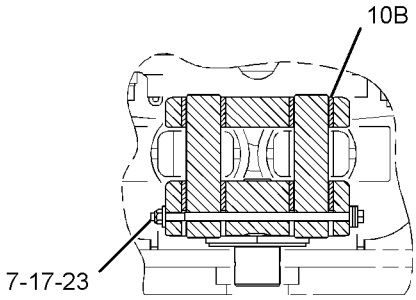

SECTION C-C

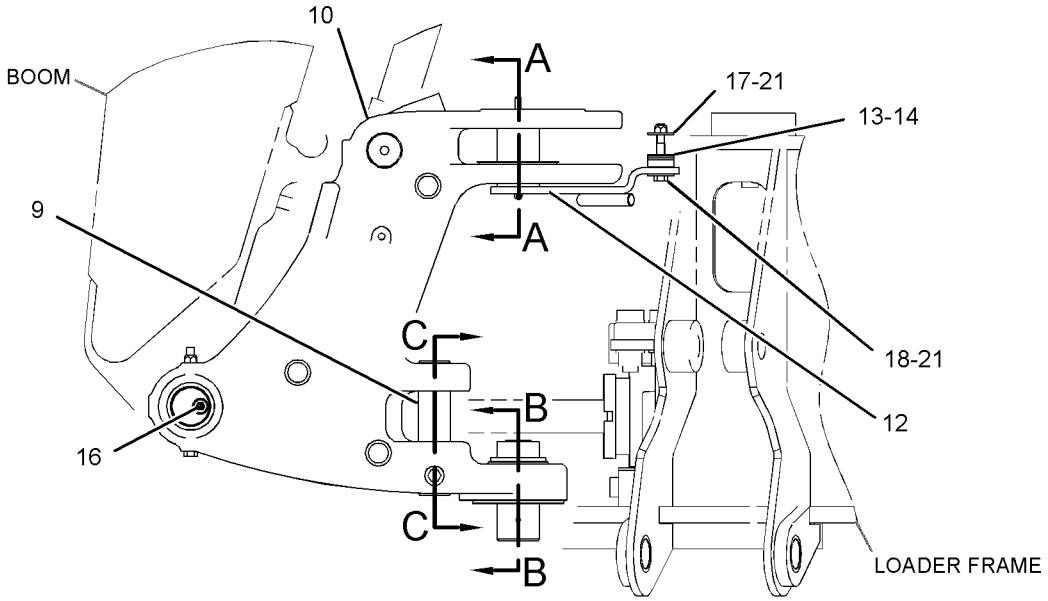

RIGHT SIDE VIEW

GRAPHIC #1 **<END>** g01983675

FRAME AND BODY

251-4519 FRAME GP-SWING

S/N: CBD1-4401
PART OF 213-9284 CHASSIS AR
TYPE 2

SMCS-6506 **i03687373**

NOTE	REF NO	GRAPHIC REF	PART NUMBER	QTY	PART NAME 1 2 3 4 5 6 (PRODUCT LEVEL)	SEE PAGE
B	1	1	**8T-4821**	5	WASHER (13.5X40X3-MM THK)	
	2	1	**8T-4837**	1	WASHER (48X85X6-MM THK)	
	3	1	**300-5440**	1	PIN	
BC	4	1	**176-0626**	2	WASHER (67.5X120X3-MM THK)	
	5	1	**9R-7882**	1	SPACER (14X25X7-MM THK)	
B	6	1	**9R-8291**	2	SPACER (66X125X1-MM THK)	
	7	1	**270-5290**	1	BOLT-SOCKET HEAD (M12X1.75X300-MM)	
	8	1	**209-6850**	1	PIN AS	
	9	1	**209-6855**	2	PIN	
CY	10	1	**316-1079**	1	FRAME AS-SWING	483
	11	1	**237-5330**	2	PIN	
	12	1	**290-8156**	1	PIN AS	
		1	**9F-2049**	1	DOWEL	
	13	1	**250-0741**	1	LUG	
B	14	1	**136-7440**	2	SHIM (1-MM THK)	
	15	1	**3B-8486**	1	FITTING-GREASE (HYDRAULIC)	
	16	1	**3B-8489**	3	FITTING-GREASE (HYDRAULIC)	
M	17	1	**6V-7687**	4	LOCKNUT (M12X1.75-THD)	
M	18	1	**8T-6868**	1	BOLT (M12X1.75X80-MM)	
M	19	1	**8T-3652**	1	NUT (M42X2-THD)	
M	20	1	**8T-4139**	1	BOLT (M12X1.75X30-MM)	
M	22	1	**8T-7930**	2	BOLT (M12X1.75X160-MM)	
C	23	1	**5P-1076**	3	WASHER-HARD (13.5X30X4-MM THK)	

B-USE AS REQUIRED
C-CHANGE FROM PREVIOUS TYPE
M-METRIC PART
Y-SEPARATE ILLUSTRATION

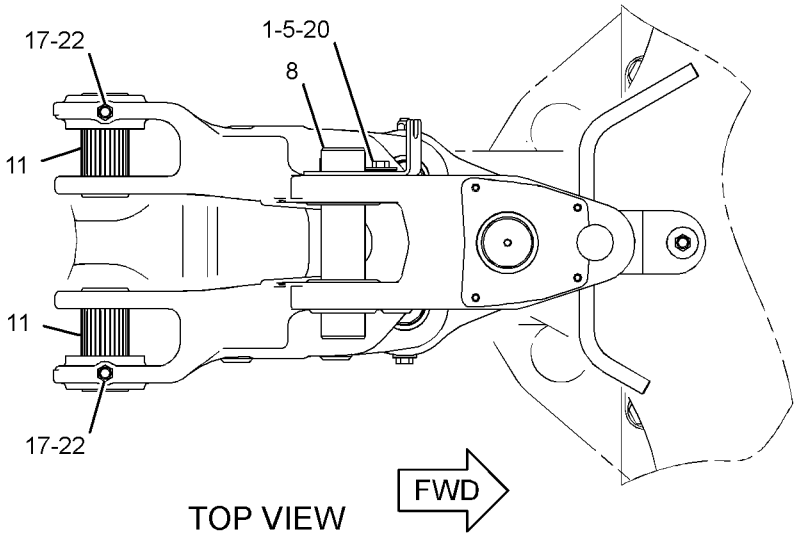

TOP VIEW

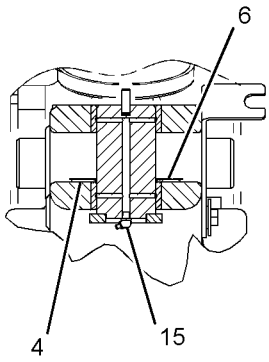

SECTION A-A

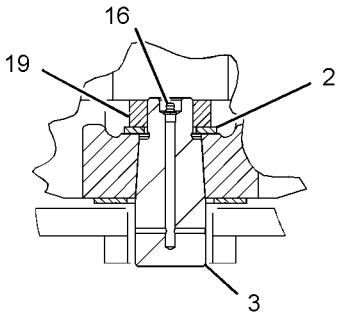

SECTION B-B

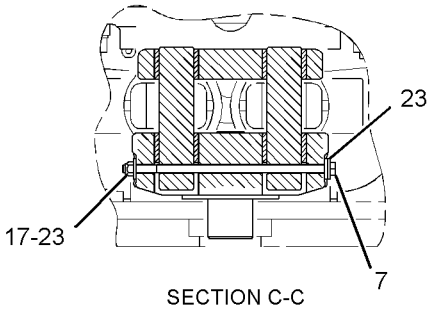

SECTION C-C

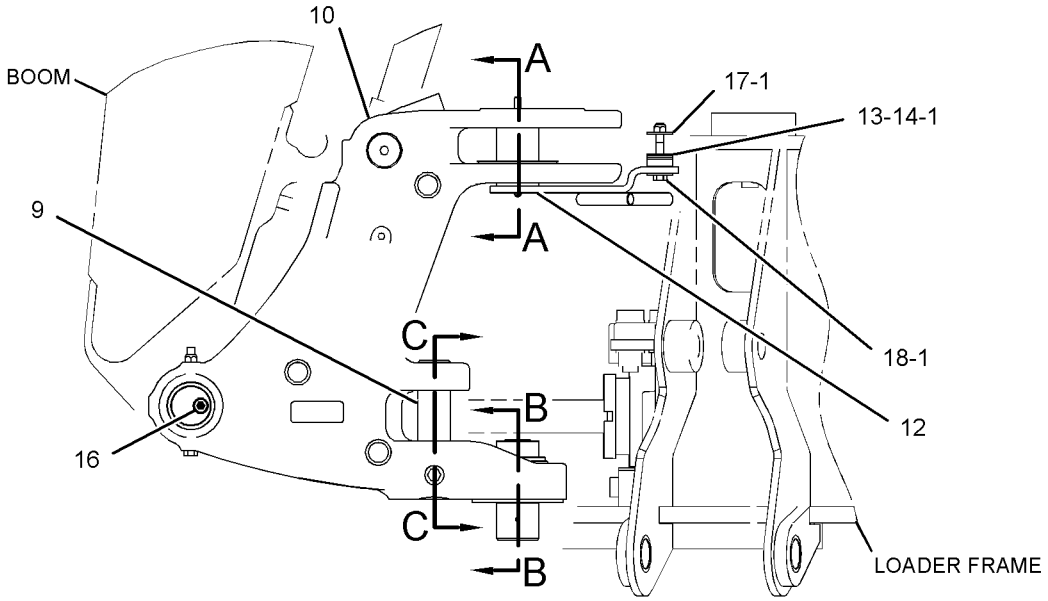

RIGHT SIDE VIEW

GRAPHIC #1 **<END>** g01983993

FRAME AND BODY

251-4519 FRAME GP-SWING

S/N: CBD4402-UP; MFG1-UP

PART OF 213-9284, 291-9190, 372-5176 CHASSIS AR

SMCS-6506 **i03687372**

NOTE	REF NO	GRAPHIC REF	PART NUMBER	QTY	PART NAME 1 2 3 4 5 6 (PRODUCT LEVEL)	SEE PAGE
B	1	1	**8T-4821**	5	WASHER (13.5X40X3-MM THK)	
	2	1	**8T-4837**	1	WASHER (48X85X6-MM THK)	
	3	1	**300-5440**	1	PIN	
B	4	1	**176-0626**	2	WASHER (67.5X120X3-MM THK)	
	5	1	**9R-7882**	1	SPACER (14X25X7-MM THK)	
B	6	1	**9R-8291**	2	SPACER (66X125X1-MM THK)	
	7	1	**270-5290**	1	BOLT-SOCKET HEAD (M12X1.75X300-MM)	
	8	1	**209-6850**	1	PIN AS	
	9	1	**209-6855**	2	PIN	
Y	10	1	**316-1079**	1	FRAME AS-SWING	483
	11	1	**237-5330**	2	PIN	
C	12	1	**328-8776**	1	PIN AS	
		1	**9F-2049**	1	DOWEL	
	13	1	**250-0741**	1	LUG	
B	14	1	**136-7440**	2	SHIM (1-MM THK)	
C	15	1	**3B-8486**	2	FITTING-GREASE	
	16	1	**3B-8489**	3	FITTING-GREASE	
M	17	1	**6V-7687**	4	LOCKNUT (M12X1.75-THD)	
M	18	1	**8T-6868**	1	BOLT (M12X1.75X80-MM)	
M	19	1	**8T-3652**	1	NUT (M42X2-THD)	
M	20	1	**8T-4139**	1	BOLT (M12X1.75X30-MM)	
	21	1	**5P-1076**	3	WASHER-HARD (13.5X30X4-MM THK)	
M	22	1	**8T-7930**	2	BOLT (M12X1.75X160-MM)	

B-USE AS REQUIRED
C-CHANGE FROM PREVIOUS TYPE
M-METRIC PART
Y-SEPARATE ILLUSTRATION

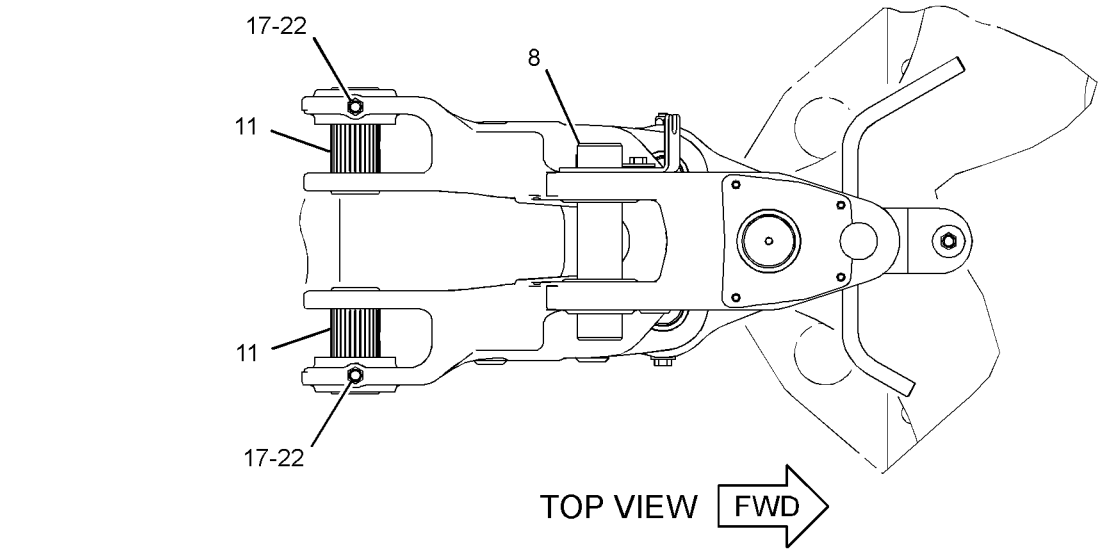

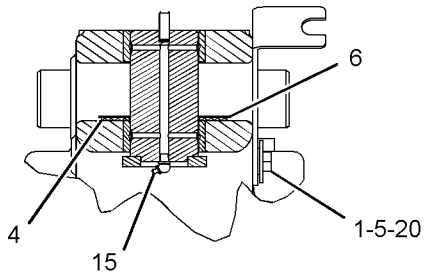

SECTION A-A

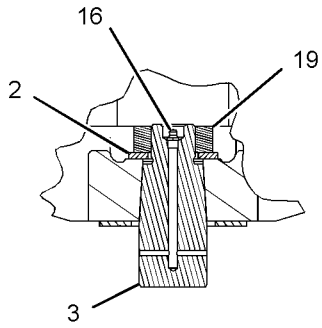

SECTION B-B

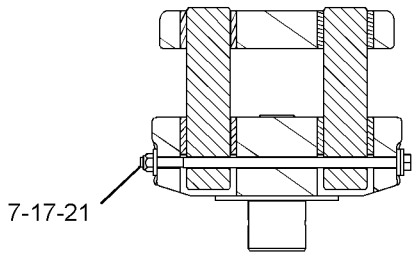

SECTION C-C

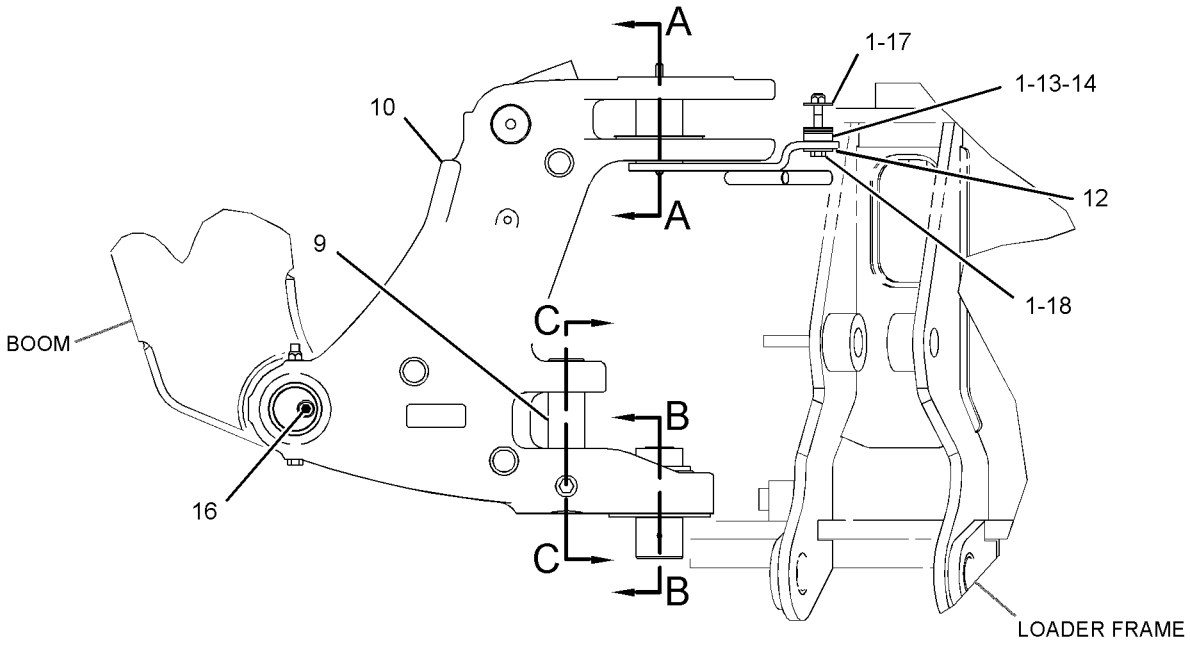

RIGHT SIDE VIEW

GRAPHIC #1

<END>

g01984238

355-5861 GUARD GP-CYLINDER—STABILIZER

S/N: CBD7714-UP; MFG1-UP

PART OF 133-3362, 133-3363, 133-3366 PAD & GUARD GP-STABILIZER

AN ATTACHMENT

SMCS-7164 **i04185424**

NOTE	REF NO	GRAPHIC REF	PART NUMBER	QTY	PART NAME 1 2 3 4 5 6 (PRODUCT LEVEL)	SEE PAGE
	1	1	**3S-8536**	2	SPACER (0.406X0.656X0.38-IN THK)	
	2	1	**8T-4986**	4	CLAMP-HOSE	
	3	1	**130-1638**	2	PIN	
	4	1	**188-3953**	2	PAD	
	5	1	**194-9487**	2	BUMPER AS	
	6	1	**241-0888**	2	PLATE	
	7	1	**241-0889**	2	GUARD AS	
					(EACH INCLUDES)	
M		1	**8T-3490**	2	NUT-WELD (M10X1.5-THD)	
	8	1	**318-8228**	2	PLATE AS	
	9	1	**5P-4116**	2	WASHER-HARD (8.8X20.5X2-MM THK)	
M	10	1	**7X-2537**	2	BOLT (M8X1.25X35-MM)	
	11	1	**7X-7729**	2	WASHER (11X25X3-MM THK)	
M	12	1	**8T-4195**	2	BOLT (M10X1.5X30-MM)	
	13	1	**9R-0109**	4	WASHER (41X64X3-MM THK)	

M-METRIC PART

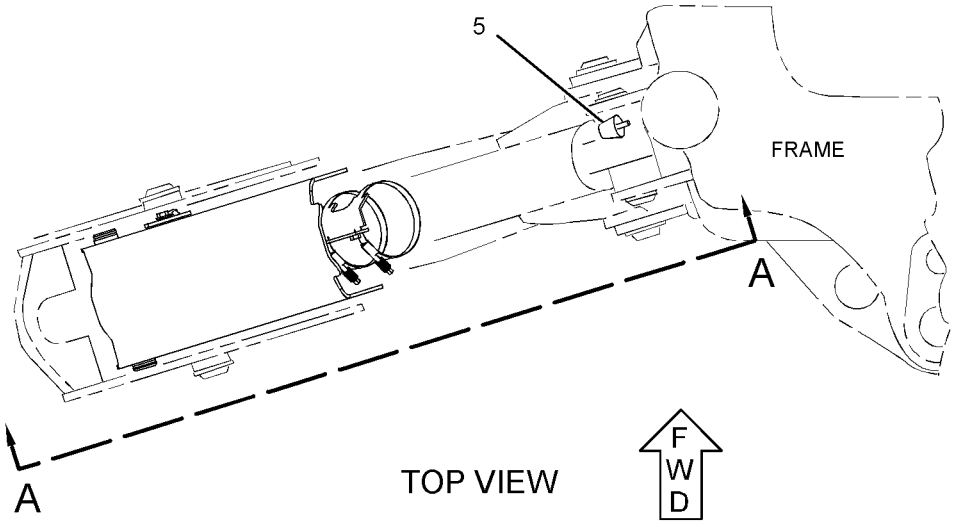

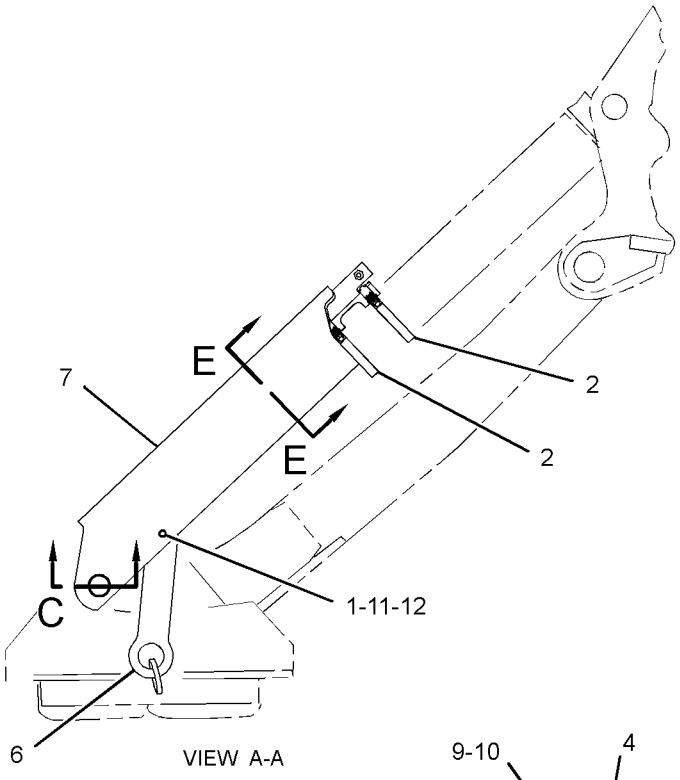

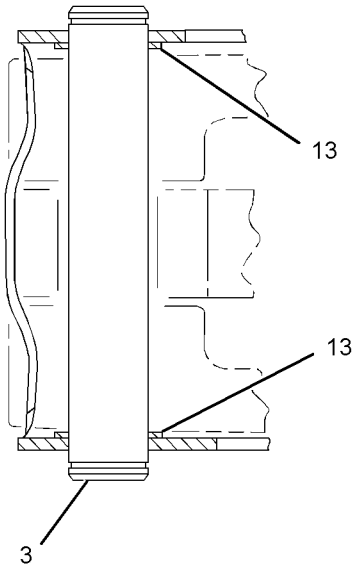

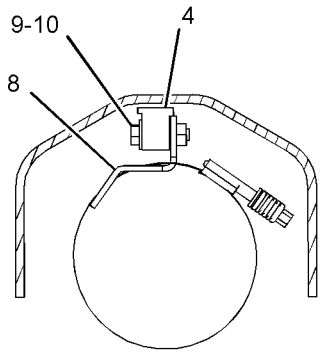

GRAPHIC #1

<END>

g02118116

FRAME AND BODY

217-9672 GUARD GP-DRIVE SHAFT

S/N: CBD1-UP; MFG1-UP
PART OF 220-9183 DRIVE AR-BACKHOE LOADER
AN ATTACHMENT

SMCS-7153 **i02548977**

NOTE	REF NO	GRAPHIC REF	PART NUMBER	QTY	PART NAME 1 2 3 4 5 6 (PRODUCT LEVEL)	SEE PAGE
	1	1	**216-5981**	1	GUARD AS	
M	2	1	**290-3347**	4	BOLT-CARRIAGE (M16X2X40-MM)	
	3	1	**8T-4122**	4	WASHER-HARD (17X32X3.5-MM THK)	
M	4	1	**8T-4132**	4	NUT (M16X2-THD)	

M-METRIC PART

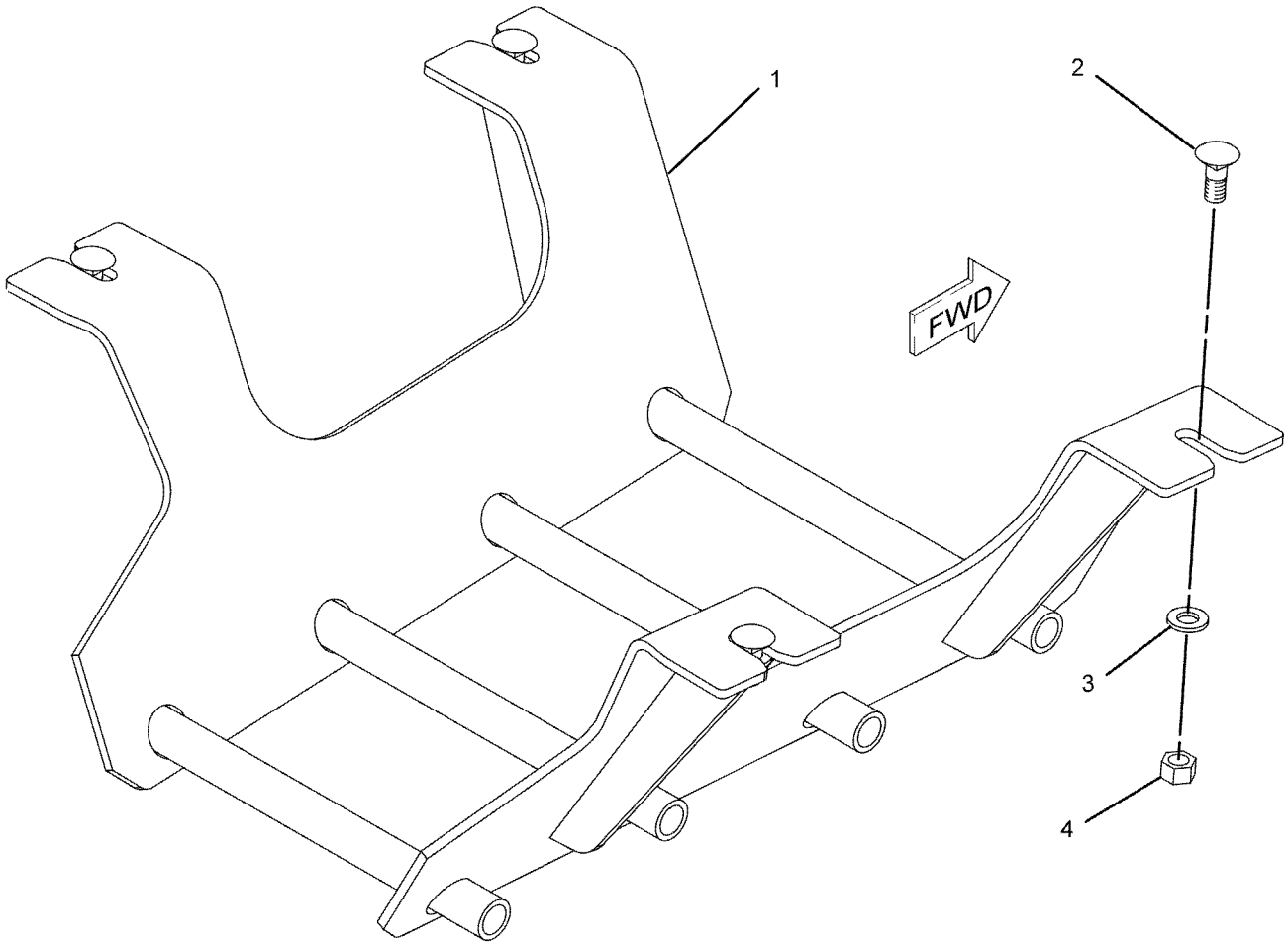

GRAPHIC #1 **<END>** g01083443

FRAME AND BODY

256-0324 GUARD GP-RADIATOR

S/N: CBD1-UP; MFG1-UP

AN ATTACHMENT

SMCS-7155 **i02498545**

NOTE	REF NO	GRAPHIC REF	PART NUMBER	QTY	PART NAME 1 2 3 4 5 6 (PRODUCT LEVEL)	SEE PAGE
	1	1	**256-0323**	1	COVER	
M	2	1	**7X-2572**	2	BOLT (M24X3X35-MM)	
	3	1	**8T-4167**	2	WASHER-HARD (26X44X4-MM THK)	

M-METRIC PART

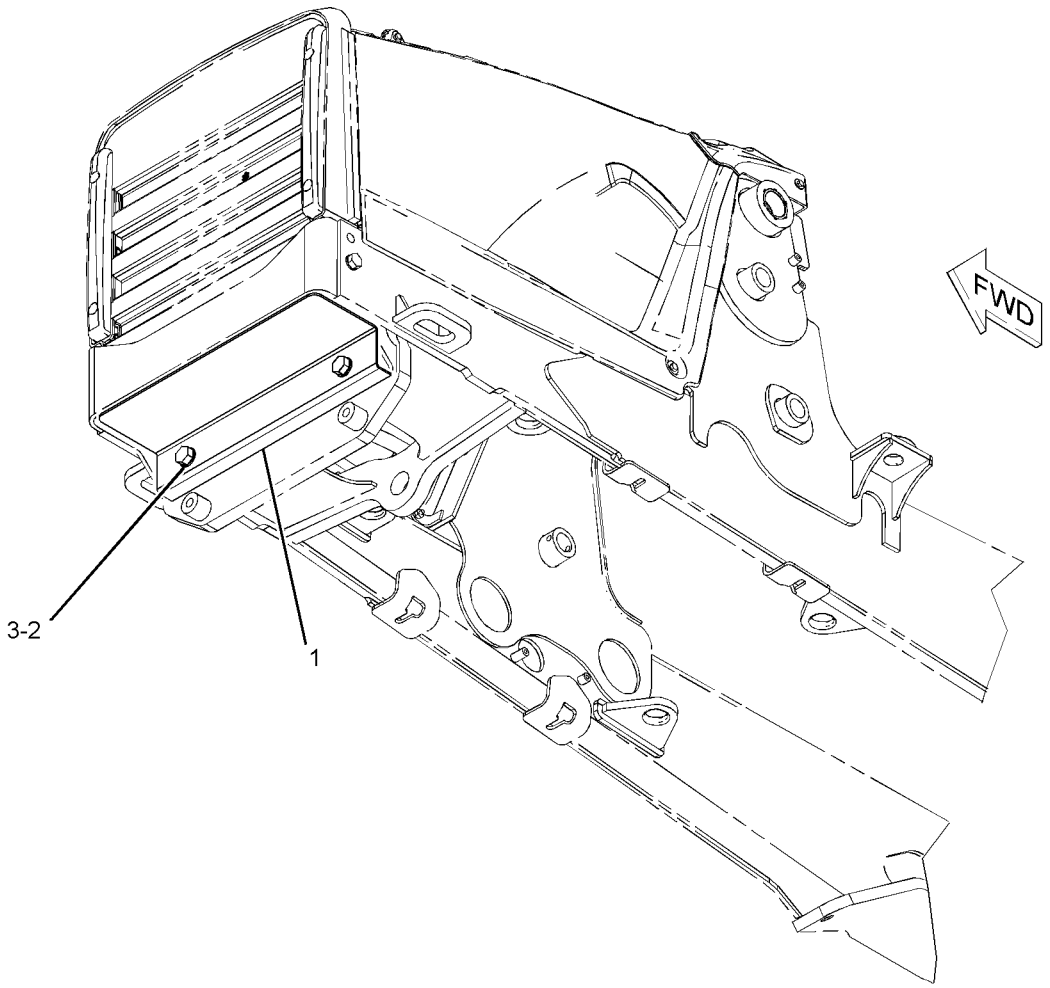

GRAPHIC #1 **<END>** g01096781

FRAME AND BODY

211-3546 HOOD & GUARD GP

S/N: CBD1-4629
PART OF 213-9284 CHASSIS AR
TYPE 1

SMCS-7150, 7170, 7251, 7263 **i02359889**

NOTE	REF NO	GRAPHIC REF	PART NUMBER	QTY	PART NAME 1 2 3 4 5 6 (PRODUCT LEVEL)	SEE PAGE
D	1	1	**6V-1580**		SEAL (0.4-M)	
	2	1	**123-0428**	2	BAR	
	3	1	**231-9363**	1	ENCLOSURE AS (RH)	
	4	1	**244-1085**	1	ENCLOSURE (LH)	
	5	1	**244-7614**	1	GUARD AS	
Y	6	1	*245-5728*	1	HOOD GP-ENGINE	512
	7	1	**247-1080**	2	BUMPER AS	
	8	1	**247-6296**	1	GRILL	
	9	1	**250-3344**	1	COWLING AS	
		1	**250-3331**	1	FILM-STRIPE (YELLOW)	
	10	1	**252-9725**	1	BRACE	
	11	1	**7X-0579**	10	WASHER-HARD (8.8X25.5X2-MM THK)	
M	12	1	**7X-2564**	2	BOLT (M20X2.5X90-MM)	
	13	1	**8T-4121**	8	WASHER-HARD (11X21X2.5-MM THK)	
	14	1	**8T-4123**	2	WASHER (22X35X3.5-MM THK)	
M	15	1	**8T-4136**	2	BOLT (M10X1.5X25-MM)	
M	16	1	**8T-4137**	6	BOLT (M10X1.5X20-MM)	
M	17	1	**8T-4139**	2	BOLT (M12X1.75X30-MM)	
M	18	1	**8T-4189**	12	BOLT (M8X1.25X20-MM)	
	19	1	**8T-4223**	2	WASHER-HARD (13.5X25.5X3-MM THK)	
	20	1	**8T-4224**	7	WASHER-HARD (8.8X16X2-MM THK)	
M	21	1	**8T-7547**	5	BOLT (M8X1.25X30-MM)	

D-ORDER BY THE METER
M-METRIC PART
Y-SEPARATE ILLUSTRATION

211-3546 **HOOD & GUARD GP** *(contd.)* **i02359889**

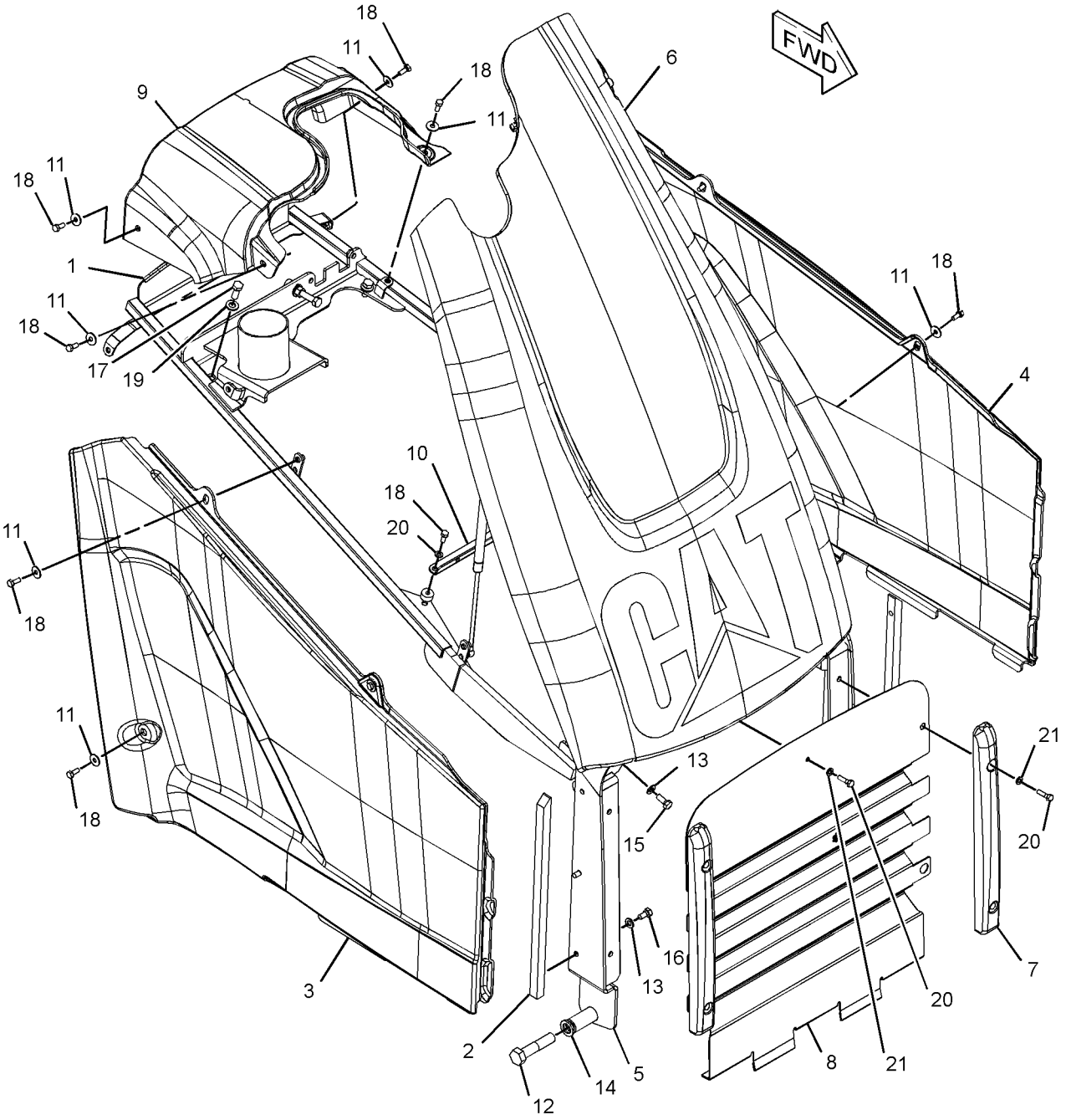

GRAPHIC #1 **<END>** g01214320

FRAME AND BODY

211-3546 HOOD & GUARD GP

S/N: CBD1-4629
PART OF 213-9284 CHASSIS AR
TYPE 2

SMCS-7150, 7170, 7251, 7263 **i03016404**

NOTE	REF NO	GRAPHIC REF	PART NUMBER	QTY	PART NAME 1 2 3 4 5 6 (PRODUCT LEVEL)	SEE PAGE
D	1	1	**6V-1580**		SEAL (0.4-M)	
	2	1	**123-0428**	2	BAR	
	3	1	**231-9363**	1	ENCLOSURE AS (RH)	
		1	**244-1086**	1	ENCLOSURE (RH)	
	4	1	**244-1085**	1	ENCLOSURE (LH)	
	5	1	**244-7614**	1	GUARD AS	
Y	6	1	*245-5728*	1	HOOD GP-ENGINE	512
	7	1	**247-1080**	2	BUMPER AS	
	8	1	**247-6296**	1	GRILL	
	9	1	**250-3344**	1	COWLING AS	
		1	**250-3331**	1	FILM-STRIPE (YELLOW)	
C	10	1	**320-9655**	1	PLATE AS	
M		1	**165-8718**	2	NUT-WELD (M4X0.07-THD)	
	11	1	**7X-0579**	10	WASHER-HARD (8.8X25.5X2-MM THK)	
M	12	1	**7X-2564**	2	BOLT (M20X2.5X90-MM)	
	13	1	**8T-4121**	8	WASHER-HARD (11X21X2.5-MM THK)	
	14	1	**8T-4123**	2	WASHER (22X35X3.5-MM THK)	
M	15	1	**8T-4136**	2	BOLT (M10X1.5X25-MM)	
M	16	1	**8T-4137**	6	BOLT (M10X1.5X20-MM)	
M	17	1	**8T-4139**	2	BOLT (M12X1.75X30-MM)	
M	18	1	**8T-4189**	12	BOLT (M8X1.25X20-MM)	
	19	1	**8T-4223**	2	WASHER-HARD (13.5X25.5X3-MM THK)	
	20	1	**8T-4224**	7	WASHER-HARD (8.8X16X2-MM THK)	
M	21	1	**8T-7547**	5	BOLT (M8X1.25X30-MM)	

C-CHANGE FROM PREVIOUS TYPE
D-ORDER BY THE METER
M-METRIC PART
Y-SEPARATE ILLUSTRATION

211-3546 **HOOD & GUARD GP** *(contd.)* **i03016404**

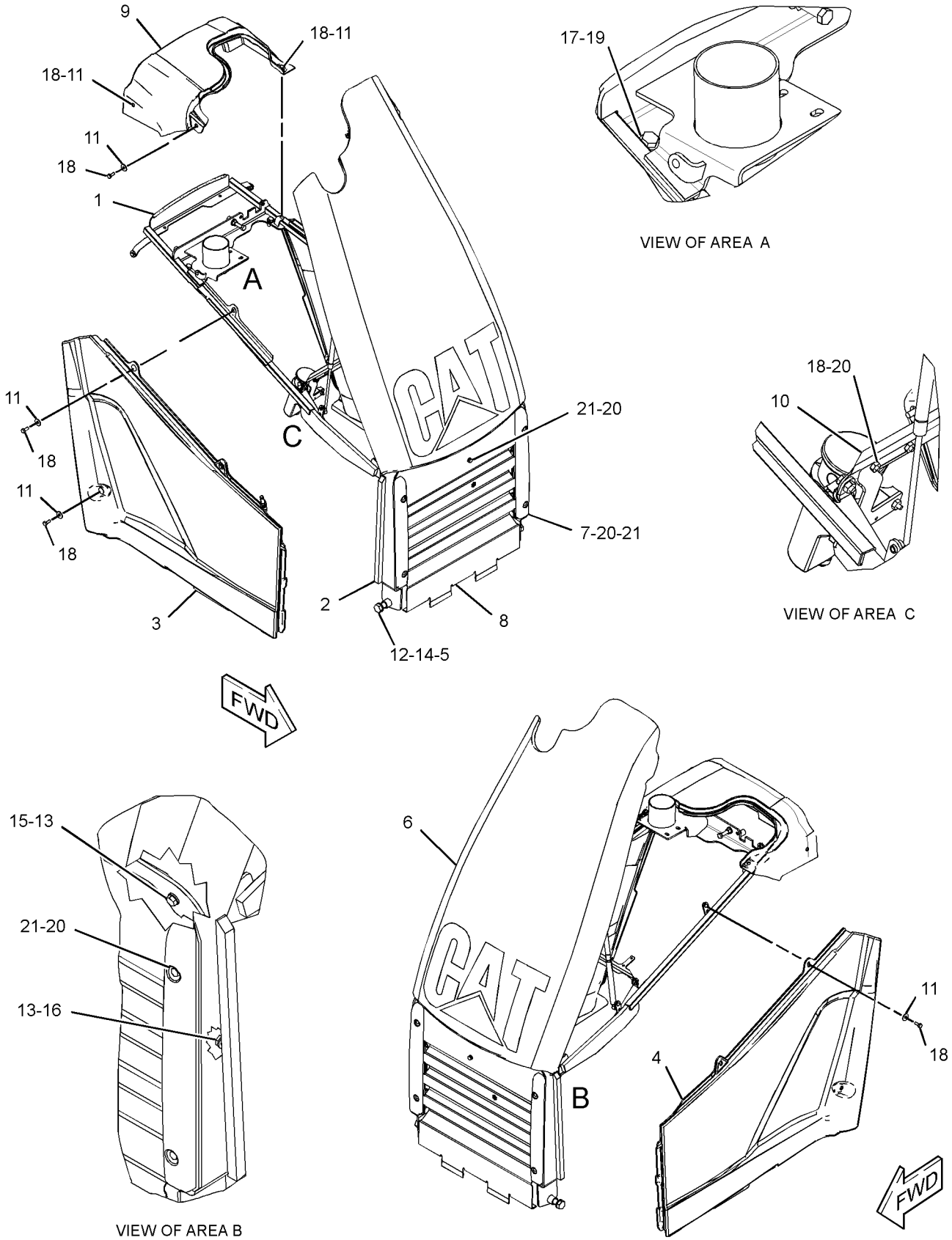

GRAPHIC #1

<END>

g01710958

FRAME AND BODY

297-5300 HOOD & GUARD GP

S/N: CBD4630-UP

PART OF 213-9284 CHASSIS AR

SMCS-7150, 7170, 7251, 7263 **i03580780**

NOTE	REF NO	GRAPHIC REF	PART NUMBER	QTY	PART NAME 1 2 3 4 5 6 (PRODUCT LEVEL)	SEE PAGE
D	1	1	**6V-1580**		SEAL (0.4-M)	
	2	1	**123-0428**	2	BAR	
	3	1	**231-9363**	1	ENCLOSURE AS (RH)	
		1	**244-1086**	1	ENCLOSURE (RH)	
		1	**275-0002**	1	INSULATION	
	4	1	**244-1085**	1	ENCLOSURE (LH)	
	5	1	**247-1080**	2	BUMPER AS	
	6	1	**247-6296**	1	GRILL	
	7	1	**244-2041**	1	COWLING	
Y	8	1	*297-5301*	1	HOOD GP-ENGINE	515
	9	1	**318-9553**	1	GUARD AS	
	10	1	**320-9655**	1	PLATE AS	
	11	1	**7X-0579**	8	WASHER-HARD (8.8X25.5X2-MM THK)	
	12	1	**8T-4121**	8	WASHER-HARD (11X21X2.5-MM THK)	
	13	1	**8T-4123**	2	WASHER (22X35X3.5-MM THK)	
M	14	1	**8T-4136**	2	BOLT (M10X1.5X25-MM)	
M	15	1	**8T-4137**	6	BOLT (M10X1.5X20-MM)	
M	16	1	**8T-4139**	2	BOLT (M12X1.75X30-MM)	
M	17	1	**8T-4141**	2	BOLT (M20X2.5X70-MM)	
M	18	1	**8T-4189**	10	BOLT (M8X1.25X20-MM)	
	19	1	**8T-4223**	2	WASHER-HARD (13.5X25.5X3-MM THK)	
	20	1	**8T-4224**	7	WASHER-HARD (8.8X16X2-MM THK)	
M	21	1	**8T-7547**	5	BOLT (M8X1.25X30-MM)	

D-ORDER BY THE METER
M-METRIC PART
Y-SEPARATE ILLUSTRATION

297-5300 **HOOD & GUARD GP** *(contd.)* **i03580780**

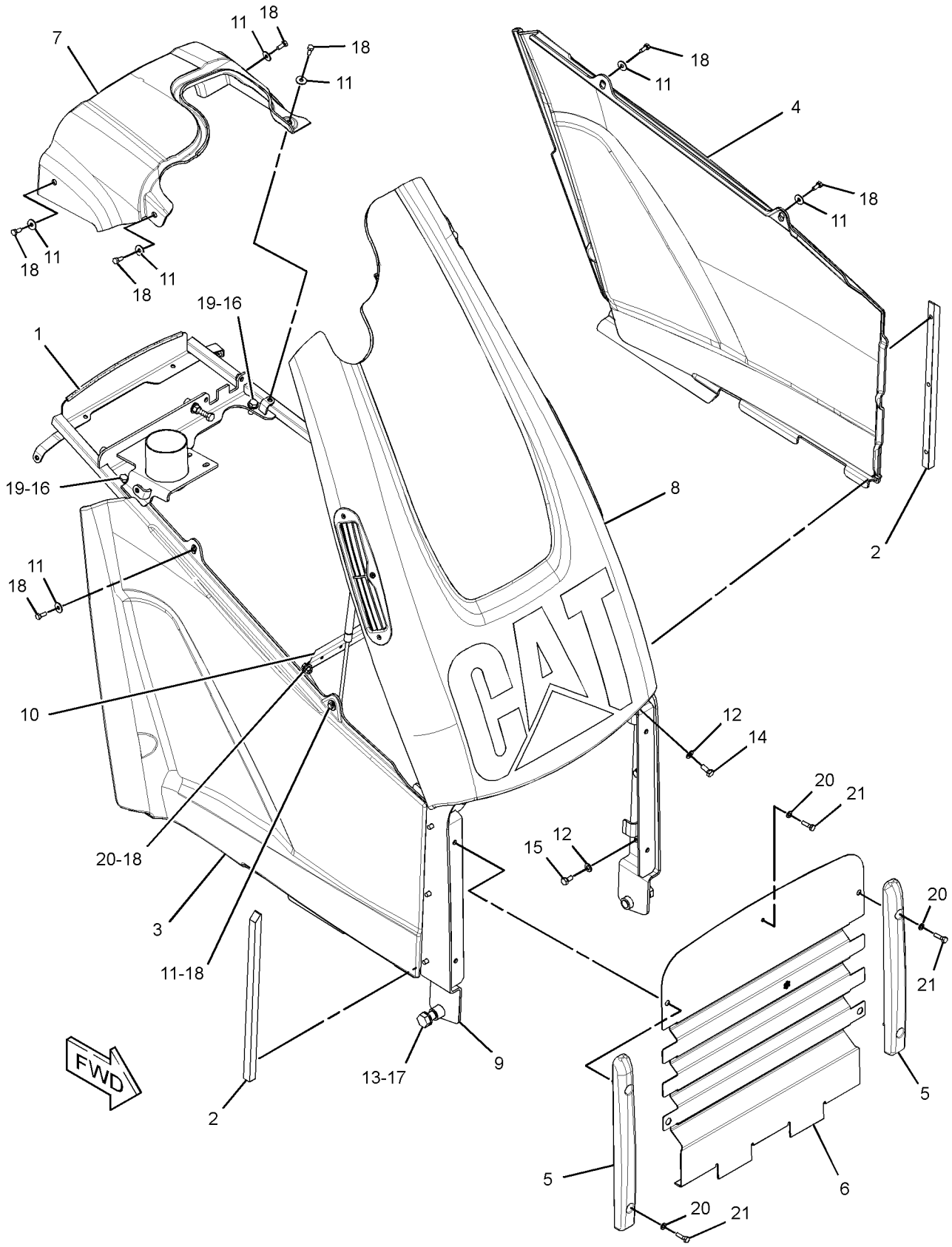

GRAPHIC #1 **<END>** g01877314

297-5300 HOOD & GUARD GP

S/N: CBD1-UP; MFG1-UP

PART OF 213-9284, 291-9190, 372-5176 CHASSIS AR

SMCS-7150, 7170, 7251, 7263 **i04130730**

NOTE	REF NO	GRAPHIC REF	PART NUMBER	QTY	PART NAME 1 2 3 4 5 6 (PRODUCT LEVEL)	SEE PAGE
C	1	1	**9X-7114**	4	SPACER (8.5X10.15X5.6-MM THK)	
	2	1	**123-0428**	2	BAR	
	3	1	**244-2041**	1	COWLING	
	4	1	**247-1080**	2	BUMPER AS	
Y	5	1	*297-5301*	1	HOOD GP-ENGINE	515
C	6	1	**317-7180**	1	ENCLOSURE (LH)	
C	7	1	**317-7313**	1	ENCLOSURE AS (RH)	
		1	**275-0002**	1	INSULATION	
		1	**317-7181**	1	ENCLOSURE (RH)	
C	8	1	**325-1969**	1	BRACE	
C	9	1	**325-3639**	1	GUARD AS	
C	10	1	**325-5483**	1	GRILL	
	11	1	**7X-0579**	8	WASHER-HARD (8.8X25.5X2-MM THK)	
	12	1	**8T-4121**	8	WASHER-HARD (11X21X2.5-MM THK)	
	13	1	**8T-4123**	2	WASHER (22X35X3.5-MM THK)	
M	14	1	**8T-4136**	2	BOLT (M10X1.5X25-MM)	
M	15	1	**8T-4137**	6	BOLT (M10X1.5X20-MM)	
M	16	1	**8T-4139**	2	BOLT (M12X1.75X30-MM)	
M	17	1	**8T-4141**	2	BOLT (M20X2.5X70-MM)	
M	18	1	**8T-4189**	10	BOLT (M8X1.25X20-MM)	
	19	1	**8T-4223**	2	WASHER-HARD (13.5X25.5X3-MM THK)	
C	20	1	**8T-4224**	6	WASHER-HARD (8.8X16X2-MM THK)	
CM	21	1	**8T-7547**	4	BOLT (M8X1.25X30-MM)	

C-CHANGE FROM PREVIOUS TYPE
M-METRIC PART
Y-SEPARATE ILLUSTRATION

297-5300 **HOOD & GUARD GP** *(contd.)* **i04130730**

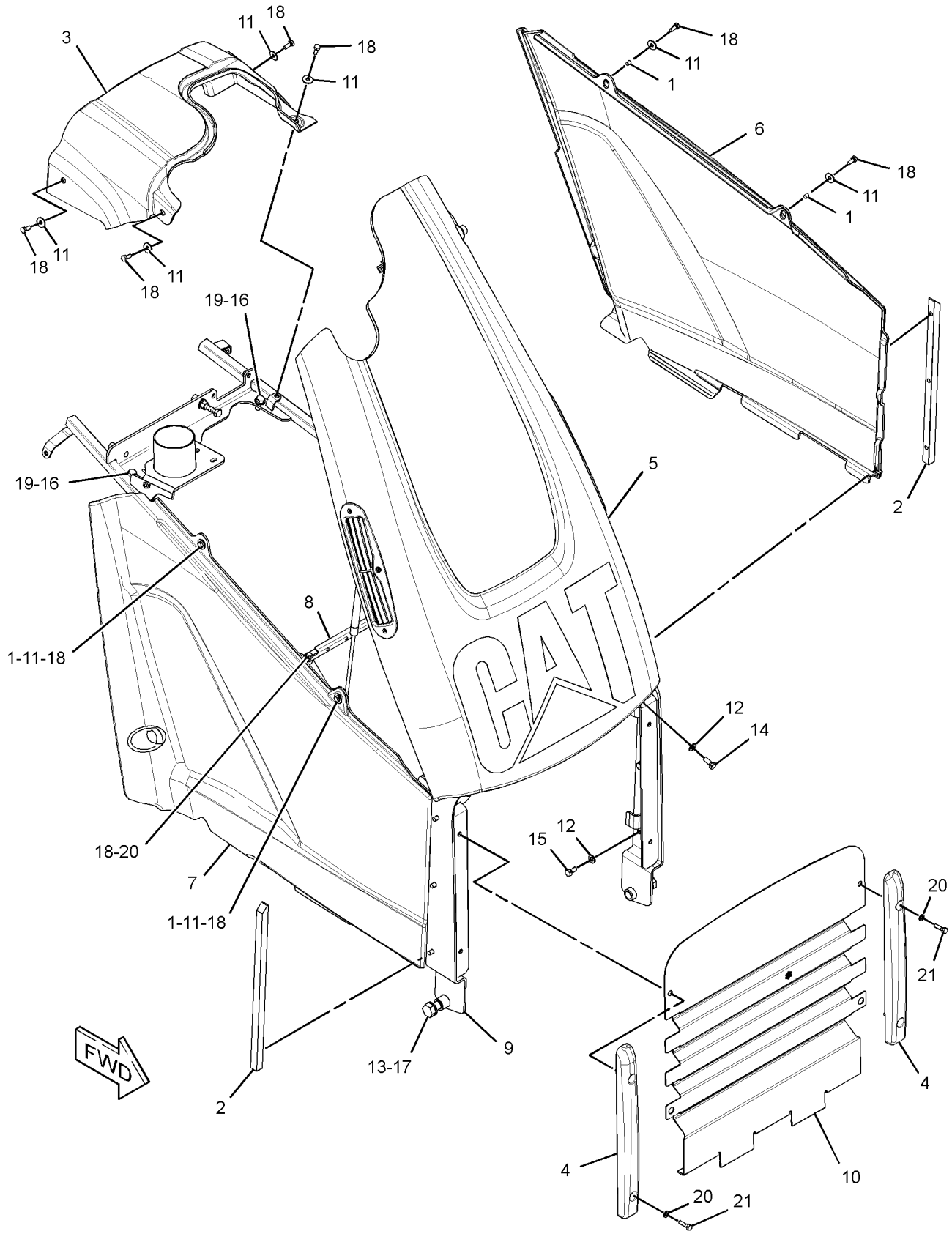

GRAPHIC #1 **<END>** g02711661

FRAME AND BODY

245-5728 HOOD GP-ENGINE

S/N: CBD1-4629

PART OF 211-3546 HOOD & GUARD GP

SMCS-7251 **i03030241**

NOTE	REF NO	GRAPHIC REF	PART NUMBER	QTY	PART NAME 1 2 3 4 5 6 (PRODUCT LEVEL)	SEE PAGE
	1	1	**245-1223**	1	FRAME AS	
J	2	1	**250-5881**	1	SPRING AS-GAS (RH)	
Y	3	1	*253-5384*	1	HOOD GP-ENGINE	513
J	4	1	**254-9301**	1	SPRING AS-GAS (LOCKABLE) (LH)	
	5	1	**3B-4505**	2	LOCKWASHER	
	6	1	**8T-4223**	2	WASHER-HARD (13.5X25.5X3-MM THK)	
M	7	1	**8T-4244**	2	NUT (M12X1.75-THD)	
M	8	1	**8T-4648**	1	BOLT (M12X1.75X70-MM)	
M	9	1	**8T-6869**	2	BOLT (M8X1.25X60-MM)	
	10	1	**288-1157**	1	FILM-INSTRUCTION (UNLOCK)	
	11	1	**8T-4224**	4	WASHER-HARD (8.8X16X2-MM THK)	
					AVAILABLE REPAIR KIT(S):	
J			**275-0001**	2	KIT-GAS SPRING	
					(EACH INCLUDES STUDS & CLIPS)	

J-KIT MARKED J AVAILABLE FOR PART(S) MARKED J
M-METRIC PART
Y-SEPARATE ILLUSTRATION

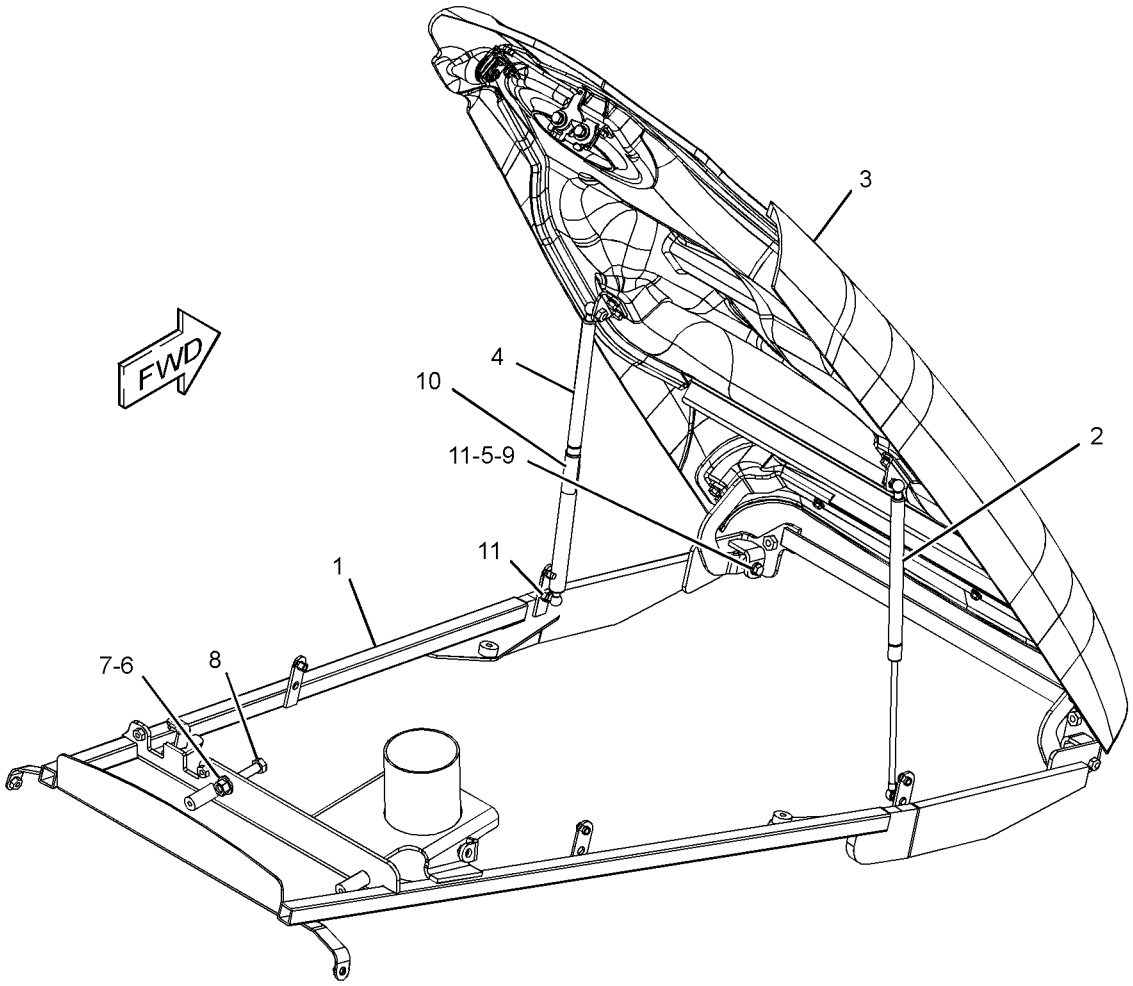

GRAPHIC #1 **<END>** g01281696

253-5384 HOOD GP-ENGINE

S/N: CBD1-4629
PART OF 245-5728 HOOD GP-ENGINE
TYPE 1

SMCS-7251 **i02908478**

NOTE	REF NO	GRAPHIC REF	PART NUMBER	QTY	PART NAME 1 2 3 4 5 6 (PRODUCT LEVEL)	SEE PAGE
	1	1	**5E-8557**	1	CLIP	
	2	1	**245-4914**	1	HINGE AS	
	3	1	**246-2718**	1	HOOD AS	
	4	1	**248-0395**	1	BRACKET AS	
	5	1	**250-1878**	1	FILM-IDENTIFICATION (CAT)	
	6	1	**250-3330**	1	FILM-STRIPE (YELLOW)	
	7	1	**250-6850**	2	BRACKET AS	
	8	1	**250-6858**	1	LATCH AS (HOOD)	
	9	1	**251-4374**	1	LOCK AS (HOOD)	
	10	1	**251-4375**	1	ROD	
	11	1	**6V-5834**	2	SCREW-HEAD (10-14X0.75-IN)	
M	12	1	**7X-2537**	2	BOLT (M8X1.25X35-MM)	
M	13	1	**8T-4189**	10	BOLT (M8X1.25X20-MM)	
	14	1	**8T-4224**	12	WASHER-HARD (8.8X16X2-MM THK)	
E	15	1	**9X-8699**		SEAL (70-CM)	
	16	1	**7X-0620**	2	WASHER-HARD (5.5X13X1.6-MM THK)	

E-ORDER BY THE CENTIMETER
M-METRIC PART

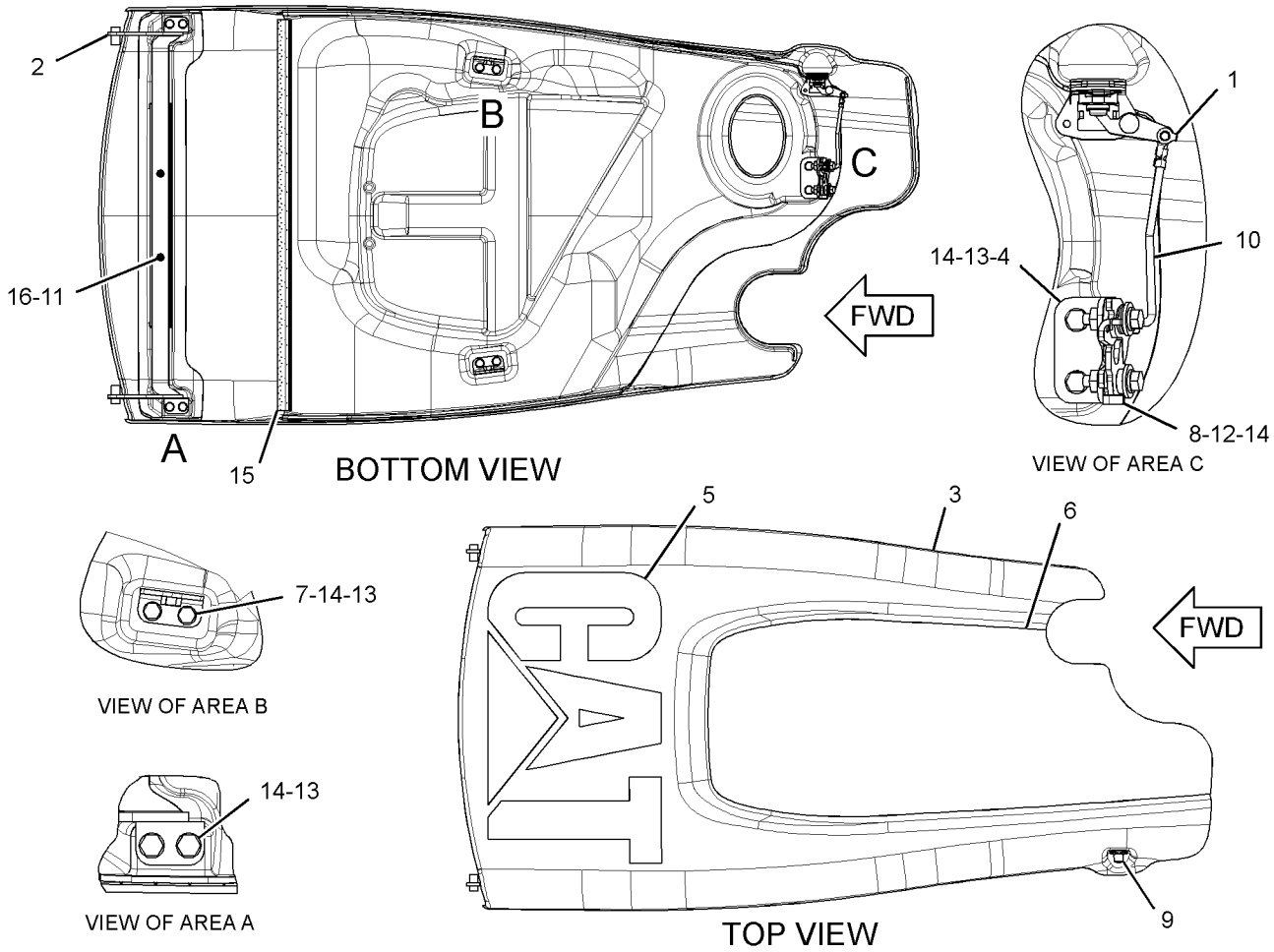

GRAPHIC #1 **<END>** g01459070

FRAME AND BODY

253-5384 HOOD GP-ENGINE

S/N: CBD1-4629
PART OF 245-5728 HOOD GP-ENGINE
TYPE 2

SMCS-7251 **i03030646**

NOTE	REF NO	GRAPHIC REF	PART NUMBER	QTY	PART NAME 1 2 3 4 5 6 (PRODUCT LEVEL)	SEE PAGE
	1	1	**5E-8557**	1	CLIP	
C	2	1	**318-4217**	1	HINGE AS (RH)	
	3	1	**246-2718**	1	HOOD AS	
	4	1	**248-0395**	1	BRACKET AS	
	5	1	**250-1878**	1	FILM-IDENTIFICATION (CAT)	
	7	1	**250-6850**	2	BRACKET AS	
	8	1	**250-6858**	1	LATCH AS	
	9	1	**251-4374**	1	LOCK AS	
	10	1	**251-4375**	1	ROD	
M	12	1	**7X-2537**	2	BOLT (M8X1.25X35-MM)	
M	13	1	**8T-4189**	10	BOLT (M8X1.25X20-MM)	
	14	1	**8T-4224**	12	WASHER-HARD (8.8X16X2-MM THK)	
E	15	1	**9X-8699**		SEAL (70-CM)	
C	17	1	**318-4222**	1	HINGE AS (LH)	

C-CHANGE FROM PREVIOUS TYPE
E-ORDER BY THE CENTIMETER
M-METRIC PART

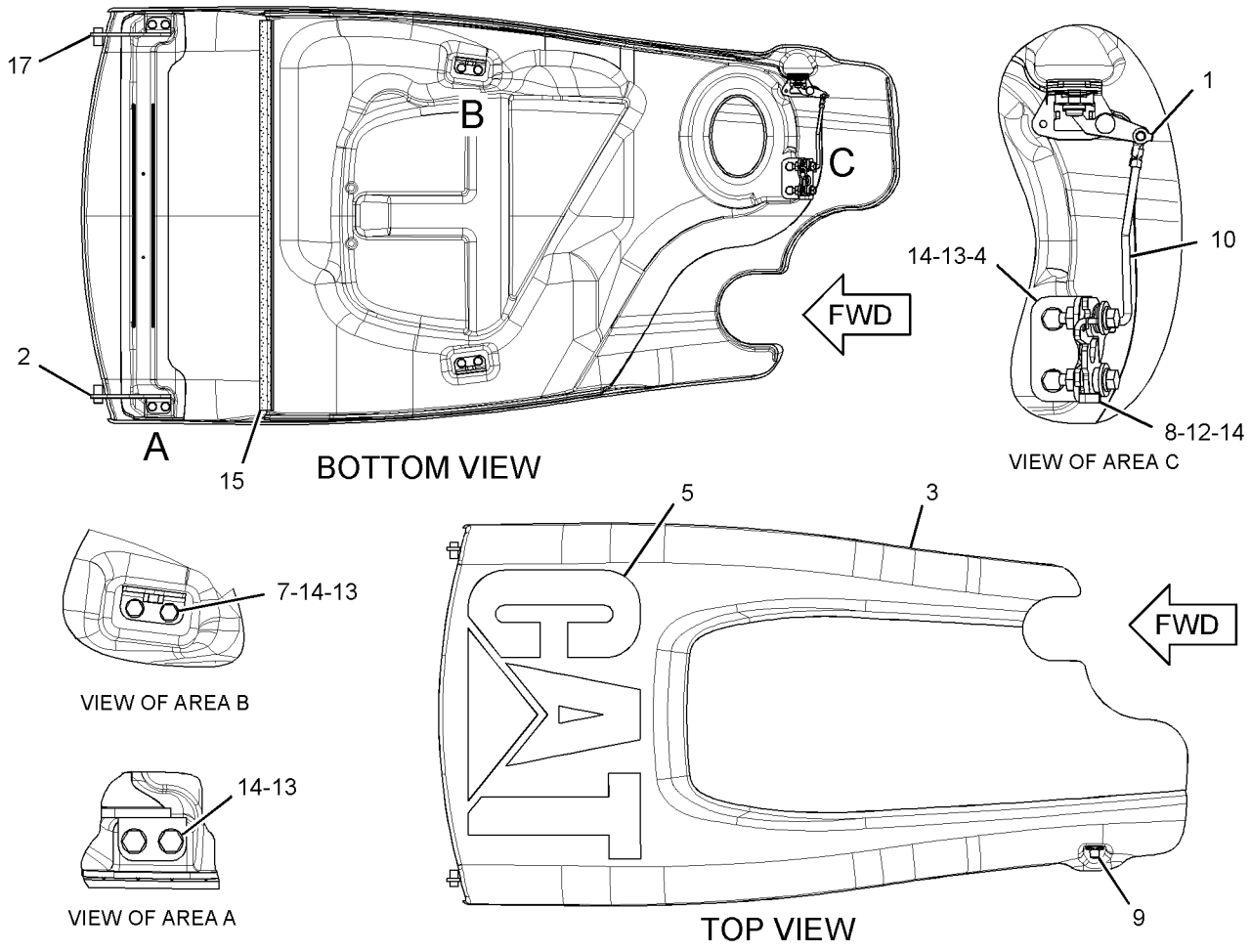

GRAPHIC #1 **<END>** g01883676

FRAME AND BODY

297-5301 HOOD GP-ENGINE

S/N: CBD4630-UP; MFG1-UP

PART OF 297-5300 HOOD & GUARD GP

SMCS-7251 **i03590626**

NOTE	REF NO	GRAPHIC REF	PART NUMBER	QTY	PART NAME 1 2 3 4 5 6 (PRODUCT LEVEL)	SEE PAGE
J	1	1	**250-5881**	1	SPRING AS-GAS (RH)	
J	2	1	**254-9301**	1	SPRING AS-GAS (LOCKABLE) (LH)	
	3	1	**288-1157**	1	FILM-INSTRUCTION (UNLOCK)	
Y	4	1	*297-5310*	1	HOOD GP-ENGINE	516
	5	1	**318-9453**	1	FRAME AS	
	6	1	**3B-4505**	2	LOCKWASHER	
	7	1	**8T-4223**	2	WASHER-HARD (13.5X25.5X3-MM THK)	
	8	1	**8T-4224**	4	WASHER-HARD (8.8X16X2-MM THK)	
M	9	1	**8T-4244**	2	NUT (M12X1.75-THD)	
M	10	1	**8T-4648**	1	BOLT (M12X1.75X70-MM)	
M	11	1	**8T-6869**	2	BOLT (M8X1.25X60-MM)	
					AVAILABLE REPAIR KIT(S):	
J			**275-0001**	2	KIT-GAS SPRING	
					(EACH INCLUDES STUDS & CLIPS)	

J-KIT MARKED J SERVICES PARTS MARKED J
M-METRIC PART
Y-SEPARATE ILLUSTRATION

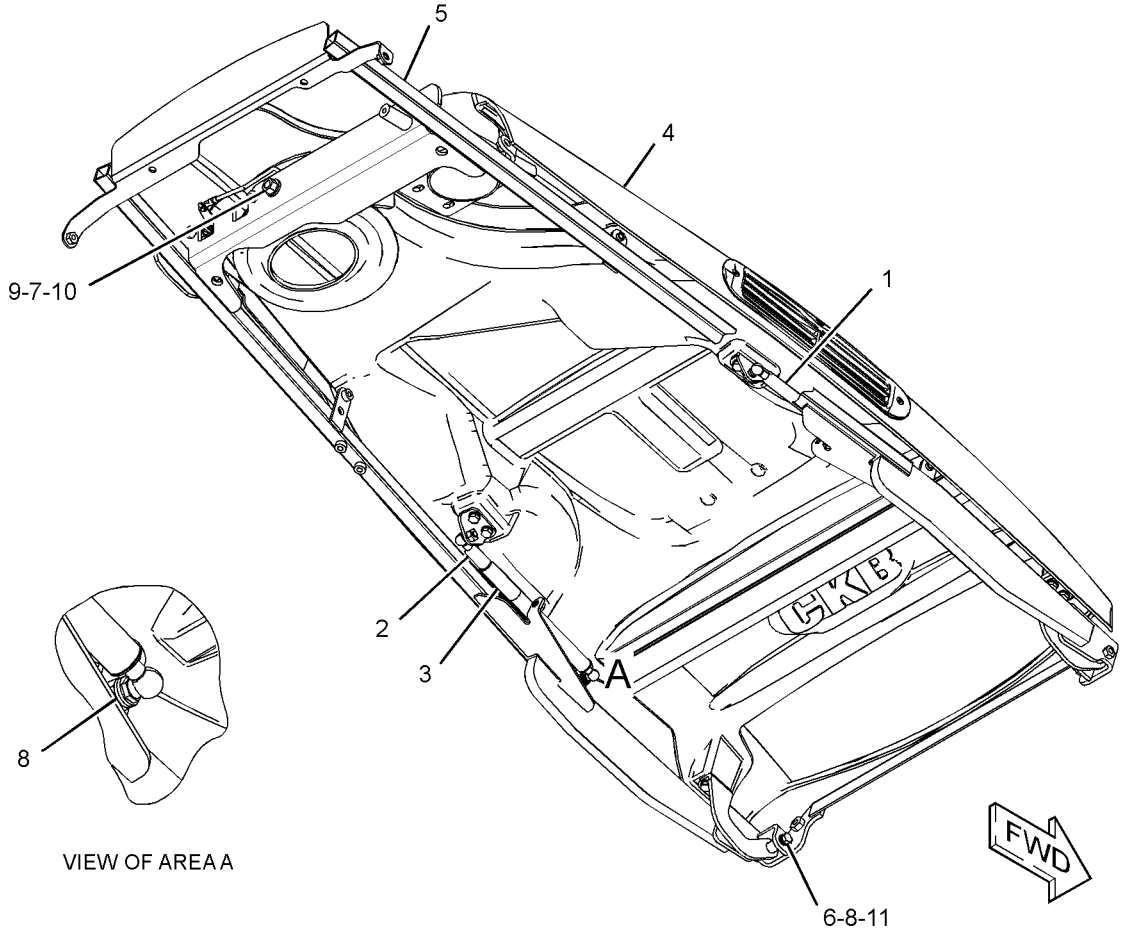

GRAPHIC #1 **<END>** g01512102

FRAME AND BODY

297-5310 HOOD GP-ENGINE

S/N: CBD4630-UP

PART OF 297-5301 HOOD GP-ENGINE

SMCS-7251 **i03590642**

NOTE	REF NO	GRAPHIC REF	PART NUMBER	QTY	PART NAME 1 2 3 4 5 6 (PRODUCT LEVEL)	SEE PAGE
	1	2	**5E-8557**	1	CLIP	
	2	2	**248-0395**	1	BRACKET AS	
	3	1	**250-1878**	1	FILM-IDENTIFICATION (CAT)	
	5	2	**250-6850**	2	BRACKET AS	
	6	2	**250-6858**	1	LATCH AS (HOOD)	
L	7	2	**251-4374**	1	LOCK AS (HOOD)	
	8	2	**251-4375**	1	ROD	
	9	1	**297-5311**	1	HOOD AS	
J	10	2	**312-1671**		SEAL (7-DM)	
	11	2	**313-1457**	1	GRILL AS	
	12	1	**313-1458**	1	GRILL AS	
	13	1	**318-4217**	1	HINGE AS (RH)	
	14	1	**318-4222**	1	HINGE AS (LH)	
M	15	2	**7X-2537**	2	BOLT (M8X1.25X35-MM)	
M	16	1	**8C-6428**	6	SCREW-FLAT HEAD (M5X0.8X30-MM)	
M	17	2	**8T-4189**	10	BOLT (M8X1.25X20-MM)	
	18	2	**8T-4224**	12	WASHER-HARD (8.8X16X2-MM THK)	

J-ORDER BY THE DECIMETER
L-REQUIRES CORPORATE KEY
M-METRIC PART

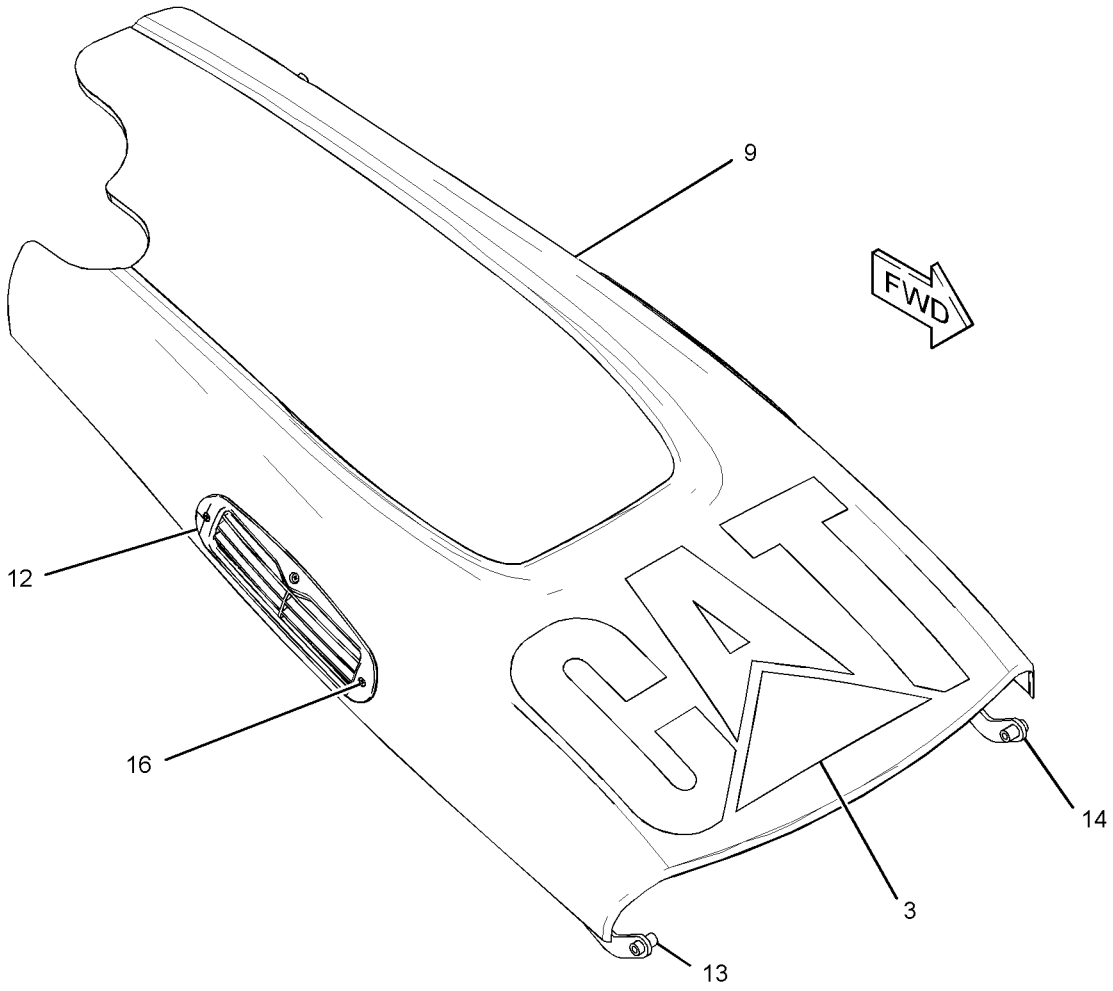

GRAPHIC #1 g01675114

297-5310 **HOOD GP-ENGINE** *(contd.)* **i03590642**

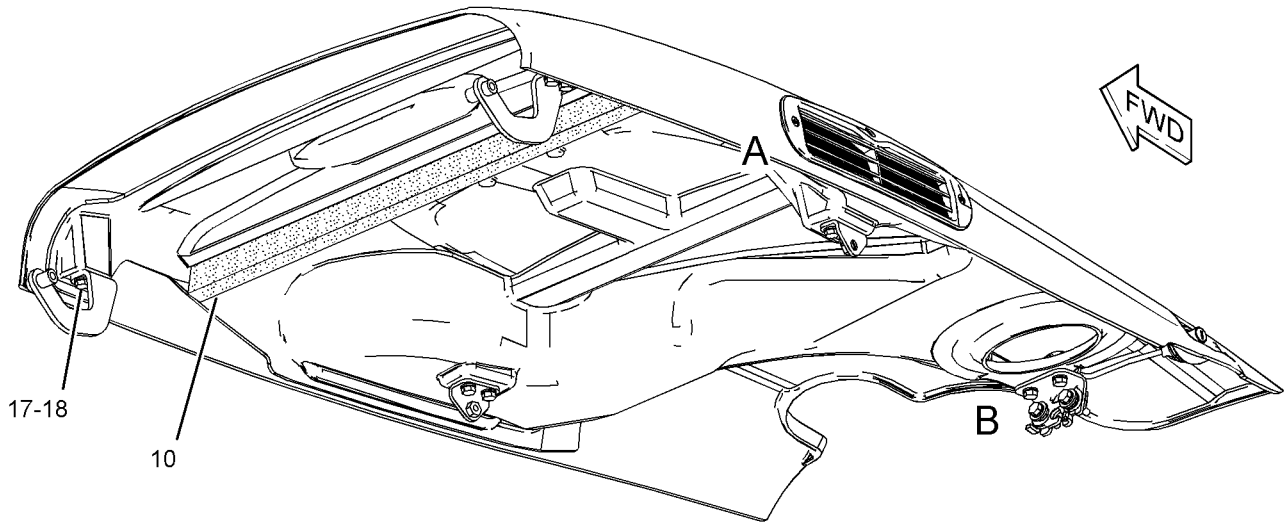

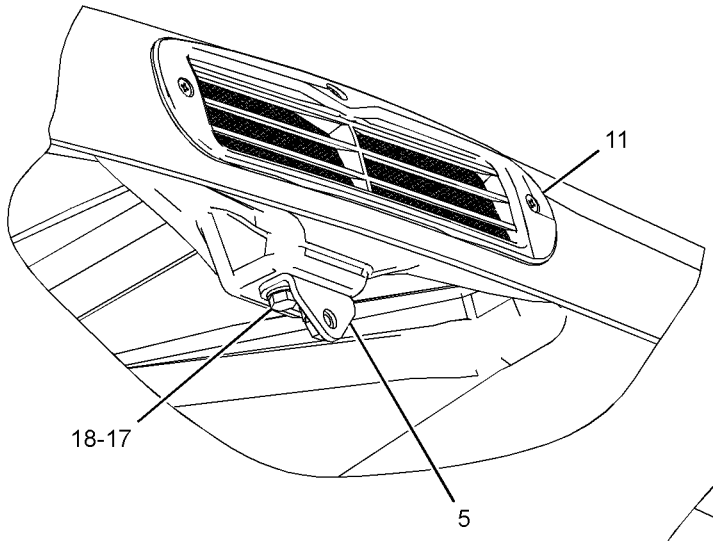

VIEW OF AREA A

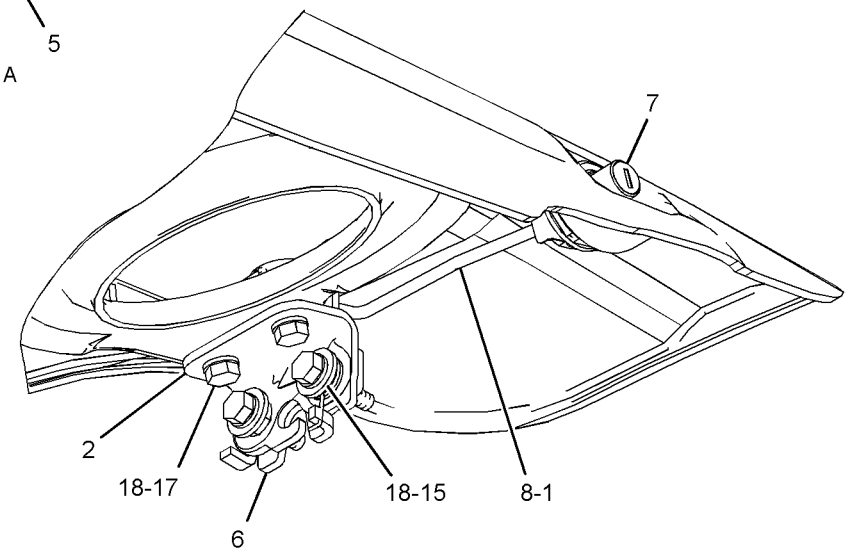

VIEW OF AREA B

GRAPHIC #2 **<END>** g01521619

FRAME AND BODY

297-5310 HOOD GP-ENGINE

S/N: CBD4630-UP; MFG1-UP

PART OF 297-5301 HOOD GP-ENGINE

SMCS-7251 **i04023219**

NOTE	REF NO	GRAPHIC REF	PART NUMBER	QTY	PART NAME 1 2 3 4 5 6 (PRODUCT LEVEL)	SEE PAGE
	1	2	**5E-8557**	1	CLIP	
C	2	2	**341-9304**	1	BRACKET AS	
	3	1	**250-1878**	1	FILM-IDENTIFICATION (CAT)	
	5	2	**250-6850**	2	BRACKET AS	
	6	2	**250-6858**	1	LATCH AS (HOOD)	
CL	7	2	**313-7109**	1	LOCK AS (HOOD)	
	8	2	**251-4375**	1	ROD	
	9	1	**297-5311**	1	HOOD AS	
J	10	2	**312-1671**		SEAL (7-DM)	
	11	2	**313-1457**	1	GRILL AS	
	12	1	**313-1458**	1	GRILL AS	
C	13	1	**292-3995**	1	HINGE AS (RH)	
C	14	1	**292-3996**	1	HINGE AS (LH)	
M	15	2	**7X-2537**	2	BOLT (M8X1.25X35-MM)	
M	16	1	**8C-6428**	6	SCREW-FLAT HEAD (M5X0.8X30-MM)	
M	17	2	**8T-4189**	10	BOLT (M8X1.25X20-MM)	
	18	2	**8T-4224**	12	WASHER-HARD (8.8X16X2-MM THK)	

C-CHANGE FROM PREVIOUS TYPE
J-ORDER BY THE DECIMETER
L-REQUIRES CORPORATE KEY
M-METRIC PART

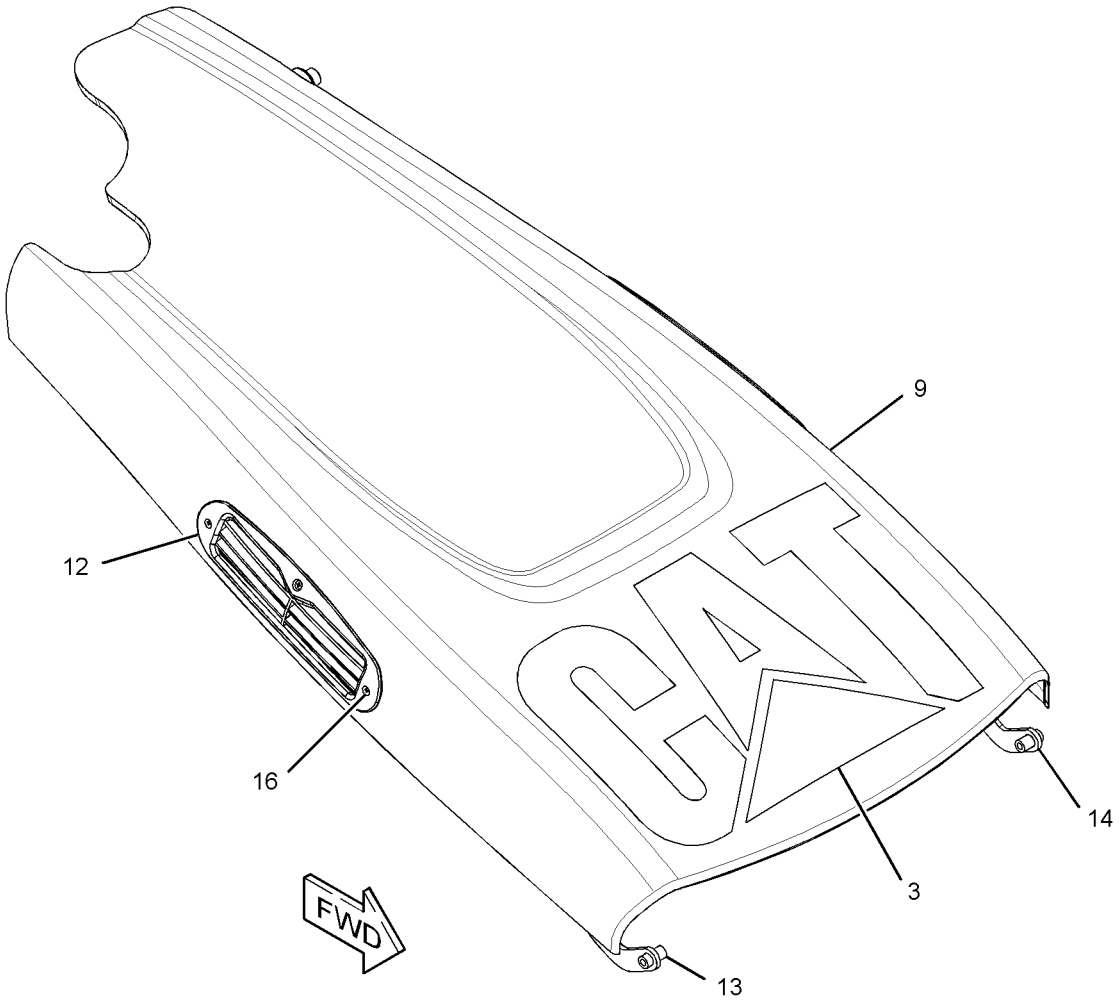

GRAPHIC #1 g02564520

297-5310 **HOOD GP-ENGINE** *(contd.)* **i04023219**

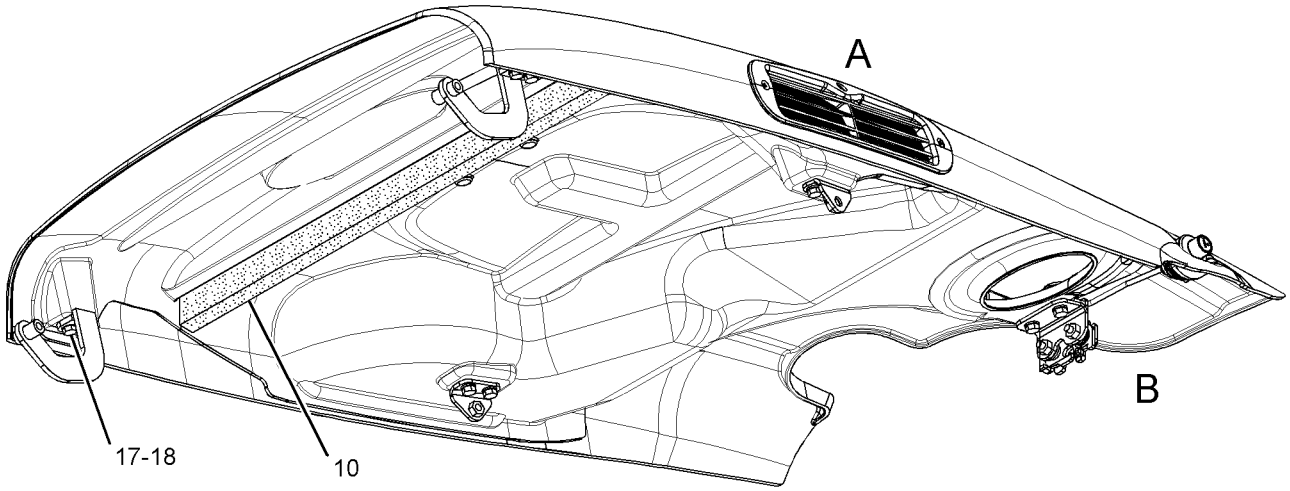

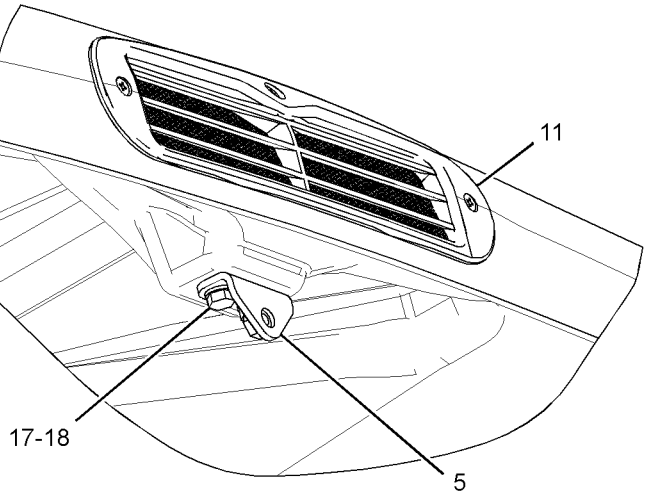

VIEW OF AREA A

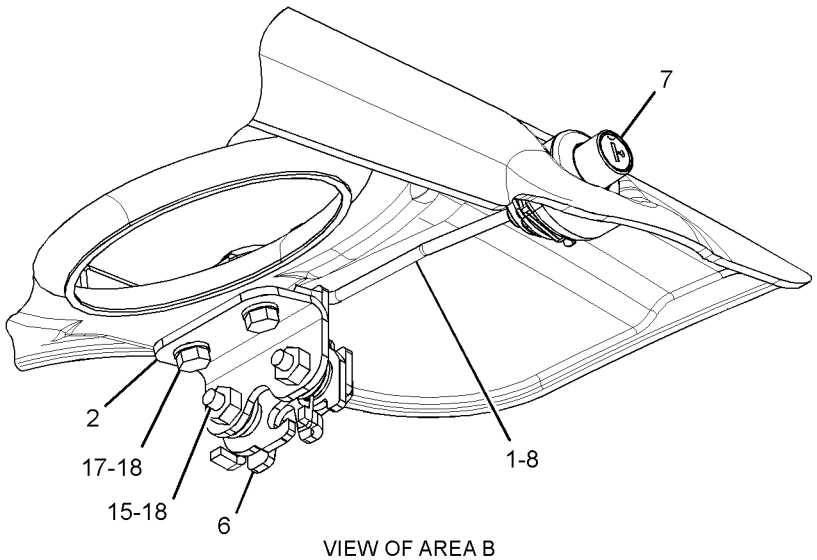

VIEW OF AREA B

GRAPHIC #2 **<END>** g02564524

162-3960 ACCUMULATOR GP-RIDE CONTROL–CHARGED

S/N: CBD1-UP
PART OF 246-9802 LINES GP-RIDE CONTROL
FIELD REPLACEMENT ORDER 162-3961–PAGE 521
AN ATTACHMENT

SMCS-5077 **i02837879**

NOTE	REF NO	GRAPHIC REF	PART NUMBER	QTY	PART NAME 1 2 3 4 5 6 (PRODUCT LEVEL)	SEE PAGE
	1	1	**158-2306**	1	VALVE-GAS	
	2	1	**241-0037**	1	FILM-WARNING (HIGH PRESSURE, READ OMM)	
	3	1	**170-0503**	1	FILM-WARNING (ACCUM, HIGH PRESS, READ OMM)	
					AVAILABLE REPAIR KIT(S):	
			160-0496	1	KIT-SEAL (ACCUMULATOR)	
					(INCLUDES SEALS)	

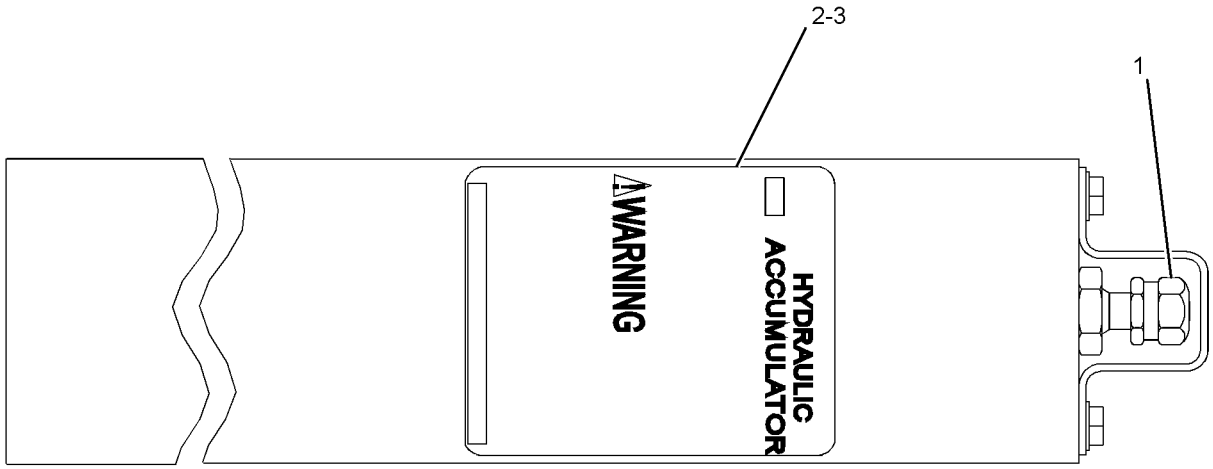

GRAPHIC #1 **<END>** g01254896

162-3961 ACCUMULATOR GP-RIDE CONTROL—UNCHARGED

S/N: CBD1-UP

FIELD REPLACEMENT FOR 162-3960 ACCUMULATOR GP-RIDE CONTROL

SMCS-5077 **i02185832**

NOTE	PART NUMBER	QTY	PART NAME 1 2 3 4 5 6 (PRODUCT LEVEL)	SEE PAGE
			(NO SERVICED PARTS)	

<END>

345-3672 ACCUMULATOR GP-RIDE CONTROL–CHARGED

S/N: CBD1-UP; MFG1-UP
PART OF 246-9802 LINES GP-RIDE CONTROL
FIELD REPLACEMENT ORDER 345-3674–PAGE 523
AN ATTACHMENT

SMCS-5077 **i04454576**

NOTE	REF NO	GRAPHIC REF	PART NUMBER	QTY	PART NAME 1 2 3 4 5 6 (PRODUCT LEVEL)	SEE PAGE
	1	1	**224-5132**	1	CAP (GAS VALVE)	
	2	1	**224-5152**	1	VALVE-GAS (HYDRAULIC ACCUMULATOR)	
	3	1	**3J-7354**	1	SEAL-O-RING	
	4	1	**1J-9671**	1	SEAL-O-RING	
	5	1	**241-0037**	1	FILM-WARNING (HIGH PRESSURE, READ OMM)	

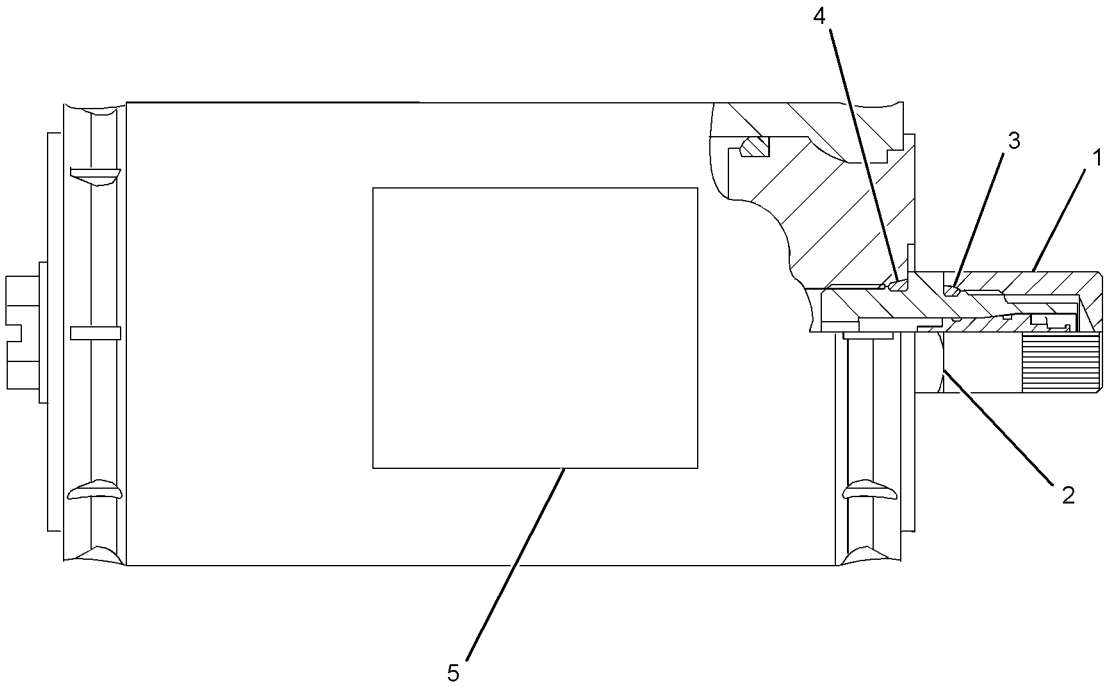

GRAPHIC #1 **<END>** g01965975

345-3674 ACCUMULATOR GP-RIDE CONTROL–UNCHARGED

S/N: CBD1-UP

FIELD REPLACEMENT FOR 345-3672–PAGE 522

SMCS-5077 **i04454675**

NOTE	REF NO	GRAPHIC REF	PART NUMBER	QTY	PART NAME 1 2 3 4 5 6 (PRODUCT LEVEL)	SEE PAGE
	1	1	**224-5132**	1	CAP (GAS VALVE)	
	2	1	**224-5152**	1	VALVE-GAS (HYDRAULIC ACCUMULATOR)	
	3	1	**3J-7354**	1	SEAL-O-RING	
	4	1	**1J-9671**	1	SEAL-O-RING	
	5	1	**241-0037**	1	FILM-WARNING (HIGH PRESSURE, READ OMM)	

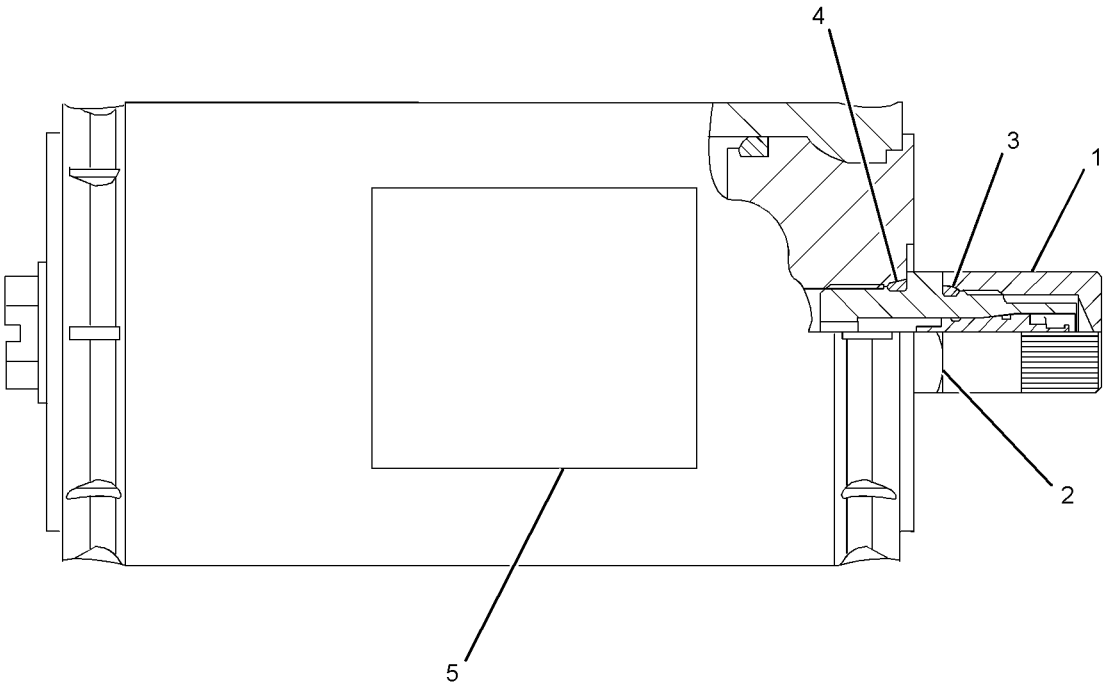

GRAPHIC #1 **<END>** g01966053

HYDRAULIC SYSTEM

220-9179 CONTROL AR-RIDE

S/N: CBD1-UP; MFG1-UP

AN ATTACHMENT

SMCS-5004 **i02526797**

NOTE	PART NUMBER	QTY	PART NAME 1 2 3 4 5 6 (PRODUCT LEVEL)	SEE PAGE
Y	*246-9802*	1	LINES GP-RIDE CONTROL	654
Y	*211-4264*	1	WIRING GP-RIDE CONTROL	345

Y-SEPARATE ILLUSTRATION

<END>

282-9956 CONVERSION AR-CUSHION SWING–KIT

S/N: MFG1-UP
AN ATTACHMENT

SMCS-5057, 5105, 5454 **i03860130**

NOTE	REF NO	GRAPHIC REF	PART NUMBER	QTY	PART NAME 1 2 3 4 5 6 (PRODUCT LEVEL)	SEE PAGE
	1	1	*187-2120*	2	ELBOW AS	
					(EACH INCLUDES)	
		1	**4J-5477**	1	SEAL-O-RING	
		1	**8C-8408**	1	ELBOW	
	2	1	**206-3685**	1	VALVE GP-CUSHION CROSSOVER RLF	
		1	**7I-8084**	2	PLUG	
	3	1	**226-5634**	2	CONNECTOR AS	
					(EACH INCLUDES)	
		1	**3J-1907**	1	SEAL-O-RING	
		1	**4J-5477**	1	SEAL-O-RING	
		1	**167-0566**	1	CARTRIDGE	
		1	**226-5633**	1	CONNECTOR	
I	4	1	**269-0471**	1	HOSE AS	
I	5	1	**269-0472**	1	HOSE AS	
	6	1	*148-8428*	2	TEE AS	
					(EACH INCLUDES)	
		1	**3K-0360**	1	SEAL-O-RING	
		1	**6V-8398**	2	SEAL-O-RING	
		1	**6V-8782**	1	TEE	
	7	1	**8T-4224**	2	WASHER-HARD (8.8X16X2-MM THK)	
M	8	1	**8T-6870**	2	BOLT (M8X1.25X70-MM)	

I-REFER TO HYDRAULIC INFORMATION SYSTEM
M-METRIC PART

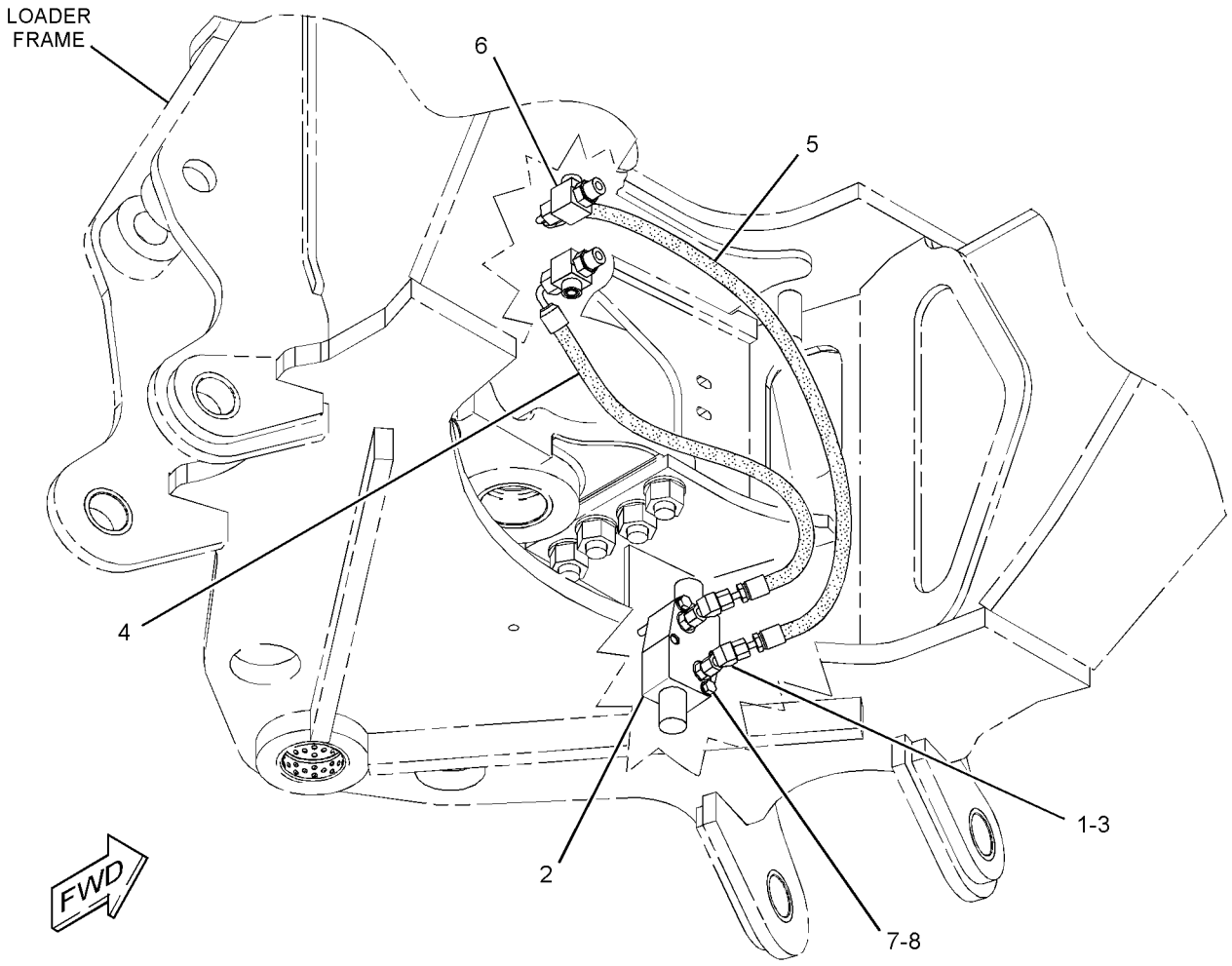

GRAPHIC #1 **<END>** g01807273

304-7847 COOLER GP-HYD & XMSN OIL

S/N: MFG1-UP

PART OF 304-4023 RADIATOR & HYD OIL COOLER GP

SMCS-1374, 1375 **i03858911**

NOTE	REF NO	GRAPHIC REF	PART NUMBER	QTY	PART NAME 1 2 3 4 5 6 (PRODUCT LEVEL)	SEE PAGE
M	1	1	**8T-7547**	2	BOLT (M8X1.25X30-MM)	
	2	1	**9M-5733**	32	RIVET-POP	
	3	1	**214-4746**	1	CORE AS-OIL COOLER (HYDRAULIC)	
	4	1	**304-7849**	1	CORE AS-OIL COOLER (TRANSMISSION)	
M	5	1	**5C-7261**	2	NUT (M8X1.25-THD)	
	6	1	**9N-0869**	6	WASHER-HARD (8.8X25.5X2-MM THK)	
	7	1	**9W-4216**	2	SPACER (9X18X7-MM THK)	

M-METRIC PART

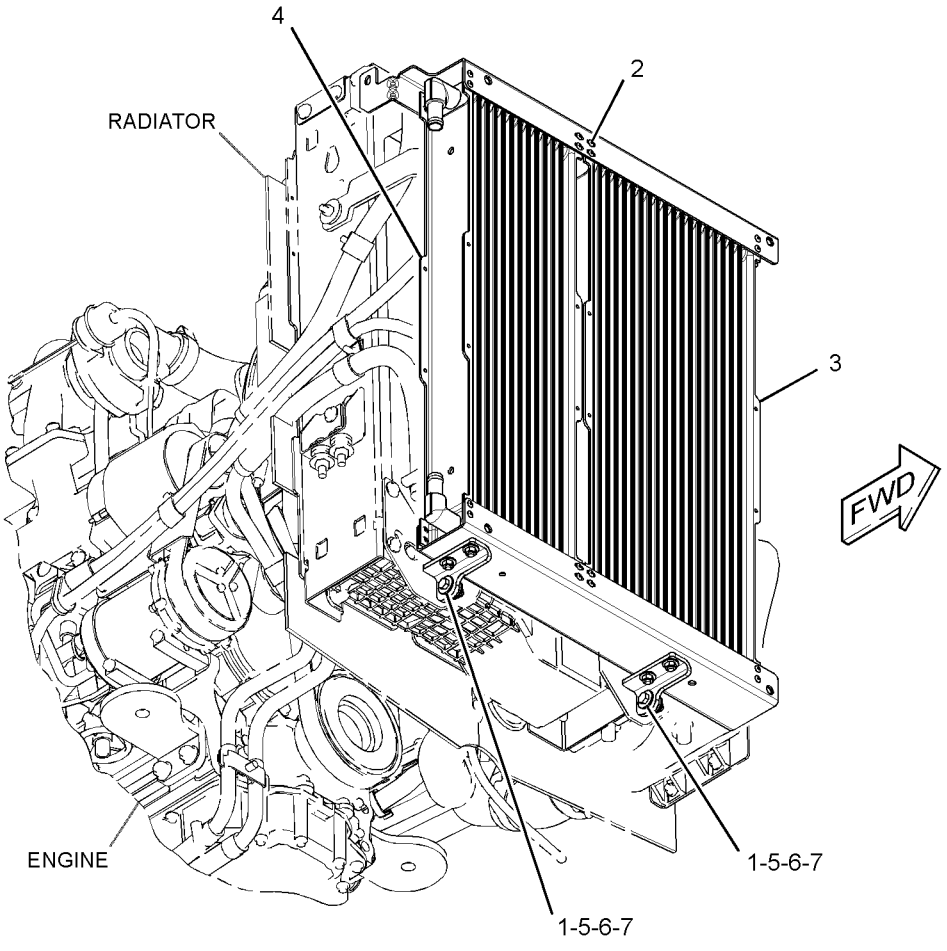

GRAPHIC #1 **<END>** g01597733

HYDRAULIC SYSTEM

224-6237 CYLINDER & LINES GP-THUMB

S/N: CBD1-UP

PART OF 271-3025, 271-3026, 282-0887, 282-0888, 282-0889 THUMB AR

AN ATTACHMENT

SMCS-5057, 5362 **i02646494**

NOTE	REF NO	GRAPHIC REF	PART NUMBER	QTY	PART NAME 1 2 3 4 5 6 (PRODUCT LEVEL)	SEE PAGE
	1	1	**106-0401**	1	FITTING (QUICK DISCONNECT, FEMALE)	
	2	1	**106-0406**	1	FITTING (QUICK DISCONNECT, MALE)	
I	3	1	**221-4314**	2	HOSE AS	
	4	1	**270-3409**	2	SPACER (45.24X63.5X10-MM THK)	
Y	5	1	**275-4243**	1	CYLINDER GP-THUMB	555
	6	1	*153-6252*	2	CONNECTOR AS	
		1	**6V-8398**	1	SEAL-O-RING	
		1	**7M-8485**	1	SEAL-O-RING	
		1	**9X-8408**	1	CONNECTOR	
	7	1	**6V-8398**	2	SEAL-O-RING	

I-REFER TO HYDRAULIC INFORMATION SYSTEM
Y-SEPARATE ILLUSTRATION

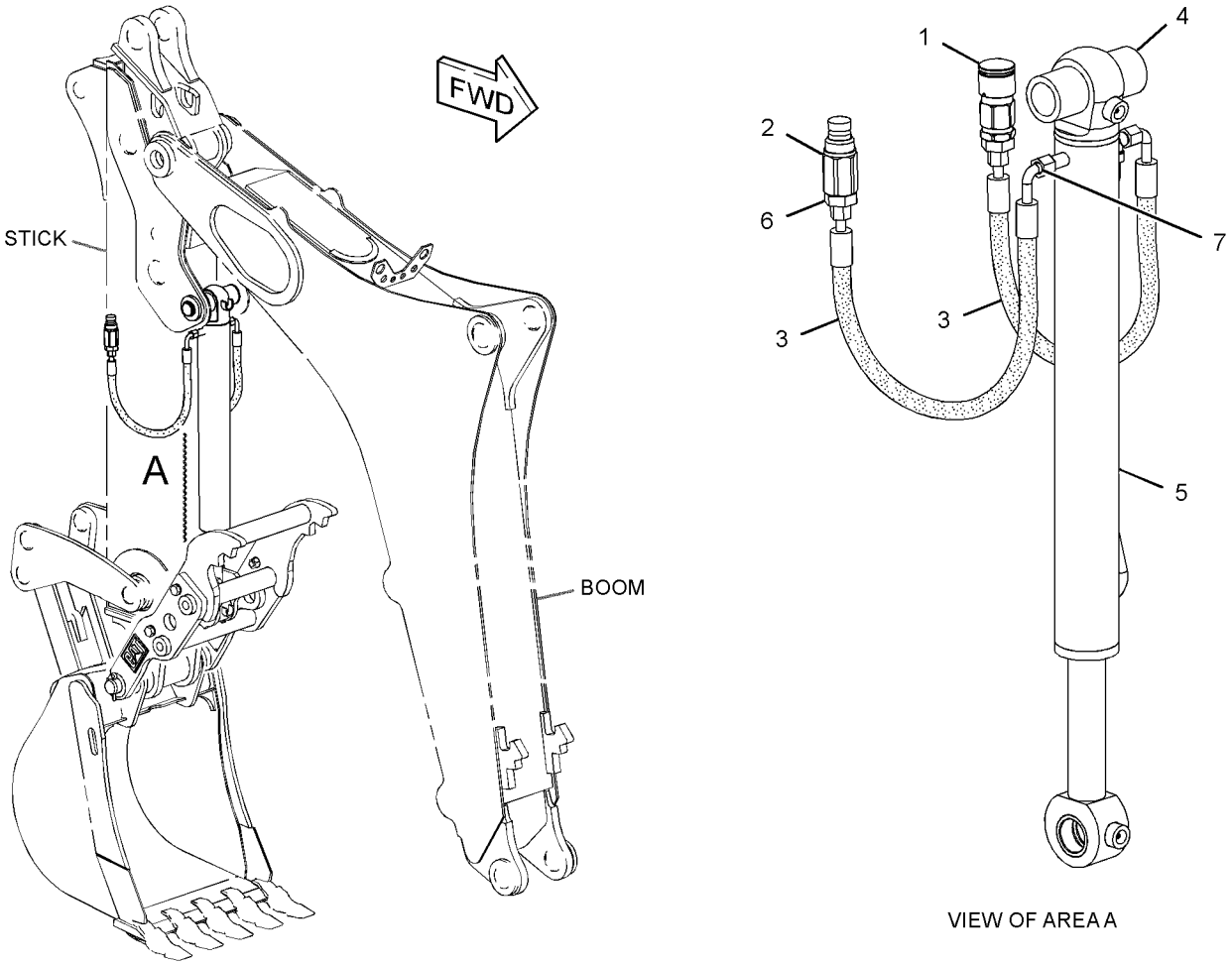

GRAPHIC #1 **<END>** g01290622

HYDRAULIC SYSTEM

224-6237 CYLINDER & LINES GP-THUMB

S/N: CBD1-UP; MFG1-UP

PART OF 271-3025, 271-3026, 281-6716, 282-0887, 282-0888, 282-0889 THUMB AR AN ATTACHMENT

SMCS-5057, 5362 **i03694239**

NOTE	REF NO	GRAPHIC REF	PART NUMBER	QTY	PART NAME 1 2 3 4 5 6 (PRODUCT LEVEL)	SEE PAGE
I	1	1	**221-4314**	2	HOSE AS	
	2	1	**270-3409**	2	SPACER (45.24X63.5X10-MM THK)	
Y	3	1	**275-4243**	1	CYLINDER GP-THUMB	555
C	6	1	**280-2652**	2	VALVE-BALL	
C	7	1	**294-0973**	1	TOOL	
C	8	1	*148-8340*	2	CONNECTOR AS	
					(EACH INCLUDES)	
		1	**3K-0360**	1	SEAL-O-RING	
		1	**6V-8398**	1	SEAL-O-RING	
		1	**6V-8639**	1	CONNECTOR	
C	9	1	*148-8392*	2	ELBOW AS	
					(EACH INCLUDES)	
		1	**6V-9746**	1	SEAL-O-RING	
		1	**6V-9853**	1	ELBOW	
C	11	1	**3K-0360**	2	SEAL-O-RING	
	12	1	**6V-8398**	2	SEAL-O-RING	
C	13	1	**6V-1889**	2	CLIP	
C	14	1	**7I-1036**	2	COUPLING AS	
C	15	1	**8T-4121**	4	WASHER-HARD (11X21X2.5-MM THK)	
CM	16	1	**8T-4133**	2	NUT (M10X1.5-THD)	
M	17	1	**8T-4195**	2	BOLT (M10X1.5X30-MM)	

C-CHANGE FROM PREVIOUS TYPE
I-REFER TO HYDRAULIC INFORMATION SYSTEM
M-METRIC PART
Y-SEPARATE ILLUSTRATION

224-6237 **CYLINDER & LINES GP-THUMB** *(contd.)* **i03694239**

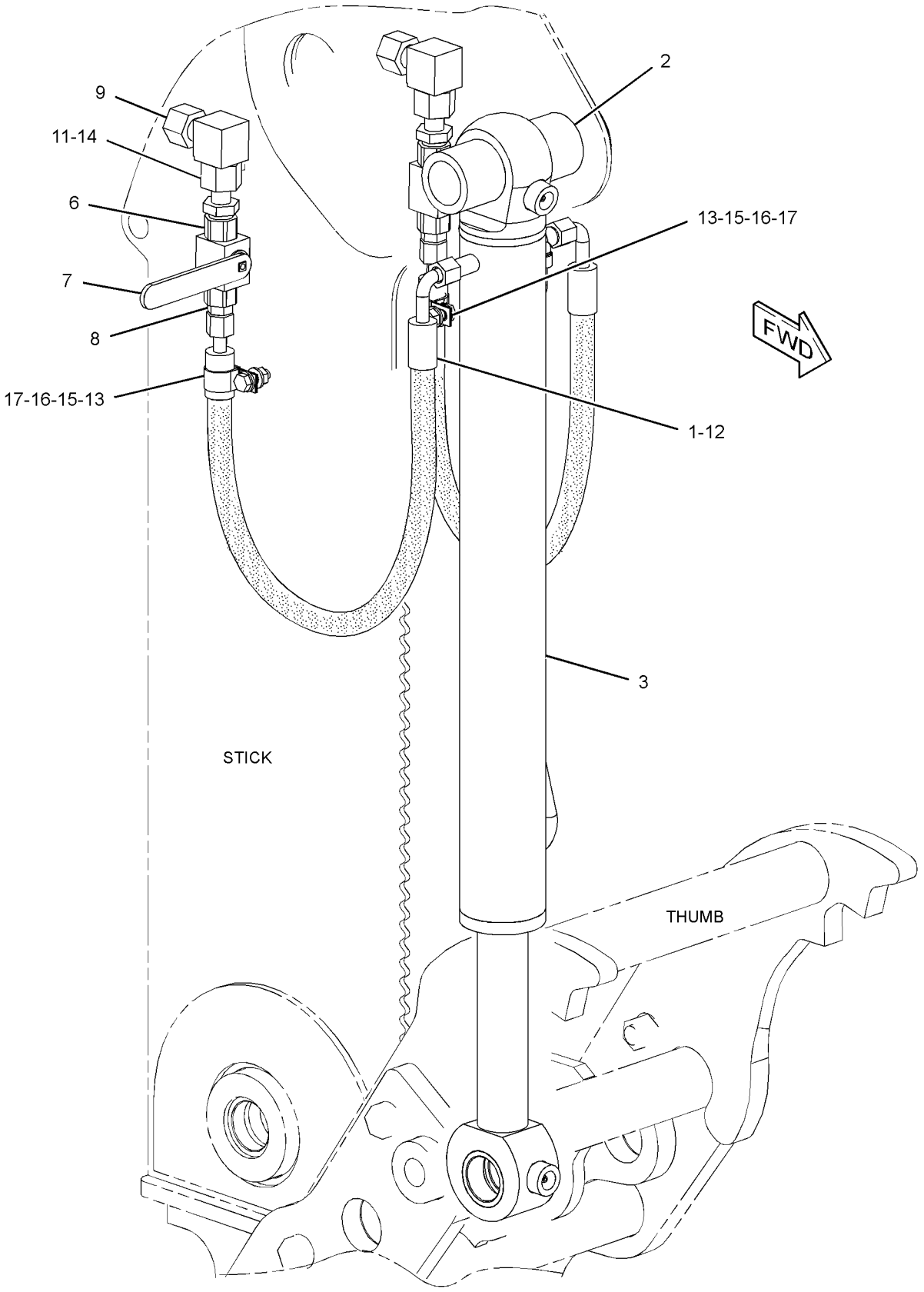

GRAPHIC #1 **<END>** g01464407

HYDRAULIC SYSTEM

210-7086 CYLINDER GP-BACKHOE BUCKET

S/N: CBD1-UP
85-MM (3.3-IN) BORE X 852-MM (33.5-IN) STROKE
PART OF 209-9929 BACKHOE AR-EXTENDABLE STICK, 209-9924 BACKHOE AR-STANDARD STICK
AN ATTACHMENT

SMCS-5457 **i04389914**

NOTE	REF NO	GRAPHIC REF	PART NUMBER	QTY	PART NAME 1 2 3 4 5 6 (PRODUCT LEVEL)	SEE PAGE
	1	1	**213-2483**	1	HEAD	
	2	1	**336-4179**	1	PISTON	
	3	1	**213-2486**	1	ROD AS	
	3A	1	**9R-0162**	2	BUSHING	
	4	1	**336-4182**	1	CYLINDER AS-HYDRAULIC	
	4A	1	**6V-8398**	1	SEAL-O-RING	
	4B	1	**9R-0139**	2	BUSHING	
J	5	1	**223-3502**	1	RING-WEAR	
J	6	1	**167-2202**	1	SEAL AS-BUFFER	
J	7	1	**167-2310**	1	SEAL-U-CUP	
M	8	1	**173-9683**	1	BOLT (M30X3.5X90-MM)	
J	9	1	**1H-7339**	1	SEAL-O-RING	
J	10	1	**210-7026**	1	SEAL AS	
J	11	1	**2H-6338**	1	SEAL-O-RING	
J	12	1	**5J-8016**	1	WIPER-ROD	
J	13	1	**8J-2574**	1	RING-BACKUP	
J	14	1	**9X-7260**	1	RING-WEAR	
	15	1	**9X-8399**	1	WASHER (33X56X6-MM THK)	
					AVAILABLE REPAIR KIT(S):	
J			**365-1283**	1	KIT-HYD CYLINDER SEAL	
					(INCLUDES RINGS & SEALS)	
					(FOR USE WITH REHS1392)	

J-KIT MARKED J SERVICES PARTS MARKED J
M-METRIC PART

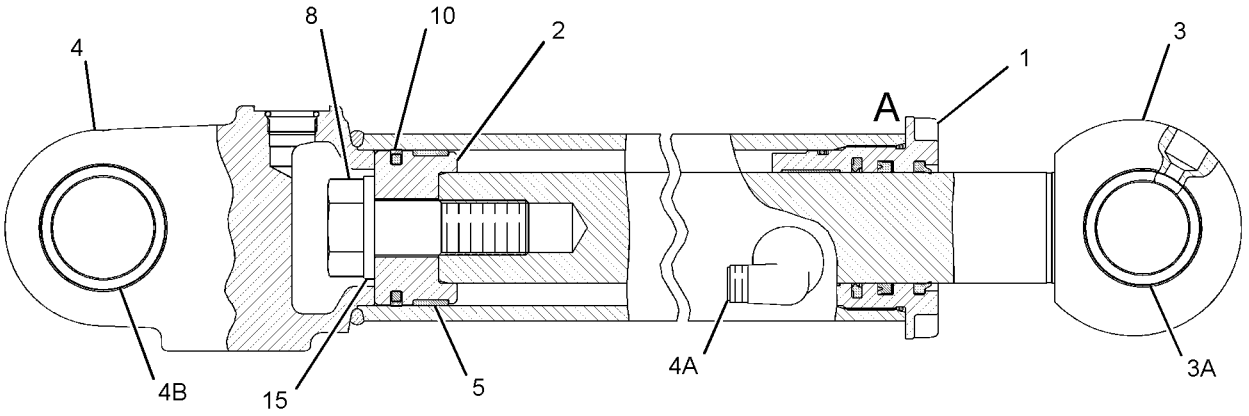

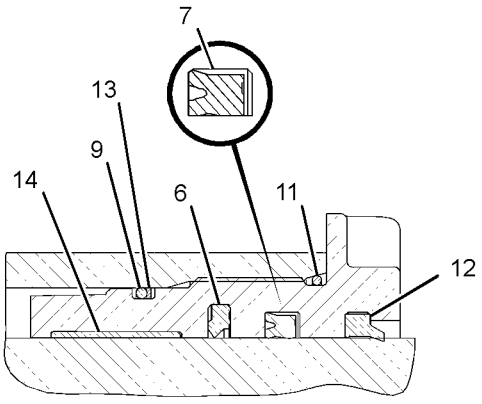

VIEW OF AREA A

GRAPHIC #1 **<END>** g01857195

HYDRAULIC SYSTEM

210-7088 CYLINDER GP-BACKHOE BUCKET

S/N: CBD1-UP; MFG1-UP
88.9-MM (3.5-IN) BORE X 852-MM (33.5-IN) STROKE
PART OF 209-9929 BACKHOE AR-EXTENDABLE STICK, 209-9924 BACKHOE AR-STANDARD STICK
AN ATTACHMENT

SMCS-5457 **i04415575**

NOTE	REF NO	GRAPHIC REF	PART NUMBER	QTY	PART NAME 1 2 3 4 5 6 (PRODUCT LEVEL)	SEE PAGE
	1	1	**187-3510**	1	HEAD	
	2	1	**213-4616**	1	ROD AS	
	2A	1	**9R-0162**	2	BUSHING	
	3	1	**213-4620**	1	CYLINDER AS	
	3A	1	**9R-0139**	2	BUSHING	
	3B	1	**6V-8398**	1	SEAL-O-RING	
J	4	1	**223-3356**	1	RING-WEAR	
	5	1	**228-9572**	1	PISTON	
J	6	1	**289-2937**	1	SEAL AS-BUFFER	
J	7	1	**289-2948**	1	SEAL-U-CUP	
M	8	1	**173-9683**	1	BOLT (M30X3.5X90-MM)	
J	9	1	**6V-6707**	1	SEAL-O-RING	
J	10	1	**2H-4145**	1	SEAL-O-RING	
J	11	1	**4J-9224**	1	RING-BACKUP	
J	12	1	**5J-7011**	1	SEAL	
J	13	1	**5J-7012**	1	RING-EXPANDER	
J	14	1	**289-2956**	1	SEAL-WIPER	
J	15	1	**8T-0785**	1	RING-WEAR	
	16	1	**9X-8399**	1	WASHER (33X56X6-MM THK)	
					AVAILABLE REPAIR KIT(S):	
J			**338-7038**	1	KIT-HYD CYLINDER SEAL	

J-KIT MARKED J SERVICES PARTS MARKED J
M-METRIC PART

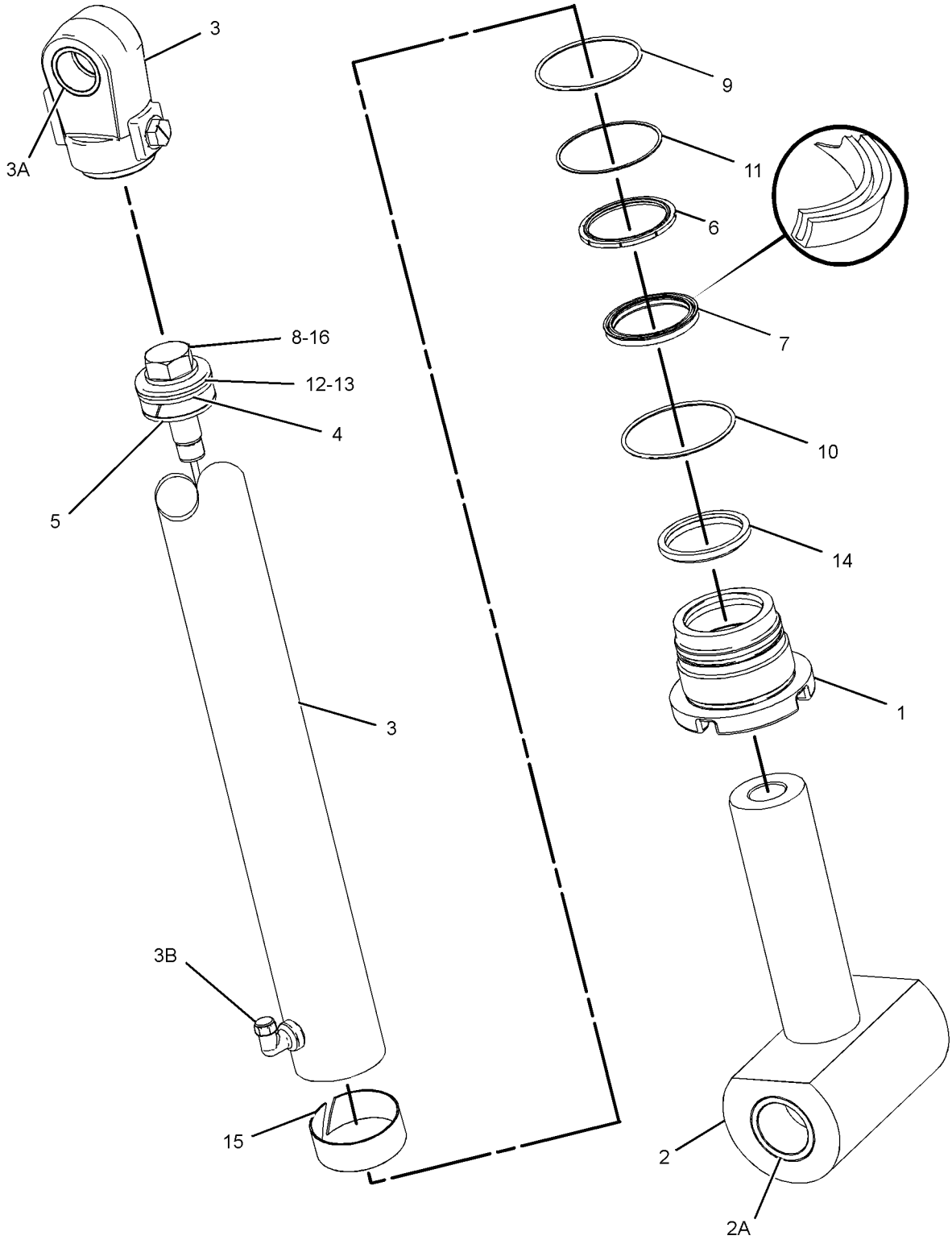

GRAPHIC #1 **<END>** g02093517

210-7074 CYLINDER GP-BOOM

S/N: CBD1-UP; MFG1-UP
114.3-MM (4.5-IN) BORE X 943-MM (37.1-IN) STROKE
PART OF 209-9929 BACKHOE AR-EXTENDABLE STICK, 209-9924 BACKHOE AR-STANDARD STICK
AN ATTACHMENT

SMCS-5456 **i02495861**

NOTE	REF NO	GRAPHIC REF	PART NUMBER	QTY	PART NAME 1 2 3 4 5 6 (PRODUCT LEVEL)	SEE PAGE
	1	1	**276-3859**	1	HEAD	
	2	1	**214-3850**	1	ROD AS	
		1	**2Y-5821**	1	RING	
		1	**9R-2700**	2	BEARING-SLEEVE	
		1	**9T-2178**	1	SPRING	
	3	1	**276-4005**	1	CYLINDER AS	
		1	**6V-9746**	1	SEAL-O-RING	
	4	1	**228-4136**	1	PISTON	
	5	1	**167-2200**	1	SEAL AS	
	6	1	**167-2307**	1	SEAL-U-CUP	
	7	1	**175-7902**	1	SEAL-O-RING	
	8	1	**231-3538**	1	SEAL-WIPER	
	9	1	**4J-9220**	1	RING-BACKUP	
	10	1	**4M-0189**	1	SEAL-O-RING	
	11	1	**5J-4986**	1	SEAL AS	
	12	1	**5J-5731**	1	LOCKNUT (1-3/4-12-THD)	
	13	1	**8T-4958**	1	RING-WEAR	
	14	1	**226-4162**	1	RING-WEAR	

REPARO 295-9891

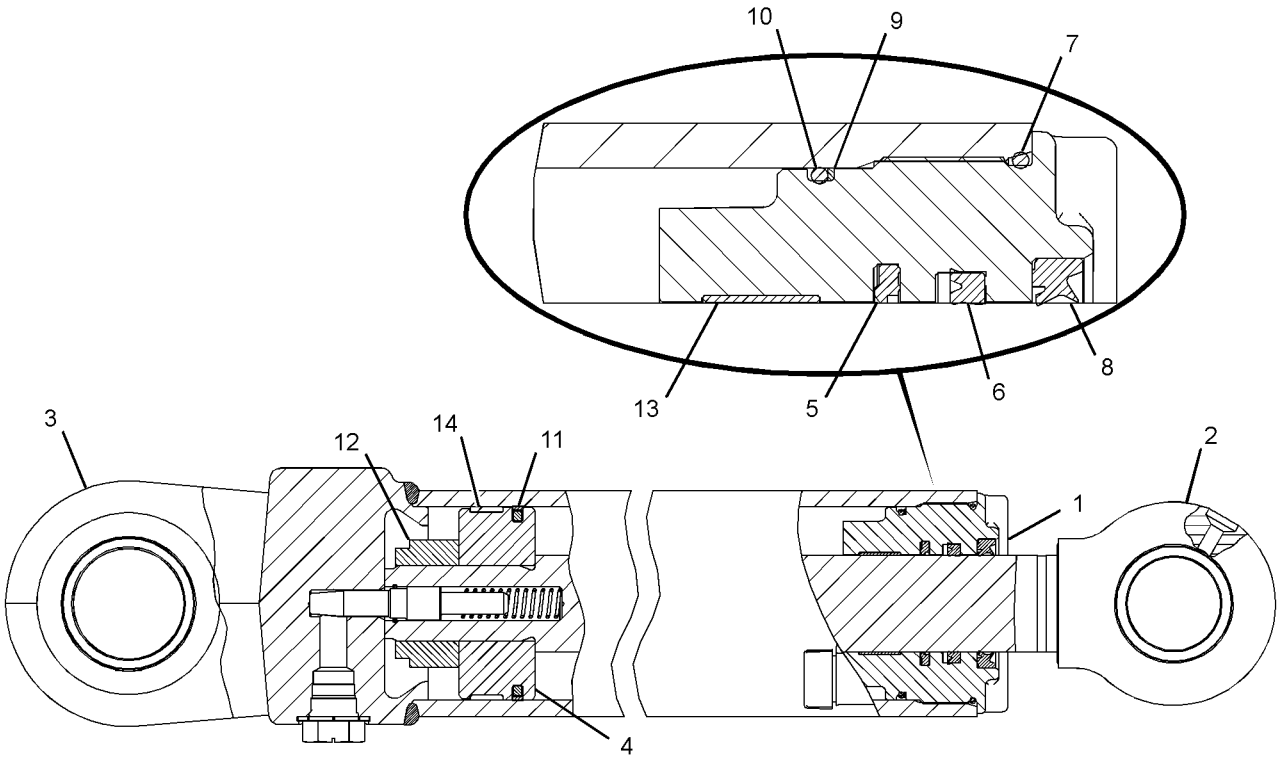

GRAPHIC #1 **<END>** g01264801

269-0381 CYLINDER GP-HYDRAULIC

S/N: CBD5758-UP; MFG1-UP
100-MM (3.9-IN) BORE X 254-MM (10-IN) STROKE. RH
PART OF 214-2198, 297-0165 HYDRAULIC AR

SMCS-7562 **i04492033**

NOTE	REF NO	GRAPHIC REF	PART NUMBER	QTY	PART NAME 1 2 3 4 5 6 (PRODUCT LEVEL)	SEE PAGE
	1	1	**3B-8489**	1	FITTING-GREASE	
	2	1	**3N-5739**	1	SPRING	
	3	1	**6E-1478**	1	PLUNGER	
	4	1	**102-3582**	1	WASHER (11X19.5X2.5-MM THK)	
J	5	1	**233-0619**	1	SEAL-WIPER	
J	6	1	**233-2589**	1	RING-WEAR	
	7	1	**233-2613**	1	BEARING	
	8	1	**269-0382**	1	CYLINDER AS-HYDRAULIC	
	8A	1	**9T-2883**	2	BEARING	
	9	1	**269-0386**	1	ROD AS	
	9A	1	**274-4274**	1	BUSHING	
	10	1	**269-0388**	1	HEAD	
	11	1	**269-0389**	1	PISTON	
J	12	1	**140-7649**	1	SEAL-PISTON	
J	13	1	**167-2183**	1	SEAL AS-BUFFER	
J	14	1	**167-2303**	1	SEAL-U-CUP	
J	15	1	**2K-6830**	1	RING-BACKUP	
J	16	1	**2Y-5821**	1	RING	
J	17	1	**3E-6735**	1	SEAL-O-RING	
J	18	1	**9X-4611**	1	SEAL-O-RING	
M	19	1	**9X-6611**	1	SETSCREW-SOCKET (M10X1.5X16-MM)	
					AVAILABLE REPAIR KIT(S):	
J			**377-9352**	1	KIT-HYDRAULIC CYLINDER SEAL	

J-KIT MARKED J SERVICES PARTS MARKED J
M-METRIC PART

269-0381 CYLINDER GP-HYDRAULIC *(contd.)* **i04492033**

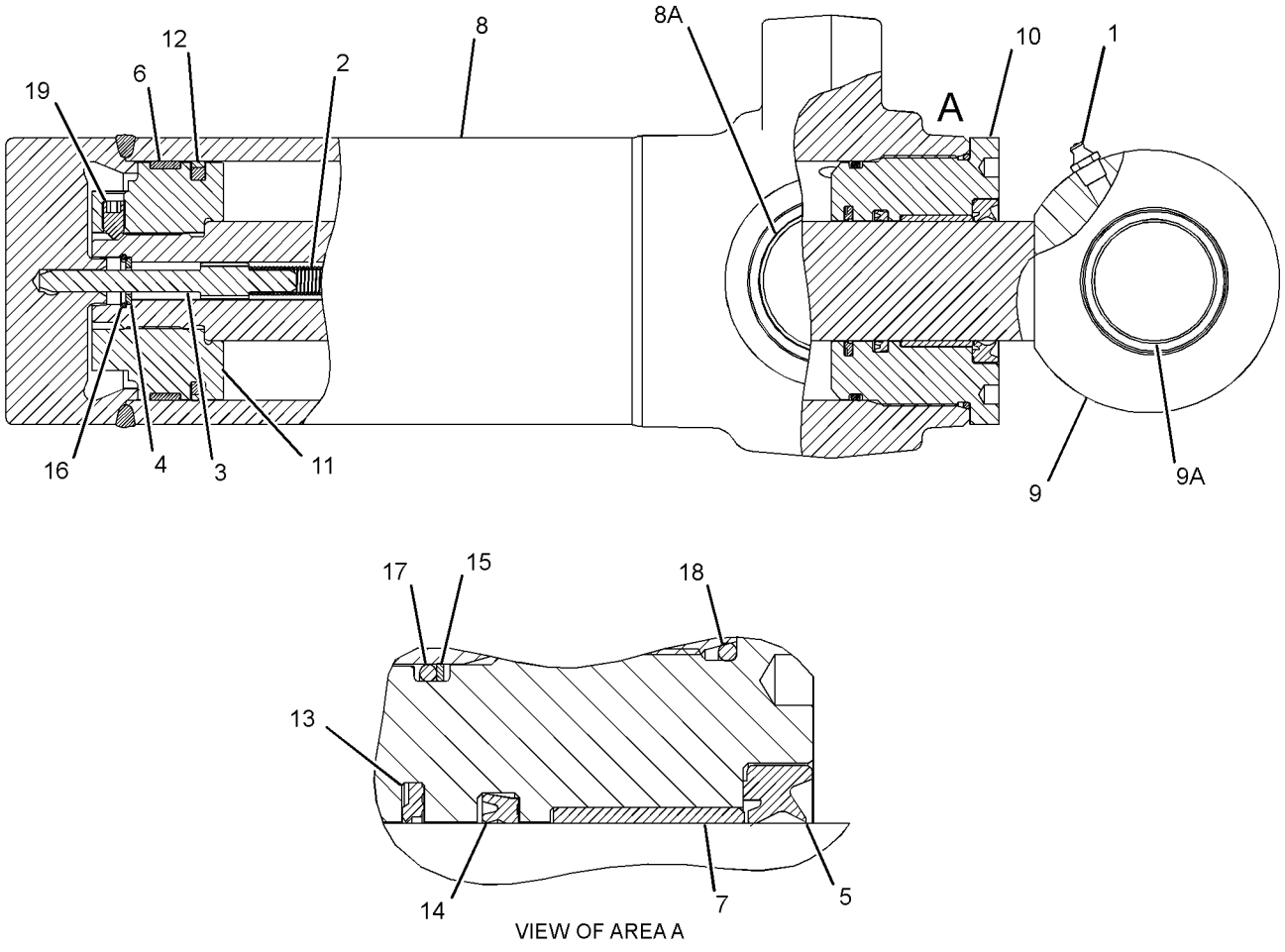

VIEW OF AREA A

GRAPHIC #1 **<END>** g02096053

278-1971 CYLINDER GP-HYDRAULIC

S/N: CBD1-5757
100-MM (3.9-IN) BORE X 254-MM (10-IN) STROKE
PART OF 214-2198 HYDRAULIC AR

SMCS-7562 **i03614137**

NOTE	REF NO	GRAPHIC REF	PART NUMBER	QTY	PART NAME 1 2 3 4 5 6 (PRODUCT LEVEL)	SEE PAGE
	1	1	**2Y-5821**	1	RING	
	2	1	**3N-5739**	1	SPRING	
	3	1	**6E-1478**	1	PLUNGER	
	4	1	**9T-2883**	2	BEARING	
	5	1	**102-3582**	1	WASHER (11X19.5X2.5-MM THK)	
	6	1	**233-2583**	1	PISTON	
J	7	1	**233-2585**	1	SEAL AS	
J	8	1	**233-2589**	1	RING-WEAR	
	9	1	**233-2595**	1	HEAD AS	
		1	**233-2613**	1	BEARING	
J	10	1	**233-2603**	1	SEAL-O-RING	
J	11	1	**233-2606**	1	SEAL-WIPER	
J	12	1	**233-2610**	1	SEAL-U-CUP	
J	13	1	**233-2616**	1	SEAL	
	14	1	**233-2631**	1	ROD AS	
J	15	1	**244-8826**	1	RING-BACKUP	
	16	1	**274-4274**	1	BUSHING	
	17	1	**278-1972**	1	CYLINDER AS	
	18	1	**3B-8489**	1	FITTING-GREASE	
J	19	1	**3E-6735**	1	SEAL-O-RING	
JM	20	1	**9X-6611**	1	SETSCREW-SOCKET (M10X1.5X16-MM)	
					AVAILABLE REPAIR KIT(S):	
J			**233-2622**	1	KIT-SEAL	
					(INCLUDES SEALS, RINGS, & SETSCREW)	

J-KIT MARKED J SERVICES PARTS MARKED J
M-METRIC PART

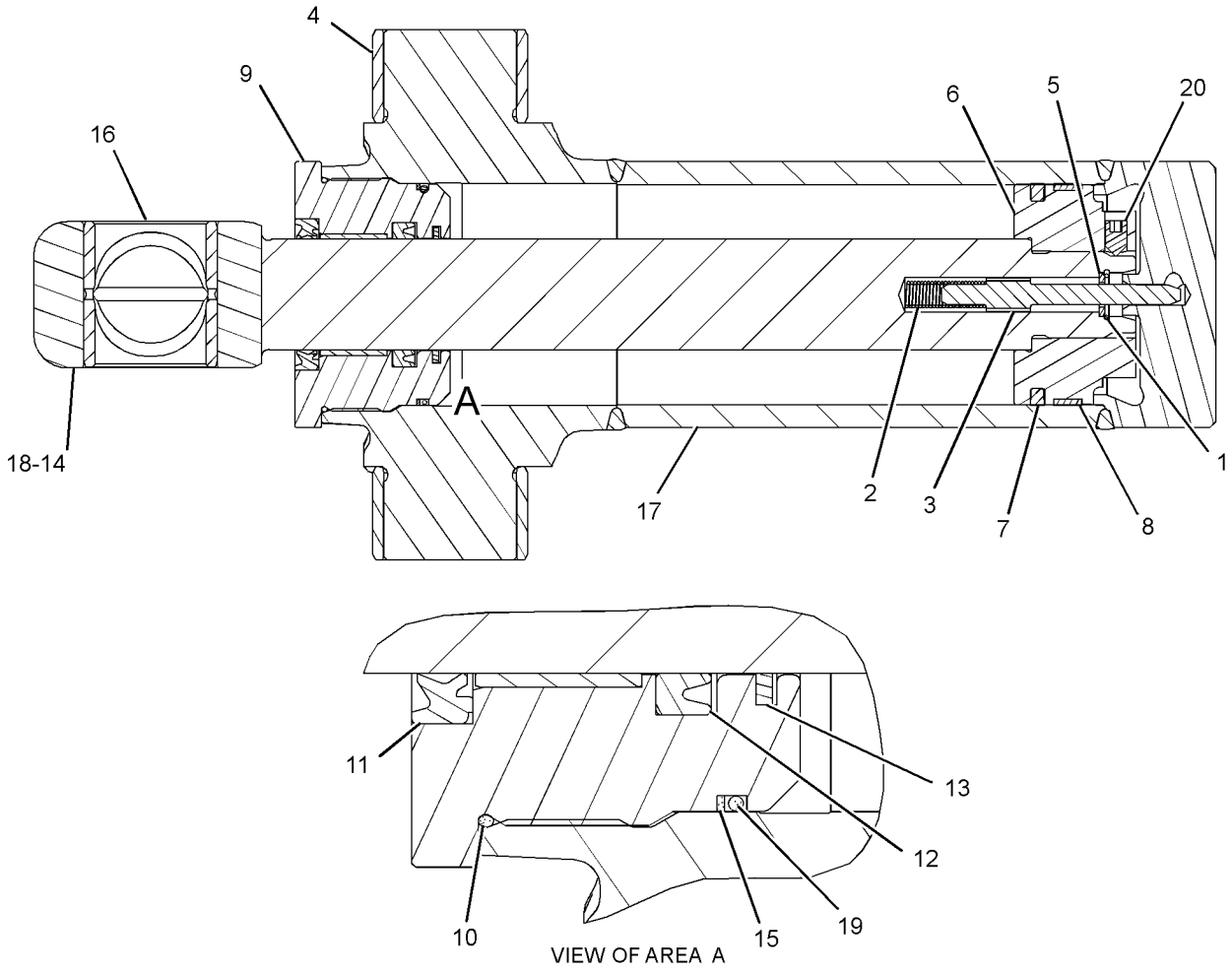

GRAPHIC #1 **<END>** g01202480

215-7298 CYLINDER GP-LIFT

S/N: CBD5760-UP; MFG1-UP
82.6-MM (3.3-IN) BORE X 705.4-MM (27.8-IN) STROKE
PART OF 213-9298 LOADER AR

SMCS-5102 **i03996943**

NOTE	REF NO	GRAPHIC REF	PART NUMBER	QTY	PART NAME 1 2 3 4 5 6 (PRODUCT LEVEL)	SEE PAGE
	1	1	**215-7297**	1	CYLINDER AS	
	1A	1	**9R-0153**	2	BUSHING	
		1	**7J-9108**	1	SEAL-O-RING	
	2	1	**5B-9385**	1	BOLT (1-14X2.5-IN)	
	3	1	**5P-8250**	1	WASHER (28X49X5-MM THK)	
J	4	1	**8J-6371**	1	RING-WEAR	
J	5	1	**6J-0793**	1	SEAL AS	
		1	**6J-0789**	1	RING-EXPANDER	
		1	**6J-0790**	1	SEAL	
	6	1	**4T-7010**	1	PISTON	
	7	1	**191-6112**	1	HEAD	
J	8	1	**167-2302**	1	SEAL-U-CUP	
J	9	1	**2H-3931**	1	SEAL-O-RING	
J	10	1	**8J-2574**	1	RING-BACKUP	
R	11	1	**9T-0661**	1	ROD AS	
	11A	1	**9R-0321**	2	BUSHING	
J	12	1	**227-1143**	1	SEAL-WIPER	
J	13	1	**167-2192**	1	SEAL AS-BUFFER	
J	14	1	**4T-6779**	1	RING	
J	15	1	**1H-7339**	1	SEAL-O-RING	
	16	1	**3B-8489**	1	FITTING-GREASE	
					AVAILABLE REPAIR KIT(S):	
J			**234-2593**	1	KIT-SEAL (LIFT CYLINDER)	

J-KIT MARKED J SERVICES PARTS MARKED J
R-REMFG PART MAY BE AVAILABLE

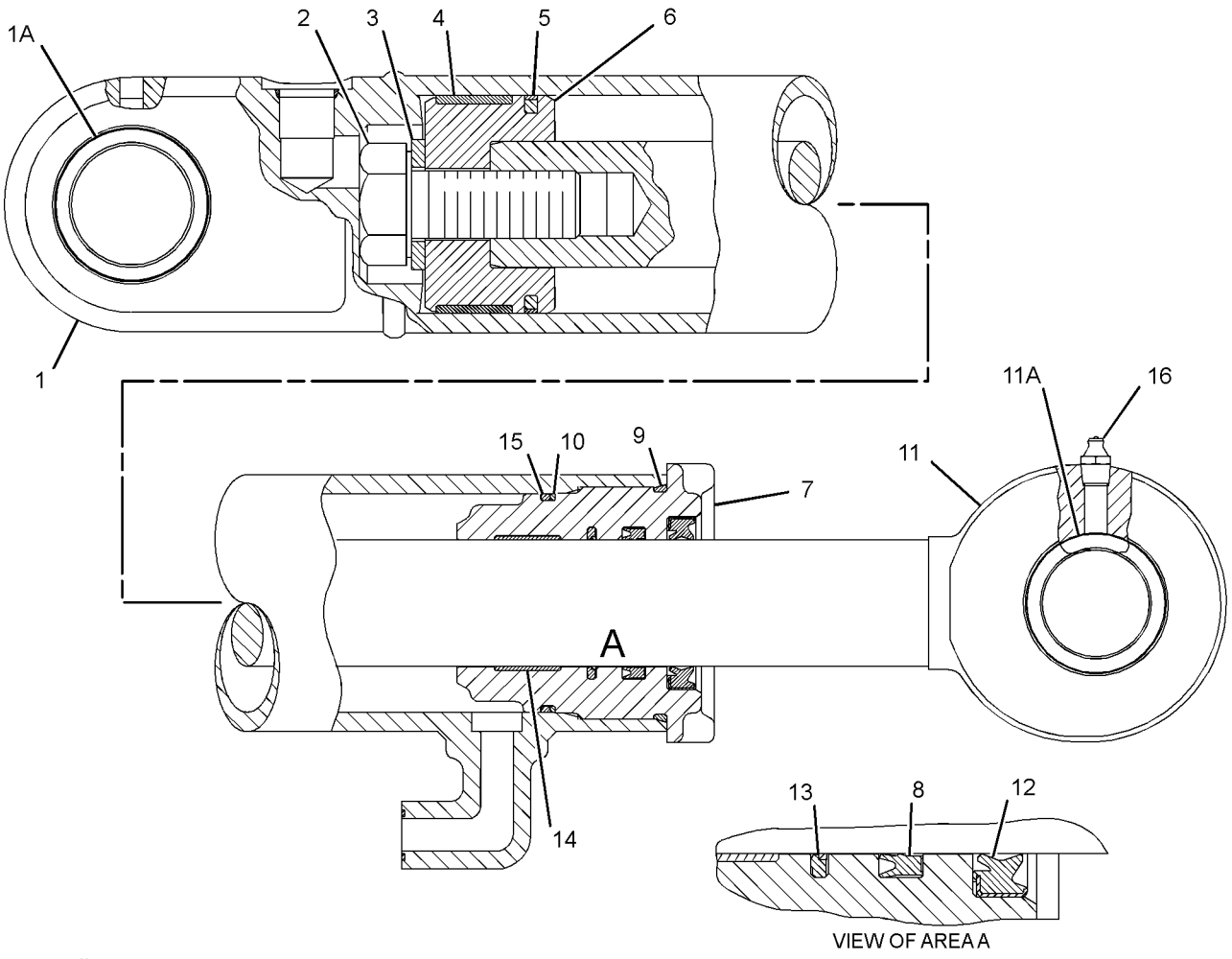

GRAPHIC #1 **<END>** g02382536

228-3508 CYLINDER GP-LIFT

S/N: CBD1-5759; MFG1-UP
82.5-MM (3.2-IN) BORE X 705-MM (27.7-IN) STROKE
PART OF 213-9298, 318-9555 LOADER AR

SMCS-5102 **i02360023**

NOTE	REF NO	GRAPHIC REF	PART NUMBER	QTY	PART NAME 1 2 3 4 5 6 (PRODUCT LEVEL)	SEE PAGE
J	1	1	**8J-6371**	1	RING-WEAR	
J	2	1	**227-1143**	1	SEAL-WIPER	
	3	1	**233-2568**	1	ROD AS	
	4	1	**233-2578**	1	PISTON	
	5	1	**233-2590**	1	HEAD AS	
		1	**233-2605**	1	BEARING	
J	6	1	**233-2597**	1	SEAL-O-RING	
J	7	1	**233-2599**	1	RING-BACKUP	
J	8	1	**233-2601**	1	SEAL-O-RING	
J	9	1	**233-2609**	1	SEAL-U-CUP	
J	10	1	**244-3839**	1	SEAL-PISTON	
	11	1	**252-9207**	1	CYLINDER AS	
	12	1	**3B-8489**	2	FITTING-GREASE	
	13	1	**9R-0153**	2	BUSHING	
	14	1	**9R-0321**	2	BUSHING	
JM	15	1	**9X-6611**	1	SETSCREW-SOCKET (M10X1.5X16-MM)	
					AVAILABLE REPAIR KIT(S):	
J			**233-2628**	1	KIT-SEAL	

J-KIT MARKED J SERVICES PARTS MARKED J
M-METRIC PART

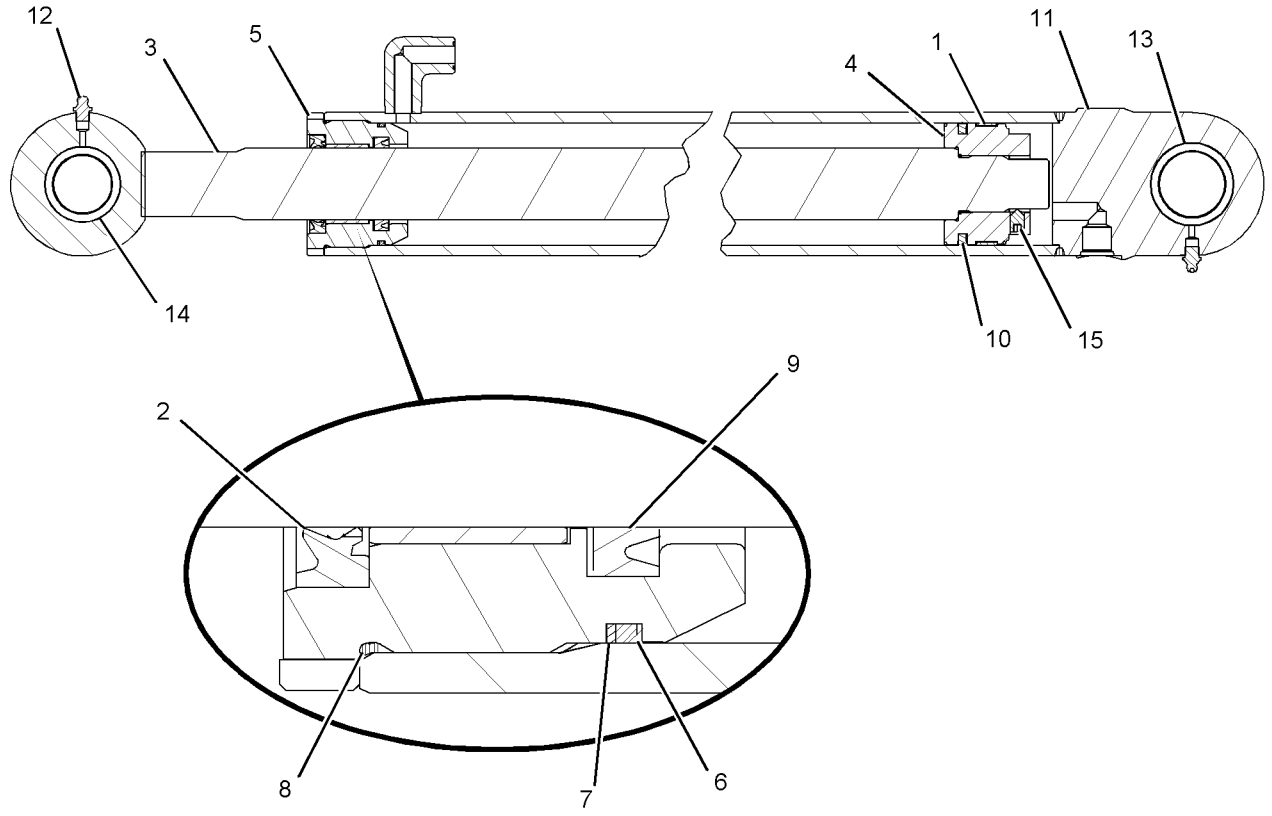

GRAPHIC #1 **<END>** g01085626

HYDRAULIC SYSTEM

185-1839 CYLINDER GP-MULTIPURPOSE BUKT

S/N: CBD1-UP
76.2-MM (3-IN) BORE X 260-MM (10.2-IN) STROKE
PART OF 112-0938, 112-0939 BUCKET AR-MULTIPURPOSE
AN ATTACHMENT

SMCS-5457 **i03904352**

NOTE	REF NO	GRAPHIC REF	PART NUMBER	QTY	PART NAME 1 2 3 4 5 6 (PRODUCT LEVEL)	SEE PAGE
	1	1	**6E-0122**	1	HEAD	
	2	1	**9T-2212**	1	PISTON	
R	3	1	**9T-4008**	1	ROD AS	
	3A	1	**9T-4007**	2	BEARING	
R	4	1	**9T-4009**	1	CYLINDER AS	
J	5	1	**167-2186**	1	SEAL AS-BUFFER	
J	6	1	**167-2294**	1	SEAL-U-CUP	
J	7	1	**1H-7339**	1	SEAL-O-RING	
J	8	1	**226-8202**	1	SEAL-WIPER	
J	9	1	**4T-6780**	1	RING-WEAR	
	10	1	**5P-8250**	1	WASHER (28X49X5-MM THK)	
	11	1	**6F-7037**	1	BOLT (1-14X3.25-IN)	
J	12	1	**6J-1972**	1	SEAL AS	
J	13	1	**6J-5733**	1	RING-WEAR	
J	14	1	**8J-2574**	1	RING-BACKUP	
					AVAILABLE REPAIR KIT(S):	
J			**235-0354**	1	KIT-SEAL (HYDRAULIC CYLINDER)	

J-KIT MARKED J SERVICES PART(S) MARKED J
R-REMFG PART MAY BE AVAILABLE

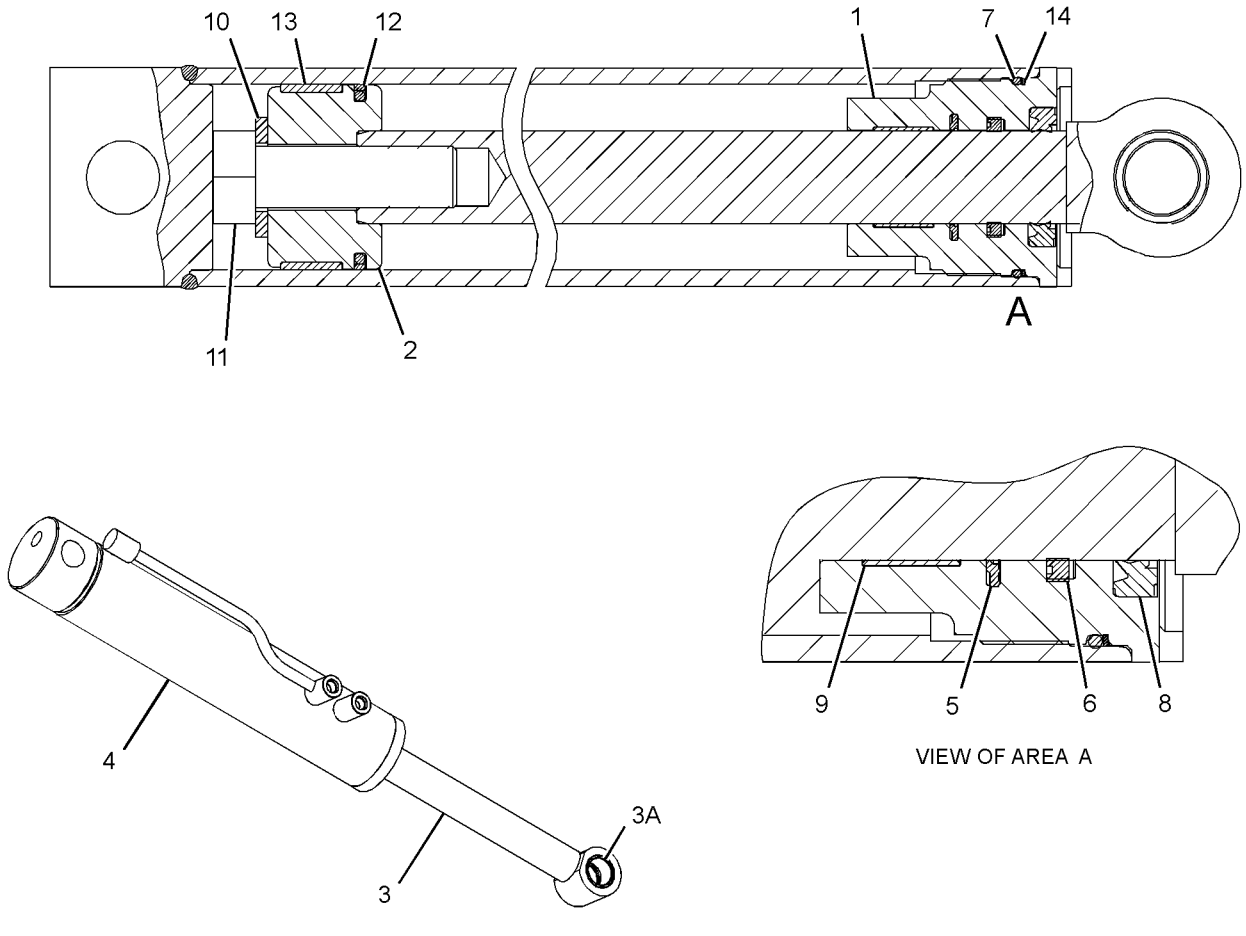

GRAPHIC #1 **<END>** g01166193

226-5540 CYLINDER GP-MULTIPURPOSE BUKT

S/N: CBD1-UP; MFG1-UP
76-MM (2.99-IN) BORE X 262-MM (10.31-IN) STROKE
PART OF 216-8800, 216-8801, 216-8820, 216-8821 BUCKET GP-MULTIPURPOSE AN ATTACHMENT

SMCS-5457 **i02498189**

NOTE	REF NO	GRAPHIC REF	PART NUMBER	QTY	PART NAME 1 2 3 4 5 6 (PRODUCT LEVEL)	SEE PAGE
	1	1	**3B-8489**	2	FITTING-GREASE	
	2	1	**9S-8004**	2	PLUG-O-RING	
	3	1	**3J-1907**	2	SEAL-O-RING	
	4	1	**9T-4007**	2	BEARING	
					AVAILABLE REPAIR KIT(S):	
			230-9357	1	KIT-SEAL	
					(INCLUDES WIPER SEAL, O-RINGS, MOISTURE EXCLUDER & POLYPAK)	

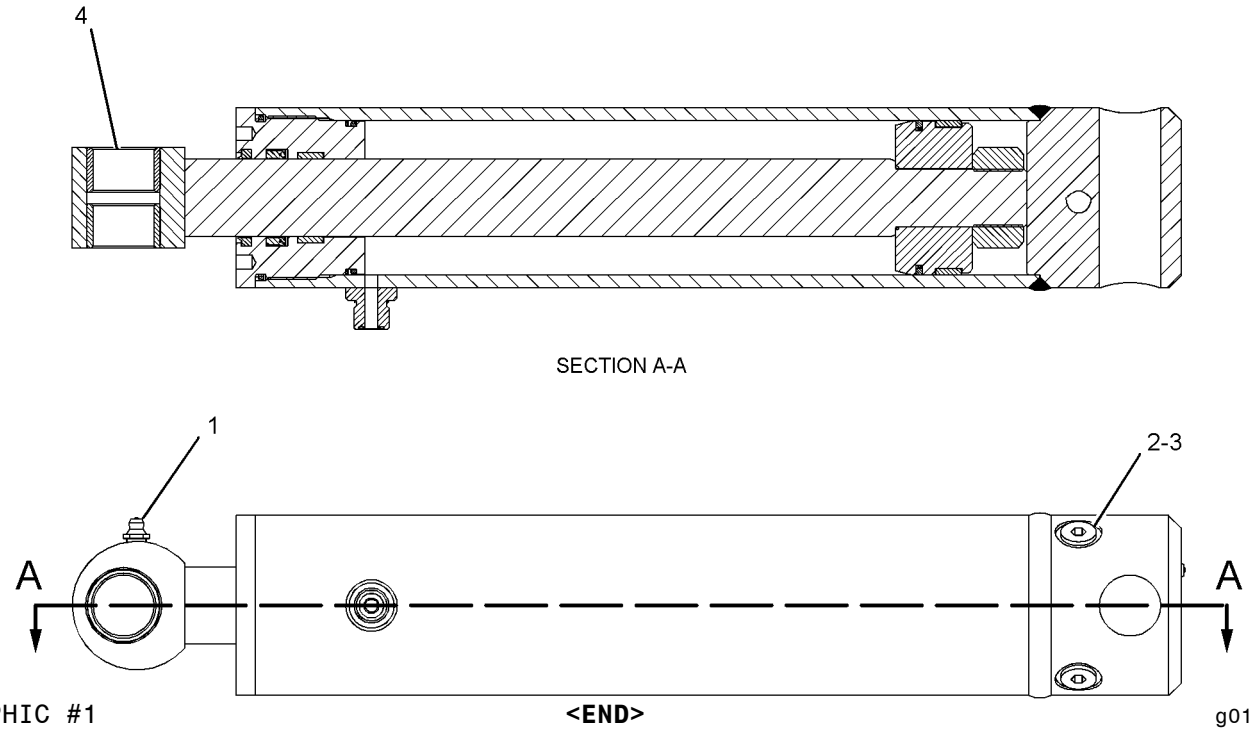

GRAPHIC #1 **<END>** g01086486

262-7049 CYLINDER GP-STABILIZER–LH

S/N: CBD1-5744
100-MM (3.9-IN) BORE X 541-MM (21.3-IN) STROKE
PART OF 214-2198 HYDRAULIC AR

SMCS-5468 **i02360030**

NOTE	REF NO	GRAPHIC REF	PART NUMBER	QTY	PART NAME 1 2 3 4 5 6 (PRODUCT LEVEL)	SEE PAGE
	1	1	**233-2576**	1	ROD AS	
	2	1	**233-2582**	1	PISTON	
J	3	1	**233-2585**	1	SEAL AS	
J	4	1	**233-2588**	1	RING-WEAR	
	5	1	**233-2594**	1	HEAD AS	
		1	**233-2614**	1	RING-WEAR	
J	6	1	**233-2603**	1	SEAL-O-RING	
J	7	1	**233-2607**	1	SEAL AS	
J	8	1	**233-2611**	1	SEAL-U-CUP	
J	9	1	**233-2615**	1	SEAL	
J	10	1	**244-8826**	1	RING-BACKUP	
	11	1	**262-7051**	1	CYLINDER AS	
	12	1	**3B-8489**	2	FITTING-GREASE	
J	13	1	**3E-6735**	1	SEAL-O-RING	
J	14	1	**4J-0526**	1	SEAL-O-RING	
	15	1	**9R-0321**	4	BUSHING	
JM	16	1	**9X-6611**	1	SETSCREW-SOCKET (M10X1.5X16-MM)	
					AVAILABLE REPAIR KIT(S):	
J			**233-2623**	1	KIT-SEAL	

J-KIT(S) MARKED J SERVICES PART(S) MARKED J
M-METRIC PART

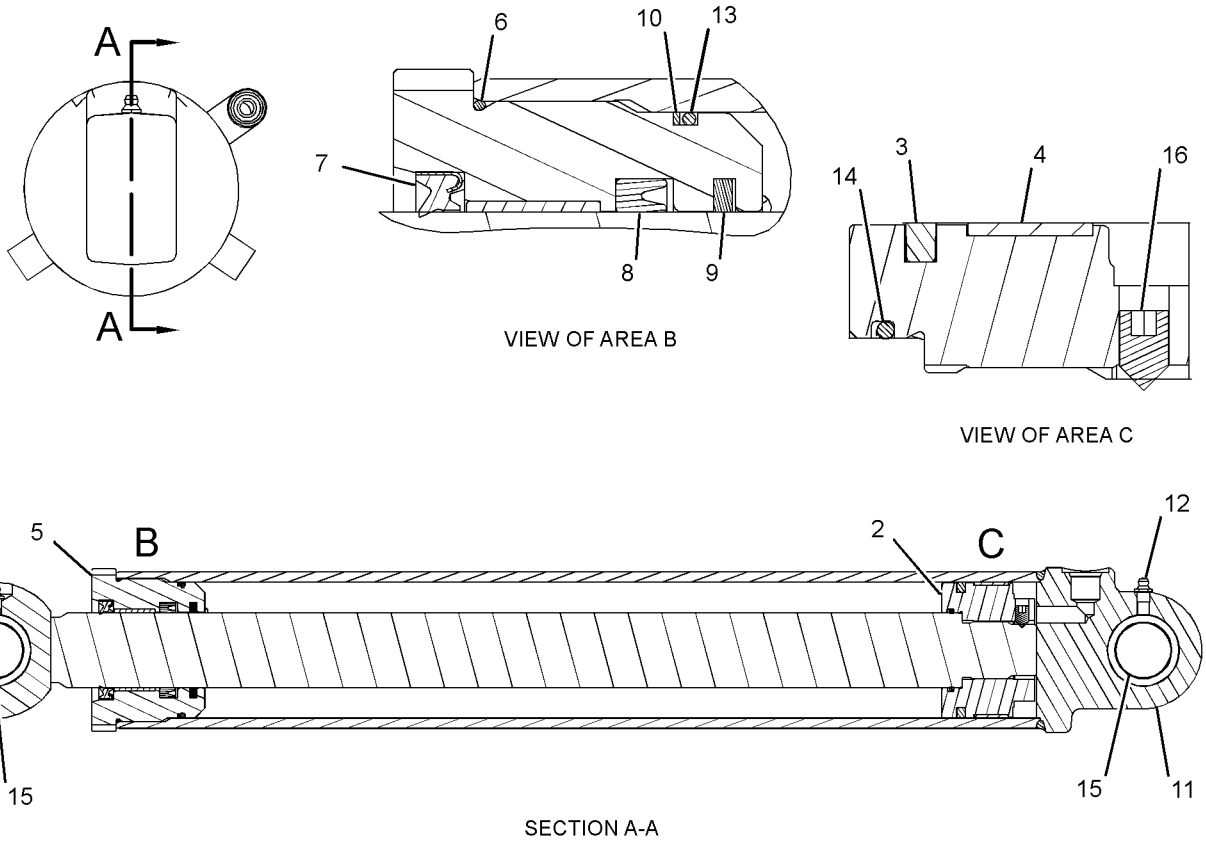

GRAPHIC #1 **<END>** g01201682

262-7050 CYLINDER GP-STABILIZER–RH

S/N: CBD1-5744
100-MM (3.9-IN) BORE X 541-MM (21.3-IN) STROKE
PART OF 214-2198 HYDRAULIC AR
FIELD REPLACEMENT FOR 228-3500 CYLINDER GP-STABILIZER

SMCS-5468 **i02360031**

NOTE	REF NO	GRAPHIC REF	PART NUMBER	QTY	PART NAME 1 2 3 4 5 6 (PRODUCT LEVEL)	SEE PAGE
	1	1	**233-2576**	1	ROD AS	
	2	1	**233-2582**	1	PISTON	
J	3	1	**233-2585**	1	SEAL AS	
J	4	1	**233-2588**	1	RING-WEAR	
	5	1	**233-2594**	1	HEAD AS	
		1	**233-2614**	1	RING-WEAR	
J	6	1	**233-2603**	1	SEAL-O-RING	
J	7	1	**233-2607**	1	SEAL AS	
J	8	1	**233-2611**	1	SEAL-U-CUP	
J	9	1	**233-2615**	1	SEAL	
J	10	1	**244-8826**	1	RING-BACKUP	
	11	1	**262-7052**	1	CYLINDER AS	
	12	1	**3B-8489**	2	FITTING-GREASE	
J	13	1	**3E-6735**	1	SEAL-O-RING	
J	14	1	**4J-0526**	1	SEAL-O-RING	
	15	1	**9R-0321**	4	BUSHING	
JM	16	1	**9X-6611**	1	SETSCREW-SOCKET (M10X1.5X16-MM)	
					AVAILABLE REPAIR KIT(S):	
J			**233-2623**	1	KIT-SEAL	

J-KIT MARKED J SERVICES PART(S) MARKED J)
M-METRIC PART

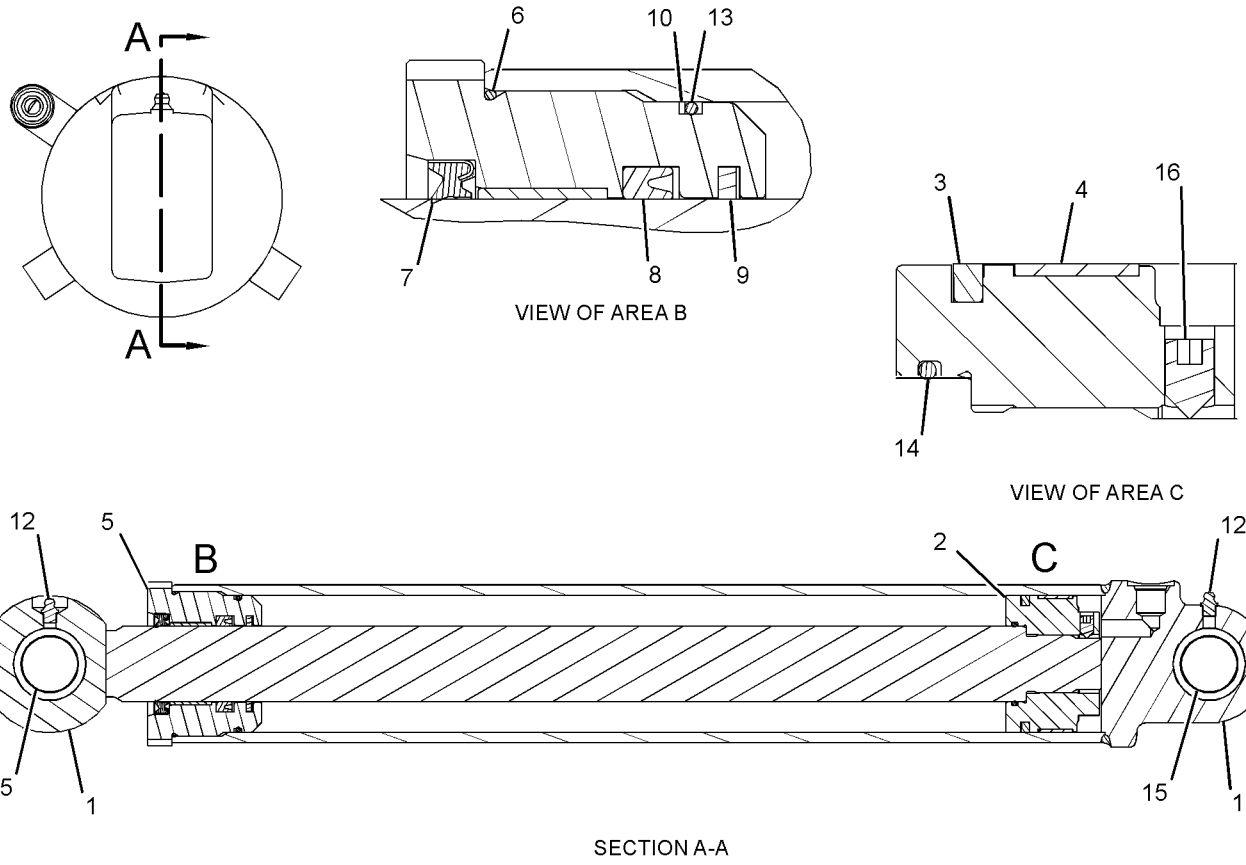

GRAPHIC #1 **<END>** g01201741

291-2681 CYLINDER GP-STABILIZER–LH

S/N: CBD5745-UP; MFG1-UP

PART OF 214-2198, 297-0165 HYDRAULIC AR

SMCS-5468 **i03835169**

NOTE	REF NO	GRAPHIC REF	PART NUMBER	QTY	PART NAME 1 2 3 4 5 6 (PRODUCT LEVEL)	SEE PAGE
	1	1	**3B-8489**	2	FITTING-GREASE	
	2	1	**140-7649**	1	SEAL-PISTON	
	3	1	**233-0625**	1	SEAL-WIPER	
	4	1	**233-2614**	1	RING-WEAR	
	5	1	**291-2684**	1	CYLINDER AS	
	5A	1	**9R-0321**	2	BUSHING	
	6	1	**291-2691**	1	ROD AS	
	6A	1	**9R-0321**	2	BUSHING	
	7	1	**291-2695**	1	PISTON	
	8	1	**291-2696**	1	HEAD	
	9	1	**140-7656**	1	RING-WEAR	
	10	1	**167-2306**	1	SEAL-U-CUP	
	11	1	**1H-8128**	1	SEAL-O-RING	
	12	1	**291-1559**	1	SEAL AS-BUFFER	
	13	1	**294-9507**	1	RING-BACKUP	
	14	1	**3E-6735**	1	SEAL-O-RING	
	15	1	**4J-0526**	1	SEAL-O-RING	
M	16	1	**9X-6611**	1	SETSCREW-SOCKET (M10X1.5X16-MM)	

M-METRIC PART

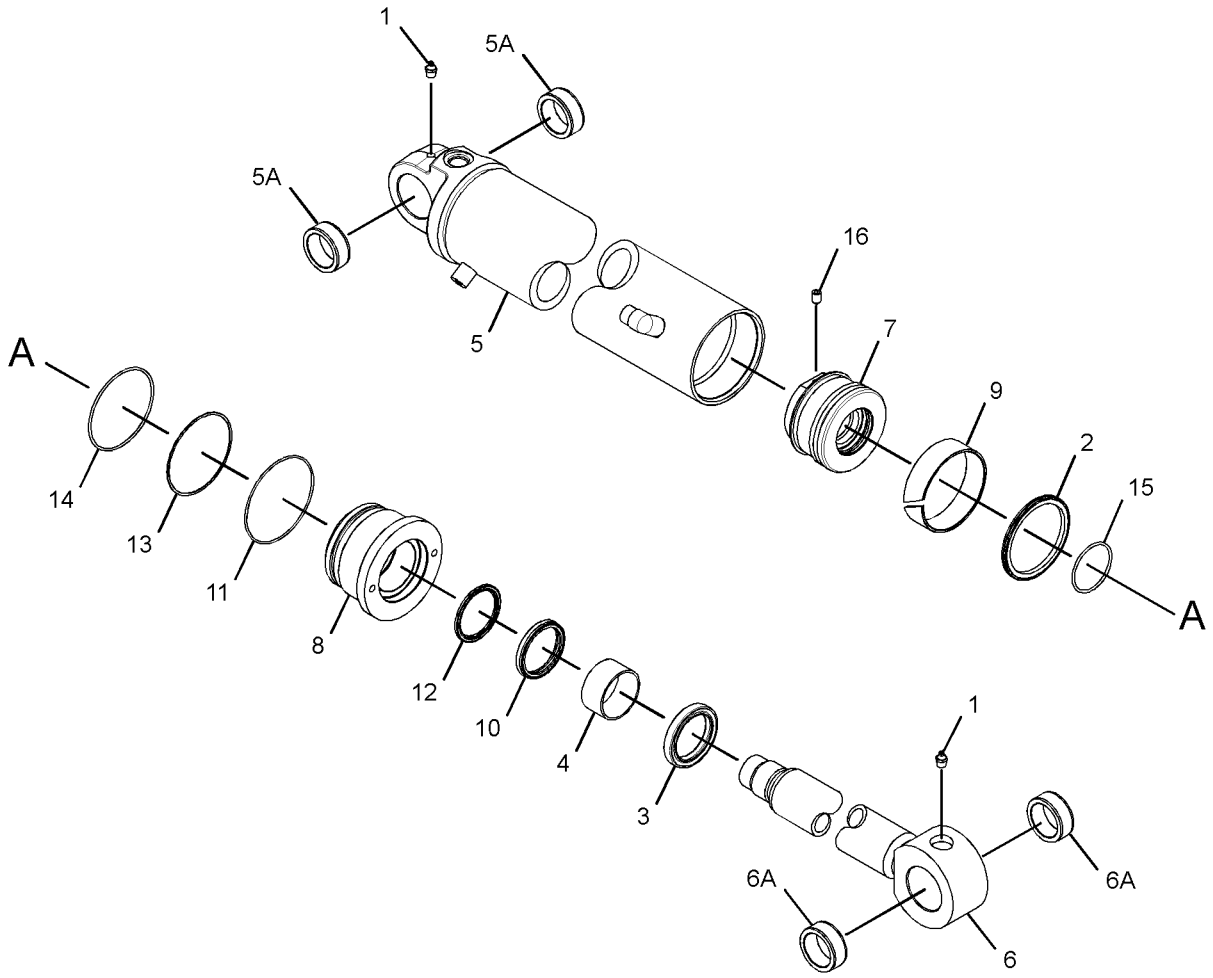

GRAPHIC #1 **<END>** g02097204

HYDRAULIC SYSTEM

291-2682 CYLINDER GP-STABILIZER–RH

S/N: CBD5745-UP; MFG1-UP
100-MM (3.9-IN) BORE X 541-MM (21.3-IN) STROKE
PART OF 214-2198, 297-0165 HYDRAULIC AR

SMCS-5468 **i03835209**

NOTE	REF NO	GRAPHIC REF	PART NUMBER	QTY	PART NAME 1 2 3 4 5 6 (PRODUCT LEVEL)	SEE PAGE
	1	1	**3B-8489**	2	FITTING-GREASE	
	2	1	**140-7649**	1	SEAL-PISTON	
	3	1	**233-0625**	1	SEAL-WIPER	
	4	1	**233-2614**	1	RING-WEAR	
	5	1	**291-2683**	1	CYLINDER AS	
	5A	1	**9R-0321**	2	BUSHING	
	6	1	**291-2691**	1	ROD AS	
	6A	1	**9R-0321**	2	BUSHING	
	7	1	**291-2695**	1	PISTON	
	8	1	**291-2696**	1	HEAD	
	9	1	**140-7656**	1	RING-WEAR	
	10	1	**167-2306**	1	SEAL-U-CUP	
	11	1	**1H-8128**	1	SEAL-O-RING	
	12	1	**291-1559**	1	SEAL AS-BUFFER	
	13	1	**294-9507**	1	RING-BACKUP	
	14	1	**3E-6735**	1	SEAL-O-RING	
	15	1	**4J-0526**	1	SEAL-O-RING	
M	16	1	**9X-6611**	1	SETSCREW-SOCKET (M10X1.5X16-MM)	

M-METRIC PART

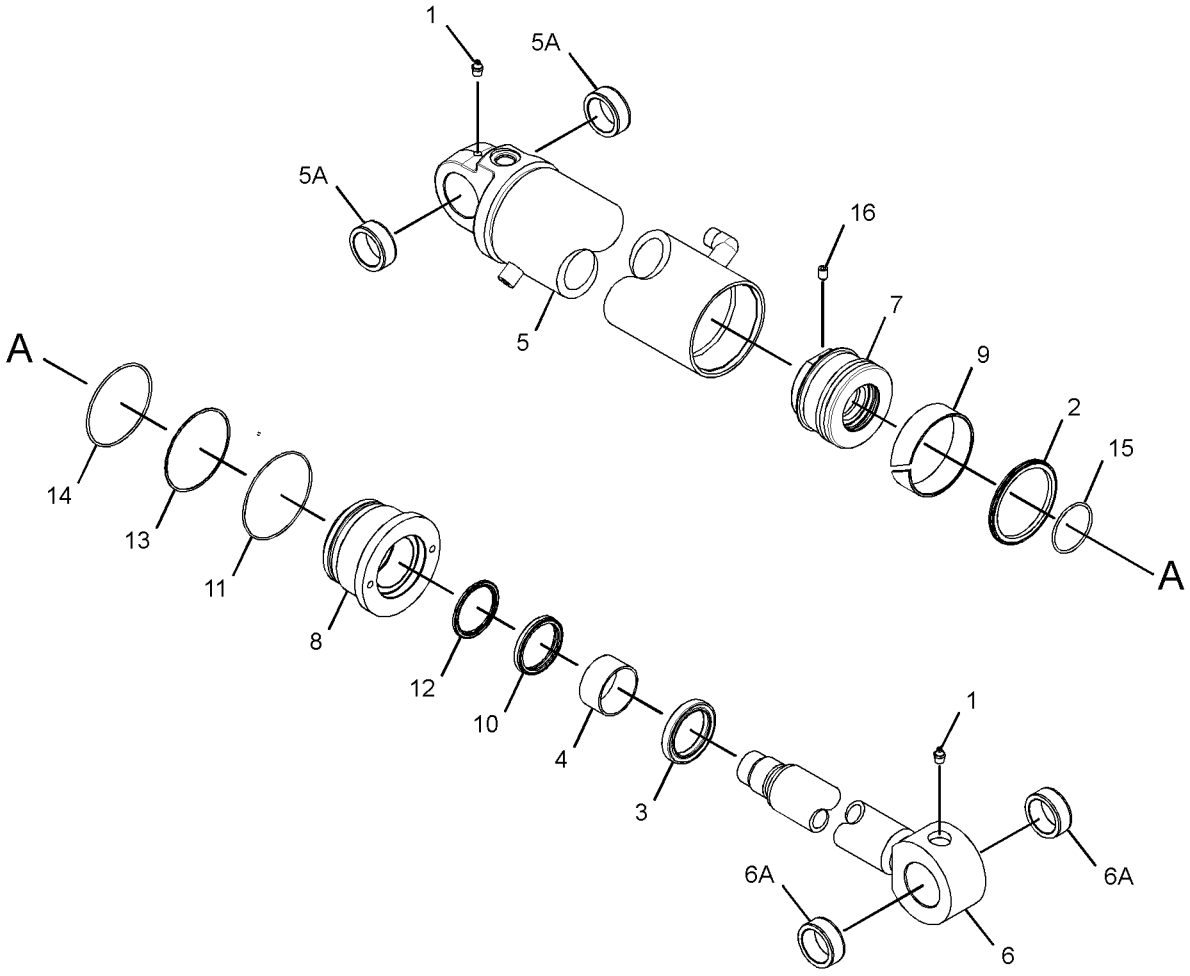

GRAPHIC #1 **<END>** g02097273

210-7078 CYLINDER GP-STICK

S/N: CBD1-UP; MFG1-UP
108-MM(4.3-IN) BORE X 679-MM (26.7-IN) STROKE
PART OF 209-9929 BACKHOE AR-EXTENDABLE STICK, 209-9924 BACKHOE AR-STANDARD STICK
AN ATTACHMENT

SMCS-5458 **i04534152**

NOTE	REF NO	GRAPHIC REF	PART NUMBER	QTY	PART NAME 1 2 3 4 5 6 (PRODUCT LEVEL)	SEE PAGE
	1	1	**214-2249**	1	HEAD	
	2	1	**214-2250**	1	PISTON	
	3	1	**214-3729**	1	CYLINDER AS	
	3A	1	**214-2255**	2	BUSHING	
		1	**6V-8398**	1	SEAL-O-RING	
	4	1	**228-6061**	1	ROD AS	
	4A	1	**9R-3092**	2	BUSHING	
	5	1	**167-2200**	1	SEAL AS	
	6	1	**362-3819**	1	SEAL-U-CUP	
	7	1	**1H-6227**	1	SEAL-O-RING	
	8	1	**225-9524**	1	RING-WEAR	
	9	1	**231-3538**	1	SEAL-WIPER	
	10	1	**4M-0189**	1	SEAL-O-RING	
	11	1	**5J-5731**	1	LOCKNUT (1-3/4-12-THD)	
	12	1	**5J-7854**	1	SEAL AS	
	13	1	**5J-7865**	1	RING-BACKUP	
	14	1	**8T-4958**	1	RING-WEAR	

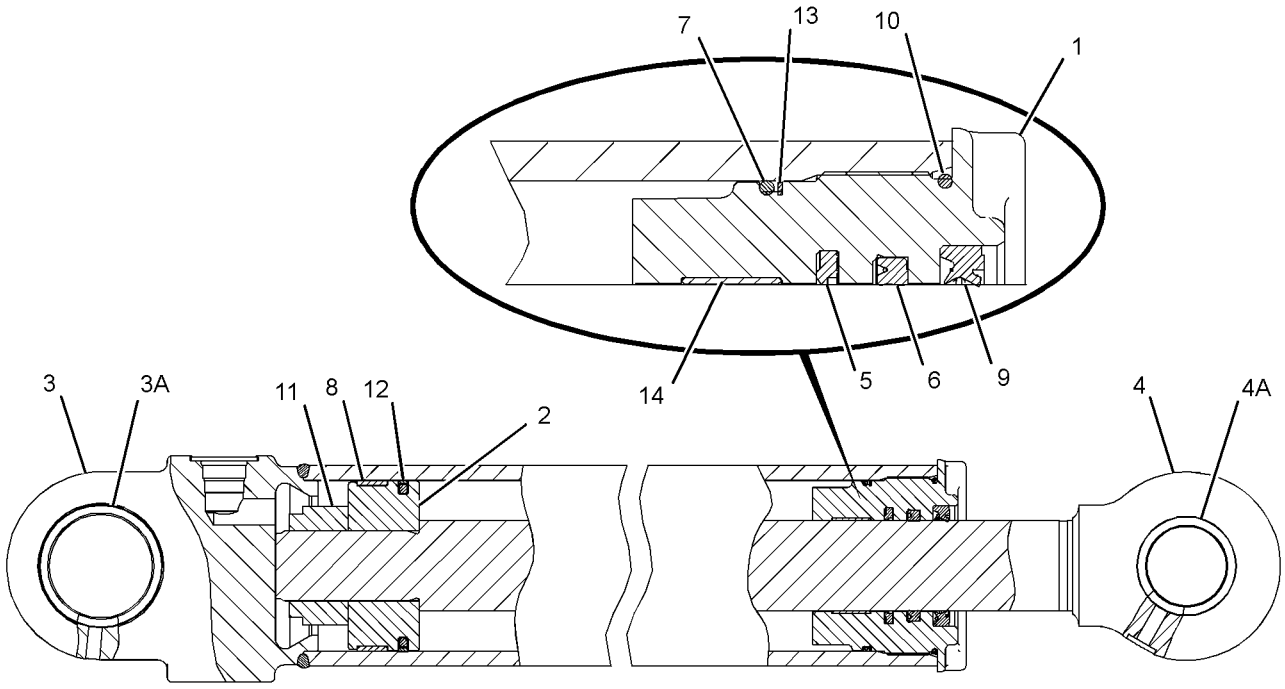

GRAPHIC #1 **<END>** g02113381

210-7098 CYLINDER GP-STICK–EXTENDABLE

S/N: CBD1-UP; MFG1-UP
76.2-MM (3-IN) BORE X 1164-MM (45.8-IN) STROKE
PART OF 271-1404 STICK GP
AN ATTACHMENT

SMCS-5458 **i04389857**

NOTE	REF NO	GRAPHIC REF	PART NUMBER	QTY	PART NAME 1 2 3 4 5 6 (PRODUCT LEVEL)	SEE PAGE
	1	1	**191-6159**	1	HEAD	
	2	1	**215-7457**	1	ROD AS	
	3	1	**215-7460**	1	CYLINDER AS	
		1	**6V-8398**	1	SEAL-O-RING	
	4	1	**229-8911**	1	PISTON	
J	5	1	**167-2186**	1	SEAL AS-BUFFER	
J	6	1	**167-2294**	1	SEAL-U-CUP	
M	7	1	**173-9779**	1	BOLT (M24X3X80-MM)	
J	8	1	**1H-7339**	1	SEAL-O-RING	
J	9	1	**223-3353**	1	RING-WEAR	
J	10	1	**226-8202**	1	SEAL-WIPER	
J	11	1	**4T-6780**	1	RING-WEAR	
J	12	1	**6J-2680**	1	SEAL-O-RING	
J	13	1	**6J-1972**	1	SEAL AS	
J	14	1	**6J-5731**	1	RING-BACKUP	
	15	1	**6V-8237**	1	WASHER (26X44X4-MM THK)	
					AVAILABLE REPAIR KIT(S):	
J			**338-7156**	1	KIT-HYD CYLINDER SEAL	
					(INCLUDES RINGS & SEALS)	
					(FOR USE WITH REHS1392	

J-KIT MARKED J SERVICES PARTS MARKED J
M-METRIC PART

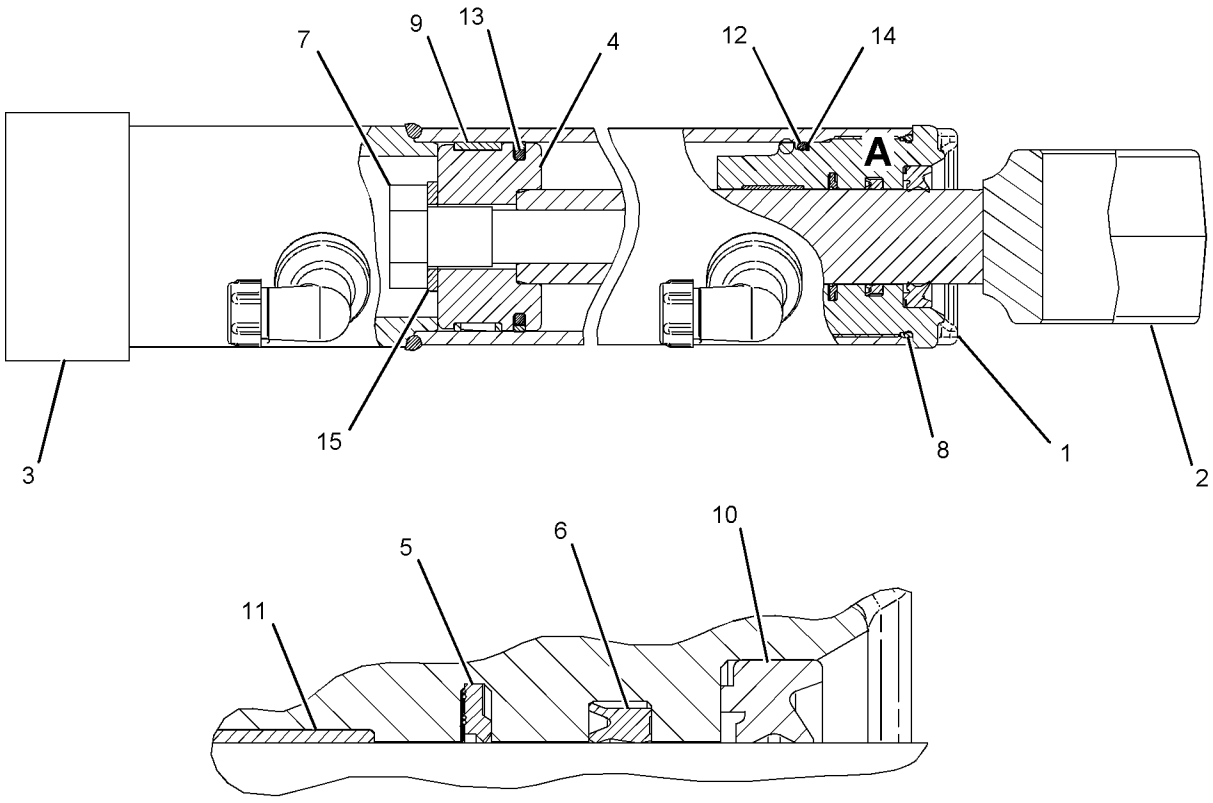

VIEW OF AREA A

GRAPHIC #1 **<END>** g01089695

275-4243 CYLINDER GP-THUMB

S/N: CBD1-UP; MFG1-UP
PART OF 224-6237 CYLINDER & LINES GP-THUMB
AN ATTACHMENT

SMCS-5362 **i02646495**

NOTE	REF NO	GRAPHIC REF	PART NUMBER	QTY	PART NAME 1 2 3 4 5 6 (PRODUCT LEVEL)	SEE PAGE
	1	1	**276-4168**	1	CYLINDER AS	
	2	1	**276-4169**	1	ROD AS	
	3	1	**276-4170**	1	PISTON	
	4	1	**276-4171**	1	HEAD	
	5	1	**282-6836**	1	STOP	
	6	1	**3B-8489**	2	FITTING-GREASE	
	7	1	**9R-0320**	4	BUSHING	
					AVAILABLE REPAIR KIT(S):	
			276-4172	1	KIT-SEAL	
					(INCLUDES SEALS, RINGS & SETSCREW)	

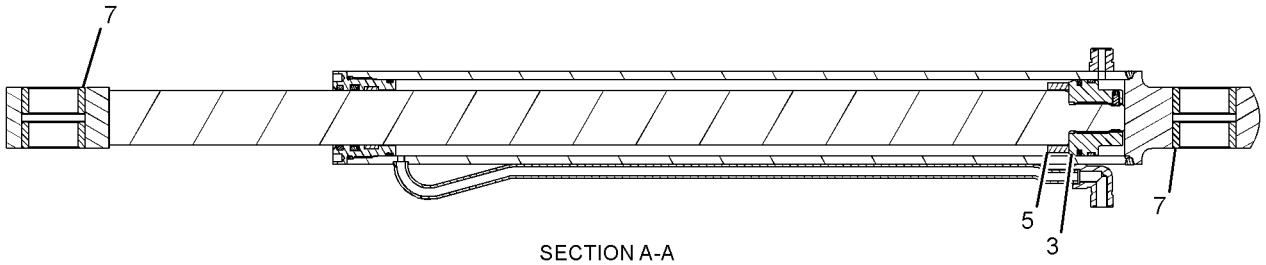

SECTION A-A

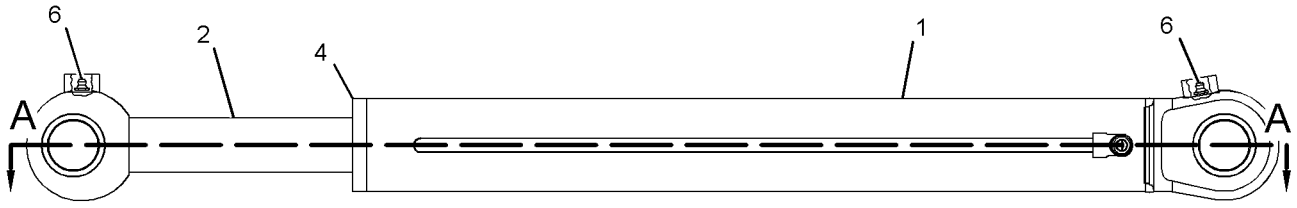

GRAPHIC #1 **<END>** g01234167

206-3553 CYLINDER GP-TILT

S/N: CBD1-UP; MFG1-UP
82.55-MM (3.2-IN) BORE X 642.1-MM (25.2-IN) STROKE
PART OF 213-9298, 318-9555 LOADER AR

SMCS-5104 **i02358262**

NOTE	REF NO	GRAPHIC REF	PART NUMBER	QTY	PART NAME 1 2 3 4 5 6 (PRODUCT LEVEL)	SEE PAGE
	1	1	**4T-7010**	1	PISTON	
R	2	1	**9T-3948**	1	ROD AS	
	2A	1	**9R-0320**	2	BEARING-SLEEVE	
	3	1	**206-3552**	1	CYLINDER AS	
	3A	1	**7J-9108**	2	SEAL-O-RING	
	3B	1	**9T-0766**	1	BEARING	
	4	1	**167-2192**	1	SEAL AS-BUFFER	
	5	1	**167-2302**	1	SEAL-U-CUP	
	6	1	**227-1143**	1	SEAL-WIPER	
	7	1	**191-6112**	1	HEAD	
	8	1	**1H-7339**	1	SEAL-O-RING	
	9	1	**2H-3931**	1	SEAL-O-RING	
	10	1	**4T-6779**	1	RING	
	11	1	**5P-8250**	1	WASHER (28X49X5-MM THK)	
	12	1	**6J-0793**	1	SEAL AS	
		1	**6J-0789**	1	RING-EXPANDER	
		1	**6J-0790**	1	SEAL	
	13	1	**5B-9385**	1	BOLT (1-14X2.5-IN)	
	14	1	**8J-2574**	1	RING-BACKUP	
	15	1	**8J-6371**	1	RING-WEAR	

R-REMFG PART MAY BE AVAILABLE

206-3553 CYLINDER GP-TILT *(contd.)* **i02358262**

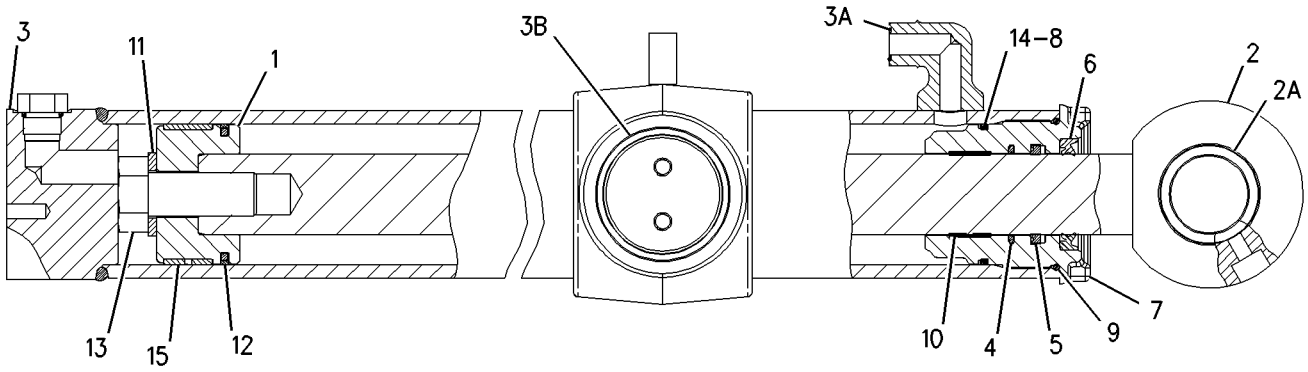

GRAPHIC #1 **<END>** g01004786

112-1826 DRIVE & MTG GP-PUMP

S/N: CBD1-UP; MFG1-UP
PART OF 214-6910, 214-6911, 214-6912, 214-6913, 323-3627, 323-3628, 323-3629, 323-3630 POWER TRAIN AR
AN ATTACHMENT

SMCS-3108, 5070 **i03477541**

NOTE	REF NO	GRAPHIC REF	PART NUMBER	QTY	PART NAME 1 2 3 4 5 6 (PRODUCT LEVEL)	SEE PAGE
M	1	1	**8T-9405**	4	BOLT-SOCKET HEAD (M4X0.7X16-MM)	
	2	1	**9U-8886**	1	RING-SEAL	
	3	1	**115-1918**	1	PLATE	
	4	1	**117-3534**	1	ADAPTER	
	5	1	**274-4555**	1	HUB	
Y	6	1	**128-5596**	1	SHAFT GP-PUMP DRIVE	691
	7	1	**175-7904**	1	SEAL-O-RING	
	8	1	**8T-4122**	2	WASHER-HARD (17X32X3.5-MM THK)	
M	9	1	**8T-7338**	2	BOLT (M16X2X45-MM)	

M-METRIC PART
Y-SEPARATE ILLUSTRATION

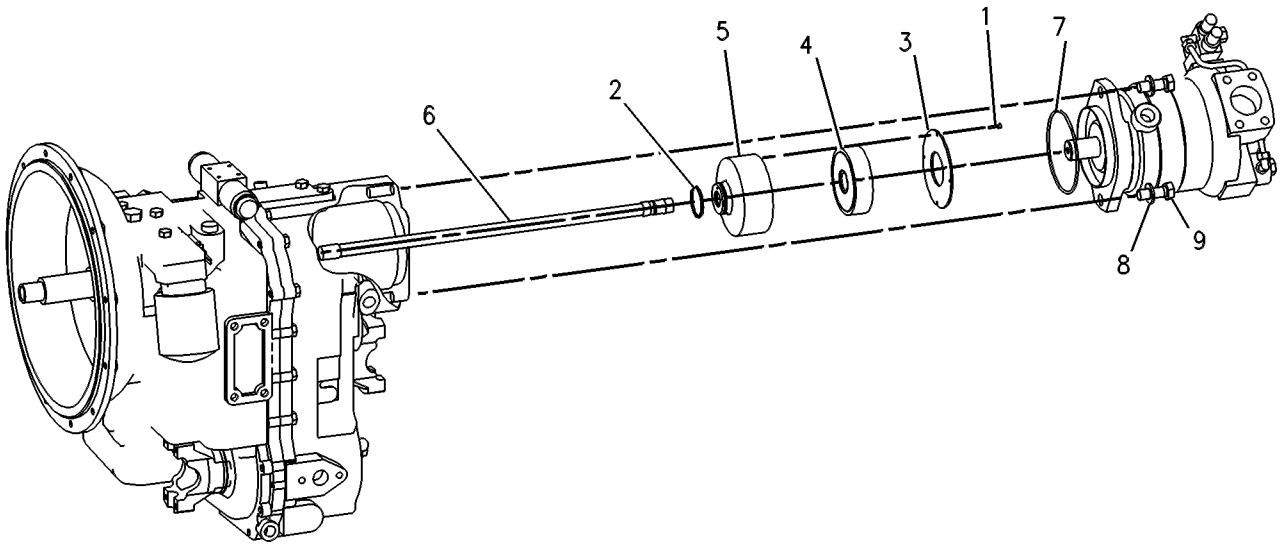

GRAPHIC #1 **<END>** g00131524

219-8566 FASTENER GP-VALVE–BANK

S/N: CBD1-UP; MFG1-UP
PART OF 209-9943 VALVE AR-BANK 2, 209-9944 VALVE AR-BANK 3
AN ATTACHMENT

SMCS-5051 **i02496193**

NOTE	REF NO	GRAPHIC REF	PART NUMBER	QTY	PART NAME 1 2 3 4 5 6 (PRODUCT LEVEL)	SEE PAGE
	1	1	**8T-4121**	3	WASHER-HARD (11X21X2.5-MM THK)	
M	2	1	**8T-4195**	3	BOLT (M10X1.5X30-MM)	

M-METRIC PART

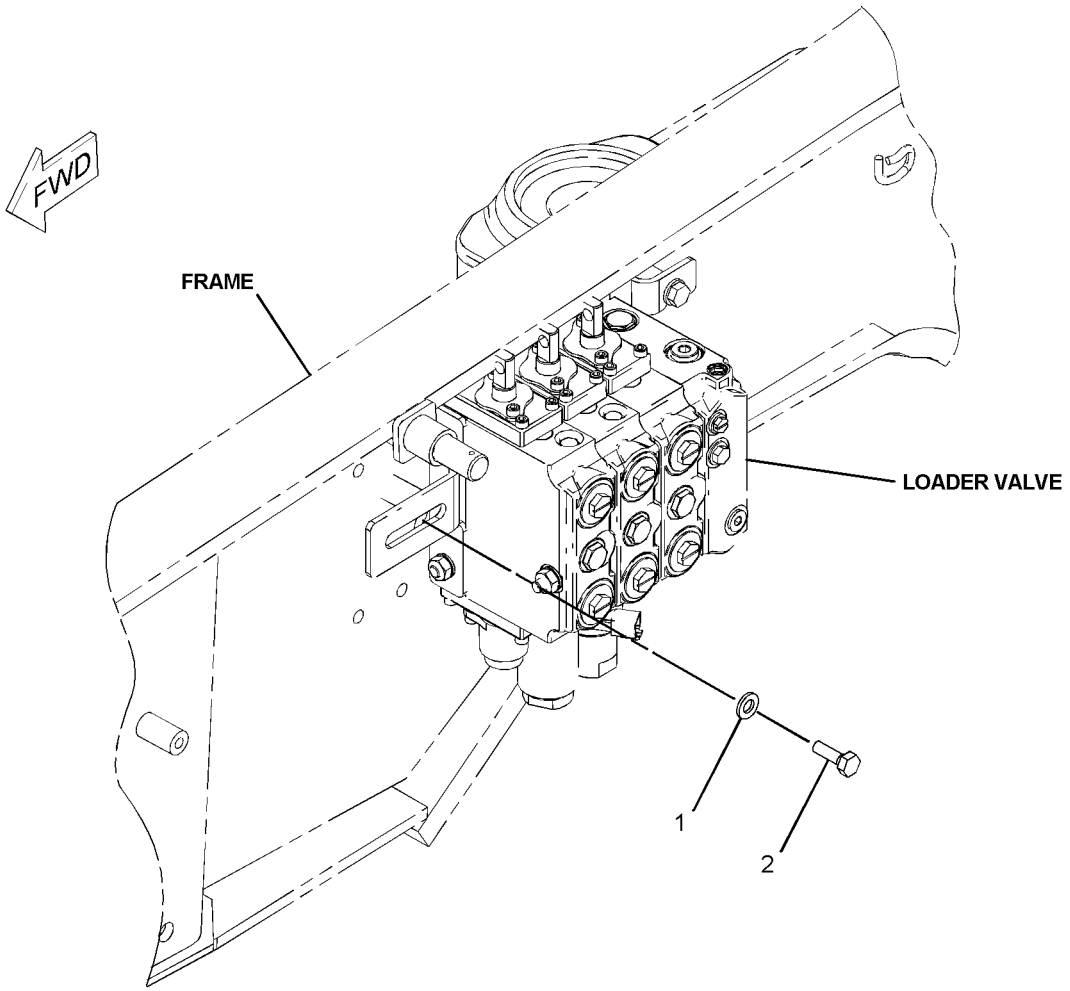

GRAPHIC #1 **<END>** g01082895

210-6243 FILTER GP-OIL–HYDRAULIC

S/N: CBD5745-UP; MFG1-UP

PART OF 214-2198, 297-0165 HYDRAULIC AR

SMCS-5068 **i04083651**

NOTE	REF NO	GRAPHIC REF	PART NUMBER	QTY	PART NAME 1 2 3 4 5 6 (PRODUCT LEVEL)	SEE PAGE
	1	1	**164-6709**	1	PLUG AS	
		1	**3J-1907**	1	SEAL-O-RING	
		1	**5F-9144**	1	SEAL-O-RING	
	2	1	*148-8335*	1	CONNECTOR AS	
		1	**5K-9090**	1	SEAL-O-RING	
		1	**6V-8635**	1	CONNECTOR	
		1	**7M-8485**	1	SEAL-O-RING	
	3	1	**6V-9830**	1	CAP AS	
	4	1	**6V-9833**	1	CAP AS	
	5	1	**126-1817**	1	FILTER-OIL (ULTRA HIGH EFFICIENCY) (HYDRAULIC)	

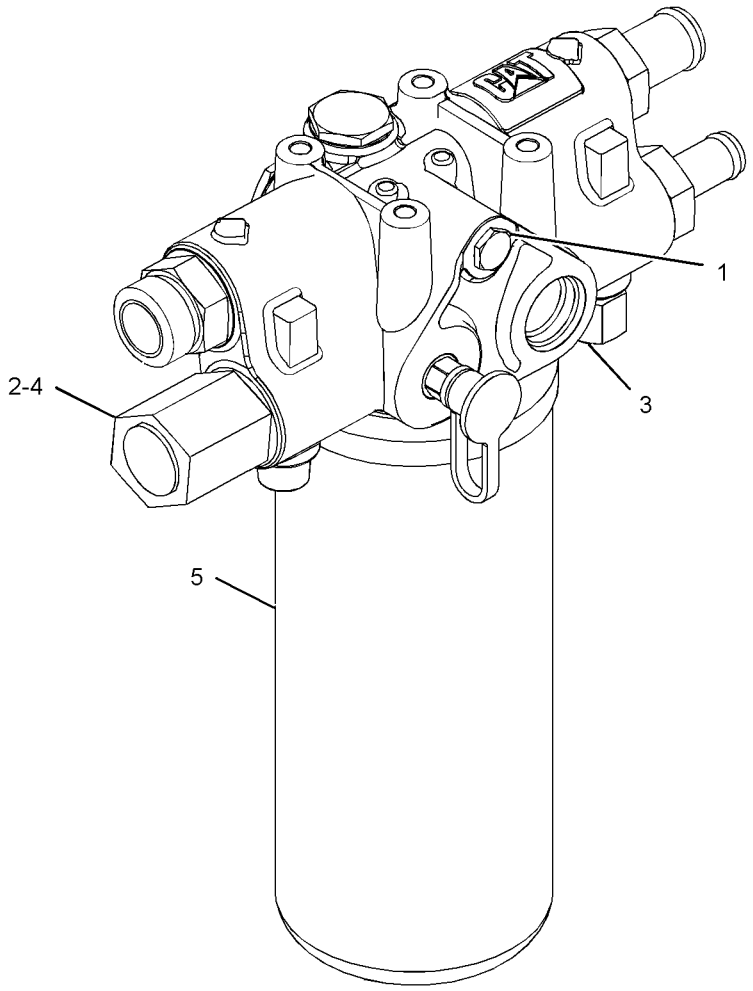

GRAPHIC #1 **<END>** g01694636

132-8769 FITTING GP-HYDRAULIC

S/N: MFG1-UP
AN ATTACHMENT

SMCS-5057 **i01456598**

NOTE	REF NO	GRAPHIC REF	PART NUMBER	QTY	PART NAME 1 2 3 4 5 6 (PRODUCT LEVEL)	SEE PAGE
	1	1	**106-0406**	1	FITTING (QUICK DISCONNECT, MALE)	
	2	1	**106-0401**	1	FITTING (QUICK DISCONNECT, FEMALE)	

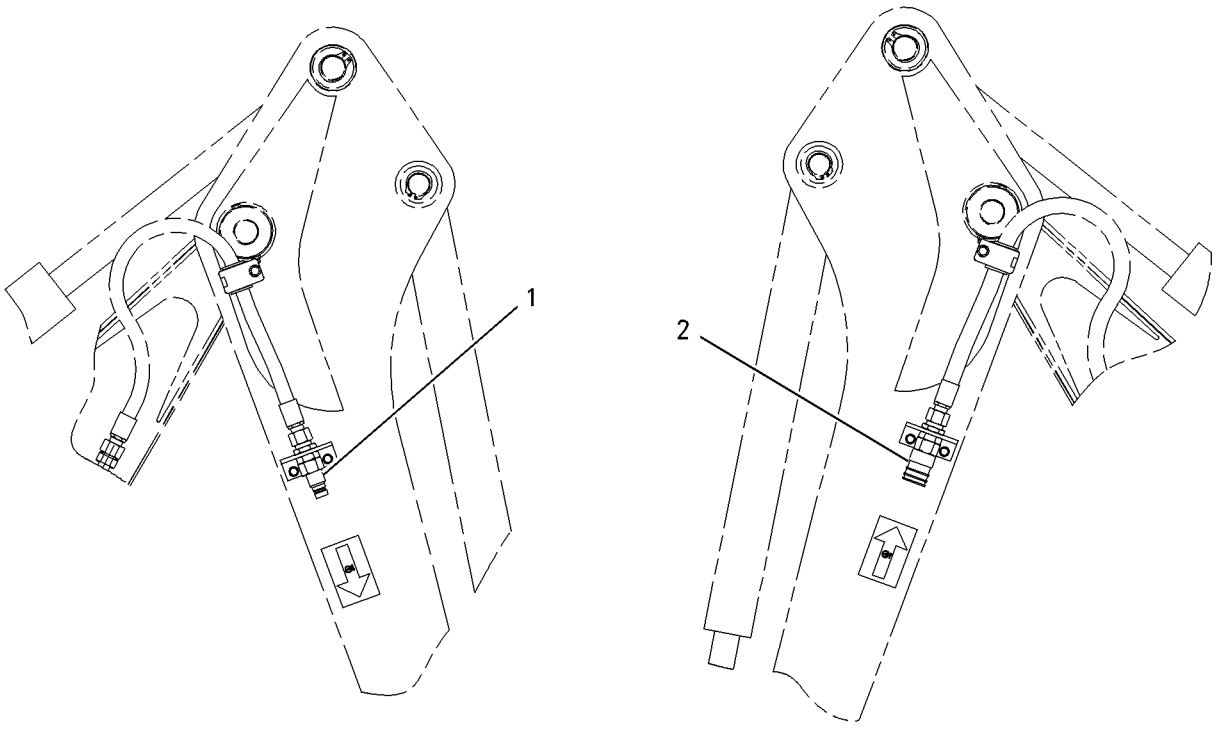

LEFT SIDE VIEW RIGHT SIDE VIEW

GRAPHIC #1 **<END>** g00759123

HYDRAULIC SYSTEM

214-2198 HYDRAULIC AR

S/N: CBD1-UP; MFG1-UP

PART OF 213-9271, 372-5174 COMMON AR

SMCS-5050 **i03996367**

NOTE	PART NUMBER	QTY	PART NAME 1 2 3 4 5 6 (PRODUCT LEVEL)	SEE PAGE
Y	**262-7050**	1	CYLINDER GP-STABILIZER (RH)	549
			S/N: CBD1-5744	
Y	**291-2682**	1	CYLINDER GP-STABILIZER (RH)	552
			S/N: CBD5745-UP	
Y	**262-7049**	1	CYLINDER GP-STABILIZER (LH)	547
			S/N: CBD1-5744	
Y	**291-2681**	1	CYLINDER GP-STABILIZER (LH)	551
			S/N: CBD5745-UP	
Y	**278-1971**	2	CYLINDER GP-HYDRAULIC (SWING)	539
			S/N: CBD1-5757	
Y	**269-0381**	2	CYLINDER GP-HYDRAULIC (SWING)	537
			S/N: CBD5758-UP	
Y	**210-6243**	1	FILTER GP-OIL (HYDRAULIC)	560
Y	*216-5332*	1	LINES GP-DRAIN	621
Y	*257-3160*	1	LINES GP-HYDRAULIC OIL COOLER	626
Y	*219-8568*	1	LINES GP-PILOT (SIGNAL)	648
Y	*219-8567*	1	LINES GP-PUMP	652
Y	*232-1248*	1	LINES GP-SWING	667
Y	**247-7867**	1	PUMP GP-PISTON	684
			S/N: CBD1-2163	
Y	**296-6714**	1	PUMP GP-PISTON	686
			S/N: CBD2164-6688	
Y	**350-0666**	1	PUMP GP-PISTON	690
			S/N: CBD6689-UP	
Y	**247-7868**	1	PUMP GP-METERING (HMU)	464
Y	*245-8777*	1	TANK & MTG GP-HYDRAULIC	692

Y-SEPARATE ILLUSTRATION

<END>

297-0165 HYDRAULIC AR

S/N: MFG1-UP

PART OF 291-9185 COMMON AR

SMCS-5050 **i04047754**

NOTE	PART NUMBER	QTY	PART NAME 1 2 3 4 5 6 (PRODUCT LEVEL)	SEE PAGE
Y	**269-0381**	2	CYLINDER GP-HYDRAULIC	537
Y	**291-2681**	1	CYLINDER GP-STABILIZER (LH)	551
Y	**291-2682**	1	CYLINDER GP-STABILIZER (RH)	552
Y	**210-6243**	1	FILTER GP-OIL (HYDRAULIC)	560
Y	*216-5332*	1	LINES GP-DRAIN	621
Y	*343-4096*	1	LINES GP-HYDRAULIC OIL COOLER	628
Y	*219-8568*	1	LINES GP-PILOT (SIGNAL)	648
Y	*219-8567*	1	LINES GP-PUMP	652
Y	*232-1248*	1	LINES GP-SWING	667
Y	**247-7868**	1	PUMP GP-METERING (HMU)	464
Y	**350-0666**	1	PUMP GP-PISTON	690
Y	*297-1232*	1	TANK & MTG GP-HYDRAULIC	694

Y-SEPARATE ILLUSTRATION

<END>

HYDRAULIC SYSTEM

220-5973 KICKOUT & POSITIONER GP

S/N: CBD1-2257

PART OF 213-9298 LOADER AR

SMCS-5109, 5112 **i02548979**

NOTE	REF NO	GRAPHIC REF	PART NUMBER	QTY	PART NAME 1 2 3 4 5 6 (PRODUCT LEVEL)	SEE PAGE
	1	1	**290-8140**	1	LEVER AS	
		1	**7Y-0336**	1	SPACER (24.5X44X24-MM THK)	
		1	**9R-2614**	1	BEARING	
M	2	1	**8T-4189**	2	BOLT (M8X1.25X20-MM)	
	3	1	**268-5689**	1	FILM-IDENTIFICATION (BUCKET LEVEL)	
	4	1	**8T-0706**	1	RING-RETAINING	
	5	1	**8T-5063**	1	ROD END	
	6	1	**9R-3255**	1	LEVER	
	7	1	**9R-5301**	2	PIN-COTTER	
	8	1	**128-7902**	1	SPACER (60.25X75X6-MM THK)	
B	9	1	**128-7903**	1	SPACER (61X114.3X3-MM THK)	
B	10	1	**128-7905**	1	SPACER (61X114.3X1-MM THK)	
	11	1	**279-6052**	1	LINK AS	
	12	1	**130-5891**	1	LEVER AS	
	13	1	**130-7952**	1	PLATE	
	14	1	**140-6009**	1	LEVER AS	
	15	1	**141-6343**	1	SPRING	
	16	1	**290-8139**	1	PLATE AS	
	17	1	**106-7301**	1	ROD AS	
	18	1	**227-5571**	1	TUBE AS	
	19	1	**272-0555**	1	PIVOT AS	
	20	1	**1B-8736**	1	KEY-WOODRUFF	
	21	1	**3B-8489**	2	FITTING-GREASE	
	22	1	**272-0557**	1	PLATE AS	
	23	1	**8C-6955**	1	END-YOKE ROD	
	24	1	**8T-4123**	8	WASHER (22X35X3.5-MM THK)	
M	25	1	**8T-4133**	2	NUT (M10X1.5-THD)	
M	26	1	**8T-4182**	1	BOLT (M10X1.5X45-MM)	
	27	1	**9R-2806**	2	PIN	
	28	1	**9R-2807**	4	CLIP	
	29	1	**8T-4224**	2	WASHER-HARD (8.8X16X2-MM THK)	

B-USE AS REQUIRED
M-METRIC PART

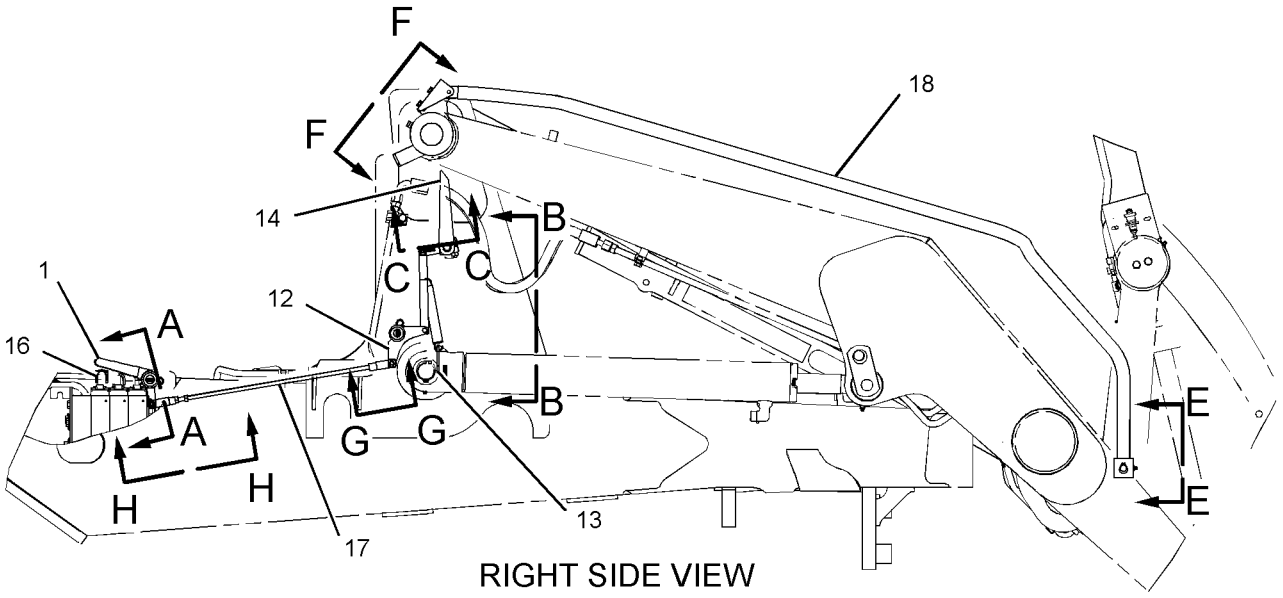

RIGHT SIDE VIEW

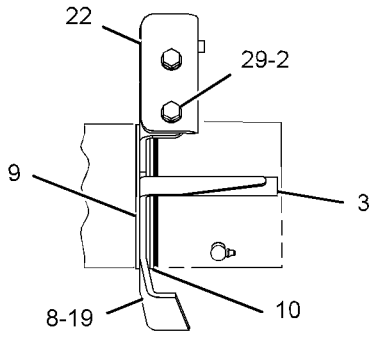

VIEW F-F

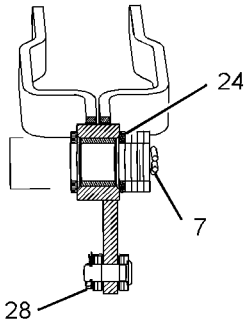

SECTION A-A

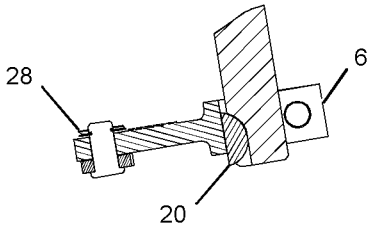

SECTION C-C

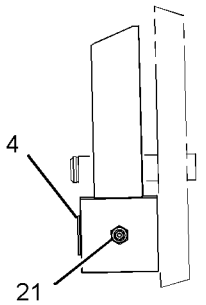

VIEW E-E

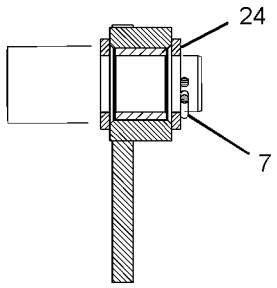

SECTION D-D

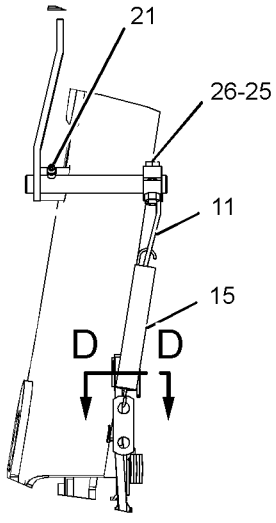

VIEW B-B

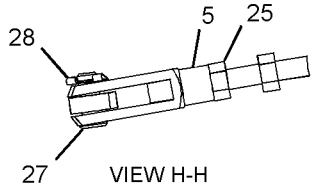

VIEW H-H

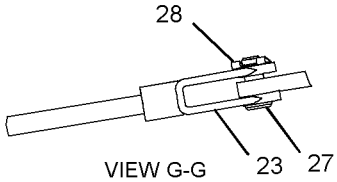

VIEW G-G

GRAPHIC #1

<END>

g01254288

220-5973 KICKOUT & POSITIONER GP

S/N: CBD2258-UP

PART OF 213-9298 LOADER AR

SMCS-5109, 5112 **i02827290**

NOTE	REF NO	GRAPHIC REF	PART NUMBER	QTY	PART NAME 1 2 3 4 5 6 (PRODUCT LEVEL)	SEE PAGE
	1	1	**290-8140**	1	LEVER AS	
		1	**7Y-0336**	1	SPACER (24.5X44X24-MM THK)	
		1	**9R-2614**	1	BEARING	
M	2	1	**8T-4189**	2	BOLT (M8X1.25X20-MM)	
C	3	1	**268-5689**	1	FILM-IDENTIFICATION (BUCKET LEVEL)	
	4	1	**8T-0706**	1	RING-RETAINING	
	5	1	**8T-5063**	1	ROD END	
	6	1	**9R-3255**	1	LEVER	
	7	1	**9R-5301**	2	PIN-COTTER	
	8	1	**128-7902**	1	SPACER (60.25X75X6-MM THK)	
B	9	1	**128-7903**	1	SPACER (61X114.3X3-MM THK)	
B	10	1	**128-7905**	1	SPACER (61X114.3X1-MM THK)	
	11	1	**279-6052**	1	LINK AS	
	12	1	**130-5891**	1	LEVER AS	
	13	1	**130-7952**	1	PLATE	
	14	1	**140-6009**	1	LEVER AS	
	15	1	**141-6343**	1	SPRING	
	16	1	**290-8139**	1	PLATE AS	
	17	1	**106-7301**	1	ROD AS	
C	18	1	**297-2831**	1	PIPE AS	
	19	1	**272-0555**	1	PIVOT AS	
	20	1	**1B-8736**	1	KEY-WOODRUFF	
	21	1	**3B-8489**	2	FITTING-GREASE	
	22	1	**272-0557**	1	PLATE AS	
	23	1	**8C-6955**	1	END-YOKE ROD	
	24	1	**8T-4123**	8	WASHER (22X35X3.5-MM THK)	
M	25	1	**8T-4133**	2	NUT (M10X1.5-THD)	
M	26	1	**8T-4182**	1	BOLT (M10X1.5X45-MM)	
	27	1	**9R-2806**	2	PIN	
	28	1	**9R-2807**	4	CLIP	
	29	1	**8T-4224**	2	WASHER-HARD (8.8X16X2-MM THK)	

B-USE AS REQUIRED
C-CHANGE FROM PREVIOUS TYPE
M-METRIC PART

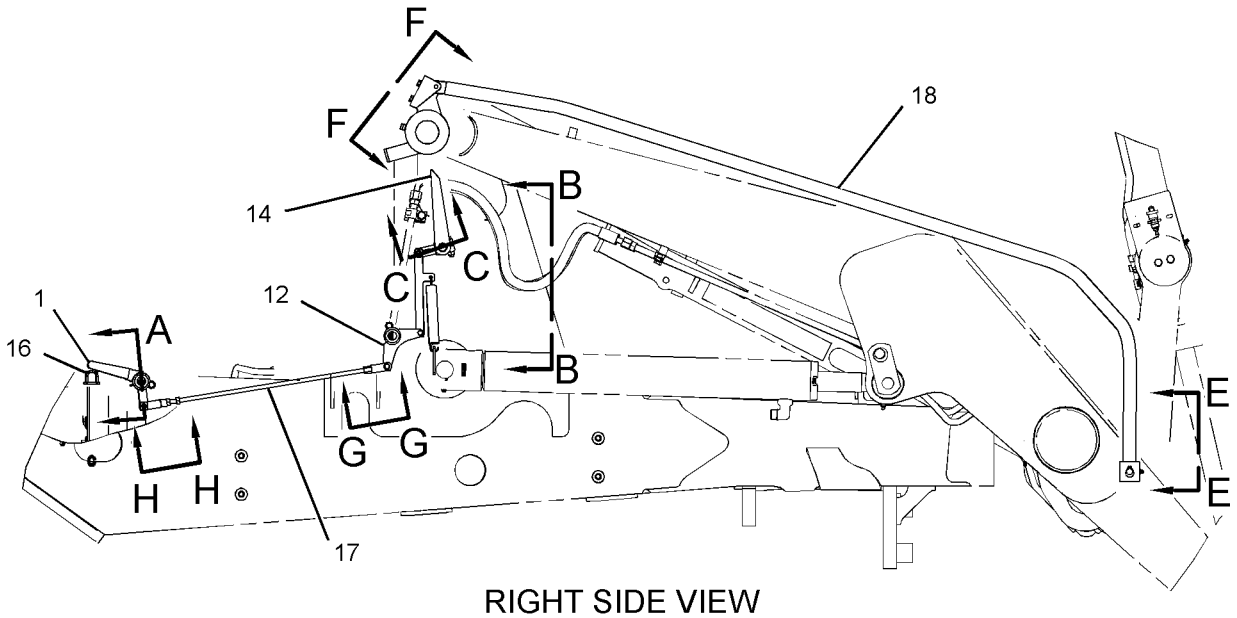

RIGHT SIDE VIEW

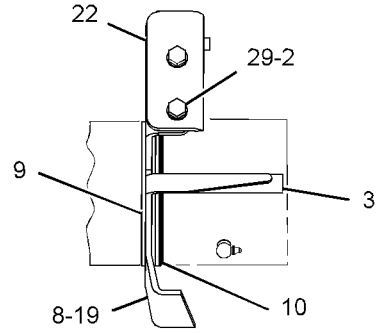

VIEW F-F

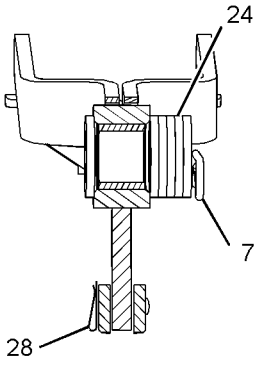

SECTION A

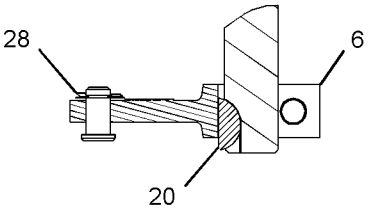

SECTION C-C

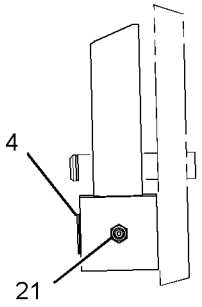

VIEW E-E

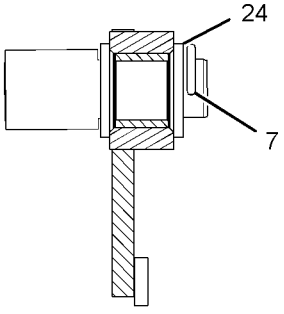

SECTION D-D

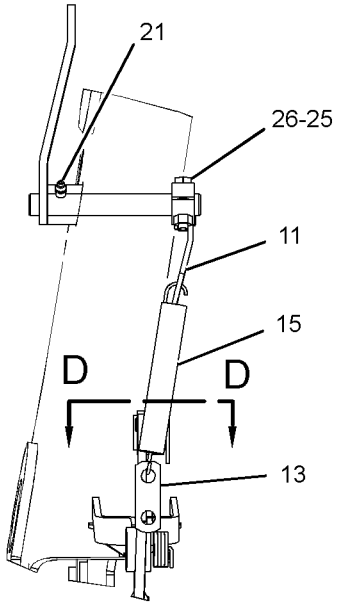

VIEW B-B

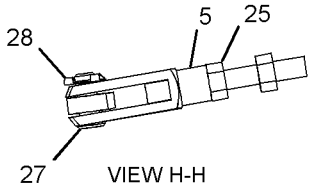

VIEW H-H

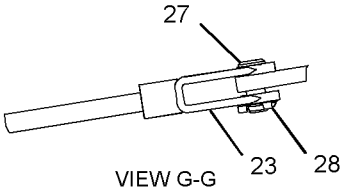

VIEW G-G

GRAPHIC #1

<END>

g01398339

HYDRAULIC SYSTEM

220-5973 KICKOUT & POSITIONER GP

S/N: CBD2258-UP; MFG1-UP

PART OF 213-9298, 318-9555 LOADER AR

SMCS-5109, 5112 **i04346111**

NOTE	REF NO	GRAPHIC REF	PART NUMBER	QTY	PART NAME 1 2 3 4 5 6 (PRODUCT LEVEL)	SEE PAGE
	1	1	**9R-3255**	1	LEVER	
	2	1	**106-7301**	1	ROD AS	
	3	1	**128-7902**	1	SPACER (60.25X75X6-MM THK)	
B	4	1	**128-7903**	1	SPACER (61X114.3X3-MM THK)	
B	5	1	**128-7905**	1	SPACER (61X114.3X1-MM THK)	
	6	1	**130-5891**	1	LEVER AS	
		1	**7Y-0336**	1	SPACER (24.5X44X24-MM THK)	
		1	**9R-2614**	1	BEARING	
		1	**9R-3135**	1	PIN	
	7	1	**130-7952**	1	PLATE	
	8	1	**140-6009**	1	LEVER AS	
	9	1	**141-6343**	1	SPRING	
	10	1	**268-5689**	1	FILM-IDENTIFICATION (BUCKET LEVEL)	
	11	1	**279-6052**	1	LINK AS	
	12	1	**290-8139**	1	PLATE AS	
		1	**220-5974**	1	PLATE	
C	13	1	**316-3317**	1	LEVER AS	
	13A	1	**9R-2614**	1	BEARING	
C	14	1	**316-5561**	1	PIPE AS	
C	15	1	**326-8834**	1	PLATE	
	16	1	**1B-8736**	1	KEY-WOODRUFF	
	17	1	**3B-8489**	2	FITTING-GREASE	
	18	1	**8C-6955**	1	END-YOKE ROD	
	19	1	**8T-0706**	1	RING-RETAINING	
C	20	1	**8T-4121**	4	WASHER-HARD (11X21X2.5-MM THK)	
	21	1	**8T-4123**	8	WASHER (22X35X3.5-MM THK)	
M	22	1	**8T-4133**	2	NUT (M10X1.5-THD)	
M	23	1	**8T-4182**	1	BOLT (M10X1.5X45-MM)	
	24	1	**8T-5063**	1	ROD END	
C	25	1	**8T-6658**	1	PIN	
	26	1	**9R-2806**	2	PIN	
C	27	1	**9R-2807**	5	CLIP	
	28	1	**9R-5301**	2	PIN-COTTER	

B-USE AS REQUIRED
C-CHANGE FROM PREVIOUS TYPE
M-METRIC PART

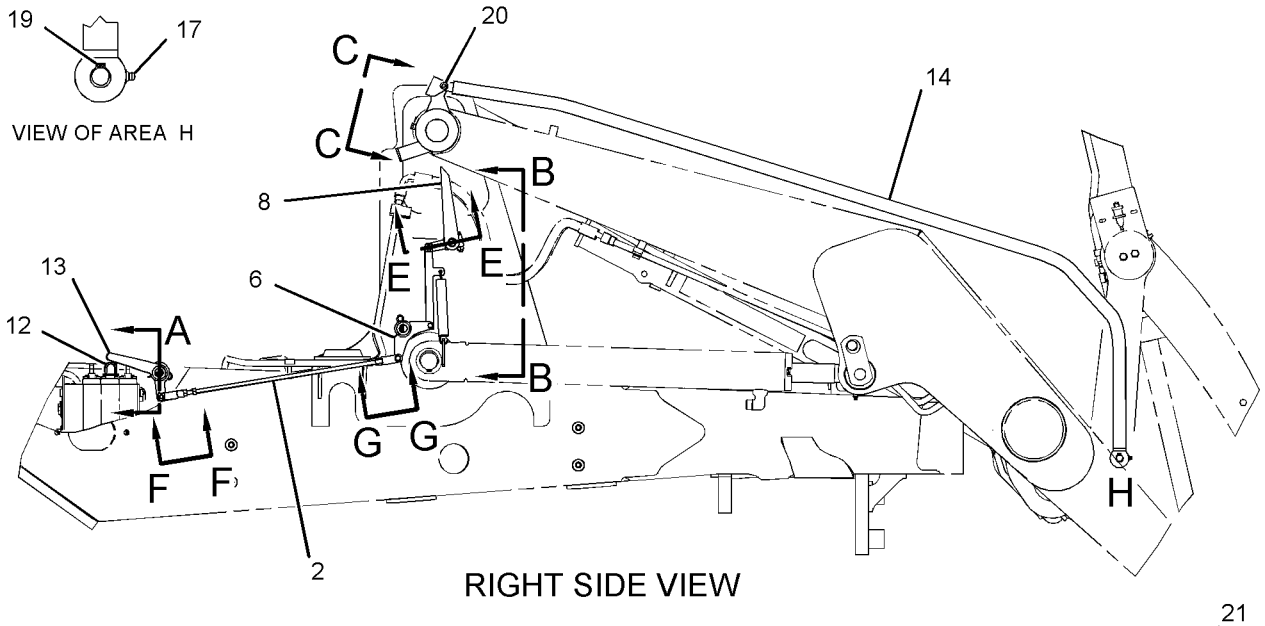

RIGHT SIDE VIEW

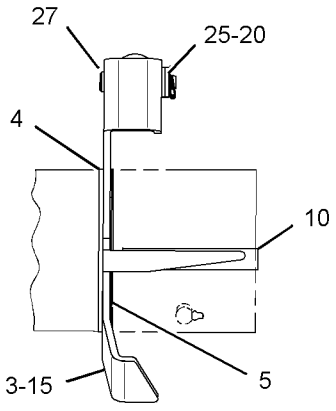

VIEW C-C

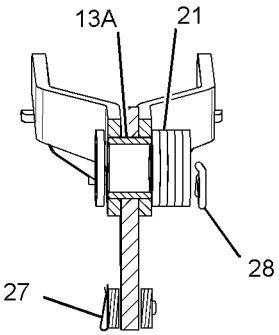

SECTION A

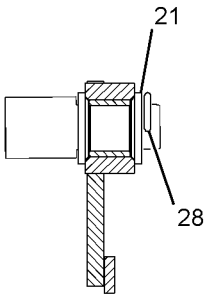

SECTION D-D

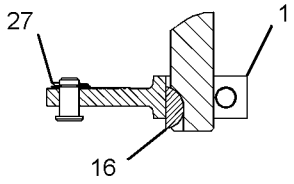

SECTION E-E

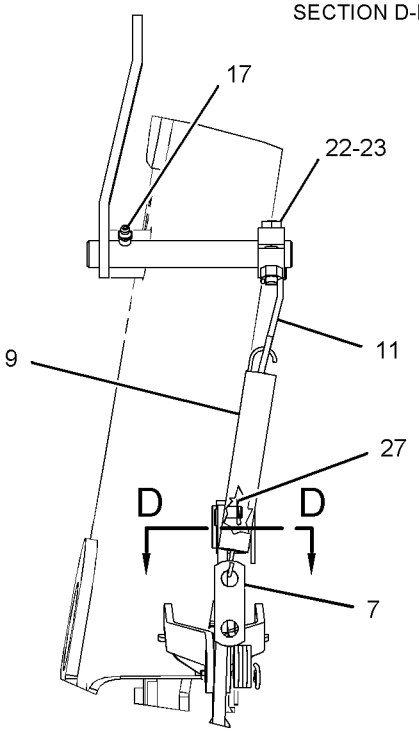

VIEW B-B

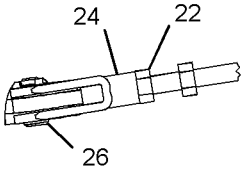

VIEW F-F

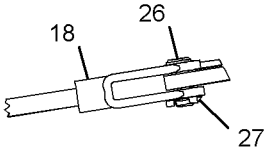

VIEW G-G

GRAPHIC #1 **<END>** g02586096

HYDRAULIC SYSTEM

249-7912 LINES GP-BACKHOE AUXILIARY

S/N: CBD1-8758
AN ATTACHMENT

SMCS-5057 **i02568325**

NOTE	REF NO	GRAPHIC REF	PART NUMBER	QTY	PART NAME 1 2 3 4 5 6 (PRODUCT LEVEL)	SEE PAGE
	1	1	**4W-3753**	2	SPACER (13.5X25X38.1-MM THK)	
	2	1	**106-0401**	1	FITTING (QUICK DISCONNECT, FEMALE)	
	3	1	**106-0406**	1	FITTING (QUICK DISCONNECT, MALE)	
	4	1	**109-1260**	2	BRACKET	
	5	1	**144-8344**	1	SPACER (11X19X20-MM THK)	
	6	1	*155-2026*	1	UNION AS	
		1	**5K-9090**	2	SEAL-O-RING	
		1	**6V-8998**	1	UNION	
	7	1	**217-2617**	1	TUBE AS	
I	8	1	**217-2699**	1	HOSE AS	
	9	1	*241-6226*	1	TEE AS	
		1	**6V-8398**	1	SEAL-O-RING	
		1	**6V-9746**	1	SEAL-O-RING	
		1	**7J-9108**	1	SEAL-O-RING	
		1	**241-6225**	1	TEE	
	10	1	**241-8448**	2	FILM-WARNING (HYD PRESS, READ OMM, U.S.)	
I	11	1	**290-6711**	1	HOSE AS	
	12	1	**251-9360**	1	TUBE AS	
I	13	1	**252-0200**	1	HOSE AS	
	14	1	**277-4543**	1	BRACKET AS	
	15	1	**281-4726**	2	FILM-INSTRUCTION (OIL FLOW DIRECTION)	
	16	1	*148-8392*	1	ELBOW AS	
		1	**6V-9746**	1	SEAL-O-RING	
		1	**6V-9853**	1	ELBOW	
	17	1	*150-3053*	2	CONNECTOR AS	
					(EACH INCLUDES)	
		1	**6V-9746**	1	SEAL-O-RING	
		1	**7M-8485**	1	SEAL-O-RING	
		1	**108-3872**	1	CONNECTOR	
I	18	1	**262-4459**	1	HOSE AS	
	19	1	**2P-1293**	2	LOCKNUT (1-3/16-12-THD)	
	20	1	**5K-9090**	2	SEAL-O-RING	
	21	1	**5P-7466**	4	CLIP (SLOT)	
	22	1	**5P-7467**	4	CLIP (TAB)	
	23	1	**5P-8112**	4	GROMMET	
	24	1	**8S-0023**	1	CLIP (SLOT)	
	25	1	**6V-9170**	1	NUT-BULKHEAD (1-14-THD)	
	26	1	**6V-9172**	1	NUT (1-7/16-12-THD)	
	27	1	**6V-9746**	1	SEAL-O-RING	
	28	1	**7X-7729**	2	WASHER (11X25X3-MM THK)	
	29	1	**8T-1889**	3	CLIP (SLOT)	
	30	1	**8T-1890**	3	CLIP (TAB)	
	31	1	**8T-4121**	8	WASHER-HARD (11X21X2.5-MM THK)	
M	32	1	**8T-4133**	1	NUT (M10X1.5-THD)	
M	33	1	**8T-4136**	5	BOLT (M10X1.5X25-MM)	
M	34	1	**7X-2549**	2	BOLT (M12X1.75X100-MM)	
M	35	1	**8T-4185**	1	BOLT (M10X1.5X50-MM)	
M	36	1	**8T-4196**	2	BOLT (M10X1.5X35-MM)	
	37	1	**8T-4223**	2	WASHER-HARD (13.5X25.5X3-MM THK)	
	38	1	**8S-0024**	1	CLIP (TAB)	

I-REFER TO HYDRAULIC INFORMATION SYSTEM
M-METRIC PART

249-7912 **LINES GP-BACKHOE AUXILIARY** *(contd.)* **i02568325**

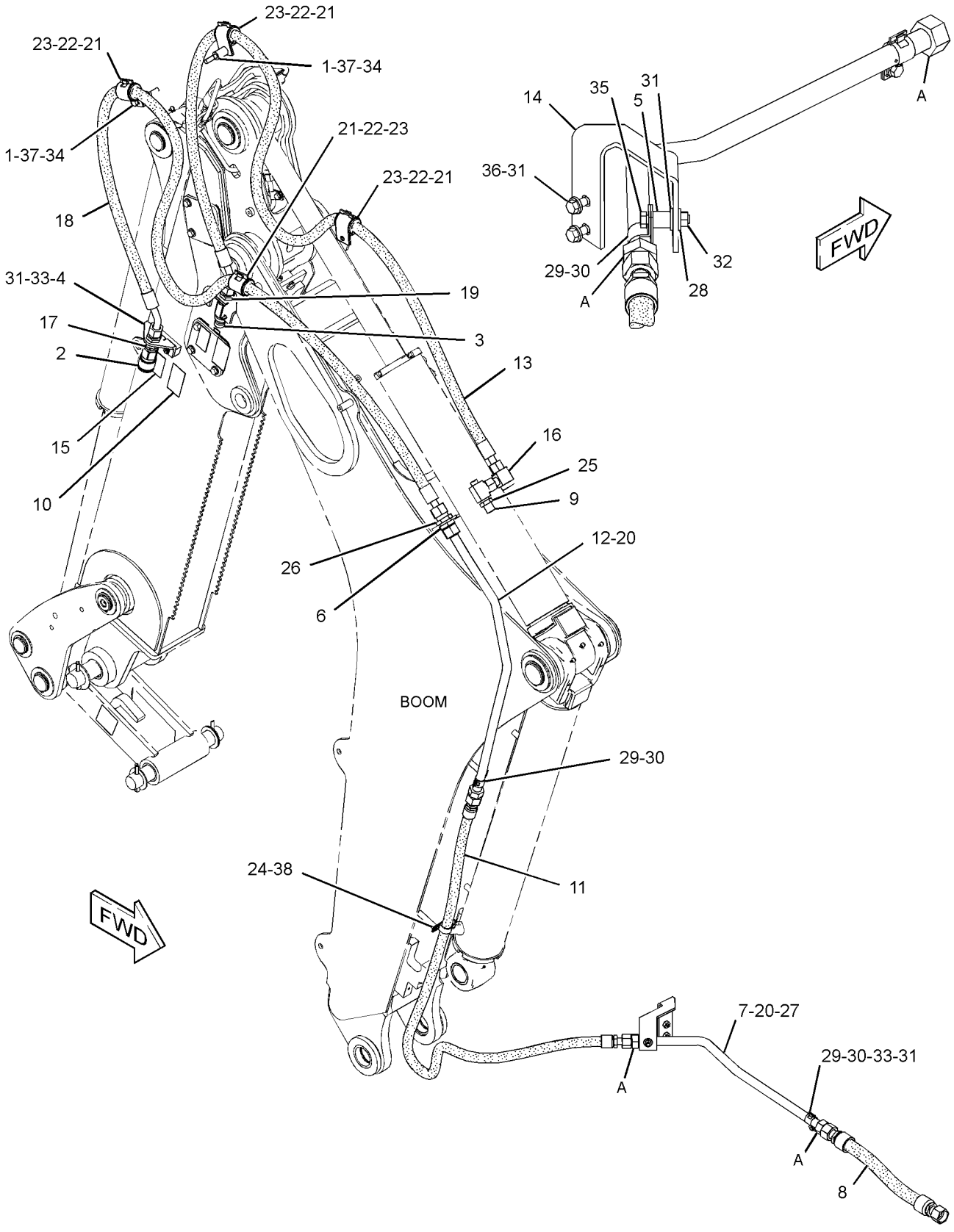

GRAPHIC #1 **<END>** g01318075

HYDRAULIC SYSTEM

249-7912 LINES GP-BACKHOE AUXILIARY

S/N: CBD8759-UP; MFG1-UP

AN ATTACHMENT

SMCS-5057 **i04438114**

NOTE	REF NO	GRAPHIC REF	PART NUMBER	QTY	PART NAME 1 2 3 4 5 6 (PRODUCT LEVEL)	SEE PAGE
	1	1	**106-0401**	1	FITTING (QUICK DISCONNECT, FEMALE)	
	2	1	**106-0406**	1	FITTING (QUICK DISCONNECT, MALE)	
	3	1	**109-1260**	2	BRACKET	
	4	1	**144-8344**	1	SPACER (11X19X20-MM THK)	
	5	1	**217-2617**	1	TUBE AS	
I	6	1	**217-2699**	1	HOSE AS	
	7	1	*241-6226*	1	TEE AS	
		1	**6V-8398**	1	SEAL-O-RING	
		1	**6V-9746**	1	SEAL-O-RING	
		1	**7J-9108**	1	SEAL-O-RING	
		1	**241-6225**	1	TEE	
B	8	1	**241-8448**	2	FILM-WARNING (HYD PRESS, READ OMM, U.S.)	
					—OR—	
BC		1	**241-8450**	2	FILM-WARNING (HYD PRESS, READ OMM, INTL)	
	9	1	**251-9360**	1	TUBE AS	
	10	1	**277-4543**	1	BRACKET AS	
C	11	1	**281-4726**	2	FILM-INSTRUCTION (OIL FLOW DIRECTION)	
I	12	1	**290-6711**	1	HOSE AS	
CI	13	1	**312-2598**	1	HOSE AS	
CI	14	1	**312-2599**	1	HOSE AS	
	15	1	*148-8392*	1	ELBOW AS	
		1	**6V-9746**	1	SEAL-O-RING	
		1	**6V-9853**	1	ELBOW	
	16	1	*150-3053*	2	CONNECTOR AS	
					(EACH INCLUDES)	
		1	**6V-9746**	1	SEAL-O-RING	
		1	**7M-8485**	1	SEAL-O-RING	
		1	**108-3872**	1	CONNECTOR	
	17	1	*155-2026*	1	UNION AS	
		1	**5K-9090**	2	SEAL-O-RING	
		1	**6V-8998**	1	UNION	
	18	1	**2P-1293**	2	LOCKNUT (1-3/16-12-THD)	
	19	1	**5K-9090**	2	SEAL-O-RING	
C	20	1	**5P-7466**	2	CLIP (SLOT)	
C	21	1	**5P-7467**	2	CLIP (TAB)	
C	22	1	**5P-8112**	2	GROMMET	
	23	1	**6V-9170**	1	NUT-BULKHEAD (1-14-THD)	
	24	1	**6V-9172**	1	NUT (1-7/16-12-THD)	
	25	1	**6V-9746**	1	SEAL-O-RING	
	26	1	**8S-0023**	1	CLIP (SLOT)	
	27	1	**8S-0024**	1	CLIP (TAB)	
	28	1	**8T-1889**	3	CLIP (SLOT)	
	29	1	**8T-1890**	3	CLIP (TAB)	
C	30	1	**8T-4121**	10	WASHER-HARD (11X21X2.5-MM THK)	
M	31	1	**8T-4133**	1	NUT (M10X1.5-THD)	
M	32	1	**8T-4136**	5	BOLT (M10X1.5X25-MM)	
M	33	1	**8T-4185**	1	BOLT (M10X1.5X50-MM)	
M	34	1	**8T-4196**	2	BOLT (M10X1.5X35-MM)	
CM	35	1	**8T-4910**	2	BOLT (M12X1.75X60-MM)	
C	36	1	*153-6241*	2	ELBOW AS	
					(EACH INCLUDES)	
		1	**6V-8398**	1	SEAL-O-RING	
		1	**8C-8989**	1	ELBOW	

B-USE AS REQUIRED
C-CHANGE FROM PREVIOUS TYPE
I-REFER TO HYDRAULIC INFORMATION SYSTEM
M-METRIC PART

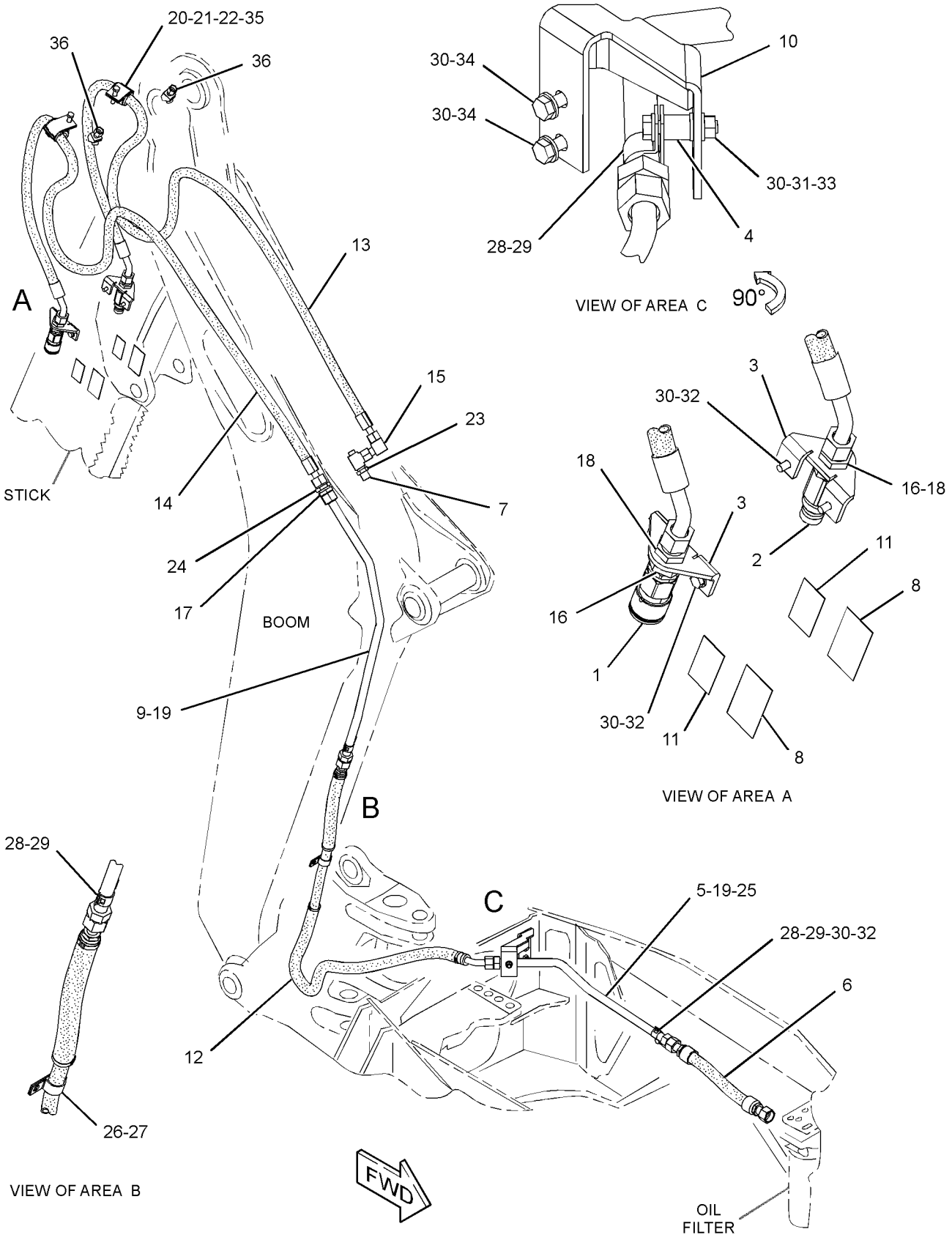

GRAPHIC #1 **<END>** g02176568

HYDRAULIC SYSTEM

262-4212 LINES GP-BACKHOE AUXILIARY

S/N: CBD1-3839
AN ATTACHMENT
TYPE 1

SMCS-5057 **i02634532**

NOTE	REF NO	GRAPHIC REF	PART NUMBER	QTY	PART NAME 1 2 3 4 5 6 (PRODUCT LEVEL)	SEE PAGE
	1	1	**106-0401**	1	FITTING (QUICK DISCONNECT, FEMALE)	
	2	1	**106-0406**	1	FITTING (QUICK DISCONNECT, MALE)	
	3	1	**109-1260**	2	BRACKET	
	4	1	**144-8344**	1	SPACER (11X19X20-MM THK)	
	5	1	*155-2026*	2	UNION AS	
					(EACH INCLUDES)	
		1	**5K-9090**	2	SEAL-O-RING	
		1	**6V-8998**	1	UNION	
	6	1	**235-5729**	1	VALVE AS-MANUAL (DIRECTIONAL FLOW)	
	7	1	**241-8448**	2	FILM-WARNING (HYD PRESS, READ OMM, U.S.)	
	8	1	**251-9360**	1	TUBE AS	
	9	1	**262-3036**	1	BRACKET	
I	10	1	**262-3038**	1	HOSE AS	
I	11	1	**262-4203**	2	HOSE AS	
	12	1	**262-4217**	1	TUBE AS	
	13	1	**262-4220**	1	TUBE AS	
	14	1	**277-4543**	1	BRACKET AS	
	15	1	**286-0689**	1	TUBE AS	
	16	1	**109-5825**	1	ELBOW	
	17	1	*148-8327*	1	CONNECTOR AS	
		1	**3D-2824**	1	SEAL-O-RING	
		1	**6V-8637**	1	CONNECTOR	
		1	**6V-9746**	1	SEAL-O-RING	
	18	1	*148-8335*	1	CONNECTOR AS	
		1	**5K-9090**	1	SEAL-O-RING	
		1	**6V-8635**	1	CONNECTOR	
		1	**7M-8485**	1	SEAL-O-RING	
	19	1	*148-8347*	1	ELBOW AS	
		1	**3D-2824**	1	SEAL-O-RING	
		1	**6V-9007**	1	ELBOW	
		1	**6V-9746**	1	SEAL-O-RING	
	20	1	*150-3053*	2	CONNECTOR AS	
					(EACH INCLUDES)	
		1	**6V-9746**	1	SEAL-O-RING	
		1	**7M-8485**	1	SEAL-O-RING	
		1	**108-3872**	1	CONNECTOR	
	21	1	*260-9143*	1	ELBOW AS	
		1	**6V-9746**	1	SEAL-O-RING	
		1	**109-5825**	1	ELBOW	
I	22	1	**290-6711**	1	HOSE AS	
I	23	1	**290-6712**	1	HOSE AS	
	24	1	**2P-1293**	2	LOCKNUT (1-3/16-12-THD)	
	25	1	**5K-9090**	2	SEAL-O-RING	
	26	1	**5P-4116**	2	WASHER-HARD (8.8X20.5X2-MM THK)	
	27	1	**5P-7466**	2	CLIP (SLOT)	
	28	1	**5P-7467**	2	CLIP (TAB)	
	29	1	**5P-8112**	2	GROMMET	
	30	1	**6V-9172**	2	NUT (1-7/16-12-THD)	
	31	1	**6V-9746**	2	SEAL-O-RING	
	32	1	**8S-0023**	2	CLIP (SLOT)	
	33	1	**8S-0024**	2	CLIP (TAB)	
	34	1	**8T-1887**	1	CLIP (SLOT)	
	35	1	**8T-1888**	1	CLIP (TAB)	
	36	1	**8T-1889**	2	CLIP (SLOT)	
	37	1	**8T-1890**	2	CLIP (TAB)	

262-4212 **LINES GP-BACKHOE AUXILIARY** *(contd.)* **i02634532**

NOTE	REF NO	GRAPHIC REF	PART NUMBER	QTY	PART NAME 1 2 3 4 5 6 (PRODUCT LEVEL)	SEE PAGE
	38	1	**8T-4121**	12	WASHER-HARD (11X21X2.5-MM THK)	
M	39	1	**8T-4133**	1	NUT (M10X1.5-THD)	
M	40	1	**8T-4136**	4	BOLT (M10X1.5X25-MM)	
M	41	1	**8T-4137**	2	BOLT (M10X1.5X20-MM)	
M	42	1	**8T-4185**	1	BOLT (M10X1.5X50-MM)	
M	43	1	**8T-4189**	2	BOLT (M8X1.25X20-MM)	
M	44	1	**8T-4196**	2	BOLT (M10X1.5X35-MM)	
BM	45	1	**8T-4910**	2	BOLT (M12X1.75X60-MM)	

B-USE AS REQUIRED
I-REFER TO HYDRAULIC INFORMATION SYSTEM
M-METRIC PART

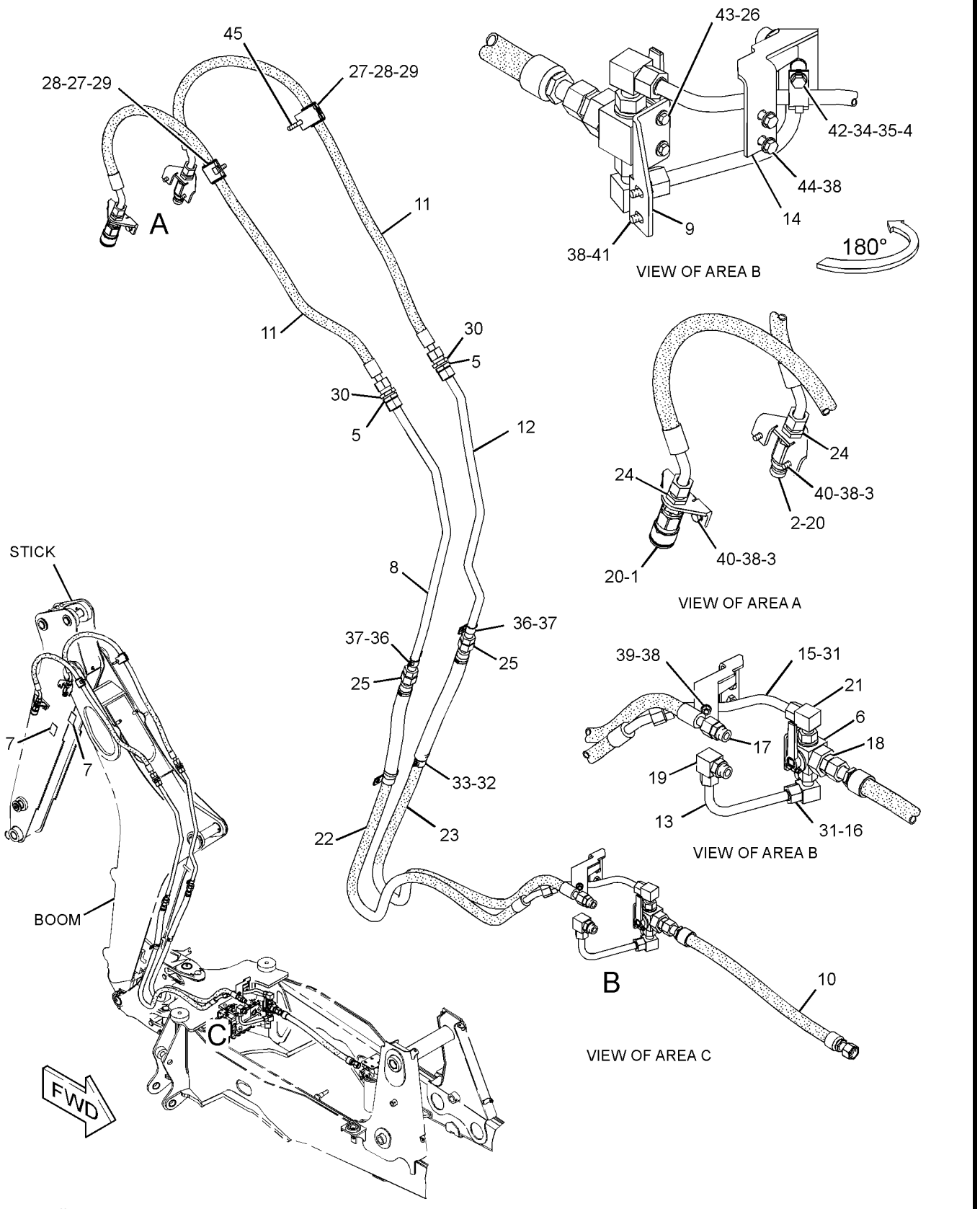

GRAPHIC #1 **<END>** g01332996

HYDRAULIC SYSTEM

262-4212 LINES GP-BACKHOE AUXILIARY

S/N: CBD1-3839
AN ATTACHMENT
TYPE 2

SMCS-5057 **i03043721**

NOTE	REF NO	GRAPHIC REF	PART NUMBER	QTY	PART NAME 1 2 3 4 5 6 (PRODUCT LEVEL)	SEE PAGE
	1	2	**106-0401**	1	FITTING (QUICK DISCONNECT, FEMALE)	
	2	2	**106-0406**	1	FITTING (QUICK DISCONNECT, MALE)	
C	3	2	**278-4497**	2	BRACKET	
	4	2	**144-8344**	1	SPACER (11X19X20-MM THK)	
	5	2	*155-2026*	2	UNION AS	
					(EACH INCLUDES)	
		2	**5K-9090**	2	SEAL-O-RING	
		2	**6V-8998**	1	UNION	
	6	2	**235-5729**	1	VALVE AS-MANUAL (DIRECTIONAL FLOW)	
	7	1	**241-8448**	2	FILM-WARNING (HYD PRESS, READ OMM, U.S.)	
	8	2	**251-9360**	1	TUBE AS	
	9	2	**262-3036**	1	BRACKET	
I	10	2	**262-3038**	1	HOSE AS	
I	11	2	**262-4203**	2	HOSE AS	
	12	2	**262-4217**	1	TUBE AS	
	13	2	**262-4220**	1	TUBE AS	
	14	2	**277-4543**	1	BRACKET AS	
	15	2	**286-0689**	1	TUBE AS	
	16	2	**109-5825**	1	ELBOW	
	17	2	*148-8327*	1	CONNECTOR AS	
		2	**3D-2824**	1	SEAL-O-RING	
		2	**6V-8637**	1	CONNECTOR	
		2	**6V-9746**	1	SEAL-O-RING	
	18	2	*148-8335*	1	CONNECTOR AS	
		2	**5K-9090**	1	SEAL-O-RING	
		2	**6V-8635**	1	CONNECTOR	
		2	**7M-8485**	1	SEAL-O-RING	
	19	2	*148-8347*	1	ELBOW AS	
		2	**3D-2824**	1	SEAL-O-RING	
		2	**6V-9007**	1	ELBOW	
		2	**6V-9746**	1	SEAL-O-RING	
	20	2	*150-3053*	2	CONNECTOR AS	
					(EACH INCLUDES)	
		2	**6V-9746**	1	SEAL-O-RING	
		2	**7M-8485**	1	SEAL-O-RING	
		2	**108-3872**	1	CONNECTOR	
	21	2	**260-9143**	1	ELBOW AS	
		2	**6V-9746**	1	SEAL-O-RING	
		2	**109-5825**	1	ELBOW	
I	22	2	**290-6711**	1	HOSE AS	
I	23	2	**290-6712**	1	HOSE AS	
	24	2	**2P-1293**	2	LOCKNUT (1-3/16-12-THD)	
	25	2	**5K-9090**	2	SEAL-O-RING	
	26	2	**5P-4116**	2	WASHER-HARD (8.8X20.5X2-MM THK)	
	27	2	**5P-7466**	2	CLIP (SLOT)	
	28	2	**5P-7467**	2	CLIP (TAB)	
	29	2	**5P-8112**	2	GROMMET	
	30	2	**6V-9172**	2	NUT (1-7/16-12-THD)	
	31	2	**6V-9746**	2	SEAL-O-RING	
	32	2	**8S-0023**	1	CLIP (SLOT)	
	33	2	**8S-0024**	1	CLIP (TAB)	
	34	2	**8T-1887**	1	CLIP (SLOT)	
	35	2	**8T-1888**	1	CLIP (TAB)	
	36	2	**8T-1889**	2	CLIP (SLOT)	
	37	2	**8T-1890**	2	CLIP (TAB)	

262-4212 **LINES GP-BACKHOE AUXILIARY** *(contd.)* **i03043721**

NOTE	REF NO	GRAPHIC REF	PART NUMBER	QTY	PART NAME 1 2 3 4 5 6 (PRODUCT LEVEL)	SEE PAGE
	38	2	**8T-4121**	12	WASHER-HARD (11X21X2.5-MM THK)	
M	39	2	**8T-4133**	1	NUT (M10X1.5-THD)	
M	40	2	**8T-4136**	4	BOLT (M10X1.5X25-MM)	
M	41	2	**8T-4137**	2	BOLT (M10X1.5X20-MM)	
M	42	2	**8T-4185**	1	BOLT (M10X1.5X50-MM)	
M	43	2	**8T-4189**	2	BOLT (M8X1.25X20-MM)	
M	44	2	**8T-4196**	2	BOLT (M10X1.5X35-MM)	
BM	45	2	**8T-4910**	2	BOLT (M12X1.75X60-MM)	
C	46	2	**204-2281**	2	STRAP-CABLE	
C	47	2	**278-4498**	2	BRACKET	
C	48	2	*148-8449*	2	TEE AS-SWIVEL	
					(EACH INCLUDES)	
		2	**6V-9746**	2	SEAL-O-RING	
		2	**6V-9839**	1	TEE-SWIVEL	
C	49	2	**6V-9832**	2	CAP AS	

B-USE AS REQUIRED
C-CHANGE FROM PREVIOUS TYPE
I-REFER TO HYDRAULIC INFORMATION SYSTEM
M-METRIC PART

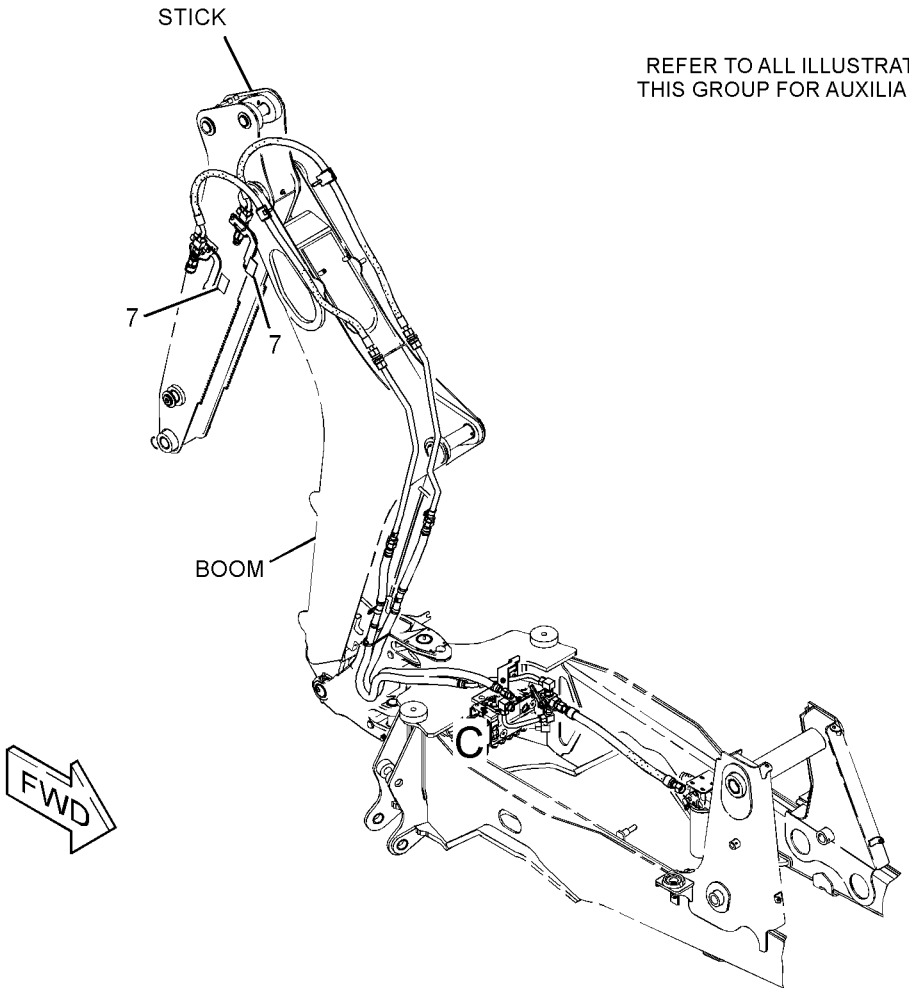

GRAPHIC #1 g01585962

262-4212 **LINES GP-BACKHOE AUXILIARY** *(contd.)* **i03043721**

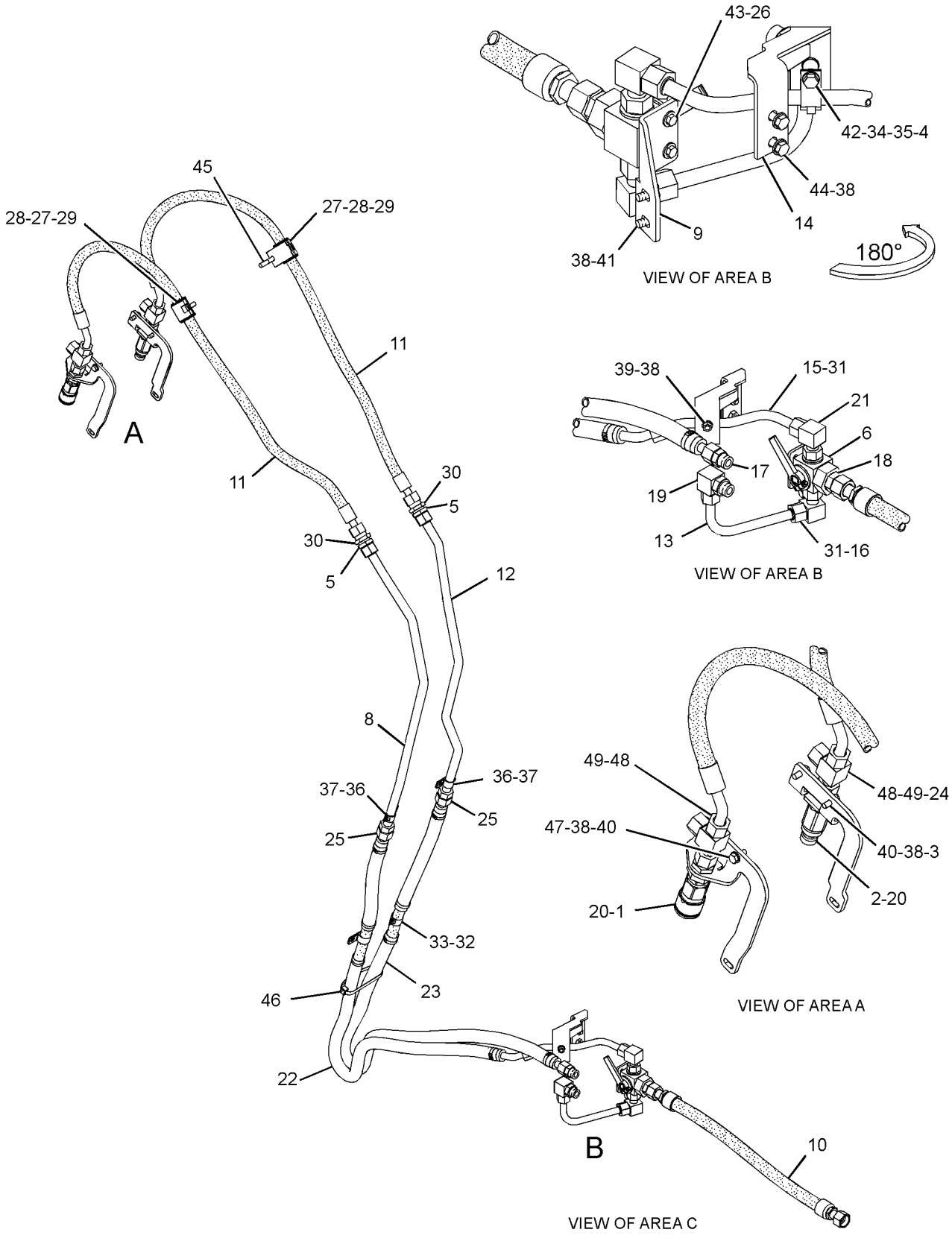

GRAPHIC #2 **<END>** g01585657

HYDRAULIC SYSTEM

262-4212 LINES GP-BACKHOE AUXILIARY

S/N: CBD3840-UP; MFG1-UP

AN ATTACHMENT

SMCS-5057 **i03247367**

NOTE	REF NO	GRAPHIC REF	PART NUMBER	QTY	PART NAME 1 2 3 4 5 6 (PRODUCT LEVEL)	SEE PAGE
	1	2	**106-0401**	1	FITTING (QUICK DISCONNECT, FEMALE)	
	2	2	**106-0406**	1	FITTING (QUICK DISCONNECT, MALE)	
	3	2	**278-4497**	2	BRACKET	
	4	2	**144-8344**	1	SPACER (11X19X20-MM THK)	
	5	2	*155-2026*	2	UNION AS	
					(EACH INCLUDES)	
		2	**5K-9090**	2	SEAL-O-RING	
		2	**6V-8998**	1	UNION	
	6	2	**235-5729**	1	VALVE AS-MANUAL (DIRECTIONAL FLOW)	
	7	1	**241-8448**	2	FILM-WARNING (HYD PRESS, READ OMM, U.S.)	
	8	2	**251-9360**	1	TUBE AS	
	9	2	**262-3036**	1	BRACKET	
I	10	2	**262-3038**	1	HOSE AS	
I	11	2	**262-4203**	2	HOSE AS	
	12	2	**262-4217**	1	TUBE AS	
C	13	2	**304-8129**	1	TUBE AS	
	14	2	**277-4543**	1	BRACKET AS	
	15	2	**286-0689**	1	TUBE AS	
	16	2	**109-5825**	1	ELBOW	
	17	2	*148-8327*	1	CONNECTOR AS	
		2	**3D-2824**	1	SEAL-O-RING	
		2	**6V-8637**	1	CONNECTOR	
		2	**6V-9746**	1	SEAL-O-RING	
	18	2	*148-8335*	1	CONNECTOR AS	
		2	**5K-9090**	1	SEAL-O-RING	
		2	**6V-8635**	1	CONNECTOR	
		2	**7M-8485**	1	SEAL-O-RING	
	19	2	*148-8347*	1	ELBOW AS	
		2	**3D-2824**	1	SEAL-O-RING	
		2	**6V-9007**	1	ELBOW	
		2	**6V-9746**	1	SEAL-O-RING	
	20	2	*150-3053*	2	CONNECTOR AS	
					(EACH INCLUDES)	
		2	**6V-9746**	1	SEAL-O-RING	
		2	**7M-8485**	1	SEAL-O-RING	
		2	**108-3872**	1	CONNECTOR	
	21	2	*260-9143*	1	ELBOW AS	
		2	**6V-9746**	1	SEAL-O-RING	
		2	**109-5825**	1	ELBOW	
I	22	2	**290-6711**	1	HOSE AS	
I	23	2	**290-6712**	1	HOSE AS	
	24	2	**2P-1293**	2	LOCKNUT (1-3/16-12-THD)	
	25	2	**5K-9090**	2	SEAL-O-RING	
	26	2	**5P-4116**	2	WASHER-HARD (8.8X20.5X2-MM THK)	
	27	2	**5P-7466**	2	CLIP (SLOT)	
	28	2	**5P-7467**	2	CLIP (TAB)	
	29	2	**5P-8112**	2	GROMMET	
	30	2	**6V-9172**	2	NUT (1-7/16-12-THD)	
	31	2	**6V-9746**	2	SEAL-O-RING	
	32	2	**8S-0023**	1	CLIP (SLOT)	
	33	2	**8S-0024**	1	CLIP (TAB)	
	34	2	**8T-1887**	1	CLIP (SLOT)	
	35	2	**8T-1888**	1	CLIP (TAB)	
	36	2	**8T-1889**	2	CLIP (SLOT)	
	37	2	**8T-1890**	2	CLIP (TAB)	
	38	2	**8T-4121**	12	WASHER-HARD (11X21X2.5-MM THK)	

262-4212 **LINES GP-BACKHOE AUXILIARY** *(contd.)* **i03247367**

NOTE	REF NO	GRAPHIC REF	PART NUMBER	QTY	PART NAME 1 2 3 4 5 6 (PRODUCT LEVEL)	SEE PAGE
M	39	2	**8T-4133**	1	NUT (M10X1.5-THD)	
M	40	2	**8T-4136**	4	BOLT (M10X1.5X25-MM)	
M	41	2	**8T-4137**	2	BOLT (M10X1.5X20-MM)	
M	42	2	**8T-4185**	1	BOLT (M10X1.5X50-MM)	
M	43	2	**8T-4189**	2	BOLT (M8X1.25X20-MM)	
M	44	2	**8T-4196**	2	BOLT (M10X1.5X35-MM)	
BM	45	2	**8T-4910**	2	BOLT (M12X1.75X60-MM)	
	46	2	**204-2281**	2	STRAP-CABLE	
	47	2	**278-4498**	2	BRACKET	
	48	2	*148-8449*	2	TEE AS-SWIVEL	
					(EACH INCLUDES)	
		2	**6V-9746**	2	SEAL-O-RING	
		2	**6V-9839**	1	TEE-SWIVEL	
	49	2	**6V-9832**	2	CAP AS	

B-USE AS REQUIRED
C-CHANGE FROM PREVIOUS TYPE
I-REFER TO HYDRAULIC INFORMATION SYSTEM
M-METRIC PART

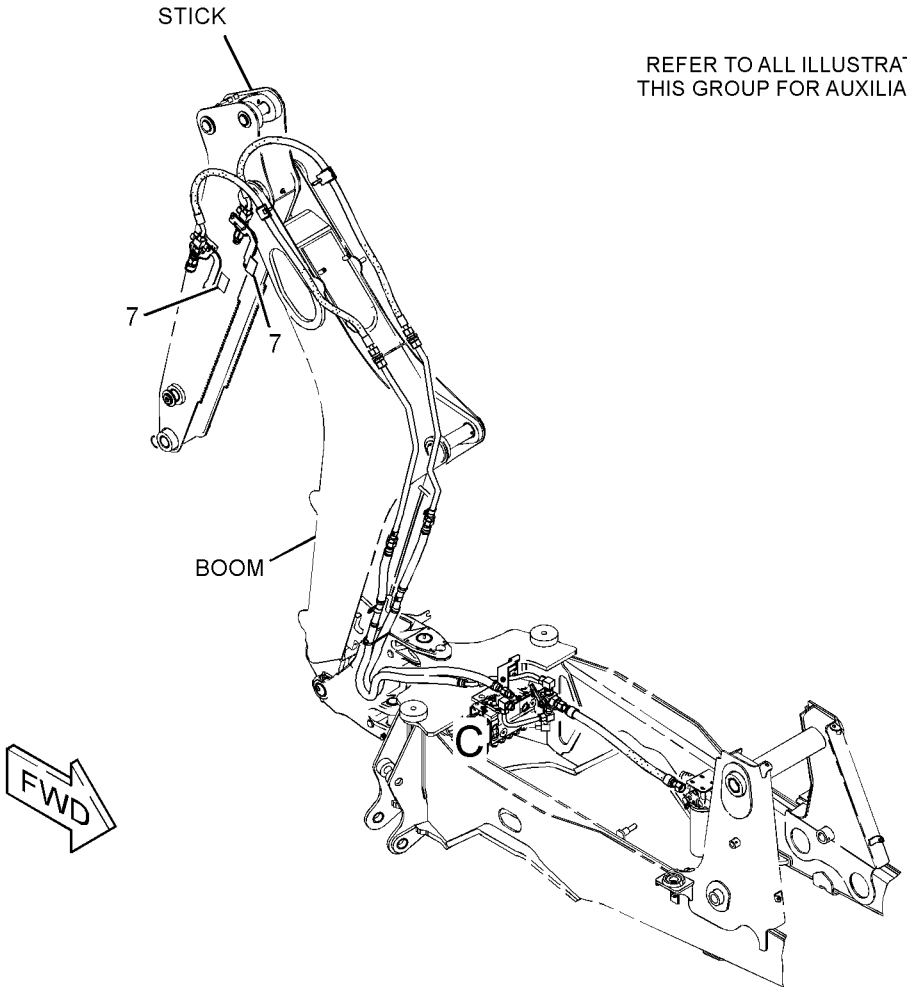

REFER TO ALL ILLUSTRATIONS OF THIS GROUP FOR AUXILIARY VIEWS

GRAPHIC #1 g01585962

262-4212 **LINES GP-BACKHOE AUXILIARY** *(contd.)* **i03247367**

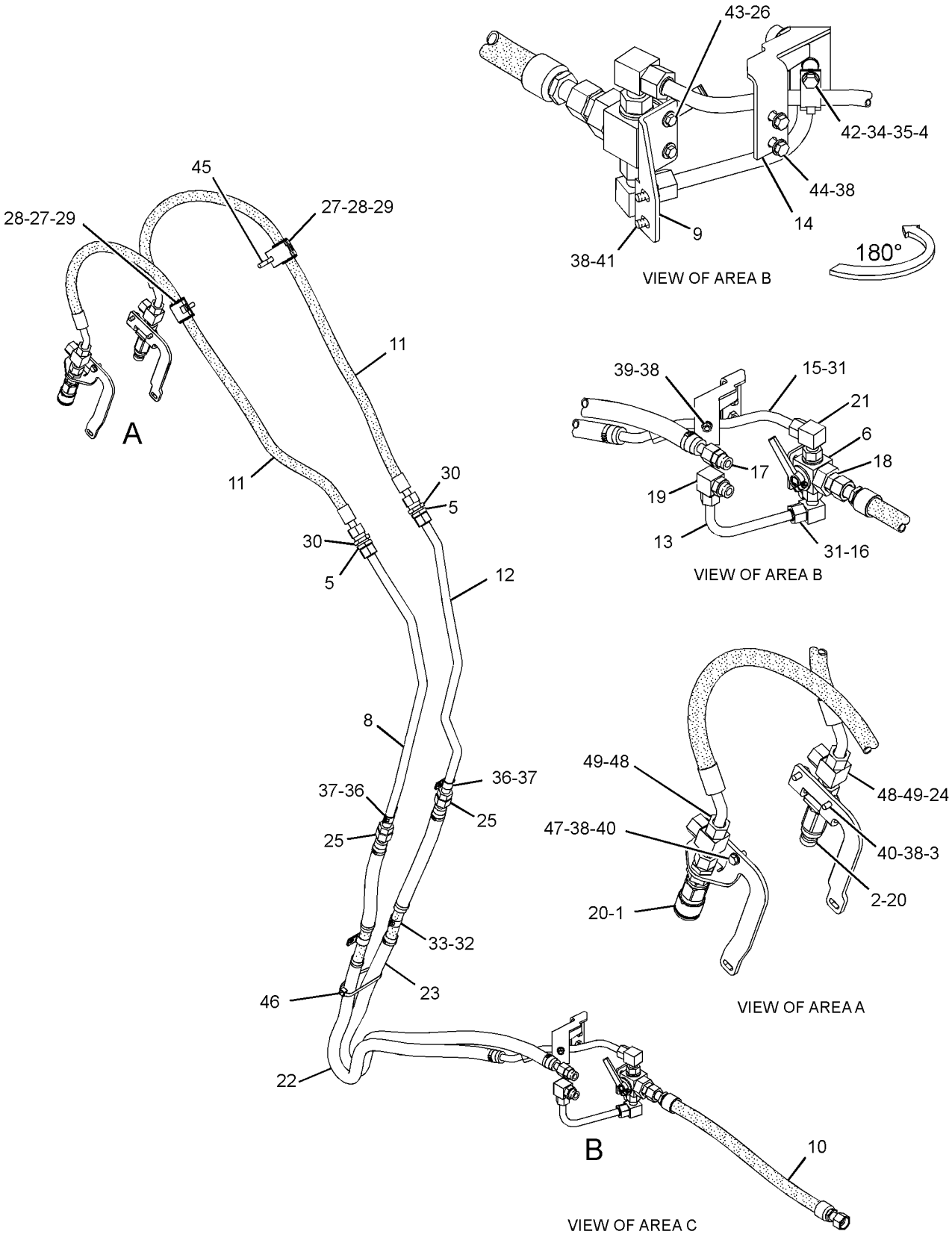

GRAPHIC #2 **<END>** g01585657

HYDRAULIC SYSTEM

262-4213 LINES GP-BACKHOE AUXILIARY

S/N: CBD1-3839
AN ATTACHMENT

SMCS-5057 **i02526968**

NOTE	REF NO	GRAPHIC REF	PART NUMBER	QTY	PART NAME 1 2 3 4 5 6 (PRODUCT LEVEL)	SEE PAGE
	1	1	**4W-3753**	2	SPACER (13.5X25X38.1-MM THK)	
	2	1	**106-0401**	1	FITTING (QUICK DISCONNECT, FEMALE)	
	3	1	**106-0406**	1	FITTING (QUICK DISCONNECT, MALE)	
	4	1	*106-8715*	1	ELBOW AS	
		1	**8C-8400**	1	ELBOW	
		1	**6V-9746**	1	SEAL-O-RING	
		1	**3D-2824**	1	SEAL-O-RING	
	5	1	**109-1260**	2	BRACKET	
	6	1	**144-8344**	1	SPACER (11X19X20-MM THK)	
	7	1	*155-2026*	2	UNION AS	
					(EACH INCLUDES)	
		1	**5K-9090**	2	SEAL-O-RING	
		1	**6V-8998**	1	UNION	
	8	1	**235-5729**	1	VALVE AS-MANUAL (DIRECTIONAL FLOW)	
		1	**6V-9746**	2	SEAL-O-RING	
		1	**281-4022**	1	HANDLE AS	
	9	1	**241-8448**	2	FILM-WARNING (HYD PRESS, READ OMM, U.S.)	
					(APPLY TO STICK SURFACE)	
	10	1	**251-9360**	1	TUBE AS	
	11	1	**262-3036**	1	BRACKET	
I	12	1	**262-3038**	1	HOSE AS	
	13	1	**262-4217**	1	TUBE AS	
	14	1	**262-4462**	1	TUBE AS	
	15	1	**277-4543**	1	BRACKET AS	
	16	1	**286-0689**	1	TUBE AS	
	17	1	**109-5825**	1	ELBOW	
	18	1	*148-8327*	1	CONNECTOR AS	
		1	**3D-2824**	1	SEAL-O-RING	
		1	**6V-8637**	1	CONNECTOR	
		1	**6V-9746**	1	SEAL-O-RING	
	19	1	*148-8335*	1	CONNECTOR AS	
		1	**5K-9090**	1	SEAL-O-RING	
		1	**6V-8635**	1	CONNECTOR	
		1	**7M-8485**	1	SEAL-O-RING	
	20	1	*150-3053*	2	CONNECTOR AS	
					(EACH INCLUDES)	
		1	**6V-9746**	1	SEAL-O-RING	
		1	**7M-8485**	1	SEAL-O-RING	
		1	**108-3872**	1	CONNECTOR	
	21	1	*260-9143*	1	ELBOW AS	
		1	**6V-9746**	1	SEAL-O-RING	
		1	**109-5825**	1	ELBOW	
I	22	1	**262-4459**	2	HOSE AS	
I	23	1	**290-6711**	1	HOSE AS	
I	24	1	**290-6712**	1	HOSE AS	
	25	1	**2P-1293**	2	LOCKNUT (1-3/16-12-THD)	
	26	1	**5K-9090**	2	SEAL-O-RING	
	27	1	**5P-4116**	2	WASHER-HARD (8.8X20.5X2-MM THK)	
	28	1	**5P-7466**	4	CLIP (SLOT)	
	29	1	**5P-7467**	4	CLIP (TAB)	
	30	1	**5P-8112**	4	GROMMET	
	31	1	**6V-9172**	2	NUT (1-7/16-12-THD)	
	32	1	**6V-9746**	2	SEAL-O-RING	
M	33	1	**7X-2549**	2	BOLT (M12X1.75X100-MM)	
	34	1	**8S-0023**	2	CLIP (SLOT)	
	35	1	**8S-0024**	2	CLIP (TAB)	

262-4213 **LINES GP-BACKHOE AUXILIARY** *(contd.)* **i02526968**

NOTE	REF NO	GRAPHIC REF	PART NUMBER	QTY	PART NAME 1 2 3 4 5 6 (PRODUCT LEVEL)	SEE PAGE
	36	1	**8T-1887**	1	CLIP (SLOT)	
	37	1	**8T-1888**	1	CLIP (TAB)	
	38	1	**8T-1889**	2	CLIP (SLOT) (2-PIECE)	
	39	1	**8T-1890**	2	CLIP (TAB) (2-PIECE)	
	40	1	**8T-4121**	12	WASHER-HARD (11X21X2.5-MM THK)	
M	41	1	**8T-4133**	1	NUT (M10X1.5-THD)	
M	42	1	**8T-4136**	4	BOLT (M10X1.5X25-MM)	
M	43	1	**8T-4137**	2	BOLT (M10X1.5X20-MM)	
M	44	1	**8T-4185**	1	BOLT (M10X1.5X50-MM)	
M	45	1	**8T-4189**	2	BOLT (M8X1.25X20-MM)	
M	46	1	**8T-4196**	2	BOLT (M10X1.5X35-MM)	
	47	1	**8T-4223**	2	WASHER-HARD (13.5X25.5X3-MM THK)	

I-REFER TO HYDRAULIC INFORMATION SYSTEM
M-METRIC PART

262-4213 **LINES GP-BACKHOE AUXILIARY** *(contd.)* **i02526968**

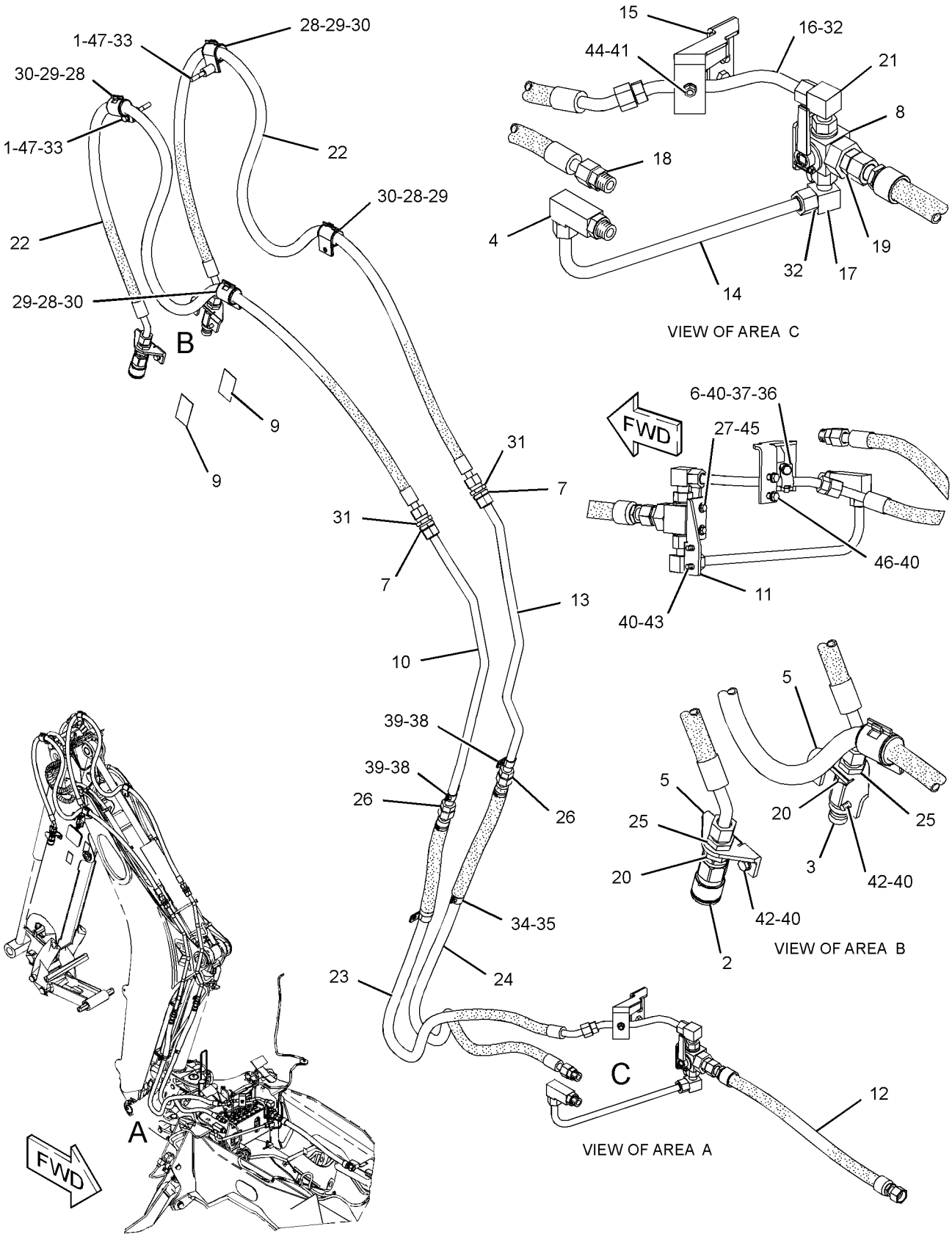

GRAPHIC #1 **<END>** g01264525

HYDRAULIC SYSTEM

262-4213 LINES GP-BACKHOE AUXILIARY

S/N: CBD3840-9160

AN ATTACHMENT

SMCS-5057 **i04515850**

NOTE	REF NO	GRAPHIC REF	PART NUMBER	QTY	PART NAME 1 2 3 4 5 6 (PRODUCT LEVEL)	SEE PAGE
	1	1	**4W-3753**	2	SPACER (13.5X25X38.1-MM THK)	
	2	1	**106-0401**	1	FITTING (QUICK DISCONNECT, FEMALE)	
	3	1	**106-0406**	1	FITTING (QUICK DISCONNECT, MALE)	
	4	1	*106-8715*	1	ELBOW AS	
		1	**8C-8400**	1	ELBOW	
		1	**6V-9746**	1	SEAL-O-RING	
		1	**3D-2824**	1	SEAL-O-RING	
	5	1	**144-8344**	1	SPACER (11X19X20-MM THK)	
C	6	1	**204-2281**	2	STRAP-CABLE	
	7	1	**235-5729**	1	VALVE AS-MANUAL (DIRECTIONAL FLOW)	
		1	**6V-9746**	2	SEAL-O-RING	
		1	**281-4022**	1	HANDLE AS	
B	8	1	**241-8448**	2	FILM-WARNING (HYD PRESS, READ OMM, U.S.)	
					—OR—	
B		1	**241-8450**	2	FILM-WARNING (HYD PRESS, READ OMM, INTL)	
	10	1	**251-9360**	1	TUBE AS	
	11	1	**262-3036**	1	BRACKET	
I	12	1	**262-3038**	1	HOSE AS	
	13	1	**262-4217**	1	TUBE AS	
	14	1	**277-4543**	1	BRACKET AS	
C	15	1	**278-4497**	1	BRACKET	
C	16	1	**278-4498**	1	BRACKET	
	17	1	**286-0689**	1	TUBE AS	
I	18	1	**290-6711**	1	HOSE AS	
I	19	1	**290-6712**	1	HOSE AS	
C	20	1	**304-8130**	1	TUBE AS	
	21	1	**109-5825**	1	ELBOW	
	22	1	*148-8327*	1	CONNECTOR AS	
		1	**3D-2824**	1	SEAL-O-RING	
		1	**6V-8637**	1	CONNECTOR	
		1	**6V-9746**	1	SEAL-O-RING	
	23	1	*148-8335*	1	CONNECTOR AS	
		1	**5K-9090**	1	SEAL-O-RING	
		1	**6V-8635**	1	CONNECTOR	
		1	**7M-8485**	1	SEAL-O-RING	
C	24	1	*148-8449*	2	TEE AS-SWIVEL	
					(EACH INCLUDES)	
		1	**6V-9746**	2	SEAL-O-RING	
		1	**6V-9839**	1	TEE-SWIVEL	
	25	1	*150-3053*	2	CONNECTOR AS	
					(EACH INCLUDES)	
		1	**6V-9746**	1	SEAL-O-RING	
		1	**7M-8485**	1	SEAL-O-RING	
		1	**108-3872**	1	CONNECTOR	
	26	1	*155-2026*	2	UNION AS	
					(EACH INCLUDES)	
		1	**5K-9090**	2	SEAL-O-RING	
		1	**6V-8998**	1	UNION	
	27	1	*260-9143*	1	ELBOW AS	
		1	**6V-9746**	1	SEAL-O-RING	
		1	**109-5825**	1	ELBOW	
I	28	1	**262-4459**	2	HOSE AS	
	29	1	**330-9416**	2	CLIP (TAB)	
	30	1	**2P-1293**	2	LOCKNUT (1-3/16-12-THD)	
	31	1	**5K-9090**	2	SEAL-O-RING	
	32	1	**5P-4116**	2	WASHER-HARD (8.8X20.5X2-MM THK)	

262-4213 **LINES GP-BACKHOE AUXILIARY** *(contd.)* **i04515850**

NOTE	REF NO	GRAPHIC REF	PART NUMBER	QTY	PART NAME 1 2 3 4 5 6 (PRODUCT LEVEL)	SEE PAGE
	33	1	**5P-7466**	4	CLIP (SLOT)	
	34	1	**5P-7467**	2	CLIP (TAB)	
	35	1	**5P-8112**	4	GROMMET	
	36	1	**6V-9172**	2	NUT (1-7/16-12-THD)	
	37	1	**6V-9746**	2	SEAL-O-RING	
C	38	1	**6V-9832**	2	CAP AS	
M	39	1	**7X-2549**	2	BOLT (M12X1.75X100-MM)	
	40	1	**8S-0023**	2	CLIP (SLOT)	
	41	1	**8S-0024**	2	CLIP (TAB)	
	42	1	**8T-1887**	1	CLIP (SLOT)	
	43	1	**8T-1888**	1	CLIP (TAB)	
	44	1	**8T-1889**	2	CLIP (SLOT)	
	45	1	**8T-1890**	2	CLIP (TAB)	
	46	1	**8T-4121**	12	WASHER-HARD (11X21X2.5-MM THK)	
M	47	1	**8T-4133**	1	NUT (M10X1.5-THD)	
M	48	1	**8T-4136**	4	BOLT (M10X1.5X25-MM)	
M	49	1	**8T-4137**	2	BOLT (M10X1.5X20-MM)	
M	50	1	**8T-4185**	1	BOLT (M10X1.5X50-MM)	
M	51	1	**8T-4189**	2	BOLT (M8X1.25X20-MM)	
M	52	1	**8T-4196**	2	BOLT (M10X1.5X35-MM)	
	53	1	**8T-4223**	2	WASHER-HARD (13.5X25.5X3-MM THK)	

B-USE AS REQUIRED
C-CHANGE FROM PREVIOUS TYPE
I-REFER TO HYDRAULIC INFORMATION SYSTEM
M-METRIC PART

262-4213 **LINES GP-BACKHOE AUXILIARY** *(contd.)* **i04515850**

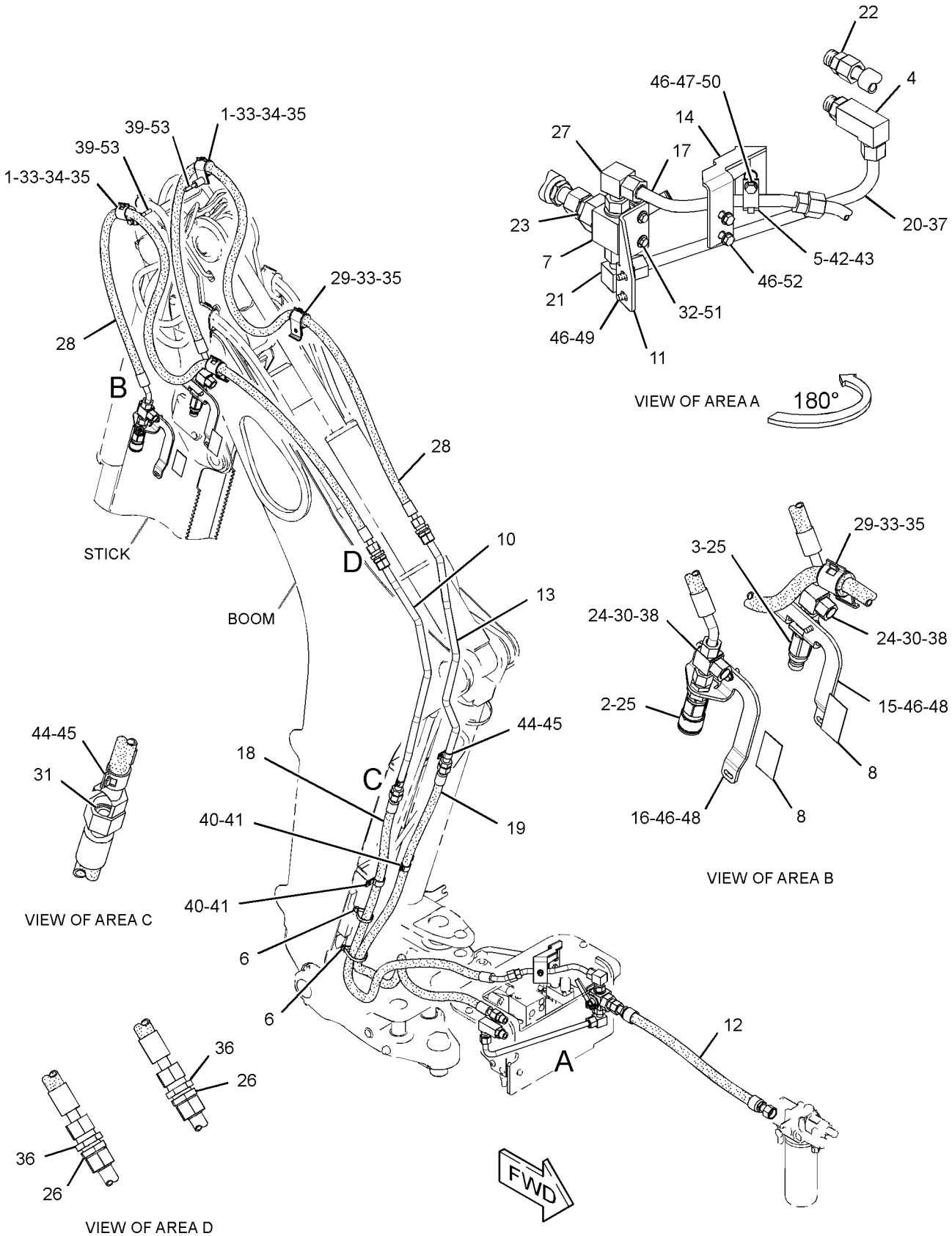

GRAPHIC #1 **<END>** g02696316

HYDRAULIC SYSTEM

262-4213 LINES GP-BACKHOE AUXILIARY

S/N: CBD9161-UP

AN ATTACHMENT

SMCS-5057 **i04528081**

NOTE	REF NO	GRAPHIC REF	PART NUMBER	QTY	PART NAME 1 2 3 4 5 6 (PRODUCT LEVEL)	SEE PAGE
	1	1	**106-0401**	1	FITTING (QUICK DISCONNECT, FEMALE)	
	2	1	**106-0406**	1	FITTING (QUICK DISCONNECT, MALE)	
	3	1	*106-8715*	1	ELBOW AS	
		1	**8C-8400**	1	ELBOW	
		1	**6V-9746**	1	SEAL-O-RING	
		1	**3D-2824**	1	SEAL-O-RING	
	4	1	**144-8344**	1	SPACER (11X19X20-MM THK)	
	5	1	**204-2281**	2	STRAP-CABLE	
	6	1	**235-5729**	1	VALVE AS-MANUAL (DIRECTIONAL FLOW)	
		1	**6V-9746**	2	SEAL-O-RING	
		1	**281-4022**	1	HANDLE AS	
B	7	1	**241-8448**	2	FILM-WARNING (HYD PRESS, READ OMM, U.S.)	
					—OR—	
B		1	**241-8450**	2	FILM-WARNING (HYD PRESS, READ OMM, INTL)	
	9	1	**251-9360**	1	TUBE AS	
	10	1	*260-9143*	1	ELBOW AS	
		1	**6V-9746**	1	SEAL-O-RING	
		1	**109-5824**	1	ELBOW	
	11	1	**262-3036**	1	BRACKET	
I	12	1	**262-3038**	1	HOSE AS	
	13	1	**262-4217**	1	TUBE AS	
	14	1	**277-4543**	1	BRACKET AS	
	15	1	**278-4497**	1	BRACKET	
	16	1	**278-4498**	1	BRACKET	
	17	1	**286-0689**	1	TUBE AS	
I	18	1	**290-6711**	1	HOSE AS	
I	19	1	**290-6712**	1	HOSE AS	
	20	1	**304-8130**	1	TUBE AS	
CI	21	1	**312-2599**	2	HOSE AS	
	22	1	**109-5825**	1	ELBOW	
	23	1	*148-8327*	1	CONNECTOR AS	
		1	**3D-2824**	1	SEAL-O-RING	
		1	**6V-8637**	1	CONNECTOR	
		1	**6V-9746**	1	SEAL-O-RING	
	24	1	*148-8335*	1	CONNECTOR AS	
		1	**5K-9090**	1	SEAL-O-RING	
		1	**6V-8635**	1	CONNECTOR	
		1	**7M-8485**	1	SEAL-O-RING	
	25	1	*148-8449*	2	TEE AS-SWIVEL	
					(EACH INCLUDES)	
		1	**6V-9746**	2	SEAL-O-RING	
		1	**6V-9839**	1	TEE-SWIVEL	
	26	1	*150-3053*	2	CONNECTOR AS	
					(EACH INCLUDES)	
		1	**6V-9746**	1	SEAL-O-RING	
		1	**7M-8485**	1	SEAL-O-RING	
		1	**108-3872**	1	CONNECTOR	
C	27	1	*153-6241*	2	ELBOW AS	
					(EACH INCLUDES)	
		1	**6V-8398**	1	SEAL-O-RING	
		1	**8C-8989**	1	ELBOW	
	28	1	*155-2026*	2	UNION AS	
					(EACH INCLUDES)	
		1	**5K-9090**	2	SEAL-O-RING	
		1	**6V-8998**	1	UNION	
	29	1	**2P-1293**	2	LOCKNUT (1-3/16-12-THD)	

262-4213 LINES GP-BACKHOE AUXILIARY *(contd.)* i04528081

NOTE	REF NO	GRAPHIC REF	PART NUMBER	QTY	PART NAME 1 2 3 4 5 6 (PRODUCT LEVEL)	SEE PAGE
	30	1	**5K-9090**	2	SEAL-O-RING	
	31	1	**5P-4116**	2	WASHER-HARD (8.8X20.5X2-MM THK)	
C	32	1	**5P-7466**	2	CLIP (SLOT)	
	33	1	**5P-7467**	2	CLIP (TAB)	
C	34	1	**5P-8112**	2	GROMMET	
	35	1	**6V-9172**	2	NUT (1-7/16-12-THD)	
	36	1	**6V-9746**	2	SEAL-O-RING	
	37	1	**6V-9832**	2	CAP AS	
	38	1	**8S-0023**	2	CLIP (SLOT)	
	39	1	**8S-0024**	2	CLIP (TAB)	
	40	1	**8T-1887**	1	CLIP (SLOT)	
	41	1	**8T-1888**	1	CLIP (TAB)	
	42	1	**8T-1889**	2	CLIP (SLOT)	
	43	1	**8T-1890**	2	CLIP (TAB)	
C	44	1	**8T-4121**	11	WASHER-HARD (11X21X2.5-MM THK)	
M	45	1	**8T-4133**	1	NUT (M10X1.5-THD)	
CM	46	1	**8T-4136**	6	BOLT (M10X1.5X25-MM)	
M	47	1	**8T-4185**	1	BOLT (M10X1.5X50-MM)	
M	48	1	**8T-4189**	2	BOLT (M8X1.25X20-MM)	
M	49	1	**8T-4196**	2	BOLT (M10X1.5X35-MM)	
C	50	1	**8T-4223**	2	WASHER-HARD (13.5X25.5X3-MM THK)	

B-USE AS REQUIRED
C-CHANGE FROM PREVIOUS TYPE
I-REFER TO HYDRAULIC INFORMATION SYSTEM
M-METRIC PART

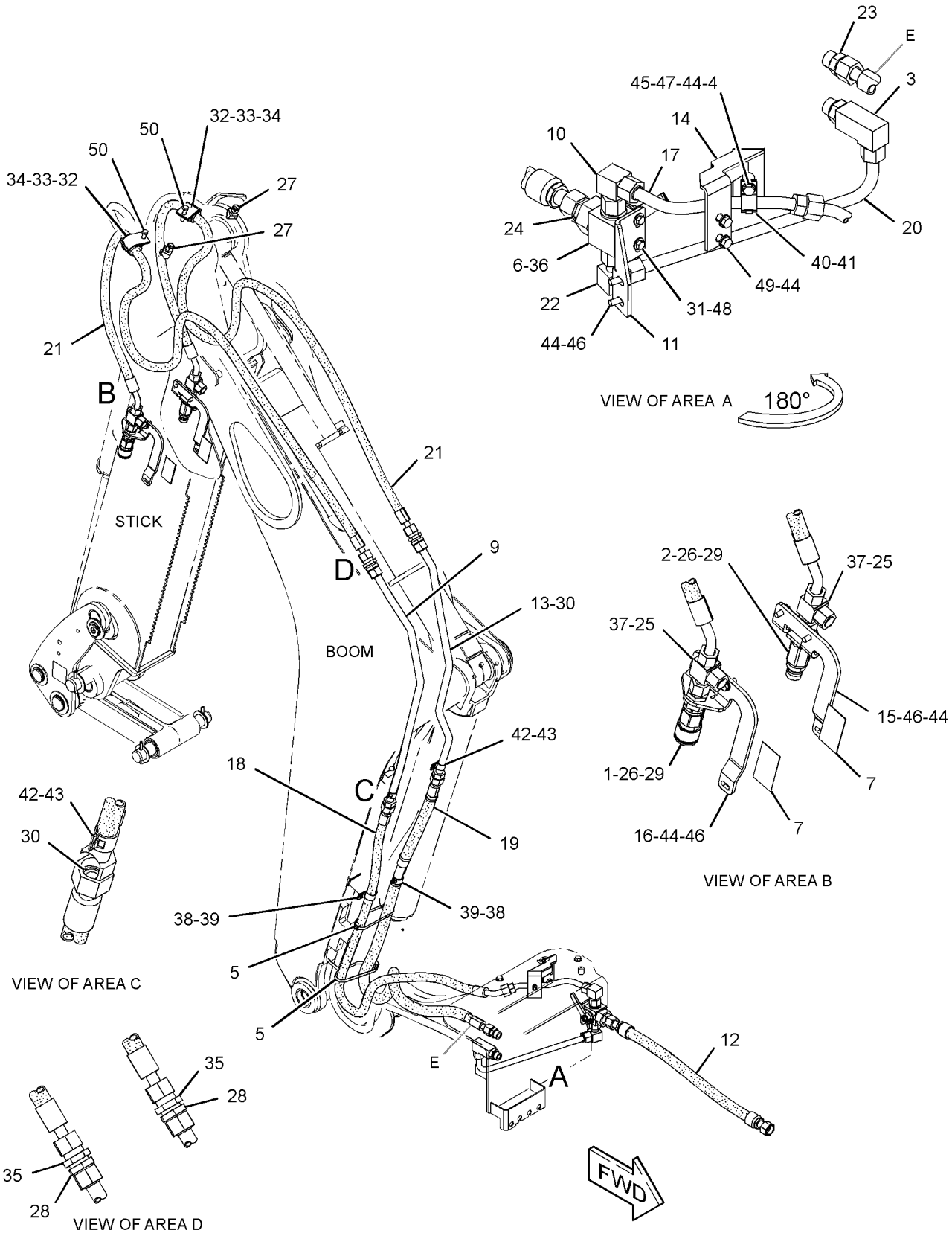

GRAPHIC #1 **<END>** g02714176

HYDRAULIC SYSTEM

266-2407 LINES GP-BACKHOE AUXILIARY–KIT

S/N: MFG1-UP

AN ATTACHMENT

SMCS-5057 **i03860150**

NOTE	REF NO	GRAPHIC REF	PART NUMBER	QTY	PART NAME 1 2 3 4 5 6 (PRODUCT LEVEL)	SEE PAGE
	1	1	**106-0401**	1	FITTING (QUICK DISCONNECT, FEMALE)	
	2	1	**106-0406**	1	FITTING (QUICK DISCONNECT, MALE)	
	3	2	**144-8344**	1	SPACER (11X19X20-MM THK)	
	4	1	**204-2281**	1	STRAP-CABLE	
	5	2	**235-5729**	1	VALVE AS-MANUAL (DIRECTIONAL FLOW)	
		2	**6V-9746**	2	SEAL-O-RING	
		2	**281-4022**	1	HANDLE AS	
	6	1	**241-8448**	2	FILM-WARNING (HYD PRESS, READ OMM, U.S.)	
	7	1	**251-9360**	1	TUBE AS	
	8	2	**262-3036**	1	BRACKET	
I	9	1	**262-3038**	1	HOSE AS	
I	10	1	**262-4203**	2	HOSE AS	
	11	1	**262-4217**	1	TUBE AS	
	12	2	**262-4220**	1	TUBE AS	
	13	2	**277-4543**	1	BRACKET AS	
	14	1	**278-4497**	1	BRACKET	
	15	1	**278-4498**	1	BRACKET	
	16	2	**286-0689**	1	TUBE AS	
I	17	1	**290-6711**	1	HOSE AS	
I	18	1	**290-6712**	1	HOSE AS	
	19	2	**109-5825**	1	ELBOW	
	20	2	*148-8327*	1	CONNECTOR AS	
		2	**3D-2824**	1	SEAL-O-RING	
		2	**6V-8637**	1	CONNECTOR	
		2	**6V-9746**	1	SEAL-O-RING	
	21	2	*148-8335*	1	CONNECTOR AS	
		2	**5K-9090**	1	SEAL-O-RING	
		2	**6V-8635**	1	CONNECTOR	
		2	**7M-8485**	1	SEAL-O-RING	
	22	2	*148-8347*	1	ELBOW AS	
		2	**3D-2824**	1	SEAL-O-RING	
		2	**6V-9007**	1	ELBOW	
		2	**6V-9746**	1	SEAL-O-RING	
	23	1	*148-8449*	2	TEE AS-SWIVEL	
					(EACH INCLUDES)	
		1	**6V-9746**	2	SEAL-O-RING	
		1	**6V-9839**	1	TEE-SWIVEL	
	24	1	*150-3053*	2	CONNECTOR AS	
					(EACH INCLUDES)	
		1	**6V-9746**	1	SEAL-O-RING	
		1	**7M-8485**	1	SEAL-O-RING	
		1	**108-3872**	1	CONNECTOR	
	25	1	*155-2026*	2	UNION AS	
					(EACH INCLUDES)	
		1	**5K-9090**	2	SEAL-O-RING	
		1	**6V-8998**	1	UNION	
	26	2	*260-9143*	1	ELBOW AS	
		2	**6V-9746**	1	SEAL-O-RING	
		2	**109-5825**	1	ELBOW	
	27	1	**2P-1293**	2	LOCKNUT (1-3/16-12-THD)	
	28	1	**5K-9090**	2	SEAL-O-RING	
	29	2	**5P-4116**	2	WASHER-HARD (8.8X20.5X2-MM THK)	
	30	1	**5P-7466**	2	CLIP (SLOT)	
	31	1	**5P-7467**	2	CLIP (TAB)	
	32	1	**5P-8112**	2	GROMMET	
	33	1	**6V-9172**	2	NUT (1-7/16-12-THD)	

266-2407 **LINES GP-BACKHOE AUXILIARY** *(contd.)* **i03860150**

NOTE	REF NO	GRAPHIC REF	PART NUMBER	QTY	PART NAME 1 2 3 4 5 6 (PRODUCT LEVEL)	SEE PAGE
	34	2	**6V-9746**	2	SEAL-O-RING	
	35	1	**6V-9832**	2	CAP AS	
	36	1	**8S-0023**	2	CLIP (SLOT)	
	37	1	**8S-0024**	2	CLIP (TAB)	
	38	2	**8T-1887**	1	CLIP (SLOT)	
	39	2	**8T-1888**	1	CLIP (TAB)	
	40	1	**8T-1889**	2	CLIP (SLOT)	
	41	1	**8T-1890**	2	CLIP (TAB)	
	42	1,2	**8T-4121**	12	WASHER-HARD (11X21X2.5-MM THK)	
M	43	2	**8T-4133**	1	NUT (M10X1.5-THD)	
M	44	1	**8T-4136**	4	BOLT (M10X1.5X25-MM)	
M	45	2	**8T-4137**	2	BOLT (M10X1.5X20-MM)	
M	46	2	**8T-4185**	1	BOLT (M10X1.5X50-MM)	
M	47	2	**8T-4189**	2	BOLT (M8X1.25X20-MM)	
M	48	2	**8T-4196**	2	BOLT (M10X1.5X35-MM)	
BM	49	1	**8T-4910**	2	BOLT (M12X1.75X60-MM)	

B-USE AS REQUIRED
I-REFER TO HYDRAULIC INFORMATION SYSTEM
M-METRIC PART

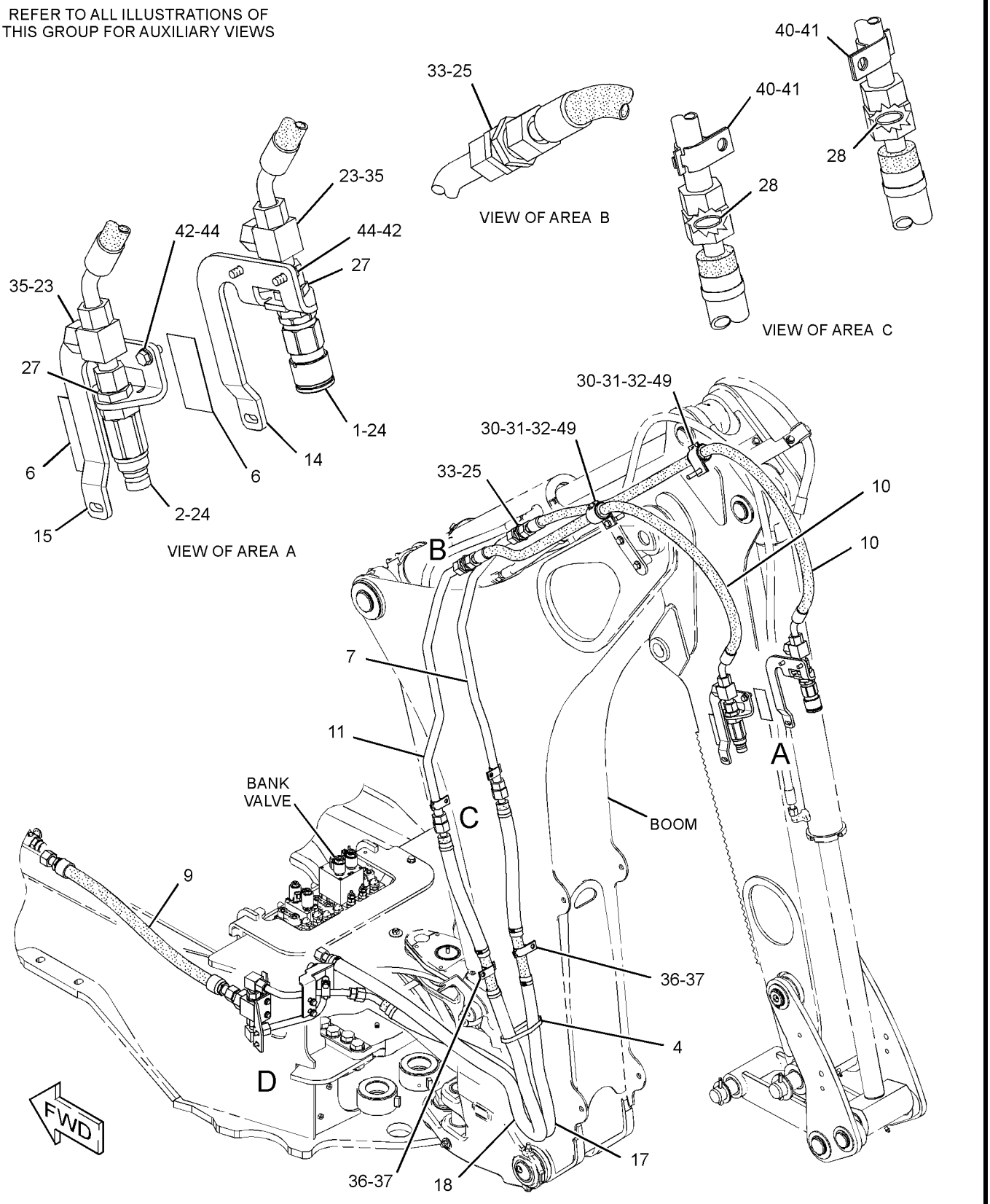

GRAPHIC #1

g01806335

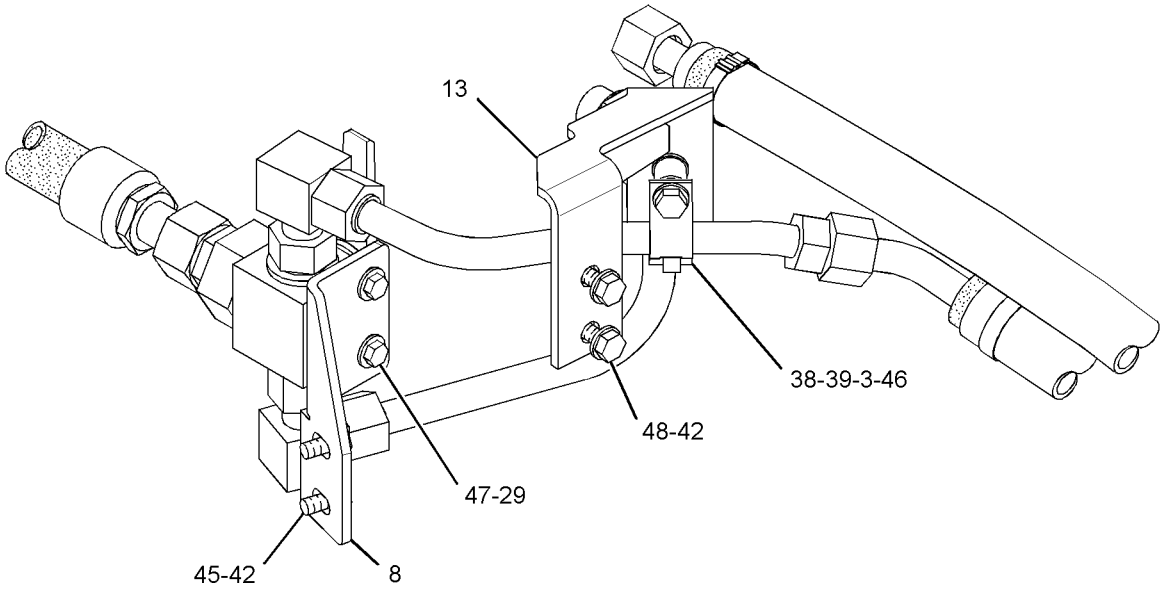

VIEW OF AREA D

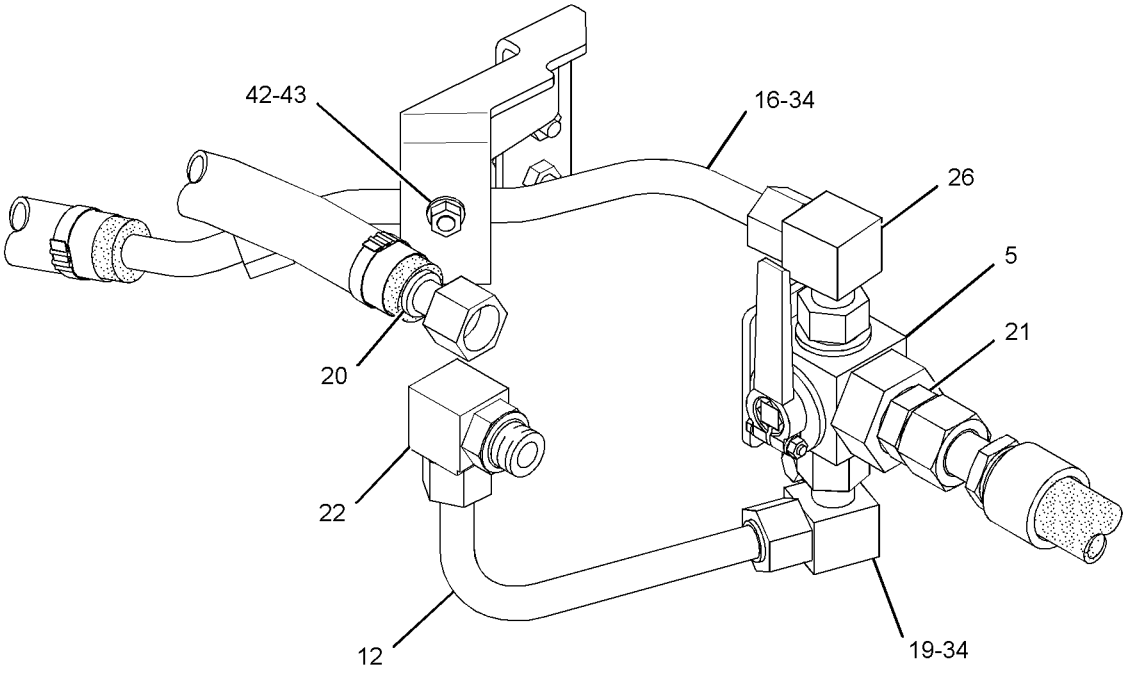

VIEW OF AREA D 180°

GRAPHIC #2 **<END>** g01806336

HYDRAULIC SYSTEM

266-2408 LINES GP-BACKHOE AUXILIARY–KIT, EXTENDABLE STICK

S/N: MFG1-UP

AN ATTACHMENT

SMCS-5057 **i03860149**

NOTE	REF NO	GRAPHIC REF	PART NUMBER	QTY	PART NAME 1 2 3 4 5 6 (PRODUCT LEVEL)	SEE PAGE
	1	1	**4W-3753**	2	SPACER (13.5X25X38.1-MM THK)	
	2	1	**106-0401**	1	FITTING (QUICK DISCONNECT, FEMALE)	
	3	1	**106-0406**	1	FITTING (QUICK DISCONNECT, MALE)	
	4	1	*106-8715*	1	ELBOW AS	
		1	**3D-2824**	1	SEAL-O-RING	
		1	**6V-9746**	1	SEAL-O-RING	
		1	**8C-8400**	1	ELBOW	
	5	1	**144-8344**	1	SPACER (11X19X20-MM THK)	
	6	1	**204-2281**	1	STRAP-CABLE	
	7	1	**235-5729**	1	VALVE AS-MANUAL (DIRECTIONAL FLOW)	
		1	**6V-9746**	2	SEAL-O-RING	
		1	**281-4022**	1	HANDLE AS	
	8	1	**241-8448**	2	FILM-WARNING (HYD PRESS, READ OMM, U.S.)	
	9	1	**251-9360**	1	TUBE AS	
	10	1	**262-3036**	1	BRACKET	
I	11	1	**262-3038**	1	HOSE AS	
	12	1	**262-4217**	1	TUBE AS	
	13	1	**262-4462**	1	TUBE AS	
	14	1	**277-4543**	1	BRACKET AS	
	15	1	**278-4497**	1	BRACKET	
	16	1	**278-4498**	1	BRACKET	
	17	1	**286-0689**	1	TUBE AS	
I	18	1	**290-6711**	1	HOSE AS	
I	19	1	**290-6712**	1	HOSE AS	
	20	1	**109-5825**	1	ELBOW	
	21	1	*148-8327*	1	CONNECTOR AS	
		1	**3D-2824**	1	SEAL-O-RING	
		1	**6V-8637**	1	CONNECTOR	
		1	**6V-9746**	1	SEAL-O-RING	
	22	1	*148-8335*	1	CONNECTOR AS	
		1	**5K-9090**	1	SEAL-O-RING	
		1	**6V-8635**	1	CONNECTOR	
		1	**7M-8485**	1	SEAL-O-RING	
	23	1	*148-8449*	2	TEE AS-SWIVEL	
					(EACH INCLUDES)	
		1	**6V-9746**	2	SEAL-O-RING	
		1	**6V-9839**	1	TEE-SWIVEL	
	24	1	*150-3053*	2	CONNECTOR AS	
					(EACH INCLUDES)	
		1	**6V-9746**	1	SEAL-O-RING	
		1	**7M-8485**	1	SEAL-O-RING	
		1	**108-3872**	1	CONNECTOR	
	25	1	*155-2026*	2	UNION AS	
					(EACH INCLUDES)	
		1	**5K-9090**	2	SEAL-O-RING	
		1	**6V-8998**	1	UNION	
	26	1	*260-9143*	1	ELBOW AS	
		1	**6V-9746**	1	SEAL-O-RING	
		1	**109-5825**	1	ELBOW	
I	27	1	**262-4459**	2	HOSE AS	
	28	1	**2P-1293**	2	LOCKNUT (1-3/16-12-THD)	
	29	1	**5K-9090**	2	SEAL-O-RING	
	30	1	**5P-4116**	2	WASHER-HARD (8.8X20.5X2-MM THK)	
	31	1	**5P-7466**	4	CLIP (SLOT)	
	32	1	**5P-7467**	4	CLIP (TAB)	

266-2408 **LINES GP-BACKHOE AUXILIARY** *(contd.)* **i03860149**

NOTE	REF NO	GRAPHIC REF	PART NUMBER	QTY	PART NAME 1 2 3 4 5 6 (PRODUCT LEVEL)	SEE PAGE
	33	1	**5P-8112**	4	GROMMET	
	34	1	**6V-9172**	2	NUT (1-7/16-12-THD)	
	35	1	**6V-9746**	2	SEAL-O-RING	
	36	1	**6V-9832**	2	CAP AS	
BM	37	1	**7X-2549**	2	BOLT (M12X1.75X100-MM)	
	38	1	**8S-0023**	2	CLIP (SLOT)	
	39	1	**8S-0024**	2	CLIP (TAB)	
	40	1	**8T-1887**	1	CLIP (SLOT)	
	41	1	**8T-1888**	1	CLIP (TAB)	
	42	1	**8T-1889**	2	CLIP (SLOT)	
	43	1	**8T-1890**	2	CLIP (TAB)	
	44	1	**8T-4121**	12	WASHER-HARD (11X21X2.5-MM THK)	
M	45	1	**8T-4133**	1	NUT (M10X1.5-THD)	
M	46	1	**8T-4136**	4	BOLT (M10X1.5X25-MM)	
M	47	1	**8T-4137**	2	BOLT (M10X1.5X20-MM)	
M	48	1	**8T-4185**	1	BOLT (M10X1.5X50-MM)	
M	49	1	**8T-4189**	2	BOLT (M8X1.25X20-MM)	
M	50	1	**8T-4196**	2	BOLT (M10X1.5X35-MM)	
	51	1	**8T-4223**	2	WASHER-HARD (13.5X25.5X3-MM THK)	

B-USE AS REQUIRED
I-REFER TO HYDRAULIC INFORMATION SYSTEM
M-METRIC PART

266-2408 **LINES GP-BACKHOE AUXILIARY** *(contd.)* **i03860149**

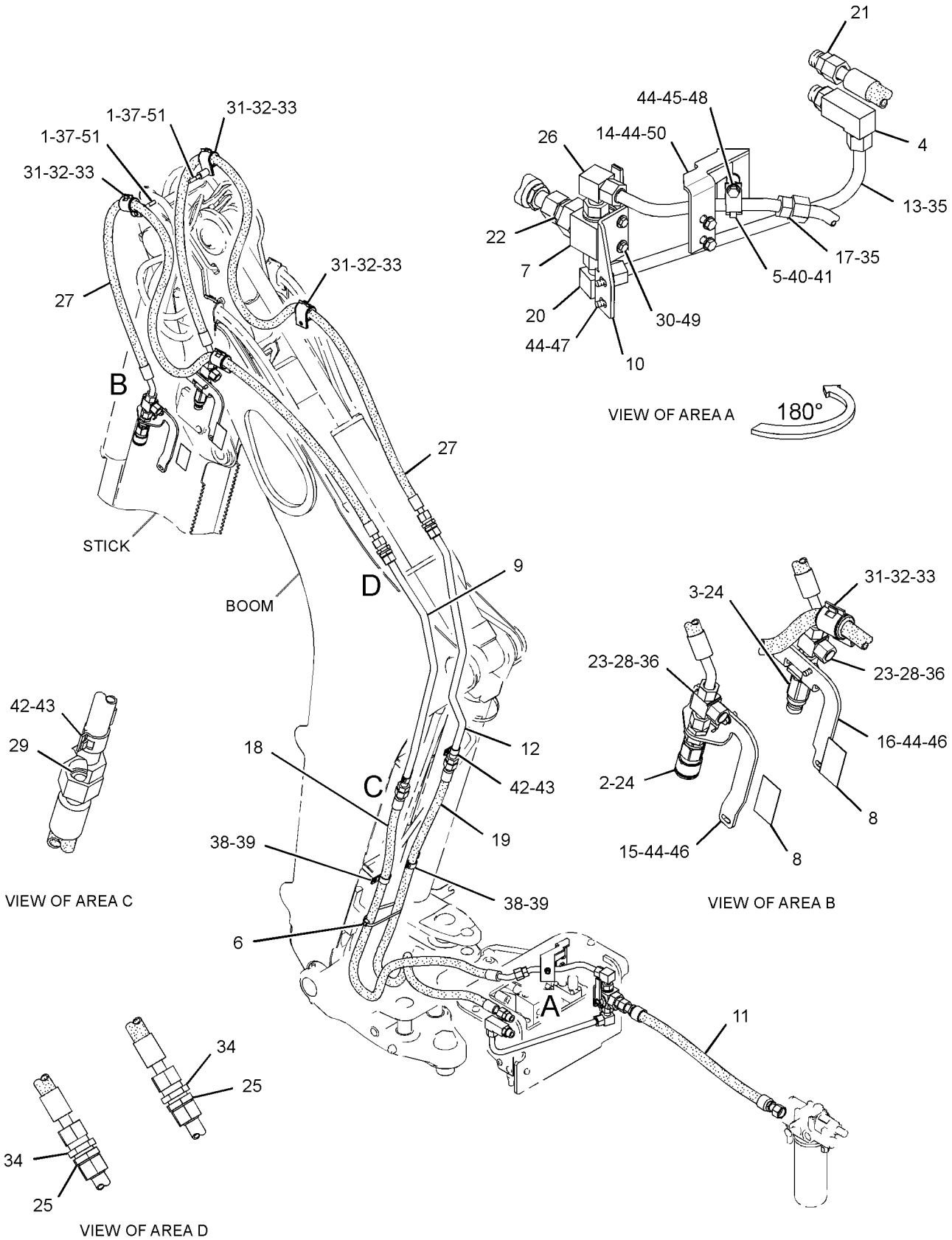

GRAPHIC #1 **<END>** g01806053

HYDRAULIC SYSTEM

211-7601 LINES GP-BOOM

S/N: CBD1-2631

PART OF 209-9929 BACKHOE AR-EXTENDABLE STICK, 209-9924 BACKHOE AR-STANDARD STICK

AN ATTACHMENT

SMCS-5057, 5456 **i02755945**

NOTE	REF NO	GRAPHIC REF	PART NUMBER	QTY	PART NAME 1 2 3 4 5 6 (PRODUCT LEVEL)	SEE PAGE
	1	1	**5P-0599**	1	CLAMP-BAND	
	2	1	**9R-4619**	1	SUPPORT AS	
M		1	**6V-8224**	1	NUT-WELD (M10X1.5-THD)	
I	3	1	**290-6700**	1	HOSE AS	
	4	1	**250-0658**	1	TUBE AS	
I	5	1	**250-0804**	1	HOSE AS	
	6	1	*148-8341*	2	CONNECTOR AS	
					(EACH INCLUDES)	
		1	**3D-2824**	1	SEAL-O-RING	
		1	**6V-8713**	1	CONNECTOR	
		1	**7J-9108**	1	SEAL-O-RING	
	7	1	*148-8382*	1	ELBOW AS	
		1	**3D-2824**	1	SEAL-O-RING	
		1	**7J-9108**	1	SEAL-O-RING	
		1	**8T-0404**	1	ELBOW	
	8	1	**7J-9108**	1	SEAL-O-RING	
	9	1	**8T-1887**	1	CLIP (SLOT)	
	10	1	**8T-1888**	1	CLIP (TAB)	
	11	1	**8T-4121**	1	WASHER-HARD (11X21X2.5-MM THK)	
M	12	1	**8T-4137**	1	BOLT (M10X1.5X20-MM)	

I-REFER TO HYDRAULIC INFORMATION SYSTEM
M-METRIC PART

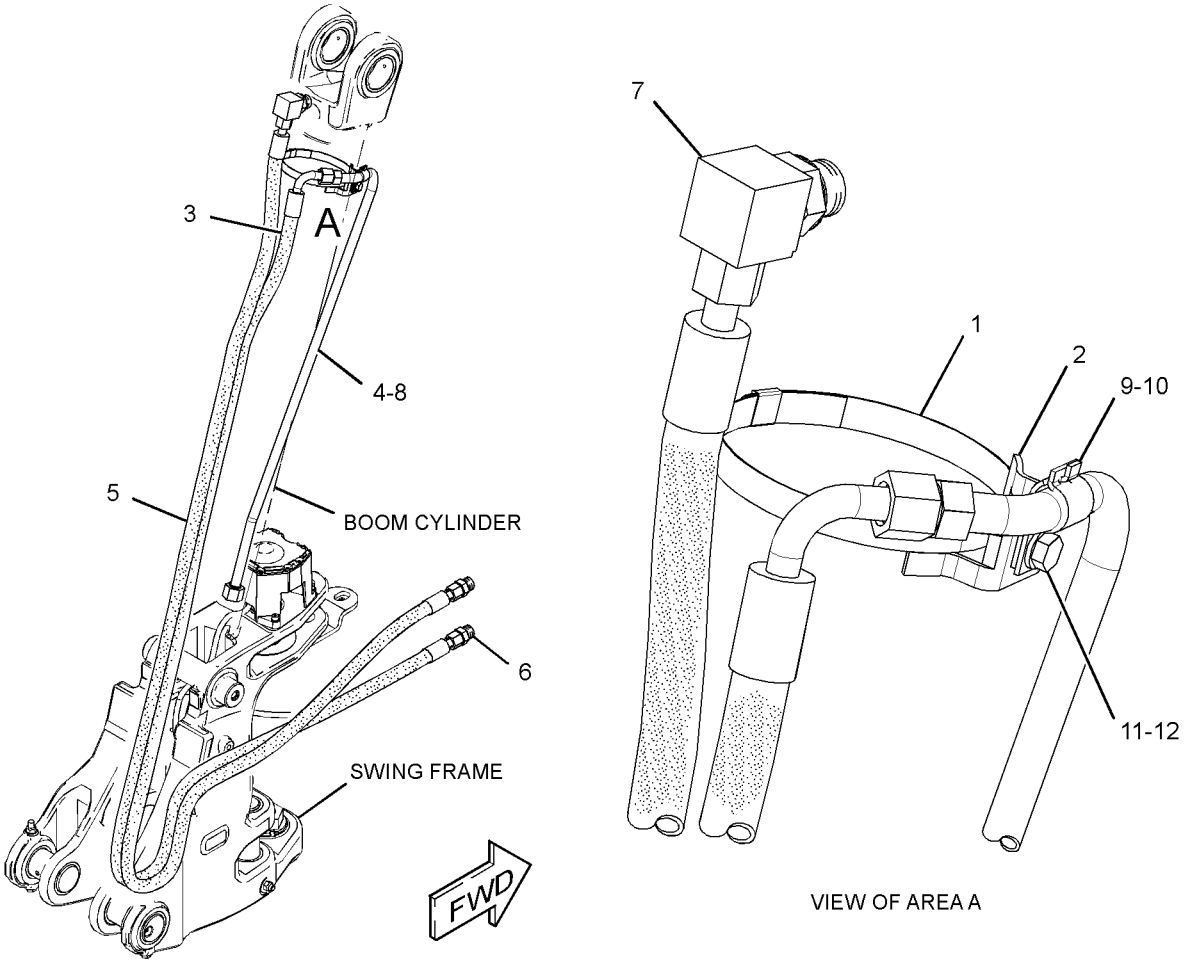

GRAPHIC #1 **<END>** g01385039

HYDRAULIC SYSTEM

211-7601 LINES GP-BOOM

S/N: CBD2632-7713

PART OF 209-9929 BACKHOE AR-EXTENDABLE STICK, 209-9924 BACKHOE AR-STANDARD STICK

AN ATTACHMENT

SMCS-5057, 5456 **i03877498**

NOTE	REF NO	GRAPHIC REF	PART NUMBER	QTY	PART NAME 1 2 3 4 5 6 (PRODUCT LEVEL)	SEE PAGE
	1	1	**5P-0599**	1	CLAMP-BAND	
	2	1	**9R-4619**	1	SUPPORT AS	
M		1	**6V-8224**	1	NUT-WELD (M10X1.5-THD)	
CI	3	1	**142-1072**	1	HOSE AS	
	4	1	**250-0658**	1	TUBE AS	
CI	5	1	**311-2505**	1	HOSE AS	
C	6	1	*311-2510*	1	LINES GP-HYDRAULIC	
I		1	**311-2519**	1	HOSE AS	
I		1	**311-2501**	1	HOSE AS	
	7	1	*148-8341*	2	CONNECTOR AS	
					(EACH INCLUDES)	
		1	**3D-2824**	1	SEAL-O-RING	
		1	**6V-8713**	1	CONNECTOR (SEAL)	
		1	**7J-9108**	1	SEAL-O-RING	
	8	1	*148-8382*	1	ELBOW AS	
		1	**3D-2824**	1	SEAL-O-RING	
		1	**7J-9108**	1	SEAL-O-RING	
		1	**8T-0404**	1	ELBOW (90-DEG)	
C	9	1	**7J-9108**	3	SEAL-O-RING	
	10	1	**8T-1887**	1	CLIP (SLOT)	
	11	1	**8T-1888**	1	CLIP (TAB)	
	12	1	**8T-4121**	1	WASHER-HARD (11X21X2.5-MM THK)	
M	13	1	**8T-4137**	1	BOLT (M10X1.5X20-MM)	
	14	1	**7K-1181**	1	STRAP-CABLE	
	15	1	**5P-5148**	2	STRAP-CABLE	

C-CHANGE FROM PREVIOUS TYPE
I-REFER TO HYDRAULIC INFORMATION SYSTEM
M-METRIC PART

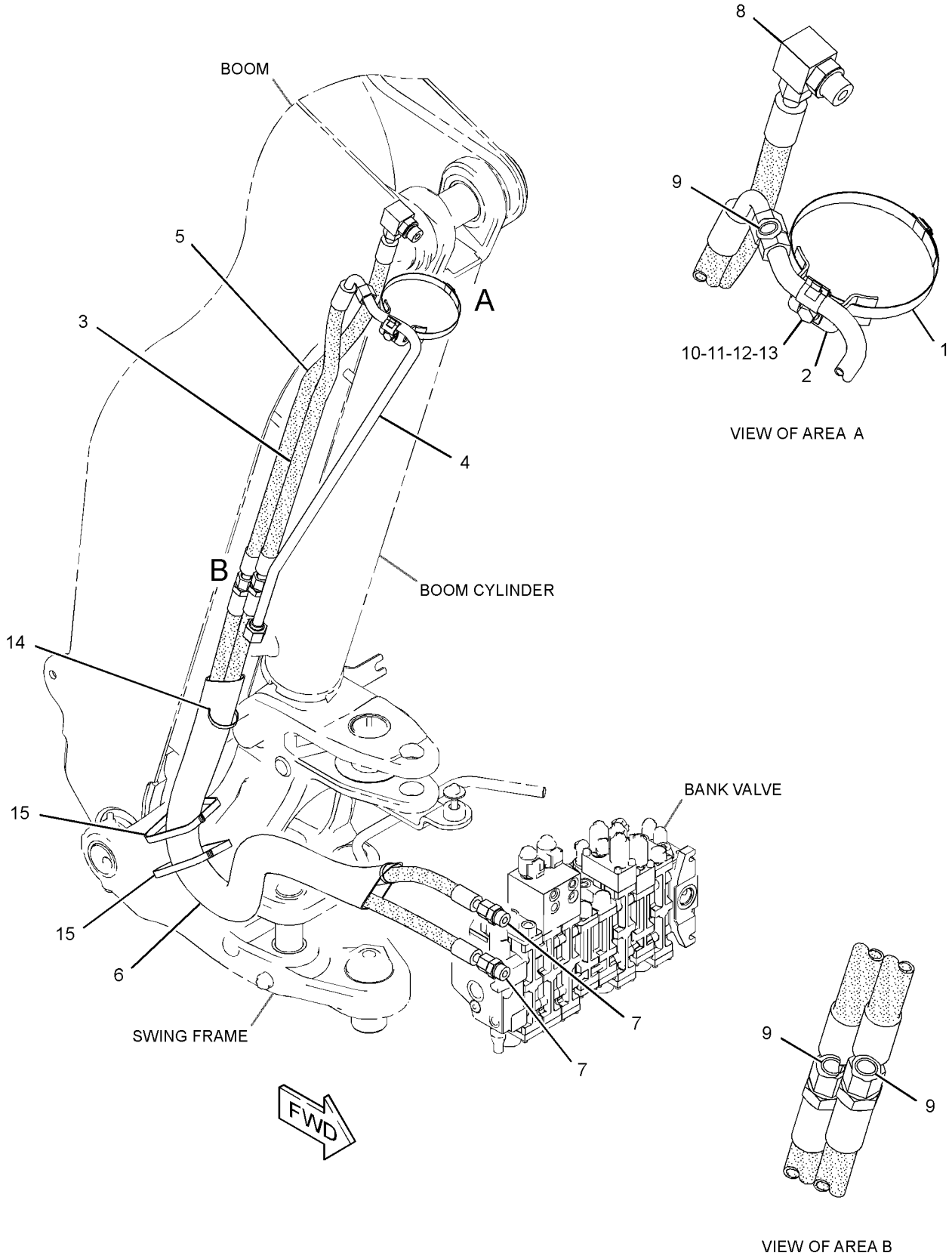

GRAPHIC #1 **<END>** g02145238

HYDRAULIC SYSTEM

211-7601 LINES GP-BOOM

S/N: CBD7714-UP; MFG1-UP

PART OF 209-9929 BACKHOE AR-EXTENDABLE STICK, 209-9924 BACKHOE AR-STANDARD STICK

AN ATTACHMENT

SMCS-5057, 5456 **i04185792**

NOTE	REF NO	GRAPHIC REF	PART NUMBER	QTY	PART NAME 1 2 3 4 5 6 (PRODUCT LEVEL)	SEE PAGE
	1	1	**5P-0599**	1	CLAMP-BAND	
	2	1	**9R-4619**	1	SUPPORT AS	
M		1	**6V-8224**	1	NUT-WELD (M10X1.5-THD)	
I	3	1	**142-1072**	1	HOSE AS	
	4	1	**7K-1181**	1	STRAP-CABLE	
	5	1	**250-0658**	1	TUBE AS	
I	6	1	**311-2505**	1	HOSE AS	
C	7	1	**6U-0456**	4	STRAP	
	8	1	*148-8341*	2	CONNECTOR AS	
					(EACH INCLUDES)	
		1	**3D-2824**	1	SEAL-O-RING	
		1	**6V-8713**	1	CONNECTOR	
		1	**7J-9108**	1	SEAL-O-RING	
	9	1	*148-8382*	1	ELBOW AS	
		1	**3D-2824**	1	SEAL-O-RING	
		1	**7J-9108**	1	SEAL-O-RING	
		1	**8T-0404**	1	ELBOW	
	10	1	**7J-9108**	3	SEAL-O-RING	
	11	1	**8T-1887**	1	CLIP (SLOT)	
	12	1	**8T-1888**	1	CLIP (TAB)	
	13	1	**8T-4121**	1	WASHER-HARD (11X21X2.5-MM THK)	
M	14	1	**8T-4137**	1	BOLT (M10X1.5X20-MM)	
CI	15	1	**311-2501**	2	HOSE AS	

C-CHANGE FROM PREVIOUS TYPE
I-REFER TO HYDRAULIC INFORMATION SYSTEM
M-METRIC PART

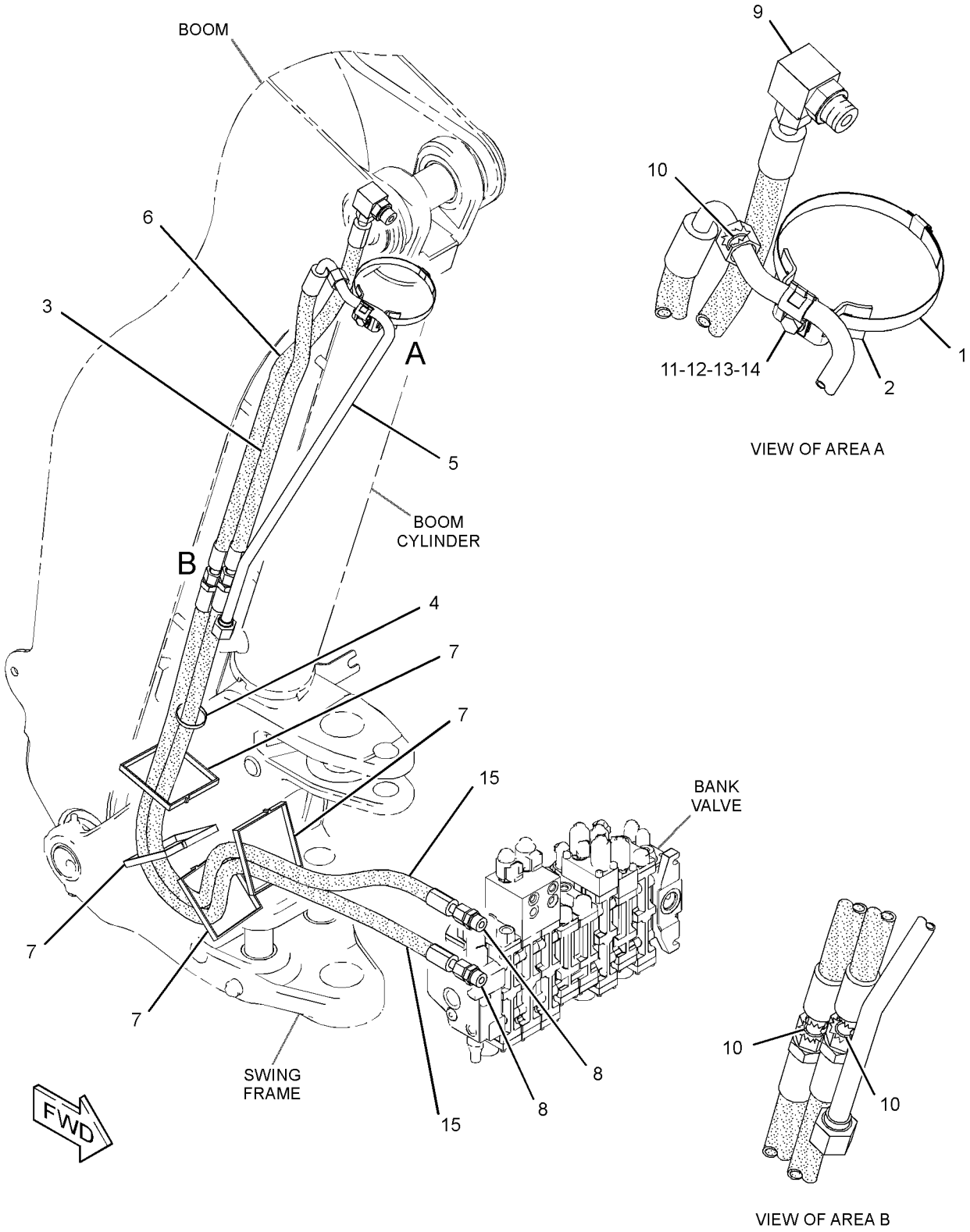

GRAPHIC #1 **<END>** g02149829

HYDRAULIC SYSTEM

246-9311 LINES GP-BUCKET—STANDARD STICK

S/N: CBD1-2631

PART OF 209-9924 BACKHOE AR-STANDARD STICK

AN ATTACHMENT

SMCS-5057, 5457 **i02634526**

NOTE	REF NO	GRAPHIC REF	PART NUMBER	QTY	PART NAME 1 2 3 4 5 6 (PRODUCT LEVEL)	SEE PAGE
	1	1	**5P-0599**	1	CLAMP-BAND	
	2	1	**9R-5948**	1	BLOCK	
I	3	1	**250-6793**	1	HOSE AS	
I	4	1	**266-4326**	1	HOSE AS	
	5	1	**251-1541**	1	PLATE AS	
	6	1	**248-5547**	2	PLATE	
I	7	1	**250-6755**	1	HOSE AS	
I	8	1	**252-0165**	1	HOSE AS	
	9	1	*148-8328*	1	CONNECTOR AS	
		1	**3D-2824**	1	SEAL-O-RING	
		1	**6V-8398**	1	SEAL-O-RING	
		1	**6V-8633**	1	CONNECTOR	
	10	1	*148-8341*	1	CONNECTOR AS	
		1	**3D-2824**	1	SEAL-O-RING	
		1	**6V-8713**	1	CONNECTOR	
		1	**7J-9108**	1	SEAL-O-RING	
	11	1	*148-8382*	1	ELBOW AS	
		1	**3D-2824**	1	SEAL-O-RING	
		1	**7J-9108**	1	SEAL-O-RING	
		1	**8T-0404**	1	ELBOW	
	12	1	*148-8457*	1	UNION AS	
		1	**6V-8398**	2	SEAL-O-RING	
		1	**6V-8995**	1	UNION	
	13	1	*169-7409*	1	UNION AS	
		1	**6V-8996**	1	UNION	
		1	**7J-9108**	2	SEAL-O-RING	
	14	1	**5P-7464**	4	CLIP (SLOT)	
	15	1	**5P-7465**	4	CLIP (TAB)	
	16	1	**6V-1249**	2	GROMMET	
	17	1	**6V-1889**	1	CLIP	
	18	1	**6V-7359**	2	GROMMET	
	19	1	**6V-9169**	1	NUT (13/16-16-THD)	
	20	1	**6V-9170**	1	NUT-BULKHEAD (1-14-THD)	
	21	1	**7X-7729**	4	WASHER (11X25X3-MM THK)	
	22	1	**8T-4121**	2	WASHER-HARD (11X21X2.5-MM THK)	
M	23	1	**8T-4136**	2	BOLT (M10X1.5X25-MM)	
M	24	1	**8T-4139**	4	BOLT (M12X1.75X30-MM)	
	25	1	**8T-4223**	8	WASHER-HARD (13.5X25.5X3-MM THK)	
M	26	1	**8T-4244**	2	NUT (M12X1.75-THD)	
M	27	1	**8T-4183**	2	BOLT (M12X1.75X40-MM)	
	28	1	**7C-4354**	1	CLIP	
M	29	1	**8T-4195**	4	BOLT (M10X1.5X30-MM)	

I-REFER TO HYDRAULIC INFORMATION SYSTEM
M-METRIC PART

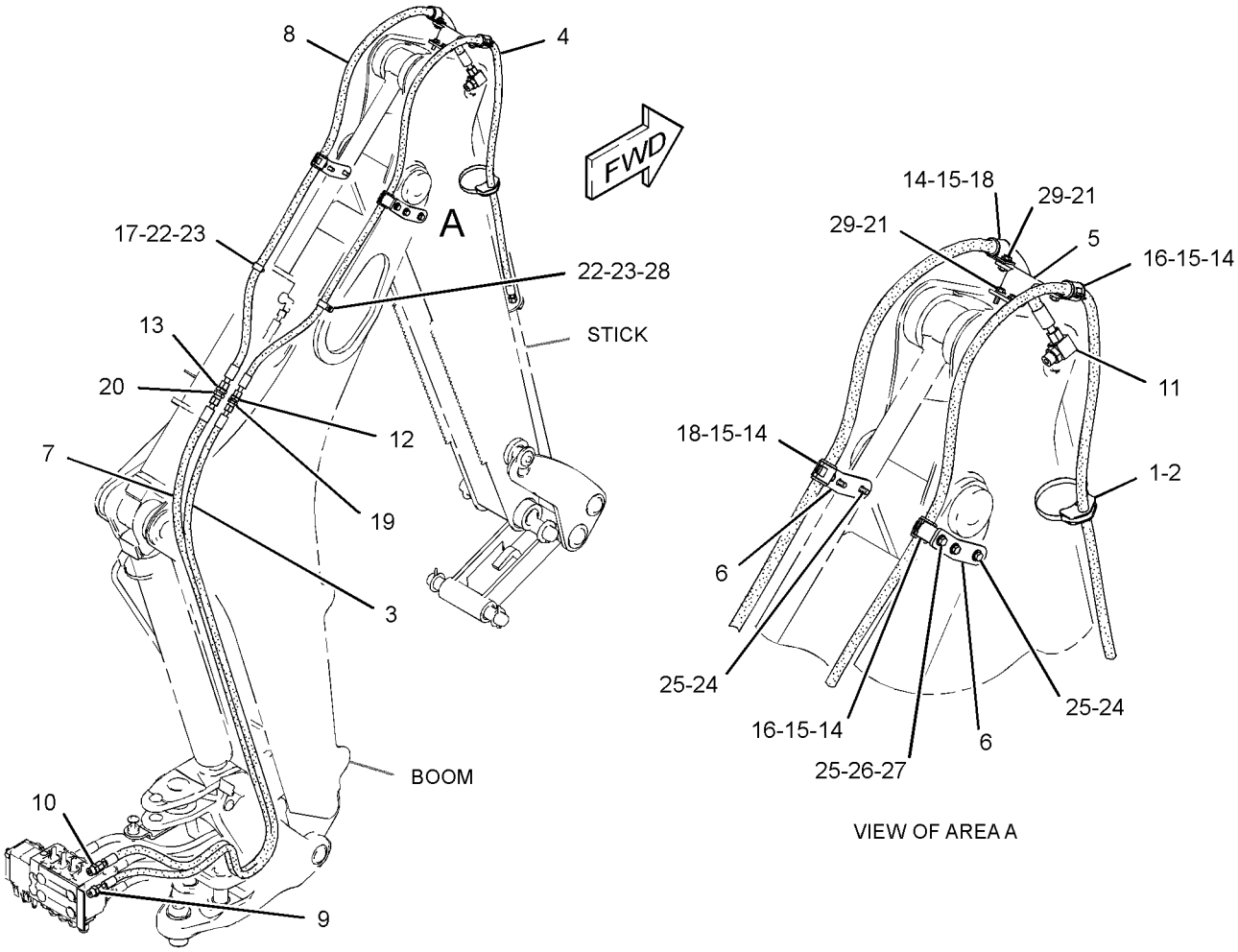

GRAPHIC #1 **<END>** g01254607

246-9311 LINES GP-BUCKET—STANDARD STICK

S/N: CBD2632-8409

PART OF 209-9924 BACKHOE AR-STANDARD STICK

AN ATTACHMENT

SMCS-5057, 5457 **i03695805**

NOTE	REF NO	GRAPHIC REF	PART NUMBER	QTY	PART NAME 1 2 3 4 5 6 (PRODUCT LEVEL)	SEE PAGE
	1	1	**5P-0599**	1	CLAMP-BAND	
	2	1	**9R-5948**	1	BLOCK	
CI	3	1	**311-2498**	1	HOSE AS	
I	4	1	**266-4326**	1	HOSE AS	
	5	1	**251-1541**	1	PLATE AS	
	6	1	**248-5547**	2	PLATE	
CI	7	1	**231-0215**	1	HOSE AS	
I	8	1	**252-0165**	1	HOSE AS	
C	9	1	*311-2510*	1	LINES GP-HYDRAULIC	
I		1	**311-2501**	1	HOSE AS	
I		1	**311-2519**	1	HOSE AS	
C	10	1	*148-8341*	2	CONNECTOR AS	
					(EACH INCLUDES)	
		1	**3D-2824**	1	SEAL-O-RING	
		1	**6V-8713**	1	CONNECTOR	
		1	**7J-9108**	1	SEAL-O-RING	
	11	1	*148-8382*	1	ELBOW AS	
		1	**3D-2824**	2	SEAL-O-RING	
		1	**7J-9108**	1	SEAL-O-RING	
		1	**8T-0404**	1	ELBOW	
C	12	1	*268-1548*	1	CONNECTOR AS	
		1	**6V-8398**	1	SEAL-O-RING	
		1	**268-1547**	1	CONNECTOR	
		1	**7J-9108**	1	SEAL-O-RING	
	13	1	*169-7409*	1	UNION AS	
		1	**6V-8996**	1	UNION	
		1	**7J-9108**	2	SEAL-O-RING	
	14	1	**5P-7464**	4	CLIP (SLOT)	
	15	1	**5P-7465**	4	CLIP (TAB)	
	16	1	**6V-1249**	2	GROMMET	
	17	1	**6V-1889**	1	CLIP	
	18	1	**6V-7359**	2	GROMMET	
C	19	1	**7J-9108**	2	SEAL-O-RING	
C	20	1	**6V-9170**	2	NUT-BULKHEAD (1-14-THD)	
	21	1	**7X-7729**	4	WASHER (11X25X3-MM THK)	
	22	1	**8T-4121**	2	WASHER-HARD (11X21X2.5-MM THK)	
M	23	1	**8T-4136**	2	BOLT (M10X1.5X25-MM)	
M	24	1	**8T-4139**	4	BOLT (M12X1.75X30-MM)	
	25	1	**8T-4223**	8	WASHER-HARD (13.5X25.5X3-MM THK)	
M	26	1	**8T-4244**	2	NUT (M12X1.75-THD)	
M	27	1	**8T-4183**	2	BOLT (M12X1.75X40-MM)	
	28	1	**7C-4354**	1	CLIP	
M	29	1	**8T-4195**	4	BOLT (M10X1.5X30-MM)	
	30	1	**7K-1181**	1	STRAP-CABLE	

C-CHANGE FROM PREVIOUS TYPE
I-REFER TO HYDRAULIC INFORMATION SYSTEM
M-METRIC PART

246-9311 **LINES GP-BUCKET** *(contd.)* **i03695805**

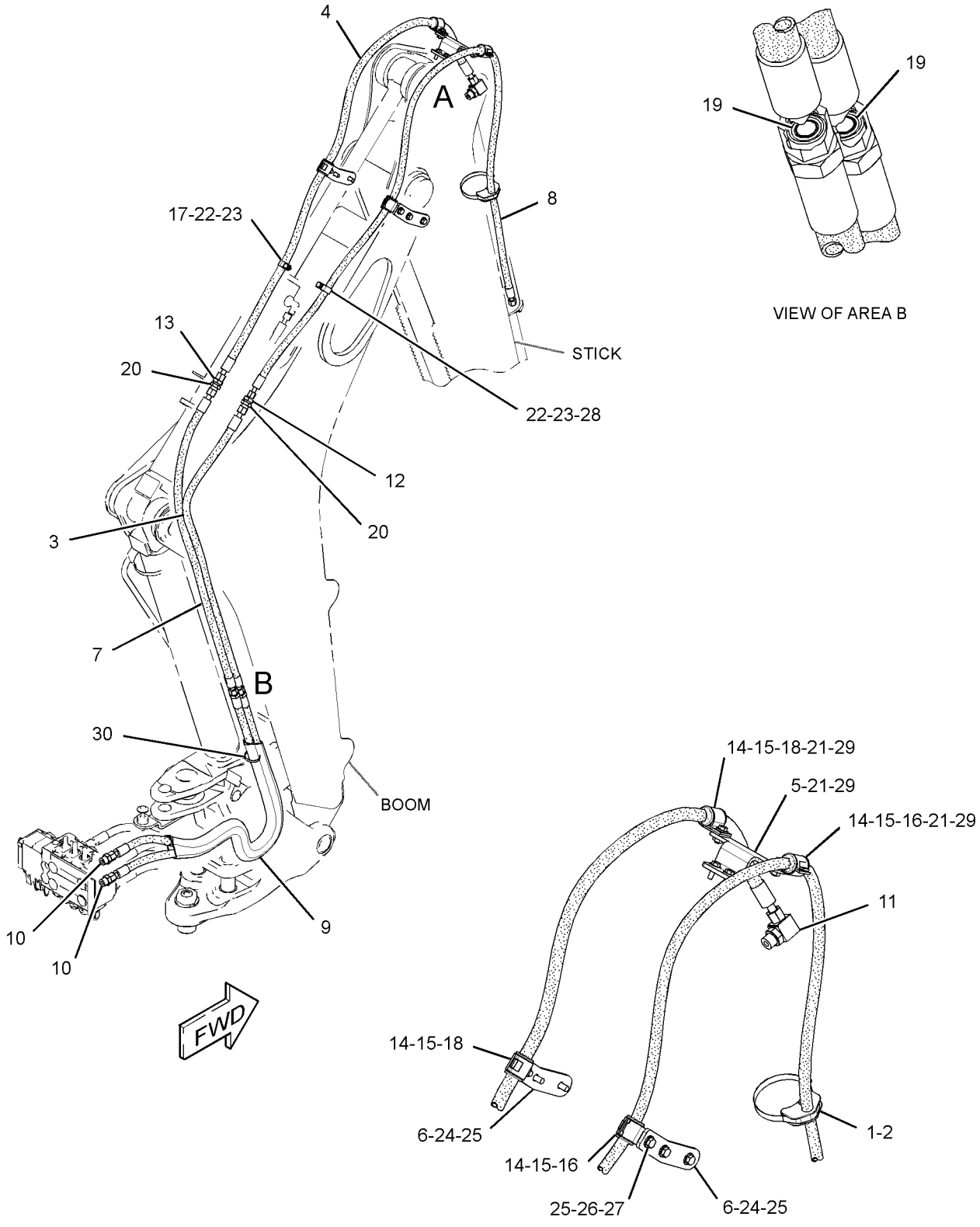

GRAPHIC #1 **<END>** g02106358

HYDRAULIC SYSTEM

246-9311 LINES GP-BUCKET—STANDARD STICK

S/N: CBD8410-UP; MFG1-UP

PART OF 209-9924 BACKHOE AR-STANDARD STICK

AN ATTACHMENT

SMCS-5057, 5457 **i04467249**

NOTE	REF NO	GRAPHIC REF	PART NUMBER	QTY	PART NAME 1 2 3 4 5 6 (PRODUCT LEVEL)	SEE PAGE
	1	1	**5P-0599**	1	CLAMP-BAND	
	2	1	**9R-5948**	1	BLOCK	
I	3	1	**311-2498**	1	HOSE AS	
I	4	1	**266-4326**	1	HOSE AS	
	5	1	**251-1541**	1	PLATE AS	
	6	1	**248-5547**	2	PLATE	
I	7	1	**231-0215**	1	HOSE AS	
I	8	1	**252-0165**	1	HOSE AS	
CI	9	1	**311-2501**	2	HOSE AS	
	10	1	*148-8341*	2	CONNECTOR AS	
					(EACH INCLUDES)	
		1	**3D-2824**	1	SEAL-O-RING	
		1	**6V-8713**	1	CONNECTOR	
		1	**7J-9108**	1	SEAL-O-RING	
	11	1	*148-8382*	1	ELBOW AS	
		1	**3D-2824**	2	SEAL-O-RING	
		1	**7J-9108**	1	SEAL-O-RING	
		1	**8T-0404**	1	ELBOW	
	12	1	*268-1548*	1	CONNECTOR AS	
		1	**6V-8398**	1	SEAL-O-RING	
		1	**268-1547**	1	CONNECTOR	
		1	**7J-9108**	1	SEAL-O-RING	
	13	1	*169-7409*	1	UNION AS	
		1	**6V-8996**	1	UNION	
		1	**7J-9108**	2	SEAL-O-RING	
	14	1	**5P-7464**	4	CLIP (SLOT)	
	15	1	**5P-7465**	4	CLIP (TAB)	
	16	1	**6V-1249**	2	GROMMET	
	17	1	**6V-1889**	1	CLIP	
	18	1	**6V-7359**	2	GROMMET	
	19	1	**7J-9108**	2	SEAL-O-RING	
	20	1	**6V-9170**	2	NUT-BULKHEAD (1-14-THD)	
	21	1	**7X-7729**	4	WASHER (11X25X3-MM THK)	
	22	1	**8T-4121**	2	WASHER-HARD (11X21X2.5-MM THK)	
M	23	1	**8T-4136**	4	BOLT (M10X1.5X25-MM)	
M	24	1	**8T-4139**	4	BOLT (M12X1.75X30-MM)	
	25	1	**8T-4223**	8	WASHER-HARD (13.5X25.5X3-MM THK)	
M	26	1	**8T-4244**	2	NUT (M12X1.75-THD)	
M	27	1	**8T-4183**	2	BOLT (M12X1.75X40-MM)	
	28	1	**7C-4354**	1	CLIP	
M	29	1	**8T-4195**	2	BOLT (M10X1.5X30-MM)	
	30	1	**7K-1181**	1	STRAP-CABLE	

C-CHANGE FROM PREVIOUS TYPE
I-REFER TO HYDRAULIC INFORMATION SYSTEM
M-METRIC PART

246-9311 **LINES GP-BUCKET** *(contd.)* **i04467249**

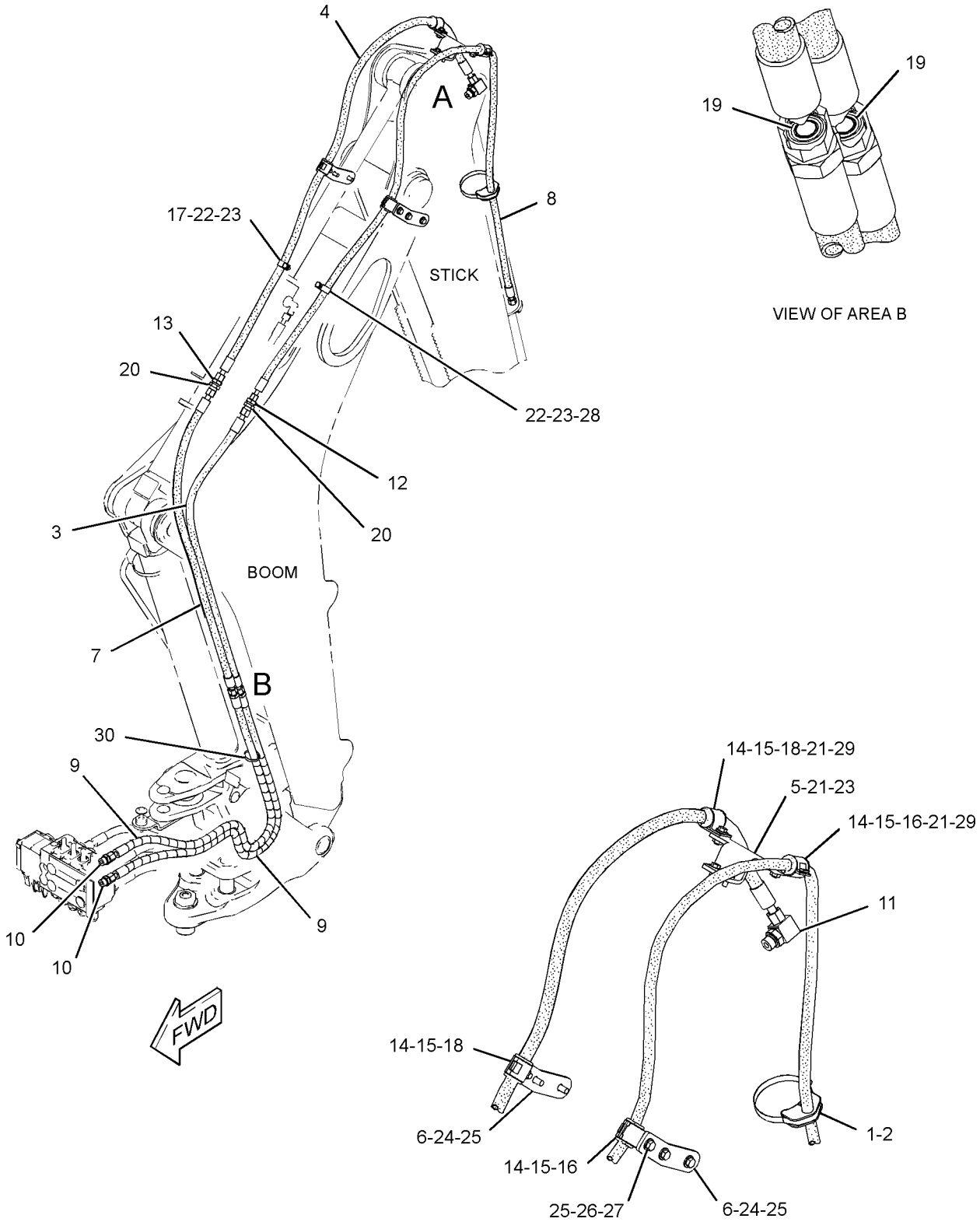

GRAPHIC #1 **<END>** g02706056

HYDRAULIC SYSTEM

246-9318 LINES GP-BUCKET—EXTENDABLE STICK

S/N: CBD1-2631

PART OF 209-9929 BACKHOE AR-EXTENDABLE STICK

AN ATTACHMENT

SMCS-5057, 5457 **i02634333**

NOTE	REF NO	GRAPHIC REF	PART NUMBER	QTY	PART NAME 1 2 3 4 5 6 (PRODUCT LEVEL)	SEE PAGE
	1	1	**5P-0599**	1	CLAMP-BAND	
	2	1	**3G-8057**	2	CLIP (SLOT)	
	3	1	**9R-5948**	1	BLOCK	
	4	1	**6V-9990**	1	GROMMET	
I	5	1	**297-4081**	1	HOSE AS	
M	6	1	**8T-4194**	4	BOLT (M12X1.75X50-MM)	
M	7	1	**8T-4183**	2	BOLT (M12X1.75X40-MM)	
	8	1	**262-1315**	1	PLATE	
	9	1	**281-4770**	1	PLATE AS (RIGHT)	
		1	**262-1314**	1	PLATE	
I	10	1	**266-4571**	1	HOSE AS	
	11	1	*268-1548*	2	CONNECTOR AS	
					(EACH INCLUDES)	
		1	**6V-8398**	1	SEAL-O-RING	
		1	**7J-9108**	1	SEAL-O-RING	
		1	**268-1547**	1	CONNECTOR	
I	12	1	**250-5462**	1	HOSE AS	
I	13	1	**250-6755**	2	HOSE AS	
I	14	1	**250-6793**	1	HOSE AS	
I	15	1	**266-4570**	2	HOSE AS	
	16	1	*148-8328*	1	CONNECTOR AS (WATER LINES)	
		1	**3D-2824**	1	SEAL-O-RING	
		1	**6V-8398**	1	SEAL-O-RING	
		1	**6V-8633**	1	CONNECTOR	
	17	1	*148-8341*	3	CONNECTOR AS	
					(EACH INCLUDES)	
		1	**3D-2824**	1	SEAL-O-RING	
		1	**6V-8713**	1	CONNECTOR	
		1	**7J-9108**	1	SEAL-O-RING	
	18	1	*148-8382*	1	ELBOW AS	
		1	**3D-2824**	1	SEAL-O-RING	
		1	**7J-9108**	1	SEAL-O-RING	
		1	**8T-0404**	1	ELBOW (90-DEG)	
	19	1	*148-8457*	1	UNION AS (ORFS)	
		1	**6V-8398**	2	SEAL-O-RING	
		1	**6V-8995**	1	UNION (BULKHEAD)	
	20	1	**3G-8047**	1	GROMMET	
	21	1	*169-7409*	1	UNION AS	
		1	**6V-8996**	1	UNION	
		1	**7J-9108**	2	SEAL-O-RING	
	22	1	**5P-7464**	2	CLIP (SLOT)	
	23	1	**5P-7465**	2	CLIP (TAB)	
	24	1	**6V-1249**	1	GROMMET	
	25	1	**6V-1889**	1	CLIP	
	26	1	**6V-7359**	1	GROMMET	
	27	1	**6V-9169**	1	NUT (13/16-16-THD)	
	28	1	**6V-9170**	3	NUT-BULKHEAD (1-14-THD)	
	29	1	**3G-8054**	2	CLIP (TAB)	
	30	1	**7C-4354**	3	CLIP	
	31	1	**8T-4121**	2	WASHER-HARD (11X21X2.5-MM THK)	
M	32	1	**8T-4136**	2	BOLT (M10X1.5X25-MM)	
M	33	1	**8T-4139**	7	BOLT (M12X1.75X30-MM)	
	34	1	**8T-4223**	19	WASHER-HARD (13.5X25.5X3-MM THK)	
M	35	1	**8T-4244**	6	NUT (M12X1.75-THD)	
	36	1	**281-4618**	1	PLATE AS (LEFT)	

246-9318 **LINES GP-BUCKET** *(contd.)* **i02634333**

NOTE	REF NO	GRAPHIC REF	PART NUMBER	QTY	PART NAME 1 2 3 4 5 6 (PRODUCT LEVEL)	SEE PAGE
		1	**262-1314**	1	PLATE	

I-REFER TO HYDRAULIC INFORMATION SYSTEM
M-METRIC PART

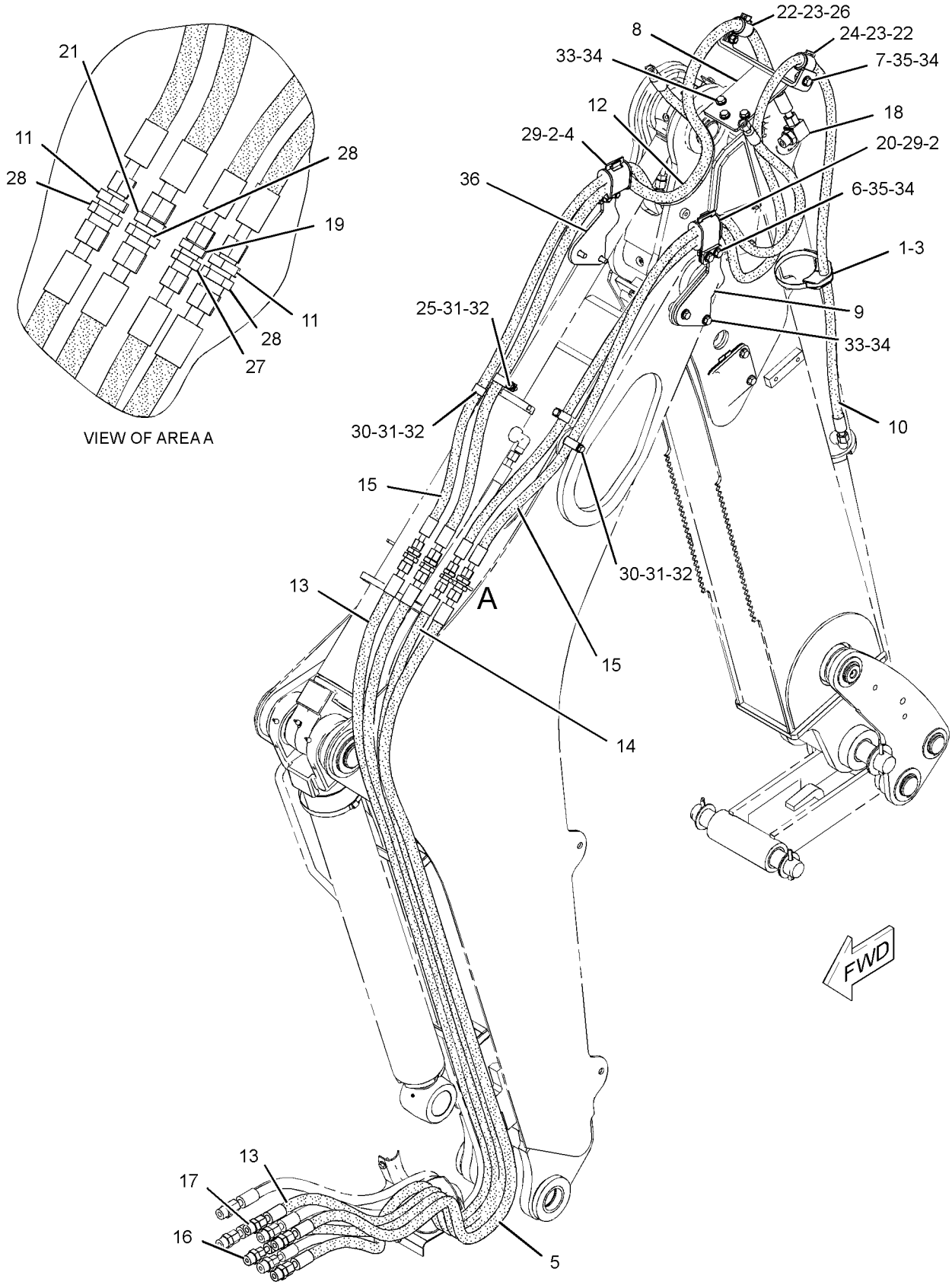

GRAPHIC #1

<END>

g01358348

HYDRAULIC SYSTEM

246-9318 LINES GP-BUCKET—EXTENDABLE STICK

S/N: CBD2632-UP

PART OF 209-9929 BACKHOE AR-EXTENDABLE STICK

AN ATTACHMENT

SMCS-5057, 5457 **i02914561**

NOTE	REF NO	GRAPHIC REF	PART NUMBER	QTY	PART NAME 1 2 3 4 5 6 (PRODUCT LEVEL)	SEE PAGE
	1	1	**5P-0599**	1	CLAMP-BAND	
	2	1	**3G-8057**	2	CLIP (SLOT)	
	3	1	**9R-5948**	1	BLOCK	
	4	1	**6V-9990**	1	GROMMET	
M	6	1	**8T-4194**	4	BOLT (M12X1.75X50-MM)	
M	7	1	**8T-4183**	2	BOLT (M12X1.75X40-MM)	
	8	1	**262-1315**	1	PLATE	
	9	1	**281-4770**	1	PLATE AS (RIGHT)	
		1	**262-1314**	1	PLATE	
I	10	1	**266-4571**	1	HOSE AS	
C	11	1	*268-1548*	3	CONNECTOR AS	
					(EACH INCLUDES)	
		1	**6V-8398**	1	SEAL-O-RING	
		1	**7J-9108**	1	SEAL-O-RING	
		1	**268-1547**	1	CONNECTOR	
I	12	1	**250-5462**	1	HOSE AS	
CI	13	1	**231-0215**	2	HOSE AS	
CI	14	1	**311-2498**	2	HOSE AS	
I	15	1	**266-4570**	2	HOSE AS	
C	16	1	*311-2510*	2	LINES GP-HYDRAULIC (WATER LINES)	
I		1	**311-2501**	1	HOSE AS	
I		1	**311-2519**	1	HOSE AS	
C	17	1	*148-8341*	4	CONNECTOR AS	
					(EACH INCLUDES)	
		1	**3D-2824**	1	SEAL-O-RING	
		1	**6V-8713**	1	CONNECTOR	
		1	**7J-9108**	1	SEAL-O-RING	
	18	1	*148-8382*	1	ELBOW AS	
		1	**3D-2824**	1	SEAL-O-RING	
		1	**7J-9108**	1	SEAL-O-RING	
		1	**8T-0404**	1	ELBOW (90-DEG)	
	20	1	**3G-8047**	1	GROMMET	
	21	1	*169-7409*	1	UNION AS	
		1	**6V-8996**	1	UNION	
		1	**7J-9108**	2	SEAL-O-RING	
	22	1	**5P-7464**	2	CLIP (SLOT)	
	23	1	**5P-7465**	2	CLIP (TAB)	
	24	1	**6V-1249**	1	GROMMET	
	25	1	**6V-1889**	1	CLIP	
	26	1	**6V-7359**	1	GROMMET	
C	27	1	**7J-9108**	4	SEAL-O-RING	
C	28	1	**6V-9170**	4	NUT-BULKHEAD (1-14-THD)	
	29	1	**3G-8054**	2	CLIP (TAB)	
	30	1	**7C-4354**	3	CLIP	
	31	1	**8T-4121**	2	WASHER-HARD (11X21X2.5-MM THK)	
M	32	1	**8T-4136**	2	BOLT (M10X1.5X25-MM)	
M	33	1	**8T-4139**	7	BOLT (M12X1.75X30-MM)	
	34	1	**8T-4223**	19	WASHER-HARD (13.5X25.5X3-MM THK)	
M	35	1	**8T-4244**	6	NUT (M12X1.75-THD)	
	36	1	**281-4618**	1	PLATE AS (LEFT)	
		1	**262-1314**	1	PLATE	

C-CHANGE FROM PREVIOUS TYPE
I-REFER TO HYDRAULIC INFORMATION SYSTEM
M-METRIC PART

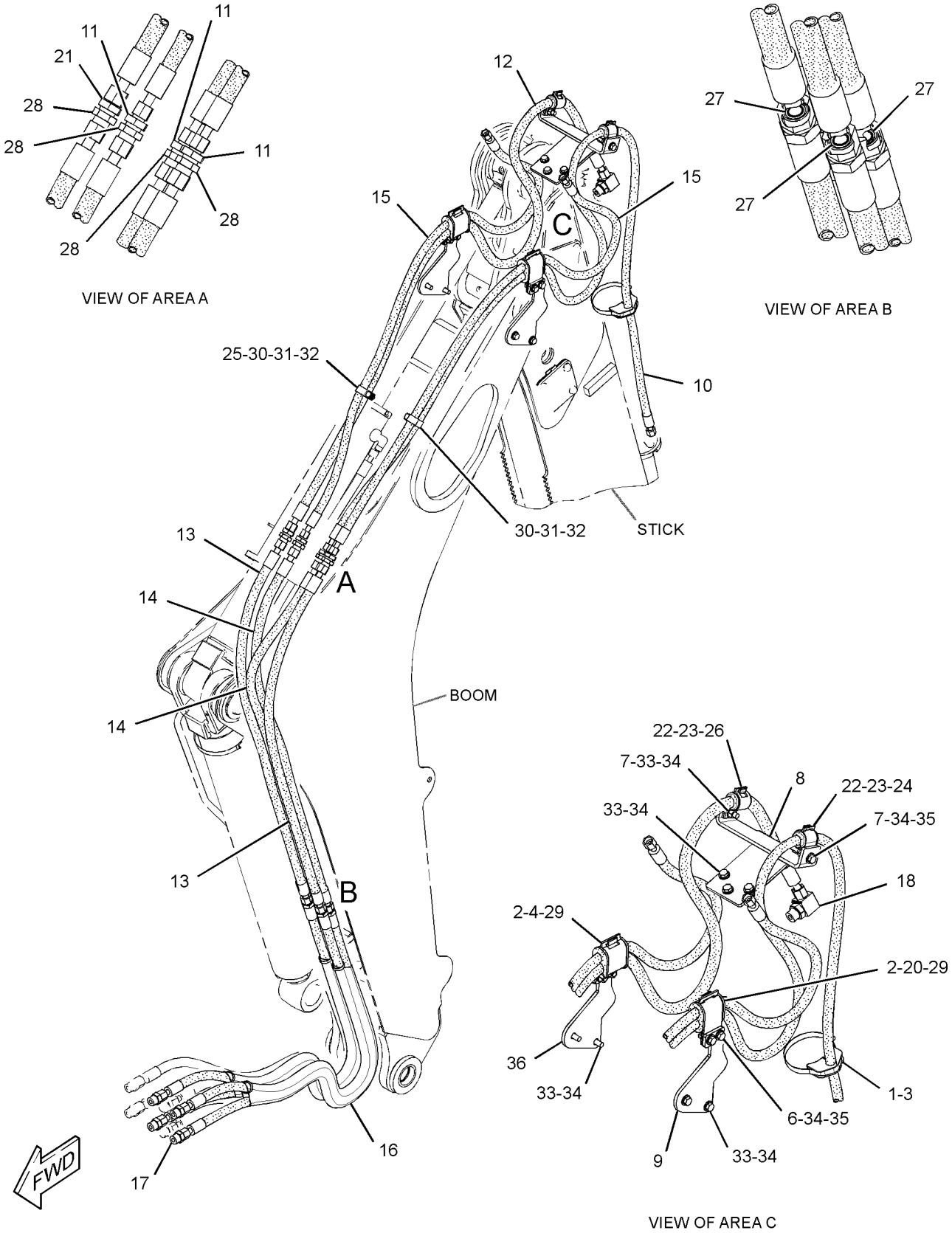

GRAPHIC #1 **<END>** g01466407

HYDRAULIC SYSTEM

246-9318 LINES GP-BUCKET—EXTENDABLE STICK

S/N: CBD2632-8457

PART OF 209-9929 BACKHOE AR-EXTENDABLE STICK

AN ATTACHMENT

SMCS-5057, 5457 **i03710545**

NOTE	REF NO	GRAPHIC REF	PART NUMBER	QTY	PART NAME 1 2 3 4 5 6 (PRODUCT LEVEL)	SEE PAGE
	1	1	**5P-0599**	1	CLAMP-BAND	
	2	1	**3G-8057**	2	CLIP (SLOT)	
	3	1	**9R-5948**	1	BLOCK	
	4	1	**6V-9990**	1	GROMMET	
M	6	1	**8T-4194**	4	BOLT (M12X1.75X50-MM)	
M	7	1	**8T-4183**	2	BOLT (M12X1.75X40-MM)	
	8	1	**262-1315**	1	PLATE	
C	9	1	**323-7311**	2	PLATE	
I	10	1	**266-4571**	1	HOSE AS	
	11	1	*268-1548*	3	CONNECTOR AS	
					(EACH INCLUDES)	
		1	**6V-8398**	1	SEAL-O-RING	
		1	**7J-9108**	1	SEAL-O-RING	
		1	**268-1547**	1	CONNECTOR	
I	12	1	**250-5462**	1	HOSE AS	
I	13	1	**231-0215**	2	HOSE AS	
I	14	1	**311-2498**	2	HOSE AS	
I	15	1	**266-4570**	2	HOSE AS	
	16	1	*311-2510*	2	LINES GP-HYDRAULIC (BUCKET)	
					(EACH INCLUDES)	
I		1	**311-2501**	1	HOSE AS	
I		1	**311-2519**	1	HOSE AS	
	17	1	*148-8341*	4	CONNECTOR AS	
					(EACH INCLUDES)	
		1	**3D-2824**	1	SEAL-O-RING	
		1	**6V-8713**	1	CONNECTOR	
		1	**7J-9108**	1	SEAL-O-RING	
	18	1	*148-8382*	1	ELBOW AS	
		1	**3D-2824**	1	SEAL-O-RING	
		1	**7J-9108**	1	SEAL-O-RING	
		1	**8T-0404**	1	ELBOW	
	20	1	**3G-8047**	1	GROMMET	
	21	1	*169-7409*	1	UNION AS	
		1	**6V-8996**	1	UNION	
		1	**7J-9108**	2	SEAL-O-RING	
	22	1	**5P-7464**	2	CLIP (SLOT)	
	23	1	**5P-7465**	2	CLIP (TAB)	
	24	1	**6V-1249**	1	GROMMET	
	25	1	**6V-1889**	1	CLIP	
	26	1	**6V-7359**	1	GROMMET	
	27	1	**7J-9108**	4	SEAL-O-RING	
	28	1	**6V-9170**	4	NUT-BULKHEAD (1-14-THD)	
	29	1	**3G-8054**	2	CLIP (TAB)	
	30	1	**7C-4354**	3	CLIP	
	31	1	**8T-4121**	2	WASHER-HARD (11X21X2.5-MM THK)	
M	32	1	**8T-4136**	2	BOLT (M10X1.5X25-MM)	
M	33	1	**8T-4139**	7	BOLT (M12X1.75X30-MM)	
	34	1	**8T-4223**	19	WASHER-HARD (13.5X25.5X3-MM THK)	
M	35	1	**8T-4244**	6	NUT (M12X1.75-THD)	
	36	1	**7K-1181**	2	STRAP-CABLE	

C-CHANGE FROM PREVIOUS TYPE
I-REFER TO HYDRAULIC INFORMATION SYSTEM
M-METRIC PART

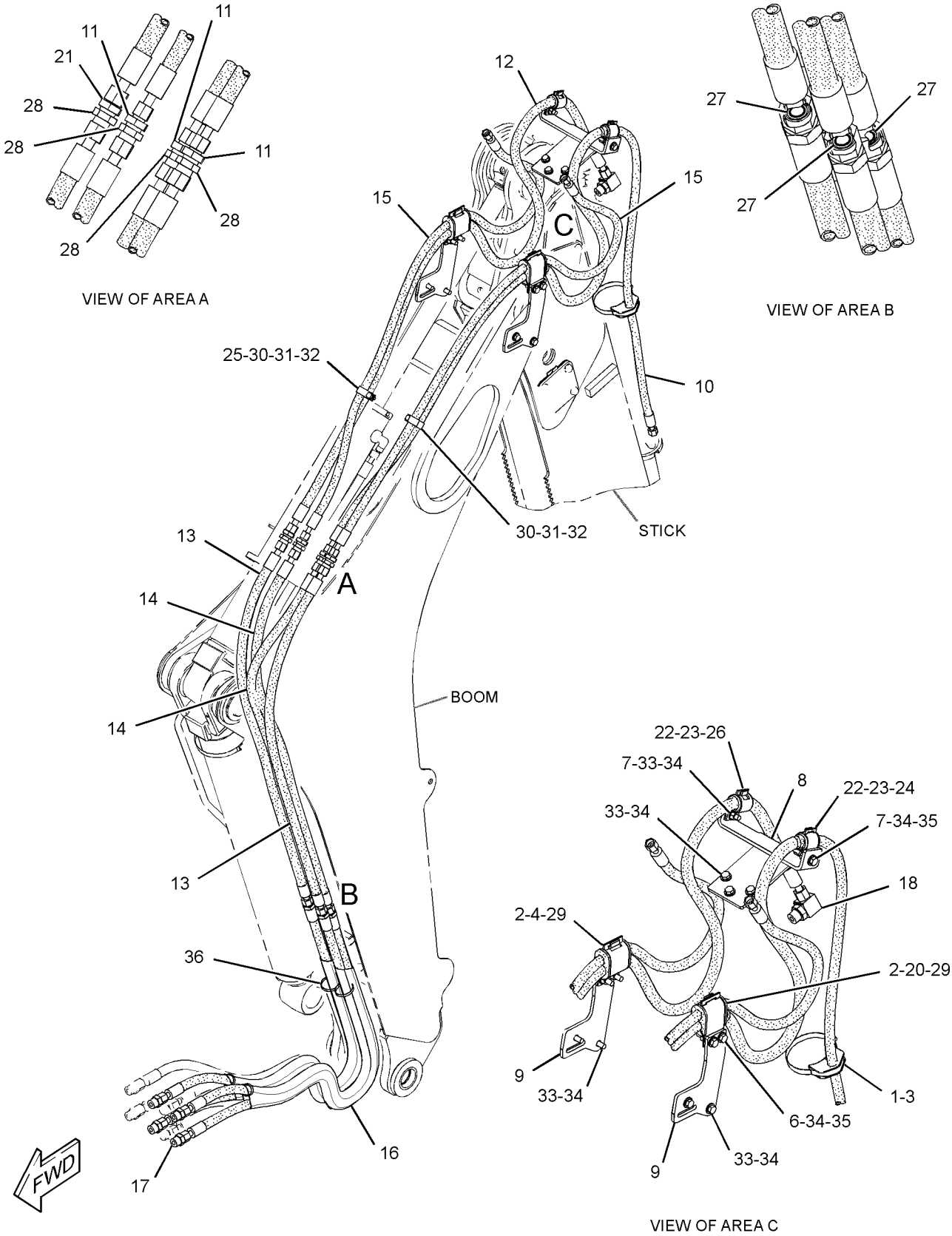

GRAPHIC #1 **<END>** g02106256

HYDRAULIC SYSTEM

246-9318 LINES GP-BUCKET—EXTENDABLE STICK

S/N: CBD8458-UP; MFG1-UP

PART OF 209-9929 BACKHOE AR-EXTENDABLE STICK

AN ATTACHMENT

SMCS-5057, 5457 **i04379789**

NOTE	REF NO	GRAPHIC REF	PART NUMBER	QTY	PART NAME 1 2 3 4 5 6 (PRODUCT LEVEL)	SEE PAGE
	1	1	**5P-0599**	1	CLAMP-BAND	
	2	1	**9R-5948**	1	BLOCK	
I	3	1	**231-0215**	2	HOSE AS	
I	4	1	**266-4570**	2	HOSE AS	
	5	1	*268-1548*	3	CONNECTOR AS	
					(EACH INCLUDES)	
		1	**6V-8398**	1	SEAL-O-RING	
		1	**7J-9108**	1	SEAL-O-RING	
		1	**268-1547**	1	CONNECTOR	
I	6	1	**311-2498**	2	HOSE AS	
CI	7	1	**311-2501**	4	HOSE AS	
C	8	1	**312-2597**	1	PLATE	
CI	9	1	**312-2600**	1	HOSE AS	
C	10	1	**314-7750**	2	PLATE	
CI	11	1	**360-4008**	1	HOSE AS	
	12	1	*148-8341*	4	CONNECTOR AS	
					(EACH INCLUDES)	
		1	**3D-2824**	1	SEAL-O-RING	
		1	**6V-8713**	1	CONNECTOR	
		1	**7J-9108**	1	SEAL-O-RING	
C	13	1	*153-6232*	1	ELBOW AS	
		1	**3D-2824**	1	SEAL-O-RING	
		1	**7J-9108**	1	SEAL-O-RING	
		1	**8T-0120**	1	ELBOW	
	14	1	*169-7409*	1	UNION AS	
		1	**6V-8996**	1	UNION	
		1	**7J-9108**	2	SEAL-O-RING	
C	15	1	**3G-8054**	1	CLIP (TAB)	
C	16	1	**3G-8057**	1	CLIP (SLOT)	
C	17	1	**5P-7464**	4	CLIP (SLOT)	
C	18	1	**5P-7465**	4	CLIP (TAB)	
	19	1	**6V-1889**	1	CLIP	
C	20	1	**6V-7359**	4	GROMMET	
	21	1	**6V-9170**	4	NUT-BULKHEAD (1-14-THD)	
	22	1	**6V-9990**	1	GROMMET	
	23	1	**7C-4354**	3	CLIP	
C	24	1	**7G-3832**	1	GROMMET	
C	25	1	**7G-3833**	1	CLIP (TAB)	
C	26	1	**7G-3834**	1	CLIP (SLOT)	
	27	1	**7J-9108**	4	SEAL-O-RING	
	28	1	**8T-4121**	2	WASHER-HARD (11X21X2.5-MM THK)	
M	29	1	**8T-4136**	2	BOLT (M10X1.5X25-MM)	
CM	30	1	**8T-4139**	6	BOLT (M12X1.75X30-MM)	
CM	31	1	**8T-4194**	2	BOLT (M12X1.75X50-MM)	
C	32	1	**8T-4223**	18	WASHER-HARD (13.5X25.5X3-MM THK)	
M	33	1	**8T-4244**	6	NUT (M12X1.75-THD)	
	34	1	**7K-1181**	2	STRAP-CABLE	
CM	35	1	**8T-4910**	4	BOLT (M12X1.75X60-MM)	

C-CHANGE FROM PREVIOUS TYPE
I-REFER TO HYDRAULIC INFORMATION SYSTEM
M-METRIC PART

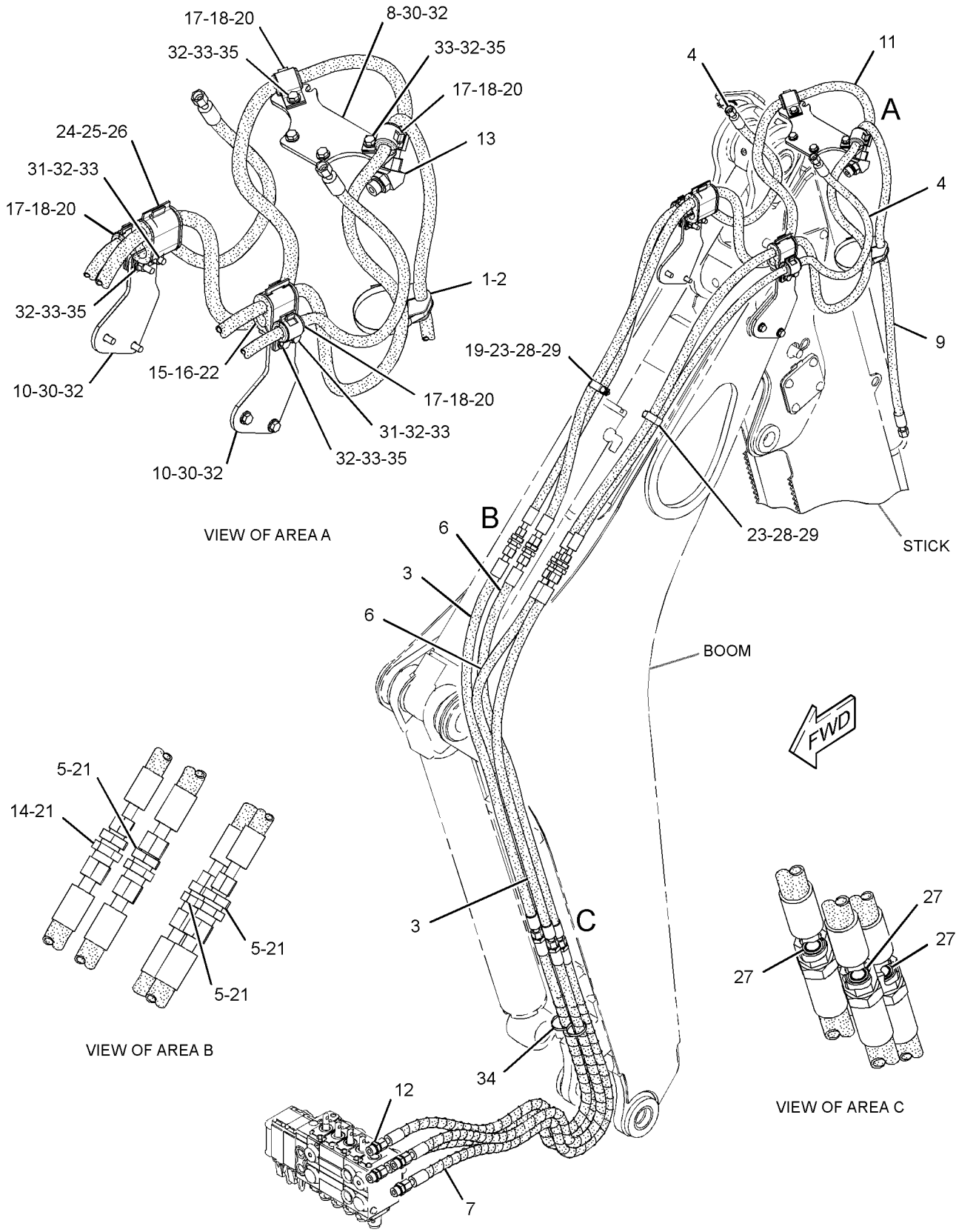

GRAPHIC #1 **<END>** g02176634

HYDRAULIC SYSTEM

202-9130 LINES GP-CONNECTING

S/N: CBD1-UP

AN ATTACHMENT

SMCS-5057 **i02646489**

NOTE	REF NO	GRAPHIC REF	PART NUMBER	QTY	PART NAME 1 2 3 4 5 6 (PRODUCT LEVEL)	SEE PAGE
I	1	1	**216-6969**	2	HOSE AS	
	2	1	**6V-8716**	2	CONNECTOR	
	3	1	**6V-9746**	4	SEAL-O-RING	
	4	1	**7M-8485**	2	SEAL-O-RING	
	5	1	**9X-6643**	2	ADAPTER	

I-REFER TO HYDRAULIC INFORMATION SYSTEM

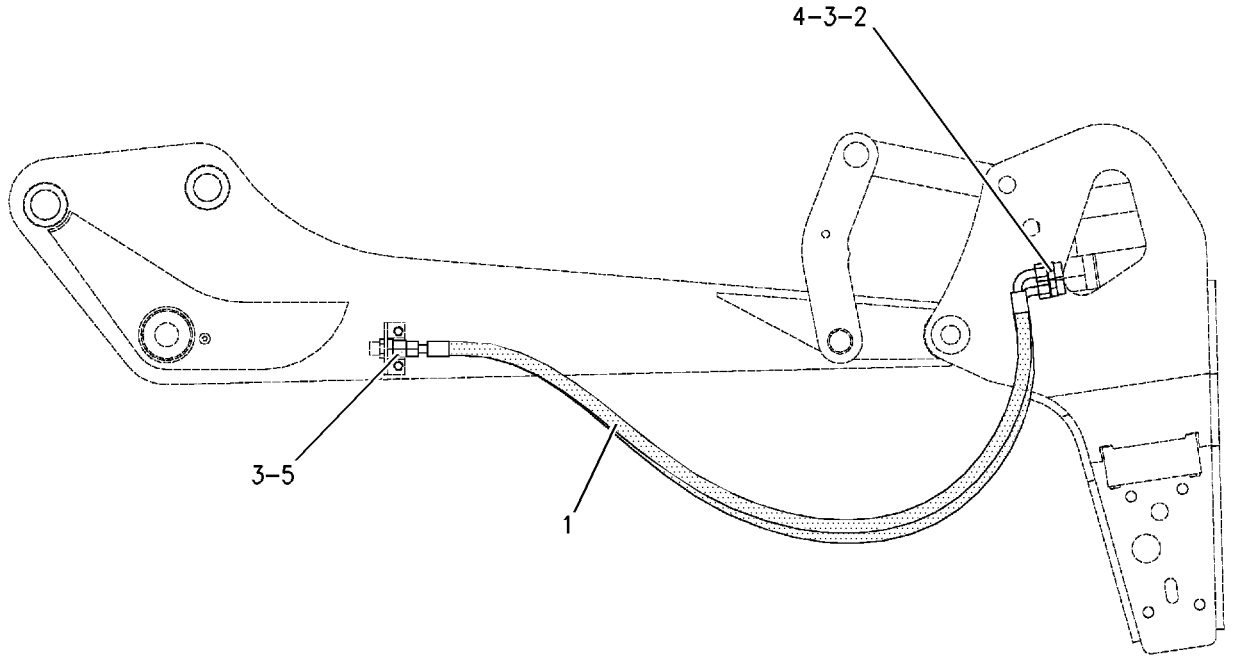

GRAPHIC #1 **<END>** g00815733

HYDRAULIC SYSTEM

216-5332 LINES GP-DRAIN

S/N: CBD1-UP; MFG1-UP

PART OF 214-2198, 297-0165 HYDRAULIC AR

SMCS-5057 **i02359467**

NOTE	REF NO	GRAPHIC REF	PART NUMBER	QTY	PART NAME 1 2 3 4 5 6 (PRODUCT LEVEL)	SEE PAGE
	1	1	**8T-0154**	1	CLAMP-HOSE	
	2	1	*165-2273*	1	VALVE GP-SHUTOFF	
		1	**3K-0360**	1	SEAL-O-RING	
		1	**6V-7238**	1	VALVE-SHUTOFF	
E	3	1	**5P-0743**		HOSE (35-CM)	

E-ORDER BY THE CENTIMETER

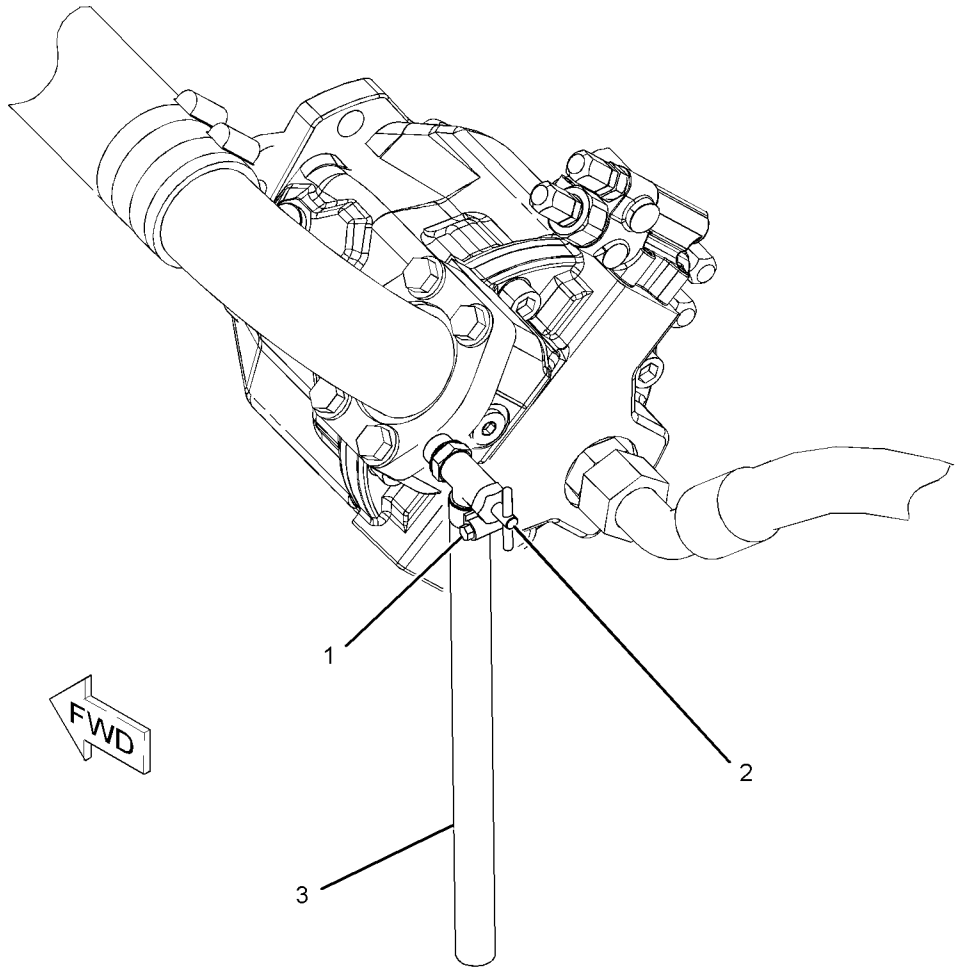

GRAPHIC #1 **<END>** g01087946

HYDRAULIC SYSTEM

247-3267 LINES GP-EXTENDABLE STICK

S/N: CBD1-1810
PART OF 271-1404 STICK GP
AN ATTACHMENT

SMCS-5057 **i02666994**

NOTE	REF NO	GRAPHIC REF	PART NUMBER	QTY	PART NAME 1 2 3 4 5 6 (PRODUCT LEVEL)	SEE PAGE
	1	1	**8T-6726**	3	CLAMP-HOSE	
	2	1	**9R-2053**	3	BLOCK	
	3	1	**262-7314**	1	PLATE AS	
I	4	1	**221-3234**	1	HOSE AS	
I	5	1	**290-6023**	1	HOSE AS	
	6	1	**305-3570**	1	TUBE AS	
	7	1	**305-3571**	1	TUBE AS	
	8	1	**6V-8398**	4	SEAL-O-RING	
	9	1	**8T-1885**	2	CLIP (SLOT)	
	10	1	**8T-1886**	2	CLIP (TAB)	
	11	1	**8T-4121**	6	WASHER-HARD (11X21X2.5-MM THK)	
M	12	1	**8T-4136**	2	BOLT (M10X1.5X25-MM)	
	13	1	*148-8364*	1	ELBOW AS	
		1	**3K-0360**	1	SEAL-O-RING	
		1	**6V-8625**	1	ELBOW	
		1	**6V-8398**	1	SEAL-O-RING	
M	14	1	**8T-4195**	4	BOLT (M10X1.5X30-MM)	
	15	1	**206-2423**	2	SADDLE	
	16	1	**8T-1892**	2	CLIP (TAB)	
	17	1	**8T-1891**	2	CLIP (SLOT)	
	18	1	**7K-1181**	4	STRAP-CABLE	

I-REFER TO HYDRAULIC INFORMATION SYSTEM
M-METRIC PART

247-3267 **LINES GP-EXTENDABLE STICK** *(contd.)* **i02666994**

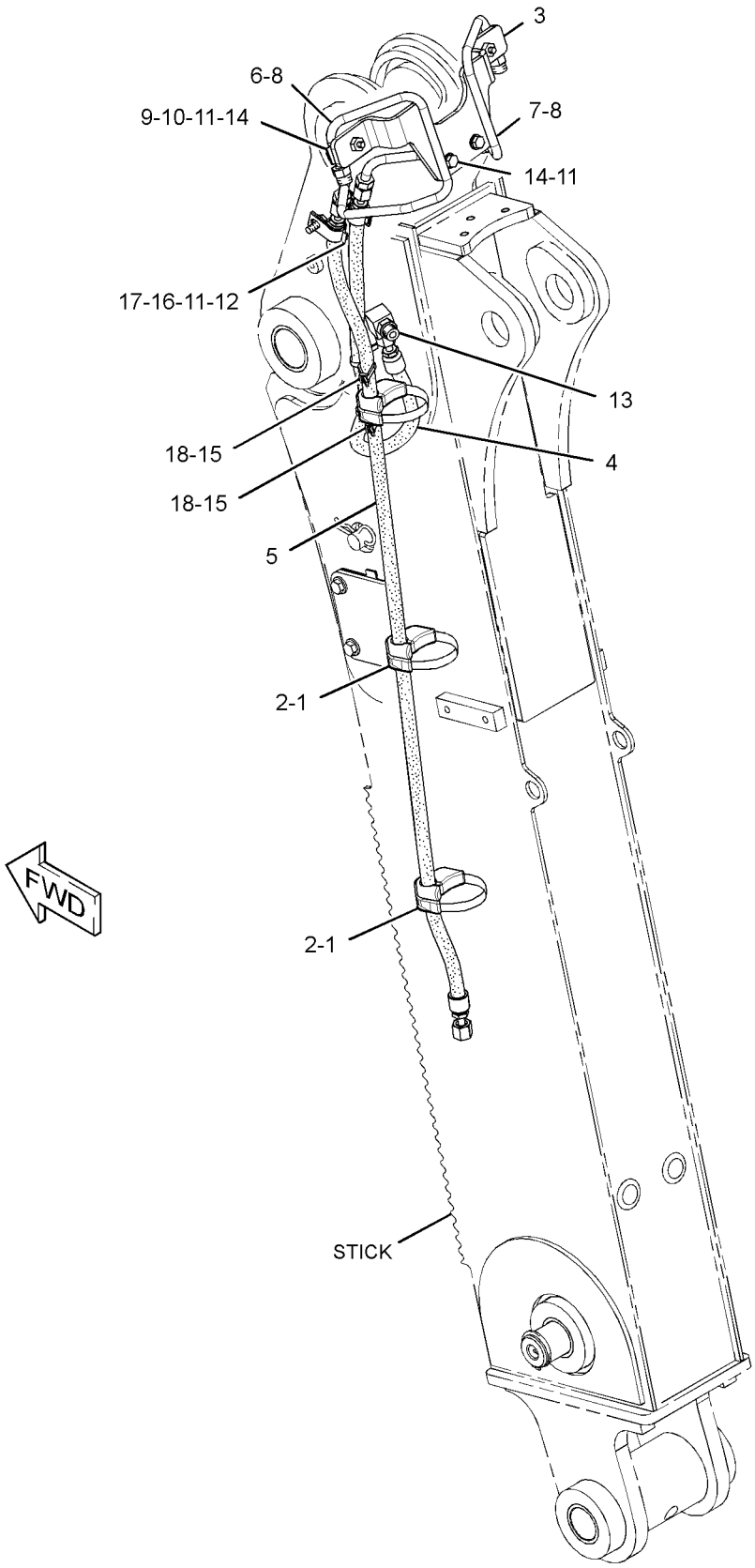

GRAPHIC #1 **<END>** g01316423

HYDRAULIC SYSTEM

331-0096 LINES GP-EXTENDABLE STICK

S/N: CBD1811-UP; MFG1-UP
PART OF 271-1404 STICK GP
AN ATTACHMENT

SMCS-5057 **i04428629**

NOTE	REF NO	GRAPHIC REF	PART NUMBER	QTY	PART NAME 1 2 3 4 5 6 (PRODUCT LEVEL)	SEE PAGE
	1	1	**7K-1181**	4	STRAP-CABLE	
	2	1	**8T-6726**	3	CLAMP-HOSE	
	3	1	**206-2423**	2	SADDLE	
I	4	1	**221-3234**	1	HOSE AS	
I	5	1	**290-6023**	1	HOSE AS	
	6	1	**329-7970**	1	PLATE AS	
	7	1	**329-8017**	1	TUBE AS	
	8	1	**330-8297**	1	TUBE AS	
	9	1	*148-8364*	1	ELBOW AS	
		1	**3K-0360**	1	SEAL-O-RING	
		1	**6V-8398**	1	SEAL-O-RING	
		1	**6V-8625**	1	ELBOW	
	10	1	**6V-8398**	4	SEAL-O-RING	
	11	1	**8T-1885**	2	CLIP (SLOT)	
	12	1	**8T-1886**	2	CLIP (TAB)	
	13	1	**8T-1891**	2	CLIP (SLOT)	
	14	1	**8T-1892**	2	CLIP (TAB)	
	15	1	**8T-4121**	8	WASHER-HARD (11X21X2.5-MM THK)	
M	16	1	**8T-4133**	2	NUT (M10X1.5-THD)	
M	17	1	**8T-4136**	2	BOLT (M10X1.5X25-MM)	
M	18	1	**8T-4172**	2	BOLT (M10X1.5X80-MM)	
M	19	1	**8T-4195**	2	BOLT (M10X1.5X30-MM)	
	20	1	**9R-2053**	3	BLOCK	

I-REFER TO HYDRAULIC INFORMATION SYSTEM
M-METRIC PART

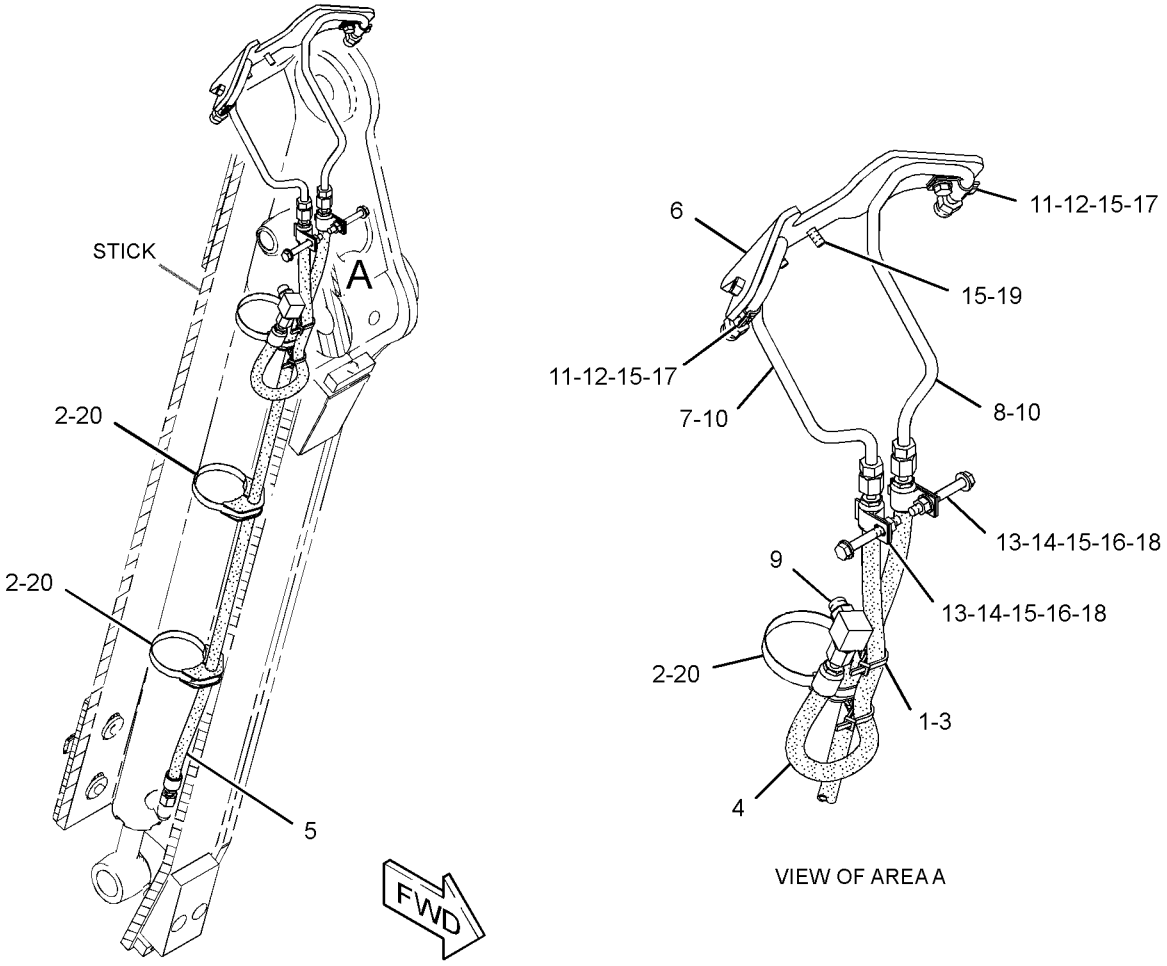

GRAPHIC #1 **<END>** g01809594

HYDRAULIC SYSTEM

257-3160 LINES GP-HYDRAULIC OIL COOLER

S/N: CBD1-UP; MFG1-UP

PART OF 214-2198 HYDRAULIC AR

SMCS-1374, 5057 **i04483771**

NOTE	REF NO	GRAPHIC REF	PART NUMBER	QTY	PART NAME 1 2 3 4 5 6 (PRODUCT LEVEL)	SEE PAGE
E	1	1	**5P-1506**		HOSE (92-CM)	
	2	1	**7K-1181**	4	STRAP-CABLE	
	3	1	**130-9984**	1	CLIP	
	4	1	**159-1503**	4	CLAMP-HOSE	
	5	1	**7X-7729**	1	WASHER (11X25X3-MM THK)	
	6	1	**232-0252**	1	TEE	
	7	1	**235-7091**	1	HOSE	
E	8	1	**136-1955**		HOSE (223-CM)	
E	8A	1	**136-1955**		HOSE (126-CM)	
	10	1	**3S-8536**	1	SPACER (0.406X0.656X0.38-IN THK)	
G	11	1	**160-2246**		SLEEVE-ABRASION (21.7-IN)	
	13	1	**5P-4116**	2	WASHER-HARD (8.8X20.5X2-MM THK)	
	14	1	**7D-7233**	2	CLIP	
	15	1	**7X-7958**	4	CLAMP-HOSE	
	16	1	**8T-4121**	1	WASHER-HARD (11X21X2.5-MM THK)	
M	17	1	**8T-4136**	1	BOLT (M10X1.5X25-MM)	
M	18	1	**8T-4195**	1	BOLT (M10X1.5X30-MM)	
M	19	1	**8T-4189**	2	BOLT (M8X1.25X20-MM)	
	20	1	**8T-7529**	3	CLIP	

E-ORDER BY THE CENTIMETER
G-ORDER BY THE INCH
M-METRIC PART

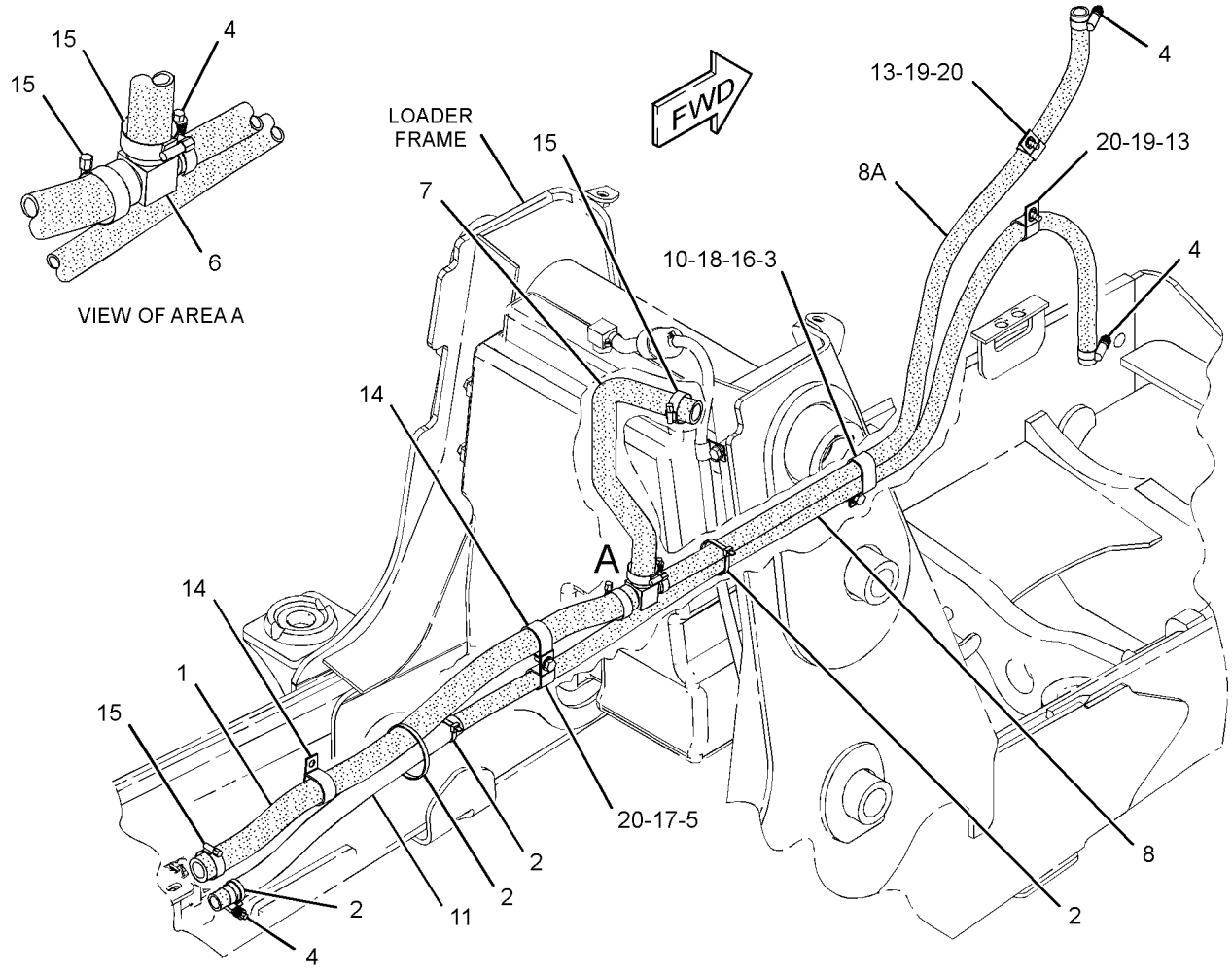

GRAPHIC #1 **<END>** g01865794

HYDRAULIC SYSTEM

343-4096 LINES GP-HYDRAULIC OIL COOLER

S/N: MFG1-UP

PART OF 297-0165 HYDRAULIC AR

SMCS-1374, 5057 **i03860121**

NOTE	REF NO	GRAPHIC REF	PART NUMBER	QTY	PART NAME 1 2 3 4 5 6 (PRODUCT LEVEL)	SEE PAGE
E	1	1	**5P-1506**		HOSE (92-CM)	
G	2	1	**160-2248**		SLEEVE-ABRASION (21.7-IN)	
	3	1	**7K-1181**	12	STRAP-CABLE	
G	4	1	**160-2246**		SLEEVE-ABRASION (83.9-IN)	
G	4A	1	**160-2246**		SLEEVE-ABRASION (48.1-IN)	
	5	1	**159-1503**	4	CLAMP-HOSE	
	6	1	**232-0252**	1	TEE	
E	7	1	**262-8088**		HOSE (220-CM)	
E	7A	1	**262-8088**		HOSE (126-CM)	
	8	1	**300-6062**	1	HOSE	
	9	1	**4P-7581**	2	CLIP	
M	10	1	**5C-7261**	2	NUT (M8X1.25-THD)	
	11	1	**5P-4116**	2	WASHER-HARD (8.8X20.5X2-MM THK)	
	12	1	**7D-7233**	2	CLIP	
	13	1	**7X-7958**	4	CLAMP-HOSE	
	14	1	**8T-4121**	3	WASHER-HARD (11X21X2.5-MM THK)	
M	15	1	**8T-4136**	2	BOLT (M10X1.5X25-MM)	
M	16	1	**8T-4137**	1	BOLT (M10X1.5X20-MM)	
	17	1	**8T-7529**	3	CLIP	

E-ORDER BY THE CENTIMETER
G-ORDER BY THE INCH
M-METRIC PART

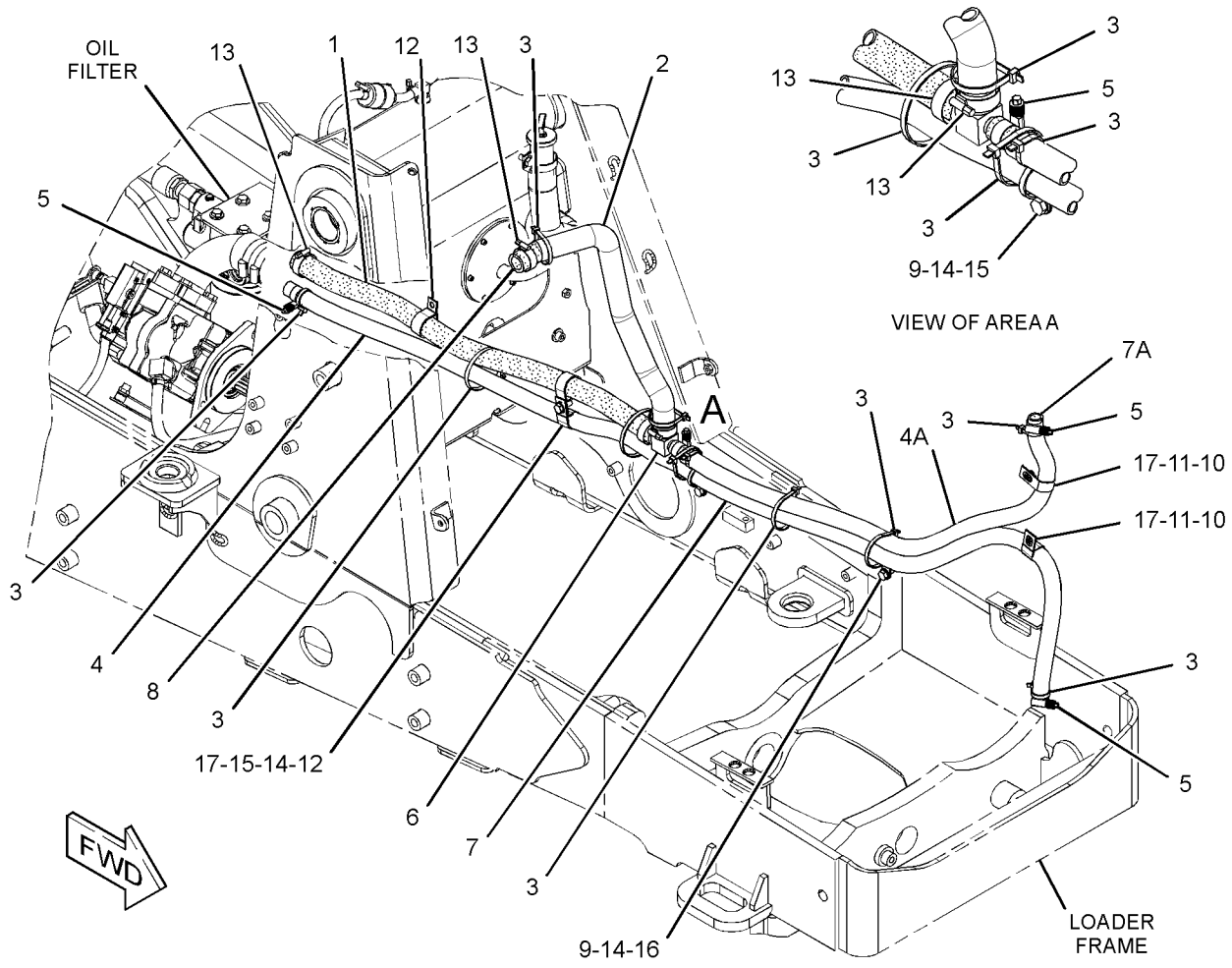

GRAPHIC #1 **<END>** g01891538

HYDRAULIC SYSTEM

246-5293 LINES GP-LIFT CYLINDER

S/N: CBD1-UP; MFG1-UP
PART OF 213-9298 LOADER AR

SMCS-5057, 5102 **i02639452**

NOTE	REF NO	GRAPHIC REF	PART NUMBER	QTY	PART NAME 1 2 3 4 5 6 (PRODUCT LEVEL)	SEE PAGE
	1	1	**7K-1181**	2	STRAP-CABLE	
	2	1	**8T-6726**	4	CLAMP-HOSE	
	3	1	**143-0777**	1	PLATE AS	
	4	1	**143-0779**	1	PLATE AS	
	5	1	**151-4841**	2	BLOCK	
	6	1	**158-3412**	10	CLIP (SLOT)	
	7	1	**211-3207**	1	TUBE AS	
	8	1	**211-3208**	1	TUBE AS	
	9	1	**231-2808**	1	TUBE AS	
	10	1	**231-2809**	1	TUBE AS	
I	11	1	**231-4784**	2	HOSE AS	
I	12	1	**231-4785**	2	HOSE AS	
	13	1	**249-4020**	1	TUBE AS	
	14	1	**249-4021**	1	TUBE AS	
	15	1	**249-4022**	1	TUBE AS	
	16	1	**249-4023**	1	TUBE AS	
	17	1	**249-4024**	1	TUBE AS	
	18	1	*148-8341*	1	CONNECTOR AS	
		1	**3D-2824**	1	SEAL-O-RING	
		1	**6V-8713**	1	CONNECTOR	
		1	**7J-9108**	1	SEAL-O-RING	
	19	1	*148-8390*	2	ELBOW AS	
					(EACH INCLUDES)	
		1	**2M-9780**	1	SEAL-O-RING	
		1	**6V-8626**	1	ELBOW	
		1	**7J-9108**	1	SEAL-O-RING	
	20	1	*148-8446*	2	TEE AS-SWIVEL	
					(EACH INCLUDES)	
		1	**6V-9838**	1	TEE-SWIVEL	
		1	**7J-9108**	2	SEAL-O-RING	
	21	1	*150-3063*	1	TEE AS	
		1	**3D-2824**	1	SEAL-O-RING	
		1	**7J-9108**	2	SEAL-O-RING	
		1	**120-9809**	1	TEE	
	22	1	*222-4732*	1	TEE AS	
		1	**6V-8398**	1	SEAL-O-RING	
		1	**6V-9031**	1	TEE-UNION	
		1	**7J-9108**	2	SEAL-O-RING	
	23	1	**6V-8398**	8	SEAL-O-RING	
	24	1	**6V-9830**	1	CAP AS	
	25	1	**6V-9831**	1	CAP AS	
	26	1	**8T-4121**	6	WASHER-HARD (11X21X2.5-MM THK)	
M	28	1	**8T-4136**	5	BOLT (M10X1.5X25-MM)	
	32	1	**9R-7803**	5	CLIP (TAB)	
M	33	1	**8T-4133**	1	NUT (M10X1.5-THD)	

I-REFER TO HYDRAULIC INFORMATION SYSTEM
M-METRIC PART

246-5293 **LINES GP-LIFT CYLINDER** *(contd.)* **i02639452**

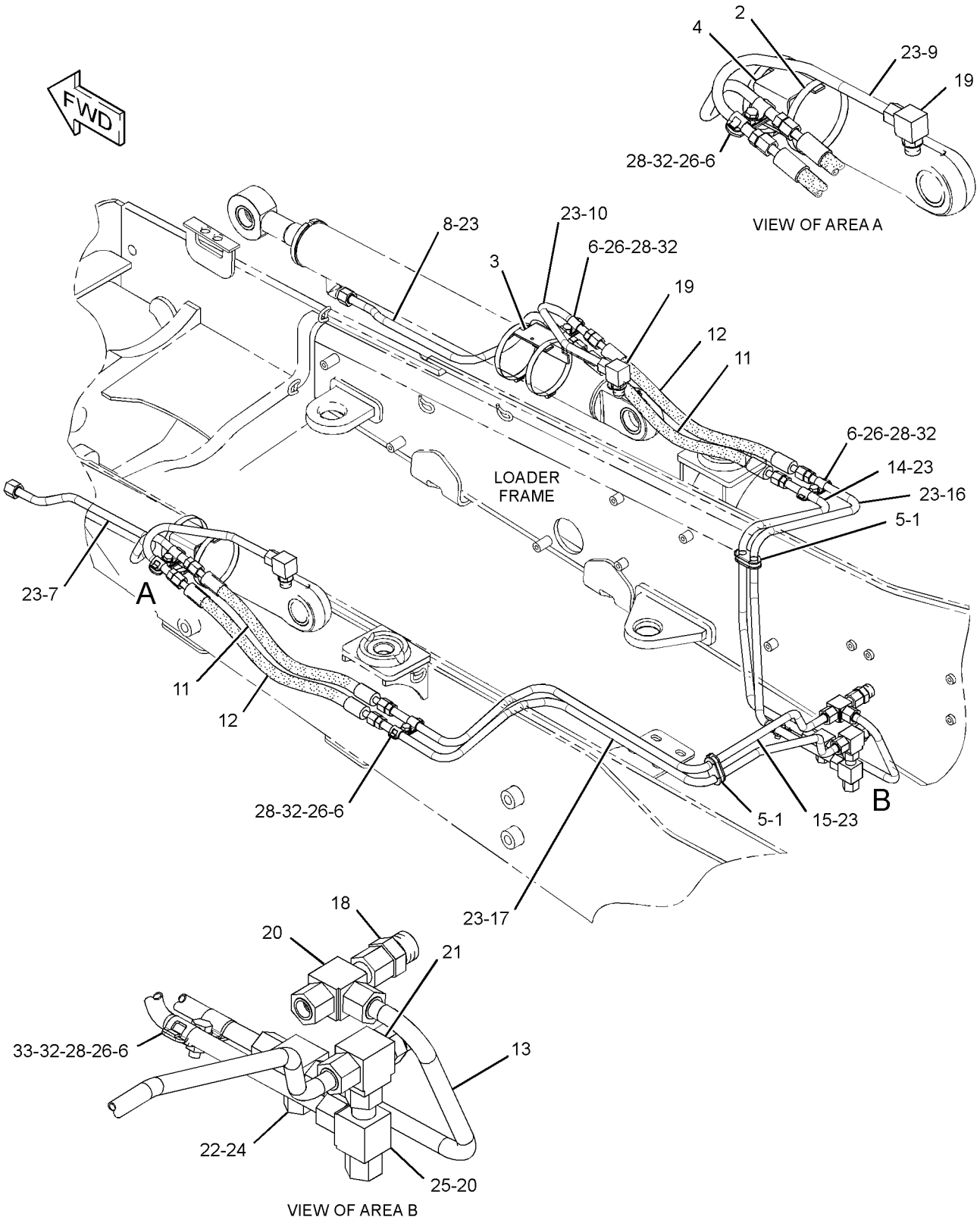

GRAPHIC #1 **<END>** g01310476

HYDRAULIC SYSTEM

315-1554 LINES GP-LIFT CYLINDER

S/N: MFG1-UP

PART OF 318-9555 LOADER AR

SMCS-5057, 5102 **i03860123**

NOTE	REF NO	GRAPHIC REF	PART NUMBER	QTY	PART NAME 1 2 3 4 5 6 (PRODUCT LEVEL)	SEE PAGE
	1	1	**7K-1181**	2	STRAP-CABLE	
	2	1	**8T-6726**	4	CLAMP-HOSE	
	3	1	**143-0777**	1	PLATE AS	
	4	1	**143-0779**	1	PLATE AS	
					(EACH PLATE AS INCLUDES)	
M		1	**8T-3490**	1	NUT-WELD (M10X1.5-THD)	
	5	1	**151-4841**	2	BLOCK	
	6	1	**158-3412**	10	CLIP (SLOT)	
	7	1	**211-3207**	1	TUBE AS	
	8	1	**211-3208**	1	TUBE AS	
	9	1	**231-2808**	1	TUBE AS	
	10	1	**231-2809**	1	TUBE AS	
I	11	1	**231-4784**	2	HOSE AS	
I	12	1	**231-4785**	2	HOSE AS	
	13	1	**249-4020**	1	TUBE AS	
	14	1	**249-4021**	1	TUBE AS	
	15	1	**249-4023**	1	TUBE AS	
	16	1	**315-1558**	1	TUBE AS	
	17	1	**315-1559**	1	TUBE AS	
	18	1	*148-8341*	1	CONNECTOR AS	
		1	**3D-2824**	1	SEAL-O-RING	
		1	**6V-8713**	1	CONNECTOR	
		1	**7J-9108**	1	SEAL-O-RING	
	19	1	*148-8390*	2	ELBOW AS	
					(EACH INCLUDES)	
		1	**2M-9780**	1	SEAL-O-RING	
		1	**6V-8626**	1	ELBOW	
		1	**7J-9108**	1	SEAL-O-RING	
	20	1	*148-8446*	2	TEE AS-SWIVEL	
					(EACH INCLUDES)	
		1	**6V-9838**	1	TEE-SWIVEL	
		1	**7J-9108**	2	SEAL-O-RING	
	21	1	*150-3063*	1	TEE AS	
		1	**3D-2824**	1	SEAL-O-RING	
		1	**7J-9108**	2	SEAL-O-RING	
		1	**120-9809**	1	TEE	
	22	1	*222-4732*	1	TEE AS	
		1	**6V-8398**	1	SEAL-O-RING	
		1	**6V-9031**	1	TEE-UNION	
		1	**7J-9108**	2	SEAL-O-RING	
	23	1	**6V-8398**	8	SEAL-O-RING	
	24	1	**6V-9830**	1	CAP AS	
	25	1	**6V-9831**	1	CAP AS	
	26	1	**8T-4121**	6	WASHER-HARD (11X21X2.5-MM THK)	
M	27	1	**8T-4133**	1	NUT (M10X1.5-THD)	
M	28	1	**8T-4136**	5	BOLT (M10X1.5X25-MM)	
	29	1	**9R-7803**	5	CLIP (TAB)	

I-REFER TO HYDRAULIC INFORMATION SYSTEM
M-METRIC PART

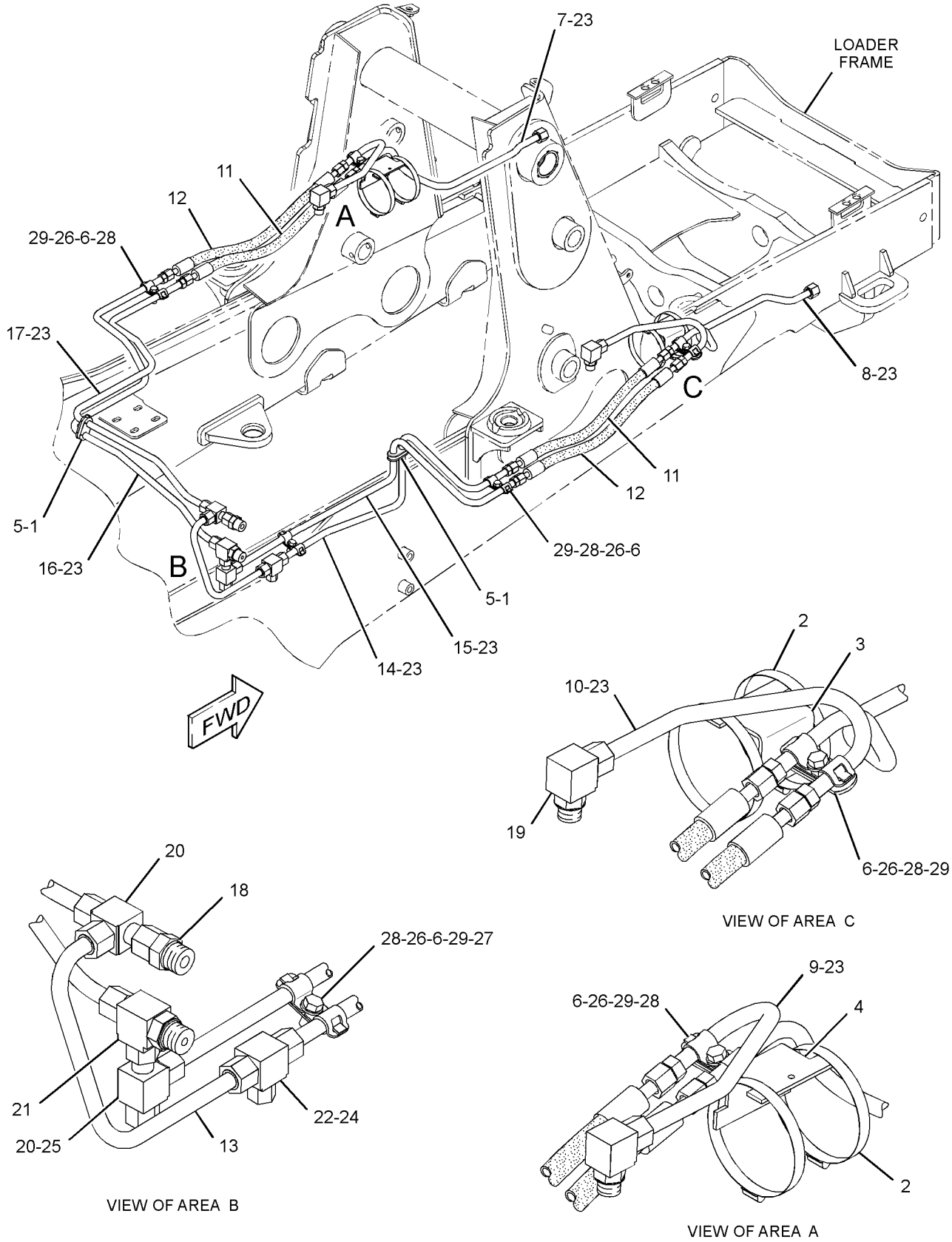

GRAPHIC #1 **<END>** g01514520

HYDRAULIC SYSTEM

246-8478 LINES GP-LOADER AUXILIARY

S/N: CBD1-6800

PART OF 209-9944 VALVE AR-BANK 3

AN ATTACHMENT

SMCS-5057 **i02496194**

NOTE	REF NO	GRAPHIC REF	PART NUMBER	QTY	PART NAME 1 2 3 4 5 6 (PRODUCT LEVEL)	SEE PAGE
	1	1	**7K-1181**	1	STRAP-CABLE	
	2	1	**151-4841**	1	BLOCK	
	3	1	**158-3412**	8	CLIP (SLOT)	
I	4	1	**215-7453**	2	HOSE AS	
	5	1	**215-7454**	1	TUBE AS	
	6	1	**215-7619**	1	TUBE AS	
	7	1	**231-3528**	1	BRACKET AS	
M		1	**8T-3490**	1	NUT-WELD (M10X1.5-THD)	
	8	1	**249-4034**	1	TUBE AS	
	9	1	**249-4035**	1	TUBE AS	
	10	1	**254-7271**	1	PLATE AS	
	11	1	*148-8382*	2	ELBOW AS	
					(EACH INCLUDES)	
		1	**3D-2824**	1	SEAL-O-RING	
		1	**7J-9108**	1	SEAL-O-RING	
		1	**8T-0404**	1	ELBOW	
	12	1	**6V-8398**	6	SEAL-O-RING	
	13	1	**6V-9830**	2	CAP AS	
	14	1	**8T-4121**	6	WASHER-HARD (11X21X2.5-MM THK)	
M	15	1	**8T-4136**	5	BOLT (M10X1.5X25-MM)	
M	16	1	**8T-4137**	1	BOLT (M10X1.5X20-MM)	
	17	1	**9R-7803**	4	CLIP (TAB)	

I-REFER TO HYDRAULIC INFORMATION SYSTEM
M-METRIC PART

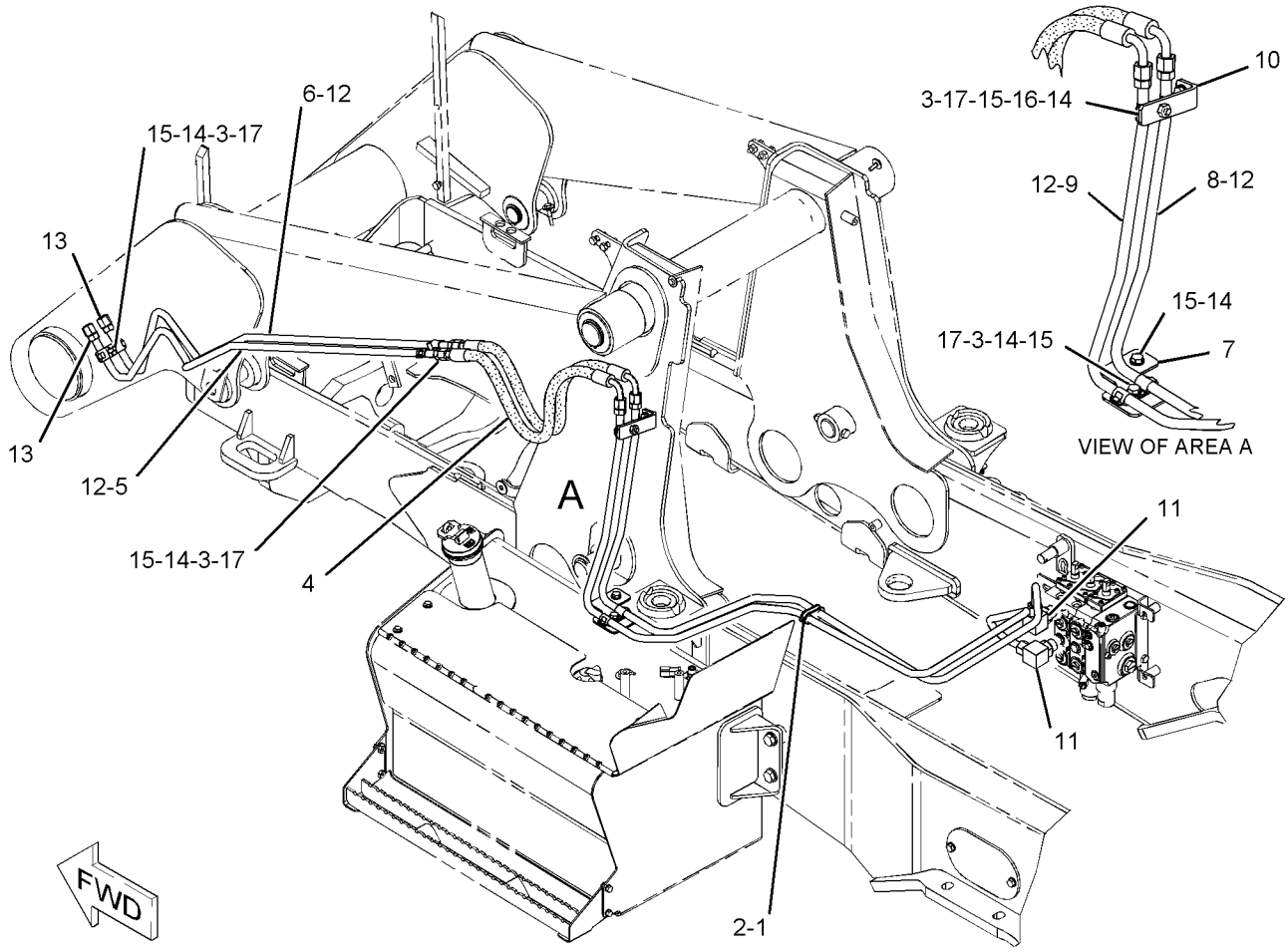

GRAPHIC #1

<END>

g01094033

HYDRAULIC SYSTEM

246-8478 LINES GP-LOADER AUXILIARY

S/N: CBD6801-UP; MFG1-UP
PART OF 209-9944 VALVE AR-BANK 3
AN ATTACHMENT

SMCS-5057 **i04145909**

NOTE	REF NO	GRAPHIC REF	PART NUMBER	QTY	PART NAME 1 2 3 4 5 6 (PRODUCT LEVEL)	SEE PAGE
	1	1	**7K-1181**	1	STRAP-CABLE	
	2	1	**151-4841**	1	BLOCK	
	3	1	**158-3412**	8	CLIP (SLOT)	
I	4	1	**215-7453**	2	HOSE AS	
	5	1	**215-7454**	1	TUBE AS	
	6	1	**215-7619**	1	TUBE AS	
	7	1	**231-3528**	1	BRACKET AS	
M		1	**8T-3490**	1	NUT-WELD (M10X1.5-THD)	
	8	1	**249-4034**	1	TUBE AS	
C	9	1	**365-1054**	1	TUBE AS	
	10	1	**254-7271**	1	PLATE AS	
	11	1	*148-8382*	2	ELBOW AS	
					(EACH INCLUDES)	
		1	**3D-2824**	1	SEAL-O-RING	
		1	**7J-9108**	1	SEAL-O-RING	
		1	**8T-0404**	1	ELBOW	
	12	1	**6V-8398**	6	SEAL-O-RING	
	13	1	**6V-9830**	2	CAP AS	
	14	1	**8T-4121**	6	WASHER-HARD (11X21X2.5-MM THK)	
M	15	1	**8T-4136**	5	BOLT (M10X1.5X25-MM)	
M	16	1	**8T-4137**	1	BOLT (M10X1.5X20-MM)	
	17	1	**9R-7803**	4	CLIP (TAB)	

C-CHANGE FROM PREVIOUS TYPE
I-REFER TO HYDRAULIC INFORMATION SYSTEM
M-METRIC PART

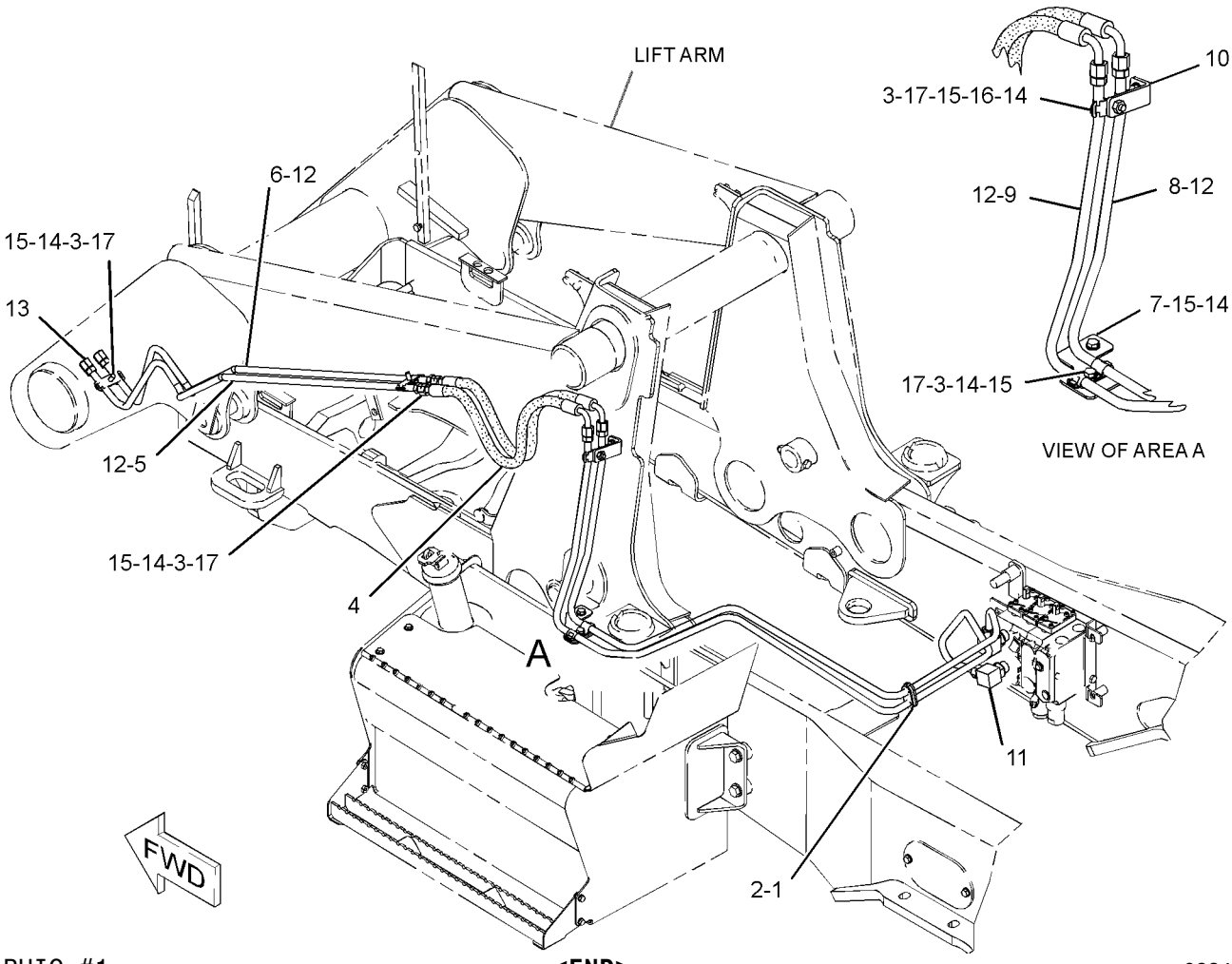

GRAPHIC #1

<END>

g02345238

HYDRAULIC SYSTEM

9R-3712 LINES GP-MULTIPURPOSE BUCKET

S/N: CBD1-UP

PART OF 112-0938, 112-0939 BUCKET AR-MULTIPURPOSE

AN ATTACHMENT

SMCS-5057 **i01515344**

NOTE	REF NO	GRAPHIC REF	PART NUMBER	QTY	PART NAME 1 2 3 4 5 6 (PRODUCT LEVEL)	SEE PAGE
	1	1	**6V-1249**	2	GROMMET	
I	2	1	**8E-3081**	1	HOSE AS	
I	3	1	**9R-0418**	2	HOSE AS	
I	4	1	**9R-5971**	1	HOSE AS	
I	5	1	**100-7442**	1	HOSE AS	
I	6	1	**117-7520**	1	HOSE AS	
	7	1	*148-8336*	4	CONNECTOR AS	
					(EACH INCLUDES)	
		1	**3J-1907**	1	SEAL-O-RING	
		1	**6V-8397**	1	SEAL-O-RING	
		1	**6V-8636**	1	CONNECTOR	
	8	1	*150-3060*	2	TEE AS	
					(EACH INCLUDES)	
		1	**6V-8397**	2	SEAL-O-RING	
		1	**6V-8398**	1	SEAL-O-RING	
		1	**8T-3444**	1	TEE-UNION	
	9	1	**5P-7464**	2	CLIP (SLOT)	
	10	1	**5P-7465**	2	CLIP (TAB)	
	11	1	**8T-1891**	4	CLIP (SLOT)	
	12	1	**8T-1892**	4	CLIP (TAB)	
	13	1	**8T-4121**	2	WASHER-HARD (11X21X2.5-MM THK)	
M	14	1	**8T-4136**	2	BOLT (M10X1.5X25-MM)	
M	15	1	**8T-4192**	2	BOLT (M12X1.75X25-MM)	
	16	1	**8T-4223**	2	WASHER-HARD (13.5X25.5X3-MM THK)	

I-REFER TO HYDRAULIC INFORMATION SYSTEM
M-METRIC PART

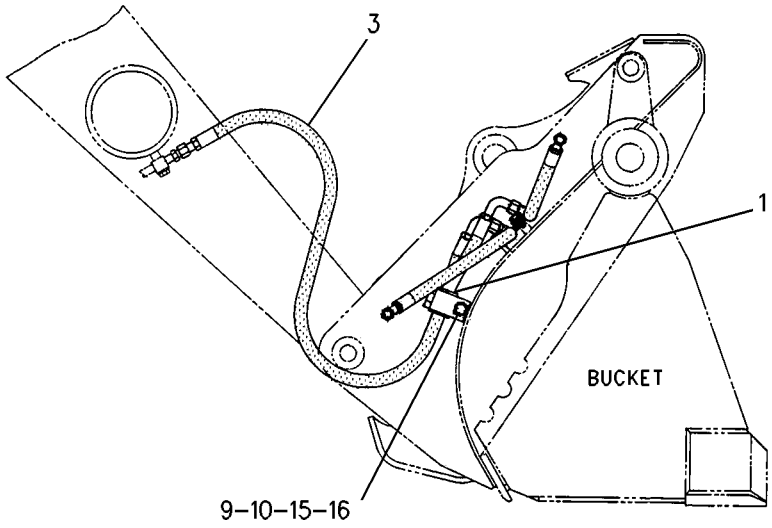

RIGHT SIDE VIEW

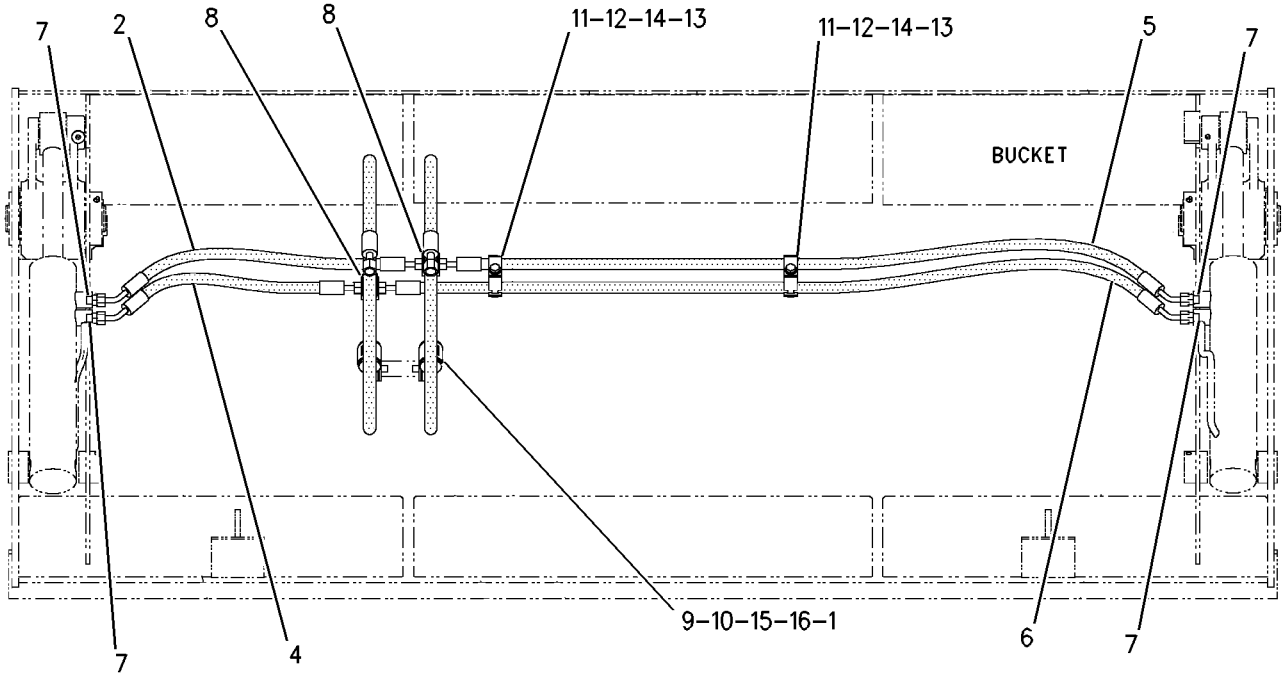

REAR VIEW

GRAPHIC #1 **<END>** g00786342

HYDRAULIC SYSTEM

251-5854 LINES GP-MULTIPURPOSE BUCKET

S/N: CBD1-UP; MFG1-UP
PART OF 216-8800, 216-8801 BUCKET GP-MULTIPURPOSE
AN ATTACHMENT

SMCS-5057 **i02529244**

NOTE	REF NO	GRAPHIC REF	PART NUMBER	QTY	PART NAME 1 2 3 4 5 6 (PRODUCT LEVEL)	SEE PAGE
	1	1	**8T-6726**	2	CLAMP-HOSE	
I	2	1	**8W-9230**	1	HOSE AS	
I	3	1	**9R-0418**	2	HOSE AS	
	4	1	**9R-8870**	2	BLOCK	
I	5	1	**100-7443**	1	HOSE AS	
I	6	1	**152-0816**	1	HOSE AS	
I	7	1	**251-5859**	1	HOSE AS	
	8	1	*148-8378*	2	ELBOW AS	
					(EACH INCLUDES)	
		1	**3J-1907**	1	SEAL-O-RING	
		1	**6V-8397**	1	SEAL-O-RING	
		1	**6V-8724**	1	ELBOW	
	9	1	*150-3060*	2	TEE AS	
					(EACH INCLUDES)	
		1	**6V-8397**	2	SEAL-O-RING	
		1	**6V-8398**	1	SEAL-O-RING	
		1	**8T-3444**	1	TEE-UNION	
	10	1	**6V-3341**	2	GROMMET	
	11	1	**6V-8397**	2	SEAL-O-RING	
	12	1	**8T-1891**	8	CLIP (SLOT)	
	13	1	**8T-1892**	8	CLIP (TAB)	
	14	1	**8T-1899**	2	CLIP (SLOT)	
	15	1	**8T-1900**	2	CLIP (TAB)	
	16	1	**8T-4121**	6	WASHER-HARD (11X21X2.5-MM THK)	
M	17	1	**8T-4136**	6	BOLT (M10X1.5X25-MM)	

I-REFER TO HYDRAULIC INFORMATION SYSTEM
M-METRIC PART

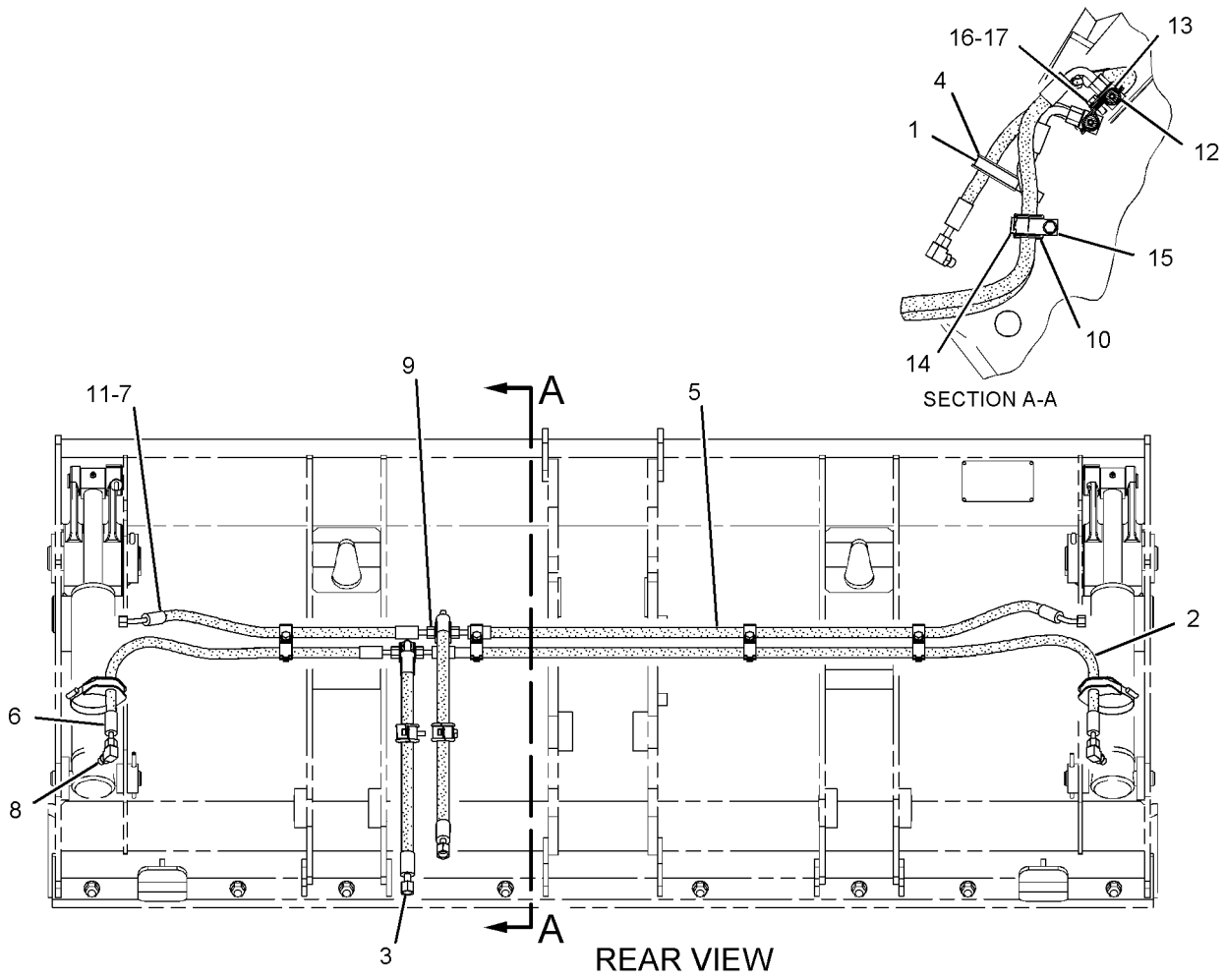

GRAPHIC #1 **<END>** g01123332

HYDRAULIC SYSTEM

251-5855 LINES GP-MULTIPURPOSE BUCKET

S/N: CBD1-UP

PART OF 216-8820, 216-8821 BUCKET GP-MULTIPURPOSE

AN ATTACHMENT

SMCS-5057 **i02498185**

NOTE	REF NO	GRAPHIC REF	PART NUMBER	QTY	PART NAME 1 2 3 4 5 6 (PRODUCT LEVEL)	SEE PAGE
I	1	1	**271-7389**	1	HOSE AS	
	2	1	**8T-6726**	2	CLAMP-HOSE	
I	3	1	**141-8437**	1	HOSE AS	
I	4	1	**9R-0418**	2	HOSE AS	
	5	1	**9R-8870**	2	BLOCK	
I	6	1	**270-9176**	1	HOSE AS	
I	7	1	**272-1750**	1	HOSE AS	
	8	1	*148-8378*	2	ELBOW AS	
					(EACH INCLUDES)	
		1	**3J-1907**	1	SEAL-O-RING	
		1	**6V-8397**	1	SEAL-O-RING	
		1	**6V-8724**	1	ELBOW	
	9	1	*150-3060*	2	TEE AS	
					(EACH INCLUDES)	
		1	**6V-8397**	2	SEAL-O-RING	
		1	**6V-8398**	1	SEAL-O-RING	
		1	**8T-3444**	1	TEE-UNION	
	10	1	**6V-3341**	2	GROMMET	
	11	1	**6V-8397**	2	SEAL-O-RING	
	12	1	**8T-1891**	8	CLIP (SLOT)	
	13	1	**8T-1892**	8	CLIP (TAB)	
	14	1	**8T-1899**	2	CLIP (SLOT)	
	15	1	**8T-1900**	2	CLIP (TAB)	
	16	1	**8T-4121**	6	WASHER-HARD (11X21X2.5-MM THK)	
M	17	1	**8T-4136**	6	BOLT (M10X1.5X25-MM)	

I-REFER TO HYDRAULIC INFORMATION SYSTEM
M-METRIC PART

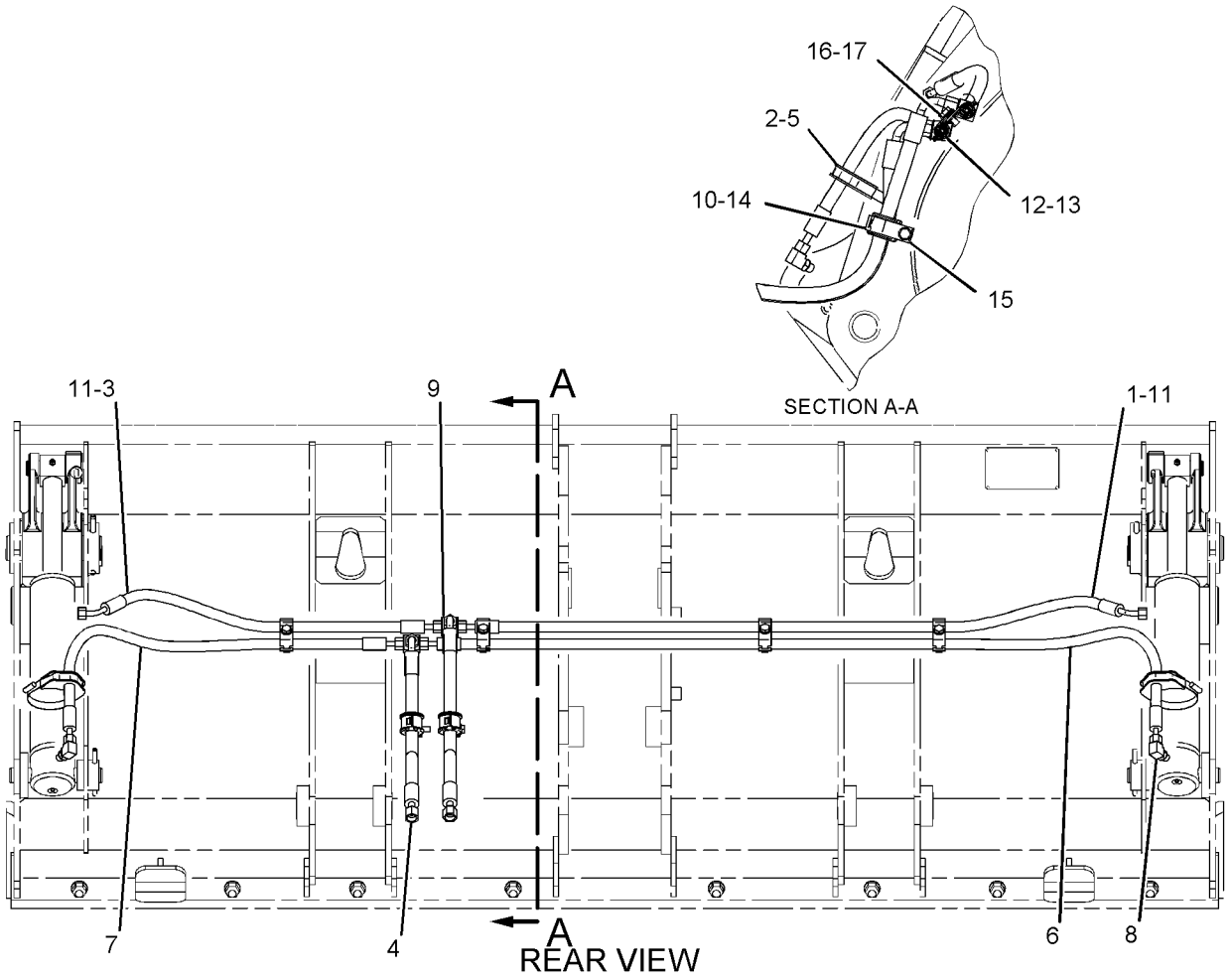

GRAPHIC #1 **<END>** g01134618

HYDRAULIC SYSTEM

337-7466 LINES GP-MULTIPURPOSE BUCKET

S/N: CBD1-UP

PART OF 216-8820, 216-8821 BUCKET GP-MULTIPURPOSE

AN ATTACHMENT

SMCS-5057 **i03916211**

NOTE	REF NO	GRAPHIC REF	PART NUMBER	QTY	PART NAME 1 2 3 4 5 6 (PRODUCT LEVEL)	SEE PAGE
	1	1	**4V-0611**	8	CLAMP	
	2	1	**4V-0612**	4	PLATE	
	3	1	**8T-6726**	2	CLAMP-HOSE	
I	4	1	**9R-0418**	2	HOSE AS	
	5	1	**9R-8870**	2	BLOCK	
I	6	1	**317-2250**	1	HOSE AS	
I	7	1	**320-9946**	1	HOSE AS	
I	8	1	**337-7469**	1	HOSE AS	
I	9	1	**337-7470**	1	HOSE AS	
	10	1	*148-8378*	2	ELBOW AS	
					(EACH INCLUDES)	
		1	**3J-1907**	1	SEAL-O-RING	
		1	**6V-8397**	1	SEAL-O-RING	
		1	**6V-8724**	1	ELBOW	
	11	1	*150-3060*	2	TEE AS	
					(EACH INCLUDES)	
		1	**6V-8397**	2	SEAL-O-RING	
		1	**6V-8398**	1	SEAL-O-RING	
		1	**8T-3444**	1	TEE-UNION	
	12	1	**6V-3341**	2	GROMMET	
	13	1	**6V-8397**	2	SEAL-O-RING	
	14	1	**7X-0440**	4	BOLT (5/16-18X1.75-IN)	
	15	1	**8T-1899**	2	CLIP (SLOT)	
	16	1	**8T-1900**	2	CLIP (TAB)	
	17	1	**8T-4121**	2	WASHER-HARD (11X21X2.5-MM THK)	
M	18	1	**8T-4136**	2	BOLT (M10X1.5X25-MM)	

I-REFER TO HYDRAULIC INFORMATION SYSTEM
M-METRIC PART

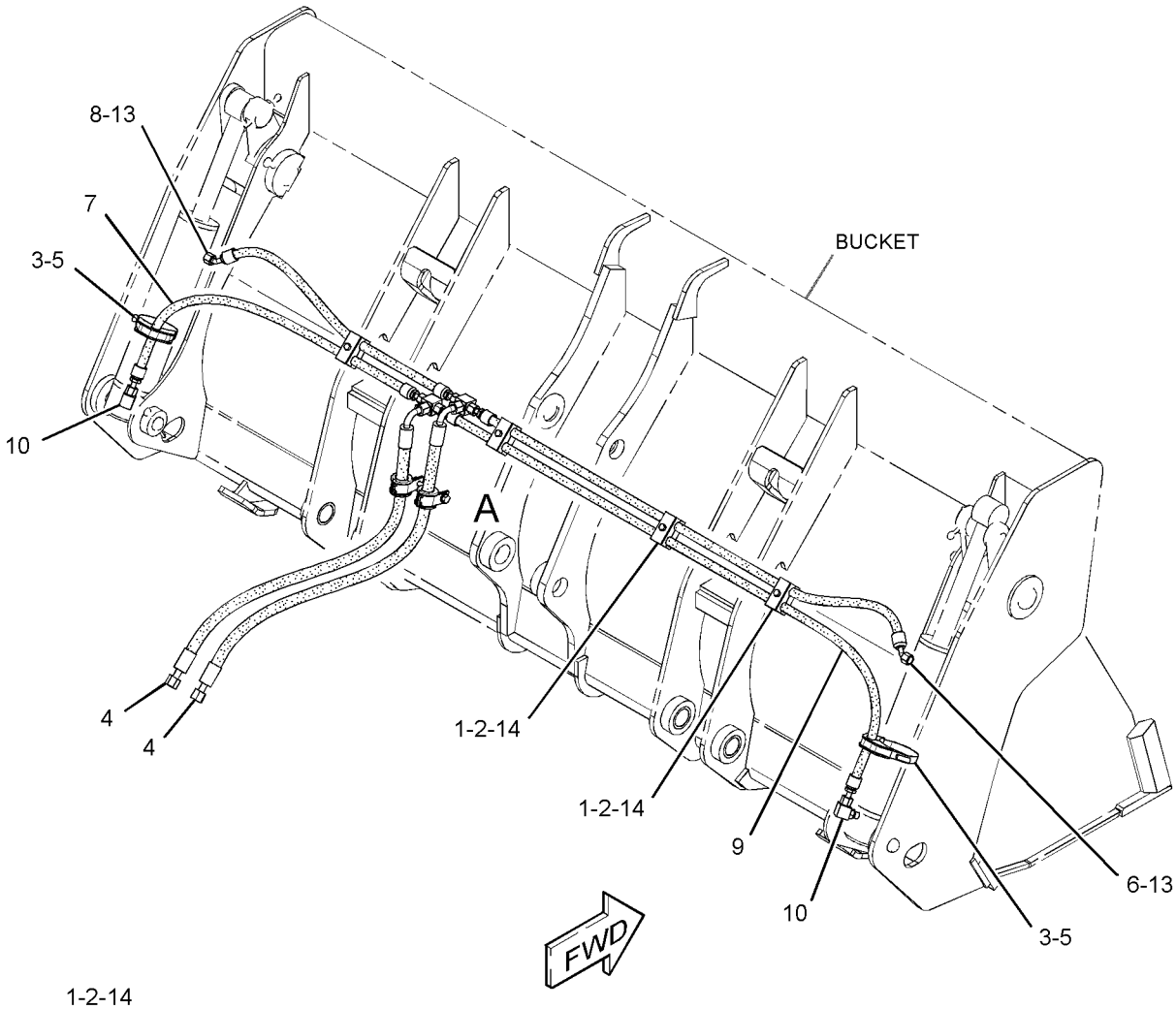

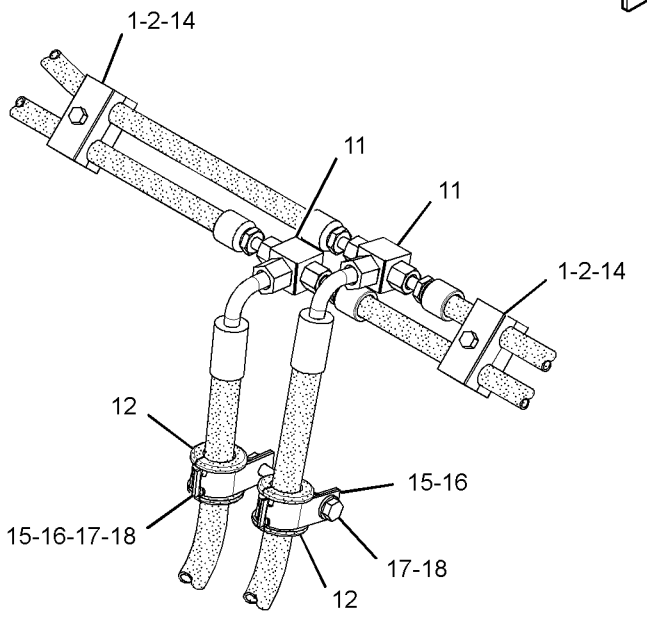

VIEW OF AREA A

GRAPHIC #1 **<END>** g02116795

HYDRAULIC SYSTEM

337-7467 LINES GP-MULTIPURPOSE BUCKET

S/N: CBD1-UP; MFG1-UP
PART OF 216-8800 BUCKET GP-MULTIPURPOSE
AN ATTACHMENT

SMCS-5057 **i03930012**

NOTE	REF NO	GRAPHIC REF	PART NUMBER	QTY	PART NAME 1 2 3 4 5 6 (PRODUCT LEVEL)	SEE PAGE
	1	1	**4V-0611**	8	CLAMP	
	2	1	**4V-0612**	4	PLATE	
	3	1	**8T-6726**	2	CLAMP-HOSE	
I	4	1	**9R-0418**	2	HOSE AS	
	5	1	**9R-8870**	2	BLOCK	
I	6	1	**317-6266**	1	HOSE AS	
I	7	1	**320-9943**	1	HOSE AS	
I	8	1	**320-9944**	1	HOSE AS	
I	9	1	**337-7471**	1	HOSE AS	
	10	1	*148-8378*	2	ELBOW AS	
					(EACH INCLUDES)	
		1	**3J-1907**	1	SEAL-O-RING	
		1	**6V-8397**	1	SEAL-O-RING	
		1	**6V-8724**	1	ELBOW	
	11	1	*150-3060*	2	TEE AS	
					(EACH INCLUDES)	
		1	**6V-8397**	2	SEAL-O-RING	
		1	**6V-8398**	1	SEAL-O-RING	
		1	**8T-3444**	1	TEE-UNION	
	12	1	**6V-3341**	2	GROMMET	
	13	1	**6V-8397**	2	SEAL-O-RING	
	14	1	**7X-0440**	4	BOLT (5/16-18X1.75-IN)	
	15	1	**8T-1899**	2	CLIP (SLOT)	
	16	1	**8T-1900**	2	CLIP (TAB)	
	17	1	**8T-4121**	2	WASHER-HARD (11X21X2.5-MM THK)	
M	18	1	**8T-4136**	2	BOLT (M10X1.5X25-MM)	

I-REFER TO HYDRAULIC INFORMATION SYSTEM
M-METRIC PART

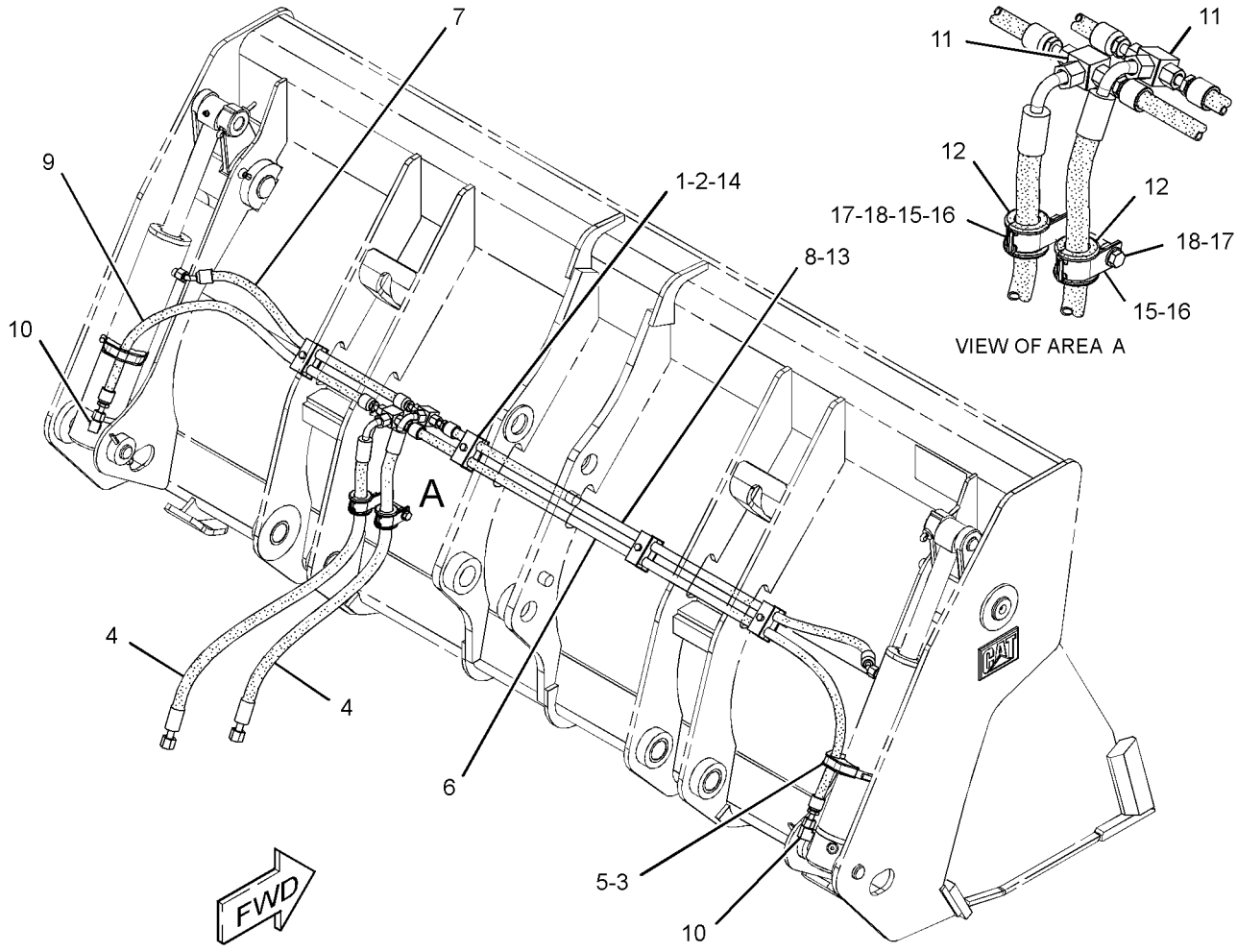

GRAPHIC #1 **<END>** g02138214

HYDRAULIC SYSTEM

219-8568 LINES GP-PILOT

S/N: CBD1-7373

PART OF 214-2198 HYDRAULIC AR

SMCS-5057, 5059 **i03111444**

NOTE	REF NO	GRAPHIC REF	PART NUMBER	QTY	PART NAME 1 2 3 4 5 6 (PRODUCT LEVEL)	SEE PAGE
	1	1	**5D-1026**	2	CLAMP-BAND	
	2	1	**6V-0852**	2	CAP-DUST	
	3	1	**7K-1181**	1	STRAP-CABLE	
Y	4	1	**8J-6875**	1	VALVE GP-SHUTTLE	721
I	5	1	**285-3582**	1	HOSE AS	
I	6	1	**222-1216**	1	HOSE AS	
I	7	1	**222-2257**	1	HOSE AS	
I	8	1	**222-2258**	1	HOSE AS	
	9	1	*250-1418*	1	CONNECTOR AS	
		1	**3J-1907**	1	SEAL-O-RING	
		1	**6V-8397**	1	SEAL-O-RING	
		1	**089-7702**	1	CONNECTOR	
I	10	1	**252-8684**	1	HOSE AS	
	11	1	*148-8336*	6	CONNECTOR AS	
					(EACH INCLUDES)	
		1	**3J-1907**	1	SEAL-O-RING	
		1	**6V-8397**	1	SEAL-O-RING	
		1	**6V-8636**	1	CONNECTOR	
	12	1	*148-8374*	1	ELBOW AS	
		1	**3K-0360**	1	SEAL-O-RING	
		1	**6V-8397**	1	SEAL-O-RING	
		1	**6V-8723**	1	ELBOW	
	13	1	*148-8433*	1	TEE AS	
		1	**6V-8397**	2	SEAL-O-RING	
		1	**6V-9836**	1	TEE-SWIVEL	
E	14	1	**5P-1505**		HOSE (61-CM)	
	15	1	*150-3027*	2	ELBOW AS	
					(EACH INCLUDES)	
		1	**2M-9780**	1	SEAL-O-RING	
		1	**6V-5653**	1	ELBOW	
	16	1	*150-3062*	1	TEE AS	
		1	**3J-7354**	1	SEAL-O-RING	
		1	**4J-5477**	1	SEAL-O-RING	
		1	**101-1787**	1	TEE AS	
	17	1	*164-5567*	2	COUPLER AS-QUICK DISCONNECT (MALE)	
					(EACH INCLUDES)	
		1	**214-7568**	1	SEAL-O-RING	
		1	**6V-3965**	1	FITTING (QUICK DISCONNECT)	
	18	1	**5P-4295**	1	CLIP	
	19	1	**6V-9168**	1	NUT (11/16-16-THD)	
	20	1	**8T-4121**	1	WASHER-HARD (11X21X2.5-MM THK)	
M	21	1	**8T-4137**	1	BOLT (M10X1.5X20-MM)	
	22	1	**9X-8257**	2	WASHER (17.5X30X3.5-MM THK)	

E-ORDER BY THE CENTIMETER
I-REFER TO HYDRAULIC INFORMATION SYSTEM
M-METRIC PART
Y-SEPARATE ILLUSTRATION

219-8568 **LINES GP-PILOT** *(contd.)* **i03111444**

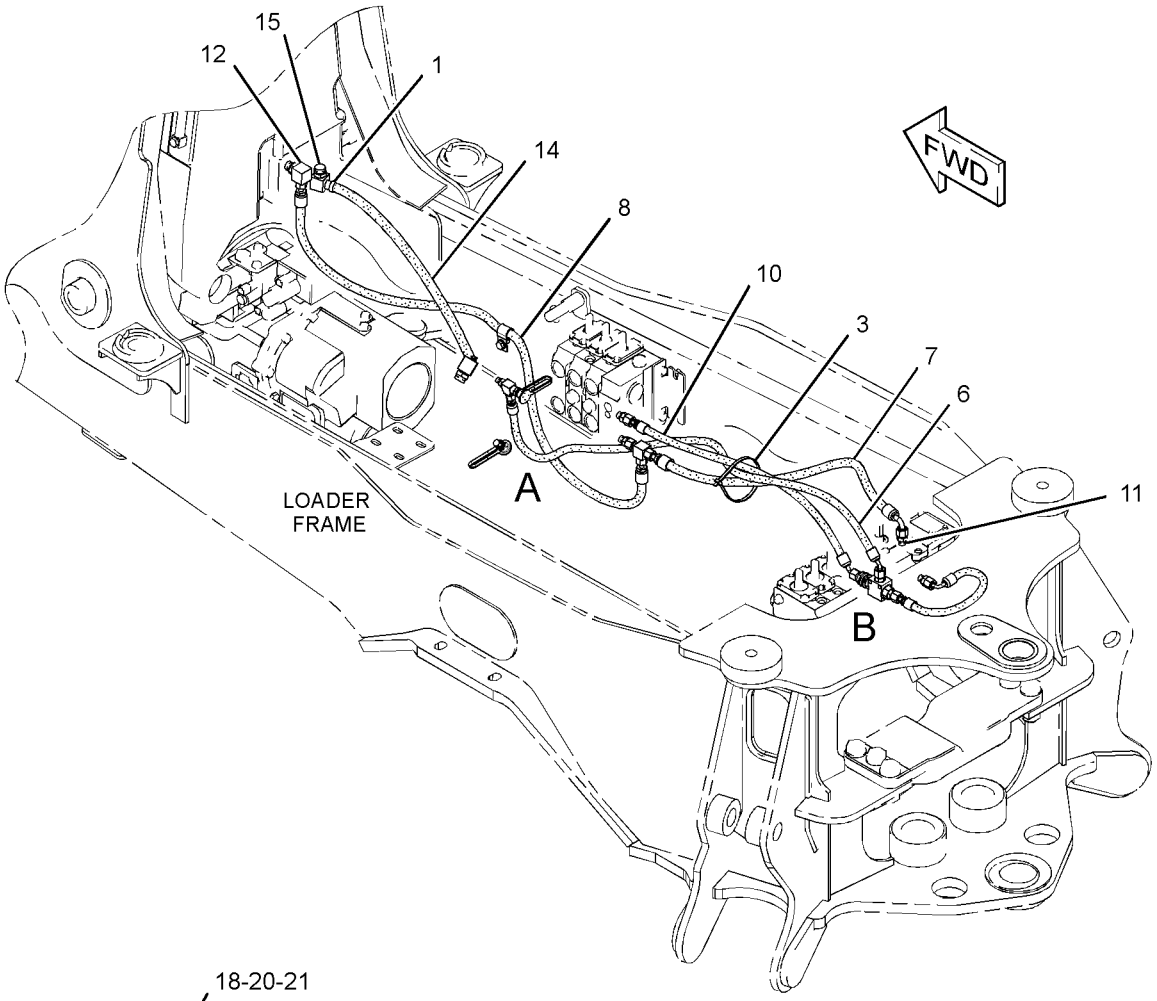

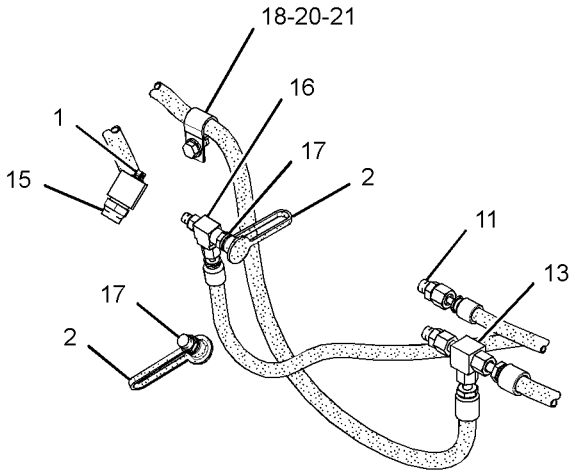

VIEW OF AREA A

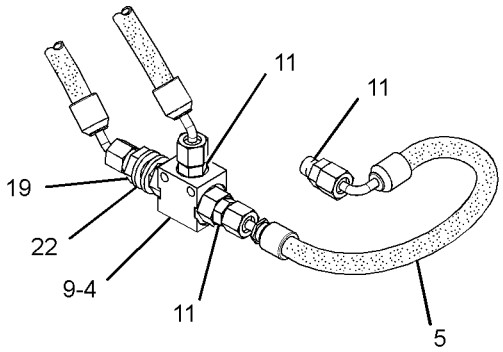

VIEW OF AREA B

GRAPHIC #1 **<END>** g01520600

HYDRAULIC SYSTEM

219-8568 LINES GP-PILOT

S/N: CBD7374-UP; MFG1-UP

PART OF 214-2198, 297-0165 HYDRAULIC AR

SMCS-5057, 5059 **i04130751**

NOTE	REF NO	GRAPHIC REF	PART NUMBER	QTY	PART NAME 1 2 3 4 5 6 (PRODUCT LEVEL)	SEE PAGE
	1	1	**5D-1026**	2	CLAMP-BAND	
	2	1	**6V-0852**	2	CAP-DUST	
	3	1	**7K-1181**	1	STRAP-CABLE	
Y	4	1	**8J-6875**	1	VALVE GP-SHUTTLE	721
I	5	1	**285-3582**	1	HOSE AS	
CI	6	1	**359-3864**	1	HOSE AS	
I	7	1	**222-2257**	1	HOSE AS	
I	8	1	**222-2258**	1	HOSE AS	
	9	1	*250-1418*	1	CONNECTOR AS	
		1	**3J-1907**	1	SEAL-O-RING	
		1	**6V-8397**	1	SEAL-O-RING	
		1	**089-7702**	1	CONNECTOR	
I	10	1	**252-8684**	1	HOSE AS	
C	11	1	*148-8336*	5	CONNECTOR AS	
					(EACH INCLUDES)	
		1	**3J-1907**	1	SEAL-O-RING	
		1	**6V-8397**	1	SEAL-O-RING	
		1	**6V-8636**	1	CONNECTOR	
	12	1	*148-8374*	1	ELBOW AS	
		1	**3K-0360**	1	SEAL-O-RING	
		1	**6V-8397**	1	SEAL-O-RING	
		1	**6V-8723**	1	ELBOW	
	13	1	*148-8433*	1	TEE AS	
		1	**6V-8397**	2	SEAL-O-RING	
		1	**6V-9836**	1	TEE-SWIVEL	
CE	14	1	**5P-1505**		HOSE (64-CM)	
	15	1	*150-3027*	2	ELBOW AS	
					(EACH INCLUDES)	
		1	**2M-9780**	1	SEAL-O-RING	
		1	**6V-5653**	1	ELBOW	
	17	1	*164-5567*	2	COUPLER AS-QUICK DISCONNECT (MALE)	
					(EACH INCLUDES)	
		1	**214-7568**	1	SEAL-O-RING	
		1	**6V-3965**	1	FITTING (QUICK DISCONNECT)	
	18	1	**5P-4295**	1	CLIP	
	19	1	**6V-9168**	1	NUT (11/16-16-THD)	
	20	1	**8T-4121**	1	WASHER-HARD (11X21X2.5-MM THK)	
M	21	1	**8T-4137**	1	BOLT (M10X1.5X20-MM)	
	22	1	**9X-8257**	2	WASHER (17.5X30X3.5-MM THK)	
C	23	1	*148-8353*	1	ELBOW AS	
		1	**3J-1907**	1	SEAL-O-RING	
		1	**6V-8397**	1	SEAL-O-RING	
		1	**6V-9001**	1	ELBOW	
C	24	1	*351-0290*	1	ADAPTER AS	
		1	**3J-7354**	1	SEAL-O-RING	
		1	**4J-5477**	1	SEAL-O-RING	
		1	**308-9568**	1	ADAPTER-TEE	

C-CHANGE FROM PREVIOUS TYPE
E-ORDER BY THE CENTIMETER
I-REFER TO HYDRAULIC INFORMATION SYSTEM
M-METRIC PART
Y-SEPARATE ILLUSTRATION

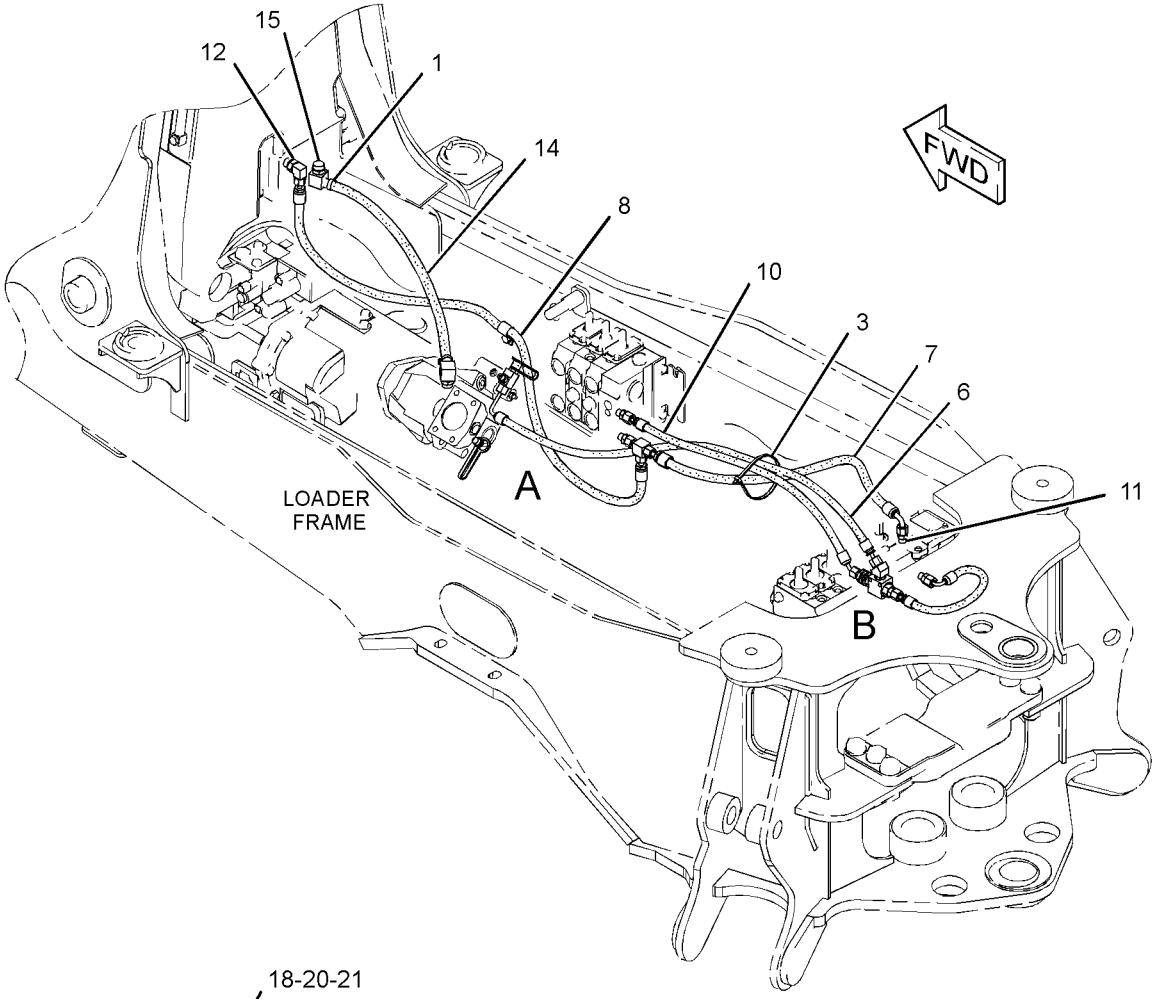

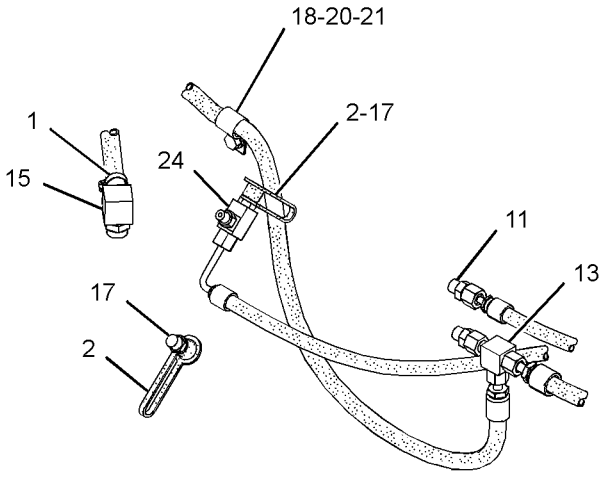

VIEW OF AREA A

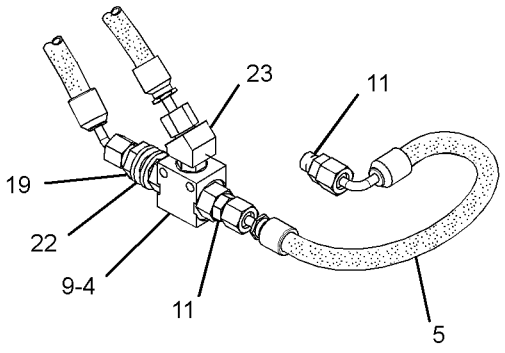

VIEW OF AREA B

GRAPHIC #1 **<END>** g02350056

HYDRAULIC SYSTEM

219-8567 LINES GP-PUMP

S/N: CBD1-UP; MFG1-UP

PART OF 214-2198, 297-0165 HYDRAULIC AR

SMCS-5057 **i02359469**

NOTE	REF NO	GRAPHIC REF	PART NUMBER	QTY	PART NAME 1 2 3 4 5 6 (PRODUCT LEVEL)	SEE PAGE
	1	1	**5P-4868**	2	CLAMP-HOSE	
	2	1	**144-0367**	1	CLAMP-HOSE	
	3	1	**211-4348**	1	ELBOW AS	
I	4	1	**213-2279**	1	HOSE AS	
I	5	1	**221-9352**	1	HOSE AS	
	6	1	**235-8528**	1	HOSE	
I	7	1	**255-9107**	1	HOSE AS	
I	8	1	**285-3581**	1	HOSE AS	
	9	1	*148-8317*	3	CONNECTOR AS	
					(EACH INCLUDES)	
		1	**3D-2824**	1	SEAL-O-RING	
		1	**5K-9090**	1	SEAL-O-RING	
		1	**6V-8714**	1	CONNECTOR	
	10	1	*148-8335*	4	CONNECTOR AS	
					(EACH INCLUDES)	
		1	**5K-9090**	1	SEAL-O-RING	
		1	**6V-8635**	1	CONNECTOR	
		1	**7M-8485**	1	SEAL-O-RING	
	11	1	**1P-4584**	2	FLANGE-HALF	
	12	1	**6J-2680**	1	SEAL-O-RING	
	13	1	**7X-7729**	4	WASHER (11X25X3-MM THK)	
M	14	1	**8T-4136**	4	BOLT (M10X1.5X25-MM)	
M	15	1	**8T-4183**	4	BOLT (M12X1.75X40-MM)	
	16	1	**8T-4223**	4	WASHER-HARD (13.5X25.5X3-MM THK)	

I-REFER TO HYDRAULIC INFORMATION SYSTEM
M-METRIC PART

219-8567 **LINES GP-PUMP** ***(contd.)*** **i02359469**

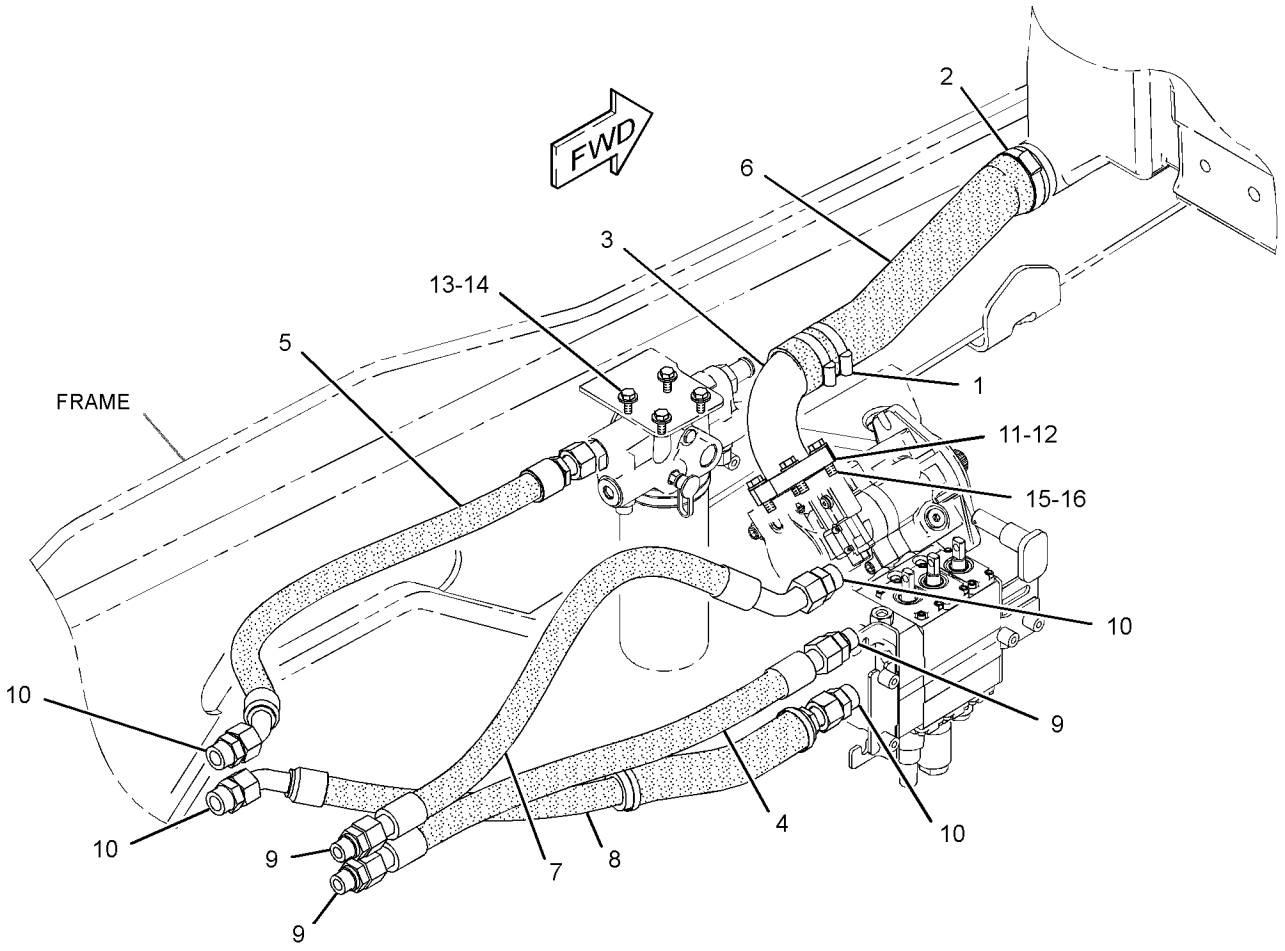

GRAPHIC #1 **<END>** g01231756

HYDRAULIC SYSTEM

246-9802 LINES GP-RIDE CONTROL

S/N: CBD1-UP
PART OF 220-9179 CONTROL AR-RIDE
AN ATTACHMENT
TYPE 1

SMCS-5057, 5077, 5264 **i02560354**

NOTE	REF NO	GRAPHIC REF	PART NUMBER	QTY	PART NAME 1 2 3 4 5 6 (PRODUCT LEVEL)	SEE PAGE
	1	1	**7K-1181**	2	STRAP-CABLE	
Y	2	1	*162-3960*	1	ACCUMULATOR GP-RIDE CONTROL (CHARGED)	520
	3	1	**279-5016**	1	FILM-WARNING (HIGH PRESS CYLINDER, READ OMM)	
Y	4	1	**245-8780**	1	MANIFOLD GP-RIDE CONTROL	674
	5	1	**247-0320**	1	BRACKET AS	
I	6	1	**252-1221**	1	HOSE AS	
I	7	1	**265-0868**	1	HOSE AS	
M	8	1	**096-5866**	2	BOLT (M8X1.25X75-MM)	
	9	1	**109-1633**	2	CLIP (SLOT)	
	10	1	**109-1634**	2	CLIP (TAB)	
	11	1	*148-8318*	1	CONNECTOR AS	
		1	**3K-0360**	1	SEAL-O-RING	
		1	**6V-8397**	1	SEAL-O-RING	
		1	**6V-8634**	1	CONNECTOR	
	12	1	*148-8340*	1	CONNECTOR AS	
		1	**3K-0360**	1	SEAL-O-RING	
		1	**6V-8398**	1	SEAL-O-RING	
		1	**6V-8639**	1	CONNECTOR	
	13	1	*148-8358*	2	ELBOW AS	
					(EACH INCLUDES)	
		1	**2M-9780**	1	SEAL-O-RING	
		1	**6V-8398**	1	SEAL-O-RING	
		1	**6V-8624**	1	ELBOW	
	14	1	*153-6241*	1	ELBOW AS	
		1	**6V-8398**	1	SEAL-O-RING	
		1	**8C-8989**	1	ELBOW	
	15	1	*164-5549*	1	COUPLING AS	
		1	**3J-1907**	1	SEAL-O-RING	
		1	**4I-6287**	1	COUPLING	
	16	1	**8T-4121**	4	WASHER-HARD (11X21X2.5-MM THK)	
M	17	1	**8T-4137**	4	BOLT (M10X1.5X20-MM)	
M	18	1	**8T-4956**	2	BOLT (M12X1.75X35-MM)	
	19	1	**8T-4223**	8	WASHER-HARD (13.5X25.5X3-MM THK)	
	20	1	**8T-4224**	2	WASHER-HARD (8.8X16X2-MM THK)	

I-REFER TO HYDRAULIC INFORMATION SYSTEM
M-METRIC PART
Y-SEPARATE ILLUSTRATION

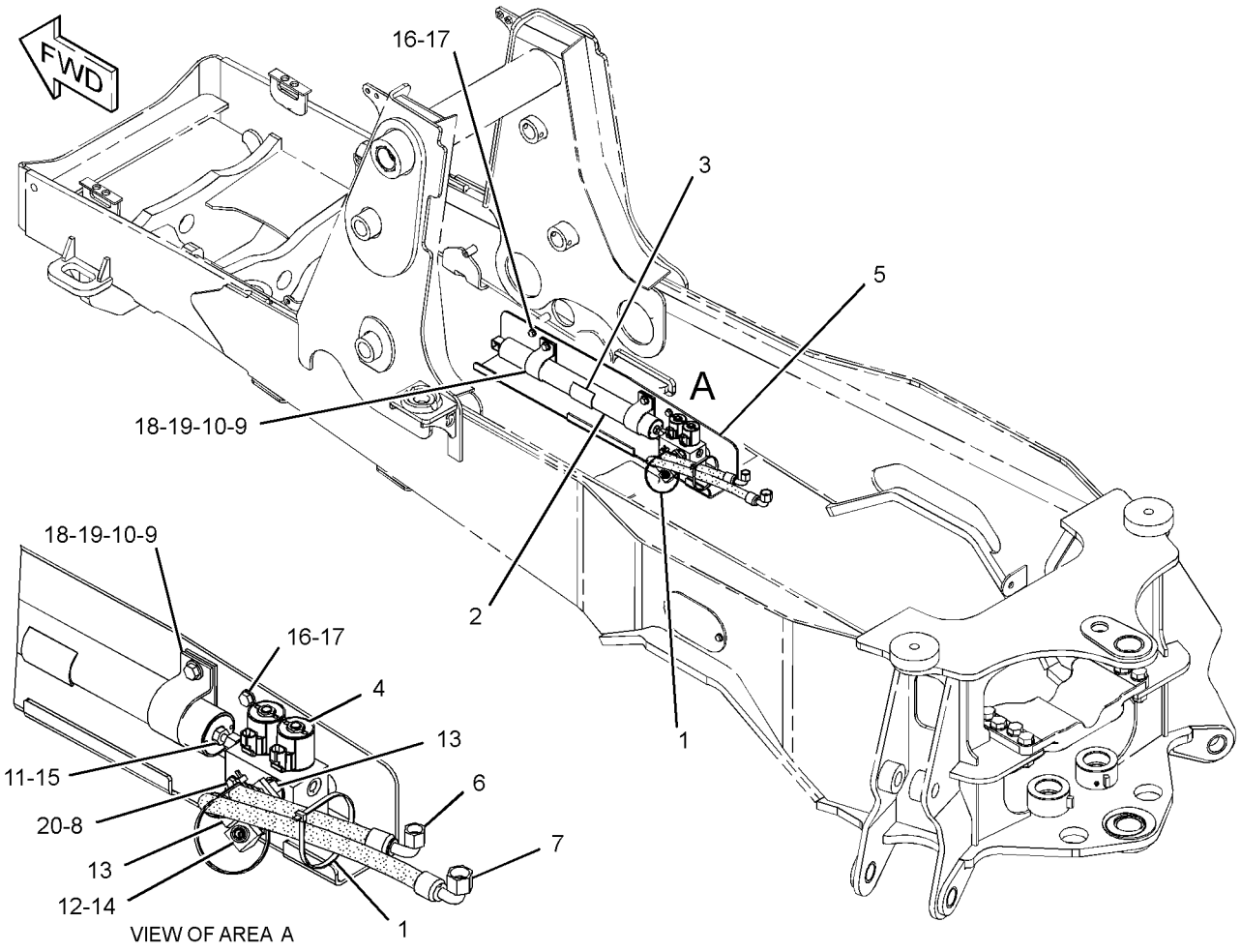

GRAPHIC #1 **<END>** g01260995

HYDRAULIC SYSTEM

246-9802 LINES GP-RIDE CONTROL

S/N: CBD1-UP
PART OF 220-9179 CONTROL AR-RIDE
AN ATTACHMENT
TYPE 2

SMCS-5057, 5077, 5264 **i03514482**

NOTE	REF NO	GRAPHIC REF	PART NUMBER	QTY	PART NAME 1 2 3 4 5 6 (PRODUCT LEVEL)	SEE PAGE
	1	1	**7K-1181**	3	STRAP-CABLE	
Y	2	1	*162-3960*	1	ACCUMULATOR GP-RIDE CONTROL (CHARGED)	520
Y	4	1	**245-8780**	1	MANIFOLD GP-RIDE CONTROL	674
	5	1	**247-0320**	1	BRACKET AS	
I	6	1	**252-1221**	1	HOSE AS	
I	7	1	**265-0868**	1	HOSE AS	
M	8	1	**096-5866**	2	BOLT (M8X1.25X75-MM)	
	9	1	**109-1633**	2	CLIP (SLOT)	
	10	1	**109-1634**	2	CLIP (TAB)	
	12	1	*148-8340*	1	CONNECTOR AS	
		1	**3K-0360**	1	SEAL-O-RING	
		1	**6V-8398**	1	SEAL-O-RING	
		1	**6V-8639**	1	CONNECTOR	
	13	1	*148-8358*	2	ELBOW AS	
					(EACH INCLUDES)	
		1	**2M-9780**	1	SEAL-O-RING	
		1	**6V-8398**	1	SEAL-O-RING	
		1	**6V-8624**	1	ELBOW	
	14	1	*153-6241*	1	ELBOW AS	
		1	**6V-8398**	1	SEAL-O-RING	
		1	**8C-8989**	1	ELBOW	
C	16	1	**8T-4121**	3	WASHER-HARD (11X21X2.5-MM THK)	
CM	17	1	**8T-4137**	3	BOLT (M10X1.5X20-MM)	
M	18	1	**8T-4139**	2	BOLT (M12X1.75X30-MM)	
C	19	1	**8T-4223**	2	WASHER-HARD (13.5X25.5X3-MM THK)	
	20	1	**8T-4224**	2	WASHER-HARD (8.8X16X2-MM THK)	
C	21	1	**292-8222**	1	TUBE AS	
C	22	1	*148-8365*	1	ELBOW AS	
		1	**3J-1907**	1	SEAL-O-RING	
		1	**6V-8398**	1	SEAL-O-RING	
		1	**8T-6876**	1	ELBOW	
C	23	1	*148-8354*	1	ELBOW AS	
		1	**3K-0360**	1	SEAL-O-RING	
		1	**6V-8398**	1	SEAL-O-RING	
		1	**6V-9002**	1	ELBOW	
	24	1	*148-8370*	1	ELBOW AS	
		1	**6V-8398**	1	SEAL-O-RING	
		1	**6V-9851**	1	ELBOW	
I	25	1	**194-4334**	1	HOSE AS	
B	26	1	**276-2334**	1	FILM-WARNING (HIGH PRESS CYLINDER, READ OMM) (INTL)	
					-OR-	
B			**279-5016**	1	FILM-WARNING (HIGH PRESS CYLINDER, READ OMM) (U.S.)	

B-USE AS REQUIRED
C-CHANGE FROM PREVIOUS TYPE
I-REFER TO HYDRAULIC INFORMATION SYSTEM
M-METRIC PART
Y-SEPARATE ILLUSTRATION

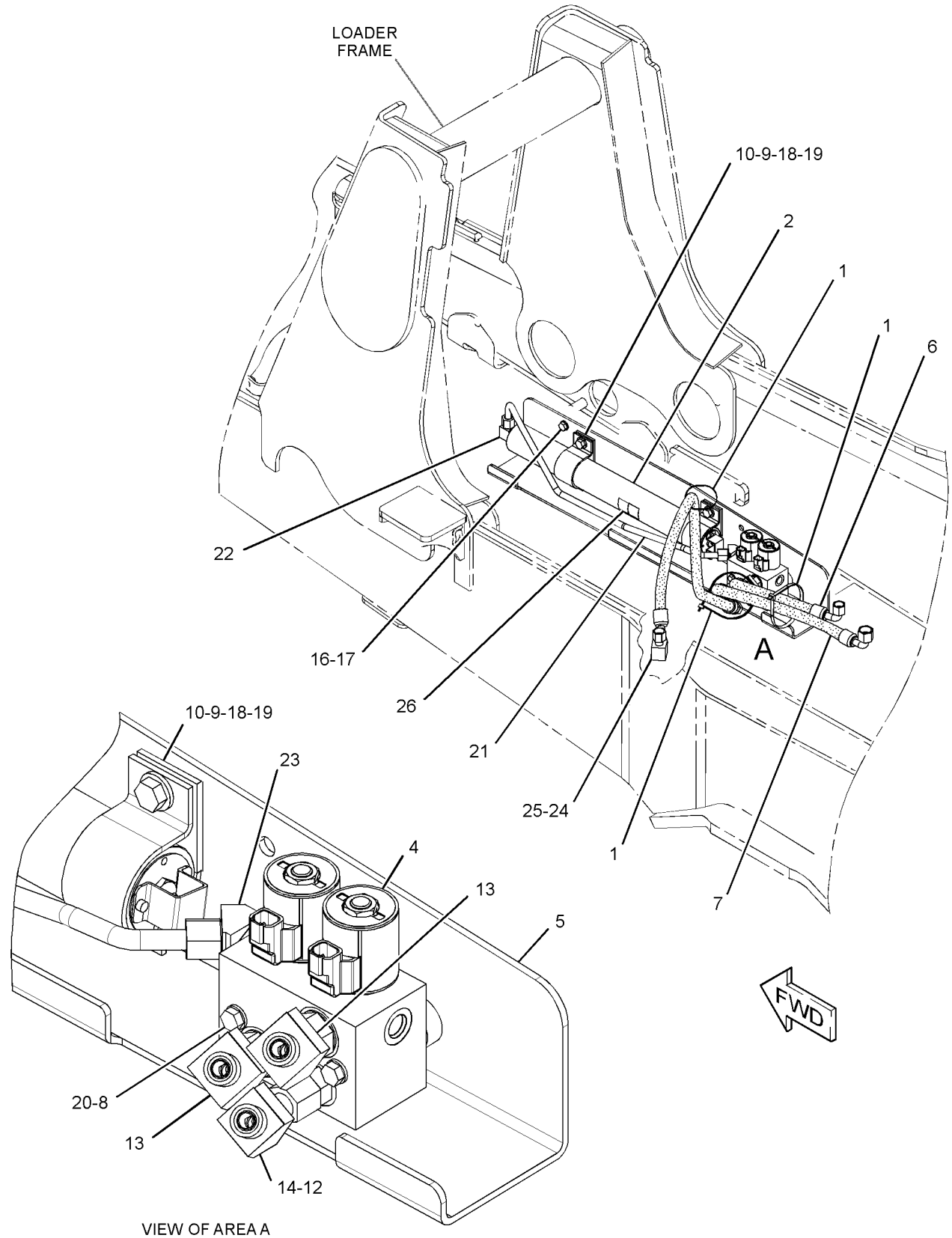

VIEW OF AREA A
(HOSES REMOVED FOR CLARITY)

GRAPHIC #1 **<END>** g01876936

HYDRAULIC SYSTEM

246-9802 LINES GP-RIDE CONTROL

S/N: CBD1-UP; MFG1-UP
PART OF 220-9179 CONTROL AR-RIDE
AN ATTACHMENT

SMCS-5057, 5077, 5264 **i04454510**

NOTE	REF NO	GRAPHIC REF	PART NUMBER	QTY	PART NAME 1 2 3 4 5 6 (PRODUCT LEVEL)	SEE PAGE
	1	1	**7K-1181**	3	STRAP-CABLE	
C	2	1	**8A-8563**	2	SPACER (8.6X20X10-MM THK)	
I	3	1	**194-4334**	1	HOSE AS	
Y	4	1	**245-8780**	1	MANIFOLD GP-RIDE CONTROL	674
I	5	1	**252-1221**	1	HOSE AS	
I	6	1	**265-0868**	1	HOSE AS	
B	7	1	**276-2334**	1	FILM-WARNING (HIGH PRESS CYLINDER, READ OMM) (INTL)	
					-OR-	
B		1	**279-5016**	1	FILM-WARNING (HIGH PRESS CYLINDER, READ OMM) (U.S.)	
C	9	1	**331-8675**	1	BRACKET AS	
CY	10	1	*345-3672*	1	ACCUMULATOR GP-RIDE CONTROL (CHARGED)	522
C	11	1	*148-8318*	1	CONNECTOR AS	
		1	**3K-0360**	1	SEAL-O-RING	
		1	**6V-8397**	1	SEAL-O-RING	
		1	**6V-8634**	1	CONNECTOR	
	12	1	*148-8340*	1	CONNECTOR AS	
		1	**3K-0360**	1	SEAL-O-RING	
		1	**6V-8398**	1	SEAL-O-RING	
		1	**6V-8639**	1	CONNECTOR	
	13	1	*148-8358*	2	ELBOW AS	
					(EACH INCLUDES)	
		1	**2M-9780**	1	SEAL-O-RING	
		1	**6V-8398**	1	SEAL-O-RING	
		1	**6V-8624**	1	ELBOW	
	14	1	*148-8370*	1	ELBOW AS	
		1	**6V-8398**	1	SEAL-O-RING	
		1	**6V-9851**	1	ELBOW	
	15	1	*153-6241*	1	ELBOW AS	
		1	**6V-8398**	1	SEAL-O-RING	
		1	**8C-8989**	1	ELBOW	
C	16	1	*164-5549*	1	COUPLING AS	
		1	**3J-1907**	1	SEAL-O-RING	
		1	**4I-6287**	1	COUPLING	
C	17	1	**286-3018**	2	CLIP (SLOT)	
C	18	1	**286-3019**	2	CLIP (TAB)	
C	19	1	**7X-0605**	2	WASHER-HARD (13X28X1.6-MM THK)	
	20	1	**8T-4121**	3	WASHER-HARD (11X21X2.5-MM THK)	
M	21	1	**8T-4137**	3	BOLT (M10X1.5X20-MM)	
CM	22	1	**8T-4177**	2	BOLT (M8X1.25X90-MM)	
	23	1	**8T-4223**	2	WASHER-HARD (13.5X25.5X3-MM THK)	
	24	1	**8T-4224**	2	WASHER-HARD (8.8X16X2-MM THK)	
CM	25	1	**8T-4956**	2	BOLT (M12X1.75X35-MM)	

B-USE AS REQUIRED
C-CHANGE FROM PREVIOUS TYPE
I-REFER TO HYDRAULIC INFORMATION SYSTEM
M-METRIC PART
Y-SEPARATE ILLUSTRATION

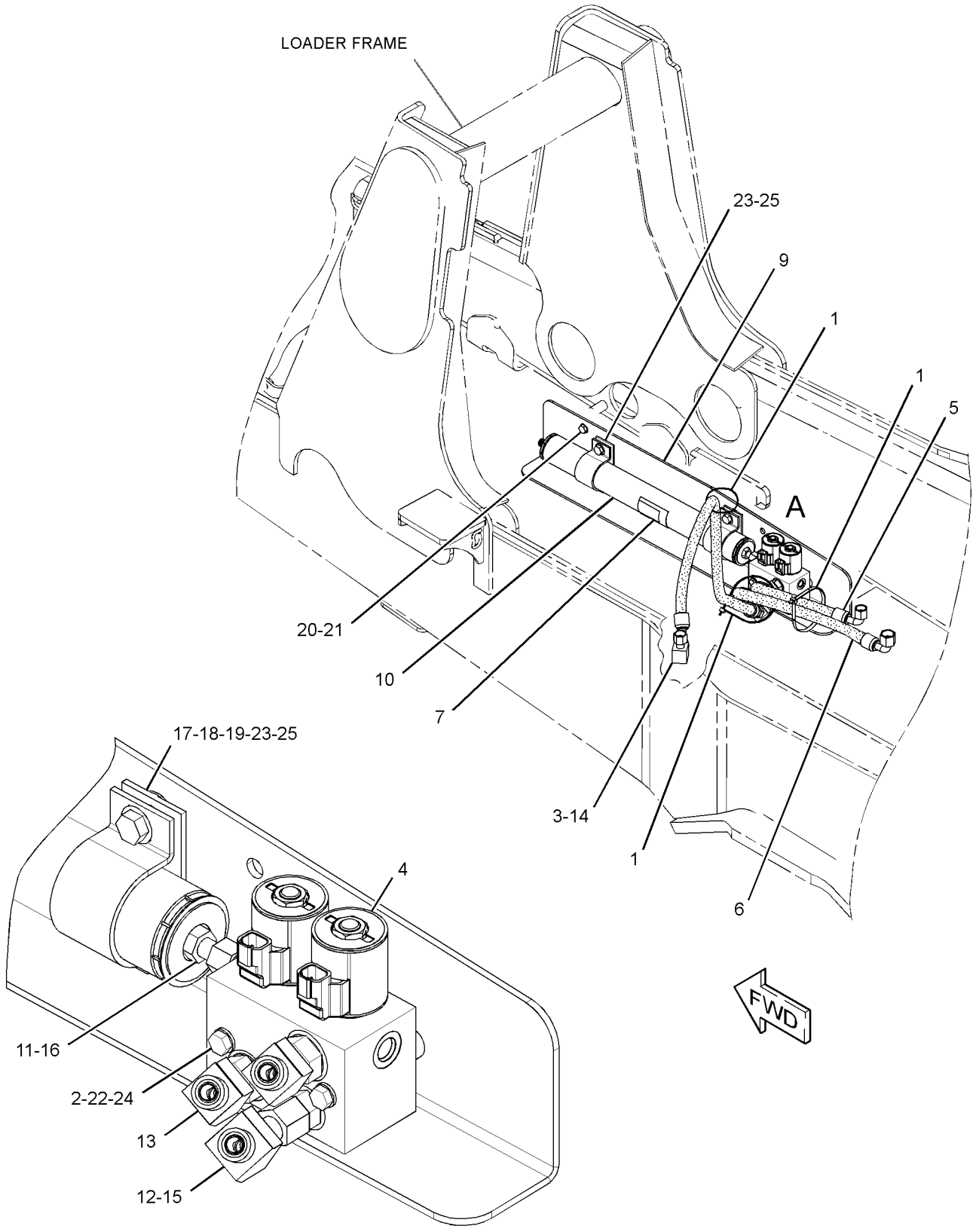

VIEW OF AREA A
(HOSES REMOVED FOR CLARITY)

GRAPHIC #1 **<END>** g02712860

HYDRAULIC SYSTEM

211-7568 LINES GP-STABILIZER

S/N: CBD1-UP; MFG1-UP
PART OF 212-0206 VALVE AR-BANK 8
AN ATTACHMENT

SMCS-5057, 5468 **i02560009**

NOTE	REF NO	GRAPHIC REF	PART NUMBER	QTY	PART NAME 1 2 3 4 5 6 (PRODUCT LEVEL)	SEE PAGE
	1	1	**201-3621**	1	TUBE AS	
	2	1	**201-3622**	1	TUBE AS	
	3	1	**201-3623**	1	TUBE AS	
	4	1	**201-3624**	1	TUBE AS	
I	5	1	**289-8744**	1	HOSE AS	
I	6	1	**289-8745**	1	HOSE AS	
I	7	1	**289-8746**	1	HOSE AS	
I	8	1	**289-8747**	1	HOSE AS	
	9	1	*148-8345*	3	CONNECTOR AS	
					(EACH INCLUDES)	
		1	**2M-9780**	1	SEAL-O-RING	
		1	**6V-8398**	1	SEAL-O-RING	
		1	**6V-8638**	1	CONNECTOR	
	10	1	*148-8372*	2	ELBOW AS	
					(EACH INCLUDES)	
		1	**2M-9780**	1	SEAL-O-RING	
		1	**6V-8398**	1	SEAL-O-RING	
		1	**6V-8721**	1	ELBOW	
	11	1	*164-5557*	1	CONNECTOR AS	
		1	**2M-9780**	1	SEAL-O-RING	
		1	**5I-4370**	1	CONNECTOR	
		1	**6V-8398**	1	SEAL-O-RING	
	12	1	**5P-7462**	4	CLIP (SLOT)	
	13	1	**5P-7463**	4	CLIP (TAB)	
	14	1	**6V-0683**	4	GROMMET	
	15	1	**6V-8397**	4	SEAL-O-RING	
	16	1	**8T-1885**	4	CLIP (SLOT)	
	17	1	**8T-1886**	4	CLIP (TAB)	
	18	1	**8T-4121**	6	WASHER-HARD (11X21X2.5-MM THK)	
M	19	1	**8T-4137**	4	BOLT (M10X1.5X20-MM)	
M	20	1	**8T-4196**	2	BOLT (M10X1.5X35-MM)	

I-REFER TO HYDRAULIC INFORMATION SYSTEM
M-METRIC PART

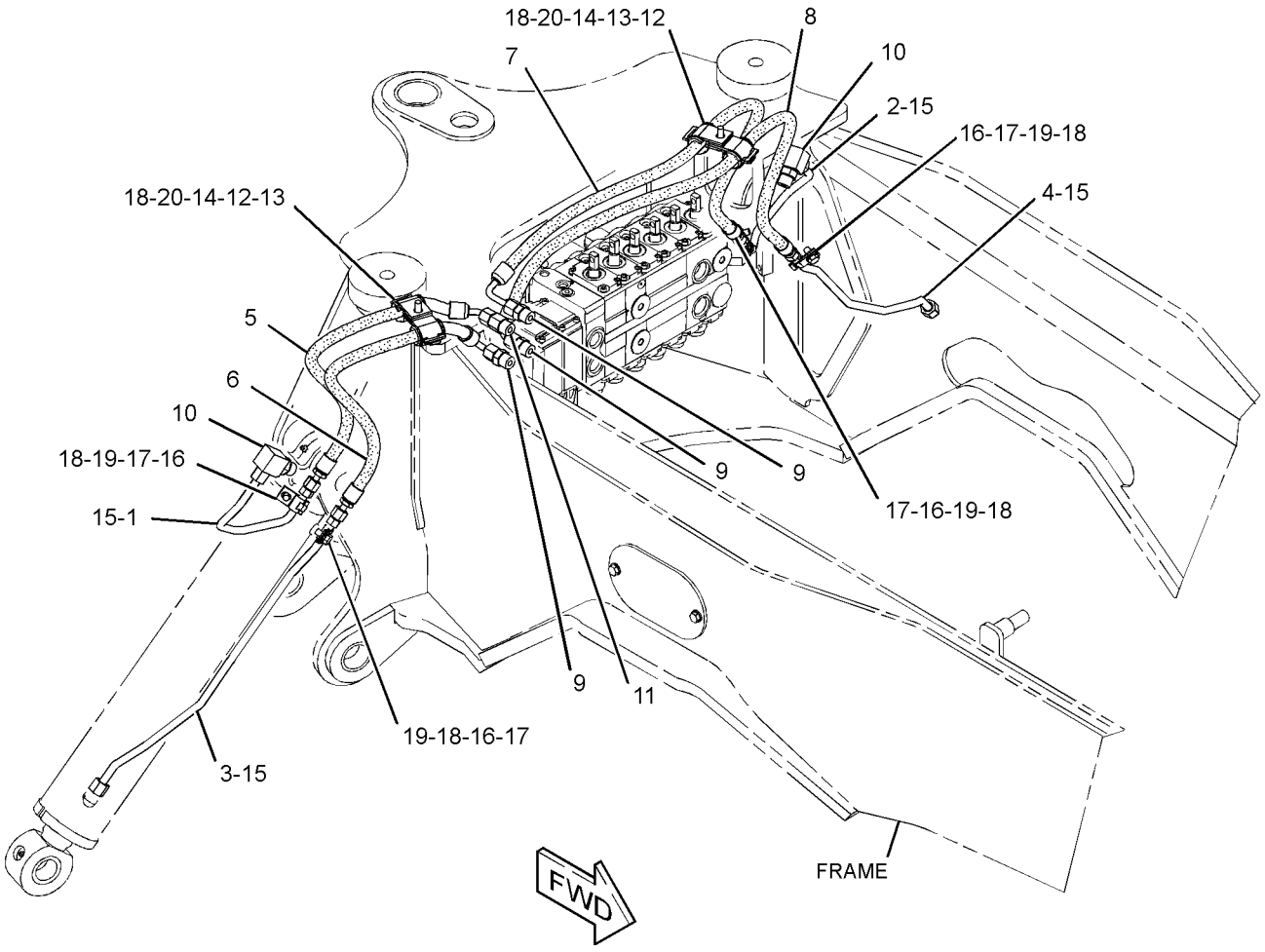

GRAPHIC #1 **<END>** g01286060

HYDRAULIC SYSTEM

228-3974 LINES GP-STABILIZER

S/N: CBD1-UP; MFG1-UP
PART OF 209-9934 VALVE AR-BANK 6, 209-9935 VALVE AR-BANK 7
AN ATTACHMENT

SMCS-5057, 5468 **i02560057**

NOTE	REF NO	GRAPHIC REF	PART NUMBER	QTY	PART NAME 1 2 3 4 5 6 (PRODUCT LEVEL)	SEE PAGE
	1	1	**201-3621**	1	TUBE AS	
	2	1	**201-3622**	1	TUBE AS	
	3	1	**201-3623**	1	TUBE AS	
	4	1	**201-3624**	1	TUBE AS	
I	5	1	**289-8740**	1	HOSE AS	
I	6	1	**289-8741**	1	HOSE AS	
I	7	1	**289-8742**	1	HOSE AS	
I	8	1	**289-8743**	1	HOSE AS	
	9	1	*148-8345*	3	CONNECTOR AS	
					(EACH INCLUDES)	
		1	**2M-9780**	1	SEAL-O-RING	
		1	**6V-8398**	1	SEAL-O-RING	
		1	**6V-8638**	1	CONNECTOR	
	10	1	*148-8372*	2	ELBOW AS	
					(EACH INCLUDES)	
		1	**2M-9780**	1	SEAL-O-RING	
		1	**6V-8398**	1	SEAL-O-RING	
		1	**6V-8721**	1	ELBOW	
	11	1	*164-5557*	1	CONNECTOR AS	
		1	**2M-9780**	1	SEAL-O-RING	
		1	**5I-4370**	1	CONNECTOR	
		1	**6V-8398**	1	SEAL-O-RING	
	12	1	**5P-7462**	4	CLIP (SLOT)	
	13	1	**5P-7463**	4	CLIP (TAB)	
	14	1	**6V-0683**	4	GROMMET	
	15	1	**6V-8397**	4	SEAL-O-RING	
	16	1	**8T-1885**	4	CLIP (SLOT)	
	17	1	**8T-1886**	4	CLIP (TAB)	
	18	1	**8T-4121**	6	WASHER-HARD (11X21X2.5-MM THK)	
M	19	1	**8T-4137**	4	BOLT (M10X1.5X20-MM)	
M	20	1	**8T-4196**	2	BOLT (M10X1.5X35-MM)	

I-REFER TO HYDRAULIC INFORMATION SYSTEM
M-METRIC PART

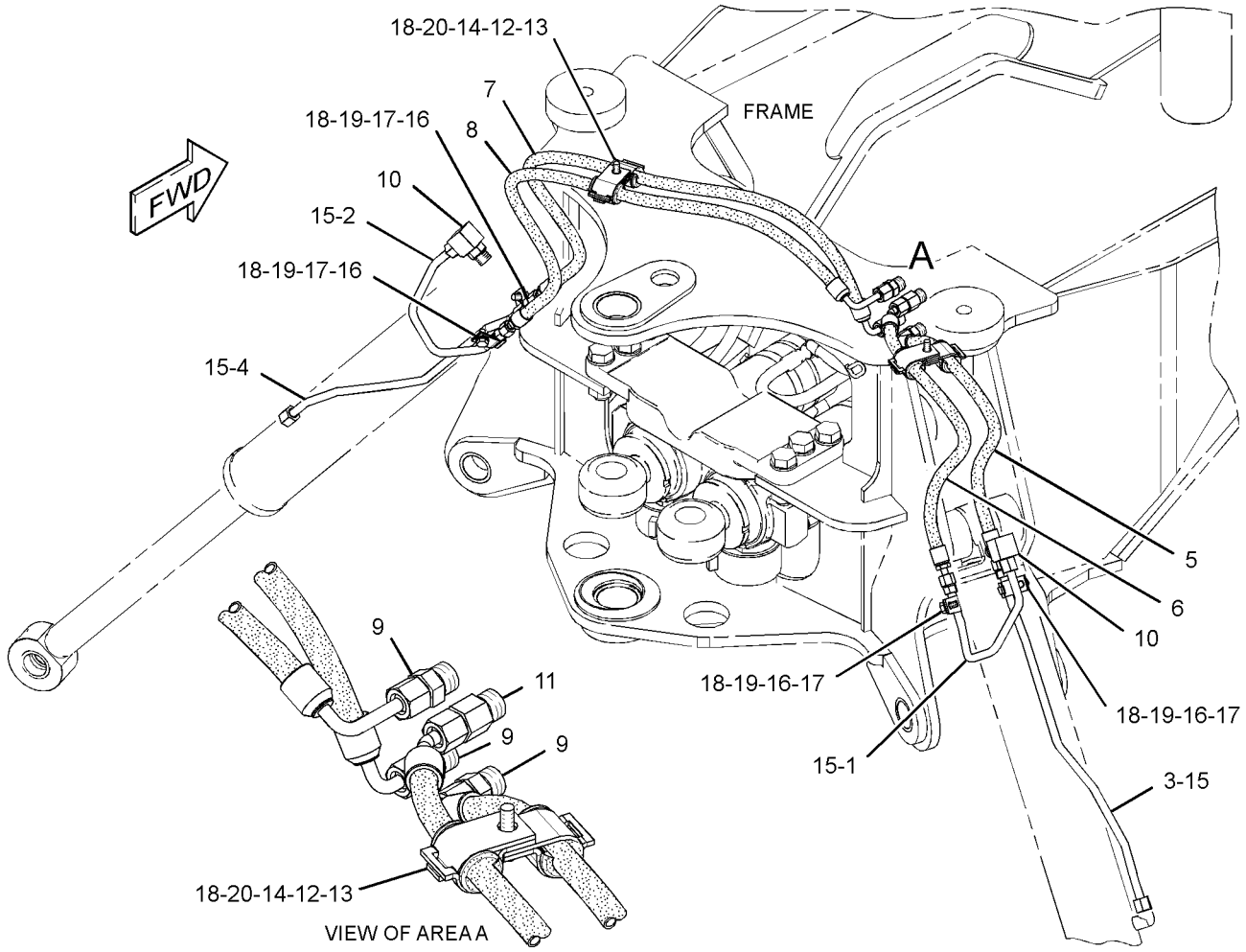

GRAPHIC #1 **<END>** g01298716

HYDRAULIC SYSTEM

211-7564 LINES GP-STICK

S/N: CBD1-2631

PART OF 209-9929 BACKHOE AR-EXTENDABLE STICK, 209-9924 BACKHOE AR-STANDARD STICK

AN ATTACHMENT

SMCS-5057 **i02639396**

NOTE	REF NO	GRAPHIC REF	PART NUMBER	QTY	PART NAME 1 2 3 4 5 6 (PRODUCT LEVEL)	SEE PAGE
	1	1	**5P-3860**	1	CLAMP-HOSE	
	2	1	**9R-5948**	1	BLOCK	
I	3	1	**199-2566**	1	HOSE AS	
I	4	1	**297-1230**	1	HOSE AS	
	5	1	*148-8328*	1	CONNECTOR AS	
		1	**3D-2824**	1	SEAL-O-RING	
		1	**6V-8398**	1	SEAL-O-RING	
		1	**6V-8633**	1	CONNECTOR	
	6	1	*148-8341*	1	CONNECTOR AS	
		1	**3D-2824**	1	SEAL-O-RING	
		1	**6V-8713**	1	CONNECTOR	
		1	**7J-9108**	1	SEAL-O-RING	
	7	1	*153-6232*	1	ELBOW AS	
		1	**3D-2824**	1	SEAL-O-RING	
		1	**7J-9108**	1	SEAL-O-RING	
		1	**8T-0120**	1	ELBOW	

I-REFER TO HYDRAULIC INFORMATION SYSTEM

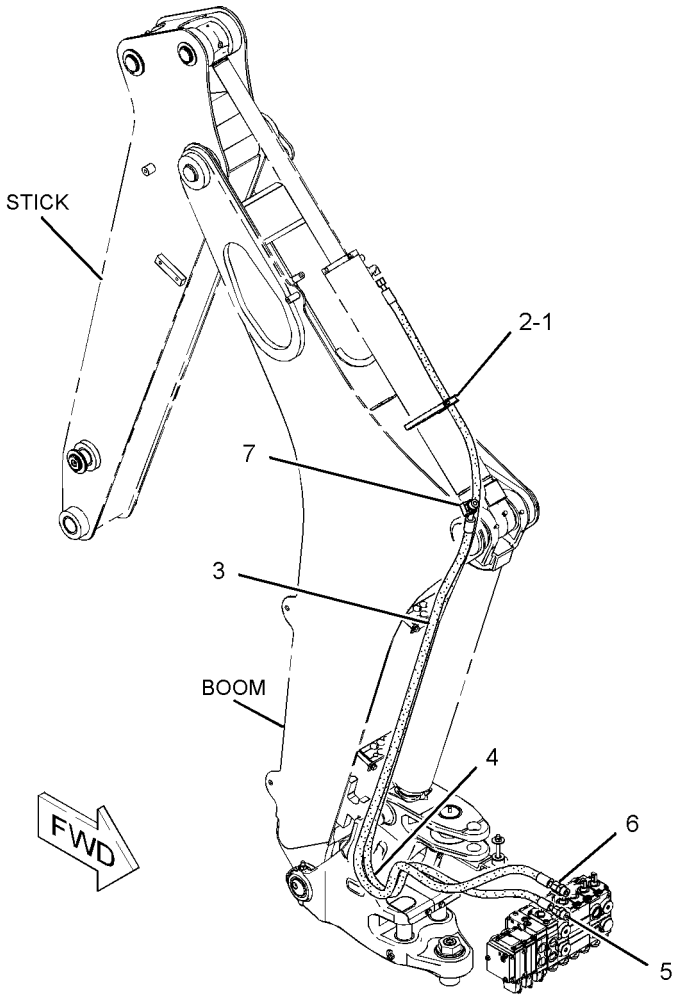

GRAPHIC #1 **<END>** g01078872

HYDRAULIC SYSTEM

211-7564 LINES GP-STICK

S/N: CBD2632-8409; MFG1-UP

PART OF 209-9929 BACKHOE AR-EXTENDABLE STICK, 209-9924 BACKHOE AR-STANDARD STICK

AN ATTACHMENT

SMCS-5057 **i04533548**

NOTE	REF NO	GRAPHIC REF	PART NUMBER	QTY	PART NAME 1 2 3 4 5 6 (PRODUCT LEVEL)	SEE PAGE
	1	1	**5P-3860**	1	CLAMP-HOSE	
	2	1	**9R-5948**	1	BLOCK	
CI	3	1	**229-5124**	1	HOSE AS	
CI	4	1	**278-1170**	1	HOSE AS	
	5	1	*148-8328*	1	CONNECTOR AS	
		1	**3D-2824**	1	SEAL-O-RING	
		1	**6V-8398**	1	SEAL-O-RING	
		1	**6V-8633**	1	CONNECTOR	
	6	1	*148-8341*	1	CONNECTOR AS	
		1	**3D-2824**	1	SEAL-O-RING	
		1	**6V-8713**	1	CONNECTOR	
		1	**7J-9108**	1	SEAL-O-RING	
	7	1	*153-6232*	1	ELBOW AS	
		1	**3D-2824**	1	SEAL-O-RING	
		1	**7J-9108**	1	SEAL-O-RING	
		1	**8T-0120**	1	ELBOW	
	8	1	**7K-1181**	1	STRAP-CABLE	
I	9	1	**278-7793**	1	HOSE AS	
C	10	1	**6V-8398**	1	SEAL-O-RING	
C	11	1	**7J-9108**	1	SEAL-O-RING	
CI	12	1	**311-2501**	1	HOSE AS	

C-CHANGE FROM PREVIOUS TYPE
I-REFER TO HYDRAULIC INFORMATION SYSTEM

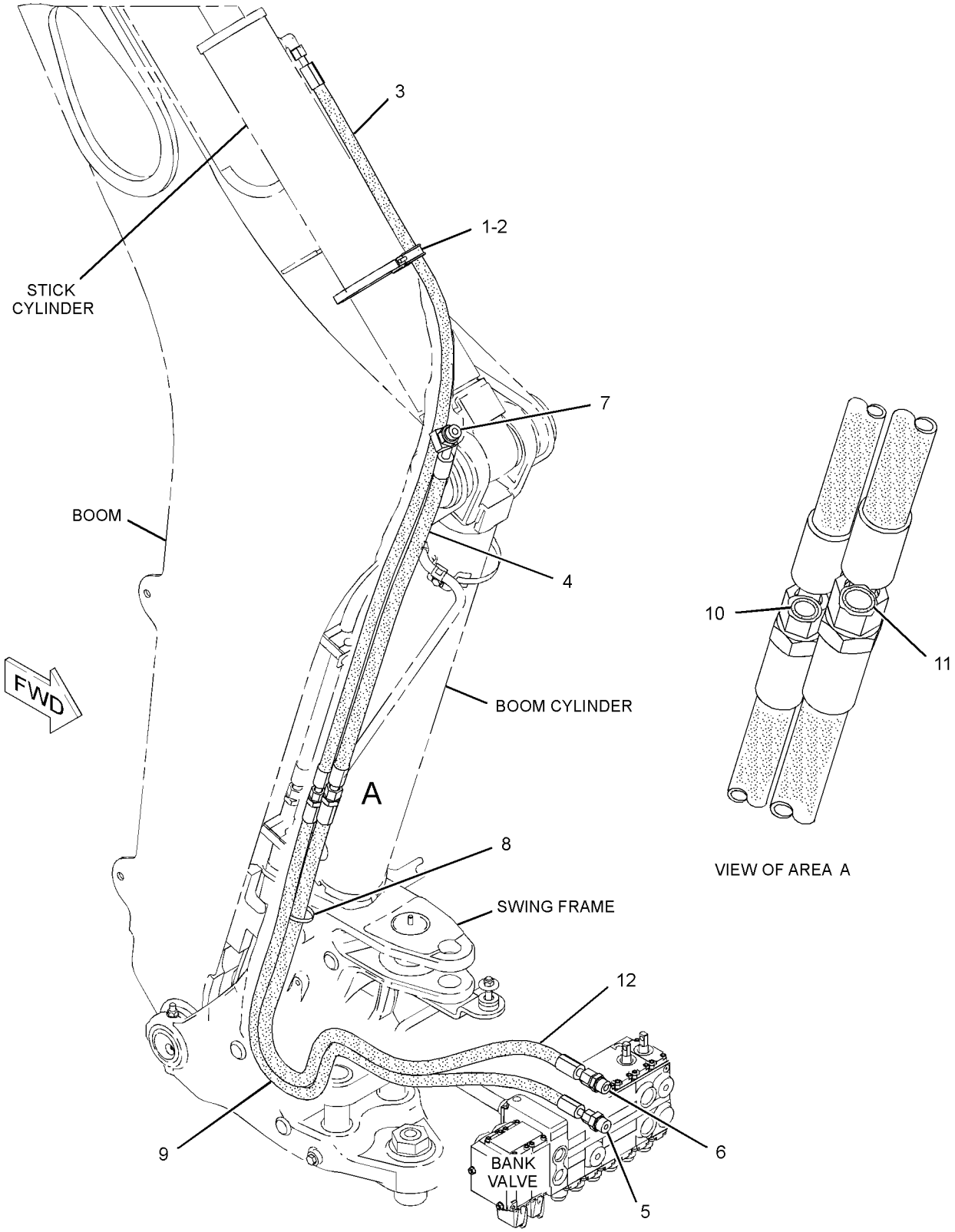

GRAPHIC #1 **<END>** g02702276

HYDRAULIC SYSTEM

232-1248 LINES GP-SWING

S/N: CBD1-UP; MFG1-UP

PART OF 214-2198, 297-0165 HYDRAULIC AR

SMCS-5057, 5105 **i02359473**

NOTE	REF NO	GRAPHIC REF	PART NUMBER	QTY	PART NAME 1 2 3 4 5 6 (PRODUCT LEVEL)	SEE PAGE
	1	1	**5P-0599**	2	CLAMP-BAND	
	2	1	**9R-2053**	2	BLOCK	
I	3	1	**9R-9005**	2	HOSE AS	
	4	1	*155-7321*	2	ADAPTER AS	
					(EACH INCLUDES)	
		1	**3D-2824**	1	SEAL-O-RING	
		1	**6V-1722**	1	ADAPTER-O-RING	
I	5	1	**216-2777**	1	HOSE AS	
I	6	1	**233-1488**	1	HOSE AS	
	7	1	*148-8340*	4	CONNECTOR AS	
					(EACH INCLUDES)	
		1	**3K-0360**	1	SEAL-O-RING	
		1	**6V-8398**	1	SEAL-O-RING	
		1	**6V-8639**	1	CONNECTOR	
	8	1	*148-8364*	4	ELBOW AS	
					(EACH INCLUDES)	
		1	**3K-0360**	1	SEAL-O-RING	
		1	**6V-8398**	1	SEAL-O-RING	
		1	**6V-8625**	1	ELBOW	

I-REFER TO HYDRAULIC INFORMATION SYSTEM

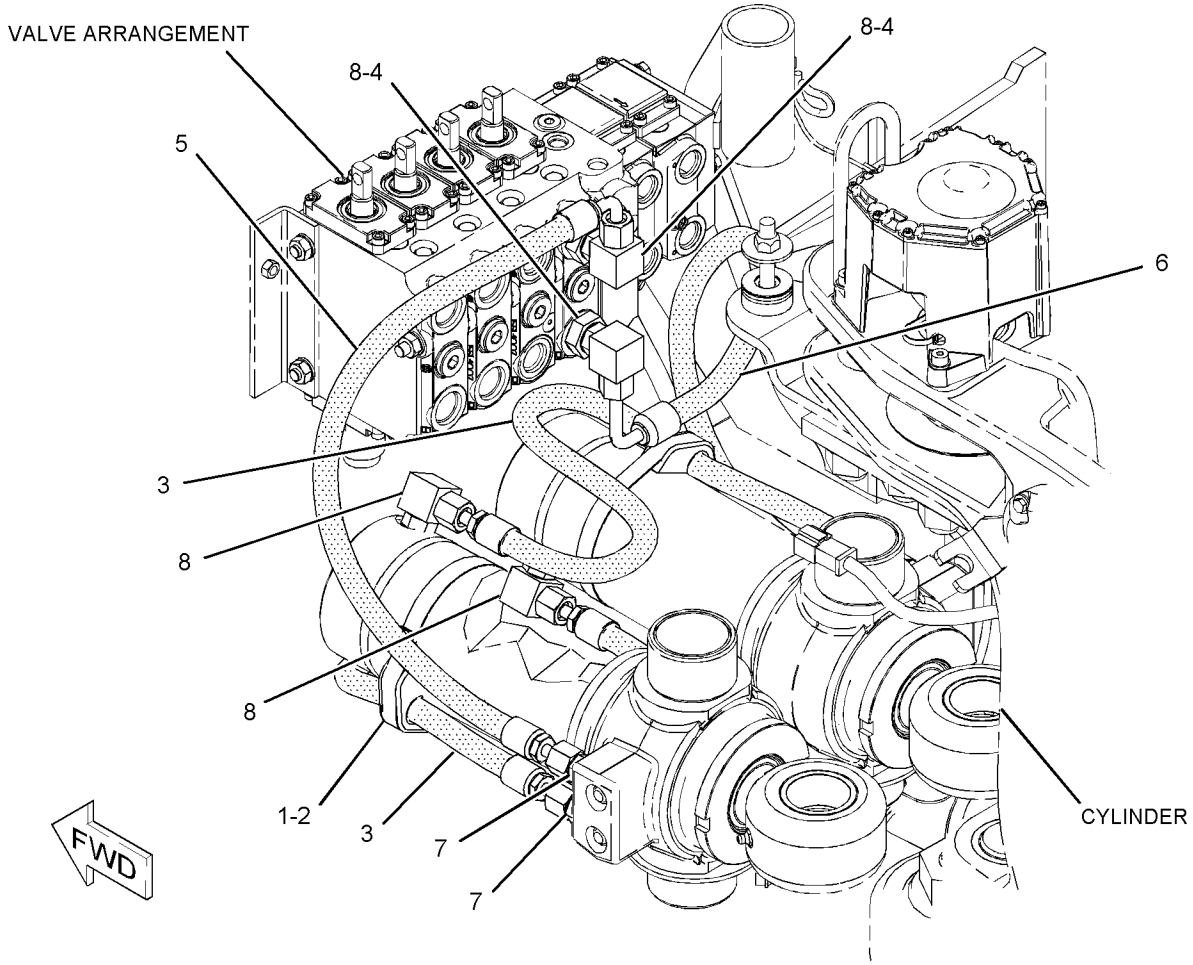

GRAPHIC #1 **<END>** g01072180

HYDRAULIC SYSTEM

246-5292 LINES GP-TILT CYLINDER

S/N: CBD1-7258

PART OF 213-9298 LOADER AR

SMCS-5057, 5104 **i02658691**

NOTE	REF NO	GRAPHIC REF	PART NUMBER	QTY	PART NAME 1 2 3 4 5 6 (PRODUCT LEVEL)	SEE PAGE
I	1	1	**9R-1034**	2	HOSE AS	
	2	1	**156-3837**	4	CLIP (SLOT)	
	3	1	**156-3838**	2	CLIP (TAB)	
	4	1	**158-3412**	8	CLIP (SLOT)	
	5	1	**187-3164**	1	TUBE AS	
	6	1	**187-3166**	1	TUBE AS	
I	7	1	**215-7453**	2	HOSE AS	
	8	1	**232-3244**	1	TUBE AS	
	9	1	**187-4329**	1	TUBE AS	
	10	1	**232-3277**	1	BRACKET AS	
	11	1	**207-7581**	1	TUBE AS	
	12	1	**249-4032**	1	TUBE AS	
	13	1	**151-4841**	1	BLOCK	
	14	1	**254-7271**	1	PLATE AS	
	15	1	*148-8341*	2	CONNECTOR AS	
					(EACH INCLUDES)	
		1	**3D-2824**	1	SEAL-O-RING	
		1	**6V-8713**	1	CONNECTOR	
		1	**7J-9108**	1	SEAL-O-RING	
	16	1	*148-8390*	1	ELBOW AS	
		1	**2M-9780**	1	SEAL-O-RING	
		1	**6V-8626**	1	ELBOW	
		1	**7J-9108**	1	SEAL-O-RING	
	17	1	*148-8393*	2	ELBOW AS	
					(EACH INCLUDES)	
		1	**6V-9852**	1	ELBOW	
		1	**7J-9108**	1	SEAL-O-RING	
	18	1	**6V-8398**	8	SEAL-O-RING	
	19	1	**8T-4121**	8	WASHER-HARD (11X21X2.5-MM THK)	
M	20	1	**8T-4136**	6	BOLT (M10X1.5X25-MM)	
M	21	1	**8T-4137**	2	BOLT (M10X1.5X20-MM)	
	22	1	**7K-1181**	1	STRAP-CABLE	
	24	1	**9R-7803**	4	CLIP (TAB)	

I-REFER TO HYDRAULIC INFORMATION SYSTEM
M-METRIC PART

246-5292 **LINES GP-TILT CYLINDER** *(contd.)* **i02658691**

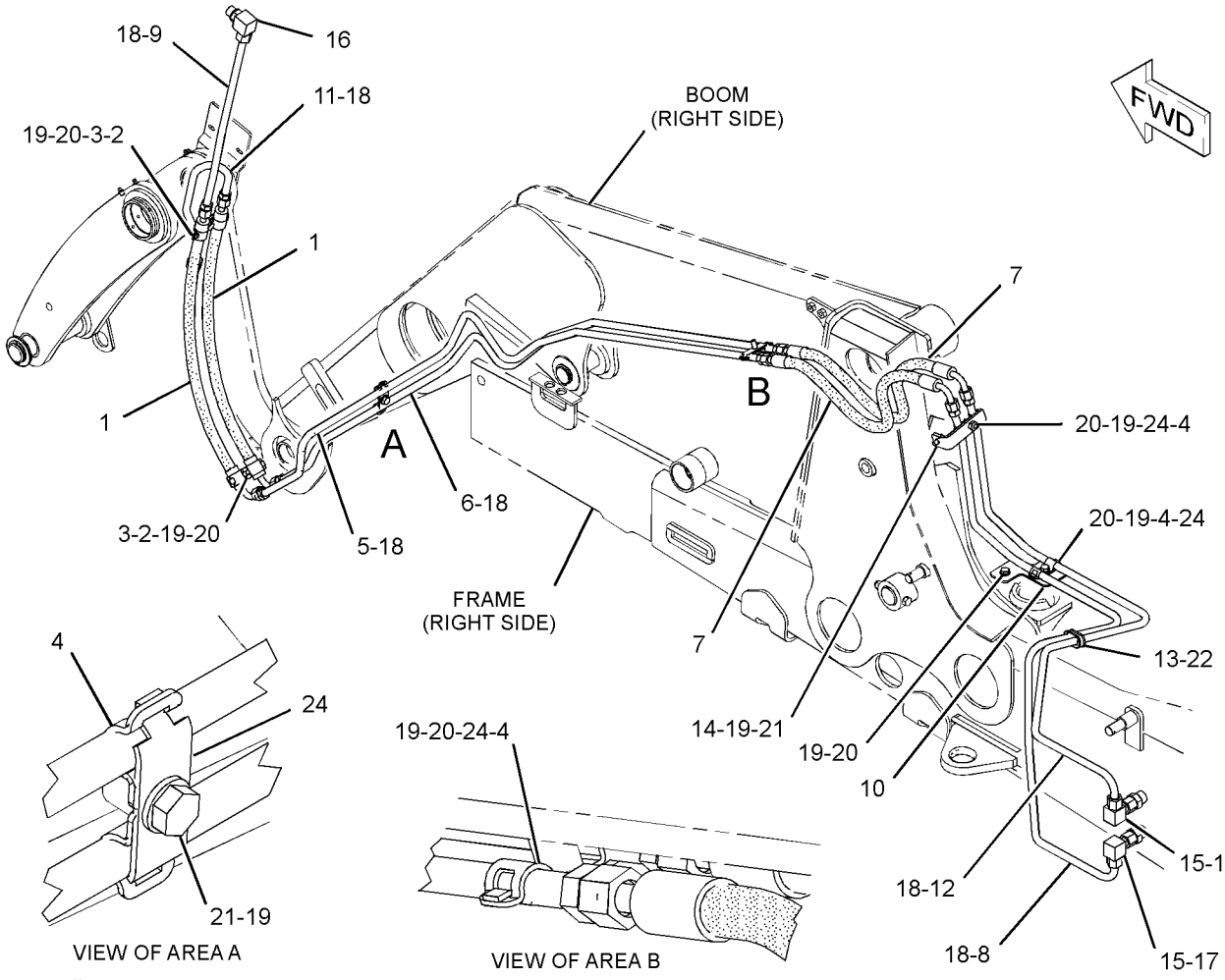

GRAPHIC #1

<END>

g01338744

HYDRAULIC SYSTEM

246-5292 LINES GP-TILT CYLINDER

S/N: CBD7259-UP; MFG1-UP

PART OF 213-9298, 318-9555 LOADER AR

SMCS-5057, 5104 **i04130729**

NOTE	REF NO	GRAPHIC REF	PART NUMBER	QTY	PART NAME 1 2 3 4 5 6 (PRODUCT LEVEL)	SEE PAGE
I	1	1	**9R-1034**	2	HOSE AS	
C	2	1	**6V-5185**	4	CLIP (SLOT)	
C	3	1	**6V-5186**	4	CLIP (TAB)	
	4	1	**158-3412**	8	CLIP (SLOT)	
	5	1	**187-3164**	1	TUBE AS	
	6	1	**187-3166**	1	TUBE AS	
I	7	1	**215-7453**	2	HOSE AS	
	8	1	**232-3244**	1	TUBE AS	
	9	1	**187-4329**	1	TUBE AS	
	10	1	**232-3277**	1	BRACKET AS	
	11	1	**207-7581**	1	TUBE AS	
	12	1	**249-4032**	1	TUBE AS	
	13	1	**151-4841**	1	BLOCK	
	14	1	**254-7271**	1	PLATE AS	
	15	1	*148-8341*	2	CONNECTOR AS	
					(EACH INCLUDES)	
		1	**3D-2824**	1	SEAL-O-RING	
		1	**6V-8713**	1	CONNECTOR	
		1	**7J-9108**	1	SEAL-O-RING	
	16	1	*148-8390*	1	ELBOW AS	
		1	**2M-9780**	1	SEAL-O-RING	
		1	**6V-8626**	1	ELBOW	
		1	**7J-9108**	1	SEAL-O-RING	
	17	1	*148-8393*	2	ELBOW AS	
					(EACH INCLUDES)	
		1	**6V-9852**	1	ELBOW	
		1	**7J-9108**	1	SEAL-O-RING	
	18	1	**6V-8398**	8	SEAL-O-RING	
	19	1	**8T-4121**	8	WASHER-HARD (11X21X2.5-MM THK)	
CM	20	1	**8T-4136**	4	BOLT (M10X1.5X25-MM)	
M	21	1	**8T-4137**	2	BOLT (M10X1.5X20-MM)	
	22	1	**7K-1181**	1	STRAP-CABLE	
CM	23	1	**8T-4195**	2	BOLT (M10X1.5X30-MM)	
	24	1	**9R-7803**	4	CLIP (TAB)	

C-CHANGE FROM PREVIOUS TYPE
I-REFER TO HYDRAULIC INFORMATION SYSTEM
M-METRIC PART

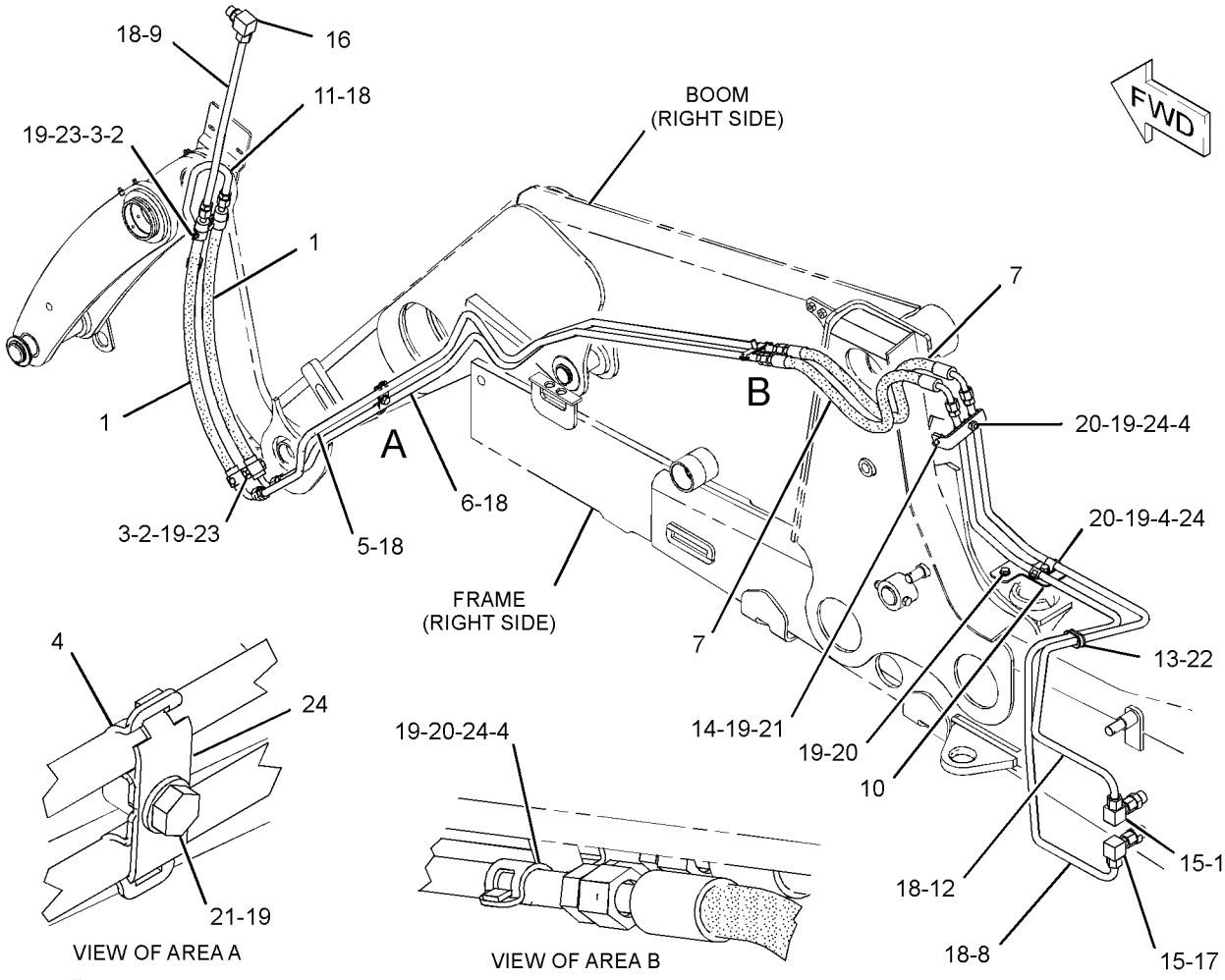

GRAPHIC #1

<END>

g02330773

259-6742 MANIFOLD GP-CONTROL–INLET

S/N: CBD1-UP; MFG1-UP
PART OF 248-0483 VALVE GP-BANK 6, 248-0484 VALVE GP-BANK 7, 248-0485 VALVE GP-BANK 8
AN ATTACHMENT

SMCS-5264 **i02520544**

NOTE	REF NO	GRAPHIC REF	PART NUMBER	QTY	PART NAME 1 2 3 4 5 6 (PRODUCT LEVEL)	SEE PAGE
	1	1	**259-6758**	1	VALVE GP-RELIEF (LOAD SENSING)	
	2	1	**192-7515**	1	SEAL-O-RING	
	3	1	**6V-5138**	1	SEAL-O-RING	

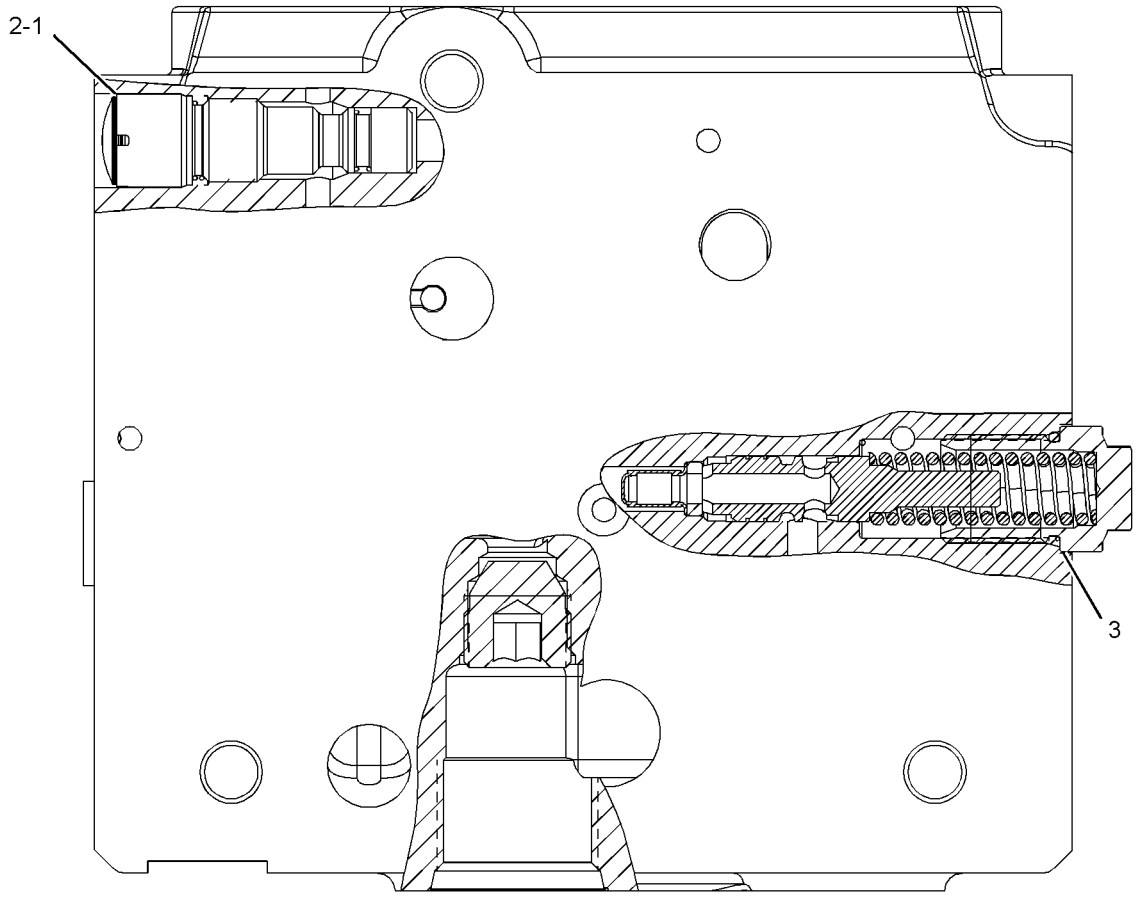

GRAPHIC #1 **<END>** g01140755

HYDRAULIC SYSTEM

259-6745 MANIFOLD GP-CONTROL–INLET

S/N: CBD1-UP; MFG1-UP
PART OF 248-0481 VALVE GP-BANK 2, 248-0482 VALVE GP-BANK 3
AN ATTACHMENT

SMCS-5264 **i02520512**

NOTE	REF NO	GRAPHIC REF	PART NUMBER	QTY	PART NAME 1 2 3 4 5 6 (PRODUCT LEVEL)	SEE PAGE
	1	1	**259-6758**	1	VALVE GP-RELIEF (LOAD SENSING)	
	2	1	**4J-7533**	1	SEAL-O-RING	
	3	1	**6V-7970**	1	SEAL-O-RING	
	4	1	**7M-8485**	1	SEAL-O-RING	
	5	1	**192-7515**	1	SEAL-O-RING	
	6	1	**9S-8001**	1	PLUG-O-RING	

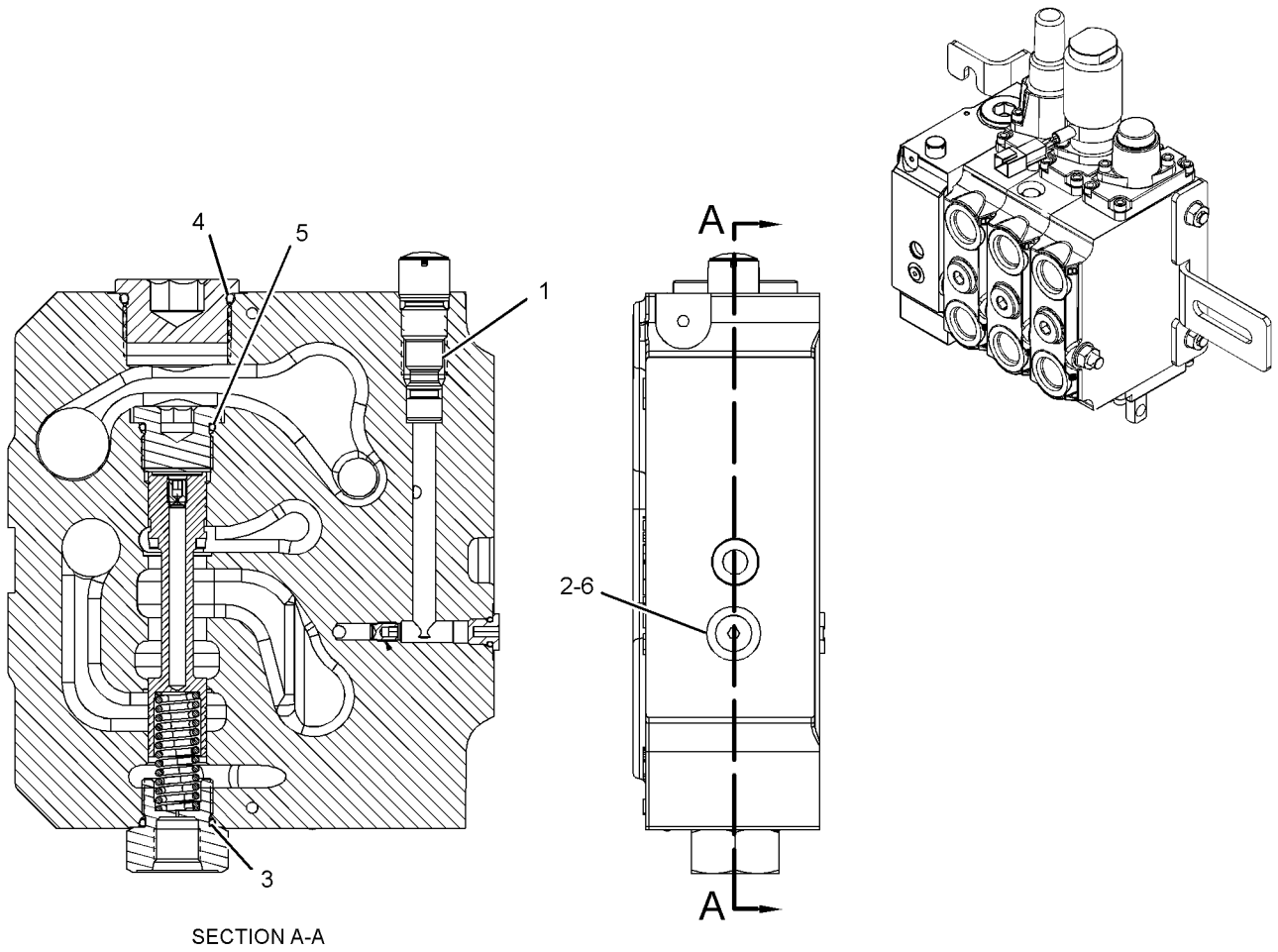

SECTION A-A

GRAPHIC #1 **<END>** g01183742

HYDRAULIC SYSTEM

245-8780 MANIFOLD GP-RIDE CONTROL

S/N: CBD1-UP; MFG1-UP
PART OF 246-9802 LINES GP-RIDE CONTROL
AN ATTACHMENT

SMCS-5264 **i03904432**

NOTE	REF NO	GRAPHIC REF	PART NUMBER	QTY	PART NAME 1 2 3 4 5 6 (PRODUCT LEVEL)	SEE PAGE
J	1	1	**249-3124**	1	VALVE GP-SOLENOID (RIDE CONTROL, SWITCH)	
L	2	1	**249-3125**	1	VALVE GP-SOLENOID (ACCUMULATOR)	
	3	1	**238-4628**	2	COIL AS (12-VOLT)	
					AVAILABLE REPAIR KIT(S):	
J			**141-0888**	1	KIT-SEAL (RIDE CONTROL, SWITCH)	
					(INCLUDES BACK-UP RING & O-RING SEALS)	
L			**227-5509**	1	KIT-SEAL (ACCUMULATOR)	

J-KIT MARKED J AVAILABLE FOR PART MARKED J
L-KIT MARKED L AVAILABLE FOR PART MARKED L

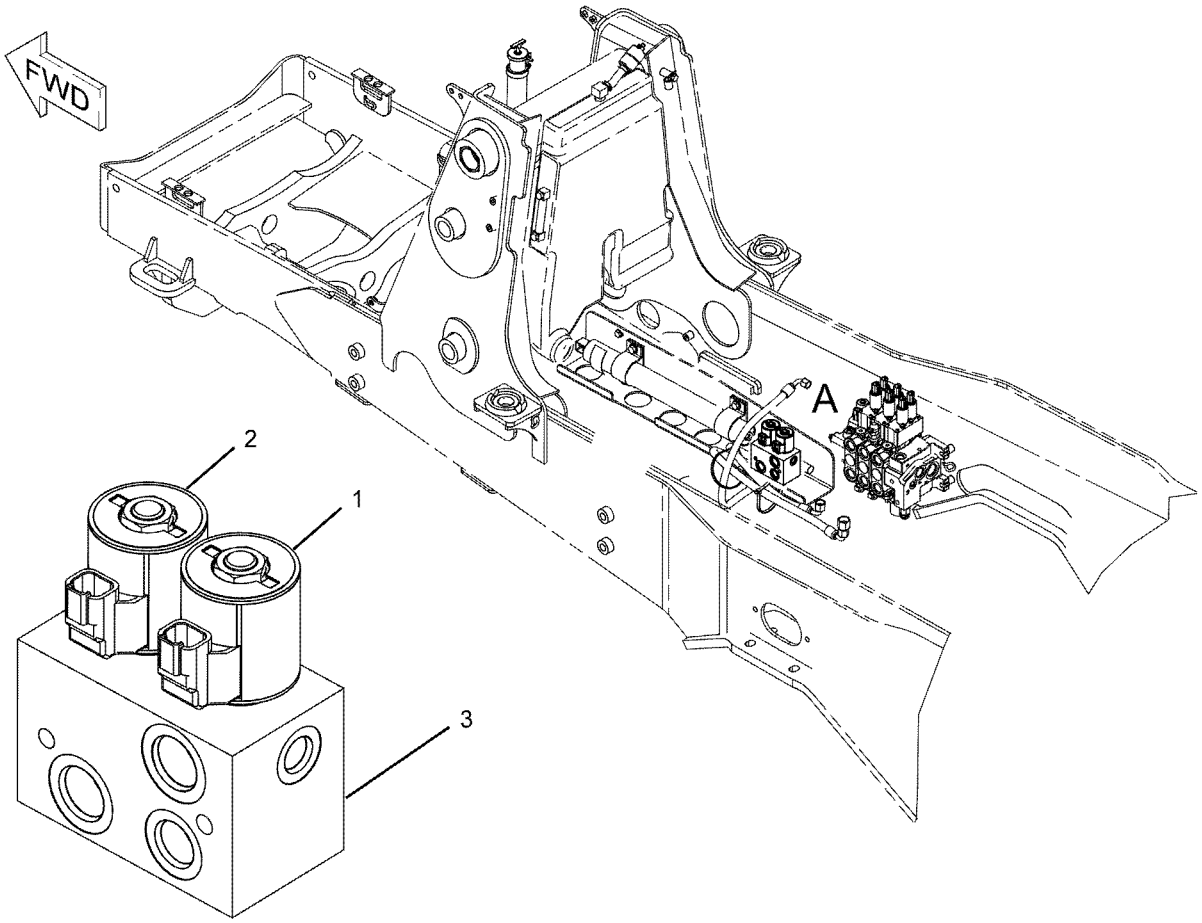

VIEW OF AREA A

GRAPHIC #1 **<END>** g01094840

219-8564 MOUNTING GP-BANK VALVE

S/N: CBD1-3839
PART OF 209-9935 VALVE AR-BANK 7, 212-0206 VALVE AR-BANK 8
AN ATTACHMENT

SMCS-5051 **i02560017**

NOTE	REF NO	GRAPHIC REF	PART NUMBER	QTY	PART NAME 1 2 3 4 5 6 (PRODUCT LEVEL)	SEE PAGE
	1	1	**219-0006**	1	BRACKET AS	
M	2	1	**165-7019**	1	BOLT (M12X1.75X45-MM)	
M	4	1	**8T-4183**	2	BOLT (M12X1.75X40-MM)	
M	5	1	**8T-4192**	3	BOLT (M12X1.75X25-MM)	
	7	1	**8T-4223**	6	WASHER-HARD (13.5X25.5X3-MM THK)	

M-METRIC PART

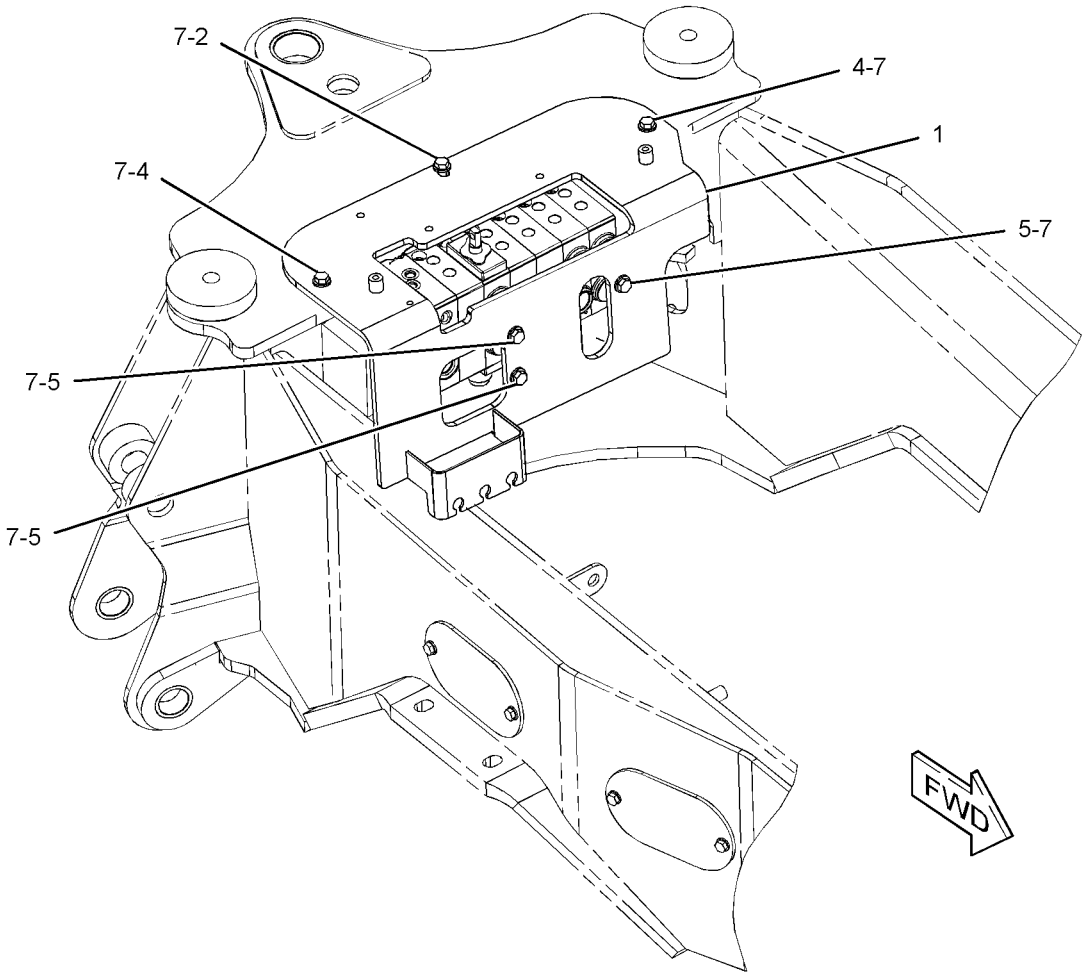

GRAPHIC #1 **<END>** g01282546

HYDRAULIC SYSTEM

219-8564 MOUNTING GP-BANK VALVE

S/N: CBD3840-UP; MFG1-UP
PART OF 209-9935 VALVE AR-BANK 7, 212-0206 VALVE AR-BANK 8
AN ATTACHMENT

SMCS-5051 **i03247353**

NOTE	REF NO	GRAPHIC REF	PART NUMBER	QTY	PART NAME 1 2 3 4 5 6 (PRODUCT LEVEL)	SEE PAGE
C	1	1	**301-9664**	1	BRACKET AS	
		1	**7T-1099**	2	LINK	
M		1	**8T-3490**	2	NUT-WELD (M10X1.5-THD)	
M		1	**9R-2672**	2	BOSS-THREADED (M10X1.5-THD)	
M	2	1	**165-7019**	1	BOLT (M12X1.75X45-MM)	
M	4	1	**8T-4183**	2	BOLT (M12X1.75X40-MM)	
M	5	1	**8T-4192**	3	BOLT (M12X1.75X25-MM)	
	7	1	**8T-4223**	6	WASHER-HARD (13.5X25.5X3-MM THK)	

C-CHANGE FROM PREVIOUS TYPE
M-METRIC PART

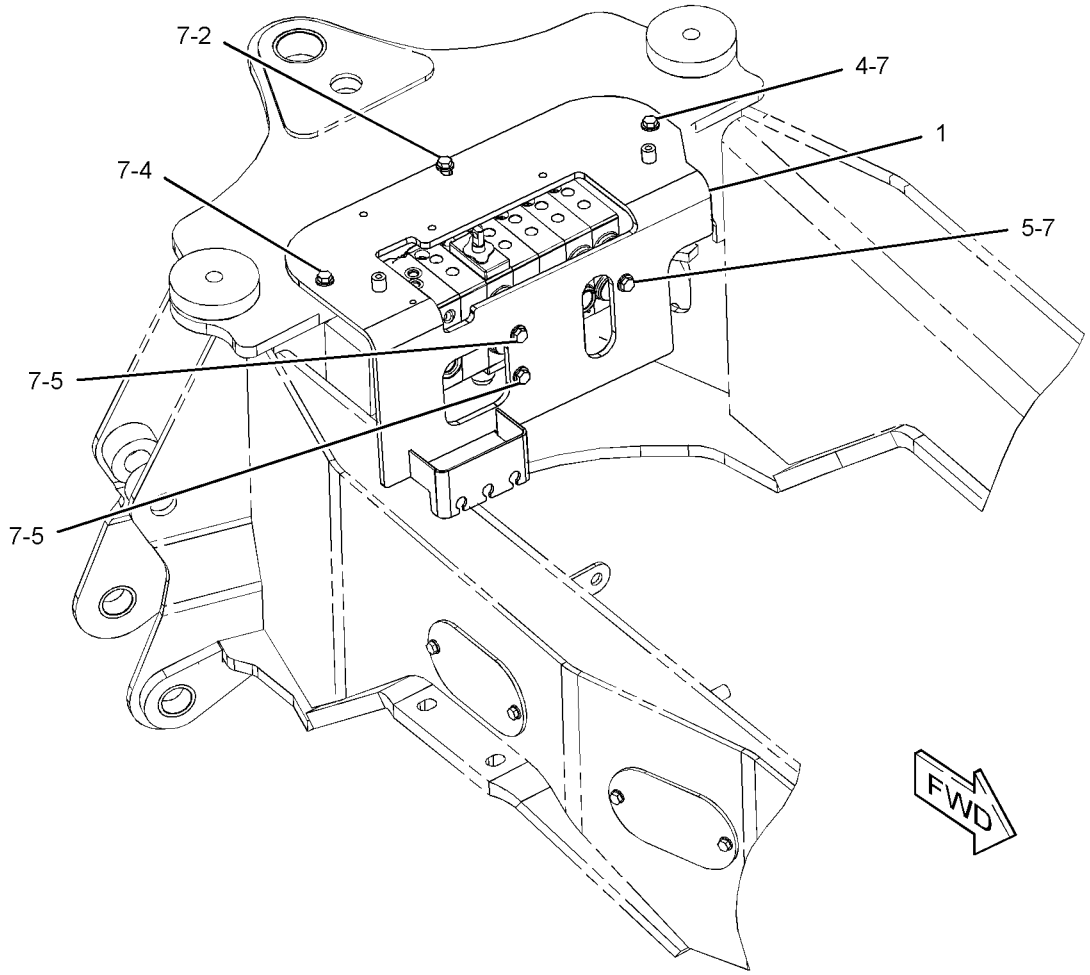

GRAPHIC #1 **<END>** g01282546

290-8077 MOUNTING GP-BANK VALVE

S/N: CBD1-3839
PART OF 209-9934 VALVE AR-BANK 6
AN ATTACHMENT

SMCS-5051 **i02559964**

NOTE	REF NO	GRAPHIC REF	PART NUMBER	QTY	PART NAME 1 2 3 4 5 6 (PRODUCT LEVEL)	SEE PAGE
	1	1	**219-0006**	1	BRACKET AS	
M	2	1	**165-7019**	1	BOLT (M12X1.75X45-MM)	
M	3	1	**8T-4183**	3	BOLT (M12X1.75X40-MM)	
M	4	1	**8T-4192**	2	BOLT (M12X1.75X25-MM)	
	5	1	**8T-4223**	6	WASHER-HARD (13.5X25.5X3-MM THK)	

M-METRIC PART

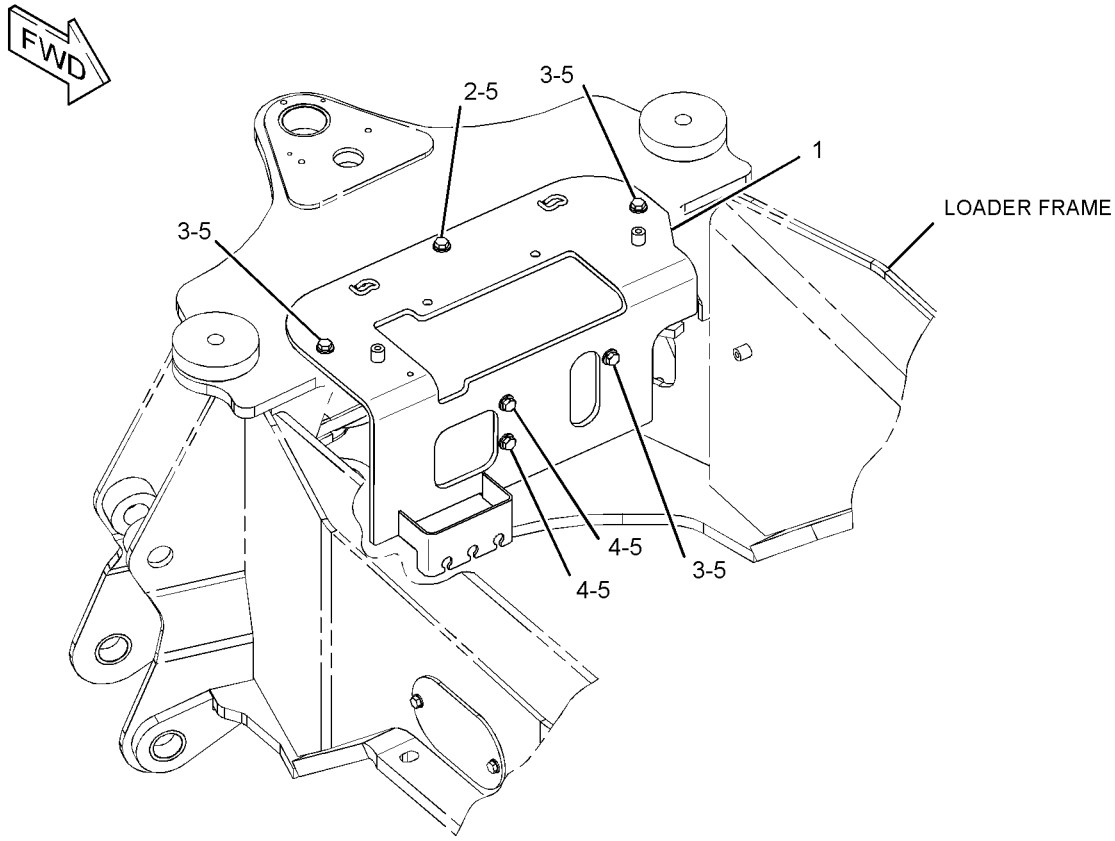

GRAPHIC #1 **<END>** g01321704

HYDRAULIC SYSTEM

290-8077 MOUNTING GP-BANK VALVE

S/N: CBD3840-UP; MFG1-UP
PART OF 209-9934 VALVE AR-BANK 6
AN ATTACHMENT

SMCS-5051 **i03247374**

NOTE	REF NO	GRAPHIC REF	PART NUMBER	QTY	PART NAME 1 2 3 4 5 6 (PRODUCT LEVEL)	SEE PAGE
C	1	1	**301-9664**	1	BRACKET AS	
		1	**7T-1099**	2	LINK	
M		1	**8T-3490**	2	NUT-WELD (M10X1.5-THD)	
M		1	**9R-2672**	2	BOSS-THREADED (M10X1.5-THD)	
M	2	1	**165-7019**	1	BOLT (M12X1.75X45-MM)	
M	3	1	**8T-4183**	3	BOLT (M12X1.75X40-MM)	
M	4	1	**8T-4192**	2	BOLT (M12X1.75X25-MM)	
	5	1	**8T-4223**	6	WASHER-HARD (13.5X25.5X3-MM THK)	

C-CHANGE FROM PREVIOUS TYPE
M-METRIC PART

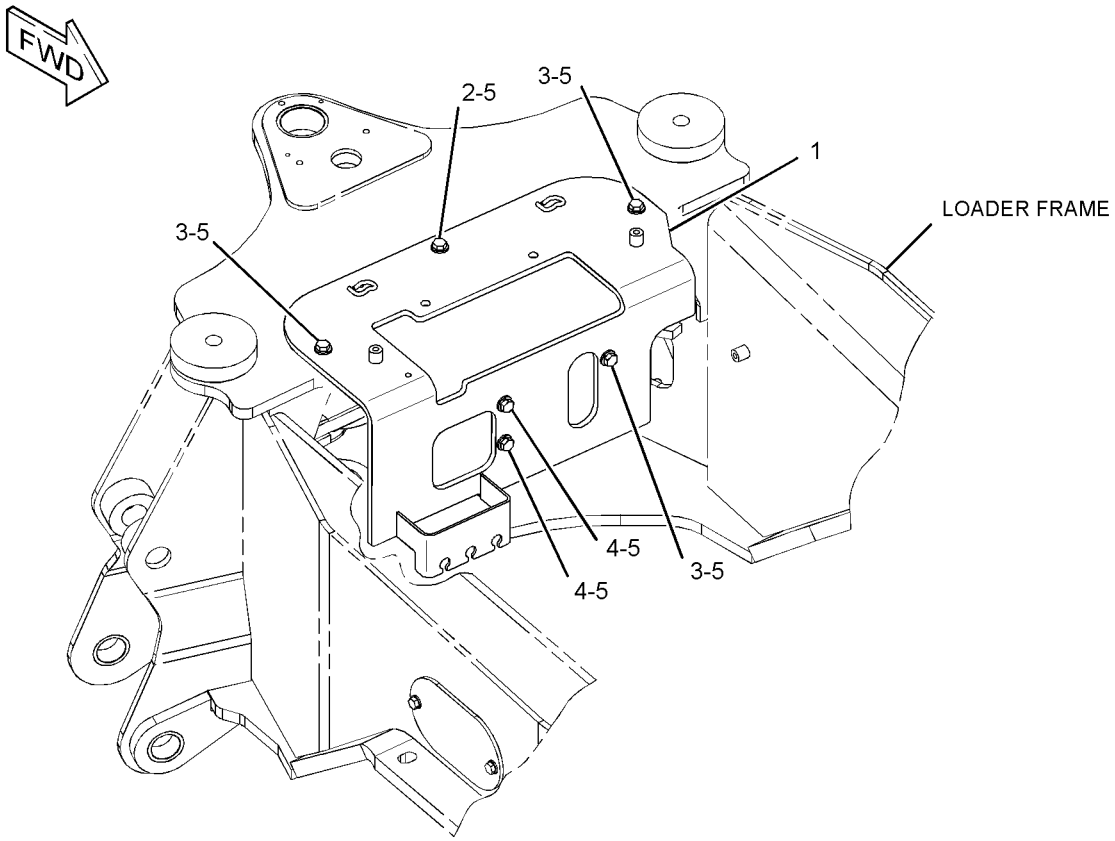

GRAPHIC #1 **<END>** g01321704

9R-4668 MOUNTING GP-CYLINDER

S/N: CBD1-UP
PART OF 112-0938, 112-0939 BUCKET AR-MULTIPURPOSE
AN ATTACHMENT

SMCS-5102, 6068, 7562 **i01513986**

NOTE	REF NO	GRAPHIC REF	PART NUMBER	QTY	PART NAME 1 2 3 4 5 6 (PRODUCT LEVEL)	SEE PAGE
	1	1	**9R-4677**	2	PIN	
	2	1	**3B-5317**	4	PIN-COTTER	
	3	1	**9R-4678**	2	PIN	
	4	1	**3B-8489**	4	FITTING-GREASE	

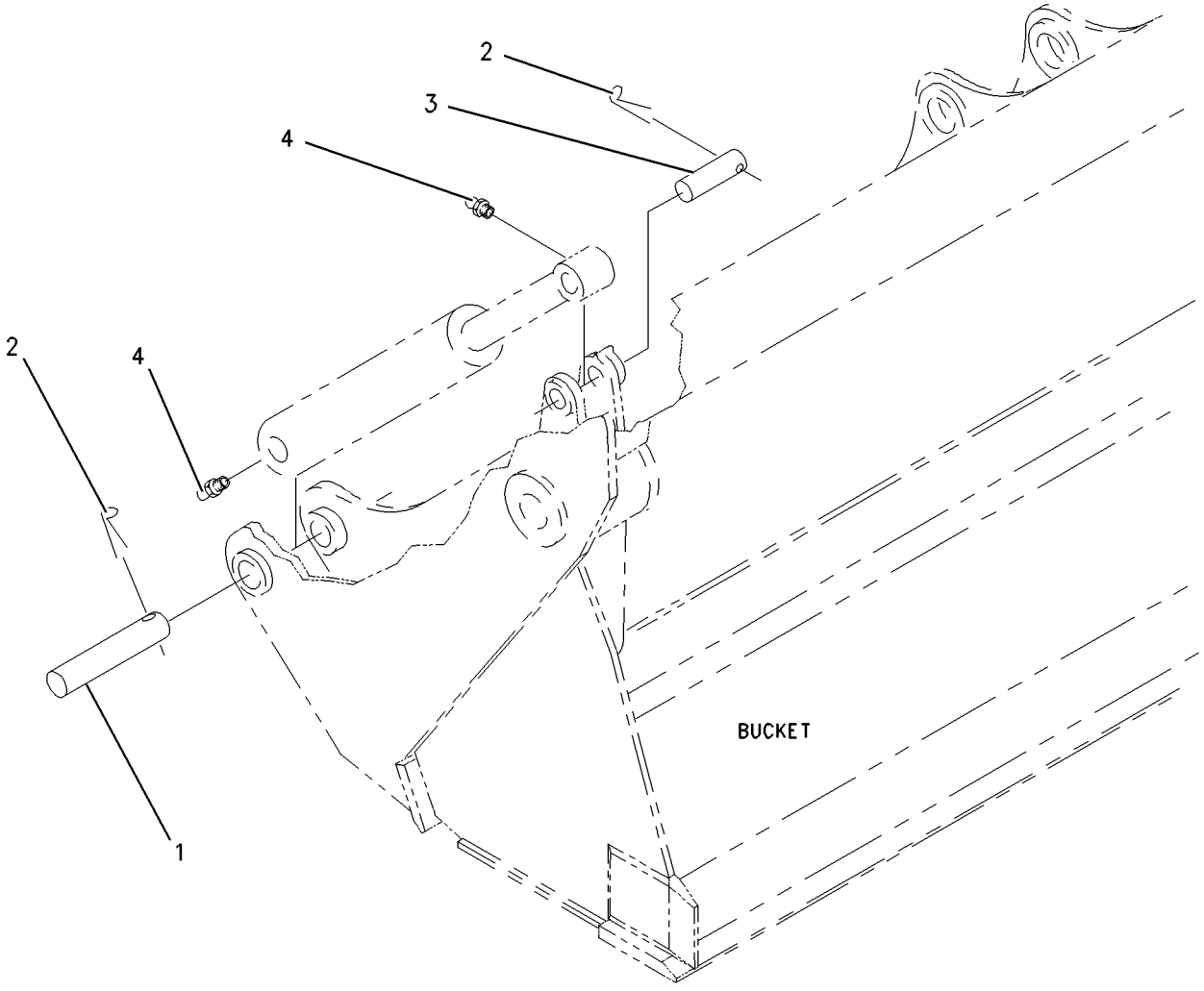

GRAPHIC #1 **<END>** g00759178

HYDRAULIC SYSTEM

263-8577 MOUNTING GP-CYLINDER

S/N: CBD1-UP; MFG1-UP
PART OF 271-3023 THUMB GP
AN ATTACHMENT

SMCS-5102, 6068, 7562 **i02916197**

NOTE	REF NO	GRAPHIC REF	PART NUMBER	QTY	PART NAME 1 2 3 4 5 6 (PRODUCT LEVEL)	SEE PAGE
B	1	1	**9R-1510**	24	WASHER (51X82X4-MM THK)	
	2	1	**221-4295**	1	PIN	
	3	1	**221-4296**	1	PIN	
	4	1	**270-3410**	1	PIN	
	5	1	**3B-5319**	2	PIN-COTTER	
	6	1	**6V-3213**	4	RING-RETAINING (EXTERNAL)	
BM	7	1	**6V-7744**	1	LOCKNUT (M10X1.5-THD)	
BM	8	1	**8T-6685**	1	BOLT (M10X1.5X110-MM)	
B	9	1	**9R-0158**	6	WASHER (46X69X3-MM THK)	

B-USE AS REQUIRED
M-METRIC PART

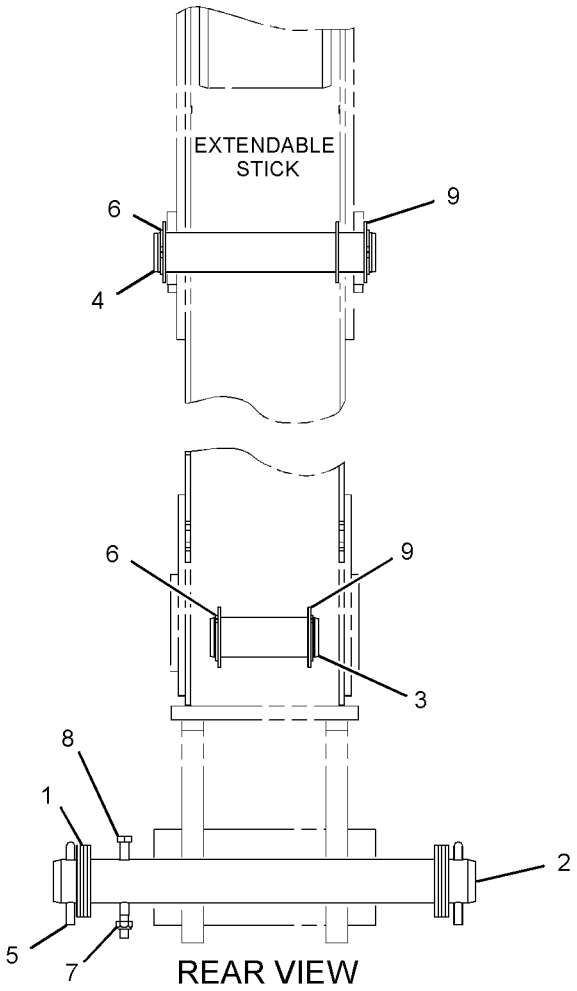

GRAPHIC #1

<END>

g01469776

246-9309 MOUNTING GP-LINES–BACKHOE

S/N: CBD1-4610

PART OF 209-9929 BACKHOE AR-EXTENDABLE STICK, 209-9924 BACKHOE AR-STANDARD STICK

AN ATTACHMENT

SMCS-5057 **i02495936**

NOTE	REF NO	GRAPHIC REF	PART NUMBER	QTY	PART NAME 1 2 3 4 5 6 (PRODUCT LEVEL)	SEE PAGE
	1	1	**248-4274**	2	BLOCK	
	2	1	**248-4275**	2	BLOCK	
	3	1	**248-4276**	2	BLOCK	
	4	1	**248-4277**	2	PLATE	
	5	1	**8T-4121**	4	WASHER-HARD (11X21X2.5-MM THK)	
M	6	1	**8T-4196**	4	BOLT (M10X1.5X35-MM)	

M-METRIC PART

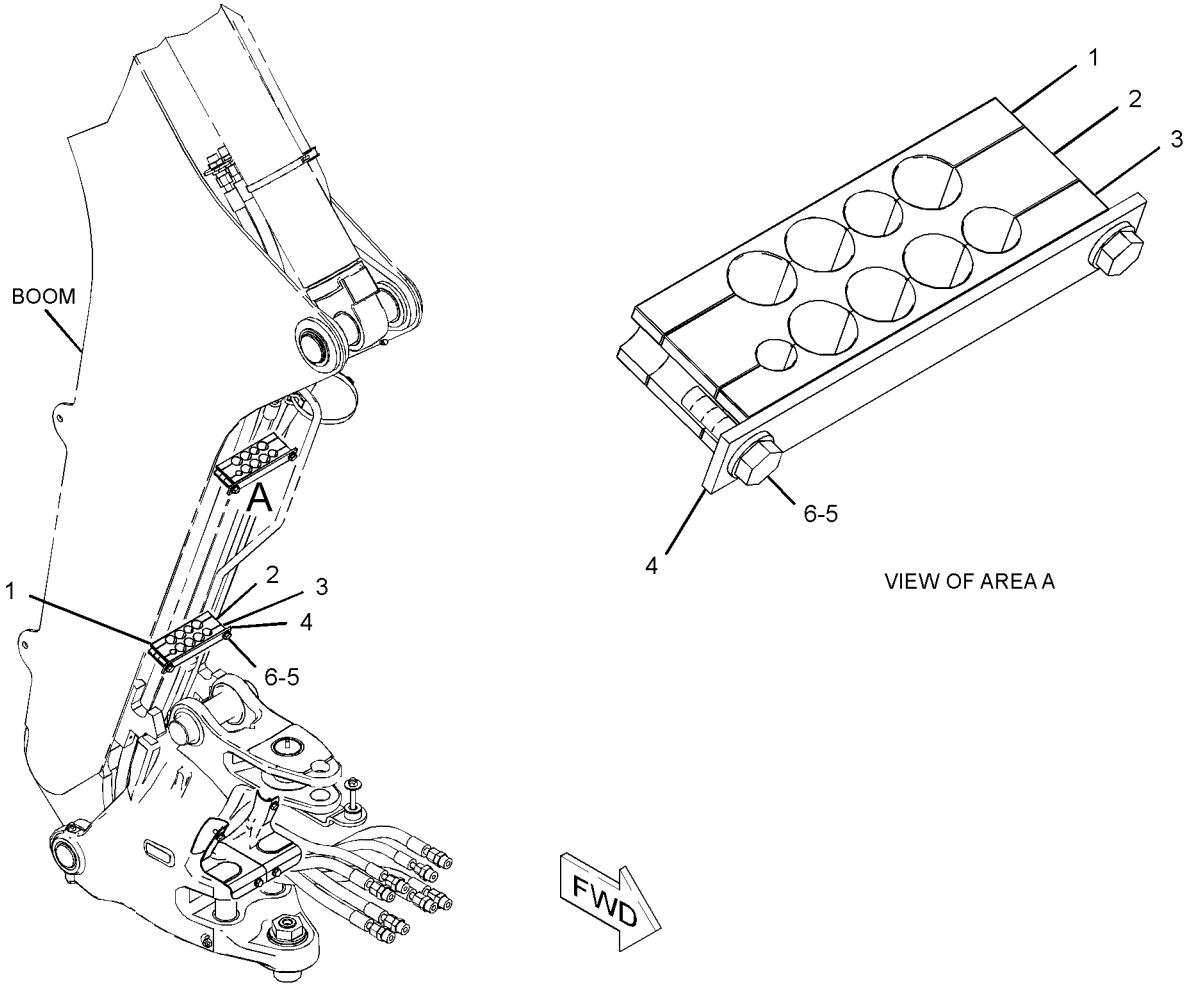

GRAPHIC #1 **<END>** g01190731

246-9309 MOUNTING GP-LINES–BACKHOE

S/N: CBD4611-UP; MFG1-UP

PART OF 209-9929 BACKHOE AR-EXTENDABLE STICK, 209-9924 BACKHOE AR-STANDARD STICK

AN ATTACHMENT

SMCS-5057 **i03564942**

NOTE	REF NO	GRAPHIC REF	PART NUMBER	QTY	PART NAME 1 2 3 4 5 6 (PRODUCT LEVEL)	SEE PAGE
	1	1	**248-4277**	2	PLATE	
C	2	1	**311-2513**	2	BLOCK	
C	3	1	**311-2514**	2	BLOCK	
C	4	1	**311-2515**	2	BLOCK	
	5	1	**8T-4121**	4	WASHER-HARD (11X21X2.5-MM THK)	
M	6	1	**8T-4196**	4	BOLT (M10X1.5X35-MM)	

C-CHANGE FROM PREVIOUS TYPE
M-METRIC PART

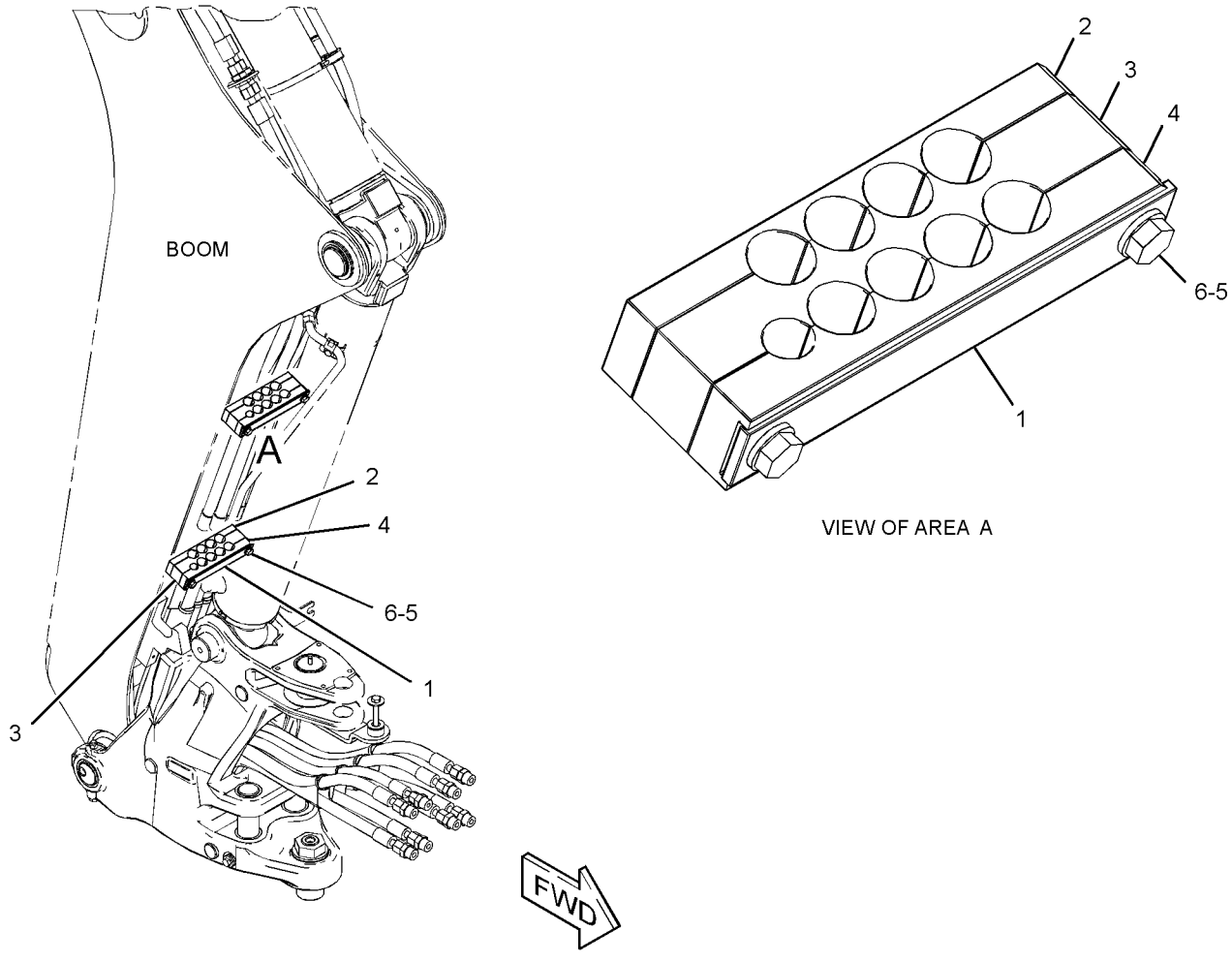

GRAPHIC #1 **<END>** g01807197

HYDRAULIC SYSTEM

247-7867 PUMP GP-PISTON

S/N: CBD1-2163

PART OF 214-2198 HYDRAULIC AR

SMCS-5070 **i02548983**

NOTE	REF NO	GRAPHIC REF	PART NUMBER	QTY	PART NAME 1 2 3 4 5 6 (PRODUCT LEVEL)	SEE PAGE
	1	1	**232-3587**	1	KIT-BEARING (FRONT)	
					(INCLUDES CUP & CONE)	
	2	1	**232-3586**	1	KIT-BEARING (REAR)	
					(INCLUDES CUP & CONE)	
	3	1	**260-3145**	1	KIT-SWASHPLATE	
					(INCLUDES BEARINGS & PINS)	
	4	1	**263-5514**	1	SHAFT-DRIVE	
	5	1	**260-3146**	1	SWASHPLATE	
	6	1	**260-3149**	1	KIT-CYLINDER (PISTON PUMP)	
					(INCLUDES PISTON AS, RETAINER, RETAINER GUIDE, PINS, BLOCK, SPRING, SPRING SEATS & RING)	
	7	1	**260-3147**	1	PLATE	
	8	1	**248-1348**	1	VALVE GP-CONTROL (GENERATOR PUMP)	
	9	1	**3J-1907**	1	SEAL-O-RING	
	10	1	**3K-0360**	1	SEAL-O-RING	
	11	1	**232-3591**	1	SEAL-LIP TYPE	
	12	1	**6J-7855**	1	RING-LOCK	
	13	1	**2M-9780**	2	SEAL-O-RING	
	14	1	**8L-2777**	1	SEAL-O-RING	
	15	1	**6J-2245**	1	SEAL-O-RING	
	16	1	**3J-7354**	4	SEAL-O-RING	
	17	1	**234-4173**	4	SEAL-O-RING	
					PARTS SHOWN IN GRAPHIC(S) WITHOUT A REFERENCE NUMBER ARE NOT SERVICED SEPARATELY	
					AVAILABLE REPAIR KIT(S):	
			260-3150	1	KIT-SEAL (PISTON PUMP)	
					(INCLUDES RINGS & SEALS)	

247-7867 PUMP GP-PISTON *(contd.)* **i02548983**

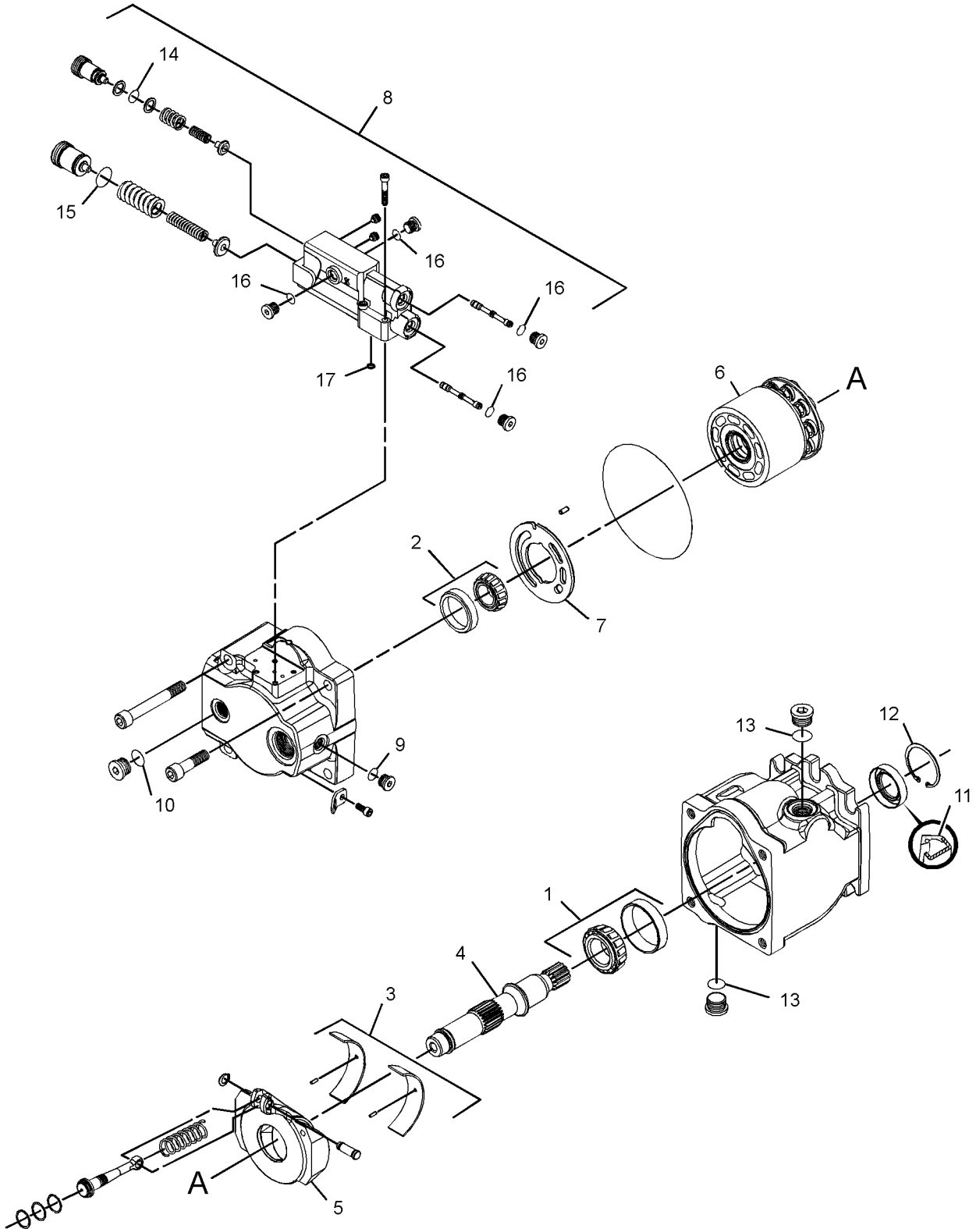

GRAPHIC #1 **<END>** g01276503

HYDRAULIC SYSTEM

296-6714 PUMP GP-PISTON

S/N: CBD2164-6688

PART OF 214-2198 HYDRAULIC AR

SMCS-5070 **i04130749**

NOTE	REF NO	GRAPHIC REF	PART NUMBER	QTY	PART NAME 1 2 3 4 5 6 (PRODUCT LEVEL)	SEE PAGE
	1	1	**232-3587**	1	KIT-BEARING (AUXILIARY PUMP)	
	2	1	**232-3586**	1	KIT-BEARING (AUXILIARY PUMP)	
					(EACH KIT BEARING INCLUDES CUP & CONE)	
	3	1	**296-6715**	1	KIT-BEARING (SWASHPLATE)	
					(INCLUDES BEARINGS & DOWEL PINS)	
	4	1	**263-5514**	1	SHAFT-DRIVE	
	5	1	**260-3146**	1	SWASHPLATE	
	6	1	**260-3149**	1	KIT-CYLINDER (PISTON PUMP)	
					(INCLUDES PISTON AS, SLIPPER RETAINER, GUIDE, HOLD DOWN PINS, CYLINER BLOCK, SPRING SEATS, SPRING & RETAINING RING)	
	7	1	**260-3147**	1	PLATE	
Y	8	1	**248-1348**	1	VALVE GP-CONTROL (GENERATOR PUMP)	706
L	9	1	**232-3591**	1	SEAL-LIP TYPE	
	10	1	**6J-7855**	1	RING-LOCK	
L	11	1	**2M-9780**	2	SEAL-O-RING	
L	12	1	**3J-1907**	1	SEAL-O-RING	
L	13	1	**3K-0360**	1	SEAL-O-RING	
L	14	1	**307-3049**	1	PLUG AS	
L	15	1	**6J-2245**	1	SEAL-O-RING	
L	16	1	**3J-7354**	4	SEAL-O-RING	
L	17	1	**234-4173**	4	SEAL-O-RING	
	18	1	**359-5232**	1	ROD-PISTON	
	19	1	**341-7656**	1	CAP-END	
					AVAILABLE REPAIR KIT(S):	
L			**307-3043**	1	KIT-SEAL (PISTON PUMP)	
					(ALSO INCLUDES SEAL RINGS, CAP SEAL, PISTON RINGS & PARTS MARKED J IN GRAPHIC)	
					PARTS SHOWN IN GRAPHIC(S) WITHOUT A REFERENCE NUMBER ARE NOT SERVICED SEPERATELY	

L-KIT MARKED L SERVICES PARTS MARKED L
Y-SEPARATE ILLUSTRATION

296-6714 PUMP GP-PISTON *(contd.)* **i04130749**

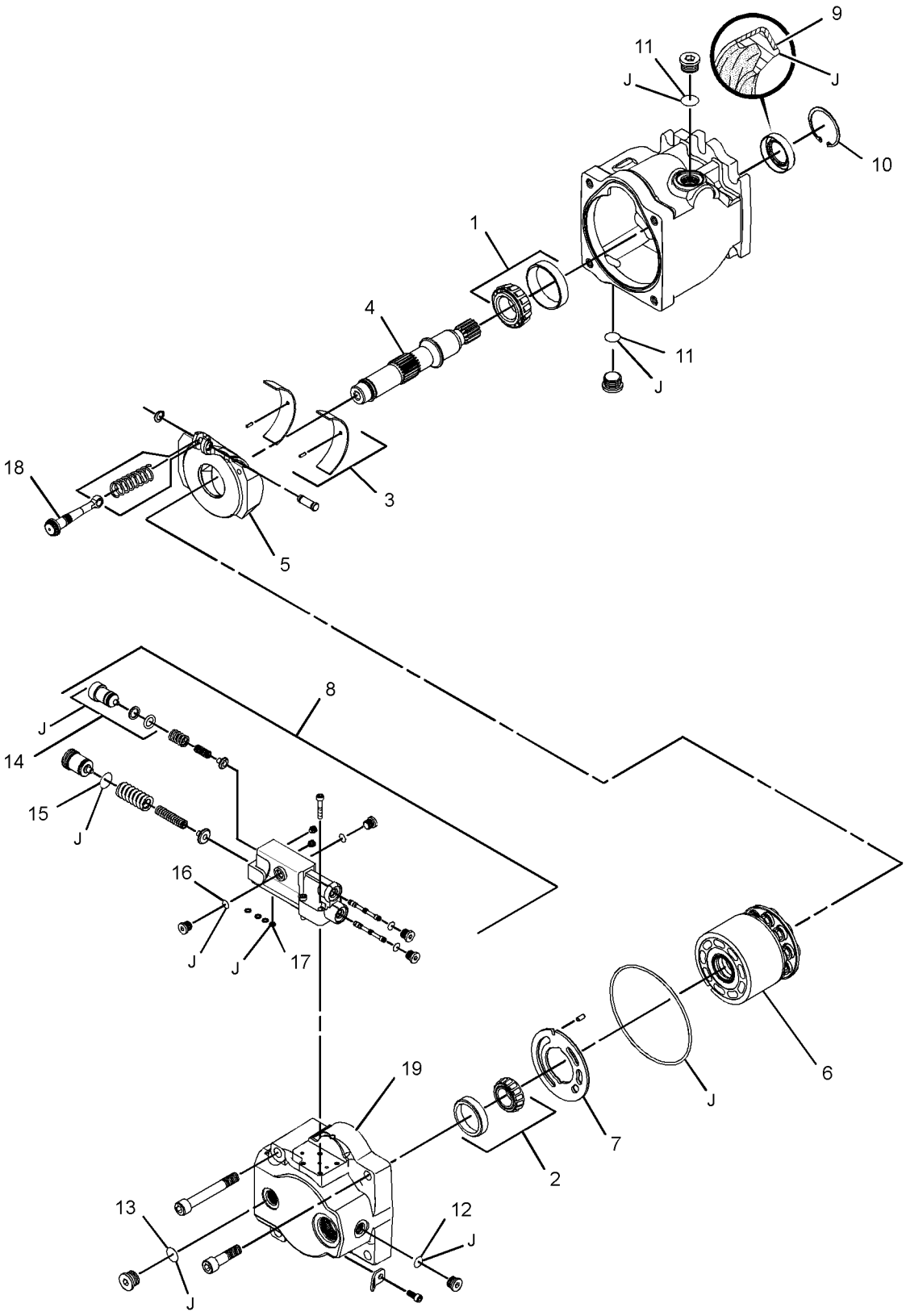

GRAPHIC #1 **<END>** g02328675

HYDRAULIC SYSTEM

335-8197 PUMP GP-PISTON

S/N: CBD6689-UP; MFG1-UP

PART OF 350-0666 PUMP GP-PISTON

SMCS-5070 **i03996595**

NOTE	REF NO	GRAPHIC REF	PART NUMBER	QTY	PART NAME 1 2 3 4 5 6 (PRODUCT LEVEL)	SEE PAGE
	1	1	**335-8198**	1	ROTATING GP-PUMP	
	2	1	**335-8209**	1	PISTON-CONTROL	
	3	1	**335-8210**	1	PISTON ROD	
	6	1	**335-8213**	1	SWASHPLATE AS	
	7	1	**335-8214**	1	SHAFT-PUMP	
	8	1	**335-8215**	1	PLUG	
	9	1	**335-8216**	1	SPRING	
	10	1	**335-8217**	1	SHIM	
	11	1	**335-8218**	1	RING-STOP	
	12	1	**335-8219**	1	BEARING-ROLLER	
	13	1	**335-8220**	1	BEARING-ROLLER	
	14	1	**335-8221**	1	LINER-BEARING	
	15	1	**335-8222**	1	LINER-BEARING	
	16	1	**335-8226**	1	RETAINING RING	
M	17	1	**8T-2503**	4	BOLT-SOCKET HEAD (M14X2X35-MM)	
	18	1	**335-8228**	2	PIN	
	19	1	**335-8229**	1	PIN	
	20	1	**335-8230**	1	PLUG	
M	21	1	**8C-8580**	2	BOLT-SOCKET HEAD (M5X0.8X16-MM)	
					PARTS SHOWN IN GRAPHIC(S) WITHOUT A REFERENCE NUMBER ARE NOT SERVICED SEPARATELY	
					AVAILABLE REPAIR KIT(S):	
			336-4682	1	KIT-SEAL (PISTON PUMP)	
					(INCLUDES SHAFT RING SEAL & SEAL-O-RINGS)	

M-METRIC PART

335-8197 **PUMP GP-PISTON** *(contd.)* **i03996595**

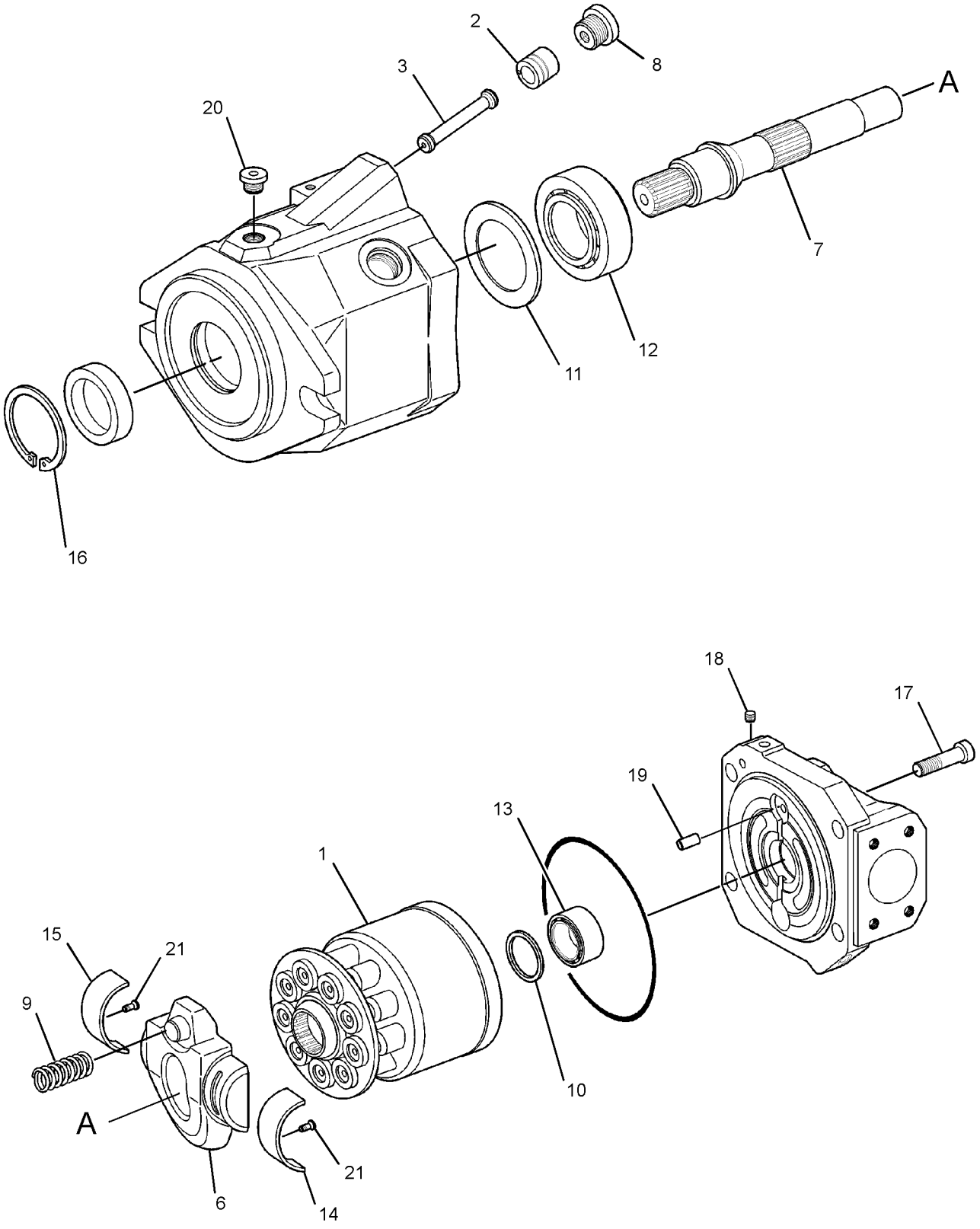

GRAPHIC #1 **<END>** g02138307

HYDRAULIC SYSTEM

350-0666 PUMP GP-PISTON

S/N: CBD6689-UP; MFG1-UP

PART OF 214-2198, 297-0165 HYDRAULIC AR

SMCS-5070 **i03996399**

NOTE	REF NO	GRAPHIC REF	PART NUMBER	QTY	PART NAME 1 2 3 4 5 6 (PRODUCT LEVEL)	SEE PAGE
Y	1	1	*335-8197*	1	PUMP GP-PISTON	688
Y	2	1	**285-5240**	1	VALVE GP-PUMP CONTROL (PRESSURE, FLOW COMPENSATOR)	720

Y-SEPARATE ILLUSTRATION

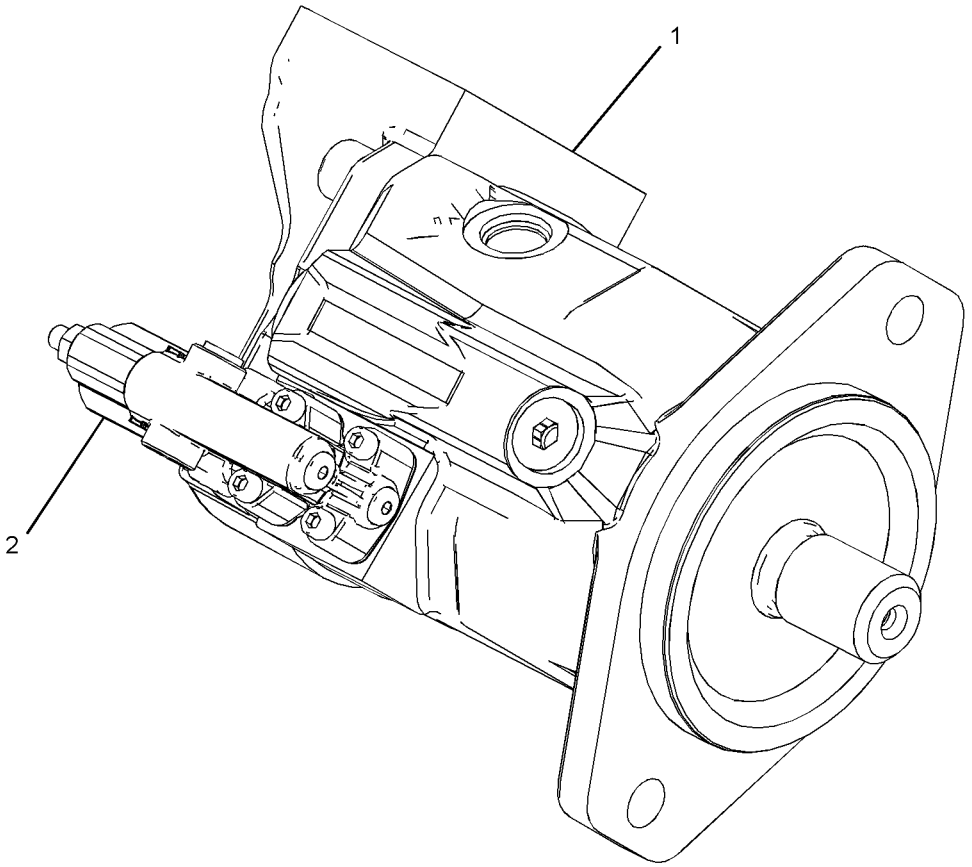

GRAPHIC #1 **<END>** g02131853

HYDRAULIC SYSTEM

128-5596 SHAFT GP-PUMP DRIVE

S/N: CBD1-UP; MFG1-UP
PART OF 112-1826 DRIVE & MTG GP-PUMP
AN ATTACHMENT

SMCS-3108 **i03477588**

NOTE	REF NO	GRAPHIC REF	PART NUMBER	QTY	PART NAME 1 2 3 4 5 6 (PRODUCT LEVEL)	SEE PAGE
	1	1	**130-8150**	1	RING-RETAINING	

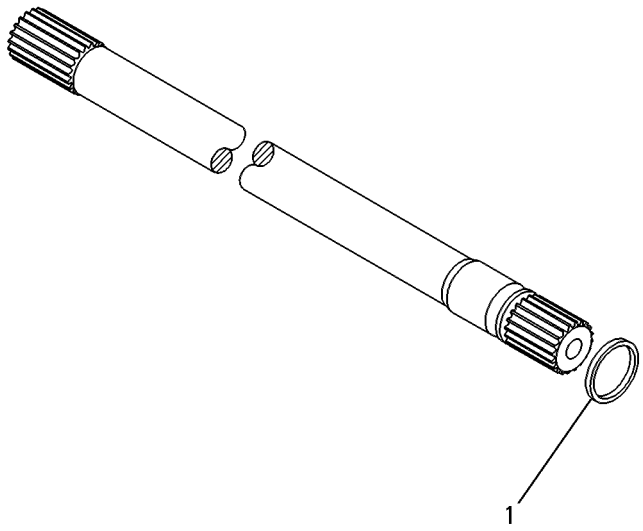

GRAPHIC #1 **<END>** g00131851

HYDRAULIC SYSTEM

245-8777 TANK & MTG GP-HYDRAULIC

S/N: CBD1-UP; MFG1-UP

PART OF 214-2198 HYDRAULIC AR

SMCS-5056 **i03505466**

NOTE	REF NO	GRAPHIC REF	PART NUMBER	QTY	PART NAME 1 2 3 4 5 6 (PRODUCT LEVEL)	SEE PAGE
	1	1	**5P-4961**	3	CLAMP-HOSE	
E	3	1	**5P-1442**		HOSE (8-CM)	
E	3A	1	**5P-1442**		HOSE (124-CM)	
	5	1	**9M-0164**	1	CLAMP-HOSE	
	6	1	**9R-9925**	1	FILTER ELEMENT-BREATHER (HYDRAULIC TANK)	
	7	1	**127-4471**	1	CLAMP-HOSE	
	8	1	**132-3056**	1	SEAL-O-RING	
	9	1	**210-7773**	1	BRACKET AS	
	10	1	**222-4067**	6	BOLT-SOCKET HEAD (M5X0.8X14-MM)	
	11	1	**234-6927**	1	HOSE	
	12	1	**293-4671**	1	TUBE AS	
	13	1	**235-5843**	1	DIFFUSER AS	
	14	1	**237-3797**	1	CAP-FILL (HYDRAULIC OIL)	
	15	1	*245-8778*	1	TANK GP-HYDRAULIC	
		1	**253-8295**	1	GAUGE-SIGHT (FLUID LEVEL)	
	16	1	*217-8185*	1	ELBOW AS	
		1	**3K-0360**	1	SEAL-O-RING	
		1	**9X-3982**	1	ELBOW	
	17	1	**6D-3479**	1	CLIP	
	18	1	**8T-4121**	2	WASHER-HARD (11X21X2.5-MM THK)	
M	19	1	**8T-4137**	2	BOLT (M10X1.5X20-MM)	
	20	1	**7X-7729**	4	WASHER (11X25X3-MM THK)	
M	21	1	**8T-4139**	1	BOLT (M12X1.75X30-MM)	
M	22	1	**8T-4179**	3	BOLT (M12X1.75X20-MM)	
M	23	1	**8T-4191**	4	BOLT (M10X1.5X16-MM)	
	24	1	**8T-4223**	4	WASHER-HARD (13.5X25.5X3-MM THK)	
	25	1	**8T-0328**	6	WASHER-HARD (5.5X10X1-MM THK)	

E-ORDER BY THE CENTIMETER
M-METRIC PART

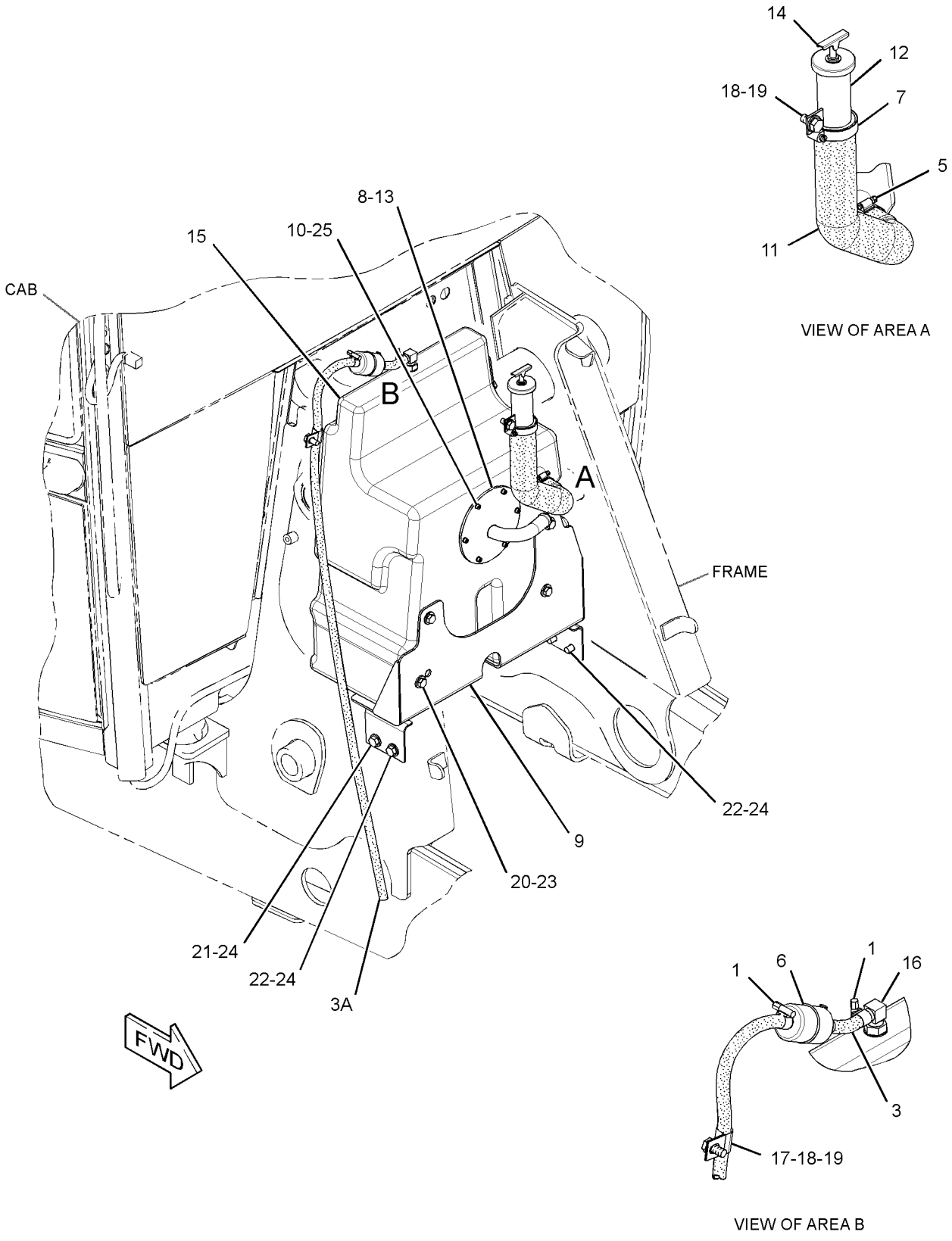

GRAPHIC #1 **<END>** g01818680

HYDRAULIC SYSTEM

297-1232 TANK & MTG GP-HYDRAULIC

S/N: MFG1-UP

PART OF 297-0165 HYDRAULIC AR

SMCS-5056 **i04498850**

NOTE	REF NO	GRAPHIC REF	PART NUMBER	QTY	PART NAME 1 2 3 4 5 6 (PRODUCT LEVEL)	SEE PAGE
	1	1	**5P-4961**	3	CLAMP-HOSE	
E	2	1	**5P-1442**		HOSE (124-CM)	
E	2A	1	**5P-1442**		HOSE (8-CM)	
	3	1	**9M-0164**	1	CLAMP-HOSE	
	4	1	**9R-9925**	1	FILTER ELEMENT-BREATHER (HYDRAULIC TANK)	
	5	1	**127-4471**	1	CLAMP-HOSE	
	6	1	*217-8185*	1	ELBOW AS	
		1	**3K-0360**	1	SEAL-O-RING	
		1	**9X-3982**	1	ELBOW	
	7	1	**222-4067**	6	BOLT-SOCKET HEAD (M5X0.8X14-MM)	
	8	1	**234-8815**	1	TUBE AS	
	9	1	**237-3797**	1	CAP-FILL (HYDRAULIC OIL)	
	10	1	*297-1233*	1	TANK GP-HYDRAULIC	
		1	**297-1234**	1	TANK-HYDRAULIC	
		1	**253-8295**	1	GAUGE-SIGHT (HYDRAULIC OIL LEVEL)	
	11	1	**297-4400**	1	HOSE	
	12	1	**299-9015**	1	BRACKET AS	
	13	1	**300-6061**	1	DIFFUSER AS	
M	14	1	**8T-4191**	3	BOLT (M10X1.5X16-MM)	
	15	1	**132-3056**	1	SEAL-O-RING	
	17	1	**7X-7729**	3	WASHER (11X25X3-MM THK)	
	18	1	**8T-4121**	1	WASHER-HARD (11X21X2.5-MM THK)	
M	19	1	**8T-4137**	1	BOLT (M10X1.5X20-MM)	
M	21	1	**8T-4179**	4	BOLT (M12X1.75X20-MM)	
	22	1	**8T-4223**	4	WASHER-HARD (13.5X25.5X3-MM THK)	
	23	1	**8T-0328**	6	WASHER-HARD (5.5X10X1-MM THK)	
	24	1	**205-9920**	1	STRAP-CABLE	
	25	1	**334-4603**	1	FILM-INFORMATION (HYDO ADVANCED 10)	

E-ORDER BY THE CENTIMETER
M-METRIC PART

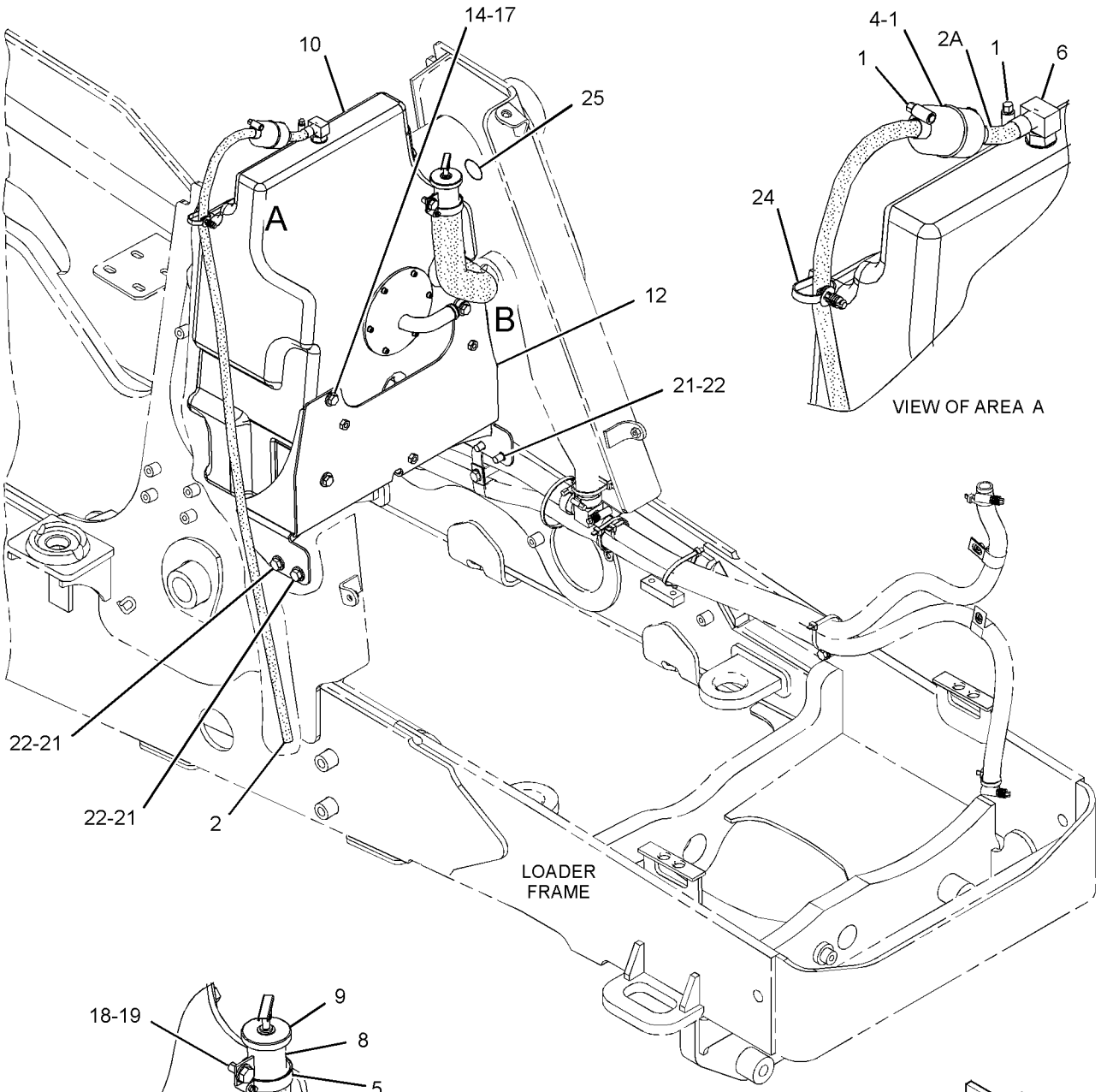

VIEW OF AREA A

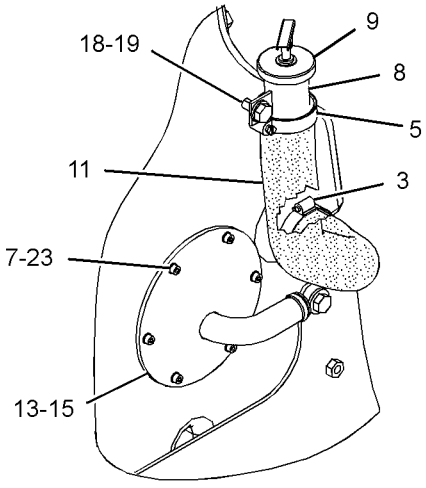

VIEW OF AREA B

GRAPHIC #1 **<END>** g02714361

209-9943 VALVE AR-BANK 2

S/N: CBD1-UP; MFG1-UP
PART OF 356-0067, 356-0068, 356-0069, 374-3517, 374-3518, 374-3519, 374-3521, 374-3529, 374-6532, 374-6533, 374-6534, 374-6535, 374-6536
DISTRIBUTION AR
AN ATTACHMENT

SMCS-5051 **i02837599**

NOTE	PART NUMBER	QTY	PART NAME 1 2 3 4 5 6 (PRODUCT LEVEL)	SEE PAGE
Y	*206-1645*	1	CONTROL GP-HYDRAULIC HAND (LOADER)	954
Y	*219-8566*	1	FASTENER GP-VALVE (BANK)	559
Y	*248-0481*	1	VALVE GP-BANK 2	698
	251-5625	1	FILM-INSTRUCTION (BUCKET CONTROL)	
			(ON RIGHT HAND CONSOLE)	

Y-SEPARATE ILLUSTRATION

<END>

209-9944 VALVE AR-BANK 3

S/N: CBD1-UP; MFG1-UP
AN ATTACHMENT

SMCS-5051 **i02837600**

NOTE	PART NUMBER	QTY	PART NAME 1 2 3 4 5 6 (PRODUCT LEVEL)	SEE PAGE
Y	*209-3364*	1	CONTROL GP-HYDRAULIC HAND (LOADER)	957
Y	*219-8566*	1	FASTENER GP-VALVE (BANK)	559
Y	*246-8478*	1	LINES GP-LOADER AUXILIARY	634
Y	**248-0482**	1	VALVE GP-BANK 3	699
	251-5626	1	FILM-INSTRUCTION (BUCKET CONTROL)	
			(ON RH CONSOLE)	

Y-SEPARATE ILLUSTRATION

<END>

209-9934 VALVE AR-BANK 6

S/N: CBD1-UP; MFG1-UP
FOR USE WITH 209-9924—PAGE 1
AN ATTACHMENT

SMCS-5051 **i02559968**

NOTE	PART NUMBER	QTY	PART NAME 1 2 3 4 5 6 (PRODUCT LEVEL)	SEE PAGE
Y	*228-3974*	1	LINES GP-STABILIZER	662
Y	*290-8077*	1	MOUNTING GP-BANK VALVE	677
Y	*248-0483*	1	VALVE GP-BANK 6	700

Y-SEPARATE ILLUSTRATION

<END>

HYDRAULIC SYSTEM

209-9935 VALVE AR-BANK 7

S/N: CBD1-UP; MFG1-UP
PART OF 356-0067, 356-0068, 356-0069, 374-3517, 374-3518, 374-3519, 374-3521, 374-3529, 374-6532, 374-6533, 374-6534, 374-6535, 374-6536
DISTRIBUTION AR
FOR USE WITH 209-9924—PAGE 1
AN ATTACHMENT

SMCS-5051 **i02559973**

NOTE	PART NUMBER	QTY	PART NAME 1 2 3 4 5 6 (PRODUCT LEVEL)	SEE PAGE
Y	*209-3375*	1	CONTROL GP-HYDRAULIC PEDAL (SINGLE FUNCTION, RH)	970
Y	*228-3974*	1	LINES GP-STABILIZER	662
Y	*219-8564*	1	MOUNTING GP-BANK VALVE	675
Y	**248-0484**	1	VALVE GP-BANK 7	702
B	**6V-9831**	2	CAP AS	
B	*148-8341*	2	CONNECTOR AS	
			(EACH INCLUDES)	
	3D-2824	1	SEAL-O-RING	
	6V-8713	1	CONNECTOR	
	7J-9108	1	SEAL-O-RING	

B-USE AS REQUIRED
Y-SEPARATE ILLUSTRATION

<END>

212-0206 VALVE AR-BANK 8

S/N: CBD1-UP; MFG1-UP
AN ATTACHMENT

SMCS-5051 **i02571669**

NOTE	PART NUMBER	QTY	PART NAME 1 2 3 4 5 6 (PRODUCT LEVEL)	SEE PAGE
Y	*209-3365*	1	CONTROL GP-HYDRAULIC PEDAL (SINGLE FUNCTION, LH)	968
Y	*209-3375*	1	CONTROL GP-HYDRAULIC PEDAL (SINGLE FUNCTION, RH)	970
Y	*211-7568*	1	LINES GP-STABILIZER	660
Y	*219-8564*	1	MOUNTING GP-BANK VALVE	675
Y	**248-0485**	1	VALVE GP-BANK 8	704
B	**6V-9831**	4	CAP AS	
B	*148-8341*	4	CONNECTOR AS	
			(EACH INCLUDES)	
	3D-2824	1	SEAL-O-RING	
	6V-8713	1	CONNECTOR	
	7J-9108	1	SEAL-O-RING	

B-USE AS REQUIRED
Y-SEPARATE ILLUSTRATION

<END>

HYDRAULIC SYSTEM

248-0481 VALVE GP-BANK 2

S/N: CBD1-UP; MFG1-UP
PART OF 209-9943 VALVE AR-BANK 2
AN ATTACHMENT

SMCS-5051 **i02496192**

NOTE	REF NO	GRAPHIC REF	PART NUMBER	QTY	PART NAME 1 2 3 4 5 6 (PRODUCT LEVEL)	SEE PAGE
	1	1	**259-6747**	1	KIT-BRACKET (INLET MANIFOLD)	
					(INCLUDES BRACKET, BOLTS & WASHERS)	
	2	1	**259-6748**	1	KIT-BRACKET (VALVE)	
					(INCLUDES BRACKET, NUTS & WASHERS)	
Y	3	1	**259-6745**	1	MANIFOLD GP-CONTROL (INLET)	673
Y	4	1	**259-6732**	1	VALVE GP-CONTROL (LIFT)	710
Y	5	1	**259-6731**	1	VALVE GP-CONTROL (TILT)	709
	6	1	**259-6749**	1	KIT-FASTENER	
					(INCLUDES RODS, NUTS & WASHERS)	
	7	1	**259-6754**	2	KIT-SEAL (VALVES)	
					(EACH INCLUDES SEAL-O-RINGS)	
	8	1	**8T-4121**	2	WASHER-HARD (11X21X2.5-MM THK)	
M	9	1	**8T-4137**	2	BOLT (M10X1.5X20-MM)	

M-METRIC PART
Y-SEPARATE ILLUSTRATION

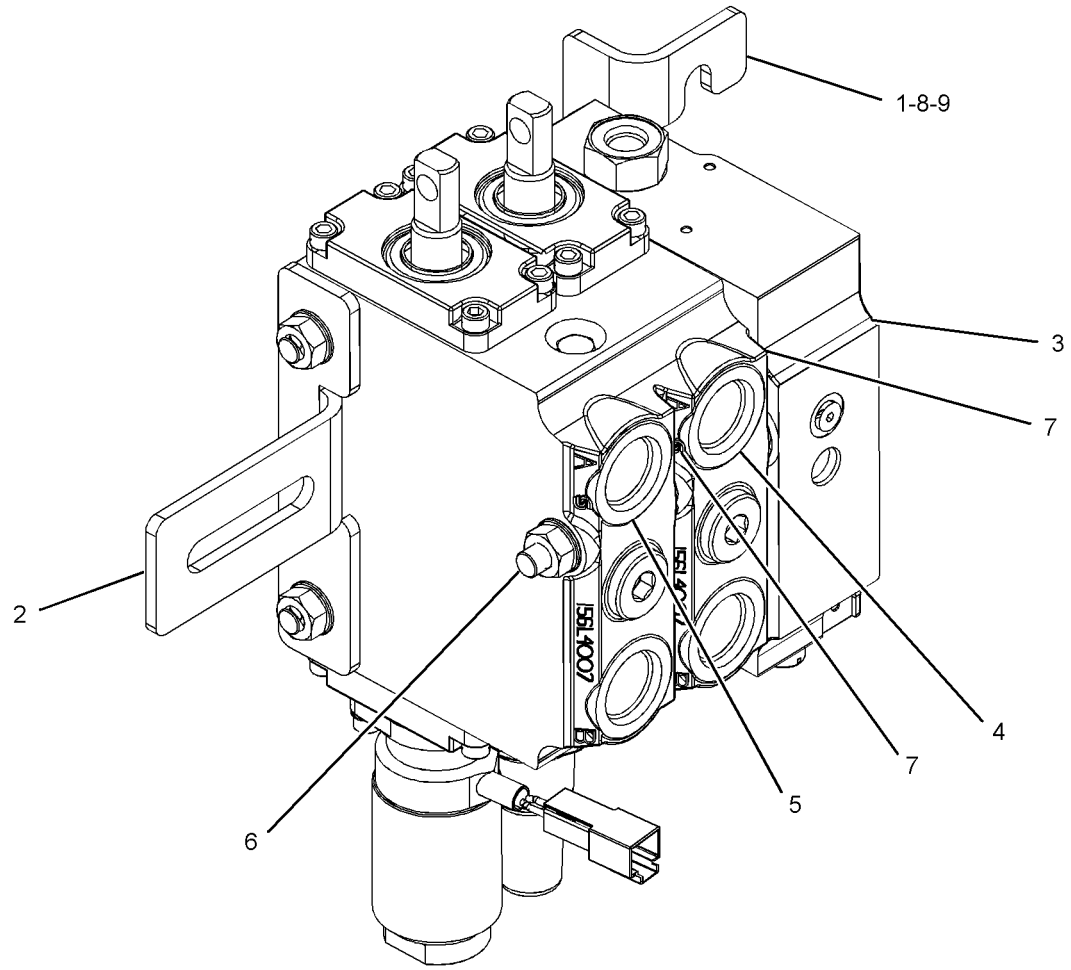

GRAPHIC #1 **<END>** g01122328

248-0482 VALVE GP-BANK 3

S/N: CBD1-UP; MFG1-UP
PART OF 209-9944 VALVE AR-BANK 3
AN ATTACHMENT

SMCS-5051 **i02524758**

NOTE	REF NO	GRAPHIC REF	PART NUMBER	QTY	PART NAME 1 2 3 4 5 6 (PRODUCT LEVEL)	SEE PAGE
	1	1	**259-6747**	1	KIT-BRACKET (INLET MANIFOLD)	
					(INCLUDES WASHERS, BOLTS & BRACKET)	
	2	1	**259-6748**	1	KIT-BRACKET (VALVE)	
					(INCLUDES NUTS, WASHERS & BRACKET)	
Y	3	1	**259-6745**	1	MANIFOLD GP-CONTROL (INLET)	673
Y	4	1	**259-6732**	1	VALVE GP-CONTROL (LIFT)	710
Y	5	1	**259-6730**	1	VALVE GP-CONTROL (TILT)	708
Y	6	1	**259-6729**	1	VALVE GP-CONTROL (AUXILIARY)	707
	7	1	**259-6754**	3	KIT-SEAL (VALVES)	
					(INCLUDES SEALS)	
	8	1	**259-6750**	1	KIT-FASTENER (3-BANK)	
					(INCLUDES RODS, WASHERS & NUTS)	
	9	1	**8T-4121**	2	WASHER-HARD (11X21X2.5-MM THK)	
M	10	1	**8T-4137**	2	BOLT (M10X1.5X20-MM)	

M-METRIC PART
Y-SEPARATE ILLUSTRATION

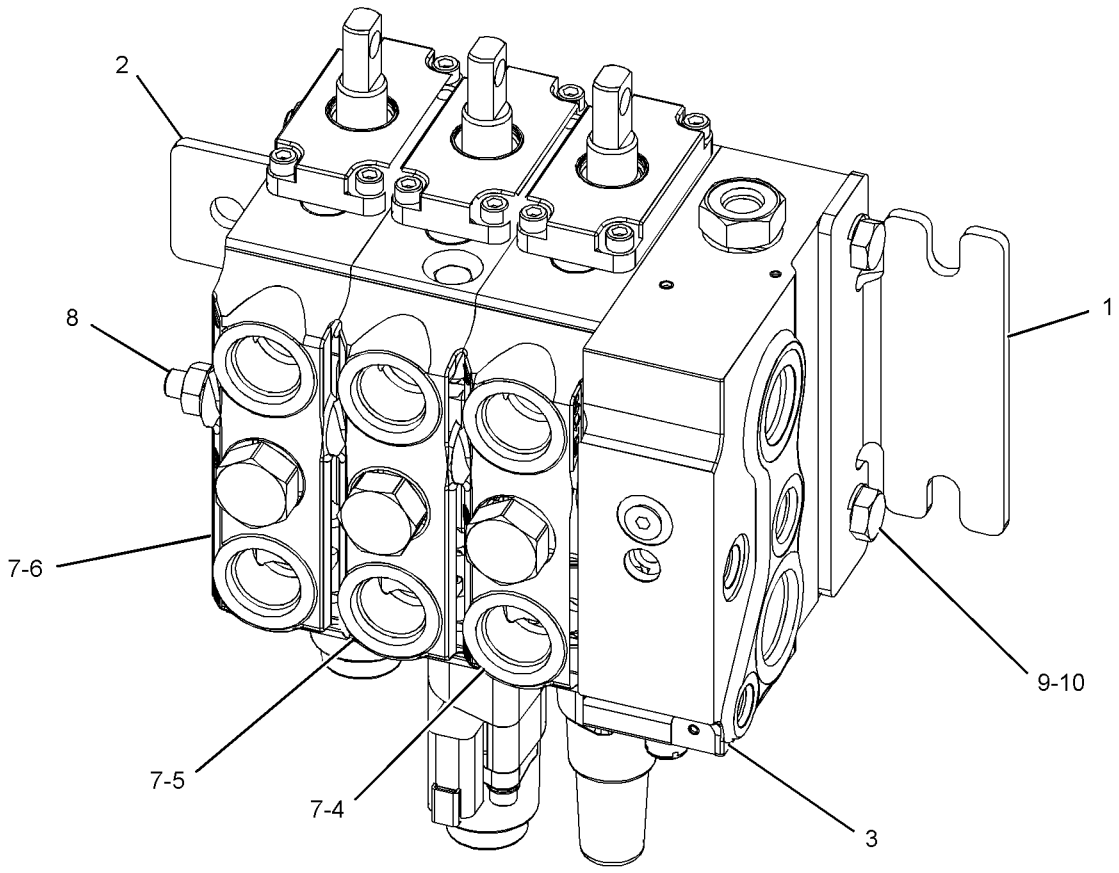

GRAPHIC #1 **<END>** g01263561

HYDRAULIC SYSTEM

248-0483 VALVE GP-BANK 6

S/N: CBD1-UP; MFG1-UP
PART OF 209-9934 VALVE AR-BANK 6
AN ATTACHMENT

SMCS-5051 **i02496047**

NOTE	REF NO	GRAPHIC REF	PART NUMBER	QTY	PART NAME 1 2 3 4 5 6 (PRODUCT LEVEL)	SEE PAGE
	1	1	**259-6757**	1	KIT-BRACKET	
					(INCLUDES WASHERS, NUTS & BRACKET)	
	2	1	**259-6746**	2	VALVE GP-CONTROL (STABILIZER)	
					(EACH INCLUDES)	
		1	**210-8917**	1	LEVER GP-CONTROL VALVE (STABILIZER)	
Y	3	1	**259-6742**	1	MANIFOLD GP-CONTROL (INLET)	672
Y	4	1	**259-6739**	1	VALVE GP-CONTROL (BOOM)	718
Y	5	1	**259-6738**	1	VALVE GP-CONTROL (SWING)	716
Y	6	1	**259-6737**	1	VALVE GP-CONTROL (BUCKET)	715
Y	7	1	**259-6736**	1	VALVE GP-CONTROL (STICK)	714
	8	1	**259-6751**	1	KIT-FASTENER (4-BANK)	
					(INCLUDES RODS, WASHERS & NUTS)	
	9	1	**259-6754**	4	KIT-SEAL	
					(EACH INCLUDES)	
		1	**3E-6714**	1	SEAL-O-RING	
		1	**133-4771**	2	SEAL-O-RING	
		1	**192-7506**	4	SEAL-O-RING	
		1	**192-7508**	2	SEAL-O-RING	
	10	1	**259-6755**	1	KIT-COVER	
	11	1	**259-6756**	1	KIT-FASTENER (2-BANK)	
					(INCLUDES RODS, WASHERS & NUTS)	
	12	1	**192-7506**	12	SEAL-O-RING	
	13	1	**192-7511**	1	SEAL	
	14	1	**192-7508**	10	SEAL-O-RING	
	15	1	**192-7509**	2	SEAL-O-RING	

Y-SEPARATE ILLUSTRATION

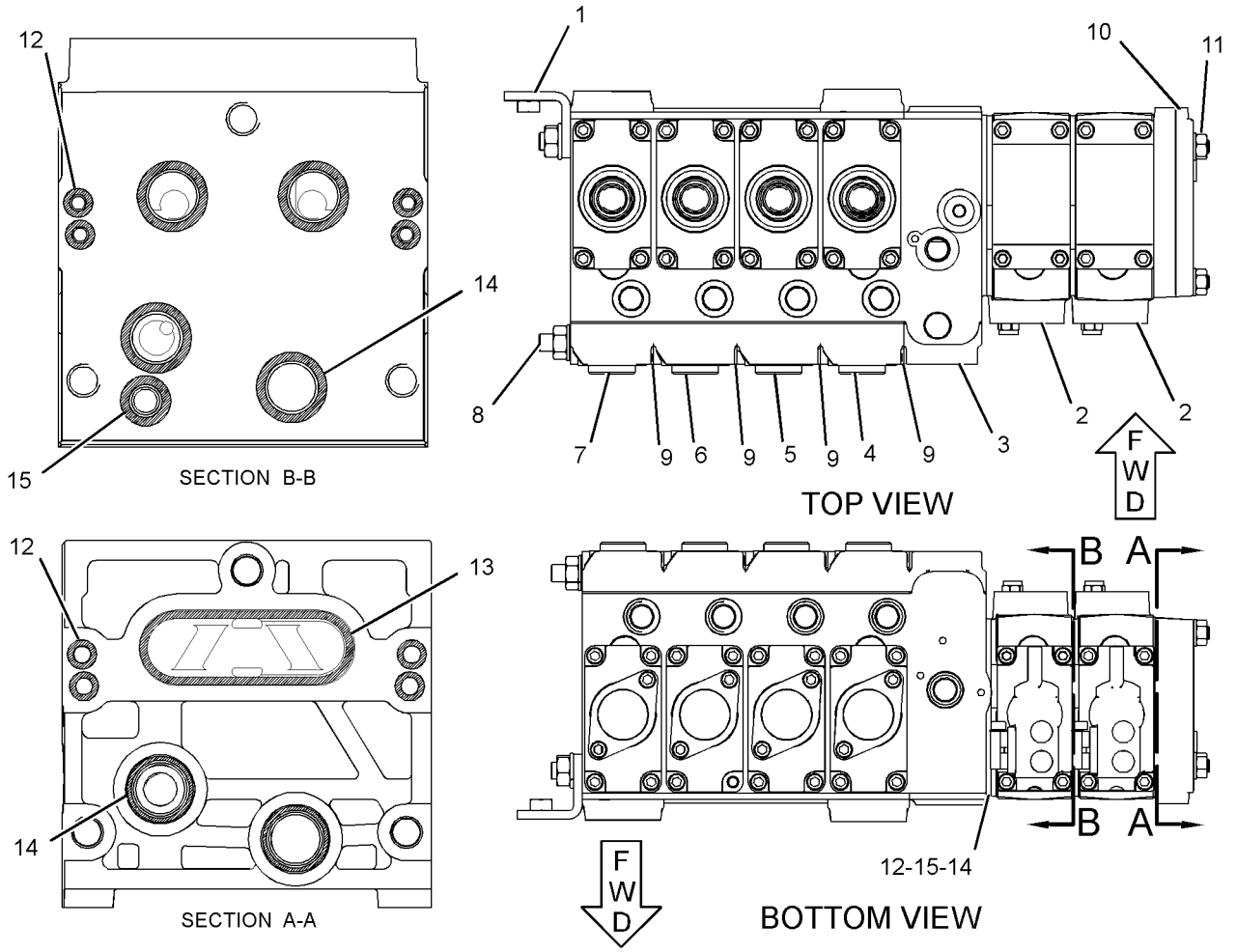

GRAPHIC #1

<END>

g01230751

HYDRAULIC SYSTEM

248-0484 VALVE GP-BANK 7

S/N: CBD1-UP; MFG1-UP
PART OF 209-9935 VALVE AR-BANK 7
AN ATTACHMENT

SMCS-5051 **i02355551**

NOTE	REF NO	GRAPHIC REF	PART NUMBER	QTY	PART NAME 1 2 3 4 5 6 (PRODUCT LEVEL)	SEE PAGE
	1	1	**259-6746**	2	VALVE GP-CONTROL (STABILIZER)	
					(EACH INCLUDES)	
		1	**210-8917**	1	LEVER GP-CONTROL VALVE (STABILIZER)	
Y	2	1	**259-6742**	1	MANIFOLD GP-CONTROL (INLET)	672
Y	3	1	**259-6739**	1	VALVE GP-CONTROL (BOOM)	718
Y	4	1	**259-6738**	1	VALVE GP-CONTROL (SWING)	716
Y	5	1	**259-6737**	1	VALVE GP-CONTROL (BUCKET)	715
Y	6	1	**259-6735**	1	VALVE GP-CONTROL (STICK)	713
Y	7	1	**259-6734**	1	VALVE GP-CONTROL (EXTENDABLE STICK)	712
	8	1	**259-6754**	5	KIT-SEAL	
					(EACH INCLUDES)	
		1	**3E-6714**	1	SEAL-O-RING	
		1	**133-4771**	2	SEAL-O-RING	
		1	**192-7506**	4	SEAL-O-RING	
		1	**192-7508**	2	SEAL-O-RING	
	9	1	**259-6755**	1	KIT-COVER	
	10	1	**259-6756**	1	KIT-FASTENER (2-BANK)	
					(INCLUDES RODS, WASHERS & NUTS)	
	11	1	**259-6752**	1	KIT-FASTENER (5-BANK)	
					(INCLUDES RODS, WASHERS & NUTS)	
	12	1	**192-7506**	12	SEAL-O-RING	
	13	1	**192-7511**	1	SEAL	
	14	1	**192-7508**	10	SEAL-O-RING	
	15	1	**192-7509**	2	SEAL-O-RING	

Y-SEPARATE ILLUSTRATION

248-0484 VALVE GP-BANK 7 *(contd.)* **i02355551**

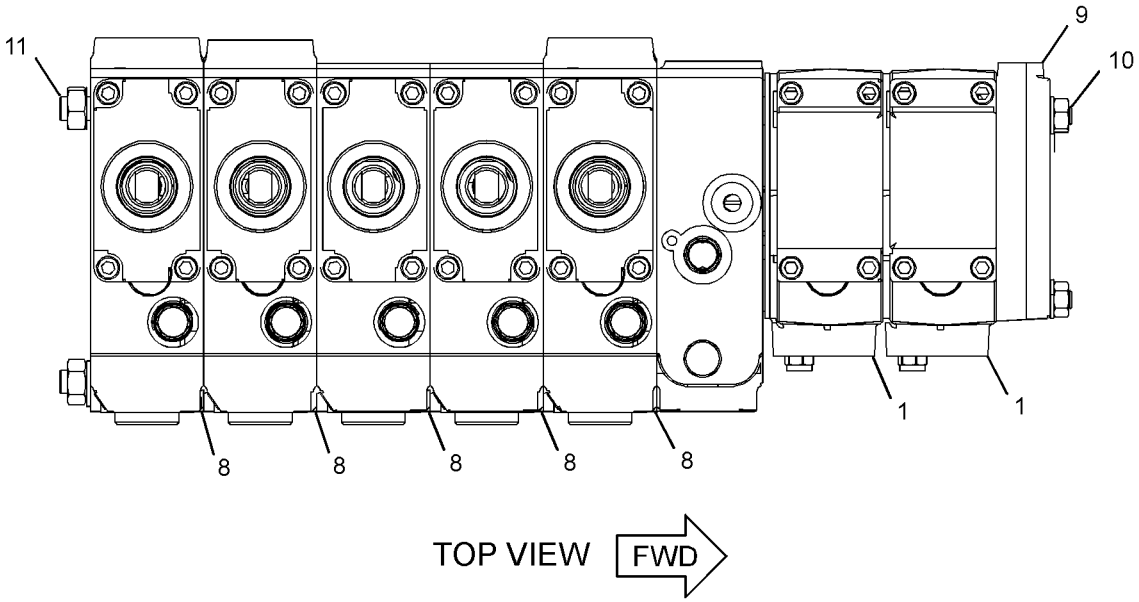

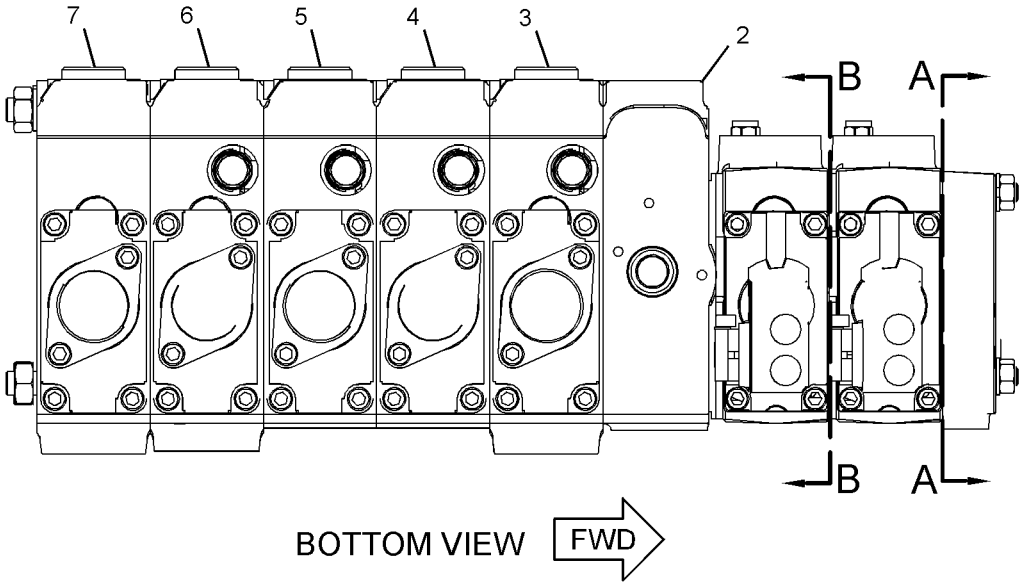

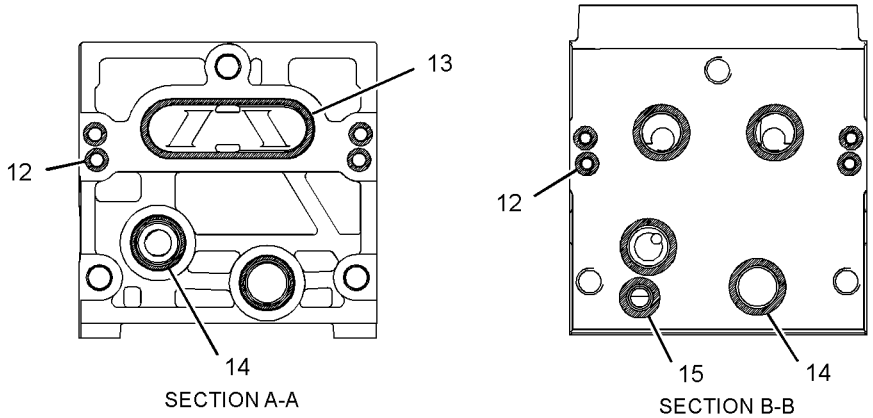

GRAPHIC #1 **<END>** g01230930

HYDRAULIC SYSTEM

248-0485 VALVE GP-BANK 8

S/N: CBD1-UP; MFG1-UP
PART OF 212-0206 VALVE AR-BANK 8
AN ATTACHMENT

SMCS-5051 **i02494105**

NOTE	REF NO	GRAPHIC REF	PART NUMBER	QTY	PART NAME 1 2 3 4 5 6 (PRODUCT LEVEL)	SEE PAGE
	1	1	**259-6746**	2	VALVE GP-CONTROL (STABILIZER)	
					(EACH INCLUDES)	
		1	**210-8917**	1	LEVER GP-CONTROL VALVE (STABILIZER)	
Y	2	1	**259-6742**	1	MANIFOLD GP-CONTROL (INLET)	672
Y	3	1	**259-6733**	1	VALVE GP-CONTROL (AUXILIARY)	711
Y	4	1	**259-6739**	1	VALVE GP-CONTROL (BOOM)	718
Y	5	1	**259-6738**	1	VALVE GP-CONTROL (SWING)	716
Y	6	1	**259-6737**	1	VALVE GP-CONTROL (BUCKET)	715
Y	7	1	**259-6735**	1	VALVE GP-CONTROL (STICK)	713
Y	8	1	**259-6734**	1	VALVE GP-CONTROL (EXTENDABLE STICK)	712
	9	1	**259-6756**	1	KIT-FASTENER (2-BANK) (TIE ROD)	
					(INCLUDES RODS, WASHERS, & NUTS)	
	10	1	**259-6753**	1	KIT-FASTENER (6-BANK) (TIE ROD)	
					(INCLUDES RODS, WASHERS, & NUTS)	
	11	1	**259-6755**	1	KIT-COVER	
	12	1	**259-6754**	6	KIT-SEAL (VALVES)	
					(INCLUDES SEAL-O-RINGS)	
	13	1	**192-7506**	12	SEAL-O-RING	
	14	1	**192-7511**	1	SEAL	
	15	1	**192-7508**	10	SEAL-O-RING	
	16	1	**192-7509**	2	SEAL-O-RING	

Y-SEPARATE ILLUSTRATION

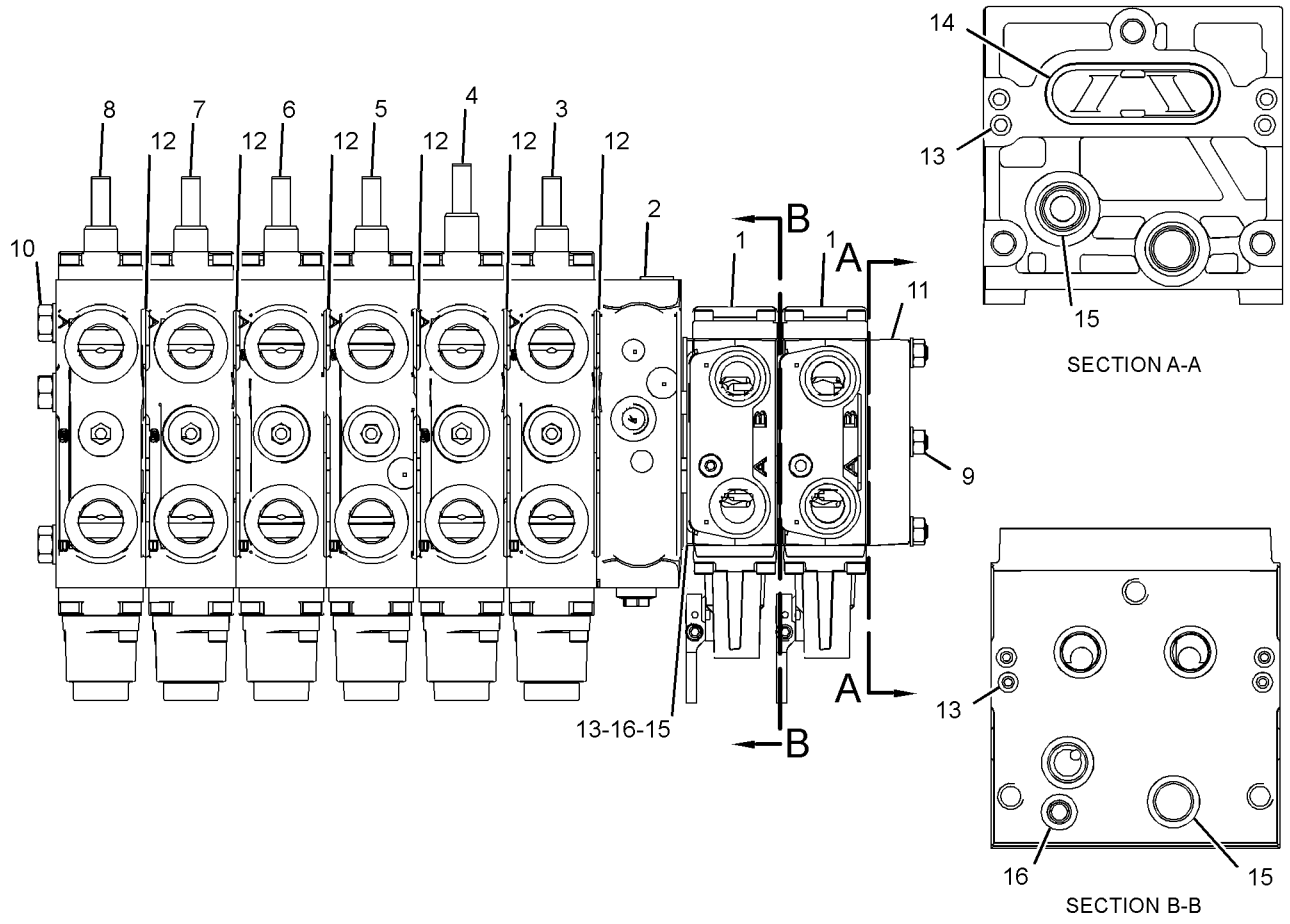

GRAPHIC #1 **<END>** g01168887

HYDRAULIC SYSTEM

248-1348 VALVE GP-CONTROL

S/N: CBD2164-6688

PART OF 296-6714 PUMP GP-PISTON

SMCS-5051 **i03082684**

NOTE	REF NO	GRAPHIC REF	PART NUMBER	QTY	PART NAME 1 2 3 4 5 6 (PRODUCT LEVEL)	SEE PAGE
	1	1	**307-3049**	1	PLUG AS	
	2	1	**9S-8002**	4	PLUG-O-RING	
	3	1	**3J-7354**	4	SEAL-O-RING	
M	4	1	**9X-6615**	4	BOLT (M5X0.8X30-MM)	
	5	1	**234-4173**	4	SEAL-O-RING	
					PARTS SHOWN IN GRAPHIC(S) WITHOUT A REFERENCE NUMBER ARE NOT SERVICED SEPARATELY	

M-METRIC PART

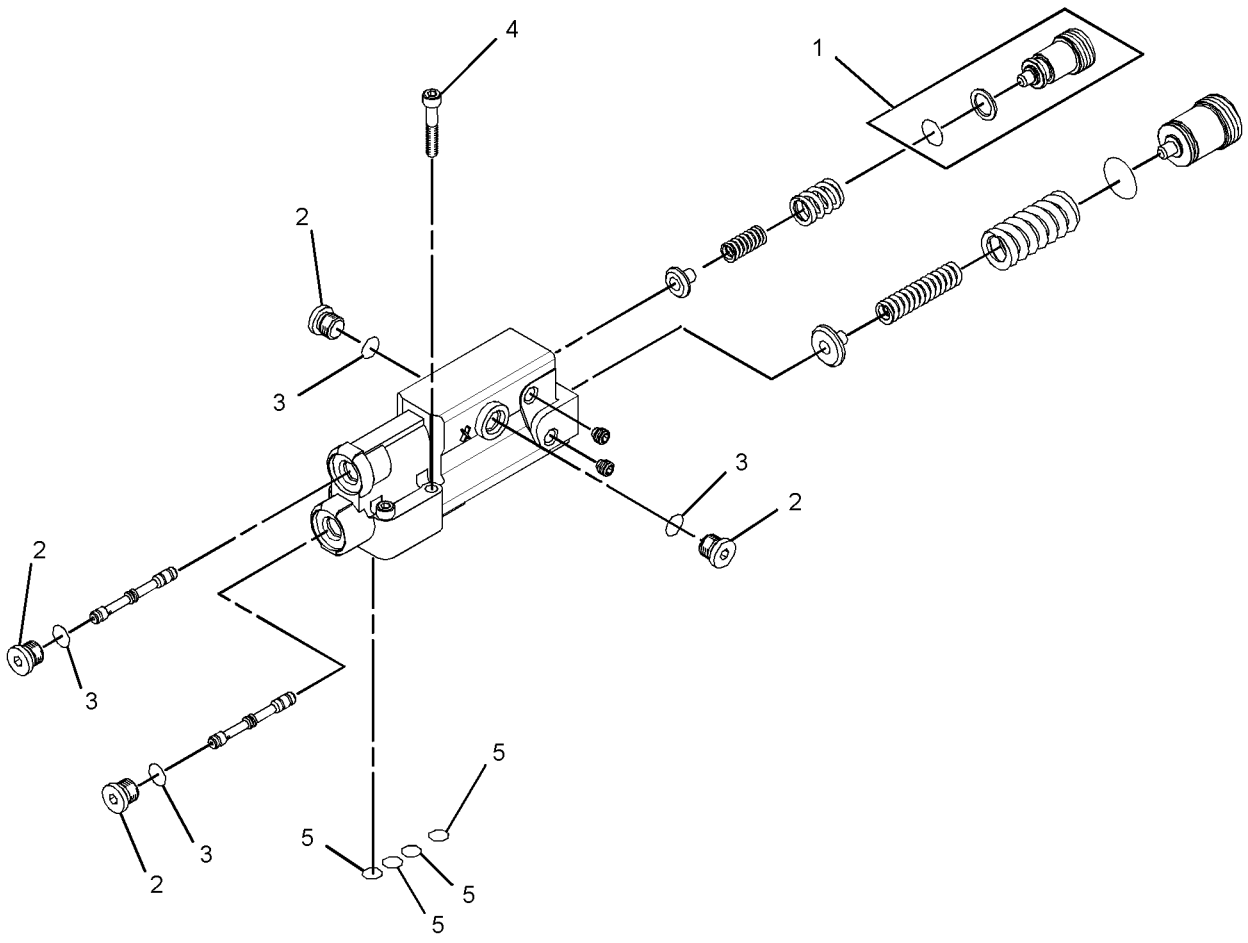

GRAPHIC #1 **<END>** g01577477

259-6729 VALVE GP-CONTROL–AUXILIARY

S/N: CBD1-UP; MFG1-UP
PART OF 248-0482 VALVE GP-BANK 3
AN ATTACHMENT

SMCS-5051 **i02520520**

NOTE	REF NO	GRAPHIC REF	PART NUMBER	QTY	PART NAME 1 2 3 4 5 6 (PRODUCT LEVEL)	SEE PAGE
	1	1	**260-3005**	1	VALVE GP-RELIEF	
	2	1	**260-3010**	1	KIT-SEAL	
					(INCLUDES SCREWS & SEALS)	
	3	1	**6V-7970**	1	SEAL-O-RING	
	4	1	**260-3009**	1	KIT-SEAL	
					(INCLUDES SEALS, SCREWS & HOUSING)	
	5	1	**260-3011**	1	KIT-COVER	
					(INCLUDES SCREWS, SPRINGS & CAP)	
	6	1	**192-7863**	1	PLUG	
	7	1	**192-7864**	2	PLUG	
	8	1	**192-7510**	2	SEAL-O-RING	

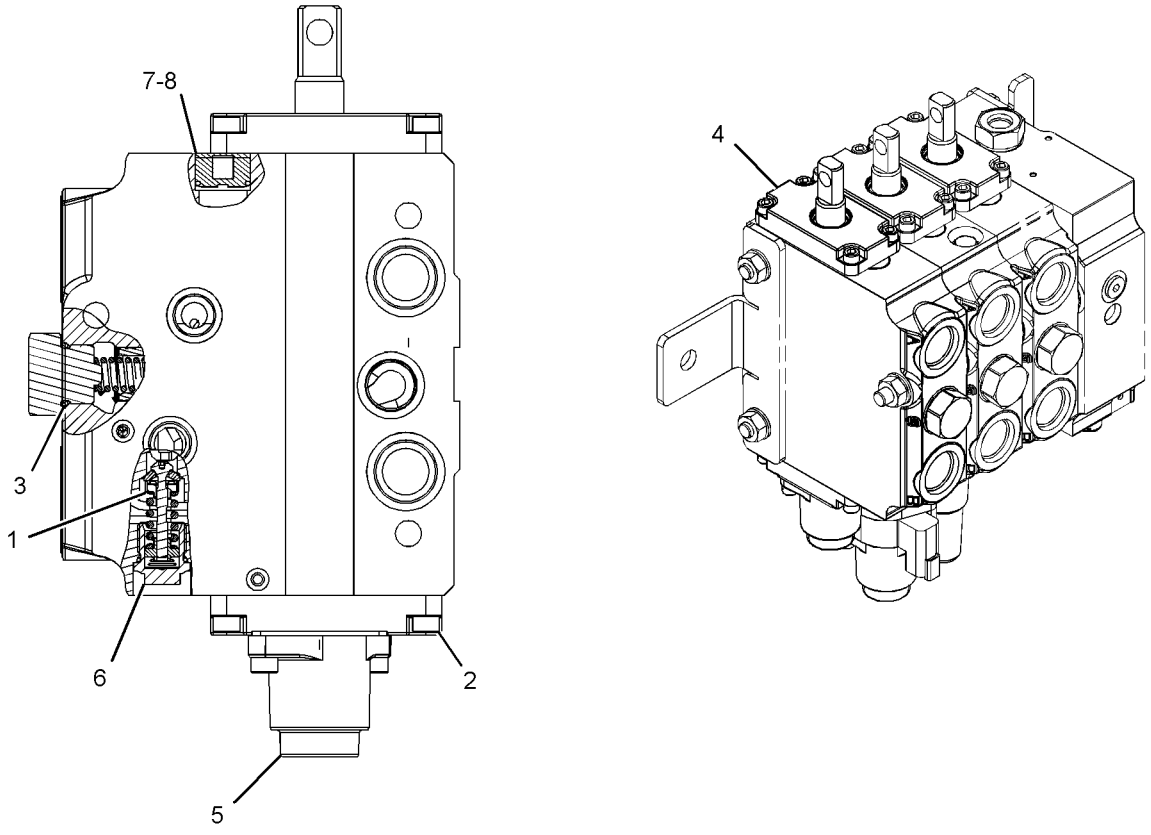

GRAPHIC #1 **<END>** g01214255

HYDRAULIC SYSTEM

259-6730 VALVE GP-CONTROL–TILT

S/N: CBD1-UP; MFG1-UP
PART OF 248-0482 VALVE GP-BANK 3
AN ATTACHMENT

SMCS-5051 **i02520523**

NOTE	REF NO	GRAPHIC REF	PART NUMBER	QTY	PART NAME 1 2 3 4 5 6 (PRODUCT LEVEL)	SEE PAGE
	1	1	**260-3005**	1	VALVE GP-RELIEF (TILT CYLINDER HEAD END)	
	2	1	**260-3002**	1	VALVE GP-RELIEF (TILT CYLINDER ROD END)	
	3	1	**260-3012**	1	KIT-DETENT	
					(INCLUDES SEAL, GASKETS, E-CLIP, PLATE, SCREWS, COIL, END CAP, STEM, MAGNET, SPRINGS, WASHERS & HOUSING)	
	4	1	**260-3009**	1	KIT-SEAL	
					(INCLUDES HOUSING, SEALS, WIPER, & SCREWS)	
	5	1	**6V-5138**	2	SEAL-O-RING	
	6	1	**6V-7970**	1	SEAL-O-RING	
	7	1	**260-3010**	1	KIT-SEAL	
					(INCLUDES SEALS, HOUSING, & SCREWS)	
	8	1	**192-7863**	2	PLUG	
	9	1	**192-7864**	2	PLUG	
	10	1	**192-7510**	2	SEAL-O-RING	

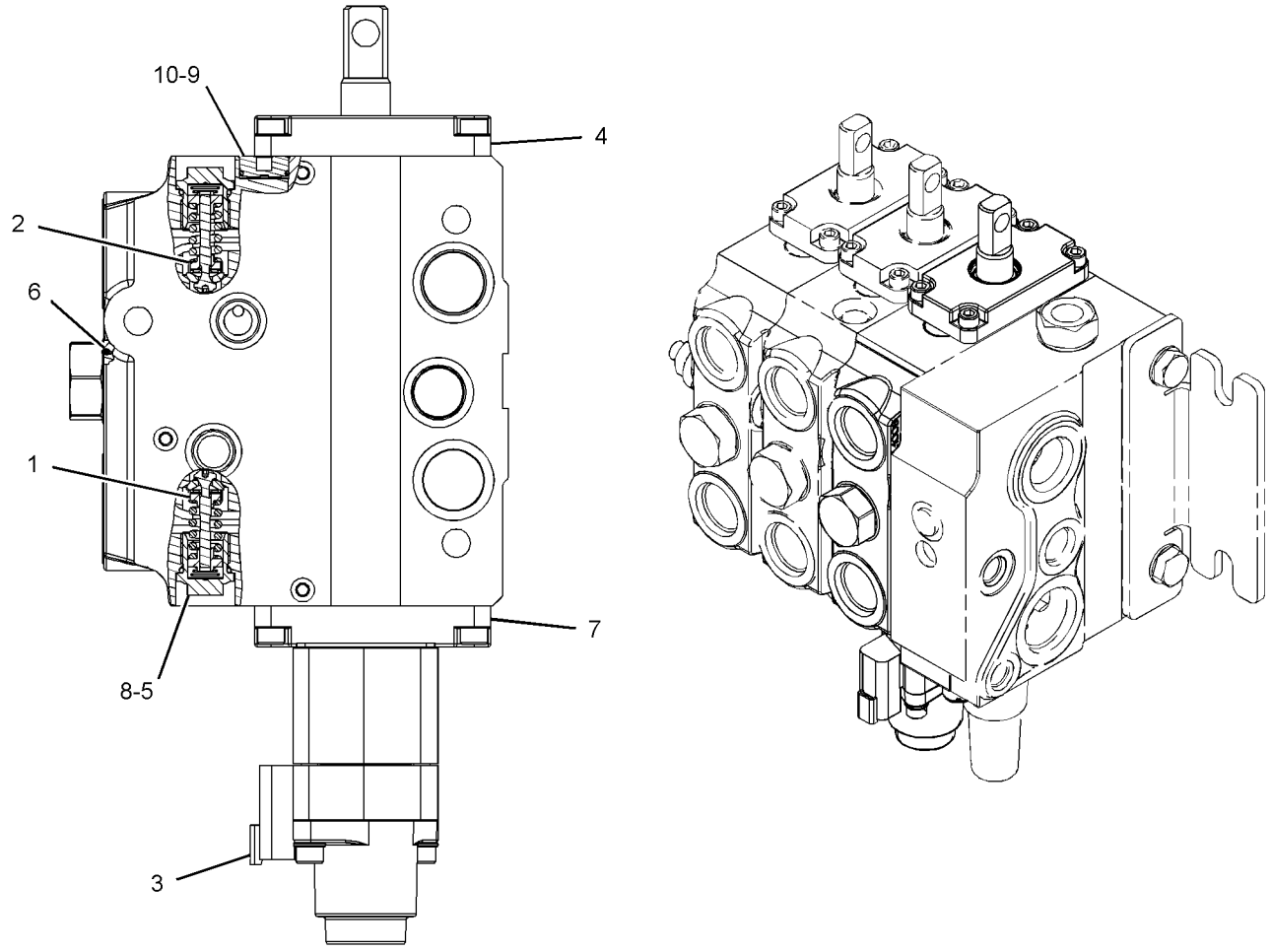

GRAPHIC #1 **<END>** g01213218

259-6731 VALVE GP-CONTROL–TILT

S/N: CBD1-UP; MFG1-UP
PART OF 248-0481 VALVE GP-BANK 2
AN ATTACHMENT

SMCS-5051 **i02520510**

NOTE	REF NO	GRAPHIC REF	PART NUMBER	QTY	PART NAME 1 2 3 4 5 6 (PRODUCT LEVEL)	SEE PAGE
	1	1	**260-3005**	1	VALVE GP-RELIEF (UPPER)	
	2	1	**260-3002**	1	VALVE GP-RELIEF (LOWER)	
	3	1	**260-3012**	1	KIT-DETENT (ELECTRICAL)	
					(INCLUDES SEAL, GASKETS, CLIP, PLATE, SCREWS, COIL, END CAP, STEM, MAGNET, RETAINERS, SPRINGS, WASHERS & HOUSING)	
	4	1	**260-3009**	1	KIT-SEAL (CONTROL VALVE)	
					(INCLUDES HOUSING, SEALS, WIPER & SCREWS)	
	5	1	**6V-5138**	2	SEAL-O-RING	
	6	1	**6V-7970**	1	SEAL-O-RING	
	7	1	**260-3010**	1	KIT-SEAL (VALVE)	
					(INCLUDES HOUSING, SEALS & SCREWS)	
	8	1	**192-7864**	2	PLUG	
	9	1	**192-7863**	2	PLUG	
	10	1	**192-7510**	2	SEAL-O-RING	

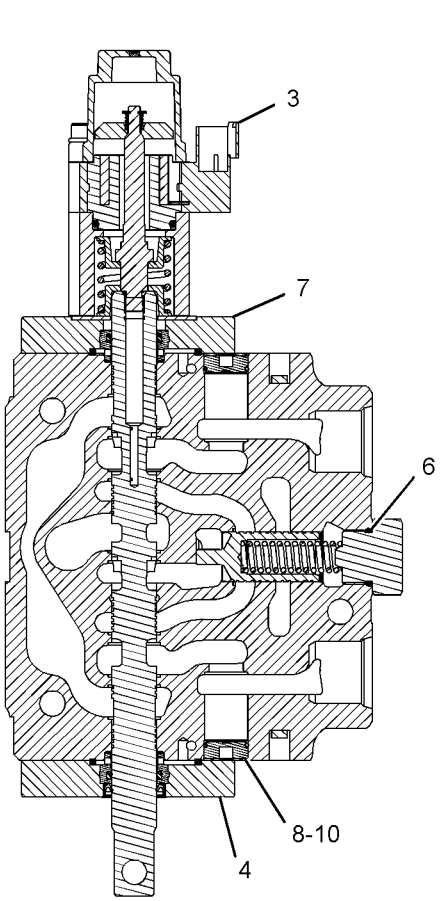

SECTION A-A

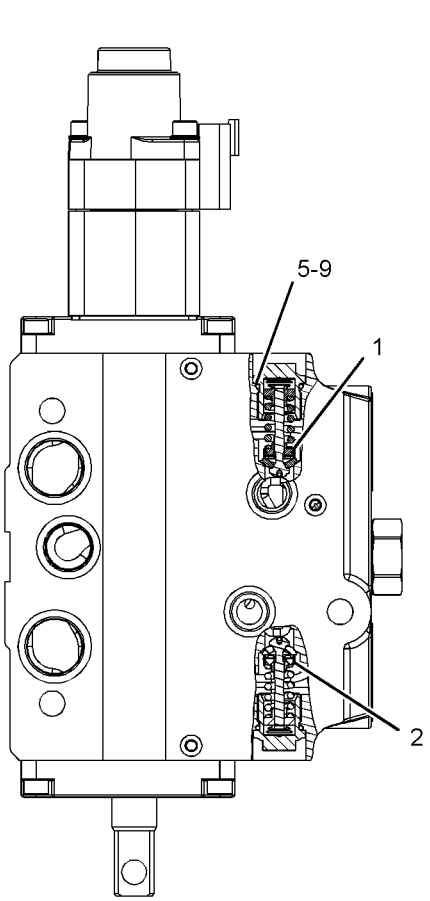

VIEW B-B

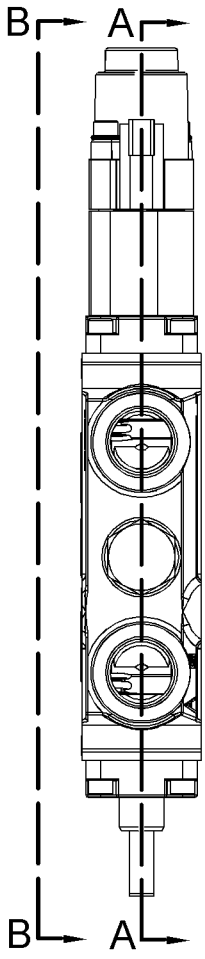

GRAPHIC #1 **<END>** g01230676

HYDRAULIC SYSTEM

259-6732 VALVE GP-CONTROL–LIFT

S/N: CBD1-UP; MFG1-UP
PART OF 248-0481 VALVE GP-BANK 2, 248-0482 VALVE GP-BANK 3
AN ATTACHMENT

SMCS-5051 **i02520511**

NOTE	REF NO	GRAPHIC REF	PART NUMBER	QTY	PART NAME 1 2 3 4 5 6 (PRODUCT LEVEL)	SEE PAGE
	1	1	**260-3010**	1	KIT-SEAL (VALVE)	
					(INCLUDES HOUSING, SEALS, & SCREWS)	
	2	1	**260-3009**	1	KIT-SEAL (CONTROL VALVE)	
					(INCLUDES HOUSING, SEALS, WIPER, & SCREWS)	
	3	1	**6V-7970**	1	SEAL-O-RING	
	4	1	**260-3013**	1	KIT-DETENT (MECHANICAL)	
					(INCLUDES WASHERS, END CAP, SCREWS, SPACER, SPRINGS & SLEEVE)	
	5	1	**192-7864**	2	PLUG	
	6	1	**192-7510**	2	SEAL-O-RING	

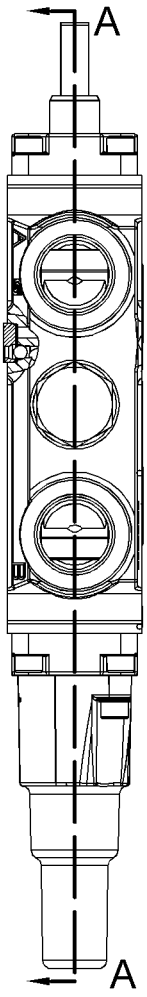

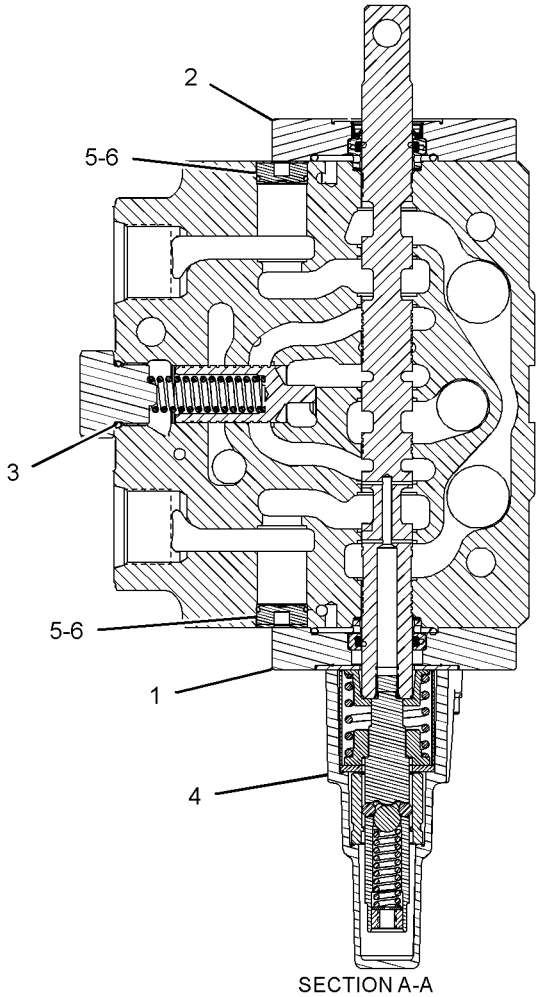

SECTION A-A

GRAPHIC #1 **<END>** g01214247

259-6733 VALVE GP-CONTROL–AUXILIARY

S/N: CBD1-UP; MFG1-UP
PART OF 248-0485 VALVE GP-BANK 8
AN ATTACHMENT

SMCS-5051 **i02520603**

NOTE	REF NO	GRAPHIC REF	PART NUMBER	QTY	PART NAME 1 2 3 4 5 6 (PRODUCT LEVEL)	SEE PAGE
	1	1	**260-3004**	2	VALVE GP-RELIEF (STICK CYL, HEAD END, ROD END)	
	2	1	**260-3010**	1	KIT-SEAL (VALVE)	
					(INCLUDES HOUSING, SEALS & SCREWS)	
	3	1	**260-3009**	1	KIT-SEAL (CONTROL VALVE)	
					(INCLUDES HOUSING, SEALS, WIPER & SCREWS)	
	4	1	**6V-7970**	1	SEAL-O-RING	
	5	1	**6V-5138**	2	SEAL-O-RING	
	6	1	**260-3011**	1	KIT-COVER (VALVE)	
					(INCLUDES SCREWS, WASHERS, RETAINER, SPRING & END CAP)	
	7	1	**192-7863**	2	PLUG	
	8	1	**192-7864**	2	PLUG	
	9	1	**192-7510**	2	SEAL-O-RING	

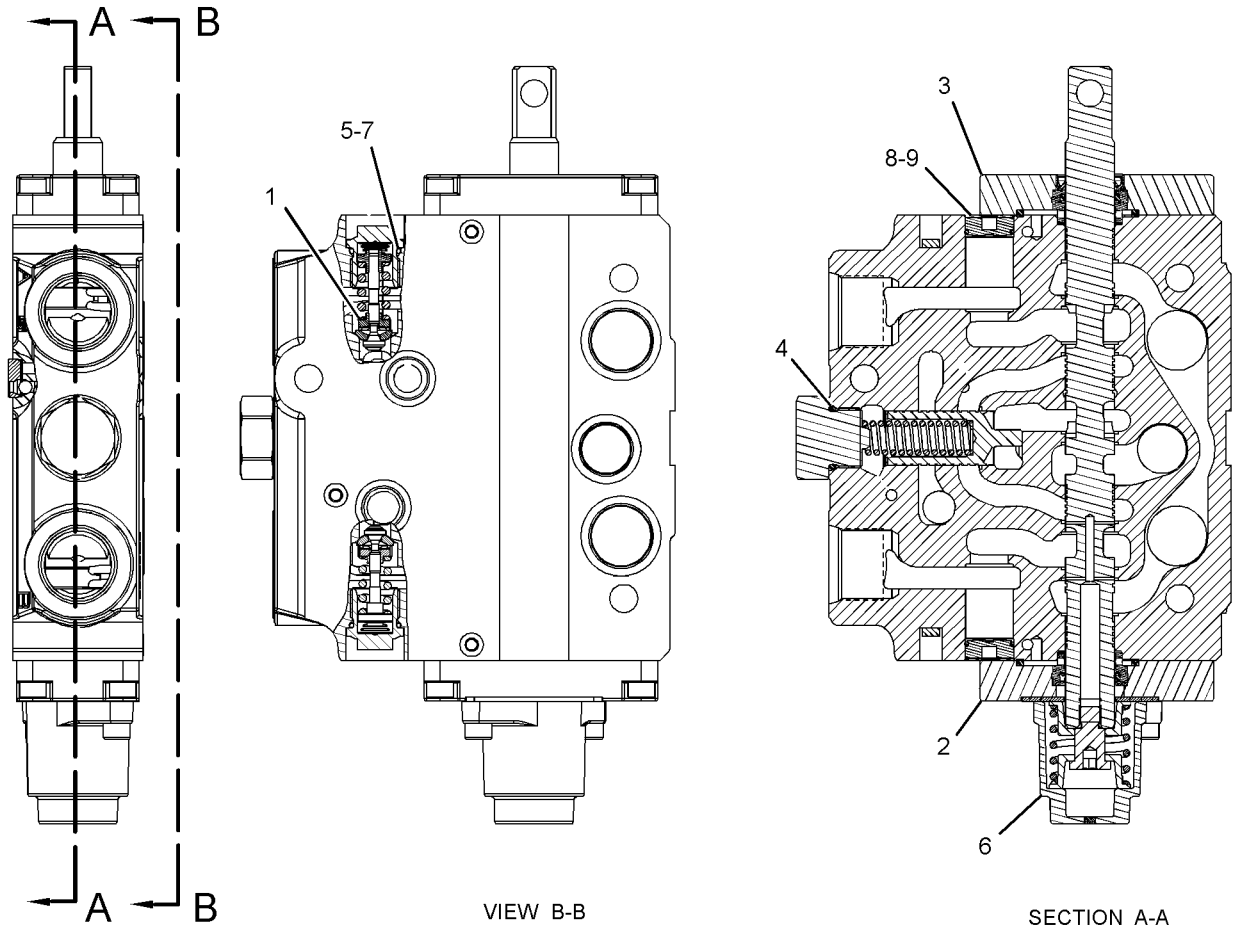

VIEW B-B

SECTION A-A

GRAPHIC #1

<END>

g01228296

259-6734 VALVE GP-CONTROL–EXTENDABLE STICK

S/N: CBD1-UP; MFG1-UP
PART OF 248-0484 VALVE GP-BANK 7, 248-0485 VALVE GP-BANK 8
AN ATTACHMENT

SMCS-5051 **i02520590**

NOTE	REF NO	GRAPHIC REF	PART NUMBER	QTY	PART NAME 1 2 3 4 5 6 (PRODUCT LEVEL)	SEE PAGE
	1	1	**260-3005**	1	VALVE GP-RELIEF (TILT CYLINDER HEAD END)	
	2	1	**260-3010**	1	KIT-SEAL (VALVE)	
					(INCLUDES SEALS & SCREWS)	
	3	1	**260-3009**	1	KIT-SEAL (CONTROL VALVE)	
					(INCLUDES SEALS, WIPER & SCREWS)	
	4	1	**6V-5138**	1	SEAL-O-RING	
	5	1	**6V-7970**	1	SEAL-O-RING	
	6	1	**260-3011**	1	KIT-COVER (VALVE)	
					(INCLUDES SCREWS, WASHER, RETAINER, SPRING & END CAP)	
	7	1	**192-7510**	2	SEAL-O-RING	
	8	1	**192-7863**	2	PLUG	
	9	1	**192-7864**	2	PLUG	
	10	1	**170-5076**	1	VALVE GP-PILOT RELIEF	
		1	**9X-7737**	1	SEAL-O-RING	

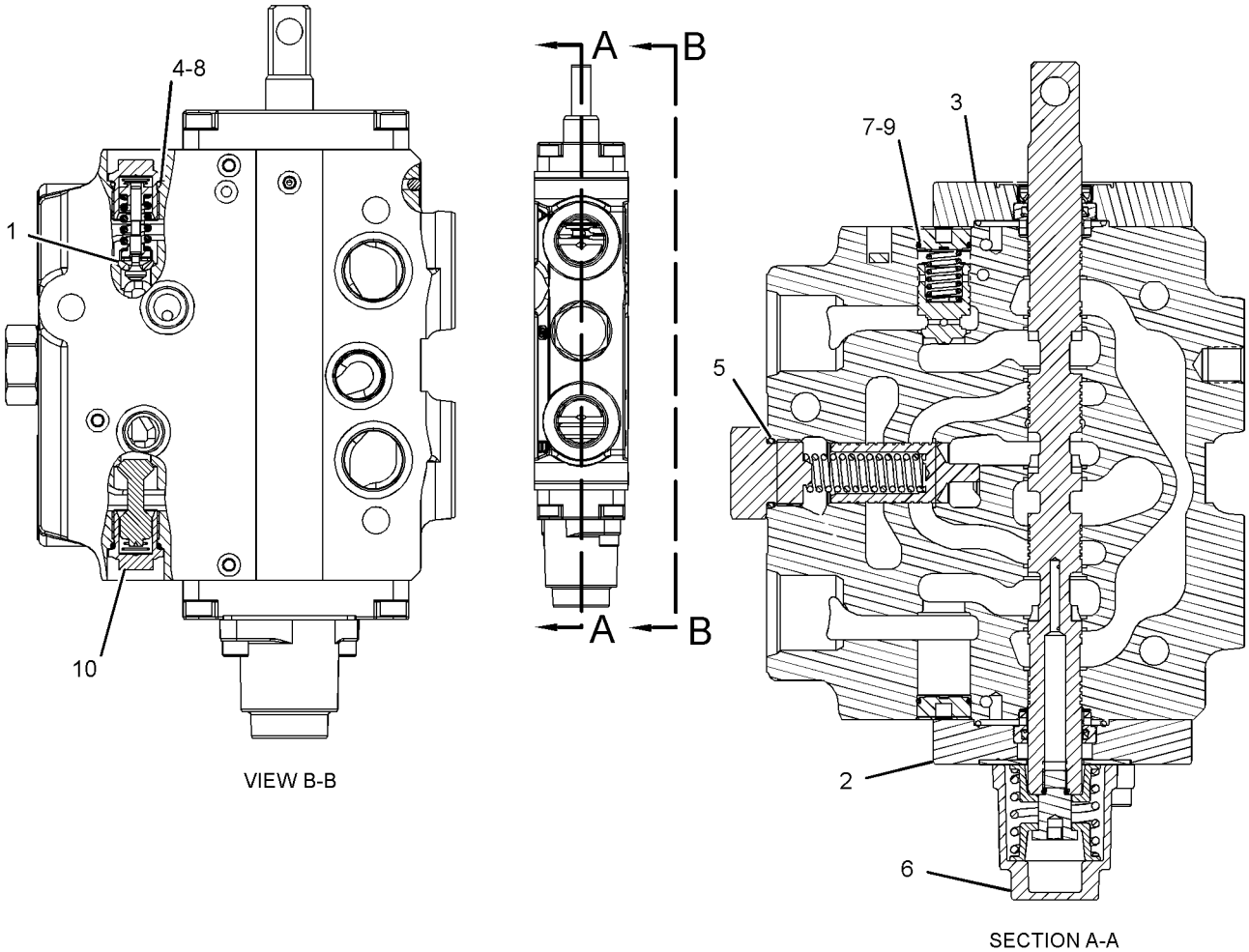

VIEW B-B

SECTION A-A

GRAPHIC #1 **<END>** g01230803

259-6735 VALVE GP-CONTROL–STICK

S/N: CBD1-UP; MFG1-UP
PART OF 248-0484 VALVE GP-BANK 7, 248-0485 VALVE GP-BANK 8
AN ATTACHMENT

SMCS-5051 **i02520592**

NOTE	REF NO	GRAPHIC REF	PART NUMBER	QTY	PART NAME 1 2 3 4 5 6 (PRODUCT LEVEL)	SEE PAGE
	1	1	**260-3004**	2	VALVE GP-RELIEF (STICK CYL, HEAD END, ROD END)	
	2	1	**260-3009**	1	KIT-SEAL (CONTROL VALVE)	
					(INCLUDES SEALS, WIPER & SCREWS)	
	3	1	**260-3010**	1	KIT-SEAL (VALVE)	
					(INCLUDES SEALS & SCREWS)	
	4	1	**6V-5138**	2	SEAL-O-RING	
	5	1	**6V-7970**	1	SEAL-O-RING	
	6	1	**260-3011**	1	KIT-COVER (VALVE)	
					(INCLUDES SCREWS, WASHERS, SPRINGS & END CAP)	
	7	1	**192-7510**	2	SEAL-O-RING	
	8	1	**192-7863**	2	PLUG	
	9	1	**192-7864**	2	PLUG	

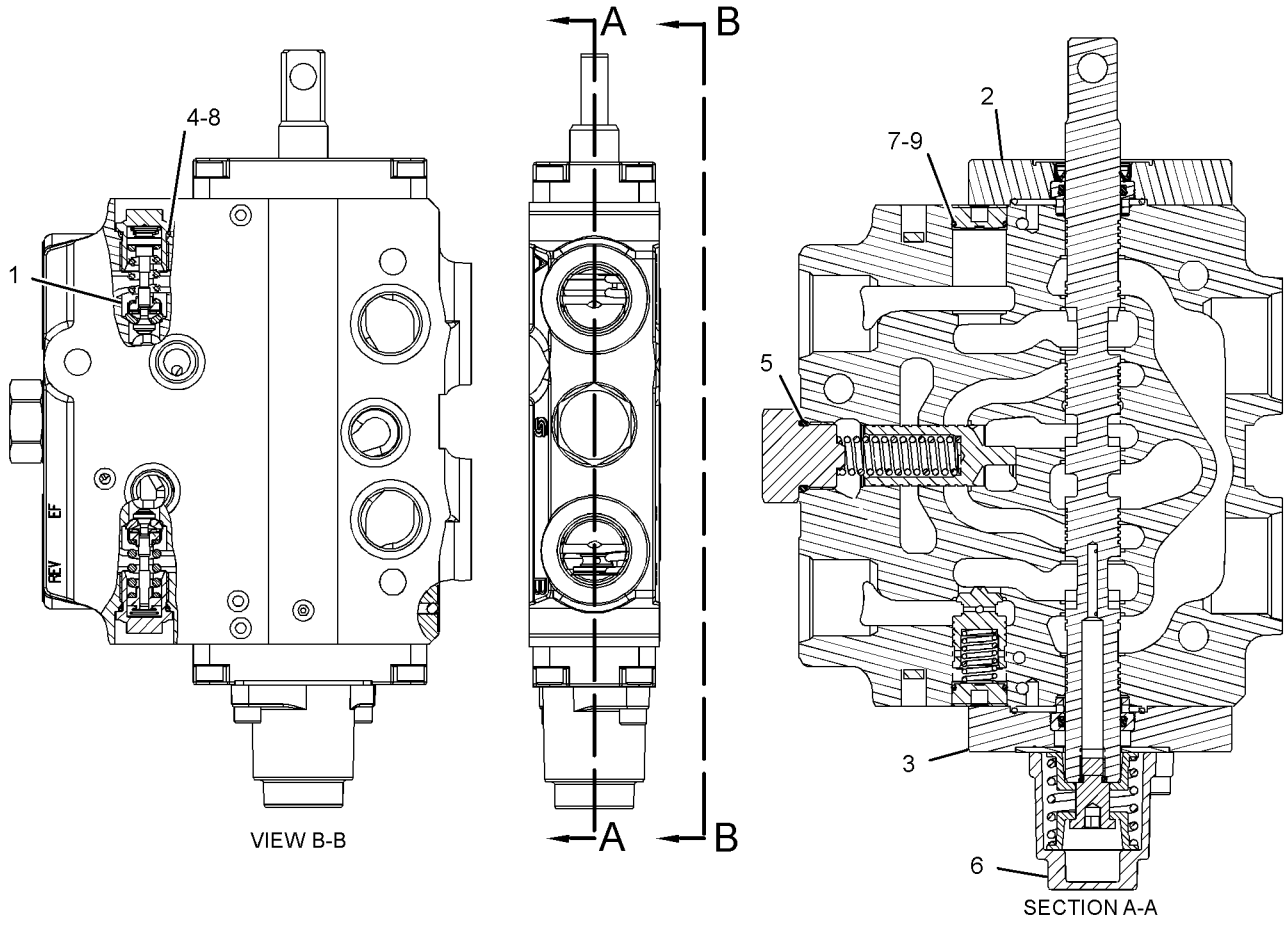

GRAPHIC #1 **<END>** g01169174

HYDRAULIC SYSTEM

259-6736 VALVE GP-CONTROL–STICK

S/N: CBD1-UP; MFG1-UP
PART OF 248-0483 VALVE GP-BANK 6
AN ATTACHMENT

SMCS-5051 **i02520537**

NOTE	REF NO	GRAPHIC REF	PART NUMBER	QTY	PART NAME 1 2 3 4 5 6 (PRODUCT LEVEL)	SEE PAGE
	1	1	**260-3004**	2	VALVE GP-RELIEF (STICK CYL, HEAD END, ROD END)	
	2	1	**6V-5138**	2	SEAL-O-RING	
	3	1	**260-3010**	1	KIT-SEAL (VALVE)	
					(INCLUDES SEALS & SCREWS)	
	4	1	**260-3009**	1	KIT-SEAL (CONTROL VALVE)	
					(INCLUDES SEALS, WIPER & SCREWS)	
	5	1	**6V-7970**	1	SEAL-O-RING	
	6	1	**260-3011**	1	KIT-COVER (VALVE)	
					(INCLUDES SCREWS, WASHERS, SPRINGS & END CAP)	
	7	1	**192-7510**	2	SEAL-O-RING	
	8	1	**192-7863**	2	PLUG	
	9	1	**192-7864**	2	PLUG	

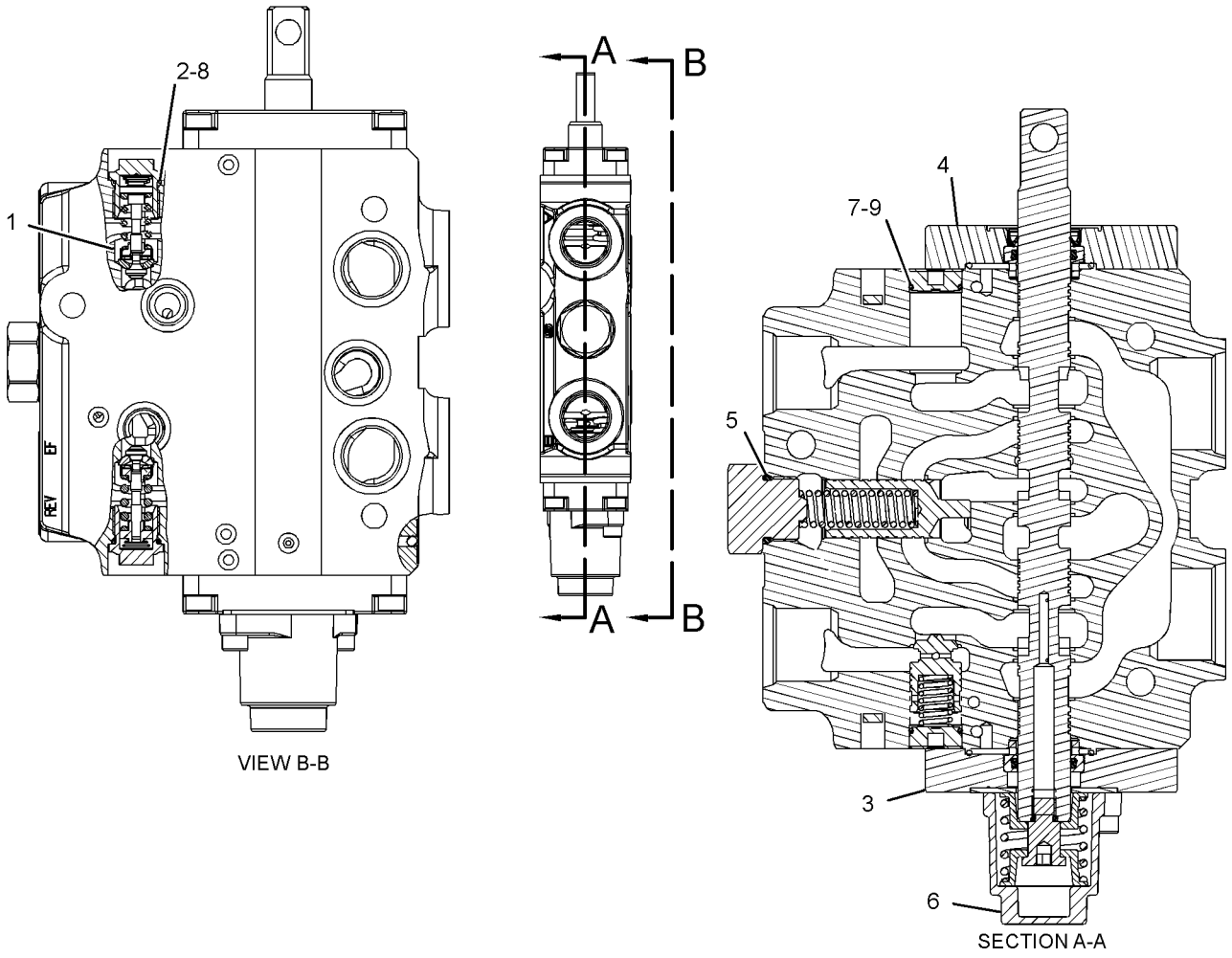

VIEW B-B

SECTION A-A

GRAPHIC #1 **<END>** g01168245

HYDRAULIC SYSTEM

259-6737 VALVE GP-CONTROL–BUCKET

S/N: CBD1-UP; MFG1-UP
PART OF 248-0483 VALVE GP-BANK 6, 248-0484 VALVE GP-BANK 7, 248-0485 VALVE GP-BANK 8
AN ATTACHMENT

SMCS-5051 **i02520539**

NOTE	REF NO	GRAPHIC REF	PART NUMBER	QTY	PART NAME 1 2 3 4 5 6 (PRODUCT LEVEL)	SEE PAGE
	1	1	**260-3006**	2	VALVE GP-RELIEF	
	2	1	**260-3010**	1	KIT-SEAL (VALVE)	
					(INCLUDES SCREWS, SEALS & HOUSING)	
	3	1	**260-3009**	1	KIT-SEAL (CONTROL VALVE)	
					(INCLUDES SCREWS, SEALS, WIPER & HOUSING)	
	4	1	**6V-7970**	2	SEAL-O-RING	
	5	1	**6V-5138**	1	SEAL-O-RING	
	6	1	**260-3011**	1	KIT-COVER (VALVE)	
					(INCLUDES SCREWS, WASHERS, SPRINGS & CAP)	
	7	1	**192-7863**	2	PLUG	
	8	1	**192-7864**	2	PLUG	
	9	1	**192-7510**	2	SEAL-O-RING	

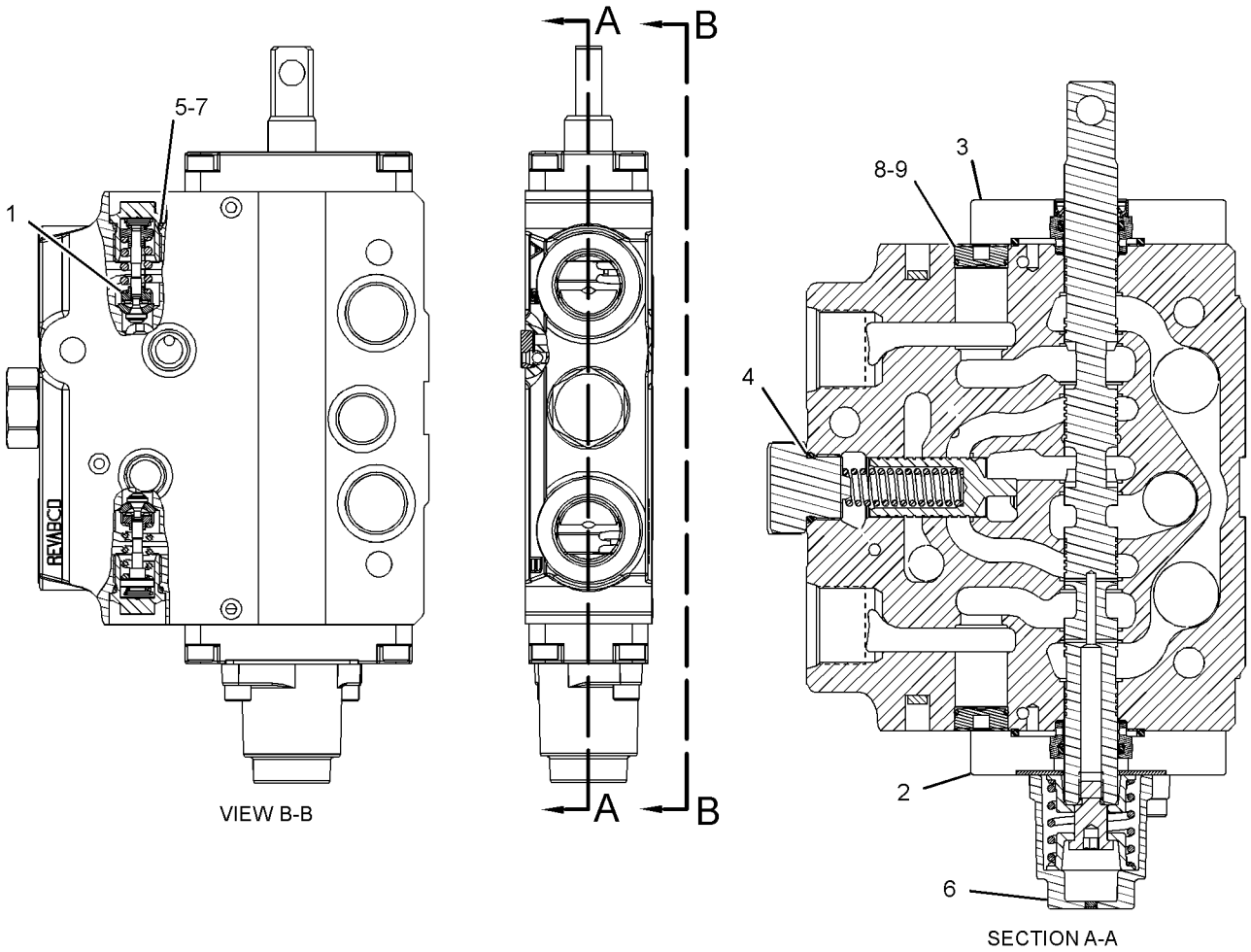

GRAPHIC #1 **<END>** g01235702

259-6738 VALVE GP-CONTROL–SWING

S/N: CBD1-UP; MFG1-UP

PART OF 248-0483 VALVE GP-BANK 6, 248-0484 VALVE GP-BANK 7, 248-0485 VALVE GP-BANK 8

AN ATTACHMENT

SMCS-5051 **i02520541**

NOTE	REF NO	GRAPHIC REF	PART NUMBER	QTY	PART NAME 1 2 3 4 5 6 (PRODUCT LEVEL)	SEE PAGE
	1	1	**260-3007**	2	VALVE GP-RELIEF (SWING CYLINDER ROD END)	
	2	1	**260-3010**	1	KIT-SEAL (VALVE)	
					(INCLUDES SEALS, SCREWS & HOUSING)	
	3	1	**260-3009**	1	KIT-SEAL (CONTROL VALVE)	
					(INCLUDES SEALS, SCREWS, WIPER & HOUSING)	
	4	1	**6V-7970**	1	SEAL-O-RING	
	5	1	**6V-5138**	1	SEAL-O-RING	
	6	1	**260-3011**	1	KIT-COVER (VALVE)	
					(INCLUDES SCREWS, WASHERS, SPRINGS, & END CAP)	
	7	1	**192-7863**	2	PLUG	
	8	1	**192-7864**	2	PLUG	
	9	1	**192-7510**	2	SEAL-O-RING	

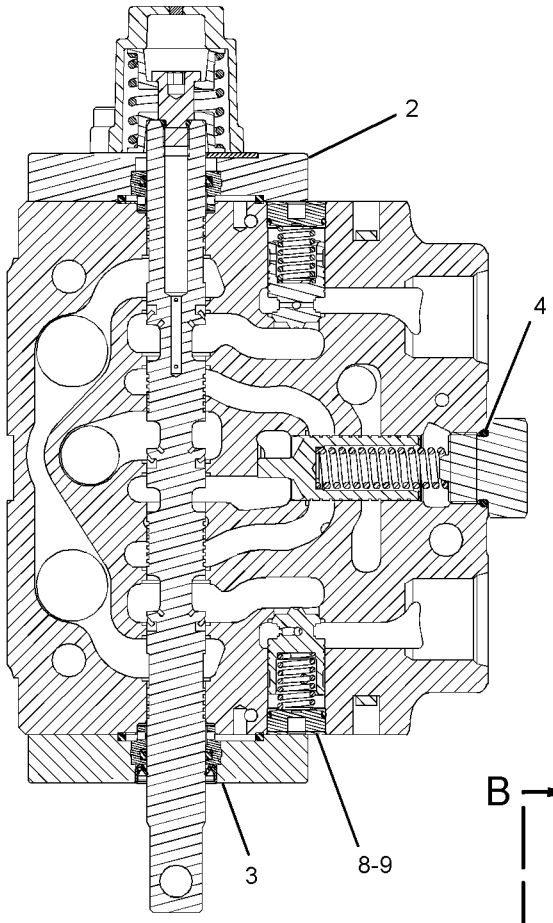

SECTION A-A

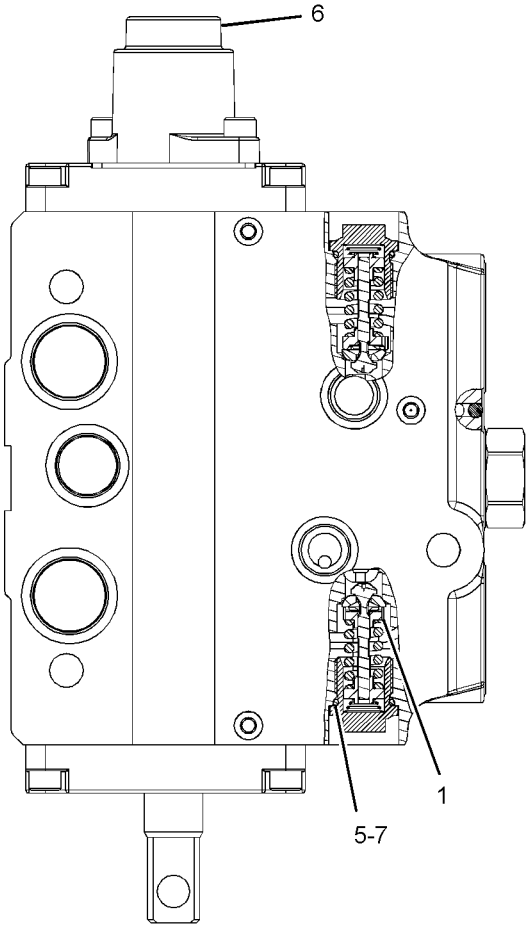

VIEW B-B

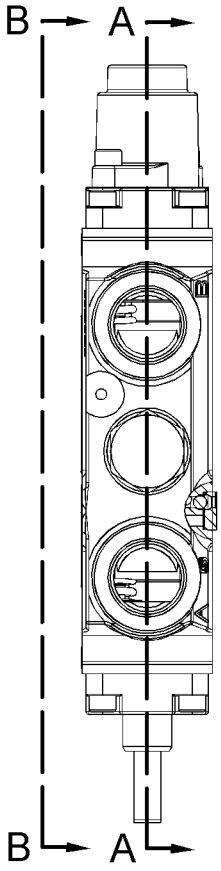

GRAPHIC #1

<END>

g01228165

259-6739 VALVE GP-CONTROL–BOOM

S/N: CBD1-UP; MFG1-UP

PART OF 248-0483 VALVE GP-BANK 6, 248-0484 VALVE GP-BANK 7, 248-0485 VALVE GP-BANK 8

AN ATTACHMENT

SMCS-5051 **i02520543**

NOTE	REF NO	GRAPHIC REF	PART NUMBER	QTY	PART NAME 1 2 3 4 5 6 (PRODUCT LEVEL)	SEE PAGE
	1	1	**260-3003**	1	VALVE GP-RELIEF (160-BAR (2321-PSI)) (BOOM CYLINDER HEAD END)	
	2	1	**260-3006**	1	VALVE GP-RELIEF (BOOM CYLINDER ROD END)	
	3	1	**260-3010**	1	KIT-SEAL (VALVE)	
					(INCLUDES SEALS & SCREWS)	
	4	1	**6V-7970**	1	SEAL-O-RING	
	5	1	**6V-5138**	2	SEAL-O-RING	
	6	1	**192-7510**	2	SEAL-O-RING	
	7	1	**260-3009**	1	KIT-SEAL (CONTROL VALVE)	
					(INCLUDES SEALS, WIPER & SCREWS)	
	8	1	**260-3011**	1	KIT-COVER (VALVE)	
					(INCLUDES SCREWS, WASHERS, SPRINGS & END CAP)	
	9	1	**192-7863**	2	PLUG	
	10	1	**192-7864**	2	PLUG	

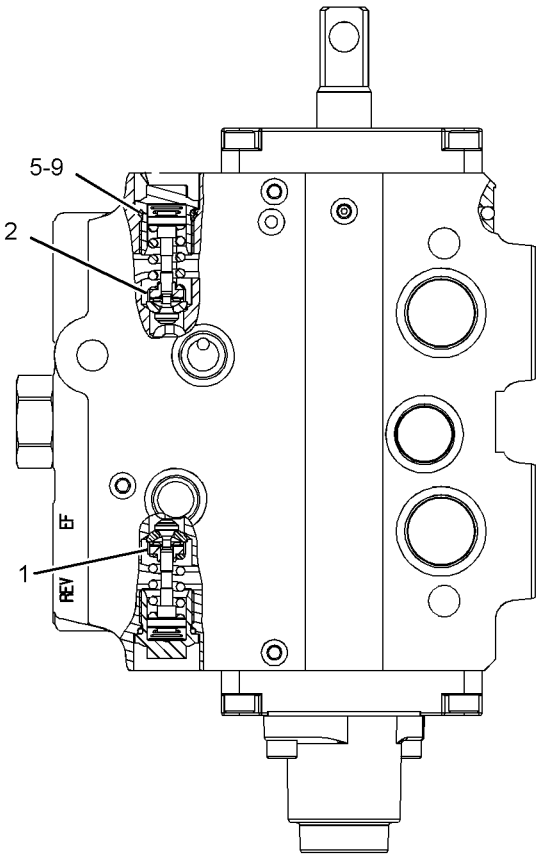

REAR VIEW

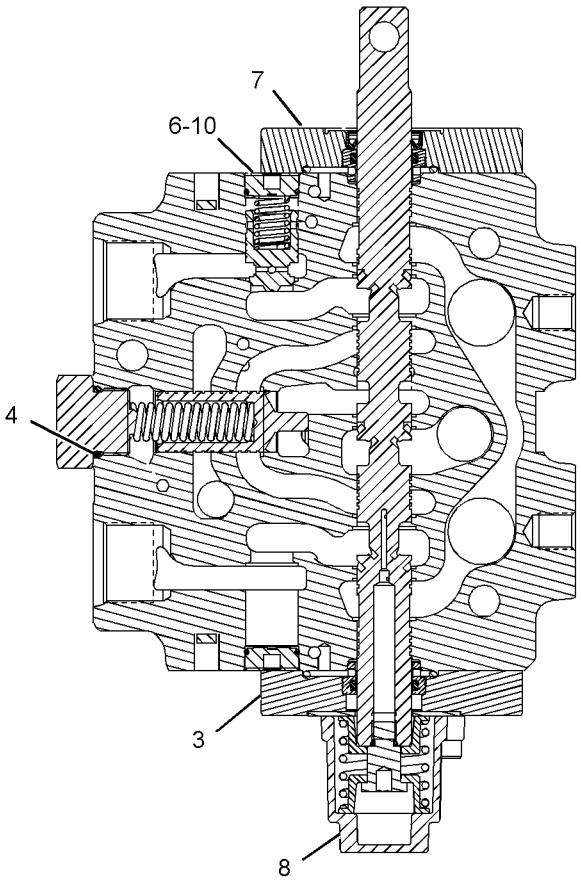

SECTION A-A

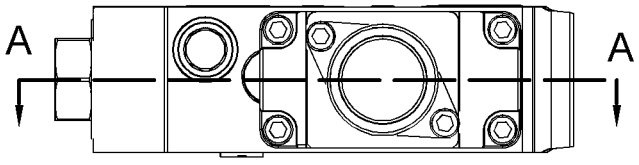

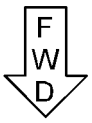

BOTTOM VIEW

GRAPHIC #1 **<END>** g01165684

HYDRAULIC SYSTEM

285-5240 VALVE GP-PUMP CONTROL–
PRESSURE, FLOW COMPENSATOR
S/N: CBD6689-UP; MFG1-UP
PART OF 350-0666 PUMP GP-PISTON

SMCS-5086, 5455 **i03996598**

NOTE	REF NO	GRAPHIC REF	PART NUMBER	QTY	PART NAME 1 2 3 4 5 6 (PRODUCT LEVEL)	SEE PAGE
M	1	1	**8T-8442**	4	BOLT-SOCKET HEAD (M6X1X30-MM)	
	2	1	**280-7870**	1	GASKET	
J	3	1	**6E-6528**	2	SEAL	
	4	1	**9S-8002**	1	PLUG-O-RING	
	5	1	**3J-7354**	1	SEAL-O-RING	
J	6	1	**033-6043**	1	SEAL-O-RING	
J	7	1	**6V-6339**	1	SEAL-O-RING	
					AVAILABLE REPAIR KIT(S):	
J			**293-8350**	1	KIT-SEAL (FLOW COMPENSATOR)	
					(INCLUDES SEAL-O-RINGS & BACK-UP RINGS)	

J-KIT MARKED J SERVICES PARTS MARKED J
M-METRIC PART

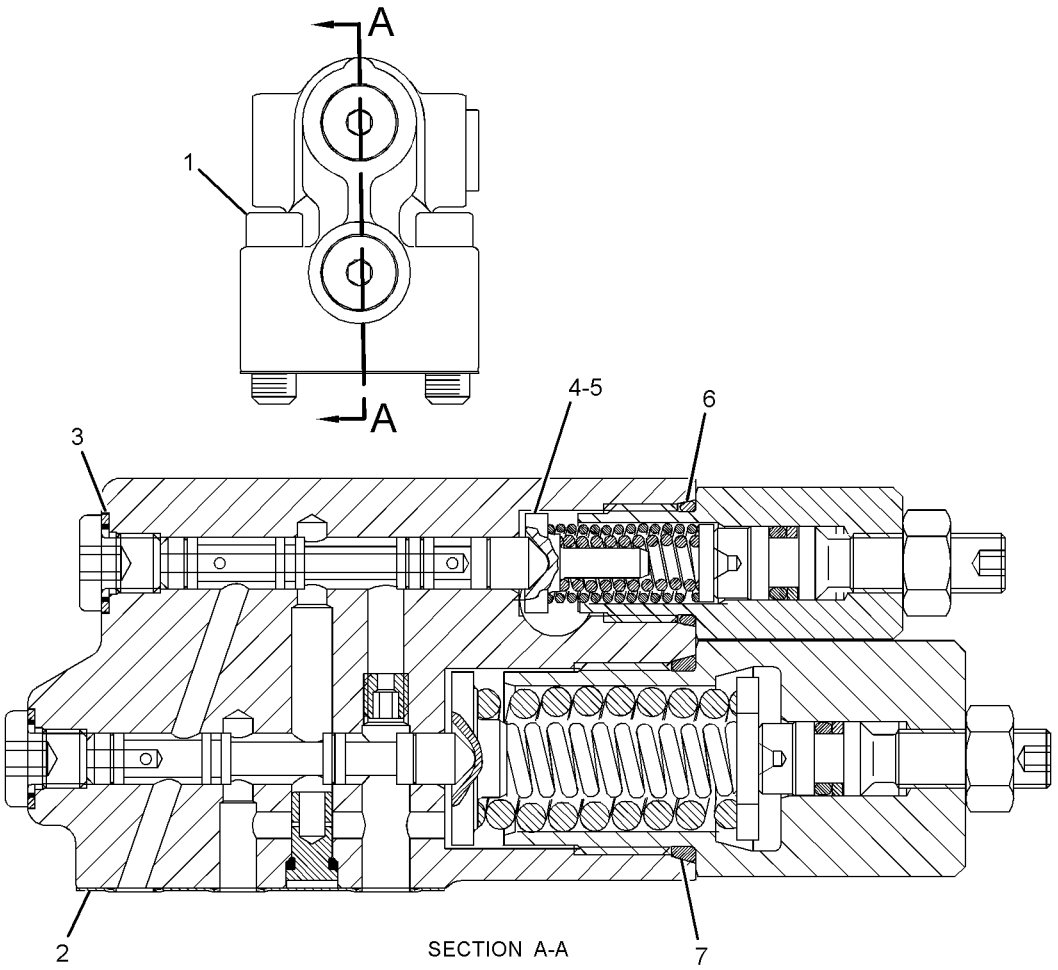

GRAPHIC #1 **<END>** g01297140

HYDRAULIC SYSTEM

8J-6875 VALVE GP-SHUTTLE

S/N: CBD1-UP; MFG1-UP

PART OF 219-8568 LINES GP-PILOT

SMCS-5079 **i02773481**

NOTE	REF NO	GRAPHIC REF	PART NUMBER	QTY	PART NAME 1 2 3 4 5 6 (PRODUCT LEVEL)	SEE PAGE
	1	1	**4T-9905**	2	ADAPTER	
	2	1	**2M-9780**	2	SEAL-O-RING	
	3	1	**4B-9784**	1	BALL	

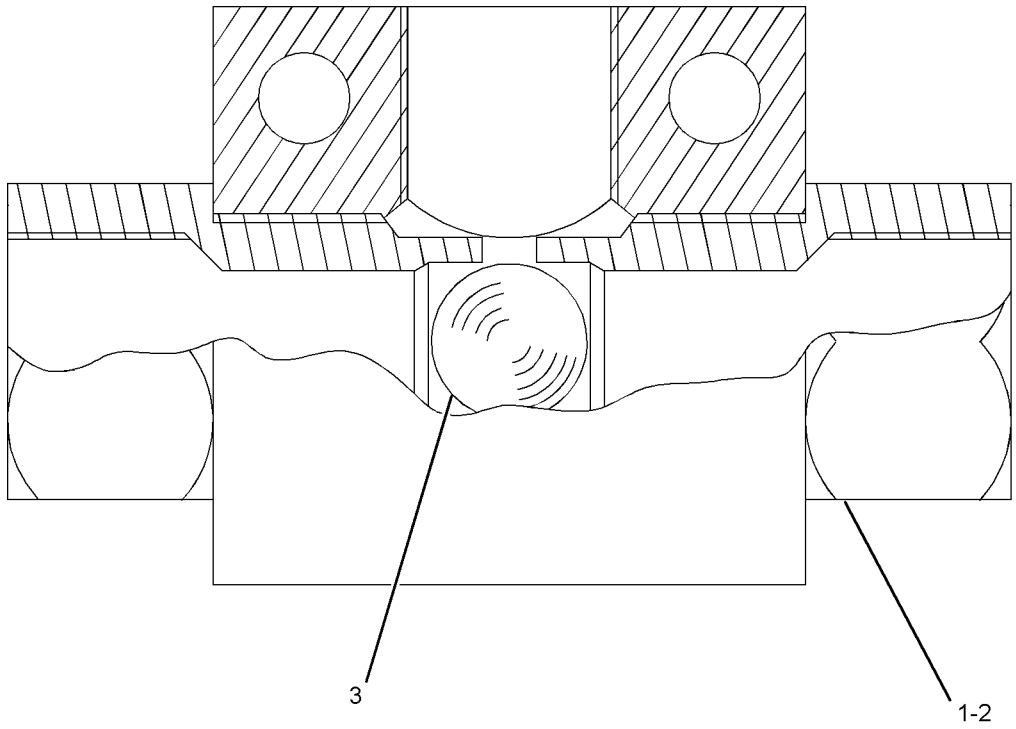

GRAPHIC #1 **<END>** g01047576

IMPLEMENTS

227-8378 ARM GP-LIFT

S/N: CBD1-UP; MFG1-UP

PART OF 213-9298, 318-9555 LOADER AR

SMCS-6118, 6119 **i03661121**

NOTE	REF NO	GRAPHIC REF	PART NUMBER	QTY	PART NAME 1 2 3 4 5 6 (PRODUCT LEVEL)	SEE PAGE
B	1	1	**9R-0109**	10	WASHER (41X64X3-MM THK)	
	2	1	**9R-0158**	2	WASHER (46X69X3-MM THK)	
	3	1	**9R-3182**	2	PIN	
B	4	1	**9R-4066**	2	WASHER (61X98X4-MM THK)	
B	5	1	**9R-8390**	2	SPACER (61X98X1-MM THK)	
	6	1	**9R-9373**	1	PIN AS	
	7	1	**127-8987**	2	RING-RETAINING	
	8	1	**128-5010**	1	PIN	
B	9	1	**128-7903**	2	SPACER (61X114.3X3-MM THK)	
B	10	1	**128-7905**	2	SPACER (61X114.3X1-MM THK)	
	11	1	**130-5451**	2	PIN	
	12	1	**132-6496**	1	PIN AS	
	13	1	**248-2257**	1	ARM AS-LIFT	
	13A	1	**9R-0111**	4	BUSHING	
	13B	1	**9R-6690**	4	BUSHING	
	13C	1	**9R-0320**	2	BUSHING	
	14	1	**3B-8488**	4	FITTING-GREASE	
	15	1	**3B-8489**	5	FITTING-GREASE	
	16	1	**6V-3213**	2	RING-RETAINING	
M	17	1	**6V-7687**	2	LOCKNUT (M12X1.75-THD)	
	18	1	**6V-8144**	6	RING-RETAINING	
M	19	1	**8T-4176**	2	BOLT (M12X1.75X90-MM)	
B	20	1	**111-4337**	6	WASHER (46X70X1-MM THK)	
B	21	1	**119-4594**	4	WASHER (41X64X1-MM THK)	

B-USE AS REQUIRED
M-METRIC PART

227-8378 **ARM GP-LIFT** *(contd.)* **i03661121**

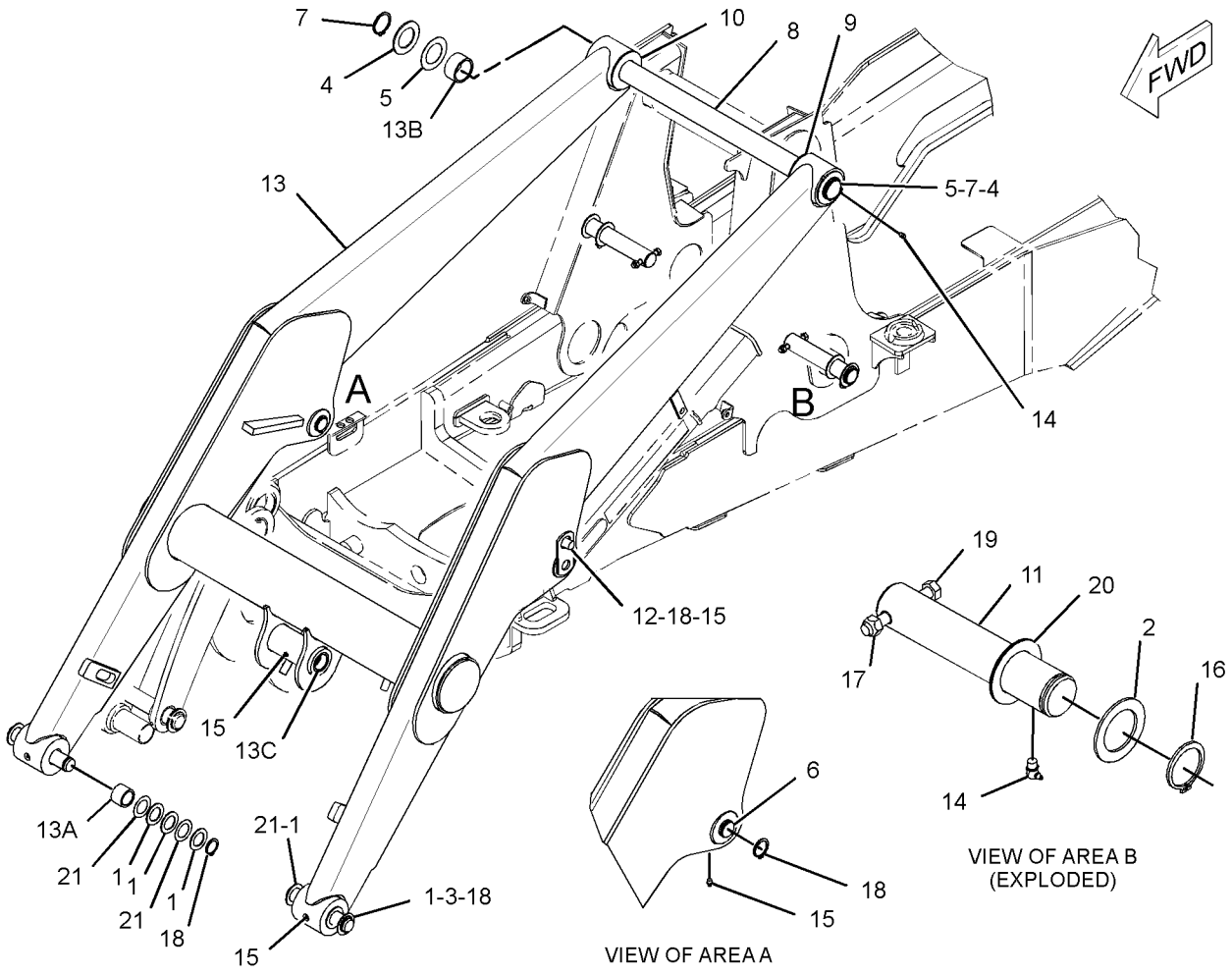

GRAPHIC #1 **<END>** g01975946

370-7917 BOOM & BEARING AS

S/N: CBD1-UP; MFG1-UP
FIELD INSTALLATION

SMCS-6501 **i04460728**

NOTE	REF NO	GRAPHIC REF	PART NUMBER	QTY	PART NAME 1 2 3 4 5 6 (PRODUCT LEVEL)	SEE PAGE
	1	1	**209-6181**	2	BUSHING	
	2	1	*370-7055*	1	BOOM AS	
M		1	**9R-9866**	2	BOSS-THREADED (M10X1.5-THD)	
	3	1	**9R-0413**	2	BUSHING	

M-METRIC PART

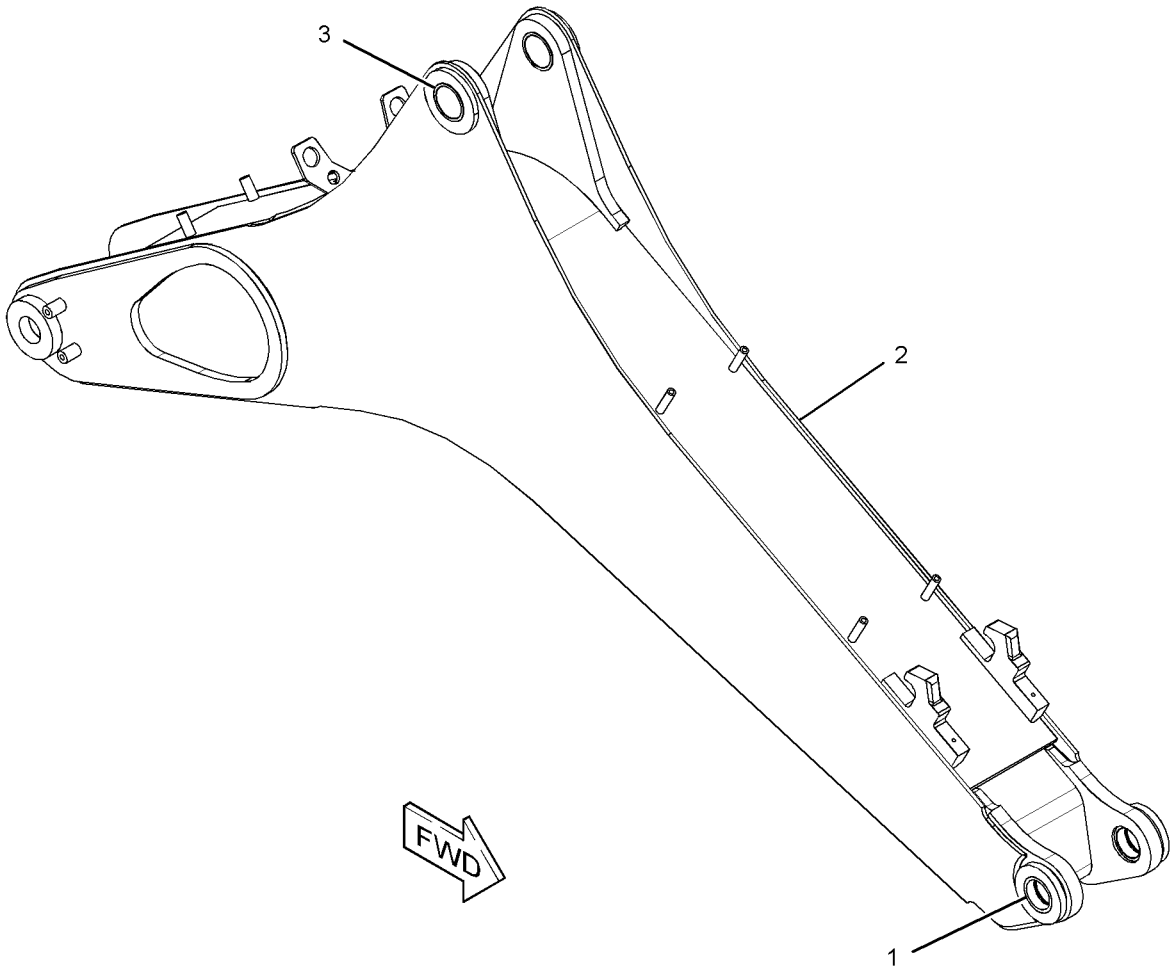

GRAPHIC #1 **<END>** g02438456

IMPLEMENTS

209-9928 BOOM GP

S/N: CBD1-UP; MFG1-UP
PART OF 209-9929 BACKHOE AR-EXTENDABLE STICK, 209-9924 BACKHOE AR-STANDARD STICK
AN ATTACHMENT

SMCS-6501 **i02942858**

NOTE	REF NO	GRAPHIC REF	PART NUMBER	QTY	PART NAME 1 2 3 4 5 6 (PRODUCT LEVEL)	SEE PAGE
	1	1	**213-6726**	1	PIN	
B	2	1	**176-0626**	4	WASHER (67.5X120X3-MM THK)	
	3	1	**316-4844**	1	BOOM AS	
	3A	1	**9R-0413**	2	BUSHING	
M	3B	1	**9R-9866**	2	BOSS-THREADED (M10X1.5-THD)	
	3C	1	**209-6181**	2	BUSHING	
	4	1	**095-0929**	2	RING-RETAINING	
	5	1	**3B-8488**	3	FITTING-GREASE	
	6	1	**3B-8489**	1	FITTING-GREASE	

B-USE AS REQUIRED
M-METRIC PART

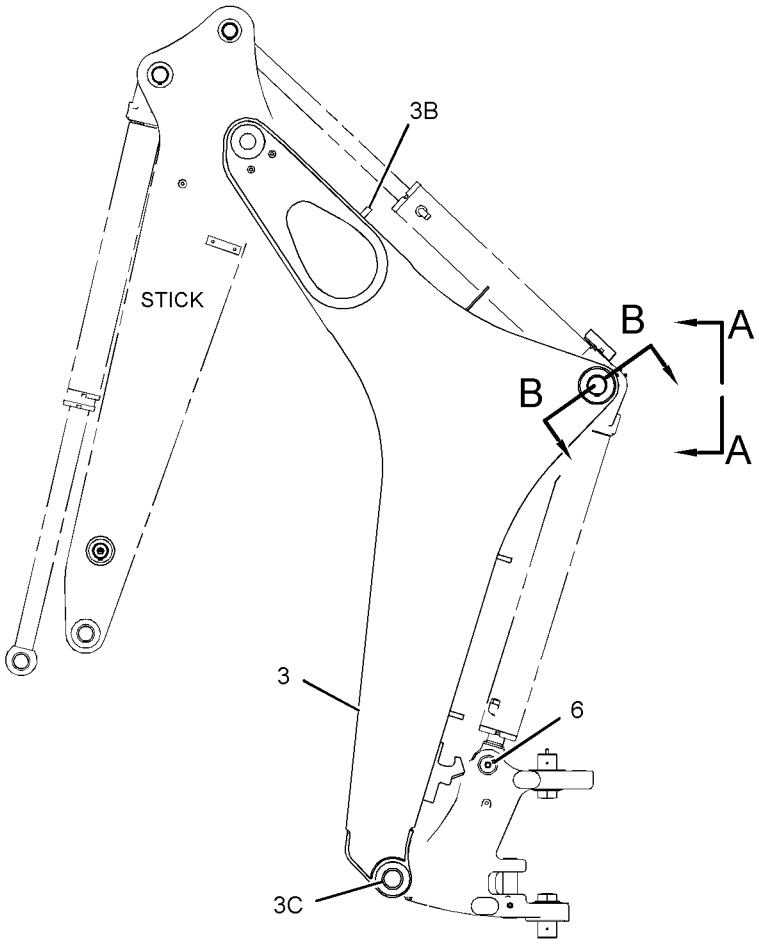

RIGHT SIDE VIEW

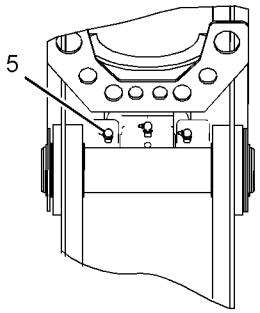

VIEW A-A

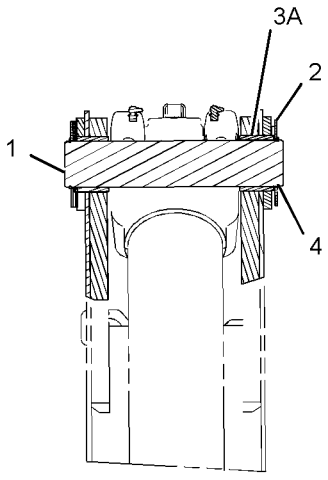

SECTION B-B

GRAPHIC #1 **<END>** g01576477

218-0745 BRACE GP-LIFT CYLINDER

S/N: CBD1-UP; MFG1-UP

PART OF 213-9298, 318-9555 LOADER AR

SMCS-7507 **i02545135**

NOTE	REF NO	GRAPHIC REF	PART NUMBER	QTY	PART NAME 1 2 3 4 5 6 (PRODUCT LEVEL)	SEE PAGE
	1	1	**9R-0109**	1	WASHER (41X64X3-MM THK)	
	2	1	**9R-0189**	1	PIN	
	3	1	**132-6497**	1	BRACE AS	
	4	1	**9R-5301**	1	PIN-COTTER	

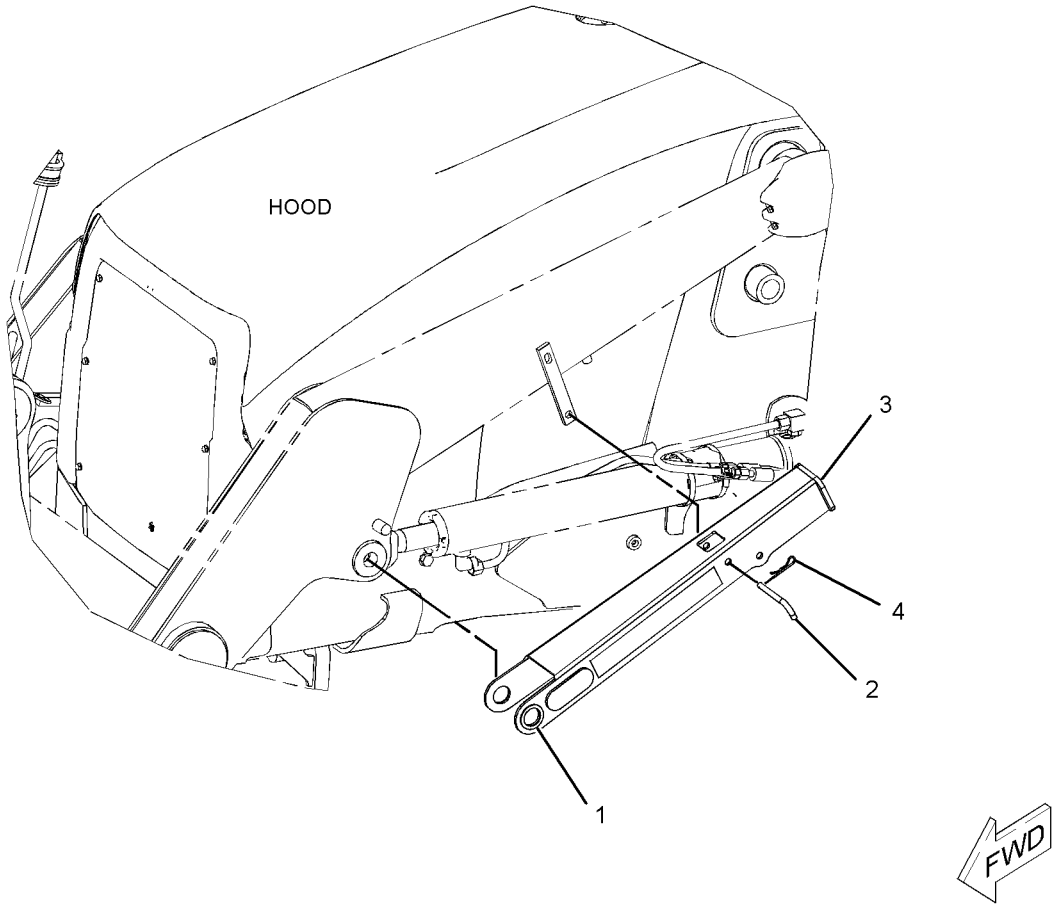

GRAPHIC #1 **<END>** g01183429

IMPLEMENTS

270-3204 GUARD GP-BOOM

S/N: CBD1-UP
AN ATTACHMENT

SMCS-7150 **i04057429**

NOTE	REF NO	GRAPHIC REF	PART NUMBER	QTY	PART NAME 1 2 3 4 5 6 (PRODUCT LEVEL)	SEE PAGE
	1	1	**270-3205**	1	PLATE AS	
M	2	1	**8T-4184**	4	BOLT (M12X1.75X45-MM)	
	3	1	**8T-4223**	16	WASHER-HARD (13.5X25.5X3-MM THK)	

M-METRIC PART

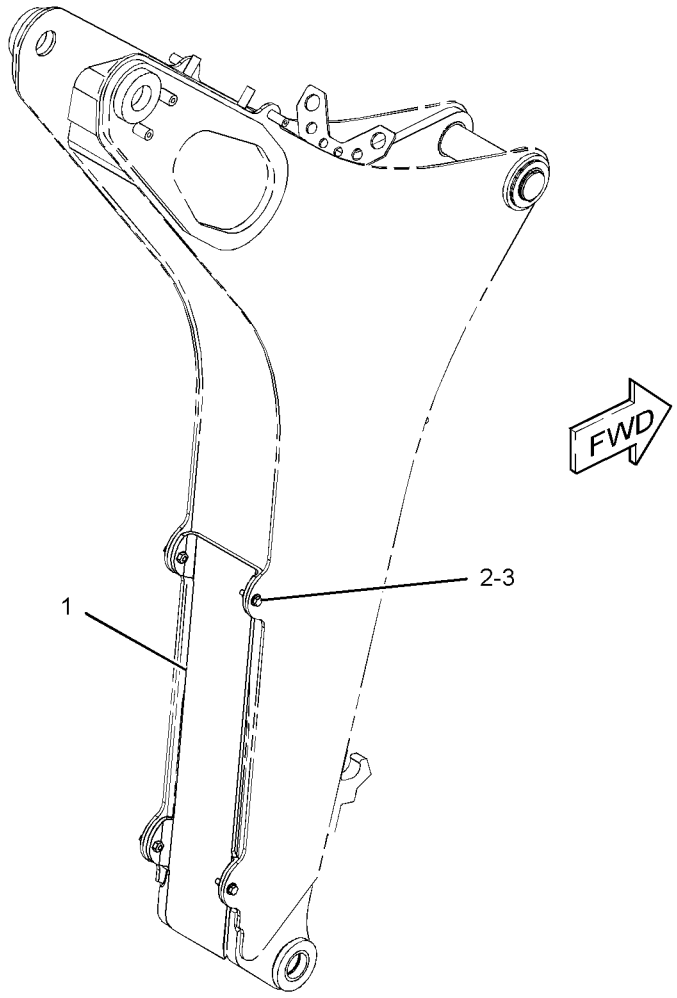

GRAPHIC #1 **<END>** g02271213

270-3204 GUARD GP-BOOM

S/N: CBD1-UP; MFG1-UP
AN ATTACHMENT

SMCS-7150 **i02959807**

NOTE	REF NO	GRAPHIC REF	PART NUMBER	QTY	PART NAME 1 2 3 4 5 6 (PRODUCT LEVEL)	SEE PAGE
C	1	1	**294-5792**	1	PLATE AS	
CM	2	1	**8T-4139**	4	BOLT (M12X1.75X30-MM)	
C	3	1	**8T-4223**	4	WASHER-HARD (13.5X25.5X3-MM THK)	

C-CHANGE FROM PREVIOUS TYPE
M-METRIC PART

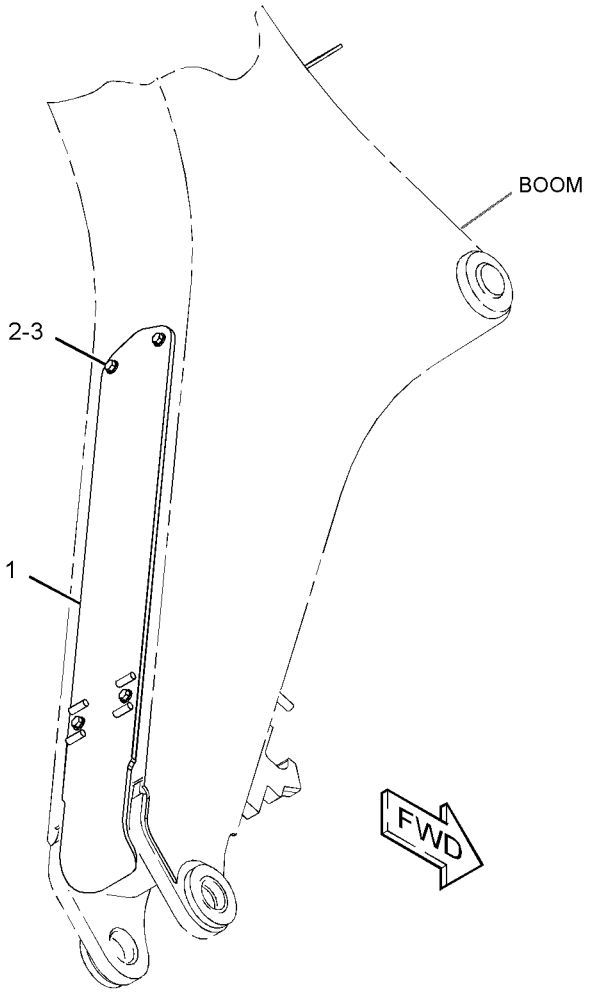

GRAPHIC #1 **<END>** g01514060

213-6692 LINKAGE GP-BACKHOE BUCKET

S/N: CBD1-UP; MFG1-UP

PART OF 209-9929 BACKHOE AR-EXTENDABLE STICK, 209-9924 BACKHOE AR-STANDARD STICK

AN ATTACHMENT

SMCS-6513 **i02495868**

NOTE	REF NO	GRAPHIC REF	PART NUMBER	QTY	PART NAME 1 2 3 4 5 6 (PRODUCT LEVEL)	SEE PAGE
B	1	1	**9R-0158**	5	WASHER (46X69X3-MM THK)	
B	2	1	**9R-1502**	4	WASHER (56X90X4-MM THK)	
B	3	1	**9R-1510**	9	WASHER (51X82X4-MM THK)	
	4	1	**154-5278**	1	PIN	
	5	1	**154-5279**	1	PIN	
	6	1	**154-5280**	1	PIN	
	7	1	**213-6690**	1	GUIDE AS (RH) (RH)	
		1	**9R-0162**	1	BUSHING	
		1	**9R-0170**	1	BUSHING	
		1	**213-6687**	1	BUSHING	
	8	1	**213-6691**	1	GUIDE AS (LH) (LH)	
		1	**9R-0162**	1	BUSHING	
		1	**9R-0170**	1	BUSHING	
		1	**213-6687**	1	BUSHING	
	9	1	**213-6698**	1	PIN	
	10	1	**213-6723**	1	LINK AS	
		1	**9R-0170**	2	BUSHING	
		1	**213-6703**	2	BEARING	
	11	1	**239-9435**	1	FILM-INSTRUCTION (LINK)	
	12	1	**3B-5319**	4	PIN-COTTER	
	13	1	**3B-8489**	3	FITTING-GREASE	
	14	1	**6V-4364**	2	RING-RETAINING	
	15	1	**6V-8344**	2	RING-RETAINING	

B-USE AS REQUIRED

213-6692 **LINKAGE GP-BACKHOE BUCKET** *(contd.)* **i02495868**

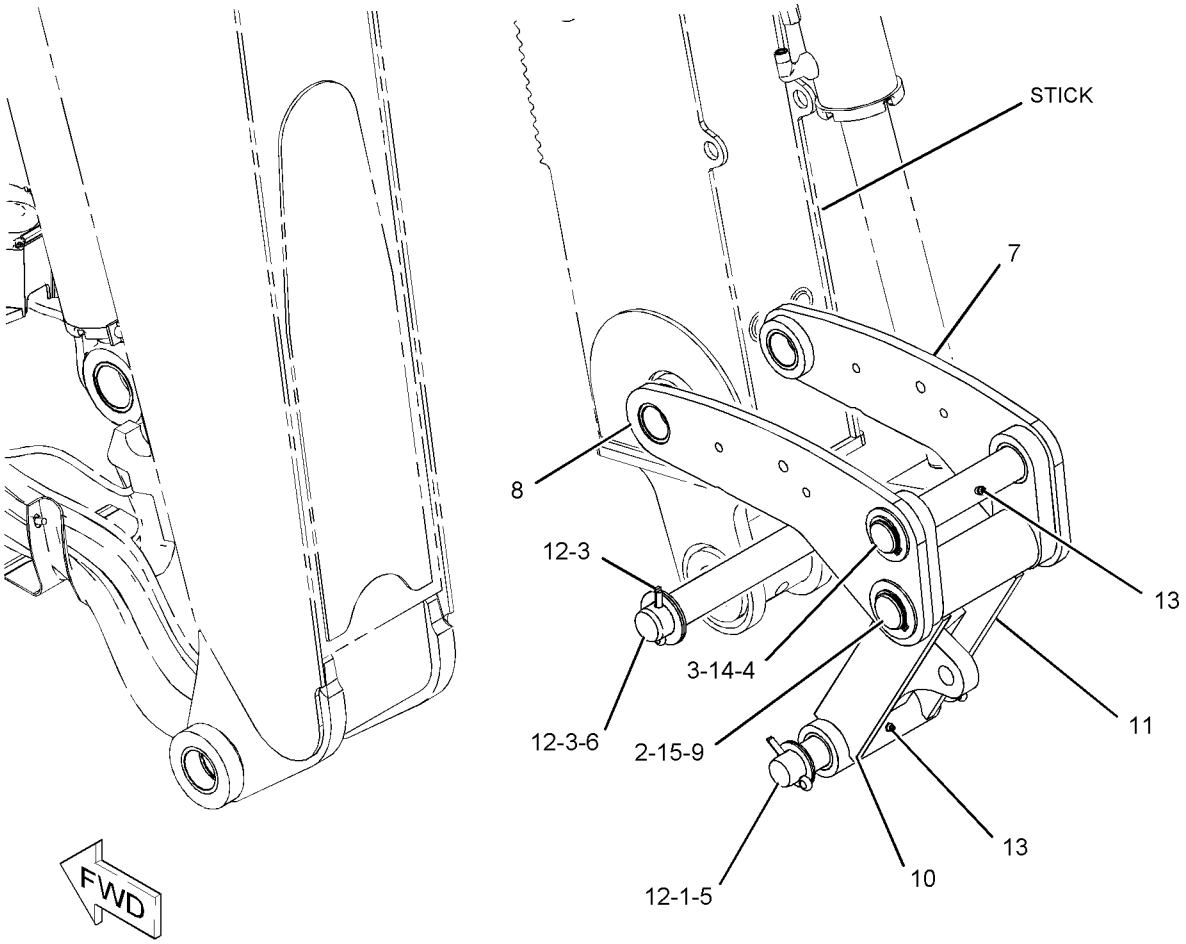

GRAPHIC #1

<END>

g01079508

9R-9140 LINKAGE GP-LOADER BUCKET

S/N: CBD1-2257
FRONT
PART OF 213-9298 LOADER AR

SMCS-6513 **i01539041**

NOTE	REF NO	GRAPHIC REF	PART NUMBER	QTY	PART NAME 1 2 3 4 5 6 (PRODUCT LEVEL)	SEE PAGE
M	1	1	**8T-4137**	4	BOLT (M10X1.5X20-MM)	
	2	1	**8T-4121**	4	WASHER-HARD (11X21X2.5-MM THK)	
	3	1	**101-0117**	1	PLATE	
	4	1	**9R-5834**	1	LINK AS (RH)	
	5	1	**9R-1107**	1	BEARING	
	6	1	**9R-5828**	1	BUSHING	
	7	1	**9R-5835**	1	LINK AS (LH)	
	8	1	**9R-1107**	1	BEARING	
	9	1	**9R-5828**	1	BUSHING	
	10	1	**3B-8489**	7	FITTING-GREASE	
	11	1	**118-7789**	1	PLATE	
	12	1	**9R-4494**	3	PIN AS	
B	13	1	**9R-0158**	8	WASHER (46X69X3-MM THK)	
	14	1	**6V-3213**	3	RING-RETAINING	
	15	1	**9R-4482**	1	SPACER (52.7X60.3X99-MM THK) (100MM THK)	
	16	1	**9R-5063**	1	GUIDE AS	
	17	1	**9R-1104**	1	BEARING	
	18	1	**9R-9152**	1	GUIDE AS (RH)	
	19	1	**9R-1104**	1	BEARING	
	20	1	**9R-3933**	1	PIN	
	21	1	**9R-9153**	1	GUIDE	
B	22	1	**111-4337**	10	WASHER (46X70X1-MM THK)	

B-USE AS REQUIRED
M-METRIC PART

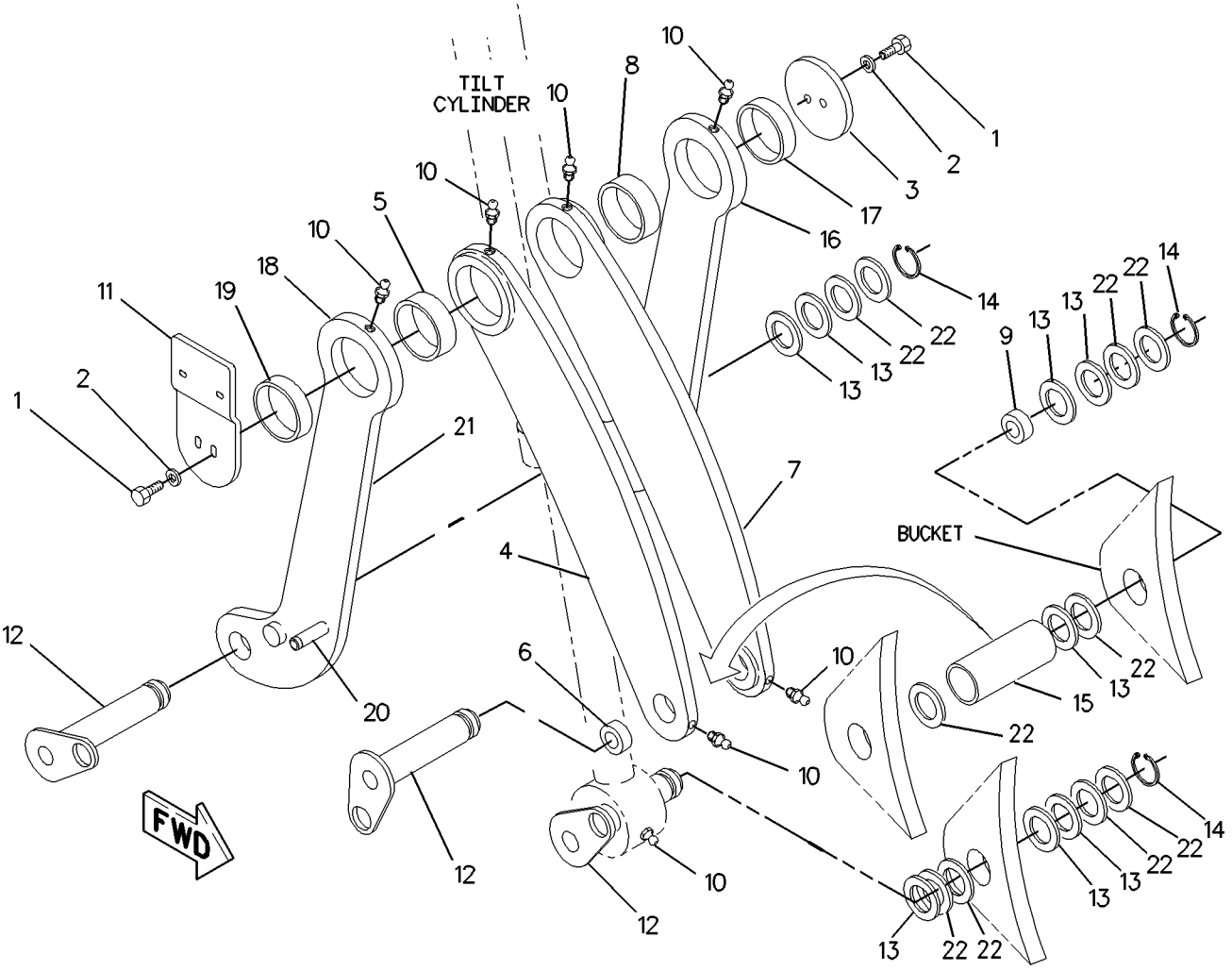

GRAPHIC #1 **<END>** g00799330

297-2834 LINKAGE GP-LOADER BUCKET

S/N: CBD2258-UP; MFG1-UP

PART OF 213-9298, 318-9555 LOADER AR

SMCS-6513 **i02827292**

NOTE	REF NO	GRAPHIC REF	PART NUMBER	QTY	PART NAME 1 2 3 4 5 6 (PRODUCT LEVEL)	SEE PAGE
	1	1	**9R-4482**	1	SPACER (52.7X60.3X99-MM THK)	
	2	1	**9R-4494**	3	PIN AS	
	3	1	**9R-5063**	1	GUIDE AS	
	4	1	**9R-5834**	1	LINK AS (RH)	
	5	1	**9R-5835**	1	LINK AS (LH)	
	6	1	**101-0117**	1	PLATE	
B	7	1	**111-4337**	10	WASHER (46X70X1-MM THK)	
	8	1	**118-7789**	1	PLATE	
	9	1	**297-2833**	1	GUIDE AS (RH)	
		1	**9R-1104**	1	BEARING	
		1	**9R-9153**	1	GUIDE	
		1	**200-8313**	1	PIN	
	10	1	**3B-8489**	7	FITTING-GREASE	
	11	1	**6V-3213**	3	RING-RETAINING	
	12	1	**8T-4121**	4	WASHER-HARD (11X21X2.5-MM THK)	
M	13	1	**8T-4137**	4	BOLT (M10X1.5X20-MM)	
B	14	1	**9R-0158**	8	WASHER (46X69X3-MM THK)	

B-USE AS REQUIRED
M-METRIC PART

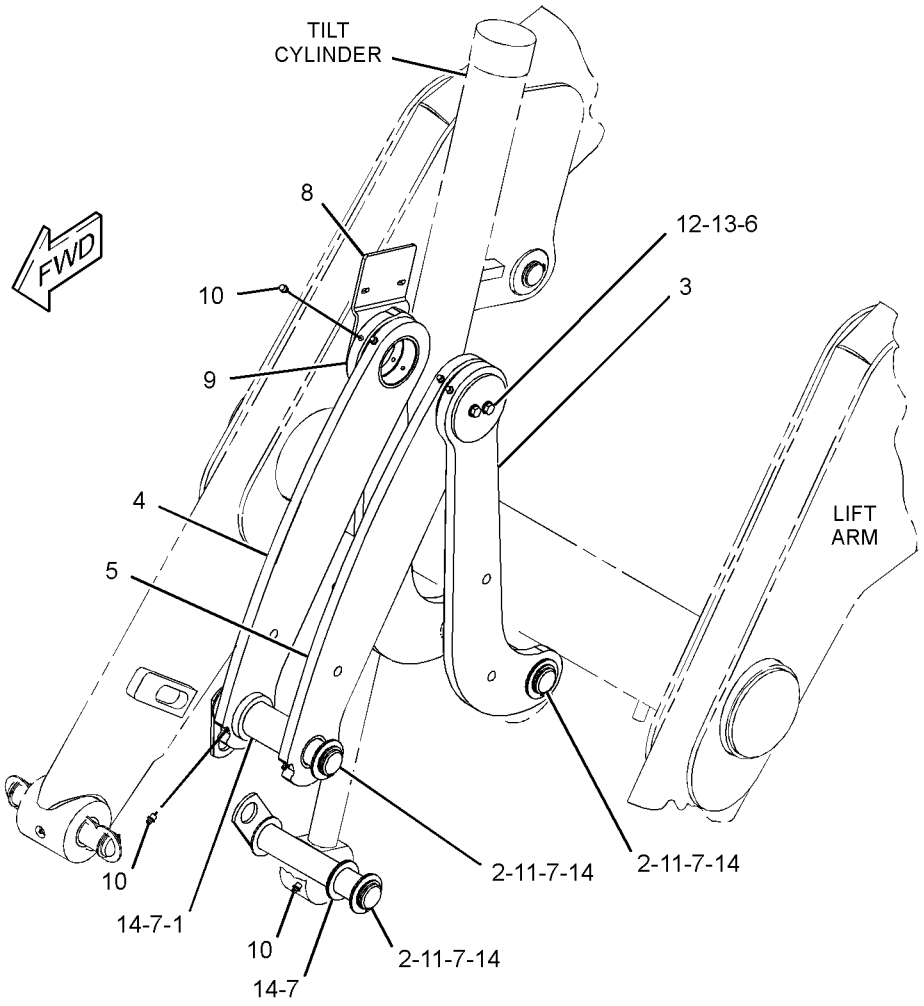

GRAPHIC #1 **<END>** g01406938

211-5182 LOCK GP-TRANSPORT–BOOM

S/N: CBD1-UP; MFG1-UP
PART OF 213-9284, 291-9190, 372-5176 CHASSIS AR
TYPE 1

SMCS-7505 **i03484744**

NOTE	REF NO	GRAPHIC REF	PART NUMBER	QTY	PART NAME 1 2 3 4 5 6 (PRODUCT LEVEL)	SEE PAGE
	1	1	**5P-7958**	1	SLEEVE-CABLE SPLICE	
	2	1	**9R-8594**	1	PIN AS	
	3	1	**131-8775**	1	BRACKET AS	
	4	1	**134-0143**	1	CABLE	
	5	1	**214-4285**	2	PAD AS	
	6	1	**214-6999**	1	HOOK	
	7	1	**214-7043**	1	SPACER (6.15X7.94X10-MM THK)	
	8	1	**225-8227**	1	HOOK	
	9	1	**276-2353**	1	CABLE AS	
		1	**2R-0364**	1	RING-RETAINING	
		1	**4D-9517**	1	CLIP	
		1	**6V-0826**	1	GROMMET	
		1	**279-9452**	1	CLIP	
	10	1	**3B-8489**	2	FITTING-GREASE	
M	11	1	**5A-3604**	2	BOLT-SOCKET HEAD (M8X1.25X25-MM)	
M	12	1	**5C-9553**	1	BOLT (M6X1X16-MM)	
	13	1	**6E-1135**	2	PIN	
	14	1	**8T-4121**	3	WASHER-HARD (11X21X2.5-MM THK)	
M	15	1	**8T-4137**	1	BOLT (M10X1.5X20-MM)	
M	16	1	**8T-4195**	2	BOLT (M10X1.5X30-MM)	
	17	1	**7K-1181**	1	STRAP-CABLE	
	18	1	**8T-4224**	1	WASHER-HARD (8.8X16X2-MM THK)	
M	19	1	**8T-4908**	1	BOLT (M8X1.25X25-MM)	
	20	1	**214-4281**	1	PIN	

M-METRIC PART

211-5182 **LOCK GP-TRANSPORT** *(contd.)* **i03484744**

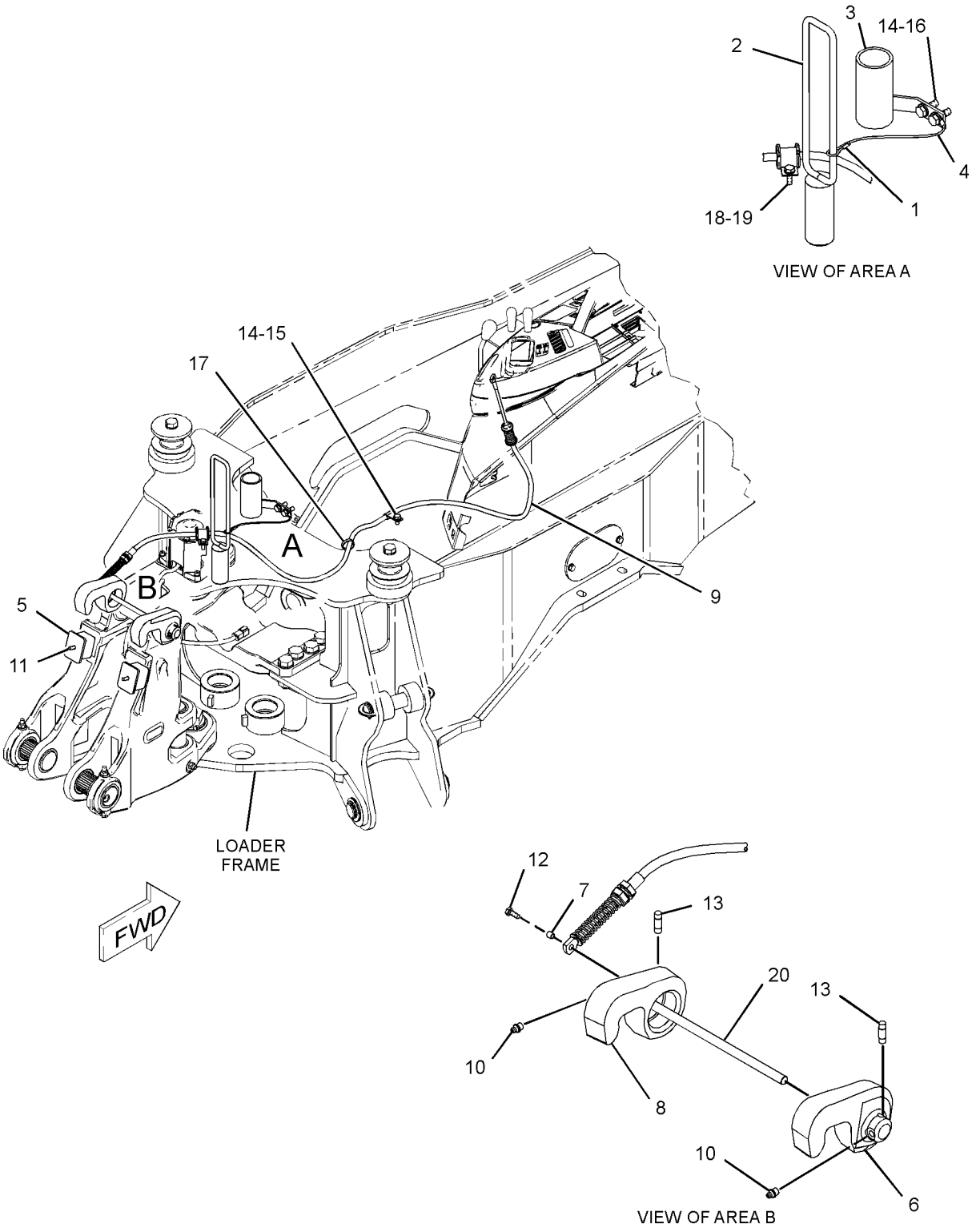

GRAPHIC #1 **<END>** g01880813

211-5182 LOCK GP-TRANSPORT–BOOM

S/N: CBD1-UP; MFG1-UP
PART OF 213-9284, 291-9190, 372-5176 CHASSIS AR
TYPE 2

SMCS-7505 **i04488830**

NOTE	REF NO	GRAPHIC REF	PART NUMBER	QTY	PART NAME 1 2 3 4 5 6 (PRODUCT LEVEL)	SEE PAGE
	1	1	**5P-7958**	1	SLEEVE-CABLE SPLICE	
C	2	1	**317-4928**	1	PIN AS	
	3	1	**131-8775**	1	BRACKET AS	
	4	1	**134-0143**	1	CABLE	
	5	1	**214-4285**	2	PAD AS	
	6	1	**214-6999**	1	HOOK	
	7	1	**214-7043**	1	SPACER (6.15X7.94X10-MM THK)	
	8	1	**225-8227**	1	HOOK	
	9	1	**276-2353**	1	CABLE AS	
		1	**2R-0364**	1	RING-RETAINING	
		1	**4D-9517**	1	CLIP	
		1	**6V-0826**	1	GROMMET	
		1	**279-9452**	1	CLIP	
	10	1	**3B-8489**	2	FITTING-GREASE	
M	11	1	**5A-3604**	2	BOLT-SOCKET HEAD (M8X1.25X25-MM)	
M	12	1	**5C-9553**	1	BOLT (M6X1X16-MM)	
	13	1	**6E-1135**	2	PIN	
	14	1	**8T-4121**	3	WASHER-HARD (11X21X2.5-MM THK)	
M	15	1	**8T-4137**	1	BOLT (M10X1.5X20-MM)	
M	16	1	**8T-4195**	2	BOLT (M10X1.5X30-MM)	
	17	1	**214-4281**	1	PIN	
	18	1	**8T-4224**	1	WASHER-HARD (8.8X16X2-MM THK)	
M	19	1	**8T-4908**	1	BOLT (M8X1.25X25-MM)	
	20	1	**7K-1181**	1	STRAP-CABLE	

C-CHANGE FROM PREVIOUS TYPE
M-METRIC PART

211-5182 **LOCK GP-TRANSPORT** *(contd.)* **i04488830**

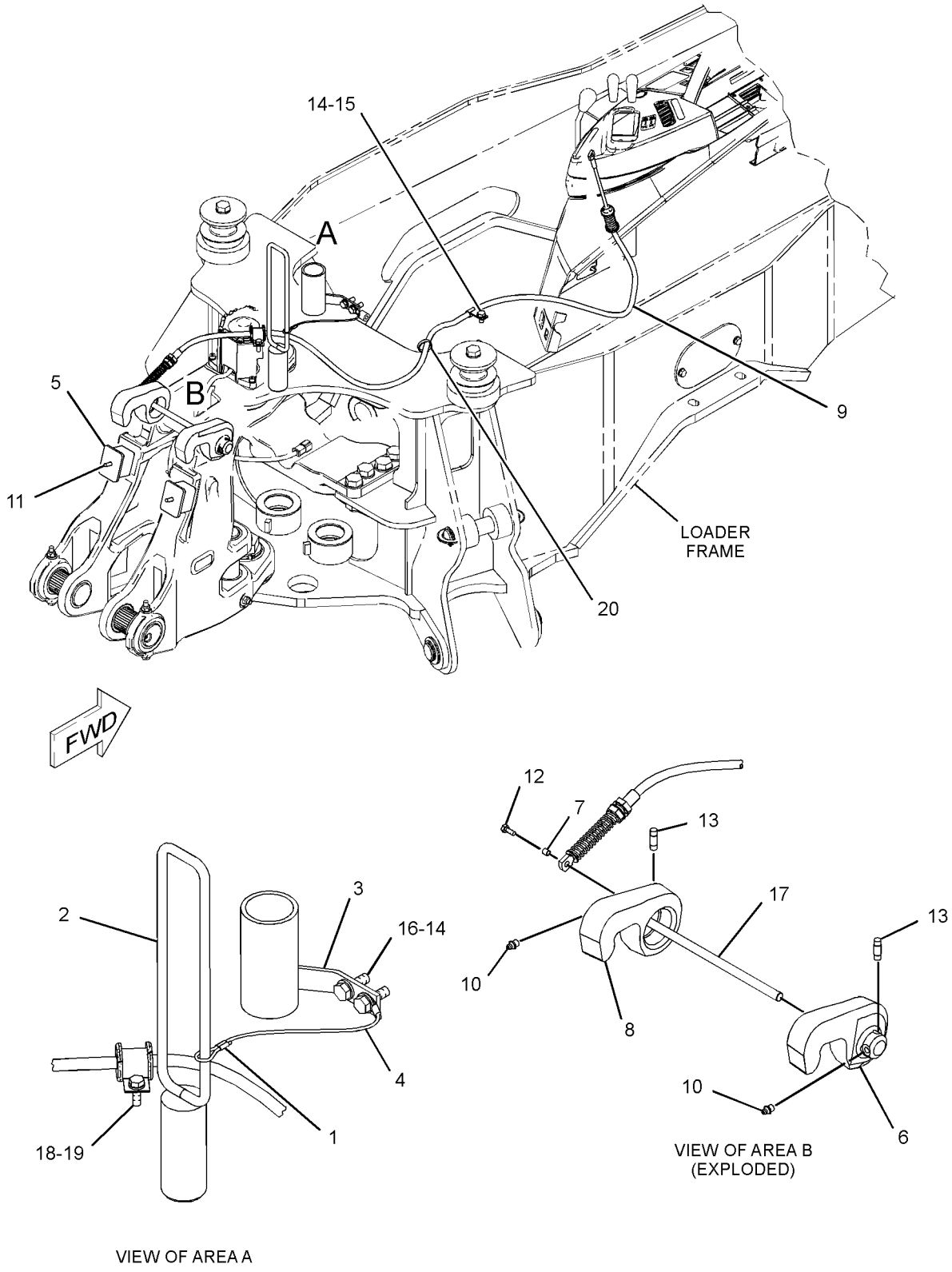

GRAPHIC #1 **<END>** g01805480

209-9938 MOUNTING GP-STICK

S/N: CBD1-UP; MFG1-UP
PART OF 209-9929 BACKHOE AR-EXTENDABLE STICK
AN ATTACHMENT

SMCS-6502 **i02495860**

NOTE	REF NO	GRAPHIC REF	PART NUMBER	QTY	PART NAME 1 2 3 4 5 6 (PRODUCT LEVEL)	SEE PAGE
B	1	1	**9R-5238**	6	SPACER (56X110X3-MM THK)	
B	2	1	**9R-1510**	7	WASHER (51X82X4-MM THK)	
B	3	1	**286-3086**	3	SPACER (56X130X1-MM THK)	
	4	1	**213-6710**	1	PIN AS	
	5	1	**213-6714**	1	PIN	
	6	1	**220-1019**	1	PIN	
	7	1	**3B-8488**	1	FITTING-GREASE	
	8	1	**3B-8489**	1	FITTING-GREASE	
	9	1	**6V-4364**	2	RING-RETAINING	
	10	1	**6V-8344**	2	RING-RETAINING	

B-USE AS REQUIRED

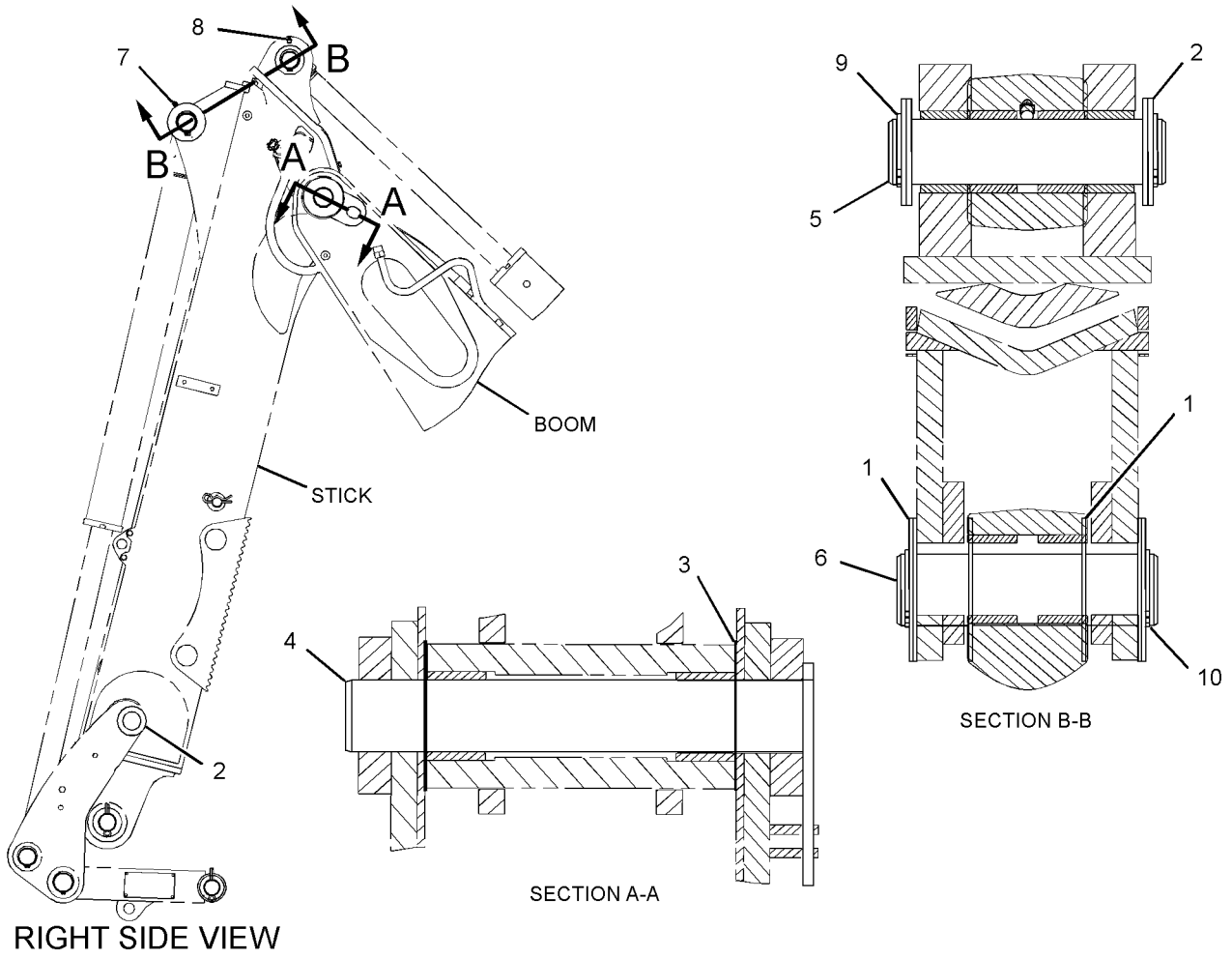

GRAPHIC #1 **<END>** g01198453

133-3362 PAD & GUARD GP-STABILIZER—STREET

S/N: CBD1-2111
AN ATTACHMENT

SMCS-7222 **i02700002**

NOTE	REF NO	GRAPHIC REF	PART NUMBER	QTY	PART NAME 1 2 3 4 5 6 (PRODUCT LEVEL)	SEE PAGE
	1	1	**8T-4986**	4	CLAMP-HOSE	
B	2	1	**9R-0109**	12	WASHER (41X64X3-MM THK)	
BC	3	1	**9R-0158**	6	WASHER (46X69X3-MM THK)	
	4	1	**130-1638**	2	PIN	
	5	1	**188-3953**	2	PAD	
	6	1	**201-5810**	2	PLATE	
	7	1	**201-5812**	2	PLATE AS	
					(EACH INCLUDES)	
M		1	**8T-3612**	2	NUT-WELD (M8X1.25-THD)	
		1	**201-5810**	1	PLATE	
C	8	1	**203-7060**	2	SPACER (12.58X15.88X8-MM)	
C	9	1	**238-9546**	2	SHAFT	
CY	10	1	*238-9547*	2	PAD GP-STABILIZER (STREET)	769
C	11	1	**241-0888**	2	PLATE	
C	12	1	**241-0889**	2	GUARD AS	
	13	1	**5P-4116**	2	WASHER-HARD (8.8X20.5X2-MM THK)	
C	14	1	**6V-3213**	4	RING-RETAINING	
	15	1	**6V-8144**	4	RING-RETAINING	
M	16	1	**7X-2537**	2	BOLT (M8X1.25X35-MM)	
C	17	1	**7X-7729**	2	WASHER (11X25X3-MM THK)	
CM	18	1	**8T-4195**	2	BOLT (M10X1.5X30-MM)	
	19	1	**214-4285**	2	PAD AS	
M	20	1	**5A-3604**	2	BOLT-SOCKET HEAD (M8X1.25X25-MM)	

B-USE AS REQUIRED
C-CHANGE FROM PREVIOUS TYPE
M-METRIC PART
Y-SEPARATE ILLUSTRATION

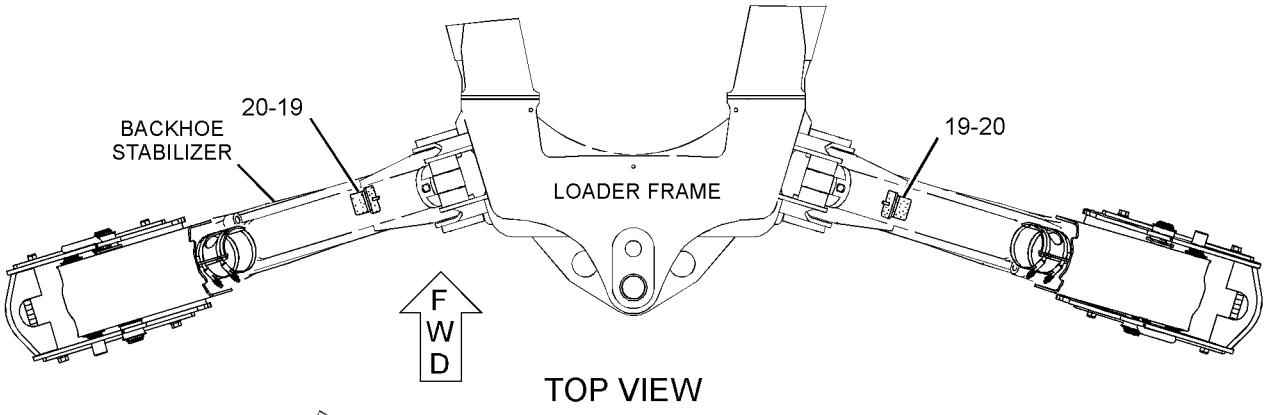

TOP VIEW

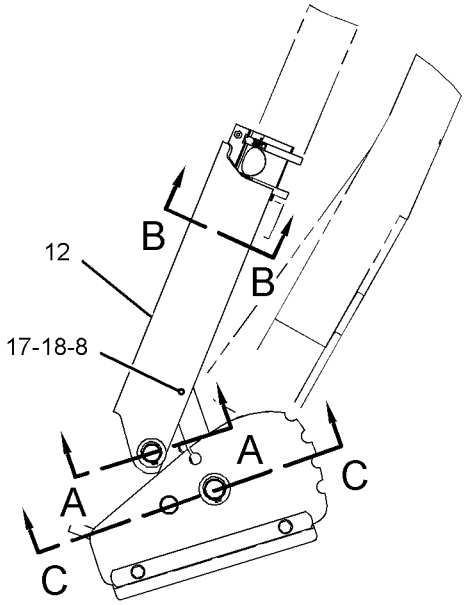

REAR VIEW
(LEFT SIDE)

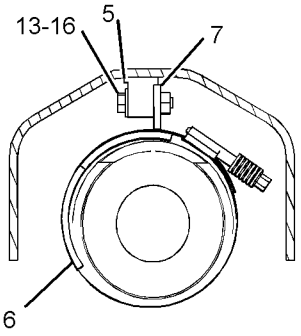

SECTION B-B

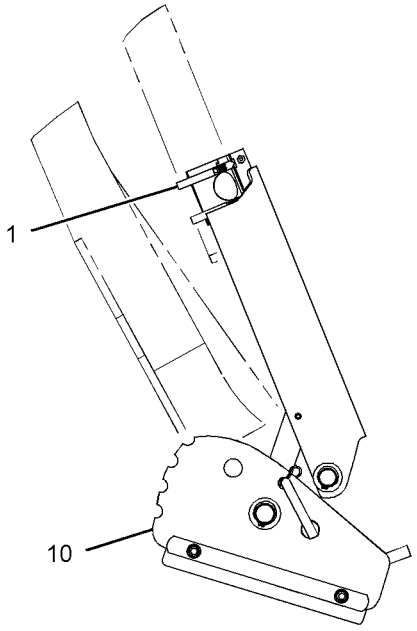

REAR VIEW
(RIGHT SIDE)

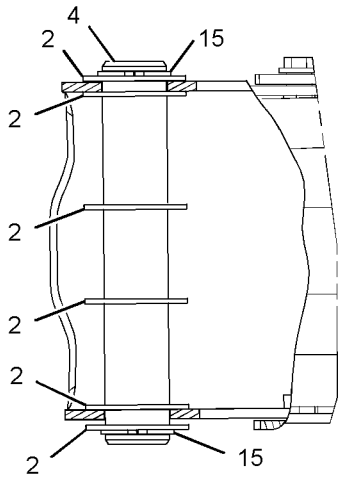

SECTION A-A

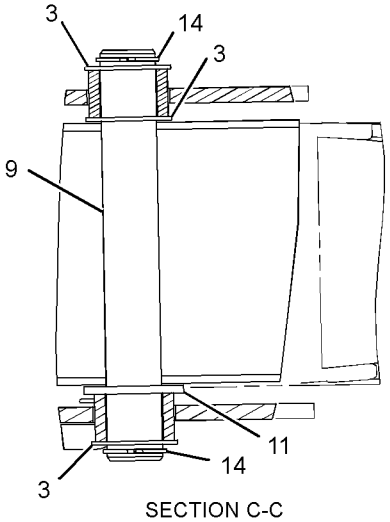

SECTION C-C

GRAPHIC #1 **<END>** g01367243

133-3362 PAD & GUARD GP-STABILIZER—STREET

S/N: CBD2112-6509
AN ATTACHMENT

SMCS-7222 **i02867285**

NOTE	REF NO	GRAPHIC REF	PART NUMBER	QTY	PART NAME 1 2 3 4 5 6 (PRODUCT LEVEL)	SEE PAGE
	1	1	**8T-4986**	4	CLAMP-HOSE	
B	2	1	**9R-0109**	12	WASHER (41X64X3-MM THK)	
B	3	1	**9R-0158**	6	WASHER (46X69X3-MM THK)	
	4	1	**130-1638**	2	PIN	
	5	1	**188-3953**	2	PAD	
	6	1	**201-5810**	2	PLATE	
	7	1	**201-5812**	2	PLATE AS	
					(EACH INCLUDES)	
M		1	**8T-3612**	2	NUT-WELD (M8X1.25-THD)	
		1	**201-5810**	1	PLATE	
	8	1	**3S-8536**	2	SPACER (0.406X0.656X0.38-IN THK)	
	9	1	**238-9546**	2	SHAFT	
Y	10	1	*238-9547*	2	PAD GP-STABILIZER (STREET)	769
	11	1	**241-0888**	2	PLATE	
	12	1	**241-0889**	2	GUARD AS	
	13	1	**5P-4116**	2	WASHER-HARD (8.8X20.5X2-MM THK)	
	14	1	**6V-3213**	4	RING-RETAINING	
	15	1	**6V-8144**	4	RING-RETAINING	
M	16	1	**7X-2537**	2	BOLT (M8X1.25X35-MM)	
	17	1	**7X-7729**	2	WASHER (11X25X3-MM THK)	
M	18	1	**8T-4195**	2	BOLT (M10X1.5X30-MM)	
C	19	1	**194-9487**	2	BUMPER AS	

B-USE AS REQUIRED
C-CHANGE FROM PREVIOUS TYPE
M-METRIC PART
Y-SEPARATE ILLUSTRATION

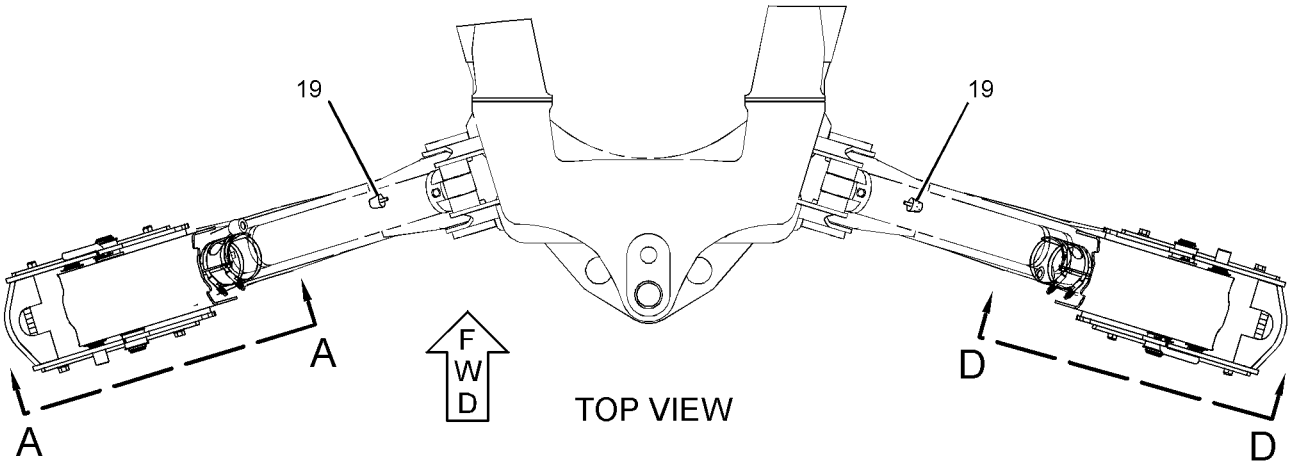

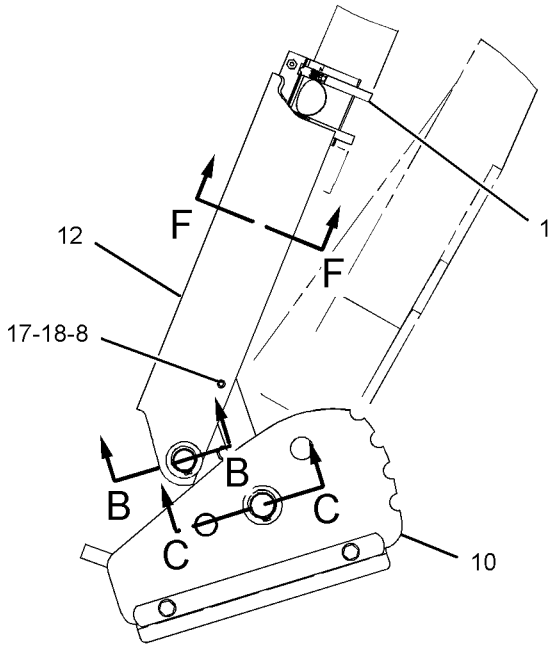

VIEW A-A

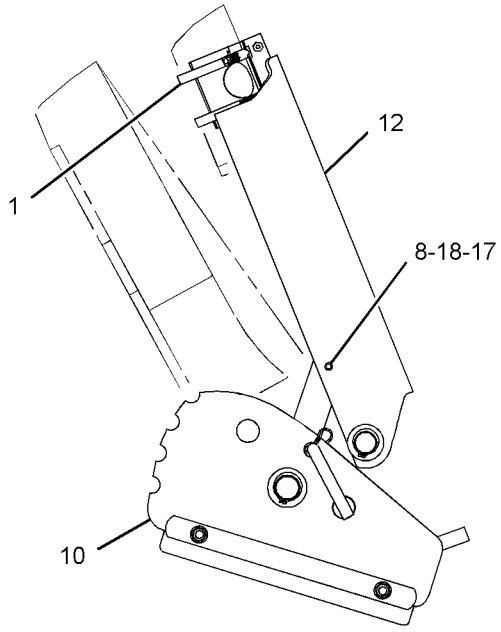

VIEW D-D

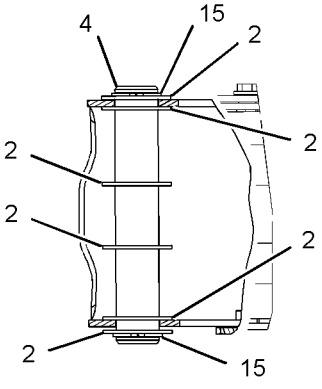

SECTION B-B

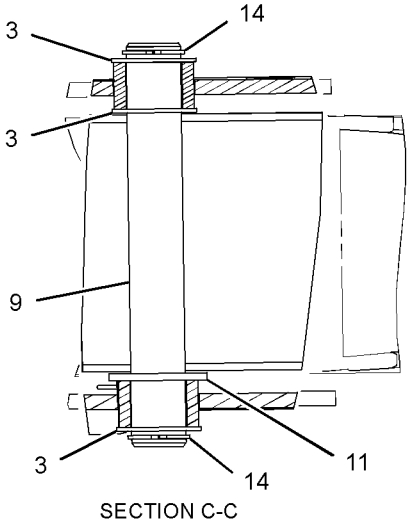

SECTION C-C

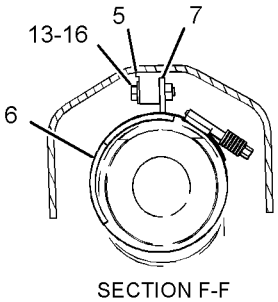

SECTION F-F

GRAPHIC #1

<END>

g01431964

133-3362 PAD & GUARD GP-STABILIZER—STREET

S/N: CBD6510-7713

AN ATTACHMENT

SMCS-7222 **i03336720**

NOTE	REF NO	GRAPHIC REF	PART NUMBER	QTY	PART NAME 1 2 3 4 5 6 (PRODUCT LEVEL)	SEE PAGE
	1	1	**8T-4986**	4	CLAMP-HOSE	
B	2	1	**9R-0109**	12	WASHER (41X64X3-MM THK)	
B	3	1	**9R-0158**	6	WASHER (46X69X3-MM THK)	
	4	1	**130-1638**	2	PIN	
	5	1	**188-3953**	2	PAD	
	6	1	**194-9487**	2	BUMPER AS	
C	7	1	**318-8228**	2	PLATE AS	
	8	1	**3S-8536**	2	SPACER (0.406X0.656X0.38-IN THK)	
	9	1	**238-9546**	2	SHAFT	
Y	10	1	*238-9547*	2	PAD GP-STABILIZER (STREET)	769
	11	1	**241-0888**	2	PLATE	
	12	1	**241-0889**	2	GUARD AS	
					(EACH INCLUDES)	
M		1	**8T-3490**	2	NUT-WELD (M10X1.5-THD)	
	13	1	**5P-4116**	2	WASHER-HARD (8.8X20.5X2-MM THK)	
	14	1	**6V-3213**	4	RING-RETAINING	
	15	1	**6V-8144**	4	RING-RETAINING	
M	16	1	**7X-2537**	2	BOLT (M8X1.25X35-MM)	
	17	1	**7X-7729**	2	WASHER (11X25X3-MM THK)	
M	18	1	**8T-4195**	2	BOLT (M10X1.5X30-MM)	

B-USE AS REQUIRED
C-CHANGE FROM PREVIOUS TYPE
M-METRIC PART
Y-SEPARATE ILLUSTRATION

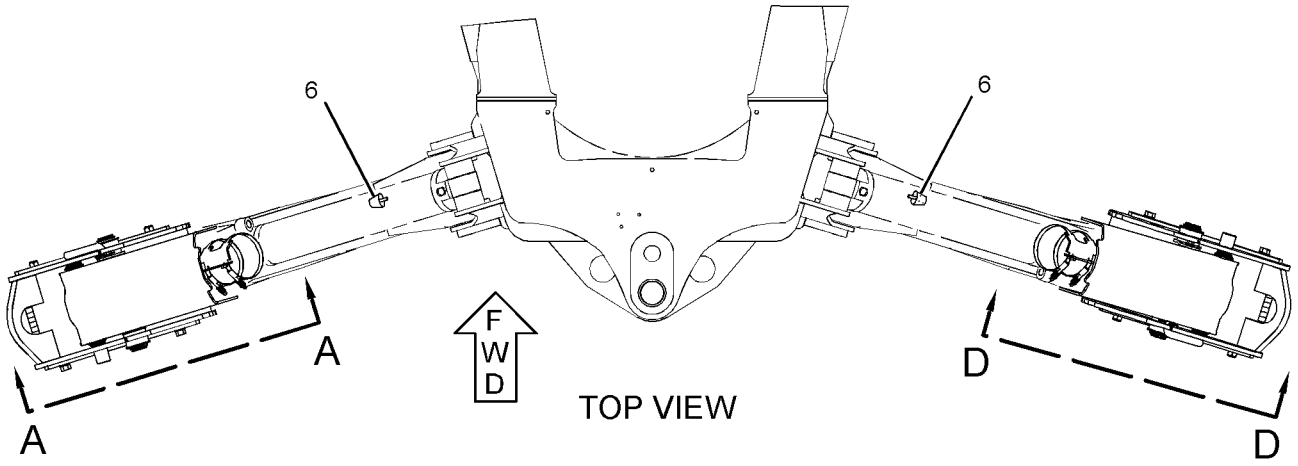

TOP VIEW

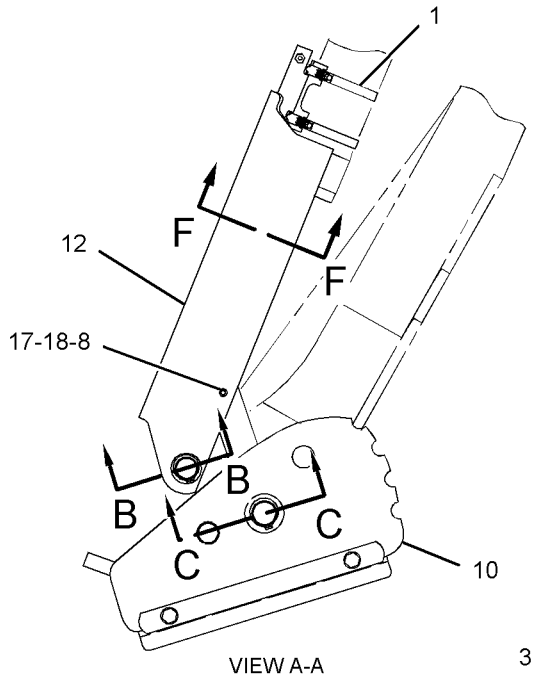

VIEW A-A

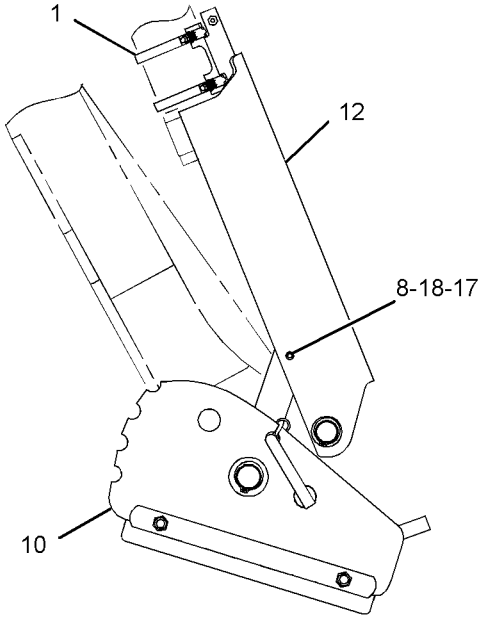

VIEW D-D

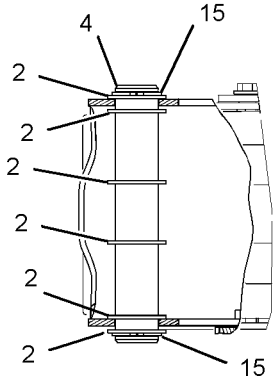

SECTION B-B

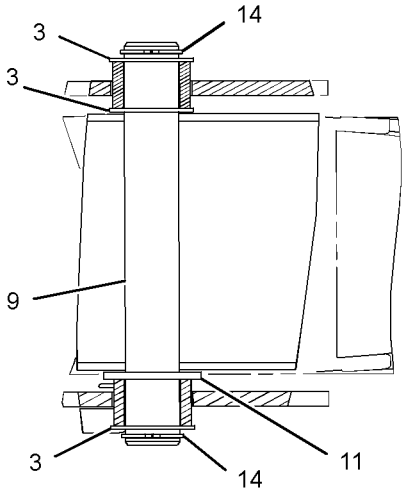

SECTION C-C

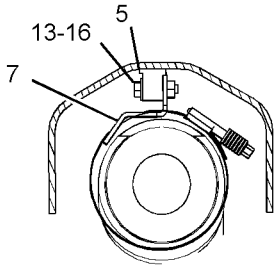

SECTION F-F

GRAPHIC #1

<END>

g01728069

133-3362 PAD & GUARD GP-STABILIZER–STREET

S/N: CBD7714-UP; MFG1-UP

AN ATTACHMENT

SMCS-7222 **i04185415**

NOTE	REF NO	GRAPHIC REF	PART NUMBER	QTY	PART NAME 1 2 3 4 5 6 (PRODUCT LEVEL)	SEE PAGE
CY	1	1	*9R-6007*	1	PAD & MTG GP-STABILIZER (STREET)	764
CY	2	1	*355-5861*	1	GUARD GP-CYLINDER (STABILIZER)	500

C-CHANGE FROM PREVIOUS TYPE
Y-SEPARATE ILLUSTRATION

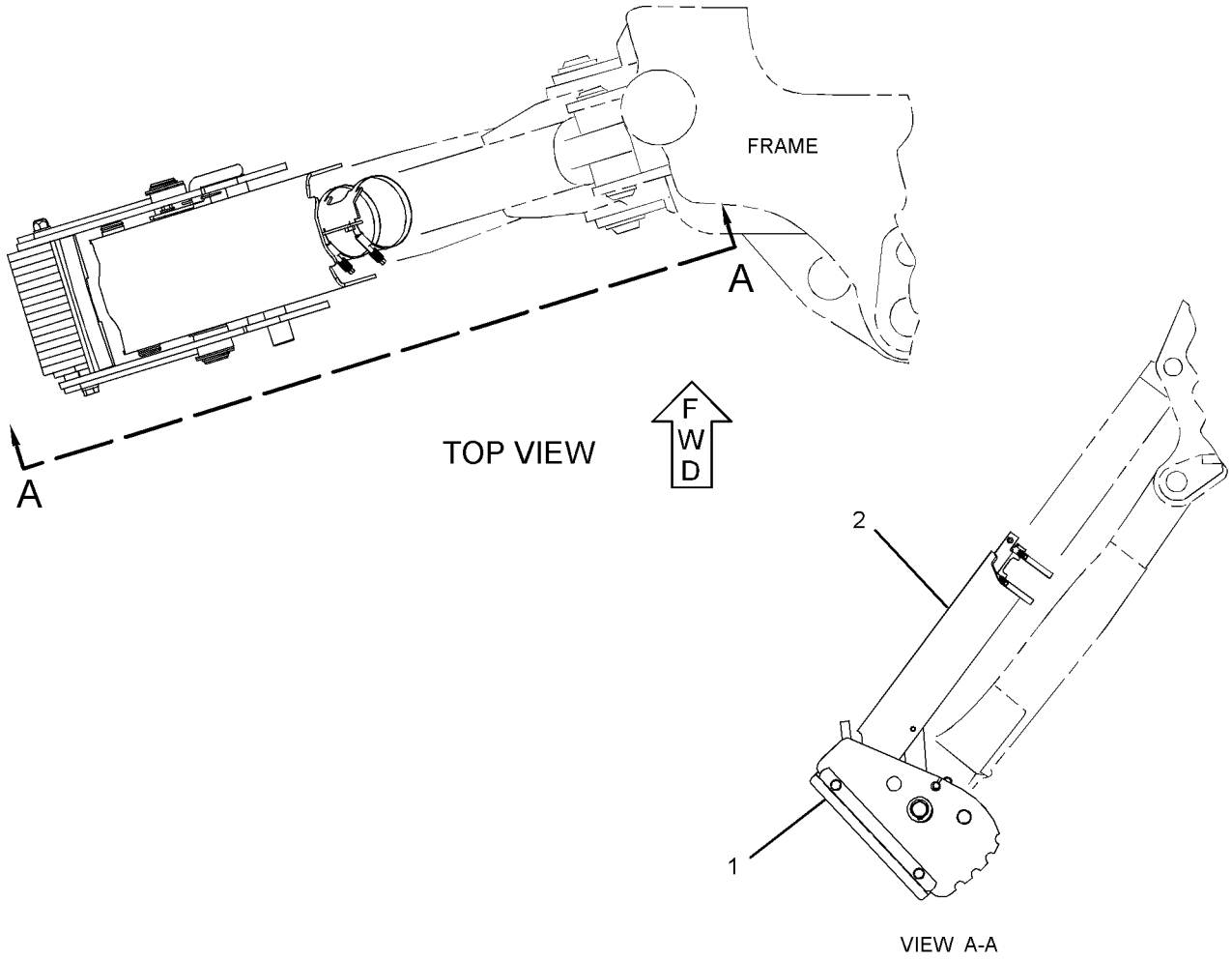

GRAPHIC #1 **<END>** g02117580

133-3363 PAD & GUARD GP-STABILIZER

S/N: CBD1-2111
AN ATTACHMENT

SMCS-7222 **i02700003**

NOTE	REF NO	GRAPHIC REF	PART NUMBER	QTY	PART NAME 1 2 3 4 5 6 (PRODUCT LEVEL)	SEE PAGE
	1	1	**8T-4986**	4	CLAMP-HOSE	
BC	2	1	**9R-0109**	12	WASHER (41X64X3-MM THK)	
BC	3	1	**9R-0158**	6	WASHER (46X69X3-MM THK)	
	4	1	**130-1638**	2	PIN	
	5	1	**188-3953**	2	PAD	
	6	1	**201-5810**	2	PLATE	
	7	1	**201-5812**	2	PLATE AS	
					(EACH INCLUDES)	
M		1	**8T-3612**	2	NUT-WELD (M8X1.25-THD)	
		1	**201-5810**	1	PLATE	
C	8	1	**203-7060**	2	SPACER (12.58X15.88X8-MM)	
C	9	1	**238-9546**	2	SHAFT	
C	10	1	**239-1416**	2	PAD AS	
C	11	1	**241-0888**	2	PLATE	
C	12	1	**241-0889**	2	GUARD AS	
					(EACH INCLUDES)	
M		1	**8T-3490**	2	NUT-WELD (M10X1.5-THD)	
	13	1	**5P-4116**	2	WASHER-HARD (8.8X20.5X2-MM THK)	
	14	1	**6V-3213**	4	RING-RETAINING	
	15	1	**6V-8144**	4	RING-RETAINING	
M	16	1	**7X-2537**	2	BOLT (M8X1.25X35-MM)	
C	17	1	**7X-7729**	2	WASHER (11X25X3-MM THK)	
CM	18	1	**8T-4195**	2	BOLT (M10X1.5X30-MM)	
	19	1	**214-4285**	2	PAD AS	
M	20	1	**5A-3604**	2	BOLT-SOCKET HEAD (M8X1.25X25-MM)	

B-USE AS REQUIRED
C-CHANGE FROM PREVIOUS TYPE
M-METRIC PART

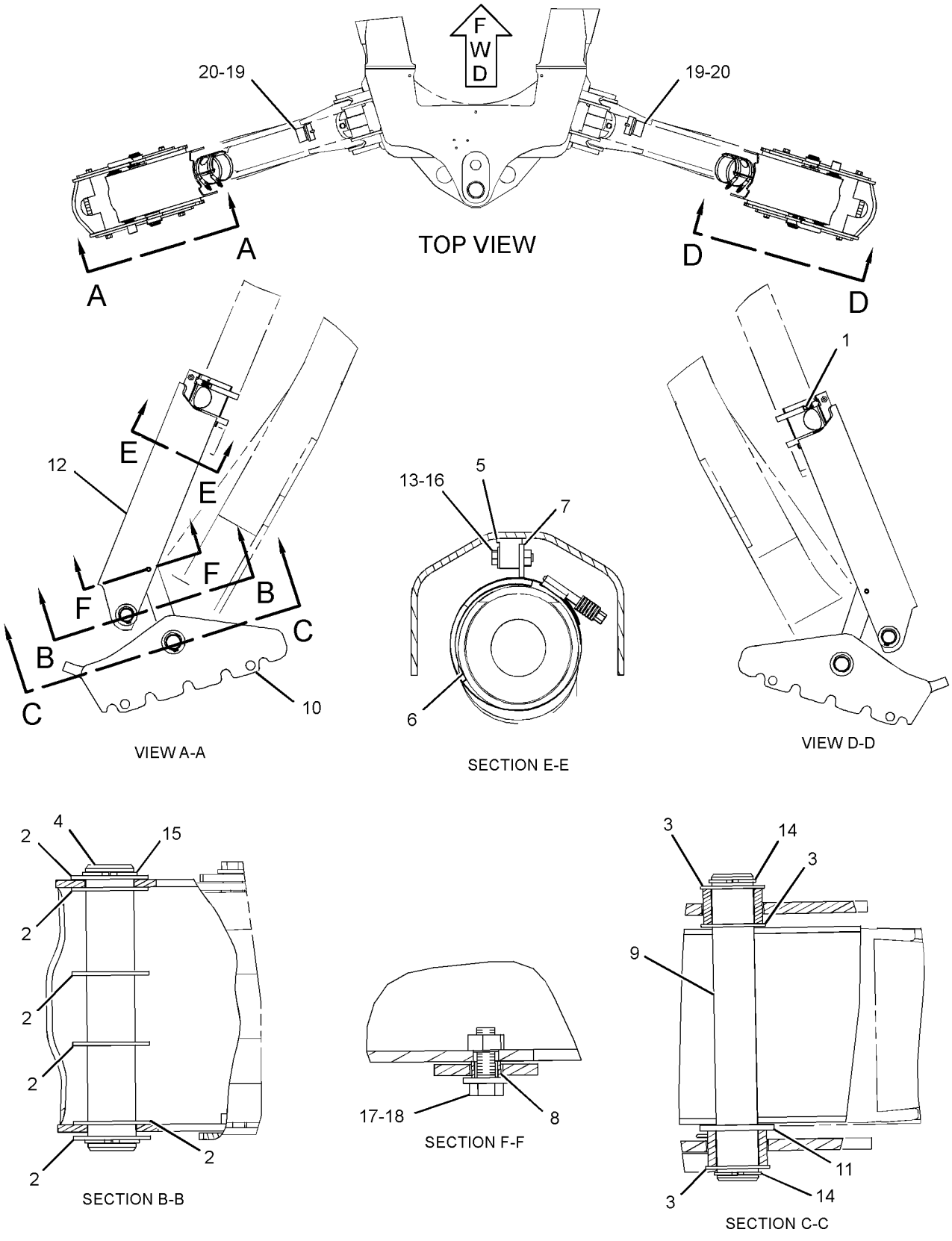

GRAPHIC #1 **<END>** g01386557

IMPLEMENTS

133-3363 PAD & GUARD GP-STABILIZER

S/N: CBD2112-6509

AN ATTACHMENT

SMCS-7222 **i02869134**

NOTE	REF NO	GRAPHIC REF	PART NUMBER	QTY	PART NAME 1 2 3 4 5 6 (PRODUCT LEVEL)	SEE PAGE
	1	1	**8T-4986**	4	CLAMP-HOSE	
B	2	1	**9R-0109**	12	WASHER (41X64X3-MM THK)	
B	3	1	**9R-0158**	6	WASHER (46X69X3-MM THK)	
	4	1	**130-1638**	2	PIN	
	5	1	**188-3953**	2	PAD	
	6	1	**201-5810**	2	PLATE	
	7	1	**201-5812**	2	PLATE AS	
					(EACH INCLUDES)	
M		1	**8T-3612**	2	NUT-WELD (M8X1.25-THD)	
		1	**201-5810**	1	PLATE	
	8	1	**3S-8536**	2	SPACER (0.406X0.656X0.38-IN THK)	
	9	1	**238-9546**	2	SHAFT	
	10	1	**239-1416**	2	PAD AS	
	11	1	**241-0888**	2	PLATE	
	12	1	**241-0889**	2	GUARD AS	
					(EACH INCLUDES)	
M		1	**8T-3490**	2	NUT-WELD (M10X1.5-THD)	
	13	1	**5P-4116**	2	WASHER-HARD (8.8X20.5X2-MM THK)	
	14	1	**6V-3213**	4	RING-RETAINING	
	15	1	**6V-8144**	4	RING-RETAINING	
M	16	1	**7X-2537**	2	BOLT (M8X1.25X35-MM)	
	17	1	**7X-7729**	2	WASHER (11X25X3-MM THK)	
M	18	1	**8T-4195**	2	BOLT (M10X1.5X30-MM)	
C	19	1	**194-9487**	2	BUMPER AS	

B-USE AS REQUIRED
C-CHANGE FROM PREVIOUS TYPE
M-METRIC PART

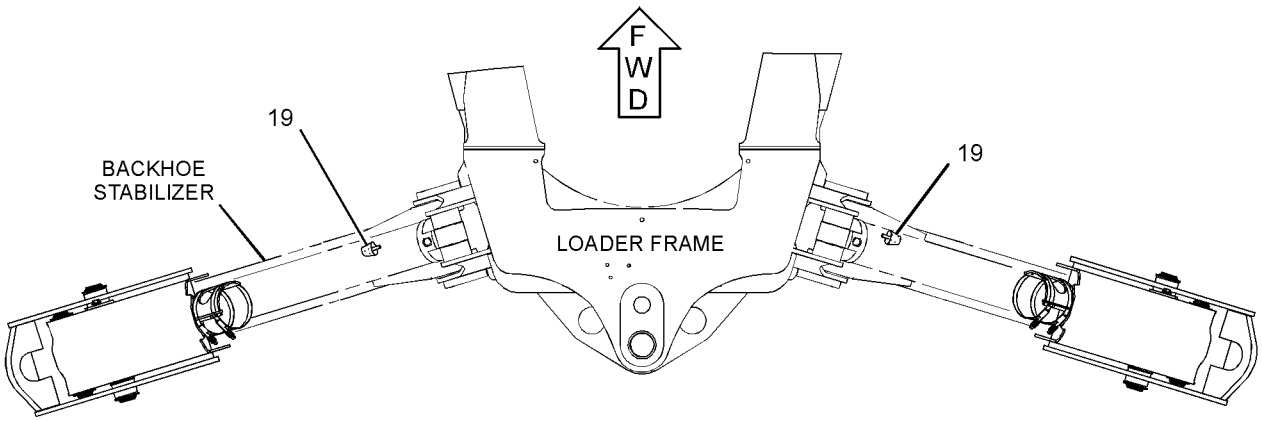

TOP VIEW

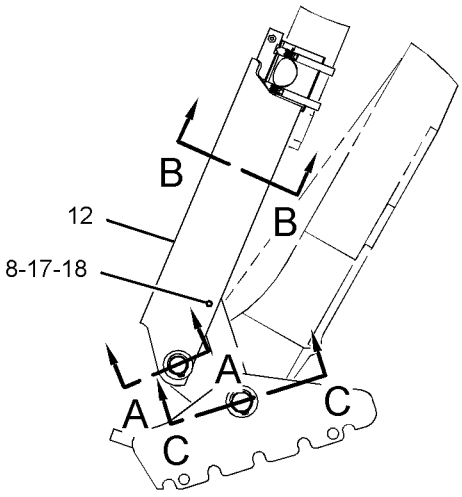

REAR VIEW
(LEFT SIDE)

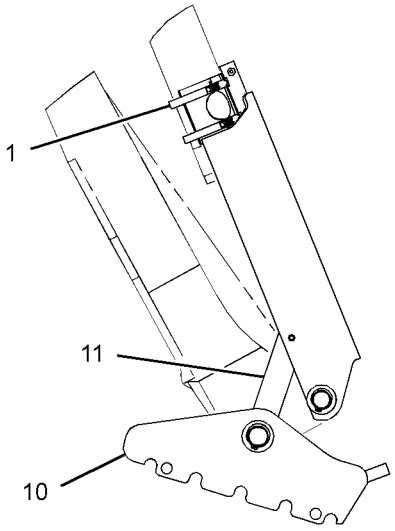

REAR VIEW
(RIGHT SIDE)

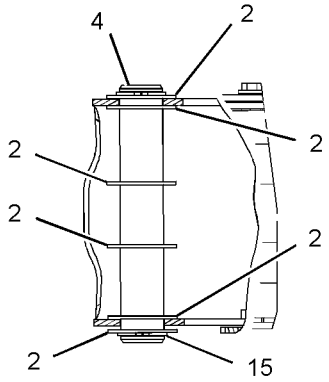

SECTION A-A

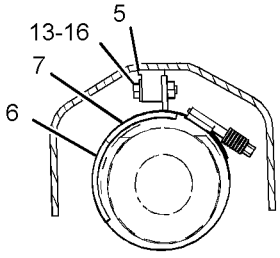

SECTION B-B

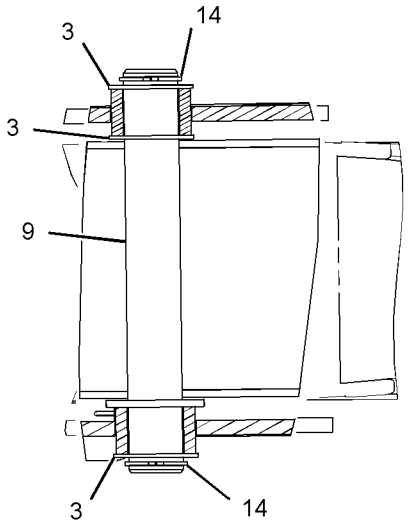

SECTION C-C

GRAPHIC #1

<END>

g01429711

IMPLEMENTS

133-3363 PAD & GUARD GP-STABILIZER

S/N: CBD6510-7713

AN ATTACHMENT

SMCS-7222 **i03336723**

NOTE	REF NO	GRAPHIC REF	PART NUMBER	QTY	PART NAME 1 2 3 4 5 6 (PRODUCT LEVEL)	SEE PAGE
	1	1	**8T-4986**	4	CLAMP-HOSE	
B	2	1	**9R-0109**	12	WASHER (41X64X3-MM THK)	
B	3	1	**9R-0158**	6	WASHER (46X69X3-MM THK)	
	4	1	**130-1638**	2	PIN	
	5	1	**188-3953**	2	PAD	
	6	1	**194-9487**	2	BUMPER AS	
C	7	1	**318-8228**	2	PLATE AS	
	8	1	**3S-8536**	2	SPACER (0.406X0.656X0.38-IN THK)	
	9	1	**238-9546**	2	SHAFT	
	10	1	**239-1416**	2	PAD AS	
	11	1	**241-0888**	2	PLATE	
	12	1	**241-0889**	2	GUARD AS	
	13	1	**5P-4116**	2	WASHER-HARD (8.8X20.5X2-MM THK)	
	14	1	**6V-3213**	4	RING-RETAINING	
	15	1	**6V-8144**	4	RING-RETAINING	
M	16	1	**7X-2537**	2	BOLT (M8X1.25X35-MM)	
	17	1	**7X-7729**	2	WASHER (11X25X3-MM THK)	
M	18	1	**8T-4195**	2	BOLT (M10X1.5X30-MM)	

B-USE AS REQUIRED
C-CHANGE FROM PREVIOUS TYPE
M-METRIC PART

133-3363 **PAD & GUARD GP-STABILIZER** *(contd.)* **i03336723**

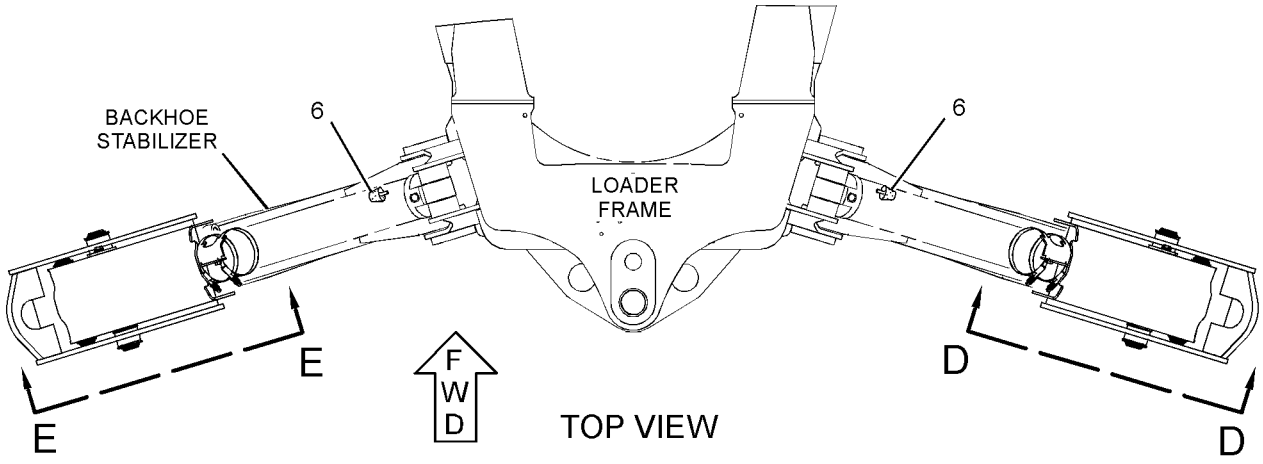

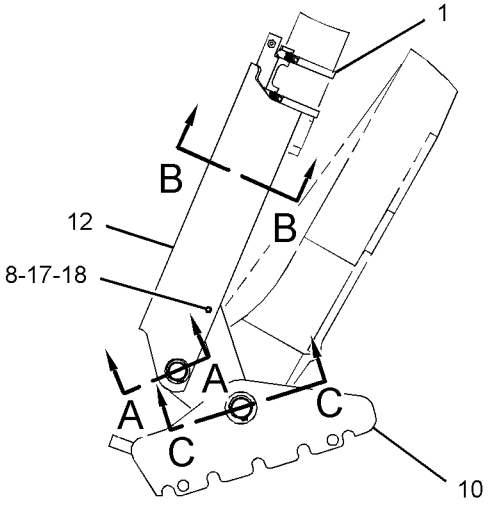

VIEW E-E

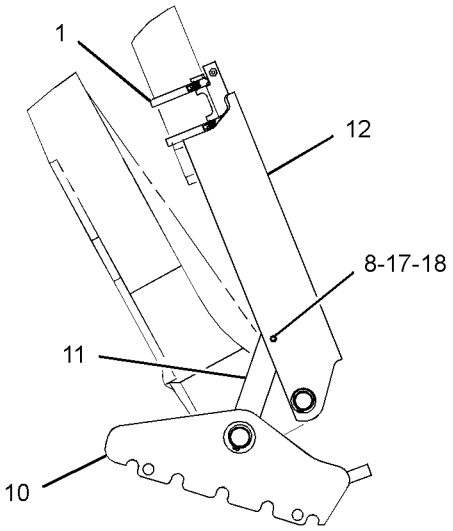

VIEW D-D

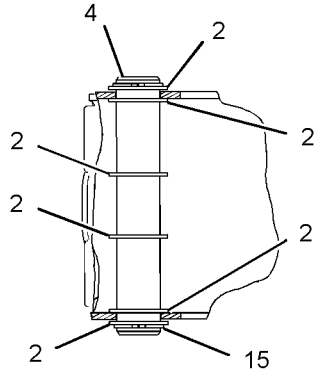

SECTION A-A

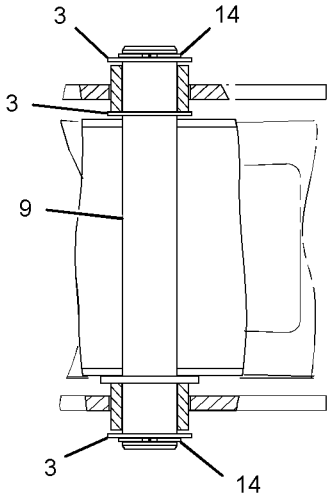

SECTION C-C

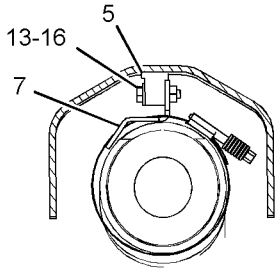

SECTION B-B

GRAPHIC #1

<END>

g01728244

IMPLEMENTS

133-3363 PAD & GUARD GP-STABILIZER

S/N: CBD7714-UP; MFG1-UP

AN ATTACHMENT

SMCS-7222 **i04185431**

NOTE	REF NO	GRAPHIC REF	PART NUMBER	QTY	PART NAME 1 2 3 4 5 6 (PRODUCT LEVEL)	SEE PAGE
CY	1	1	*116-4942*	1	PAD & MTG GP-STABILIZER	767
CY	2	1	*355-5861*	1	GUARD GP-CYLINDER (STABILIZER)	500

C-CHANGE FROM PREVIOUS TYPE
Y-SEPARATE ILLUSTRATION

133-3363 **PAD & GUARD GP-STABILIZER** *(contd.)* **i04185431**

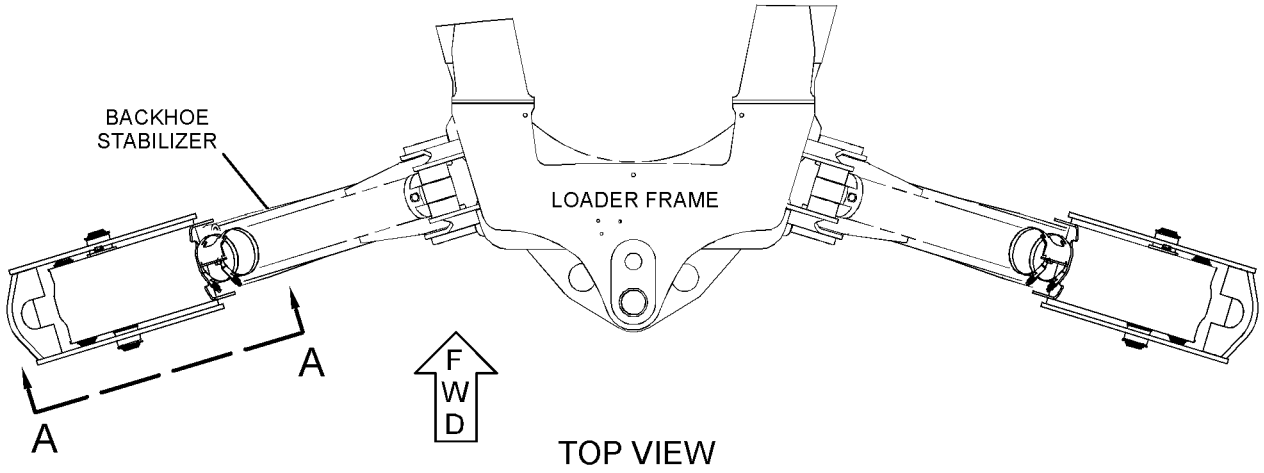

TOP VIEW

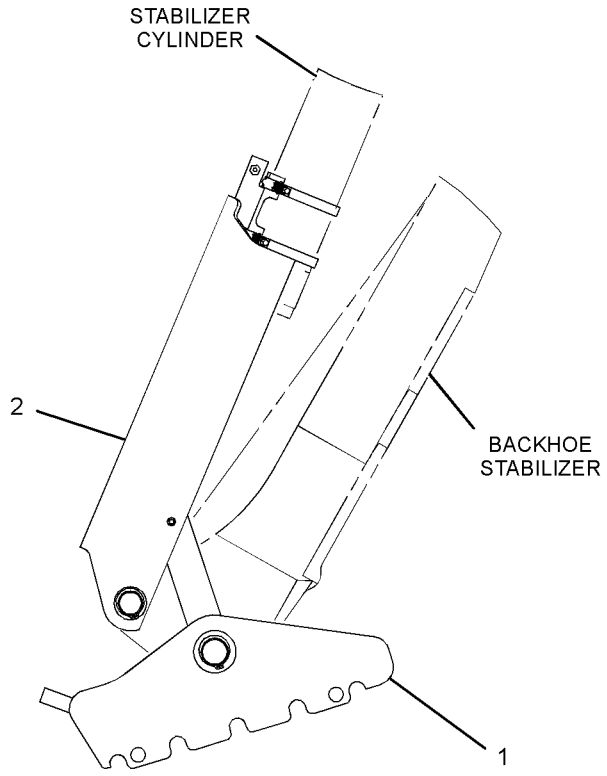

VIEW A-A

GRAPHIC #1 **<END>** g02114555

IMPLEMENTS

133-3366 PAD & GUARD GP-STABILIZER—STREET

S/N: CBD1-2111
AN ATTACHMENT

SMCS-7222 **i02700004**

NOTE	REF NO	GRAPHIC REF	PART NUMBER	QTY	PART NAME 1 2 3 4 5 6 (PRODUCT LEVEL)	SEE PAGE
	1	1	**8T-4986**	4	CLAMP-HOSE	
B	2	1	**9R-0109**	12	WASHER (41X64X3-MM THK)	
BC	3	1	**9R-0158**	6	WASHER (46X69X3-MM THK)	
	5	1	**130-1638**	2	PIN	
	6	1	**188-3953**	2	PAD	
	7	1	**201-5810**	2	PLATE	
	8	1	**201-5812**	2	PLATE AS	
					(EACH INCLUDES)	
M		1	**8T-3612**	2	NUT-WELD (M8X1.25-THD)	
		1	**201-5810**	1	PLATE	
C	9	1	**203-7060**	2	SPACER (12.58X15.88X8-MM)	
C	10	1	**238-9546**	2	SHAFT	
C	11	1	**241-0888**	2	PLATE	
C	12	1	**241-0889**	2	GUARD AS (STABILIZER)	
					(EACH INCLUDES)	
M		1	**8T-3490**	1	NUT-WELD (M10X1.5-THD)	
CY	13	1	*247-7555*	2	PAD GP-STABILIZER (STREET)	770
	14	1	**5P-4116**	2	WASHER-HARD (8.8X20.5X2-MM THK)	
	15	1	**6V-3213**	4	RING-RETAINING	
	16	1	**6V-8144**	4	RING-RETAINING	
M	17	1	**7X-2537**	2	BOLT (M8X1.25X35-MM)	
C	18	1	**7X-7729**	2	WASHER (11X25X3-MM THK)	
CM	19	1	**8T-4195**	2	BOLT (M10X1.5X30-MM)	
	20	1	**214-4285**	2	PAD AS	
M	21	1	**5A-3604**	2	BOLT-SOCKET HEAD (M8X1.25X25-MM)	

B-USE AS REQUIRED
C-CHANGE FROM PREVIOUS TYPE
M-METRIC PART
Y-SEPARATE ILLUSTRATION

133-3366 **PAD & GUARD GP-STABILIZER** *(contd.)* **i02700004**

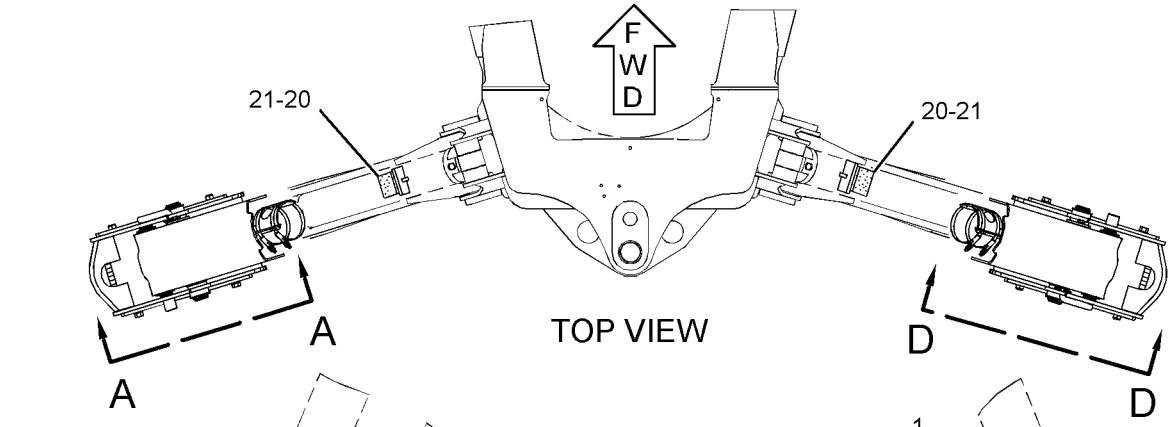

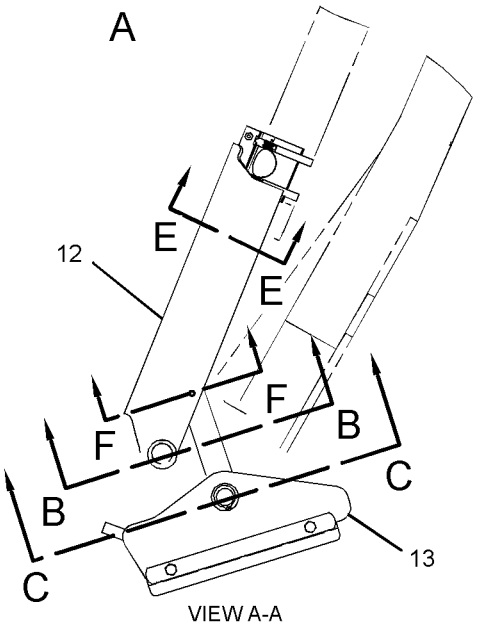

VIEW A-A

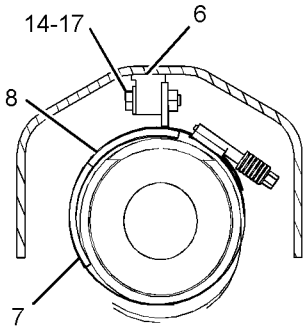

SECTION E-E

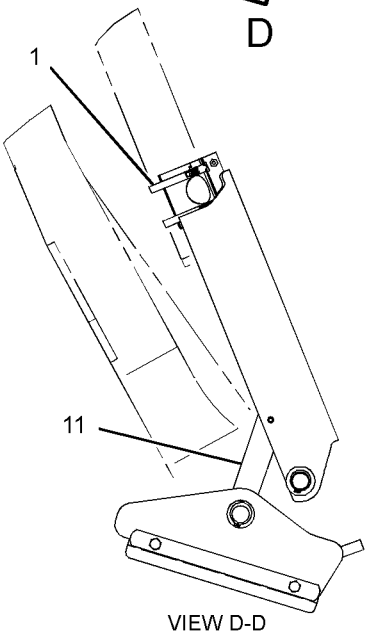

VIEW D-D

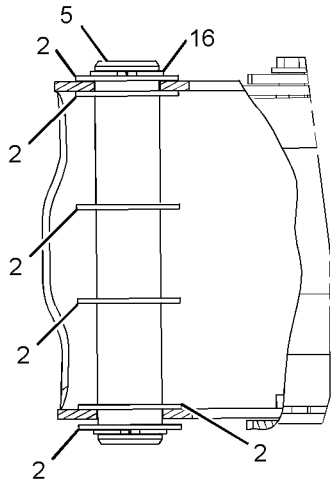

SECTION B-B

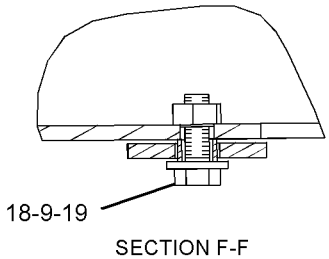

SECTION F-F

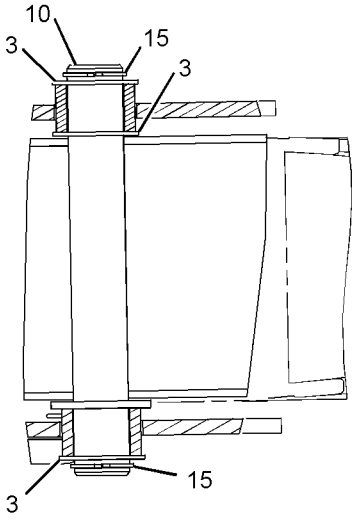

SECTION C-C

GRAPHIC #1 **<END>** g01386887

IMPLEMENTS

133-3366 PAD & GUARD GP-STABILIZER—STREET

S/N: CBD2112-6509

AN ATTACHMENT

SMCS-7222 **i02975506**

NOTE	REF NO	GRAPHIC REF	PART NUMBER	QTY	PART NAME 1 2 3 4 5 6 (PRODUCT LEVEL)	SEE PAGE
	1	1	**8T-4986**	4	CLAMP-HOSE	
B	2	1	**9R-0109**	12	WASHER (41X64X3-MM THK)	
B	3	1	**9R-0158**	6	WASHER (46X69X3-MM THK)	
	5	1	**130-1638**	2	PIN	
	6	1	**188-3953**	2	PAD	
	7	1	**201-5810**	2	PLATE	
	8	1	**201-5812**	2	PLATE AS	
					(EACH INCLUDES)	
M		1	**8T-3612**	2	NUT-WELD (M8X1.25-THD)	
		1	**201-5810**	1	PLATE	
	9	1	**3S-8536**	2	SPACER (0.406X0.656X0.38-IN THK)	
	10	1	**238-9546**	2	SHAFT	
	11	1	**241-0888**	2	PLATE	
	12	1	**241-0889**	2	GUARD AS (STABILIZER)	
Y	13	1	*247-7555*	2	PAD GP-STABILIZER (STREET)	770
	14	1	**5P-4116**	2	WASHER-HARD (8.8X20.5X2-MM THK)	
	15	1	**6V-3213**	4	RING-RETAINING	
	16	1	**6V-8144**	4	RING-RETAINING	
M	17	1	**7X-2537**	2	BOLT (M8X1.25X35-MM)	
	18	1	**7X-7729**	2	WASHER (11X25X3-MM THK)	
M	19	1	**8T-4195**	2	BOLT (M10X1.5X30-MM)	
C	20	1	**194-9487**	2	BUMPER AS	

B-USE AS REQUIRED
C-CHANGE FROM PREVIOUS TYPE
M-METRIC PART
Y-SEPARATE ILLUSTRATION

133-3366 **PAD & GUARD GP-STABILIZER** *(contd.)* **i02975506**

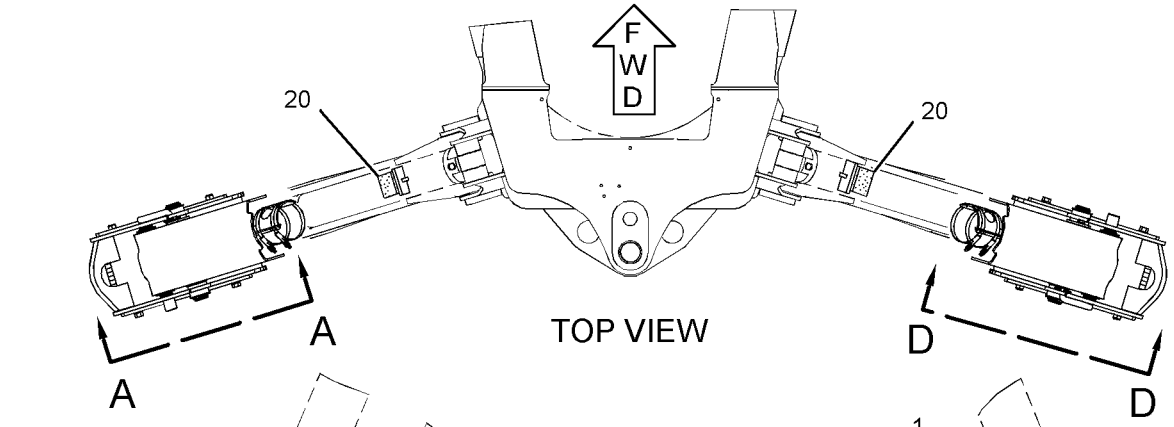

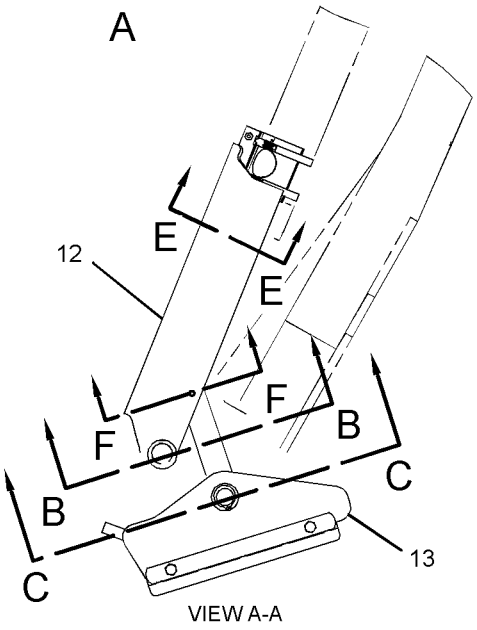

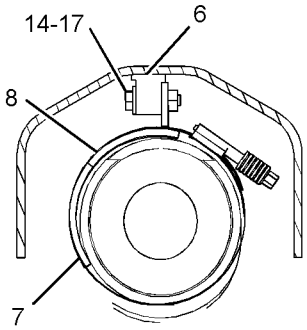

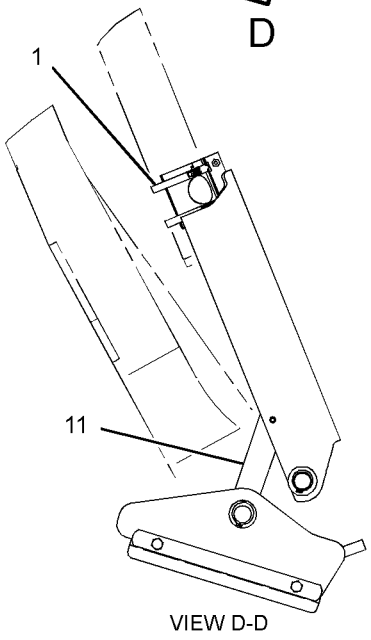

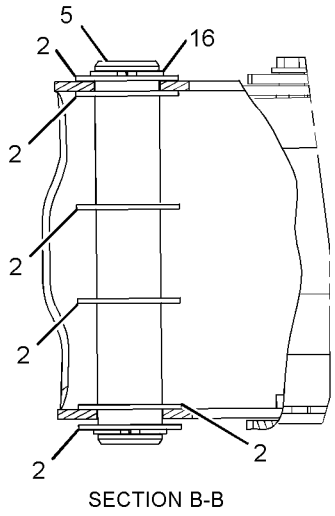

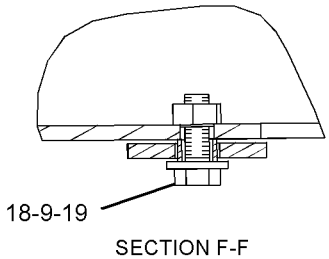

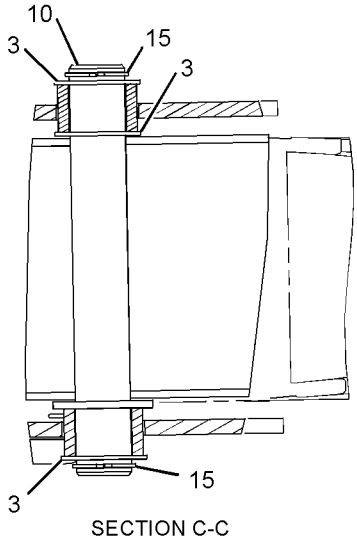

GRAPHIC #1 **<END>** g01714440

IMPLEMENTS

133-3366 PAD & GUARD GP-STABILIZER—STREET

S/N: CBD6510-7713

AN ATTACHMENT

SMCS-7222 **i03580820**

NOTE	REF NO	GRAPHIC REF	PART NUMBER	QTY	PART NAME 1 2 3 4 5 6 (PRODUCT LEVEL)	SEE PAGE
	1	1	**8T-4986**	4	CLAMP-HOSE	
B	2	1	**9R-0109**	12	WASHER (41X64X3-MM THK)	
B	3	1	**9R-0158**	6	WASHER (46X69X3-MM THK)	
	5	1	**130-1638**	2	PIN	
	6	1	**188-3953**	2	PAD	
C	8	1	**318-8228**	2	PLATE AS	
	9	1	**3S-8536**	2	SPACER (0.406X0.656X0.38-IN THK)	
	10	1	**238-9546**	2	SHAFT	
	11	1	**241-0888**	2	PLATE	
	12	1	**241-0889**	2	GUARD AS (STABILIZER)	
					(EACH INCLUDES)	
M		1	**8T-3490**	2	NUT-WELD (M10X1.5-THD)	
Y	13	1	*247-7555*	2	PAD GP-STABILIZER (STREET)	770
	14	1	**5P-4116**	2	WASHER-HARD (8.8X20.5X2-MM THK)	
	15	1	**6V-3213**	4	RING-RETAINING	
	16	1	**6V-8144**	4	RING-RETAINING	
M	17	1	**7X-2537**	2	BOLT (M8X1.25X35-MM)	
	18	1	**7X-7729**	2	WASHER (11X25X3-MM THK)	
M	19	1	**8T-4195**	2	BOLT (M10X1.5X30-MM)	
	20	1	**194-9487**	2	BUMPER AS	

B-USE AS REQUIRED
C-CHANGE FROM PREVIOUS TYPE
M-METRIC PART
Y-SEPARATE ILLUSTRATION

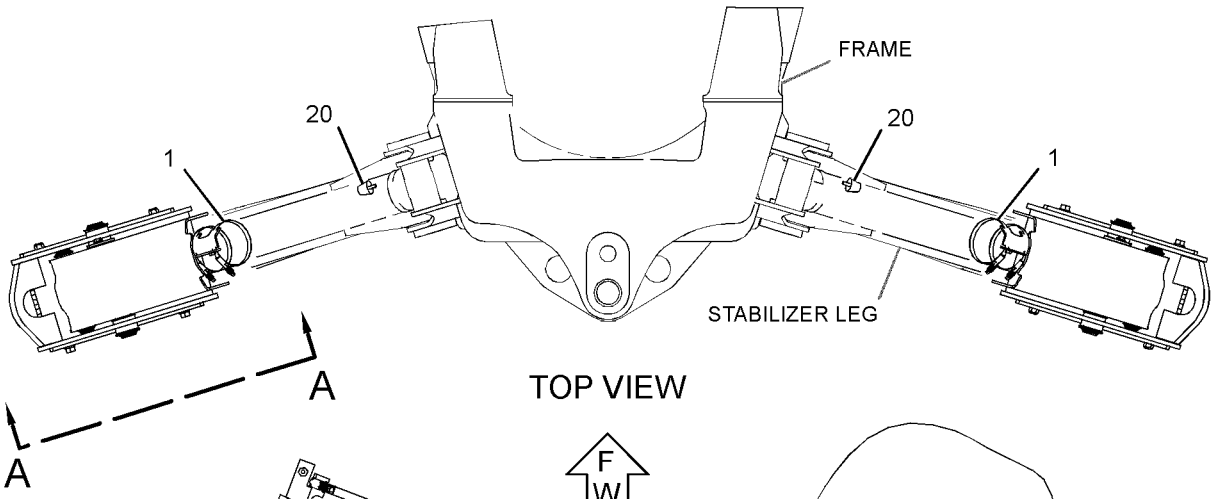

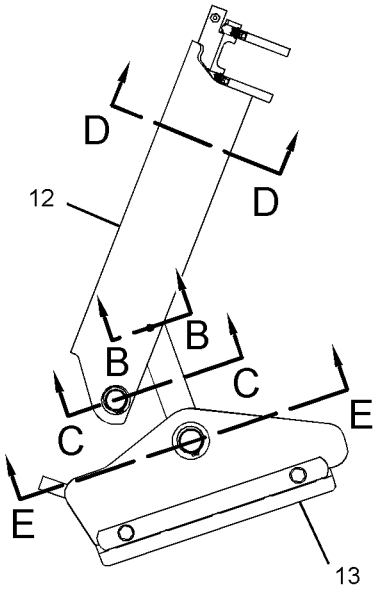

VIEW A-A

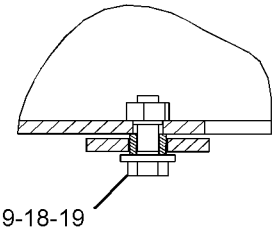

SECTION B-B

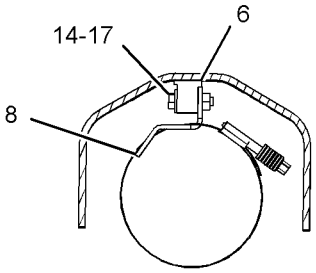

SECTION D-D

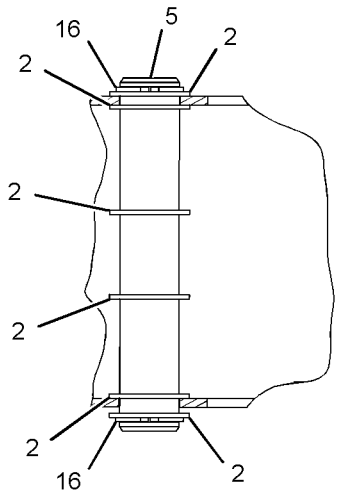

SECTION C-C

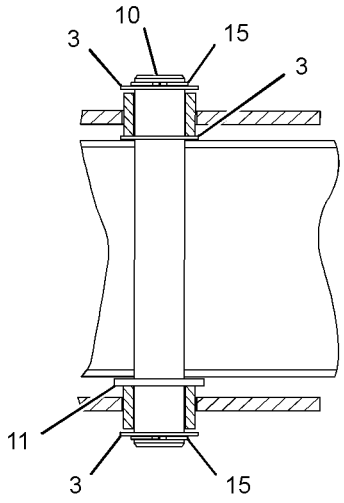

SECTION E-E

GRAPHIC #1 **<END>** g01785277

IMPLEMENTS

133-3366 PAD & GUARD GP-STABILIZER—STREET

S/N: CBD7714-UP; MFG1-UP

AN ATTACHMENT

SMCS-7222 **i04185470**

NOTE	REF NO	GRAPHIC REF	PART NUMBER	QTY	PART NAME 1 2 3 4 5 6 (PRODUCT LEVEL)	SEE PAGE
CY	1	1	*9R-1085*	1	PAD & MTG GP-STABILIZER (STREET)	762
CY	2	1	*355-5861*	1	GUARD GP-CYLINDER (STABILIZER)	500

C-CHANGE FROM PREVIOUS TYPE
Y-SEPARATE ILLUSTRATION

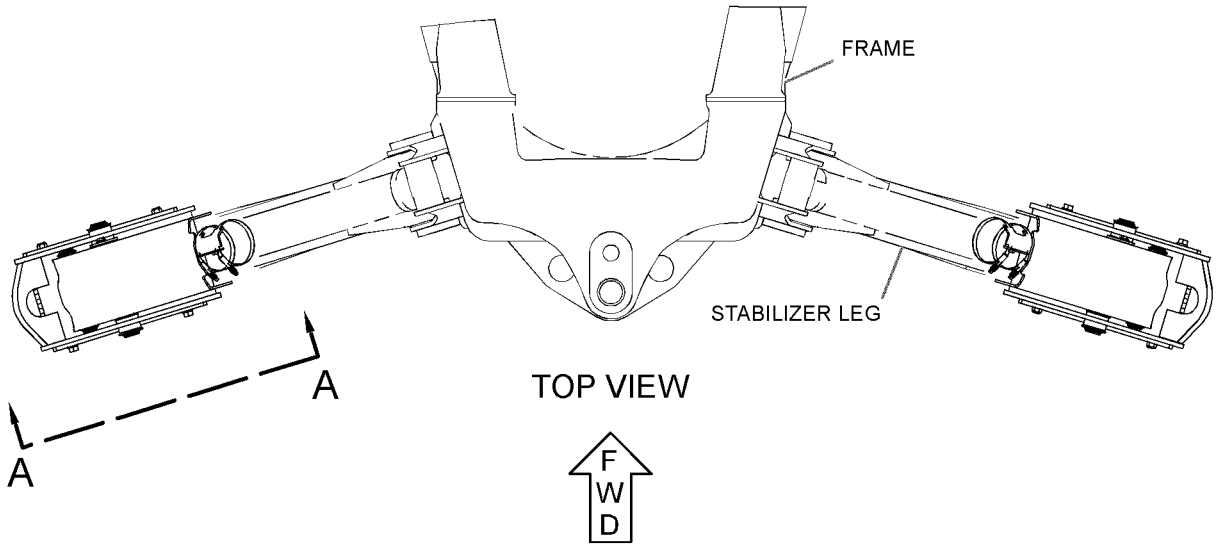

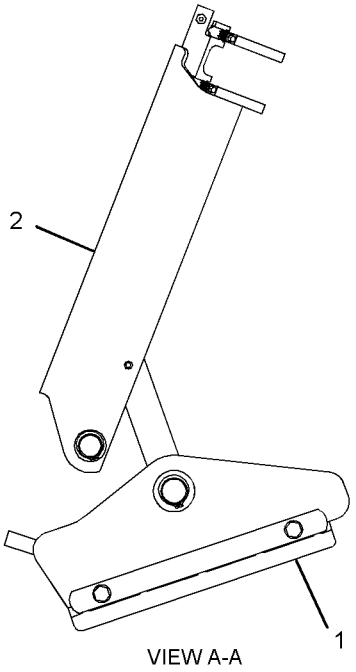

GRAPHIC #1 **<END>** g02116056

9R-1085 PAD & MTG GP-STABILIZER–STREET

S/N: CBD1-7713
PART OF 356-0067, 356-0068, 356-0069 DISTRIBUTION AR
AN ATTACHMENT

SMCS-7222 **i02528028**

NOTE	REF NO	GRAPHIC REF	PART NUMBER	QTY	PART NAME 1 2 3 4 5 6 (PRODUCT LEVEL)	SEE PAGE
	1	1	**9R-0422**	2	PIN	
C	2	1	**238-9546**	2	SHAFT	
CY	3	1	*247-7555*	2	PAD GP-STABILIZER (STREET)	770
	4	1	**6V-3213**	4	RING-RETAINING	
	5	1	**6V-8144**	4	RING-RETAINING	
B	6	1	**9R-0109**	8	WASHER (41X64X3-MM THK)	
BC	7	1	**9R-0158**	16	WASHER (46X69X3-MM THK)	

B-USE AS REQUIRED
C-CHANGE FROM PREVIOUS TYPE
Y-SEPARATE ILLUSTRATION

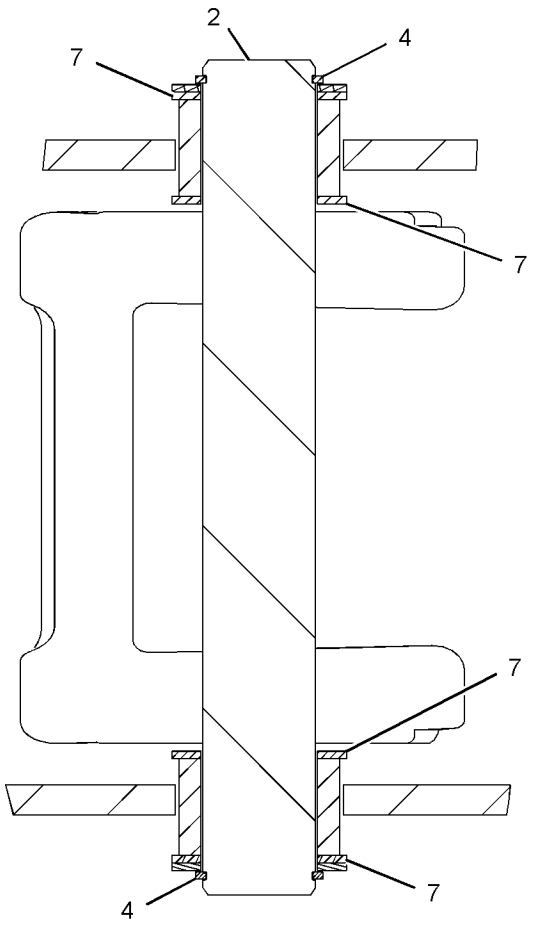

SECTION A-A

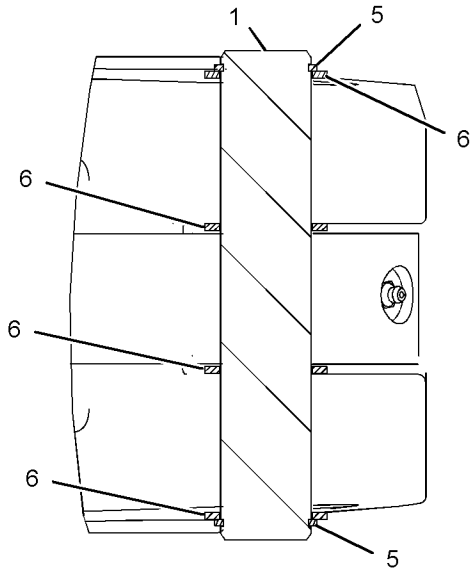

SECTION B-B

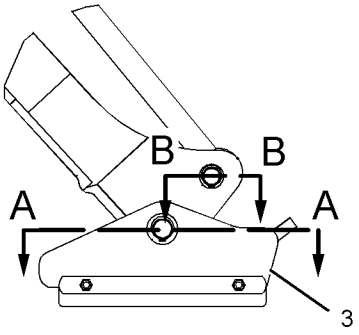

GRAPHIC #1 **<END>** g01264964

9R-1085 PAD & MTG GP-STABILIZER—STREET

S/N: CBD1-UP; MFG1-UP
PART OF 356-0067, 356-0068, 356-0069, 374-3517, 374-3518, 374-3519, 374-3521, 374-3529, 374-6532, 374-6533, 374-6534, 374-6535, 374-6536
DISTRIBUTION AR, 133-3366 PAD & GUARD GP-STABILIZER
AN ATTACHMENT

SMCS-7222 **i04185394**

NOTE	REF NO	GRAPHIC REF	PART NUMBER	QTY	PART NAME 1 2 3 4 5 6 (PRODUCT LEVEL)	SEE PAGE
B	1	1	**9R-0158**	16	WASHER (46X69X3-MM THK)	
	2	1	**238-9546**	2	SHAFT	
Y	3	1	*247-7555*	2	PAD GP-STABILIZER (STREET)	770
	4	1	**6V-3213**	4	RING-RETAINING	

B-USE AS REQUIRED
Y-SEPARATE ILLUSTRATION

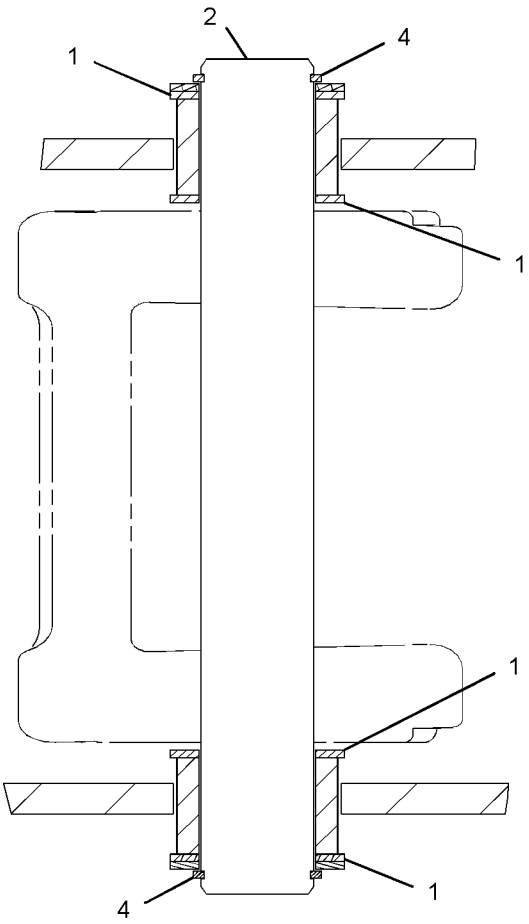

SECTION A-A

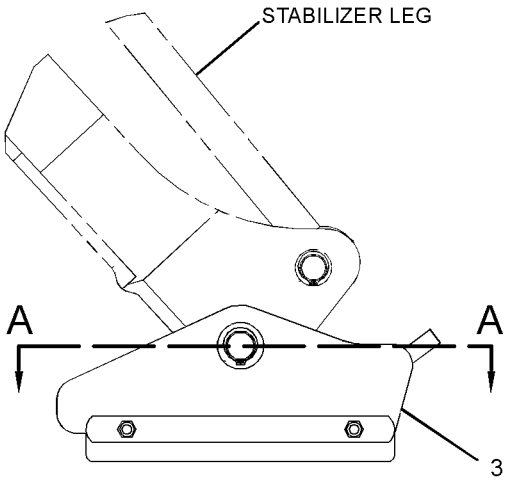

GRAPHIC #1 **<END>** g02112213

IMPLEMENTS

9R-6007 PAD & MTG GP-STABILIZER—STREET

S/N: CBD1-7713

AN ATTACHMENT

SMCS-7222 **i02519513**

NOTE	REF NO	GRAPHIC REF	PART NUMBER	QTY	PART NAME 1 2 3 4 5 6 (PRODUCT LEVEL)	SEE PAGE
BC	1	1	**9R-0109**	10	WASHER (41X64X3-MM THK)	
BC	2	1	**9R-0158**	16	WASHER (46X69X3-MM THK)	
C	3	1	**9R-0422**	2	PIN	
	4	1	**6V-8144**	4	RING-RETAINING	
C	5	1	**238-9546**	2	SHAFT	
CY	6	1	*238-9547*	2	PAD GP-STABILIZER (STREET)	769
C	7	1	**6V-3213**	4	RING-RETAINING	

B-USE AS REQUIRED
C-CHANGE FROM PREVIOUS TYPE
Y-SEPARATE ILLUSTRATION

9R-6007 **PAD & MTG GP-STABILIZER** *(contd.)* **i02519513**

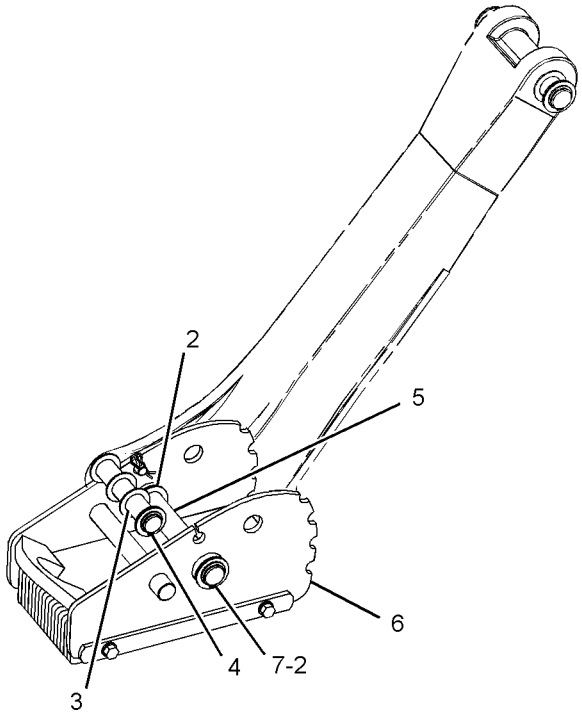

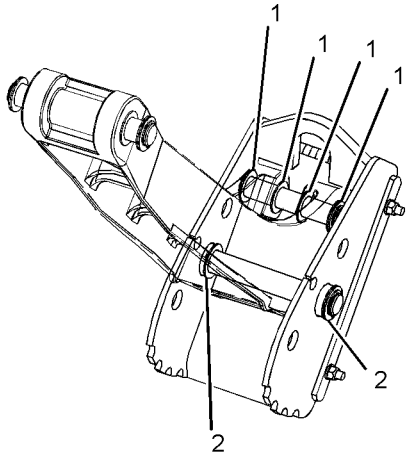



GRAPHIC #1 **<END>** g01260446

9R-6007 PAD & MTG GP-STABILIZER—STREET

S/N: CBD7714-UP; MFG1-UP
PART OF 133-3362 PAD & GUARD GP-STABILIZER
AN ATTACHMENT

SMCS-7222 **i04523811**

NOTE	REF NO	GRAPHIC REF	PART NUMBER	QTY	PART NAME 1 2 3 4 5 6 (PRODUCT LEVEL)	SEE PAGE
B	1	1	**9R-0158**	16	WASHER (46X69X3-MM THK)	
	2	1	**6V-3213**	4	RING-RETAINING	
Y	3	1	*238-9547*	2	PAD GP-STABILIZER (STREET)	769

B-USE AS REQUIRED
Y-SEPARATE ILLUSTRATION

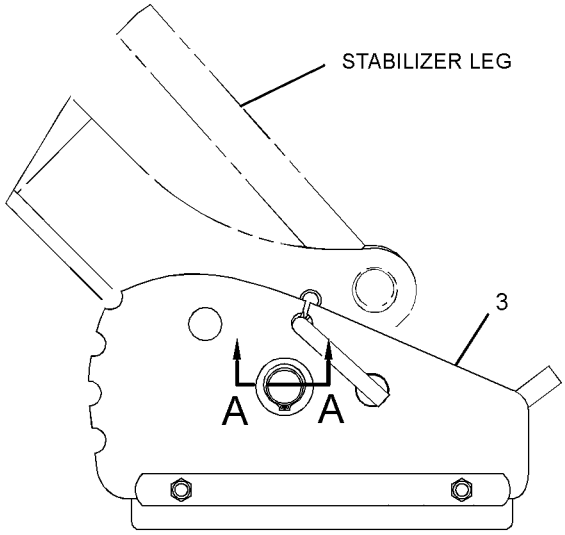

REAR VIEW

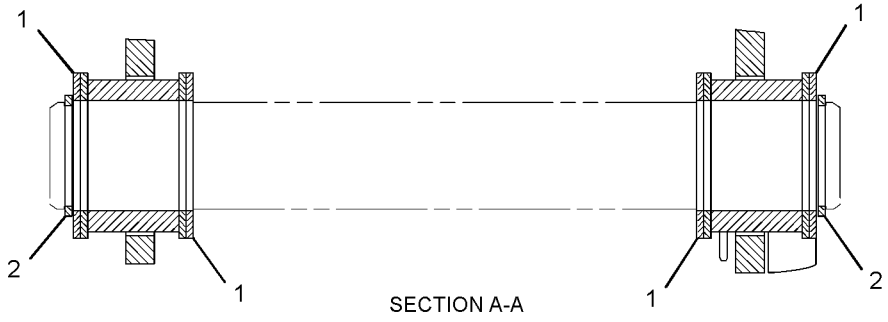

SECTION A-A

GRAPHIC #1 **<END>** g02712980

116-4942 PAD & MTG GP-STABILIZER

S/N: CBD1-7713
AN ATTACHMENT

SMCS-7222 **i03525652**

NOTE	REF NO	GRAPHIC REF	PART NUMBER	QTY	PART NAME 1 2 3 4 5 6 (PRODUCT LEVEL)	SEE PAGE
B	1	1	**9R-0109**	8	WASHER (41X64X3-MM THK)	
B	2	1	**9R-0158**	14	WASHER (46X69X3-MM THK)	
	3	1	**9R-0422**	2	PIN	
C	4	1	**238-9546**	2	SHAFT	
C	5	1	**239-1416**	2	PAD AS	
	6	1	**6V-3213**	4	RING-RETAINING	
	7	1	**6V-8144**	4	RING-RETAINING	

B-USE AS REQUIRED
C-CHANGE FROM PREVIOUS TYPE

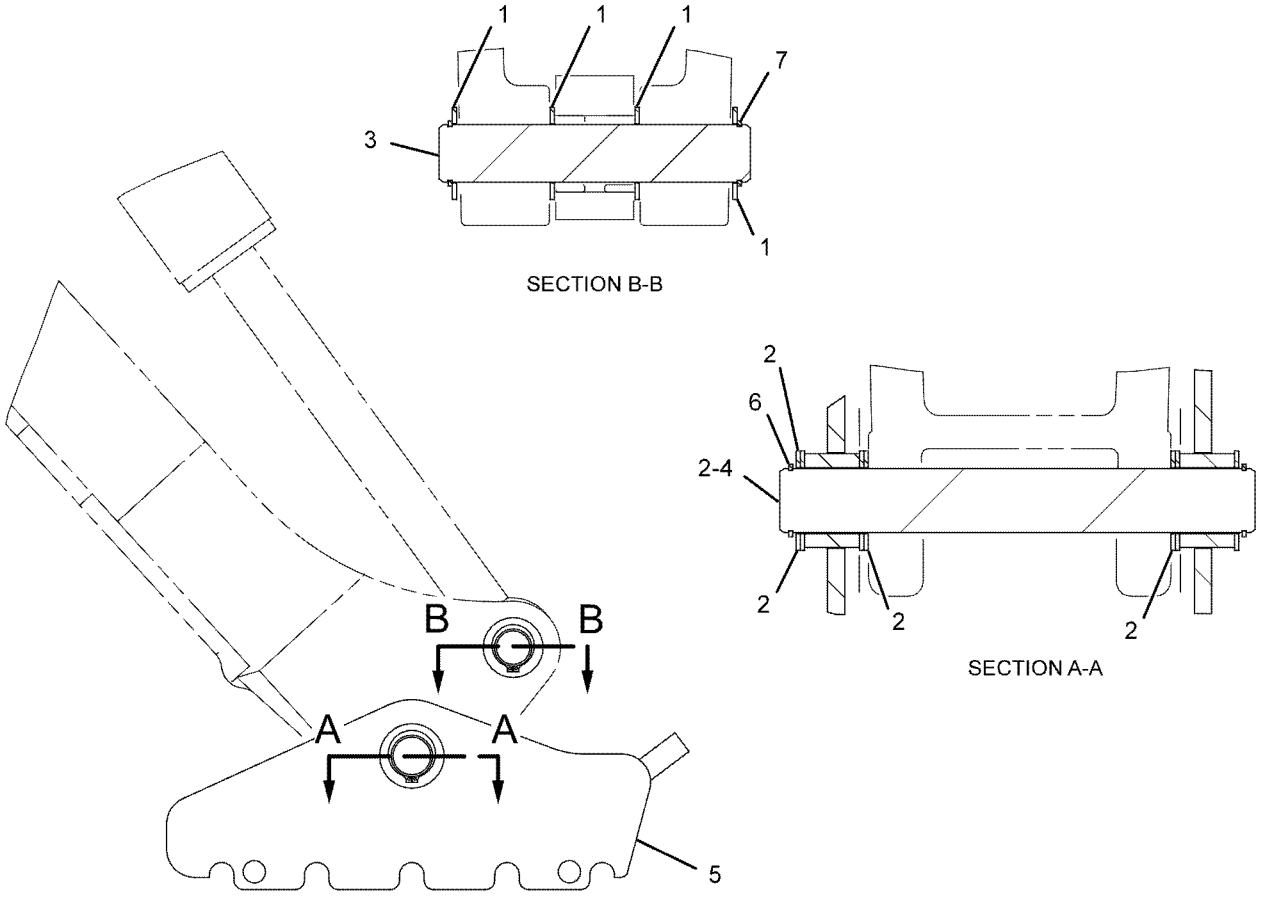

GRAPHIC #1 **<END>** g01096084

116-4942 PAD & MTG GP-STABILIZER

S/N: CBD7714-UP; MFG1-UP
PART OF 133-3363 PAD & GUARD GP-STABILIZER
AN ATTACHMENT

SMCS-7222 **i04515710**

NOTE	REF NO	GRAPHIC REF	PART NUMBER	QTY	PART NAME 1 2 3 4 5 6 (PRODUCT LEVEL)	SEE PAGE
B	1	1	**9R-0158**	14	WASHER (46X69X3-MM THK)	
	2	1	**6V-3213**	4	RING-RETAINING	
	3	1	**239-1416**	2	PAD AS	

B-USE AS REQUIRED

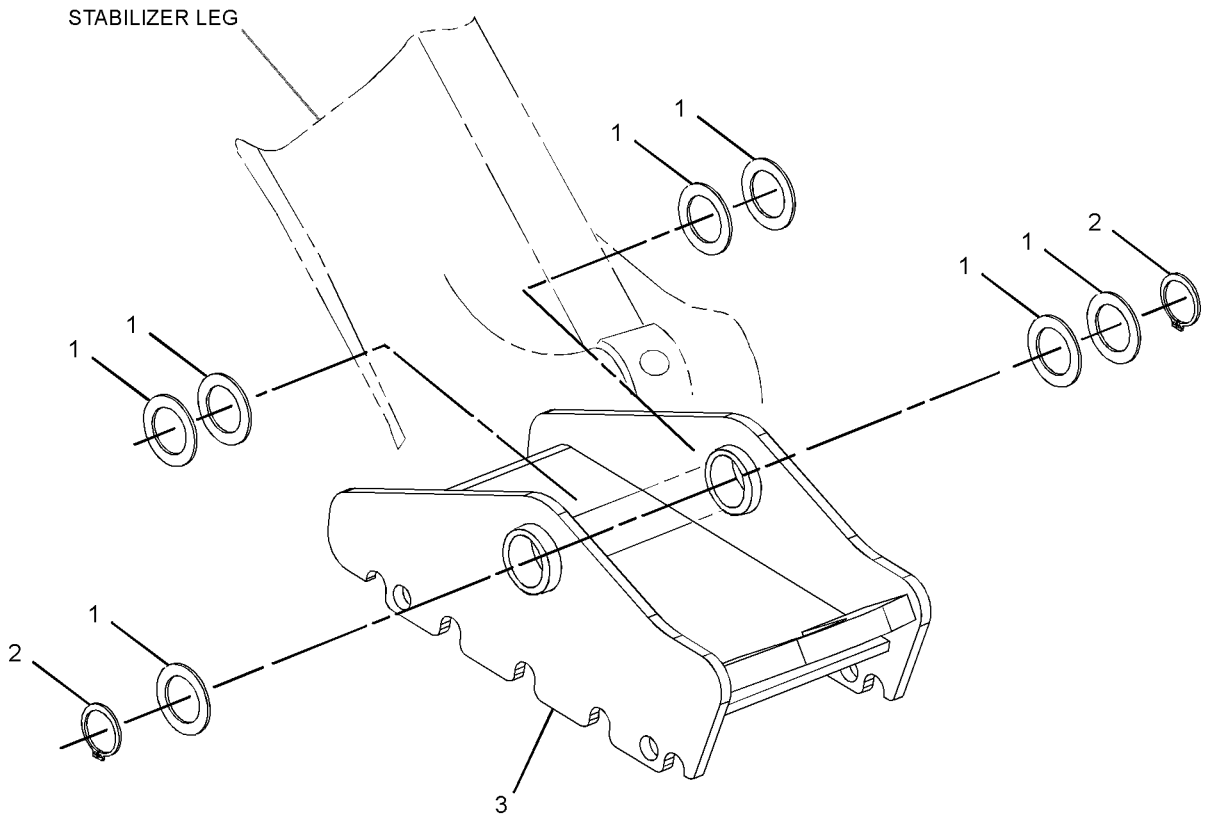

GRAPHIC #1 **<END>** g02711081

238-9547 PAD GP-STABILIZER—STREET

S/N: CBD1-UP; MFG1-UP

PART OF 133-3362 PAD & GUARD GP-STABILIZER, 9R-6007 PAD & MTG GP-STABILIZER

AN ATTACHMENT

SMCS-7222 **i02293888**

NOTE	REF NO	GRAPHIC REF	PART NUMBER	QTY	PART NAME 1 2 3 4 5 6 (PRODUCT LEVEL)	SEE PAGE
	1	1	**237-9349**	1	PAD AS	
	2	1	**237-9355**	1	PIN AS	
	3	1	**237-9356**	1	PAD AS	
	4	1	**241-0890**	2	SPACER (16.7X22.2X22.2-MM THK)	
	5	1	**241-0891**	2	PLATE	
	6	1	**241-0892**	1	PLATE	
	7	1	**3K-2889**	2	LOCKNUT (5/8-11-THD)	
	8	1	**5P-0370**	1	LOCK PIN	
	9	1	**5P-7971**	2	BOLT (5/8-11X12-IN)	
	10	1	**9X-8257**	2	WASHER (17.5X30X3.5-MM THK)	

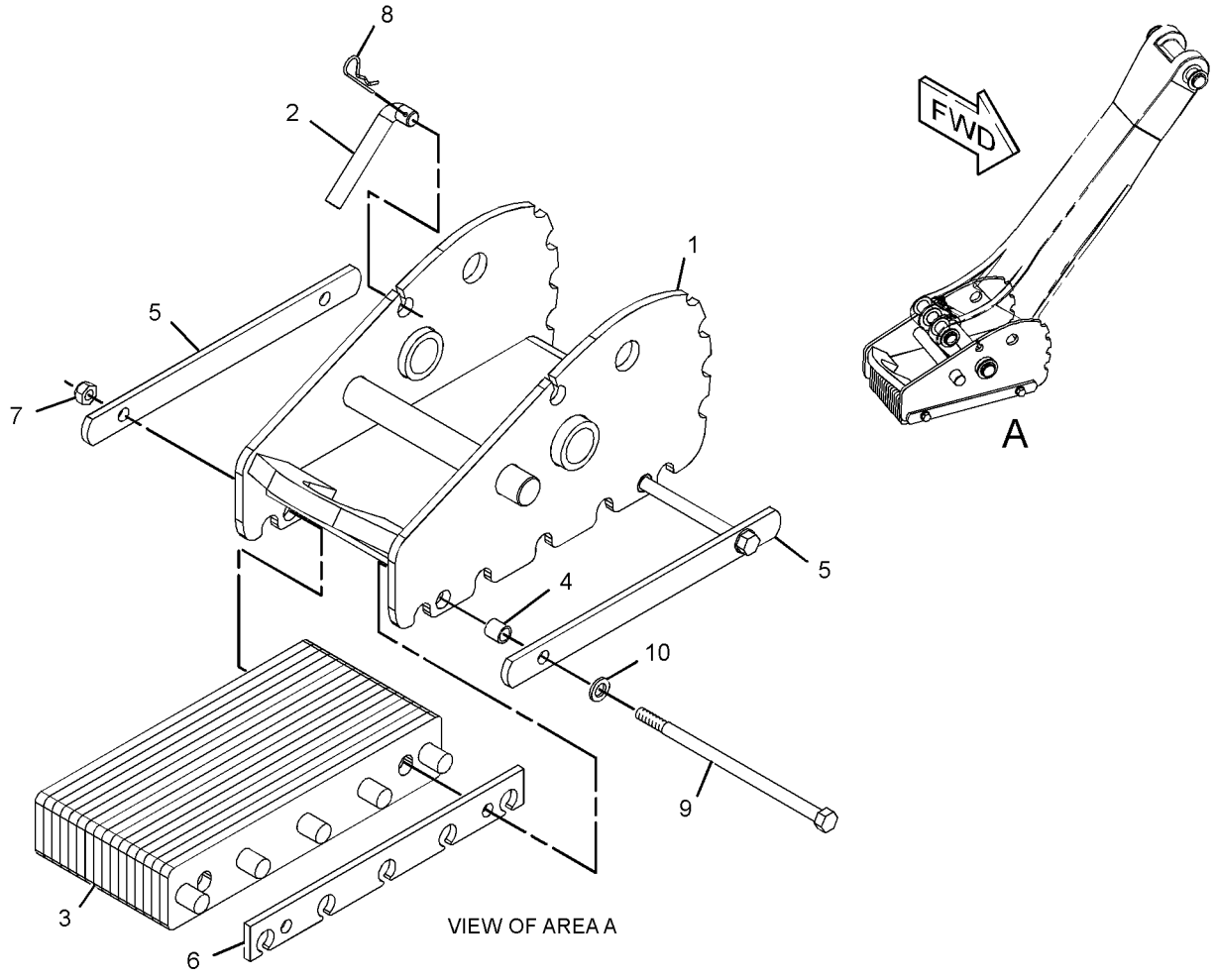

GRAPHIC #1 **<END>** g01198250

247-7555 PAD GP-STABILIZER–STREET

S/N: CBD1-UP; MFG1-UP

PART OF 133-3366 PAD & GUARD GP-STABILIZER, 9R-1085 PAD & MTG GP-STABILIZER

AN ATTACHMENT

SMCS-7222 **i02331302**

NOTE	REF NO	GRAPHIC REF	PART NUMBER	QTY	PART NAME 1 2 3 4 5 6 (PRODUCT LEVEL)	SEE PAGE
	1	1	**237-9356**	1	PAD AS	
	2	1	**239-1416**	1	PAD AS	
	3	1	**241-0890**	2	SPACER (16.7X22.2X22.2-MM THK)	
	4	1	**241-0891**	2	PLATE	
	5	1	**241-0892**	1	PLATE	
	6	1	**3K-2889**	2	LOCKNUT (5/8-11-THD)	
	7	1	**5P-7971**	2	BOLT (5/8-11X12-IN)	
	8	1	**9X-8257**	2	WASHER (17.5X30X3.5-MM THK)	

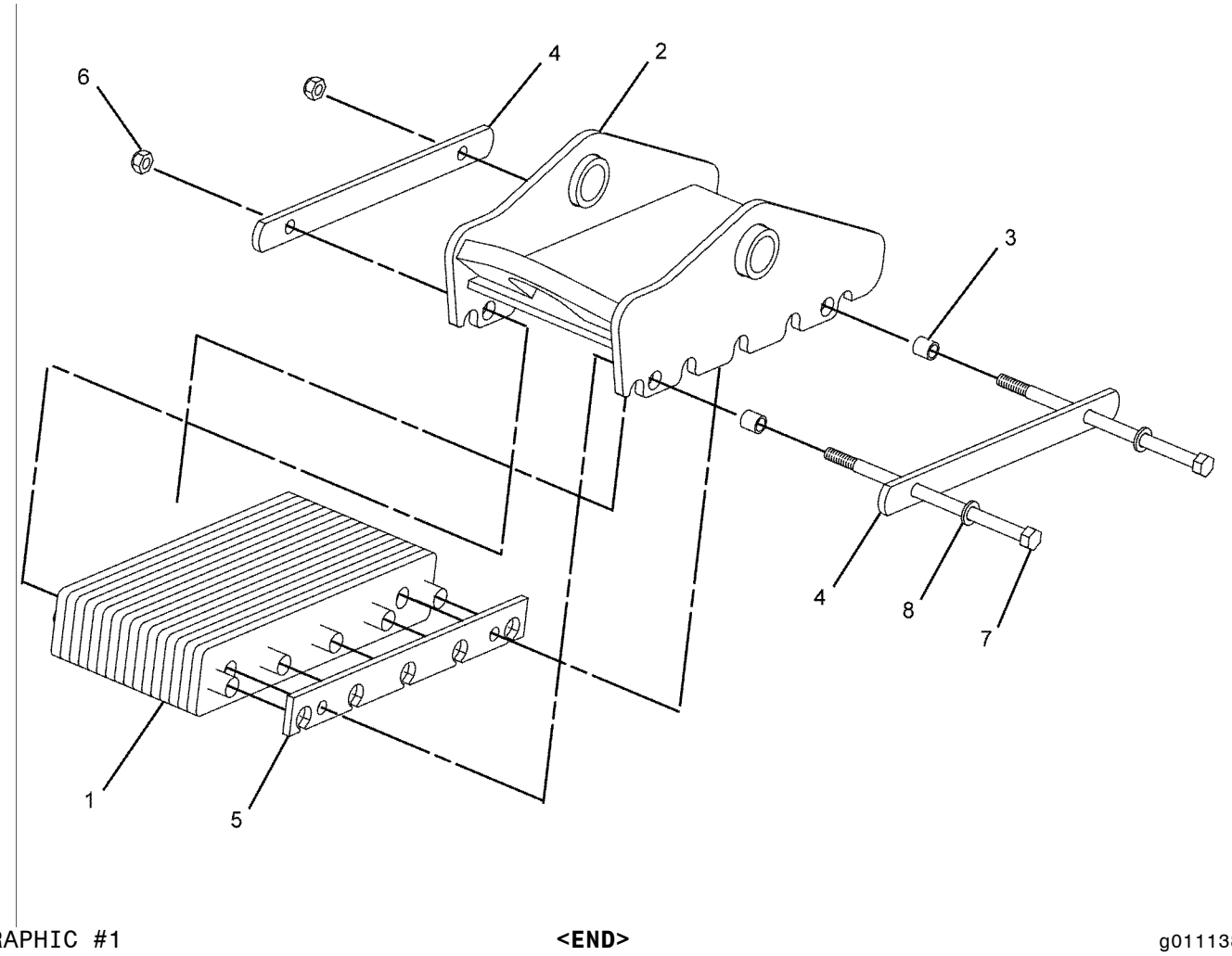

GRAPHIC #1 **<END>** g01113818

266-5834 STABILIZER GP-BACKHOE

S/N: CBD1-UP; MFG1-UP

PART OF 213-9284, 291-9190, 372-5176 CHASSIS AR

SMCS-7222 **i04130750**

NOTE	REF NO	GRAPHIC REF	PART NUMBER	QTY	PART NAME 1 2 3 4 5 6 (PRODUCT LEVEL)	SEE PAGE
	1	1	**9R-0422**	2	PIN	
B	2	1	**111-4337**	2	WASHER (46X70X1-MM THK)	
B	3	1	**119-4594**	2	WASHER (41X64X1-MM THK)	
	4	1	**130-0777**	2	STABILIZER AS	
					(EACH INCLUDES)	
		1	**9R-0411**	2	BUSHING	
	5	1	**238-9546**	2	SHAFT	
	6	1	**261-6703**	2	PIN	
	7	1	**293-7383**	2	PIN	
	8	1	**6V-3213**	4	RING-RETAINING	
	9	1	**6V-8144**	8	RING-RETAINING	
B	10	1	**9R-0109**	16	WASHER (41X64X3-MM THK)	
B	11	1	**9R-0158**	14	WASHER (46X69X3-MM THK)	

B-USE AS REQUIRED

266-5834 **STABILIZER GP-BACKHOE** *(contd.)* **i04130750**

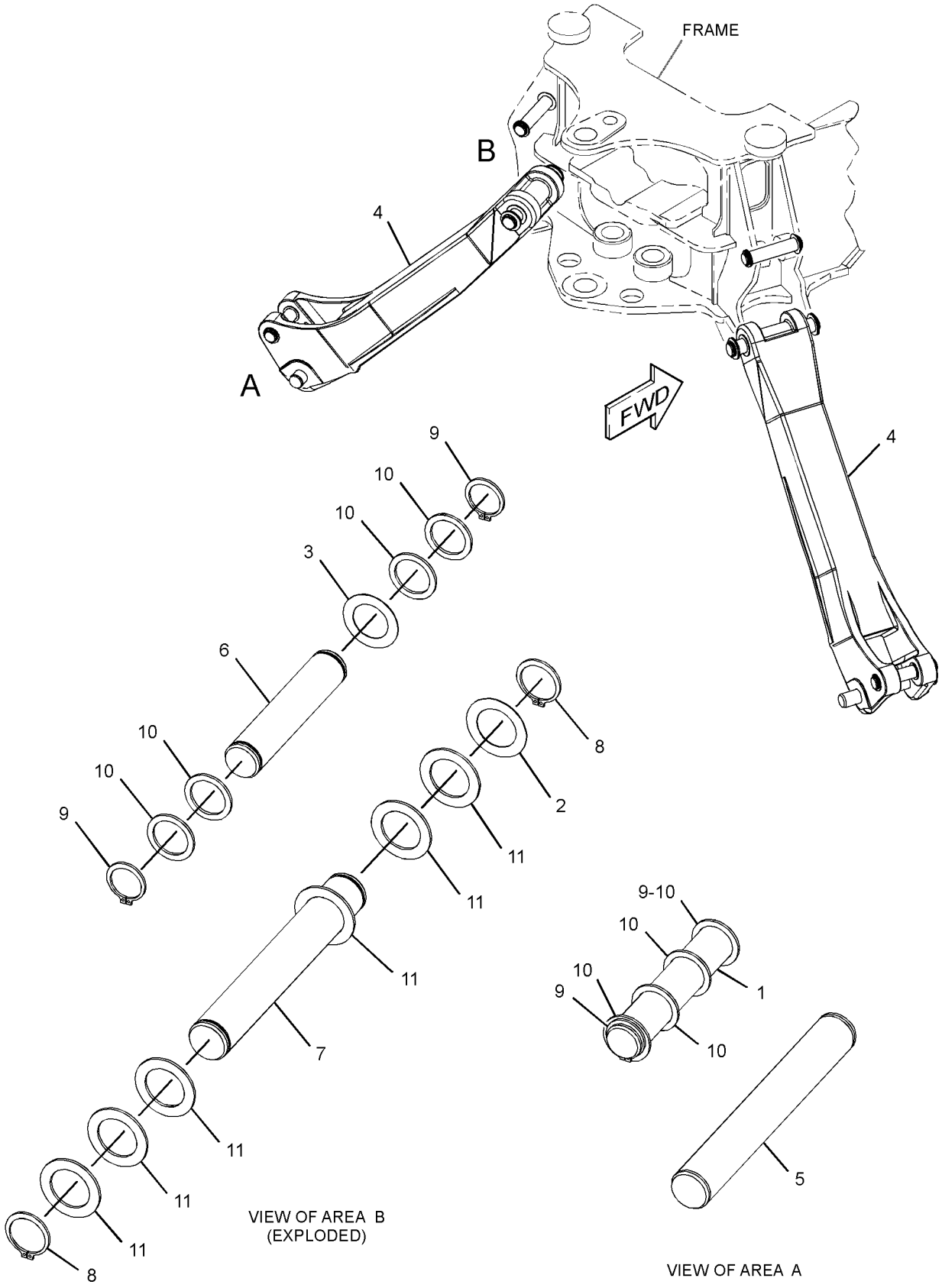

GRAPHIC #1 **<END>** g02711792

271-8669 STICK AS

S/N: CBD1-UP; MFG1-UP
PART OF 271-8666 STICK GP-HOE
AN ATTACHMENT

SMCS-6502 **i03261401**

NOTE	REF NO	GRAPHIC REF	PART NUMBER	QTY	PART NAME 1 2 3 4 5 6 (PRODUCT LEVEL)	SEE PAGE
	1	1	**9R-0162**	4	BEARING-SLEEVE	
	2	1	**9R-0170**	2	BEARING-SLEEVE	
M	3	1	**8Y-3795**	2	BOSS (M10X1.5X39-MM)	
	4	1	**9R-3092**	2	BEARING-SLEEVE	
	5	1	**107-6711**	2	BLOCK	
	6	1	**221-4315**	1	STOP AS	
		1	**221-4322**	1	PLATE	

M-METRIC PART

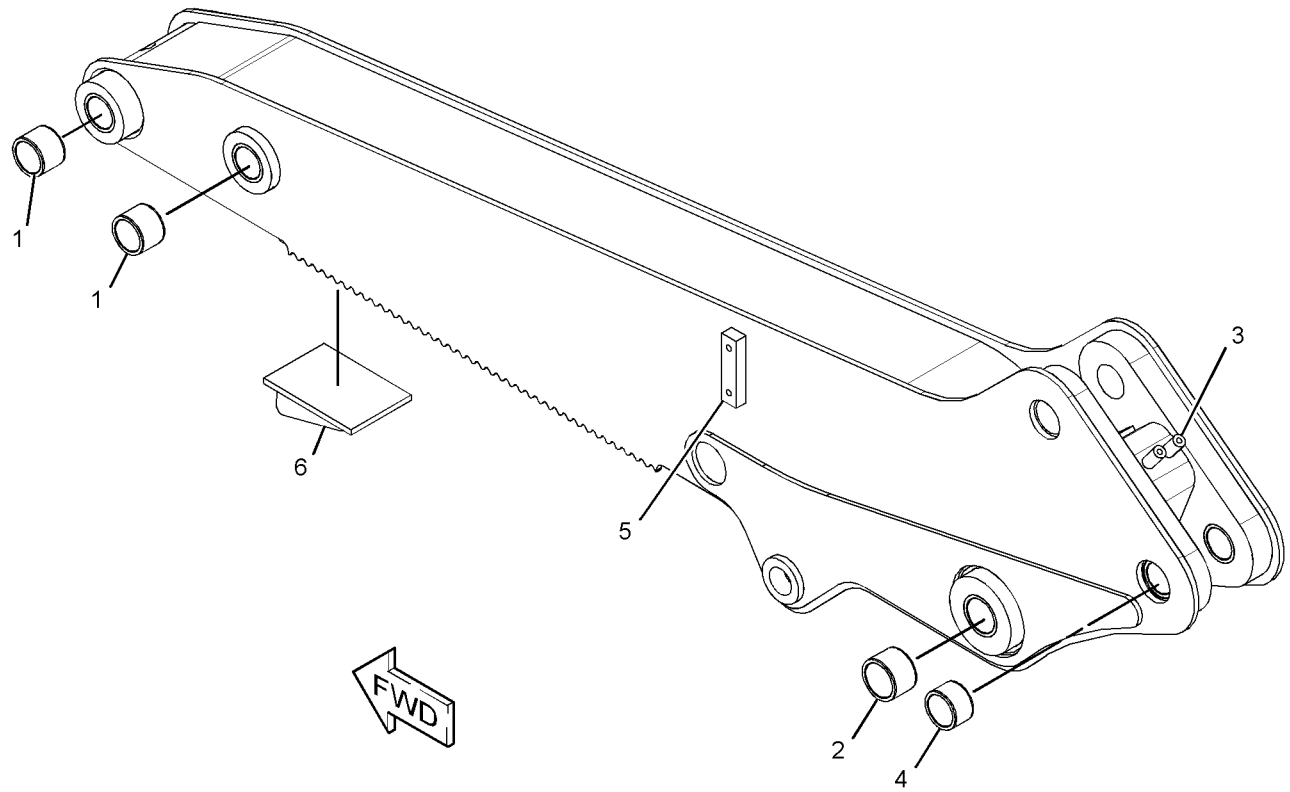

GRAPHIC #1 **<END>** g01675073

IMPLEMENTS

271-1404 STICK GP

S/N: CBD1-1810
PART OF 209-9929 BACKHOE AR-EXTENDABLE STICK
AN ATTACHMENT

SMCS-6502 **i02568333**

NOTE	REF NO	GRAPHIC REF	PART NUMBER	QTY	PART NAME 1 2 3 4 5 6 (PRODUCT LEVEL)	SEE PAGE
	1	1	**3B-8489**	4	FITTING-GREASE	
	2	1	**9R-2959**	2	CLIP	
	3	1	**209-2435**	2	BLOCK	
Y	4	1	**210-7098**	1	CYLINDER GP-STICK	554
	5	1	**214-6143**	1	PIN	
	6	1	**216-6295**	1	PLATE	
	7	1	**217-0055**	1	PIN	
	8	1	**217-1577**	2	PAD AS	
	9	1	**219-8151**	1	STICK AS (INNER)	
	10	1	**220-1018**	1	PIN	
	11	1	**222-5171**	2	SCREW AS (ADJUSTER)	
					(EACH INCLUDES)	
		1	**3E-4352**	1	WASHER-HARD (8.8X20.5X2.5-MM THK)	
M		1	**9X-2403**	1	SETSCREW-HEX SOCKET (M12X1.75X50-MM)	
	12	1	**223-3926**	1	PLATE	
	13	1	**226-9764**	2	PAD AS	
	14	1	**233-5165**	4	PLATE	
B	15	1	**233-5166**	12	SHIM (1-MM THK)	
B	16	1	**233-5167**	4	SHIM (2-MM THK)	
	17	1	**233-5169**	4	PAD	
Y	18	1	*247-3267*	1	LINES GP-EXTENDABLE STICK	622
	19	1	**271-1408**	1	STICK AS (OUTER)	
	20	1	**1L-3768**	2	RING-RETAINING	
	21	1	**2Y-2881**	2	BUTTON-PLUG	
	22	1	**5V-7190**	4	WASHER-HARD (10.5X45.2X6-MM THK)	
	23	1	**6V-4364**	2	RING-RETAINING	
B	24	1	**8T-4121**	12	WASHER-HARD (11X21X2.5-MM THK)	
M	25	1	**8T-4136**	2	BOLT (M10X1.5X25-MM)	
M	26	1	**8T-4139**	2	BOLT (M12X1.75X30-MM)	
M	27	1	**8T-4183**	2	BOLT (M12X1.75X40-MM)	
M	28	1	**8T-4194**	2	BOLT (M12X1.75X50-MM)	
M	29	1	**8T-4195**	2	BOLT (M10X1.5X30-MM)	
	30	1	**8T-4223**	26	WASHER-HARD (13.5X25.5X3-MM THK)	
M	31	1	**8T-4910**	4	BOLT (M12X1.75X60-MM)	
	32	1	**284-3615**	16	SCREW-HEX SOCKET (M12X1.75X35-MM)	
B	33	1	**287-5667**	6	SHIM (1-MM THK)	

B-USE AS REQUIRED
M-METRIC PART
Y-SEPARATE ILLUSTRATION

271-1404 **STICK GP** *(contd.)* **i02568333**

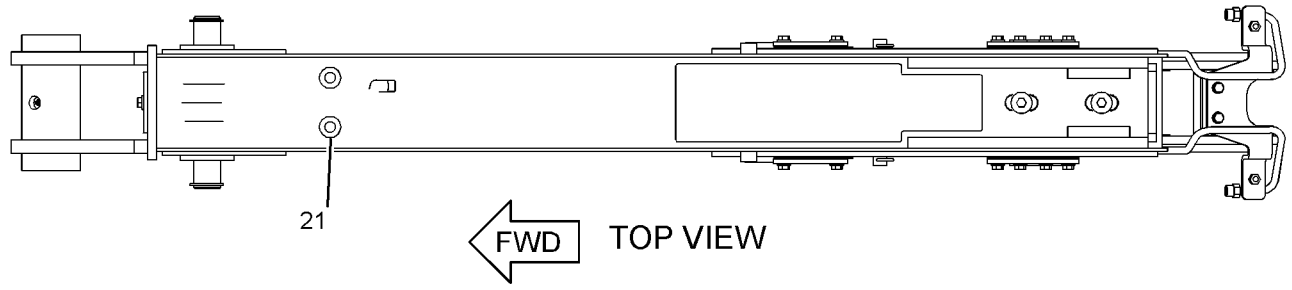

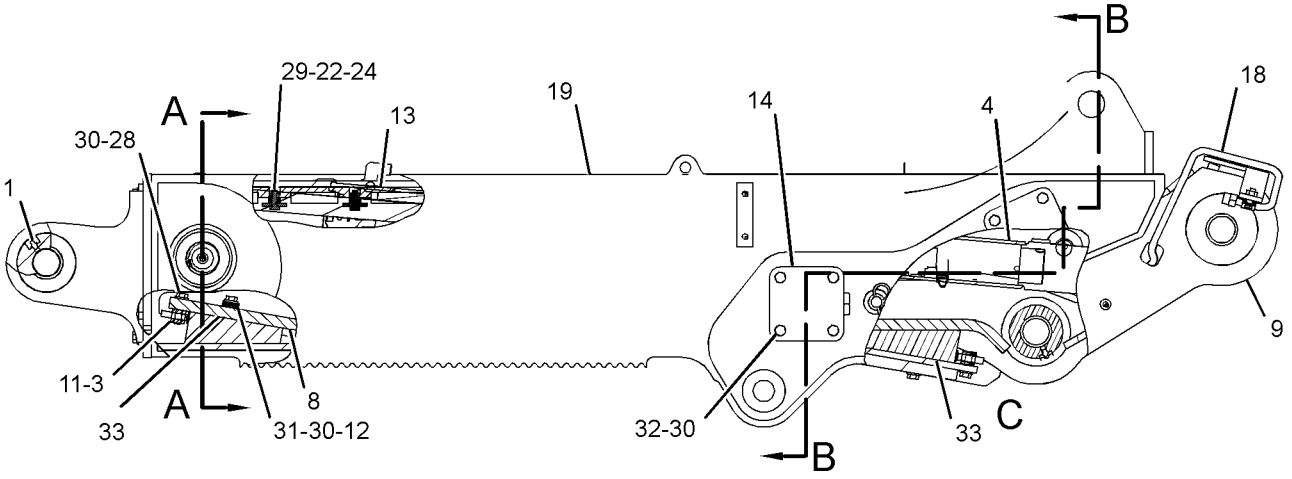

LEFT SIDE VIEW

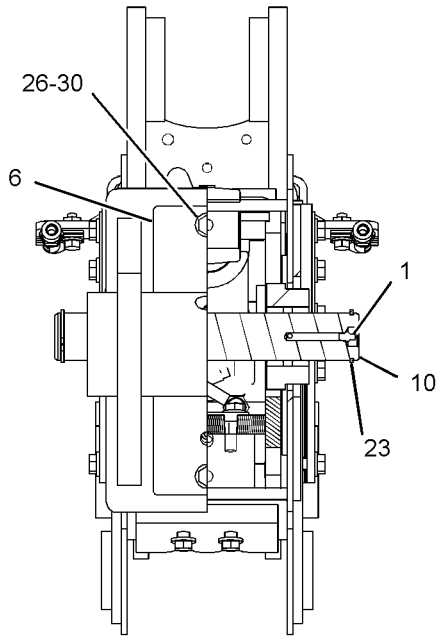

SECTION A-A

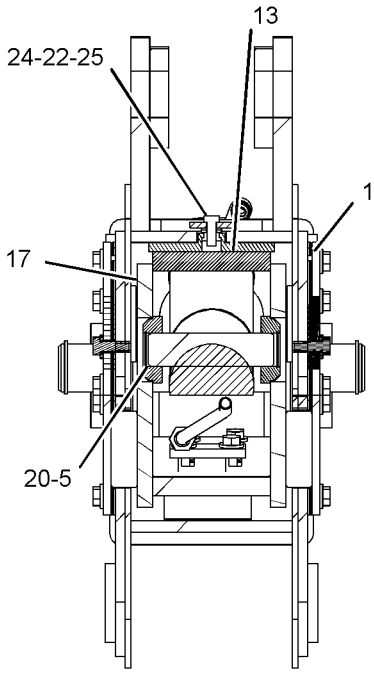

SECTION B-B

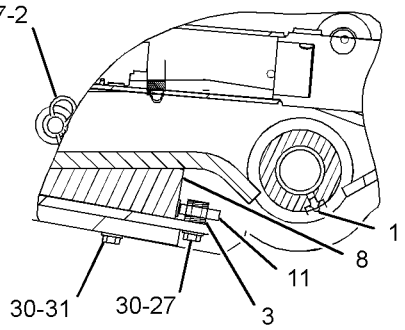

VIEW OF AREA C

GRAPHIC #1 **<END>** g01310083

IMPLEMENTS

271-1404 STICK GP

S/N: CBD1811-UP; MFG1-UP
PART OF 209-9929 BACKHOE AR-EXTENDABLE STICK
AN ATTACHMENT

SMCS-6502 **i04428549**

NOTE	REF NO	GRAPHIC REF	PART NUMBER	QTY	PART NAME 1 2 3 4 5 6 (PRODUCT LEVEL)	SEE PAGE
	1	1	**3B-8489**	4	FITTING-GREASE	
	2	1	**9R-2959**	2	CLIP	
	3	1	**209-2435**	2	BLOCK	
Y	4	1	**210-7098**	1	CYLINDER GP-STICK	554
	5	1	**214-6143**	1	PIN	
	6	1	**216-6295**	1	PLATE	
	7	1	**217-0055**	1	PIN	
C	8	1	**217-1577**	1	PAD AS	
C	9	1	**305-7426**	1	STICK AS (INNER)	
	10	1	**220-1018**	1	PIN	
	11	1	**222-5171**	2	SCREW AS (ADJUSTER)	
					(EACH INCLUDES)	
		1	**3E-4352**	1	WASHER-HARD (8.8X20.5X2.5-MM THK)	
M		1	**9X-2403**	1	SETSCREW-HEX SOCKET (M12X1.75X50-MM)	
	12	1	**223-3926**	1	PLATE	
	13	1	**226-9764**	2	PAD AS	
	14	1	**233-5165**	4	PLATE	
BC	15	1	**233-5166**	8	SHIM (1-MM THK)	
BC	16	1	**233-5167**	4	SHIM (2-MM THK)	
	17	1	**233-5169**	4	PAD	
CY	18	1	*331-0096*	1	LINES GP-EXTENDABLE STICK	624
	19	1	**271-1408**	1	STICK AS (OUTER)	
	20	1	**1L-3768**	2	RING-RETAINING	
	21	1	**2Y-2881**	2	BUTTON-PLUG	
	22	1	**5V-7190**	4	WASHER-HARD (10.5X45.2X6-MM THK)	
	23	1	**6V-4364**	2	RING-RETAINING	
B	24	1	**8T-4121**	12	WASHER-HARD (11X21X2.5-MM THK)	
M	25	1	**8T-4136**	2	BOLT (M10X1.5X25-MM)	
M	26	1	**8T-4139**	2	BOLT (M12X1.75X30-MM)	
M	27	1	**8T-4183**	2	BOLT (M12X1.75X40-MM)	
M	28	1	**8T-4194**	2	BOLT (M12X1.75X50-MM)	
M	29	1	**8T-4195**	2	BOLT (M10X1.5X30-MM)	
	30	1	**8T-4223**	26	WASHER-HARD (13.5X25.5X3-MM THK)	
M	31	1	**8T-4910**	4	BOLT (M12X1.75X60-MM)	
M	32	1	**297-5510**	16	SCREW-HEX SOCKET (M12X1.75X30-MM)	
C	33	1	**287-5667**	4	SHIM (1-MM THK)	
C	34	1	**111-9251**	2	WASHER-HARD (20X35X1.6-MM THK)	
C	35	1	**289-9426**	1	PAD AS	
B	36	1	**293-9882**	4	SHIM (1-MM THK)	
B	37	1	**293-9884**	4	SHIM (0.25-MM THK)	

B-USE AS REQUIRED
C-CHANGE FROM PREVIOUS TYPE
M-METRIC PART
Y-SEPARATE ILLUSTRATION

271-1404 **STICK GP** *(contd.)* **i04428549**

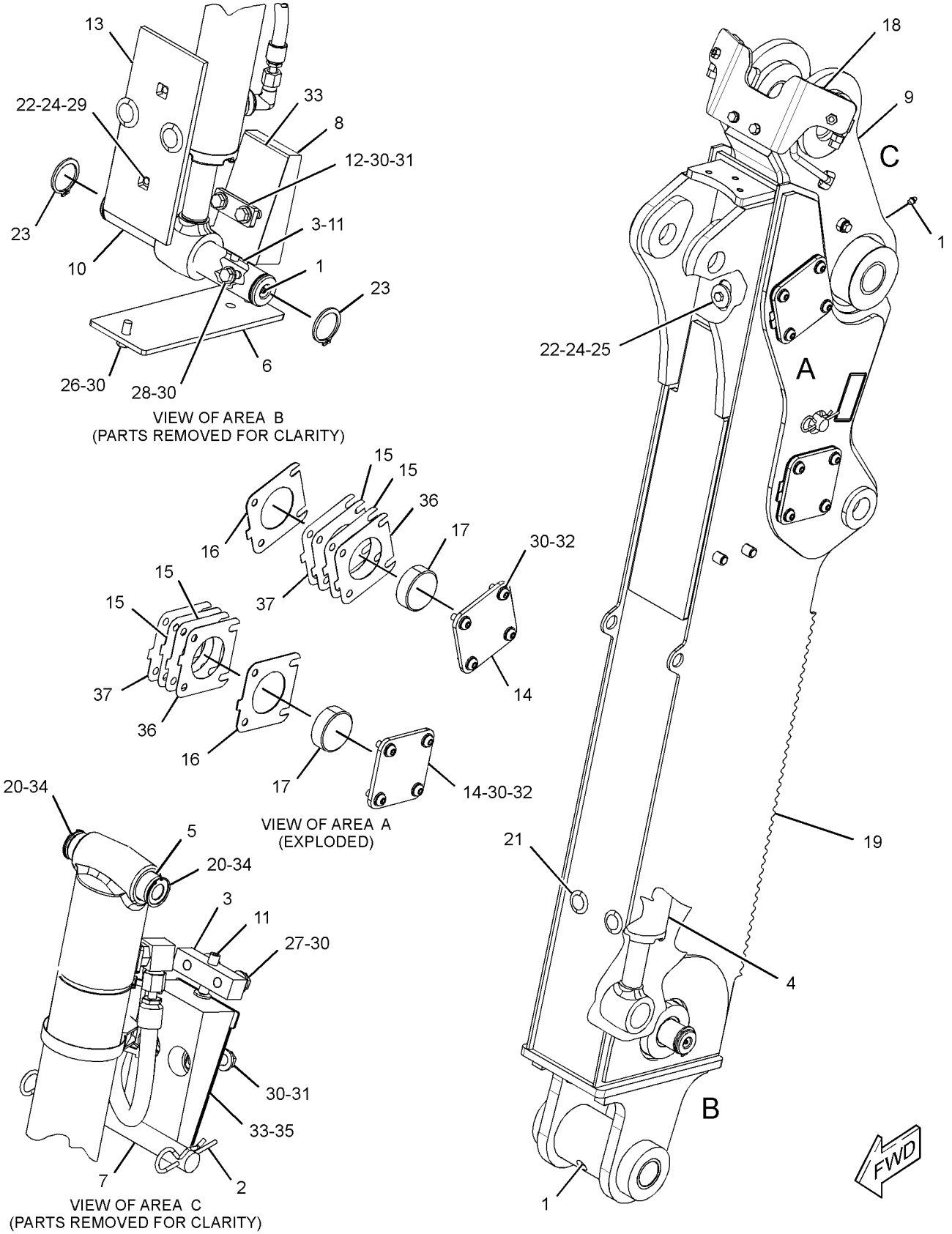

GRAPHIC #1 **<END>** g02712173

IMPLEMENTS

271-8666 STICK GP-HOE

S/N: CBD1-UP; MFG1-UP
PART OF 209-9924 BACKHOE AR-STANDARD STICK
AN ATTACHMENT

SMCS-6502 **i02495942**

NOTE	REF NO	GRAPHIC REF	PART NUMBER	QTY	PART NAME 1 2 3 4 5 6 (PRODUCT LEVEL)	SEE PAGE
B	1	1	**9R-1510**	8	WASHER (51X82X4-MM THK)	
B	2	1	**286-3086**	3	SPACER (56X130X1-MM THK)	
	3	1	**213-6696**	1	PIN	
	4	1	**213-6697**	1	PIN	
	5	1	**213-6710**	1	PIN AS	
	6	1	**213-6714**	1	PIN	
Y	7	1	**271-8669**	1	STICK AS	773
	8	1	**3B-8488**	1	FITTING-GREASE	
	9	1	**3B-8489**	5	FITTING-GREASE	
	10	1	**6V-4364**	4	RING-RETAINING	
	11	1	**6V-8344**	2	RING-RETAINING	
B	12	1	**9R-1502**	6	WASHER (56X90X4-MM THK)	

B-USE AS REQUIRED
Y-SEPARATE ILLUSTRATION

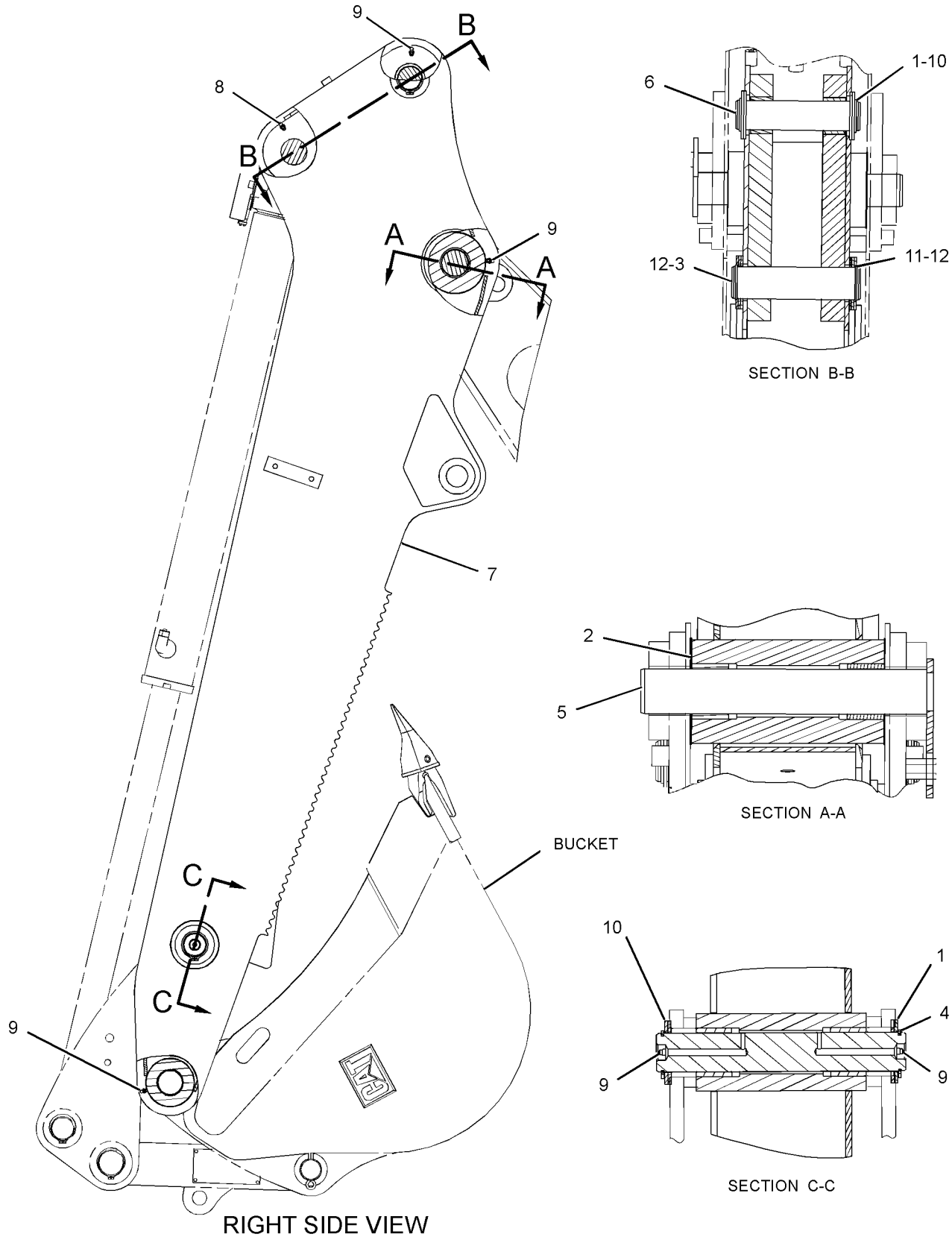

GRAPHIC #1 **<END>** g01239378

WORK TOOLS

361-1103 ADJUSTER GP-MANUAL

S/N: CBD1-UP; MFG1-UP
PART OF 361-1101 COUPLER GP-QUICK
AN ATTACHMENT

SMCS-6129 **i04460718**

NOTE	REF NO	GRAPHIC REF	PART NUMBER	QTY	PART NAME 1 2 3 4 5 6 (PRODUCT LEVEL)	SEE PAGE
	1	1	**7K-1700**	2	WASHER-THRUST (1.27X2.12X0.60-MM THK)	
	2	1	**284-9277**	1	BUSHING	
	3	1	**361-1104**	1	WEDGE AS	
	4	1	**361-1105**	1	SCREW-ADJUSTING	
	5	1	**361-1106**	1	NUT-SLEEVE	
	6	1	**361-1107**	1	SEAL-WIPER	
M	7	1	**8T-0269**	2	BOLT-SOCKET HEAD (M6X1X20-MM)	

M-METRIC PART

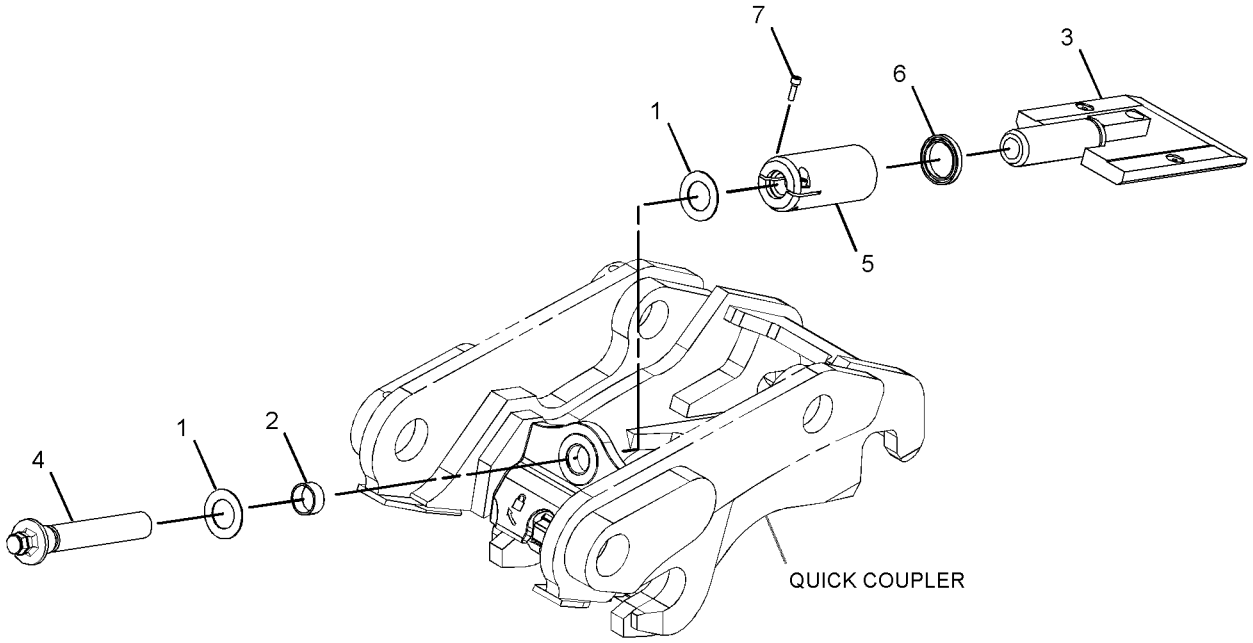

GRAPHIC #1 **<END>** g02468816

112-0938 BUCKET AR-MULTIPURPOSE

S/N: CBD1-UP
PART OF 112-0940 BUCKET AR-MULTIPURPOSE
AN ATTACHMENT

SMCS-6104 **i01525762**

NOTE	PART NUMBER	QTY	PART NAME 1 2 3 4 5 6 (PRODUCT LEVEL)	SEE PAGE
Y	**108-3036**	1	BUCKET GP-MULTIPURPOSE	855
Y	**185-1839**	2	CYLINDER GP-MULTIPURPOSE BUKT	544
Y	*9R-3712*	1	LINES GP-MULTIPURPOSE BUCKET	638
Y	*9R-4668*	1	MOUNTING GP-CYLINDER	679
Y-SEPARATE ILLUSTRATION				

<END>

112-0939 BUCKET AR-MULTIPURPOSE

S/N: CBD1-UP
PART OF 112-0941 BUCKET AR-MULTIPURPOSE
AN ATTACHMENT

SMCS-6104 **i01525713**

NOTE	PART NUMBER	QTY	PART NAME 1 2 3 4 5 6 (PRODUCT LEVEL)	SEE PAGE
Y	**112-1778**	1	BUCKET GP-MULTIPURPOSE	856
Y	**185-1839**	2	CYLINDER GP-MULTIPURPOSE BUKT	544
Y	*104-6310*	1	FORK GP	879
Y	*9R-3712*	1	LINES GP-MULTIPURPOSE BUCKET	638
Y	*9R-4668*	1	MOUNTING GP-CYLINDER	679
Y-SEPARATE ILLUSTRATION				

<END>

112-0940 BUCKET AR-MULTIPURPOSE

S/N: CBD1-UP
AN ATTACHMENT

SMCS-6104 **i02837634**

NOTE	PART NUMBER	QTY	PART NAME 1 2 3 4 5 6 (PRODUCT LEVEL)	SEE PAGE
Y	**112-0938**	1	BUCKET AR-MULTIPURPOSE	781
	106-9387	1	FILM-IDENTIFICATION (BUCKET LEVEL)	
Y-SEPARATE ILLUSTRATION				

<END>

112-0941 BUCKET AR-MULTIPURPOSE

S/N: CBD1-UP
AN ATTACHMENT

SMCS-6104 **i02837635**

NOTE	PART NUMBER	QTY	PART NAME 1 2 3 4 5 6 (PRODUCT LEVEL)	SEE PAGE
Y	**112-0939**	1	BUCKET AR-MULTIPURPOSE	781
	106-9387	1	FILM-IDENTIFICATION (BUCKET LEVEL)	
Y-SEPARATE ILLUSTRATION				

<END>

WORK TOOLS

232-2685 BUCKET AR-MULTIPURPOSE

S/N: CBD1-UP; MFG1-UP

AN ATTACHMENT

SMCS-6104 **i02520042**

NOTE	PART NUMBER	QTY	PART NAME 1 2 3 4 5 6 (PRODUCT LEVEL)	SEE PAGE
Y	**216-8801**	1	BUCKET GP-MULTIPURPOSE	860
Y	**104-6310**	1	FORK GP	879

Y-SEPARATE ILLUSTRATION

<END>

WORK TOOLS

9R-5201 BUCKET AS-GENERAL PURPOSE

S/N: CBD1-UP
0.76 CU M(1.0 CU YD)
PART OF 190-1055 BUCKET GP-GENERAL PURPOSE
AN ATTACHMENT

SMCS-6101 **i02548272**

NOTE	REF NO	GRAPHIC REF	PART NUMBER	QTY	PART NAME 1 2 3 4 5 6 (PRODUCT LEVEL)	SEE PAGE
	1	1	**137-4234**	1	PLATE-IDENTIFICATION (WORK TOOL)	
	2	1	**168-8389**	4	TACK-FASTENER	
Y	3	1	*190-7595*	1	BUCKET AS-GENERAL PURPOSE	784

Y-SEPARATE ILLUSTRATION

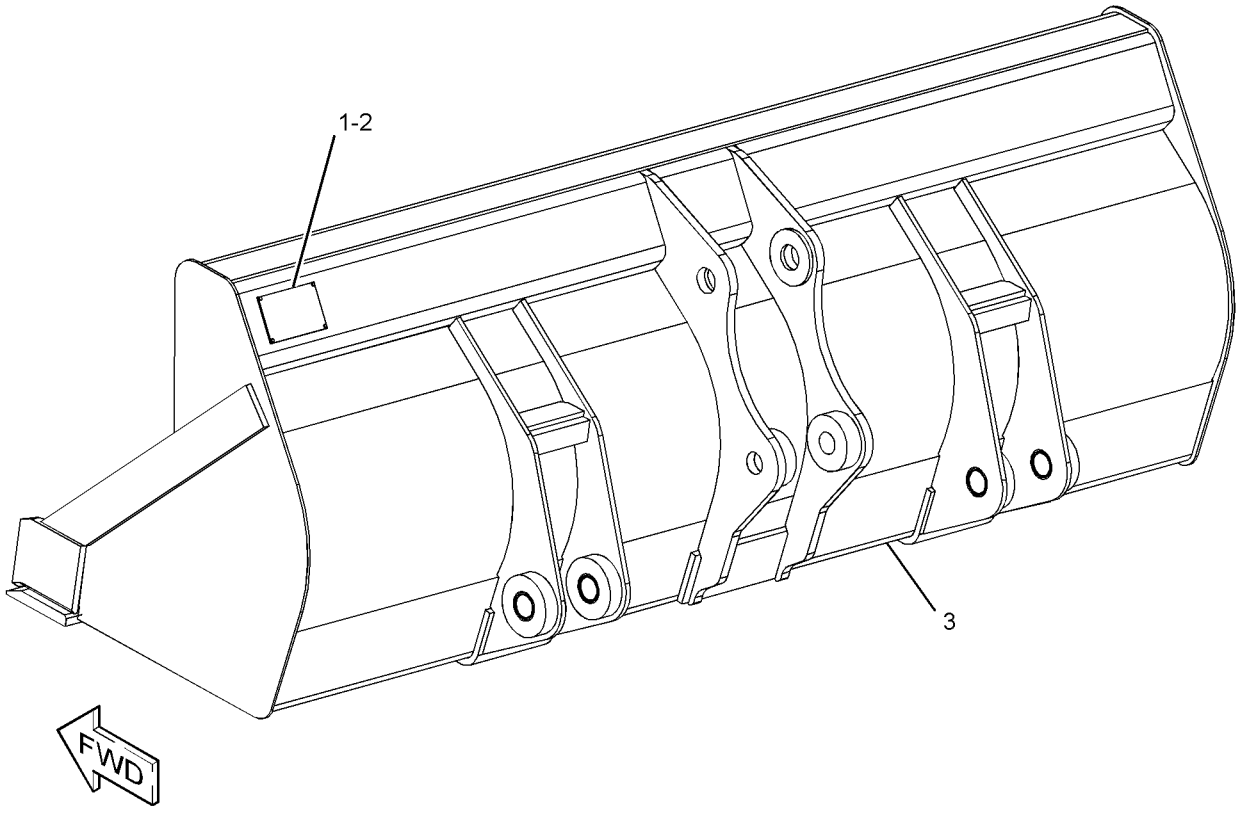

GRAPHIC #1 **<END>** g01277460

WORK TOOLS

190-7595 BUCKET AS-GENERAL PURPOSE

S/N: CBD1-UP

PART OF 9R-5201 BUCKET AS-GENERAL PURPOSE

AN ATTACHMENT

SMCS-6101 **i02548303**

NOTE	REF NO	GRAPHIC REF	PART NUMBER	QTY	PART NAME 1 2 3 4 5 6 (PRODUCT LEVEL)	SEE PAGE
	1	1	*9R-0336*	2	BRACKET AS-LIFT	
					(EACH INCLUDES)	
		1	**9R-0111**	1	BEARING-SLEEVE	
	2	1	*9R-0343*	2	BRACKET AS-LIFT	
					(EACH INCLUDES)	
		1	**9R-0111**	1	BEARING-SLEEVE	
	3	1	**9R-0347**	2	EDGE	
	4	1	**9R-4672**	1	EDGE	
	5	1	**9R-5205**	1	EDGE (LH)	
	6	1	**9R-5206**	1	EDGE (RH)	

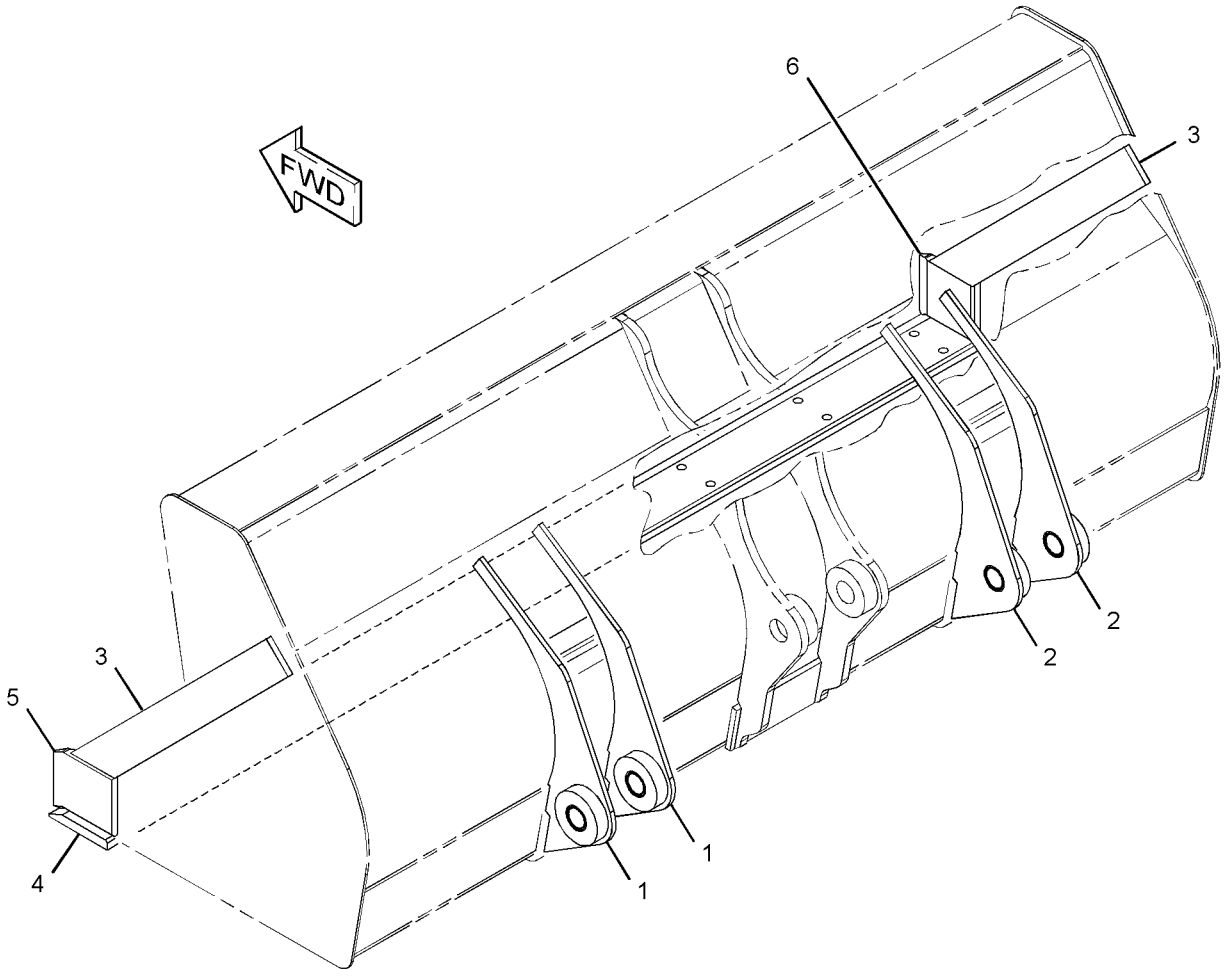

GRAPHIC #1 **<END>** g01280215

WORK TOOLS

190-7598 BUCKET AS-GENERAL PURPOSE

S/N: CBD1-UP

PART OF 9R-5989 BUCKET GP-GENERAL PURPOSE

AN ATTACHMENT

SMCS-6101 **i02548329**

NOTE	REF NO	GRAPHIC REF	PART NUMBER	QTY	PART NAME 1 2 3 4 5 6 (PRODUCT LEVEL)	SEE PAGE
	1	1	*9R-0336*	2	BRACKET AS-LIFT	
					(EACH INCLUDES)	
		1	**9R-0111**	1	BEARING-SLEEVE	
	2	1	*9R-0343*	2	BRACKET AS-LIFT	
					(EACH INCLUDES)	
		1	**9R-0111**	1	BEARING-SLEEVE	
	3	1	**9R-0376**	2	EDGE	
	4	1	**9R-4672**	1	EDGE	
	5	1	**9R-5205**	1	EDGE (LH)	
	6	1	**9R-5206**	1	EDGE (RH)	

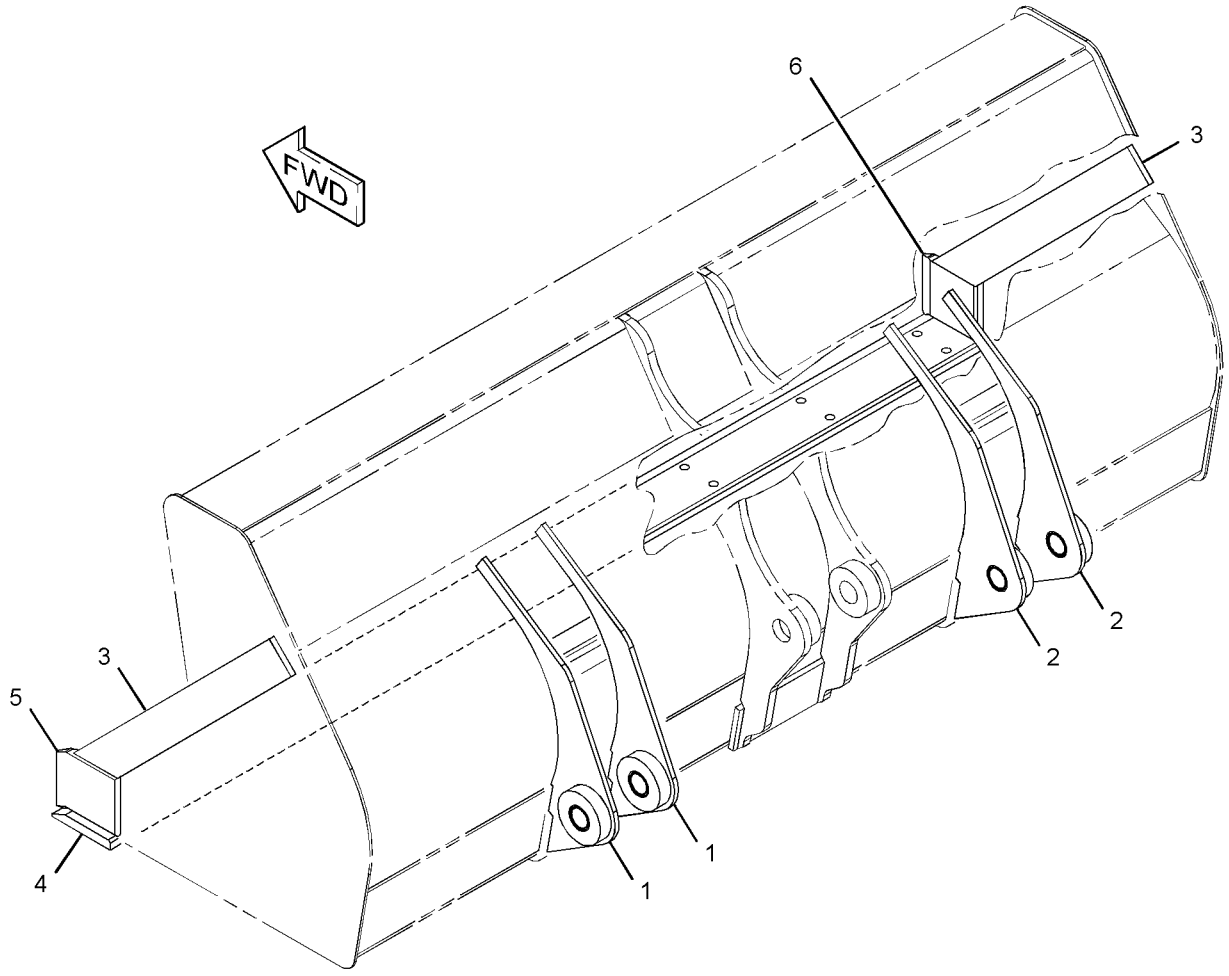

GRAPHIC #1 **<END>** g01280215

251-1157 BUCKET AS-GENERAL PURPOSE

S/N: CBD1-UP; MFG1-UP
.76-CU M (1-CU YD) CAPACITY
PART OF 251-1780 BUCKET GP-GENERAL PURPOSE
AN ATTACHMENT

SMCS-6101 **i02660181**

NOTE	REF NO	GRAPHIC REF	PART NUMBER	QTY	PART NAME 1 2 3 4 5 6 (PRODUCT LEVEL)	SEE PAGE
	1	1	*251-1172*	2	BRACKET AS-LIFT (RH)	
					(EACH INCLUDES)	
	1A	1	**9R-0111**	1	BEARING-SLEEVE	
	2	1	*251-1173*	2	BRACKET AS-LIFT (LH)	
					(EACH INCLUDES)	
	2A	1	**9R-0111**	1	BEARING-SLEEVE	
	3	1	**9R-0347**	2	EDGE	
	4	1	**9R-4672**	1	EDGE	
	5	1	**9R-5205**	1	EDGE (LH)	
	6	1	**9R-5206**	1	EDGE (RH)	

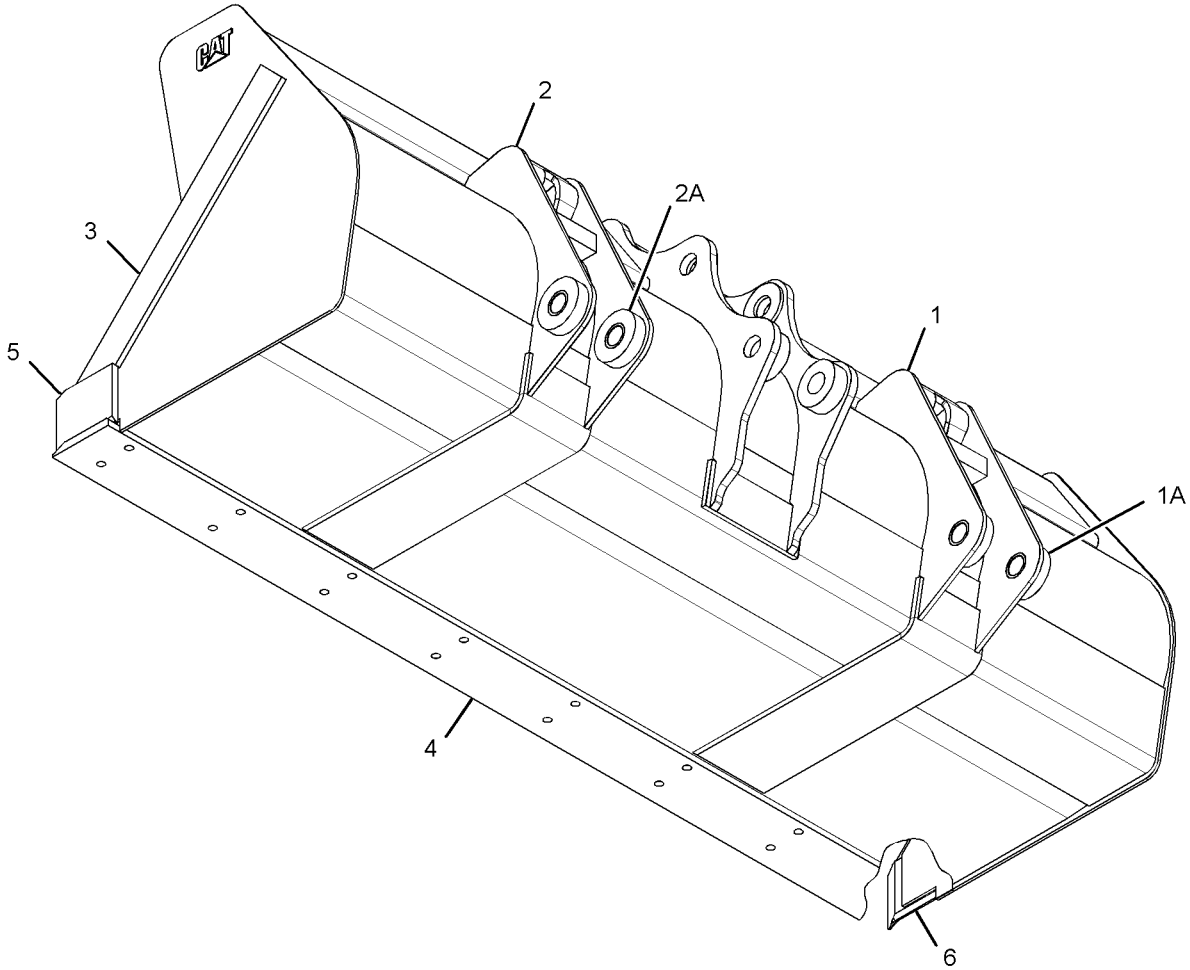

GRAPHIC #1 **<END>** g01342321

251-1160 BUCKET AS-GENERAL PURPOSE

S/N: CBD1-UP; MFG1-UP
.96-CU M (1.25-CU YD) CAPACITY
PART OF 251-1789 BUCKET GP-GENERAL PURPOSE
AN ATTACHMENT

SMCS-6101 **i02660183**

NOTE	REF NO	GRAPHIC REF	PART NUMBER	QTY	PART NAME 1 2 3 4 5 6 (PRODUCT LEVEL)	SEE PAGE
	1	1	*251-1172*	2	BRACKET AS-LIFT (RH)	
					(EACH INCLUDES)	
	1A	1	**9R-0111**	1	BEARING-SLEEVE	
	2	1	*251-1173*	2	BRACKET AS-LIFT (LH)	
					(EACH INCLUDES)	
	2A	1	**9R-0111**	1	BEARING-SLEEVE	
	3	1	**9R-0376**	2	EDGE	
	4	1	**9R-4672**	1	EDGE	
	5	1	**9R-5205**	1	EDGE (LH)	
	6	1	**9R-5206**	1	EDGE (RH)	

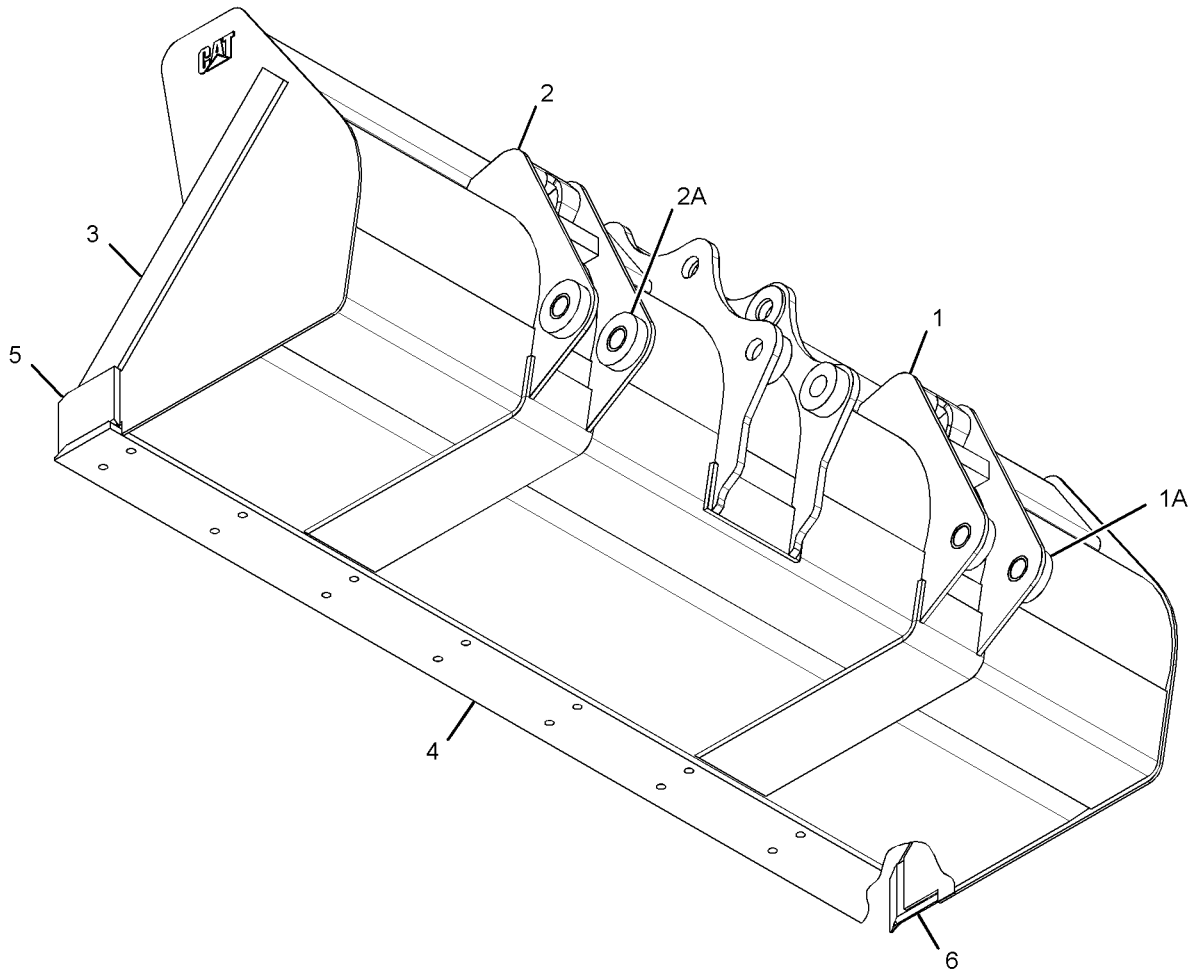

GRAPHIC #1 **<END>** g01342321

WORK TOOLS

219-3355 BUCKET AS-HOE

S/N: CBD1-UP
305-MM (12-IN)
PART OF 219-3379 BUCKET GP-HOE
AN ATTACHMENT

SMCS-6503 **i02655063**

NOTE	REF NO	GRAPHIC REF	PART NUMBER	QTY	PART NAME 1 2 3 4 5 6 (PRODUCT LEVEL)	SEE PAGE
	1	1	*151-7929*	1	BRACKET AS (LH)	
	1A	1	**9R-0320**	1	BEARING-SLEEVE	
	1B	1	**154-5257**	1	BEARING-SLEEVE	
	3	1	*151-7930*	1	BRACKET AS (RH)	
	3A	1	**9R-0320**	1	BEARING-SLEEVE	
	3B	1	**154-5257**	1	BEARING-SLEEVE	
	4	1	**161-4130**	2	PLATE-IDENTIFICATION (CAT)	
	5	1	**201-1235**	3	ADAPTER (2-STRAP)	
	6	1	**219-9494**	1	EDGE	

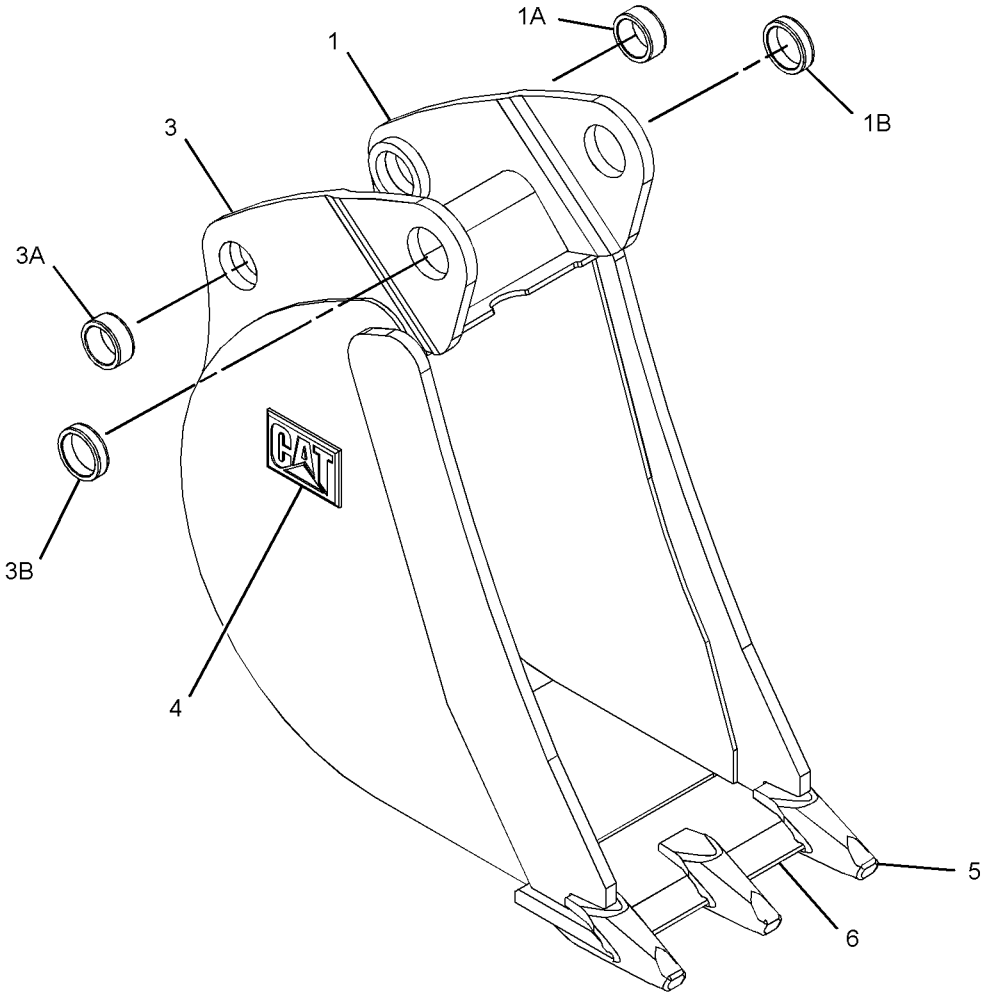

GRAPHIC #1 **<END>** g01341909

219-3355 BUCKET AS-HOE

S/N: CBD1-UP; MFG1-UP
305-MM (12-IN)
PART OF 219-3379 BUCKET GP-HOE
AN ATTACHMENT

SMCS-6503 **i02909212**

NOTE	REF NO	GRAPHIC REF	PART NUMBER	QTY	PART NAME 1 2 3 4 5 6 (PRODUCT LEVEL)	SEE PAGE
C	1	1	*286-9338*	1	BRACKET AS (RH)	
	1A	1	**9R-0320**	1	BEARING-SLEEVE	
	1B	1	**154-5257**	1	BEARING-SLEEVE	
C	2	1	*286-9340*	1	BRACKET AS (LH)	
	2A	1	**9R-0320**	1	BEARING-SLEEVE	
	2B	1	**154-5257**	1	BEARING-SLEEVE	
	3	1	*304-8424*	1	EDGE AS	
		1	**201-1235**	3	ADAPTER (2-STRAP)	
		1	**219-9494**	1	EDGE	

C-CHANGE FROM PREVIOUS TYPE

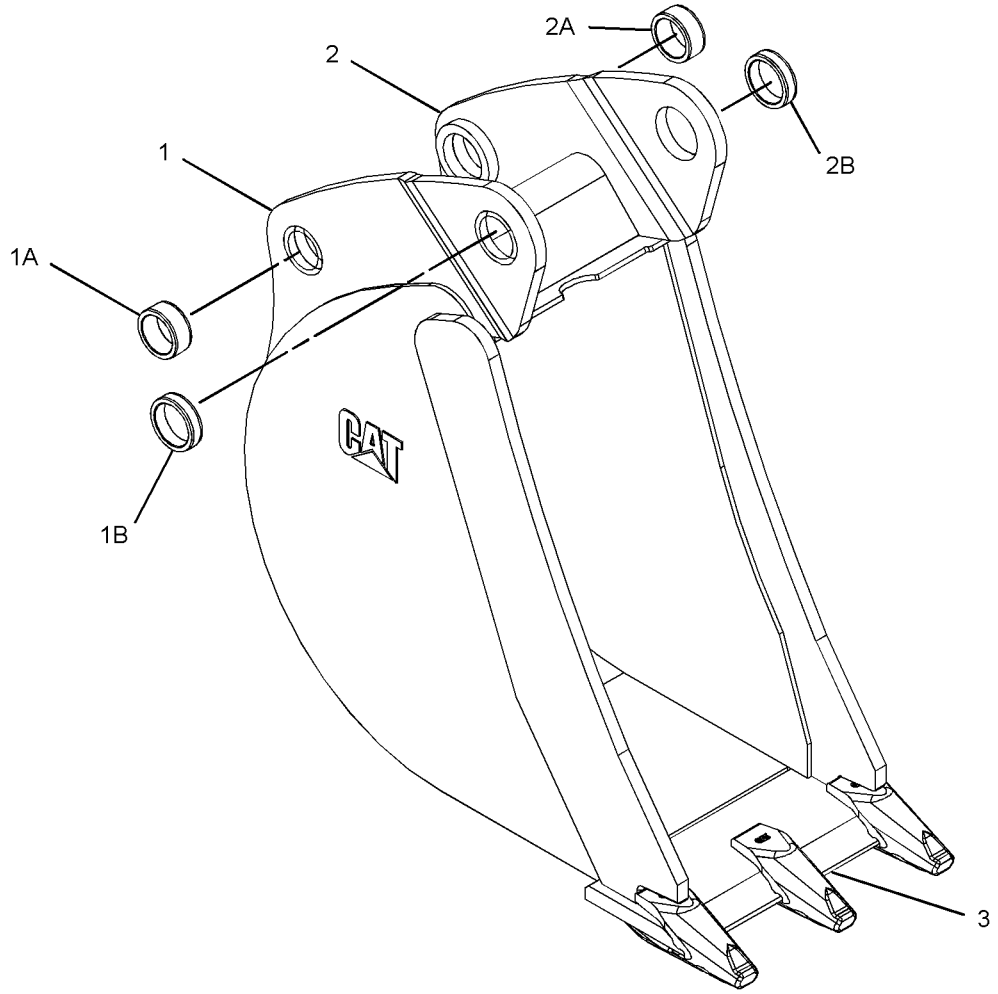

GRAPHIC #1 **<END>** g01381373

WORK TOOLS

219-3356 BUCKET AS-HOE

S/N: CBD1-UP
458-MM (18-IN)
PART OF 219-3380 BUCKET GP-HOE
AN ATTACHMENT

SMCS-6503 **i02655128**

NOTE	REF NO	GRAPHIC REF	PART NUMBER	QTY	PART NAME 1 2 3 4 5 6 (PRODUCT LEVEL)	SEE PAGE
	1	1	*151-7902*	1	BRACKET AS (LH)	
	1A	1	**9R-0162**	1	BEARING-SLEEVE	
	1B	1	**168-0480**	1	BEARING-SLEEVE	
	2	1	*151-7903*	1	BRACKET AS (RH)	
	2A	1	**9R-0162**	1	BEARING-SLEEVE	
	2B	1	**168-0480**	1	BEARING-SLEEVE	
	3	1	**161-4130**	2	PLATE-IDENTIFICATION (CAT)	
	4	1	**201-1235**	4	ADAPTER (2-STRAP)	
	5	1	**219-9487**	1	EDGE	

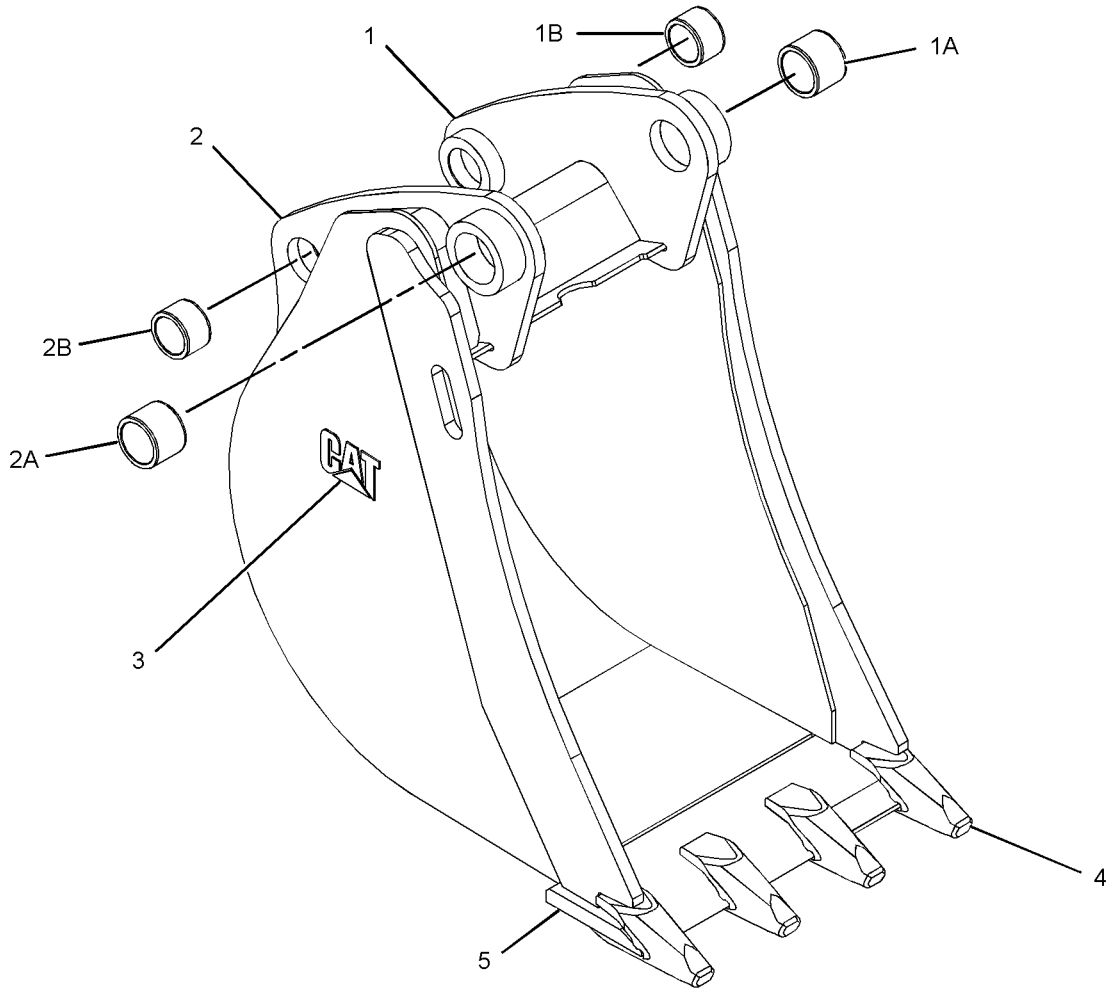

GRAPHIC #1 **<END>** g01335125

WORK TOOLS

219-3356 BUCKET AS-HOE

S/N: CBD1-UP; MFG1-UP
458-MM (18-IN)
PART OF 219-3380 BUCKET GP-HOE
AN ATTACHMENT

SMCS-6503 **i02810351**

NOTE	REF NO	GRAPHIC REF	PART NUMBER	QTY	PART NAME 1 2 3 4 5 6 (PRODUCT LEVEL)	SEE PAGE
C	1	1	*286-9337*	1	BRACKET AS (LH)	
	1A	1	**9R-0162**	1	BEARING-SLEEVE	
	1B	1	**168-0480**	1	BEARING-SLEEVE	
C	2	1	*286-9336*	1	BRACKET AS (RH)	
	2A	1	**9R-0162**	1	BEARING-SLEEVE	
	2B	1	**168-0480**	1	BEARING-SLEEVE	
	3	1	*300-4157*	1	EDGE AS	
		1	**201-1235**	4	ADAPTER (2-STRAP)	
		1	**219-9487**	1	EDGE	

C-CHANGE FROM PREVIOUS TYPE

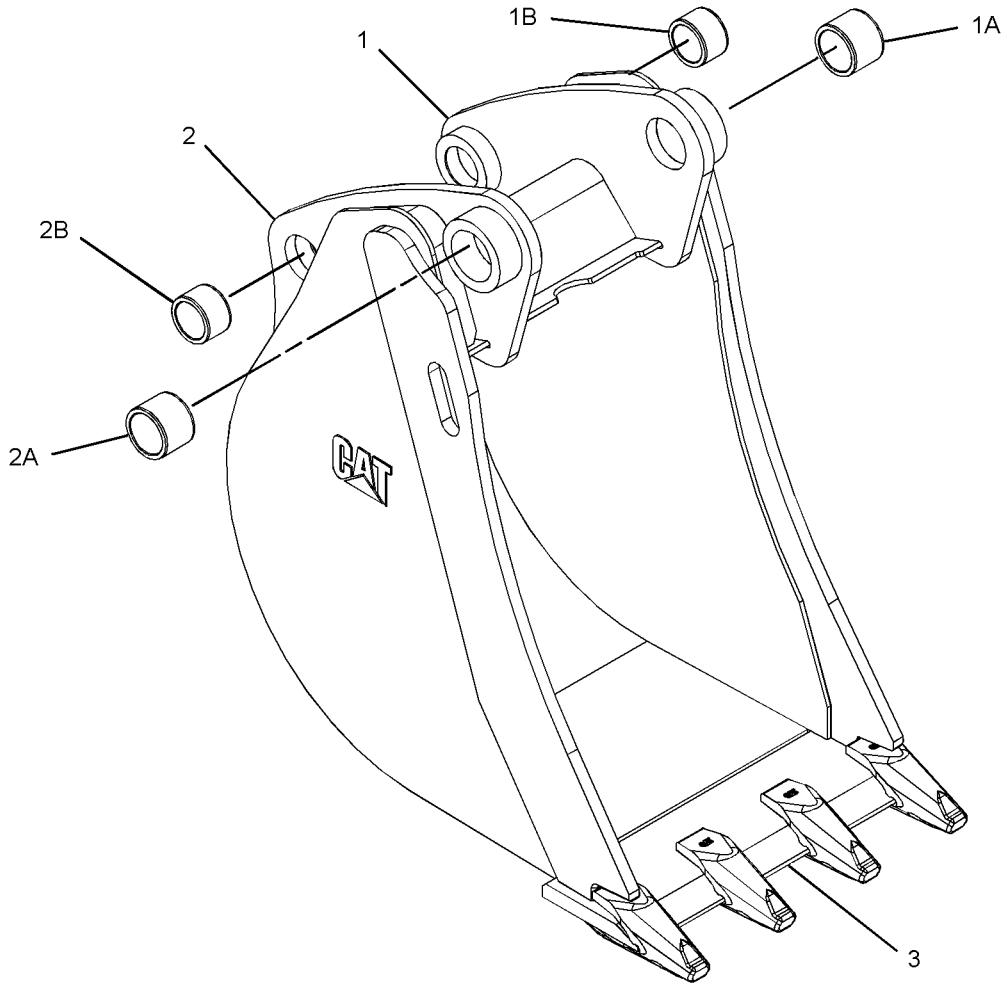

GRAPHIC #1 **<END>** g01409544

WORK TOOLS

219-3357 BUCKET AS-HOE

S/N: CBD1-UP
610-MM (24-IN)
PART OF 219-3381 BUCKET GP-HOE
AN ATTACHMENT

SMCS-6503 **i02659639**

NOTE	REF NO	GRAPHIC REF	PART NUMBER	QTY	PART NAME 1 2 3 4 5 6 (PRODUCT LEVEL)	SEE PAGE
	1	1	*151-7902*	1	BRACKET AS (LH)	
	1A	1	**9R-0162**	1	BEARING-SLEEVE	
	1B	1	**168-0480**	1	BEARING-SLEEVE	
	2	1	*151-7903*	1	BRACKET AS (RH)	
	2A	1	**9R-0162**	1	BEARING-SLEEVE	
	2B	1	**168-0480**	1	BEARING-SLEEVE	
	3	1	**161-4130**	2	PLATE-IDENTIFICATION (CAT)	
	4	1	**201-1235**	5	ADAPTER (2-STRAP)	
	5	1	**219-9488**	1	EDGE	

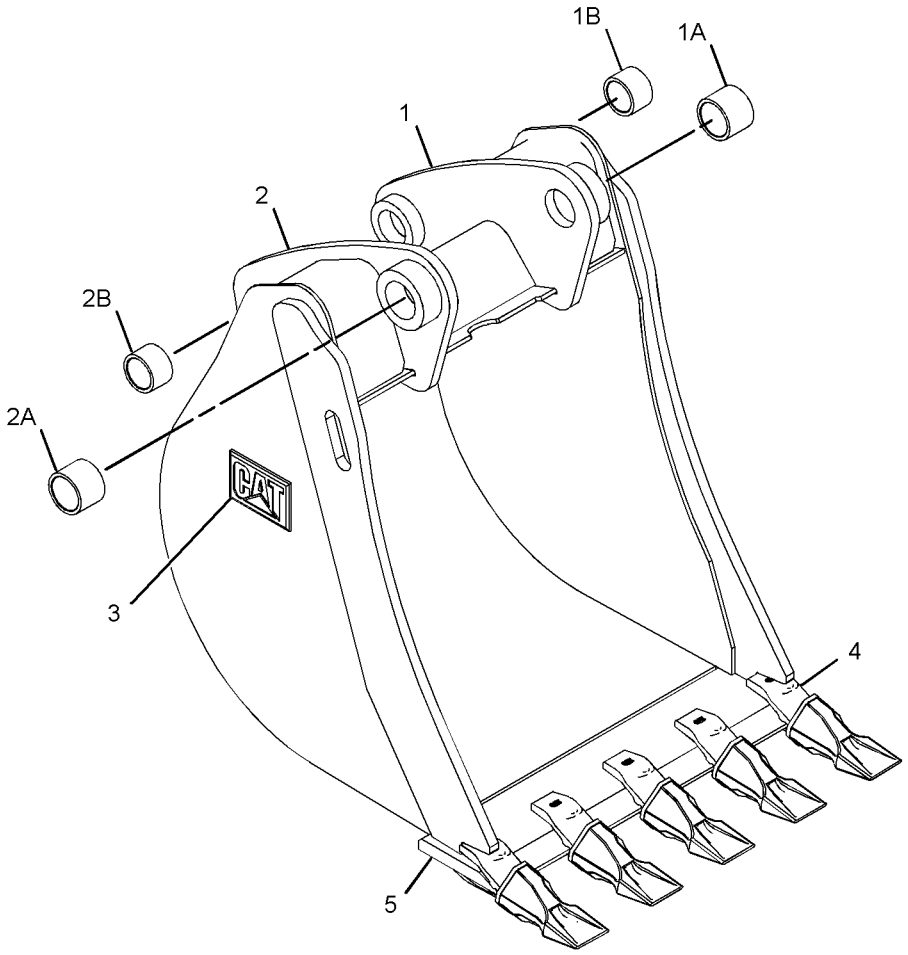

GRAPHIC #1 **<END>** g01336103

WORK TOOLS

219-3357 BUCKET AS-HOE

S/N: CBD1-UP; MFG1-UP
610-MM (24-IN)
PART OF 219-3381 BUCKET GP-HOE
AN ATTACHMENT

SMCS-6503 **i02909213**

NOTE	REF NO	GRAPHIC REF	PART NUMBER	QTY	PART NAME 1 2 3 4 5 6 (PRODUCT LEVEL)	SEE PAGE
C	1	1	*286-9336*	1	BRACKET AS (RH)	
	1A	1	**9R-0162**	1	BEARING-SLEEVE	
	1B	1	**168-0480**	1	BEARING-SLEEVE	
C	2	1	*286-9337*	1	BRACKET AS (LH)	
	2A	1	**9R-0162**	1	BEARING-SLEEVE	
	2B	1	**168-0480**	1	BEARING-SLEEVE	
	3	1	*300-4158*	1	EDGE AS	
		1	**201-1235**	5	ADAPTER (2-STRAP)	
		1	**219-9488**	1	EDGE	

C-CHANGE FROM PREVIOUS TYPE

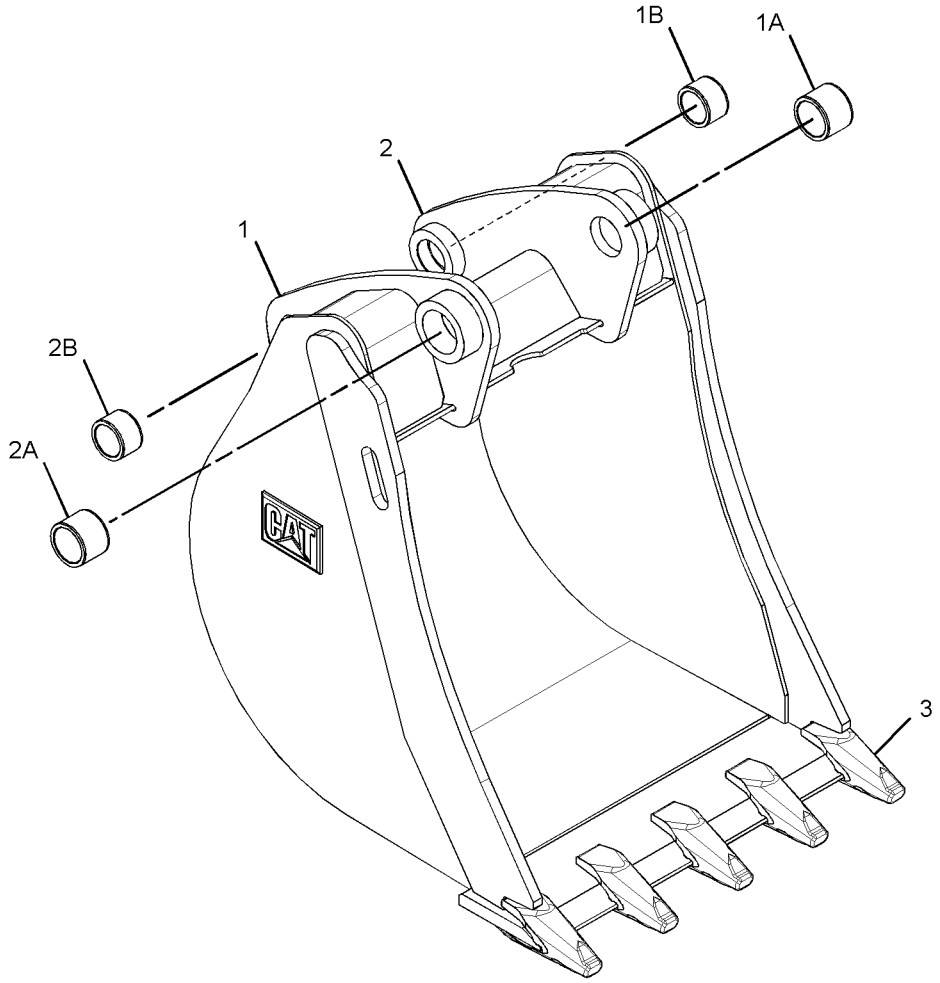

GRAPHIC #1 **<END>** g01382136

WORK TOOLS

219-3358 BUCKET AS-HOE

S/N: CBD1-UP
762-MM (30-IN)
PART OF 219-3382 BUCKET GP-HOE
AN ATTACHMENT

SMCS-6503 **i02651249**

NOTE	REF NO	GRAPHIC REF	PART NUMBER	QTY	PART NAME 1 2 3 4 5 6 (PRODUCT LEVEL)	SEE PAGE
	1	1	*151-7902*	1	BRACKET AS (LH)	
	1A	1	**9R-0162**	1	BEARING-SLEEVE	
	1B	1	**168-0480**	1	BEARING-SLEEVE	
	2	1	*151-7903*	1	BRACKET AS (RH)	
	2A	1	**9R-0162**	1	BEARING-SLEEVE	
	2B	1	**168-0480**	1	BEARING-SLEEVE	
	3	1	**161-4130**	2	PLATE-IDENTIFICATION (CAT)	
	4	1	**201-1235**	5	ADAPTER (2-STRAP)	
	5	1	**219-9489**	1	EDGE	

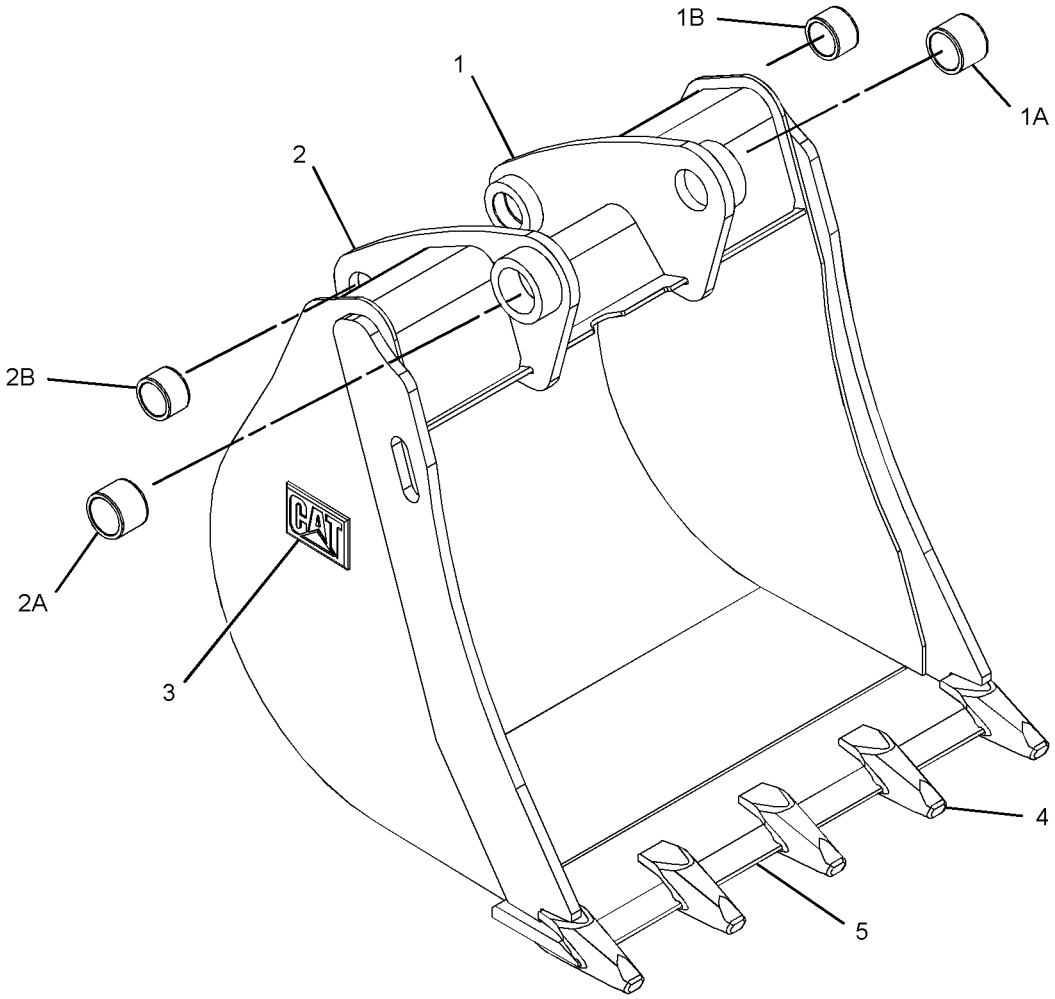

GRAPHIC #1 **<END>** g01341875

WORK TOOLS

219-3358 BUCKET AS-HOE

S/N: CBD1-UP; MFG1-UP
762-MM (30-IN)
PART OF 219-3382 BUCKET GP-HOE
AN ATTACHMENT

SMCS-6503 **i02810353**

NOTE	REF NO	GRAPHIC REF	PART NUMBER	QTY	PART NAME 1 2 3 4 5 6 (PRODUCT LEVEL)	SEE PAGE
C	1	1	*286-9337*	1	BRACKET AS (LH)	
	1A	1	**9R-0162**	1	BEARING-SLEEVE	
	1B	1	**168-0480**	1	BEARING-SLEEVE	
C	2	1	*286-9336*	1	BRACKET AS (RH)	
	2A	1	**9R-0162**	1	BEARING-SLEEVE	
	2B	1	**168-0480**	1	BEARING-SLEEVE	
	3	1	*300-4159*	1	EDGE AS	
		1	**201-1235**	5	ADAPTER	
		1	**219-9487**	1	EDGE	

C-CHANGE FROM PREVIOUS TYPE

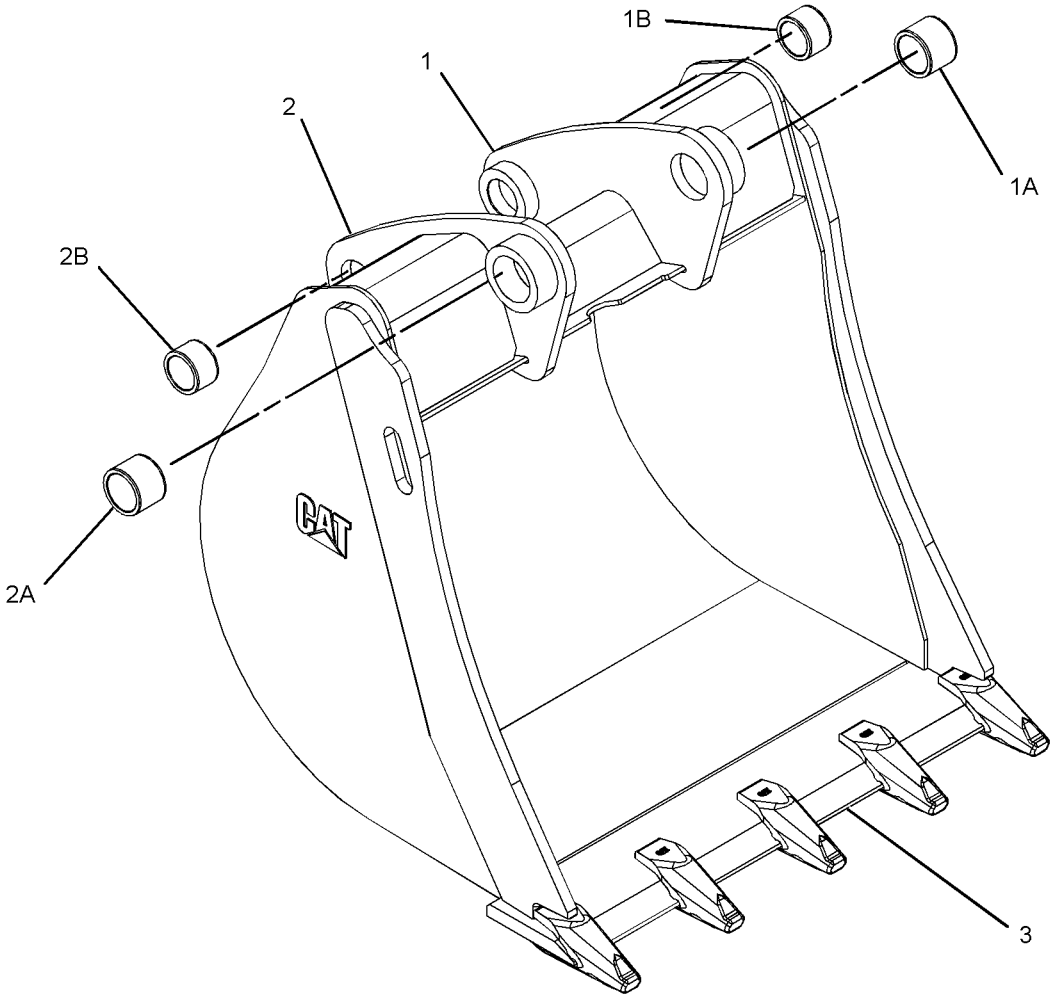

GRAPHIC #1 **<END>** g01409512

WORK TOOLS

219-3359 BUCKET AS-HOE

S/N: CBD1-UP
914-MM (36-IN)
PART OF 219-3383 BUCKET GP-HOE
AN ATTACHMENT

SMCS-6503 **i02651454**

NOTE	REF NO	GRAPHIC REF	PART NUMBER	QTY	PART NAME 1 2 3 4 5 6 (PRODUCT LEVEL)	SEE PAGE
	1	1	*151-7902*	1	BRACKET AS (LH)	
	1A	1	**9R-0162**	1	BEARING-SLEEVE	
	1B	1	**168-0480**	1	BEARING-SLEEVE	
	2	1	*151-7903*	1	BRACKET AS (RH)	
	2A	1	**9R-0162**	1	BEARING-SLEEVE	
	2B	1	**168-0480**	1	BEARING-SLEEVE	
	3	1	**161-4130**	2	PLATE-IDENTIFICATION (CAT)	
	4	1	**201-1235**	6	ADAPTER (2-STRAP)	
	5	1	**219-9490**	1	EDGE	

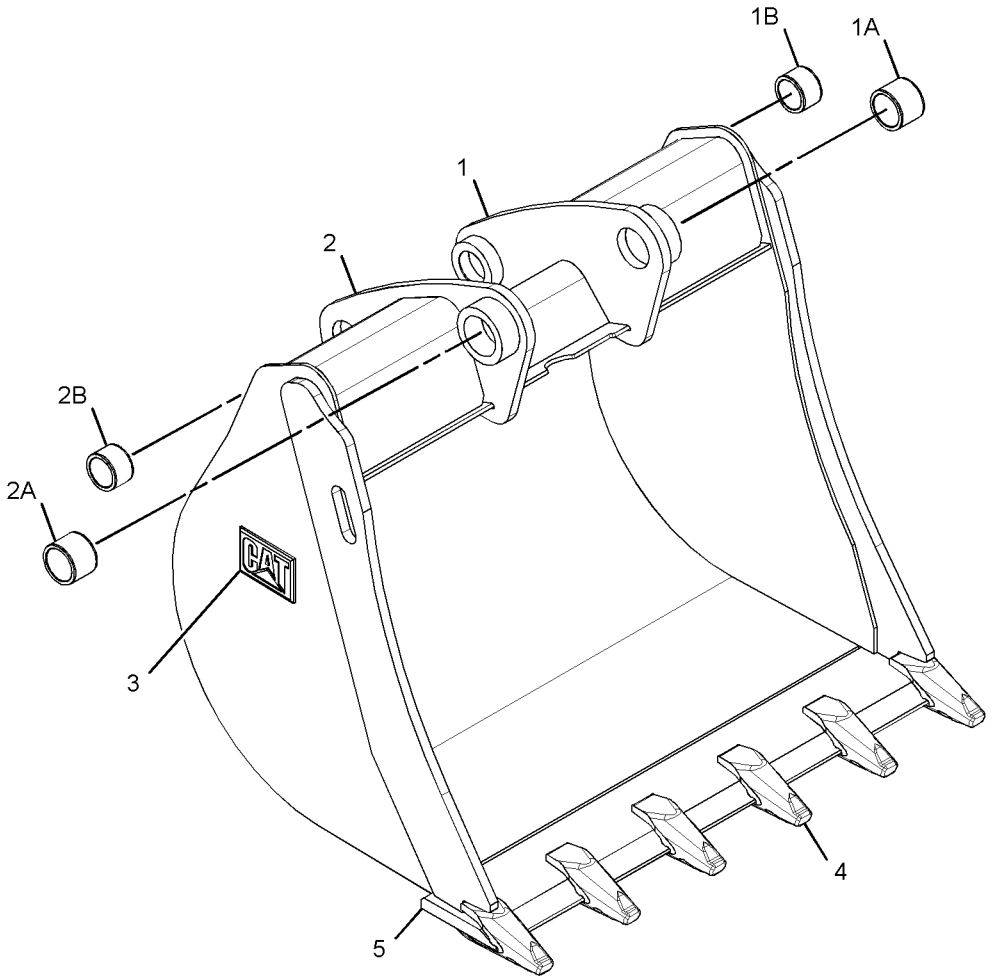

GRAPHIC #1 **<END>** g01341811

WORK TOOLS

219-3359 BUCKET AS-HOE

S/N: CBD1-UP; MFG1-UP
914-MM (36-IN)
PART OF 219-3383 BUCKET GP-HOE
AN ATTACHMENT

SMCS-6503 **i02909214**

NOTE	REF NO	GRAPHIC REF	PART NUMBER	QTY	PART NAME 1 2 3 4 5 6 (PRODUCT LEVEL)	SEE PAGE
C	1	1	*286-9336*	1	BRACKET AS (RH)	
	1A	1	**9R-0162**	1	BEARING-SLEEVE	
	1B	1	**168-0480**	1	BEARING-SLEEVE	
C	2	1	*286-9337*	1	BRACKET AS (LH)	
	2A	1	**9R-0162**	1	BEARING-SLEEVE	
	2B	1	**168-0480**	1	BEARING-SLEEVE	
	3	1	*300-4160*	1	EDGE AS	
		1	**201-1235**	6	ADAPTER (2-STRAP)	
		1	**219-9490**	1	EDGE	

C-CHANGE FROM PREVIOUS TYPE

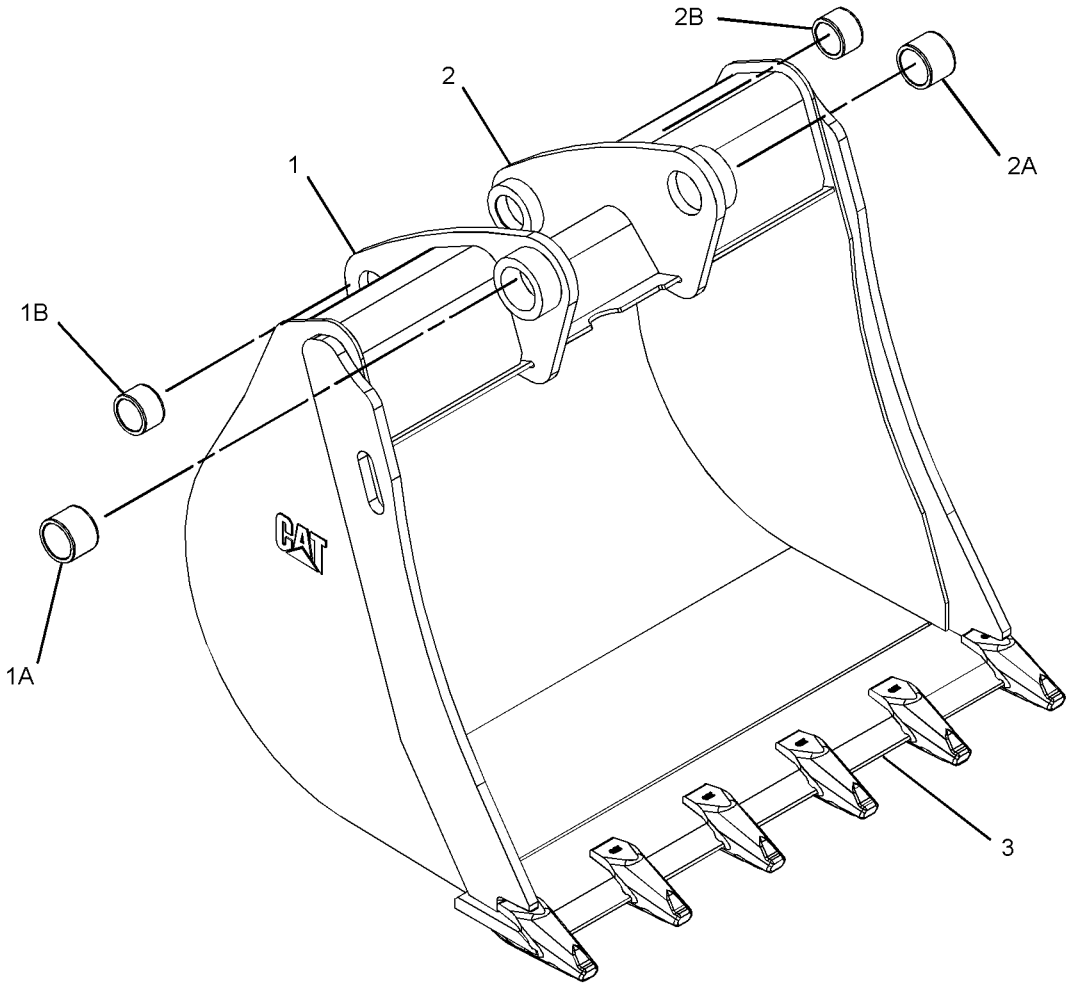

GRAPHIC #1 **<END>** g01382084

WORK TOOLS

219-3360 BUCKET AS-HOE—HEAVY-DUTY

S/N: CBD1-UP
305-MM (12-IN)
PART OF 219-3384 BUCKET GP-HOE
AN ATTACHMENT

SMCS-6503 **i02651463**

NOTE	REF NO	GRAPHIC REF	PART NUMBER	QTY	PART NAME 1 2 3 4 5 6 (PRODUCT LEVEL)	SEE PAGE
	1	1	**134-5884**	1	EDGE (LH)	
	2	1	**134-5885**	1	EDGE (RH)	
	3	1	**151-7927**	2	PLATE	
	4	1	*151-7929*	1	BRACKET AS (LH)	
	4A	1	**9R-0320**	1	BEARING-SLEEVE	
	4B	1	**154-5257**	1	BEARING-SLEEVE	
	5	1	*151-7930*	1	BRACKET AS (RH)	
	5A	1	**9R-0320**	1	BEARING-SLEEVE	
	5B	1	**154-5257**	1	BEARING-SLEEVE	
	6	1	**161-4130**	2	PLATE-IDENTIFICATION (CAT)	
	7	1	**201-1234**	3	ADAPTER (2-STRAP)	
	8	1	**219-9493**	1	EDGE	

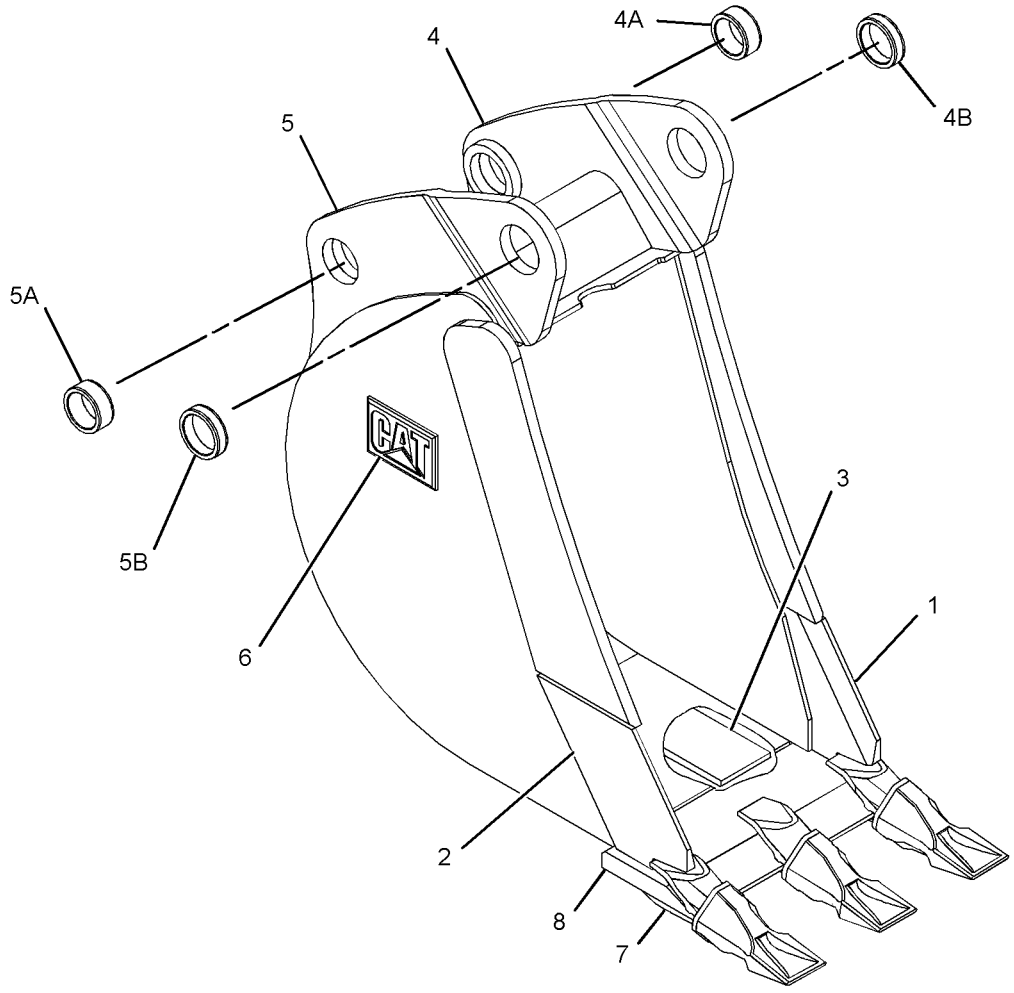

GRAPHIC #1 **<END>** g01335502

WORK TOOLS

219-3360 BUCKET AS-HOE—HEAVY-DUTY

S/N: CBD1-UP; MFG1-UP
305-MM (12-IN)
PART OF 219-3384 BUCKET GP-HOE
AN ATTACHMENT

SMCS-6503 **i02909215**

NOTE	REF NO	GRAPHIC REF	PART NUMBER	QTY	PART NAME 1 2 3 4 5 6 (PRODUCT LEVEL)	SEE PAGE
	1	1	**174-3950**	5	PLATE	
C	2	1	*286-9338*	1	BRACKET AS (RH)	
	2A	1	**9R-0320**	1	BEARING-SLEEVE	
	2B	1	**154-5257**	1	BEARING-SLEEVE	
C	3	1	*286-9340*	1	BRACKET AS (LH)	
	3A	1	**9R-0320**	1	BEARING-SLEEVE	
	3B	1	**154-5257**	1	BEARING-SLEEVE	
	4	1	*300-4161*	1	EDGE AS	
	4A	1	**201-1234**	3	ADAPTER (2-STRAP)	
	4B	1	**219-9493**	1	EDGE	
	5	1	*304-8420*	1	PLATE AS	
		1	**134-5885**	1	EDGE (RH)	
	6	1	*304-8421*	1	PLATE AS	
		1	**134-5884**	1	EDGE (LH)	

C-CHANGE FROM PREVIOUS TYPE

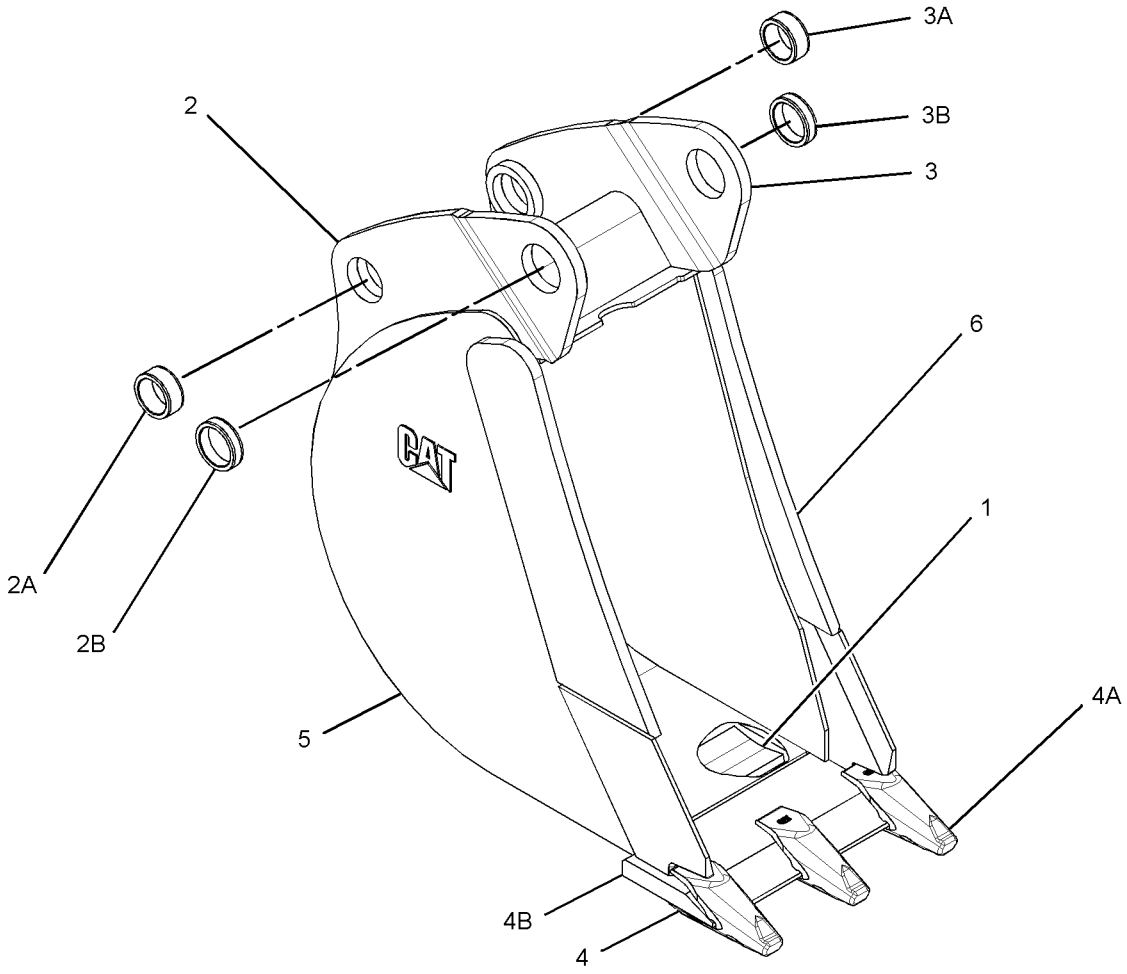

GRAPHIC #1 **<END>** g01485853

WORK TOOLS

219-3361 BUCKET AS-HOE—HEAVY-DUTY

S/N: CBD1-UP
407-MM (16-IN)
PART OF 219-3385 BUCKET GP-HOE
AN ATTACHMENT

SMCS-6503 **i02651472**

NOTE	REF NO	GRAPHIC REF	PART NUMBER	QTY	PART NAME 1 2 3 4 5 6 (PRODUCT LEVEL)	SEE PAGE
	1	1	**134-5884**	1	EDGE (LH)	
	2	1	**134-5885**	1	EDGE (RH)	
	3	1	*151-7902*	1	BRACKET AS (LH)	
	3A	1	**9R-0162**	1	BEARING-SLEEVE	
	3B	1	**168-0480**	1	BEARING-SLEEVE	
	4	1	*151-7903*	1	BRACKET AS (RH)	
	4A	1	**9R-0162**	1	BEARING-SLEEVE	
	4B	1	**168-0480**	1	BEARING-SLEEVE	
	5	1	**151-7927**	3	PLATE	
	6	1	**161-4130**	2	PLATE-IDENTIFICATION (CAT)	
	7	1	**201-1234**	3	ADAPTER (2-STRAP)	
	8	1	**219-9482**	1	EDGE	

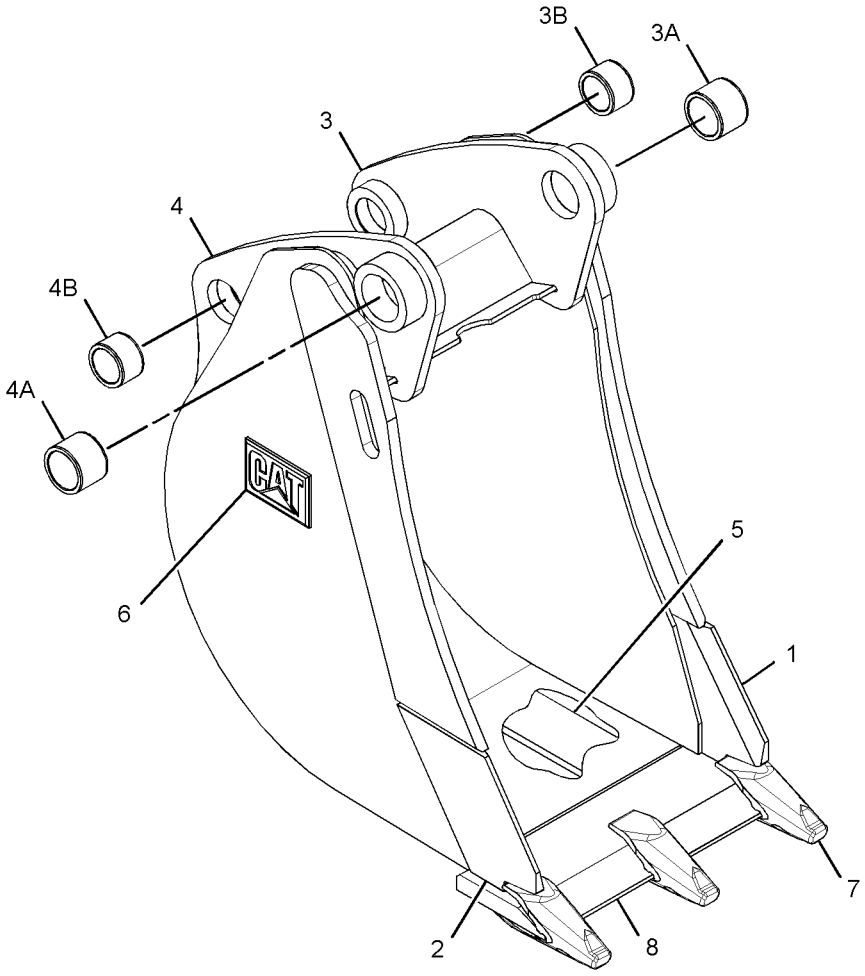

GRAPHIC #1 **<END>** g01341887

219-3361 BUCKET AS-HOE—HEAVY-DUTY

S/N: CBD1-UP; MFG1-UP
407-MM (16-IN)
PART OF 219-3385 BUCKET GP-HOE
AN ATTACHMENT

SMCS-6503 **i03351181**

NOTE	REF NO	GRAPHIC REF	PART NUMBER	QTY	PART NAME 1 2 3 4 5 6 (PRODUCT LEVEL)	SEE PAGE
	1	1	**306-8128**	5	PLATE	
C	2	1	*286-9336*	1	BRACKET AS (RH)	
	2A	1	**9R-0162**	1	BEARING-SLEEVE	
	2B	1	**168-0480**	1	BEARING-SLEEVE	
C	3	1	*286-9337*	1	BRACKET AS (LH)	
	3A	1	**9R-0162**	1	BEARING-SLEEVE	
	3B	1	**168-0480**	1	BEARING-SLEEVE	
	4	1	*299-3342*	1	EDGE AS	
		1	**219-9482**	1	EDGE	
		1	**201-1234**	3	ADAPTER (2-STRAP)	
	5	1	*300-7049*	1	PLATE AS	
		1	**134-5885**	1	EDGE (RH)	
	6	1	*300-7051*	1	PLATE AS	
		1	**134-5884**	1	EDGE (LH)	

C-CHANGE FROM PREVIOUS TYPE

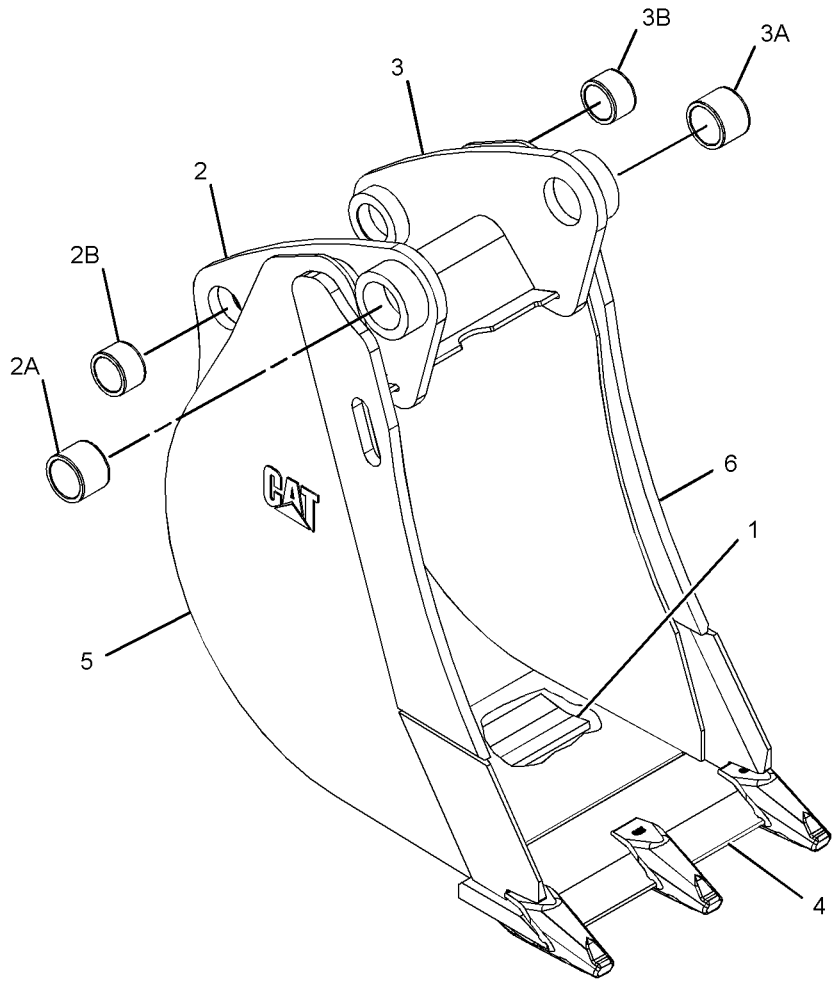

GRAPHIC #1 **<END>** g01381334

WORK TOOLS

219-3362 BUCKET AS-HOE—HEAVY-DUTY

S/N: CBD1-UP
458-MM (18-IN)
PART OF 219-3386 BUCKET GP-HOE
AN ATTACHMENT

SMCS-6503 **i02655178**

NOTE	REF NO	GRAPHIC REF	PART NUMBER	QTY	PART NAME 1 2 3 4 5 6 (PRODUCT LEVEL)	SEE PAGE
	1	1	**134-5884**	1	EDGE (LH)	
	2	1	**134-5885**	1	EDGE (RH)	
	3	1	*151-7902*	1	BRACKET AS (LH)	
	3A	1	**9R-0162**	1	BEARING-SLEEVE	
	3B	1	**168-0480**	1	BEARING-SLEEVE	
	4	1	*151-7903*	1	BRACKET AS (RH)	
	4A	1	**9R-0162**	1	BEARING-SLEEVE	
	4B	1	**168-0480**	1	BEARING-SLEEVE	
	5	1	**151-7927**	3	PLATE	
	6	1	**161-4130**	2	PLATE-IDENTIFICATION (CAT)	
	7	1	**201-1234**	4	ADAPTER (2-STRAP)	
	8	1	**219-9483**	1	EDGE	

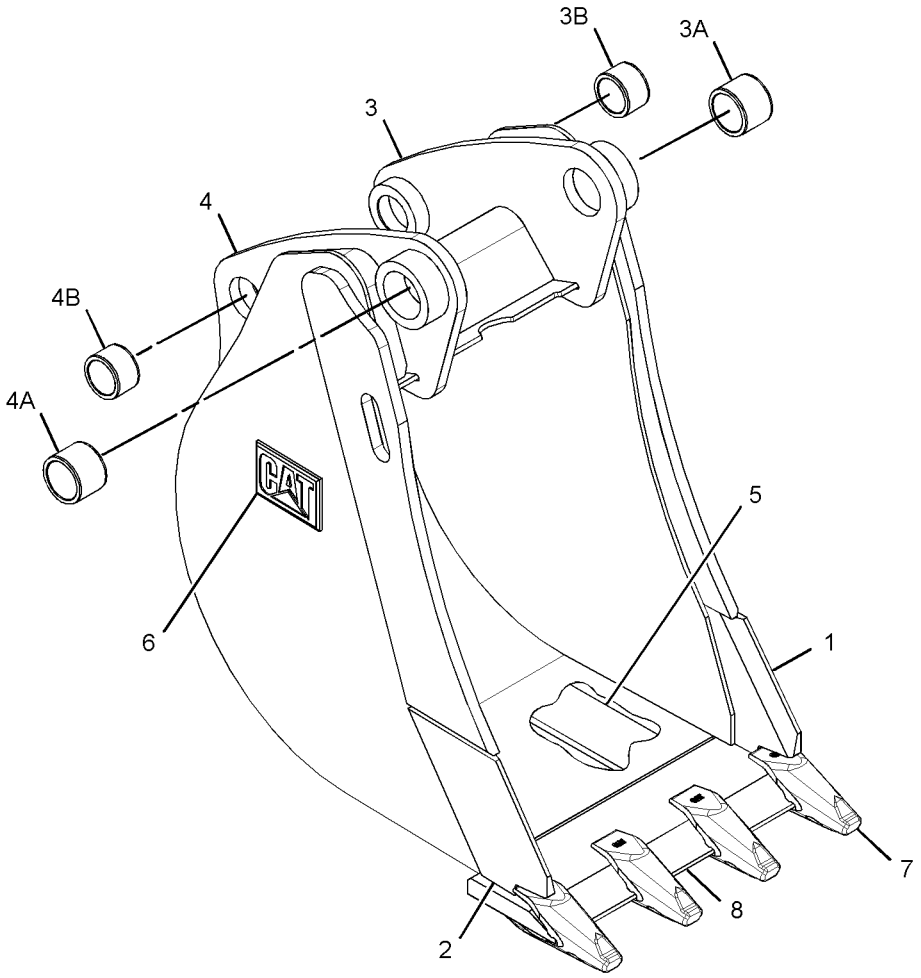

GRAPHIC #1 **<END>** g01341856

219-3362 BUCKET AS-HOE—HEAVY-DUTY

S/N: CBD1-UP; MFG1-UP
458-MM (18-IN)
PART OF 219-3386 BUCKET GP-HOE
AN ATTACHMENT

SMCS-6503 **i02909217**

NOTE	REF NO	GRAPHIC REF	PART NUMBER	QTY	PART NAME 1 2 3 4 5 6 (PRODUCT LEVEL)	SEE PAGE
	1	1	**172-8279**	5	PLATE	
C	2	1	*286-9336*	1	BRACKET AS (RH)	
	2A	1	**9R-0162**	1	BEARING-SLEEVE	
	2B	1	**168-0480**	1	BEARING-SLEEVE	
C	3	1	*286-9337*	1	BRACKET AS (LH)	
	3A	1	**9R-0162**	1	BEARING-SLEEVE	
	3B	1	**168-0480**	1	BEARING-SLEEVE	
	4	1	*299-3344*	1	EDGE AS	
	4A	1	**201-1234**	4	ADAPTER	
	4B	1	**219-9483**	1	EDGE	
	5	1	*300-7049*	1	PLATE AS	
		1	**134-5885**	1	EDGE (RH)	
	6	1	*300-7051*	1	PLATE AS	
		1	**134-5884**	1	EDGE (LH)	

C-CHANGE FROM PREVIOUS TYPE

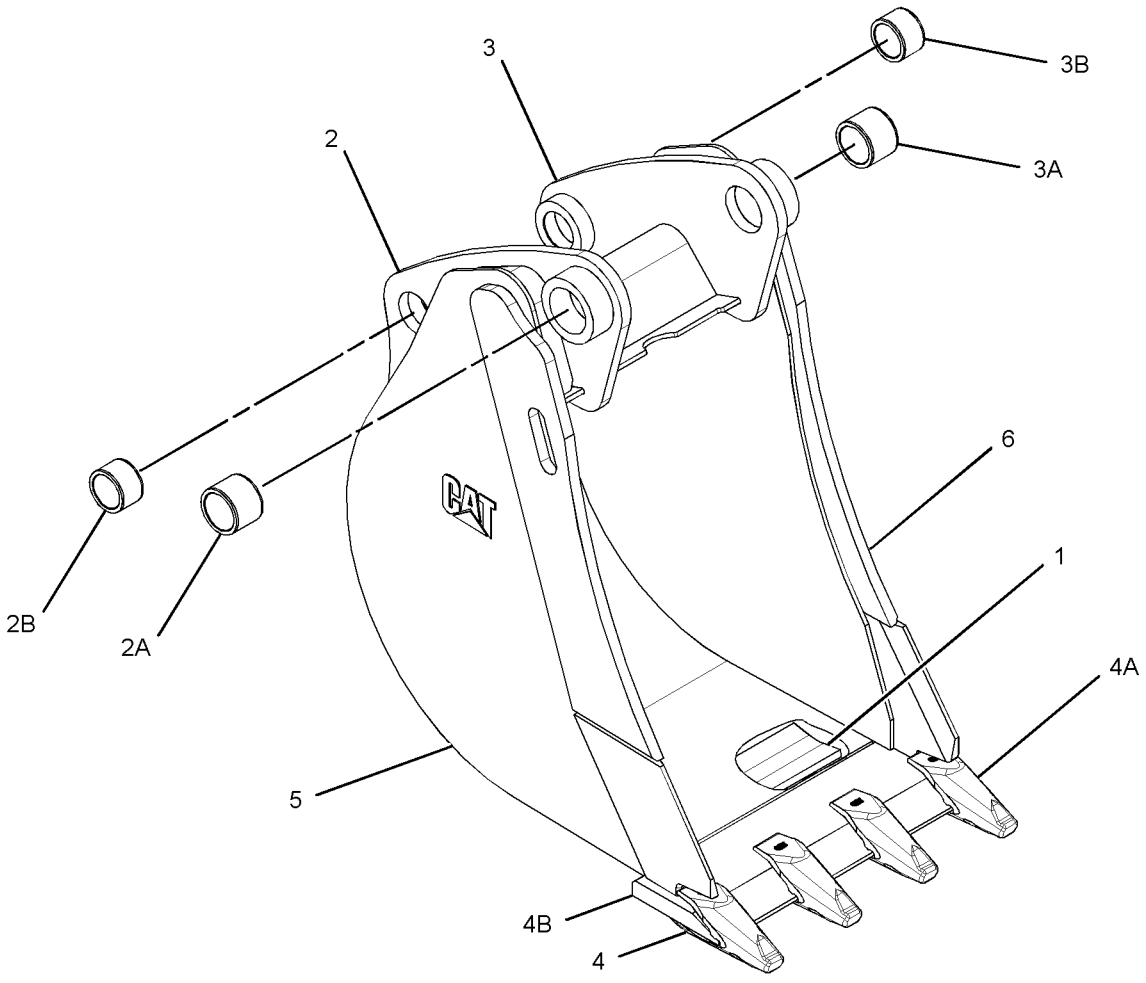

GRAPHIC #1 **<END>** g01486193

WORK TOOLS

219-3363 BUCKET AS-HOE—HEAVY-DUTY

S/N: CBD1-UP
610-MM (24-IN)
PART OF 219-3387 BUCKET GP-HOE
AN ATTACHMENT

SMCS-6503 **i02655228**

NOTE	REF NO	GRAPHIC REF	PART NUMBER	QTY	PART NAME 1 2 3 4 5 6 (PRODUCT LEVEL)	SEE PAGE
	1	1	**134-5884**	1	EDGE (LH)	
	2	1	**134-5885**	1	EDGE (RH)	
	3	1	*151-7902*	1	BRACKET AS (LH)	
	3A	1	**9R-0162**	1	BEARING-SLEEVE	
	3B	1	**168-0480**	1	BEARING-SLEEVE	
	4	1	*151-7903*	1	BRACKET AS (RH)	
	4A	1	**9R-0162**	1	BEARING-SLEEVE	
	4B	1	**168-0480**	1	BEARING-SLEEVE	
	5	1	**151-7927**	4	PLATE	
	6	1	**161-4130**	2	PLATE-IDENTIFICATION (CAT)	
	7	1	**201-1234**	5	ADAPTER (2-STRAP)	
	8	1	**219-9484**	1	EDGE	

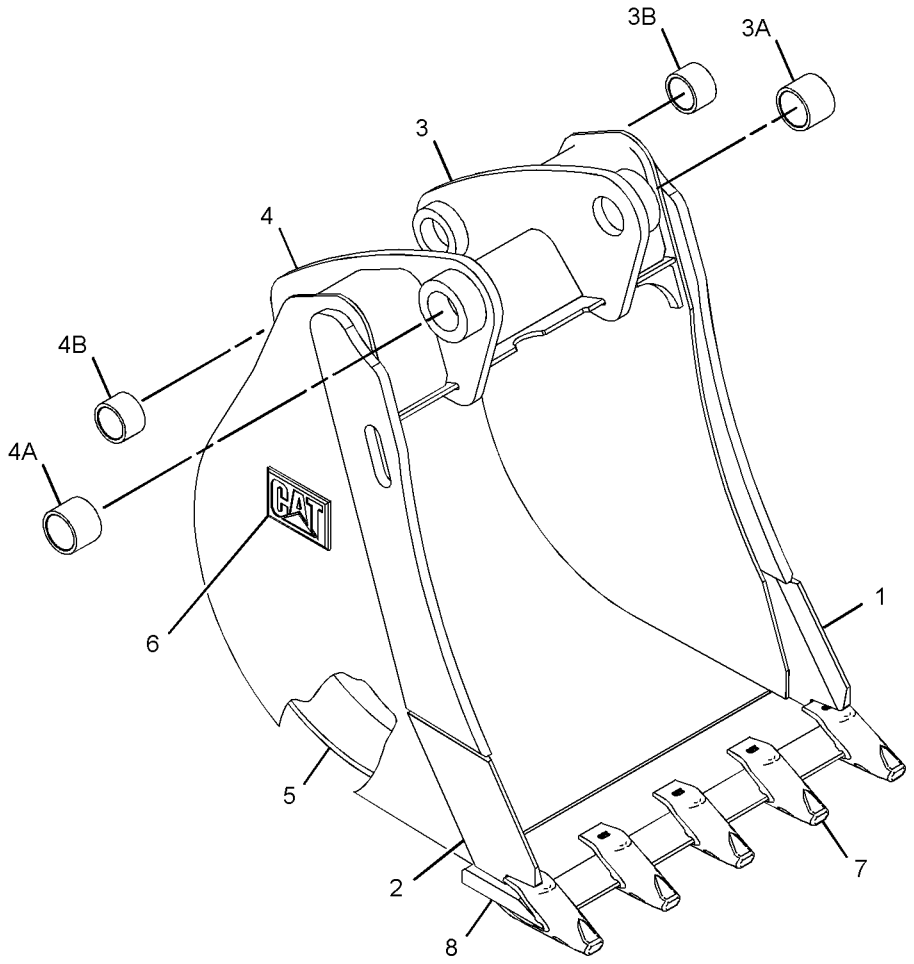

GRAPHIC #1 **<END>** g01335129

219-3363 BUCKET AS-HOE—HEAVY-DUTY

S/N: CBD1-UP; MFG1-UP
610-MM (24-IN)
PART OF 219-3387 BUCKET GP-HOE
AN ATTACHMENT

SMCS-6503 **i02909218**

NOTE	REF NO	GRAPHIC REF	PART NUMBER	QTY	PART NAME 1 2 3 4 5 6 (PRODUCT LEVEL)	SEE PAGE
	1	1	**172-8280**	5	PLATE	
C	2	1	*286-9336*	1	BRACKET AS (RH)	
	2A	1	**9R-0162**	1	BEARING-SLEEVE	
	2B	1	**168-0480**	1	BEARING-SLEEVE	
C	3	1	*286-9337*	1	BRACKET AS (LH)	
	3A	1	**9R-0162**	1	BEARING-SLEEVE	
	3B	1	**168-0480**	1	BEARING-SLEEVE	
	4	1	*299-3348*	1	EDGE AS	
		1	**201-1234**	5	ADAPTER (2-STRAP)	
		1	**219-9484**	1	EDGE	
	5	1	*300-7049*	1	PLATE AS	
		1	**134-5885**	1	EDGE (RH)	
	6	1	*300-7051*	1	PLATE AS	
		1	**134-5884**	1	EDGE (LH)	

C-CHANGE FROM PREVIOUS TYPE

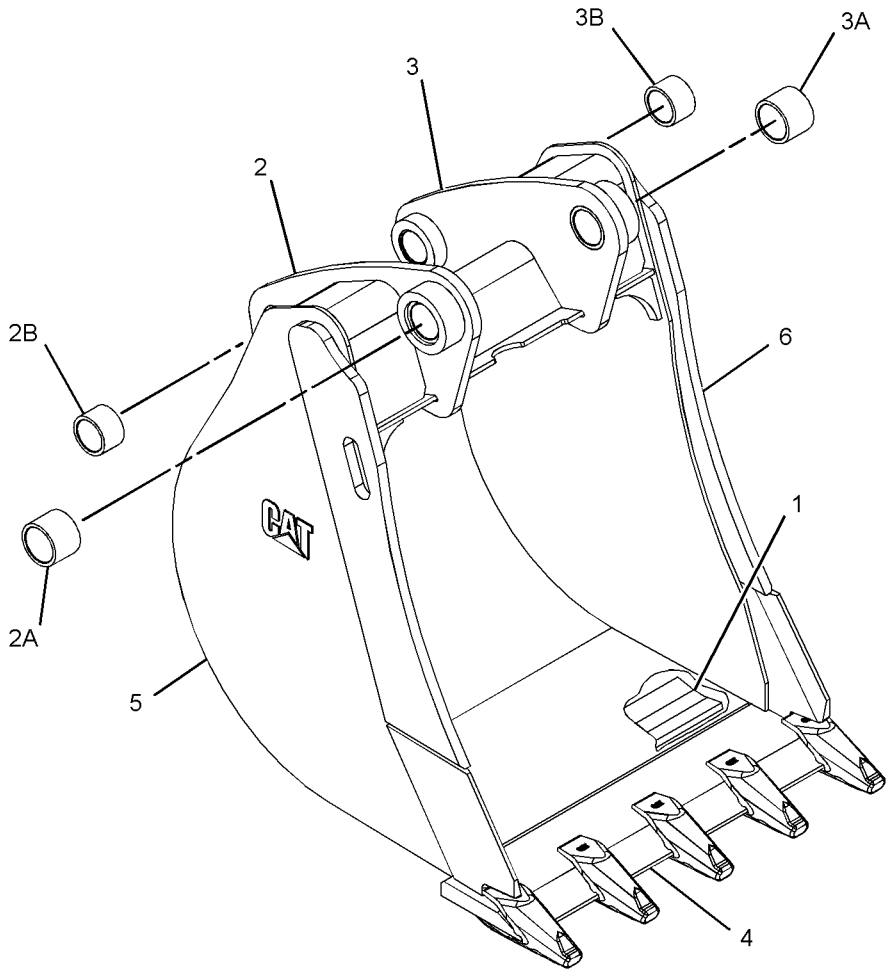

GRAPHIC #1 **<END>** g01381312

WORK TOOLS

219-3364 BUCKET AS-HOE—HEAVY-DUTY

S/N: CBD1-UP
762-MM (30-IN)
PART OF 219-3388 BUCKET GP-HOE
AN ATTACHMENT

SMCS-6503 **i02651476**

NOTE	REF NO	GRAPHIC REF	PART NUMBER	QTY	PART NAME 1 2 3 4 5 6 (PRODUCT LEVEL)	SEE PAGE
	1	1	**134-5884**	1	EDGE (LH)	
	2	1	**134-5885**	1	EDGE (RH)	
	3	1	*151-7902*	1	BRACKET AS (LH)	
	3A	1	**9R-0162**	1	BEARING-SLEEVE	
	3B	1	**168-0480**	1	BEARING-SLEEVE	
	4	1	*151-7903*	1	BRACKET AS (RH)	
	4A	1	**9R-0162**	1	BEARING-SLEEVE	
	4B	1	**168-0480**	1	BEARING-SLEEVE	
	5	1	**151-7927**	4	PLATE	
	6	1	**161-4130**	2	PLATE-IDENTIFICATION (CAT)	
	7	1	**201-1234**	5	ADAPTER (2-STRAP)	
	8	1	**219-9485**	1	EDGE	

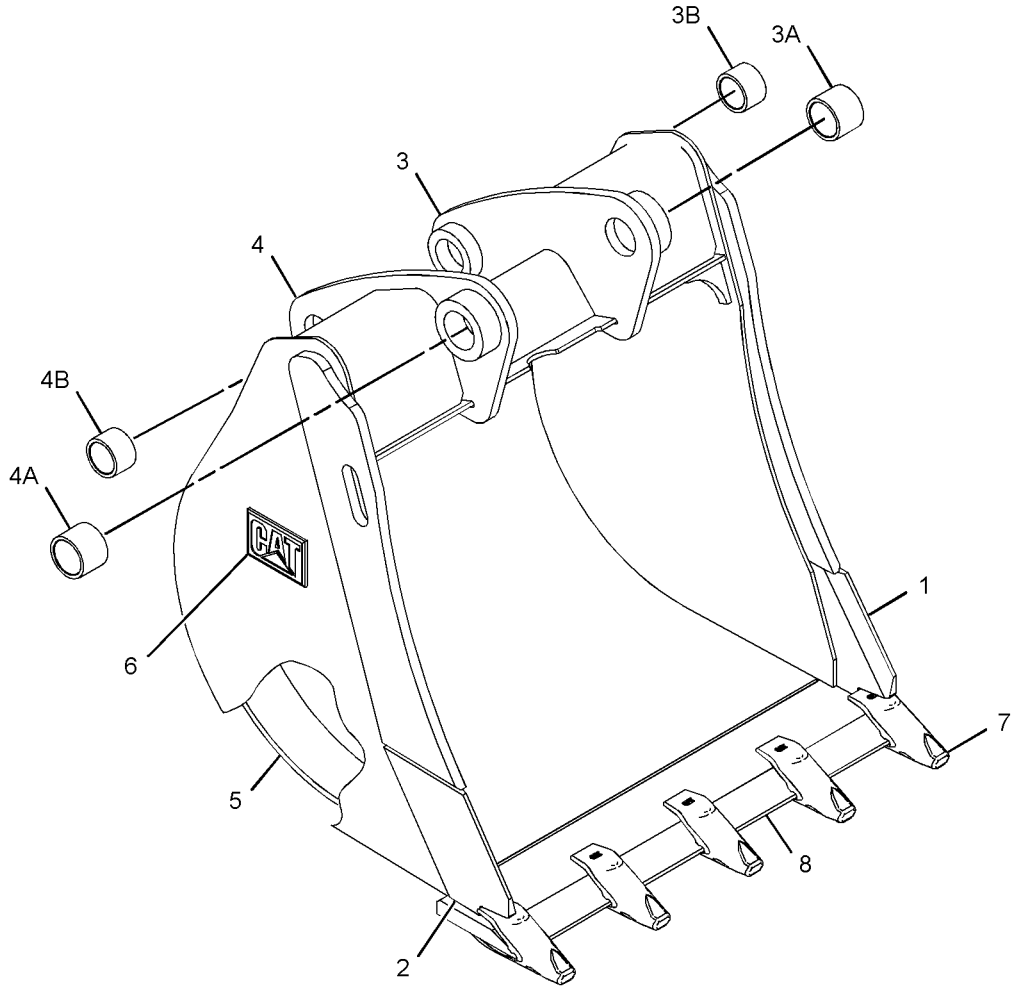

GRAPHIC #1 **<END>** g01337591

219-3364 BUCKET AS-HOE—HEAVY-DUTY

S/N: CBD1-UP; MFG1-UP
762-MM (30-IN)
PART OF 219-3388 BUCKET GP-HOE
AN ATTACHMENT

SMCS-6503 **i02909219**

NOTE	REF NO	GRAPHIC REF	PART NUMBER	QTY	PART NAME 1 2 3 4 5 6 (PRODUCT LEVEL)	SEE PAGE
	1	1	**174-4765**	5	PLATE	
C	2	1	*286-9336*	1	BRACKET AS (RH)	
	2A	1	**9R-0162**	1	BEARING-SLEEVE	
	2B	1	**168-0480**	1	BEARING-SLEEVE	
C	3	1	*286-9337*	1	BRACKET AS (LH)	
	3A	1	**9R-0162**	1	BEARING-SLEEVE	
	3B	1	**168-0480**	1	BEARING-SLEEVE	
	4	1	*299-3351*	1	EDGE AS	
		1	**219-9485**	1	EDGE	
		1	**201-1234**	1	ADAPTER (2-STRAP)	
	5	1	*300-7049*	1	PLATE AS	
		1	**134-5885**	1	EDGE (RH)	
	6	1	*300-7051*	1	PLATE AS	
		1	**134-5884**	1	EDGE (LH)	

C-CHANGE FROM PREVIOUS TYPE

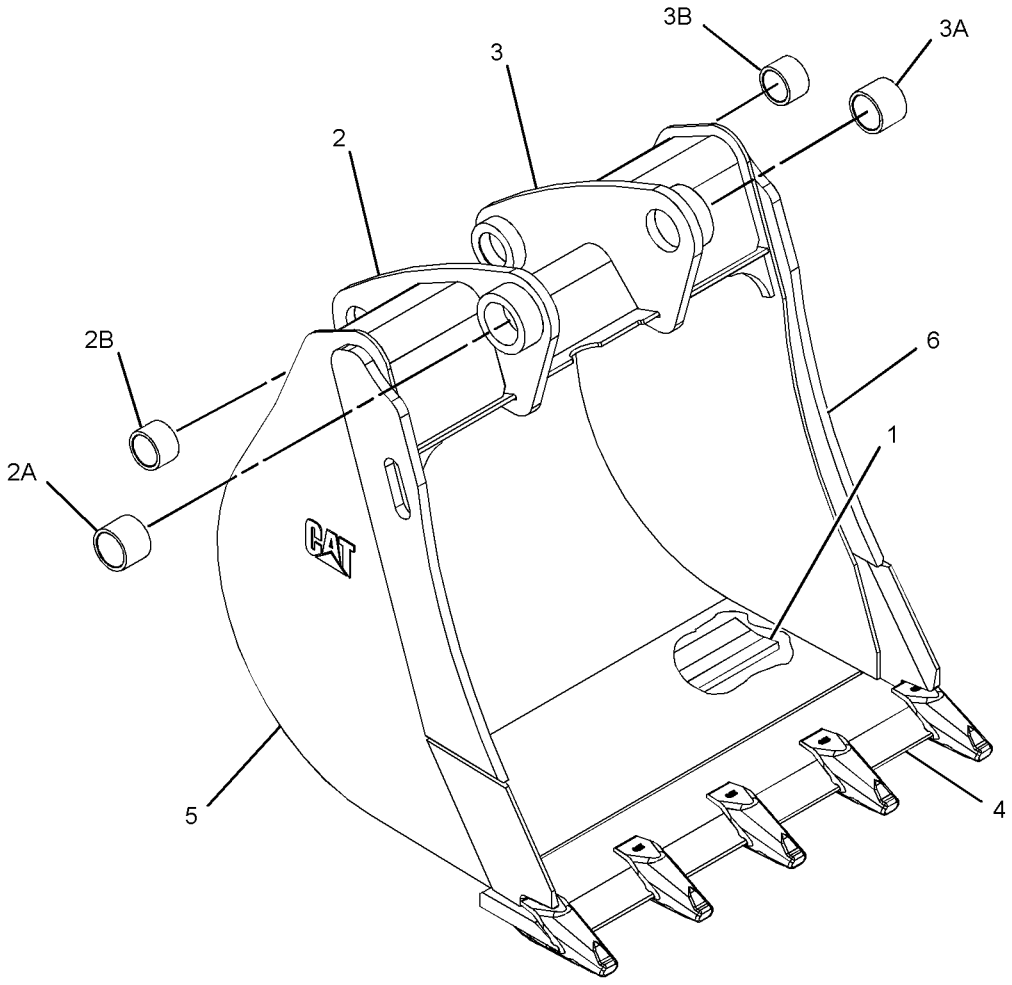

GRAPHIC #1 **<END>** g01381371

WORK TOOLS

219-3365 BUCKET AS-HOE—HEAVY-DUTY

S/N: CBD1-UP
914-MM (36-IN)
PART OF 219-3389 BUCKET GP-HOE
AN ATTACHMENT
TYPE 1

SMCS-6503 **i02655250**

NOTE	REF NO	GRAPHIC REF	PART NUMBER	QTY	PART NAME 1 2 3 4 5 6 (PRODUCT LEVEL)	SEE PAGE
	1	1	**134-5884**	1	EDGE (LH)	
	2	1	**134-5885**	1	EDGE (RH)	
	3	1	*151-7902*	1	BRACKET AS (LH)	
	3A	1	**9R-0162**	1	BEARING-SLEEVE	
	3B	1	**168-0480**	1	BEARING-SLEEVE	
	4	1	*151-7903*	1	BRACKET AS (RH)	
	4A	1	**9R-0162**	1	BEARING-SLEEVE	
	4B	1	**168-0480**	1	BEARING-SLEEVE	
	5	1	**151-7927**	5	PLATE	
	6	1	**161-4130**	2	PLATE-IDENTIFICATION (CAT)	
	7	1	**201-1234**	6	ADAPTER (2-STRAP)	
	8	1	**219-9486**	1	EDGE	

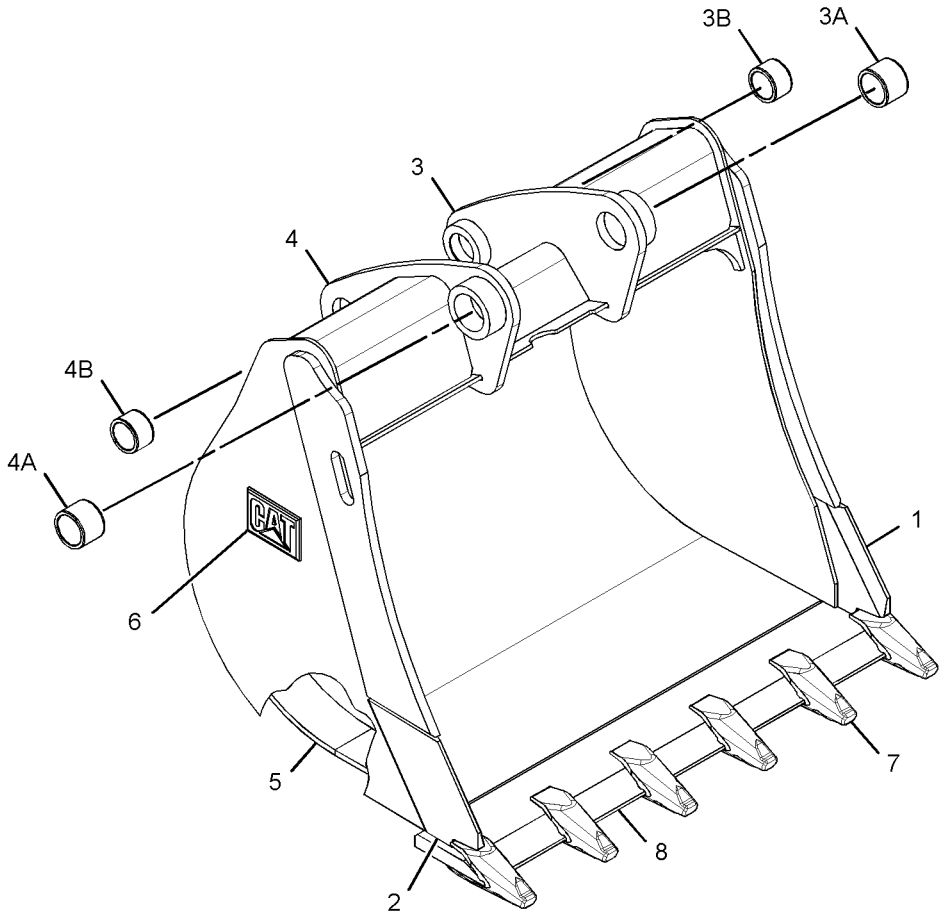

GRAPHIC #1 **<END>** g01341948

219-3365 BUCKET AS-HOE—HEAVY-DUTY

S/N: CBD1-UP
914-MM (36-IN)
PART OF 219-3389 BUCKET GP-HOE
AN ATTACHMENT
TYPE 2

SMCS-6503 **i02909220**

NOTE	REF NO	GRAPHIC REF	PART NUMBER	QTY	PART NAME 1 2 3 4 5 6 (PRODUCT LEVEL)	SEE PAGE
	1	1	**193-5416**	5	PLATE	
C	2	1	*286-9336*	1	BRACKET AS (RH)	
C	3	1	*286-9337*	1	BRACKET AS (LH)	
					(EACH BRACKET AS INCLUDES)	
		1	**9R-0162**	1	BEARING-SLEEVE	
		1	**168-0480**	1	BEARING-SLEEVE	
	4	1	*300-4154*	1	EDGE AS	
		1	**201-1234**	6	ADAPTER (2-STRAP)	
		1	**219-9486**	1	EDGE	
	5	1	*300-7049*	1	PLATE AS	
		1	**134-5885**	1	EDGE (RH)	
	6	1	*300-7051*	1	PLATE AS	
		1	**134-5884**	1	EDGE (LH)	

C-CHANGE FROM PREVIOUS TYPE

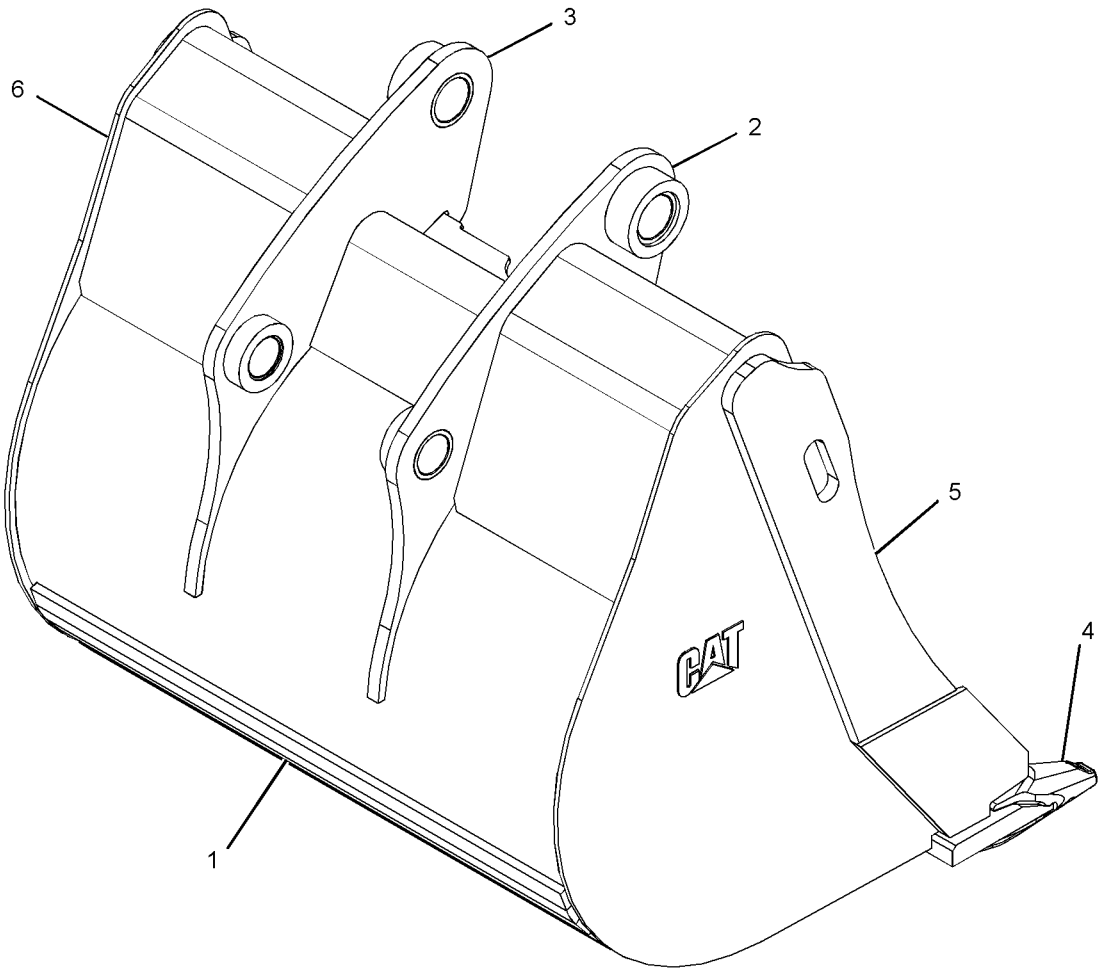

GRAPHIC #1 **<END>** g01381329

WORK TOOLS

219-3366 BUCKET AS-HOE—HIGH CAPACITY

S/N: CBD1-UP
458-MM (18-IN)
PART OF 219-3390 BUCKET GP-HOE
AN ATTACHMENT
TYPE 1

SMCS-6503 **i02651487**

NOTE	REF NO	GRAPHIC REF	PART NUMBER	QTY	PART NAME 1 2 3 4 5 6 (PRODUCT LEVEL)	SEE PAGE
	1	1	**134-5884**	1	EDGE (LH)	
	2	1	**134-5885**	1	EDGE (RH)	
	3	1	*151-7902*	1	BRACKET AS (LH)	
	3A	1	**9R-0162**	1	BEARING-SLEEVE	
	3B	1	**168-0480**	1	BEARING-SLEEVE	
	4	1	*151-7903*	1	BRACKET AS (RH)	
	4A	1	**9R-0162**	1	BEARING-SLEEVE	
	4B	1	**168-0480**	1	BEARING-SLEEVE	
	5	1	**161-4130**	2	PLATE-IDENTIFICATION (CAT)	
	6	1	**201-1234**	4	ADAPTER (2-STRAP)	
	7	1	**219-9483**	1	EDGE	

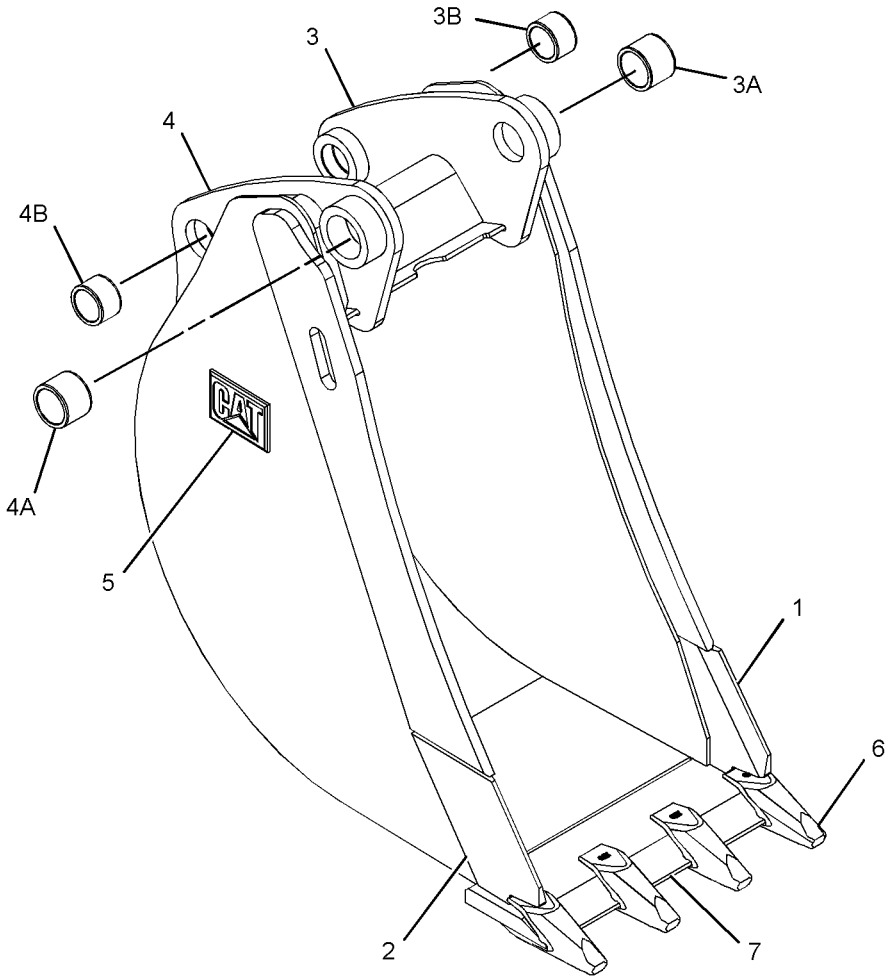

GRAPHIC #1 **<END>** g01334080

219-3366 BUCKET AS-HOE—HIGH CAPACITY

S/N: CBD1-UP
458-MM (18-IN)
PART OF 219-3390 BUCKET GP-HOE
AN ATTACHMENT
TYPE 2

SMCS-6503 **i02909221**

NOTE	REF NO	GRAPHIC REF	PART NUMBER	QTY	PART NAME 1 2 3 4 5 6 (PRODUCT LEVEL)	SEE PAGE
	1	1	**172-8279**	5	PLATE	
C	2	1	*286-9336*	1	BRACKET AS	
	2A	1	**9R-0162**	1	BEARING-SLEEVE	
	2B	1	**168-0480**	1	BEARING-SLEEVE	
C	3	1	*286-9337*	1	BRACKET AS	
	3A	1	**9R-0162**		BEARING-SLEEVE	
	3B	1	**168-0480**	1	BEARING-SLEEVE	
	4	1	*299-3344*	1	EDGE AS	
			201-1234	4	ADAPTER	
			219-9483	1	EDGE	
	5	1	*300-7054*	1	PLATE AS	
		1	**134-5885**	1	EDGE (RH)	
	6	1	*300-7055*	1	PLATE AS	
		1	**134-5884**	1	EDGE (LH)	

C-CHANGE FROM PREVIOUS TYPE

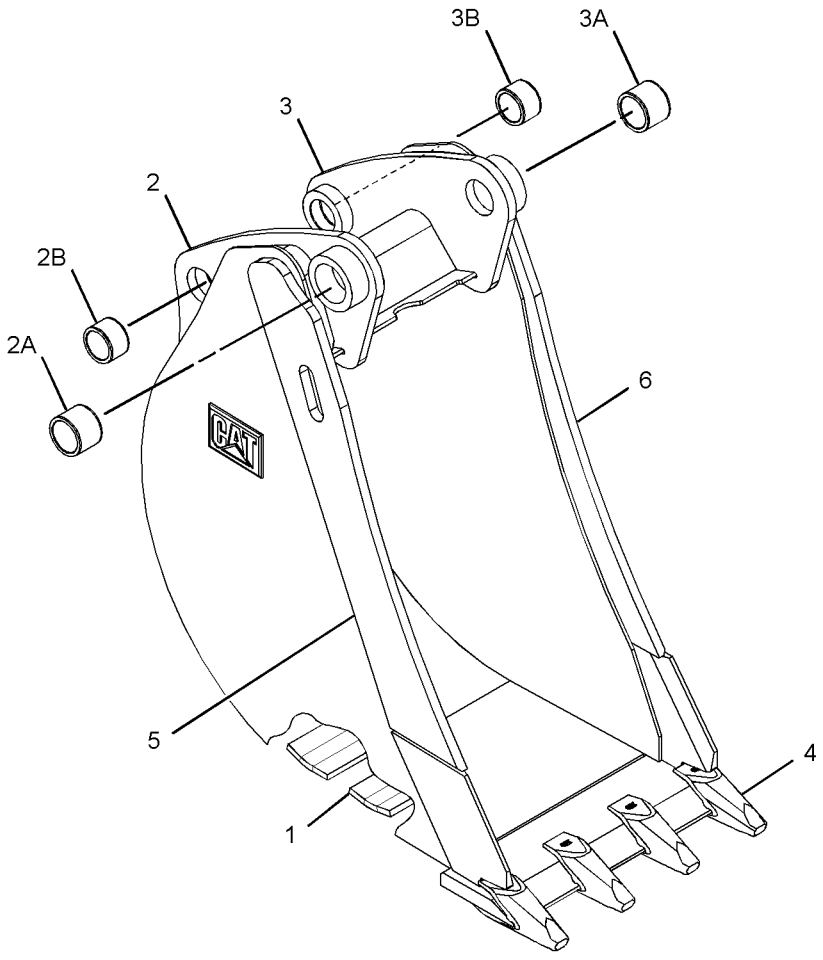

GRAPHIC #1 **<END>** g01381674

219-3367 BUCKET AS-HOE—HIGH CAPACITY

S/N: CBD1-UP
610-MM (24-IN)
PART OF 219-3391 BUCKET GP-HOE
AN ATTACHMENT

SMCS-6503 **i02651949**

NOTE	REF NO	GRAPHIC REF	PART NUMBER	QTY	PART NAME 1 2 3 4 5 6 (PRODUCT LEVEL)	SEE PAGE
	1	1	**134-5884**	1	EDGE (LH)	
	2	1	**134-5885**	1	EDGE (RH)	
	3	1	*151-7902*	1	BRACKET AS (LH)	
	3A	1	**9R-0162**	1	BEARING-SLEEVE	
	3B	1	**168-0480**	1	BEARING-SLEEVE	
	4	1	*151-7903*	1	BRACKET AS (RH)	
	4A	1	**9R-0162**	1	BEARING-SLEEVE	
	4B	1	**168-0480**	1	BEARING-SLEEVE	
	5	1	**151-7926**	2	PLATE	
	6	1	**161-4130**	2	PLATE-IDENTIFICATION (CAT)	
	7	1	**201-1234**	5	ADAPTER (2-STRAP)	
	8	1	**219-9486**	1	EDGE	

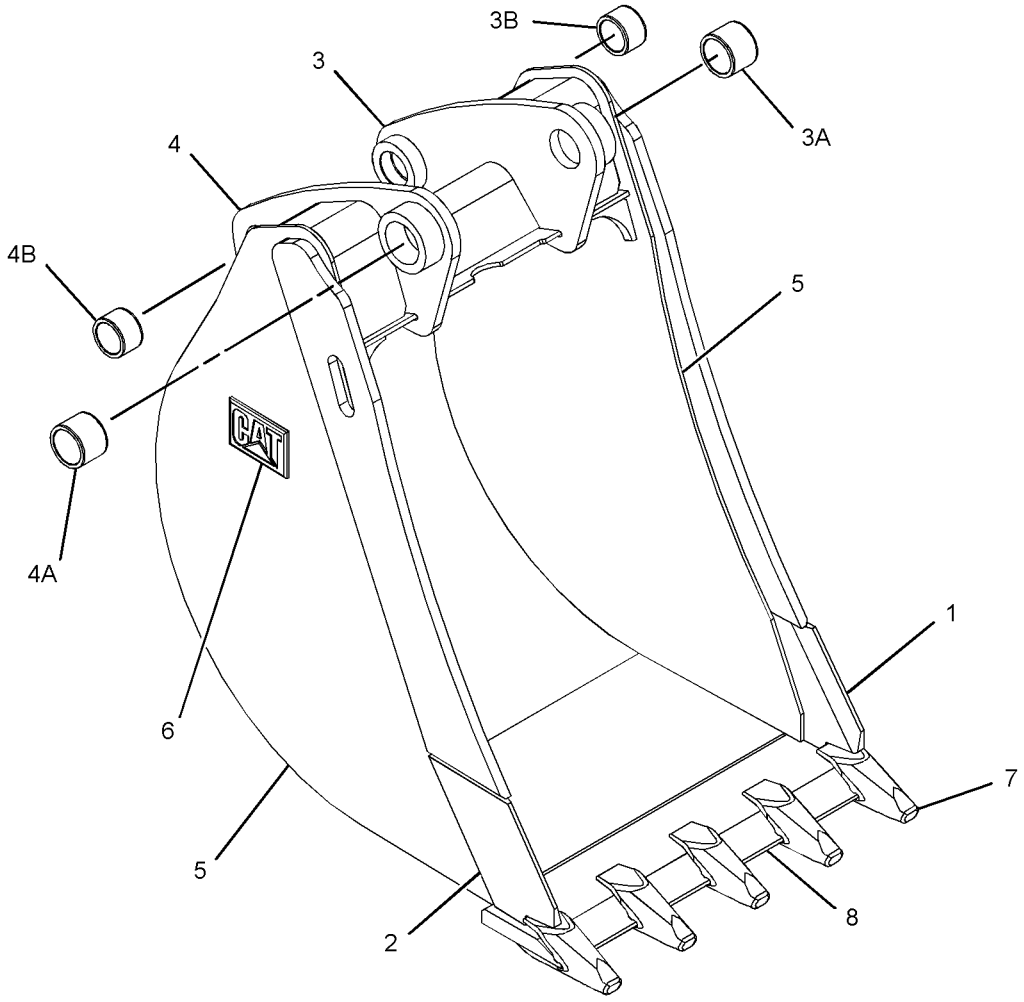

GRAPHIC #1 **<END>** g01342073

219-3367 BUCKET AS-HOE—HIGH CAPACITY

S/N: CBD1-UP; MFG1-UP
610-MM (24-IN)
PART OF 219-3391 BUCKET GP-HOE
AN ATTACHMENT

SMCS-6503 **i02909222**

NOTE	REF NO	GRAPHIC REF	PART NUMBER	QTY	PART NAME 1 2 3 4 5 6 (PRODUCT LEVEL)	SEE PAGE
	1	1	**172-8280**	5	PLATE	
C	2	1	*286-9336*	1	BRACKET AS	
	2A	1	**9R-0162**	1	BEARING-SLEEVE	
	2B	1	**168-0480**	1	BEARING-SLEEVE	
C	3	1	*286-9337*	1	BRACKET AS	
	3A	1	**9R-0162**	1	BEARING-SLEEVE	
	3B	1	**168-0480**	1	BEARING-SLEEVE	
	4	1	*299-3348*	1	EDGE AS	
		1	**201-1234**	5	ADAPTER	
		1	**219-9483**	1	EDGE	
	5	1	*300-7054*	1	PLATE AS	
		1	**134-5885**	1	EDGE (RH)	
	6	1	*300-7055*	1	PLATE AS	
		1	**134-5884**	1	EDGE (LH)	

C-CHANGE FROM PREVIOUS TYPE

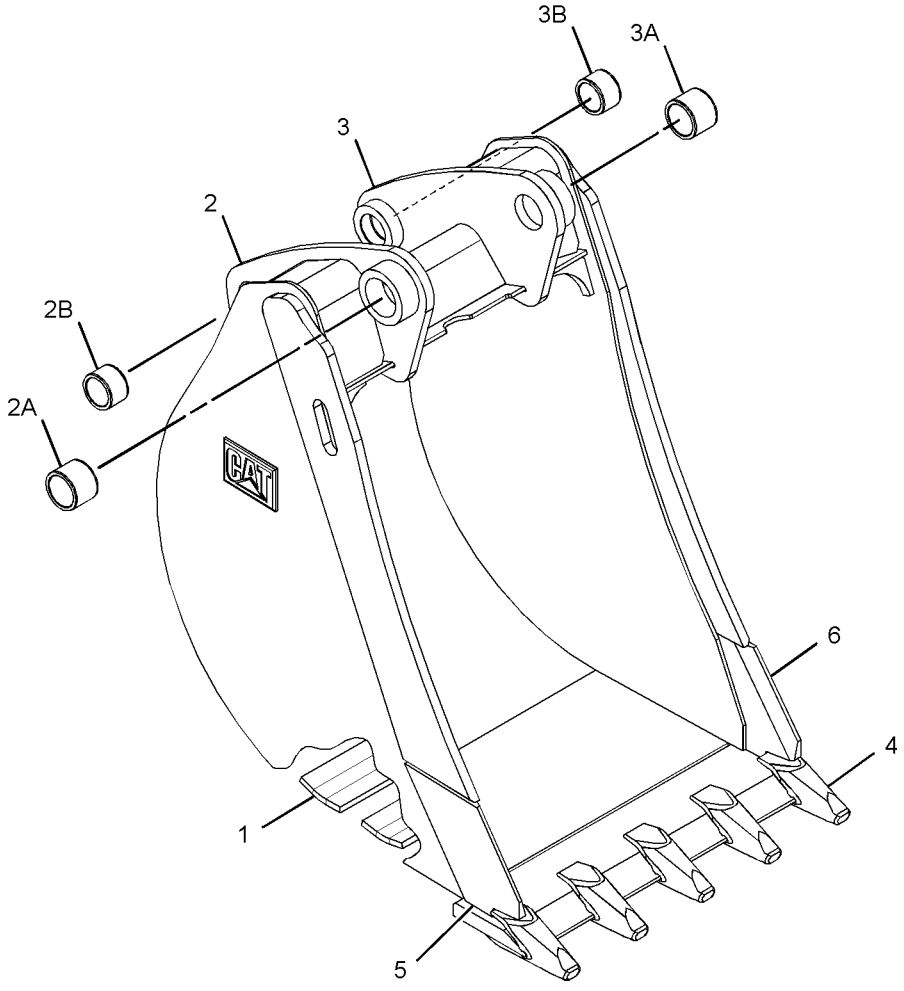

GRAPHIC #1 **<END>** g01382190

WORK TOOLS

219-3368 BUCKET AS-HOE—HIGH CAPACITY

S/N: CBD1-UP
762-MM (30-IN)
PART OF 219-3392 BUCKET GP-HOE
AN ATTACHMENT

SMCS-6503 **i02651972**

NOTE	REF NO	GRAPHIC REF	PART NUMBER	QTY	PART NAME 1 2 3 4 5 6 (PRODUCT LEVEL)	SEE PAGE
	1	1	**134-5884**	1	EDGE (LH)	
	2	1	**134-5885**	1	EDGE (RH)	
	3	1	*151-7902*	1	BRACKET AS (LH)	
	3A	1	**9R-0162**	1	BEARING-SLEEVE	
	3B	1	**168-0480**	1	BEARING-SLEEVE	
	4	1	*151-7903*	1	BRACKET AS (RH)	
	4A	1	**9R-0162**	1	BEARING-SLEEVE	
	4B	1	**168-0480**	1	BEARING-SLEEVE	
	5	1	**161-4130**	2	PLATE-IDENTIFICATION (CAT)	
	6	1	**201-1234**	5	ADAPTER (2-STRAP)	
	7	1	**219-9485**	1	EDGE	

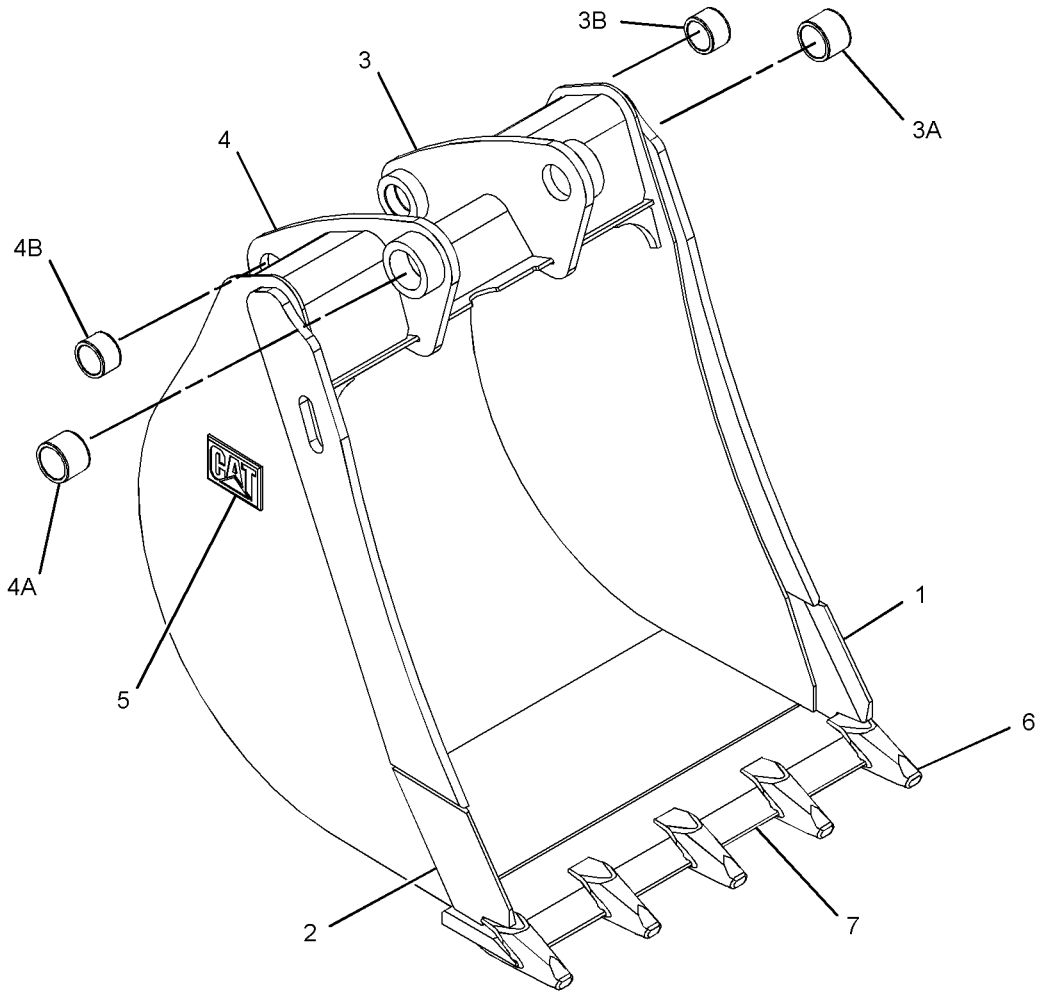

GRAPHIC #1 **<END>** g01341935

219-3368 BUCKET AS-HOE—HIGH CAPACITY

S/N: CBD1-UP; MFG1-UP
762-MM (30-IN)
PART OF 219-3392 BUCKET GP-HOE
AN ATTACHMENT

SMCS-6503 **i02909223**

NOTE	REF NO	GRAPHIC REF	PART NUMBER	QTY	PART NAME 1 2 3 4 5 6 (PRODUCT LEVEL)	SEE PAGE
	1	1	**174-4765**	5	PLATE	
C	2	1	*286-9336*	1	BRACKET AS	
	2A	1	**9R-0162**	1	BEARING-SLEEVE	
	2B	1	**168-0480**	1	BEARING-SLEEVE	
C	3	1	*286-9337*	1	BRACKET AS	
	3A	1	**9R-0162**		BEARING-SLEEVE	
	3B	1	**168-0480**	1	BEARING-SLEEVE	
	4	1	*299-3351*	1	EDGE AS	
			201-1234	5	ADAPTER	
			219-9485	1	EDGE	
	5	1	*300-7054*	1	PLATE AS	
		1	**134-5885**	1	EDGE (RH)	
	6	1	*300-7055*	1	PLATE AS	
		1	**134-5884**	1	EDGE (LH)	

C-CHANGE FROM PREVIOUS TYPE

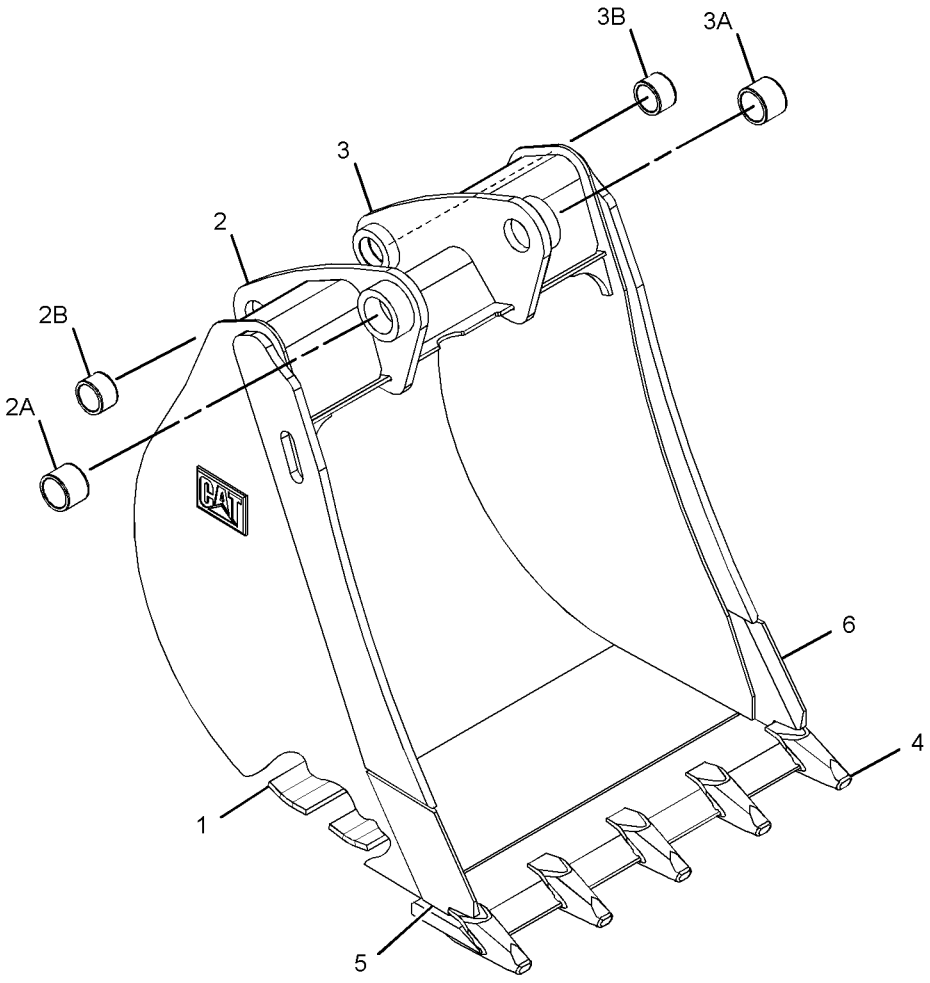

GRAPHIC #1 **<END>** g01381718

WORK TOOLS

219-3369 BUCKET AS-HOE—HIGH CAPACITY

S/N: CBD1-UP
914-MM (36-IN)
PART OF 219-3393 BUCKET GP-HOE
AN ATTACHMENT
TYPE 1

SMCS-6503 **i02651983**

NOTE	REF NO	GRAPHIC REF	PART NUMBER	QTY	PART NAME 1 2 3 4 5 6 (PRODUCT LEVEL)	SEE PAGE
	1	1	**134-5884**	1	EDGE (LH)	
	2	1	**134-5885**	1	EDGE (RH)	
	3	1	*151-7902*	1	BRACKET AS (LH)	
	3A	1	**9R-0162**	1	BEARING-SLEEVE	
	3B	1	**168-0480**	1	BEARING-SLEEVE	
	4	1	*151-7903*	1	BRACKET AS (RH)	
	4A	1	**9R-0162**	1	BEARING-SLEEVE	
	4B	1	**168-0480**	1	BEARING-SLEEVE	
	5	1	**161-4130**	2	PLATE-IDENTIFICATION (CAT)	
	6	1	**201-1234**	6	ADAPTER (2-STRAP)	
	7	1	**219-9486**	1	EDGE	

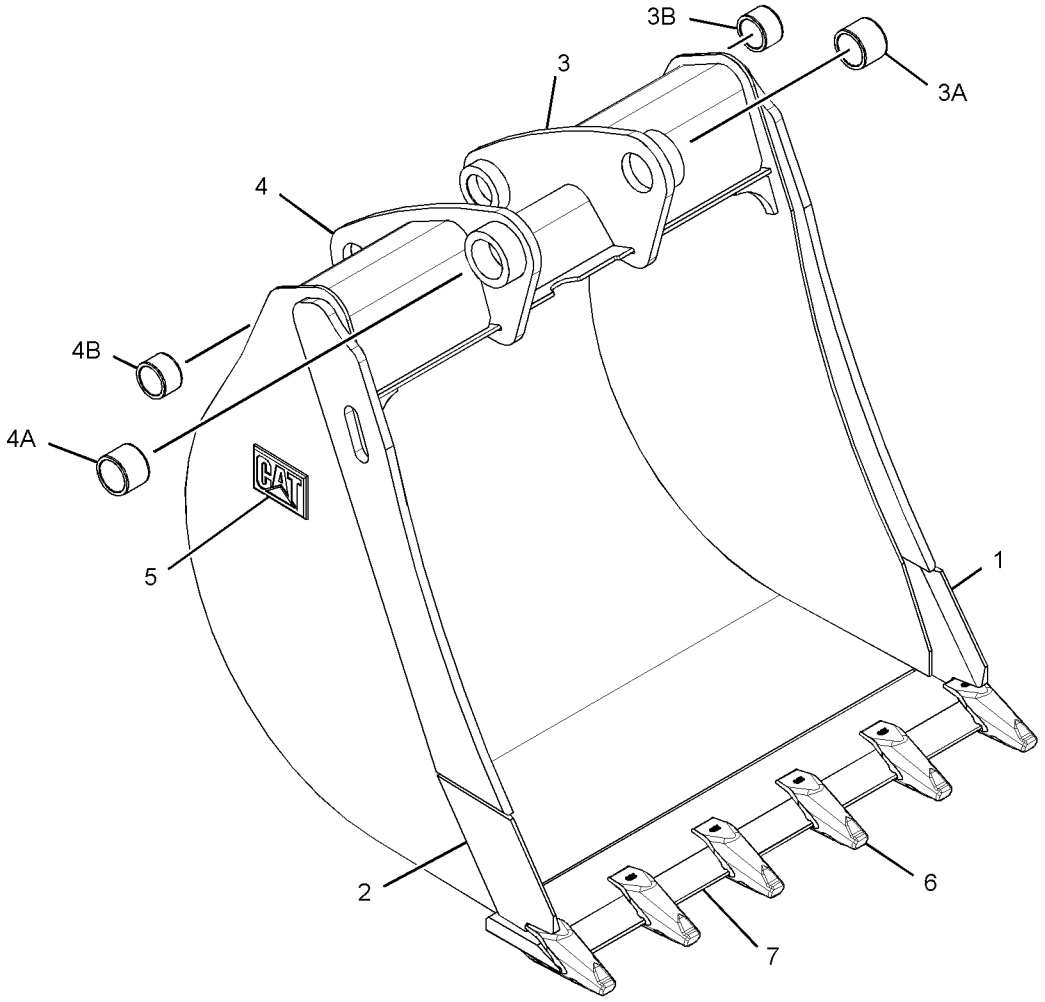

GRAPHIC #1 **<END>** g01335133

219-3369 BUCKET AS-HOE—HIGH CAPACITY

S/N: CBD1-UP
914-MM (36-IN)
PART OF 219-3393 BUCKET GP-HOE
AN ATTACHMENT
TYPE 2

SMCS-6503 **i04142533**

NOTE	REF NO	GRAPHIC REF	PART NUMBER	QTY	PART NAME 1 2 3 4 5 6 (PRODUCT LEVEL)	SEE PAGE
	1	1	**193-5416**	5	PLATE	
C	2	1	*286-9336*	1	BRACKET AS (RH)	
	2A	1	**9R-0162**	1	BUSHING	
	2B	1	**168-0480**	1	BUSHING	
C	3	1	*286-9337*	1	BRACKET AS (LH)	
	3A	1	**9R-0162**		BUSHING	
	3B	1	**168-0480**	1	BUSHING	
	4	1	*300-4154*	1	EDGE AS	
			201-1234	6	ADAPTER	
			219-9486	1	EDGE	
	5	1	*300-7054*	1	PLATE AS	
			134-5885	1	EDGE (RH)	
	6	1	*300-7055*	1	PLATE AS	
			134-5884	1	EDGE (LH)	

C-CHANGE FROM PREVIOUS TYPE

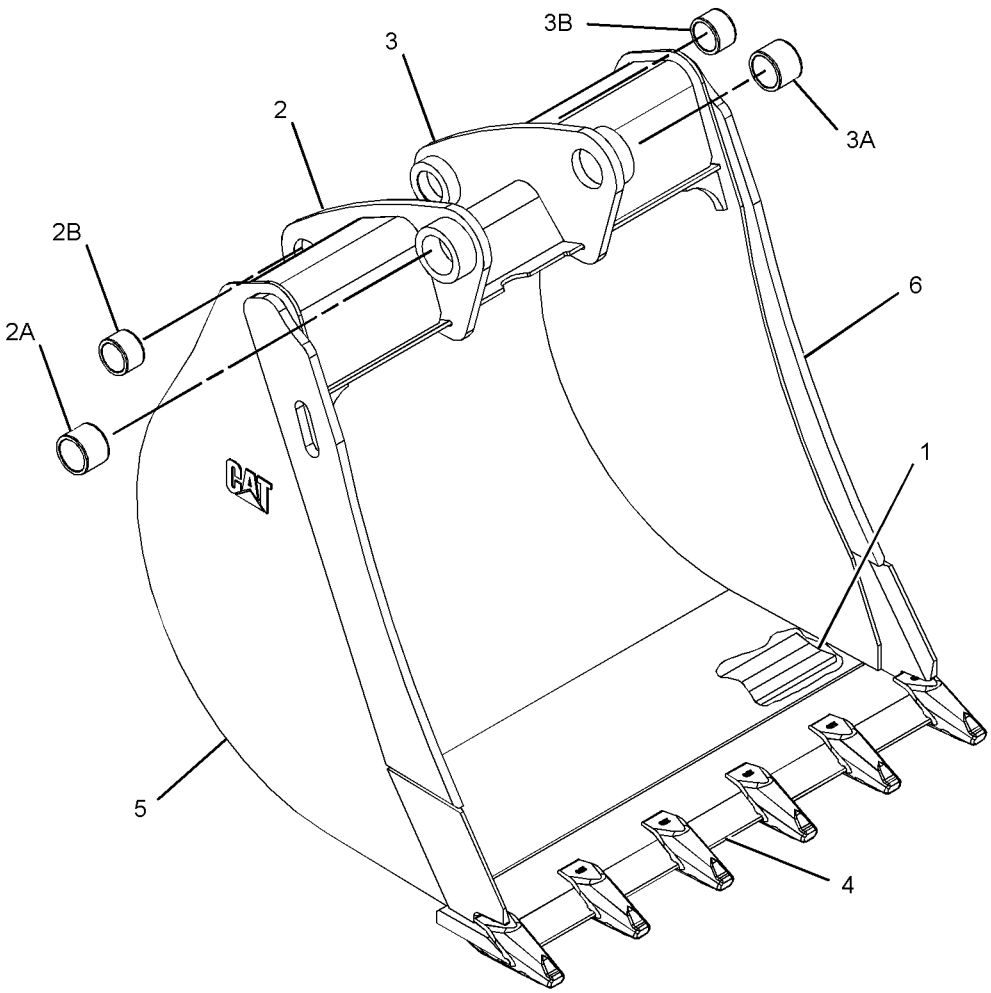

GRAPHIC #1 **<END>** g01382185

WORK TOOLS

219-3370 BUCKET AS-HOE—ROCK

S/N: CBD1-UP; MFG1-UP
305-MM (12-IN)
PART OF 219-3394 BUCKET GP-HOE
AN ATTACHMENT

SMCS-6503 **i02909225**

NOTE	REF NO	GRAPHIC REF	PART NUMBER	QTY	PART NAME 1 2 3 4 5 6 (PRODUCT LEVEL)	SEE PAGE
	1	1	**174-3950**	6	PLATE	
C	2	1	*286-9338*	1	BRACKET AS (RH)	
	2A	1	**9R-0320**	1	BEARING-SLEEVE	
	2B	1	**154-5257**	1	BEARING-SLEEVE	
C	3	1	*286-9340*	1	BRACKET AS (LH)	
	3A	1	**9R-0320**	1	BEARING-SLEEVE	
	3B	1	**154-5257**	1	BEARING-SLEEVE	
	4	1	*300-4161*	1	EDGE AS	
		1	**201-1234**	3	ADAPTER	
		1	**219-9485**	1	EDGE	
	5	1	*300-7059*	1	PLATE AS	
		1	**197-6258**	1	EDGE-RH	
	6	1	*300-7061*	1	PLATE AS	
		1	**197-6259**	1	EDGE-LH	

C-CHANGE FROM PREVIOUS TYPE

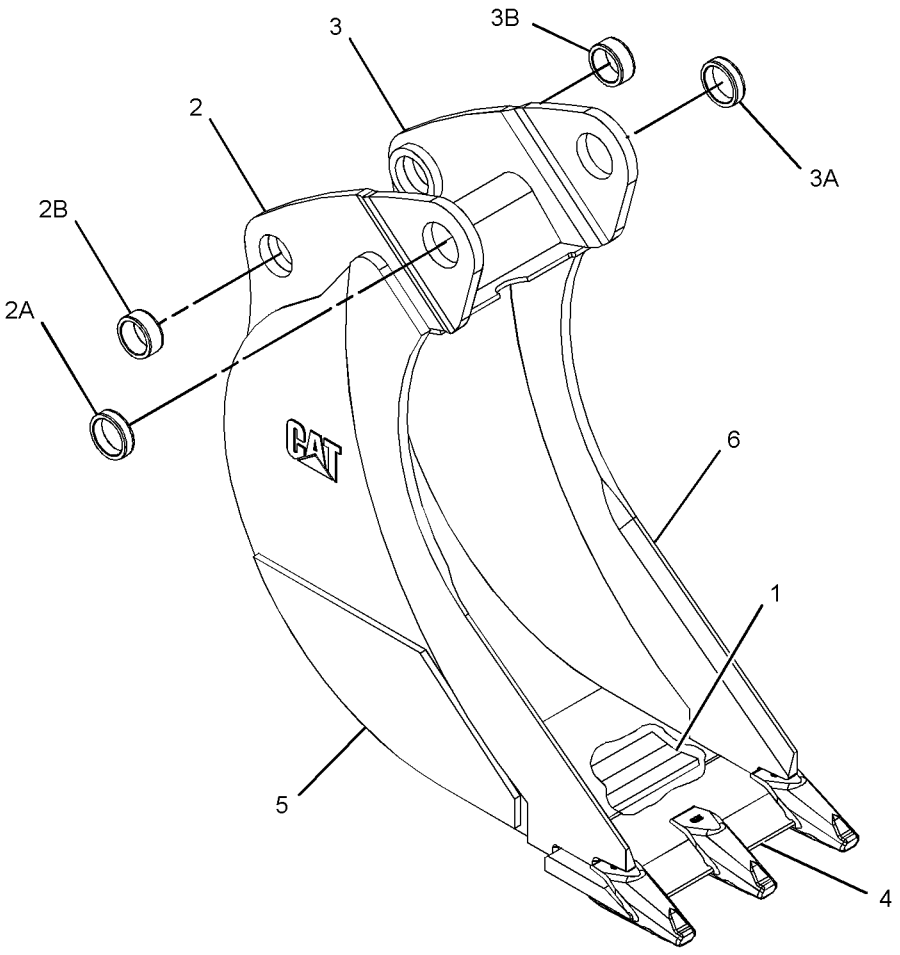

GRAPHIC #1 **<END>** g01382722

WORK TOOLS

219-3371 BUCKET AS-HOE–ROCK

S/N: CBD1-UP
18-INCH
PART OF 219-3395 BUCKET GP-HOE
AN ATTACHMENT

SMCS-6503 **i02023904**

NOTE	REF NO	GRAPHIC REF	PART NUMBER	QTY	PART NAME 1 2 3 4 5 6 (PRODUCT LEVEL)	SEE PAGE
	1	1	*151-7902*	1	BRACKET AS (LH)	
	1A	1	**9R-0162**	1	BEARING-SLEEVE	
	1B	1	**168-0480**	1	BEARING-SLEEVE	
	2	1	*151-7903*	1	BRACKET AS (RH)	
	2A	1	**9R-0162**	1	BEARING-SLEEVE	
	2B	1	**168-0480**	1	BEARING-SLEEVE	
	3	1	**172-8276**	2	PLATE	
	4	1	**172-8279**	4	PLATE	
	5	1	**196-8921**	1	EDGE (RH)	
	6	1	**196-8922**	1	EDGE (LH)	
	7	1	**201-1234**	4	ADAPTER	
	8	1	**219-9483**	1	EDGE	

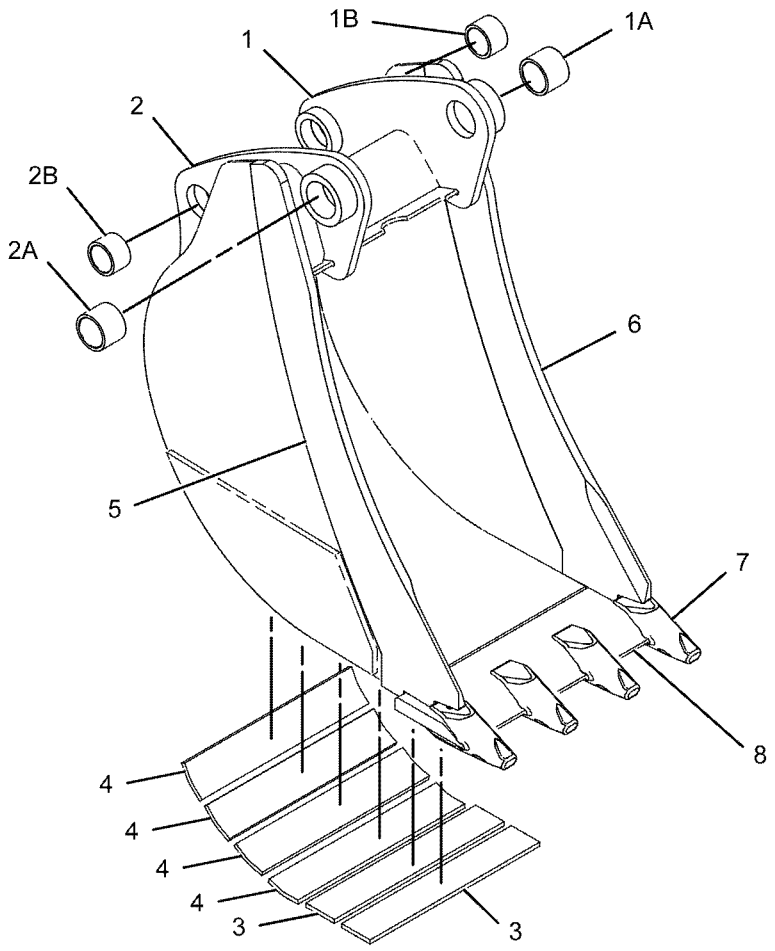

GRAPHIC #1 **<END>** g01045772

WORK TOOLS

219-3371 BUCKET AS-HOE–ROCK

S/N: CBD1-UP; MFG1-UP
18-INCH
PART OF 219-3395 BUCKET GP-HOE
AN ATTACHMENT

SMCS-6503 **i02909226**

NOTE	REF NO	GRAPHIC REF	PART NUMBER	QTY	PART NAME 1 2 3 4 5 6 (PRODUCT LEVEL)	SEE PAGE
	1	1	**172-8279**	6	PLATE	
C	2	1	*286-9336*	1	BRACKET AS (RH)	
	2A	1	**9R-0162**	1	BEARING-SLEEVE	
	2B	1	**168-0480**	1	BEARING-SLEEVE	
C	3	1	*286-9337*	1	BRACKET AS (LH)	
	3A	1	**9R-0162**	1	BEARING-SLEEVE	
	3B	1	**168-0480**	1	BEARING-SLEEVE	
	4	1	*299-3344*	1	EDGE AS	
		1	**201-1234**	4	ADAPTER	
		1	**219-9483**	1	EDGE	
	5	1	*300-7056*	1	PLATE AS	
		1	**196-8921**	1	EDGE (RH)	
	6	1	*300-7057*	1	PLATE AS	
		1	**196-8922**	1	EDGE (LH)	

C-CHANGE FROM PREVIOUS TYPE

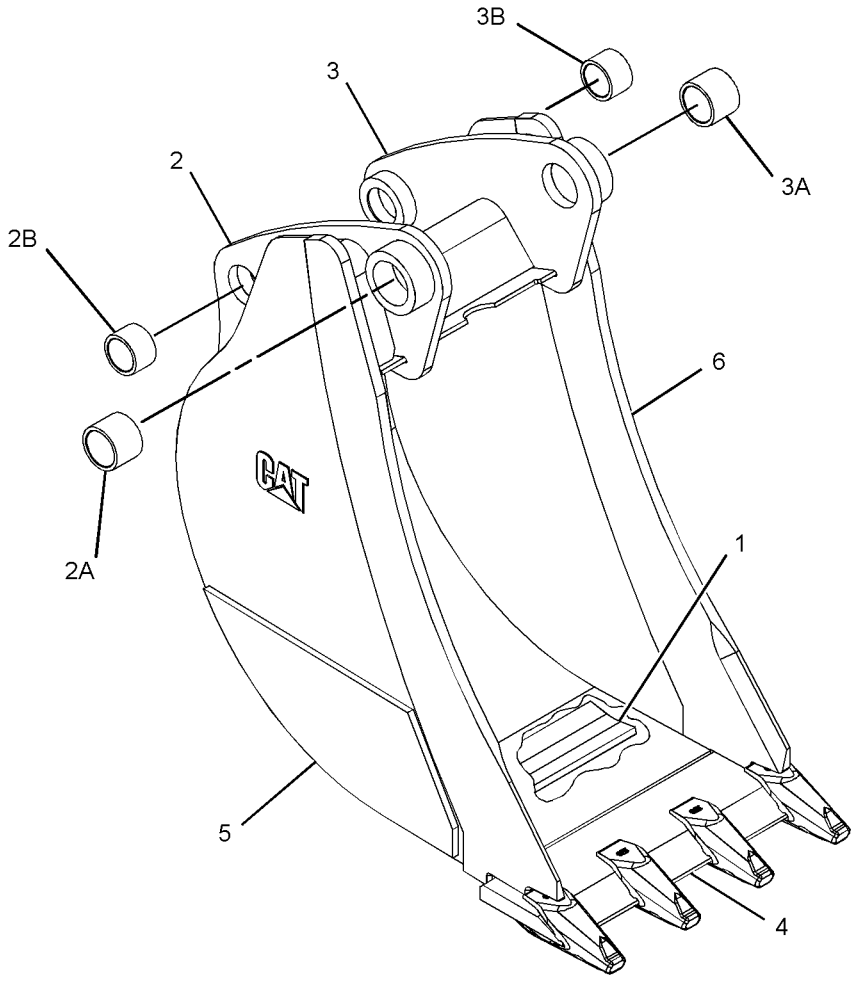

GRAPHIC #1 **<END>** g01382715

WORK TOOLS

219-3372 BUCKET AS-HOE—ROCK

S/N: CBD1-UP
24-INCH
PART OF 219-3396 BUCKET GP-HOE
AN ATTACHMENT

SMCS-6503 **i02023827**

NOTE	REF NO	GRAPHIC REF	PART NUMBER	QTY	PART NAME 1 2 3 4 5 6 (PRODUCT LEVEL)	SEE PAGE
	1	1	*151-7902*	1	BRACKET AS (LH)	
	1A	1	**9R-0162**	1	BEARING-SLEEVE	
	1B	1	**168-0480**	1	BEARING-SLEEVE	
	2	1	*151-7903*	1	BRACKET AS (RH)	
	2A	1	**9R-0162**	1	BEARING-SLEEVE	
	2B	1	**168-0480**	1	BEARING-SLEEVE	
	3	1	**172-8277**	2	PLATE	
	4	1	**172-8280**	4	PLATE	
	5	1	**196-8921**	1	EDGE (RH)	
	6	1	**196-8922**	1	EDGE (LH)	
	7	1	**201-1234**	5	ADAPTER	
	8	1	**219-9484**	1	EDGE	

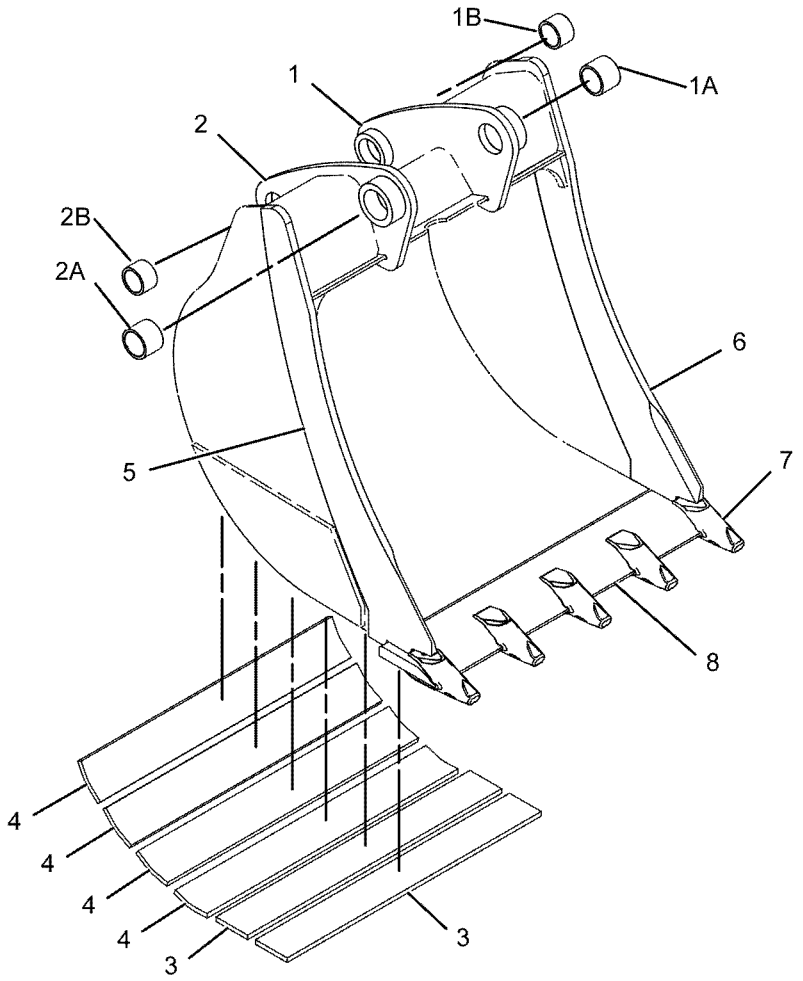

GRAPHIC #1 **<END>** g01045604

WORK TOOLS

219-3372 BUCKET AS-HOE–ROCK

S/N: CBD1-UP; MFG1-UP
24-INCH
PART OF 219-3396 BUCKET GP-HOE
AN ATTACHMENT

SMCS-6503 **i02909227**

NOTE	REF NO	GRAPHIC REF	PART NUMBER	QTY	PART NAME 1 2 3 4 5 6 (PRODUCT LEVEL)	SEE PAGE
	1	1	**172-8280**	6	PLATE	
C	2	1	*286-9336*	1	BRACKET AS (RH)	
	2A	1	**9R-0162**	1	BEARING-SLEEVE	
	2B	1	**168-0480**	1	BEARING-SLEEVE	
C	3	1	*286-9337*	1	BRACKET AS (LH)	
	3A	1	**9R-0162**	1	BEARING-SLEEVE	
	3B	1	**168-0480**	1	BEARING-SLEEVE	
	4	1	*299-3348*	1	EDGE AS	
		1	**201-1234**	5	ADAPTER	
		1	**219-9484**	1	EDGE	
	5	1	*300-7056*	1	PLATE AS	
		1	**196-8921**	1	EDGE (RH)	
	6	1	*300-7057*	1	PLATE AS	
		1	**196-8922**	1	EDGE (LH)	

C-CHANGE FROM PREVIOUS TYPE

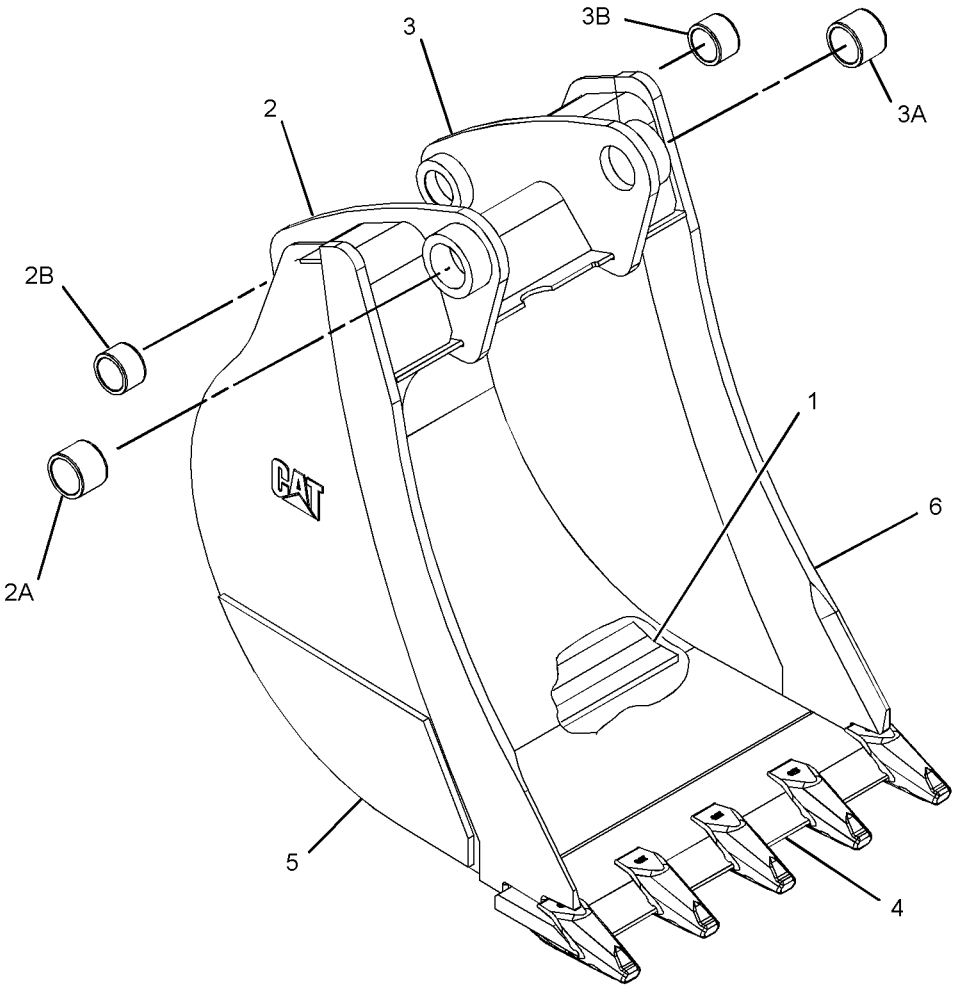

GRAPHIC #1 **<END>** g01382695

WORK TOOLS

219-3373 BUCKET AS-HOE–ROCK

S/N: CBD1-UP
30-INCH
PART OF 219-3397 BUCKET GP-HOE
AN ATTACHMENT

SMCS-6503 **i02023906**

NOTE	REF NO	GRAPHIC REF	PART NUMBER	QTY	PART NAME 1 2 3 4 5 6 (PRODUCT LEVEL)	SEE PAGE
	1	1	*151-7902*	1	BRACKET AS (LH)	
	1A	1	**9R-0162**	1	BEARING-SLEEVE	
	1B	1	**168-0480**	1	BEARING-SLEEVE	
	2	1	*151-7903*	1	BRACKET AS (RH)	
	2A	1	**9R-0162**	1	BEARING-SLEEVE	
	2B	1	**168-0480**	1	BEARING-SLEEVE	
	3	1	**172-8278**	2	PLATE	
	4	1	**174-4765**	4	PLATE	
	5	1	**196-8921**	1	EDGE (RH)	
	6	1	**196-8922**	1	EDGE (LH)	
	7	1	**201-1234**	5	ADAPTER	
	8	1	**219-9485**	1	EDGE	

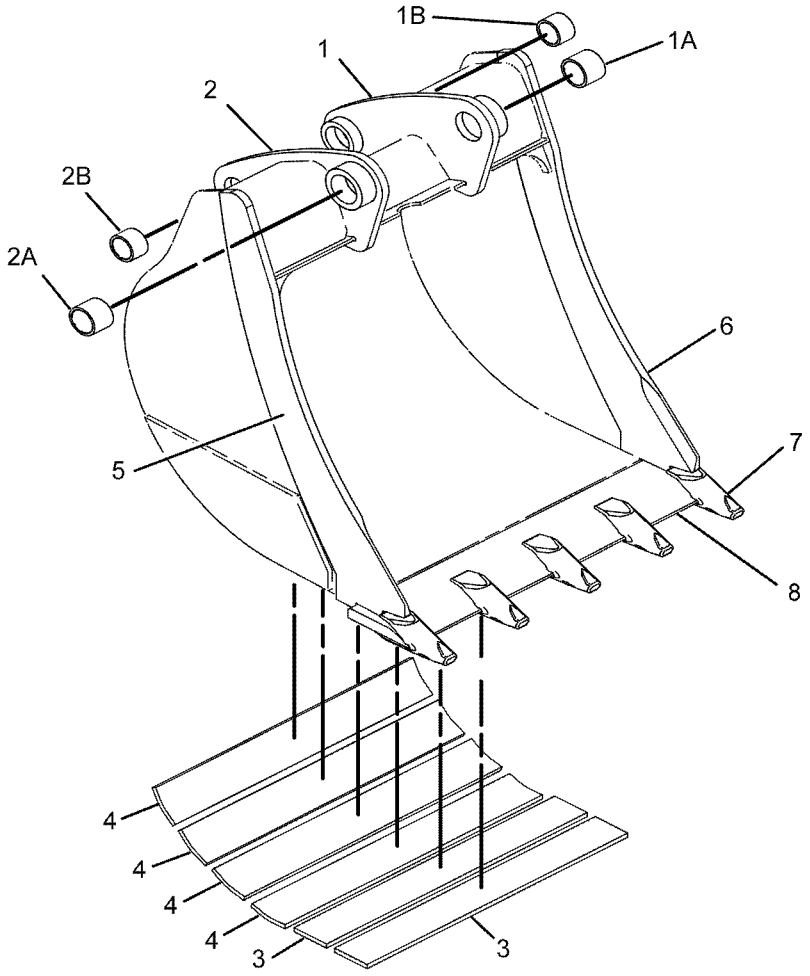

GRAPHIC #1 **<END>** g01045664

WORK TOOLS

219-3373 BUCKET AS-HOE–ROCK

S/N: CBD1-UP; MFG1-UP
30-INCH
PART OF 219-3397 BUCKET GP-HOE
AN ATTACHMENT

SMCS-6503 **i02909228**

NOTE	REF NO	GRAPHIC REF	PART NUMBER	QTY	PART NAME 1 2 3 4 5 6 (PRODUCT LEVEL)	SEE PAGE
	1	1	**174-4765**	6	PLATE	
C	2	1	*286-9336*	1	BRACKET AS (RH)	
	2A	1	**9R-0162**	1	BEARING-SLEEVE	
	2B	1	**168-0480**	1	BEARING-SLEEVE	
C	3	1	*286-9337*	1	BRACKET AS (LH)	
	3A	1	**9R-0162**	1	BEARING-SLEEVE	
	3B	1	**168-0480**	1	BEARING-SLEEVE	
	4	1	*299-3351*	1	EDGE AS	
		1	**201-1234**	5	ADAPTER	
		1	**219-9485**	1	EDGE	
	5	1	*300-7056*	1	PLATE AS	
		1	**196-8921**	1	EDGE (RH)	
	6	1	*300-7057*	1	PLATE AS	
		1	**196-8922**	1	EDGE (LH)	

C-CHANGE FROM PREVIOUS TYPE

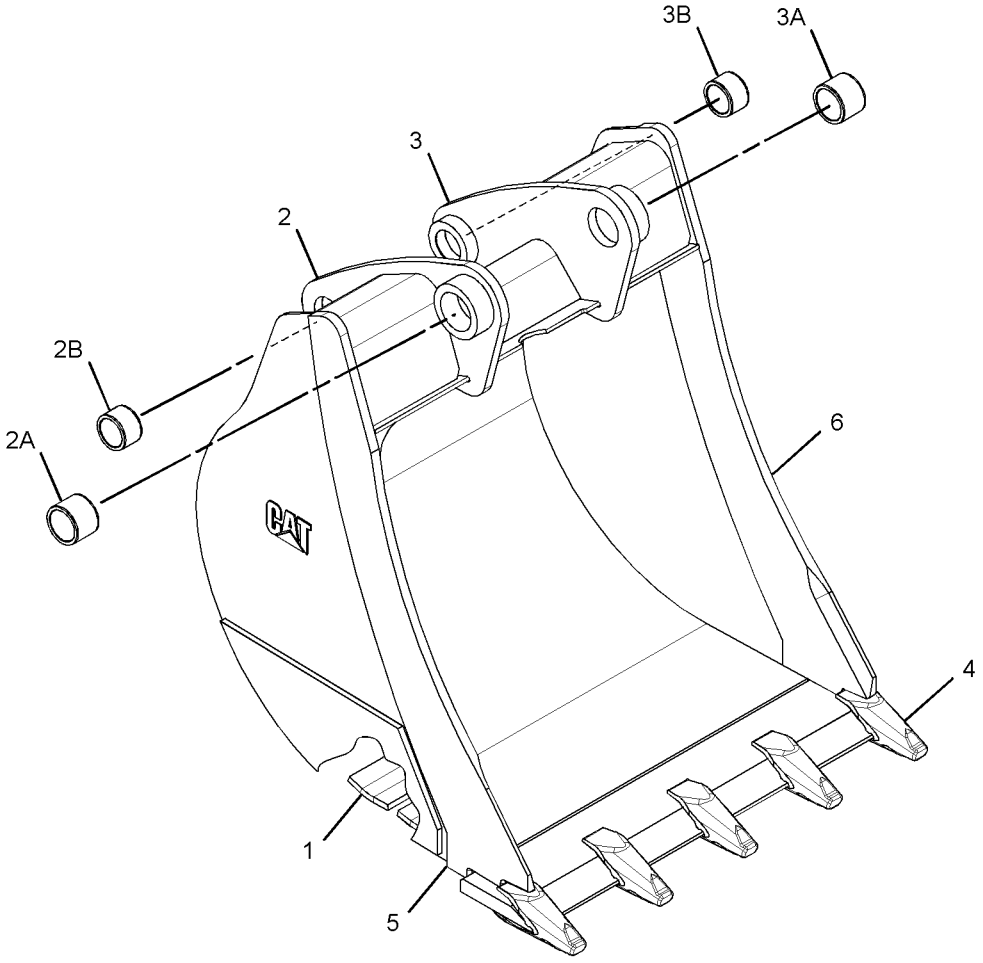

GRAPHIC #1 **<END>** g01383031

219-3374 BUCKET AS-HOE–ROCK

S/N: CBD1-UP
914-MM (36-IN)
PART OF 219-3398 BUCKET GP-HOE
AN ATTACHMENT
TYPE 1

SMCS-6503 **i02660341**

NOTE	REF NO	GRAPHIC REF	PART NUMBER	QTY	PART NAME 1 2 3 4 5 6 (PRODUCT LEVEL)	SEE PAGE
	1	1	*151-7902*	1	BRACKET AS (LH)	
	1A	1	**9R-0162**	1	BEARING-SLEEVE	
	1B	1	**168-0480**	1	BEARING-SLEEVE	
	2	1	*151-7903*	1	BRACKET AS (RH)	
	2A	1	**9R-0162**	1	BEARING-SLEEVE	
	2B	1	**168-0480**	1	BEARING-SLEEVE	
	3	1	**161-4130**	2	PLATE-IDENTIFICATION (CAT)	
	4	1	**196-8921**	1	EDGE (RH)	
	5	1	**196-8922**	1	EDGE (LH)	
	6	1	**201-1234**	6	ADAPTER (2-STRAP)	
	7	1	**219-9486**	1	EDGE	

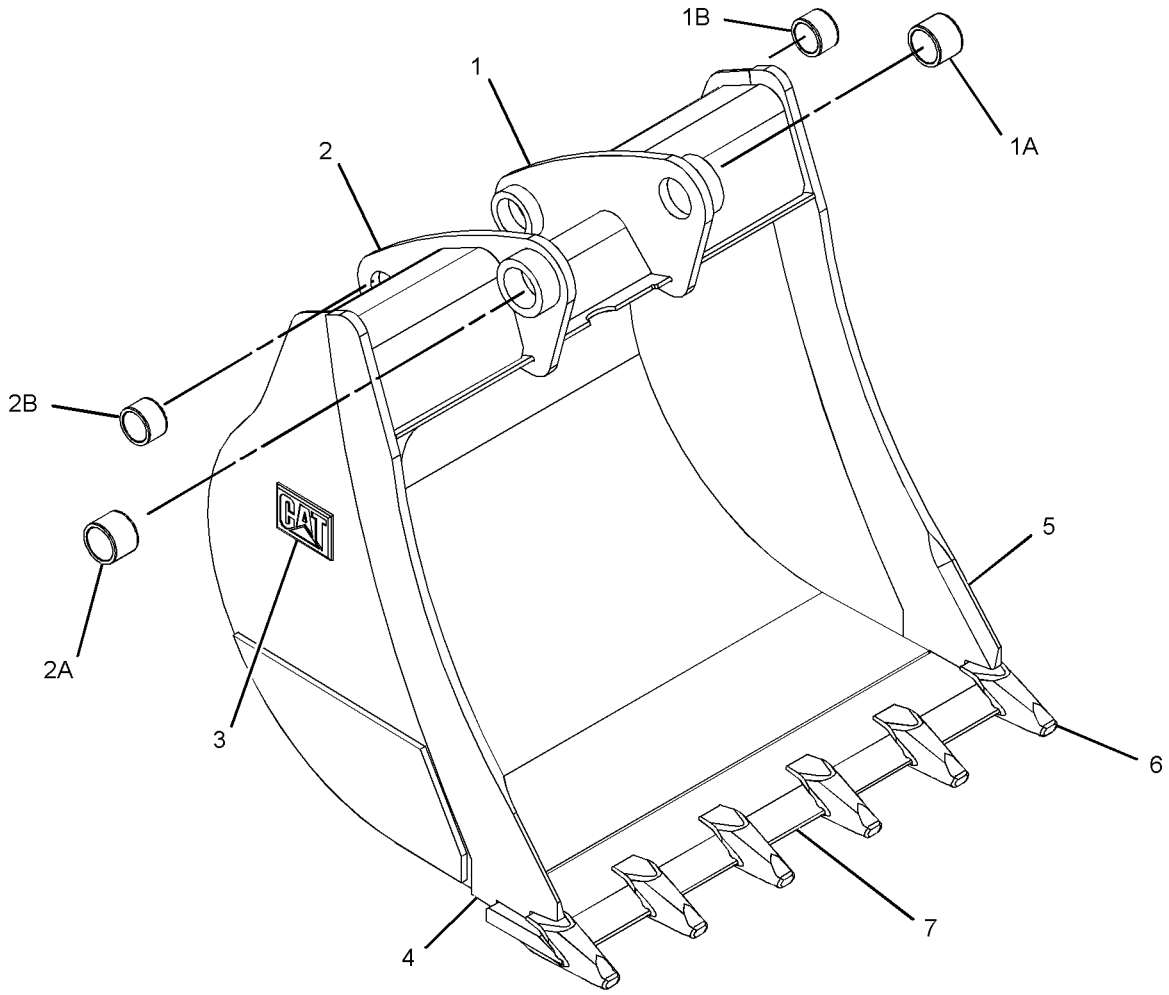

GRAPHIC #1 **<END>** g01342084

WORK TOOLS

219-3374 BUCKET AS-HOE–ROCK

S/N: CBD1-UP
914-MM (36-IN)
PART OF 219-3398 BUCKET GP-HOE
AN ATTACHMENT
TYPE 2

SMCS-6503 **i02909229**

NOTE	REF NO	GRAPHIC REF	PART NUMBER	QTY	PART NAME 1 2 3 4 5 6 (PRODUCT LEVEL)	SEE PAGE
	1	1	**193-5416**	6	PLATE	
	2	1	*286-9336*	1	BRACKET AS	
	2A	1	**9R-0162**	1	BEARING-SLEEVE	
	2B	1	**168-0480**	1	BEARING-SLEEVE	
	3	1	*286-9337*	1	BRACKET AS	
	3A	1	**9R-0162**	1	BEARING-SLEEVE	
	3B	1	**168-0480**	1	BEARING-SLEEVE	
	4	1	*300-4154*	1	EDGE AS	
			201-1234	6	ADAPTER	
			219-9486	1	EDGE	
	5	1	*300-7056*	1	PLATE AS	
			196-8921	1	EDGE (RH)	
	6	1	*300-7057*	1	PLATE AS	
			196-8922	1	EDGE (LH)	

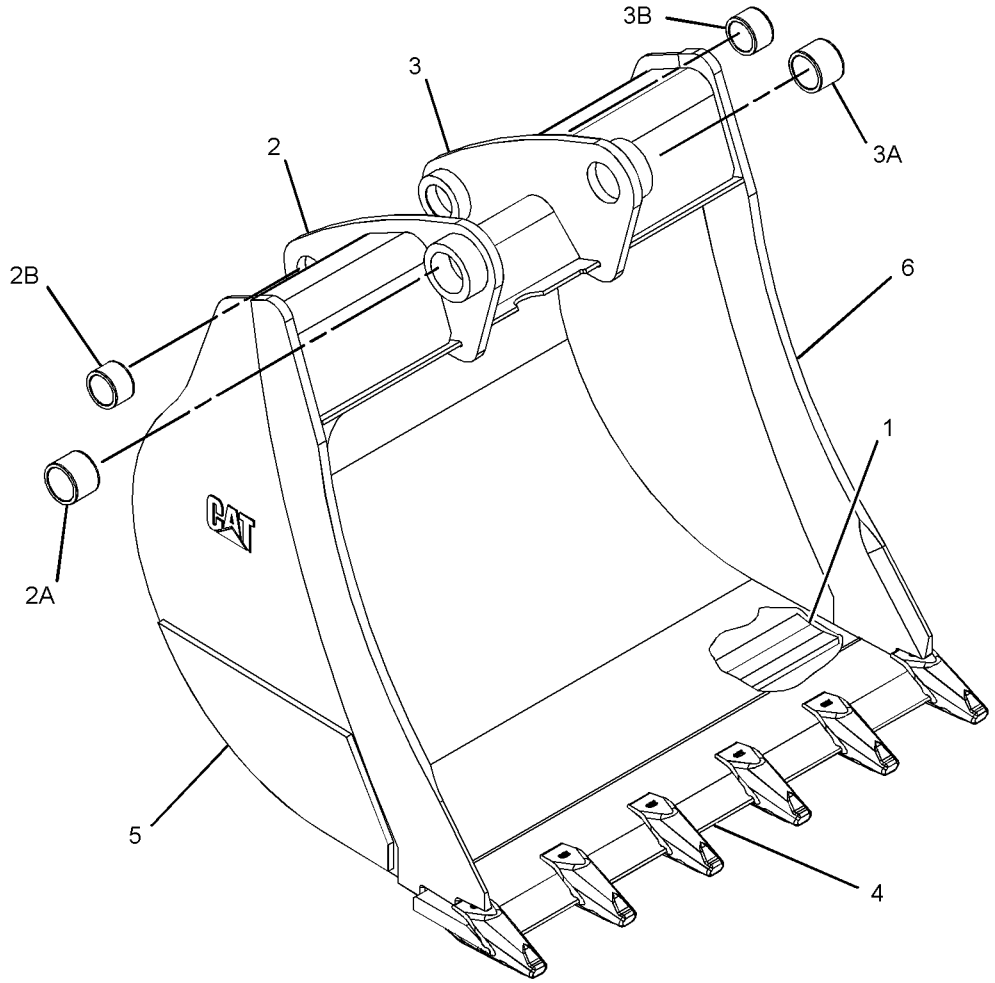

GRAPHIC #1 **<END>** g01382166

WORK TOOLS

9R-5989 BUCKET GP-GENERAL PURPOSE

S/N: CBD1-UP
0.95 CU M (1.25 CU YD)
AN ATTACHMENT

SMCS-6101 **i02548309**

NOTE	REF NO	GRAPHIC REF	PART NUMBER	QTY	PART NAME 1 2 3 4 5 6 (PRODUCT LEVEL)	SEE PAGE
	1	1	**137-4234**	1	PLATE-IDENTIFICATION (WORK TOOL)	
	2	1	**168-8389**	4	TACK-FASTENER	
Y	3	1	*190-7598*	1	BUCKET AS-GENERAL PURPOSE	785

Y-SEPARATE ILLUSTRATION

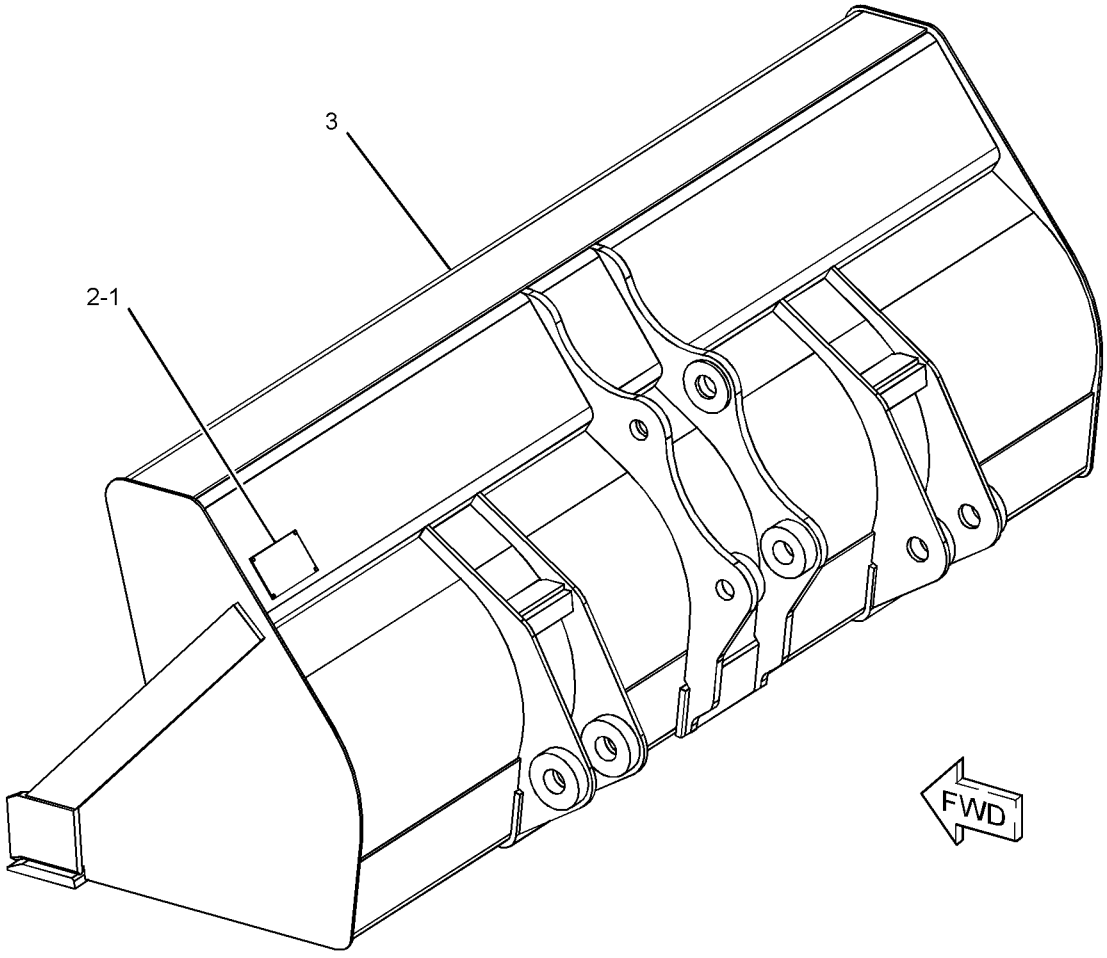

GRAPHIC #1 **<END>** g01277910

WORK TOOLS

190-1055 BUCKET GP-GENERAL PURPOSE

S/N: CBD1-UP

AN ATTACHMENT

SMCS-6101 **i02529179**

NOTE	PART NUMBER	QTY	PART NAME 1 2 3 4 5 6 (PRODUCT LEVEL)	SEE PAGE
Y	*9R-5201*	1	BUCKET AS-GENERAL PURPOSE	783
Y	*9R-5866*	1	TOOTH GP-UNI	896

Y-SEPARATE ILLUSTRATION

<END>

251-1778 BUCKET GP-GENERAL PURPOSE

S/N: CBD1-UP

AN ATTACHMENT

SMCS-6101 **i02520066**

NOTE	PART NUMBER	QTY	PART NAME 1 2 3 4 5 6 (PRODUCT LEVEL)	SEE PAGE
Y	**251-1780**	1	BUCKET GP-GENERAL PURPOSE	829
Y	*9R-5321*	1	EDGE GP-CUTTING	878

Y-SEPARATE ILLUSTRATION

<END>

WORK TOOLS

251-1780 BUCKET GP-GENERAL PURPOSE

S/N: CBD1-UP; MFG1-UP
PART OF 251-1778 BUCKET GP-GENERAL PURPOSE
AN ATTACHMENT

SMCS-6101 **i02520067**

NOTE	REF NO	GRAPHIC REF	PART NUMBER	QTY	PART NAME 1 2 3 4 5 6 (PRODUCT LEVEL)	SEE PAGE
	1	1	**137-4234**	1	PLATE-IDENTIFICATION (WORK TOOL)	
	2	1	**168-8389**	4	TACK-FASTENER	
Y	3	1	*251-1157*	1	BUCKET AS-GENERAL PURPOSE	786

Y-SEPARATE ILLUSTRATION

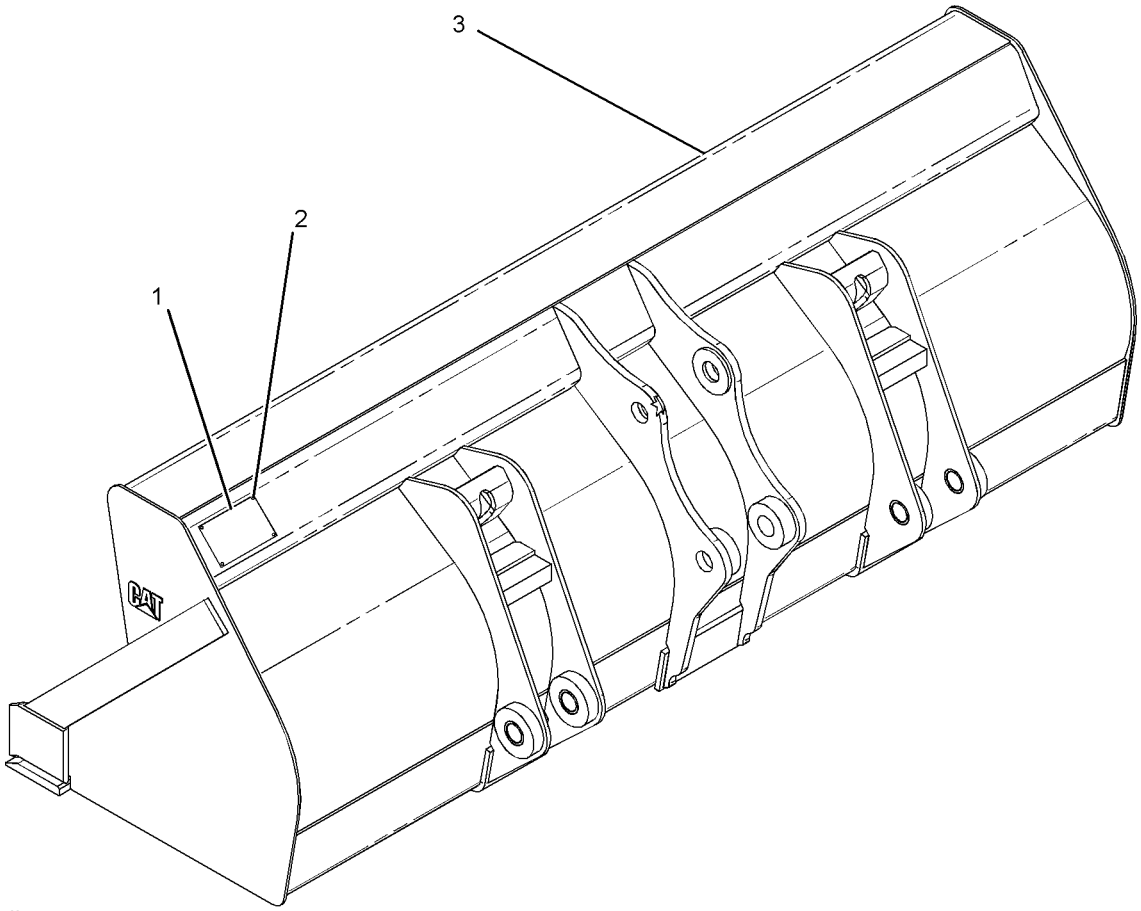

GRAPHIC #1 **<END>** g01114180

251-1787 BUCKET GP-GENERAL PURPOSE

S/N: CBD1-UP

AN ATTACHMENT

SMCS-6101 **i02520073**

NOTE	PART NUMBER	QTY	PART NAME 1 2 3 4 5 6 (PRODUCT LEVEL)	SEE PAGE
Y	**251-1789**	1	BUCKET GP-GENERAL PURPOSE	831
Y	*9R-5321*	1	EDGE GP-CUTTING	878
Y-SEPARATE ILLUSTRATION				

<END>

251-1788 BUCKET GP-GENERAL PURPOSE

S/N: CBD1-UP

AN ATTACHMENT

SMCS-6101 **i02520074**

NOTE	PART NUMBER	QTY	PART NAME 1 2 3 4 5 6 (PRODUCT LEVEL)	SEE PAGE
Y	**251-1789**	1	BUCKET GP-GENERAL PURPOSE	831
Y	*9R-5866*	1	TOOTH GP-UNI	896
Y-SEPARATE ILLUSTRATION				

<END>

251-1789 BUCKET GP-GENERAL PURPOSE

S/N: CBD1-UP; MFG1-UP
PART OF 251-1787, 251-1788 BUCKET GP-GENERAL PURPOSE, 356-0067, 356-0068, 356-0069, 374-3517, 374-3518, 374-3519, 374-3521, 374-3529, 374-6532, 374-6533, 374-6534, 374-6535, 374-6536 DISTRIBUTION AR
AN ATTACHMENT

SMCS-6101 **i02520076**

NOTE	REF NO	GRAPHIC REF	PART NUMBER	QTY	PART NAME 1 2 3 4 5 6 (PRODUCT LEVEL)	SEE PAGE
	1	1	**137-4234**	1	PLATE-IDENTIFICATION (WORK TOOL)	
	2	1	**168-8389**	4	TACK-FASTENER	
Y	3	1	**251-1160**	1	BUCKET AS-GENERAL PURPOSE	787

Y-SEPARATE ILLUSTRATION

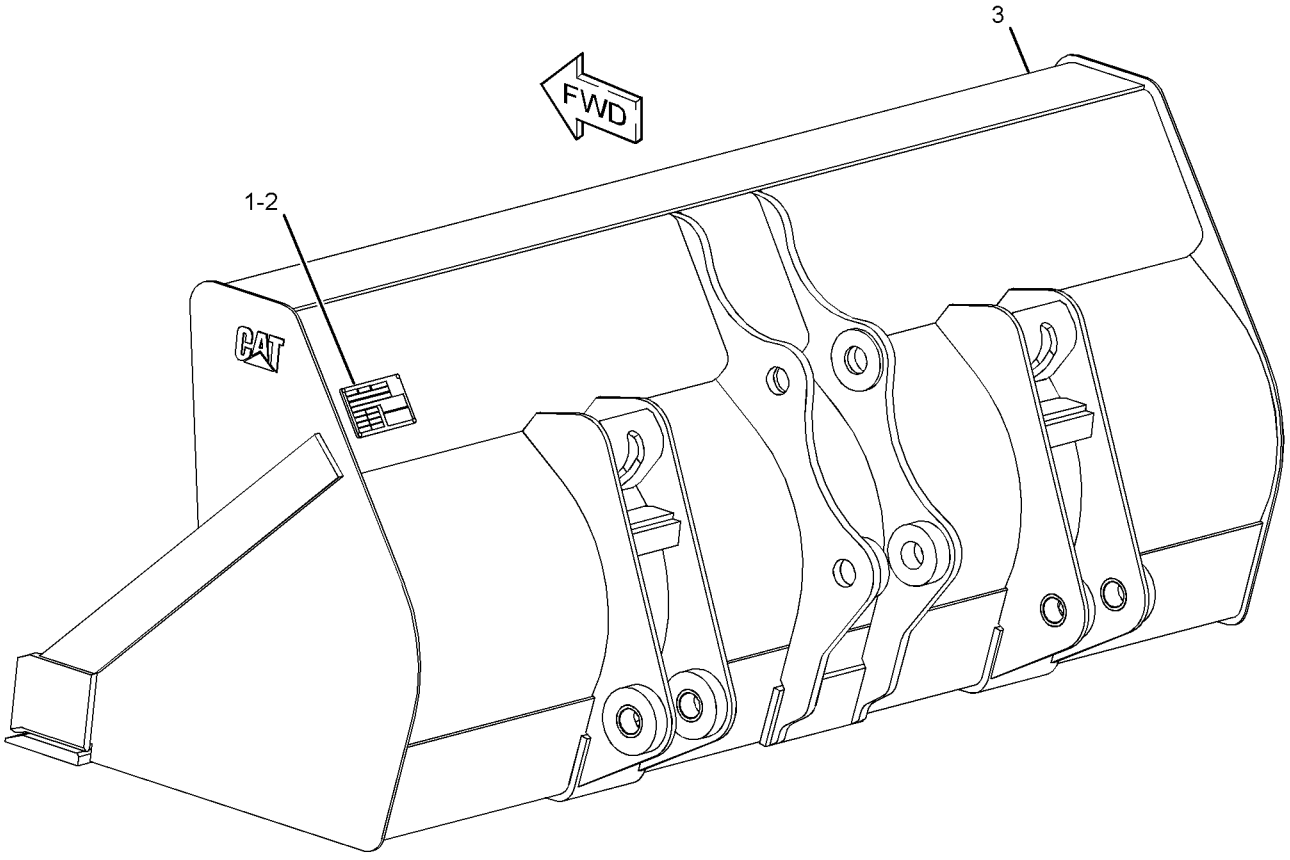

GRAPHIC #1 **<END>** g01262677

WORK TOOLS

219-3379 BUCKET GP-HOE

S/N: CBD1-UP; MFG1-UP
PART OF 219-3410 BUCKET GP-HOE
AN ATTACHMENT

SMCS-6503 **i02655047**

NOTE	REF NO	GRAPHIC REF	PART NUMBER	QTY	PART NAME 1 2 3 4 5 6 (PRODUCT LEVEL)	SEE PAGE
	1	1	**137-4234**	1	PLATE-IDENTIFICATION (WORK TOOL)	
	2	1	**168-8389**	1	TACK-FASTENER	
	3	1	*208-5245*	3	TIP GP-PENETRATION	
					(EACH INCLUDES)	
		1	**201-1238**	1	PIN	
		1	**201-1239**	1	RETAINER AS	
		1	**208-5235**	1	TIP-PENETRATION	
Y	4	1	*219-3355*	1	BUCKET AS-HOE	788

Y-SEPARATE ILLUSTRATION

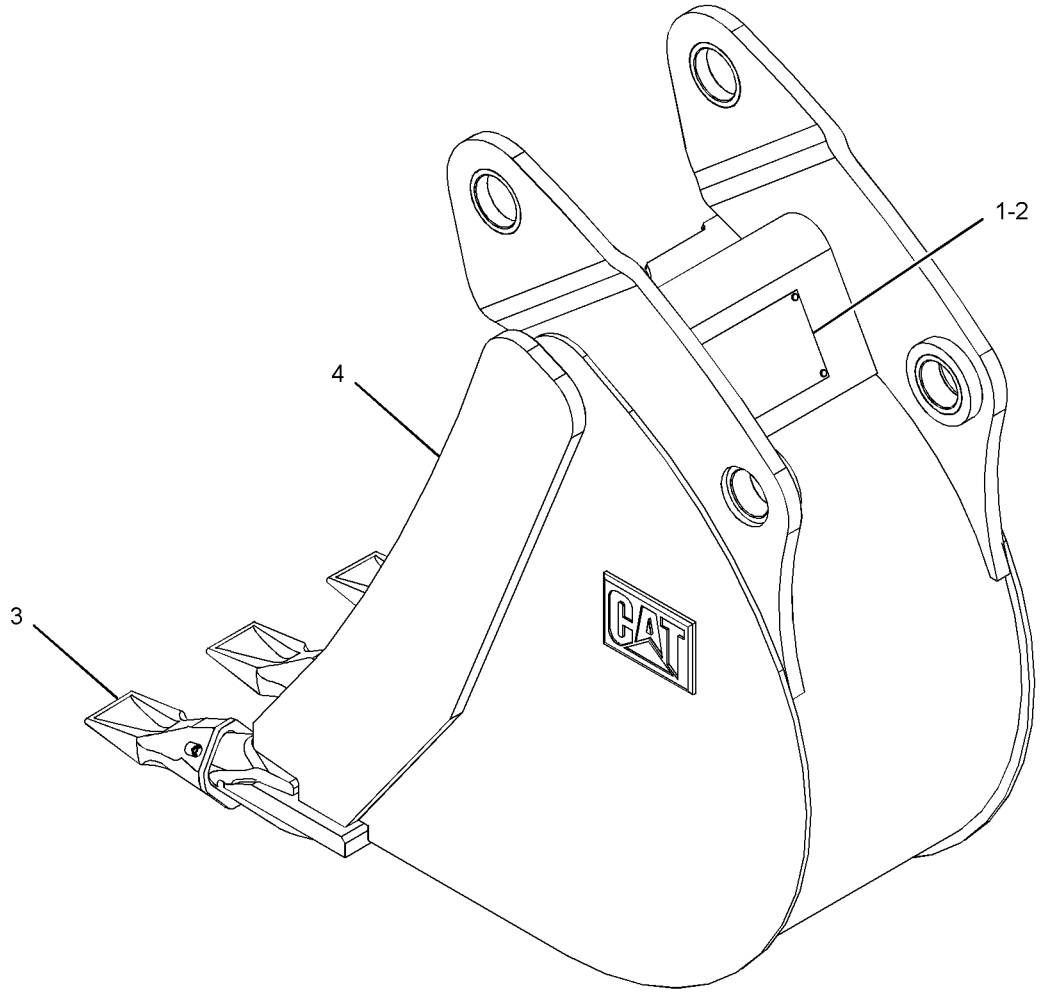

GRAPHIC #1 **<END>** g01341882

WORK TOOLS

219-3380 BUCKET GP-HOE

S/N: CBD1-UP; MFG1-UP
AN ATTACHMENT

SMCS-6503 **i02655102**

NOTE	REF NO	GRAPHIC REF	PART NUMBER	QTY	PART NAME 1 2 3 4 5 6 (PRODUCT LEVEL)	SEE PAGE
	1	1	**137-4234**	1	PLATE-IDENTIFICATION (WORK TOOL)	
	2	1	**168-8389**	4	TACK-FASTENER	
	3	1	*208-5245*	4	TIP GP-PENETRATION	
					(EACH INCLUDES)	
		1	**201-1238**	1	PIN	
		1	**201-1239**	1	RETAINER AS	
		1	**208-5235**	1	TIP-PENETRATION	
Y	4	1	*219-3356*	1	BUCKET AS-HOE	790

Y-SEPARATE ILLUSTRATION

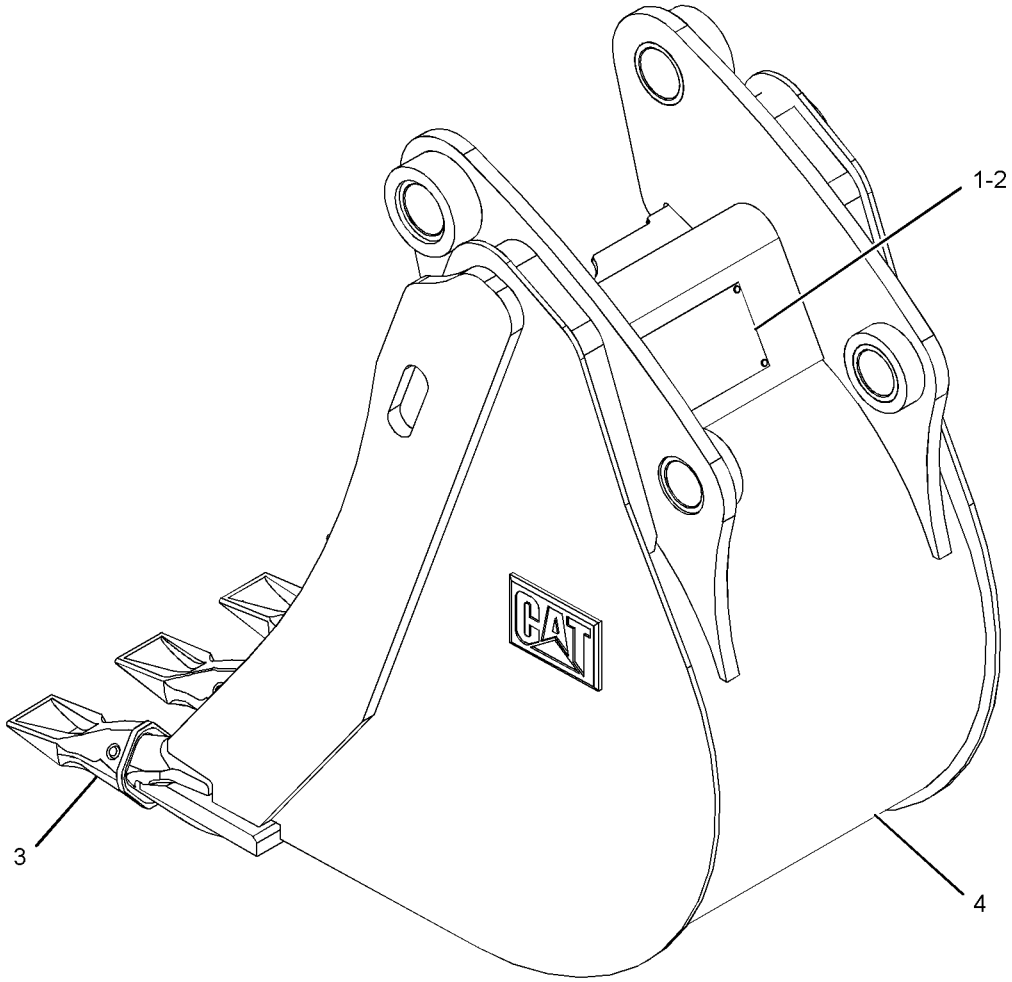

GRAPHIC #1 **<END>** g01339842

WORK TOOLS

219-3381 BUCKET GP-HOE

S/N: CBD1-UP; MFG1-UP

AN ATTACHMENT

SMCS-6503 **i02651120**

NOTE	REF NO	GRAPHIC REF	PART NUMBER	QTY	PART NAME 1 2 3 4 5 6 (PRODUCT LEVEL)	SEE PAGE
	1	1	**137-4234**	1	PLATE-IDENTIFICATION (WORK TOOL)	
	2	1	**168-8389**	4	TACK-FASTENER	
	3		*208-5245*	5	TIP GP-PENETRATION	
					(EACH INCLUDES)	
		1	**201-1238**	1	PIN	
		1	**201-1239**	1	RETAINER AS	
		1	**208-5235**	1	TIP-PENETRATION	
Y	4	1	*219-3357*	1	BUCKET AS-HOE	792

Y-SEPARATE ILLUSTRATION

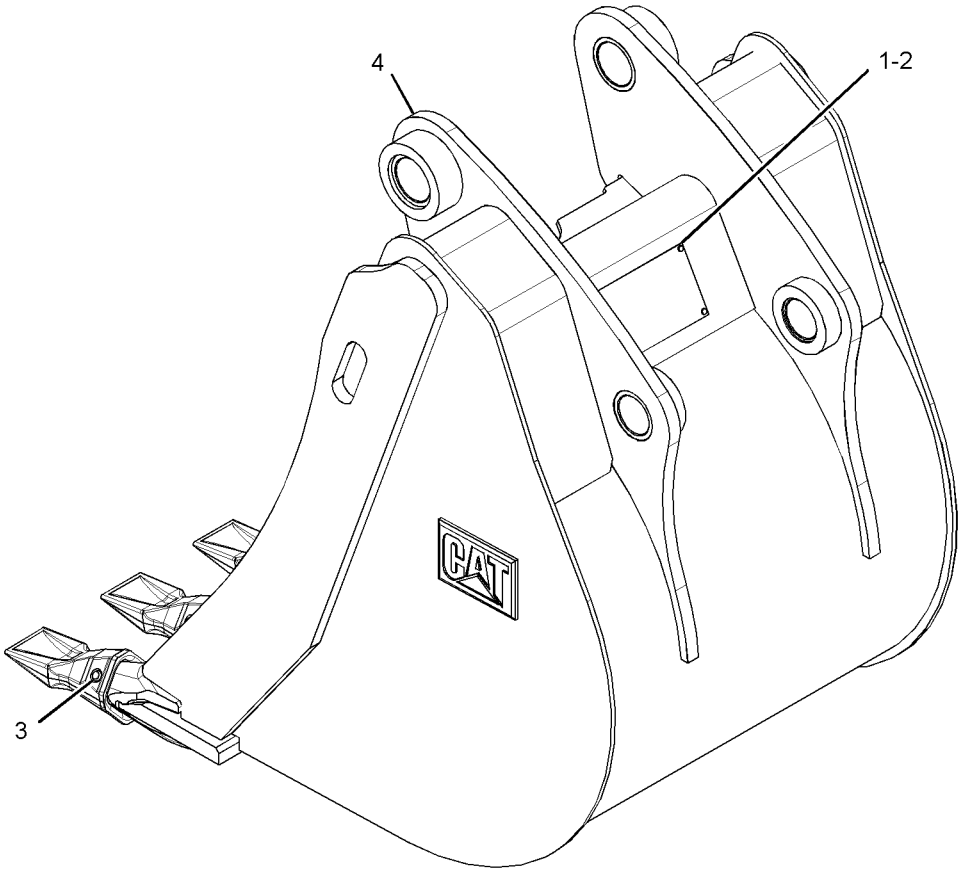

GRAPHIC #1 **<END>** g01340268

WORK TOOLS

219-3382 BUCKET GP-HOE

S/N: CBD1-UP; MFG1-UP
AN ATTACHMENT

SMCS-6503 **i02651192**

NOTE	REF NO	GRAPHIC REF	PART NUMBER	QTY	PART NAME 1 2 3 4 5 6 (PRODUCT LEVEL)	SEE PAGE
	1	1	**137-4234**	1	PLATE-IDENTIFICATION (WORK TOOL)	
	2	1	**168-8389**	4	TACK-FASTENER	
	3	1	*208-5245*	5	TIP GP-PENETRATION	
					(EACH INCLUDES)	
		1	**201-1238**	1	PIN	
		1	**201-1239**	1	RETAINER AS	
		1	**208-5235**	1	TIP-PENETRATION	
Y	4	1	*219-3358*	1	BUCKET AS-HOE	794

Y-SEPARATE ILLUSTRATION

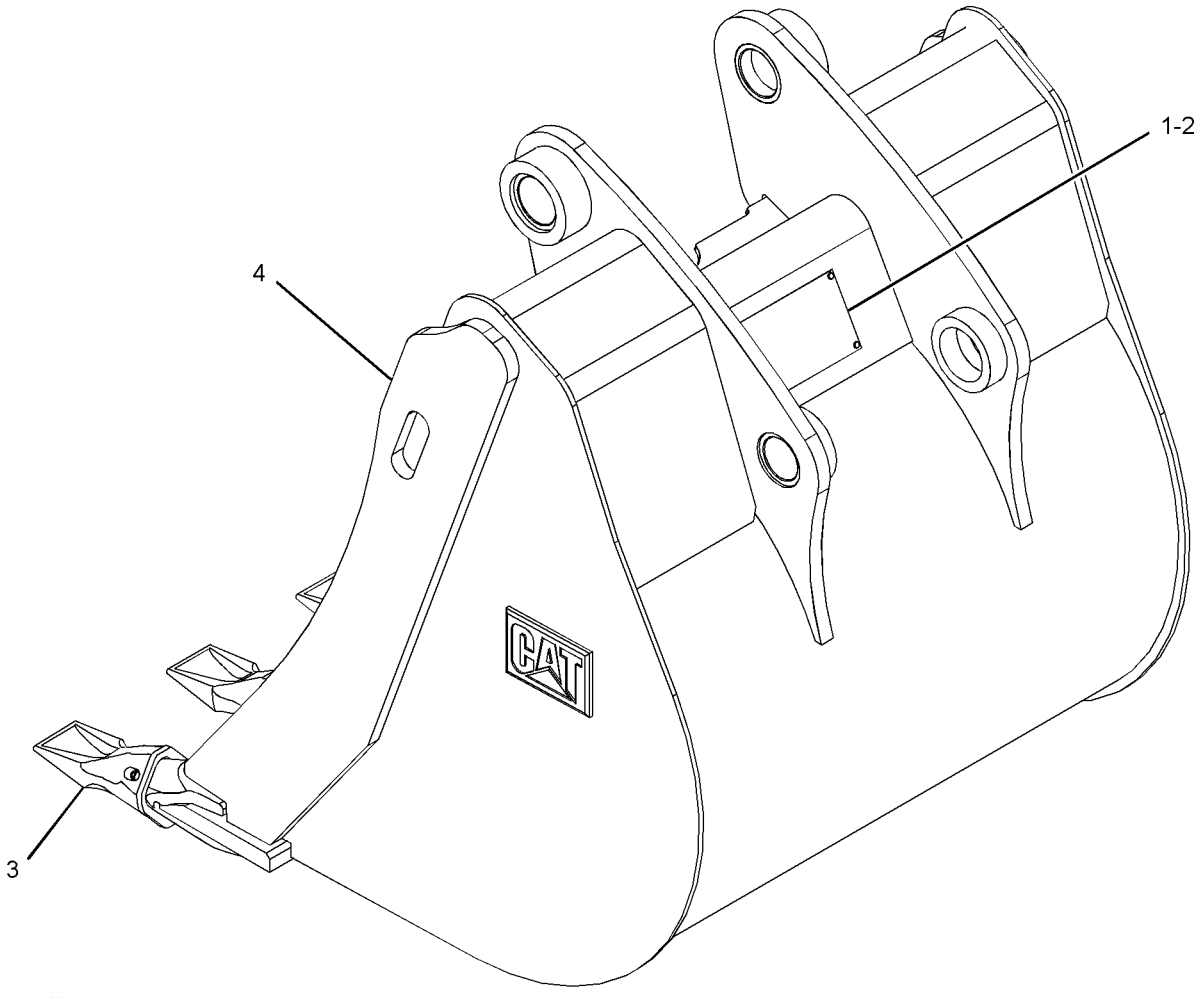

GRAPHIC #1 **<END>** g01341854

WORK TOOLS

219-3383 BUCKET GP-HOE

S/N: CBD1-UP; MFG1-UP

AN ATTACHMENT

SMCS-6503 **i02651285**

NOTE	REF NO	GRAPHIC REF	PART NUMBER	QTY	PART NAME 1 2 3 4 5 6 (PRODUCT LEVEL)	SEE PAGE
	1	1	**137-4234**	1	PLATE-IDENTIFICATION (WORK TOOL)	
	2	1	**168-8389**	4	TACK-FASTENER	
	3	1	*208-5245*	6	TIP GP-PENETRATION	
					(EACH INCLUDES)	
		1	**201-1238**	1	PIN	
		1	**201-1239**	1	RETAINER AS	
		1	**208-5235**	1	TIP-PENETRATION	
Y	4	1	*219-3359*	1	BUCKET AS-HOE	796

Y-SEPARATE ILLUSTRATION

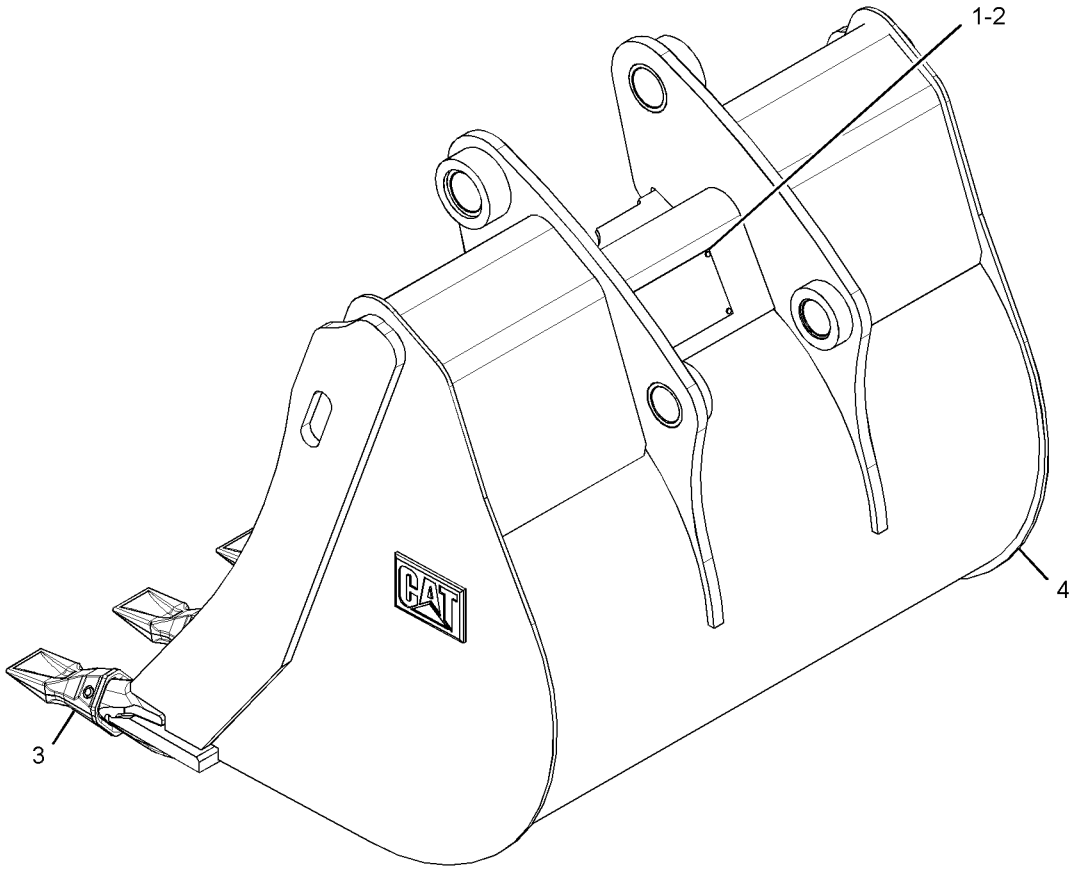

GRAPHIC #1 **<END>** g01341780

WORK TOOLS

219-3384 BUCKET GP-HOE

S/N: CBD1-UP; MFG1-UP
PART OF 219-3411 BUCKET GP-HOE
AN ATTACHMENT

SMCS-6503 **i02651328**

NOTE	REF NO	GRAPHIC REF	PART NUMBER	QTY	PART NAME 1 2 3 4 5 6 (PRODUCT LEVEL)	SEE PAGE
	1	1	**137-4234**	1	PLATE-IDENTIFICATION (WORK TOOL)	
	2	1	**168-8389**	4	TACK-FASTENER	
	3	1	*208-5245*	6	TIP GP-PENETRATION	
					(EACH INCLUDES)	
		1	**201-1238**	1	PIN	
		1	**201-1239**	1	RETAINER AS	
		1	**208-5235**	1	TIP-PENETRATION	
Y	4	1	*219-3360*	1	BUCKET AS-HOE	798

Y-SEPARATE ILLUSTRATION

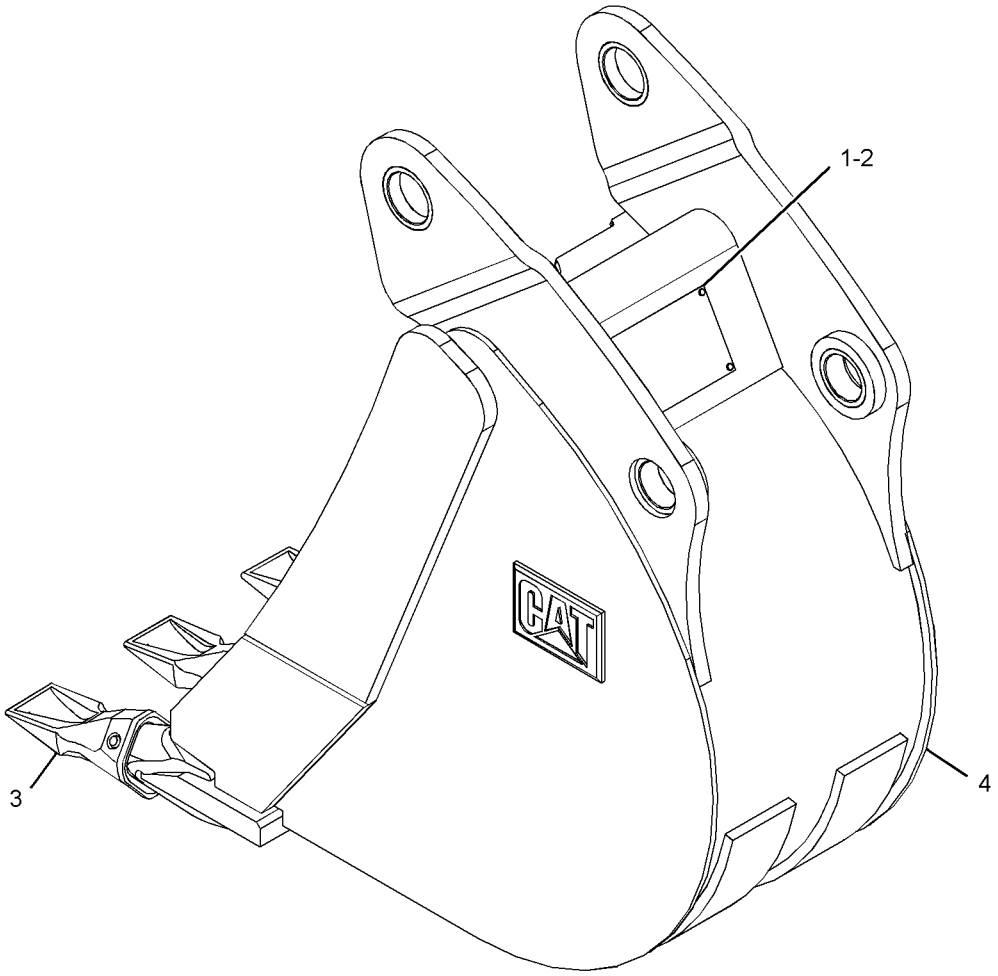

GRAPHIC #1 **<END>** g01335483

WORK TOOLS

219-3385 BUCKET GP-HOE

S/N: CBD1-UP; MFG1-UP

AN ATTACHMENT

SMCS-6503 **i02651377**

NOTE	REF NO	GRAPHIC REF	PART NUMBER	QTY	PART NAME 1 2 3 4 5 6 (PRODUCT LEVEL)	SEE PAGE
	1	1	**137-4234**	1	PLATE-IDENTIFICATION (WORK TOOL)	
	2	1	**168-8389**	4	TACK-FASTENER	
	3	1	*208-5245*	3	TIP GP-PENETRATION	
					(EACH INCLUDES)	
		1	**201-1238**	1	PIN	
		1	**201-1239**	1	RETAINER AS	
		1	**208-5235**	1	TIP-PENETRATION	
Y	4	1	*219-3361*	1	BUCKET AS-HOE	800

Y-SEPARATE ILLUSTRATION

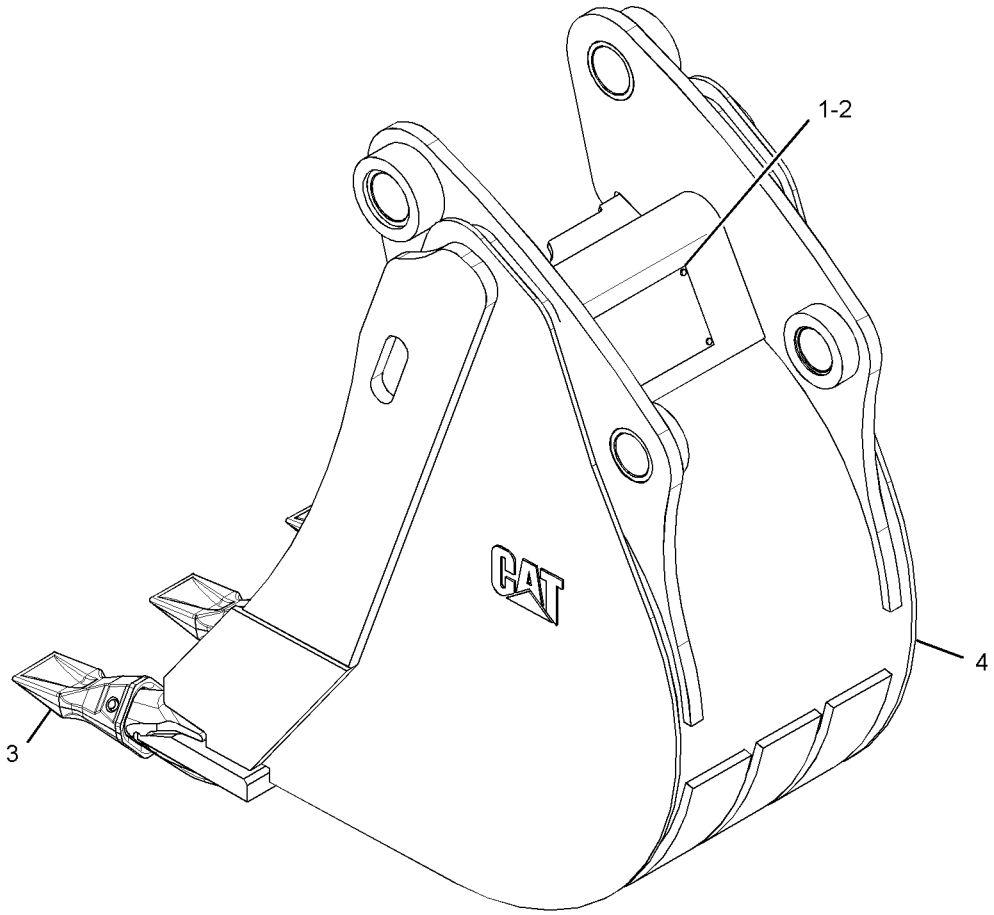

GRAPHIC #1 **<END>** g01341891

WORK TOOLS

219-3386 BUCKET GP-HOE

S/N: CBD1-UP; MFG1-UP

AN ATTACHMENT

SMCS-6503 **i02655166**

NOTE	REF NO	GRAPHIC REF	PART NUMBER	QTY	PART NAME 1 2 3 4 5 6 (PRODUCT LEVEL)	SEE PAGE
	1	1	**137-4234**	1	PLATE-IDENTIFICATION (WORK TOOL)	
	2	1	**168-8389**	4	TACK-FASTENER	
	3	1	*208-5245*	4	TIP GP-PENETRATION	
					(EACH INCLUDES)	
		1	**201-1238**	1	PIN	
		1	**201-1239**	1	RETAINER AS	
		1	**208-5235**	1	TIP-PENETRATION	
Y	4	1	*219-3362*	1	BUCKET AS-HOE	802

Y-SEPARATE ILLUSTRATION

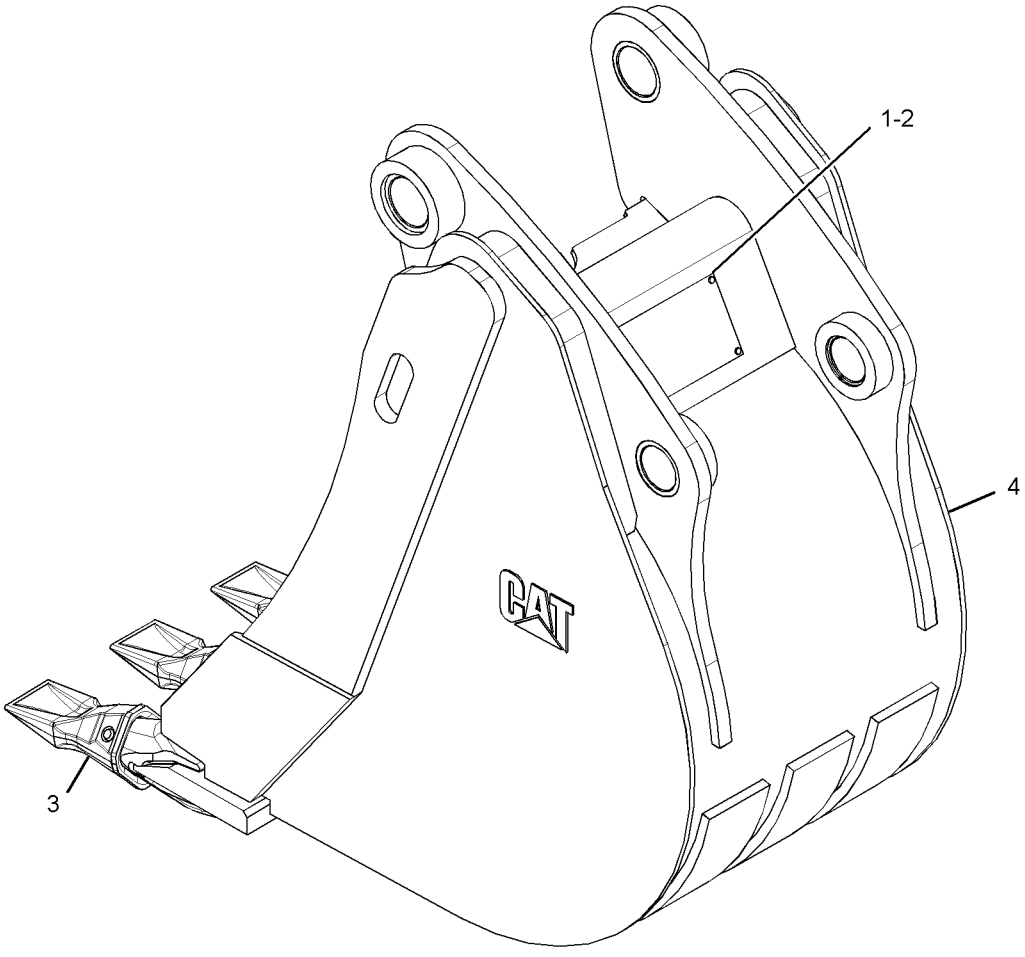

GRAPHIC #1 **<END>** g01341827

WORK TOOLS

219-3387 BUCKET GP-HOE

S/N: CBD1-UP; MFG1-UP
PART OF 374-3521, 374-3529, 374-6535, 374-6536 DISTRIBUTION AR
AN ATTACHMENT

SMCS-6503 **i02662143**

NOTE	REF NO	GRAPHIC REF	PART NUMBER	QTY	PART NAME 1 2 3 4 5 6 (PRODUCT LEVEL)	SEE PAGE
	1	1	**137-4234**	1	PLATE-IDENTIFICATION (WORK TOOL)	
	2	1	**168-8389**	4	TACK-FASTENER	
	3		*208-5245*	5	TIP GP-PENETRATION	
					(EACH INCLUDES)	
		1	**201-1238**	1	PIN	
		1	**201-1239**	1	RETAINER AS	
		1	**208-5235**	1	TIP-PENETRATION	
Y	4	1	*219-3363*	1	BUCKET AS-HOE	804

Y-SEPARATE ILLUSTRATION

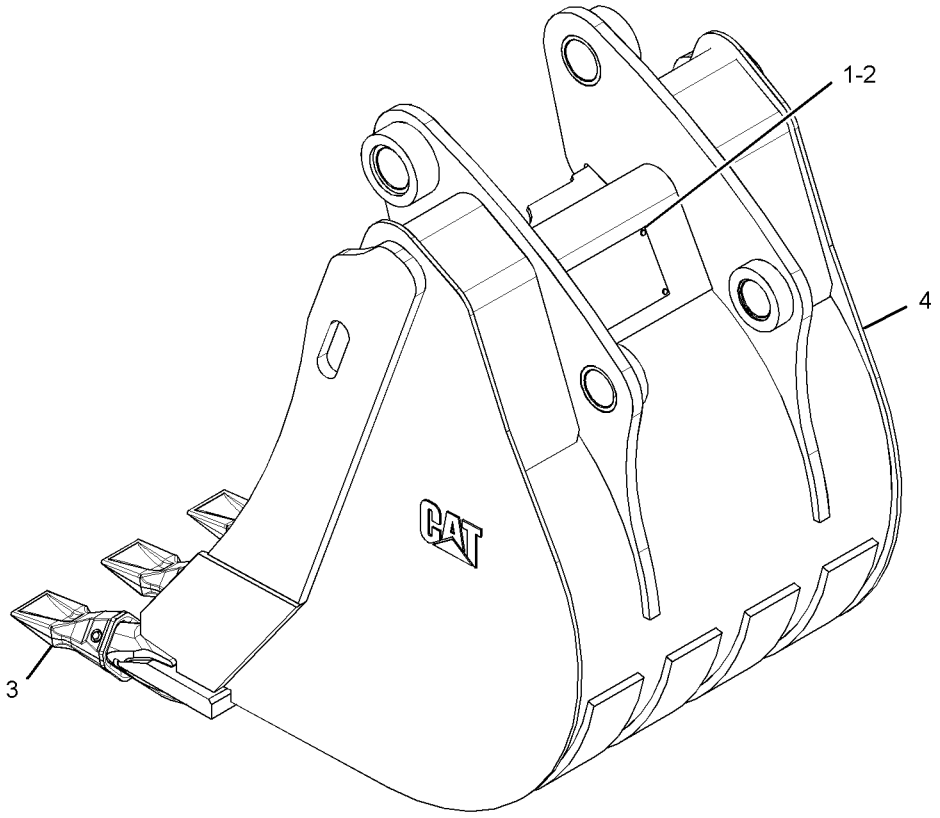

GRAPHIC #1 **<END>** g01336850

WORK TOOLS

219-3388 BUCKET GP-HOE

S/N: CBD1-UP; MFG1-UP
PART OF 356-0067, 356-0068, 356-0069, 374-3517, 374-3518, 374-3519, 374-6532, 374-6533, 374-6534 DISTRIBUTION AR
AN ATTACHMENT

SMCS-6503 **i02651411**

NOTE	REF NO	GRAPHIC REF	PART NUMBER	QTY	PART NAME 1 2 3 4 5 6 (PRODUCT LEVEL)	SEE PAGE
	1	1	**137-4234**	1	PLATE-IDENTIFICATION (WORK TOOL)	
	2	1	**168-8389**	4	TACK-FASTENER	
	3	1	*208-5245*	5	TIP GP-PENETRATION	
					(EACH INCLUDES)	
		1	**201-1238**	1	PIN	
		1	**201-1239**	1	RETAINER AS	
		1	**208-5235**	1	TIP-PENETRATION	
Y	4	1	*219-3364*	1	BUCKET AS-HOE	806

Y-SEPARATE ILLUSTRATION

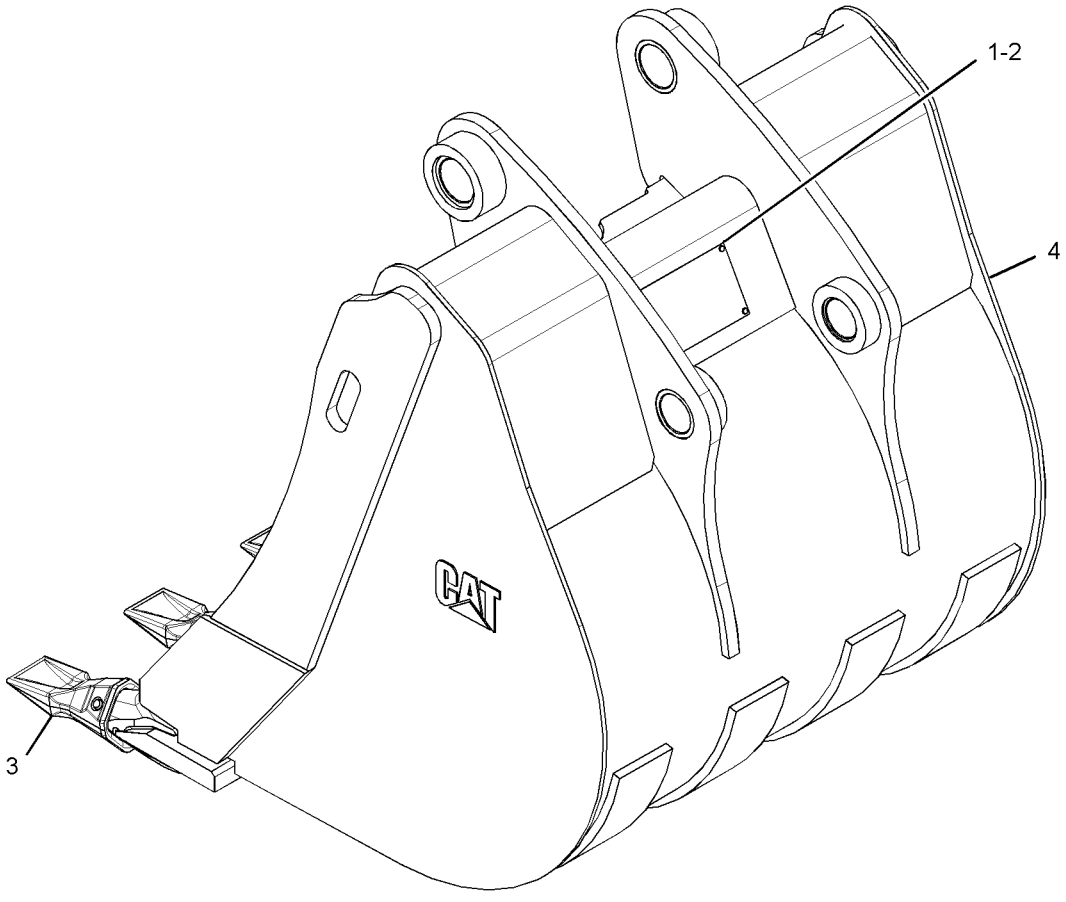

GRAPHIC #1 **<END>** g01337564

WORK TOOLS

219-3389 BUCKET GP-HOE

S/N: CBD1-UP

AN ATTACHMENT

SMCS-6503 **i02655231**

NOTE	REF NO	GRAPHIC REF	PART NUMBER	QTY	PART NAME 1 2 3 4 5 6 (PRODUCT LEVEL)	SEE PAGE
	1	1	**137-4234**	1	PLATE-IDENTIFICATION (WORK TOOL)	
	2	1	**168-8389**	4	TACK-FASTENER	
	3	1	*208-5245*	6	TIP GP-PENETRATION	
					(EACH INCLUDES)	
		1	**201-1238**	1	PIN	
		1	**201-1239**	1	RETAINER AS	
		1	**208-5235**	1	TIP-PENETRATION	
Y	4	1	*219-3365*	1	BUCKET AS-HOE	808

Y-SEPARATE ILLUSTRATION

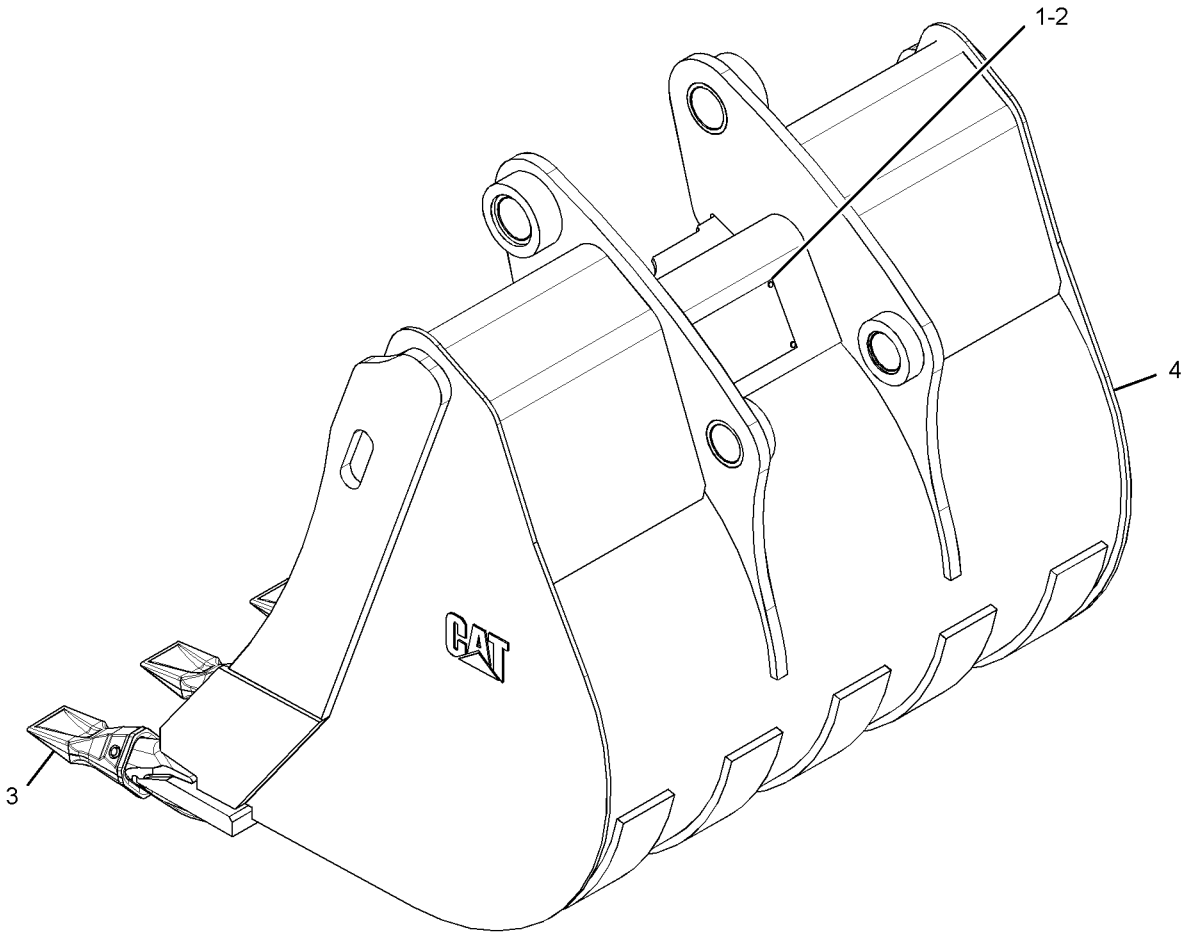

GRAPHIC #1 **<END>** g01341913

WORK TOOLS

219-3390 BUCKET GP-HOE

S/N: CBD1-UP

AN ATTACHMENT

SMCS-6503 **i02651416**

NOTE	REF NO	GRAPHIC REF	PART NUMBER	QTY	PART NAME 1 2 3 4 5 6 (PRODUCT LEVEL)	SEE PAGE
	1	1	**137-4234**	1	PLATE-IDENTIFICATION (WORK TOOL)	
	2	1	**168-8389**	4	TACK-FASTENER	
	3		*208-5245*	4	TIP GP-PENETRATION	
					(EACH INCLUDES)	
		1	**201-1238**	1	PIN	
		1	**201-1239**	1	RETAINER AS	
		1	**208-5235**	1	TIP-PENETRATION	
Y	4	1	*219-3366*	1	BUCKET AS-HOE	810

Y-SEPARATE ILLUSTRATION

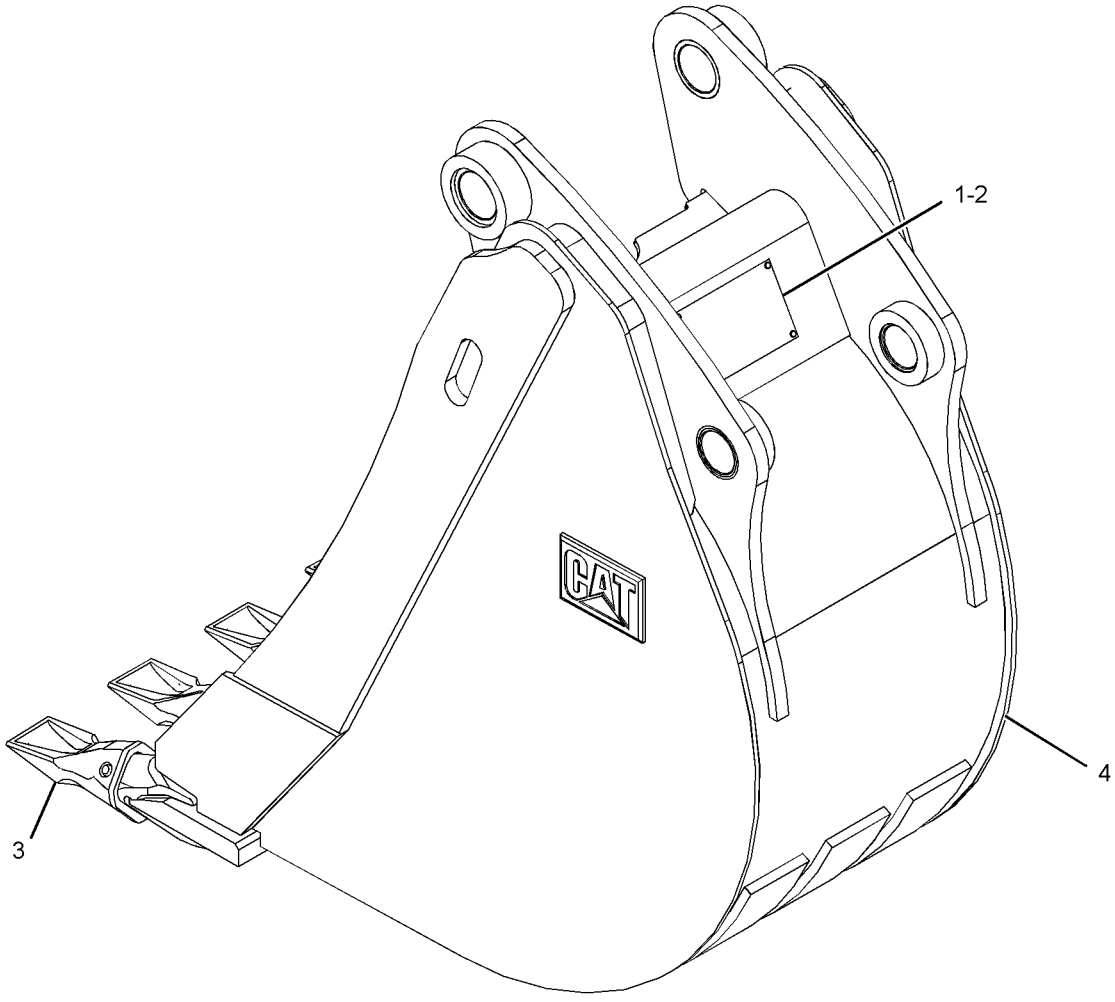

GRAPHIC #1 **<END>** g01337051

WORK TOOLS

219-3391 BUCKET GP-HOE

S/N: CBD1-UP; MFG1-UP

AN ATTACHMENT

SMCS-6503 **i02651579**

NOTE	REF NO	GRAPHIC REF	PART NUMBER	QTY	PART NAME 1 2 3 4 5 6 (PRODUCT LEVEL)	SEE PAGE
	1	1	**137-4234**	1	PLATE-IDENTIFICATION (WORK TOOL)	
	2	1	**168-8389**	4	TACK-FASTENER	
	3	1	*208-5245*	5	TIP GP-PENETRATION	
					(EACH INCLUDES)	
		1	**201-1238**	1	PIN	
		1	**201-1239**	1	RETAINER AS	
		1	**208-5235**	1	TIP-PENETRATION	
Y	4	1	*219-3367*	1	BUCKET AS-HOE	812

Y-SEPARATE ILLUSTRATION

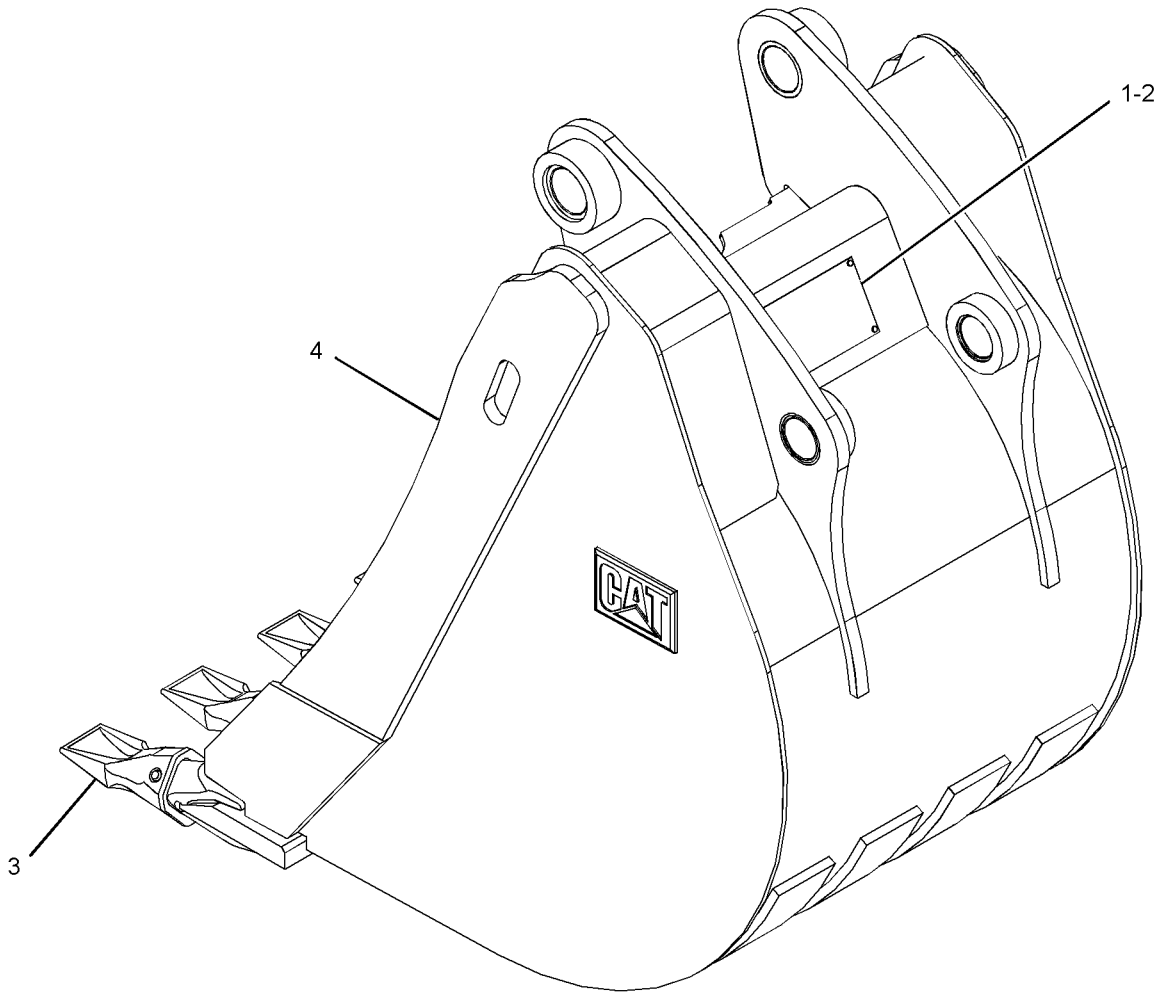

GRAPHIC #1 **<END>** g01341952

WORK TOOLS

219-3392 BUCKET GP-HOE

S/N: CBD1-UP; MFG1-UP
AN ATTACHMENT

SMCS-6503 **i02651582**

NOTE	REF NO	GRAPHIC REF	PART NUMBER	QTY	PART NAME 1 2 3 4 5 6 (PRODUCT LEVEL)	SEE PAGE
	1	1	**137-4234**	1	PLATE-IDENTIFICATION (WORK TOOL)	
	2	1	**168-8389**	4	TACK-FASTENER	
	3	1	*208-5245*	5	TIP GP-PENETRATION	
					(EACH INCLUDES)	
		1	**201-1238**	1	PIN	
		1	**201-1239**	1	RETAINER AS	
		1	**208-5235**	1	TIP-PENETRATION	
Y	4	1	*219-3368*	1	BUCKET AS-HOE	814

Y-SEPARATE ILLUSTRATION

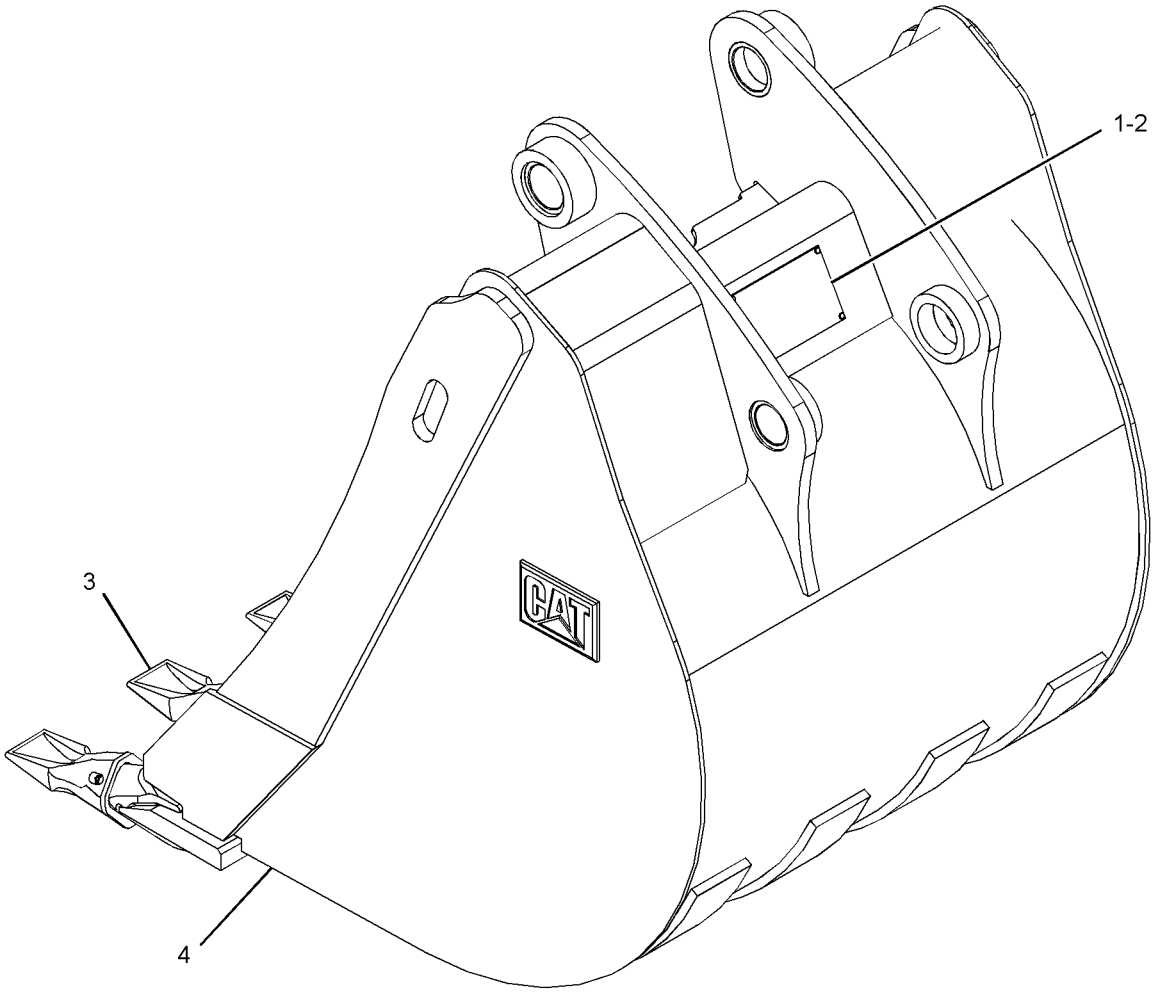

GRAPHIC #1 **<END>** g01341920

WORK TOOLS

219-3393 BUCKET GP-HOE

S/N: CBD1-UP

AN ATTACHMENT

SMCS-6503 **i02651586**

NOTE	REF NO	GRAPHIC REF	PART NUMBER	QTY	PART NAME 1 2 3 4 5 6 (PRODUCT LEVEL)	SEE PAGE
	1	1	**137-4234**	1	PLATE-IDENTIFICATION (WORK TOOL)	
	2	1	**168-8389**	4	TACK-FASTENER	
	3		*208-5245*	6	TIP GP-PENETRATION	
					(EACH INCLUDES)	
		1	**201-1238**	1	PIN	
		1	**201-1239**	1	RETAINER AS	
		1	**208-5235**	1	TIP-PENETRATION	
Y	4	1	*219-3369*	1	BUCKET AS-HOE	816

Y-SEPARATE ILLUSTRATION

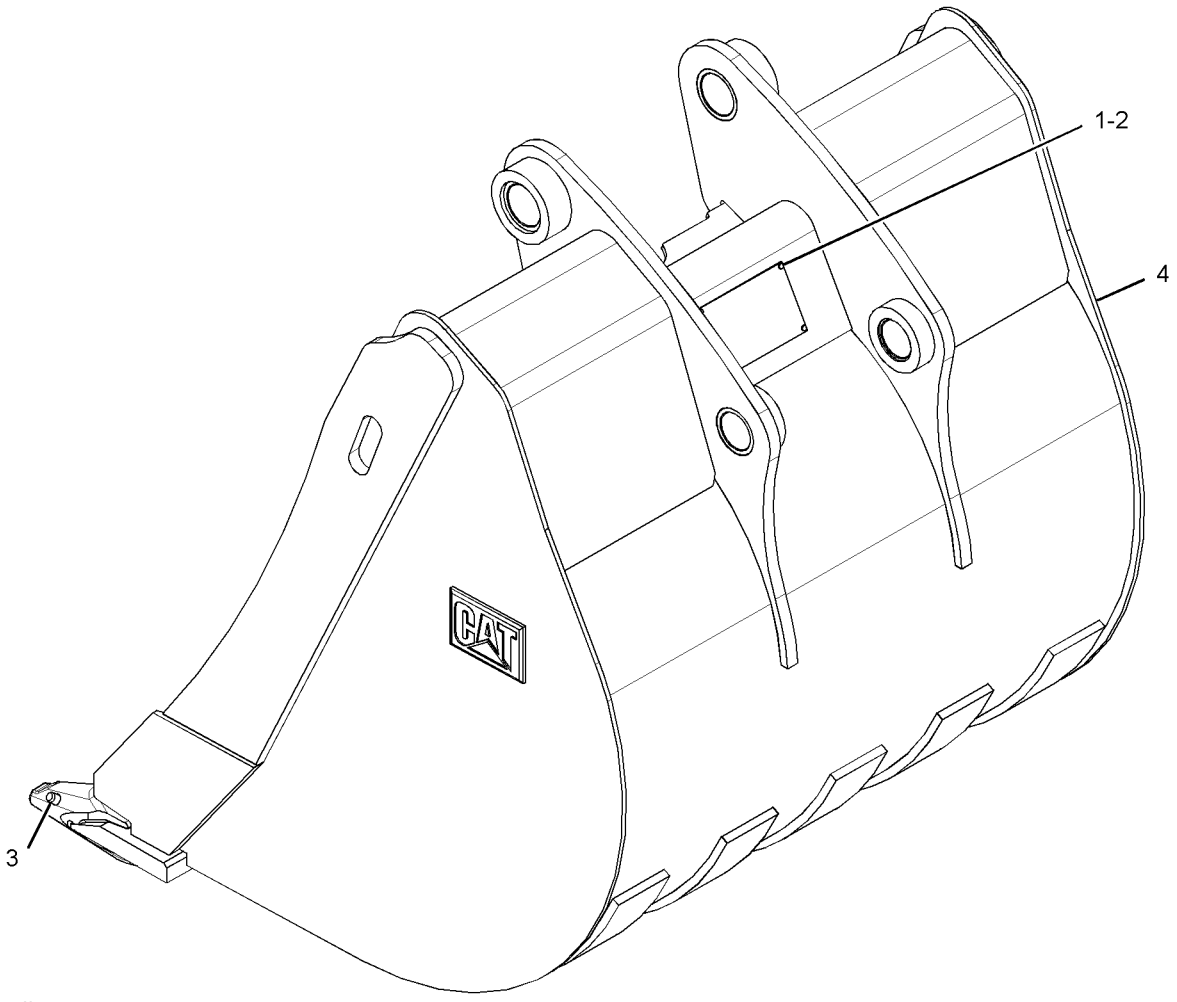

GRAPHIC #1 **<END>** g01336804

WORK TOOLS

219-3394 BUCKET GP-HOE

S/N: CBD1-UP; MFG1-UP
PART OF 219-3412 BUCKET GP-HOE
AN ATTACHMENT

SMCS-6503 **i02659875**

NOTE	REF NO	GRAPHIC REF	PART NUMBER	QTY	PART NAME 1 2 3 4 5 6 (PRODUCT LEVEL)	SEE PAGE
	1	1	**137-4234**	1	PLATE-IDENTIFICATION (WORK TOOL)	
	2	1	**168-8389**	4	TACK-FASTENER	
	3	1	*208-5245*	3	TIP GP-PENETRATION	
					(EACH INCLUDES)	
		1	**201-1238**	1	PIN	
		1	**201-1239**	1	RETAINER AS	
		1	**208-5235**	1	TIP-PENETRATION	
Y	4	1	*219-3370*	1	BUCKET AS-HOE (ROCK)	818

Y-SEPARATE ILLUSTRATION

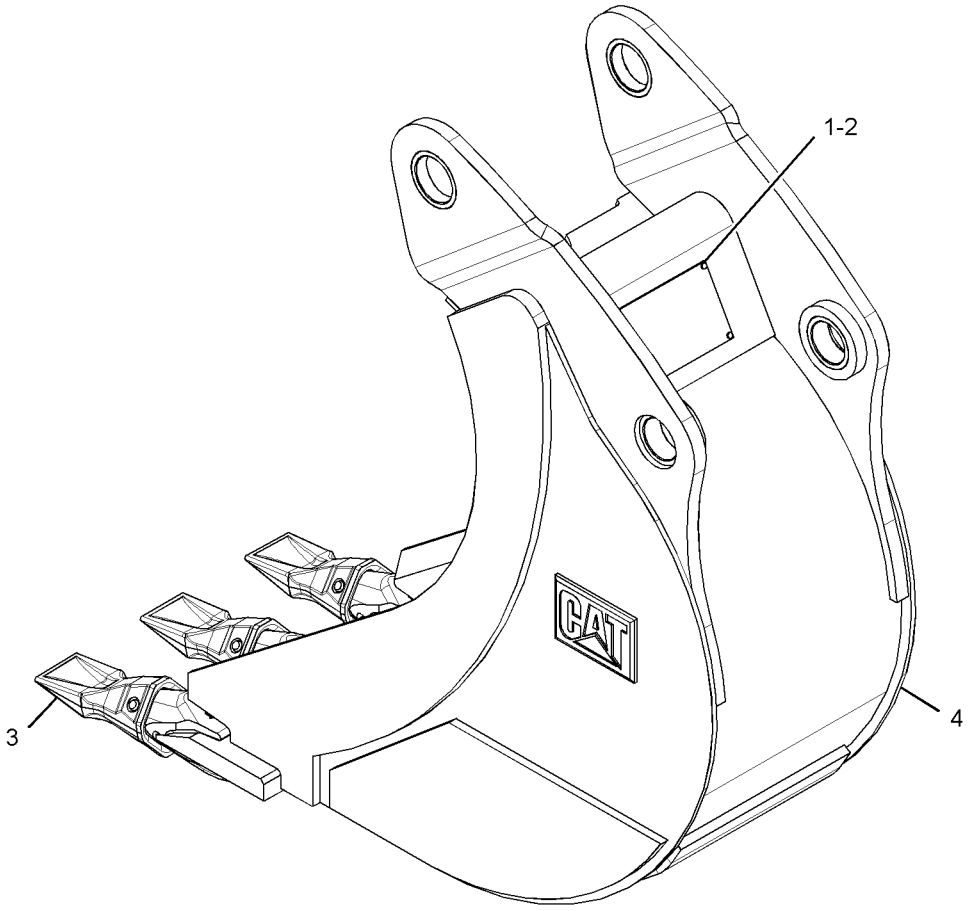

GRAPHIC #1 **<END>** g01342095

219-3395 BUCKET GP-HOE–ROCK

S/N: CBD1-UP; MFG1-UP
458-MM (18-IN)
AN ATTACHMENT

SMCS-6503 **i03008676**

NOTE	REF NO	GRAPHIC REF	PART NUMBER	QTY	PART NAME 1 2 3 4 5 6 (PRODUCT LEVEL)	SEE PAGE
	1	1	*208-5245*	4	TIP GP-PENETRATION	
					(EACH INCLUDES)	
	1A	1	**201-1238**	1	PIN	
	1B	1	**201-1239**	1	RETAINER AS	
	1C	1	**208-5235**	1	TIP-PENETRATION	
Y	2	1	*219-3371*	1	BUCKET AS-HOE (ROCK)	819

Y-SEPARATE ILLUSTRATION

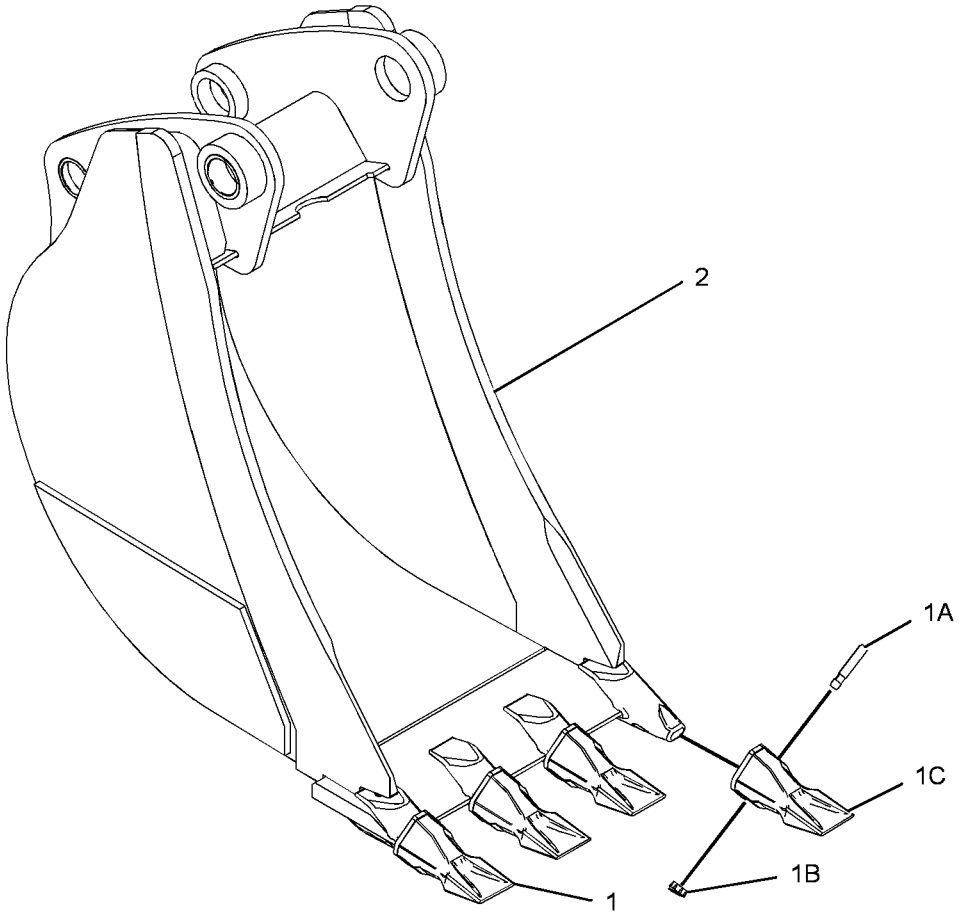

GRAPHIC #1 **<END>** g01524038

WORK TOOLS

219-3396 BUCKET GP-HOE–ROCK

S/N: CBD1-UP; MFG1-UP
610-MM (24-IN)
AN ATTACHMENT

SMCS-6503 **i03008675**

NOTE	REF NO	GRAPHIC REF	PART NUMBER	QTY	PART NAME 1 2 3 4 5 6 (PRODUCT LEVEL)	SEE PAGE
	1	1	*208-5245*	5	TIP GP-PENETRATION	
					(EACH INCLUDES)	
	1A	1	**201-1238**	1	PIN	
	1B	1	**201-1239**	1	RETAINER AS	
	1C	1	**208-5235**	1	TIP-PENETRATION	
Y	2	1	*219-3372*	1	BUCKET AS-HOE (ROCK)	821

Y-SEPARATE ILLUSTRATION

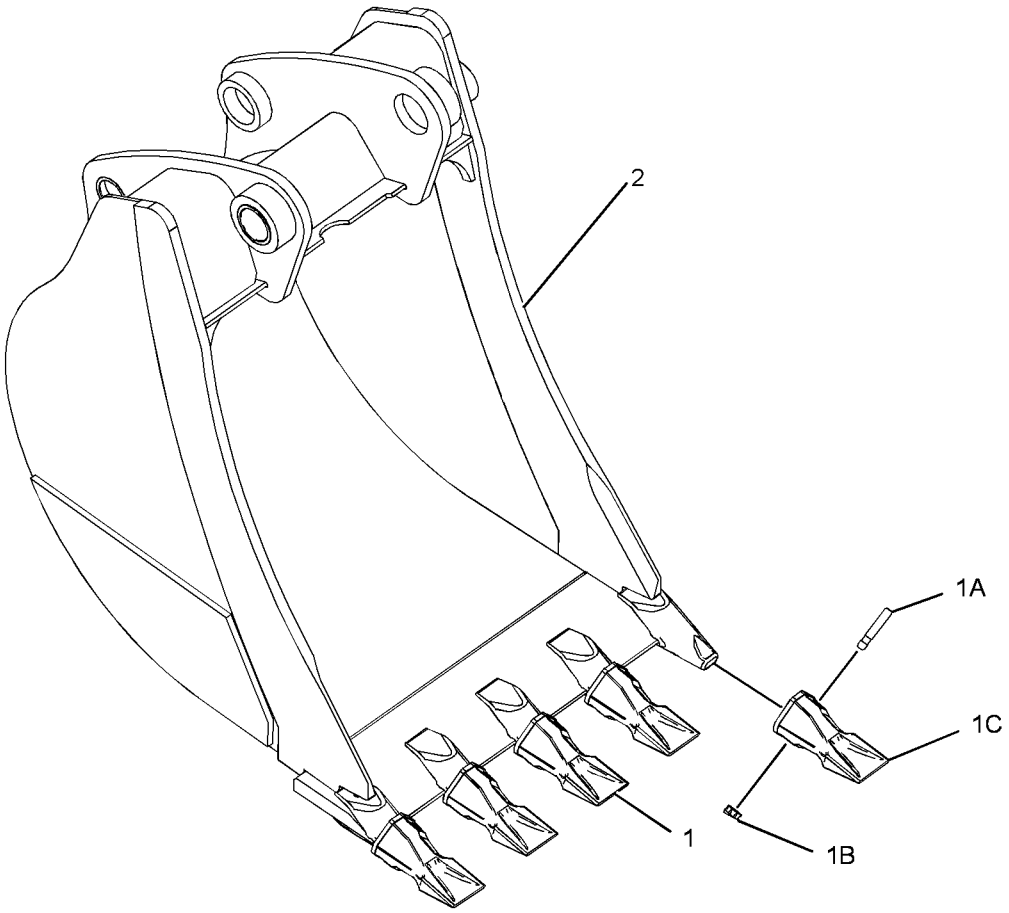

GRAPHIC #1 **<END>** g01524042

219-3397 BUCKET GP-HOE–ROCK

S/N: CBD1-UP; MFG1-UP
762-MM (30-IN)
AN ATTACHMENT

SMCS-6503 **i03008666**

NOTE	REF NO	GRAPHIC REF	PART NUMBER	QTY	PART NAME 1 2 3 4 5 6 (PRODUCT LEVEL)	SEE PAGE
	1	1	*208-5245*	5	TIP GP-PENETRATION	
					(EACH INCLUDES)	
	1A	1	**201-1238**	1	PIN	
	1B	1	**201-1239**	1	RETAINER AS	
	1C	1	**208-5235**	1	TIP-PENETRATION	
Y	2		*219-3373*	1	BUCKET AS-HOE (ROCK)	823

Y-SEPARATE ILLUSTRATION

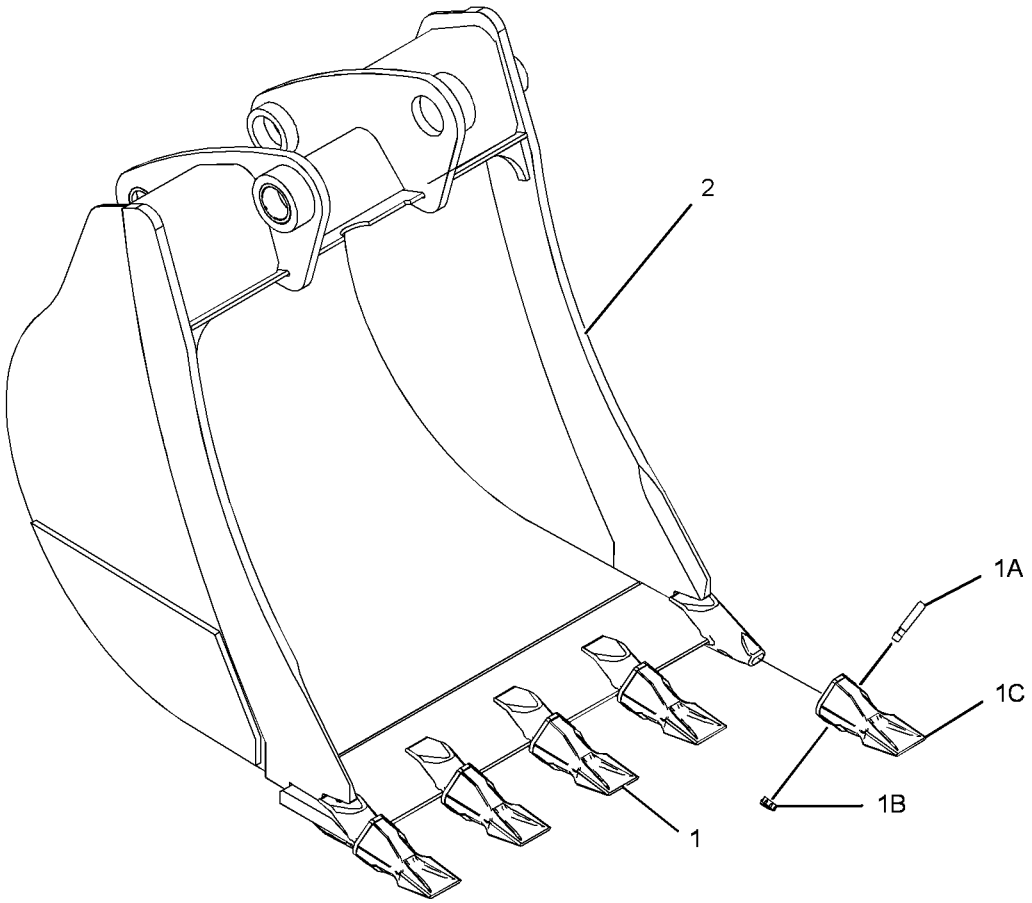

GRAPHIC #1 **<END>** g01524018

WORK TOOLS

219-3398 BUCKET GP-HOE

S/N: CBD1-UP

AN ATTACHMENT

SMCS-6503 **i02660342**

NOTE	REF NO	GRAPHIC REF	PART NUMBER	QTY	PART NAME 1 2 3 4 5 6 (PRODUCT LEVEL)	SEE PAGE
	1	1	**137-4234**	1	PLATE-IDENTIFICATION (WORK TOOL)	
	2	1	**168-8389**	4	TACK-FASTENER	
	3	1	*208-5245*	6	TIP GP-PENETRATION	
					(EACH INCLUDES)	
		1	**201-1238**	1	PIN	
		1	**201-1239**	1	RETAINER AS	
		1	**208-5235**	1	TIP-PENETRATION	
Y	4	1	*219-3374*	1	BUCKET AS-HOE (ROCK)	825

Y-SEPARATE ILLUSTRATION

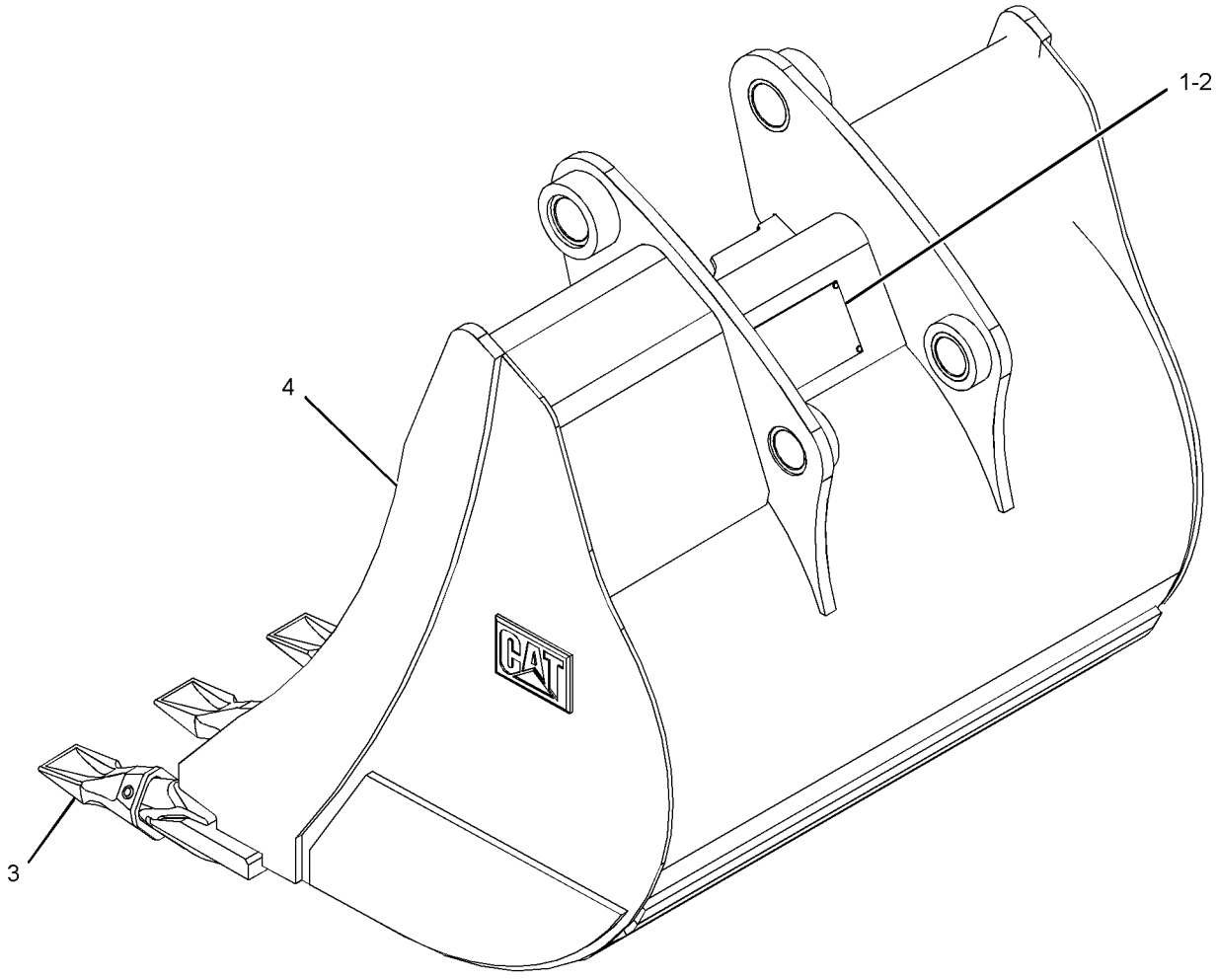

GRAPHIC #1 **<END>** g01342103

WORK TOOLS

219-3410 BUCKET GP-HOE

S/N: CBD1-UP; MFG1-UP
305-MM (12-IN)
AN ATTACHMENT

SMCS-6503 **i01938761**

NOTE	REF NO	GRAPHIC REF	PART NUMBER	QTY	PART NAME 1 2 3 4 5 6 (PRODUCT LEVEL)	SEE PAGE
	1	1	**6V-3213**	2	RING-RETAINING	
	2	1	**6V-4364**	2	RING-RETAINING	
	3	1	**9R-0158**	5	WASHER (46X69X3-MM THK)	
	4	1	**9R-1510**	3	WASHER (51X82X4-MM THK)	
	5	1	**168-0443**	1	PIN	
	6	1	**168-0444**	1	PIN	
Y	7	1	**219-3379**	1	BUCKET GP-HOE	832

Y-SEPARATE ILLUSTRATION

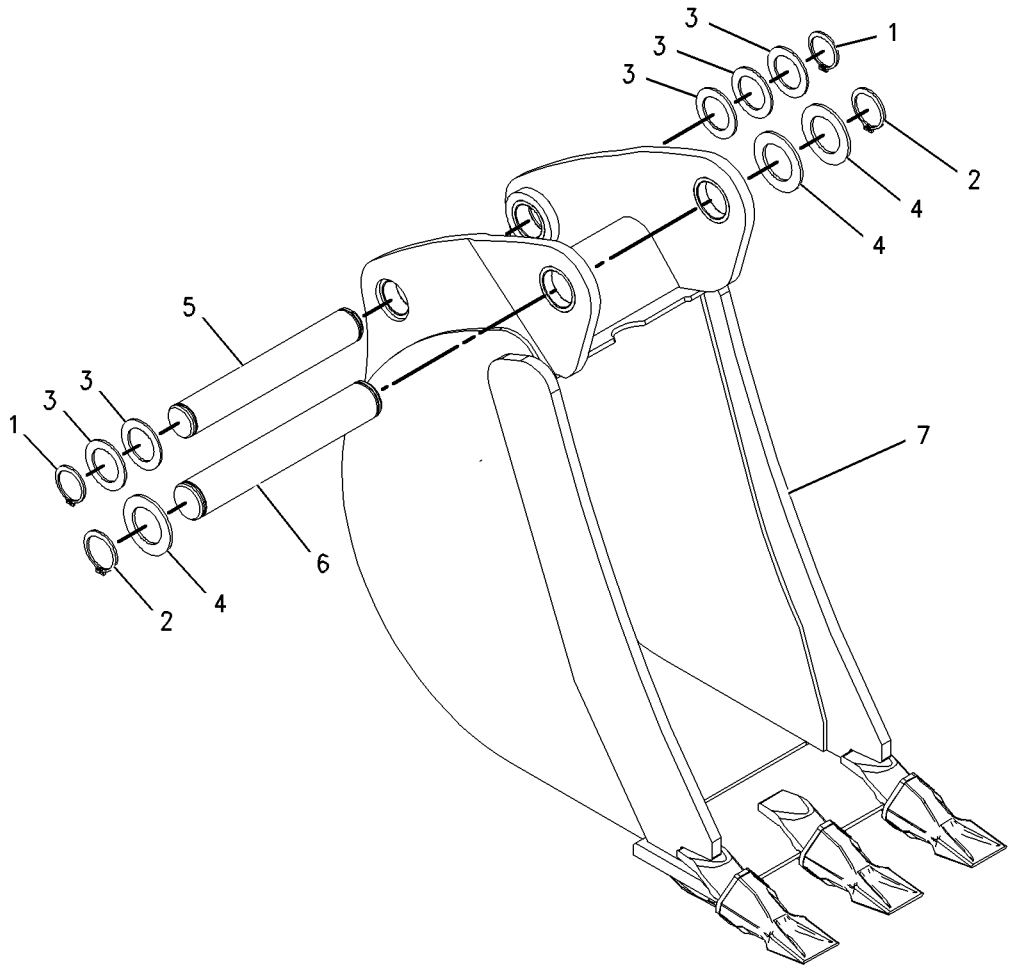

GRAPHIC #1 **<END>** g01001892

WORK TOOLS

219-3411 BUCKET GP-HOE—HEAVY-DUTY

S/N: CBD1-UP; MFG1-UP
305-MM (12-IN)
AN ATTACHMENT

SMCS-6503 **i01938759**

NOTE	REF NO	GRAPHIC REF	PART NUMBER	QTY	PART NAME 1 2 3 4 5 6 (PRODUCT LEVEL)	SEE PAGE
	1	1	**6V-3213**	2	RING-RETAINING	
	2	1	**6V-4364**	2	RING-RETAINING	
	3	1	**9R-0158**	5	WASHER (46X69X3-MM THK)	
	4	1	**9R-1510**	3	WASHER (51X82X4-MM THK)	
	5	1	**168-0443**	1	PIN	
	6	1	**168-0444**	1	PIN	
Y	7	1	**219-3384**	1	BUCKET GP-HOE (HEAVY-DUTY)	837

Y-SEPARATE ILLUSTRATION

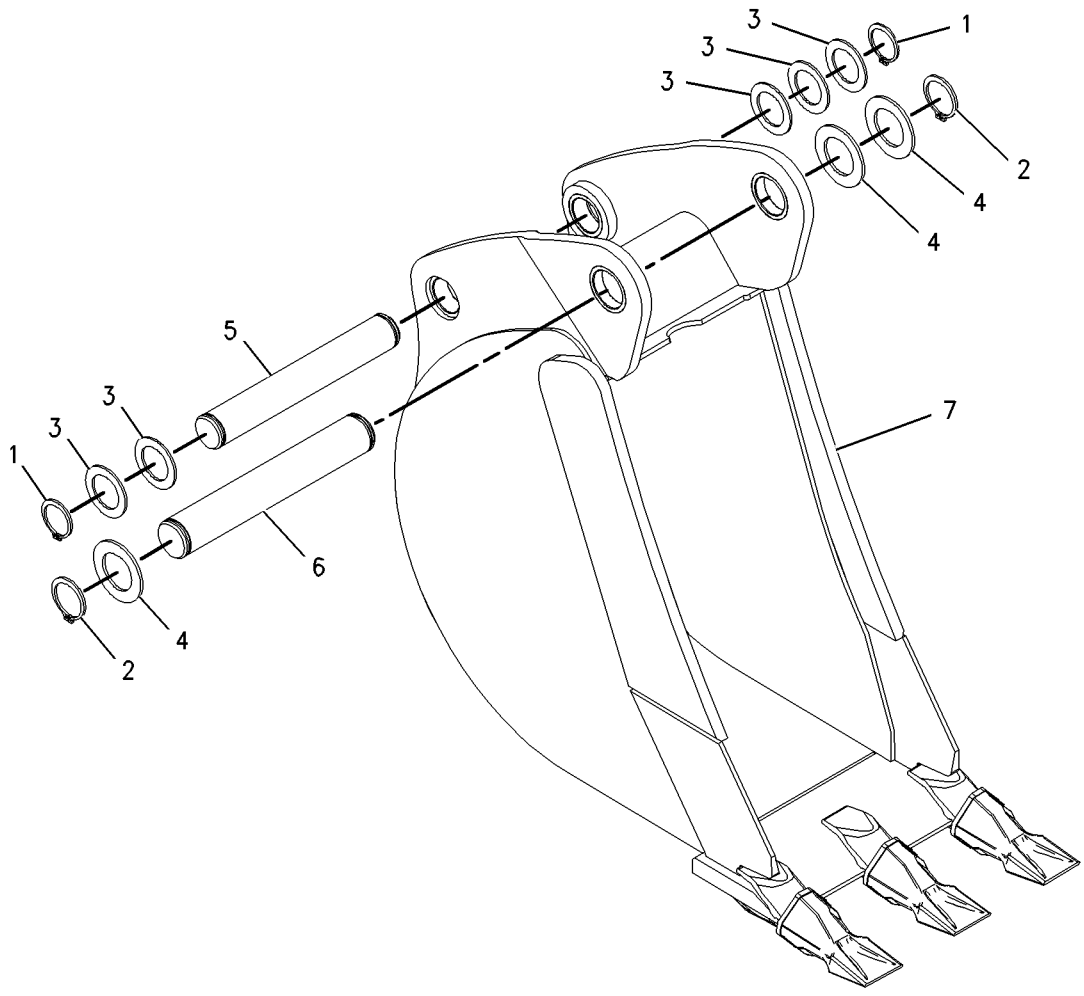

GRAPHIC #1 **<END>** g01001906

WORK TOOLS

219-3412 BUCKET GP-HOE—ROCK

S/N: CBD1-UP; MFG1-UP
305-MM (12-IN)
AN ATTACHMENT

SMCS-6503 **i01938756**

NOTE	REF NO	GRAPHIC REF	PART NUMBER	QTY	PART NAME 1 2 3 4 5 6 (PRODUCT LEVEL)	SEE PAGE
	1	1	**6V-3213**	2	RING-RETAINING	
	2	1	**6V-4364**	2	RING-RETAINING	
	3	1	**9R-0158**	4	WASHER (46X69X3-MM THK)	
	4	1	**9R-1510**	3	WASHER (51X82X4-MM THK)	
	5	1	**168-0443**	1	PIN	
	6	1	**168-0444**	1	PIN	
Y	7	1	**219-3394**	1	BUCKET GP-HOE (ROCK)	847

Y-SEPARATE ILLUSTRATION

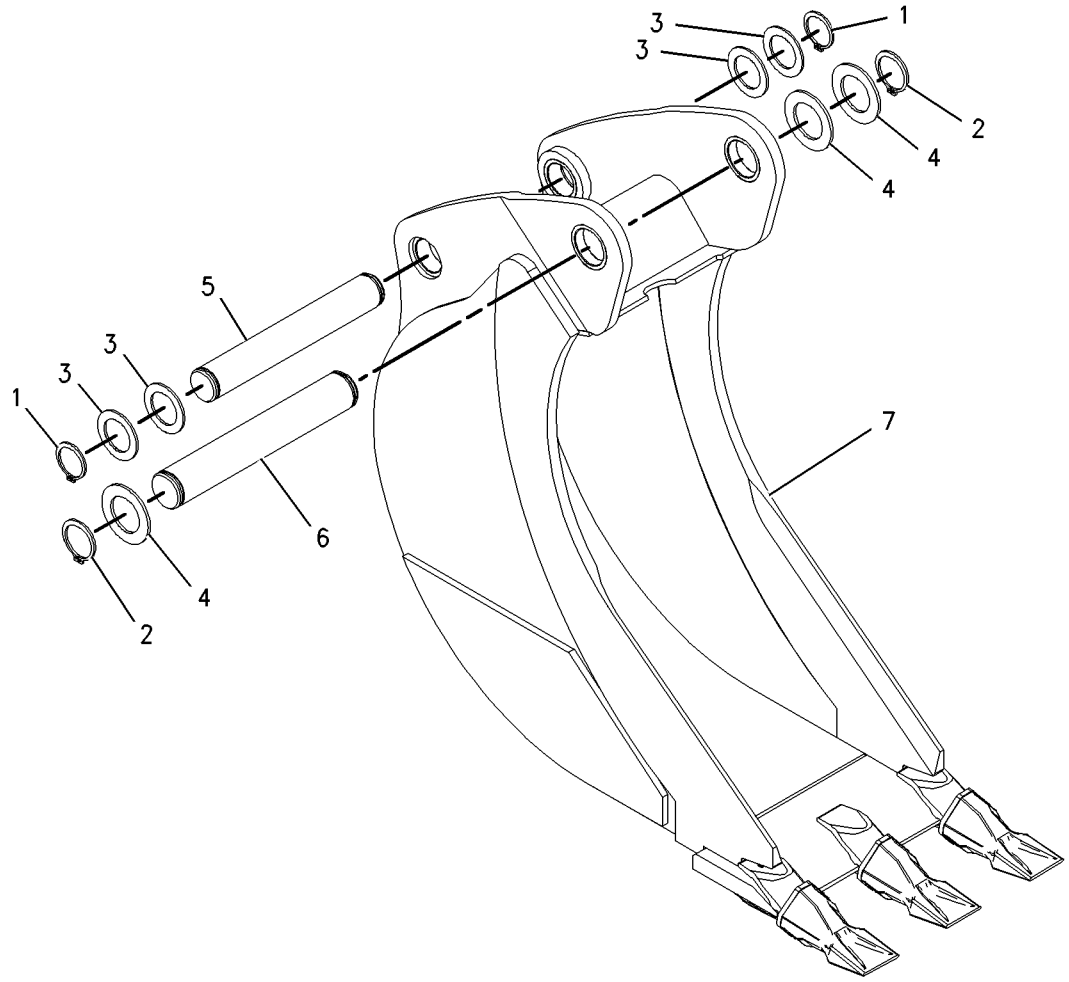

GRAPHIC #1 **<END>** g01001913

108-3036 BUCKET GP-MULTIPURPOSE

S/N: CBD1-UP
0.95 CU M(1.25 CU YD)
PART OF 112-0938 BUCKET AR-MULTIPURPOSE
AN ATTACHMENT

SMCS-6104 **i03769049**

NOTE	REF NO	GRAPHIC REF	PART NUMBER	QTY	PART NAME 1 2 3 4 5 6 (PRODUCT LEVEL)	SEE PAGE
Y	1	1	**108-3037**	1	BULLDOZER AS	865
Y	2	1	**126-4224**	1	CLAM AS-MULTIPURPOSE BUCKET	869
	3	1	**9R-4676**	2	PIN	
	4	1	**4J-1888**	2	PIN-COTTER	
	5	1	**3B-8489**	2	FITTING-GREASE	

Y-SEPARATE ILLUSTRATION

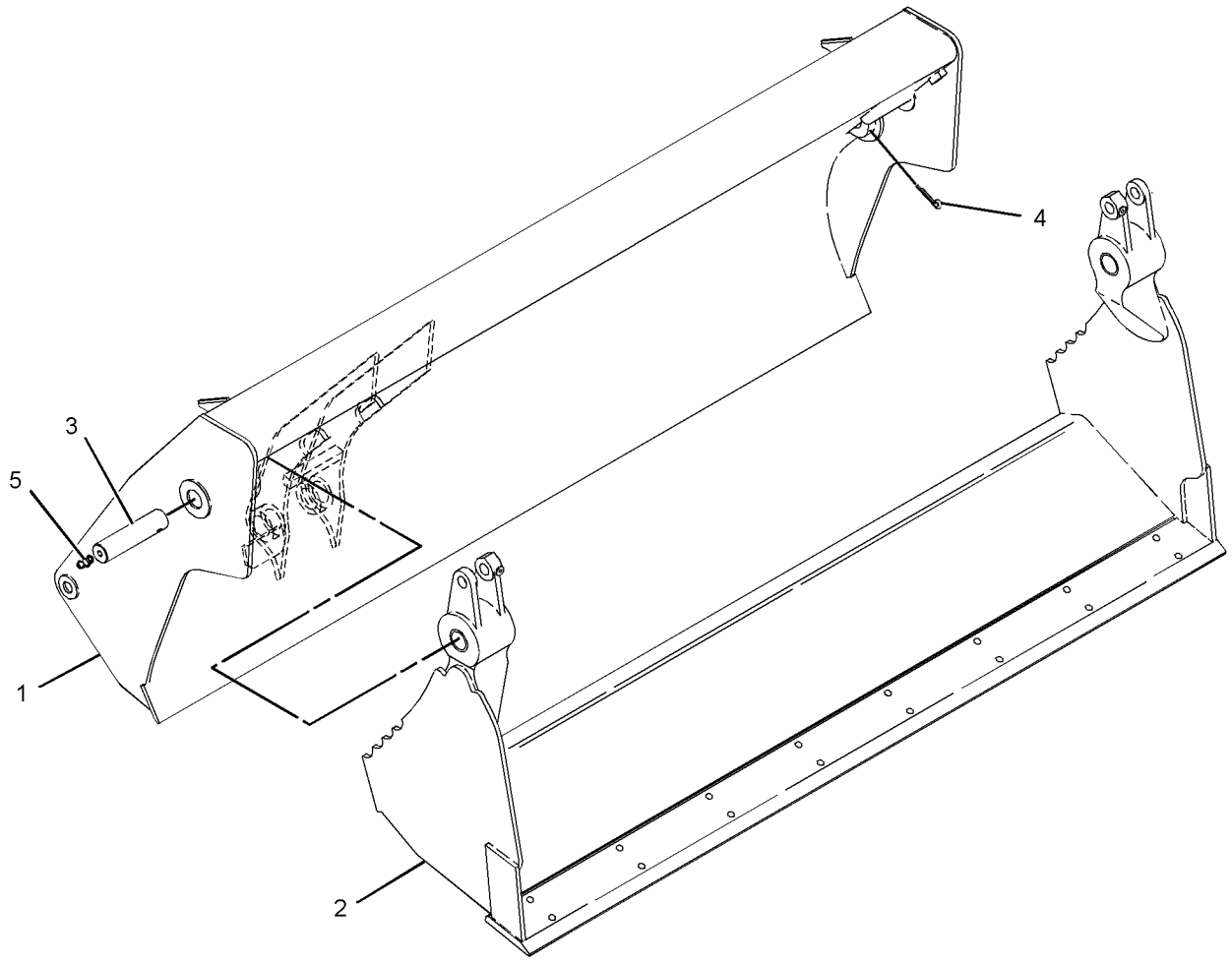

GRAPHIC #1 **<END>** g02006395

WORK TOOLS

112-1778 BUCKET GP-MULTIPURPOSE

S/N: CBD1-UP
0.95 CU M(1.25 CU YD)
PART OF 112-0939 BUCKET AR-MULTIPURPOSE
AN ATTACHMENT

SMCS-6104 **i01518488**

NOTE	REF NO	GRAPHIC REF	PART NUMBER	QTY	PART NAME 1 2 3 4 5 6 (PRODUCT LEVEL)	SEE PAGE
	1	1	**112-1777**	1	BULLDOZER AS	
	2	1	**104-6314**	2	BRACKET	
	3	1	**104-6313**	1	BRACKET AS	
	4	1	**106-9388**	2	BRACKET	
	5	1	**110-2861**	4	BRACKET	
	7	1	**9R-0111**	2	BUSHING	
	8	1	**9R-4670**	1	EDGE	
FM		1	**9R-5271**	2	BOSS (M10X1.5X25-MM)	
	9	1	**112-1775**	2	PLATE AS	
	10	1	**126-4224**	1	CLAM AS-MULTIPURPOSE BUCKET	
	11	1	**9R-4672**	1	EDGE	
	12	1	**125-7116**	1	EDGE	
	13	1	**9R-4675**	2	BUSHING-TERMINAL	
	14	1	**9R-5294**	2	HINGE	
	15	1	**3B-8489**	2	FITTING-GREASE	
	16	1	**4J-1888**	2	PIN-COTTER	
	17	1	**9R-4676**	2	PIN	

F-NOT SHOWN
M-METRIC PART

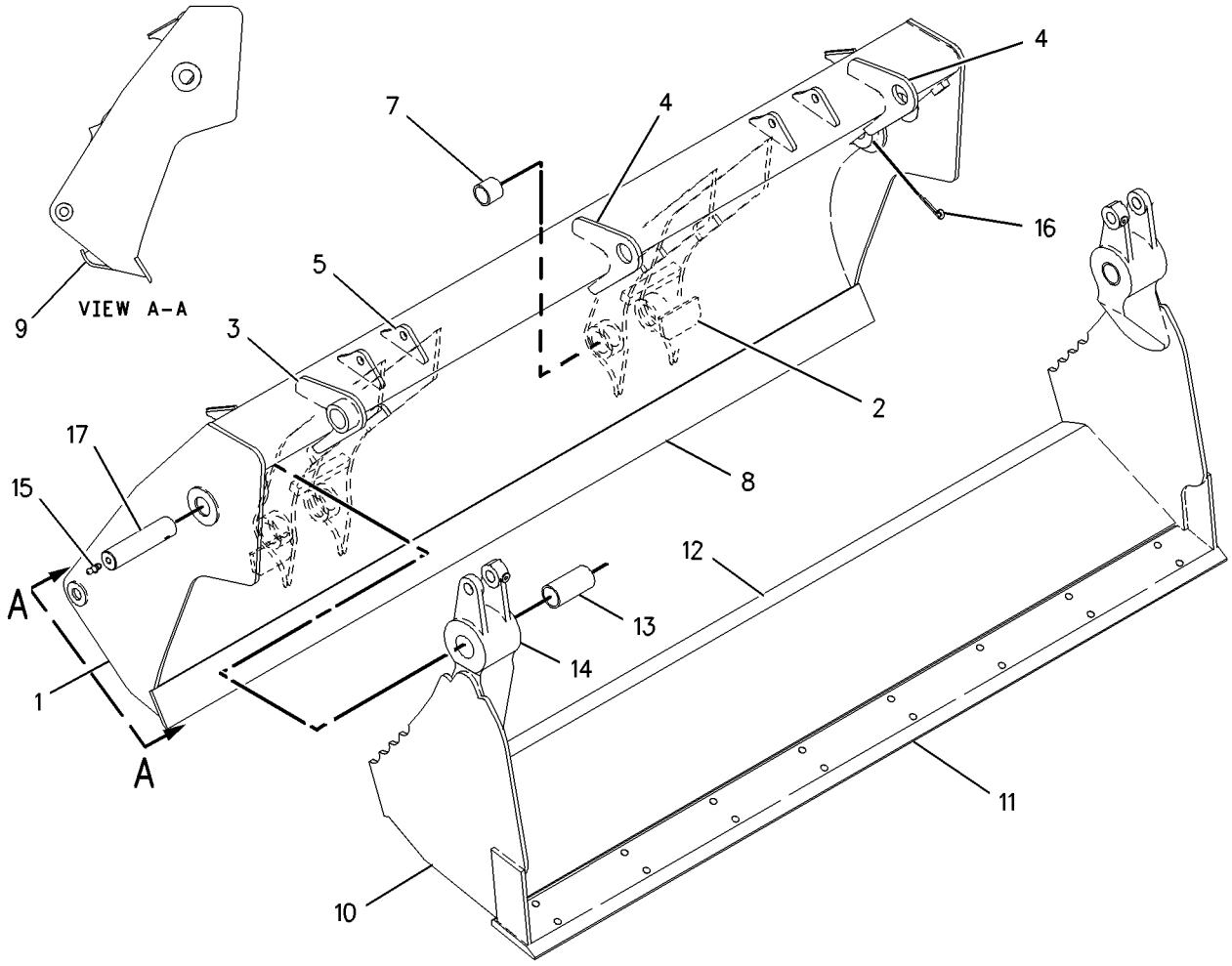

GRAPHIC #1 **<END>** g00788040

WORK TOOLS

216-8800 BUCKET GP-MULTIPURPOSE

S/N: CBD1-UP
1.0-CU M (I.3-CU YD)
AN ATTACHMENT

SMCS-6104 **i02520167**

NOTE	REF NO	GRAPHIC REF	PART NUMBER	QTY	PART NAME 1 2 3 4 5 6 (PRODUCT LEVEL)	SEE PAGE
	1	1	**9R-4676**	2	PIN	
	2	1	**9R-4677**	2	PIN	
	3	1	**9R-4678**	2	PIN	
	4	1	**095-0865**	4	PIN-COTTER	
	5	1	**096-1820**	2	PIN-COTTER	
	6	1	**137-4234**	1	PLATE-IDENTIFICATION (WORK TOOL)	
	7	1	**168-8389**	4	TACK-FASTENER	
Y	8	1	**216-8811**	1	BULLDOZER AS	868
Y	9	1	**216-8803**	1	CLAM AS-MULTIPURPOSE BUCKET	870
Y	10	1	**226-5540**	2	CYLINDER GP-MULTIPURPOSE BUKT	546
	11	1	**233-3757**	1	EDGE	
Y	12	1	*251-5854*	1	LINES GP-MULTIPURPOSE BUCKET	640
	13	1	**3B-8489**	2	FITTING-GREASE	
	14	1	**3F-5108**	8	BOLT-PLOW (5/8-11X2.25-IN)	
	15	1	**4K-0367**	8	NUT-FULL (5/8-11-THD)	
	16	1	**8T-4122**	8	WASHER-HARD (17X32X3.5-MM THK)	

Y-SEPARATE ILLUSTRATION

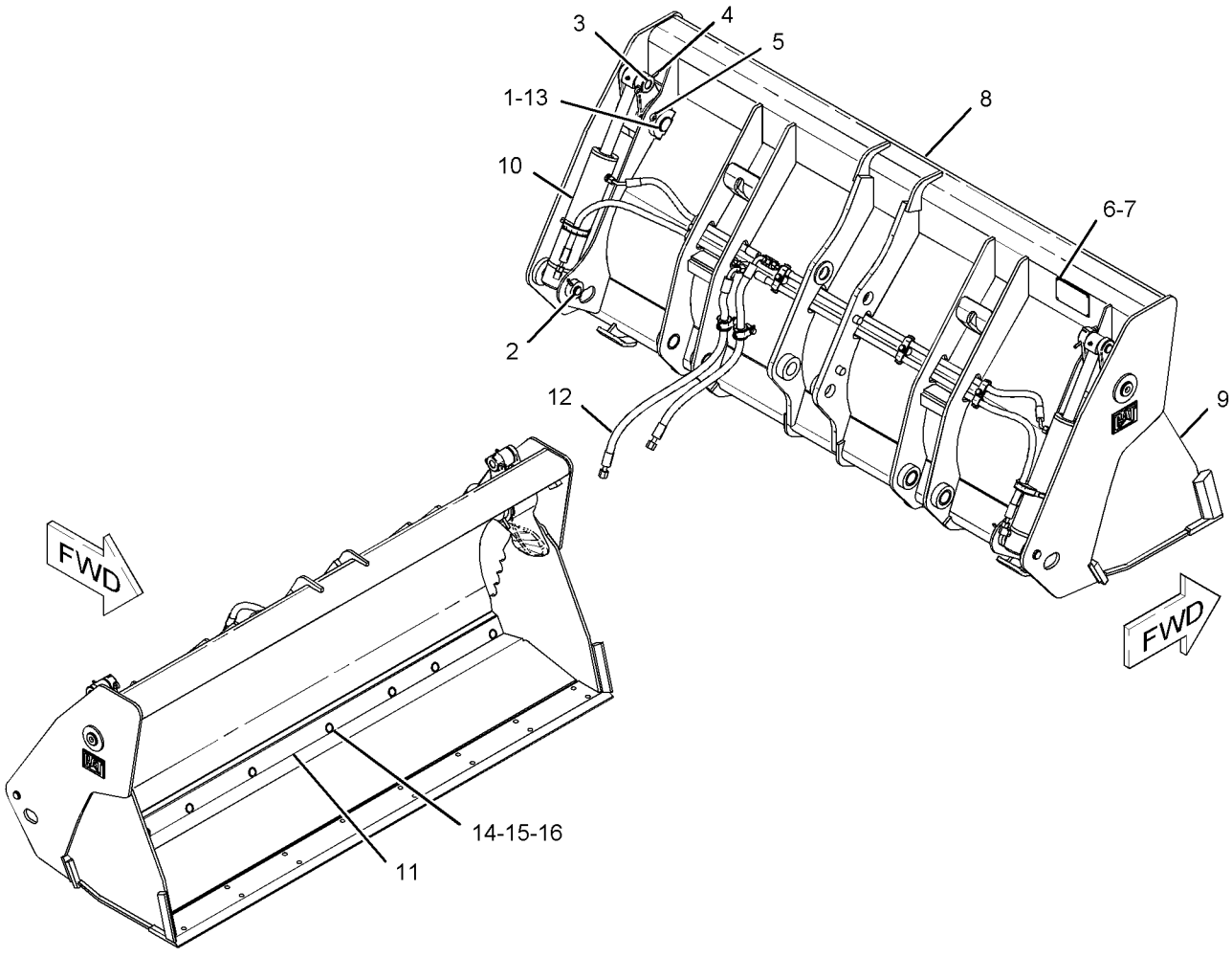

GRAPHIC #1 **<END>** g01131814

WORK TOOLS

216-8800 BUCKET GP-MULTIPURPOSE

S/N: CBD1-UP; MFG1-UP
1.0-CU M (I.3-CU YD)
AN ATTACHMENT

SMCS-6104 **i03929964**

NOTE	REF NO	GRAPHIC REF	PART NUMBER	QTY	PART NAME 1 2 3 4 5 6 (PRODUCT LEVEL)	SEE PAGE
	1	1	**9R-4676**	2	PIN	
	2	1	**9R-4677**	2	PIN	
	3	1	**9R-4678**	2	PIN	
	4	1	**095-0865**	4	PIN-COTTER	
	5	1	**096-1820**	2	PIN-COTTER	
	6	1	**137-4234**	1	PLATE-IDENTIFICATION (WORK TOOL)	
	7	1	**168-8389**	4	TACK-FASTENER	
Y	8	1	*216-8802*	1	BULLDOZER AS	867
Y	9	1	**216-8803**	1	CLAM AS-MULTIPURPOSE BUCKET	870
Y	10	1	**226-5540**	2	CYLINDER GP-MULTIPURPOSE BUKT	546
	11	1	**233-3757**	1	EDGE	
CY	12	1	*337-7467*	1	LINES GP-MULTIPURPOSE BUCKET	646
	13	1	**3B-8489**	2	FITTING-GREASE	
	14	1	**3F-5108**	8	BOLT-PLOW (5/8-11X2.25-IN)	
	15	1	**4K-0367**	8	NUT-FULL (5/8-11-THD)	
	16	1	**8T-4122**	8	WASHER-HARD (17X32X3.5-MM THK)	

C-CHANGE FROM PREVIOUS TYPE
Y-SEPARATE ILLUSTRATION

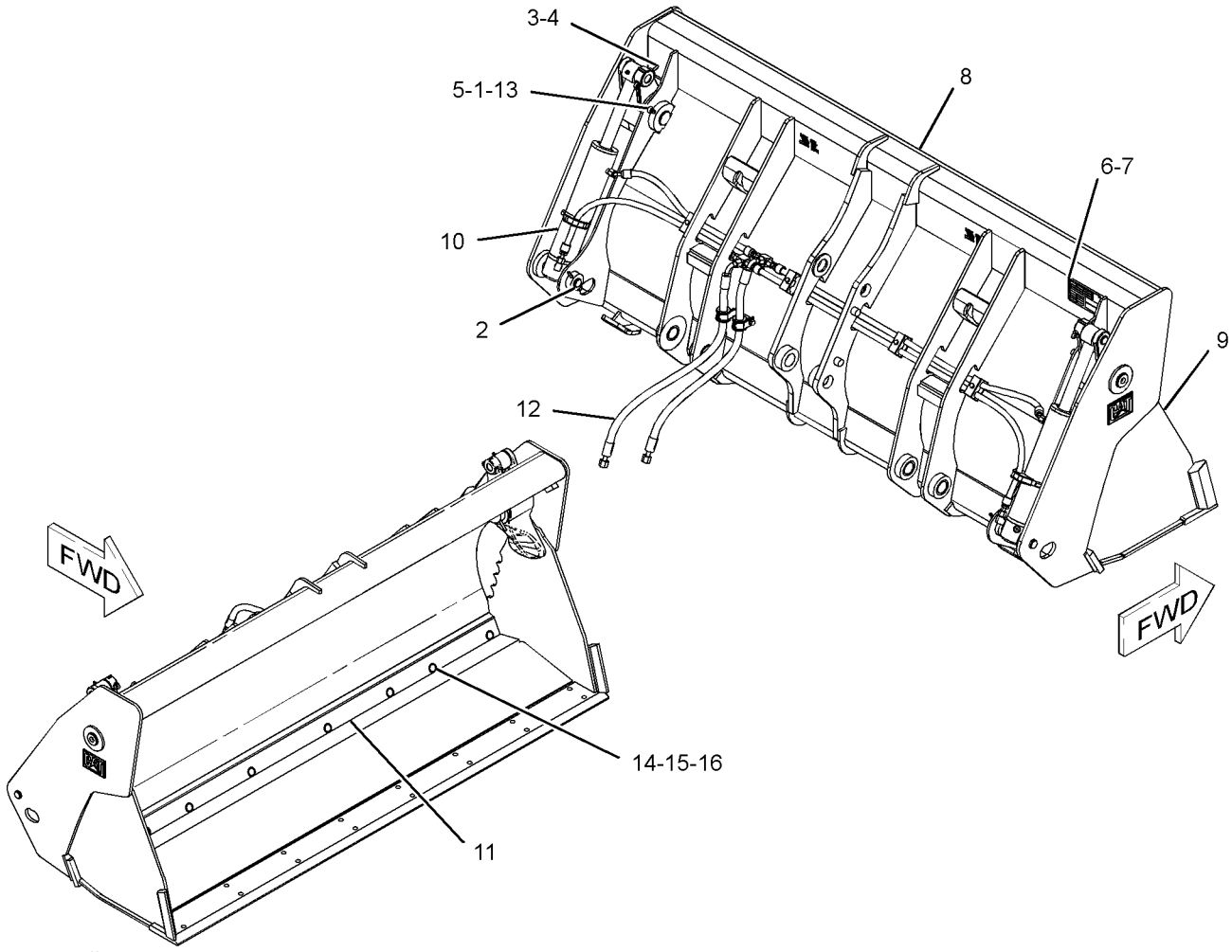

GRAPHIC #1 **<END>** g02173858

WORK TOOLS

216-8801 BUCKET GP-MULTIPURPOSE

S/N: CBD1-UP; MFG1-UP
1.0-CU M (1.31-CU YD) CAPACITY
PART OF 232-2685 BUCKET AR-MULTIPURPOSE
AN ATTACHMENT

SMCS-6104 **i02520041**

NOTE	REF NO	GRAPHIC REF	PART NUMBER	QTY	PART NAME 1 2 3 4 5 6 (PRODUCT LEVEL)	SEE PAGE
	1	1	**9R-4676**	2	PIN	
	2	1	**137-4234**	1	PLATE-IDENTIFICATION (WORK TOOL)	
	3	1	**168-8389**	4	TACK-FASTENER	
Y	4	1	**216-8803**	1	CLAM AS-MULTIPURPOSE BUCKET	870
Y	5	1	**216-8811**	1	BULLDOZER AS	868
Y	6	1	**226-5540**	2	CYLINDER GP-MULTIPURPOSE BUKT	546
	7	1	**233-3757**	1	EDGE	
Y	8	1	*251-5854*	1	LINES GP-MULTIPURPOSE BUCKET	640
	9	1	**095-0865**	4	PIN-COTTER	
	10	1	**096-1820**	2	PIN-COTTER	
	11	1	**3B-8489**	2	FITTING-GREASE	
	12	1	**3F-5108**	8	BOLT-PLOW (5/8-11X2.25-IN)	
	13	1	**4K-0367**	8	NUT-FULL (5/8-11-THD)	
	14	1	**8T-4122**	8	WASHER-HARD (17X32X3.5-MM THK)	
	15	1	**9R-4677**	2	PIN	
	16	1	**9R-4678**	2	PIN	
Y	17	1	*263-8591*	1	PLATE & FILM GP	1078

Y-SEPARATE ILLUSTRATION

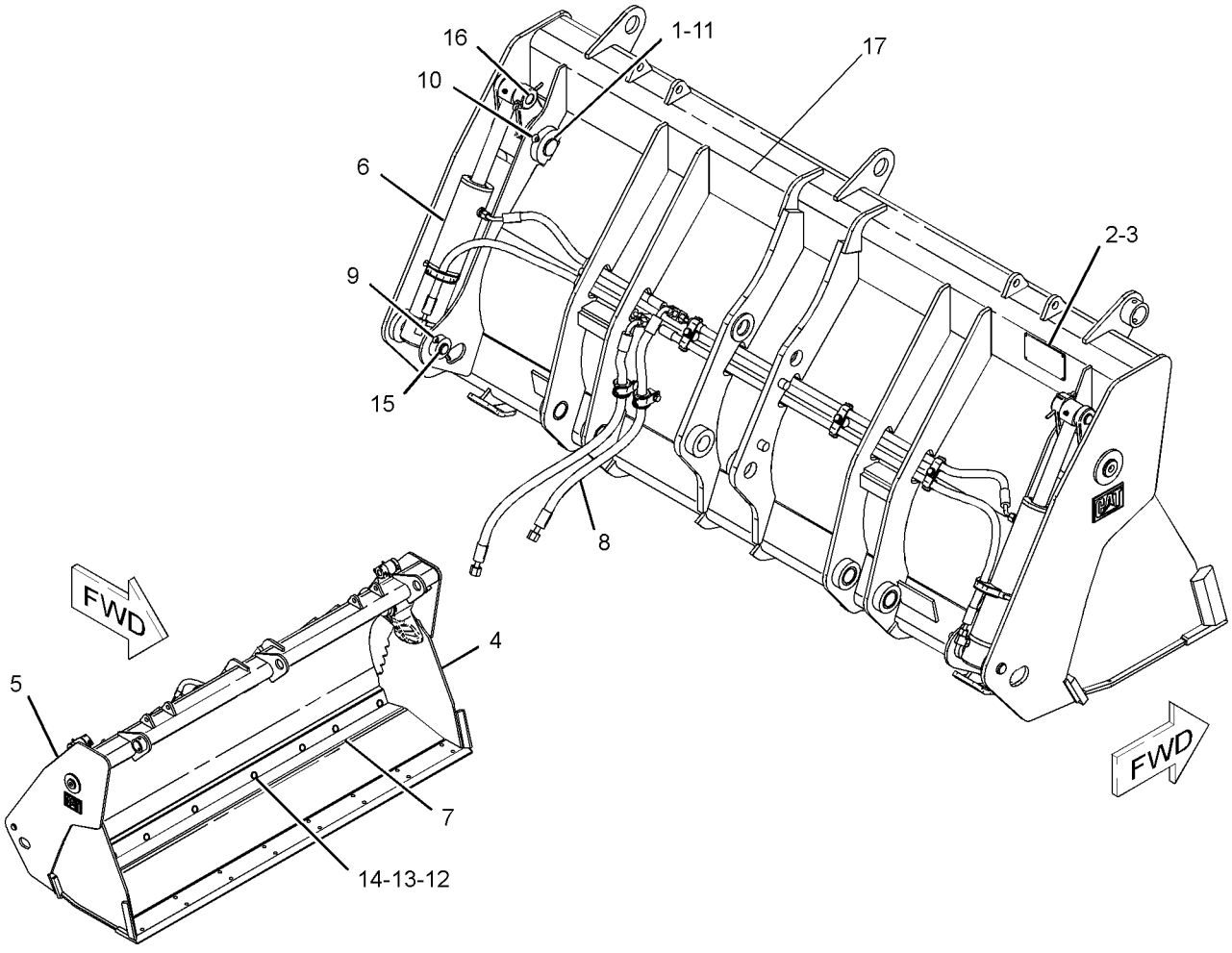

GRAPHIC #1 **<END>** g01239509

WORK TOOLS

216-8820 BUCKET GP-MULTIPURPOSE

S/N: CBD1-UP
1.1-CU M (1.4-CU YD)
AN ATTACHMENT
TYPE 1

SMCS-6104 **i02837648**

NOTE	REF NO	GRAPHIC REF	PART NUMBER	QTY	PART NAME 1 2 3 4 5 6 (PRODUCT LEVEL)	SEE PAGE
	1	1	**9R-4676**	2	PIN	
	2	1	**9R-4677**	2	PIN	
	3	1	**9R-4678**	2	PIN	
	4	1	**095-0865**	4	PIN-COTTER	
	5	1	**096-1820**	2	PIN-COTTER	
	6	1	**137-4234**	1	PLATE-IDENTIFICATION (WORK TOOL)	
	7	1	**168-8389**	4	TACK-FASTENER	
Y	8	1	**216-8762**	1	BULLDOZER AS (FORKS)	866
Y	9	1	**216-8826**	1	CLAM AS-MULTIPURPOSE BUCKET	871
Y	10	1	**226-5540**	2	CYLINDER GP-MULTIPURPOSE BUKT	546
	11	1	**233-0859**	1	EDGE	
Y	12	1	*251-5855*	1	LINES GP-MULTIPURPOSE BUCKET	642
	13	1	**3B-8489**	2	FITTING-GREASE	
	14	1	**3F-5108**	8	BOLT-PLOW (5/8-11X2.25-IN)	
	15	1	**4K-0367**	8	NUT-FULL (5/8-11-THD)	
	16	1	**8T-4122**	8	WASHER-HARD (17X32X3.5-MM THK)	

Y-SEPARATE ILLUSTRATION

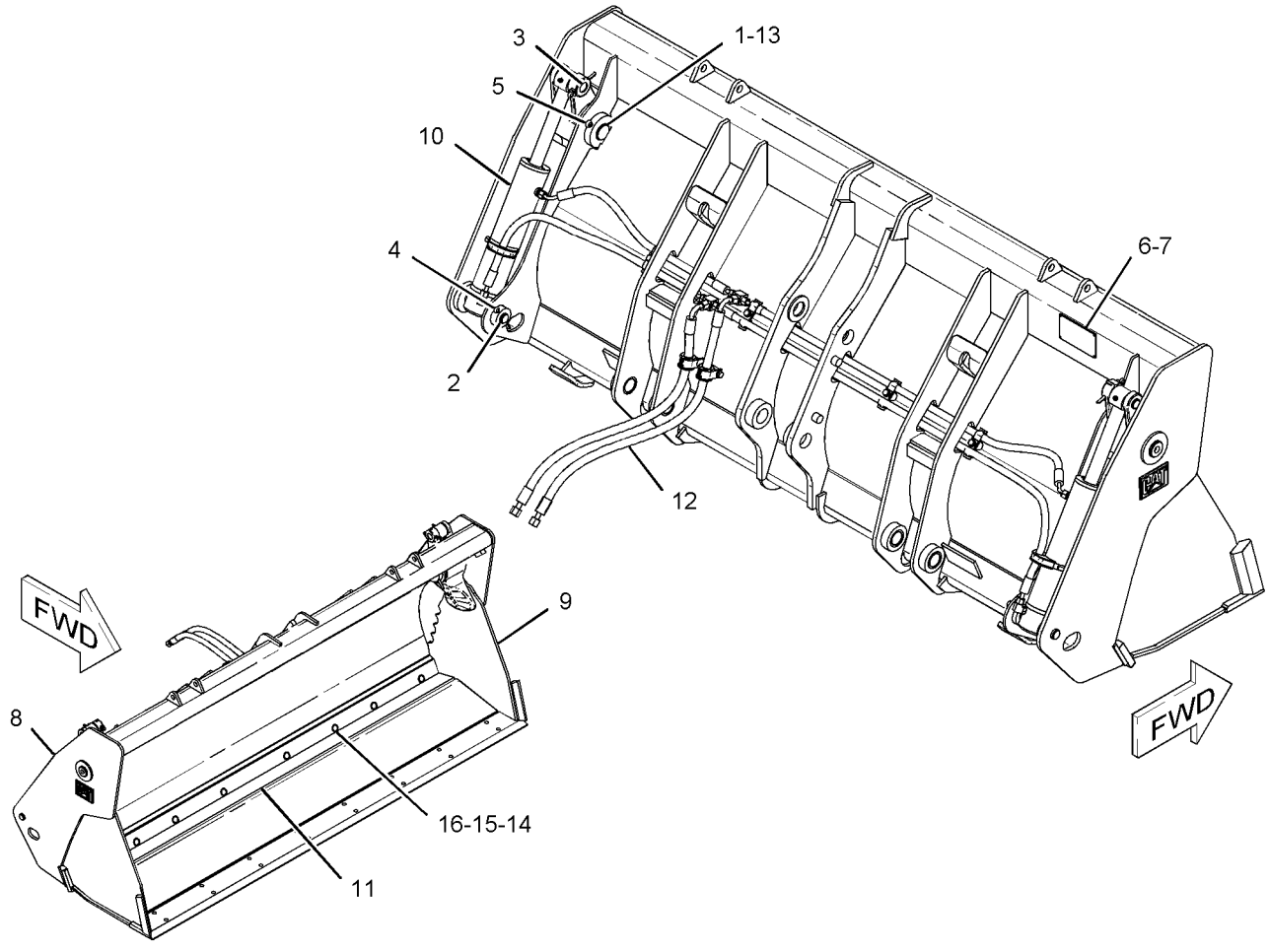

GRAPHIC #1 **<END>** g01134475

WORK TOOLS

216-8820 BUCKET GP-MULTIPURPOSE

S/N: CBD1-UP
1.1-CU M (1.4-CU YD)
AN ATTACHMENT
TYPE 2

SMCS-6104 **i03908680**

NOTE	REF NO	GRAPHIC REF	PART NUMBER	QTY	PART NAME 1 2 3 4 5 6 (PRODUCT LEVEL)	SEE PAGE
	1	1	**9R-4676**	2	PIN	
	2	1	**9R-4677**	2	PIN	
	3	1	**9R-4678**	2	PIN	
	4	1	**095-0865**	4	PIN-COTTER	
	5	1	**096-1820**	2	PIN-COTTER	
	6	1	**137-4234**	1	PLATE-IDENTIFICATION (WORK TOOL)	
	7	1	**168-8389**	4	TACK-FASTENER	
Y	8	1	**216-8762**	1	BULLDOZER AS (FORKS)	866
Y	9	1	**216-8826**	1	CLAM AS-MULTIPURPOSE BUCKET	871
Y	10	1	**226-5540**	2	CYLINDER GP-MULTIPURPOSE BUKT	546
	11	1	**233-0859**	1	EDGE	
CY	12	1	*337-7466*	1	LINES GP-MULTIPURPOSE BUCKET	644
	13	1	**3B-8489**	2	FITTING-GREASE	
	14	1	**3F-5108**	8	BOLT-PLOW (5/8-11X2.25-IN)	
	15	1	**4K-0367**	8	NUT-FULL (5/8-11-THD)	
	16	1	**8T-4122**	8	WASHER-HARD (17X32X3.5-MM THK)	

C-CHANGE FROM PREVIOUS TYPE
Y-SEPARATE ILLUSTRATION

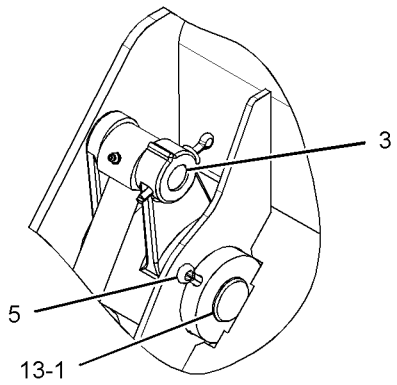

VIEW OF AREA A

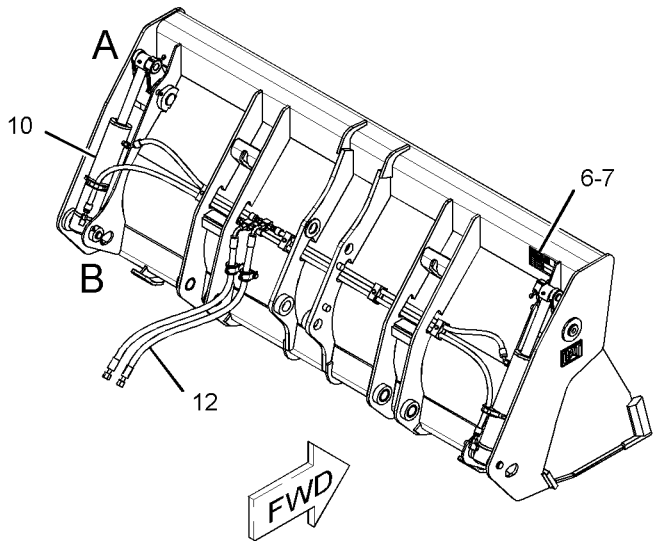

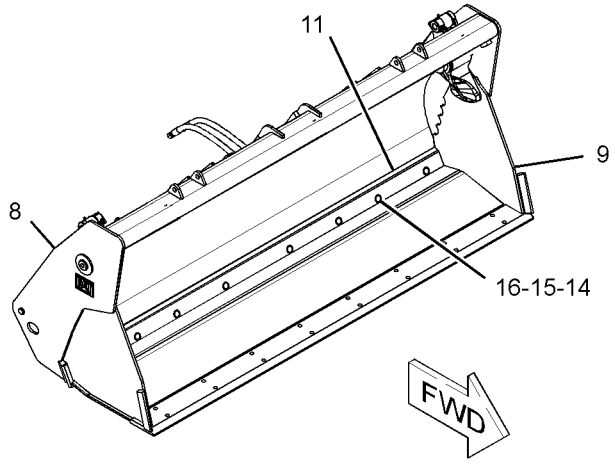

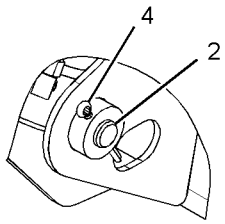

VIEW OF AREA B

GRAPHIC #1 **<END>** g02160297

WORK TOOLS

216-8821 BUCKET GP-MULTIPURPOSE

S/N: CBD1-UP
1.1-CU M (1.4-CU YD) CAPACITY
AN ATTACHMENT
TYPE 1

SMCS-6104 **i02520026**

NOTE	REF NO	GRAPHIC REF	PART NUMBER	QTY	PART NAME 1 2 3 4 5 6 (PRODUCT LEVEL)	SEE PAGE
	1	1	**9R-4676**	2	PIN	
	2	1	**137-4234**	1	PLATE-IDENTIFICATION (WORK TOOL)	
	3	1	**168-8389**	4	TACK-FASTENER	
Y	4	1	**216-8762**	1	BULLDOZER AS (FORKS)	866
Y	5	1	**216-8826**	1	CLAM AS-MULTIPURPOSE BUCKET	871
Y	6	1	**226-5540**	2	CYLINDER GP-MULTIPURPOSE BUKT	546
	7	1	**233-0859**	1	EDGE	
Y	8	1	*251-5855*	1	LINES GP-MULTIPURPOSE BUCKET	642
	9	1	**095-0865**	4	PIN-COTTER	
	10	1	**096-1820**	2	PIN-COTTER	
	11	1	**3B-8489**	2	FITTING-GREASE	
	12	1	**3F-5108**	8	BOLT-PLOW (5/8-11X2.25-IN)	
	13	1	**4K-0367**	8	NUT-FULL (5/8-11-THD)	
	14	1	**8T-4122**	8	WASHER-HARD (17X32X3.5-MM THK)	
	15	1	**9R-4677**	2	PIN	
	16	1	**9R-4678**	2	PIN	
Y	17	1	*263-8591*	1	PLATE & FILM GP	1078

Y-SEPARATE ILLUSTRATION

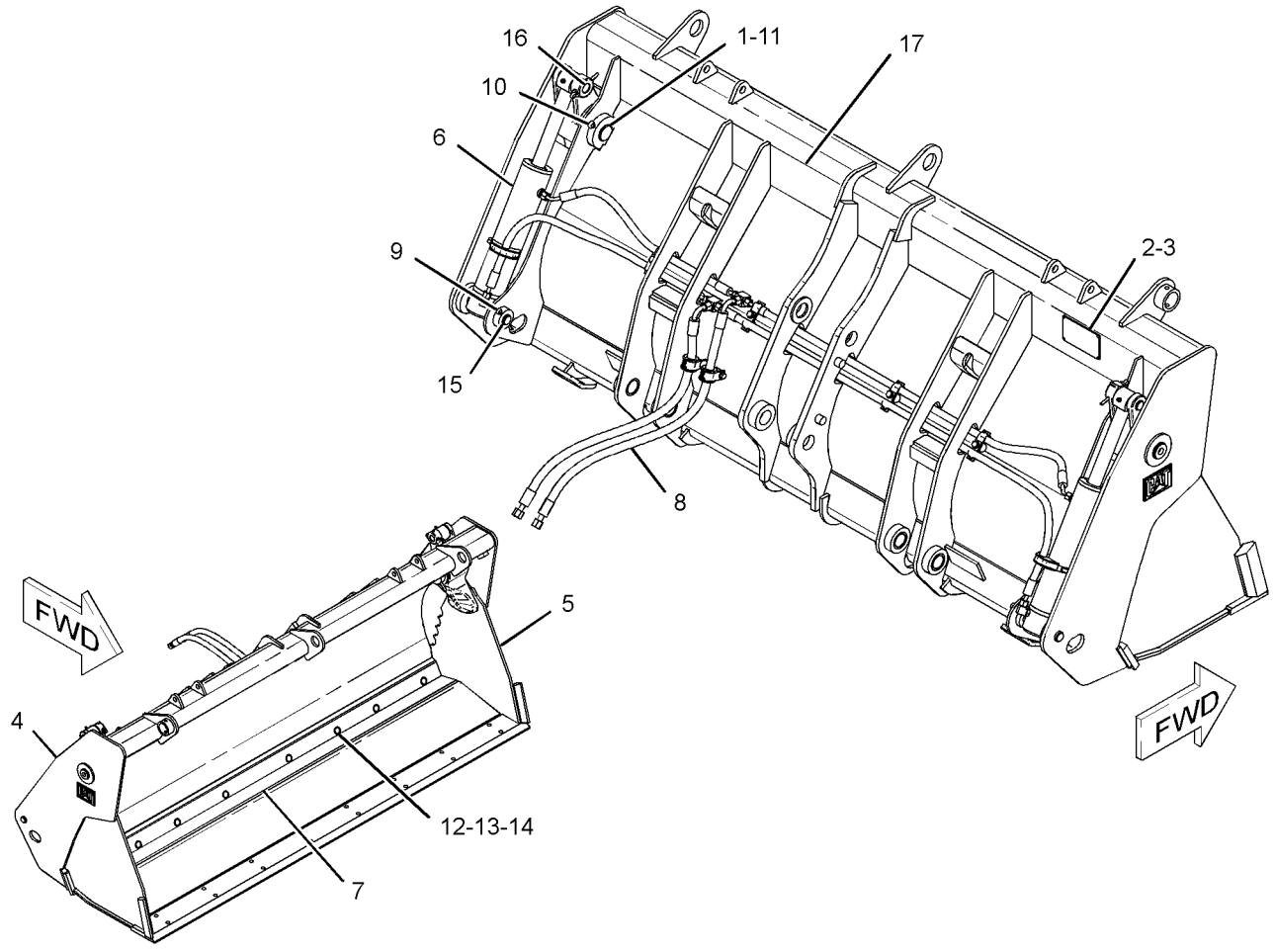

GRAPHIC #1 **<END>** g01239525

WORK TOOLS

216-8821 BUCKET GP-MULTIPURPOSE

S/N: CBD1-UP
1.1-CU M (1.4-CU YD) CAPACITY
AN ATTACHMENT
TYPE 2

SMCS-6104 **i03911350**

NOTE	REF NO	GRAPHIC REF	PART NUMBER	QTY	PART NAME 1 2 3 4 5 6 (PRODUCT LEVEL)	SEE PAGE
	1	1	**9R-4676**	2	PIN	
	2	1	**137-4234**	1	PLATE-IDENTIFICATION (WORK TOOL)	
	3	1	**168-8389**	4	TACK-FASTENER	
Y	4	1	**216-8762**	1	BULLDOZER AS (FORKS)	866
Y	5	1	**216-8826**	1	CLAM AS-MULTIPURPOSE BUCKET	871
Y	6	1	**226-5540**	2	CYLINDER GP-MULTIPURPOSE BUKT	546
	7	1	**233-0859**	1	EDGE	
CY	8	1	*337-7466*	1	LINES GP-MULTIPURPOSE BUCKET	644
	9	1	**095-0865**	4	PIN-COTTER	
	10	1	**096-1820**	2	PIN-COTTER	
	11	1	**3B-8489**	2	FITTING-GREASE	
	12	1	**3F-5108**	8	BOLT-PLOW (5/8-11X2.25-IN)	
	13	1	**4K-0367**	8	NUT-FULL (5/8-11-THD)	
	14	1	**8T-4122**	8	WASHER-HARD (17X32X3.5-MM THK)	
	15	1	**9R-4677**	2	PIN	
	16	1	**9R-4678**	2	PIN	
Y	17	1	*263-8591*	1	PLATE & FILM GP	1078

C-CHANGE FROM PREVIOUS TYPE
Y-SEPARATE ILLUSTRATION

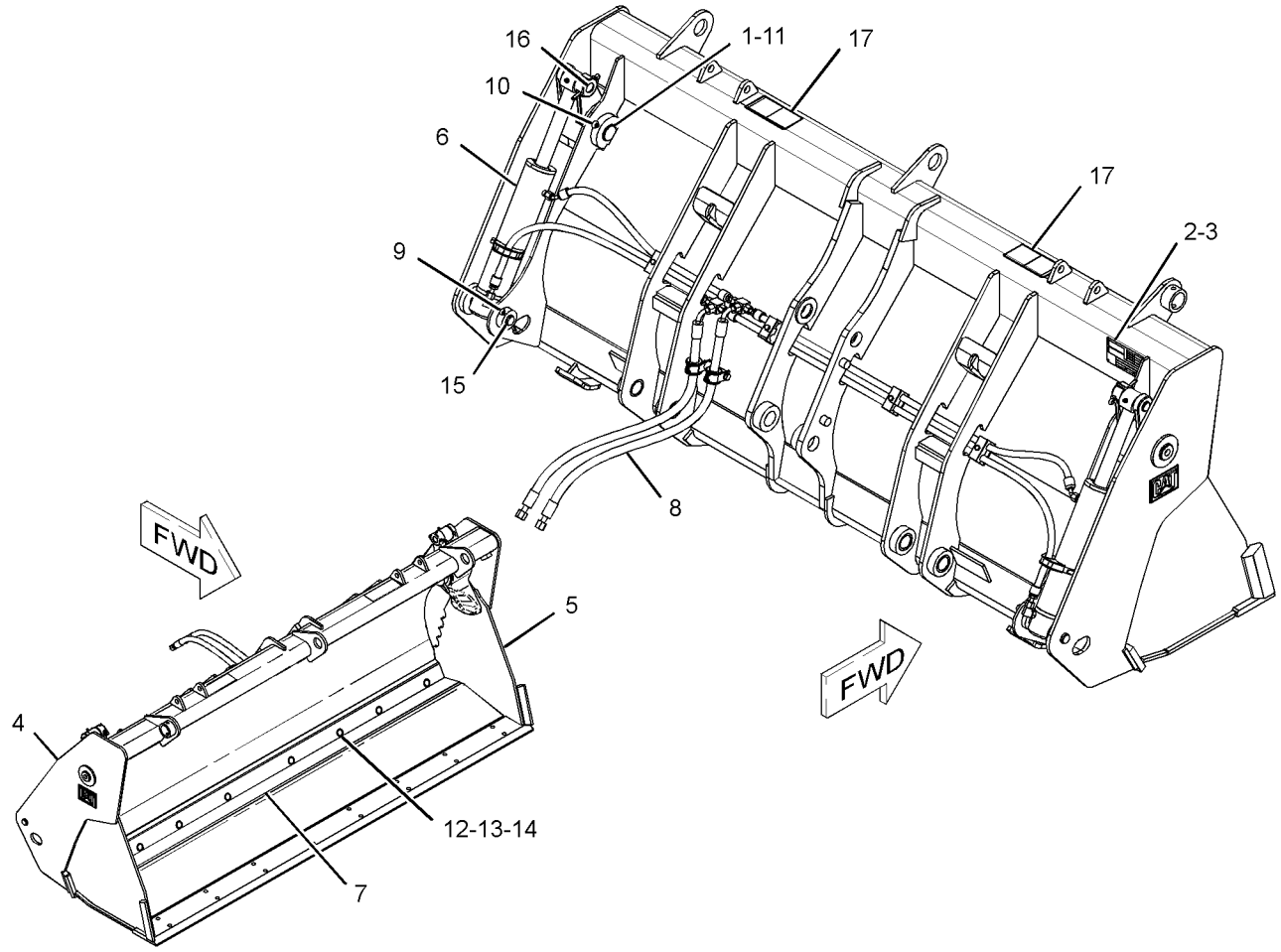

GRAPHIC #1 **<END>** g02160561

WORK TOOLS

108-3037 BULLDOZER AS

S/N: CBD1-UP
PART OF 108-3036 BUCKET GP-MULTIPURPOSE
AN ATTACHMENT

SMCS-6050 **i03769091**

NOTE	REF NO	GRAPHIC REF	PART NUMBER	QTY	PART NAME 1 2 3 4 5 6 (PRODUCT LEVEL)	SEE PAGE
	1	1	**9R-4670**	1	EDGE	
M	2	1	**9R-5271**	2	BOSS (M10X1.5X25-MM)	
	3	1	*104-3970*	2	BRACKET AS (LH)	
					(EACH INCLUDES)	
	3A	1	**9R-0111**	1	BEARING-SLEEVE	
	4	1	*104-3975*	2	BRACKET AS (RH)	
					(EACH INCLUDES)	
	4A	1	**9R-0111**	1	BEARING-SLEEVE	
	5	1	**112-1775**	2	PLATE AS	

M-METRIC PART

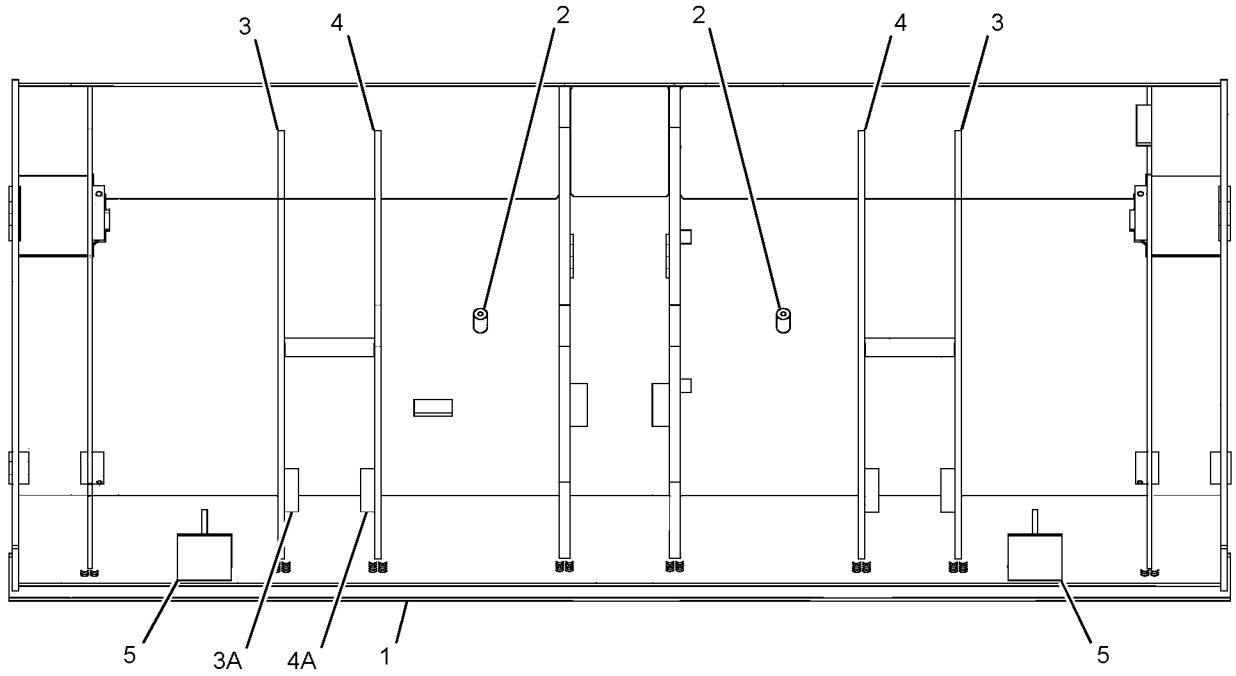

REAR VIEW

GRAPHIC #1 **<END>** g02005375

WORK TOOLS

216-8762 BULLDOZER AS—FORKS

S/N: CBD1-UP
PART OF 216-8820, 216-8821 BUCKET GP-MULTIPURPOSE
AN ATTACHMENT

SMCS-6050 **i02514974**

NOTE	REF NO	GRAPHIC REF	PART NUMBER	QTY	PART NAME 1 2 3 4 5 6 (PRODUCT LEVEL)	SEE PAGE
	1	1	**216-8778**	2	BRACKET	
	2	1	**216-8780**	1	BRACKET AS	
	3	1	**216-8781**	4	BRACKET	
	5	1	**224-6250**	2	PLATE	

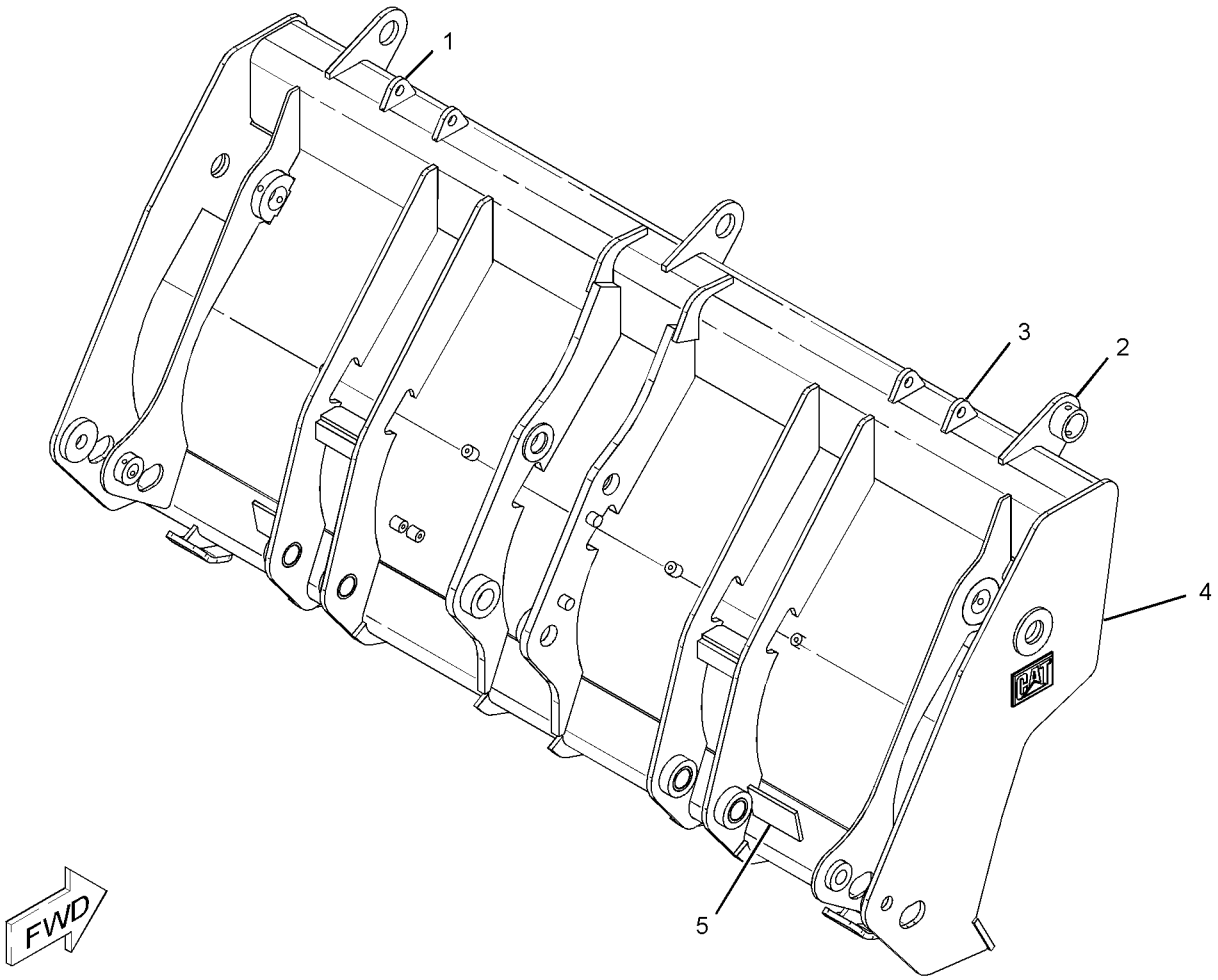

GRAPHIC #1 **<END>** g01134462

WORK TOOLS

216-8802 BULLDOZER AS

S/N: CBD1-UP; MFG1-UP
PART OF 216-8800 BUCKET GP-MULTIPURPOSE, 216-8811 BULLDOZER AS
FIELD REPLACEMENT ORDER 216-8811—PAGE 868
AN ATTACHMENT

SMCS-6050 **i02529153**

NOTE	REF NO	GRAPHIC REF	PART NUMBER	QTY	PART NAME 1 2 3 4 5 6 (PRODUCT LEVEL)	SEE PAGE
M	1	1	**9R-5271**	6	BOSS (M10X1.5X25-MM)	

M-METRIC PART

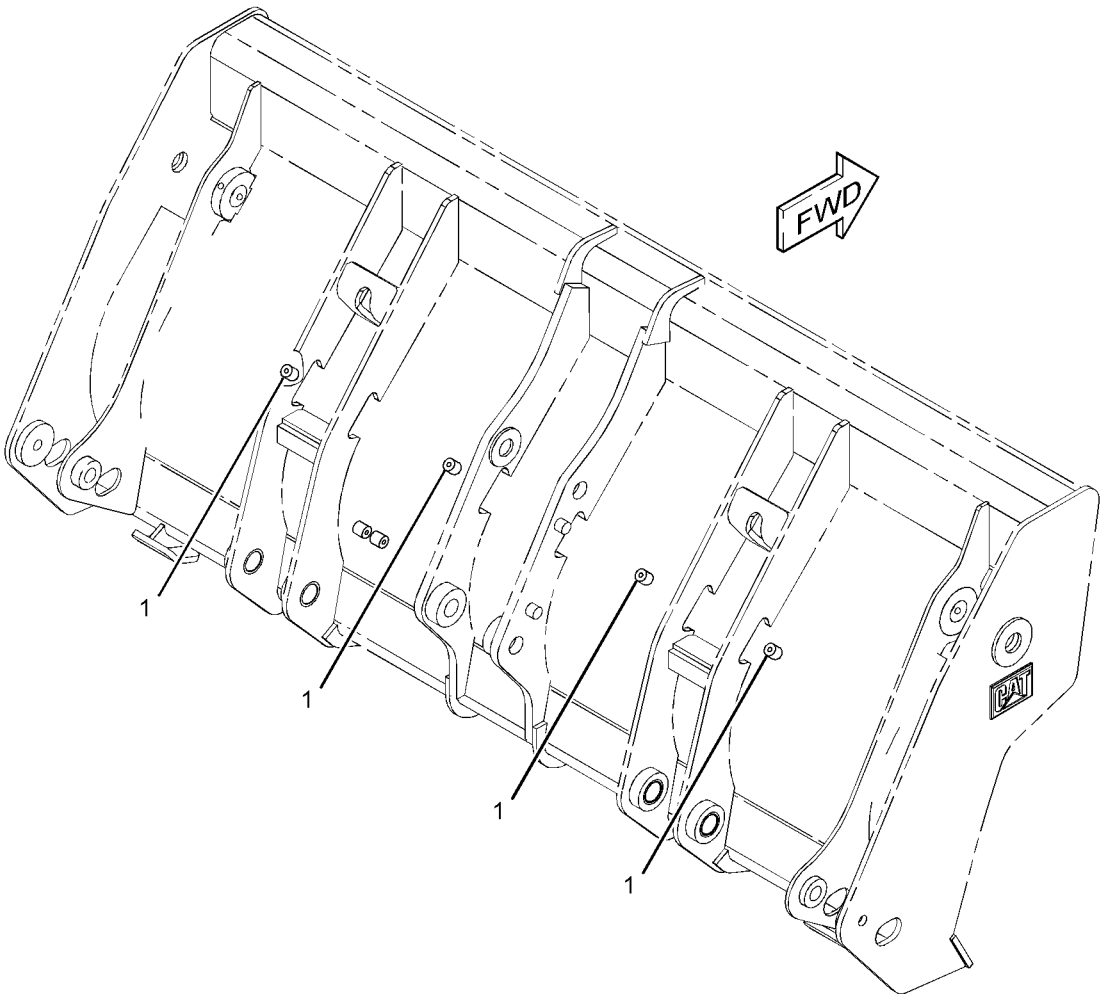

GRAPHIC #1 **<END>** g01263358

216-8811 BULLDOZER AS

S/N: CBD1-UP; MFG1-UP
PART OF 216-8800, 216-8801 BUCKET GP-MULTIPURPOSE
FIELD REPLACEMENT FOR 216-8802—PAGE 867
AN ATTACHMENT

SMCS-6050 **i02520055**

NOTE	REF NO	GRAPHIC REF	PART NUMBER	QTY	PART NAME 1 2 3 4 5 6 (PRODUCT LEVEL)	SEE PAGE
	1	1	**216-8778**	2	BRACKET	
	2	1	**216-8780**	1	BRACKET AS	
	3	1	**216-8781**	4	BRACKET	
Y	4	1	**216-8802**	1	BULLDOZER AS	867
	5	1	**224-6250**	2	PLATE	

Y-SEPARATE ILLUSTRATION

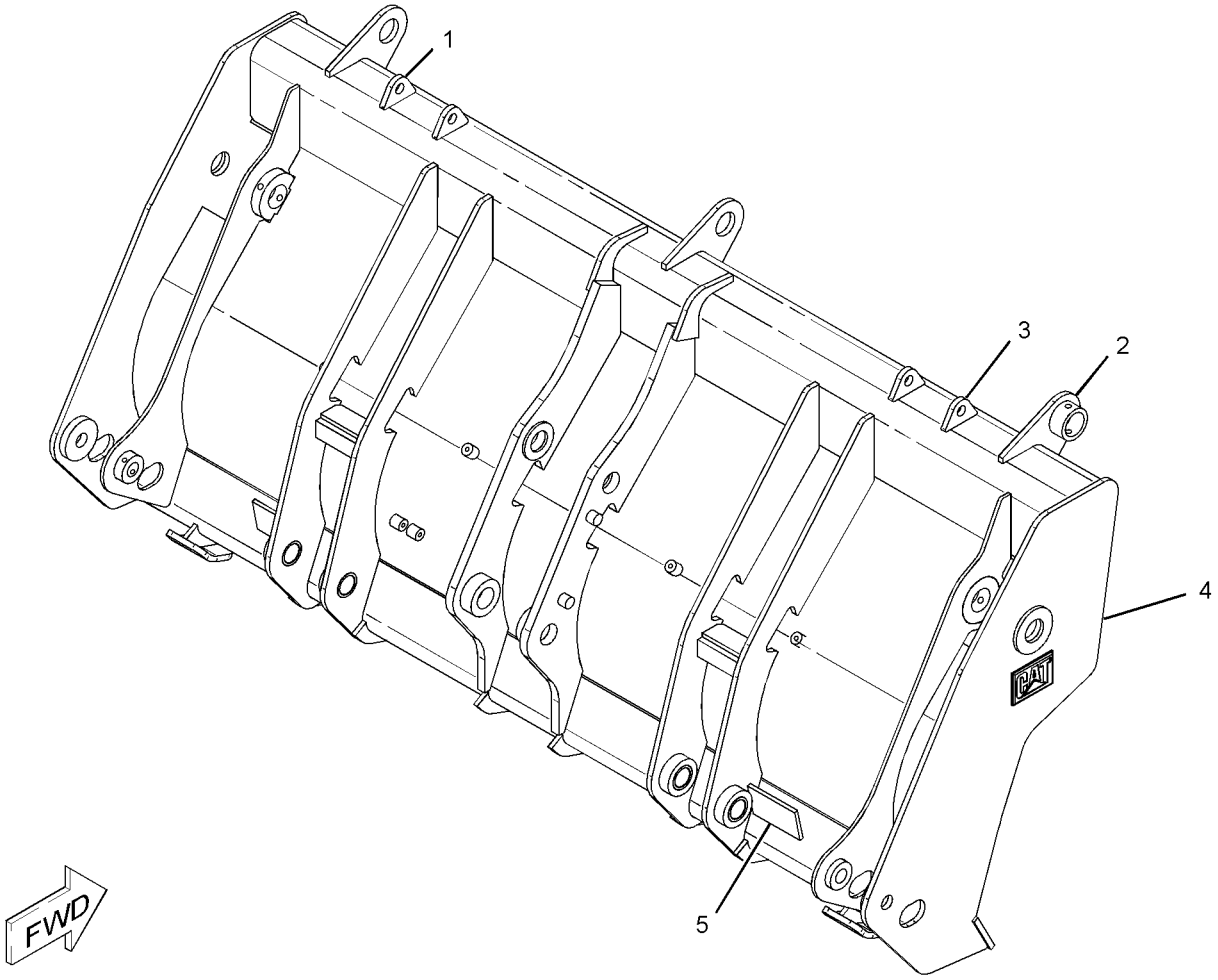

GRAPHIC #1 **<END>** g01134458

WORK TOOLS

126-4224 CLAM AS-MULTIPURPOSE BUCKET

S/N: CBD1-UP
PART OF 108-3036 BUCKET GP-MULTIPURPOSE
AN ATTACHMENT

SMCS-6104 **i03769349**

NOTE	REF NO	GRAPHIC REF	PART NUMBER	QTY	PART NAME 1 2 3 4 5 6 (PRODUCT LEVEL)	SEE PAGE
	1	1	*126-4226*	1	PLATE AS	
		1	**9R-4675**	1	BUSHING-TERMINAL	
		1	**9R-5294**	1	HINGE	
	2	1	*126-4227*	1	PLATE AS	
		1	**9R-4675**	1	BUSHING-TERMINAL	
		1	**9R-5294**	1	HINGE	
	3	1	*125-7122*	1	PLATE AS	
		1	**9R-4672**	1	EDGE	
		1	**125-7116**	1	EDGE	

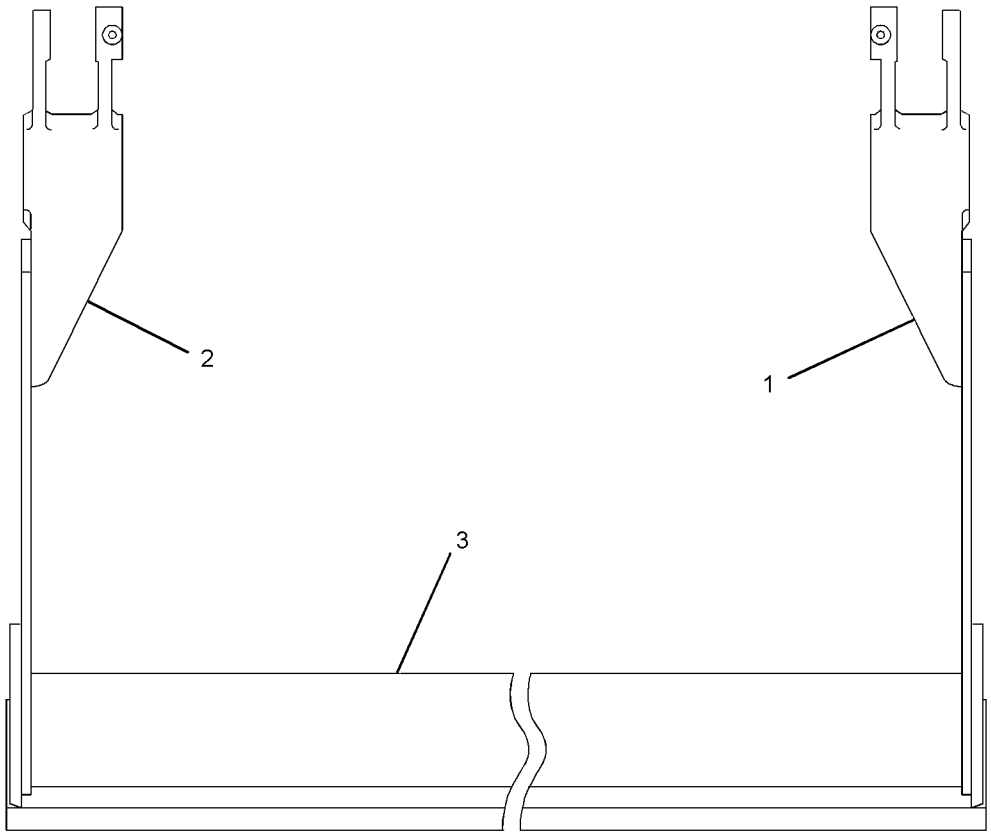

FRONT VIEW

GRAPHIC #1 **<END>** g02004399

WORK TOOLS

216-8803 CLAM AS-MULTIPURPOSE BUCKET

S/N: CBD1-UP; MFG1-UP
PART OF 216-8800, 216-8801 BUCKET GP-MULTIPURPOSE
AN ATTACHMENT

SMCS-6104 **i02520054**

NOTE	REF NO	GRAPHIC REF	PART NUMBER	QTY	PART NAME 1 2 3 4 5 6 (PRODUCT LEVEL)	SEE PAGE
	1	1	*216-8843*	1	PLATE AS	
		1	**216-8839**	1	PLATE (WEAR)	
		1	**9R-4672**	1	EDGE	

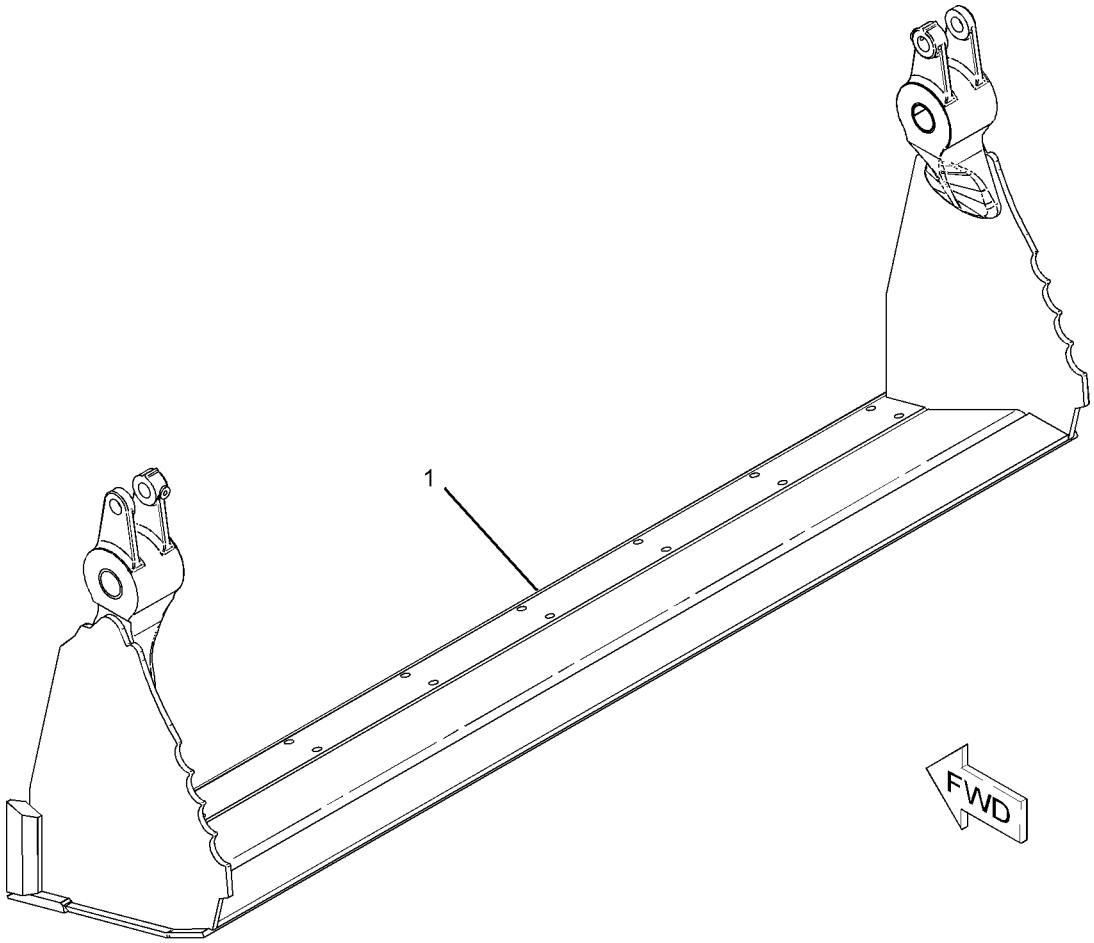

GRAPHIC #1 **<END>** g01134490

216-8826 CLAM AS-MULTIPURPOSE BUCKET

S/N: CBD1-UP

PART OF 216-8820, 216-8821 BUCKET GP-MULTIPURPOSE

AN ATTACHMENT

SMCS-6104 **i02498179**

NOTE	REF NO	GRAPHIC REF	PART NUMBER	QTY	PART NAME 1 2 3 4 5 6 (PRODUCT LEVEL)	SEE PAGE
	1	1	*216-8804*	1	PLATE AS (LH)	
		1	**9R-4675**	1	BUSHING-TERMINAL	
		1	**9R-5294**	1	HINGE	
	2	1	*216-8805*	1	PLATE AS (RH)	
		1	**9R-4675**	1	BUSHING-TERMINAL	
		1	**9R-5294**	1	HINGE	
	3	1	*216-8829*	1	PLATE AS	
		1	**9R-5313**	1	EDGE	

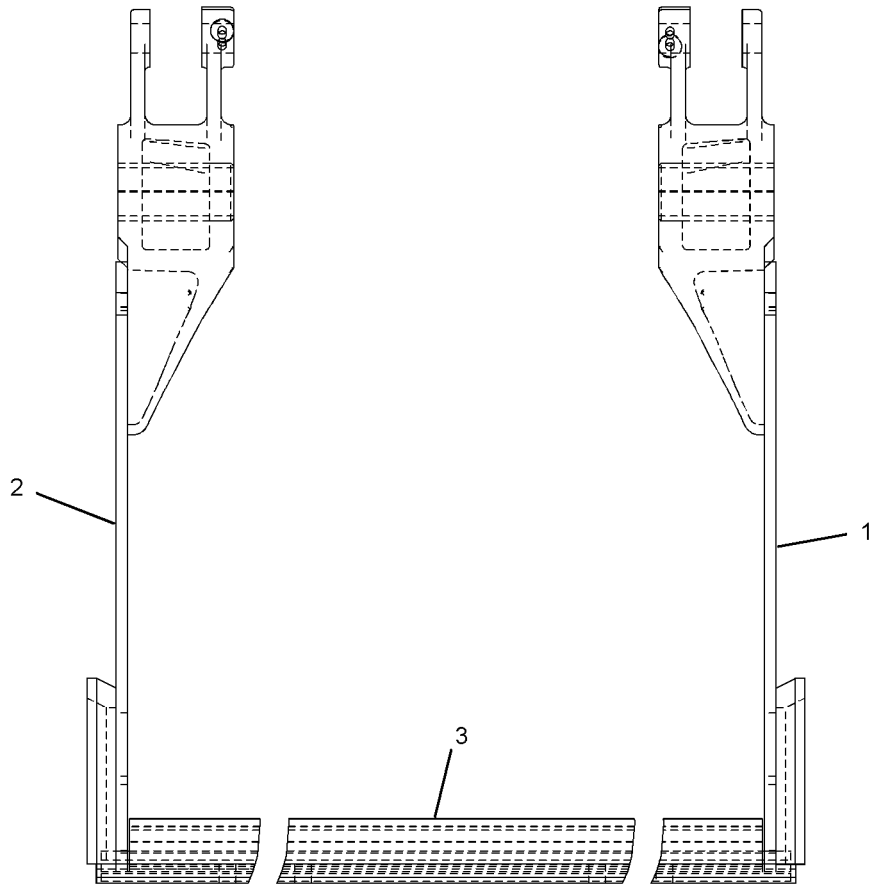

FRONT VIEW

GRAPHIC #1 **<END>** g01135645

222-7379 COUPLER AR-QUICK–PIN-LOCK

S/N: MFG1-UP

AN ATTACHMENT

SMCS-6129 **i03860169**

NOTE	PART NUMBER	QTY	PART NAME 1 2 3 4 5 6 (PRODUCT LEVEL)	SEE PAGE
Y	*222-7464*	1	COUPLER GP-QUICK (PIN-LOCK)	875
Y	*216-0928*	1	PIN GP-COUPLER (PIN-LOCK)	882
Y	*215-9478*	1	PIN GP-COUPLER (MACHINE)	881

Y-SEPARATE ILLUSTRATION

<END>

WORK TOOLS

176-6251 COUPLER GP-QUICK–HOE

S/N: CBD1-UP
PART OF 178-8850 COUPLER GP-QUICK
AN ATTACHMENT

SMCS-6129 **i01780370**

NOTE	REF NO	GRAPHIC REF	PART NUMBER	QTY	PART NAME 1 2 3 4 5 6 (PRODUCT LEVEL)	SEE PAGE
	1	1	**176-6252**	1	COUPLER	
	2	1	**200-5921**	1	HOOK	
	3	1	**132-3725**	1	SPRING	
	4	1	**132-3721**	1	PIN AS (HOOK)	
	5	1	**132-3723**	1	LOCK PIN	
	6	1	**8B-7121**	1	FITTING-HYDRAULIC	
F		1	**132-3821**	1	LEVER-ACTUATING	

F-NOT SHOWN

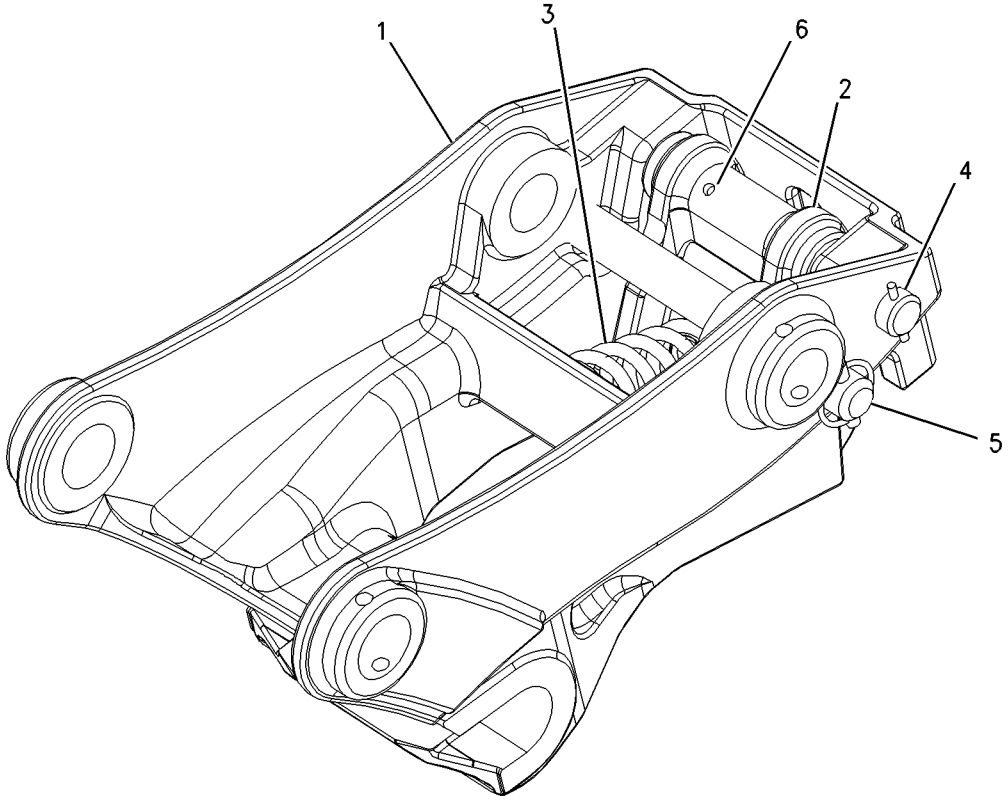

GRAPHIC #1 **<END>** g00910762

WORK TOOLS

178-8850 COUPLER GP-QUICK

S/N: CBD1-UP
HOE
AN ATTACHMENT

SMCS-6129 **i02529152**

NOTE	REF NO	GRAPHIC REF	PART NUMBER	QTY	PART NAME 1 2 3 4 5 6 (PRODUCT LEVEL)	SEE PAGE
	1	1	**4J-1888**	2	PIN-COTTER	
	2	1	**132-3777**	1	PIN	
	3	1	**132-3778**	1	PIN	
Y	4	1	**176-6251**	1	COUPLER GP-QUICK	873

Y-SEPARATE ILLUSTRATION

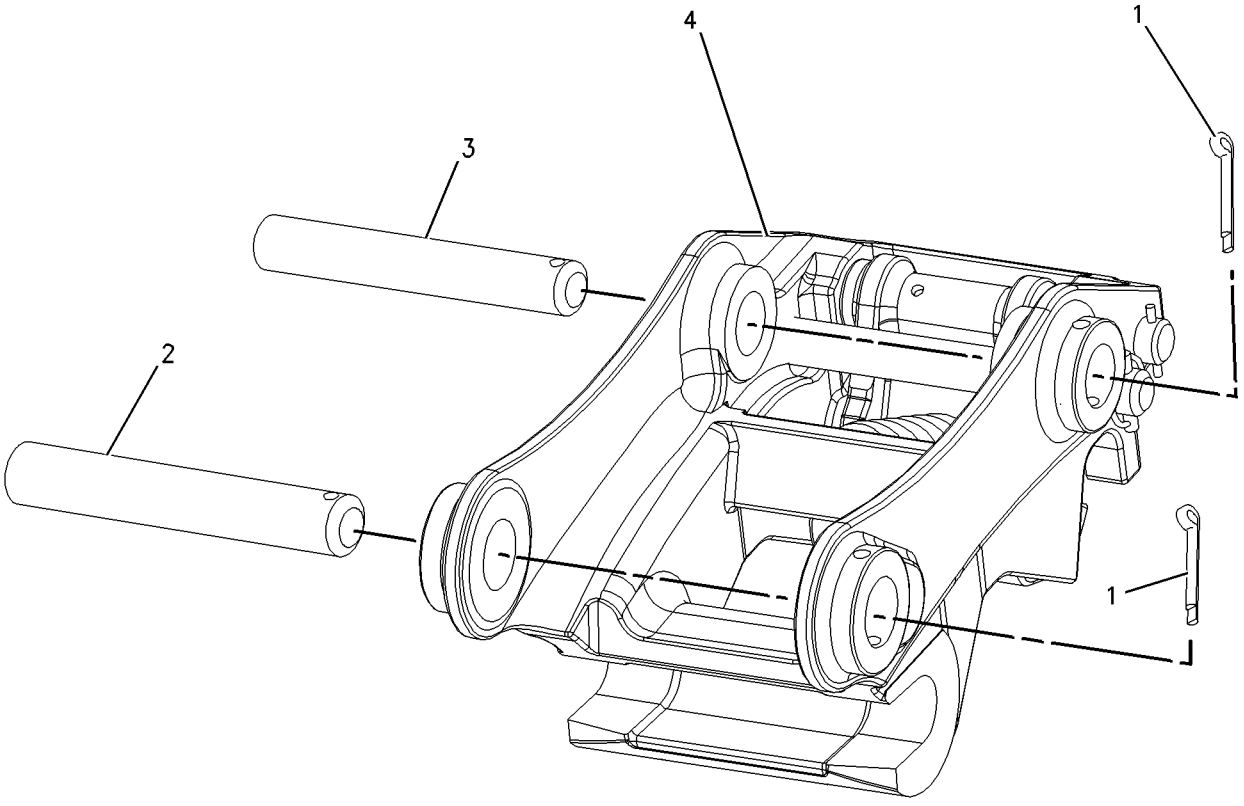

GRAPHIC #1 **<END>** g00904540

222-7464 COUPLER GP-QUICK–PIN-LOCK

S/N: MFG1-UP

PART OF 222-7379 COUPLER AR-QUICK

AN ATTACHMENT

SMCS-6129 **i03860217**

NOTE	REF NO	GRAPHIC REF	PART NUMBER	QTY	PART NAME 1 2 3 4 5 6 (PRODUCT LEVEL)	SEE PAGE
	1	1	**154-2704**	1	PLATE-INSTRUCTION (BUCKET SPECIFICATIONS)	
	2	1	**168-8389**	4	TACK-FASTENER	
	3	1	**276-1368**	2	BUSHING	
	4	1	*232-2735*	1	COUPLER AS	
	4A	1	**161-4130**	2	PLATE-IDENTIFICATION (CAT)	
	5	1	**3B-8489**	1	FITTING-GREASE	
	6	1	**9R-0320**	2	BUSHING	
	7	1	**9R-3700**	2	BUSHING	

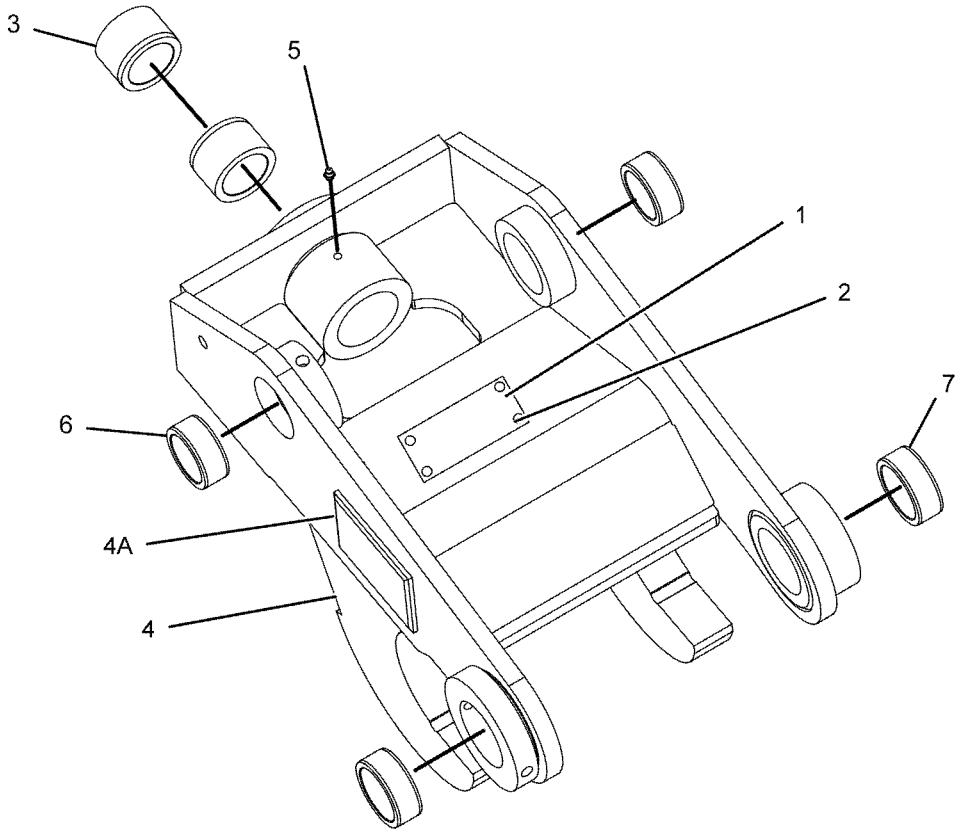

GRAPHIC #1 **<END>** g01072399

WORK TOOLS

361-1100 COUPLER GP-QUICK

S/N: CBD1-UP; MFG1-UP
AN ATTACHMENT

SMCS-6129 **i04460712**

NOTE	REF NO	GRAPHIC REF	PART NUMBER	QTY	PART NAME 1 2 3 4 5 6 (PRODUCT LEVEL)	SEE PAGE
	1	1	**132-3778**	1	PIN	
Y	2	1	*361-1101*	1	COUPLER GP-QUICK	877
	3	1	**361-1110**	1	PIN	
	4	1	**363-7466**	1	WRENCH (22-MM)	
	5	1	**4J-1888**	2	PIN-COTTER	

Y-SEPARATE ILLUSTRATION

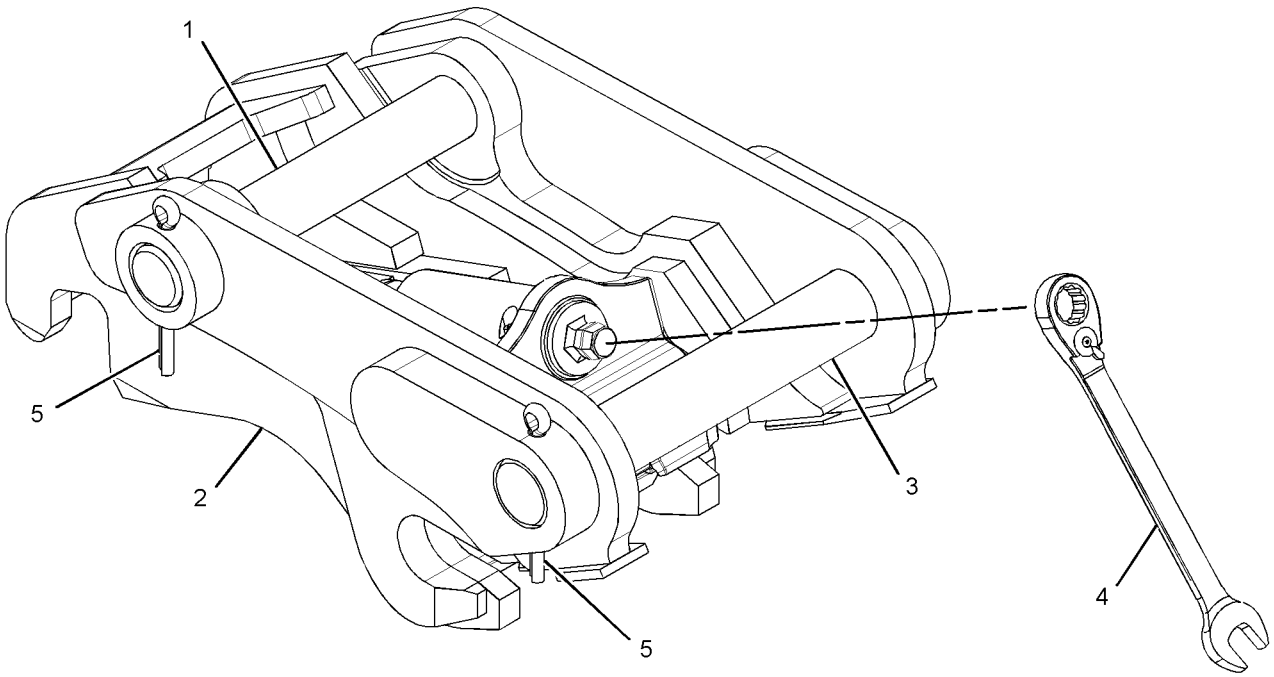

GRAPHIC #1 **<END>** g02471764

361-1101 COUPLER GP-QUICK

S/N: CBD1-UP; MFG1-UP
PART OF 361-1100 COUPLER GP-QUICK
AN ATTACHMENT

SMCS-6129 **i04460715**

NOTE	REF NO	GRAPHIC REF	PART NUMBER	QTY	PART NAME 1 2 3 4 5 6 (PRODUCT LEVEL)	SEE PAGE
	1	1	**168-8389**	4	TACK-FASTENER	
Y	2	1	*361-1103*	1	ADJUSTER GP-MANUAL (QUICK COUPLER)	780
	3	1	**361-1210**	1	PLATE-IDENTIFICATION	
	4	1	**9H-3771**	1	FITTING	
	5	1	**243-0862**	2	SEAL	
	6	1	**361-1109**	1	SHAFT	
	7	1	**361-1108**	1	LOCK GP-MECHANICAL	

Y-SEPARATE ILLUSTRATION

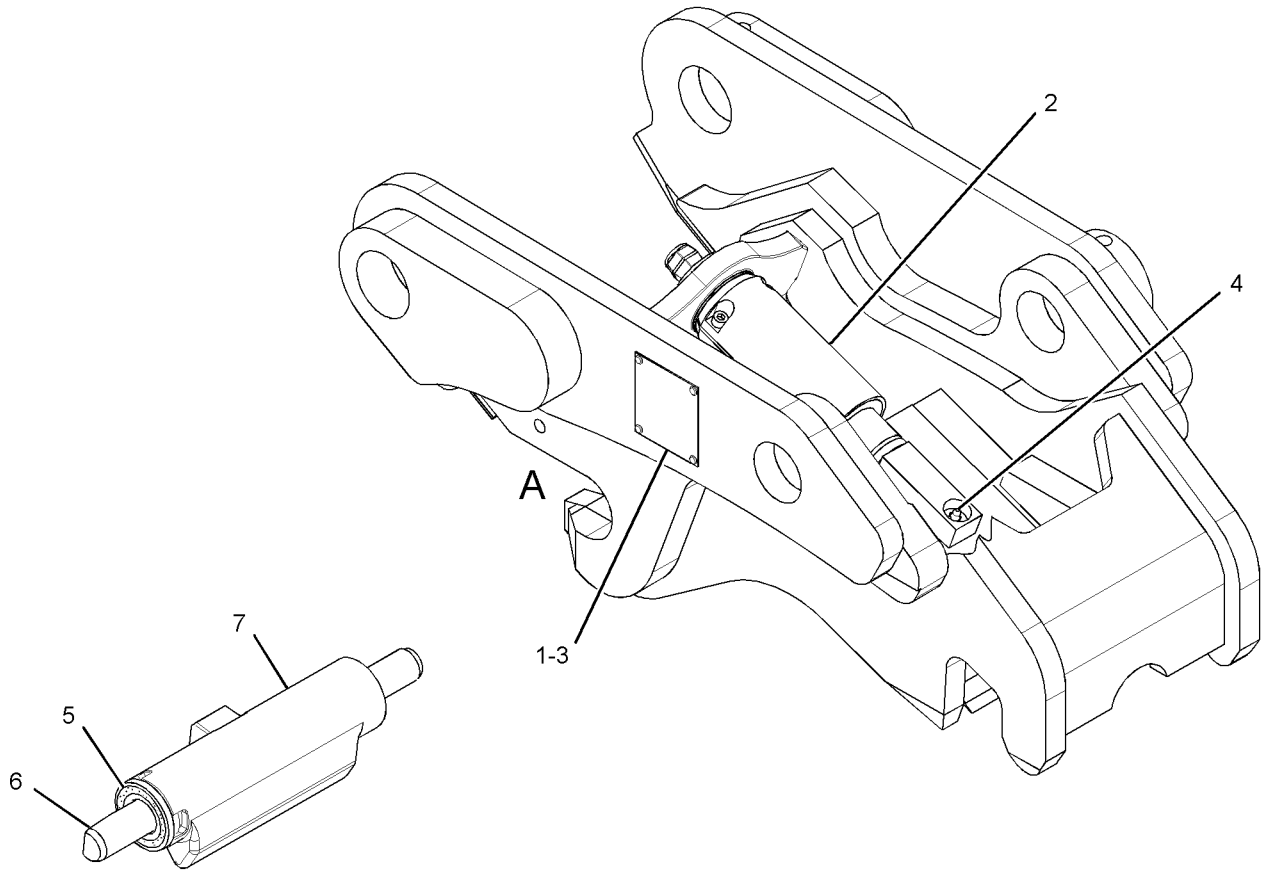

VIEW OF AREA A
(COMPONENTS REMOVED FOR CLARITY)

GRAPHIC #1 **<END>** g02469356

WORK TOOLS

9R-5321 EDGE GP-CUTTING

S/N: CBD1-UP; MFG1-UP
PART OF 251-1778, 251-1787 BUCKET GP-GENERAL PURPOSE, 356-0067, 374-3517, 374-6532 DISTRIBUTION AR
AN ATTACHMENT

SMCS-6801 **i01450695**

NOTE	REF NO	GRAPHIC REF	PART NUMBER	QTY	PART NAME 1 2 3 4 5 6 (PRODUCT LEVEL)	SEE PAGE
	1	1	**9W-8215**	2	EDGE-CUTTING	
	2	1	**3F-5108**	8	BOLT-PLOW (5/8-11X2.25-IN)	
	3	1	**4K-0367**	8	NUT-FULL (5/8-11-THD)	
	4	1	**8T-4122**	8	WASHER-HARD (17X32X3.5-MM THK)	

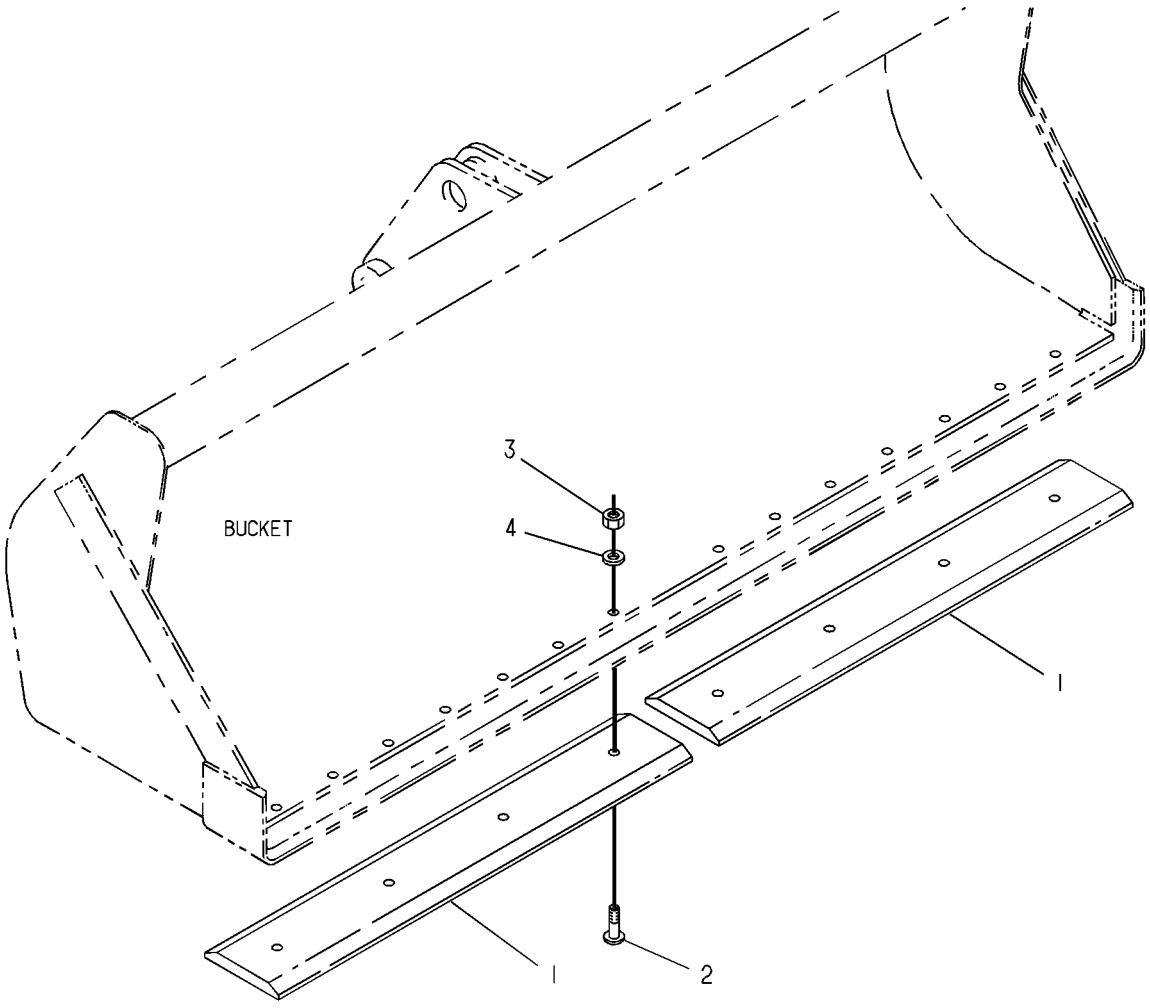

GRAPHIC #1 **<END>** g00130834

WORK TOOLS

104-6310 FORK GP

S/N: CBD1-UP; MFG1-UP
PART OF 112-0939, 232-2685 BUCKET AR-MULTIPURPOSE
AN ATTACHMENT

SMCS-6405 **i01526339**

NOTE	REF NO	GRAPHIC REF	PART NUMBER	QTY	PART NAME 1 2 3 4 5 6 (PRODUCT LEVEL)	SEE PAGE
	1	1	**104-6311**	2	BRACKET AS	
	2	1	**104-6312**	2	FORK AS	
	3	1	**104-6316**	1	PIN	
	4	1	**104-6317**	2	PIN	
	5	1	**4J-1888**	1	PIN-COTTER	
	6	1	**9R-0109**	4	WASHER (41X64X3-MM THK)	
	7	1	**112-1776**	2	PIN AS	
	8	1	**6V-8144**	4	RING-RETAINING	
	9	1	**5D-8159**	2	PIN AS	

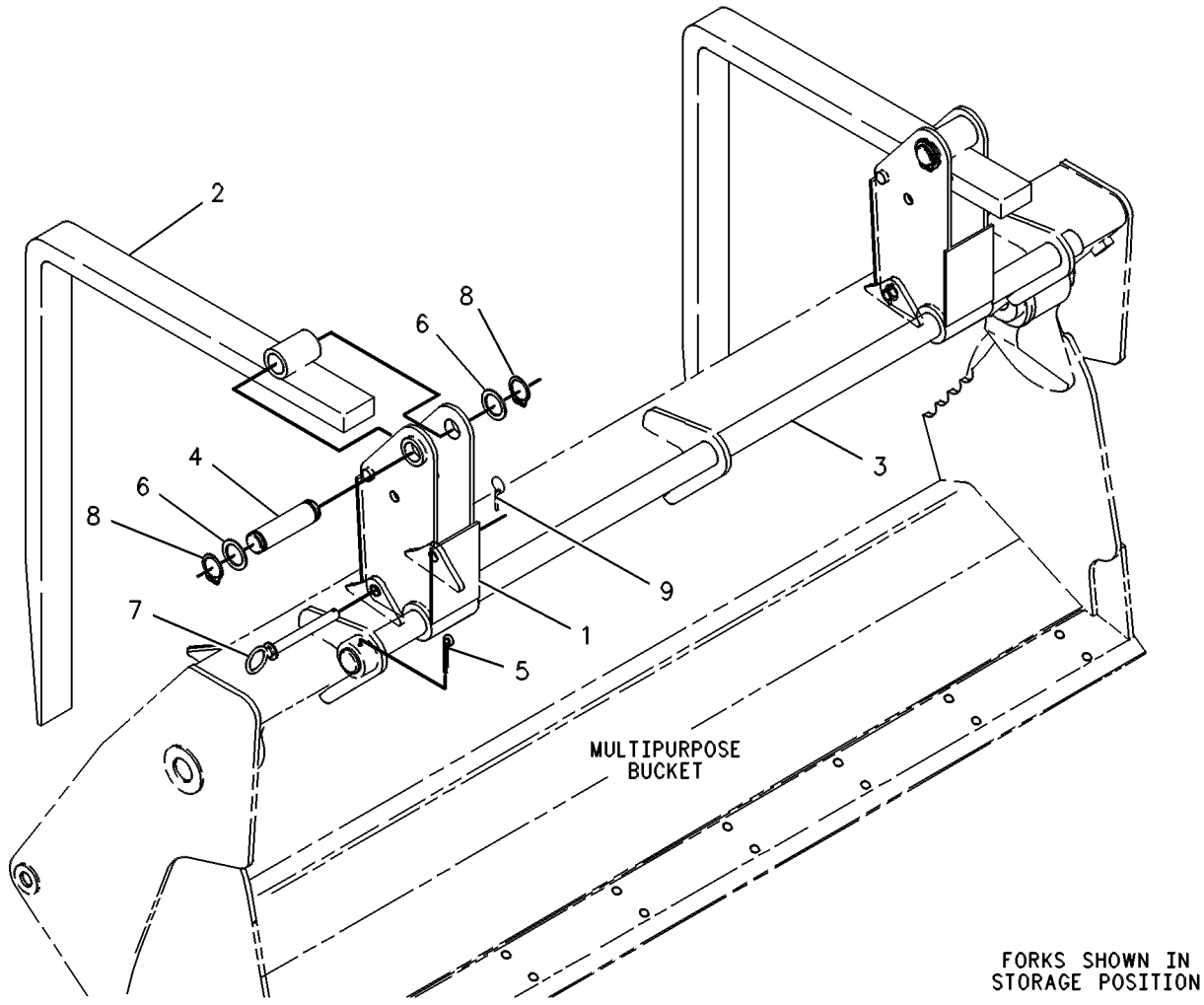

GRAPHIC #1 **<END>** g00131084

178-3593 MOUNTING GP-BUCKET—BACKHOE, QUICK COUPLER

S/N: CBD1-UP; MFG1-UP

AN ATTACHMENT

SMCS-6101 **i01456949**

NOTE	PART NUMBER	QTY	PART NAME 1 2 3 4 5 6 (PRODUCT LEVEL)	SEE PAGE
	3B-5319	4	PIN-COTTER	
	154-5279	1	PIN	
	154-5280	1	PIN	
B	**9R-0158**	5	WASHER (46X69X3-MM THK)	
B	**9R-1510**	5	WASHER (51X82X4-MM THK)	

B-USE AS REQUIRED

<END>

WORK TOOLS

215-9478 PIN GP-COUPLER—MACHINE

S/N: MFG1-UP
PART OF 222-7379 COUPLER AR-QUICK
AN ATTACHMENT

SMCS-6129 **i03860214**

NOTE	REF NO	GRAPHIC REF	PART NUMBER	QTY	PART NAME 1 2 3 4 5 6 (PRODUCT LEVEL)	SEE PAGE
	1	1	**215-3373**	1	PIN	
	2	1	**168-0425**	1	PIN	
M	3	1	**6V-7744**	2	LOCKNUT (M10X1.5-THD)	
M	4	1	**8T-4198**	2	BOLT (M10X1.5X100-MM)	

M-METRIC PART

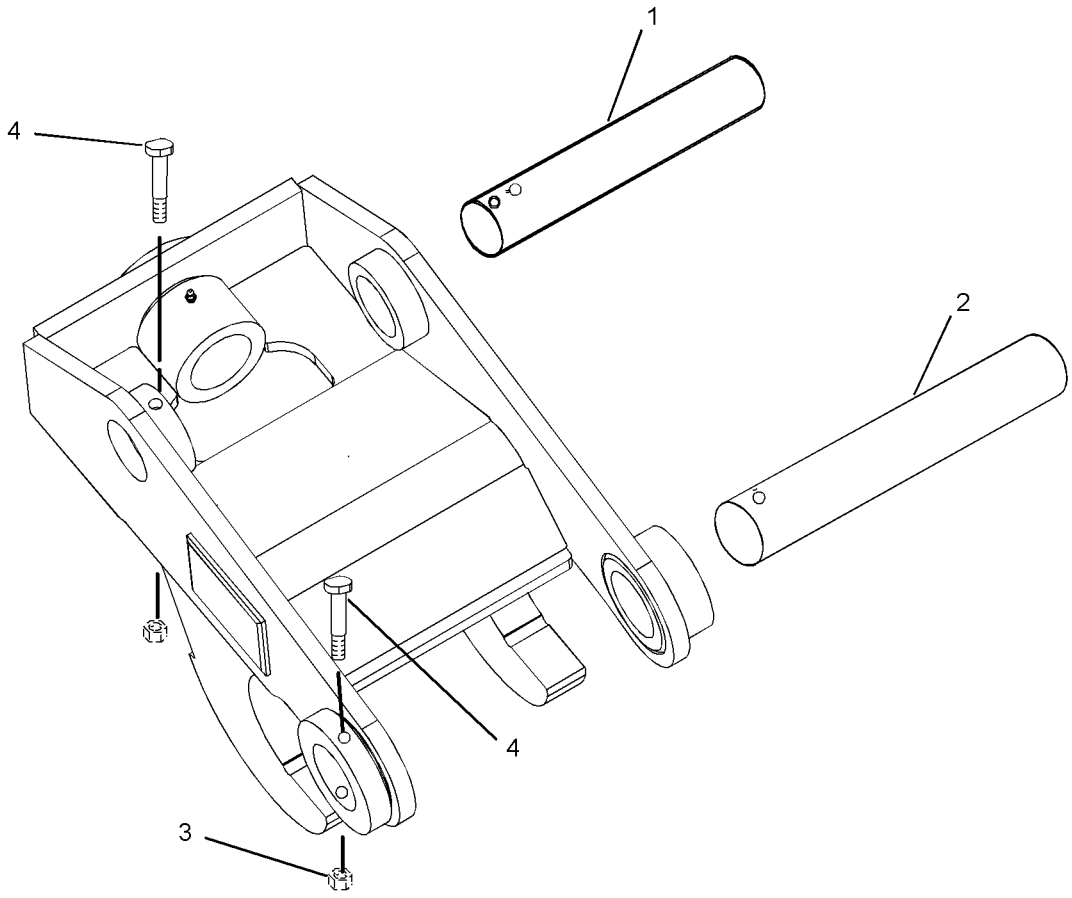

GRAPHIC #1 **<END>** g01224240

WORK TOOLS

216-0928 PIN GP-COUPLER—PIN-LOCK

S/N: MFG1-UP
PART OF 222-7379 COUPLER AR-QUICK
AN ATTACHMENT

SMCS-6129 **i03860216**

NOTE	REF NO	GRAPHIC REF	PART NUMBER	QTY	PART NAME 1 2 3 4 5 6 (PRODUCT LEVEL)	SEE PAGE
	1	1	**222-7411**	1	PIN AS	
	2	1	**216-3712**	1	PIN	

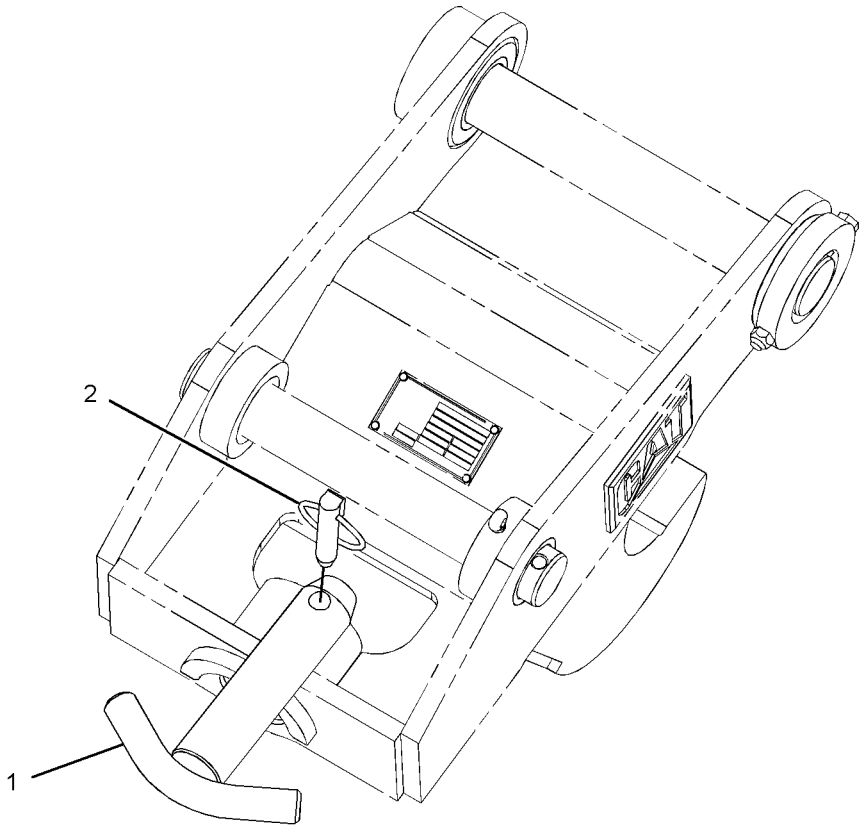

GRAPHIC #1 **<END>** g01239833

271-3025 THUMB AR–24-IN, HYD, HEAVY-DUTY, WITH COUPLER

S/N: CBD1-UP
AN ATTACHMENT
TYPE 1

SMCS-6547 **i02646504**

NOTE	REF NO	GRAPHIC REF	PART NUMBER	QTY	PART NAME 1 2 3 4 5 6 (PRODUCT LEVEL)	SEE PAGE
	1	1	**221-4283**	1	TINE AS-THUMB (24-IN)	
Y	2	1	*224-6237*	1	CYLINDER & LINES GP-THUMB	528
Y	3	1	*271-3023*	1	THUMB GP	895

Y-SEPARATE ILLUSTRATION

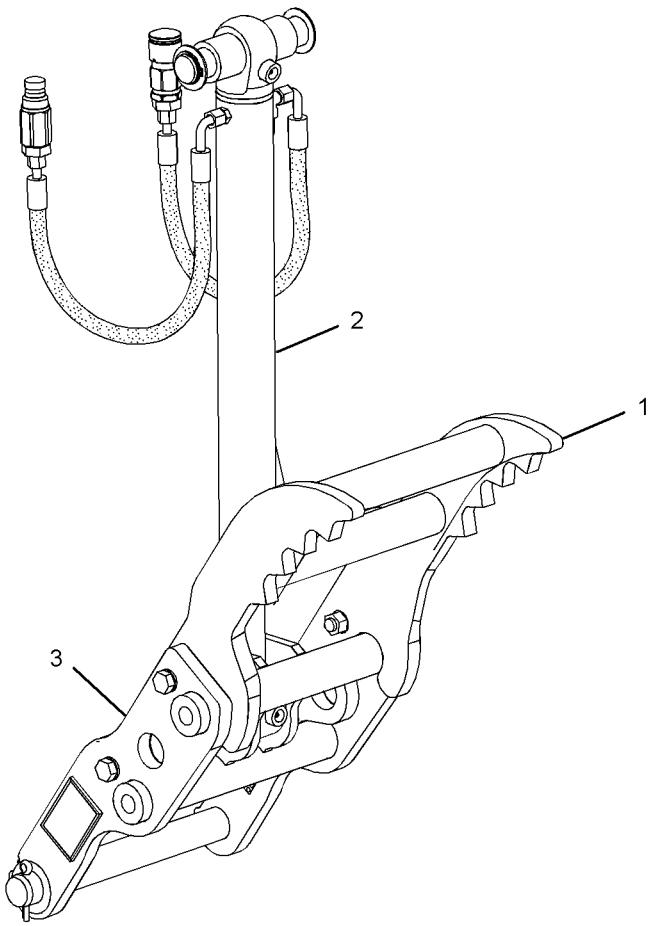

GRAPHIC #1 **<END>** g01234133

WORK TOOLS

271-3025 THUMB AR–24-IN, HYD, HEAVY-DUTY, WITH COUPLER

S/N: CBD1-UP
AN ATTACHMENT
TYPE 2

SMCS-6547 **i02922446**

NOTE	REF NO	GRAPHIC REF	PART NUMBER	QTY	PART NAME 1 2 3 4 5 6 (PRODUCT LEVEL)	SEE PAGE
	1	1	**221-4283**	1	TINE AS-THUMB (24-IN)	
Y	2	1	*224-6237*	1	CYLINDER & LINES GP-THUMB	528
Y	3	1	*271-3023*	1	THUMB GP (BACKHOE, COMMON)	895

Y-SEPARATE ILLUSTRATION

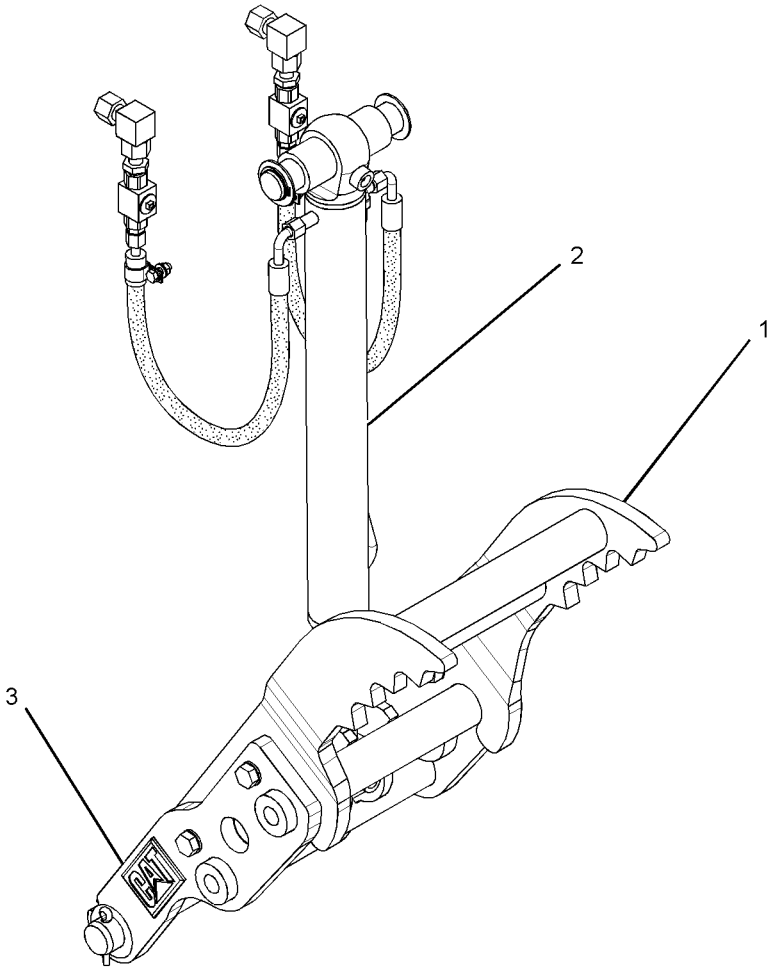

GRAPHIC #1 **<END>** g01459712

WORK TOOLS

271-3026 THUMB AR–24-IN, HYD, ROCK

S/N: CBD1-UP

AN ATTACHMENT

TYPE 1

SMCS-6547 **i02646505**

NOTE	REF NO	GRAPHIC REF	PART NUMBER	QTY	PART NAME 1 2 3 4 5 6 (PRODUCT LEVEL)	SEE PAGE
	1	1	**221-4284**	1	TINE AS-THUMB (24-IN, ROCK)	
Y	2	1	*224-6237*	1	CYLINDER & LINES GP-THUMB	528
Y	3	1	*271-3023*	1	THUMB GP	895

Y-SEPARATE ILLUSTRATION

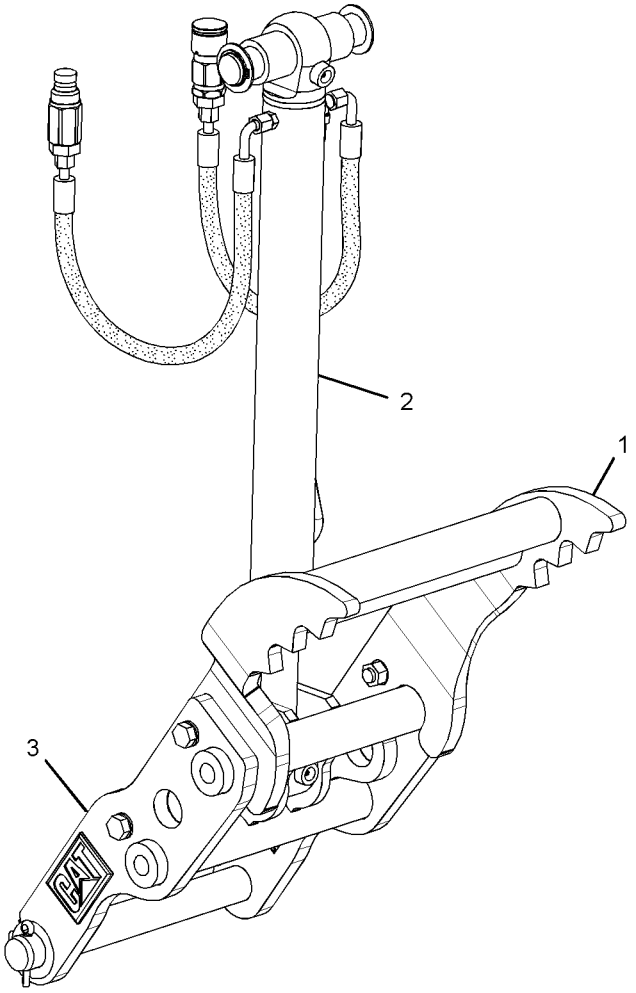

GRAPHIC #1 **<END>** g01335289

271-3026 THUMB AR–24-IN, HYD, ROCK

S/N: CBD1-UP
AN ATTACHMENT
TYPE 2

SMCS-6547 **i02922447**

NOTE	REF NO	GRAPHIC REF	PART NUMBER	QTY	PART NAME 1 2 3 4 5 6 (PRODUCT LEVEL)	SEE PAGE
	1	1	**221-4284**	1	TINE AS-THUMB (24-IN, ROCK)	
Y	2	1	*224-6237*	1	CYLINDER & LINES GP-THUMB	528
Y	3	1	*271-3023*	1	THUMB GP (BACKHOE, COMMON)	895

Y-SEPARATE ILLUSTRATION

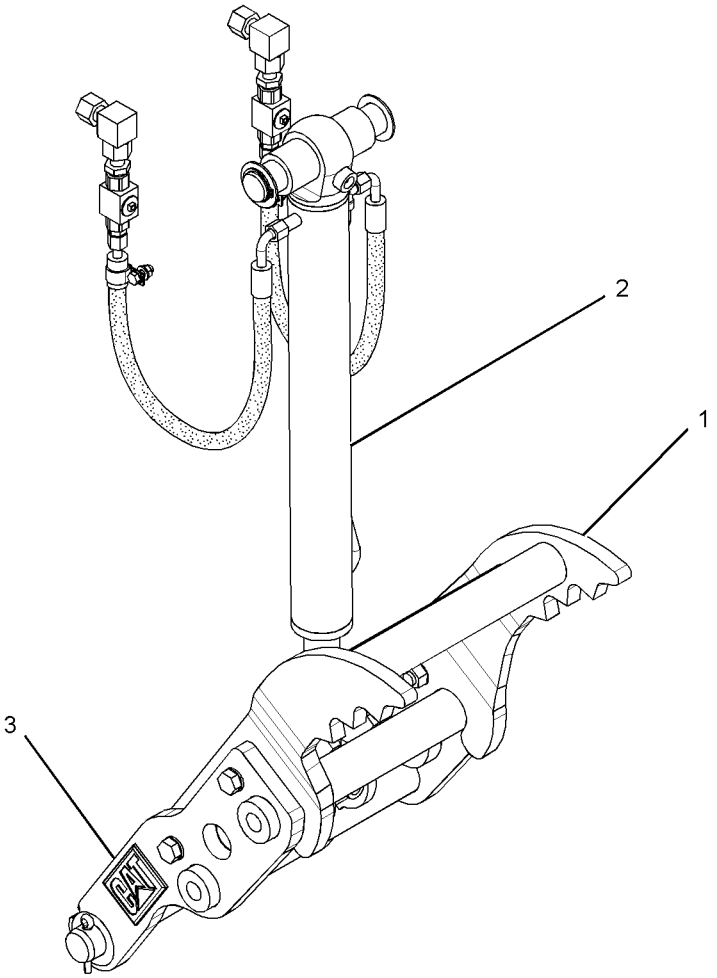

GRAPHIC #1 **<END>** g01459714

281-6716 THUMB AR–24-IN, HYD, WITH COUPLER

S/N: MFG1-UP

FOR USE WITH PIN GRABBER COUPLERS BUCKET

AN ATTACHMENT

SMCS-6547 **i03860135**

NOTE	REF NO	GRAPHIC REF	PART NUMBER	QTY	PART NAME 1 2 3 4 5 6 (PRODUCT LEVEL)	SEE PAGE
Y	1	1	*224-6237*	1	CYLINDER & LINES GP-THUMB	528
Y	2	1	*271-3023*	1	THUMB GP (BACKHOE, COMMON)	895
	3	1	**281-6708**	1	TINE AS-THUMB (24-IN)	

Y-SEPARATE ILLUSTRATION

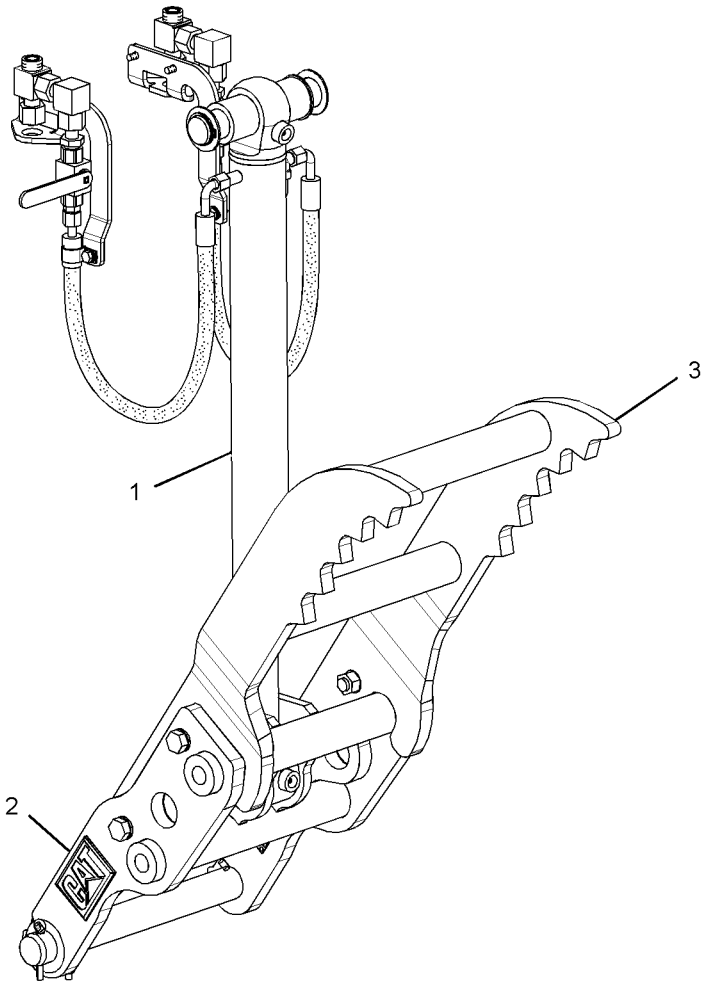

GRAPHIC #1 **<END>** g01370594

282-0887 THUMB AR–30-IN, HYD, HEAVY-DUTY

S/N: CBD1-UP
AN ATTACHMENT
TYPE 1

SMCS-6547 **i02646492**

NOTE	REF NO	GRAPHIC REF	PART NUMBER	QTY	PART NAME 1 2 3 4 5 6 (PRODUCT LEVEL)	SEE PAGE
Y	1	1	*224-6237*	1	CYLINDER & LINES GP-THUMB	528
Y	2	1	*271-3023*	1	THUMB GP (BACKHOE, COMMON)	895
	3	1	**274-5819**	1	TINE AS-THUMB (30-IN)	

Y-SEPARATE ILLUSTRATION

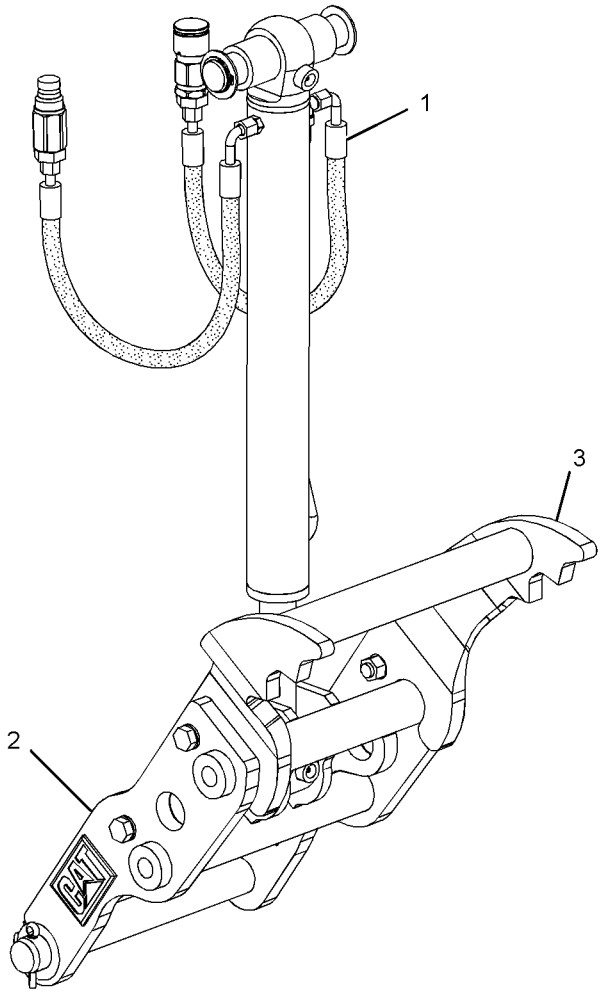

GRAPHIC #1 **<END>** g01234185

282-0887 THUMB AR—30-IN, HYD, HEAVY-DUTY

S/N: CBD1-UP
AN ATTACHMENT
TYPE 2

SMCS-6547 **i02922448**

NOTE	REF NO	GRAPHIC REF	PART NUMBER	QTY	PART NAME 1 2 3 4 5 6 (PRODUCT LEVEL)	SEE PAGE
Y	1	1	*224-6237*	1	CYLINDER & LINES GP-THUMB	528
Y	2	1	*271-3023*	1	THUMB GP (BACKHOE, COMMON)	895
	3	1	**274-5819**	1	TINE AS-THUMB (30-IN)	

Y-SEPARATE ILLUSTRATION

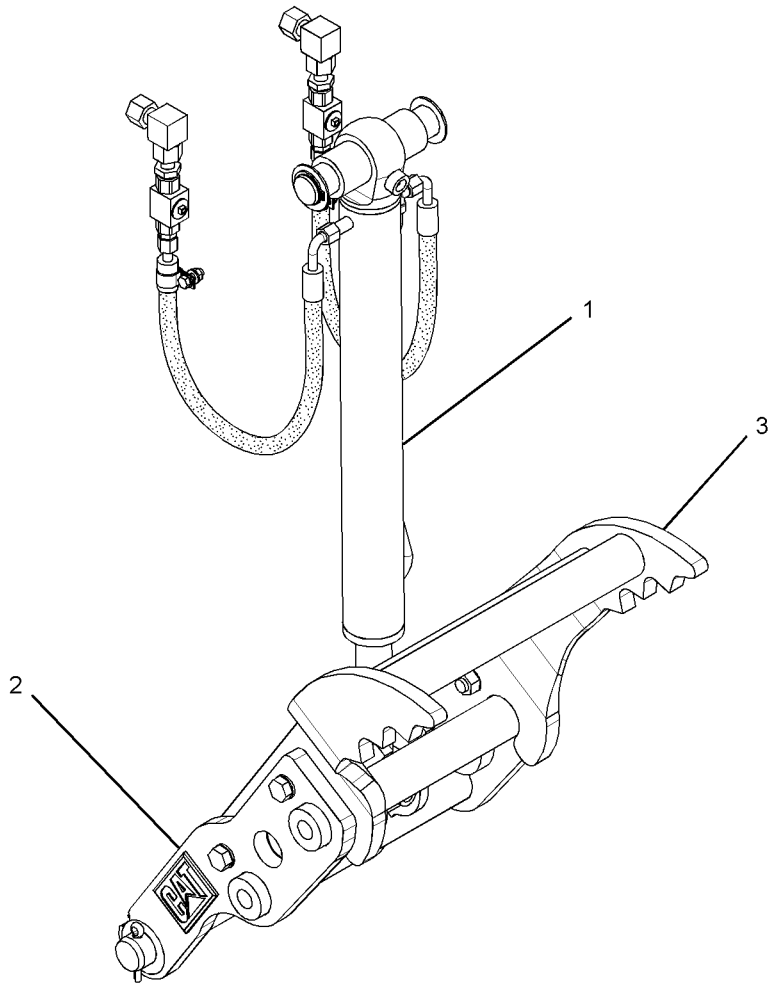

GRAPHIC #1 **<END>** g01460008

282-0888 THUMB AR–30-IN, HYD, HEAVY-DUTY, WITH COUPLER

S/N: CBD1-UP

FOR USE WITH 30" STANDARD DUTY BUCKETS WITH COUPLER, 30" HEAVY DUTY BUCKETS WITH COUPLER, 30" HIGH CAPACITY BUCKETS, 30" SOIL EXCAVATION BUCKETS

AN ATTACHMENT

TYPE 1

SMCS-6547 **i02646506**

NOTE	REF NO	GRAPHIC REF	PART NUMBER	QTY	PART NAME 1 2 3 4 5 6 (PRODUCT LEVEL)	SEE PAGE
Y	1	1	*224-6237*	1	CYLINDER & LINES GP-THUMB	528
Y	2	1	*271-3023*	1	THUMB GP (BACKHOE, COMMON)	895
	3	1	**274-5823**	1	TINE AS-THUMB (30-IN)	

Y-SEPARATE ILLUSTRATION

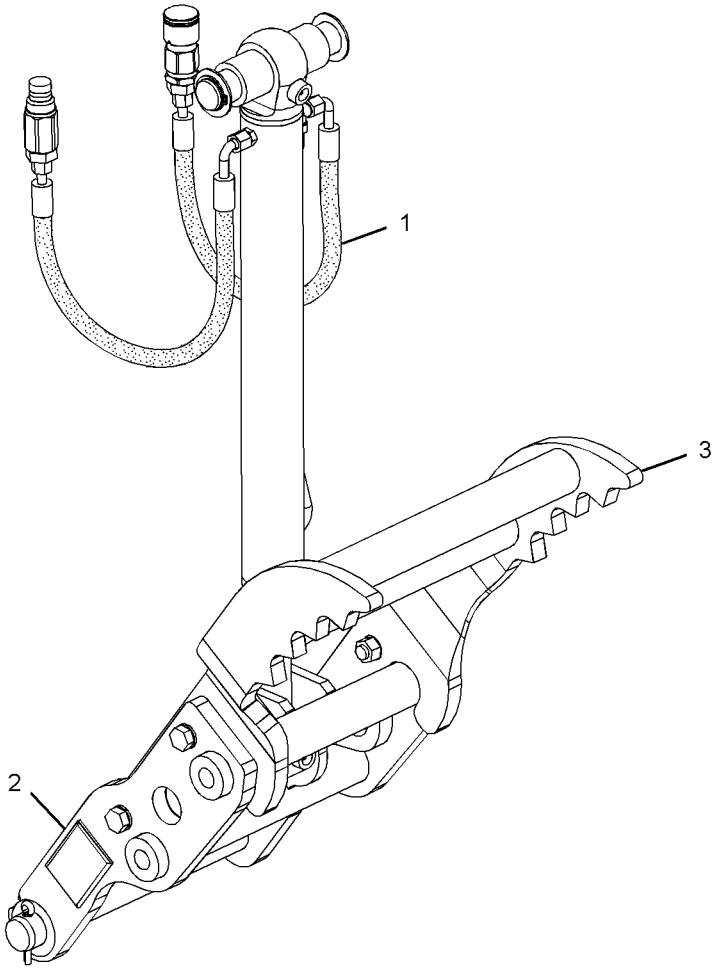

GRAPHIC #1 **<END>** g01234203

282-0888 THUMB AR–30-IN, HYD, HEAVY-DUTY, WITH COUPLER

S/N: CBD1-UP

FOR USE WITH 30" STANDARD DUTY BUCKETS WITH COUPLER, 30" HEAVY DUTY BUCKETS WITH COUPLER, 30" HIGH CAPACITY BUCKETS, 30" SOIL EXCAVATION BUCKETS

AN ATTACHMENT

TYPE 2

SMCS-6547 **i02922449**

NOTE	REF NO	GRAPHIC REF	PART NUMBER	QTY	PART NAME 1 2 3 4 5 6 (PRODUCT LEVEL)	SEE PAGE
Y	1	1	*224-6237*	1	CYLINDER & LINES GP-THUMB	528
Y	2	1	*271-3023*	1	THUMB GP (BACKHOE, COMMON)	895
	3	1	**274-5823**	1	TINE AS-THUMB (30-IN)	

Y-SEPARATE ILLUSTRATION

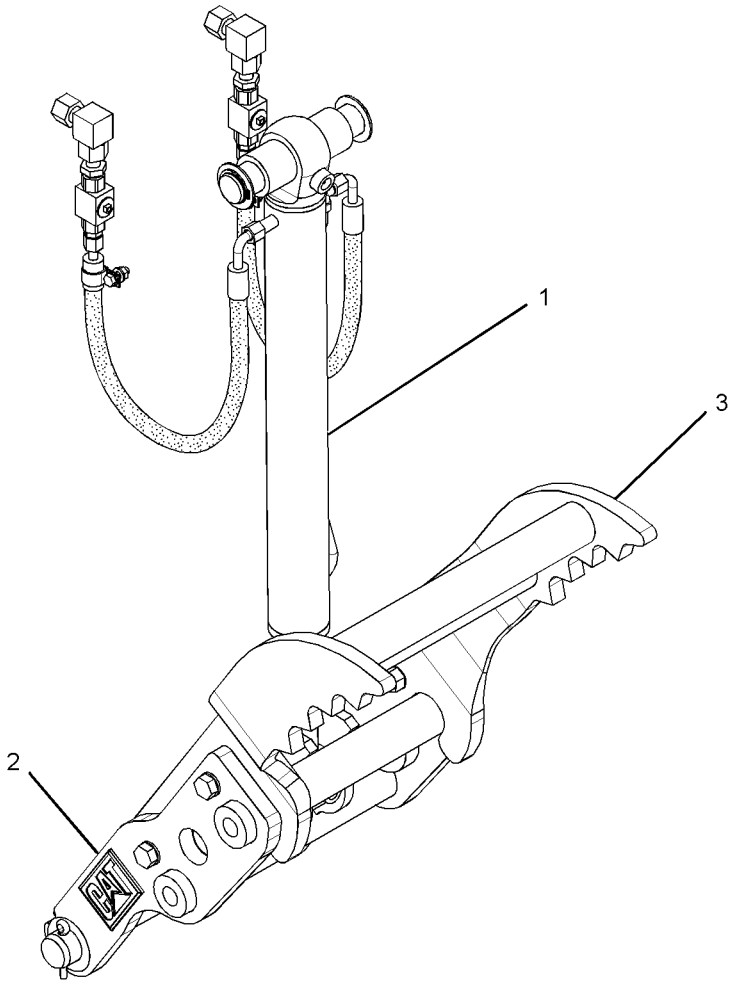

GRAPHIC #1 **<END>** g01459717

282-0889 THUMB AR–30-IN, HYD, ROCK

S/N: CBD1-UP

FOR USE WITH 30" HEAVY DUTY ROCK BUCKETS, 30" HEAVY DUTY PIN LOCK BUCKETS

AN ATTACHMENT

TYPE 1

SMCS-6547 **i02646507**

NOTE	REF NO	GRAPHIC REF	PART NUMBER	QTY	PART NAME 1 2 3 4 5 6 (PRODUCT LEVEL)	SEE PAGE
Y	1	1	*224-6237*	1	CYLINDER & LINES GP-THUMB	528
Y	2	1	*271-3023*	1	THUMB GP (BACKHOE, COMMON)	895
	3	1	**274-5826**	1	TINE AS-THUMB (30-IN, ROCK)	

Y-SEPARATE ILLUSTRATION

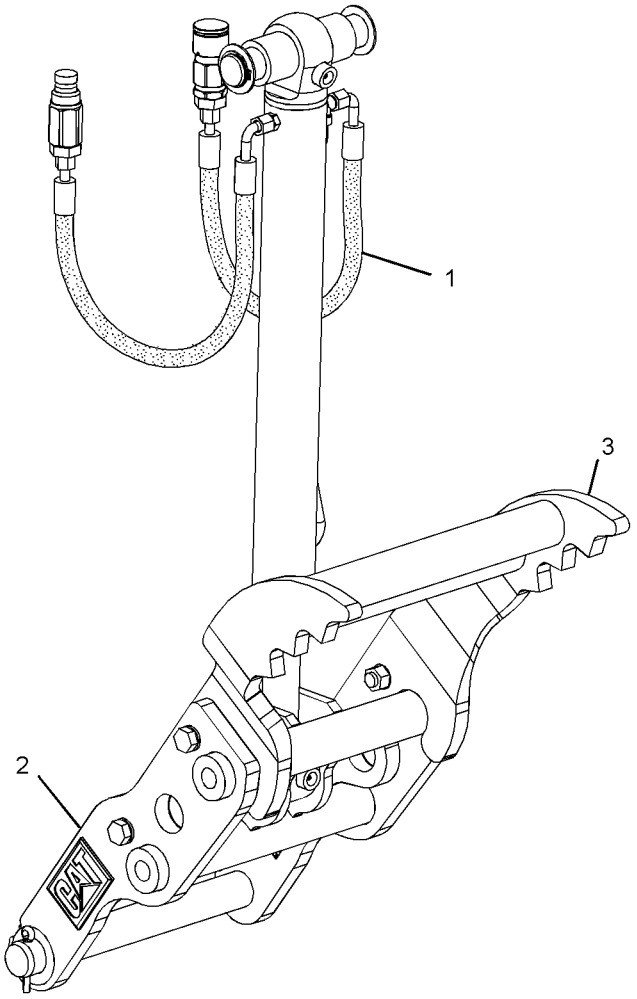

GRAPHIC #1 **<END>** g01234196

WORK TOOLS

282-0889 THUMB AR—30-IN, HYD, ROCK

S/N: CBD1-UP

FOR USE WITH 30" HEAVY DUTY ROCK BUCKETS, 30" HEAVY DUTY PIN LOCK BUCKETS

AN ATTACHMENT

TYPE 2

SMCS-6547 **i02922450**

NOTE	REF NO	GRAPHIC REF	PART NUMBER	QTY	PART NAME 1 2 3 4 5 6 (PRODUCT LEVEL)	SEE PAGE
Y	1	1	*224-6237*	1	CYLINDER & LINES GP-THUMB	528
Y	2	1	*271-3023*	1	THUMB GP (BACKHOE, COMMON)	895
	3	1	**274-5826**	1	TINE AS-THUMB (30-IN, ROCK)	

Y-SEPARATE ILLUSTRATION

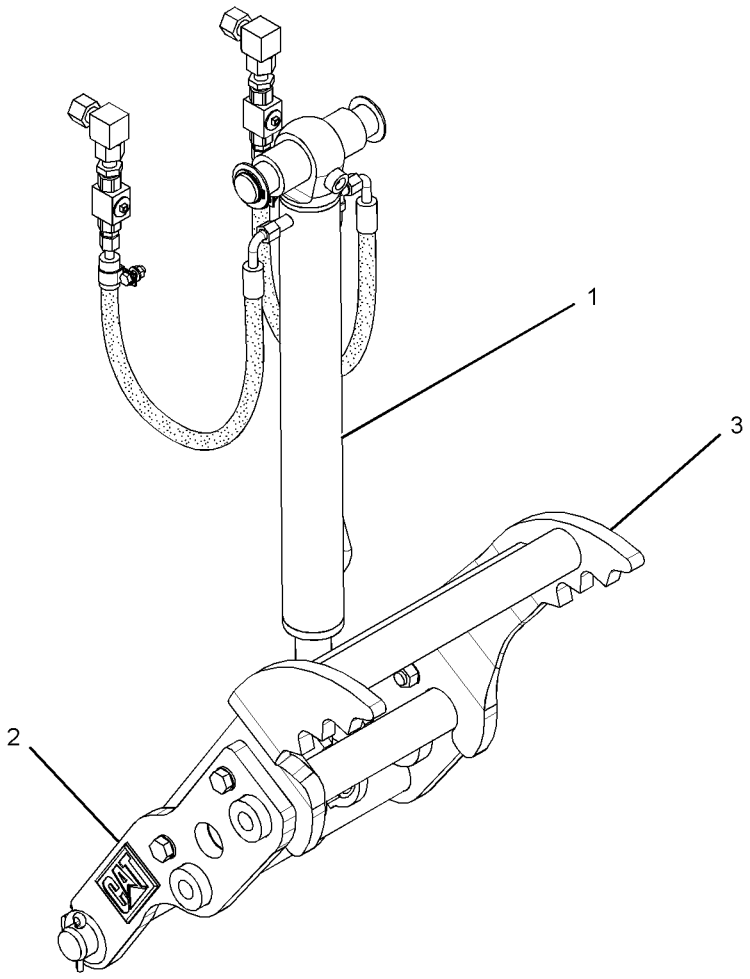

GRAPHIC #1 **<END>** g01460011

WORK TOOLS

221-4267 THUMB GP–BACKHOE

S/N: CBD1-UP; MFG1-UP
PART OF 271-3023 THUMB GP
AN ATTACHMENT

SMCS-6547 **i02646498**

NOTE	REF NO	GRAPHIC REF	PART NUMBER	QTY	PART NAME 1 2 3 4 5 6 (PRODUCT LEVEL)	SEE PAGE
	1	1	**221-4263**	1	LINK AS	
	1A	1	**154-2704**	1	PLATE-INSTRUCTION (BUCKET SPECIFICATIONS)	
	1B	1	**168-8389**	4	TACK-FASTENER	
	2	1	**3B-8489**	2	FITTING-GREASE	
	3	1	**8T-4123**	8	WASHER (22X35X3.5-MM THK)	
M	4	1	**8T-4131**	4	NUT (M20X2.5-THD)	
M	5	1	**8T-4187**	4	BOLT (M20X2.5X80-MM)	

M-METRIC PART

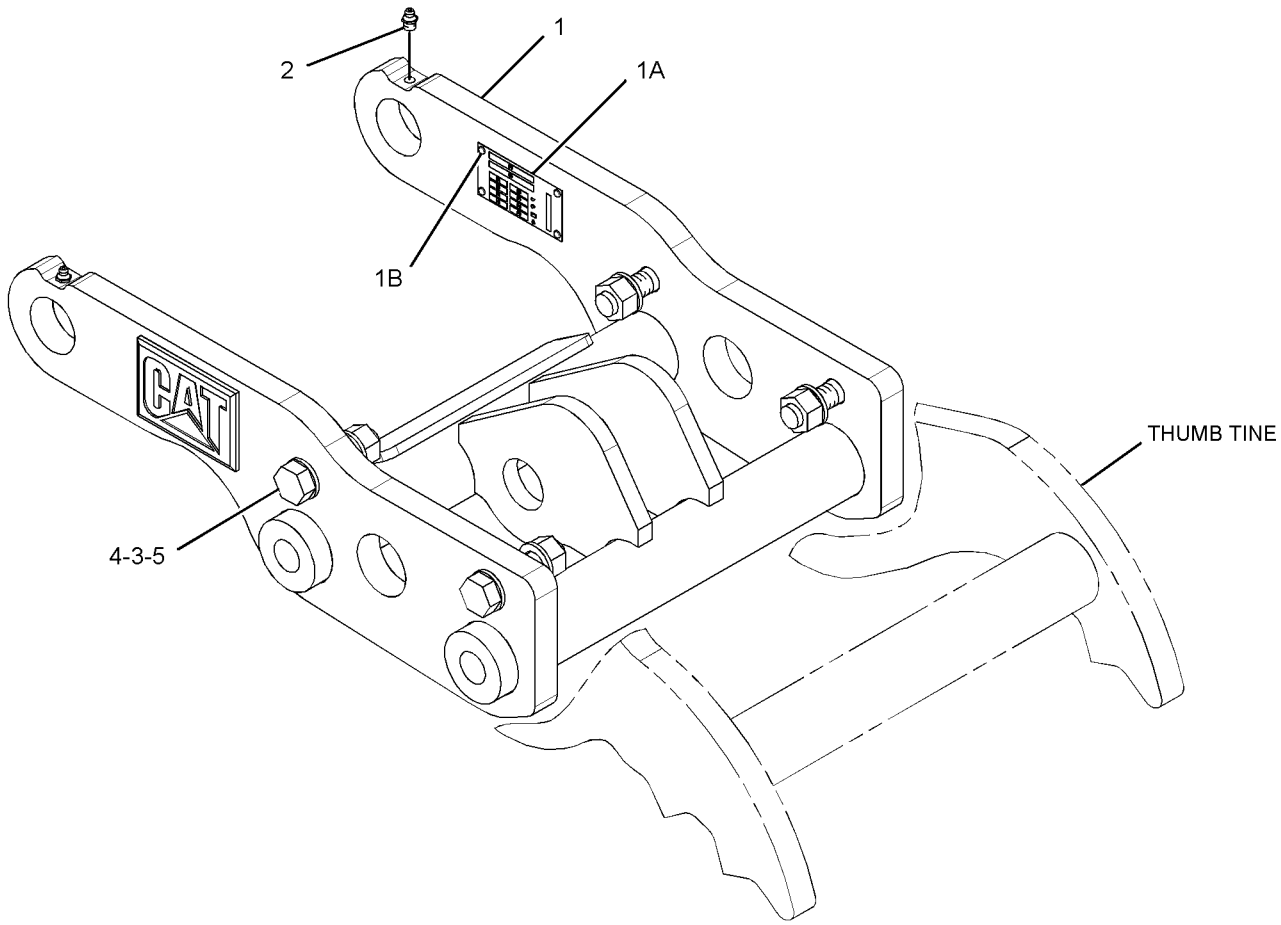

GRAPHIC #1 **<END>** g01335201

271-3023 THUMB GP—BACKHOE, COMMON

S/N: CBD1-UP; MFG1-UP

PART OF 271-3025, 271-3026, 281-6716, 282-0887, 282-0888, 282-0889 THUMB AR AN ATTACHMENT

SMCS-6547 **i02646496**

NOTE	REF NO	GRAPHIC REF	PART NUMBER	QTY	PART NAME 1 2 3 4 5 6 (PRODUCT LEVEL)	SEE PAGE
Y	1	1	*221-4267*	1	THUMB GP	894
Y	2	1	*263-8577*	1	MOUNTING GP-CYLINDER	680

Y-SEPARATE ILLUSTRATION

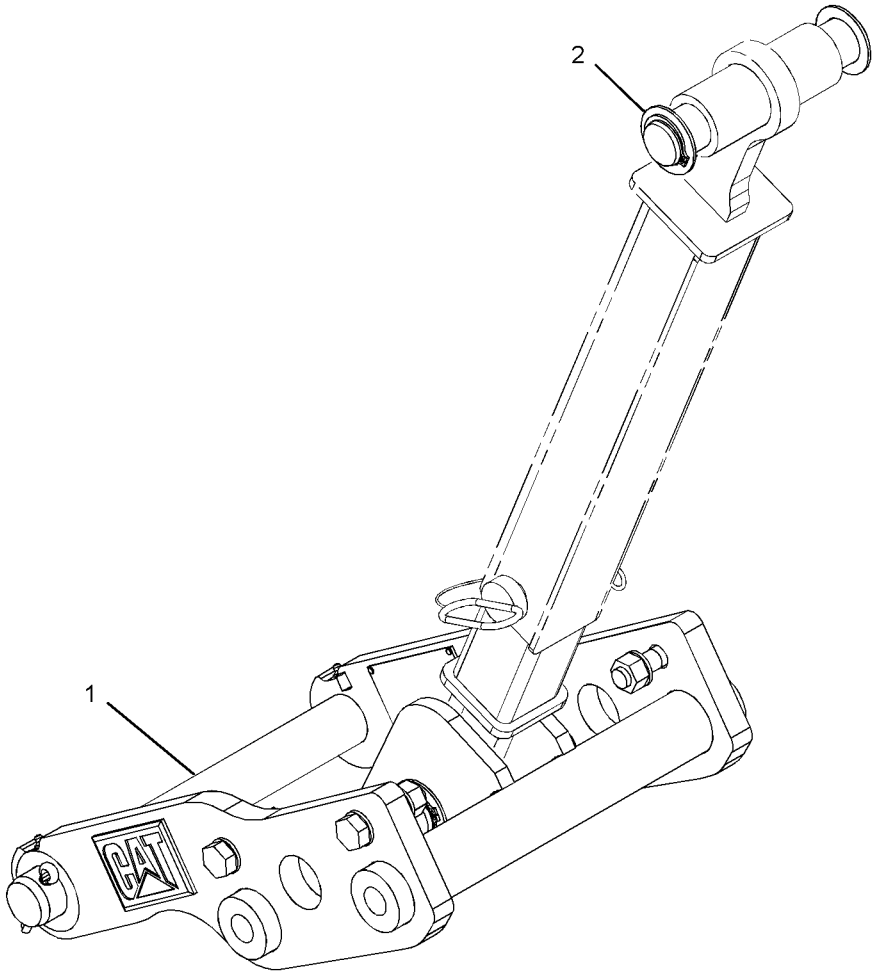

GRAPHIC #1 **<END>** g01234131

WORK TOOLS

9R-5866 TOOTH GP-UNI

S/N: CBD1-UP; MFG1-UP
PART OF 190-1055, 251-1788 BUCKET GP-GENERAL PURPOSE, 356-0068, 356-0069, 374-3518, 374-3519, 374-3521, 374-3529, 374-6533, 374-6534, 374-6535, 374-6536 DISTRIBUTION AR
AN ATTACHMENT

SMCS-6822 **i01854583**

NOTE	REF NO	GRAPHIC REF	PART NUMBER	QTY	PART NAME 1 2 3 4 5 6 (PRODUCT LEVEL)	SEE PAGE
	1	1	**135-8203**	8	TOOTH-UNI	
	2	1	**4F-3657**	16	BOLT-PLOW (5/8-11X2.75 IN)	
	3	1	**4K-0367**	16	NUT-FULL (5/8-11 THD)	

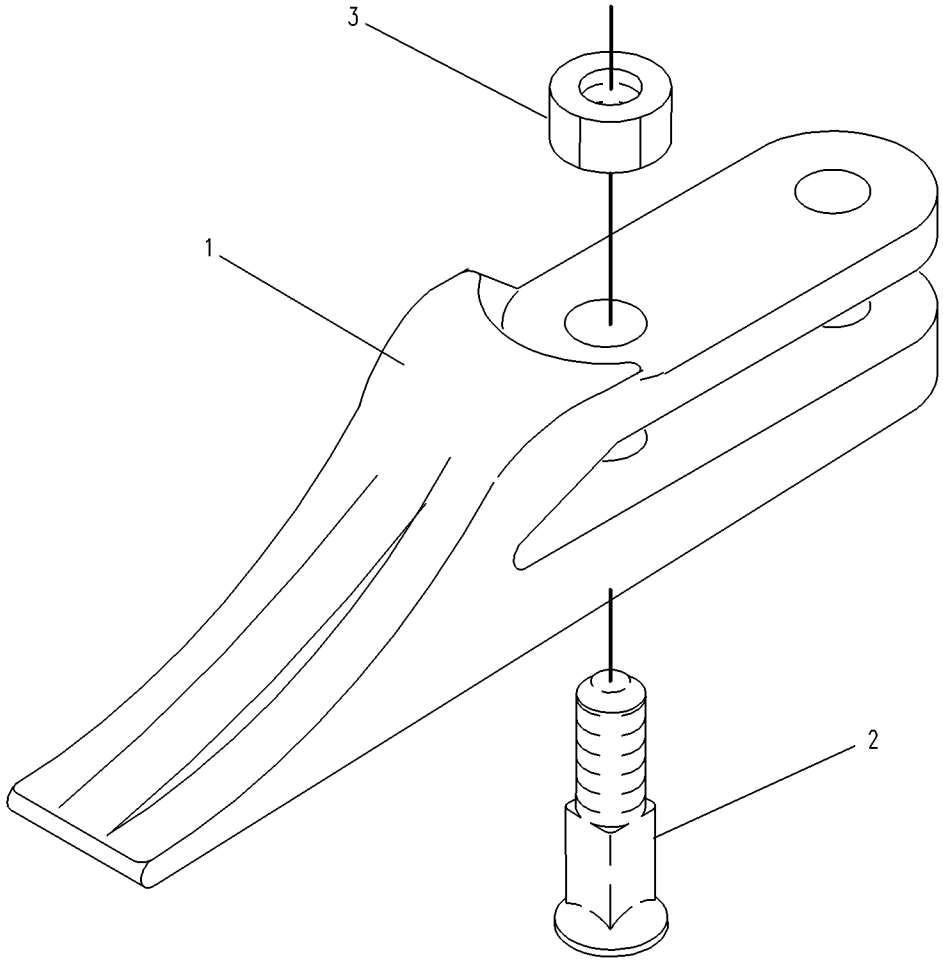

GRAPHIC #1 **<END>** g00130909

OPERATOR STATION

164-1278 ADJUSTER GP-SEAT

S/N: CBD1-UP

PART OF 164-1205 SEAT GP-STATIC

AN ATTACHMENT

SMCS-7321 **i01525310**

NOTE	REF NO	GRAPHIC REF	PART NUMBER	QTY	PART NAME 1 2 3 4 5 6 (PRODUCT LEVEL)	SEE PAGE
	1	1	**9X-2027**	4	WASHER (11X18X2-MM THK)	
	2	1	**164-1279**	1	BASE AS	
	3	1	**164-1281**	1	ROD	
	4	1	**164-1282**	1	HANDLE	
	5	1	**164-1287**	1	BRACKET AS	
	6	1	**164-1288**	1	BRACKET AS	
	7	1	**164-1290**	2	SPRING-TORSION	
	8	1	**164-1291**	4	BOLT-SHOULDER	
	9	1	**2K-4973**	8	LOCKNUT (3/8-16-THD)	
	10	1	**164-1283**	1	KIT-LATCH	
	11	1	**164-1286**	2	PLATE	
	12	1	**164-1289**	2	PLATE AS	
J	13	1	**7X-0605**	4	WASHER-HARD (13X28X1.6-MM THK)	
J	14	1	**1K-6872**	2	LOCKNUT (1/2-13-THD)	
J	15	1	**0S-1621**	2	BOLT (1/2-13X1-IN)	
J	16	1	**164-1280**	1	KIT-TETHER	

J-KIT MARKED J INCLUDES PARTS MARKED J

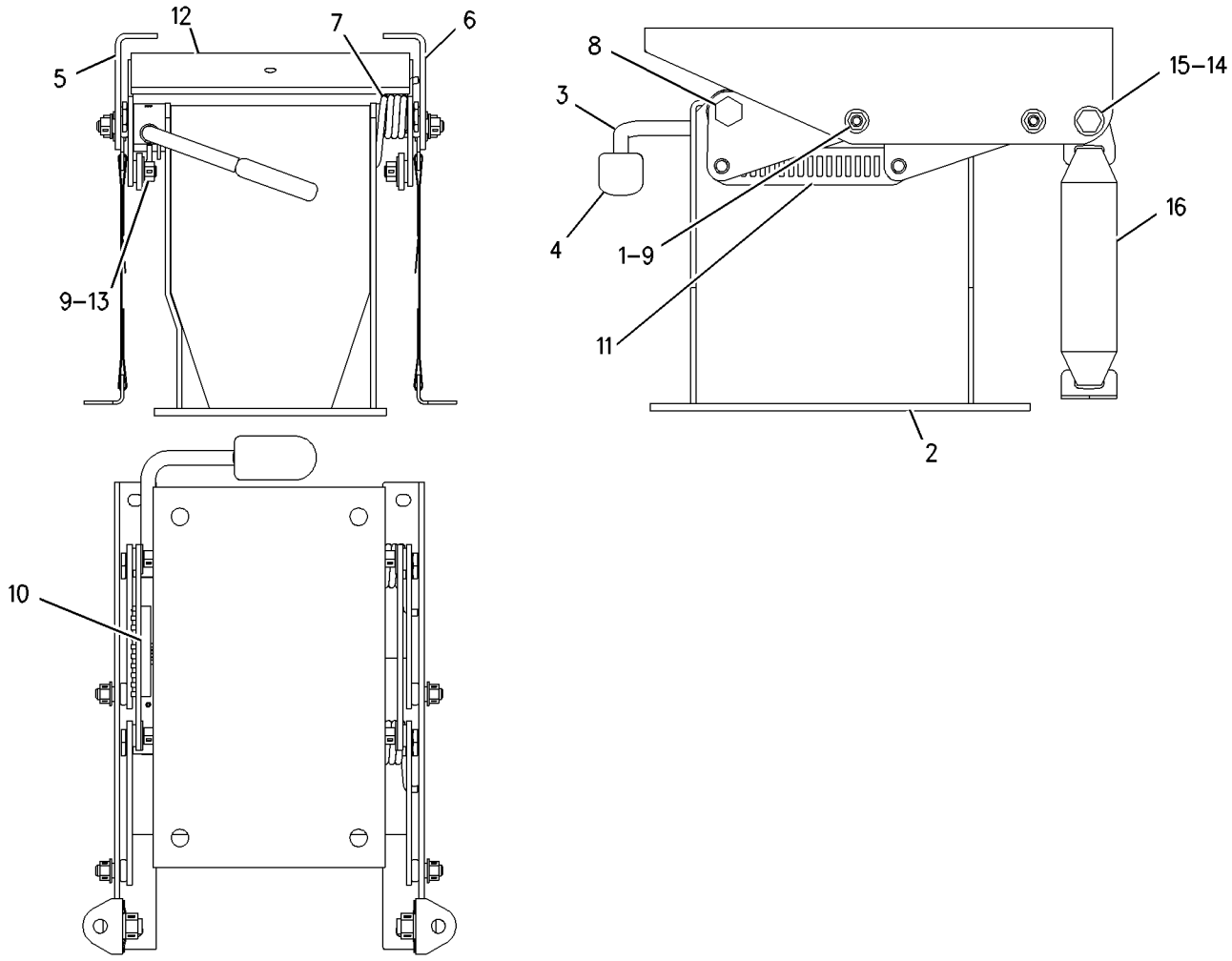

GRAPHIC #1 **<END>** g00744116

OPERATOR STATION

206-1801 AIR CONDITIONER & MOUNTING GP

S/N: CBD1-UP; MFG1-UP
PART OF 228-4602, 291-9195 CAB AR-ENCLOSED ROPS
AN ATTACHMENT

SMCS-7320 **i03996313**

NOTE	REF NO	GRAPHIC REF	PART NUMBER	QTY	PART NAME 1 2 3 4 5 6 (PRODUCT LEVEL)	SEE PAGE
	1	1	**221-2420**	2	HOSE-AIR	
E	2	1	**6V-6813**		HOSE (28-CM)	
	3	1	**6L-4725**	2	CLAMP-HOSE	
	4	1	**8Y-5737**	1	CLAMP (COMPRESSION)	
	5	1	**8Y-6967**	6	LOUVER AS-VENT	
	6	1	**9M-7959**	4	CLAMP-HOSE	
	7	1	**9N-2231**	1	GROMMET AS	
	8	1	**110-6109**	1	KNOB-CONTROL (AIR CONDITIONER)	
	9	1	**130-4832**	2	SCREW (8-18X10-MM)	
	10	1	**206-1684**	1	COVER (CAB FILTER)	
	11	1	**164-1368**	4	FASTENER-PANEL	
	12	1	**164-8474**	2	LOUVER AS-VENT	
	13	1	**189-0881**	1	CONTROL AS (PANEL)	
		1	**129-1831**	1	CLAMP	
	14	1	**193-3356**	1	CABLE AS	
	15	1	**194-5622**	1	VALVE AS-WATER (AIR CONDITIONER)	
		1	**6V-6717**	1	SCREW-WASHER HEAD (8-32X9.52-MM)	
		1	**124-0312**	2	SCREW-PAN HEAD (8-16X0.32-IN)	
	16	1	**206-1648**	1	LOUVER	
	17	1	**206-1653**	4	GASKET	
	18	1	**206-1682**	1	PANEL-CONTROL	
	19	1	**206-1803**	2	GASKET	
	20	1	**206-1804**	1	GASKET	
	21	1	**206-1805**	1	GASKET	
E	22	1	**220-0738**		SEAL (87-CM)	
	23	1	**206-1807**	1	GASKET	
	24	1	**206-1808**	1	PLATE	
	25	1	**206-1809**	1	ROD AS	
		1	**5B-3254**	1	NUT-JAM (7/16-20-THD)	
	26	1	**206-1810**	1	DUCT-AIR	
	27	1	**206-1812**	1	DUCT-AIR	
	28	1	**206-1814**	1	DUCT-AIR	
	29	1	**206-1815**	1	DUCT-AIR	
	30	1	**206-1816**	1	DUCT-AIR	
	31	1	**206-1817**	2	DUCT-AIR	
	32	1	**206-1818**	1	DUCT AS-AIR	
	33	1	**206-1846**	1	INSULATION	
	34	1	**206-1847**	1	INSULATION	
Y	35	1	**358-7087**	1	HEATER & AIR CONDITIONER GP	993
	36	1	**211-2661**	1	FILTER ELEMENT AS-AIR (CAB HEATER)	
	37	1	**218-0666**	6	LOUVER AS	
D	38	1	**5P-6129**		TUBE (1.1-M)	
	39	1	**255-0795**	1	FILM-IDENTIFICATION (TEMPERATURE CONTROL)	
	40	1	**5P-4116**	1	WASHER-HARD (8.8X20.5X2-MM THK)	
M	41	1	**111-4627**	3	SCREW-MACHINE (M6X1X30-MM)	
	42	1	**8Y-6352**	1	LOUVER AS	
	43	1	**7X-0579**	1	WASHER-HARD (8.8X25.5X2-MM THK)	
M	44	1	**8T-4200**	1	BOLT (M8X1.25X16-MM)	
	45	1	**9X-2038**	4	WASHER (7X19X2-MM THK)	
M	46	1	**9X-2045**	8	SCREW-TRUSS HEAD (M6X1X20-MM)	
	47	1	**3S-2093**	2	STRAP-CABLE	
	48	1	**4H-2558**	2	GROMMET	
	49	1	**8T-4205**	4	WASHER-HARD (7.2X14.5X2-MM THK)	

D-ORDER BY THE METER
E-ORDER BY THE CENTIMETER
M-METRIC PART
Y-SEPARATE ILLUSTRATION

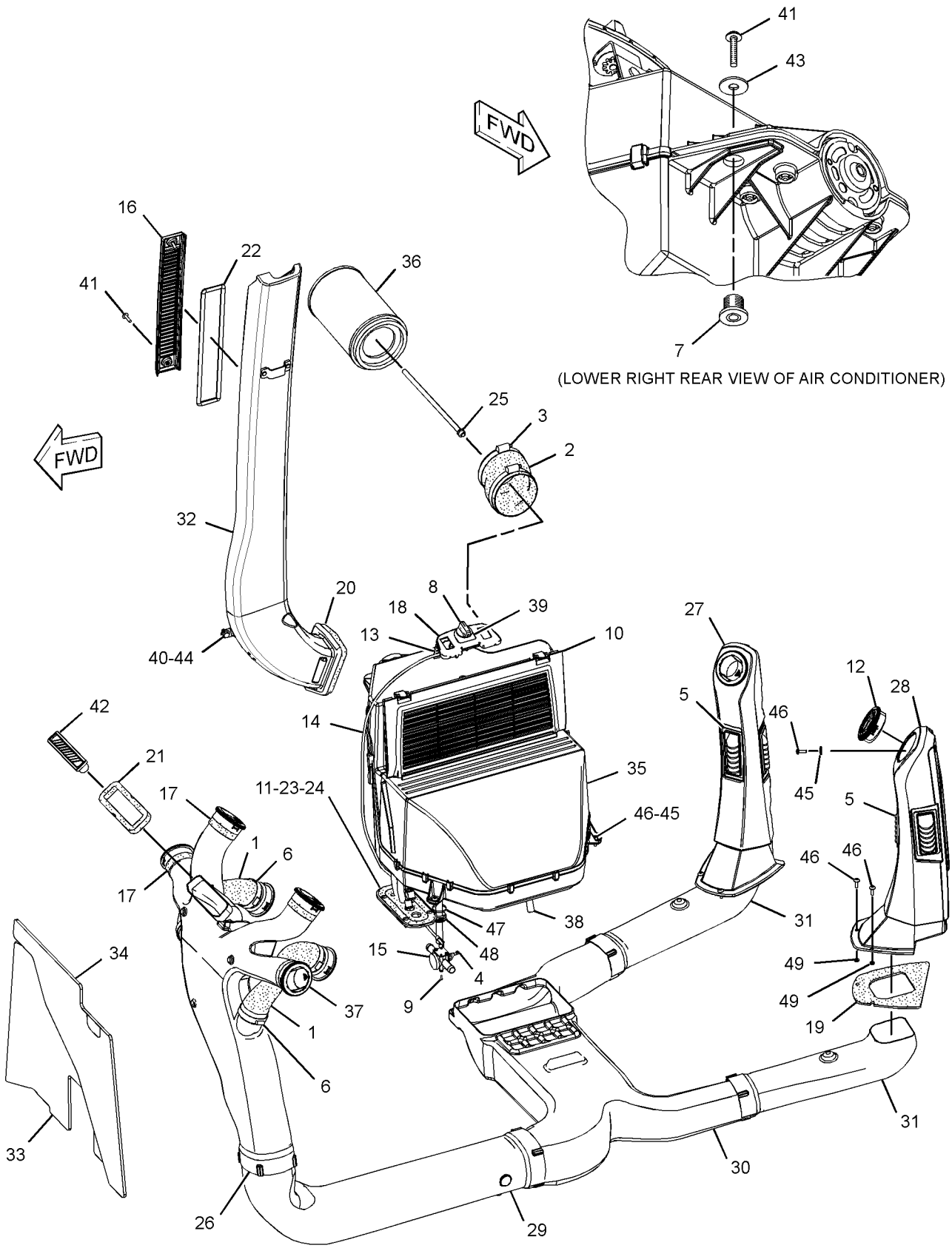

GRAPHIC #1 **<END>** g01576933

OPERATOR STATION

204-4161 CAB AR-ENCLOSED ROPS—SINGLE DOOR, WITHOUT A/C

S/N: CBD1-UP; MFG1-UP

AN ATTACHMENT

SMCS-7301, 7325 **i03385674**

NOTE	PART NUMBER	QTY	PART NAME 1 2 3 4 5 6 (PRODUCT LEVEL)	SEE PAGE
Y	**206-1888**	1	CAB GP-ENCLOSED ROPS	908
			—OR—	
Y	**309-3225**	1	CAB GP-ENCLOSED ROPS (SINGLE DOOR)	918
Y	*248-2720*	1	COMPARTMENT GP-LITERATURE (STORAGE BOX)	932
Y	*206-1700*	1	CONSOLE GP-OPERATOR (RH)	942
Y	*206-1703*	1	CONSOLE GP-OPERATOR (FRONT)	946
Y	*221-3002*	1	CONTROL & MTG GP-STABILIZER	948
Y	*206-1630*	1	CONTROL GP-STEERING	974
Y	*220-3785*	1	COVER GP-WIPER MOTOR	982
Y	*213-9311*	1	FAN GP-SUCTION (WITHOUT AIR CONDITIONER)	128
Y	*213-1891*	1	FENDER GP-REAR	475
Y	*206-1620*	1	FLOOR MAT GP	992
Y	*223-3968*	1	FLOORPLATE GP	481
			—OR—	
Y	*284-2753*	1	FLOORPLATE GP	482
Y	*206-1800*	1	HEATER GP-CAB	995
Y	*211-4276*	1	LIGHTING GP-FLOOD & SIGNAL (CAB, NACD)	259
Y	*211-0072*	1	LINES GP-HEATER	1010
Y	*259-6276*	1	MIRROR GP-REAR VIEW (INTERIOR)	1017
Y	*205-9560*	1	MOUNTING GP-CAB	1020
Y	*205-9568*	1	ROOF GP-CAB	1024
Y	*280-7365*	1	SEAT GP-SUSPENSION (CLOTH)	1036
Y	*206-1727*	1	WASHER GP-WINDOW	1049
Y	*206-1725*	1	WIPER GP-WINDOW	1068
Y	*211-4243*	1	WIRING GP-CONSOLE (SIDE)	291
Y	*211-4245*	1	WIRING GP-CONSOLE (FRONT)	294
Y	*211-4269*	1	WIRING GP-HEATER	313
Y	*211-4242*	1	WIRING GP-PLATFORM	323
	250-7912	1	FILM-IDENTIFICATION (CATERPILLAR, FRONT)	
			(ON FRONT WINDSHIELD)	
	251-5628	1	FILM-IDENTIFICATION (STABILIZER CONTROL)	
			(ON RH CONSOLE NEXT TO STABILIZER CONTROLS)	
	285-1207	1	MAT-PROTECTIVE	

Y-SEPARATE ILLUSTRATION

<END>

OPERATOR STATION

204-4162 CAB AR-ENCLOSED ROPS—DOUBLE DOOR, WITHOUT A/C

S/N: CBD1-UP; MFG1-UP

AN ATTACHMENT

SMCS-7301, 7325 **i03385781**

NOTE	PART NUMBER	QTY	PART NAME 1 2 3 4 5 6 (PRODUCT LEVEL)	SEE PAGE
Y	**206-1889**	1	CAB GP-ENCLOSED ROPS	912
			—OR—	
Y	**309-3226**	1	CAB GP-ENCLOSED ROPS	920
Y	*206-1700*	1	CONSOLE GP-OPERATOR (RH)	942
Y	*206-1703*	1	CONSOLE GP-OPERATOR (FRONT)	946
Y	*206-1702*	1	CONSOLE GP-OPERATOR (LH)	944
Y	*221-3002*	1	CONTROL & MTG GP-STABILIZER	948
Y	*206-1633*	1	CONTROL GP-STEERING	975
			—OR—	
Y	*218-4453*	1	CONTROL GP-STEERING	977
Y	*213-9311*	1	FAN GP-SUCTION (WITHOUT AIR CONDITIONER)	128
Y	*213-1891*	1	FENDER GP-REAR	475
Y	*206-1618*	1	FLOOR MAT GP	991
Y	*223-3968*	1	FLOORPLATE GP	481
			—OR—	
Y	*284-2753*	1	FLOORPLATE GP	482
Y	*206-1800*	1	HEATER GP-CAB	995
Y	*211-4277*	1	LIGHTING GP-FLOOD & SIGNAL (NACD, OPTIONAL)	261
Y	*209-4703*	1	LINER GP-CAB	1006
Y	*211-0072*	1	LINES GP-HEATER	1010
Y	*205-9578*	1	MIRROR GP-REAR VIEW (INTERIOR)	1015
Y	*205-9560*	1	MOUNTING GP-CAB	1020
Y	*205-9569*	1	ROOF GP-CAB	1026
Y	*280-7365*	1	SEAT GP-SUSPENSION (CLOTH)	1036
Y	*206-1727*	1	WASHER GP-WINDOW	1049
Y	*206-1725*	1	WIPER GP-WINDOW	1068
Y	*211-4243*	1	WIRING GP-CONSOLE (SIDE)	291
Y	*211-4245*	1	WIRING GP-CONSOLE (FRONT)	294
Y	*211-4269*	1	WIRING GP-HEATER	313
Y	*211-4242*	1	WIRING GP-PLATFORM	323
	250-7912	1	FILM-IDENTIFICATION (CATERPILLAR, FRONT)	
			(ON FRONT WINDSHIELD)	
	251-5628	1	FILM-IDENTIFICATION (STABILIZER CONTROL)	
			(ON RH CONSOLE NEXT TO STABILIZER CONTROLS)	
	285-1207	1	MAT-PROTECTIVE	
	5P-9768	1	PLUG-HOLE	

Y-SEPARATE ILLUSTRATION

<END>

OPERATOR STATION

228-4602 CAB AR-ENCLOSED ROPS—DOUBLE DOOR, WITH A/C

S/N: CBD1-UP; MFG1-UP

PART OF 356-0069, 374-3519, 374-3529, 374-6534, 374-6536 DISTRIBUTION AR

AN ATTACHMENT

SMCS-7301, 7325 **i03349282**

NOTE	PART NUMBER	QTY	PART NAME 1 2 3 4 5 6 (PRODUCT LEVEL)	SEE PAGE
Y	*206-1801*	1	AIR CONDITIONER & MOUNTING GP	898
Y	**206-1889**	1	CAB GP-ENCLOSED ROPS	912
			—OR—	
Y	**309-3226**	1	CAB GP-ENCLOSED ROPS	920
Y	*248-5025*	1	COMPRESSOR & MTG GP-REFRIG	933
Y	*211-0705*	1	CONDENSER & MTG GP-REFRIGERANT	940
Y	*206-1702*	1	CONSOLE GP-OPERATOR (LH)	944
Y	*206-1700*	1	CONSOLE GP-OPERATOR (RH)	942
Y	*206-1703*	1	CONSOLE GP-OPERATOR (FRONT)	946
Y	*221-3002*	1	CONTROL & MTG GP-STABILIZER	948
Y	*206-1633*	1	CONTROL GP-STEERING	975
			—OR—	
Y	*218-4453*	1	CONTROL GP-STEERING	977
Y	*266-2234*	1	FAN GP-SUCTION (WITH AIR CONDITIONER)	129
Y	*213-1891*	1	FENDER GP-REAR	475
Y	*206-1618*	1	FLOOR MAT GP	991
Y	*284-2753*	1	FLOORPLATE GP	482
Y	*211-4277*	1	LIGHTING GP-FLOOD & SIGNAL (NACD, OPTIONAL)	261
Y	*209-4703*	1	LINER GP-CAB	1006
Y	*211-0071*	1	LINES GP-HEATER & AIR COND	1011
Y	*205-9578*	1	MIRROR GP-REAR VIEW (INTERIOR)	1015
Y	*205-9560*	1	MOUNTING GP-CAB	1020
Y	*205-9569*	1	ROOF GP-CAB	1026
Y	*280-7365*	1	SEAT GP-SUSPENSION (CLOTH)	1036
Y	*206-1727*	1	WASHER GP-WINDOW	1049
Y	*206-1725*	1	WIPER GP-WINDOW	1068
Y	*211-4268*	1	WIRING GP-AIR CONDITIONER	282
Y	*211-4243*	1	WIRING GP-CONSOLE (SIDE)	291
Y	*211-4245*	1	WIRING GP-CONSOLE (FRONT)	294
Y	*211-4242*	1	WIRING GP-PLATFORM	323
	251-5628	1	FILM-IDENTIFICATION (STABILIZER CONTROL)	
			(ON RH CONSOLE NEXT TO STABILIZER CONTROLS)	
	250-7912	1	FILM-IDENTIFICATION (CATERPILLAR, FRONT)	
			(ON FRONT WINDSHIELD)	
	285-1207	1	MAT-PROTECTIVE	
	5P-9768	1	PLUG-HOLE	

Y-SEPARATE ILLUSTRATION

<END>

OPERATOR STATION

291-9195 CAB AR-ENCLOSED ROPS—DOUBLE DOOR, WITH A/C

S/N: MFG1-UP

AN ATTACHMENT

SMCS-7301, 7325 **i03857015**

NOTE	PART NUMBER	QTY	PART NAME 1 2 3 4 5 6 (PRODUCT LEVEL)	SEE PAGE
Y	*206-1801*	1	AIR CONDITIONER & MOUNTING GP	898
Y	**309-3226**	1	CAB GP-ENCLOSED ROPS	920
Y	*299-1055*	1	COMPRESSOR GP-REFRIGERANT	938
Y	*301-9725*	1	CONDENSER & MTG GP-REFRIGERANT	941
Y	*206-1700*	1	CONSOLE GP-OPERATOR (RH)	942
Y	*206-1702*	1	CONSOLE GP-OPERATOR (LH)	944
Y	*206-1703*	1	CONSOLE GP-OPERATOR (FRONT)	946
Y	*221-3002*	1	CONTROL & MTG GP-STABILIZER	948
Y	*218-4453*	1	CONTROL GP-STEERING (TILT)	977
Y	*299-4716*	1	FAN GP-SUCTION (WITH AIR CONDITIONER)	133
Y	*213-1891*	1	FENDER GP-REAR	475
Y	*206-1618*	1	FLOOR MAT GP	991
Y	*284-2753*	1	FLOORPLATE GP	482
Y	*211-4277*	1	LIGHTING GP-FLOOD & SIGNAL (NACD, OPTIONAL)	261
Y	*209-4703*	1	LINER GP-CAB	1006
Y	*297-5250*	1	LINES GP-HEATER & AIR COND	1013
Y	*205-9578*	1	MIRROR GP-REAR VIEW (INTERIOR)	1015
Y	*205-9560*	1	MOUNTING GP-CAB	1020
Y	*205-9569*	1	ROOF GP-CAB	1026
Y	*280-7365*	1	SEAT GP-SUSPENSION (CLOTH)	1036
Y	*206-1727*	1	WASHER GP-WINDOW	1049
Y	*206-1725*	1	WIPER GP-WINDOW	1068
Y	*290-6732*	1	WIRING GP-AIR CONDITIONER	288
Y	*290-6737*	1	WIRING GP-CONSOLE (SIDE)	296
Y	*290-6722*	1	WIRING GP-PLATFORM	339
	250-7912	1	FILM-IDENTIFICATION (CATERPILLAR, FRONT)	
	251-5628	1	FILM-IDENTIFICATION (STABILIZER CONTROL)	
	285-1207	1	MAT-PROTECTIVE (HEAVY-DUTY)	
	5P-9768	1	PLUG-HOLE	
	227-1057	1	PLUG-HOLE	

Y-SEPARATE ILLUSTRATION

<END>

OPERATOR STATION

288-8043 CAB AS

S/N: CBD1405-UP
PART OF 206-1888 CAB GP-ENCLOSED ROPS
AN ATTACHMENT

SMCS-7301 **i03045481**

NOTE	REF NO	GRAPHIC REF	PART NUMBER	QTY	PART NAME 1 2 3 4 5 6 (PRODUCT LEVEL)	SEE PAGE
	1	1	**5D-9629**	2	ROD	
	2	1	**204-4175**	1	ROPS AS	
	3	1	**205-9566**	1	POST AS	
	4	1	**205-9567**	1	POST AS	
	5	1	**206-1717**	1	BRACKET	
	6	1	**234-0095**	2	INSERT-THREADED (M6X1-THD)	
M	7	1	**6V-9632**	4	NUT-WELD (M6X1-THD)	
	8	1	**7T-1099**	28	LINK	
M	9	1	**8T-3612**	10	NUT-WELD (M8X1.25-THD)	

M-METRIC PART

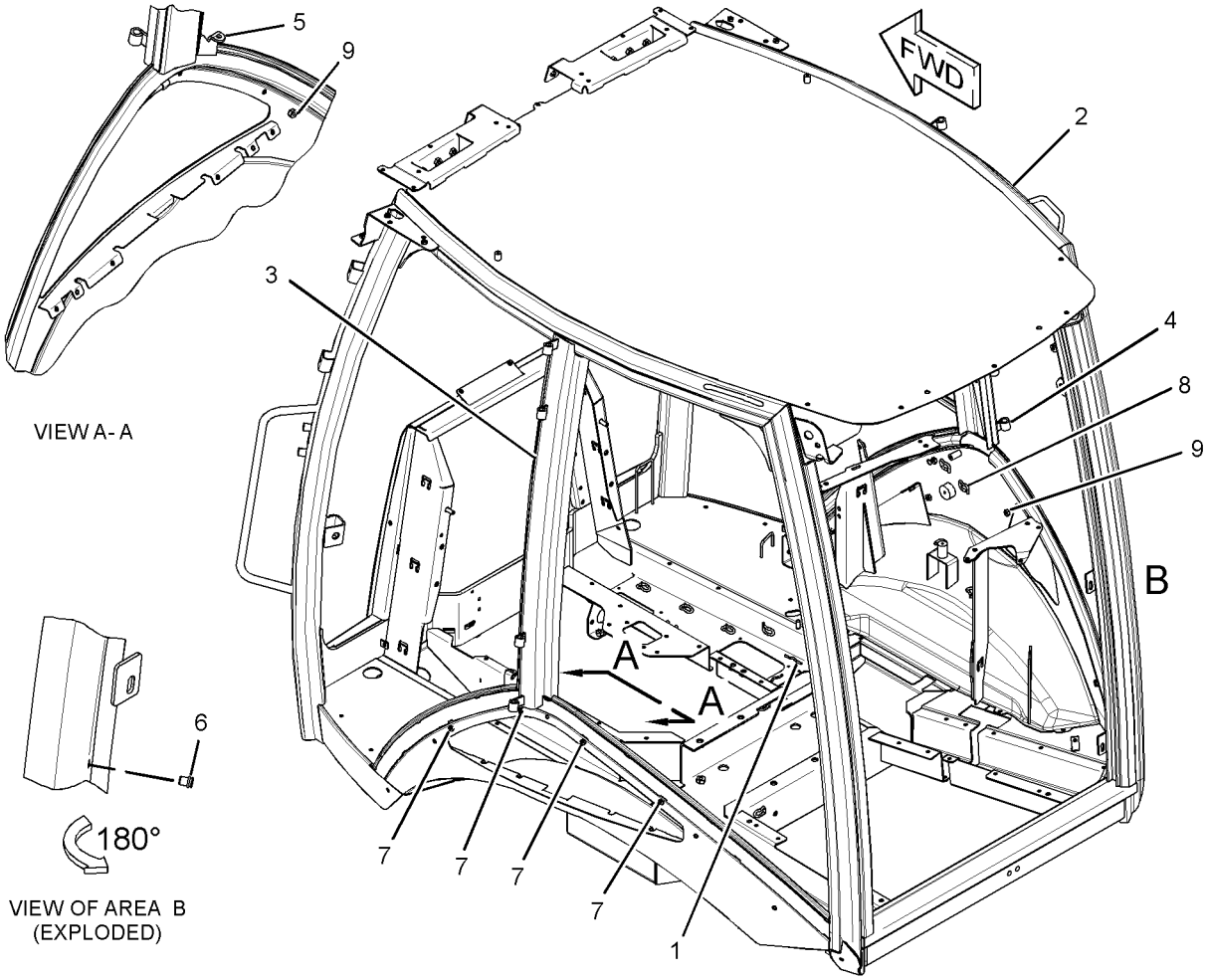

GRAPHIC #1 **<END>** g01390055

OPERATOR STATION

288-8044 CAB AS

S/N: CBD1-UP

PART OF 206-1889 CAB GP-ENCLOSED ROPS

AN ATTACHMENT

SMCS-7301 **i03045530**

NOTE	REF NO	GRAPHIC REF	PART NUMBER	QTY	PART NAME 1 2 3 4 5 6 (PRODUCT LEVEL)	SEE PAGE
	1	2	**5D-9629**	2	ROD	
	2	1	**204-4175**	1	ROPS AS	
	3	1	**205-9566**	1	POST AS	
	4	1	**205-9567**	1	POST AS	
	5	1	**206-1717**	1	BRACKET	
	6	1	**234-0095**	2	INSERT-THREADED (M6X1-THD)	
M	7	1	**6V-9632**	4	NUT-WELD (M6X1-THD)	
	8	1,2	**7T-1099**	28	LINK	
M	9	1,2	**8T-3612**	10	NUT-WELD (M8X1.25-THD)	

M-METRIC PART

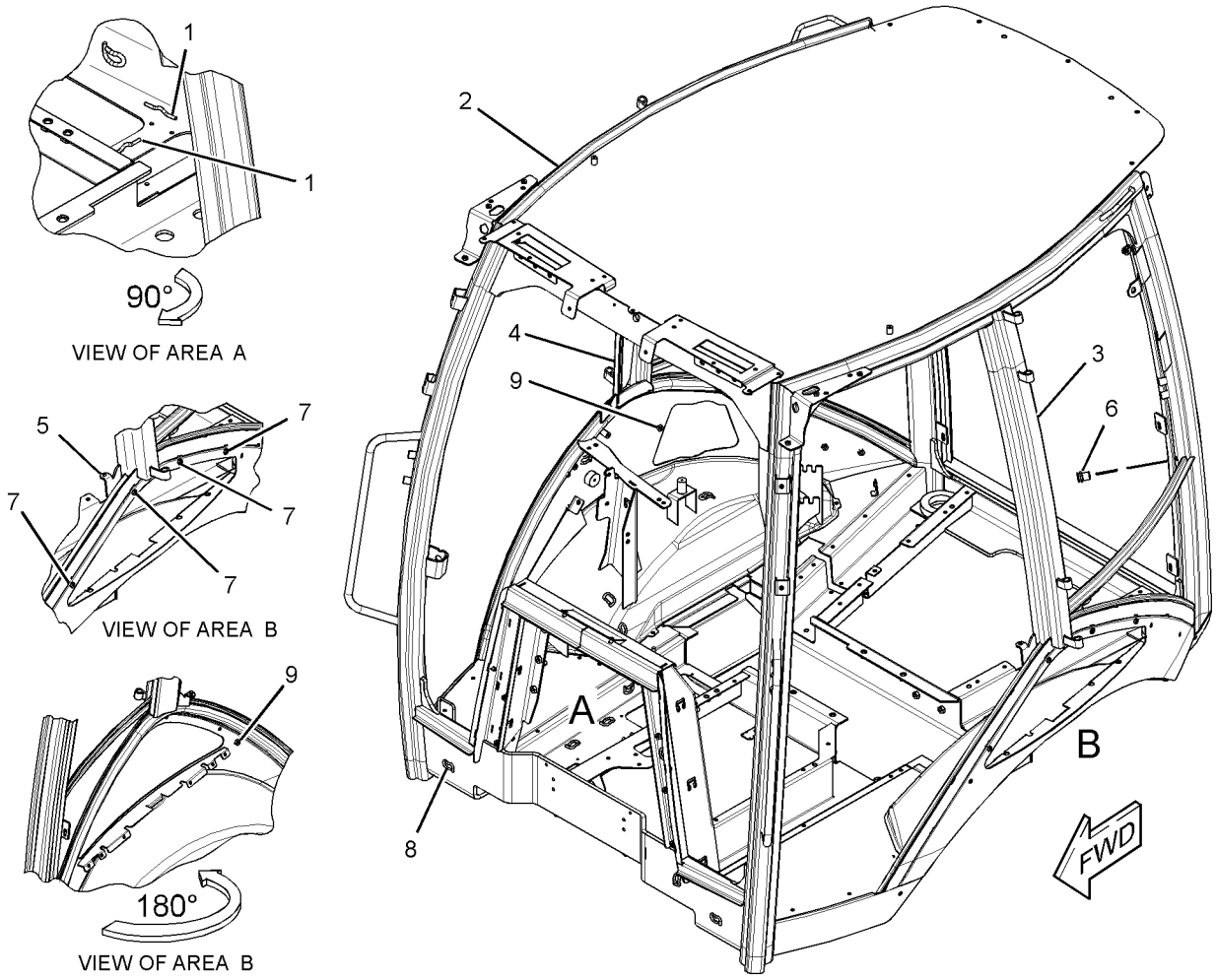

GRAPHIC #1 g01352257

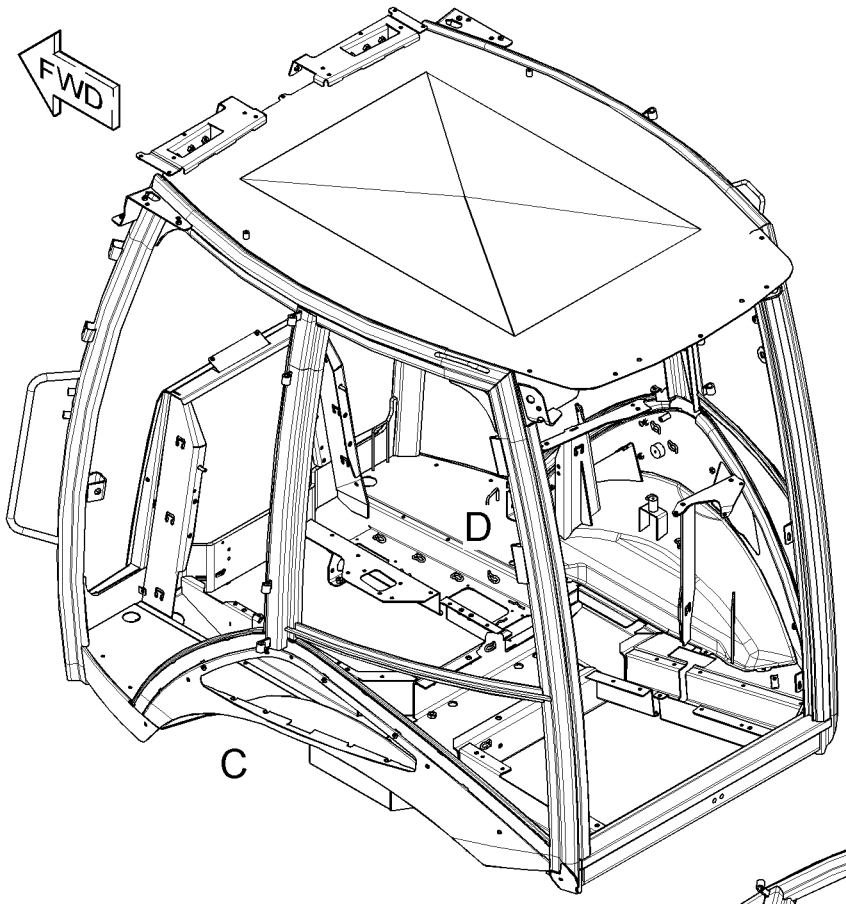

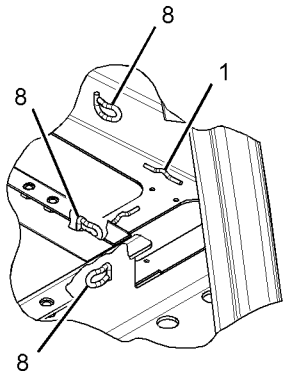

VIEW OF AREA D

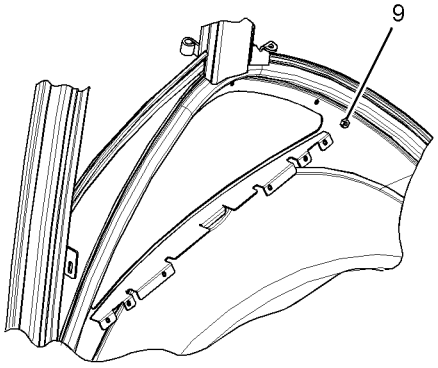

VIEW OF AREA C

90°

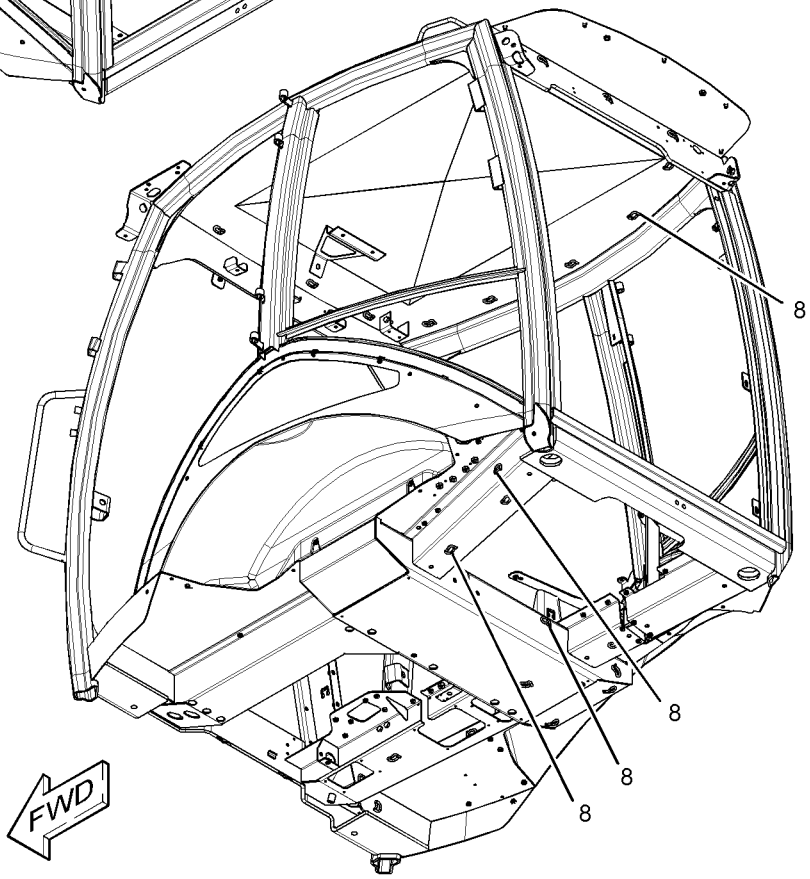

GRAPHIC #2 **<END>** g01346735

OPERATOR STATION

206-1888 CAB GP-ENCLOSED ROPS—SINGLE DOOR

S/N: CBD1-1404

PART OF 204-4161 CAB AR-ENCLOSED ROPS

AN ATTACHMENT

SMCS-7301, 7325 **i03327904**

NOTE	REF NO	GRAPHIC REF	PART NUMBER	QTY	PART NAME 1 2 3 4 5 6 (PRODUCT LEVEL)	SEE PAGE
	1	1	**8Y-7309**	2	RETAINER	
	2	1	**123-0380**	1	SHIELD-STRIKER	
B	3	1	**177-4877**	1	SHIM (1-MM THK)	
	4	1	**187-0413**	1	STRIKER	
	5	1	**204-4200**	1	CAB AS	
	6	1	**205-9605**	1	GLASS (FRONT, LH)	
	7	1	**205-9606**	1	GLASS (FRONT, RH)	
	8	1	**205-9607**	1	GLASS (WINDSHIELD) (WINDSHIELD)	
	9	1	**205-9608**	1	GLASS (REAR, RH)	
	10	1	**205-9609**	1	GLASS (REAR, LH)	
Y	11	1	**205-9611**	1	WINDOW GP-CAB (RH)	1053
	12	1	**205-9613**	1	GLASS (SIDE, RH)	
	13	1	**205-9616**	2	SPACER (15.8X21.34X101-MM THK)	
	14	1	**205-9629**	2	SPACER (15.9X21.4X50-MM THK)	
	15	1	**206-1590**	4	PIN	
Y	16	1	**206-1592**	1	DOOR GP-CAB (LH)	983
	17	1	**206-1647**	1	PLATE	
	18	1	**210-6475**	1	PLATE	
Y	19	1	*229-0300*	1	WINDOW GP-CAB (REAR)	1058
	20	1	**129-5256**	8	BUSHING	
	21	1	**129-5257**	12	BUSHING	
M	22	1	**131-3987**	2	SCREW (M4X0.7X12-MM)	
	23	1	**159-4945**	1	KEEPER	
	24	1	**223-2030**	2	LATCH AS (HOLD OPEN)	
					(EACH INCLUDES)	
M		1	**6V-7743**	2	LOCKNUT (M6X1-THD)	
M		1	**9X-2045**	2	SCREW-TRUSS HEAD (M6X1X20-MM)	
		1	**143-2827**	1	SPRING	
M	25	1	**5C-7261**	2	NUT (M8X1.25-THD)	
	26	1	**5P-4116**	10	WASHER-HARD (8.8X20.5X2-MM THK)	
	27	1	**7X-2393**	2	BUMPER-CONICAL	
	28	1	**8S-7803**	8	RING-RETAINING	
M	29	1	**8T-4189**	8	BOLT (M8X1.25X20-MM)	
M	30	1	**8T-4200**	2	BOLT (M8X1.25X16-MM)	
	31	1	**9R-5616**	3	PLUG	

B-USE AS REQUIRED
M-METRIC PART
Y-SEPARATE ILLUSTRATION

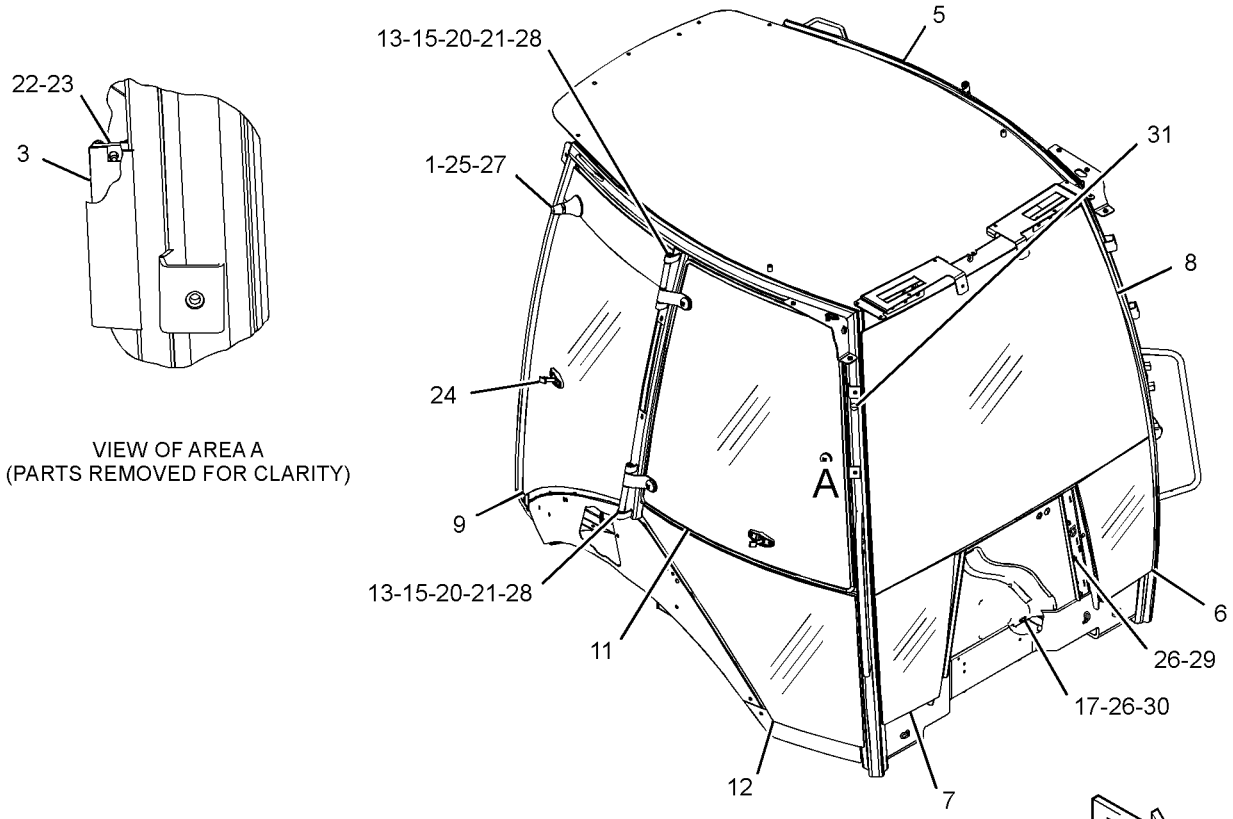

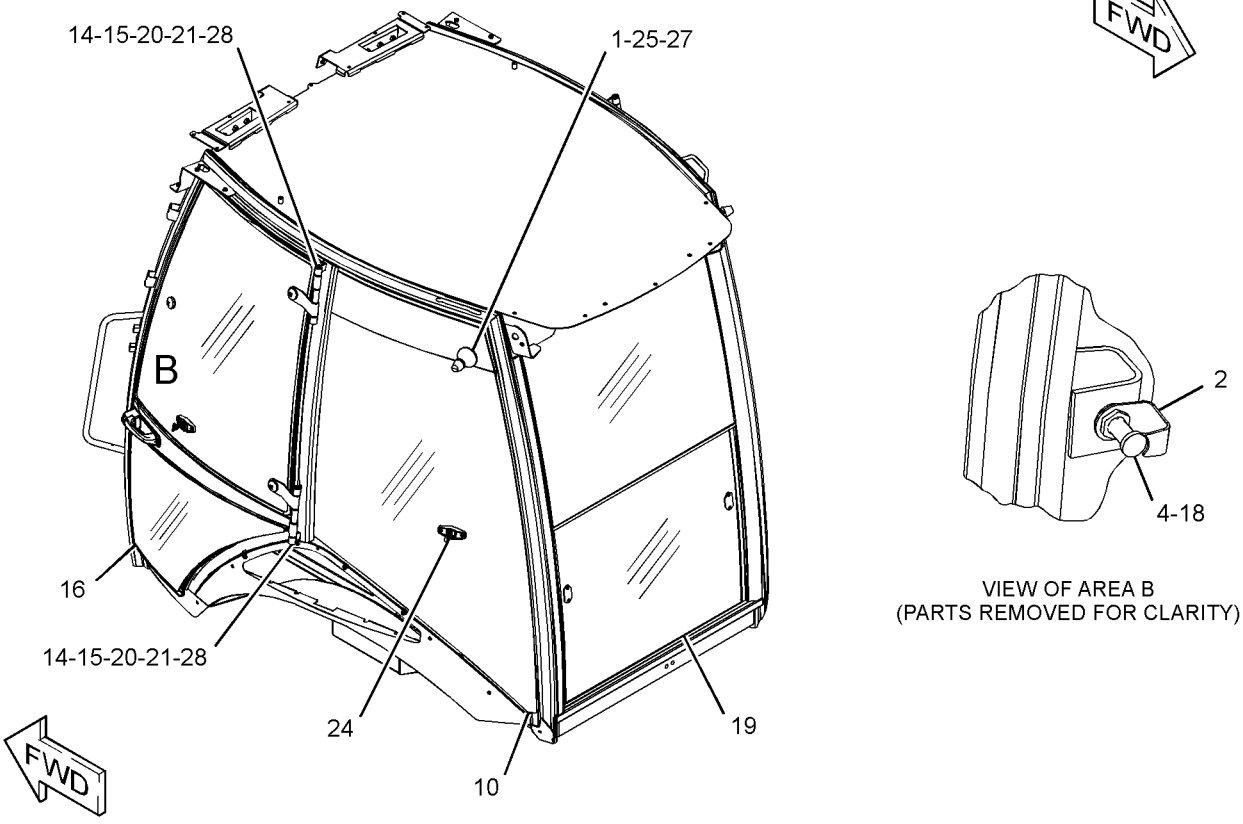

GRAPHIC #1 **<END>** g01952896

OPERATOR STATION

206-1888 CAB GP-ENCLOSED ROPS—SINGLE DOOR

S/N: CBD1405-UP

PART OF 204-4161 CAB AR-ENCLOSED ROPS

AN ATTACHMENT

SMCS-7301, 7325 **i03327907**

NOTE	REF NO	GRAPHIC REF	PART NUMBER	QTY	PART NAME 1 2 3 4 5 6 (PRODUCT LEVEL)	SEE PAGE
	1	1	**8Y-7309**	2	RETAINER	
	2	1	**123-0380**	1	SHIELD-STRIKER	
	3	1	**129-5256**	8	BUSHING	
	4	1	**129-5257**	12	BUSHING	
	5	1	**159-4945**	1	KEEPER	
B	6	1	**177-4877**	1	SHIM (1-MM THK)	
	7	1	**187-0413**	1	STRIKER	
	8	1	**205-9605**	1	GLASS (FRONT, LH)	
	9	1	**205-9606**	1	GLASS (FRONT, RH)	
	10	1	**205-9607**	1	GLASS (WINDSHIELD)	
	11	1	**205-9608**	1	GLASS (REAR, RH)	
	12	1	**205-9609**	1	GLASS (REAR, LH)	
Y	13	1	**205-9611**	1	WINDOW GP-CAB (RH)	1053
	14	1	**205-9613**	1	GLASS (SIDE, RH)	
	15	1	**205-9616**	2	SPACER (15.8X21.34X101-MM THK)	
	16	1	**205-9629**	2	SPACER (15.9X21.4X50-MM THK)	
	17	1	**206-1590**	4	PIN	
Y	18	1	**206-1592**	1	DOOR GP-CAB (LH)	983
	19	1	**206-1647**	1	PLATE	
	20	1	**210-6475**	1	PLATE	
	21	1	**223-2030**	2	LATCH AS (HOLD OPEN)	
					(EACH INCLUDES)	
M		1	**6V-7743**	2	LOCKNUT (M6X1-THD)	
M		1	**9X-2045**	2	SCREW-TRUSS HEAD (M6X1X20-MM)	
		1	**143-2827**	1	SPRING	
Y	22	1	*229-0300*	1	WINDOW GP-CAB (REAR)	1058
CY	23	1	**288-8043**	1	CAB AS	905
M	24	1	**131-3987**	2	SCREW (M4X0.7X12-MM)	
M	25	1	**5C-7261**	2	NUT (M8X1.25-THD)	
	26	1	**5P-4116**	10	WASHER-HARD (8.8X20.5X2-MM THK)	
	27	1	**7X-2393**	2	BUMPER-CONICAL	
	28	1	**8S-7803**	8	RING-RETAINING	
CM	30	1	**8T-4200**	10	BOLT (M8X1.25X16-MM)	
	31	1	**9R-5616**	3	PLUG	

B-USE AS REQUIRED
C-CHANGE FROM PREVIOUS TYPE
M-METRIC PART
Y-SEPARATE ILLUSTRATION

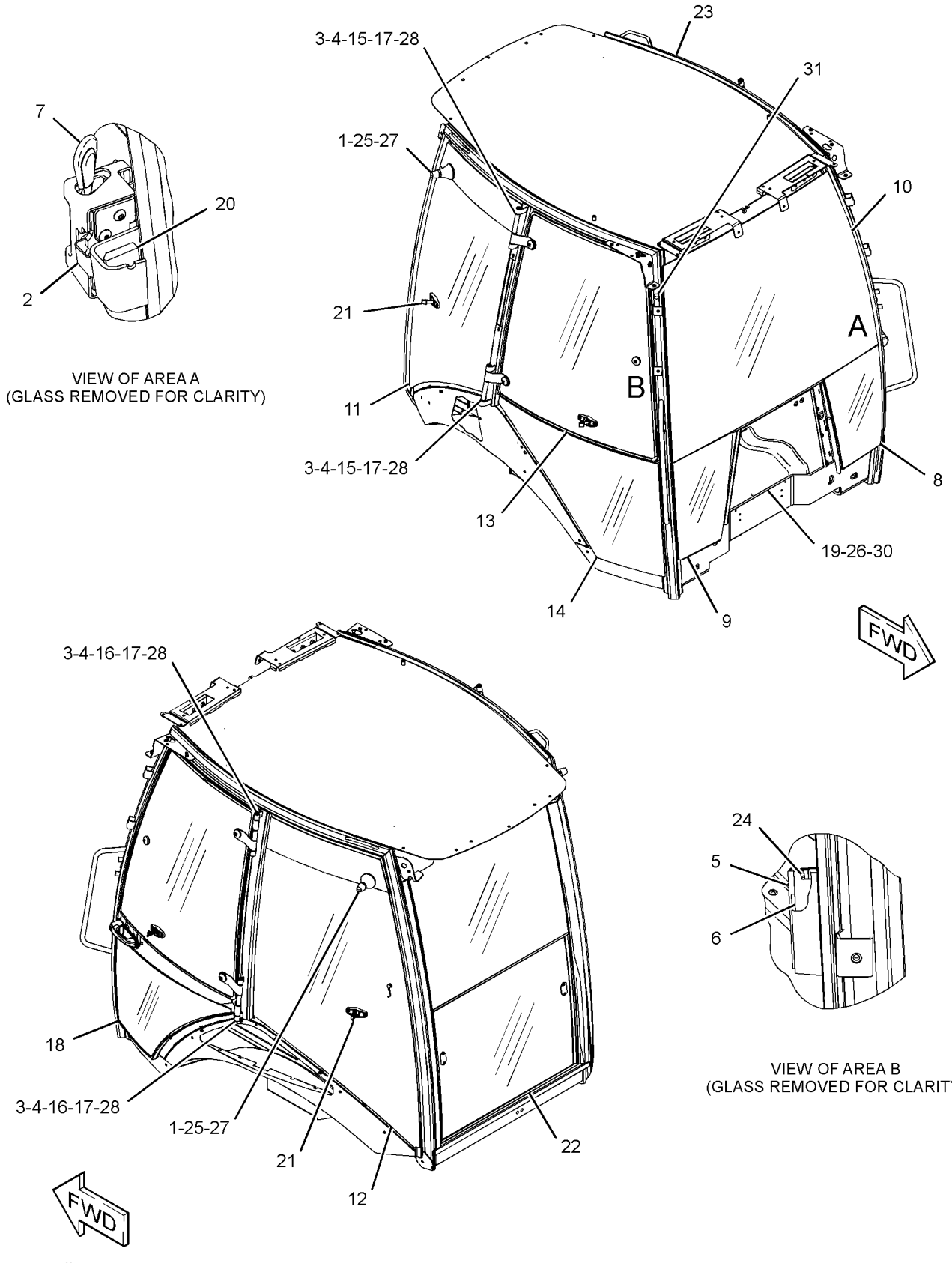

GRAPHIC #1 **<END>** g01712663

OPERATOR STATION

206-1889 CAB GP-ENCLOSED ROPS—DOUBLE DOOR

S/N: CBD1-UP
PART OF 204-4162, 228-4602 CAB AR-ENCLOSED ROPS
AN ATTACHMENT
TYPE 1

SMCS-7301, 7325 **i02560325**

NOTE	REF NO	GRAPHIC REF	PART NUMBER	QTY	PART NAME 1 2 3 4 5 6 (PRODUCT LEVEL)	SEE PAGE
	1	2	**123-0380**	2	SHIELD-STRIKER	
B	2	2	**177-4877**	4	SHIM (1-MM THK)	
	3	2	**187-0413**	2	STRIKER	
	4	2	**204-4220**	1	CAB AS	
	5	2	**205-9605**	1	GLASS (FRONT, LH)	
	6	2	**205-9606**	1	GLASS (FRONT, RH)	
	7	2	**205-9607**	1	GLASS (WINDSHIELD)	
Y	8	2	**205-9619**	1	WINDOW GP-CAB (UPPER, LH)	1054
	9	2	**205-9622**	1	GLASS (LOWER, LH)	
Y	10	1	**205-9628**	1	WINDOW GP-CAB (UPPER, RH)	1056
	11	1	**205-9631**	1	GLASS (LOWER, RH)	
	12	1	**206-1590**	4	PIN	
Y	13	2	**206-1592**	1	DOOR GP-CAB (LH)	983
Y	14	1	**206-1593**	1	DOOR GP-CAB (RH)	987
	15	2	**206-1647**	1	PLATE	
	16	2	**210-6475**	2	PLATE	
Y	17	1	*229-0300*	1	WINDOW GP-CAB (REAR)	1058
	18	1	**129-5256**	12	BUSHING	
	19	1	**129-5257**	8	BUSHING	
M	20	2	**131-3987**	8	SCREW (M4X0.7X12-MM)	
	21	2	**159-4945**	2	KEEPER	
	22	2	**159-4946**	2	KEEPER	
	23	2	**5P-4116**	11	WASHER-HARD (8.8X20.5X2-MM THK)	
	24	1	**8S-7803**	8	RING-RETAINING	
M	25	2	**8T-4189**	9	BOLT (M8X1.25X20-MM)	
M	26	2	**8T-4200**	2	BOLT (M8X1.25X16-MM)	
	27	2	**9R-5616**	3	PLUG	
BE	28	1	**201-1601**		SEAL (6-CM)	

B-USE AS REQUIRED
E-ORDER BY THE CENTIMETER
M-METRIC PART
Y-SEPARATE ILLUSTRATION

REFER TO ALL ILLUSTRATIONS OF THIS GROUP FOR AUXILIARY VIEWS

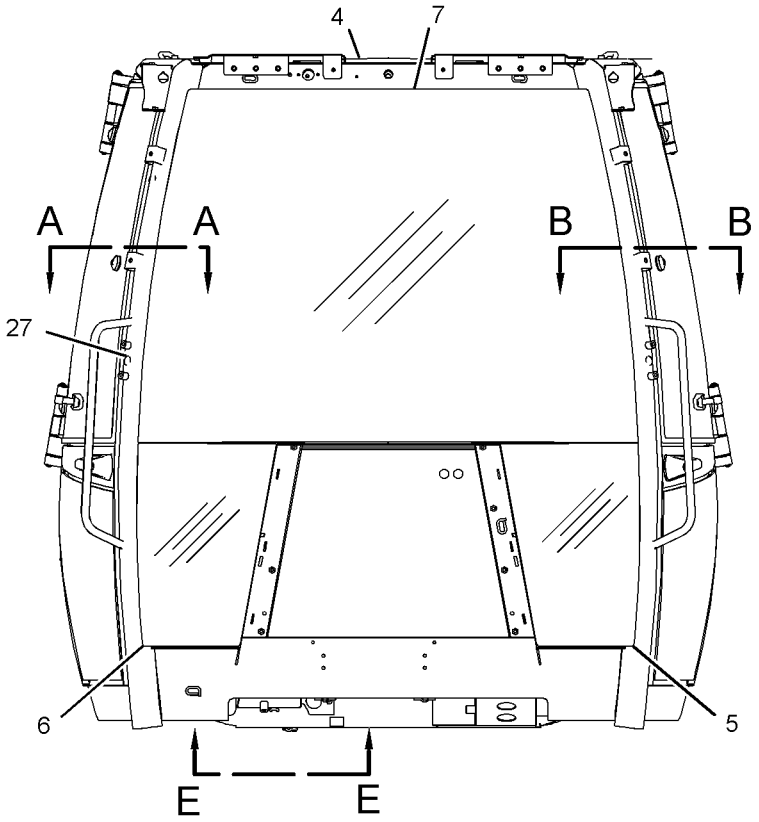

FRONT VIEW

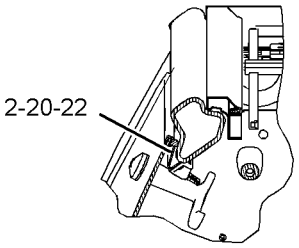

SECTION A-A

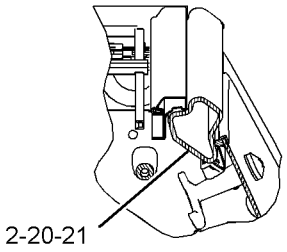

SECTION B-B

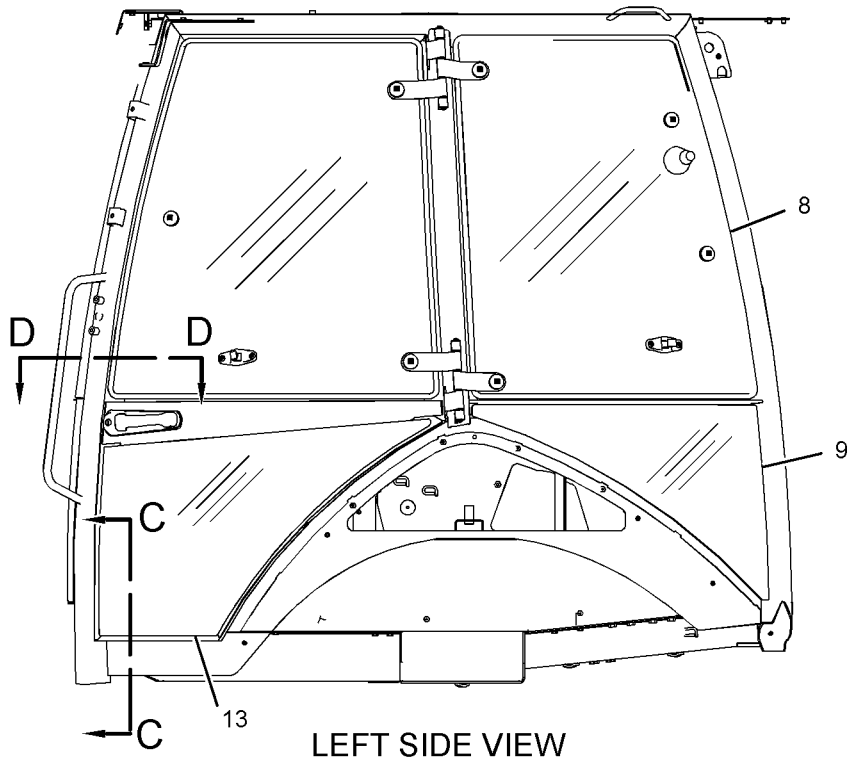

LEFT SIDE VIEW

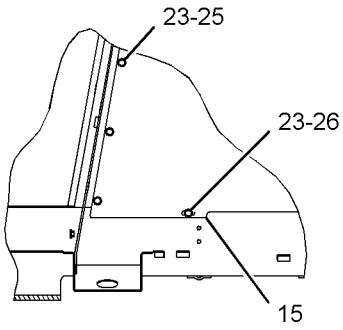

SECTION C-C

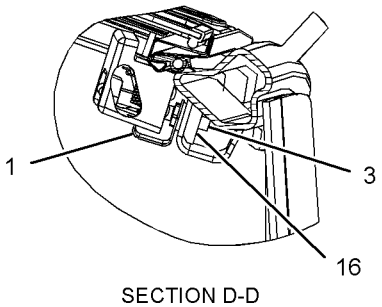

SECTION D-D

GRAPHIC #1

g01334063

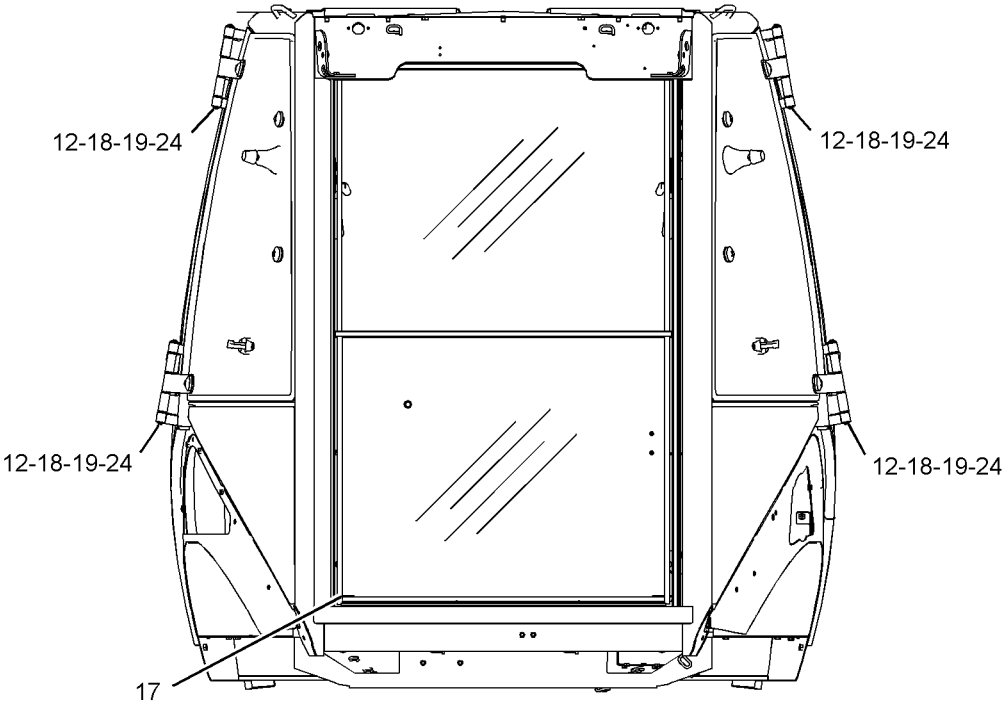

REAR VIEW

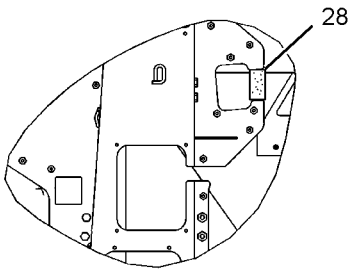

VIEW E-E

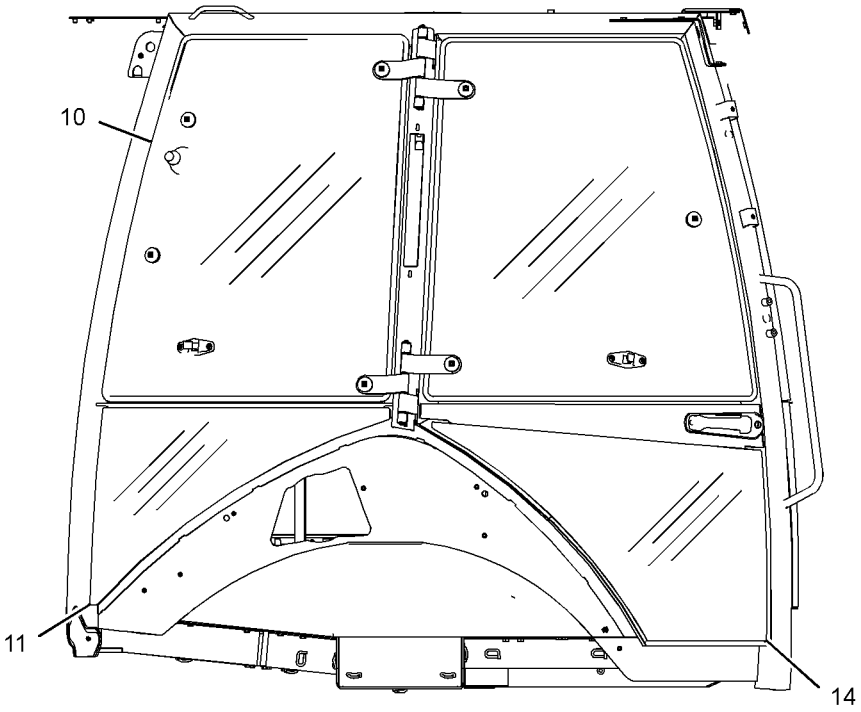

RIGHT SIDE VIEW

GRAPHIC #2 **<END>** g01334448

OPERATOR STATION

206-1889 CAB GP-ENCLOSED ROPS—DOUBLE DOOR

S/N: CBD1-UP
PART OF 204-4162, 228-4602 CAB AR-ENCLOSED ROPS
AN ATTACHMENT
TYPE 2

SMCS-7301, 7325 **i02668470**

NOTE	REF NO	GRAPHIC REF	PART NUMBER	QTY	PART NAME 1 2 3 4 5 6 (PRODUCT LEVEL)	SEE PAGE
	1	1	**123-0380**	2	SHIELD-STRIKER	
B	2	1	**177-4877**	4	SHIM (1-MM THK)	
	3	1	**187-0413**	2	STRIKER	
CY	4	1	**288-8044**	1	CAB AS	906
	5	1	**205-9605**	1	GLASS (FRONT, LH)	
	6	1	**205-9606**	1	GLASS (FRONT, RH)	
	7	1	**205-9607**	1	GLASS (WINDSHIELD)	
Y	8	1	**205-9619**	1	WINDOW GP-CAB (UPPER, LH)	1054
	9	1	**205-9622**	1	GLASS (LOWER, LH)	
Y	10	2	**205-9628**	1	WINDOW GP-CAB (UPPER, RH)	1056
	11	2	**205-9631**	1	GLASS (LOWER, RH)	
	12	2	**206-1590**	4	PIN	
Y	13	1	**206-1592**	1	DOOR GP-CAB (LH)	983
Y	14	2	**206-1593**	1	DOOR GP-CAB (RH)	987
	15	1	**206-1647**	1	PLATE	
	16	1	**210-6475**	2	PLATE	
Y	17	2	*229-0300*	1	WINDOW GP-CAB (REAR)	1058
	18	2	**129-5256**	12	BUSHING	
	19	2	**129-5257**	8	BUSHING	
M	20	1	**131-3987**	8	SCREW (M4X0.7X12-MM)	
	21	1	**159-4945**	2	KEEPER	
	22	1	**159-4946**	2	KEEPER	
	23	1	**5P-4116**	11	WASHER-HARD (8.8X20.5X2-MM THK)	
	24	2	**8S-7803**	8	RING-RETAINING	
CM	25	1	**8T-4200**	11	BOLT (M8X1.25X16-MM)	
	26	1	**9R-5616**	3	PLUG	

B-USE AS REQUIRED
C-CHANGE FROM PREVIOUS TYPE
M-METRIC PART
Y-SEPARATE ILLUSTRATION

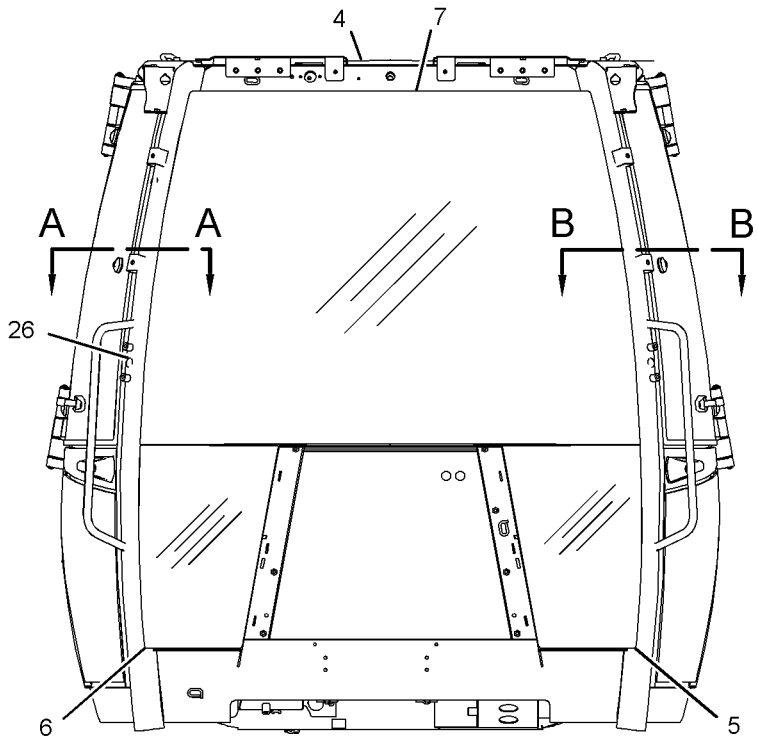

FRONT VIEW

REFER TO ALL ILLUSTRATIONS OF THIS GROUP FOR AUXILIARY VIEWS

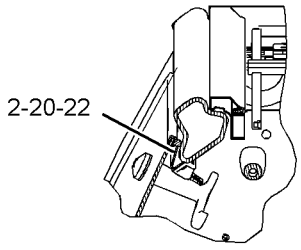

SECTION A-A

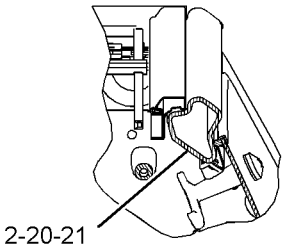

SECTION B-B

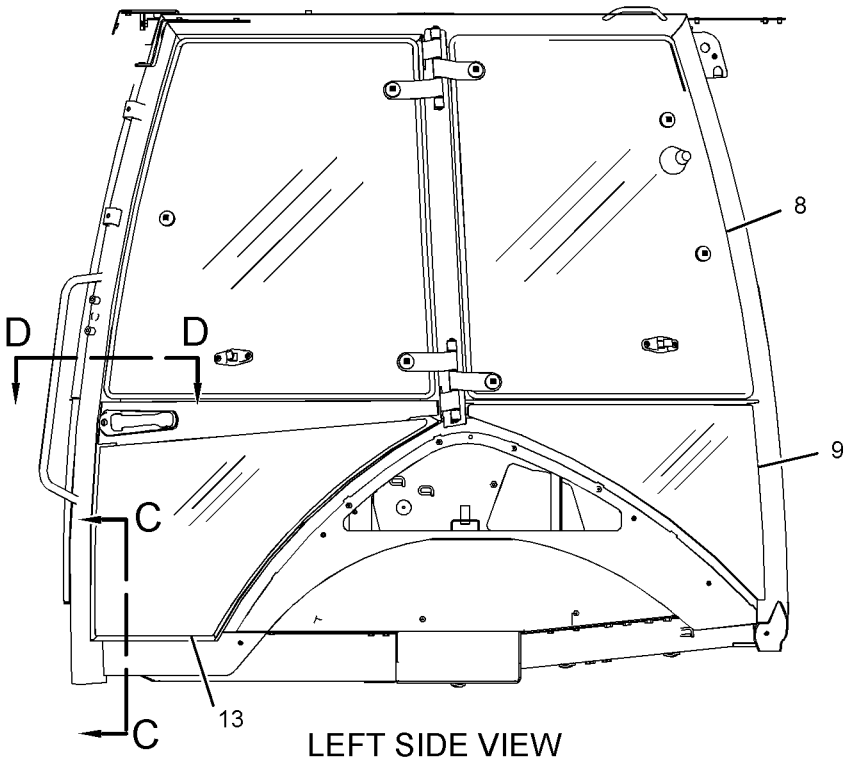

LEFT SIDE VIEW

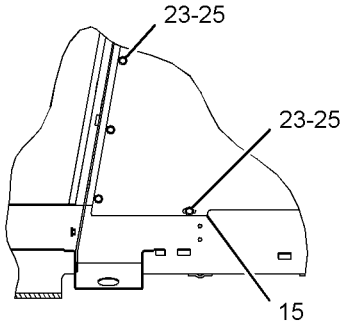

SECTION C-C

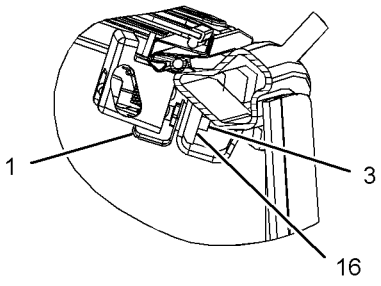

SECTION D-D

GRAPHIC #1

g01343514

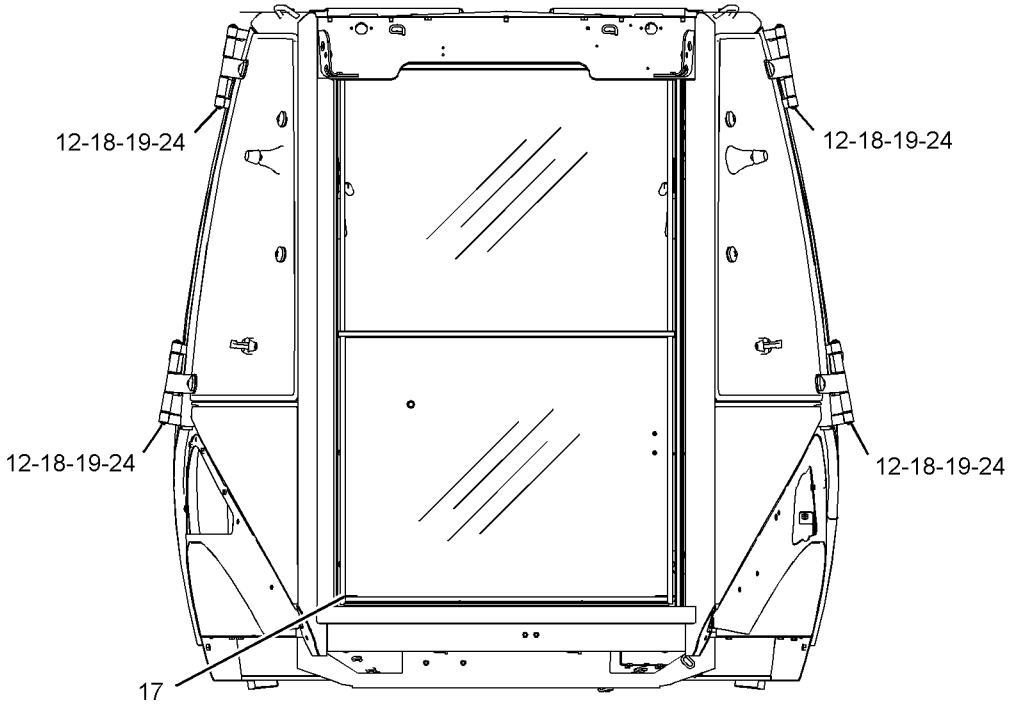

REAR VIEW

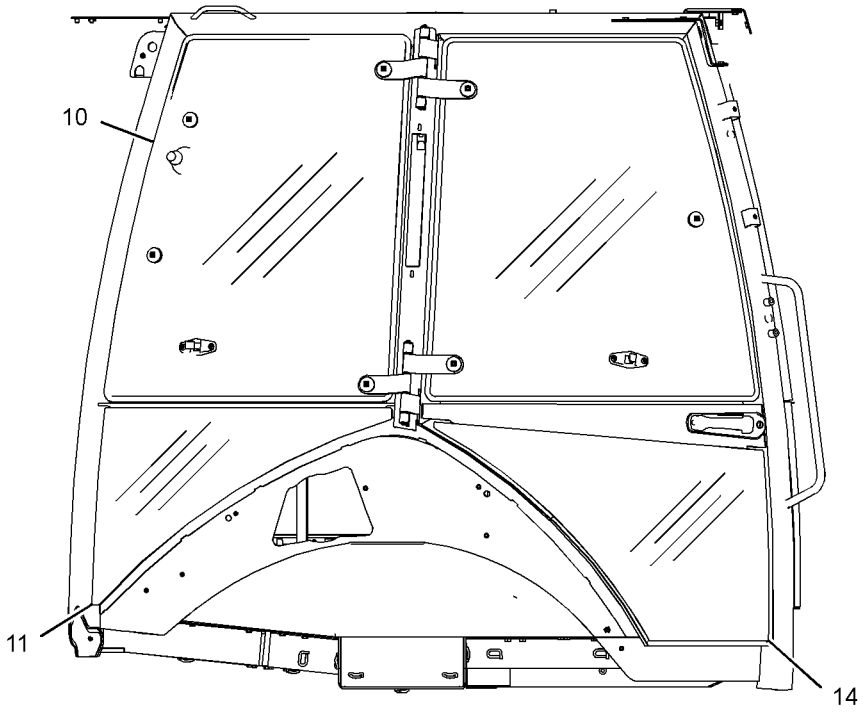

RIGHT SIDE VIEW

GRAPHIC #2 **<END>** g01343515

OPERATOR STATION

309-3225 CAB GP-ENCLOSED ROPS—SINGLE DOOR

S/N: CBD1-UP; MFG1-UP
PART OF 204-4161 CAB AR-ENCLOSED ROPS
AN ATTACHMENT

SMCS-7301, 7325 **i03975232**

NOTE	REF NO	GRAPHIC REF	PART NUMBER	QTY	PART NAME 1 2 3 4 5 6 (PRODUCT LEVEL)	SEE PAGE
	1	1	**8Y-7309**	2	RETAINER	
	2	1	**123-0380**	1	SHIELD-STRIKER	
	3	1	**129-5256**	8	BUSHING	
	4	1	**129-5257**	12	BUSHING	
	5	1	**159-4945**	1	KEEPER	
B	6	1	**177-4877**	1	SHIM (1-MM THK)	
	7	1	**187-0413**	1	STRIKER	
	8	1	**205-9605**	1	GLASS (FRONT, LH)	
	9	1	**205-9606**	1	GLASS (FRONT, RH)	
	10	1	**205-9607**	1	GLASS (WINDSHIELD)	
	11	1	**205-9608**	1	GLASS (REAR, RH)	
	12	1	**205-9609**	1	GLASS (REAR, LH)	
Y	13	1	**205-9611**	1	WINDOW GP-CAB (RH)	1053
	14	1	**205-9613**	1	GLASS (SIDE, RH)	
	15	1	**205-9616**	2	SPACER (15.8X21.34X101-MM THK)	
	16	1	**205-9629**	2	SPACER (15.9X21.4X50-MM THK)	
	17	1	**206-1590**	4	PIN	
Y	18	1	**206-1592**	1	DOOR GP-CAB (LH)	983
	19	1	**210-6475**	1	PLATE	
	20	1	**223-2030**	2	LATCH AS (HOLD OPEN)	
					(EACH INCLUDES)	
M		1	**6V-7743**	2	LOCKNUT (M6X1-THD)	
M		1	**9X-2045**	2	SCREW-TRUSS HEAD (M6X1X20-MM)	
		1	**143-2827**	1	SPRING	
Y	21	1	*229-0300*	1	WINDOW GP-CAB (REAR)	1058
	22	1	**309-1202**	1	CAB AS	
M	23	1	**131-3987**	2	SCREW (M4X0.7X12-MM)	
M	24	1	**5C-7261**	2	NUT (M8X1.25-THD)	
	25	1	**4E-1384**	2	BUMPER-CONICAL	
	26	1	**8S-7803**	8	RING-RETAINING	
	27	1	**9R-5616**	3	PLUG	

B-USE AS REQUIRED
M-METRIC PART
Y-SEPARATE ILLUSTRATION

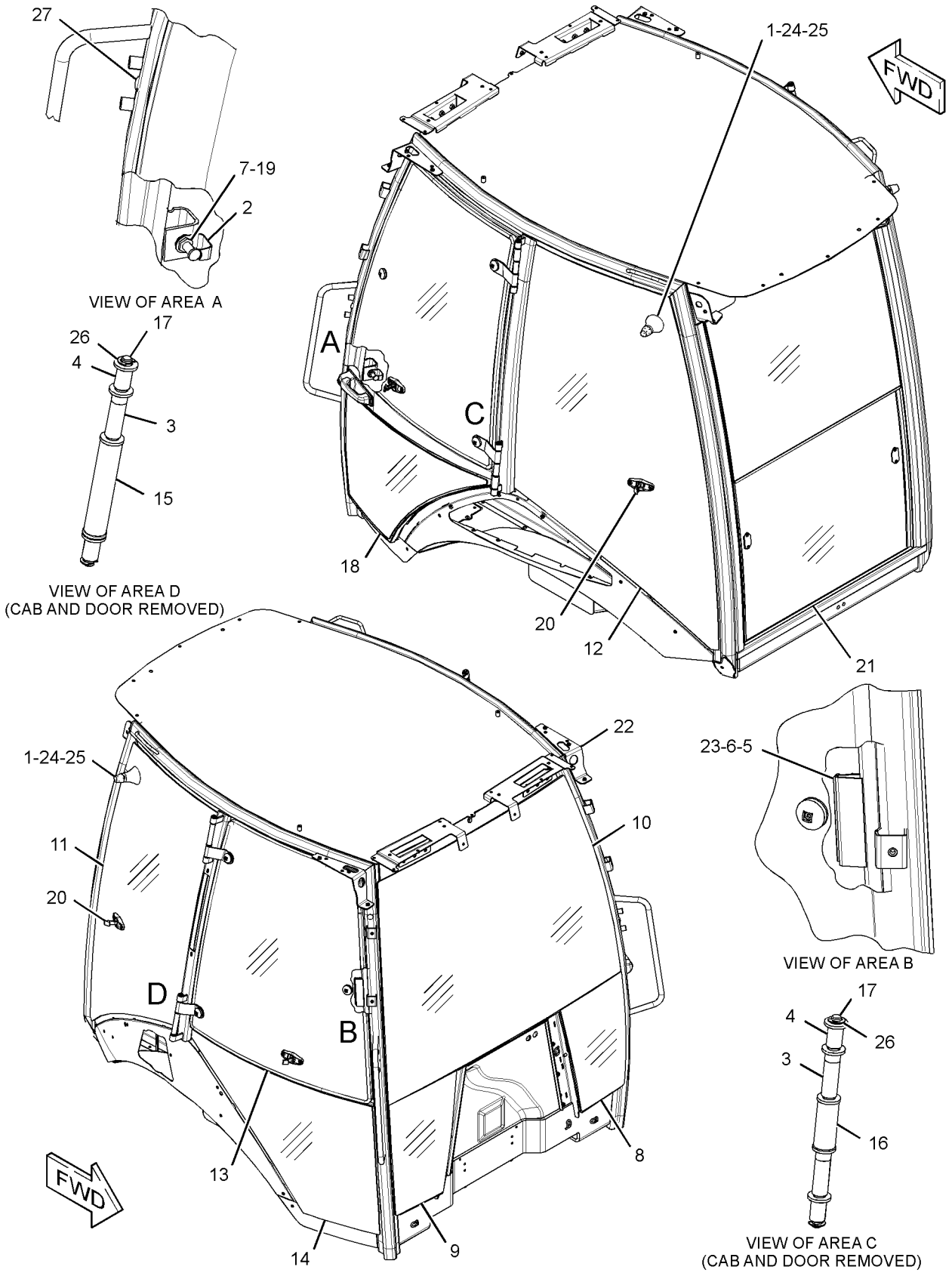

GRAPHIC #1 **<END>** g01694320

OPERATOR STATION

309-3226 CAB GP-ENCLOSED ROPS

S/N: CBD3169-UP; MFG1-UP
PART OF 204-4162, 228-4602, 291-9195 CAB AR-ENCLOSED ROPS
AN ATTACHMENT

SMCS-7301, 7325 **i03443580**

NOTE	REF NO	GRAPHIC REF	PART NUMBER	QTY	PART NAME 1 2 3 4 5 6 (PRODUCT LEVEL)	SEE PAGE
	1	1	**123-0380**	2	SHIELD-STRIKER	
	2	1	**129-5256**	12	BUSHING	
	3	1	**129-5257**	8	BUSHING	
	4	1	**159-4945**	2	KEEPER	
	5	1	**159-4946**	2	KEEPER	
B	6	1	**177-4877**	4	SHIM (1-MM THK)	
	7	1	**187-0413**	2	STRIKER	
	8	1	**205-9605**	1	GLASS (FRONT, LH)	
	9	1	**205-9606**	1	GLASS (FRONT, RH)	
	10	1	**205-9607**	1	GLASS (WINDSHIELD)	
Y	11	1	**205-9619**	1	WINDOW GP-CAB (UPPER, LH)	1054
	12	1	**205-9622**	1	GLASS (LOWER, LH)	
Y	13	1	**205-9628**	1	WINDOW GP-CAB (UPPER, RH)	1056
	14	1	**205-9631**	1	GLASS (LOWER, RH)	
	15	1	**206-1590**	4	PIN	
Y	16	1	**206-1592**	1	DOOR GP-CAB (LH)	983
Y	17	1	**206-1593**	1	DOOR GP-CAB (RH)	987
	18	1	**210-6475**	2	PLATE	
Y	19	1	*229-0300*	1	WINDOW GP-CAB (REAR)	1058
	20	1	**309-1203**	1	CAB AS	
M	21	1	**131-3987**	8	SCREW (M4X0.7X12-MM)	
	22	1	**8S-7803**	8	RING-RETAINING	
	23	1	**9R-5616**	3	PLUG	

B-USE AS REQUIRED
M-METRIC PART
Y-SEPARATE ILLUSTRATION

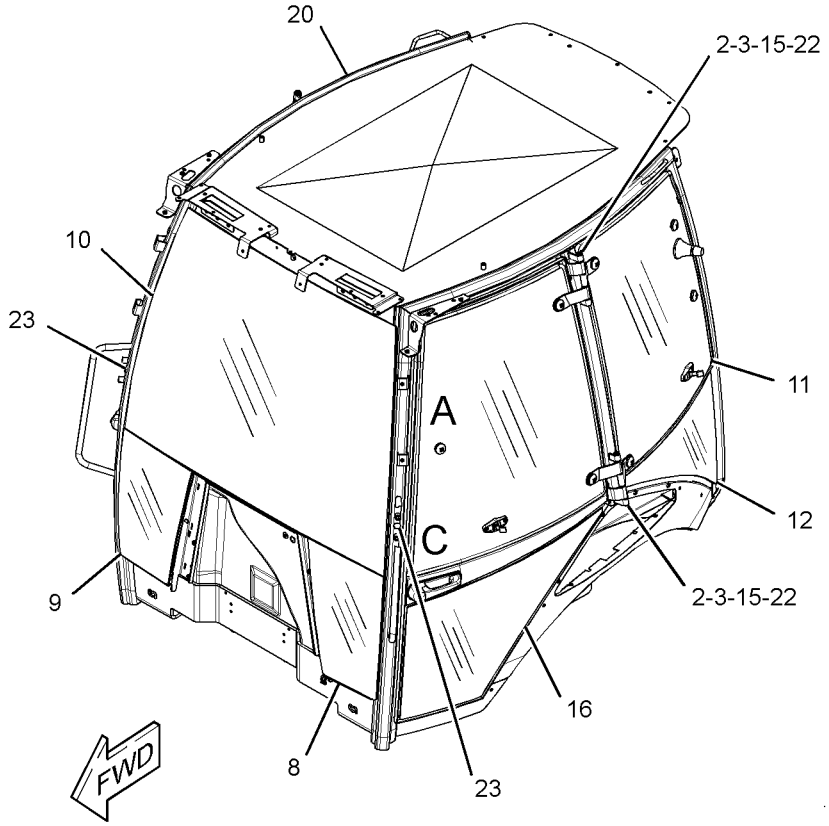

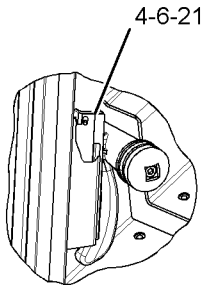

VIEW OF AREA A
(GLASS REMOVED FOR CLARITY)

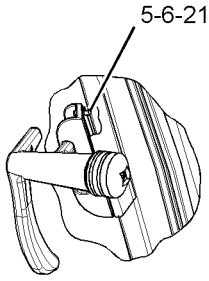

VIEW OF AREA B
(GLASS REMOVED FOR CLARITY)

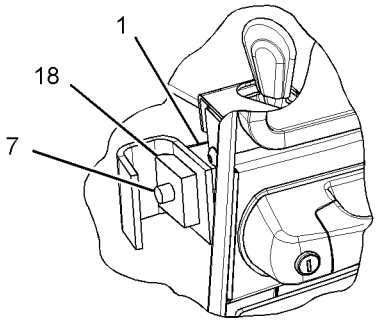

VIEW OF AREA C

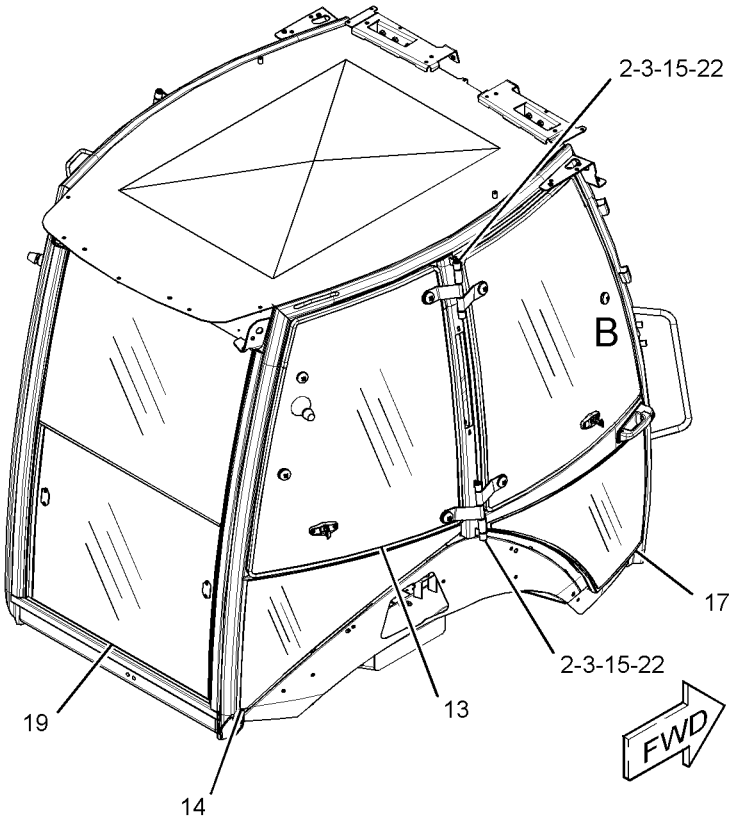

GRAPHIC #1 **<END>** g01515988

OPERATOR STATION

204-4160 CANOPY AR-OPEN ROPS—WITHOUT FRONT WINDOW

S/N: CBD1-UP; MFG1-UP
PART OF 374-3521, 374-6535 DISTRIBUTION AR
AN ATTACHMENT

SMCS-7302, 7323 **i03385664**

NOTE	PART NUMBER	QTY	PART NAME 1 2 3 4 5 6 (PRODUCT LEVEL)	SEE PAGE
Y	*206-1884*	1	CANOPY GP-OPEN ROPS (WITHOUT FRONT WINDOW)	927
			—OR—	
Y	*309-3227*	1	CANOPY GP-OPEN ROPS (WITHOUT FRONT WINDOW)	930
Y	*248-2720*	1	COMPARTMENT GP-LITERATURE (STORAGE BOX)	932
Y	*206-1700*	1	CONSOLE GP-OPERATOR (RH)	942
Y	*206-1703*	1	CONSOLE GP-OPERATOR (FRONT)	946
Y	*221-3002*	1	CONTROL & MTG GP-STABILIZER	948
Y	*206-1630*	1	CONTROL GP-STEERING	974
Y	*276-8515*	1	COVER GP-CAB	981
Y	*213-9311*	1	FAN GP-SUCTION (WITHOUT AIR CONDITIONER)	128
Y	*213-1891*	1	FENDER GP-REAR	475
Y	*206-1620*	1	FLOOR MAT GP	992
Y	*223-3967*	1	FLOORPLATE GP	480
			—OR—	
Y	*284-2753*	1	FLOORPLATE GP	482
Y	*211-4276*	1	LIGHTING GP-FLOOD & SIGNAL (CAB, NACD)	259
Y	*259-6276*	1	MIRROR GP-REAR VIEW (INTERIOR)	1017
Y	*205-9560*	1	MOUNTING GP-CAB	1020
Y	*206-1701*	1	PROTECTION GP-VANDALISM (ROTATING GUARD)	1081
Y	*205-9568*	1	ROOF GP-CAB	1024
Y	*280-7364*	1	SEAT GP-SUSPENSION (VINYL)	1036
Y	*206-1704*	1	TRIM GP-CAB (OPEN ROPS)	1047
Y	*211-4242*	1	WIRING GP-PLATFORM	323
Y	*211-4243*	1	WIRING GP-CONSOLE (SIDE)	291
Y	*211-4245*	1	WIRING GP-CONSOLE (FRONT)	294
	256-5299	1	FILM-IDENTIFICATION (CATERPILLAR)	
			(ON CAB ROOF CENTERED HORIZONTALLY & VERTICALLY)	
	251-5628	1	FILM-IDENTIFICATION (STABILIZER CONTROL)	
			(ON RH CONSOLE NEXT TO STABILIZER CONTROLS)	
	227-1057	1	PLUG-HOLE	

Y-SEPARATE ILLUSTRATION

<END>

OPERATOR STATION

204-4164 CANOPY AR-OPEN ROPS—WITH FRONT WINDOW

S/N: CBD1-UP; MFG1-UP

PART OF 356-0067, 356-0068, 374-3517, 374-3518, 374-6532, 374-6533

DISTRIBUTION AR

AN ATTACHMENT

SMCS-7302, 7323 **i03349101**

NOTE	PART NUMBER	QTY	PART NAME 1 2 3 4 5 6 (PRODUCT LEVEL)	SEE PAGE
Y	*206-1885*	1	CANOPY GP-OPEN ROPS (WITH FRONT WINDOW)	929
			—OR—	
Y	*309-3228*	1	CANOPY GP-OPEN ROPS (WITH FRONT WINDOW)	931
Y	*206-1700*	1	CONSOLE GP-OPERATOR (RH)	942
Y	*206-1703*	1	CONSOLE GP-OPERATOR (FRONT)	946
Y	*206-1702*	1	CONSOLE GP-OPERATOR (LH)	944
Y	*221-3002*	1	CONTROL & MTG GP-STABILIZER	948
Y	*206-1633*	1	CONTROL GP-STEERING	975
			—OR—	
Y	*218-4453*	1	CONTROL GP-STEERING	977
Y	*276-8515*	1	COVER GP-CAB	981
Y	*220-3785*	1	COVER GP-WIPER MOTOR	982
Y	*213-9311*	1	FAN GP-SUCTION (WITHOUT AIR CONDITIONER)	128
Y	*213-1891*	1	FENDER GP-REAR	475
Y	*206-1618*	1	FLOOR MAT GP	991
Y	*223-3967*	1	FLOORPLATE GP	480
			—OR—	
Y	*284-2753*	1	FLOORPLATE GP	482
Y	*211-4277*	1	LIGHTING GP-FLOOD & SIGNAL (NACD, OPTIONAL)	261
Y	*259-6276*	1	MIRROR GP-REAR VIEW (INTERIOR)	1017
Y	*205-9560*	1	MOUNTING GP-CAB	1020
Y	*206-1701*	1	PROTECTION GP-VANDALISM (ROTATING GUARD)	1081
Y	*205-9569*	1	ROOF GP-CAB	1026
Y	*280-7364*	1	SEAT GP-SUSPENSION (VINYL)	1036
Y	*206-1704*	1	TRIM GP-CAB	1047
Y	*206-1728*	1	WIPER & WASHER GP-WINDOW	1064
Y	*211-4243*	1	WIRING GP-CONSOLE (SIDE)	291
Y	*211-4245*	1	WIRING GP-CONSOLE (FRONT)	294
Y	*211-4242*	1	WIRING GP-PLATFORM	323
	250-7912	1	FILM-IDENTIFICATION (CATERPILLAR, FRONT)	
			(ON FRONT WINDSHIELD)	
	251-5628	1	FILM-IDENTIFICATION (STABILIZER CONTROL)	
			(ON RH CONSOLE NEXT TO STABILIZER CONTROLS)	
	5P-9768	1	PLUG-HOLE	
	227-1057	1	PLUG-HOLE	

Y-SEPARATE ILLUSTRATION

<END>

OPERATOR STATION

292-9690 CANOPY AR-OPEN ROPS—WITH FRONT WINDOW

S/N: CBD1-UP

AN ATTACHMENT

SMCS-7302, 7323 **i03386660**

NOTE	PART NUMBER	QTY	PART NAME 1 2 3 4 5 6 (PRODUCT LEVEL)	SEE PAGE
Y	*206-1885*	1	CANOPY GP-OPEN ROPS (WITH FRONT WINDOW)	929
			—OR—	
Y	*309-3228*	1	CANOPY GP-OPEN ROPS (WITH FRONT WINDOW)	931
Y	*206-1700*	1	CONSOLE GP-OPERATOR (RH)	942
Y	*206-1702*	1	CONSOLE GP-OPERATOR (LH)	944
Y	*206-1703*	1	CONSOLE GP-OPERATOR (FRONT)	946
Y	*221-3002*	1	CONTROL & MTG GP-STABILIZER	948
Y	*206-1633*	1	CONTROL GP-STEERING	975
			S/N: CBD1-3352	
Y	*218-4453*	1	CONTROL GP-STEERING	977
			S/N: CBD3353-UP	
Y	*276-8515*	1	COVER GP-CAB	981
			S/N: CBD3353-UP	
Y	*220-3785*	1	COVER GP-WIPER MOTOR	982
Y	*213-9311*	1	FAN GP-SUCTION (WITHOUT AIR CONDITIONER)	128
Y	*213-1891*	1	FENDER GP-REAR	475
Y	*206-1618*	1	FLOOR MAT GP	991
Y	*223-3967*	1	FLOORPLATE GP	480
			S/N: CBD1-3352	
Y	*284-2753*	1	FLOORPLATE GP	482
			S/N: CBD3353-UP	
Y	*211-4277*	1	LIGHTING GP-FLOOD & SIGNAL (NACD, OPTIONAL)	261
Y	*259-6276*	1	MIRROR GP-REAR VIEW (INTERIOR)	1017
Y	*205-9560*	1	MOUNTING GP-CAB	1020
Y	*206-1701*	1	PROTECTION GP-VANDALISM (ROTATING GUARD)	1081
Y	*205-9569*	1	ROOF GP-CAB	1026
Y	*249-5167*	1	SEAT GP-STATIC	1033
			S/N: CBD1-3352	
Y	*180-5774*	1	SEAT GP-STATIC	1033
			S/N: CBD3353-UP	
Y	*206-1704*	1	TRIM GP-CAB	1047
Y	*206-1728*	1	WIPER & WASHER GP-WINDOW	1064
Y	*211-4242*	1	WIRING GP-PLATFORM	323
Y	*211-4243*	1	WIRING GP-CONSOLE (SIDE)	291
Y	*211-4245*	1	WIRING GP-CONSOLE (FRONT)	294
	250-7912	1	FILM-IDENTIFICATION (CATERPILLAR, FRONT)	
			(ON FRONT WINDSHIELD)	
	251-5628	1	FILM-IDENTIFICATION (STABILIZER CONTROL)	
			(ON RH CONSOLE NEXT TO STABILIZER CONTROLS)	
	285-1207	1	MAT-PROTECTIVE	
			S/N: CBD1-3352	
	5P-9768	1	PLUG-HOLE	
	227-1057	1	PLUG-HOLE	
	273-1474	1	SEAL (CONSOLE, LH)	

Y-SEPARATE ILLUSTRATION

<END>

OPERATOR STATION

292-9691 CANOPY AR-OPEN ROPS—WITHOUT FRONT WINDOW

S/N: CBD1-UP
AN ATTACHMENT

SMCS-7302, 7323 **i03355343**

NOTE	PART NUMBER	QTY	PART NAME 1 2 3 4 5 6 (PRODUCT LEVEL)	SEE PAGE
Y	*206-1884*	1	CANOPY GP-OPEN ROPS (WITHOUT FRONT WINDOW)	927
			—OR—	
Y	*309-3227*	1	CANOPY GP-OPEN ROPS (WITHOUT FRONT WINDOW)	930
Y	*248-2720*	1	COMPARTMENT GP-LITERATURE (STORAGE BOX)	932
Y	*206-1700*	1	CONSOLE GP-OPERATOR (RH)	942
Y	*206-1703*	1	CONSOLE GP-OPERATOR (FRONT)	946
Y	*221-3002*	1	CONTROL & MTG GP-STABILIZER	948
Y	*206-1630*	1	CONTROL GP-STEERING	974
Y	*276-8515*	1	COVER GP-CAB	981
Y	*213-9311*	1	FAN GP-SUCTION (WITHOUT AIR CONDITIONER)	128
Y	*213-1891*	1	FENDER GP-REAR	475
Y	*206-1620*	1	FLOOR MAT GP	992
Y	*223-3967*	1	FLOORPLATE GP	480
			—OR—	
Y	*284-2753*	1	FLOORPLATE GP	482
Y	*211-4276*	1	LIGHTING GP-FLOOD & SIGNAL (CAB, NACD)	259
Y	*259-6276*	1	MIRROR GP-REAR VIEW (INTERIOR)	1017
Y	*205-9560*	1	MOUNTING GP-CAB	1020
Y	*206-1701*	1	PROTECTION GP-VANDALISM (ROTATING GUARD)	1081
Y	*205-9568*	1	ROOF GP-CAB	1024
Y	*249-5167*	1	SEAT GP-STATIC	1033
			—OR—	
Y	*180-5774*	1	SEAT GP-STATIC	1033
Y	*206-1704*	1	TRIM GP-CAB (OPEN ROPS)	1047
Y	*211-4243*	1	WIRING GP-CONSOLE (SIDE)	291
Y	*211-4245*	1	WIRING GP-CONSOLE (FRONT)	294
Y	*211-4242*	1	WIRING GP-PLATFORM	323
	285-1203	1	LITERATURE GP	
	5P-7957	1	LANYARD	
	5P-7958	1	SLEEVE-CABLE SPLICE	
	5P-8500	2	KEY	
	251-5628	1	FILM-IDENTIFICATION (STABILIZER CONTROL)	
			(ON RH CONSOLE NEXT TO STABILIZER CONTROLS)	
	256-5299	1	FILM-IDENTIFICATION (CATERPILLAR)	
			(ON CAB ROOF CENTERED HORIZONTALLY & VERTICALLY)	
	285-1207	1	MAT-PROTECTIVE	
	227-1057	1	PLUG-HOLE	

Y-SEPARATE ILLUSTRATION

<END>

OPERATOR STATION

309-1204 CANOPY AS

S/N: CBD1-UP; MFG1-UP
PART OF 309-3227 CANOPY GP-OPEN ROPS
AN ATTACHMENT

SMCS-7302 **i03880465**

NOTE	REF NO	GRAPHIC REF	PART NUMBER	QTY	PART NAME 1 2 3 4 5 6 (PRODUCT LEVEL)	SEE PAGE
	1	1	**5D-9629**	2	ROD	
M	2	1	**8T-3612**	10	NUT-WELD (M8X1.25-THD)	
	3	1	**7T-1099**	28	LINK	
M	4	1	**6V-9632**	4	NUT-WELD (M6X1-THD)	
	5	1	**318-2280**	1	ROPS AS	

M-METRIC PART

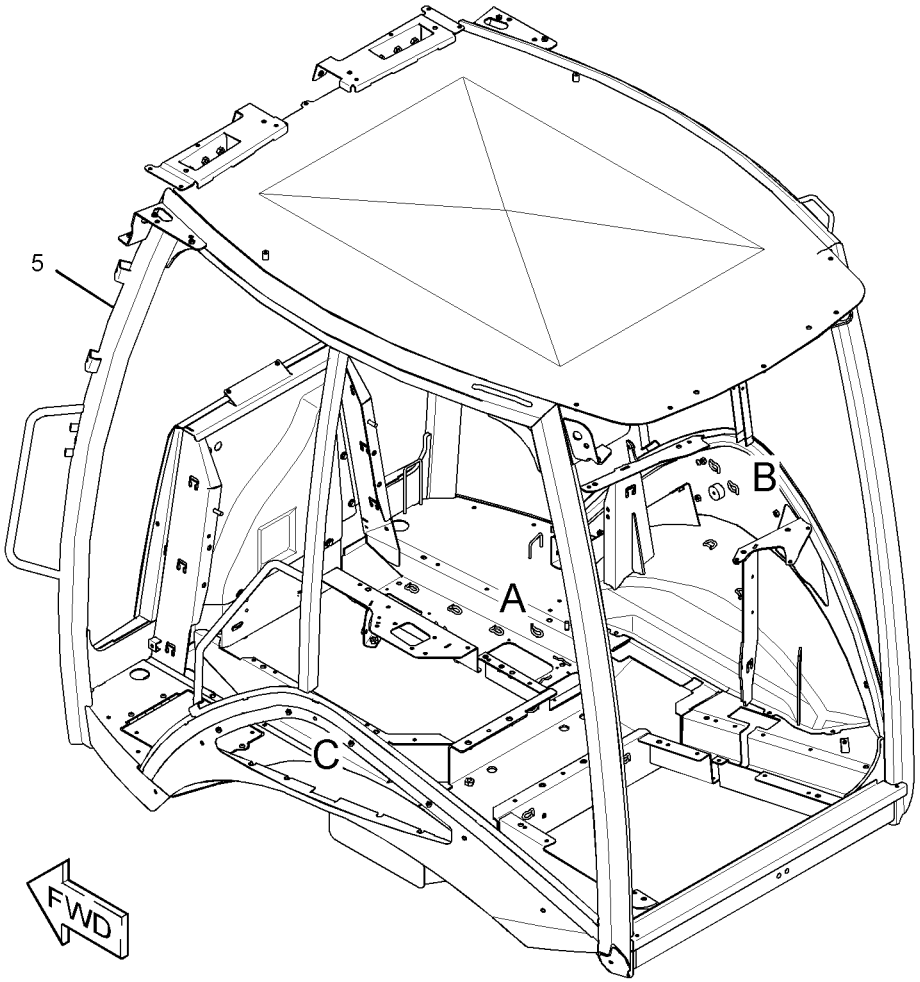

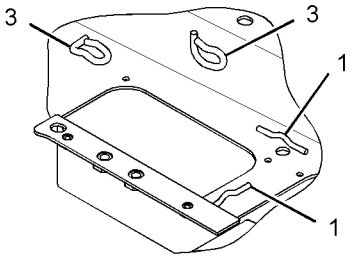

VIEW OF AREA A

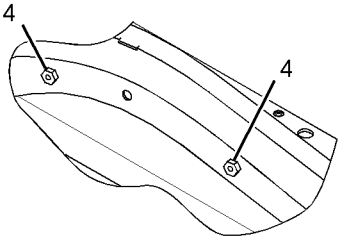

VIEW OF AREA C

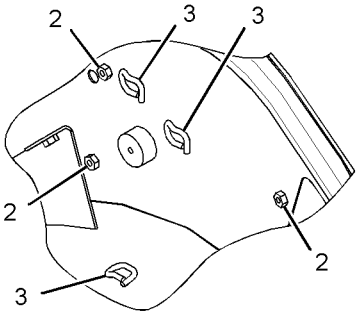

VIEW OF AREA B

GRAPHIC #1 **<END>** g01891914

OPERATOR STATION

206-1884 CANOPY GP-OPEN ROPS—WITHOUT FRONT WINDOW

S/N: CBD1-UP

PART OF 204-4160, 292-9691 CANOPY AR-OPEN ROPS

AN ATTACHMENT

SMCS-7302, 7323 **i02560299**

NOTE	REF NO	GRAPHIC REF	PART NUMBER	QTY	PART NAME 1 2 3 4 5 6 (PRODUCT LEVEL)	SEE PAGE
E	1	1	**9X-2092**		TRIM-EDGE (40-CM EACH)	
	2	1	**204-4230**	1	CANOPY AS	
	3	1	**205-9605**	1	GLASS (FRONT, LH)	
	4	1	**205-9606**	1	GLASS (FRONT, RH)	
	5	1	**206-1647**	1	PLATE	
	6	1	**5P-4116**	11	WASHER-HARD (8.8X20.5X2-MM THK)	
M	7	1	**8T-4200**	11	BOLT (M8X1.25X16-MM)	
	8	1	**9R-5616**	3	PLUG	

E-ORDER BY THE CENTIMETER
M-METRIC PART

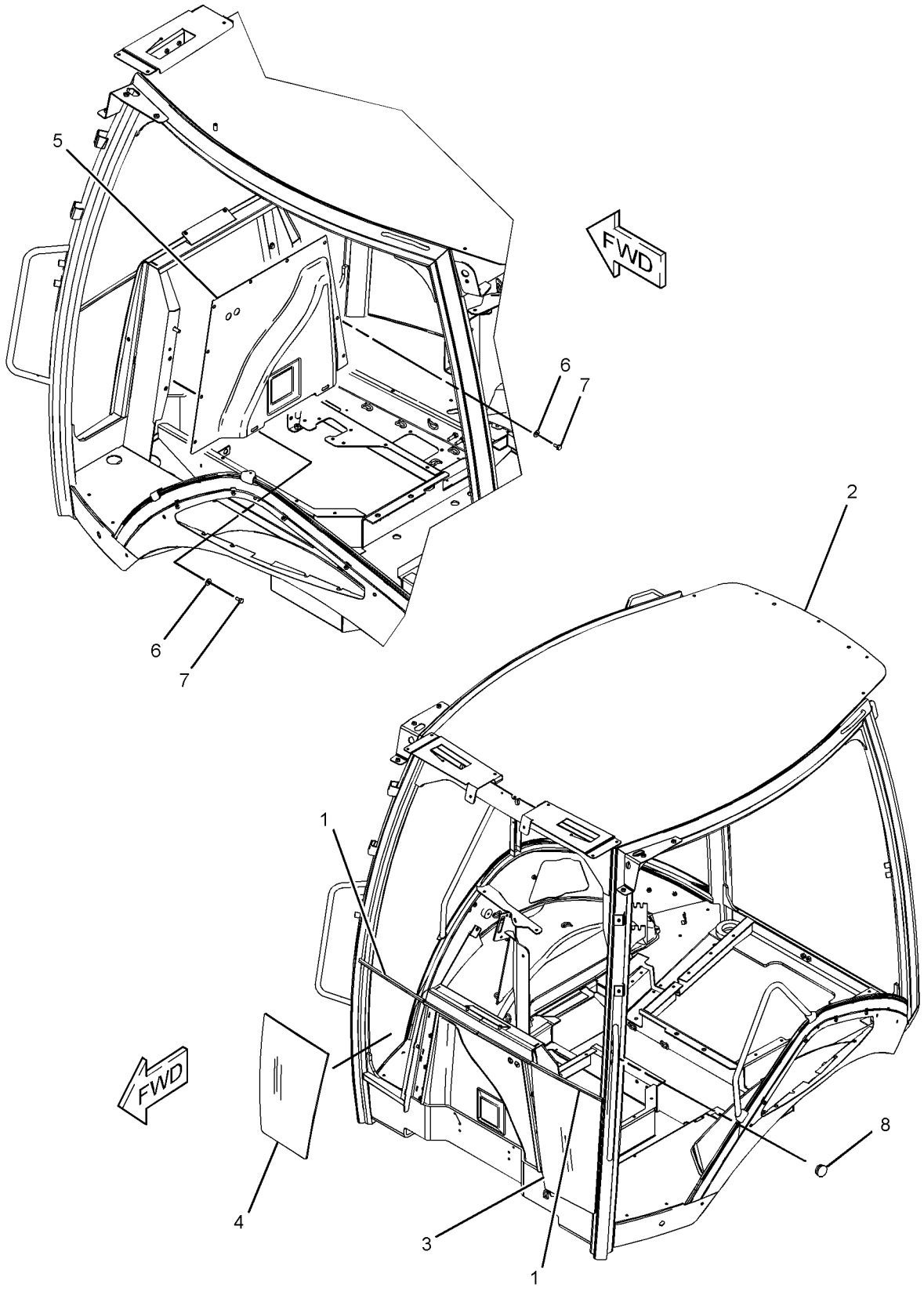

GRAPHIC #1 **<END>** g01272044

OPERATOR STATION

206-1885 CANOPY GP-OPEN ROPS—WITH FRONT WINDOW

S/N: CBD1-UP

PART OF 204-4164, 292-9690 CANOPY AR-OPEN ROPS

AN ATTACHMENT

SMCS-7302, 7323 **i02560312**

NOTE	REF NO	GRAPHIC REF	PART NUMBER	QTY	PART NAME 1 2 3 4 5 6 (PRODUCT LEVEL)	SEE PAGE
	1	1	**204-4240**	1	CANOPY AS	
	2	1	**205-9605**	1	GLASS (FRONT, LH)	
	3	1	**205-9606**	1	GLASS (FRONT, RH)	
	4	1	**205-9607**	1	GLASS (WINDSHIELD)	
	5	1	**206-1647**	1	PLATE	
	6	1	**5P-4116**	10	WASHER-HARD (8.8X20.5X2-MM THK)	
M	7	1	**8T-4200**	10	BOLT (M8X1.25X16-MM)	
	8	1	**9R-5616**	3	PLUG	

M-METRIC PART

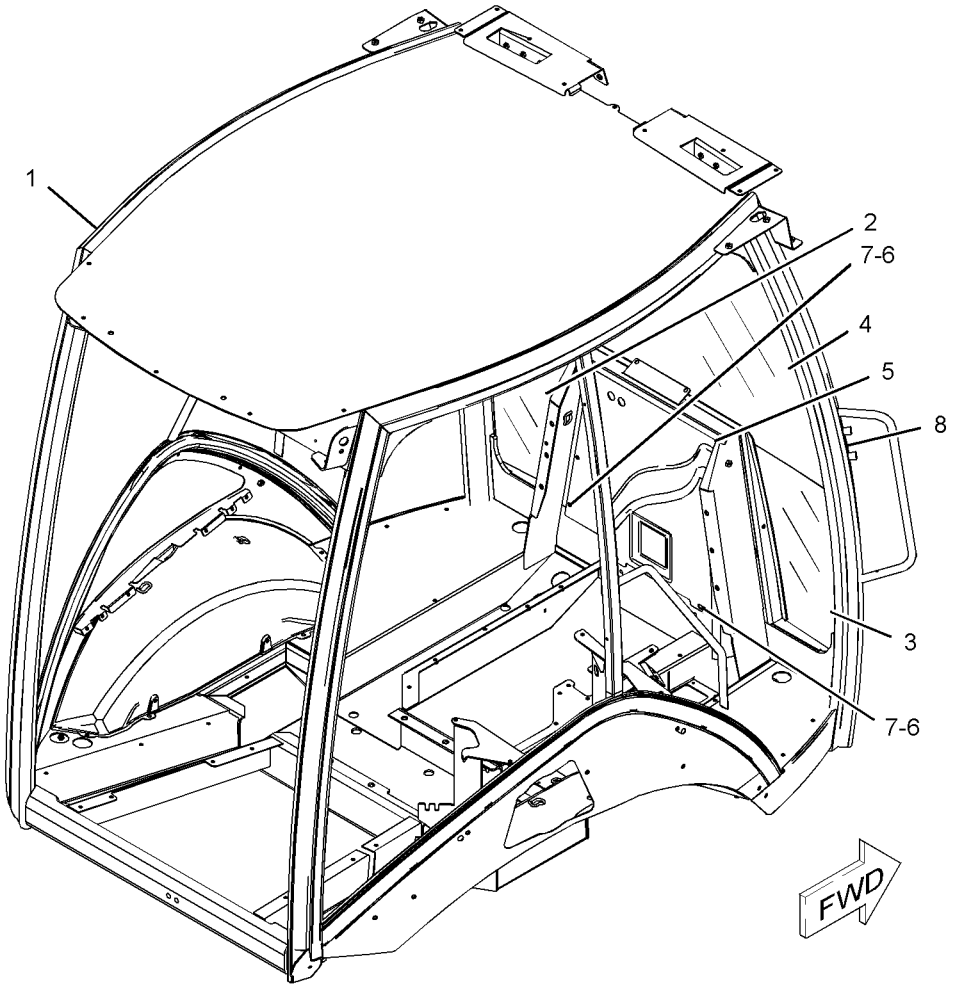

GRAPHIC #1 **<END>** g01272029

OPERATOR STATION

309-3227 CANOPY GP-OPEN ROPS—WITHOUT FRONT WINDOW

S/N: CBD1-UP; MFG1-UP

PART OF 204-4160, 292-9691 CANOPY AR-OPEN ROPS

AN ATTACHMENT

SMCS-7302, 7323 **i04157840**

NOTE	REF NO	GRAPHIC REF	PART NUMBER	QTY	PART NAME 1 2 3 4 5 6 (PRODUCT LEVEL)	SEE PAGE
E	1	1	**9X-2092**		TRIM-EDGE (40-CM EACH)	
	2	1	**205-9605**	1	GLASS (FRONT, LH)	
	3	1	**205-9606**	1	GLASS (FRONT, RH)	
Y	4	1	**309-1204**	1	CANOPY AS	926
	5	1	**9R-5616**	3	PLUG	

E-ORDER BY THE CENTIMETER
Y-SEPARATE ILLUSTRATION

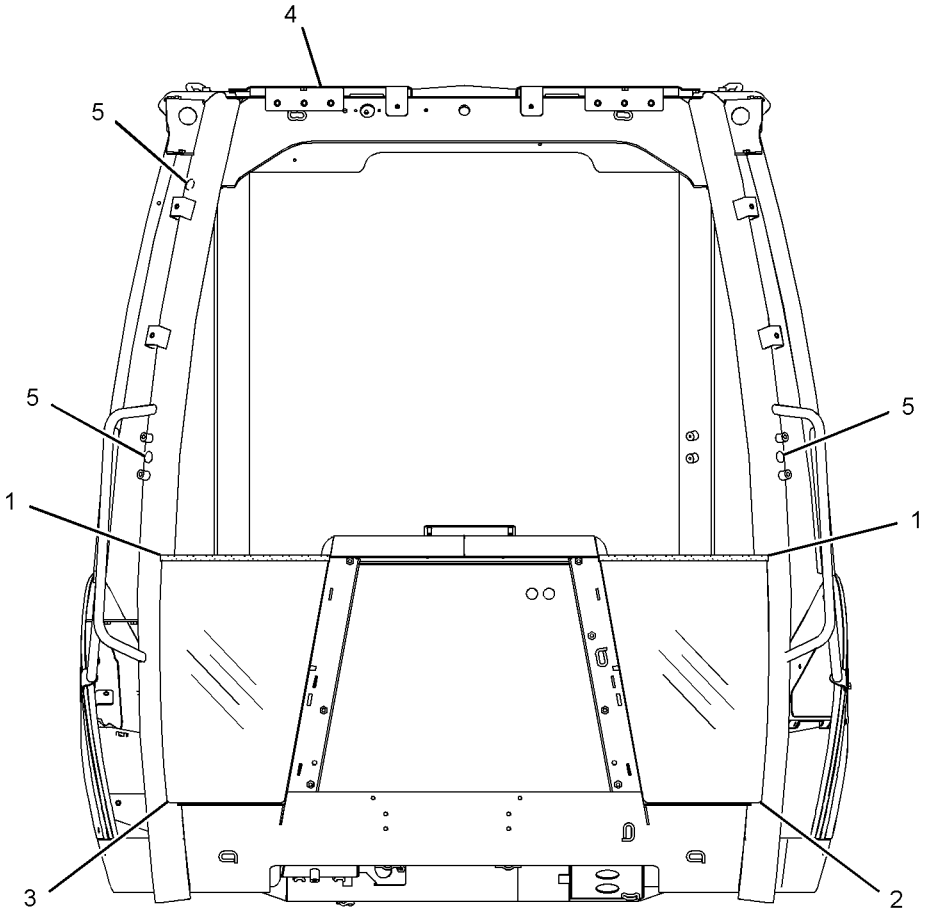

FRONT VIEW

GRAPHIC #1 **<END>** g01513326

OPERATOR STATION

309-3228 CANOPY GP-OPEN ROPS—WITH FRONT WINDOW

S/N: CBD3169-UP; MFG1-UP
PART OF 204-4164, 292-9690 CANOPY AR-OPEN ROPS
AN ATTACHMENT

SMCS-7302, 7323 **i03349120**

NOTE	REF NO	GRAPHIC REF	PART NUMBER	QTY	PART NAME 1 2 3 4 5 6 (PRODUCT LEVEL)	SEE PAGE
	1	1	**205-9605**	1	GLASS (FRONT, LH)	
	2	1	**205-9606**	1	GLASS (FRONT, RH)	
	3	1	**205-9607**	1	GLASS (WINDSHIELD)	
	4	1	**309-1205**	1	CANOPY AS	
	5	1	**9R-5616**	3	PLUG	

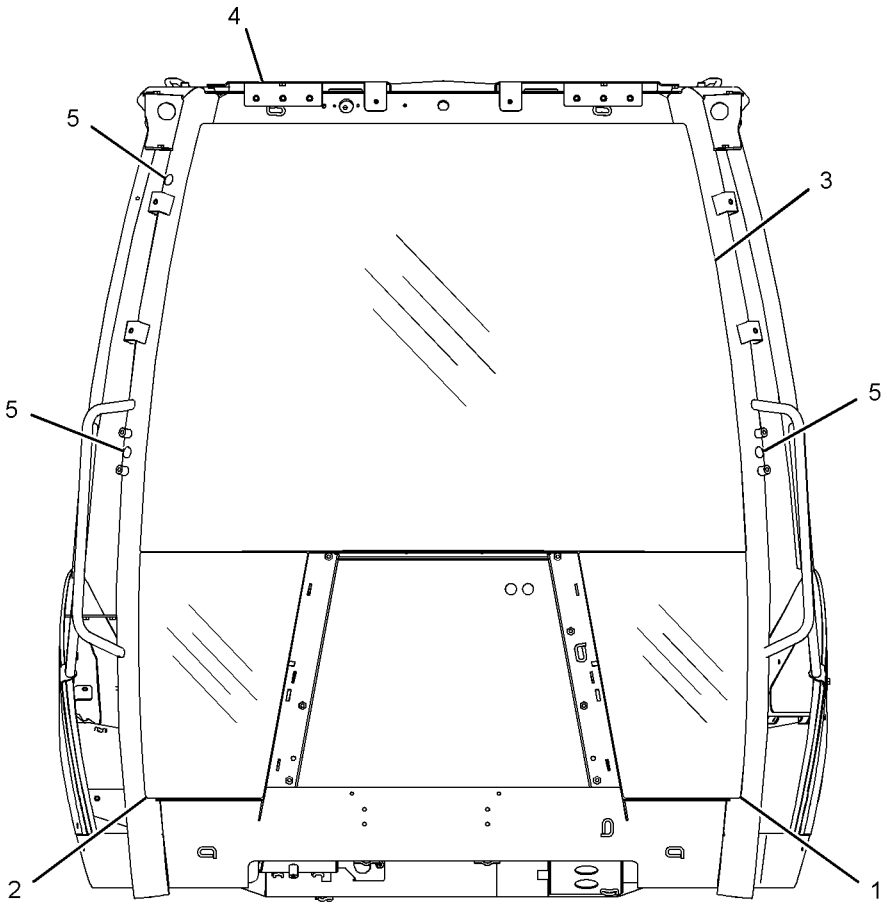

FRONT VIEW

GRAPHIC #1 **<END>** g01513333

OPERATOR STATION

248-2720 COMPARTMENT GP-LITERATURE–STORAGE BOX

S/N: CBD1-UP; MFG1-UP

PART OF 204-4161 CAB AR-ENCLOSED ROPS, 204-4160, 292-9691 CANOPY AR-OPEN ROPS

AN ATTACHMENT

SMCS-7268 **i02697249**

NOTE	REF NO	GRAPHIC REF	PART NUMBER	QTY	PART NAME 1 2 3 4 5 6 (PRODUCT LEVEL)	SEE PAGE
	1	1	**206-1706**	1	BOX AS-STORAGE	
J	2	1	**206-1708**	1	LOCK AS	
	3	1	**261-9639**	6	SCREW-PAN HEAD (12X0.5-IN)	
	4	1	**232-4454**	2	HINGE-DOOR	
	5	1	**223-2035**	1	COVER AS (STORAGE)	
	6	1	**252-5218**	1	LANYARD (371-MM)	
	7	1	**252-5219**	1	LANYARD (281-MM)	
M	8	1	**9X-2043**	2	SCREW-TRUSS HEAD (M6X1X14-MM)	
M	9	1	**9X-2044**	10	SCREW-TRUSS HEAD (M6X1X16-MM)	
E	10	1	**220-0738**		SEAL (88-CM)	
D	11	1	**5P-5927**		SEAL (1.7-M)	

D-ORDER BY THE METER
E-ORDER BY THE CENTIMETER
J-REQUIRES 5P8500 KEY
M-METRIC PART

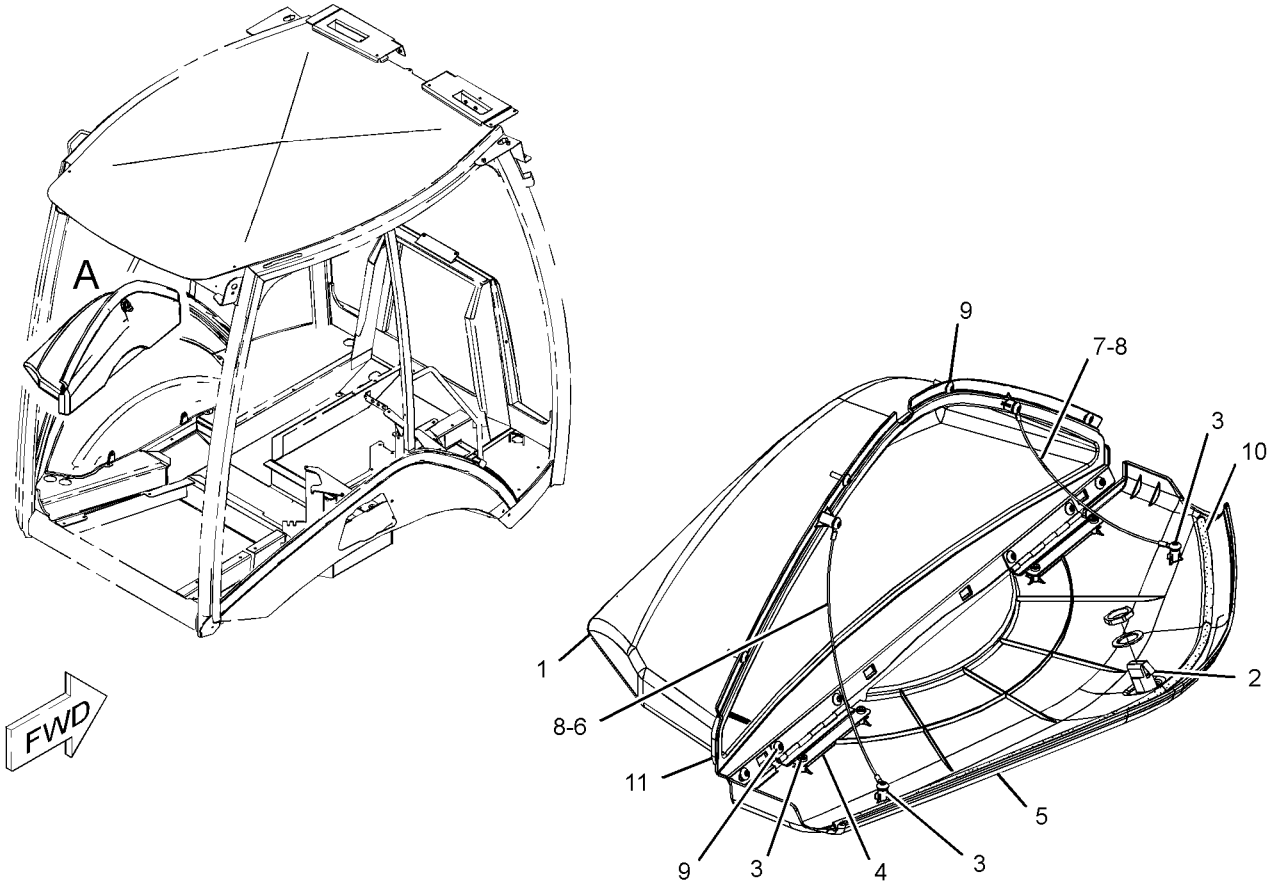

VIEW OF AREA A
(LITERATURE DOOR OPEN FOR CLARITY)

GRAPHIC #1 **<END>** g01283737

OPERATOR STATION

248-5025 COMPRESSOR & MTG GP-REFRIG

S/N: CBD1-UP
PART OF 228-4602 CAB AR-ENCLOSED ROPS
AN ATTACHMENT

SMCS-1802 **i02566221**

NOTE	REF NO	GRAPHIC REF	PART NUMBER	QTY	PART NAME 1 2 3 4 5 6 (PRODUCT LEVEL)	SEE PAGE
	1	1	**9R-5383**	1	BOSS (11X25X20-MM THK)	
Y	2	1	**214-4302**	1	COMPRESSOR GP-REFRIGERANT	937
	3	1	**296-3740**	1	BRACKET AS	
		1	**133-6934**	4	SPACER (11X20X25-MM THK)	
	4	1	**249-2707**	1	BRACKET	
	5	1	**249-9312**	1	PLATE	
	6	1	**5P-4116**	8	WASHER-HARD (8.8X20.5X2-MM THK)	
M	7	1	**6V-7744**	1	LOCKNUT (M10X1.5-THD)	
	8	1	**9Y-0083**	1	SPACER (14.3X16X10-MM THK)	
M	9	1	**108-2989**	2	BOLT (M8X1.25X130-MM)	
M	10	1	**7X-2541**	2	BOLT (M8X1.25X140-MM)	
	11	1	**8T-4121**	6	WASHER-HARD (11X21X2.5-MM THK)	
M	12	1	**8T-4195**	2	BOLT (M10X1.5X30-MM)	
	13	1	**8T-4224**	2	WASHER-HARD (8.8X16X2-MM THK)	
M	14	1	**8T-6466**	1	BOLT (M10X1.5X60-MM)	
M	15	1	**8T-5436**	1	BOLT (M10X1.5X130-MM)	
M	16	1	**8T-7547**	2	BOLT (M8X1.25X30-MM)	
B	17	1	**6J-6517**	3	SHIM (0.12-MM THK)	
B	18	1	**9G-3732**	3	SHIM	
B	19	1	**9G-3733**	3	SHIM (0.25-MM THK)	
M	20	1	**6V-9189**	4	LOCKNUT (M8X1.25-THD)	

B-USE AS REQUIRED
M-METRIC PART
Y-SEPARATE ILLUSTRATION

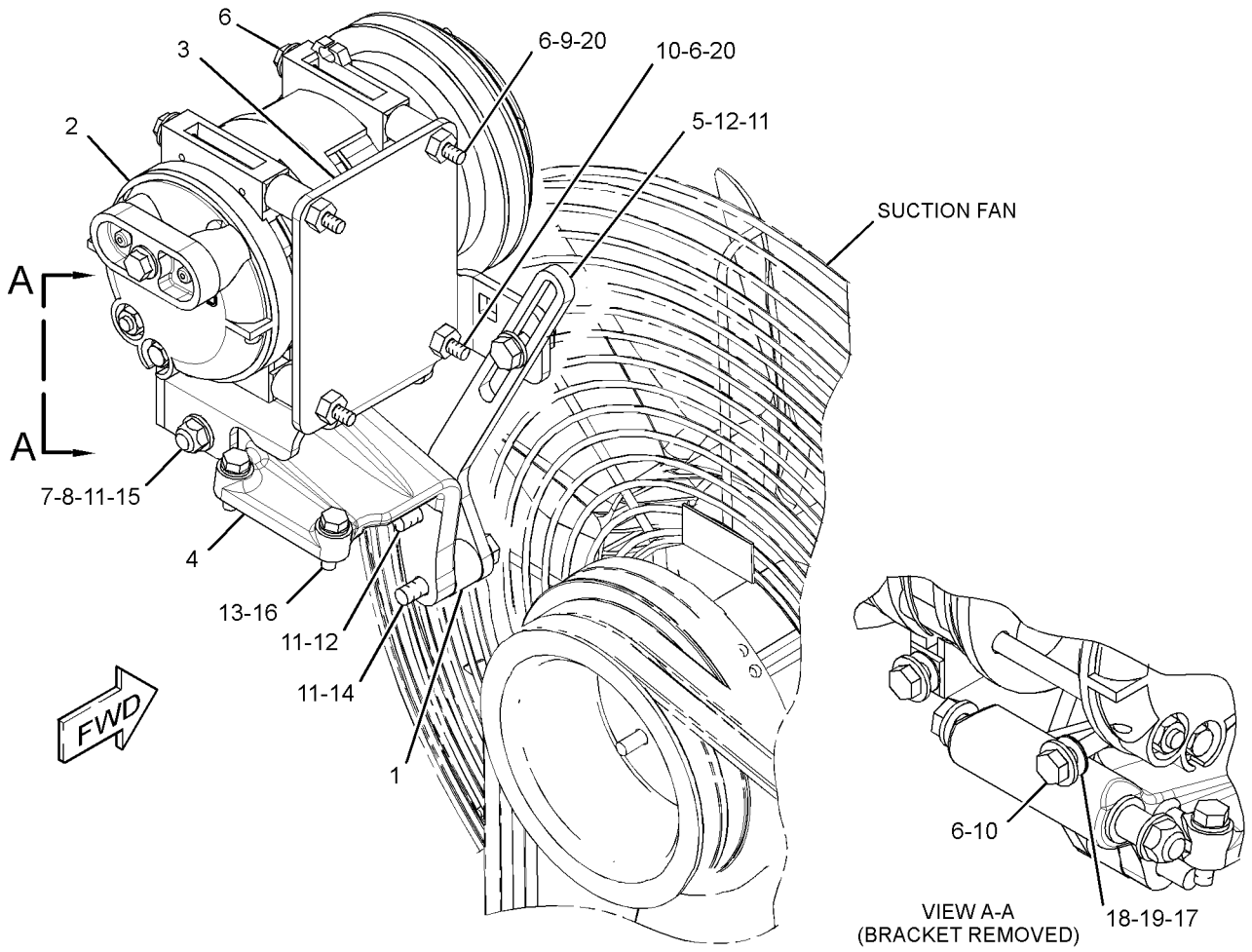

GRAPHIC #1 **<END>** g01340210

OPERATOR STATION

248-5025 COMPRESSOR & MTG GP-REFRIG

S/N: CBD1-UP; MFG1-UP
PART OF 228-4602 CAB AR-ENCLOSED ROPS
AN ATTACHMENT

SMCS-1802 **i02987846**

NOTE	REF NO	GRAPHIC REF	PART NUMBER	QTY	PART NAME 1 2 3 4 5 6 (PRODUCT LEVEL)	SEE PAGE
	1	1	**9R-5383**	1	BOSS (11X25X20-MM THK)	
	2	1	**9Y-0083**	1	SPACER (14.3X16X10-MM THK)	
M	3	1	**108-2989**	2	BOLT (M8X1.25X130-MM)	
Y	4	1	**214-4302**	1	COMPRESSOR GP-REFRIGERANT	937
	5	1	**249-2707**	1	BRACKET	
	6	1	**249-9312**	1	PLATE	
C	7	1	**291-4781**	1	BRACKET AS	
C	8	1	**291-4785**	1	PLATE	
C	9	1	**291-4786**	1	PLATE	
CM	10	1	**5C-7261**	4	NUT (M8X1.25-THD)	
C	11	1	**5P-4116**	12	WASHER-HARD (8.8X20.5X2-MM THK)	
M	12	1	**6V-7744**	1	LOCKNUT (M10X1.5-THD)	
M	13	1	**7X-2541**	2	BOLT (M8X1.25X140-MM)	
C	14	1	**8T-4121**	7	WASHER-HARD (11X21X2.5-MM THK)	
CM	15	1	**8T-4195**	3	BOLT (M10X1.5X30-MM)	
CM	16	1	**8T-4197**	1	BOLT (M8X1.25X40-MM)	
CM	17	1	**8T-4908**	2	BOLT (M8X1.25X25-MM)	
M	18	1	**8T-5436**	1	BOLT (M10X1.5X130-MM)	
M	19	1	**8T-6466**	1	BOLT (M10X1.5X60-MM)	
CM	20	1	**8T-7547**	1	BOLT (M8X1.25X30-MM)	

C-CHANGE FROM PREVIOUS TYPE
M-METRIC PART
Y-SEPARATE ILLUSTRATION

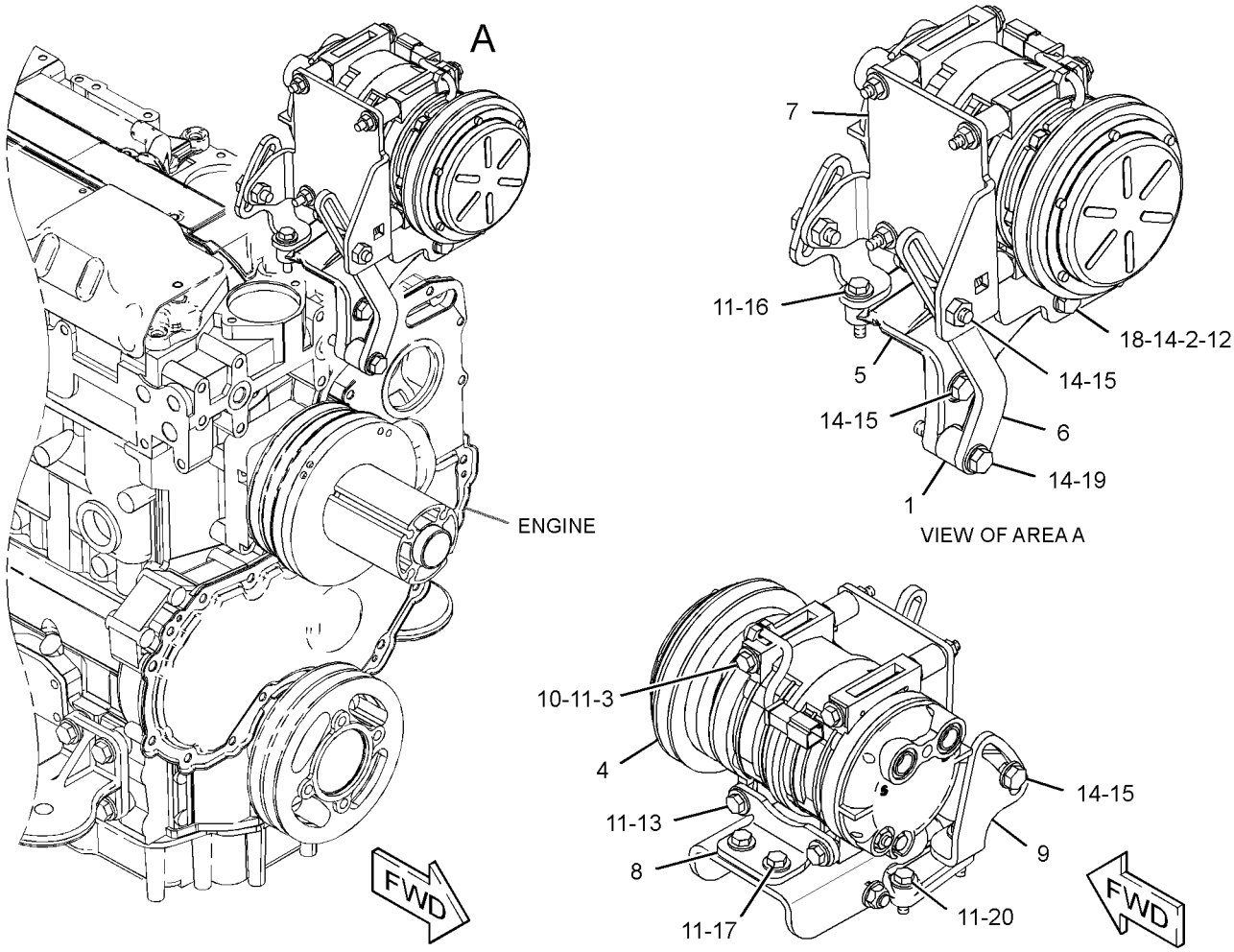

GRAPHIC #1

<END>

g01522167

214-4302 COMPRESSOR GP-REFRIGERANT

S/N: CBD1-UP; MFG1-UP
PART OF 248-5025 COMPRESSOR & MTG GP-REFRIG
AN ATTACHMENT

SMCS-1802 **i02498181**

NOTE	REF NO	GRAPHIC REF	PART NUMBER	QTY	PART NAME 1 2 3 4 5 6 (PRODUCT LEVEL)	SEE PAGE
	1	1	**102-8802**	1	KIT-RECEPTACLE (2-PIN)	
					(INCLUDES RECEPTACLE AS & WEDGE)	
	2	1	**229-4896**	2	SEAL-O-RING	
	3	1	**229-7356**	1	VALVE AS-RELIEF	
		1	**9X-7378**	1	SEAL-O-RING	

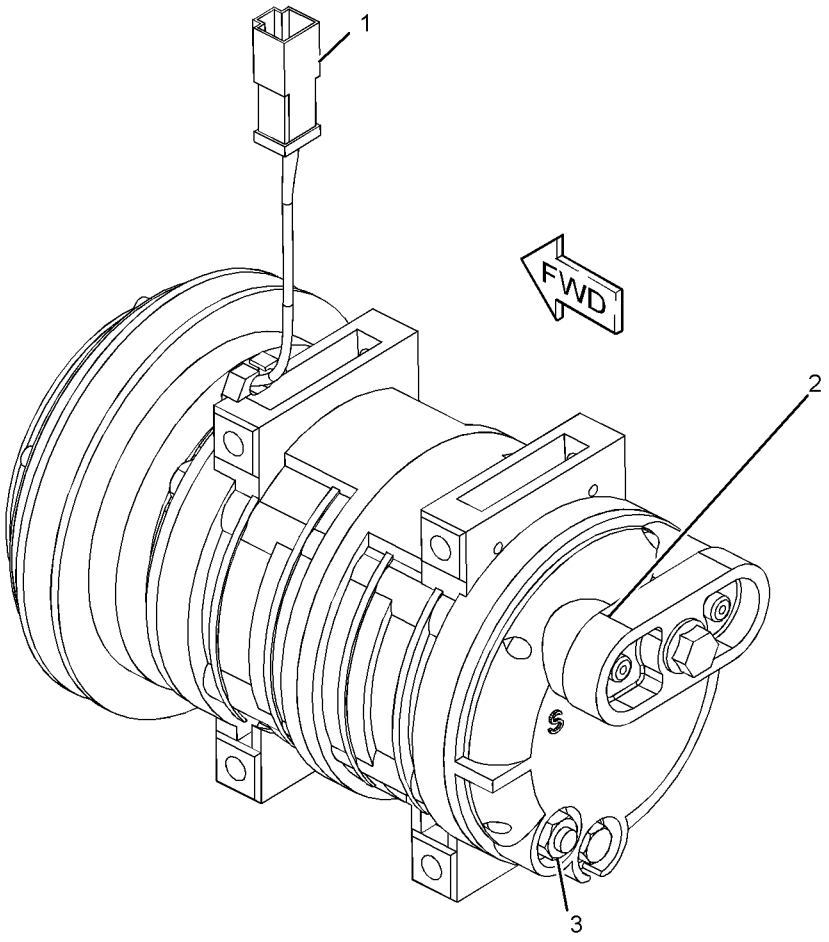

GRAPHIC #1 **<END>** g01239853

OPERATOR STATION

299-1055 COMPRESSOR GP-REFRIGERANT

S/N: MFG1-UP
PART OF 291-9195 CAB AR-ENCLOSED ROPS
AN ATTACHMENT

SMCS-1802 **i03857278**

NOTE	REF NO	GRAPHIC REF	PART NUMBER	QTY	PART NAME 1 2 3 4 5 6 (PRODUCT LEVEL)	SEE PAGE
	1	1	**113-7913**	1	STUD (M16X2X45-MM)	
	2	1	**288-9734**	1	BRACKET	
	3	1	**290-7831**	1	BRACKET	
Y	4	1	**299-2212**	1	COMPRESSOR GP-REFRIGERANT	939
M	5	1	**7X-2538**	4	BOLT (M8X1.25X100-MM)	
M	6	1	**7X-2553**	1	BOLT (M16X2X40-MM)	
	7	1	**8T-4121**	2	WASHER-HARD (11X21X2.5-MM THK)	
M	8	1	**8T-4132**	1	NUT (M16X2-THD)	
M	9	1	**8T-4136**	2	BOLT (M10X1.5X25-MM)	
	10	1	**8T-4224**	4	WASHER-HARD (8.8X16X2-MM THK)	
	11	1	**9X-8257**	2	WASHER (17.5X30X3.5-MM THK)	

M-METRIC PART
Y-SEPARATE ILLUSTRATION

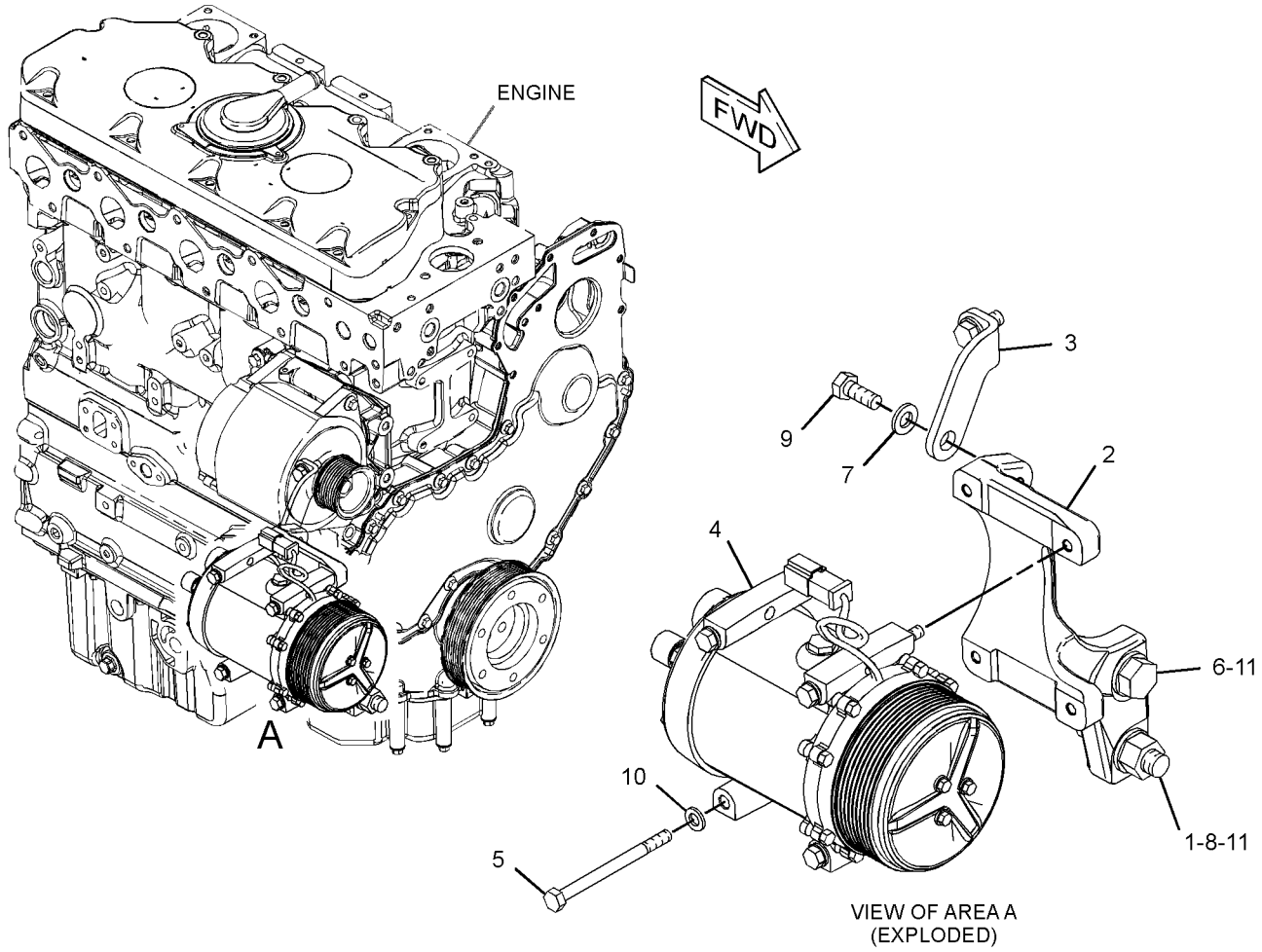

VIEW OF AREA A
(EXPLODED)

GRAPHIC #1 **<END>** g01515120

OPERATOR STATION

299-2212 COMPRESSOR GP-REFRIGERANT

S/N: MFG1-UP

PART OF 299-1055 COMPRESSOR GP-REFRIGERANT

AN ATTACHMENT

SMCS-1802 **i03857280**

NOTE	REF NO	GRAPHIC REF	PART NUMBER	QTY	PART NAME 1 2 3 4 5 6 (PRODUCT LEVEL)	SEE PAGE
	1	1	**126-1767**	2	PIN-CONNECTOR (14-GA TO 16-GA)	
	2	1	**102-8802**	1	KIT-RECEPTACLE (2-PIN)	
					(INCLUDES RECEPTACLE AS & WEDGE)	
	3	1	**314-4018**	1	VALVE AS-PRESSURE RELIEF (REFRIGERANT COMPRESSOR)	
	4	1	**7T-4532**	1	PLUG AS	
	5	1	**9X-7385**	2	SEAL-O-RING	

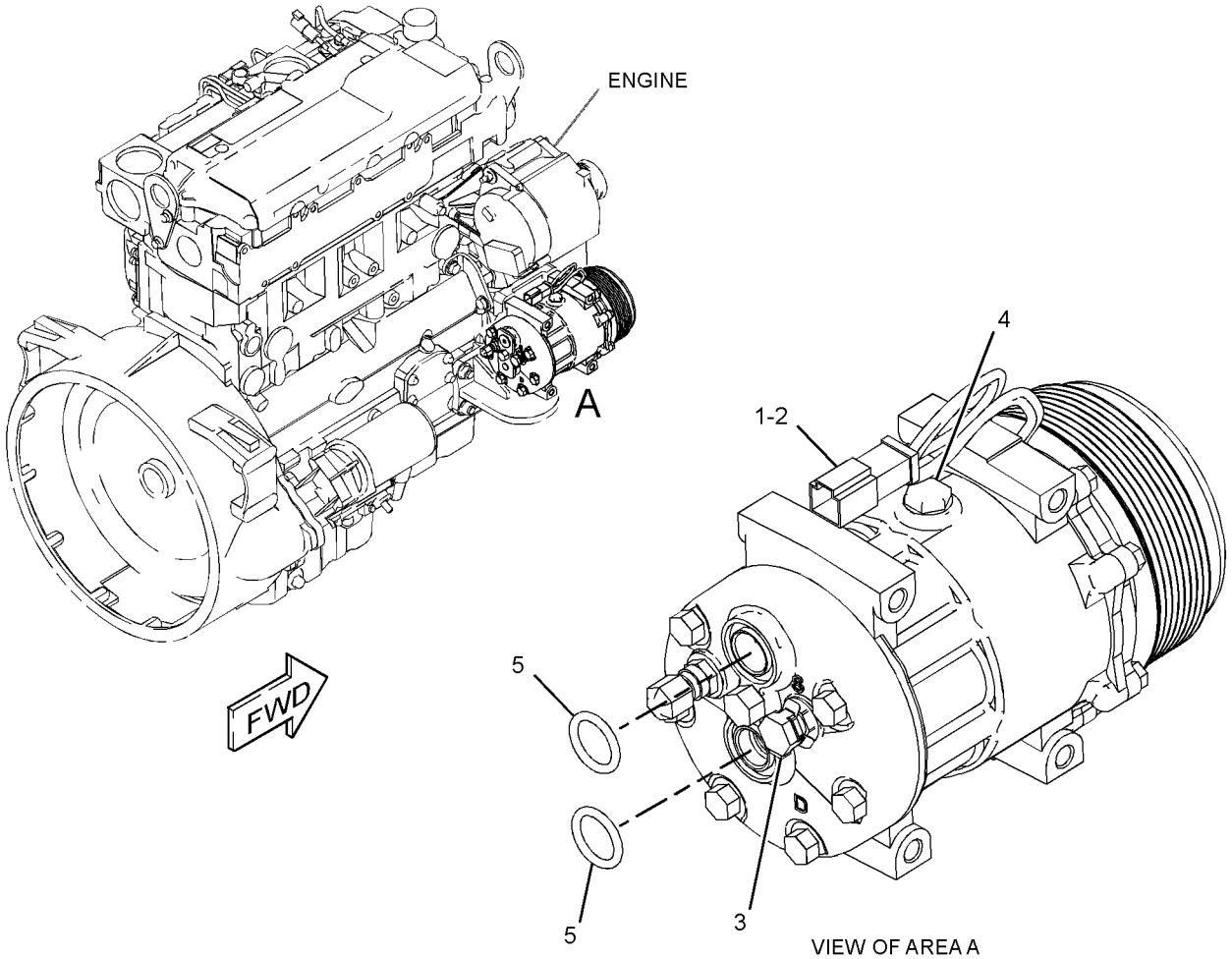

GRAPHIC #1

<END>

g01513535

OPERATOR STATION

211-0705 CONDENSER & MTG GP-REFRIGERANT

S/N: CBD1-UP; MFG1-UP
PART OF 228-4602 CAB AR-ENCLOSED ROPS
AN ATTACHMENT

SMCS-1805 **i02498177**

NOTE	REF NO	GRAPHIC REF	PART NUMBER	QTY	PART NAME 1 2 3 4 5 6 (PRODUCT LEVEL)	SEE PAGE
	1	1	**211-1381**	1	CORE AS-CONDENSER	
	2	1	**7X-0579**	4	WASHER-HARD (8.8X25.5X2-MM THK)	
M	3	1	**8T-4189**	4	BOLT (M8X1.25X20-MM)	

M-METRIC PART

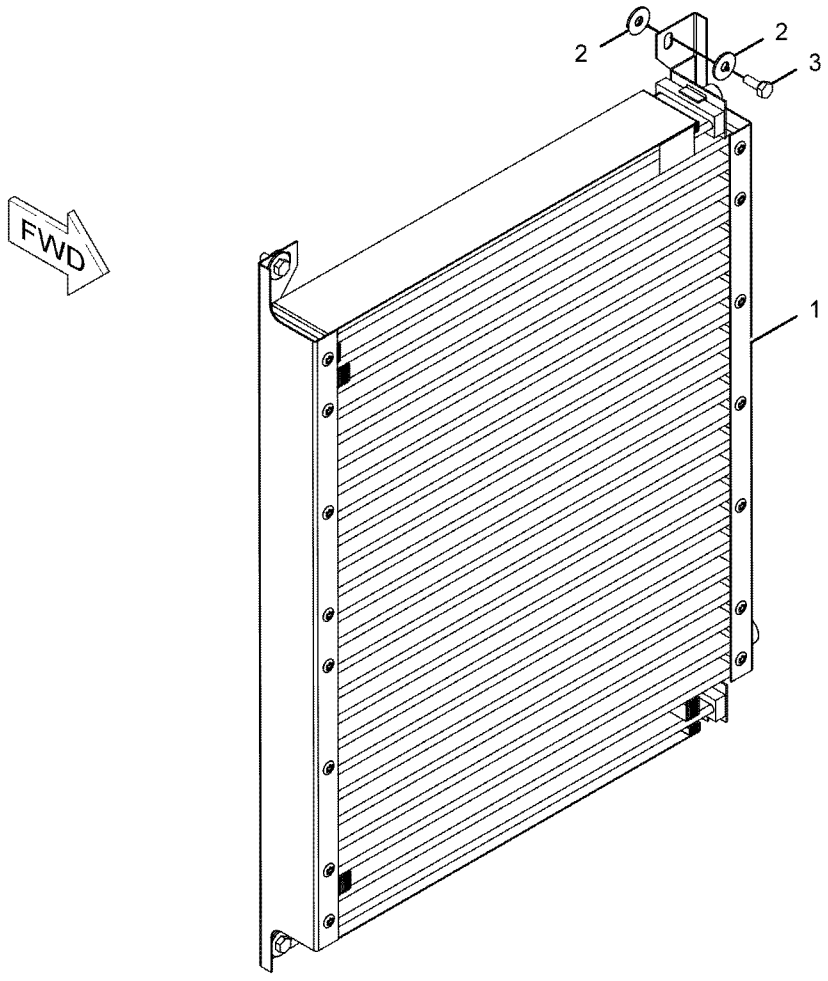

GRAPHIC #1 **<END>** g01080362

OPERATOR STATION

301-9725 CONDENSER & MTG GP-REFRIGERANT

S/N: MFG1-UP
PART OF 291-9195 CAB AR-ENCLOSED ROPS
AN ATTACHMENT

SMCS-1805 **i03858353**

NOTE	REF NO	GRAPHIC REF	PART NUMBER	QTY	PART NAME 1 2 3 4 5 6 (PRODUCT LEVEL)	SEE PAGE
	1	1	**353-8584**	1	CORE AS-CONDENSER	
		1	**317-8141**	4	MOUNT	
	2	1	**8C-9987**	4	WASHER (8.3X28X2.5-MM THK)	
M	3	1	**8T-4908**	4	BOLT (M8X1.25X25-MM)	

M-METRIC PART

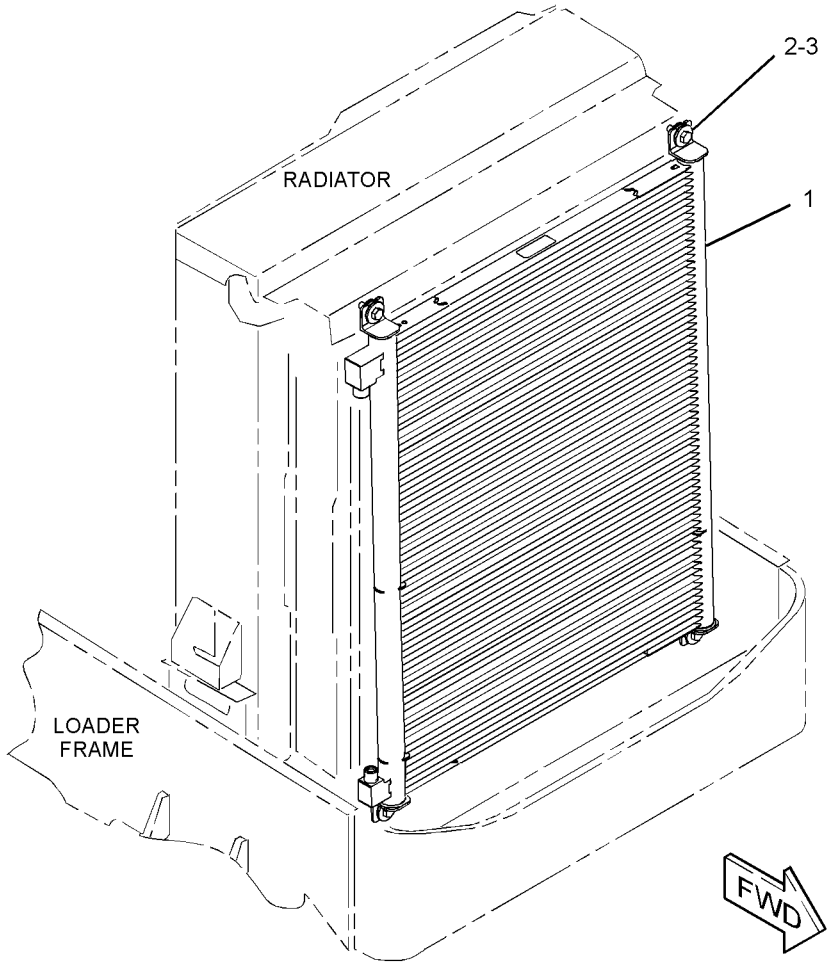

GRAPHIC #1 **<END>** g02099593

OPERATOR STATION

206-1700 CONSOLE GP-OPERATOR—RH

S/N: CBD1-UP; MFG1-UP

PART OF 204-4161, 204-4162, 228-4602, 291-9195 CAB AR-ENCLOSED ROPS, 204-4160, 204-4164, 292-9690, 292-9691 CANOPY AR-OPEN ROPS

AN ATTACHMENT

SMCS-5258, 7451 **i02700052**

NOTE	REF NO	GRAPHIC REF	PART NUMBER	QTY	PART NAME 1 2 3 4 5 6 (PRODUCT LEVEL)	SEE PAGE
B	1	1	**2S-3163**	1	PLUG	
	2	1	**164-1178**	1	CLIP	
	3	1	**167-8251**	1	FASTENER	
	4	1	**206-1678**	1	HOUSING AS (UPPER)	
	5	1	**206-1679**	1	PANEL AS (UPPER)	
		1	**206-1667**	2	CLIP	
	6	1	**206-1681**	1	PANEL AS (LOWER)	
		1	**172-8591**	5	NUT-SPRING	
	7	1	**261-9645**	1	COVER AS (CONTROLS, FRONT, UPPER)	
		1	**206-1667**	1	CLIP	
	8	1	**261-9644**	1	COVER AS (CONTROLS, FRONT, LOWER)	
		1	**206-1667**	1	CLIP	
	9	1	**269-9115**	1	COVER AS (FENDER, FRONT)	
		1	**172-8591**	1	NUT-SPRING	
	10	1	**206-1690**	1	COVER (FENDER, REAR)	
	11	1	**206-1692**	1	COVER AS (CONTROLS, REAR)	
		1	**206-1667**	3	CLIP	
M	12	1	**9X-2045**	16	SCREW-TRUSS HEAD (M6X1X20-MM)	
B	13	1	**248-2709**	2	PLUG	
	14	1	**9X-2038**	5	WASHER (7X19X2-MM THK)	
	15	1	**206-1687**	1	COVER-FUSE	
E	16	1	**261-9634**		SEAL-BULK (78-CM)	
E	17	1	**261-9634**		SEAL-BULK (73-CM)	

B-USE AS REQUIRED
E-ORDER BY THE CENTIMETER
M-METRIC PART

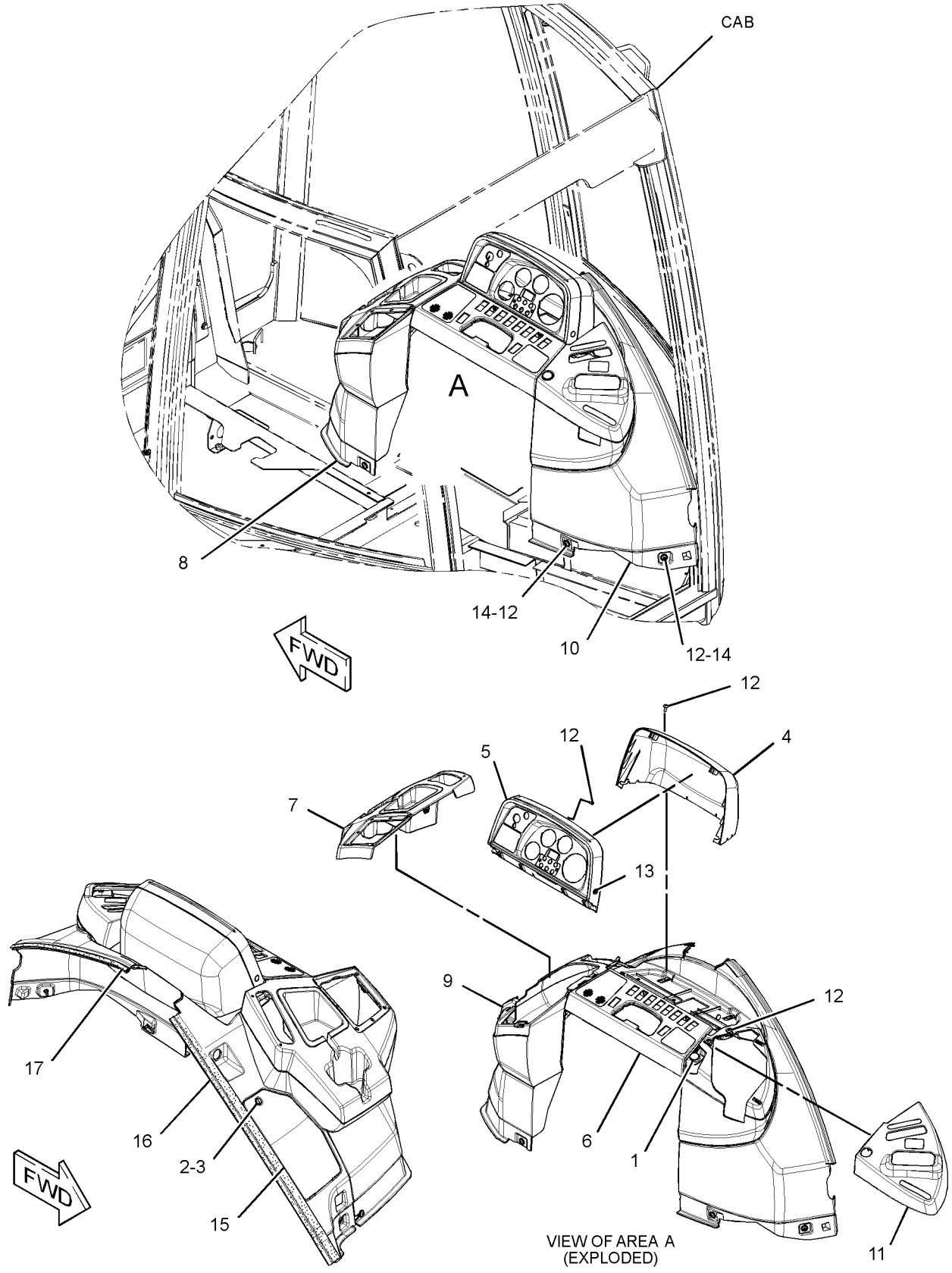

GRAPHIC #1 **<END>** g01391889

OPERATOR STATION

206-1702 CONSOLE GP-OPERATOR—LH

S/N: CBD1-UP; MFG1-UP
PART OF 204-4162, 228-4602, 291-9195 CAB AR-ENCLOSED ROPS, 204-4164, 292-9690 CANOPY AR-OPEN ROPS
AN ATTACHMENT

SMCS-5258, 7451 **i03819249**

NOTE	REF NO	GRAPHIC REF	PART NUMBER	QTY	PART NAME 1 2 3 4 5 6 (PRODUCT LEVEL)	SEE PAGE
E	1	1	**3E-6600**		SEAL (33-CM)	
D	2	1	**5P-5927**		SEAL (1.7-M)	
E	3	1	**293-1980**		SEAL (71.2-CM)	
E	3A	1	**293-1980**		SEAL (77.4-CM)	
	4	1	**206-1696**	1	CONSOLE AS	
	5	1	**206-1698**	1	DOOR-STORAGE	
	6	1	**206-1699**	1	CUP HOLDER (REAR)	
	7	1	**206-1706**	1	BOX AS-STORAGE	
J	8	1	**206-1708**	1	LOCK AS	
	9	1	**206-1712**	1	HINGE-DOOR	
	10	1	**210-6491**	1	CUP HOLDER (FRONT)	
	11	1	**249-2482**	1	PLATE	
	12	1	**261-9636**	1	BRACKET-SUPPORT	
	13	1	**261-9637**	2	BRACKET AS	
	14	1	**261-9639**	3	SCREW-PAN HEAD (12X0.5-IN)	
M	15	1	**5C-2890**	3	NUT (M6X1-THD)	
	16	1	**8T-4205**	3	WASHER-HARD (7.2X14.5X2-MM THK)	
	17	1	**9X-2038**	6	WASHER (7X19X2-MM THK)	
M	18	1	**9X-2044**	19	SCREW-TRUSS HEAD (M6X1X16-MM)	

D-ORDER BY THE METER
E-ORDER BY THE CENTIMETER
J-REQUIRES CORPORATE KEY
M-METRIC PART

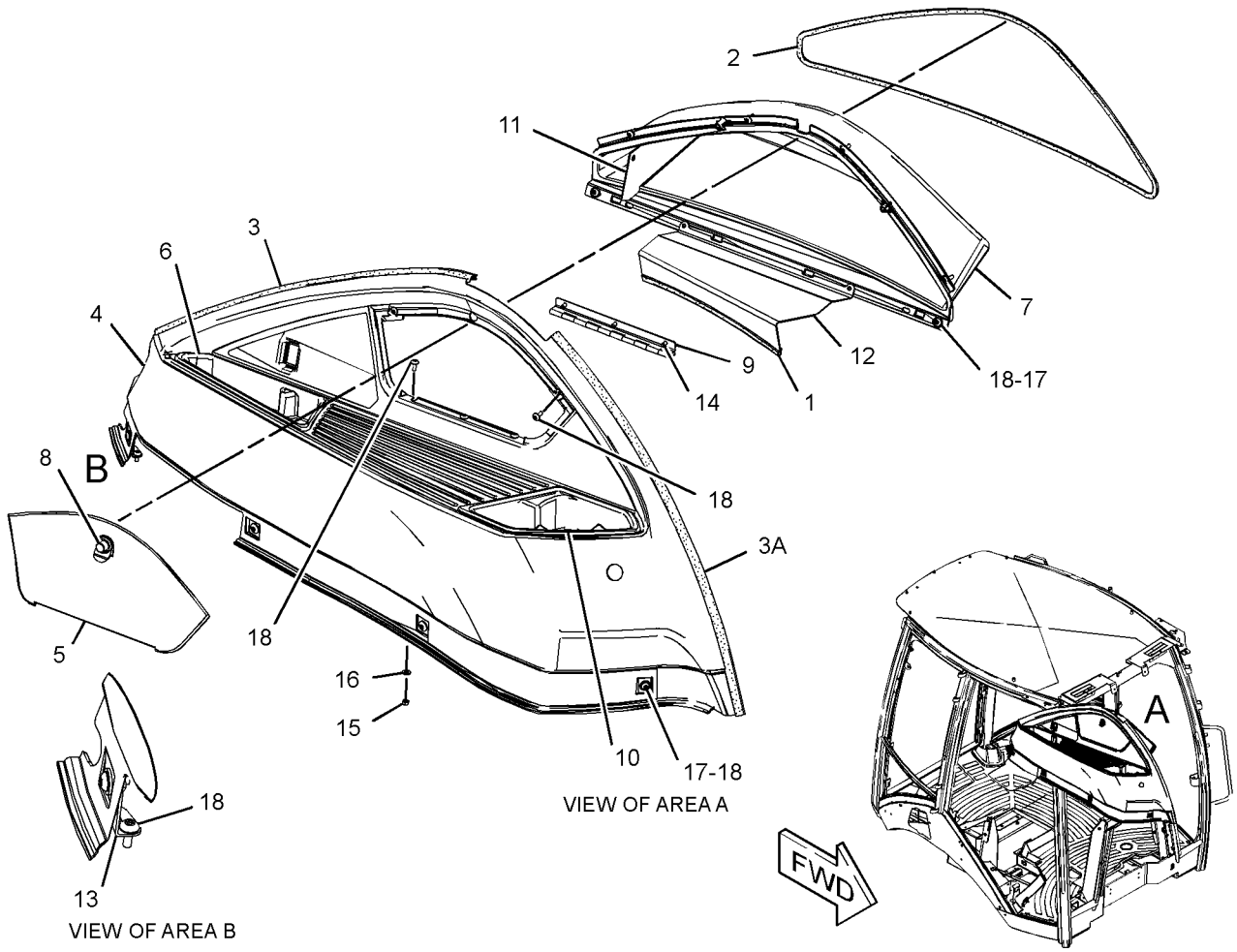

GRAPHIC #1 **<END>** g01199313

OPERATOR STATION

206-1703 CONSOLE GP-OPERATOR—FRONT

S/N: CBD1-UP; MFG1-UP

PART OF 204-4161, 204-4162, 228-4602, 291-9195 CAB AR-ENCLOSED ROPS, 204-4160, 204-4164, 292-9690, 292-9691 CANOPY AR-OPEN ROPS

AN ATTACHMENT

SMCS-5258, 7451 **i02959350**

NOTE	REF NO	GRAPHIC REF	PART NUMBER	QTY	PART NAME 1 2 3 4 5 6 (PRODUCT LEVEL)	SEE PAGE
B	1	1	**184-5293**	1	PLUG	
	2	1	**206-1658**	1	COVER AS-STEERING COLUMN (UPPER)	
		1	**206-1667**	2	CLIP	
	3	1	**206-1659**	1	DOOR-STORAGE	
	4	1	**206-1660**	1	COVER AS-STEERING COLUMN (FRONT)	
		1	**206-1667**	4	CLIP	
	5	1	**206-1661**	1	COVER AS-STEERING COLUMN (REAR)	
		1	**206-1667**	4	CLIP	
	6	1	**206-1662**	1	CONSOLE AS-FRONT (UPPER)	
		1	**206-1667**	8	CLIP	
	7	1	**206-1663**	1	CONSOLE-FRONT (MIDDLE)	
J	8	1	**206-1708**	1	LOCK AS	
	9	1	**261-9639**	10	SCREW-PAN HEAD (12X0.5-IN)	
E	10	1	**220-0738**		SEAL (22-CM)	
	11	1	**224-2147**	1	CONSOLE AS-FRONT (LOWER, LH)	
	12	1	**224-2149**	1	CONSOLE AS-FRONT (LOWER, RH)	
	13	1	**233-5260**	2	LANYARD	
M	14	1	**120-9027**	2	SCREW-PAN HEAD (M3X0.5X16-MM)	
	15	1	**206-1854**	1	HINGE	
M	16	1	**8T-2658**	2	LOCKNUT (M3X0.5-THD)	
M	17	1	**9X-2044**	2	SCREW-TRUSS HEAD (M6X1X16-MM)	
M	18	1	**9X-2045**	16	SCREW-TRUSS HEAD (M6X1X20-MM)	
	19	1	**258-2354**	1	BRACKET-LATCH	
	20	1	**9X-2038**	3	WASHER (7X19X2-MM THK)	
	21	1	**4I-3038**	2	WASHER (3.3X8X0.5-MM THK)	
D	22	1	**5P-7070**		INSULATION-STRIP (0.03-M EACH)	

B-USE AS REQUIRED
D-ORDER BY THE METER
E-ORDER BY THE CENTIMETER
J-REQUIRES CORPORATE KEY
M-METRIC PART

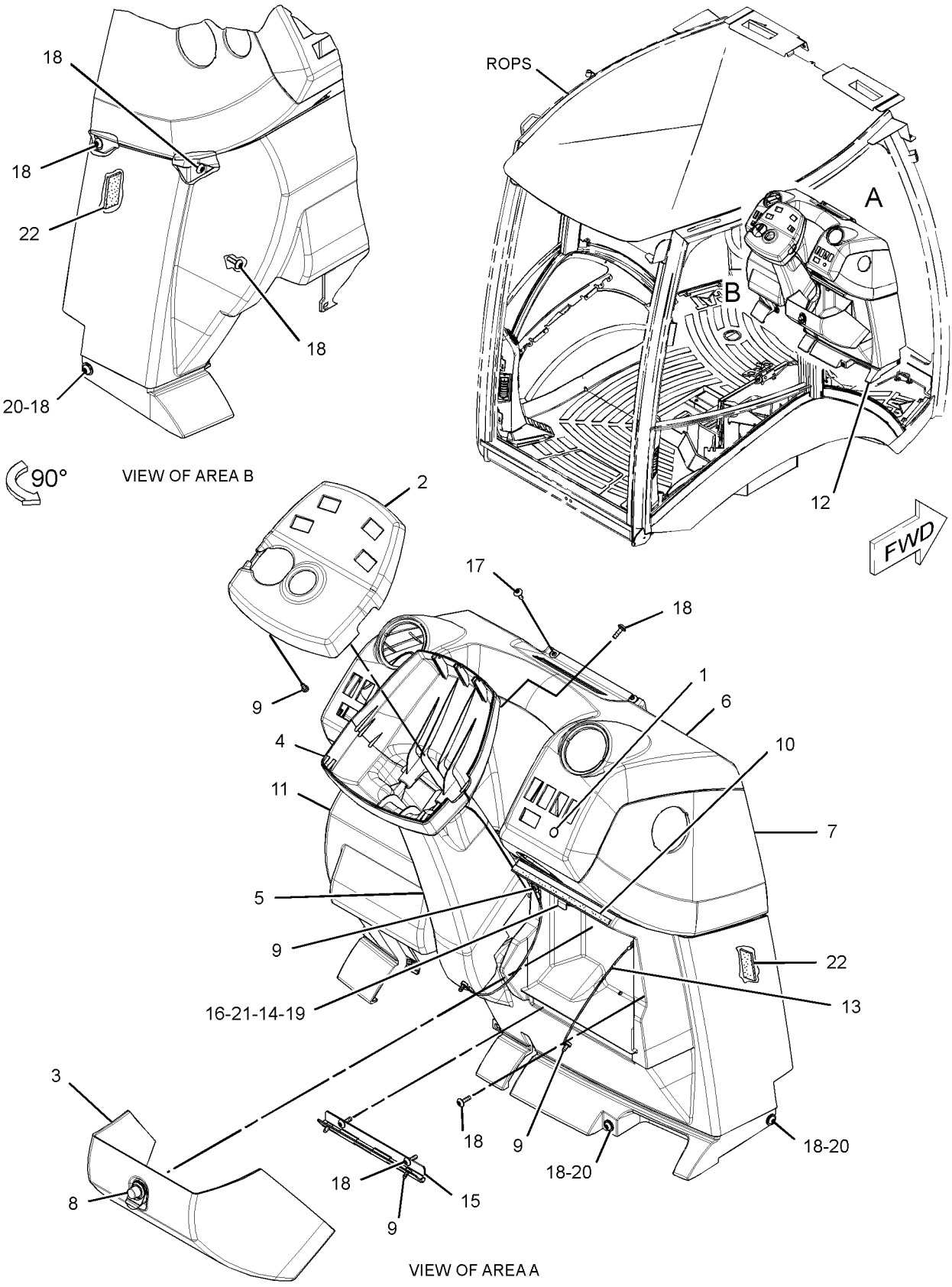

GRAPHIC #1 **<END>** g01522089

OPERATOR STATION

221-3002 CONTROL & MTG GP-STABILIZER

S/N: CBD1-2593

PART OF 204-4161, 204-4162, 228-4602 CAB AR-ENCLOSED ROPS, 204-4160, 204-4164, 292-9690, 292-9691 CANOPY AR-OPEN ROPS

AN ATTACHMENT

SMCS-7222 **i02495314**

NOTE	REF NO	GRAPHIC REF	PART NUMBER	QTY	PART NAME 1 2 3 4 5 6 (PRODUCT LEVEL)	SEE PAGE
	1	1	**8T-6902**	1	CLIP	
	2	1	**9R-8165**	1	BEARING	
	3	1	**183-6084**	1	BEARING	
	4	1	**206-1874**	1	LEVER AS	
Y	5	1	**221-3006**	2	CONTROL GP-HYDRAULIC HAND	967
	6	1	**229-5280**	1	PLATE AS	
	7	1	**229-5745**	1	SPACER (8X15.875X11.6-MM THK)	
	8	1	**232-1542**	1	SEAL	
	9	1	**248-2708**	1	GROMMET	
	10	1	**248-2710**	1	GROMMET	
	11	1	**164-1395**	1	KNOB	
	12	1	**5P-4116**	6	WASHER-HARD (8.8X20.5X2-MM THK)	
B	13	1	**6E-5431**	1	SHIM (0.5-MM THK)	
M	14	1	**7X-0465**	3	BOLT (M6X1X100-MM)	
M	15	1	**8T-4189**	4	BOLT (M8X1.25X20-MM)	
M	16	1	**8T-7547**	1	BOLT (M8X1.25X30-MM)	
	17	1	**9X-8256**	4	WASHER (6.6X12X2-MM THK)	
M	18	1	**8T-4138**	1	BOLT (M6X1X20-MM)	

B-USE AS REQUIRED
M-METRIC PART
Y-SEPARATE ILLUSTRATION

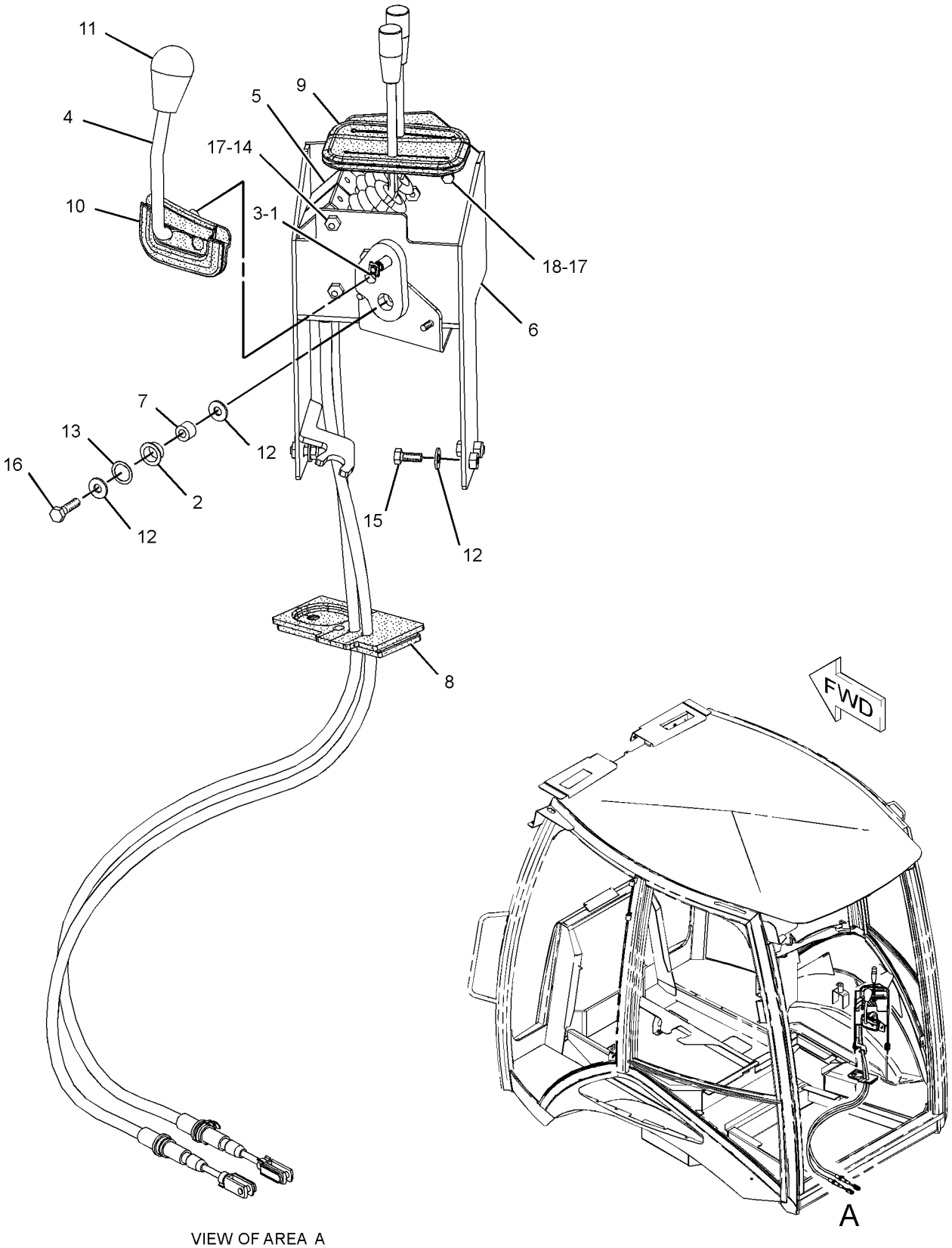

VIEW OF AREA A

GRAPHIC #1 **<END>** g01230695

OPERATOR STATION

221-3002 CONTROL & MTG GP-STABILIZER

S/N: CBD2594-UP

PART OF 204-4161, 204-4162, 228-4602 CAB AR-ENCLOSED ROPS, 204-4160, 204-4164, 292-9690, 292-9691 CANOPY AR-OPEN ROPS

AN ATTACHMENT

SMCS-7222 **i02888469**

NOTE	REF NO	GRAPHIC REF	PART NUMBER	QTY	PART NAME 1 2 3 4 5 6 (PRODUCT LEVEL)	SEE PAGE
	1	1	**8T-6902**	1	CLIP	
	2	1	**9R-8165**	1	BEARING	
	3	1	**183-6084**	1	BEARING	
	4	1	**206-1874**	1	LEVER AS	
Y	5	1	**221-3006**	2	CONTROL GP-HYDRAULIC HAND	967
C	6	1	**296-7593**	1	PLATE AS	
	7	1	**229-5745**	1	SPACER (8X15.875X11.6-MM THK)	
	8	1	**232-1542**	1	SEAL	
	9	1	**248-2708**	1	GROMMET	
	10	1	**248-2710**	1	GROMMET	
	11	1	**164-1395**	1	KNOB	
	12	1	**5P-4116**	6	WASHER-HARD (8.8X20.5X2-MM THK)	
B	13	1	**6E-5431**	1	SHIM (0.5-MM THK)	
M	14	1	**7X-0465**	3	BOLT (M6X1X100-MM)	
M	15	1	**8T-4189**	4	BOLT (M8X1.25X20-MM)	
M	16	1	**8T-7547**	1	BOLT (M8X1.25X30-MM)	
C	17	1	**9X-8256**	7	WASHER (6.6X12X2-MM THK)	
M	18	1	**8T-4138**	1	BOLT (M6X1X20-MM)	
CM	19	1	**129-3178**	3	LOCKNUT (M6X1-THD)	

B-USE AS REQUIRED
C-CHANGE FROM PREVIOUS TYPE
M-METRIC PART
Y-SEPARATE ILLUSTRATION

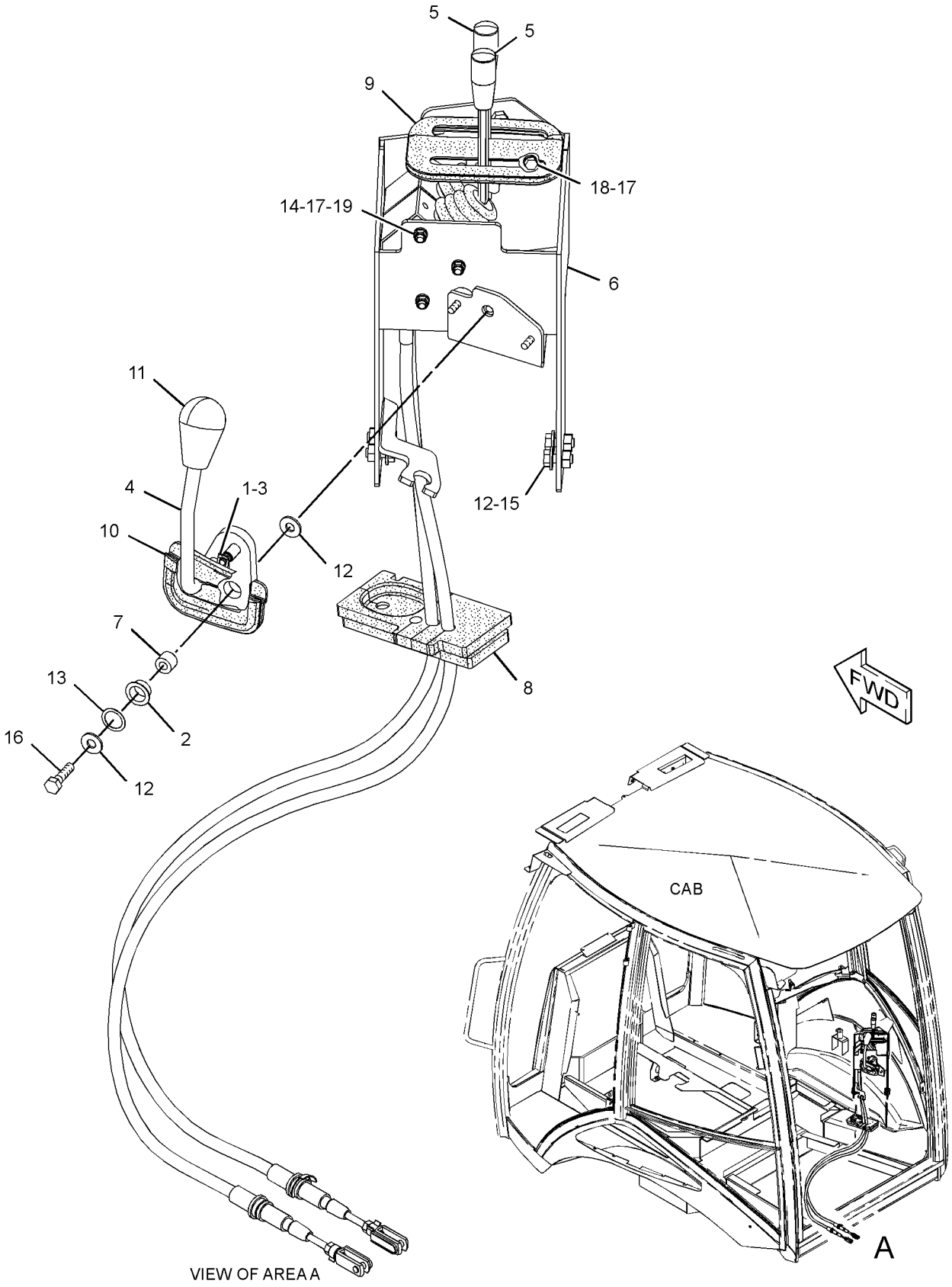

GRAPHIC #1 **<END>** g01407908

OPERATOR STATION

221-3002 CONTROL & MTG GP-STABILIZER

S/N: CBD2594-UP; MFG1-UP
PART OF 204-4161, 204-4162, 228-4602, 291-9195 CAB AR-ENCLOSED ROPS,
204-4160, 204-4164 CANOPY AR-OPEN ROPS
AN ATTACHMENT

SMCS-7222 **i04389420**

NOTE	REF NO	GRAPHIC REF	PART NUMBER	QTY	PART NAME 1 2 3 4 5 6 (PRODUCT LEVEL)	SEE PAGE
	1	1	**8T-6902**	1	CLIP	
	2	1	**9R-8165**	1	BEARING	
	3	1	**183-6084**	1	BEARING	
	4	1	**206-1874**	1	LEVER AS	
Y	5	1	**221-3006**	2	CONTROL GP-HYDRAULIC HAND (STABILIZER)	967
C	6	1	**229-5280**	1	PLATE AS	
	7	1	**229-5745**	1	SPACER (8X15.875X11.6-MM THK)	
	8	1	**232-1542**	1	SEAL	
	9	1	**248-2708**	1	GROMMET	
	10	1	**248-2710**	1	GROMMET	
	11	1	**164-1395**	1	KNOB	
	12	1	**5P-4116**	6	WASHER-HARD (8.8X20.5X2-MM THK)	
B	13	1	**6E-5431**	1	SHIM (0.5-MM THK)	
M	14	1	**7X-0465**	3	BOLT (M6X1X100-MM)	
M	15	1	**8T-4189**	4	BOLT (M8X1.25X20-MM)	
M	16	1	**8T-7547**	1	BOLT (M8X1.25X30-MM)	
C	17	1	**9X-8256**	4	WASHER (6.6X12X2-MM THK)	
M	18	1	**8T-4138**	1	BOLT (M6X1X20-MM)	

B-USE AS REQUIRED
C-CHANGE FROM PREVIOUS TYPE
M-METRIC PART
Y-SEPARATE ILLUSTRATION

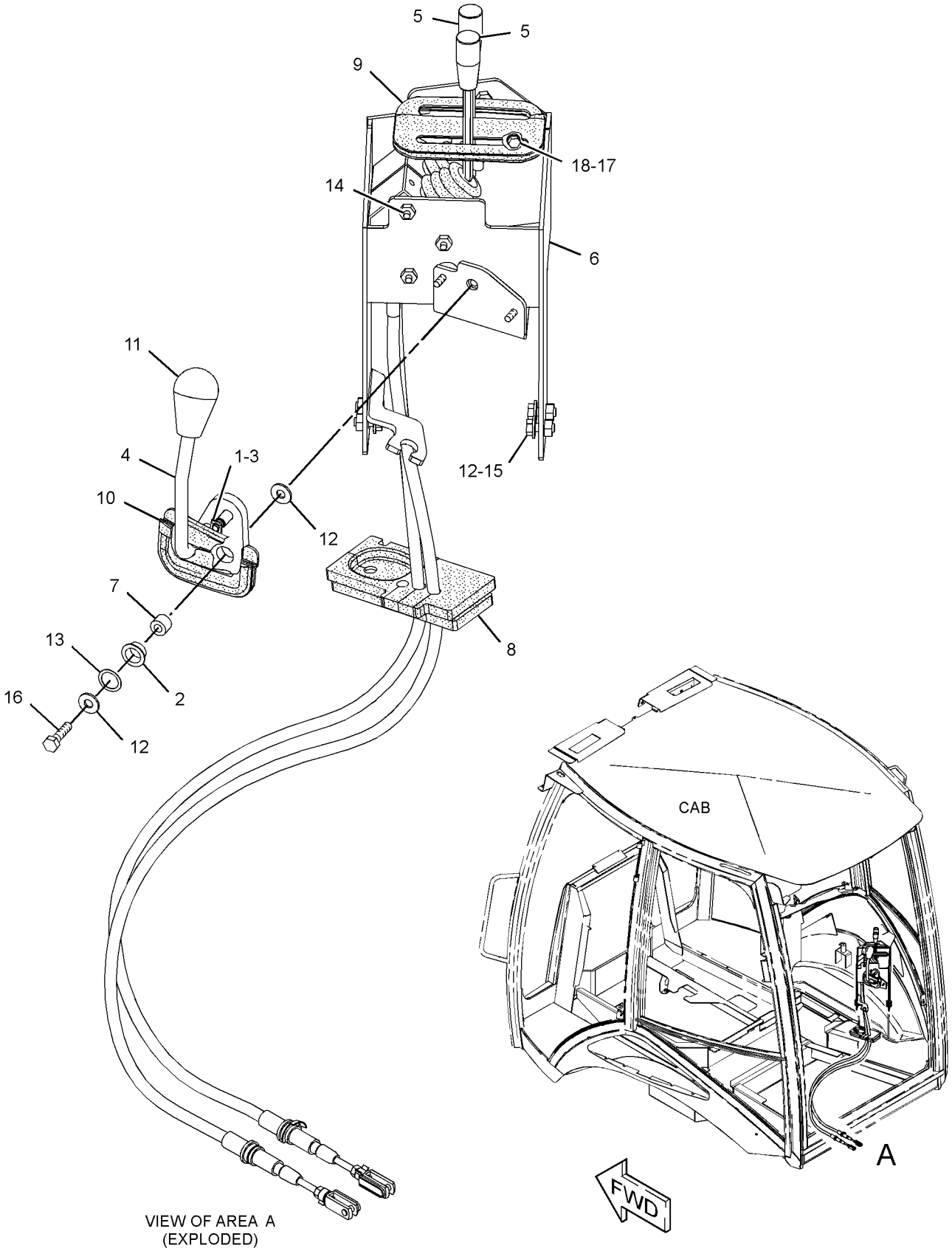

GRAPHIC #1 **<END>** g02515616

OPERATOR STATION

206-1645 CONTROL GP-HYDRAULIC HAND—LOADER

S/N: CBD1-UP; MFG1-UP
SINGLE TILT
PART OF 209-9943 VALVE AR-BANK 2
AN ATTACHMENT

SMCS-5063 **i02674345**

NOTE	REF NO	GRAPHIC REF	PART NUMBER	QTY	PART NAME 1 2 3 4 5 6 (PRODUCT LEVEL)	SEE PAGE
B	1	1	**1K-0502**	7	WASHER (16.3X25.4X1.2-MM THK)	
	2	1	**2R-0364**	3	RING-RETAINING	
M	3	1	**9X-2040**	2	SCREW-TRUSS HEAD (M10X1.5X25-MM)	
	4	1	**5H-3193**	1	PIN-SPRING	
	5	1	**9R-1765**	1	COVER-TOP (TOP)	
	6	1	**9R-1766**	1	COVER-BOTTOM	
	7	1	**9R-1767**	1	BOOT	
	8	1	**9R-9868**	1	SWITCH GP-PUSH BUTTON (NEUTRALIZER, DOWNSHIFT)	
		1	**9W-0625**	1	SWITCH AS-PUSH BUTTON	
		1	**144-1636**	2	PIN-CONNECTOR (14-GA TO 18-GA)	
D		1	**5P-5677**		WIRE (18-GA, BLACK) (2-M)	
D		1	**6V-2689**		TUBE-HEAT SHRINK (6.35-MM DIA) (1.1-M)	
M	9	1	**9X-2065**	2	NUT (M10X1.5-THD, LH)	
	10	1	**107-5591**	1	NUT-JAM (3/4-16-THD)	
M	11	1	**134-0453**	2	TURNBUCKLE	
	12	1	**164-1368**	12	FASTENER-PANEL	
	13	1	**183-3135**	1	JOINT AS	
	14	1	**183-3137**	1	PIN	
	15	1	**206-1695**	1	BOOT	
	16	1	**209-3363**	1	ROD	
	17	1	**216-3351**	1	ROD	
	18	1	**216-3358**	1	DAMPER AS (SPRING)	
		1	**095-9230**	1	PIN-SPRING	
		1	**183-3132**	1	CYLINDER	
	19	1	**291-5108**	1	GASKET	
	20	1	**220-0269**	1	SHAFT	
	21	1	**230-2510**	1	LEVER AS	
	22	1	**269-8129**	1	BRACKET AS	
	23	1	**269-8817**	1	PLATE	
	24	1	**270-2795**	1	PLATE	
	25	1	**272-7104**	1	ROD	
	26	1	**275-8869**	1	BRACKET AS	
	27	1	**179-8235**	1	LOCK PIN	
	28	1	**102-8802**	1	KIT-RECEPTACLE (2-PIN)	
					(INCLUDES RECEPTACLE AS & WEDGE)	
M	29	1	**6V-7744**	4	LOCKNUT (M10X1.5-THD)	
	30	1	**7X-7729**	4	WASHER (11X25X3-MM THK)	
	31	1	**8C-4987**	1	PIN-CLEVIS	
	32	1	**8T-4121**	3	WASHER-HARD (11X21X2.5-MM THK)	
M	33	1,1	**8T-4133**	6	NUT (M10X1.5-THD)	
M	34	1	**8T-4136**	1	BOLT (M10X1.5X25-MM)	
M	35	1	**8T-4137**	2	BOLT (M10X1.5X20-MM)	
M	36	1	**8T-4189**	4	BOLT (M8X1.25X20-MM)	
	37	1	**5P-4116**	4	WASHER-HARD (8.8X20.5X2-MM THK)	
	38	1	**8T-4773**	2	BALL JOINT	
	39	1	**8T-4815**	2	ROD END	
	40	1	**8T-9501**	2	SCREW (10-16X0.75-IN)	
	41	1	**9R-2807**	1	CLIP	
	42	1	**9R-3067**	1	PIN	
E	43	1	**3E-6600**		SEAL (7-CM)	

B-USE AS REQUIRED
D-ORDER BY THE METER
E-ORDER BY THE CENTIMETER
M-METRIC PART

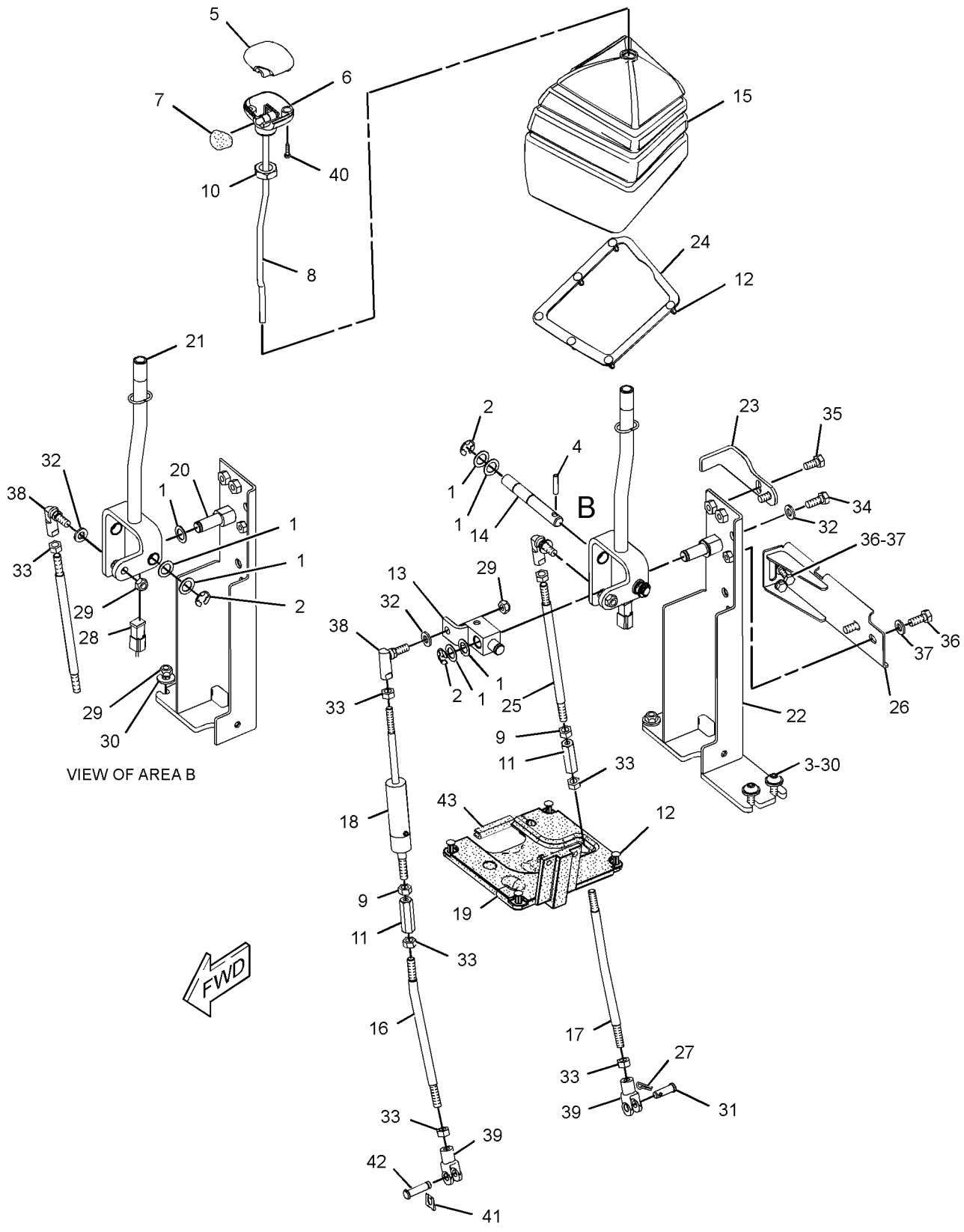

GRAPHIC #1 **<END>** g01312659

OPERATOR STATION

209-3364 CONTROL GP-HYDRAULIC HAND–LOADER

S/N: CBD1-UP; MFG1-UP
PART OF 209-9944 VALVE AR-BANK 3
AN ATTACHMENT

SMCS-5063 **i02674348**

NOTE	REF NO	GRAPHIC REF	PART NUMBER	QTY	PART NAME 1 2 3 4 5 6 (PRODUCT LEVEL)	SEE PAGE
	1	1	**1K-0502**	10	WASHER (16.3X25.4X1.2-MM THK)	
	2	1	**2R-0364**	4	RING-RETAINING	
M	3	1	**9X-2040**	2	SCREW-TRUSS HEAD (M10X1.5X25-MM)	
	4	1	**5H-3193**	1	PIN-SPRING	
	5	1	**9R-1765**	1	COVER-TOP (TOP)	
	6	1	**9R-1766**	1	COVER-BOTTOM	
	7	1	**9R-1767**	1	BOOT	
	8	1	**9R-9868**	1	SWITCH GP-PUSH BUTTON (NEUTRALIZER, DOWNSHIFT)	
		1	**5P-5677**	2	WIRE (18-GA, BLACK)	
		1	**9X-3401**	2	PIN-CONNECTOR (16-GA TO 18-GA)	
D		1	**6V-2689**		TUBE-HEAT SHRINK (6.35-MM DIA) (1.1-M)	
		1	**9W-0625**	1	SWITCH AS-PUSH BUTTON	
M	9	1	**9X-2065**	3	NUT (M10X1.5-THD, LH)	
	10	1	**107-5591**	1	NUT-JAM (3/4-16-THD)	
M	11	1	**134-0453**	3	TURNBUCKLE	
	12	1	**164-1368**	12	FASTENER-PANEL	
	13	1	**183-3135**	1	JOINT AS	
	14	1	**183-3137**	1	PIN	
	15	1	**206-1668**	1	BOOT	
	16	1	**209-3363**	1	ROD (LOWER)	
	17	1	**216-3350**	1	ROD	
	18	1	**216-3351**	1	ROD (LOWER)	
	19	1	**216-3358**	1	DAMPER AS (SPRING)	
		1	**095-9230**	1	PIN-SPRING	
		1	**183-3132**	1	CYLINDER	
	20	1	**291-5108**	1	GASKET	
	21	1	**220-0269**	1	SHAFT	
	22	1	**220-3251**	1	ROD	
	23	1	**230-2510**	1	LEVER AS	
	24	1	**230-3038**	1	LEVER AS	
	25	1	**269-8129**	1	BRACKET AS	
	26	1	**269-8817**	1	PLATE	
	27	1	**270-2795**	1	PLATE	
	28	1	**272-7104**	1	ROD	
	29	1	**275-8869**	1	BRACKET AS	
	30	1	**164-1395**	1	KNOB	
	31	1	**179-8235**	2	LOCK PIN	
	32	1	**102-8802**	1	KIT-RECEPTACLE (2-PIN) (INCLUDES RECEPTACLE AS & WEDGE)	
M	33	1	**6V-7744**	4	LOCKNUT (M10X1.5-THD)	
	34	1,1	**7X-7729**	4	WASHER (11X25X3-MM THK)	
	35	1	**8C-4987**	2	PIN-CLEVIS	
	36	1	**8T-4121**	4	WASHER-HARD (11X21X2.5-MM THK)	
M	37	1	**8T-4133**	9	NUT (M10X1.5-THD)	
M	38	1	**8T-4136**	1	BOLT (M10X1.5X25-MM)	
M	39	1	**8T-4137**	2	BOLT (M10X1.5X20-MM)	
M	40	1	**8T-4189**	4	BOLT (M8X1.25X20-MM)	
	41	1	**5P-4116**	4	WASHER-HARD (8.8X20.5X2-MM THK)	
	42	1	**8T-4773**	3	BALL JOINT	
	43	1	**8T-4815**	3	ROD END	
	44	1	**8T-9501**	2	SCREW (10-16X0.75-IN)	
	45	1	**9R-2807**	1	CLIP	
	46	1	**9R-3067**	1	PIN	
E	47	1	**3E-6600**		SEAL (7-CM)	

209-3364 **CONTROL GP-HYDRAULIC HAND** *(contd.)* **i02674348**

D-ORDER BY THE METER
E-ORDER BY THE CENTIMETER
M-METRIC PART

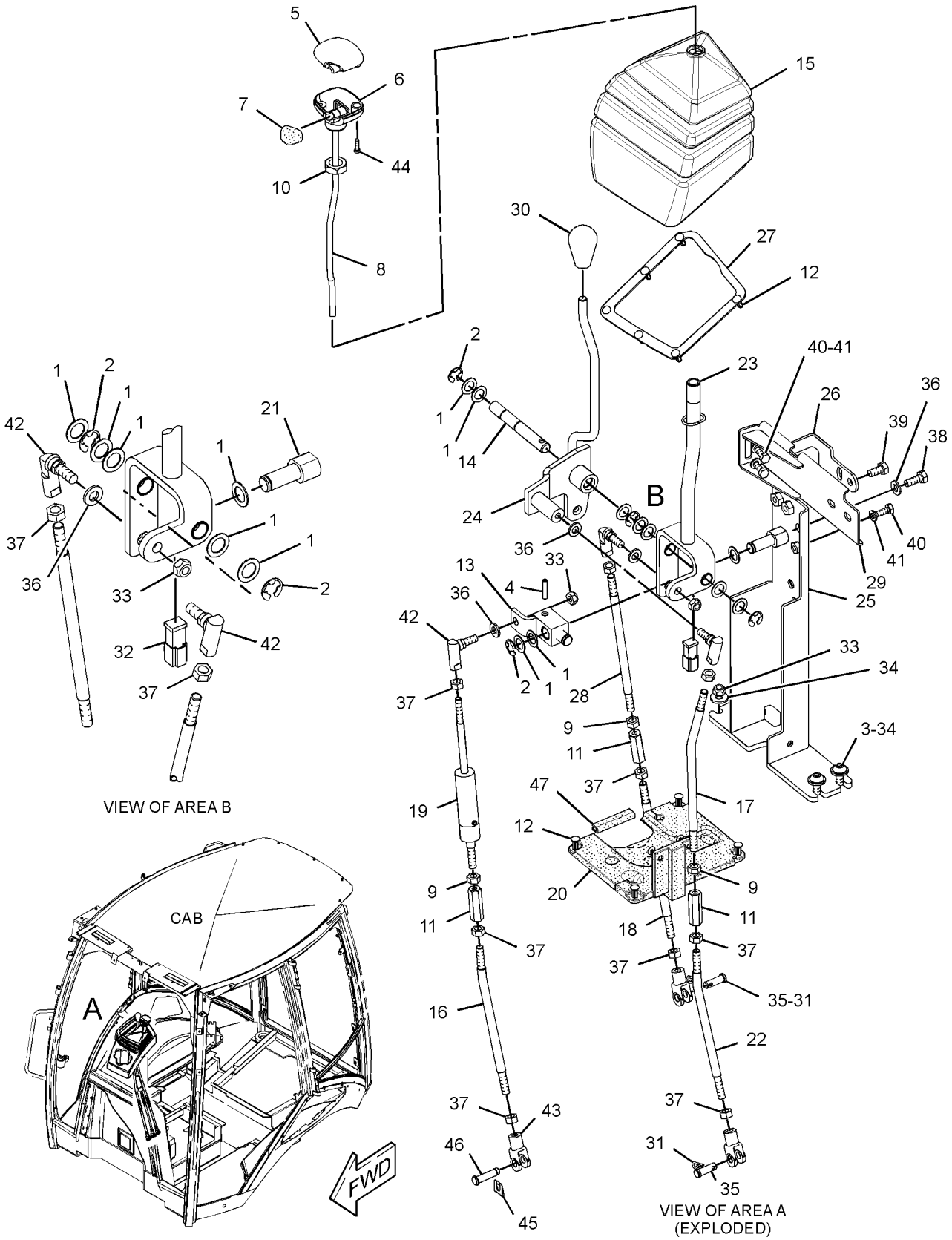

GRAPHIC #1 **<END>** g01314431

OPERATOR STATION

209-3370 CONTROL GP-HYDRAULIC HAND–BACKHOE

S/N: CBD1-3839
STANDARD
AN ATTACHMENT

SMCS-5063 **i02495493**

NOTE	REF NO	GRAPHIC REF	PART NUMBER	QTY	PART NAME 1 2 3 4 5 6 (PRODUCT LEVEL)	SEE PAGE
	1	1	**164-1361**	2	BOOT	
	2	1	**164-1371**	2	PLATE	
	3	1	**164-1399**	2	KNOB	
	4	1	**164-1409**	1	LEVER AS (RH)	
	5	1	**164-1411**	1	LEVER AS (LH)	
	6	1	**164-1435**	2	PLATE	
	7	1	**170-6312**	4	BEARING	
	8	1	**190-5130**	1	FILM-INSTRUCTION (BACKHOE)	
	9	1	**206-1672**	1	CONSOLE	
	10	1	**206-1673**	1	CONSOLE AS	
		1	**172-8591**	2	NUT-SPRING	
	11	1	**209-3348**	4	ROD	
	12	1	**209-3353**	1	TOWER AS	
	13	1	**209-3368**	1	GASKET	
	14	1	**164-1402**	2	SLEEVE	
	15	1	**164-1404**	2	SPACER (10.67X16.95X23-MM THK)	
	16	1	**179-8235**	4	LOCK PIN	
M	17	1	**6V-7744**	8	LOCKNUT (M10X1.5-THD)	
	18	1	**7X-7729**	8	WASHER (11X25X3-MM THK)	
	19	1	**8C-4987**	4	PIN-CLEVIS	
	20	1	**8T-4121**	8	WASHER-HARD (11X21X2.5-MM THK)	
M	21	1	**8T-4133**	8	NUT (M10X1.5-THD)	
M	22	1	**8T-4138**	6	BOLT (M6X1X20-MM)	
M	23	1	**8T-4172**	2	BOLT (M10X1.5X80-MM)	
M	24	1	**8T-4195**	2	BOLT (M10X1.5X30-MM)	
	25	1	**8T-4773**	4	BALL JOINT	
	26	1	**8T-4815**	4	ROD END	
M	27	1	**8T-6466**	2	BOLT (M10X1.5X60-MM)	
	28	1	**9R-9901**	6	FASTENER	
	29	1	**9X-2038**	4	WASHER (7X19X2-MM THK)	
M	30	1	**9X-2045**	6	SCREW-TRUSS HEAD (M6X1X20-MM)	
	31	1	**9X-8256**	6	WASHER (6.6X12X2-MM THK)	

M-METRIC PART

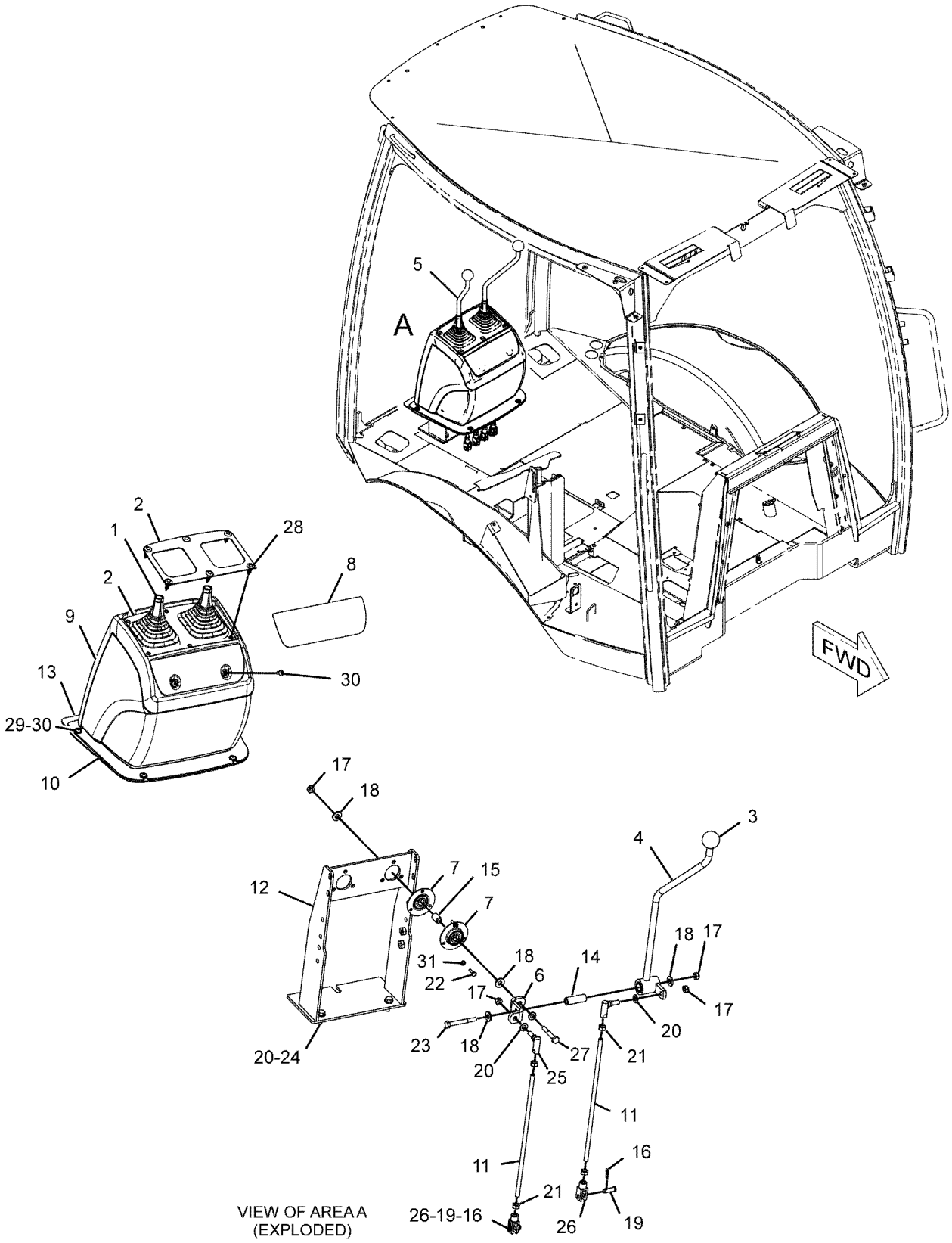

GRAPHIC #1 **<END>** g01080443

OPERATOR STATION

209-3370 CONTROL GP-HYDRAULIC HAND–BACKHOE

S/N: CBD1-UP; MFG1-UP
STANDARD
PART OF 374-3521, 374-3529, 374-6535, 374-6536 DISTRIBUTION AR
AN ATTACHMENT

SMCS-5063 **i03247346**

NOTE	REF NO	GRAPHIC REF	PART NUMBER	QTY	PART NAME 1 2 3 4 5 6 (PRODUCT LEVEL)	SEE PAGE
	1	1	**164-1361**	2	BOOT	
	2	1	**164-1371**	2	PLATE	
	3	1	**164-1399**	2	KNOB	
	4	1	**164-1409**	1	LEVER AS (RH)	
	5	1	**164-1411**	1	LEVER AS (LH)	
	6	1	**164-1435**	2	PLATE	
	7	1	**170-6312**	4	BEARING	
	8	1	**190-5130**	1	FILM-INSTRUCTION (BACKHOE)	
	9	1	**206-1672**	1	CONSOLE	
	10	1	**206-1673**	1	CONSOLE AS	
		1	**172-8591**	2	NUT-SPRING	
C	11	1	**303-9307**	4	ROD	
	12	1	**209-3353**	1	TOWER AS	
	13	1	**209-3368**	1	GASKET	
	14	1	**164-1402**	2	SLEEVE	
	15	1	**164-1404**	2	SPACER (10.67X16.95X23-MM THK)	
	16	1	**179-8235**	4	LOCK PIN	
M	17	1	**6V-7744**	8	LOCKNUT (M10X1.5-THD)	
	18	1	**7X-7729**	8	WASHER (11X25X3-MM THK)	
	19	1	**8C-4987**	4	PIN-CLEVIS	
	20	1	**8T-4121**	8	WASHER-HARD (11X21X2.5-MM THK)	
M	21	1	**8T-4133**	8	NUT (M10X1.5-THD)	
M	22	1	**8T-4138**	6	BOLT (M6X1X20-MM)	
M	23	1	**8T-4172**	2	BOLT (M10X1.5X80-MM)	
M	24	1	**8T-4195**	2	BOLT (M10X1.5X30-MM)	
	25	1	**8T-4773**	4	BALL JOINT	
	26	1	**8T-4815**	4	ROD END	
M	27	1	**8T-6466**	2	BOLT (M10X1.5X60-MM)	
	28	1	**9R-9901**	6	FASTENER	
	29	1	**9X-2038**	4	WASHER (7X19X2-MM THK)	
M	30	1	**9X-2045**	6	SCREW-TRUSS HEAD (M6X1X20-MM)	
	31	1	**9X-8256**	6	WASHER (6.6X12X2-MM THK)	

C-CHANGE FROM PREVIOUS TYPE
M-METRIC PART

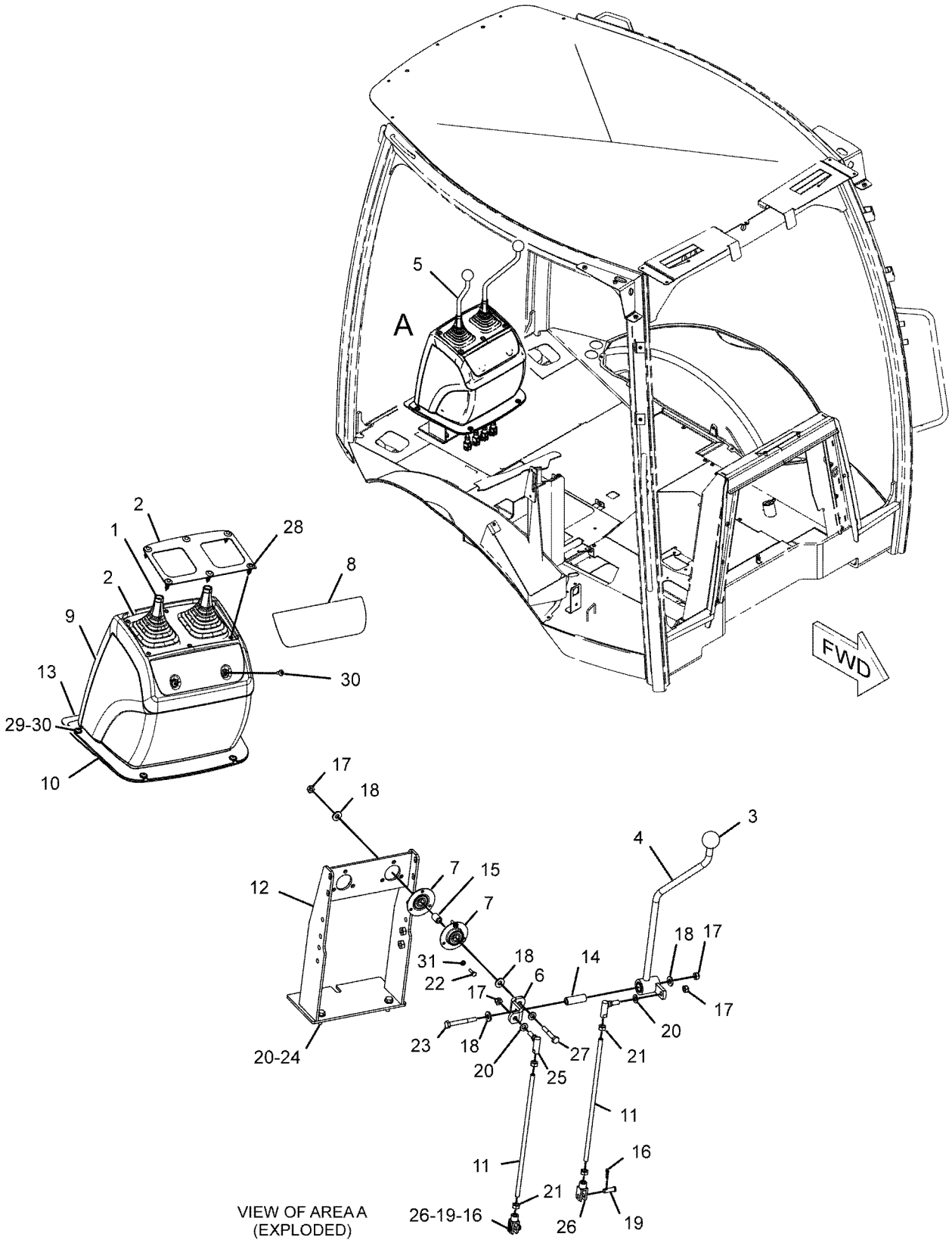

GRAPHIC #1 **<END>** g01080443

OPERATOR STATION

209-3371 CONTROL GP-HYDRAULIC HAND–

4-FUNCTION, EXCAVATOR

S/N: CBD1-3839

AN ATTACHMENT

SMCS-5063 **i02495494**

NOTE	REF NO	GRAPHIC REF	PART NUMBER	QTY	PART NAME 1 2 3 4 5 6 (PRODUCT LEVEL)	SEE PAGE
	1	1	**142-7405**	2	COLLAR	
	2	1	**164-1361**	2	BOOT	
	3	1	**164-1371**	2	PLATE	
	4	1	**164-1399**	2	KNOB	
	5	1	**164-1409**	1	LEVER AS (RH)	
	6	1	**164-1411**	1	LEVER AS (LH)	
	7	1	**164-1421**	1	PLATE	
	8	1	**164-1422**	1	SHAFT AS	
	9	1	**164-1425**	1	COUPLER AS	
	10	1	**164-1429**	1	COUPLER AS	
	11	1	**164-1435**	2	PLATE	
	12	1	**164-1438**	2	ROD	
	13	1	**170-6312**	4	BEARING	
	14	1	**190-5128**	1	FILM-INSTRUCTION (EXCAVATOR CONTROL)	
	15	1	**206-1672**	1	CONSOLE (REAR)	
	16	1	**206-1673**	1	CONSOLE AS (REAR)	
		1	**172-8591**	2	NUT-SPRING	
	17	1	**209-3349**	2	ROD	
	18	1	**209-3350**	2	ROD	
	19	1	**209-3353**	1	TOWER AS	
	20	1	**231-2878**	1	GASKET	
	21	1	**164-1402**	2	SLEEVE	
	22	1	**164-1404**	2	SPACER (10.67X16.95X23-MM THK)	
M	23	1	**6V-7744**	14	LOCKNUT (M10X1.5-THD)	
M	24	1	**6V-8932**	2	SETSCREW-SOCKET (M6X1X10-MM)	
	25	1	**7X-7729**	8	WASHER (11X25X3-MM THK)	
	26	1	**8T-4121**	20	WASHER-HARD (11X21X2.5-MM THK)	
M	27	1	**8T-4133**	16	NUT (M10X1.5-THD)	
M	28	1	**8T-4138**	6	BOLT (M6X1X20-MM)	
M	29	1	**8T-4172**	2	BOLT (M10X1.5X80-MM)	
M	30	1	**8T-4195**	6	BOLT (M10X1.5X30-MM)	
	31	1	**8T-4773**	10	BALL JOINT	
	32	1	**8T-4815**	2	ROD END	
M	33	1	**8T-6466**	2	BOLT (M10X1.5X60-MM)	
	34	1	**9R-2806**	2	PIN	
	35	1	**9R-2807**	2	CLIP	
	36	1	**9R-9901**	6	FASTENER	
	37	1	**9X-2038**	4	WASHER (7X19X2-MM THK)	
M	38	1	**9X-2045**	6	SCREW-TRUSS HEAD (M6X1X20-MM)	
	39	1	**9X-8256**	6	WASHER (6.6X12X2-MM THK)	

M-METRIC PART

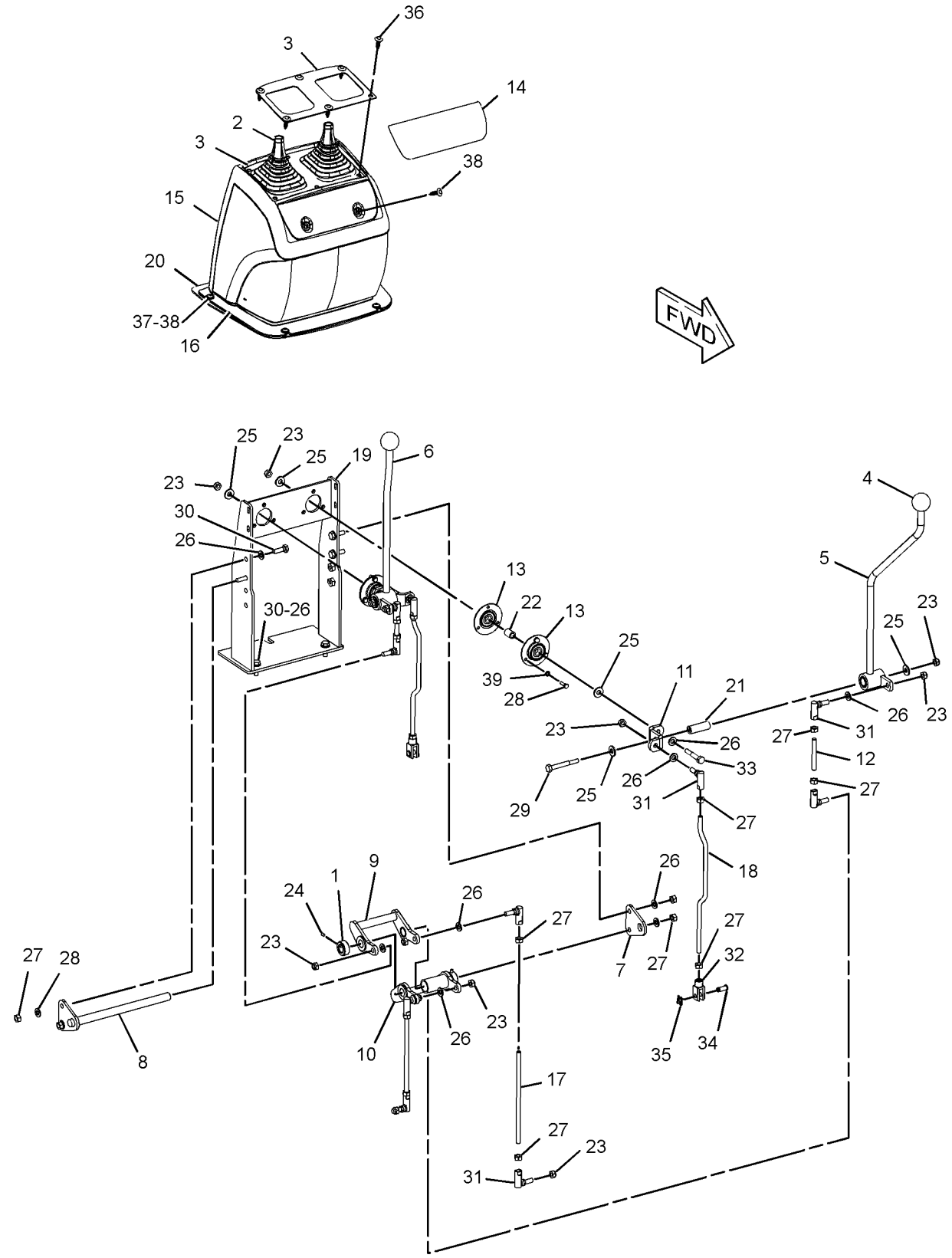

GRAPHIC #1 **<END>** g01167264

OPERATOR STATION

209-3371 CONTROL GP-HYDRAULIC HAND–

4-FUNCTION, EXCAVATOR

S/N: CBD1-UP; MFG1-UP

PART OF 356-0067, 356-0068, 356-0069, 374-3517, 374-3518, 374-3519, 374-6532, 374-6533, 374-6534 DISTRIBUTION AR AN ATTACHMENT

SMCS-5063 **i03429701**

NOTE	REF NO	GRAPHIC REF	PART NUMBER	QTY	PART NAME 1 2 3 4 5 6 (PRODUCT LEVEL)	SEE PAGE
	1	1	**142-7405**	2	COLLAR	
	2	1	**164-1361**	2	BOOT	
	3	1	**164-1371**	2	PLATE	
	4	1	**164-1399**	2	KNOB	
	5	1	**164-1409**	1	LEVER AS (RH)	
	6	1	**164-1411**	1	LEVER AS (LH)	
	7	1	**164-1421**	1	PLATE	
	8	1	**164-1422**	1	SHAFT AS	
	9	1	**164-1425**	1	COUPLER AS	
	10	1	**164-1429**	1	COUPLER AS	
	11	1	**164-1435**	2	PLATE	
	12	1	**164-1438**	2	ROD	
	13	1	**170-6312**	4	BEARING	
	14	1	**190-5128**	1	FILM-INSTRUCTION (EXCAVATOR CONTROL)	
	15	1	**206-1672**	1	CONSOLE (REAR)	
	16	1	**206-1673**	1	CONSOLE AS (REAR)	
		1	**172-8591**	2	NUT-SPRING	
C	17	1	**303-9308**	2	ROD	
C	18	1	**303-9309**	2	ROD	
	19	1	**209-3353**	1	TOWER AS	
	20	1	**231-2878**	1	GASKET	
	21	1	**164-1402**	2	SLEEVE	
	22	1	**164-1404**	2	SPACER (10.67X16.95X23-MM THK)	
M	23	1	**6V-7744**	14	LOCKNUT (M10X1.5-THD)	
M	24	1	**6V-8932**	2	SETSCREW-SOCKET (M6X1X10-MM)	
	25	1	**7X-7729**	8	WASHER (11X25X3-MM THK)	
	26	1	**8T-4121**	20	WASHER-HARD (11X21X2.5-MM THK)	
M	27	1	**8T-4133**	16	NUT (M10X1.5-THD)	
M	28	1	**8T-4138**	6	BOLT (M6X1X20-MM)	
M	29	1	**8T-4172**	2	BOLT (M10X1.5X80-MM)	
M	30	1	**8T-4195**	6	BOLT (M10X1.5X30-MM)	
	31	1	**8T-4773**	10	BALL JOINT	
	32	1	**8T-4815**	2	ROD END	
M	33	1	**8T-6466**	2	BOLT (M10X1.5X60-MM)	
	34	1	**9R-2806**	2	PIN	
	35	1	**9R-2807**	2	CLIP	
	36	1	**9R-9901**	6	FASTENER	
	37	1	**9X-2038**	4	WASHER (7X19X2-MM THK)	
M	38	1	**9X-2045**	6	SCREW-TRUSS HEAD (M6X1X20-MM)	
	39	1	**9X-8256**	6	WASHER (6.6X12X2-MM THK)	

C-CHANGE FROM PREVIOUS TYPE
M-METRIC PART

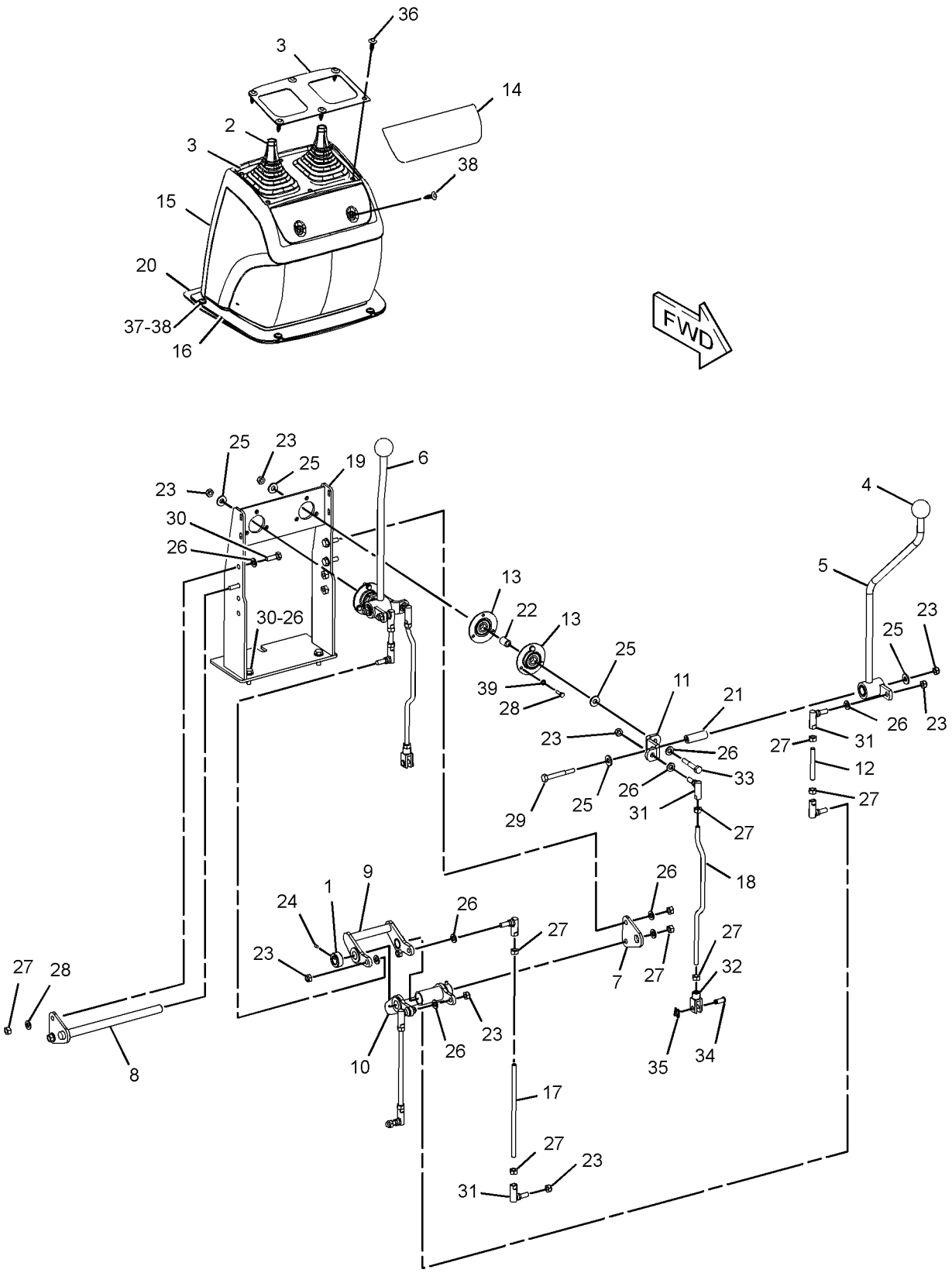

GRAPHIC #1 **<END>** g01167264

OPERATOR STATION

221-3006 CONTROL GP-HYDRAULIC HAND–STABILIZER

S/N: CBD1-UP; MFG1-UP
PART OF 221-3002 CONTROL & MTG GP-STABILIZER
AN ATTACHMENT

SMCS-5063 **i02495313**

NOTE	REF NO	GRAPHIC REF	PART NUMBER	QTY	PART NAME 1 2 3 4 5 6 (PRODUCT LEVEL)	SEE PAGE
	1	1	**228-4592**	1	KNOB	
	2	1	**228-4593**	1	GAITER	
	3	1	**228-4597**	1	CLIP	
	4	1	**232-3072**	1	CABLE AS	

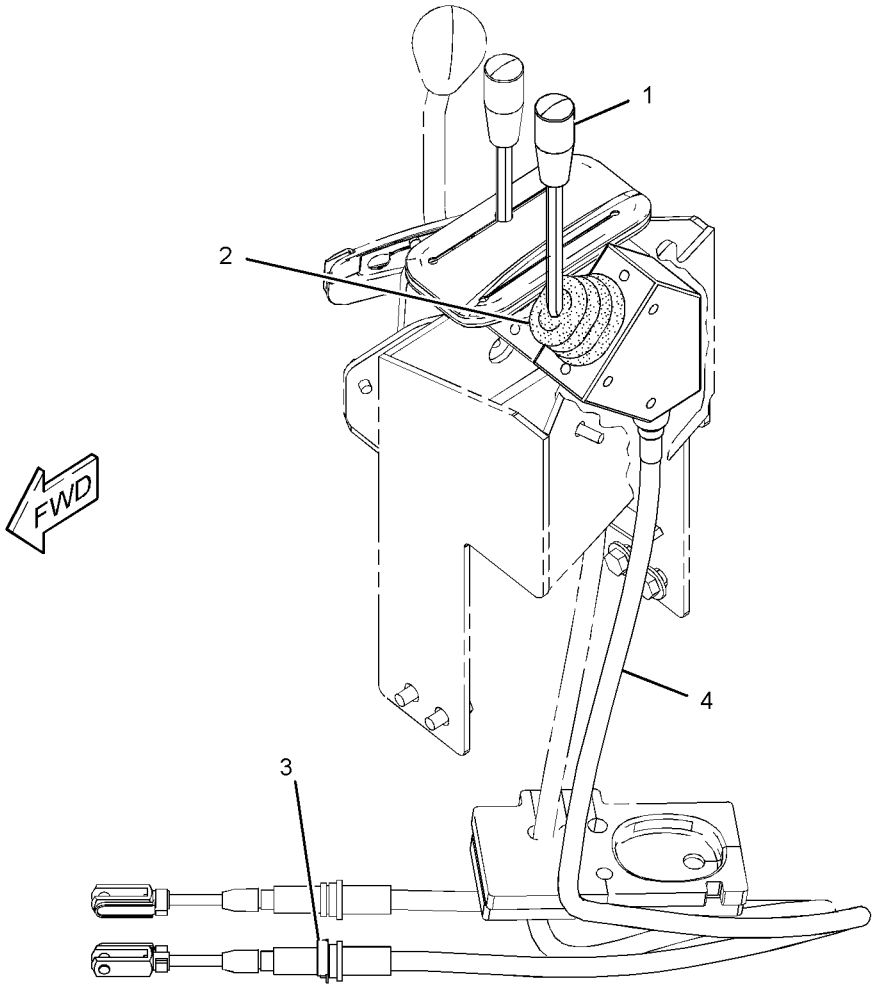

GRAPHIC #1 **<END>** g01258955

OPERATOR STATION

209-3365 CONTROL GP-HYDRAULIC PEDAL–

SINGLE FUNCTION, LH

S/N: CBD1-3839

PART OF 212-0206 VALVE AR-BANK 8

AN ATTACHMENT

SMCS-5063 **i02547006**

NOTE	REF NO	GRAPHIC REF	PART NUMBER	QTY	PART NAME 1 2 3 4 5 6 (PRODUCT LEVEL)	SEE PAGE
	1	1	**8T-4815**	1	ROD END (YOKE)	
	2	1	**8T-6431**	1	ROD END (BEARING)	
	3	1	**164-1547**	1	SHAFT AS	
	4	1	**179-8235**	1	LOCK PIN	
	5	1	**209-3352**	1	ROD	
	6	1	**231-2877**	1	PEDAL AS (LH)	
	7	1	**232-1536**	1	SUPPORT AS	
	8	1	**232-1540**	1	SEAL	
M	9	1	**6V-7744**	1	LOCKNUT (M10X1.5-THD)	
M	10	1	**6V-8335**	1	BOLT-SELF-LOCKING (M10X1.5X40-MM)	
	11	1	**8C-4987**	1	PIN-CLEVIS	
	12	1	**8M-3175**	1	WASHER-HARD (10.2X16X3-MM THK)	
	13	1	**8T-4121**	6	WASHER-HARD (11X21X2.5-MM THK)	
M	14	1	**8T-4133**	4	NUT (M10X1.5-THD)	
M	15	1	**8T-4186**	1	BOLT (M10X1.5X40-MM)	
M	16	1	**8T-4195**	2	BOLT (M10X1.5X30-MM)	
	17	1	**198-0098**	1	FILM-INSTRUCTION (AUXILIARY)	

M-METRIC PART

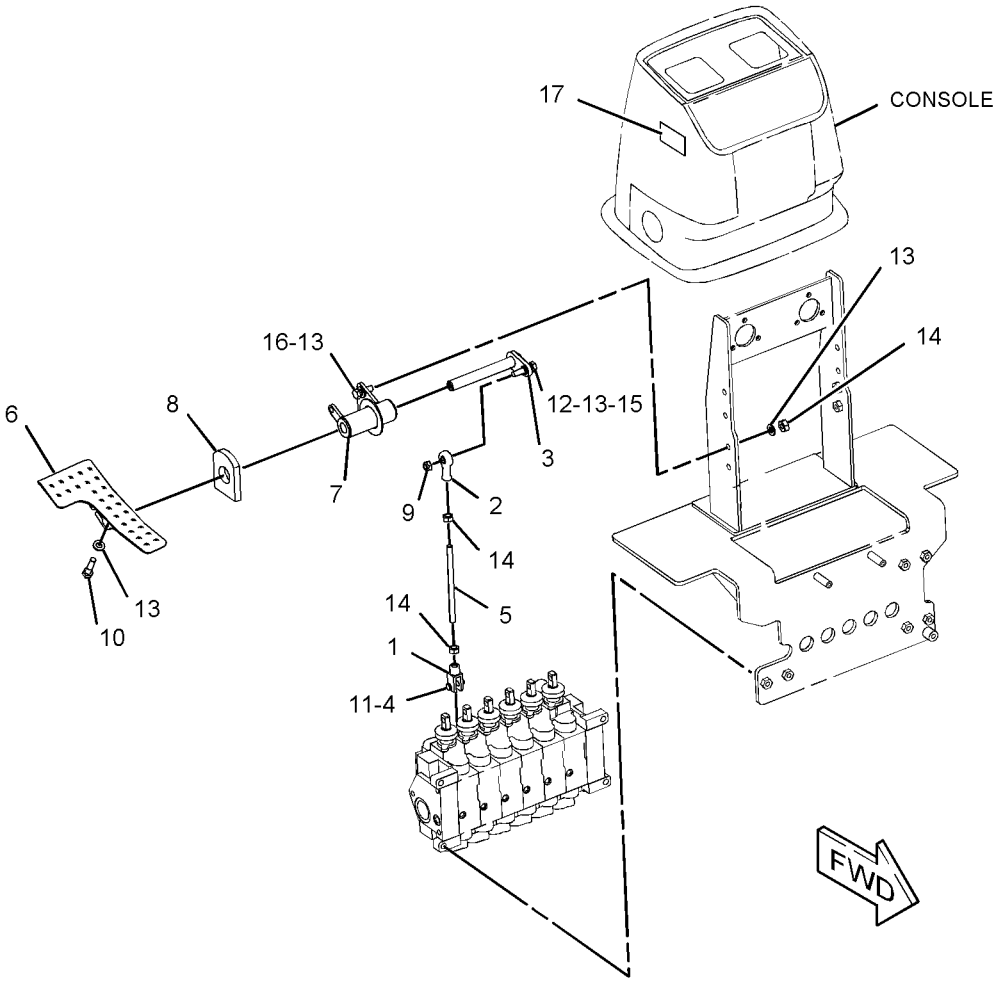

GRAPHIC #1 **<END>** g01305508

209-3365 CONTROL GP-HYDRAULIC PEDAL–

SINGLE FUNCTION, LH

S/N: CBD3840-UP; MFG1-UP

PART OF 212-0206 VALVE AR-BANK 8

AN ATTACHMENT

SMCS-5063 **i03247321**

NOTE	REF NO	GRAPHIC REF	PART NUMBER	QTY	PART NAME 1 2 3 4 5 6 (PRODUCT LEVEL)	SEE PAGE
	1	1	**8T-4815**	1	ROD END (YOKE)	
	2	1	**8T-6431**	1	ROD END (BEARING)	
	3	1	**164-1547**	1	SHAFT AS	
	4	1	**179-8235**	1	LOCK PIN	
C	5	1	**303-9310**	1	ROD	
	6	1	**231-2877**	1	PEDAL AS (LH)	
	7	1	**232-1536**	1	SUPPORT AS	
	8	1	**232-1540**	1	SEAL	
M	9	1	**6V-7744**	1	LOCKNUT (M10X1.5-THD)	
M	10	1	**6V-8335**	1	BOLT-SELF-LOCKING (M10X1.5X40-MM)	
	11	1	**8C-4987**	1	PIN-CLEVIS	
	12	1	**8M-3175**	1	WASHER-HARD (10.2X16X3-MM THK)	
	13	1	**8T-4121**	6	WASHER-HARD (11X21X2.5-MM THK)	
M	14	1	**8T-4133**	4	NUT (M10X1.5-THD)	
M	15	1	**8T-4186**	1	BOLT (M10X1.5X40-MM)	
M	16	1	**8T-4195**	2	BOLT (M10X1.5X30-MM)	
	17	1	**198-0098**	1	FILM-INSTRUCTION (AUXILIARY)	

C-CHANGE FROM PREVIOUS TYPE
M-METRIC PART

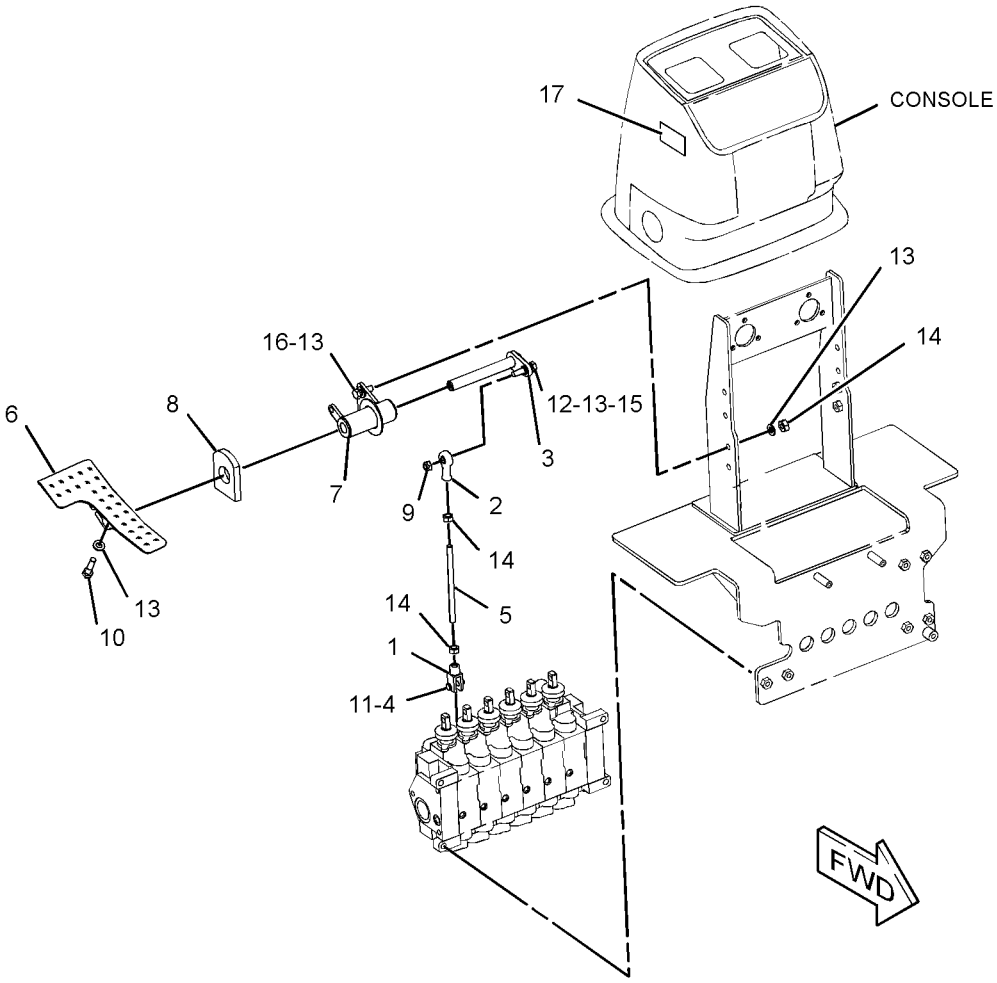

GRAPHIC #1 **<END>** g01305508

OPERATOR STATION

209-3375 CONTROL GP-HYDRAULIC PEDAL–

SINGLE FUNCTION, RH

S/N: CBD1-3839

PART OF 209-9935 VALVE AR-BANK 7, 212-0206 VALVE AR-BANK 8

AN ATTACHMENT

SMCS-5063 **i02333606**

NOTE	REF NO	GRAPHIC REF	PART NUMBER	QTY	PART NAME 1 2 3 4 5 6 (PRODUCT LEVEL)	SEE PAGE
	1	1	**8T-4815**	1	ROD END	
	2	1	**8T-6431**	1	ROD END	
B	3	1	**133-8916**	1	FILM-INSTRUCTION (EXTENDABLE STICK)	
	4	1	**164-1547**	1	SHAFT AS	
	5	1	**179-8235**	1	LOCK PIN	
B	6	1	**198-0098**	1	FILM-INSTRUCTION (AUXILIARY)	
	7	1	**209-3352**	1	ROD	
	8	1	**231-2875**	1	SUPPORT AS (RH)	
	9	1	**231-2876**	1	PEDAL AS (RH)	
	10	1	**232-1540**	1	SEAL	
M	11	1	**6V-7744**	1	LOCKNUT (M10X1.5-THD)	
M	12	1	**6V-8335**	1	BOLT-SELF-LOCKING (M10X1.5X40-MM)	
	13	1	**8C-4987**	1	PIN-CLEVIS	
	14	1	**8M-3175**	1	WASHER-HARD (10.2X16X3-MM THK)	
	15	1	**8T-4121**	4	WASHER-HARD (11X21X2.5-MM THK)	
M	16	1	**8T-4133**	2	NUT (M10X1.5-THD)	
M	17	1	**8T-4186**	1	BOLT (M10X1.5X40-MM)	
M	18	1	**8T-4195**	2	BOLT (M10X1.5X30-MM)	

B-USE AS REQUIRED
M-METRIC PART

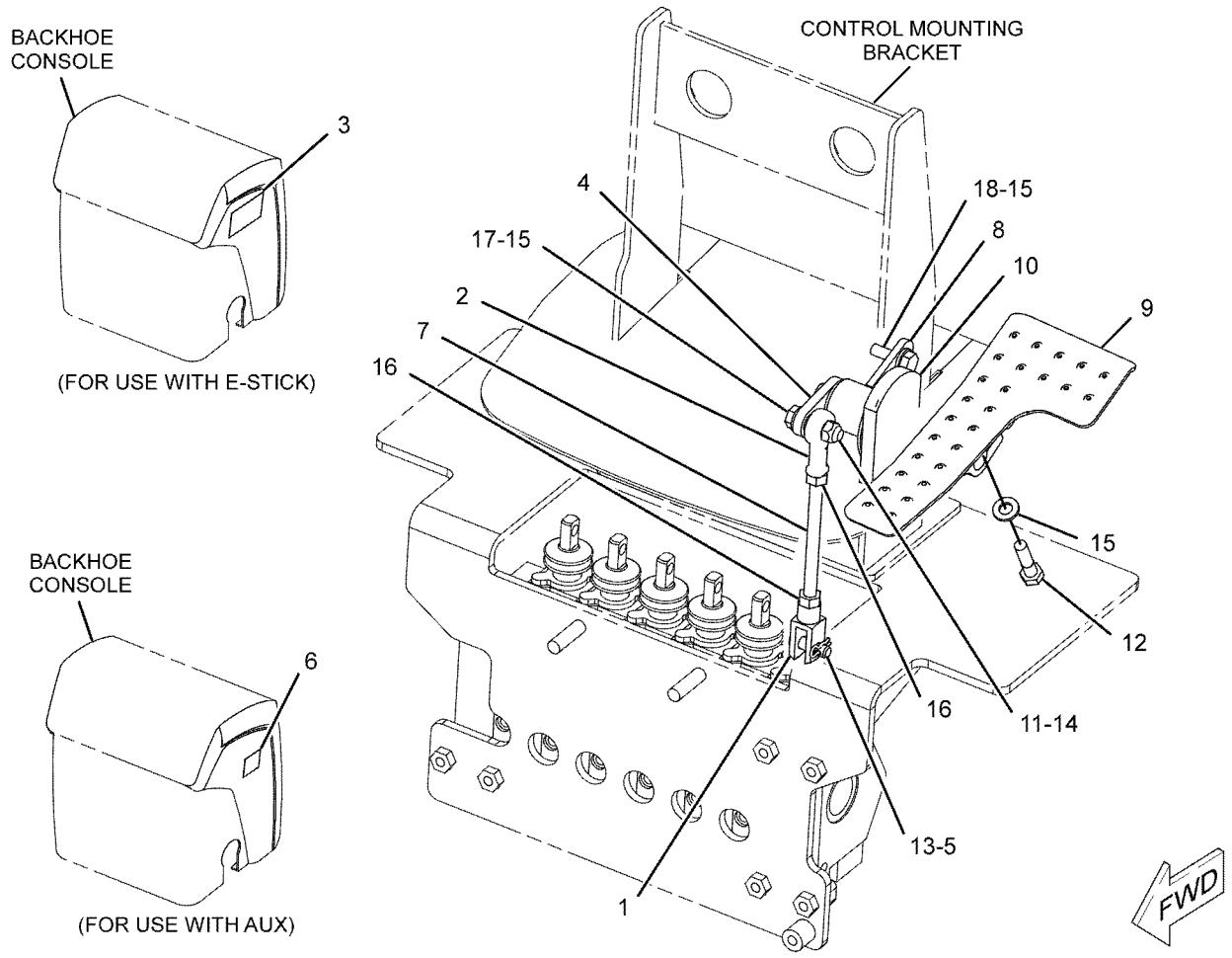

GRAPHIC #1

<END>

g01080154

OPERATOR STATION

209-3375 CONTROL GP-HYDRAULIC PEDAL–

SINGLE FUNCTION, RH

S/N: CBD3840-UP; MFG1-UP

PART OF 209-9935 VALVE AR-BANK 7, 212-0206 VALVE AR-BANK 8

AN ATTACHMENT

SMCS-5063 **i03247349**

NOTE	REF NO	GRAPHIC REF	PART NUMBER	QTY	PART NAME 1 2 3 4 5 6 (PRODUCT LEVEL)	SEE PAGE
	1	1	**8T-4815**	1	ROD END	
	2	1	**8T-6431**	1	ROD END	
B	3	1	**133-8916**	1	FILM-INSTRUCTION (EXTENDABLE STICK)	
	4	1	**164-1547**	1	SHAFT AS	
	5	1	**179-8235**	1	LOCK PIN	
B	6	1	**198-0098**	1	FILM-INSTRUCTION (AUXILIARY)	
C	7	1	**303-9310**	1	ROD	
	8	1	**231-2875**	1	SUPPORT AS (RH)	
	9	1	**231-2876**	1	PEDAL AS (RH)	
	10	1	**232-1540**	1	SEAL	
M	11	1	**6V-7744**	1	LOCKNUT (M10X1.5-THD)	
M	12	1	**6V-8335**	1	BOLT-SELF-LOCKING (M10X1.5X40-MM)	
	13	1	**8C-4987**	1	PIN-CLEVIS	
	14	1	**8M-3175**	1	WASHER-HARD (10.2X16X3-MM THK)	
	15	1	**8T-4121**	4	WASHER-HARD (11X21X2.5-MM THK)	
M	16	1	**8T-4133**	2	NUT (M10X1.5-THD)	
M	17	1	**8T-4186**	1	BOLT (M10X1.5X40-MM)	
M	18	1	**8T-4195**	2	BOLT (M10X1.5X30-MM)	

B-USE AS REQUIRED
C-CHANGE FROM PREVIOUS TYPE
M-METRIC PART

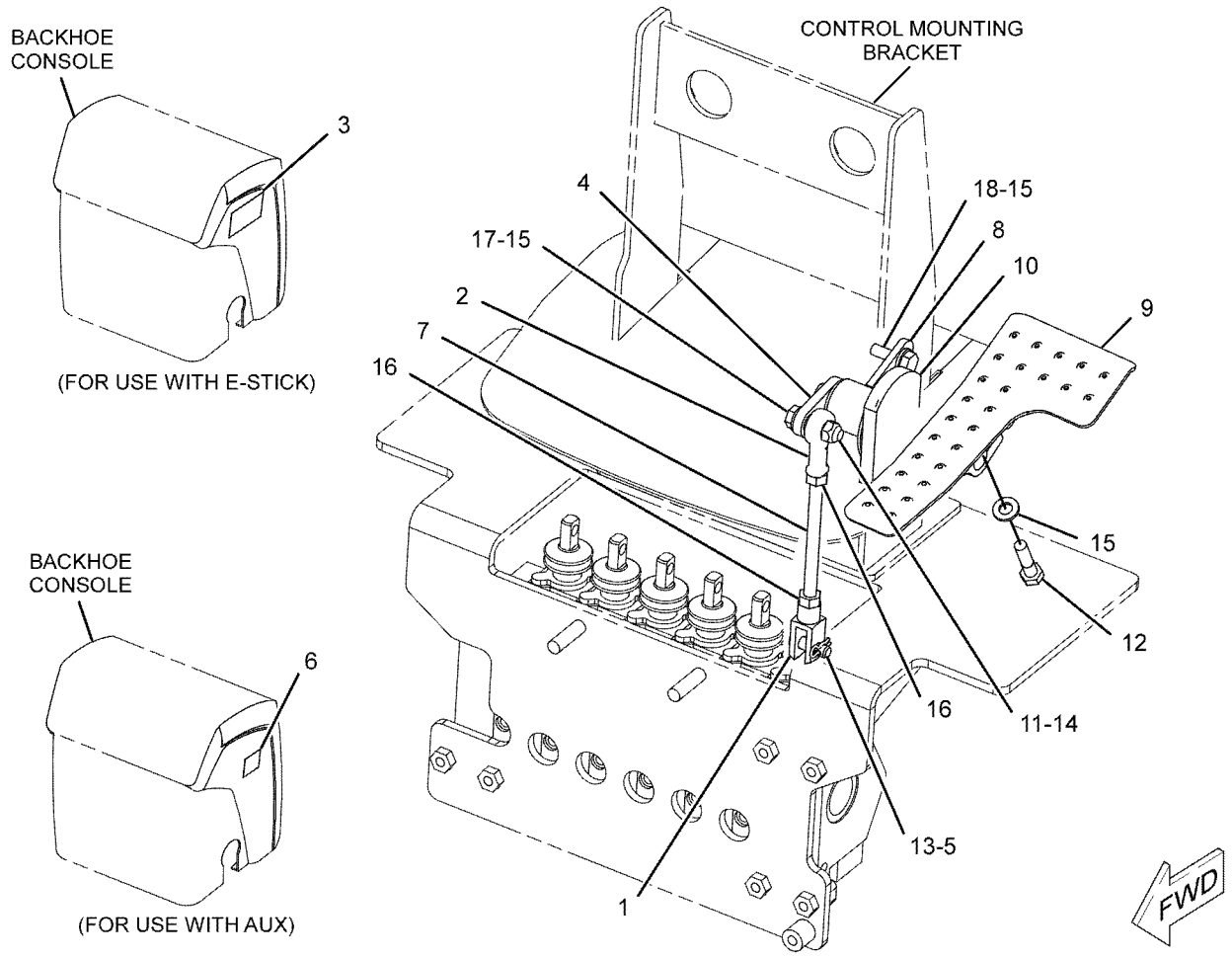

GRAPHIC #1 **<END>** g01080154

OPERATOR STATION

206-1630 CONTROL GP-STEERING

S/N: CBD1-UP; MFG1-UP
PART OF 204-4161 CAB AR-ENCLOSED ROPS, 204-4160, 292-9691 CANOPY AR-OPEN ROPS
AN ATTACHMENT

SMCS-4309, 4310, 4338 **i03184092**

NOTE	REF NO	GRAPHIC REF	PART NUMBER	QTY	PART NAME 1 2 3 4 5 6 (PRODUCT LEVEL)	SEE PAGE
	1	1	**1V-9385**	1	COVER-EMBLEM	
	2	1	**032-1557**	1	STEERING WHEEL	
	3	1	**330-9710**	1	COLUMN AS-STEERING	
	4	1	**206-1632**	1	PLATE AS	
	5	1	**214-4701**	1	SWITCH AS-ROCKER (HORN)	
	6	1	**7X-7729**	6	WASHER (11X25X3-MM THK)	
	7	1	**8T-4121**	4	WASHER-HARD (11X21X2.5-MM THK)	
M	8	1	**8T-4133**	2	NUT (M10X1.5-THD)	
M	9	1	**8T-4136**	4	BOLT (M10X1.5X25-MM)	
M	10	1	**8T-4195**	4	BOLT (M10X1.5X30-MM)	
M	11	1	**8T-8894**	1	BOLT-SOCKET HEAD (M10X1.5X20-MM)	
	12	1	**9K-5635**	3	SCREW-TAPPING (8-18X1-IN)	

M-METRIC PART

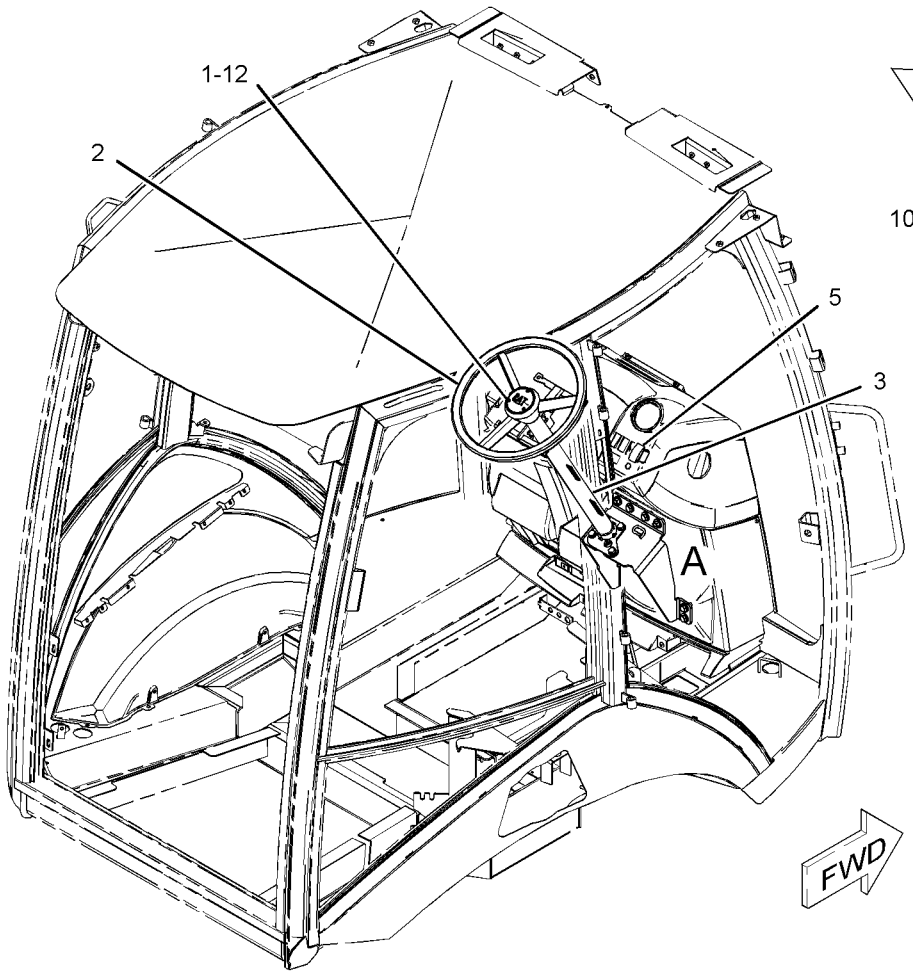

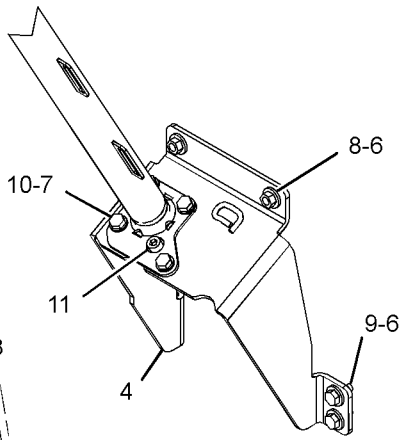

VIEW OF AREA A

GRAPHIC #1 **<END>** g01189226

OPERATOR STATION

206-1633 CONTROL GP-STEERING–TILT

S/N: CBD1-UP; MFG1-UP
PART OF 204-4162, 228-4602 CAB AR-ENCLOSED ROPS, 204-4164, 292-9690 CANOPY AR-OPEN ROPS
AN ATTACHMENT

SMCS-4309, 4310, 4338 **i02495440**

NOTE	REF NO	GRAPHIC REF	PART NUMBER	QTY	PART NAME 1 2 3 4 5 6 (PRODUCT LEVEL)	SEE PAGE
	1	1	**2T-3360**	1	BUTTON AS-HORN	
	2	1	**153-7368**	1	PLUG	
Y	3	1	**153-7369**	1	KNOB GP-STEERING	455
	4	1	**206-1632**	1	PLATE AS	
J	5	1	**206-1635**	1	COLUMN AS-STEERING	
M		1	**6V-8227**	1	NUT (M18X1.5-THD)	
	6	1	**217-8058**	1	WIRE AS	
	7	1	**227-1057**	1	PLUG-HOLE	
	8	1	**145-9291**	1	STEERING WHEEL AS	
	9	1	**7X-7729**	6	WASHER (11X25X3-MM THK)	
	10	1	**8T-4121**	4	WASHER-HARD (11X21X2.5-MM THK)	
M	11	1	**8T-4133**	2	NUT (M10X1.5-THD)	
M	12	1	**8T-4136**	4	BOLT (M10X1.5X25-MM)	
M	13	1	**8T-4195**	4	BOLT (M10X1.5X30-MM)	
M	14	1	**8T-6411**	1	SCREW-MACHINE (M6X1X12-MM)	
M	15	1	**8T-8894**	1	BOLT-SOCKET HEAD (M10X1.5X20-MM)	
					AVAILABLE REPAIR KIT(S):	
J			**254-9926**	1	KIT-TILT PEDAL	
					(INCLUDES SPRING, RING, BOLT, NUT & TILT LEVER)	
J			**254-9927**	1	KIT-PIVOT	
					(INCLUDES BUSHINGS, NUTS, PINS & WASHERS)	
J			**254-9925**	1	KIT-GAS SPRING	
					(INCLUDES PINS, RINGS & SPRING AS)	
J			**252-8059**	1	KIT-HORN	
					(INCLUDES HORN CONTACT AS, SCREWS & LOCKWASHERS)	

J-KITS MARKED J AVAILABLE FOR PART(S) MARKED J
M-METRIC PART
Y-SEPARATE ILLUSTRATION

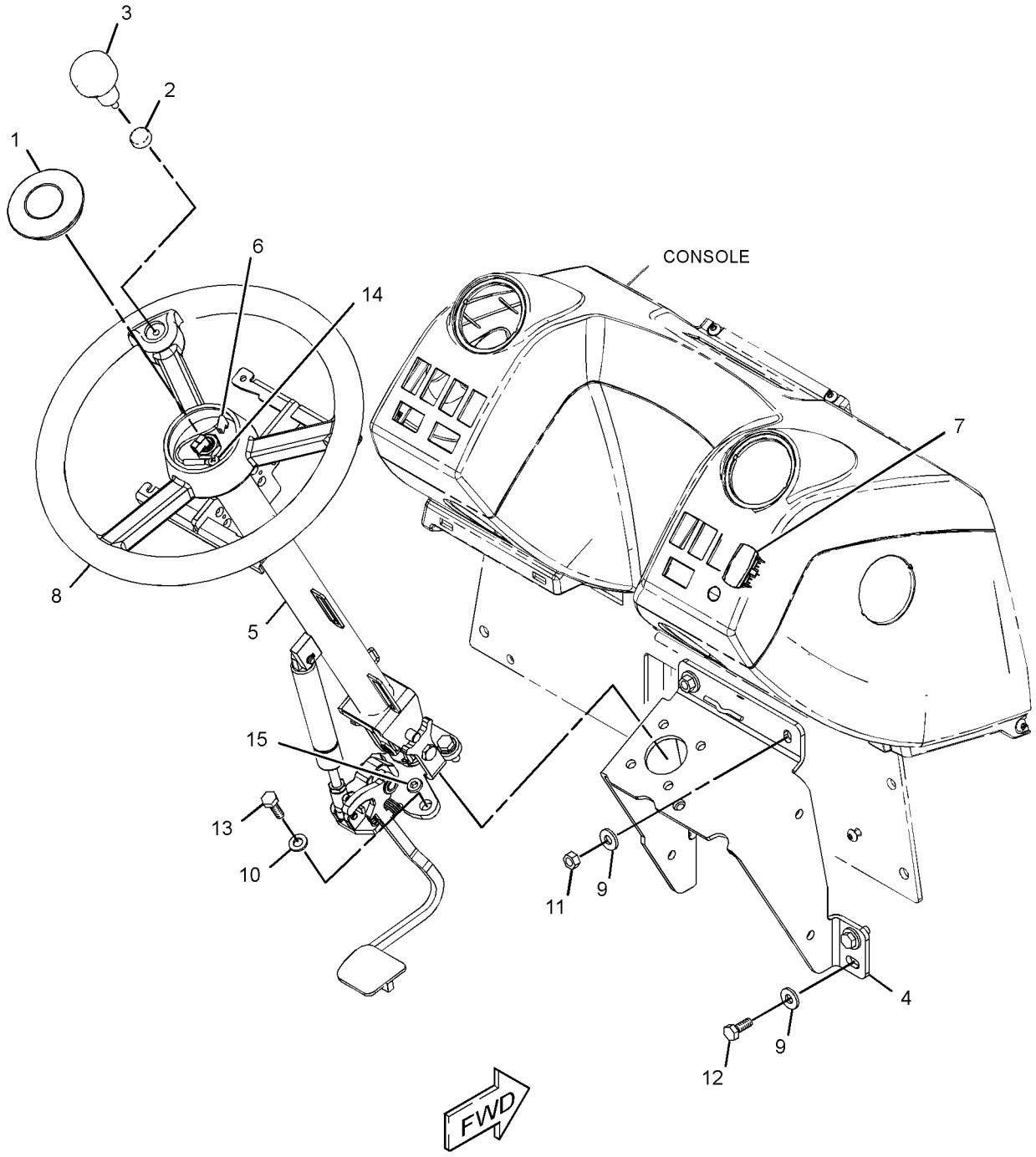

GRAPHIC #1 **<END>** g01233577

OPERATOR STATION

218-4453 CONTROL GP-STEERING–TILT

S/N: CBD3169-UP; MFG1-UP
PART OF 204-4162, 228-4602, 291-9195 CAB AR-ENCLOSED ROPS, 204-4164, 292-9690 CANOPY AR-OPEN ROPS
AN ATTACHMENT

SMCS-4309, 4310, 4338 **i03029984**

NOTE	REF NO	GRAPHIC REF	PART NUMBER	QTY	PART NAME 1 2 3 4 5 6 (PRODUCT LEVEL)	SEE PAGE
	1	1	**153-7368**	1	PLUG	
Y	2	1	**153-7369**	1	KNOB GP-STEERING	455
	3	1	**206-1632**	1	PLATE AS	
	4	1	**214-4701**	1	SWITCH AS-ROCKER (HORN)	
	5	1	**218-4454**	1	STEERING COLUMN GP (TILT)	
		1	**254-9925**	1	SPRING GP-GAS	
					(INCLUDES RINGS, PINS, & SPRING AS)	
		1	**254-9927**	1	KIT-PIVOT	
					(INCLUDES BUSHINGS, NUTS, PINS, & WASHERS)	
		1	**254-9926**	1	KIT-TILT PEDAL	
					(INCLUDES SPRING. BOLT, RING, NUT & TILT LEVER)	
M		1	**6V-8227**	1	NUT (M18X1.5-THD)	
	6	1	**145-9291**	1	STEERING WHEEL AS	
	7	1	**7X-7729**	6	WASHER (11X25X3-MM THK)	
	8	1	**8R-2916**	1	COVER AS (CAT STEERING WHEEL)	
	9	1	**8T-4121**	4	WASHER-HARD (11X21X2.5-MM THK)	
M	10	1	**8T-4133**	2	NUT (M10X1.5-THD)	
M	11	1	**8T-4136**	4	BOLT (M10X1.5X25-MM)	
M	12	1	**8T-4195**	4	BOLT (M10X1.5X30-MM)	
M	13	1	**8T-8894**	1	BOLT-SOCKET HEAD (M10X1.5X20-MM)	

M-METRIC PART
Y-SEPARATE ILLUSTRATION

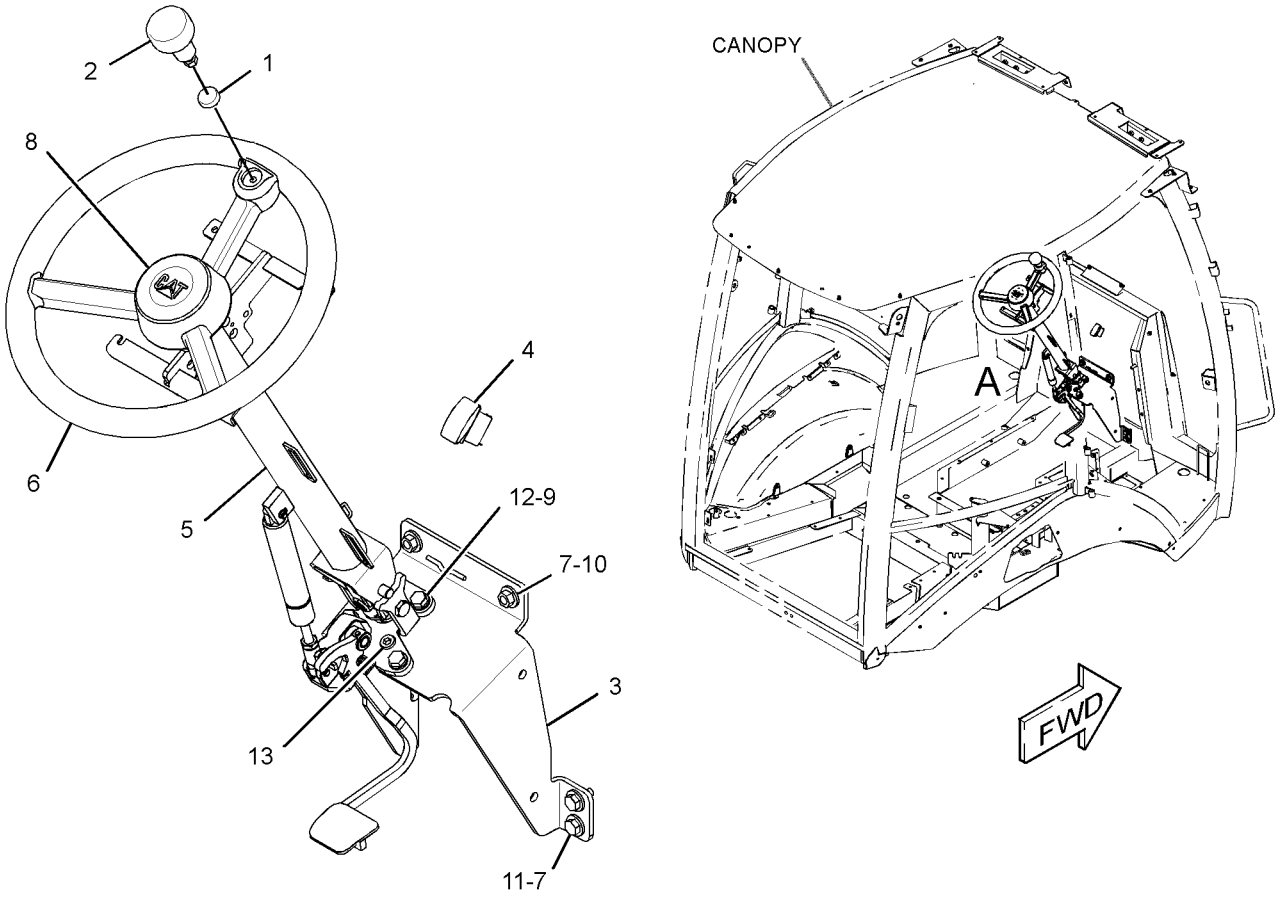

VIEW OF AREA A
(EXPLODED)

GRAPHIC #1 **<END>** g01433102

OPERATOR STATION

206-1643 CONTROL GP-TRANSMISSION

S/N: CBD1-UP; MFG1-UP
PART OF 214-6910, 214-6911, 214-6912, 214-6913, 323-3627, 323-3628, 323-3629, 323-3630 POWER TRAIN AR
AN ATTACHMENT

SMCS-3065, 3168 **i04498910**

NOTE	REF NO	GRAPHIC REF	PART NUMBER	QTY	PART NAME 1 2 3 4 5 6 (PRODUCT LEVEL)	SEE PAGE
	1	1	**102-8802**	1	KIT-RECEPTACLE (2-PIN)	
					(INCLUDES RECEPTACLE AS & WEDGE)	
	2	1	**9R-1766**	1	COVER-BOTTOM	
	3	1	**9R-1767**	1	BOOT	
	4	1	**107-5591**	1	NUT-JAM (3/4-16-THD)	
	5	1	**164-1153**	1	KNOB (UPPER)	
	6	1	**164-1368**	8	FASTENER-PANEL	
	7	1	**206-1669**	1	BOOT	
	8	1	**328-3211**	1	ROD AS	
	9	1	**220-3470**	1	BOOT-SEAL	
	10	1	**230-2389**	1	PLATE	
	11	1	**230-2390**	1	PLATE	
	12	1	**261-2207**	1	CONTROL GP-TRANSMISSION (FORWARD, NEUTRAL, REVERSE)	
	13	1	**263-7261**	1	SWITCH GP-PUSH BUTTON (NEUTRALIZER, DOWNSHIFT)	
		1	**9X-3401**	2	PIN-CONNECTOR (16-GA TO 18-GA)	
BD		1	**5P-5677**		WIRE (18-GA, BLACK)	
D		1	**6V-2689**		TUBE-HEAT SHRINK (6.35-MM DIA) (1.3-M)	
		1	**9W-0625**	1	SWITCH AS-PUSH BUTTON (NEUTRALIZER)	
M	14	1	**095-0756**	4	SCREW-MACHINE (M5X0.8X16-MM)	
	15	1	**8T-4223**	1	WASHER-HARD (13.5X25.5X3-MM THK)	
M	16	1	**8T-4956**	1	BOLT (M12X1.75X35-MM)	
	17	1	**8T-9501**	2	SCREW (10-16X0.75-IN)	
	18	1	**3S-2093**	1	STRAP-CABLE	

B-USE AS REQUIRED
D-ORDER BY THE METER
M-METRIC PART

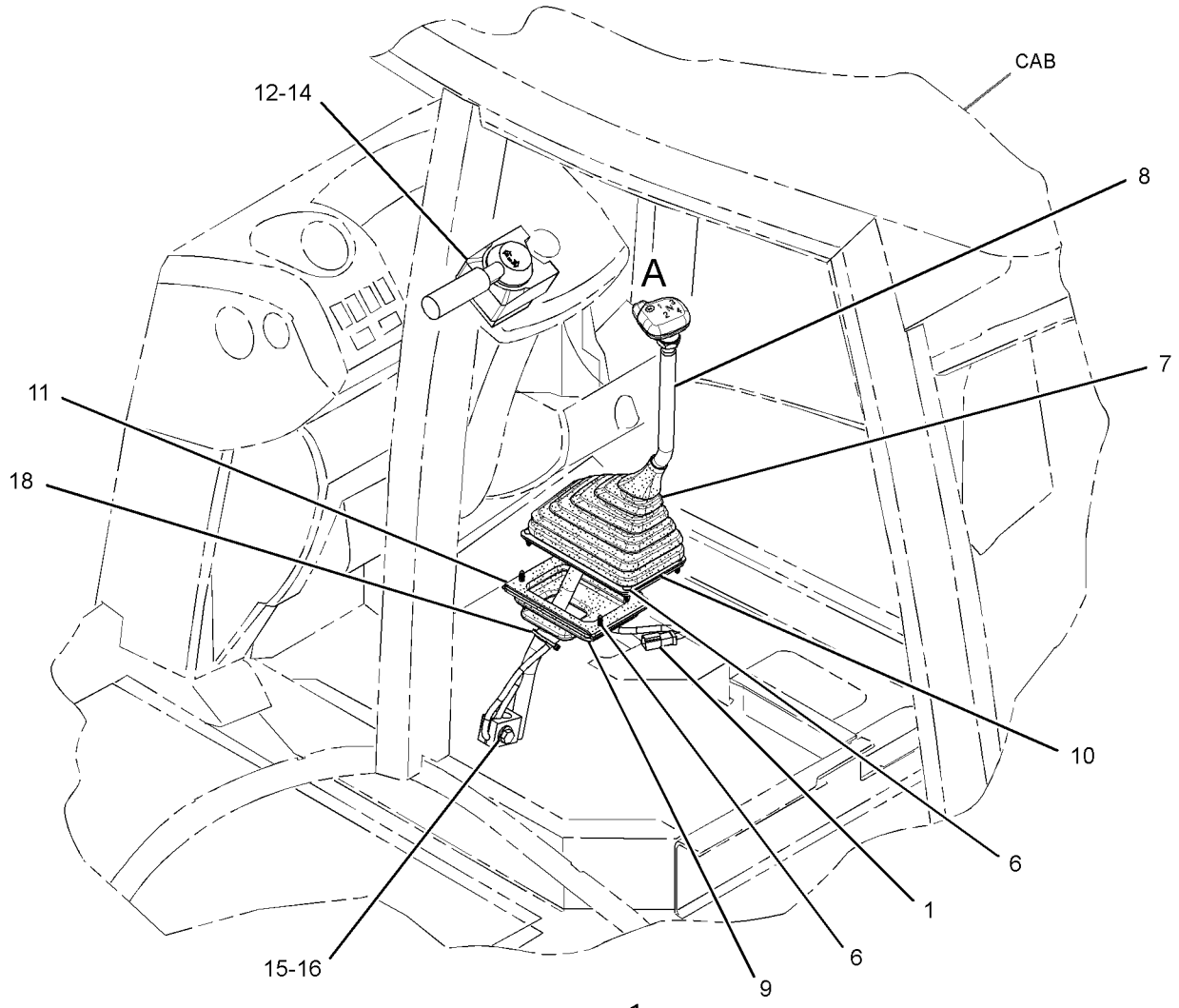

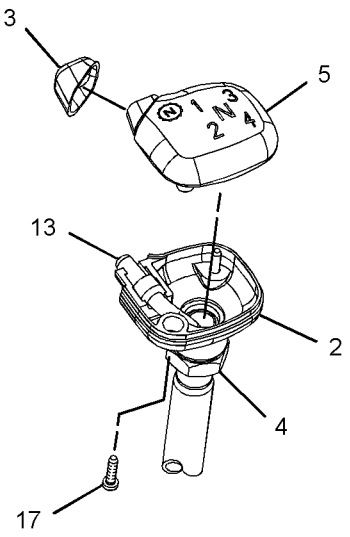

VIEW OF AREA A
(EXPLODED)

GRAPHIC #1 **<END>** g02470018

276-8515 COVER GP-CAB

S/N: CBD1-UP; MFG1-UP

PART OF 204-4160, 204-4164, 292-9690, 292-9691 CANOPY AR-OPEN ROPS

AN ATTACHMENT

SMCS-7301 **i03007180**

NOTE	REF NO	GRAPHIC REF	PART NUMBER	QTY	PART NAME 1 2 3 4 5 6 (PRODUCT LEVEL)	SEE PAGE
	1	1	**276-4070**	1	PLATE	
M	2	1	**9X-2042**	2	SCREW-TRUSS HEAD (M6X1X12-MM)	

M-METRIC PART

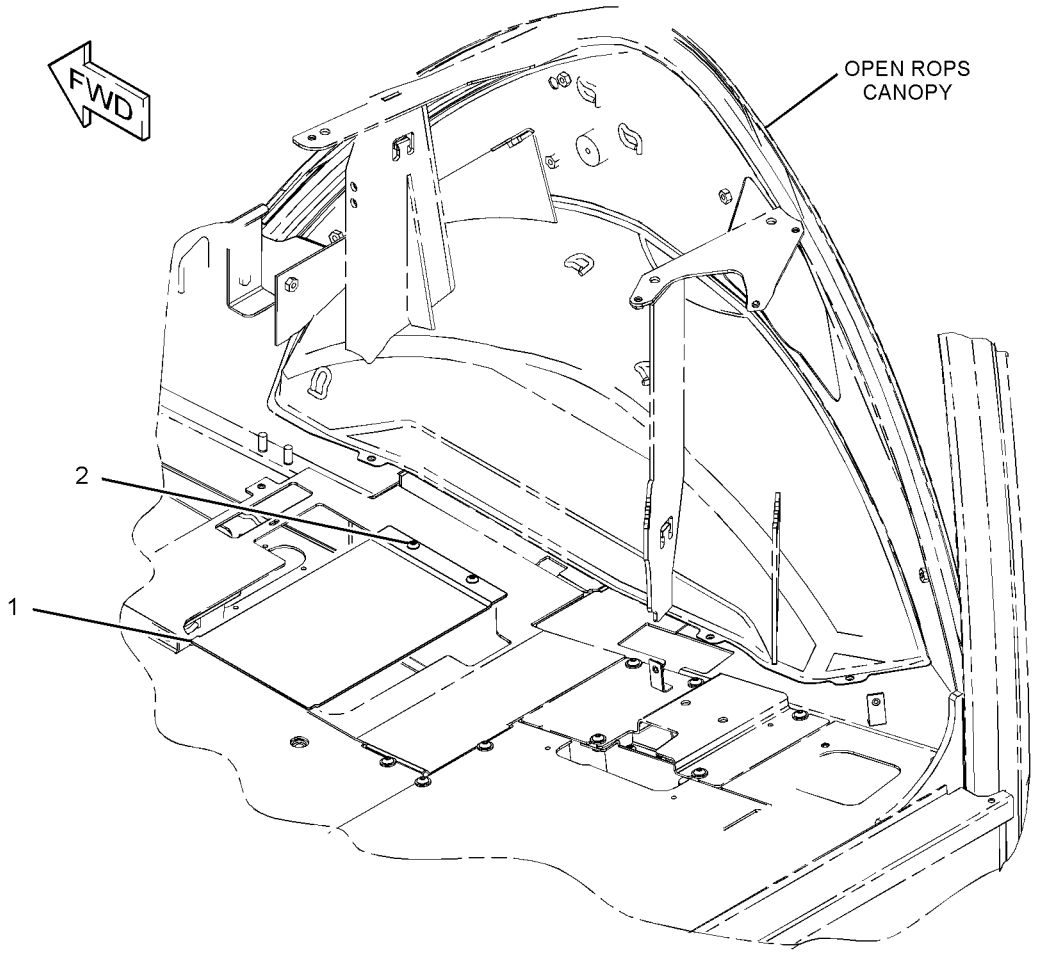

GRAPHIC #1 **<END>** g01413755

OPERATOR STATION

220-3785 COVER GP-WIPER MOTOR

S/N: CBD1-UP; MFG1-UP
PART OF 204-4161 CAB AR-ENCLOSED ROPS, 204-4164, 292-9690 CANOPY AR-OPEN ROPS
AN ATTACHMENT

SMCS-7305 **i02639354**

NOTE	REF NO	GRAPHIC REF	PART NUMBER	QTY	PART NAME 1 2 3 4 5 6 (PRODUCT LEVEL)	SEE PAGE
	1	1	**226-5635**	1	COVER	
M	2	1	**9X-2043**	3	SCREW-TRUSS HEAD (M6X1X14-MM)	
	3	1	**282-7835**	1	PLATE	
M	4	1	**8C-3798**	2	BOLT-LOCKING (M6X1X30)	
	5	1	**282-7833**	1	GROMMET	
	6	1	**9X-8256**	2	WASHER (6.6X12X2-MM THK)	
	7	1	**9X-2038**	3	WASHER (7X19X2-MM THK)	

M-METRIC PART

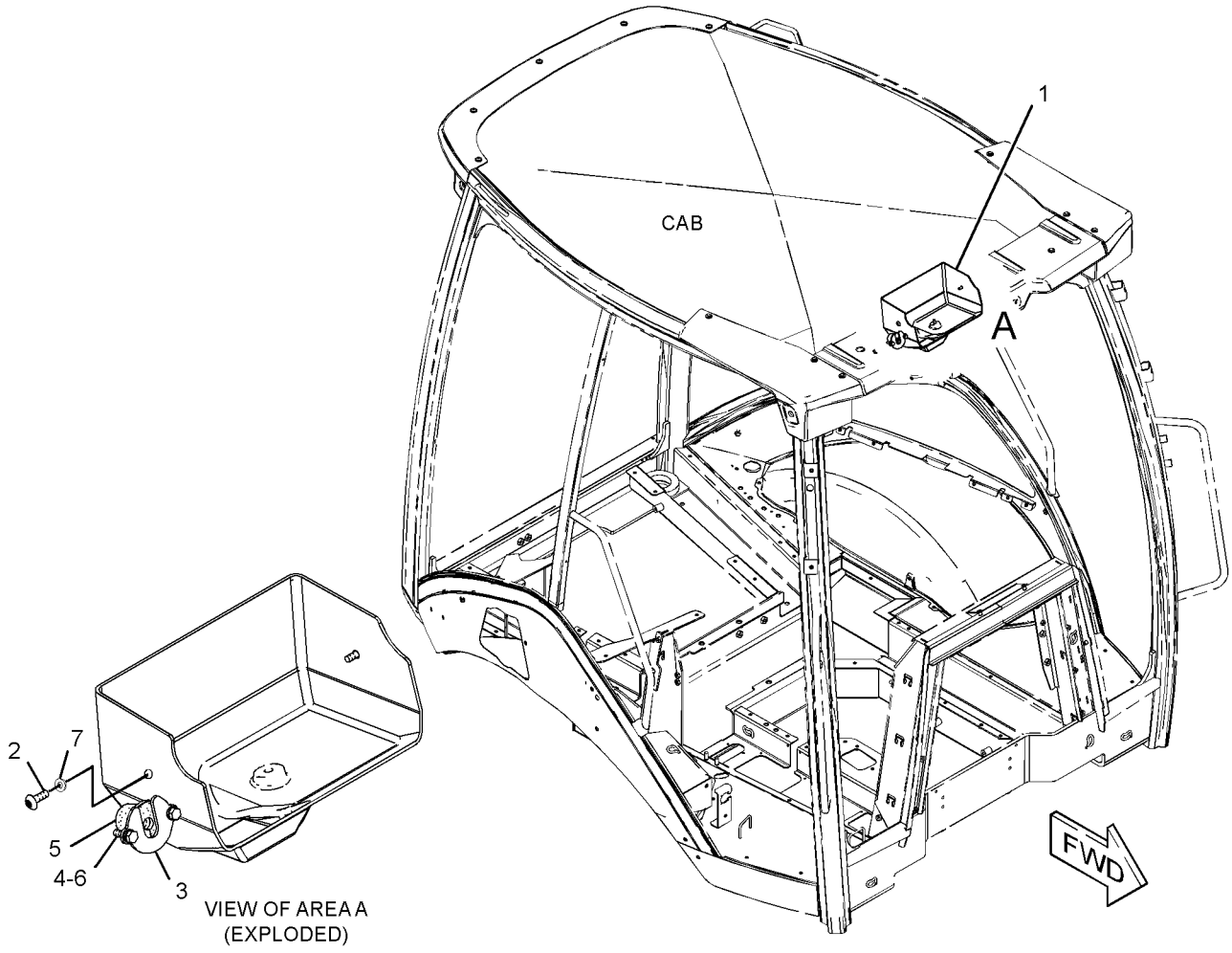

GRAPHIC #1 **<END>** g01328104

OPERATOR STATION

206-1592 DOOR GP-CAB–LH

S/N: CBD1-UP

PART OF 206-1888, 206-1889, 309-3226 CAB GP-ENCLOSED ROPS

AN ATTACHMENT

SMCS-7308 **i02811425**

NOTE	REF NO	GRAPHIC REF	PART NUMBER	QTY	PART NAME 1 2 3 4 5 6 (PRODUCT LEVEL)	SEE PAGE
	1	1	**132-2249**	2	SPACER (7.4X12.7X24-MM THK)	
J	2	1	**159-4269**	1	SPRING GP-GAS	
B	3	1	**177-4877**	1	SHIM (1-MM THK)	
Y	4	1	**205-9585**	1	WINDOW GP-DOOR (LH)	1062
	5	1	**205-9588**	1	GLASS (LH)	
	6	1	**206-1594**	1	DOOR AS (LH)	
	7	1	**223-2028**	1	SEAL AS (LH)	
	8	1	**248-2714**	2	NUT-ACORN (M6X1-THD)	
L	9	1	**252-1862**	1	HANDLE AS (PULL)	
	10	1	**252-1863**	1	GASKET	
	11	1	**252-1864**	1	LATCH AS (LH)	
	12	1	**253-1817**	1	SPACER (6.5X14.5X12-MM THK)	
	13	1	**253-1857**	1	PLATE	
	14	1	**253-1858**	1	COVER (LATCH)	
	15	1	**254-1126**	1	PLATE	
	16	1	**254-1127**	1	PLATE	
M	17	1	**131-3987**	2	SCREW (M4X0.7X12-MM)	
	18	1	**159-4946**	1	KEEPER	
	19	1	**197-5107**	2	SCREW-TRUSS HEAD (M6X1X60-MM)	
	20	1	**205-7048**	2	INSERT-THREADED (M6X1-THD)	
M	21	1	**5C-9553**	3	BOLT (M6X1X16-MM)	
M	22	1	**5Y-0660**	1	NUT (M6X1-THD)	
	24	1	**9X-2038**	4	WASHER (7X19X2-MM THK)	
M	25	1	**9X-2045**	4	SCREW-TRUSS HEAD (M6X1X20-MM)	
	26	1	**258-3697**	1	WASHER-NYLON (7X20X2-MM THK)	
M	27	1	**287-8257**	1	BOLT (M6X1X65-MM)	
					AVAILABLE REPAIR KIT(S):	
J			**161-9044**	1	KIT-FITTING	
					(INCLUDES NUT & FITTING AS)	

B-USE AS REQUIRED
J-KIT MARKED J SERVICES PART MARKED J
L-REQUIRES CORPORATE KEY
M-METRIC PART
Y-SEPARATE ILLUSTRATION

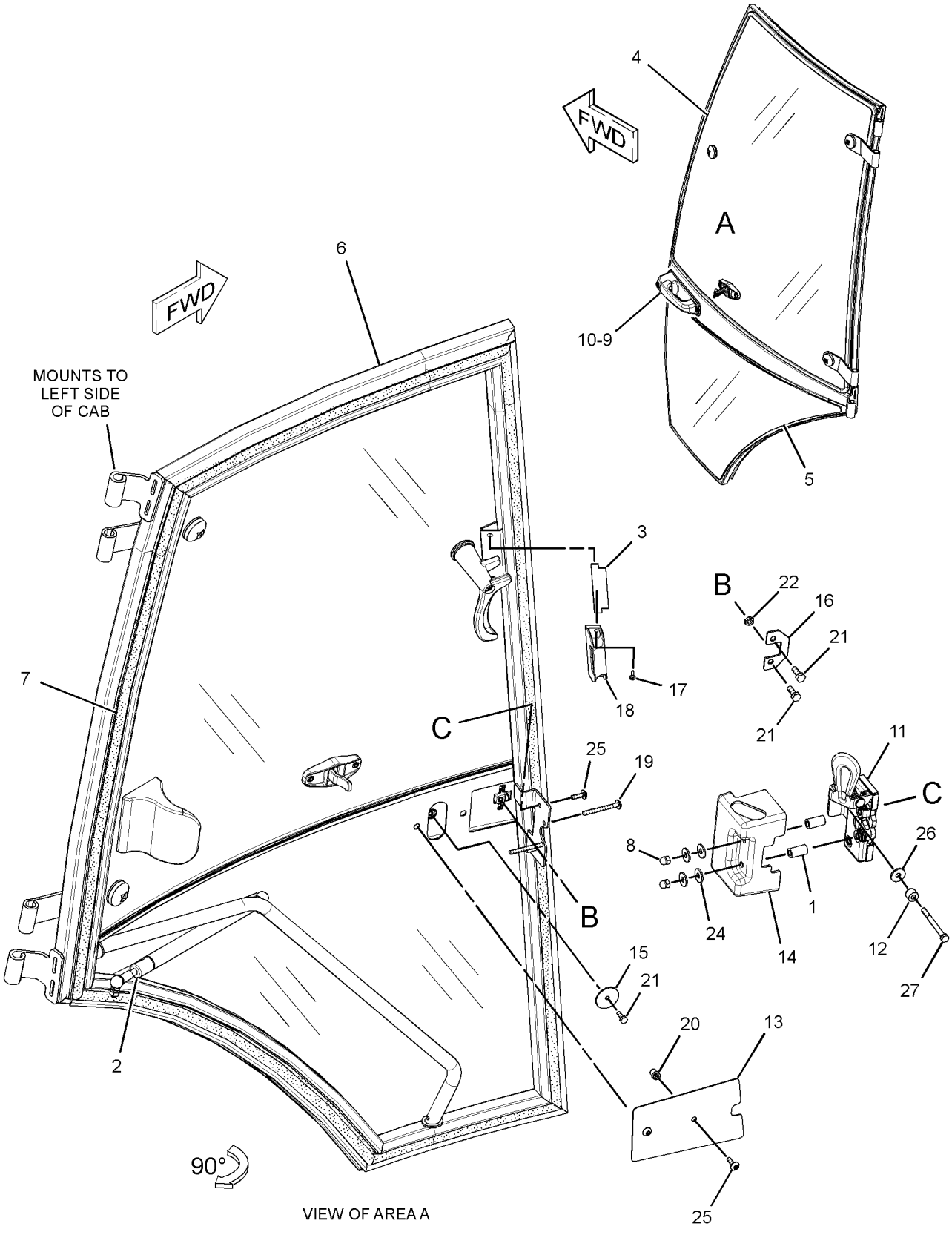

GRAPHIC #1 **<END>** g01406964

OPERATOR STATION

206-1592 DOOR GP-CAB—LH

S/N: CBD1-UP; MFG1-UP
PART OF 309-3225, 309-3226 CAB GP-ENCLOSED ROPS
AN ATTACHMENT

SMCS-7308 **i03872830**

NOTE	REF NO	GRAPHIC REF	PART NUMBER	QTY	PART NAME 1 2 3 4 5 6 (PRODUCT LEVEL)	SEE PAGE
	1	1	**132-2249**	2	SPACER (7.4X12.7X24-MM THK)	
J	2	1	**159-4269**	1	SPRING GP-GAS (CAB DOOR)	
B	3	1	**177-4877**	1	SHIM (1-MM THK)	
Y	4	1	**205-9585**	1	WINDOW GP-DOOR (LH)	1062
	5	1	**205-9588**	1	GLASS (LH)	
	6	1	**206-1594**	1	DOOR AS (LH)	
C	7	1	**307-9936**	1	SEAL AS (LH)	
E		1	**315-4123**		SEAL (463-CM)	
	8	1	**248-2714**	2	NUT-ACORN (M6X1-THD)	
L	9	1	**252-1862**	1	HANDLE AS (PULL)	
	10	1	**252-1863**	1	GASKET	
	11	1	**252-1864**	1	LATCH AS (LH)	
	12	1	**253-1817**	1	SPACER (6.5X14.5X12-MM THK)	
	13	1	**253-1857**	1	PLATE	
	14	1	**253-1858**	1	COVER (LATCH)	
	15	1	**254-1126**	1	PLATE	
	16	1	**254-1127**	1	PLATE	
M	17	1	**131-3987**	2	SCREW (M4X0.7X12-MM)	
	18	1	**159-4946**	1	KEEPER	
	19	1	**197-5107**	2	SCREW-TRUSS HEAD (M6X1X60-MM)	
	20	1	**205-7048**	2	INSERT-THREADED (M6X1-THD)	
M	21	1	**5C-9553**	3	BOLT (M6X1X16-MM)	
M	22	1	**5Y-0660**	1	NUT (M6X1-THD)	
M	23	1	**287-8257**	1	BOLT (M6X1X65-MM)	
	24	1	**9X-2038**	4	WASHER (7X19X2-MM THK)	
M	25	1	**9X-2045**	4	SCREW-TRUSS HEAD (M6X1X20-MM)	
	26	1	**258-3697**	1	WASHER-NYLON (7X20X2-MM THK)	
E	27	1	**9X-6383**		SEAL (60-CM)	
					AVAILABLE REPAIR KIT(S):	
J			**161-9044**	1	KIT-FITTING (BALL STUD)	
					(INCLUDES NUT & FITTING AS)	

B-USE AS REQUIRED
C-CHANGE FROM PREVIOUS TYPE
E-ORDER BY THE CENTIMETER
J-KIT MARKED J SERVICES PART MARKED J
L-REQUIRES CORPORATE KEY
M-METRIC PART
Y-SEPARATE ILLUSTRATION

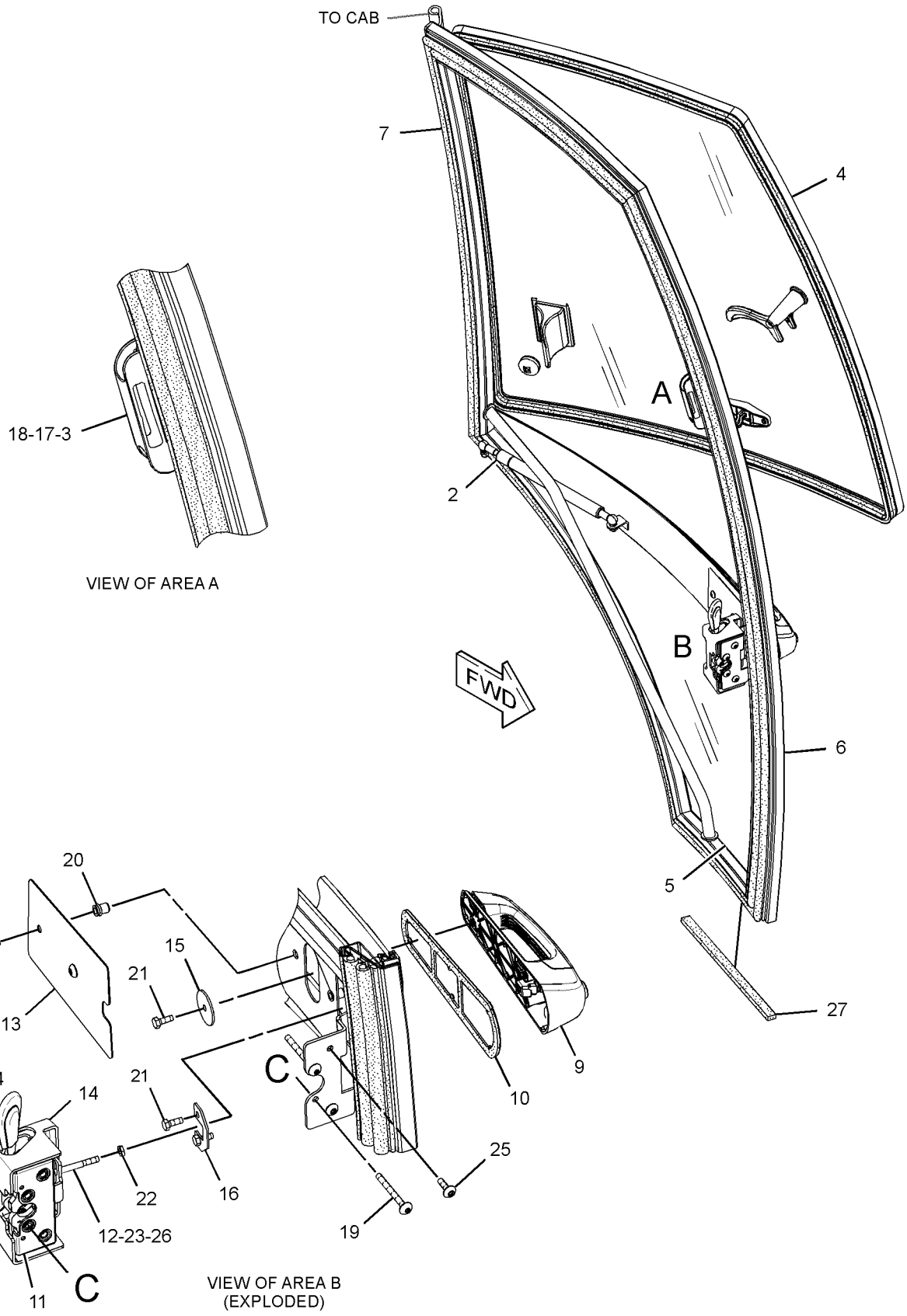

GRAPHIC #1 **<END>** g01778816

OPERATOR STATION

206-1593 DOOR GP-CAB—RH

S/N: CBD1-UP

PART OF 206-1889, 309-3226 CAB GP-ENCLOSED ROPS

AN ATTACHMENT

SMCS-7308 **i02810355**

NOTE	REF NO	GRAPHIC REF	PART NUMBER	QTY	PART NAME 1 2 3 4 5 6 (PRODUCT LEVEL)	SEE PAGE
	1	1	**132-2249**	2	SPACER (7.4X12.7X24-MM THK)	
J	2	1	**159-4269**	1	SPRING GP-GAS	
B	3	1	**177-4877**	1	SHIM (1-MM THK)	
Y	4	1	**205-9595**	1	WINDOW GP-DOOR (RH)	1063
	5	1	**205-9598**	1	GLASS (RH)	
	6	1	**206-1606**	1	DOOR AS (RH)	
	7	1	**223-2029**	1	SEAL AS (RH)	
	8	1	**248-2714**	2	NUT-ACORN (M6X1-THD)	
L	9	1	**252-1862**	1	HANDLE AS (PULL)	
	10	1	**252-1863**	1	GASKET	
	11	1	**252-1865**	1	LATCH AS (RH)	
	12	1	**253-1817**	1	SPACER (6.5X14.5X12-MM THK)	
	13	1	**253-1857**	1	PLATE	
	14	1	**253-1858**	1	COVER (LATCH)	
	15	1	**254-1126**	1	PLATE	
	16	1	**254-1127**	1	PLATE	
M	17	1	**131-3987**	2	SCREW (M4X0.7X12-MM)	
	18	1	**159-4945**	1	KEEPER	
	19	1	**197-5107**	2	SCREW-TRUSS HEAD (M6X1X60-MM)	
	20	1	**205-7048**	2	INSERT-THREADED (M6X1-THD)	
M	21	1	**5C-9553**	3	BOLT (M6X1X16-MM)	
M	22	1	**5Y-0660**	1	NUT (M6X1-THD)	
	24	1	**9X-2038**	4	WASHER (7X19X2-MM THK)	
M	25	1	**9X-2045**	4	SCREW-TRUSS HEAD (M6X1X20-MM)	
	26	1	**258-3697**	1	WASHER-NYLON (7X20X2-MM THK)	
M	27	1	**287-8257**	1	BOLT (M6X1X65-MM)	
					AVAILABLE REPAIR KIT(S):	
J			**161-9044**	1	KIT-FITTING (BALL STUD)	
					(INCLUDES NUT & FITTING AS)	

B-USE AS REQUIRED
J-KIT MARKED J SERVICES PART MARKED J
L-REQUIRES CORPORATE KEY
M-METRIC PART
Y-SEPARATE ILLUSTRATION

206-1593 DOOR GP-CAB *(contd.)* i02810355

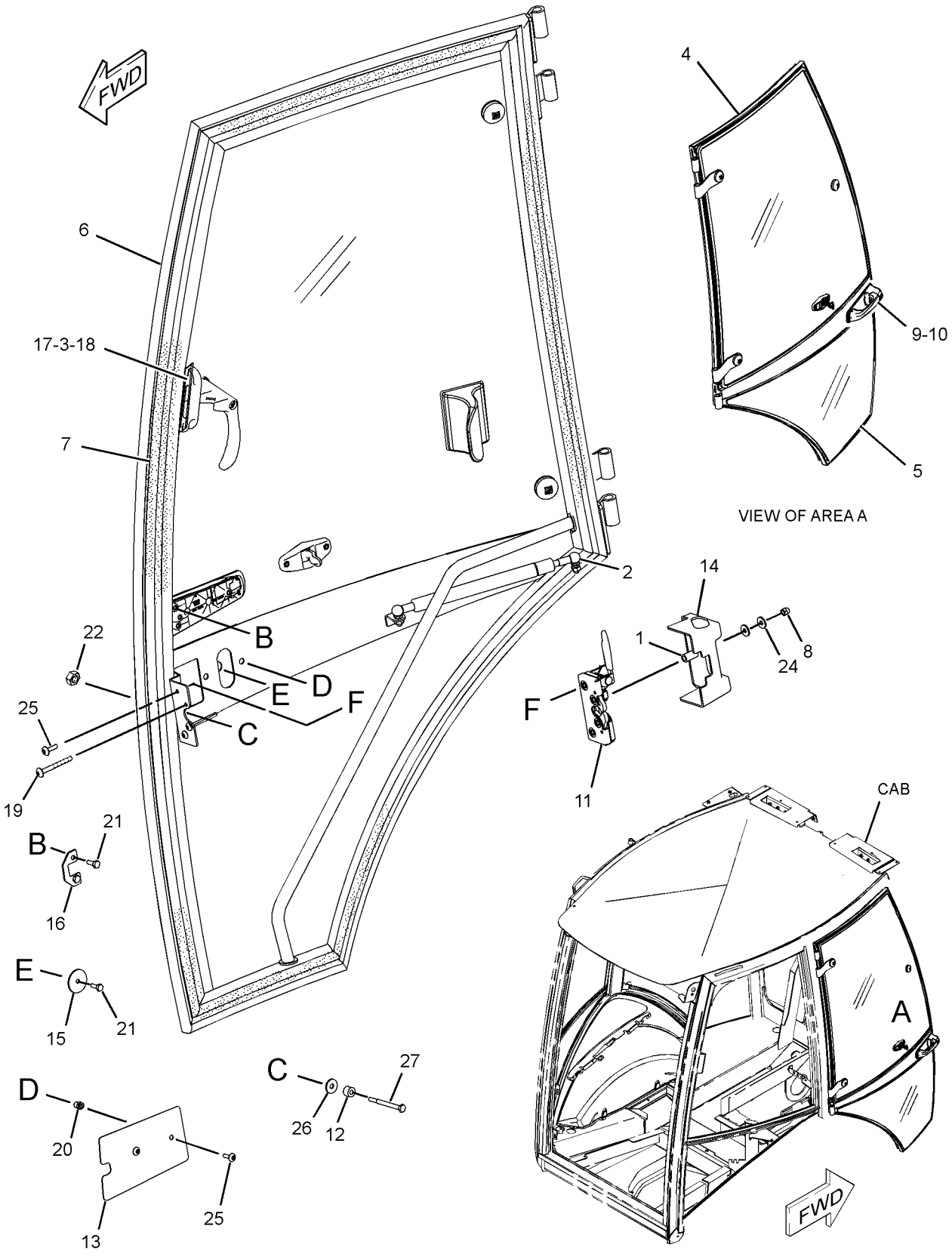

GRAPHIC #1 **<END>** g01407623

OPERATOR STATION

206-1593 DOOR GP-CAB—RH

S/N: CBD3169-UP; MFG1-UP
PART OF 309-3226 CAB GP-ENCLOSED ROPS
AN ATTACHMENT

SMCS-7308 **i03875942**

NOTE	REF NO	GRAPHIC REF	PART NUMBER	QTY	PART NAME 1 2 3 4 5 6 (PRODUCT LEVEL)	SEE PAGE
	1	1	**132-2249**	2	SPACER (7.4X12.7X24-MM THK)	
J	2	1	**159-4269**	1	SPRING GP-GAS (CAB DOOR)	
B	3	1	**177-4877**	1	SHIM (1-MM THK)	
Y	4	1	**205-9595**	1	WINDOW GP-DOOR (RH)	1063
	5	1	**205-9598**	1	GLASS (RH)	
	6	1	**206-1606**	1	DOOR AS (RH)	
C	7	1	**307-9937**	1	SEAL AS (RH)	
E		1	**315-4123**		SEAL (463-CM)	
	8	1	**248-2714**	2	NUT-ACORN (M6X1-THD)	
L	9	1	**252-1862**	1	HANDLE AS (PULL)	
	10	1	**252-1863**	1	GASKET	
	11	1	**252-1865**	1	LATCH AS (RH)	
	12	1	**253-1817**	1	SPACER (6.5X14.5X12-MM THK)	
	13	1	**253-1857**	1	PLATE	
	14	1	**253-1858**	1	COVER (LATCH)	
	15	1	**254-1126**	1	PLATE	
	16	1	**254-1127**	1	PLATE	
M	17	1	**131-3987**	2	SCREW (M4X0.7X12-MM)	
	18	1	**159-4945**	1	KEEPER	
	19	1	**197-5107**	2	SCREW-TRUSS HEAD (M6X1X60-MM)	
	20	1	**205-7048**	2	INSERT-THREADED (M6X1-THD)	
M	21	1	**5C-9553**	3	BOLT (M6X1X16-MM)	
M	22	1	**5Y-0660**	1	NUT (M6X1-THD)	
M	23	1	**287-8257**	1	BOLT (M6X1X65-MM)	
	24	1	**9X-2038**	4	WASHER (7X19X2-MM THK)	
M	25	1	**9X-2045**	4	SCREW-TRUSS HEAD (M6X1X20-MM)	
	26	1	**258-3697**	1	WASHER-NYLON (7X20X2-MM THK)	
BE	27	1	**9X-6383**		SEAL (60-CM)	
					AVAILABLE REPAIR KIT(S):	
J			**161-9044**	1	KIT-FITTING	
					(INCLUDES FITTING AS & NUT)	

B-USE AS REQUIRED
C-CHANGE FROM PREVIOUS TYPE
E-ORDER BY THE CENTIMETER
J-KIT MARKED J SERVICES PART(S) MARKED J
L-REQUIRES CORPORATE KEY
M-METRIC PART
Y-SEPARATE ILLUSTRATION

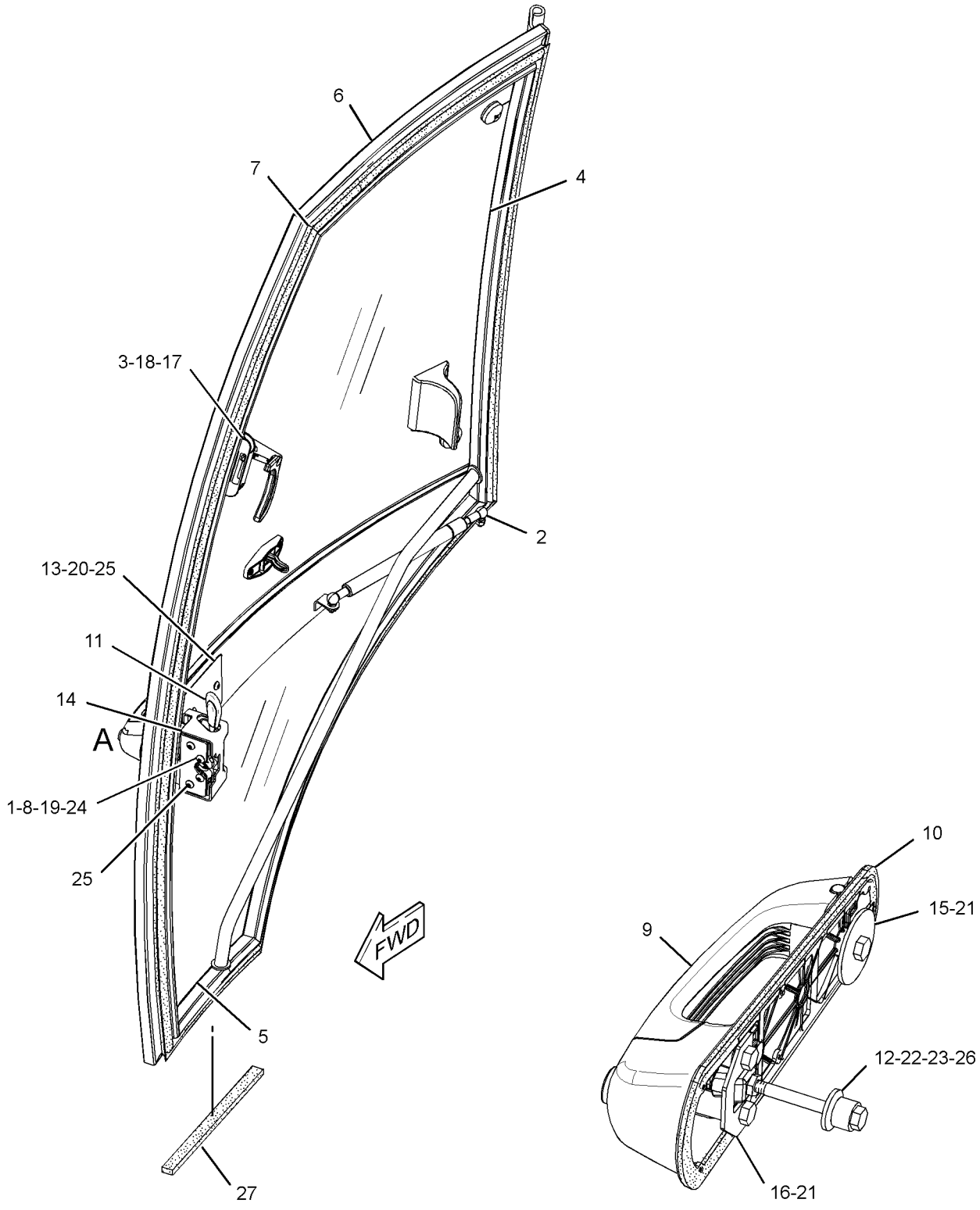

VIEW OF AREA A
(PARTS REMOVED FOR CLARITY)

GRAPHIC #1 **<END>** g01784733

OPERATOR STATION

206-1618 FLOOR MAT GP

S/N: CBD1-UP; MFG1-UP
PART OF 204-4162, 228-4602, 291-9195 CAB AR-ENCLOSED ROPS, 204-4164, 292-9690 CANOPY AR-OPEN ROPS
AN ATTACHMENT

SMCS-7265 **i02495441**

NOTE	REF NO	GRAPHIC REF	PART NUMBER	QTY	PART NAME 1 2 3 4 5 6 (PRODUCT LEVEL)	SEE PAGE
	1	1	**247-8179**	2	PLATE	
	2	1	**284-1602**	1	FLOOR MAT	
	3	1	**1H-3244**	4	LOCKWASHER	
M	4	1	**9X-2045**	4	SCREW-TRUSS HEAD (M6X1X20-MM)	

M-METRIC PART

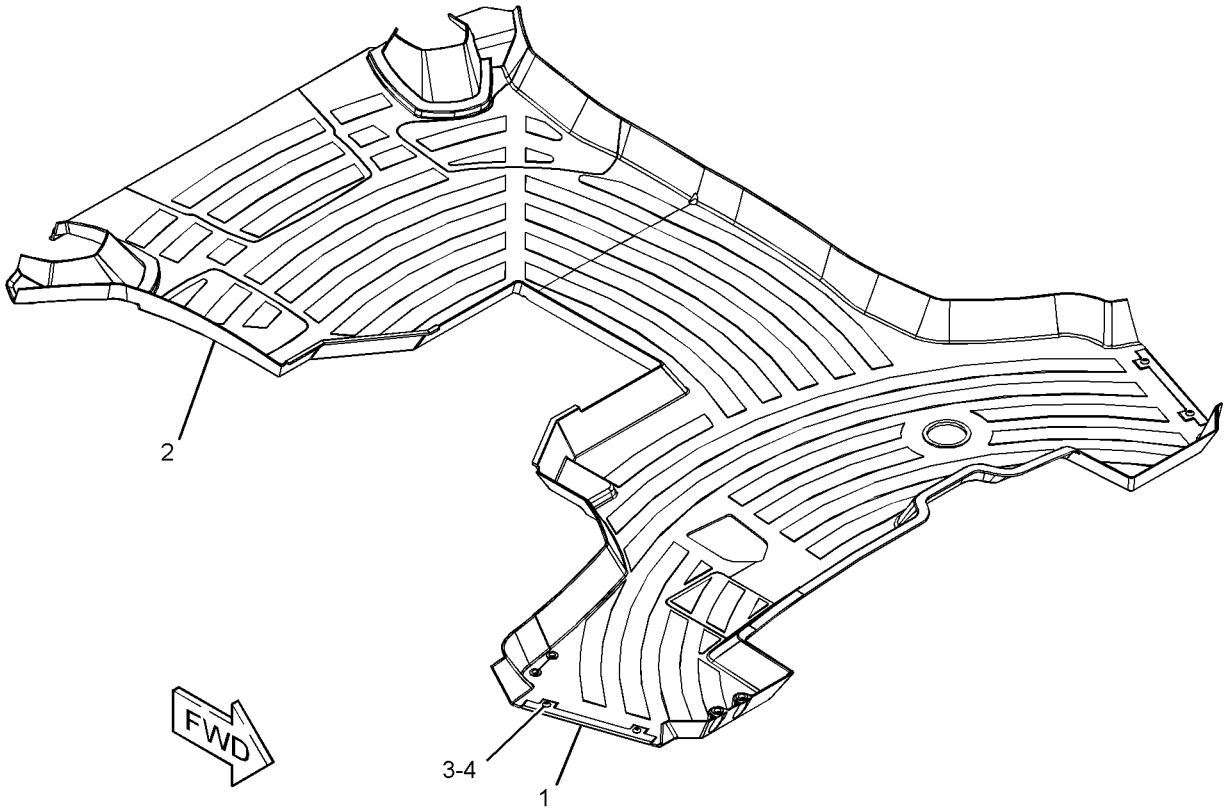

GRAPHIC #1 **<END>** g01228081

OPERATOR STATION

206-1620 FLOOR MAT GP

S/N: CBD1-UP; MFG1-UP
PART OF 204-4161 CAB AR-ENCLOSED ROPS, 204-4160, 292-9691 CANOPY AR-OPEN ROPS
AN ATTACHMENT

SMCS-7265 **i02495294**

NOTE	REF NO	GRAPHIC REF	PART NUMBER	QTY	PART NAME 1 2 3 4 5 6 (PRODUCT LEVEL)	SEE PAGE
	1	1	**206-1621**	1	FLOOR MAT	
	2	1	**247-8179**	2	PLATE	
	3	1	**1H-3244**	4	LOCKWASHER	
M	4	1	**9X-2045**	4	SCREW-TRUSS HEAD (M6X1X20-MM)	

M-METRIC PART

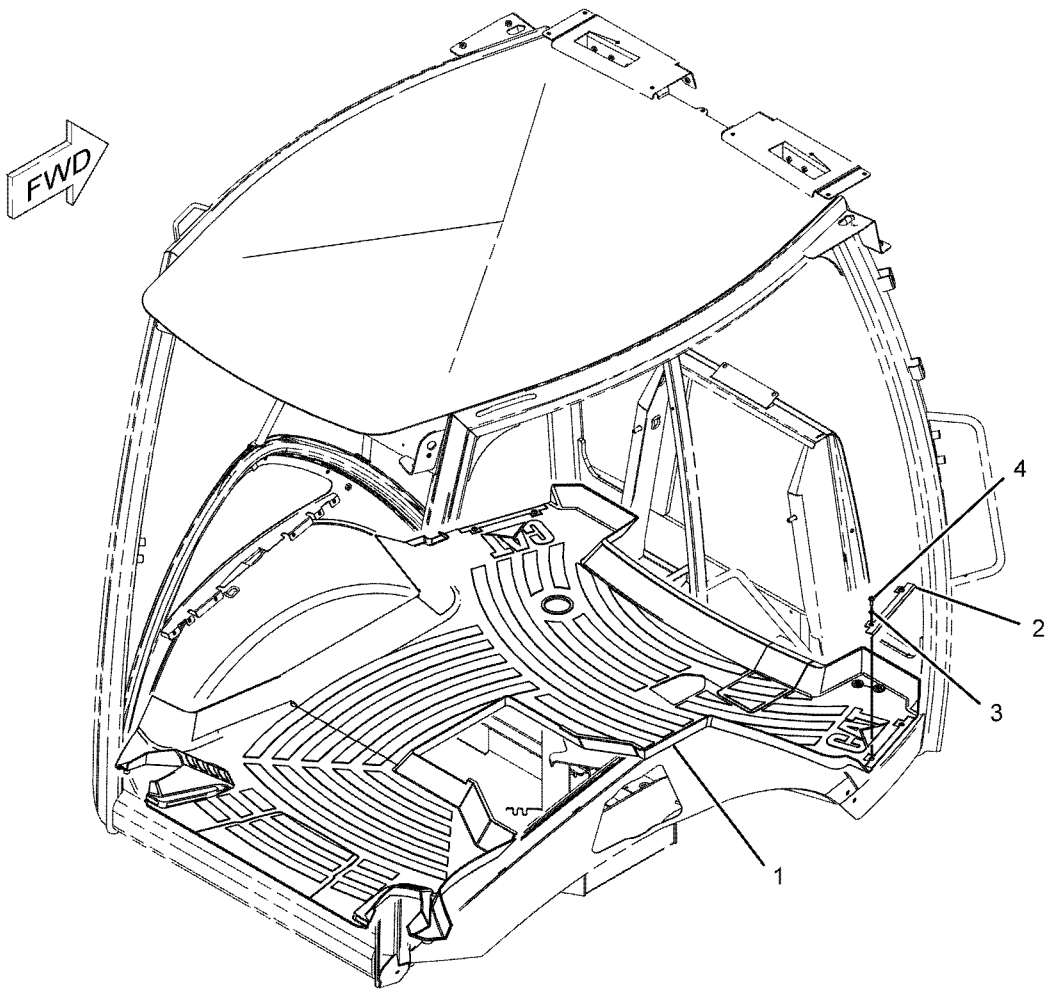

GRAPHIC #1 **<END>** g01080493

OPERATOR STATION

358-7087 HEATER & AIR CONDITIONER GP

S/N: CBD1-UP; MFG1-UP
PART OF 206-1801 AIR CONDITIONER & MOUNTING GP
AN ATTACHMENT

SMCS-7304, 7309, 7320, 7337 **i03996324**

NOTE	REF NO	GRAPHIC REF	PART NUMBER	QTY	PART NAME 1 2 3 4 5 6 (PRODUCT LEVEL)	SEE PAGE
	1	1	**8C-3756**	1	FILM-IDENTIFICATION (GROUP NO., SEQUENCE NO.)	
	2	1	**119-9631**	1	SWITCH-TEMPERATURE (HVAC)	
	3	1	**185-4015**	11	CLIP	
M	4	1	**187-7719**	3	SCREW-HEX FLANGE (M5X2.24X14-MM)	
	5	1	**204-9921**	1	RESISTOR AS	
	6	1	**210-7665**	1	HOUSING-TOP	
	7	1	**210-7666**	1	BAFFLE	
	8	1	**210-8401**	1	COIL AS-EVAPORATOR	
D		1	**5P-5688**		SEAL (1-M)	
		1	**219-6283**	1	LATCH	
	9	1	**211-2660**	1	FILTER ELEMENT-AIR (CAB HEATER, AIR CONDITIONER)	
	10	1	**219-6281**	1	COVER AS	
		1	**6C-3680**	1	RIVET-POP	
		1	**219-6283**	1	LATCH	
	15	1	**219-6292**	1	HOUSING AS	
		1	**7H-3937**	4	LOCKWASHER (EXTERNAL TOOTH)	
M		1	**129-3178**	4	LOCKNUT (M6X1-THD)	
	16	1	**220-3762**	1	HARNESS AS-HEATER & AIR COND	
		1	**128-7716**	1	CONNECTOR	
		1	**7T-6739**	1	HOUSING-PLUG	
		1	**7T-0093**	3	PIN-CONNECTOR (12-GA TO 14-GA)	
		1	**155-2270**	1	KIT-CONNECTING PLUG (2-PIN)	
					(INCLUDES PLUG AS, WEDGE & INTERFACE SEAL)	
		1	**8T-8737**	1	PLUG-SEAL	
		1	**177-9653**	1	KIT-RECEPTACLE (4-PIN)	
					(INCLUDES RECEPTACLE AS & WEDGE)	
		1	**8T-8730**	2	SOCKET-CONNECTOR (16-GA TO 18-GA)	
		1	**192-2112**	5	SOCKET-TERMINAL	
	17	1	**253-9510**	1	GUARD	
	18	1	**304-8965**	1	BLOWER GP-CAB (HEATER)	
		1	**7T-0093**		PIN-CONNECTOR (12-GA TO 14-GA)	
		1	**177-9645**	1	KIT-RECEPTACLE (2-PIN)	
					(INCLUDES RECEPTACLE AS & WEDGE)	
	19	1	**2S-3745**	4	SCREW-TAPPING (10-16X0.5-IN)	
M	20	1	**6V-7357**	4	BOLT (M6X1X25-MM)	
	21	1	**8T-4205**	5	WASHER-HARD (7.2X14.5X2-MM THK)	
D	22	1	**5P-5655**		SEAL (0.5-M)	
DJ	23	1	**5P-5637**		SEAL (0.8-M)	
EJ	24	1	**8C-7524**		SEAL (35-CM)	
					AVAILABLE REPAIR KIT(S):	
J			**285-9109**	1	KIT-SEAL (HVAC)	
					(INCLUDES GASKETS & SEALS)	

D-ORDER BY THE METER
E-ORDER BY THE CENTIMETER
J-KIT MARKED J SERVICE(S) PARTS MARKED J
M-METRIC PART

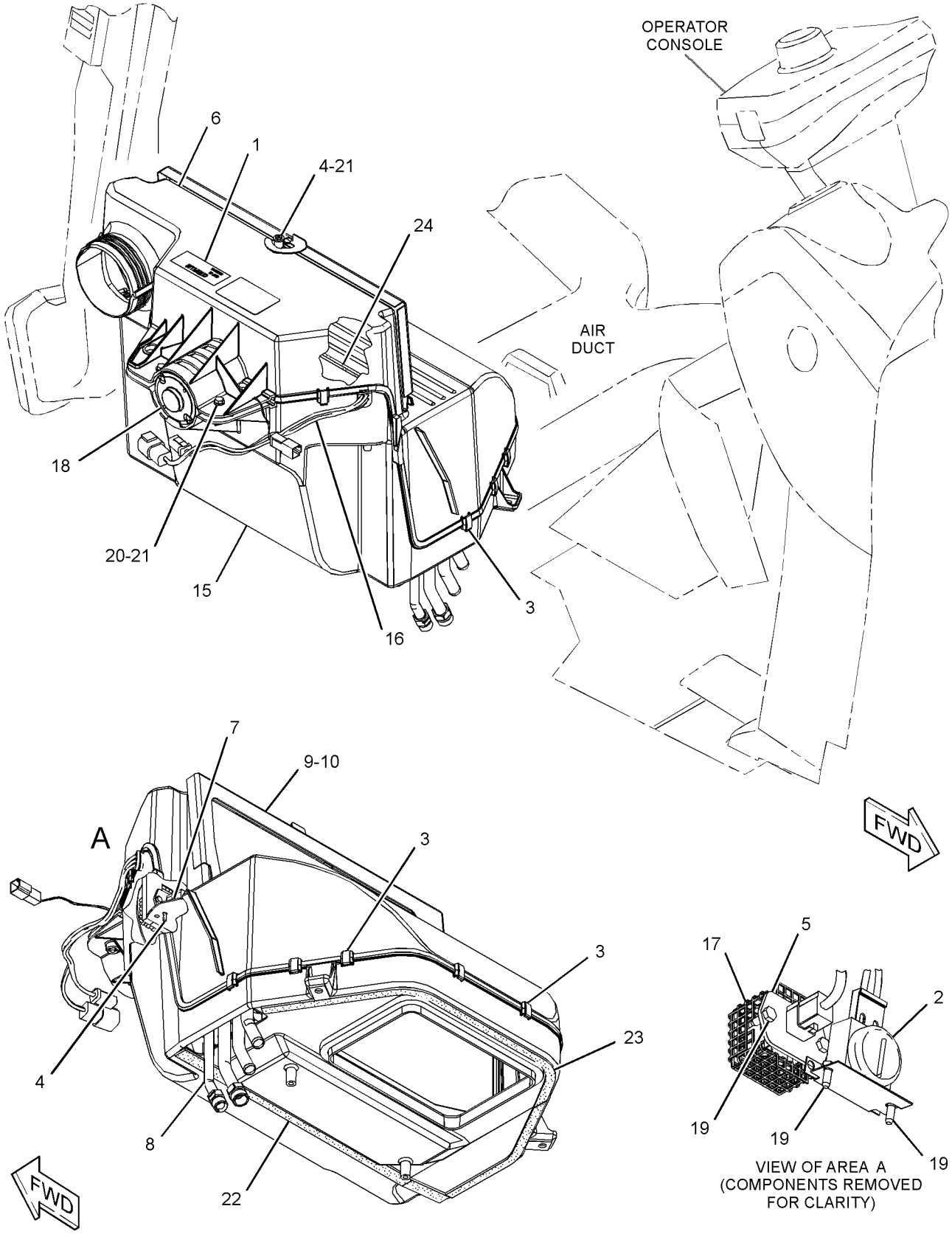

GRAPHIC #1 **<END>** g02535921

OPERATOR STATION

206-1800 HEATER GP-CAB

S/N: CBD1-7950
PART OF 204-4161, 204-4162 CAB AR-ENCLOSED ROPS
AN ATTACHMENT

SMCS-7304 **i02763463**

NOTE	REF NO	GRAPHIC REF	PART NUMBER	QTY	PART NAME 1 2 3 4 5 6 (PRODUCT LEVEL)	SEE PAGE
	1	1	**221-2420**	2	HOSE-AIR	
E	2	1	**6V-6813**		HOSE (28-CM)	
	3	1	**6L-4725**	2	CLAMP-HOSE	
	4	1	**8Y-5737**	1	CLAMP	
	5	1	**8Y-6967**	6	LOUVER AS-VENT	
	6	1	**9M-7959**	4	CLAMP-HOSE	
	7	1	**9N-2231**	1	GROMMET AS	
	8	1	**110-6109**	1	KNOB-CONTROL (TEMPERATURE)	
	9	1	**130-4832**	2	SCREW (8-18X10-MM)	
	10	1	**164-1368**	4	FASTENER-PANEL	
	11	1	**164-8474**	2	LOUVER AS-VENT	
	12	1	**189-0881**	1	CONTROL AS (PANEL)	
		1	**129-1831**	1	CLAMP	
	13	1	**193-3356**	1	CABLE AS	
	14	1	**194-5622**	1	VALVE AS-WATER	
		1	**6V-6717**	1	SCREW-WASHER HEAD (8-32X9.52-MM)	
		1	**124-0312**	2	SCREW-PAN HEAD (8-16X0.32-IN)	
	15	1	**206-1648**	1	LOUVER	
	16	1	**206-1653**	4	GASKET	
	17	1	**206-1682**	1	PANEL-CONTROL (INSERT)	
	18	1	**206-1684**	1	COVER (CAB FILTER)	
	19	1	**206-1803**	2	GASKET	
	20	1	**206-1804**	1	GASKET	
	21	1	**206-1805**	1	GASKET	
E	22	1	**220-0738**		SEAL (87-CM)	
	23	1	**206-1807**	1	GASKET	
	24	1	**206-1808**	1	PLATE	
	25	1	**206-1809**	1	ROD AS	
	26	1	**206-1810**	1	DUCT-AIR	
	27	1	**206-1812**	1	DUCT-AIR	
	28	1	**206-1814**	1	DUCT-AIR	
	29	1	**206-1815**	1	DUCT-AIR	
	30	1	**206-1816**	1	DUCT-AIR	
	31	1	**206-1817**	2	DUCT-AIR	
	32	1	**206-1818**	1	DUCT AS-AIR	
Y	33	1	*210-8364*	1	HEATER GP-CAB	999
	34	1	**211-2661**	1	FILTER ELEMENT AS-AIR (CAB HEATER)	
	35	1	**218-0666**	6	LOUVER AS	
	36	1	**255-0795**	1	FILM-IDENTIFICATION (TEMPERATURE CONTROL)	
M	37	1	**111-4627**	3	SCREW-MACHINE (M6X1X30-MM)	
	38	1	**5P-4116**	1	WASHER-HARD (8.8X20.5X2-MM THK)	
	39	1	**7X-0579**	1	WASHER-HARD (8.8X25.5X2-MM THK)	
M	40	1	**8T-4200**	1	BOLT (M8X1.25X16-MM)	
	41	1	**8Y-6352**	1	LOUVER AS	
	42	1	**9X-2038**	4	WASHER (7X19X2-MM THK)	
M	43	1	**9X-2045**	8	SCREW-TRUSS HEAD (M6X1X20-MM)	
	44	1	**8T-4205**	4	WASHER-HARD (7.2X14.5X2-MM THK)	

E-ORDER BY THE CENTIMETER
M-METRIC PART
Y-SEPARATE ILLUSTRATION

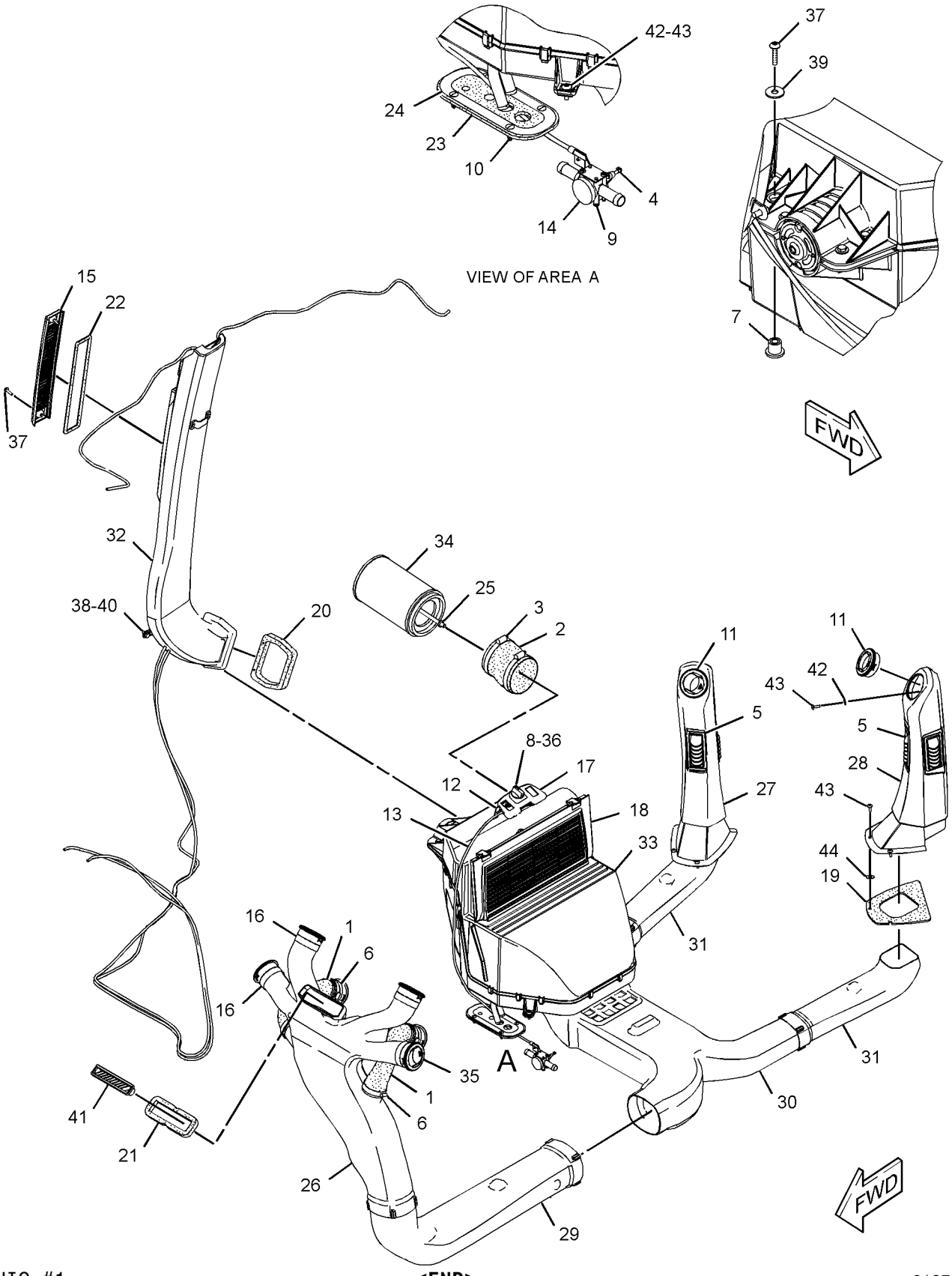

GRAPHIC #1 **<END>** g01379893

OPERATOR STATION

206-1800 HEATER GP-CAB

S/N: CBD7951-UP; MFG1-UP
PART OF 204-4161, 204-4162 CAB AR-ENCLOSED ROPS
AN ATTACHMENT

SMCS-7304 **i04217709**

NOTE	REF NO	GRAPHIC REF	PART NUMBER	QTY	PART NAME 1 2 3 4 5 6 (PRODUCT LEVEL)	SEE PAGE
	1	1	**221-2420**	2	HOSE-AIR	
E	2	1	**6V-6813**		HOSE (28-CM)	
	3	1	**6L-4725**	2	CLAMP-HOSE	
	4	1	**8Y-5737**	1	CLAMP	
	5	1	**8Y-6967**	6	LOUVER AS-VENT	
	6	1	**9M-7959**	4	CLAMP-HOSE	
	7	1	**9N-2231**	1	GROMMET AS	
	8	1	**110-6109**	1	KNOB-CONTROL (TEMPERATURE)	
	9	1	**130-4832**	2	SCREW (8-18X10-MM)	
	10	1	**164-1368**	4	FASTENER-PANEL	
	11	1	**164-8474**	2	LOUVER AS-VENT	
	12	1	**189-0881**	1	CONTROL AS (PANEL)	
		1	**129-1831**	1	CLAMP	
	13	1	**193-3356**	1	CABLE AS	
	14	1	**194-5622**	1	VALVE AS-WATER	
		1	**6V-6717**	1	SCREW-WASHER HEAD (8-32X9.52-MM)	
		1	**124-0312**	2	SCREW-PAN HEAD (8-16X0.32-IN)	
	15	1	**206-1648**	1	LOUVER	
	16	1	**206-1653**	4	GASKET	
	17	1	**206-1682**	1	PANEL-CONTROL	
	18	1	**206-1684**	1	COVER (CAB FILTER)	
	19	1	**206-1803**	2	GASKET	
	20	1	**206-1804**	1	GASKET	
	21	1	**206-1805**	1	GASKET	
E	22	1	**220-0738**		SEAL (87-CM)	
	23	1	**206-1807**	1	GASKET	
	24	1	**206-1808**	1	PLATE	
	25	1	**206-1809**	1	ROD AS	
	26	1	**206-1810**	1	DUCT-AIR	
	27	1	**206-1812**	1	DUCT-AIR	
	28	1	**206-1814**	1	DUCT-AIR	
	29	1	**206-1815**	1	DUCT-AIR	
	30	1	**206-1816**	1	DUCT-AIR	
	31	1	**206-1817**	2	DUCT-AIR	
	32	1	**206-1818**	1	DUCT AS-AIR	
CY	33	1	*358-7086*	1	HEATER GP-CAB	1001
	34	1	**211-2661**	1	FILTER ELEMENT AS-AIR (CAB HEATER)	
	35	1	**218-0666**	6	LOUVER AS	
	36	1	**255-0795**	1	FILM-IDENTIFICATION (TEMPERATURE CONTROL)	
M	37	1	**111-4627**	3	SCREW-MACHINE (M6X1X30-MM)	
	38	1	**5P-4116**	1	WASHER-HARD (8.8X20.5X2-MM THK)	
	39	1	**7X-0579**	1	WASHER-HARD (8.8X25.5X2-MM THK)	
M	40	1	**8T-4200**	1	BOLT (M8X1.25X16-MM)	
	41	1	**8Y-6352**	1	LOUVER AS	
	42	1	**9X-2038**	4	WASHER (7X19X2-MM THK)	
M	43	1	**9X-2045**	8	SCREW-TRUSS HEAD (M6X1X20-MM)	
	44	1	**8T-4205**	4	WASHER-HARD (7.2X14.5X2-MM THK)	

C-CHANGE FROM PREVIOUS TYPE
E-ORDER BY THE CENTIMETER
M-METRIC PART
Y-SEPARATE ILLUSTRATION

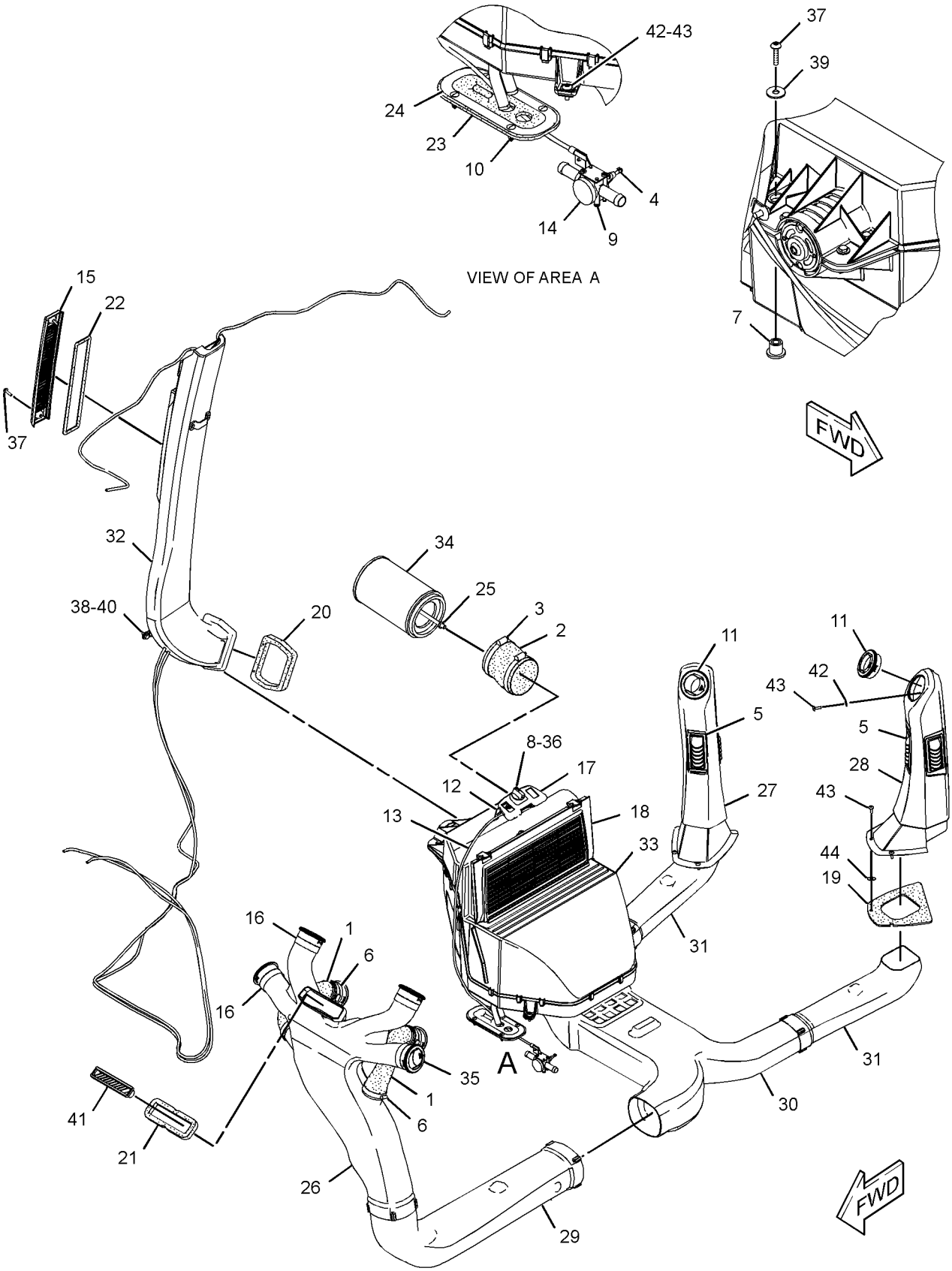

GRAPHIC #1 **<END>** g02438499

OPERATOR STATION

210-8364 HEATER GP-CAB

S/N: CBD1-7950
PART OF 206-1800 HEATER GP-CAB
AN ATTACHMENT

SMCS-7304 **i02952139**

NOTE	REF NO	GRAPHIC REF	PART NUMBER	QTY	PART NAME 1 2 3 4 5 6 (PRODUCT LEVEL)	SEE PAGE
	1	1	**8C-3756**	1	FILM-IDENTIFICATION (GROUP NO., SEQUENCE NO.)	
	2	1	**304-8965**	1	BLOWER GP-CAB	
		1	**177-9645**	1	KIT-RECEPTACLE (2-PIN)	
					(INCLUDES RECEPTACLE AS & WEDGE)	
		1	**7T-0093**	2	PIN-CONNECTOR (12-GA TO 14-GA)	
	3	1	**185-4015**	11	CLIP	
	4	1	**204-9921**	1	RESISTOR AS	
	5	1	**210-7665**	1	HOUSING-TOP	
	6	1	**210-7666**	1	BAFFLE	
	7	1	**210-8402**	1	COIL AS-HEATER	
DJ		1	**5P-5688**		SEAL (1-M)	
J		1	*219-6288*	1	GASKET	
	8	1	**211-2660**	1	FILTER ELEMENT-AIR (RECIRCULATION)	
	9	1	**212-3416**	3	SCREW-PAN HEAD (8-16XO.5-IN)	
	10	1	**219-6281**	1	COVER AS	
		1	**219-6283**	1	LATCH	
		1	**6C-3680**	1	RIVET-POP	
J	11	1	*219-6284*	2	GASKET	
J	12	1	*219-6285*	1	GASKET	
J	13	1	*219-6286*	1	GASKET	
J	14	1	*219-6287*	2	GASKET	
	15	1	**219-6292**	1	HOUSING AS	
		1	**7H-3937**	4	LOCKWASHER (EXTERNAL TOOTH)	
M		1	**129-3178**	4	LOCKNUT (M6X1-THD)	
	17	1	**253-2470**	1	HARNESS AS-HEATER	
		1	**177-9653**	1	KIT-RECEPTACLE (4-PIN)	
					(INCLUDES RECEPTACLE AS & WEDGE)	
		1	**155-2271**	1	KIT-CONNECTING PLUG (4-PIN)	
					(INCLUDES PLUG AS, WEDGE & INTERFACE SEAL)	
	18	1	**253-9510**	1	GUARD	
	19	1	**2S-3745**	2	SCREW-TAPPING (10-16XO.5-IN)	
M	20	1	**6V-7357**	4	BOLT (M6X1X25-MM)	
	21	1	**8T-4205**	5	WASHER-HARD (7.2X14.5X2-MM THK)	
D	22	1	**5P-5655**		SEAL (O.5-M)	
DJ	23	1	**5P-5637**		SEAL (O.8-M)	
EJ	24	1	**8C-7524**		SEAL (35-CM)	
					AVAILABLE REPAIR KIT(S):	
J			**285-9109**	1	KIT-SEAL (HVAC)	

D-ORDER BY THE METER
E-ORDER BY THE CENTIMETER
J-KIT MARKED J SERVICES PARTS MARKED J
M-METRIC PART

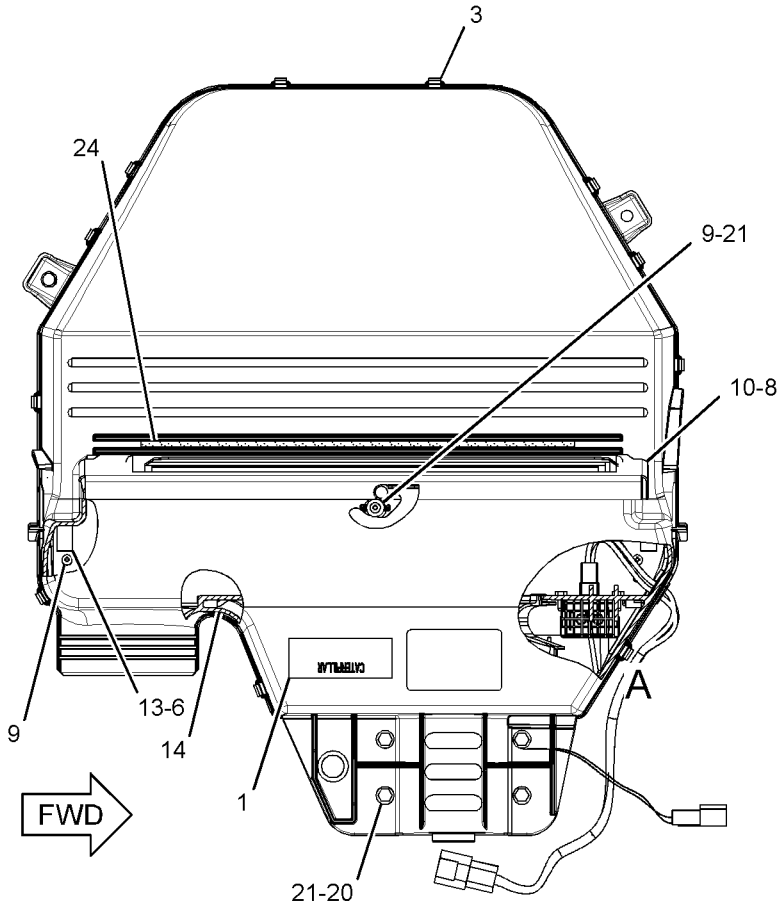

TOP VIEW

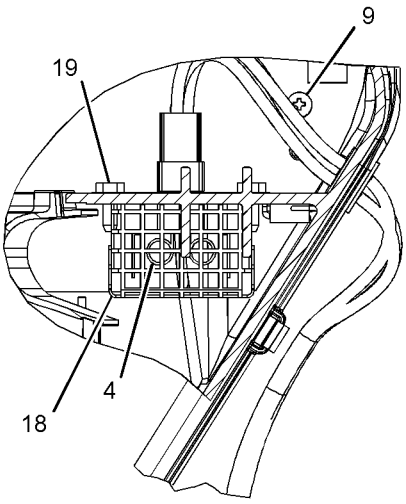

VIEW OF AREA A

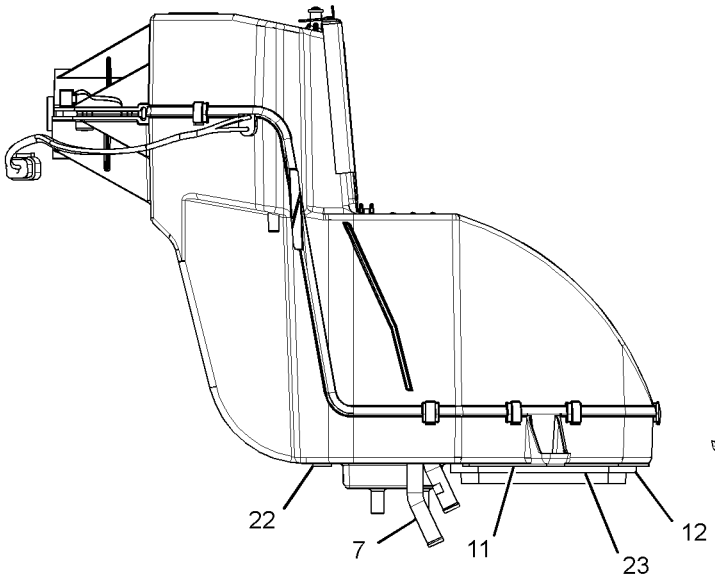

FRONT VIEW

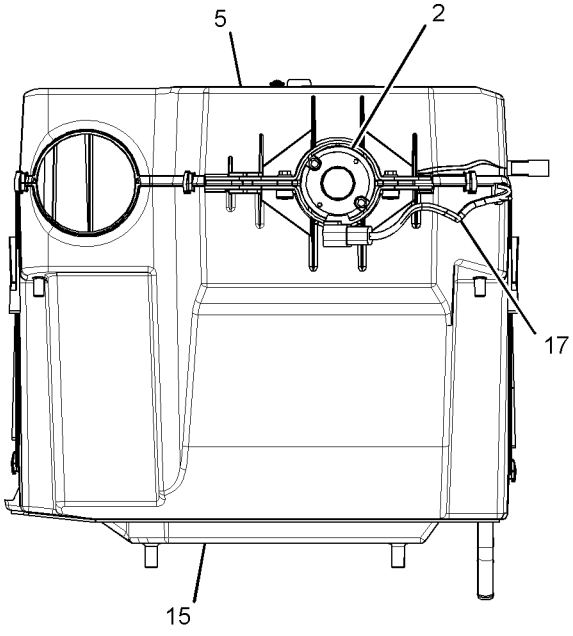

RIGHT SIDE VIEW

GRAPHIC #1 **<END>** g01460989

OPERATOR STATION

358-7086 HEATER GP-CAB

S/N: CBD7951-UP; MFG1-UP
PART OF 206-1800 HEATER GP-CAB
AN ATTACHMENT

SMCS-7304 **i04244750**

NOTE	REF NO	GRAPHIC REF	PART NUMBER	QTY	PART NAME 1 2 3 4 5 6 (PRODUCT LEVEL)	SEE PAGE
	1	1	**8C-3756**	1	FILM-IDENTIFICATION (GROUP NO., SEQUENCE NO.)	
	2	1	**185-4015**	11	CLIP	
M	3	1	**187-7719**	3	SCREW-HEX FLANGE (M5X2.24X14-MM)	
	4	1	**204-9921**	1	RESISTOR AS	
	5	1	**210-7665**	1	HOUSING-TOP	
	6	1	**210-7666**	1	BAFFLE	
	7	1	**210-8402**	1	COIL AS-HEATER	
D		1	**5P-5688**	1	SEAL (1-M)	
		1	**219-6283**	1	LATCH	
	8	1	**211-2660**	1	FILTER ELEMENT-AIR (CAB HEATER)	
	9	1	**219-6281**	1	COVER AS	
		1	**6C-3680**	1	RIVET-POP	
		1	**219-6283**	1	LATCH	
	14	1	**219-6292**	1	HOUSING AS	
		1	**7H-3937**	4	LOCKWASHER (EXTERNAL TOOTH)	
M		1	**129-3178**	4	LOCKNUT (M6X1-THD)	
	15	1	**253-2470**	1	HARNESS AS-HEATER (CAB)	
		1	**128-7716**	1	CONNECTOR	
		1	**220-5725**	1	GROMMET	
		1	**7T-0093**	3	PIN-CONNECTOR (12-GA TO 14-GA)	
		1	**8T-8737**	1	PLUG-SEAL	
		1	**177-9653**	1	KIT-RECEPTACLE (4-PIN)	
					(INCLUDES RECEPTACLE AS & WEDGE)	
		1	**192-2112**	3	SOCKET-TERMINAL	
	16	1	**253-9510**	1	GUARD	
	17	1	**304-8965**	1	BLOWER GP-CAB (HEATER)	
		1	**7T-0093**		PIN-CONNECTOR (12-GA TO 14-GA)	
		1	**177-9645**	1	KIT-RECEPTACLE (2-PIN)	
					(INCLUDES RECEPTACLE AS & WEDGE)	
	18	1	**2S-3745**	2	SCREW-TAPPING (10-16X0.5-IN)	
M	19	1	**6V-7357**	4	BOLT (M6X1X25-MM)	
	20	1	**8T-4205**	5	WASHER-HARD (7.2X14.5X2-MM THK)	
D	21	1	**5P-5655**		SEAL (0.5-M)	
DJ	22	1	**5P-5637**		SEAL (0.8-M)	
EJ	23	1	**8C-7524**		SEAL (35-CM)	
					AVAILABLE REPAIR KIT(S):	
J			**285-9109**	1	KIT-SEAL (HVAC)	
					(ALSO INCLUDES GASKETS & SEALS)	

D-ORDER BY THE METER
E-ORDER BY THE CENTIMETER
J-KIT MARKED J SERVICES PARTS MARKED J
M-METRIC PART

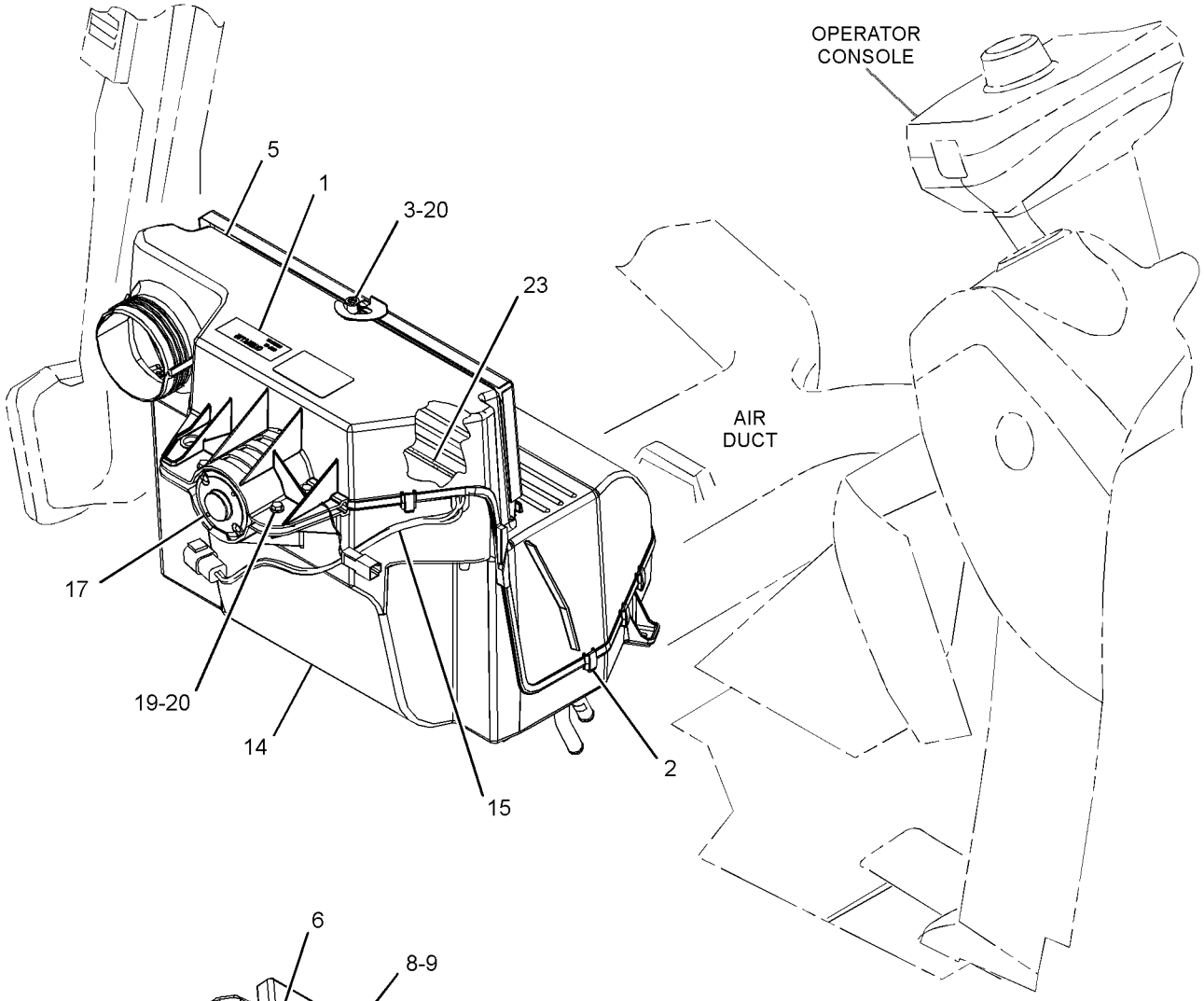

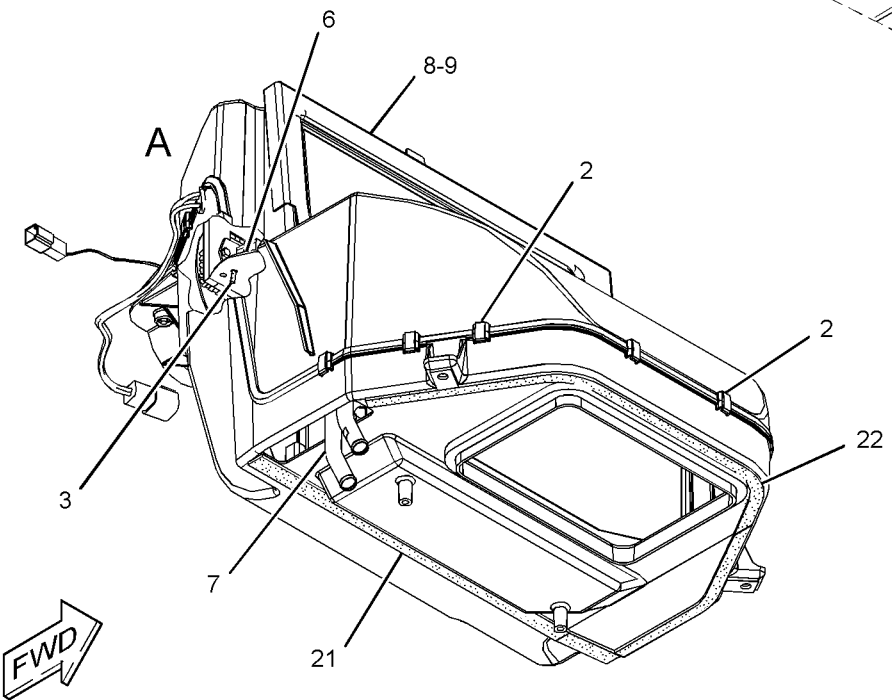

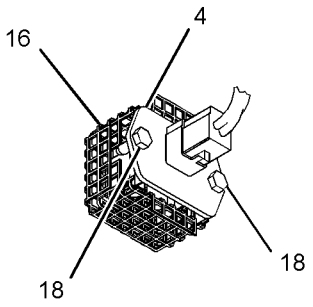

VIEW OF AREA A
(COMPONENTS REMOVED
FOR CLARITY)

FWD

GRAPHIC #1 **<END>** g02177999

OPERATOR STATION

299-6985 LATCH GP-CAB DOOR & WINDOW

S/N: CBD1-UP; MFG1-UP

PART OF 205-9611, 205-9619, 205-9628 WINDOW GP-CAB, 205-9595 WINDOW GP-DOOR

AN ATTACHMENT

SMCS-7308, 7310 **i02752216**

NOTE	REF NO	GRAPHIC REF	PART NUMBER	QTY	PART NAME 1 2 3 4 5 6 (PRODUCT LEVEL)	SEE PAGE
M	1	1	**161-6984**	1	SCREW-TRUSS HEAD (M5X0.8X20-MM)	
	2	1	**161-6987**	1	WASHER-HARD (5.2X16X1.5-MM THK)	
	3	1	**161-9294**	1	SPRING-FLAT WIRE	
M	4	1	**162-6556**	1	LOCKNUT (M6X1-THD)	
M	5	1	**5C-2874**	1	NUT (M5X0.8-THD)	

M-METRIC PART

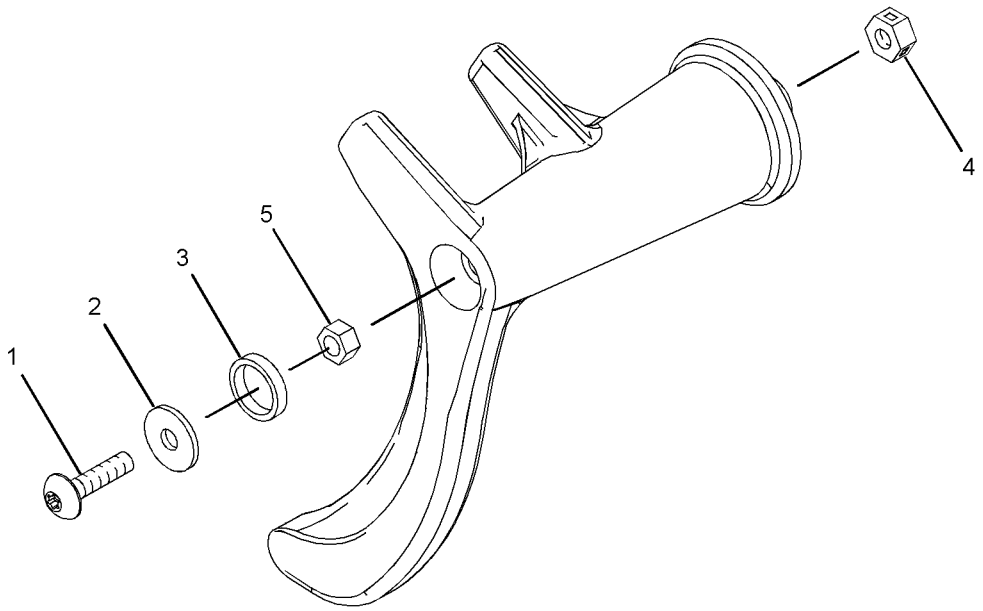

GRAPHIC #1 **<END>** g01405536

OPERATOR STATION

299-6986 LATCH GP-CAB DOOR & WINDOW

S/N: CBD1-UP; MFG1-UP
PART OF 205-9619, 205-9628 WINDOW GP-CAB, 205-9585 WINDOW GP-DOOR
AN ATTACHMENT

SMCS-7308, 7310 **i02812577**

NOTE	REF NO	GRAPHIC REF	PART NUMBER	QTY	PART NAME 1 2 3 4 5 6 (PRODUCT LEVEL)	SEE PAGE
M	1	1	**161-6984**	1	SCREW-TRUSS HEAD (M5X0.8X20-MM)	
	2	1	**161-6987**	1	WASHER-HARD (5.2X16X1.5-MM THK)	
	3	1	**161-9294**	1	SPRING-FLAT WIRE	
M	4	1	**162-6556**	1	LOCKNUT (M6X1-THD)	
M	5	1	**5C-2874**	1	NUT (M5X0.8-THD)	

M-METRIC PART

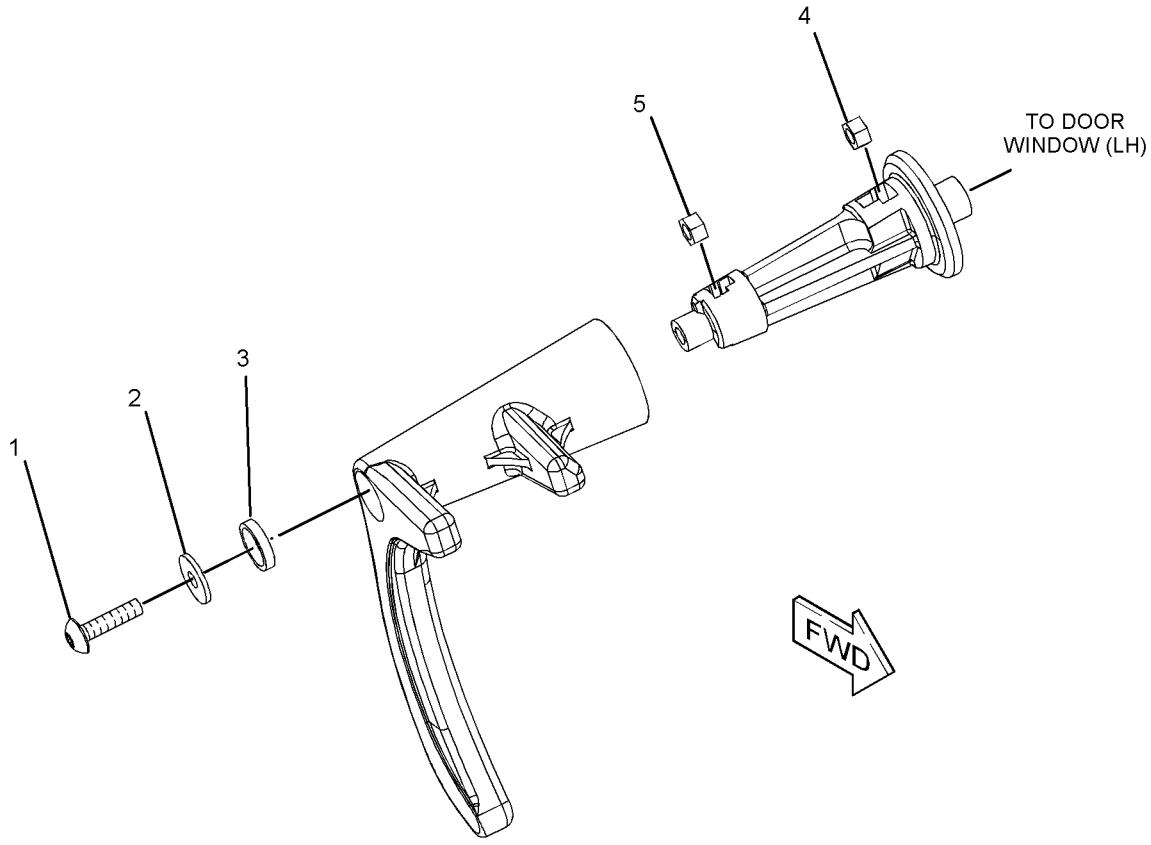

GRAPHIC #1 **<END>** g01384201

OPERATOR STATION

209-3367 LEVER GP-GOVERNOR–HANDHELD

S/N: CBD1-UP; MFG1-UP
PART OF 206-1640, 251-3802 CONTROL GP-GOVERNOR
ALSO AN ATTACHMENT

SMCS-1265 **i03576000**

NOTE	REF NO	GRAPHIC REF	PART NUMBER	QTY	PART NAME 1 2 3 4 5 6 (PRODUCT LEVEL)	SEE PAGE
	1	1	**8T-4742**	1	END-YOKE ROD	
	2	1	**8T-4744**	1	PIN AS-SPRING	

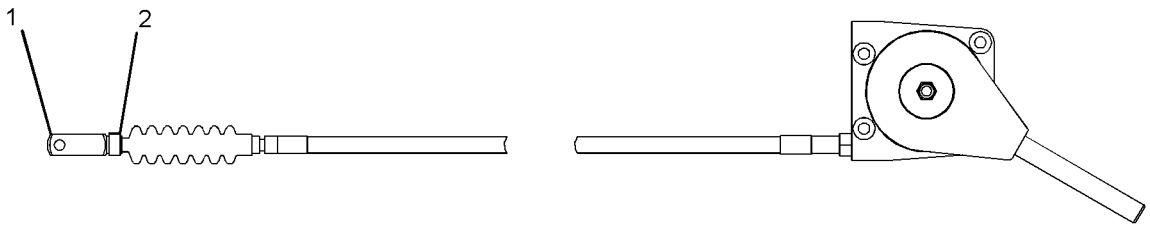

GRAPHIC #1 **<END>** g01927174

OPERATOR STATION

209-4703 LINER GP-CAB

S/N: CBD1-UP
PART OF 204-4162, 228-4602 CAB AR-ENCLOSED ROPS
AN ATTACHMENT

SMCS-7329 **i02559932**

NOTE	REF NO	GRAPHIC REF	PART NUMBER	QTY	PART NAME 1 2 3 4 5 6 (PRODUCT LEVEL)	SEE PAGE
	1	1	**8E-1118**	1	ANTENNA AS	
	2	1	**8R-6111**	1	CABLE AS-COAXIAL	
	3	1	**9U-8263**	1	COVER	
	4	1	**084-4277**	1	LAMP GP-DOME	
		1	**210-8754**	1	LAMP (12-VOLT)	
M	5	1	**113-0920**	8	BOLT-SOCKET HEAD (M4X0.7X35-MM)	
	6	1	**169-7291**	2	COVER-SPEAKER	
	7	1	**209-4704**	1	LINER AS-CAB	
	8	1	**209-4705**	1	COVER	
	9	1	**209-4716**	2	PLATE	
	10	1	**229-6052**	2	SPACER (9.7X12.7X7.5-MM THK)	
	11	1	**262-9567**	2	SPEAKER	
	12	1	**282-7832**	1	GROMMET	
	13	1	**282-7835**	1	PLATE	
M	14	1	**121-9870**	5	SCREW-MACHINE (M6X1X40-MM)	
M	15	1	**123-0707**	8	SCREW-HEX SOCKET (M4X0.7X20-MM)	
M	16	1	**8T-4181**	2	BOLT (M6X1X20-MM)	
	17	1	**9X-2038**	2	WASHER (7X19X2-MM THK)	
	18	1	**9X-8256**	2	WASHER (6.6X12X2-MM THK)	
	19	1	**132-2249**	1	SPACER (7.4X12.7X24-MM THK)	

M-METRIC PART

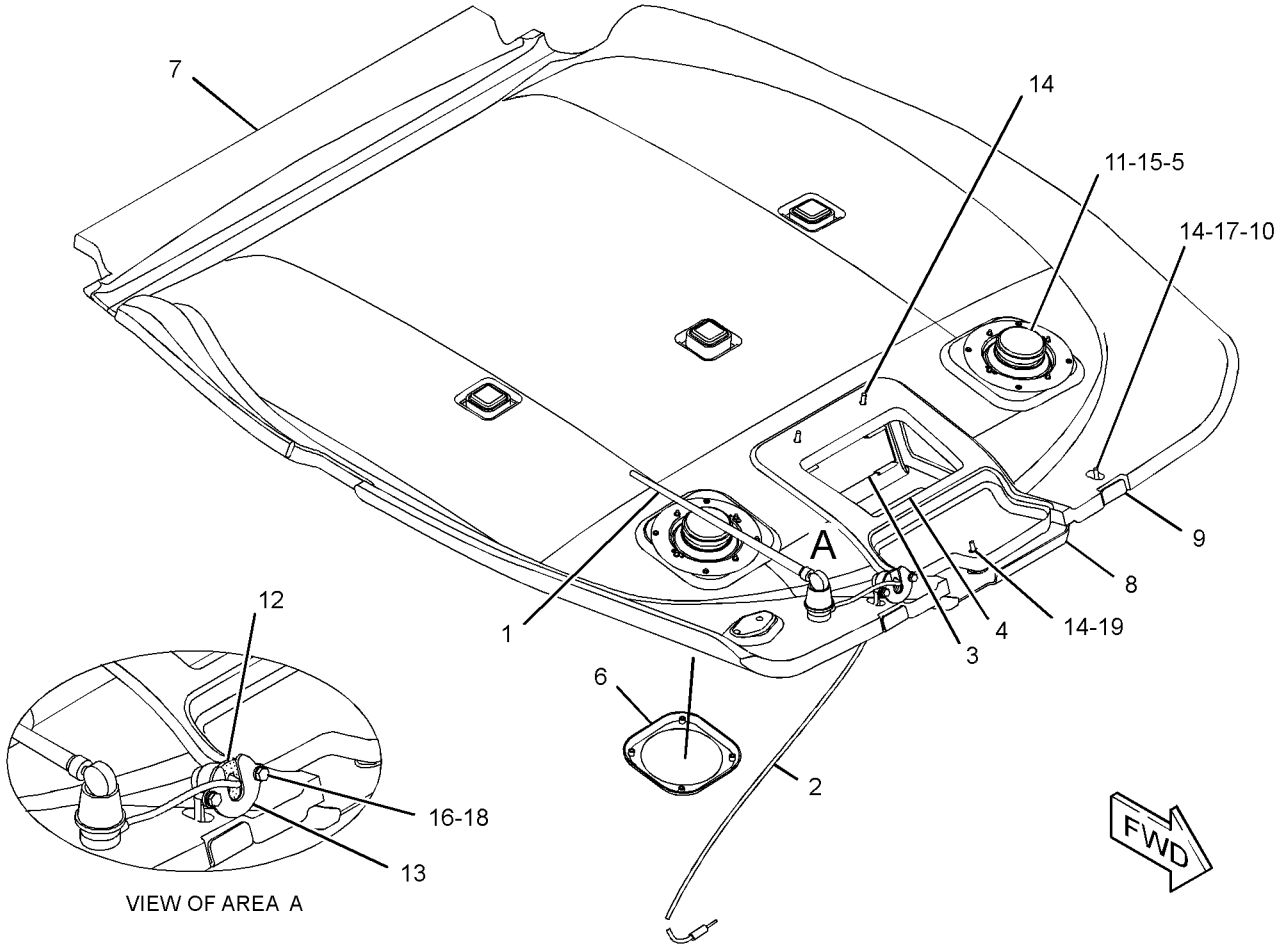

GRAPHIC #1 **<END>** g01282191

OPERATOR STATION

209-4703 LINER GP-CAB

S/N: CBD1-UP; MFG1-UP
PART OF 204-4162, 228-4602, 291-9195 CAB AR-ENCLOSED ROPS
AN ATTACHMENT

SMCS-7329 **i03013610**

NOTE	REF NO	GRAPHIC REF	PART NUMBER	QTY	PART NAME 1 2 3 4 5 6 (PRODUCT LEVEL)	SEE PAGE
	1	1	**8E-1118**	1	ANTENNA AS	
	2	1	**8R-6111**	1	CABLE AS-COAXIAL	
	3	1	**9U-8263**	1	COVER	
	4	1	**084-4277**	1	LAMP GP-DOME (12-VOLT)	
		1	**210-8754**	1	LAMP (12-VOLT)	
M	5	1	**113-0920**	8	BOLT-SOCKET HEAD (M4X0.7X35-MM)	
	6	1	**169-7291**	2	COVER-SPEAKER	
	7	1	**209-4704**	1	LINER AS-CAB	
		1	**263-5781**	2	PLATE AS	
					(EACH INCLUDES)	
		1	**205-7047**	8	INSERT-THREADED (M4X0.7-THD)	
C	8	1	**292-5773**	1	COVER	
	9	1	**209-4716**	2	PLATE	
C	10	1	**145-0981**	4	SPACER (8.5X12.7X18-MM)	
	11	1	**262-9567**	2	SPEAKER	
	12	1	**282-7832**	1	GROMMET	
	13	1	**282-7835**	1	PLATE	
M	14	1	**121-9870**	5	SCREW-MACHINE (M6X1X40-MM)	
M	15	1	**123-0707**	8	SCREW-HEX SOCKET (M4X0.7X20-MM)	
M	16	1	**8C-3798**	2	BOLT-LOCKING (M6X1X30-MM)	
	17	1	**9X-2038**	3	WASHER (7X19X2-MM THK)	
	18	1	**9X-8256**	2	WASHER (6.6X12X2-MM THK)	
	19	1	**132-2249**	1	SPACER (7.4X12.7X24-MM THK)	
	20	1	**124-6569**	1	FASTENER	

C-CHANGE FROM PREVIOUS TYPE
M-METRIC PART

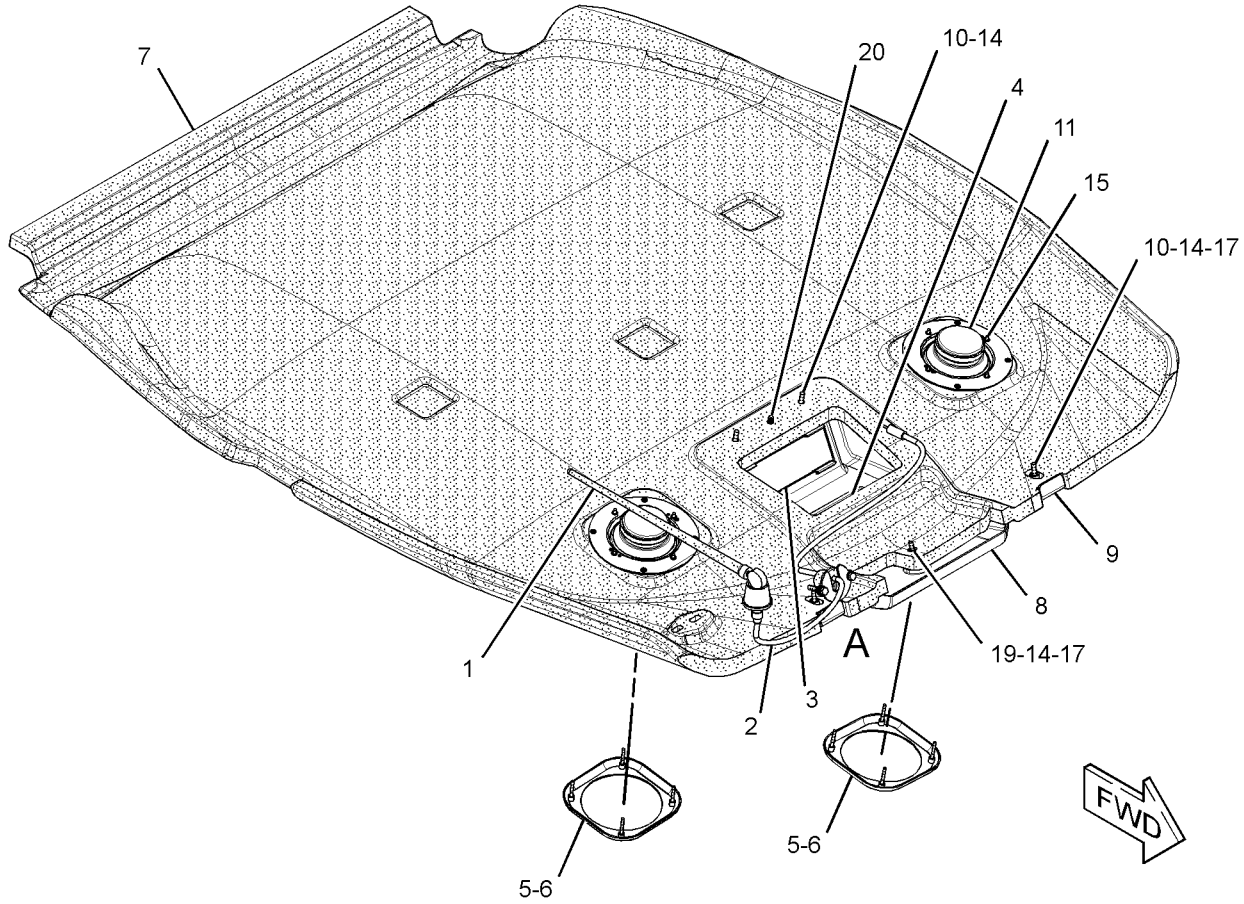

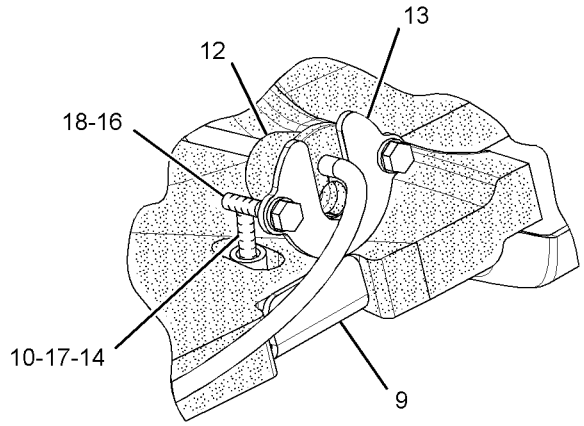

VIEW OF AREA A

GRAPHIC #1 **<END>** g01595675

OPERATOR STATION

211-0072 LINES GP-HEATER

S/N: CBD1-UP; MFG1-UP
PART OF 204-4161, 204-4162 CAB AR-ENCLOSED ROPS
AN ATTACHMENT

SMCS-1812 **i02495323**

NOTE	REF NO	GRAPHIC REF	PART NUMBER	QTY	PART NAME 1 2 3 4 5 6 (PRODUCT LEVEL)	SEE PAGE
M	1	1	**8T-4137**	3	BOLT (M10X1.5X20-MM)	
	2	1	**5D-1026**	8	CLAMP-BAND	
	3	1	**6P-8855**	1	SPACER-SPECIAL	
	4	1	**9M-4814**	1	CONNECTOR-HOSE	
	5	1	**134-3856**	1	ELBOW	
	6	1	**3E-4321**	4	CLIP	
	7	1	**7K-1181**	3	STRAP-CABLE	
	8	1	**8T-4121**	3	WASHER-HARD (11X21X2.5-MM THK)	
E	9	1	**5P-0767**		HOSE (22-CM)	
E	10	1	**5P-0767**		HOSE (65-CM)	
E	11	1	**5P-0767**		HOSE (205-CM)	
E	12	1	**5P-0767**		HOSE (260-CM)	

E-ORDER BY THE CENTIMETER
M-METRIC PART

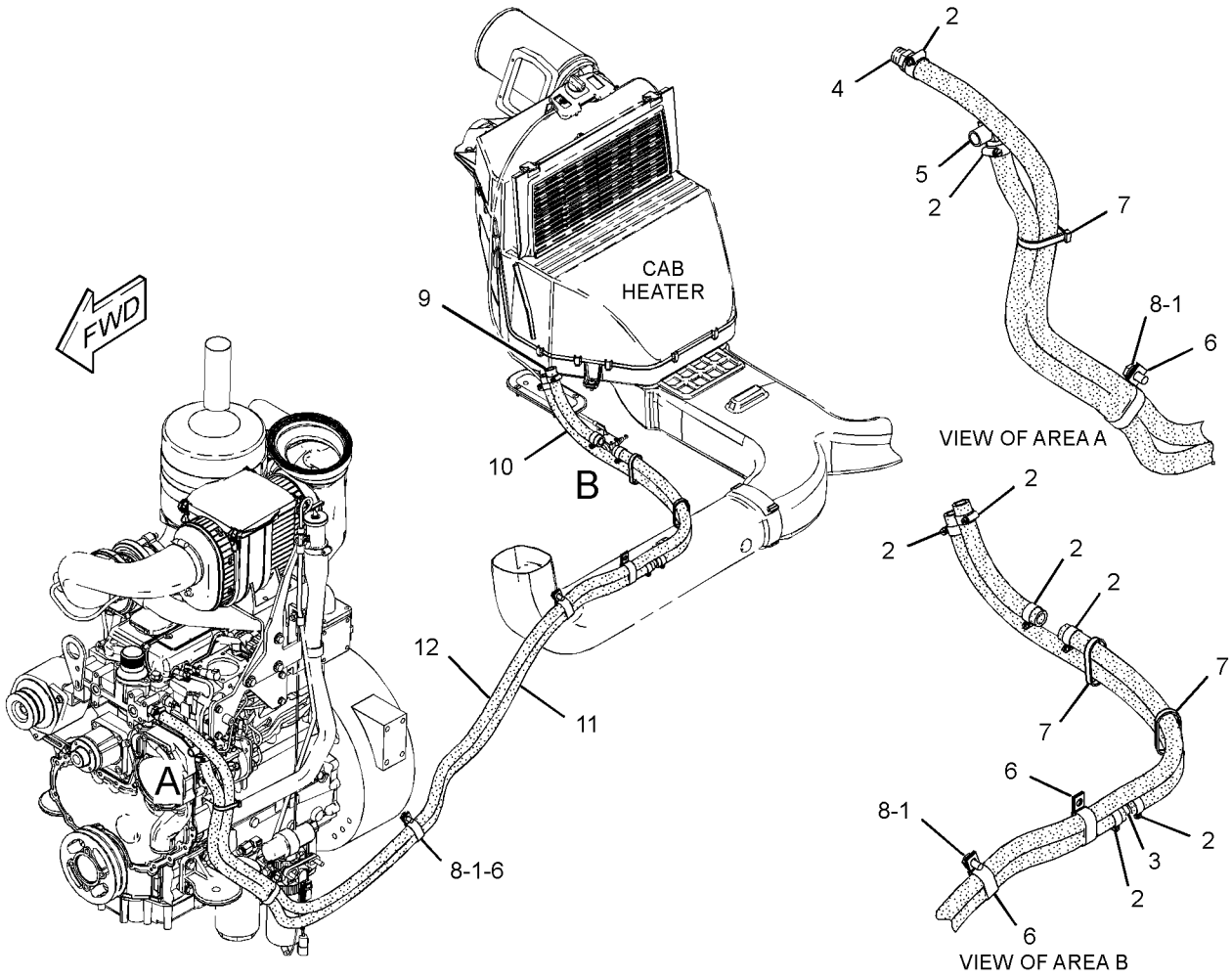

GRAPHIC #1 **<END>** g01231612

OPERATOR STATION

211-0071 LINES GP-HEATER & AIR COND

S/N: CBD1-UP; MFG1-UP
PART OF 228-4602 CAB AR-ENCLOSED ROPS
AN ATTACHMENT

SMCS-1380, 1808, 1812 **i02559980**

NOTE	REF NO	GRAPHIC REF	PART NUMBER	QTY	PART NAME 1 2 3 4 5 6 (PRODUCT LEVEL)	SEE PAGE
E	1	1	**5P-0767**		HOSE (22-CM)	
E	1A	1	**5P-0767**		HOSE (65-CM)	
E	1B	1	**5P-0767**		HOSE (205-CM)	
E	1C	1	**5P-0767**		HOSE (260-CM)	
	5	1	**3S-2093**	1	STRAP-CABLE	
	6	1	**6P-8855**	1	SPACER-SPECIAL	
	7	1	**7K-1181**	8	STRAP-CABLE	
	8	1	**9M-4814**	1	CONNECTOR-HOSE	
	9	1	**105-9411**	1	SUPPORT	
	10	1	**130-9984**	2	CLIP	
	11	1	**134-3856**	1	ELBOW	
	12	1	**289-6021**	1	PLATE	
	13	1	**289-6018**	2	U-BOLT	
	14	1	**170-0235**	1	ACCUMULATOR-REFRIGERANT (AIR CONDITIONER)	
I	15	1	**214-3735**	1	HOSE AS	
I	16	1	**214-3736**	1	HOSE AS	
I	17	1	**214-3737**	1	HOSE AS	
I	18	1	**214-3738**	1	HOSE AS	
	19	1	**214-3739**	1	HOSE AS	
	21	1	**255-0800**	1	PLATE	
	22	1	**283-4237**	1	DRYER-REFRIGERANT (IN-LINE)	
		1	**3E-0068**	1	TUBE AS-REFRIGERANT ORIFICE	
	23	1	**109-1633**	1	CLIP (SLOT)	
	24	1	**109-1634**	1	CLIP (TAB)	
M	25	1	**208-9293**	2	BOLT-FLANGE HEAD (M10X1.5X30-MM)	
	26	1	**3E-4321**	4	CLIP	
	27	1	**5D-1026**	8	CLAMP-BAND	
	28	1	**5K-5338**	1	CLIP	
	29	1	**2K-4973**	4	LOCKNUT (3/8-16-THD)	
	30	1	**8T-4121**	9	WASHER-HARD (11X21X2.5-MM THK)	
M	31	1	**8T-4136**	2	BOLT (M10X1.5X25-MM)	
M	32	1	**8T-4137**	3	BOLT (M10X1.5X20-MM)	
M	33	1	**8T-4139**	1	BOLT (M12X1.75X30-MM)	
M	34	1	**8T-4189**	1	BOLT (M8X1.25X20-MM)	
	35	1	**8T-4223**	1	WASHER-HARD (13.5X25.5X3-MM THK)	
	36	1	**8T-4224**	1	WASHER-HARD (8.8X16X2-MM THK)	
	37	1	**9M-8406**	1	CLIP	
	38	1	**9X-7380**	2	SEAL-O-RING	
	39	1	**9X-7381**	3	SEAL-O-RING	
	40	1	**9X-7382**	1	SEAL-O-RING	
	41	1	**9X-7383**	2	SEAL-O-RING	
	42	1	**132-5789**	1	CLIP	

E-ORDER BY THE CENTIMETER
I-REFER TO HYDRAULIC INFORMATION SYSTEM
M-METRIC PART

211-0071 **LINES GP-HEATER & AIR COND** *(contd.)* **i02559980**

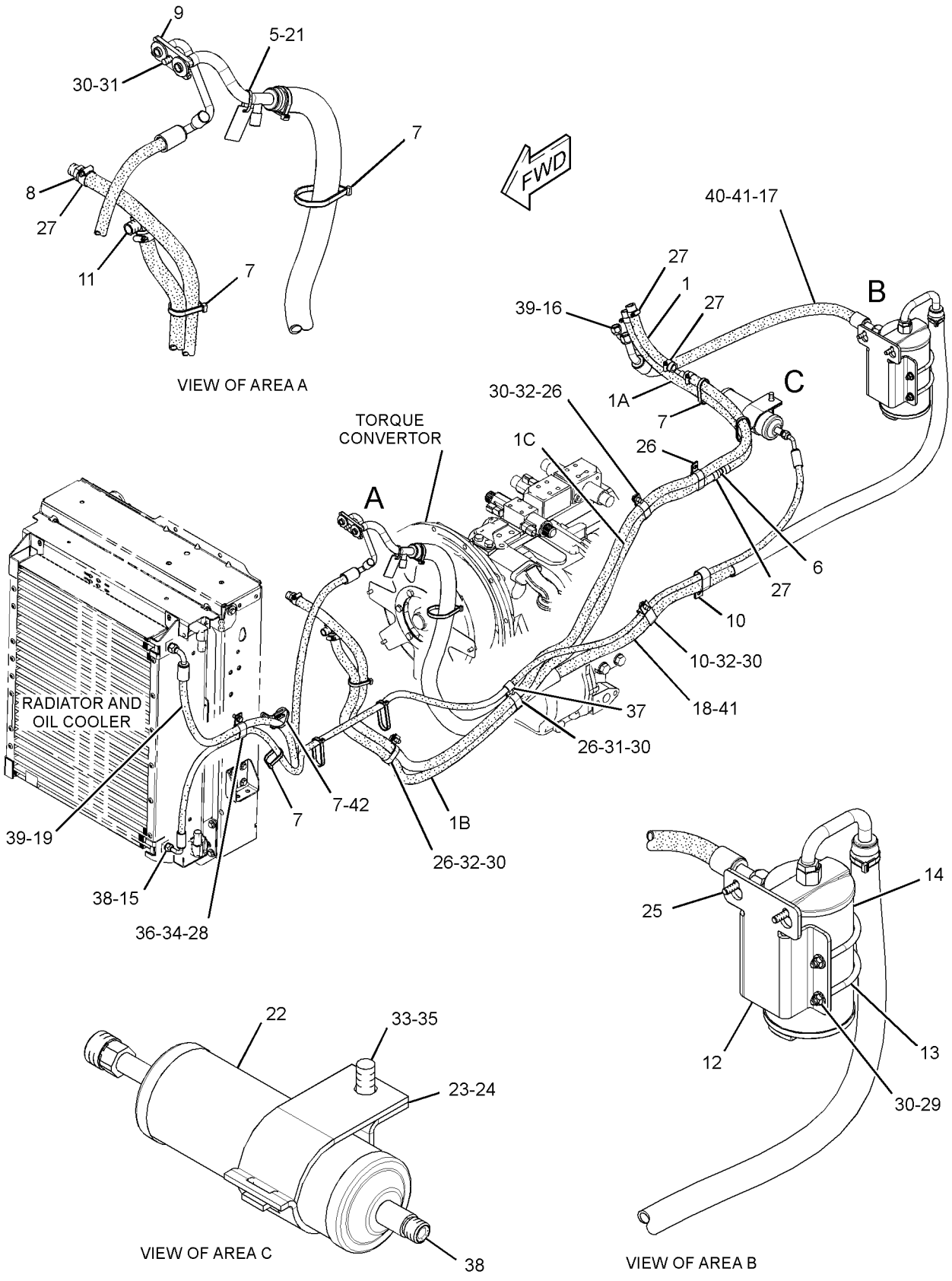

GRAPHIC #1 **<END>** g01343470

OPERATOR STATION

297-5250 LINES GP-HEATER & AIR COND

S/N: MFG1-UP

PART OF 291-9195 CAB AR-ENCLOSED ROPS

AN ATTACHMENT

SMCS-1380, 1808, 1812 **i03857277**

NOTE	REF NO	GRAPHIC REF	PART NUMBER	QTY	PART NAME 1 2 3 4 5 6 (PRODUCT LEVEL)	SEE PAGE
	1	1	**9X-7383**	2	SEAL-O-RING	
	2	1	**3S-2093**	1	STRAP-CABLE	
	3	1	**5D-1026**	8	CLAMP-BAND	
E	4	1	**5P-0767**		HOSE (22-CM)	
E	4A	1	**5P-0767**		HOSE (78-CM)	
E	4B	1	**5P-0767**		HOSE (212-CM)	
E	4C	1	**5P-0767**		HOSE (278-CM)	
	5	1	**6P-8855**	1	SPACER-SPECIAL	
	6	1	**7K-1181**	6	STRAP-CABLE	
	7	1	**9M-4814**	1	CONNECTOR-HOSE	
	8	1	**315-7790**	1	PLATE	
	9	1	**114-0063**	1	PLATE-INSTRUCTION	
	10	1	**130-9984**	4	CLIP	
	11	1	**9X-3959**	1	ELBOW	
	12	1	**151-4841**	2	BLOCK	
	13	1	**170-0235**	1	ACCUMULATOR-REFRIGERANT (AIR CONDITIONER)	
I	14	1	**214-3736**	1	HOSE AS	
I	15	1	**214-3737**	1	HOSE AS	
	16	1	**283-4237**	1	DRYER-REFRIGERANT (IN-LINE) (AIR CONDITIONER)	
		1	**3E-0068**	1	TUBE AS-REFRIGERANT ORIFICE	
	17	1	**289-6018**	2	U-BOLT	
	18	1	**289-6021**	1	PLATE	
	19	1	**297-5252**	1	HOSE AS	
I	20	1	**297-5253**	1	HOSE AS	
	21	1	**297-5254**	1	HOSE AS	
	22	1	**317-4270**	1	BRACKET AS	
	23	1	**109-1633**	1	CLIP (SLOT)	
	24	1	**109-1634**	1	CLIP (TAB)	
M	25	1	**208-9293**	2	BOLT-FLANGE HEAD (M10X1.5X30-MM)	
	26	1	**2K-4973**	4	LOCKNUT (3/8-16-THD)	
	27	1	**3E-4321**	6	CLIP	
	28	1	**5D-0718**	1	CLIP	
	29	1	**5K-5338**	2	CLIP	
	30	1	**5P-4116**	4	WASHER-HARD (8.8X20.5X2-MM THK)	
M	31	1	**5C-7261**	1	NUT (M8X1.25-THD)	
	32	1	**8T-4121**	8	WASHER-HARD (11X21X2.5-MM THK)	
M	33	1	**8T-4195**	1	BOLT (M10X1.5X30-MM)	
M	34	1	**8T-4137**	3	BOLT (M10X1.5X20-MM)	
M	35	1	**8T-4139**	1	BOLT (M12X1.75X30-MM)	
M	36	1	**8T-4189**	3	BOLT (M8X1.25X20-MM)	
M	37	1	**8T-4192**	1	BOLT (M12X1.75X25-MM)	
	38	1	**8T-4223**	2	WASHER-HARD (13.5X25.5X3-MM THK)	
	39	1	**9X-7380**	2	SEAL-O-RING	
	40	1	**9X-7381**	3	SEAL-O-RING	
	41	1	**9X-7382**	1	SEAL-O-RING	

E-ORDER BY THE CENTIMETER
I-REFER TO HYDRAULIC INFORMATION SYSTEM
M-METRIC PART

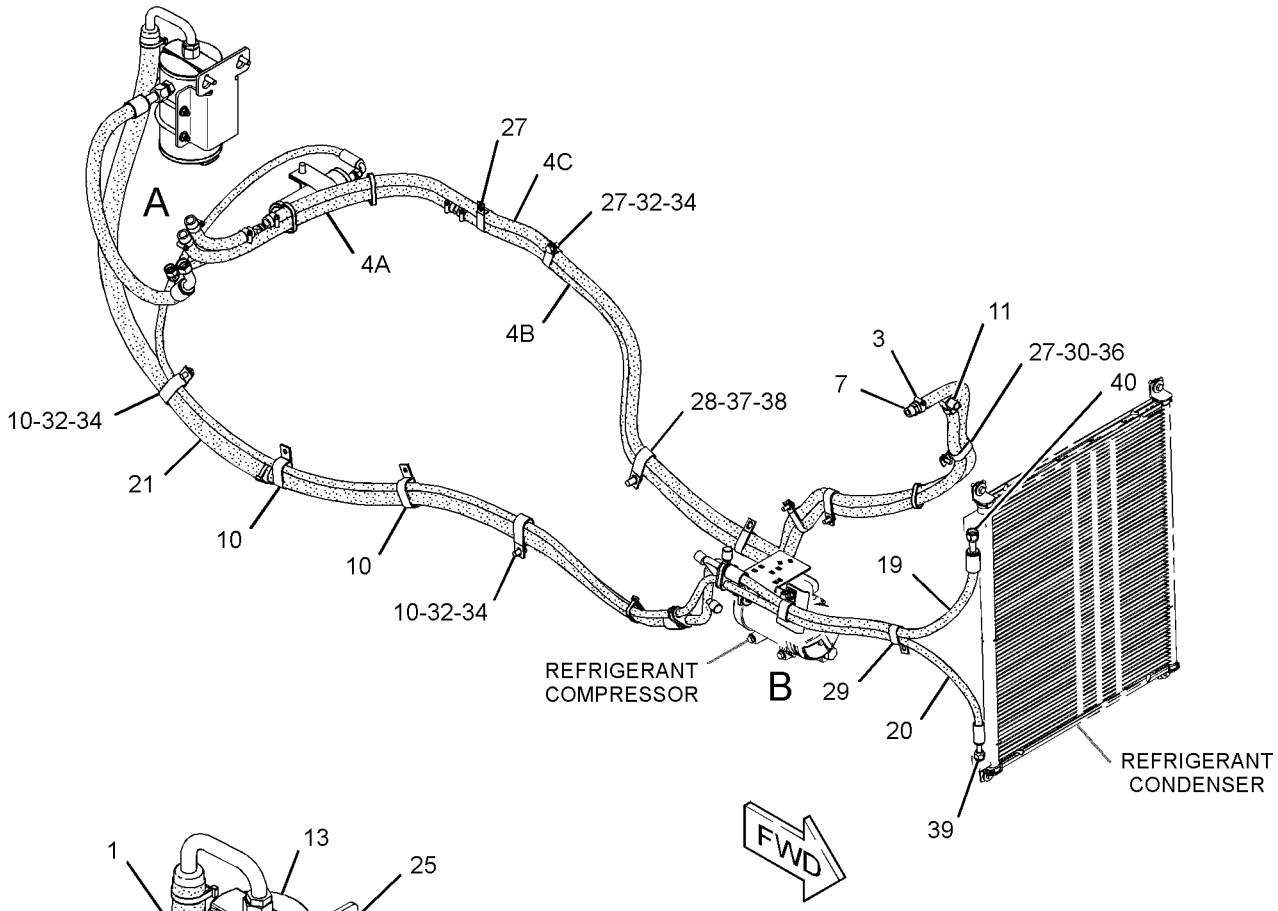

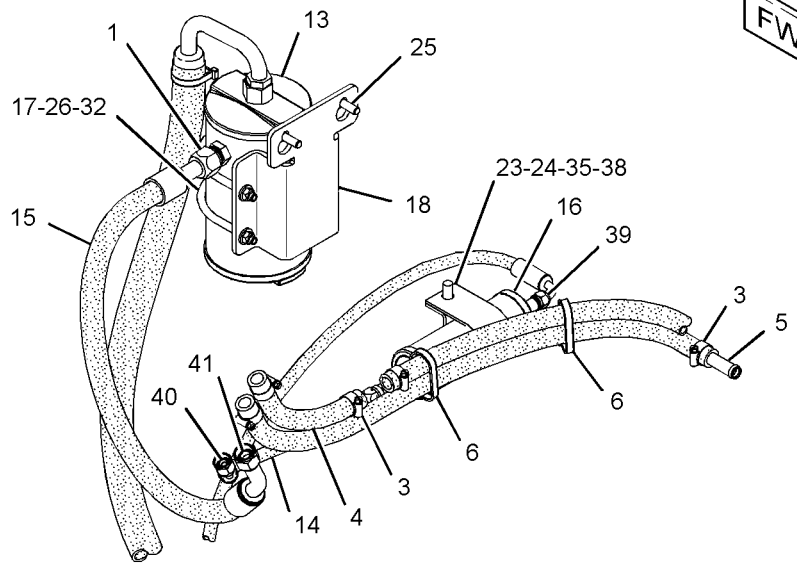

VIEW OF AREA A

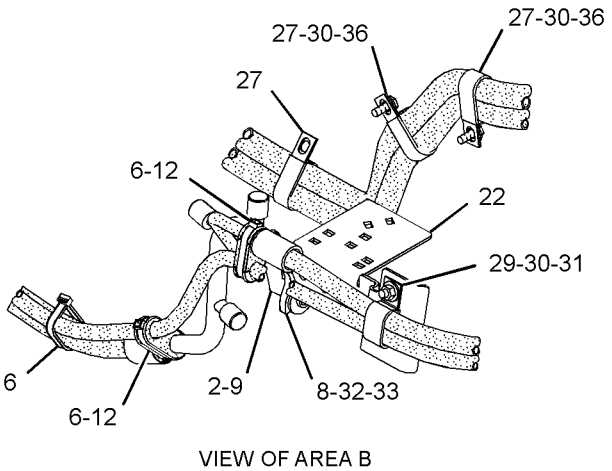

VIEW OF AREA B

GRAPHIC #1 **<END>** g01783893

205-9578 MIRROR GP-REAR VIEW—INTERIOR

S/N: CBD1-UP; MFG1-UP

PART OF 204-4162, 228-4602, 291-9195 CAB AR-ENCLOSED ROPS

AN ATTACHMENT

SMCS-7319 **i02495431**

NOTE	REF NO	GRAPHIC REF	PART NUMBER	QTY	PART NAME 1 2 3 4 5 6 (PRODUCT LEVEL)	SEE PAGE
	1	1	**199-0929**	1	MIRROR AS	
	2	1	**096-6166**	2	WASHER-HARD (4.5X9X1-MM THK)	
M	3	1	**153-8004**	2	BOLT-SOCKET HEAD (M4X0.7X35-MM)	

M-METRIC PART

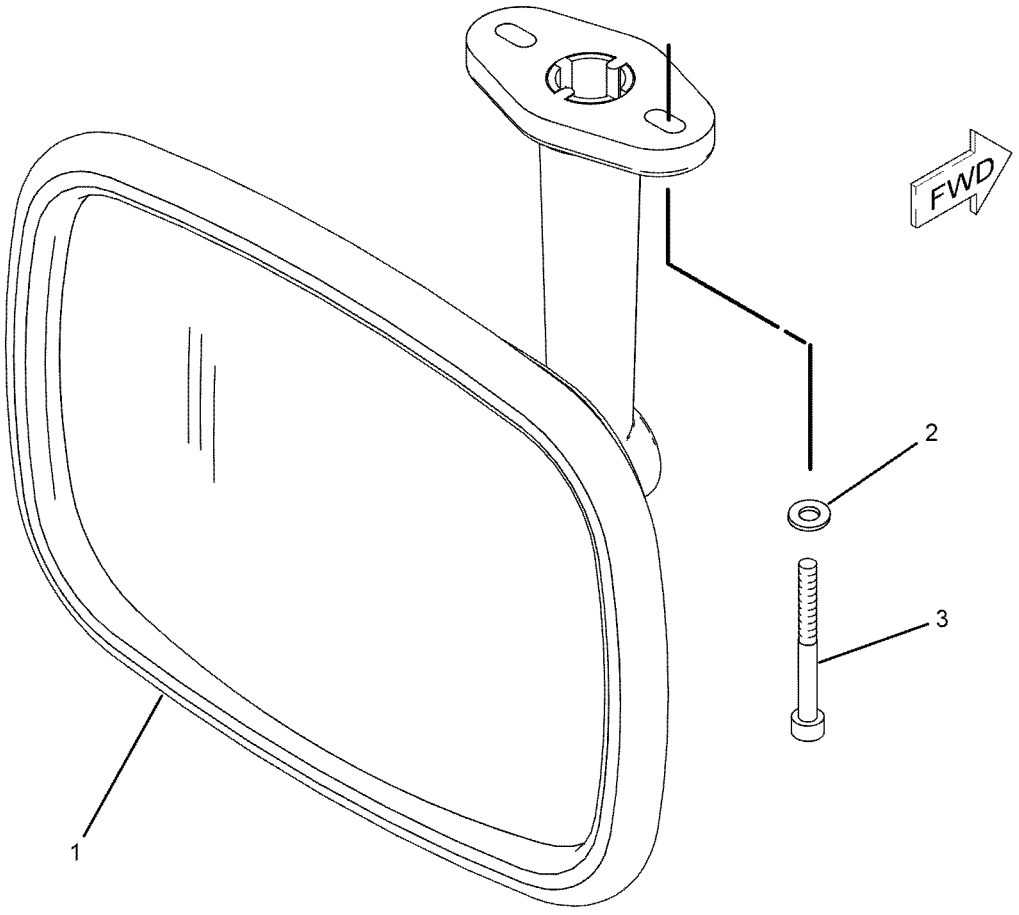

GRAPHIC #1 **<END>** g01080519

OPERATOR STATION

205-9580 MIRROR GP-REAR VIEW—EXTERIOR

S/N: CBD1-UP; MFG1-UP
PART OF 356-0067, 356-0068, 356-0069, 374-3517, 374-3518, 374-3519, 374-3521, 374-3529, 374-6532, 374-6533, 374-6534, 374-6535, 374-6536
DISTRIBUTION AR
AN ATTACHMENT

SMCS-7319 **i02560297**

NOTE	REF NO	GRAPHIC REF	PART NUMBER	QTY	PART NAME 1 2 3 4 5 6 (PRODUCT LEVEL)	SEE PAGE
	1	1	**123-6620**	2	MIRROR AS	
	2	1	**159-7105**	1	BRACKET & MOUNTING AS (LH)	
	3	1	**159-7106**	1	BRACKET & MOUNTING AS (RH)	
	4	1	**8T-4224**	4	WASHER-HARD (8.8X16X2-MM THK)	
M	5	1	**8T-4908**	4	BOLT (M8X1.25X25-MM)	

M-METRIC PART

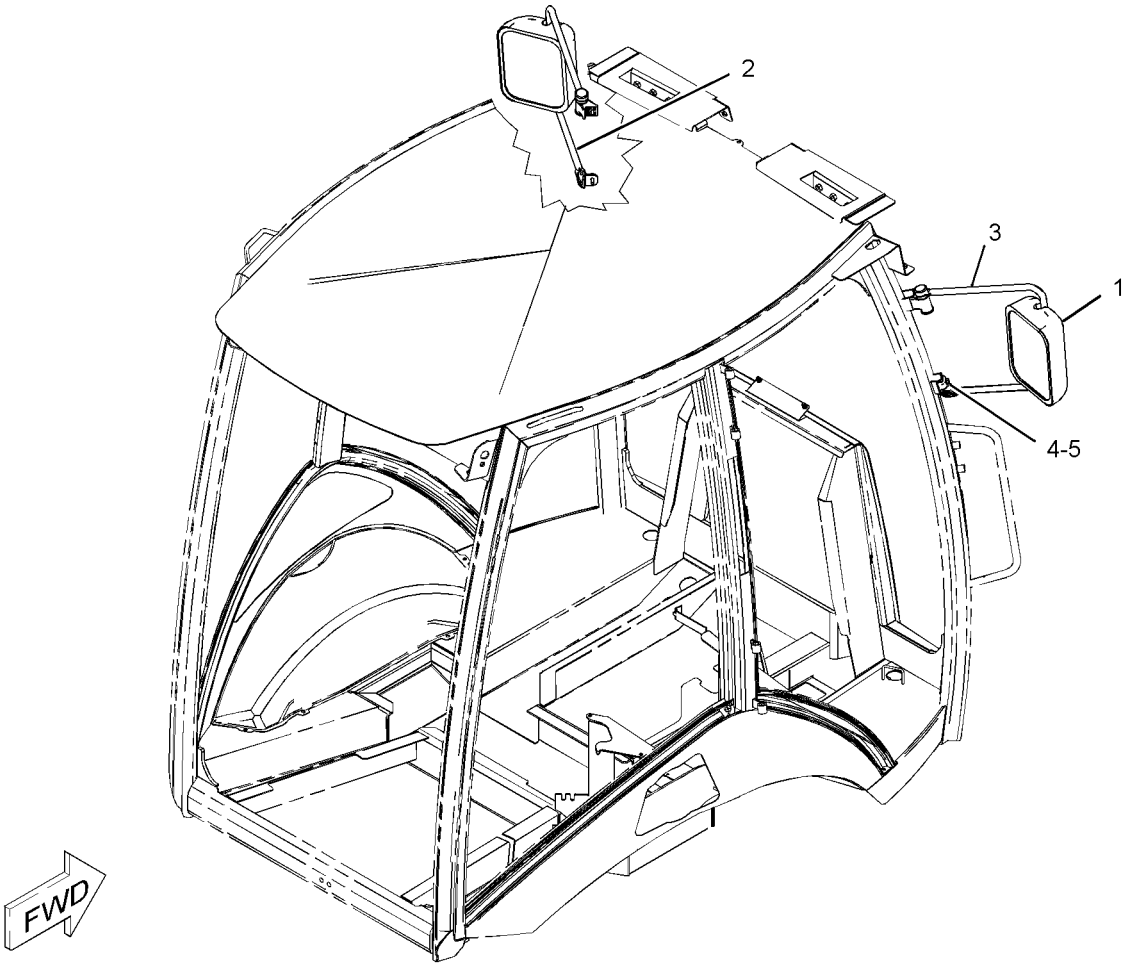

GRAPHIC #1 **<END>** g01090966

259-6276 MIRROR GP-REAR VIEW—INTERIOR

S/N: CBD1-UP; MFG1-UP

PART OF 204-4161 CAB AR-ENCLOSED ROPS, 204-4160, 204-4164, 292-9690, 292-9691 CANOPY AR-OPEN ROPS

AN ATTACHMENT

SMCS-7319 **i02495302**

NOTE	REF NO	GRAPHIC REF	PART NUMBER	QTY	PART NAME 1 2 3 4 5 6 (PRODUCT LEVEL)	SEE PAGE
M	1	1	**8C-4982**	2	BOLT-SOCKET HEAD (M4X0.7X20-MM)	
	2	1	**199-0929**	1	MIRROR AS	
	3	1	**096-6166**	2	WASHER-HARD (4.5X9X1-MM THK)	

M-METRIC PART

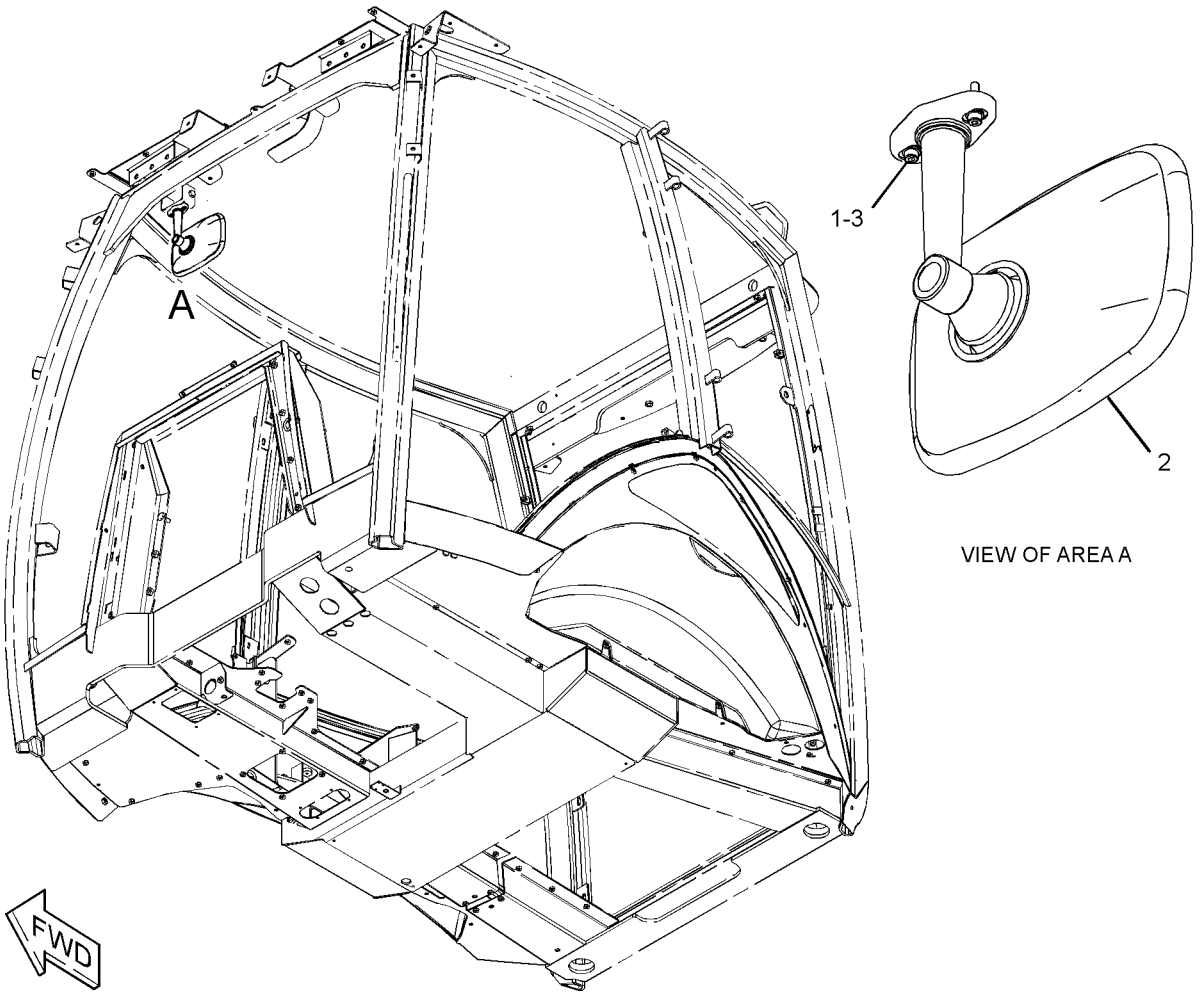

VIEW OF AREA A

GRAPHIC #1 **<END>** g01190426

OPERATOR STATION

186-2589 MOTOR GP-WINDOW WIPER—FRONT

S/N: CBD1-UP; MFG1-UP
12 VOLT
PART OF 206-1728 WIPER & WASHER GP-WINDOW, 206-1725 WIPER GP-WINDOW
AN ATTACHMENT

SMCS-7305 **i02218622**

NOTE	REF NO	GRAPHIC REF	PART NUMBER	QTY	PART NAME 1 2 3 4 5 6 (PRODUCT LEVEL)	SEE PAGE
M	1	1	**5C-7261**	1	NUT (M8X1.25-THD)	
	2	1	**3F-9556**	1	LOCKWASHER	
	3	1	**152-7691**	1	MOTOR GP-WINDOW WIPER	
		1	**9G-3695**	1	PLUG-SEAL	
		1	**102-8805**	1	KIT-RECEPTACLE (6-PIN)	
					(INCLUDES RECEPTACLE AS & WEDGE)	
		1	**186-3735**	5	PIN-CONNECTOR (16-GA TO 18-GA)	
	4	1	**206-5823**	1	CAP	

M-METRIC PART

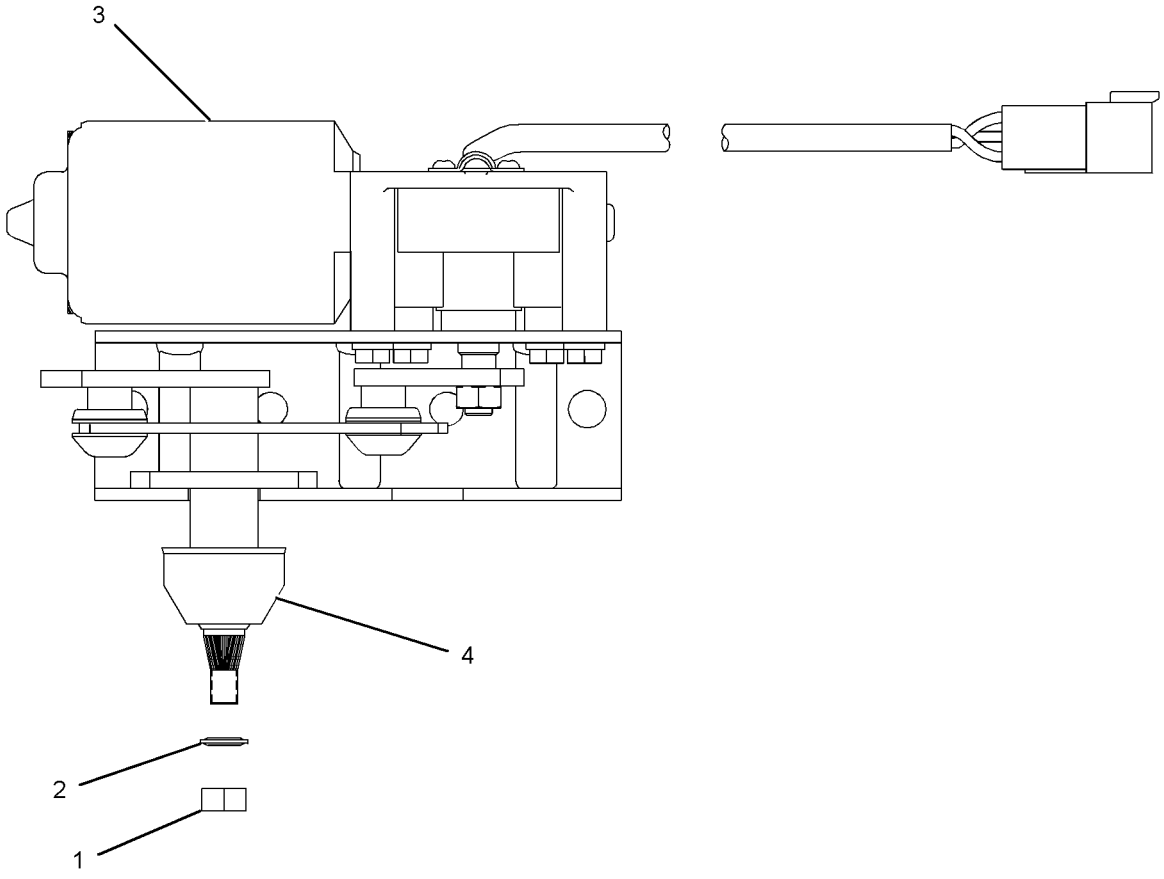

GRAPHIC #1 **<END>** g01120206

OPERATOR STATION

330-5010 MOTOR GP-WINDOW WIPER

S/N: CBD6666-UP; MFG1-UP
PART OF 206-1725 WIPER GP-WINDOW
AN ATTACHMENT

SMCS-7305 **i03998960**

NOTE	REF NO	GRAPHIC REF	PART NUMBER	QTY	PART NAME 1 2 3 4 5 6 (PRODUCT LEVEL)	SEE PAGE
	1	1	**102-8804**	1	KIT-RECEPTACLE (4-PIN)	
					(INCLUDES RECEPTACLE AS & WEDGE)	
	2	1	**263-3823**	1	CAP-WIPER	
	3	1	**3F-9556**	1	LOCKWASHER	
M	4	1	**5C-7261**	1	NUT (M8X1.25-THD)	
	5	1	**186-3735**	4	PIN-CONNECTOR (16-GA TO 18-GA)	

M-METRIC PART

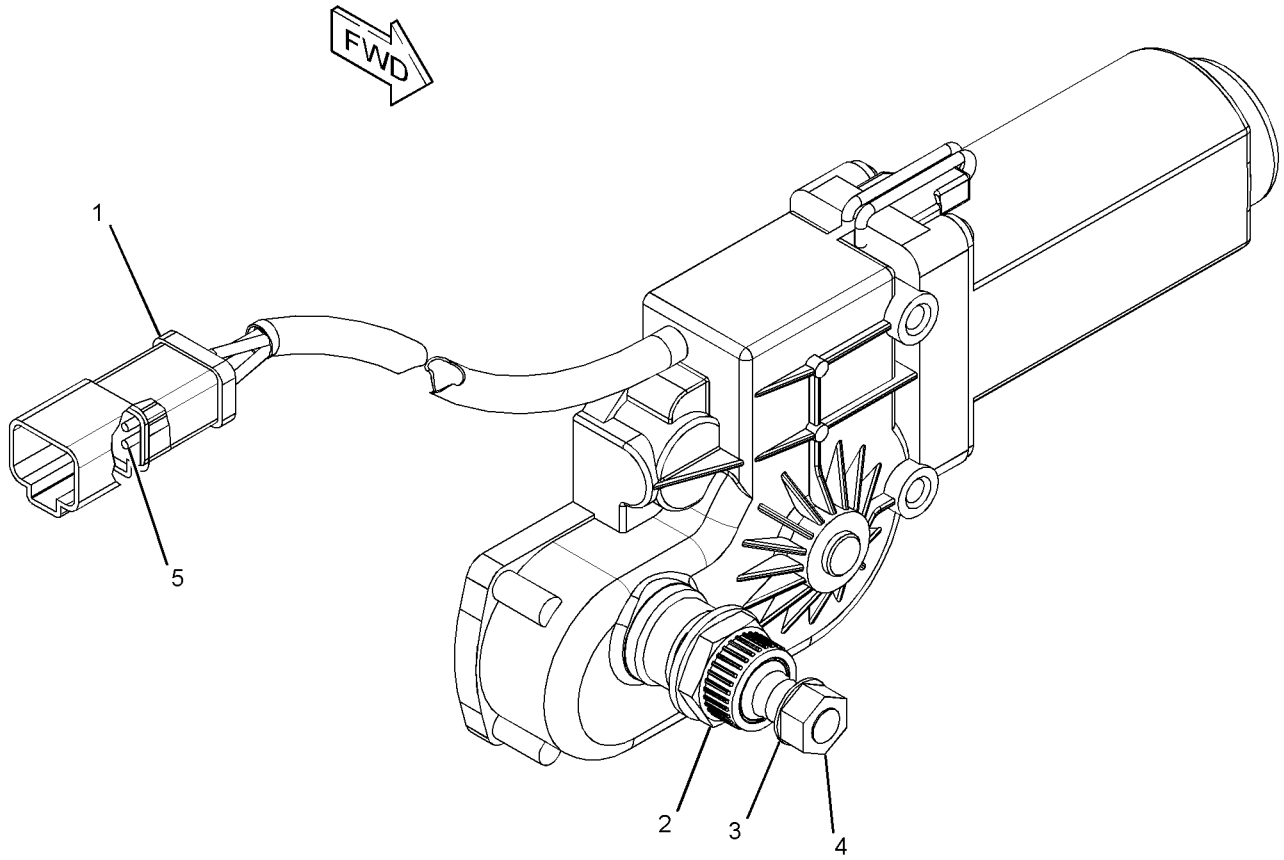

GRAPHIC #1 **<END>** g02133753

OPERATOR STATION

205-9560 MOUNTING GP-CAB

S/N: CBD1-UP; MFG1-UP

PART OF 204-4161, 204-4162, 228-4602, 291-9195 CAB AR-ENCLOSED ROPS, 204-4160, 204-4164, 292-9690, 292-9691 CANOPY AR-OPEN ROPS AN ATTACHMENT

SMCS-7301 **i04472909**

NOTE	REF NO	GRAPHIC REF	PART NUMBER	QTY	PART NAME 1 2 3 4 5 6 (PRODUCT LEVEL)	SEE PAGE
	1	1	**6Y-9930**	2	MOUNT AS	
	2	1	**118-2990**	2	MOUNT AS	
	3	1	**9W-6582**	2	SLEEVE	
M	4	1	**7X-2568**	2	BOLT (M20X2.5X180-MM)	
	5	1	**297-5849**	2	WASHER-HARD (17X75X10-MM THK)	
	6	1	**8T-4123**	4	WASHER (22X35X3.5-MM THK)	
M	7	1	**8T-4131**	2	NUT (M20X2.5-THD)	
M	8	1	**8T-4132**	2	NUT (M16X2-THD)	
	9	1	**335-1836**	2	BOLT-SPECIAL	
	10	1	**9W-6584**	2	WASHER (20.5X114X10-MM THK)	
	11	1	**9X-8257**	4	WASHER (17.5X30X3.5-MM THK)	
	12	1	**1L-6377**	2	BUTTON-PLUG	

M-METRIC PART

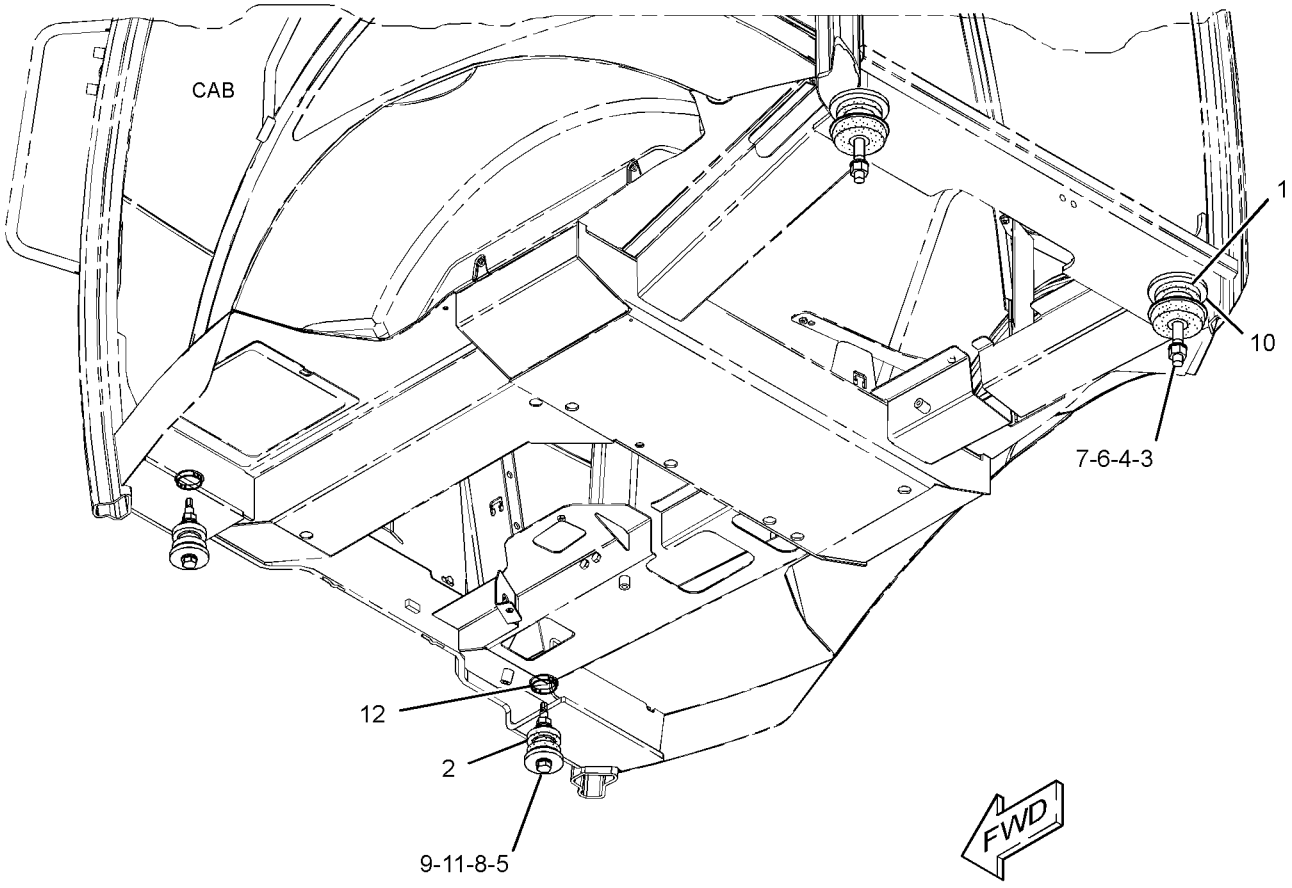

GRAPHIC #1 **<END>** g02713293

OPERATOR STATION

209-3378 PEDAL GP-GOVERNOR

S/N: CBD1-UP; MFG1-UP
PART OF 206-1640 CONTROL GP-GOVERNOR
ALSO AN ATTACHMENT

SMCS-1265 **i02837885**

NOTE	REF NO	GRAPHIC REF	PART NUMBER	QTY	PART NAME 1 2 3 4 5 6 (PRODUCT LEVEL)	SEE PAGE
M	1	1	**129-3178**	1	LOCKNUT (M6X1-THD)	
M	2	1	**5C-7261**	1	NUT (M8X1.25-THD)	
M	3	1	**5C-9553**	1	BOLT (M6X1X16-MM)	
	4	1	**8T-4205**	1	WASHER-HARD (7.2X14.5X2-MM THK)	
M	5	1	**095-0641**	4	BOLT-SOCKET HEAD (M4X0.7X10-MM)	
	6	1	**243-0063**	1	BOOT	
	7	1	**3F-9556**	2	LOCKWASHER	
	8	1	**6V-8186**	2	NUT-FULL (5/16-24-THD)	
	9	1	**8T-6902**	3	CLIP	
M	10	1	**9X-2842**	1	BOLT (M8X1.25X45-MM)	
					AVAILABLE REPAIR KIT(S):	
			164-1154	1	KIT-SERVICE	
					(INCLUDES CLAMP & SCREWS)	
			243-0062	1	KIT-REPAIR (GOVERNOR PEDAL)	
					(INCLUDES SHAFT, CLIPS & BEARINGS)	

M-METRIC PART

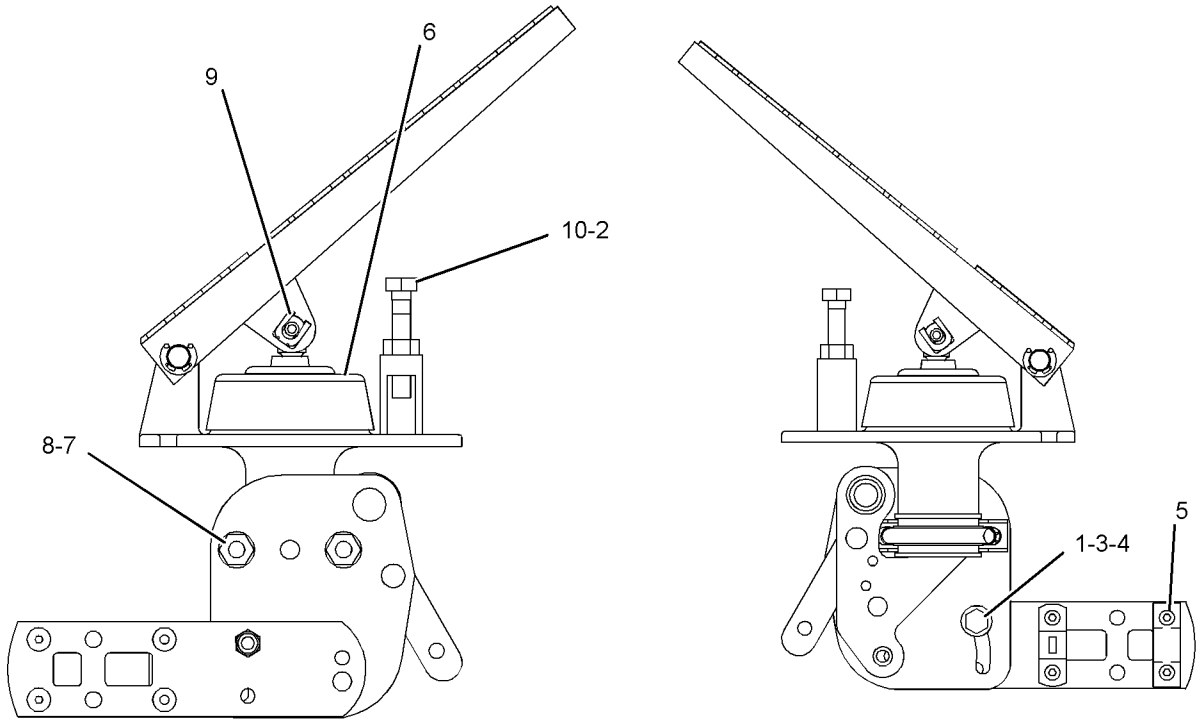

RIGHT SIDE VIEW **LEFT SIDE VIEW**

GRAPHIC #1 **<END>** g01081364

OPERATOR STATION

243-0059 PEDAL GP-GOVERNOR

S/N: CBD1-UP; MFG1-UP
PART OF 251-3802 CONTROL GP-GOVERNOR
AN ATTACHMENT

SMCS-1265 **i02837887**

NOTE	REF NO	GRAPHIC REF	PART NUMBER	QTY	PART NAME 1 2 3 4 5 6 (PRODUCT LEVEL)	SEE PAGE
M	1	1	**129-3178**	1	LOCKNUT (M6X1-THD)	
M	2	1	**5C-7261**	1	NUT (M8X1.25-THD)	
M	3	1	**5C-9553**	1	BOLT (M6X1X16-MM)	
	4	1	**8T-4205**	1	WASHER-HARD (7.2X14.5X2-MM THK)	
	5	1	**8T-6902**	3	CLIP	
	6	1	**3F-9556**	2	LOCKWASHER	
M	7	1	**095-0641**	4	BOLT-SOCKET HEAD (M4X0.7X10-MM)	
	8	1	**6V-8186**	2	NUT-FULL (5/16-24-THD)	
M	9	1	**9X-2842**	1	BOLT (M8X1.25X45-MM)	
	10	1	**243-0063**	1	BOOT	
					AVAILABLE REPAIR KIT(S):	
			164-1154		KIT-SERVICE	
					KIT INCLUDES CABLE CLAMPS AND SCREWS.	
			243-0062		KIT-REPAIR (GOVERNOR PEDAL)	
					KIT INCLUDES CABLE CLAMPS AND SCREWS.	

M-METRIC PART

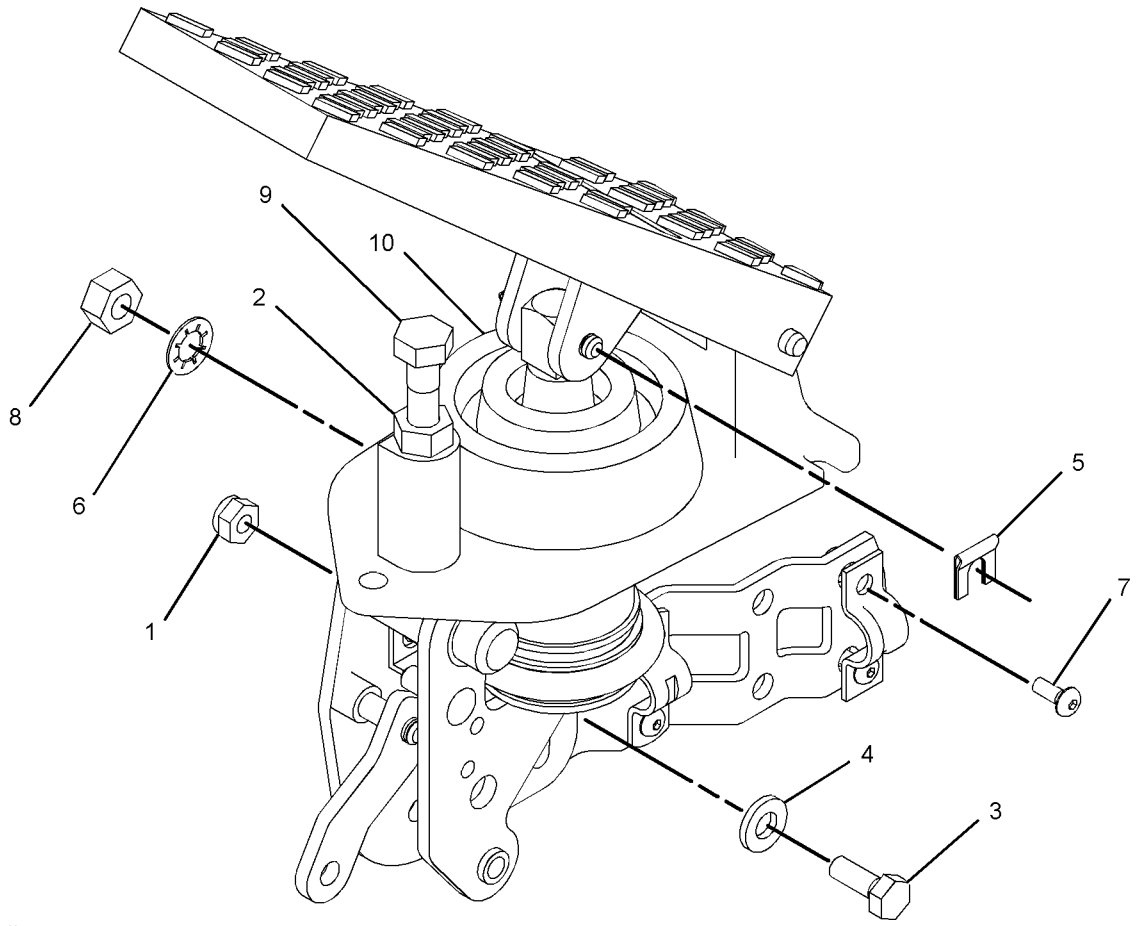

GRAPHIC #1 **<END>** g01040438

OPERATOR STATION

263-9088 RADIO GP-COMMUNICATION–PRODUCT LINK 121SR

S/N: CBD1-UP

PART OF 225-7994 INSTALLATION GP-COMMUNICATION

AN ATTACHMENT

SMCS-733T **i03954672**

NOTE	PART NUMBER	QTY	PART NAME 1 2 3 4 5 6 (PRODUCT LEVEL)	SEE PAGE
	336-3566	1	SOFTWARE GP-COMMUNICATION (PRODUCT LINK 121SR)	

<END>

OPERATOR STATION

205-9568 ROOF GP-CAB

S/N: CBD1-UP; MFG1-UP
PART OF 204-4161 CAB AR-ENCLOSED ROPS, 204-4160, 292-9691 CANOPY AR-OPEN ROPS
AN ATTACHMENT

SMCS-7301 **i02548963**

NOTE	REF NO	GRAPHIC REF	PART NUMBER	QTY	PART NAME 1 2 3 4 5 6 (PRODUCT LEVEL)	SEE PAGE
	1	1	**205-9570**	1	COVER-ROOF (CENTER)	
	2	1	**205-9576**	1	COVER-ROOF (LH)	
	3	1	**205-9577**	1	COVER-ROOF (RH)	
	4	1	**220-3786**	1	COVER-ROOF (REAR)	
	5	1	**9X-6165**	16	WASHER (6.5X22X2.5-MM THK)	
M	6	1	**9X-2045**	9	SCREW-TRUSS HEAD (M6X1X20-MM)	
M	7	1	**8T-4138**	16	BOLT (M6X1X20-MM)	
	8	1	**9X-2038**	7	WASHER (7X19X2-MM THK)	

M-METRIC PART

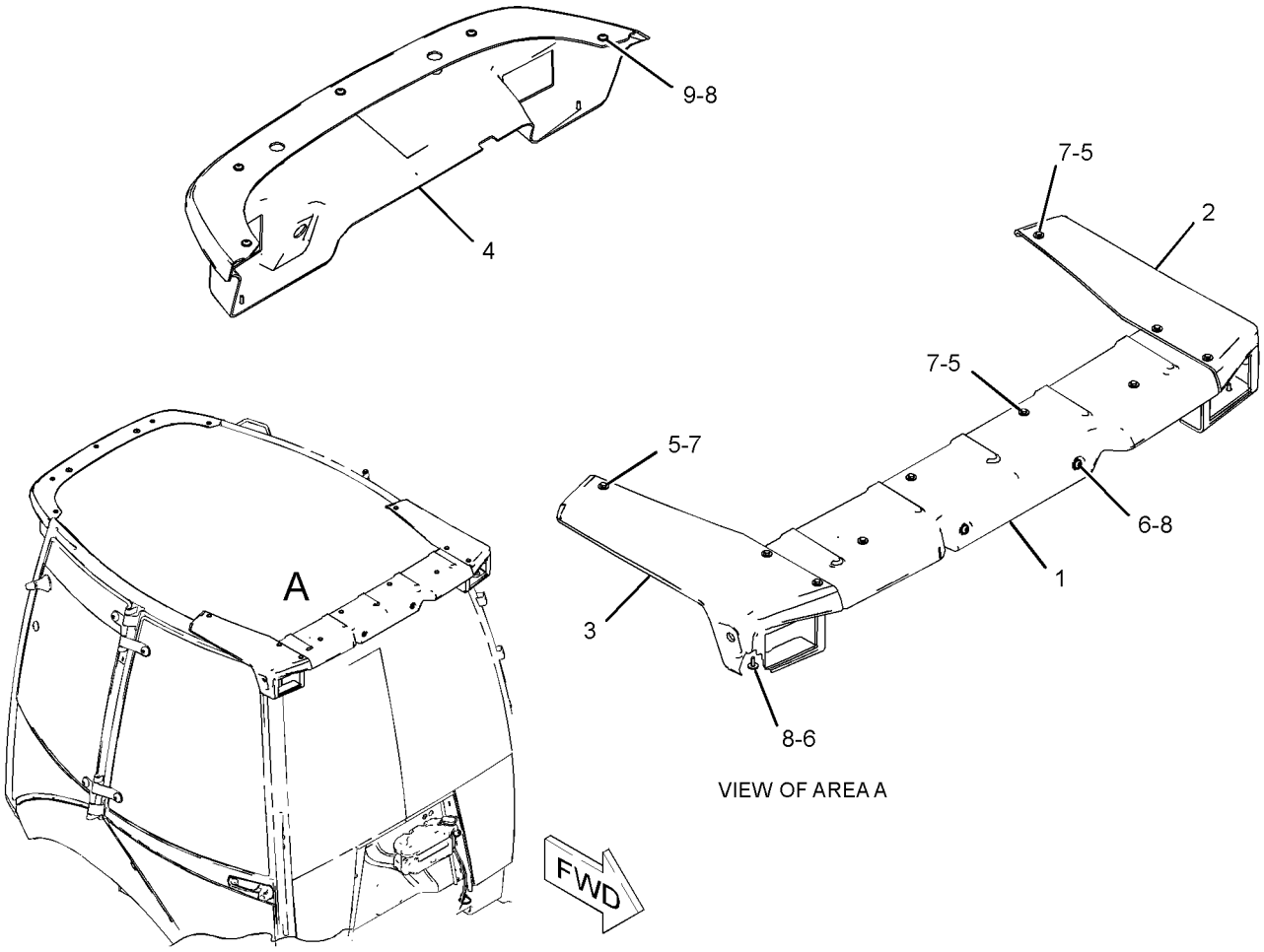

VIEW OF AREA A

GRAPHIC #1 **<END>** g01267607

OPERATOR STATION

205-9569 ROOF GP-CAB

S/N: CBD1-UP; MFG1-UP
PART OF 204-4162, 228-4602, 291-9195 CAB AR-ENCLOSED ROPS, 204-4164, 292-9690 CANOPY AR-OPEN ROPS
AN ATTACHMENT

SMCS-7301 **i02548964**

NOTE	REF NO	GRAPHIC REF	PART NUMBER	QTY	PART NAME 1 2 3 4 5 6 (PRODUCT LEVEL)	SEE PAGE
	1	1	**205-9570**	1	COVER-ROOF (CENTER)	
	2	1	**205-9571**	1	COVER-ROOF (REAR)	
	3	1	**205-9576**	1	COVER-ROOF (LH)	
	4	1	**205-9577**	1	COVER-ROOF (RH)	
	5	1	**9X-6165**	16	WASHER (6.5X22X2.5-MM THK)	
M	6	1	**8T-4138**	16	BOLT (M6X1X20-MM)	
	7	1	**9X-2038**	7	WASHER (7X19X2-MM THK)	
M	8	1	**9X-2045**	9	SCREW-TRUSS HEAD (M6X1X20-MM)	

M-METRIC PART

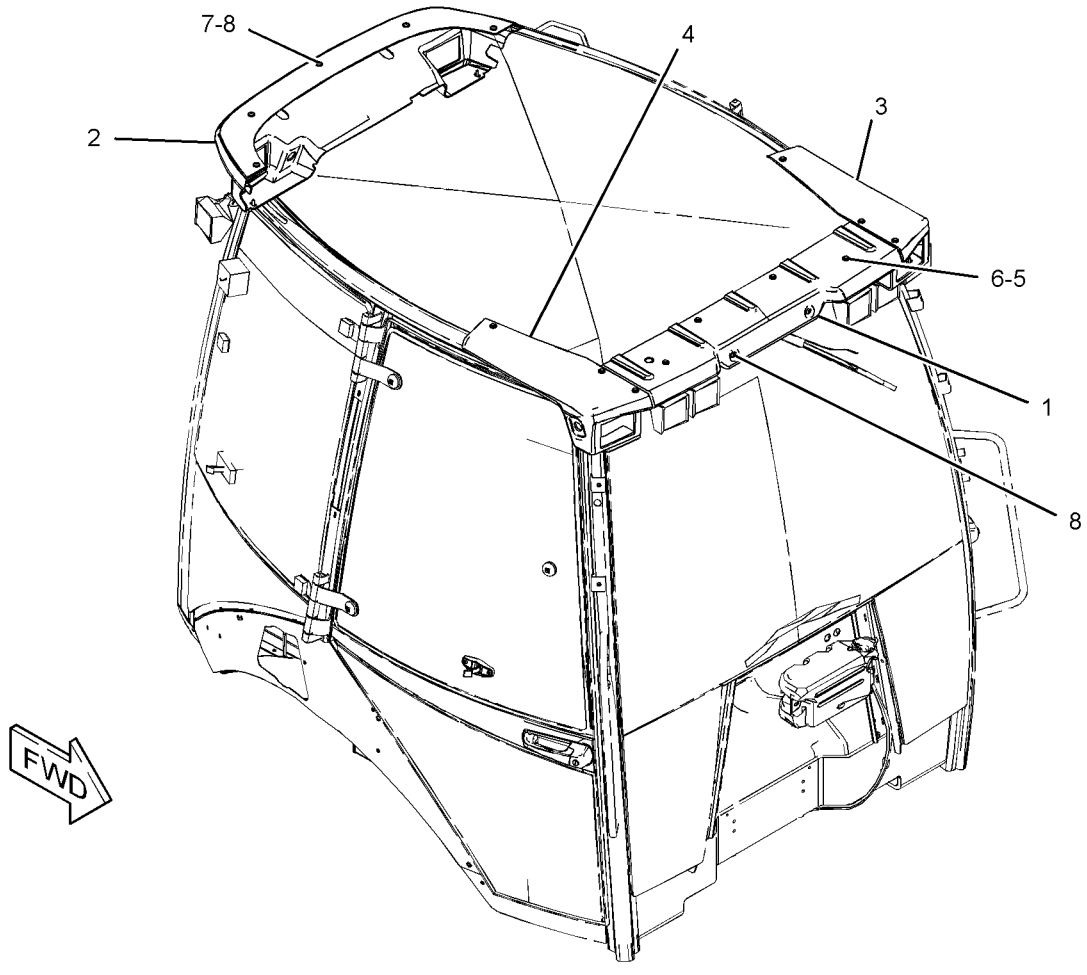

GRAPHIC #1 **<END>** g01233481

206-1747 SEAT BELT GP–RETRACTABLE, 2-IN

S/N: CBD1-UP; MFG1-UP
PART OF 356-0067, 356-0068, 356-0069, 374-3517, 374-3518, 374-3519, 374-3521, 374-3529, 374-6532, 374-6533, 374-6534, 374-6535, 374-6536
DISTRIBUTION AR
AN ATTACHMENT

SMCS-7327 **i02529189**

NOTE	REF NO	GRAPHIC REF	PART NUMBER	QTY	PART NAME 1 2 3 4 5 6 (PRODUCT LEVEL)	SEE PAGE
	1	1	**206-1749**	1	SEAT BELT (2-IN)	
	2	1	**8T-4223**	4	WASHER-HARD (13.5X25.5X3-MM THK)	
M	3	1	**8T-4956**	2	BOLT (M12X1.75X35-MM)	

M-METRIC PART

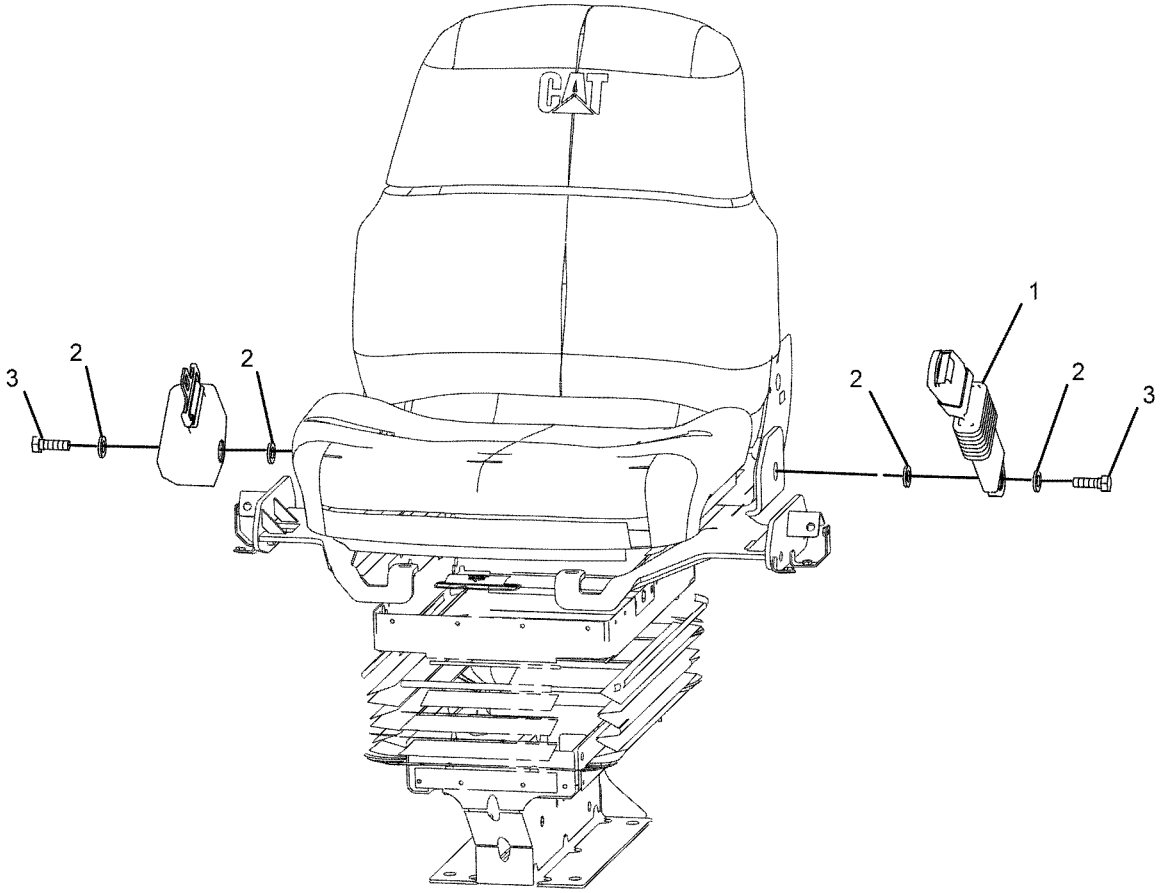

FRONT VIEW
(TOP LEFT)

GRAPHIC #1 **<END>** g01078751

OPERATOR STATION

206-1748 SEAT BELT GP–RETRACTABLE, 3-IN

S/N: CBD1-UP; MFG1-UP

AN ATTACHMENT

SMCS-7327 **i02495483**

NOTE	REF NO	GRAPHIC REF	PART NUMBER	QTY	PART NAME 1 2 3 4 5 6 (PRODUCT LEVEL)	SEE PAGE
	1	1	**206-1750**	1	SEAT BELT (3-IN)	
	2	1	**8T-4223**	4	WASHER-HARD (13.5X25.5X3-MM THK)	
M	3	1	**8T-4956**	2	BOLT (M12X1.75X35-MM)	

M-METRIC PART

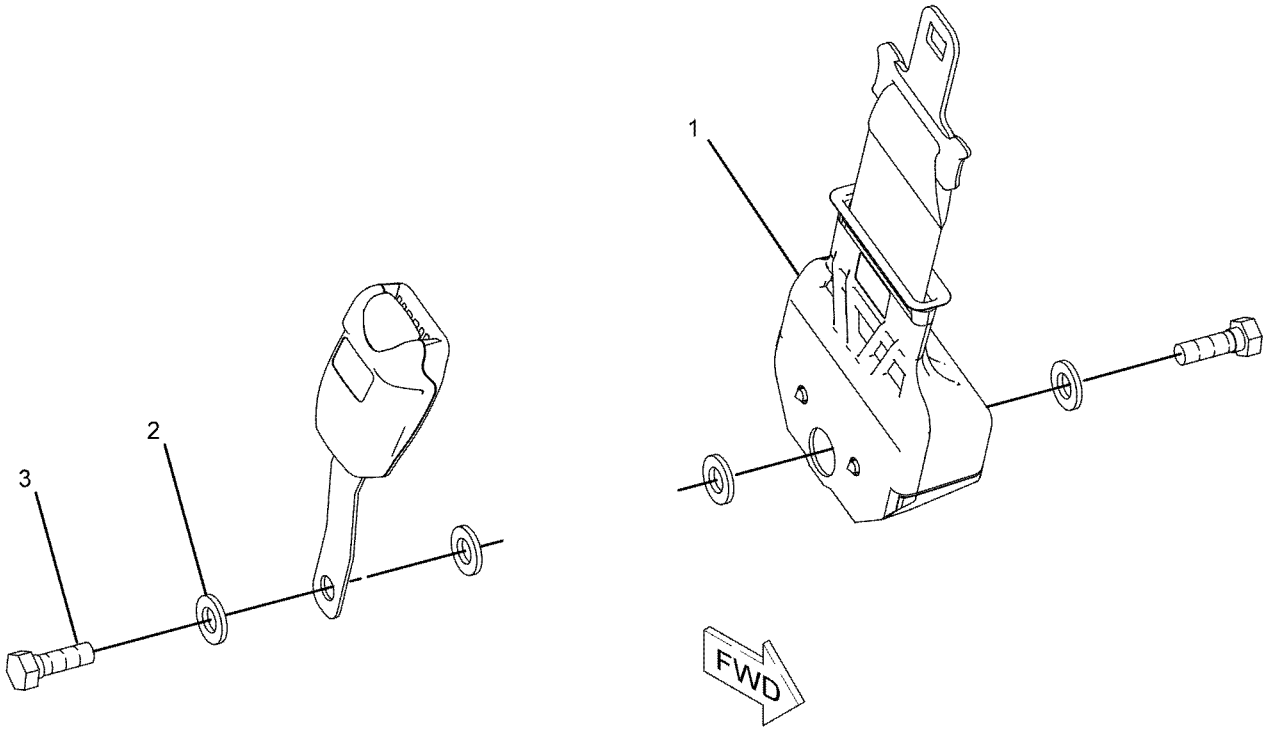

GRAPHIC #1 **<END>** g01078668

OPERATOR STATION

164-1296 SEAT GP

S/N: CBD1-UP
STATIC
PART OF 164-1205 SEAT GP-STATIC
AN ATTACHMENT

SMCS-7312, 7321, 7324, 7336 **i01528214**

NOTE	REF NO	GRAPHIC REF	PART NUMBER	QTY	PART NAME 1 2 3 4 5 6 (PRODUCT LEVEL)	SEE PAGE
	1	1	**7X-0622**	2	WASHER (13X24X2.5-MM THK)	
M	2	1	**7X-2537**	2	BOLT (M8X1.25X35-MM)	
M	3	1	**8T-4200**	2	BOLT (M8X1.25X16-MM)	
	4	1	**9M-1974**	2	WASHER-HARD (8.8X16X2-MM THK)	
M	5	1	**129-3180**	2	LOCKNUT (M12X1.75-THD)	
M	6	1	**131-3540**	8	LOCKNUT (M8X1.25-THD)	
	7	1	**164-1248**	1	PAN	
	8	1	**164-1260**	1	PAN-BACK	
	9	1	**164-1266**	1	CUSHION AS-BACK	
	10	1	**164-1297**	1	BRACKET AS	
	11	1	**164-1298**	1	BRACKET AS	
	12	1	**164-1299**	2	BLOCK	
	13	1	**180-5795**	1	CUSHION AS-SEAT	
	14	1	**195-7056**	2	SPACER (19.8X26.2X9-MM THK)	
	15	1	**195-9223**	2	SCREW-PAN HEAD	
	16	1	**8T-9501**	2	SCREW (10-16X0.75-IN)	

M-METRIC PART

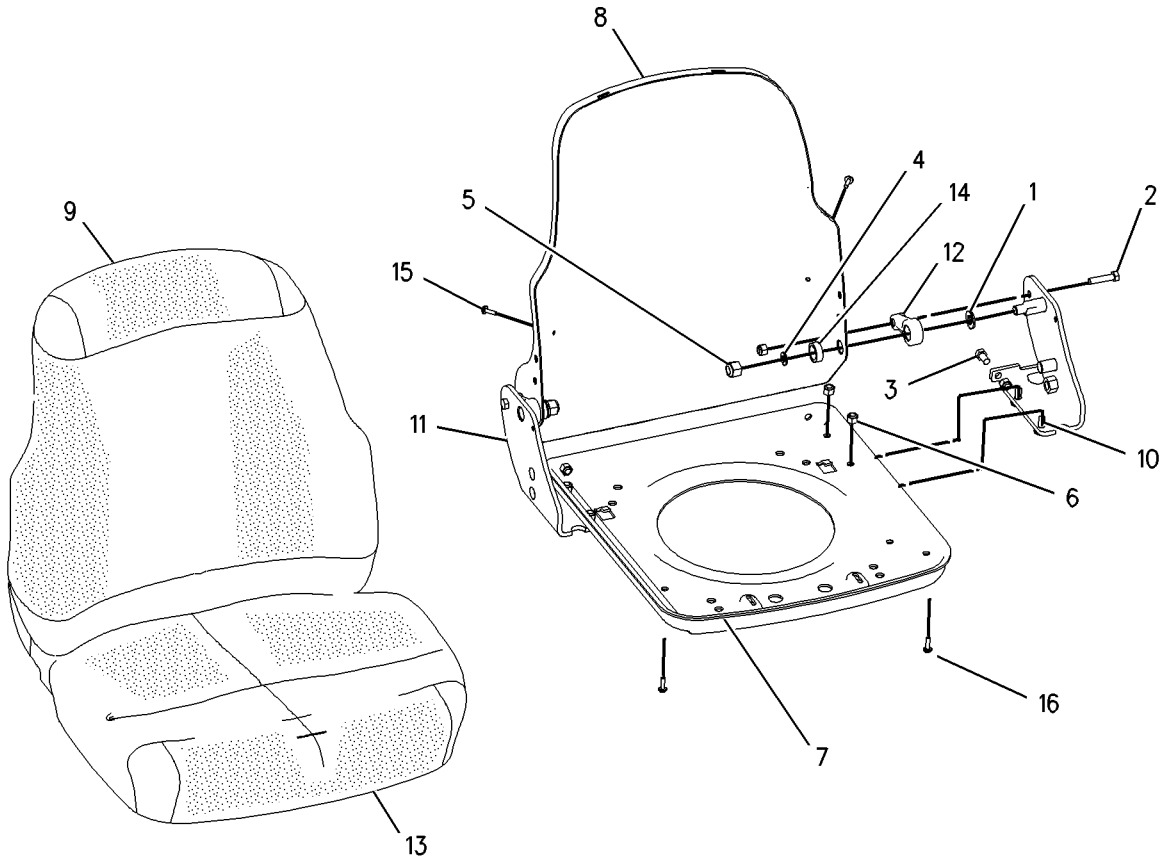

GRAPHIC #1 **<END>** g00793187

OPERATOR STATION

273-5905 SEAT GP–VINYL

S/N: CBD1-UP; MFG1-UP
PART OF 206-1791 SEAT GP-SUSPENSION
AN ATTACHMENT

SMCS-7312, 7321, 7324, 7336 **i02520657**

NOTE	PART NUMBER	QTY	PART NAME 1 2 3 4 5 6 (PRODUCT LEVEL)	SEE PAGE
	164-1258	1	BRACKET AS (RH)	
	164-1259	1	BRACKET AS (LH)	
	164-1266	1	CUSHION AS-BACK	
	260-0058	1	CUSHION AS-SEAT	
	164-1249	1	LEVER AS (RECLINER CONTROL)	
	164-1263	1	PAN AS (SEAT)	
	180-5797	1	PAN AS (SEAT BACK)	
M	**8T-4189**	2	BOLT (M8X1.25X20-MM)	
	8T-8917	2	BOLT (1/2-13X1.25-IN)	
	164-1265	1	BOLT (3/8-16X1.1-IN)	
	260-0045	1	BOLT-SPECIAL	
M	**105-3481**	2	BOLT-SOCKET HEAD (M8X1.25X20-MM)	
	260-0027	1	KNOB-SLIDE (SEAT ADJUSTMENT)	
	260-0028	1	LEVER-TILT (BOTTOM)	
M	**3T-0852**	8	LOCKNUT (M8X1.25-THD)	
M	**9X-6620**	1	LOCKNUT (M10X1.5-THD)	
M	**129-3180**	2	LOCKNUT (M12X1.75-THD)	
	260-0029	1	PAN (SEAT)	
	260-0040	1	PAN (SEAT)	
	180-5781	1	ROD	
	8T-9501	2	SCREW (10-16X0.75-IN)	
M	**8T-6412**	2	SCREW-MACHINE (M6X1X20-MM)	
	195-9223	2	SCREW-PAN HEAD	
	164-1256	2	SPACER (19X25.4X12.5-MM THK)	
	164-1251	1	SPRING	
	164-1252	1	SPRING	
	164-1273	1	SPRING-EXTENSION	
	161-9283	1	WASHER (19.8X31.8X1.6-MM THK)	
	5P-8245	2	WASHER-HARD (13.5X25.5X3-MM THK)	

M-METRIC PART

<END>

OPERATOR STATION

273-6036 SEAT GP–CLOTH

S/N: CBD1-UP; MFG1-UP
PART OF 206-1792 SEAT GP-SUSPENSION
AN ATTACHMENT

SMCS-7312, 7321, 7324, 7336 **i02520647**

NOTE	PART NUMBER	QTY	PART NAME 1 2 3 4 5 6 (PRODUCT LEVEL)	SEE PAGE
	164-1258	1	BRACKET AS (RH)	
	164-1259	1	BRACKET AS (LH)	
	164-1244	1	CUSHION AS-BACK (SEAT)	
	260-0050	1	CUSHION AS-SEAT	
	164-1249	1	LEVER AS (RECLINER CONTROL)	
	164-1263	1	PAN AS (SEAT)	
	180-5797	1	PAN AS (SEAT BACK)	
M	**8T-4189**	2	BOLT (M8X1.25X20-MM)	
	8T-8917	2	BOLT (1/2-13X1.25-IN)	
	164-1265	1	BOLT (3/8-16X1.1-IN)	
	260-0045	1	BOLT-SPECIAL	
M	**105-3481**	2	BOLT-SOCKET HEAD (M8X1.25X20-MM)	
	260-0028	1	LEVER-TILT (BOTTOM)	
	260-0027	1	KNOB-SLIDE (SEAT ADJUSTMENT)	
M	**3T-0852**	8	LOCKNUT (M8X1.25-THD)	
M	**9X-6620**	1	LOCKNUT (M10X1.5-THD)	
M	**129-3180**	2	LOCKNUT (M12X1.75-THD)	
	260-0029	1	PAN (SEAT)	
	260-0040	1	PAN (SEAT)	
	180-5781	1	ROD	
	8T-9501	2	SCREW (10-16X0.75-IN)	
M	**8T-6412**	2	SCREW-MACHINE (M6X1X20-MM)	
	195-9223	2	SCREW-PAN HEAD	
	164-1256	2	SPACER (19X25.4X12.5-MM THK)	
	164-1251	1	SPRING (RECLINER)	
	164-1252	1	SPRING (SEAT RECLINER)	
	164-1273	1	SPRING-EXTENSION (TILT)	
	161-9283	1	WASHER (19.8X31.8X1.6-MM THK)	
	5P-8245	2	WASHER-HARD (13.5X25.5X3-MM THK)	

M-METRIC PART

<END>

OPERATOR STATION

164-1205 SEAT GP-STATIC

S/N: CBD1-UP
SWIVEL - VINYL
PART OF 180-5774 SEAT GP-STATIC
AN ATTACHMENT

SMCS-7312 **i01510365**

NOTE	REF NO	GRAPHIC REF	PART NUMBER	QTY	PART NAME 1 2 3 4 5 6 (PRODUCT LEVEL)	SEE PAGE
	1	1	**4L-6454**	8	BOLT (3/8-16X1-IN)	
	2	1	**2K-4973**	8	LOCKNUT (3/8-16-THD)	
	3	1	**5P-1075**	4	WASHER-HARD (10.2X22.5X3-MM THK)	
Y	4	1	**164-1296**	1	SEAT GP (VINYL)	1029
Y	5	1	**164-1292**	1	SWIVEL & SLIDE GP-SEAT	1043
Y	6	1	**164-1278**	1	ADJUSTER GP-SEAT	897
	7	1	**195-7055**	4	WASHER-HARD (9.9X28.5X3.2-MM THK)	

Y-SEPARATE ILLUSTRATION

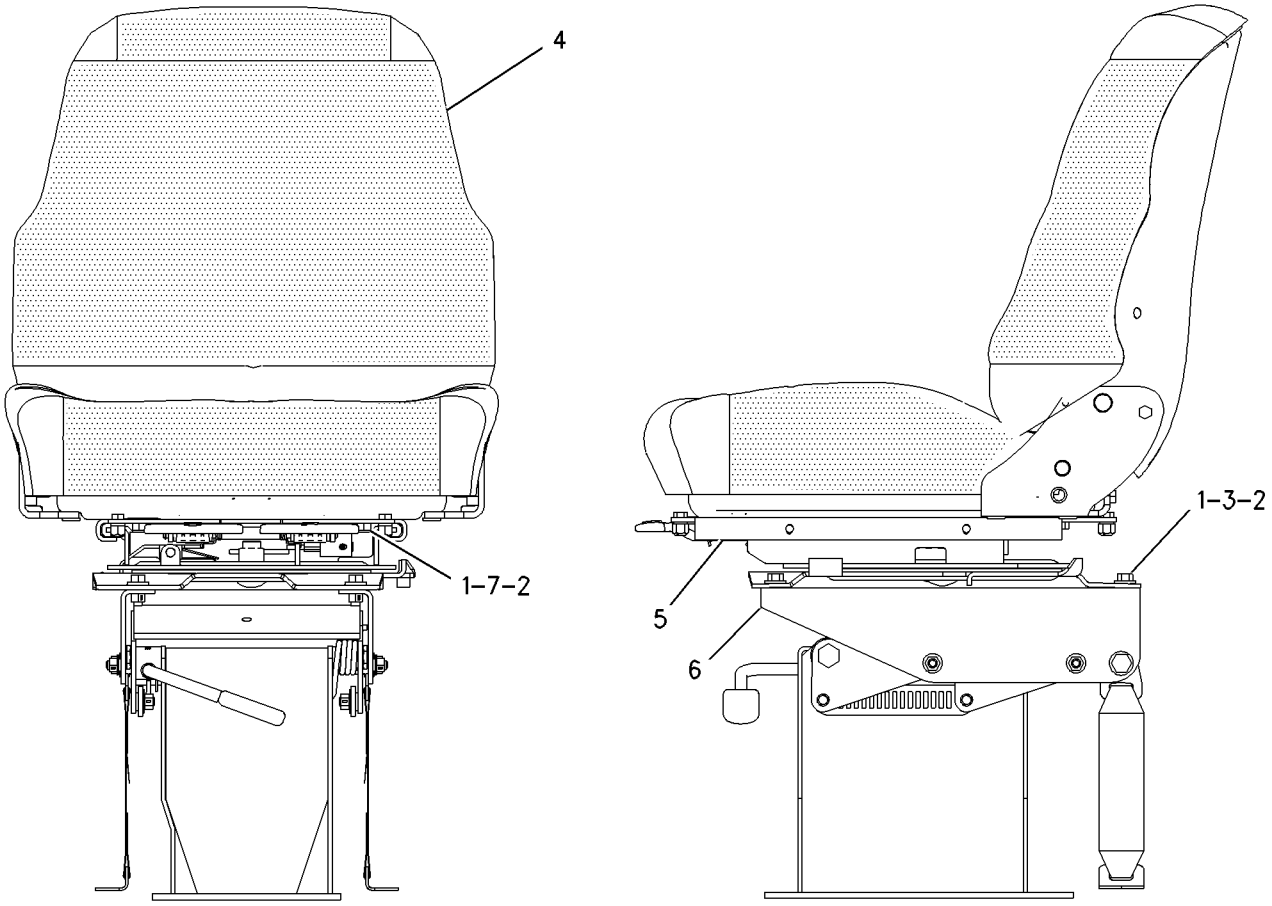

GRAPHIC #1 **<END>** g00744096

180-5774 SEAT GP-STATIC

S/N: CBD1-UP
VINYL, UTILITY
PART OF 292-9690, 292-9691 CANOPY AR-OPEN ROPS, 249-5167 SEAT GP-STATIC
AN ATTACHMENT

SMCS-7312 **i01456905**

NOTE	PART NUMBER	QTY	PART NAME 1 2 3 4 5 6 (PRODUCT LEVEL)	SEE PAGE
M	**8T-4139**	4	BOLT (M12X1.75X30-MM)	
Y	**164-1205**	1	SEAT GP-STATIC (VINYL, SWIVEL)	1032
	8T-4223	4	WASHER-HARD (13.5X25.5X3-MM THK)	

M-METRIC PART
Y-SEPARATE ILLUSTRATION

<END>

249-5167 SEAT GP-STATIC

S/N: CBD1-UP
PART OF 292-9690, 292-9691 CANOPY AR-OPEN ROPS
AN ATTACHMENT

SMCS-7312 **i02048181**

NOTE	PART NUMBER	QTY	PART NAME 1 2 3 4 5 6 (PRODUCT LEVEL)	SEE PAGE
Y	*180-5774*	1	SEAT GP-STATIC	1033

Y-SEPARATE ILLUSTRATION

<END>

OPERATOR STATION

206-1791 SEAT GP-SUSPENSION—VINYL

S/N: CBD1-UP; MFG1-UP
PART OF 280-7364 SEAT GP-SUSPENSION
AN ATTACHMENT

SMCS-7324, 7336 **i02601894**

NOTE	REF NO	GRAPHIC REF	PART NUMBER	QTY	PART NAME 1 2 3 4 5 6 (PRODUCT LEVEL)	SEE PAGE
	1	1	**2K-4973**	4	LOCKNUT (3/8-16-THD)	
	2	1	**4L-6454**	4	BOLT (3/8-16X1-IN)	
	3	1	**195-7055**	4	WASHER-HARD (9.9X28.5X3.2-MM THK)	
Y	4	1	**273-5905**	1	SEAT GP	1030
Y	5	1	**273-6372**	1	SUSPENSION GP-SEAT	1036
	6	1	**164-1265**	4	BOLT (3/8-16X1.1-IN)	
	7	1	**4B-5271**	4	WASHER (25.5X11.2X2-MM THK)	
	8	1	**5T-7870**	4	KNOB	
	9	1	**164-1247**	1	BRACKET AS (RH)	
	10	1	**220-3790**	1	ARMREST AS (RH)	
M		1	**6A-9083**	1	SCREW-MACHINE (M6X1X15-MM)	
	11	1	**164-1261**	1	BRACKET AS (LH)	
	12	1	**220-3791**	1	ARMREST AS (LH)	
M		1	**6A-9083**	1	SCREW-MACHINE (M6X1X15-MM)	
	13	1	**1K-6872**	2	LOCKNUT (1/2-13-THD)	
	14	1	**0S-1595**	2	BOLT (1/2-13X1.25-IN)	
	15	1	**5P-8245**	2	WASHER-HARD (13.5X25.5X3-MM THK)	

M-METRIC PART
Y-SEPARATE ILLUSTRATION

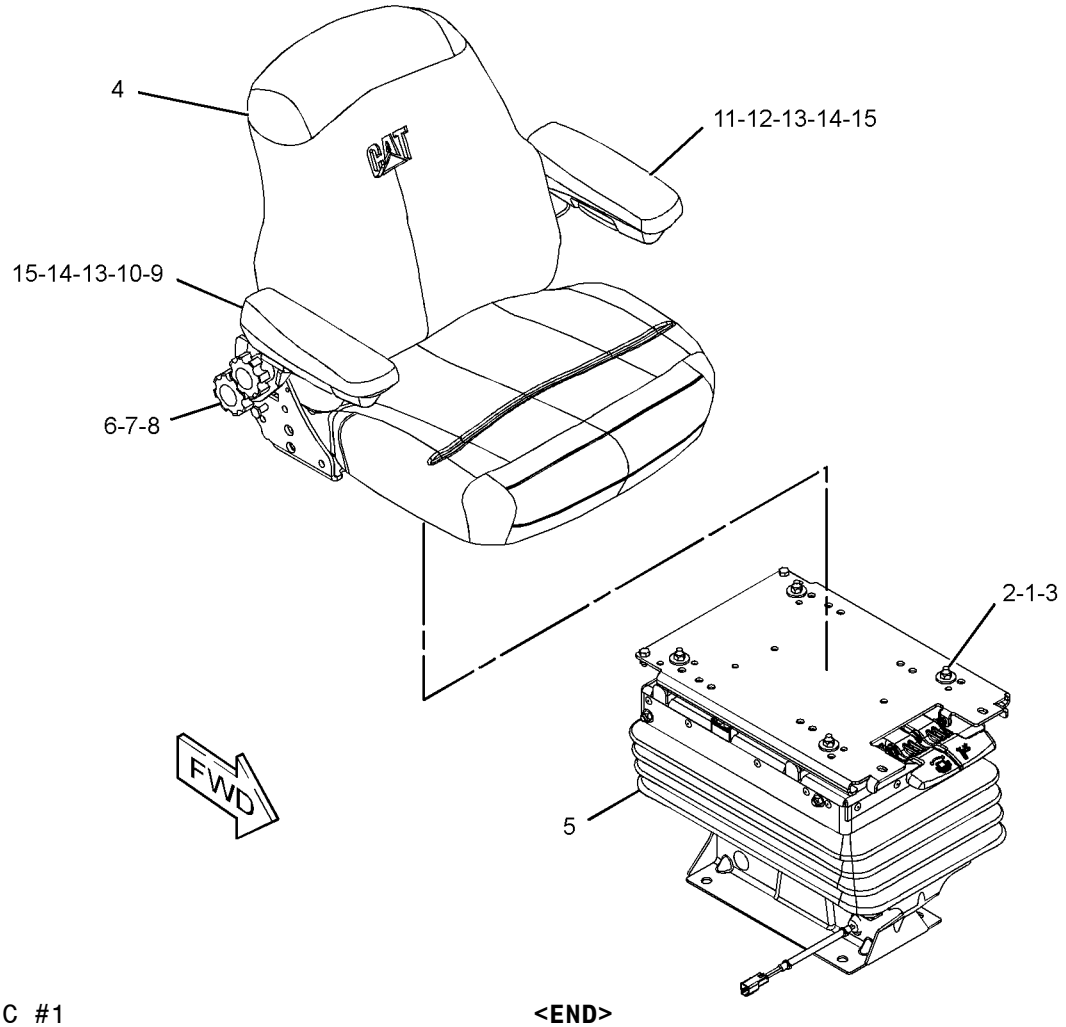

GRAPHIC #1 **<END>** g01298418

OPERATOR STATION

206-1792 SEAT GP-SUSPENSION—CLOTH

S/N: CBD1-UP; MFG1-UP
PART OF 280-7365 SEAT GP-SUSPENSION
AN ATTACHMENT

SMCS-7324, 7336 **i04397660**

NOTE	REF NO	GRAPHIC REF	PART NUMBER	QTY	PART NAME 1 2 3 4 5 6 (PRODUCT LEVEL)	SEE PAGE
	1	1	**2K-4973**	4	LOCKNUT (3/8-16-THD)	
	2	1	**4L-6454**	4	BOLT (3/8-16X1-IN)	
	3	1	**195-7055**	4	WASHER-HARD (9.9X28.5X3.2-MM THK)	
Y	4	1	**273-6036**	1	SEAT GP (CLOTH)	1031
Y	5	1	**273-6372**	1	SUSPENSION GP-SEAT	1036
	6	1	**164-1265**	4	BOLT (3/8-16X1.1-IN)	
	7	1	**4B-5271**	4	WASHER (25.5X11.2X2-MM THK)	
	8	1	**5T-7870**	4	KNOB (ARMREST ADJUSTMENT)	
	9	1	**164-1247**	1	BRACKET AS (RH)	
	10	1	**220-3790**	1	ARMREST AS (RH)	
M		1	**6A-9083**	1	SCREW-MACHINE (M6X1X15-MM)	
	11	1	**164-1261**	1	BRACKET AS (LH)	
	12	1	**220-3791**	1	ARMREST AS (LH)	
M		1	**6A-9083**	1	SCREW-MACHINE (M6X1X15-MM)	
	13	1	**1K-6872**	2	LOCKNUT (1/2-13-THD)	
	14	1	**0S-1595**	2	BOLT (1/2-13X1.25-IN)	
	15	1	**5P-8245**	2	WASHER-HARD (13.5X25.5X3-MM THK)	

M-METRIC PART
Y-SEPARATE ILLUSTRATION

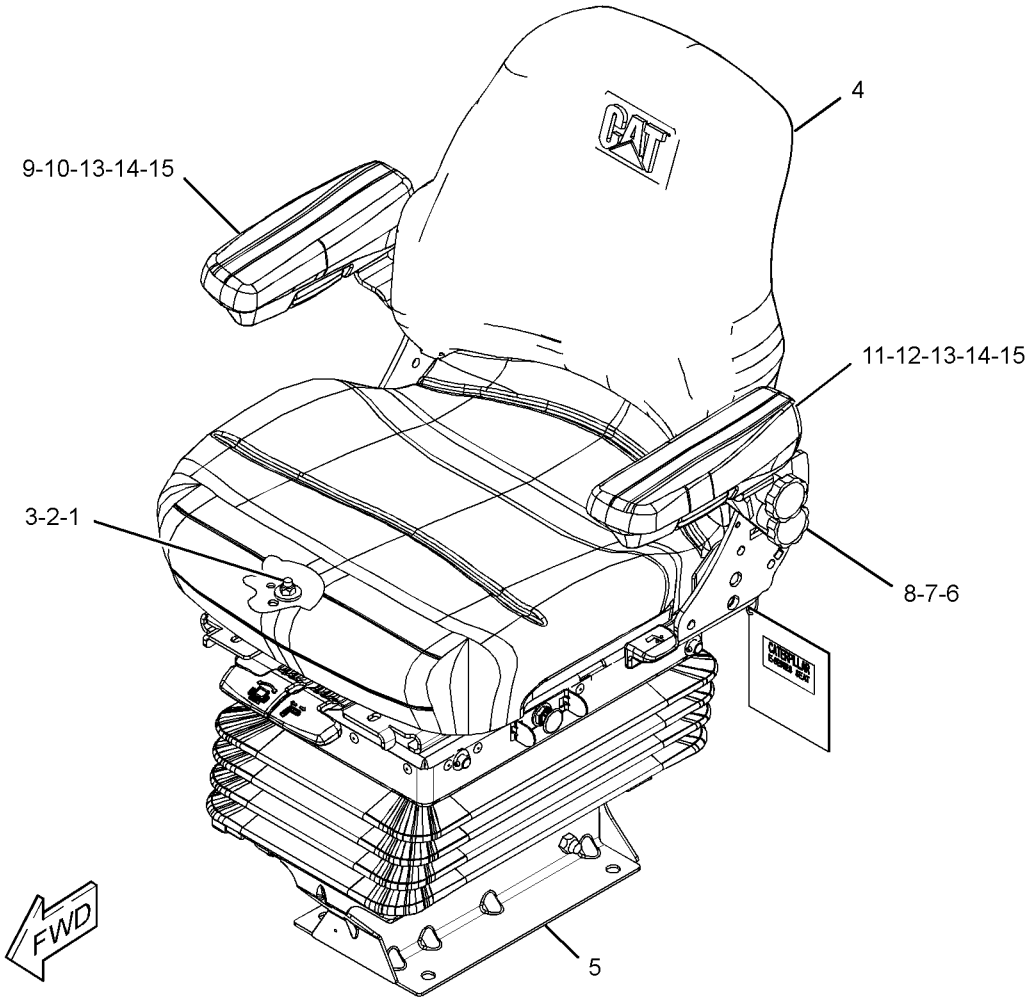

GRAPHIC #1 **<END>** g02588043

OPERATOR STATION

280-7364 SEAT GP-SUSPENSION—VINYL

S/N: CBD1-UP; MFG1-UP
PART OF 204-4160, 204-4164 CANOPY AR-OPEN ROPS
AN ATTACHMENT

SMCS-7324, 7336 **i02495285**

NOTE	PART NUMBER	QTY	PART NAME 1 2 3 4 5 6 (PRODUCT LEVEL)	SEE PAGE
Y	**206-1791**	1	SEAT GP-SUSPENSION (VINYL)	1034
M	**8T-4139**	4	BOLT (M12X1.75X30-MM)	
	3S-2093	1	STRAP-CABLE	
	8T-4223	4	WASHER-HARD (13.5X25.5X3-MM THK)	

M-METRIC PART
Y-SEPARATE ILLUSTRATION

<END>

280-7365 SEAT GP-SUSPENSION—CLOTH

S/N: CBD1-UP; MFG1-UP
PART OF 204-4161, 204-4162, 228-4602, 291-9195 CAB AR-ENCLOSED ROPS
AN ATTACHMENT

SMCS-7324, 7336 **i02495283**

NOTE	PART NUMBER	QTY	PART NAME 1 2 3 4 5 6 (PRODUCT LEVEL)	SEE PAGE
Y	**206-1792**	1	SEAT GP-SUSPENSION (CLOTH)	1035
M	**8T-4139**	4	BOLT (M12X1.75X30-MM)	
	3S-2093	1	STRAP-CABLE	
	8T-4223	4	WASHER-HARD (13.5X25.5X3-MM THK)	

M-METRIC PART
Y-SEPARATE ILLUSTRATION

<END>

273-6372 SUSPENSION GP-SEAT

S/N: CBD1-UP
PART OF 206-1791, 206-1792 SEAT GP-SUSPENSION
AN ATTACHMENT

SMCS-7312, 7324 **i04397661**

NOTE	PART NUMBER	QTY	PART NAME 1 2 3 4 5 6 (PRODUCT LEVEL)	SEE PAGE
	260-0059	1	AIR COMPRESSOR GP (SUSPENSION SEAT)	
	164-1215	1	ABSORBER AS-SHOCK (SEAT)	
	164-1218	2	ARM AS-SUSPENSION (OUTER)	
	260-0060	1	ARM AS-SUSPENSION (INNER)	
	164-1219	1	BRACKET AS (FRONT)	
	164-1220	1	BRACKET AS (REAR)	
	260-0036	1	HARNESS AS-RIDE CONTROL	
	260-0057	1	LATCH AS-SLIDE	
	260-0052	1	PLATE AS-SLIDE	
	260-0051	1	PLATE AS-UPPER	
	260-0047	2	SHAFT AS (UPPER)	
	218-0235	2	SWITCH AS-LIMIT (SUSPENSION SEAT)	
			(EACH INCLUDES)	
	102-8803	1	KIT-RECEPTACLE (3-PIN)	
			(INCLUDES RECEPTACLE AS & WEDGE)	
	8T-8729	3	PIN-CONNECTOR (16-GA TO 18-GA)	

273-6372 **SUSPENSION GP-SEAT** *(contd.)* **i04397661**

NOTE	PART NUMBER	QTY	PART NAME 1 2 3 4 5 6 (PRODUCT LEVEL)	SEE PAGE
	4B-9784	8	BALL	
	260-0063	1	BASE-SEAT	
	164-1230	12	BEARING	
	260-0067	2	BEARING	
	260-0042	1	BEARING-FLANGED	
	161-9289	2	BLOCK-SLIDER	
	260-0043	1	BLOCK-STOP	
	0S-0509	1	BOLT (3/8-16X0.75-IN)	
	1H-3337	4	BOLT (1/4-20X0.875-IN)	
	4M-0061	2	BOLT (5/16-18X0.75-IN)	
	7X-0481	1	BOLT (1/2-13X8-IN)	
	260-0041	1	BOLT (3/4-10X1.42-IN)	
M	**197-6657**	1	BOLT-ROUND HEAD (M12X1.75X80-MM)	
	164-1240	1	BOOT	
	237-3943	1	BRACKET	
	164-1229	4	BUMPER	
	164-1237	1	BUSHING	
	111-5042	34	FASTENER	
	260-0046	1	HOUSING-UPPER	
	102-8804	1	KIT-RECEPTACLE (4-PIN) (INCLUDES RECEPTACLE AS & WEDGE)	
	149-4745	2	KIT-SLIDER BLOCK (SUSPENSION SEAT) (EACH INCLUDES SLIDER BLOCKS & BOLT)	
	321-6337	1	LEVER	
	260-0032	1	LEVER	
	1K-6872	1	LOCKNUT (1/2-13-THD)	
	2D-6235	4	LOCKNUT (1/4-20-THD)	
	2K-4973	8	LOCKNUT (3/8-16-THD)	
M	**6V-7687**	1	LOCKNUT (M12X1.75-THD)	
M	**096-4882**	2	LOCKNUT (M8X1.25-THD)	
	9N-7446	4	LOCKNUT (4-40-THD)	
	3B-4505	2	LOCKWASHER	
	3J-4818	2	LOCKWASHER	
	6V-8185	2	NUT (1/4-20-THD)	
	2L-5893	1	PIN-SPRING	
	4H-8380	4	PIN-SPRING	
	164-1232	1	PLATE	
	260-0044	1	PLATE-LATCH	
	5V-1497	2	RETAINER	
	215-1242	1	RING	
	8S-7803	3	RING-RETAINING	
	130-8343	1	SCREW-BUTTON HEAD (3/8-16X0.625-IN)	
	6L-7155	2	SCREW-MACHINE (1/4-20X0.5-IN)	
	173-5787	2	SETSCREW (1/4-20-THD)	
	164-1226	2	SHAFT (BACK, VINYL)	
	260-0049	2	SHAFT-LOWER	
	161-9288	1	SHAFT-PIVOT (SWIVEL)	
	260-0030	1	SHAFT-PIVOT	
	164-1233	2	SPACER (13X25.4X20.5-MM THK)	
	164-1238	1	SPACER (12.8X22.2X3.1-MM THK)	
	164-1239	2	SPACER (13.5X19X61.9-MM THK)	
	163-1135	1	SPRING	
	260-0034	1	SPRING-RETURN	
	260-0035	1	SPRING-RETURN	
	260-0033	1	SPRING-TORSION	
	7X-0622	6	WASHER (13X24X2.5-MM THK)	
	9X-1481	2	WASHER (13X25.4X1.6-MM THK)	

273-6372 **SUSPENSION GP-SEAT** *(contd.)* **i04397661**

M-METRIC PART

<END>

OPERATOR STATION

273-6372 SUSPENSION GP-SEAT

S/N: CBD1-UP; MFG1-UP
PART OF 206-1791, 206-1792 SEAT GP-SUSPENSION
AN ATTACHMENT

SMCS-7312, 7324 **i04397735**

NOTE	REF NO	GRAPHIC REF	PART NUMBER	QTY	PART NAME 1 2 3 4 5 6 (PRODUCT LEVEL)	SEE PAGE
C	1	2	**3S-2093**	2	STRAP-CABLE	
	2	1,2	**111-5042**	34	FASTENER	
	3	2	**243-3593**	1	SPRING AS-AIR	
		2	**130-8343**	1	SCREW-BUTTON HEAD (3/8-16X0.625-IN)	
		2	**163-1135**	1	SPRING	
		2	**164-1232**	1	PLATE	
D		2	**5P-6010**		TUBE (1-M)	
	4	1	**149-4745**	2	KIT-SLIDER BLOCK (SUSPENSION SEAT)	
					(EACH INCLUDES BOLT & BLOCKS)	
C	5	1	**161-9283**	1	WASHER (19.8X31.8X1.6-MM THK)	
C	6	1	**161-9285**	1	NUT (3/4-10-THD)	
	7	1	**161-9288**	1	SHAFT-PIVOT	
	8	1	**161-9289**	2	BLOCK-SLIDER	
	9	2	**180-5789**	2	NUT	
	10	2	**164-1215**	1	ABSORBER AS-SHOCK (SEAT)	
	11	2	**164-1218**	2	ARM AS-SUSPENSION (OUTER)	
	12	2	**164-1219**	1	BRACKET AS (FRONT)	
	13	2	**164-1220**	1	BRACKET AS (REAR)	
	14	2	**164-1226**	2	SHAFT	
C	15	2	**164-1228**	1	HARNESS AS-RIDE CONTROL	
	16	2	**164-1229**	4	BUMPER	
	17	2	**164-1230**	12	BEARING	
	19	2	**164-1233**	2	SPACER (13X25.4X20.5-MM THK)	
C	20	1	**164-1234**	1	PLATE	
C	21	1	**164-1235**	1	KNOB	
	22	2	**164-1237**	1	BUSHING	
	23	2	**164-1238**	1	SPACER (12.8X22.2X3.1-MM THK)	
	24	2	**164-1239**	2	SPACER (13.5X19X61.9-MM THK)	
	25	1	**164-1240**	1	BOOT	
	26	1	**173-5787**	2	SETSCREW (1/4-20-THD)	
C	28	2	**185-3890**	2	SCREW-PAN HEAD (8-32X33.3-MM)	
M	29	2	**197-6657**	1	BOLT-ROUND HEAD (M12X1.75X80-MM)	
C	30	1	**215-8196**	1	VALVE AS	
	31	2	**237-3943**	1	BRACKET	
	32	1	**260-0030**	1	SHAFT-PIVOT	
	33	1	**321-6337**	1	LEVER (HANDLE-SWIVEL)	
	34	1	**260-0032**	1	LEVER (HANDLE-SLIDE)	
	35	1	**260-0033**	1	SPRING-TORSION (SWIVEL LATCH)	
	36	1	**260-0034**	1	SPRING-RETURN (SWIVEL)	
	37	1	**260-0035**	1	SPRING-RETURN (SLIDE)	
	38	1	**260-0041**	1	BOLT (3/4-1-X1.42-IN)	
	40	1	**260-0043**	1	BLOCK-STOP	
	41	1	**260-0044**	1	PLATE-LATCH	
	42	1	**317-5309**	1	HOUSING AS	
		1	**260-0046**	1	HOUSING-UPPER	
M		1	**6V-9632**	2	NUT-WELD (M6X1-THD)	
	43	1	**260-0047**	2	SHAFT AS (UPPER)	
	44	2	**260-0049**	2	SHAFT-LOWER	
	45	1	**260-0051**	1	PLATE AS-UPPER	
	46	1	**260-0052**	1	PLATE AS-SLIDE	
	47	1	**260-0057**	1	LATCH AS-SLIDE	
	48	2	**260-0059**	1	AIR COMPRESSOR GP (SUSPENSION SEAT)	
	50	2	**260-0063**	1	BASE-SEAT	
	51	2	**260-0067**	2	BEARING	
C	52	1	**289-1204**	1	RING	

273-6372 SUSPENSION GP-SEAT *(contd.)* i04397735

NOTE	REF NO	GRAPHIC REF	PART NUMBER	QTY	PART NAME 1 2 3 4 5 6 (PRODUCT LEVEL)	SEE PAGE
M	53	1	**096-4882**	2	LOCKNUT (M8X1.25-THD)	
CM	54	2	**129-3180**	1	LOCKNUT (M12X1.75-THD)	
C	55	1,2	**153-0088**	4	WASHER-HARD (10.31X20X1.65-MM THK)	
	56	2	**0S-0509**	1	BOLT (3/8-16X0.75-IN)	
	57	2	**1H-3337**	4	BOLT (1/4-20X0.875-IN)	
	58	2	**1K-6872**	1	LOCKNUT (1/2-13-THD)	
	59	2	**2D-6235**	4	LOCKNUT (1/4-20-THD)	
	60	1,2	**2K-4973**	8	LOCKNUT (3/8-16-THD)	
	61	1	**2L-5893**	1	PIN-SPRING	
	62	1	**3B-4505**	2	LOCKWASHER	
C	63	1	**3B-4631**	1	PIN-COTTER	
	64	2	**3J-4818**	2	LOCKWASHER	
C	65	1	**4B-9784**	12	BALL	
	66	1,2	**9L-7469**	4	LOCK PIN	
	67	1	**4M-0061**	2	BOLT (5/16-18X0.75-IN)	
	68	1	**6L-7155**	2	SCREW-MACHINE (1/4-20X0.5-IN)	
	69	2	**6V-8185**	4	NUT (1/4-20-THD)	
	70	2	**7X-0481**	1	BOLT (1/2-13X8-IN)	
	71	2	**7X-0622**	6	WASHER (13X24X2.5-MM THK)	
	72	1	**8S-7803**	3	RING-RETAINING	
	73	2	**9X-1481**	2	WASHER (13X25.4X1.6-MM THK)	
	74	1	**8Y-5946**	1	FASTENER	
	75	2	**260-0060**	1	ARM AS-SUSPENSION (INNER)	

C-CHANGE FROM PREVIOUS TYPE
D-ORDER BY THE METER
M-METRIC PART

273-6372 SUSPENSION GP-SEAT *(contd.)* i04397735

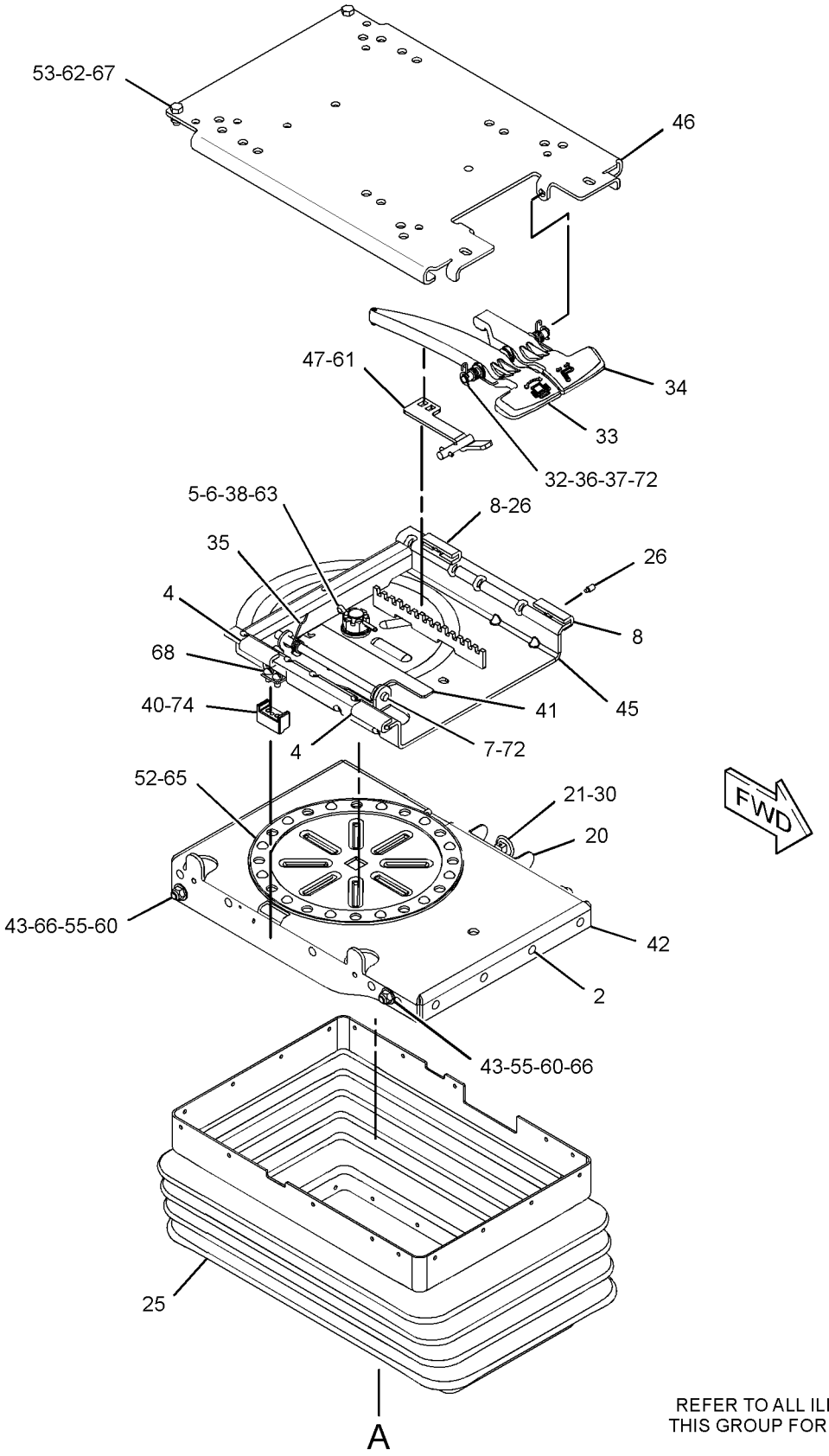

REFER TO ALL ILLUSTRATIONS OF THIS GROUP FOR AUXILIARY VIEWS

GRAPHIC #1 g01515019

273-6372 SUSPENSION GP-SEAT *(contd.)* i04397735

REFER TO ALL ILLUSTRATIONS OF
THIS GROUP FOR AUXILIARY VIEWS

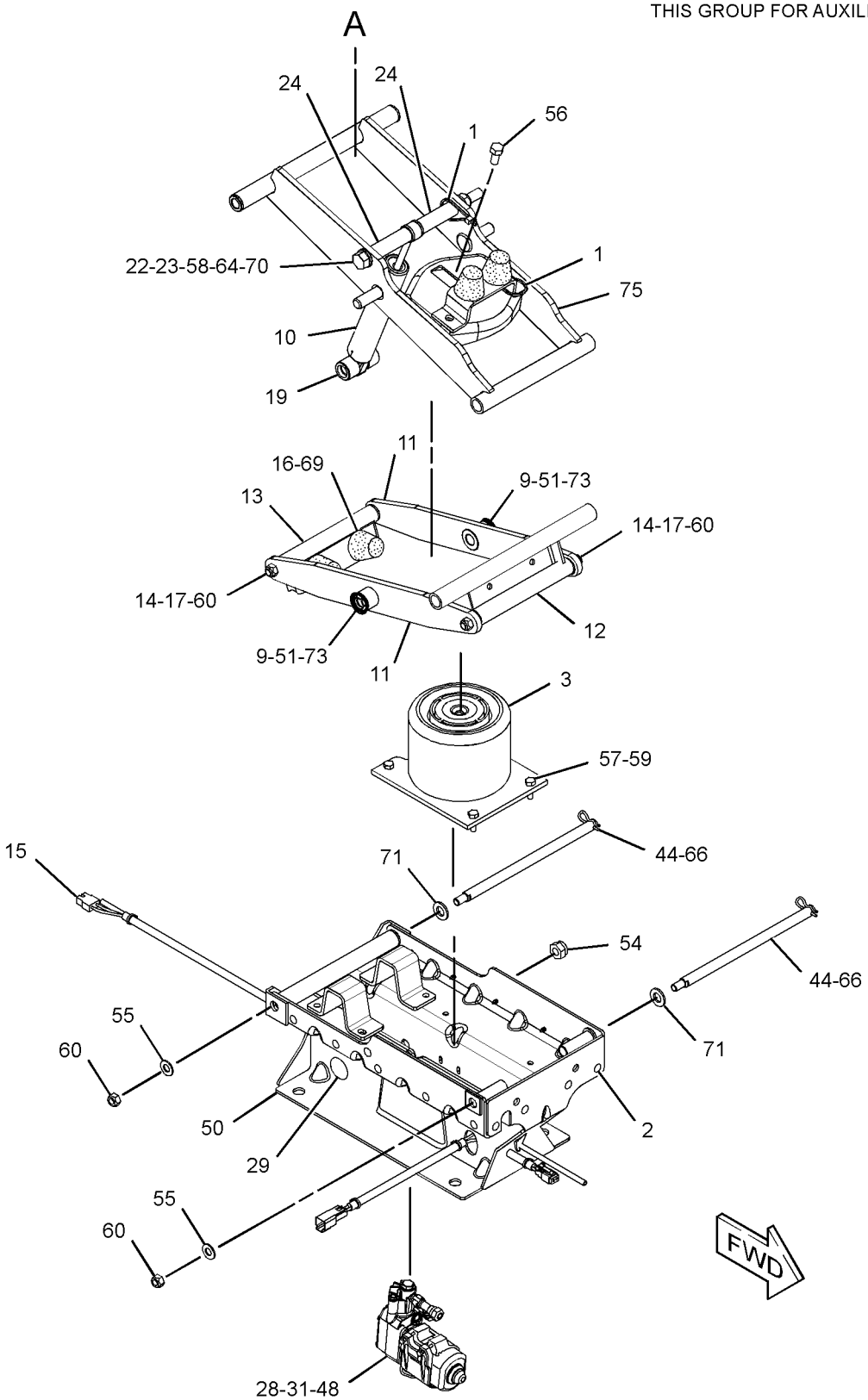

GRAPHIC #2 **<END>** g01951585

OPERATOR STATION

164-1292 SWIVEL & SLIDE GP-SEAT

S/N: CBD1-UP

PART OF 164-1205 SEAT GP-STATIC

AN ATTACHMENT

SMCS-7312, 7321 **i01959007**

NOTE	REF NO	GRAPHIC REF	PART NUMBER	QTY	PART NAME 1 2 3 4 5 6 (PRODUCT LEVEL)	SEE PAGE
Y	1	1	**164-1293**	1	SWIVEL GP-SEAT	1045
	2	1	**095-0878**	2	PIN-SPRING	
	3	1	**031-4155**	4	LOCKNUT (5/16-18-THD)	
	4	1	**123-6077**	1	SHAFT-PIVOT	
	5	1	**132-9240**	1	LATCH AS	
	6	1	**135-1706**	1	SPRING	
	7	1	**154-8278**	1	SPRING-RETURN	
	8	1	**154-8280**	1	SPRING-RETURN	
	9	1	**154-8284**	1	TUBE	
	10	1	**161-9744**	1	KIT-SLIDER BLOCK	
		1	**161-9289**	2	BLOCK-SLIDER	
		1	**173-5787**	2	SETSCREW (1/4-20-THD)	
	11	1	**164-1211**	1	LEVER (SLIDE)	
	12	1	**164-1212**	1	LEVER (SWIVEL)	
	13	1	**164-1295**	1	PLATE AS-SLIDE	
	14	1	**3B-4505**	4	LOCKWASHER	
	15	1	**4M-0061**	4	BOLT (5/16-18X0.75-IN)	
	16	1	**8S-7803**	2	RING-RETAINING	
	17	1	**161-9290**	1	WASHER (11.9X20.7X2.3-MM THK)	

Y-SEPARATE ILLUSTRATION

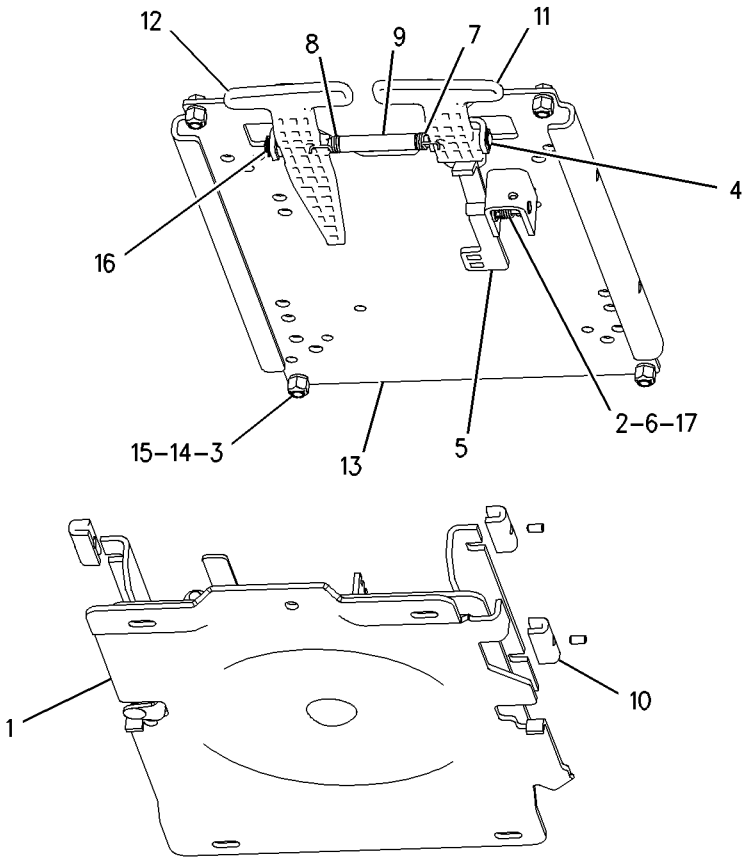

GRAPHIC #1 **<END>** g00739102

164-1293 SWIVEL GP-SEAT

S/N: CBD1-UP

PART OF 164-1292 SWIVEL & SLIDE GP-SEAT

AN ATTACHMENT

SMCS-7312, 7321 **i01525450**

NOTE	REF NO	GRAPHIC REF	PART NUMBER	QTY	PART NAME 1 2 3 4 5 6 (PRODUCT LEVEL)	SEE PAGE
	1	1	**8S-7803**	1	RING-RETAINING	
	2	1	**161-9282**	1	BOLT (3/4-10X1.5-IN)	
	3	1	**161-9283**	1	WASHER (19.8X31.8X1.6-MM THK)	
	4	1	**161-9285**	1	NUT (3/4-10-THD)	
	5	1	**161-9286**	1	SPRING-LATCH	
	6	1	**161-9288**	1	SHAFT-PIVOT	
	7	1	**164-1294**	1	LATCH AS	
		1	**9C-4457**	1	FASTENER	
	8	1	**3B-4631**	1	PIN-COTTER	

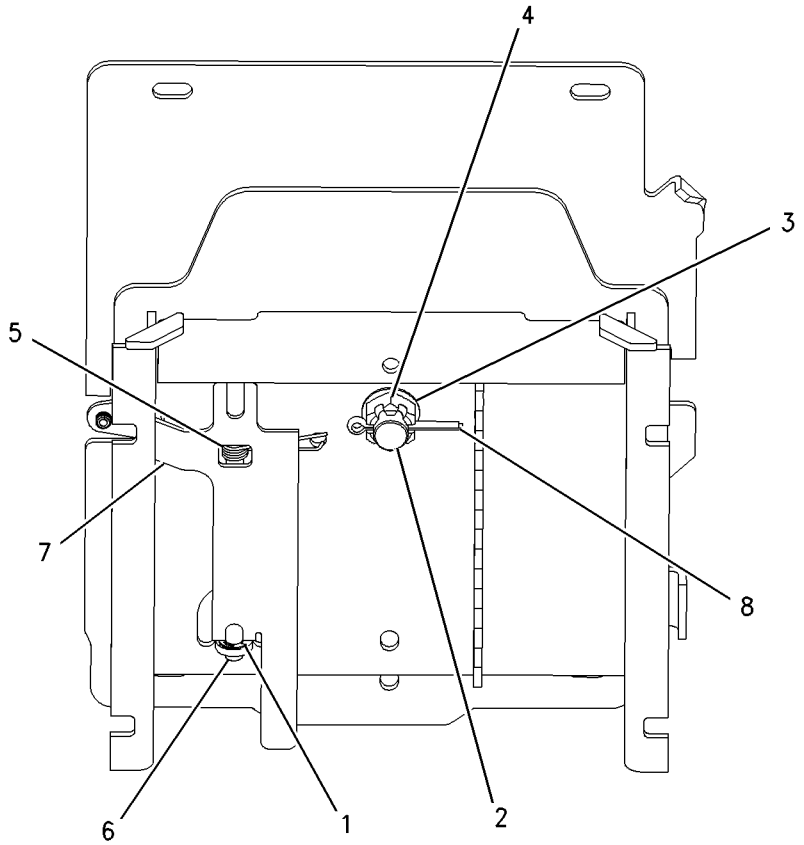

GRAPHIC #1 **<END>** g00737841

OPERATOR STATION

239-1080 TACHOMETER GP-ELECTRIC

S/N: CBD1-UP; MFG1-UP
PART OF 211-4243, 290-6737 WIRING GP-CONSOLE
AN ATTACHMENT

SMCS-7462 **i02022948**

NOTE	REF NO	GRAPHIC REF	PART NUMBER	QTY	PART NAME 1 2 3 4 5 6 (PRODUCT LEVEL)	SEE PAGE
	1	1	**4B-2043**	7	NUT (8-32-THD)	
	2	1	**9B-7233**	7	LOCKWASHER	
	3	1	**122-7137**	1	LAMP (12-VOLT)	
	4	1	**131-1424**	1	SEAL	

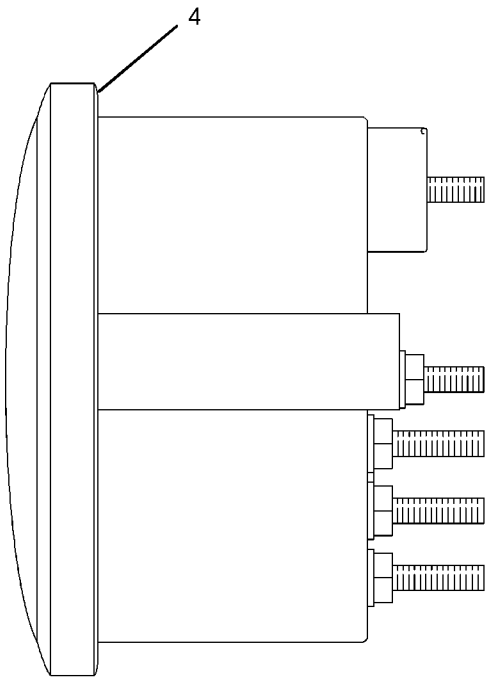

LEFT SIDE VIEW

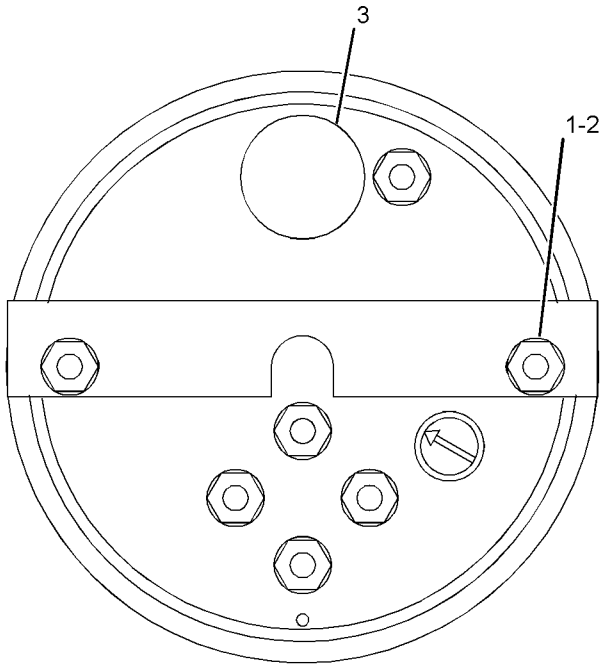

REAR VIEW

GRAPHIC #1 **<END>** g01030658

OPERATOR STATION

206-1704 TRIM GP-CAB—OPEN ROPS

S/N: CBD1-UP; MFG1-UP

PART OF 204-4160, 204-4164, 292-9690, 292-9691 CANOPY AR-OPEN ROPS

AN ATTACHMENT

SMCS-7329, 7451 **i04263698**

NOTE	REF NO	GRAPHIC REF	PART NUMBER	QTY	PART NAME 1 2 3 4 5 6 (PRODUCT LEVEL)	SEE PAGE
E	1	1	**8C-7524**		SEAL (40-CM)	
	2	1	**9C-4457**	4	FASTENER	
	3	1	**141-1762**	1	SPACER (21.2X25.4X20-MM THK)	
	4	1	**206-1623**	1	INSERT (LH)	
	5	1	**206-1625**	1	INSERT (RH)	
	6	1	**206-1637**	1	CONSOLE-STORAGE	
	7	1	**206-1665**	2	PLUG	
	8	1	**206-1666**	1	PLUG	
	9	1	**206-1683**	1	INSERT	
	10	1	**206-1798**	1	COVER-POST	
	11	1	**206-1799**	4	PLUG	
	12	1	**213-1888**	1	COVER-FENDER	
	13	1	**261-9632**	1	COVER AS	
		1	**206-1684**	1	COVER (CAB FILTER)	
	14	1	**282-7833**	1	GROMMET	
	15	1	**282-7835**	1	PLATE	
M	16	1	**6V-7744**	1	LOCKNUT (M10X1.5-THD)	
	17	1	**8T-4222**	1	WASHER-PLATED (11X32X2.5-MM THK)	
M	18	1	**8T-4178**	1	BOLT (M10X1.5X90-MM)	
M	19	1	**8T-4181**	2	BOLT (M6X1X20-MM)	
	20	1	**9X-2038**	2	WASHER (7X19X2-MM THK)	
M	21	1	**9X-2044**	6	SCREW-TRUSS HEAD (M6X1X16-MM)	
	22	1	**9X-8256**	2	WASHER (6.6X12X2-MM THK)	
B	23	1	**6V-0292**	1	PLUG	

B-USE AS REQUIRED
E-ORDER BY THE CENTIMETER
M-METRIC PART

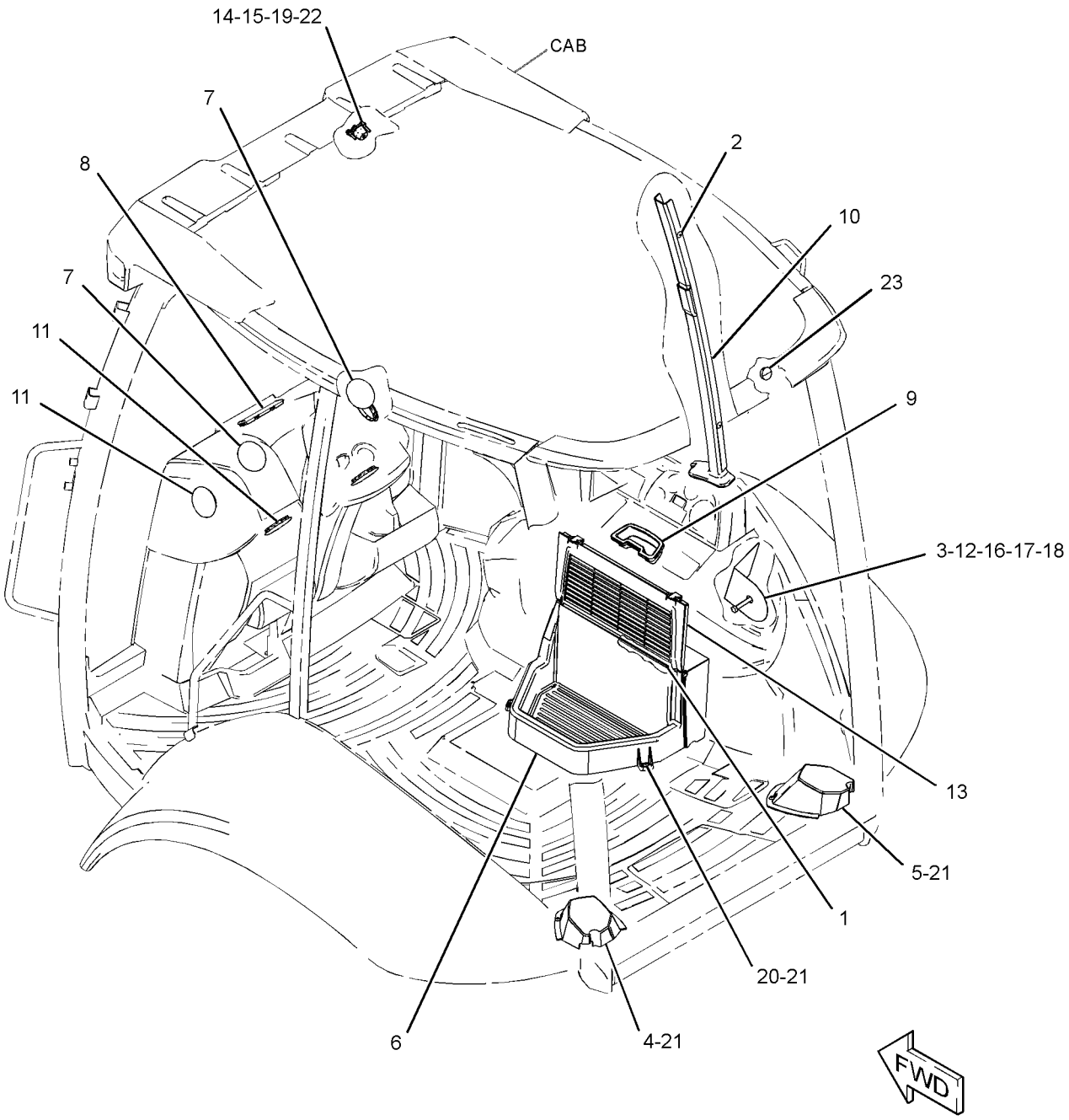

GRAPHIC #1 **<END>** g02590557

OPERATOR STATION

206-1727 WASHER GP-WINDOW

S/N: CBD1-4546

PART OF 204-4161, 204-4162, 228-4602 CAB AR-ENCLOSED ROPS

AN ATTACHMENT

SMCS-7306 **i02733225**

NOTE	REF NO	GRAPHIC REF	PART NUMBER	QTY	PART NAME 1 2 3 4 5 6 (PRODUCT LEVEL)	SEE PAGE
	1	1	**282-7835**	1	PLATE	
D	2	1	**6V-0505**		SEAL (0.5-M)	
	3	1	**3S-2093**	11	STRAP-CABLE	
	4	1	**8T-1118**	1	NOZZLE AS-WASHER	
	5	1	**9R-3469**	2	DIAPHRAGM	
	6	1	**9X-8372**	1	FILM-INSTRUCTION (WASHER FILL)	
	7	1	**121-6936**	1	CONNECTOR	
	8	1	**213-6051**	1	HARNESS AS-CAB	
		1	**155-2265**	1	KIT-CONNECTING PLUG (8-PIN)	
		1	**155-2271**	2	KIT-CONNECTING PLUG (4-PIN)	
		1	**155-2274**	1	KIT-CONNECTING PLUG (6-PIN)	
					(EACH PLUG KIT INCLUDES PLUG AS, WEDGE & INTERFACE SEAL)	
		1	**102-8805**	1	KIT-RECEPTACLE (6-PIN)	
					(INCLUDES RECEPTACLE AS & WEDGE)	
		1	**8L-8413**	15	STRAP-CABLE	
E		1	**125-7874**		TUBE-HEAT SHRINK (5.72-MM DIA) (5-CM)	
E		1	**119-3662**		TUBE-HEAT SHRINK (10.85-MM DIA) (7-CM)	
D		1	**6V-2689**		TUBE-HEAT SHRINK (6.35-MM DIA) (0.1-M)	
	9	1	**214-3763**	1	TANK GP-WINDOW WASHER	
		1	**254-5683**	1	CAP	
		1	**8E-8293**	2	GROMMET	
		1	**6T-1375**	2	PUMP AS-WASHER	
		1	**214-3742**	1	TANK-WASHER	
	10	1	**276-8791**	1	CLIP	
	11	1	**283-3451**	2	CONNECTOR AS	
	12	1	**156-0283**	2	WASHER-HARD (8.4X35X2.5-MM THK)	
M	13	1	**8T-5093**	2	BOLT-LOCKING (M8X1.25X25-MM)	
E	14	1	**144-0195**		HOSE (17-CM)	
E	14A	1	**144-0195**		HOSE (21-CM EACH)	
E	14B	1	**144-0195**		HOSE (81-CM)	
M	15	1	**8C-3798**	2	BOLT-LOCKING (M6X1X30-MM)	
	16	1	**282-7833**	1	GROMMET	
	17	1	**9X-8256**	2	WASHER (6.6X12X2-MM THK)	

D-ORDER BY THE METER
E-ORDER BY THE CENTIMETER
M-METRIC PART

206-1727 **WASHER GP-WINDOW** *(contd.)* **i02733225**

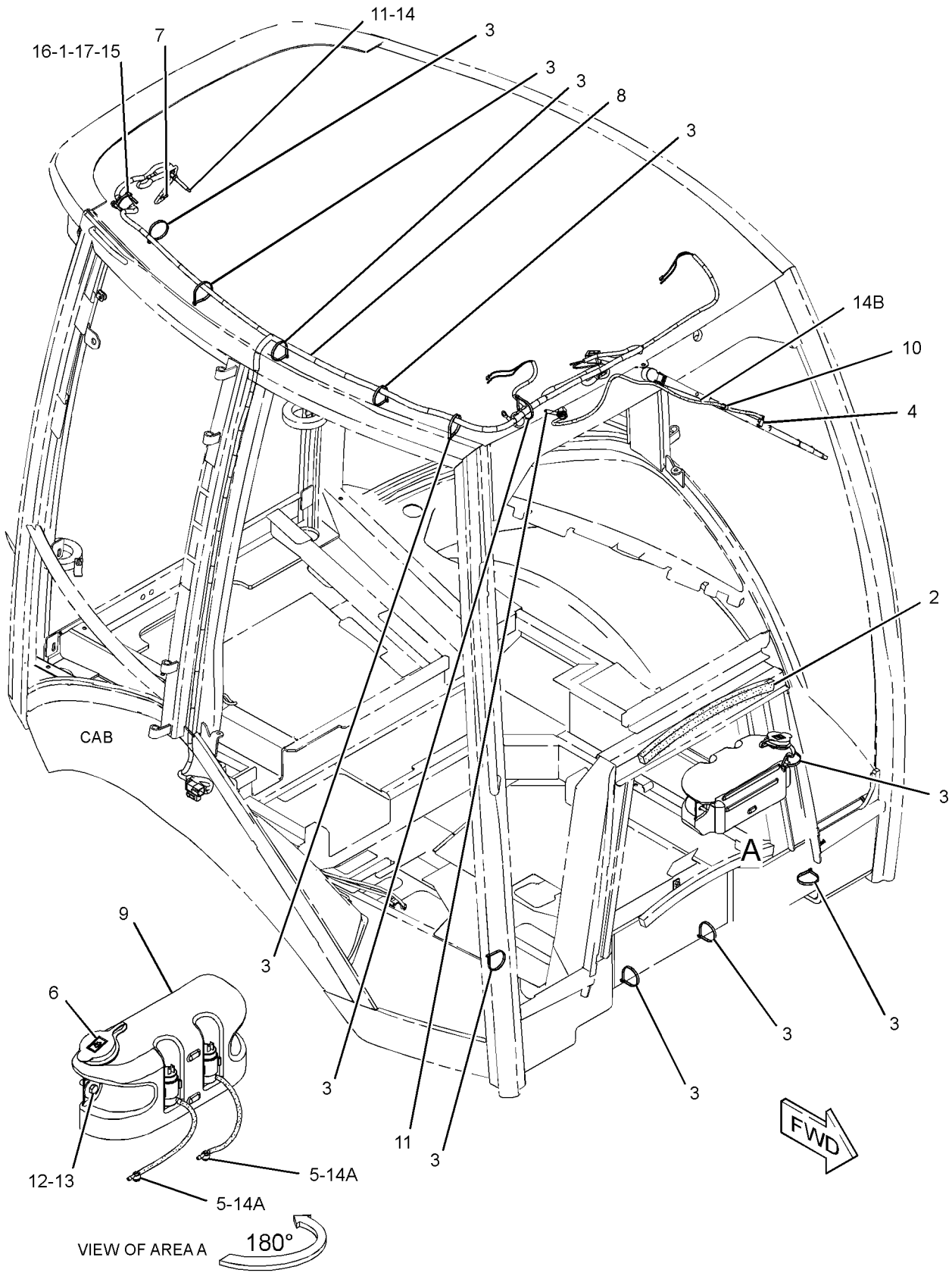

GRAPHIC #1 **<END>** g01335474

OPERATOR STATION

206-1727 WASHER GP-WINDOW

S/N: CBD4547-UP; MFG1-UP

PART OF 204-4161, 204-4162, 228-4602, 291-9195 CAB AR-ENCLOSED ROPS

AN ATTACHMENT

SMCS-7306 **i04374338**

NOTE	REF NO	GRAPHIC REF	PART NUMBER	QTY	PART NAME 1 2 3 4 5 6 (PRODUCT LEVEL)	SEE PAGE
	1	1	**282-7835**	1	PLATE	
	3	1	**3S-2093**	11	STRAP-CABLE	
	4	1	**8T-1118**	1	NOZZLE AS-WASHER	
	5	1	**9R-3469**	2	DIAPHRAGM	
	6	1	**9X-8372**	1	FILM-INSTRUCTION (WASHER FILL)	
	7	1	**121-6936**	1	CONNECTOR	
	8	1	**213-6051**	1	HARNESS AS-CAB (WINDOW WASHER)	
		1	**9W-0852**	1	PIN-CONNECTOR (14-GA TO 16-GA)	
		1	**9X-3401**	4	PIN-CONNECTOR (16-GA TO 18-GA)	
		1	**155-2265**	1	KIT-CONNECTING PLUG (8-PIN)	
		1	**155-2271**	2	KIT-CONNECTING PLUG (4-PIN)	
		1	**155-2274**	1	KIT-CONNECTING PLUG (6-PIN)	
					(EACH PLUG KIT INCLUDES PLUG AS, WEDGE & INTERFACE SEAL)	
		1	**8T-8737**	3	PLUG-SEAL	
		1	**102-8805**	1	KIT-RECEPTACLE (6-PIN)	
					(INCLUDES RECEPTACLE AS & WEDGE)	
		1	**9W-0844**	5	SOCKET-CONNECTOR (14-GA TO 16-GA)	
		1	**180-9340**	15	SOCKET-CONNECTOR (14-GA TO 18-GA)	
		1	**8L-8413**	15	STRAP-CABLE	
		1	**097-7234**	2	TERMINAL-BLADE (18-GA TO 22-GA)	
		1	**2L-8069**	1	TERMINAL-RING (2-GA TO 10-GA, 3/8-IN SCREW)	
		1	**5P-4571**	2	TERMINAL-BLADE (14-GA TO 16-GA)	
E		1	**119-3662**		TUBE-HEAT SHRINK (10.85-MM DIA) (7-CM)	
E		1	**125-7874**		TUBE-HEAT SHRINK (5.72-MM DIA) (5-CM)	
D		1	**6V-2689**		TUBE-HEAT SHRINK (6.35-MM DIA) (0.1-M)	
	9	1	**214-3763**	1	TANK GP-WINDOW WASHER	
		1	**254-5683**	1	CAP	
		1	**8E-8293**	2	GROMMET	
		1	**6T-1375**	2	PUMP AS-WASHER	
		1	**214-3742**	1	TANK-WASHER	
	10	1	**276-8791**	1	CLIP	
	11	1	**283-3451**	2	CONNECTOR AS	
	12	1	**156-0283**	2	WASHER-HARD (8.4X35X2.5-MM THK)	
M	13	1	**8T-5093**	2	BOLT-LOCKING (M8X1.25X25-MM)	
E	14	1	**144-0195**		HOSE (17-CM)	
E	14A	1	**144-0195**		HOSE (21-CM EACH)	
E	14B	1	**144-0195**		HOSE (72-CM)	
M	15	1	**8C-3798**	2	BOLT-LOCKING (M6X1X30-MM)	
	16	1	**282-7833**	1	GROMMET	
	17	1	**9X-8256**	2	WASHER (6.6X12X2-MM THK)	

D-ORDER BY THE METER
E-ORDER BY THE CENTIMETER
M-METRIC PART

206-1727 **WASHER GP-WINDOW** *(contd.)* **i04374338**

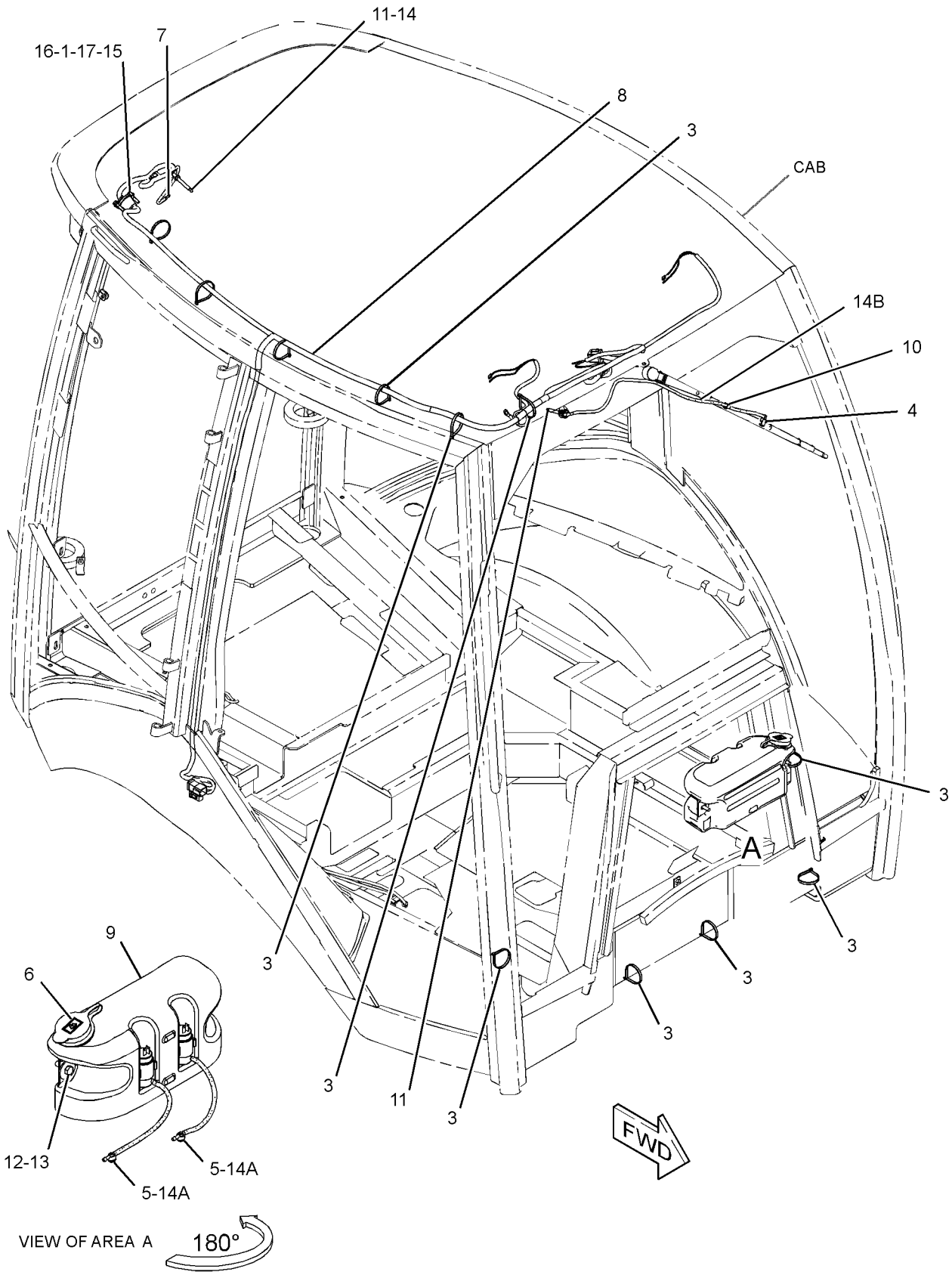

GRAPHIC #1 **<END>** g02713198

OPERATOR STATION

205-9611 WINDOW GP-CAB–RH

S/N: CBD1-UP; MFG1-UP
PART OF 206-1888, 309-3225 CAB GP-ENCLOSED ROPS
AN ATTACHMENT

SMCS-7310 **i03043840**

NOTE	REF NO	GRAPHIC REF	PART NUMBER	QTY	PART NAME 1 2 3 4 5 6 (PRODUCT LEVEL)	SEE PAGE
E	1	1	**317-4423**		SEAL (360-CM)	
	2	1	**100-7608**	1	HANDLE (RH)	
	3	1	**129-8542**	5	RETAINER (MOUNT)	
	4	1	**129-8545**	6	WASHER (13X40X3-MM THK)	
M	5	1	**136-4192**	3	BOLT (M6X1X35-MM)	
	6	1	**154-5423**	2	SPACER (6.6X12.7X17-MM THK)	
Y	7	1	**299-6985**	1	LATCH GP-CAB DOOR & WINDOW (RH)	1003
	8	1	**205-9612**	1	GLASS (RH)	
	9	1	**205-9617**	1	HINGE (UPPER)	
	10	1	**205-9618**	1	HINGE (LOWER)	
	11	1	**223-2030**	1	LATCH AS (HOLD OPEN)	
M		1	**6V-7743**	2	LOCKNUT (M6X1-THD)	
M		1	**9X-2045**	2	SCREW-TRUSS HEAD (M6X1X20-MM)	
		1	**143-2827**	1	SPRING	
M	12	1	**6V-7743**	2	LOCKNUT (M6X1-THD)	

E-ORDER BY THE CENTIMETER
M-METRIC PART
Y-SEPARATE ILLUSTRATION

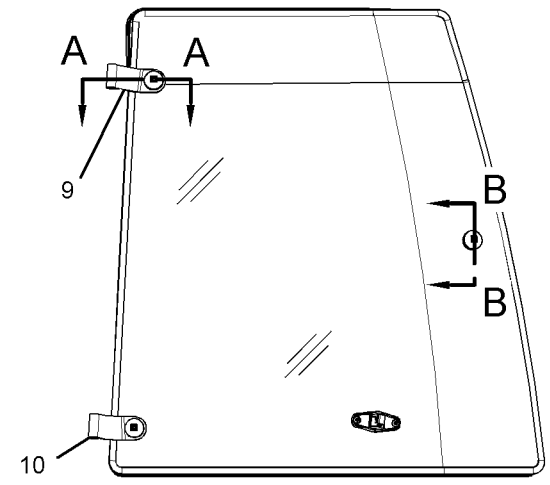

RIGHT SIDE VIEW

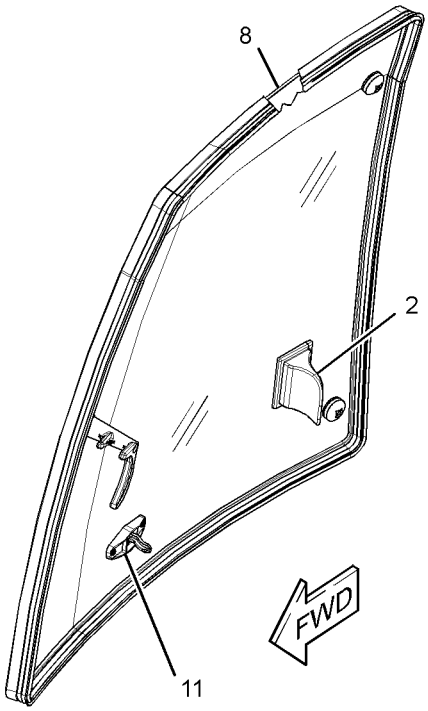

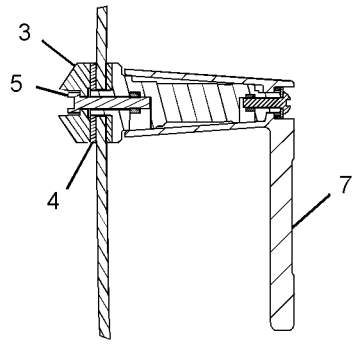

SECTION B-B

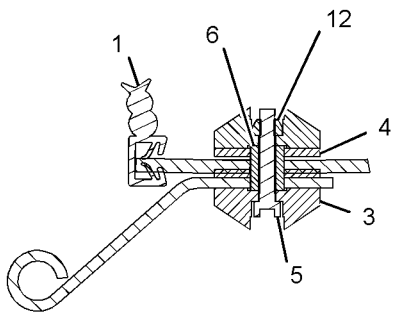

SECTION A-A

GRAPHIC #1 **<END>** g01560857

OPERATOR STATION

205-9619 WINDOW GP-CAB—UPPER, LH

S/N: CBD1-UP; MFG1-UP
PART OF 206-1889, 309-3226 CAB GP-ENCLOSED ROPS
AN ATTACHMENT

SMCS-7310 **i03873852**

NOTE	REF NO	GRAPHIC REF	PART NUMBER	QTY	PART NAME 1 2 3 4 5 6 (PRODUCT LEVEL)	SEE PAGE
E	1	1	**148-5353**		SEAL (342-CM)	
	2	1	**8Y-7309**	1	RETAINER	
	3	1	**100-7608**	1	HANDLE	
	4	1	**129-8542**	6	RETAINER	
	5	1	**129-8545**	8	WASHER (13X40X3-MM THK)	
M	6	1	**136-4192**	4	BOLT (M6X1X35-MM)	
	7	1	**154-5423**	2	SPACER (6.6X12.7X17-MM THK)	
	8	1	**205-9621**	1	GLASS (UPPER, LH)	
	9	1	**205-9623**	1	HINGE (LOWER, LH)	
	10	1	**205-9624**	1	HINGE (UPPER, LH)	
	11	1	**223-2030**	1	LATCH AS (HOLD OPEN)	
M		1	**6V-7743**	2	LOCKNUT (M6X1-THD)	
M		1	**9X-2045**	2	SCREW-TRUSS HEAD (M6X1X20-MM)	
		1	**143-2827**	1	SPRING	
Y	12	1	**299-6985**	1	LATCH GP-CAB DOOR & WINDOW (LOWER)	1003
Y	13	1	**299-6986**	1	LATCH GP-CAB DOOR & WINDOW (UPPER)	1004
M	14	1	**5C-7261**	1	NUT (M8X1.25-THD)	
M	15	1	**6V-7743**	2	LOCKNUT (M6X1-THD)	
	16	1	**4E-1384**	1	BUMPER-CONICAL	
	17	1	**242-9574**	1	SEAL-O-RING	

E-ORDER BY THE CENTIMETER
M-METRIC PART
Y-SEPARATE ILLUSTRATION

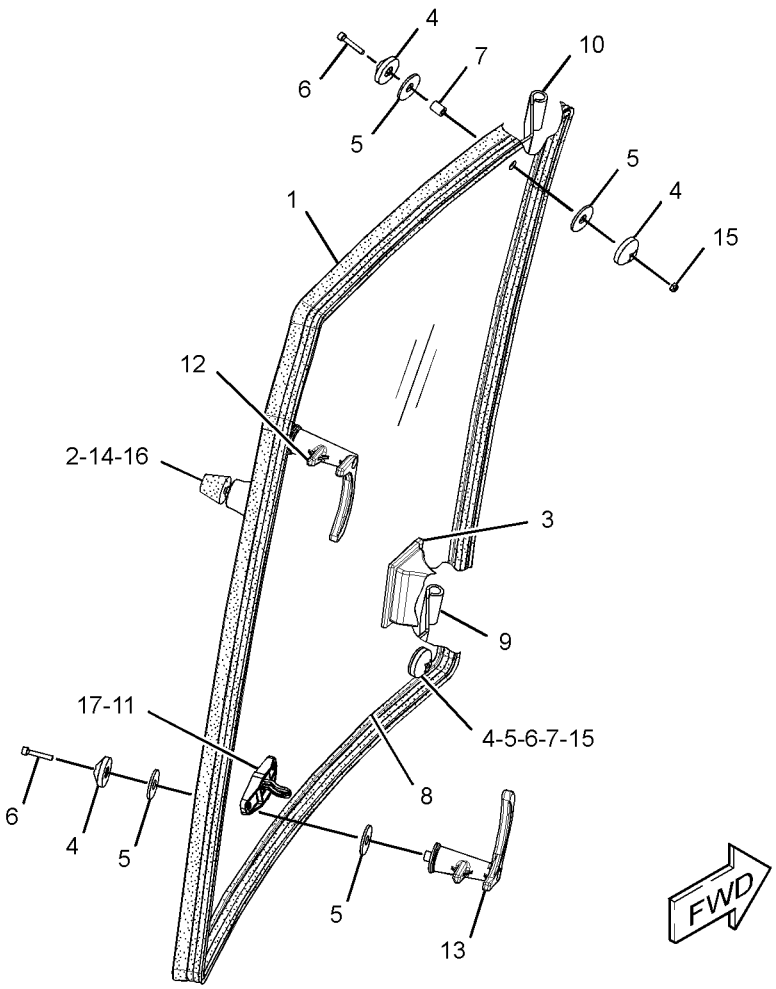

GRAPHIC #1 **<END>** g02092736

OPERATOR STATION

205-9628 WINDOW GP-CAB—UPPER, RH

S/N: CBD1-UP; MFG1-UP
PART OF 206-1889, 309-3226 CAB GP-ENCLOSED ROPS
AN ATTACHMENT

SMCS-7310 **i03873851**

NOTE	REF NO	GRAPHIC REF	PART NUMBER	QTY	PART NAME 1 2 3 4 5 6 (PRODUCT LEVEL)	SEE PAGE
E	1	1	**148-5353**		SEAL (342-CM)	
	2	1	**8Y-7309**	1	RETAINER	
	3	1	**100-7608**	1	HANDLE	
	4	1	**129-8542**	6	RETAINER	
	5	1	**129-8545**	8	WASHER (13X40X3-MM THK)	
M	6	1	**136-4192**	4	BOLT (M6X1X35-MM)	
	7	1	**154-5423**	2	SPACER (6.6X12.7X17-MM THK)	
Y	8	1	**299-6985**	1	LATCH GP-CAB DOOR & WINDOW (RH)	1003
Y	9	1	**299-6986**	1	LATCH GP-CAB DOOR & WINDOW (LH)	1004
	10	1	**205-9630**	1	GLASS (UPPER, RH)	
	11	1	**205-9633**	1	HINGE (LOWER, RH)	
	12	1	**205-9634**	1	HINGE (UPPER, RH)	
	13	1	**223-2030**	1	LATCH AS (HOLD OPEN)	
M		1	**6V-7743**	2	LOCKNUT (M6X1-THD)	
M		1	**9X-2045**	2	SCREW-TRUSS HEAD (M6X1X20-MM)	
		1	**143-2827**	2	SPRING	
M	14	1	**5C-7261**	1	NUT (M8X1.25-THD)	
M	15	1	**6V-7743**	2	LOCKNUT (M6X1-THD)	
	16	1	**4E-1384**	1	BUMPER-CONICAL	
	17	1	**242-9574**	1	SEAL-O-RING	

E-ORDER BY THE CENTIMETER
M-METRIC PART
Y-SEPARATE ILLUSTRATION

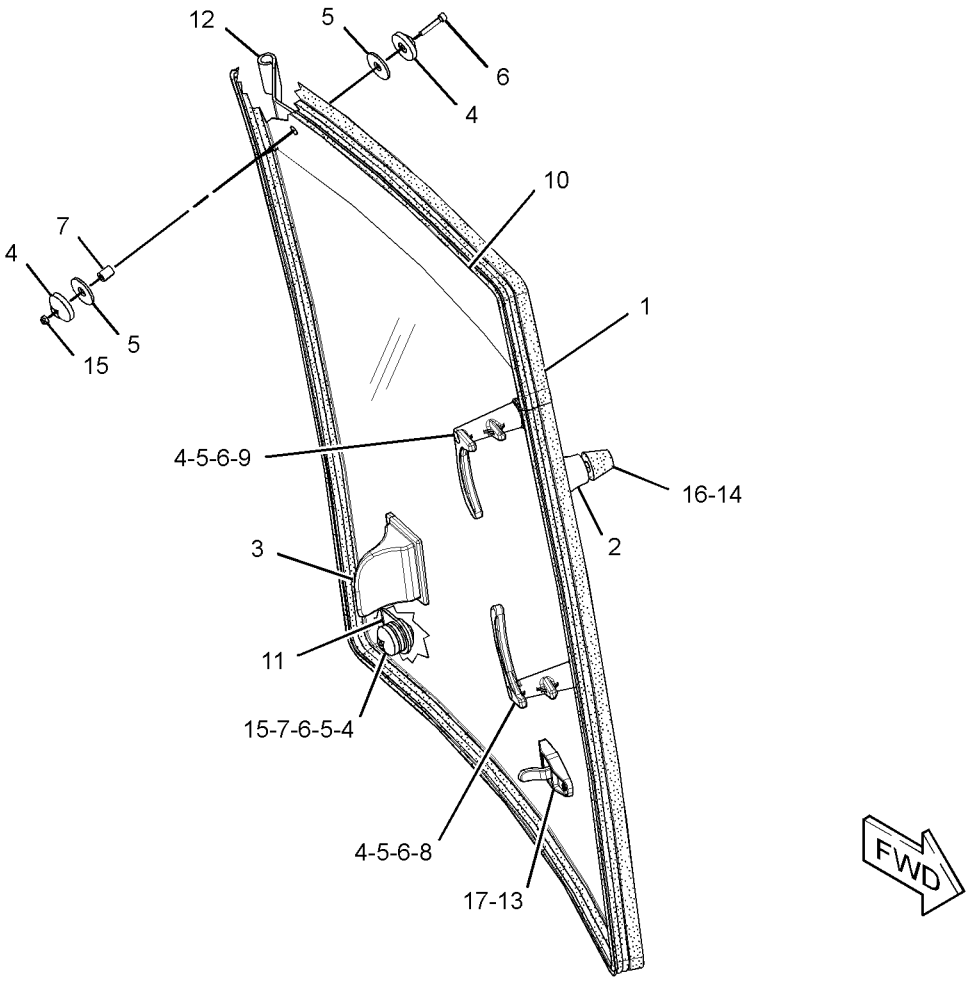

GRAPHIC #1 **<END>** g02092829

OPERATOR STATION

229-0300 WINDOW GP-CAB—REAR

S/N: CBD1-UP
PART OF 206-1888, 206-1889 CAB GP-ENCLOSED ROPS
AN ATTACHMENT

SMCS-7310 **i02495305**

NOTE	REF NO	GRAPHIC REF	PART NUMBER	QTY	PART NAME 1 2 3 4 5 6 (PRODUCT LEVEL)	SEE PAGE
	1	1	**5P-4115**	6	WASHER-HARD (7.2X19X2-MM THK)	
M	2	1	**9X-2044**	4	SCREW-TRUSS HEAD (M6X1X16-MM)	
	3	1	**9X-2132**	4	RETAINER	
	4	1	**110-5602**	2	KNOB	
	5	1	**119-8349**	2	CAP	
	6	1	**121-9743**	1	SEAL	
M	7	1	**129-3180**	4	LOCKNUT (M12X1.75-THD)	
M	8	1	**131-8203**	4	SCREW-FLAT HEAD (M8X1.25X30-MM)	
	9	1	**146-7744**	1	KIT-LATCH (RH) (RH)	
	10	1	**146-7745**	1	KIT-LATCH (LH) (LH)	
	11	1	**164-1308**	2	ROLLER	
	12	1	**164-1328**	2	SPRING AS-GAS	
	13	1	**164-1342**	4	BOLT-SPECIAL	
	14	1	**164-1343**	4	WASHER-THRUST (13.6X30X5.1-MM THK)	
	15	1	**164-1344**	4	WASHER-THRUST (13.6X30X2.1-MM THK)	
	16	1	**164-1345**	4	BEARING	
	17	1	**164-1346**	4	STRIKER	
	18	1	**164-1351**	2	PIN	
	19	1	**164-1352**	1	LATCH AS (LH)	
	20	1	**164-1353**	1	LATCH AS (RH)	
	21	1	**167-8182**	2	BUMPER	
	22	1	**171-2870**	2	SPACER (7X10X5.4-MM THK)	
B	23	1	**201-9465**	4	SHIM (1-MM THK)	
	24	1	**218-4854**	1	PLATE AS	
	25	1	**218-4856**	1	PLATE AS	
	26	1	**229-0298**	1	LINKAGE AS	
	27	1	**229-0305**	1	FRAME AS	
	28	1	**229-0308**	1	GLASS	
	29	1	**229-0310**	1	WINDOW AS	
		1	**229-0309**	1	GLASS	
M	30	1	**5C-2890**	2	NUT (M6X1-THD)	
	31	1	**5P-4116**	4	WASHER-HARD (8.8X20.5X2-MM THK)	
M	32	1	**8T-4200**	4	BOLT (M8X1.25X16-MM)	
	33	1	**8T-4223**	4	WASHER-HARD (13.5X25.5X3-MM THK)	
D	34	1	**5P-5637**		SEAL (1-M)	
E	35	1	**9X-6383**		SEAL (88-CM)	
E	36	1	**164-1314**		SEAL-BULK (153-CM EACH)	
E	37	1	**164-1354**		CHANNEL-WINDOW (90-CM)	
E	38	1	**164-1354**		CHANNEL-WINDOW (75-CM)	
E	39	1	**164-1354**		CHANNEL-WINDOW (74-CM)	

B-USE AS REQUIRED
D-ORDER BY THE METER
E-ORDER BY THE CENTIMETER
M-METRIC PART

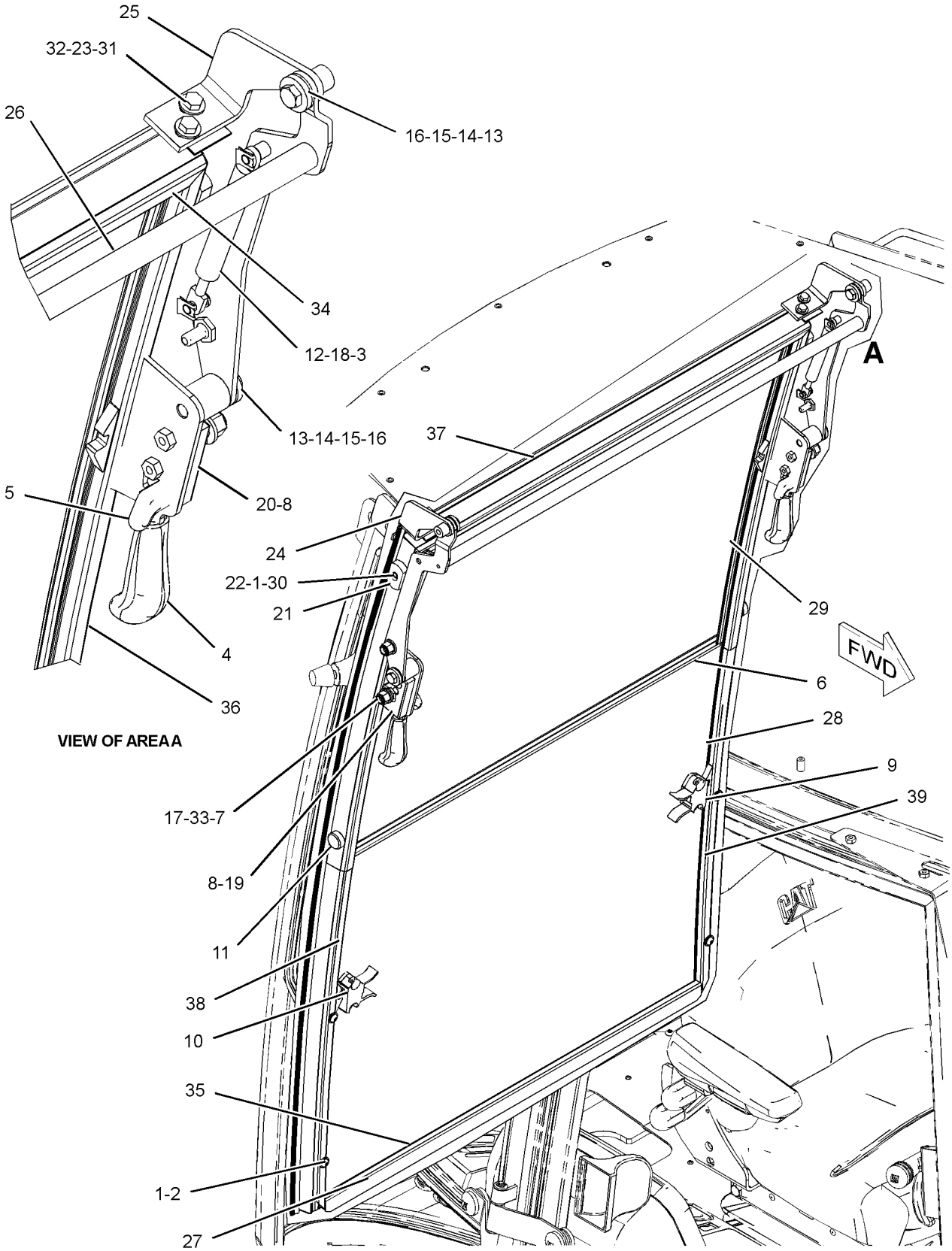

GRAPHIC #1

<END>

g01257484

OPERATOR STATION

229-0300 WINDOW GP-CAB—REAR

S/N: CBD1-UP; MFG1-UP
PART OF 206-1888, 206-1889, 309-3225, 309-3226 CAB GP-ENCLOSED ROPS
AN ATTACHMENT

SMCS-7310 **i04238189**

NOTE	REF NO	GRAPHIC REF	PART NUMBER	QTY	PART NAME 1 2 3 4 5 6 (PRODUCT LEVEL)	SEE PAGE
	1	1	**5P-4115**	6	WASHER-HARD (7.2X19X2-MM THK)	
M	2	1	**9X-2044**	4	SCREW-TRUSS HEAD (M6X1X16-MM)	
	3	1	**9X-2132**	4	RETAINER	
	4	1	**110-5602**	2	KNOB	
	5	1	**119-8349**	2	CAP	
	6	1	**308-1273**	1	SEAL	
M	7	1	**129-3180**	4	LOCKNUT (M12X1.75-THD)	
M	8	1	**179-7262**	4	SCREW-FLAT HEAD (M8X1.25X40-MM)	
	9	1	**146-7744**	1	KIT-LATCH (RH)	
	10	1	**146-7745**	1	KIT-LATCH (LH)	
	11	1	**164-1308**	2	ROLLER	
	12	1	**164-1328**	2	SPRING AS-GAS	
	13	1	**164-1342**	4	BOLT-SPECIAL	
	14	1	**164-1343**	4	WASHER-THRUST (13.6X30X5.1-MM THK)	
	15	1	**164-1344**	4	WASHER-THRUST (13.6X30X2.1-MM THK)	
	16	1	**164-1345**	4	BEARING	
	17	1	**164-1346**	4	STRIKER	
	18	1	**164-1351**	2	PIN	
	19	1	**164-1352**	1	LATCH AS (LH)	
	20	1	**164-1353**	1	LATCH AS (RH)	
	21	1	**167-8182**	2	BUMPER	
	22	1	**171-2870**	2	SPACER (7X10X5.4-MM THK)	
B	23	1	**201-9465**	4	SHIM (1-MM THK)	
	24	1	**359-3107**	1	PLATE AS (RH)	
	25	1	**359-3106**	1	PLATE AS (LH)	
	26	1	**229-0298**	1	LINKAGE AS	
	27	1	**290-1273**	1	FRAME AS	
	28	1	**229-0308**	1	GLASS	
	29	1	**229-0310**	1	WINDOW AS	
		1	**229-0309**	1	GLASS	
M	30	1	**5C-2890**	2	NUT (M6X1-THD)	
	31	1	**5P-4116**	4	WASHER-HARD (8.8X20.5X2-MM THK)	
M	32	1	**8T-4200**	4	BOLT (M8X1.25X16-MM)	
	33	1	**8T-4223**	2	WASHER-HARD (13.5X25.5X3-MM THK)	
D	34	1	**5P-5637**		SEAL (1-M)	
E	35	1	**9X-6383**		SEAL (88-CM)	
E	36	1	**164-1314**		SEAL-BULK (153-CM EACH)	
E	37	1	**164-1354**		CHANNEL-WINDOW (90-CM)	
E	37A	1	**164-1354**		CHANNEL-WINDOW (75-CM EACH)	
E	37B	1	**164-1354**		CHANNEL-WINDOW (74-CM EACH)	
	38	1	**150-8015**	2	GASKET	
	39	1	**8T-2970**	4	WASHER (13X28X1.6-MM THK)	

B-USE AS REQUIRED
D-ORDER BY THE METER
E-ORDER BY THE CENTIMETER
M-METRIC PART

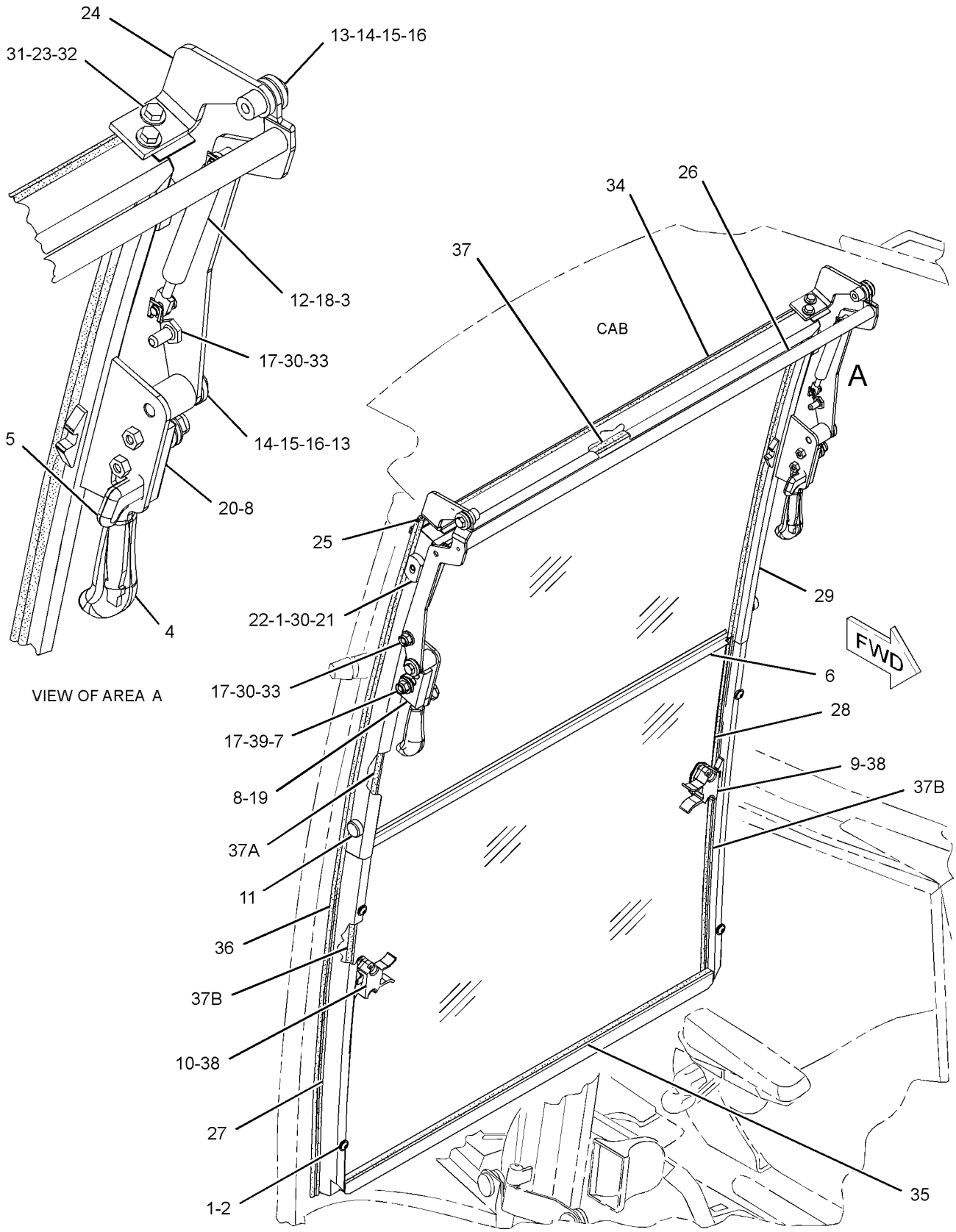

GRAPHIC #1

<END>

g02136116

OPERATOR STATION

205-9585 WINDOW GP-DOOR–LH

S/N: CBD1-UP; MFG1-UP
PART OF 206-1592 DOOR GP-CAB
AN ATTACHMENT

SMCS-7308, 7310 **i03811449**

NOTE	REF NO	GRAPHIC REF	PART NUMBER	QTY	PART NAME 1 2 3 4 5 6 (PRODUCT LEVEL)	SEE PAGE
E	1	1	**317-4423**		SEAL (354-CM)	
	2	1	**100-7608**	1	HANDLE	
	3	1	**129-8542**	5	RETAINER	
	4	1	**129-8545**	6	WASHER (13X40X3-MM THK)	
M	5	1	**136-4192**	3	BOLT (M6X1X35-MM)	
	6	1	**154-5423**	2	SPACER (6.6X12.7X17-MM THK)	
Y	7	1	**299-6986**	1	LATCH GP-CAB DOOR & WINDOW (LH)	1004
	8	1	**205-9587**	1	GLASS (LH)	
	9	1	**205-9590**	1	HINGE (UPPER)	
	10	1	**205-9591**	1	HINGE (LOWER)	
	11	1	**223-2030**	1	LATCH AS (HOLD OPEN)	
M		1	**6V-7743**	2	LOCKNUT (M6X1-THD)	
M		1	**9X-2045**	2	SCREW-TRUSS HEAD (M6X1X20-MM)	
		1	**143-2827**	1	SPRING	
M	12	1	**6V-7743**	2	LOCKNUT (M6X1-THD)	
	13	1	**242-9574**	1	SEAL-O-RING	

E-ORDER BY THE CENTIMETER
M-METRIC PART
Y-SEPARATE ILLUSTRATION

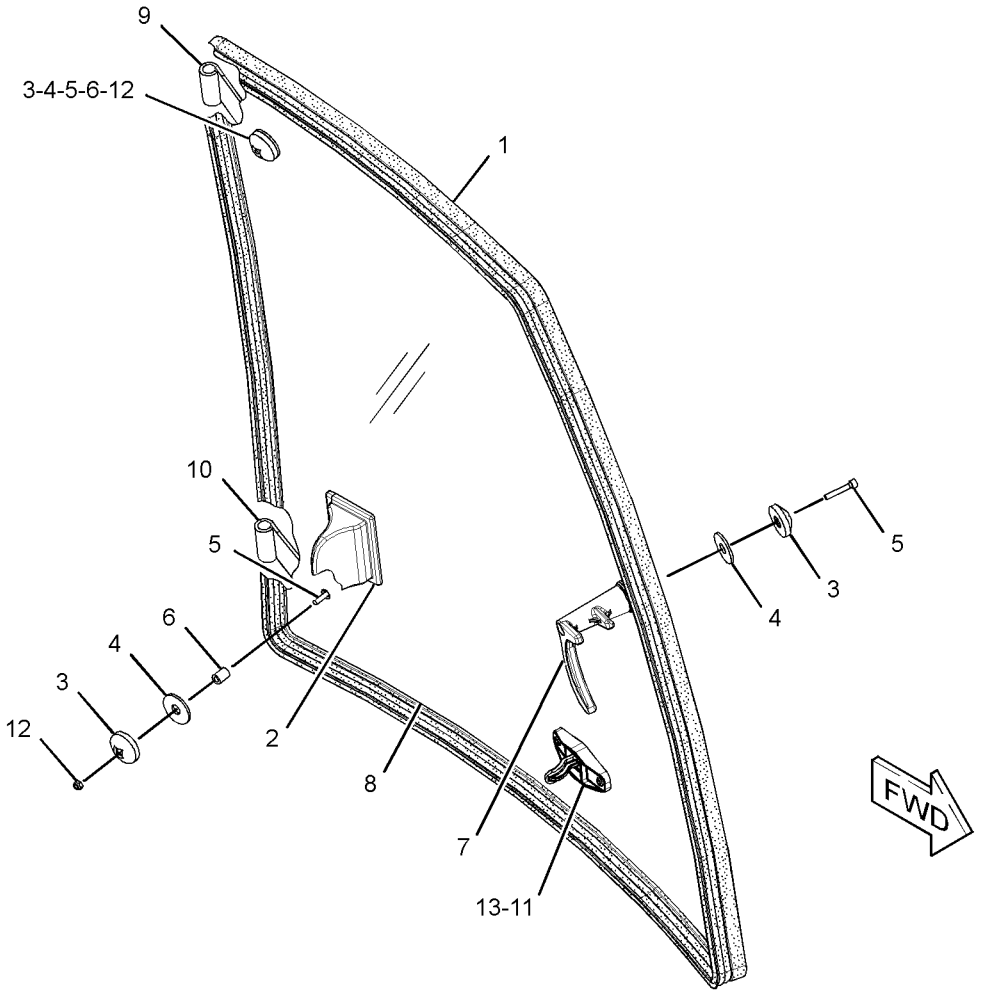

GRAPHIC #1 **<END>** g02092575

OPERATOR STATION

205-9595 WINDOW GP-DOOR–RH

S/N: CBD1-UP; MFG1-UP
PART OF 206-1593 DOOR GP-CAB
AN ATTACHMENT

SMCS-7308, 7310 **i03811451**

NOTE	REF NO	GRAPHIC REF	PART NUMBER	QTY	PART NAME 1 2 3 4 5 6 (PRODUCT LEVEL)	SEE PAGE
E	1	1	**317-4423**		SEAL (354-CM)	
	2	1	**100-7608**	1	HANDLE	
	3	1	**129-8542**	5	RETAINER	
	4	1	**129-8545**	6	WASHER (13X40X3-MM THK)	
M	5	1	**136-4192**	3	BOLT (M6X1X35-MM)	
	6	1	**154-5423**	2	SPACER (6.6X12.7X17-MM THK)	
Y	7	1	**299-6985**	1	LATCH GP-CAB DOOR & WINDOW (RH)	1003
	8	1	**205-9597**	1	GLASS (RH)	
	9	1	**205-9614**	1	HINGE (LOWER)	
	10	1	**205-9615**	1	HINGE (UPPER)	
	11	1	**223-2030**	1	LATCH AS (HOLD OPEN)	
M		1	**6V-7743**	2	LOCKNUT (M6X1-THD)	
M		1	**9X-2045**	2	SCREW-TRUSS HEAD (M6X1X20-MM)	
		1	**143-2827**	1	SPRING	
M	12	1	**6V-7743**	2	LOCKNUT (M6X1-THD)	
	13	1	**242-9574**	1	SEAL-O-RING	

E-ORDER BY THE CENTIMETER
M-METRIC PART
Y-SEPARATE ILLUSTRATION

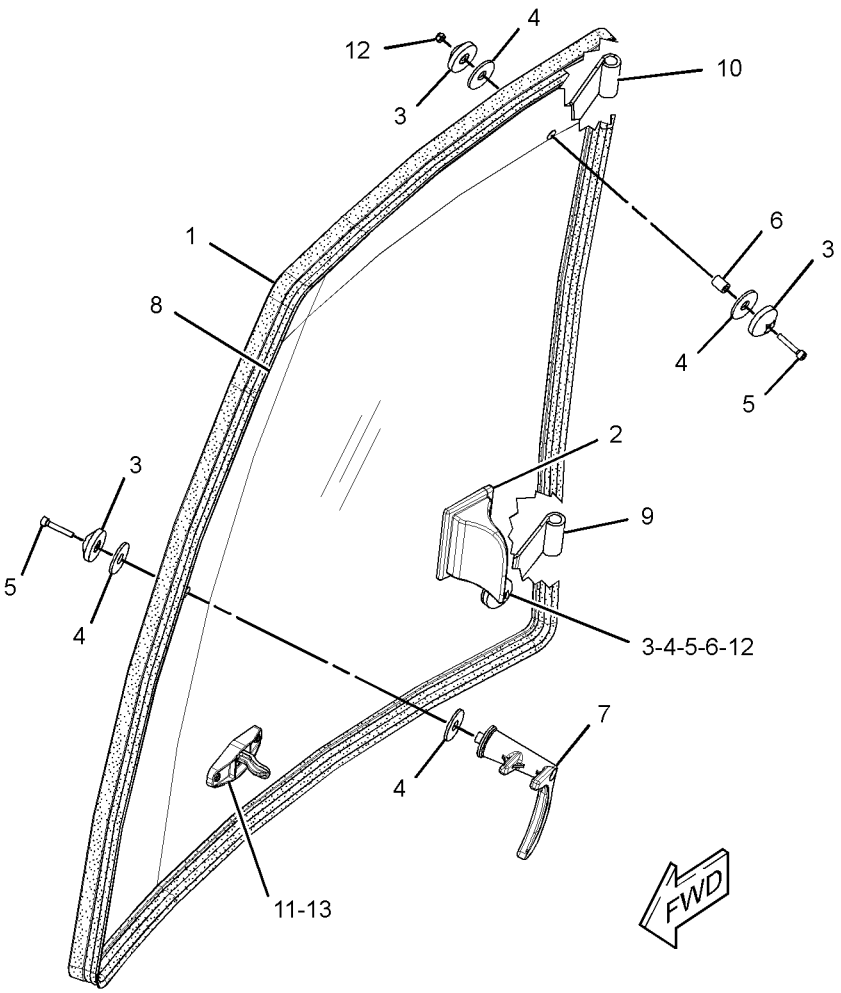

GRAPHIC #1 **<END>** g02092693

OPERATOR STATION

206-1728 WIPER & WASHER GP-WINDOW

S/N: CBD1-4547

PART OF 204-4164, 292-9690 CANOPY AR-OPEN ROPS

AN ATTACHMENT

SMCS-7305, 7306 **i02548967**

NOTE	REF NO	GRAPHIC REF	PART NUMBER	QTY	PART NAME 1 2 3 4 5 6 (PRODUCT LEVEL)	SEE PAGE
	1	1	**3S-2093**	10	STRAP-CABLE	
	2	1	**276-8791**	1	CLIP	
	3	1	**8T-1118**	1	NOZZLE AS-WASHER	
	4	1	**9R-3469**	1	DIAPHRAGM	
	5	1	**101-0745**	1	BLADE AS-WIPER (600-MM) (FRONT)	
	6	1	**283-3451**	1	CONNECTOR AS	
	7	1	**213-6051**	1	HARNESS AS-CAB	
		1	**097-7234**	1	TERMINAL-BLADE (18-GA TO 22-GA)	
E		1	**119-3662**		TUBE-HEAT SHRINK (10.85-MM DIA) (7-CM)	
E		1	**125-7874**		TUBE-HEAT SHRINK (5.72-MM DIA) (5-CM)	
		1	**124-8616**	2	TERMINAL-RECEPTACLE	
		1	**8L-8413**	15	STRAP-CABLE	
		1	**102-8804**	1	KIT-RECEPTACLE (4-PIN)	
					(EACH RECEPTACLE KIT INCLUDES RECEPTACLE AS & WEDGE)	
		1	**155-2265**	1	KIT-CONNECTING PLUG (8-PIN)	
		1	**155-2271**	2	KIT-CONNECTING PLUG (4-PIN)	
		1	**155-2274**	1	KIT-CONNECTING PLUG (6-PIN)	
					(EACH PLUG KIT INCLUDES PLUG AS, WEDGE & INTERFACE SEAL)	
	8	1	**154-5410**	1	ARM-WINDOW WIPER	
Y	9	1	**186-2589**	1	MOTOR GP-WINDOW WIPER (FRONT)	1018
	10	1	**214-3763**	1	TANK GP-WINDOW WASHER	
M	11	1	**6V-7357**	1	BOLT (M6X1X25-MM)	
	12	1	**8T-4205**	1	WASHER-HARD (7.2X14.5X2-MM THK)	
E	13	1	**144-0195**		HOSE (217-CM)	
E	14	1	**144-0195**		HOSE (79-CM)	
E	15	1	**144-0195**		HOSE (297-CM)	
	16	1	**156-0283**	2	WASHER-HARD (8.4X35X2.5-MM THK)	
	17	1	**9X-8372**	1	FILM-INSTRUCTION (WASHER FILL)	
M	18	1	**8T-5093**	1	BOLT-LOCKING (M8X1.25X25-MM)	
D	19	1	**6V-0505**		SEAL (0.5-M)	
	20	1	**6K-9632**	1	TEE	
	21	1	**144-0195**		HOSE (15-CM EACH)	

D-ORDER BY THE METER
E-ORDER BY THE CENTIMETER
M-METRIC PART
Y-SEPARATE ILLUSTRATION

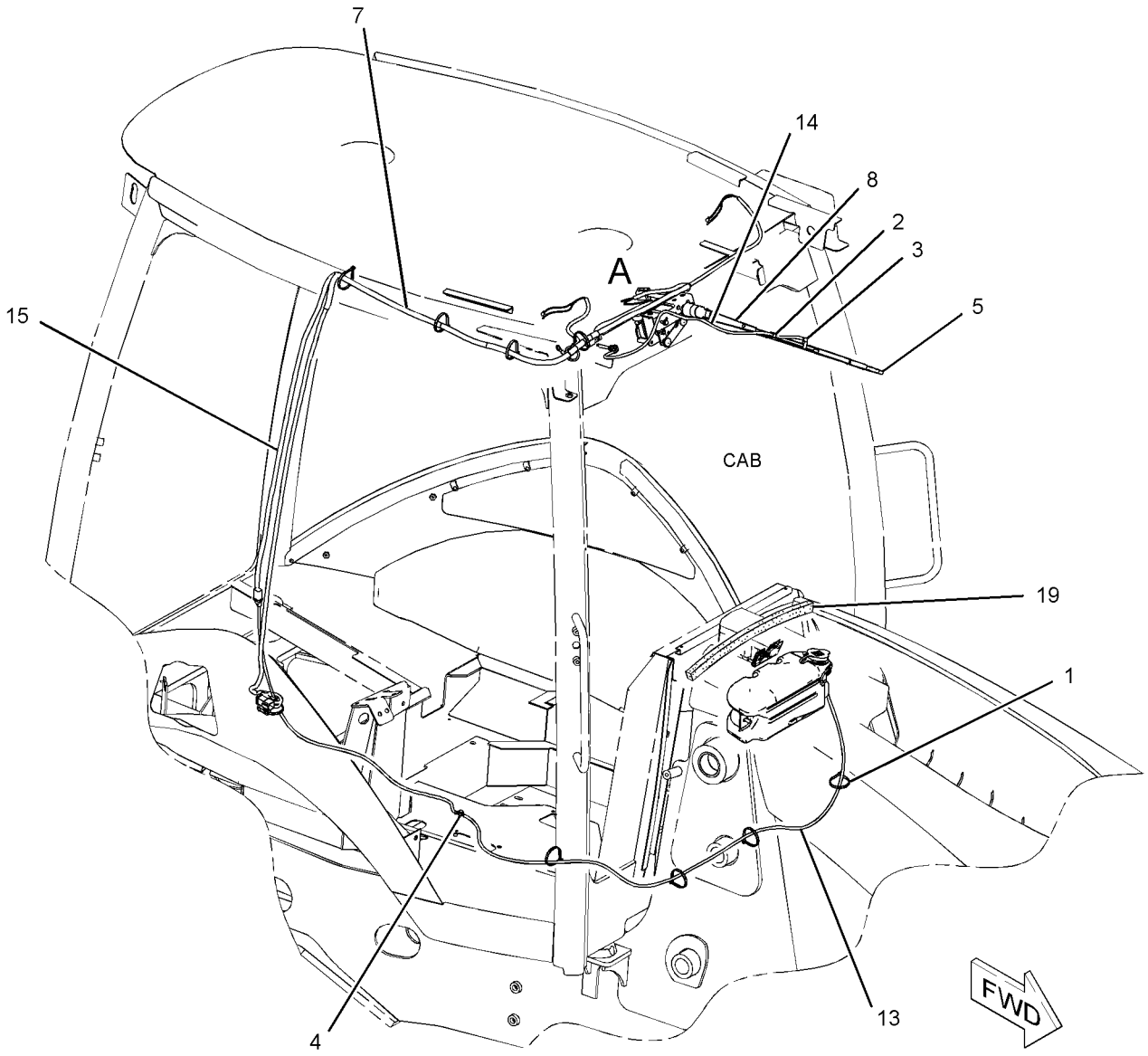

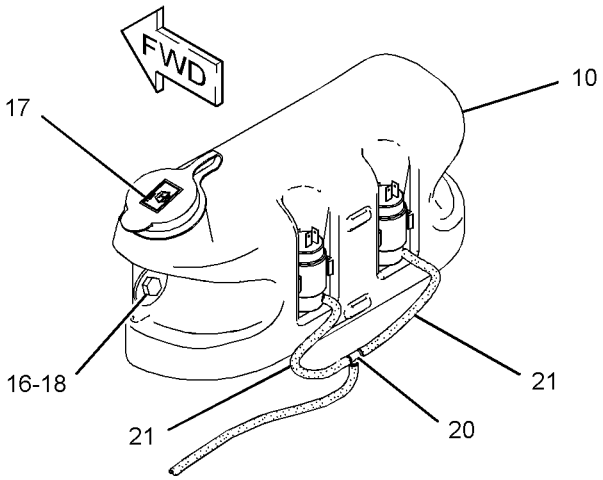

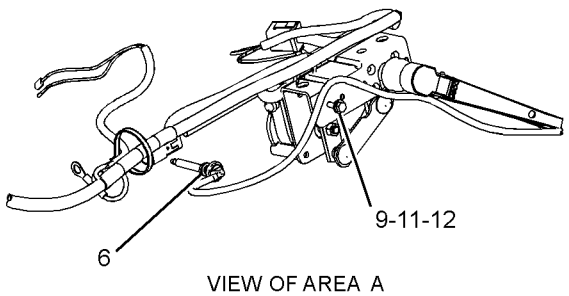

VIEW OF AREA A

GRAPHIC #1 **<END>** g01277958

OPERATOR STATION

206-1728 WIPER & WASHER GP-WINDOW

S/N: CBD4548-UP; MFG1-UP
PART OF 204-4164, 292-9690 CANOPY AR-OPEN ROPS
AN ATTACHMENT

SMCS-7305, 7306 **i03488508**

NOTE	REF NO	GRAPHIC REF	PART NUMBER	QTY	PART NAME 1 2 3 4 5 6 (PRODUCT LEVEL)	SEE PAGE
	1	1	**3S-2093**	10	STRAP-CABLE	
	2	1	**276-8791**	1	CLIP	
	3	1	**8T-1118**	1	NOZZLE AS-WASHER	
	4	1	**9R-3469**	1	DIAPHRAGM	
	5	1	**101-0745**	1	BLADE AS-WIPER (600-MM) (FRONT)	
	6	1	**283-3451**	1	CONNECTOR AS	
	7	1	**213-6051**	1	HARNESS AS-CAB (WIPER MOTOR)	
	8	1	**154-5410**	1	ARM-WINDOW WIPER	
Y	9	1	**186-2589**	1	MOTOR GP-WINDOW WIPER (FRONT)	1018
	10	1	**214-3763**	1	TANK GP-WINDOW WASHER	
		1	**6T-1375**	2	PUMP AS-WASHER	
		1	**8E-8293**	2	GROMMET	
		1	**214-3742**	1	TANK-WASHER	
		1	**254-5683**	1	CAP	
M	11	1	**6V-7357**	1	BOLT (M6X1X25-MM)	
	12	1	**8T-4205**	1	WASHER-HARD (7.2X14.5X2-MM THK)	
E	13	1	**144-0195**		HOSE (217-CM)	
E	13A	1	**144-0195**		HOSE (79-CM)	
E	13B	1	**144-0195**		HOSE (297-CM)	
E	13C	1	**144-0195**		HOSE (15-CM EACH)	
	14	1	**156-0283**	2	WASHER-HARD (8.4X35X2.5-MM THK)	
	15	1	**9X-8372**	1	FILM-INSTRUCTION (WASHER FILL)	
M	16	1	**8T-5093**	1	BOLT-LOCKING (M8X1.25X25-MM)	
	17	1	**6K-9632**	1	TEE	

E-ORDER BY THE CENTIMETER
M-METRIC PART
Y-SEPARATE ILLUSTRATION

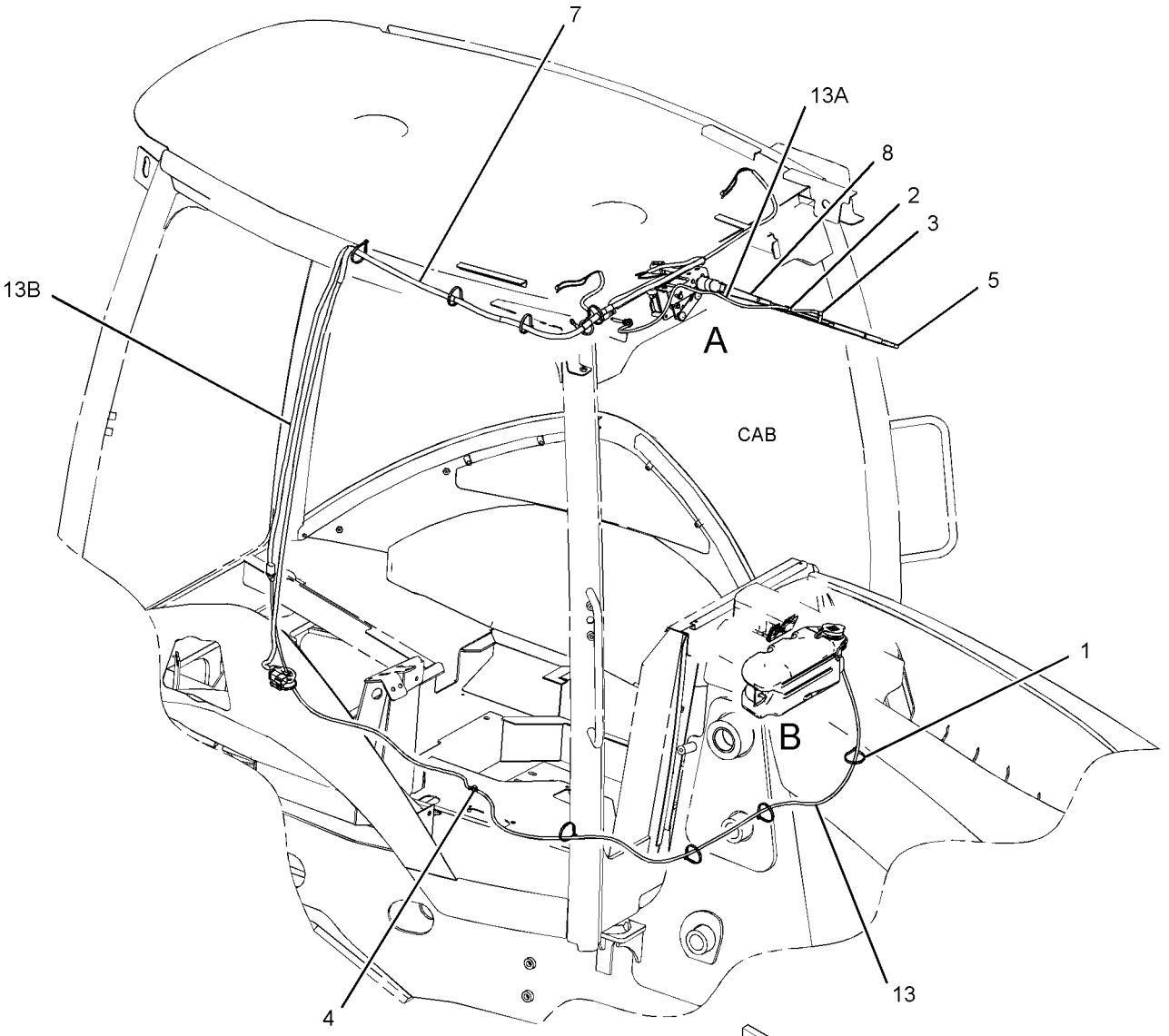

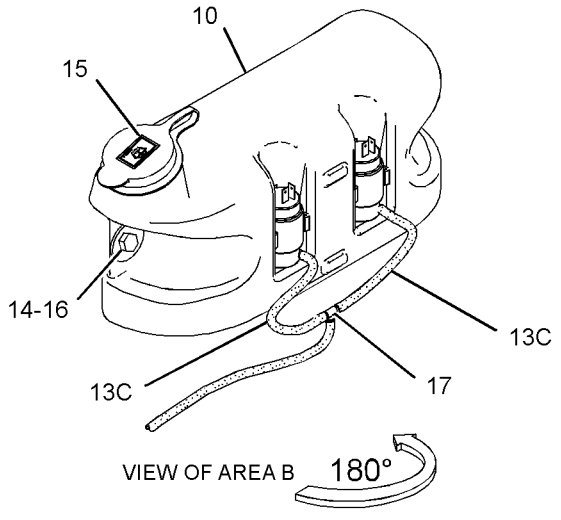

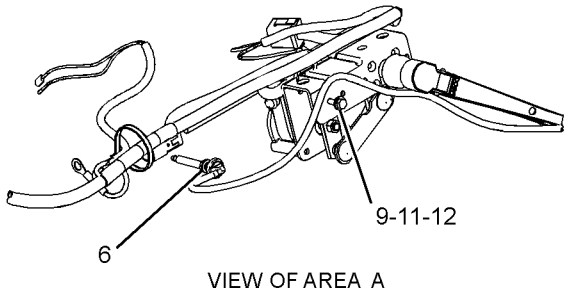

GRAPHIC #1 **<END>** g01761114

OPERATOR STATION

206-1725 WIPER GP-WINDOW

S/N: CBD1-6665

PART OF 204-4161, 204-4162, 228-4602 CAB AR-ENCLOSED ROPS

AN ATTACHMENT

SMCS-7305 **i02650974**

NOTE	REF NO	GRAPHIC REF	PART NUMBER	QTY	PART NAME 1 2 3 4 5 6 (PRODUCT LEVEL)	SEE PAGE
	1	1	**5C-8811**	1	BLADE AS-WIPER (500-MM) (REAR)	
	2	1	**101-0745**	1	BLADE AS-WIPER (600-MM) (FRONT)	
	3	1	**154-5410**	1	ARM-WINDOW WIPER (FRONT)	
	4	1	**160-2169**	2	SPACER (7X11X8.4-MM THK)	
Y	5	1	**186-2589**	1	MOTOR GP-WINDOW WIPER (FRONT)	1018
	6	1	**214-4709**	1	SWITCH AS-ROCKER (WIPER, WASHER, REAR)	
		1	**111-7899**	1	GASKET	
	7	1	**220-2000**	1	MOTOR GP-WINDOW WIPER (REAR)	
		1	**186-3735**	5	PIN-CONNECTOR (16-GA TO 18-GA)	
		1	**102-8804**	1	KIT-RECEPTACLE (4-PIN)	
					(INCLUDES RECEPTACLE AS & WEDGE)	
	8	1	**220-2001**	1	ARM AS-WIPER (REAR)	
		1	**136-3194**	1	NOZZLE AS-WASHER	
E		1	**194-5171**		HOSE (35-CM)	
	9	1	**223-8263**	1	PLATE	
	10	1	**229-0306**	1	PLATE	
M	11	1	**6V-7357**	1	BOLT (M6X1X25-MM)	
M	12	1	**8T-4138**	2	BOLT (M6X1X20-MM)	
M	13	1	**8T-4171**	4	BOLT (M6X1X12-MM)	
	14	1	**8T-4205**	9	WASHER-HARD (7.2X14.5X2-MM THK)	
M	15	1	**5C-2890**	1	NUT (M6X1-THD)	
M	16	1	**8T-4971**	1	BOLT (M6X1X30-MM)	

E-ORDER BY THE CENTIMETER
M-METRIC PART
Y-SEPARATE ILLUSTRATION

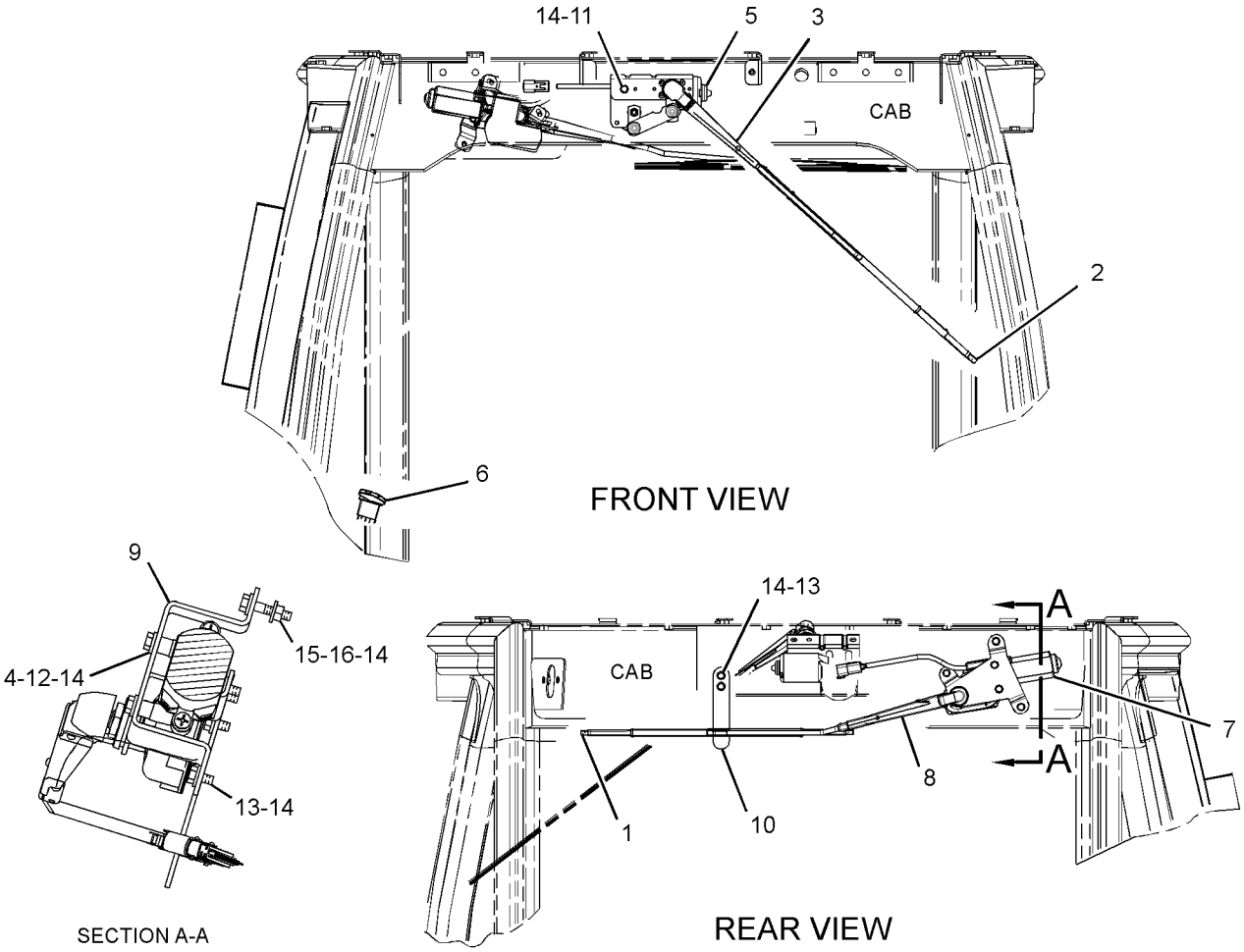

GRAPHIC #1 **<END>** g01336241

OPERATOR STATION

206-1725 WIPER GP-WINDOW

S/N: CBD6666-UP; MFG1-UP

PART OF 204-4161, 204-4162, 228-4602, 291-9195 CAB AR-ENCLOSED ROPS

AN ATTACHMENT

SMCS-7305 **i04368922**

NOTE	REF NO	GRAPHIC REF	PART NUMBER	QTY	PART NAME 1 2 3 4 5 6 (PRODUCT LEVEL)	SEE PAGE
	1	1	**5C-8811**	1	BLADE AS-WIPER (500-MM) (REAR)	
	2	1	**101-0745**	1	BLADE AS-WIPER (600-MM) (FRONT)	
	3	1	**154-5410**	1	ARM-WINDOW WIPER (FRONT)	
	4	1	**160-2169**	2	SPACER (7X11X8.4-MM THK)	
Y	5	1	**186-2589**	1	MOTOR GP-WINDOW WIPER (FRONT)	1018
	6	1	**214-4709**	1	SWITCH AS-ROCKER (WIPER, WASHER, REAR)	
		1	**111-7899**	1	GASKET	
CY	7	1	**330-5010**	1	MOTOR GP-WINDOW WIPER (REAR)	1019
	8	1	**220-2001**	1	ARM AS-WIPER (REAR)	
E		1	**194-5171**		HOSE (35-CM)	
		1	**305-9190**	1	NOZZLE AS-WASHER	
	9	1	**223-8263**	1	PLATE	
	10	1	**229-0306**	1	PLATE	
M	11	1	**6V-7357**	3	BOLT (M6X1X25-MM)	
M	12	1	**8T-4971**	1	BOLT (M6X1X30-MM)	
M	13	1	**8T-4171**	4	BOLT (M6X1X12-MM)	
	14	1	**8T-4205**	9	WASHER-HARD (7.2X14.5X2-MM THK)	
M	15	1	**5C-2890**	1	NUT (M6X1-THD)	

C-CHANGE FROM PREVIOUS TYPE
E-ORDER BY THE CENTIMETER
M-METRIC PART
Y-SEPARATE ILLUSTRATION

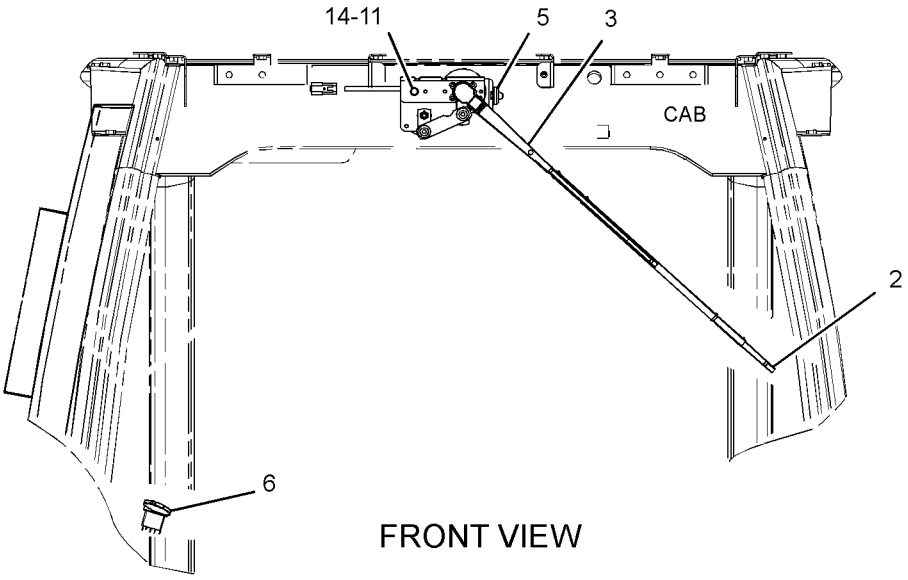

FRONT VIEW

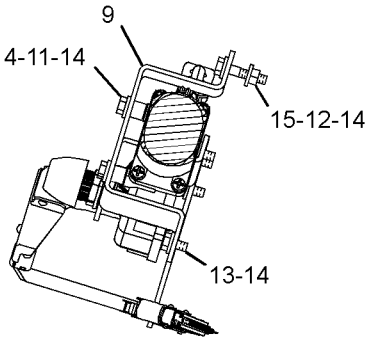

SECTION A-A

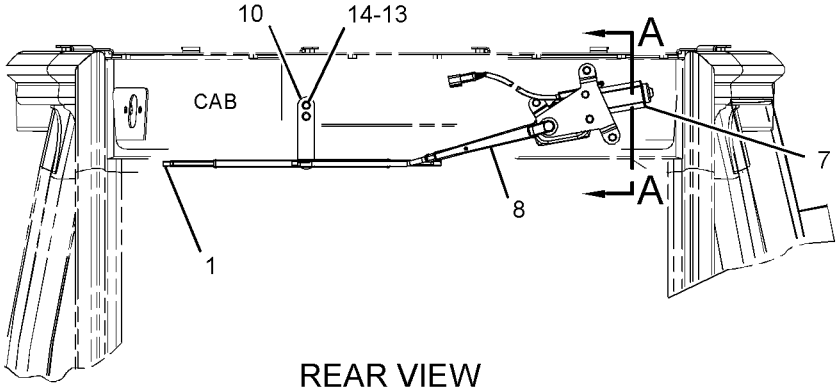

REAR VIEW

GRAPHIC #1

<END>

g02592516

SERVICE EQUIPMENT AND SUPPLIES

250-7914 FILM GP

S/N: CBD1-UP; MFG1-UP

PART OF 213-9284, 372-5176 CHASSIS AR

SMCS-7405, 7557 **i02658763**

NOTE	REF NO	GRAPHIC REF	PART NUMBER	QTY	PART NAME 1 2 3 4 5 6 (PRODUCT LEVEL)	SEE PAGE
	1	1	**294-4955**	1	FILM-IDENTIFICATION (416E, RH)	
	2	1	**292-2833**	1	FILM-IDENTIFICATION (BOOM, RH)	
	3	1	**294-4954**	1	FILM-IDENTIFICATION (416E, LH)	
	4	1	**292-2834**	1	FILM-IDENTIFICATION (BOOM, LH)	

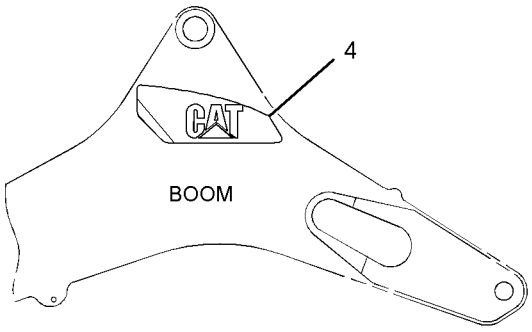

LEFT SIDE VIEW

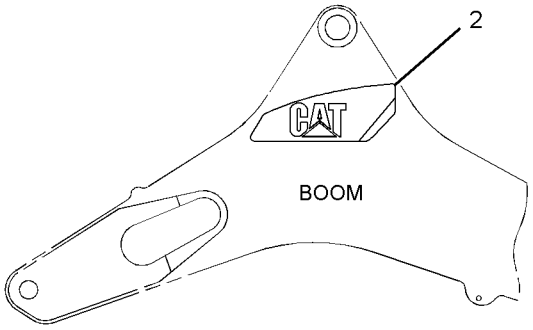

RIGHT SIDE VIEW

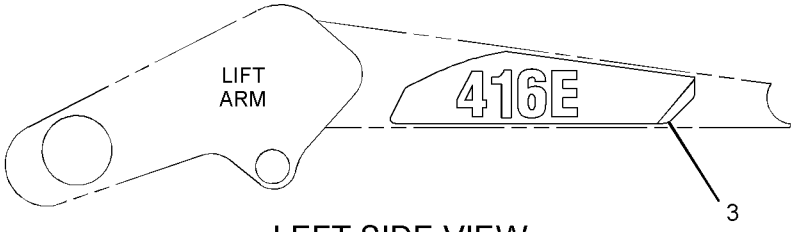

LEFT SIDE VIEW

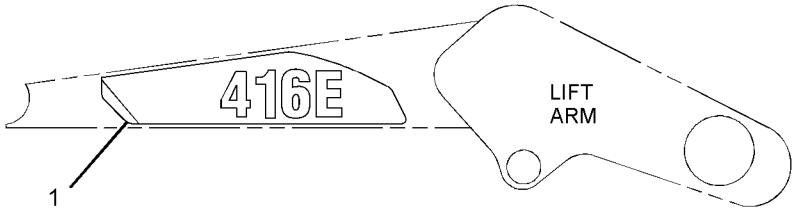

RIGHT SIDE VIEW

GRAPHIC #1 **<END>** g01403188

306-7466 FILM GP

S/N: MFG1-UP

PART OF 291-9190 CHASSIS AR

SMCS-7405, 7557 **i03859033**

NOTE	REF NO	GRAPHIC REF	PART NUMBER	QTY	PART NAME 1 2 3 4 5 6 (PRODUCT LEVEL)	SEE PAGE
	1	1	**294-4955**	1	FILM-IDENTIFICATION (416E, RH)	
	2	1	**292-2833**	1	FILM-IDENTIFICATION (BOOM, RH)	
	3	1	**294-4954**	1	FILM-IDENTIFICATION (416E, LH)	
	4	1	**292-2834**	1	FILM-IDENTIFICATION (BOOM, LH)	

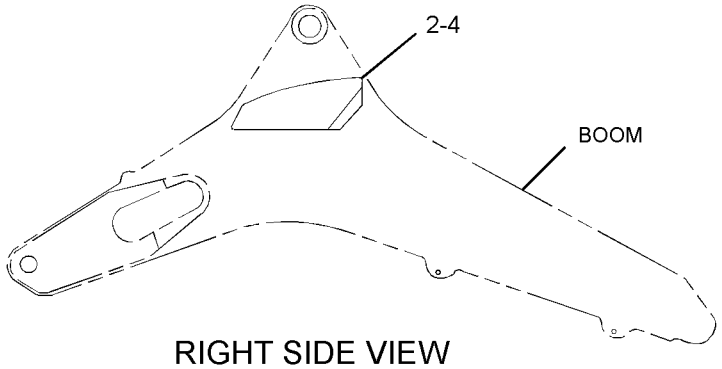

RIGHT SIDE VIEW

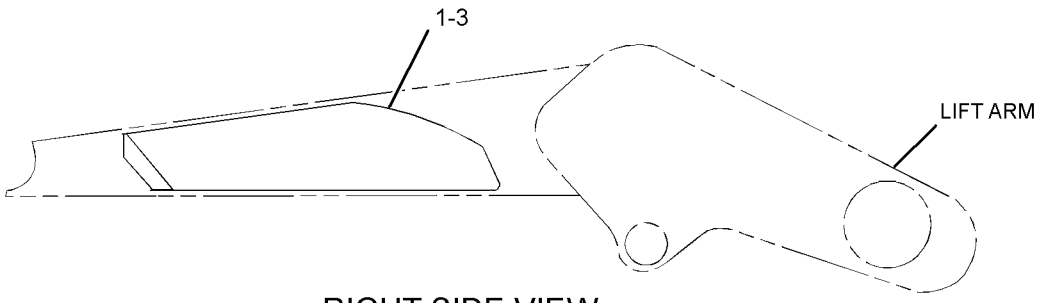

RIGHT SIDE VIEW

GRAPHIC #1 **<END>** g01874637

SERVICE EQUIPMENT AND SUPPLIES

175-7877 LINK GP-SHIPPING

S/N: CBD1-UP; MFG1-UP

AN ATTACHMENT

SMCS-6513 **i04483650**

NOTE	REF NO	GRAPHIC REF	PART NUMBER	QTY	PART NAME 1 2 3 4 5 6 (PRODUCT LEVEL)	SEE PAGE
	1	1	**6K-0806**	2	STRAP-CABLE	
	2	1	**120-9286**	1	PLATE	

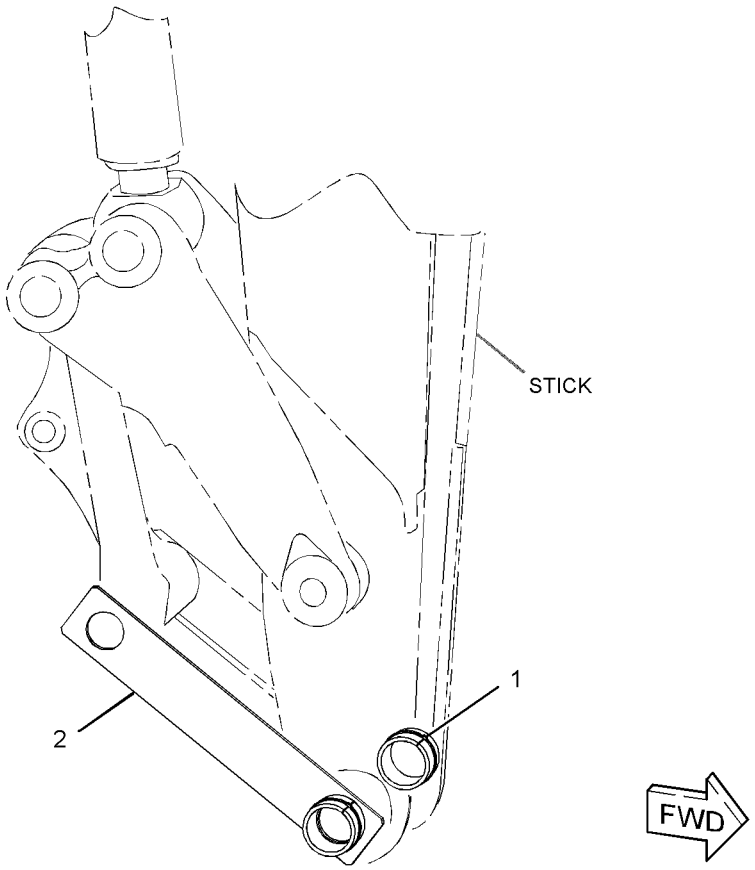

GRAPHIC #1 **<END>** g02712516

SERVICE EQUIPMENT AND SUPPLIES

216-0909 LOCK GP-VANDALISM

S/N: CBD1-UP; MFG1-UP
PART OF 356-0067, 356-0068, 356-0069, 374-3517, 374-3518, 374-3519, 374-3521, 374-3529, 374-6532, 374-6533, 374-6534, 374-6535, 374-6536
DISTRIBUTION AR
AN ATTACHMENT

SMCS-7315 **i02497023**

NOTE	PART NUMBER	QTY	PART NAME 1 2 3 4 5 6 (PRODUCT LEVEL)	SEE PAGE
J	**246-2641**	1	PADLOCK GP (VANDALISM GUARD)	
J-REQUIRES 5P-8500 KEY				

<END>

248-5712 PLATE & FILM GP

S/N: CBD1-UP
PART OF 213-9284 CHASSIS AR

SMCS-7405 **i03251101**

NOTE	PART NUMBER	QTY	PART NAME 1 2 3 4 5 6 (PRODUCT LEVEL)	SEE PAGE
	239-6989	1	PLATE-SERIAL NUMBER (MACHINE)	
			(MACHINE MAIN FRAME)	
	225-4150	1	PLATE-SERVICE INFORMATION (MACHINE)	
			(ON SERVICE PLATE ON MAIN FRAME)	
	250-7910	1	FILM-INSTRUCTION (BOOM LOCK)	
			(NEXT TO BOOM LOCK ON RH CONSOLE)	
	250-7911	1	FILM-INSTRUCTION (VARIABLE SPEED)	
			(ON RH CONSOLE NEXT TO GOVERNOR CONTROL HANDLE)	
	159-3590	1	FILM-IDENTIFICATION (WATER SEPARATOR)	
			(ON LH SIDE OF THE MAIN FRAME NEXT TO THE FUEL TANK 20-MM+/-10 FROM THE FUEL TANK	
			BRACKET & UP FROM THE BOTTOM EDGE OF THE MAIN FRAME 50-MM+/-10)	
	258-9999	4	FILM-IDENTIFICATION (LIFT EYE LOCATION)	
			(APPLY A TOTAL OF 4 FILMS. THE FIRST 2 FILMS MUST BE APPLIED TO THE FRONT SIDE OF THE FRONT AXLE BETWEEN THE CHASSIS	
			& WHEEL ASSEMBLY ON THE LH & RH SIDE OF THE MACHINE. THE LAST W FILMS MUST BE APPLIED TO THE STAB PAD CENTERED UNDER	
			THE LIFTING HOLE ORIENTED WITH THE ARROW POINTING UP WHEN THE STABILIZER IS IN UPWARD POSITION)	
	252-2157	4	FILM-INFORMATION (TIE-DOWN)	
			(APPLY 2 FILMS, ONE ON EACH SIDE OF THE MACHINE IN FRONT OF THE MAIN FRAME ABOVE THE FRONT AXLE ABOVE THE TIE DOWN	
			(MOUNTING PLATE. APPLY THE OTHER 2 FILMS ON THE REAR OF THE MACHINE ON THE MAIN FRAME NEXT TO THE TIE DOWN HOLES UNDER	
			THE SWING)	
	252-8435	1	FILM-IDENTIFICATION (START SWITCH, READ OMM)	
			(ON RH CONSOLE AROUND KEYSWITCH)	
	289-3412	1	FILM-COVER (PROTECT) (BATTERY BOX)	
			(PLACE FILM INSIDE BATTERY BOX ON THE LEFT SIDE 150 +/- 5-MM UP FROM THE BOTTOM OF THE BOX)	
	231-9361	1	FILM-IDENTIFICATION (FUSE, RELAY)	
			(UNDER RH CONSOLE COVER THAT COVERS THE POWER DISTRIBUTION BLOCK. ORIENT FILM SUCH THAT IT	

NOTE	PART NUMBER	QTY	PART NAME 1 2 3 4 5 6 (PRODUCT LEVEL)	SEE PAGE
			(CAN BE READ WHEN THE COVER IS OPEN & THE BLOCK IS EXPOSED)	
	159-8033	1	FILM-IDENTIFICATION (12-VOLT)	
			(INSIDE BATTERY BOX DOOR CENTERED FROM SIDE TO SIDE ABOVE THE JUMP START WARNING FILM & CENTERED FROM TOP TO BOTTOM	
			(BETWEEN THE JUMP START FILM & BEND IN THE DOOR)	
	255-0796	1	FILM-IDENTIFICATION (LUBRICATION POINTS)	
			(UNDER THE HOOD ON PRE-CLEANER, REMOVE SUPPPLIER FILM & ORIENT FILM SUCH THAT IT CAN BE READ FROM THE LEFT SIDE OF THE	
			(MACHINE)	
	231-9358	1	FILM-IDENTIFICATION (FUSE PANEL)	
			(INSIDE RH CONSOLE ACCESS PANEL. ORIENT FILM SUCH THAT IT CAN BE READ WHILE STANDING	
			ON THE GROUND WITH THE ACCESS DOOR OPEN & VIEWING FILM)	
	134-7258	1	FILM-INFORMATION (EXTENDED LIFE COOLANT)	
			(ON SHUNT TANK NEXT TO RADIATOR CAP ORIENTED SUCH THAT YOU CAN READ IT FROM MACHINE)	
	225-0041	1	FILM-INFORMATION (ROPS, FOPS, READ OMM)	
			(ON THE LH A-POST 350+/-5-MM FROM THE FLOOR. THE UPPER FILM SHOULD BE THE NO WELD/NO DRILL	
			(& THE ROPS/FOPS IN THE LOWER POSITION)	
	202-9824	1	FILM-INFORMATION (BRAZIL)	
			(PLACE BRAZILIAN INFORMATION PLATE NEAR THE PIN PLATE)	
	124-2456	1	FILM-INSTRUCTION (NO STEP)	
			(POSITION INSIDE BATTERY BOX DOOR 75 +/-5-MM FROM THE RIGHT EDGE & THE TOP EDGE IS EVEN WITH THE 12 VOLT FILM)	
	219-0302	1	FILM-WARNING (NO WELD, NO DRILL, READ OMM)	
			(ON THE LH A-POST 350 +/- 5-MM FROM THE FLOOR. THE UPPER FILM SHOULD BE THE	
			(NO WELD/NO DRILL & THE ROPS/FOPS IN THE LOWER POSITION)	
	225-0312	1	FILM-WARNING (JUMP START, READ OMM, INTL)	
			(INSIDE OF BATTERY BOX DOOR CENTERED ABOVE DOOR LATCH & 75 +/- 5-MM UP FROM THE EDGE OF DOOR)	
	226-1240	2	FILM-WARNING (CRUSH HAZARD, STAY BACK, INTL)	
			(ON BOOM 700-MM +/-5-MM UP FROM CENTER LINE OF SWING & BOOM LOWER FOOT PIN & 150-MM +/-5-MM	
			(OVER FROM THE OUTER EDGE OF BOOM CENTERED & ORIENTATED SO THAT THE FILM CAN BE READ WHILE STANDING ON THE GROUND)	
	239-9430	1	FILM-WARNING (ARM BRACE, READ OMM, INTL)	
			(ON SAFETY BRACE CENTERED FROM TOP TO BOTTOM & SIDE TO SIDE)	
	255-0793	1	FILM-WARNING (READ OMM)	
			(ON RH CONSOLE UNDER KEYSWITCH IN AREA PROVIDED. UNIVERSAL FILM IS LOCATED ON UPPER	
			(HALF & THE SEATBELT FILM ON THE LOWER HALF)	
	255-0794	1	FILM-WARNING (SEAT BELT)	
			(ON RH CONSOLE UNDER KEYSWITCH IN AREA PROVIDED. UNIVERSAL FILM IS LOCATED ON UPPER	
			(HALF & THE SEATBELT FILM ON THE LOWER HALF)	
	259-4402	1	FILM-WARNING (HOT FLUID UNDER PRESSURE)	

248-5712 **PLATE & FILM GP** ***(contd.)*** **i03251101**

NOTE	PART NUMBER	QTY	PART NAME 1 2 3 4 5 6 (PRODUCT LEVEL)	SEE PAGE
			(ON TOP OF THE RADIATOR SHUNT TANK CAP. ORIENT FILM SO THAT IT CAN BE READ WHILE	
			(LOOKING AT THE ENGINE AREA FROM THE LEFT SIDE OF THE TRACTOR)	
	224-8946	1	FILM-WARNING (NO ETHER SPRAY/AIR INTK, INTL)	
			(UNDER HOOD ON PRE-CLEANER UNDER THE SERVICE FILM. ORIENT FILM SUCH THAT IT CAN BE READ FROM LEFT SIDE OF THE MACHINE)	
	240-7095	2	FILM-WARNING (NO ENTRANCE, EXIT, READ OMM)	
			(ON THE REAR OF THE CAB AR THE BOTTOM STRUCTURE 50 +/- 5-MM FROM THE TOWARD RED REFLECTOR)	

<END>

SERVICE EQUIPMENT AND SUPPLIES

263-8591 PLATE & FILM GP

S/N: CBD1-UP; MFG1-UP
PART OF 216-8801, 216-8821 BUCKET GP-MULTIPURPOSE
AN ATTACHMENT

SMCS-7405 **i02520028**

NOTE	REF NO	GRAPHIC REF	PART NUMBER	QTY	PART NAME 1 2 3 4 5 6 (PRODUCT LEVEL)	SEE PAGE
	1	1	**247-6118**	2	FILM-WARNING (CRUSH HAZARD, STAY BACK)	

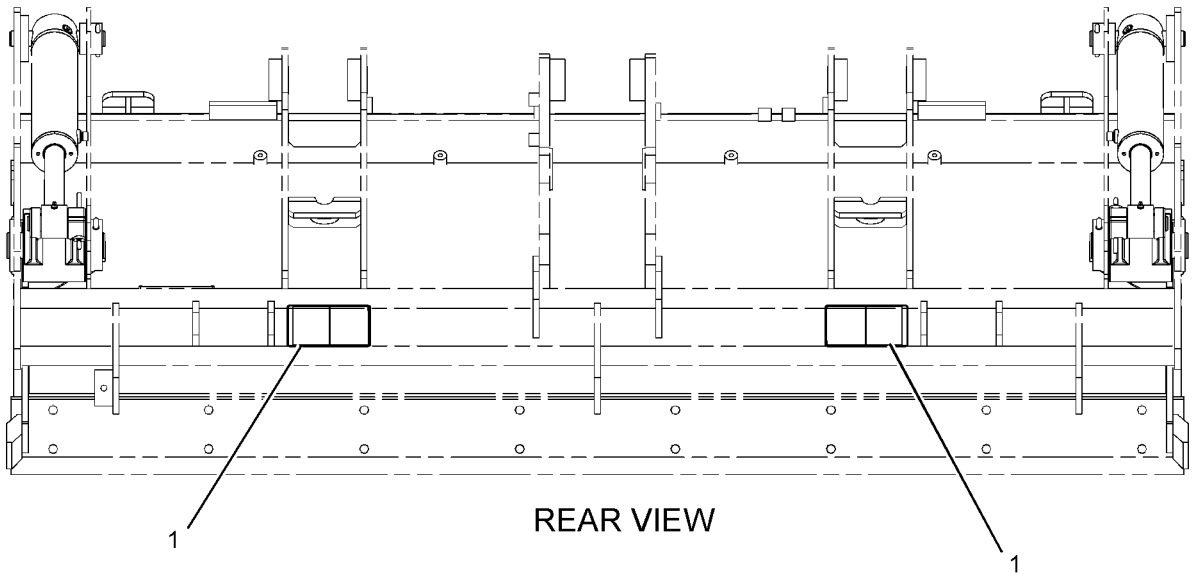

GRAPHIC #1 **<END>** g01231780

SERVICE EQUIPMENT AND SUPPLIES

372-5182 PLATE & FILM GP

S/N: MFG1-UP

PART OF 372-5176 CHASSIS AR

SMCS-7405 **i04527155**

NOTE	PART NUMBER	QTY	PART NAME 1 2 3 4 5 6 (PRODUCT LEVEL)	SEE PAGE
	239-6989	1	PLATE-SERIAL NUMBER (MACHINE)	
			(ON MACHINE MAIN FRAME)	
	225-4150	1	PLATE-SERVICE INFORMATION (MACHINE)	
			(ON MACHINE MAIN FRAME)	
B	**193-5913**	2	PLUG	
B	**193-5914**	16	PLUG	
B	**193-5915**	6	PLUG	
B	**193-5916**	4	PLUG	
	289-3412	1	FILM-COVER (PROTECT)	
			(PLACE FILM INSIDE BATTERY BOX ON THE LEFT SIDE 150 +/- 5-MM UP FROM THE BOTTOM OF THE BOX)	
	159-3590	1	FILM-IDENTIFICATION (WATER SEPARATOR)	
			(ON LH SIDE OF THE MAIN FRAME NEXT TO THE FUEL TANK 20-MM+/-10 FROM THE FUEL TANK	
			BRACKET & UP FROM THE BOTTOM EDGE OF THE MAIN FRAME 50-MM+/-10)	
	159-8033	1	FILM-IDENTIFICATION (12-VOLT)	
			(INSIDE BATTERY BOX DOOR CENTERED FROM SIDE TO SIDE ABOVE THE JUMP START WARNING FILM & CENTERED FROM TOP TO BOTTOM	
			BETWEEN THE JUMP START FILM & BEND IN THE DOOR)	
	231-9358	1	FILM-IDENTIFICATION (FUSE PANEL)	
			(INSIDE RH CONSOLE ACCESS PANEL. ORIENT FILM SUCH THAT IT CAN BE READ WHILE STANDING	
			ON THE GROUND WITH THE ACCESS DOOR OPEN & VIEWING FILM)	
	231-9361	1	FILM-IDENTIFICATION (FUSE, RELAY)	
			(UNDER RH CONSOLE COVER THAT COVERS THE POWER DISTRIBUTION BLOCK. ORIENT FILM SUCH THAT IT	
			CAN BE READ WHEN THE COVER IS OPEN & THE BLOCK IS EXPOSED)	
	252-8435	1	FILM-IDENTIFICATION (START SWITCH, READ OMM)	
			(ON RH CONSOLE AROUND KEYSWITCH)	
	255-0796	1	FILM-IDENTIFICATION (LUBRICATION POINTS)	
			(UNDER THE HOOD ON PRE-CLEANER, REMOVE SUPPPLIER FILM & ORIENT FILM SUCH THAT IT CAN BE READ FROM THE LEFT SIDE OF THE	
			MACHINE)	
	258-9999	4	FILM-IDENTIFICATION (LIFT EYE LOCATION)	
			(ON FRONT SIDE OF THE FRONT AXLE BETWEEN THE CHASSIS	
			& WHEEL ASSEMBLY ON THE LH & RH SIDE OF THE MACHINE & ASLO ON THE STAB PAD CENTERED UNDER	
			THE LIFTING HOLE ORIENTED WITH THE ARROW POINTING UP WHEN THE STABILIZER IS IN UPWARD POSITION)	
	134-7258	1	FILM-INFORMATION (EXTENDED LIFE COOLANT)	
			(ON SHUNT TANK NEXT TO RADIATOR CAP ORIENTED SUCH THAT YOU CAN READ IT FROM MACHINE)	
	225-0041	1	FILM-INFORMATION (ROPS, FOPS, READ OMM)	

SERVICE EQUIPMENT AND SUPPLIES

372-5182 **PLATE & FILM GP** *(contd.)* **i04527155**

NOTE	PART NUMBER	QTY	PART NAME 1 2 3 4 5 6 (PRODUCT LEVEL)	SEE PAGE
			(ON THE LH A-POST 350+/-5-MM FROM THE FLOOR. THE UPPER FILM SHOULD BE THE NO WELD/NO DRILL	
			& THE ROPS/FOPS IN THE LOWER POSITION)	
	252-2157	4	FILM-INFORMATION (TIE-DOWN)	
			(ONE ON EACH SIDE OF THE MACHINE IN FRONT OF THE MAIN FRAME ABOVE THE FRONT AXLE ABOVE THE TIE DOWN	
			MOUNTING PLATE & ALSO ON THE REAR OF THE MACHINE ON THE MAIN FRAME NEXT TO THE TIE DOWN HOLES UNDER	
	124-2456	1	FILM-INSTRUCTION (NO STEP)	
			(POSITION INSIDE BATTERY BOX DOOR 75 +/-5-MM FROM THE RIGHT EDGE & THE TOP EDGE IS EVEN WITH THE 12 VOLT FILM)	
	250-7910	1	FILM-INSTRUCTION (BOOM LOCK)	
			(NEXT TO BOOM LOCK ON RH CONSOLE)	
	250-7911	1	FILM-INSTRUCTION (VARIABLE SPEED)	
			(ON RH CONSOLE NEXT TO GOVERNOR CONTROL HANDLE)	
	219-0302	1	FILM-WARNING (NO WELD, NO DRILL, READ OMM)	
			(ON THE LH A-POST 350 +/- 5-MM FROM THE FLOOR. THE UPPER FILM SHOULD BE THE	
			NO WELD/NO DRILL & THE ROPS/FOPS IN THE LOWER POSITION)	
	224-8946	1	FILM-WARNING (NO ETHER SPRAY/AIR INTK, INTL)	
			(UNDER HOOD ON PRE-CLEANER UNDER THE SERVICE FILM. ORIENT FILM SUCH THAT IT CAN BE READ FROM LEFT SIDE OF THE MACHINE)	
	225-0312	1	FILM-WARNING (JUMP START, READ OMM, INTL)	
			(INSIDE OF BATTERY BOX DOOR CENTERED ABOVE DOOR LATCH & 75 +/- 5-MM UP FROM THE EDGE OF DOOR)	
	226-1240	2	FILM-WARNING (CRUSH HAZARD, STAY BACK, INTL)	
			(ON BOOM 700-MM +/-5-MM UP FROM CENTER LINE OF SWING & BOOM LOWER FOOT PIN & ALSO 150-MM +/-5-MM	
			OVER FROM THE OUTER EDGE OF BOOM)	
	239-9430	1	FILM-WARNING (ARM BRACE, READ OMM, INTL)	
			(ON SAFETY BRACE CENTERED FROM TOP TO BOTTOM & SIDE TO SIDE)	
	240-7095	2	FILM-WARNING (NO ENTRANCE, EXIT, READ OMM)	
			(ON THE REAR OF THE CAB AT THE BOTTOM STRUCTURE 50 +/- 5-MM FROM THE TOWARD RED REFLECTOR)	
	255-0793	1	FILM-WARNING (READ OMM)	
			(ON RH CONSOLE UNDER KEYSWITCH IN AREA PROVIDED. UNIVERSAL FILM IS LOCATED ON UPPER	
			HALF & THE SEATBELT FILM ON THE LOWER HALF)	
	255-0794	1	FILM-WARNING (SEAT BELT)	
			(ON RH CONSOLE UNDER KEYSWITCH IN AREA PROVIDED. UNIVERSAL FILM IS LOCATED ON UPPER	
			HALF & THE SEATBELT FILM ON THE LOWER HALF)	
	259-4402	1	FILM-WARNING (HOT FLUID UNDER PRESSURE)	
			(ON TOP OF THE RADIATOR SHUNT TANK CAP. ORIENT FILM SO THAT IT CAN BE READ WHILE	
			LOOKING AT THE ENGINE AREA FROM THE LEFT SIDE OF THE TRACTOR)	
B-USE AS REQUIRED				

<END>

206-1701 PROTECTION GP-VANDALISM—ROTATING GUARD

S/N: CBD1-UP; MFG1-UP

PART OF 204-4160, 204-4164, 292-9690, 292-9691 CANOPY AR-OPEN ROPS

AN ATTACHMENT

SMCS-7315 **i02495296**

NOTE	REF NO	GRAPHIC REF	PART NUMBER	QTY	PART NAME 1 2 3 4 5 6 (PRODUCT LEVEL)	SEE PAGE
	1	1	**206-1852**	1	COVER-VANDALISM	
	2	1	**206-1853**	2	BUSHING	
	3	1	**206-1855**	1	PLATE	
	4	1	**206-1856**	1	BRACKET	
J	5	1	**226-0291**	1	LOCK AS (PROTECTION)	
M	6	1	**129-3178**	2	LOCKNUT (M6X1-THD)	
M	7	1	**174-8131**	1	SCREW-TRUSS HEAD (M4X0.7X12-MM)	
	8	1	**232-4636**	2	BOLT-CARRIAGE (M6X1-MM)	
	9	1	**8C-9660**	1	WASHER (4.6X7.9X0.8-MM THK)	
M	10	1	**8T-2659**	1	LOCKNUT (M4X0.7-THD)	
	11	1	**9X-2038**	2	WASHER (7X19X2-MM THK)	

J-REQUIRES 5P-8500 KEY
M-METRIC PART

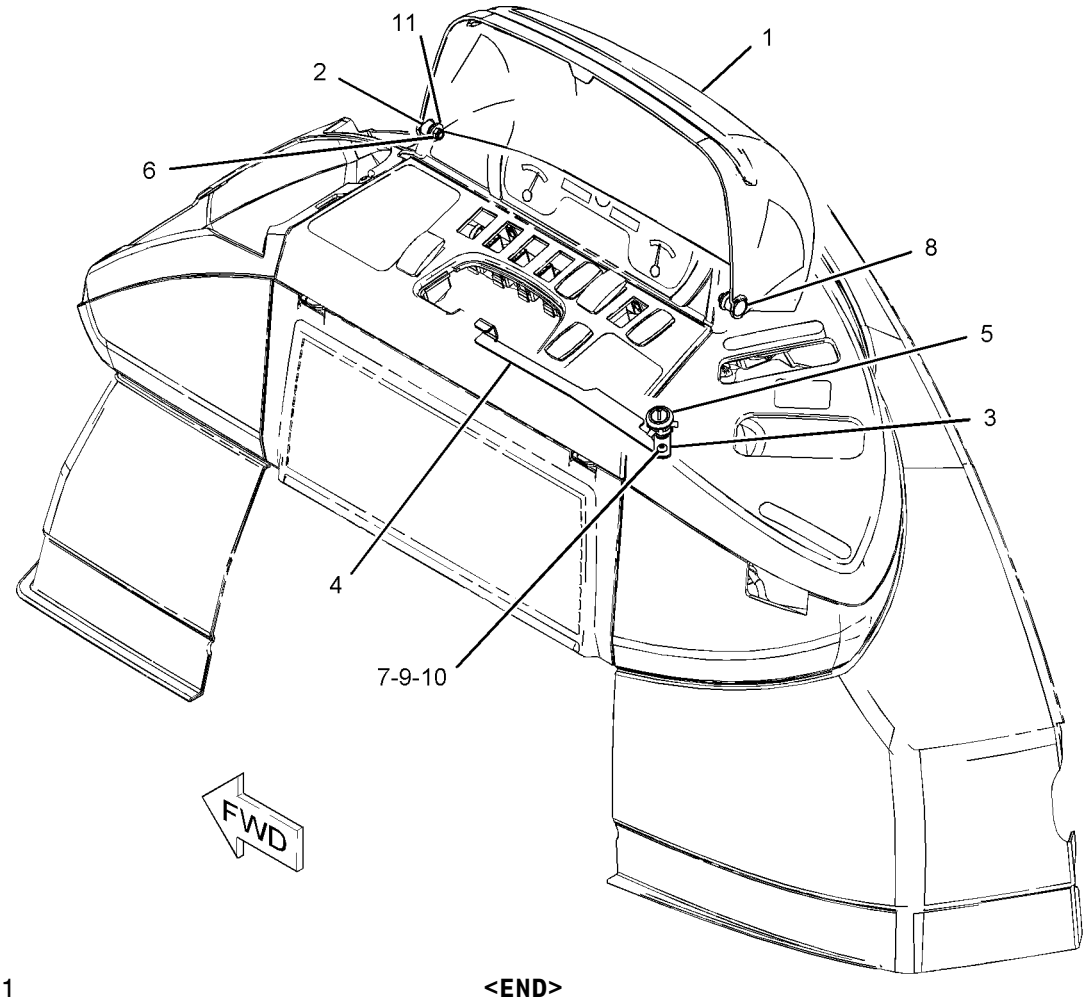

GRAPHIC #1 **<END>** g01083362

SERVICE EQUIPMENT AND SUPPLIES

119-1530 TRANSPORT AR-MACHINE

S/N: CBD1-UP; MFG1-UP
TRANSPORT (NO BUCKET OPTION)
AN ATTACHMENT

SMCS-0355 **i02481622**

NOTE	PART NUMBER	QTY	PART NAME 1 2 3 4 5 6 (PRODUCT LEVEL)	SEE PAGE
Y	*120-9289*	1	TRANSPORT GP-MACHINE (WITHOUT BUCKET)	1083

Y-SEPARATE ILLUSTRATION

<END>

SERVICE EQUIPMENT AND SUPPLIES

120-9289 TRANSPORT GP-MACHINE

S/N: CBD1-UP; MFG1-UP
PART OF 119-1530 TRANSPORT AR-MACHINE
AN ATTACHMENT

SMCS-0355 **i02481623**

NOTE	REF NO	GRAPHIC REF	PART NUMBER	QTY	PART NAME 1 2 3 4 5 6 (PRODUCT LEVEL)	SEE PAGE
B	1	1	**120-9333**	1	TUBE	
B	2	1	**120-9332**	2	BLOCK	
B	3	1	**3B-5322**	2	PIN-COTTER	
B	4	1	**034-1432**	4	STRAP-CABLE	
	5	1	**9R-0109**	2	WASHER (41X64X3-MM THK)	

B-USE AS REQUIRED

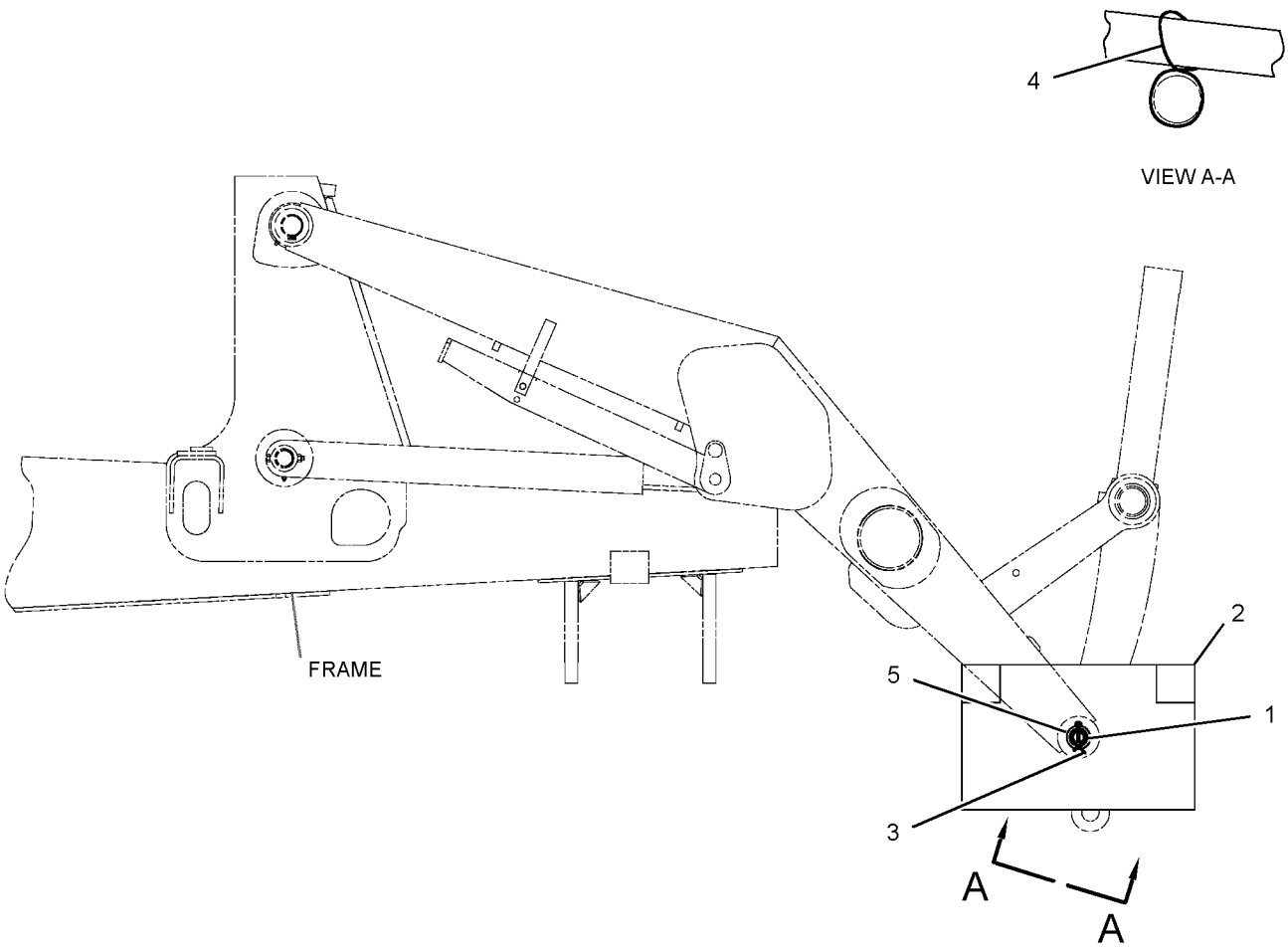

RIGHT SIDE VIEW

GRAPHIC #1 **<END>** g01254675

MEMORANDA

PART NUMBER INDEX

Part	Page
0	
0S-0509	1037
	1040
0S-1595	1034
	1035
0S-1603	65
	66
0S-1621	897
1	
1A-0621	442
	445
1B-4430	350
1B-8736	27
	28
	41
	43
	45
	47
	48
	104
	563
	565
	567
1H-3244	269
	270
	271
	272
	991
	992
1H-3337	1037
	1040
1H-6227	553
1H-7339	531
	541
	544
	554
	556
1H-8128	551
	552
1H-8278	347
1J-9671	522
	523
1K-0502	954
	957
1K-6872	897
	1034
	1035
	1037
	1040
1K-7082	384
1L-3768	774
	776
1L-6377	324
	327
	330
	335
	341
	1020
1M-6119	229
	231
	233
1M-6120	229
	231
	233
1P-0810	233
	238
	240
	259
	263
	310
1P-4278	193
	195
	200
1P-4334	131
1P-4584	652
1P-7009	193
1R-5396	448
	449
1S-7251	226
	229
	233
	236
	238
	240
	242
	244
	299
	302
	306
	310
1S-7252	228
	231
1U-8846	347
	350
1V-6585	151
	153
1V-9385	974
2	
2B-0858	57
	58
	61
	94
	97
2B-0941	368
	370
	371
	373
2D-2628	425
2D-2629	425
2D-2630	425
2D-2631	425
2D-2633	425
2D-6235	1037
	1040
2H-3922	279
	317
	319
	321
2H-3931	541
	556
2H-4145	533
2H-6338	531
2K-4973	897
	1011
	1013
	1032
	1034
	1035
	1037
	1040
2K-5986	442
	445
2K-6830	537
2K-7069	156
	158
	160
	162
2L-5893	1037
	1040
2L-8067	285
	288
	315
	335
	339
	341
2L-8068	339
2L-8069	259
	263
	285
	288
	315
	335
	341
	1051
2L-8075	285
	296
2L-8076	291
2L-8077	335
	341
2L-8079	302
	306
	310
	335
	341
2M-9780	456
	458
	460
	462
	630
	632
	648
	650
	654
	656
	658
	660
	662
	668
	670
	684
	686
	721
2P-1293	569
	571
	574
	577
	580
	583
2P-8104	273
2R-0364	734
	736
	954
	957
2S-3163	942
2S-3745	993
	999
	1001
2T-3360	975
2W-9710	136
	141
2Y-2881	774
	776
2Y-5821	535
	537
	539
3	
3B-4505	512
	515
	1037
	1040
	1043
3B-4610	450
3B-4631	1040
	1045
3B-5317	679
3B-5319	680
	729
	880
3B-5322	1083
3B-6552	486
3B-6769	486
3B-8486	488
	490
	492
	496
	498
3B-8488	484
	486
	488
	490
	492
	494
	722
	725
	738
	778
3B-8489	484
	486
	488
	490
	492
	494
	496
	498
	537
	539

► **PRIMARY REFERENCE**

PART NUMBER INDEX

Part	Page	Part	Page	Part	Page	Part	Page
	541	3E-0068	1011		345		684
	543		1013		351		686
	546	3E-4321	1010		368		692
	547		1011		371		694
	549		1013		383	3K-2889	769
	551	3E-4352	774		404		770
	552		776		410	3K-8460	192
	555	3E-4363	379		415		200
	563	3E-5153	273		419	3K-8782	257
	565	3E-5154	273		420	3N-4968	453
	567	3E-6600	259		442	3N-5739	537
	679		264		445		539
	722		336		456	3P-0130	129
	725		944		458	3S-2093	184
	729		954		460		188
	731		957		462		200
	733	3E-6714	700		525		215
	734		702		546		216
	736	3E-6735	537		560		233
	738		539		638		236
	774		547		640		238
	776		549		642		240
	778		551		644		242
	855		552		646		244
	856	3E-8299	236		648		249
	858		238		650		259
	859		242		654		261
	860		324		656		263
	861		327		658		282
	862		331		684		285
	863	3E-8320	233		686		286
	864		236	3J-4818	299		289
	875		238		302		291
	894		240		306		294
3C-4883	259		242		311		296
	263		244		1037		299
3D-2824	574	3E-9362	282		1040		302
	577		285	3J-7354	220		303
	580		288		456		306
	583	3F-5108	858		458		310
	586		859		460		311
	589		860		462		313
	592		861		522		315
	596		862		523		317
	599		863		648		319
	601		864		650		321
	603		878		684		324
	605	3F-9556	1018		686		327
	607		1019		706		330
	609		1021		720		335
	611		1022	3K-0360	456		339
	614	3G-8047	611		458		341
	616		614		460		344
	618		616		462		345
	630	3G-8054	611		525		405
	632		614		529		410
	634		616		621		415
	636		618		622		420
	652	3G-8057	611		624		898
	664		614		648		979
	665		616		650		1011
	667		618		654		1013
	668	3J-1907	200		656		1036
	670		215		658		1039
	697		216		667		1049

PART NUMBER INDEX

Part	Page
	1051
	1064
	1066
3S-6049	231
3S-6050	231
3S-8536	500
	626
	741
	743
	748
	750
	756
	758
3T-0852	1030
	1031
3T-5760	229
	231
	242
	244
4	
4B-0418	155
4B-2043	291
	292
	296
	1046
4B-4863	165
	172
	173
	323
	327
	330
	335
	341
4B-5271	1034
	1035
4B-9784	721
	1037
	1040
4D-6466	226
	229
	236
	238
	240
	242
	244
	443
4D-7388	136
	155
4D-9517	734
	736
4E-1384	918
	1054
	1056
4E-8619	▶451
	452
4F-3657	896
4F-7952	355
	360
4F-9029	350
4H-2558	898
4H-8380	1037
4I-3038	323
4I-6287	654
	658
4J-0520	363
4J-0522	368
	370
	371
	373
4J-0526	547
	549
	551
	552
4J-1888	855
	856
	874
	876
	879
4J-5477	383
	442
	445
	456
	458
	460
	462
	525
	648
	650
4J-7533	673
4J-9220	535
4J-9224	533
4K-0367	858
	859
	860
	861
	862
	863
	864
	878
	896
4L-6454	350
	1032
	1034
	1035
4M-0061	1037
	1040
	1043
4M-0189	535
	553
4P-7428	311
4P-7429	321
4P-7581	226
	233
	236
	238
	240
	299
	303
	307
	311
	323
	327
	330
	335
	341
	344
	855
	856
4P-8134	226
	233
	238
	240
	242
	244
	269
4T-6779	541
	556
4T-6780	544
	554
4T-7010	541
	556
4T-9905	721
4V-0611	644
	646
4V-0612	644
	646
4W-3753	569
	583
	586
	596
4W-9972	404
	410
	415
	420
5	
5A-3604	734
	736
	739
	746
	754
5B-3254	898
5B-9079	102
5B-9385	541
	556
5C-2874	299
	303
	307
	311
	1003
	1004
5C-2890	184
	186
	226
	229
	233
	236
	238
	240
	242
	244
	269
	270
	271
	272
	282
	286
	289
	313
	315
	324
	327
	330
	335
	341
	344
	443
	446
	944
	1058
	1060
	1068
	1070
5C-7261	118
	134
	136
	150
	226
	229
	242
	244
	268
	269
	270
	271
	272
	282
	286
	289
	313
	315
	324
	327
	330
	335
	341
	442
	455
	466
	475
	527
	628
	908
	910
	918
	935
	1013
	1018
	1019
	1021
	1022
	1054
	1056
5C-8312	165
	172
	173

▶ **PRIMARY REFERENCE**

PART NUMBER INDEX

Part	Page
5C-8811	1068
	1070
5C-9553	226
	233
	236
	238
	240
	341
	734
	736
	983
	985
	987
	989
	1021
	1022
5D-0718	1013
5D-1026	29
	31
	33
	109
	136
	200
	456
	458
	460
	462
	648
	650
	1010
	1011
	1013
5D-8159	879
5D-9629	905
	906
	926
5E-8557	513
	514
	516
	518
5F-3999	453
5F-9144	560
5G-2934	465
	466
5H-3193	954
	957
5H-4909	350
5I-4370	660
	662
5J-4986	535
5J-5731	535
	553
5J-7011	533
5J-7012	533
5J-7854	553
5J-7865	553
5J-8016	531
5K-5338	442
	445
	1011
	1013
5K-9090	560
	569
	571
	574
	577
	580
	583
	586
	589
	590
	592
	596
	652
5P-0370	769
5P-0599	599
	601
	603
	605
	607
	609
	611
	614
	616
	618
	667
5P-0743	621
5P-0747	226
	228
	229
	231
	299
	302
	306
	310
5P-0761	226
	228
	229
	231
	233
	236
	238
	240
	242
	244
5P-0767	1010
	1011
	1013
5P-0805	475
5P-1075	1032
5P-1076	494
	496
	498
5P-1420	193
	195
	200
5P-1442	193
	195
	200
	692
	694
5P-1476	317
	319
	321
5P-1478	302
	306
	310
5P-1505	107
	200
	456
	458
	460
	462
	648
	650
5P-1506	626
	628
5P-2931	347
5P-3860	664
	665
5P-4115	1058
	1060
5P-4116	107
	109
	128
	129
	131
	133
	134
	138
	141
	149
	165
	218
	221
	307
	311
	368
	370
	371
	373
	442
	445
	465
	466
	486
	500
	574
	577
	580
	583
	586
	590
	592
	596
	626
	628
	739
	741
	743
	746
	748
	750
	754
	756
	758
	898
	908
	910
	912
	915
	927
	929
	933
	935
5P-4295	456
	458
	460
	462
	648
	650
5P-4571	259
	263
	291
	1051
5P-4868	652
5P-4924	445
5P-4961	692
	694
5P-5148	601
5P-5623	344
5P-5637	993
	999
	1001
	1058
	1060
5P-5655	993
	999
	1001
5P-5677	954
	957
	979
5P-5688	993
	999
	1001
5P-5927	477
	932
	944
5P-6006	285
	335
	339
5P-6010	1039
5P-6129	898
5P-6459	311
5P-6718	414
	420
5P-7070	341
	946
5P-7462	460
	462
	660
	662
5P-7463	460
	462
	660
	662
5P-7464	605
	607
	609
	611

► **PRIMARY REFERENCE**

PART NUMBER INDEX

Part	Page	Part	Page	Part	Page	Part	Page
	614	5P-8500	925		207		276
	616	5P-9085	193		211	6I-0645	69
	618		195	6I-0254	143		71
	638	5P-9297	486		145		120
5P-7465	605	5P-9768	902		147		122
	607		903	6I-0260	29		123
	609		904		31		124
	611		923		33		126
	614		924		35		167
	616	5T-6374	233		37	6I-0646	55
	618	5T-7870	1034		79		98
	638		1035		81	6I-0650	69
5P-7466	569	5T-9771	486		83		71
	571	5V-1497	1037		110		225
	574	5V-2545	392		115	6I-0846	29
	577	5V-7190	774		117		31
	580		776		119		33
	583	5V-9155	155		121		35
	587	5Y-0660	983		124		37
	590		985		126		39
	592		987		204	6I-0847	67
	596		989		207		68
5P-7467	569				211	6I-0917	29
	571				223		31
	574	**6**			224		33
	577				225		35
	580	6A-9083	1034	6I-0289	79		37
	583		1035		81		39
	587	6B-0933	223		83	6I-1497	107
	590		224	6I-0291	204		109
	592	6C-3680	993		207		111
	596		999		211		112
5P-7814	192		1001	6I-0363	79	6I-4039	177
	200	6D-0337	▶425		81	6I-4374	119
5P-7957	925		426		83		121
5P-7958	334	6D-0443	425	6I-0364	177		124
	339	6D-1734	453		178		126
	734	6D-3479	692		179	6J-0789	541
	736	6D-4246	107		275		556
	925	6E-0122	544		276	6J-0790	541
5P-7971	769	6E-1135	734	6I-0423	67		556
	770		736		68	6J-0793	541
5P-8066	404	6E-1478	537	6I-0454	223		556
	410		539		224	6J-1972	544
	414	6E-5431	948	6I-0501	99		554
	420		950	6I-0502	99	6J-2245	684
5P-8112	569		952	6I-0563	177		686
	571	6E-6528	720		178	6J-2680	554
	574	6F-7037	544		179		652
	577	6F-7045	279		180	6J-5731	554
	580	6G-2263	107		182	6J-5733	544
	583	6H-3592	339	6I-0572	50	6J-6517	933
	587	6H-3616	75		55	6J-7855	684
	590		76		79		686
	592	6I-0217	69		81	6K-0806	282
	597		71		83		285
5P-8245	65		79		120		288
	66		81		122		321
	1030		83		123		323
	1031		143		124		327
	1034		145		126		330
	1035		147		180		334
5P-8250	541		180	6I-0594	223		404
	544		182		224		409
	556		204		275		415

▶ **PRIMARY REFERENCE**

PART NUMBER INDEX

Part	Page
	419
	1074
6K-8178	195
	200
6K-9632	1064
	1066
6L-4725	898
	995
	997
6L-7155	1037
	1040
6N-6984	136
	141
6P-6591	250
	252
6P-8855	1010
	1011
	1013
6S-8620	107
	200
	442
	445
6T-0465	226
	229
	233
	236
	238
	240
	242
	244
6T-1375	1049
	1051
	1066
6T-5598	229
	236
	238
	240
	242
	244
6T-9142	353
	356
	358
	361
6T-9143	353
	356
	358
	361
6T-9144	353
	356
	358
	361
6T-9145	353
	356
	358
	361
6T-9146	353
	356
	358
	361
6T-9147	353
	356
	358
	361
6T-9160	397
	399
6T-9163	353
	356
	358
	361
6T-9164	353
	356
	358
	361
6T-9165	353
	356
	358
	361
6T-9166	353
	356
	358
	361
6T-9196	393
	398
6U-0456	603
6V-0292	1047
6V-0491	302
	310
6V-0505	1049
	1064
6V-0683	460
	462
	660
	662
6V-0826	734
	736
6V-0852	368
	371
	415
	420
	648
	650
6V-1195	222
6V-1249	605
	607
	609
	611
	614
	616
	638
6V-1363	165
	172
	173
6V-1580	504
	506
	508
6V-1722	667
6V-1889	529
	605
	607
	609
	611
	614
	616
	618
6V-2315	448
	449
6V-2689	294
	954
	957
	979
	1049
	1051
6V-2722	321
6V-3213	680
	722
	731
	733
	739
	741
	743
	746
	748
	750
	754
	756
	758
	762
	763
	764
	766
	767
	768
	771
	852
	853
	854
6V-3341	640
	642
	644
	646
6V-3507	291
	296
6V-3582	156
6V-3940	350
6V-3965	368
	371
	414
	420
	648
	650
6V-4248	445
6V-4292	456
	458
	460
	462
6V-4364	729
	738
	774
	776
	778
	852
	853
	854
6V-4589	409
	414
	419
6V-5100	393
	398
6V-5138	672
	708
	709
	711
	712
	713
	714
	715
	716
	718
6V-5185	670
6V-5186	670
6V-5653	456
	458
	460
	462
	648
	650
6V-5834	513
6V-6228	347
	350
	363
6V-6339	720
6V-6707	533
6V-6717	898
	995
	997
6V-6813	898
	995
	997
6V-7238	621
6V-7357	250
	252
	443
	446
	477
	993
	999
	1001
	1064
	1066
	1068
	1070
6V-7359	311
	605
	607
	609
	611
	614
	616
	618
6V-7687	494
	496
	498
	722
	1037
6V-7731	404
	409
	415
	419
6V-7743	466
	471
	908
	910
	918
	1053
	1054
	1056
	1062
	1063
6V-7744	474
	680

► **PRIMARY REFERENCE**

PART NUMBER INDEX

Part	Page	Part	Page	Part	Page	Part	Page
	881		970		667		654
	933		972		668		656
	935	6V-8344	729		670		658
	954		738	6V-8399	414		667
	957		778	6V-8455	367	6V-8641	383
	959	6V-8363	317	6V-8500	397	6V-8713	599
	961		319		399		601
	963		321	6V-8523	317		603
	965	6V-8370	317		319		605
	968		319		321		607
	969		321	6V-8624	654		609
	970	6V-8378	410		656		611
	972		415		658		614
	1047		420	6V-8625	622		616
6V-7970	673	6V-8397	220		624		618
	707		456		667		630
	708		458	6V-8626	630		632
	709		460		632		664
	710		462		668		665
	711		638		670		668
	712		640	6V-8627	383		670
	713		642		442		697
	714		644		445	6V-8714	652
	715		646	6V-8628	456	6V-8716	134
	716		648		458		138
	718		650		460		620
6V-8077	368		654		462	6V-8721	660
	371		658	6V-8633	605		662
6V-8097	404		660		611	6V-8723	456
	409		662		664		458
	414	6V-8398	525		665		648
	419		528	6V-8634	456		650
6V-8144	722		529		458	6V-8724	640
	739		531		460		642
	741		533		462		644
	743		553		654		646
	746		554		658	6V-8757	395
	748		569	6V-8635	560		400
	750		571		574	6V-8759	441
	754		589		577	6V-8782	525
	756		605		580	6V-8801	229
	758		607		583		233
	762		609		586	6V-8932	963
	764		611		589		965
	767		614		592	6V-8995	605
	771		616		596		611
	879		618		652	6V-8996	605
6V-8185	1037		622	6V-8636	456		607
	1040		624		458		609
6V-8186	1021		630		460		611
	1022		632		462		614
6V-8210	355		634		638		616
	360		636		648		618
6V-8224	599		638		650	6V-8998	569
	601		640	6V-8637	574		571
	603		642		577		574
6V-8227	975		644		580		577
	977		646		583		580
6V-8237	554		654		586		583
6V-8335	404		656		589		586
	409		658		592		589
	414		660		596		592
	419		662	6V-8638	660		596
	968		664		662	6V-9001	650
	969		665	6V-8639	529	6V-9002	656

► **PRIMARY REFERENCE**

PART NUMBER INDEX

Part	Page
6V-9007	574
	577
	580
	592
6V-9023	302
	306
	335
	339
6V-9031	630
	632
6V-9168	648
	650
6V-9169	605
	611
6V-9170	569
	571
	605
	607
	609
	611
	614
	616
	618
6V-9172	569
	571
	574
	577
	580
	583
	587
	590
	592
	597
6V-9178	424
6V-9182	134
	138
6V-9189	933
6V-9632	330
	445
	905
	906
	926
	1039
6V-9746	134
	138
	529
	535
	569
	571
	574
	577
	578
	580
	581
	583
	586
	587
	589
	590
	592
	593
	596
	597
	620
6V-9830	560
	630
	632
	634
	636
6V-9831	630
	632
	697
6V-9832	578
	581
	587
	590
	593
	597
6V-9833	560
6V-9836	648
	650
6V-9838	630
	632
6V-9839	578
	581
	586
	589
	592
	596
6V-9850	456
	458
	460
	462
6V-9851	656
	658
6V-9852	668
	670
6V-9853	529
	569
	571
6V-9872	220
6V-9990	611
	614
	616
	618
6Y-1341	404
	409
	414
	419
6Y-1896	404
	410
	414
	420
6Y-2035	404
	410
	414
	420
6Y-2736	397
	399
6Y-2737	355
	360
6Y-7929	395
6Y-7957	393
	398
	400
6Y-9930	1020

7

Part	Page
7C-0351	79
	81
	83
7C-1224	79
	83
7C-1281	29
	31
	33
7C-4354	195
	200
	233
	605
	607
	609
	611
	614
	616
	618
7C-4616	69
	71
7D-7233	111
	112
	626
	628
7E-3870	171
7G-1060	323
	327
	330
7G-3832	618
7G-3833	618
7G-3834	618
7H-3937	993
	999
	1001
7I-1036	529
7I-8084	525
7J-9108	541
	556
	569
	571
	599
	601
	603
	605
	607
	609
	611
	614
	616
	618
	630
	632
	634
	636
	664
	665
	668
	670
	697
7K-1181	184
	186
	188
	190
	193
	195
	200
	226
	229
	233
	236
	238
	240
	242
	244
	250
	252
	283
	286
	288
	294
	299
	302
	306
	310
	321
	323
	327
	330
	334
	339
	383
	440
	442
	445
	456
	458
	460
	462
	601
	603
	607
	609
	616
	618
	622
	624
	626
	628
	630
	632
	634
	636
	648
	650
	654
	656
	658
	665
	668
	670
	734
	736
	1010
	1011
	1013
7K-1700	780
7M-8485	134
	138

PART NUMBER INDEX

Part	Page	Part	Page	Part	Page	Part	Page
	528		678	7W-1176	67		743
	560		905		68		746
	569		906	7W-2326	23		748
	571		926		111		750
	574	7T-2646	353		112		754
	577		356	7W-4634	99		756
	580		358	7W-4642	67		758
	583		361		68		1029
	586	7T-2651	355	7X-0440	644	7X-2538	938
	589		360		646	7X-2540	133
	592	7T-3017	397	7X-0465	948	7X-2541	933
	596		399		950		935
	620	7T-3021	397		952	7X-2549	569
	652		399	7X-0481	1037		583
	673	7T-3022	397		1040		587
7N-0718	233		399	7X-0579	136		597
	236	7T-3034	353		141	7X-2553	385
	238		356		150		938
	240		358		154	7X-2559	350
	242		361		504		472
	244	7T-3051	355		506	7X-2564	504
	►279		360		508		506
7N-3718	193	7T-3109	404		510	7X-2568	1020
	195		409		898	7X-2572	503
7N-5274	228		414		940	7X-2579	469
	231		419		995	7X-3374	350
7N-7221	291	7T-3111	405		997	7X-4741	409
	294		410	7X-0586	156		414
	296		415		158		419
	302		420		160	7X-4744	424
	306	7T-3119	404		162	7X-7729	111
	310		410		165		133
	323		414		477		179
	335		420	7X-0603	136		193
	341	7T-3195	404		141		195
7N-7779	302		410	7X-0605	658		226
	306		414		897		228
	310		420	7X-0608	268		229
	451	7T-3249	404	7X-0618	384		231
7N-7780	302		409	7X-0620	513		233
	306		414	7X-0622	1029		236
	310		419		1037		238
	451	7T-3251	404		1040		240
7N-9017	302		410	7X-0818	186		242
	306		414		190		244
	310		420		368		324
7N-9737	451	7T-3253	355		370		327
7N-9738	302		360		371		331
	306	7T-4532	939		373		335
	310	7T-4848	323	7X-1443	158		341
7R-2750	334		327		160		442
	335		330		162		445
	340		334	7X-2393	908		500
7R-2751	334		339		910		569
	340	7T-6087	273	7X-2534	283		605
7R-8239	450	7T-6088	273		313		607
7S-1912	193	7T-6090	273		324		609
	195	7T-6092	273		327		626
	200	7T-6093	273	7X-2537	500		652
7T-0093	993	7T-6099	273		513		692
	999	7T-6739	993		514		694
	1001	7T-6799	291		516		739
7T-1099	445		296		518		741
	466	7T-9987	228		739		743
	676		231		741		746

► **PRIMARY REFERENCE**

PART NUMBER INDEX

Part	Page	Part	Page	Part	Page	Part	Page
	748		982		303		1051
	750		1008		307		1064
	754		1049		311	8M-2773	195
	756		1051		317		200
	758	8C-4982	1017		319	8M-3175	477
	954	8C-4987	954		321		968
	957		957		410		969
	959		959		415		970
	961		961		420		972
	963		968	8F-3590	259	8N-0869	226
	965		969		263		228
	974		970		299		229
	975		972		303		233
	977	8C-5748	404		307		236
7X-7898	156		409		331		238
	160		414		335		240
	162		419		341		242
7X-7958	626	8C-6354	323	8H-5303	279		244
	628		327	8H-5306	279	8R-2916	977
7X-9065	291		330	8J-2574	531	8R-6111	1006
	292		334		541		1008
	296		339		544	8R-6263	451
7X-9866	464	8C-6428	516		556	8S-0023	368
7X-9873	464		518	8J-4455	273		370
7Y-0336	563	8C-6955	563	8J-6371	541		371
	565		565		543		373
	567		567		556		569
7Y-3883	299	8C-7505	347	8J-6875	648		571
	302		350		650		574
	306	8C-7524	993		▶721		577
	310		999	8L-2746	409		580
7Y-9099	475		1001		414		583
	477		1047		419		587
		8C-8400	583	8L-2777	684		590
			586	8L-2779	404		593
8			589		409		597
			596		414	8S-0024	368
8A-8563	658	8C-8408	525		419		370
8B-7121	873	8C-8522	466	8L-8413	20		371
8C-0572	151		471		22		373
	153	8C-8580	688		219		569
8C-3056	226	8C-8989	571		222		571
	229		589		226		574
	236		654		228		577
	238		656		229		580
	240		658		231		583
	242	8C-9660	1081		236		587
	244	8C-9778	273		242		590
8C-3290	468	8C-9783	273		259		593
	469	8C-9987	941		261		597
	470	8D-2707	425		263	8S-3020	228
8C-3398	324	8D-9671	311		282		231
	327	8E-1118	1006		285		233
	331		1008		286		236
	335	8E-3081	638		288		238
	341	8E-5707	393		289		240
8C-3681	136		395		291		242
	141		398		294		244
	155		400		310	8S-7803	908
8C-3756	993	8E-8293	1049		313		910
	999		1051		315		912
	1001		1066		317		915
8C-3798	107	8E-9571	477		319		918
	109	8F-1434	273		324		920
	259		299		1049		1037

▶ **PRIMARY REFERENCE**

PART NUMBER INDEX

Part	Page	Part	Page	Part	Page	Part	Page
	1040		624	8T-2223	136		192
	1043		660	8T-2503	688		195
	1045		662	8T-2658	946		200
8T-0076	456	8T-1887	233	8T-2659	291		215
	458		574		297		216
	460		577		1081		226
	462		580	8T-2970	1060		229
8T-0120	618		584	8T-3444	638		233
	664		587		640		236
	665		590		642		238
8T-0154	621		593		644		240
8T-0164	442		597		646		242
	445		599	8T-3490	134		244
8T-0269	780		601		156		254
8T-0292	350		603		158		255
8T-0328	299	8T-1888	233		160		256
	303		574		162		259
	307		577		177		261
	311		580		178		263
	410		584		179		273
	415		587		500		299
	420		590		632		303
	692		593		634		307
	694		597		636		311
8T-0352	324		599		676		321
	327		601		678		324
	331		603		743		327
	335	8T-1889	569		746		331
	341		571		748		336
8T-0389	254		574		754		341
	255		577		758		368
	256		580	8T-3612	136		370
8T-0404	599		584		155		371
	601		587		249		373
	603		590		466		442
	605		593		739		445
	607		597		741		456
	609	8T-1890	569		746		458
	611		571		748		460
	614		574		754		462
	616		577		756		474
	634		580		905		484
	636		584		906		486
8T-0706	563		587		926		488
	565		590	8T-3652	494		492
	567		593		496		504
8T-0785	533		597		498		506
8T-1118	1049	8T-1891	622	8T-4001	469		508
	1051		624		470		510
	1064		638		484		529
	1066		640		486		559
8T-1159	200		642		488		567
8T-1580	355	8T-1892	622		490		569
	360		624		492		571
8T-1581	404		638	8T-4121	77		575
	409		640		78		578
	414		642		107		580
	419	8T-1899	640		111		584
8T-1683	460		642		112		587
	462		644		133		590
8T-1885	622		646		134		593
	624	8T-1900	640		138		597
	660		642		177		599
	662		644		178		601
8T-1886	622		646		179		603

► **PRIMARY REFERENCE**

PART NUMBER INDEX

Part	Page	Part	Page	Part	Page	Part	Page
	605		502		578		609
	607		558		581		611
	609		858		584		614
	611		859		587		616
	614		860		590		618
	616		861		593		622
	618		862		597		624
	622		863		624		626
	624		864		630		628
	626		878		632		630
	628	8T-4123	504		954		632
	630		506		957		634
	632		508		959		636
	634		510		961		638
	636		563		963		640
	638		565		965		642
	640		567		968		644
	642		894		969		646
	644		1020		970		652
	646	8T-4131	384		972		668
	648		894		974		670
	650		1020		975		774
	654	8T-4132	77		977		776
	656		78	8T-4136	111		938
	658		502		112		954
	660		938		134		957
	662		1020		138		974
	668	8T-4133	111		177		975
	670		136		178		977
	681		141		179		1011
	683		177		193	8T-4137	134
	692		178		195		226
	694		179		200		228
	698		195		299		229
	699		200		303		231
	731		226		307		233
	733		228		311		236
	734		229		324		238
	736		231		327		240
	774		233		331		242
	776		236		336		244
	933		238		368		299
	935		240		370		303
	938		242		371		307
	954		244		373		311
	957		259		442		336
	959		261		446		341
	961		263		460		504
	963		273		462		506
	965		324		504		508
	968		327		506		510
	969		331		508		575
	970		336		510		578
	972		341		569		581
	974		442		571		584
	975		445		575		587
	977		466		578		593
	1010		471		581		597
	1011		529		584		599
	1013		563		587		601
8T-4122	77		565		590		603
	78		567		593		628
	218		569		597		634
	221		571		605		636
	474		575		607		648

PART NUMBER INDEX

Part	Page	Part	Page	Part	Page	Part	Page
	650		614		614		563
	654		616		616		565
	656		618		652		575
	658		656		675		578
	660		692		676		581
	662		728		677		584
	668		774		678		587
	670		776		774		590
	692		1011		776		593
	694		1013	8T-4184	727		597
	698		1033	8T-4185	107		626
	699		1036		226		908
	731	8T-4140	221		228		912
	733	8T-4141	508		234		940
	734		510		236		948
	736	8T-4167	468		238		950
	954		469		240		952
	957		470		569		954
	1010		484		571		957
	1011		486		575		1011
	1013		488		578		1013
8T-4138	107		490		581		1030
	109		492		584		1031
	184		503		587	8T-4191	692
	186	8T-4171	286		590		694
	188		289		593	8T-4192	134
	190		299		597		138
	229		303	8T-4186	968		193
	242		307		969		195
	244		315		970		311
	317		1068		972		384
	319		1070	8T-4187	894		638
	321	8T-4172	133	8T-4189	107		675
	324		458		109		676
	327		462		136		677
	331		624		138		678
	336		959		141		1013
	341		961		149	8T-4193	218
	442		963		150	8T-4194	371
	446		965		156		373
	948	8T-4174	77		158		611
	950	8T-4176	368		160		614
	952		370		162		616
	959		371		165		618
	961		373		193		774
	963		722		195		776
	965	8T-4177	658		200	8T-4195	111
	1024	8T-4178	1047		218		177
	1026	8T-4179	200		221		178
	1068		692		249		179
8T-4139	299		694		299		192
	303	8T-4181	261		303		215
	307		263		307		216
	453		1006		311		341
	494		1047		452		456
	496	8T-4182	141		465		458
	498		563		466		460
	504		565		504		462
	506		567		506		474
	508	8T-4183	465		508		484
	510		466		510		486
	605		605		513		488
	607		607		514		492
	609		609		516		500
	611		611		518		529

► **PRIMARY REFERENCE**

PART NUMBER INDEX

Part	Page	Part	Page	Part	Page	Part	Page
	559		324		1001		1028
	605		327		1021		1033
	607		331		1022		1036
	609		336		1064		1058
	622		341		1066		1060
	624		367		1068	8T-4224	128
	626		465		1070		129
	670		898	8T-4222	136		131
	734		908		141		133
	736		910		474		156
	739		912		490		158
	741		915		1047		160
	743		927	8T-4223	134		162
	746		929		138		184
	748		995		193		186
	750		997		195		188
	754		1029		200		190
	756		1058		299		193
	758		1060		303		195
	774	8T-4205	107		307		200
	776		109		311		218
	933		184		368		221
	935		186		370		226
	959		188		371		229
	961		190		373		231
	963		226		385		242
	965		229		465		244
	968		234		466		249
	969		236		504		269
	970		238		506		270
	972		240		508		271
	974		242		510		272
	975		244		512		283
	977		250		515		286
	1013		252		569		289
8T-4196	77		269		584		299
	78		270		587		303
	111		271		590		307
	133		272		597		311
	321		283		605		313
	490		286		607		315
	569		289		609		324
	571		299		611		327
	575		303		614		331
	578		307		616		336
	581		313		618		341
	584		315		638		367
	587		317		652		440
	590		319		654		442
	593		321		656		446
	597		324		658		450
	660		327		675		452
	662		331		676		455
	681		336		677		465
	683		341		678		504
8T-4197	935		442		692		506
8T-4198	881		446		694		508
8T-4200	136		466		727		510
	141		471		728		512
	149		898		774		513
	151		944		776		514
	153		993		979		515
	154		995		1011		516
	218		997		1013		518
	221		999		1027		525

PART NUMBER INDEX

Part	Page	Part	Page	Part	Page	Part	Page
	563		734		436		508
	565		736		438		510
	654		935		439		527
	656		941	8T-6385	472		933
	658		1016	8T-6411	975		935
	734	8T-4910	571	8T-6412	1030		948
	736		575		1031		950
	933		578	8T-6431	968		952
	938		581		969	8T-7876	122
	1011		593		970		123
	1016		618		972		124
8T-4244	512		774	8T-6466	234		126
	515		776		456		198
	605	8T-4956	368		460	8T-7930	494
	607		370		933		496
	609		385		935		498
	611		654		959	8T-7934	234
	614		658		961	8T-7963	465
	616		979		963	8T-8442	720
	618		1027		965	8T-8729	252
8T-4648	512		1028	8T-6658	567		263
	515	8T-4958	535	8T-6685	680		288
8T-4742	184		553	8T-6703	136		302
	186	8T-4970	112	8T-6726	156		306
	1005	8T-4971	1068		158		310
8T-4744	184		1070		160		321
	186	8T-4984	136		162		344
	1005	8T-4986	500		165		1036
8T-4773	954		739		622	8T-8730	252
	957		741		624		263
	959		743		630		321
	961		746		632		340
	963		748		640		993
	965		750		642	8T-8737	252
8T-4778	474		754		644		259
8T-4815	954		756		646		263
	957		758	8T-6868	494		285
	959	8T-5005	229		496		288
	961		231		498		291
	963		242	8T-6869	455		296
	965		244		512		302
	968	8T-5063	563		515		306
	969		565	8T-6870	525		310
	970		567	8T-6876	656		315
	972	8T-5091	475	8T-6885	319		321
8T-4821	494		477	8T-6902	948		331
	496	8T-5093	299		950		334
	498		303		952		336
8T-4837	494		307		1021		340
	496		311		1022		344
	498		475	8T-6912	440		993
8T-4908	128		1049	8T-7338	558		1001
	129		1051	8T-7529	107		1051
	131		1064		109	8T-8799	226
	133		1066		134		229
	136	8T-5436	435		138		236
	141		933		626		238
	165		935		628		240
	184	8T-5439	384	8T-7547	118		242
	186		428		136		244
	188		429		141		283
	190		430		443		286
	442		431		446		288
	445		432		504		313
	446		433		506		315

► **PRIMARY REFERENCE**

PART NUMBER INDEX

Part	Page
	323
	327
	330
	334
	339
8T-8894	215
	216
	974
	975
	977
8T-8917	1030
	1031
8T-9402	107
	109
8T-9405	165
	172
	173
	558
8T-9501	954
	957
	979
	1029
	1030
	1031
8T-9534	286
	289
	315
	335
	341
8W-9230	640
8X-5489	234
8Y-3795	773
8Y-5737	898
	995
	997
8Y-5946	1040
8Y-6352	898
	995
	997
8Y-6967	898
	995
	997
8Y-7309	908
	910
	918
	1054
	1056
8Y-8080	226
	229
	236
	242
8Y-8081	226
	228
	229
	231
	233
	236
	238
	240
	242
	244

9

Part	Page
9B-7233	291
	292
	296
	1046
9C-4457	1045
	1047
9F-2049	494
	496
	498
9F-2247	207
9F-5644	268
	269
	272
	279
	336
	341
9G-3695	1018
9G-3732	933
9G-3733	933
9G-4191	226
	234
	236
	238
	240
	242
	244
9H-3771	877
9K-5635	974
9L-7469	1040
9M-0164	692
	694
9M-1974	404
	409
	414
	419
	1029
9M-4814	1010
	1011
	1013
9M-5733	118
	527
9M-7958	111
	112
	136
	155
9M-7959	898
	995
	997
9M-8406	193
	195
	456
	458
	460
	462
	1011
9N-0869	118
	527
9N-2231	898
	995
	997
9N-7446	1037
9P-9150	404
	409

Part	Page
	414
	419
9R-0109	500
	722
	726
	739
	741
	743
	746
	748
	750
	754
	756
	758
	762
	764
	767
	771
	879
	1083
9R-0111	722
	784
	785
	786
	787
	856
	865
9R-0139	531
	533
9R-0153	541
	543
9R-0158	680
	722
	729
	731
	733
	739
	741
	743
	746
	748
	750
	754
	756
	758
	762
	763
	764
	766
	767
	768
	771
	852
	853
	854
	880
9R-0162	531
	533
	729
	773
	790
	791
	792
	793
	794

Part	Page
	795
	796
	797
	800
	801
	802
	803
	804
	805
	806
	807
	808
	809
	810
	811
	812
	813
	814
	815
	816
	817
	819
	820
	821
	822
	823
	824
	825
	826
9R-0170	729
	773
9R-0189	726
9R-0320	555
	556
	722
	788
	789
	798
	799
	818
	875
9R-0321	541
	543
	547
	549
	551
	552
9R-0336	784
	785
9R-0343	784
	785
9R-0347	784
	786
9R-0366	483
	494
9R-0376	785
	787
9R-0411	771
9R-0413	724
	725
9R-0418	638
	640
	642
	644
	646

PART NUMBER INDEX

Part	Page
9R-0422	762
	764
	767
	771
9R-0431	484
	486
	488
	490
	492
9R-0481	484
	486
	488
	490
	492
9R-0601	433
9R-1034	668
	670
9R-1085	4
	5
	6
	7
	8
	9
	10
	11
	12
	13
	14
	15
	16
	760
	▶762
	▶763
9R-1104	731
	733
9R-1107	731
9R-1499	259
	261
	263
9R-1502	729
	778
9R-1510	680
	729
	738
	778
	852
	853
	854
	880
9R-1765	954
	957
9R-1766	954
	957
	979
9R-1767	954
	957
	979
9R-1956	430
9R-2053	622
	624
	667
9R-2614	563
	565
	567
9R-2672	156
	158
	160
	162
	676
	678
9R-2700	535
9R-2806	440
	563
	565
	567
	963
	965
9R-2807	440
	443
	446
	563
	565
	567
	954
	957
	963
	965
9R-2959	774
	776
9R-3067	954
	957
9R-3092	553
	773
9R-3135	567
9R-3182	722
9R-3255	563
	565
	567
9R-3469	1049
	1051
	1064
	1066
9R-3700	875
9R-3712	▶638
	781
9R-3884	456
	460
9R-3933	731
9R-4066	722
9R-4110	484
	486
	488
	490
	492
9R-4482	731
	733
9R-4494	731
	733
9R-4619	599
	601
	603
9R-4668	▶679
	781
9R-4670	856
	865
9R-4672	784
	785
	786
	787
	856
	869
	870
9R-4675	856
	869
	871
9R-4676	855
	856
	858
	859
	860
	861
	862
	863
	864
9R-4677	679
	858
	859
	860
	861
	862
	863
	864
9R-4678	679
	858
	859
	860
	861
	862
	863
	864
9R-5063	731
	733
9R-5201	▶783
	828
9R-5205	784
	785
	786
	787
9R-5206	784
	785
	786
	787
9R-5238	738
9R-5271	856
	865
	867
9R-5294	856
	869
	871
9R-5301	563
	565
	567
	726
9R-5313	871
9R-5321	4
	7
	12
	828
	830
	▶878
9R-5383	933
	935
9R-5429	494
9R-5616	908
	910
	912
	915
	918
	920
	927
	929
	930
	931
9R-5828	731
9R-5834	731
	733
9R-5835	731
	733
9R-5866	5
	6
	8
	9
	10
	11
	13
	14
	15
	16
	828
	830
	▶896
9R-5948	605
	607
	609
	611
	614
	616
	618
	664
	665
9R-5971	638
9R-5989	▶827
9R-6007	745
	▶764
	▶766
9R-6481	429
	430
9R-6690	722
9R-7240	219
	222
9R-7701	484
	486
	488
9R-7803	630
	632
	634
	636
	668
	670
9R-7882	494
	496
	498
9R-7942	258
9R-7958	258
9R-8165	948
	950
	952
9R-8291	494
	496
	498

▶ **PRIMARY REFERENCE**

PART NUMBER INDEX

Part	Page
9R-8390	722
9R-8594	734
9R-8870	640
	642
	644
	646
9R-9005	667
9R-9140	17
	►731
9R-9152	731
9R-9153	731
	733
9R-9373	722
9R-9702	384
9R-9866	724
	725
9R-9868	954
	957
9R-9901	959
	961
	963
	965
9R-9925	692
	694
9S-4191	200
	215
	216
	404
	409
	414
	419
9S-8001	673
9S-8002	706
	720
9S-8004	351
	546
9T-0661	541
9T-0766	556
9T-2178	535
9T-2212	544
9T-2883	537
	539
9T-3948	556
9T-4007	544
	546
9T-4008	544
9T-4009	544
9U-2277	344
9U-8263	1006
	1008
9U-8875	393
	395
9U-8886	393
	395
	558
9W-0607	254
	255
	256
9W-0625	954
	957
	979
9W-0844	302
	306
	310
	335
	340
	1051
9W-0852	334
	340
	1051
9W-1951	324
	334
	340
9W-3326	259
	263
9W-4216	118
	527
9W-5460	355
	360
9W-6582	1020
9W-6584	1020
9W-8215	878
9W-9910	77
9W-9915	77
	78
9W-9952	77
	78
9W-9953	77
	78
9X-0199	317
	319
	321
9X-1054	282
	285
	288
	302
	306
	313
	315
	340
9X-1055	282
	285
	288
	302
	306
	313
	315
	341
9X-1481	1037
	1040
9X-2027	897
9X-2032	330
9X-2036	273
9X-2038	443
	480
	481
	482
	898
	942
	944
	946
	959
	961
	963
	965
	982
	983
	985
	987
	989
	995
	997
	1006
	1008
	1024
	1026
	1047
	1081
9X-2040	954
	957
9X-2042	222
	981
9X-2043	480
	481
	482
	932
	982
9X-2044	446
	932
	944
	946
	1047
	1058
	1060
9X-2045	442
	445
	898
	908
	910
	918
	942
	946
	959
	961
	963
	965
	983
	985
	987
	989
	991
	992
	995
	997
	1024
	1026
	1053
	1054
	1056
	1062
	1063
9X-2065	954
	957
9X-2092	927
	930
9X-2132	1058
	1060
9X-2403	774
	776
9X-2842	1021
	1022
9X-3401	20
	22
	285
	286
	288
	291
	310
	315
	340
	344
	957
	979
	1051
9X-3402	335
	340
9X-3959	1013
9X-3982	692
	694
9X-4244	254
	255
	256
9X-4611	537
9X-4813	324
	334
	340
9X-6165	344
	1024
	1026
9X-6378	350
9X-6383	985
	989
	1058
	1060
9X-6611	537
	539
	543
	547
	549
	551
	552
9X-6615	404
	409
	414
	419
	706
9X-6620	1030
	1031
9X-6643	620
9X-7114	510
9X-7260	531
9X-7344	317
	319
	321
9X-7378	282
	285
	289
	937
9X-7380	1011
	1013
9X-7381	1011
	1013
9X-7382	1011
	1013
9X-7383	1011
	1013
9X-7385	939
9X-7684	350
9X-7737	712
9X-8118	257

► PRIMARY REFERENCE

PART NUMBER INDEX

Part	Page
	258
9X-8139	257
	258
9X-8256	112
	259
	261
	263
	948
	950
	952
	959
	961
	963
	965
	982
	1006
	1008
	1047
	1049
	1051
9X-8257	385
	472
	648
	650
	769
	770
	938
	1020
9X-8372	1049
	1051
	1064
	1066
9X-8399	531
	533
9X-8408	528
9X-8699	513
	514
9X-9882	339
9Y-0083	933
	935
9Y-5015	57
	58
	61

0

Part	Page
005-0469	353
	355
	356
	358
	360
	361
005-0471	404
	409
	414
	419
014-5645	404
	409
	414
	419
030-1705	233
031-4155	1043
031-5644	136
	266
	267
032-1557	974
032-9090	41
	43
	49
032-9091	41
	43
	49
033-6041	350
033-6043	720
033-7687	65
	66
033-8248	111
034-1432	1083
035-8017	198
035-8063	55
	281
035-8068	50
	55
038-9317	226
	228
	229
	231
	233
	236
	238
	240
	242
	244
039-9133	450
054-6733	464
054-6882	464
067-6002	50
	55
067-6006	50
	55
	57
	58
067-6043	50
	55
067-6095	27
	104
067-6179	69
	71
067-6213	79
	81
	83
067-6264	198
067-6265	198
067-6366	223
	224
067-6873	41
	43
	49
067-6874	41
	43
	49
067-6999	198
069-4080	200
	215
	216
069-4707	381
084-4277	1006
	1008
084-4348	259
	263
089-7702	648
	650
089-7990	384
091-2436	282
	285
	288
	291
	294
	296
	313
	315
	323
	335
	341
092-3635	456
	458
	460
	462
093-8828	381
095-0641	1021
	1022
095-0756	979
095-0865	858
	859
	860
	861
	862
	863
	864
095-0878	1043
095-0924	386
095-0927	398
095-0929	725
095-1041	381
095-9230	954
	957
096-1820	858
	859
	860
	861
	862
	863
	864
096-4882	1037
	1040
096-5516	397
	399
096-5866	156
	158
	160
	162
	654
	656
096-6166	330
	335
	1015
	1017
097-7234	1051
	1064
098-5747	379
	453

1

Part	Page
100-3685	273
100-3751	69
	71
	143
	145
	147
100-4112	273
100-4113	273
100-4115	273
100-4118	273
100-4119	273
100-4461	113
	114
100-4830	73
	74
	204
	207
	211
100-4838	29
	31
	33
	35
	37
	39
100-4841	29
	31
	33
	35
	37
	39
	50
	55
100-5041	282
	285
	288
	302
	306
	313
	315
	341
100-5805	330
	334
	340
100-6674	282
	286
	288
	302
	306
	310
100-7442	638
100-7443	640
100-7608	1053
	1054
	1056
	1062
	1063
101-0117	731
	733
101-0333	442
	445
101-0745	1064
	1066
	1068

► **PRIMARY REFERENCE**

PART NUMBER INDEX

Part	Page
	1070
101-1787	648
101-2987	75
	76
101-3617	67
	68
101-3771	79
	81
	83
101-3895	69
	71
	119
	121
	124
	126
101-7404	200
102-3582	537
	539
102-8801	250
	252
	291
	296
	310
	324
	334
	340
102-8802	20
	22
	173
	219
	222
	250
	252
	259
	263
	278
	282
	285
	288
	291
	294
	299
	302
	306
	310
	313
	315
	317
	319
	321
	345
	1036
102-8804	259
	263
	291
	296
	324
	334
	340
	1019
	1037
	1064
	1068
102-8805	259
	261
	263
	324
	334
	340
	344
	1018
	1049
	1051
102-8806	259
	261
	263
102-9941	100
103-2529	442
	445
103-2543	323
	327
	330
	334
	341
103-5796	472
104-1995	282
	285
	288
	291
	294
	296
	306
	313
	315
104-3288	353
	356
104-3970	865
104-3975	865
104-6310	781
	782
	▶879
104-6311	879
104-6312	879
104-6313	856
104-6314	856
104-6316	879
104-6317	879
105-3481	1030
	1031
105-8034	442
	445
105-9411	1011
106-0401	528
	561
	569
	571
	574
	577
	580
	583
	586
	589
	592
	596
106-0406	528
	561
	569
	571
	574
	577
	580
	583
	586
	589
	592
	596
106-7301	563
	565
	567
106-8020	220
106-8704	282
	323
	327
	330
	345
106-8715	583
	586
	589
	596
106-8916	180
	182
106-9387	781
106-9388	856
106-9586	424
106-9861	355
	360
107-5591	954
	957
	979
107-6711	773
107-6826	392
108-2989	933
	935
108-3036	781
	▶855
108-3037	855
	▶865
108-3872	569
	571
	574
	577
	580
	583
	586
	589
	592
	596
109-1260	569
	571
	574
	583
109-1633	654
	656
	1011
	1013
109-1634	654
	656
	1011
	1013
109-5824	589
109-5825	574
	577
	580
	583
	586
	589
	592
	596
110-0203	334
	340
110-2445	156
	158
	160
	162
	165
110-2861	856
110-5602	1058
	1060
110-6109	898
	995
	997
110-7887	291
	296
111-0859	63
	64
111-3422	210
111-3423	210
111-4337	722
	731
	733
	771
111-4627	344
	898
	995
	997
111-5042	1037
	1039
111-6792	282
	285
	288
	323
	335
	341
111-6793	323
	335
	341
111-6795	282
	285
	288
	324
	334
	340

▶ **PRIMARY REFERENCE**

PART NUMBER INDEX

Part	Page
111-6816	282
	285
	288
	334
	340
111-7899	259
	263
	285
	288
	291
	294
	296
	315
	334
	339
	1068
	1070
111-7906	367
111-7907	▶367
	403
111-8222	167
	168
	169
111-9251	776
112-0938	781
112-0939	▶781
112-0940	▶781
112-0941	▶781
112-1775	856
	865
112-1776	879
112-1777	856
112-1778	781
	▶856
112-1826	388
	389
	390
	391
	▶558
112-9338	428
	429
113-0920	1006
	1008
113-6349	223
	224
	225
113-7913	938
113-8129	143
	145
	147
113-8490	268
113-8491	268
113-8492	268
114-0063	1013
114-2579	167
	168
	169
114-4363	67
	68
114-6099	484
	486
	488
	490
	492
115-1615	282
	286
	289
	299
	302
	306
	313
	315
	341
115-1918	558
116-4942	752
	▶767
	▶768
116-5763	475
	477
117-3534	558
117-7520	638
117-9713	367
117-9887	392
118-2990	1020
118-6842	465
	▶471
118-6854	465
	466
118-7286	134
	138
118-7789	731
	733
118-7790	317
	319
	321
118-8118	192
	200
	214
	217
118-8119	192
	200
119-1530	▶1082
119-3662	259
	263
	282
	285
	288
	291
	296
	302
	306
	310
	313
	315
	324
	335
	341
	1049
	1051
	1064
119-4594	722
	771
119-4740	388
	389
	390
	391
119-5025	184
	186
	188
	190
119-5708	112
119-8349	1058
	1060
119-9631	993
120-9027	946
120-9286	1074
120-9289	1082
	▶1083
120-9332	1083
120-9333	1083
120-9762	355
	360
120-9809	630
	632
121-0697	398
121-0714	398
121-0883	67
	68
121-0885	398
121-0904	398
	400
121-2059	353
	356
121-2060	353
	356
121-2061	353
	356
121-2500	393
	395
121-6936	1049
	1051
121-7385	404
	409
	414
	419
121-7389	404
	409
	414
	419
121-7390	404
	409
	414
	419
121-7391	404
	409
	414
	419
121-7396	404
	409
	414
	419
121-7398	353
	356
	358
	361
121-7399	353
	356
	358
	361
121-7400	353
	356
	358
	361
121-7401	353
	356
	358
	361
121-7402	353
	356
	358
	361
121-7403	404
	409
	414
	419
121-7404	404
	409
	414
	419
121-9743	1058
121-9870	1006
	1008
121-9875	409
	419
122-1877	398
	400
122-1878	398
	400
122-1879	353
	356
122-1883	410
	420
122-1884	398
	400
122-1886	393
	395
122-3652	409
122-4401	282
	285
	288
	291
	294
	296
	306
	313
	315
122-6785	404
	415
	419
122-6787	404
	410
	415
	420
122-7137	1046
123-0380	908
	910
	912
	915
	918
	920
123-0428	504
	506
	508
	510
123-0707	1006
	1008
123-0714	395
123-1377	415
	420
123-2899	63

▶ **PRIMARY REFERENCE**

PART NUMBER INDEX

Part	Page
123-2918	410
	420
123-2919	410
	420
123-2920	395
	409
123-4065	141
	150
	154
123-6077	1043
123-6620	1016
123-7615	302
	306
	310
123-8905	393
	395
	398
	400
123-8906	353
	355
	356
	360
123-8907	397
	399
	404
	409
	414
	419
123-8908	353
	356
	358
	361
123-8909	393
	395
123-8910	353
	356
	358
	361
123-8912	398
	400
124-0312	898
	995
	997
124-2456	1076
	1080
124-3536	85
	86
	88
	90
	92
124-3815	69
	71
	169
	204
	207
	211
124-5640	282
	285
	288
	302
	306
	310
124-6259	156
	160
	162
	165
124-6569	1008
124-8616	1064
125-7116	856
	869
125-7122	869
125-7874	259
	261
	263
	282
	285
	286
	288
	289
	291
	294
	296
	302
	306
	311
	313
	315
	319
	321
	324
	335
	341
	1049
	1051
	1064
125-7875	261
	285
	294
	302
	306
	311
	324
	335
	341
125-7876	229
	233
	236
	238
	240
	242
	244
	259
	263
126-1767	291
	939
126-1768	335
126-1817	560
126-4224	855
	856
	▶869
126-4226	869
126-4227	869
127-3017	404
	409
	414
	419
127-4293	431
127-4471	111
	112
	158
	692
	694
127-4834	470
127-8987	722
128-4123	324
	334
	340
128-4168	335
	339
128-4172	302
	306
128-4178	335
	339
128-4179	285
128-4249	324
128-5010	722
128-5016	334
	340
128-5596	558
	▶691
128-7716	993
	1001
128-7902	563
	565
	567
128-7903	563
	565
	567
	722
128-7905	563
	565
	567
	722
129-1831	898
	995
	997
129-3178	156
	158
	160
	162
	165
	250
	252
	477
	950
	993
	999
	1001
	1021
	1022
	1081
129-3180	1029
	1030
	1031
	1040
	1058
	1060
129-4741	466
	471
129-5256	908
	910
	912
	915
	918
	920
129-5257	908
	910
	912
	915
	918
	920
129-8542	1053
	1054
	1056
	1062
	1063
129-8545	477
	1053
	1054
	1056
	1062
	1063
130-0165	249
130-0777	771
130-1638	500
	739
	741
	743
	746
	748
	750
	754
	756
	758
130-3216	128
	129
	131
130-3880	128
130-4832	898
	995
	997
130-5451	722
130-5891	563
	565
	567
130-6791	294
130-7282	350
130-7881	133
130-7952	563
	565
	567
130-8150	691
130-8343	1037
	1039
130-9984	134
	138
	626
	1011
	1013
131-0232	219
	222
131-1424	291
	296
	1046
131-1496	285
131-3540	1029
131-3987	908
	910
	912
	915

▶ **PRIMARY REFERENCE**

PART NUMBER INDEX

Part	Page	Part	Page	Part	Page	Part	Page
	918	134-3856	1010	137-4234	783		603
	920		1011		827	142-3388	128
	983	134-5884	798		829		129
	985		799		831		131
	987		800		832	142-3391	128
	989		801		833		129
131-8203	1058		802		834		131
131-8775	734		803		835		133
	736		804		836	142-7405	963
132-1806	334		805		837		965
	339		806		838	143-0539	▶273
132-2249	983		807		839		275
	985		808		840	143-0777	630
	987		809		841		632
	989		810		842	143-0779	630
	1006		811		843		632
	1008		812		844	143-1344	273
132-2558	472		813		845	143-2827	908
132-3056	692		814		846		910
	694		815		847		918
132-3721	873		816		851		1053
132-3723	873		817		858		1054
132-3725	873	134-5885	798		859		1056
132-3777	874		799		860		1062
132-3778	874		800		861		1063
	876		801		862	144-0195	1049
132-3821	873		802		863		1051
132-5789	229		803		864		1064
	242		804	138-2053	27		1066
	244		805		104	144-0367	652
	311		806	138-8454	341	144-1636	954
	1011		807	140-3640	136	144-6734	365
132-6496	722		808		141	144-8344	569
132-6497	726		809	140-6009	563		571
132-8769	▶561		810		565		574
132-9240	1043		811		567		577
133-1011	69		812	140-7649	537		580
	71		813		551		583
133-3362	▶739		814		552		586
	▶741		815	140-7656	551		589
	▶743		816		552		592
	▶745		817	140-8714	204		596
133-3363	▶746	134-7258	1076		207	145-0981	1008
	▶748		1079		211	145-2350	149
	▶750	135-1706	1043	140-8718	204	145-9291	975
	▶752	135-5009	233		207		977
133-3366	▶754		238		211	146-6729	273
	▶756		240	140-8783	223	146-7744	1058
	▶758		244		224		1060
	▶760	135-8203	896		225	146-7745	1058
133-3413	249	136-1955	107	141-0888	674		1060
133-4771	700		109	141-1667	174	146-9439	277
	702		626		180		323
133-6517	249	136-3112	371	141-1762	1047		327
133-6934	933		373	141-6343	563		330
133-8916	970	136-3194	1068		565		334
	972	136-4192	1053		567		339
134-0143	734		1054	141-8061	296		345
	736		1056		324	147-0203	393
134-0453	954		1062		335		395
	957		1063		341	147-0209	404
134-2540	323	136-7440	494	141-8437	642		409
	324		496	142-0485	442		414
	334		498		445		419
	340	136-7808	363	142-1072	601		▶424

▶ **PRIMARY REFERENCE**

PART NUMBER INDEX

Part	Page
147-0227	393
147-0238	393
	395
147-1979	57
	58
147-5553	180
	182
148-5353	1054
	1056
148-8317	652
148-8318	456
	458
	460
	462
	654
	658
148-8325	383
148-8326	220
148-8327	574
	577
	580
	583
	586
	589
	592
	596
148-8328	605
	611
	664
	665
148-8335	560
	574
	577
	580
	583
	586
	589
	592
	596
	652
148-8336	456
	458
	460
	462
	638
	648
	650
148-8339	134
	138
148-8340	529
	654
	656
	658
	667
148-8341	599
	601
	603
	605
	607
	609
	611
	614
	616
	618
	630
	632
	664
	665
	668
	670
	697
148-8345	660
	662
148-8347	574
	577
	580
	592
148-8353	650
148-8354	656
148-8358	654
	656
	658
148-8360	134
	138
148-8364	622
	624
	667
148-8365	656
148-8367	456
	458
	460
	462
148-8368	383
	442
	445
148-8369	456
	458
	460
	462
148-8370	656
	658
148-8372	660
	662
148-8374	456
	458
	648
	650
148-8378	640
	642
	644
	646
148-8382	599
	601
	603
	605
	607
	609
	611
	614
	616
	618
	630
	632
	668
	670
	697
148-8383	460
	462
148-8390	630
	632
	668
	670
148-8392	529
	569
	571
148-8393	668
	670
148-8428	525
148-8433	648
	650
148-8446	630
	632
148-8449	578
	581
	586
	589
	592
	596
148-8457	605
	611
149-3516	192
	200
149-4745	1037
	1039
149-9954	214
	217
150-3026	456
	458
	460
	462
150-3027	456
	458
	460
	462
	648
	650
150-3033	442
	445
150-3053	569
	571
	574
	577
	580
	583
	586
	589
	592
	596
150-3060	638
	640
	642
	644
	646
150-3062	648
150-3063	630
	632
150-7732	35
	37
150-8015	1060
151-1975	192
	200
151-2963	471
151-4841	184
	186
	188
	190
	383
	442
	445
	630
	632
	668
	670
	697
151-7902	790
	792
	794
	796
	800
	802
	804
	806
	808
	810
	812
	814
	816
	819
	821
	823
	825
151-7903	790
	792
	794
	796
	800
	802
	804
	806
	808
	810
	812
	814
	816
	819
	821
	823
	825
151-7926	812
151-7927	798
	800
	802
	804
	806
	808
151-7929	788
	798
151-7930	788
	798
152-0816	640
152-3968	210
152-5532	335
	339
152-6144	347
	350
	363
152-7691	1018
153-0088	1040
153-3061	128
	129
	131
153-6232	618

► **PRIMARY REFERENCE**

PART NUMBER INDEX

Part	Page	Part	Page	Part	Page	Part	Page
	664		323		236		626
	665		340		238		628
153-6241	571	155-2265	323		240	160-2248	628
	589		340		242	161-3249	398
	654		1049		244		400
	656		1051		250	161-4130	788
	658		1064		252		790
153-6252	528	155-2270	250		324		792
153-7368	975		252		327		794
	977		259		330		796
153-7369	▶455		261		335		798
	975		263		341		800
	977		282	157-1669	200		802
153-8004	1015		285		215		804
154-2704	875		286		216		806
	894		288	158-2306	520		808
154-5257	788		294	158-3412	630		810
	789		302		632		812
	798		306		634		814
	799		310		636		816
	818		313		668		825
154-5278	729		315		670		875
154-5279	729		317	159-1503	134	161-6984	1003
	880		319		138		1004
154-5280	729		321		626	161-6987	1003
	880		323		628		1004
154-5404	347		340	159-3590	1075	161-9044	983
	453		344		1079		985
154-5410	1064		993	159-4269	983		987
	1066	155-2271	259		985		989
	1068		261		987	161-9282	1045
	1070		263		989	161-9283	1030
154-5416	440		291	159-4945	908		1031
154-5423	1053		296		910		1039
	1054		323		912		1045
	1056		330		915	161-9285	1039
	1062		335		918		1045
	1063		340		920	161-9286	1045
154-5428	344		999		987	161-9288	1037
154-8278	1043		1049		989		1039
154-8280	1043		1051	159-4946	912		1045
154-8284	1043		1064		915	161-9289	1037
155-2026	569	155-2274	291		920		1039
	571		296		983		1043
	574		319		985	161-9290	1043
	577		323	159-7105	1016	161-9294	1003
	580		340	159-7106	1016		1004
	583		1049	159-7907	451	161-9744	1043
	586		1051	159-8033	1076	161-9820	225
	589		1064		1079	162-0177	351
	592	155-7321	667	159-8049	233	162-1565	29
	596	155-8804	204	159-8050	233		31
155-2255	250	156-0283	475		236		33
	252		477		238	162-3960	▶520
	291		1049		240		654
	296		1051		242		656
	323		1064		244	162-3961	▶521
	334		1066	160-0496	520	162-4004	474
	340	156-1200	192	160-2169	1068	162-6556	1003
155-2260	302		200		1070		1004
	306	156-3837	668	160-2243	200	163-0753	441
	310	156-3838	668	160-2244	200		▶450
	317	156-6175	226	160-2245	317	163-1135	1037
	319		229	160-2246	319		1039
	321		233		321	164-1153	979

▶ **PRIMARY REFERENCE**

PART NUMBER INDEX

Part	Page
164-1154	1021
	1022
164-1178	942
164-1205	▶1032
	1033
164-1211	1043
164-1212	1043
164-1215	1036
	1039
164-1218	1036
	1039
164-1219	1036
	1039
164-1220	1036
	1039
164-1226	1037
	1039
164-1228	1039
164-1229	1037
	1039
164-1230	1037
	1039
164-1232	1037
	1039
164-1233	1037
	1039
164-1234	1039
164-1235	1039
164-1237	1037
	1039
164-1238	1037
	1039
164-1239	1037
	1039
164-1240	1037
	1039
164-1244	1031
164-1247	1034
	1035
164-1248	1029
164-1249	1030
	1031
164-1251	1030
	1031
164-1252	1030
	1031
164-1256	1030
	1031
164-1258	1030
	1031
164-1259	1030
	1031
164-1260	1029
164-1261	1034
	1035
164-1263	1030
	1031
164-1265	1030
	1031
	1034
	1035
164-1266	1029
	1030
164-1273	1030
	1031
164-1278	▶897
	1032
164-1279	897
164-1280	897
164-1281	897
164-1282	897
164-1283	897
164-1286	897
164-1287	897
164-1288	897
164-1289	897
164-1290	897
164-1291	897
164-1292	1032
	▶1043
164-1293	1043
	▶1045
164-1294	1045
164-1295	1043
164-1296	▶1029
	1032
164-1297	1029
164-1298	1029
164-1299	1029
164-1308	1058
	1060
164-1314	1058
	1060
164-1328	1058
	1060
164-1342	1058
	1060
164-1343	1058
	1060
164-1344	1058
	1060
164-1345	1058
	1060
164-1346	1058
	1060
164-1351	1058
	1060
164-1352	1058
	1060
164-1353	1058
	1060
164-1354	1058
	1060
164-1361	959
	961
	963
	965
164-1368	440
	898
	954
	957
	979
	995
	997
164-1371	959
	961
	963
164-1395	184
	186
	188
	190
	948
	950
	952
	957
164-1399	959
	961
	963
	965
164-1402	959
	961
	963
	965
164-1404	959
	961
	963
	965
164-1409	959
	961
	963
	965
164-1411	959
	961
	963
	965
164-1421	963
	965
164-1422	963
	965
164-1425	963
	965
164-1429	963
	965
164-1435	959
	961
	963
	965
164-1438	963
	965
164-1547	968
	969
	970
	972
164-3876	465
	466
164-5549	654
	658
164-5557	660
	662
164-5567	368
	371
	648
	650
164-5605	456
	458
	460
	462
164-6709	560
164-7556	254
	255
	256
164-8474	898
	995
	997
164-9425	299
	302
	306
	310
164-9598	450
164-9599	450
165-0312	291
165-2273	621
165-4021	107
	109
165-4931	368
	371
165-6595	442
	445
165-7019	675
	676
	677
	678
165-7951	200
	215
	216
165-8357	249
165-8718	506
165-8996	384
166-9413	351
167-0566	525
167-2183	537
167-2186	544
	554
167-2192	541
	556
167-2200	535
	553
167-2202	531
167-2294	544
	554
167-2302	541
	556
167-2303	537
167-2306	551
	552
167-2307	535
167-2310	531
167-3692	324
	340
167-3693	291
	294
	296
	302
	306
	310
167-8182	1058
	1060
167-8251	942
168-0425	881
168-0443	852
	853
	854
168-0444	852
	853
	854
168-0480	790
	791
	792
	793

▶ **PRIMARY REFERENCE**

PART NUMBER INDEX

Part	Page	Part	Page	Part	Page	Part	Page
	794		1008		815	178-3336	149
	795	169-7409	605		823	178-3593	▶880
	796		607		824	178-7539	259
	797		609	174-8131	1081		261
	800		611	174-9194	149		263
	801		614	174-9638	175		323
	802		616		180		327
	803		618		182		330
	804	170-0235	1011	174-9711	404		334
	805		1013		409		339
	806	170-0503	520		414	178-8465	20
	807	170-5076	712		419		22
	808	170-6305	292	175-0054	404		310
	809		296		409	178-8850	▶874
	810	170-6312	959		414	178-9242	229
	811		961		419		231
	812		963	175-7877	▶1074		242
	813		965	175-7902	535		244
	814	170-6542	292	175-7904	558	178-9566	398
	815		296	176-0348	259		400
	816	170-9360	250		263	179-5434	257
	817		252	176-0626	496	179-6401	323
	819	171-2870	1058		498		327
	820		1060		725		330
	821	172-5317	393	176-1477	20		334
	822		395		22		339
	823	172-6050	393		310	179-7262	1060
	824		395	176-1521	20	179-8235	954
	825		398		22		957
	826		400	176-1522	310		959
168-8389	783	172-6489	259	176-6219	210		961
	827		261	176-6251	▶873		968
	829		263		874		969
	831	172-6490	259	176-6252	873		970
	832		261	177-4877	908		972
	833		263		910	179-9392	334
	834	172-8276	819		912		339
	835	172-8277	821		915	180-3664	▶257
	836	172-8278	823		918		267
	837	172-8279	803		920	180-3730	220
	838		811		983		222
	839		819		985	180-5774	924
	840		820		987		925
	841	172-8280	805		989		1033
	842		813	177-9645	340	180-5781	1030
	843		821		993		1031
	844		822		999	180-5789	1039
	845	172-8591	942		1001	180-5795	1029
	846		959	177-9648	282	180-5797	1030
	847		961		285		1031
	851		963		288	180-9340	285
	858		965		310		286
	859	173-5787	1037		313		288
	860		1039		315		291
	861		1043	177-9653	993		296
	862	173-9683	531		999		302
	863		533		1001		306
	864	173-9779	554	177-9656	282		310
	875	174-3950	799		285		315
	877		818		288		340
	894	174-4643	347		313		344
169-5326	211	174-4647	350		315		1051
169-5861	192	174-4650	350	178-1781	226	180-9900	334
	200	174-4671	347		229		339
169-7291	1006	174-4765	807		236	183-3132	954

▶ **PRIMARY REFERENCE**

PART NUMBER INDEX

Part	Page
	957
183-3135	954
	957
183-3137	954
	957
183-6084	948
	950
	952
184-0982	219
	220
	222
184-5293	946
185-0882	57
	58
	61
185-0884	50
	55
185-1546	102
185-1839	▶544
	781
185-1861	20
	22
185-3890	1039
185-4015	993
	999
	1001
185-6627	167
	168
	169
185-6643	107
	109
186-2589	▶1018
	1064
	1066
	1068
	1070
186-3735	173
	219
	222
	259
	282
	291
	296
	299
	302
	306
	310
	323
	340
	345
	1018
	1019
	1068
186-3736	259
	296
	310
	335
	340
187-0413	908
	910
	912
	915
	918
	920
187-2120	525
187-2866	173
187-3164	668
	670
187-3166	668
	670
187-3510	533
187-4329	668
	670
187-7719	993
	1001
188-3953	500
	739
	741
	743
	746
	748
	750
	754
	756
	758
189-0881	898
	995
	997
189-3158	285
	288
	299
	302
	306
	310
	321
	334
	341
190-1055	▶828
190-5128	963
	965
190-5130	959
	961
190-7595	783
	▶784
190-7598	▶785
	827
190-7634	222
190-9767	398
191-6112	541
	556
191-6159	554
192-2112	993
	1001
192-7506	700
	702
	704
192-7508	700
	702
	704
192-7509	700
	702
	704
192-7510	707
	708
	709
	710
	711
	712
	713
	714
	715
	716
	718
192-7511	700
	702
	704
192-7515	672
	673
192-7863	707
	708
	709
	711
	712
	713
	714
	715
	716
	718
192-7864	707
	708
	709
	710
	711
	712
	713
	714
	715
	716
	718
192-7876	217
193-0618	214
	217
193-3356	898
	995
	997
193-5416	809
	817
	826
193-5913	466
	1079
193-5914	1079
193-5915	1079
193-5916	1079
193-9055	475
	477
194-4334	656
	658
194-5171	1068
	1070
194-5390	180
	182
194-5622	898
	995
	997
194-9487	500
	741
	743
	748
	750
	756
	758
195-2132	75
	76
195-2134	75
	76
195-2136	75
	76
195-2221	75
	76
195-6339	429
195-6341	430
	434
195-6343	433
195-6344	431
	432
	435
	439
195-6348	437
195-7055	1032
	1034
	1035
195-7056	1029
195-9223	1029
	1030
	1031
196-2384	323
	340
196-2385	323
	340
196-2386	323
	340
196-2412	334
	340
196-2413	340
196-8921	819
	820
	821
	822
	823
	824
	825
	826
196-8922	819
	820
	821
	822
	823
	824
	825
	826
197-5107	330
	983
	985
	987
	989
197-6258	818
197-6259	818
197-6657	1037
	1039
197-7499	291
	296
197-9155	350
198-0098	968
	969
	970
	972
198-7811	350
	381
198-7814	377
	379

▶ **PRIMARY REFERENCE**

PART NUMBER INDEX

Part	Page	Part	Page	Part	Page	Part	Page
198-7823	347	199-0784	366		790	201-1878	▶430
198-7825	347	199-0785	381		791	201-1881	426
	453	199-0786	351		792		▶431
198-7838	347	199-0787	351		793	201-1882	▶431
	453	199-0807	366		794	201-1883	▶431
198-7841	347	199-0808	366		795	201-1902	432
	453	199-0858	363		796	201-1911	432
198-7842	347		381		797	201-1912	▶432
	453	199-0929	1015	201-1238	832	201-1913	426
198-7843	347		1017		833		427
	453	199-2566	664		834		▶432
198-8645	29	199-9267	280		835	201-1915	428
	31		281		836		429
	33	199-9751	57		837		430
199-0646	381		58		838		436
199-0648	377		61		839		438
199-0652	350		93		840	201-1916	431
199-0653	387		96		841		432
199-0656	381		299		842		433
199-0659	366		302		843		435
199-0663	381		306		844		439
199-0668	350		311		845	201-1918	5
199-0672	448				846		6
	449				847		8
199-0673	366	**2**			848		9
199-0675	381				849		10
199-0676	350	200-5921	873		850		11
199-0678	381	200-6345	310		851		13
199-0679	350	200-8313	733	201-1239	832		14
199-0680	381	201-1024	323		833		15
199-0681	448		327		834		16
	449		330		835		▶426
199-0683	347		334		836	201-1919	428
	453		339		837		429
199-0684	381	201-1234	798		838		430
199-0685	381		799		839		431
199-0686	381		800		840		432
199-0687	381		801		841		433
199-0688	381		802		842		435
199-0689	381		803		843		436
199-0690	381		804		844		438
199-0691	381		805		845		439
199-0692	381		806		846	201-1920	▶426
199-0693	381		807		847		428
199-0694	366		808		848		429
199-0695	363		809		849		430
	381		810		850		431
199-0697	381		811		851		432
199-0700	448		812	201-1601	912		433
	449		813	201-1835	220		434
199-0701	448		814	201-1862	426		435
	449		815		427		436
199-0702	448		816		▶428		437
	449		817	201-1863	428		438
199-0703	448		818	201-1864	428		439
	449		819		▶429	201-1923	▶426
199-0706	350		820	201-1874	426	201-1925	4
199-0752	448		821		428		7
	449		822		▶429		12
199-0756	366		823	201-1875	429		▶426
199-0759	448		824	201-1876	429	201-1930	▶427
	449		825		▶430	201-1931	427
199-0760	387		826	201-1877	426		▶433
199-0778	350	201-1235	788		427	201-1932	433
199-0783	474		789		▶430	201-1933	▶433

▶ **PRIMARY REFERENCE**

PART NUMBER INDEX

Part	Page
201-1954	▶427
201-3304	233
201-3621	660
	662
201-3622	660
	662
201-3623	660
	662
201-3624	660
	662
201-3954	4
	5
	6
	7
	8
	9
	10
	11
	12
	13
	14
	15
	16
	▶474
201-5810	739
	741
	746
	748
	754
	756
201-5812	739
	741
	746
	748
	754
	756
201-9459	278
201-9465	1058
	1060
202-5909	107
	109
202-5993	442
	445
202-6010	▶278
	388
	389
	390
	391
202-6029	442
	445
202-6108	282
	285
202-6186	428
	429
	430
	436
	438
202-6611	255
	256
202-6614	254
202-9130	▶620
202-9824	1076
203-7060	739
	746
	754
204-0317	456
	458
	460
	462
204-0775	278
204-2281	578
	581
	586
	589
	592
	596
204-3080	347
	453
204-4160	10
	15
	▶922
204-4161	▶901
204-4162	▶902
204-4164	4
	5
	7
	8
	12
	13
	▶923
204-4175	905
	906
204-4200	908
204-4220	912
204-4230	927
204-4240	929
204-9921	993
	999
	1001
205-1627	165
	172
205-6298	278
205-7047	1008
205-7048	983
	985
	987
	989
205-9163	353
	415
	420
205-9362	278
205-9560	901
	902
	903
	904
	922
	923
	924
	925
	▶1020
205-9566	905
	906
205-9567	905
	906
205-9568	901
	922
	925
	▶1024
205-9569	902
	903
	904
	923
	924
	▶1026
205-9570	1024
	1026
205-9571	1026
205-9576	1024
	1026
205-9577	1024
	1026
205-9578	902
	903
	904
	▶1015
205-9580	4
	5
	6
	7
	8
	9
	10
	11
	12
	13
	14
	15
	16
	▶1016
205-9585	983
	985
	▶1062
205-9587	1062
205-9588	983
	985
205-9590	1062
205-9591	1062
205-9595	987
	989
	▶1063
205-9597	1063
205-9598	987
	989
205-9605	908
	910
	912
	915
	918
	920
	927
	929
	930
	931
205-9606	908
	910
	912
	915
	918
	920
	927
	929
	930
	931
205-9607	908
	910
	912
	915
	918
	920
	929
	931
205-9608	908
	910
	918
205-9609	908
	910
	918
205-9611	908
	910
	918
	▶1053
205-9612	1053
205-9613	908
	910
	918
205-9614	1063
205-9615	1063
205-9616	908
	910
	918
205-9617	1053
205-9618	1053
205-9619	912
	915
	920
	▶1054
205-9621	1054
205-9622	912
	915
	920
205-9623	1054
205-9624	1054
205-9628	912
	915
	920
	▶1056
205-9629	908
	910
	918
205-9630	1056
205-9631	912
	915
	920
205-9633	1056
205-9634	1056
205-9920	321
	694
206-1345	291
	296
	323
	327
	330
	334
	339
206-1486	317
	319
	321
206-1590	908
	910
	912
	915
	918
	920

▶ PRIMARY REFERENCE

PART NUMBER INDEX

Part	Page
	915
	918
	920
206-1592	908
	910
	912
	915
	918
	920
	▶983
	▶985
206-1593	912
	915
	920
	▶987
	▶989
206-1594	983
	985
206-1606	987
	989
206-1618	902
	903
	904
	923
	924
	▶991
206-1620	901
	922
	925
	▶992
206-1621	992
206-1623	1047
206-1625	1047
206-1630	901
	922
	925
	▶974
206-1632	974
	975
	977
206-1633	902
	903
	923
	924
	▶975
206-1634	442
	445
206-1635	975
206-1637	1047
206-1638	388
	389
	390
	391
	▶442
	▶445
206-1640	20
	22
	▶184
	▶186
206-1642	388
	389
	390
	391
	▶440
206-1643	388
	389
	390
	391
	▶979
206-1645	696
	▶954
206-1647	908
	910
	912
	915
	927
	929
206-1648	898
	995
	997
206-1652	456
	458
	460
	462
206-1653	898
	995
	997
206-1658	946
206-1659	946
206-1660	946
206-1661	946
206-1662	946
206-1663	946
206-1665	1047
206-1666	1047
206-1667	942
	946
206-1668	957
206-1669	979
206-1672	959
	961
	963
	965
206-1673	959
	961
	963
	965
206-1678	942
206-1679	942
206-1681	942
206-1682	898
	995
	997
206-1683	1047
206-1684	898
	995
	997
	1047
206-1687	942
206-1690	942
206-1692	942
206-1695	954
206-1696	944
206-1698	944
206-1699	944
206-1700	901
	902
	903
	904
	922
	923
	924
	925
	▶942
206-1701	922
	923
	924
	925
	▶1081
206-1702	902
	903
	904
	923
	924
	▶944
206-1703	901
	902
	903
	904
	922
	923
	924
	925
	▶1047
206-1706	932
	944
206-1708	932
	944
	946
206-1712	944
206-1717	905
	906
206-1718	323
	327
	330
	334
	339
206-1725	901
	902
	903
	904
	▶1068
	▶1070
206-1727	901
	902
	903
	904
	▶1049
	▶1051
206-1728	923
	924
	▶1064
	▶1066
206-1747	4
	5
	6
	7
	8
	9
	10
	11
	12
	13
	14
	15
	16
	▶1027
206-1748	▶1028
206-1749	1027
206-1750	1028
206-1760	442
	445
206-1766	442
	445
206-1769	442
	445
206-1791	▶1034
	1036
206-1792	▶1035
	1036
206-1798	1047
206-1799	1047
206-1800	901
	902
	▶995
	▶997
206-1801	▶898
	903
	904
206-1803	898
	995
	997
206-1804	898
	995
	997
206-1805	898
	995
	997
206-1807	898
	995
	997
206-1808	898
	995
	997
206-1809	898
	995
	997
206-1810	898
	995
	997
206-1812	898
	995
	997
206-1814	898
	995
	997
206-1815	898
	995
	997
206-1816	898
	995
	997
206-1817	898
	995
	997

▶ **PRIMARY REFERENCE**

PART NUMBER INDEX

Part	Page
206-1818	898
	995
	997
206-1832	480
	481
	482
206-1835	480
	481
	482
206-1845	480
	481
206-1846	898
206-1847	898
206-1850	481
206-1852	1081
206-1853	1081
206-1854	946
206-1855	1081
206-1856	1081
206-1874	948
	950
	952
206-1884	922
	925
	▶927
206-1885	923
	924
	▶929
206-1888	901
	▶908
	▶910
206-1889	902
	903
	▶912
	▶915
206-2423	622
	624
206-3552	556
206-3553	17
	18
	▶556
206-3685	525
206-5823	1018
207-4255	453
207-4257	387
207-4258	347
	453
207-4262	453
207-4263	376
207-4266	453
207-4267	376
207-4268	453
207-4271	453
207-4272	453
207-5962	387
207-7581	668
	670
208-0321	347
208-0322	363
208-5029	204
208-5235	832
	833
	834
	835
	836
	837
	838
	839
	840
	841
	842
	843
	844
	845
	846
	847
	848
	849
	850
	851
208-5245	832
	833
	834
	835
	836
	837
	838
	839
	840
	841
	842
	843
	844
	845
	846
	847
	848
	849
	850
	851
208-8240	409
	410
	414
	415
	419
	420
208-9281	174
208-9293	1011
	1013
209-2435	774
	776
209-3348	959
209-3349	963
209-3350	963
209-3352	968
	970
209-3353	959
	961
	963
	965
209-3363	954
	957
209-3364	696
	▶957
209-3365	697
	▶968
	▶969
209-3367	184
	186
	188
	190
	▶1005
209-3368	959
	961
209-3370	10
	11
	15
	16
	▶959
	▶961
209-3371	4
	5
	6
	7
	8
	9
	12
	13
	14
	▶963
	▶965
209-3375	697
	▶970
	▶972
209-3378	184
	186
	▶1021
209-4157	386
209-4232	375
209-4703	902
	903
	904
	▶1006
	▶1008
209-4704	1006
	1008
209-4705	1006
209-4716	1006
	1008
209-4777	490
	492
209-6181	724
	725
209-6850	494
	496
	498
209-6855	494
	496
	498
209-6862	494
209-7454	363
209-7455	365
209-7456	347
209-7460	377
	379
209-7462	363
209-7463	363
209-7464	347
209-7465	377
	379
209-7466	386
209-7472	363
209-7473	363
209-9219	52
	53
	54
209-9875	347
209-9882	347
	▶363
209-9883	347
209-9884	347
	▶377
209-9885	347
	▶379
209-9886	347
209-9887	347
209-9922	2
	▶484
	▶486
	▶488
209-9924	▶1
	4
	5
	6
	7
	8
	9
	10
	11
	12
	13
	14
	15
	16
209-9928	1
	▶725
209-9929	▶1
209-9934	▶696
209-9935	4
	5
	6
	7
	8
	9
	10
	11
	12
	13
	14
	15
	16
209-9938	1
	▶738
209-9943	4
	5
	6
	7
	8
	9
	10
	11
	12
	13
	14
	15
	16
	▶696
209-9944	▶696
210-3098	350

▶ **PRIMARY REFERENCE**

PART NUMBER INDEX

Part	Page	Part	Page	Part	Page	Part	Page
210-3099	350	210-8401	993	211-3653	▶470	211-4291	▶266
210-3100	350	210-8402	999	211-3783	475	211-4292	▶267
210-3106	350		1001		477	211-4348	652
210-5924	347	210-8754	1006	211-4242	▶323	211-5182	2
	▶386		1008		▶327		3
210-5931	386	210-8917	700		▶330		▶734
210-5932	377		702		▶334		▶736
	379		704		901	211-5779	154
210-5937	347	211-0052	324		902	211-7564	1
210-5942	347		340		903		▶664
210-5946	347	211-0071	903		922		▶665
210-5947	347		▶1011		923	211-7568	▶660
210-5948	151	211-0072	901		924		697
	153		902		925	211-7601	1
210-5949	▶151		▶1010	211-4243	▶291		▶599
	152	211-0092	365		901		▶601
	154	211-0705	903		902		▶603
210-5951	140		▶940		903	211-9286	384
	▶141	211-1018	4		922	212-0206	▶697
210-5953	▶118		5		923	212-3416	999
	151		6		924	212-5702	381
210-5954	118		7		925	212-5712	448
210-5955	118		8	211-4245	▶294		449
210-6139	141		9		901	212-5713	350
210-6141	141		10		902	212-9353	133
210-6243	▶560		11		903	213-0139	282
	562		12		922		285
210-6475	908		13		923		288
	910		14		924		310
	912		15		925		315
	915		16	211-4262	17	213-1881	475
	918		▶152		18		477
	920	211-1019	▶153		▶317	213-1884	475
210-6491	944	211-1381	940		▶319		477
210-6803	19	211-2660	993		▶321	213-1887	475
	▶156		999	211-4264	▶345		477
210-6807	19		1001		524	213-1888	1047
	20	211-2661	898	211-4267	17	213-1889	475
	22		995		▶277		477
	▶171		997	211-4268	▶282	213-1891	▶475
210-6813	19	211-3207	630		▶285		▶477
	▶177		632		903		901
210-7026	531	211-3208	630	211-4269	▶313		902
210-7074	1		632		▶315		903
	▶535	211-3461	153		901		904
210-7078	1	211-3462	153		902		922
	▶553	211-3463	153	211-4276	▶259		923
210-7086	1	211-3546	2		901		924
	▶531		▶504		922		925
210-7088	1		▶506		925	213-2279	652
	▶533	211-3649	5	211-4277	▶261	213-2483	531
210-7098	▶554		6		▶263	213-2486	531
	774		8		902	213-4222	387
	776		9		903	213-4616	533
210-7302	350		10		904	213-4620	533
210-7305	350		11		923	213-6040	294
210-7665	993		13		924	213-6043	344
	999		14	211-4283	2	213-6049	261
	1001		15		3	213-6051	1049
210-7666	993		16		▶344		1051
	999		▶468	211-4285	2		1064
	1001	211-3652	4		▶226		1066
210-7773	692		7	211-4286	11	213-6055	282
210-8364	995		12		16		285
	▶999		▶469		▶228		288

▶ **PRIMARY REFERENCE**

PART NUMBER INDEX

Part	Page	Part	Page	Part	Page	Part	Page
	313		469		339		▶881
	315	214-3255	470	214-4718	282	215-9515	193
213-6060	278	214-3647	141		285		195
213-6085	345		154		288		200
213-6088	226	214-3729	553	214-4719	345	216-0909	4
213-6089	226	214-3735	1011	214-4722	291		5
	229	214-3736	1011		296		6
	236		1013	214-4723	323		7
	238	214-3737	1011		327		8
	240		1013		330		9
	242	214-3738	1011		334		10
	244	214-3739	1011		339		11
213-6091	228	214-3740	▶368	214-4746	527		12
	231		▶370	214-4754	484		13
213-6092	228		388		486		14
	231		389		488		15
213-6094	226		391		492		16
	236	214-3742	1049	214-5097	347		▶1075
	238		1051		453	216-0928	872
	240		1066	214-6143	774		▶882
213-6687	729	214-3751	▶138		776	216-1600	381
213-6690	729		140	214-6910	▶388	216-1601	387
213-6691	729	214-3753	138	214-6911	▶388	216-1606	387
213-6692	1	214-3763	1049	214-6912	▶389	216-1608	350
	▶729		1051	214-6913	▶389	216-1609	350
213-6696	778		1064	214-6999	734		▶375
213-6697	778		1066		736	216-1610	350
213-6698	729	214-3850	535	214-7043	734		▶387
213-6702	483	214-4281	734		736	216-1612	381
	494		736	214-7407	141		▶448
213-6703	729	214-4285	734		▶155	216-1613	381
213-6710	738		736	214-7457	141		▶449
	778		739	214-7458	141	216-2267	404
213-6714	738		746	214-7469	464		409
	778		754	214-7568	200	216-2777	667
213-6723	729	214-4302	933		648	216-3350	957
213-6726	725		935		650	216-3351	954
213-9271	▶3		▶937	215-1242	1037		957
213-9284	▶2	214-4692	277	215-2023	347	216-3358	954
	3	214-4693	291		453		957
213-9298	3		296	215-3373	881	216-3712	882
	4	214-4695	282	215-3882	456	216-4457	363
	▶17		285		458	216-4458	363
213-9311	▶128		288	215-3883	456	216-4459	453
	901		313		458	216-4461	363
	902		315	215-4012	174	216-4464	363
	922	214-4698	261	215-4013	141	216-4465	363
	923	214-4700	261	215-7066	442	216-4466	363
	924	214-4701	974	215-7067	442	216-4475	16
	925		977		445		17
214-0973	19	214-4702	323	215-7297	541		▶392
	20		327	215-7298	17	216-4476	388
	▶77		330		▶541		389
214-2198	3		334	215-7453	634		391
	4		339		636		▶392
	▶562	214-4703	313		668	216-4983	174
214-2202	3		315		670	216-5332	562
	4	214-4709	1068	215-7454	634		▶621
	▶140		1070		636	216-5515	363
214-2249	553	214-4716	294	215-7457	554	216-5981	502
214-2250	553		339	215-7460	554	216-6295	774
214-2255	553	214-4717	323	215-7619	634		776
214-3203	55		327		636	216-6891	193
	98		330	215-8196	1039		195
214-3254	468		334	215-9478	872	216-6892	193

▶ **PRIMARY REFERENCE**

PART NUMBER INDEX

Part	Page	Part	Page	Part	Page	Part	Page
	195		449		834		▶840
216-6969	620	217-2617	569	219-3358	▶794	219-3388	4
216-7473	347		571		▶795		5
216-8314	43	217-2699	569		835		6
	45		571	219-3359	▶796		7
	46	217-2868	363		▶797		8
	47	217-2876	381		836		9
	48	217-2877	377	219-3360	▶798		12
216-8634	69	217-2878	379		▶799		13
	71	217-2879	377		837		14
216-8687	365	217-2880	363	219-3361	▶800		▶841
216-8689	365	217-2883	347		▶801	219-3389	▶842
216-8691	365	217-2914	350		838	219-3390	▶843
216-8700	365	217-8058	975	219-3362	▶802	219-3391	▶844
216-8762	861	217-8185	692		▶803	219-3392	▶845
	862		694		839	219-3393	▶846
	863	217-8195	460	219-3363	▶804	219-3394	▶847
	864		462		▶805		854
	▶866	217-8197	460		840	219-3395	▶848
216-8778	866		462	219-3364	▶806	219-3396	▶849
	868	217-8199	456		▶807	219-3397	▶850
216-8780	866		458		841	219-3398	▶851
	868		460	219-3365	▶808	219-3410	▶852
216-8781	866		462		▶809	219-3411	▶853
	868	217-8200	456		842	219-3412	▶854
216-8800	▶858		458	219-3366	▶810	219-5752	16
	▶859		460		▶811		▶456
216-8801	782		462		843		▶458
	▶860	217-9672	17	219-3367	▶812	219-5753	17
216-8802	859		▶502		▶813		▶460
	▶867	217-9920	442		844		▶462
	868		445	219-3368	▶814	219-6281	993
216-8803	858		▶452		▶815		999
	859	218-0235	1036		845		1001
	860	218-0666	898	219-3369	▶816	219-6283	993
	▶870		995		▶817		999
216-8804	871		997		846		1001
216-8805	871	218-0745	17	219-3370	▶818	219-6284	999
216-8811	858		18		847	219-6285	999
	860		▶726	219-3371	▶819	219-6286	999
	▶868	218-4453	902		▶820	219-6287	999
216-8820	▶861		903		848	219-6288	999
	▶862		904	219-3372	▶821	219-6292	993
216-8821	▶863		923		▶822		999
	▶864		924		849		1001
216-8826	861		▶977	219-3373	▶823	219-8151	774
	862	218-4454	977		▶824	219-8564	▶675
	863	218-4854	1058		850		▶676
	864	218-4856	1058	219-3374	▶825		697
	▶871	218-8404	484		▶826	219-8566	▶559
216-8829	871		486		851		696
216-8839	870		488	219-3379	▶832	219-8567	562
216-8843	870	219-0006	675		852		▶652
216-9497	365		677	219-3380	▶833	219-8568	562
216-9498	363	219-0302	1076	219-3381	▶834		▶648
	▶365		1080	219-3382	▶835		▶650
217-0055	774	219-3273	249	219-3383	▶836	219-8751	363
	776	219-3355	▶788	219-3384	▶837	219-8752	363
217-1577	774		▶789		853	219-8753	363
	776		832	219-3385	▶838	219-8754	363
217-2345	381	219-3356	▶790	219-3386	▶839	219-8755	363
217-2346	381		▶791	219-3387	10	219-8756	363
217-2347	448		833		11	219-8757	363
	449	219-3357	▶792		15	219-8758	363
217-2349	448		▶793		16	219-8759	363

▶ **PRIMARY REFERENCE**

PART NUMBER INDEX

Part	Page	Part	Page	Part	Page	Part	Page
219-8783	386	220-3762	993	221-4322	773		160
219-8795	347	220-3785	901	221-9352	652		162
	350		923	222-1216	648	224-2147	946
219-8798	347		924	222-1801	474	224-2149	946
	453		▶982	222-1802	474	224-5132	522
219-8834	448	220-3786	1024	222-2257	648		523
219-8835	449	220-3790	1034		650	224-5152	522
219-8836	381		1035	222-2258	648		523
219-8839	350	220-3791	1034		650	224-5917	195
219-9482	800		1035	222-2690	184		200
	801	220-5725	1001		186	224-6237	▶528
219-9483	802	220-5973	17	222-3518	200		▶529
	803		18	222-4067	692		883
	810		▶563		694		884
	811		▶565	222-4732	630		885
	813		▶567		632		886
	819	220-5974	567	222-5171	774		887
	820	220-8024	442		776		888
219-9484	804		445	222-7091	19		889
	805	220-8631	67		20		890
	821		68		▶111		891
	822	220-9179	▶524	222-7379	▶872		892
219-9485	806	220-9182	▶16	222-7411	882		893
	807		388	222-7464	872	224-6250	866
	814		389		▶875		868
	815		390	222-9824	353	224-8946	1077
	818	220-9183	▶17		415		1080
	823		388		420	224-9473	20
	824		389	223-2028	983		▶158
219-9486	808		391	223-2029	987		▶160
	809	221-0811	16	223-2030	908		▶162
	812		17		910	225-0041	1076
	816		▶384		918		1079
	817	221-2420	898		1053	225-0060	475
	825		995		1054		477
	826		997		1056	225-0312	1076
219-9487	790	221-3002	901		1062		1080
	791		902		1063	225-4150	1075
	795		903	223-2035	932		1079
219-9488	792		904	223-3353	554	225-4287	149
	793		922	223-3356	533	225-4317	21
219-9489	794		923	223-3502	531		23
219-9490	796		924	223-3926	774		25
	797		925		776		26
219-9493	798		▶948	223-3962	480		▶94
	799		▶950	223-3964	481	225-5436	85
219-9494	788		▶952	223-3967	▶480		86
	789	221-3006	948		922	225-5437	85
220-0269	954		950		923		86
	957		952		924	225-5438	85
220-0738	475		▶967		925		86
	477	221-3234	622	223-3968	▶481		88
	898		624		901		90
	932	221-4263	894		902		92
	946	221-4267	▶894	223-4546	480	225-5439	85
	995		895		481		88
	997	221-4283	883		482	225-5441	85
220-1018	774		884	223-4960	20		88
	776	221-4284	885		▶178	225-5451	85
220-1019	738		886	223-8263	1068		88
220-2000	1068	221-4295	680		1070	225-5453	85
220-2001	1068	221-4296	680	223-8267	480		88
	1070	221-4314	528		481	225-5454	85
220-3251	957		529		482		88
220-3470	979	221-4315	773	223-8995	158	225-5458	85

▶ **PRIMARY REFERENCE**

PART NUMBER INDEX

Part	Page
	88
225-5459	85
	88
225-5495	57
	58
225-5496	57
	58
225-5498	57
	58
225-5499	57
	58
225-5501	59
	60
	62
225-5502	59
	60
	62
225-5625	102
225-5629	102
	103
225-5634	102
	103
225-5638	102
	103
225-5640	102
225-5959	63
	102
	103
225-5960	102
	103
225-5961	102
	103
225-5962	102
	103
225-5963	▶102
	104
	105
225-6005	79
	81
	83
225-6041	79
	81
	83
225-6451	29
	31
	33
	35
	37
	39
225-6455	29
	35
225-6456	29
	31
	33
	35
	37
	39
225-6461	29
	31
	33
	35
	37
	39
225-6464	29
	31
	33
	35
	37
	39
225-6477	29
	31
	33
	35
	37
	39
225-6478	29
	31
	33
	35
	37
	39
225-6479	29
	31
	33
	35
	37
	39
225-6522	29
	31
	33
	35
	37
	39
225-6817	119
	121
225-6818	119
	121
	124
	126
225-6820	124
225-7738	143
	145
	147
225-7739	143
	145
	147
225-7741	143
	145
	147
225-7772	41
	43
225-7781	43
225-7941	122
	123
	124
	126
	281
225-7944	50
	55
	120
	122
	123
	124
	126
225-7970	323
	327
	330
	334
225-7992	317
	319
225-7994	▶250
	▶252
225-8016	143
225-8019	143
	145
	147
225-8227	734
	736
225-8287	69
	71
225-8329	113
	114
225-8524	180
	182
225-8526	180
	182
225-8533	180
	182
225-8534	180
	182
225-8536	175
	180
	182
225-8848	73
	74
225-8858	50
	55
225-9524	553
226-0291	475
	477
	1081
226-0449	160
	162
226-1240	1076
	1080
226-4162	535
226-4346	375
	377
	379
226-4364	350
226-4365	350
	377
226-4366	350
	377
226-4367	350
226-4370	350
	377
226-5540	▶546
	858
	859
	860
	861
	862
	863
	864
226-5633	525
226-5634	525
226-5635	982
226-7164	291
	296
226-8202	544
	554
226-9764	774
	776
227-1057	291
227-1143	541
	543
	556
227-5509	674
227-5556	475
	477
227-5571	563
227-7449	164
227-8378	17
	18
	▶722
228-3508	17
	18
	▶543
228-3974	▶662
	696
	697
228-4136	535
228-4592	967
228-4593	967
228-4597	967
228-4602	6
	9
	11
	14
	16
	▶903
228-5089	229
228-5856	285
	288
	291
	296
	315
	340
228-6061	553
228-7391	223
	224
228-9129	▶214
	215
228-9130	214
228-9132	214
	217
228-9572	533
229-0298	1058
	1060
229-0300	908
	910
	912
	915
	918
	920
	▶1058

▶ **PRIMARY REFERENCE**

PART NUMBER INDEX

Part	Page
	▶1060
229-0305	1058
229-0306	1068
	1070
229-0308	1058
	1060
229-0309	1058
	1060
229-0310	1058
	1060
229-4896	29
	31
	35
	937
229-5080	379
229-5083	379
229-5085	377
	379
229-5088	379
229-5093	365
229-5124	665
229-5280	948
	952
229-5745	948
	950
	952
229-6052	1006
229-7356	937
229-8911	554
229-9855	229
	233
230-2389	979
230-2390	979
230-2510	954
	957
230-2610	368
	370
	371
	373
230-3038	957
230-4011	324
	340
230-5739	16
	17
	▶350
230-5743	17
	▶347
230-5745	16
	▶453
230-6368	226
	228
	233
	236
	238
	240
230-7300	21
	23
	25
	26
	▶65
230-7353	21
	23
	25
	26
	▶99
230-7355	21
	23
	25
	26
	▶143
	▶145
230-7569	21
	23
	25
	26
	▶95
230-7578	21
	23
	25
	26
	▶113
230-8094	79
	81
	83
230-8989	207
	211
230-8995	207
	211
230-8996	207
	211
230-8997	207
	211
230-8998	207
	211
230-9127	29
	31
	33
	35
	37
	39
230-9357	546
231-0033	21
	23
	25
	26
	▶115
231-0046	95
231-0149	21
	26
	▶168
231-0215	607
	609
	614
	616
	618
231-0670	366
231-0671	366
231-0683	▶376
	453
231-0684	453
231-0685	453
231-0688	376
231-0692	▶366
	381
231-0693	366
231-0694	366
231-0695	366
231-0696	366
231-0697	366
231-0698	350
231-0699	350
231-0700	377
231-0701	379
231-0703	377
	379
231-0719	375
231-2808	630
	632
231-2809	630
	632
231-2875	970
	972
231-2876	970
	972
231-2877	968
	969
231-2878	963
	965
231-3052	249
231-3054	249
231-3528	634
	636
231-3538	535
	553
231-4784	630
	632
231-4785	630
	632
231-9357	291
	296
231-9358	1076
	1079
231-9361	1075
	1079
231-9363	504
	506
	508
232-0252	626
	628
232-1248	562
	▶667
232-1322	57
	58
	61
	93
	96
232-1323	204
	207
	211
232-1328	204
	207
	211
232-1536	968
	969
232-1540	968
	969
	970
	972
232-1542	948
	950
	952
232-1793	204
	207
	211
232-1794	204
	207
	211
232-2685	▶782
232-2720	204
232-2721	204
232-2722	204
232-2723	204
232-2725	204
	207
	211
232-2726	204
	207
	211
232-2735	875
232-2865	480
	481
	482
232-2869	480
	481
	482
232-2870	480
	481
	482
232-3072	967
232-3126	198
	203
	211
	247
232-3149	204
	207
	211
232-3157	204
	207
	211
232-3244	668
	670
232-3274	204
	207
	211
232-3277	668
	670
232-3586	684
	686
232-3587	684
	686
232-3591	684
	686
232-3657	69
	71
232-3666	69
	71
232-3722	▶119
	122
232-3751	50
	55
	120
	122
	123
	124
	126
232-4454	932
232-4636	1081
232-4706	291
	296
232-6204	21

▶ **PRIMARY REFERENCE**

PART NUMBER INDEX

Part	Page	Part	Page	Part	Page	Part	Page
	23	233-2606	539	234-0387	204		370
	25	233-2607	547	234-1981	156		371
	26		549		158		373
	▶96	233-2609	543		160		458
232-6661	21	233-2610	539		162		462
	23	233-2611	547		▶164	236-1673	207
	25		549		165	236-1674	207
	26	233-2613	537	234-2593	541	236-2144	198
	▶247		539	234-2622	158	236-6651	111
232-6662	247	233-2614	547		160		112
	248		549	234-3030	174	236-6923	282
232-7400	▶41		551		180		285
	43		552	234-4173	684		288
	46	233-2615	547		686	236-8238	21
232-7440	50		549		706		23
	55	233-2616	539	234-4328	▶254		25
232-7449	52	233-2622	539		259		26
	53	233-2623	547		261		▶67
	54		549		263	237-0022	29
232-7519	▶57	233-2628	543	234-4329	▶255		31
	59	233-2631	539		261		33
232-7596	50	233-3757	858		263	237-0024	21
	55		859	234-6927	692		23
232-7597	50		860	234-7730	254		25
	55	233-3784	41		255		26
232-7599	50		43		256		▶275
	55	233-3785	41	234-7731	254	237-0025	21
232-7600	50		43		255		23
232-7603	50	233-3786	41		256		25
232-7604	▶50		43	234-8815	694		26
	52		49	235-0128	184		▶79
	53	233-3788	43		186		▶81
233-0619	537	233-3789	43		188	237-0769	29
233-0625	551	233-3790	43		190		31
	552	233-5165	774	235-0336	19		33
233-0859	861		776		20		35
	862	233-5166	774		▶299		37
	863		776		▶302		39
	864	233-5167	774		▶306	237-0944	483
233-1488	667		776	235-0354	544		494
233-2568	543	233-5169	774	235-1790	204	237-0975	177
233-2576	547		776		207		178
	549	233-5260	946	235-4752	324		179
233-2578	543	233-7104	204	235-5363	178	237-3658	21
233-2582	547	233-7222	124		179		23
	549		126	235-5364	177		25
233-2583	539	233-7223	124	235-5729	574		26
233-2585	539	233-7231	88		577		▶75
	547		90		580	237-3786	180
	549	233-7232	88		583	237-3794	180
233-2588	547		90		586		182
	549	233-7432	21		589	237-3797	692
233-2589	537		23		592		694
	539		25		596	237-3921	180
233-2590	543		26	235-5843	692		182
233-2594	547		▶73	235-6281	197	237-3922	180
	549	233-7977	317	235-7091	626	237-3943	1037
233-2595	539		319	235-8528	652		1039
233-2597	543		321	235-8634	229	237-4157	164
233-2599	543	233-9530	223		233	237-4894	280
233-2601	543		224	235-8747	299		281
233-2603	539	233-9531	223		302	237-4896	21
	547		224		306		23
	549	234-0095	905		310		25
233-2605	543		906	236-1583	368		26

▶ **PRIMARY REFERENCE**

PART NUMBER INDEX

Part	Page
	▶280
237-5188	409
237-5330	494
	496
	498
237-5408	23
	25
	▶175
237-9349	769
237-9355	769
237-9356	769
	770
238-2799	21
	26
	▶122
	▶123
238-4626	409
238-4628	674
238-5228	376
238-5254	347
	453
238-5255	347
	453
238-5256	377
	379
238-5289	350
	▶381
238-5290	381
238-5291	351
238-5292	351
238-5293	350
238-5294	350
238-7492	282
	285
	288
238-7567	393
238-8288	167
238-8289	167
238-8290	23
	25
	▶167
238-8671	204
	207
	211
238-9397	299
	302
	306
	310
238-9546	739
	741
	743
	746
	748
	750
	754
	756
	758
	762
	763
	764
	767
	771
238-9547	739
	741
	743
	764
	766
	▶769
239-1080	292
	296
	▶1046
239-1416	746
	748
	750
	767
	768
	770
239-1434	184
	186
239-1435	184
	188
239-2270	171
239-6989	1075
	1079
239-9430	1076
	1080
239-9435	729
240-4639	226
	228
	233
	236
	238
	240
240-5571	204
	207
	211
240-7095	1077
	1080
241-0037	520
	522
	523
241-0888	500
	739
	741
	743
	746
	748
	750
	754
	756
	758
	769
	770
241-0889	500
	739
	741
	743
	746
	748
	750
	754
	756
	758
241-0890	769
	770
241-0891	769
	770
241-0892	769
	770
241-4275	193
	195
	200
241-6225	569
	571
241-6226	569
	571
241-8448	569
	571
	574
	577
	580
	583
	586
	589
	592
	596
241-8450	571
	586
	589
242-3196	▶229
242-3197	6
	9
	14
	▶231
242-3294	229
242-6114	323
	340
242-6116	323
	340
242-6118	323
	340
242-6120	323
	340
242-9574	1054
	1056
	1062
	1063
242-9751	128
	129
	131
	133
243-0059	188
	190
	▶1022
243-0062	1021
	1022
243-0063	1021
	1022
243-0862	877
243-3593	1039
243-5026	347
	453
243-5027	226
	229
	233
	236
	238
	240
	242
	244
244-1085	504
	506
	508
244-1086	506
	508
244-2041	508
	510
244-3106	299
	302
	306
	310
244-3113	475
	477
244-3712	200
244-3839	543
244-7614	504
	506
244-8826	539
	547
	549
245-1223	512
245-4827	385
245-4914	513
245-5728	504
	506
	▶512
245-6098	2
	3
	▶218
245-6101	218
245-6103	218
245-6104	218
	▶219
245-6105	219
	▶220
245-6107	220
245-6108	218
245-6109	465
	466
245-6841	19
	▶23
245-8777	562
	▶692
245-8778	692
245-8780	654
	656
	658
	▶674
245-9828	65
	66
246-0568	19
246-1163	29
	31
	35
246-2582	21
	26
	▶29
	▶31
	▶33
246-2583	23
	25
	▶35
	▶37
246-2622	200
246-2641	1075
246-2671	323
	327
	330
	334
	339
246-2718	513
	514

▶ **PRIMARY REFERENCE**

PART NUMBER INDEX

Part	Page
246-5292	17
	18
	▶668
	▶670
246-5293	17
	▶630
246-7854	490
246-8030	323
	327
	330
	334
246-8038	345
246-8051	299
	302
246-8053	226
	229
	233
	236
	238
	240
	242
	244
246-8058	229
	242
	244
246-8478	▶634
	▶636
	696
246-9309	1
	▶681
	▶683
246-9311	1
	▶605
	▶607
	▶609
246-9318	1
	▶611
	▶614
	▶616
	▶618
246-9802	524
	▶654
	▶656
	▶658
247-0144	143
	145
247-0320	654
	656
247-1080	504
	506
	508
	510
247-1385	136
	155
247-3267	▶622
	774
247-4001	177
	178
	179
247-4868	▶58
	60
247-4884	198
	203
247-4885	21
	26
	▶203
247-5360	19
	▶193
247-5361	20
	▶195
247-6118	1078
247-6296	504
	506
	508
247-7555	754
	756
	758
	762
	763
	▶770
247-7798	29
	35
247-7867	562
	▶684
247-7868	▶464
	562
247-8179	991
	992
247-8199	▶268
	324
	327
	330
	335
	339
247-8222	470
247-9730	156
	162
	165
248-0395	513
	514
	516
248-0481	696
	▶698
248-0482	696
	▶699
248-0483	696
	▶700
248-0484	697
	▶702
248-0485	697
	▶704
248-1348	684
	686
	▶706
248-2214	▶249
248-2257	722
248-2707	184
	186
	188
	190
248-2708	948
	950
	952
248-2709	942
248-2710	948
	950
	952
248-2714	983
	985
	987
	989
248-2720	901
	922
	925
	▶932
248-3231	156
	158
	160
	162
	165
248-3290	404
	409
248-4274	681
248-4275	681
248-4276	681
248-4277	681
	683
248-5025	903
	▶933
	▶935
248-5547	605
	607
	609
248-5712	2
	▶1075
249-0403	188
	190
249-0974	120
	122
	123
	124
	126
249-2482	944
249-2707	933
	935
249-3124	674
249-3125	674
249-4020	630
	632
249-4021	630
	632
249-4022	630
249-4023	630
	632
249-4024	630
249-4032	668
	670
249-4034	634
	636
249-4035	634
249-5046	111
249-5167	924
	925
	▶1033
249-5295	111
249-5297	111
249-5512	156
	158
	160
	162
	165
249-7912	▶569
	▶571
249-9076	250
	252
249-9312	933
	935
249-9328	▶473
249-9329	473
249-9330	473
250-0658	599
	601
	603
250-0741	494
	496
	498
250-0804	599
250-1418	648
	650
250-1878	513
	514
	516
	518
250-2314	136
	155
250-3330	513
250-3331	504
	506
250-3344	504
	506
250-4337	138
250-5462	611
	614
	616
250-5881	512
	515
250-6755	605
	611
250-6793	605
	611
250-6850	513
	514
	516
	518
250-6855	410
250-6858	513
	514
	516
	518
250-7910	1075
	1080
250-7911	1075
	1080
250-7912	901
	902
	903
	904
	923
	924
250-7914	2
	3
	▶1072
250-7963	4
	5
	6
	7
	8
	9
	10
	11

▶ **PRIMARY REFERENCE**

PART NUMBER INDEX

Part	Page
	12
	13
	14
	15
	16
	▶107
251-1157	▶786
	829
251-1160	▶787
	831
251-1172	786
	787
251-1173	786
	787
251-1541	605
	607
	609
251-1778	▶828
251-1780	828
	▶829
251-1787	▶830
251-1788	▶830
251-1789	4
	5
	6
	7
	8
	9
	10
	11
	12
	13
	14
	15
	16
	830
	▶831
251-2432	21
	23
	25
	26
	▶63
251-2436	63
251-2437	63
	64
251-3227	136
	155
251-3231	219
	222
251-3802	19
	▶188
	▶190
251-4336	71
251-4374	513
	514
	516
251-4375	513
	514
	516
	518
251-4519	2
	3
	▶494
	▶496
	▶498
251-4889	473
251-4890	473
251-4891	473
251-5625	696
251-5626	696
251-5628	901
	902
	903
	904
	922
	923
	924
	925
251-5854	▶640
	858
	860
251-5855	▶642
	861
	863
251-5859	640
251-6352	388
	389
	390
	▶403
251-6353	388
	389
	391
	▶403
251-9360	569
	571
	574
	577
	580
	583
	586
	589
	592
	596
251-9570	299
	302
	306
252-0165	605
	607
	609
252-0200	569
252-0315	156
252-1221	654
	656
	658
252-1862	983
	985
	987
	989
252-1863	983
	985
	987
	989
252-1864	983
	985
252-1865	987
	989
252-2157	1075
	1080
252-4640	▶19
	388
	390
	391
252-4641	7
	8
	9
	10
	11
	12
	13
	14
	15
	16
	▶20
	389
	390
	391
252-5218	932
252-5219	932
252-5521	▶472
252-5522	472
252-5523	472
252-5524	472
252-6256	21
	26
	▶223
252-6438	57
	58
	61
252-8059	975
252-8435	1075
	1079
252-8684	648
	650
252-9207	543
252-9612	175
252-9725	504
253-0352	19
	20
	▶215
	▶216
253-0354	215
	216
253-0783	465
253-0784	2
	3
	▶465
	▶466
253-1817	983
	985
	987
	989
253-1857	983
	985
	987
	989
253-1858	983
	985
	987
	989
253-2470	999
	1001
253-2472	23
	25
	▶124
	▶126
253-4137	158
	165
253-4138	156
	158
	160
	162
	165
253-5022	387
253-5024	347
253-5384	512
	▶513
	▶514
253-8295	692
	694
253-9510	993
	999
	1001
254-1126	983
	985
	987
	989
254-1127	983
	985
	987
	989
254-2187	177
	178
	179
254-2267	115
	117
254-2270	115
	117
254-3954	57
	58
	61
254-4418	107
	109
254-5303	452
254-5683	1049
	1051
	1066
254-7271	634
	636
	668
	670
254-9301	512
	515
254-9925	975
	977
254-9926	975
	977
254-9927	975
	977
255-0793	1076
	1080
255-0794	1076
	1080
255-0795	898
	995
	997
255-0796	1076
	1079
255-0800	1011
255-2279	20
	▶172

▶ PRIMARY REFERENCE

PART NUMBER INDEX

Part	Page
255-3447	180
	182
255-4692	165
	172
	173
255-9107	652
256-0143	111
256-0323	503
256-0324	▶503
256-0546	▶383
	388
	389
	390
	391
256-0550	383
256-0551	▶371
	▶373
	388
	389
	390
256-5299	922
	925
256-6803	250
	252
256-7736	23
	25
	▶224
257-3160	562
	▶626
258-2354	946
258-3697	983
	985
	987
	989
258-4946	59
	60
	62
258-9999	1075
	1079
259-0127	350
259-0128	351
259-0129	351
259-1802	1
259-1831	397
259-1832	399
259-2940	438
259-4402	1076
	1080
259-6276	901
	922
	923
	924
	925
	▶1017
259-6729	699
	▶707
259-6730	699
	▶708
259-6731	698
	▶709
259-6732	698
	699
	▶710
259-6733	704
	▶711
259-6734	702
	704
	▶712
259-6735	702
	704
	▶713
259-6736	700
	▶714
259-6737	700
	702
	704
	▶715
259-6738	700
	702
	704
	▶716
259-6739	700
	702
	704
	▶718
259-6742	▶672
	700
	702
	704
259-6745	▶673
	698
	699
259-6746	700
	702
	704
259-6747	698
	699
259-6748	698
	699
259-6749	698
259-6750	699
259-6751	700
259-6752	702
259-6753	704
259-6754	698
	699
	700
	702
	704
259-6755	700
	702
	704
259-6756	700
	702
	704
259-6757	700
259-6758	672
	673
259-6918	193
259-8417	155
260-0027	1030
	1031
260-0028	1030
	1031
260-0029	1030
	1031
260-0030	1037
	1039
260-0032	1037
	1039
260-0033	1037
	1039
260-0034	1037
	1039
260-0035	1037
	1039
260-0036	1036
260-0040	1030
	1031
260-0041	1037
	1039
260-0042	1037
260-0043	1037
	1039
260-0044	1037
	1039
260-0045	1030
	1031
260-0046	1037
	1039
260-0047	1036
	1039
260-0049	1037
	1039
260-0050	1031
260-0051	1036
	1039
260-0052	1036
	1039
260-0057	1036
	1039
260-0058	1030
260-0059	1036
	1039
260-0060	1036
	1040
260-0063	1037
	1039
260-0067	1037
	1039
260-0634	156
	162
	165
260-1336	172
260-1392	156
	162
260-1393	156
	165
260-3002	708
	709
260-3003	718
260-3004	711
	713
	714
260-3005	707
	708
	709
	712
260-3006	715
	718
260-3007	716
260-3009	707
	708
	709
	710
260-3010	707
	708
	709
	710
	711
	712
	713
	714
	715
	716
	718
260-3011	707
	711
	712
	713
	714
	715
	716
	718
260-3012	708
	709
260-3013	710
260-3122	172
260-3145	684
260-3146	684
	686
260-3147	684
	686
260-3149	684
	686
260-3150	684
260-7393	162
260-7652	250
	252
260-7653	252
260-9143	574
	577
	580
	583
	586
	589
	592
	596
261-0376	133
261-0428	133
261-2207	979
261-2320	19
	▶173
261-5517	440
	▶441
261-5519	441
261-6703	771
261-8051	▶176
261-9632	1047
261-9634	942
261-9635	440
261-9636	944
261-9637	944

▶ **PRIMARY REFERENCE**

PART NUMBER INDEX

Part	Page
261-9639	932
	944
	946
261-9644	942
261-9645	942
262-1314	611
	612
	614
262-1315	611
	614
	616
262-3036	574
	577
	580
	583
	586
	589
	592
	596
262-3038	574
	577
	580
	583
	586
	589
	592
	596
262-4080	442
	445
262-4082	442
	445
262-4084	442
	445
262-4203	574
	577
	580
	592
262-4212	▶574
	▶577
	▶580
262-4213	▶583
	▶586
	▶589
262-4217	574
	577
	580
	583
	586
	589
	592
	596
262-4220	574
	577
	592
262-4459	569
	583
	586
	596
262-4462	583
	596
262-7043	483
	494
262-7044	484
	486
	488
	490
	492
262-7049	▶547
	562
262-7050	▶549
	562
262-7051	547
262-7052	549
262-7314	622
262-8088	134
	628
262-9567	1006
	1008
262-9786	164
263-3823	1019
263-5376	174
	180
263-5514	684
	686
263-5781	1008
263-7261	979
263-8577	▶680
	895
263-8591	860
	863
	864
	▶1078
263-9088	250
	▶1023
264-7029	340
265-0868	654
	656
	658
265-8182	268
266-2234	▶129
	▶131
	903
266-2235	129
	131
266-2407	▶592
266-2408	▶596
266-3712	204
266-4326	605
	607
	609
266-4570	611
	614
	616
	618
266-4571	611
	614
	616
266-5834	2
	3
	▶771
266-6830	204
267-2701	270
	271
	272
	324
	327
	330
	339
	483
	494
	496
	498
267-2809	259
	269
	270
	271
	272
267-5211	269
	270
	271
	272
267-5213	269
	270
	271
	272
267-7065	197
267-7069	23
	25
	▶197
268-0867	21
268-1547	607
	609
	611
	614
	616
	618
268-1548	607
	609
	611
	614
	616
	618
268-1709	403
268-1964	294
268-5689	563
	565
	567
268-7758	291
268-7759	324
	327
	330
	335
	339
269-0381	▶537
	562
269-0382	537
269-0386	537
269-0388	537
269-0389	537
269-0471	525
269-0472	525
269-7680	310
	336
269-8129	954
	957
269-8817	954
	957
269-9115	942
270-2728	291
	296
270-2795	954
	957
270-3204	▶727
	▶728
270-3205	727
270-3409	528
	529
270-3410	680
270-5290	494
	496
	498
270-9176	642
271-1404	1
	▶774
	▶776
271-1408	774
	776
271-2403	▶401
	403
271-2404	▶402
	403
271-2407	401
	▶404
271-2408	402
	▶409
271-3023	883
	884
	885
	886
	887
	888
	889
	890
	891
	892
	893
	▶895
271-3025	▶883
	▶884
271-3026	▶885
	▶886
271-4487	▶385
	401
	402
	403
271-7167	368
	370
	371
	373
271-7309	385
271-7389	642
271-8666	1
	▶778
271-8669	▶773
	778
272-0537	220
272-0555	563
	565
272-0557	563
	565
272-1750	642
272-2232	21
	23
	25
	26
272-2265	119
	121
	126
272-7104	954
	957
272-9800	257
	258
273-1474	924
273-3610	20
	▶21
273-5905	▶1030
	1034

▶ PRIMARY REFERENCE

PART NUMBER INDEX

Part	Page
273-6036	▶1031
	1035
273-6372	1034
	1035
	▶1036
	▶1039
274-3774	259
	263
	299
	302
	306
	310
	330
	335
	339
274-3775	330
	335
	339
274-3776	330
	335
	340
274-3777	330
	335
	340
274-3778	330
	335
274-3779	330
	335
	340
274-3780	330
	335
	340
274-4274	537
	539
274-4553	393
	395
	398
	400
274-4555	558
274-4557	404
274-4560	404
274-4716	45
	48
274-4962	207
274-5819	888
	889
274-5823	890
	891
274-5826	892
	893
274-8034	414
	419
274-8614	404
	409
	414
	419
274-8616	393
	395
274-8617	393
	395
274-8620	397
	399
274-8621	397
	399
274-8623	404
	409
	414
	419
274-8625	404
	409
	414
	419
274-8628	393
	395
274-8629	393
	395
274-8630	353
	356
274-8631	358
274-8632	361
274-8634	397
	399
274-8635	393
274-8636	393
	395
274-8637	397
	399
275-0001	512
	515
275-0002	508
	510
275-0467	▶353
	409
275-0468	▶355
	419
275-0469	355
275-0470	▶356
	419
275-0471	360
275-0472	▶360
	404
	414
275-0473	▶358
	404
275-0474	▶361
	414
275-0475	404
	409
	414
	419
275-0476	▶393
	404
	410
275-0477	404
	409
	414
	419
275-0478	▶397
	409
	414
	419
275-0553	324
	327
	330
	335
	339
275-0570	282
	286
	289
	313
	315
275-0652	442
	445
275-0653	442
	445
275-1038	204
	207
	211
275-4243	528
	529
	▶555
275-8869	954
	957
275-9883	79
	81
	83
275-9907	482
276-1368	875
276-2334	656
	658
276-2353	734
	736
276-3420	26
276-3859	535
276-4005	535
276-4070	981
276-4168	555
276-4169	555
276-4170	555
276-4171	555
276-4172	555
276-5337	▶398
	409
276-5339	▶399
	404
	414
276-5605	50
	55
276-6820	435
276-7287	▶269
	282
	286
	289
	313
	315
276-7290	▶270
	324
	327
	330
	335
	339
276-7291	▶271
	324
	327
	330
	335
276-7476	92
276-8086	434
276-8515	922
	923
	924
	925
	▶981
276-8791	1049
	1051
	1064
277-1873	233
	238
	240
	242
	244
277-3012	69
	71
277-3638	437
277-4543	569
	571
	574
	577
	580
	583
	586
	589
	592
	596
277-5156	21
	23
	25
278-0205	404
	409
278-0215	397
	399
278-0216	397
	399
278-0217	397
	399
278-0218	397
	399
278-0219	397
	399
278-1170	665
278-1971	▶539
	562
278-1972	539
278-4497	577
	580
	586
	589
	592
	596
278-4498	578
	581
	586
	589
	592
	596
278-5113	103
278-5126	28
278-5454	483
	494
278-6377	269
	272
278-7066	490
278-7695	484
	486
	488
	490
	492
278-7793	665
279-5016	654
	656

▶ **PRIMARY REFERENCE**

PART NUMBER INDEX

Part	Page
	658
279-6052	563
	565
	567
279-9452	734
	736
280-2652	529
280-7009	404
	409
	419
280-7012	409
	414
	419
280-7364	922
	923
	▶1036
280-7365	901
	902
	903
	904
	▶1036
280-7870	720
281-4022	583
	586
	589
	592
	596
281-4618	611
	614
281-4726	569
	571
281-4770	611
	614
281-6708	887
281-6716	▶887
282-0887	▶888
	▶889
282-0888	▶890
	▶891
282-0889	▶892
	▶893
282-3854	▶427
282-3862	427
	▶434
282-3863	434
282-3864	434
282-3865	427
	▶435
282-3866	▶435
282-3867	435
282-3868	427
	▶436
282-3869	▶436
282-3870	436
282-5079	154
282-5081	154
282-6836	555
282-7832	1006
	1008
282-7833	259
	261
	263
	982
	1047
	1049
	1051
282-7835	259
	261
	263
	982
	1006
	1008
	1047
	1049
	1051
282-9630	152
	▶154
282-9956	▶525
283-3451	1049
	1051
	1064
	1066
283-4237	1011
	1013
284-1602	991
284-2753	▶482
	901
	902
	903
	904
	922
	923
	924
	925
284-3425	225
284-3615	774
284-8531	250
	252
284-9039	220
	222
284-9277	780
285-1203	925
285-1207	901
	902
	903
	904
	924
	925
285-3581	652
285-3582	648
	650
285-3583	442
	445
285-3584	442
	445
285-3605	19
	20
	▶192
285-5098	192
	200
285-5240	690
	▶720
285-9109	993
	999
	1001
286-0689	574
	577
	580
	583
	586
	589
	592
	596
286-3018	658
286-3019	658
286-3029	35
	37
286-3030	35
	37
286-3086	738
	778
286-3592	143
286-4880	247
	248
286-7848	100
286-9082	▶427
286-9083	427
	428
	▶437
286-9084	437
286-9085	▶437
286-9086	▶428
286-9087	436
286-9336	791
	793
	795
	797
	801
	803
	805
	807
	809
	811
	813
	815
	817
	820
	822
	824
	826
286-9337	791
	793
	795
	797
	801
	803
	805
	807
	809
	811
	813
	815
	817
	820
	822
	824
	826
286-9338	789
	799
	818
286-9340	789
	799
	818
287-5667	774
	776
287-8257	983
	985
	987
	989
287-8573	29
	31
	33
	39
287-8597	67
	68
288-0422	69
	71
288-1157	512
	515
288-1394	86
288-1395	86
288-6954	156
	158
	160
	162
288-8043	▶905
	910
288-8044	▶906
	915
288-9734	938
288-9942	88
	90
288-9943	88
	90
289-1204	1039
289-2937	533
289-2948	533
289-2956	533
289-3412	1075
	1079
289-6018	1011
	1013
289-6021	1011
	1013
289-8740	662
289-8741	662
289-8742	662
289-8743	662
289-8744	660
289-8745	660
289-8746	660
289-8747	660
289-9426	776
290-1273	1060
290-3347	502
290-3972	446
290-4164	347
	453
290-5760	▶256
	263
290-6023	622
	624
290-6700	599
290-6711	569
	571
	574
	577
	580
	583
	586

▶ **PRIMARY REFERENCE**

PART NUMBER INDEX

Part	Page	Part	Page	Part	Page	Part	Page
	589		565		1073		518
	592		567	294-5792	728	297-5510	776
	596	290-8140	563	294-9507	551	297-5849	1020
290-6712	574		565		552	297-6898	330
	577	290-8156	494	294-9812	395	297-6899	330
	580		496		400	297-7964	200
	583	291-1559	551	294-9814	403	298-0663	311
	586		552		▶414		341
	589	291-2681	▶551	294-9815	403	298-3599	442
	592		562		▶419		445
	596	291-2682	▶552	294-9820	410	298-5112	24
290-6722	▶339		562		420		▶114
	904	291-2683	552	294-9821	395	298-5129	24
290-6723	339	291-2684	551	294-9822	409		▶93
290-6732	▶288	291-2691	551	294-9823	410	298-5131	24
	904		552	294-9824	410		▶97
290-6737	▶296	291-2695	551	295-1711	71	298-5629	22
	904		552	295-5550	158		▶179
290-6738	296	291-2696	551		165	298-5901	165
290-6739	341		552	295-8472	465	299-1055	904
290-6745	233	291-4781	935		466		▶938
290-6746	233	291-4785	935	296-3740	933	299-2212	938
290-6752	22	291-4786	935	296-3744	200		▶939
	▶310	291-5108	954	296-6714	562	299-3342	801
290-6753	310		957		▶686	299-3344	803
290-6789	2	291-8378	442	296-6715	686		811
	▶233		445	296-7593	950		820
290-6790	10	291-9185	▶3	297-0165	3	299-3348	805
	11	291-9188	3		▶562		813
	15		▶22	297-1230	664		822
	16	291-9190	▶2	297-1232	562	299-3351	807
	▶236		3		▶694		815
	▶238	291-9195	▶904	297-1233	694		824
	▶240	292-2833	1072	297-1234	694	299-3444	482
290-6791	233		1073	297-2831	565	299-4684	112
	236	292-2834	1072	297-2833	733	299-4716	▶133
	238		1073	297-2834	17		904
	240	292-3995	518		18	299-4732	133
	242	292-3996	518		▶733	299-4777	482
	244	292-5773	1008	297-4081	611	299-6985	▶1003
290-6792	233	292-8222	656	297-4400	694		1053
	236	292-9690	▶924	297-5250	904		1054
	238	292-9691	▶925		▶1013		1056
	240	293-1980	944	297-5252	1013		1063
	242	293-2147	415	297-5253	1013	299-6986	▶1004
	244		419	297-5254	1013		1054
290-6799	259	293-4053	164	297-5257	311		1056
	263	293-4671	112	297-5260	2		1062
290-6801	321		692		▶221	299-9015	694
290-6830	4	293-5308	490	297-5261	221		
	5	293-5309	2		▶222		
	6		▶490	297-5266	221	**3**	
	7	293-5352	165	297-5268	221		
	8	293-7383	771	297-5278	221	300-1702	186
	9	293-8350	720	297-5300	2		190
	12	293-8753	409		3	300-4154	809
	13	293-9289	384		▶508		817
	14	293-9882	776		▶510		826
	▶242	293-9884	776	297-5301	508	300-4157	791
	▶244	294-0288	69		510	300-4158	793
290-7831	938		71		▶515	300-4159	795
290-8077	▶677	294-0973	529	297-5310	515	300-4160	797
	▶678	294-4954	1072		▶516	300-4161	799
	696		1073		▶518		818
290-8139	563	294-4955	1072	297-5311	516	300-4995	263

▶ **PRIMARY REFERENCE**

PART NUMBER INDEX

Part	Page
300-4996	263
300-5440	494
	496
	498
300-6061	694
300-6062	628
300-7049	801
	803
	805
	807
	809
300-7051	801
	803
	805
	807
	809
300-7054	811
	813
	815
	817
300-7055	811
	813
	815
	817
300-7056	820
	822
	824
	826
300-7057	820
	822
	824
	826
300-7059	818
300-7061	818
301-0589	250
	252
301-7292	339
301-9664	676
	678
301-9725	904
	▶941
301-9765	174
301-9766	174
302-8432	415
	419
303-0418	428
	▶438
303-0428	▶438
303-0429	438
303-5149	259
303-5154	259
303-5767	24
	▶68
303-5768	24
	▶66
303-5769	24
	▶276
303-5770	24
	▶64
303-5778	24
	▶76
303-5795	276
303-9307	961
303-9308	965
303-9309	965
303-9310	969
	972
304-3266	392
304-3269	392
304-4022	22
	▶136
304-4023	▶149
	150
304-5696	345
304-7847	149
	▶527
304-7848	136
304-7849	527
304-7850	149
304-7851	149
304-8129	580
304-8130	586
	589
304-8420	799
304-8421	799
304-8424	789
304-8760	24
	▶69
304-8761	24
	▶98
304-8764	79
	83
304-8965	993
	999
	1001
304-9457	112
305-3423	414
	419
305-3424	400
305-3425	400
305-3427	▶400
	419
305-3429	▶395
	414
	420
305-3431	395
	400
305-3570	622
305-3571	622
305-6917	174
305-6918	150
305-7426	776
305-7881	225
305-9190	1070
306-7466	2
	▶1073
306-8128	801
307-2033	22
	▶112
307-2242	133
307-3043	686
307-3049	686
	706
307-9936	985
307-9937	989
308-1273	1060
308-1792	31
	33
	37
	39
308-4728	21
	26
	▶52
308-4729	21
	26
	▶43
	▶45
308-4730	21
	26
	▶85
	▶86
308-4731	21
	26
	▶59
308-4732	21
	26
	▶104
308-9568	650
309-1202	918
309-1203	920
309-1204	▶926
	930
309-1205	931
309-1325	▶258
	266
309-3225	901
	▶918
309-3226	902
	903
	904
	▶920
309-3227	922
	925
	▶930
309-3228	923
	924
	▶931
309-7555	24
	▶110
309-9106	22
	▶150
310-0674	341
310-7304	149
311-2498	607
	609
	614
	616
	618
311-2501	601
	603
	607
	609
	614
	616
	618
311-2505	601
	603
311-2510	601
	607
	614
	616
311-2513	683
311-2514	683
311-2515	683
311-2519	601
	607
	614
	616
311-2768	174
311-6094	107
	109
311-6184	233
311-7567	▶272
	341
312-1671	516
	518
312-2597	618
312-2598	571
312-2599	571
	589
312-2600	618
312-6442	233
312-6455	233
313-1333	23
	25
	▶204
313-1375	21
	26
	▶207
313-1380	21
	23
	25
	26
	▶71
313-1457	516
	518
313-1458	516
	518
313-3355	23
	25
	▶53
313-3357	23
	25
	▶46
	▶47
313-3359	23
	25
	▶88
	▶90
313-3360	23
	25
	▶60
313-3362	23
	25
	▶105
313-3363	23
	25
	▶27
313-7109	518
314-4018	939
314-7618	222
314-7750	618
315-0033	149
315-1369	22
	▶134
315-1554	18
	▶632
315-1558	632
315-1559	632

▶ **PRIMARY REFERENCE**

PART NUMBER INDEX

Part	Page
315-3381	211
315-3384	28
315-3385	▶103
	106
315-3386	103
315-3387	103
315-3388	103
315-3390	61
315-3391	61
315-3392	61
315-3393	61
315-3394	61
315-3395	92
315-3411	24
	▶147
315-3418	24
	▶248
315-4123	985
	989
315-5401	134
315-5496	109
315-7790	1013
315-9721	182
316-1079	▶483
	496
	498
316-1926	350
316-3317	567
316-4844	725
316-5561	567
316-6899	24
	▶120
316-6925	24
	▶281
316-6941	24
	▶117
316-7896	▶61
	62
317-2250	644
317-3111	21
	26
	▶180
317-3769	33
	37
	110
317-3778	33
	110
317-4270	1013
317-4423	1053
	1062
	1063
317-4928	736
317-5309	1039
317-5502	174
317-6266	646
317-7120	490
317-7180	510
317-7181	510
317-7313	510
317-8141	941
317-9776	24
	▶225
318-2280	926
318-4217	514
	516
318-4222	514
	516
318-8228	500
	743
	750
	758
318-9453	515
318-9553	508
318-9555	3
	▶18
319-0755	238
	240
	244
320-2384	▶428
320-9213	198
320-9655	506
	508
320-9943	646
320-9944	646
320-9946	644
321-2559	466
321-6337	1037
	1039
321-7031	112
321-7704	22
	▶24
322-4571	428
	▶439
322-4572	▶439
322-4573	▶439
322-4574	439
322-5799	22
	▶78
322-9476	24
	▶83
322-9615	180
	182
322-9616	180
	182
322-9663	57
	58
	61
322-9664	61
322-9761	141
	150
323-3627	7
	12
	▶390
323-3628	4
	▶390
323-3629	8
	9
	10
	11
	13
	14
	15
	16
	▶391
323-3630	5
	6
	▶391
323-4142	222
323-4145	222
323-5724	19
	▶25
323-5725	4
	5
	6
	20
	▶26
323-7311	616
323-9307	22
	▶109
323-9312	86
	90
	92
324-0444	69
	71
324-2578	414
	419
324-2579	414
324-3851	141
	150
324-9745	341
325-1344	477
325-1969	510
325-3639	510
325-5483	510
325-5855	136
326-1880	64
326-8834	567
326-8993	▶210
	211
326-8999	24
	▶54
326-9000	24
	▶48
326-9002	24
	▶92
326-9003	24
	▶62
326-9004	24
	▶106
326-9005	24
	▶28
326-9006	24
	▶211
326-9008	24
	▶39
326-9010	24
	▶182
326-9012	24
	▶198
326-9013	24
	▶74
328-3211	979
328-8776	498
329-0129	24
	▶169
329-5699	155
329-5700	136
329-6655	57
	58
329-7970	624
329-8017	624
330-5010	▶1019
	1070
330-6734	165
330-8297	624
330-9416	586
330-9710	974
331-0096	▶624
	776
331-5615	306
331-8538	375
	377
	379
331-8675	658
332-6587	22
	▶165
332-7333	165
332-7541	134
332-7542	134
332-7549	204
334-1996	90
334-1997	90
334-2318	86
334-2319	86
334-4603	694
334-9334	100
	101
335-1584	54
	▶55
335-1836	78
	1020
335-8197	▶688
	690
335-8198	688
335-8209	688
335-8210	688
335-8213	688
335-8214	688
335-8215	688
335-8216	688
335-8217	688
335-8218	688
335-8219	688
335-8220	688
335-8221	688
335-8222	688
335-8226	688
335-8228	688
335-8229	688
335-8230	688
335-8529	200
335-9162	22
	▶174
335-9163	174
336-3545	▶246
	252
336-3566	1023
336-4179	531
336-4182	531
336-4682	688
337-7466	▶644
	862
	864
337-7467	▶646
	859
337-7469	644
337-7470	644
337-7471	646
338-5731	288
338-7038	533

▶ **PRIMARY REFERENCE**

PART NUMBER INDEX

Part	Page
338-7156	554
341-7656	686
341-8235	111
341-8236	112
341-9304	518
343-1820	174
343-4096	562
	▶628
343-6821	174
344-8938	452
344-8939	452
345-3672	▶522
	658
345-3674	▶523
346-0407	69
346-0408	69
346-9824	224
346-9825	223
	225
348-8149	133
349-1063	200
	216
	▶217
349-2856	446
349-3650	466
350-0666	562
	▶690
350-1846	27
350-2374	104
351-0290	650
353-2205	41
353-2206	41
353-2207	41
353-2208	41
353-7423	49
353-7424	49
353-7425	49
353-8584	941
353-9667	49
354-1274	120
	▶121
	123
354-1672	145
355-2252	147
355-5861	▶500
	745
	752
	760
355-6224	126
356-0067	▶4
356-0068	▶5
356-0069	▶6
358-7086	997
	▶1001
358-7087	898
	▶993
359-0715	45
	47
	48
	▶49
359-0719	86
	90
	92
359-0720	86
	90
	92
359-0721	86
	90
	92
359-0722	86
	90
	92
359-0723	86
	90
	92
359-0724	86
	90
	92
359-0731	25
359-0734	26
359-0744	24
359-0747	101
359-0750	100
359-3106	1060
359-3107	1060
359-3864	650
359-5232	686
359-9666	223
	224
	225
360-4008	618
360-7347	24
	▶100
360-7351	25
	26
	▶101
361-1100	▶876
361-1101	876
	▶877
361-1103	▶780
	877
361-1104	780
361-1105	780
361-1106	780
361-1107	780
361-1108	877
361-1109	877
361-1110	876
361-1210	877
361-6877	22
	▶200
361-9554	217
362-3819	553
363-7466	876
363-8597	263
365-1054	636
365-1283	531
370-7055	724
370-7917	▶724
372-3537	81
372-5174	▶4
372-5175	3
	▶492
372-5176	▶3
	4
372-5177	492
372-5182	3
	▶1079
374-3517	▶7
374-3518	▶8
374-3519	▶9
374-3521	▶10
374-3529	▶11
374-6532	▶12
374-6533	▶13
374-6534	▶14
374-6535	▶15
374-6536	▶16
376-2119	477
377-4844	246
377-9352	537
380-2601	28

▶ PRIMARY REFERENCE



© 2011 CATERPILLAR
ALL RIGHTS
RESERVED

CAT, CATERPILLAR, THEIR RESPECTIVE LOGOS, “CATERPILLAR YELLOW” AND THE POWER EDGE TRADE DRESS, AS WELL AS CORPORATE AND PRODUCT IDENTITY USED HEREIN, ARE TRADEMARKS OF CATERPILLAR AND MAY NOT BE USED WITHOUT PERMISSION.