OUTUBRO 2020

9812/3020 B5-1-1 LABELS IDENTITY

RUTHZIL TRATOR COMERCIAL DE PEÇAS LTDA 11 97083-6812 ROLANDO CITRANGULO

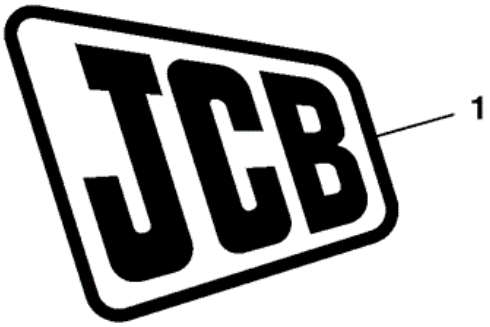

1



19

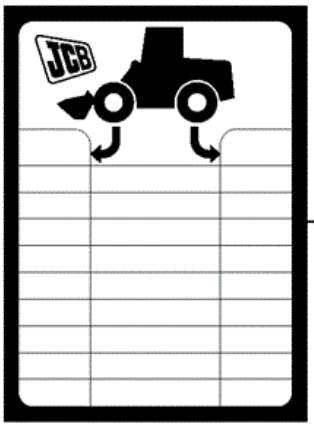

18

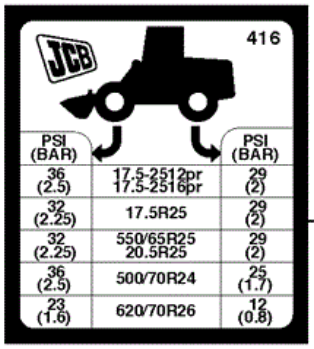

18A

821481

Product Catalog\WHEELED LOADERS\416 01243000-01243499,01317500-01317999,01472000-01472999,02095872-02095875 9812/3020 \A ATTACHMENTS\A01 SHOVELS\A1-1-1 SHOVEL 1.3CU.M.

9812/3020 A1-1-1 SHOVEL 1.3CU.M.

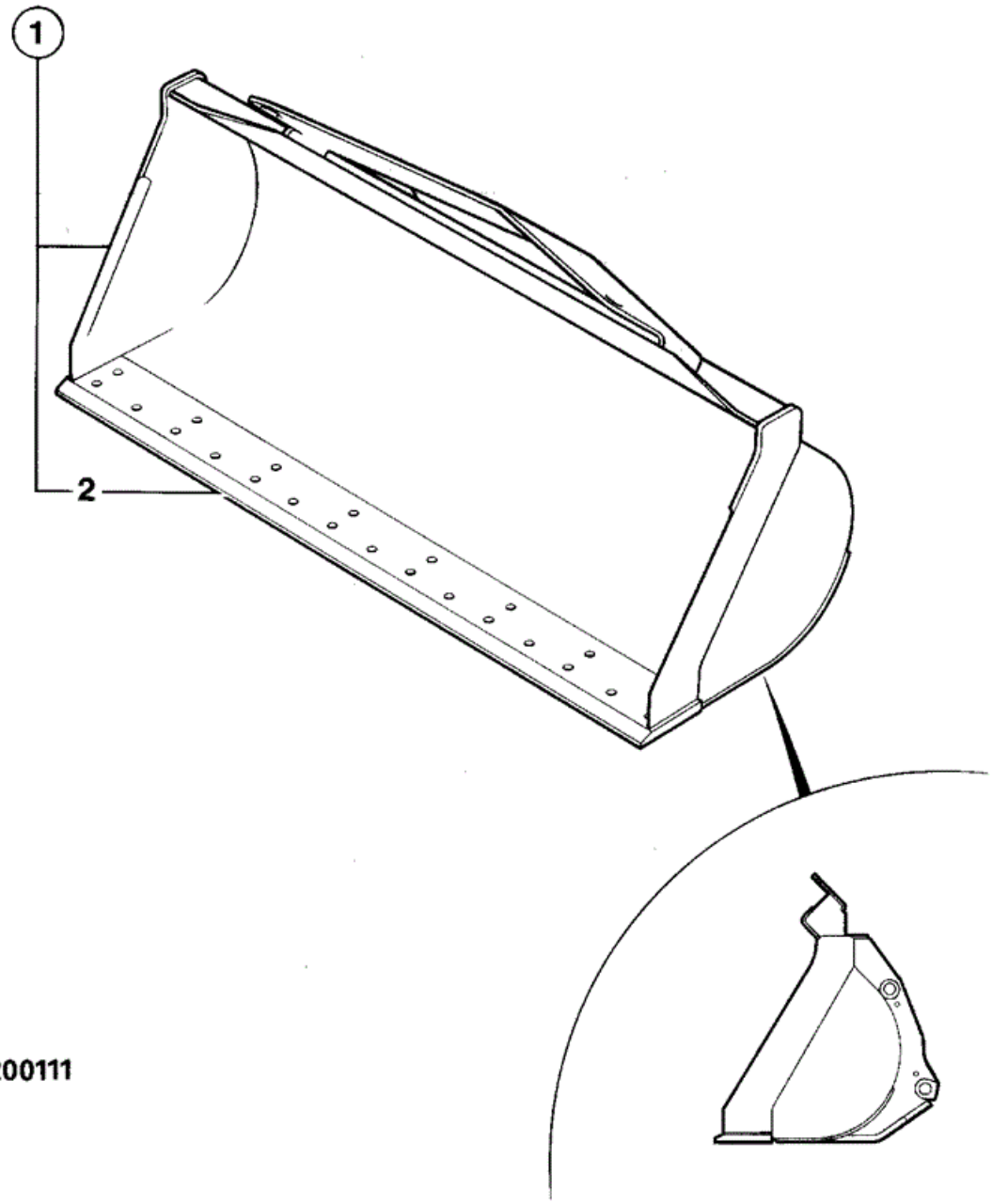

Item	Part No	Change No	Description	Usage Code	QTY

1	510/88100		Shovel 1.4 cu.m/1.8 cu.yrd.		1
2	:510/90309		Toeplate 2400mm wide 23 holes (Weld-In)		1

Applicability Date Ranges:
From: , To:

Product Catalog\WHEELED LOADERS\416 01243000-01243499,01317500-01317999,01472000-01472999,02095872-02095875 9812/3020 \A ATTACHMENTS\A01 SHOVELS\A1-2-1 SHOVEL 1.6CU.M.

9812/3020 A1-2-1 SHOVEL 1.6CU.M.

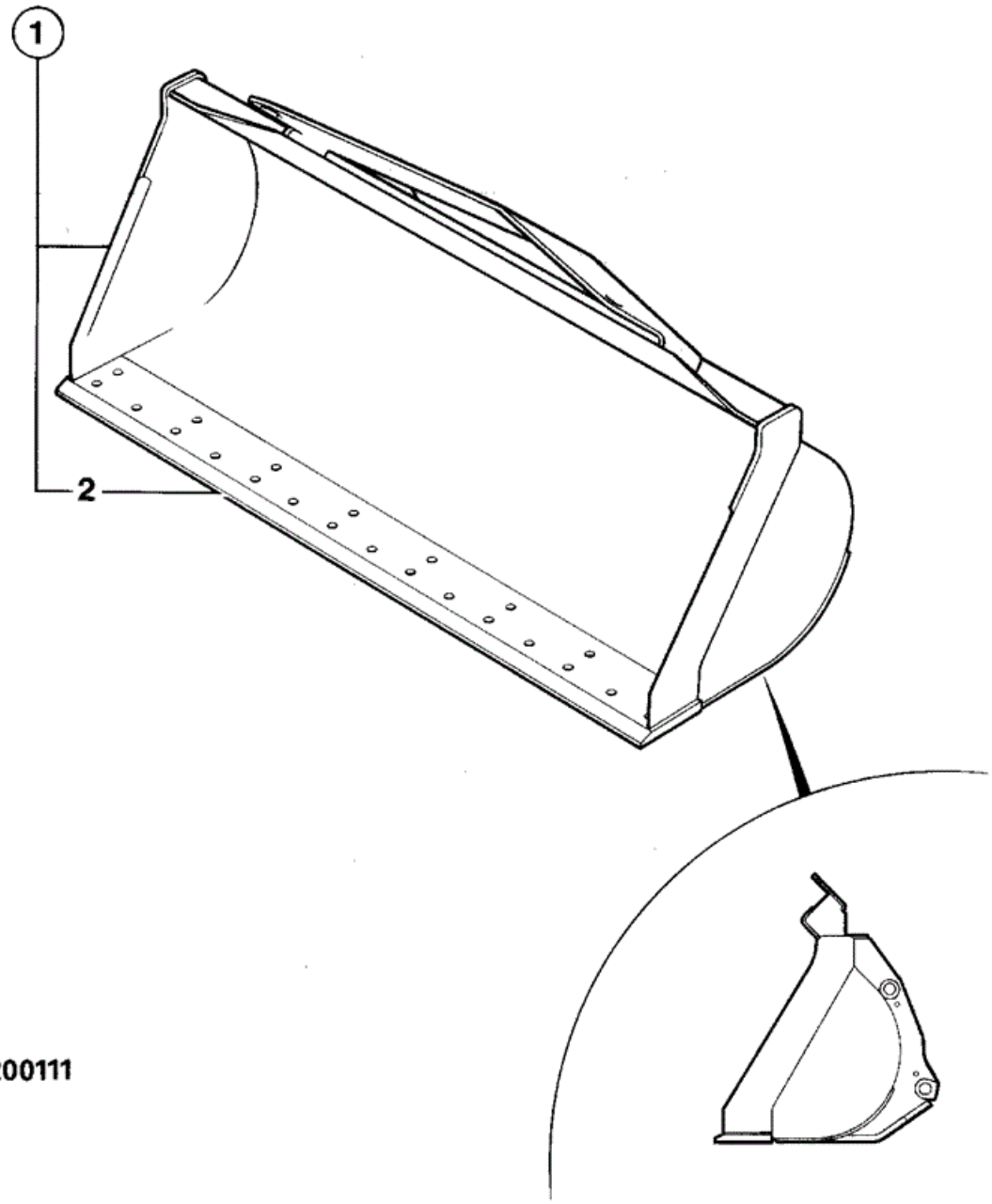

Item	Part No	Change No	Description	Usage Code	QTY

1	510/88200		Shovel 1.6Cu.M.		1
2	:510/90309		Toeplate 2400mm wide 23 holes (Weld-In)		1

Applicability Date Ranges:
From: , To:

Product Catalog\WHEELED LOADERS\416 01243000-01243499,01317500-01317999,01472000-01472999,02095872-02095875 9812/3020 \A ATTACHMENTS\A01 SHOVELS\A1-3-1 SHOVEL 1.6 CU.M. , WITH WELD ON V23 ADAPTERS, SALES SPECIAL

9812/3020 A1-3-1 SHOVEL 1.6 CU.M. , WITH WELD ON V23 ADAPTERS, SALES SPECIAL

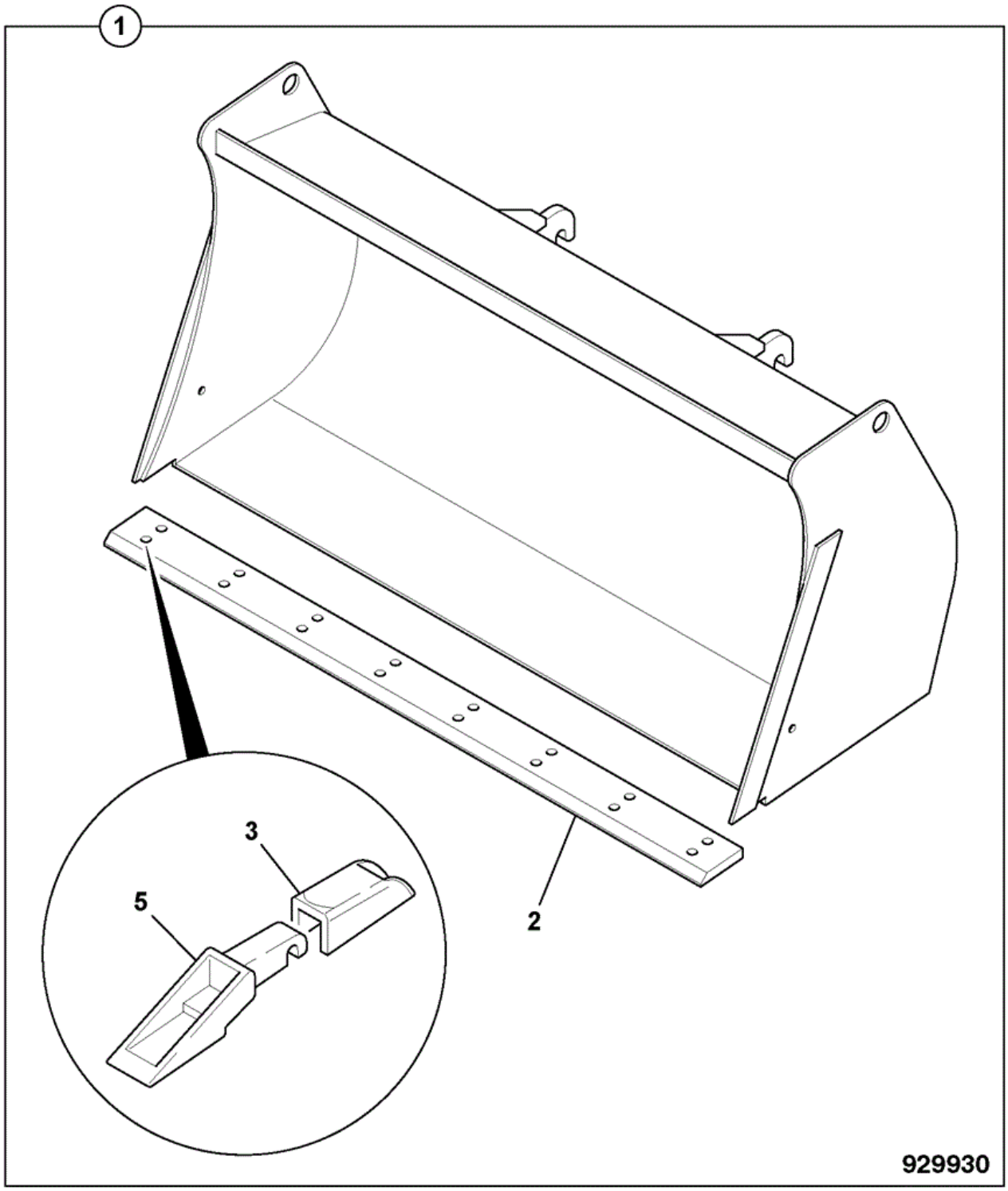

Item	Part No	Change No	Description	Usage Code	QTY
1	332/W5370		Shovel 1.6cu.m. c/w V23 weld-on adapters		1
2	:510/90309		Toeplate 2400mm wide 23 holes (Weld-In)		1

3	:510/92311		Adapter tooth Welded to toeplate		8
5	****		'See Remark' See page A1-17-1		8

Applicability Date Ranges:
From: , To:

Product Catalog\WHEELED LOADERS\416 01243000-01243499,01317500-01317999,01472000-01472999,02095872-02095875 9812/3020 \A ATTACHMENTS\A01 SHOVELS\A1-5-1 SHOVEL 1.4CU.M. QUICKHITCH

9812/3020 A1-5-1 SHOVEL 1.4CU.M. QUICKHITCH

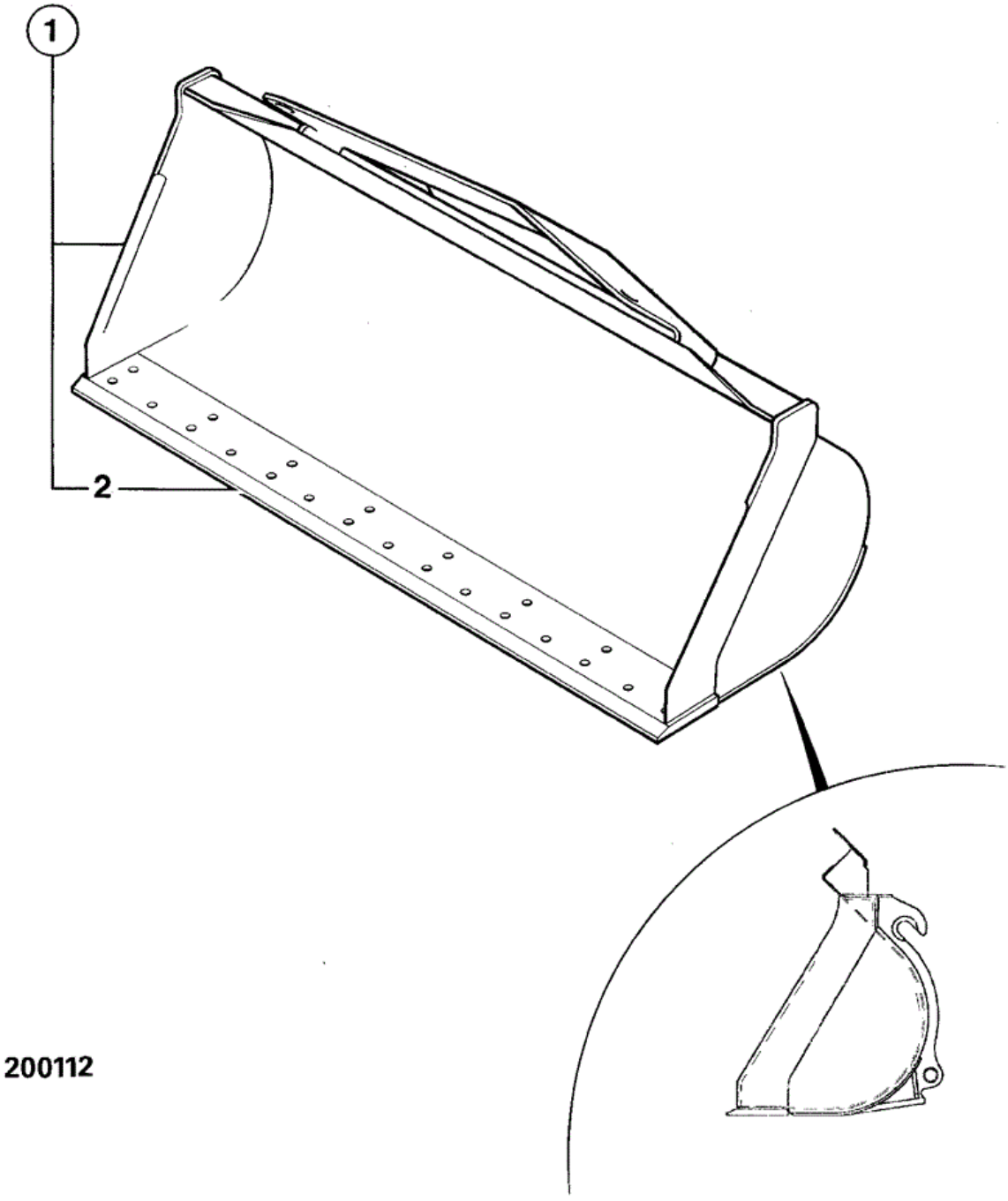

Item	Part No	Change No	Description	Usage Code	QTY
1	510/89300		Shovel 1.4 Cu. M		1
2	:510/90309		Toeplate 2400mm wide 23 holes (Weld-In)		1

Applicability Date Ranges:
From: , To:

Product Catalog\WHEELED LOADERS\416 01243000-01243499,01317500-01317999,01472000-01472999,02095872-02095875 9812/3020 \A ATTACHMENTS\A01 SHOVELS\A1-6-1 SHOVEL 1.6CU.M. QUICKHITCH

9812/3020 A1-6-1 SHOVEL 1.6CU.M. QUICKHITCH

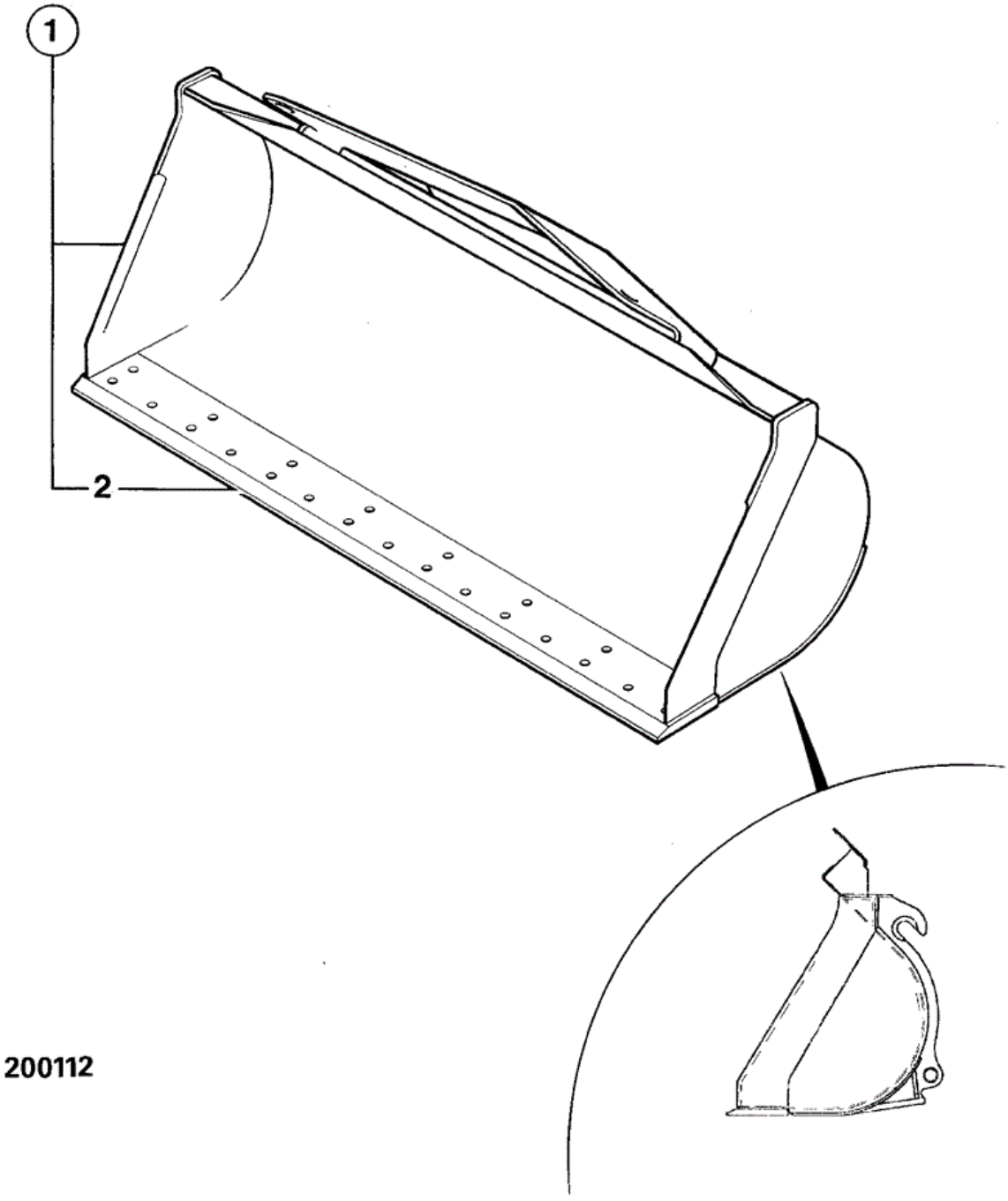

Item	Part No	Change No	Description	Usage Code	QTY
1	510/89400		Shovel 1.6Cu M		1
2	:510/90309		Toeplate 2400mm wide 23 holes (Weld-In)		1

Applicability Date Ranges:
From: , To:

Product Catalog\WHEELED LOADERS\416 01243000-01243499,01317500-01317999,01472000-01472999,02095872-02095875 9812/3020 \A ATTACHMENTS\A01 SHOVELS\A1-7-1 SHOVEL 2.0CU.M., SALES SPECIAL

9812/3020 A1-7-1 SHOVEL 2.0CU.M., SALES SPECIAL

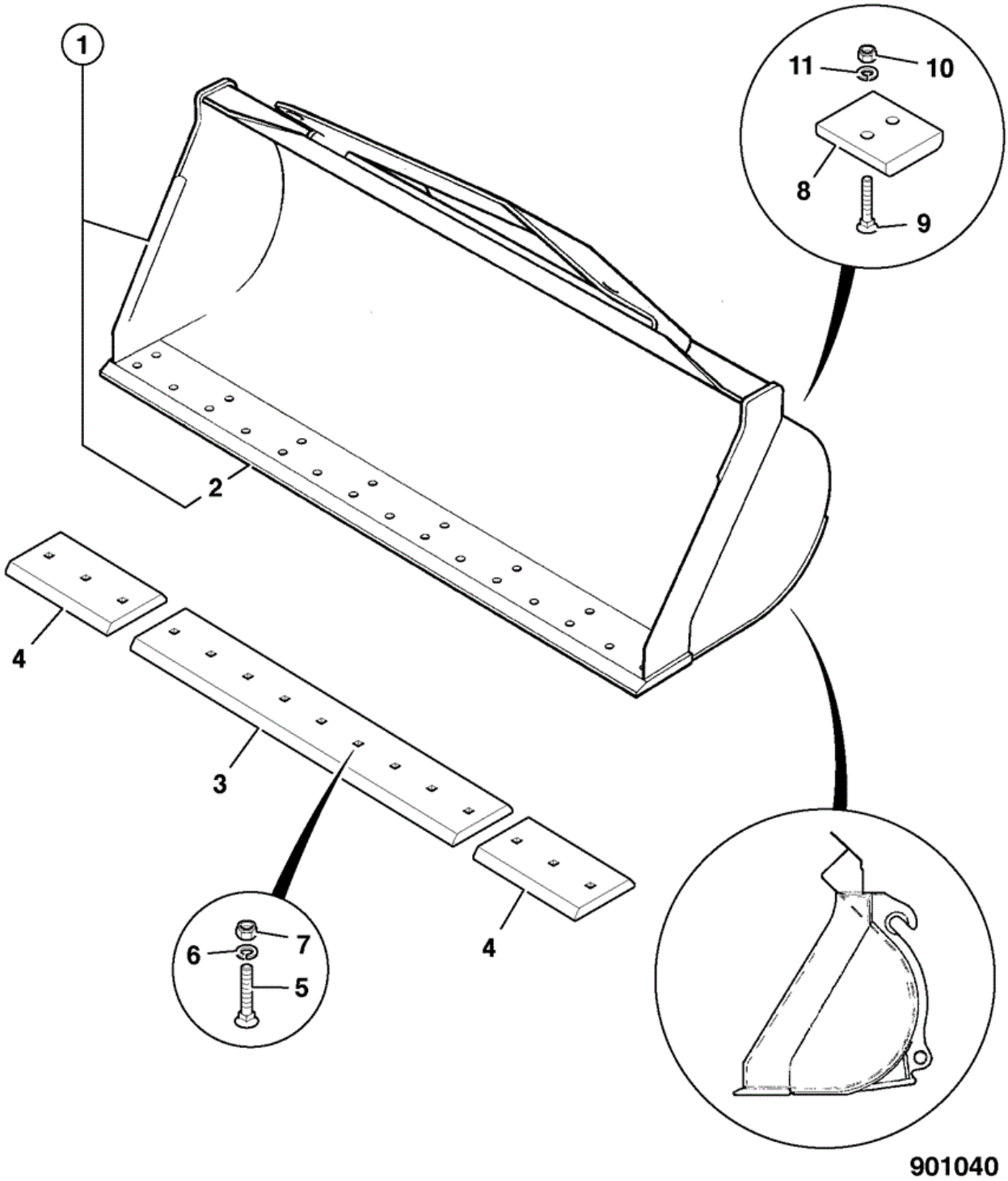

Item	Part No	Change No	Description	Usage Code	QTY
1	332/W2696		Shovel 2.0 CU.M. Sales special 0895		1
2	:332/G5505		Toeplate (Weld-On)		1

3	:332/G5507		Toeplate centre (Bolt-On)		1
4	:332/G5510		Toeplate end (Bolt-On)		2
5	:511/42215		Bolt plough		14
6	:1410/0008Z		Washer		14
7	:1340/2201Z		Nut 3/4 UNC		14
8	:332/C2951		Plate heel		2
9	:511/42215		Bolt plough		8
10	:1340/2201Z		Nut 3/4 UNC		8
11	:1410/0008Z		Washer		8

Applicability Date Ranges:
From: , To:

Product Catalog\WHEELED LOADERS\416 01243000-01243499,01317500-01317999,01472000-01472999,02095872-02095875 9812/3020 \A ATTACHMENTS\A01 SHOVELS\A1-7-10 SHOVEL 2.5CU.M., SALES SPECIAL

9812/3020 A1-7-10 SHOVEL 2.5CU.M., SALES SPECIAL

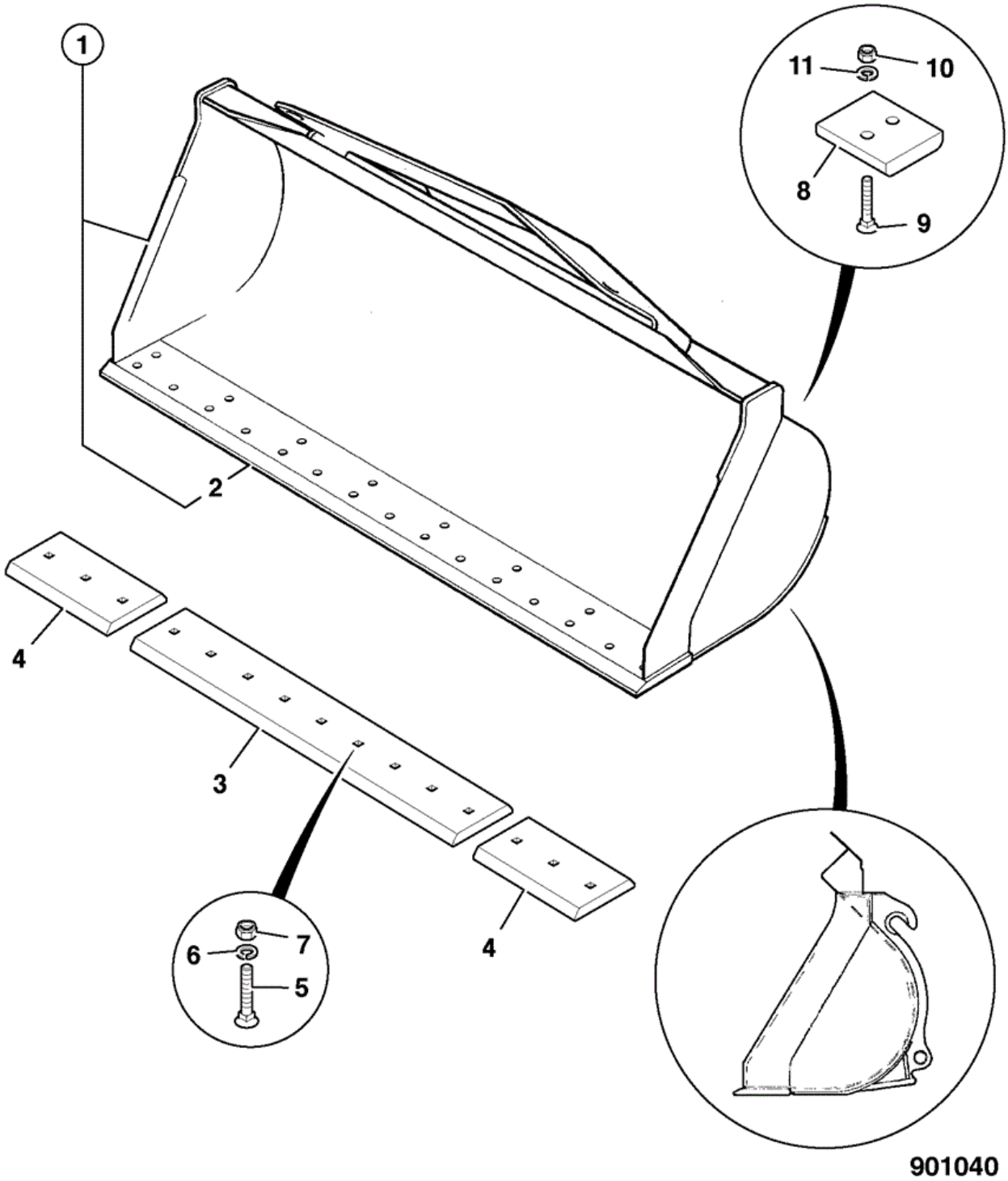

Item	Part No	Change No	Description	Usage Code	QTY
1	333/W7589		Shovel GP 2.5cu.m. Sales special 4183		1
3	:983/10189		Toeplate centre		1

4	:983/10190		Toeplate outer		2
5	:511/42215		Bolt plough		15
6	:511/47604		Washer		15
7	:511/47603		Nut		15
8	:332/E7650		Plate heel		2
9	:511/42215		Bolt plough		8
10	:511/47603		Nut		8
11	:511/47604		Washer		8

Applicability Date Ranges:
From: , To:

Product Catalog\WHEELED LOADERS\416 01243000-01243499,01317500-01317999,01472000-01472999,02095872-02095875 9812/3020 \A ATTACHMENTS\A01 SHOVELS\A1-8-1 SHOVEL 1.6CU.M. HY-TIP SALES SPECIAL

9812/3020 A1-8-1 SHOVEL 1.6CU.M. HY-TIP SALES SPECIAL

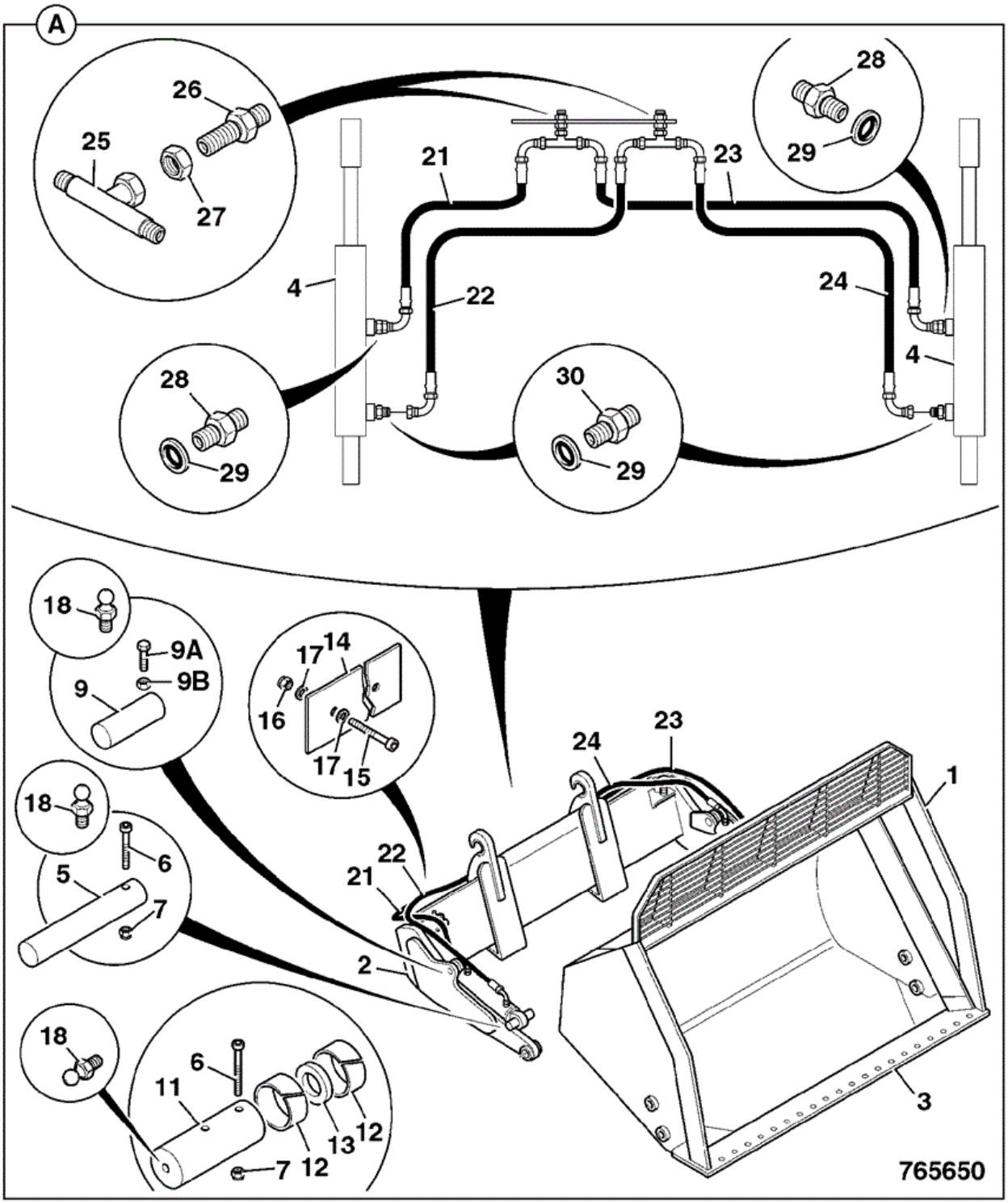

Item	Part No	Change No	Description	Usage Code	QTY
A	970/60700		Shovel 1.6 cu.m. hy tip Sales special 5898		1
1	:331/19544		Shovel 1.6cu.m. hy tip		1

2	:983/10878		Cradle assembly		1
3	:983/10534		Toeplate		1
3A	****		'See Remark' See A1-7-10 for bolt-on toeplate		1
4	332/G4552		Ram assembly See page E4-9-1		2
4J	903/20652		Nipple grease		1
5	:983/10536		Pin pivot		2
6	:1315/3421Z		Bolt M10 x 110		4
7	1370/0303Z		Nut lock M10		4
8	983/10537		Pin pivot		2
9	511/34409		Plate retaining		2
9A	1315/0307Z		Setscrew M8 X 25		4
9B	1425/0007Z		Washer Washer		4
11	983/10538		Pin main pivot		2
12	983/10539		Bush pivot		4
13	983/10870		Spacer		2
14	510/90112		Buffer rubber		2
15	1315/0311Z		Setscrew		4
16	1370/0203Z		Nut Nut M8		4
17	1420/0007Z		Washer (M8)		8
18	983/10872		Nipple grease M10		2
19	983/10541		Pin lynch		1
20	983/10542		Label lynch pin instructio		1
21	903/20646		Hose assembly		1
22	903/20644		Hose assembly		1
23	903/20645		Hose assembly		1
24	903/20646		Hose assembly		1
25	903/20632		Adapter tee		2
26	903/20944		Adapter 1/2" BSP		2
27	903/20940		Nut 1/2 BSP		2
28	903/20633		Adapter restrictor 1/2" BSP x 3/8"		2
29	903/20945		Washer sealing 3/8" BSP		4
30	903/20946		Adapter 1/2" BSP x 3/8"		2
32	1406/0018		Washer Bonded (1/2" BSP)		2
33	1604/0004		Adaptor Male		2
34	45/910400		Coupling 1/2" BSP female quick release		1
35	45/910500		Coupling 1/2" BSP male quick release		1
36	613/80127		Hose 1/2"BSP x 790mm		2

9812/3020 E4-9-1 RAM BUCKET SALES SPECIAL

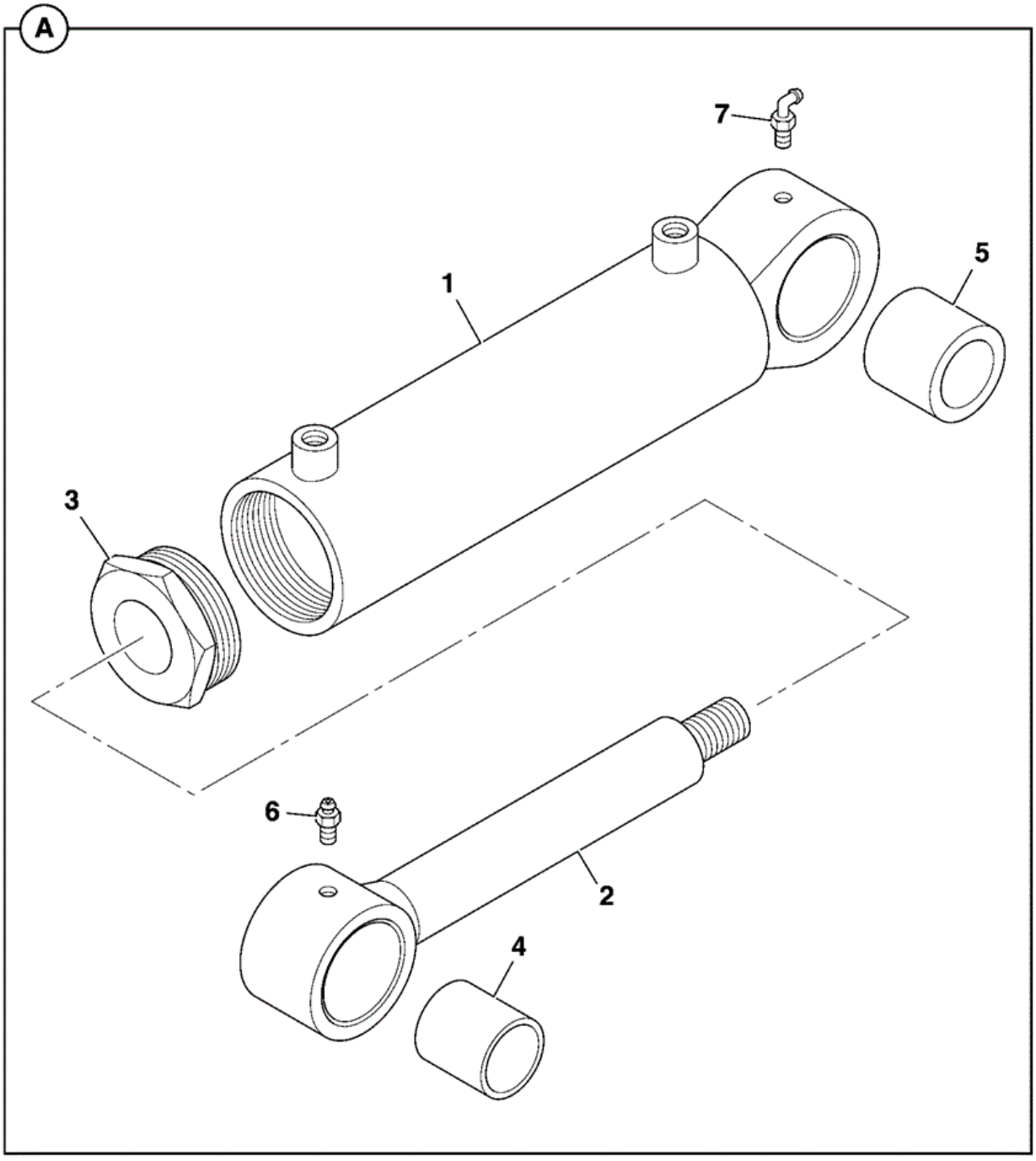

765800

Item	Part No	Change No	Description	Usage Code	QTY
A	332/G4552		Ram assembly		1
10	:332/G4553		Kit-seal		1

From: , To:

Product Catalog\WHEELED LOADERS\416 01243000-01243499,01317500-01317999,01472000-01472999,02095872-02095875 9812/3020 \A ATTACHMENTS\A01 SHOVELS\A1-9-1 SHOVEL GENERAL PURPOSE 2.1CU.M., SALES SPECIAL

9812/3020 A1-9-1 SHOVEL GENERAL PURPOSE 2.1CU.M., SALES SPECIAL

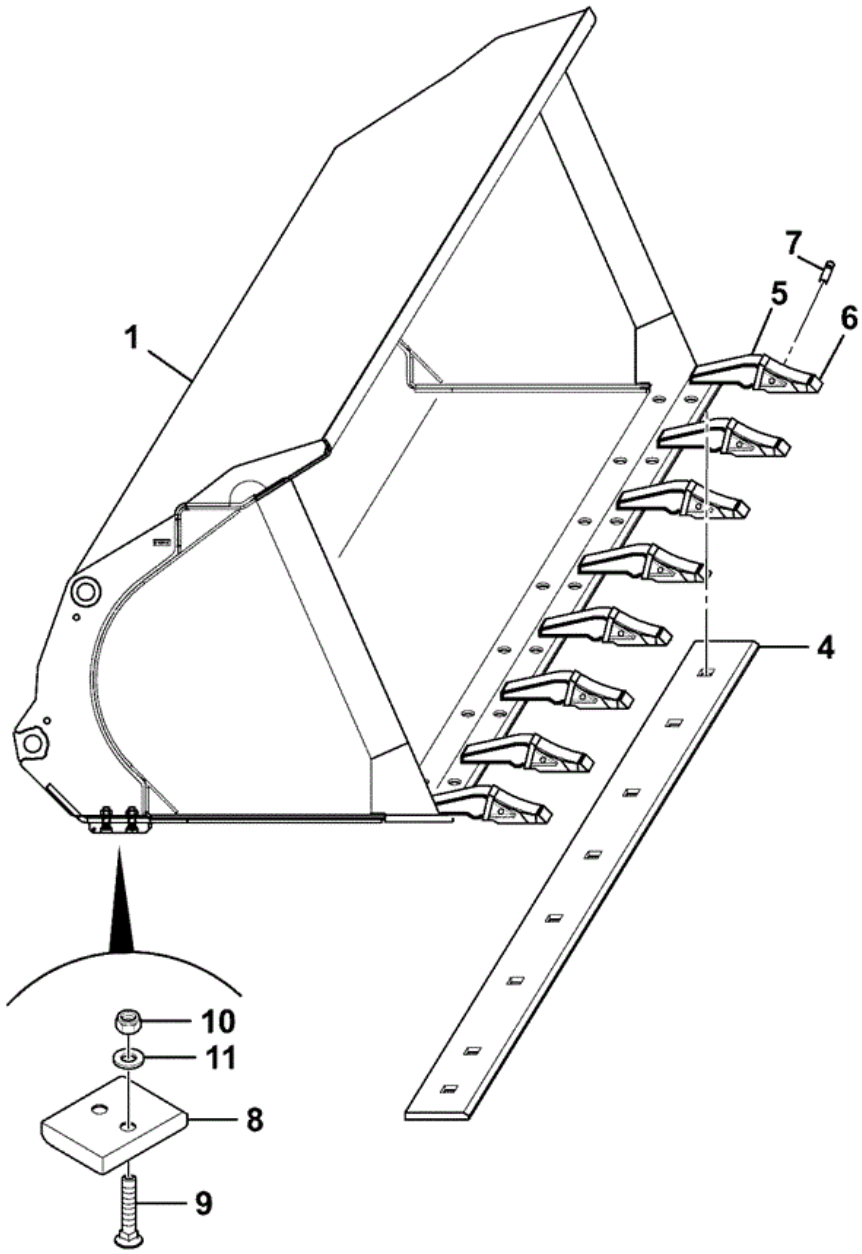

Item	Part No	Change No	Description	Usage Code	QTY
1	334/S0179		Shovel GP 2.0 cu.m. Sales special 4507		1

4	:333/H5300		Toeplate		1
5	:333/H5301		Adapter		8
6	:333/H5302		Tooth J200		8
7	:333/H5303		Pin & retainer J200		8
8	:332/C2951		Plate heel		1
9	:511/42215		Bolt plough		8
10	:511/47603		Nut		8
11	:511/47604		Washer		8

Applicability Date Ranges:
From: , To:

Product Catalog\WHEELED LOADERS\416 01243000-01243499,01317500-01317999,01472000-01472999,02095872-02095875 9812/3020 \A ATTACHMENTS\A01 SHOVELS\A1-11-1 TOEPLATE, BOLT-ON 2400MM WIDE

9812/3020 A1-11-1 TOEPLATE, BOLT-ON 2400MM WIDE

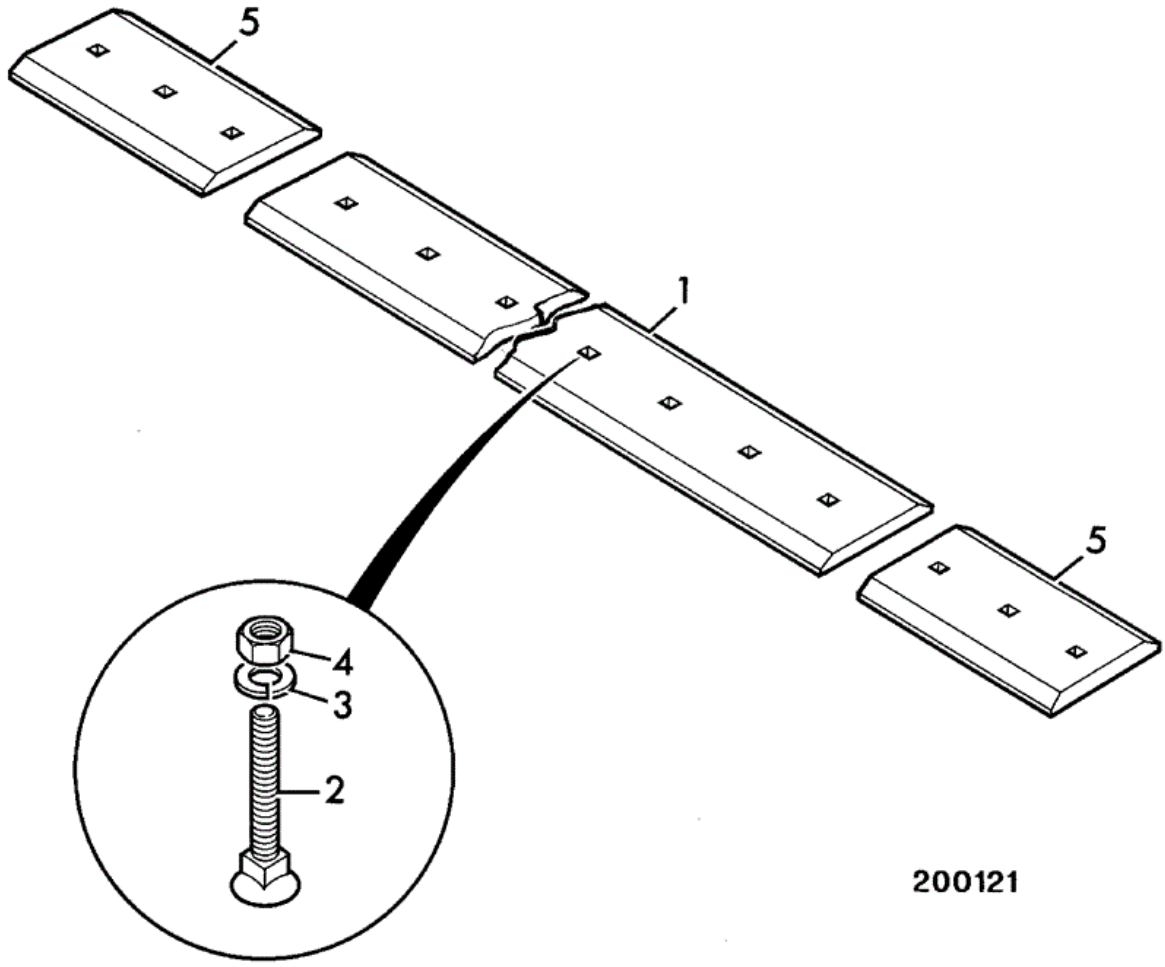

Item	Part No	Change No	Description	Usage Code	QTY
1	510/82001		Toeplate inner 1500mm wide 9 holes (Bolt-On) reversible		1
2	826/01022		Ploughbolt M20 x 75mm		15

3	823/00353		Washer Hardened M20		15
4	1370/0701Z		Nut (M20)		15
5	510/91800		Toeplate outer 444mm wide 3 holes (Bolt-On) Reversible		2

Applicability Date Ranges:
From: , To:

9812/3020 A1-12-1 TOOTH GUARD

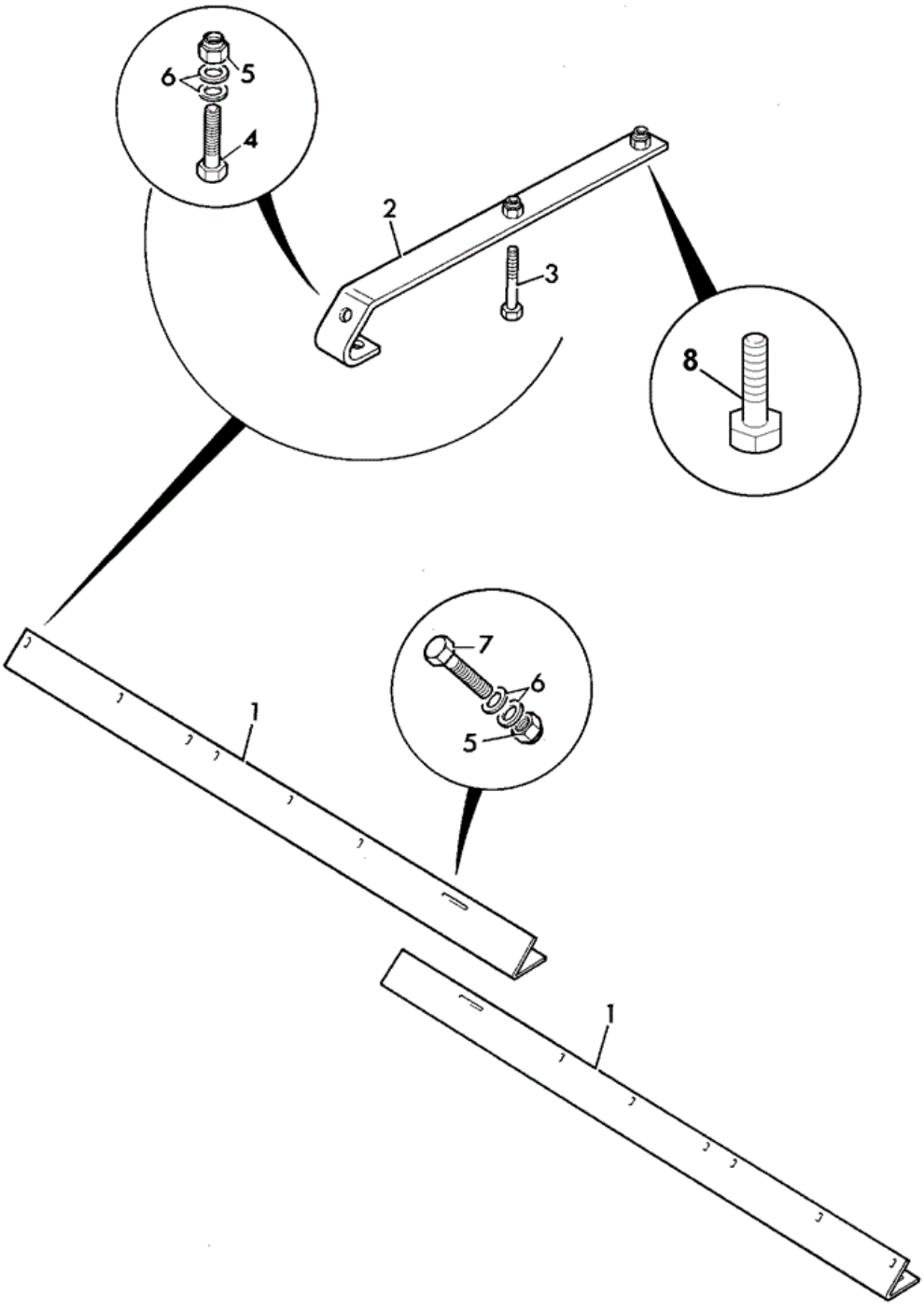

276471

Item	Part No	Change No	Description	Usage Code	QTY
1	265/01542	Superseded	Guard pressing		2
1	331/42706	Superseded	Guard tooth		2

1	332/T8428		Guard tooth		2
2	268/40075	Superseded	Bracket		2
2	331/42707		Bracket tooth guard		2
3	1315/3716D		Bolt M16 x 70		2
4	1315/0408D		Setscrew M10 x 30		4
5	1370/0303D		Nut Self Lock M10		8
6	1420/0008D		Washer (M10)		16
7	1315/0405D		Setscrew M10 x 20		4
7	1315/0407D		Setscrew M10 x 25 Replaces 1315/0405D		4
8	1315/0712D		Setscrew M16 x 50mm Only used when fitted through shell		2

Applicability Date Ranges:
From: , To:

Product Catalog\WHEELED LOADERS\416 01243000-01243499,01317500-01317999,01472000-01472999,02095872-02095875 9812/3020 \A ATTACHMENTS\A01 SHOVELS\A1-12-2 TOOTH GUARD

9812/3020 A1-12-2 TOOTH GUARD

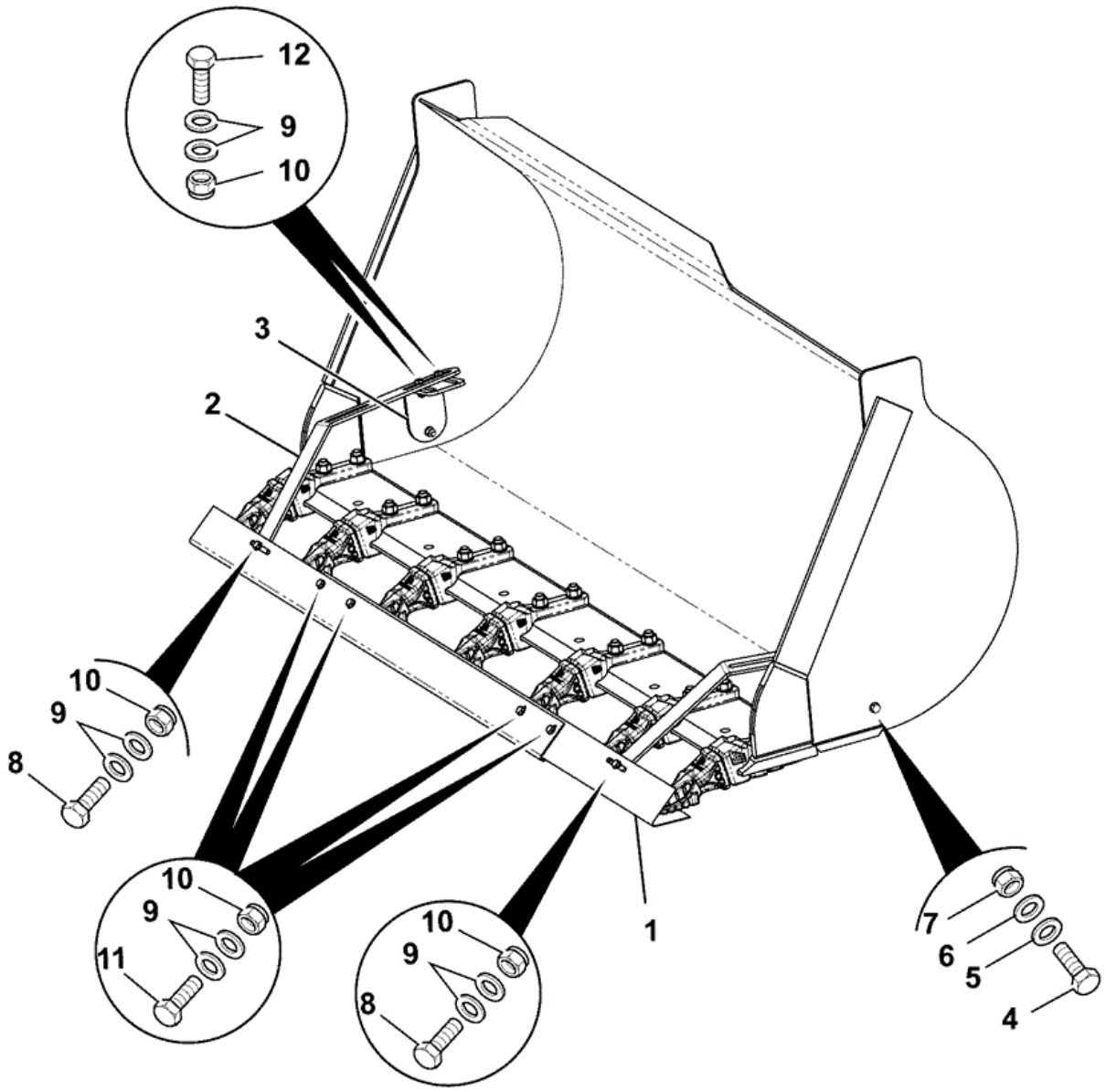

333-R7123-1

Item	Part No	Change No	Description	Usage Code	QTY
1	332/T8428		Guard tooth		2
2	333/R7586		Bracket tooth gaurd		2

3	333/R7587		Bracket side		2
4	1315/0510D		Setscrew M12 x 40mm		2
5	1410/0005D		Washer 1/2in small		2
6	1420/0009D		Washer (M12)		2
7	1370/0403D		Nut Lock M12		2
8	1315/0408D		Setscrew M10 x 30		2
9	1420/0008D		Washer (M10)		20
10	1370/0303D		Nut Self Lock M10		10
11	1315/0407D		Setscrew M10 x 25		4
12	1315/0409D		Setscrew M10 x 35mm		4

Applicability Date Ranges:
From: , To:

Product Catalog\WHEELED LOADERS\416 01243000-01243499,01317500-01317999,01472000-01472999,02095872-02095875 9812/3020 \A ATTACHMENTS\A01 SHOVELS\A1-17-1 TOOTH OPTIONS ESCO V23 SERIES

9812/3020 A1-17-1 TOOTH OPTIONS ESCO V23 SERIES

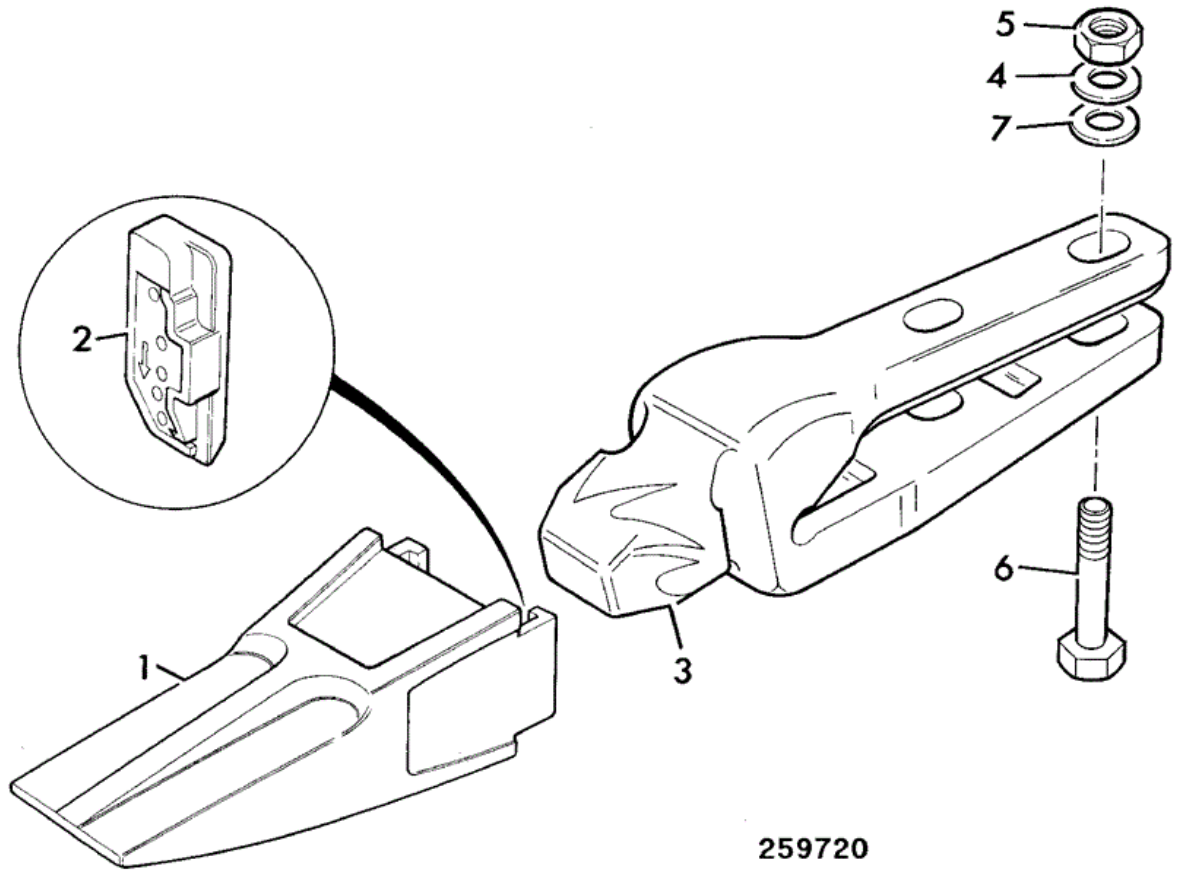

Item	Part No	Change No	Description	Usage Code	QTY
1	510/92001		Tooth point		8
2	510/92002		Pin locking		8

3	993/99635		Adapter		8
4	1425/0012Z		Washer spring M20 No longer fitted		16
5	1370/0701D		Nut		16
6	1315/3818D		Bolt (M20 x 80)		16
7	823/00353		Washer Hardened M20		16

Applicability Date Ranges:
From: , To: 21/07/2010

Product Catalog\WHEELED LOADERS\416 01243000-01243499,01317500-01317999,01472000-01472999,02095872-02095875 9812/3020 \A ATTACHMENTS\A01 SHOVELS\A1-17-10 TOOTH OPTIONS BYG J250

9812/3020 A1-17-10 TOOTH OPTIONS BYG J250

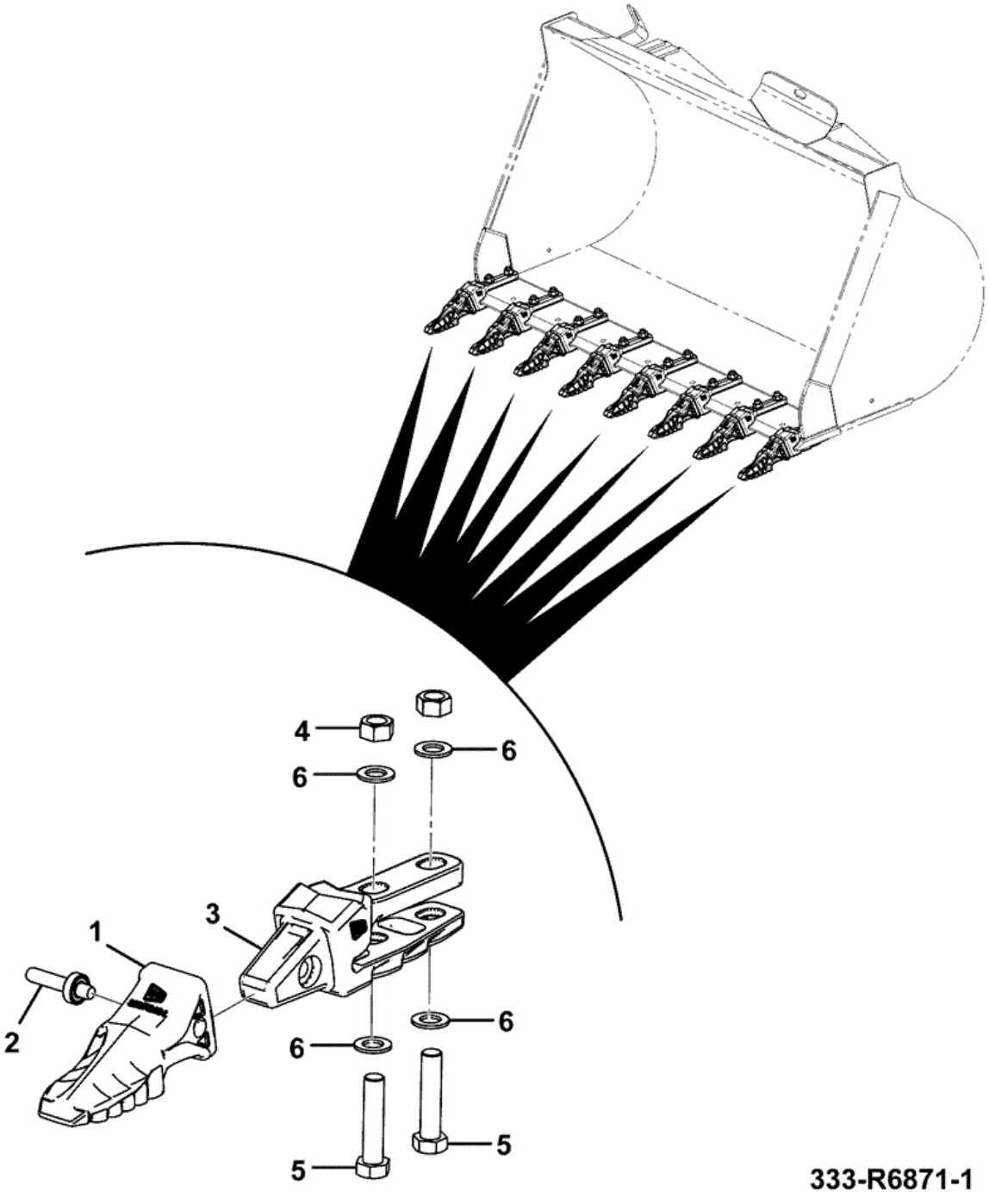

Item	Part No	Change No	Description	Usage Code	QTY
1	333/R2134		Tooth		8
2	333/R2165		Assembly locking pin		8

3	332/W9991		Adapter bolt-on		8
4	1370/0701D		Nut		16
5	1315/3819D		Bolt M20 x 90 dacromet		16
6	823/00353		Washer Hardened M20		16

9812/3020 A1-18-1 LOCKING PIN KIT FOR BYG J250 TEETH

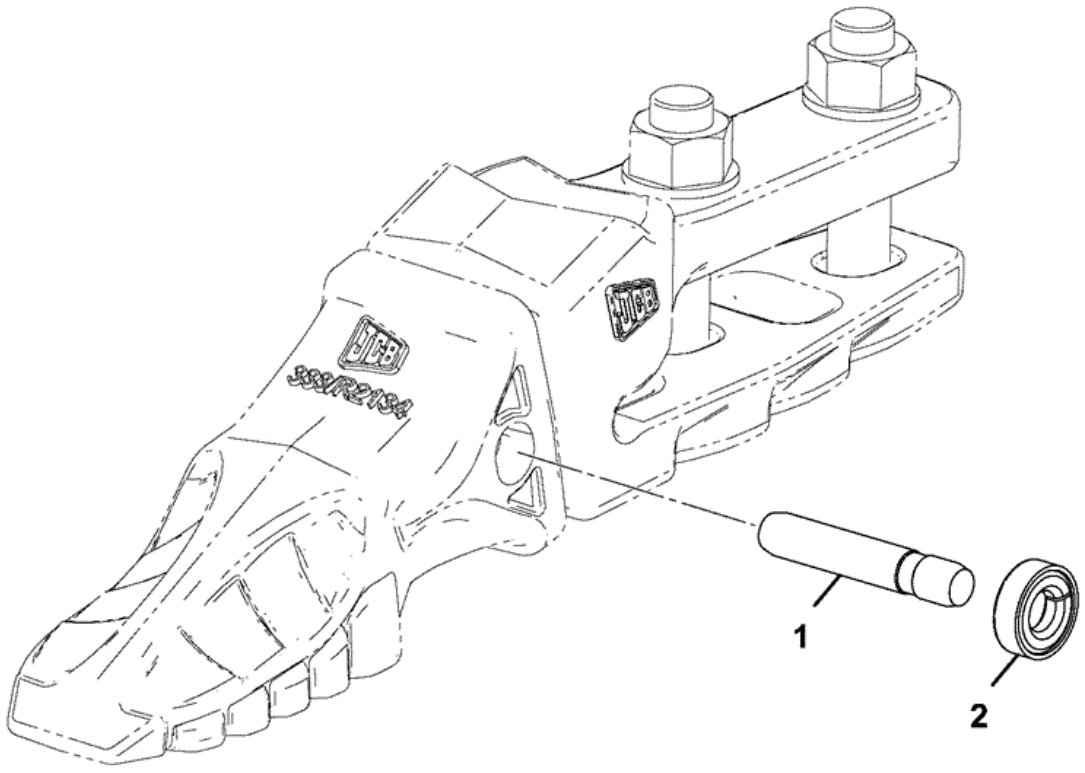

333-R2165-1

Item	Part No	Change No	Description	Usage Code	QTY
1	333/R6925		Pin locking		1
2	980/84672		Washer (13.5mm x 30.8mm x 8mm)		1

Applicability Date Ranges:
From: 22/07/2010 , To:

Product Catalog\WHEELED LOADERS\416 01243000-01243499,01317500-01317999,01472000-01472999,02095872-02095875 9812/3020 \A ATTACHMENTS\A01 SHOVELS\A1-18-1 LOCKING PIN KIT FOR BYG J250 TEETH

9812/3020 A1-18-1 LOCKING PIN KIT FOR BYG J250 TEETH

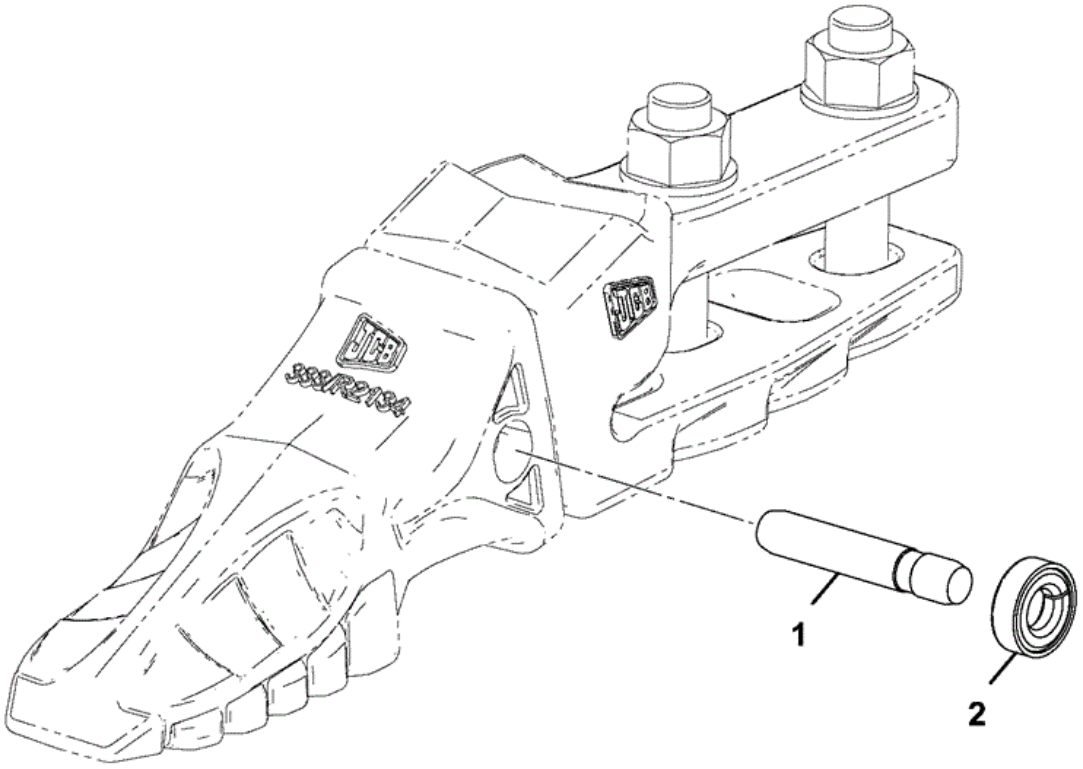

333-R2165-1

Item	Part No	Change No	Description	Usage Code	QTY
1	333/R6925		Pin locking		1
2	980/84672		Washer (13.5mm x 30.8mm x 8mm)		1

Applicability Date Ranges:
From: 22/07/2010 , To:

Product Catalog\WHEELED LOADERS\416 01243000-01243499,01317500-01317999,01472000-01472999,02095872-02095875 9812/3020 \B BODYWORK, CAB, LOADER END\B01 BODYWORK/FRAME\B1-1-1 CHASSIS FRONT WITH RUBBER APRON

9812/3020 B1-1-1 CHASSIS FRONT WITH RUBBER APRON

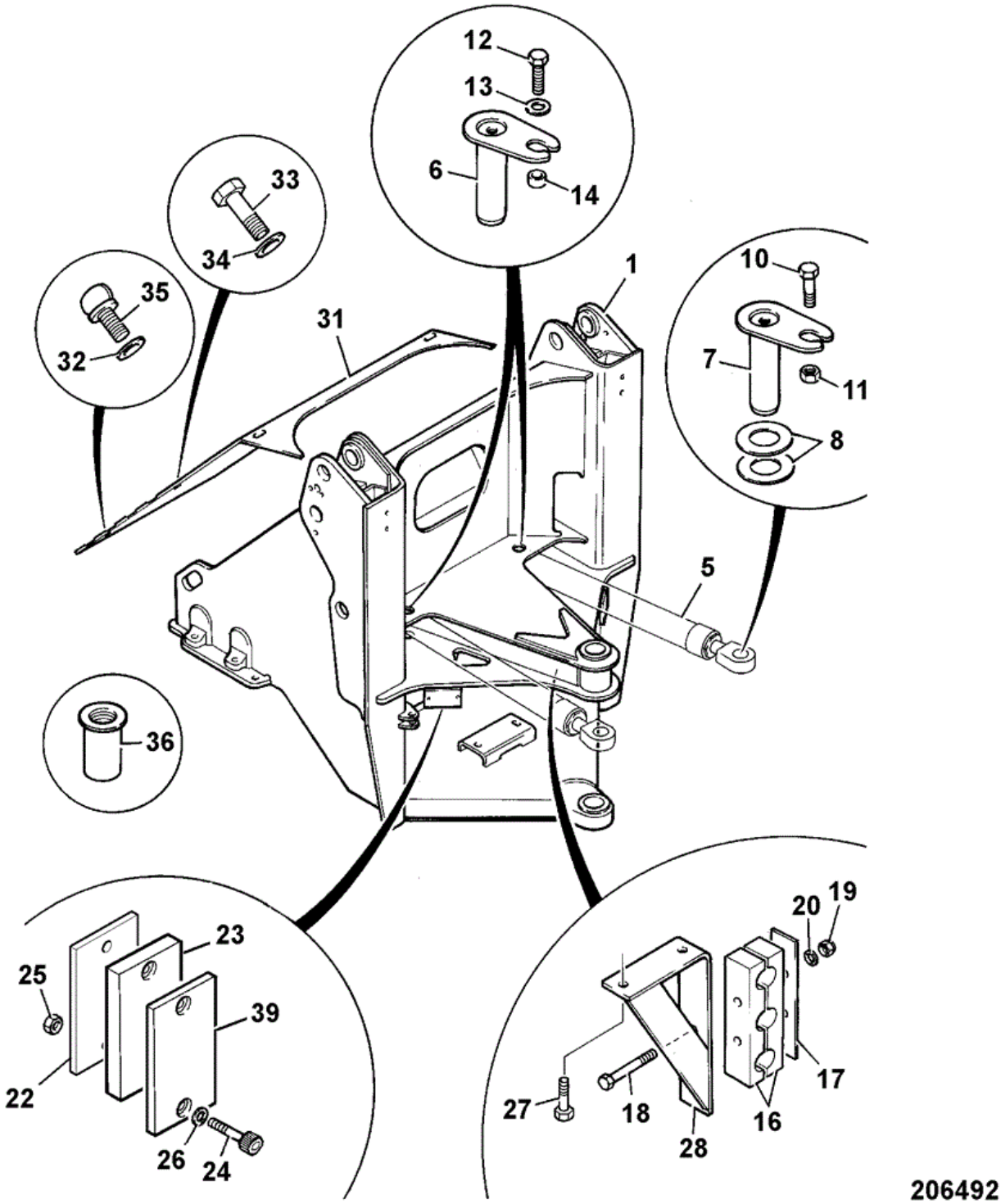

Item	Part No	Change No	Description	Usage Code	QTY
1	335/90121		Chassis front		1
5	****		'See Remark' See E4 for steer rams		1

6	911/26300		Pin pivot		2
6	332/G3981		Pin pivot expander Expander pin service replacement for o/s bore		2
7	911/26400		Pin pivot steer ram rear		2
7	333/C5917		Pin pivot expander 287.4mm long Expander pin service replacement for o/s bore		2
8	819/00040		Shim 1.00/1.05mm Replace by nylon shims below		14
8	334/P5029		Shim nylon 3mm		1
8	334/P5030		Shim nylon 3.5mm		1
8	334/P5064		Shim nylon 4mm		2
8	334/P5075		Shim nylon 4.5mm		1
8	334/P5082		Shim nylon 5mm		1
8	334/P5085		Shim nylon 5.5mm		1
8	334/P5102		Shim nylon 6mm		1
10	1315/0712Z		Bolt M16 x 50mm		2
11	1370/0603Z		Nut lock M16		2
12	1315/0708Z		Screw		2
13	1412/0007Z		Washer		4
14	830/00599		Spacer		4
16	821/10256		Clamp hose		2
17	331/43279		Plate hose clamp		1
18	1315/3421D		Bolt M10 x110mm		2
19	1370/0303D		Nut Self Lock M10		2
20	1420/0008D		Washer (M10)		6
22	331/63038		Plate spacer RH on chassis (bump stop)		1
23	331/21957		Stop articulation,Rubber 104mm hole centres,		2
24	1315/3413D		Bolt M10 x 55mm		4
25	1370/0303D		Nut Self Lock M10		4
26	1420/0008D		Washer (M10)		4
27	1315/0407D		Setscrew M10 x 25		2
28	268/00132		Bracket hose support		1
31	265/01947		Mat apron		1
32	1420/0011Z		Washer (M16)		2
33	1315/0409Z		Setscrew M10 x 35		2
34	1412/0004Z		Washer (7/16" Large)		4
35	826/01526		Screw thumb		2
36	826/01249		Nut Rrivet M10		4
37	823/00480		Retainer		2

39	331/21955		Plate striker, Articulation		2
40	821/00350		Clamp (Pair)		4

Applicability Date Ranges:
From: , To:

Product Catalog\WHEELED LOADERS\416 01243000-01243499,01317500-01317999,01472000-01472999,02095872-02095875 9812/3020 \B BODYWORK, CAB, LOADER END\B01 BODYWORK/FRAME\B1-1-3 CHASSIS FRONT

9812/3020 B1-1-3 CHASSIS FRONT

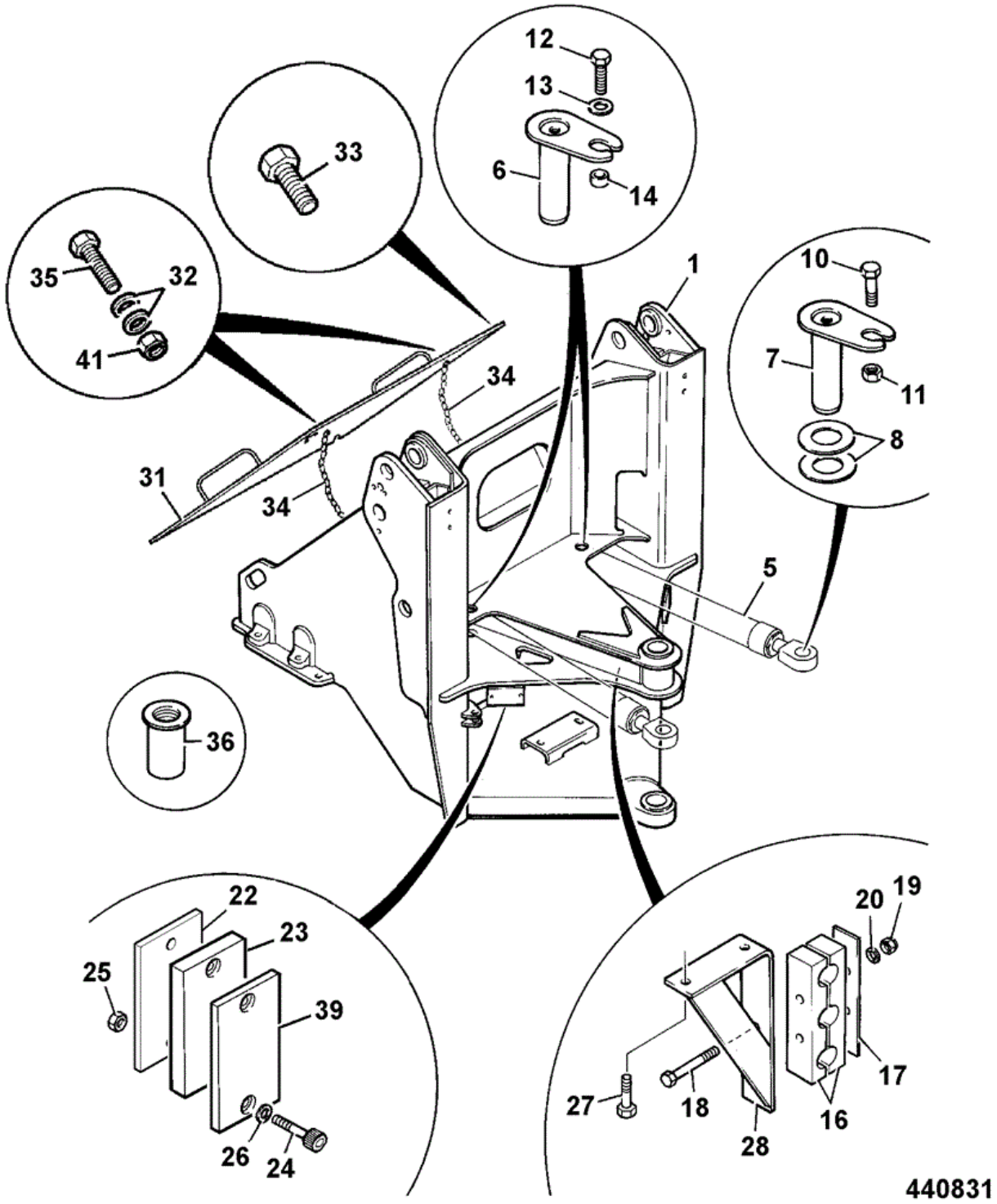

Item	Part No	Change No	Description	Usage Code	QTY
1	335/90121	to M1317854	Chassis front		1
1	332/T9591		Chassis front		1

1	334/R4758		Chassis front (Upgrade) Strengthened front chassis		1
5	****		'See Remark' See E4 for steer rams		1
6	911/26300		Pin pivot		2
6	332/G3981		Pin pivot expander Expander pin service replacement for o/s bore		2
7	911/26400		Pin pivot steer ram rear		2
7	333/C5917		Pin pivot expander 287.4mm long Expander pin service replacement for o/s bore		2
8	819/00040		Shim 1.00/1.05mm Replaced by nylon shims below		14
8	334/P5029		Shim nylon 3mm		1
8	334/P5030		Shim nylon 3.5mm		1
8	334/P5064		Shim nylon 4mm		2
8	334/P5075		Shim nylon 4.5mm		1
8	334/P5082		Shim nylon 5mm		1
8	334/P5085		Shim nylon 5.5mm		1
8	334/P5102		Shim nylon 6mm		1
10	1315/0712D		Setscrew M16 x 50mm		2
11	1370/0603D		Nut -Lock Nut, M16		2
12	1315/0708D		Setscrew M16 x 30mm		2
13	1412/0007Z		Washer		4
14	830/00599		Spacer		4
16	821/10256		Clamp hose		2
17	331/43279		Plate hose clamp		1
18	1315/3421D		Bolt M10 x110mm		2
19	1370/0303D		Nut Self Lock M10		2
20	1420/0008D		Washer (M10)		6
22	331/63038		Plate spacer RH on chassis (bump stop)		1
23	331/21957		Stop articulation,Rubber 104mm hole centres,		2
24	1315/3413D		Bolt M10 x 55mm		4
25	1370/0303D		Nut Self Lock M10		4
26	1420/0008D		Washer (M10)		4
27	1315/0407D		Setscrew M10 x 25		2
28	268/00132		Bracket hose support		1
31	335/02905	Superseded	Plate cover, front chassis		1
31	331/62315	Superseded	Plate cover, front chassis		1
31	332/T4784		Plate cover front chassis		1

32	1420/0006Z		Washer (M6)		8
33	826/11079		Setscrew Flange Head M10 x 20mm		4
34	918/10008		Chain retention		2
34	918/10036		Chain retention Replaces 918/10008		2
35	1315/0210D		Setscrew M6 x 40mm		4
36	826/01249		Nut Rrivet M10		4
37	823/00480		Retainer		2
39	331/21955		Plate striker, Articulation		2
40	821/00350		Clamp (Pair)		4
41	1370/0103D		Nut (M6)		4

Applicability Date Ranges:
From: , To:

Product Catalog\WHEELED LOADERS\416 01243000-01243499,01317500-01317999,01472000-01472999,02095872-02095875 9812/3020 \B BODYWORK, CAB, LOADER END\B01 BODYWORK/FRAME\B1-1-10 CHASSIS FRONT SERVICE SCHEME REPAIR

9812/3020 B1-1-10 CHASSIS FRONT SERVICE SCHEME REPAIR

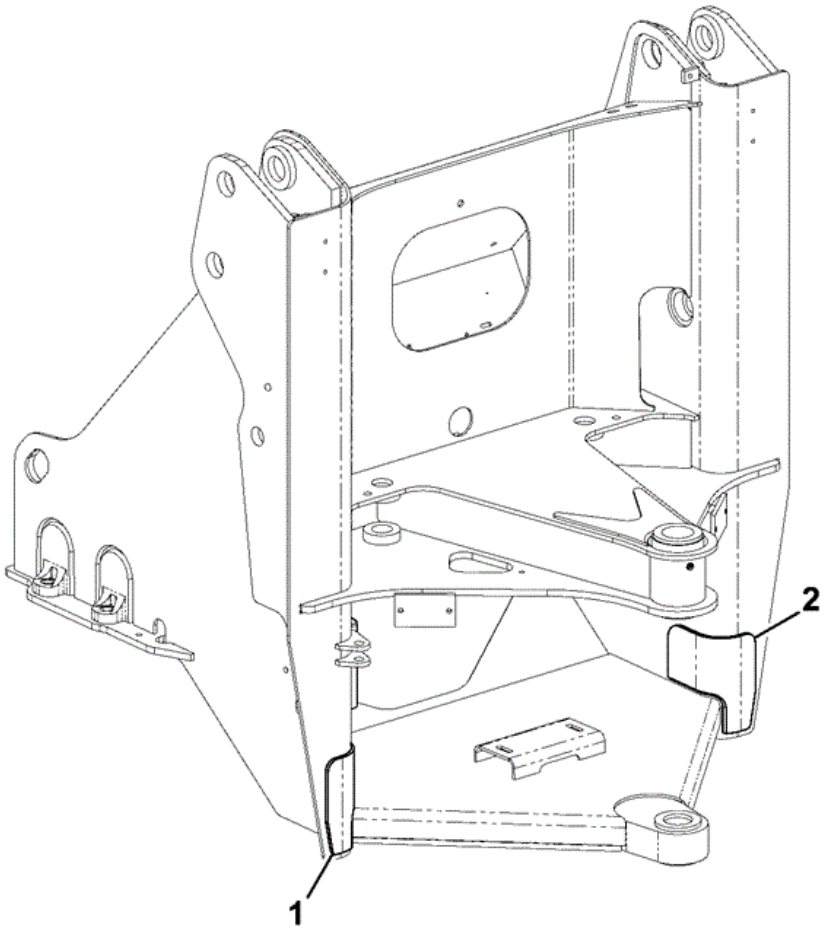

333-V9026-1

Item	Part No	Change No	Description	Usage Code	QTY
1	333/V9034		Plate repair LH		1
2	333/V9036		Plate repair RH		1

Applicability Date Ranges:
From: , To:

9812/3020 B1-2-1 CHASSIS REAR

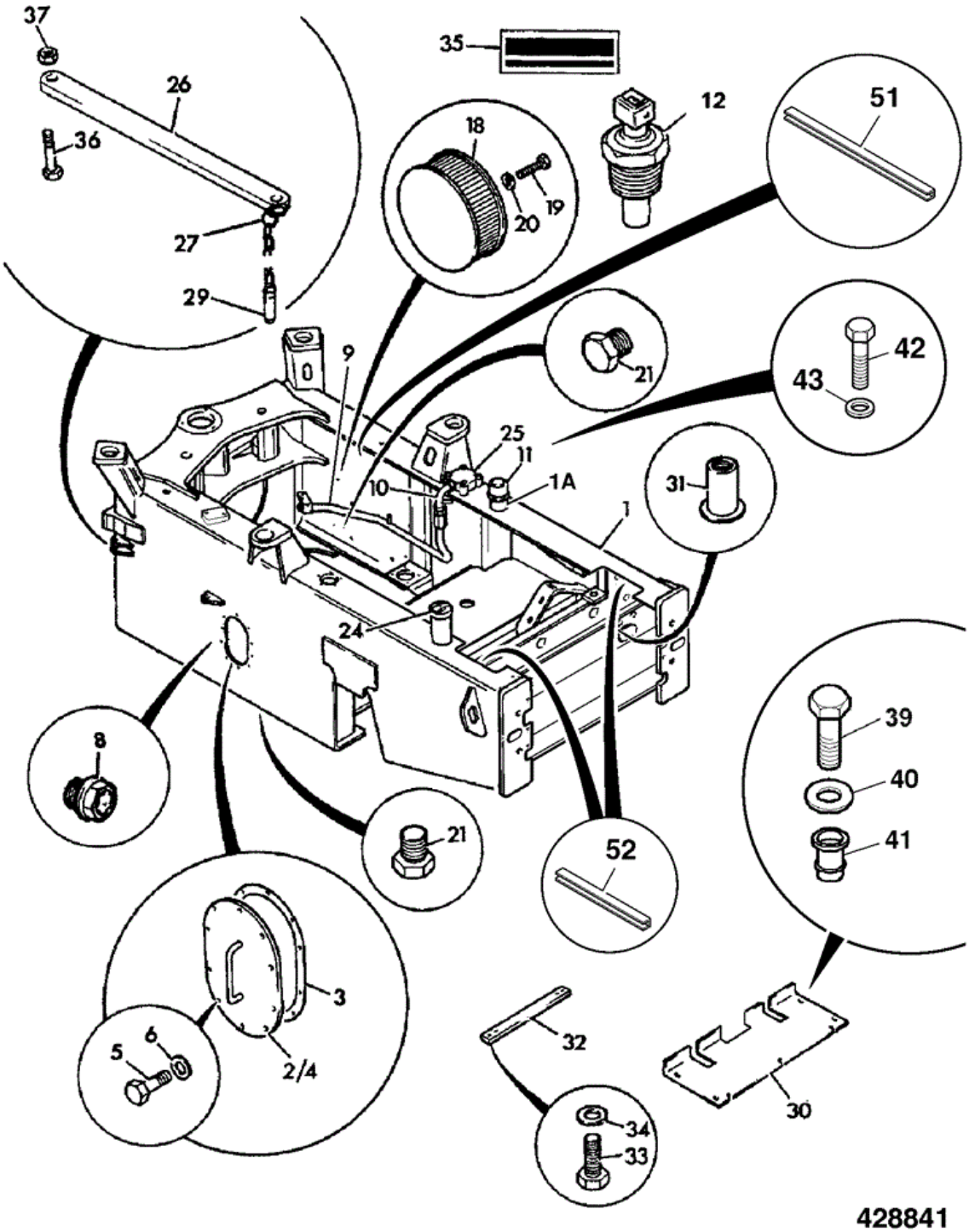

Item	Part No	Change No	Description	Usage Code	QTY
1	335/10630	<M1243061	Chassis rear		1
1	335/12830	<30/10/2010	Chassis rear		1

1	333/R1734		Chassis rear		1
1A	:268/00142		Tube fuel filler		1
2	****		Cover Access Assembly Fuel tank, hyd tank		2
2	:826/11114		Nut Rivet, M6		10
3	813/00434		Gasket Access Cover		2
5	1315/0207D		Setscrew M6 x 25mm		20
6	1420/0006D		Washer (M6)		20
8	123/08053		Gauge Sight 50mm		1
9	335/90149		Pipe main return		1
10	268/00115		Pipe main return elbow		1
11	274/01052		Cap Hydraulic		1
12	716/30128	to 19/08/2012	Sender Temperature (1/2" x 14 NPTF)		1
12	333/U7228		Sender temperature c/w O Ring (9/16"-18UNF)		1
14	32/925592	Replaced by	Breather filter		1
14	332/P3040		Breather		1
18	32/901100		Strainer Suction		1
19	1315/3520D		Bolt M12x100 dacromet		1
20	1420/0009D		Washer (M12)		1
21	32/925390		Plug Drain G1A Hydraulic & fuel tanks		2
24	265/00455	to JUL09	Cap filler diesel		1
24	332/F4780	to 03/02/2011	Cap Diesel Filler Vented	A	1
24	332/G0879		Cap Vented Diesel Filler	B	1
24A	:332/F8101	to 03/02/2011	Chain retaining	A	1
24A	:332/G0880		Chain Retaining	B	1
24	123/06343		Seal For both caps		1
24	701/45501		Key Door/Ignition		1
25	581/18072		Filter hydraulic, assembly		1
26	268/00253	to FEB09	Stay articulation one chain & pin	A	1
26	:268/00254		Stay articulation double chain & pin	B	1
27	:259/25101		Chain	A,B	2
29	:811/30057		Pin pivot	A	1
29	:332/V7980		Pin 70 x 19mm dia.	B	2
29A	826/00479		Clip 'R' Secures item 29	B	2
30	331/40462		Plate anti-recirculation		1
31	826/01104		Nut Rivet		7
32	262/57604	<30/10/2010	Rod tie		1

33	1315/0710D		Setscrew M16 x 40mm		4
34	1425/0011Z		Washer spring M16		4
35	817/03604		Label Danger Articulation		2
36	1315/3818D		Bolt (M20 x 80)		1
37	1370/0703D		Nut M20, 2.5 pitch		1
37A	1420/0012D		Washer Plain M20		1
38	331/21048		Plate closing chassis		1
39	1315/0408D		Setscrew M10 x 30		9
40	1412/0005D		Washer (1/2" Large)		9
41	826/01104		Nut Rivet		7
42	1315/0307D		Setscrew M8 x 25 mm		4
43	1420/0007D		Washer (M8)		4
51	926/50402		Strip edging, 550mm		1
52	926/50402		Strip edging, 550mm Cut to 320mm		2

9812/3020 E1-20-1 FILTER, HYDRAULIC

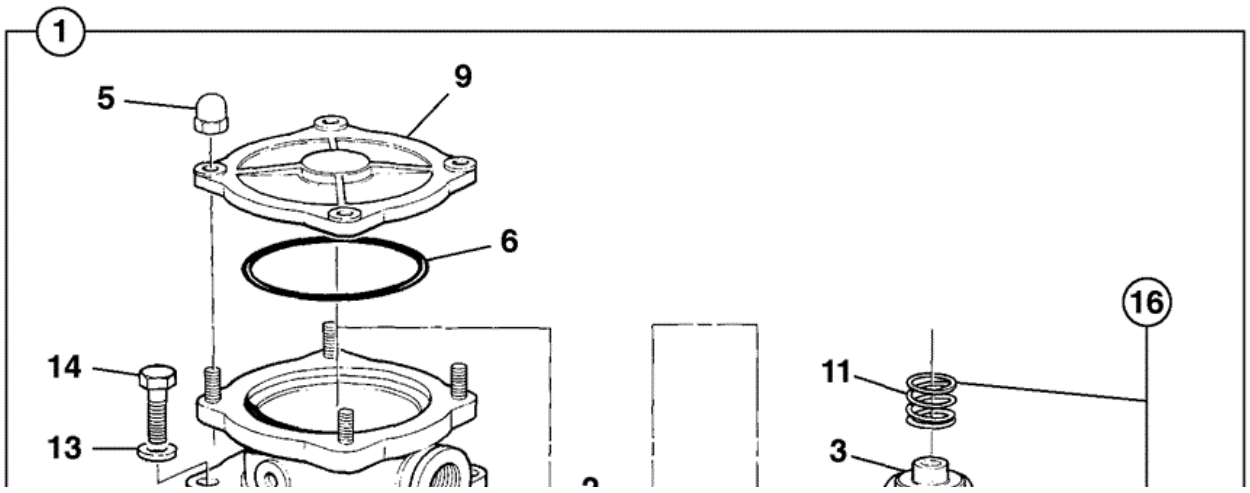

Item	Part No	Change No	Description	Usage Code	QTY
1	581/18072		Filter hydraulic, assembly		1
2	:581/00012		Element filter 10 micron		1
3	:581/06303		Bridge		1
3A	:581/05901		Coil		1
4	:581/05605		Ring packing		1
5	:581/05606		Nut acorn		4
6	:581/05602		O Ring		1
7	:581/05604		Seal		1
8	:581/06302		Seal filter element		1
9	:581/05610		Cover filter		1
10	:581/05611		Housing filter		1
11	:32/925357		Spring		1
12	:581/05613		Valve by-pass assembly		1
13	1420/0007Z	to 09/05/2011	Washer (M8)		4
13	1406/0008		Seal Washer Replaces 1420/0007Z		4
14	1315/0307Z		Setscrew M8 X 25		4
15	581/07101		Seal filter element		1
16	:332/C4746		Insert inc. top spring seal,column & rod		1

Applicability Date Ranges:
From: , To:

Product Catalog\WHEELED LOADERS\416 01243000-01243499,01317500-01317999,01472000-01472999,02095872-02095875 9812/3020 \B BODYWORK, CAB, LOADER END\B01 BODYWORK/FRAME\B1-2-10 CHASSIS REAR TIE BAR

9812/3020 B1-2-10 CHASSIS REAR TIE BAR

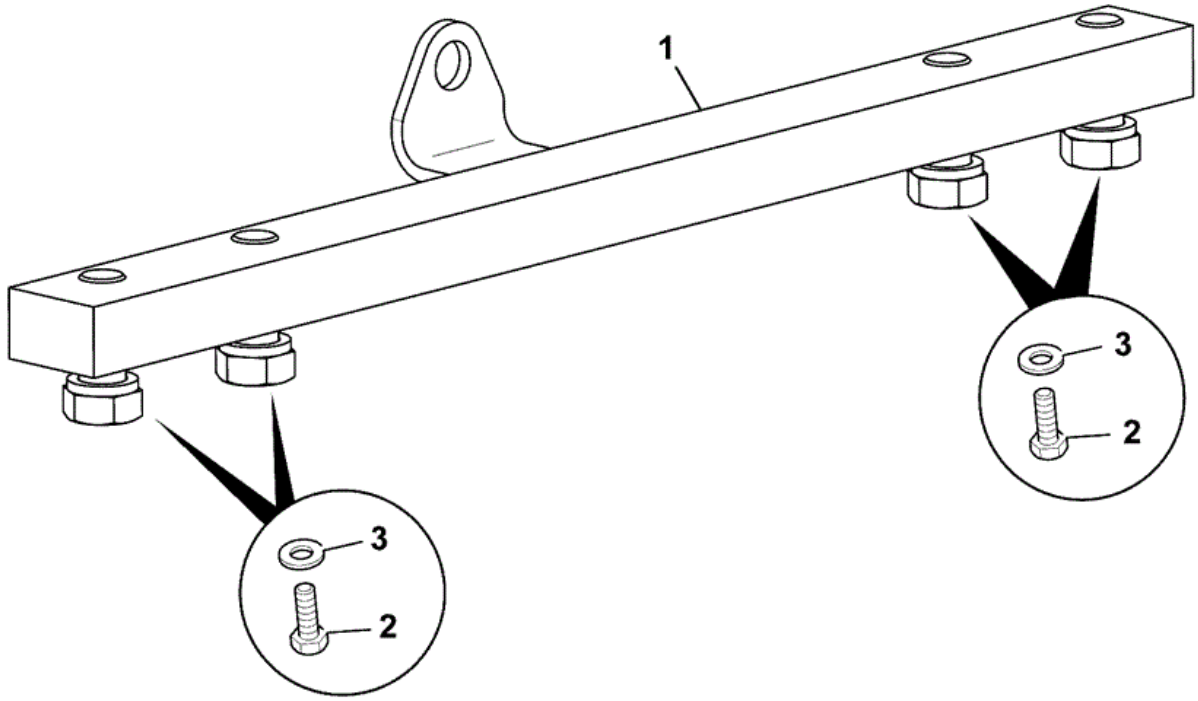

269-10416-2

Item	Part No	Change No	Description	Usage Code	QTY
1	333/R1309		Bar tie WA		1
2	1315/0710D		Setscrew M16 x 40mm		4
3	1425/0011D		Washer spring		4

Applicability Date Ranges:
From: 31/10/2010 , To: NOV2010

Product Catalog\WHEELED LOADERS\416 01243000-01243499,01317500-01317999,01472000-01472999,02095872-02095875 9812/3020 \B BODYWORK, CAB, LOADER END\B01 BODYWORK/FRAME\B1-2-11 CHASSIS REAR TIE BAR

9812/3020 B1-2-11 CHASSIS REAR TIE BAR

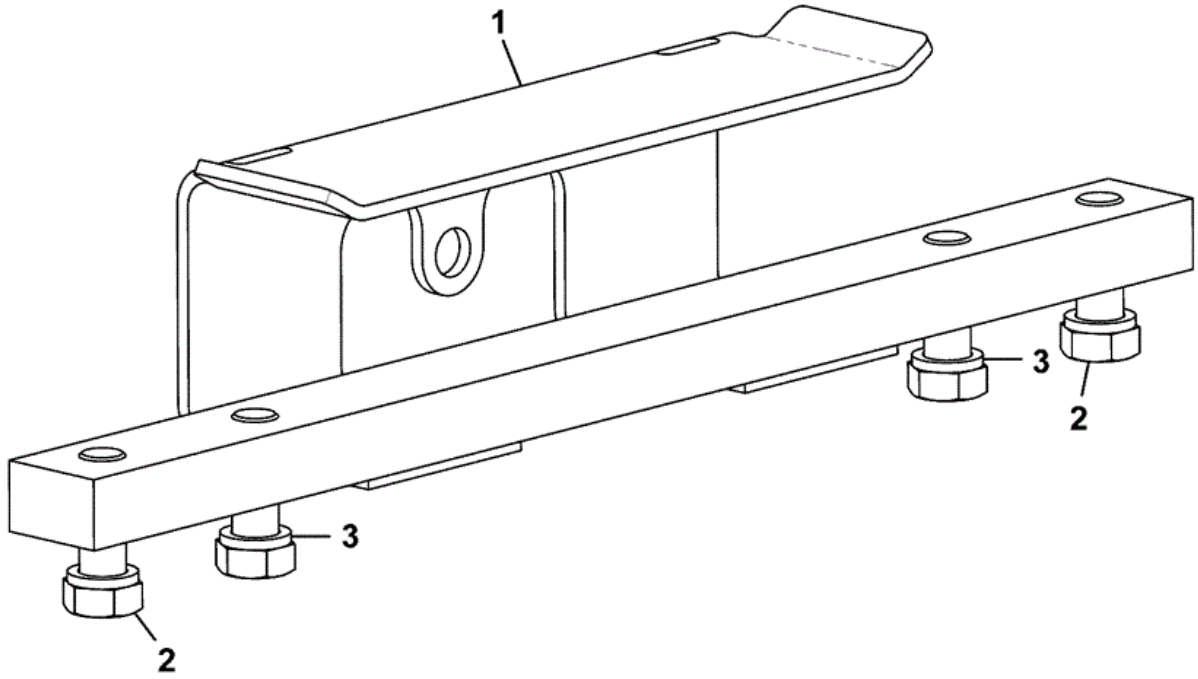

269-10416-3

Item	Part No	Change No	Description	Usage Code	QTY
1	333/S8936		Bar tie WA		1
2	1315/0711D		Setscrew M16x45		4

2	1315/0712D		Setscrew M16 x 50mm Replaces 1315/0711D		4
3	1425/0011D		Washer spring		4

Applicability Date Ranges:
From: DEC2010 , To:

9812/3020 B1-5-1 CENTRE PIVOT

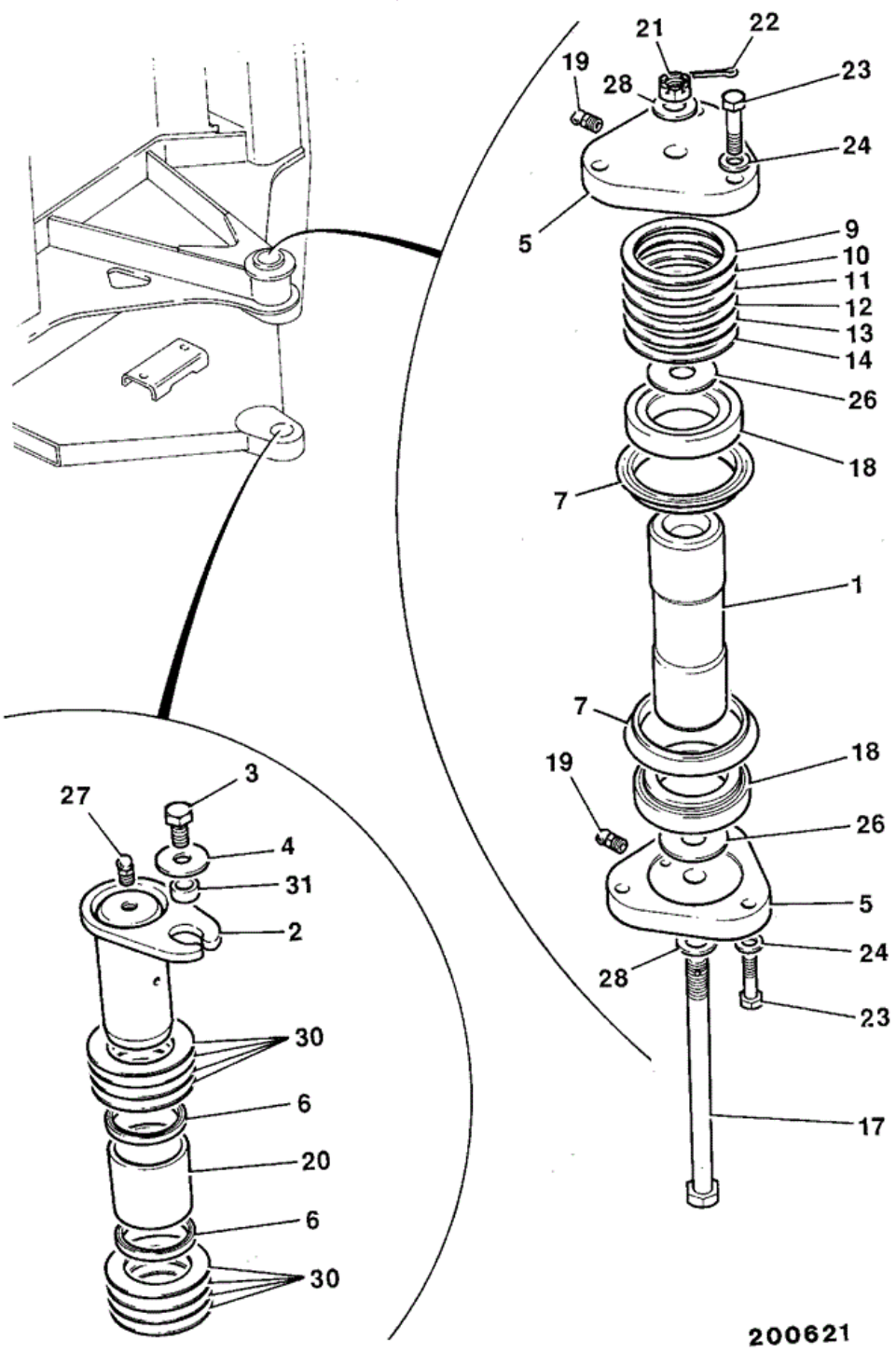

Item	Part No	Change No	Description	Usage Code	QTY
1	265/00244		Pin Pivot Upper Centre		1
2	911/27100		Pin pivot		1

3	1315/0708Z		Screw		1
4	1412/0007Z		Washer		1
5	259/01305		Cap End		2
6	813/00414		Seal 65mm Internal Dia.		2
7	813/00250		Seal V		2
9	819/00029		Shim 1.000mm		1
10	819/00030		Shim 0.250mm		1
11	819/00031		Shim 0.150mm		1
12	819/00035		Shim 0.500mm		1
13	819/00037		Shim 0.900mm		1
14	819/00036		Shim 0.700mm		1
17	826/01442		Bolt Centre Pivot		1
18	907/03800		Bearing		2
19	1450/1001		Nipple grease 90deg. angle		2
19	970/61104		Nipple grease,90 deg.angle stainless steel Sales special 7954		2
20	809/00113		Bearing 65x72		1
21	826/01443		Nut Slotted		1
22	2103/1111		Pin Split		1
23	1315/3512Z		Bolt M12 x 50mm		6
24	1420/0009Z		Washer (M12)		6
26	259/01306		Washer		2
27	1450/1007		Nipple Grease		1
27	970/61103		Nipple grease,45 deg.angle stainless steel Sales special 7954		1
28	1420/0012Z		Washer M20		2
30	819/00094		Shim 65 i/d 1mm thick		8
31	830/00599		Spacer		1

Applicability Date Ranges:
From: , To:

Product Catalog\WHEELED LOADERS\416 01243000-01243499,01317500-01317999,01472000-01472999,02095872-02095875 9812/3020 \B BODYWORK, CAB, LOADER END\B01 BODYWORK/FRAME\B1-6-1 BODYWORK STANDARD STEPS & LIGHT ARMS

9812/3020 B1-6-1 BODYWORK STANDARD STEPS & LIGHT ARMS

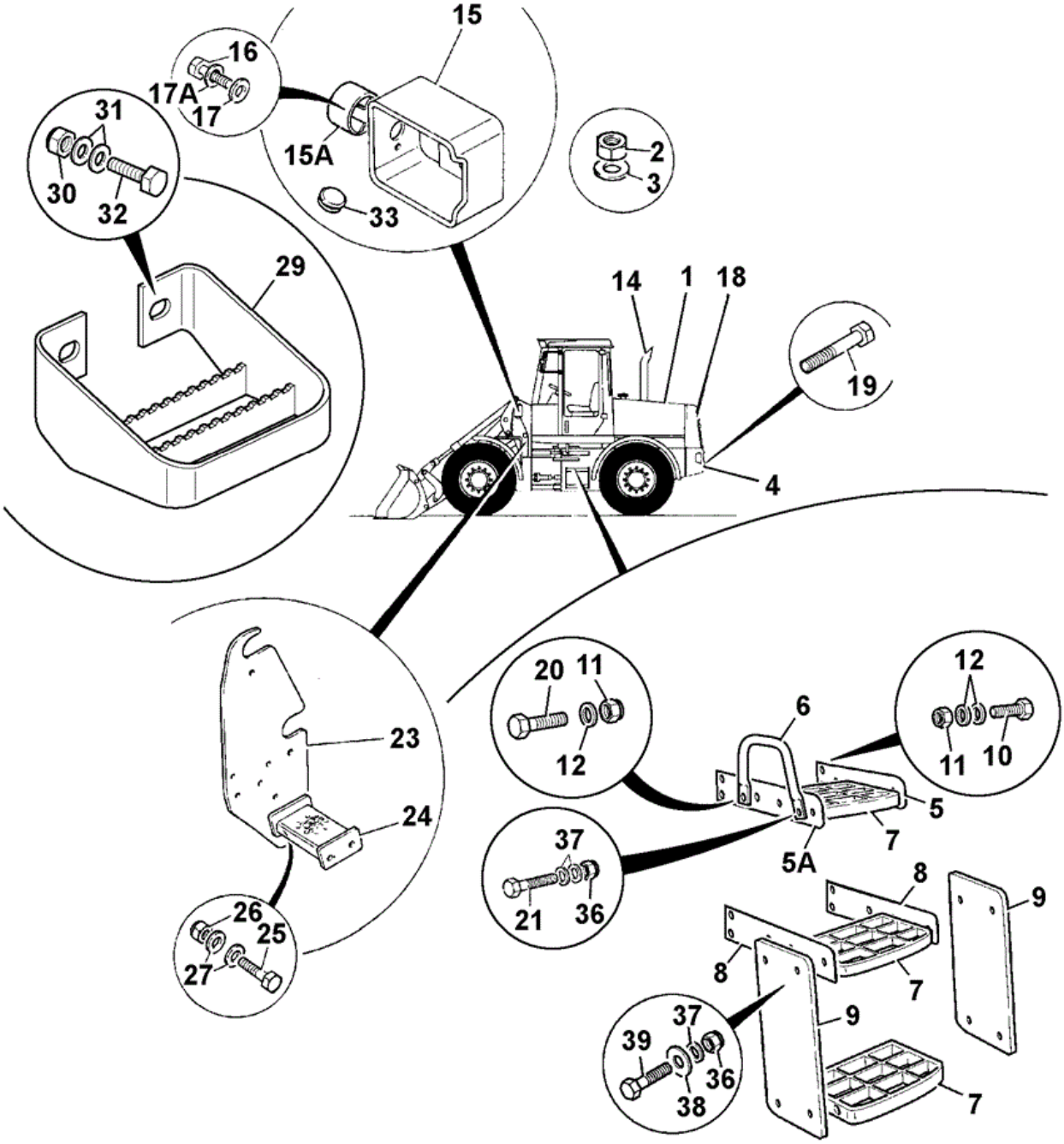

429051

Item	Part No	Change No	Description	Usage Code	QTY
1	****		'See Remark' See Engine covers B1-4-1		1
2	1370/0901D		Nut		6

3	1420/0014D		Washer (M24)		10
4	****		'See Remark' See Counterweight B1-17-1		1
5	331/52858		Plate mounting		1
5A	331/52859		Plate mounting		1
6	265/01846		Handle grab (Yellow)		1
7	331/22800		Step Metal Tread		3
7	331/42054		Step stainless steel Sales special 9851		3
8	331/52856		Plate mounting Lower		2
9	331/26443		Mounting step, flexible		2
9	331/68317		Plate mounting rigid Sales special 8719		2
9A	162/00890		Spacer Sales special 8719 (fitted with bottom step)		4
10	1315/0509D		Screw M12x35mm		8
11	1370/0403D		Nut Lock M12		9
12	1420/0009D		Washer (M12)		17
13	1412/0005Z		Washer Plain 1/2"		8
14	****		'See Remark' Exhaust extension see Index		1
15	335/09579		Box light		2
15A	335/12449		Arm front light		2
16	1315/3416D		Bolt M10 x 70mm long		4
17	1420/0008D		Washer (M10)		4
17A	1425/0008D		Washer Spring M10		4
18	****		'See Remark' See Rear Grille B1-10-1		1
19	1315/0712D		Setscrew M16 x 50mm		8
20	1315/3512D		Bolt M12 x 50mm long		1
21	1315/3412D		Bolt M10 x 50		3
23	265/00448	to 13/06/2012	Plate front fender mtg.		2
23	334/L9738		Plate front fender mtg.		2
24	268/00154	to DEC08	Step front fender Not fitted from JAN08		2
25	1315/0407D		Setscrew M10 x 25		4
26	1370/0303D		Nut Self Lock M10		6
27	1420/0008D		Washer (M10)		12
28	823/00571		Washer nylon		28

29	335/10023		Step Rear Use when Rear fenders are not fitted		1
30	1370/0603D		Nut -Lock Nut, M16		2
31	1420/0011D		Washer (M16)		4
32	1315/0711D		Setscrew M16x45		2
33	2410/0115		Grommet 44.4 x 3.5 For item 15		2
34	2410/1114		Grommet Blind, 38.1x3.5 mm For item 15		2
35	1315/3514D		Bolt M12 x 60mm long		1
36	1370/0303D		Nut Self Lock M10		12
37	1420/0008D		Washer (M10)		8
38	1412/0004D		Washer 7/16" Large		8
39	1315/3412D		Bolt M10 x 50		8
40	828/00162		Grommet		2

Applicability Date Ranges:
From: , To:

Product Catalog\WHEELED LOADERS\416 01243000-01243499,01317500-01317999,01472000-01472999,02095872-02095875 9812/3020 \B BODYWORK, CAB, LOADER END\B01 BODYWORK/FRAME\B1-6-2 STEP REAR CHASSIS

9812/3020 B1-6-2 STEP REAR CHASSIS

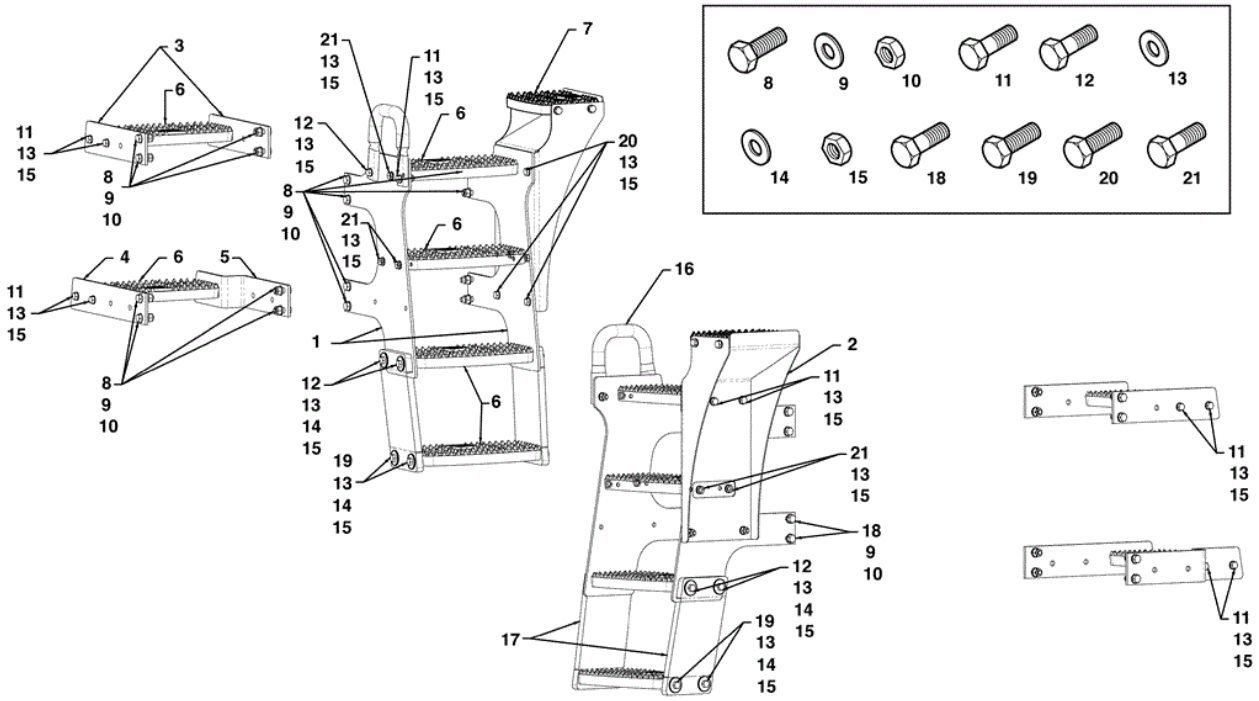

Item	Part No	Change No	Description	Usage Code	QTY
1	332/V5107		Plate mounting step		2
2	332/V5477		Plate mounting WA RH		1
3	331/52856		Plate mounting		2
4	331/52854		Plate mounting		1
5	331/52855		Bracket mounting		1
6	331/22800		Step Metal Tread		6
6	331/42054		Step stainless steel Sales special 2837		6
7	589/10221		Step		1
8	1315/0509D		Screw M12x35mm		14
9	1420/0009D		Washer (M12)		32
10	1370/0403D		Nut Lock M12		16
11	1315/3410D		Bolt M10 x 40mm		11
12	1315/3412D		Bolt M10 x 50		5
13	1420/0008D		Washer (M10)		56
14	1412/0004D		Washer 7/16" Large		8
15	1370/0303D		Nut Self Lock M10		32

16	265/01846		Handle grab (Yellow)		1
17	332/V0846		Mounting Step Flexible LH		2
18	1315/3512D		Bolt M12 x 50mm long		2
19	1315/0411D		Setscrew M10X45		4
20	1315/0408D		Setscrew M10 x 30		7
21	1315/3409D		Bolt M10 x 35mm long		5

Applicability Date Ranges:
From: M1317889 , To:

Product Catalog\WHEELED LOADERS\416 01243000-01243499,01317500-01317999,01472000-01472999,02095872-02095875 9812/3020 \B BODYWORK, CAB, LOADER END\B01 BODYWORK/FRAME\B1-6-5 LIGHT LIGHT ARM

9812/3020 B1-6-5 LIGHT LIGHT ARM

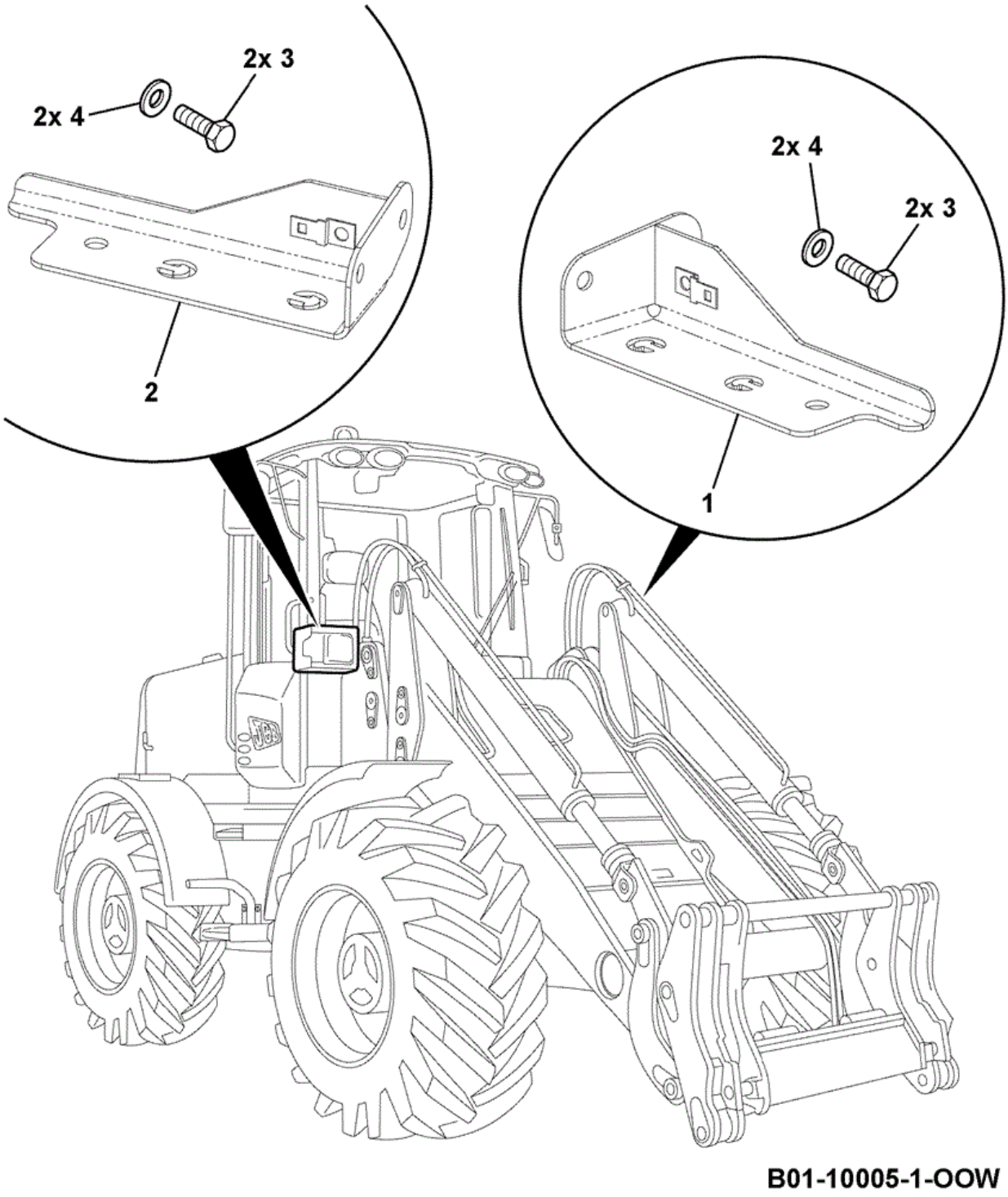

Item	Part No	Change No	Description	Usage Code	QTY
1	332/V8960		Bracket front light LH		1
2	332/V9254		Bracket front light RH		1

3	1315/0405D		Setscrew M10 x 20		4
4	1420/0008D		Washer (M10)		4

Applicability Date Ranges:
From: M1317979 , To:

Product Catalog\WHEELED LOADERS\416 01243000-01243499,01317500-01317999,01472000-01472999,02095872-02095875 9812/3020 \B BODYWORK, CAB, LOADER END\B01 BODYWORK/FRAME\B1-7-1 ENGINE COVER

9812/3020 B1-7-1 ENGINE COVER

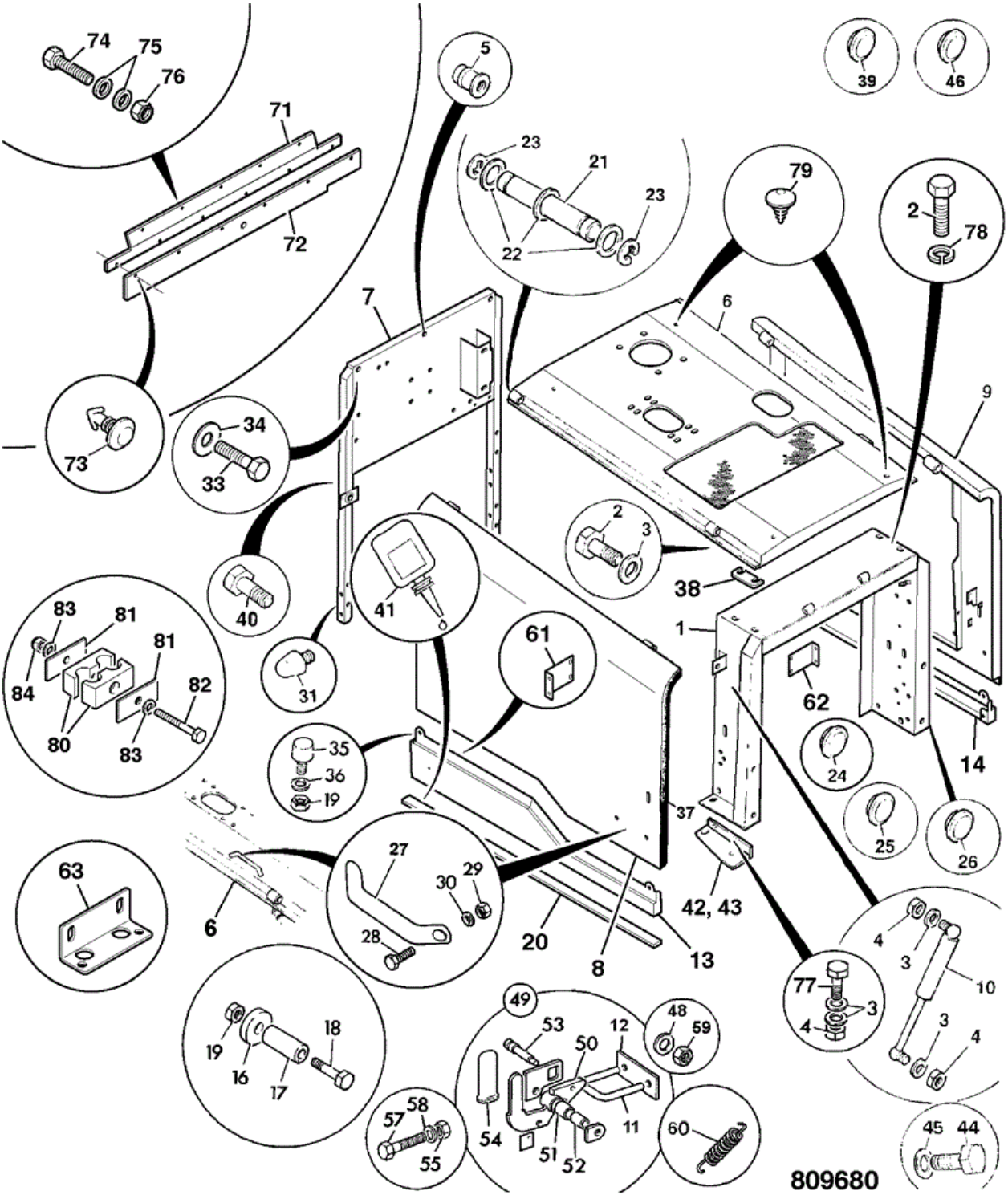

Item	Part No	Change No	Description	Usage Code	QTY
1	335/11727		Frame engine cover support rear		1
2	1315/0407Z		Setscrew M10 x 25 mm		21

3	1420/0008Z		Washer (M10)		38
4	1370/0303Z		Nut lock M10		20
5	826/01104		Nut Rivet		9
6	335/12450	to DEC08	Cover top panel		1
6	:332/V1952		Cover top panel		1
7	335/11689	Superseded	Frame engine cover support front		1
7	335/13829	Superseded	Frame engine cover support front		1
7	332/V9579		Frame engine cover support front		1
8	335/11639	to DEC08	Cover left side upper		1
8	:332/V1956		Cover left side upper		1
9	335/11641	to DEC08	Cover right side upper		1
9	:332/V1959		Cover right side upper		1
10	331/61706		Strut gas		2
11	265/02620		Arm striker		2
12	265/02621		Plate back		2
13	335/11671		Cover left side lower,fixed		1
14	335/11672		Cover right side lower,fixed		1
16	:265/00394		Roller No longer fitted		2
17	:830/00609		Spacer		2
18	:1315/0308Z		Setscrew M8 x 30		2
19	:1370/0203Z		Nut Nut M8		2
20	:926/12700		Seal Rubber 1180mm long		2
21	:811/90725		Pin Hinge		4
22	****		'See Remark' 1420/0009Z not fitted		32
23	:821/00492		Circlip E Series		8
24	2410/1013		Grommet 31.8mm.		1
25	2410/1014		Grommet 38.1mm.		1
26	828/00261		Buffer (stop),Rubber		2
27	162/00643		Handle Plastic M6		4
28	1315/0205Z		Setscrew M6 x 20mm		8
29	1370/0103Z		Nut Self Lock M6		8
30	1420/0006Z		Washer (M6)		8
31	122/22701		Stop bump		2
31	478/02306		Buffer Stop Replaces 122/22701		4
33	1315/0408Z		Setscrew M10 x 30 3 used on item 7		7

34	1412/0003D		Washer (3/8" Large) 3 used on item 7		11
35	265/00589		Buffer Rubber No longer fitted		4
36	1420/0007Z		Washer (M8)		4
37	926/04800		Strip Edging Approx. 1.7m		0
38	331/30823		Shim		4
39	2410/1006		Grommet		1
40	1315/3414Z		Bolt M10x60		4
41	4102/0901		Sealant Clear		0
42	331/30825		Plate spreader		1
43	331/30825		Plate spreader		1
44	1315/0405Z		Setscrew M10 x 20 mm		4
45	1412/0003Z		Washer (3/8" Large)		16
46	2410/1113		Grommet 31.8		1
47	265/02525		Bracket support		2
48	265/02650		Shim		4
49	269/10253		Latch assembly N.S.P		1
50	:268/10151		Plate Latch		1
51	:831/00064		Bush Self Lubricating		1
52	:829/00583		Spindle		2
53	:265/02645		Arm latch spring		1
54	:265/02675		Grip Handle		1
55	:1370/0201Z		Nut Standard M8		1
56	:1420/0007Z		Washer (M8)		1
57	:1315/3416Z		Bolt M10 x 70		1
58	:1420/0008Z		Washer (M10)		6
59	:1370/0301Z		Nut Plain, M10		5
60	:814/00431		Spring Latch Return		1
61	331/61757		Bracket lower panel left side		1
62	331/61760		Bracket lower panel right side		1
63	331/59931		Plate spreader		2
71	331/61796	Superseded	Plate baffle		1
71	M.S.S		Multi Supersession		1
71	331/68805		Plate baffle		1
71	331/68806		Baffle rubber		1
71	331/68805	Superseded	Plate baffle		1
			Baffle rubber		

71	332/T5379		Replaces plate & rubber baffle		1
72	331/61802	Superseded	Baffle rubber		1
72	M.S.S		Multi Supersession		1
72	331/68806		Baffle rubber		1
72	331/68805		Plate baffle		1
72	331/68806	Superseded	Baffle rubber		1
72	332/T5379		Baffle rubber Replaces plate & rubber baffle		1
73	826/00959		Fastener drive yellow		6
74	1315/0203D		Setscrew M6 x 16mm		5
75	1420/0006D		Washer (M6)		10
76	1370/0103D		Nut (M6)		5
77	1315/0409D		Setscrew M10 x 35mm		4
78	1425/0008Z		Spring Washer		4
79	826/01800		Fastener fir tree		4

Applicability Date Ranges:
From: , To:

Product Catalog\WHEELED LOADERS\416 01243000-01243499,01317500-01317999,01472000-01472999,02095872-02095875 9812/3020 \B BODYWORK, CAB, LOADER END\B01 BODYWORK/FRAME\B1-9-1 FUEL SENDER

9812/3020 B1-9-1 FUEL SENDER

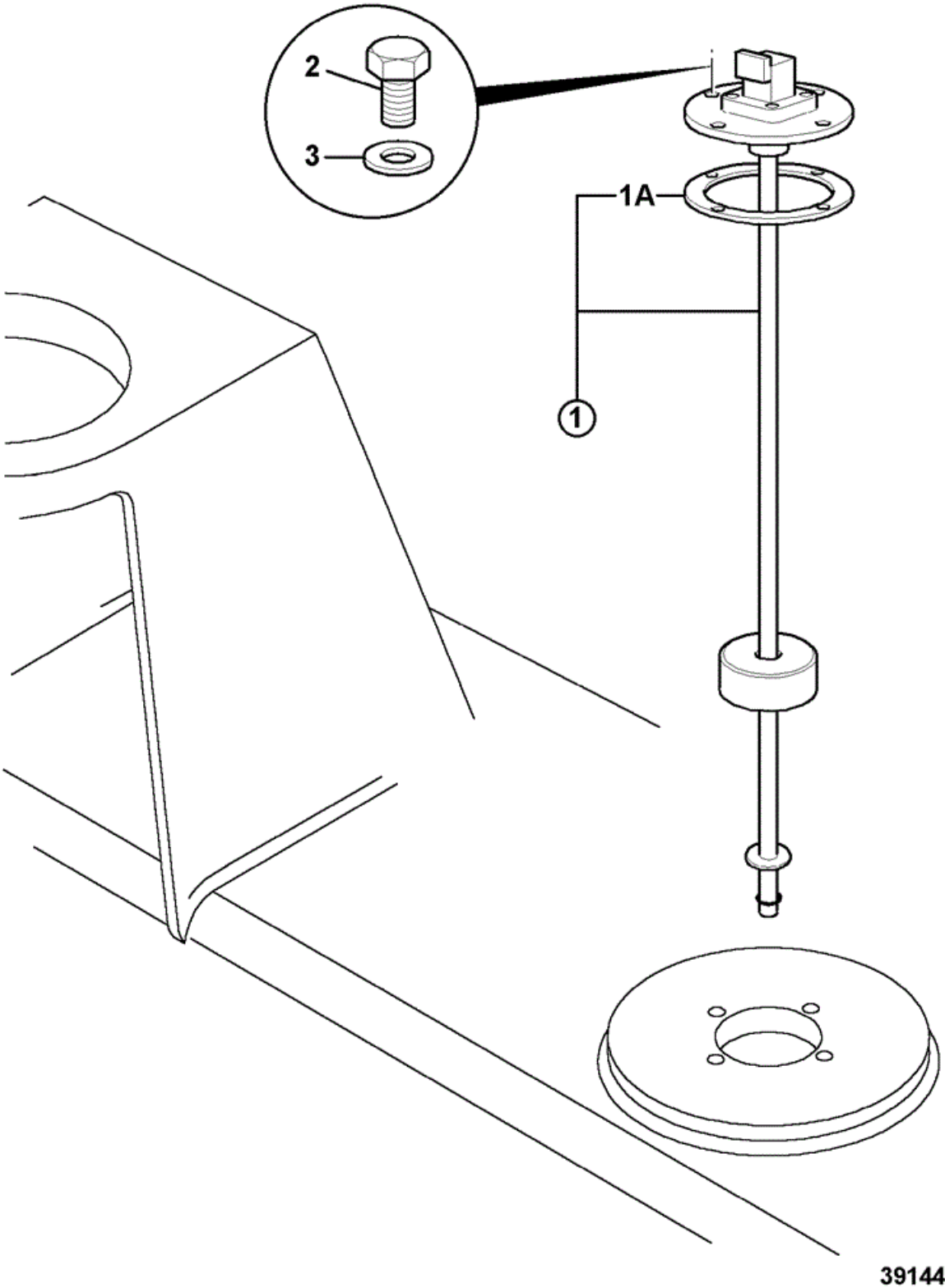

Item	Part No	Change No	Description	Usage Code	QTY

1	704/50086		Fuel Sender Unit		1
1A	:813/10225	Superseded	Gasket		1
1A	:333/R6888		Gasket Viton		1
2	1315/0103D		Setscrew M5 x 16mm		4
3	1420/0005D		Washer (M5)		4

Applicability Date Ranges:
From: , To: 01/04/2012

Product Catalog\WHEELED LOADERS\416 01243000-01243499,01317500-01317999,01472000-01472999,02095872-02095875 9812/3020 \B BODYWORK, CAB, LOADER END\B01 BODYWORK/FRAME\B1-9-2 FUEL SENDER INSTALLATION

9812/3020 B1-9-2 FUEL SENDER INSTALLATION

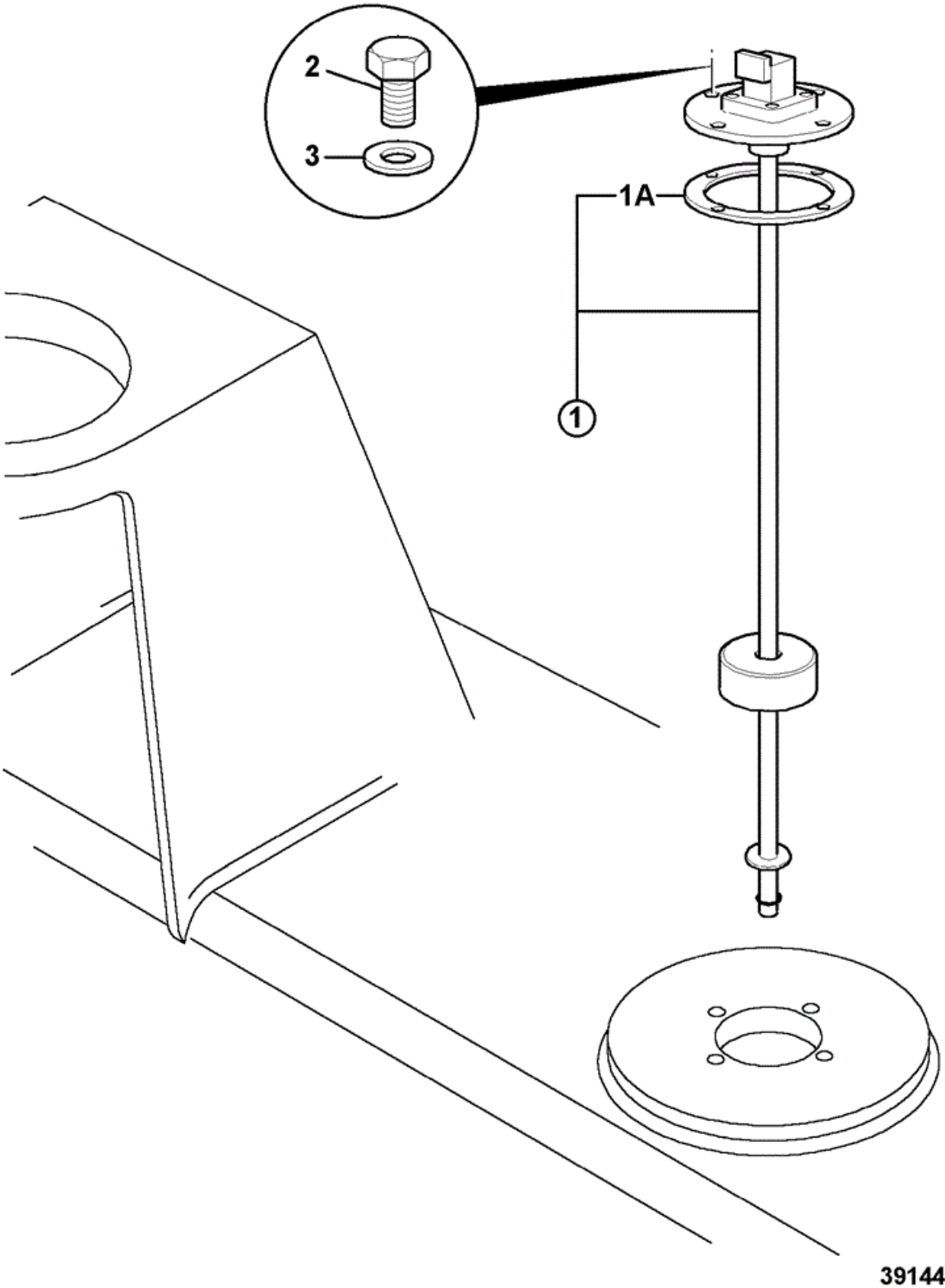

Item	Part No	Change No	Description	Usage Code	QTY

1	333/T5214	to 08/04/2014	Sender fuel		1
1	334/T9238		Sender fuel		1
1A	:333/R6888		Gasket Viton		1
2	1315/0103D		Setscrew M5 x 16mm		4
3	1420/0005D		Washer (M5)		4

Applicability Date Ranges:
From: 02/04/2012 , To:

Product Catalog\WHEELED LOADERS\416 01243000-01243499,01317500-01317999,01472000-01472999,02095872-02095875 9812/3020 \B BODYWORK, CAB, LOADER END\B01 BODYWORK/FRAME\B1-10-1 REAR GRILLE

9812/3020 B1-10-1 REAR GRILLE

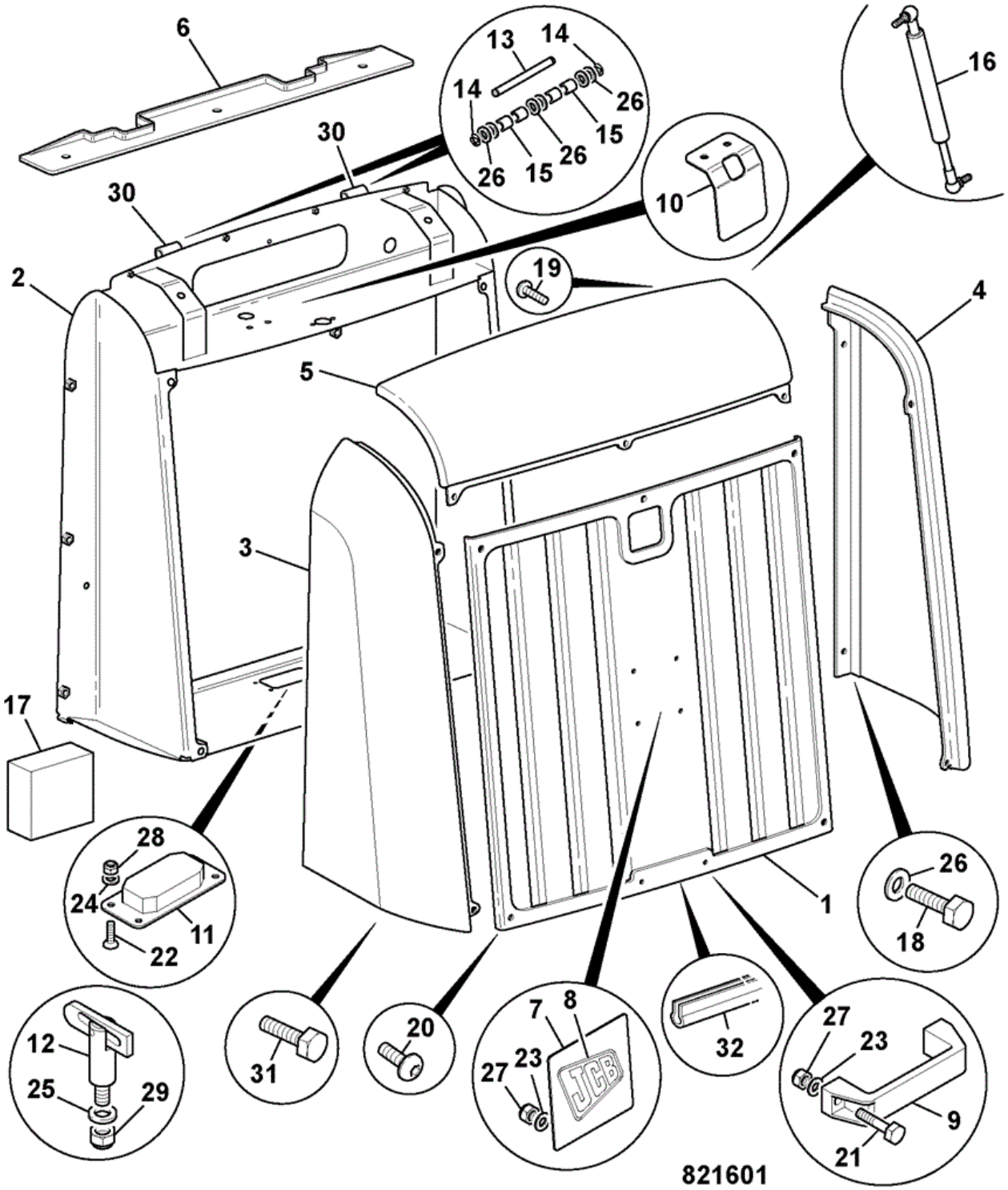

Item	Part No	Change No	Description	Usage Code	QTY
1	335/11734		Panel rear grille		1
2	335/12481	Superseded	Frame rear grille		1

2	335/13784	to APR09	Frame rear grille		1
2	332/V1915		Frame rear grille		1
3	346/00414		Grille surround left side		1
4	346/00415		Grille surround right side		1
5	346/00416		Grille surround upper		1
6	346/00419		Trim sealing strip		1
7	335/08763		Plate		1
8	817/19787		Decal JCB		1
9	162/00643		Handle Plastic M6		1
10	331/48126		Plate Blanking		1
11	331/48328		Handle		1
12	259/80601		Latch		1
13	265/01819		Pin Hinge		2
14	821/00492		Circlip E Series		4
15	265/01843		Bearing Oilite		8
16	265/00660		Strut gas 560N		2
17	265/01692		Block foam support No longer fitted		2
18	826/01616		Screw M10 x 25mm		6
19	826/11127		Bolt M5 Button Head		7
20	826/10881		Bolt M8 x 40 LG		5
21	1315/0108D		Screw M5x30		2
22	1315/0205D		Setscrew M6 x 20		2
23	1420/0005D		Washer (M5)		12
24	1420/0006D		Washer (M6)		4
25	1420/0007D		Washer (M8)		23
26	1420/0008D		Washer (M10)		12
27	1370/0003D		Nut Lock M5		10
28	1370/0103D		Nut (M6)		2
29	1370/0203D		Nut Lock M8		9
30	335/12306		Hinge		2
31	1315/0301D		Setscrew M8 x 12mm		4
32	926/12700		Seal Rubber 1400mm long on bottom edge		0
32	926/07800		Seal Rubber, Window/Door Replaces 926/12700, 1400mm long		0

Applicability Date Ranges:
From: , To:

Product Catalog\WHEELED LOADERS\416 01243000-01243499,01317500-01317999,01472000-01472999,02095872-02095875 9812/3020 \B BODYWORK, CAB, LOADER END\B01 BODYWORK/FRAME\B1-11-1 CONDENSER INSTALLATION

9812/3020 B1-11-1 CONDENSER INSTALLATION

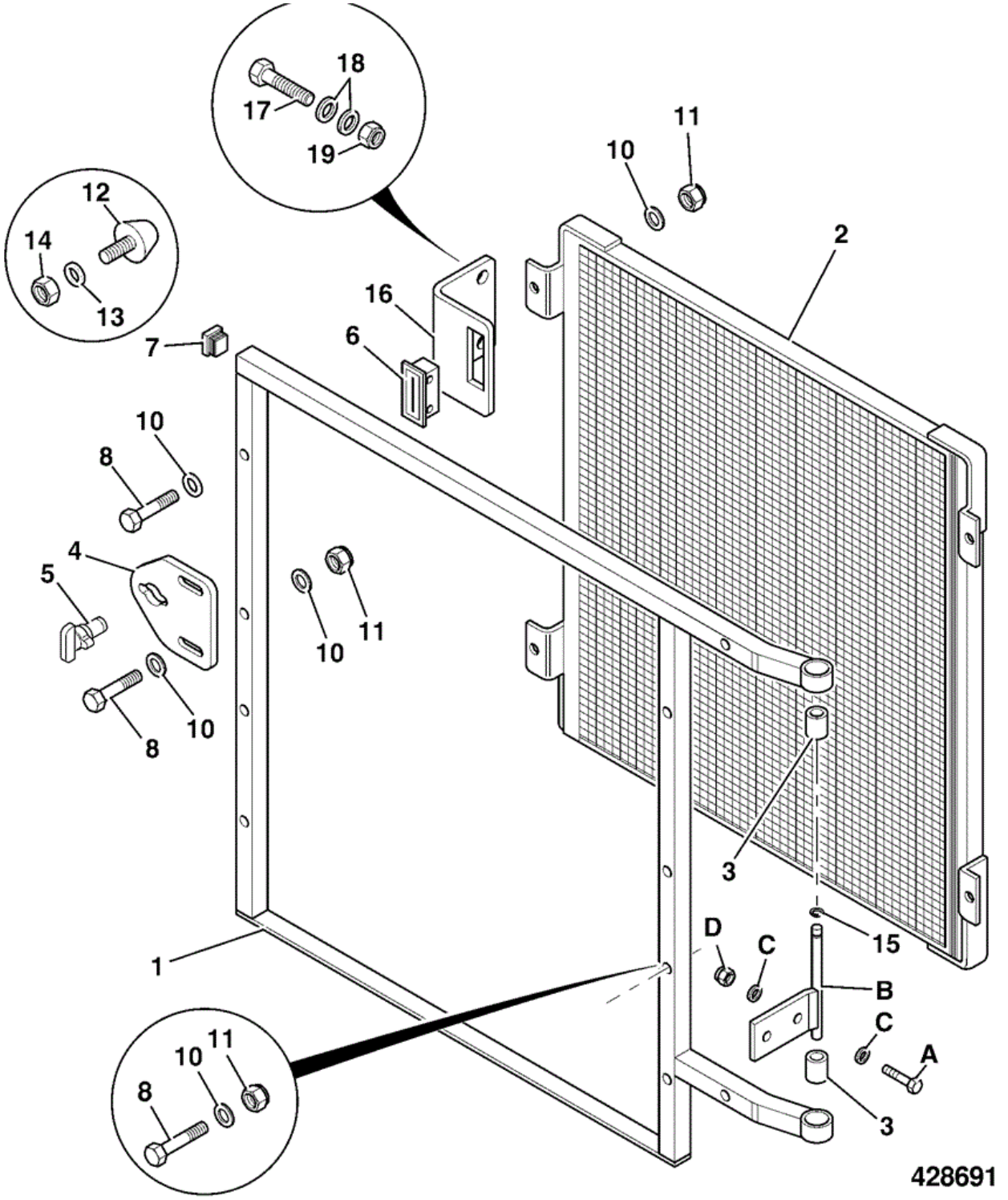

Item	Part No	Change No	Description	Usage Code	QTY
A	1315/0407D		Setscrew M10 x 25		4
B	335/03575		Hinge		2

C	1420/0008D		Washer (M10)		8
D	1370/0303D		Nut Self Lock M10		4
1	268/30160		Frame condenser		1
2	30/916900		Condenser		1
2	265/02481		Condenser epoxy		1
3	265/01843		Bearing Oilite		2
4	265/02179		Catch mounting		1
5	826/10532		Fastener 1/4 turn		1
6	478/00288		Retainer		1
7	835/00172		Plug		2
8	1315/0210D		Setscrew M6 x 40mm		6
10	1420/0006D		Washer (M6)		12
11	1370/0103D		Nut (M6)		6
12	478/02306		Buffer Stop		1
13	1412/0002D		Washer (5/16" Large)		2
14	1370/0203D		Nut Lock M8		1
15	821/00492		Circlip E Series		2
16	331/30771		Plate latch mounting		1
17	1315/0303D		Setscrew M8 x 16mm		3
18	1420/0007D		Washer (M8)		8
19	1370/0203D		Nut Lock M8		5

Applicability Date Ranges:
From: , To: 23/01/2011

Product Catalog\WHEELED LOADERS\416 01243000-01243499,01317500-01317999,01472000-01472999,02095872-02095875 9812/3020 \B BODYWORK, CAB, LOADER END\B01 BODYWORK/FRAME\B1-11-2 CONDENSER INSTALLATION

9812/3020 B1-11-2 CONDENSER INSTALLATION

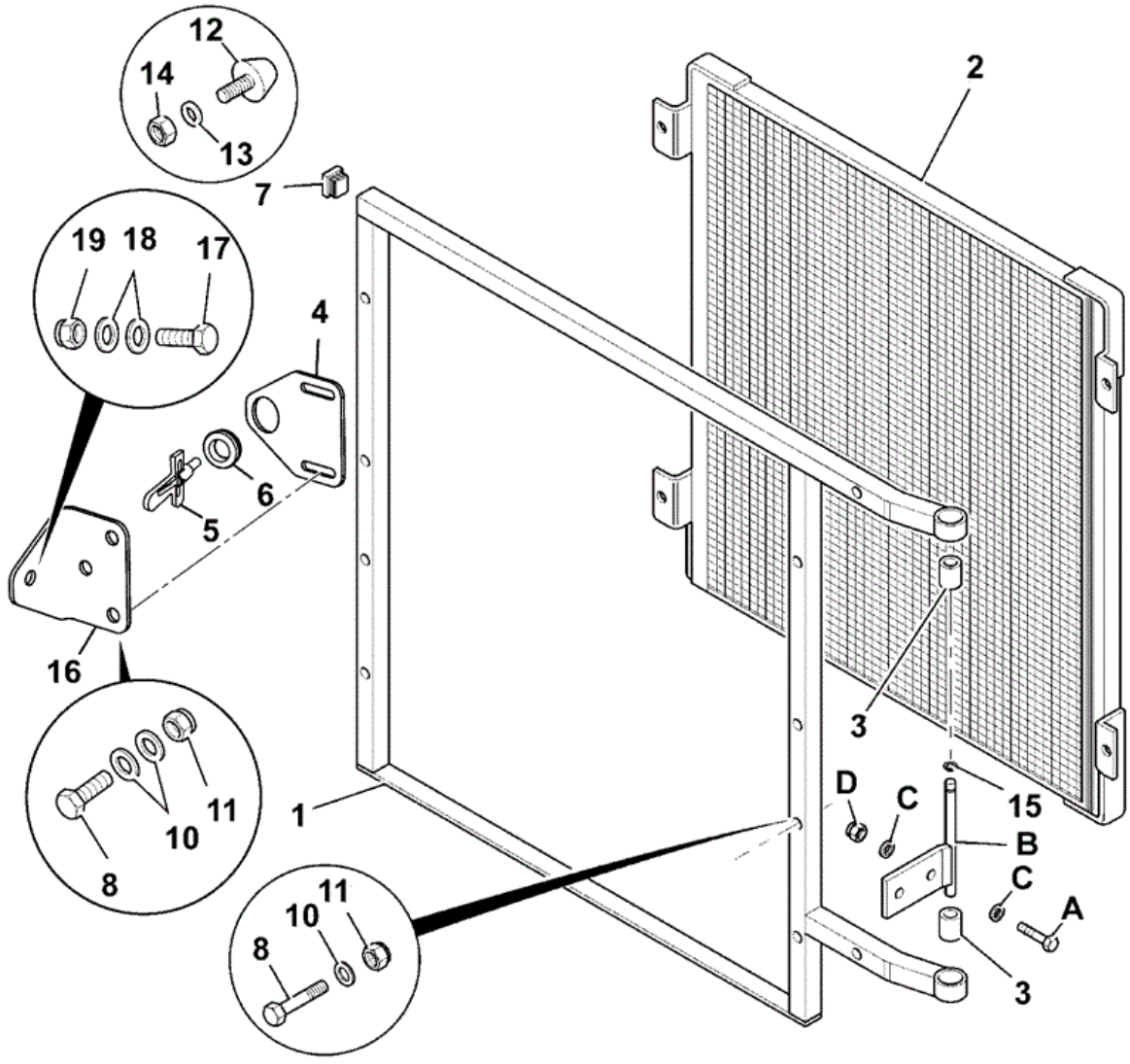

Item	Part No	Change No	Description	Usage Code	QTY
A	1315/0407D		Setscrew M10 x 25		4
B	335/03575		Hinge		2

C	1420/0008D		Washer (M10)		8
D	1370/0303D		Nut Self Lock M10		4
1	268/30160		Frame condenser		1
2	30/916900		Condenser		1
2	265/02481		Condenser epoxy		1
3	265/01843		Bearing Oilite		2
4	333/R7249		Bracket		1
5	259/80601		Latch		1
6	2410/0111		Grommet		1
7	835/00172		Plug		2
8	1315/0210D		Setscrew M6 x 40mm		6
10	1420/0006D		Washer (M6)		12
11	1370/0103D		Nut (M6)		6
12	478/02306		Buffer Stop		1
13	1412/0002D		Washer (5/16" Large)		2
14	1370/0203D		Nut Lock M8		1
15	821/00492		Circlip E Series		2
16	333/R7241		Bracket latch		1
17	1315/0303D		Setscrew M8 x 16mm		3
18	1420/0007D		Washer (M8)		8
19	1370/0203D		Nut Lock M8		5
26	821/00165		Clamp 25.4mm/20mm holes 42mm high		2
27	821/00443		Plate Cover		1
28	1315/3318D		Bolt M8 x 80mm		1
29	1370/0203D		Nut Lock M8		1
30	1420/0007D		Washer (M8)		2

Applicability Date Ranges:
From: 24/01/2011 , To:

Product Catalog\WHEELED LOADERS\416 01243000-01243499,01317500-01317999,01472000-01472999,02095872-02095875 9812/3020 \B BODYWORK, CAB, LOADER END\B01 BODYWORK/FRAME\B1-12-1 FENDERS FRONT & REAR

9812/3020 B1-12-1 FENDERS FRONT & REAR

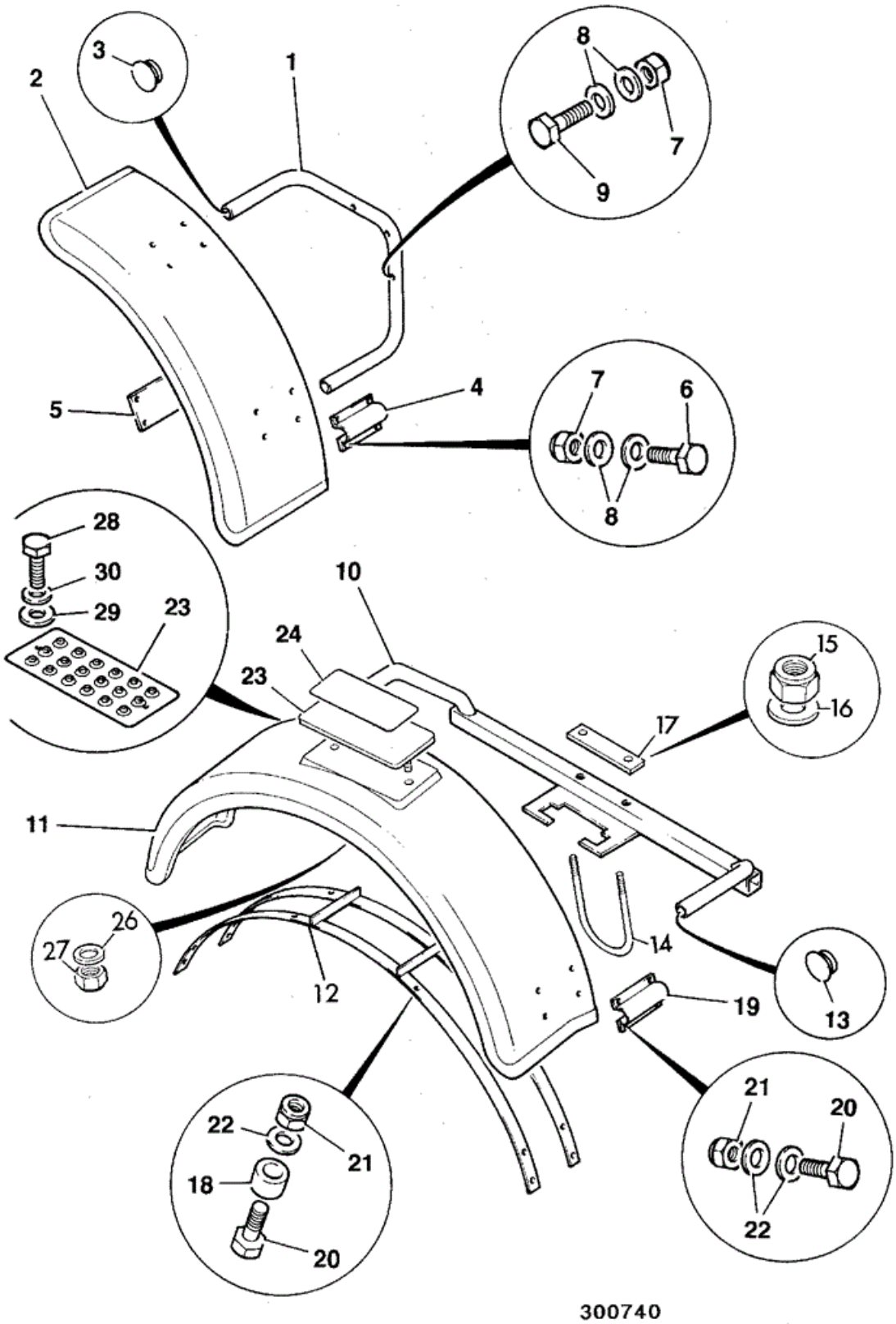

Item	Part No	Change No	Description	Usage Code	QTY

1	265/00449		Tube mounting front fender		2
2	331/58248		Fender front, 385mm wide textured finish 17.5R25 tyres		2
2	331/58238		Fender front LH,short textured finish 460/70R24 & 500/70R24 tyres		1
2	331/58240		Fender front RH,short textured finish 460/70R24 & 500/70R24 tyres		1
3	835/10035		Plug Black Plastic		4
4	265/00532		Plate saddle		4
4A	926/06300		Strip 2 pieces approx 120mm long per bracket		0
5	265/00533		Plate back		4
6	1315/0407Z		Setscrew M10 x 25 mm		16
7	1370/0303Z		Nut lock M10		22
8	1420/0008Z		Washer (M10)		44
9	1315/3415Z		Bolt (M10 x 65)		6
10	268/10083	to 06/09/2011	Mounting rear fender		2
10	333/T6020	to 17/01/2012	Mounting rear fender		2
10	333/T4124		Mounting rear fender		2
11	331/58249		Fender rear textured finish 17.5R25 tyres		2
11	331/58239		Fender rear,short textured finish 17.5R25 tyres		2
12	268/10032		Bracket mounting fender		2
13	835/10035		Plug Black Plastic		4
14	826/01469	to 10/06/2012	Bolt 'U' M20		2
14	333/U8621		Bolt "U" M20 (95mm radius)		2
15	1370/0703Z		Nut LOCK NUT (M20)		4
16	1420/0012Z		Washer M20		4
17	265/00527		Plate clamp		4
18	476/25007		Spacer		8
19	265/00532		Plate saddle		4
19A	926/06300		Strip 2 pieces approx 120mm long per bracket		0
20	1315/0408Z		Setscrew M10 x 30		24
21	1370/0303Z		Nut lock M10		24
22	1420/0008Z		Washer (M10)		40
23	331/33133	Superseded	Plate tread, fender	A	2
23	332/V5118		Plate tread fender	B	2
24	****		'See Remark' No longer fitted		1

26	1420/0006Z		Washer (M6)		6
27	1370/0103Z		Nut Self Lock M6		6
28	826/00902		Capscrew Button Head M6 x 20	A,B	6
29	823/00198		Washer Nylon	A	6
30	1410/0001Z		Washer (1/4")	A	6
32	9814/0194		Kit fitting instruction rear fender		1

Applicability Date Ranges:
From: , To:

Product Catalog\WHEELED LOADERS\416 01243000-01243499,01317500-01317999,01472000-01472999,02095872-02095875 9812/3020 \B BODYWORK, CAB, LOADER END\B01 BODYWORK/FRAME\B1-12-2 FENDERS FRONT & REAR SCANDINAVIAN MARKETS

9812/3020 B1-12-2 FENDERS FRONT & REAR SCANDINAVIAN MARKETS

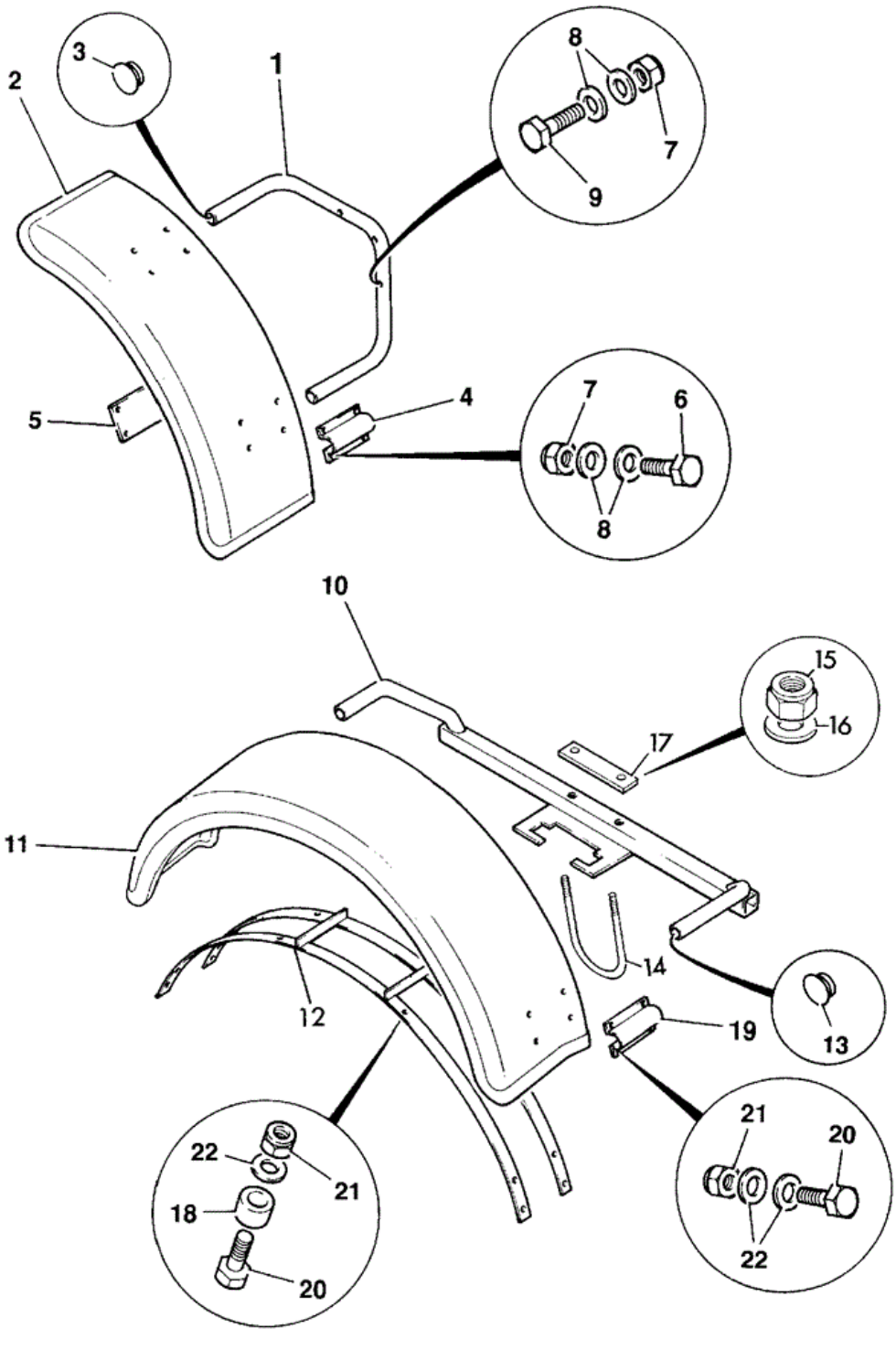

Item	Part No	Change No	Description	Usage Code	QTY
1	830/12276		Tube mounting front fender		2
			Fender front LH		

2	331/45738		Left hand		1
2A	331/45740		Fender front RH Right hand		1
3	835/10035		Plug Black Plastic		4
4	265/00532		Plate saddle		4
4A	926/06300		Strip 2 pieces approx 120mm long per bracket		0
5	265/00533		Plate back		4
6	1315/0407D		Setscrew M10 x 25		16
7	1370/0303D		Nut Self Lock M10		22
8	1420/0008D		Washer (M10)		44
9	1315/3415D		Bolt M10x65		6
10	335/07937		Mounting rear fender LH & RH mounting		2
11	331/45733		Fender rear		2
12	335/07677		Bracket mounting rear fender		2
13	835/10035		Plug Black Plastic		4
14	826/01469	to 10/06/2012	Bolt 'U' M20		2
14	333/U8621		Bolt "U" M20 (95mm radius)		2
15	1370/0703D		Nut M20, 2.5 pitch		4
16	1420/0012D		Washer Plain M20		4
17	265/00527		Plate clamp		4
18	476/25007		Spacer		8
19	265/00532		Plate saddle		4
19A	926/06300		Strip 2 pieces approx 120mm long per bracket		0
20	1315/0408D		Setscrew M10 x 30		24
21	1370/0303D		Nut Self Lock M10		24
22	1420/0008D		Washer (M10)		40

Applicability Date Ranges:
From: , To:

Product Catalog\WHEELED LOADERS\416 01243000-01243499,01317500-01317999,01472000-01472999,02095872-02095875 9812/3020 \B BODYWORK, CAB, LOADER END\B01 BODYWORK/FRAME\B1-12-10 FENDERS REAR 460 AND 500 TYRE OPTIONS

9812/3020 B1-12-10 FENDERS REAR 460 AND 500 TYRE OPTIONS

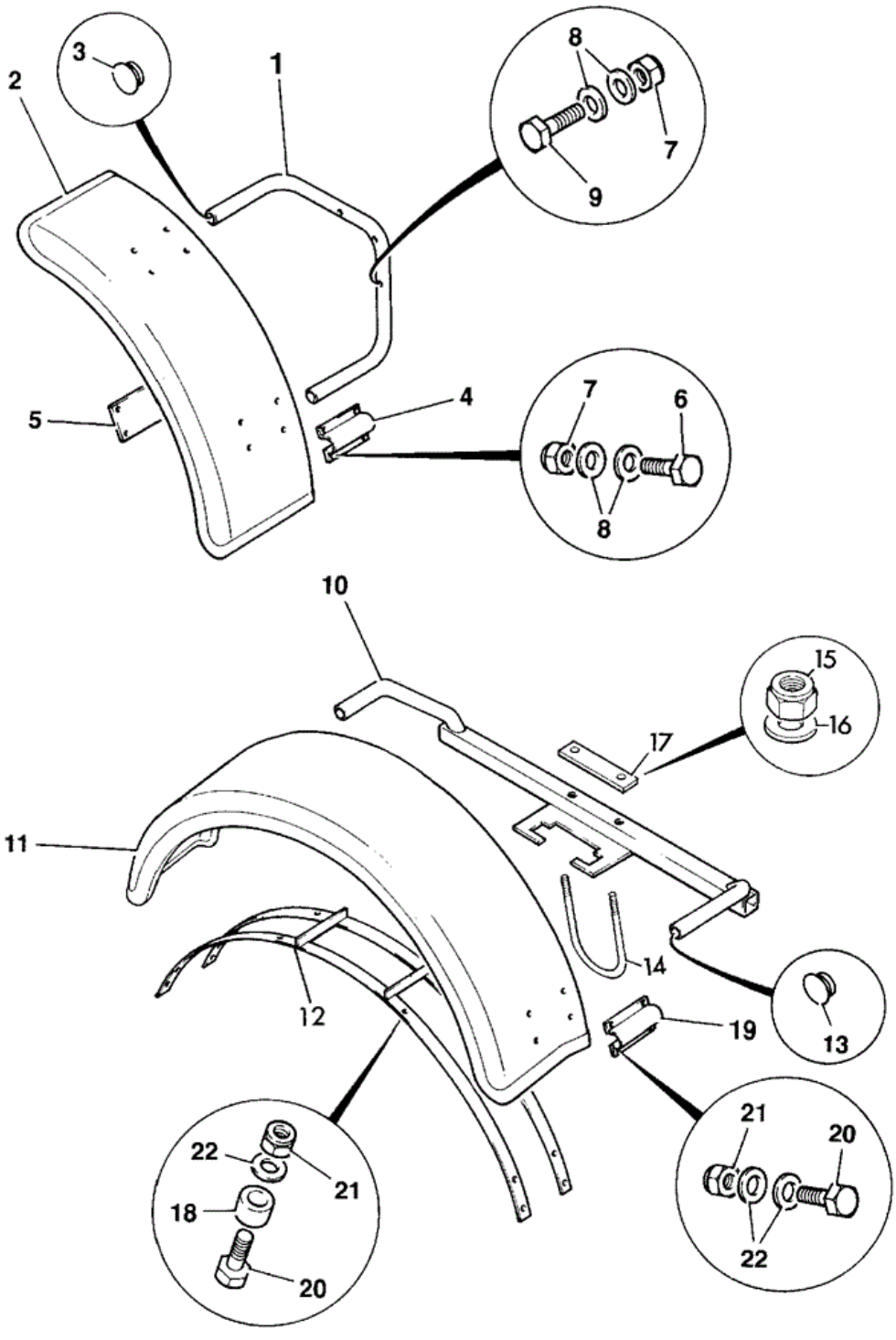

Item	Part No	Change No	Description	Usage Code	QTY
10	333/T4362		Mounting rear fender		2
11	333/S1167		Fender rear		2

12	335/07677		Bracket mounting rear fender		2
13	835/10035		Plug Black Plastic		4
14	826/01469	to 10/06/2012	Bolt 'U' M20		2
14	333/U8621		Bolt "U" M20 (95mm radius)		2
15	1370/0703D		Nut M20, 2.5 pitch		4
16	1420/0012D		Washer Plain M20		4
17	265/00527		Plate clamp		2
18	476/25007		Spacer		8
19	265/00532		Plate saddle		4
20	1315/0408D		Setscrew M10 x 30		24
21	1370/0303D		Nut Self Lock M10		24
22	1420/0008D		Washer (M10)		40
23	926/06304		Strip sealing, foam 2 pieces approx. 120mm long per bracket item 19		8

Applicability Date Ranges:
From: , To:

Product Catalog\WHEELED LOADERS\416 01243000-01243499,01317500-01317999,01472000-01472999,02095872-02095875 9812/3020 \B BODYWORK, CAB, LOADER END\B01 BODYWORK/FRAME\B1-12-20 FENDERS FRONT PARLOCK

9812/3020 B1-12-20 FENDERS FRONT PARLOCK

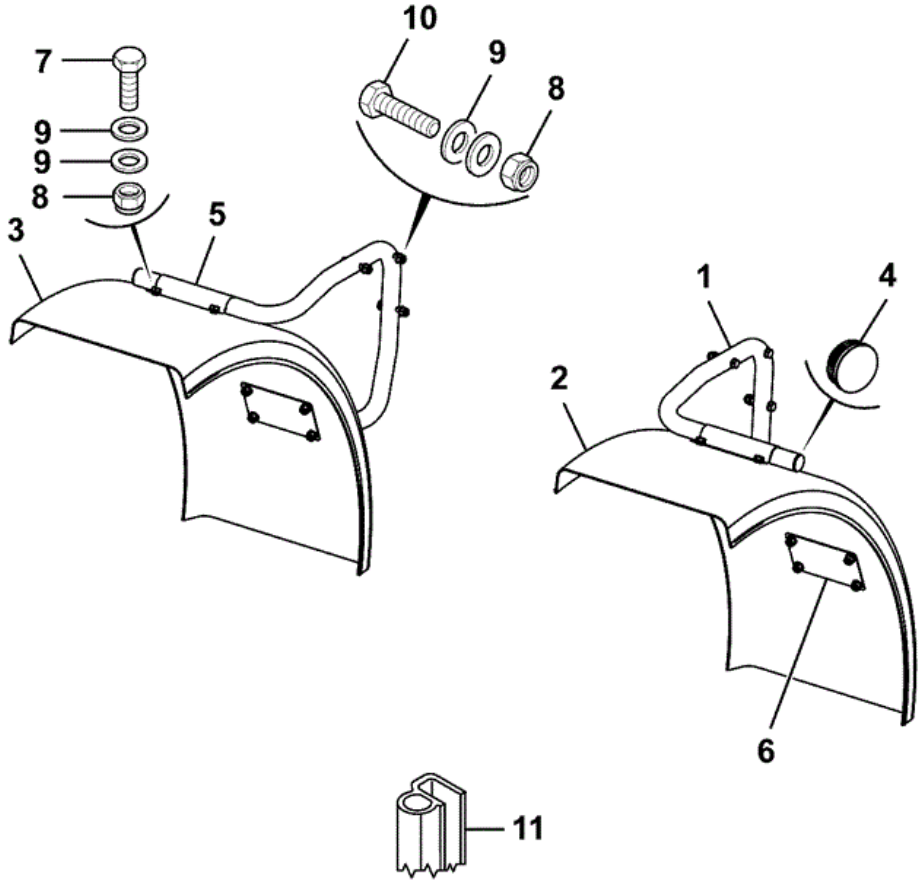

269-11043-3

Item	Part No	Change No	Description	Usage Code	QTY
1	333/S1910		Mounting front fender		2
2	331/45738		Fender front LH		1

3	331/45740		Fender front RH		1
4	835/10035		Plug Black Plastic		4
5	265/00532		Plate saddle		4
6	265/00533		Plate back		4
7	1315/0407D		Setscrew M10 x 25		16
8	1370/0303D		Nut Self Lock M10		22
9	1420/0008D		Washer (M10)		44
10	1315/3415D		Bolt M10x65		6
11	926/06304		Strip sealing, foam		8

Applicability Date Ranges:
From: , To:

Product Catalog\WHEELED LOADERS\416 01243000-01243499,01317500-01317999,01472000-01472999,02095872-02095875 9812/3020 \B BODYWORK, CAB, LOADER END\B01 BODYWORK/FRAME\B1-12-30 FENDERS REAR PARLOCK

9812/3020 B1-12-30 FENDERS REAR PARLOCK

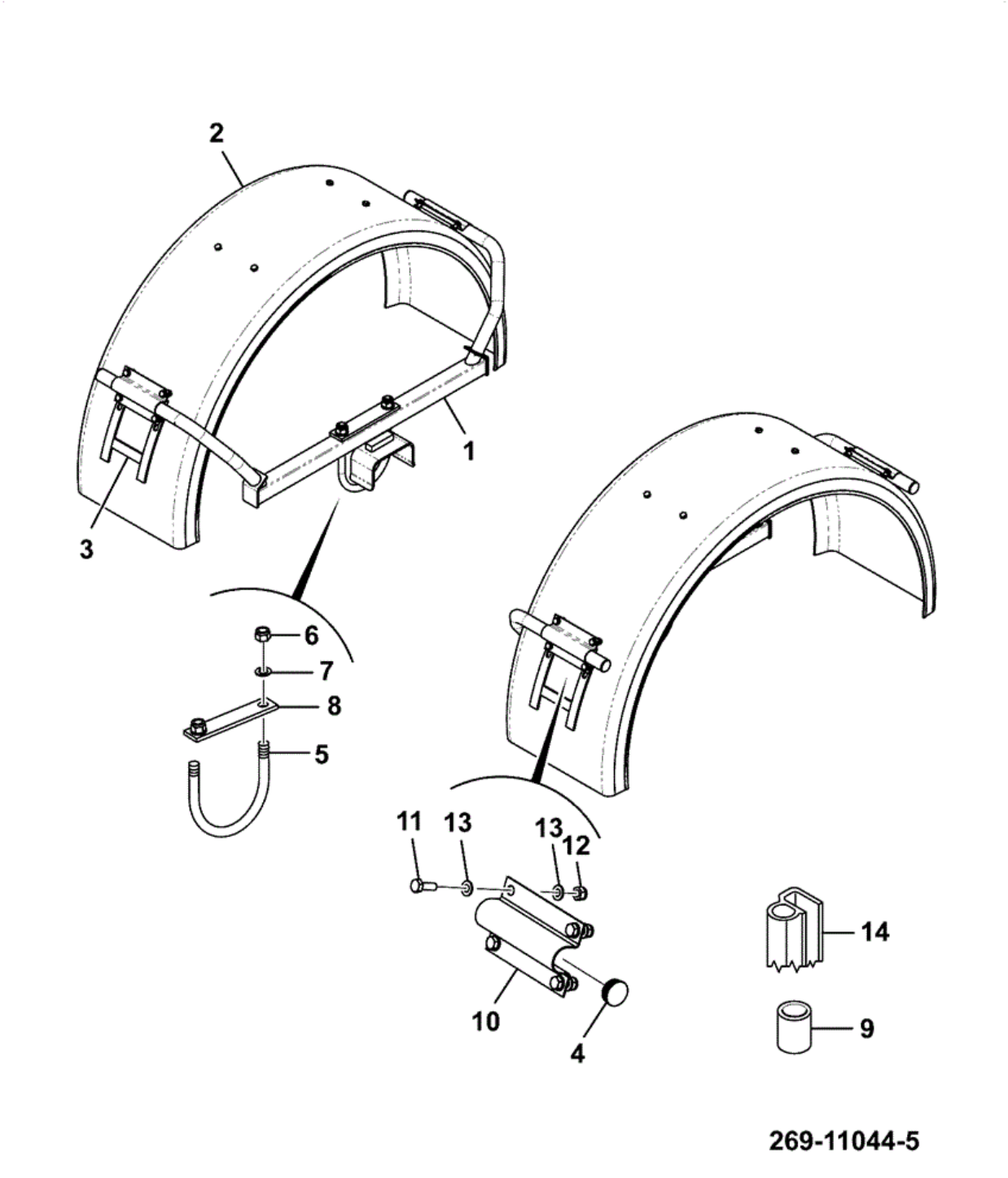

Item	Part No	Change No	Description	Usage Code	QTY
1	333/T4362		Mounting rear fender		2
2	331/45733		Fender rear		2

3	335/07677		Bracket mounting rear fender		2
4	835/10035		Plug Black Plastic		4
5	333/U8621		Bolt "U" M20 (95mm radius)		2
6	1370/0703D		Nut M20, 2.5 pitch		4
7	1420/0012D		Washer Plain M20		4
8	265/00527		Plate clamp		2
9	476/25007		Spacer		8
10	265/00532		Plate saddle		4
11	1315/0408D		Setscrew M10 x 30		24
12	1370/0303D		Nut Self Lock M10		24
13	1420/0008D		Washer (M10)		40
14	926/06304		Strip sealing, foam		8

Applicability Date Ranges:
From: , To:

Product Catalog\WHEELED LOADERS\416 01243000-01243499,01317500-01317999,01472000-01472999,02095872-02095875 9812/3020 \B BODYWORK, CAB, LOADER END\B01 BODYWORK/FRAME\B1-13-1 SOUND PROOFING ENGINE COVER

9812/3020 B1-13-1 SOUND PROOFING ENGINE COVER

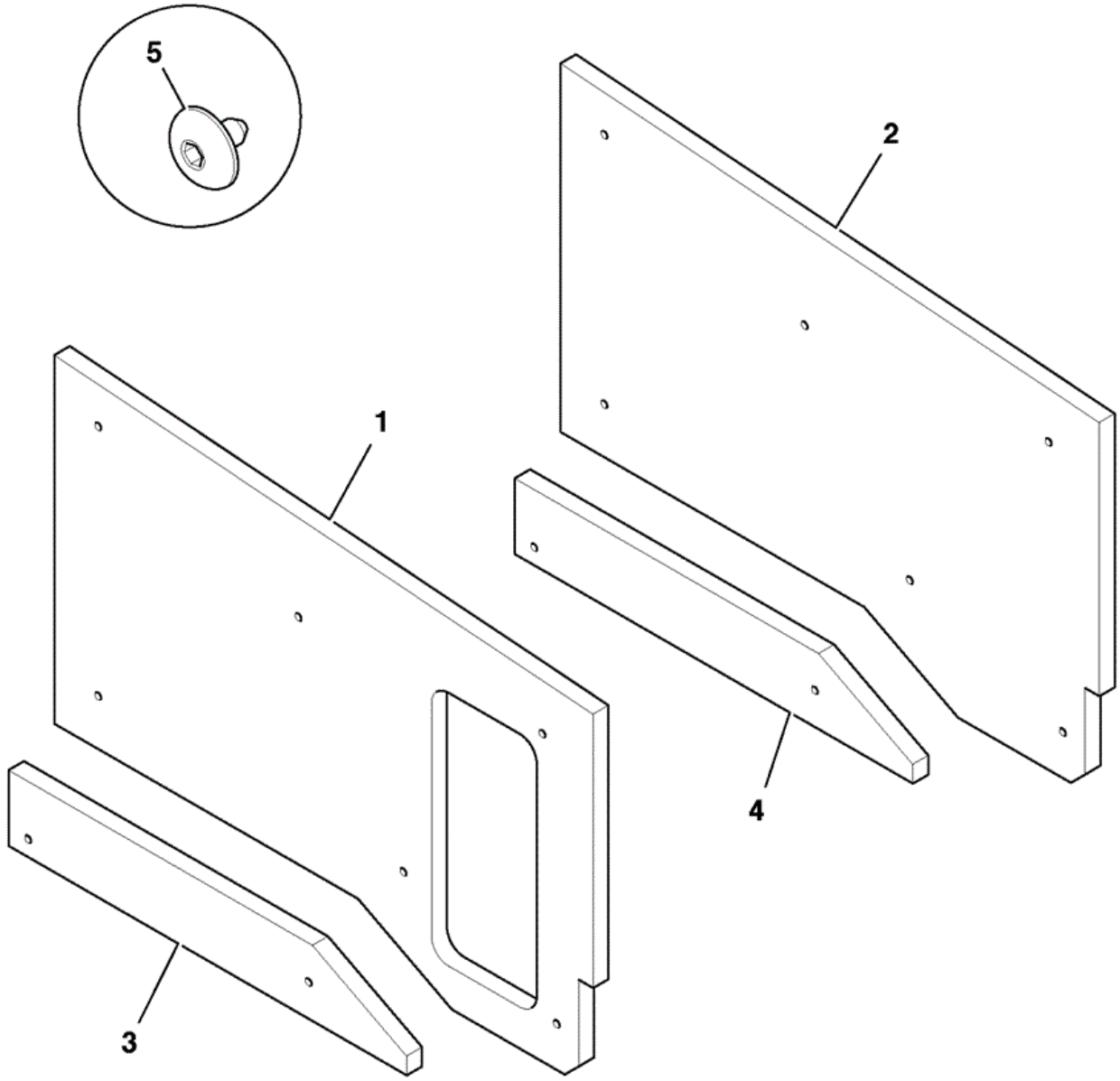

821492

Item	Part No	Change No	Description	Usage Code	QTY
1	331/61759		Panel soundproofing LH door		1
2	331/61264		Panel soundproofing RH door		1

3	331/61265		Panel soundproofing LH lower fixed panel		1
4	331/61266		Panel soundproofing RH lower fixed panel		1
5	826/01308		Button Fastener		16

Applicability Date Ranges:
From: , To: OCT09

Product Catalog\WHEELED LOADERS\416 01243000-01243499,01317500-01317999,01472000-01472999,02095872-02095875 9812/3020 \B BODYWORK, CAB, LOADER END\B01 BODYWORK/FRAME\B1-13-2 SOUND PROOFING ENGINE COVER

9812/3020 B1-13-2 SOUND PROOFING ENGINE COVER

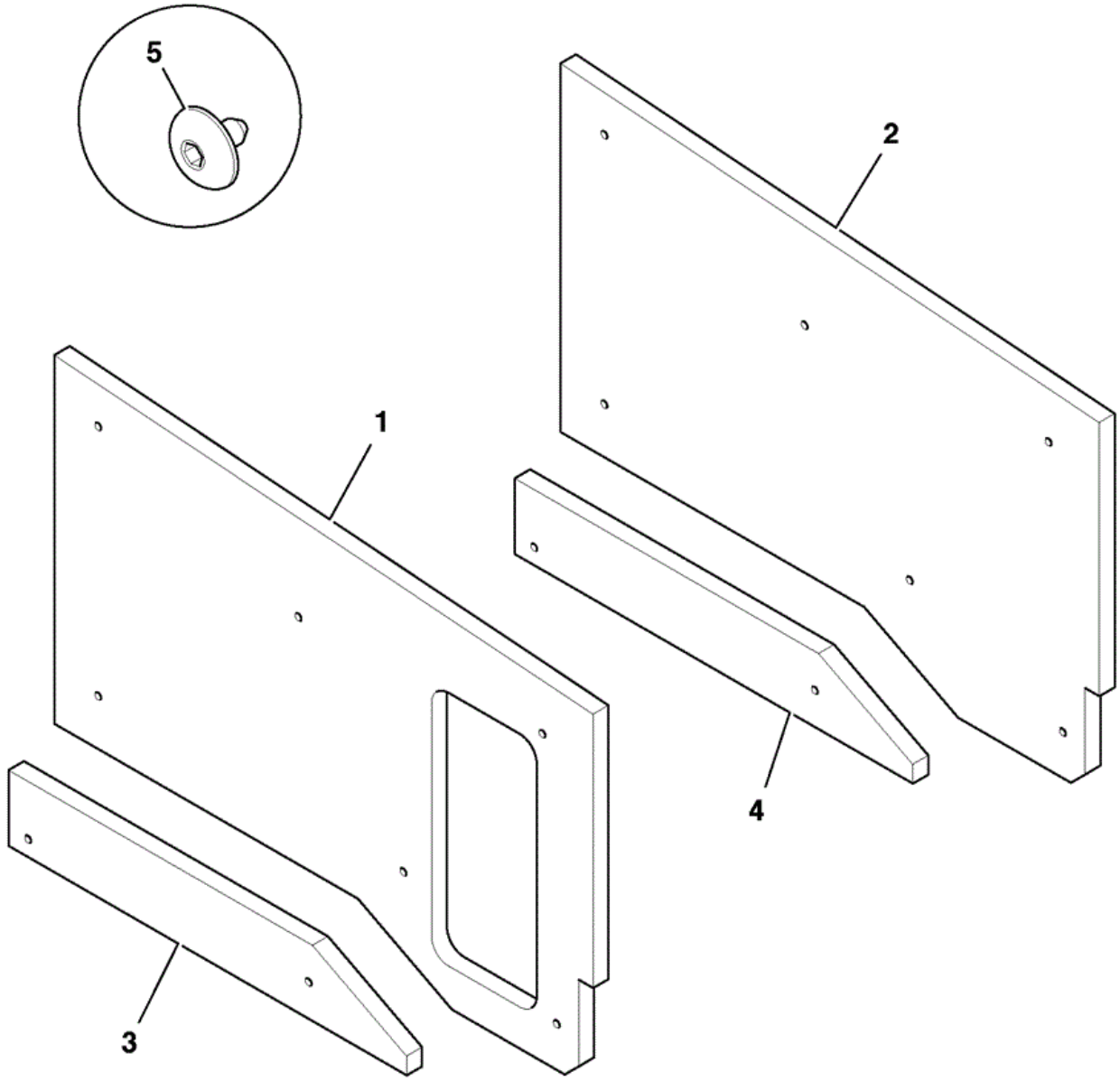

821492

Item	Part No	Change No	Description	Usage Code	QTY
A	332/W4504		Kit soundproofing ABI		1
1	:332/W4507		Panel soundproofing LH door		1

2	:332/W4506		Panel soundproofing RH door		1
3	:332/W4510		Panel soundproofing LH lower fixed panel		1
4	:332/W4508		Panel soundproofing RH lower fixed panel		1
5	826/01308		Button Fastener		16

Applicability Date Ranges:
From: NOV09 , To:

9812/3020 B1-14-1 STEP/TOOLBOX

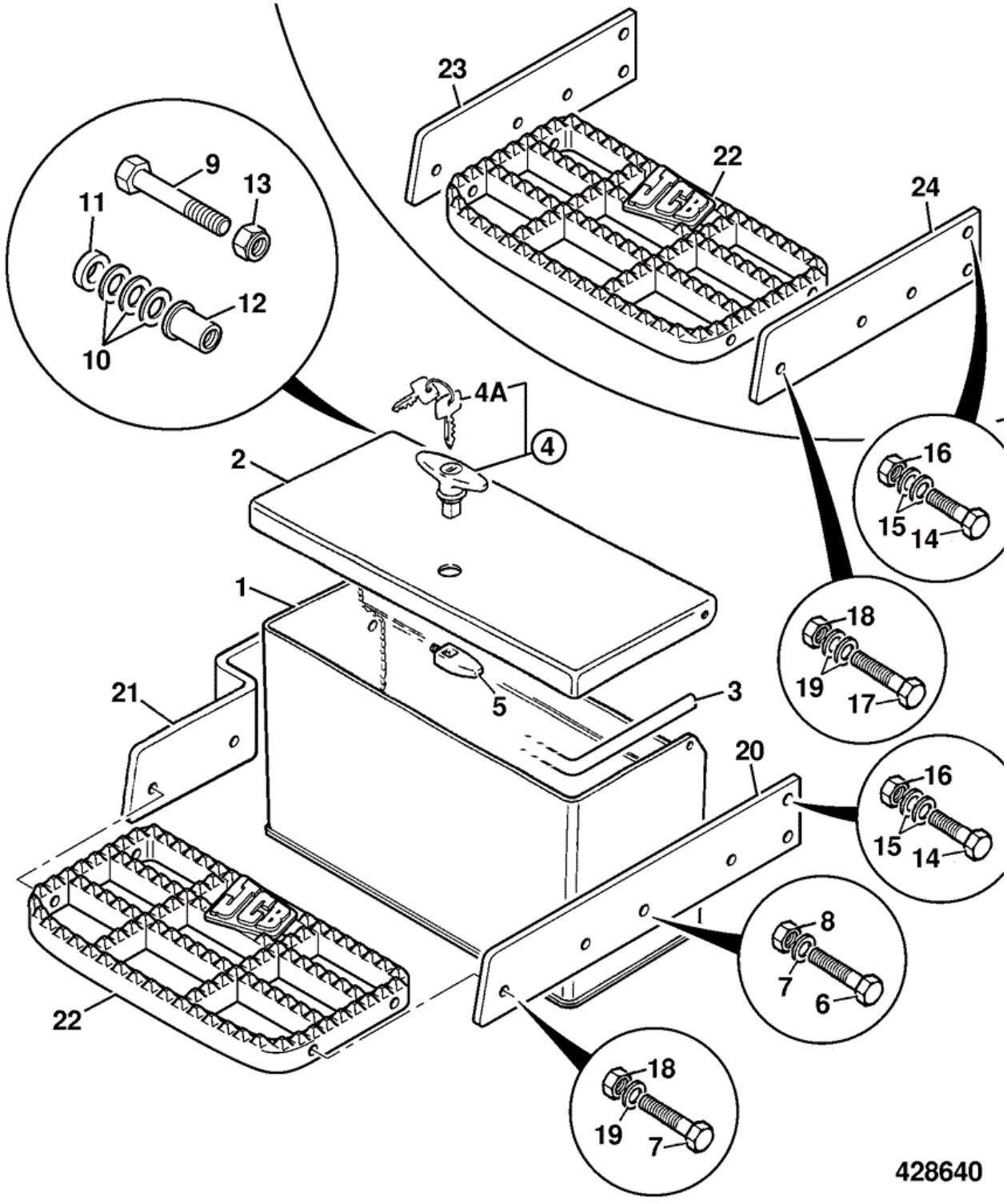

Item	Part No	Change No	Description	Usage Code	QTY
1	268/00237		Box tool		1
2	265/01850		Cover toolbox		1

3	926/04800		Strip Edging Approx. 1560mm		0
4	265/00392		Handle tee		1
4A	:264/24301		Key		1
5	264/37400		Latch		1
6	1315/0509D		Screw M12x35mm		4
7	1420/0009D		Washer (M12)		8
8	1370/0403D		Nut Lock M12		4
9	1315/0310D		Setscrew M8 x 40 mm		2
10	1420/0007D		Washer (M8)		6
11	823/00530	Superseded	Washer		2
11	123/06256		Spacer Steel 5mm Long		2
12	826/01103		Rivet nut M8		2
13	1370/0203D		Nut Lock M8		2
14	1315/0509D		Screw M12x35mm		4
15	1420/0009D		Washer (M12)		16
16	1370/0403D		Nut Lock M12		8
17	1315/3412D		Bolt M10 x 50		8
18	1370/0403D		Nut Lock M12		8
19	1420/0009D		Washer (M12)		16
20	331/34888	Superseded	Plate mounting		1
20	331/52854		Plate mounting		1
21	331/34887	Superseded	Bracket mounting		1
21	331/52855		Bracket mounting		1
22	331/22800		Step Metal Tread		2
22	331/42054		Step stainless steel Sales special 9851		2
23	331/28699	Superseded	Plate mounting, step		1
23	331/52856		Plate mounting		1
24	331/28699	Superseded	Plate mounting, step		1
24	331/52856		Plate mounting		1

Applicability Date Ranges:
From: , To:

Product Catalog\WHEELED LOADERS\416 01243000-01243499,01317500-01317999,01472000-01472999,02095872-02095875 9812/3020 \B BODYWORK, CAB, LOADER END\B01 BODYWORK/FRAME\B1-15-1 GUARDS REAR LIGHTS

9812/3020 B1-15-1 GUARDS REAR LIGHTS

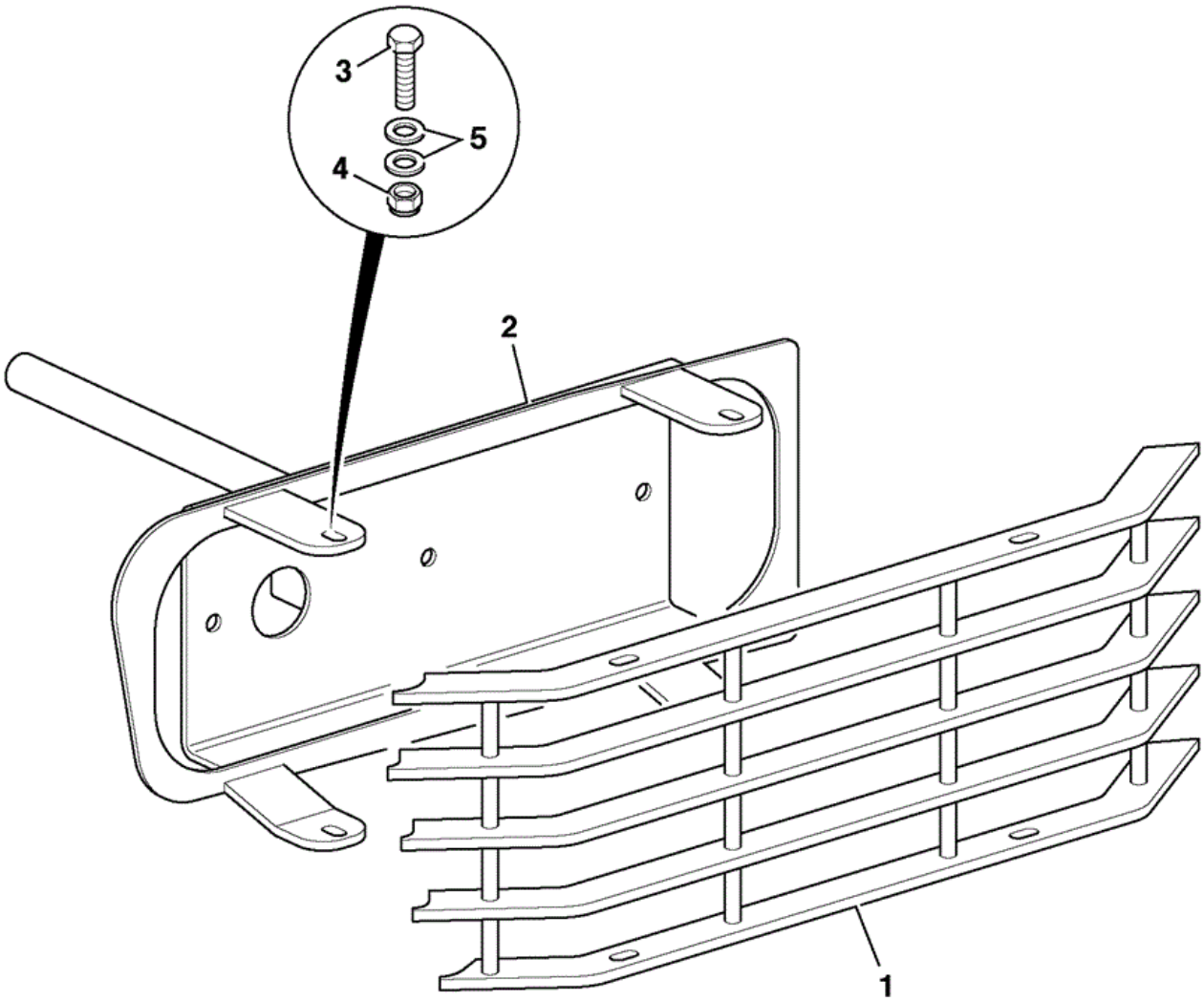

796770

Item	Part No	Change No	Description	Usage Code	QTY
1	335/12380	Superseded	Guard rear light LH		1
1	332/V7569		Guard rear light		1

1	335/12381	Superseded	Guard rear light RH		1
1	332/V7569		Guard rear light		1
2	335/12373		Bracket rear light LH		2
2	335/12374		Bracket rear light RH		1
3	1315/0207D		Setscrew M6 x 25mm		8
4	1370/0103D		Nut (M6)		8
5	1420/0006D		Washer (M6)		16

Note 1: Light guards must be matched as a pair

Applicability Date Ranges:
From: , To:

Product Catalog\WHEELED LOADERS\416 01243000-01243499,01317500-01317999,01472000-01472999,02095872-02095875 9812/3020 \B BODYWORK, CAB, LOADER END\B01 BODYWORK/FRAME\B1-16-1 GUARD, BELLY

9812/3020 B1-16-1 GUARD, BELLY

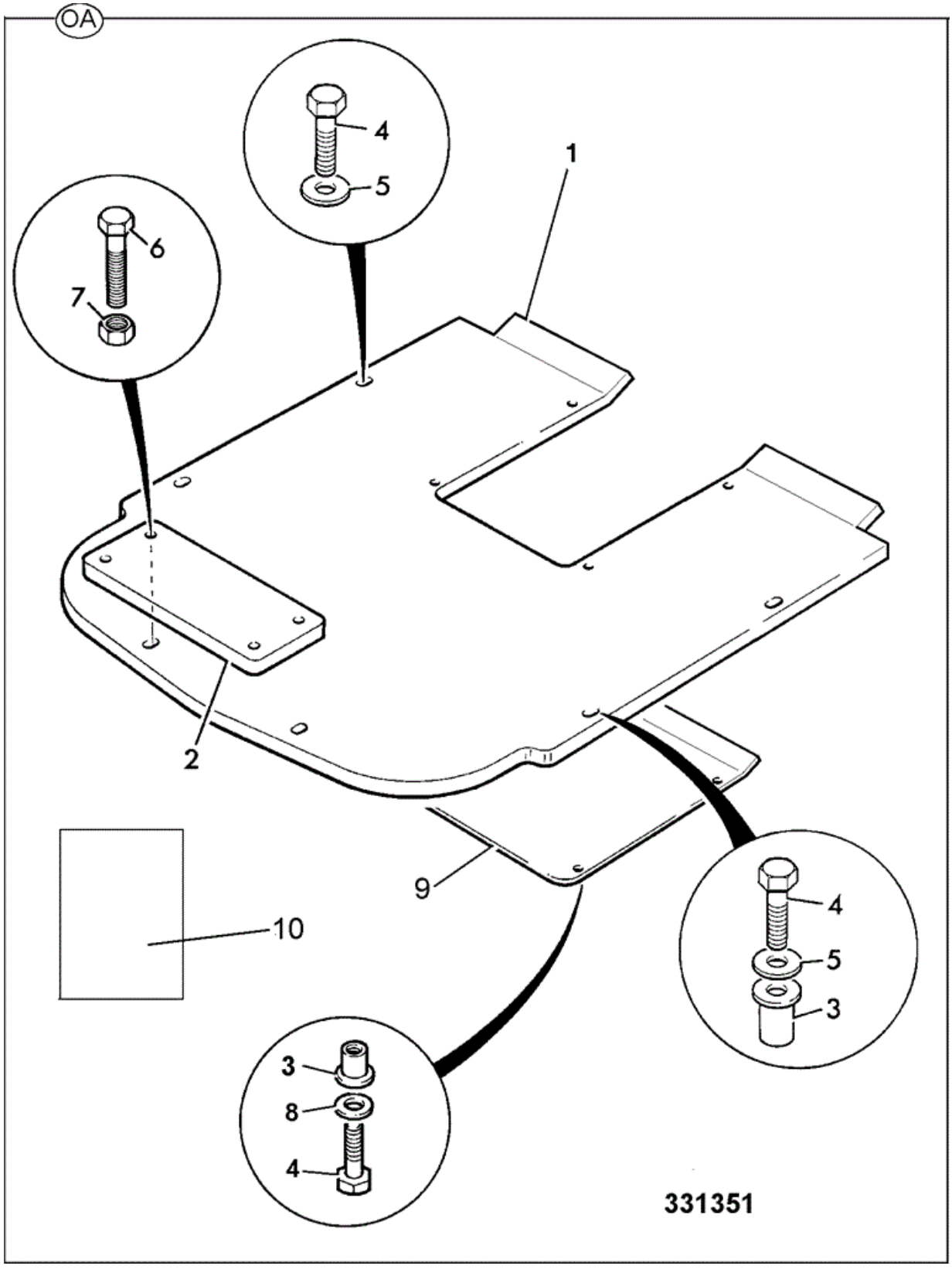

Item	Part No	Change No	Description	Usage Code	QTY

A	980/88792		Kit belly guard		1
1	:265/03037		Guard belly		1
2	:265/01280		Guard rear chassis		1
3	:826/01249		Nut Rrivet M10		10
4	:1315/0407D		Setscrew M10 x 25		10
5	:1412/0004D		Washer 7/16" Large		10
6	:1315/0510D		Setscrew M12 x 40mm		2
7	:1370/0403D		Nut Lock M12		2
8	:1420/0009D		Washer (M12)		4
9	:265/03038		Plate access		1
10	:9814/0190		Kit belly guard instruction		1

Applicability Date Ranges:
From: , To:

9812/3020 B1-17-1 COUNTERWEIGHT WITH TOW HITCH

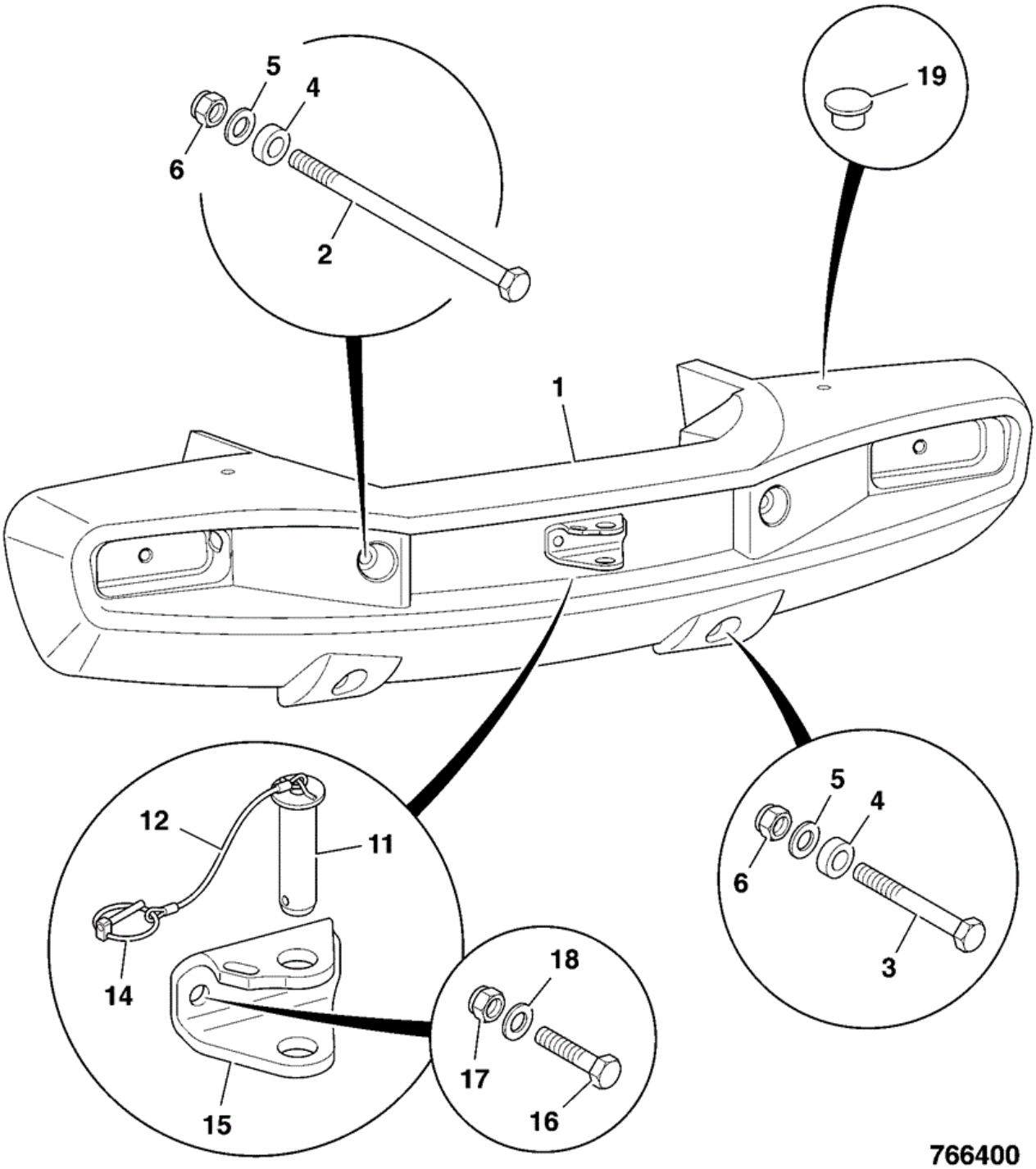

Item	Part No	Change No	Description	Usage Code	QTY
1	331/56855		Counterweight 1420KG		1
2	1315/4037D		Bolt M24 x 340 long		2

3	1315/4021D		Bolt M24 x110mm long		2
4	823/10643		Washer M24		4
5	1420/0014D		Washer (M24)		8
6	1370/0903D		Nut Lock M24		4
11	335/08533		Pin recovery hitch		1
12	265/00739		Wire retaining		1
14	826/00512		Pin Linch		1
15	331/50791		Bracket		1
16	1315/4031D		Bolt M24 x 220		2
16	1315/4032D		Bolt M24 x 240 Replaces 1315/4031D		2
17	1370/0901D		Nut		2
18	1422/0014D		Washer (M24)		4
19	835/00170	To 11/07/2015	Plug yellow M30		2
19	335/B1213	From 12/07/2015	Plug Push In, M30		2

Applicability Date Ranges:
From: , To:

Product Catalog\WHEELED LOADERS\416 01243000-01243499,01317500-01317999,01472000-01472999,02095872-02095875 9812/3020 \B BODYWORK, CAB, LOADER END\B01 BODYWORK/FRAME\B1-18-1 MOUNTINGS REAR LIGHTS

9812/3020 B1-18-1 MOUNTINGS REAR LIGHTS

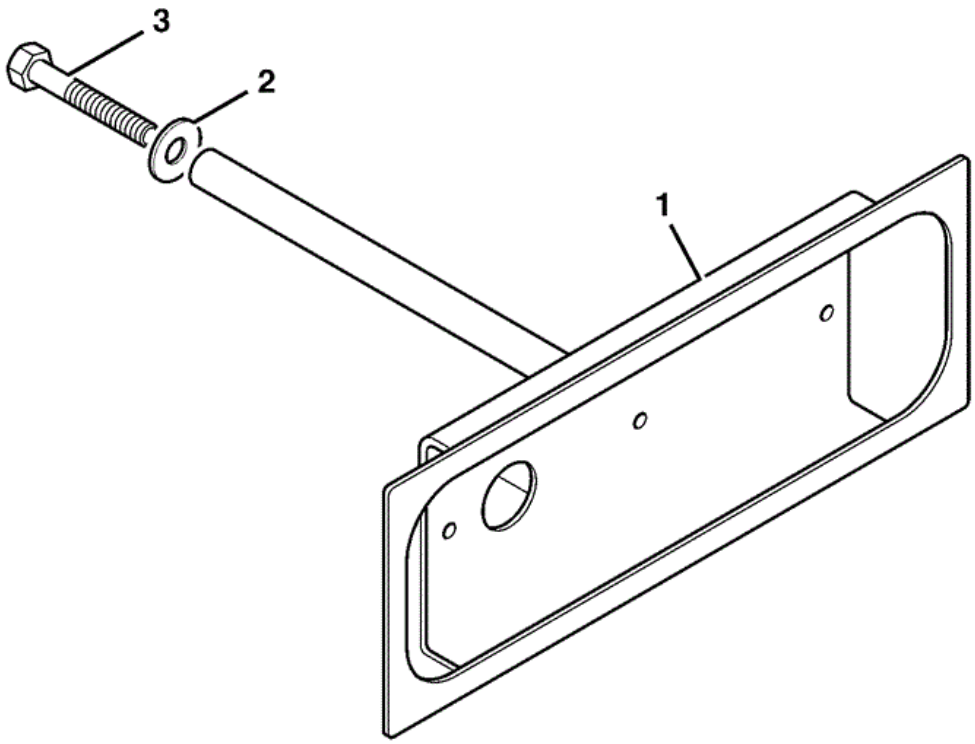

377320

Item	Part No	Change No	Description	Usage Code	QTY
1	335/11855		Bracket rear light LH		1
1	335/11856		Bracket rear light RH		1

1	335/13888		Bracket rear light blanking LH Sales special 8573		1
1	335/13889		Bracket rear light blanking RH Sales special 8573		1
2	1412/0003D		Washer (3/8" Large)		2
3	1315/0308D		Setscrew M8 x 30 mm		2
4	1420/0007D		Washer (M8)		2

Applicability Date Ranges:
From: , To:

Product Catalog\WHEELED LOADERS\416 01243000-01243499,01317500-01317999,01472000-01472999,02095872-02095875 9812/3020 \B BODYWORK, CAB, LOADER END\B01 BODYWORK/FRAME\B1-19-1 GUARD REAR PROTECTION SALES SPECIAL

9812/3020 B1-19-1 GUARD REAR PROTECTION SALES SPECIAL

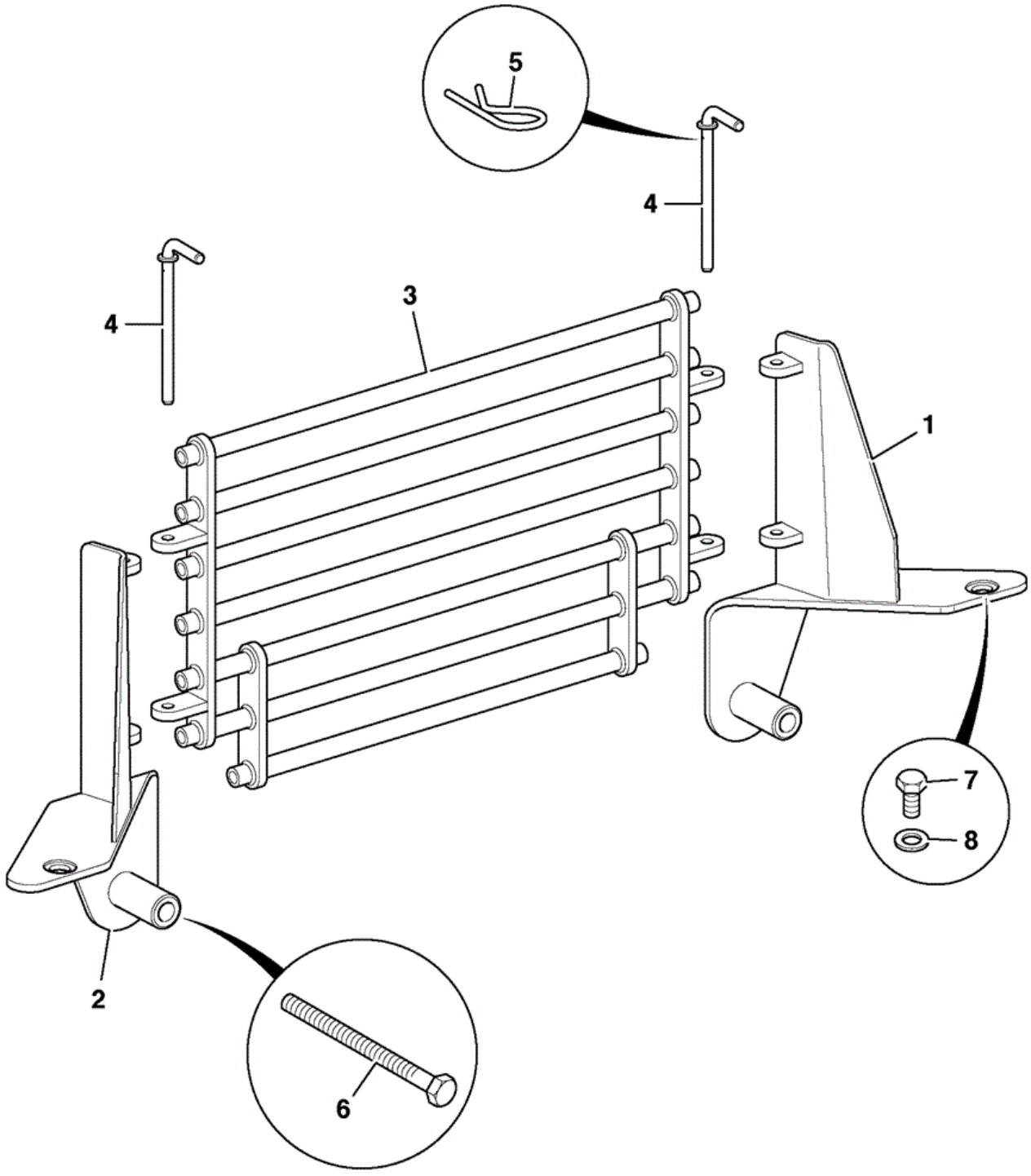

Item	Part No	Change No	Description	Usage Code	QTY
1	333/P8101		Bracket support LH Sales special 1020		1
2	333/P9279		Bracket support RH		1

3	333/P8416		Guard rear WA		1
4	331/52195		Pin locking		2
5	826/00479		Clip 'R'		2
6	826/10863		Bolt M24 x 480mm		2
7	1315/1112D		Screw M30 X 50mm		2
8	1420/0015D		Washer Plain, M30		2
9	823/10643		Washer M24		2

Applicability Date Ranges:
From: , To:

Product Catalog\WHEELED LOADERS\416 01243000-01243499,01317500-01317999,01472000-01472999,02095872-02095875 9812/3020 \B BODYWORK, CAB, LOADER END\B01 BODYWORK/FRAME\B1-20-1 GUARD SHOVEL RAM SALES SPECIAL

9812/3020 B1-20-1 GUARD SHOVEL RAM SALES SPECIAL

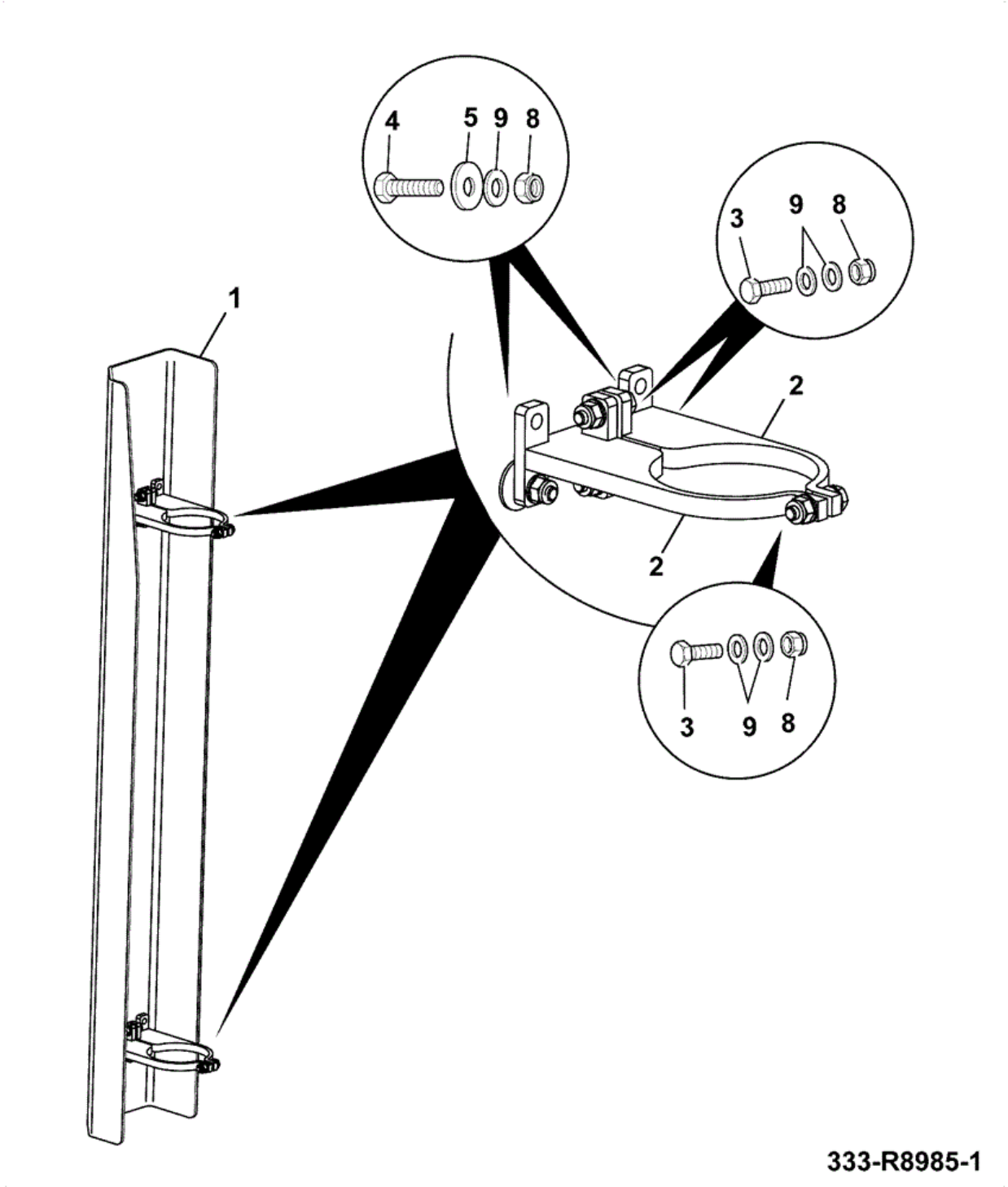

Item	Part No	Change No	Description	Usage Code	QTY
1	333/R9011		Guard plate Sales special 1227		1
2	333/R9335		Bracket ram guard		4

3	1315/0411D		Setscrew M10X45		6
4	1315/0409D		Setscrew M10 x 35mm		4
5	1412/0004D		Washer 7/16" Large		4
8	1370/0303D		Nut Self Lock M10		10
9	1420/0008D		Washer (M10)		16

Applicability Date Ranges:
From: , To:

Product Catalog\WHEELED LOADERS\416 01243000-01243499,01317500-01317999,01472000-01472999,02095872-02095875 9812/3020 \B BODYWORK, CAB, LOADER END\B01 BODYWORK/FRAME\B1-22-1 GUARDS, FRONT LIGHT OPTIONAL

9812/3020 B1-22-1 GUARDS, FRONT LIGHT OPTIONAL

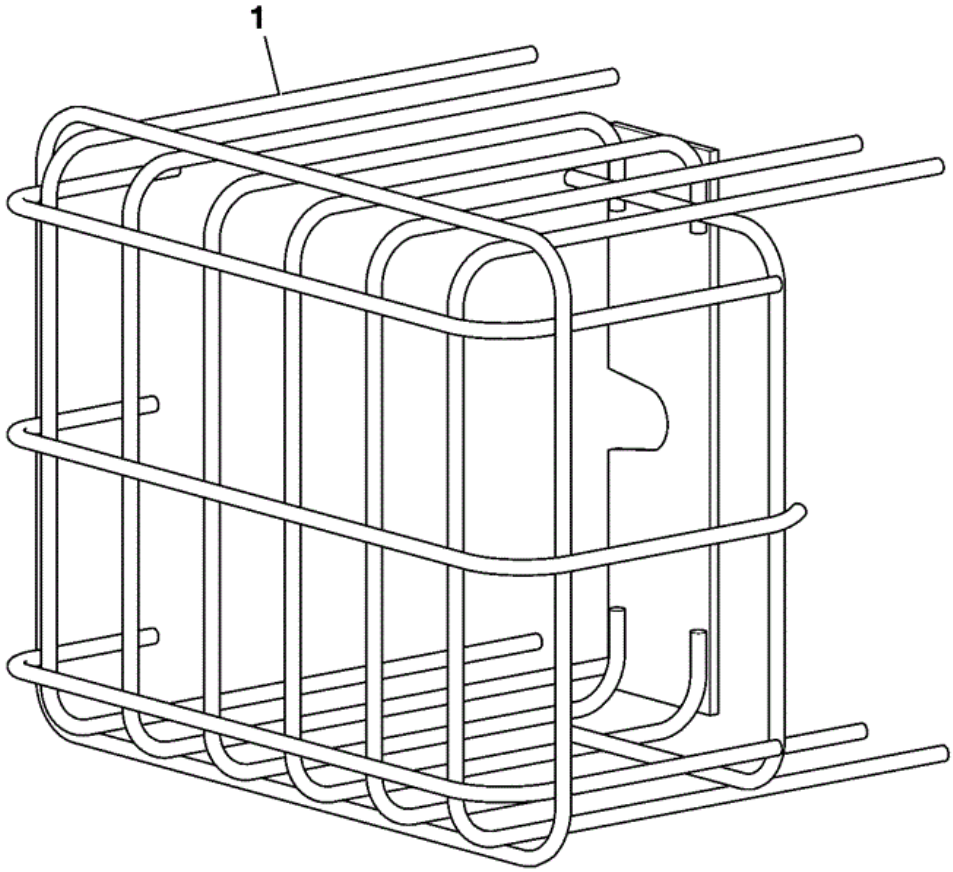

730140

Item	Part No	Change No	Description	Usage Code	QTY
1	331/41222		Guard front light yellow		2
1	335/12509		Guard front light black		2
2	****		Assembly front headlight guards		1

Applicability Date Ranges:
From: , To:

Product Catalog\WHEELED LOADERS\416 01243000-01243499,01317500-01317999,01472000-01472999,02095872-02095875 9812/3020 \B BODYWORK, CAB, LOADER END\B01 BODYWORK/FRAME\B1-30-1 AUTO GREASING MAIN FEED HT

9812/3020 B1-30-1 AUTO GREASING MAIN FEED HT

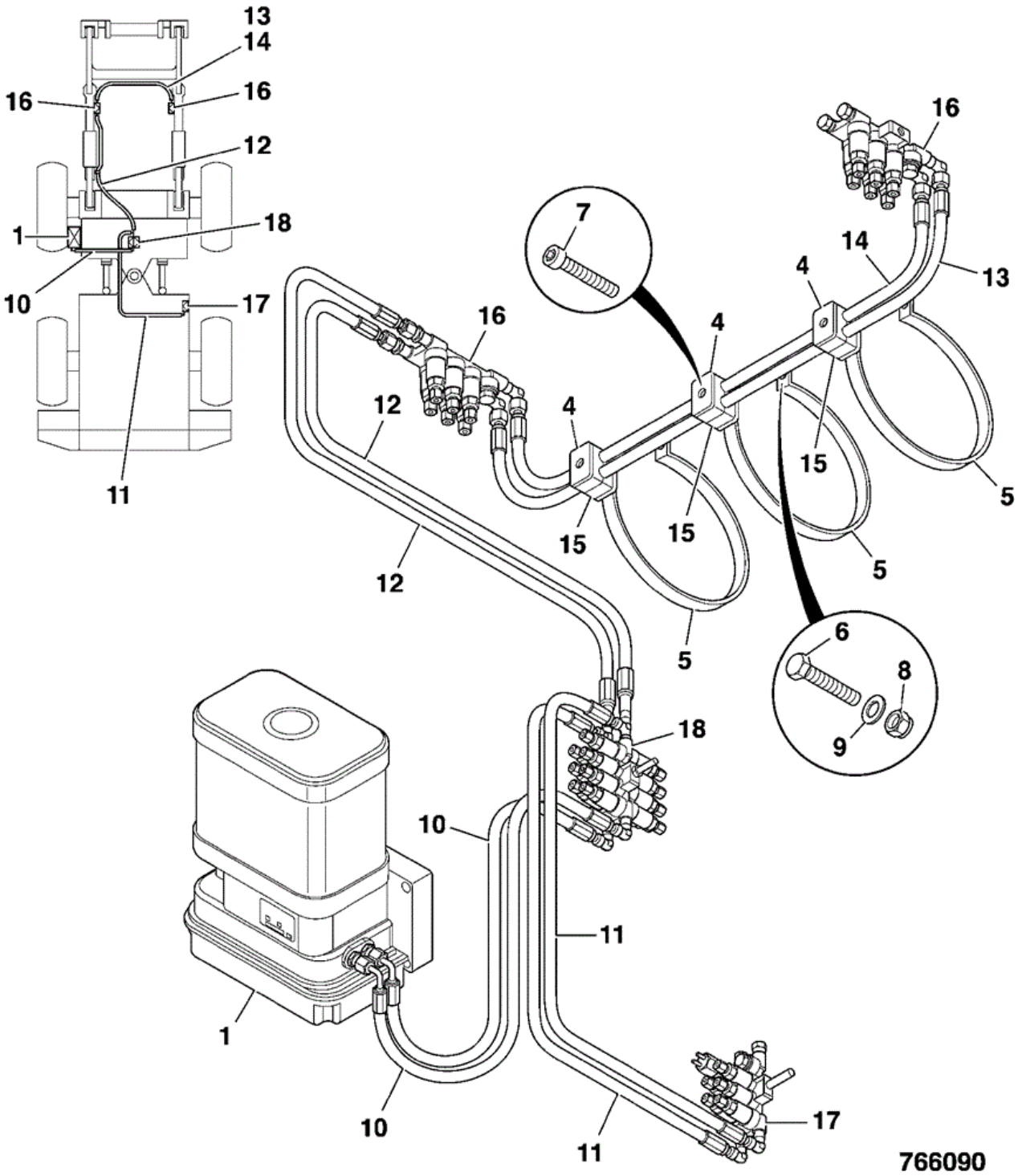

Item	Part No	Change No	Description	Usage Code	QTY
1	****		'See Remark' For pump see section C1-32-1		1
2	983/10967		Tie cable 338mm long		25

3	983/10968		Tie cable		25
4	983/10959		Plate		3
5	983/10991		Bracket clamp 220mm dia.		3
6	1315/0309D		Setscrew M8 x 35 mm		3
7	1391/3209		Capscrew M6 x 35		3
8	1370/0201D		Nut Plain M8		3
9	1420/0007D		Washer (M8)		3
10	983/10919		Hose E10-1250-S10 1/4"		2
11	983/10920		Hose S10-2700-S10 1/4"		2
12	983/10920		Hose S10-2700-S10 1/4"		2
13	983/10922		Hose S10-1200-S10 1/4"		1
14	983/10923		Hose S10-1100-S10 1/4"		1
15	983/10954		Clamp double 12mm dia.		3
16	983/10934		Block 7 port		2
17	983/10924		Block 7 port		1
18	983/10930		Block twin 14 port		1

Applicability Date Ranges:
From: , To:

Product Catalog\WHEELED LOADERS\416 01243000-01243499,01317500-01317999,01472000-01472999,02095872-02095875 9812/3020 \B BODYWORK, CAB, LOADER END\B01 BODYWORK/FRAME\B1-31-1 AUTO GREASING PIVOT STEERING HT

9812/3020 B1-31-1 AUTO GREASING PIVOT STEERING HT

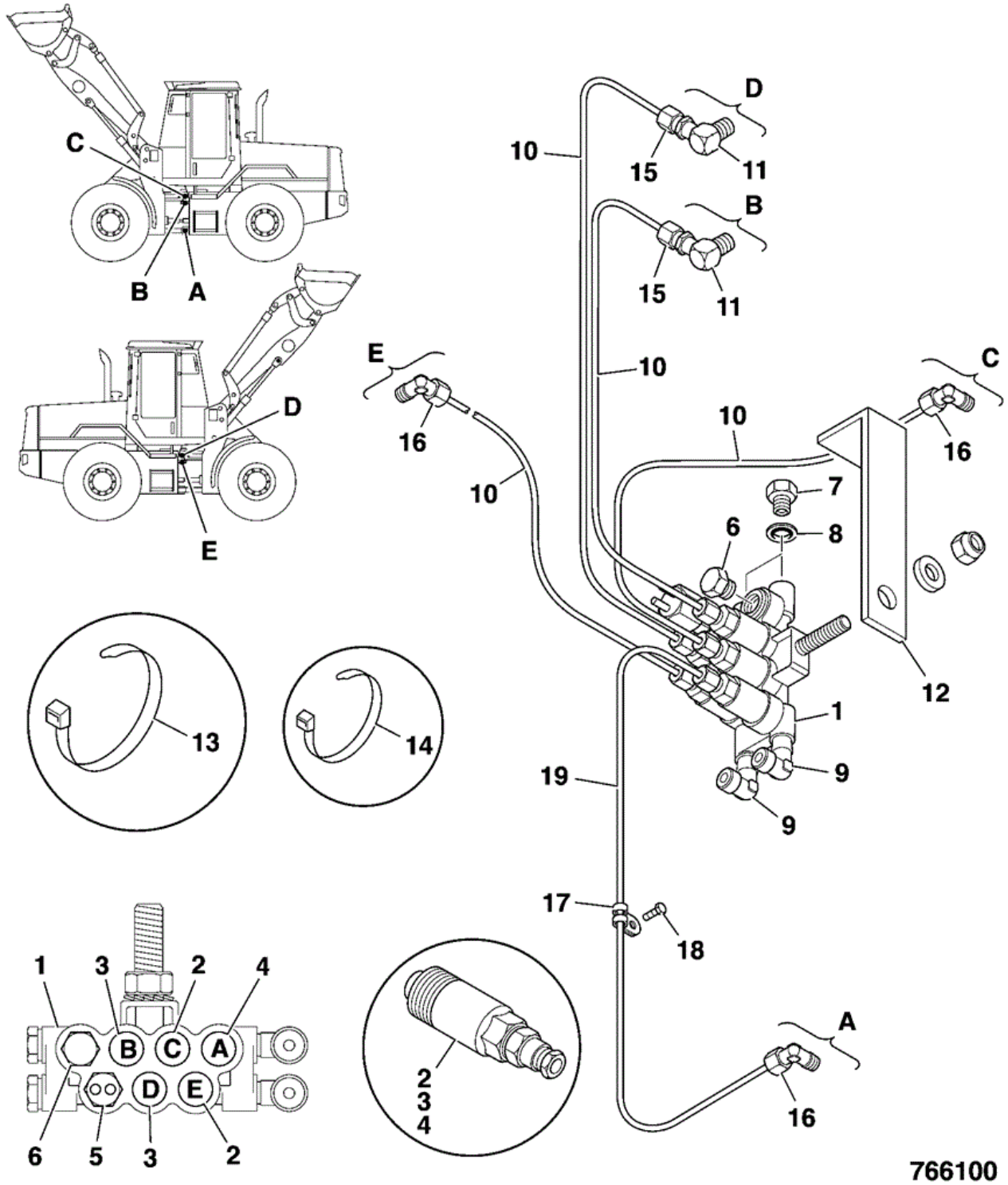

Item	Part No	Change No	Description	Usage Code	QTY
A	****		'See Remark' Grease Point		1
			'See Remark'		

B	****		Grease Point		1
C	****		'See Remark' Grease Point		1
D	****		'See Remark' Grease Point		1
E	****		'See Remark' Grease Point		1
1	983/10924		Block 7 port		1
2	983/10925		Unit metering 0.100cc		2
3	983/10586		Unit metering 0.200cc		2
4	983/10587		Unit metering 0.400cc		1
5	983/10589		Switch pressure		1
6	983/10926		Plug shut off		1
7	983/10927		Plug 1/4"		2
8	983/10928		Washer sealing		2
9	983/10929		Adapter Elbow		2
10	983/10596		Pipe grease 6mm dia. x 3000mm		4
11	983/10945		Adapter elbow		2
12	983/10946		Bracket		1
13	983/10967		Tie cable 338mm long		10
14	983/10968		Tie cable		20
15	983/10947		Adapter straight		2
16	983/10948		Adapter elbow		3
17	983/10949		Clamp 6mm dia.		1
18	826/01309		Screw Taptite, M5 x 10mm Long		1
19	983/10989		Pipe		1

Applicability Date Ranges:
From: , To:

Product Catalog\WHEELED LOADERS\416 01243000-01243499,01317500-01317999,01472000-01472999,02095872-02095875 9812/3020 \B BODYWORK, CAB, LOADER END\B02 CAB\B2-0-1 CAB STANDARD ASSEMBLIES

9812/3020 B2-0-1 CAB STANDARD ASSEMBLIES

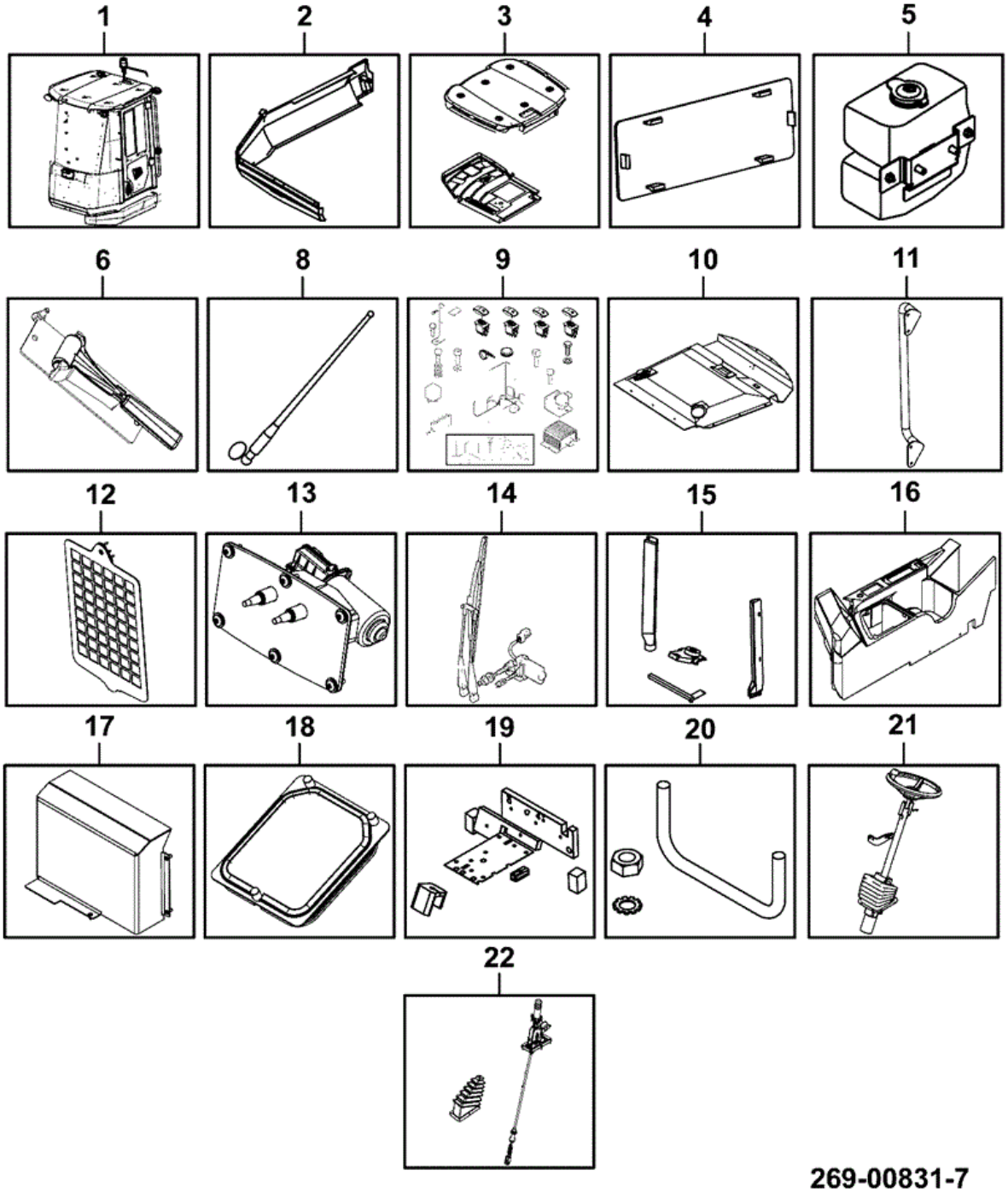

Item	Part No	Change No	Description	Usage Code	QTY
1	333/P9481		Cab assembly ABI		1
2	****		Assembly skirts		1

3	****		Assembly canopy/cab fittings		1
4	****		Assembly radio blank		1
5	****		Assembly washer bottle		1
6	****		Assembly emergency hammer		1
8	****		Assembly aerial		1
9	****		Assembly cab electrics		1
10	****		Assembly headliner		1
11	****		Assembly interior grab handle		1
12	****		Assembly recirculation filter		1
13	****		Assembly front wiper		1
14	****		Assembly rear wiper		1
15	****		Assembly cab front mouldings		1
16	****		Assembly cab RH side moulding		1
17	****		Assembly rear bulkhead moulding		1
18	****		Assembly fusebox moulding		1
19	****		Assembly cab soundproofing		1
20	****		Assembly hose guide		2
21	****		Assembly steering column installation		1
22	****		Assembly parkbrake		1

Applicability Date Ranges:
From: , To:

Product Catalog\WHEELED LOADERS\416 01243000-01243499,01317500-01317999,01472000-01472999,02095872-02095875 9812/3020 \B BODYWORK, CAB, LOADER END\B02 CAB\B2-0-10 CANOPY CAB ASSEMBLIES

9812/3020 B2-0-10 CANOPY CAB ASSEMBLIES

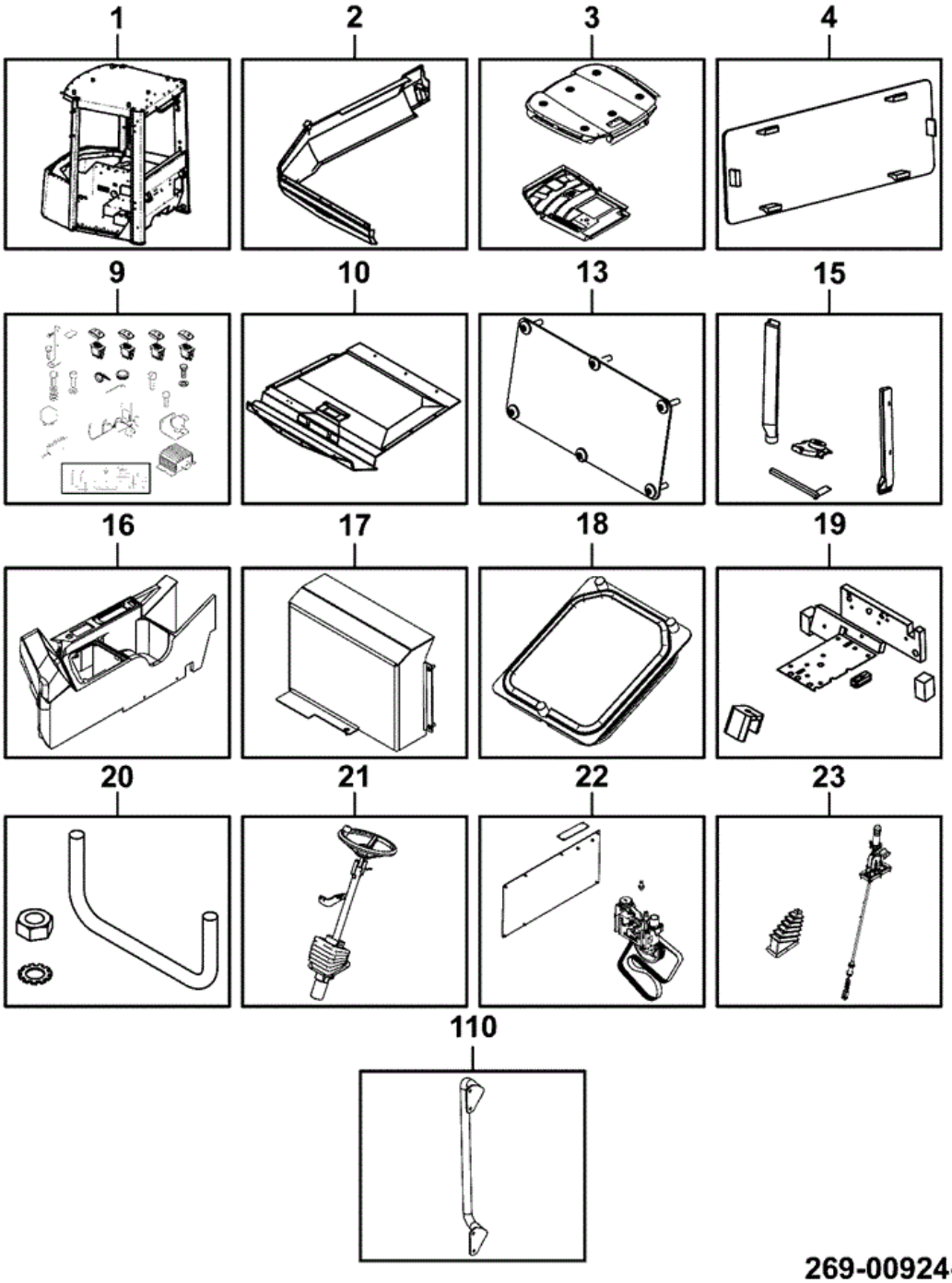

Item	Part No	Change No	Description	Usage Code	QTY
1	333/R3974		Cab canopy ABI		1
2	****		Assembly skirts		1

3	****		Assembly canopy/cab fittings		1
4	****		Assembly radio blank		1
9	****		Assembly cab electrics		1
10	****		Assembly canopy headliner		1
13	****		Assembly front wiper blank		1
15	****		Assembly canopy front mouldings		1
16	****		Assembly cab RH side moulding		1
17	****		Assembly canopy rear bulkead moulding		1
18	****		Assembly canopy fusebox		1
19	****		Assembly cab soundproofing		1
20	****		Assembly hose guide		1
21	****		Assembly steering column installation		1
22	****		Assembly heaterless build		1
23	****		Assembly parkbrake		1
110	****		Assembly interior grab handle		1

Applicability Date Ranges:
From: , To:

9812/3020 B2-1-1 CAB ASSEMBLY

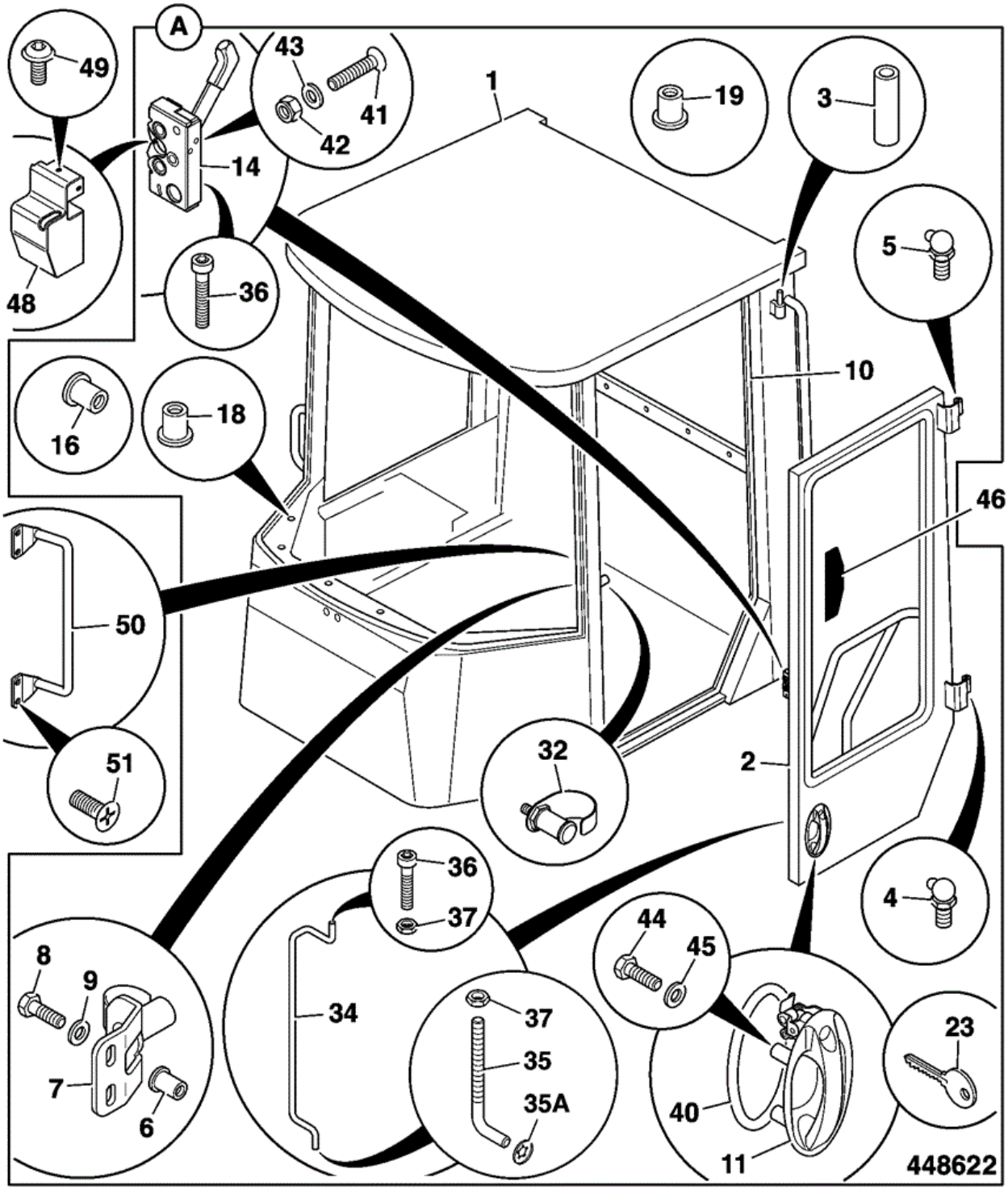

Item	Part No	Change No	Description	Usage Code	QTY
A	269/00825		Cab assembly ABI		1
A	332/U4556		Cab assembly ABI without JCB logo Sales special 9919 and 1047		1

1	269/00844		Cab WA Sealed & data plate		1
2	****		'See Remark' Cab glass see B2-2-1		1
3	****		'See Remark' Cab door see B2-3-1		1
4	****		'See Remark' Cab window see B2-4-1		1
5	****		'See Remark' Cab trim see B2-10-1		1
7	123/05740		Plug Blanking 30mm		6
15	826/10977		Rivet nut M8		9
16	826/10879		Nut rivet hex. M6		27
17	826/10973		Nut Low Profile Hex Bollho M5		4
18	826/01101		Nut Nut,M6		24
19	826/01099		Rivet Nut M6		28
20	826/01102		Nut M8		4
21	826/01261		Nut Rivet		10
22	826/11035		Nut M6 Caged Nut		2
50	335/01153		Handle grab interior		1
51	826/00853		Screw M8x30 csk Head		1

Applicability Date Ranges:
From: , To: 31/10/2010

9812/3020 B2-1-2 CAB ASSEMBLY

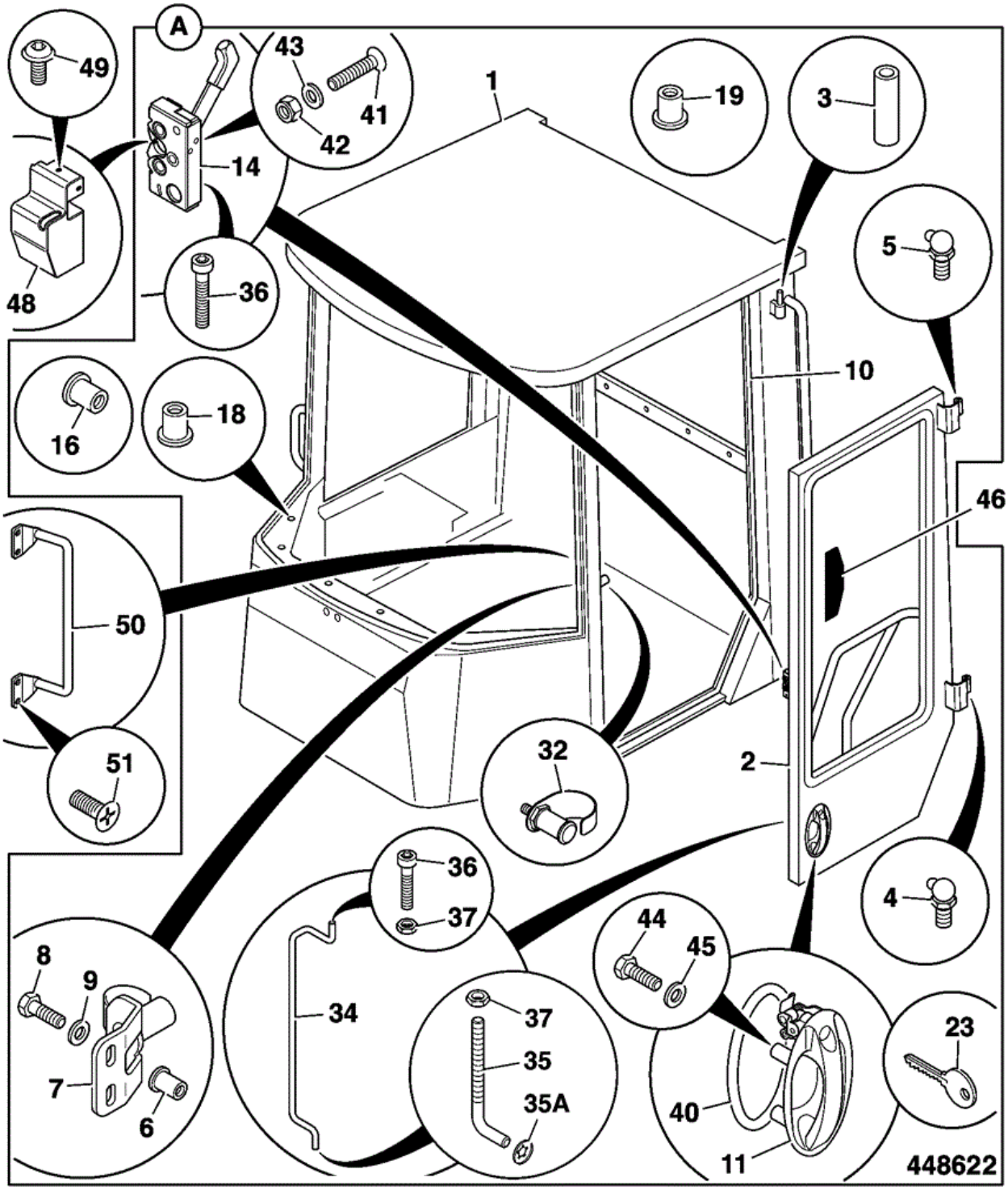

Item	Part No	Change No	Description	Usage Code	QTY
A	333/P9481		Cab assembly ABI		1
1	333/P9465		Cab WA painted/sealed & dataplate		1

2	****		'See Remark' Cab glass see B2-2-1		1
3	****		'See Remark' Cab door see B2-3-1		1
4	****		'See Remark' Cab window see B2-4-1		1
5	****		'See Remark' Cab trim see B2-10-1		1
7	123/05740		Plug Blanking 30mm		6
15	826/10977		Rivet nut M8		9
16	826/10879		Nut rivet hex. M6		30
17	826/10973		Nut Low Profile Hex Bollho M5		4
18	826/01101		Nut Nut,M6		24
19	826/01099		Rivet Nut M6		28
20	826/01102		Nut M8		4
21	826/01261		Nut Rivet		10
22	826/11035		Nut M6 Caged Nut		2
50	335/01153		Handle grab interior		1
51	826/00853		Screw M8x30 csk Head		1

Applicability Date Ranges:
From: 01/11/2010 , To:

9812/3020 B2-1-5 CAB ASSEMBLY METAL DOOR

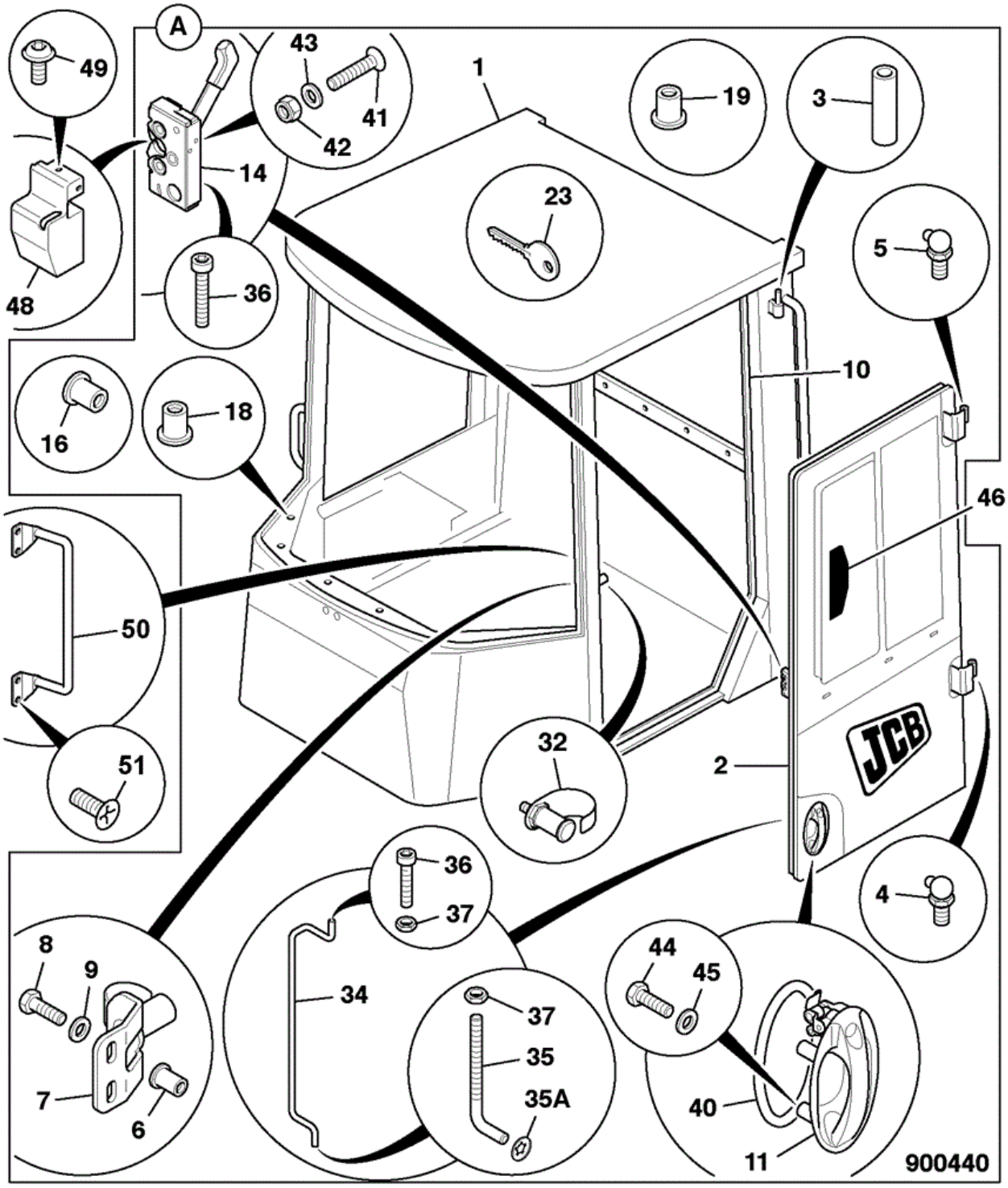

Item	Part No	Change No	Description	Usage Code	QTY
A	269/00795		Cab assembly,ABI metal door		1
1	269/00844		Cab WA Sealed & data plate		1

2	****		'See Remark' Cab glass see B2-2-1		1
3	****		'See Remark' Cab door see B2-3-5		1
4	****		'See Remark' Cab window see B2-4-1		1
5	****		'See Remark' Cab trim see B2-10-1		1
7	123/05740		Plug Blanking 30mm		6
15	826/10977		Rivet nut M8		9
16	826/10879		Nut rivet hex. M6		27
17	826/10973		Nut Low Profile Hex Bollho M5		4
18	826/01101		Nut Nut,M6		24
19	826/01099		Rivet Nut M6		30
20	826/01102		Nut M8		4
21	826/01261		Nut Rivet		10
50	335/01153		Handle grab interior		1
51	826/00853		Screw M8x30 csk Head		1

Applicability Date Ranges:
From: , To:

Product Catalog\WHEELED LOADERS\416 01243000-01243499,01317500-01317999,01472000-01472999,02095872-02095875 9812/3020 \B BODYWORK, CAB, LOADER END\B02 CAB\B2-1-10 CAB LOW ROOF SALES SPECIAL

9812/3020 B2-1-10 CAB LOW ROOF SALES SPECIAL

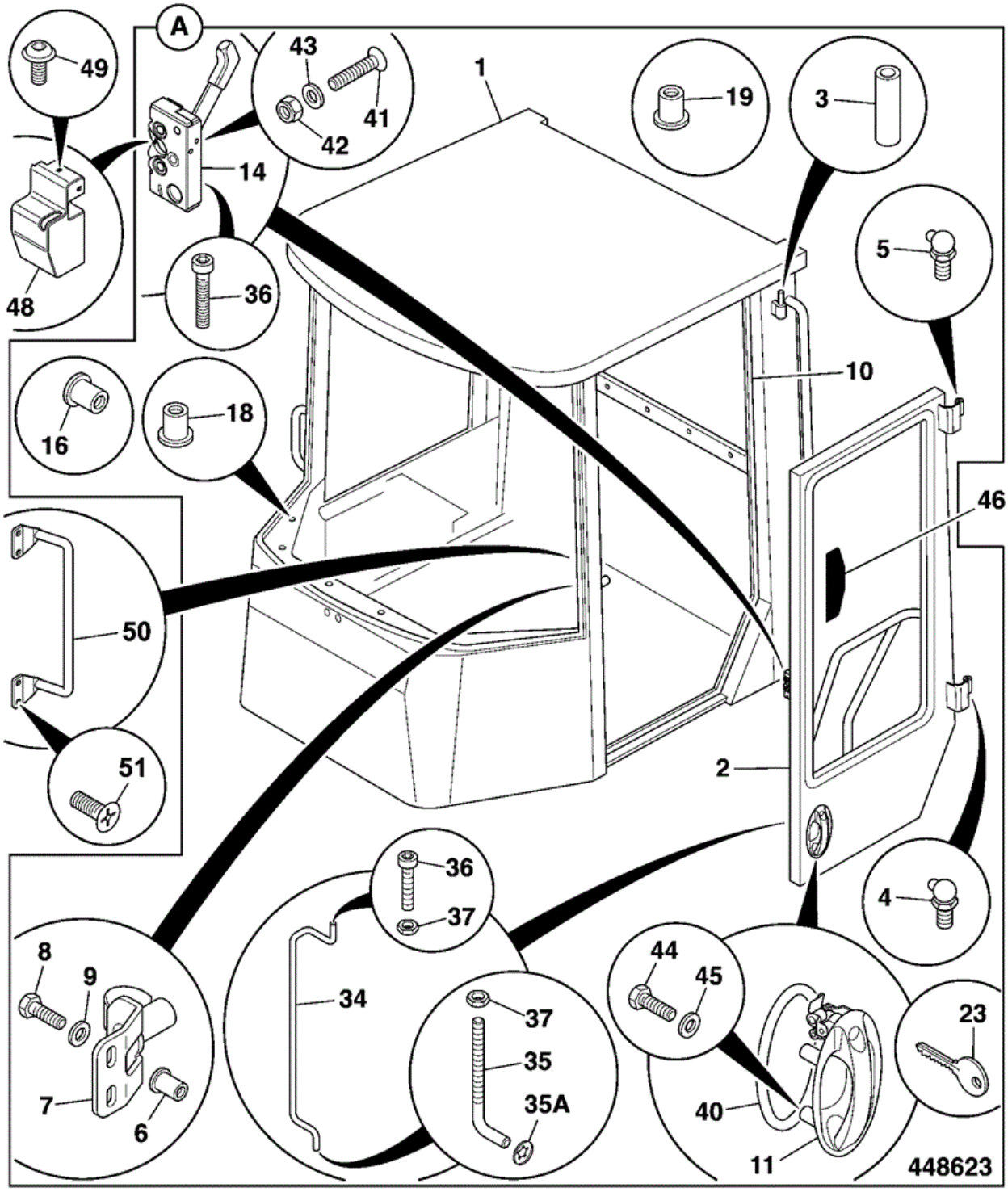

Item	Part No	Change No	Description	Usage Code	QTY
A	269/00905		Cab assembly ABI Sales special 1047 and 1048		1
			'See Remark'		

A	****		See page B2-2-5 for cab glazing		1
A	****		'See Remark' See page B2-3-10 for cab door		1
A	****		'See Remark' See page B2-4-5 for RH window		1
1	269/00908		Cab assembly, low roof painted & sealed		1
2	****		'See Remark' See B2-3-10 for door		1
5	123/05740		Plug Blanking 30mm		6
15	826/10977		Rivet nut M8		13
16	826/10879		Nut rivet hex. M6		26
17	826/10973		Nut Low Profile Hex Bollho M5		4
18	826/01101		Nut Nut,M6		21
19	826/01099		Rivet Nut M6		30
20	826/01102		Nut M8		4
21	826/01261		Nut Rivet		10
50	335/05256		Handle		1
51	826/00853		Screw M8x30 csk Head		4

Applicability Date Ranges:
From: , To:

Product Catalog\WHEELED LOADERS\416 01243000-01243499,01317500-01317999,01472000-01472999,02095872-02095875 9812/3020 \B BODYWORK, CAB, LOADER END\B02 CAB\B2-2-1 CAB GLAZING

9812/3020 B2-2-1 CAB GLAZING

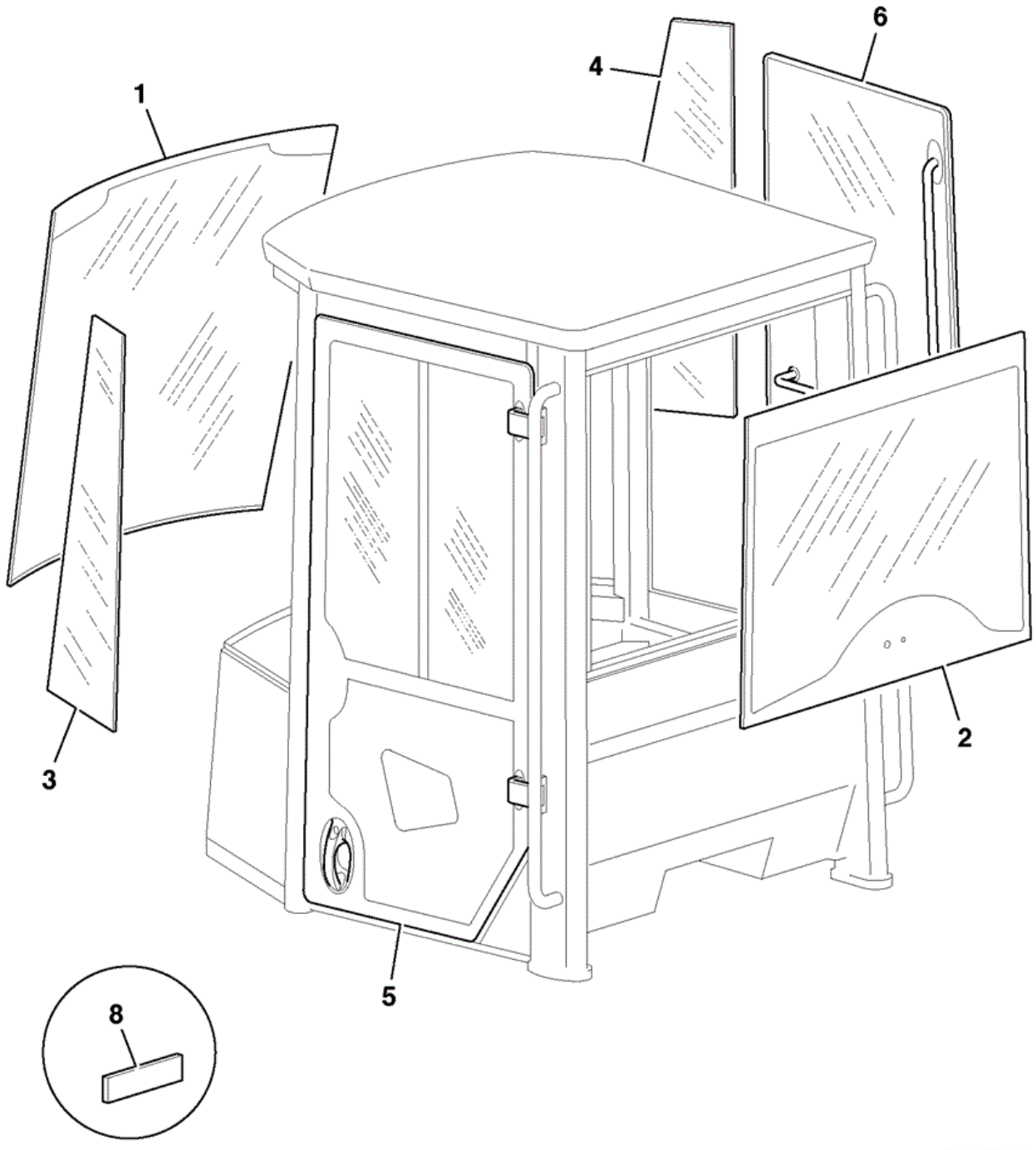

Item	Part No	Change No	Description	Usage Code	QTY
1	827/80438		Windscreen front tinted green Length 1070mm		1
			Screen rear tinted,heated		

2	827/80436		Height 800mm		1
3	827/30469		Glass L.H. side green tinted		1
4	827/30470		Glass R.H. side green tinted		1
5	****		'See Remark' Cab door see B2-3-1		1
6	****		'See Remark' Cab RH window see B2-4-1		1
8	926/15500		Spacer Block		16

Applicability Date Ranges:
From: , To:

Product Catalog\WHEELED LOADERS\416 01243000-01243499,01317500-01317999,01472000-01472999,02095872-02095875 9812/3020 \B BODYWORK, CAB, LOADER END\B02 CAB\B2-2-5 CAB GLASS LOW ROOF CAB, SALES SPECIAL

9812/3020 B2-2-5 CAB GLASS LOW ROOF CAB, SALES SPECIAL

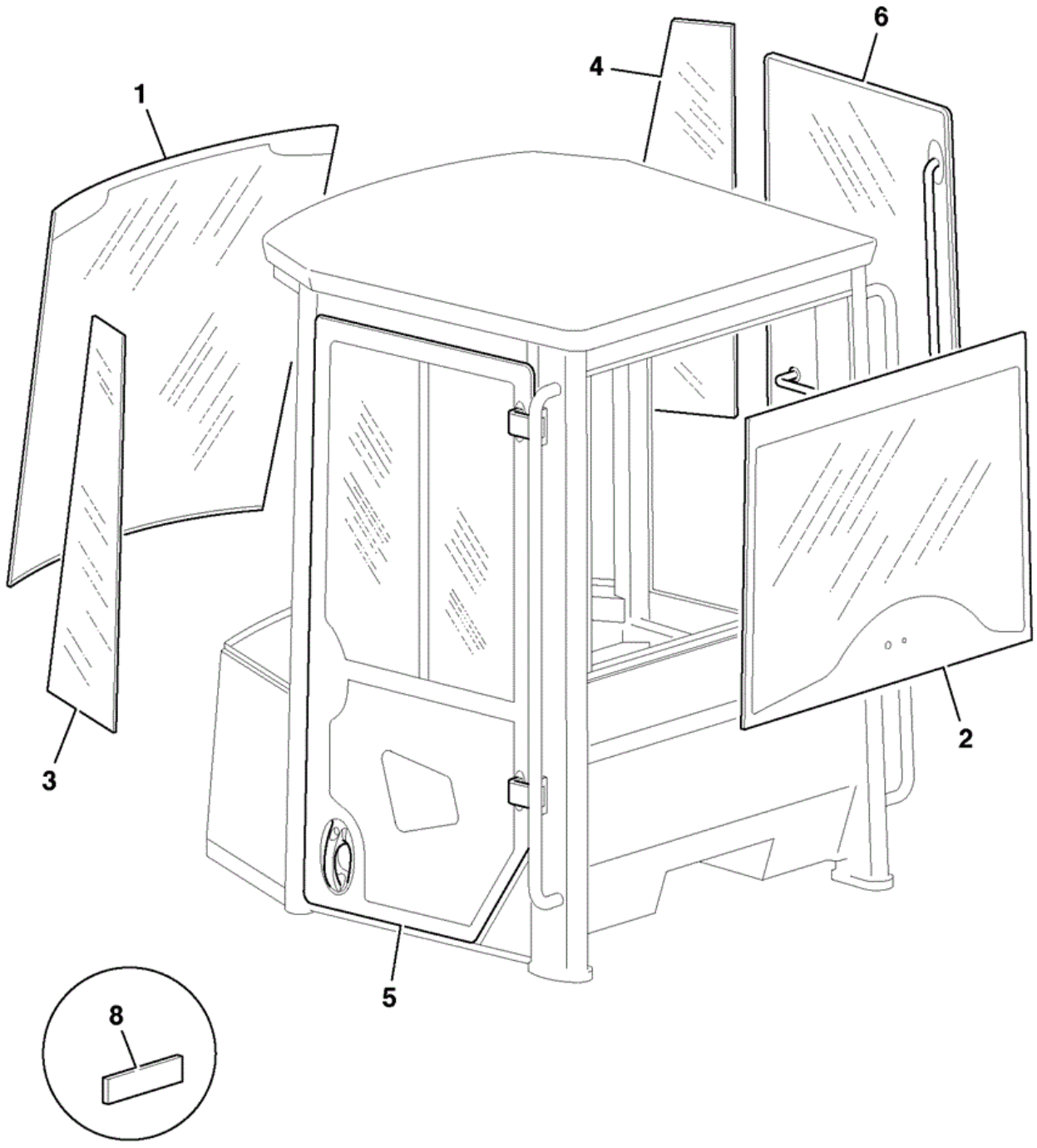

Item	Part No	Change No	Description	Usage Code	QTY
1	827/80439		Windscreen tinted low cab Sales special 1047 and 1048. Length 1013mm		1
			Screen rear, heated tinted		

2	827/80437		Height 735mm		1
3	827/30488		Glass L.H.side low roof		1
4	827/30489		Glass R.H. side low roof		1
5	****		'See Remark' Cab Door see B2-3-1		1
6	****		'See Remark' Cab window see B2-4-1		1
8	926/15500		Spacer Block		16

Applicability Date Ranges:
From: , To:

9812/3020 B2-3-1 DOOR, LEFT SIDE

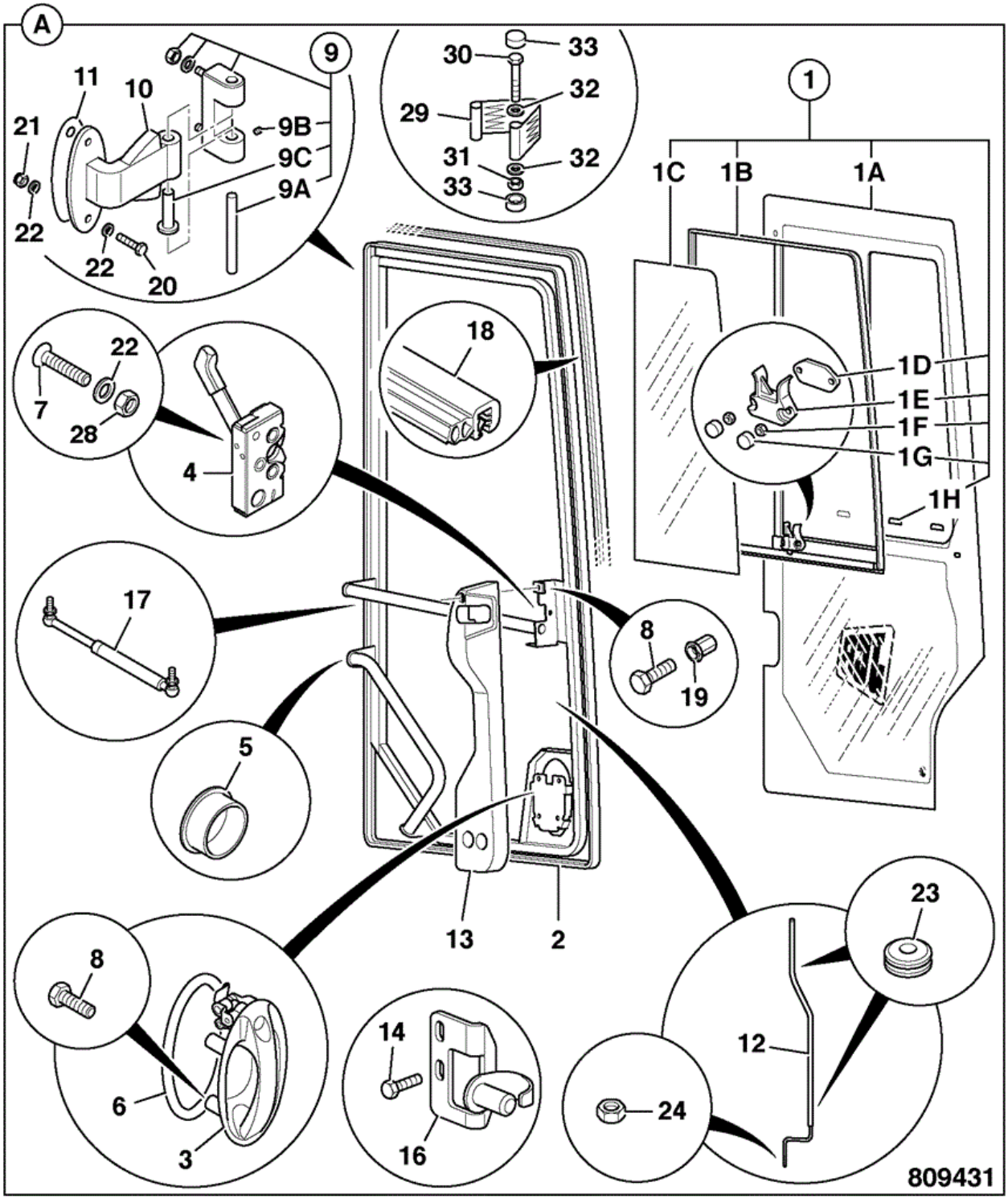

Item	Part No	Change No	Description	Usage Code	QTY
A	269/00826		Door assembly		1
A	332/U4557		Door assembly no JCB logo Sales special 9919		1

1	:269/00845		Window sliding assembly		1
1	332/U4558		Window sliding assembly no JCB logo Sales special 9919		1
1A	::827/80388		Glass door		1
1A	332/U4559		Glass door no JCB logo Sales special 9919		1
1B	::927/20063		Window assembly sliding		1
1C	::827/80390		Glass sliding		1
1D	::331/52514		Spacer		3
1E	::331/52515	Superseded	Catch assembly		1
1E	::927/17002		Catch assembly inc. backplate Backplate not required		1
1F	::331/52516		Nut M5		2
1G	::331/52517		Cap		2
1H	::331/52526		Baffle drain		3
1J	::331/52521		Seal weatherstrip Vertical 80cm		1
1K	::331/33413		Seal flock section Surrounds item 1B		1
2	:335/10493		Frame door		1
3	:331/43116	Superseded	Handle door		1
3	:332/A3730		Handle Door		1
4	:826/11026		Handle		1
4	826/11629		Handle Replaces 826/11026(refer to 998/11375)		1
6	:331/28105		Gasket Door Handle		1
7	:826/01814		Screw Countersunk M8x35		2
8	:826/01559		Screw Button Head Socket		5
9	:331/31247		Hinge Block Assembly		2
9A	::331/31381		Pin Hinge		1
9B	::331/31386		Screw Grub		1
9C	::331/31385		Bush Nylon		1
10	335/09474		Hinge		2
11	813/10281		Gasket		2
12	:331/63226	Superseded	Rod Connecting		1
12	:332/A6664		Rod connecting		1
12A	:826/00711		Washer Retainer(Grip) M4		1
13	:331/44771		Moulding latch cover		1
13	331/64765		Moulding latch cover Replaces 331/44771		1

14	1315/0307D		Setscrew M8 x 25 mm		2
16	:335/11281		Bracket striker		1
17	:331/46388		Strut Gas, Door, 330N		1
18	:926/90009		Seal Length 4600mm (Supplied from 926/45000)		1
19	:826/10879		Nut rivet hex. M6		1
21	:1370/0203D		Nut Lock M8		6
21A	:122/23509		Cap Nut M8		4
22	:1420/0007D		Washer (M8)		6
23	****		'See Remark' Not fitted		2
24	:1370/9403Z		Nut Lock		2
29	331/35245		Strap Check		2
30	1315/3316D		Bolt M8 x 70mm		2
31	1370/0203D		Nut Lock M8		8
32	1420/0007D		Washer (M8)		10
33	122/23509		Cap Nut M8		4

Applicability Date Ranges:
From: , To:

Product Catalog\WHEELED LOADERS\416 01243000-01243499,01317500-01317999,01472000-01472999,02095872-02095875 9812/3020 \B BODYWORK, CAB, LOADER END\B02 CAB\B2-3-5 DOOR, LEFT SIDE LOWER METAL PLATE

9812/3020 B2-3-5 DOOR, LEFT SIDE LOWER METAL PLATE

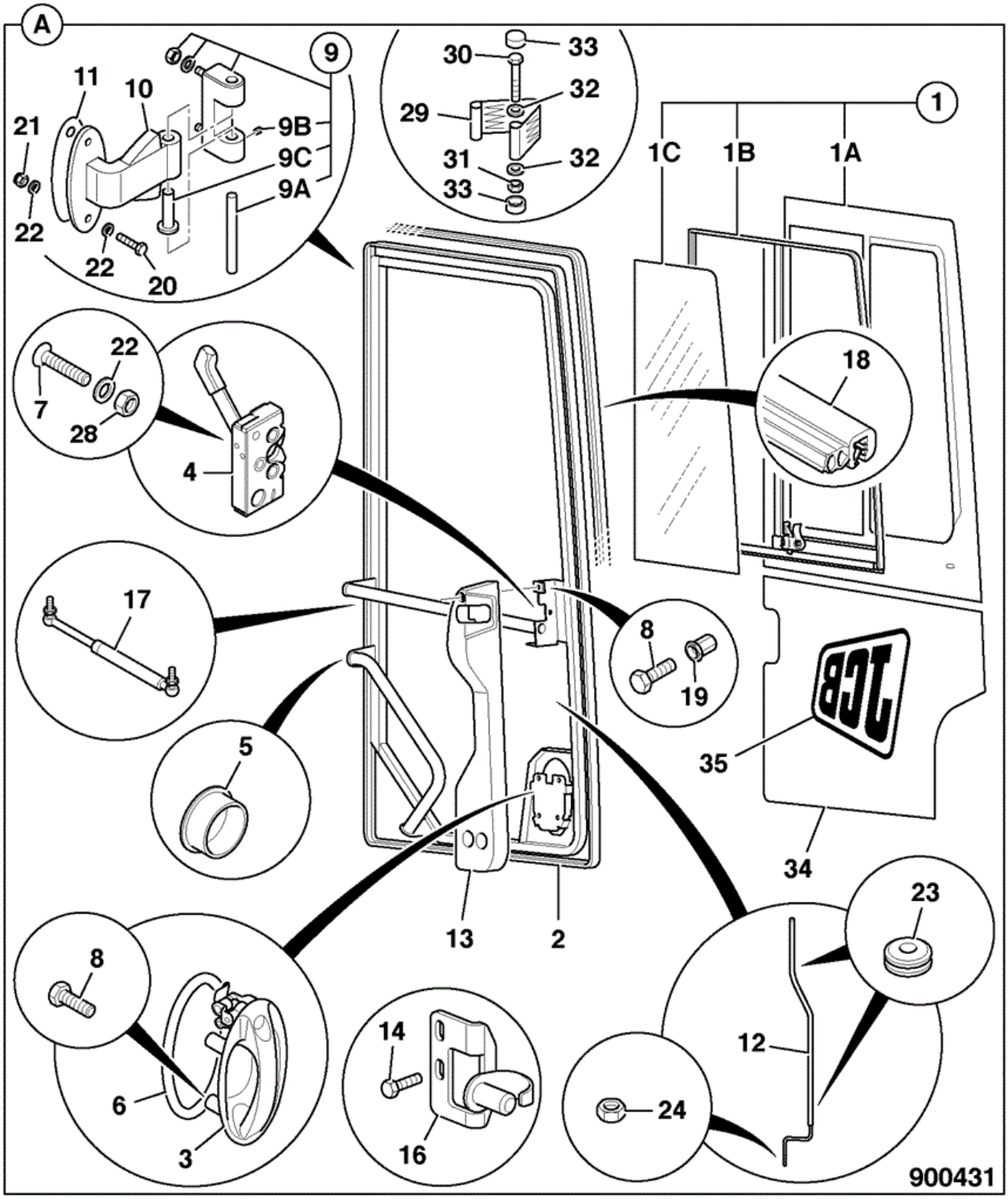

Item	Part No	Change No	Description	Usage Code	QTY
A	269/00793		Door assembly		1
1	:269/00794		Assembly sliding window		1

1A	::827/80459		Glass half door		1
1B	::927/20063		Window assembly sliding		1
1C	::827/80390		Glass sliding		1
1D	::331/52526		Baffle drain		3
2	:335/10493		Frame door		1
3	:331/43116		Handle door		1
4	:826/11026		Handle		1
4	826/11629		Handle Replaces 826/11026 (refer to 998/11375)		1
6	:331/28105		Gasket Door Handle		1
7	:826/01814		Screw Countersunk M8x35		2
8	:826/01559		Screw Button Head Socket		5
9	:331/31247		Hinge Block Assembly		2
9A	::331/31381		Pin Hinge		1
9B	::331/31386		Screw Grub		1
9C	::331/31385		Bush Nylon		1
10	335/09474		Hinge		2
11	813/10281		Gasket		2
12	:331/63226	Superseded	Rod Connecting		1
12	:332/A6664		Rod connecting		1
12A	:826/00711		Washer Retainer(Grip) M4		1
13	:331/44771		Moulding latch cover		1
13	331/64765		Moulding latch cover Replaces 331/44771		1
14	1315/0307D		Setscrew M8 x 25 mm		2
16	:335/11281		Bracket striker		1
17	:331/46388		Strut Gas, Door, 330N		1
18	:926/90009		Seal Length 4600mm (Supplied from 926/45000)		1
19	:826/10879		Nut rivet hex. M6		1
21	:1370/0203D		Nut Lock M8		6
21A	:122/23509		Cap Nut M8		4
22	:1420/0007D		Washer (M8)		6
23	****		'See Remark' Not fitted		2
24	:1370/9403Z		Nut Lock		2
29	331/35245		Strap Check		2
30	1315/3316D		Bolt M8 x 70mm		2
31	1370/0203D		Nut Lock M8		2
32	1420/0007D		Washer (M8)		4

33	122/23509		Cap Nut M8		4
34	331/64903		Plate lower door panel		1
35	817/17442		Decal JCB Insignia(yellow)		1

Note 1: REPLACED BY 826/11629 + 331/64765 + 331/63226+ 826/00711 + 1370/9403Z (KIT 998/11401)

Applicability Date Ranges:
From: , To:

Product Catalog\WHEELED LOADERS\416 01243000-01243499,01317500-01317999,01472000-01472999,02095872-02095875 9812/3020 \B BODYWORK, CAB, LOADER END\B02 CAB\B2-3-10 DOOR LEFT SIDE LOW ROOF CAB, SALES SPECIAL

9812/3020 B2-3-10 DOOR LEFT SIDE LOW ROOF CAB, SALES SPECIAL

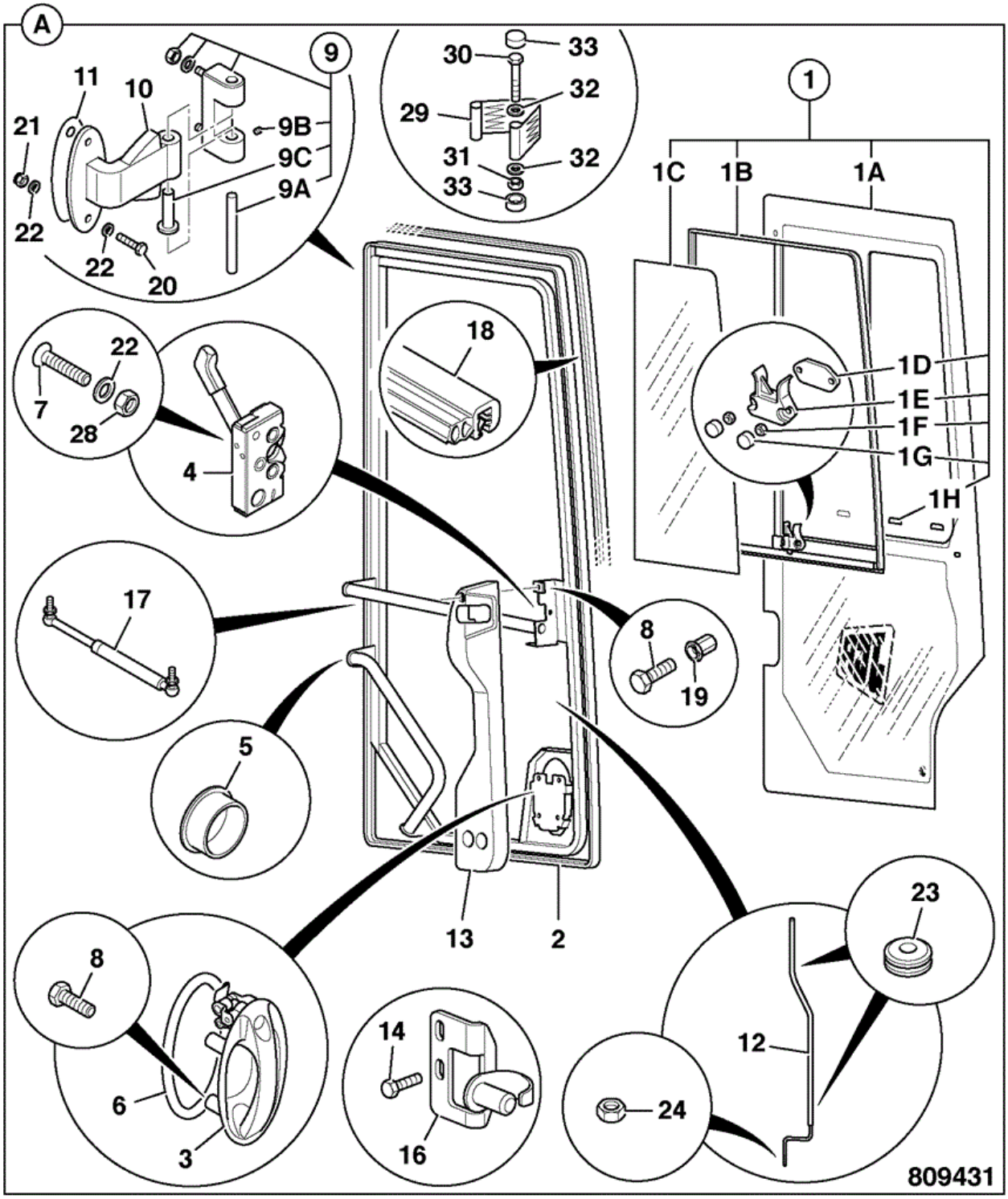

Item	Part No	Change No	Description	Usage Code	QTY
A	269/00911		Door assembly low roof Sales special 1047 and 1048		1
1	:269/00926		Window sliding assembly		1

1A	::827/80412		Glass door		1
1B	****		None serviced part Was 927/20066		1
1C	::827/80413		Glass sliding		1
1D	::331/52514		Spacer		1
1E	::331/52516		Nut M5		1
1F	::331/52516		Nut M5		2
1G	::331/52517		Cap		2
1H	::331/52526		Baffle drain		3
2	:335/11330		Frame door		1
3	:332/A3730		Handle Door		1
4	826/11629		Handle		1
6	:331/28105		Gasket Door Handle		1
7	:826/01814		Screw Countersunk M8x35		2
8	:826/01559		Screw Button Head Socket		5
9	:331/31247		Hinge Block Assembly		2
9A	::331/31381		Pin Hinge		1
9B	::331/31386		Screw Grub		1
9C	::331/31385		Bush Nylon		1
10	335/09474		Hinge		2
11	813/10281		Gasket		2
12	:331/63226	Superseded	Rod Connecting		1
12	:332/A6664		Rod connecting		1
12A	:826/00711		Washer Retainer(Grip) M4		1
13	331/64765		Moulding latch cover		1
15	:1315/0307D		Setscrew M8 x 25 mm For item 16		2
16	:335/11281		Bracket striker		1
17	:331/46388		Strut Gas, Door, 330N		1
18	:926/90010		Seal Length 4473mm (Supplied from 926/45000)		1
19	:826/10879		Nut rivet hex. M6		1
21	:1370/0203D		Nut Lock M8		6
21A	:122/23509		Cap Nut M8		4
22	:1420/0007D		Washer (M8)		6
23	****		'See Remark' Not fitted		2
24	:1370/9403Z		Nut Lock		2
29	331/35245		Strap Check		2
30	1315/3316D		Bolt M8 x 70mm		2

31	1370/0203D		Nut Lock M8		8
32	1420/0007D		Washer (M8)		10
33	122/23509		Cap Nut M8		4

Applicability Date Ranges:
From: , To:

9812/3020 B2-4-1 WINDOW, RIGHT SIDE

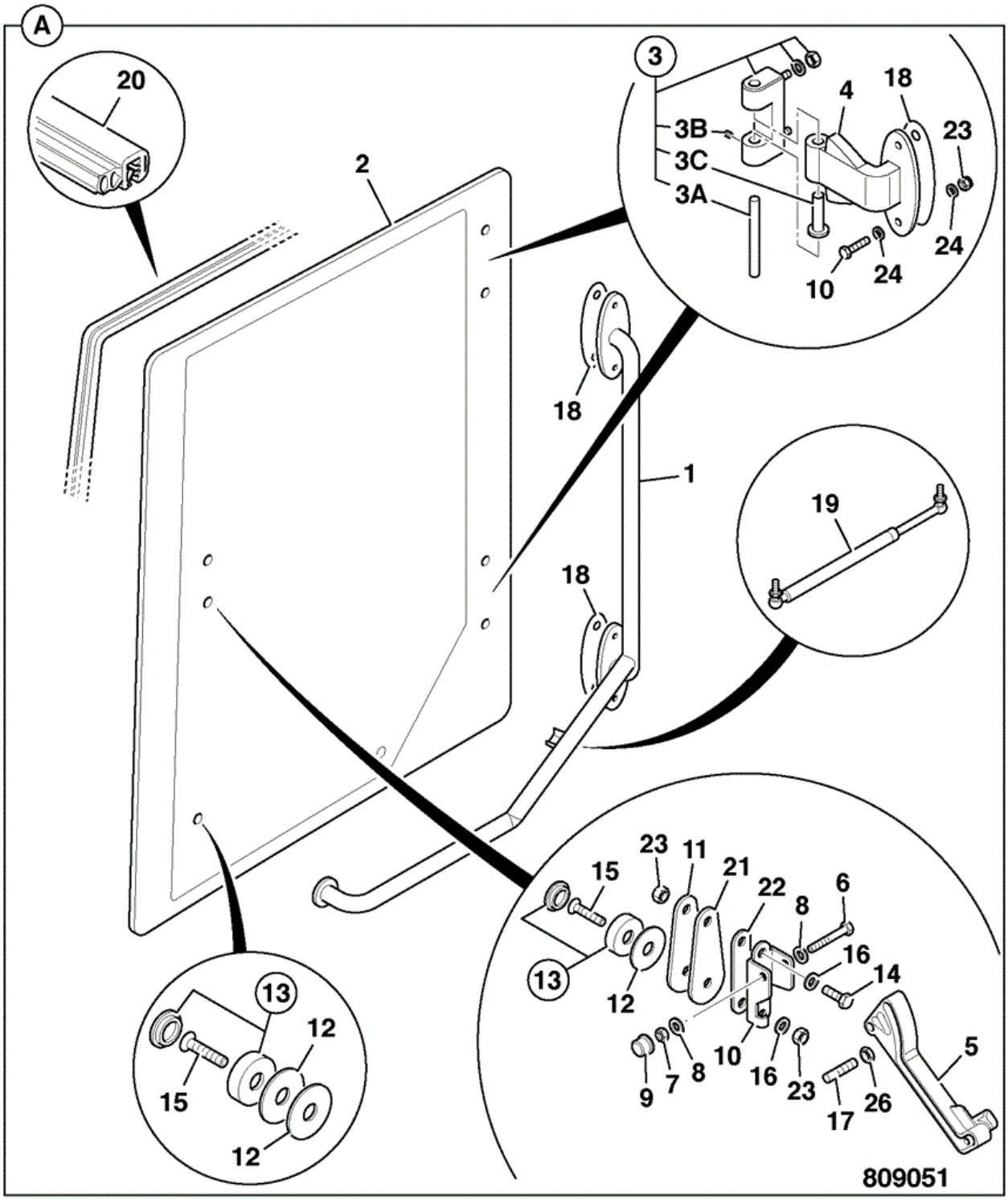

Item	Part No	Change No	Description	Usage Code	QTY
A	****		Window assembly right side		1
1	:335/10494		Handle grab		1

2	:827/80389		Glass window right side		1
3	:331/31247		Hinge Block Assembly		2
3A	::331/31381		Pin Hinge		1
3B	::331/31386		Screw Grub		1
3C	::331/31385		Bush Nylon		1
4	:335/09474		Hinge		2
5	:331/38532		Handle Side Window		1
6	:1315/3212D		Bolt M6 x 50		1
7	:1370/0103D		Nut (M6)		1
8	:826/10977		Rivet nut M8		1
9	:835/00074		Cap Nut,M6		2
10	:331/35450		Bracket Left,stay mounting cab window		1
11	:331/35756		Moulding plastic,outer clamp window		1
12	:813/10233		Gasket window, cab		3
13	:331/23194		Cap plastic door hinges		2
14	:826/11040		Screw Set Screw M8 X 20		1
15	:826/11183		Screw socket M8x45 Csk. black		2
16	:823/00529		Washer		8
17	:331/45087		Bar Window Stay		1
18	:813/10281		Gasket		4
19	:331/46389		Strut		1
20	:926/90007		Seal window Length 3395mm (supplied from 926/45000)		1
21	:813/10244		Gasket outer clamp,window		1
22	:813/10239		Gasket inner clamp,window		1
23	:1370/0203D		Nut Lock M8		10
24	:1420/0007D		Washer (M8)		5
25	:1315/0308D		Setscrew M8 x 30 mm		4
26	:122/23509		Cap Nut M8		8

Applicability Date Ranges:
From: , To: DEC2012

Product Catalog\WHEELED LOADERS\416 01243000-01243499,01317500-01317999,01472000-01472999,02095872-02095875 9812/3020 \B BODYWORK, CAB, LOADER END\B02 CAB\B2-4-2 WINDOW RIGHT SIDE

9812/3020 B2-4-2 WINDOW RIGHT SIDE

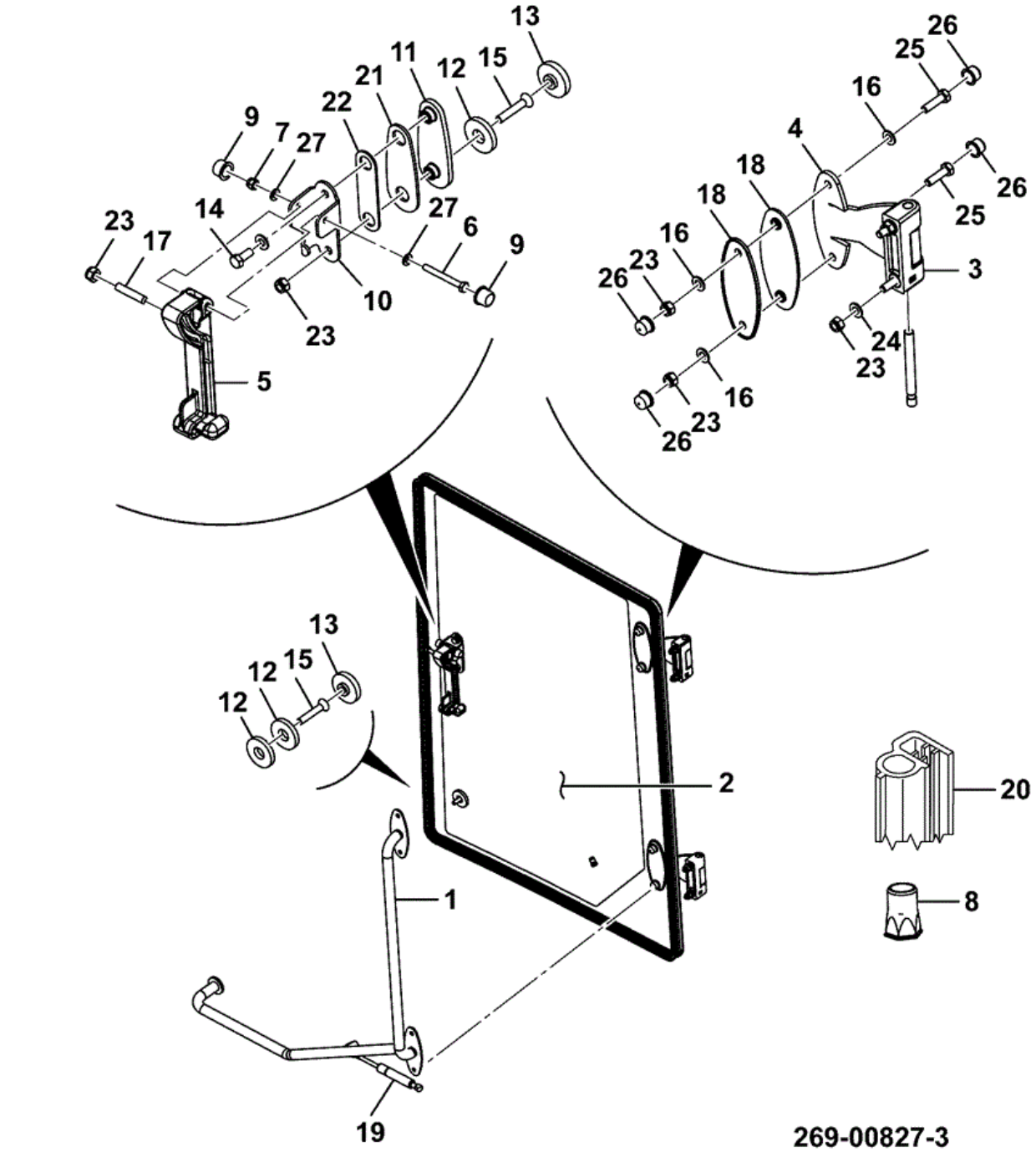

Item	Part No	Change No	Description	Usage Code	QTY
1	335/10494		Handle grab		1
2	827/80389		Glass window right side		1

3	331/31247		Hinge Block Assembly		2
4	335/09474		Hinge		2
5	333/A3122		Handle LH, ABI side window		1
6	1315/3213D		Bolt M6 x 55		1
7	1370/0103D		Nut (M6)		1
8	826/10977		Rivet nut M8		1
9	835/00074		Cap Nut,M6		2
10	331/35450		Bracket Left,stay mounting cab window		1
11	331/35756		Moulding plastic,outer clamp window		1
12	813/10233		Gasket window, cab		3
13	331/23194		Cap plastic door hinges		2
14	826/11040		Screw Set Screw M8 X 20		1
15	826/11183		Screw socket M8x45 Csk. black		2
16	823/00529		Washer		8
17	331/45087		Bar Window Stay		1
18	813/10281		Gasket		4
19	331/46389		Strut		1
20	926/90007		Seal window		1
21	813/10244		Gasket outer clamp,window		1
22	813/10239		Gasket inner clamp,window		1
23	1370/0203D		Nut Lock M8		10
24	1420/0007D		Washer (M8)		5
25	1315/0308D		Setscrew M8 x 30 mm		4
26	122/23509		Cap Nut M8		8
27	1420/0006D		Washer (M6)		2

Applicability Date Ranges:
From: JAN2013 , To:

Product Catalog\WHEELED LOADERS\416 01243000-01243499,01317500-01317999,01472000-01472999,02095872-02095875 9812/3020 \B BODYWORK, CAB, LOADER END\B02 CAB\B2-4-5 WINDOW RIGHT SIDE LOW ROOF CAB, SALES SPECIAL

9812/3020 B2-4-5 WINDOW RIGHT SIDE LOW ROOF CAB, SALES SPECIAL

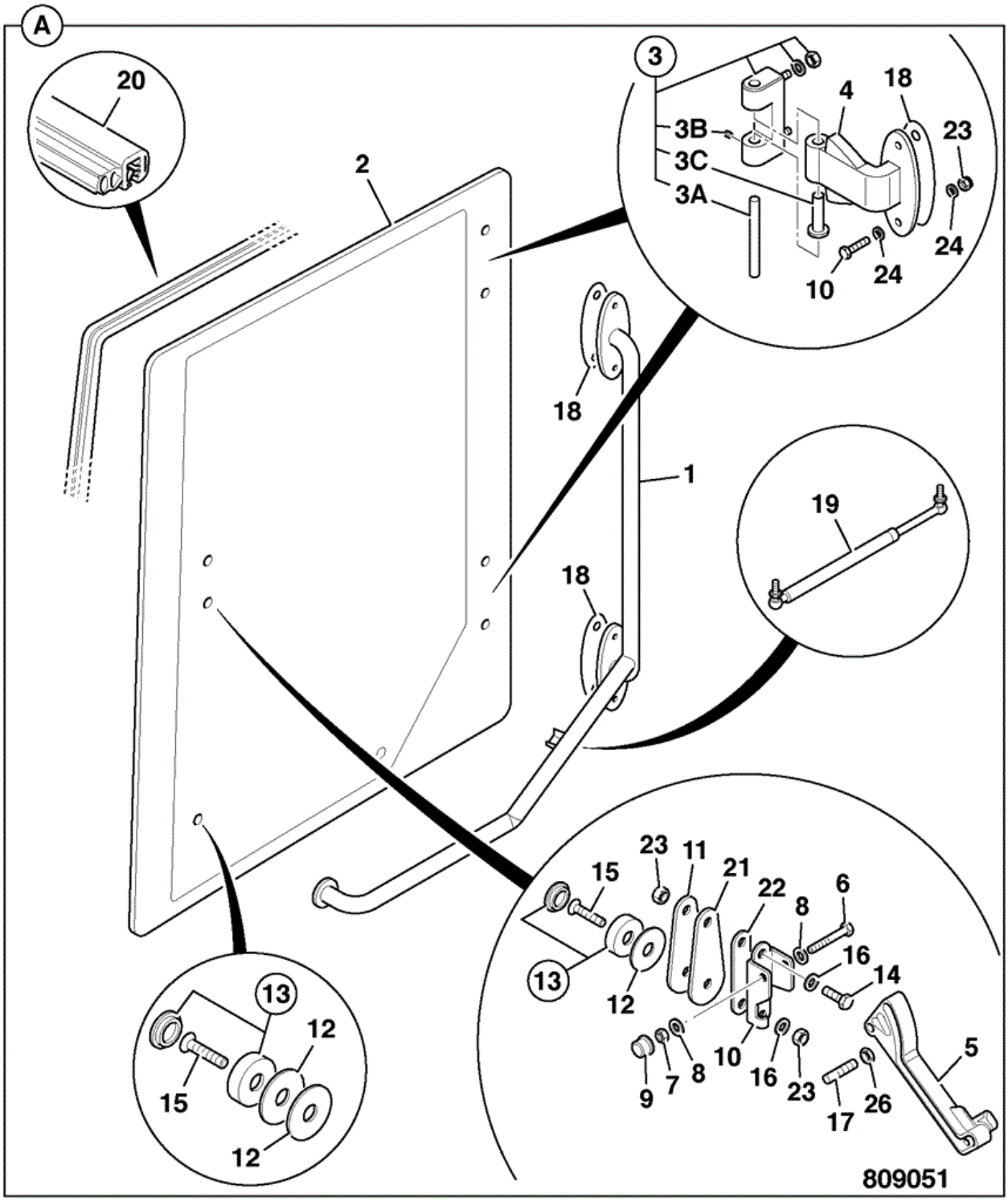

Item	Part No	Change No	Description	Usage Code	QTY
A	269/00907		Window assembly,right side low roof Sales special 1047 and 1048		1

1	:335/11279		Handle grab low roof		1
2	:827/80411		Glass side window		1
3	:331/31247		Hinge Block Assembly		2
3A	::331/31381		Pin Hinge		1
3B	::331/31386		Screw Grub		1
3C	::331/31385		Bush Nylon		1
4	:335/09474		Hinge		2
5	:331/38532		Handle Side Window		1
6	:1315/3212D		Bolt M6 x 50		1
7	:1370/0103D		Nut (M6)		1
8	:826/10977		Rivet nut M8		1
9	:835/00074		Cap Nut,M6		2
10	:331/35450		Bracket Left,stay mounting cab window		1
11	:331/35756		Moulding plastic,outer clamp window		1
12	:813/10233		Gasket window, cab		3
13	:331/23194		Cap plastic door hinges		2
14	:826/11040		Screw Set Screw M8 X 20		1
15	:826/11183		Screw socket M8x45 Csk. black		2
16	:823/00529		Washer		8
17	:331/45087		Bar Window Stay		1
18	:813/10281		Gasket		4
19	:331/46389		Strut		1
20	:926/90008		Seal Length 3262mm (supplied from 926/45000)		1
21	:813/10244		Gasket outer clamp,window		1
22	:813/10239		Gasket inner clamp,window		1
23	:1370/0203D		Nut Lock M8		10
24	:1420/0007D		Washer (M8)		5
25	:1315/0308D		Setscrew M8 x 30 mm		4
26	:122/23509		Cap Nut M8		8

Applicability Date Ranges:
From: , To: DEC2012

Product Catalog\WHEELED LOADERS\416 01243000-01243499,01317500-01317999,01472000-01472999,02095872-02095875 9812/3020 \B BODYWORK, CAB, LOADER END\B02 CAB\B2-4-6 WINDOW, RIGHT SIDE LOW ROOF

9812/3020 B2-4-6 WINDOW, RIGHT SIDE LOW ROOF

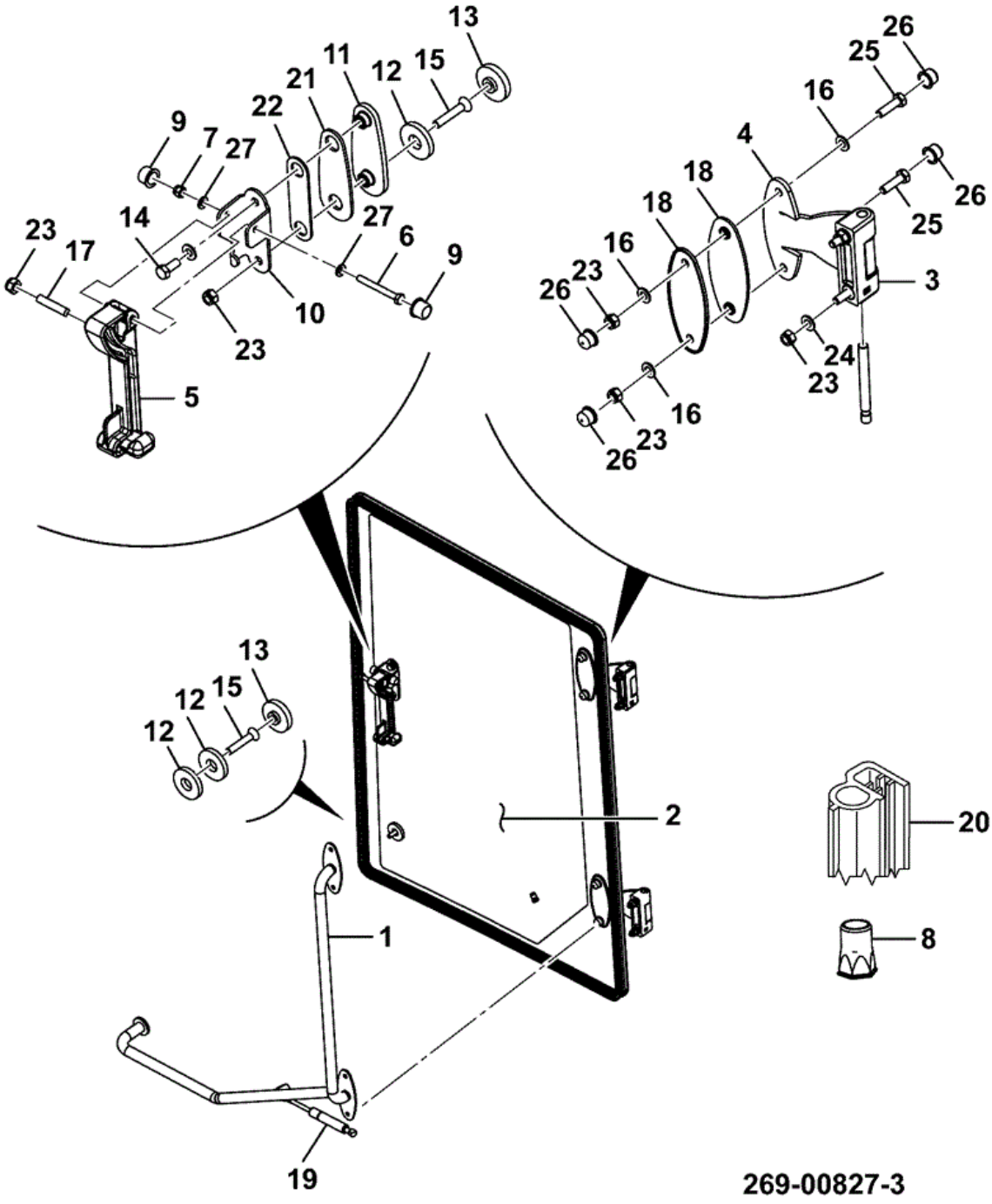

Item	Part No	Change No	Description	Usage Code	QTY
1	335/11279		Handle grab low roof		1
2	827/80411		Glass side window		1

3	331/31247		Hinge Block Assembly		2
4	335/09474		Hinge		2
5	333/A3122		Handle LH, ABI side window		1
6	1315/3213D		Bolt M6 x 55		1
7	1370/0103D		Nut (M6)		1
8	826/10977		Rivet nut M8		1
9	835/00074		Cap Nut,M6		2
10	331/35450		Bracket Left,stay mounting cab window		1
11	331/35756		Moulding plastic,outer clamp window		1
12	813/10233		Gasket window, cab		3
13	331/23194		Cap plastic door hinges		2
14	826/11040		Screw Set Screw M8 X 20		1
15	826/11183		Screw socket M8x45 Csk. black		2
16	823/00529		Washer		8
17	331/45087		Bar Window Stay		1
18	813/10281		Gasket		4
19	331/46389		Strut		1
20	926/90008		Seal		1
21	813/10244		Gasket outer clamp,window		1
22	813/10239		Gasket inner clamp,window		1
23	1370/0203D		Nut Lock M8		10
24	1420/0007D		Washer (M8)		5
25	1315/0308D		Setscrew M8 x 30 mm		4
26	122/23509		Cap Nut M8		8
27	1420/0006D		Washer (M6)		2

Applicability Date Ranges:
From: JAN2013 , To:

Product Catalog\WHEELED LOADERS\416 01243000-01243499,01317500-01317999,01472000-01472999,02095872-02095875 9812/3020 \B BODYWORK, CAB, LOADER END\B02 CAB\B2-4-10 WINDOW RIGHT SIDE OPEN ANGLE, SALES SPECIAL

9812/3020 B2-4-10 WINDOW RIGHT SIDE OPEN ANGLE, SALES SPECIAL

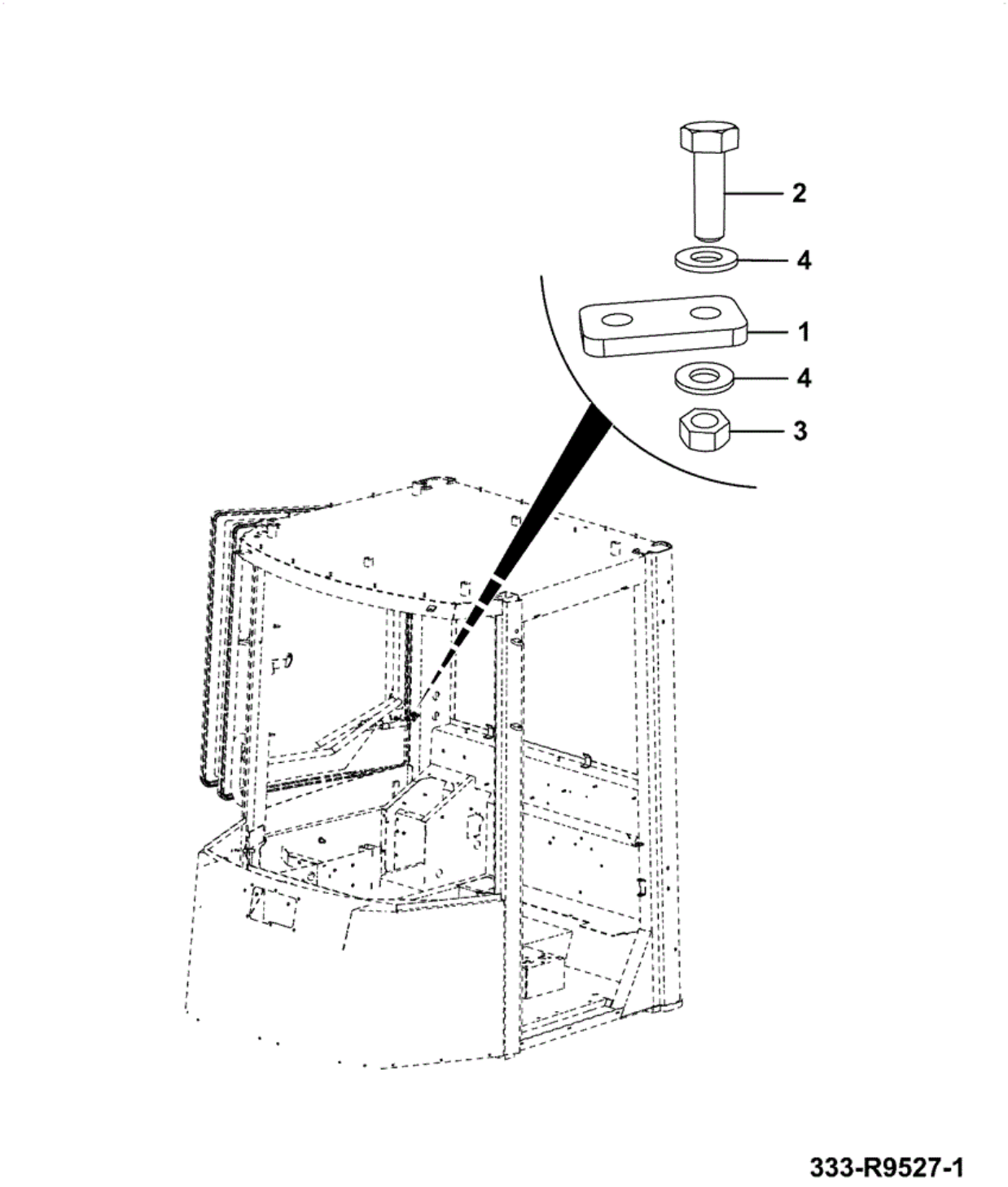

Item	Part No	Change No	Description	Usage Code	QTY
1	333/R9885		Plate adapter Sales special 1549		1

2	1315/0307D		Setscrew M8 x 25 mm		1
3	1370/0201D		Nut Plain M8		1
4	1420/0007D		Washer (M8)		2

Applicability Date Ranges:
From: , To:

9812/3020 B2-5-1 CAB MOUNTINGS

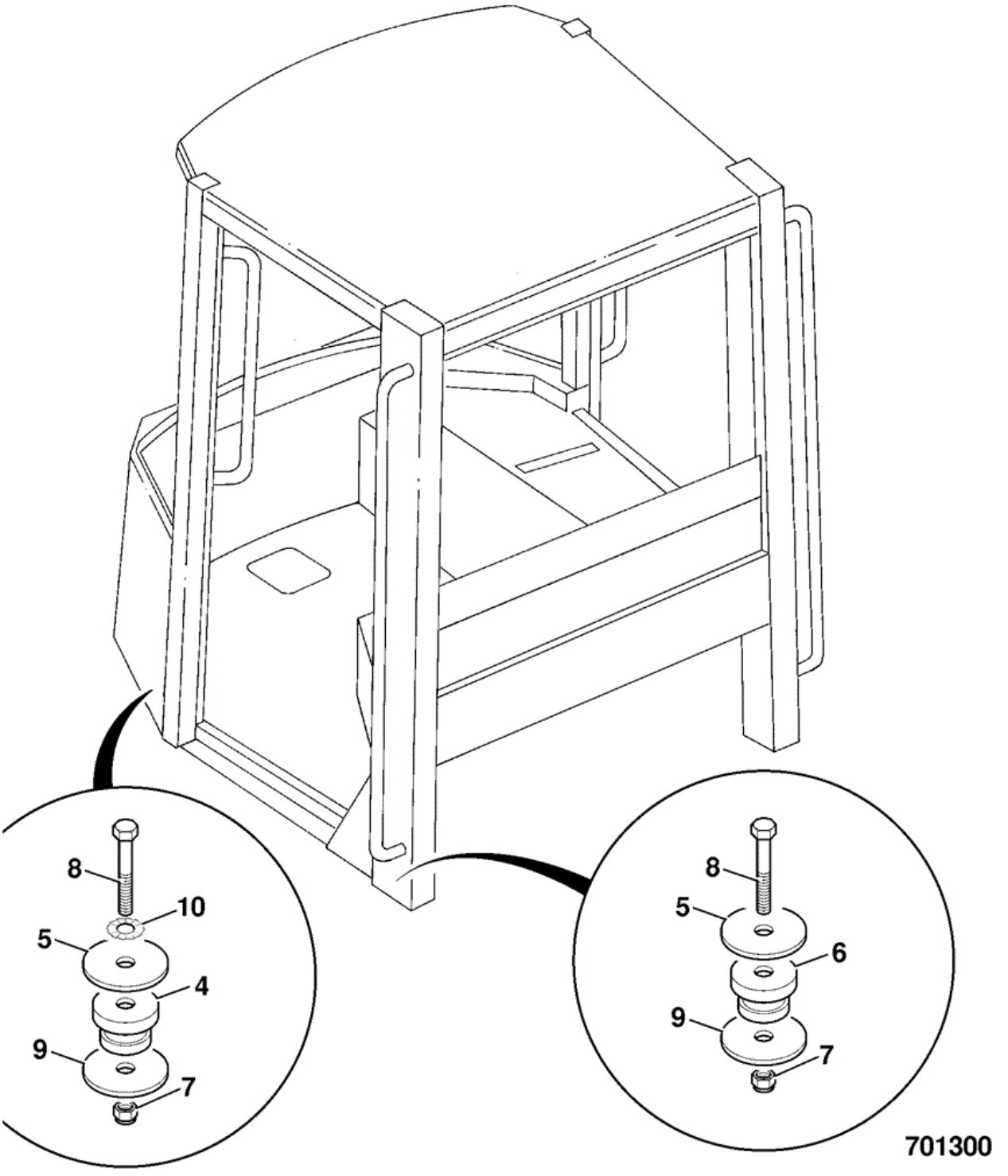

Item	Part No	Change No	Description	Usage Code	QTY
4	265/00241		Mounting Cab,60 Shore		2
4A	265/00900		Plate mounting front cab Low roof cab only		2

5	265/01124		Pad rebound 20mm thick 20 mm thickness		4
6	265/00242		Mounting Cab, 45 Shore		2
7	1370/0703D		Nut M20, 2.5 pitch		4
8	1315/3823D		Bolt M20 x 130mm		4
9	265/00657		Pad rebound 8mm thick 9 mm thickness		4
10	1417/0018Z		Washer External Teeth Lock		2

Applicability Date Ranges:
From: , To:

Product Catalog\WHEELED LOADERS\416 01243000-01243499,01317500-01317999,01472000-01472999,02095872-02095875 9812/3020 \B BODYWORK, CAB, LOADER END\B02 CAB\B2-6-1 ROOF MOULDING

9812/3020 B2-6-1 ROOF MOULDING

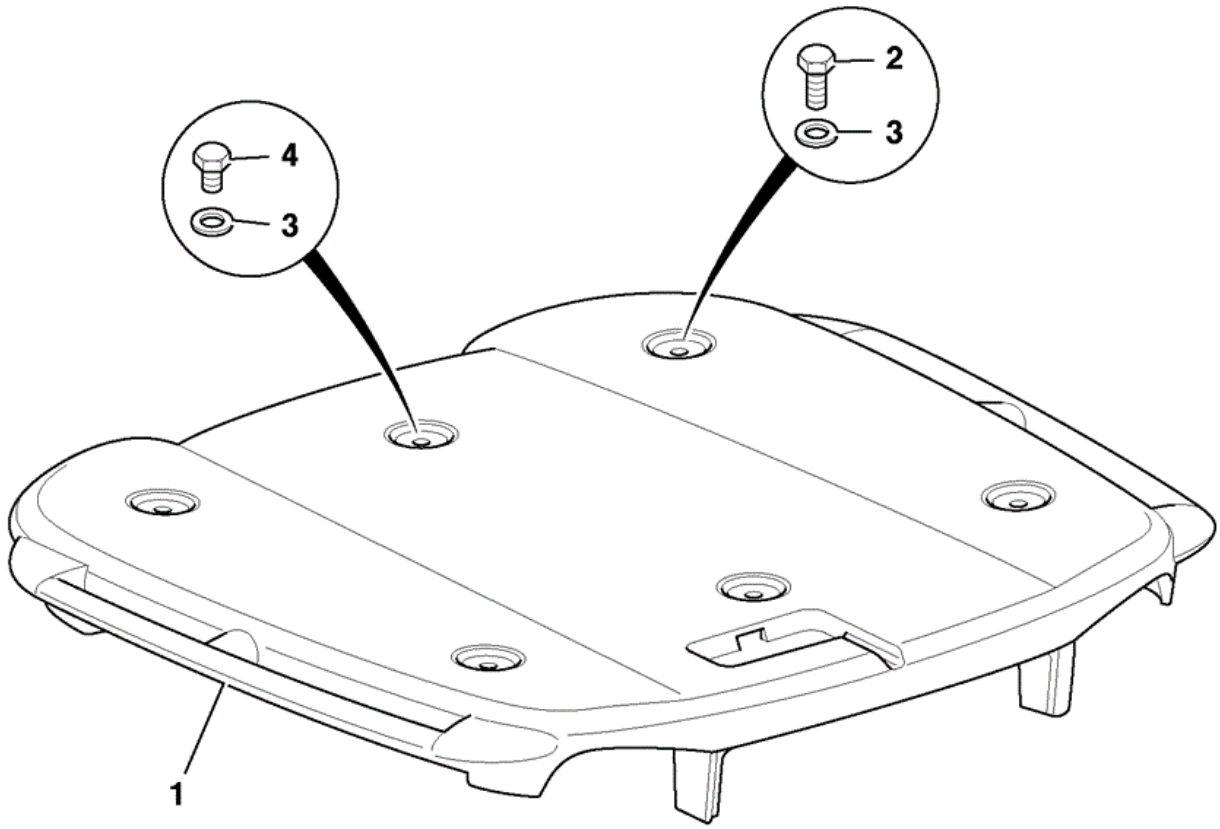

809010

Item	Part No	Change No	Description	Usage Code	QTY
1	346/00324		Moulding roof		1
1	970/61466		Moulding roof black Sales special 1047 for the Italian Military		1

2	1315/0708D		Setscrew M16 x 30mm		4
3	1420/0011D		Washer (M16)		6
4	1315/0705D	to AUG09	Setscrew M16 x 20mm		2
4	1315/0708D		Setscrew M16 x 30mm		2

Applicability Date Ranges:
From: , To:

Product Catalog\WHEELED LOADERS\416 01243000-01243499,01317500-01317999,01472000-01472999,02095872-02095875 9812/3020 \B BODYWORK, CAB, LOADER END\B02 CAB\B2-7-1 ROOF LINER

9812/3020 B2-7-1 ROOF LINER

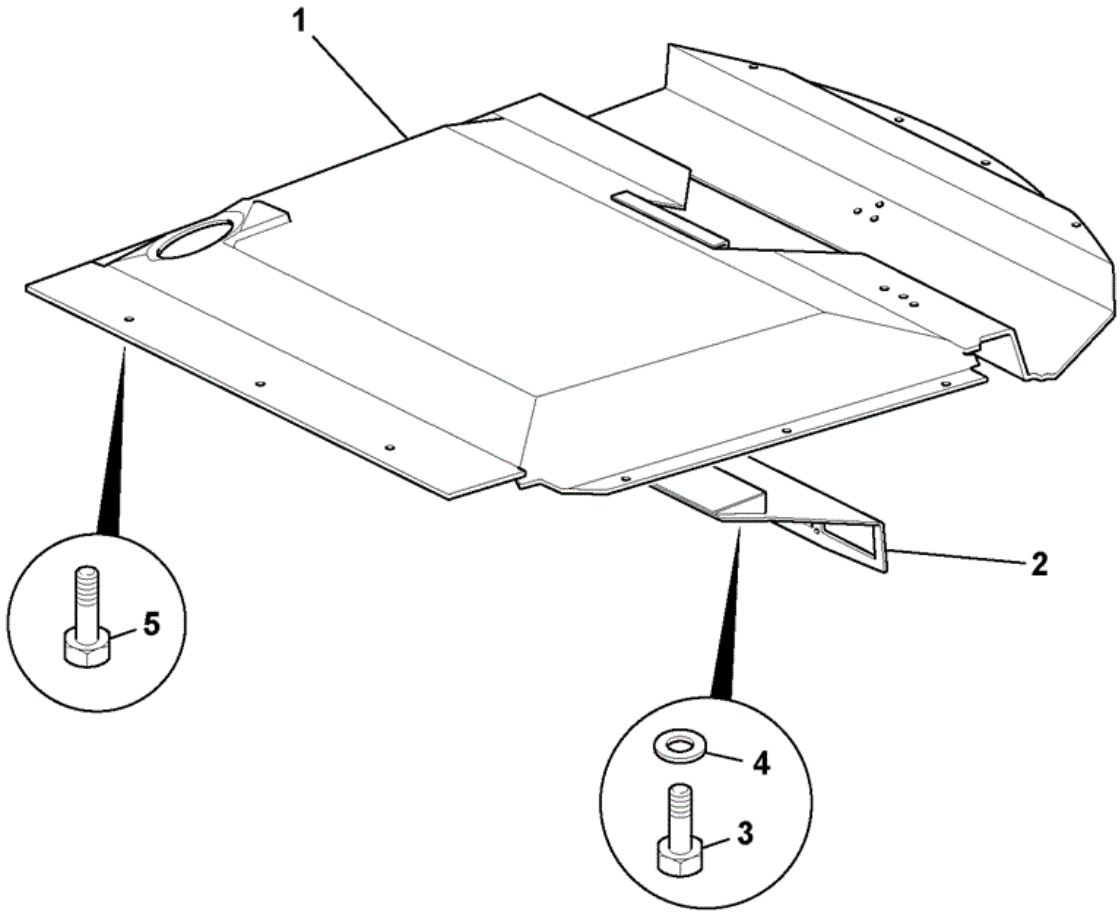

822060

Item	Part No	Change No	Description	Usage Code	QTY
1	331/54691	Superseded	Liner roof		1
1	331/17593	to OCT2010	Lining roof		1

1	333/S5108		Liner roof, inc. speakers & harness ABI		1
2	331/19623	Superseded	Panel switch roof mounted		1
2	332/V6290		Panel switch roof mounted		1
3	826/01559		Screw Button Head Socket For items 1 & 2		17
4	823/00516		Washer Nylon M6		16
4	823/00573		Washer large 1/4" For items 3 & 5		16
5	826/01406		Screw M5 x 20 For item 1		3

9812/3020 B2-7-10 ROOF LINER ABI

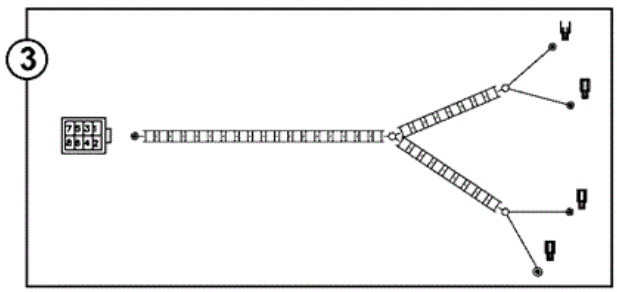

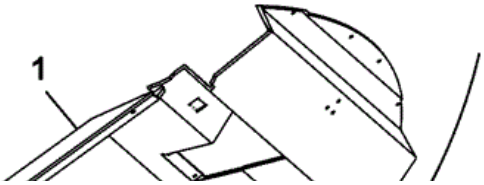

Item	Part No	Change No	Description	Usage Code	QTY
1	333/S5936		Liner roof		1
2	333/S5135		Kit-speaker grille 2 speakers + 2 grilles & fixings		1
3	719/89100		Harness speaker		1

Applicability Date Ranges:
From: , To: MAR2012

Product Catalog\WHEELED LOADERS\416 01243000-01243499,01317500-01317999,01472000-01472999,02095872-02095875 9812/3020 \B BODYWORK, CAB, LOADER END\B02 CAB\B2-7-2 ROOF LINER

9812/3020 B2-7-2 ROOF LINER

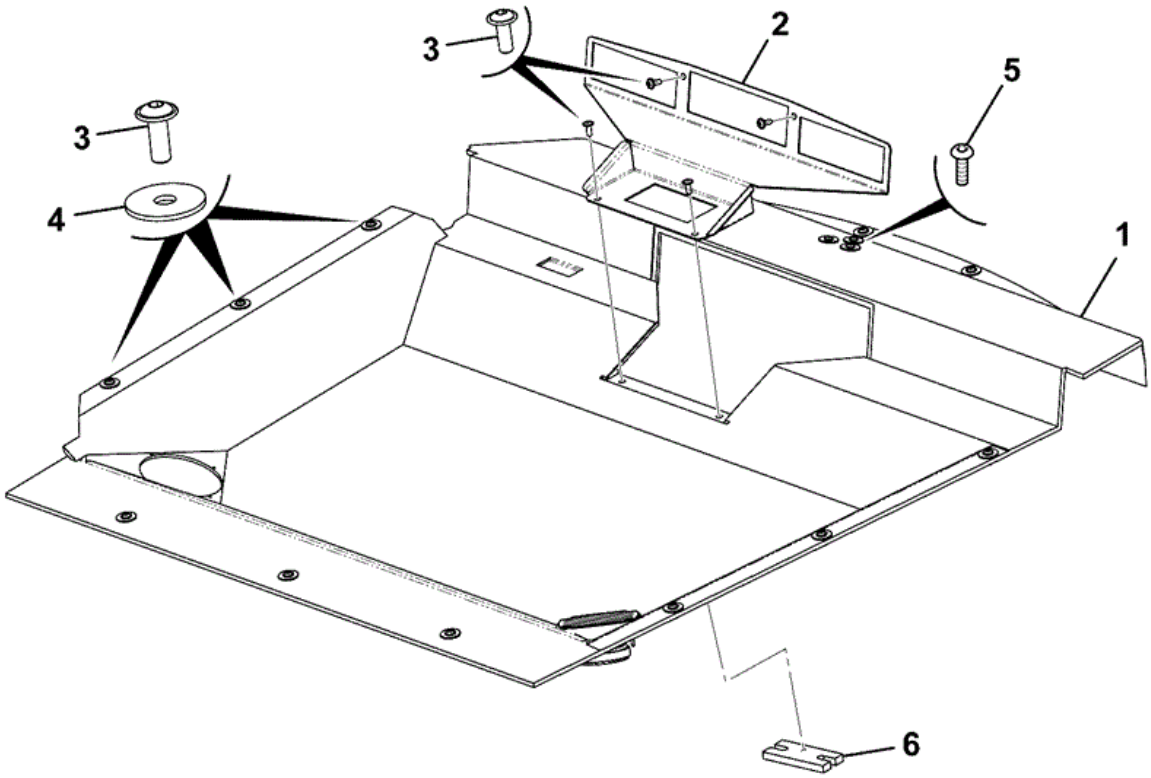

269-00839-7

Item	Part No	Change No	Description	Usage Code	QTY
1	333/S5108		Liner roof, inc. speakers & harness ABI		1
2	332/V6290		Panel switch roof mounted		1

3	826/01559		Screw Button Head Socket For items 1 & 2		17
4	823/00573		Washer large 1/4" For items 3 & 5		16
5	826/01406		Screw M5 x 20 For item 1		3
6	333/U7897		Spacer		1

9812/3020 B2-7-10 ROOF LINER ABI

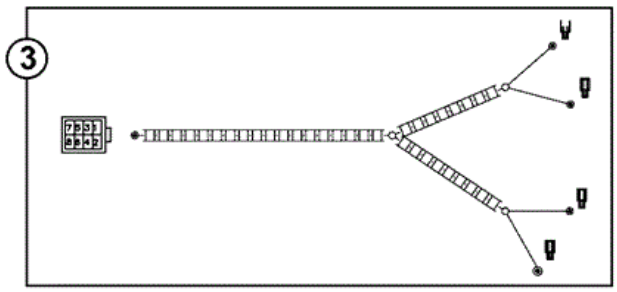

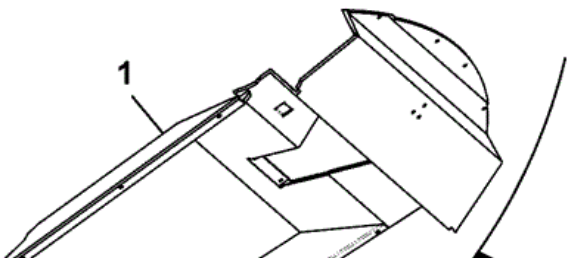

Item	Part No	Change No	Description	Usage Code	QTY
1	333/S5936		Liner roof		1
2	333/S5135		Kit-speaker grille 2 speakers + 2 grilles & fixings		1
3	719/89100		Harness speaker		1

Applicability Date Ranges:
From: APR2012 , To:

Product Catalog\WHEELED LOADERS\416 01243000-01243499,01317500-01317999,01472000-01472999,02095872-02095875 9812/3020 \B BODYWORK, CAB, LOADER END\B02 CAB\B2-7-10 ROOF LINER ABI

9812/3020 B2-7-10 ROOF LINER ABI

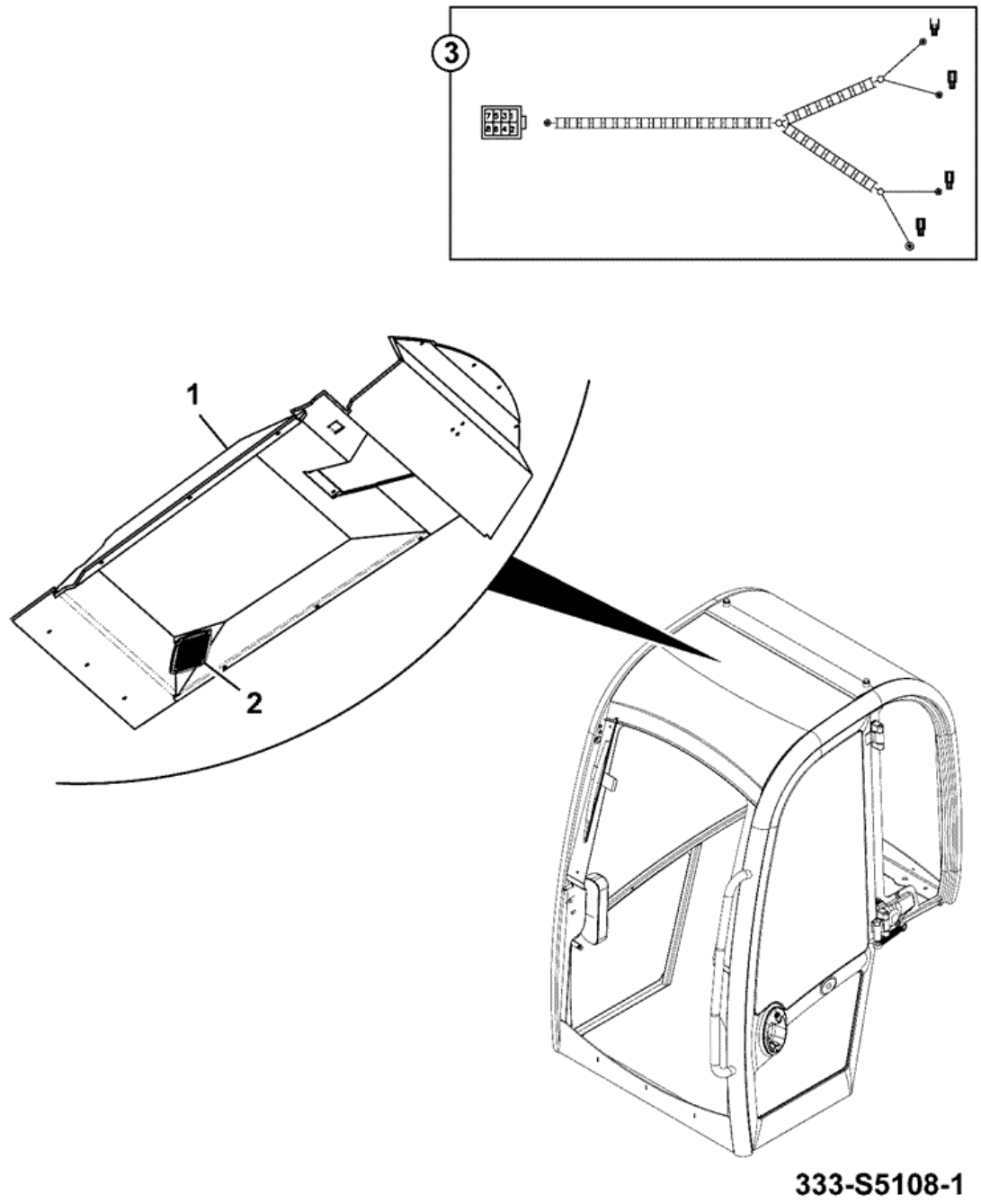

Item	Part No	Change No	Description	Usage Code	QTY
1	333/S5936		Liner roof		1
2	333/S5135		Kit-speaker grille 2 speakers + 2 grilles & fixings		1

3	719/89100		Harness speaker		1

Applicability Date Ranges:
From: , To:

Product Catalog\WHEELED LOADERS\416 01243000-01243499,01317500-01317999,01472000-01472999,02095872-02095875 9812/3020 \B BODYWORK, CAB, LOADER END\B02 CAB\B2-7-20 ROOF LINER CANOPY BUILDS

9812/3020 B2-7-20 ROOF LINER CANOPY BUILDS

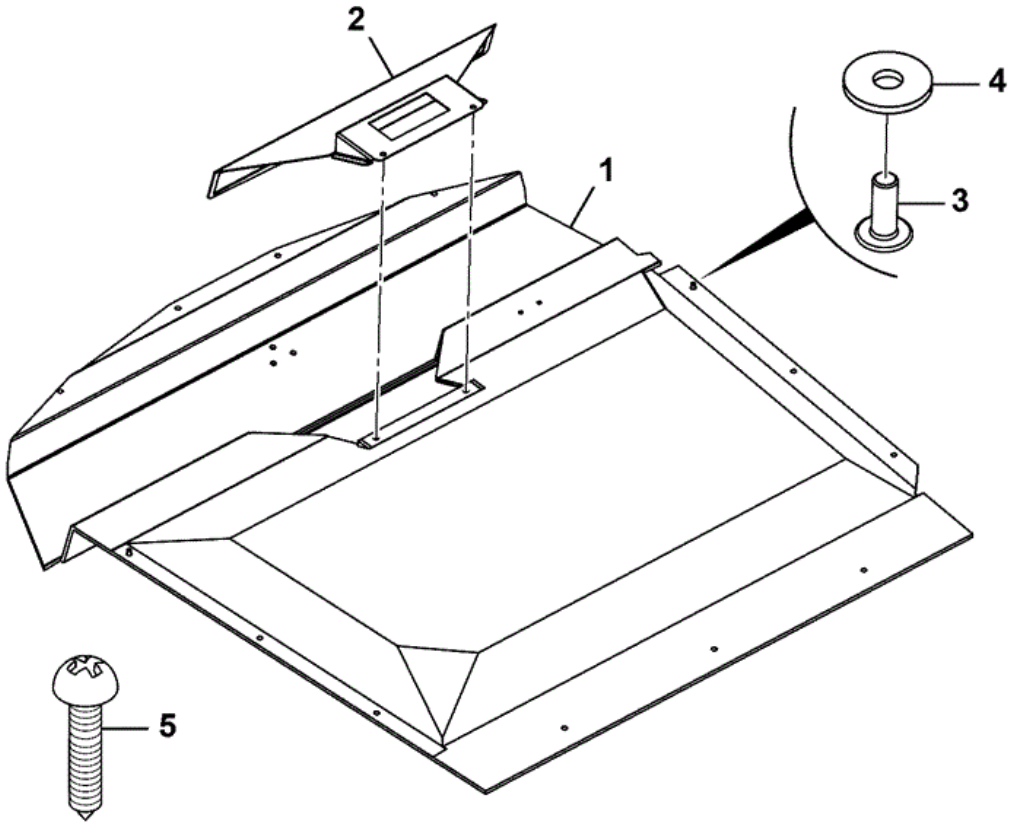

332-A1582-2

Item	Part No	Change No	Description	Usage Code	QTY
1	332/A1581		Lining roof		1
2	332/V6290		Panel switch roof mounted		1

3	826/01559		Screw Button Head Socket		17
4	823/00516		Washer Nylon M6		16
5	826/01406		Screw M5 x 20		3

Applicability Date Ranges:
From: , To:

Product Catalog\WHEELED LOADERS\416 01243000-01243499,01317500-01317999,01472000-01472999,02095872-02095875 9812/3020 \B BODYWORK, CAB, LOADER END\B02 CAB\B2-8-1 BLIND, SUN

9812/3020 B2-8-1 BLIND, SUN

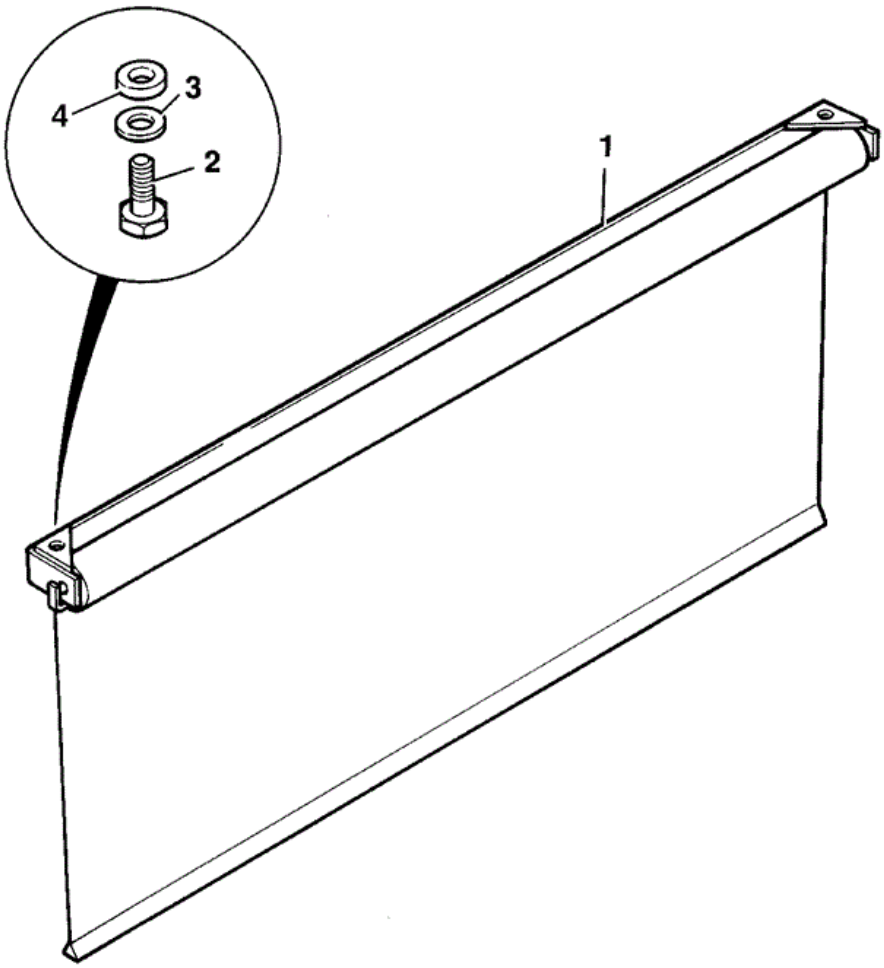

202091

Item	Part No	Change No	Description	Usage Code	QTY
1	331/39598		Sunblind		1
2	1315/3210D		Bolt M6x40		2

3	1420/0006D		Washer (M6)		2
4	830/00609		Spacer		2

Applicability Date Ranges:
From: , To:

Product Catalog\WHEELED LOADERS\416 01243000-01243499,01317500-01317999,01472000-01472999,02095872-02095875 9812/3020 \B BODYWORK, CAB, LOADER END\B02 CAB\B2-8-5 VISOR, SUN

9812/3020 B2-8-5 VISOR, SUN

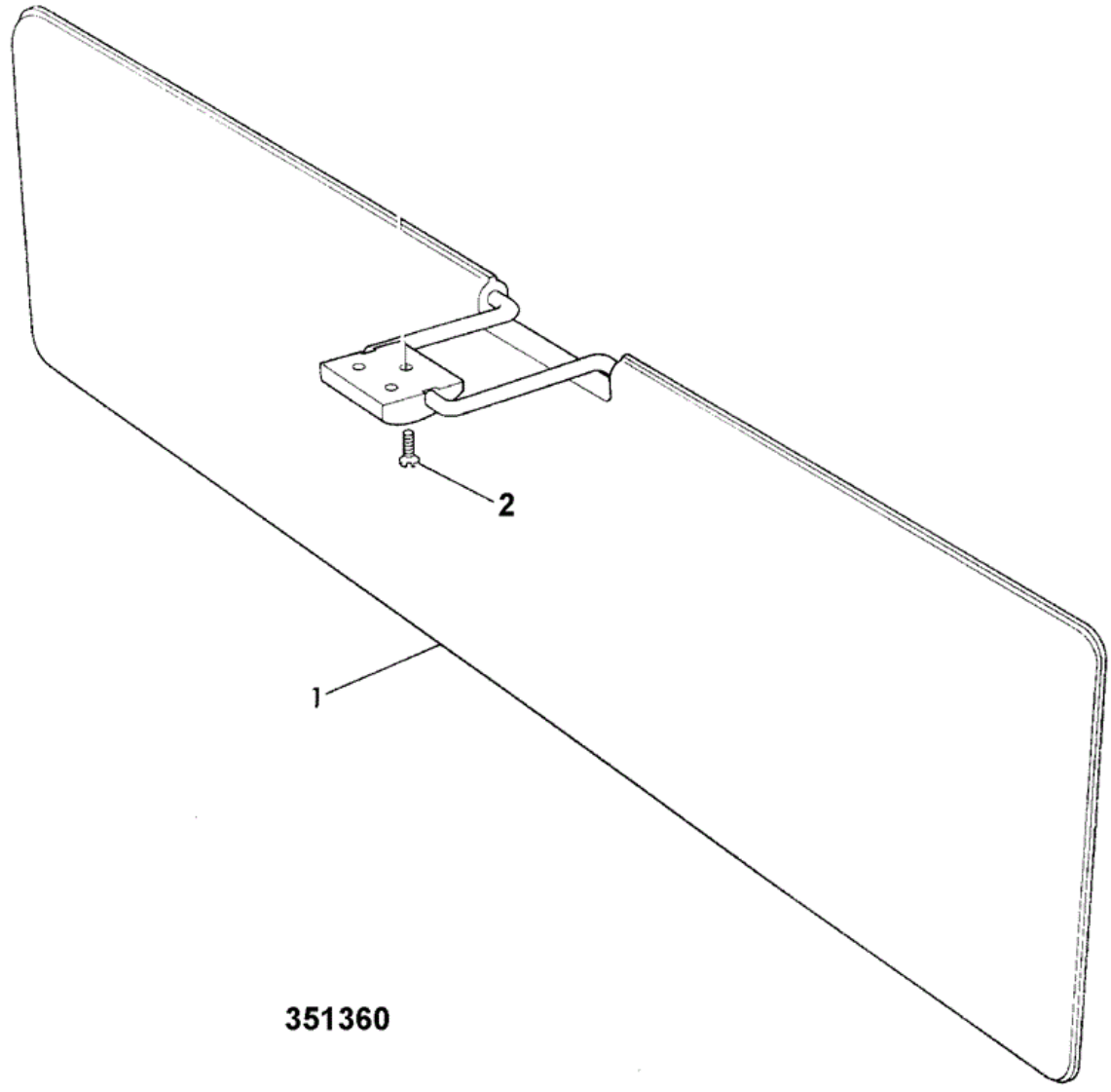

Item	Part No	Change No	Description	Usage Code	QTY
1	331/24572	Superseded	Visor sun		1
1	123/03384		Blind sun visor (flap type)		1

2	826/01282		Screw M5 x 16mm		2
3	826/00023		Screw spire		1

Applicability Date Ranges:
From: , To:

Product Catalog\WHEELED LOADERS\416 01243000-01243499,01317500-01317999,01472000-01472999,02095872-02095875 9812/3020 \B BODYWORK, CAB, LOADER END\B02 CAB\B2-9-1 ARMREST

9812/3020 B2-9-1 ARMREST

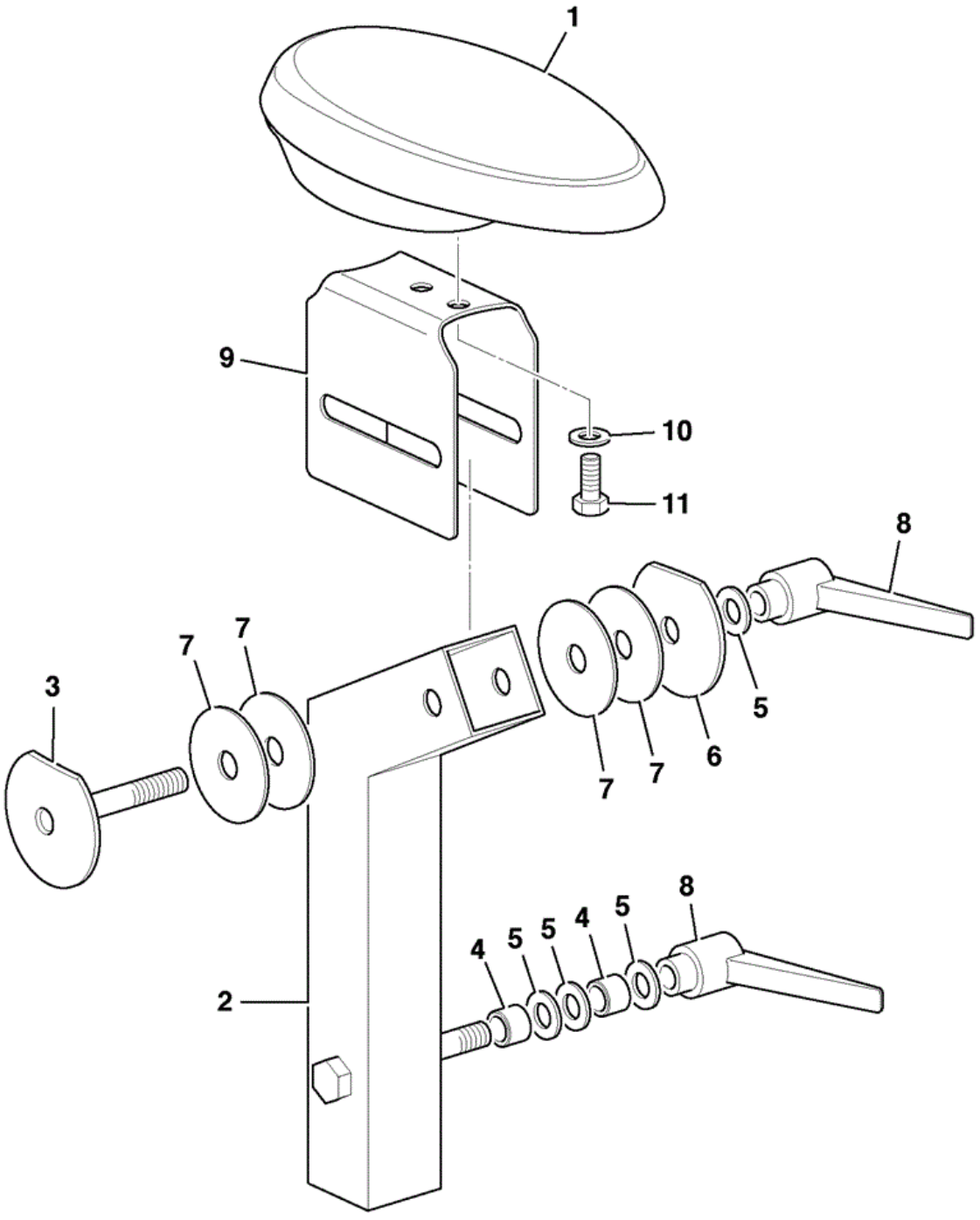

809200

Item	Part No	Change No	Description	Usage Code	QTY
1	331/34723		Pad Armrest		1
2	335/01024		Bracket armrest		1

3	331/14691		Clamp bolt arm Servo seat		1
4	123/05553		Spacer steel		2
5	1420/0008D		Washer (M10)		4
6	823/10237		Washer conical M10 servo seat		1
7	823/10262		Washer fibre		4
8	162/02997		Clamp Lever M10		2
8	332/T3216		Clamp lever M10 Replaces 162/02997		2
9	331/57954		Bracket armrest		1
10	1420/0007D		Washer (M8)		2
11	1315/0305D		Setscrew M8 x 20mm		2

Applicability Date Ranges:
From: , To:

Product Catalog\WHEELED LOADERS\416 01243000-01243499,01317500-01317999,01472000-01472999,02095872-02095875 9812/3020 \B BODYWORK, CAB, LOADER END\B02 CAB\B2-10-1 CAB COMPONENTS

9812/3020 B2-10-1 CAB COMPONENTS

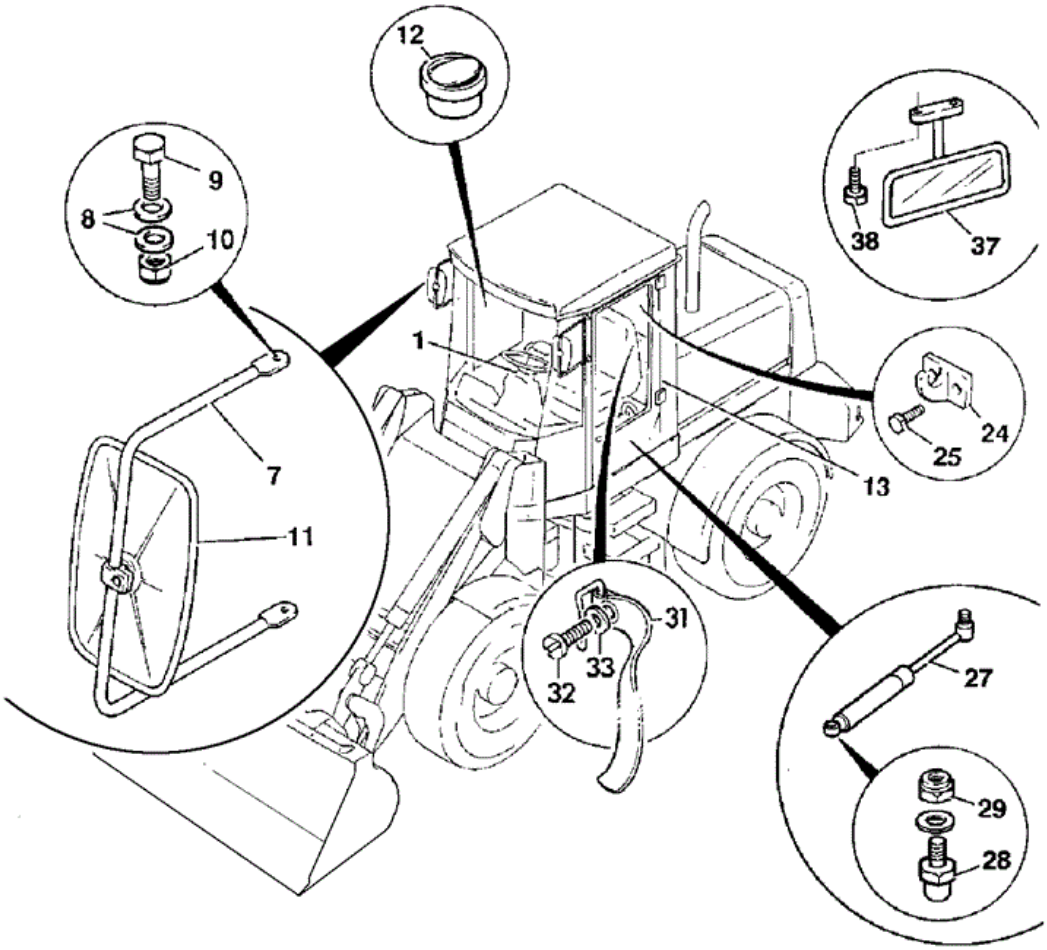

725470

Item	Part No	Change No	Description	Usage Code	QTY
1	****		'See Remark' See B2-3-1		1
7	335/03571		Bracket mirror		1

8	823/00344		Washer nylon		16
9	1315/3409Z		Bolt M10 x 35		4
10	1370/0303Z		Nut lock M10		4
11	717/20111		Mirror heated See also C1-29-1		1
11	331/34508		Mirror		1
11A	:331/65365		Glass mirror		1
12	265/00290		Vent Air		1
24	126/70000		Hook coat		1
25	:1430/0202		Screw No 8x1/2"		2
27	331/14573		Strut door stay See page B2-3-1		1
28	123/06335		Joint ball		2
29	1370/0203D		Nut Lock M8		2
31	126/00129		Strap coat tidy		1
32	1430/0202		Screw No 8x1/2"		1
33	1414/0011Z		Washer (2BA)		1
37	123/04078		Mirror interior		1
38	826/10472		Screw M5 x 25		2
39	331/18502		Strap Cup Holder		1

Applicability Date Ranges:
From: , To:

9812/3020 B2-11-1 CAB SKIRTS LH & RH STANDARD CAB

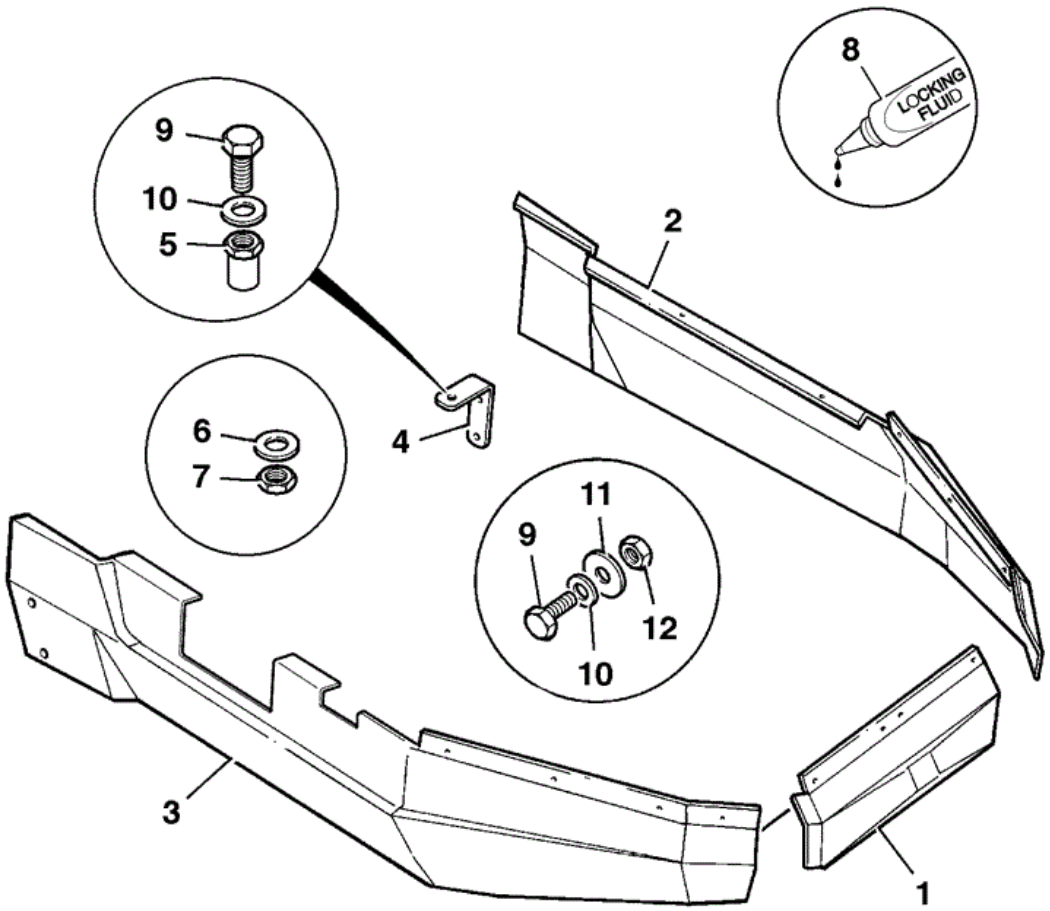

809340

Item	Part No	Change No	Description	Usage Code	QTY
1	346/00022		Moulding centre		1
2	346/00401		Plate skirt left side		1

3	346/00402		Plate skirt right side		1
4	265/02143		Bracket mounting		2
5	826/01101		Nut Nut,M6		4
6	1420/0012D		Washer Plain M20		2
7	1370/0702D		Nut Thin M20 Dacromet		4
8	4101/0200		Fluid Locking For item 4		0
9	1315/0205D		Setscrew M6 x 20		18
10	1420/0006D		Washer (M6)		16
11	1412/0001D		Washer (1/4" Large)		16
12	1370/0103D		Nut (M6)		14

Applicability Date Ranges:
From: , To:

9812/3020 B2-11-10 CAB SKIRTS LH & RH LOW ROOF CAB, SALES SPECIAL

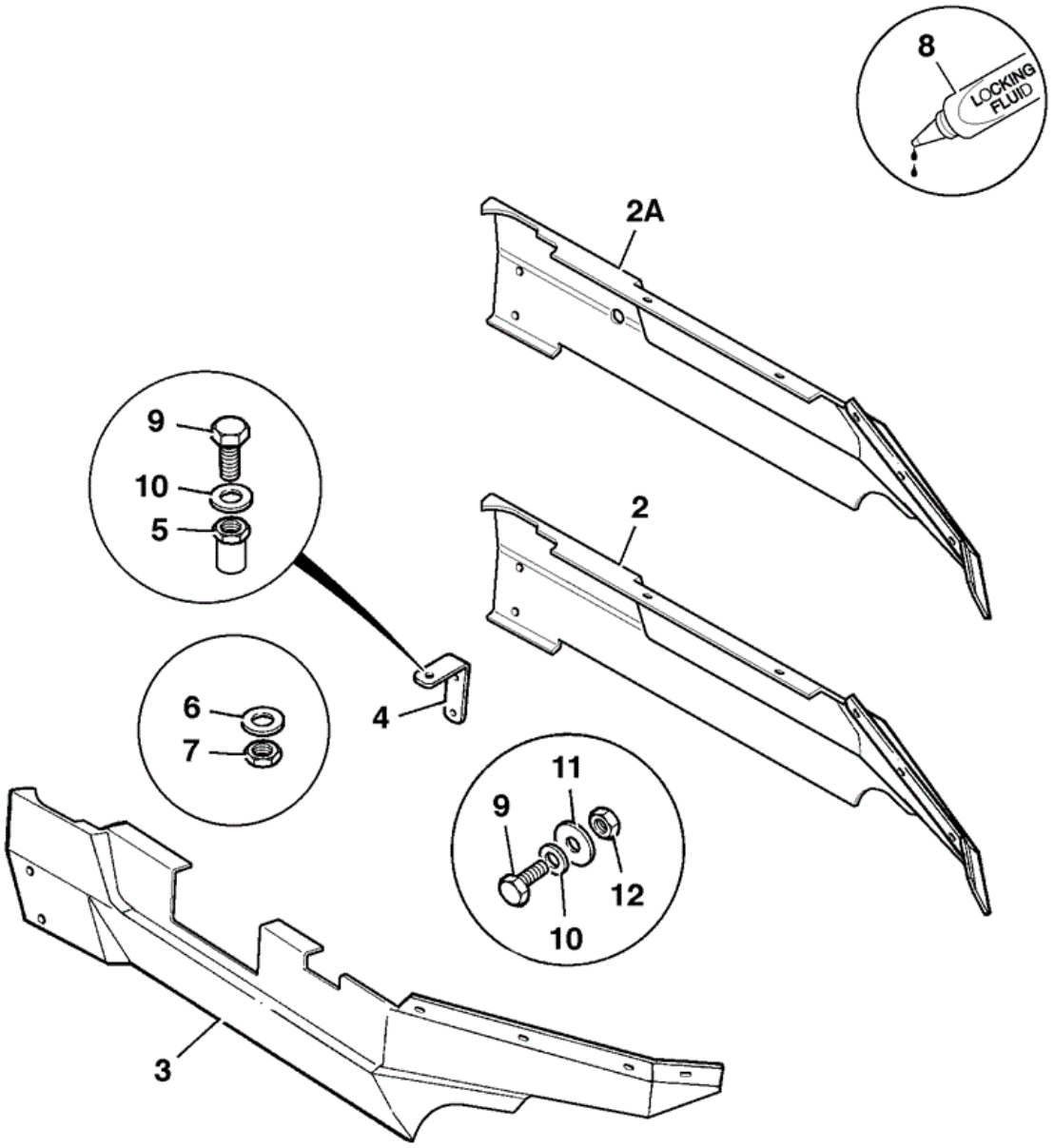

809750

Item	Part No	Change No	Description	Usage Code	QTY
2	346/00476		Moulding skirt left side Sales special 1047, 1048 & 3170		1

3	346/00477		Moulding skirt right side		1
4	331/44669		Bracket		2
5	826/01101		Nut Nut,M6		4
6	1420/0012D		Washer Plain M20		2
7	1370/0702D		Nut Thin M20 Dacromet		4
8	4101/0200		Fluid Locking For item 4		0
9	1315/0205D		Setscrew M6 x 20		18
10	1420/0006D		Washer (M6)		16
11	1412/0001D		Washer (1/4" Large)		16
12	1370/0103D		Nut (M6)		14

Applicability Date Ranges:
From: , To:

Product Catalog\WHEELED LOADERS\416 01243000-01243499,01317500-01317999,01472000-01472999,02095872-02095875 9812/3020 \B BODYWORK, CAB, LOADER END\B02 CAB\B2-12-1 CAB MAT

9812/3020 B2-12-1 CAB MAT

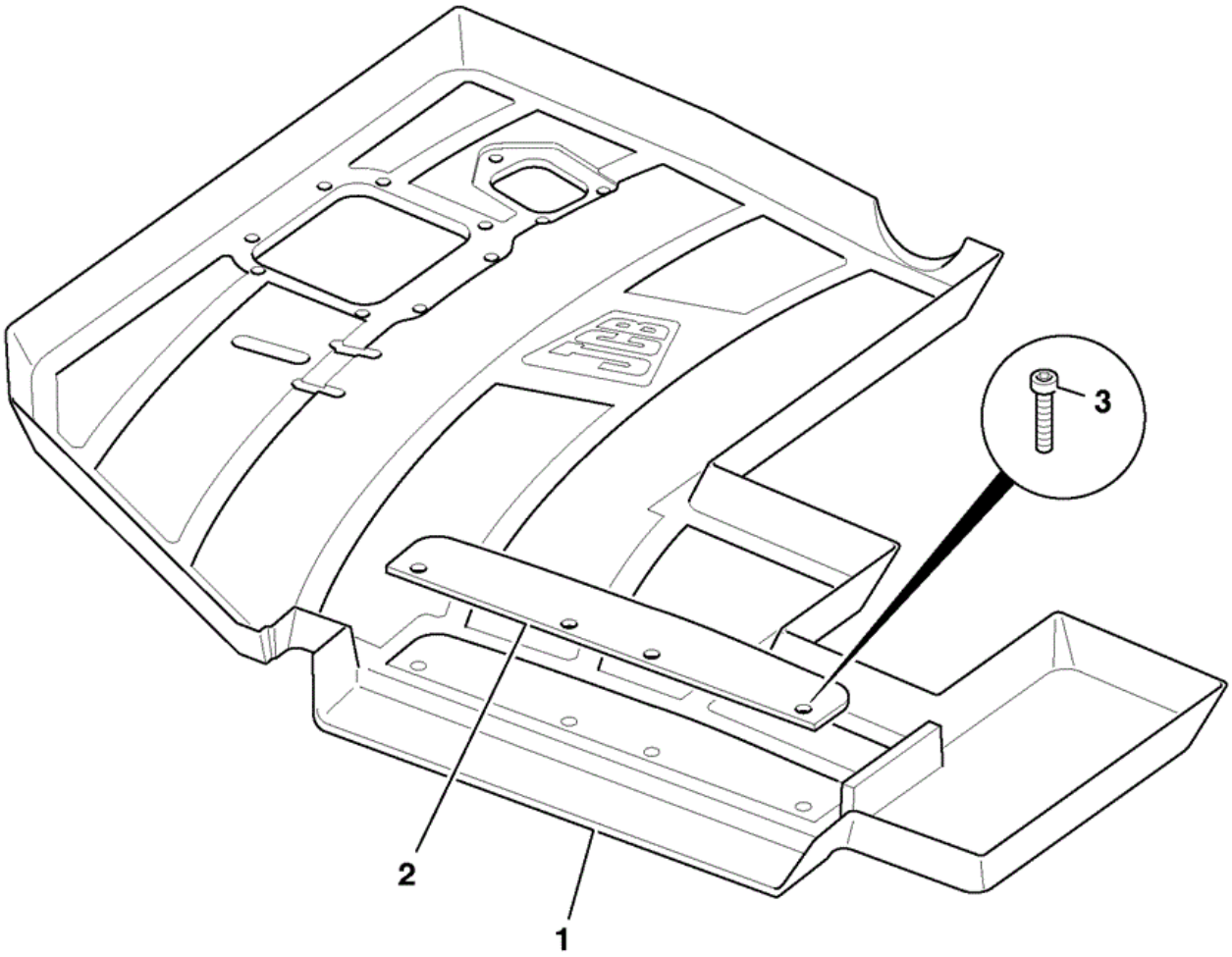

809350

Item	Part No	Change No	Description	Usage Code	QTY
1	331/57162	to 30/10/2010	Floormat		1
1	333/R1059		Floormat		1

2	331/47376		Plate		1
3	826/10529		Screw Socket Head M6x35		4

Applicability Date Ranges:
From: , To:

9812/3020 B2-14-1 FIRE EXTINGUISHER

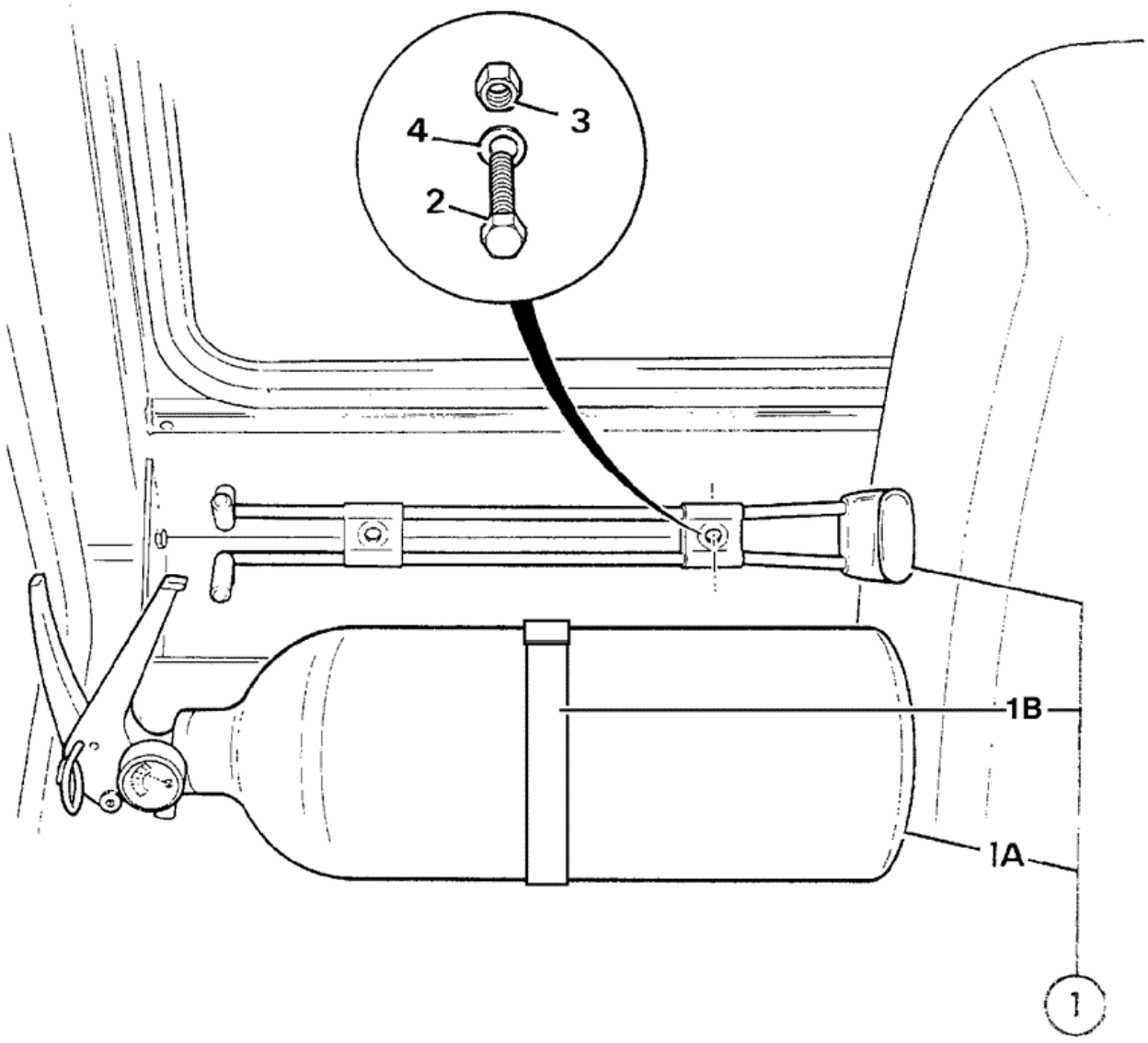

B02-10009-0-OOW

Item	Part No	Change No	Description	Usage Code	QTY
1	265/02895		Extinguisher fire c/w cradle UK builds only		1
1A	:265/02967		Extinguisher fire excludes cradle		1

1B	:332/F5749		Strap stainless steel		1
2	1315/0203Z		Setscrew		2
3	1370/0103Z		Nut Self Lock M6		2
4	1420/0006Z		Washer (M6)		2

Applicability Date Ranges:
From: , To: 22/02/2010

Product Catalog\WHEELED LOADERS\416 01243000-01243499,01317500-01317999,01472000-01472999,02095872-02095875 9812/3020 \B BODYWORK, CAB, LOADER END\B02 CAB\B2-14-2 FIRE EXTINGUISHER

9812/3020 B2-14-2 FIRE EXTINGUISHER

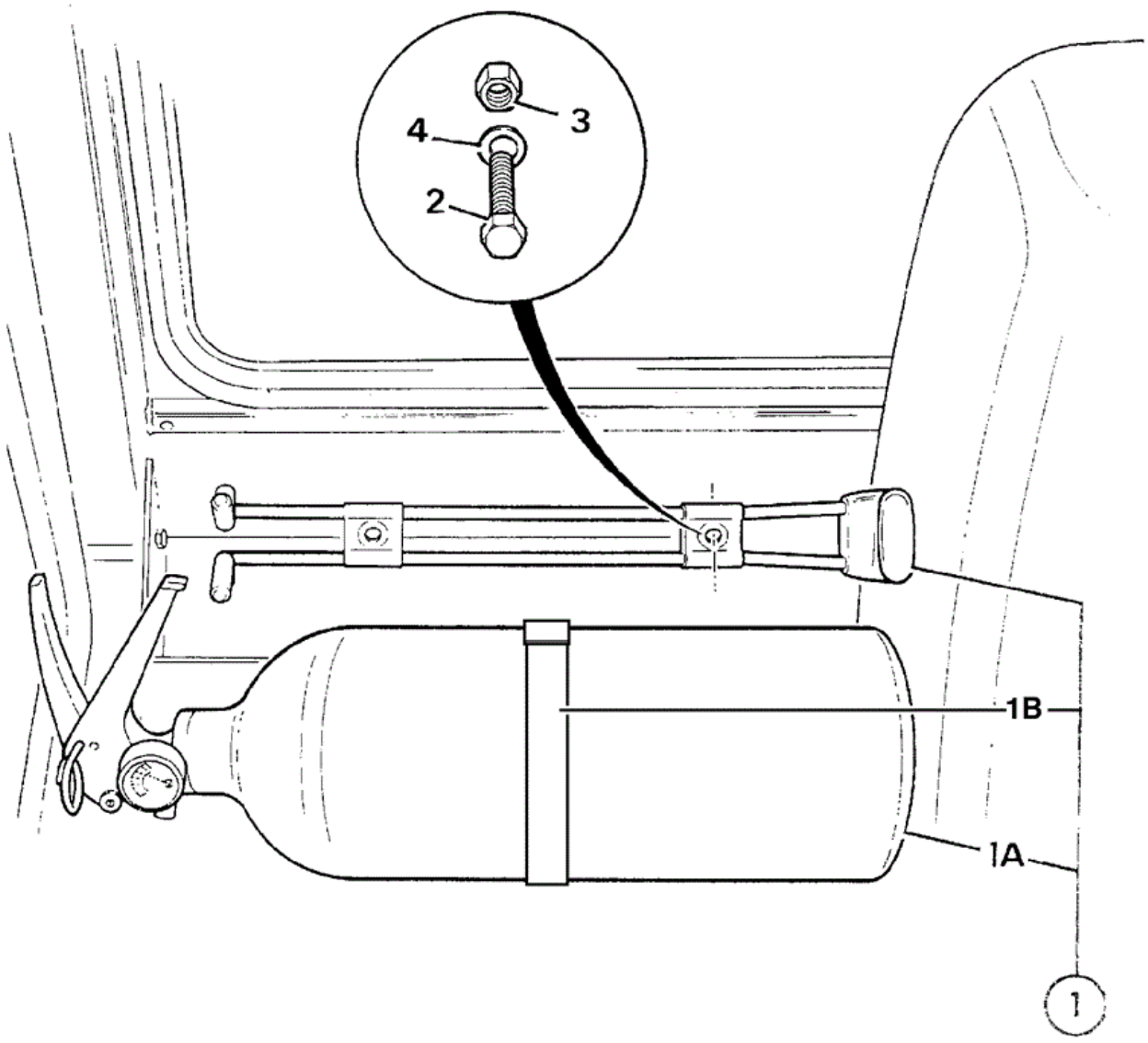

B02-10009-0-OOW

Item	Part No	Change No	Description	Usage Code	QTY
1	333/R0488		Extinguisher fire c/w cradle and strap		1
1B	:333/C2810		Strap velcro		1

1C	:333/C2809		Cradle		1
2	826/10529		Screw Socket Head M6x35		2

Applicability Date Ranges:
From: 23/02/2010 , To:

9812/3020 B2-15-1 CAB MOULDINGS & TRIM

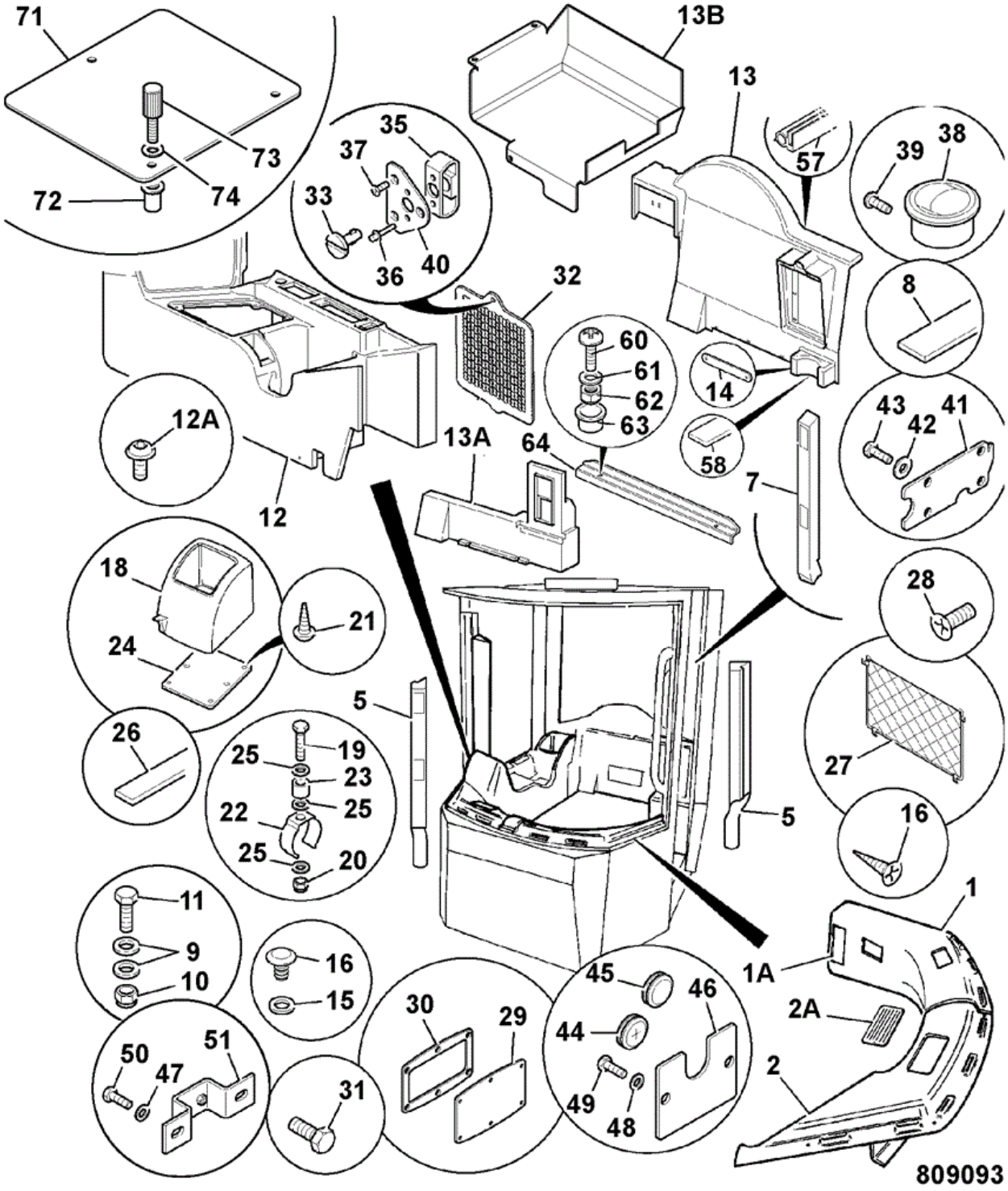

Item	Part No	Change No	Description	Usage Code	QTY
1	346/00334	to DEC08	Moulding left front		1
1	332/U7254		Moulding Front, Leftside NO ASHTRAY		1

1A	123/04531		Vent Air Register		1
2	346/00333		Moulding Front, Rightside		1
2A	123/04531		Vent Air Register		1
3	****		'See Remark' Steer column mouldings see D3-1-1		1
5	346/00325		Moulding Plenum Tidy		1
6	346/00326	to 06/04/10	Moulding pillar vent RH post		1
6	333/R4111		Moulding pillar vent RH post		1
6B	647/04104		Duct air Cut to 240mm long		1
6A	332/A1366		Plate vent blanking Canopy cab		2
7	346/00329		Moulding Vent Duct, B-Post		1
8	926/43201		Foam strip, 25 x 25 x 420 self adhesive Behind item 6		2
9	1412/0001D		Washer (1/4" Large)		4
10	1370/0003Z		Nut Nut M5		4
11	826/10805		Screw Countersunk Screw M6 x 25 For item 3 & 4		2
12	346/00327	to DEC08	Moulding side console		1
12	332/U7245		Moulding side console With power socket		1
12A	826/01406		Screw M5 x 20		2
13	346/00330		Moulding Rear Panel		1
13A	331/15368		Duct Recirculation		1
13B	332/A1367		Plate blanking Canopy cab. In place of item 13		1
14	331/18502		Strap Cup Holder		1
15	823/00516		Washer Nylon M6		2
16	826/01524		Screw Selftap		8
18	346/00328		Moulding stowage lid		1
19	1315/0112Z		Screw		2
20	1370/0001Z		Nut (M5)		6
21	826/01789		Screw		4
22	821/00223		Clip Retention		2
23	142/00670		Spacer		2
24	331/32281		Plate mounting		1
25	1420/0005Z		Washer (M5)		6
26	331/32401		Seal fusebox		1
27	331/31886		Net Luggage		1

28	1430/1104		Screw Luggage net		4
29	331/19692		Cover front panel access		1
30	331/19695		Gasket		1
31	826/01768		Screw M6 x 25 For item 30		6
32	331/16893	Superseded	Plate recirculation filter		1
32	332/U8879		Filter re-circulation c/w plate & filter ABI		1
33	826/01706		Fastener 1/4 turn		1
34	826/01707		Fastener 1/4 turn		1
35	826/01708		Receptacle		1
36	G46/13		Rivet pop		2
37	1430/1104		Screw		3
38	265/00290		Vent Air		1
39	1430/1104		Screw For item 38		4
40	331/18900		Plate mounting		1
41	331/32282		Plate slot fuse box		1
42	1412/0001D		Washer (1/4" Large)		4
43	826/01559		Screw Button Head Socket		4
44	2410/0214		Grommet		1
45	2410/1113		Grommet 31.8		3
46	331/32565		Plate harness		1
47	1420/0007D		Washer (M8)		2
48	1414/0011Z		Washer (2BA)		2
49	1315/0101Z		Screw		2
50	1315/0305D		Setscrew M8 x 20mm		2
51	331/19659		Bracket rear panel		1
57	926/19800		Seal 800mm long (Fitted to rear moulding)		0
58	926/04800		Strip Edging 400mm long (Fit to cup holder)		0
60	826/11098		Screw M6x30 Button Head		2
61	1420/0006D		Washer (M6)		2
62	1370/0103D		Nut (M6)		2
63	835/00074		Cap Nut,M6		2
64	331/62609		Moulding Rear, Closing Plate		1
71	332/A1379		Plate fusebox cover Canopy cab		1
72	826/11071		Nut M5		3

73	826/01301		Screw thumb 20mm long		3
74	823/00598		Washer Retaining		3
75	332/A1963		Seal fusebox cover Use 926/14900 cut to 650mm		1

Applicability Date Ranges:
From: , To:

Product Catalog\WHEELED LOADERS\416 01243000-01243499,01317500-01317999,01472000-01472999,02095872-02095875 9812/3020 \B BODYWORK, CAB, LOADER END\B02 CAB\B2-16-1 SOUND PROOFING CAB

9812/3020 B2-16-1 SOUND PROOFING CAB

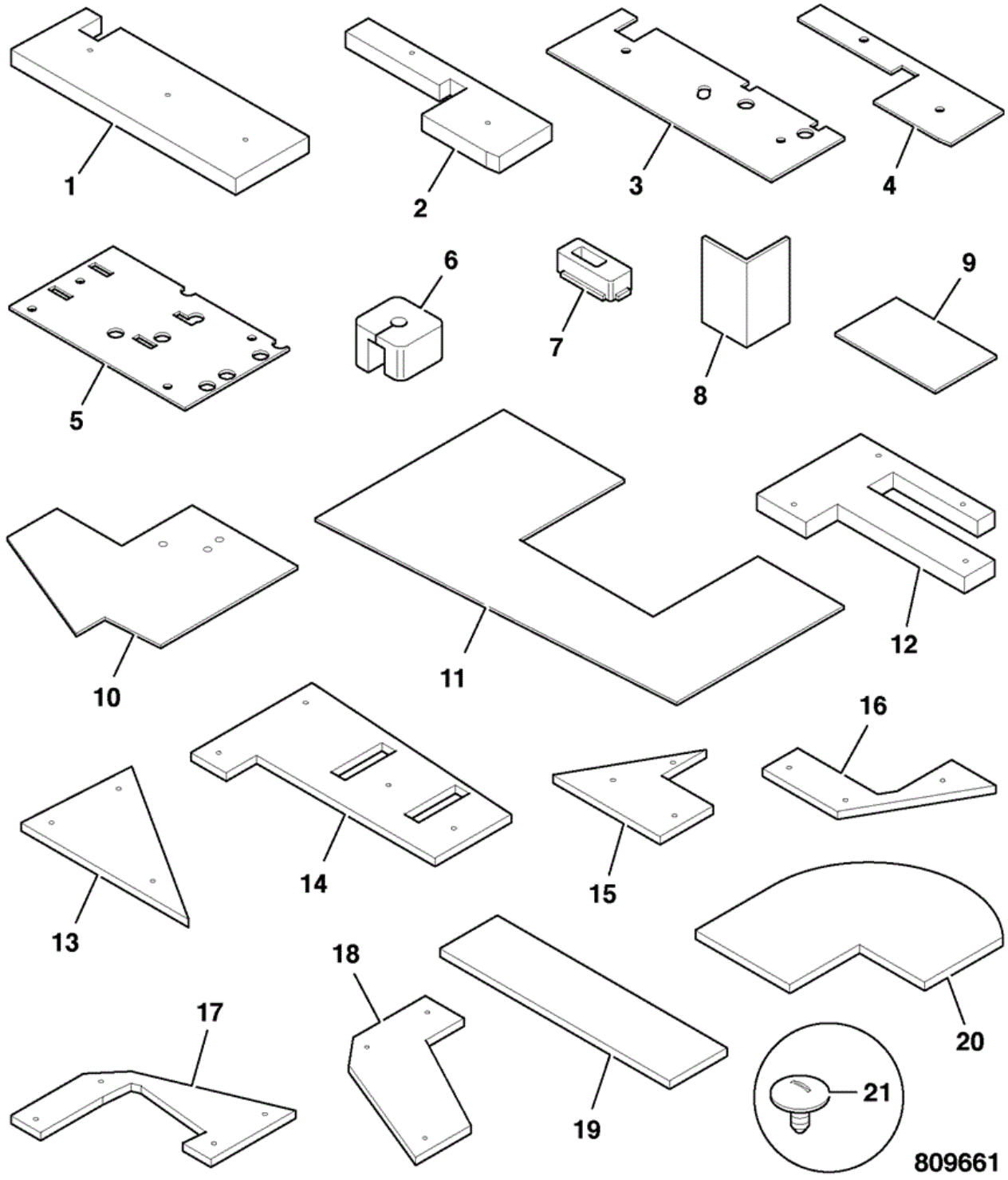

Item	Part No	Change No	Description	Usage Code	QTY
1	331/60377		Panel soundproofing cab rear		1
2	331/60378		Panel soundproofing cab rear		1

3	331/60379		Damping sheet cab rear		1
4	331/60380		Damping sheet cab rear		1
5	331/60436		Damping sheet under seatbox		1
6	265/02541		Block soundproofing column		1
7	265/00616		Panel soundproofing park brake		1
8	265/00617		Panel soundproofing "C" pillar		2
9	331/60437		Damping sheet under floormat centre		1
10	331/60438		Damping sheet under floormat left side		1
11	331/60440		Damping sheet under floormat left rear		1
12	331/60441		Panel soundproofing under seatbox		1
13	331/60601		Panel soundproofing under floor,LH rear		1
14	331/60602		Panel soundproofing RH rear		1
15	331/60603		Panel soundproofing LH rear		1
16	331/60604		Panel soundproofing middle		1
17	331/60605		Panel soundproofing RH front		1
18	331/60606	Superseded	Panel soundproofing		1
18	332/A2140		Panel soundproofing		1
19	331/51703		Panel soundproofing roof		2
20	331/58597		Panel soundproofing rear cab moulding		1
21	826/01308		Button Fastener		30

Applicability Date Ranges:
From: , To: OCT09

Product Catalog\WHEELED LOADERS\416 01243000-01243499,01317500-01317999,01472000-01472999,02095872-02095875 9812/3020 \B BODYWORK, CAB, LOADER END\B02 CAB\B2-16-2 SOUND PROOFING CAB AND DAMPING SHEETS

9812/3020 B2-16-2 SOUND PROOFING CAB AND DAMPING SHEETS

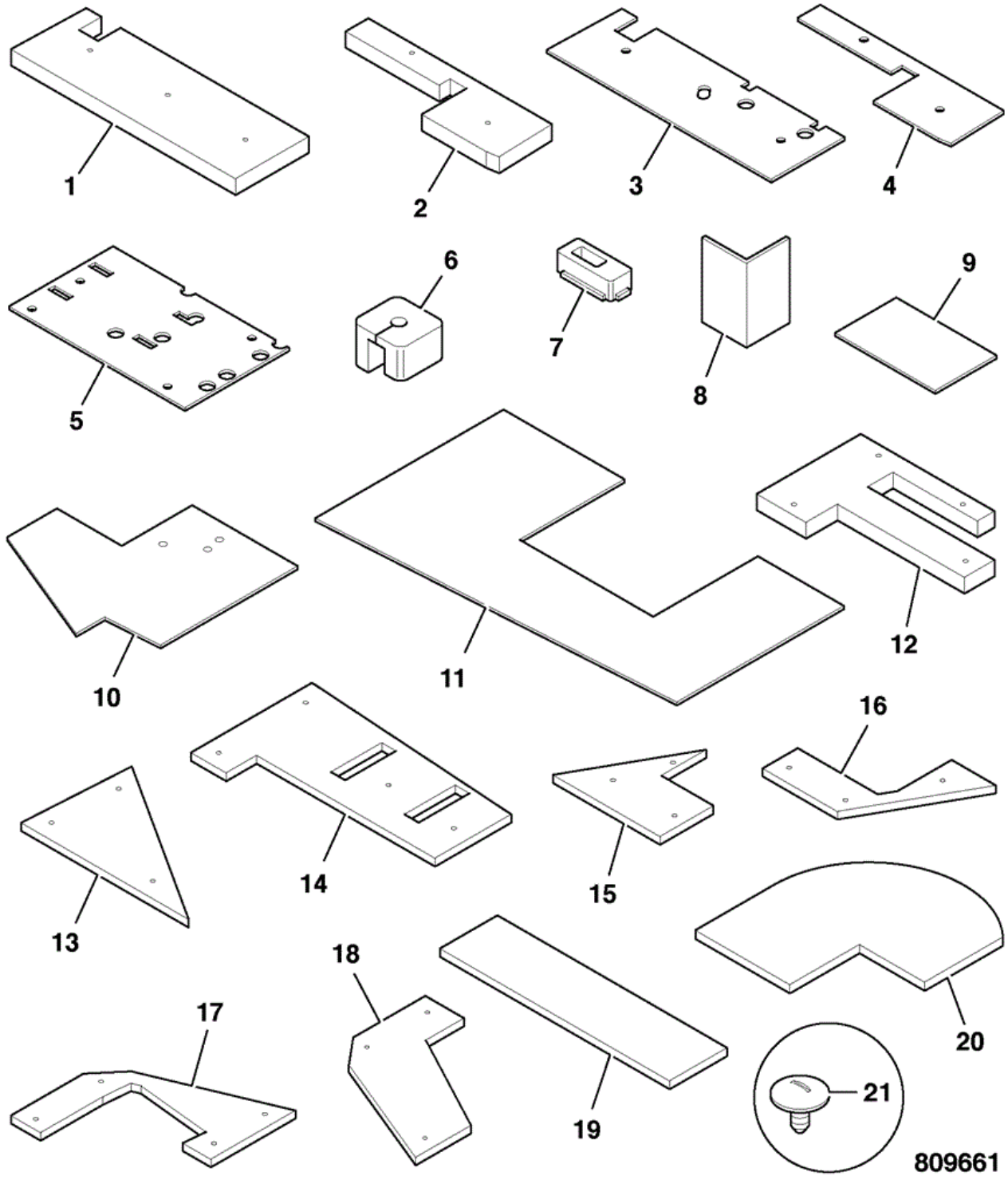

Item	Part No	Change No	Description	Usage Code	QTY
1	332/W4588		Panel soundproofing cab rear		1
2	332/W4589		Panel soundproofing cab rear		1

3	332/W4604		Damping sheet cab rear		1
4	332/W4605		Damping sheet cab rear		1
5	332/W4606	to 30/10/2010	Damping sheet under seatbox		1
5	333/R2416		Damping sheet under seatbox		1
6	332/W4591		Block soundproofing column		1
7	332/W4592		Block soundproofing park brake		1
8	332/W4593		Panel soundproofing "C" pillar		2
9	332/W4661		Damping sheet under floormat centre		1
10	332/W4663		Damping sheet floormat left side		1
11	332/W4664		Damping sheet under floormat left rear		1
12	332/W4672		Panel soundproofing under seatbox		1
13	332/W4805		Panel soundproofing under floor, LH rear		1
14	332/W4806		Panel soundproofing RH rear		1
15	332/W4807		Panel soundproofing LH rear		1
16	332/W4809		Panel soundproofing middle		1
17	332/W4810		Panel soundproofing RH front		1
18	332/W4821		Panel soundproofing front LH		1
19	332/W4659		Damping sheet roof		2
20	332/W4811		Panel soundproofing rear cab moulding		1
21	826/01308		Button Fastener		30

Applicability Date Ranges:
From: NOV09 , To:

Product Catalog\WHEELED LOADERS\416 01243000-01243499,01317500-01317999,01472000-01472999,02095872-02095875 9812/3020 \B BODYWORK, CAB, LOADER END\B02 CAB\B2-16-3 SOUND PROOFING CAB

9812/3020 B2-16-3 SOUND PROOFING CAB

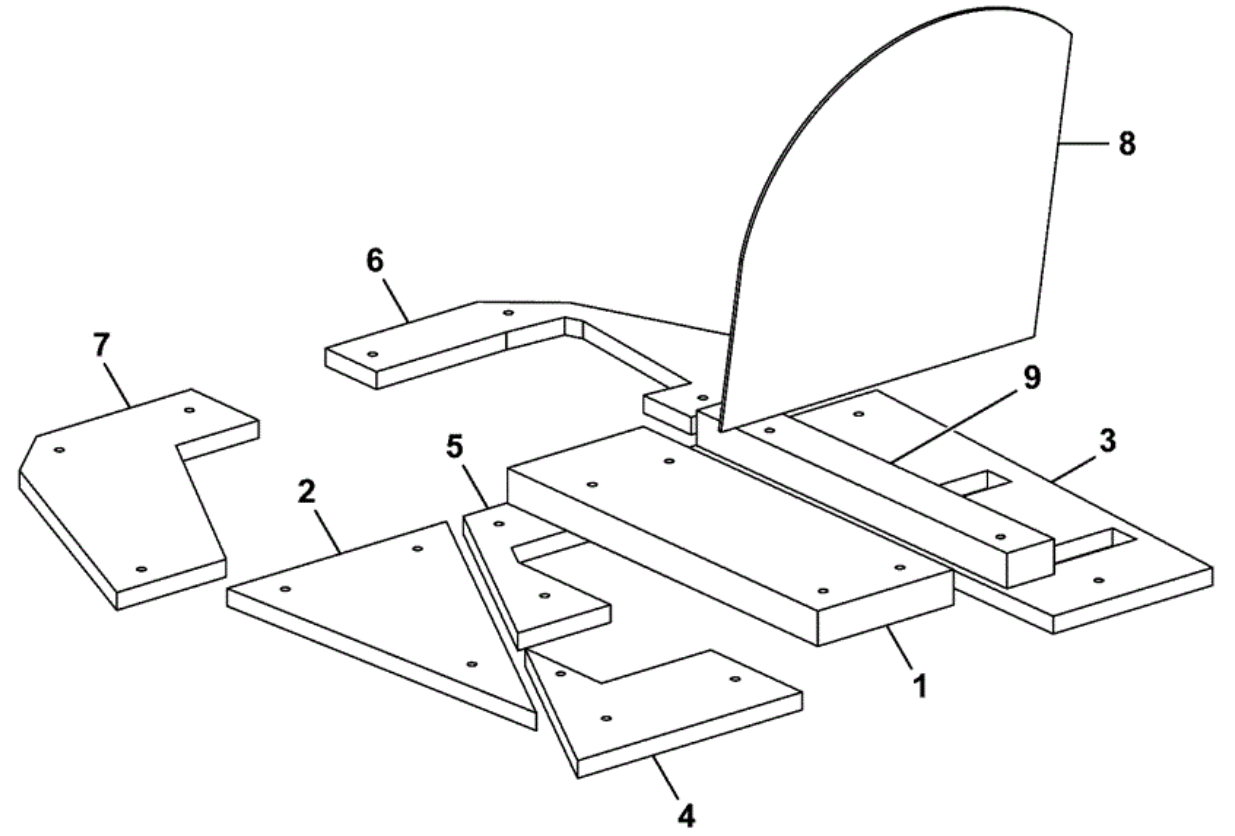

332-W4657-2

Item	Part No	Change No	Description	Usage Code	QTY
A	332/W4657		Kit soundproofing ABI		1
1	:333/S8623		Panel soundproofing		1

2	:332/W4805		Panel soundproofing under floor, LH rear		1
3	:332/W4806		Panel soundproofing RH rear		1
4	:332/W4807		Panel soundproofing LH rear		1
5	:332/W4809		Panel soundproofing middle		1
6	:332/W4810		Panel soundproofing RH front		1
7	:332/W4821		Panel soundproofing front LH		1
8	:332/W4811		Panel soundproofing rear cab moulding		1
9	:333/S8625		Panel soundproofing		1

Applicability Date Ranges:
From: 31/10/2010 , To:

9812/3020 B2-16-10 SOUND PROOFING CAB DAMPING SHEETS

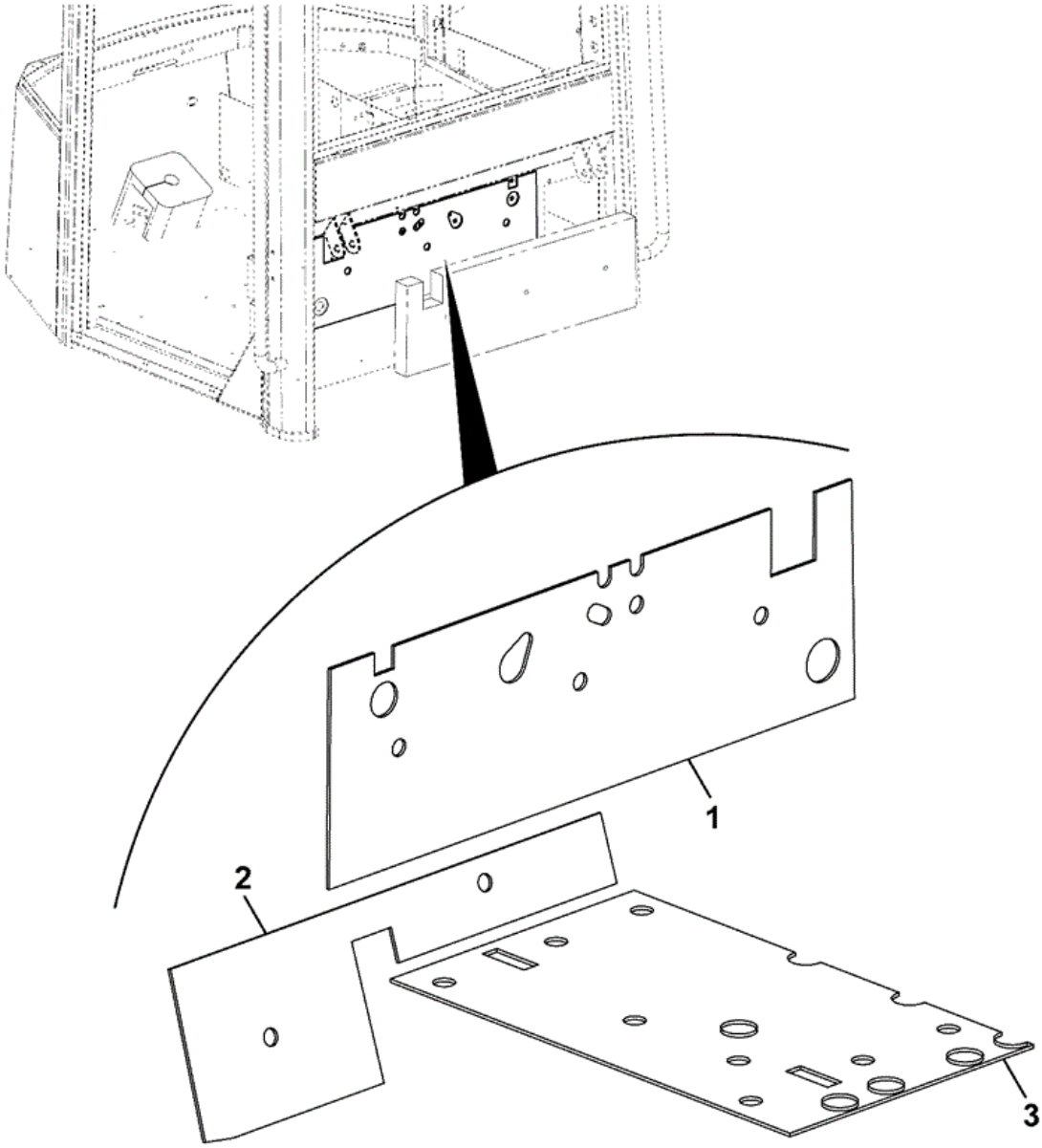

332-W4607-4

Item	Part No	Change No	Description	Usage Code	QTY
1	332/W4604		Damping sheet cab rear		1
2	332/W4605		Damping sheet cab rear		1
3	333/R2416		Damping sheet under seatbox		1

Applicability Date Ranges:
From: 31/10/2010 , To:

9812/3020 B2-17-1 TOOL KIT

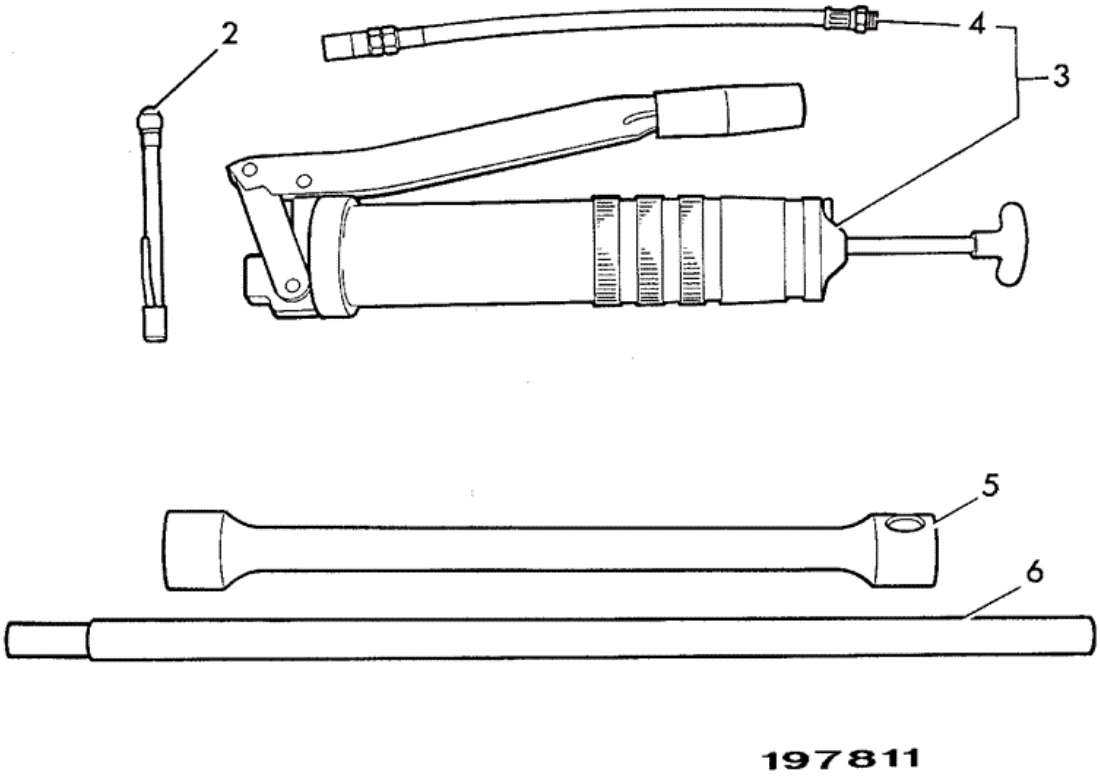

Item	Part No	Change No	Description	Usage Code	QTY
2	915/03600		Gauge tyre pressure		1
3	915/07300		Gun grease Sales option		1

4	:915/07301		Connector flexible		1
4	:4003/2017		Grease High Pressure 400g x 24 Sales option		1
5	825/99930		Socket wheel nut 32mm A/F See page F3-4-1 for location		1
6	825/99902		Bar tommy		1

Applicability Date Ranges:
From: , To:

Product Catalog\WHEELED LOADERS\416 01243000-01243499,01317500-01317999,01472000-01472999,02095872-02095875 9812/3020 \B BODYWORK, CAB, LOADER END\B02 CAB\B2-19-1 MIRROR INTERIOR

9812/3020 B2-19-1 MIRROR INTERIOR

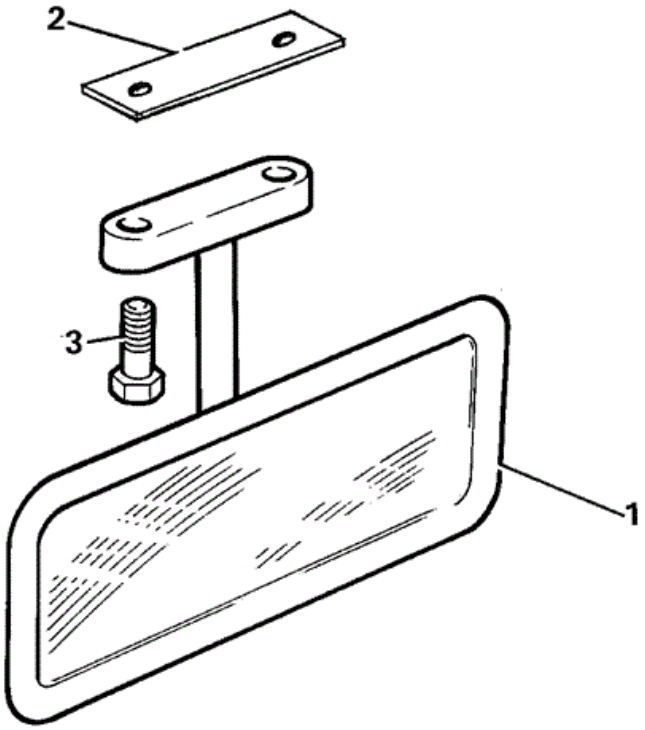

211630

Item	Part No	Change No	Description	Usage Code	QTY

1	123/04078		Mirror interior		1
2	****		'See Remark' Not required on this machine		1
3	826/10472		Screw M5 x 25		2

Applicability Date Ranges:
From: , To:

Product Catalog\WHEELED LOADERS\416 01243000-01243499,01317500-01317999,01472000-01472999,02095872-02095875 9812/3020 \B BODYWORK, CAB, LOADER END\B02 CAB\B2-20-1 RECIRCULATION FILTER AND DUCTING

9812/3020 B2-20-1 RECIRCULATION FILTER AND DUCTING

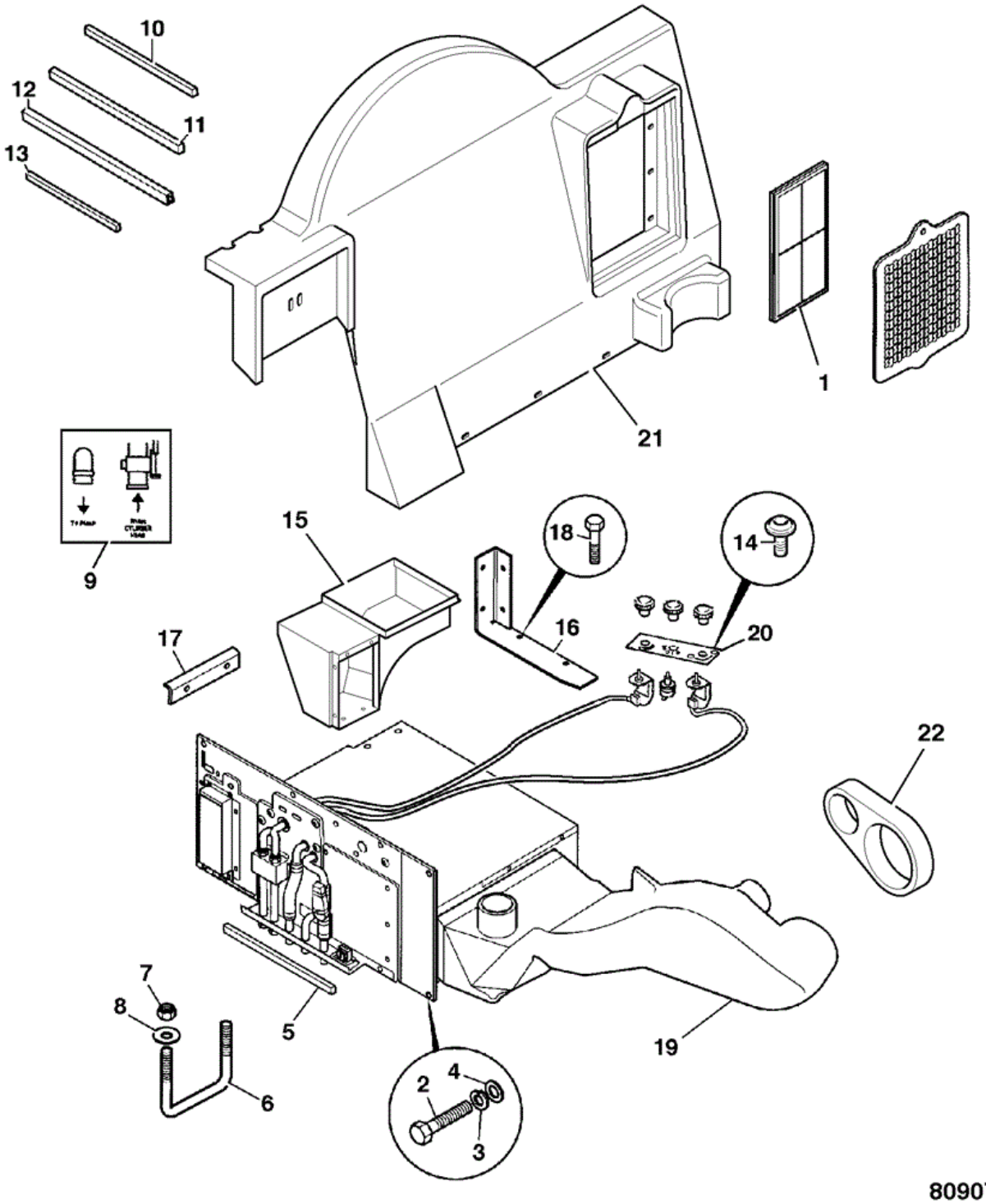

Item	Part No	Change No	Description	Usage Code	QTY
1	580/12117		Filter recirculation		1
2	1315/0205D		Setscrew M6 x 20		7

3	1420/0006D		Washer (M6)		7
4	1412/0001D		Washer (1/4" Large)		7
5	926/01300		Strip sealing		0
6	265/00256		Guide hose		2
7	1370/0301D		Nut (M10)		4
8	1417/0012Z		Washer lock		4
9	817/04971		Label Heater Pipes		1
10	157/14704		Foam seal		2
11	824/50011		Strip edging		1
12	926/09905		Strip foam 25 X 38 X 50		2
13	926/43201		Foam strip, 25 x 25 x 420 self adhesive		1
14	826/01488		Screw Button Head M5 x 12		4
15	331/57221		Duct elbow		1
16	331/16504		Bracket duct elbow		1
17	331/16505		Bracket location		1
18	1430/0202		Screw No 8x1/2"		6
19	331/57220		Moulding Front Duct		1
20	331/17043		Panel Control, Aircon		1
21	346/00330		Moulding Rear Panel		1
22	331/17540		Gasket Front Duct		1

Applicability Date Ranges:
From: , To:

Product Catalog\WHEELED LOADERS\416 01243000-01243499,01317500-01317999,01472000-01472999,02095872-02095875 9812/3020 \B BODYWORK, CAB, LOADER END\B02 CAB\B2-21-1 BLANKING PLATE HEATERLESS BUILD CANOPY

9812/3020 B2-21-1 BLANKING PLATE HEATERLESS BUILD CANOPY

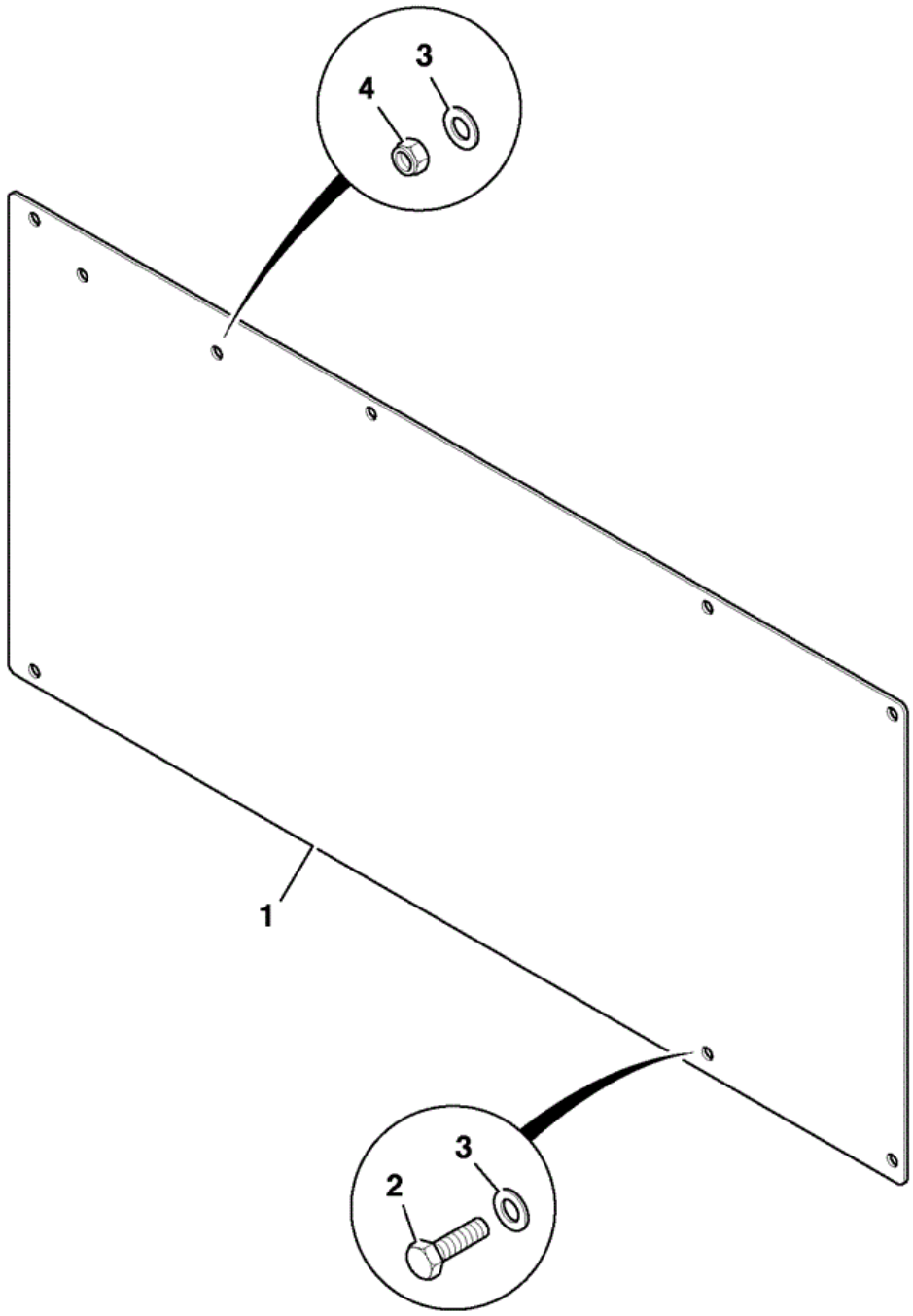

922550

Item	Part No	Change No	Description	Usage Code	QTY
1	332/R6102		Plate blanking heater unit		1
2	1315/0205D		Setscrew M6 x 20 For striker mounting		2

2	826/01559		Screw Button Head Socket		7
3	1420/0006D		Washer (M6)		4
4	1370/0103D		Nut (M6) For mounting cover latch,see B2-28-1		7
5	****		'See Remark' For Air con door catch see B2-28-1		1
6	331/38903		Plate blanking heater control		1
7	816/90595		Plug Fit to item 9		1
8	816/90783		Plug M16 Heater outlet		1
8A	1406/0015		Washer Bonded 3/8"		1
9	816/91032		Adapter Fit to bottom hose		1
10	2201/0007		Clip Wormdrive For item 9		2

Applicability Date Ranges:
From: , To:

Product Catalog\WHEELED LOADERS\416 01243000-01243499,01317500-01317999,01472000-01472999,02095872-02095875 9812/3020 \B BODYWORK, CAB, LOADER END\B02 CAB\B2-21-10 BLANKING KIT HEATERLESS BUILD

9812/3020 B2-21-10 BLANKING KIT HEATERLESS BUILD

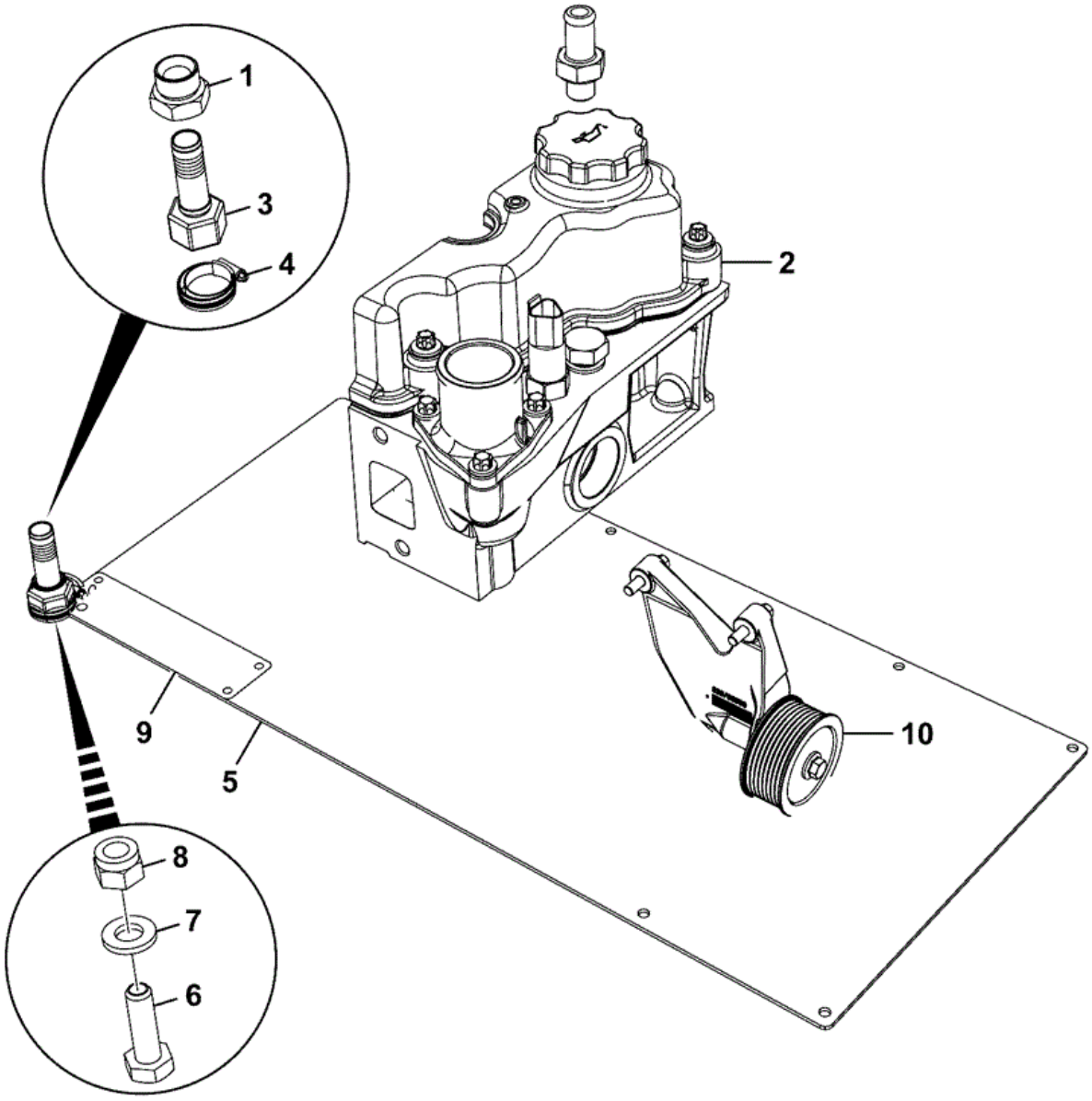

269-00797-4

Item	Part No	Change No	Description	Usage Code	QTY
1	816/90595		Plug Fit to item 3		1
2	****		Blank Plug Assembly		1

3	816/91032		Adapter Fit to bottom hose		1
4	2201/0007		Clip Wormdrive Fit to item 3		2
5	332/R6102		Plate blanking heater unit		1
6	1315/0205D		Setscrew M6 x 20 For striker moonting plate		2
7	1420/0006D		Washer (M6) For item 6		4
8	1370/0103D		Nut (M6) For item 6		2
9	331/38903		Plate blanking heater control		1
10	****		Installation Idler Assembly		1

Applicability Date Ranges:
From: , To:

9812/3020 B2-22-1 GUARD WINDSCREEN PAGE SUPERSEDED SEE B2-22-5

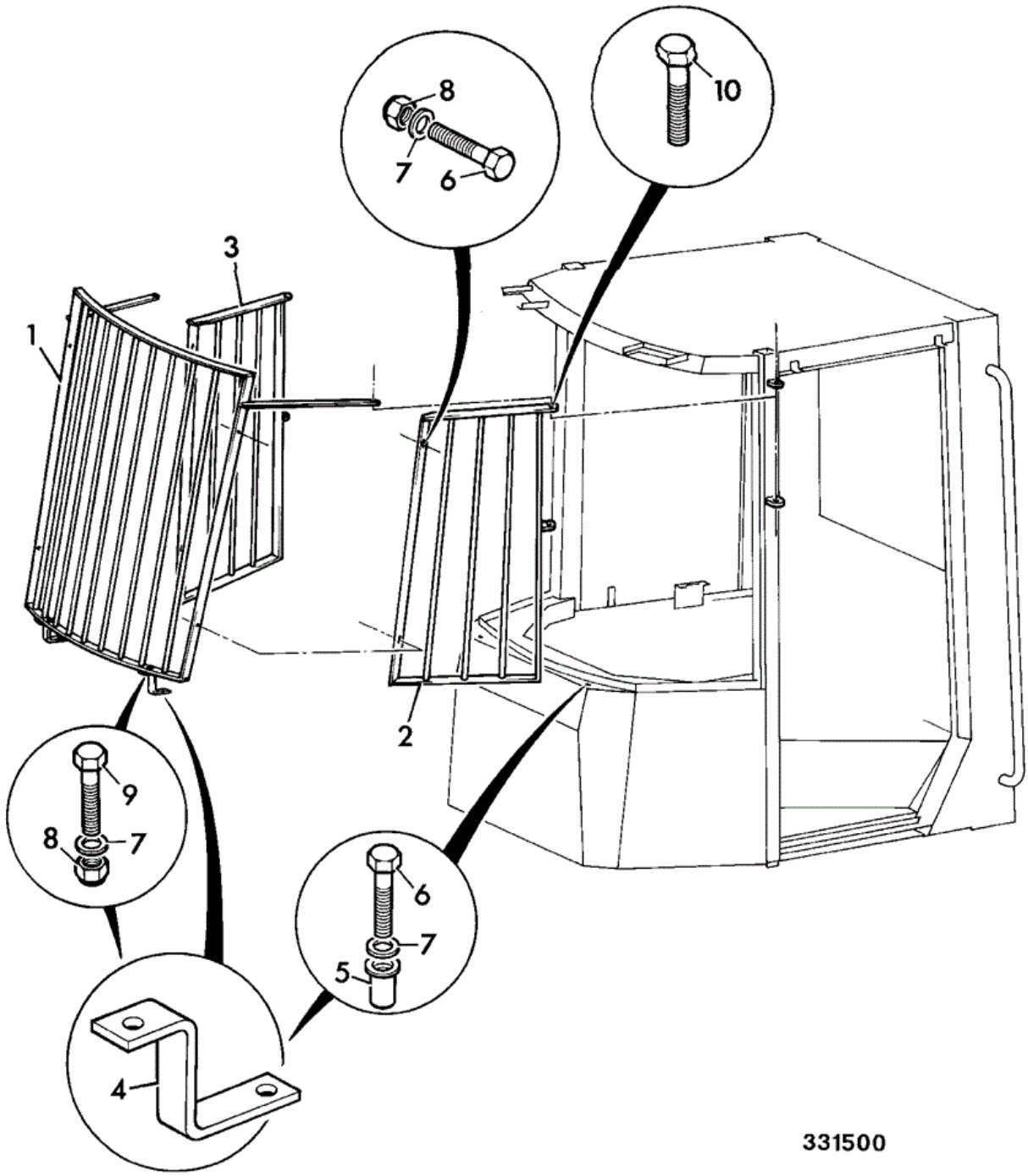

Item	Part No	Change No	Description	Usage Code	QTY
1	335/01422		Guard front screen		1
2	335/01448		Guard L.H. side		1

3	335/01449		Guard R.H. side		1
4	265/03070		Bracket screen guard		2
5	826/01103		Rivet nut M8		2
6	1315/0307Z		Setscrew M8 X 25		6
7	1420/0007Z		Washer (M8)		14
8	1370/0203Z		Nut Nut M8		6
9	1315/0308Z		Setscrew M8 x 30 Front screen		2
10	1315/3411Z		Bolt M10 x 45mm 2 screen, 2 side		4
11	331/18911		Bracket side mounting		2

Applicability Date Ranges:
From: , To:

Product Catalog\WHEELED LOADERS\416 01243000-01243499,01317500-01317999,01472000-01472999,02095872-02095875 9812/3020 \B BODYWORK, CAB, LOADER END\B02 CAB\B2-22-5 GUARD WINDSCREEN

9812/3020 B2-22-5 GUARD WINDSCREEN

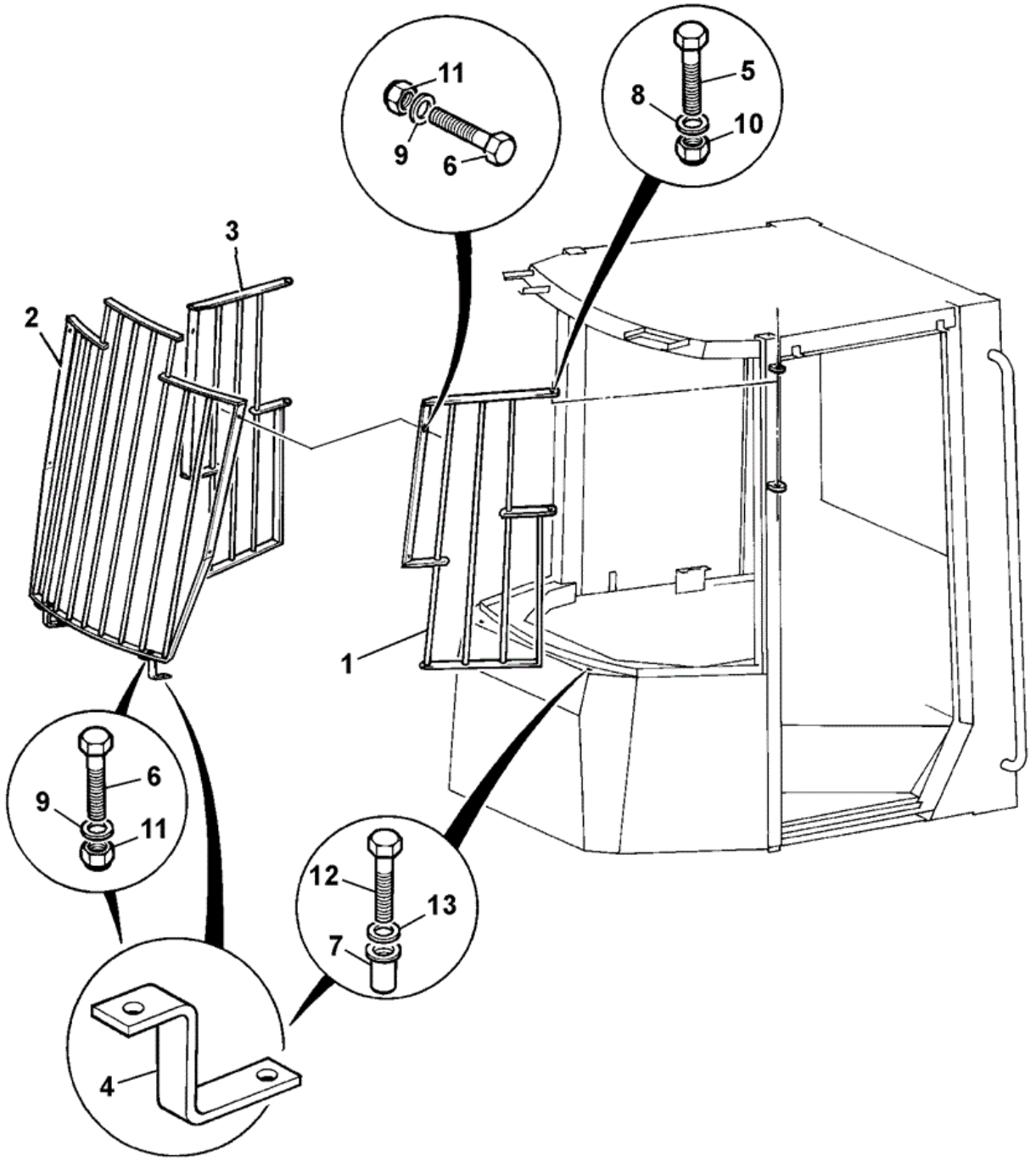

926320

Item	Part No	Change No	Description	Usage Code	QTY
1	332/A1914		Guard L.H. side		1
2	335/01422		Guard front screen		1

3	332/A1947		Guard R.H. side		1
4	265/03070		Bracket screen guard		2
5	1315/0411D		Setscrew M10X45		4
6	1315/0309D		Setscrew M8 x 35 mm		6
7	826/01101		Nut Nut,M6		2
8	1420/0008D		Washer (M10)		10
9	1420/0007D		Washer (M8)		10
10	1370/0303D		Nut Self Lock M10		4
11	1370/0203D		Nut Lock M8		6
12	1315/0208D		Setscrew (M6 X 30)		2
13	1420/0006D		Washer (M6)		2

Applicability Date Ranges:
From: , To:

Product Catalog\WHEELED LOADERS\416 01243000-01243499,01317500-01317999,01472000-01472999,02095872-02095875 9812/3020 \B BODYWORK, CAB, LOADER END\B02 CAB\B2-23-1 SEAT, AIR SUSPENSION HEATED, COMPONENTS

9812/3020 B2-23-1 SEAT, AIR SUSPENSION HEATED, COMPONENTS

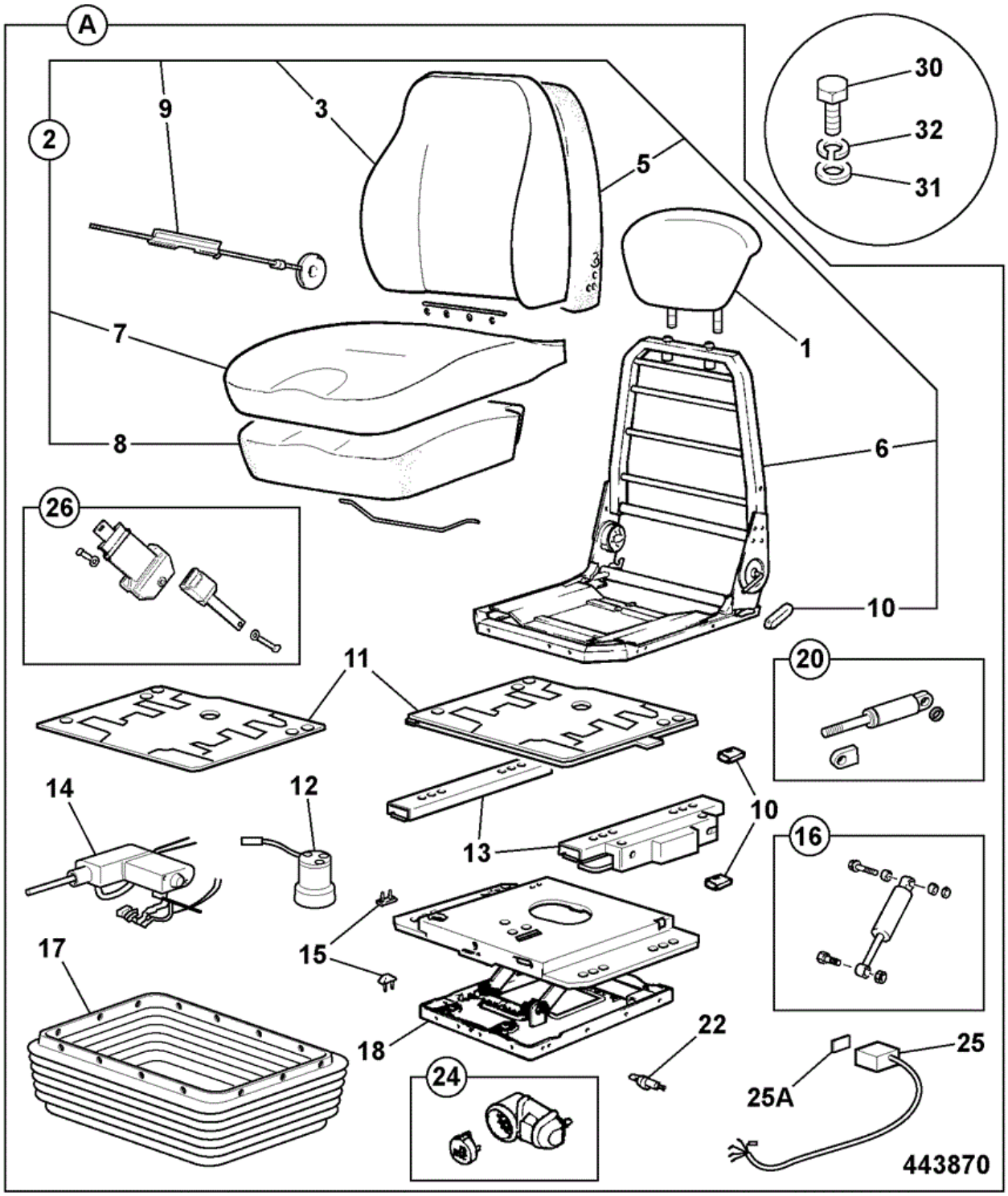

Item	Part No	Change No	Description	Usage Code	QTY
A	40/911030		Seat assy,c/w seat belt fabric,heated		1
1	:40/911093		Kit headrest		1

2	:332/C5890		Kit upper seat assembly		1
3	::332/C5893		Kit back cover		1
5	::40/207703		Kit backrest foam		1
6	::332/C5891		Kit Frame		1
7	::40/911085		Kit seat cover		1
8	::40/207705		Kit seat squab foam		1
9	::40/910669		Kit Lumbar		1
10	::40/910668		Kit knob		1
11	:332/C5894		Kit plate, swivel		1
12	:332/C5899		Kit air spring		1
13	:40/910674		Kit Runners with control		1
14	:332/C5900		Kit air compressor		1
15	:40/910676		Kit Bump Stop		1
16	:40/910677		Kit Damper		1
17	:332/C5897		Kit suspension cover		1
17A	::332/D8645		Fastener Suspension Cover		26
18	:332/C5896		Kit suspension		1
20	:40/910680		Kit Isolator Damper		1
22	:40/910681		Kit Valve Air & Lever		1
24	332/C5898		Kit one touch riser (OTR)		1
25	332/C5902		Kit flying lead heated seat		1
26	:40/910664		Kit Seat-belt, 2 inch		1
26	40/910760		Kit seatbelt, 3"(76mm) retractable		1
27	40/910968		Element seat 24V		1
28	40/910969		Element seat back 24V		1
30	1315/0303D		Setscrew M8 x 16mm		4
31	1420/0007D		Washer (M8)		4
32	1425/0007D		Washer Spring M8		4
40	40/910502		Kit armrest LH & RH & fixings		1

Applicability Date Ranges:
From: , To:

Product Catalog\WHEELED LOADERS\416 01243000-01243499,01317500-01317999,01472000-01472999,02095872-02095875 9812/3020 \B BODYWORK, CAB, LOADER END\B02 CAB\B2-24-1 SEAT, AIR SUSPENSION HEATED

9812/3020 B2-24-1 SEAT, AIR SUSPENSION HEATED

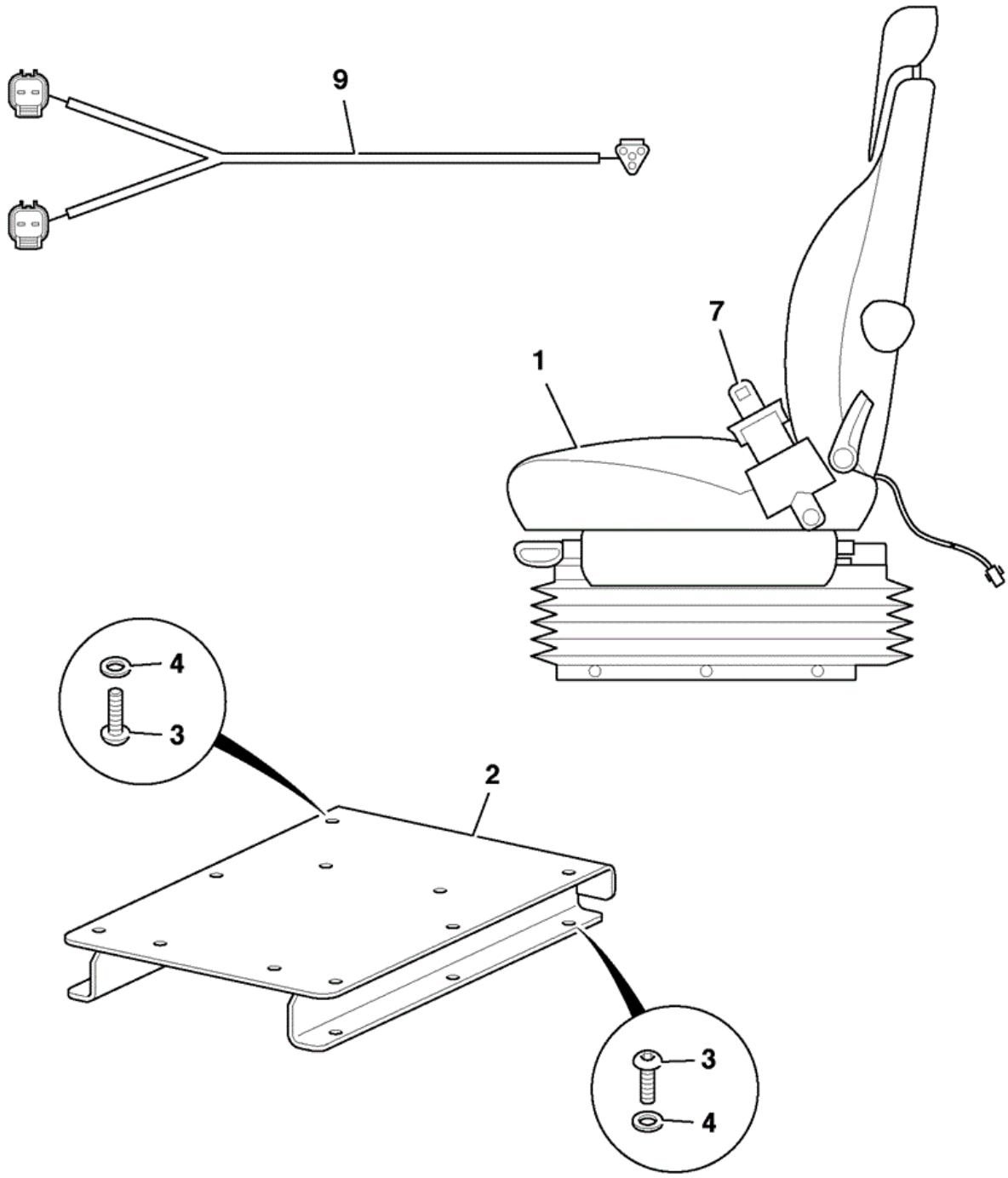

790752

Item	Part No	Change No	Description	Usage Code	QTY
1	40/911030		Seat assy,c/w seat belt fabric,heated See B2-23-1 for components		1
2	332/A1766	to 03/10/2010	Plate seat adapter WA		1

2	333/S2337		Plate seat adapter WA		1
3	826/01486		Screw Socket Button Head		12
4	823/00529		Washer		12
7	40/910760		Kit seatbelt, 3"(76mm) retractable		1
9	721/12408		Harness seat link Fitted as part of cab harness		1

Applicability Date Ranges:
From: , To:

9812/3020 B2-25-1 GUARD WINDSCREEN SALES SPECIAL

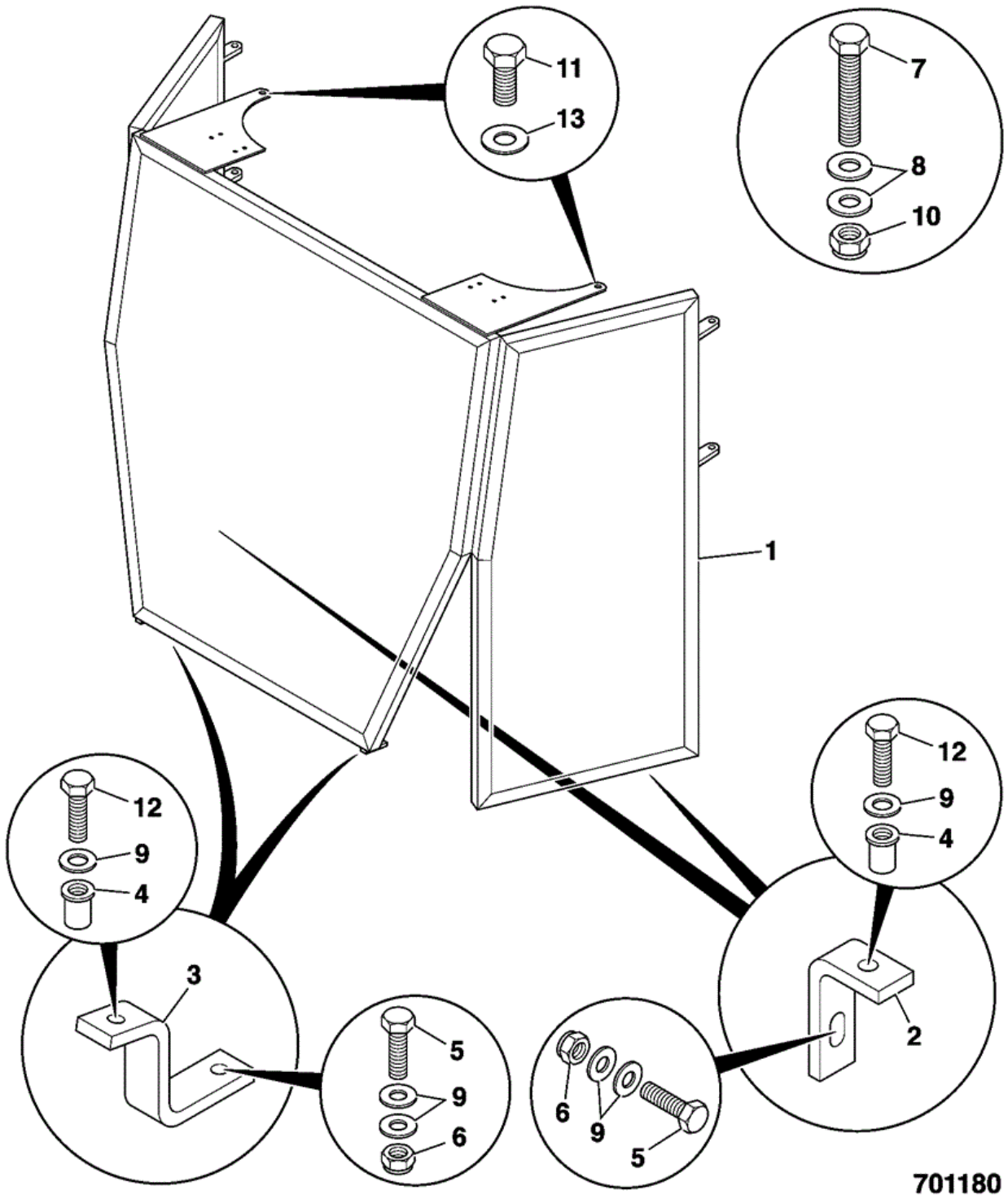

Item	Part No	Change No	Description	Usage Code	QTY
1	335/05268		Guard screen Sales special 7975		1
2	331/34333		Bracket lower side		2

3	331/29814		Bracket bottom		2
4	826/01103		Rivet nut M8		4
5	1315/0308D		Setscrew M8 x 30 mm		4
6	1370/0203Z		Nut Nut M8		4
7	1315/0412D		Bolt M10 x 50mm		2
8	1420/0008Z		Washer (M10)		4
9	1420/0007Z		Washer (M8)		12
10	1370/0303Z		Nut lock M10		4
11	1315/0708Z		Screw		2
12	1315/0307Z		Setscrew M8 X 25		4
13	1420/0011Z		Washer (M16)		2

Applicability Date Ranges:
From: , To:

Product Catalog\WHEELED LOADERS\416 01243000-01243499,01317500-01317999,01472000-01472999,02095872-02095875 9812/3020 \B BODYWORK, CAB, LOADER END\B02 CAB\B2-25-10 GUARD WINDSCREEN SCREEN FRAME, SALES SPECIAL

9812/3020 B2-25-10 GUARD WINDSCREEN SCREEN FRAME, SALES SPECIAL

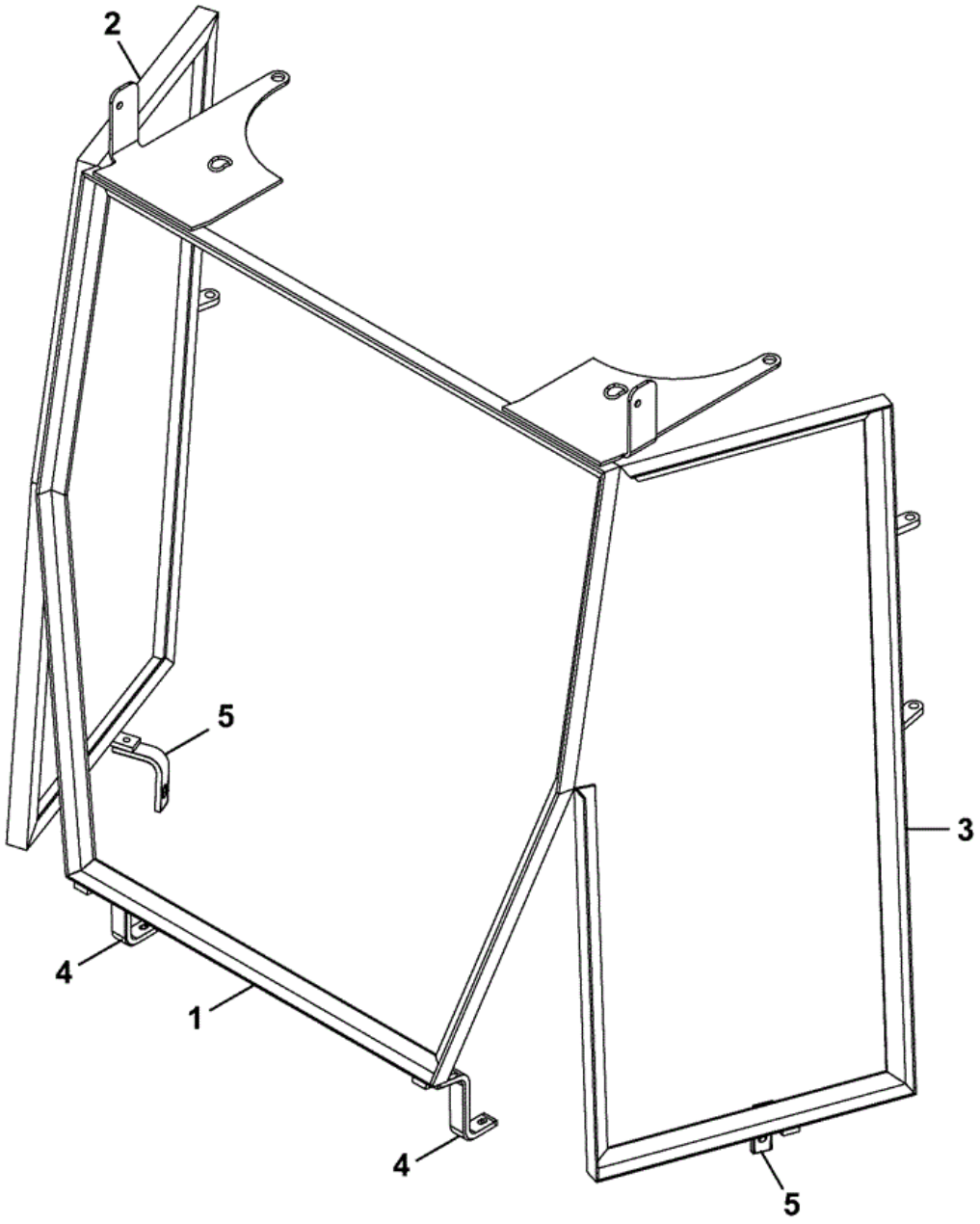

333-S1584-1

Item	Part No	Change No	Description	Usage Code	QTY
1	333/S2071		Frame front screen Sales special 1747.		1

2	333/S2075		Frame screen RH		1
3	333/S2073		Frame screen LH		1
4	333/S2222		Bracket front frame mounting		6
5	333/S2215		Bracket lower side		17

Applicability Date Ranges:
From: , To:

Product Catalog\WHEELED LOADERS\416 01243000-01243499,01317500-01317999,01472000-01472999,02095872-02095875 9812/3020 \B BODYWORK, CAB, LOADER END\B02 CAB\B2-26-1 SEAT,SUSPENSION HEATED, 24 VOLT

9812/3020 B2-26-1 SEAT,SUSPENSION HEATED, 24 VOLT

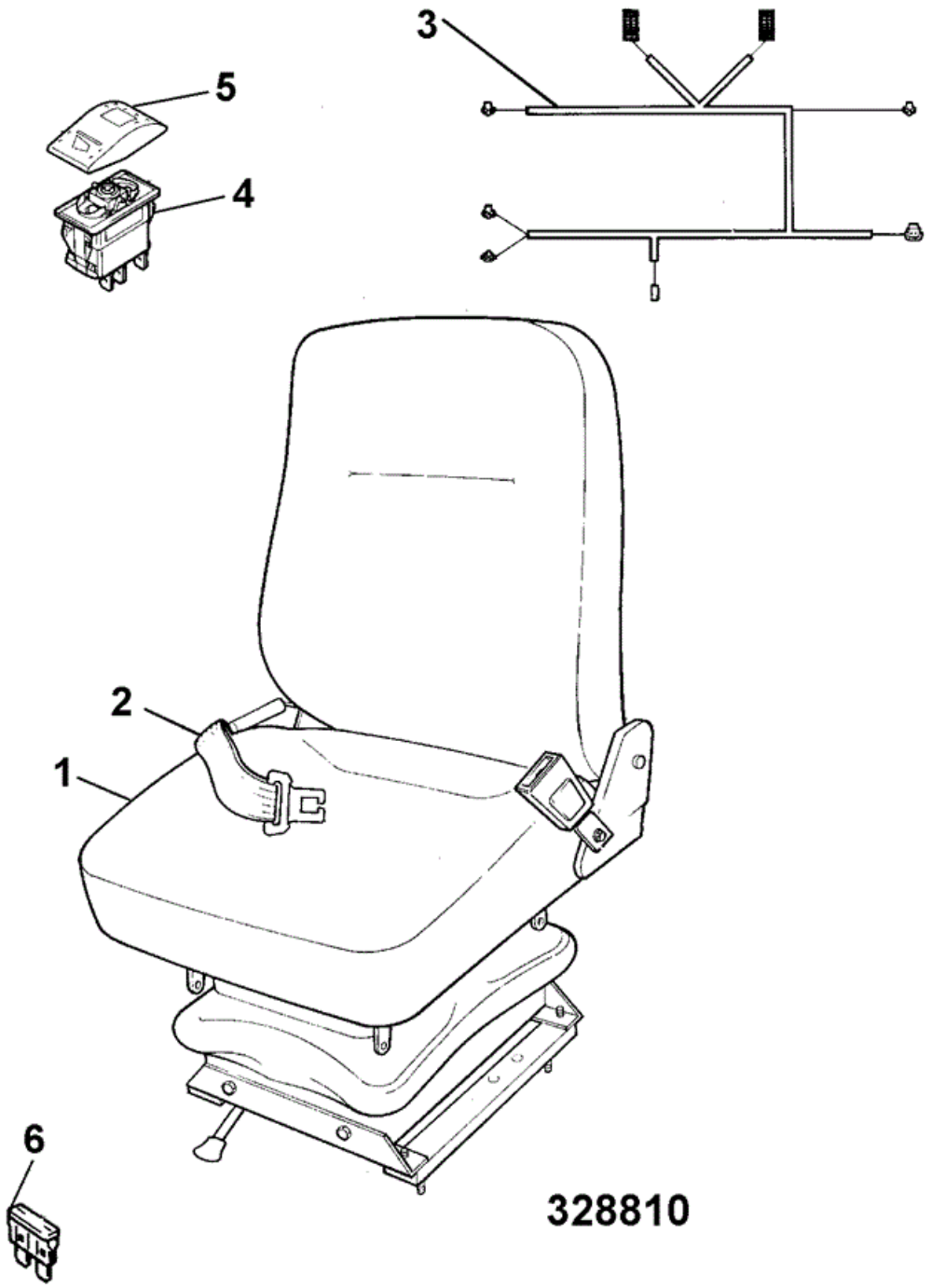

Item	Part No	Change No	Description	Usage Code	QTY

1	40/214600		Seat heated 24 volt		1
4	701/60031		Panel Switch 24V		1
5	701/58715		Cover heat seat switch decal		1
6	716/05703		Fuse 5 amp		1
7	40/210000		Kit headrest		1

Applicability Date Ranges:
From: , To:

Product Catalog\WHEELED LOADERS\416 01243000-01243499,01317500-01317999,01472000-01472999,02095872-02095875 9812/3020 \B BODYWORK, CAB, LOADER END\B02 CAB\B2-27-1 TOOL KIT

9812/3020 B2-27-1 TOOL KIT

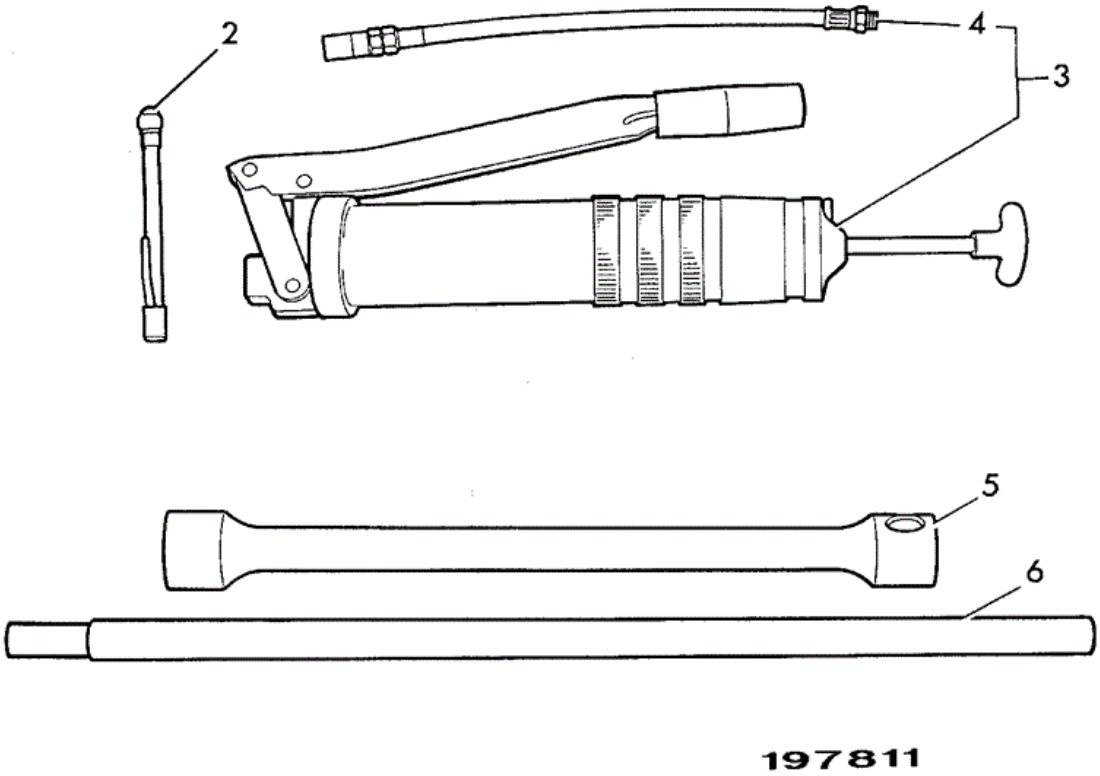

Item	Part No	Change No	Description	Usage Code	QTY
2	915/03600		Gauge tyre pressure		1
3	915/07300		Gun grease Sales option		1

4	:915/07301		Connector flexible		1
4	:4003/2017		Grease High Pressure 400g x 24 Sales option		1
5	825/99930		Socket wheel nut 32mm A/F See page F3-4-1 for location		1
6	825/99902		Bar tommy		1

Applicability Date Ranges:
From: , To:

Product Catalog\WHEELED LOADERS\416 01243000-01243499,01317500-01317999,01472000-01472999,02095872-02095875 9812/3020 \B BODYWORK, CAB, LOADER END\B02 CAB\B2-28-1 COVER, AIR CON

9812/3020 B2-28-1 COVER, AIR CON

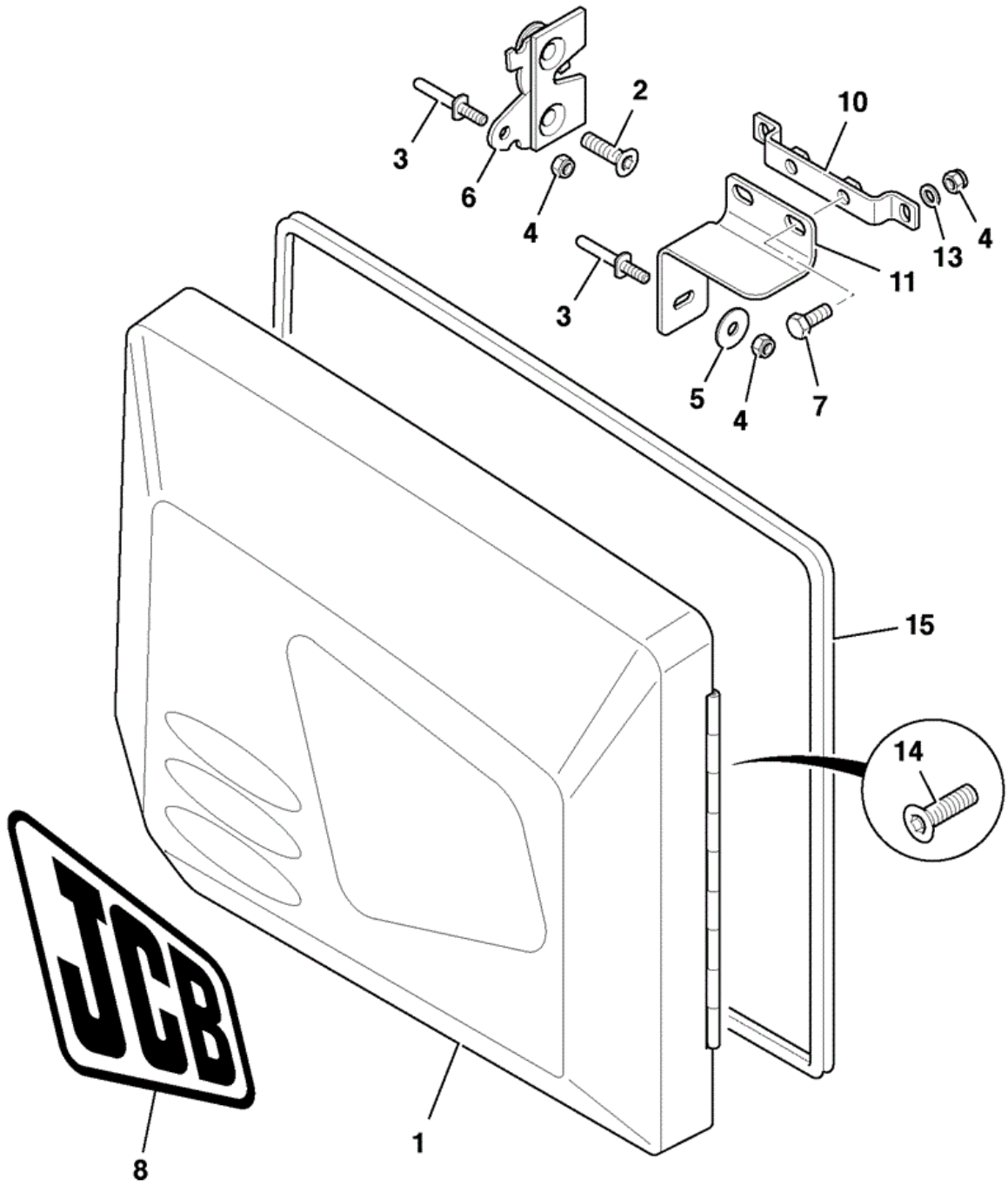

Item	Part No	Change No	Description	Usage Code	QTY
1	269/00927	Superseded	Door assembly ABI		1
1	332/A2323		Door assembly ABI		1

2	826/10811		Screw countersunk, socket head M8 x 30		2
3	331/34215		Pin striker		2
4	1371/0103Z		Nut LOCK NUT (M6)		4
5	1412/0001D		Washer (1/4" Large)		1
6	331/27126		Latch Bonnet		1
7	1315/0303		Setscrew M8 x 16		1
8	817/17442	to 06/06/2010	Decal JCB Insignia(yellow)		1
8	332/K5067	to JUN2011	Decal , JCB Logo - Yellow		1
8	817/17442		Decal JCB Insignia(yellow)		1
10	335/11395		Bracket mounting		1
11	331/57927		Bracket Pin Mounting		1
13	1420/0006D		Washer (M6)		2
14	826/01486		Screw Socket Button Head		4
15	926/90011		Seal door		1

Applicability Date Ranges:
From: , To: 25/03/2012

Product Catalog\WHEELED LOADERS\416 01243000-01243499,01317500-01317999,01472000-01472999,02095872-02095875 9812/3020 \B BODYWORK, CAB, LOADER END\B02 CAB\B2-28-10 COVER AIR-CON DOOR METAL, SALES SPECIAL

9812/3020 B2-28-10 COVER AIR-CON DOOR METAL, SALES SPECIAL

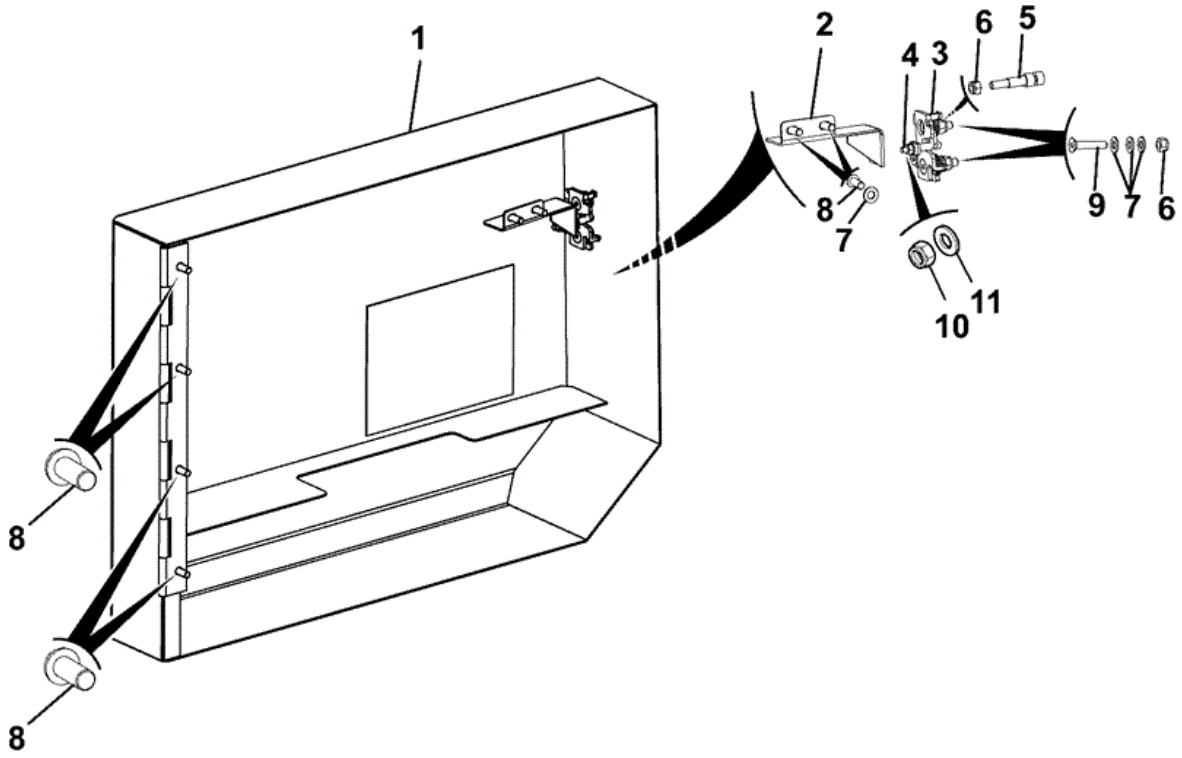

333-R6630-1

Item	Part No	Change No	Description	Usage Code	QTY
1	333/R6067	Superseded	Door air-con metal Sales special 1227 & 1747		1
1	333/S7462		Door air-con metal		1

2	333/R6085	Superseded	Bracket mounting		1
2	333/S7506		Bracket mounting		1
3	331/27126		Latch Bonnet		1
4	331/34215		Pin striker		1
5	331/34627		Bar Spring		1
6	1370/0203D		Nut Lock M8		3
7	1420/0007D		Washer (M8)		9
8	826/01486		Screw Socket Button Head		6
9	826/10481		Screw Socket M8 x 40mm		2
10	1370/0101D		Nut Plain M6		1
11	1420/0006D		Washer (M6)		1

Applicability Date Ranges:
From: , To:

Product Catalog\WHEELED LOADERS\416 01243000-01243499,01317500-01317999,01472000-01472999,02095872-02095875 9812/3020 \B BODYWORK, CAB, LOADER END\B02 CAB\B2-29-1 SEAT, SUSPENSION VINYL

9812/3020 B2-29-1 SEAT, SUSPENSION VINYL

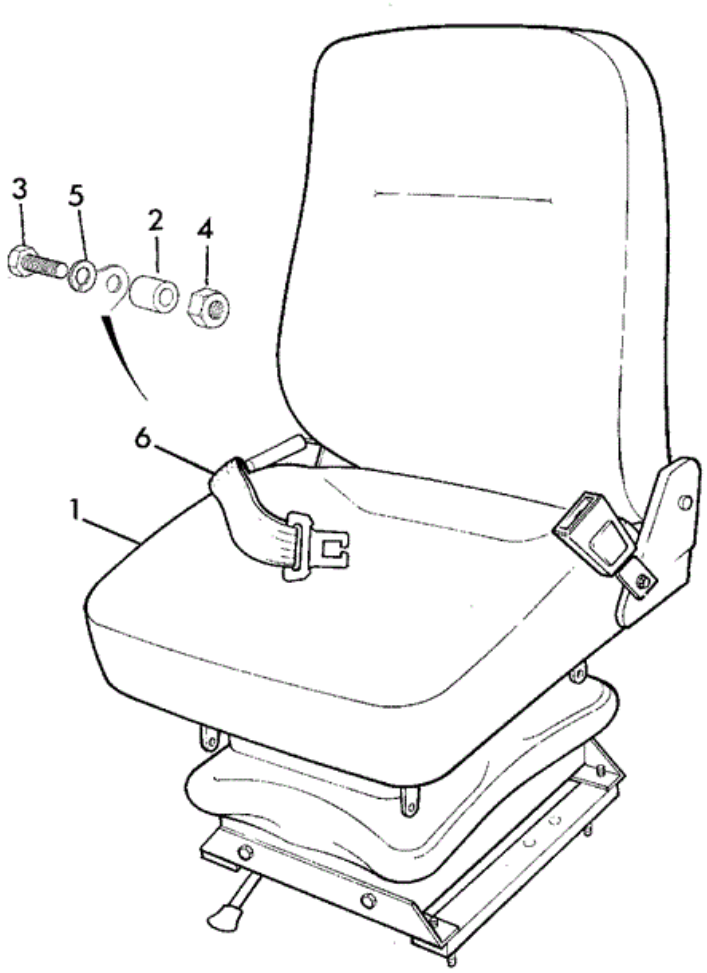

Item	Part No	Change No	Description	Usage Code	QTY

1	40/215900		Seat suspension canopy build		1

Applicability Date Ranges:
From: , To:

Product Catalog\WHEELED LOADERS\416 01243000-01243499,01317500-01317999,01472000-01472999,02095872-02095875 9812/3020 \B BODYWORK, CAB, LOADER END\B02 CAB\B2-30-1 SEAT BELT 5000LB SEAT

9812/3020 B2-30-1 SEAT BELT 5000LB SEAT

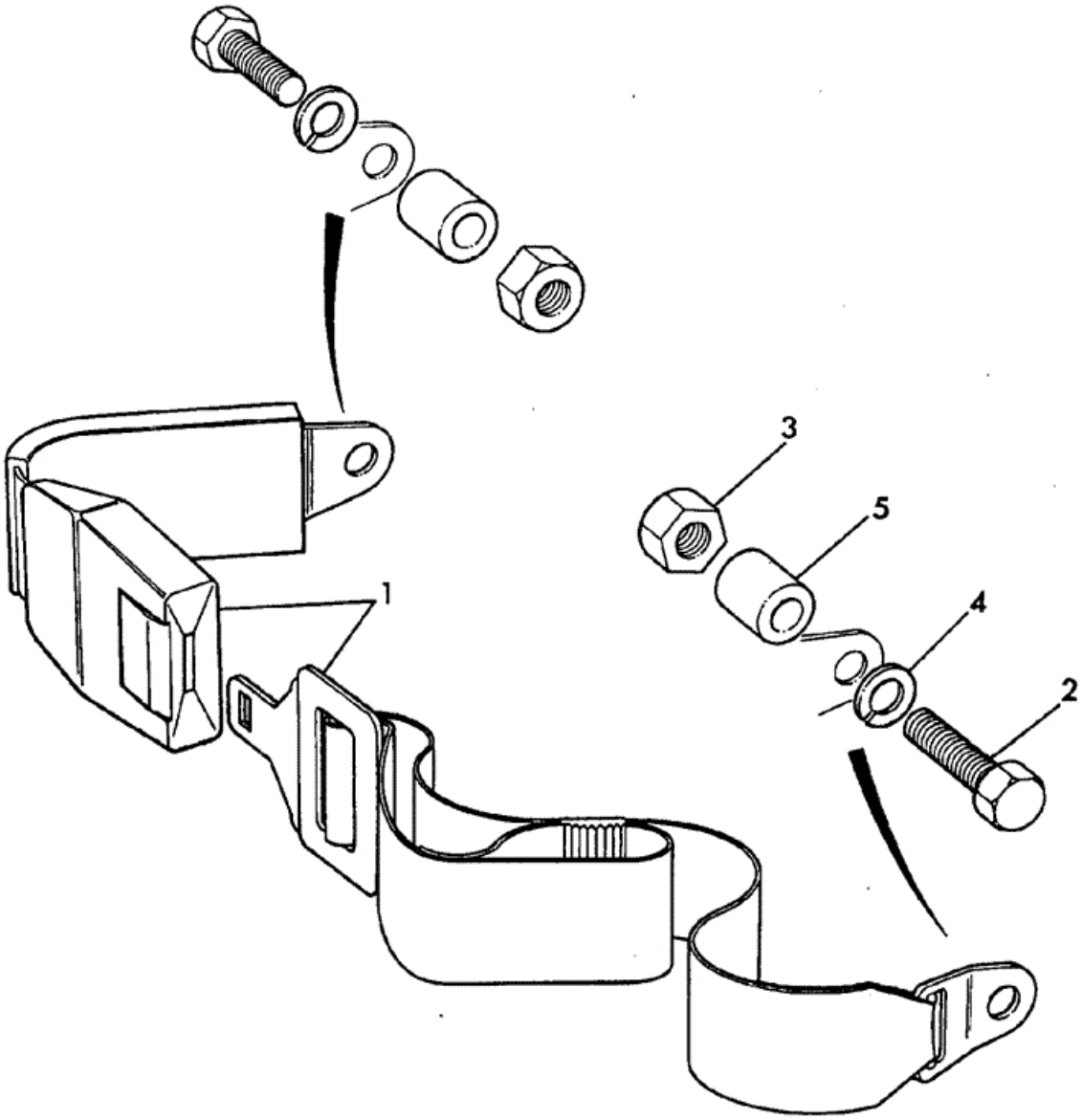

Item	Part No	Change No	Description	Usage Code	QTY

1	40/910760		Kit seatbelt, 3"(76mm) retractable Includes fixings		1

Applicability Date Ranges:
From: , To:

Product Catalog\WHEELED LOADERS\416 01243000-01243499,01317500-01317999,01472000-01472999,02095872-02095875 9812/3020 \B BODYWORK, CAB, LOADER END\B02 CAB\B2-31-2 ANTI-CAB NOD KIT

9812/3020 B2-31-2 ANTI-CAB NOD KIT

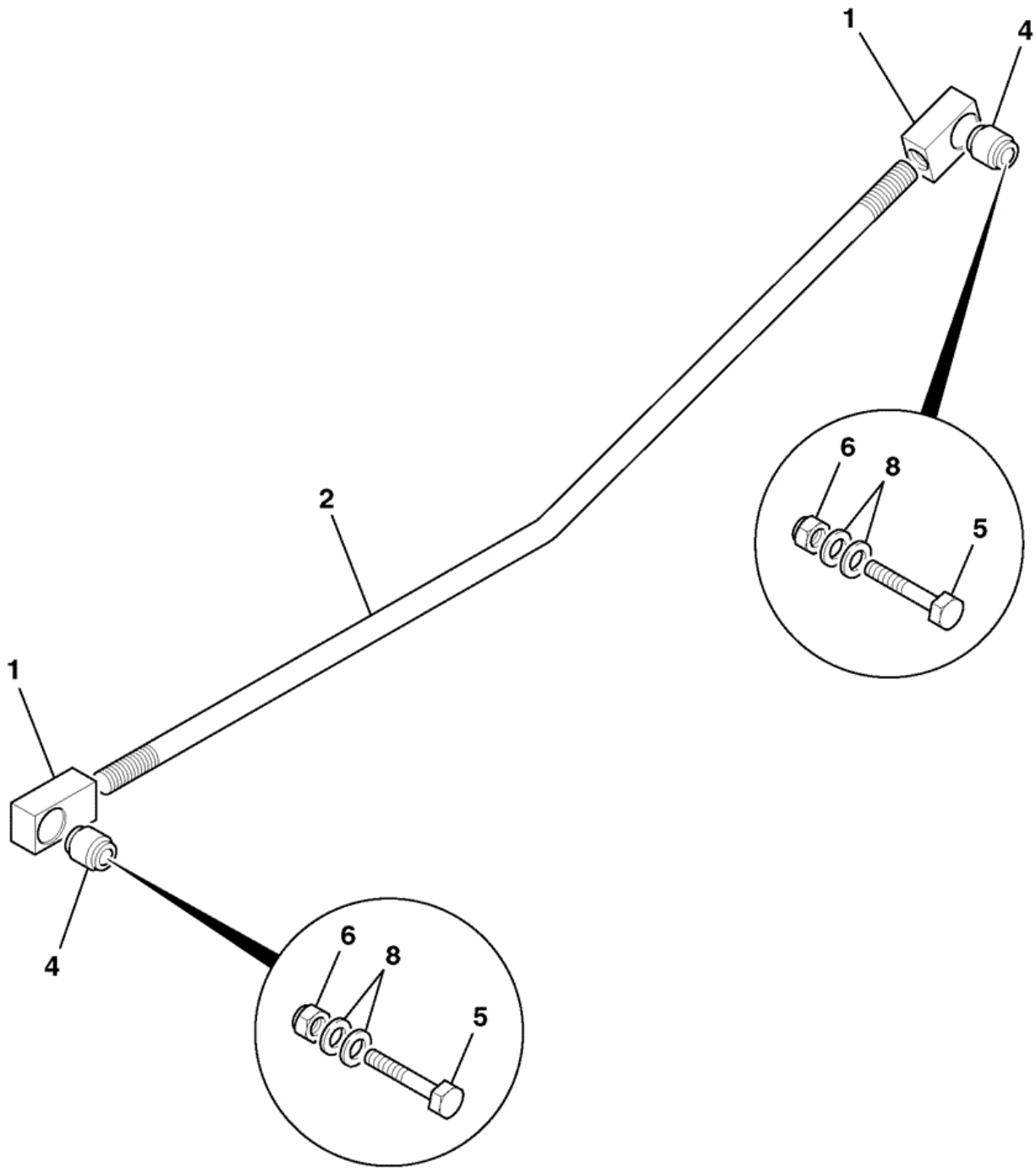

341932

Item	Part No	Change No	Description	Usage Code	QTY
1	265/01880		Boss		4
2	331/63342		Rod tie bar		2

4	265/01927		Mounting resiliant		4
5	1315/3819D		Bolt M20 x 90 dacromet		4
6	1370/0703D		Nut M20, 2.5 pitch		4
8	1420/0012D		Washer Plain M20		4

Applicability Date Ranges:
From: NOV06 , To:

Product Catalog\WHEELED LOADERS\416 01243000-01243499,01317500-01317999,01472000-01472999,02095872-02095875 9812/3020 \B BODYWORK, CAB, LOADER END\B02 CAB\B2-32-1 MIRROR EXTERNAL NON HEATED

9812/3020 B2-32-1 MIRROR EXTERNAL NON HEATED

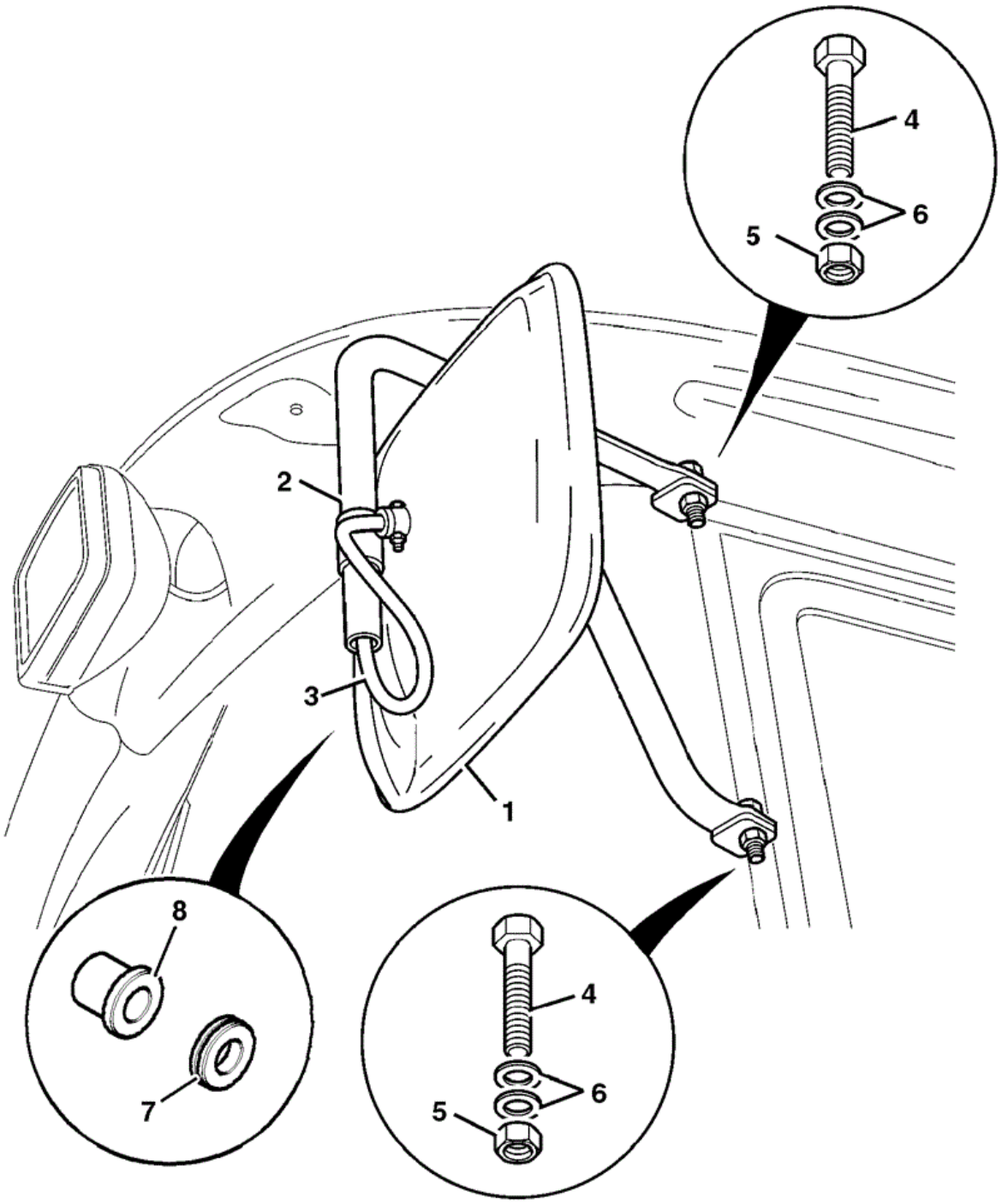

376741

Item	Part No	Change No	Description	Usage Code	QTY
1	331/34508		Mirror		2
1A	:331/65365		Glass mirror		1

2	335/03571		Bracket mirror		2
3	****		'See Remark' Not fitted - see C1 section for heated mirror		1
4	1315/3409D		Bolt M10 x 35mm long		4
5	1370/0303D		Nut Self Lock M10		4
6	823/00344		Washer nylon		16
7	2410/1103		Grommet Blind, 9.5mm x 3.5 mm		2
8	2410/1107		Grommet blind, 17.5mm Dia.		2
8	332/R8799		Grommet cable entry Replaces 2410/1107		2

Applicability Date Ranges:
From: , To: MAR10

Product Catalog\WHEELED LOADERS\416 01243000-01243499,01317500-01317999,01472000-01472999,02095872-02095875 9812/3020 \B BODYWORK, CAB, LOADER END\B02 CAB\B2-33-1 SEAT, ASSEMBLY MECH. SUSPENSION FABRIC

9812/3020 B2-33-1 SEAT, ASSEMBLY MECH. SUSPENSION FABRIC

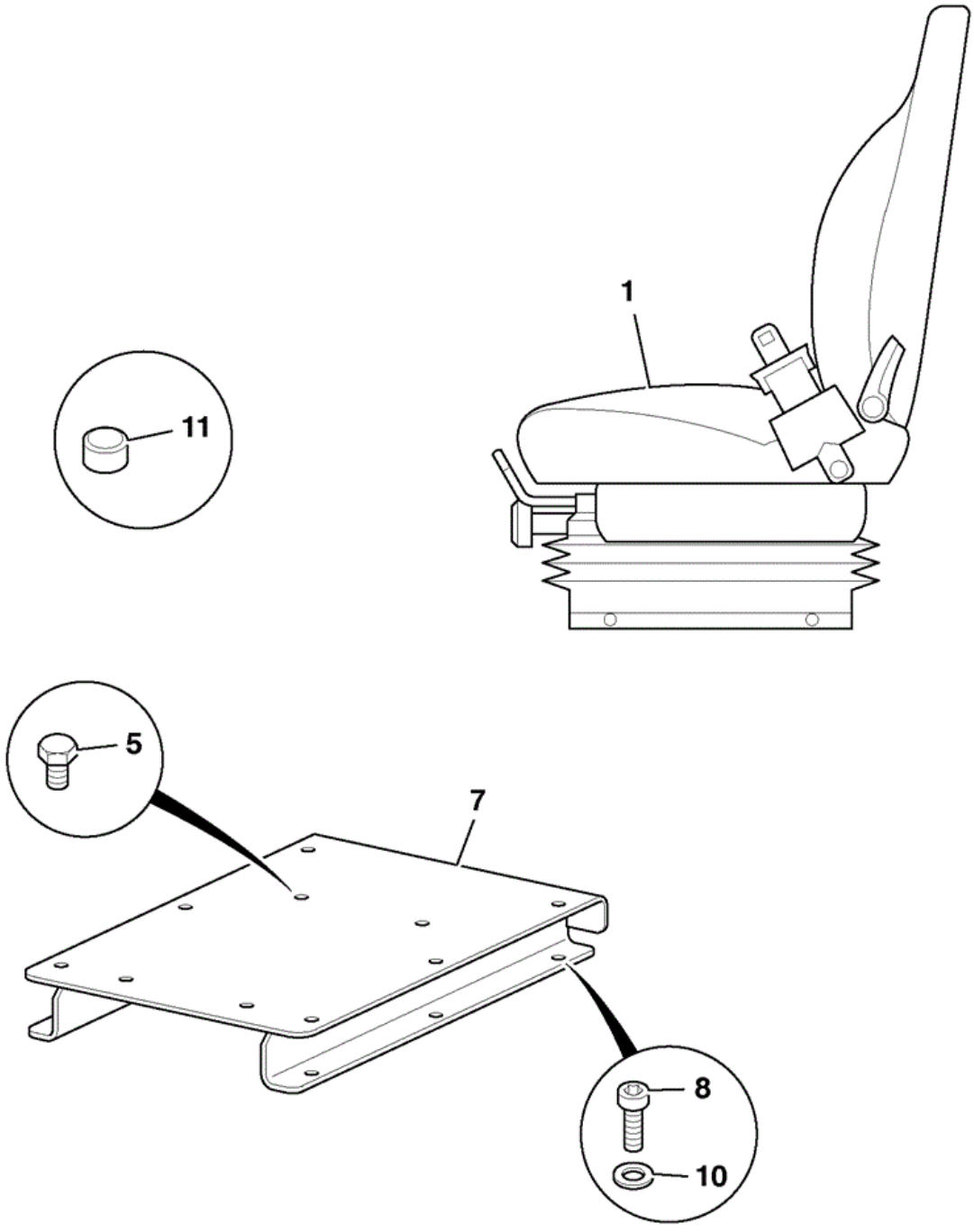

796572

Item	Part No	Change No	Description	Usage Code	QTY
1	40/911024		Seat Adjustable Back Mech. Suspension See B2-33-2 for components		1
5	1315/0301D		Setscrew M8 x 12mm		4

7	331/61610	Superseded	Plate seat adapter		1
7	332/A1766	to 03/10/2010	Plate seat adapter WA Raises seat by 50mm to improve visability		1
7	333/S2337		Plate seat adapter WA		1
8	826/01486		Screw Socket Button Head		6
10	823/00529		Washer		6

Applicability Date Ranges:
From: , To:

Product Catalog\WHEELED LOADERS\416 01243000-01243499,01317500-01317999,01472000-01472999,02095872-02095875 9812/3020 \B BODYWORK, CAB, LOADER END\B02 CAB\B2-33-2 SEAT, COMPONENTS MECH. SUSPENSION FABRIC

9812/3020 B2-33-2 SEAT, COMPONENTS MECH. SUSPENSION FABRIC

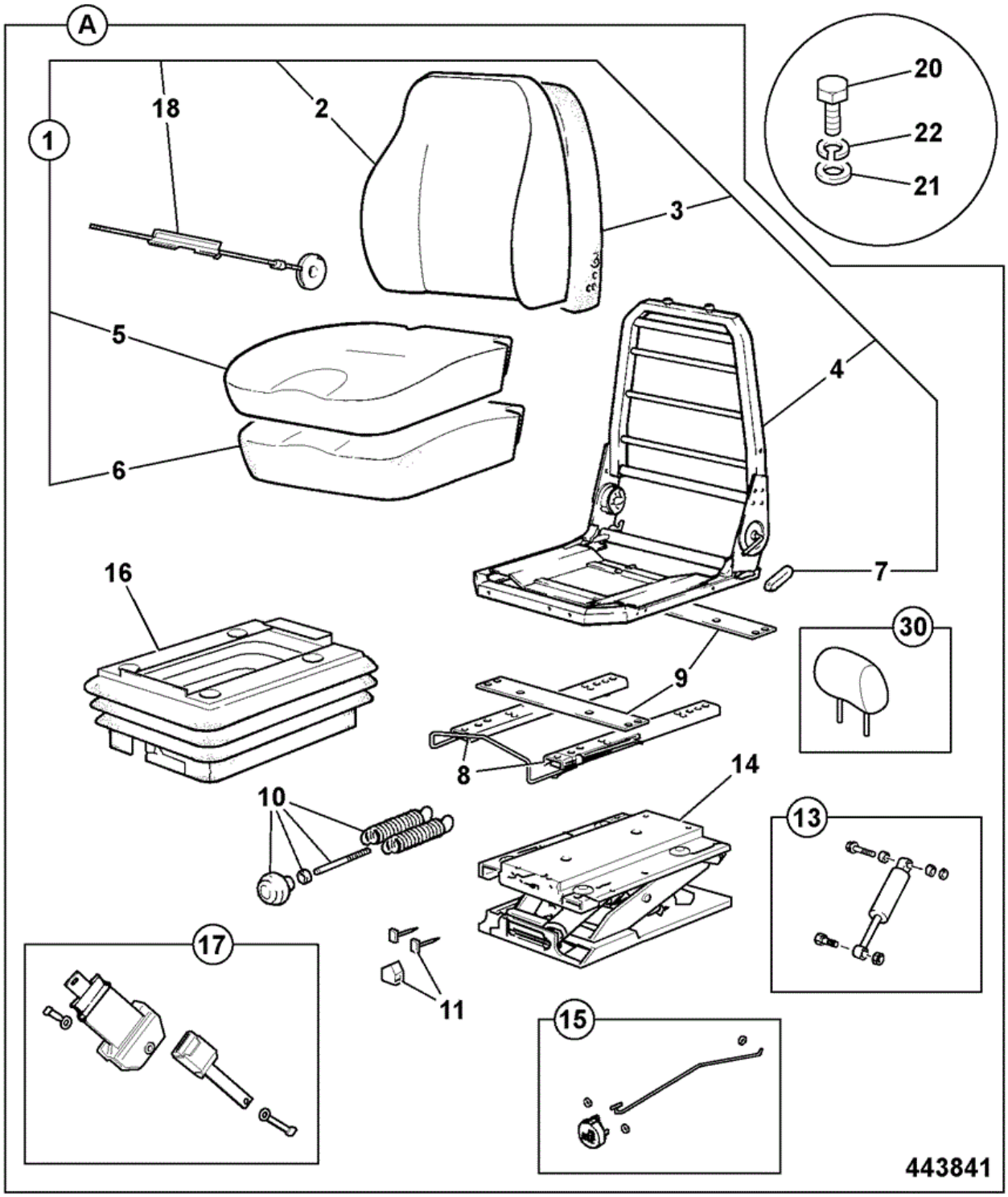

Item	Part No	Change No	Description	Usage Code	QTY
A	40/911024		Seat Adjustable Back Mech. Suspension		1
1	40/911080		Kit upper assembly		1

2	40/911082		Kit back cover		1
3	40/207703		Kit backrest foam		1
4	40/911087		Kit seat frame		1
5	40/911085		Kit seat cover		1
6	40/207705		Kit seat squab foam		1
7	40/911088		Kit lever		1
8	40/911091		Kit adjustment		1
9	40/911090		Kit cross strap		1
10	40/910657		Kit Weight Adjuster (Inc. handle)		1
11	331/36938		Kit up / bump stop		1
13	40/910659		Kit Damper		1
14	40/910660		Kit Suspension		1
15	40/910661		Kit ride indicator		1
16	40/910662		Kit suspension cover		1
17	40/910664		Kit Seat-belt, 2 inch		1
17	40/910760		Kit seatbelt, 3"(76mm) retractable		1
18	****		'See Remark' Lumbar kit not fitted		1
20	1315/0303D		Setscrew M8 x 16mm		4
21	1420/0007D		Washer (M8)		4
22	1425/0007Z		Washer Washer		4
30	40/911093		Kit headrest		1

Applicability Date Ranges:
From: , To:

Product Catalog\WHEELED LOADERS\416 01243000-01243499,01317500-01317999,01472000-01472999,02095872-02095875 9812/3020 \B BODYWORK, CAB, LOADER END\B02 CAB\B2-34-1 SEAT, ASSEMBLY MECH. SUSPENSION VINYL

9812/3020 B2-34-1 SEAT, ASSEMBLY MECH. SUSPENSION VINYL

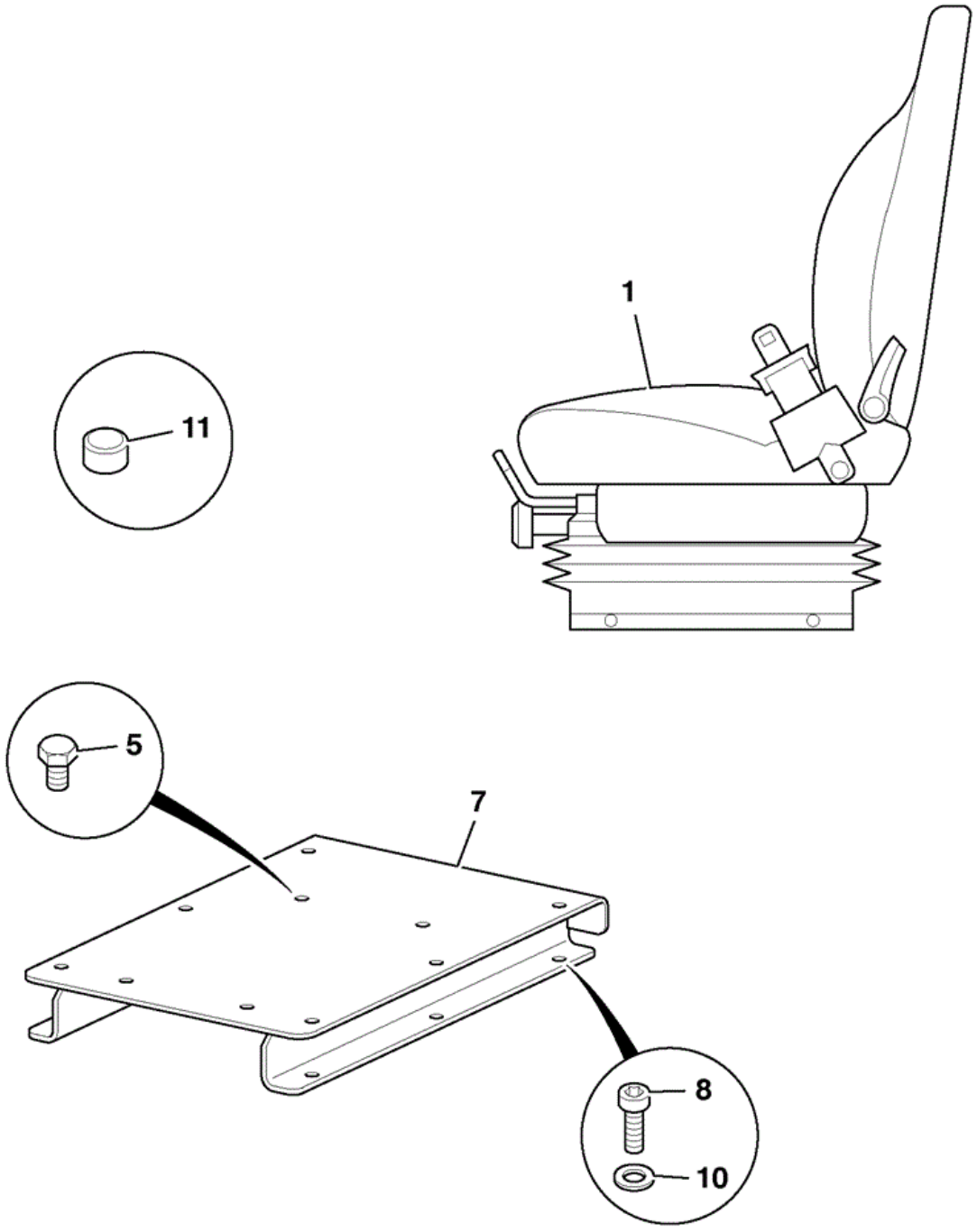

796572

Item	Part No	Change No	Description	Usage Code	QTY
1	40/911025		Seat Fixed back Mech. suspension See B2-34-2 for components		1
5	1315/0301D		Setscrew M8 x 12mm		4

7	331/61610	Superseded	Plate seat adapter		1
7	332/A1766	to 03/10/2010	Plate seat adapter WA Raises seat by 50mm to improve visability		1
7	333/S2337		Plate seat adapter WA		1
8	826/01486		Screw Socket Button Head		6
10	823/00529		Washer		6

Applicability Date Ranges:
From: , To:

Product Catalog\WHEELED LOADERS\416 01243000-01243499,01317500-01317999,01472000-01472999,02095872-02095875 9812/3020 \B BODYWORK, CAB, LOADER END\B02 CAB\B2-34-2 SEAT, COMPONENTS MECH SUSPENSION VINYL

9812/3020 B2-34-2 SEAT, COMPONENTS MECH SUSPENSION VINYL

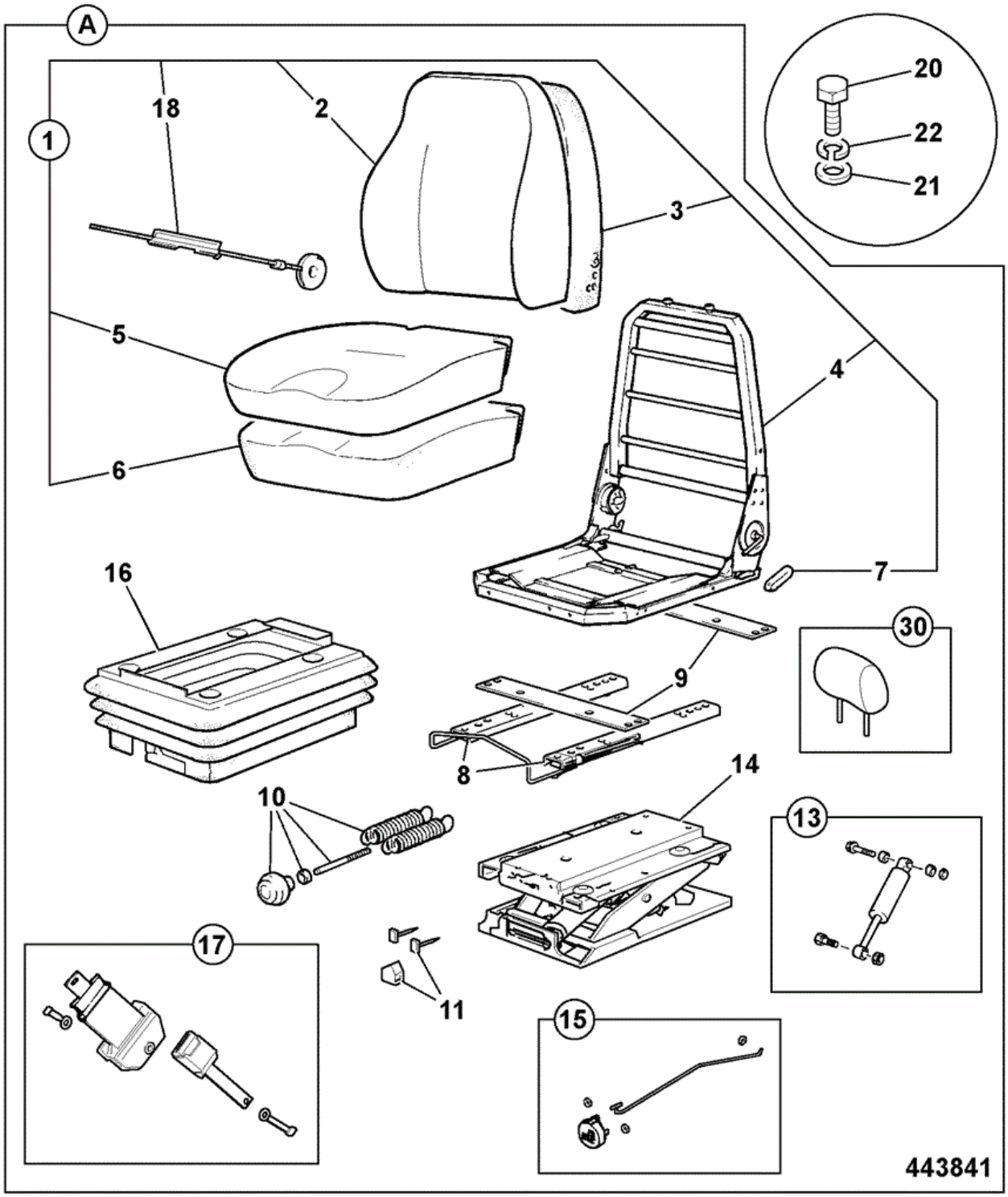

Item	Part No	Change No	Description	Usage Code	QTY
A	40/911025		Seat Fixed back Mech. suspension		1
1	:40/911079		Kit upper assembly		1

2	:40/911081		Kit back cover		1
3	:40/207703		Kit backrest foam		1
4	:40/911087		Kit seat frame		1
5	:40/911084		Kit seat cover		1
6	:40/911086		Kit seat foam		1
7	:40/911088		Kit lever		1
8	:40/911091		Kit adjustment		1
9	:40/911090		Kit cross strap		1
10	:40/910657		Kit Weight Adjuster (Inc. handle)		1
11	:331/36938		Kit up / bump stop		1
13	:40/910659		Kit Damper		1
14	:40/910660		Kit Suspension		1
15	:40/910661		Kit ride indicator		1
16	:40/910662		Kit suspension cover		1
17	:40/910664		Kit Seat-belt, 2 inch		1
17	40/910760		Kit seatbelt, 3"(76mm) retractable		1
18	****		'See Remark' Lumbar kit not fitted		1
20	1315/0303D		Setscrew M8 x 16mm		4
21	1420/0007D		Washer (M8)		4
22	1425/0007Z		Washer Washer		4
30	:40/911092		Kit headrest		1

Applicability Date Ranges:
From: , To:

Product Catalog\WHEELED LOADERS\416 01243000-01243499,01317500-01317999,01472000-01472999,02095872-02095875 9812/3020 \B BODYWORK, CAB, LOADER END\B02 CAB\B2-35-1 SEAT AIR SUSPENSION HEATED, FABRIC, INSTALLATION

9812/3020 B2-35-1 SEAT AIR SUSPENSION HEATED, FABRIC, INSTALLATION

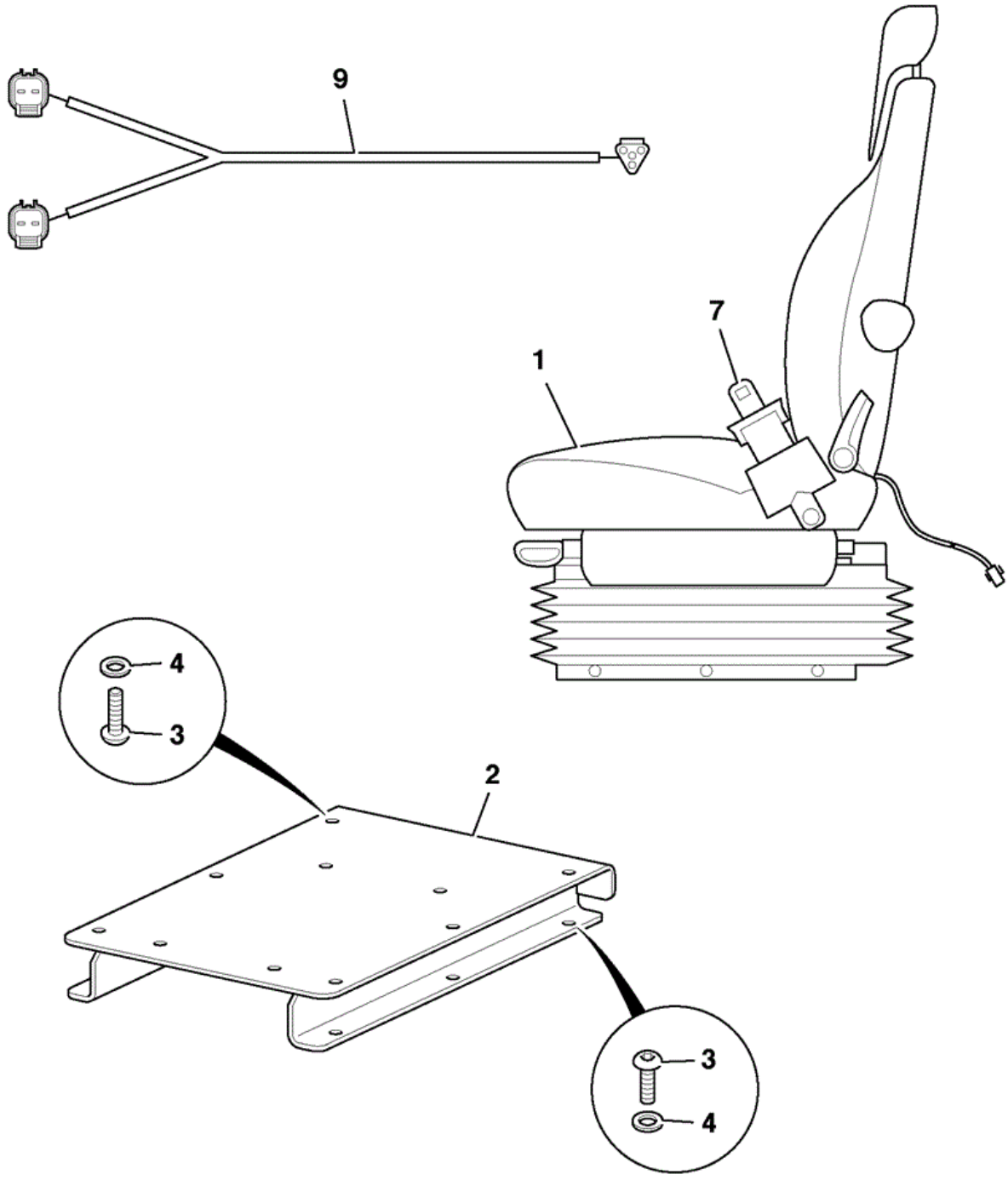

790752

Item	Part No	Change No	Description	Usage Code	QTY
1	40/911023		Seat air suspension heated seat		1
			'See Remark'		

1A	****		Upper components see page B2-35-2		1
1A	****		'See Remark' Lower components see page B2-35-3		1
2	332/A1766	to 03/10/2010	Plate seat adapter WA		1
2	****		'See Remark' Not fitted		1
3	826/01486		Screw Socket Button Head		6
4	823/00529		Washer		6
6	122/23509		Cap Nut M8		2

Applicability Date Ranges:
From: , To:

Product Catalog\WHEELED LOADERS\416 01243000-01243499,01317500-01317999,01472000-01472999,02095872-02095875 9812/3020 \B BODYWORK, CAB, LOADER END\B02 CAB\B2-35-2 SEAT AIR SUSPENSION/HEAT FABRIC, UPPER COMPONENTS

9812/3020 B2-35-2 SEAT AIR SUSPENSION/HEAT FABRIC, UPPER COMPONENTS

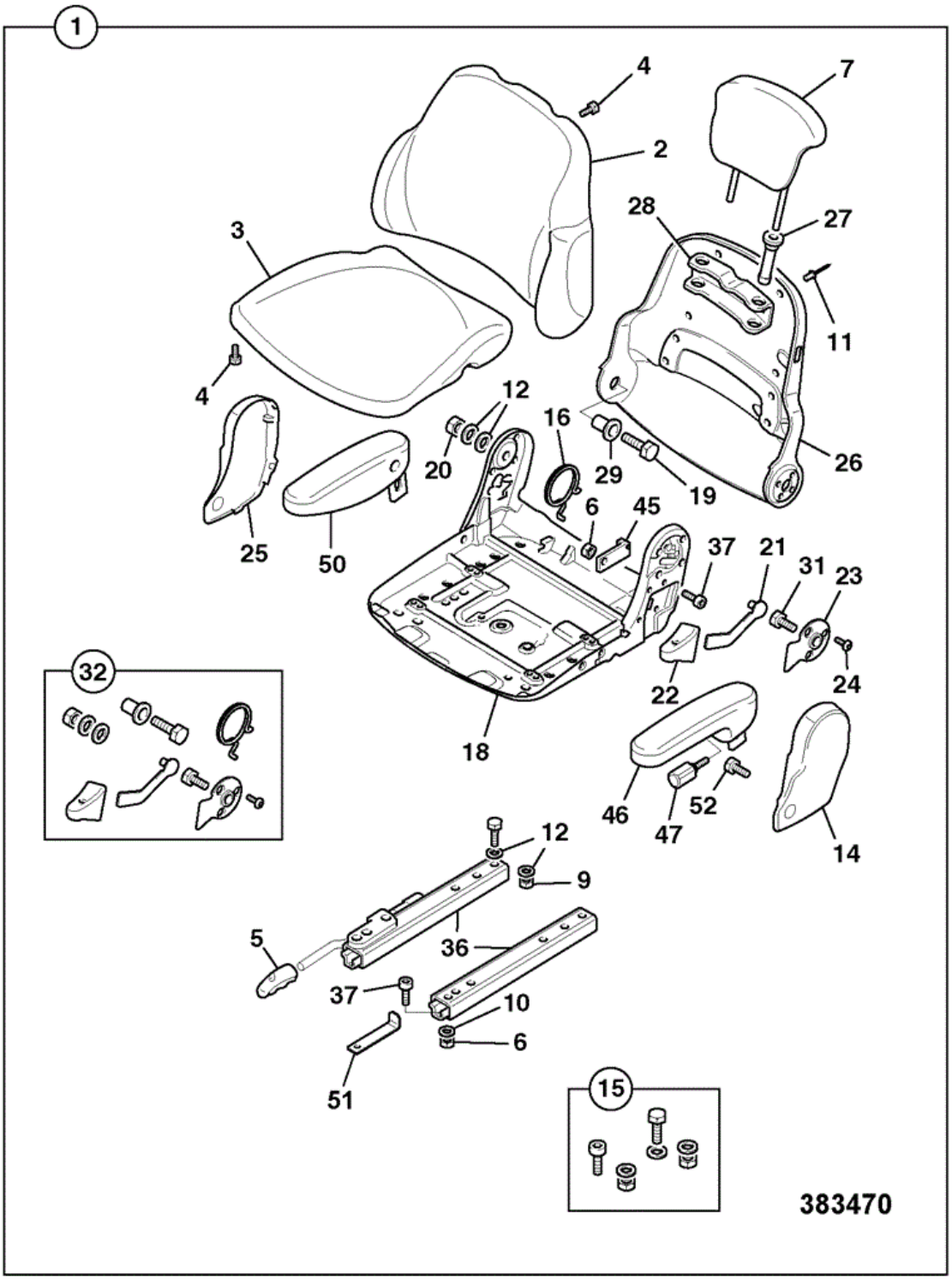

Item	Part No	Change No	Description	Usage Code	QTY
1	****		None serviced part		1
2	:40/910769		Cushion backrest		1

3	:40/910770		Cushion seat grey		1
4	:40/910625		Screw		8
5	:40/910112		Handle		1
6	:478/20117		Nut		7
7	:40/910771		Headrest		1
9	:40/910212		Nut M8		4
10	:478/20061		Washer		5
12	:40/910114		Washer		8
14	:40/910949		Cover LH backrest		1
15	:40/910229		Kit seat fixing		1
16	:40/911142		Spring Spring torsion		1
18	:40/910774		Base seat		1
19	:40/910232		Screw M8 x 40		1
20	:478/20044		Nut		1
21	:40/910233		Lever		1
22	:40/910234		Handle		1
23	:40/910235		Plate		1
24	:40/910236		Screw M6 x 10		3
25	:40/910950		Cover RH backrest		1
26	:40/910275		Backrest		1
27	:40/910245		Bush		2
28	:40/910246		Bracket retainer headrest		1
29	:40/910247		Rivet		1
30	:40/910951		Kit seatbelt		1
31	:40/910249		Screw M8 x 18		1
32	:40/910252		Kit adjuster		1
36	:40/910111		Kit-slide rails		1
37	:478/20153		Screw		4
45	:40/910265		Bracket		1
46	****		'See Remark' Not required		1
47	****		'See Remark' Not required		2
48	:40/910277		Rivet		1
49	:40/910267		Cover PVC		1
50	****		'See Remark' Not required		1
51	:478/20163		Stop		1
52	****		'See Remark' Not required		1

76	:40/910258		Screw M8 X 16		4
85	:478/20157		Belt seat		1
90	:40/910265		Bracket		1
93	:40/910277		Rivet		1
98	:478/20046		Screw		1

Applicability Date Ranges:
From: , To:

9812/3020 B2-35-3 SEAT AIR SUSPENSION/HEAT FABRIC, LOWER COMPONENTS

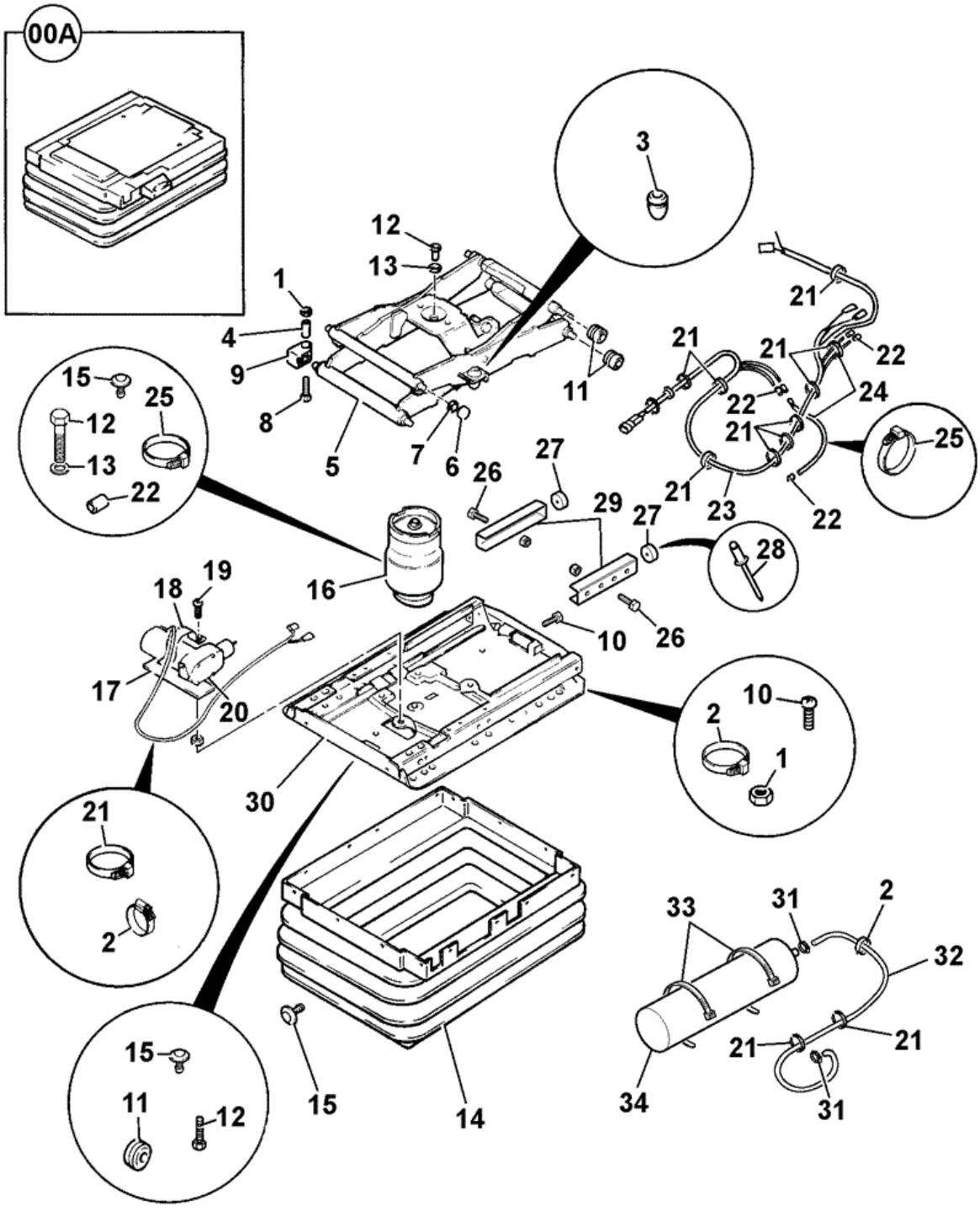

Item	Part No	Change No	Description	Usage Code	QTY
A	****		None serviced part		1
1	478/20044		Nut		6

2	478/20073		Tie cable		6
3	478/20103		Bumper		2
4	478/20060		Cap cover		4
5	40/910348		Kit swing arm		1
6	40/910349		Roller		2
7	478/20086		Ring felt		2
8	478/20087		Screw		2
9	40/911141		Bearing Bearing thrust		2
10	478/20144		Screw		1
11	478/20089		Roller Standard Seat		4
12	478/20090		Screw		2
13	40/910114		Washer		2
14	40/910941		Kit bellows Includes item 15		1
15	478/20105		Plug retainer		22
16	40/910942		Kit-air spring Standard seat inc. items 12,13,15,22,25		1
17	478/20095		Plate		1
18	40/910122		Bracket		1
19	40/910351		Screw		1
20	40/910943		Compressor Includes items 1,2,15,17,18,19,21,25		1
21	478/20099		Fastener cable		5
22	478/20084		Nipple hose		4
23	40/910944		Cable connecting Standard seat - includes items 2,15,21		1
24	40/910945		Kit-air hose Standard & Hi Spec inc.items 2,15,21,22,25		1
25	478/20108		Clamp hose		2
26	478/20137		Screw		2
27	40/910359		Bumper		2
28	40/910360		Rivet		2
29	40/910361		Stop Includes items 26,27,28		1
30	40/910948		Kit suspension-lower Includes items 1,2,9,10,11,12,15,19,29		1
31	40/910364		Clamp hose Hi Spec Seat only		3
32	40/910365		Tube Hi Spec Seat only		1

33	40/910366		Fastener cable Hi Spec Seat only		1
34	40/910962		Reservoir air Hi Spec Seat only inc. 2,21,31,32,33		1

Applicability Date Ranges:
From: , To:

Product Catalog\WHEELED LOADERS\416 01243000-01243499,01317500-01317999,01472000-01472999,02095872-02095875 9812/3020 \B BODYWORK, CAB, LOADER END\B02 CAB\B2-36-1 GLASS HAMMER

9812/3020 B2-36-1 GLASS HAMMER

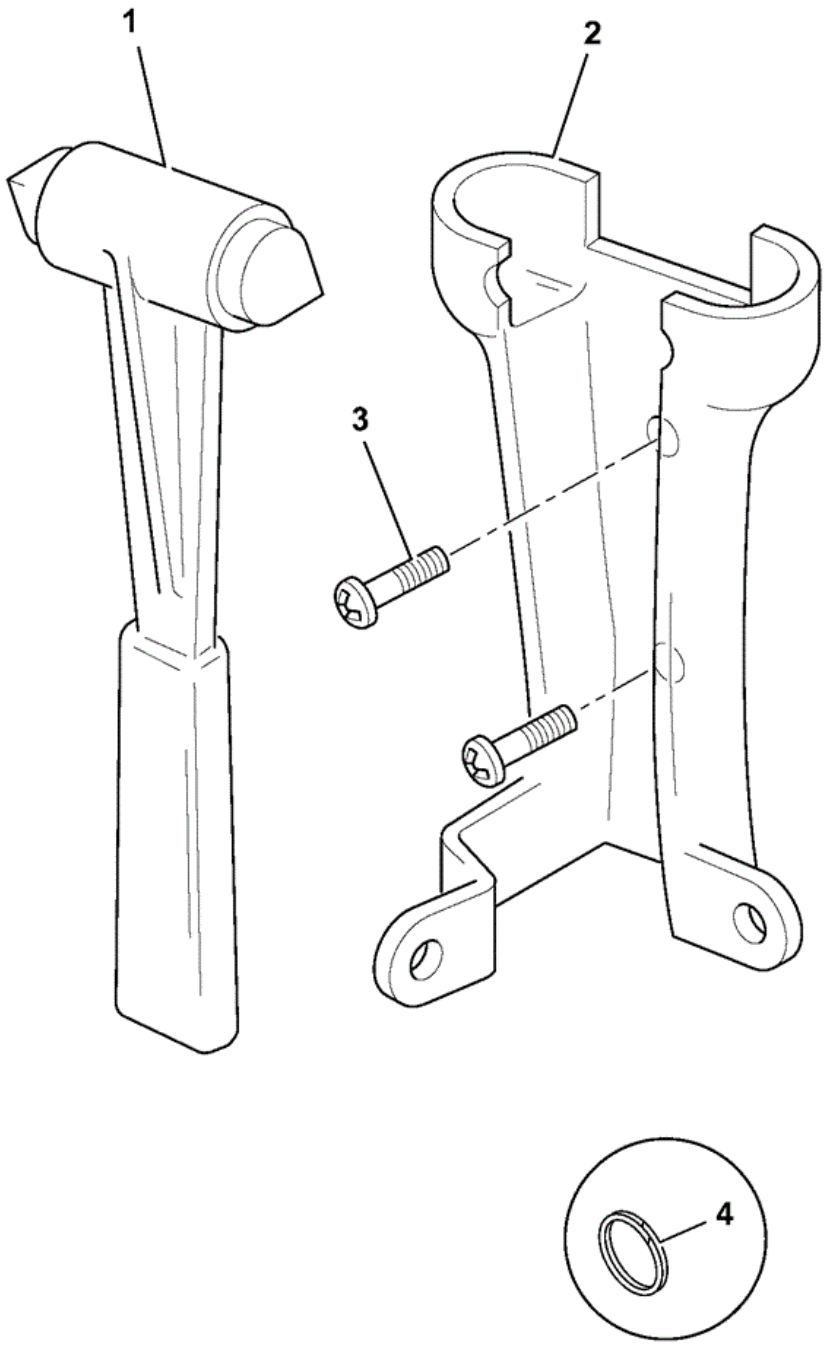

405131

Item	Part No	Change No	Description	Usage Code	QTY
1	265/00678		Hammer Emergency Glass Breaker		1
2	265/00679	Superseded	Holder Hammer	A	1

2	332/U4206		Bracket Breaker Tool Holder		1
3	1315/0103Z		Screw		2
3A	1414/0011Z		Washer (2BA)		2
3B	1370/0003Z		Nut Nut M5		2
4	152/17502		Ring key 20mm diameter approx. Not required with new holder	A	1

Applicability Date Ranges:
From: , To:

9812/3020 B2-37-1 HANDBOOK HOLDER SALES SPECIAL

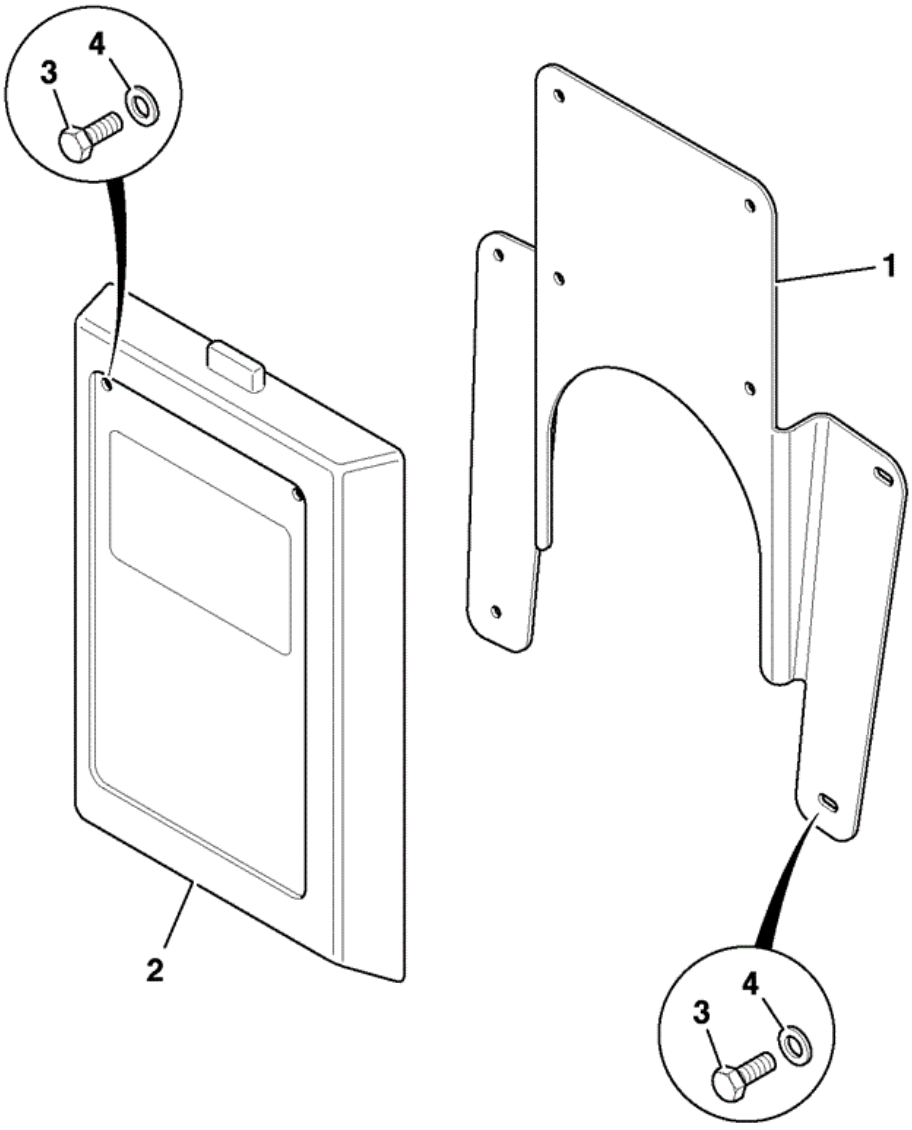

900890

Item	Part No	Change No	Description	Usage Code	QTY
1	331/66649		Bracket Sales special 9919.		1
2	157/51701		Holder handbook		1

3	1315/0208D		Setscrew (M6 X 30)		8
4	1420/0006D		Washer (M6)		12
5	1370/0103D		Nut (M6)		8

Note 1: Fitted to rear cab bulkhead moulding

Applicability Date Ranges:
From: , To:

Product Catalog\WHEELED LOADERS\416 01243000-01243499,01317500-01317999,01472000-01472999,02095872-02095875 9812/3020 \B BODYWORK, CAB, LOADER END\B02 CAB\B2-40-1 CANOPY CAB

9812/3020 B2-40-1 CANOPY CAB

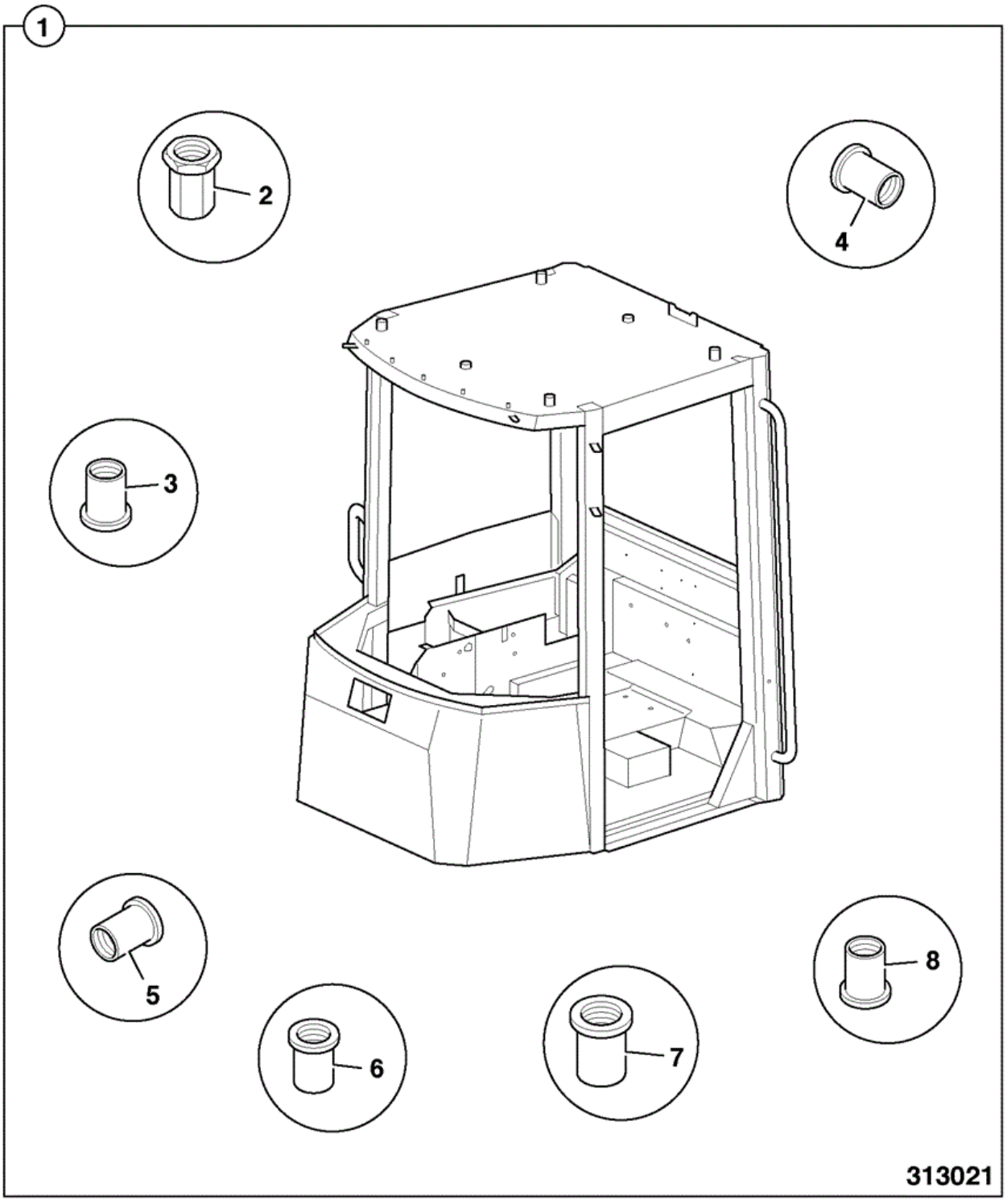

Item	Part No	Change No	Description	Usage Code	QTY
1	269/00916		Canopy ABI		1
2	:826/10977		Rivet nut M8		9

3	:826/10879		Nut rivet hex. M6		27
4	:826/10973		Nut Low Profile Hex Bollho M5		4
5	:826/01101		Nut Nut,M6		24
6	:826/01099		Rivet Nut M6		30
7	:826/01102		Nut M8		4
8	:826/01261		Nut Rivet		10

Applicability Date Ranges:
From: , To: 31/10/2010

9812/3020 B2-41-1 CANOPY GLASS GLAZING FRONT & BACK, SALES SPECIAL

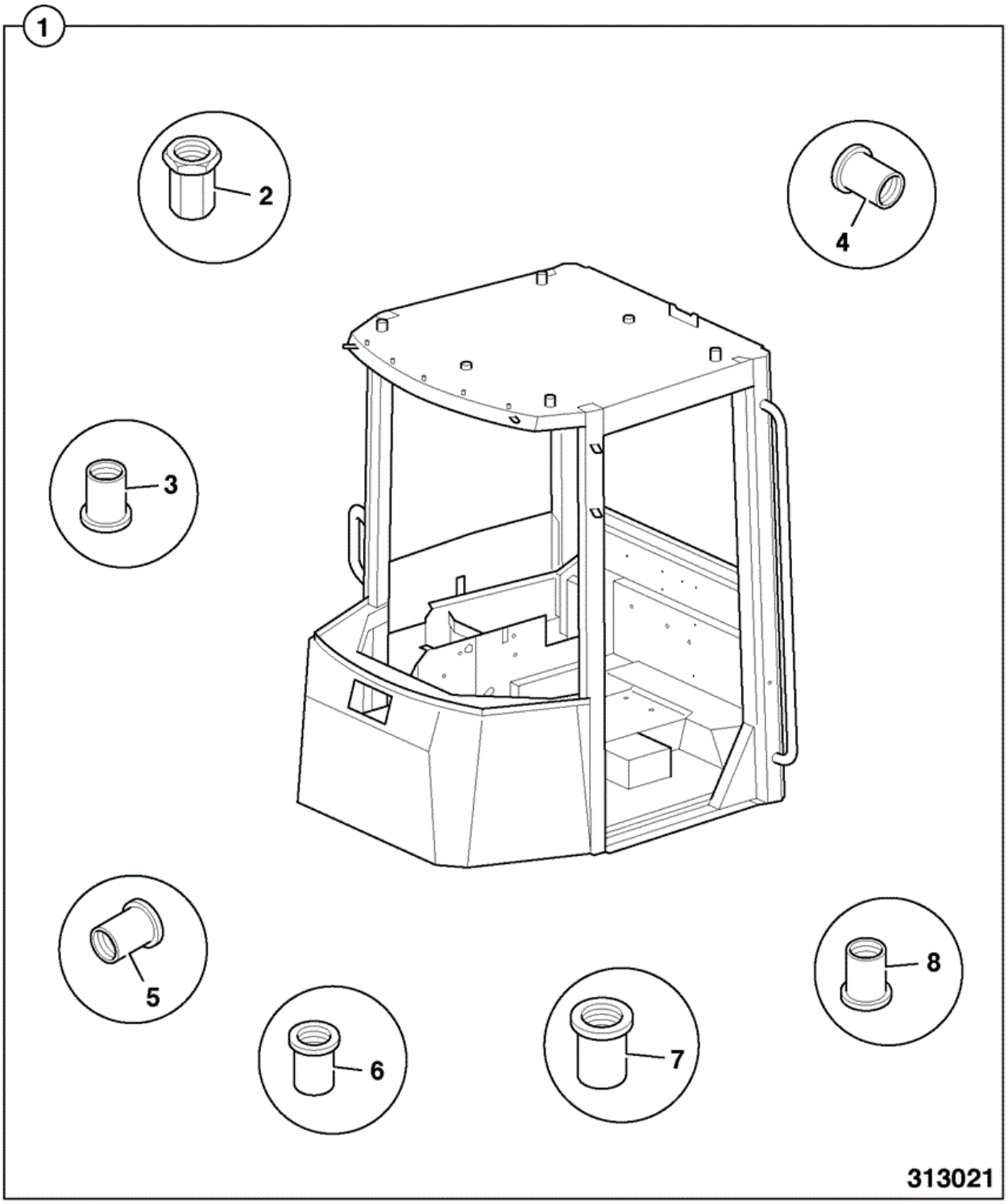

Item	Part No	Change No	Description	Usage Code	QTY
A	332/W3237		Canopy glazed front & back ABI Sales special 0611		1

B	****		Assembly cab glass		1
C	****		Assembly cab trim		1
D	****		Assembly cab riv-nuts		1
1	:333/R3975		Cab WA painted/sealed & dataplate		1
2	:826/10977		Rivet nut M8		9
3	:826/10879		Nut rivet hex. M6		28
4	:826/10973		Nut Low Profile Hex Bollho M5		2
5	:826/01101		Nut Nut,M6		24
6	:826/01099		Rivet Nut M6		28
7	:826/01102		Nut M8		4
8	:826/01261		Nut Rivet		10
9	:826/11035		Nut M6 Caged Nut		2
10	:826/11080		Nut bollhoff M8 (Red)		2

9812/3020 B2-2-1 CAB GLAZING

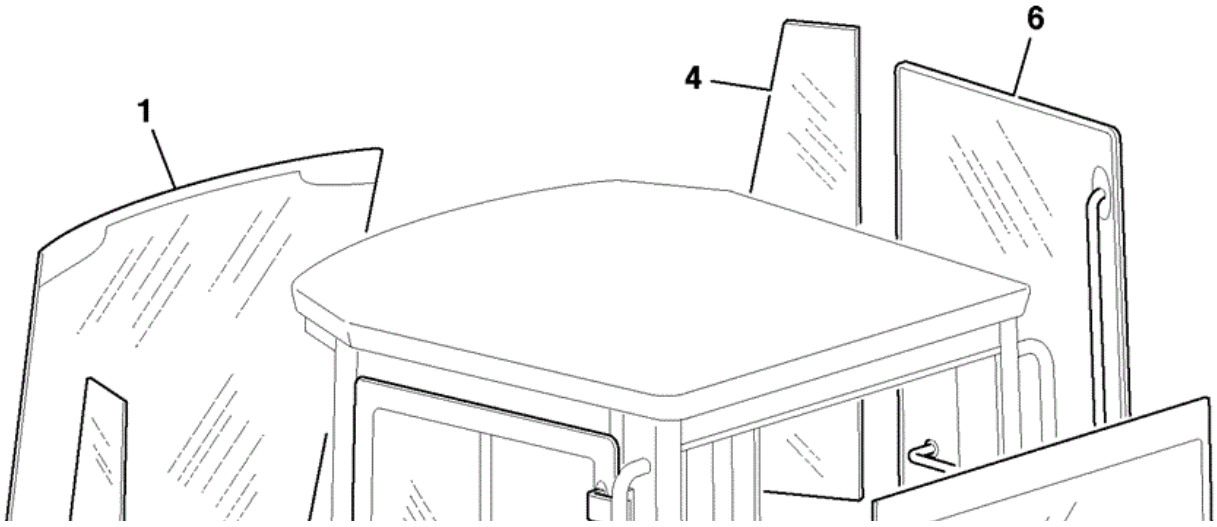

Item	Part No	Change No	Description	Usage Code	QTY
1	827/80438		Windscreen front tinted green Length 1070mm		1
2	827/80436		Screen rear tinted,heated Height 800mm		1
3	827/30469		Glass L.H. side green tinted		1
4	827/30470		Glass R.H. side green tinted		1
5	****		'See Remark' Cab door see B2-3-1		1
6	****		'See Remark' Cab RH window see B2-4-1		1
8	926/15500		Spacer Block		16

9812/3020 B2-1-2 CAB ASSEMBLY

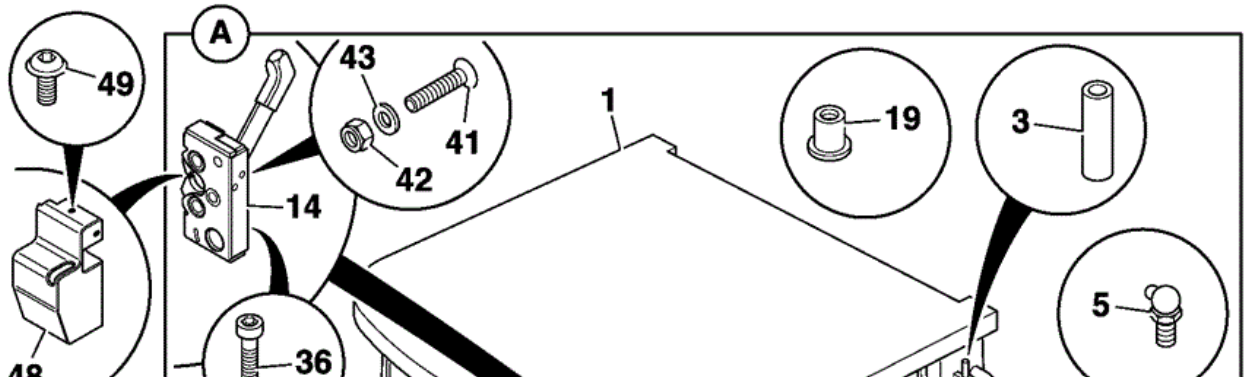

Item	Part No	Change No	Description	Usage Code	QTY
A	333/P9481		Cab assembly ABI		1
1	333/P9465		Cab WA painted/sealed & dataplate		1
2	****		'See Remark' Cab glass see B2-2-1		1
3	****		'See Remark' Cab door see B2-3-1		1
4	****		'See Remark' Cab window see B2-4-1		1
5	****		'See Remark' Cab trim see B2-10-1		1
7	123/05740		Plug Blanking 30mm		6
15	826/10977		Rivet nut M8		9
16	826/10879		Nut rivet hex. M6		30
17	826/10973		Nut Low Profile Hex Bollho M5		4
18	826/01101		Nut Nut,M6		24
19	826/01099		Rivet Nut M6		28
20	826/01102		Nut M8		4
21	826/01261		Nut Rivet		10
22	826/11035		Nut M6 Caged Nut		2
50	335/01153		Handle grab interior		1
51	826/00853		Screw M8x30 csk Head		1

From: , To:

9812/3020 B2-42-1 CANOPY CAB FRONT WIPER BLANK

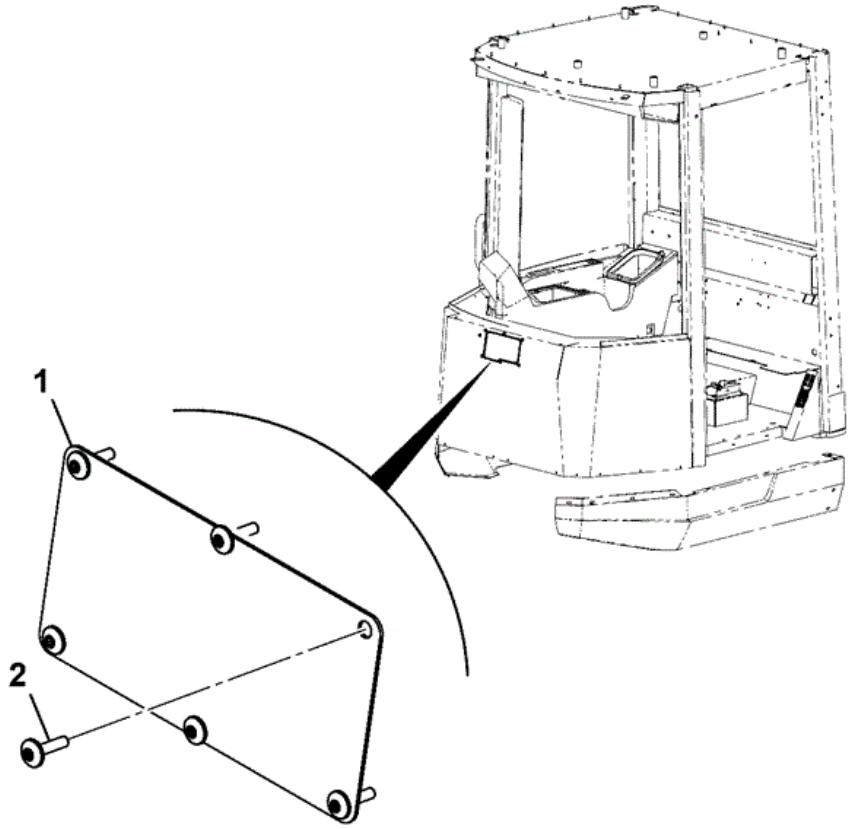

269-00923-1

Item	Part No	Change No	Description	Usage Code	QTY
1	332/A1368		Plate blanking		1
2	826/01768		Screw M6 x 25		6

Applicability Date Ranges:
From: , To:

Product Catalog\WHEELED LOADERS\416 01243000-01243499,01317500-01317999,01472000-01472999,02095872-02095875 9812/3020 \B BODYWORK, CAB, LOADER END\B02 CAB\B2-43-1 CANOPY CAB FRONT MOULDINGS

9812/3020 B2-43-1 CANOPY CAB FRONT MOULDINGS

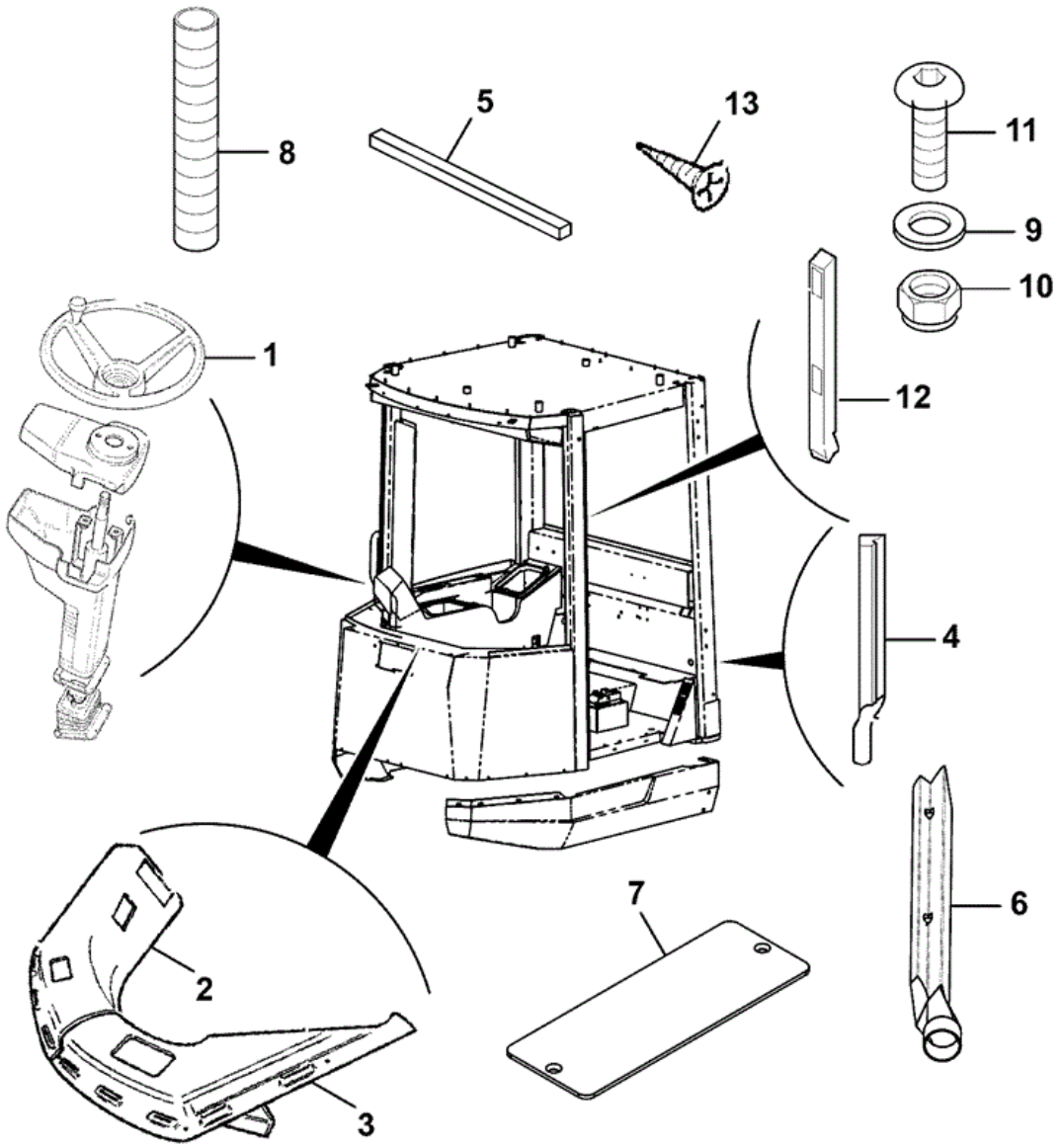

269-00919-3

Item	Part No	Change No	Description	Usage Code	QTY
1	****		Assembly cap & cowl ABI		1
2	****		Moulding Front,Assembly, Rightside		1

3	****		Moulding Front,Assembly, Leftside		1
4	346/00325		Moulding Plenum Tidy		1
5	926/43201		Foam strip, 25 x 25 x 420 self adhesive		2
6	333/R4111		Moulding pillar vent RH post		1
7	332/A1366		Plate vent blanking		1
8	647/04100		Hose Roll		1
9	1412/0001D		Washer (1/4" Large)		4
10	1370/0003Z		Nut Nut M5		4
11	826/10805		Screw Countersunk Screw M6 x 25		2
12	346/00329		Moulding Vent Duct, B-Post		1
13	826/01524		Screw Selftap		2

Applicability Date Ranges:
From: , To:

Product Catalog\WHEELED LOADERS\416 01243000-01243499,01317500-01317999,01472000-01472999,02095872-02095875 9812/3020 \B BODYWORK, CAB, LOADER END\B02 CAB\B2-44-1 CANOPY CAB REAR BULKHEAD MOULDING

9812/3020 B2-44-1 CANOPY CAB REAR BULKHEAD MOULDING

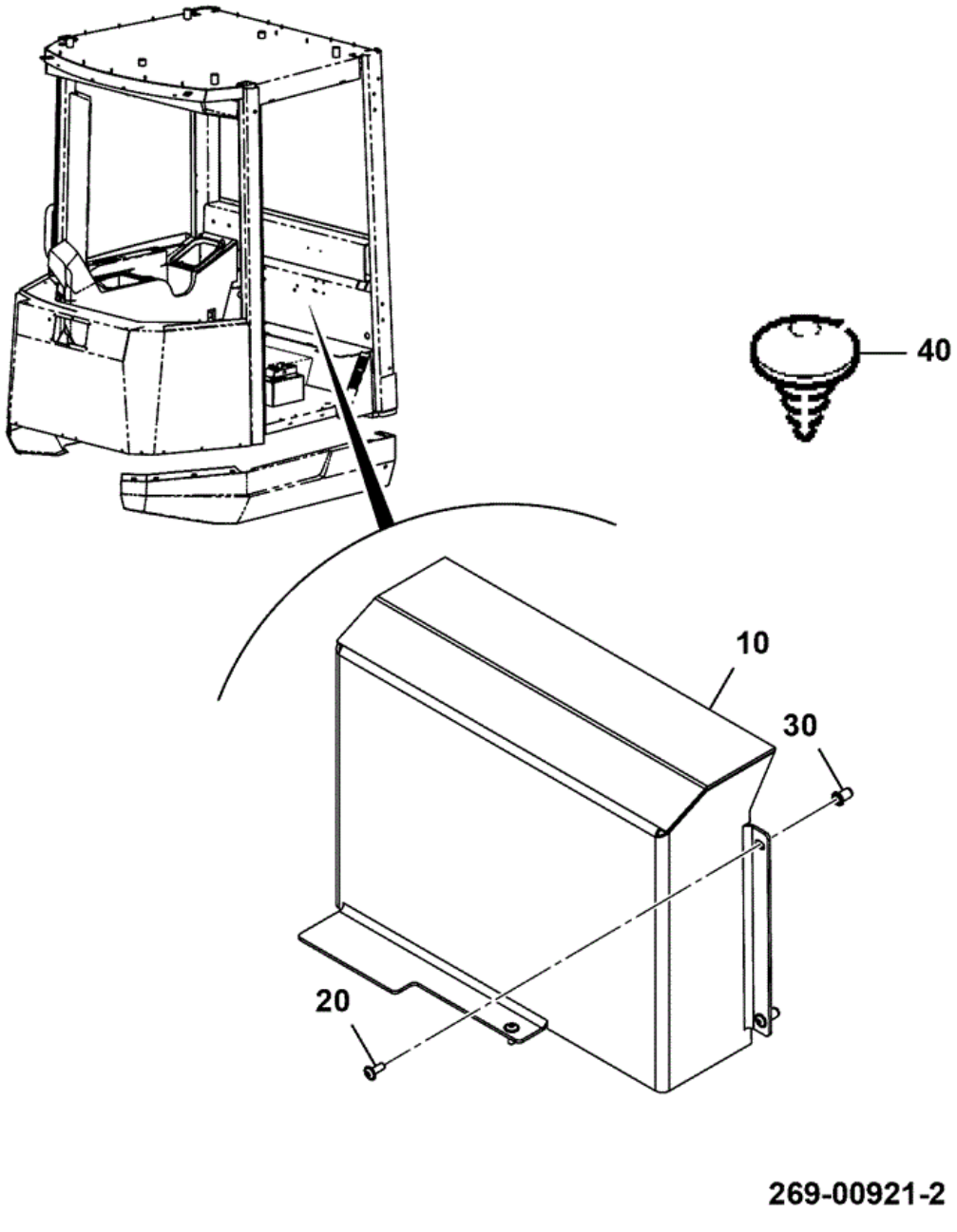

Item	Part No	Change No	Description	Usage Code	QTY
10	332/A1367		Plate blanking		1
20	826/01559		Screw Button Head Socket		3

30	826/01099		Rivet Nut M6		2
40	826/01800		Fastener fir tree		8

Applicability Date Ranges:
From: , To:

Product Catalog\WHEELED LOADERS\416 01243000-01243499,01317500-01317999,01472000-01472999,02095872-02095875 9812/3020 \B BODYWORK, CAB, LOADER END\B02 CAB\B2-44-10 CANOPY CAB FUSEBOX COVER

9812/3020 B2-44-10 CANOPY CAB FUSEBOX COVER

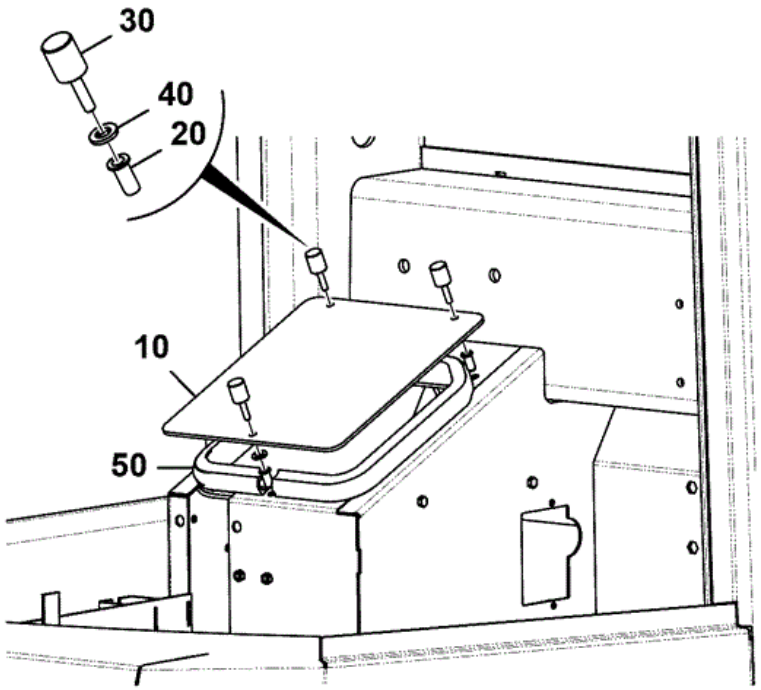

269-00922-1

Item	Part No	Change No	Description	Usage Code	QTY
10	332/A1379		Plate fusebox cover		1
20	826/11071		Nut M5		3

30	826/01301		Screw thumb 20mm long		3
40	823/00598		Washer Retaining		3
50	332/A1963		Seal fusebox cover		1

Applicability Date Ranges:
From: , To:

Product Catalog\WHEELED LOADERS\416 01243000-01243499,01317500-01317999,01472000-01472999,02095872-02095875 9812/3020 \B BODYWORK, CAB, LOADER END\B02 CAB\B2-44-20 CANOPY CAB HOSE GUIDE

9812/3020 B2-44-20 CANOPY CAB HOSE GUIDE

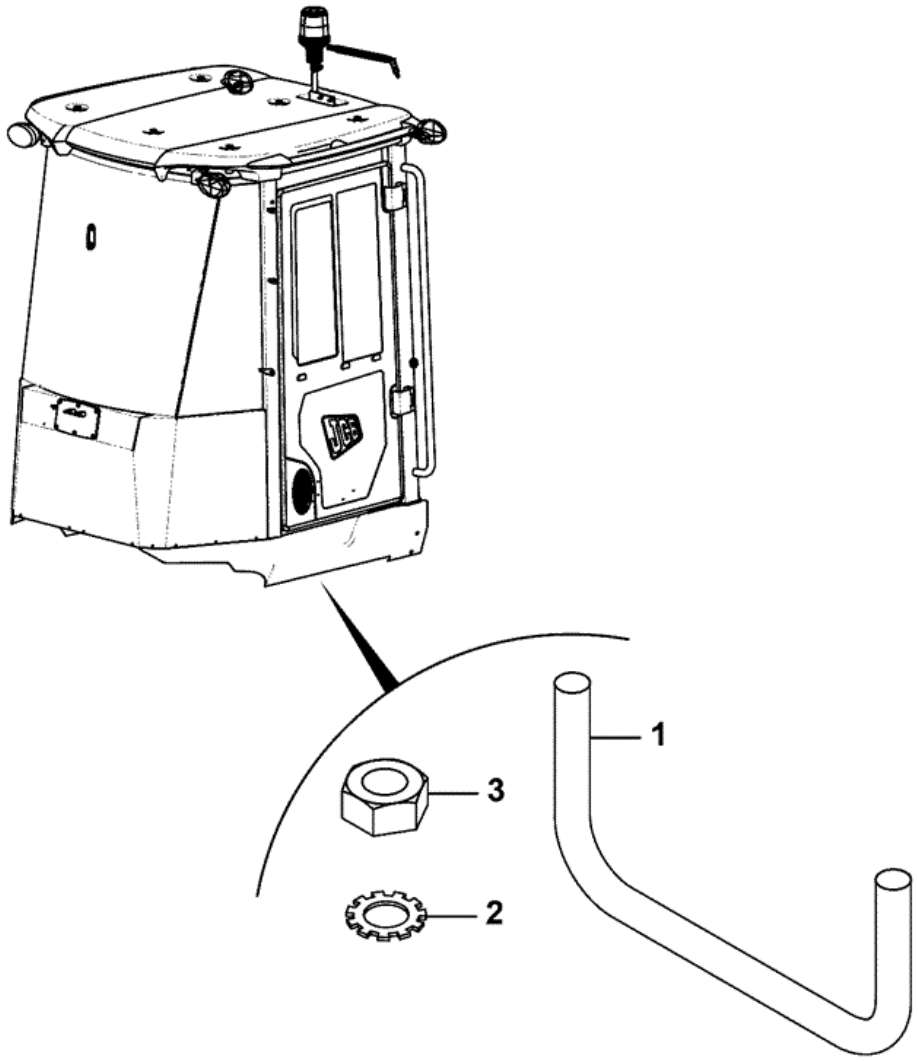

269-00868-1

Item	Part No	Change No	Description	Usage Code	QTY
1	265/00256		Guide hose		1
2	1417/0012Z		Washer lock		2
3	1370/0301D		Nut (M10)		2

Applicability Date Ranges:
From: , To:

9812/3020 B2-45-1 SEAT, AIR SUSPENSION

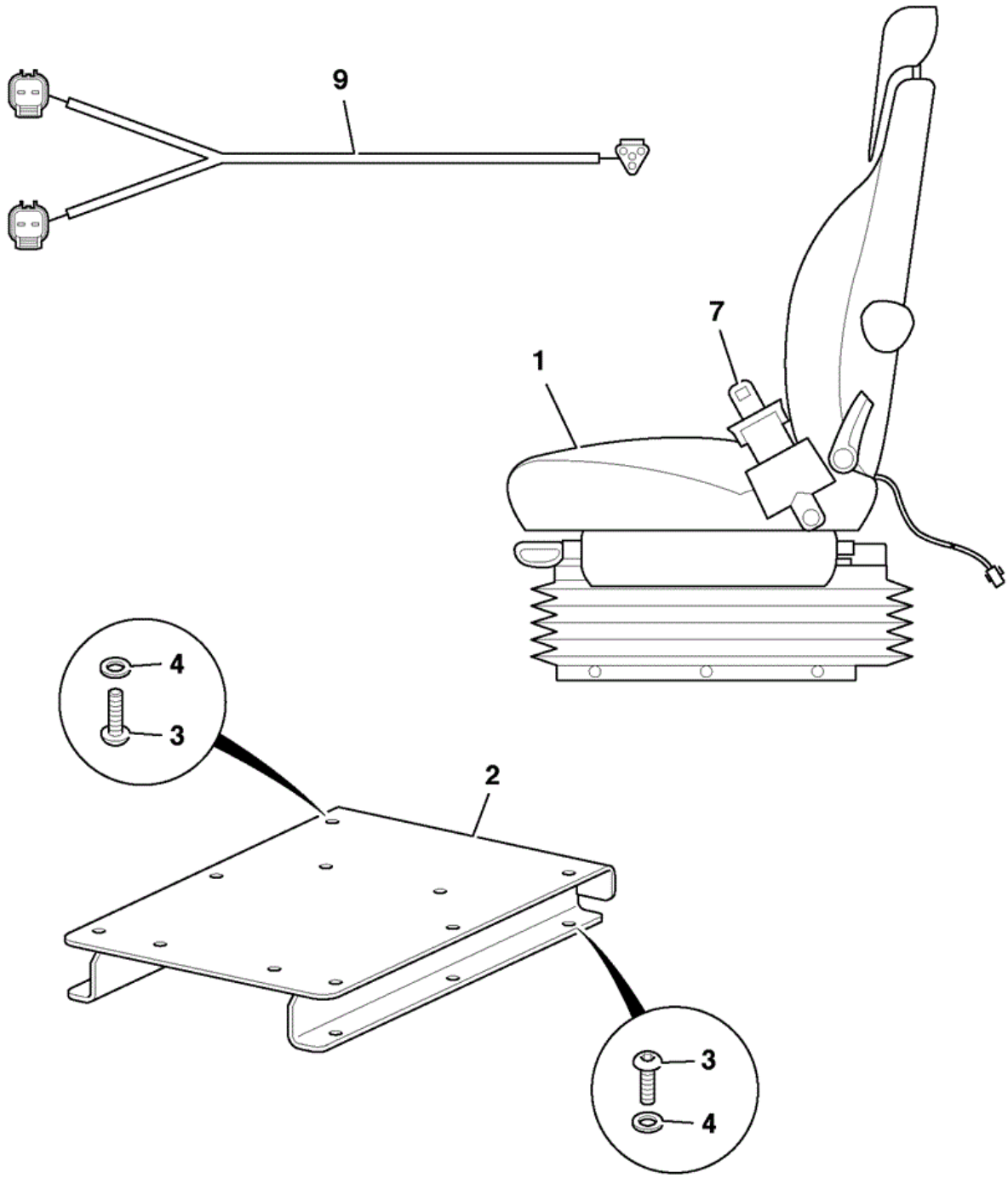

790752

Item	Part No	Change No	Description	Usage Code	QTY
1	40/911029		Seat assy,c/w seat belt fabric See B2-46-1 for components		1
2	332/A1766	to 03/10/2010	Plate seat adapter WA		1

2	333/S2337		Plate seat adapter WA		1
3	826/01486		Screw Socket Button Head		12
4	823/00529		Washer		12
7	40/910760		Kit seatbelt, 3"(76mm) retractable		1
9	721/12408		Harness seat link Fitted as part of cab harness		1

Applicability Date Ranges:
From: , To:

Product Catalog\WHEELED LOADERS\416 01243000-01243499,01317500-01317999,01472000-01472999,02095872-02095875 9812/3020 \B BODYWORK, CAB, LOADER END\B02 CAB\B2-46-1 SEAT, AIR SUSPENSION COMPONENTS

9812/3020 B2-46-1 SEAT, AIR SUSPENSION COMPONENTS

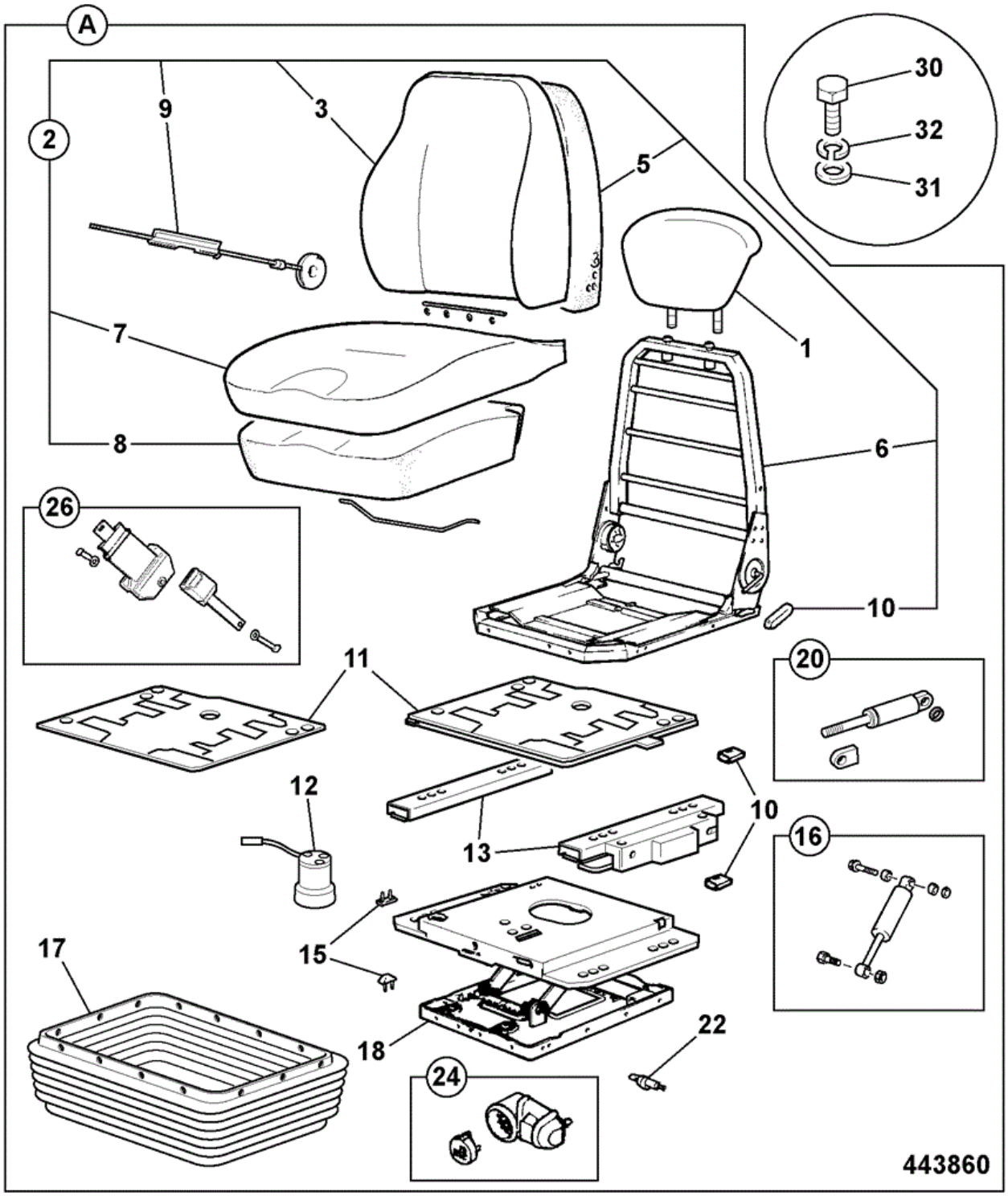

Item	Part No	Change No	Description	Usage Code	QTY
A	40/911029		Seat assy,c/w seat belt fabric		1
1	:332/C5889		Kit upper seat assembly		1

2	:332/C5893		Kit back cover		1
3	::40/910635		Kit-back cover		1
5	::40/207703		Kit backrest foam		1
6	::332/C5891		Kit Frame		1
7	::40/911085		Kit seat cover		1
8	::40/207705		Kit seat squab foam		1
9	::40/910669		Kit Lumbar		1
10	::40/910668		Kit knob		1
11	:332/C5894		Kit plate, swivel		1
12	:332/C5899		Kit air spring		1
13	:40/910674		Kit Runners with control		1
14	332/C5900		Kit air compressor		1
15	:40/910676		Kit Bump Stop		1
16	:40/910677		Kit Damper		1
17	:332/C5897		Kit suspension cover		1
17A	::332/D8645		Fastener Suspension Cover		26
18	:332/C5896		Kit suspension		1
20	:40/910680		Kit Isolator Damper		1
22	:40/910681		Kit Valve Air & Lever		1
23	332/C5901		Kit flying lead		1
24	332/C5898		Kit one touch riser (OTR)		1
26	:40/910664		Kit Seat-belt, 2 inch		1
26	40/910760		Kit seatbelt, 3"(76mm) retractable		1
30	1315/0303D		Setscrew M8 x 16mm		4
31	1420/0007D		Washer (M8)		4
32	1425/0007D		Washer Spring M8		4
40	40/910502		Kit armrest LH & RH & fixings Optional armrests		1

Applicability Date Ranges:
From: , To:

9812/3020 B2-47-1 SEATBELT WITH SWITCH, ENGINE START INTERLOCK SYSTEM

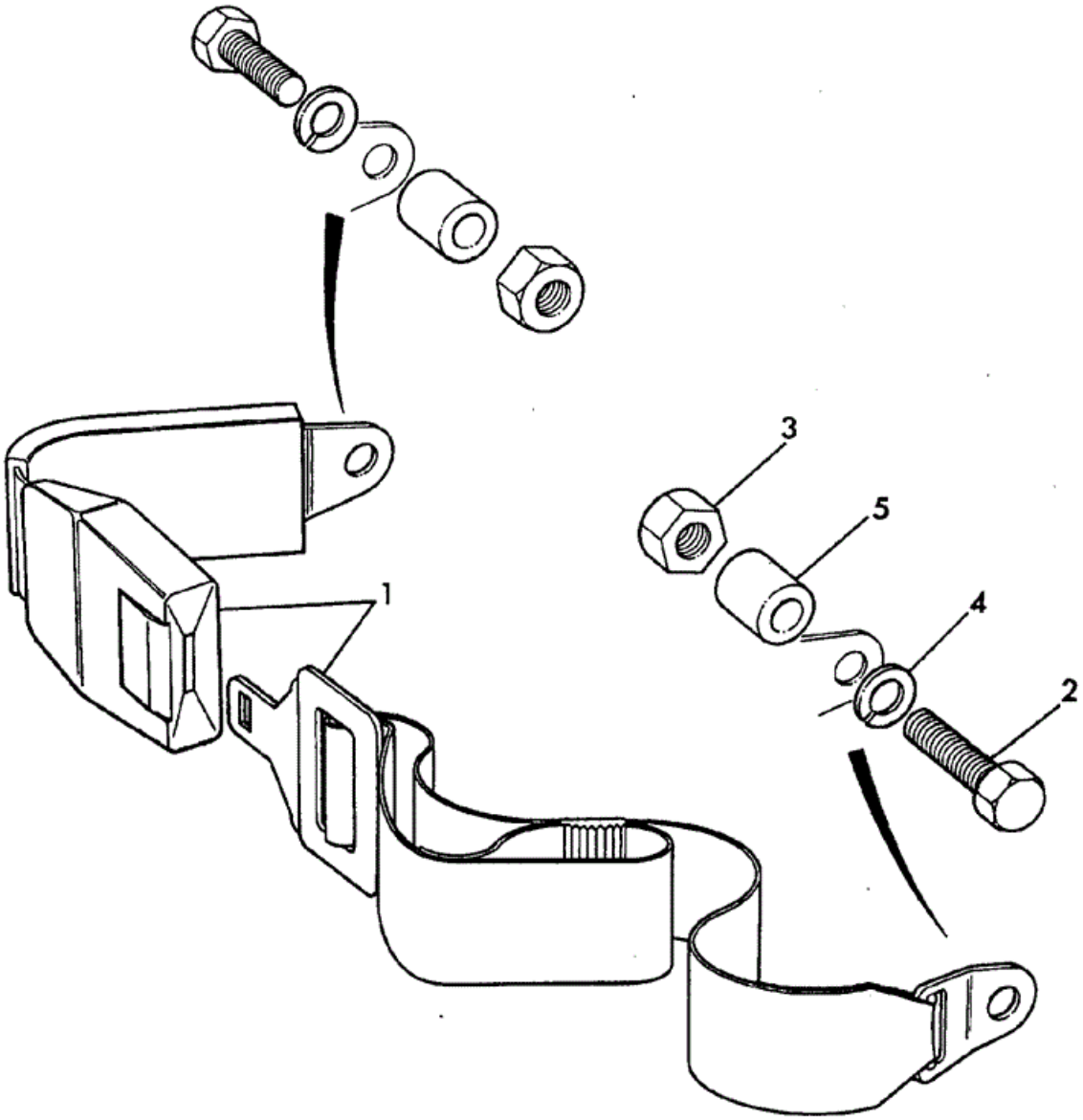

	Part				

Item	No	Change No	Description	Usage Code	QTY
1	333/R8059		Belt seat 2" with switch Sales special 1227 & 1228		1
7	701/80483		Switch Proximity Load Control Engine start interlock		1
8	826/01411		Screw pan head M4 x 16		2

Applicability Date Ranges:
From: , To:

9812/3020 B2-48-1 SEAT ASSEMBLY AIR SUSPENSION/HEATED, ACTIMO XXL,

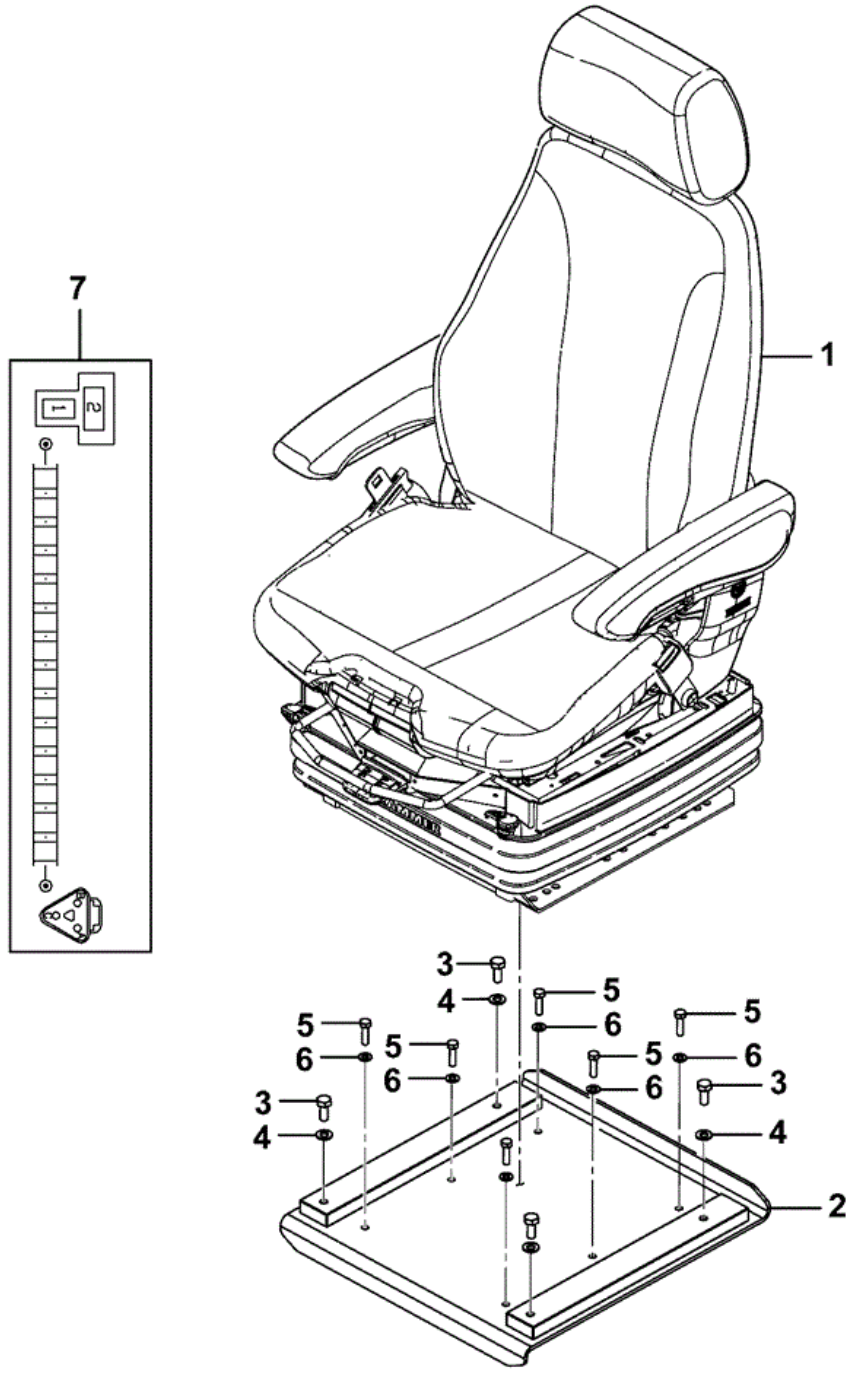

Item	Part No	Change No	Description	Usage Code	QTY
1	332/W9527		Seat Actimo XXL		1
2	333/T1496		Base seat WA		1

3	1315/0407D		Setscrew M10 x 25		4
4	1420/0008D		Washer (M10)		4
5	1315/0308D		Setscrew M8 x 30 mm		6
6	1420/0007D		Washer (M8)		6
7	333/R0774	to 28/05/2012	Harness link		1
8	701/60031		Panel Switch 24V		1
9	701/58852		Decal heated seat white lens		1

Applicability Date Ranges:
From: , To:

Product Catalog\WHEELED LOADERS\416 01243000-01243499,01317500-01317999,01472000-01472999,02095872-02095875 9812/3020 \B BODYWORK, CAB, LOADER END\B02 CAB\B2-48-10 SEAT UPPER COMPONENTS 332/W9527

9812/3020 B2-48-10 SEAT UPPER COMPONENTS 332/W9527

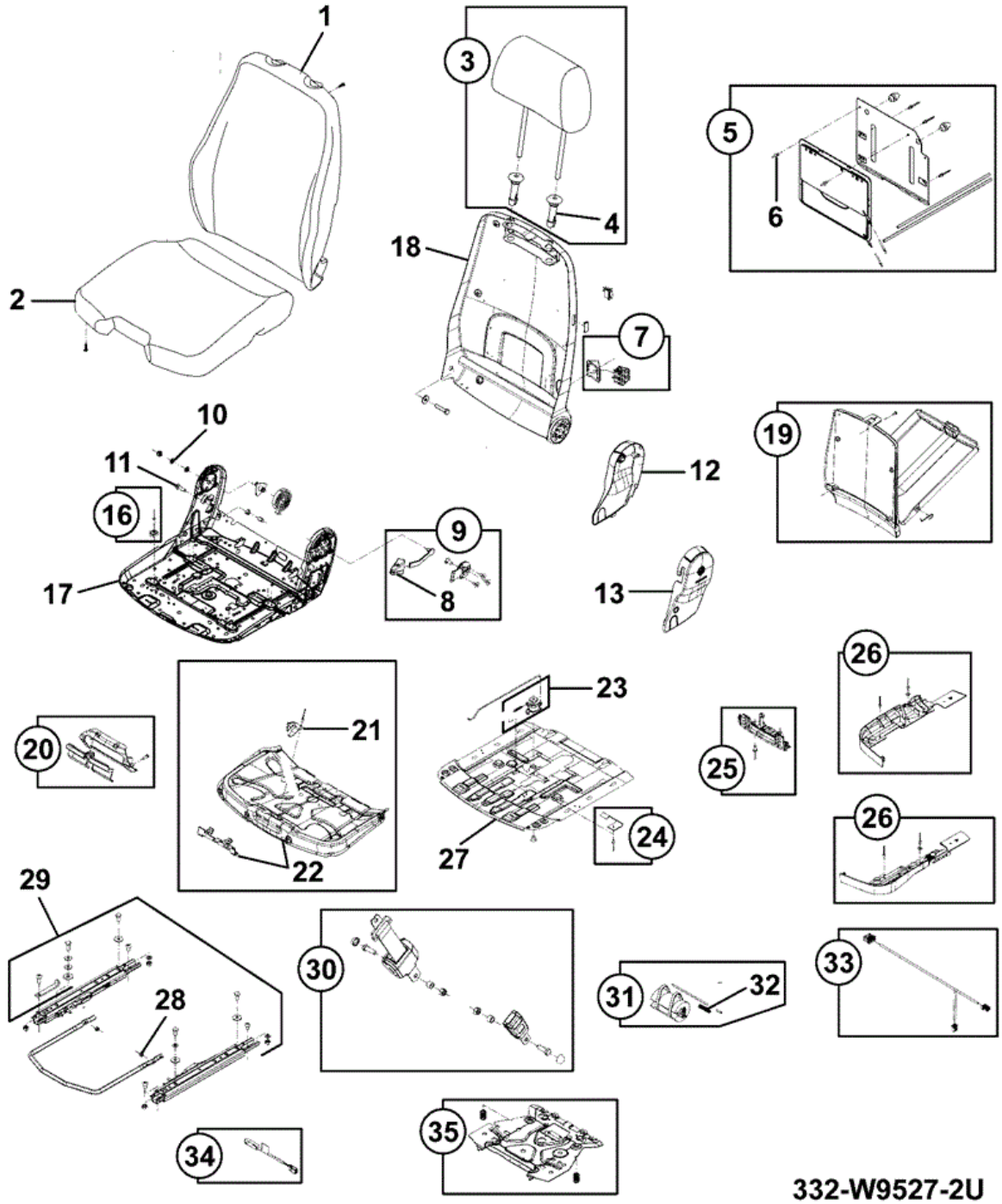

Item	Part No	Change No	Description	Usage Code	QTY
A	332/W9527		Seat Actimo XXL		1
1	:333/C8616		Cushion backrest		1

2	:333/C8617		Cushion seat		1
3	:333/C8618		Headrest		1
4	:333/C8627		Kit headrest guides		1
5	:333/C8629		Element heater		1
6	:333/C8630		Element heater		1
7	:333/C8631		Vent		1
8	:40/910234		Handle		1
9	:332/H7532		Kit Fixing		1
10	:333/C8632		Kit backrest bearing		1
11	:333/C8634		Stop		1
12	:40/910950		Cover RH backrest		1
13	:40/910949		Cover LH backrest		1
16	:333/C8637		Kit glide		1
17	:333/C8640		Seat pan complete		1
18	:333/C8641		Frame backrest		1
19	:40/910340		Cover		1
20	:333/C8642		Trigger		1
21	:40/910239		Bracket		1
22	:333/C8643		Adjuster seat angle		1
23	:40/910263		Lever		1
24	:333/C8644		Sheathing resilient		1
25	:40/910226		Bracket		1
26	:40/910959		Cover seat angle		1
27	:333/C8645		Adjuster set depth		1
28	:333/C8646		Kit adjustment slide		1
29	:333/C8647		Kit mounting parts		1
30	:40/910951		Kit seatbelt		1
31	:333/C8648		Compressor		1
32	:333/C8649		Kit small parts		1
33	:333/C8650		Harness		1
34	:333/C6188		Switch switch		1
35	:333/C8651		Panel complete		1

Applicability Date Ranges:
From: , To:

Product Catalog\WHEELED LOADERS\416 01243000-01243499,01317500-01317999,01472000-01472999,02095872-02095875 9812/3020 \B BODYWORK, CAB, LOADER END\B02 CAB\B2-48-20 SEAT LOWER COMPONENTS 332/W9527

9812/3020 B2-48-20 SEAT LOWER COMPONENTS 332/W9527

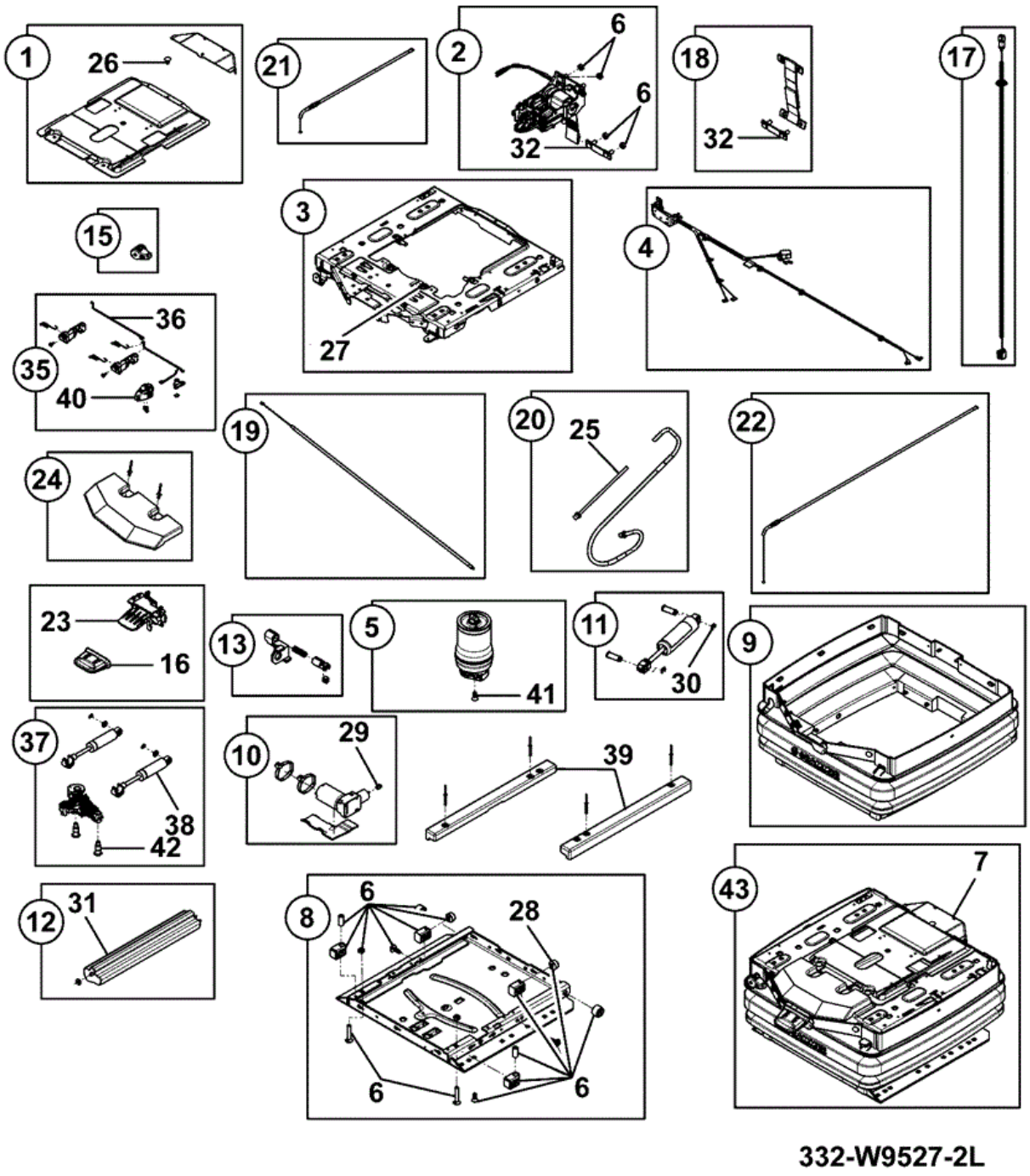

Item	Part No	Change No	Description	Usage Code	QTY
A	332/W9527		Seat Actimo XXL		1
1	:333/C9014		Cover		1

2	:333/C9015		Lever level control		1
3	:333/C9016		Plate upper		1
4	:333/C9017		Harness		1
5	:333/C9018		Spring air		1
6	:333/C9019		Kit wear parts		1
7	:333/C9057		Assembly suspension		1
8	:333/C9021		Plate suspension		1
9	:333/C9023		Bellows		1
10	:333/C9074		Compressor		1
11	:333/C9075		Strut shock absorber		1
12	:333/C9024		Reservoir added air		1
13	:333/C9025		Adjuster		1
15	:333/C9026		Handle		1
16	:333/C9027		Handle		1
17	:333/C9028		Cable connection		1
18	:333/C9029		Belt secondary		1
19	:333/C9030		Cable		1
20	:333/C9031		Tube inner		1
21	:333/C9032	Superseded	Cable		1
21	:334/C0266		Kit-cable control & lever		1
22	:333/C9033	Superseded	Cable		1
22	:334/C0266		Kit-cable control & lever		1
23	:478/20078		Lever Replaced by 334/C0266		1
24	:333/C9035		Cover handle		1
25	:332/G0456		Tube .		1
26	:333/C9036		Kit small parts cover		1
27	:333/C9037		Kit small parts suspension		1
28	:333/C9039		Kit small parts suspension		1
29	:333/C9041		Kit small parts compressor		1
30	:333/C9043		Kit small parts shock absorber		1
31	:333/C9045		Kit small parts		1
32	:333/C9047		Kit small parts		1
35	:333/C9048		Adjuster		1
36	:333/C9049		Kit small parts adjustment		1
37	:333/C9050		Kit		1
38	:333/C9051		Strut shock absorber		1
39	:333/C9052		Cover		1
40	:478/20107		Handle		1

41	:333/C9053		Kit small parts air spring		1
42	:333/C9055		Kit small parts		1
43	:333/C8647		Kit mounting parts		1

Applicability Date Ranges:
From: , To:

Product Catalog\WHEELED LOADERS\416 01243000-01243499,01317500-01317999,01472000-01472999,02095872-02095875 9812/3020 \B BODYWORK, CAB, LOADER END\B03 LOADER, FRONT END\B3-1-1 ARMS, LOADER & LINKAGE

9812/3020 B3-1-1 ARMS, LOADER & LINKAGE

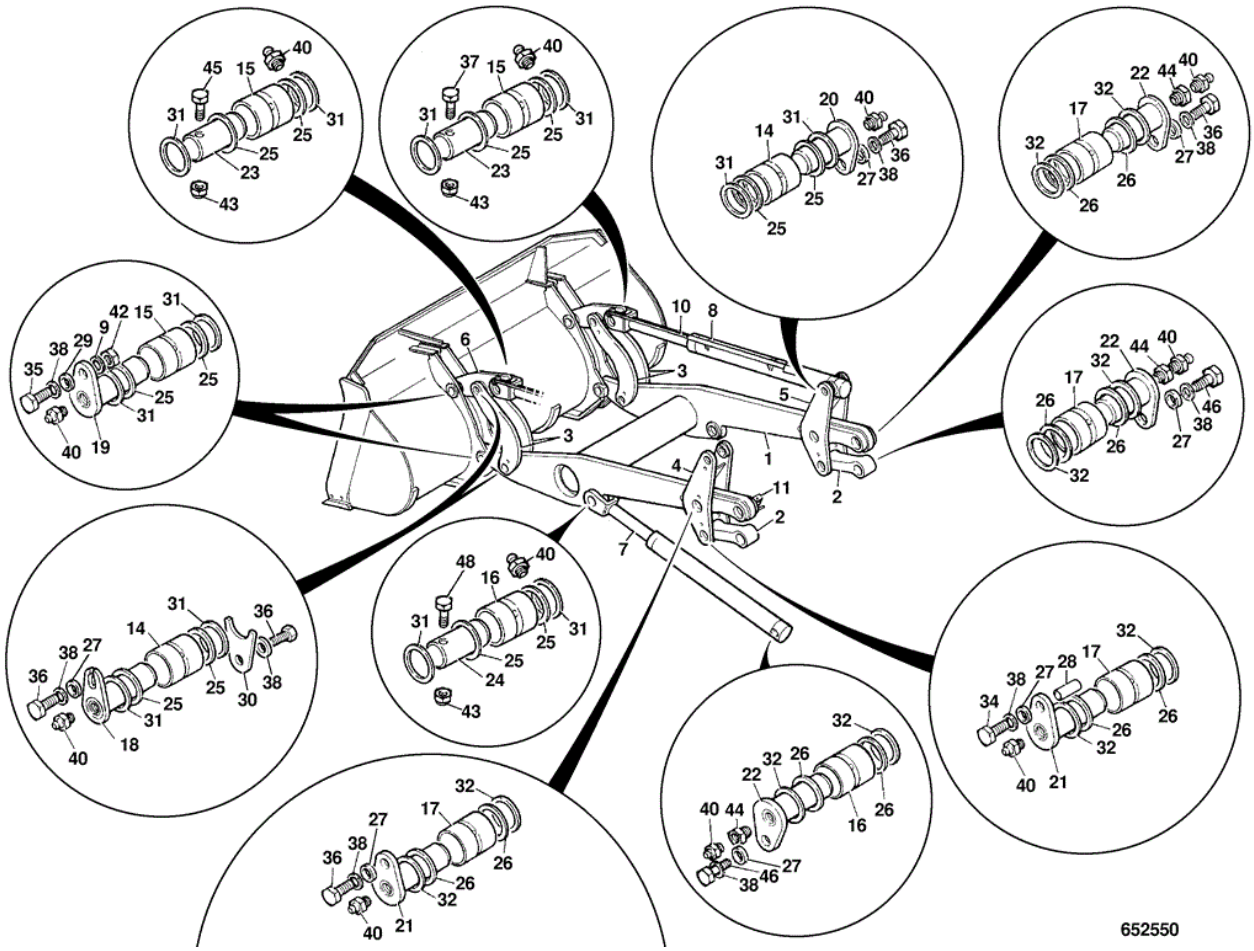

Item	Part No	Change No	Description	Usage Code	QTY
1	335/01069		Arm loader 416HT		1
1	333/R7134	to 01/04/2012	Arm loader ABI Hi lift inc. chassis links Sales special 1363,1369,1450, 1666, & 2131. Arm height 3830mm		1
1	334/L1866		Arm loader Hi-lift Sales special 1780, 3240, 3402 & 3590		1
2	265/01210		Link chassis black		2
2	334/L1644	>02/04/2012	Link chassis black (Hi-lift) Sales special 1780, 3240, 3402 & 3590		2
3	331/17095		Interlever		4
4	268/10086		Lever bucket ram left hand,black		1
4	335/02126		Lever shovel ram, left non parallel lift non parallel lift		1
5	268/10087		Lever bucket ram right hand, black		1
5	335/02127		Lever shovel ram, right non parallel lift non parallel lift		1

6	331/17094		Link shovel		2
6	331/21186		Link shovel non parallel lift non parallel lift		2
7	****		'See Remark' See E4 Index		2
8	****		'See Remark' See E4 Index		2
9	1420/0011Z		Washer (M16)		4
10	****		'See Remark' See Index D1		1
11	****		'See Remark' See Index D1		1
14	809/00112	to 27/02/2011	Bearing liner 50mm pivot bore		6
14	333/S3347		Bearing liner		6
15	809/00114		Bearing liner 60 x 50 X 52		6
16	809/00115		Bearing Liner 65mm x 62mm Lg.		4
17	809/00116		Bearing liner 65x85		8
18	911/32700		Pin pivot		4
19	911/26600		Pin pivot 50mm x 142mm Lg.		4
20	911/26800		Pin pivot 50mm x 167mm Lg.		2
21	911/27300	Superseded	Pin pivot 65mm x 160mm Lg.		4
21	332/W0231		Pin pivot 65mm x 160mm Lg.		4
22	911/27500	Superseded	Pin pivot 65mm x 200mm Lg.		6
22	332/W0326		Pin pivot 65mm x 200mm Lg.		6
23	811/50571		Pin pivot		2
24	811/50572	Superseded	Pin Pivot 64.9mm x 139 lg.		2
24	332/W0119		Pin pivot 65mm x 139mm Lg.		2
25	813/00426		Seal Pivot Pin 50X60X5		20
26	813/00414		Seal 65mm Internal Dia.		20
27	830/00599		Spacer		14
28	830/00598		Spacer ram lever		2
29	830/00600		Spacer keep plate		4
30	265/02782		Plate keep		4
31	819/00033		Shim		32
32	819/00094		Shim 65 i/d 1mm thick		32
34	1315/3727D		Bolt M16 x 170		2
35	1315/3714D		Bolt M16x60 Dacromet		4
36	1315/0708D		Setscrew M16 x 30mm		14
37	1315/3523D		Bolt		1
38	1412/0007D		Washer (5/8" Large)		20

39	1450/1001		Nipple grease 90deg. angle		2
39	970/61104		Nipple grease,90 deg.angle stainless steel Sales special 7954		2
40	1450/0001		Nipple Grease, Straight 1/8 BSP		22
40	970/61102		Nipple grease stainless steel Sales special 7954		22
42	1370/0603D		Nut -Lock Nut, M16		4
43	1370/0403D		Nut Lock M12		4
44	816/20034		Adapter 1/8		8
45	1315/3522D		Bolt M12x120		1
46	1315/0710D		Setscrew M16 x 40mm		4
47	1420/0009D		Washer (M12)		8
48	1315/3524D		Bolt M12 x 140mm		2
51	333/U6525	>13/02/2012	Spacer keep plate Fits with item 22		2
52	1315/0709D	>13/02/2012	Screw M16x35 long Fits with item 22		2

Applicability Date Ranges:
From: , To:

Product Catalog\WHEELED LOADERS\416 01243000-01243499,01317500-01317999,01472000-01472999,02095872-02095875 9812/3020 \B BODYWORK, CAB, LOADER END\B03 LOADER, FRONT END\B3-2-1 ARMS, LOADER SUPER HIGH LIFT SMOOTHSHIFT

9812/3020 B3-2-1 ARMS, LOADER SUPER HIGH LIFT SMOOTHSHIFT

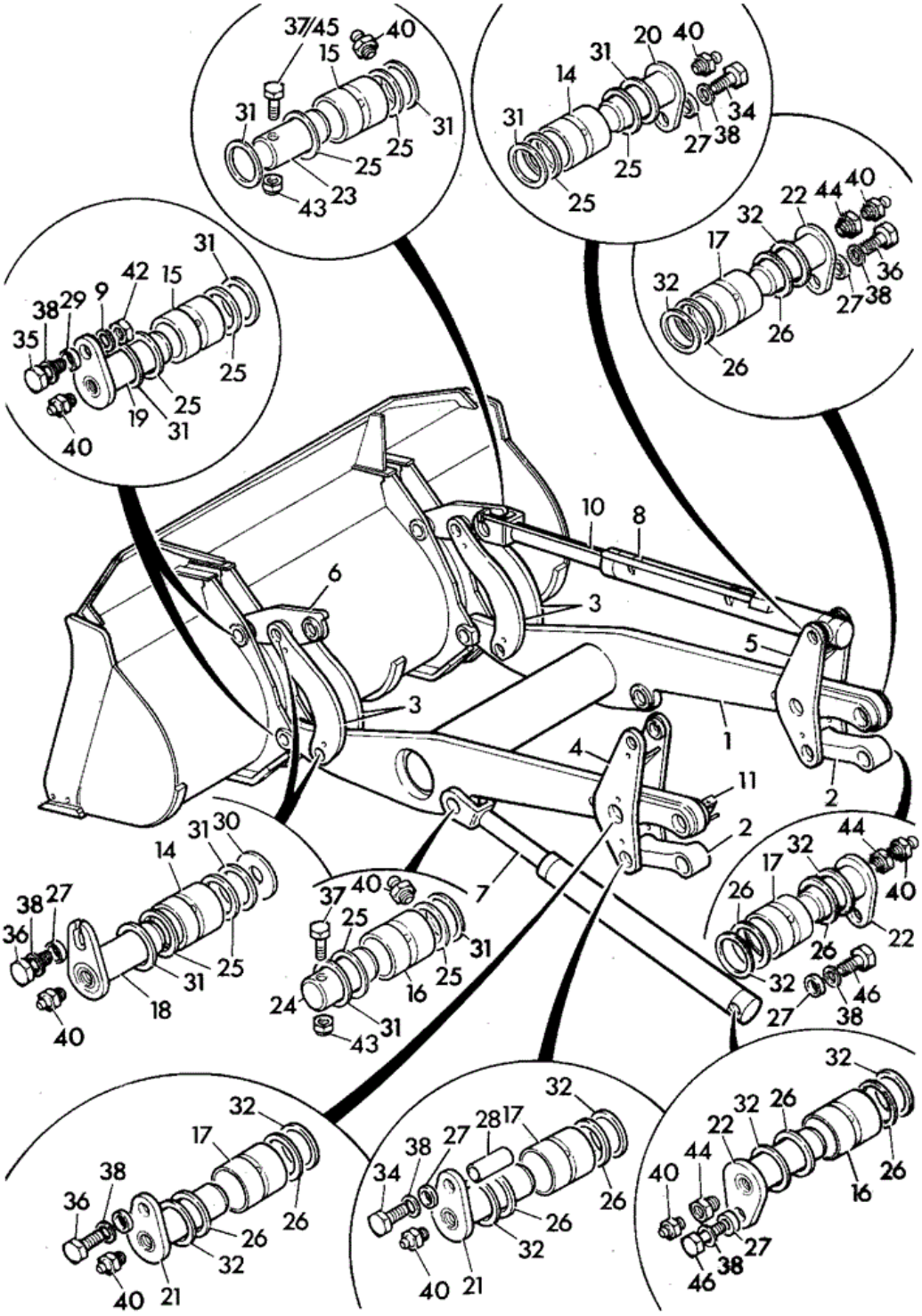

Item	Part No	Change No	Description	Usage Code	QTY
1	335/01070		Arm loader-super Hi lift Black		1
2	331/13291		Link chassis		2

3	331/17095		Interlever		4
4	331/13288		Lever bucket ram L.H. super Hi-lift		1
5	331/13289		Lever bucket ram R.H. super Hi-lift		1
6	331/17094		Link shovel		2
7	****		'See Remark' See E4 Index		2
8	****		'See Remark' See E4 Index		2
9	1420/0011Z		Washer (M16)		4
10	****		'See Remark' See index D1		1
11	****		'See Remark' See Index D1		1
14	809/00112		Bearing liner 50mm pivot bore		4
15	809/00114		Bearing liner 60 x 50 X 52		8
16	809/00115		Bearing Liner 65mm x 62mm Lg.		2
17	809/00116		Bearing liner 65x85		8
18	911/32700		Pin pivot		4
19	911/26600		Pin pivot 50mm x 142mm Lg.		4
20	911/26800		Pin pivot 50mm x 167mm Lg.		2
21	911/27300		Pin pivot 65mm x 160mm Lg.		4
22	911/27500		Pin pivot 65mm x 200mm Lg.		6
23	811/50571		Pin pivot		2
24	811/50572		Pin Pivot 64.9mm x 139 lg.		2
25	813/00426		Seal Pivot Pin 50X60X5		20
26	813/00414		Seal 65mm Internal Dia.		20
27	830/00599		Spacer		18
28	830/00598		Spacer ram lever		2
29	830/00600		Spacer keep plate		4
30	265/02782		Plate keep		4
31	819/00033		Shim		32
32	819/00094		Shim 65 i/d 1mm thick		32
34	1315/3727Z		Bolt M16x170 lg.		2
35	1315/3714Z		Bolt M16 x 60		4
36	1315/0708Z		Screw		10
37	1315/3523Z		Bolt M12x130		4
38	1412/0007Z		Washer		20
39	1450/1001		Nipple grease 90deg. angle		2
39	970/61104		Nipple grease,90 deg.angle stainless steel Sales special 7954		2

40	1450/0001		Nipple Grease, Straight 1/8 BSP		22
40	970/61102		Nipple grease stainless steel Sales special 7954		22
42	1370/0603Z		Nut lock M16		4
43	1370/0403Z		Nut Lock, M12		4
44	816/20034		Adapter 1/8		8
45	1315/3522Z		Bolt M12 x 120		1
46	1315/0710Z		Setscrew		4
47	1420/0009Z		Washer (M12)		4
48	1315/3524Z		Bolt M12 x 140 Lg.		2

Applicability Date Ranges:
From: , To:

Product Catalog\WHEELED LOADERS\416 01243000-01243499,01317500-01317999,01472000-01472999,02095872-02095875 9812/3020 \B BODYWORK, CAB, LOADER END\B03 LOADER, FRONT END\B3-4-1 AUTO GREASING UPPER LOADER HT

9812/3020 B3-4-1 AUTO GREASING UPPER LOADER HT

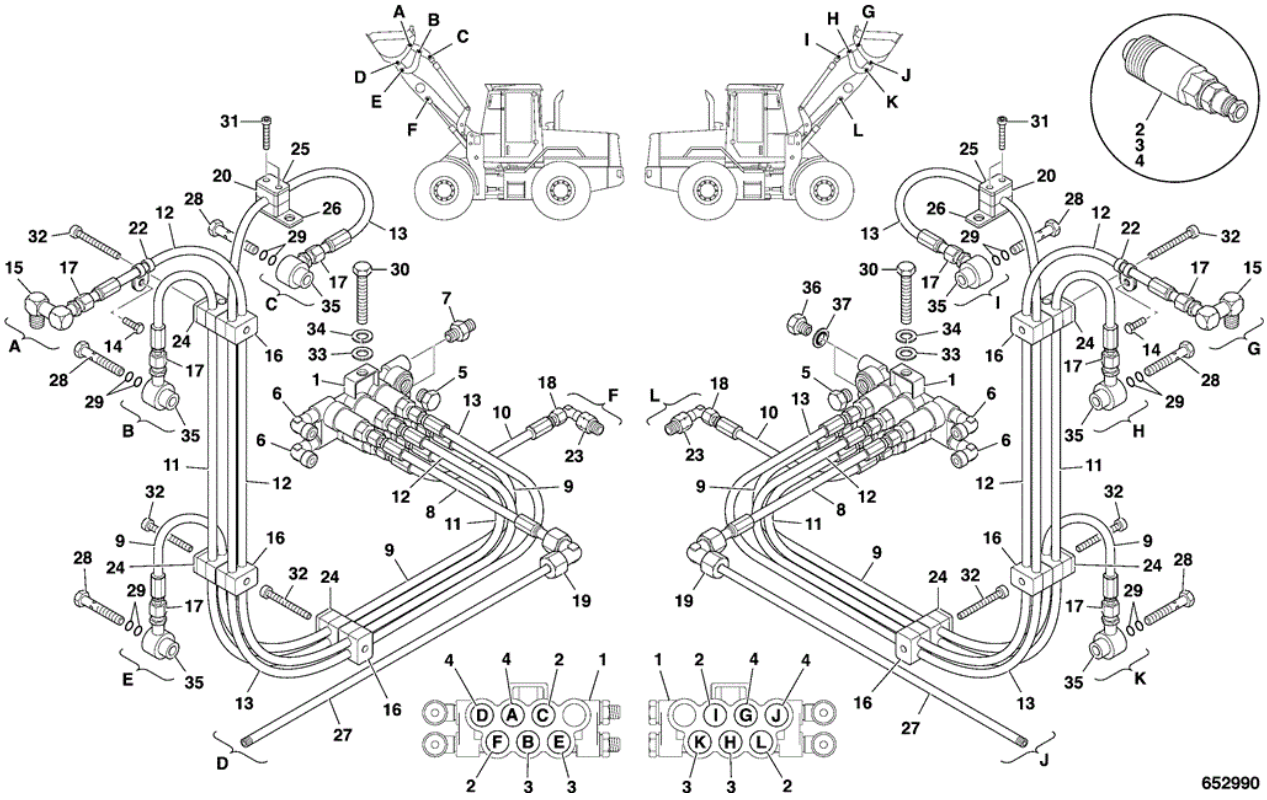

Item	Part No	Change No	Description	Usage Code	QTY
A	****		'See Remark' Grease Point		1
B	****		'See Remark' Grease Point		1
C	****		'See Remark' Grease Point		1
D	****		'See Remark' Grease Point		1
E	****		'See Remark' Grease Point		1
F	****		'See Remark' Grease point		1
G	****		'See Remark' Grease point		1
H	****		'See Remark' Grease point		1
I	****		'See Remark' Grease point		1
			'See Remark'		

J	****		Grease point		1
K	****		'See Remark' Grease point		1
L	****		'See Remark' Grease point		1
1	983/10934		Block 7 port		2
2	983/10586		Unit metering 0.200cc		4
3	983/10587		Unit metering 0.400cc		4
4	983/10588		Unit metering 1.000cc		4
5	983/10926		Plug shut off		2
6	983/10935		Adapter straight		4
7	983/10929		Adapter Elbow		2
8	983/10936		Hose S6-250-S10 1/4"		2
9	983/10985		Hose S6-400-S6 4mm		2
10	983/10986		Hose S6-1100-S6 1/4"		2
11	983/10987		Hose S6-1400-S6 1/4"		2
12	983/10988		Hose S6-1600-S6 1/4"		2
13	983/10600		Hose S6-2050-S6 1/4"		2
14	826/01309		Screw Taptite, M5 x 10mm Long		2
15	983/10945		Adapter elbow		4
16	983/10954		Clamp double 12mm dia.		12
17	983/10955		Adapter straight		8
18	983/10956		Adapter elbow		2
19	983/10957		Adapter elbow		2
20	983/10958		Clamp		2
21	983/10967		Tie cable 338mm long		20
22	983/10950		Clamp 12mm dia.		2
23	983/10951		Adapter reducer		2
24	983/10959		Plate		6
25	983/10960		Plate		2
26	983/10961		Bracket		2
27	983/10990		Tube 10mm dia. x 800mm lg		2
28	983/10963		Bolt banjo		6
29	983/10964		O Ring		12
30	1391/3412		Capscrew M10 x 50		2
31	1391/3209		Capscrew M6 x 35		4
32	1391/3215		Capscrew		6
33	1420/0008D		Washer (M10)		2
34	1425/0008D		Washer Spring M10		2

35	983/10965		Bush banjo		6
36	983/10927		Plug 1/4"		2
37	983/10941		Washer sealing		2

Applicability Date Ranges:
From: , To:

Product Catalog\WHEELED LOADERS\416 01243000-01243499,01317500-01317999,01472000-01472999,02095872-02095875 9812/3020 \B BODYWORK, CAB, LOADER END\B03 LOADER, FRONT END\B3-5-1 AUTO GREASING LOWER LOADER HT

9812/3020 B3-5-1 AUTO GREASING LOWER LOADER HT

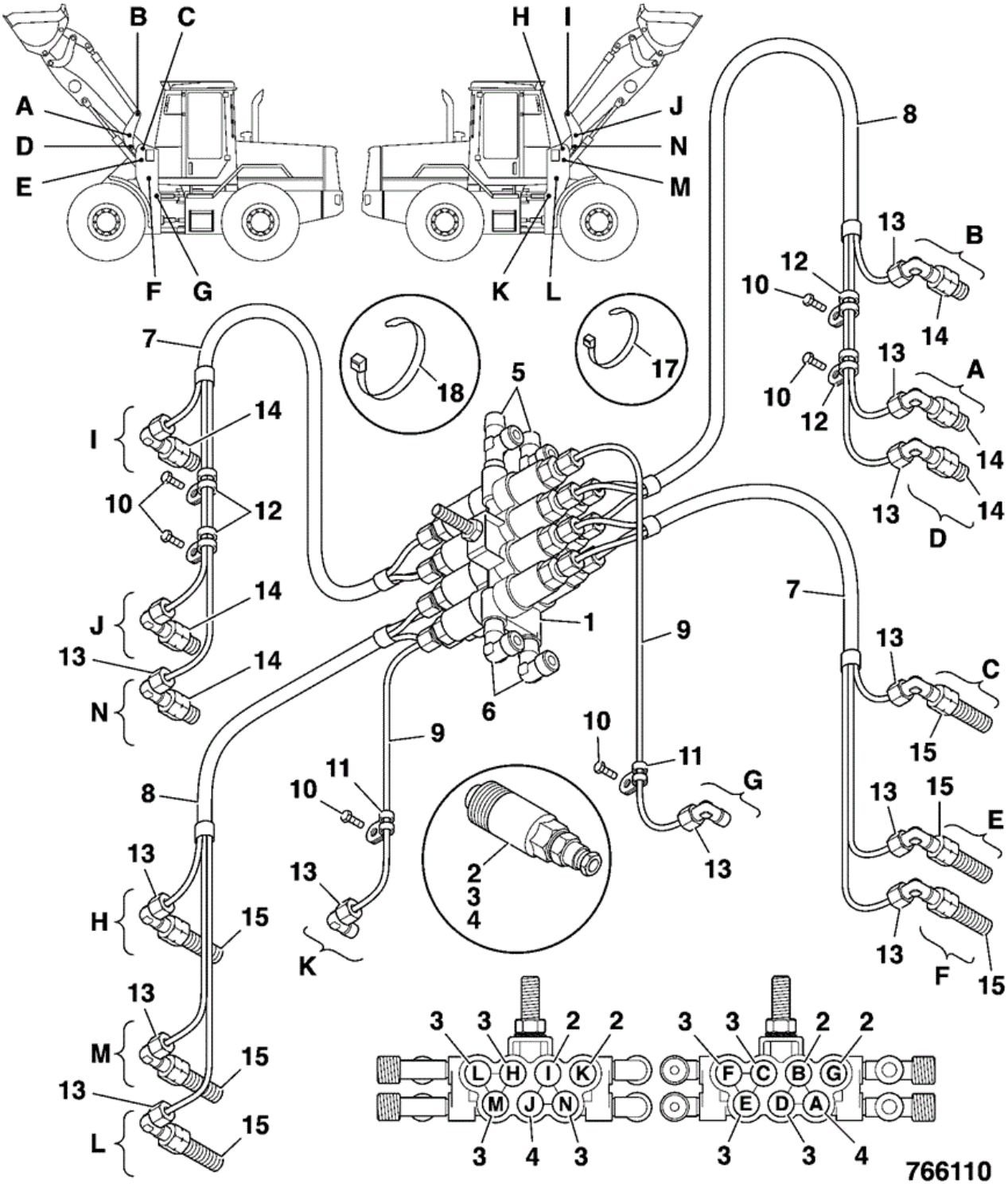

Item	Part No	Change No	Description	Usage Code	QTY
A	****		'See Remark' Grease Point		1
			'See Remark'		

B	****		Grease Point		1
C	****		'See Remark' Grease Point		1
D	****		'See Remark' Grease Point		1
E	****		'See Remark' Grease Point		1
F	****		'See Remark' Grease Point		1
G	****		'See Remark' Grease Point		1
H	****		'See Remark' Grease Point		1
I	****		'See Remark' Grease Point		1
J	****		'See Remark' Grease Point		1
K	****		'See Remark' Grease Point		1
L	****		'See Remark' Grease Point		1
M	****		'See Remark' Grease Point		1
N	****		'See Remark' Grease Point		1
1	983/10930		Block twin 14 port		1
2	983/10925		Unit metering 0.100cc		4
3	983/10585		Unit metering 0.150cc		8
4	983/10586		Unit metering 0.200cc		2
5	983/10931		Adapter tee		2
6	983/10929		Adapter Elbow		2
7	983/10932		Hose Triple 6mm x 3000mm		2
8	983/10933		Pipe grease 3 x 6mm x 4mts. lg.		2
9	983/10596		Pipe grease 6mm dia. x 3000mm		2
10	826/01309		Screw Taptite, M5 x 10mm Long		6
11	983/10949		Clamp 6mm dia.		2
12	983/10950		Clamp 12mm dia.		4
13	983/10948		Adapter elbow		14
14	983/10951		Adapter reducer		6
15	983/10952		Adapter reducer		6
16	983/10953		Tube 7mm dia. x 6mts. lg.		1
17	983/10968		Tie cable		30

18	983/10967		Tie cable 338mm long		25

Applicability Date Ranges:
From: , To:

Product Catalog\WHEELED LOADERS\416 01243000-01243499,01317500-01317999,01472000-01472999,02095872-02095875 9812/3020 \B BODYWORK, CAB, LOADER END\B03 LOADER, FRONT END\B3-6-1 SAFETY STRUT OPTIONAL

9812/3020 B3-6-1 SAFETY STRUT OPTIONAL

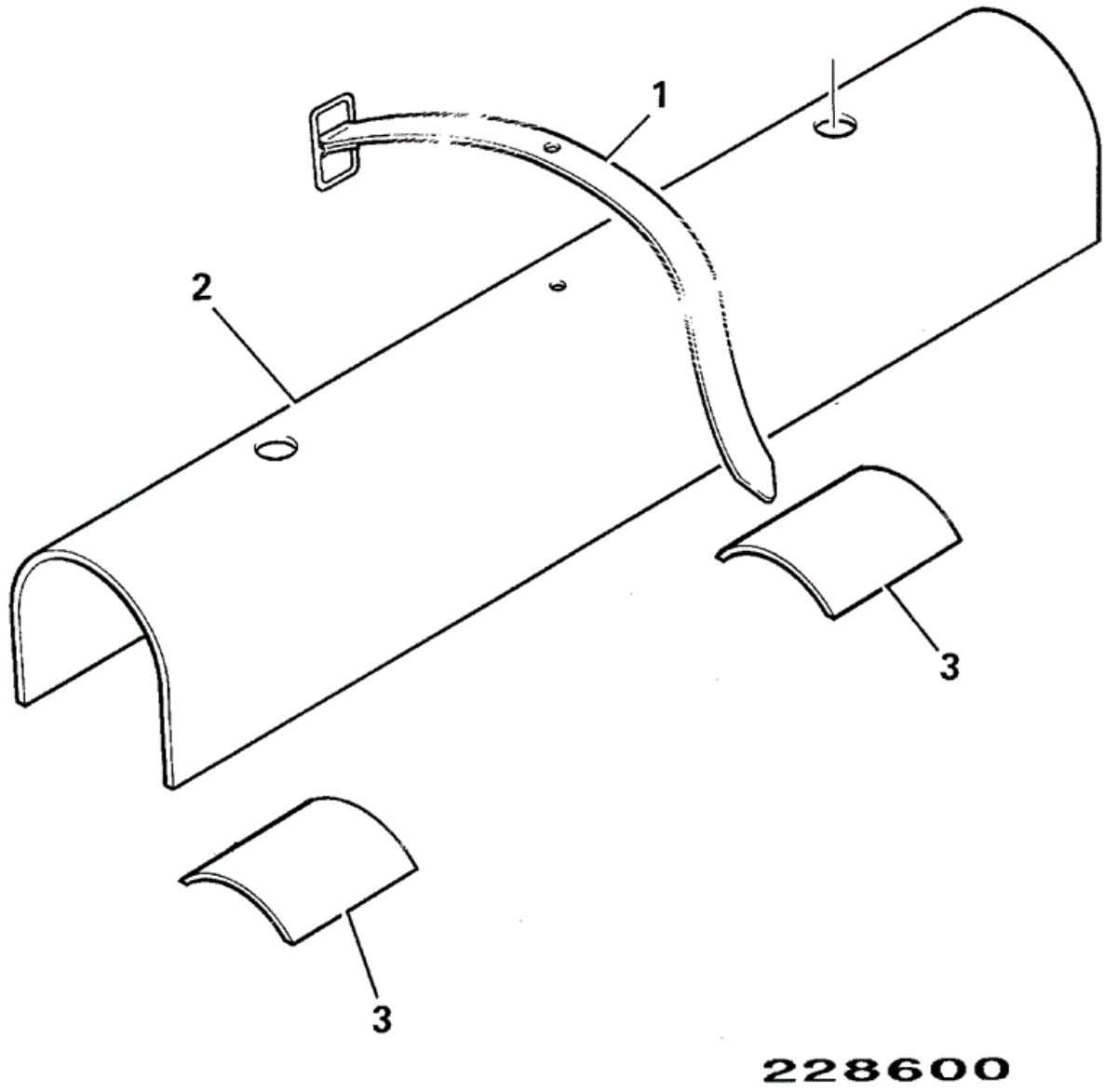

Item	Part No	Change No	Description	Usage Code	QTY

1	121/09300		Strap		1
2	265/02482		Strut safety lift ram		1
3	123/02971		Stop Rubber		2

Applicability Date Ranges:
From: , To:

Product Catalog\WHEELED LOADERS\416 01243000-01243499,01317500-01317999,01472000-01472999,02095872-02095875 9812/3020 \B BODYWORK, CAB, LOADER END\B05 REFURBISHMENTS\B5-0-1 LABELS WARNING ASSEMBLIES, ROW

9812/3020 B5-0-1 LABELS WARNING ASSEMBLIES, ROW

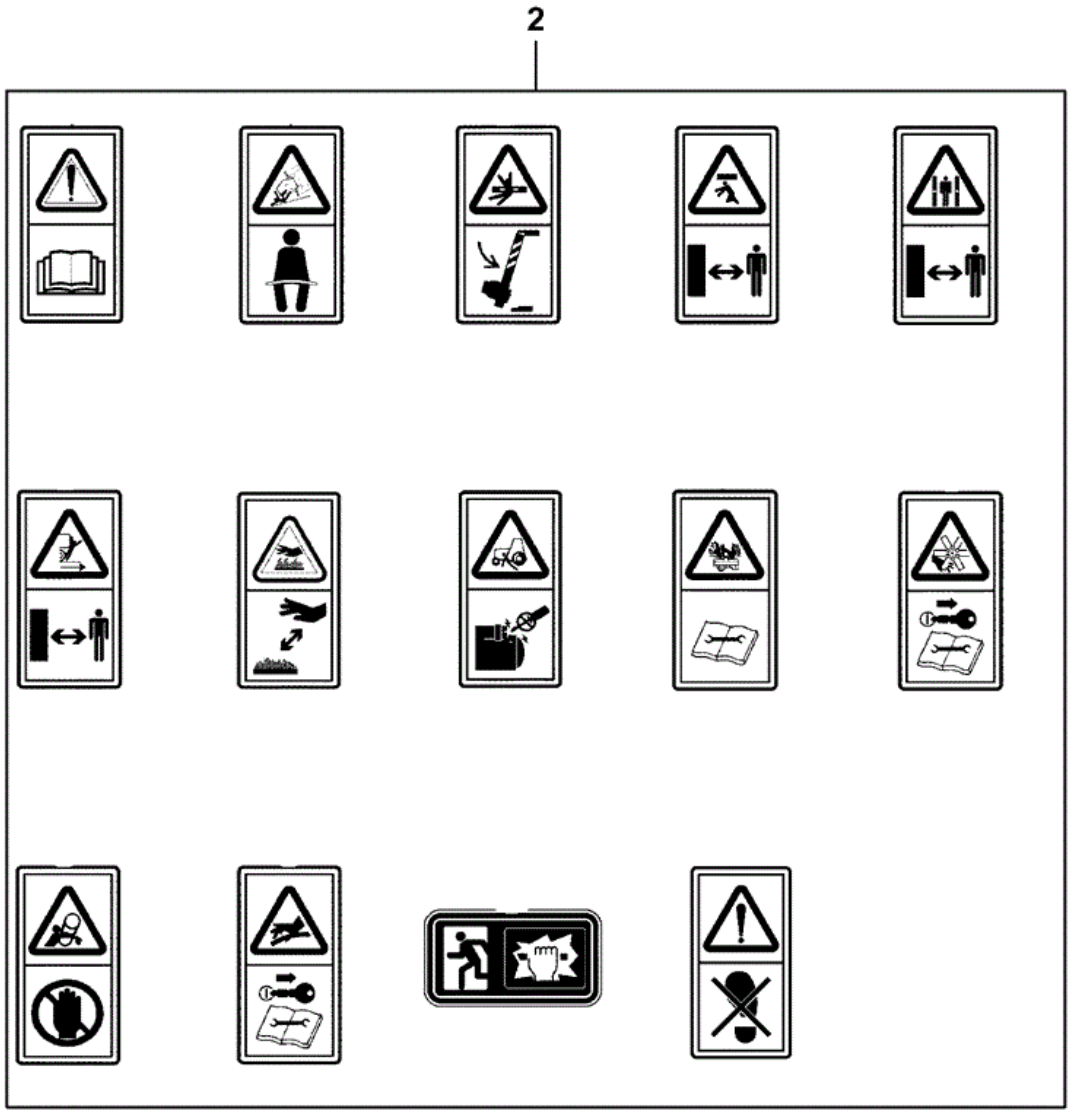

333-V5463-1

Item	Part No	Change No	Description	Usage Code	QTY
1	****		Dataplate English		1
2	****		G.A. warning labels ISO EN 474		1

9812/3020 B5-6-1 LABELS WARNING ISO EN 474

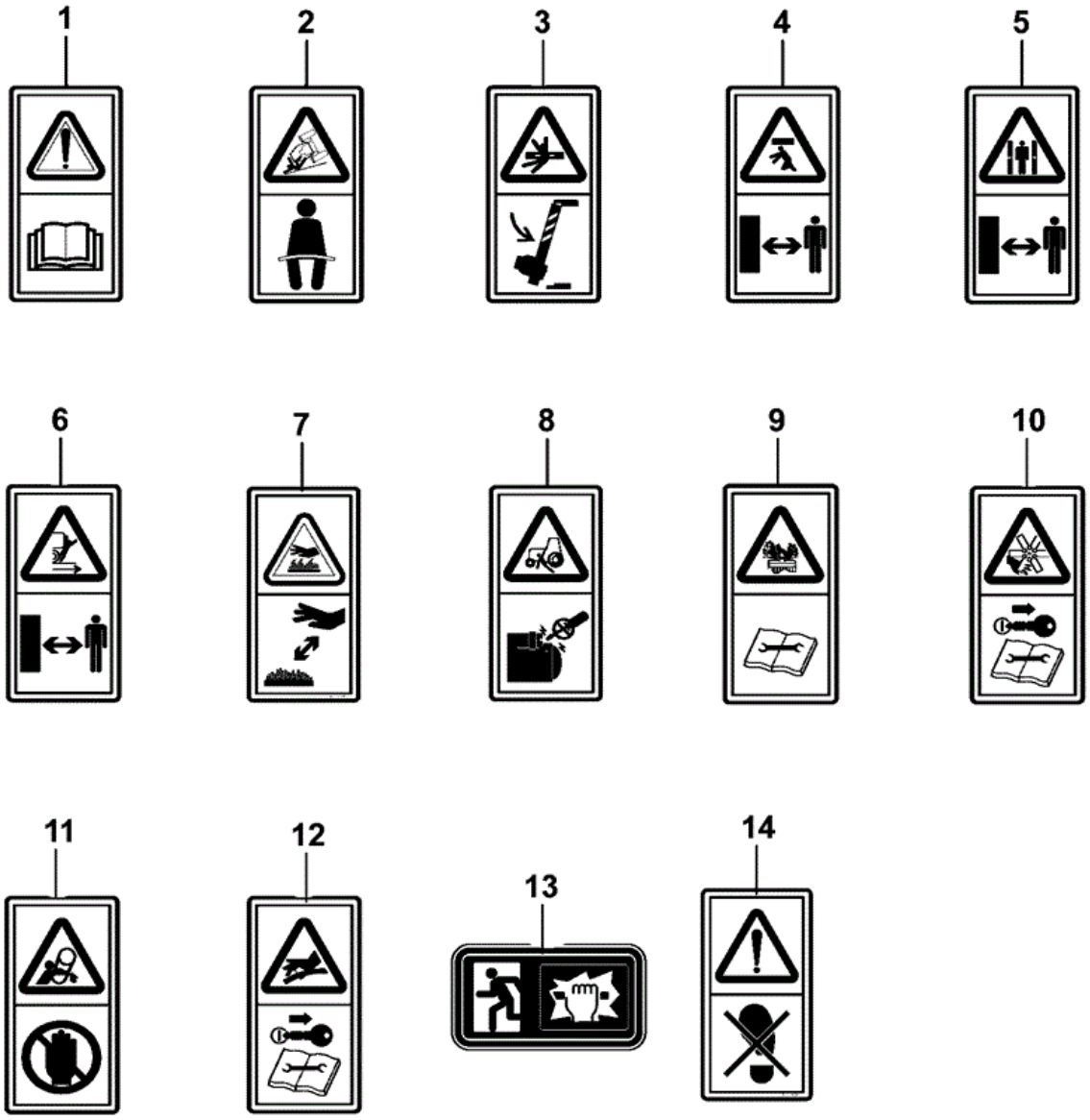

332-V1195-2

Item	Part No	Change No	Description	Usage Code	QTY
1	817/70014		Label ISO-01A (Read The Manual) Fitted near operators station		1
2	817/70029		Label ISO-10A		1

			Fitted near operators station		
3	332/P7181		Decal Warning Crushing Fitted below articulation lock		1
4	817/70008		Decal Warning Fitted to exposed sides of loader arms		2
5	817/70027		Label ISO-07D Fitted in articulation area		2
6	332/W6368		Decal Warning Crush Hazard Fitted to rear counterweight		1
7	332/P7128		Decal Warning Hot Hazard Fitted on each side of engine bay		2
8	332/P7129		Decal Warning Start Engine From Operators Seat Fitted near starter motor		1
9	332/P7131		Decal Warning Pressure Hazard Fitted above expansion tank		1
10	332/P7132		Decal warning severing of hands and fingers, rotating parts Fitted near fan cover		2
11	332/P7134		Decal Warning Entanglement Hazard Fitted on each side of engine bay		2
12	817/70002		Decal Warning Pressure Hazard Fitted next to A/C pipes		1
13	332/U9066		Label Emergency Exit Fitted to rear window		1
14	817/70024		Label warning do not use as step		6

Applicability Date Ranges:
From: , To:

Product Catalog\WHEELED LOADERS\416 01243000-01243499,01317500-01317999,01472000-01472999,02095872-02095875 9812/3020 \B BODYWORK, CAB, LOADER END\B05 REFURBISHMENTS\B5-0-10 LABELS WARNING ASSEMBLIES, SWEDEN

9812/3020 B5-0-10 LABELS WARNING ASSEMBLIES, SWEDEN

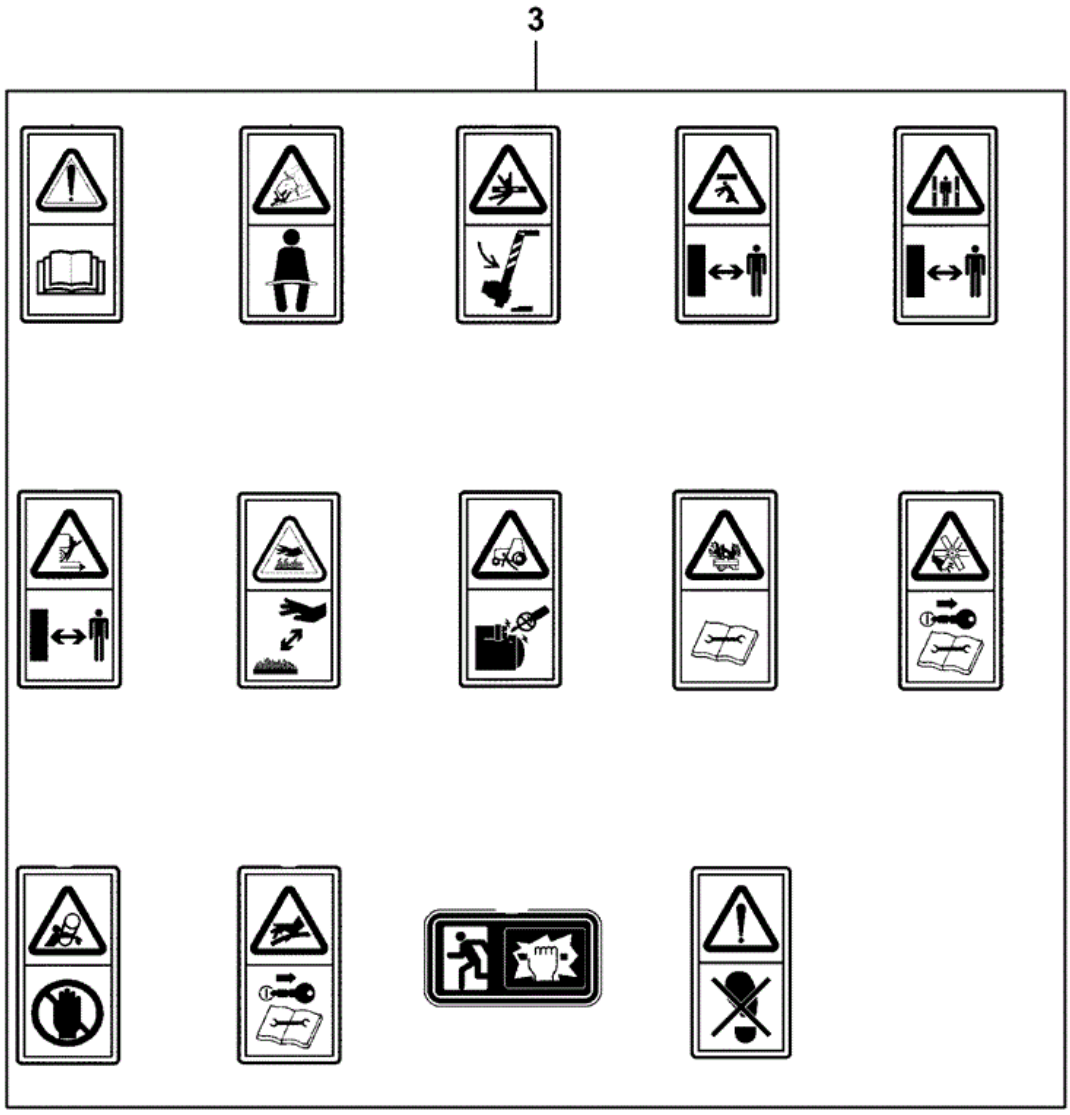

333-V5453-1

Item	Part No	Change No	Description	Usage Code	QTY
1	****		Dataplate English		1
3	****		G.A. warning labels ISO EN 474		1

9812/3020 B5-6-1 LABELS WARNING ISO EN 474

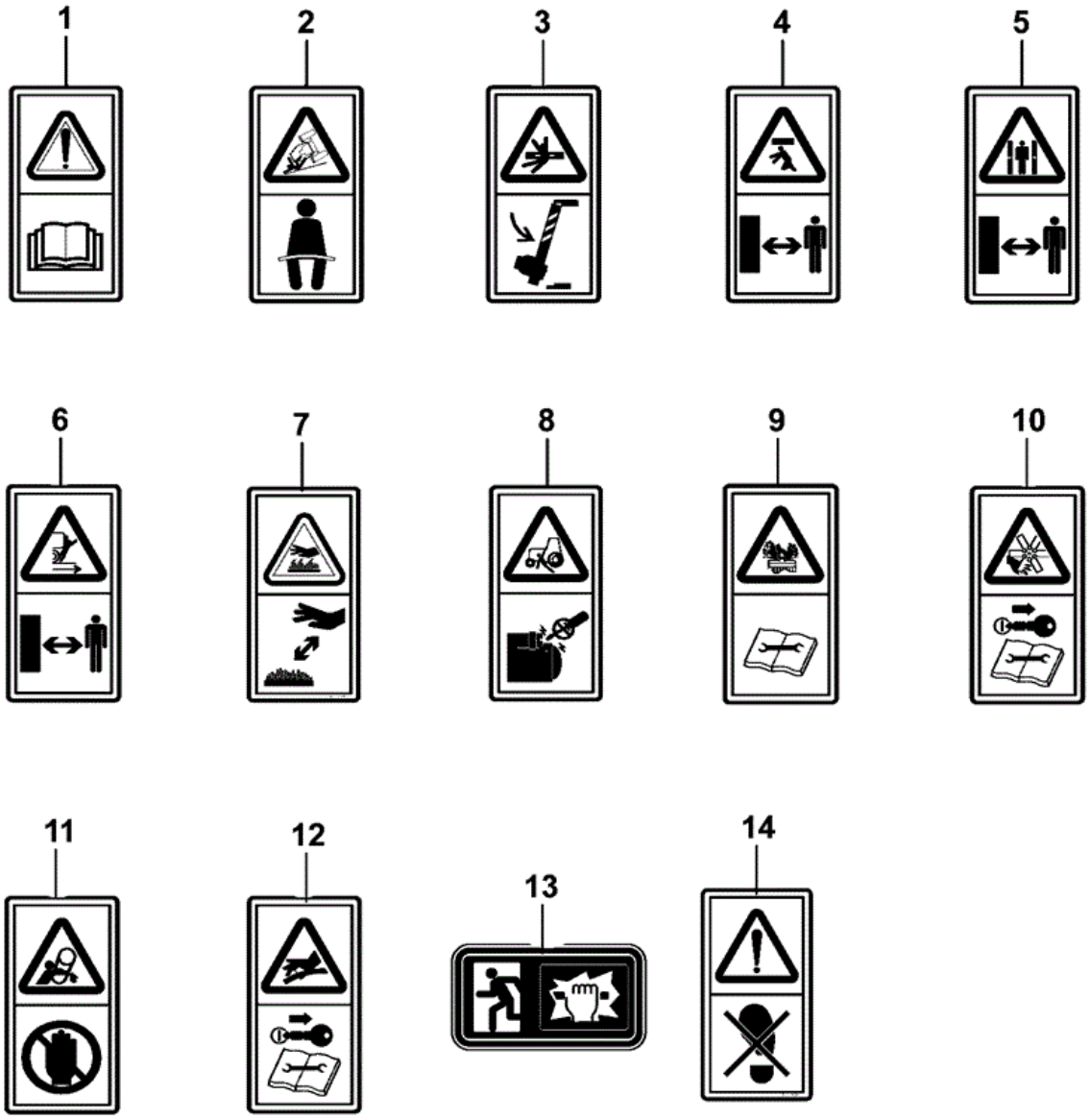

332-V1195-2

Item	Part No	Change No	Description	Usage Code	QTY
1	817/70014		Label ISO-01A (Read The Manual) Fitted near operators station		1
2	817/70029		Label ISO-10A		1

			Fitted near operators station		
3	332/P7181		Decal Warning Crushing Fitted below articulation lock		1
4	817/70008		Decal Warning Fitted to exposed sides of loader arms		2
5	817/70027		Label ISO-07D Fitted in articulation area		2
6	332/W6368		Decal Warning Crush Hazard Fitted to rear counterweight		1
7	332/P7128		Decal Warning Hot Hazard Fitted on each side of engine bay		2
8	332/P7129		Decal Warning Start Engine From Operators Seat Fitted near starter motor		1
9	332/P7131		Decal Warning Pressure Hazard Fitted above expansion tank		1
10	332/P7132		Decal warning severing of hands and fingers, rotating parts Fitted near fan cover		2
11	332/P7134		Decal Warning Entanglement Hazard Fitted on each side of engine bay		2
12	817/70002		Decal Warning Pressure Hazard Fitted next to A/C pipes		1
13	332/U9066		Label Emergency Exit Fitted to rear window		1
14	817/70024		Label warning do not use as step		6

Applicability Date Ranges:
From: , To:

Product Catalog\WHEELED LOADERS\416 01243000-01243499,01317500-01317999,01472000-01472999,02095872-02095875 9812/3020 \B BODYWORK, CAB, LOADER END\B05 REFURBISHMENTS\B5-0-20 LABELS WARNING ASSEMBLIES, ITALIAN

9812/3020 B5-0-20 LABELS WARNING ASSEMBLIES, ITALIAN

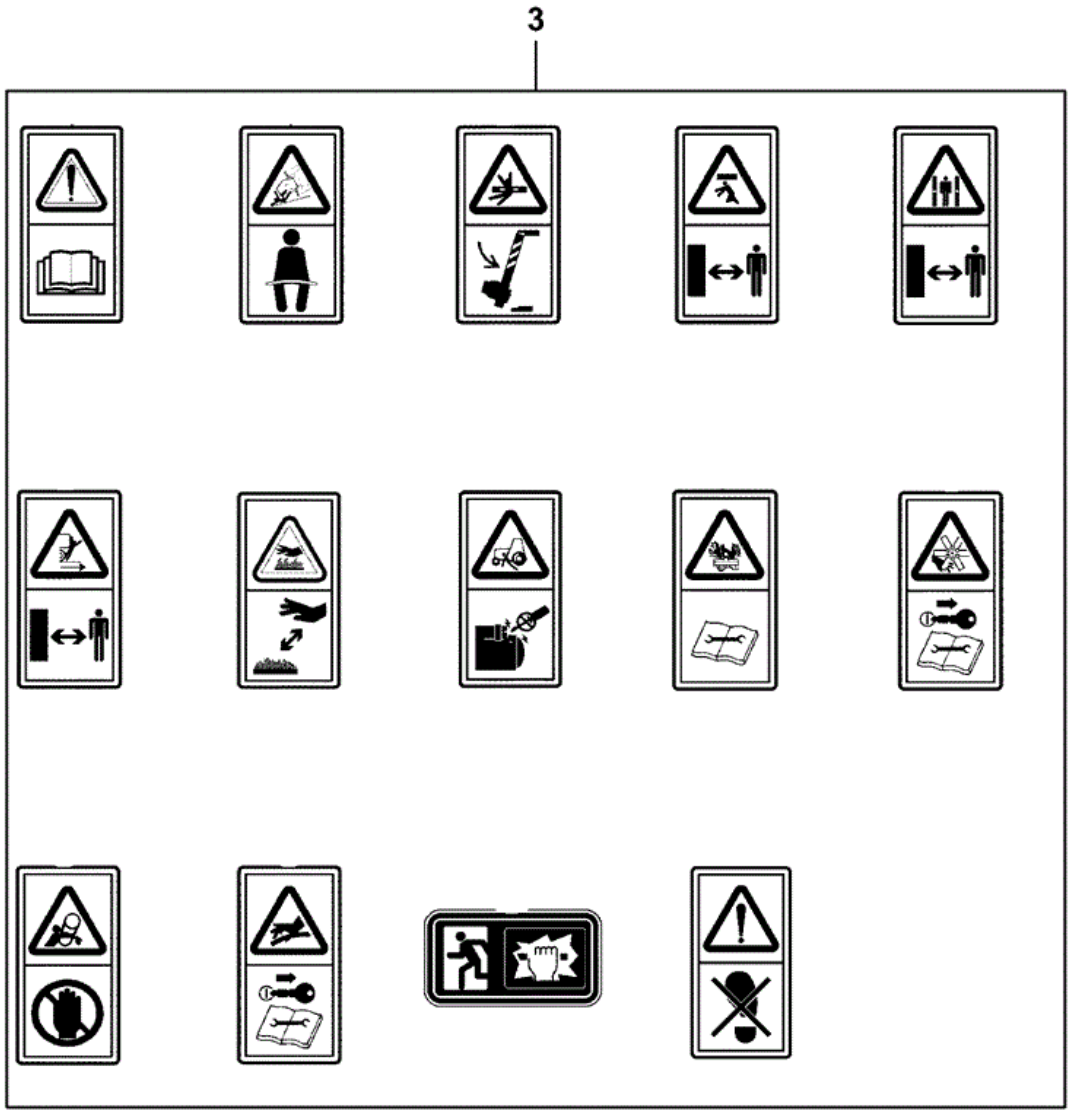

333-V5453-1

Item	Part No	Change No	Description	Usage Code	QTY
1	****		Dataplate Italian		1
3	****		G.A. warning labels ISO EN 474		1

9812/3020 B5-6-1 LABELS WARNING ISO EN 474

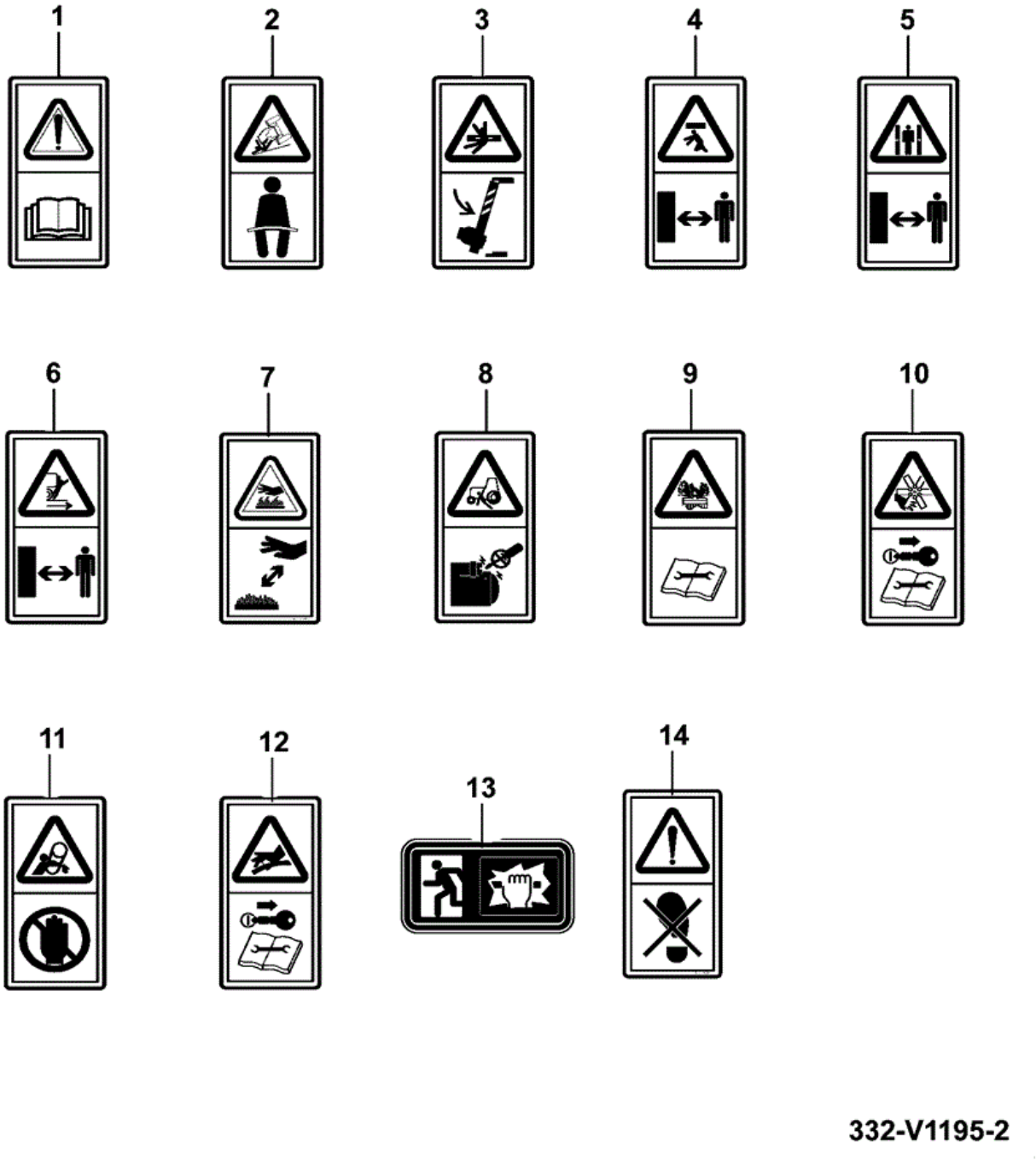

332-V1195-2

Item	Part No	Change No	Description	Usage Code	QTY
1	817/70014		Label ISO-01A (Read The Manual) Fitted near operators station		1
2	817/70029		Label ISO-10A		1

			Fitted near operators station		
3	332/P7181		Decal Warning Crushing Fitted below articulation lock		1
4	817/70008		Decal Warning Fitted to exposed sides of loader arms		2
5	817/70027		Label ISO-07D Fitted in articulation area		2
6	332/W6368		Decal Warning Crush Hazard Fitted to rear counterweight		1
7	332/P7128		Decal Warning Hot Hazard Fitted on each side of engine bay		2
8	332/P7129		Decal Warning Start Engine From Operators Seat Fitted near starter motor		1
9	332/P7131		Decal Warning Pressure Hazard Fitted above expansion tank		1
10	332/P7132		Decal warning severing of hands and fingers, rotating parts Fitted near fan cover		2
11	332/P7134		Decal Warning Entanglement Hazard Fitted on each side of engine bay		2
12	817/70002		Decal Warning Pressure Hazard Fitted next to A/C pipes		1
13	332/U9066		Label Emergency Exit Fitted to rear window		1
14	817/70024		Label warning do not use as step		6

Applicability Date Ranges:
From: , To:

Product Catalog\WHEELED LOADERS\416 01243000-01243499,01317500-01317999,01472000-01472999,02095872-02095875 9812/3020 \B BODYWORK, CAB, LOADER END\B05 REFURBISHMENTS\B5-0-30 LABELS WARNING ASSEMBLIES, GERMAN

9812/3020 B5-0-30 LABELS WARNING ASSEMBLIES, GERMAN

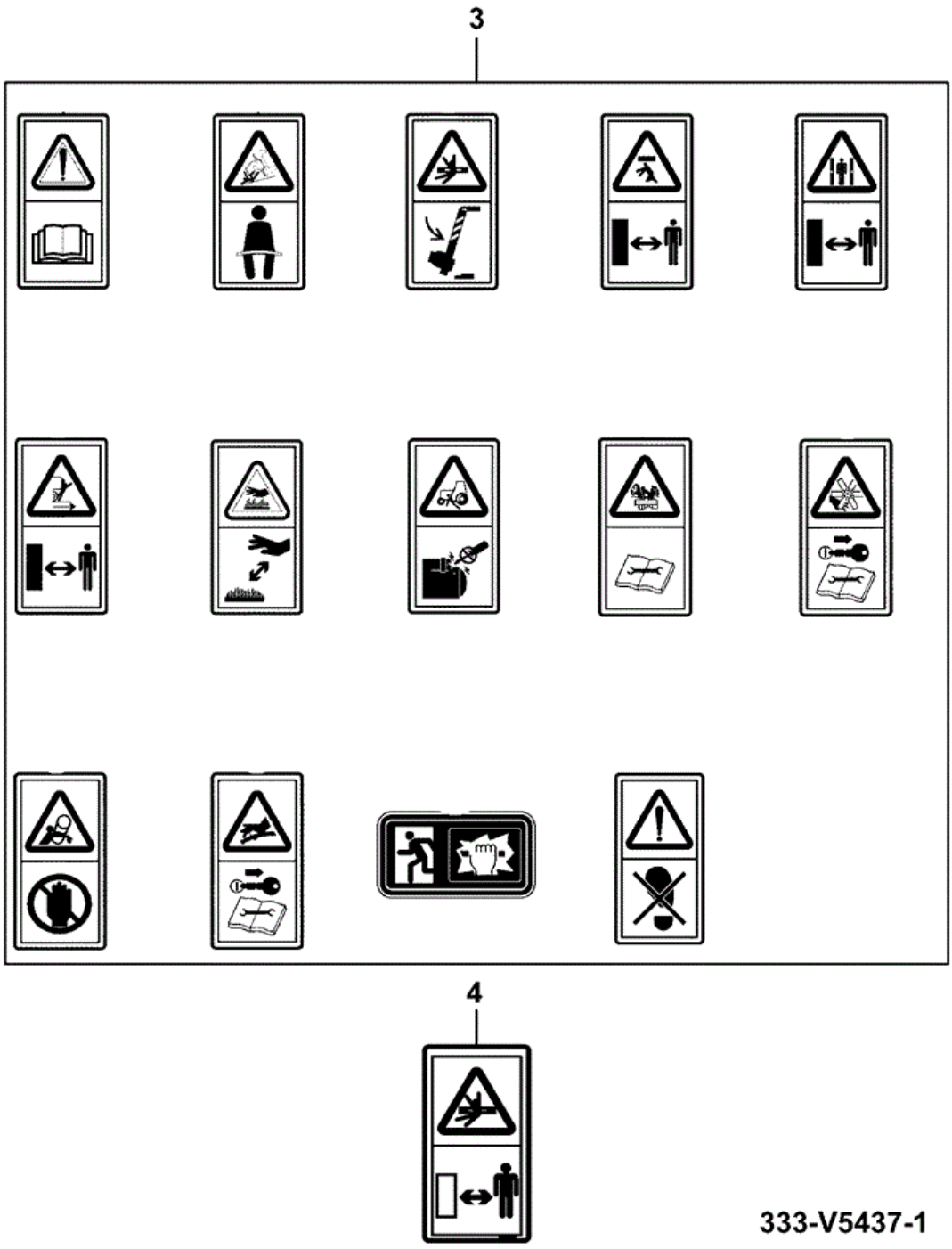

Item	Part No	Change No	Description	Usage Code	QTY
1	****		Dataplate German		1
3	****		G.A. warning labels ISO EN 474		1
			Label ISO-07D		

4	817/70027		Fit in articulation area		2

9812/3020 B5-6-1 LABELS WARNING ISO EN 474

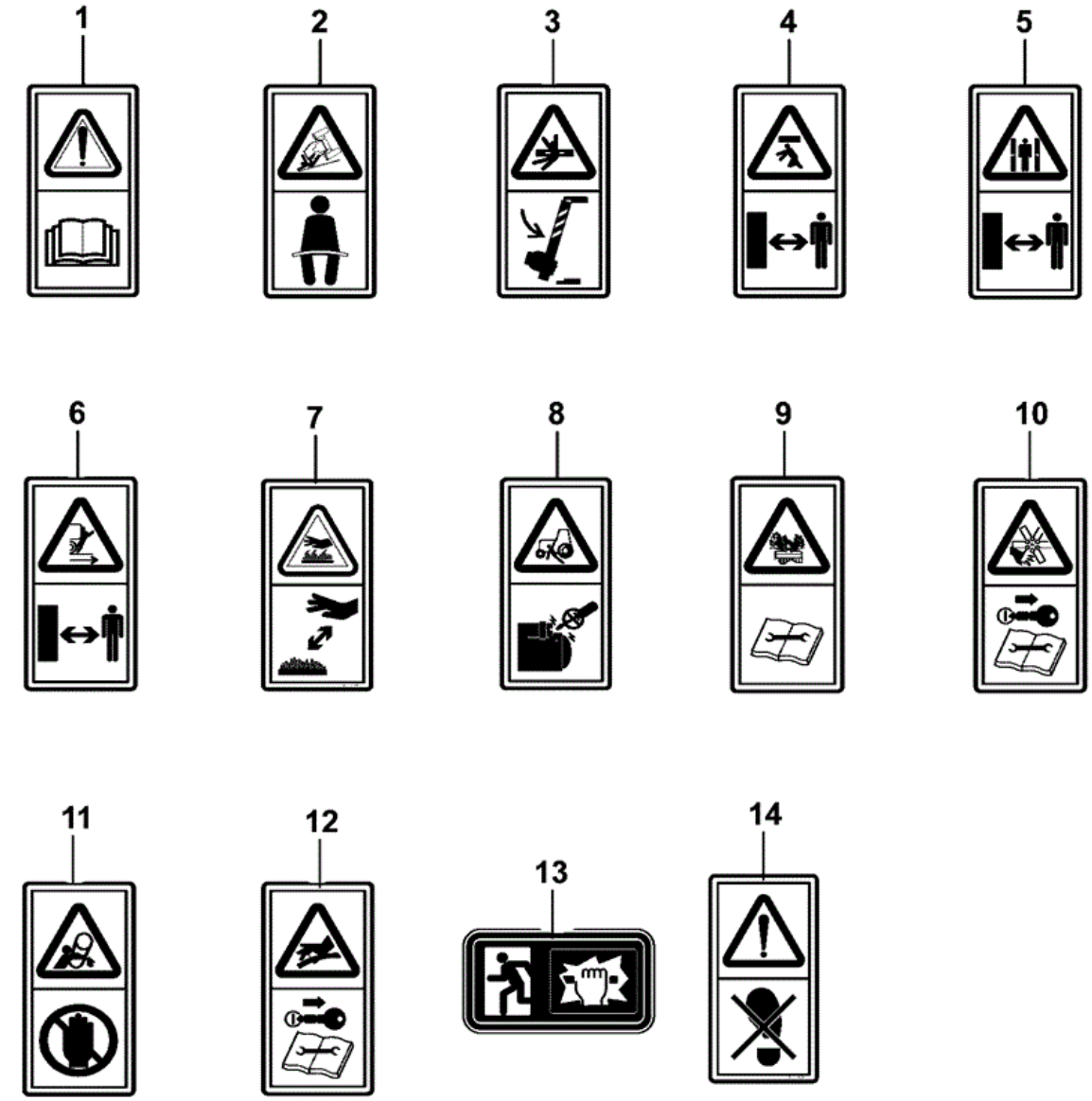

332-V1195-2

Item	Part No	Change No	Description	Usage Code	QTY
1	817/70014		Label ISO-01A (Read The Manual) Fitted near operators station		1

2	817/70029		Label ISO-10A Fitted near operators station		1
3	332/P7181		Decal Warning Crushing Fitted below articulation lock		1
4	817/70008		Decal Warning Fitted to exposed sides of loader arms		2
5	817/70027		Label ISO-07D Fitted in articulation area		2
6	332/W6368		Decal Warning Crush Hazard Fitted to rear counterweight		1
7	332/P7128		Decal Warning Hot Hazard Fitted on each side of engine bay		2
8	332/P7129		Decal Warning Start Engine From Operators Seat Fitted near starter motor		1
9	332/P7131		Decal Warning Pressure Hazard Fitted above expansion tank		1
10	332/P7132		Decal warning severing of hands and fingers, rotating parts Fitted near fan cover		2
11	332/P7134		Decal Warning Entanglement Hazard Fitted on each side of engine bay		2
12	817/70002		Decal Warning Pressure Hazard Fitted next to A/C pipes		1
13	332/U9066		Label Emergency Exit Fitted to rear window		1
14	817/70024		Label warning do not use as step		6

Applicability Date Ranges:
From: , To:

9812/3020 B5-0-40 LABELS WARNING ASSEMBLIES, USA

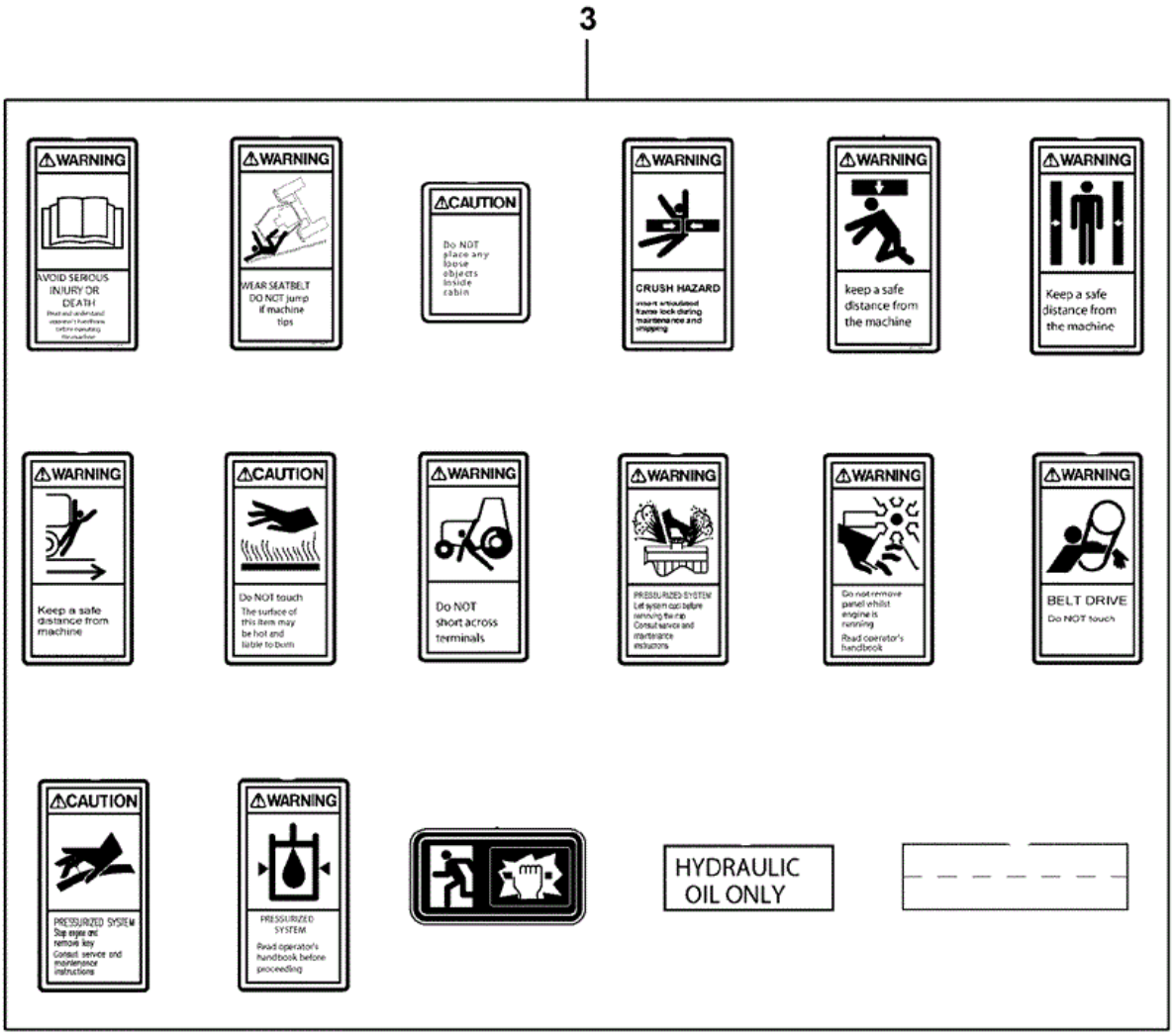

332-V1574-5

Item	Part No	Change No	Description	Usage Code	QTY
1	****		Dataplate English		1
3	****		Assembly safety labels ANSI USA		1

Applicability Date Ranges:
From: , To:

9812/3020 B5-1-1 LABELS IDENTITY

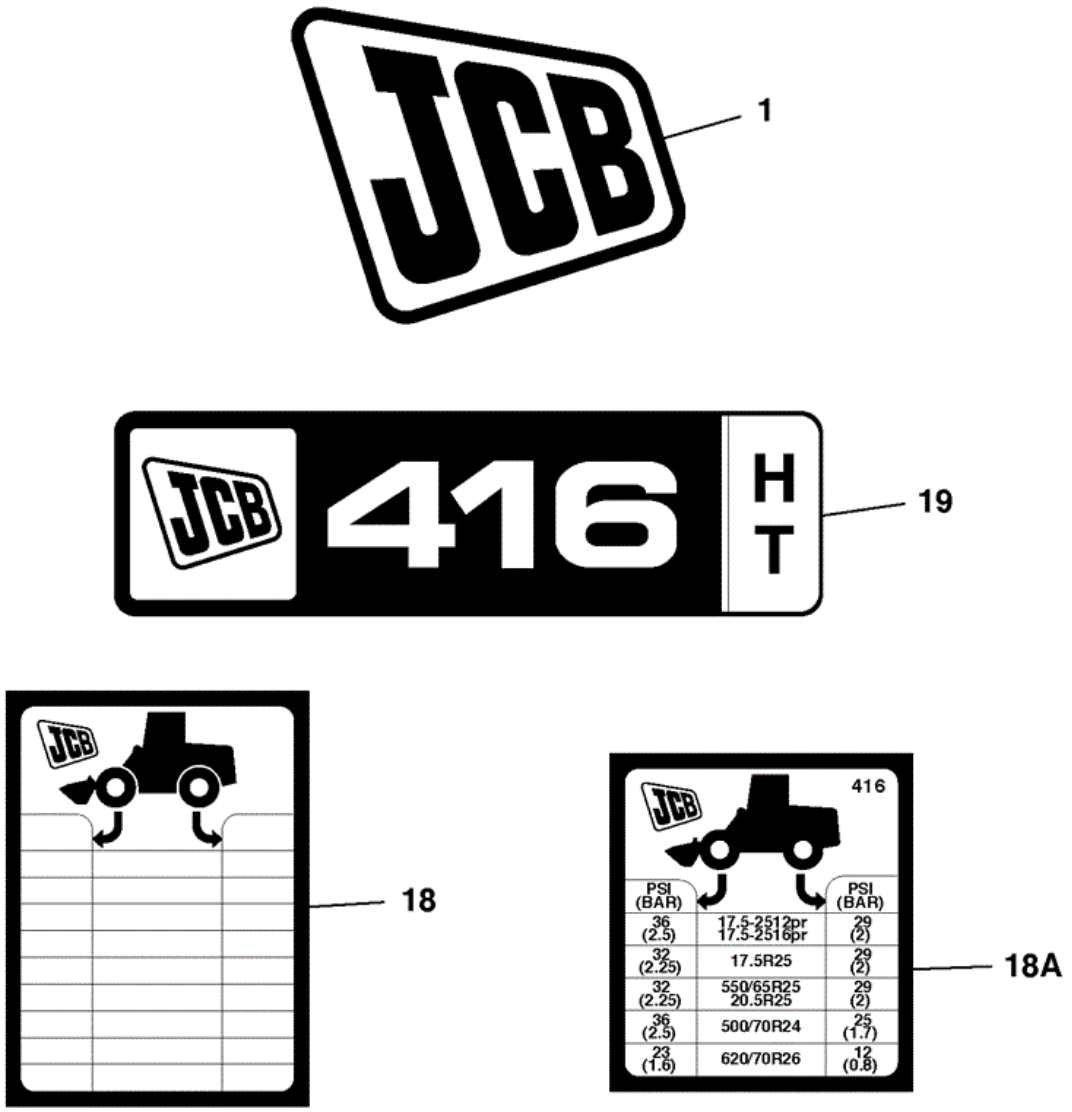

821481

Item	Part No	Change No	Description	Usage Code	QTY
1	817/17422		Decal JCB Insignia (Black) Fitted to front chassis cover		1
18	817/17213		Label tyre pressure 416, 416S		1

18A	817/20981	Replaced by	Label tyre pressure		1
18A	332/P7720		Label tyre pressure		1
18A	333/T3749		Decal tyre pressure		1
19	817/18216	Superseded	Decal 416 HT		2
19	332/R6384		Decal 416 HT		2

Applicability Date Ranges:
From: , To: 06/06/2010

Product Catalog\WHEELED LOADERS\416 01243000-01243499,01317500-01317999,01472000-01472999,02095872-02095875 9812/3020 \B BODYWORK, CAB, LOADER END\B05 REFURBISHMENTS\B5-1-5 LABELS IDENTITY AGRI

9812/3020 B5-1-5 LABELS IDENTITY AGRI

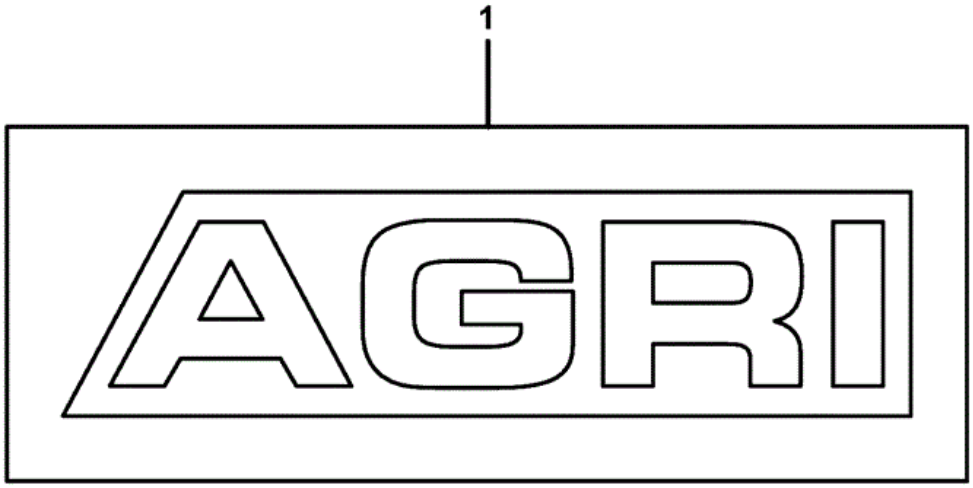

333-R7050-1

Item	Part No	Change No	Description	Usage Code	QTY
1	333/R5497		Decal AGRI		2

Applicability Date Ranges:
From: , To:

9812/3020 B5-1-10 LABELS IDENTITY WASTEMASTER

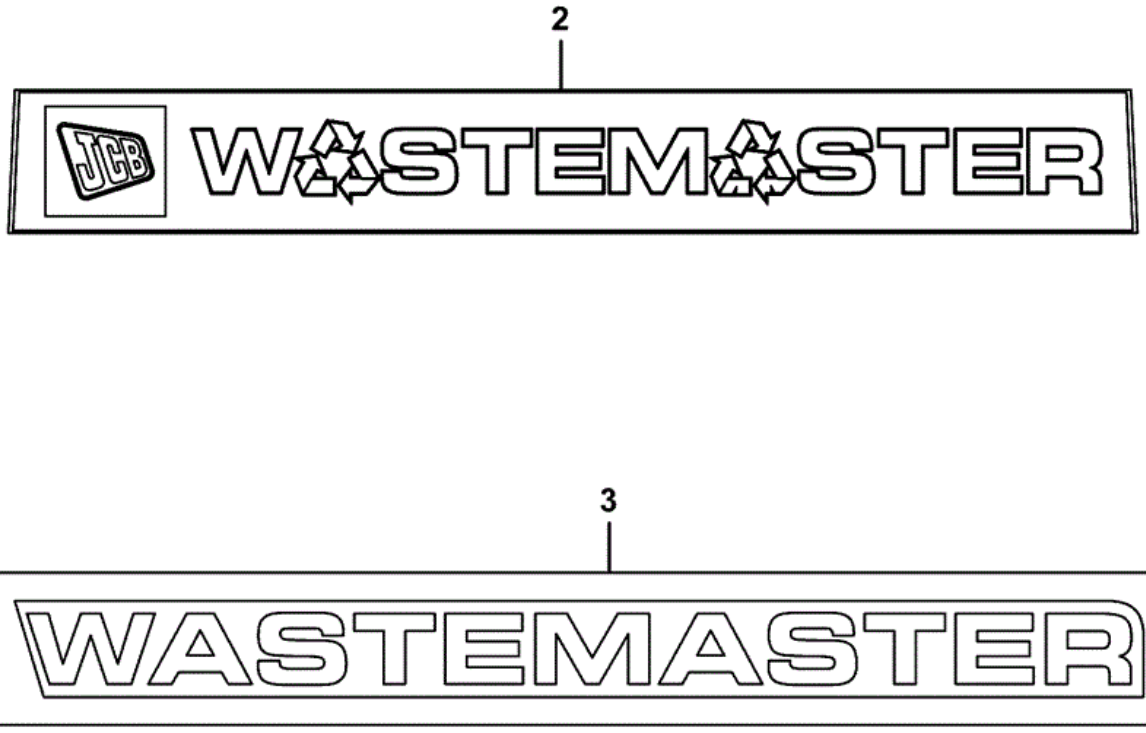

333-R8377-1

Item	Part No	Change No	Description	Usage Code	QTY
2	817/19977		Decal Sun Visor, Screen		1
3	333/R5503		Decal Nomenclature Wastemaster		2

Applicability Date Ranges:
From: , To:

9812/3020 B5-2-1 LABELS

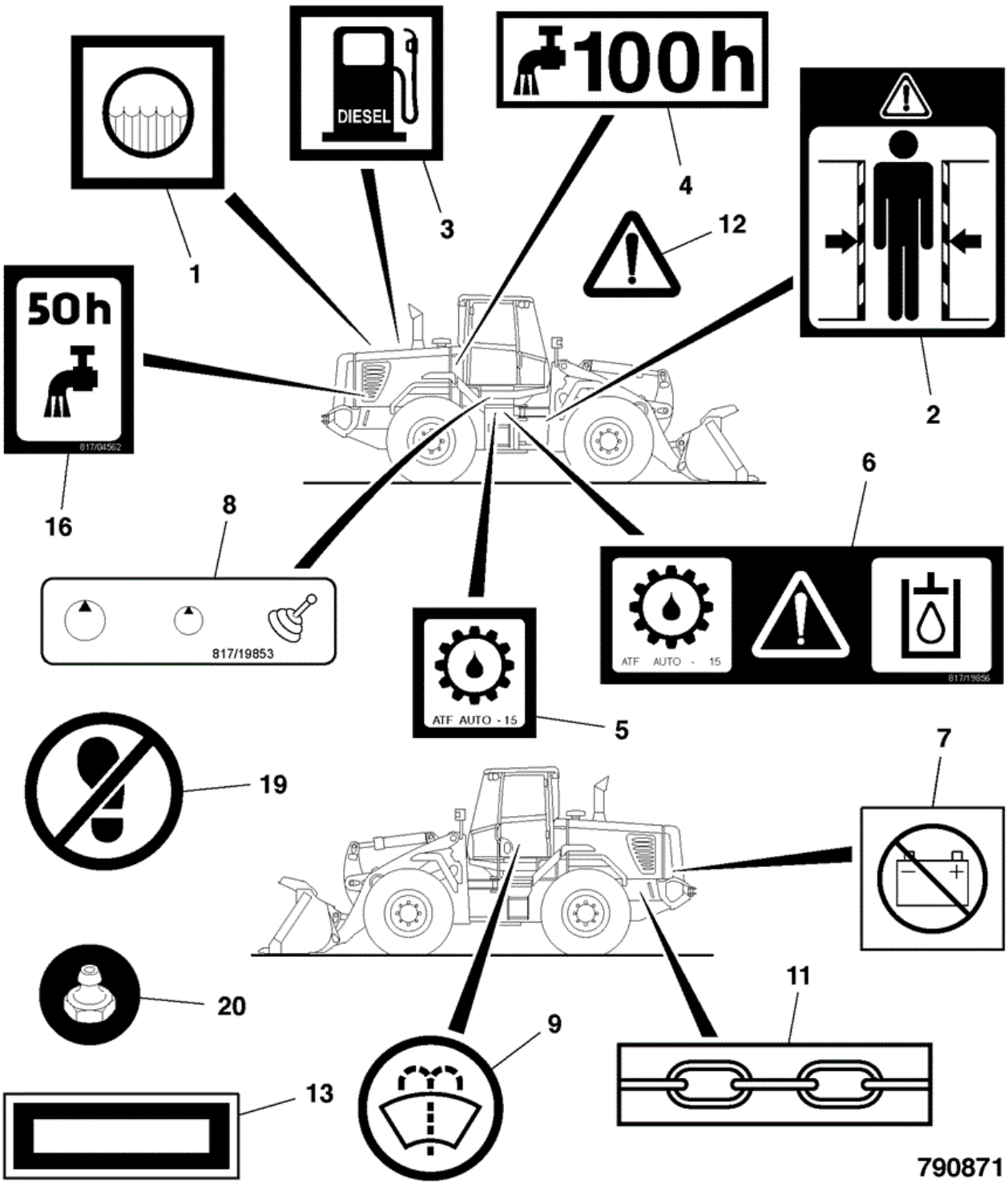

Item	Part No	Change No	Description	Usage Code	QTY
1	817/02308		Label Coolant Filler		1
1	332/P4102		Label Coolant Replaces 817/02308		1

2	817/03604		Label Danger Articulation		2
3	817/02305	Replaced by	Label Diesel		1
3	332/T4796		Label Diesel Fuel		1
5	817/17060		Label transmission oil		1
5	817/02307		Label Trans,Oil Filler Replaces 817/17060		1
7	817/01452		Label Battery Isolator		2
8	817/19853		Label test point		1
9	817/04274		Label Wash/Wipe		1
11	817/01087		Decal tie down (chain)		6
11	332/S5833		Label Tie Down Point Replaces 817/01087		4
12	817/01073		Label caution		4
13	817/02160		Label Chassis Stamping		1
19	817/18566		Decal Warning No Step Rear fender extension		2
20	817/02937		Decal Grease Points		2
21	817/02306		Label Hydraulic Fluid		1
21	332/P4074		Hydraulic Oil Label Replaces 817/02306		1
22	817/03606		Label lever lock		1
23	817/01661	to JAN09	Decal sound pressure level external 74 LPA Internal		1
24	817/17529		Label Sound Pressure 104dB LWA External		1

Applicability Date Ranges:
From: , To:

9812/3020 B5-3-1 LABELS WARNING

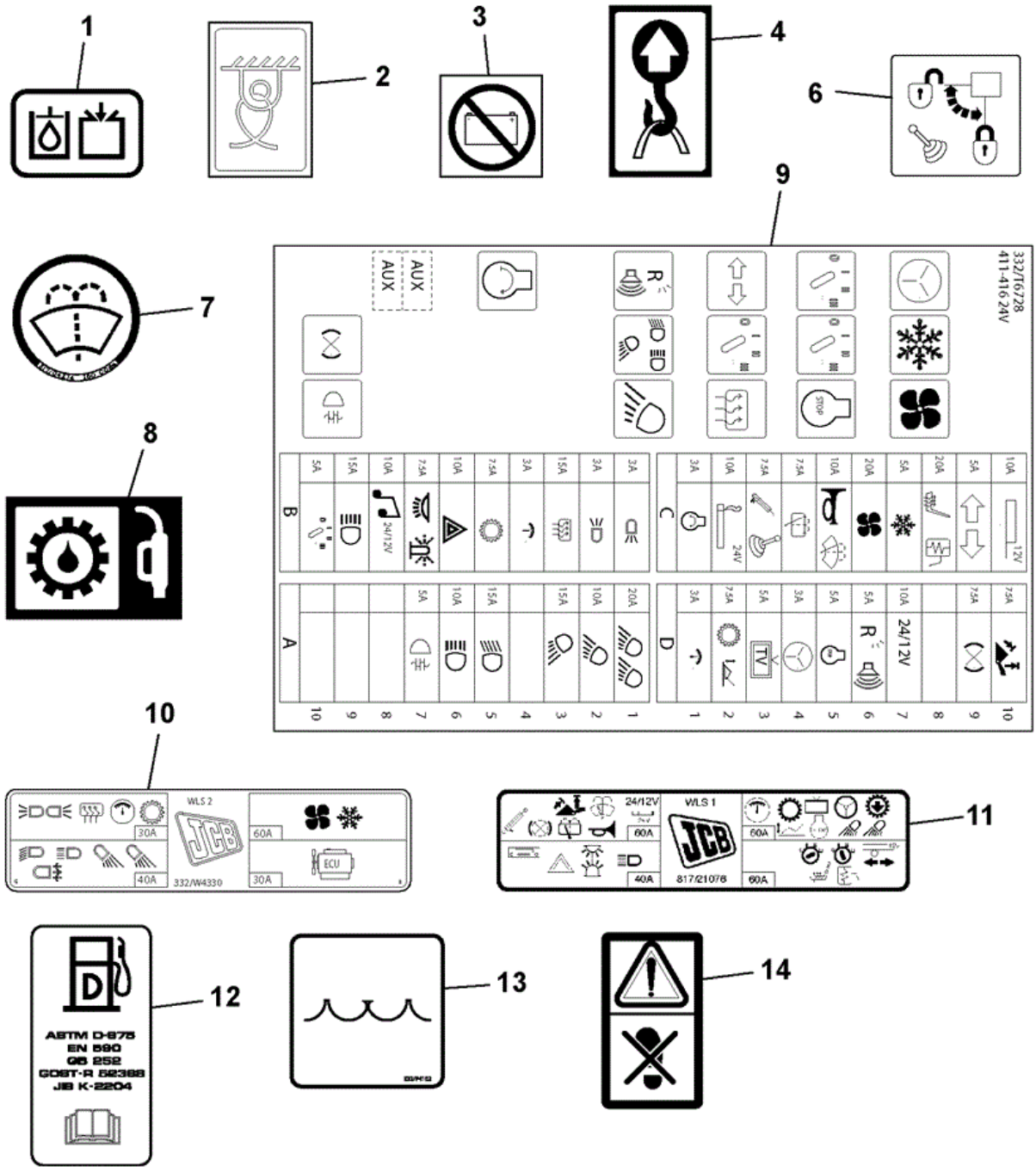

332-U9200-4

Item	Part No	Change No	Description	Usage Code	QTY
1	332/P4074		Hydraulic Oil Label Fit near fill point		1
			Label Tie Down Point		

2	332/S5833		Fit near tie down hook		4
3	817/01452		Label Battery Isolator Fit near isolator		2
4	817/01803		Label Sling Point Fit near lifting hook		4
6	817/03606		Label lever lock Fit inside cab		1
7	817/04274		Label Wash/Wipe Fit near screen wash		1
8	817/02307		Label Trans,Oil Filler Fit near transmission		1
9	332/T6728	to 14/04/2011	Decal fuse/relay box Fit to fuse box lid		1
9	333/T8572		Decal fuse/relay box Fit to fuse box lid		1
9A	332/T5700		Decal engine ECU fuses Fit to fuse box lid		2
10	332/W4330		Decal primary fuse 2 Fit to primary fuse		1
11	817/21076		Decal primary fuse 1 Fit to primary fuse		1
12	332/T4796		Label Diesel Fuel Fit near fuel filler		1
13	332/P4102		Label Coolant Fit to top panel		1
14	817/70024		Label warning do not use as step Fit to RHS top fender		1

Applicability Date Ranges:
From: , To:

9812/3020 B5-5-1 LABELS CAB

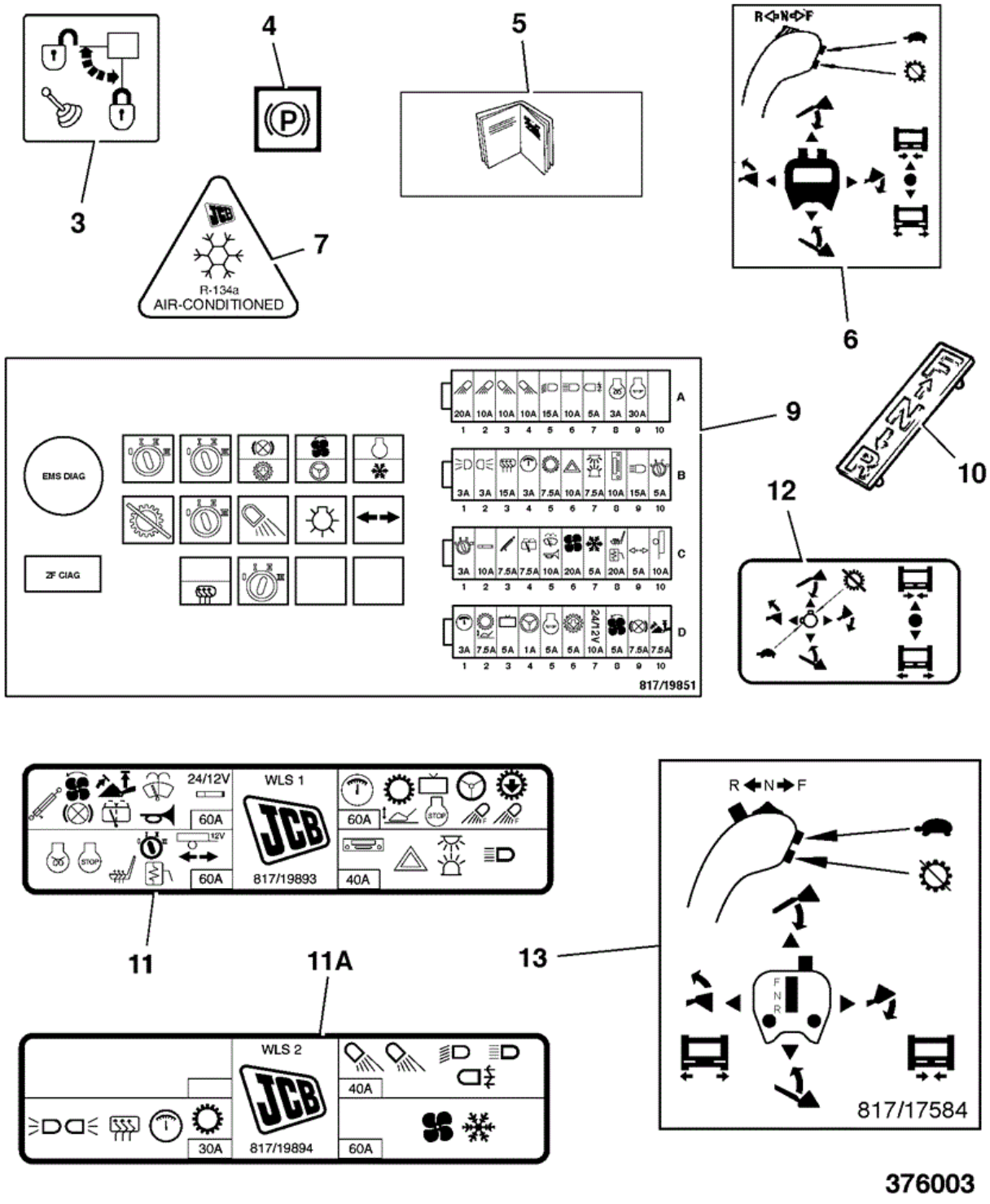

Item	Part No	Change No	Description	Usage Code	QTY
1	817/05104		Label caution No longer fitted		1
3	817/03606		Label lever lock		1

4	817/05339		Label Park Brake		1
5	817/01577		Label Read Handbook		1
6	817/16687		Decal loader control		1
7	817/04257		Label Air Conditioning		1
9	332/T6728	to 14/04/2011	Decal fuse/relay box See page C3-3-1		1
9	333/T8572		Decal fuse/relay box See page C3-3-1		1
10	817/03643		Decal F-N-R column switch		1
11	817/21076		Decal primary fuse 1 See page C3-2-1		1
11A	332/W4330		Decal primary fuse 2 See page C3-2-1		1
12	817/03605		Decal loader control 3 spool		1
13	817/17584		Decal loader control		1
13	332/W4652		Decal loader control inc. aux. function Sales special 1833. 3rd & 4th spool aux. changeover on joystick		1

Applicability Date Ranges:
From: , To:

Product Catalog\WHEELED LOADERS\416 01243000-01243499,01317500-01317999,01472000-01472999,02095872-02095875 9812/3020 \B BODYWORK, CAB, LOADER END\B05 REFURBISHMENTS\B5-6-1 LABELS WARNING ISO EN 474

9812/3020 B5-6-1 LABELS WARNING ISO EN 474

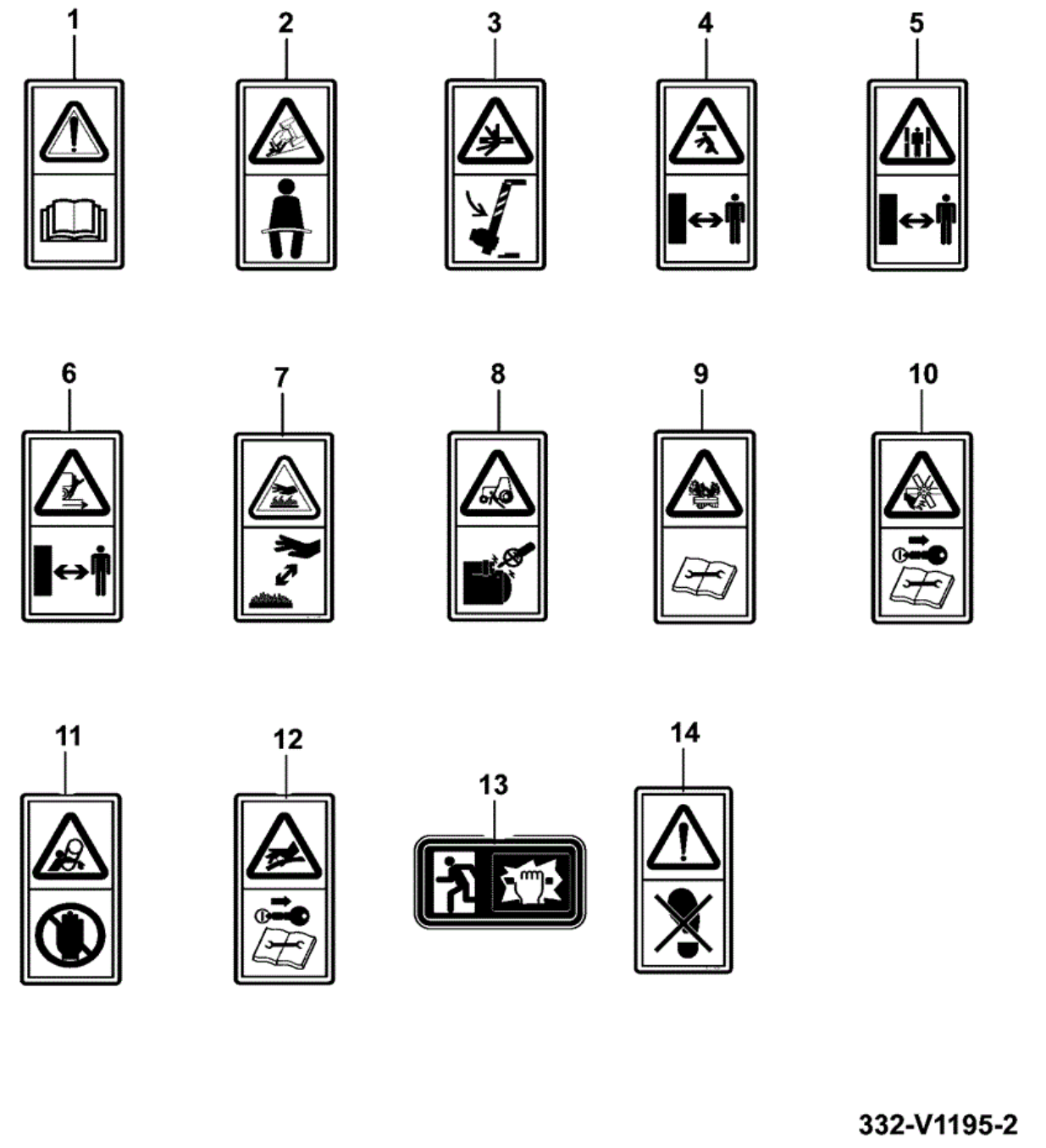

Item	Part No	Change No	Description	Usage Code	QTY
1	817/70014		Label ISO-01A (Read The Manual) Fitted near operators station		1
			Label ISO-10A		

2	817/70029		Fitted near operators station		1
3	332/P7181		Decal Warning Crushing Fitted below articulation lock		1
4	817/70008		Decal Warning Fitted to exposed sides of loader arms		2
5	817/70027		Label ISO-07D Fitted in articulation area		2
6	332/W6368		Decal Warning Crush Hazard Fitted to rear counterweight		1
7	332/P7128		Decal Warning Hot Hazard Fitted on each side of engine bay		2
8	332/P7129		Decal Warning Start Engine From Operators Seat Fitted near starter motor		1
9	332/P7131		Decal Warning Pressure Hazard Fitted above expansion tank		1
10	332/P7132		Decal warning severing of hands and fingers, rotating parts Fitted near fan cover		2
11	332/P7134		Decal Warning Entanglement Hazard Fitted on each side of engine bay		2
12	817/70002		Decal Warning Pressure Hazard Fitted next to A/C pipes		1
13	332/U9066		Label Emergency Exit Fitted to rear window		1
14	817/70024		Label warning do not use as step		6

Applicability Date Ranges:
From: , To:

9812/3020 B5-10-1 PAINT

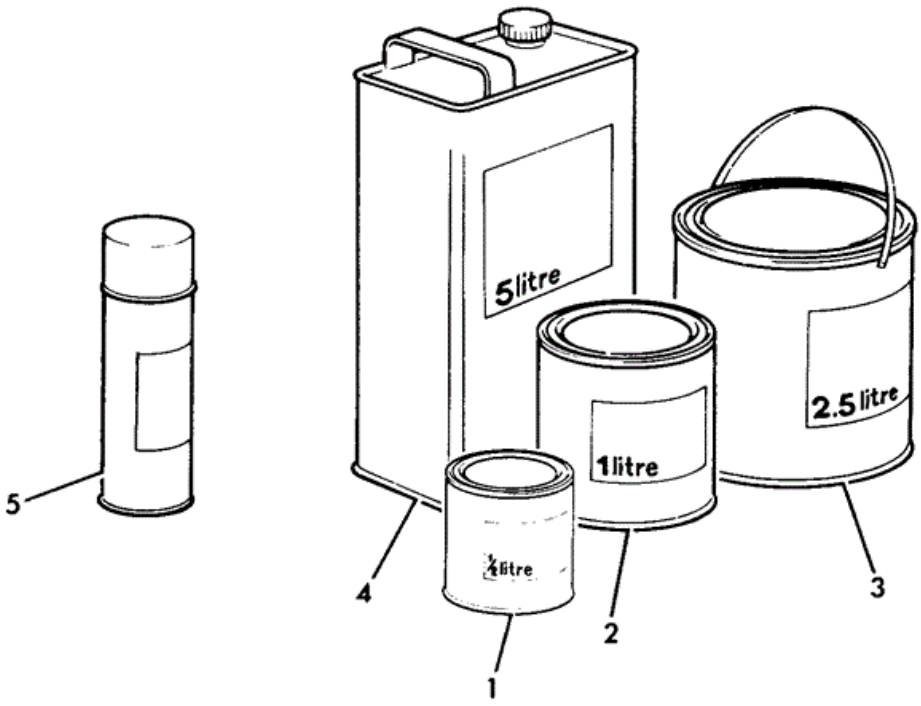

154940

Item	Part No	Change No	Description	Usage Code	QTY

2	4200/5502		Paint undercoat grey 1 lts		1
2	4200/5901		Paint undercoat yellow 1 lts		1
2	4200/6001		Paint full gloss yellow 1 lts		1
2	4200/4101		Paint black, 1 lts semi-gloss enamel		1
2	4200/5601		Paint grey gloss 1 lts		1
2	4201/0541		Paint storm gray gloss 1 litre		1
2	4201/1231		Paint yellow two pack 1 litre		1
2	4201/1331		Paint primer base		1
2	4201/1331		Paint primer base		1
2	4209/1031		Paint activator, finish 1 litre		1
2	4209/1131		Paint Activator, primer 1 litre		1
3	4200/5902		Paint undercoat yellow 2.5 lts		1
3	4200/6002		Paint full gloss yellow 2.5 lts		1
3	4200/4102		Paint black, 2.5 lts semi-gloss enamel		1
3	4200/5602		Paint grey gloss 2.5 lts		1
3	4201/0542		Paint storm gray gloss 2.5 litre		1
3	4201/1232		Paint yellow two pack 2.5 litres		1
3	4202/1532		Paint Semi-gloss black single pack 2.5 litres		1
3	4201/1332		Primer base yellow two pack 2.5 litres		1
4	4200/9203		Thinners 5 litre 2-pack For use with two pack paint		1
4	4200/2701		Thinners 5 litres For use with single pack paint		1
5	990/00074		Paint aerosol can grey primer		1
5	4200/5905		Paint yellow primer aerosol		1
5	4200/5305		Paint aerosol can full gloss yellow		1
5	990/00072		Paint aerosol can black gloss enamel		1
5	4201/0546		Paint storm grey gloss aerosol		1

Applicability Date Ranges:
From: , To:

Product Catalog\WHEELED LOADERS\416 01243000-01243499,01317500-01317999,01472000-01472999,02095872-02095875 9812/3020 \B BODYWORK, CAB, LOADER END\B05 REFURBISHMENTS\B5-20-1 OPERATOR MANUAL BRITISH

9812/3020 B5-20-1 OPERATOR MANUAL BRITISH

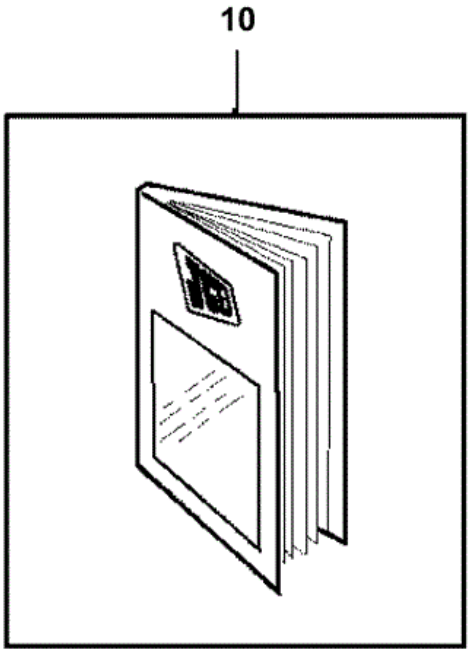

332-W5976-1

Item	Part No	Change No	Description	Usage Code	QTY
10	9811/3450	to 31/12/2009	Handbook English 411-416S		1
10	9811/6950		Handbook English 411-416S		1

Applicability Date Ranges:
From: , To:

Product Catalog\WHEELED LOADERS\416 01243000-01243499,01317500-01317999,01472000-01472999,02095872-02095875 9812/3020 \C ELECTRICS-MACHINE CAB & ENGINE\C01 ELECTRICS, MAIN MACHINE\C1-1-1 HARNESS MACHINE ELECTRICS 24 VOLT

9812/3020 C1-1-1 HARNESS MACHINE ELECTRICS 24 VOLT

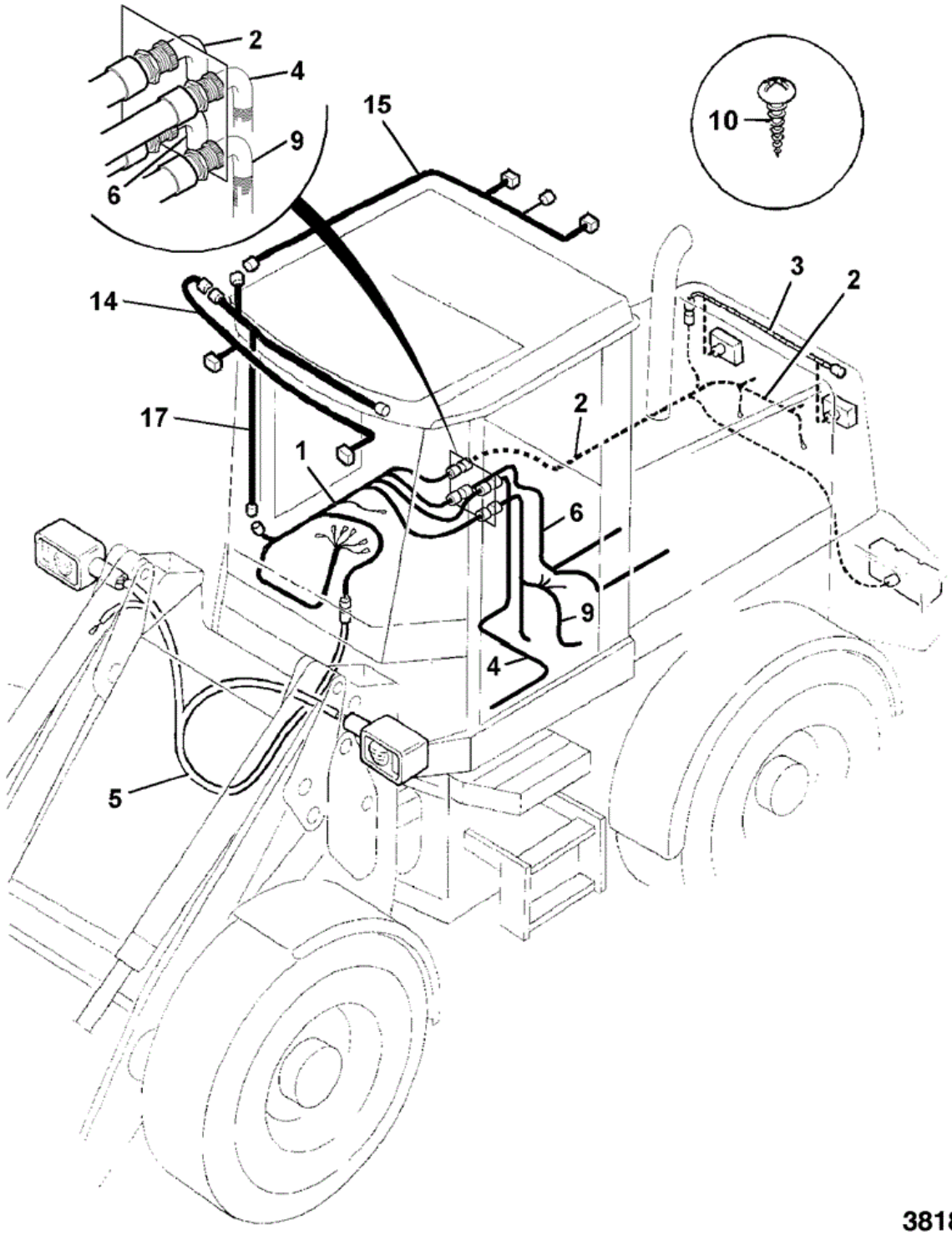

Item	Part No	Change No	Description	Usage Code	QTY
1	721/12151	to M1243078	Harness side console		1
1	721/12385	to M1317687	Harness side console		1

1	332/S4519	to M1317960	Harness side console		1
1	332/V5693	to 31/10/2010	Harness side console Includes livelink option		1
1	333/R3989	to 10/07/2011	Harness side console		1
1	333/T6891		Harness side console		1
1	332/S9320		Harness side console Transmission fitted with filter bypass switch		1
1	333/S4157		Harness side console Sales special 1833. 3rd & 4th spool aux.changeover on joystick		1
1A	:7241/0026		Cover fuse box 10 way		4
1B	:7241/0001		Box fuse 10 way		4
1C	:7241/0002		Retainer fuse box		4
2	721/12152	to M1317960	Harness rear chassis		1
2	332/V5066	to M1317924	Harness rear chassis		1
2	332/W1555	to 31/10/2010	Harness rear chassis		1
2	333/R6487		Harness rear chassis		1
3	721/12161		Harness rear grille Rear worklights & reverse alarm		1
3A	926/44500		Sleeve split 150mm long		0
4	721/12160	to 31/10/2010	Harness rear cab		1
4	333/R4744		Harness rear cab		1
5	721/12159		Harness front chassis		1
6	721/12153	to M1243078	Harness engine		1
6	721/12384	to M1243499	Harness engine		1
6	721/12504	Superseded	Harness engine tier 3 Tier 3 engine		1
6	332/V3818	to 31/10/2010	Harness engine tier 3 Tier 3 engine		1
6	333/R3984	to 06/01/2013	Harness engine Tier 3 engine		1
6	333/W0473		Harness engine		1
7	1430/1102		Screw		4
9	721/11826	to M1317687	Harness transmission		1
9	332/S5092		Harness transmission		1
10	826/00023		Screw spire		8
11	826/01277		Nut Vibration Proof		12
12	826/01453		Tie cable Double Head		6
14	721/12157	to M1317687	Harness cab roof exterior front		1
14	332/S4803		Harness cab roof exterior		1
15	721/12332		Harness cab roof exterior		1

15	333/R9161		Harness cab roof rear Sales special 1227 & 1747. Rear worklights		1
15	333/R9165		Harness cab roof front Sales special 1227 & 1747. Front worklights		1
17	721/12333	to M1317687	Harness cab roof interior		1
17	332/S4543	to M1317914	Harness cab roof interior		1
17	332/V8704		Harness cab roof interior (modified 332/S4543) Interim harness		1
17	332/V5692	to 31/10/2010	Harness cab roof interior Includes livelink option		1
17	333/R4749		Harness cab roof interior		1
18	721/12334		Harness number plate light		1
19	721/11579		Harness switchable detent Sales special 9721		1
23	926/44500		Sleeve split For 721/00097		0
25	721/12119	to M1317905	Harness throttle link Now part of item 6 332/V3818		1
32	821/10087		Clip P 13mm 13 dia for item 5		6
33	826/00864		Clip P 16mm 16 dia for item 5		2
35	2410/0215		Grommet to suit 44.4 dia hole		2
37	121/77603		Tie Cable 300mm to tie up unused branches		30
38	2410/0214		Grommet to suit 38.1 dia hole		1
39	717/13900		Plug Male Junior Timer		1
40	264/36400		Plate Tie Harness		1
41	821/00186		Clamp Top 25mm For item 1		1
42	263/34900		Harness Clip For item 1		1
43	647/06800		Tube split, 0.5m length 600mm long (for steering)		0
50	721/12374		Harness water temp. sender Service fix (overheating)		1
55	332/V7296		Harness worklight salvage Service fix. Fitted in the event of switch failure		1

Note 1: Not required on machines after APR09

Applicability Date Ranges:
From: , To:

Product Catalog\WHEELED LOADERS\416 01243000-01243499,01317500-01317999,01472000-01472999,02095872-02095875 9812/3020 \C ELECTRICS-MACHINE CAB & ENGINE\C01 ELECTRICS, MAIN MACHINE\C1-1-11 HARNESSES CONTROL AREA NETWORK (CAN) TIER 3

9812/3020 C1-1-11 HARNESSES CONTROL AREA NETWORK (CAN) TIER 3



Item	Part No	Change No	Description	Usage Code	QTY
1	332/U0782		Harness CAN cab		1

2	727/00003		Connector straight		2
3	332/R0233		Harness CAN 700mm long		1
4	727/00001		Connector T splitter		1

Applicability Date Ranges:
From: M1317800 , To:

Product Catalog\WHEELED LOADERS\416 01243000-01243499,01317500-01317999,01472000-01472999,02095872-02095875 9812/3020 \C ELECTRICS-MACHINE CAB & ENGINE\C01 ELECTRICS, MAIN MACHINE\C1-2-2 BATTERY INSTALLATION

9812/3020 C1-2-2 BATTERY INSTALLATION

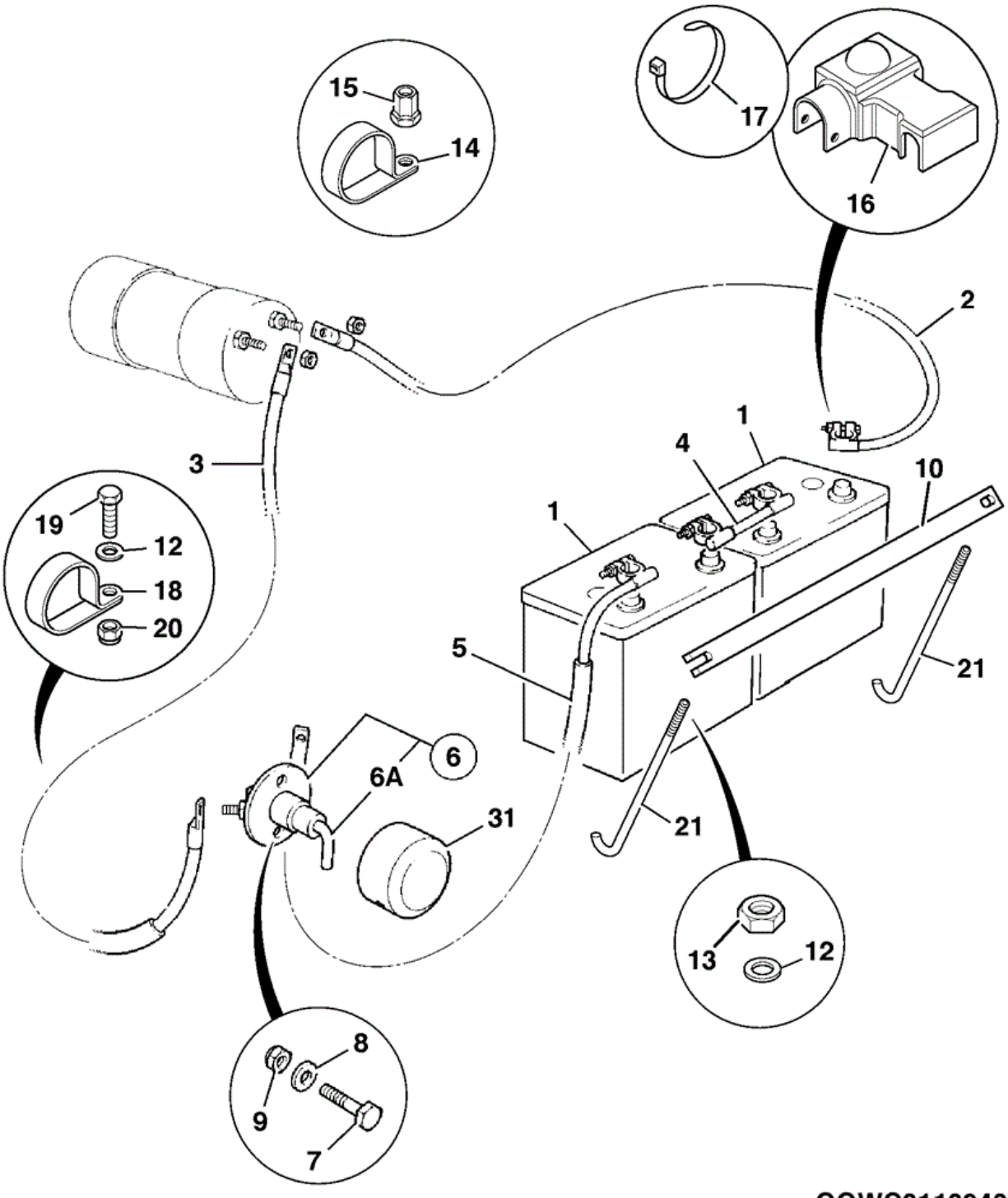

Item	Part No	Change No	Description	Usage Code	QTY
1	729/10655		Battery wet charge 130Ah		2
2	718/20091	to SEPT09	Cable battery, red		1

2A	:998/10911	to SEPT09	Terminal battery lug		1
2B	:998/10912	to SEPT09	Bolt battery lug M6		1
2	332/W2497		Cable battery red, 2300mm		1
2	333/R1527		Lead positive battery Sales special 1047 for the Italian navy		1
3	718/20138		Lead starter to isolator black		1
4	718/56111		Lead battery connection		1
5	718/56089		Lead battery to isolator		1
5A	:331/64594		Bolt battery lug 1/4"UNC		1
6	701/47400		Switch Isolator		1
6A	701/47401		Key isolator switch (to 701/47400)		1
7	1315/0307D		Setscrew M8 x 25 mm		2
8	1420/0007D		Washer (M8)		4
9	1370/0203D		Nut Lock M8		2
10	332/V7705		Clamp battery		2
12	1420/0006D		Washer (M6)		4
13	1370/0101D		Nut Plain M6		8
14	821/00329		Clamp		6
15	826/01277		Nut Vibration Proof		6
16	331/40330		Cover battery terminal		1
17	204/07006		Tie Cable		1
18	821/00329		Clamp		4
19	1315/0208D		Setscrew (M6 X 30)		2
20	1370/0103D		Nut (M6)		2
21	332/V6960		Bolt swing M6 x 70mm		2
31	265/00893		Cover Battery Isolator		1

Applicability Date Ranges:
From: M1317925 , To: M1472050

Product Catalog\WHEELED LOADERS\416 01243000-01243499,01317500-01317999,01472000-01472999,02095872-02095875 9812/3020 \C ELECTRICS-MACHINE CAB & ENGINE\C01 ELECTRICS, MAIN MACHINE\C1-2-10 INTER VEHICLE SOCKET SALES SPECIAL ITALIAN MILITARY

9812/3020 C1-2-10 INTER VEHICLE SOCKET SALES SPECIAL ITALIAN MILITARY

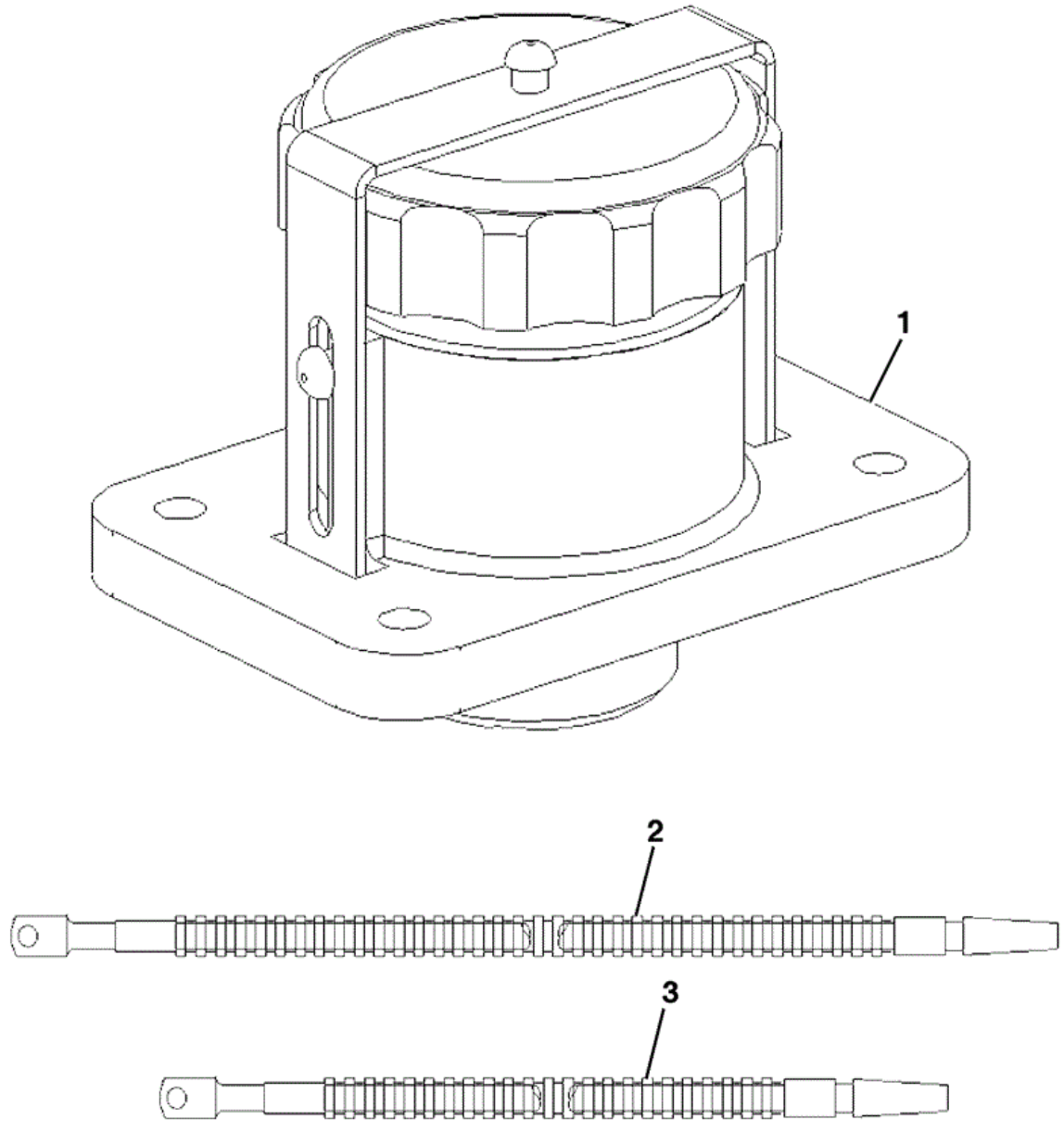

799530

Item	Part No	Change No	Description	Usage Code	QTY
			Socket intervehicle start 24 volt		

1	715/20010		Sales special 1047 for the Italian Military		1
2	333/R1962		Cable inter vehicle start 6ft long		1
3	333/R1528		Lead negative battery to start socket		1
9	333/R2965		Bracket mounting		1

Applicability Date Ranges:
From: , To:

9812/3020 C1-3-1 FUSE LINK BOX

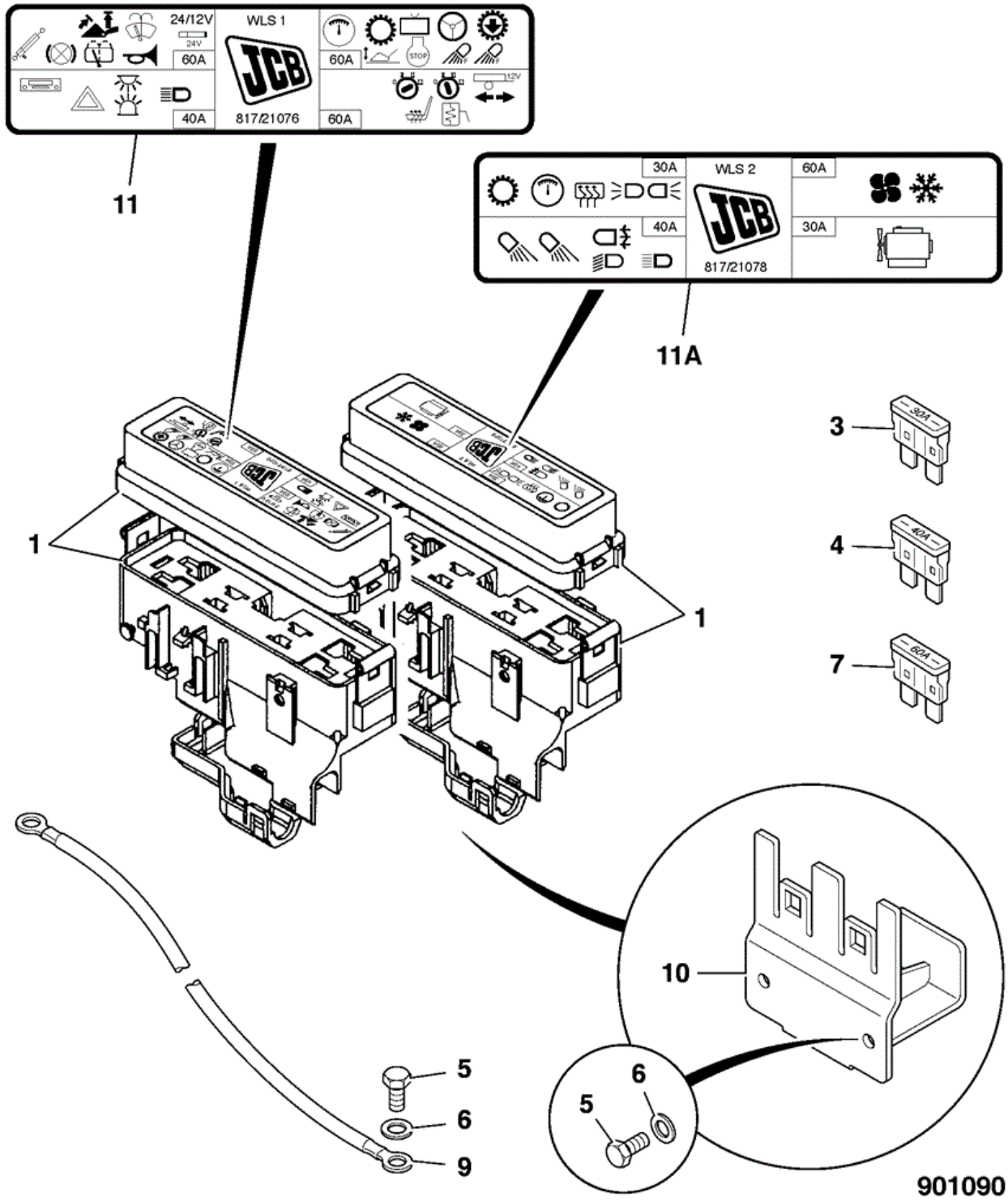

Item	Part No	Change No	Description	Usage Code	QTY
1	716/30077		Box Fuselink		2
3	716/30079		Fuse maxi fuse 30Amp		2

4	716/15900		Fuse Maxi Fuse 40Amp		2
5	1315/0305D		Setscrew M8 x 20mm		5
6	1420/0007D		Washer (M8)		6
7	716/16400		Fuse Maxi Fuse 60Amp		4
9	718/20093	to NOV08	Cable 400mm Long		2
9	718/20205	to M1317924	Cable 900mm long		2
9A	332/W2638		Lead primary fuse (double lead)		1
10	335/08621	to NOV08	Bracket fuse		2
10	331/60960		Bracket fuse mounting		2
11	817/21076		Decal primary fuse 1		1
11A	817/21078	to M1317924	Decal primary fuse 2		1
11A	332/W4330		Decal primary fuse 2		1
12	1370/0103D		Nut (M6) Item 9 to 1		1
13	1315/0303D		Setscrew M8 x 16mm Item 9 to battery		1
14	926/04800	to NOV08	Strip Edging For item 10 360mm long		0
14	926/00600		Grommet Flexiform		1

9812/3020 C350-1-1 FUSES AND RELAYS FUSELINK BOX-4 WAY

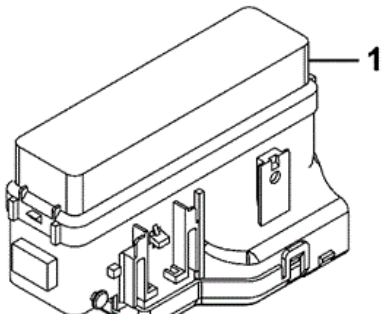

Item	Part No	Change No	Description	Usage Code	QTY
1	716/30077		Box Fuselink		1
2	7232/0008		Housing 2 WAY MAXIVAL FEM HS MTA PRIMARY FUSEBOX Grey		1
3	7232/0009		Housing 2 way (grey) Blue		1
4	7201/0079		Terminal crimp 4 - 6MM		1
5	7201/0078		Terminal Crimp 8 to 10 mm		1

Applicability Date Ranges:
From: , To:

Product Catalog\WHEELED LOADERS\416 01243000-01243499,01317500-01317999,01472000-01472999,02095872-02095875 9812/3020 \C ELECTRICS-MACHINE CAB & ENGINE\C01 ELECTRICS, MAIN MACHINE\C1-4-1 ELECTRICS, TRAILER 24 VOLT

9812/3020 C1-4-1 ELECTRICS, TRAILER 24 VOLT

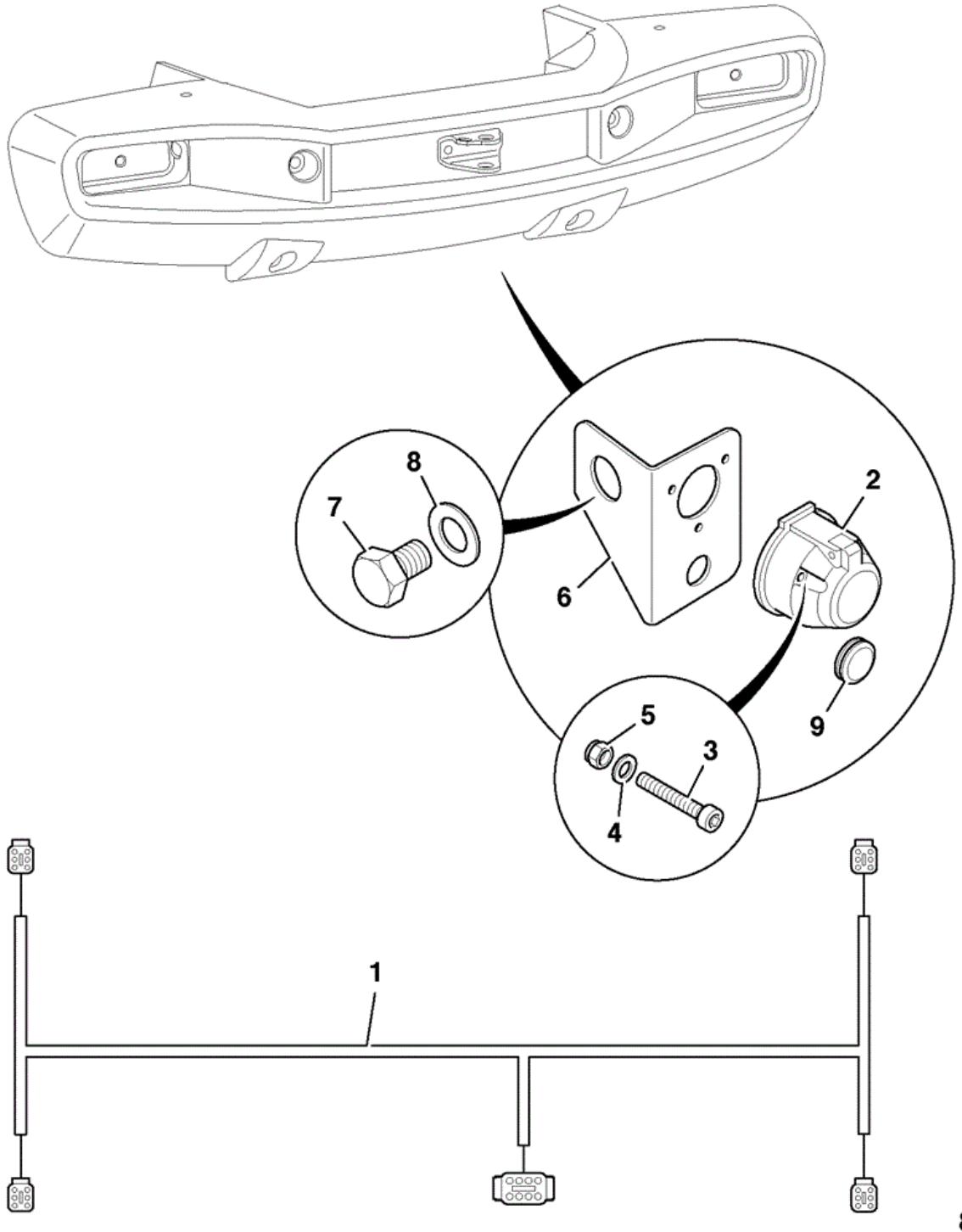

Item	Part No	Change No	Description	Usage Code	QTY
1	721/12320		Harness 24V		1
2	717/20123		Socket trailer 7 way		1

3	1391/3109D		Capscrew M5 x 35mm		3
4	1420/0005D		Washer (M5)		3
5	1370/0003D		Nut Lock M5		3
6	331/58472		Bracket mounting socket		1
7	1315/1110D		Screw M30 x 40mm		1
8	1420/0015D		Washer Plain, M30		1
9	2410/1109		Grommet Std, 25.4 mm x 3.5 mm		1

Applicability Date Ranges:
From: , To:

Product Catalog\WHEELED LOADERS\416 01243000-01243499,01317500-01317999,01472000-01472999,02095872-02095875 9812/3020 \C ELECTRICS-MACHINE CAB & ENGINE\C01 ELECTRICS, MAIN MACHINE\C1-6-1 LIGHT, HEAD RIGHT HAND DIP

9812/3020 C1-6-1 LIGHT, HEAD RIGHT HAND DIP

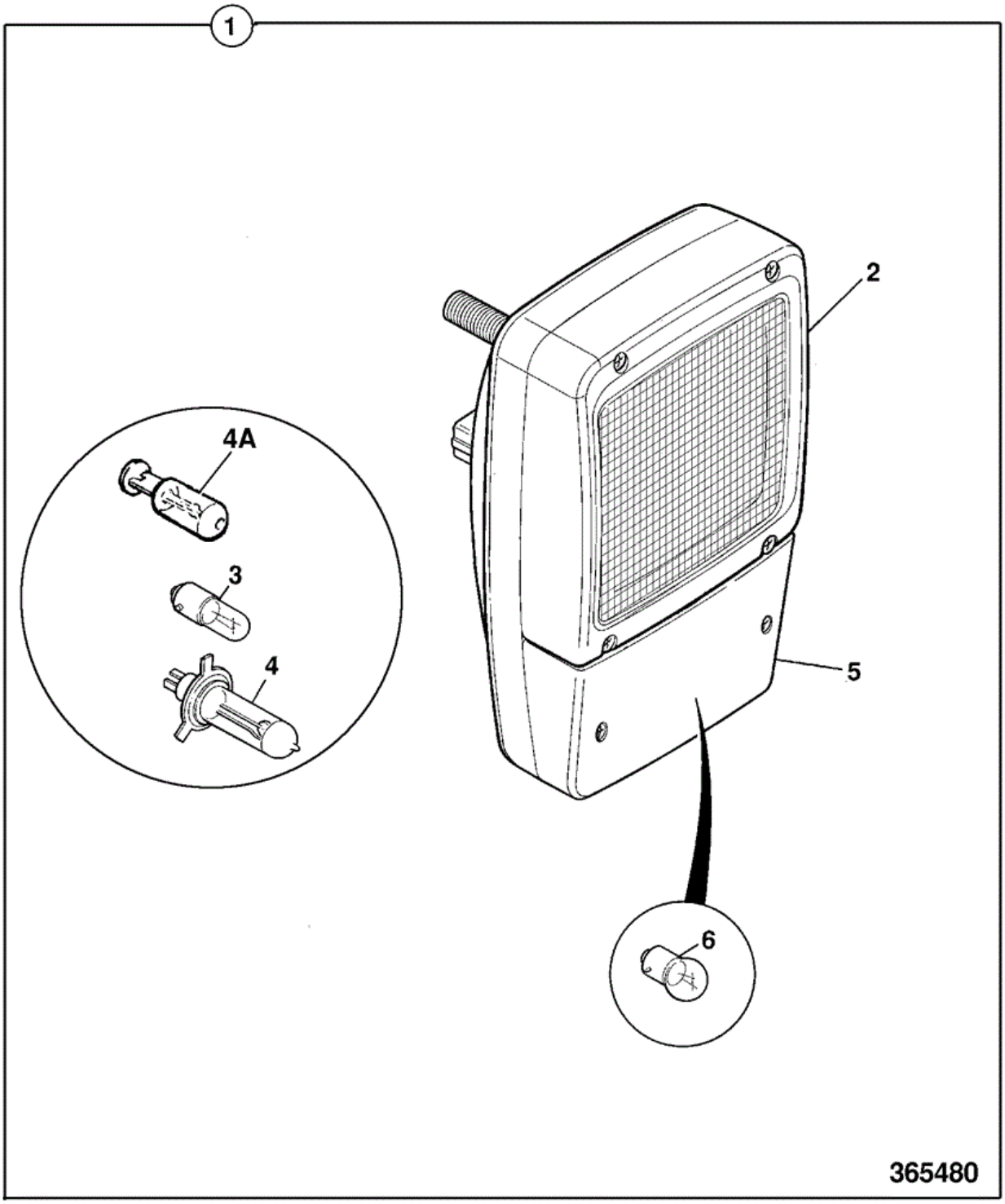

Item	Part No	Change No	Description	Usage Code	QTY
1	700/50009		Light Road,Rightside dip. Leftside fit		1
1	700/50010		Light Road,Rightside dip Rightside fit		1

2	:700/38501		Lens assembly, headlamp		1
3	:720/15002		Bulb sidelight 24V		1
4	:720/15003		Bulb main 24V 70W H7		1
4A	:720/20032		Bulb H3 24V 70W		1
5	:700/38401		Lens indicator		1
6	:720/15004		Bulb indicator 24V		1

Applicability Date Ranges:
From: , To:

Product Catalog\WHEELED LOADERS\416 01243000-01243499,01317500-01317999,01472000-01472999,02095872-02095875 9812/3020 \C ELECTRICS-MACHINE CAB & ENGINE\C01 ELECTRICS, MAIN MACHINE\C1-7-1 LIGHT, HEAD LEFT HAND DIP

9812/3020 C1-7-1 LIGHT, HEAD LEFT HAND DIP

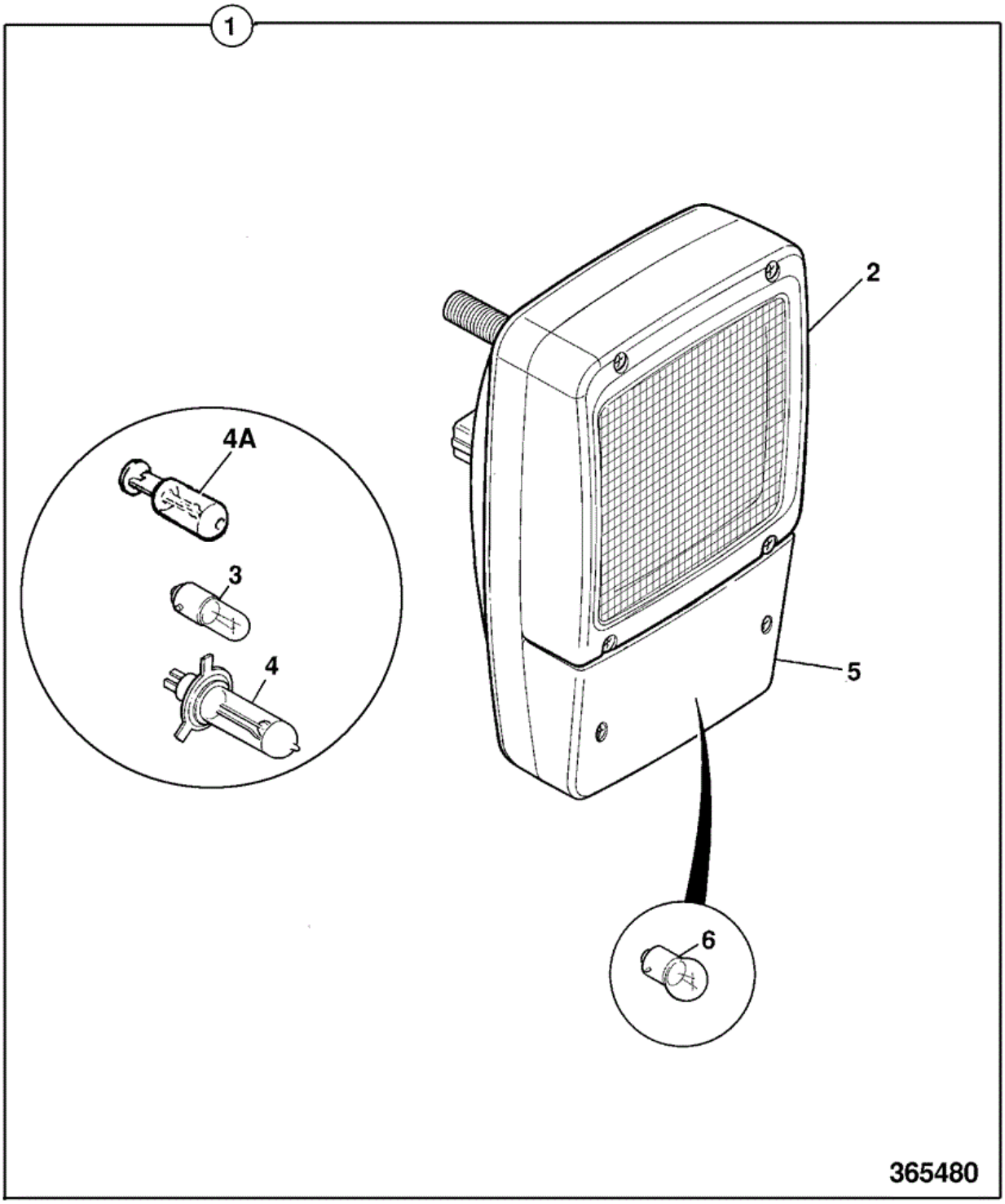

Item	Part No	Change No	Description	Usage Code	QTY
1	700/50007		Light & Side Repeater LH dip, LH side		1
1	700/50008		Light & Side Repeater LH dip, RH side		1

2	:700/38501		Lens assembly, headlamp		1
3	:720/15002		Bulb sidelight 24V		1
4	:720/15003		Bulb main 24V 70W H7		1
4A	:720/20032		Bulb H3 24V 70W		1
5	:700/38401		Lens indicator		1
6	:720/15004		Bulb indicator 24V		1

Applicability Date Ranges:
From: , To:

Product Catalog\WHEELED LOADERS\416 01243000-01243499,01317500-01317999,01472000-01472999,02095872-02095875 9812/3020 \C ELECTRICS-MACHINE CAB & ENGINE\C01 ELECTRICS, MAIN MACHINE\C1-8-1 LIGHT COMBINATION REAR 24V

9812/3020 C1-8-1 LIGHT COMBINATION REAR 24V

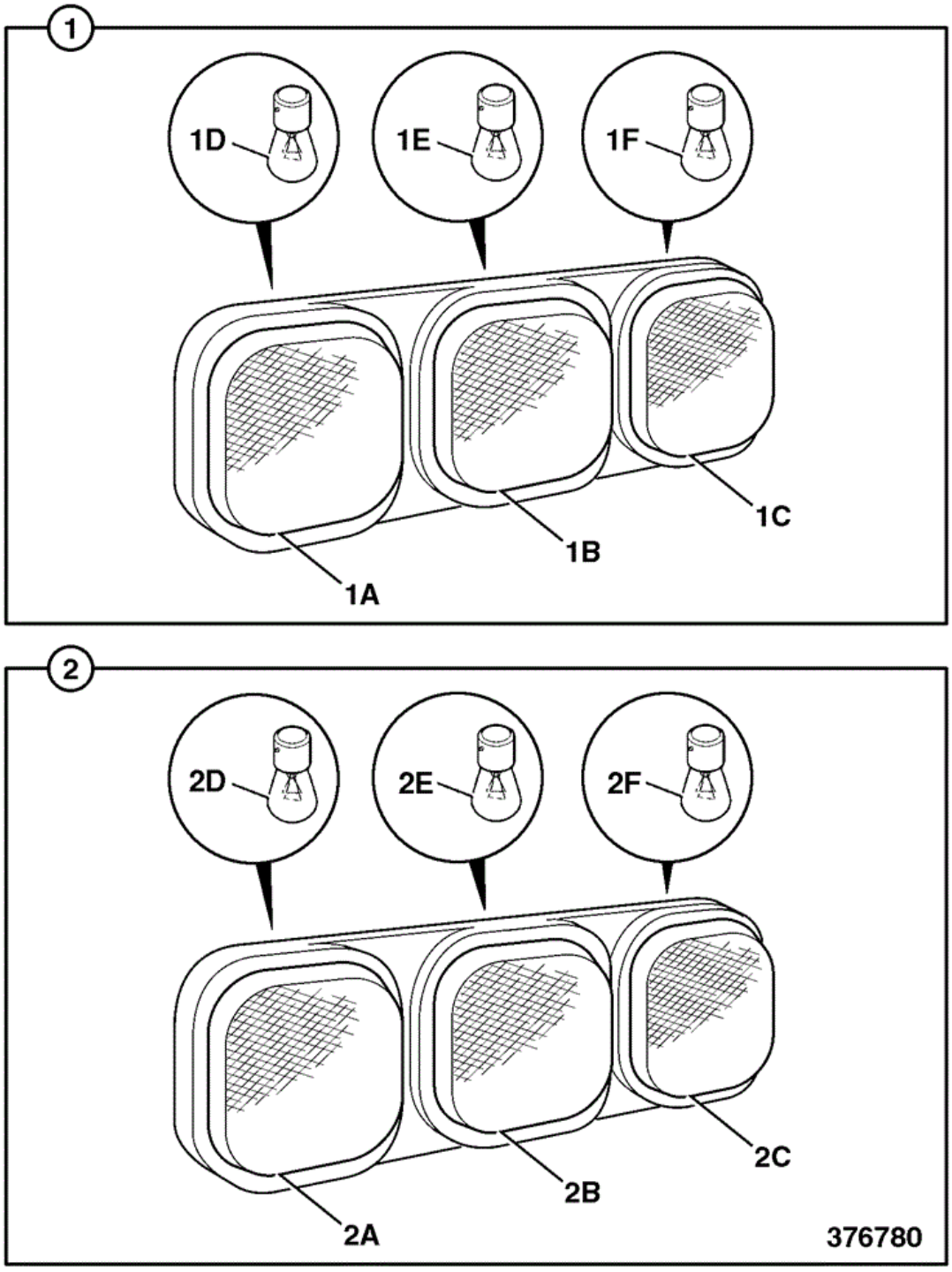

Item	Part No	Change No	Description	Usage Code	QTY
1	700/50069		Cluster Rear Light		1
1A	:700/50072		Lens Red rear position/stop		1

1B	:700/50073		Lens Amber direction indicator		1
1C	:700/50075		Lens Fog		1
1D	:720/20018		Bulb 24v 5/21W		1
1E	:720/20017		Bulb 24v 21W		1
1F	:720/20017		Bulb 24v 21W		1
1G	:332/D6290		Holder bulb Fog and indicator		2
1H	:332/D6310		Holder bulb Stop/rear position		1
2	700/50068		Cluster Rear Light		1
2A	:700/50072		Lens Red rear position/stop		1
2B	:700/50073		Lens Amber direction indicator		1
2C	:700/50074		Lens Reverse		1
2D	:720/20018		Bulb 24v 5/21W		1
2E	:720/20017		Bulb 24v 21W		1
2F	:720/20017		Bulb 24v 21W		1
3	715/20017		Plug male,6 way Deutsch Sales special 8573 (rear light blanking)		2

Applicability Date Ranges:
From: , To:

Product Catalog\WHEELED LOADERS\416 01243000-01243499,01317500-01317999,01472000-01472999,02095872-02095875 9812/3020 \C ELECTRICS-MACHINE CAB & ENGINE\C01 ELECTRICS, MAIN MACHINE\C1-9-1 WORK LIGHT AUXILLIARY

9812/3020 C1-9-1 WORK LIGHT AUXILLIARY

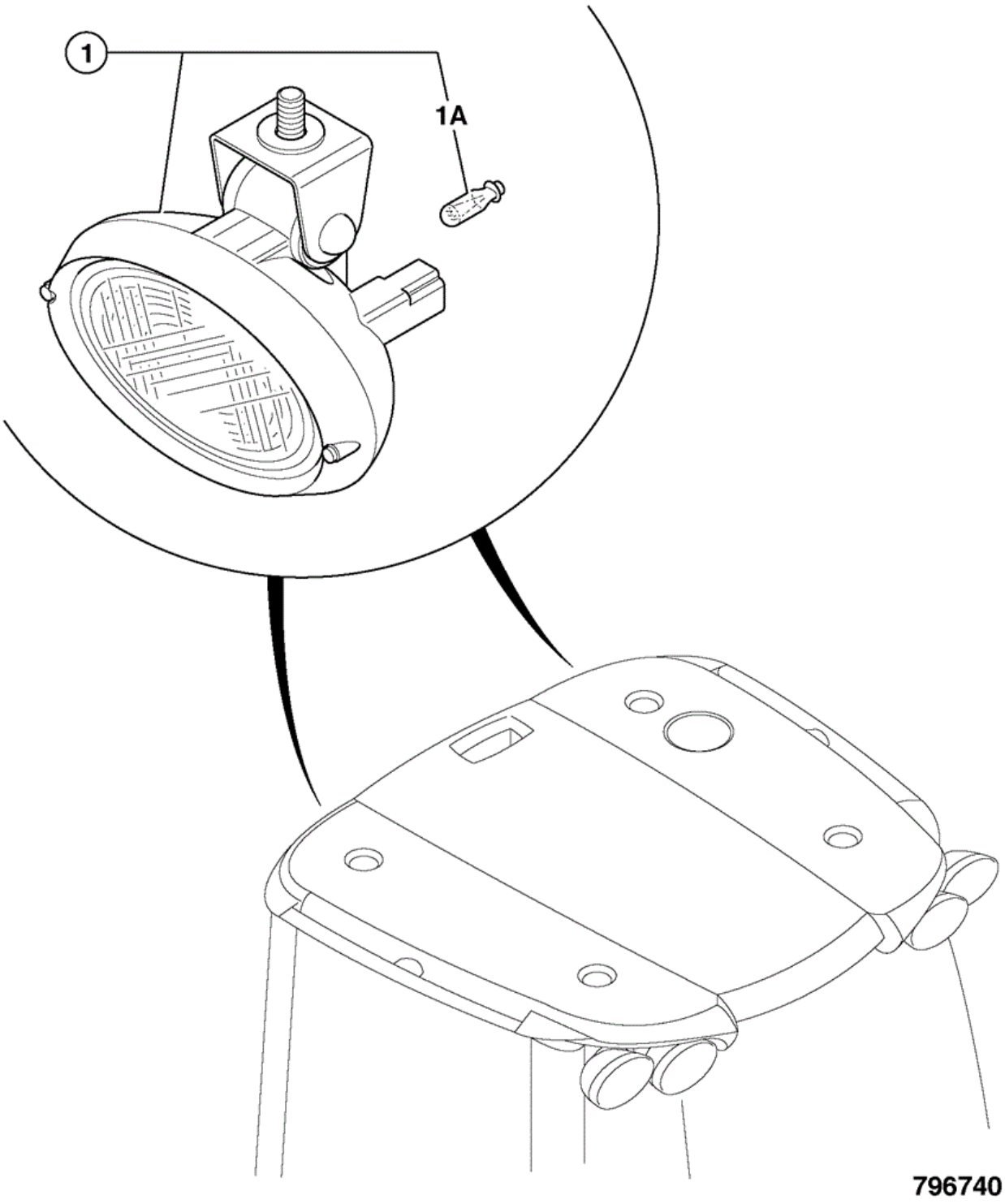

Item	Part No	Change No	Description	Usage Code	QTY
1	700/50170		Light working rear body mounted		2
1A	720/20032		Bulb H3 24V 70W		1

Applicability Date Ranges:
From: , To:

Product Catalog\WHEELED LOADERS\416 01243000-01243499,01317500-01317999,01472000-01472999,02095872-02095875 9812/3020 \C ELECTRICS-MACHINE CAB & ENGINE\C01 ELECTRICS, MAIN MACHINE\C1-11-5 CCTV INSTALLATION EMC CERTIFIED

9812/3020 C1-11-5 CCTV INSTALLATION EMC CERTIFIED

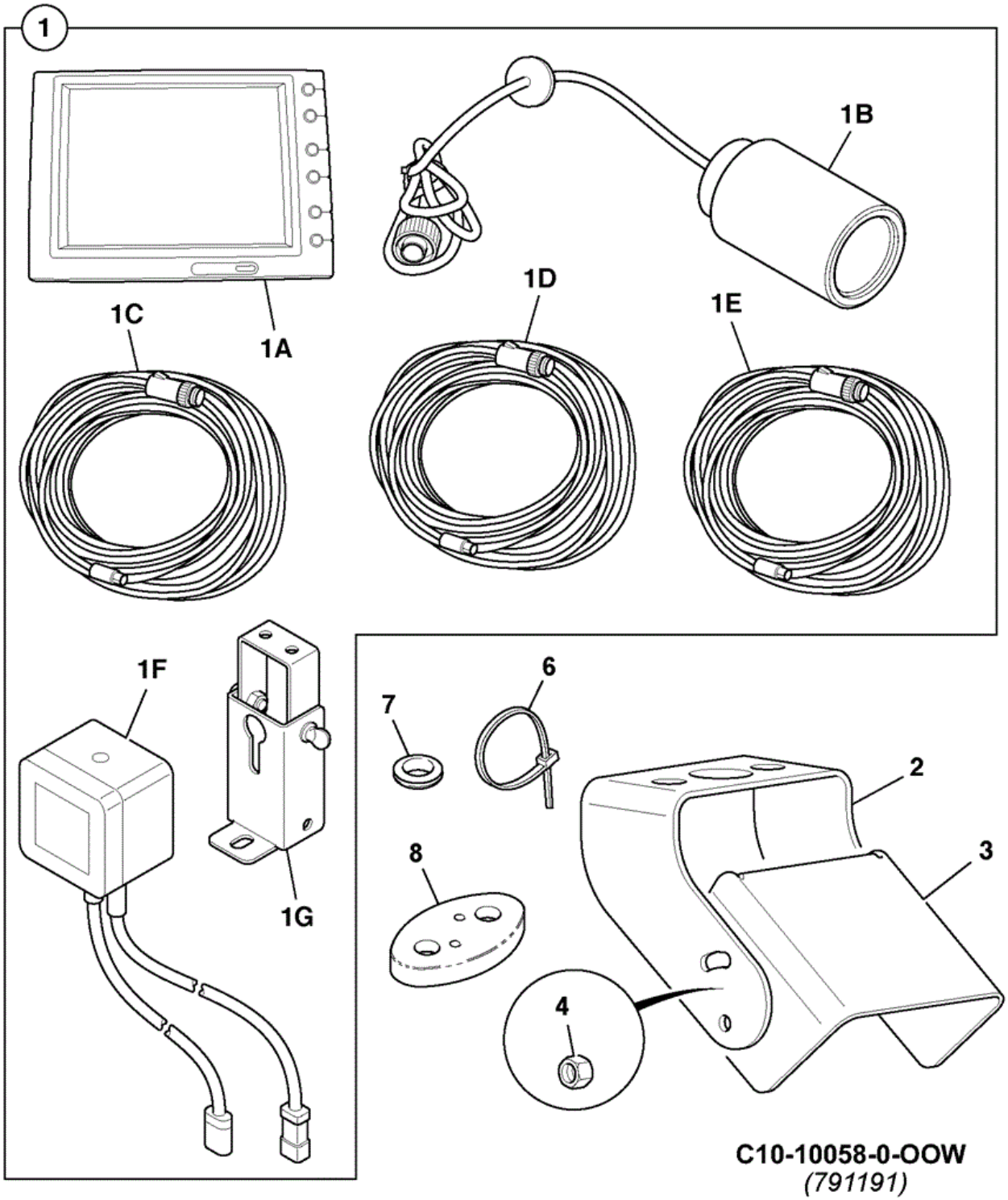

Item	Part No	Change No	Description	Usage Code	QTY
1	332/R5100		Sensor colour CCTV system		1
1A	:717/20277		Monitor		1

1B	:332/C3522		Sensor Camera		1
1C	:332/C3525		Cable data 1.25m long Power box to bulkhead		1
1D	:332/C3526		Cable data 3.45m long Bulkhead to camera		1
1E	:332/C3524		Cable power 2.6m long Power cable		1
1F	:332/E9099		Box power distribution		1
1G	:332/C3529		Bracket monitor roof mounted		1
1H	:332/E9101		Cable power 0.27m long		1
1J	:332/E9102		Cable monitor 3.0m with grommet Monitor to distribution box		1
2	331/50155		Bracket		1
3	331/50154		Cover		1
4	1370/9403D		Nut Lock M4		4
5	826/10879		Nut rivet hex. M6		4
6	826/01453		Tie cable Double Head		20
7	2410/0106		Grommet 16mm diameter		1

Applicability Date Ranges:
From: JUL07 , To: APR2013

Product Catalog\WHEELED LOADERS\416 01243000-01243499,01317500-01317999,01472000-01472999,02095872-02095875 9812/3020 \C ELECTRICS-MACHINE CAB & ENGINE\C01 ELECTRICS, MAIN MACHINE\C1-11-20 CCTV INSTALLATION CONVERSION KIT, SPILLARD TO ORLACO

9812/3020 C1-11-20 CCTV INSTALLATION CONVERSION KIT, SPILLARD TO ORLACO

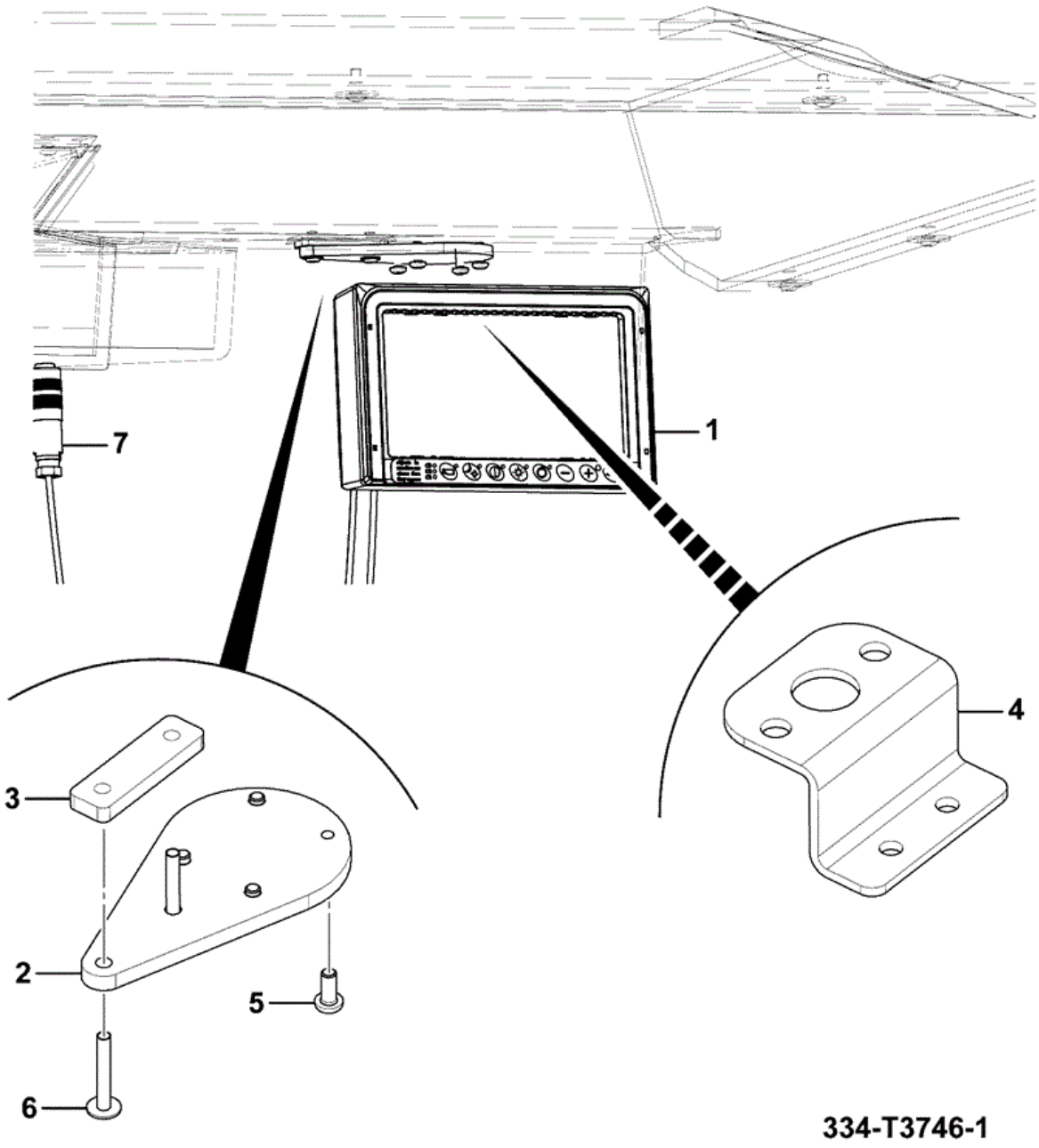

Item	Part No	Change No	Description	Usage Code	QTY
A	****		Kit-service camera conversion		1

1	:334/R5202		Camera & monitor ABI		1
2	:334/R2751		Mounting plate		1
3	:334/R2769		Mounting adaptor		1
4	:334/R0524		Mounting bracket		1
5	:826/11010		Screw socket button head M5 x 12		5
6	:826/11097		Screw M5x30 Button Head		2
7	:334/T3715		Lead power 4mts		1

9812/3020 C1-11-10 CCTV INSTALLATION EMC CERTIFIED REVERSING CAMERA, ABI

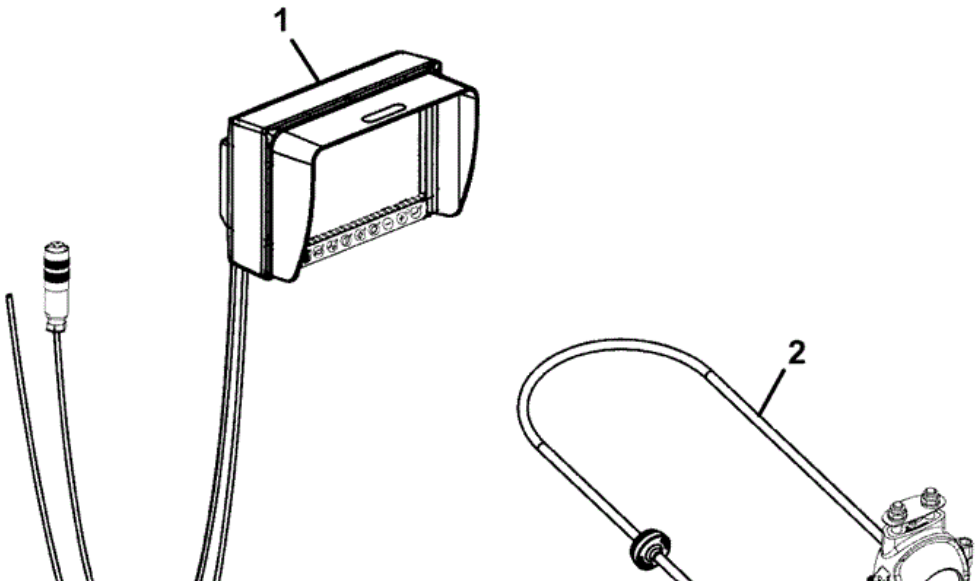

Item	Part No	Change No	Description	Usage Code	QTY
1	334/R2140		Monitor		1
2	332/J7924		Camera		1
3	****		T.B.A		2

Applicability Date Ranges:
From: , To:

Product Catalog\WHEELED LOADERS\416 01243000-01243499,01317500-01317999,01472000-01472999,02095872-02095875 9812/3020 \C ELECTRICS-MACHINE CAB & ENGINE\C01 ELECTRICS, MAIN MACHINE\C1-12-1 BEACON HAZARD WARNING

9812/3020 C1-12-1 BEACON HAZARD WARNING

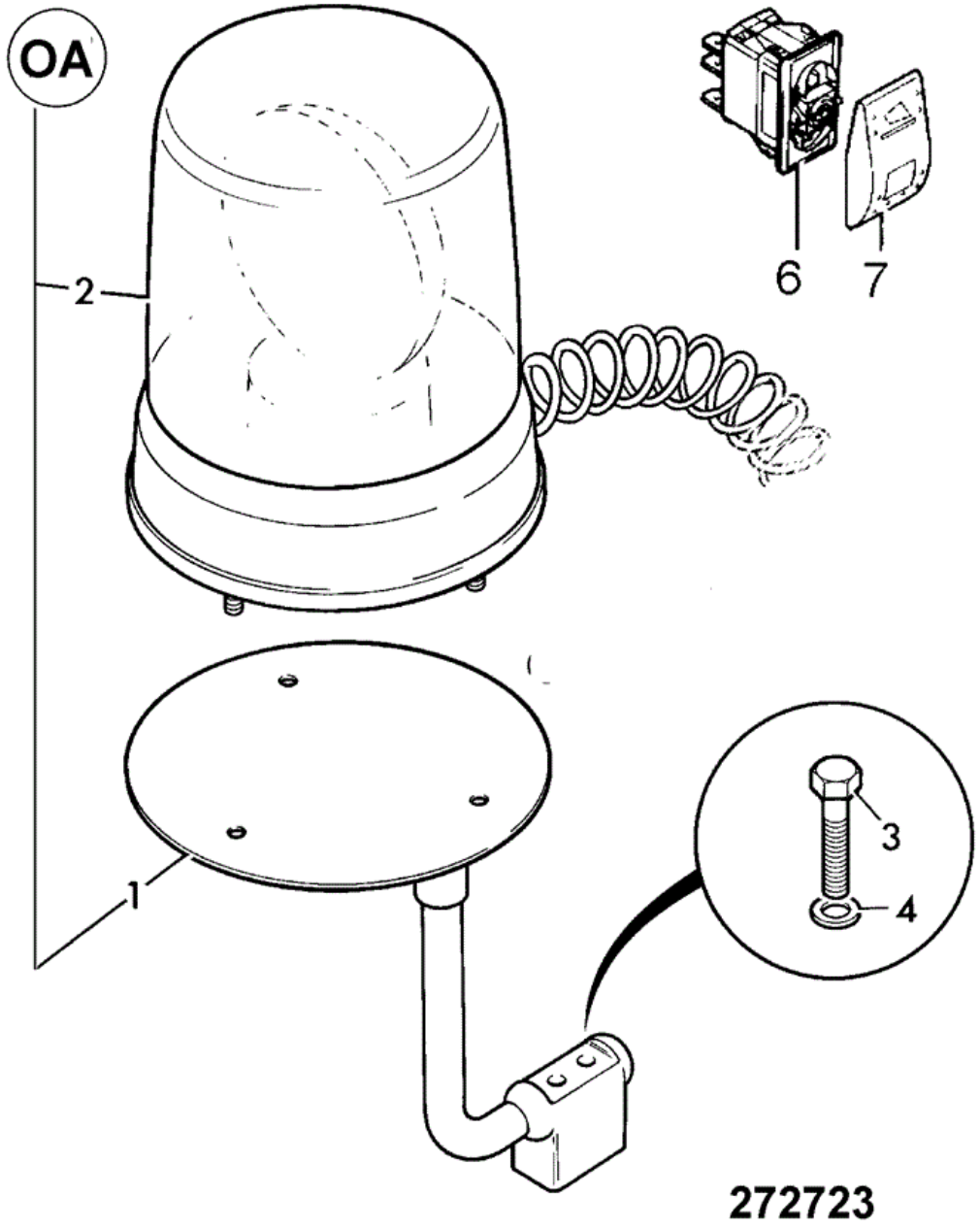

Item	Part No	Change No	Description	Usage Code	QTY
A	269/30442		Beacon assembly, 24 volt inc. bracket		1
1	:331/29978		Bracket beacon		1

2	:700/50070		Beacon 24 volt		1
2	::720/20040		Bulb 24v 70w H1		1
2A	::700/13601		Lens amber, 146mm dia		1
2B	:332/G5395		Belt drive		1
3	1315/0205D		Setscrew M6 x 20		2
4	1420/0006D		Washer (M6)		2
6	701/60031		Panel Switch 24V		1
7	701/58704		Actuator beacon switch decal		1

Applicability Date Ranges:
From: , To: M1472114

Product Catalog\WHEELED LOADERS\416 01243000-01243499,01317500-01317999,01472000-01472999,02095872-02095875 9812/3020 \C ELECTRICS-MACHINE CAB & ENGINE\C01 ELECTRICS, MAIN MACHINE\C1-12-10 BEACON HAZARD WARNING FOLDING BEACON, SALES OPTION

9812/3020 C1-12-10 BEACON HAZARD WARNING FOLDING BEACON, SALES OPTION

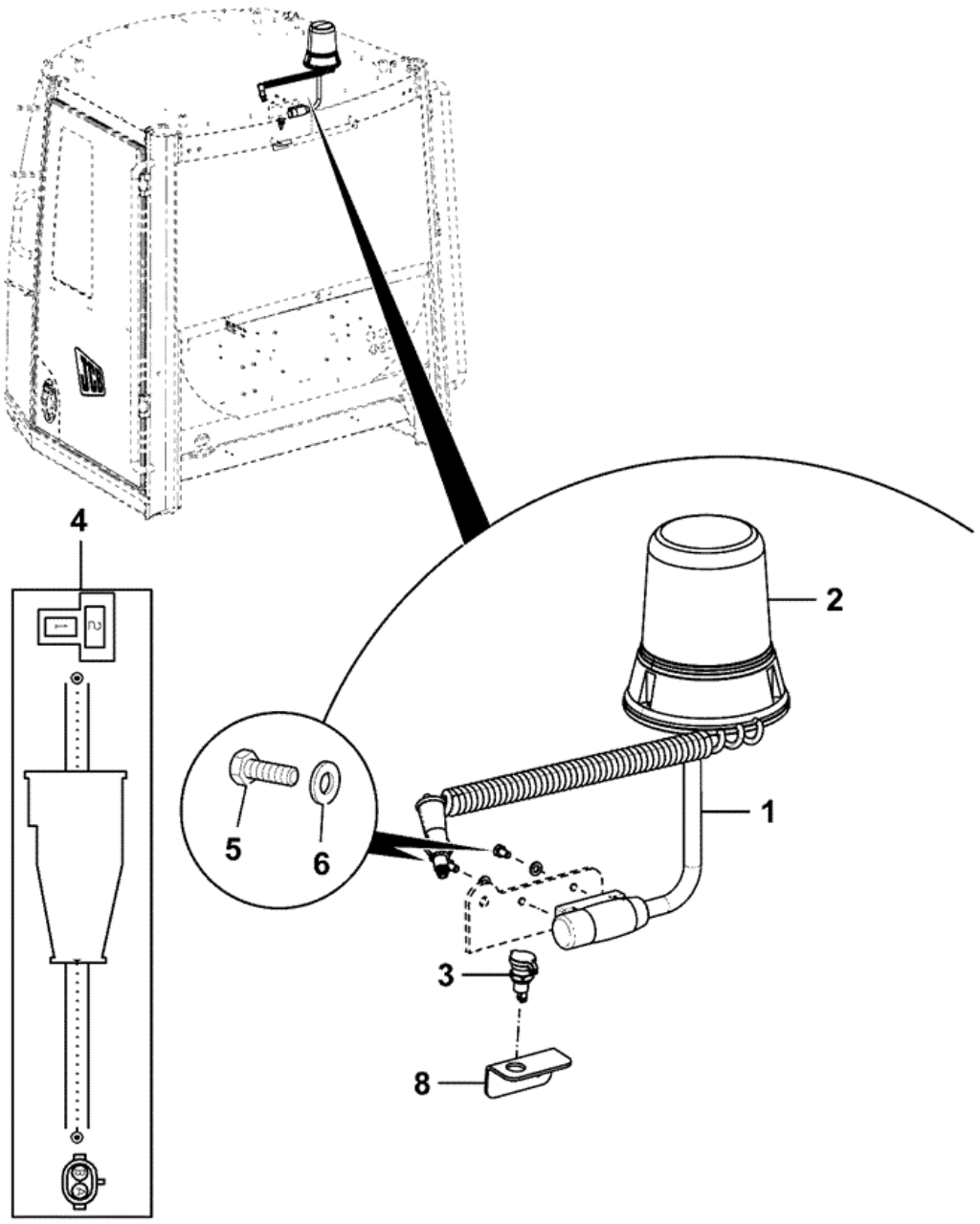

Item	Part No	Change No	Description	Usage Code	QTY
1	331/29978		Bracket beacon		1

2	333/T0717	to 31/01/2015	Beacon 24v amber 3 point fixing		1
2	335/B1630		Beacon 24v amber 3 point fixing		1
2A	:332/G9439		Lens		1
3	715/04300		Socket Beacon		1
4	333/R4888		Harness Beacon Adaptor		1
5	1315/0201D		Setscrew Set M6x12		2
6	1420/0006D		Washer (M6)		2
8	333/R4619		Bracket Beacon Connector		1

Applicability Date Ranges:
From: , To:

Product Catalog\WHEELED LOADERS\416 01243000-01243499,01317500-01317999,01472000-01472999,02095872-02095875 9812/3020 \C ELECTRICS-MACHINE CAB & ENGINE\C01 ELECTRICS, MAIN MACHINE\C1-13-1 CONVERTOR AND CONTROL UNIT TIER 3 ENGINE

9812/3020 C1-13-1 CONVERTOR AND CONTROL UNIT TIER 3 ENGINE

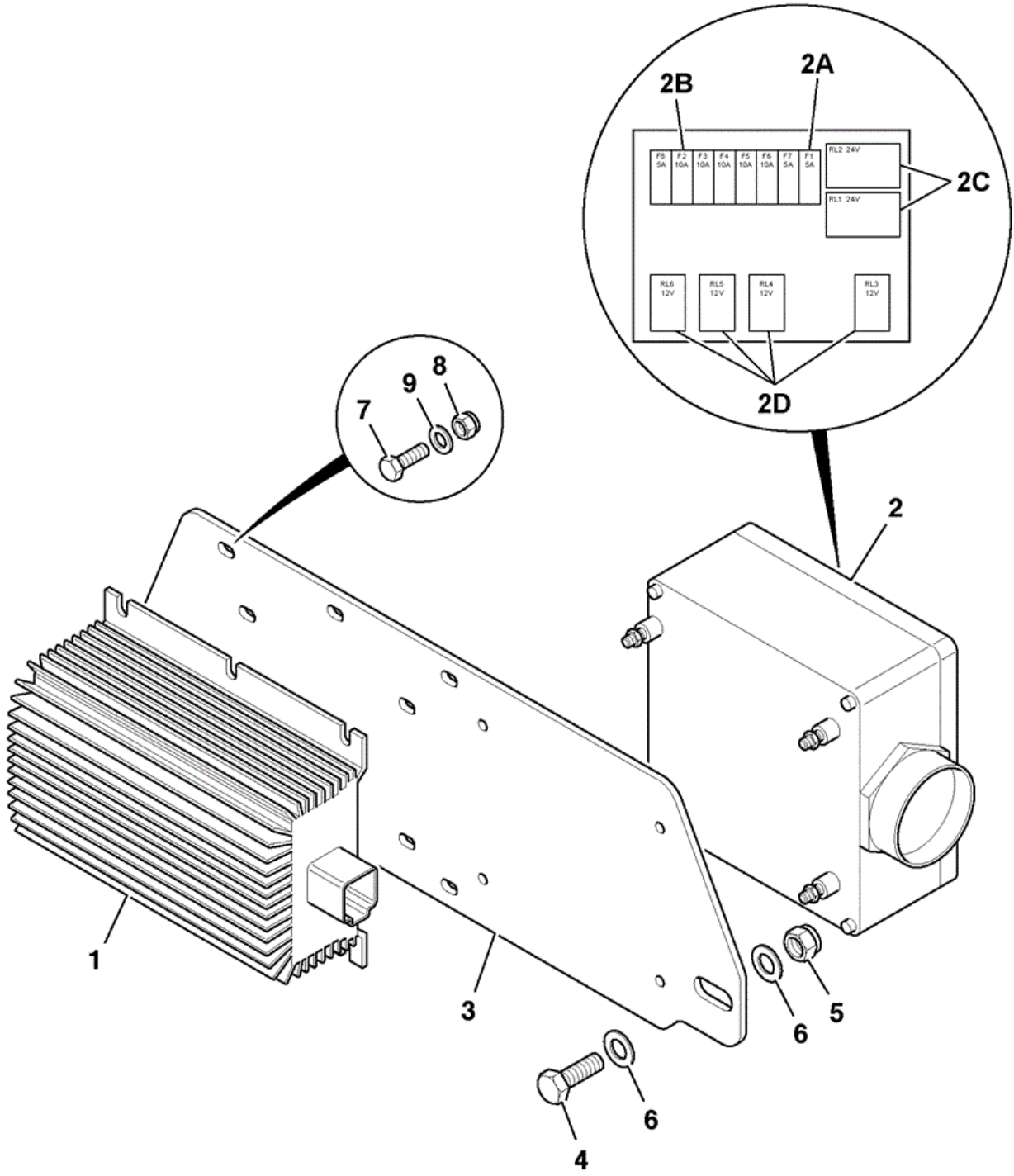

901121

Item	Part No	Change No	Description	Usage Code	QTY
1	717/20358		Convertor 24 volts to 12 volts		1
2	717/20359		Unit PCB control		1

2A	:716/05703		Fuse 5 amp		3
2B	:716/05705		Fuse 10 amp		5
2C	:716/30133		Relay Micro 24V Omron		2
2D	:716/30149		Relay 12v micro		4
3	331/67126		Plate mounting		1
4	1315/0308D		Setscrew M8 x 30 mm		2
5	1370/0203D		Nut Lock M8		2
6	1420/0007D		Washer (M8)		4
7	1315/0105D		Setscrew M5 x 20 mm		6
8	1370/0003D		Nut Lock M5		6
9	1420/0005D		Washer (M5)		12

Applicability Date Ranges:
From: M1317500 , To: 30/04/2011

Product Catalog\WHEELED LOADERS\416 01243000-01243499,01317500-01317999,01472000-01472999,02095872-02095875 9812/3020 \C ELECTRICS-MACHINE CAB & ENGINE\C01 ELECTRICS, MAIN MACHINE\C1-14-1 "P" CLIPS

9812/3020 C1-14-1 "P" CLIPS

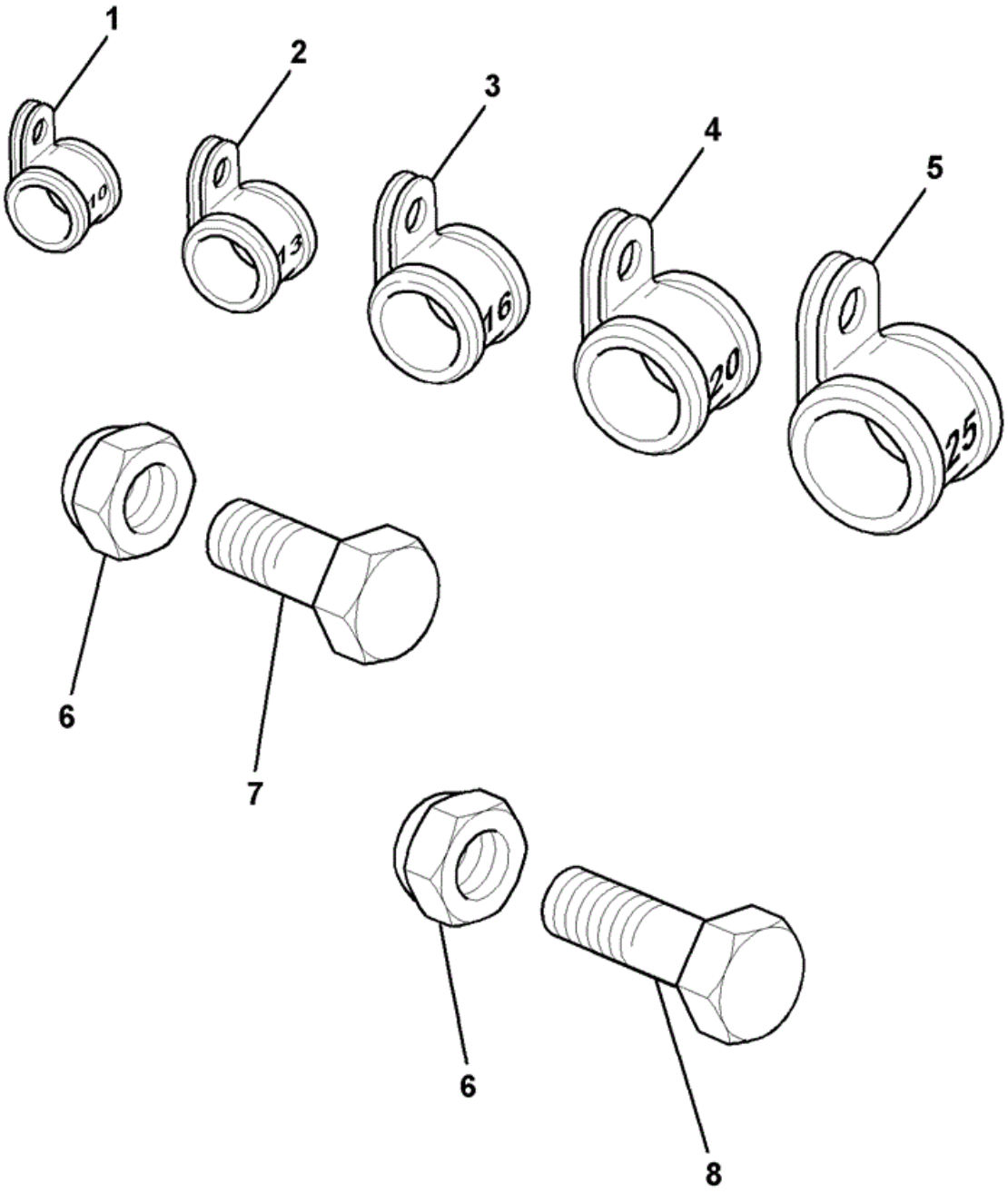

391400

Item	Part No	Change No	Description	Usage Code	QTY

1	821/00410		Clip P 10mm		0
2	821/10087		Clip P 13mm		0
3	826/00864		Clip P 16mm		0
4	821/00306		Clip 20mm		0
5	821/00329		Clamp		0
6	1370/0103D		Nut (M6)		1
6	826/01277		Nut Vibration Proof		1
7	1315/0203D		Setscrew M6 x 16mm 16 mm long		1
8	1315/0205D		Setscrew M6 x 20 20 mm long		1

Applicability Date Ranges:
From: , To:

Product Catalog\WHEELED LOADERS\416 01243000-01243499,01317500-01317999,01472000-01472999,02095872-02095875 9812/3020 \C ELECTRICS-MACHINE CAB & ENGINE\C01 ELECTRICS, MAIN MACHINE\C1-15-1 HORN, SINGLE TONE

9812/3020 C1-15-1 HORN, SINGLE TONE

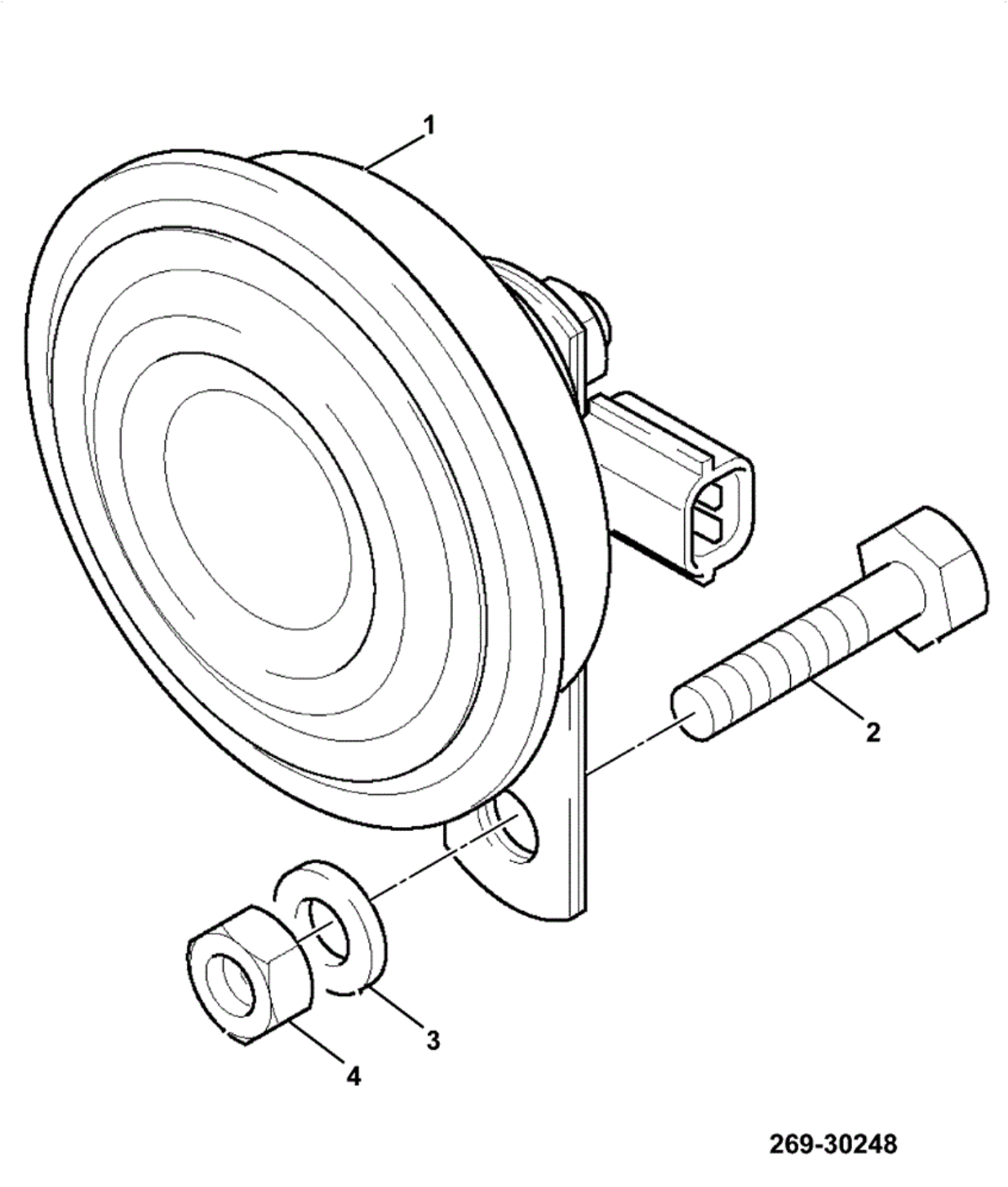

Item	Part No	Change No	Description	Usage Code	QTY
1	717/20152	to 07/05/2013	Horn 24 volt		1
1	335/B4671		Horn 24 volt		1

2	1315/0407D		Setscrew M10 x 25		1
3	1420/0008D		Washer (M10)		2
4	1370/0303D		Nut Self Lock M10		1

Applicability Date Ranges:
From: , To:

Product Catalog\WHEELED LOADERS\416 01243000-01243499,01317500-01317999,01472000-01472999,02095872-02095875 9812/3020 \C ELECTRICS-MACHINE CAB & ENGINE\C01 ELECTRICS, MAIN MACHINE\C1-22-1 ALARM, REVERSE

9812/3020 C1-22-1 ALARM, REVERSE

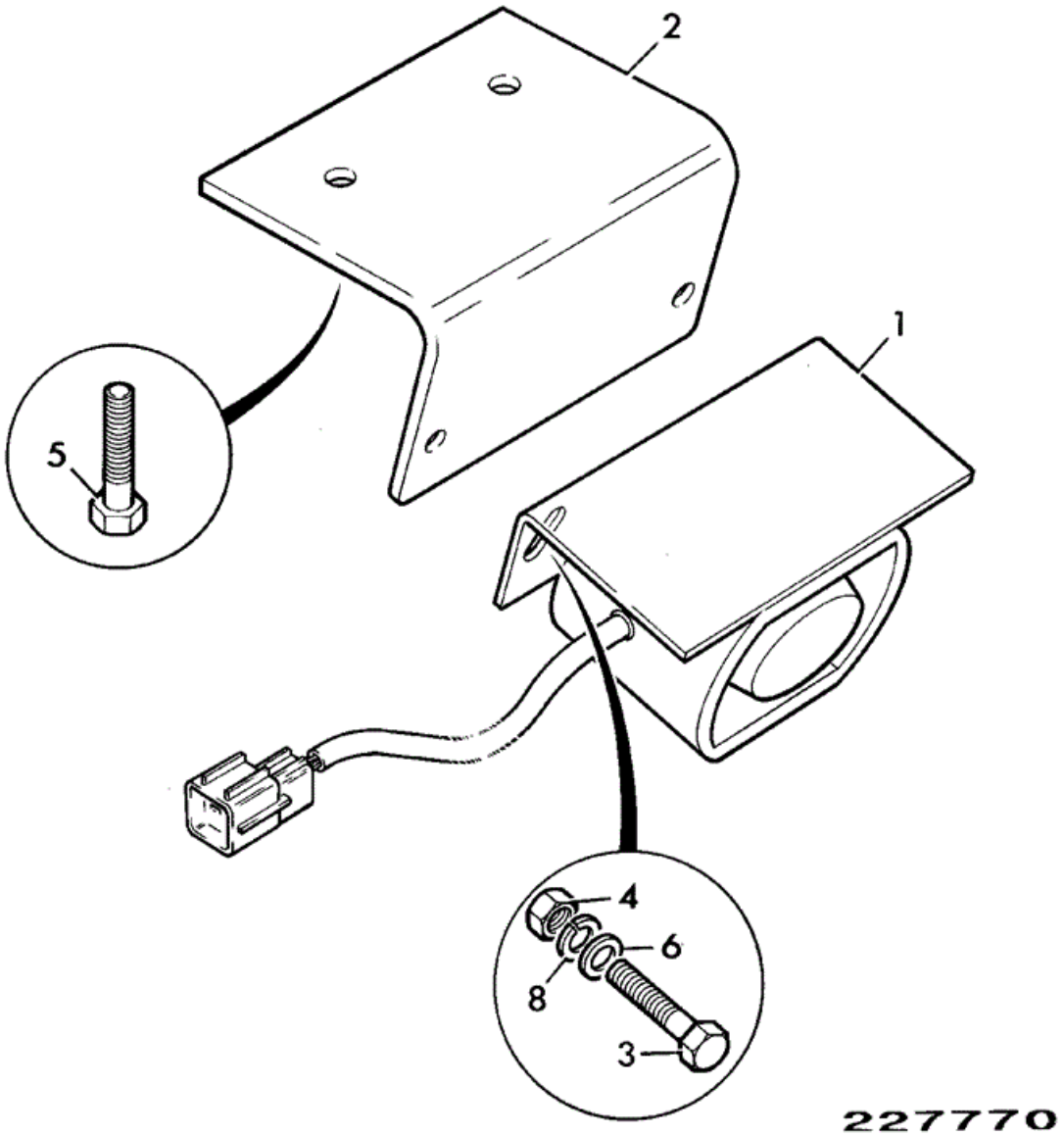

Item	Part No	Change No	Description	Usage Code	QTY

1	717/07400		Alarm reverse 112 dBA 12-36V		1
1	717/14800		Alarm reverse, Smart 87 - 112dBA 12-24V		1
2	265/02054		Bracket alarm		1
3	1315/0207Z		Screw M6x25		4
4	1370/0103Z		Nut Self Lock M6		4
5	1315/0305Z		Setscrew M8 x 20		2
6	1420/0006Z		Washer (M6)		8
7	1370/0203Z		Nut Nut M8		2
8	1420/0007Z		Washer (M8)		4

Applicability Date Ranges:
From: , To:

Product Catalog\WHEELED LOADERS\416 01243000-01243499,01317500-01317999,01472000-01472999,02095872-02095875 9812/3020 \C ELECTRICS-MACHINE CAB & ENGINE\C01 ELECTRICS, MAIN MACHINE\C1-22-2 ALARM, REVERSE BBS

9812/3020 C1-22-2 ALARM, REVERSE BBS

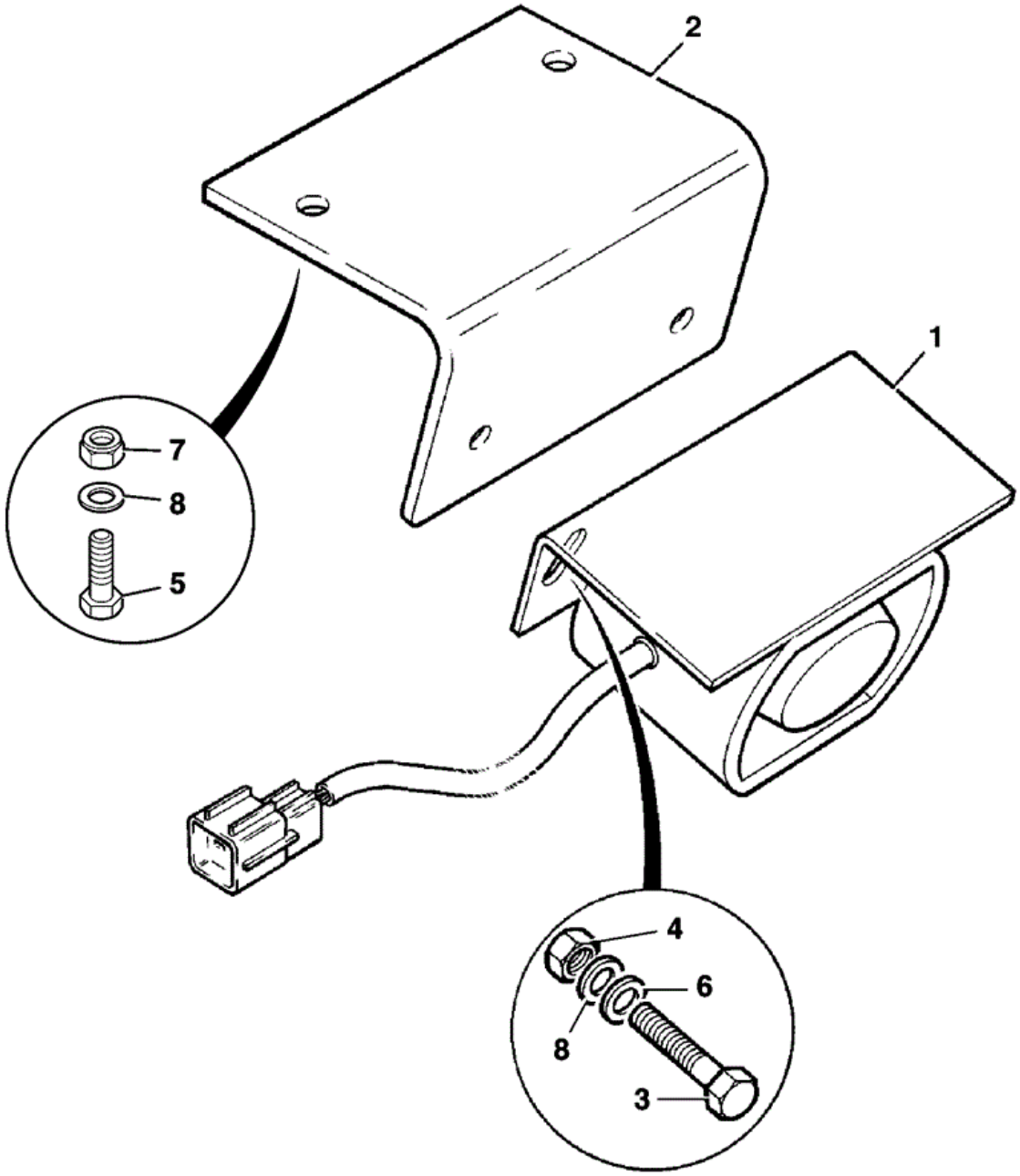

227771

Item	Part No	Change No	Description	Usage Code	QTY
1	717/20159		Alarm reverse,102dBA BBS white noise		1
2	331/35826		Bracket		1

3	1315/0307D		Setscrew M8 x 25 mm		2
4	1370/0203D		Nut Lock M8		2
5	1315/3420D		Bolt (M10 X 100)		2
6	1420/0007D		Washer (M8)		4
7	1370/0303D		Nut Self Lock M10		2
8	1420/0008D		Washer (M10)		2

Applicability Date Ranges:
From: , To:

Product Catalog\WHEELED LOADERS\416 01243000-01243499,01317500-01317999,01472000-01472999,02095872-02095875 9812/3020 \C ELECTRICS-MACHINE CAB & ENGINE\C01 ELECTRICS, MAIN MACHINE\C1-23-1 ALARM, REVERSE BBS 107dB, SALES SPECIAL

9812/3020 C1-23-1 ALARM, REVERSE BBS 107dB, SALES SPECIAL

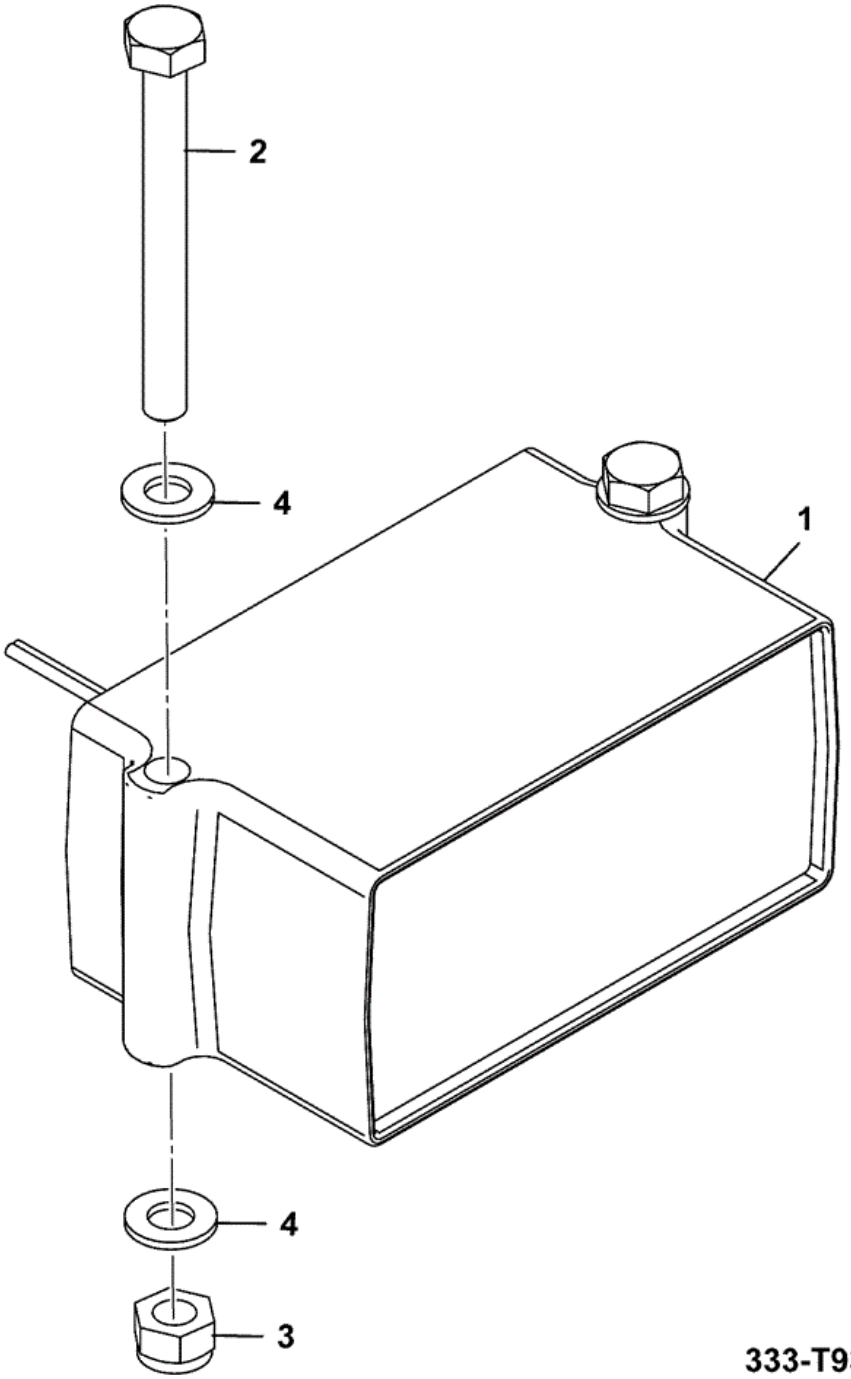

Item	Part No	Change No	Description	Usage Code	QTY
1	332/S9873		Alarm reverse,107dBA,BBS white noise Sales special 2373		1

2	1315/3420D		Bolt (M10 X 100)		2
3	1370/0303D		Nut Self Lock M10		2
4	1420/0008D		Washer (M10)		4

Applicability Date Ranges:
From: , To:

Product Catalog\WHEELED LOADERS\416 01243000-01243499,01317500-01317999,01472000-01472999,02095872-02095875 9812/3020 \C ELECTRICS-MACHINE CAB & ENGINE\C01 ELECTRICS, MAIN MACHINE\C1-24-1 HARNESS BRACKETS

9812/3020 C1-24-1 HARNESS BRACKETS

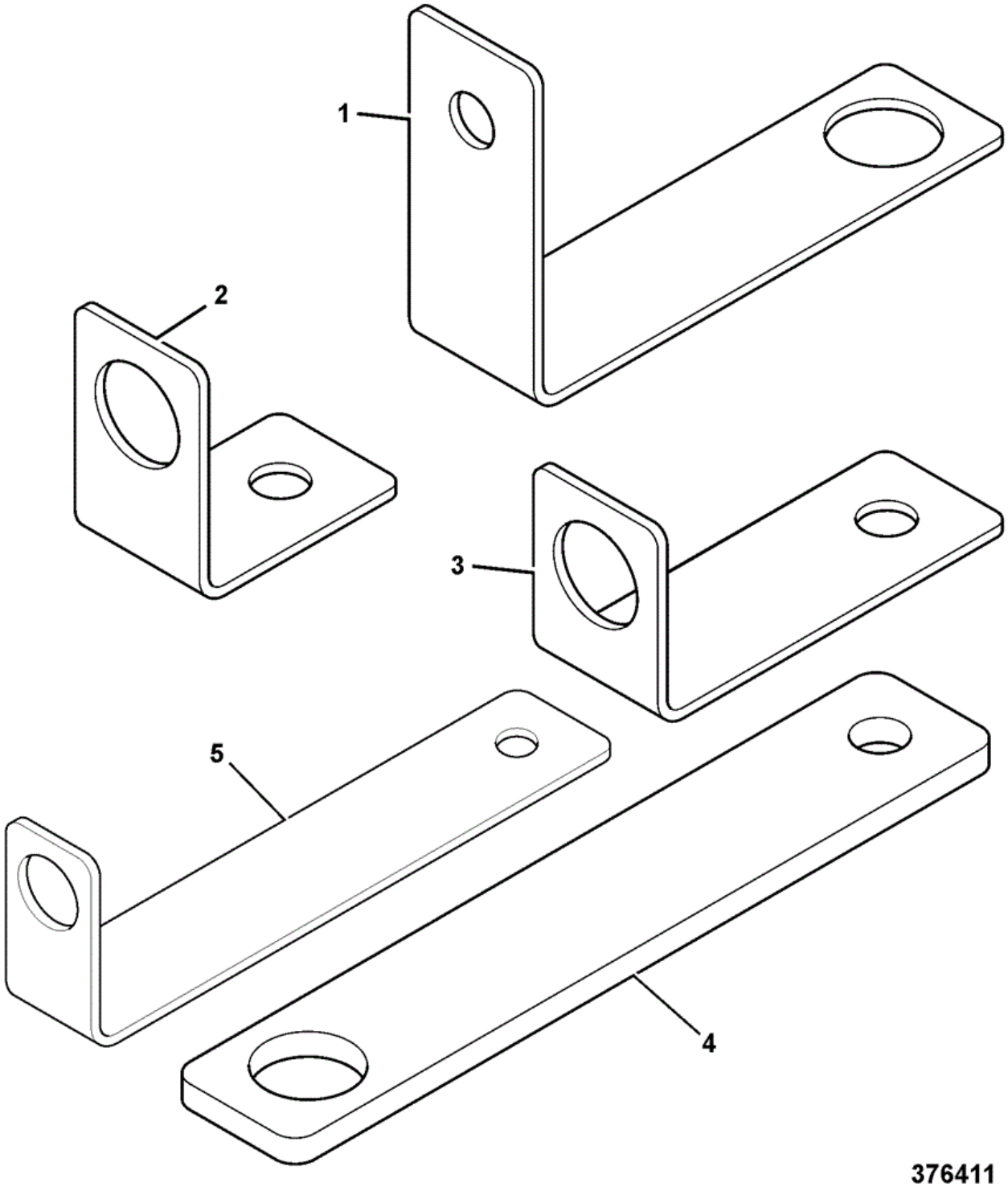

Item	Part No	Change No	Description	Usage Code	QTY
1	265/02811		Bracket mounting starter wiring 84mm x 50mm x 20mm wide		0
			Bracket mounting		

1	331/32749		55mm x 29mm x 20mm wide		1
2	265/02808		Bracket mounting P clip		0
3	265/02810		Bracket mounting alternator wiring		0
4	265/02809		Bracket mounting Transmission		1
5	331/36752		Bracket support starter wiring		1

Applicability Date Ranges:
From: , To:

9812/3020 C1-27-1 ELECTRICS EMERGENCY STEER

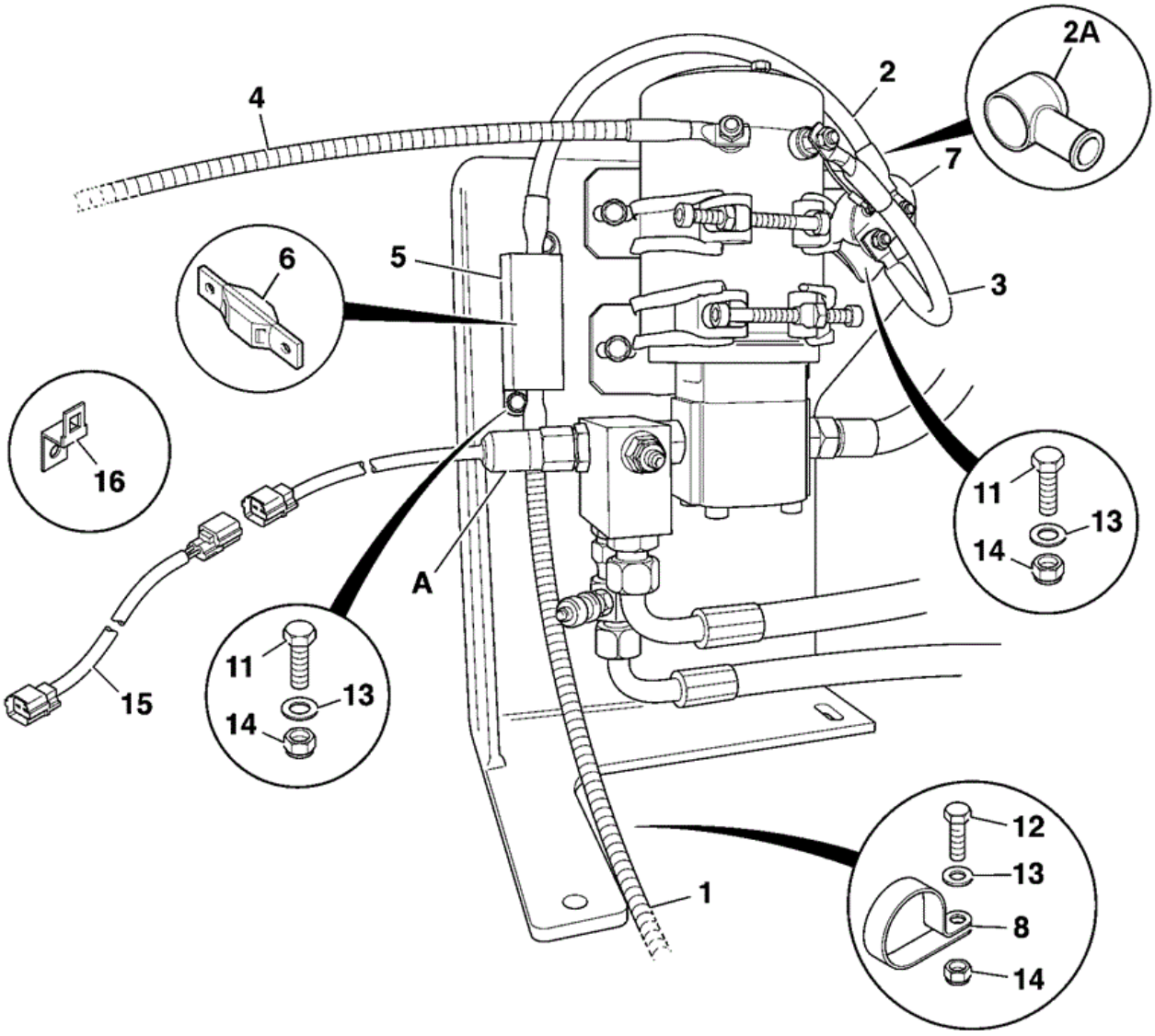

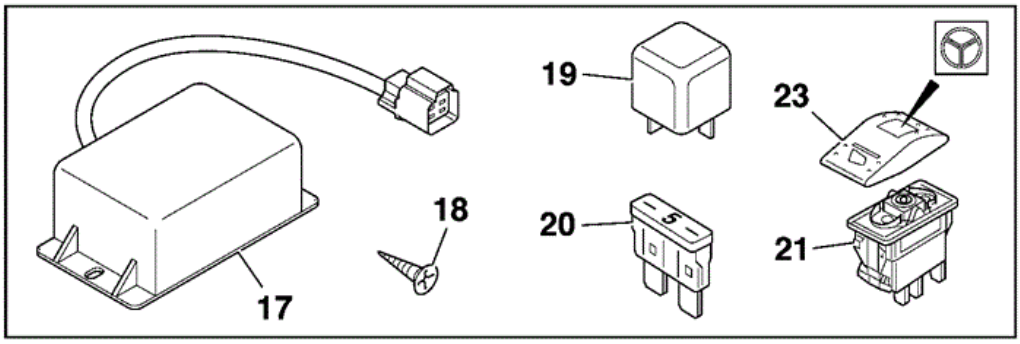

Item	Part No	Change No	Description	Usage Code	QTY
A	701/74400	Superseded	Switch pressure 150mm lead		1
A	332/V4171	to MAY2010	Switch pressure Service fix, in the event of failure replace with 333/R4178 + 333/R4040		1

A	333/R4178	to 03/08/2014	Switch press 20Bar		1
A	334/T0076		Sensor pressure 0-160Bar (Grey)		1
B	333/R4040		Harness emergency steer pressure switch		1
1	718/20191		Cable Starter to pump		1
2	718/20316	Superseded	Cable 900mm long Fuse to starter		1
2	718/56132		Cable 840mm long Fuse to starter		1
2A	717/20129		Boot Alternator Stud Fitted to item 1		1
3	****		T.B.A Pump to earth		1
4	718/20153		Cable engine earth 390mm long Emergency steer pump to starter		1
5	716/21900		Holder Fuse		1
6	716/30195		Fuse 125Amp		1
7	716/30203		Relay		1
8	821/10087		Clip P 13mm		1
11	826/01559		Screw Button Head Socket		4
12	1315/0207D		Setscrew M6 x 25mm		1
13	1420/0006D		Washer (M6)		10
14	1370/0103D		Nut (M6)		5
15	****		'See Remark' Not fitted		1
16	****		'See Remark' Not fitted		1
17	704/50091		Timer		1
18	826/01524		Screw Selftap		2
19	716/26600		Relay black		1
20	716/30195		Fuse 125Amp		1
21	701/60041		Switch 24V		1
23	701/58931		Cover switch emergency steer		1
24	821/00168		Clamp 12.7mm/12.7mm holes 26mm high		1
25	821/00300		Clamp Plate		1
26	1315/3312D		Bolt (M8 x 50)		1
27	1420/0007D		Washer (M8)		1
28	821/00481		Clip 'P'		1

Applicability Date Ranges:

From: , To:

Product Catalog\WHEELED LOADERS\416 01243000-01243499,01317500-01317999,01472000-01472999,02095872-02095875 9812/3020 \C ELECTRICS-MACHINE CAB & ENGINE\C01 ELECTRICS, MAIN MACHINE\C1-28-1 EARTH LEADS

9812/3020 C1-28-1 EARTH LEADS

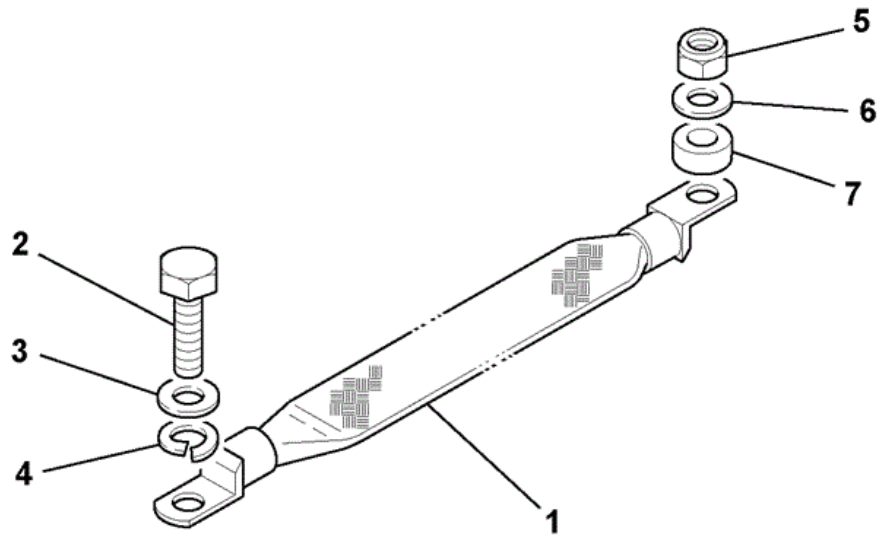

739580

Item	Part No	Change No	Description	Usage Code	QTY
1	718/20099		Lead braided earth 300mm long Cab and Engine		2
			Setscrew M10 x 20		

2	1315/0405D		Engine mounting		1
2	1315/0505D		Screw M12 x 20mm long Cab mounting		1
3	1420/0008D		Washer (M10) Engine mounting		1
3	1420/0009D		Washer (M12) Cab mounting		1
4	****		'See Remark' Not fitted		1
5	1370/0203D		Nut Lock M8		1
6	1420/0007D		Washer (M8) Cab mounting		1
7	****		'See Remark' Not fitted		1

Applicability Date Ranges:
From: , To:

Product Catalog\WHEELED LOADERS\416 01243000-01243499,01317500-01317999,01472000-01472999,02095872-02095875 9812/3020 \C ELECTRICS-MACHINE CAB & ENGINE\C01 ELECTRICS, MAIN MACHINE\C1-29-1 CONTROL PROPORTIONAL HYDS.

9812/3020 C1-29-1 CONTROL PROPORTIONAL HYDS.

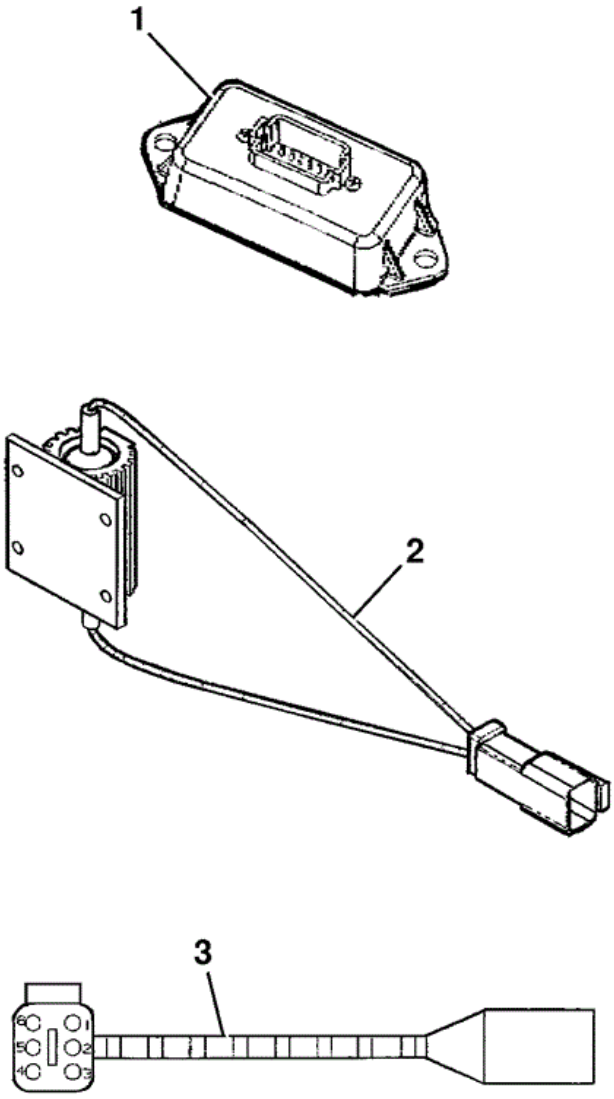

726500

Item	Part No	Change No	Description	Usage Code	QTY
1	728/32800		Controller ECU PWM		1
2	716/30227		Resistor ECU4 49mm long		1
3	704/50140		Diode pack		1

Applicability Date Ranges:
From: , To:

Product Catalog\WHEELED LOADERS\416 01243000-01243499,01317500-01317999,01472000-01472999,02095872-02095875 9812/3020 \C ELECTRICS-MACHINE CAB & ENGINE\C01 ELECTRICS, MAIN MACHINE\C1-30-1 MIRRORS EXTERNAL 24 VOLT HEATED - OPTIONAL

9812/3020 C1-30-1 MIRRORS EXTERNAL 24 VOLT HEATED - OPTIONAL

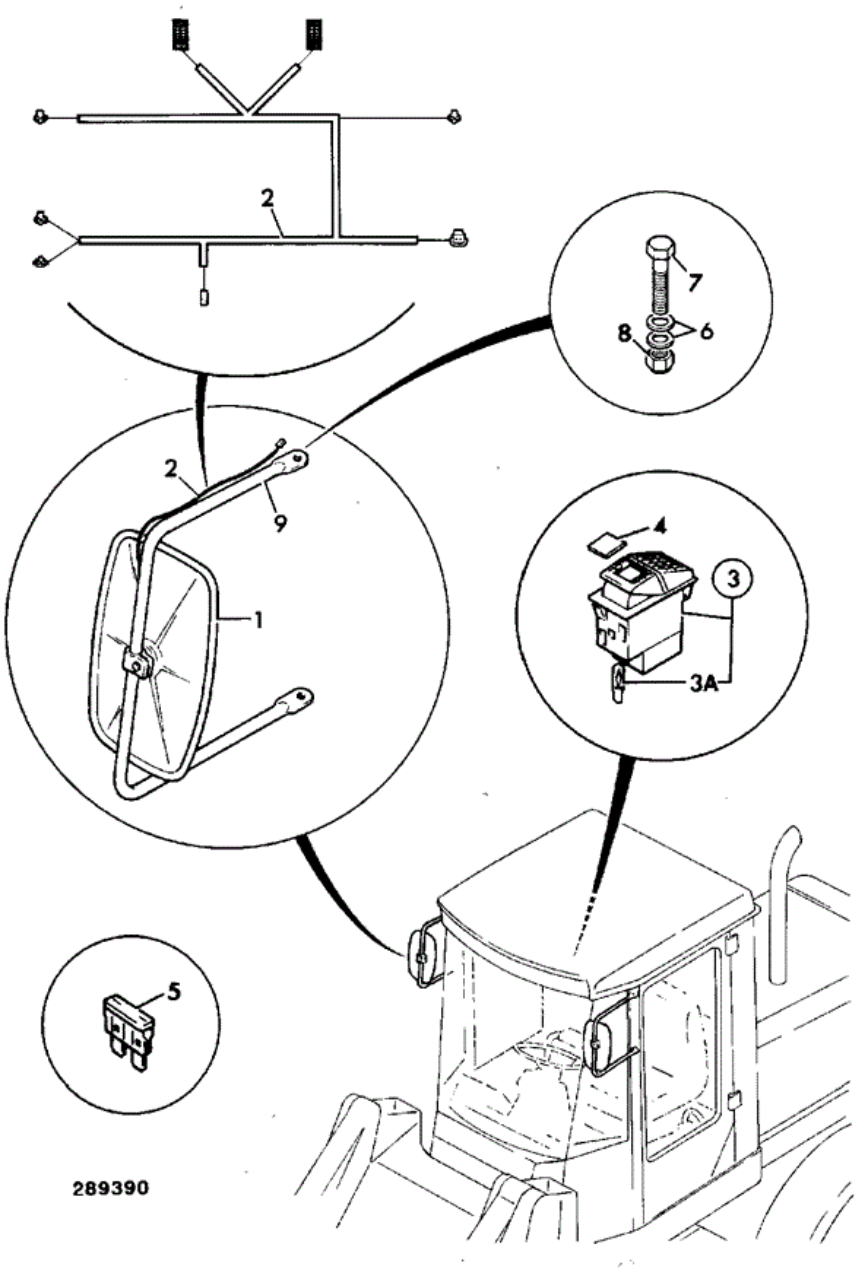

Item	Part No	Change No	Description	Usage Code	QTY
1	717/20111		Mirror heated		2

2	721/11037	Superseded	Harness heated mirror 870mm		2
2	332/W3176		Harness heated mirror 1150mm		2
3	701/60031		Panel Switch 24V		1
4	701/58748		Cover heated mirror		1
5	716/05705		Fuse 10 amp		1
6	823/00344		Washer nylon		8
7	1315/3409Z		Bolt M10 x 35		4
8	1370/0303Z		Nut lock M10		4
9	335/03571		Bracket mirror		2
10	2410/0003		Grommet		4
11	2410/0007		Grommet		2
11	332/R8799		Grommet cable entry Replaces 2410/0007		2

Applicability Date Ranges:
From: , To: MAR10

Product Catalog\WHEELED LOADERS\416 01243000-01243499,01317500-01317999,01472000-01472999,02095872-02095875 9812/3020 \C ELECTRICS-MACHINE CAB & ENGINE\C01 ELECTRICS, MAIN MACHINE\C1-32-1 PUMP AND MOUNTINGS AUTO GREASING HT

9812/3020 C1-32-1 PUMP AND MOUNTINGS AUTO GREASING HT

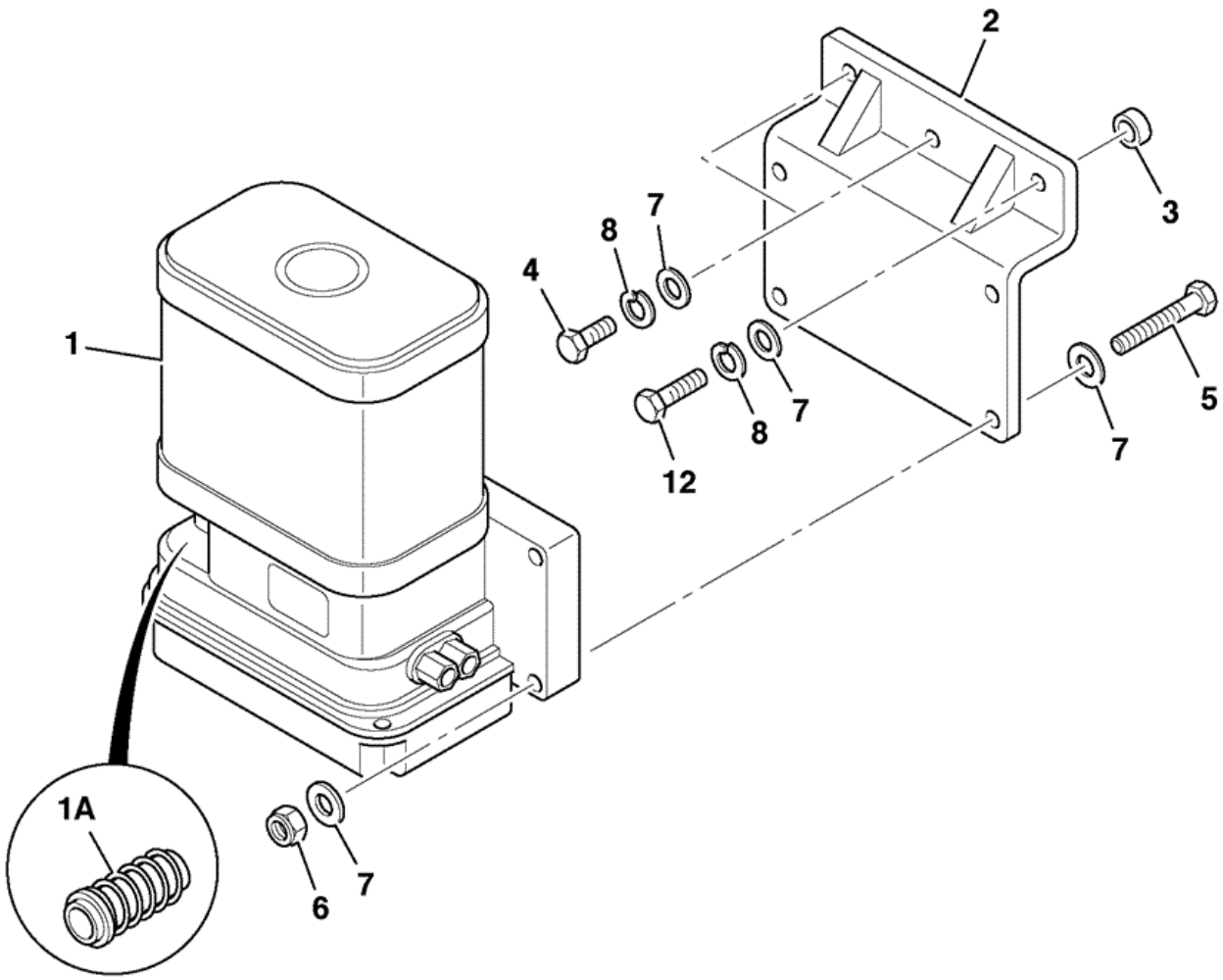

766041

Item	Part No	Change No	Description	Usage Code	QTY
1	983/10605		Pump twin 4lts.		1
1A	998/11098		Filter auto greasing		1

2	983/10913		Bracket support		1
3	983/10914		Spacer		1
4	1315/0305D		Setscrew M8 x 20mm		2
5	1315/3312D		Bolt (M8 x 50)		4
6	1370/0201D		Nut Plain M8		4
7	1420/0007D		Washer (M8)		11
8	1425/0007D		Washer Spring M8		3
9	983/10915		Clamp		2
10	983/10916		Connector male Fitted to pump		1
11	983/10917		Cap dust		1
12	1315/0307D		Setscrew M8 x 25 mm		1
13	983/10918		Connector female filler Supplied loose in cab		1
13A	332/C4830		Adapter grease gun Supplied loose in cab		1
14	4003/1506		Grease E.P. 12.5kg EP2 Grease		1

9812/3020 C1-32-10 PUMP AUTOGREASING PUMP COMPONENTS



Item	Part No	Change No	Description	Usage Code	QTY
A	983/10605		Pump twin 4lts.		1
1	:333/H8273		Pin guide		1
2	:333/H8265		Cover reservoir inc. seal		1
3	:333/H8268		Reservoir inc. seal		1
4	:333/H8266		Seal bottom		1
5	:333/H8274		Kit-plate		1
6	:333/H8275		Support		1
7	:333/G1956		Harness with connector		1
8	:333/H8276		Body		1
9	:333/G1958		Adapter grease outlet		1
10	:998/11098		Filter auto greasing		1
11	****		None serviced part		1
12	:333/G1959		Kit test button inc. harness		1
13	:333/G1960		Button test		1
14	:333/G1961		Switch low level		1
15	:333/G1962		Harness low level switch		1
16	:333/G1963		Kit-seal complete pump		1
17	:333/G1964		Clip timer		1
18	:333/G1936		Circuit board control unit		1

Applicability Date Ranges:
From: , To:

Product Catalog\WHEELED LOADERS\416 01243000-01243499,01317500-01317999,01472000-01472999,02095872-02095875 9812/3020 \C ELECTRICS-MACHINE CAB & ENGINE\C01 ELECTRICS, MAIN MACHINE\C1-32-10 PUMP AUTOGREASING PUMP COMPONENTS

9812/3020 C1-32-10 PUMP AUTOGREASING PUMP COMPONENTS

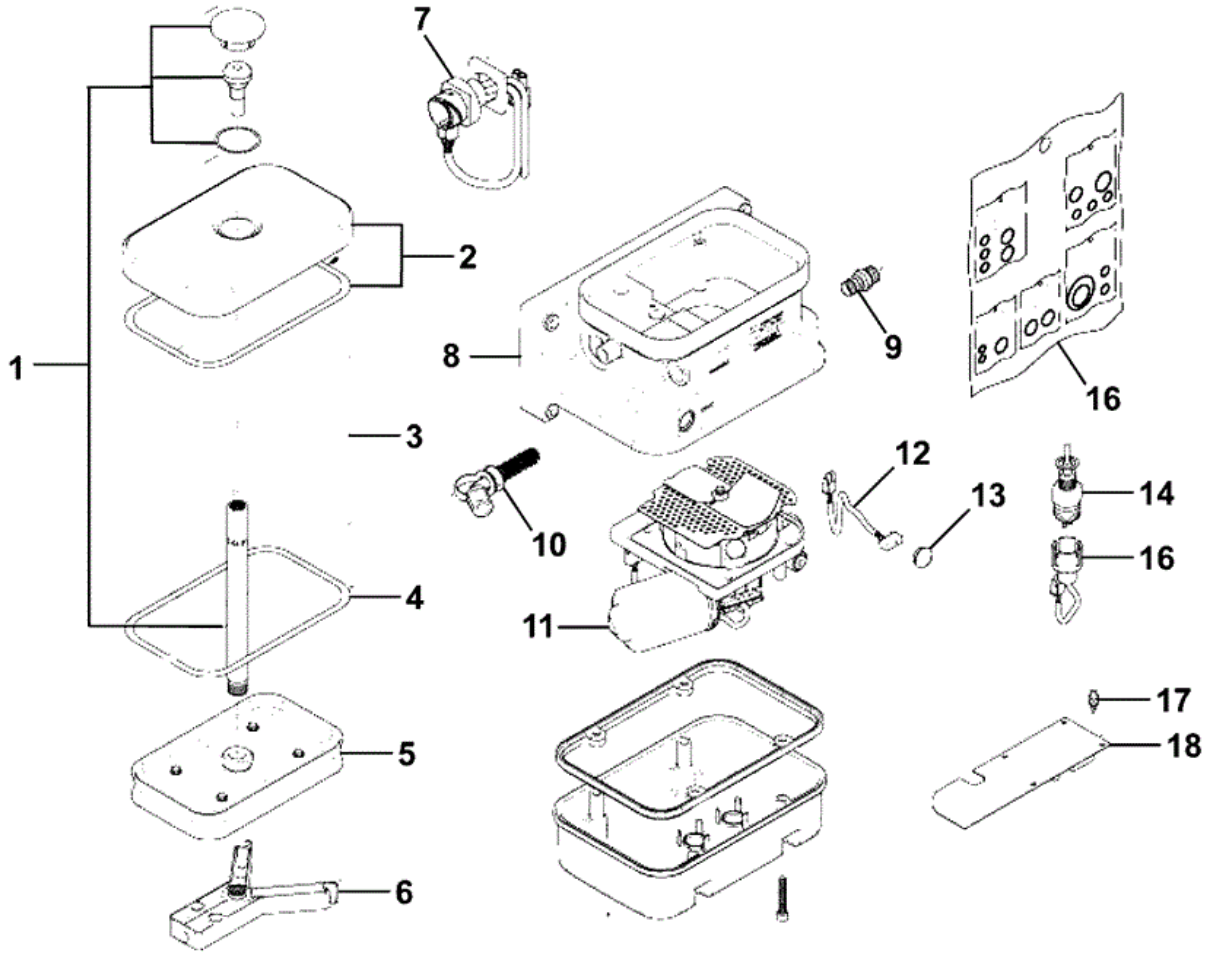

983-10605-1

Item	Part No	Change No	Description	Usage Code	QTY
A	983/10605		Pump twin 4lts.		1
1	:333/H8273		Pin guide		1

2	:333/H8265		Cover reservoir inc. seal		1
3	:333/H8268		Reservoir inc. seal		1
4	:333/H8266		Seal bottom		1
5	:333/H8274		Kit-plate		1
6	:333/H8275		Support		1
7	:333/G1956		Harness with connector		1
8	:333/H8276		Body		1
9	:333/G1958		Adapter grease outlet		1
10	:998/11098		Filter auto greasing		1
11	****		None serviced part		1
12	:333/G1959		Kit test button inc. harness		1
13	:333/G1960		Button test		1
14	:333/G1961		Switch low level		1
15	:333/G1962		Harness low level switch		1
16	:333/G1963		Kit-seal complete pump		1
17	:333/G1964		Clip timer		1
18	:333/G1936		Circuit board control unit		1

Applicability Date Ranges:
From: , To:

Product Catalog\WHEELED LOADERS\416 01243000-01243499,01317500-01317999,01472000-01472999,02095872-02095875 9812/3020 \C ELECTRICS-MACHINE CAB & ENGINE\C01 ELECTRICS, MAIN MACHINE\C1-33-1 ELECTRICS AUTO GREASING HT

9812/3020 C1-33-1 ELECTRICS AUTO GREASING HT

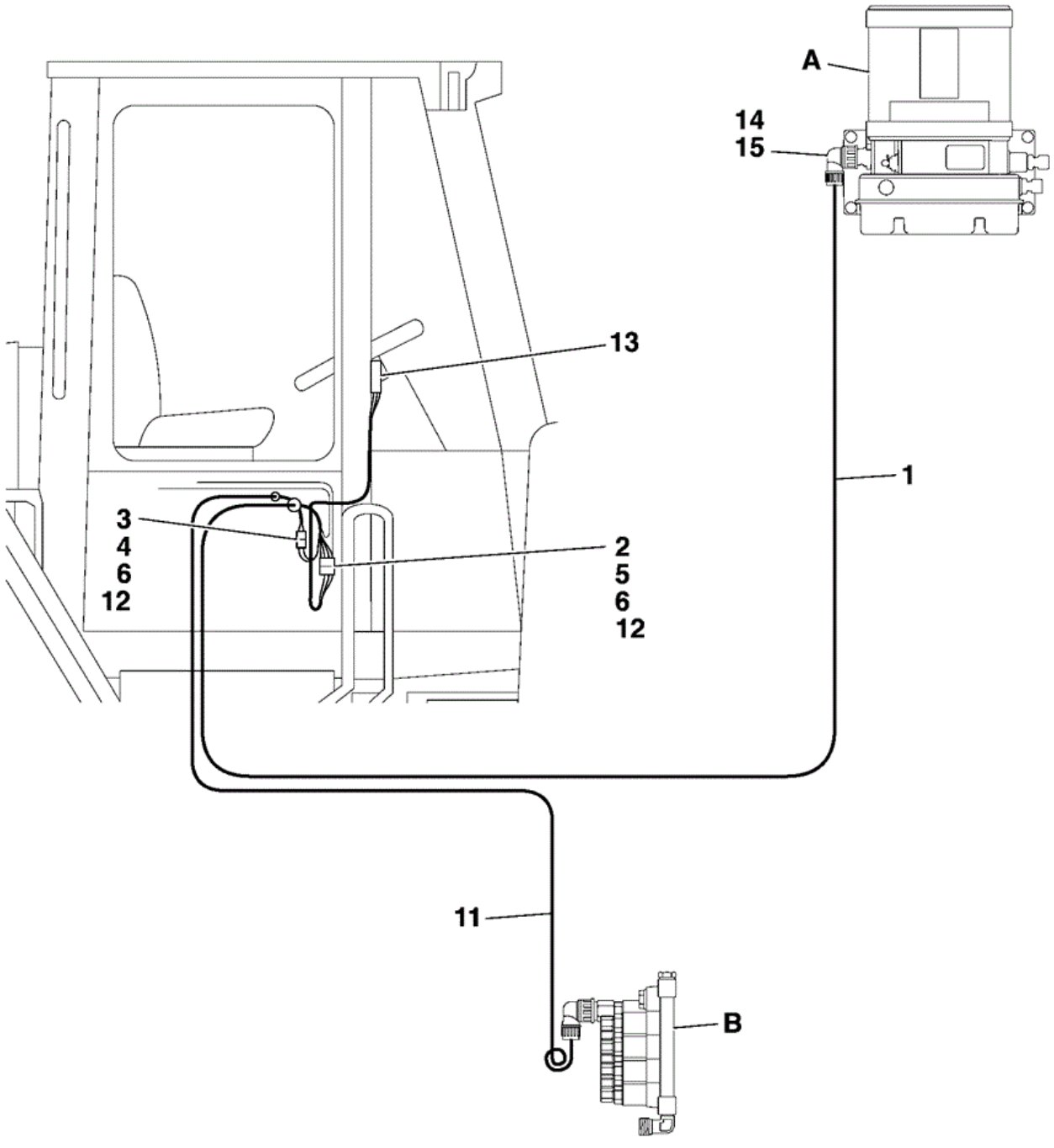

Item	Part No	Change No	Description	Usage Code	QTY
A	****		'See Remark' For pump see section C1-30-1		1
			'See Remark'		

B	****		For port block see section B1-31-1		1
1	983/10942		Harness		1
2	983/10969		Connector 4 pole male		1
3	983/10970		Connector female 2 pole		1
4	983/10971		Connector 2 pole male		1
5	983/10972		Connector 4 pole female		1
6	983/10974		Connector crimp female 0.75 sq.mm		6
7	983/10975		Connector crimp female, 1.5sq.mm		2
8	983/10976		Connector crimp female, 1.5sq.mm		2
9	983/10967		Tie cable 338mm long		25
10	983/10968		Tie cable		25
11	983/10943		Cable pressure switch 8mts.		1
12	983/10977		Connector Crimp male 0.75 sq.mm		6
13	983/10944		Unit display		1
14	983/10916		Connector male		1
15	983/10918		Connector female filler		1

Applicability Date Ranges:
From: , To:

Product Catalog\WHEELED LOADERS\416 01243000-01243499,01317500-01317999,01472000-01472999,02095872-02095875 9812/3020 \C ELECTRICS-MACHINE CAB & ENGINE\C01 ELECTRICS, MAIN MACHINE\C1-40-1 ELECTRICS BLANKING PLUGS & SEALED ELECTRICS

9812/3020 C1-40-1 ELECTRICS BLANKING PLUGS & SEALED ELECTRICS

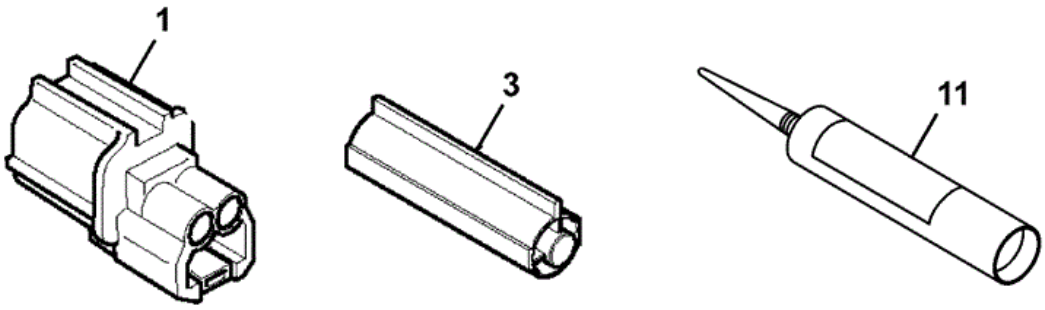

269-40720-3

Item	Part No	Change No	Description	Usage Code	QTY
			Plug harness blanking 2-way, Sealed		

1	719/10101		Part of harness		3
3	717/15200		Plug male,1 way Packard		1
8	721/00797		Harness 2 way Sumitomo		3
9	717/15000		Kit potting compound		1
11	4102/0901		Sealant Clear		0

Applicability Date Ranges:
From: , To:

Product Catalog\WHEELED LOADERS\416 01243000-01243499,01317500-01317999,01472000-01472999,02095872-02095875 9812/3020 \C ELECTRICS-MACHINE CAB & ENGINE\C02 ELECTRICS ENGINE\C2-1-1 SWITCHES & SENDERS 24VOLT

9812/3020 C2-1-1 SWITCHES & SENDERS 24VOLT

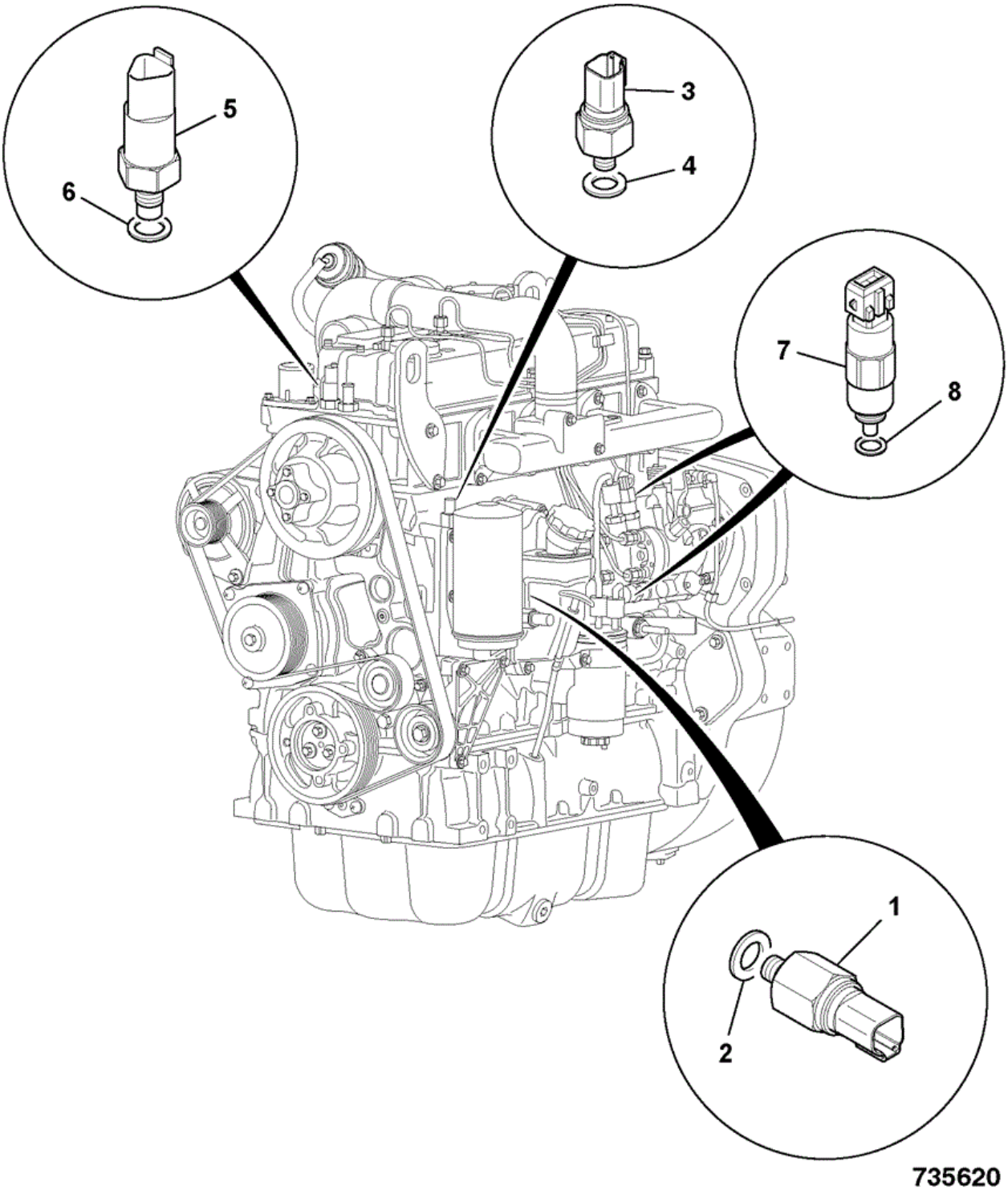

Item	Part No	Change No	Description	Usage Code	QTY
1	320/04046		Switch oil pressure		1
2	320/04057		Seal bonded		1

3	320/04554		Switch cold start advance		1
4	320/04521		Seal Bonded		1
5	320/04555		Sensor Temperature coolant (2 pin)		1
6	320/04521		Seal Bonded		1
7	716/30256		Solenoid 24volt - ESOS cold start advance		2
8	:17/105202		Seal Ring		1

Applicability Date Ranges:
From: , To:

9812/3020 C2-2-1 CABLE ALTERNATOR POSITIVE

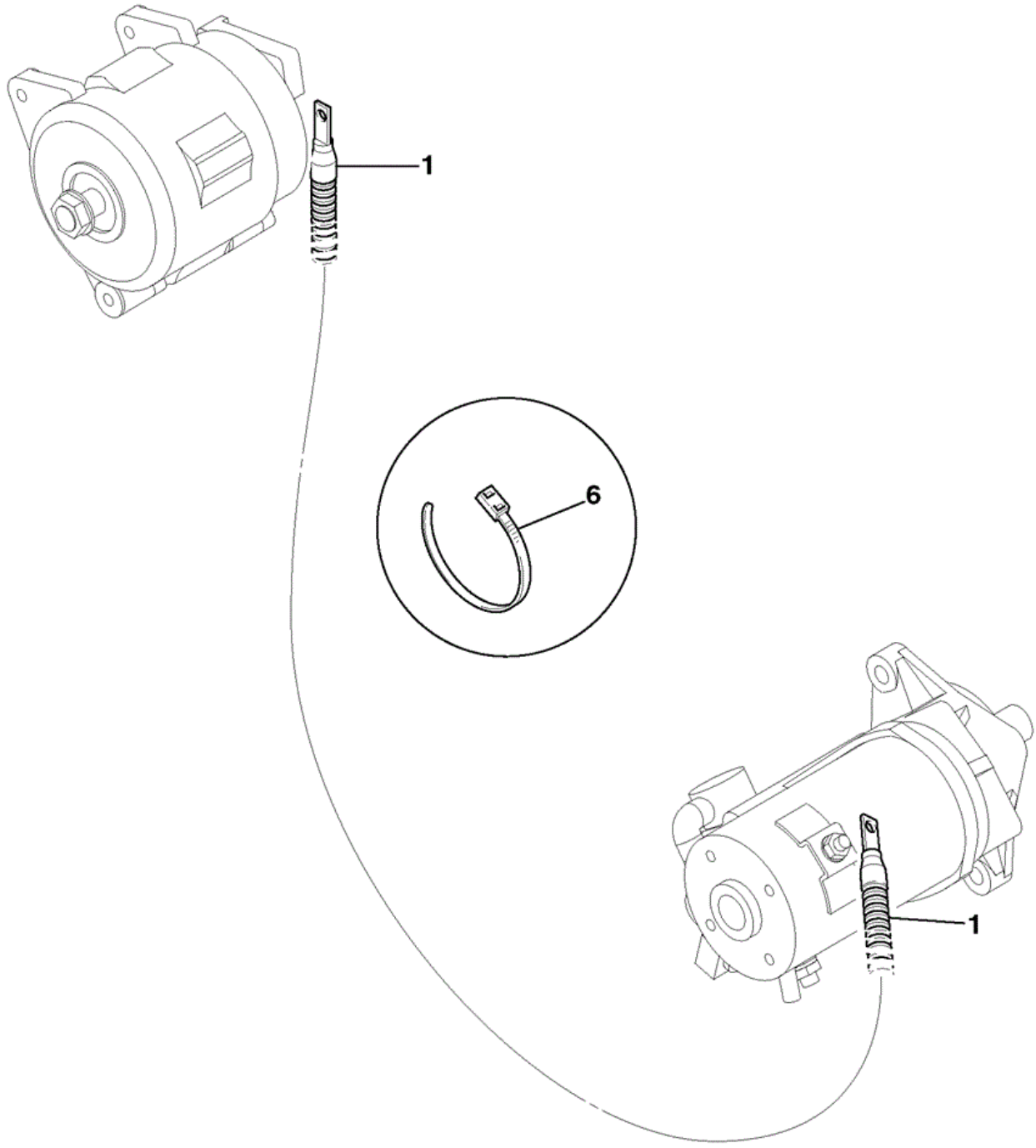

869880

Item	Part No	Change No	Description	Usage Code	QTY
1	718/20139		Cable starter to relay		1
2	826/01453		Tie cable Double Head		5

Applicability Date Ranges:
From: , To:

Product Catalog\WHEELED LOADERS\416 01243000-01243499,01317500-01317999,01472000-01472999,02095872-02095875 9812/3020 \C ELECTRICS-MACHINE CAB & ENGINE\C02 ELECTRICS ENGINE\C2-3-1 STARTER MOTOR 24.VOLT

9812/3020 C2-3-1 STARTER MOTOR 24.VOLT

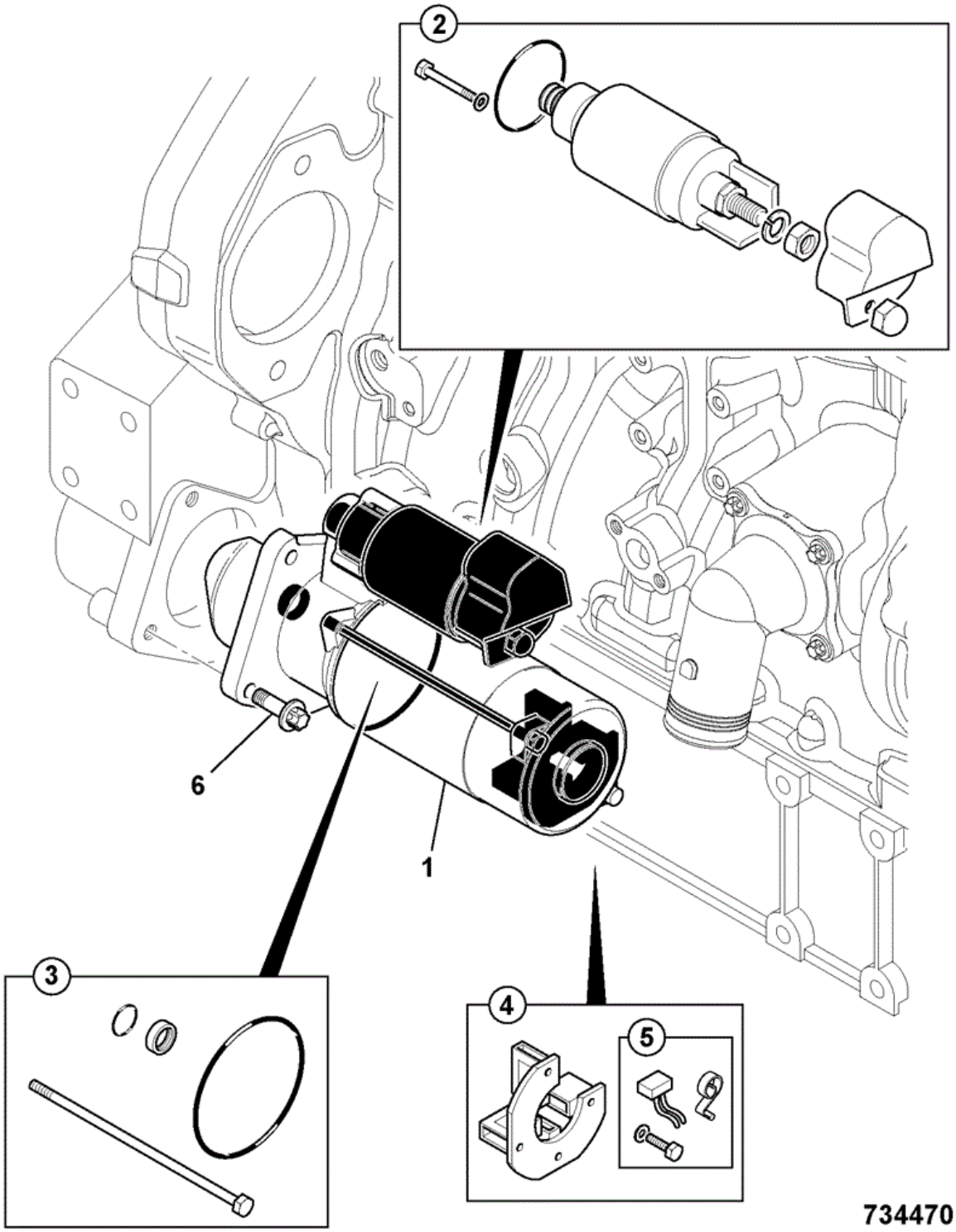

Item	Part No	Change No	Description	Usage Code	QTY
1	320/09033		Motor starter 24v with earth stud		1
2	:714/40307		Switch starter solenoid 24Volt		1

3	:714/40303		Kit-sundry parts		1
4	:714/40308		Brush holder assembly 24 Volt		1
5	:714/40309		Kit-brush 24 Volt		1
6	1319/0408Z		Screw star drive M10 x 30		3

Applicability Date Ranges:
From: , To:

Product Catalog\WHEELED LOADERS\416 01243000-01243499,01317500-01317999,01472000-01472999,02095872-02095875 9812/3020 \C ELECTRICS-MACHINE CAB & ENGINE\C02 ELECTRICS ENGINE\C2-4-1 ALTERNATOR 28VOLT - 55AMP

9812/3020 C2-4-1 ALTERNATOR 28VOLT - 55AMP

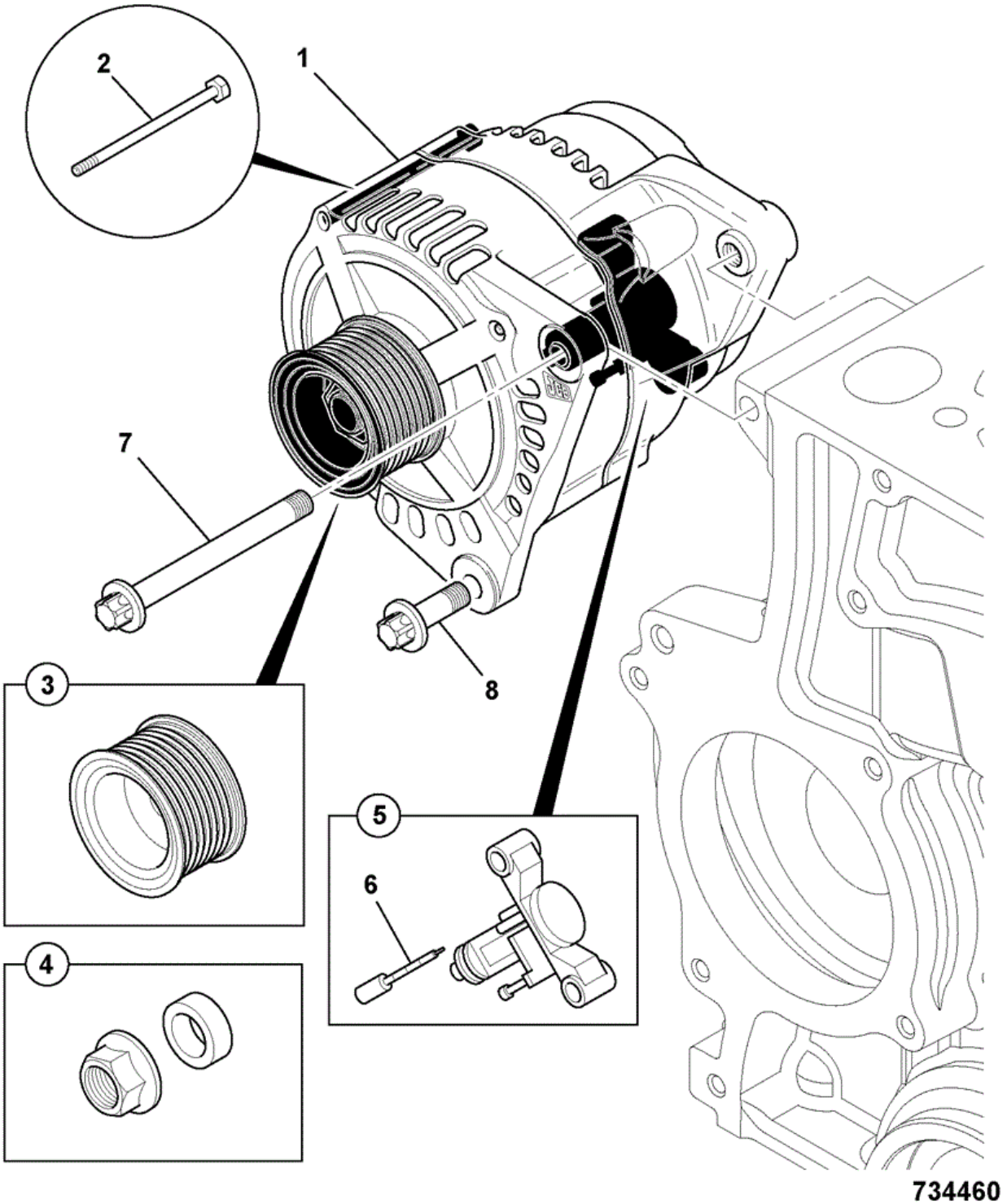

Item	Part No	Change No	Description	Usage Code	QTY
1	320/08611		Alternator 24V-55AMP		1
2	:714/40310		Kit-through bolt		1

3	:714/40312		Pulley alternator		1
4	:714/40311		Kit-nut & spacer		1
5	:714/40315		Regulator & brush box assembly - 24v		1
6	:714/40316		Kit-brush 24volt		1
7	1319/3422Z		Bolt star drive M10 x 120		1
8	1319/0408Z		Screw star drive M10 x 30		1

Applicability Date Ranges:
From: , To:

Product Catalog\WHEELED LOADERS\416 01243000-01243499,01317500-01317999,01472000-01472999,02095872-02095875 9812/3020 \C ELECTRICS-MACHINE CAB & ENGINE\C02 ELECTRICS ENGINE\C2-7-2 ENGINE BLOCK HEATER 230V

9812/3020 C2-7-2 ENGINE BLOCK HEATER 230V

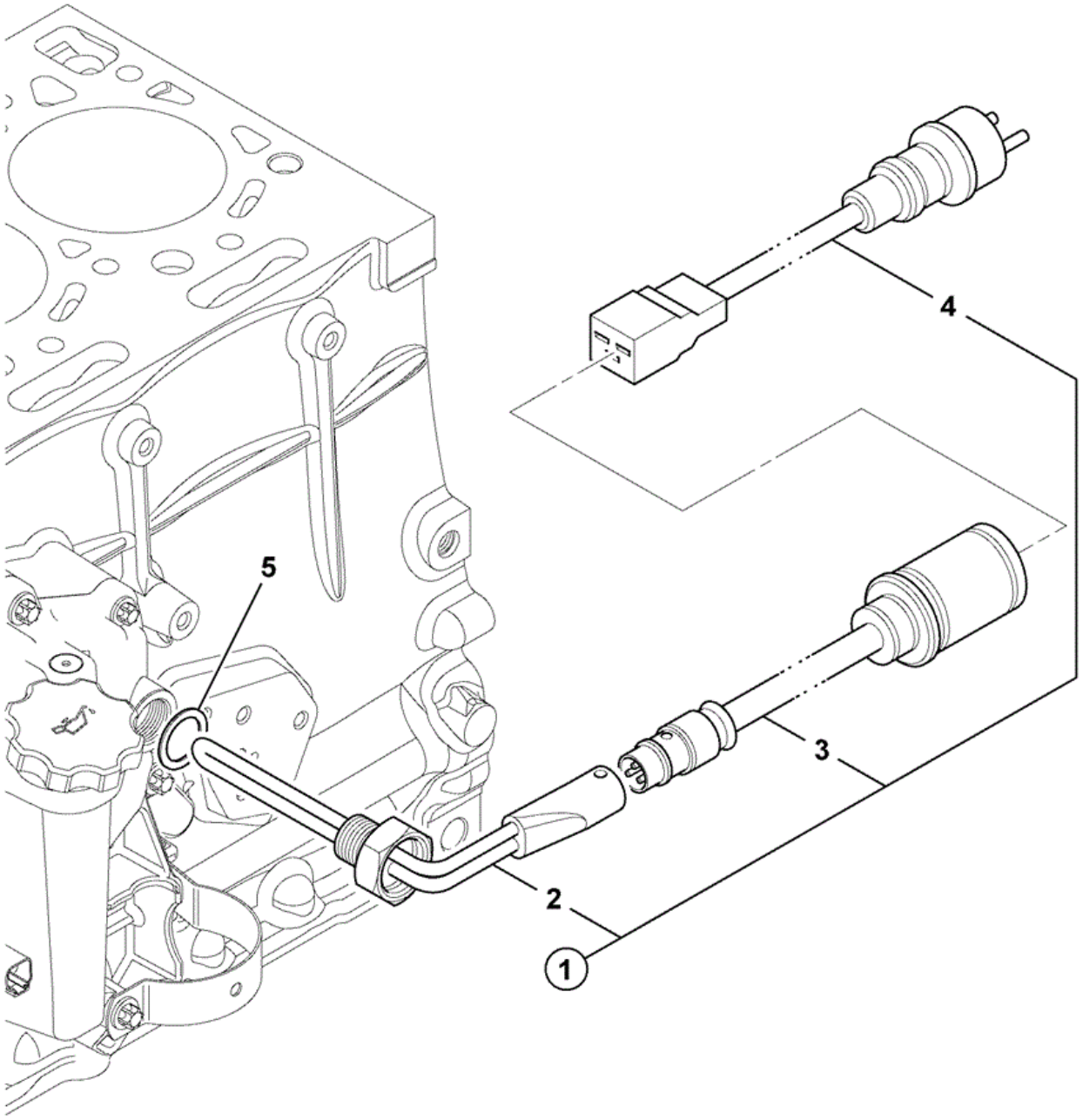

787050

Item	Part No	Change No	Description	Usage Code	QTY
1	320/04560		Kit-block heater engine 230v		1
2	:320/04559		Element Engine Block Heater 230v 1000w		1

3	:721/11977		Harness engine block heater mains power lead		1
4	:721/12094		Cable 230v mains L=2500mm		1
5	320/04553		Washer Copper Sealing		1

Applicability Date Ranges:
From: , To:

Product Catalog\WHEELED LOADERS\416 01243000-01243499,01317500-01317999,01472000-01472999,02095872-02095875 9812/3020 \C ELECTRICS-MACHINE CAB & ENGINE\C02 ELECTRICS ENGINE\C2-8-1 AIR INTAKE HEATER SALES SPECIAL

9812/3020 C2-8-1 AIR INTAKE HEATER SALES SPECIAL

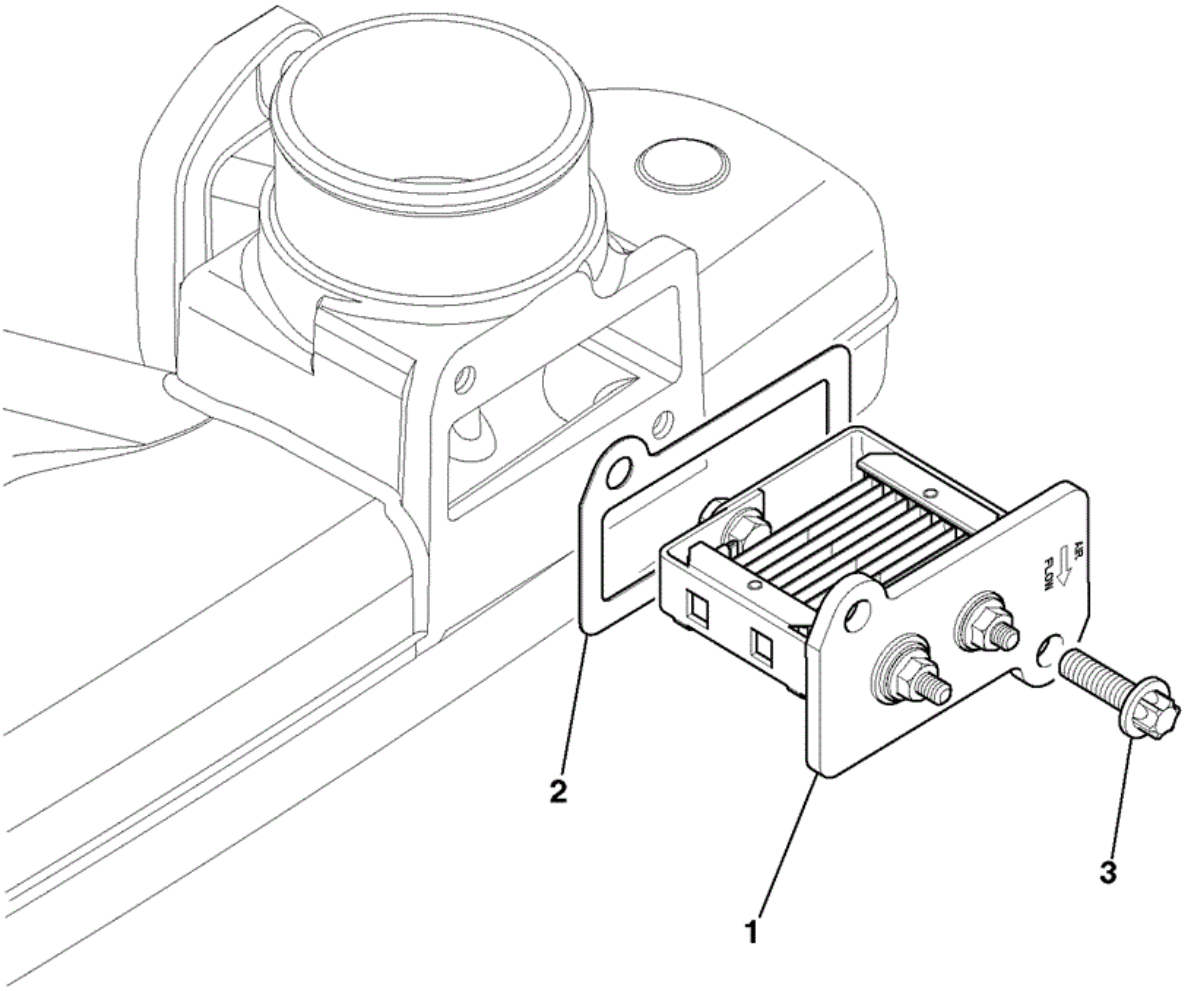

734700

Item	Part No	Change No	Description	Usage Code	QTY
1	320/05528	to 23/11/2011	Heater air intake - 24V		1
1	320/05694		Heater air intake - 24V Replaces 320/05528		1

2	320/05567		Gasket intake heater		1
3	1319/0307Z	Superseded	Screw star drive M8 x 25		2
3	1315/0207D		Setscrew M6 x 25mm		2
3	1420/0006D		Washer (M6)		2
4	332/U0377		Lead fused grid heater		1
5	718/20234		Lead Grid Heater +ve		1

Applicability Date Ranges:
From: , To:

Product Catalog\WHEELED LOADERS\416 01243000-01243499,01317500-01317999,01472000-01472999,02095872-02095875 9812/3020 \C ELECTRICS-MACHINE CAB & ENGINE\C02 ELECTRICS ENGINE\C2-9-1 GRID HEATER RELAY SALES SPECIAL

9812/3020 C2-9-1 GRID HEATER RELAY SALES SPECIAL

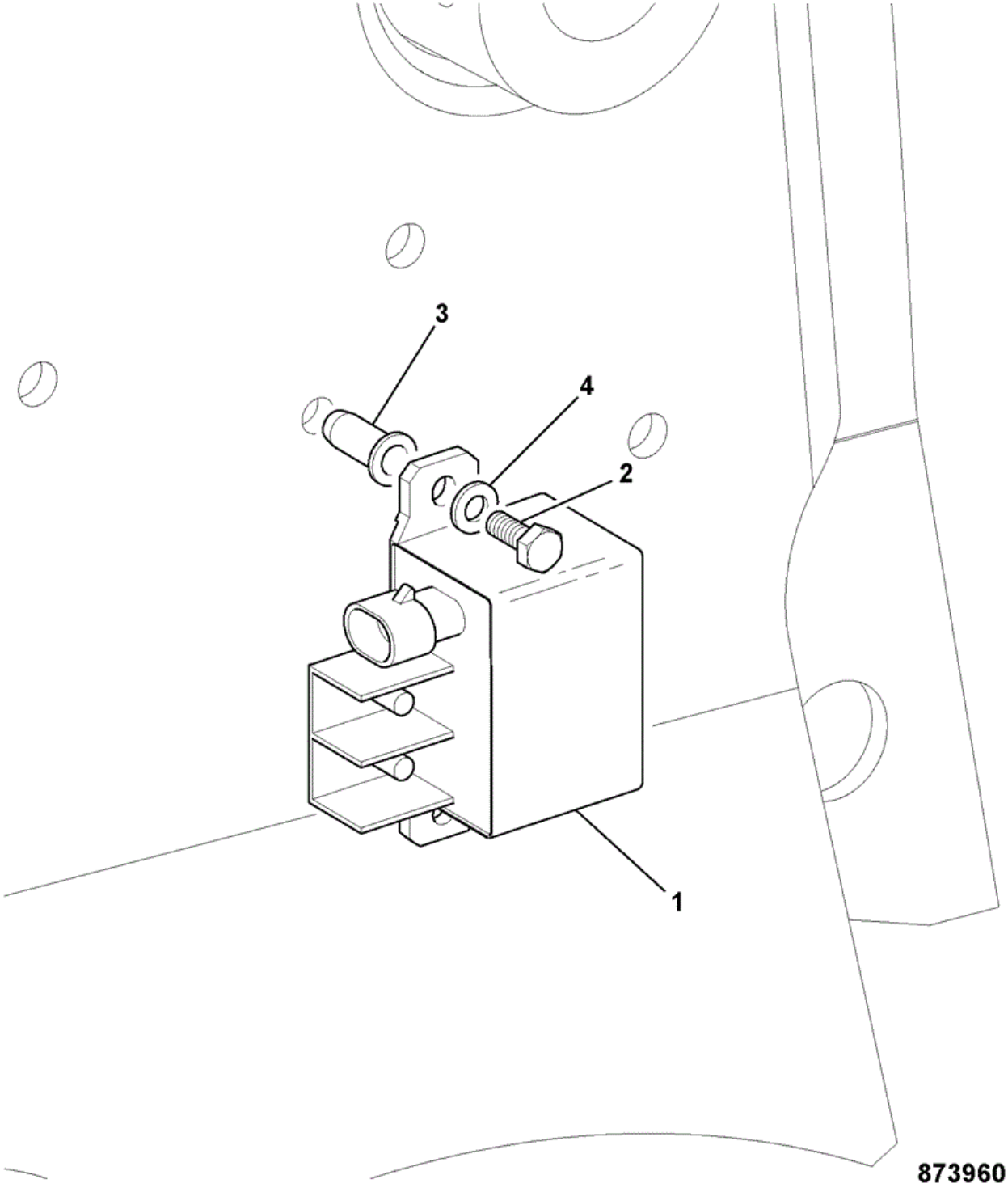

Item	Part No	Change No	Description	Usage Code	QTY
1	716/30252		Relay Grid Heater12 volt Sales option		1
1	716/30295		Relay 24 volt		1

2	1315/0207D	to JUN09	Setscrew M6 x 25mm	A	2
2	1315/0307D		Setscrew M8 x 25 mm	B	2
3	826/01316	to JUN09	Nut M6 Rivet	A	2
3	826/01101		Nut Nut,M6	B	2
4	1420/0006D	to JUN09	Washer (M6)	A	2
4	1420/0007D		Washer (M8)	B	2

Applicability Date Ranges:
From: , To:

Product Catalog\WHEELED LOADERS\416 01243000-01243499,01317500-01317999,01472000-01472999,02095872-02095875 9812/3020 \D CONTROLS-MACHINE ENGINE & STEERING\D01 CONTROLS, MACHINE\D1-1-1 MULTI-LEVER 3 SPOOL AUX. LEFT

9812/3020 D1-1-1 MULTI-LEVER 3 SPOOL AUX. LEFT

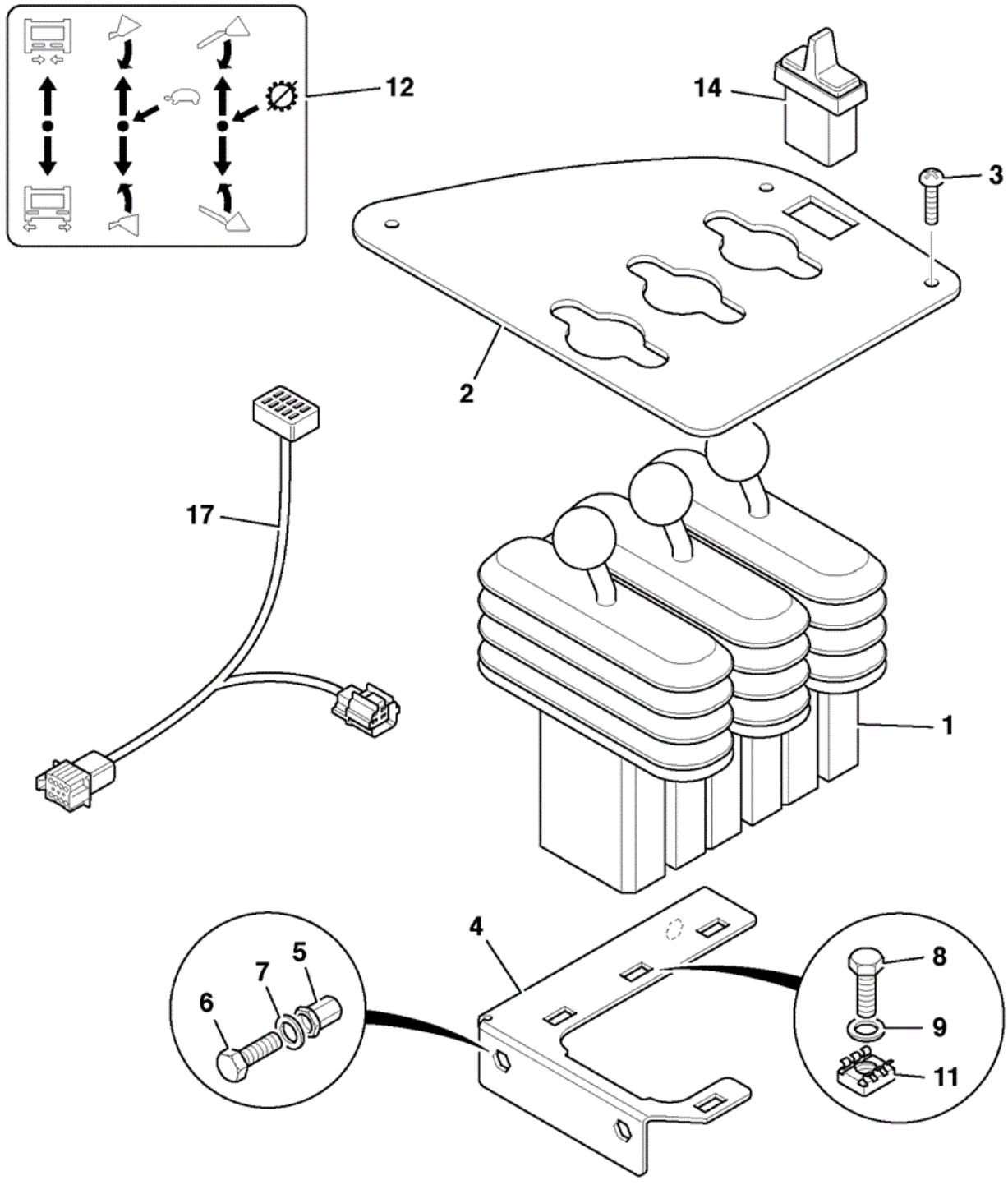

Item	Part No	Change No	Description	Usage Code	QTY
1	928/60322		Valve triple lever 3 spool		1
2	332/A2274		Plate gaiter multilever		1

3	826/11021		Screw Button Head M6x20		4
4	331/59463		Bracket		1
5	826/10977		Rivet nut M8		3
6	1315/0305D		Setscrew M8 x 20mm		3
7	1420/0007D		Washer (M8)		3
8	1315/0203D		Setscrew M6 x 16mm		4
9	1420/0006D		Washer (M6)		4
10	****		Assembly pipe cluster		1
11	826/11035		Nut M6 Caged Nut		4
12	817/20024		Decal multi-lever 3 spool		1
14	701/80530		Switch Front Paddle		1
16	1620/2051		Adaptor 1/4"BSP x 9/16"SAE		8
17	721/11967		Harness multilever		1
18	****		Assembly isolator valve		1
28	631/30800		Hose		8

Applicability Date Ranges:
From: , To:

9812/3020 D1-1-5 MULTI-LEVER 3 SPOOL COMPONENTS

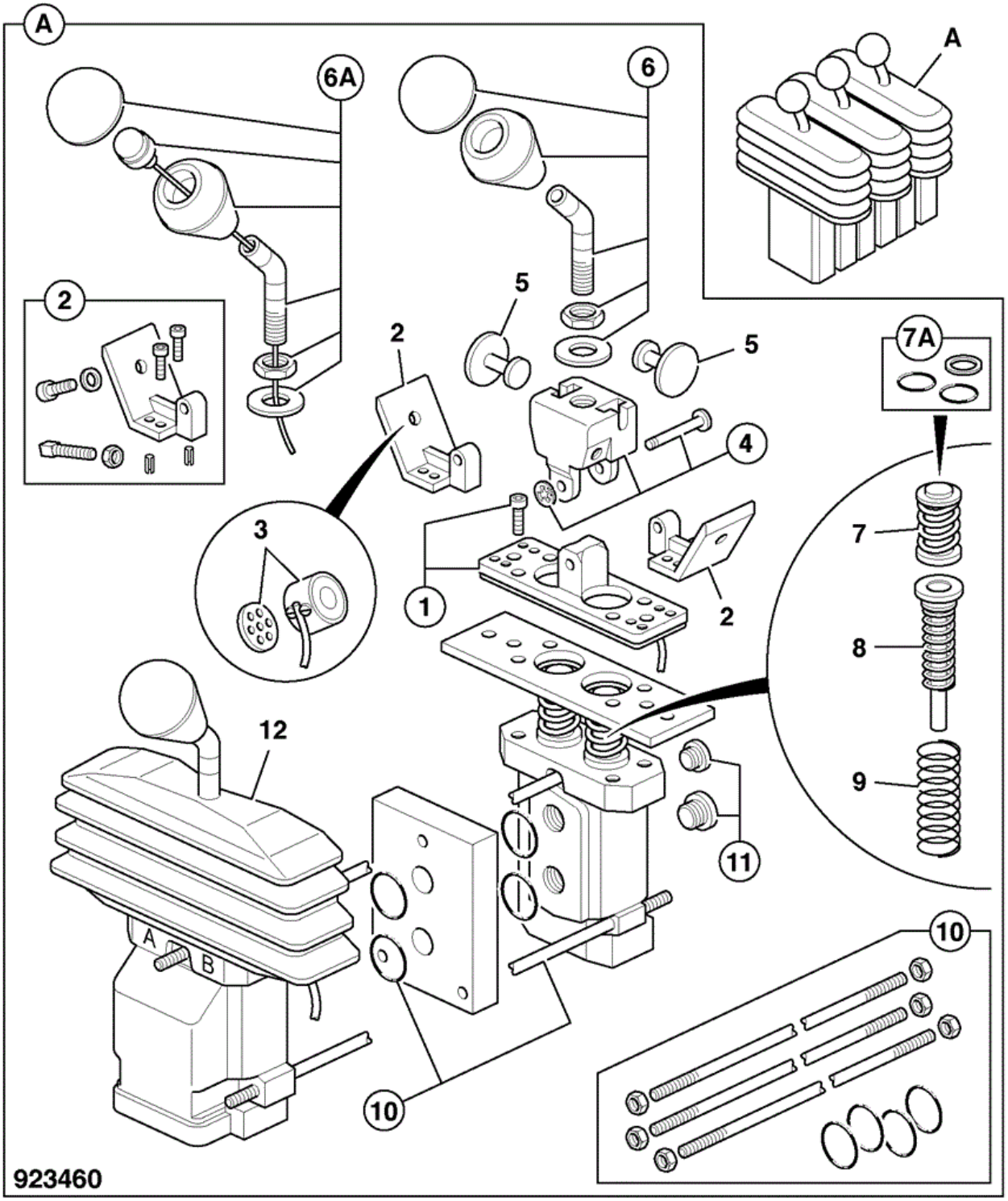

Item	Part No	Change No	Description	Usage Code	QTY
A	928/60322		Valve triple lever 3 spool		1
1	:332/D6393		Plate mounting		3

2	:332/D6423		Kit bracket for magnet		3
3	:332/D6425		Magnet		3
4	:332/D6426		Kit bearing plate lever link assembly		3
5	:332/D6427		Plate anchor		3
6	:332/D6429		Handle assembly without switch		1
6A	:332/D6430		Handle assembly with switch		2
6B	::333/C6647		Kit Knob C/W Boot		1
6C	::333/G3120		Kit-cap rubber		1
7	:332/D6440		Pin push		3
7A	:332/D6441		Kit seal push pin		3
8	:332/D6464		Spring pack		3
9	:332/D6442		Spring return		3
10	:332/D6467		Kit tie rod 3 section		1
11	:332/D6444		Kit plug		1
12	:332/D6445		Kit gaiter (one gaiter)		1

Applicability Date Ranges:
From: , To:

9812/3020 D1-2-2 CONTROL PARKING BRAKE

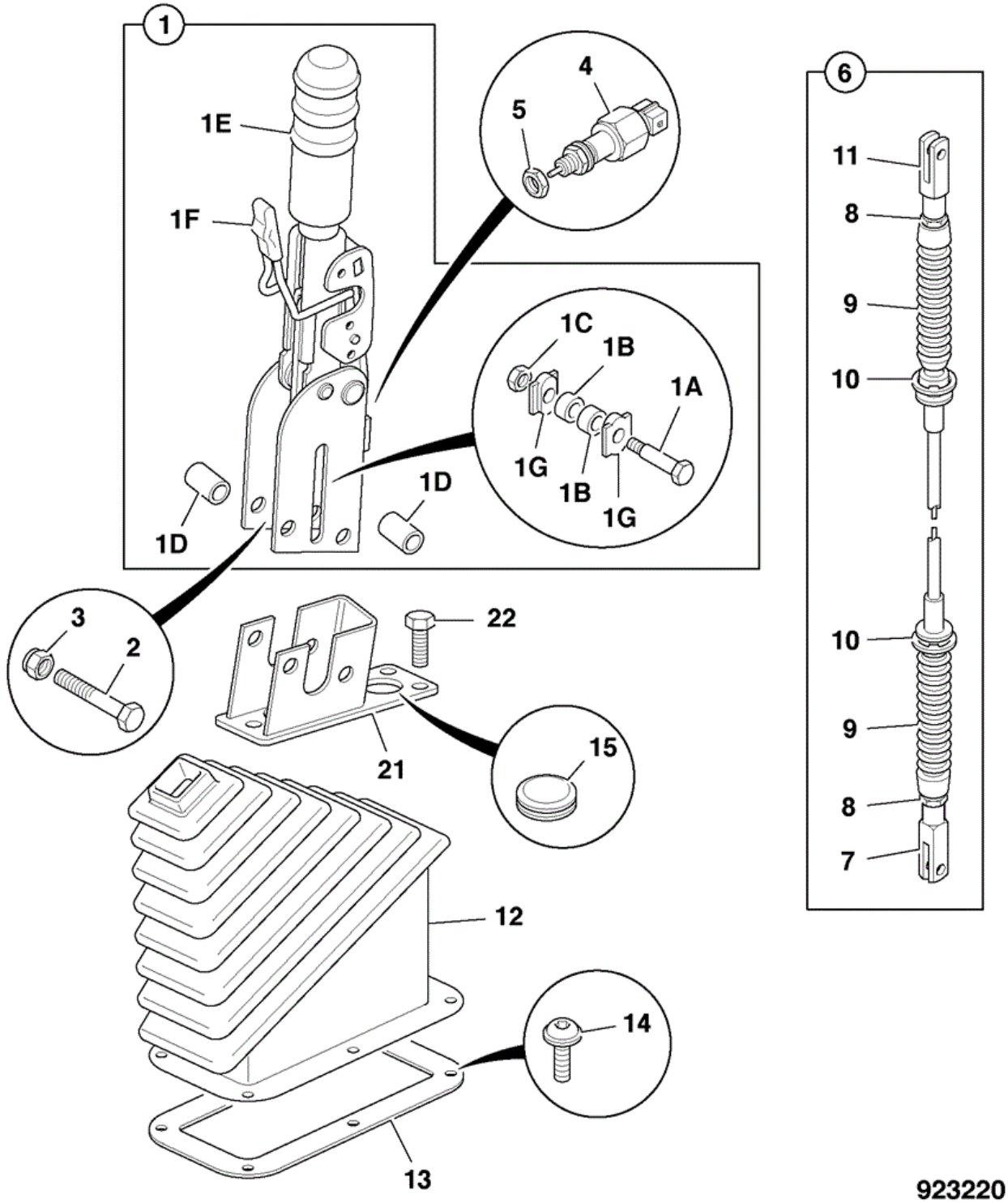

Item	Part No	Change No	Description	Usage Code	QTY
1	331/60900		Lever Handbrake		1
1A	:15/920191		Pin Treaded Clevis		1

1B	:15/920324		Spacer washer		2
1C	:331/44783		Nut		1
1D	:15/920188		Spacer		2
1E	:332/D2182		Grip handle large black		1
1F	:331/38797		Cover release handle-black		1
1G	:15/920189		Block Slide		2
2	1315/3312Z		Bolt M8x50		2
3	1370/0203Z		Nut Nut M8		2
4	701/72500		Switch Red Top		1
5	1340/0402Z		Nut Thin (1/2" UNF)		1
6	332/R7872		Cable parkbrake		1
7	:913/10094		Clevis Fork		1
8	:1340/0102Z		Nut		2
9	:2000/0080		Gaiter Bellows		2
10	:826/00627		Clip 'E'		2
11	:332/R7732		Clevis		1
12	331/21033	to 16/09/2012	Gaiter Hand Brake		1
12	333/V1593		Gaiter handbrake		1
13	331/21066		Plate Gaiter		1
14	826/01560		Screw M6x25		6
15	2410/1113		Grommet 31.8		1
16	333/U6979	>17/09/2012	Bracket switch protection For item 4		1
21	332/S7215		Bracket parkbrake		1
22	1315/0305D		Setscrew M8 x 20mm		3

Applicability Date Ranges:
From: M1317729 , To: 16/09/2012

Product Catalog\WHEELED LOADERS\416 01243000-01243499,01317500-01317999,01472000-01472999,02095872-02095875 9812/3020 \D CONTROLS-MACHINE ENGINE & STEERING\D01 CONTROLS, MACHINE\D1-3-1 CONTROL, TILT RESET

9812/3020 D1-3-1 CONTROL, TILT RESET

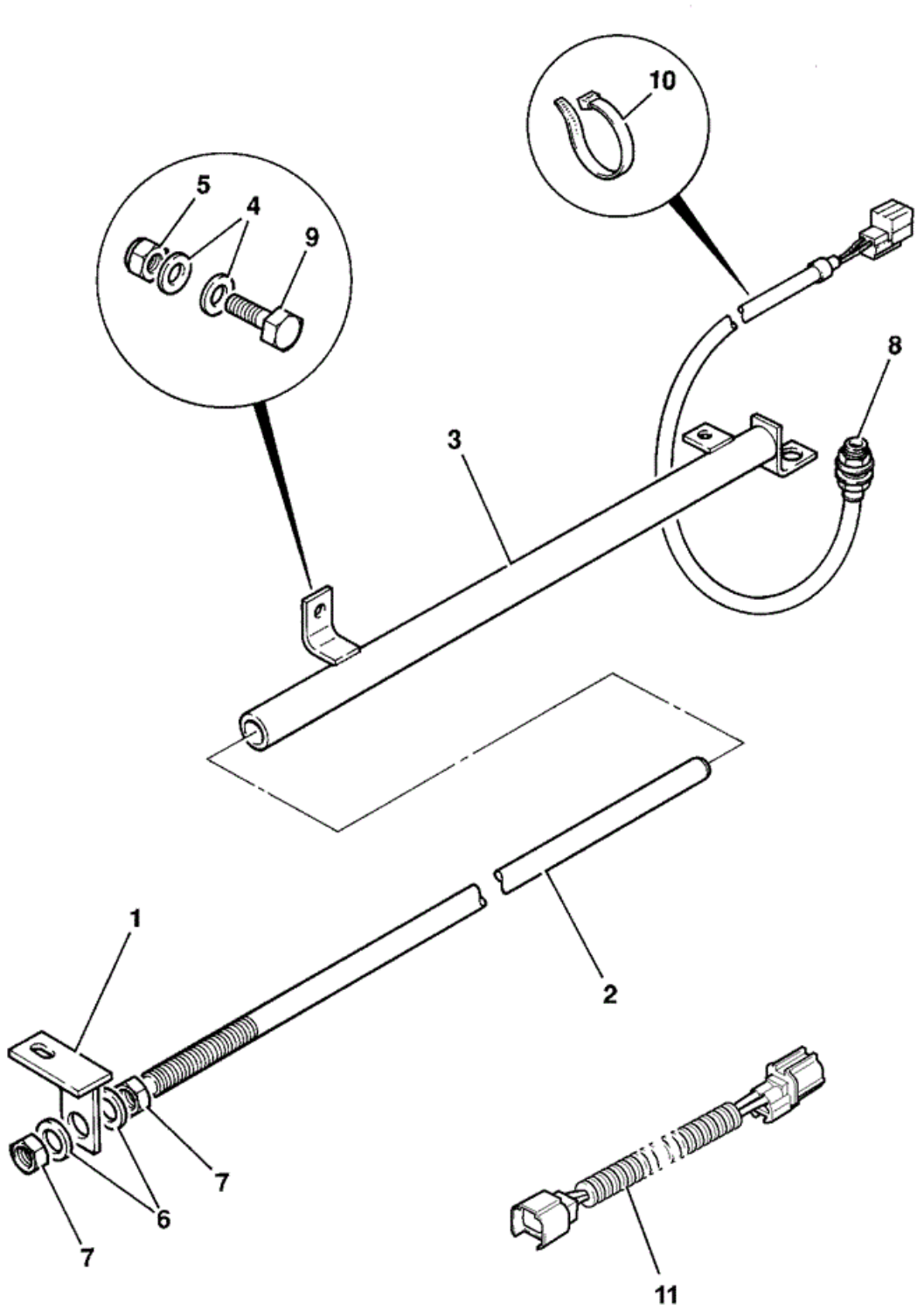

Item	Part No	Change No	Description	Usage Code	QTY

1	268/20031		Bracket mounting bar		1
2	265/00724		Bar		1
2	331/38656		Bar reset stainless/painted Sales special 9851		1
3	335/90086		Bracket reset switch		1
4	1411/0004D		Washer Plain 7/16"Medium		4
5	1370/0303D		Nut Self Lock M10		2
6	1420/0012D		Washer Plain M20		2
7	1370/0701D		Nut		2
8	701/80246	Superseded	Switch proximity		1
8	701/80610		Switch proximity wire length 2625mm		1
8	701/80612		Switch proximity wire length 3225mm Sales special 1363,1369, 1666,1780, 2131, 3402 & 3590 Super high lift (SHL)		1
9	1315/0407D		Setscrew M10 x 25		2
10	826/01453		Tie cable Double Head		8
10	826/01453		Tie cable Double Head Super Hi-lift		4
11	721/00857		Harness extension Replaced by 721/80612		1

Applicability Date Ranges:
From: , To:

Product Catalog\WHEELED LOADERS\416 01243000-01243499,01317500-01317999,01472000-01472999,02095872-02095875 9812/3020 \D CONTROLS-MACHINE ENGINE & STEERING\D01 CONTROLS, MACHINE\D1-4-1 CONTROL, RESET LIFT ARM

9812/3020 D1-4-1 CONTROL, RESET LIFT ARM

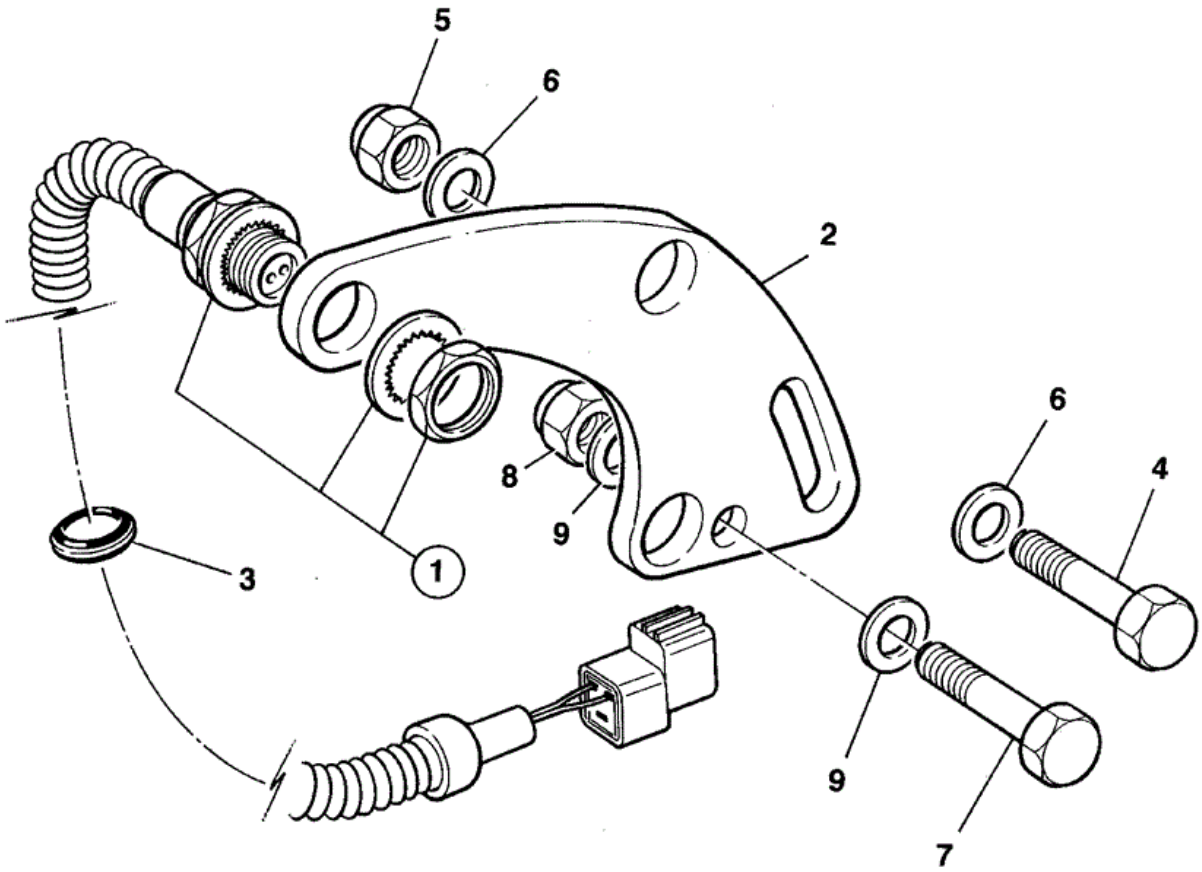

Item	Part No	Change No	Description	Usage Code	QTY
1	701/80244	Superseded	Switch proximity lift arm reset		1
1	701/80608		Switch proximity lift arm reset		1

2	265/01095		Bracket HT lift reset		1
3	2410/0308		Grommet		1
4	1315/3412D		Bolt M10 x 50		1
5	1370/0303D		Nut Self Lock M10		1
6	1420/0008D		Washer (M10)		2
7	1315/0716D		Screw M16 X 70		1
8	1370/0603D		Nut -Lock Nut, M16		1
9	1420/0011D		Washer (M16)		2

Applicability Date Ranges:
From: , To:

Product Catalog\WHEELED LOADERS\416 01243000-01243499,01317500-01317999,01472000-01472999,02095872-02095875 9812/3020 \D CONTROLS-MACHINE ENGINE & STEERING\D01 CONTROLS, MACHINE\D1-5-1 VALVE SERVO JOYSTICK CONTROL SOLENOID OPERATED AUXILIARIES

9812/3020 D1-5-1 VALVE SERVO JOYSTICK CONTROL SOLENOID OPERATED AUXILIARIES

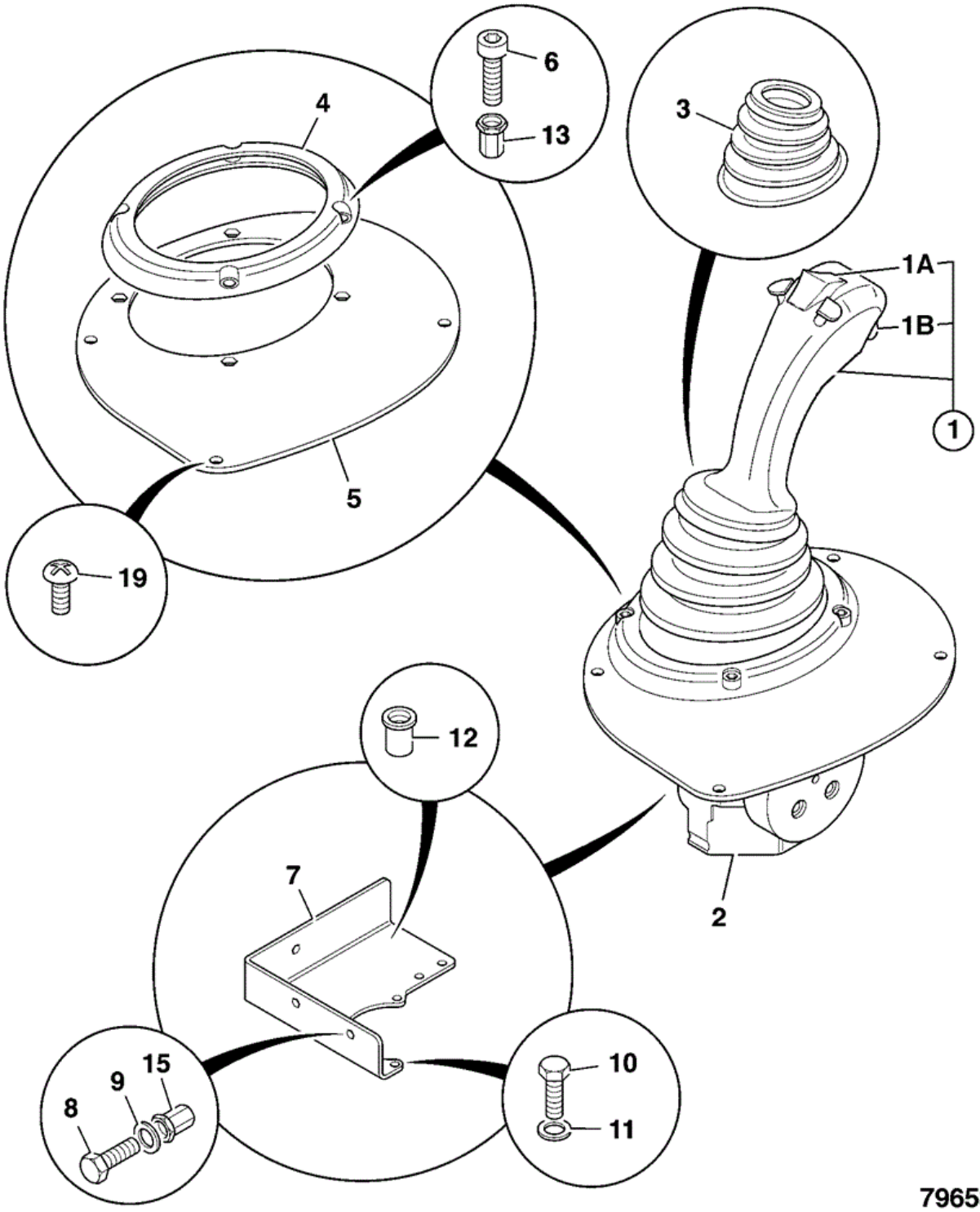

Item	Part No	Change No	Description	Usage Code	QTY
			Handle assembly proportional control		

1	701/80332		4 buttons,1 thumbswitch		1
1A	:25/223421		Switch sliding		1
1B	:25/223419		Button push & spring		4
2	25/212600		Valve servo loader control		1
3	331/50183		Gaiter joystick		1
4	821/10159		Clamp Ring Loader Lever Gaiter		1
5	331/54741	Superseded	Plate joystick gaiter		1
5	332/W3933		Plate joystick gaiter		1
6	1391/3105D		Screw Cap M5 x 20		4
7	331/62318		Bracket joystick mounting		1
8	1315/0305D		Setscrew M8 x 20mm		3
9	1420/0007D		Washer (M8)		3
10	1315/0207D		Setscrew M6 x 25mm		4
11	1420/0006D		Washer (M6)		4
12	826/01101		Nut Nut,M6 Fit to item 7		1
13	826/10973		Nut Low Profile Hex Bollho M5		4
15	826/10977		Rivet nut M8		3
16	1604/0002		Adapter		6
17	1406/0011		Washer Bonded (1/4")		6
19	826/11021		Screw Button Head M6x20		4
20	721/12247	to M1317687	Harness prop. aux. control		1
20	332/S4712		Harness prop.aux. control		1
21	716/30133	to 03/12/2010	Relay Micro 24V Omron Fitted to item 7		2
21	333/S5959		Relay micro 24V, Panasonic		2
30	333/S5408		Plate clamp Fits with item 4		1

Applicability Date Ranges:
From: , To: 03/12/2010

Product Catalog\WHEELED LOADERS\416 01243000-01243499,01317500-01317999,01472000-01472999,02095872-02095875 9812/3020 \D CONTROLS-MACHINE ENGINE & STEERING\D01 CONTROLS, MACHINE\D1-6-1 SERVO VALVE 3 SPOOL CANOPY

9812/3020 D1-6-1 SERVO VALVE 3 SPOOL CANOPY

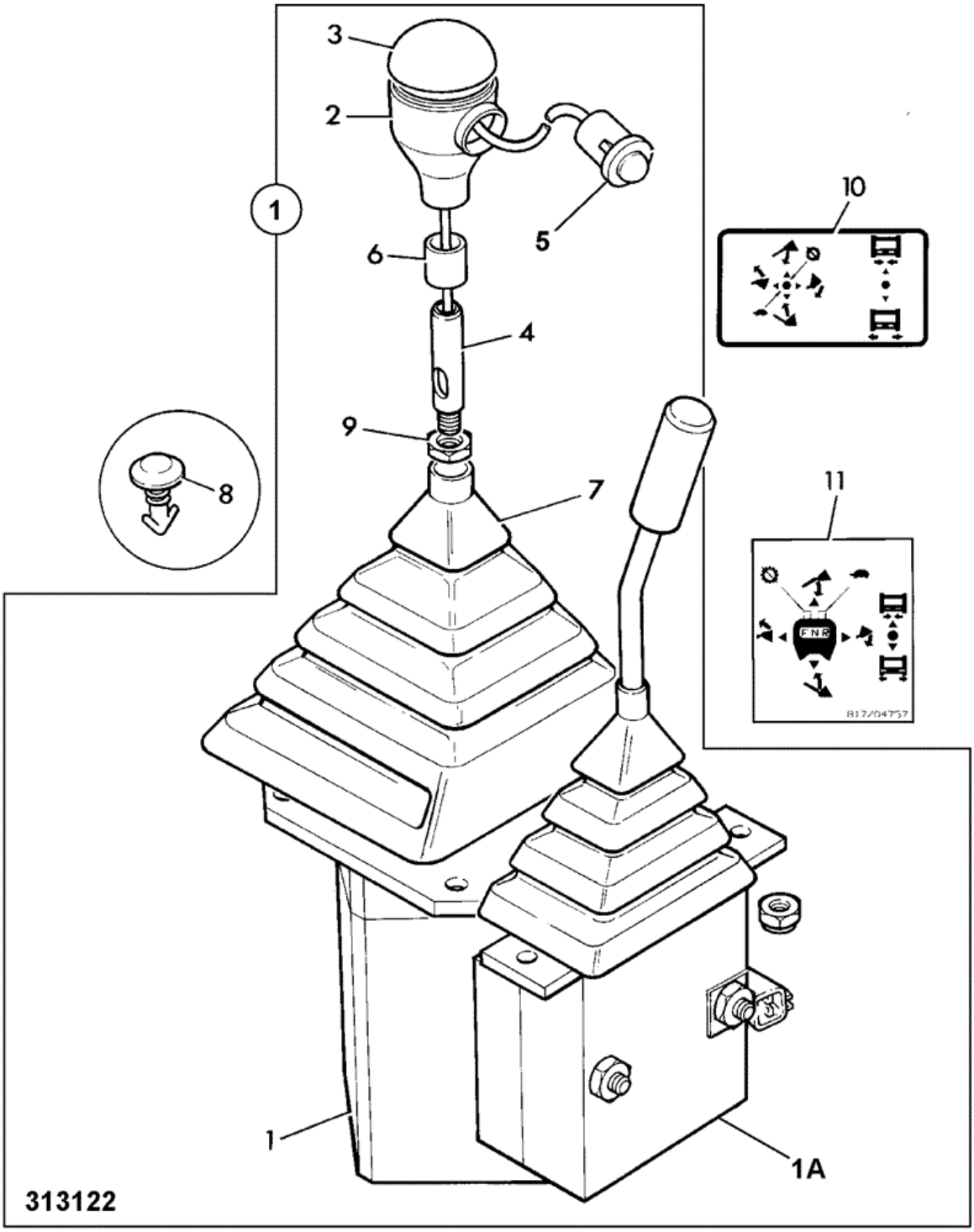

Item	Part No	Change No	Description	Usage Code	QTY
1	:25/212700		Valve servo loader control		1
1A	:25/971501		Valve aux. loader control		1

2	123/02755		Knob base		1
3	123/03461		Knob top		1
4	265/02720		Adapter control knob		1
5	701/42600		Switch push button black with microswitch		2
6	122/67459		Ring tolerance		1
7	265/00202		Gaiter loader control		1
8	826/00959		Fastener drive yellow		4
9	1370/0402Z		Nut Thin (M12)		1

Applicability Date Ranges:
From: , To:

Product Catalog\WHEELED LOADERS\416 01243000-01243499,01317500-01317999,01472000-01472999,02095872-02095875 9812/3020 \D CONTROLS-MACHINE ENGINE & STEERING\D01 CONTROLS, MACHINE\D1-7-1 VALVE SERVO JOYSTICK CONTROL 3 SPOOL, STANDARD CONTROL

9812/3020 D1-7-1 VALVE SERVO JOYSTICK CONTROL 3 SPOOL, STANDARD CONTROL

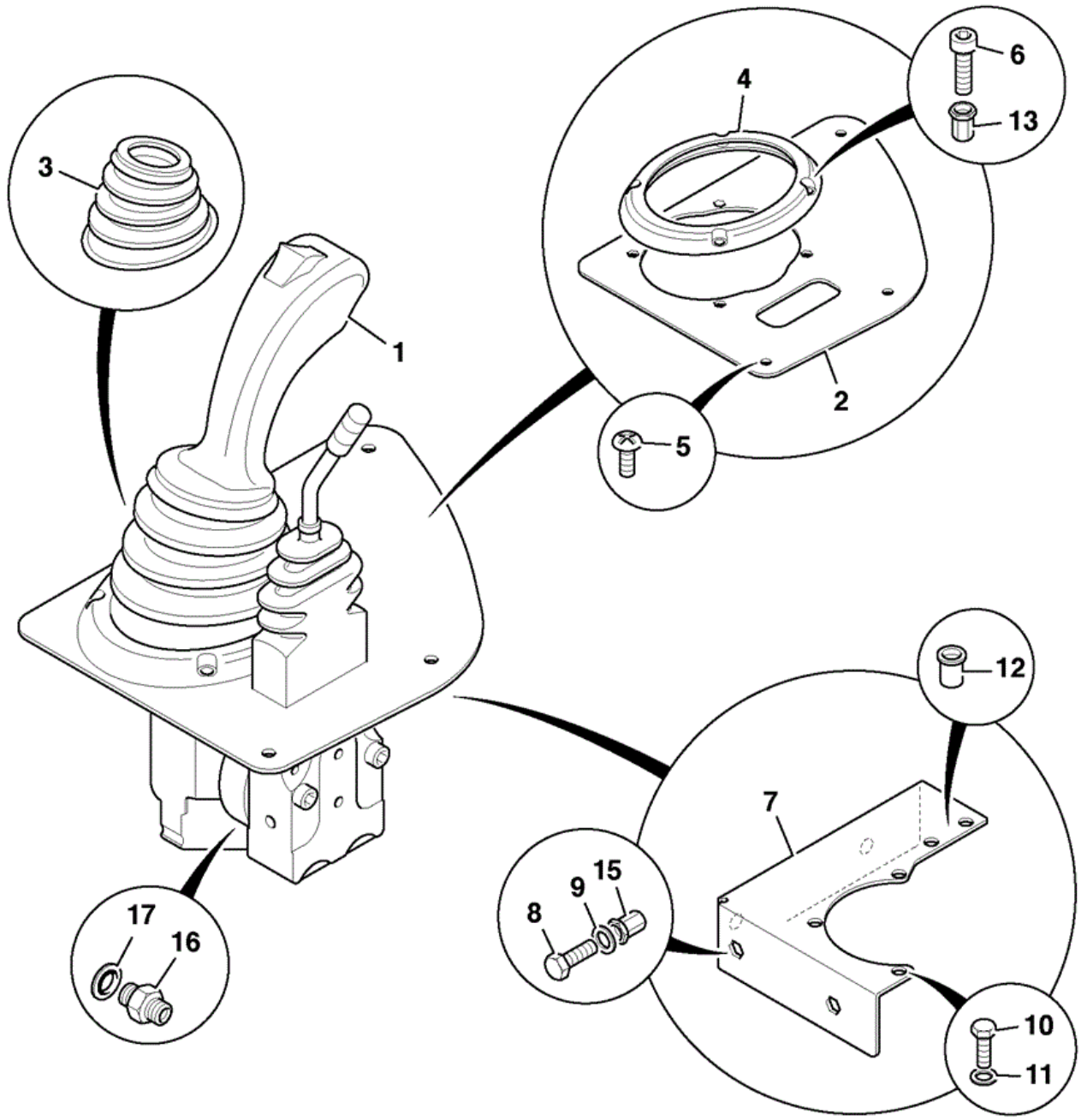

809460

Item	Part No	Change No	Description	Usage Code	QTY
			Valve loader control		

1	928/60033		See page D1-8-1 for components		1
1	928/60347		Valve loader control with detented lever Sales special 9721		1
2	331/54742	Superseded	Plate joystick gaiter		1
2	332/A2270	Superseded	Plate joystick gaiter		1
2	332/W2632		Plate joystick gaiter		1
2	332/U0034		Plate joystick gaiter detented lever Sales special 9721		1
3	331/50183		Gaiter joystick		1
4	821/10159		Clamp Ring Loader Lever Gaiter		1
5	826/11021		Screw Button Head M6x20		4
6	1391/3105D		Screw Cap M5 x 20		4
7	331/62318		Bracket joystick mounting		1
8	1315/0305D		Setscrew M8 x 20mm		3
9	1420/0007D		Washer (M8)		3
10	1315/0207D		Setscrew M6 x 25mm		4
11	1420/0006D		Washer (M6)		4
12	826/01101		Nut Nut,M6 Fit to item 7		4
13	826/10973		Nut Low Profile Hex Bollho M5		4
15	826/10977		Rivet nut M8		3
16	1604/0002		Adapter		9
17	1406/0011		Washer Bonded (1/4")		9
30	333/S5408		Plate clamp Fits with item 4		1

Applicability Date Ranges:
From: , To: M1472056

Product Catalog\WHEELED LOADERS\416 01243000-01243499,01317500-01317999,01472000-01472999,02095872-02095875 9812/3020 \D CONTROLS-MACHINE ENGINE & STEERING\D01 CONTROLS, MACHINE\D1-7-10 VALVE SERVO JOYSTICK CONTROL 4 SPOOL, STANDARD CONTROL

9812/3020 D1-7-10 VALVE SERVO JOYSTICK CONTROL 4 SPOOL, STANDARD CONTROL

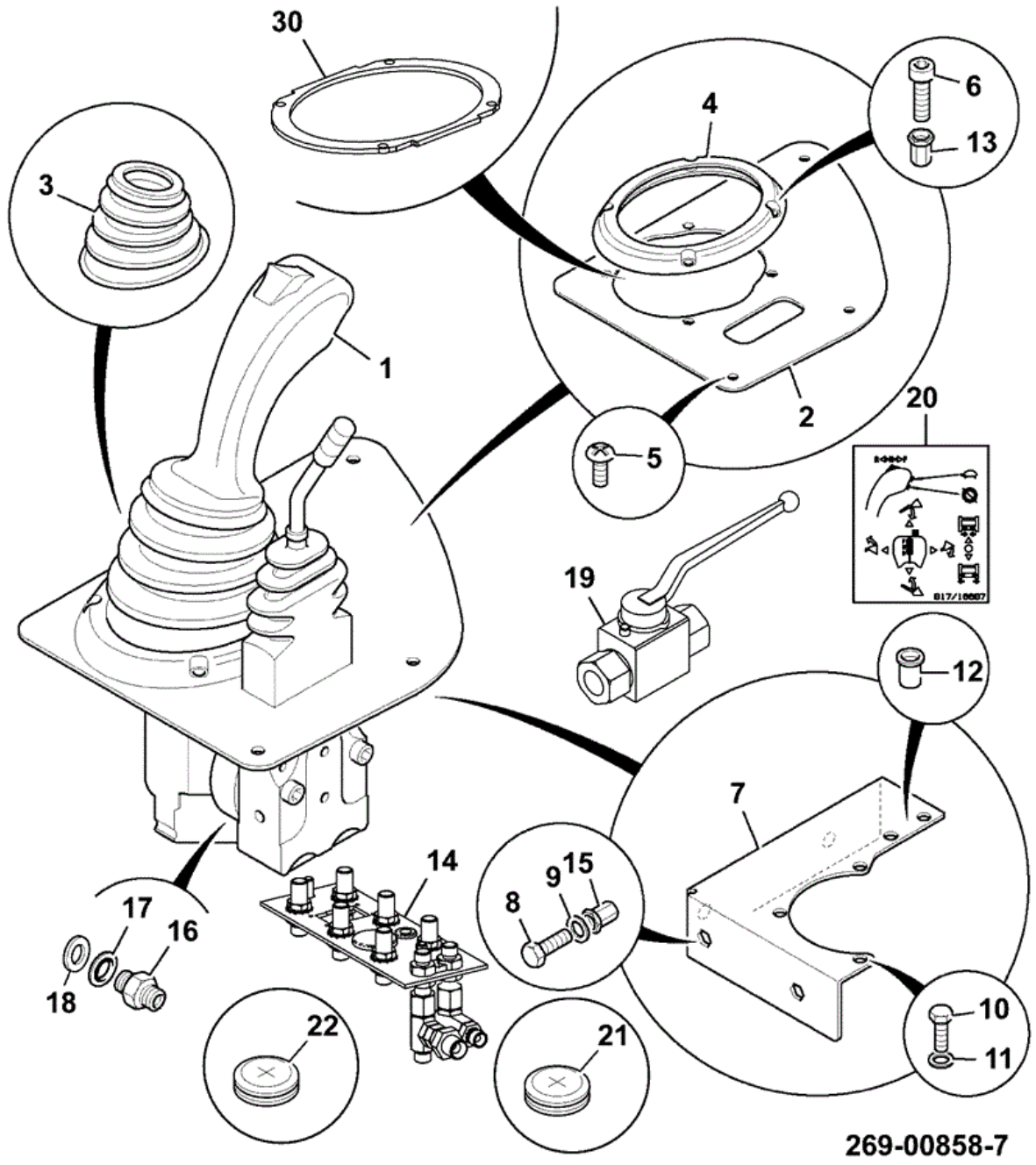

Item	Part No	Change No	Description	Usage Code	QTY
1	928/60033		Valve loader control		1

2	332/W2632		Plate joystick gaiter		1
3	331/50183		Gaiter joystick		1
4	821/10159		Clamp Ring Loader Lever Gaiter		1
5	826/11021		Screw Button Head M6x20		4
6	1391/3105D		Screw Cap M5 x 20		4
7	331/62318		Bracket joystick mounting		1
8	1315/0305D		Setscrew M8 x 20mm		3
9	1420/0007D		Washer (M8)		3
10	1315/0207D		Setscrew M6 x 25mm		4
11	1420/0006D		Washer (M6)		4
12	826/01101		Nut Nut,M6		4
13	826/10973		Nut Low Profile Hex Bollho M5		4
14	****		Assembly pipe cluster		1
15	826/10977		Rivet nut M8		3
16	631/30800		Hose		8
17	1604/0002		Adapter		11
18	1406/0011		Washer Bonded (1/4")		11
19	****		Assembly isolator valve		1
20	817/16687		Decal loader control		1
21	828/10303		Grommet blank		1
22	2410/0215		Grommet		1
23	701/60031		Panel Switch 24V		1
24	701/58833		Actuator auxiliary hydraulics		1
30	333/S5408		Plate clamp		1

Applicability Date Ranges:
From: , To:

Product Catalog\WHEELED LOADERS\416 01243000-01243499,01317500-01317999,01472000-01472999,02095872-02095875 9812/3020 \D CONTROLS-MACHINE ENGINE & STEERING\D01 CONTROLS, MACHINE\D1-8-1 SERVO VALVE COMPONENTS,928/60033

9812/3020 D1-8-1 SERVO VALVE COMPONENTS,928/60033

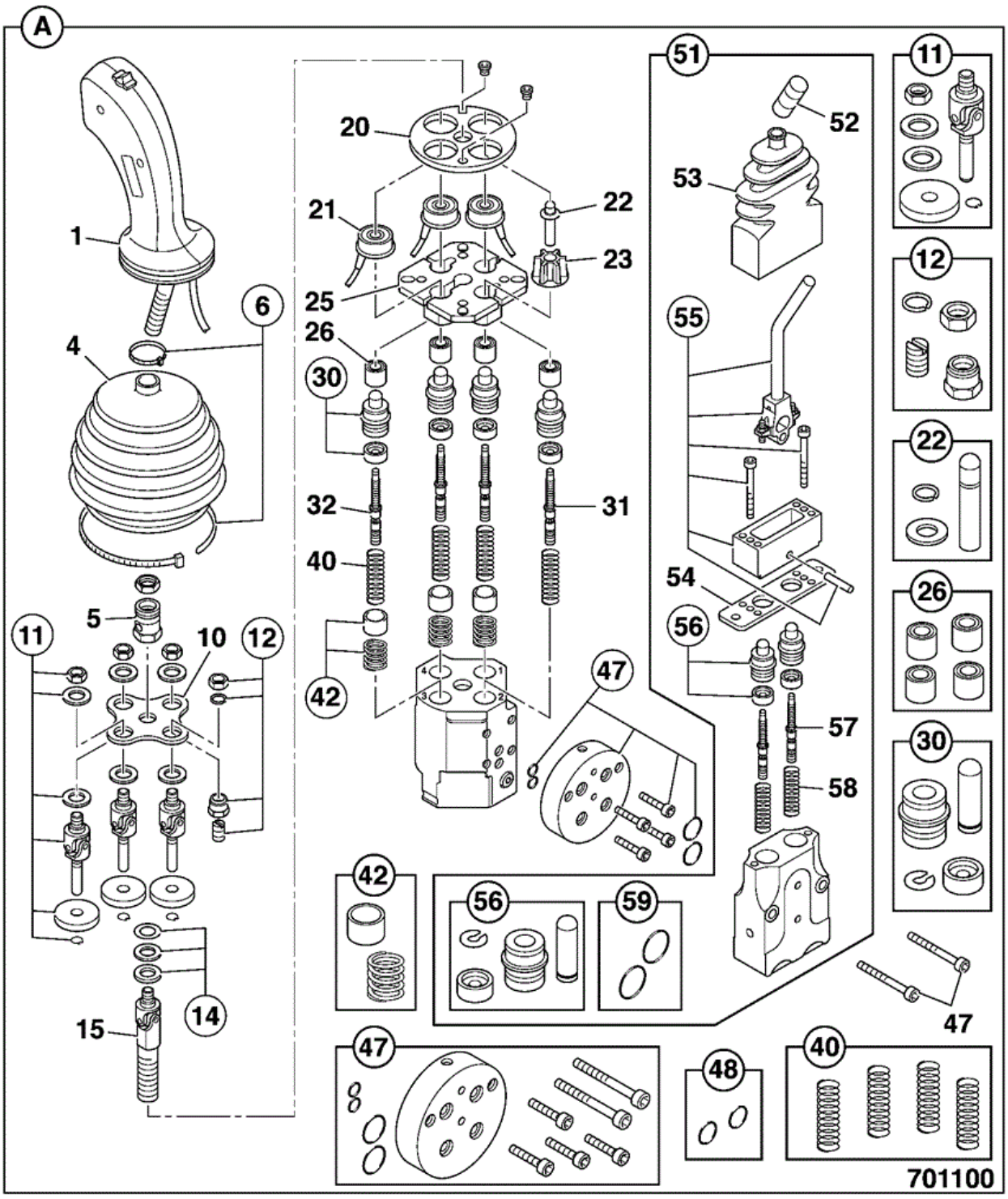

Item	Part No	Change No	Description	Usage Code	QTY
A	928/60033		Valve loader control		1
1	:331/18840		Handle c/w harness n/south operation		1

1A	::25/223421		Switch sliding		1
4	:25/222284		Boot rubber		1
5	:25/222285		Nut locking		1
6	:25/222286		Clamp		1
10	:25/222287		Plate		1
11	:25/222288		Kit cardan detent		3
12	:25/222289		Kit plunger		1
14	:25/222290		Kit shim		1
20	:25/222292		Plate		1
21	:25/222293		Solenoid		3
22	:25/222294		Plunger		1
23	:25/222295		Plunger intermediate		1
25	:25/222296		Bracket electric		1
26	:25/222297		Bush		1
30	:25/221754		Kit-plunger		4
31	:25/222142		Regulator		1
32	:25/222143		Regulator		3
40	:998/10921		Kit spring		1
42	:998/10922		Kit socket and spring		3
47	:25/222298		Kit assembly		1
48	:25/222299		Plate intermediary		1
51	::25/971501		Valve aux. loader control		1
52	::331/42642		Grip handle		1
53	::331/42643		Boot rubber		1
54	::331/42644		Plate retaining		1
55	::998/10935		Kit Lever operating		1
56	::25/945809		Kit seal and plunger		2
57	::998/10936		Kit regulating		2
58	::998/10937		Kit return spring		1
59	::998/10938		Kit seal assembly		1

Applicability Date Ranges:
From: , To:

Product Catalog\WHEELED LOADERS\416 01243000-01243499,01317500-01317999,01472000-01472999,02095872-02095875 9812/3020 \D CONTROLS-MACHINE ENGINE & STEERING\D01 CONTROLS, MACHINE\D1-9-1 VALVE SERVO JOYSTICK CONTROL 4 SPOOL

9812/3020 D1-9-1 VALVE SERVO JOYSTICK CONTROL 4 SPOOL

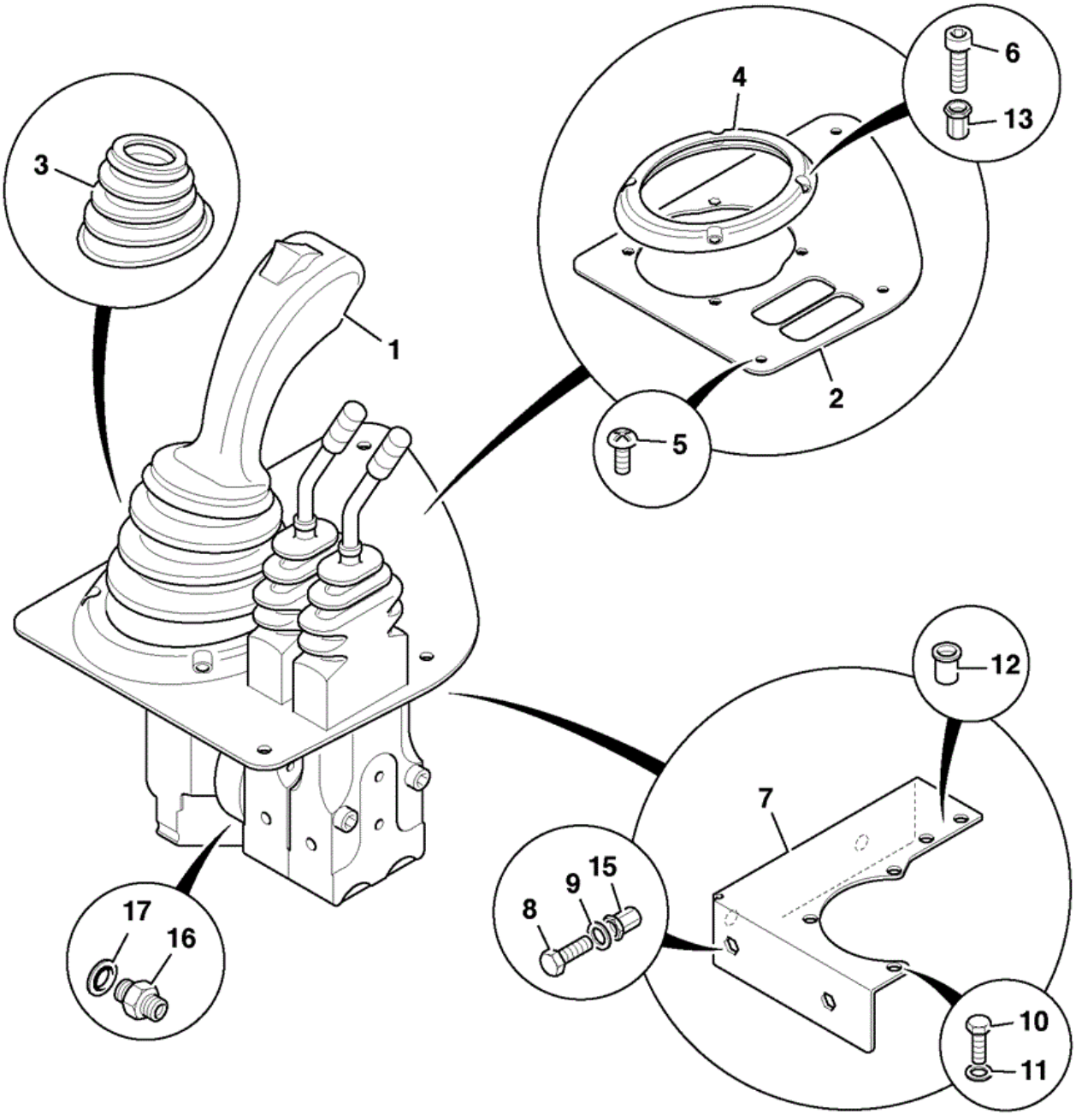

Item	Part No	Change No	Description	Usage Code	QTY
1	928/60034		Valve servo twin aux.levers See D1-10-1		1

2	331/54743	Superseded	Plate joystick gaiter		1
2	332/R1406	Superseded	Plate joystick gaiter		1
2	332/A2271	Superseded	Plate joystick gaiter		1
2	332/W3929		Plate joystick gaiter		1
3	331/50183		Gaiter joystick		1
4	821/10159		Clamp Ring Loader Lever Gaiter		1
5	826/11021		Screw Button Head M6x20		4
6	1391/3105D		Screw Cap M5 x 20		4
7	331/62318		Bracket joystick mounting		1
8	1315/0305D		Setscrew M8 x 20mm		3
9	1420/0007D		Washer (M8)		3
10	1315/0207D		Setscrew M6 x 25mm		4
11	1420/0006D		Washer (M6)		4
12	826/01101		Nut Nut,M6 Fit to item 7		4
13	826/10973		Nut Low Profile Hex Bollho M5		4
15	826/10977		Rivet nut M8		3
30	333/S5408		Plate clamp Fits with item 4		1

Applicability Date Ranges:
From: , To:

Product Catalog\WHEELED LOADERS\416 01243000-01243499,01317500-01317999,01472000-01472999,02095872-02095875 9812/3020 \D CONTROLS-MACHINE ENGINE & STEERING\D01 CONTROLS, MACHINE\D1-10-1 TWIN AUXILIARY LEVER 24 VOLT VARIFLOW, STANDAR & MULTILEVER

9812/3020 D1-10-1 TWIN AUXILIARY LEVER 24 VOLT VARIFLOW, STANDAR & MULTILEVER

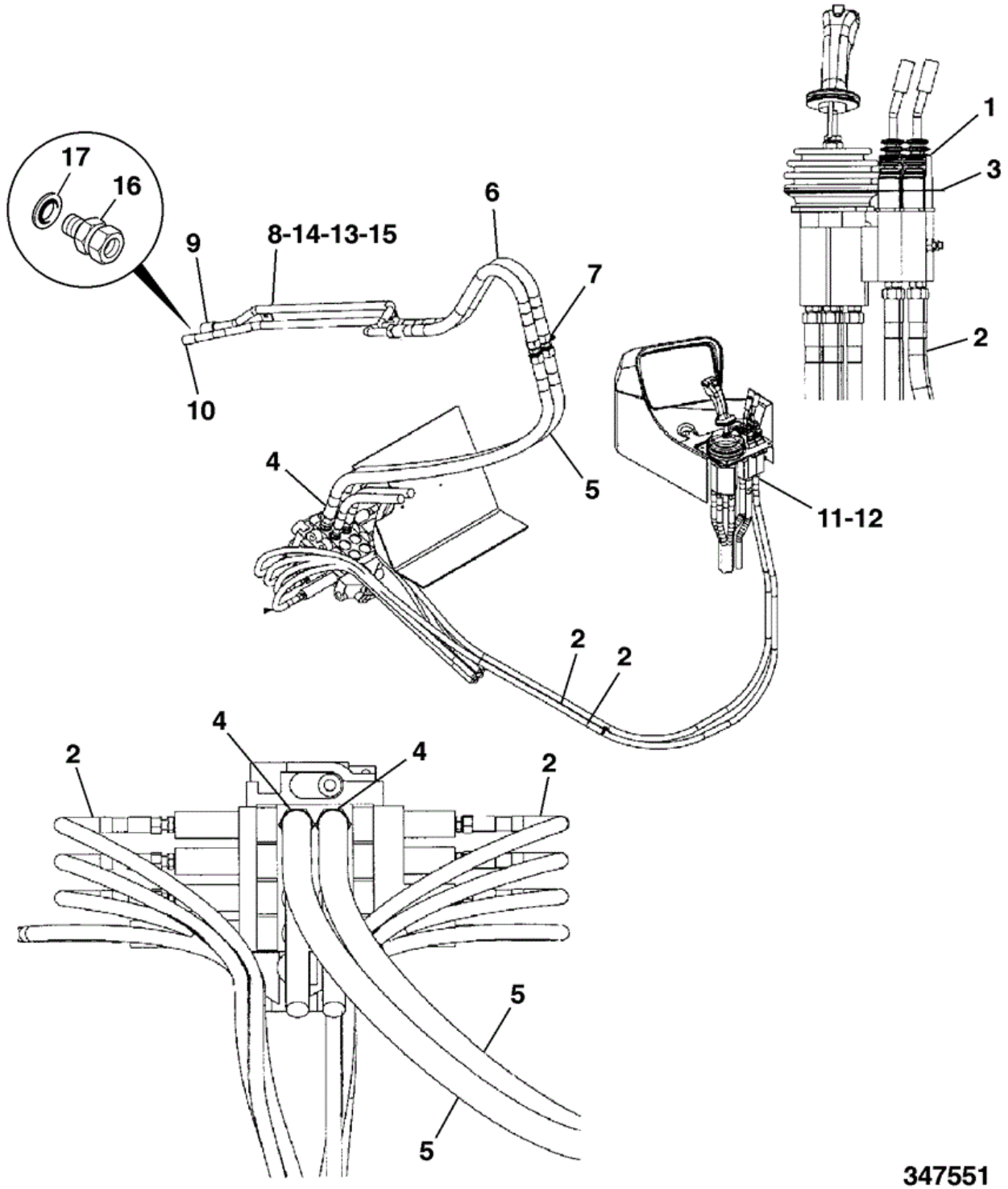

Item	Part No	Change No	Description	Usage Code	QTY
1	928/60034		Valve servo twin aux.levers		1

2	265/00542		Hose servo		2
3	332/W3929		Plate joystick gaiter		1
4	1620/2058		Adaptor 3/4BSP x 7/8SAE M/M		2
5	615/46300		Hose valve block to b/head connection		2
6	333/T9732	to 24/03/2013	Hose 3/4"BSP x 1040mm (Higher temperature rating)		2
6	333/V8171		Hose 12 HP x 1295mm		2
7	816/90033		Adaptor		2
8	335/08589		Pipe auxiliary		1
9	45/910300		Coupling 3/4" BSP male quick release		1
10	45/908400		Coupling 3/4 BSP female quick release		1
11	1604/0002		Adapter		2
12	1406/0011		Washer Bonded (1/4")		2
13	1315/3416D		Bolt M10 x 70mm long		2
14	1420/0012D		Washer Plain M20		2
15	1370/0303D		Nut Self Lock M10		2

Applicability Date Ranges:
From: , To:

Product Catalog\WHEELED LOADERS\416 01243000-01243499,01317500-01317999,01472000-01472999,02095872-02095875 9812/3020 \D CONTROLS-MACHINE ENGINE & STEERING\D01 CONTROLS, MACHINE\D1-11-1 TWIN AUXILIARY LEVER 24 VOLT VARIFLOW, PROPORTIONAL

9812/3020 D1-11-1 TWIN AUXILIARY LEVER 24 VOLT VARIFLOW, PROPORTIONAL

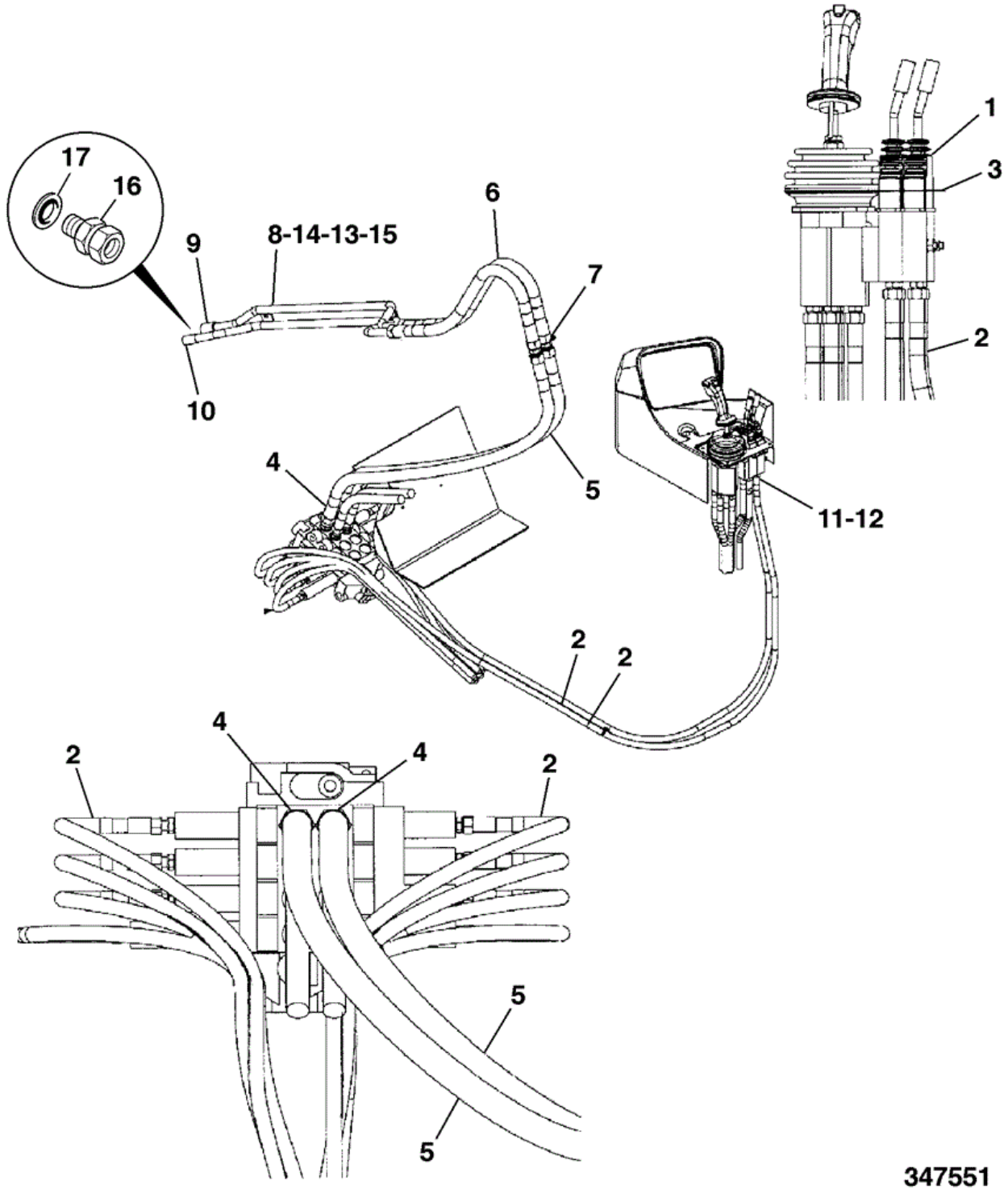

Item	Part No	Change No	Description	Usage Code	QTY
1	928/60034		Valve servo twin aux.levers		1

2	332/U2234		Hose 1/4"BSP x 3350mm Servo hose 1.1		1
2	332/U2236		Hose 1/4"BSP x 3350mm Servo hose 2.1		1
3	332/W3929		Plate joystick gaiter		1
4	816/17061		Adapter		2
10	45/908400		Coupling 3/4 BSP female quick release		1
11	1604/0002		Adapter		2
12	1406/0011		Washer Bonded (1/4")		2
13	1315/3416D		Bolt M10 x 70mm long		2
14	1420/0012D		Washer Plain M20		2
15	1370/0303D		Nut Self Lock M10		2

Applicability Date Ranges:
From: , To:

Product Catalog\WHEELED LOADERS\416 01243000-01243499,01317500-01317999,01472000-01472999,02095872-02095875 9812/3020 \D CONTROLS-MACHINE ENGINE & STEERING\D02 CONTROLS THROTTLE\D2-1-1 CONTROL, THROTTLE TIER 2

9812/3020 D2-1-1 CONTROL, THROTTLE TIER 2

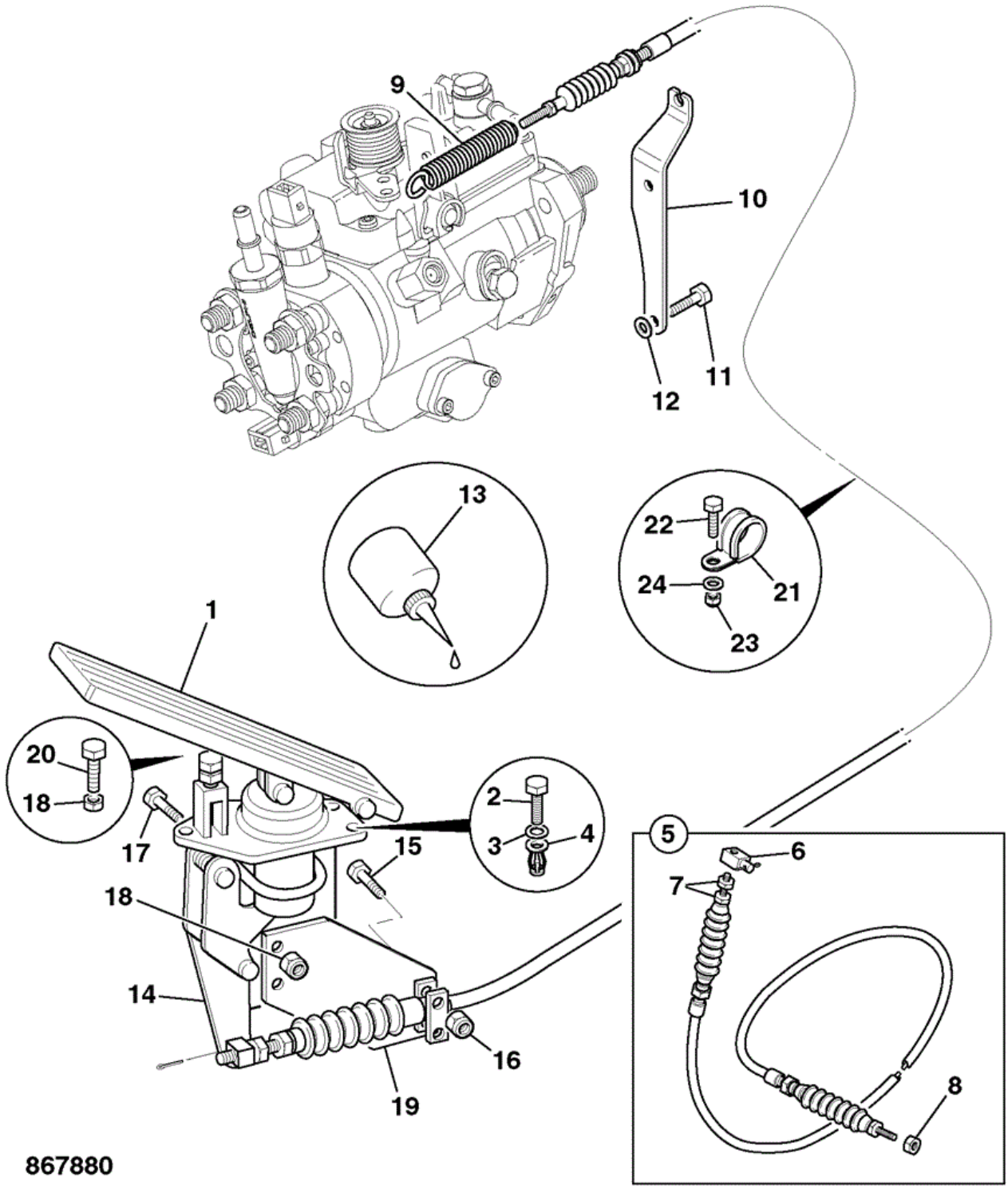

Item	Part No	Change No	Description	Usage Code	QTY
1	256/71700		Pedal assembly throttle control For Service Parts, See page D2-2-1		1
2	1315/0207D		Setscrew M6 x 25mm		3

3	1420/0006D		Washer (M6)		3
4	826/01101		Nut Nut,M6		3
5	910/60267		Cable throttle control		1
6	:262/20400		Elbow pivot		2
7	:1370/0103D		Nut (M6)		2
8	:1340/0003D		Nut locking 1/4"UNF		1
9	814/10179		Spring Overload		1
10	331/61755		Bracket throttle reaction		1
11	1315/0307D		Setscrew M8 x 25 mm		2
12	1420/0007D		Washer (M8)		2
13	4101/0251		Sealant Threadlock 50ml		0
14	265/00630		Lever Extension, Throttle Pedal		1
15	1315/0205D		Setscrew M6 x 20		2
16	1370/0103D		Nut (M6)		2
17	1315/0305D		Setscrew M8 x 20mm		1
18	1370/0203D		Nut Lock M8		2
19	265/00629		Support Cable, Throttle Pedal		1
20	1315/3314D		Bolt M8 x 60mm		1
21	821/10087		Clip P 13mm		1
22	1315/0305D		Setscrew M8 x 20mm		1
23	1370/0203D		Nut Lock M8		1
24	1420/0007D		Washer (M8)		1

Applicability Date Ranges:
From: M1243000 , To: M12434999

Product Catalog\WHEELED LOADERS\416 01243000-01243499,01317500-01317999,01472000-01472999,02095872-02095875 9812/3020 \D CONTROLS-MACHINE ENGINE & STEERING\D02 CONTROLS THROTTLE\D2-11-1 CONTROL, THROTTLE TIER 3

9812/3020 D2-11-1 CONTROL, THROTTLE TIER 3

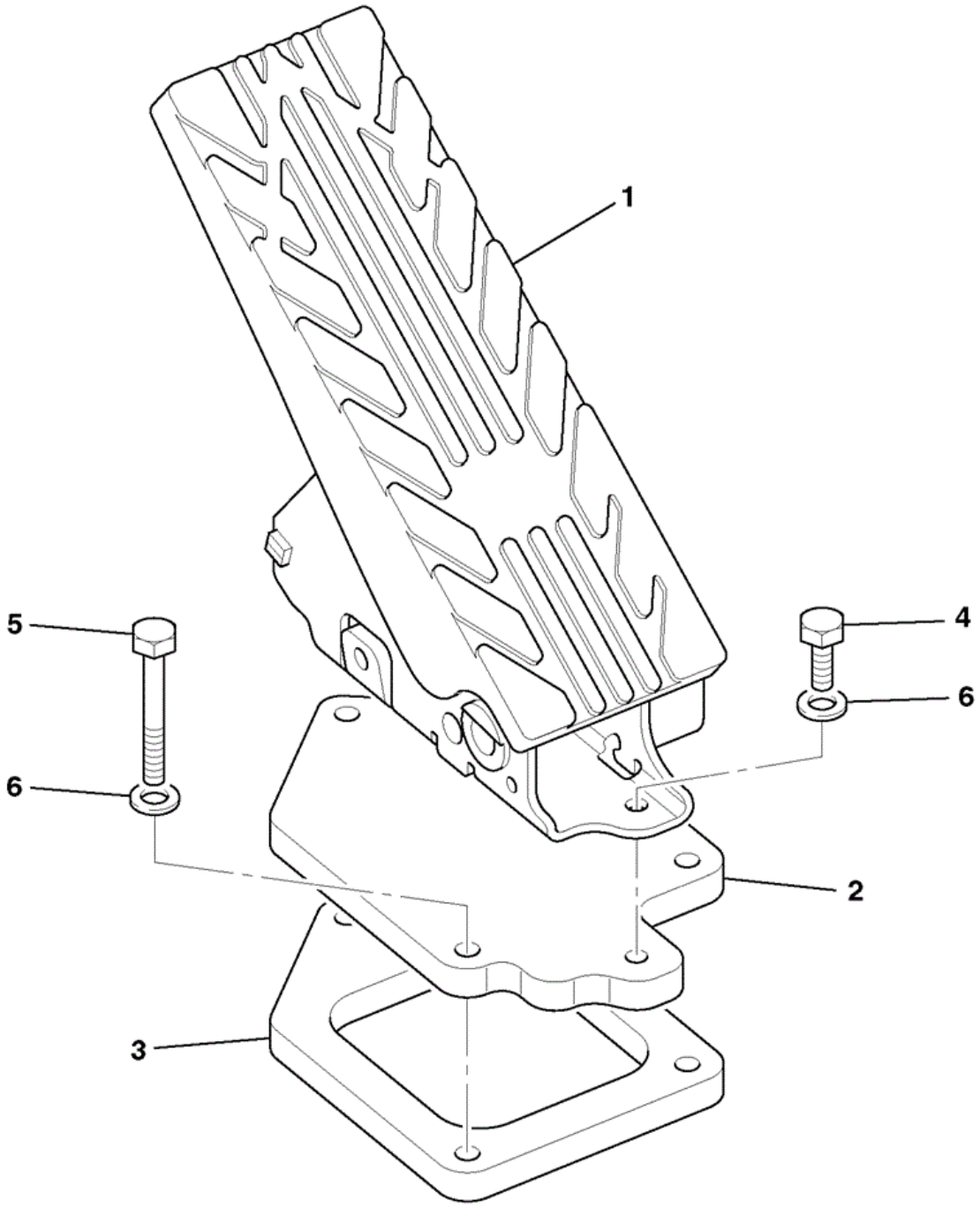

Item	Part No	Change No	Description	Usage Code	QTY
1	728/34600		Pedal electronic throttle twin track (No serviceable parts)		1
2	331/67170		Plate pedal mounting		1

3	331/67391		Plate pedal spacer		1
4	1315/0203D		Setscrew M6 x 16mm		2
5	1315/0212D		Screw		3
6	1420/0006D		Washer (M6)		1

Applicability Date Ranges:
From: M1317500 , To: 30/10/2010

Product Catalog\WHEELED LOADERS\416 01243000-01243499,01317500-01317999,01472000-01472999,02095872-02095875 9812/3020 \E HYDRAULICS & AIR INCLUDING STEERING\E01 HOSE & PIPEWORK\E1-0-1 O RINGS HYDRAULIC HOSES

9812/3020 E1-0-1 O RINGS HYDRAULIC HOSES

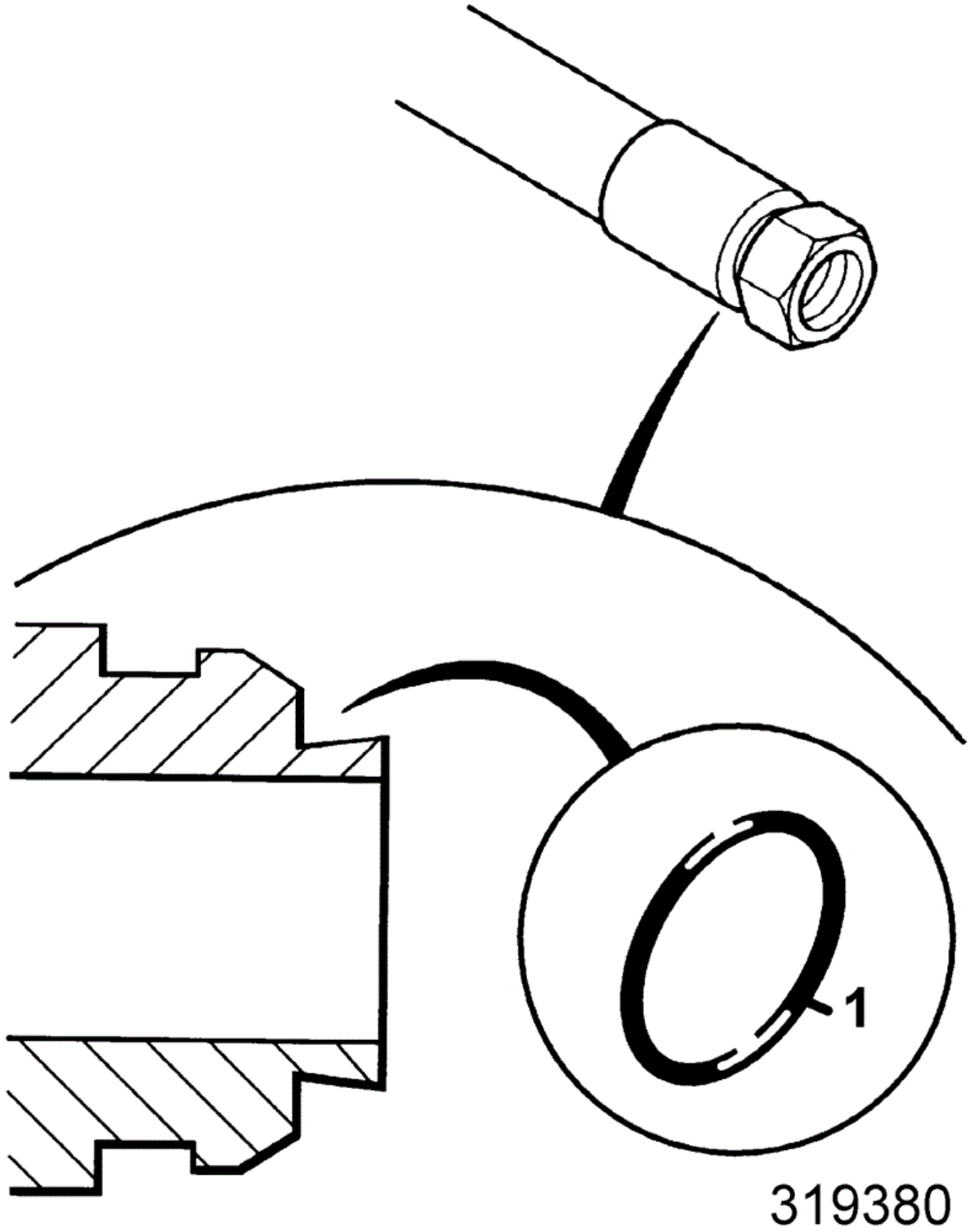

Item	Part No	Change No	Description	Usage Code	QTY
1	828/00237		O Ring 1/4"BSP I/4" BSP Hose		1

1	2301/0006		O Ring 3/8"BSP 3/8" BSP Hose		1
1	2301/0010		O Ring 1/2"BSP 1/2" BSP Hose		1
1	2301/0011		O Ring 5/8"BSP 5/8" BSP Hose		1
1	2301/0015		O Ring 3/4"BSP 3/4" BSP Hose		1
1	2301/0018		O Ring 12"BSP 1" BSP Hose		1
1	2302/0907		O Ring 1 1/4" BSP Hose		1
1	2302/0908		O Ring 1 1/2" BSP Hose		1

Applicability Date Ranges:
From: , To:

Product Catalog\WHEELED LOADERS\416 01243000-01243499,01317500-01317999,01472000-01472999,02095872-02095875 9812/3020 \E HYDRAULICS & AIR INCLUDING STEERING\E01 HOSE & PIPEWORK\E1-0-2 O RINGS AIR CON HOSES

9812/3020 E1-0-2 O RINGS AIR CON HOSES

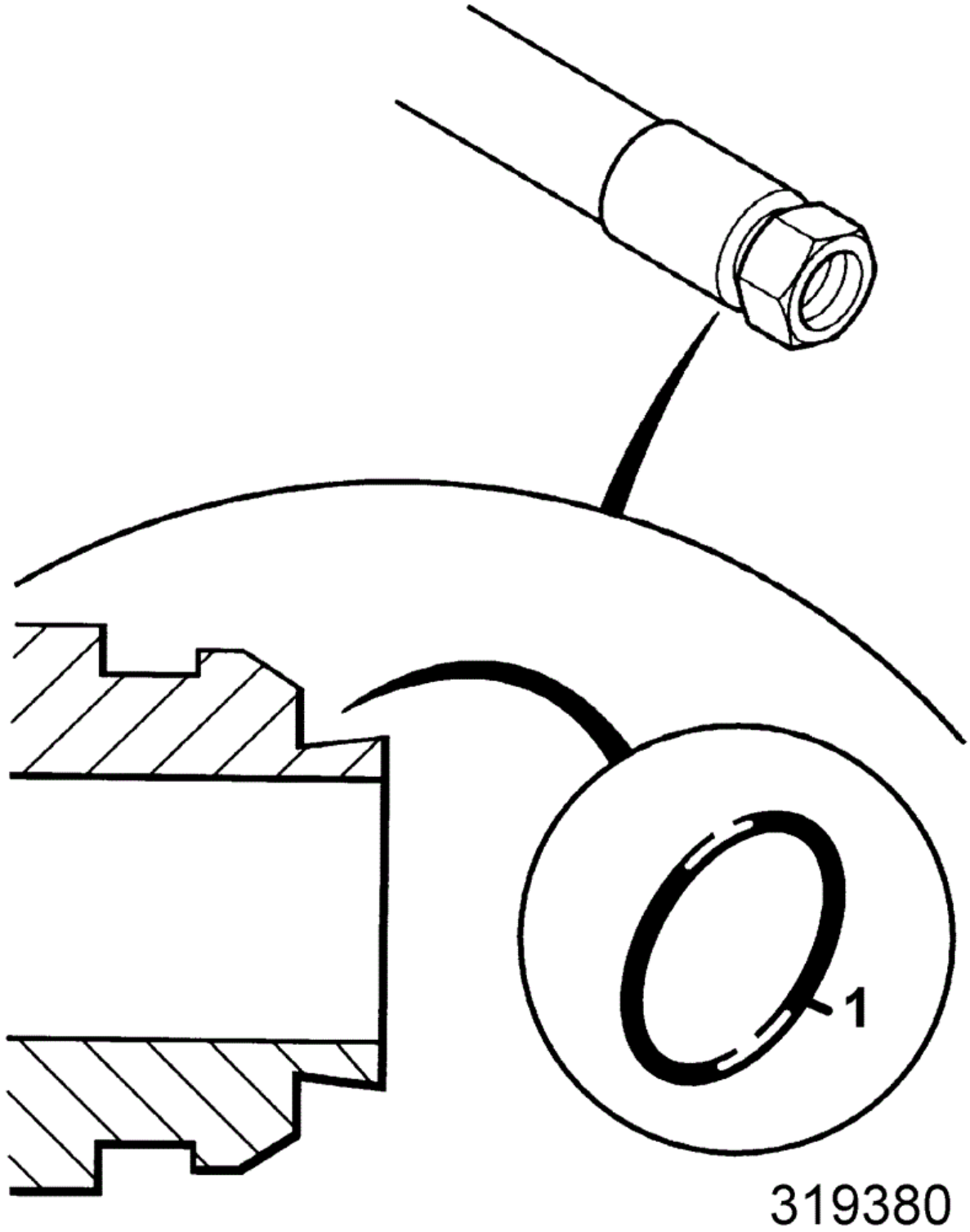

Item	Part No	Change No	Description	Usage Code	QTY
1	993/99561		O Ring No.6		1

1	993/99560	Superseded	O Ring No.8		1
1	993/84100		O Ring		1
1	993/99562		O Ring No.10		1
1	993/99610		O Ring No.12		1
1	828/10167		O Ring No 12 air con system		1

Applicability Date Ranges:
From: , To:

Product Catalog\WHEELED LOADERS\416 01243000-01243499,01317500-01317999,01472000-01472999,02095872-02095875 9812/3020 \E HYDRAULICS & AIR INCLUDING STEERING\E01 HOSE & PIPEWORK\E1-1-1 CIRCUIT LOADER END

9812/3020 E1-1-1 CIRCUIT LOADER END

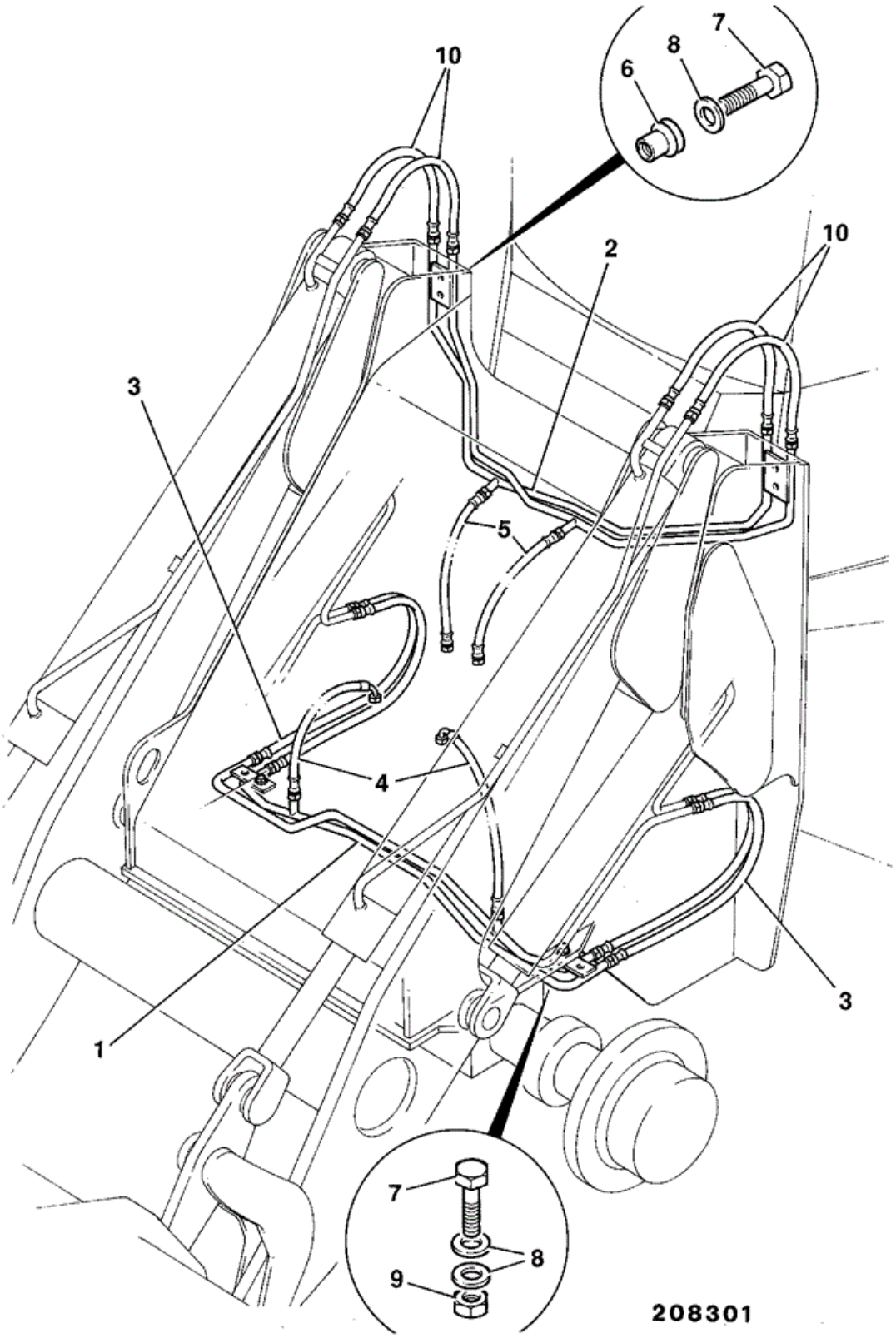

Item	Part No	Change No	Description	Usage Code	QTY

1	335/08586		Pipe lift ram		1
2	335/08587	to M1317854	Pipe ram,shovel		1
2	332/U1947		Pipe ram shovel		1
2	335/05898		Pipe ram shovel Sales special 7975 (When screen guard fitted)		1
3	615/01200		Hose 3/4 x 1020 mm		4
3	970/60388		Hose 3/4" x 1020mm wire wrapped Sales special 7973, 1019, 1227, 1747		4
4	615/80031		Hose 3/4"BSP x 620mm		2
5	209/71200		Hose 3/4"BSP x 750mm		2
5	333/R4523		Hose 3/4"BSP x 750mm wire guarded Sales special 1227		2
6	826/01249		Nut Rrivet M10		4
7	1315/0410D		Setscrew M10 x 40mm		6
8	1420/0008D		Washer (M10)		8
9	1370/0303D		Nut Self Lock M10		2
10	209/71200		Hose 3/4"BSP x 750mm		4
10	970/61325		Hose 3/4BSP x 750mm wire wrapped Sales special 7973, 1747		4
10	333/R4523		Hose 3/4"BSP x 750mm wire guarded Sales special 1019		4
10	615/00400		Hose 3/4"BSP x 910mm		4
10	332/V3857	to 05/07/2011	Hose 3/4"BSP x 1040mm Sales special 1363, 1780		4
10	333/T9732		Hose 3/4"BSP x 1040mm (Higher temperature rating) Replaces 332/V3857. Sales special 3402 & 3590		4
21	332/U9387		Sleeve heatshrink 68.6mm to 22.9mm x 300mm Sales special 9851. Fit to 1 1/4" hoses		4
22	332/U9388		Sleeve heashrink 52mm to 13mm x 1200mm Sales special 9851. Fit to 1" & 3/4" hoses		3
23	332/U9389		Sleeve heatshrink 40mm to 13mm x 1200mm Sales special 9851. Fit to 5/8" & 1/2" hoses		5
24	332/U9390		Sleeve heatshrink 32mm to 8mm x 1200mm Sales special 9851. Fit to 1/4" hoses		8
99	269/00177		G.A.		1

Applicability Date Ranges:
From: , To:

9812/3020 E1-1-10 PIPEWORK LOADER END SALES SPECIAL

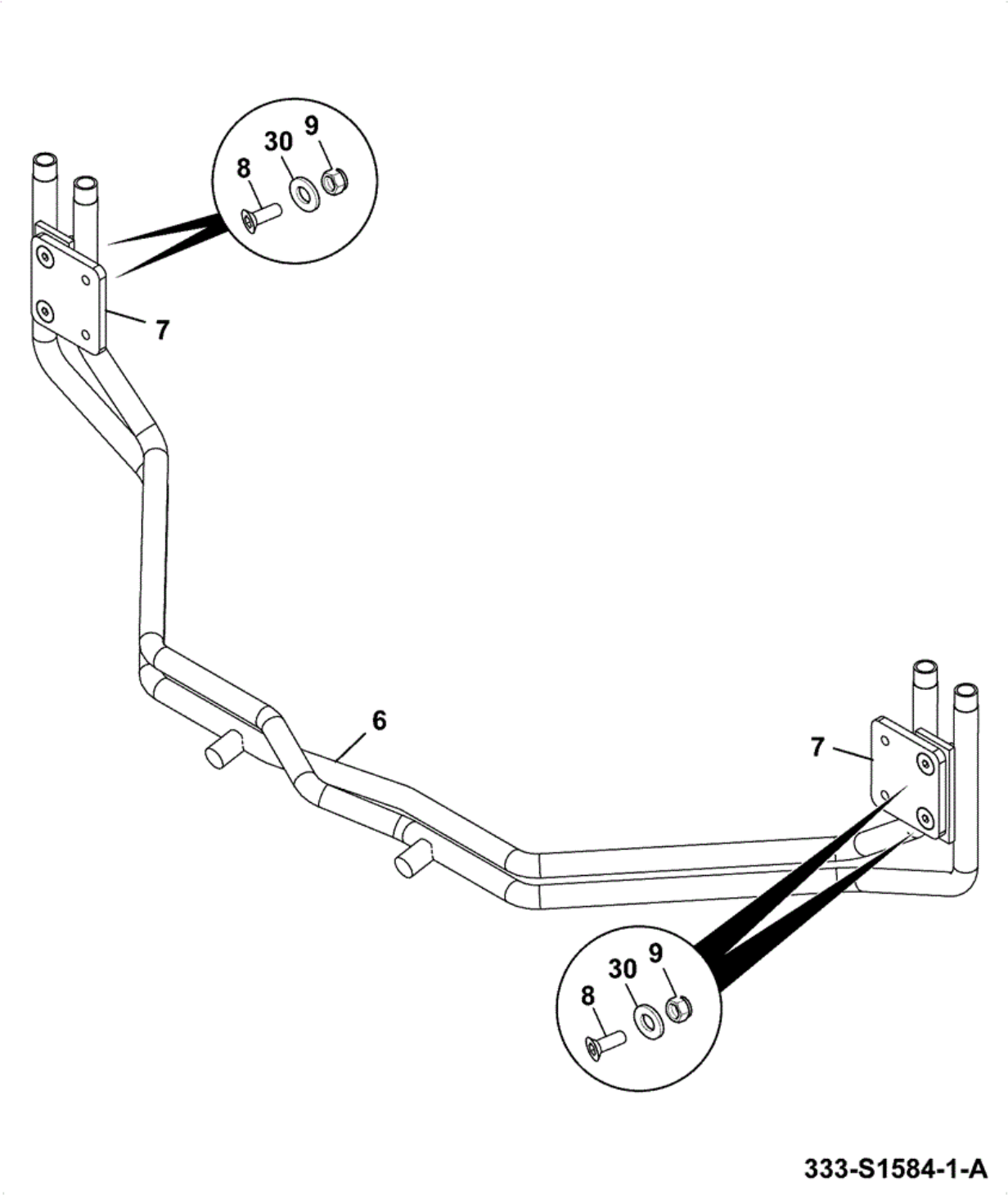

Item	Part No	Change No	Description	Usage Code	QTY
6	335/05898		Pipe ram shovel Sales special 1747		1
7	333/S2282		Plate pipework adapter		2

8	826/01766		Screw countersunk		4
9	1370/0303D		Nut Self Lock M10		4
30	1420/0008D		Washer (M10)		4

Applicability Date Ranges:
From: , To:

9812/3020 E1-2-1 CIRCUIT LOADER END AUXILIARY

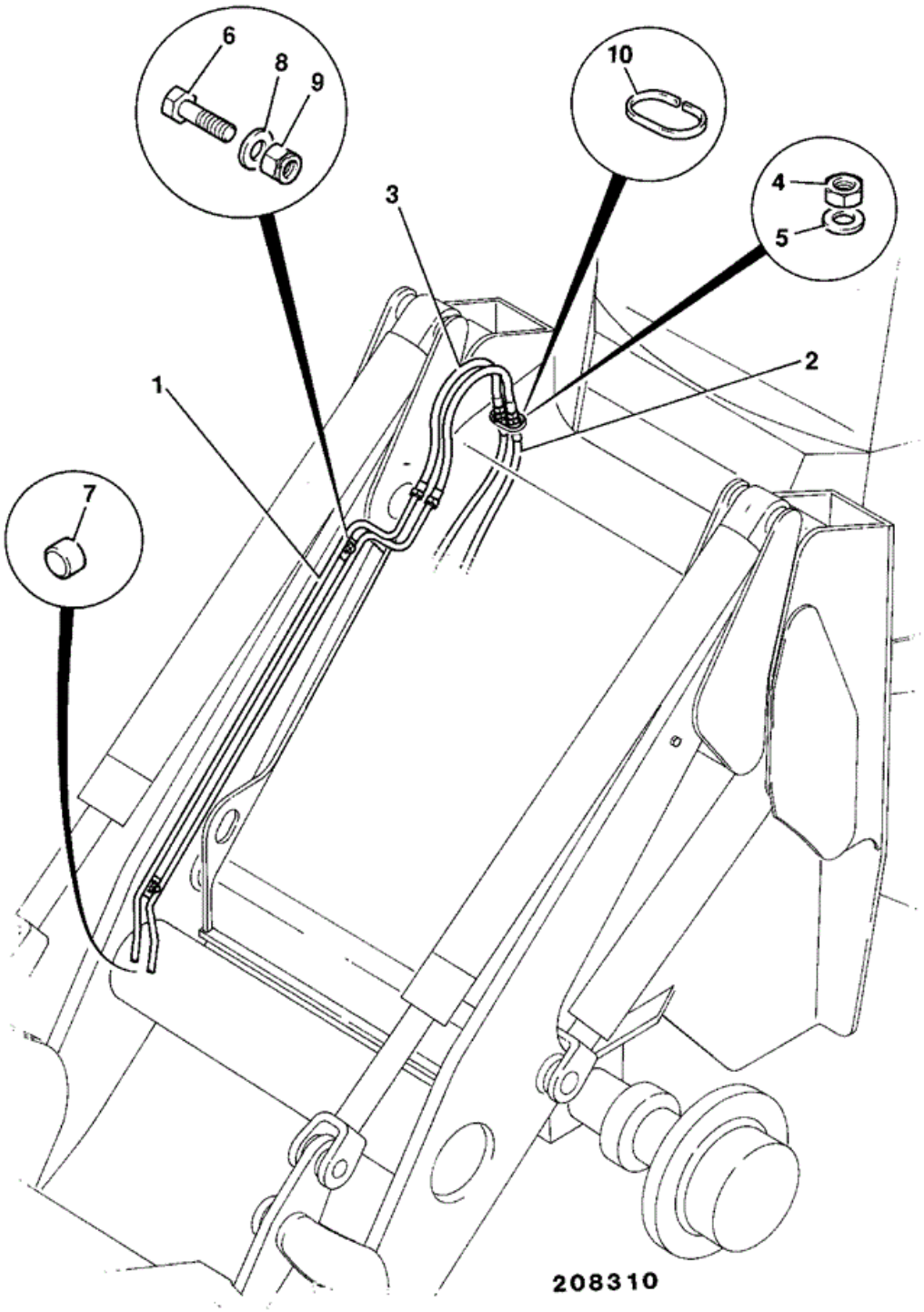

Item	Part No	Change No	Description	Usage Code	QTY

1	335/08588		Pipe Auxiliary 2 off required on 4 spool machines		1
2	629/21800		Hose 1/2"BSP x 1200mm		2
3	613/07600		Hose 1/2"BSP x 570mm		2
3	970/60271		Hose 1/2"BSP x 570mm wire guarded Sales special 1227		2
3	613/07400		Hose 1/2"BSP x 830mm Sales special 1363,1369 & 1780. Hi lift arms		2
3	613/05800		Hose 1/2"BSP x 1200mm 416 Super hi-lift		2
4	1356/0204Z		Nut BACKNUT (1/2" bsp)		2
5	1420/0012D		Washer Plain M20		2
6	1315/3416D		Bolt M10 x 70mm long		2
7	816/00190		Cap		2
8	1420/0008D		Washer (M10)		4
9	1370/0303D		Nut Self Lock M10		2
10	926/08300		Strip Edging		0

Applicability Date Ranges:
From: , To:

9812/3020 E1-3-1 CIRCUIT LOADER END SUPER HIGH LIFT

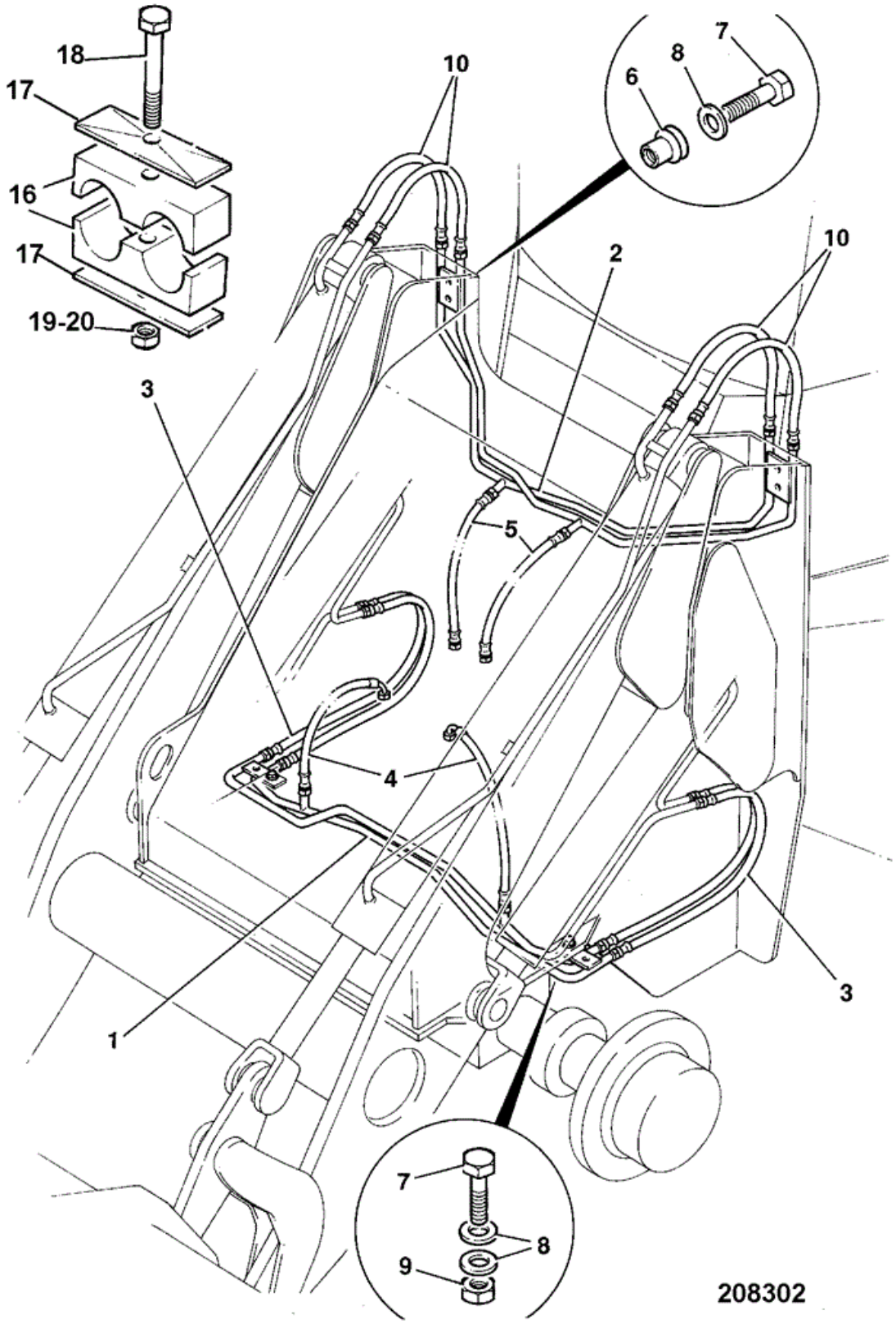

Item	Part No	Change No	Description	Usage Code	QTY

1	335/08586		Pipe lift ram		1
2	335/08587		Pipe ram,shovel		1
3	615/01200		Hose 3/4 x 1020 mm		4
3	332/V3857	to 05/07/2011	Hose 3/4"BSP x 1040mm		4
3	333/T9732		Hose 3/4"BSP x 1040mm (Higher temperature rating) Replaces 332/V3857		4
4	615/80031		Hose 3/4"BSP x 620mm		2
5	209/71200		Hose 3/4"BSP x 750mm		2
6	826/01249		Nut Rrivet M10		4
7	1315/0410D		Setscrew M10 x 40mm		6
8	1420/0008D		Washer (M10)		8
9	1370/0303D		Nut Self Lock M10		2
10	615/29100		Hose		4
16	821/00442		Clamp		8
17	821/00443		Plate Cover		8
18	1315/3316Z		Bolt (M8 x 70)		4
19	1420/0007Z		Washer (M8)		8
20	1370/0203Z		Nut Nut M8		4

Applicability Date Ranges:
From: , To:

9812/3020 E1-4-2 HOSE AND PIPEWORK LOADER VALVE

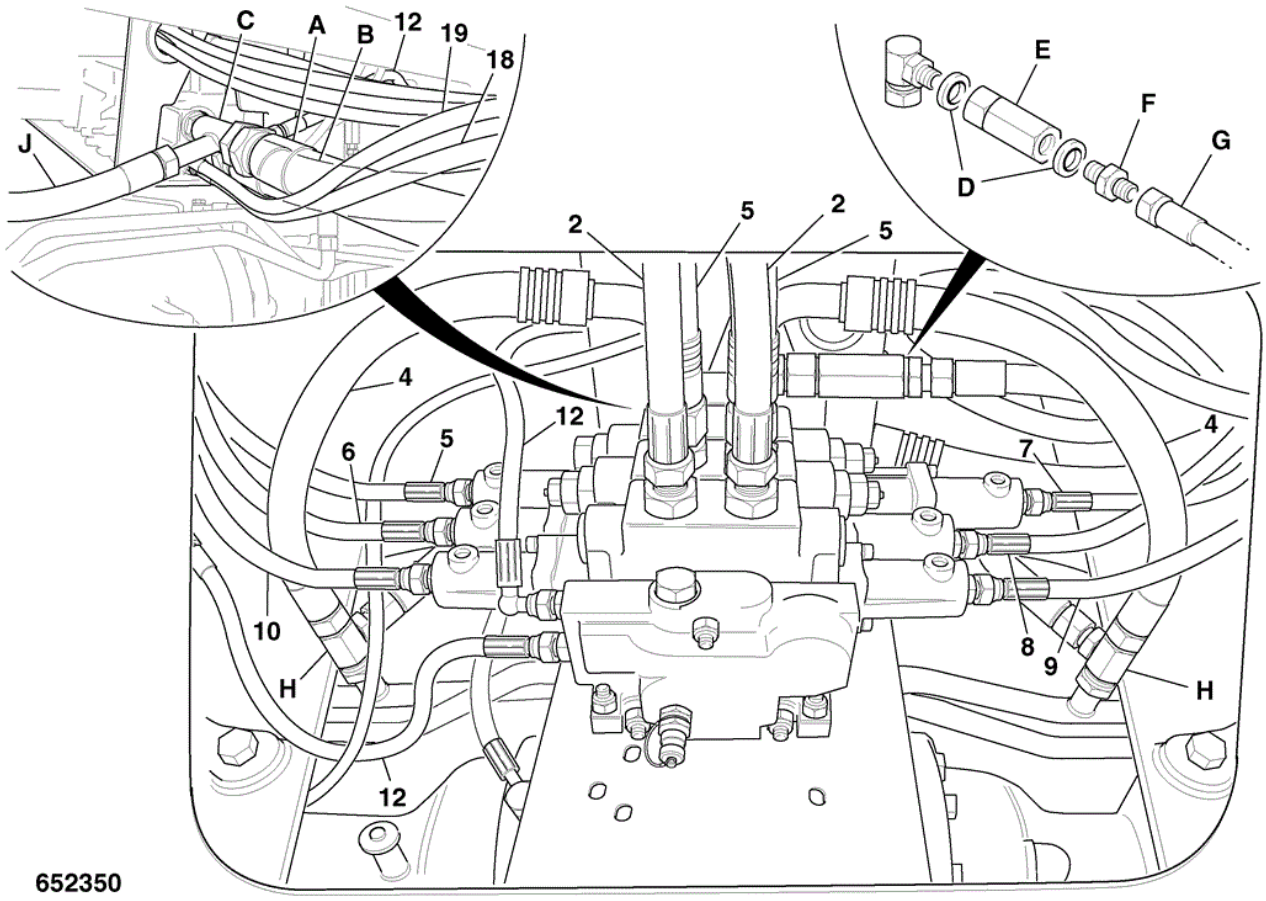

Item	Part No	Change No	Description	Usage Code	QTY
A	638/80011	Superseded	Hose 1 1/4"BSP x 1300mm Standard		1
A	333/R4988		Hose 1 1/4"BSP x 1325mm		1
A	638/80004		Hose Load suspension builds		1
B	332/U2170	Superseded	Hose 1"BSP x 2240mm Behind item A, return hose		1
B	333/R8878		Hose 1"BSP x 2165mm		1
C	816/55058		Adapter tee Standard, one stub for item 12		1
C	816/50031	Superseded	Adapter Tee Load suspension builds		1
C	816/90013		Adaptor Tee 1/4F-1/4M-1/4M BSP		1
D	1406/0018		Washer Bonded (1/2" BSP)		2
E	25/905500		Valve check		1
F	1604/0004		Adaptor Male		1

G	332/U1922		Hose 1/2"BSP x 2170mm		1
H	816/90043		Adaptor tee M/M/F Load suspension builds		1
J	617/20300		Hose Load suspension builds		1
K	816/40016		Adapter ,90 Deg.		1
2	629/21800		Hose 1/2"BSP x 1200mm		2
4	615/80031		Hose 3/4"BSP x 620mm		2
5	209/71200		Hose 3/4"BSP x 750mm		2
6	332/U2229		Hose 1/4"BSP x 3350mm ID label "2"		1
7	332/U2231		Hose 1/4"BSP x 3350mm ID label "3"		1
8	332/U2232		Hose 1/4"BSP x 3350mm ID label "4"		1
9	332/U2234		Hose 1/4"BSP x 3350mm ID label "1.1"		1
10	332/U2236		Hose 1/4"BSP x 3350mm ID label "2.1"		1
12	631/30200		Hose 1/4"BSP x 500mm		2
18	611/03800		Hose 1/4"BSP x 2300mm		1
19	332/U1920		Hose 1/4"BSP x 3300mm "SLS" LS port		1

Applicability Date Ranges:
From: M1317855 , To:

Product Catalog\WHEELED LOADERS\416 01243000-01243499,01317500-01317999,01472000-01472999,02095872-02095875 9812/3020 \E HYDRAULICS & AIR INCLUDING STEERING\E01 HOSE & PIPEWORK\E1-5-1 FILTER, HYDRAULIC RETURN PIPE

9812/3020 E1-5-1 FILTER, HYDRAULIC RETURN PIPE

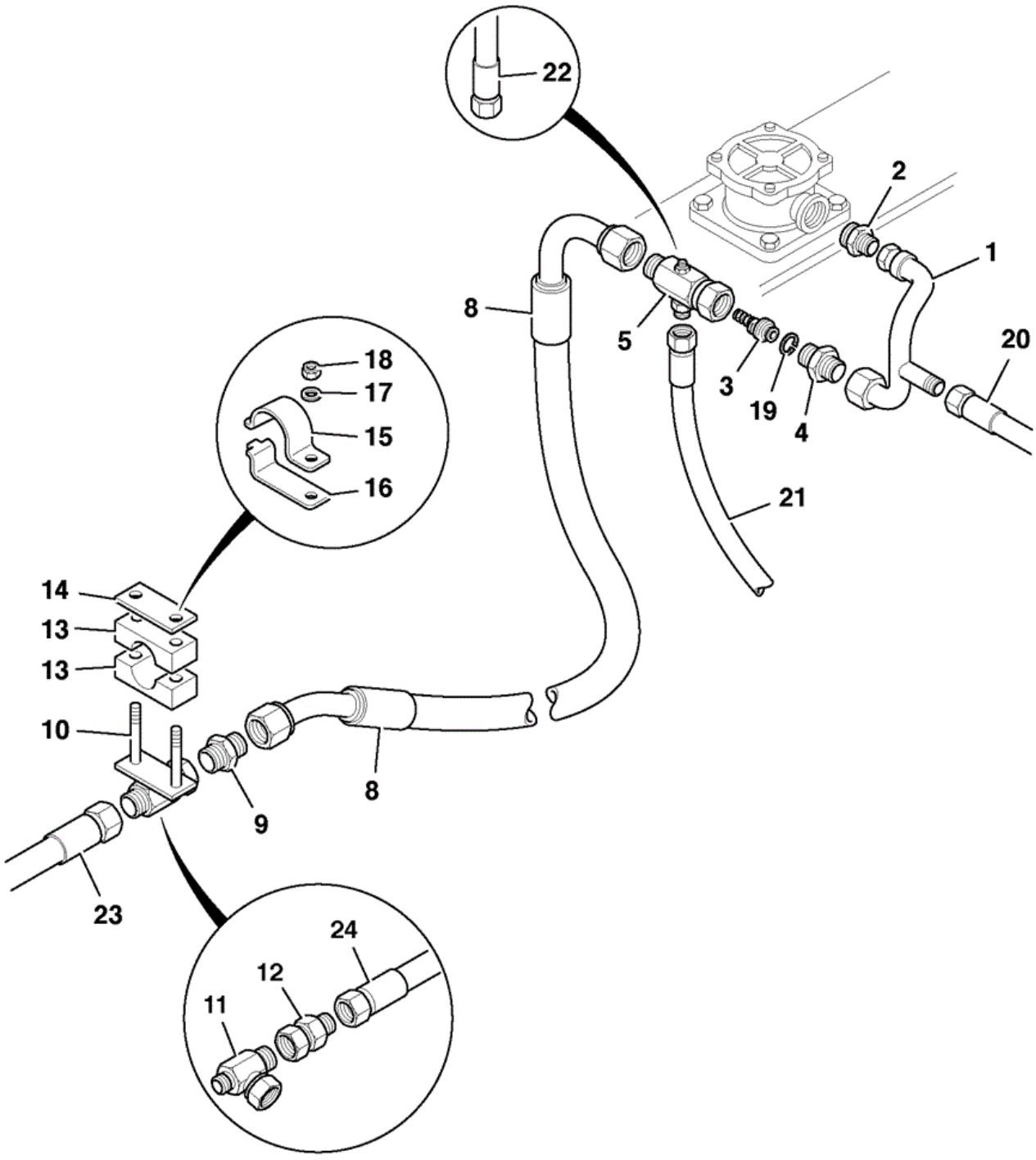

Item	Part No	Change No	Description	Usage Code	QTY
1	335/12166	<OCT06	Pipe main return elbow		1
1	335/12866		Pipe filter return		1

2	1620/2061		Adaptor M/M		1
3	25/910100		Valve control		1
4	816/13170		Adapter		1
5	816/90938		Adapter 4 way		1
8	638/80021		Hose		1
9	1604/0009		Adapter Not required if 816/90963 fitted		1
10	816/13211		Adapter with bracket		1
10	816/90963		Adapter Tee Replaces 816/13211 & item 9		1
11	816/13169		Adapter tee		1
11	816/90275		Adaptor Tee Replaces 816/13169		1
12	1612/2059		Adapter reducer 1/4"MBSPx3/8"FBSP		1
13	821/10259		Clamp 1 x R24.5mm dia.		2
14	265/00255		Plate clamp		1
15	821/00186		Clamp Top 25mm		1
16	821/00187		Clamp Base 25mm		1
17	1420/0008D		Washer (M10)		2
18	1370/0303D		Nut Self Lock M10		2
19	821/00405		Circlip		1
20	****		T.B.A Hose		1
21	****		T.B.A Hose		1
22	****		T.B.A Hose		1
23	****		T.B.A Hose		1
24	****		T.B.A Hose		1

Applicability Date Ranges:
From: , To:

9812/3020 E1-6-1 HOSE AND PIPWORK STEER RAMS

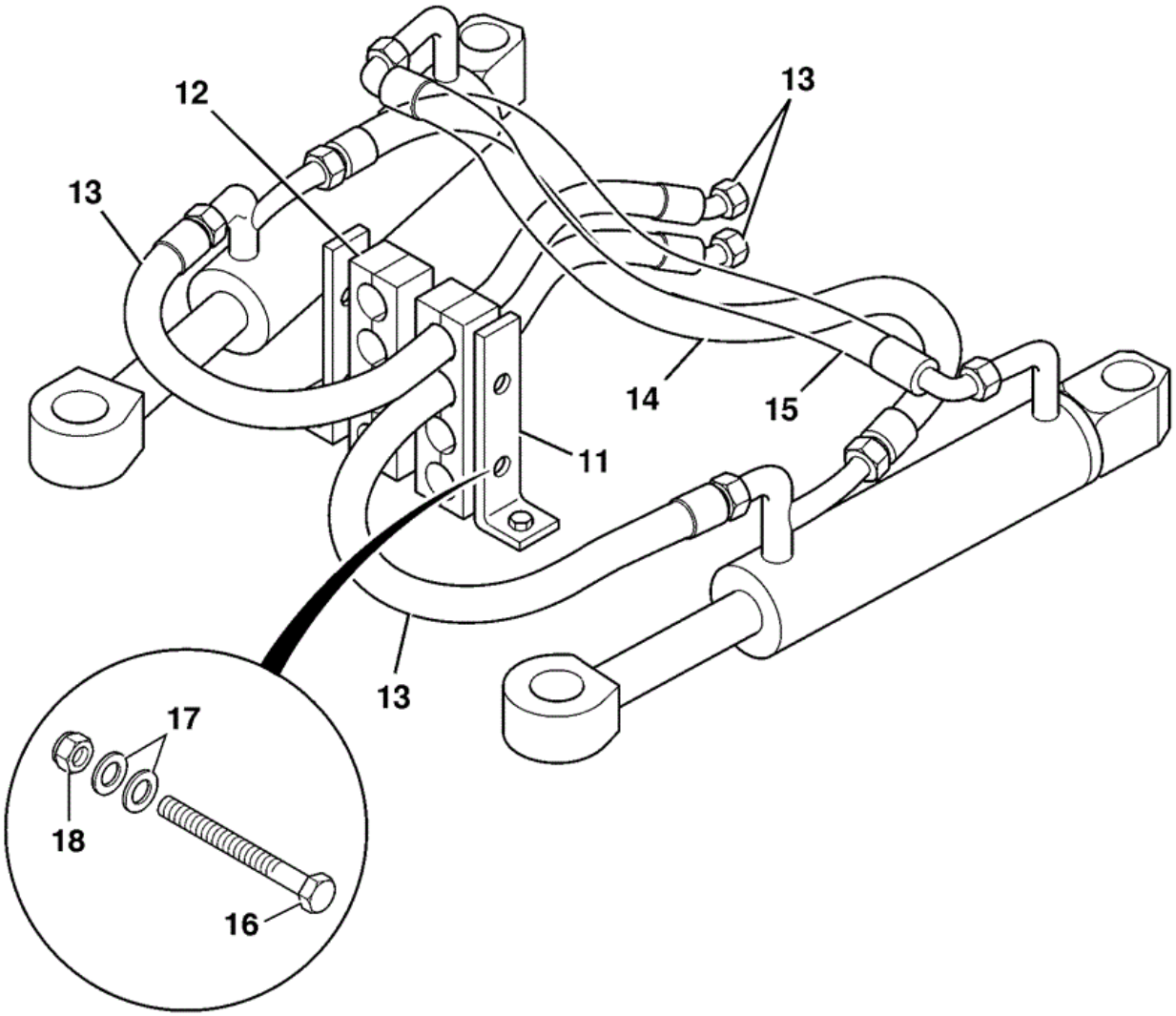

365631

Item	Part No	Change No	Description	Usage Code	QTY
11	265/00435		Bracket Mounting Clamp		2
12	821/00285		Clamp 21.3mm/21.3mm holes 37mm high		2

13	613/07400		Hose 1/2"BSP x 830mm		2
14	613/24900		Hose 1/2" str/elb 650mm		1
15	613/31900		Hose 1/2"BSP x 620mm lg. Qty 2 on fixed flow		1
16	1315/3320D		Bolt M8 x100 mm		2
17	1420/0007D		Washer (M8)		4
18	1370/0203D		Nut Lock M8		2

Applicability Date Ranges:
From: , To:

Product Catalog\WHEELED LOADERS\416 01243000-01243499,01317500-01317999,01472000-01472999,02095872-02095875 9812/3020 \E HYDRAULICS & AIR INCLUDING STEERING\E01 HOSE & PIPEWORK\E1-7-1 HOSE AND PIPEWORK STEER VALVE

9812/3020 E1-7-1 HOSE AND PIPEWORK STEER VALVE

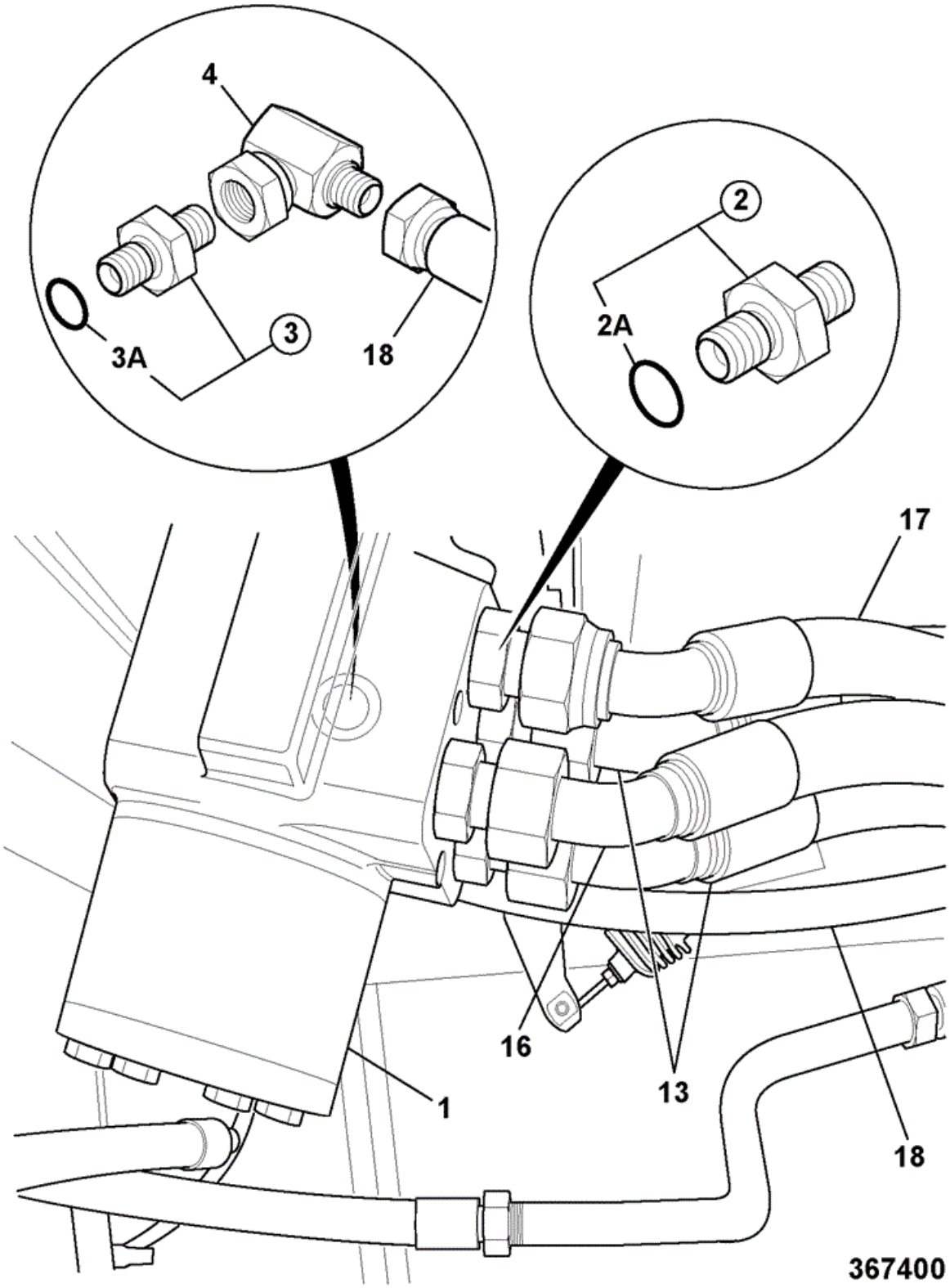

Item	Part No	Change No	Description	Usage Code	QTY

1	35/910107		Valve steering 370cc/rev		1
2	1620/0005		Adapter 3/4"UNF o-ring boss 1/2"BSP male		4
2A	:2401/0506		O Ring		1
3	1620/0001		Adapter		1
3	1620/2050		Adaptor 1/4BSP x 7/16SAE Replaces 1620/0001		1
3A	:2401/0503		O Ring		1
4	****		'See Remark' Elbow adapter		1
13	613/07400		Hose 1/2"BSP x 830mm		2
16	613/08100	to M1317854	Hose 1/2"BSP x 2570mm		1
16	332/U1922		Hose 1/2"BSP x 2170mm		1
17	633/30800		Hose 1/2" x 1220 lg.		1
18	269/30438	to M1317854	Hose 1/4"BSP x 2300mm "SLS"		1
18	332/U1920		Hose 1/4"BSP x 3300mm "SLS"		1

Applicability Date Ranges:
From: , To:

9812/3020 E1-8-1 HOSE AND PIPEWORK EMERGENCY STEER

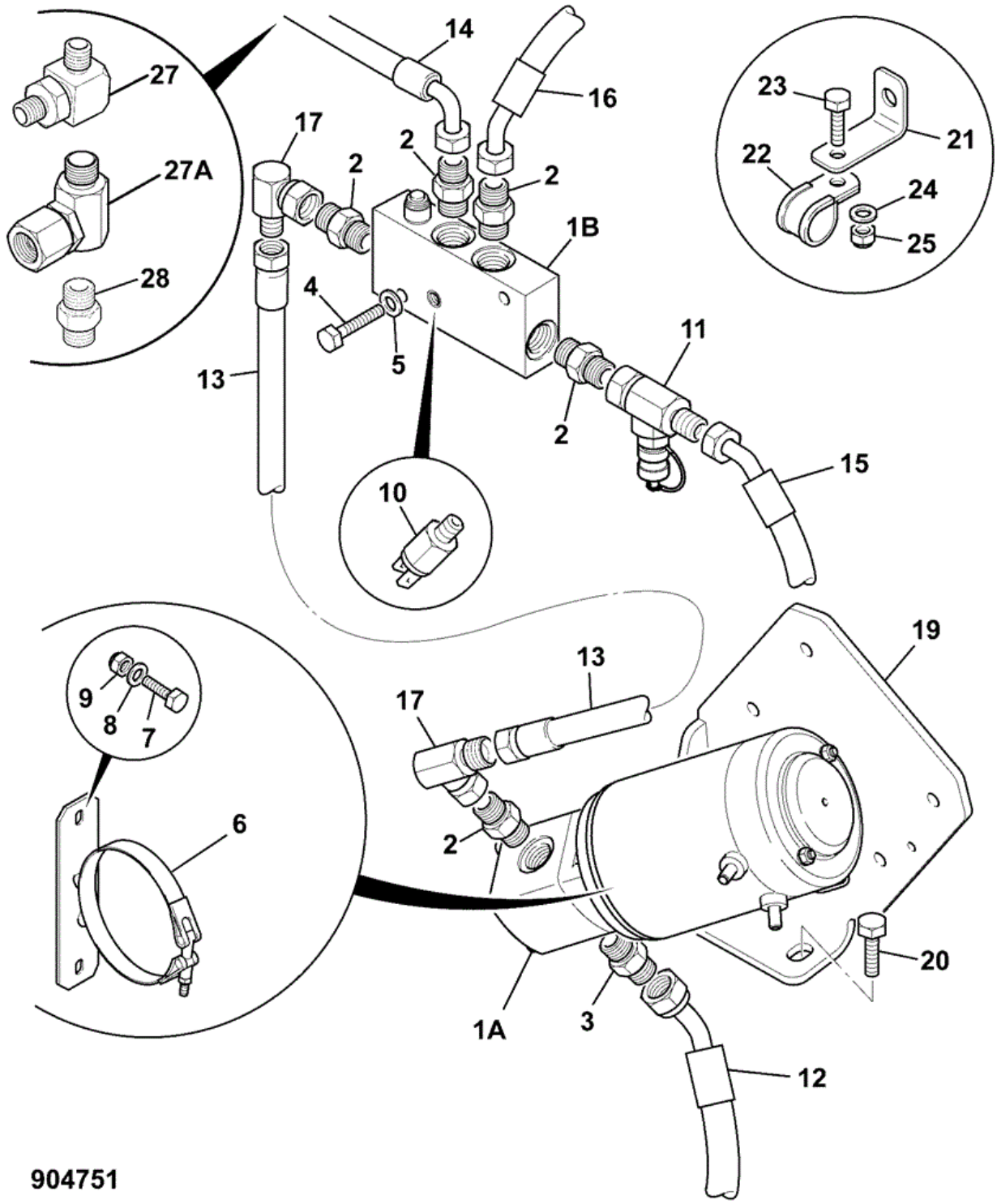

Item	Part No	Change No	Description	Usage Code	QTY
1	269/10763	to 03/02/2011	Pump and manifold emergency steer		1
1	333/S9576		Pump and manifold emergency steer ABI		1

1A	20/925740	Superseded	Pump emergency steer		1
1A	332/S1476	to 03/02/2011	Pump & motor emergency steer no thermal cut out		1
1A	333/S9560		Pump & motor emergency steer		1
1B	25/223212		Manifold assembly See page E3-16-1 for components		1
2	1620/2055		Adaptor 39.5mm Long. M/M 1/2"BSP x 7/8"SAE		5
3	1620/2058		Adaptor 3/4BSP x 7/8SAE M/M		1
4	1315/0311D		Setscrew M8x45		2
5	1420/0007D		Washer (M8)		2
6	331/38636		Clamp		2
7	1315/0305D		Setscrew M8 x 20mm		4
8	1420/0007D		Washer (M8)		8
9	1370/0203D		Nut Lock M8		4
10	701/74400		Switch pressure 150mm lead		1
11	816/55040		Adapter test		1
11	816/90757		Adapter test point stainless steel Sales special 9851		1
12	615/80100		Hose 3/4"BSP x 1360mm		1
13	613/80283		Hose Hose - Pump to manifold		1
14	633/80035		Hose Hose - Manifold to tank		1
15	613/80284		Hose 1/2"BSP x 1120mm Hose - Manifold to Orb		1
16	****		T.B.A Hose - CF hose		1
17	816/40016		Adapter ,90 Deg.		1
18	1315/0311D		Setscrew M8x45		2
19	335/12218		Bracket		1
20	1315/0308D		Setscrew M8 x 30 mm		2
21	265/02808		Bracket mounting P clip		1
22	821/00329		Clamp		1
23	1315/0203D		Setscrew M6 x 16mm		1
24	1420/0006D		Washer (M6)		1
25	1370/0103D		Nut (M6)		1
26	816/00344	Superseded	Adapter Tee		1
26	816/90043		Adaptor tee M/M/F		1
27	816/00335	<APR08	Adaptor 90 Elbow Hydraulic tank 3/4" pipe	A	1
27A	816/40016	>MAY08	Adapter ,90 Deg. Hydraulic tank 1/2" pipe		1

28	816/20008	<APR08	Adapter Hydraulic tank 3/4" pipe	A	1
29	816/13138		Adapter tee M12 x 1/4"x1/4"BSP		1

Applicability Date Ranges:
From: , To:

Product Catalog\WHEELED LOADERS\416 01243000-01243499,01317500-01317999,01472000-01472999,02095872-02095875 9812/3020 \E HYDRAULICS & AIR INCLUDING STEERING\E01 HOSE & PIPEWORK\E1-10-1 HOSE AND PIPEWORK SERVO CONTROLLER LOADER

9812/3020 E1-10-1 HOSE AND PIPEWORK SERVO CONTROLLER LOADER

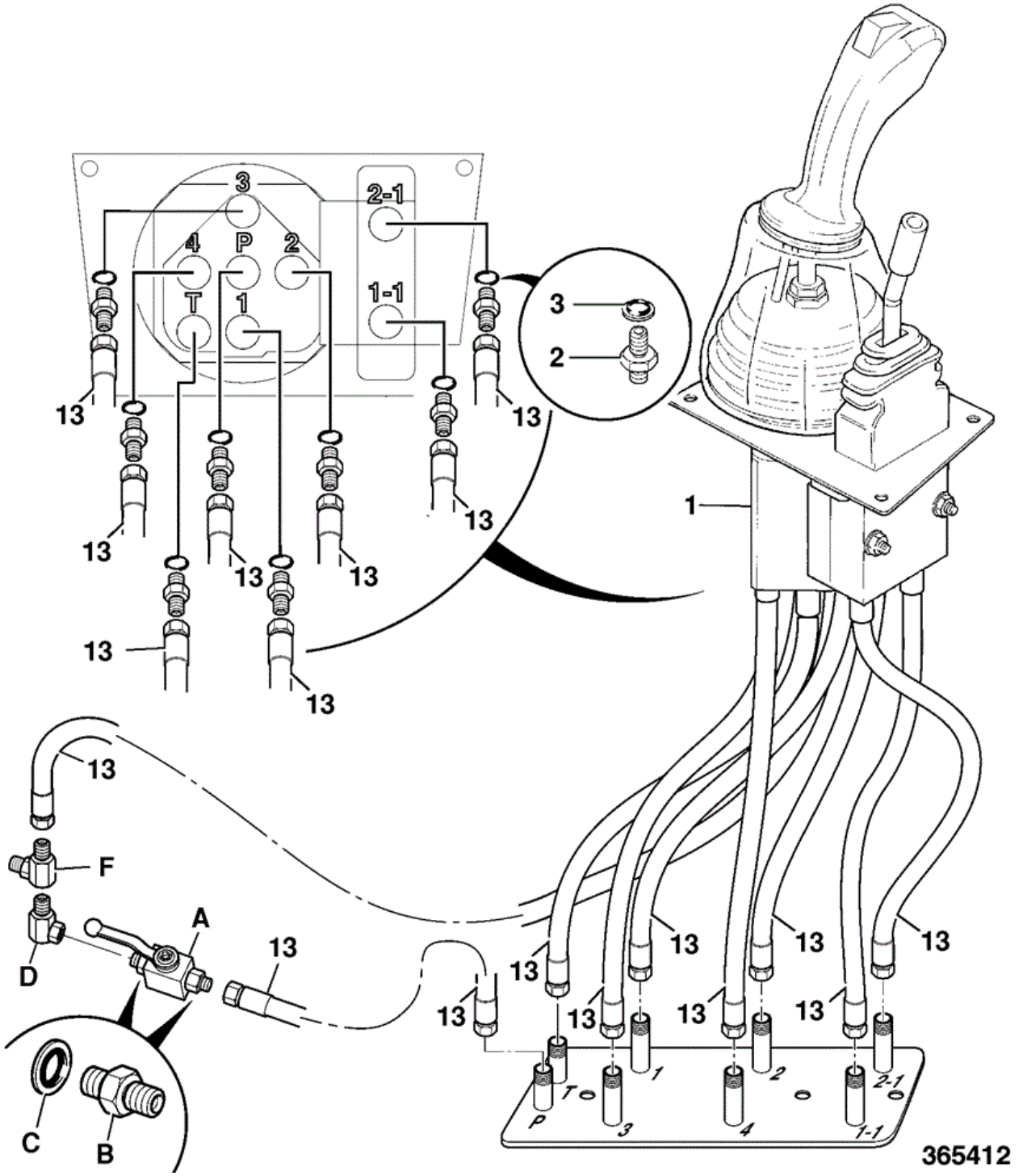

Item	Part No	Change No	Description	Usage Code	QTY
A	25/961900		Valve ball		1

B	1604/0002		Adapter		2
C	1406/0011		Washer Bonded (1/4")		2
D	816/00464		Adapter elbow - male/female		1
E	511/54703		Washer limit, red 2" dia x 10mm sq. Fits with item A		1
F	816/90013		Adaptor Tee 1/4F-1/4M-1/4M BSP Fits to item D		1
1	928/60033		Valve loader control See also section D1		1
2	1604/0002		Adapter		8
3	1406/0011		Washer Bonded (1/4")		8
4	1315/0205Z		Setscrew M6 x 20mm Item 1 to cab		5
5	1420/0006Z		Washer (M6) For item 4		5
13	631/30800		Hose		9

Applicability Date Ranges:
From: , To:

9812/3020 E1-10-5 HOSE AND PIPEWORK SERVO CONTROLLER MULTILEVER

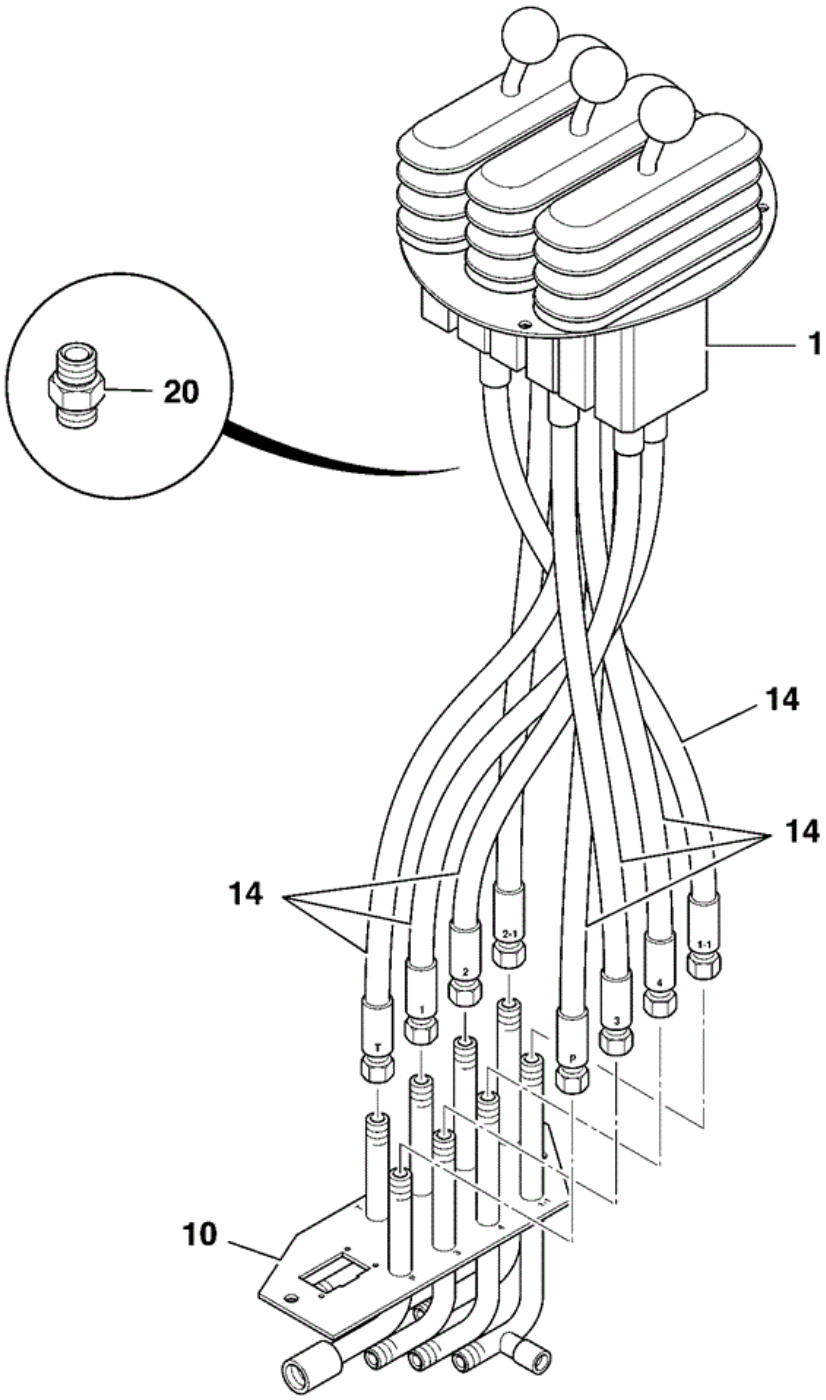

Item	Part No	Change No	Description	Usage Code	QTY
1	928/60322		Valve triple lever 3 spool		1

10	335/03479	to OCT09	Pipe assembly solenoid aux.		1
10	332/W0215		Pipe assembly See E1 section for fittings		1
14	631/80006		Hose		8
20	1620/0002	Superseded	Adapter		8
20	1620/2051		Adaptor 1/4"BSP x 9/16"SAE		8

9812/3020 D1-1-5 MULTI-LEVER 3 SPOOL COMPONENTS

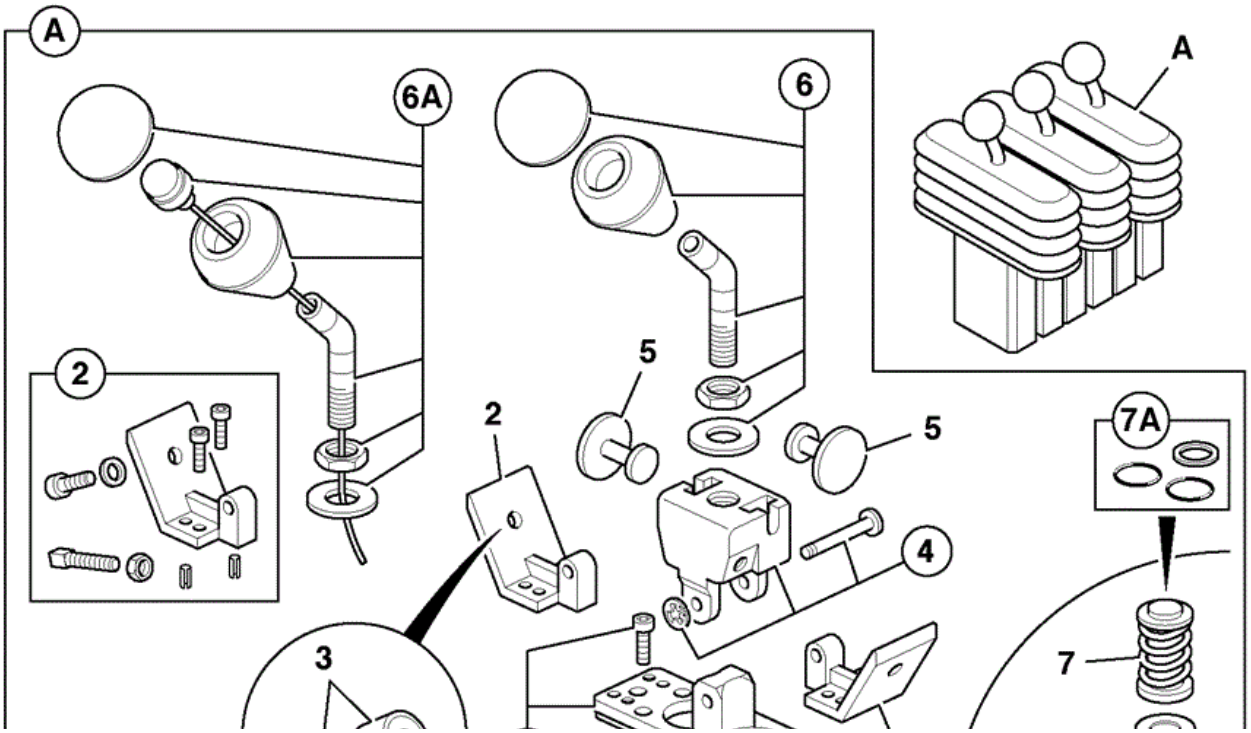

Item	Part No	Change No	Description	Usage Code	QTY
A	928/60322		Valve triple lever 3 spool		1
1	:332/D6393		Plate mounting		3
2	:332/D6423		Kit bracket for magnet		3
3	:332/D6425		Magnet		3
4	:332/D6426		Kit bearing plate lever link assembly		3
5	:332/D6427		Plate anchor		3
6	:332/D6429		Handle assembly without switch		1
6A	:332/D6430		Handle assembly with switch		2
6B	::333/C6647		Kit Knob C/W Boot		1
6C	::333/G3120		Kit-cap rubber		1
7	:332/D6440		Pin push		3
7A	:332/D6441		Kit seal push pin		3
8	:332/D6464		Spring pack		3
9	:332/D6442		Spring return		3
10	:332/D6467		Kit tie rod 3 section		1
11	:332/D6444		Kit plug		1
12	:332/D6445		Kit gaiter (one gaiter)		1

Applicability Date Ranges:
From: , To:

Product Catalog\WHEELED LOADERS\416 01243000-01243499,01317500-01317999,01472000-01472999,02095872-02095875 9812/3020 \E HYDRAULICS & AIR INCLUDING STEERING\E01 HOSE & PIPEWORK\E1-11-2 HOSE AND PIPEWORK SERVO CONTROLLER LOADER, UNDER CAB

9812/3020 E1-11-2 HOSE AND PIPEWORK SERVO CONTROLLER LOADER, UNDER CAB

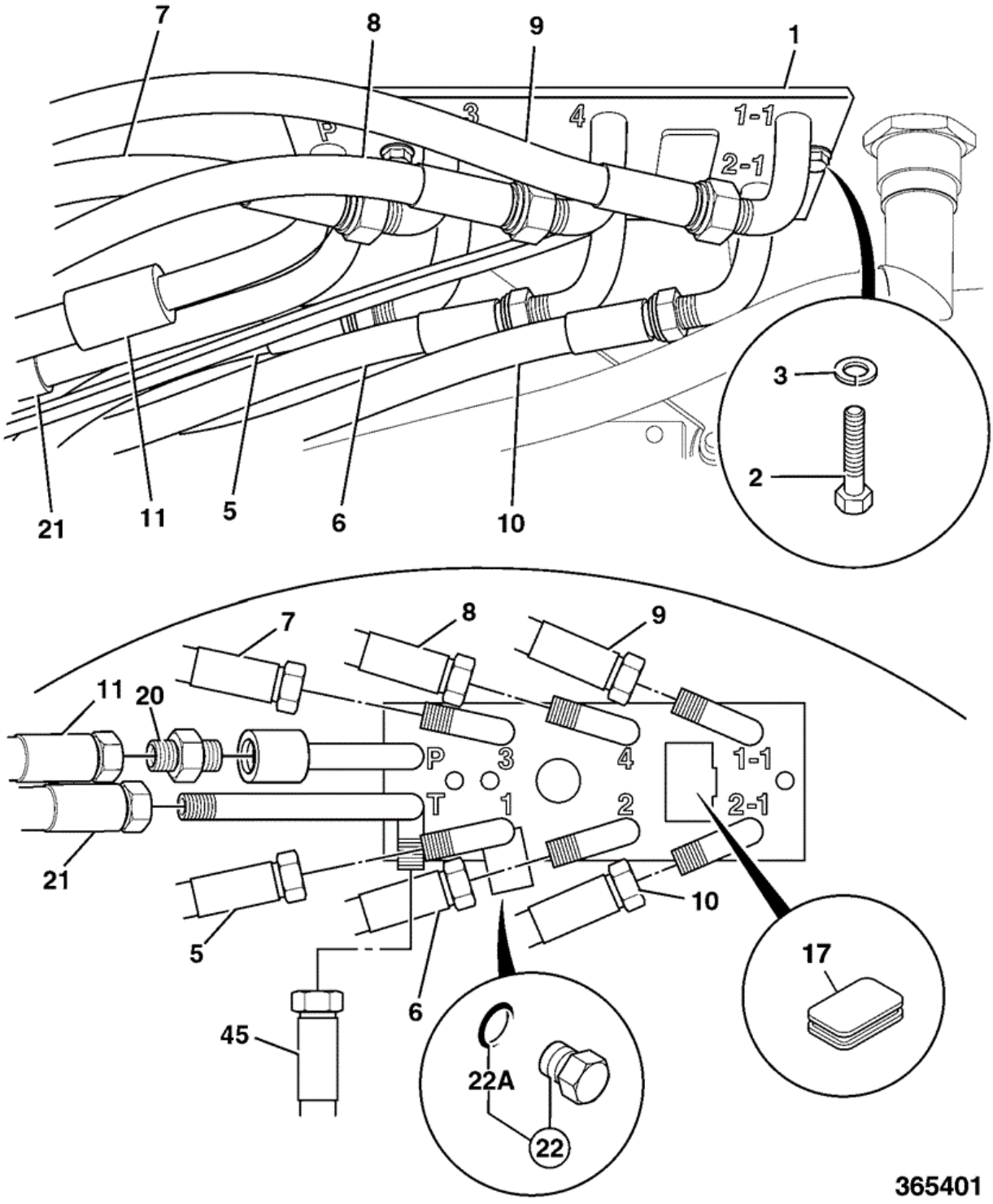

Item	Part No	Change No	Description	Usage Code	QTY
1	335/03479	to OCT09	Pipe assembly solenoid aux.		1

1	332/W0215		Pipe assembly See E1 section for fittings		1
2	1315/0305Z		Setscrew M8 x 20		2
3	1420/0007Z		Washer (M8)		2
5	332/U2225		Hose 1/4"BSP x 3350mm Port 1		1
6	332/U2229		Hose 1/4"BSP x 3350mm Port 2		1
7	332/U2231		Hose 1/4"BSP x 3350mm Port 3		1
8	332/U2232		Hose 1/4"BSP x 3350mm Port 4		1
9	332/U2234		Hose 1/4"BSP x 3350mm Port 1-1		1
10	332/U2236		Hose 1/4"BSP x 3350mm Port 2-1		1
11	265/00548		Hose servo		1
17	828/10303		Grommet blank		1
18	816/50031	Superseded	Adapter Tee		1
18	816/90013		Adaptor Tee 1/4F-1/4M-1/4M BSP		1
19	816/00464		Adapter elbow - male/female		1
20	816/13133		Adapter c/w filter		1
21	611/24300	to OCT09	Hose 1/4"BSP 1010 mm		1
21	649/51326		Hose 1/4"BSP x 1300mm		1
22	1745/0001		Plug 7/16"UNF O ring boss		1
22A	:2401/0503		O Ring		1
45	****		'See Remark' Hose		1

Applicability Date Ranges:
From: M1317855 , To: M1472056

Product Catalog\WHEELED LOADERS\416 01243000-01243499,01317500-01317999,01472000-01472999,02095872-02095875 9812/3020 \E HYDRAULICS & AIR INCLUDING STEERING\E01 HOSE & PIPEWORK\E1-11-10 PIPEWORK CLUSTER SERVO CONTROLLER, LOADER, UNDER CAB, 3 SPOOL STD. & MULTILEVER

9812/3020 E1-11-10 PIPEWORK CLUSTER SERVO CONTROLLER, LOADER, UNDER CAB, 3 SPOOL STD. & MULTILEVER

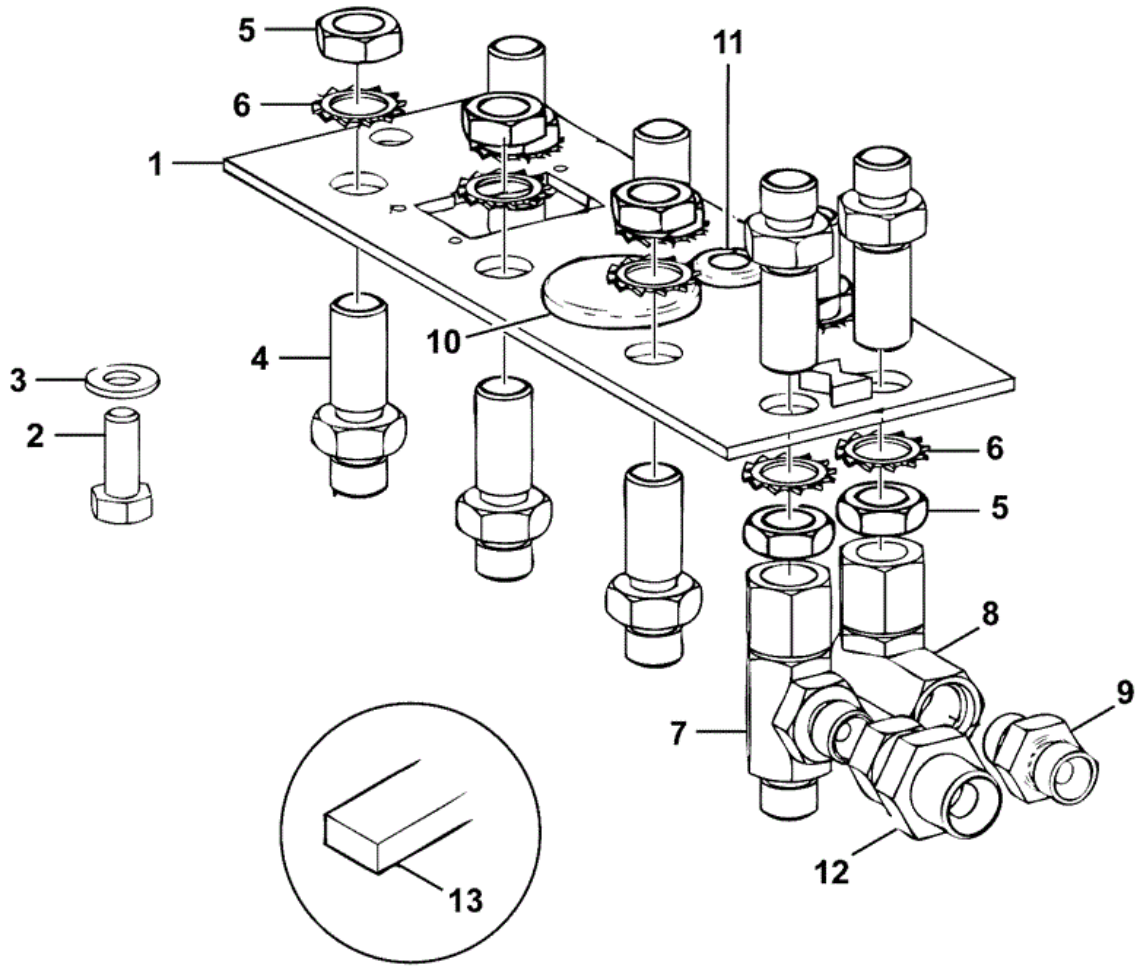

E01-10091-0-OOW

Item	Part No	Change No	Description	Usage Code	QTY
1	332/W0215		Pipe assembly		1

2	1315/0305D		Setscrew M8 x 20mm		2
3	1420/0007D		Washer (M8)		2
4	816/90005		Adaptor Bulkhead M/M		8
5	1356/0202Z		Nut BACKNUT (1/4"BSP)		8
6	1417/0014D		Washer lock 1/2"		8
7	828/10303		Grommet blank		1
8	816/90266		Adaptor		1
9	816/13133		Adapter c/w filter		1
10	2410/1112		Grommet Panel Hole Dia 29mm Panel thk 2.8-3.5mm		1
11	2410/0105		Grommet		1
12	816/20044		Adaptor Tank return		1
13	926/06300		Strip For item 1		0

Applicability Date Ranges:
From: , To:

9812/3020 E1-12-2 HOSE AND PIPEWORK DIVERTER VALVE

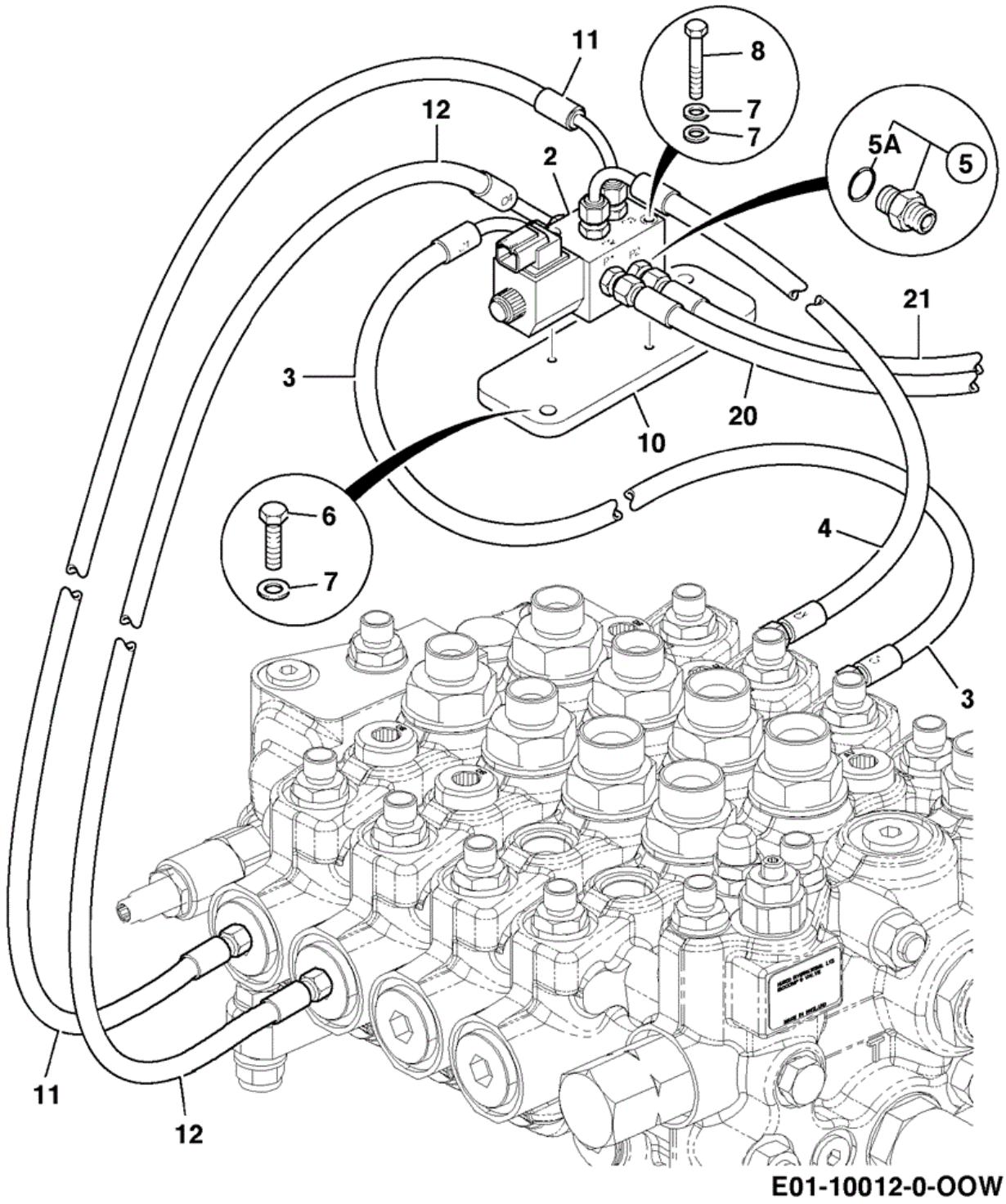

E01-10012-0-OOW

Item	Part No	Change No	Description	Usage Code	QTY
2	25/222711		Valve diverter		1
3	332/U1844		Hose 1/4"BSP x 600mm Port C1		1

4	631/32500		Hose 1/4" BSP x 310mm Port C2		1
5	1620/2050		Adaptor 1/4BSP x 7/16SAE		6
5A	:2401/0503		O Ring		1
6	1315/0305D		Setscrew M8 x 20mm		2
7	1420/0007D		Washer (M8)		2
8	1391/3112D		Screw cap M5x50		2
9	1420/0005D		Washer (M5)		2
10	331/50274		Plate mounting		1
11	332/T5211		Hose 1/4"BSP x 535mm		1
12	332/U1847		Hose 1/4"BSP x 900mm Port C4		1
20	332/U2234		Hose 1/4"BSP x 3350mm Port P1		1
21	332/U2236		Hose 1/4"BSP x 3350mm Port P2		1

9812/3020 E3-50-1 DIVERTER VALVE COMPONENTS 25/222711

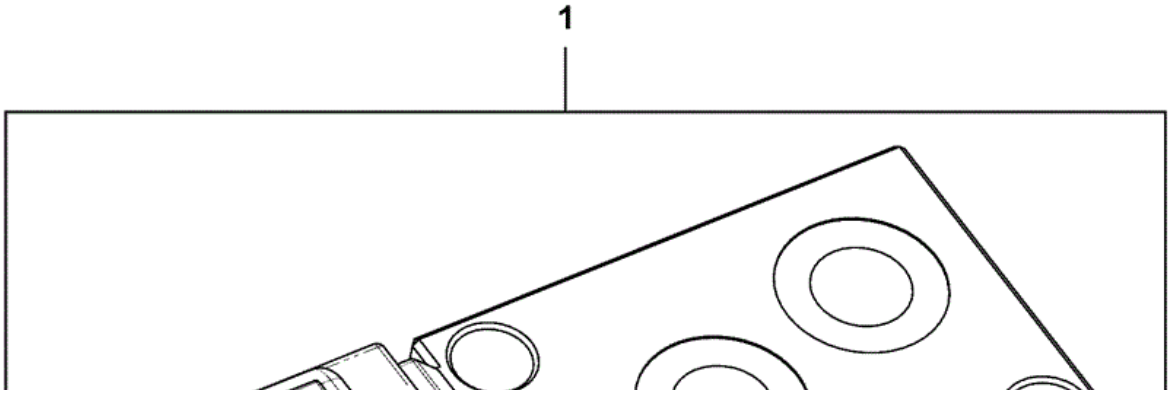

Item	Part No	Change No	Description	Usage Code	QTY
A	25/222711		Valve diverter		1
1	:333/C9721		Coil 24v		1

Applicability Date Ranges:
From: M1317856 , To:

Product Catalog\WHEELED LOADERS\416 01243000-01243499,01317500-01317999,01472000-01472999,02095872-02095875 9812/3020 \E HYDRAULICS & AIR INCLUDING STEERING\E01 HOSE & PIPEWORK\E1-14-1 ACCUMULATOR INSTALLATION LOADER CONTROLS

9812/3020 E1-14-1 ACCUMULATOR INSTALLATION LOADER CONTROLS

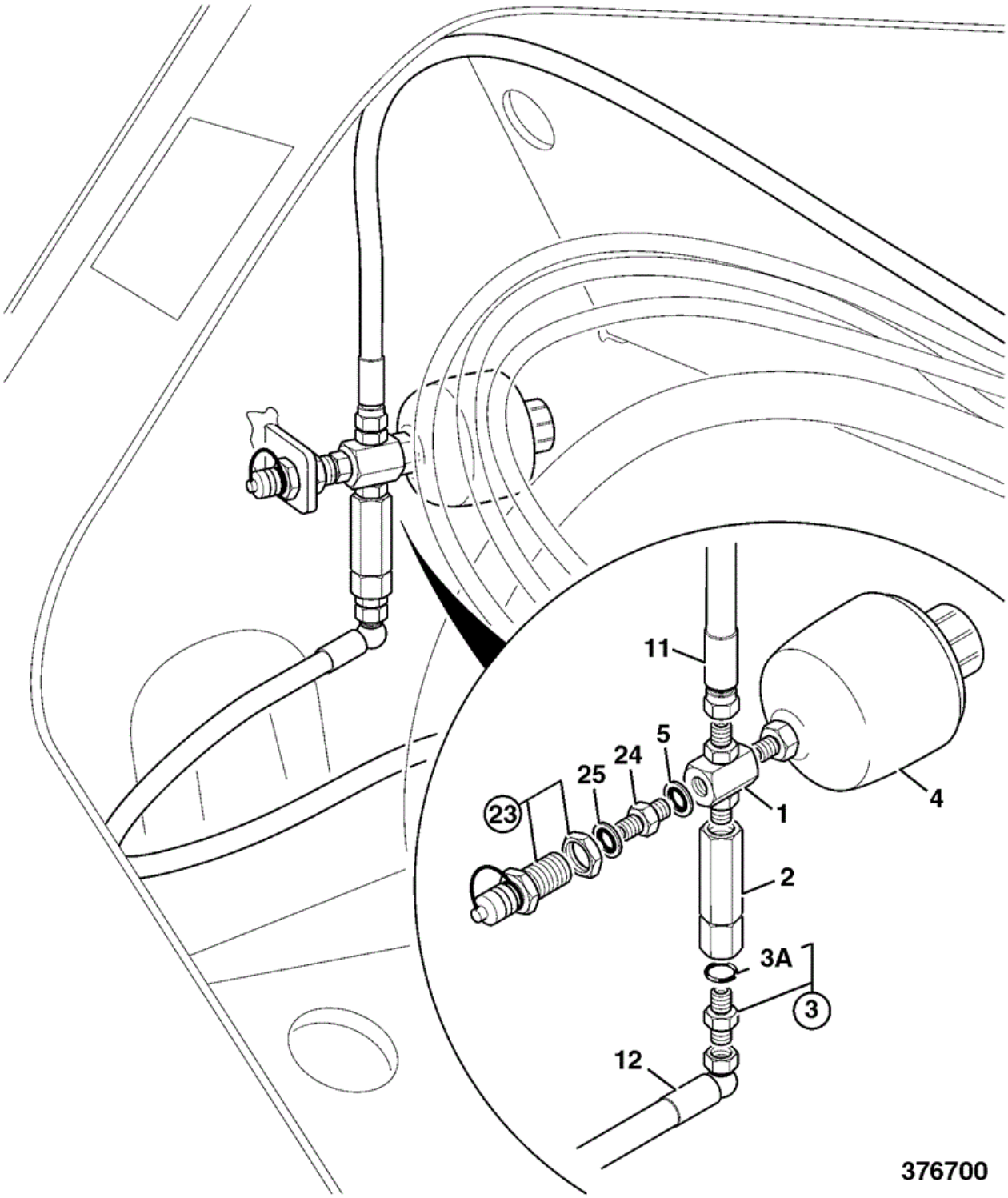

Item	Part No	Change No	Description	Usage Code	QTY
1	816/13220	<06/09/2011	Adapter 4 way		1

1	333/T5031		Adapter 4 way		1
2	25/301100		Valve check in line		1
3	1620/0002	Superseded	Adapter		1
3	1620/2051		Adaptor 1/4"BSP x 9/16"SAE		1
3A	:2401/0505		O Ring		1
4	903/05300		Accumulator 0.24 LTR 15BA		1
5	1406/0011	<06/09/2011	Washer Bonded (1/4")		1
6	816/90009	>07/09/2011	Adaptor 1/4BSP F x 9/16 SAE M Fitted to 333/T5031		1
11	265/00548		Hose servo		1
12	631/30200	To M1317854	Hose 1/4"BSP x 500mm		1
12	332/U1841	Superseded	Hose 1/4" BSP x 600mm		1
12	611/80070		Hose 1/4"BSP x 550mm		1
23	816/60290		Adapter pressure test	A	1
23	816/90965		Adapter pressure test leak free Replaces 816/60290	B	1
23	332/U3969		Adapter pressure test stainless steel Sales special 9851	B	1
24	1606/0001		Adapter	A	1
24	1620/2050		Adaptor 1/4BSP x 7/16SAE	B	1
25	1406/0008		Seal Washer	A	1

Applicability Date Ranges:
From: , To:

Product Catalog\WHEELED LOADERS\416 01243000-01243499,01317500-01317999,01472000-01472999,02095872-02095875 9812/3020 \E HYDRAULICS & AIR INCLUDING STEERING\E01 HOSE & PIPEWORK\E1-16-1 HOSE CLAMP SERVO LOOM

9812/3020 E1-16-1 HOSE CLAMP SERVO LOOM

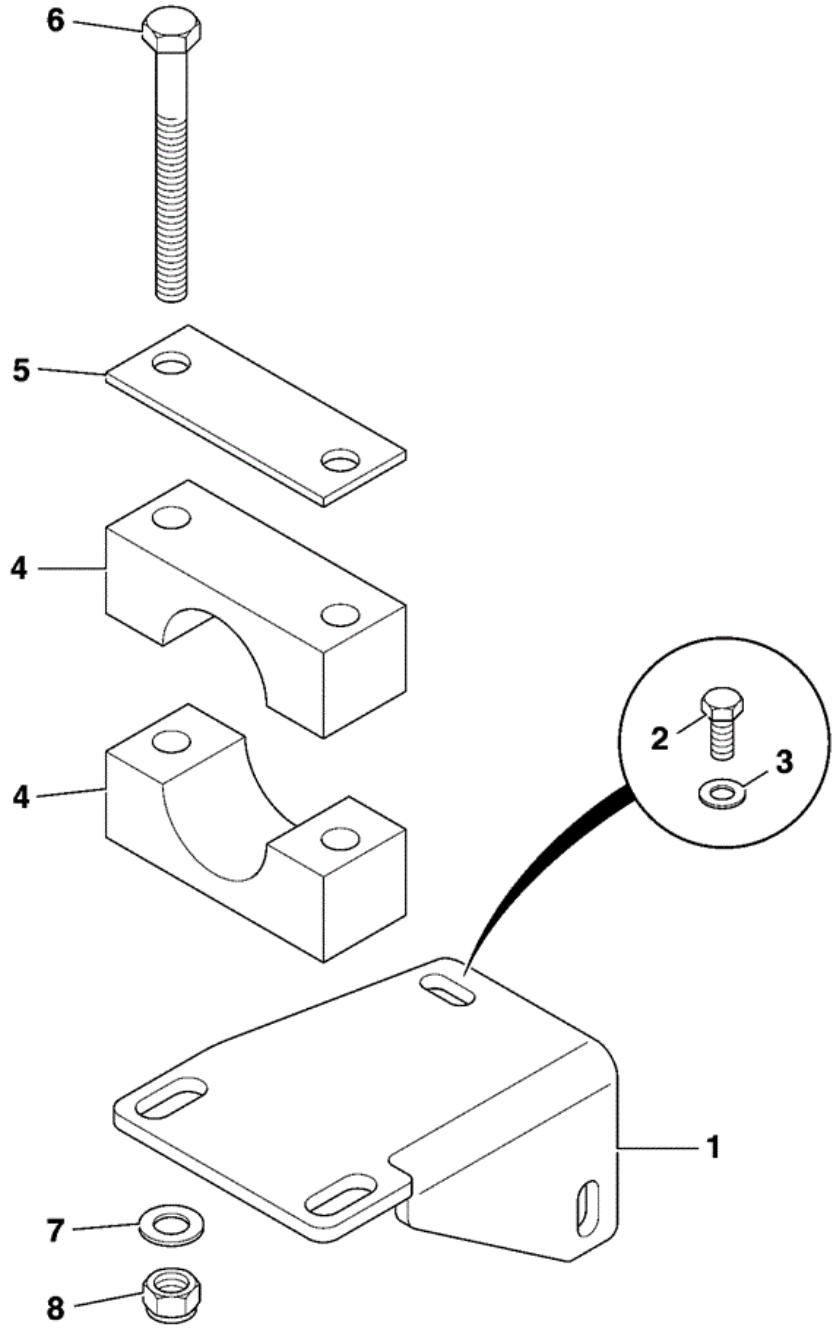

761670

Item	Part No	Change No	Description	Usage Code	QTY
1	331/45240		Bracket		1
2	1315/0303D		Setscrew M8 x 16mm		2

3	1420/0007D		Washer (M8)		2
4	821/10258		Clamp hose		2
5	265/00255		Plate clamp		1
6	1315/3419D		Bolt M10 x 90mm		2
7	1420/0008D		Washer (M10)		4
8	1370/0303D		Nut Self Lock M10		2
99	269/00534		G.A. GA SERVO LOOM CLAMP JCB 411, 412S & 416		1

Applicability Date Ranges:
From: , To:

Product Catalog\WHEELED LOADERS\416 01243000-01243499,01317500-01317999,01472000-01472999,02095872-02095875 9812/3020 \E HYDRAULICS & AIR INCLUDING STEERING\E01 HOSE & PIPEWORK\E1-17-1 HOSE AND PIPEWORK PUMP RELIEF VALVE

9812/3020 E1-17-1 HOSE AND PIPEWORK PUMP RELIEF VALVE

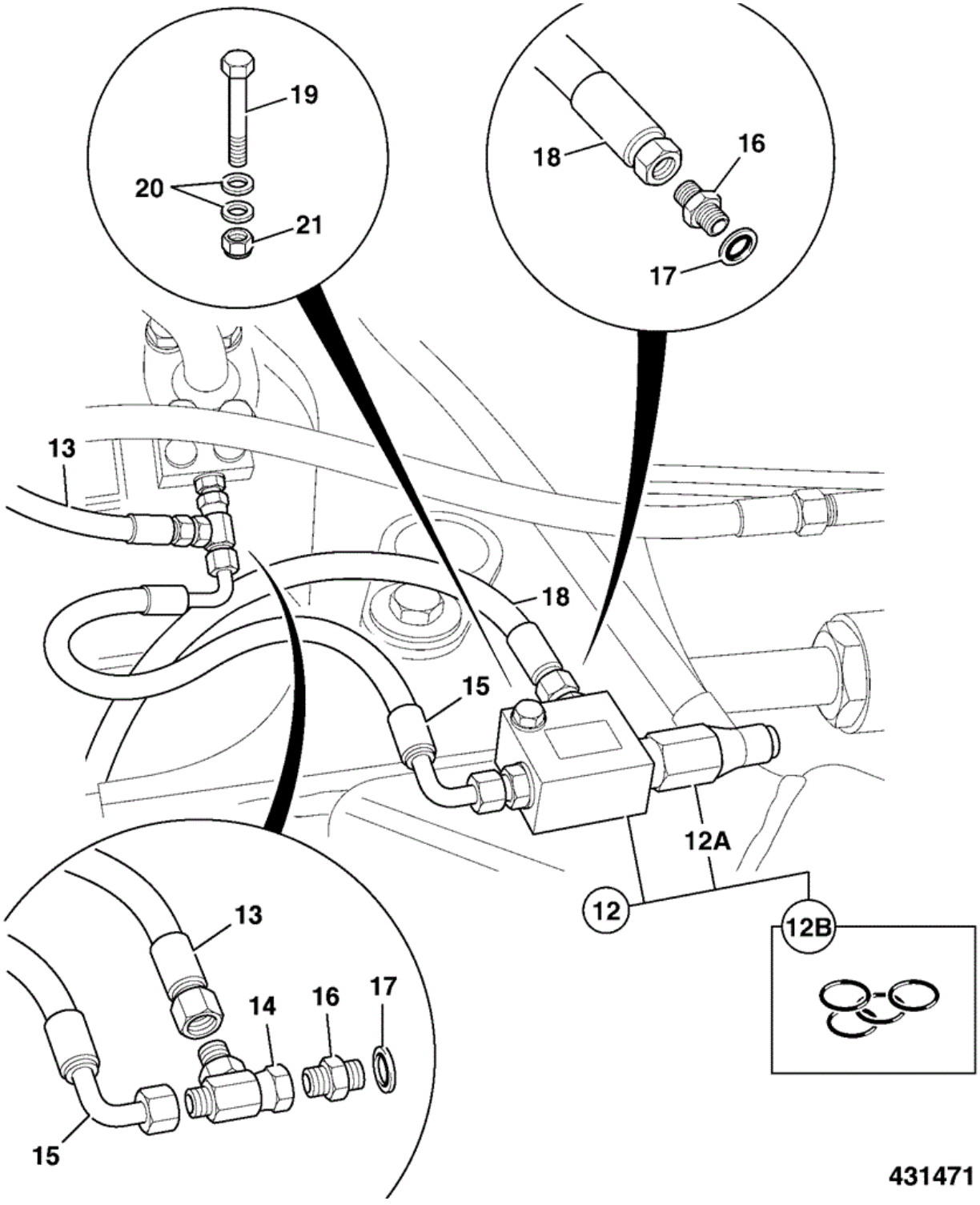

Item	Part No	Change No	Description	Usage Code	QTY
12	25/994400		Valve relief		1
12A	:25/994401		Cartridge		1

12B	:25/994402		Kit seal		1
13	****		T.B.A Hose		1
14	816/50031	Superseded	Adapter Tee Fitted to pump flange		1
14	816/90013		Adaptor Tee 1/4F-1/4M-1/4M BSP Fitted to pump flange		1
15	611/80070		Hose 1/4"BSP x 550mm		1
15	611/26500		Hose 1/4"BSP x 650mm Replaces 611/80070		1
16	1606/0003		Adapter		2
17	1406/0015		Washer Bonded 3/8"		2
18	629/28400		Hose 1/4"BSP x 950mm		1
19	1315/3313D		Bolt M8 x 55mm		1
20	1420/0007D		Washer (M8)		2
21	1370/0203D		Nut Lock M8		1

Applicability Date Ranges:
From: , To:

Product Catalog\WHEELED LOADERS\416 01243000-01243499,01317500-01317999,01472000-01472999,02095872-02095875 9812/3020 \E HYDRAULICS & AIR INCLUDING STEERING\E01 HOSE & PIPEWORK\E1-18-1 HOSE AND PIPEWORK LOAD SUSPENSION

9812/3020 E1-18-1 HOSE AND PIPEWORK LOAD SUSPENSION

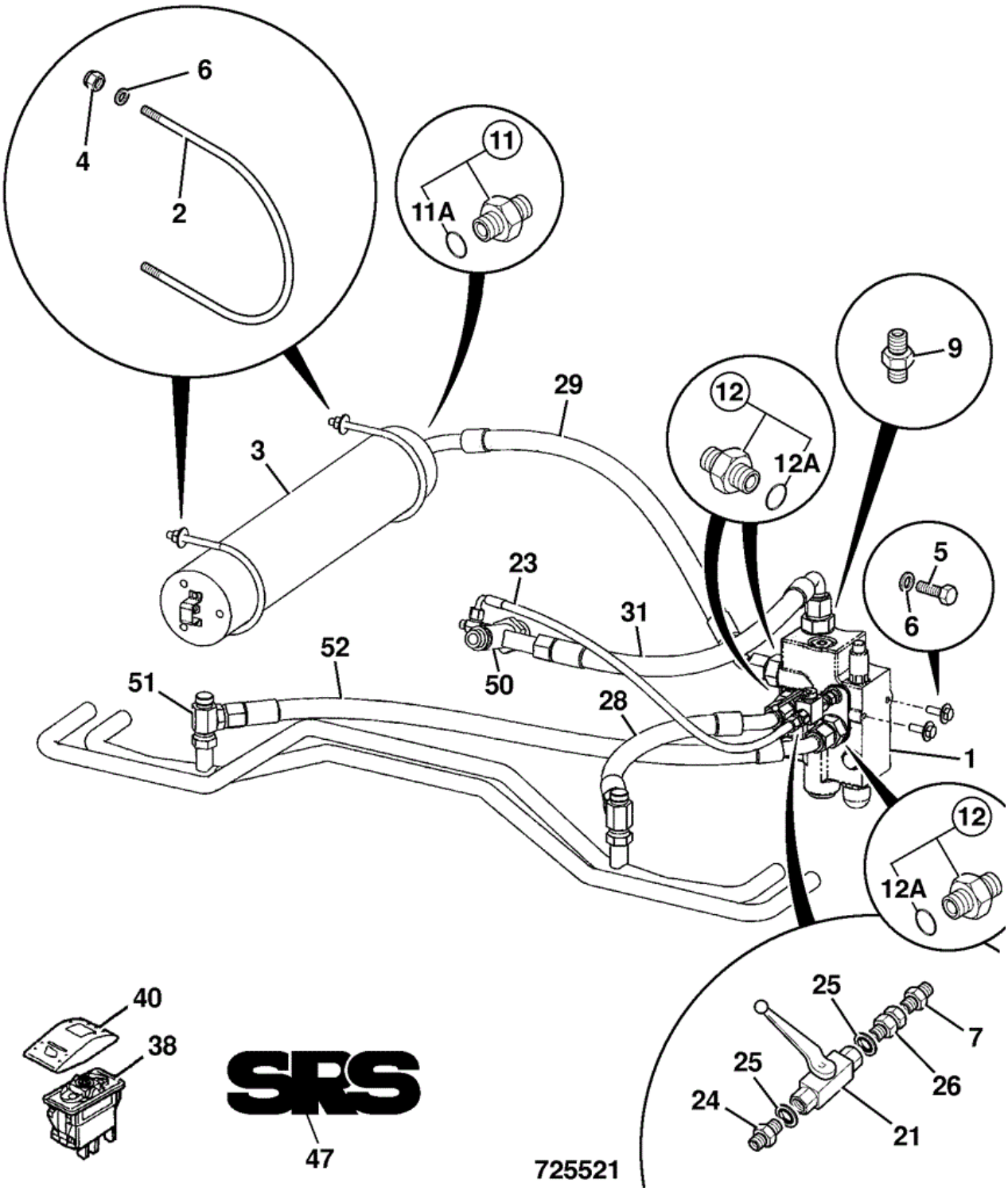

Item	Part No	Change No	Description	Usage Code	QTY
1	25/222127	to 06/02/2011	Valve ride control		1
1	333/T3222		Valve ride control		1

2	826/11580		Bolt U M10		2
3	32/925854		Accumulator zero pressure version of 32/925791 Discharged		1
4	1370/0303D		Nut Self Lock M10		4
5	1315/0408D		Setscrew M10 x 30		2
6	1420/0008D		Washer (M10)		6
7	1620/0002	Superseded	Adapter		1
7	1620/2051		Adaptor 1/4"BSP x 9/16"SAE		1
9	1620/0012	Superseded	Adapter 1" BSP		1
9	1620/2061		Adaptor M/M		1
11	1620/0010	Superseded	Adapter Includes 'O'Ring		1
11	1620/2059		Adaptor 3/4BSP/1-1/16SAE M/M		1
11A	:2401/0508		O Ring		1
12	1620/0011	Superseded	Adaptor		3
12	1620/2060		Adaptor M/M 3/4BSPx1-5/16SAE		3
12A	:2401/0510		O Ring Was item 11 on early publications		1
21	25/961900		Valve ball		1
22	816/50031	Superseded	Adapter Tee		1
22	816/90013		Adaptor Tee 1/4F-1/4M-1/4M BSP		1
23	631/30800		Hose		1
24	1604/0002		Adapter		1
25	1406/0011		Washer Bonded (1/4")		2
26	1612/0002		Adapter		1
28	615/26500		Hose		1
29	615/80071		Hose 3/4BSP		1
31	617/20300		Hose		1
36	638/10700		Hose 1.25" x 1350 lg.		1
38	701/60031		Panel Switch 24V		1
40	701/58842		Cover SRS Switch SoftTouch		1
47	817/16942		Decal smooth ride No longer fitted		2
50	816/60326		Adapter		1
51	816/00344	Superseded	Adapter Tee		2
51	816/90043		Adaptor tee M/M/F		2
52	615/80072		Hose 3/4BSP		1

9812/3020 E3-30-1 VALVE LOAD SUSPENSION

Item	Part No	Change No	Description	Usage Code	QTY
A	25/222127		Valve ride control		1
1	:25/222769		Housing		1
2	:25/222770		Socket		1
3	:25/222771		Disc spring		1
4	:25/222772		Seat valve		1
5	:25/222773		Seat valve		1
6	:25/222774		Pin throttle		1

7	:25/222775		Screw grub		1
8	:25/222776		Spring		1
9	:25/222777		Spring		1
10	:25/222778		Plug		1
11	:25/222779		Plug		1
12	:25/222780		Plug		1
13	:25/222781		Screw		1
14	:25/222782		Valve		1
15	:25/222783		Plug		1
16	:25/222784		Plug		1

9812/3020 E3-30-2 VALVE LOAD SUSPENSION

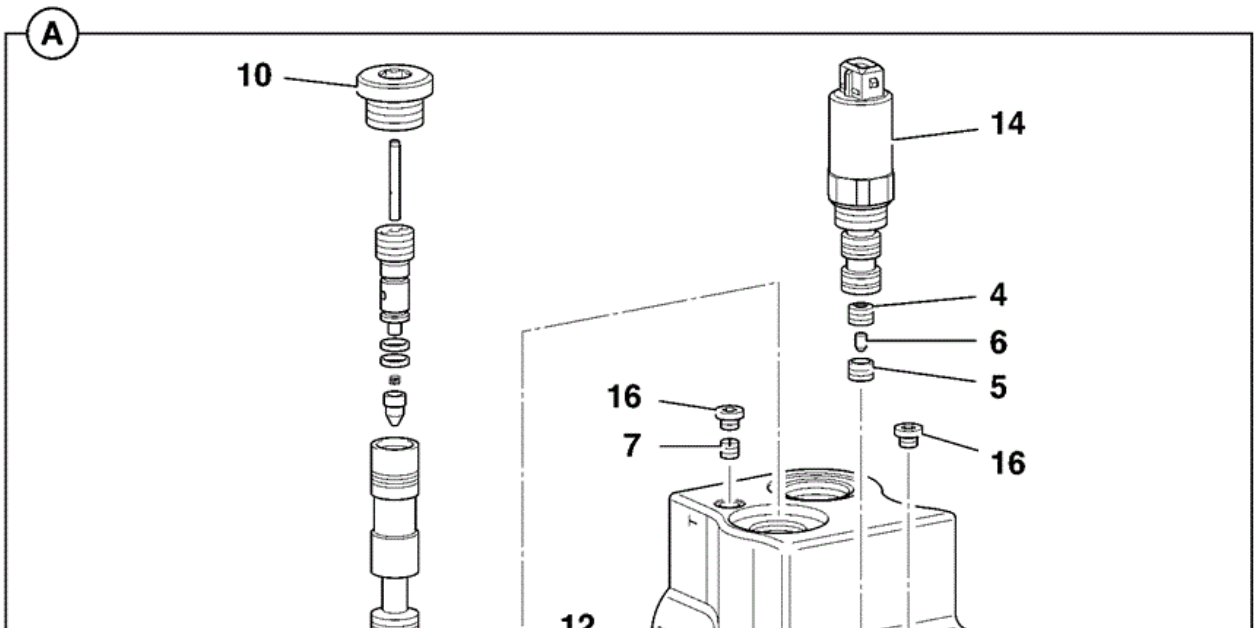

Item	Part No	Change No	Description	Usage Code	QTY
A	333/T3222		Valve ride control		1
1	:25/222769		Housing		1
1A	:333/C5858		Washer conical Fitted between item 1 & 14		1
2	:25/222770		Socket		1
3	:25/222771		Disc spring		1
4	:25/222772		Seat valve		1
5	:25/222773		Seat valve		1
6	:25/222774		Pin throttle		1
7	:25/222775		Screw grub		1
8	:25/222776		Spring		1
9	:25/222777		Spring		1
10	:25/222778		Plug		1
11	:25/222779		Plug		1
12	:25/222780		Plug		1
13	:25/222781		Screw		1
14	:25/222782		Valve		1
14	:333/C7021		Kit valve & washer Service replacement		1
15	:25/222783		Plug		1
16	:25/222784		Plug		1

Applicability Date Ranges:
From: , To:

9812/3020 E1-20-1 FILTER, HYDRAULIC

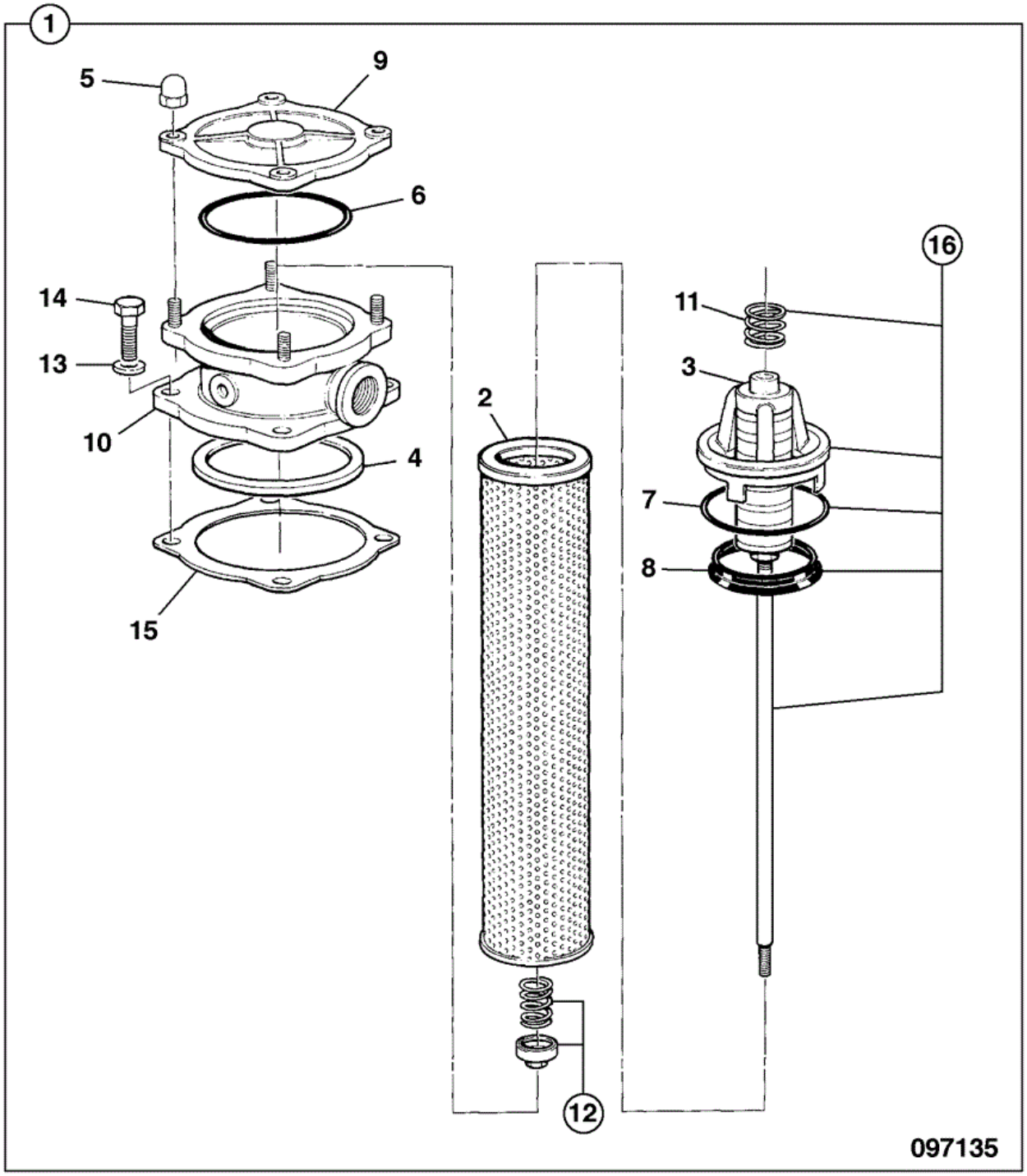

Item	Part No	Change No	Description	Usage Code	QTY
1	581/18072		Filter hydraulic, assembly		1
2	:581/00012		Element filter 10 micron		1
3	:581/06303		Bridge		1

3A	:581/05901		Coil		1
4	:581/05605		Ring packing		1
5	:581/05606		Nut acorn		4
6	:581/05602		O Ring		1
7	:581/05604		Seal		1
8	:581/06302		Seal filter element		1
9	:581/05610		Cover filter		1
10	:581/05611		Housing filter		1
11	:32/925357		Spring		1
12	:581/05613		Valve by-pass assembly		1
13	1420/0007Z	to 09/05/2011	Washer (M8)		4
13	1406/0008		Seal Washer Replaces 1420/0007Z		4
14	1315/0307Z		Setscrew M8 X 25		4
15	581/07101		Seal filter element		1
16	:332/C4746		Insert inc. top spring seal,column & rod		1

Applicability Date Ranges:
From: , To:

Product Catalog\WHEELED LOADERS\416 01243000-01243499,01317500-01317999,01472000-01472999,02095872-02095875 9812/3020 \E HYDRAULICS & AIR INCLUDING STEERING\E01 HOSE & PIPEWORK\E1-21-1 HOSE AND PIPEWORK GROUND PUMP

9812/3020 E1-21-1 HOSE AND PIPEWORK GROUND PUMP

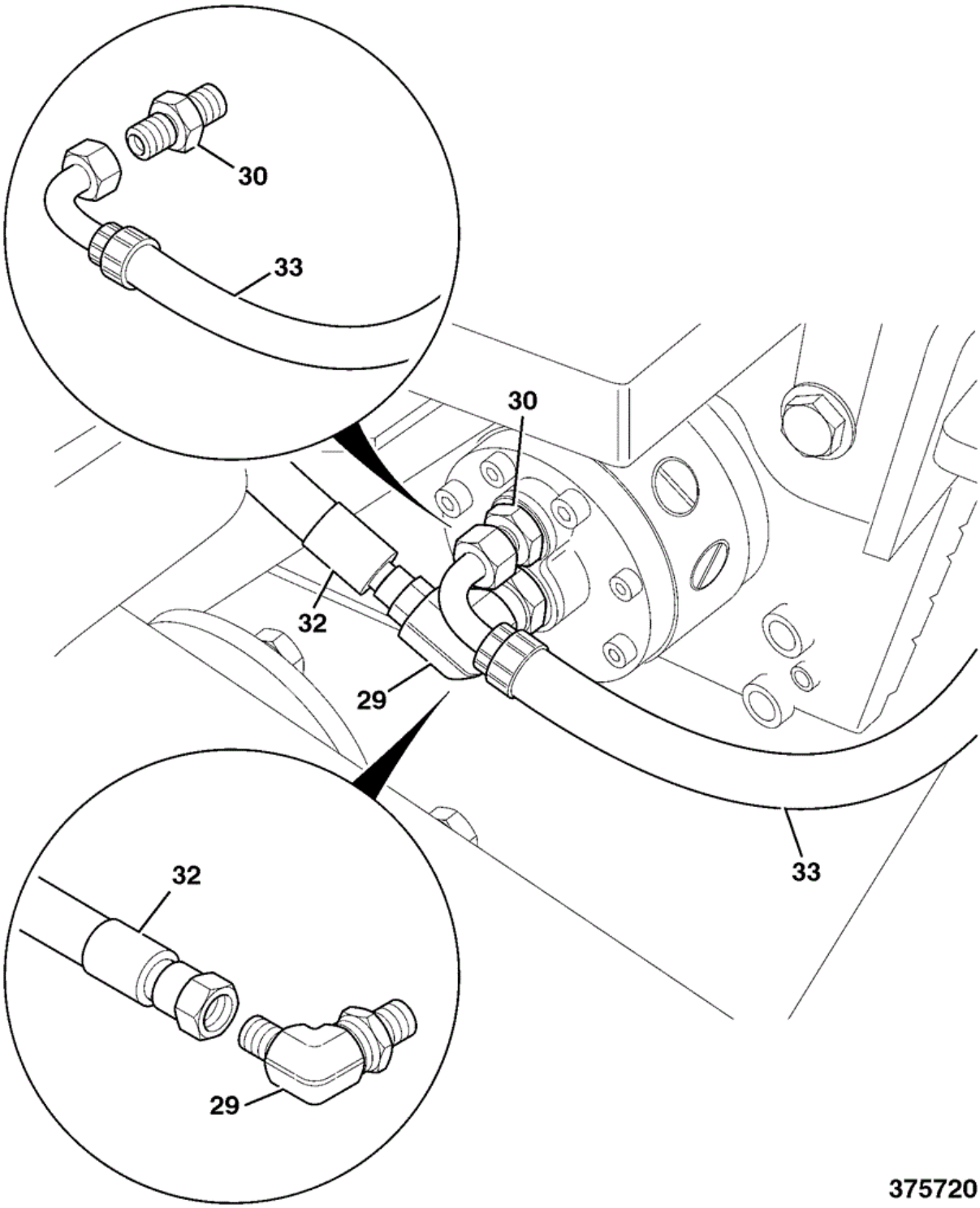

Item	Part No	Change No	Description	Usage Code	QTY
29	816/13174		Adapter		1
30	816/15202		Adapter M22 - 1/2"		1

31	816/00021		Adapter tee, 3/4"BSP, M/M/F Tank		1
32	635/33900		Hose		1
33	613/28100		Hose 1/2"BSP x 1300mm		1

Applicability Date Ranges:
From: , To:

9812/3020 E1-22-1 HOSE AND PIPEWORK GEAR PUMP

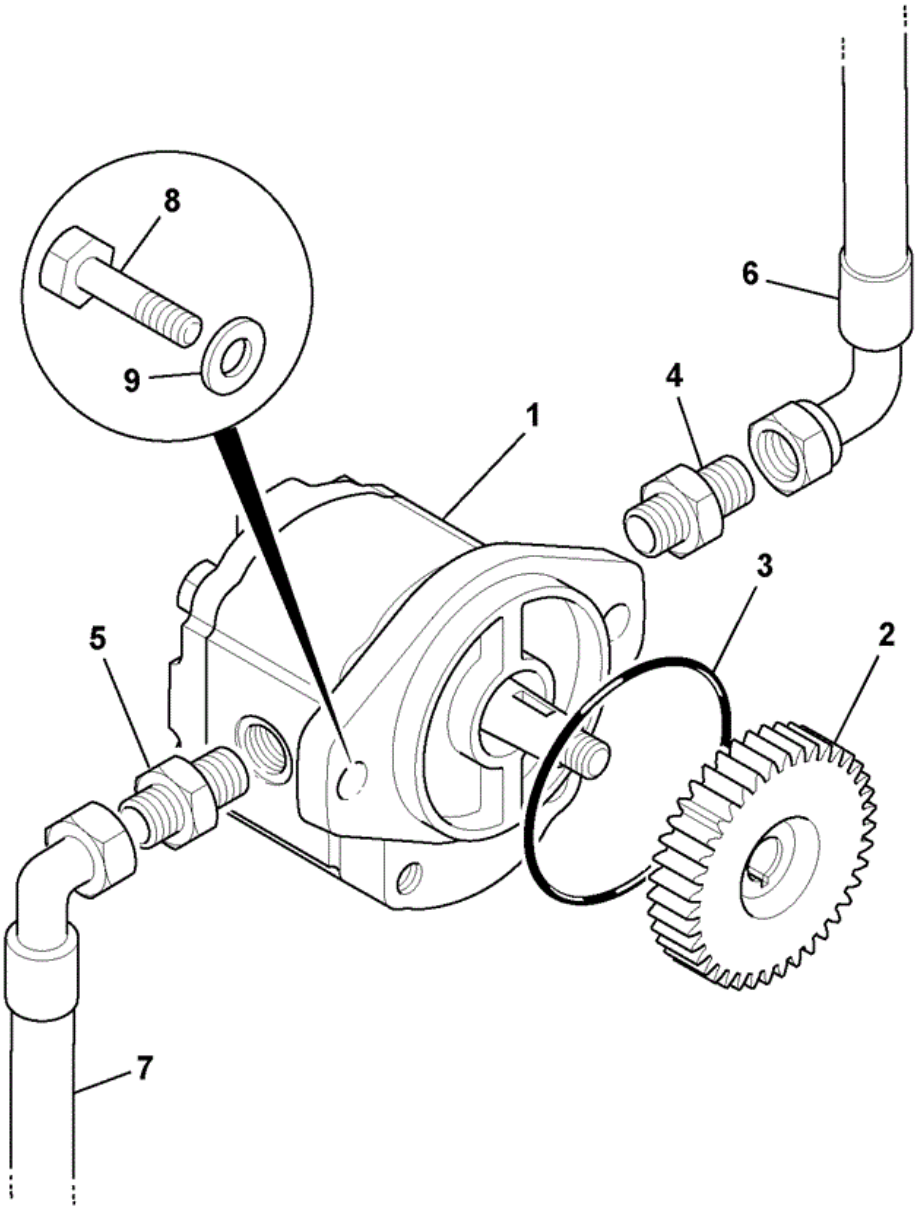

869510

Item	Part No	Change No	Description	Usage Code	QTY
1	20/925734		Pump gear See E2-4-1 for components		1
2	320/08030		Gear		1

3	320/08009		O Ring		1
4	1620/2059		Adaptor 3/4BSP/1-1/16SAE M/M		1
5	1620/2053		Adaptor 3/8BSPx3/4SAE		1
6	615/80072		Hose 3/4BSP Suction fron tank		1
7	612/80374		Hose Feed to brake valve		1
8	1315/0407D		Setscrew M10 x 25		2
9	1420/0008D		Washer (M10)		2

Applicability Date Ranges:
From: , To: 30/10/2010

9812/3020 E1-23-1 HOSE AND PIPEWORK MAIN PUMP

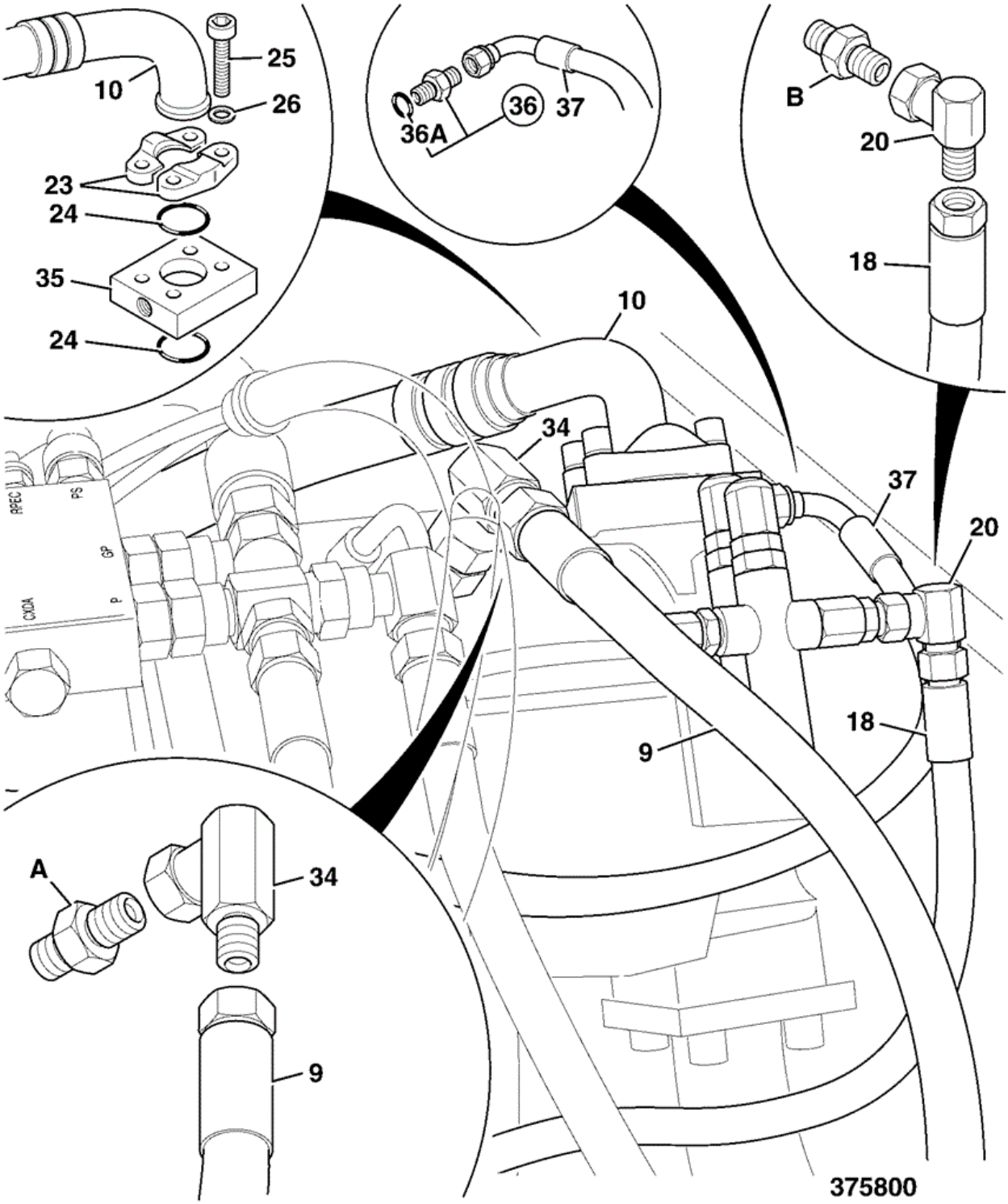

Item	Part No	Change No	Description	Usage Code	QTY
A	1620/0006		Adapter 39.5mm O Ring, 2401/0507		1
			Adapter		

B	1620/0001		O Ring, 2401/0503		1
9	635/54200		Hose 3/4" Case drain hose		1
10	616/80067	to M1317854	Hose 1" x 2200mm		1
10	332/U2170	Superseded	Hose 1"BSP x 2240mm		1
10	333/R8878		Hose 1"BSP x 2165mm		1
18	269/30438		Hose 1/4"BSP x 2300mm "SLS"		1
20	816/00464		Adapter elbow - male/female		1
23	264/01001		Clamp		2
24	828/00417		O Ring 1"SAE		2
25	1391/3414D		Capscrew		4
26	1425/0008Z		Spring Washer		4
34	816/40016		Adapter ,90 Deg.		1
35	933/17900		Flange adapter		1
36	1620/0001		Adapter		1
36	1620/2050		Adaptor 1/4BSP x 7/16SAE Replaces 1620/0001		1
37	631/30600		Hose 1/4" x 570mm long		1

Applicability Date Ranges:
From: , To:

Product Catalog\WHEELED LOADERS\416 01243000-01243499,01317500-01317999,01472000-01472999,02095872-02095875 9812/3020 \E HYDRAULICS & AIR INCLUDING STEERING\E01 HOSE & PIPEWORK\E1-24-1 HOSE AND PIPEWORK SOLENOID PROP. PILOT VALVE, 3 SPOOL

9812/3020 E1-24-1 HOSE AND PIPEWORK SOLENOID PROP. PILOT VALVE, 3 SPOOL

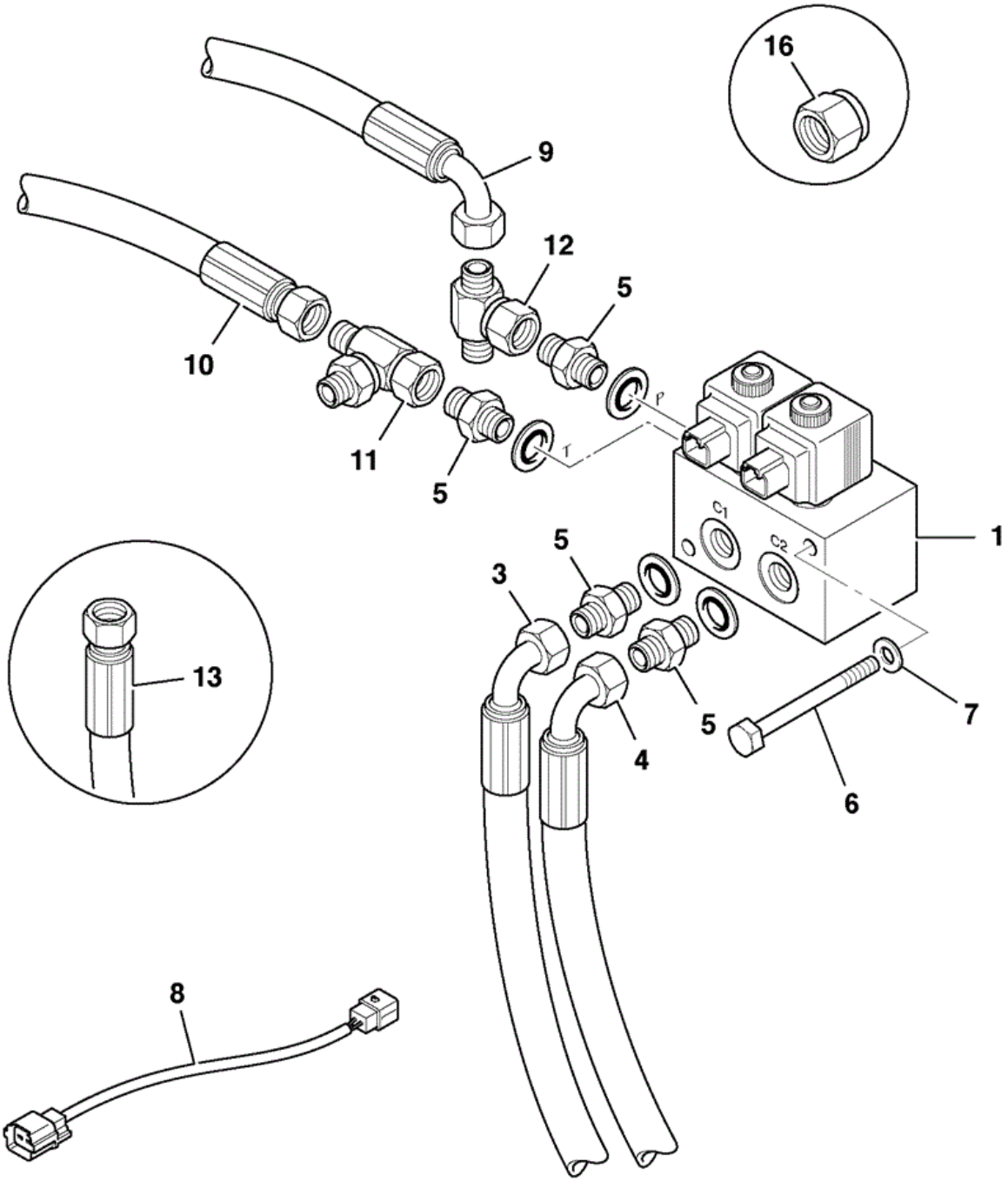

Item	Part No	Change No	Description	Usage Code	QTY
			Valve assembly prop. pilot valve		

1	25/222707		See section E3 for components		1
3	611/23900		Hose 1/4"BSP x 420mm		1
4	611/28900		Hose 1/4" BSP 865 mm		1
5	1620/0002		Adapter		4
5	1620/2051		Adaptor 1/4"BSP x 9/16"SAE Replaces 1620/0002		4
5A	:2401/0505		O Ring		4
6	1391/3318D		Capscrew M8 x 80mm grade 12.9		2
7	1420/0007D		Washer (M8)		2
8	721/11945		Harness valve block 3 spool		1
9	265/02149	to M1317854	Hose servo P port		1
9	332/U2234		Hose 1/4"BSP x 3350mm P port		1
10	265/02150	to M1317854	Hose servo T port		1
10	332/U2236		Hose 1/4"BSP x 3350mm T port		1
11	816/50031	Superseded	Adapter Tee		1
11	816/90013		Adaptor Tee 1/4F-1/4M-1/4M BSP		1
12	816/00367		Adapter M/M/F		1
13	648/31901		Hose 800mm long		2
16	816/00294		Cap Pipe		2

Applicability Date Ranges:
From: , To:

Product Catalog\WHEELED LOADERS\416 01243000-01243499,01317500-01317999,01472000-01472999,02095872-02095875 9812/3020 \E HYDRAULICS & AIR INCLUDING STEERING\E01 HOSE & PIPEWORK\E1-25-2 HOSE AND PIPEWORK PROPORTIONAL SOLENOID, PILOT VALVE, 4 SPOOL

9812/3020 E1-25-2 HOSE AND PIPEWORK PROPORTIONAL SOLENOID, PILOT VALVE, 4 SPOOL

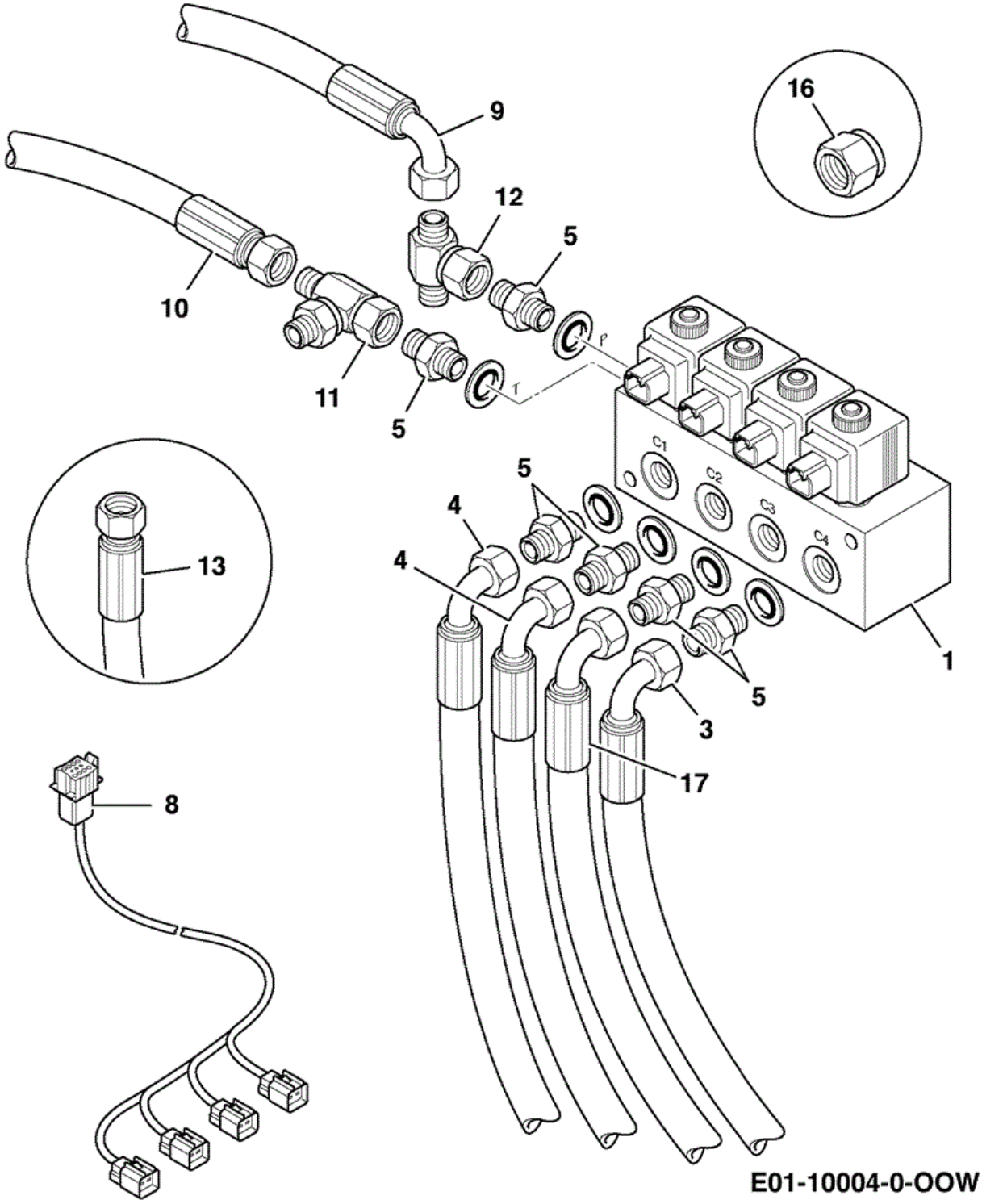

Item	Part No	Change No	Description	Usage Code	QTY
			Valve assembly prop. pilot valve		

1	25/222708		See section E3 for components		1
3	611/28900		Hose 1/4" BSP 865 mm Port C4		1
4	631/80003		Hose 1/4X260 Ports C1 & C2		2
5	1620/0002		Adapter		6
5	1620/2051		Adaptor 1/4"BSP x 9/16"SAE Replaces 1620/0002		6
5A	:2401/0505		O Ring		6
6	1391/3318D		Capscrew M8 x 80mm grade 12.9		2
7	1420/0007D		Washer (M8)		2
8	721/11944		Harness valve block 4 spool		1
9	332/U2234		Hose 1/4"BSP x 3350mm P port		1
10	332/U2236		Hose 1/4"BSP x 3350mm T port		1
11	816/50031	Superseded	Adapter Tee		1
11	816/90013		Adaptor Tee 1/4F-1/4M-1/4M BSP		1
12	816/00367		Adapter M/M/F		1
13	648/31901		Hose 800mm long		2
16	816/00294		Cap Pipe		2
17	332/T5211		Hose 1/4"BSP x 535mm Port C3		1

Applicability Date Ranges:
From: M1317856 , To:

Product Catalog\WHEELED LOADERS\416 01243000-01243499,01317500-01317999,01472000-01472999,02095872-02095875 9812/3020 \E HYDRAULICS & AIR INCLUDING STEERING\E01 HOSE & PIPEWORK\E1-26-1 HOSE AND PIPEWORK HYDRAULIC OIL COOLER

9812/3020 E1-26-1 HOSE AND PIPEWORK HYDRAULIC OIL COOLER

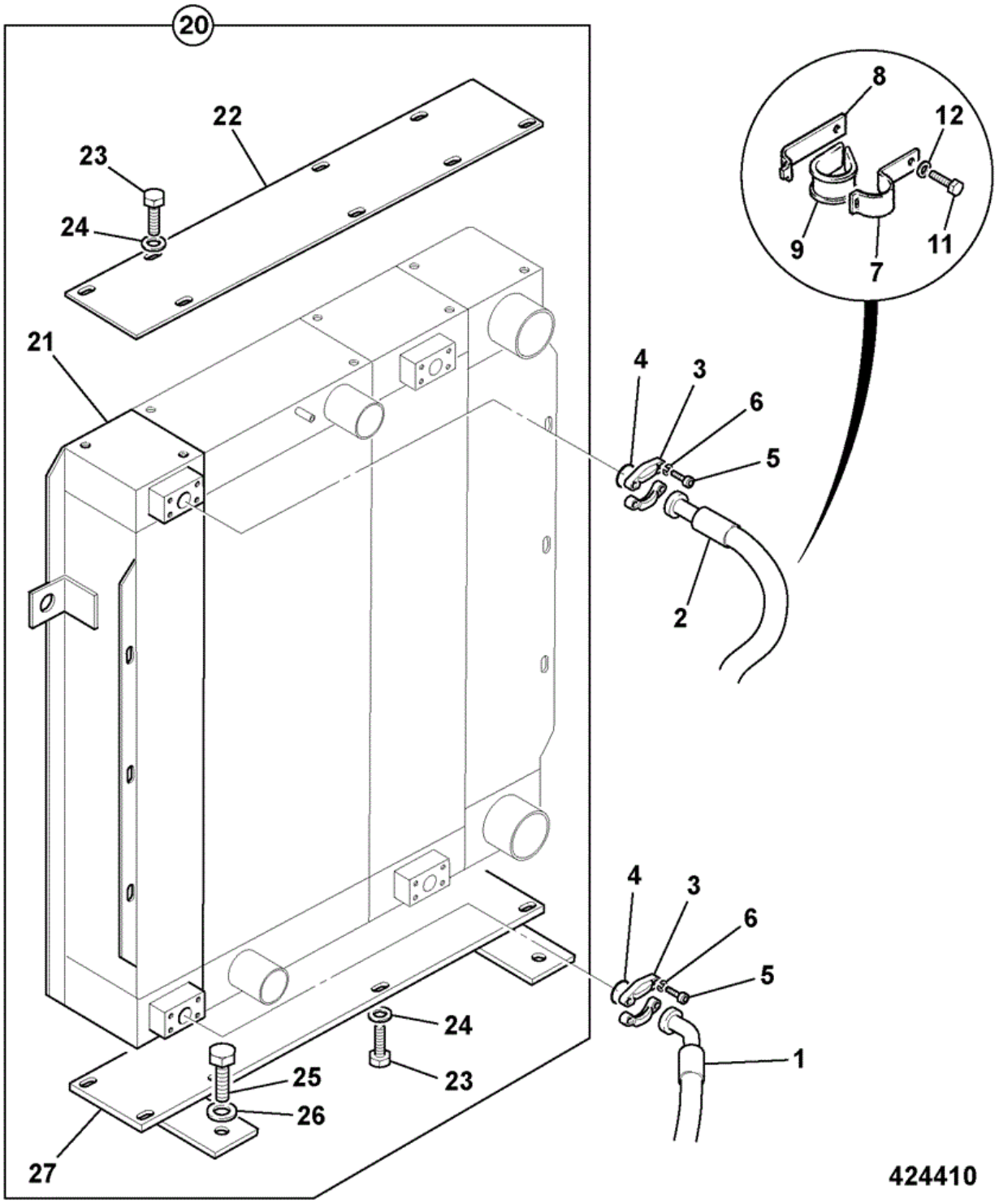

Item	Part No	Change No	Description	Usage Code	QTY
1	616/80283		Hose 3/4 x 860mm Cooler in		1

2	616/80282		Hose 3/4 x 1220mm Cooler out		1
3	264/01001		Clamp		4
4	2401/0210		O Ring		2
5	1391/3408D		Capscrew M10 x 30mm		8
6	1425/0008Z		Spring Washer		8
7	821/00183		Clamp Top		2
8	821/00184		Clamp Base		2
9	821/00185		Insert Clamp		2
11	1315/0407D		Setscrew M10 x 25		2
12	1420/0008D		Washer (M10)		2
20	30/926196		Cooler combination assembly		1
20	30/926214		Cooler combination epoxy coated Epoxy alternative		1
20	30/926699		Cooler widecore combination assembly		1
20	30/926700		Cooler widecore combination epoxy assembly		1
21	:30/926143		Cooler hydraulic oil		1
21	:30/926148		Cooler hydraulic oil epoxy coated Epoxy alternative		1
22	:30/926263		Plate top		1
22	:30/926270		Plate top epoxy coated		1
27	:30/926264		Plate base		1
27	:30/926271		Plate base epoxy coated		1

Applicability Date Ranges:
From: , To:

Product Catalog\WHEELED LOADERS\416 01243000-01243499,01317500-01317999,01472000-01472999,02095872-02095875 9812/3020 \E HYDRAULICS & AIR INCLUDING STEERING\E01 HOSE & PIPEWORK\E1-27-1 HOSE AND PIPEWORK EMERGENCY STEER VALVE

9812/3020 E1-27-1 HOSE AND PIPEWORK EMERGENCY STEER VALVE

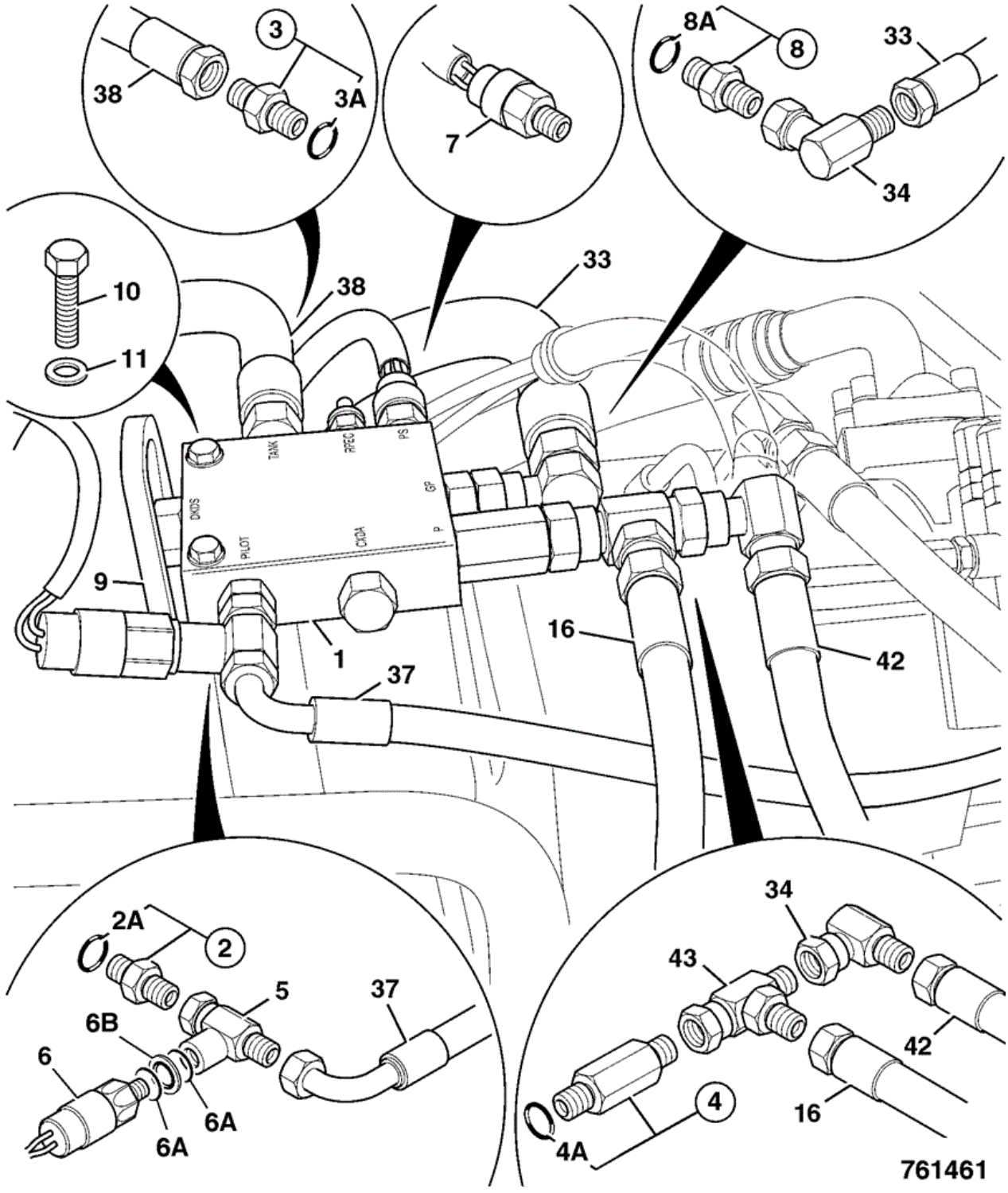

Item	Part No	Change No	Description	Usage Code	QTY
A	333/R4040	to 20/07/2010	Harness emergency steer pressure switch Salvage harness		1

1	928/60118		Valve emergency steer		1
2	1620/0002	Superseded	Adapter		1
2	1620/2051		Adaptor 1/4"BSP x 9/16"SAE		1
2A	:2401/0506		O Ring		1
3	1620/0009	Superseded	Adaptor		1
3	1620/2058		Adaptor 3/4BSP x 7/8SAE M/M		1
3A	:2401/0507		O Ring		1
4	816/17073		Adapter		1
4A	:2401/0010		O Ring		1
5	816/13138	to 20/07/2010	Adapter tee M12 x 1/4"x1/4"BSP		1
5	816/90062		Adaptor tee 1/4inchx 1/4inchBSP x 9/16inch-18UNF M/F/F		1
6	701/80305	Superseded	Switch pressure		1
6	332/V4172	to 20/07/2010	Switch pressure		1
6	333/R4180		Switch press 10Bar		1
6A	2301/0006		O Ring 3/8"BSP		2
6B	1406/0011		Washer Bonded (1/4")		1
7	701/74400		Switch pressure 150mm lead		1
8	1620/0006		Adapter 39.5mm		1
8A	:2401/0010		O Ring		1
9	335/01366		Bracket steer valve mounting		1
10	1315/3311D		Bolt M8x45mm		2
11	1420/0007D		Washer (M8)		2
16	613/08100		Hose 1/2"BSP x 2570mm		1
17	655/00259		Spacer Item 9 to transmission		2
33	613/22800		Hose 1/2"BSP x 715mm		1
34	816/10016		Adapter		2
37	631/30600		Hose 1/4" x 570mm long		1
38	635/80118		Hose		1
42	613/06100		Hose 1/2 BSP 1255 mm		1
43	816/50005		Adapter Tee		1

Applicability Date Ranges:
From: , To:

Product Catalog\WHEELED LOADERS\416 01243000-01243499,01317500-01317999,01472000-01472999,02095872-02095875 9812/3020 \E HYDRAULICS & AIR INCLUDING STEERING\E01 HOSE & PIPEWORK\E1-28-1 HOSE AND PIPEWORK QUICKHITCH LOCKING

9812/3020 E1-28-1 HOSE AND PIPEWORK QUICKHITCH LOCKING

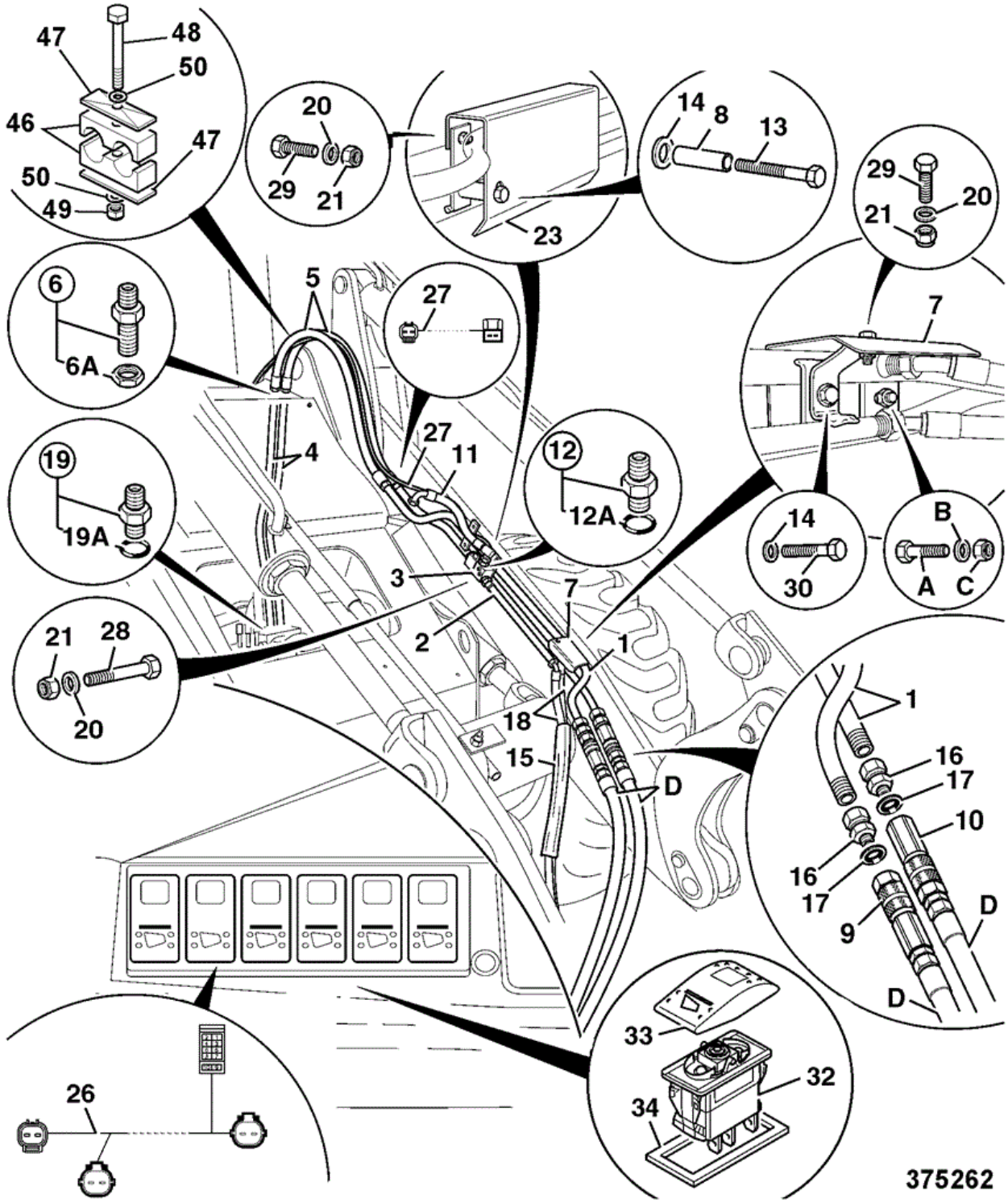

Item	Part No	Change No	Description	Usage Code	QTY
A	1315/3418D		Bolt M10 x 80		1
B	1420/0008D		Washer (M10)		1

C	1370/0303D		Nut Self Lock M10		1
D	****		'See Remark' Hoses from attachments		1
1	335/08596		Pipe assembly		1
2	335/08597		Pipe extension		1
3	25/221923		Valve solenoid		1
3A	:25/223416		Coil		1
4	615/46300		Hose valve block to b/head connection		2
5	615/46400	Replaced by	Hose 3/4"BSP x 1040mm		2
5	332/V3857	to 05/07/2011	Hose 3/4"BSP x 1040mm		2
5	333/T9732	to 24/03/2013	Hose 3/4"BSP x 1040mm (Higher temperature rating) Replaces 332/V3857		2
5	333/V8171		Hose 12 HP x 1295mm		2
5	615/80083		Hose 3/4" X 1700mm Super high lift (SHL)		2
5	970/60504		Hose wire wrapped 3/4"BSP x 1040mm Sales special 1747		2
6	816/10034		Adaptor		2
6	816/90033		Adaptor Replaces 816/10034		1
6A	:1356/0006Z		Nut		1
7	331/22996		Cover		1
8	829/30652		Spacer		1
9	45/910300		Coupling 3/4" BSP male quick release		1
10	45/908400		Coupling 3/4 BSP female quick release		1
11	612/44200		Hose 3/8"BSP x 360mm		1
11	970/60505		Hose wire wrapped Sales special 7973, 1747		1
12	1620/0003	Superseded	Adapter		2
12	1620/2052		Adaptor 3/8BSP X 9/16		2
12A	:2401/0506		O Ring		1
13	1315/3313D		Bolt M8 x 55mm		1
14	1420/0007D		Washer (M8)		2
15	:647/02615	Superseded	Hose protective (black PVC) Cut to length approx 1.2M required		1
15	:647/02611		Tube 2.475 metres Cut to length approx 1.2M required		1
16	1612/0006		Adapter		2
17	1406/0021		Washer Bonded		2
18	612/33300		Hose 3/8"BSP x 1460mm		2

18	970/60506		Hose 3/8"BSP zx 1570mm wire guarded Sales special 7973, 1227, 1747		2
19	1620/0009	Superseded	Adaptor		2
19	1620/2058		Adaptor 3/4BSP x 7/8SAE M/M		2
19A	:2401/0510		O Ring		1
20	1420/0006D		Washer (M6)		10
21	1370/0103D		Nut (M6)		5
23	331/22995		Bracket		1
26	****		'See Remark' Not required		1
27	721/12350		Harness quickhitch loader arms		1
28	1315/0212Z		Screw M6 x 50		2
29	1315/0205D		Setscrew M6 x 20		3
30	1315/0301D		Setscrew M8 x 12mm		1
32	701/60041		Switch 24V		1
33	701/58713		Cover aux decal		1
34	701/60037		Gasket Panel Switch No longer fitted		1
45	821/00410		Clip P 10mm		2
46	821/00442		Clamp For hose 615/80083 (item 5)		2
47	821/00443		Plate Cover		2
48	1315/3316D		Bolt M8 x 70mm		1
49	1420/0007D		Washer (M8)		2
50	1370/0203D		Nut Lock M8		1

Applicability Date Ranges:
From: , To:

9812/3020 E1-30-1 HOSE SUPPORT CENTRE PIVOT

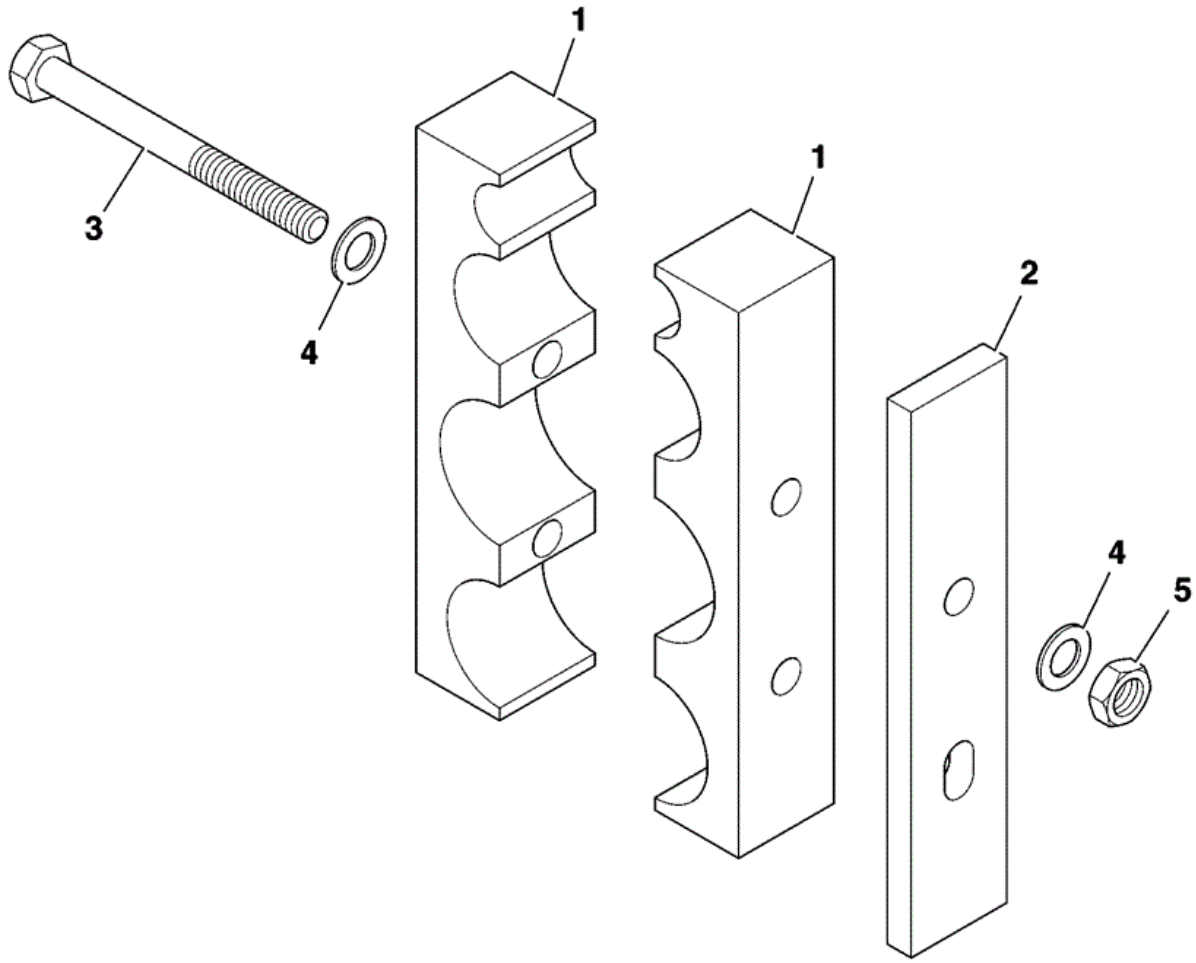

761600

Item	Part No	Change No	Description	Usage Code	QTY
1	821/10256		Clamp hose		2
2	331/43279		Plate hose clamp		1

3	1315/3421D		Bolt M10 x110mm		2
4	1420/0008D		Washer (M10)		6
5	1370/0303D		Nut Self Lock M10		2
6	268/00132		Bracket hose support		1
7	1315/0407D		Setscrew M10 x 25		2

Applicability Date Ranges:
From: , To:

Product Catalog\WHEELED LOADERS\416 01243000-01243499,01317500-01317999,01472000-01472999,02095872-02095875 9812/3020 \E HYDRAULICS & AIR INCLUDING STEERING\E01 HOSE & PIPEWORK\E1-31-1 HOSE CLAMP FEED

9812/3020 E1-31-1 HOSE CLAMP FEED

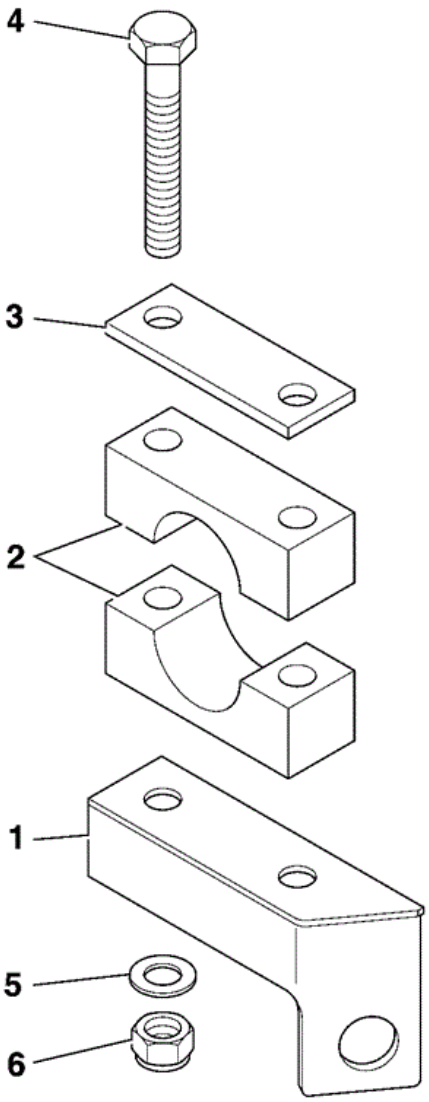

761760

Item	Part No	Change No	Description	Usage Code	QTY
1	****		'See Remark' Not fitted		1
2	821/10265		Clamp R19mm		2

3	821/00424		Plate clamp		1
4	1315/3419D		Bolt M10 x 90mm		2
5	1420/0008D		Washer (M10)		4
6	1370/0303D		Nut Self Lock M10		2

Applicability Date Ranges:
From: , To:

Product Catalog\WHEELED LOADERS\416 01243000-01243499,01317500-01317999,01472000-01472999,02095872-02095875 9812/3020 \E HYDRAULICS & AIR INCLUDING STEERING\E01 HOSE & PIPEWORK\E1-32-1 HOSE AND PIPEWORK DUAL SOLENOID VALVE SALES SPECIAL

9812/3020 E1-32-1 HOSE AND PIPEWORK DUAL SOLENOID VALVE SALES SPECIAL

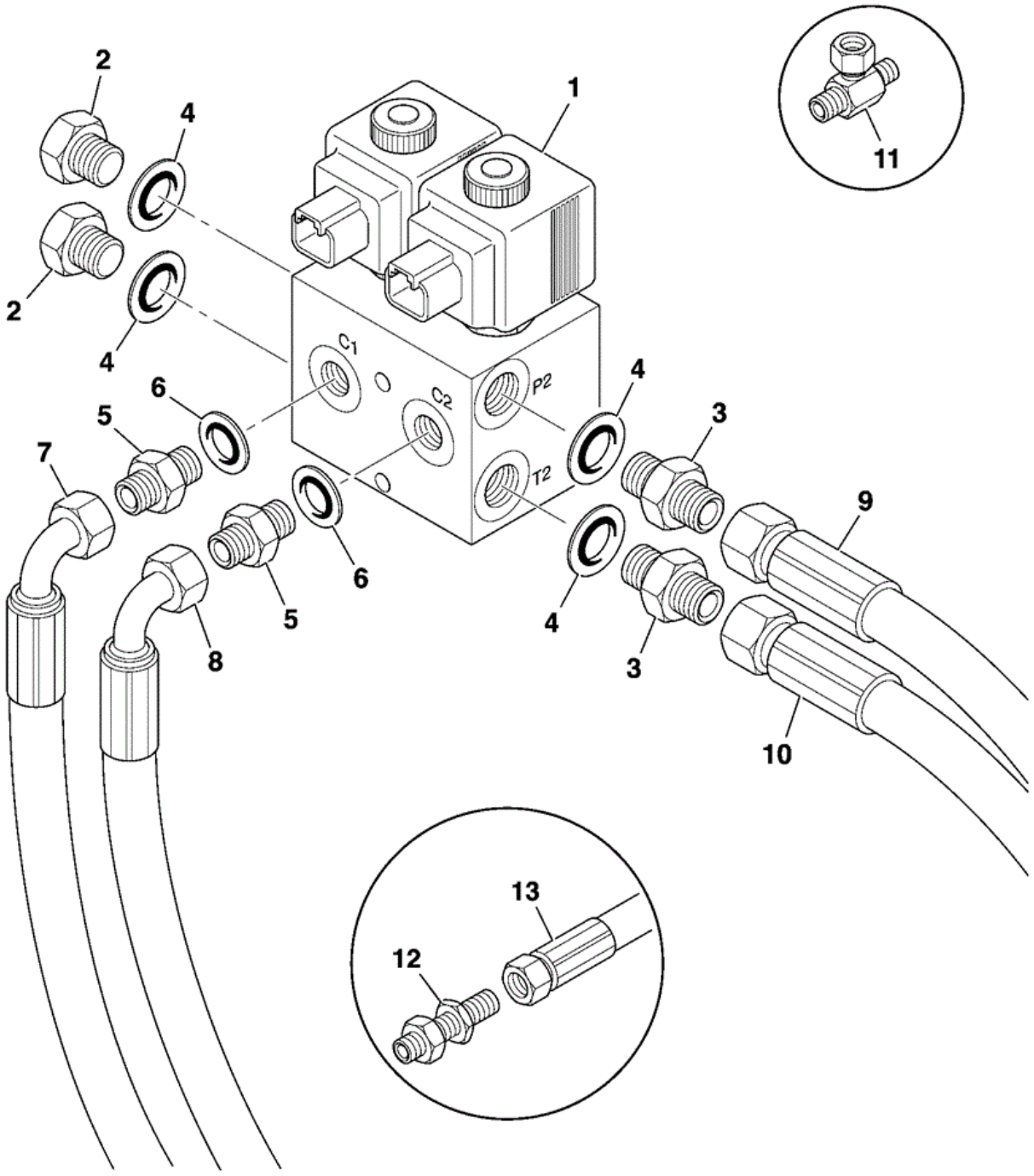

Item	Part No	Change No	Description	Usage Code	QTY
			Valve dual solenoid		

1	928/60254		Sales special 8661		1
2	816/80005		Plug 3/8"BSP		2
3	1606/0003		Adapter		2
4	1406/0015		Washer Bonded 3/8"		4
5	1604/0002		Adapter		2
6	1406/0011		Washer Bonded (1/4")		2
7	****		T.B.A Hose C1 to valve block		1
8	****		T.B.A Hose C2 to valve block		1
9	****		T.B.A Hose P2		1
10	****		T.B.A Hose T2		1
11	816/00367		Adapter M/M/F		2
12	816/10143		Adapter Through cab floor		1
13	****		T.B.A Hose bulkhead to lever		2

Applicability Date Ranges:
From: , To:

Product Catalog\WHEELED LOADERS\416 01243000-01243499,01317500-01317999,01472000-01472999,02095872-02095875 9812/3020 \E HYDRAULICS & AIR INCLUDING STEERING\E01 HOSE & PIPEWORK\E1-33-1 LOADER END HOSE SLEEVING, CANOPY CAB

9812/3020 E1-33-1 LOADER END HOSE SLEEVING, CANOPY CAB

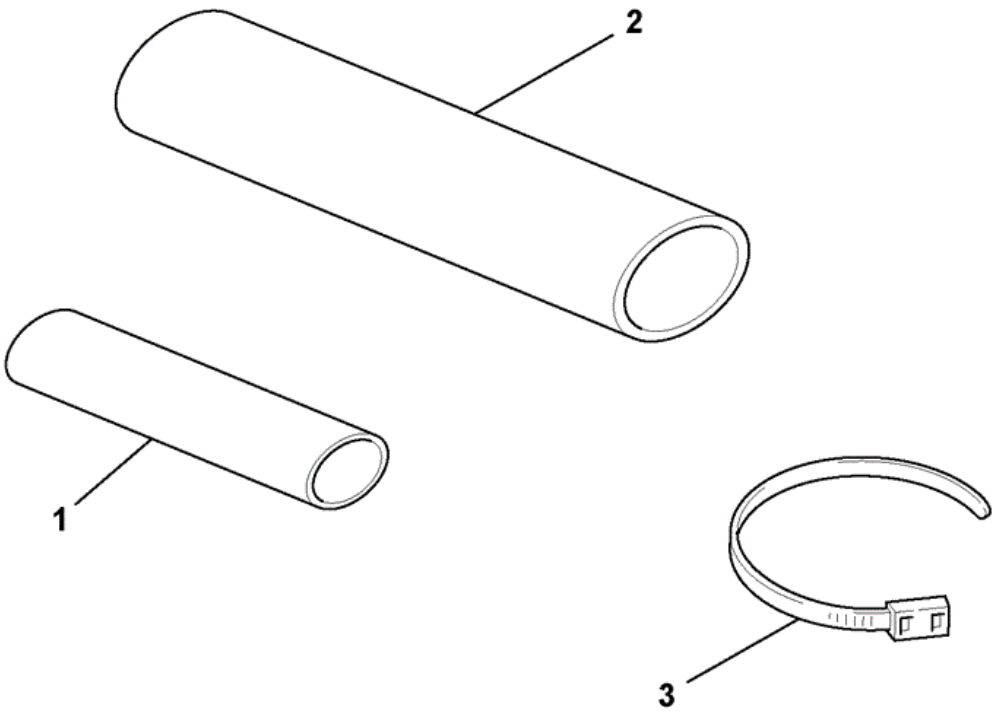

939910

Item	Part No	Change No	Description	Usage Code	QTY
1	333/R0089		Sleeve woven polyester 36mm dia, x 50mts. Auxiliary hoses, 2000mm required		0

2	333/R0090		Sleeve woven polyester 40mm dia. x 50mts. Shovel ram hoses, 2000mm required		0
3	121/77603		Tie Cable 300mm		8

Applicability Date Ranges:
From: , To:

9812/3020 E1-50-1 HOSE AND PIPEWORK TRANSMISSION

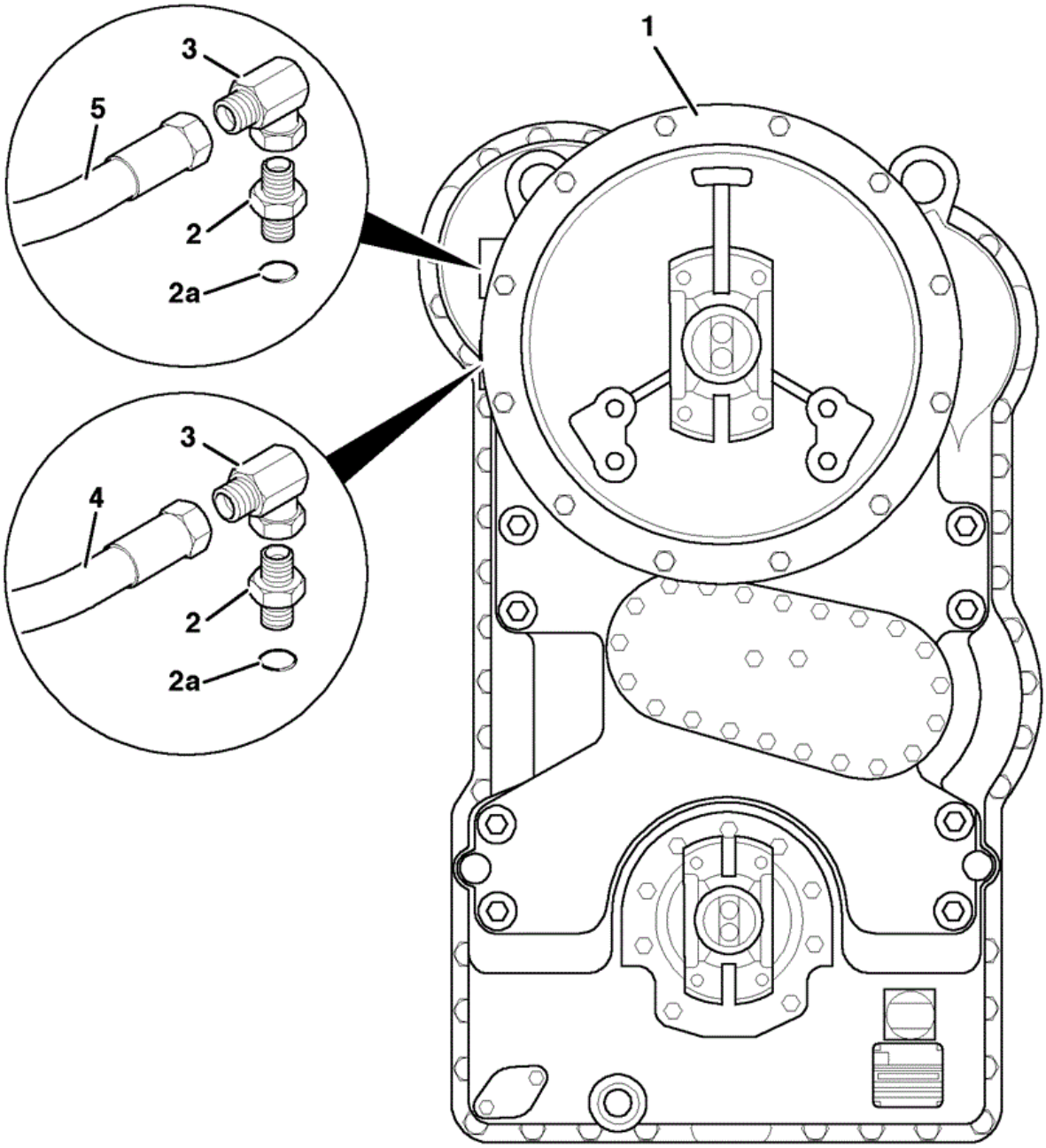

944400

Item	Part No	Change No	Description	Usage Code	QTY
1	****		'See Remark' Transmission see F5 section		1
2	1620/2061		Adaptor M/M		2

3	816/00018		Adapter 90 Degree		2
4	616/80160		Hose Transmission out		1
5	616/80161		Hose Transmission transmission in		1
6	****		'See Remark' Cooler see F6-1-1		1

Applicability Date Ranges:
From: , To:

Product Catalog\WHEELED LOADERS\416 01243000-01243499,01317500-01317999,01472000-01472999,02095872-02095875 9812/3020 \E HYDRAULICS & AIR INCLUDING STEERING\E01 HOSE & PIPEWORK\E1-55-1 HOSE AND PIPEWORK LOAD SUSPENSION

9812/3020 E1-55-1 HOSE AND PIPEWORK LOAD SUSPENSION

Item	Part No	Change No	Description	Usage Code	QTY
22	816/90013		Adaptor Tee 1/4F-1/4M-1/4M BSP FIT TO 4 WAY ADAPTOR		1
50	269/00774		G.A.		1

Applicability Date Ranges:
From: , To:

Product Catalog\WHEELED LOADERS\416 01243000-01243499,01317500-01317999,01472000-01472999,02095872-02095875 9812/3020 \E HYDRAULICS & AIR INCLUDING STEERING\E01 HOSE & PIPEWORK\E1-60-1 HOSE AND PIPEWORK LOAD SUSPENSION

9812/3020 E1-60-1 HOSE AND PIPEWORK LOAD SUSPENSION

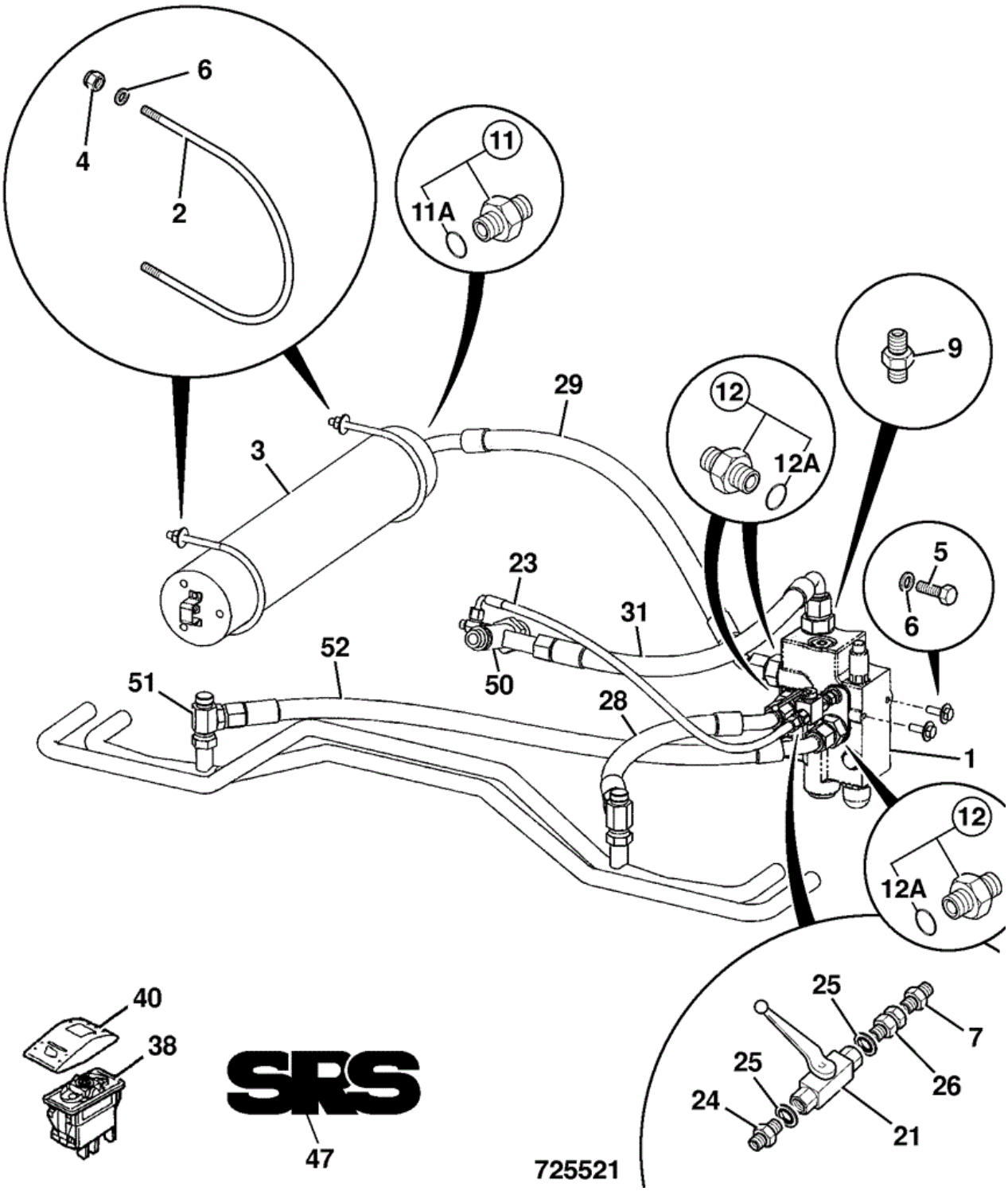

Item	Part No	Change No	Description	Usage Code	QTY
1	25/222127	to 06/02/2011	Valve ride control		1
1	333/T3222		Valve ride control		1

2	826/11580		Bolt U M10		2
3	32/925854		Accumulator zero pressure version of 32/925791 Discharged		1
4	1370/0303D		Nut Self Lock M10		4
5	1315/0408D		Setscrew M10 x 30		2
6	1420/0008D		Washer (M10)		6
7	1620/0002	Superseded	Adapter		1
7	1620/2051		Adaptor 1/4"BSP x 9/16"SAE		1
9	1620/0012	Superseded	Adapter 1" BSP		1
9	1620/2061		Adaptor M/M		1
11	1620/0010	Superseded	Adapter Includes 'O'Ring		1
11	1620/2059		Adaptor 3/4BSP/1-1/16SAE M/M		1
11A	:2401/0508		O Ring		1
12	1620/0011	Superseded	Adaptor		3
12	1620/2060		Adaptor M/M 3/4BSPx1-5/16SAE		3
12A	:2401/0510		O Ring		1
21	25/961900		Valve ball		1
23	631/30800		Hose		1
24	1604/0002		Adapter		1
25	1406/0011		Washer Bonded (1/4")		2
26	1612/0002		Adapter		1
28	615/26500		Hose		1
29	615/80071		Hose 3/4BSP		1
31	617/20300		Hose		1
36	638/10700	to 31/12/2012	Hose 1.25" x 1350 lg.		1
36	333/W8747		Hose 1 1/4"BSP LP x 1315mm Replaces 638/10700		1
38	701/60031		Panel Switch 24V		1
40	701/58842		Cover SRS Switch SoftTouch		1
47	817/16942		Decal smooth ride No longer fitted		2
50	816/60326		Adapter		1
51	816/00344	Superseded	Adapter Tee		2
51	816/90043		Adaptor tee M/M/F		2
52	615/80072		Hose 3/4BSP		1

9812/3020 E3-30-1 VALVE LOAD SUSPENSION

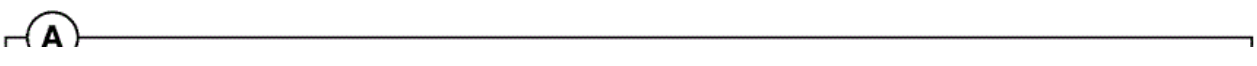

Item	Part No	Change No	Description	Usage Code	QTY
A	25/222127		Valve ride control		1
1	:25/222769		Housing		1
2	:25/222770		Socket		1
3	:25/222771		Disc spring		1
4	:25/222772		Seat valve		1
5	:25/222773		Seat valve		1
6	:25/222774		Pin throttle		1
7	:25/222775		Screw grub		1

8	:25/222776		Spring		1
9	:25/222777		Spring		1
10	:25/222778		Plug		1
11	:25/222779		Plug		1
12	:25/222780		Plug		1
13	:25/222781		Screw		1
14	:25/222782		Valve		1
15	:25/222783		Plug		1
16	:25/222784		Plug		1

9812/3020 E3-30-2 VALVE LOAD SUSPENSION

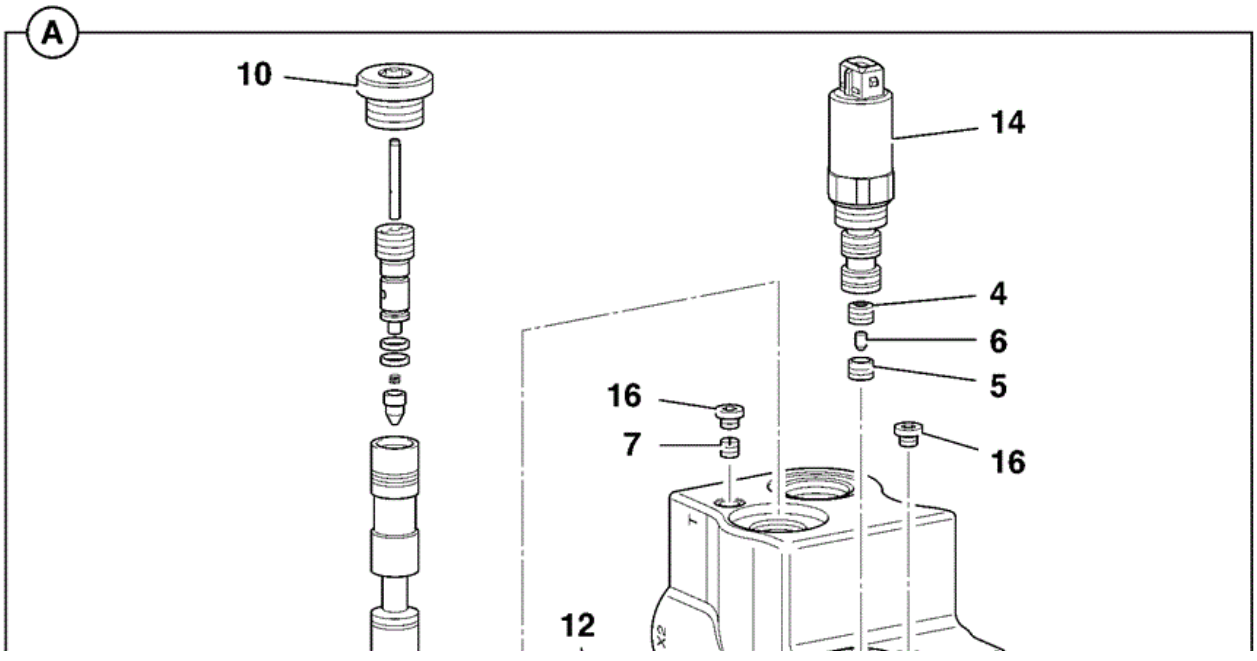

Item	Part No	Change No	Description	Usage Code	QTY
A	333/T3222		Valve ride control		1
1	:25/222769		Housing		1
1A	:333/C5858		Washer conical Fitted between item 1 & 14		1
2	:25/222770		Socket		1
3	:25/222771		Disc spring		1
4	:25/222772		Seat valve		1
5	:25/222773		Seat valve		1
6	:25/222774		Pin throttle		1
7	:25/222775		Screw grub		1
8	:25/222776		Spring		1
9	:25/222777		Spring		1
10	:25/222778		Plug		1
11	:25/222779		Plug		1
12	:25/222780		Plug		1
13	:25/222781		Screw		1
14	:25/222782		Valve		1
14	:333/C7021		Kit valve & washer Service replacement		1
15	:25/222783		Plug		1
16	:25/222784		Plug		1

Applicability Date Ranges:
From: , To:

Product Catalog\WHEELED LOADERS\416 01243000-01243499,01317500-01317999,01472000-01472999,02095872-02095875 9812/3020 \E HYDRAULICS & AIR INCLUDING STEERING\E02 PUMP/MOTOR & PUMP DRIVE\E2-1-5 PUMP COMPONENTS MAIN HYDRAULIC

9812/3020 E2-1-5 PUMP COMPONENTS MAIN HYDRAULIC

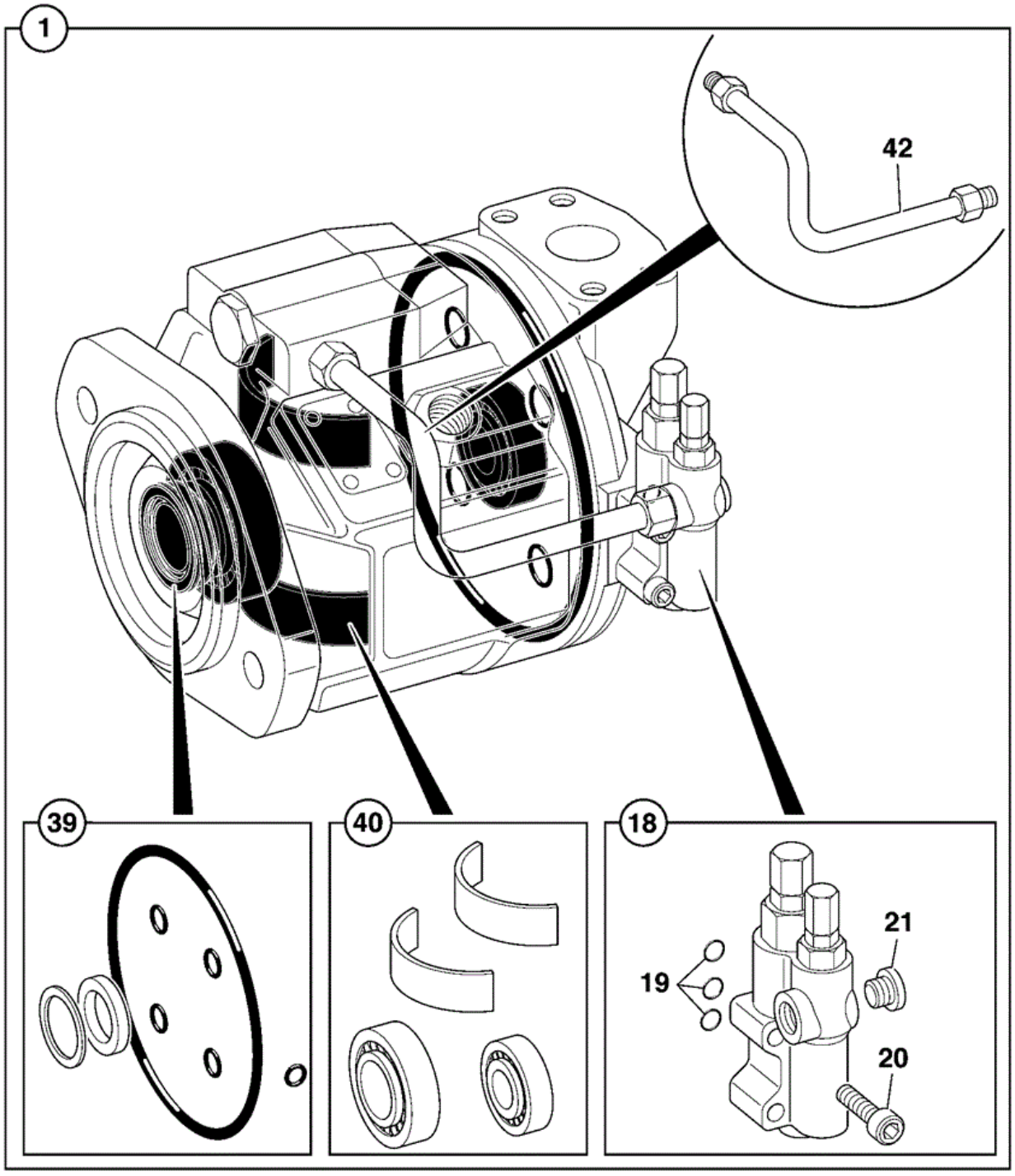

Item	Part No	Change No	Description	Usage Code	QTY
1	332/U2812		Pump hydraulic 71cc H.P. controlled		1
18	:20/902617		Valve pilot DFR1		1

19	::20/902618		O Ring		1
20	::20/902619		Screw socket		1
21	::20/902620		Plug		1
39	:904/20365		Kit Seal		1
40	:332/E6645		Kit-bearing		1
42	:20/952484		Pipe with Nut		1

Applicability Date Ranges:
From: M1317855 , To: 22/03/2011

Product Catalog\WHEELED LOADERS\416 01243000-01243499,01317500-01317999,01472000-01472999,02095872-02095875 9812/3020 \E HYDRAULICS & AIR INCLUDING STEERING\E02 PUMP/MOTOR & PUMP DRIVE\E2-2-1 PUMP, MAIN HYDRAULIC FITTINGS & ADAPTERS

9812/3020 E2-2-1 PUMP, MAIN HYDRAULIC FITTINGS & ADAPTERS

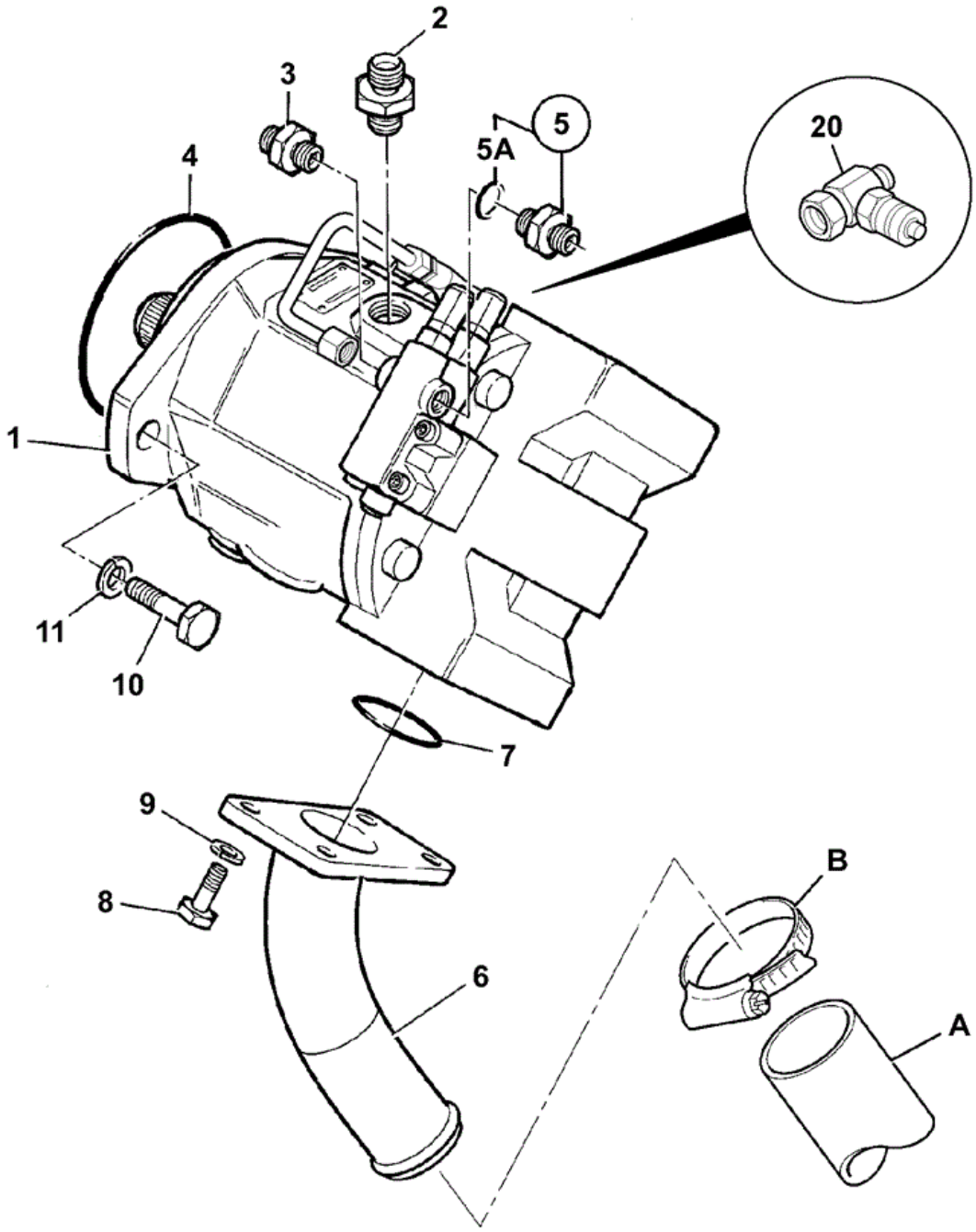

208343

Item	Part No	Change No	Description	Usage Code	QTY
A	834/10314		Hose suction		1
B	821/00404		Clip hose		1

1	20/912200	To M1317854	Pump hydraulic 71cc H.P. controlled See E2-1-1 for components	P/Ex	1
1	332/U2812	to M1472251	Pump hydraulic 71cc H.P. controlled See E2-1-5 for components		1
1	333/S8109		Pump hydraulic 71cc (No HP control) See E2-1-10 for components		1
2	1620/0009	Superseded	Adaptor		1
2	1620/2058		Adaptor 3/4BSP x 7/8SAE M/M		1
3	1620/0001	Superseded	Adapter		1
3	1620/2050		Adaptor 1/4BSP x 7/16SAE		1
3	:828/00237		O Ring 1/4"BSP		1
4	828/00351		Ring oil		1
5	1620/0001		Adapter		1
5	:2401/0503		O Ring		1
6	933/20025		Adapter suction port		1
7	2401/0219		O Ring		1
8	1315/0508D		Setscrew M12 x 30 mm		4
9	1422/0009D		Washer hardened (M12)		4
10	1315/0710D		Setscrew M16 x 40mm		2
11	1425/0011D		Washer spring		1
20	816/55045		Adapter test point		1

Applicability Date Ranges:
From: , To: M1472251

9812/3020 E2-3-1 PUMP EMERGENCY STEER

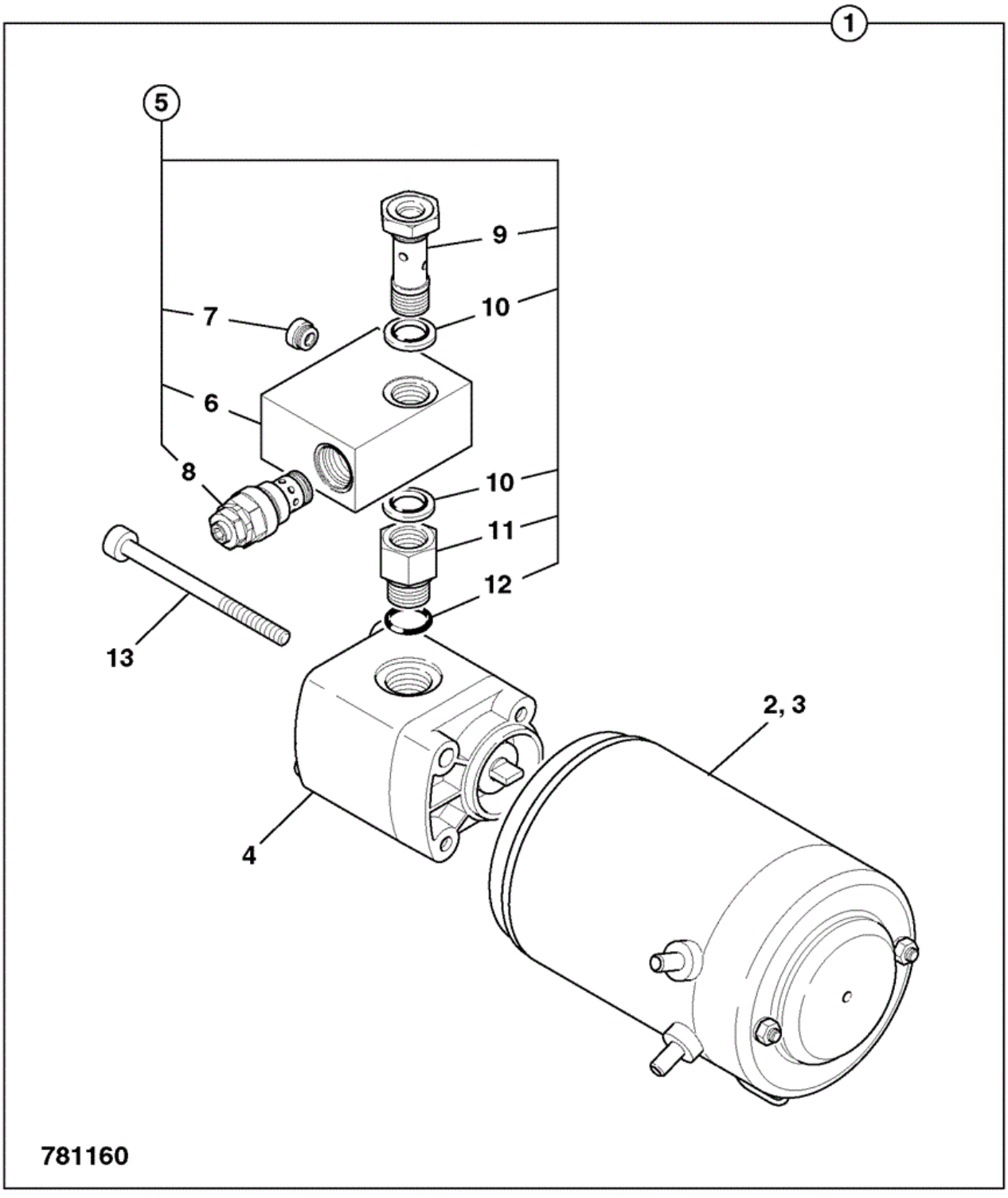

Item	Part No	Change No	Description	Usage Code	QTY
1	269/10763		Pump and manifold emergency steer		1
1A	20/925740	Superseded	Pump emergency steer	A	1

1A	332/S1476		Pump & motor emergency steer no thermal cut out	B	1
2	:25/222863		Motor with thermal protection	A	1
2	:332/G8488		Motor without thermal protection	B	1
3	:25/222864		Kit brush		1
5	25/223212		Manifold assembly Seperate from the pump, see page E3-16-1 for components		1

9812/3020 E3-16-1 VALVE ASSEMBLY MANIFOLD BLOCK 25/223212

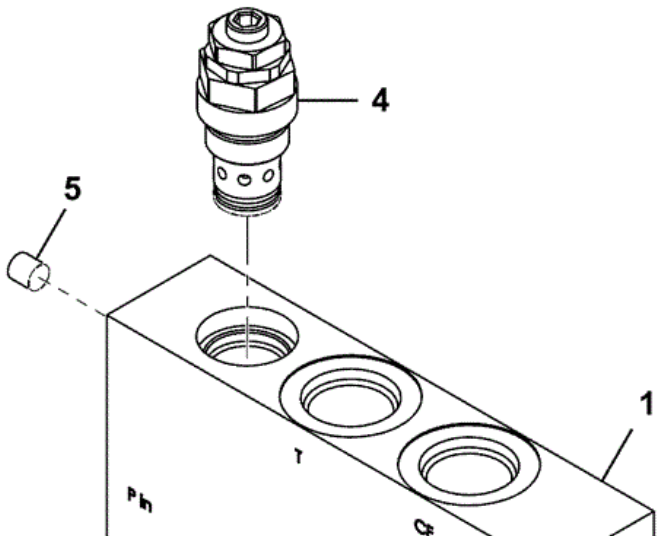

Item	Part No	Change No	Description	Usage Code	QTY
A	25/223212		Manifold assembly		1
1	****		None serviced part		1
2	:25/222867		Valve check		1
3	:333/C2674		Valve check		1
4	:25/222870		Valve relief		1
5	:333/C2675		Plug		1
6	:333/C2676		Plug		1

Applicability Date Ranges:
From: , To: M1472236

Product Catalog\WHEELED LOADERS\416 01243000-01243499,01317500-01317999,01472000-01472999,02095872-02095875 9812/3020 \E HYDRAULICS & AIR INCLUDING STEERING\E02 PUMP/MOTOR & PUMP DRIVE\E2-4-1 GEAR PUMP COMPONENTS

9812/3020 E2-4-1 GEAR PUMP COMPONENTS

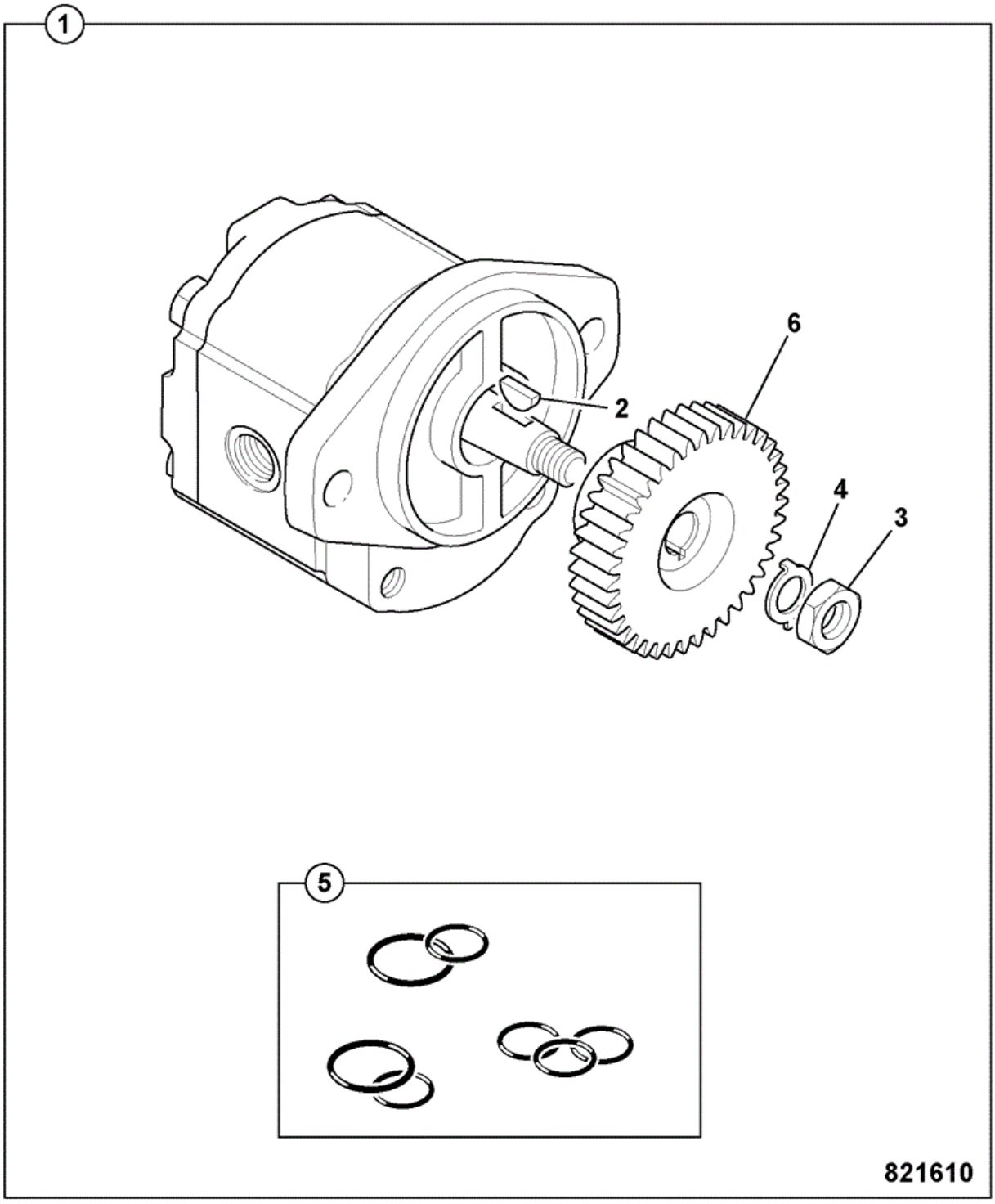

Item	Part No	Change No	Description	Usage Code	QTY
1	20/925734		Pump gear		1
2	331/61563		Key		1

3	331/61562		Nut		1
4	331/61561		Washer		1
5	****		T.B.A Seal Kit		1
6	320/08030		Gear Not supplied with pump		1

Applicability Date Ranges:
From: , To:

Product Catalog\WHEELED LOADERS\416 01243000-01243499,01317500-01317999,01472000-01472999,02095872-02095875 9812/3020 \E HYDRAULICS & AIR INCLUDING STEERING\E03 VALVES & HYDRAULIC FILTERS\E3-3-1 VALVE,COMPONENTS 332/U0027,3 SPOOL

9812/3020 E3-3-1 VALVE,COMPONENTS 332/U0027,3 SPOOL

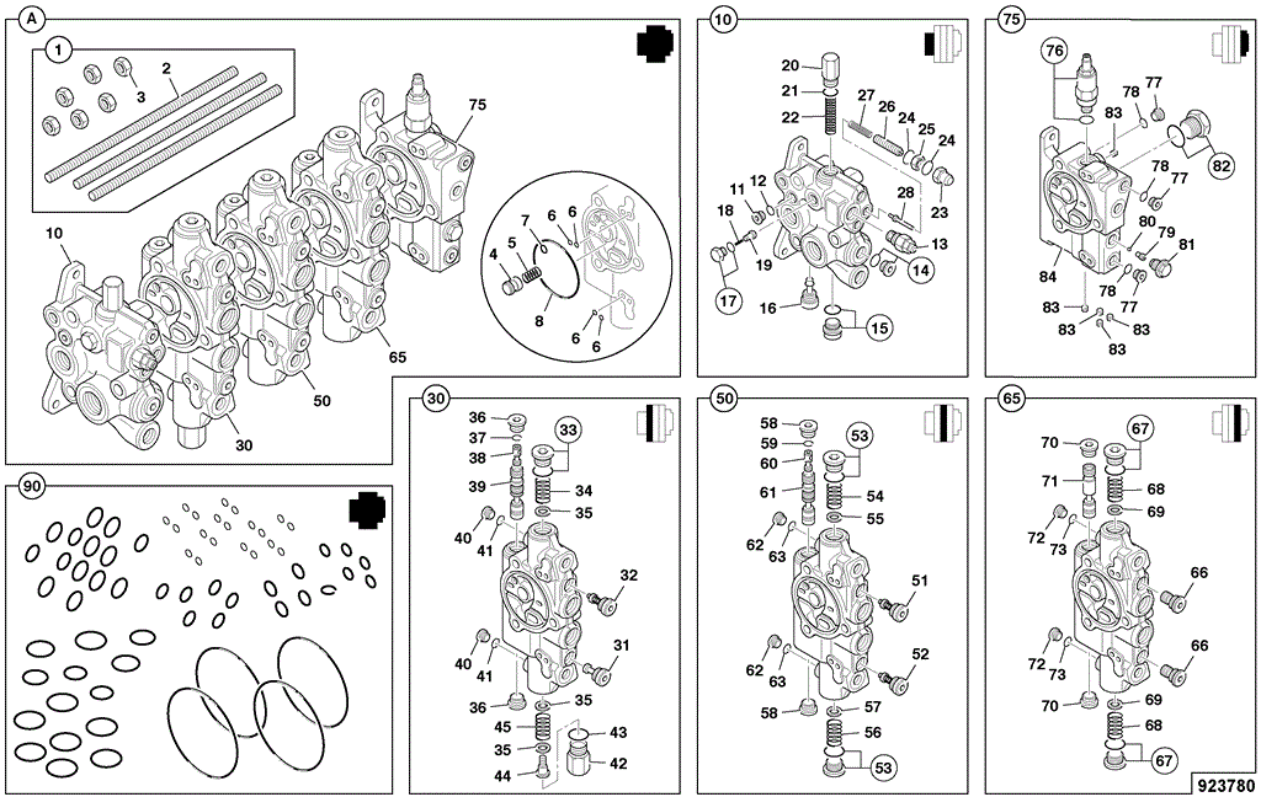

Item	Part No	Change No	Description	Usage Code	QTY
A	332/U0027		Valve assembly 3 spool		1
1	****		'See Remark' Tie rod kit		1
2	::332/F1165		Rod tie		3
3	::332/F1164		Nut		6
4	:25/220600		Poppet		3
5	:25/220601		Spring		3
6	:25/220383		Seal o ring		16
7	:332/C7164		O Ring		4
8	:828/10190		O Ring		4
10	:332/E5365		Valve inlet section		1
11	::332/C6145		Plug		1
12	::25/607219		O Ring		1
13	::332/C6189		Regulator drain 205Bar		1
14	::25/220930		Plug includes seal		1
15	::332/C6131		Plug Assembly		1

16	::332/C6195		Plug assembly		1
17	::332/E5440		Plug assembly		1
18	::25/220925		Spring		1
19	::25/220924		Poppet check valve		1
20	::332/E5430		Cap spool		1
21	::25/606112		O Ring		1
22	::332/C6139		Spring		1
23	::332/E5461		Nut special		1
24	::332/E5442		O Ring		2
25	::332/E5441		Nut special		1
26	::332/E5463		Screw adjustment		1
27	::332/E5446		Spring .		1
28	::332/E5464		Poppet		1
30	:332/F1136		Valve lift section		1
31	::332/E5355		Plug assembly		1
32	::332/F1144		Valve relief 350Bar		1
33	::332/C6129		Plug assembly		1
34	::332/E5426		Spring		1
35	::332/C6127		Washer		3
36	::332/C6131		Plug Assembly		2
37	::332/C6188		Ring retaining		1
38	::332/C6185		Valve shuttle load sense		1
39	::332/C6184		Spool compensator		1
40	::332/C6145		Plug		2
41	::25/607219		O Ring		2
42	::332/E5434		Cap spool		1
43	::332/E5437		O Ring		1
44	::332/E5436		Spool end		1
45	::332/E5427		Spring		1
50	:332/F1139		Valve shovel section		1
51	::332/E5352		Valve relief 115Bar		1
52	::332/C6191		Valve relief 250Bar		1
53	::332/C6129		Plug assembly		2
54	::332/C6214		Spring		1
55	::332/C6127		Washer		1
56	::332/C6133		Spring		1
57	::332/E5433		Washer		1
58	::332/C6131		Plug Assembly		2
59	::332/C6188		Ring retaining		1

60	::332/C6185		Valve shuttle load sense		1
61	::332/C6184		Spool compensator		1
62	::332/C6145		Plug		2
63	::25/607219		O Ring		2
65	:332/F1141		Valve aux. section		1
66	::332/C6195		Plug assembly		2
67	::332/C6129		Plug assembly		2
68	::332/C6214		Spring		2
69	::332/C6127		Washer		2
70	::332/C6131		Plug Assembly		2
71	::332/E5431		Spool compensator		1
72	::332/C6145		Plug		2
73	::25/607219		O Ring		2
75	:332/C0857		Valve outlet section		1
76	::332/D6572		Valve pressure reducing		1
77	::332/C6145		Plug		3
78	::25/607219		O Ring		3
79	::332/C6137		Screw set		1
80	::332/C6126		Ball		1
81	::25/612834		Plug Shut-off Assembly		1
82	::332/E5439		Plug		1
83	::332/C7165		Plug expander		5
84	::332/C9957		Body valve outlet		1
90	****		'See Remark' Complete seal kit		1

Applicability Date Ranges:
From: M1317855 , To:

Product Catalog\WHEELED LOADERS\416 01243000-01243499,01317500-01317999,01472000-01472999,02095872-02095875 9812/3020 \E HYDRAULICS & AIR INCLUDING STEERING\E03 VALVES & HYDRAULIC FILTERS\E3-4-1 VALVE,COMPONENTS 332/T9424,4 SPOOL

9812/3020 E3-4-1 VALVE,COMPONENTS 332/T9424,4 SPOOL

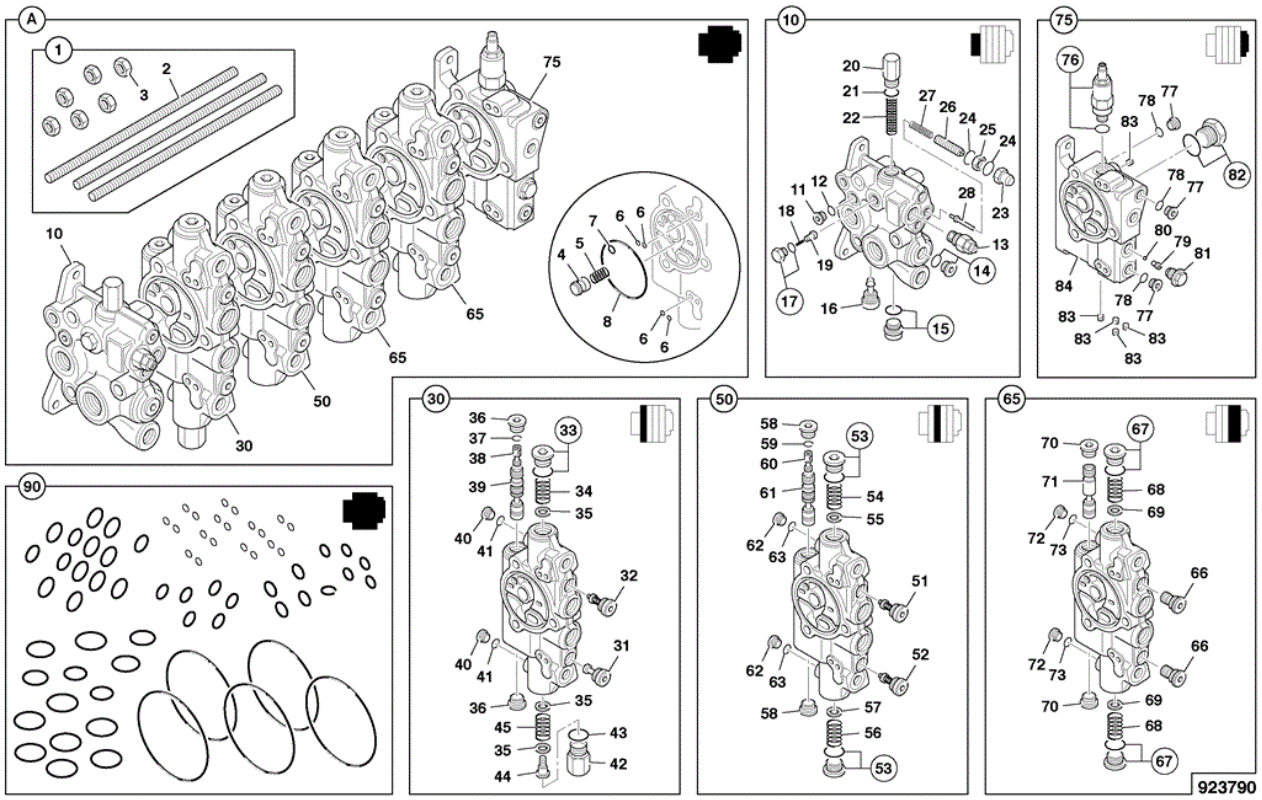

Item	Part No	Change No	Description	Usage Code	QTY
A	332/T9424		Valve assembly 4 spool		1
1	:332/C7174		Kit tie rod Tie rod kit		1
4	:25/220600		Poppet		3
5	:25/220601		Spring		3
6	:25/220383		Seal o ring		16
7	:332/C7164		O Ring		4
8	:828/10190		O Ring		4
10	:332/E5365		Valve inlet section		1
11	::332/C6145		Plug		1
12	::25/607219		O Ring		1
13	::332/C6189		Regulator drain 205Bar		1
14	::25/220930		Plug includes seal		1
15	::332/C6131		Plug Assembly		1
16	::332/C6195		Plug assembly		1
17	::332/E5440		Plug assembly		1

18	::25/220925		Spring		1
19	::25/220924		Poppet check valve		1
20	::332/E5430		Cap spool		1
21	::25/606112		O Ring		1
22	::332/C6139		Spring		1
23	::332/E5461		Nut special		1
24	::332/E5442		O Ring		2
25	::332/E5441		Nut special		1
26	::332/E5463		Screw adjustment		1
27	::332/E5446		Spring .		1
28	::332/E5464		Poppet		1
30	:332/F1136		Valve lift section		1
31	::332/E5355		Plug assembly		1
32	::332/F1144		Valve relief 350Bar		1
33	::332/C6129		Plug assembly		1
34	::332/E5426		Spring		1
35	::332/C6127		Washer		3
36	::332/C6131		Plug Assembly		2
37	::332/C6188		Ring retaining		1
38	::332/C6185		Valve shuttle load sense		1
39	::332/C6184		Spool compensator		1
40	::332/C6145		Plug		2
41	::25/607219		O Ring		2
42	::332/E5434		Cap spool		1
43	::332/E5437		O Ring		1
44	::332/E5436		Spool end		1
45	::332/E5427		Spring		1
50	:332/F1139		Valve shovel section		1
51	::332/E5352		Valve relief 115Bar		1
52	::332/C6191		Valve relief 250Bar		1
53	::332/C6129		Plug assembly		2
54	::332/C6214		Spring		1
55	::332/C6127		Washer		1
56	::332/C6133		Spring		1
57	::332/E5433		Washer		1
58	::332/C6131		Plug Assembly		2
59	::332/C6188		Ring retaining		1
60	::332/C6185		Valve shuttle load sense		1
61	::332/C6184		Spool compensator		1

62	::332/C6145		Plug		2
63	::25/607219		O Ring		2
65	:332/F1141		Valve aux. section		2
66	::332/C6195		Plug assembly		2
67	::332/C6129		Plug assembly		2
68	::332/C6214		Spring		2
69	::332/C6127		Washer		2
70	::332/C6131		Plug Assembly		2
71	::332/E5431		Spool compensator		1
72	::332/C6145		Plug		2
73	::25/607219		O Ring		2
75	:332/C0857		Valve outlet section		1
76	::332/D6572		Valve pressure reducing		1
77	::332/C6145		Plug		3
78	::25/607219		O Ring		3
79	::332/C6137		Screw set		1
80	::332/C6126		Ball		1
81	::25/612834		Plug Shut-off Assembly		1
82	::332/E5439		Plug		1
83	::332/C7165		Plug expander		5
84	::332/C9957		Body valve outlet		1
90	****		'See Remark' Complete seal kit		1

Applicability Date Ranges:
From: M1317856 , To:

9812/3020 E3-5-1 ADAPTORS 332/U0027, 3 SPOOL

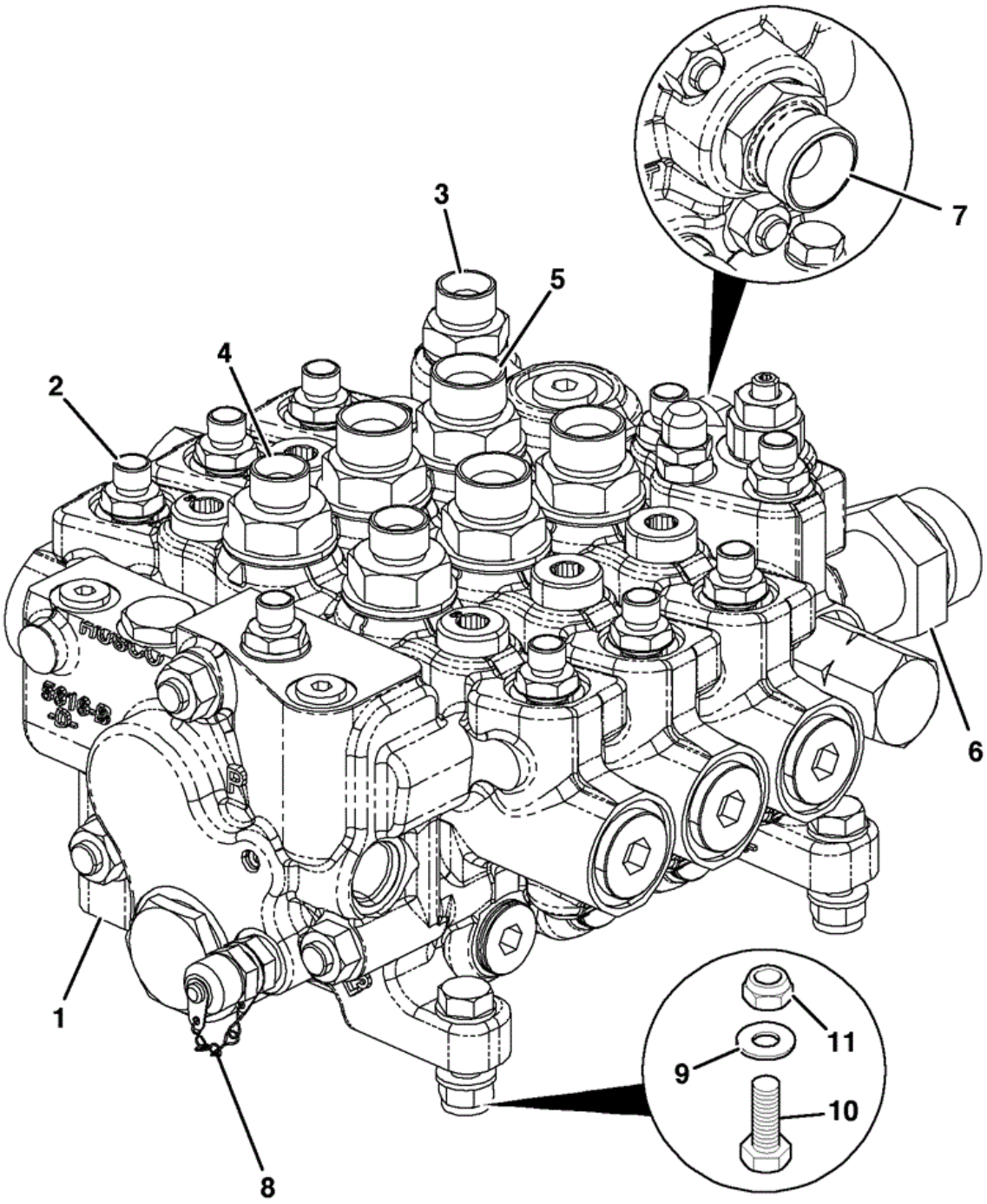

E03-10014-0-OOW

Item	Part No	Change No	Description	Usage Code	QTY
1	332/U0027		Valve assembly 3 spool See E3-3-1 for components		1
2	1620/2051		Adaptor 1/4"BSP x 9/16"SAE		10

2A	:2401/0505		O Ring		1
3	1620/2055		Adaptor 39.5mm Long. M/M 1/2"BSP x 7/8"SAE		1
3A	:2401/0507		O Ring		1
4	1620/2068		Adaptor 1/2BSP x 1-1/16SAE		2
4A	:2401/0508		O Ring		1
5	1620/2059		Adaptor 3/4BSP/1-1/16SAE M/M		4
5A	:2401/0508		O Ring		1
6	816/55058		Adapter tee		1
7	816/17095		Adapter		1
7A	:2401/0508		O Ring		1
8	45/908000		Adaptor Pressure Test Point 9/16-18UNF Male		1
9	1420/0008D		Washer (M10)		6
10	1315/0410D		Setscrew M10 x 40mm		3
11	1370/0303D		Nut Self Lock M10		3

Applicability Date Ranges:
From: M1317855 , To:

9812/3020 E3-6-1 ADAPTORS 332/T9424, 4 SPOOL

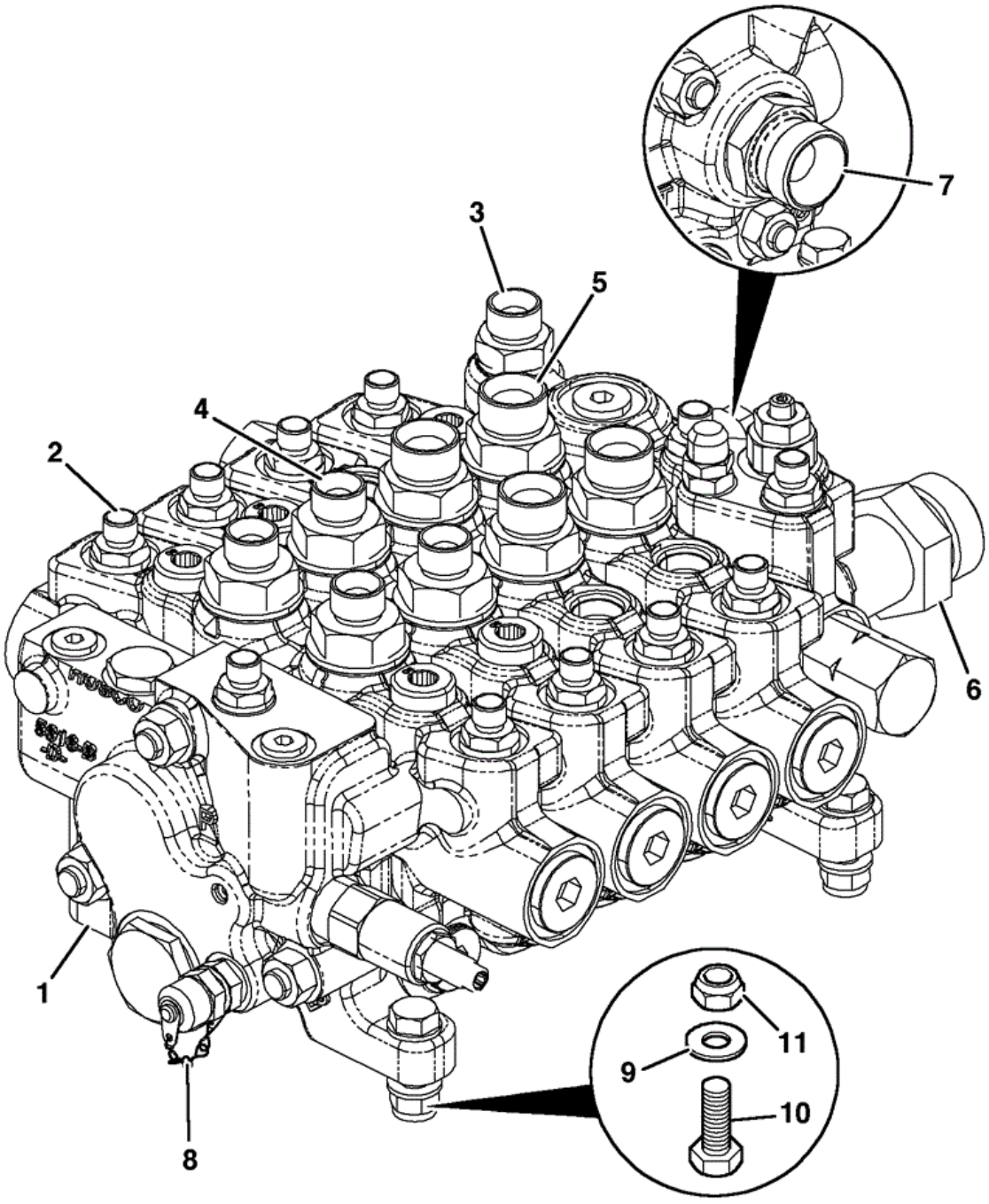

E03-10013-0-OOW

Item	Part No	Change No	Description	Usage Code	QTY
1	332/T9424		Valve assembly 4 spool		1
2	1620/2051		Adaptor 1/4"BSP x 9/16"SAE		12

2A	:2401/0505		O Ring		1
3	1620/2055		Adaptor 39.5mm Long. M/M 1/2"BSP x 7/8"SAE		1
3A	:2401/0507		O Ring		1
4	1620/2068		Adaptor 1/2BSP x 1-1/16SAE		4
4A	:2401/0508		O Ring		1
5	1620/2059		Adaptor 3/4BSP/1-1/16SAE M/M		4
5A	:2401/0508		O Ring		1
6	816/55058		Adapter tee		1
7	816/17095		Adapter		1
7A	:2401/0508		O Ring		1
8	45/908000		Adaptor Pressure Test Point 9/16-18UNF Male		1
9	1370/0303D		Nut Self Lock M10		3
10	1420/0008D		Washer (M10)		6
11	1315/0410D		Setscrew M10 x 40mm		3

Applicability Date Ranges:
From: M1317856 , To:

9812/3020 E3-9-1 VALVE ASSEMBLY 25/222707 2 STATION PROP. PILOT VALVE

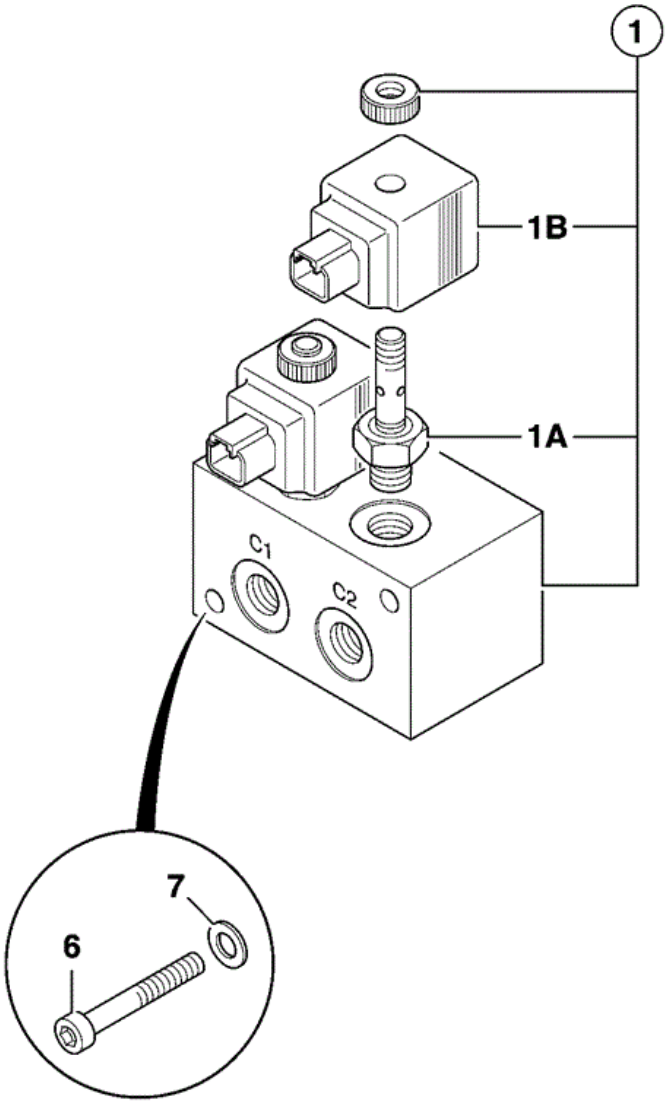

796660

Item	Part No	Change No	Description	Usage Code	QTY
1	25/222707		Valve assembly prop. pilot valve		1

1A	:25/222689		Solenoid		2
1B	:717/20155		Coil 24 volt Deutsch		2
6	1391/3318D		Capscrew M8 x 80mm grade 12.9		2
7	1420/0007D		Washer (M8)		2

Applicability Date Ranges:
From: , To:

9812/3020 E3-10-1 VALVE, STEERING

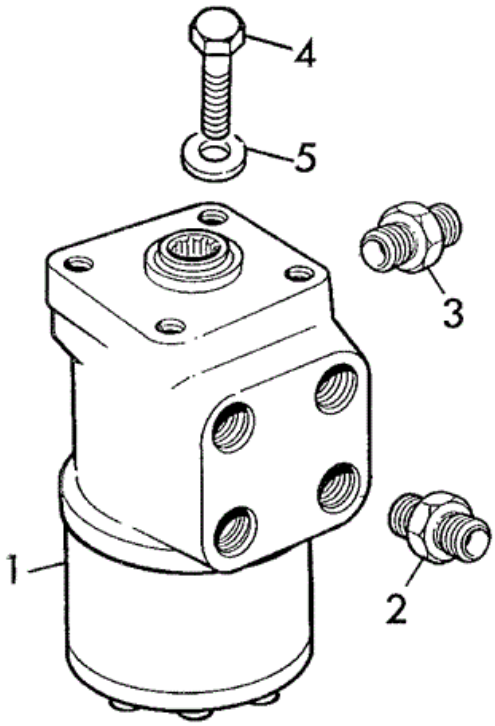

207280

Item	Part No	Change No	Description	Usage Code	QTY

1	35/910056	Superseded	Valve steering 462cc/rev		1
1	35/910107		Valve steering 370cc/rev		1
1A	35/900808		Kit-seal		1
2	1620/0005		Adapter 3/4"UNF o-ring boss 1/2"BSP male		4
2	:2401/0506		O Ring		4
3	1620/0001		Adapter		1
3	1620/2050		Adaptor 1/4BSP x 7/16SAE Replaces 1620/0001		1
3	:828/00237		O Ring 1/4"BSP		1
4	1315/0407D		Setscrew M10 x 25		4
5	1420/0008D		Washer (M10)		4

Applicability Date Ranges:
From: , To:

Product Catalog\WHEELED LOADERS\416 01243000-01243499,01317500-01317999,01472000-01472999,02095872-02095875 9812/3020 \E HYDRAULICS & AIR INCLUDING STEERING\E03 VALVES & HYDRAULIC FILTERS\E3-12-1 ACCUMULATOR INSTALLATION LOADER CONTROLS

9812/3020 E3-12-1 ACCUMULATOR INSTALLATION LOADER CONTROLS

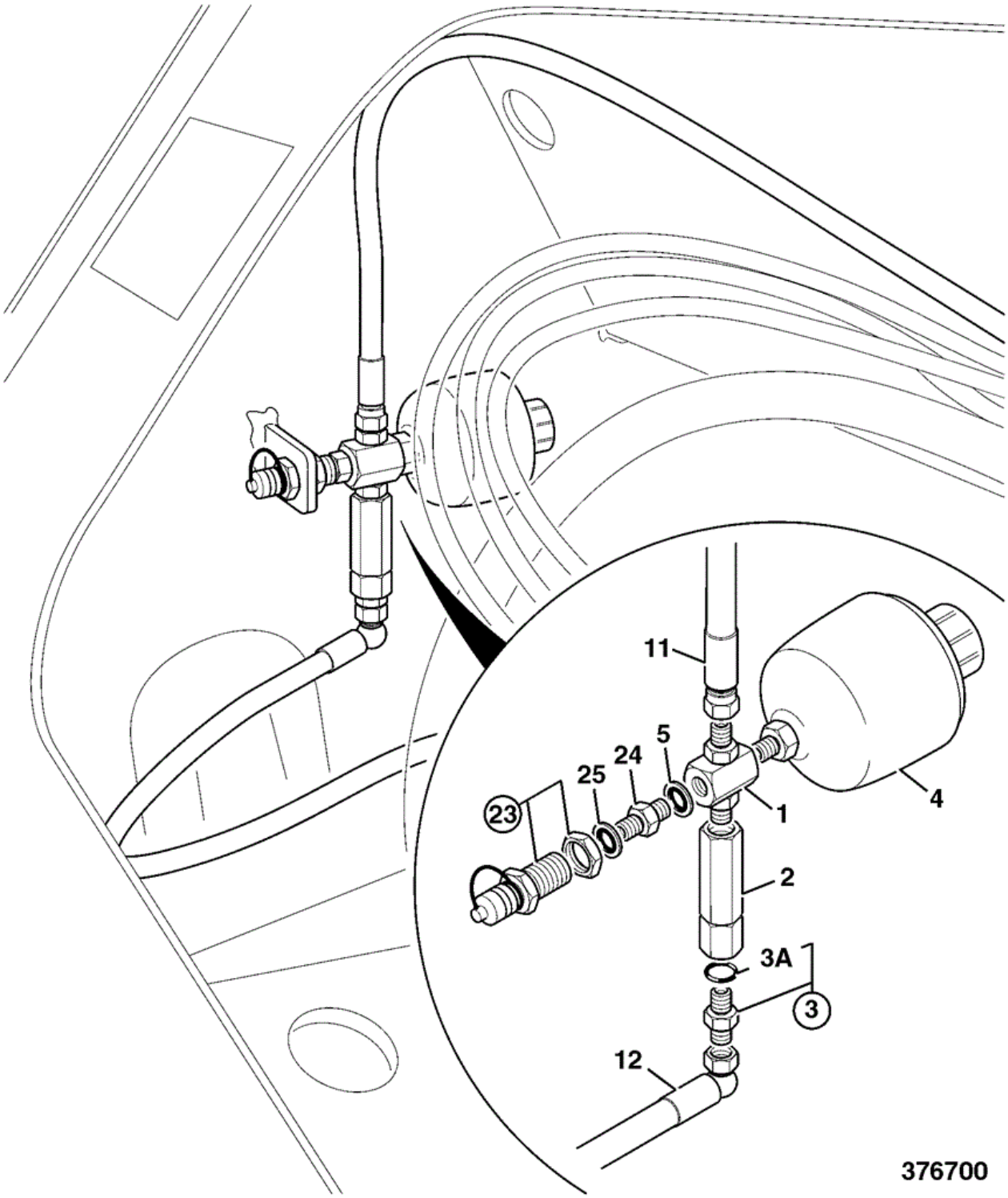

Item	Part No	Change No	Description	Usage Code	QTY
1	816/13220		Adapter 4 way		1

2	25/301100		Valve check in line		1
3	1620/0002	Superseded	Adapter		1
3	1620/2051		Adaptor 1/4"BSP x 9/16"SAE		1
3A	:2401/0505		O Ring		1
4	903/05300		Accumulator 0.24 LTR 15BA		1
5	1406/0011		Washer Bonded (1/4")		1
11	265/00548		Hose servo		1
12	631/30200		Hose 1/4"BSP x 500mm		1
23	816/60290		Adapter pressure test	A	1
23	816/90965		Adapter pressure test leak free Replaces 816/60290	B	1
23	970/61357		Adapter pressure test stainless steel Sales special 7955	B	1
23	332/U3969		Adapter pressure test stainless steel Sales special 9851	B	1
24	1606/0001		Adapter	A	1
24	1620/2050		Adaptor 1/4BSP x 7/16SAE	B	1
25	1406/0008		Seal Washer	A	1

Applicability Date Ranges:
From: , To:

Product Catalog\WHEELED LOADERS\416 01243000-01243499,01317500-01317999,01472000-01472999,02095872-02095875 9812/3020 \E HYDRAULICS & AIR INCLUDING STEERING\E03 VALVES & HYDRAULIC FILTERS\E3-13-1 VALVE ASSEMBLY 25/222708 4 STATION PROP. PILOT VALVE

9812/3020 E3-13-1 VALVE ASSEMBLY 25/222708 4 STATION PROP. PILOT VALVE

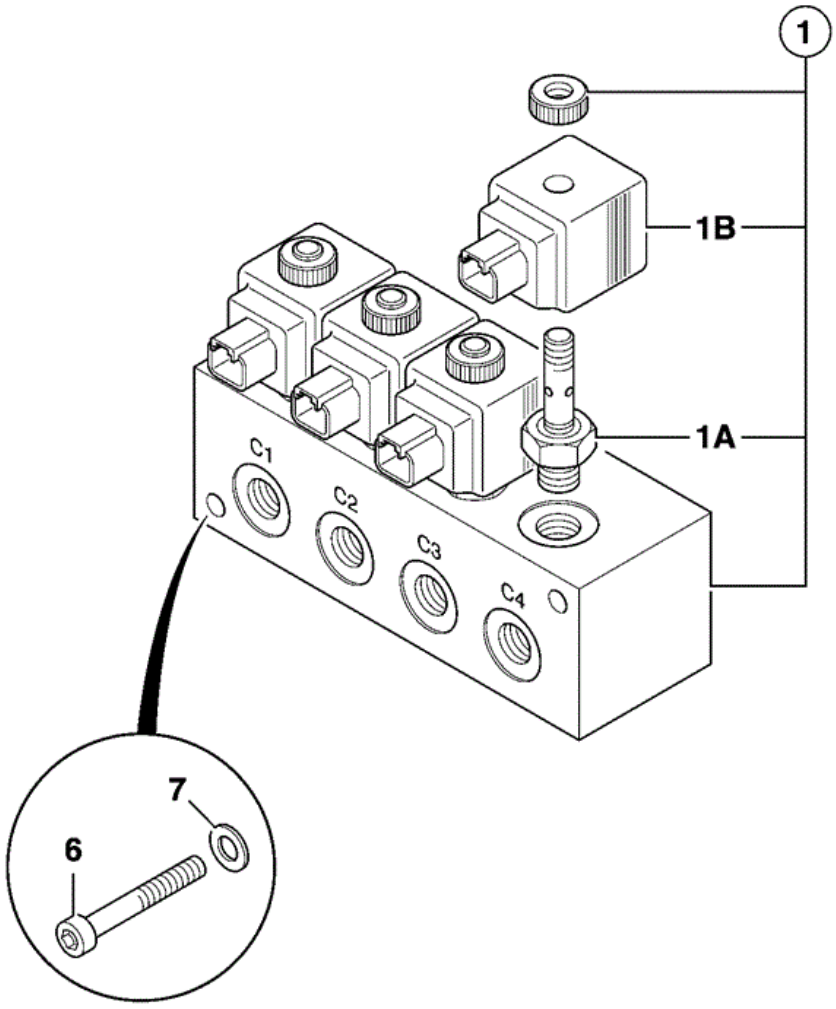

796680

Item	Part No	Change No	Description	Usage Code	QTY
1	25/222708		Valve assembly prop. pilot valve		1

1A	:25/222689		Solenoid		4
1B	:717/20155		Coil 24 volt Deutsch		4
6	1391/3318D		Capscrew M8 x 80mm grade 12.9		2
7	1420/0007D		Washer (M8)		2

Applicability Date Ranges:
From: , To:

Product Catalog\WHEELED LOADERS\416 01243000-01243499,01317500-01317999,01472000-01472999,02095872-02095875 9812/3020 \E HYDRAULICS & AIR INCLUDING STEERING\E03 VALVES & HYDRAULIC FILTERS\E3-15-1 VALVE AUXILIARY RELIEF

9812/3020 E3-15-1 VALVE AUXILIARY RELIEF

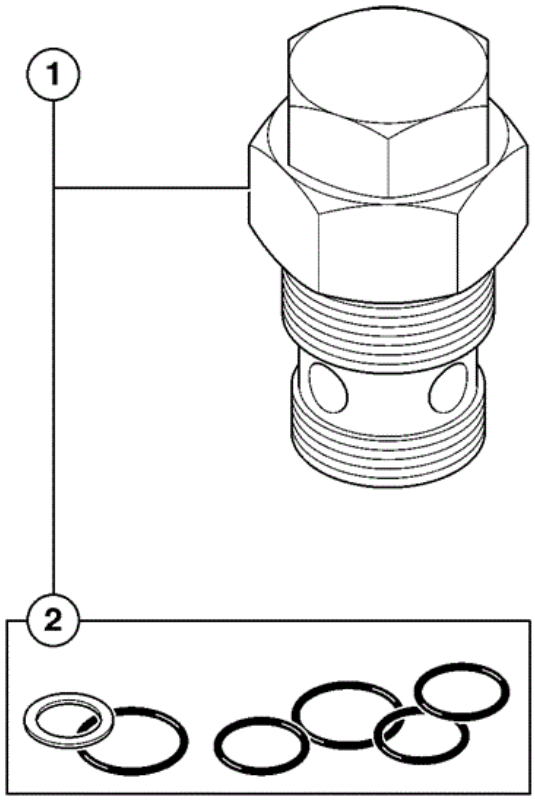

796650

Item	Part No	Change No	Description	Usage Code	QTY
1	332/V4225		Valve aux. relief 280 Bar		2

Applicability Date Ranges:
From: M1317855 , To:

Product Catalog\WHEELED LOADERS\416 01243000-01243499,01317500-01317999,01472000-01472999,02095872-02095875 9812/3020 \E HYDRAULICS & AIR INCLUDING STEERING\E03 VALVES & HYDRAULIC FILTERS\E3-16-1 VALVE ASSEMBLY MANIFOLD BLOCK 25/223212

9812/3020 E3-16-1 VALVE ASSEMBLY MANIFOLD BLOCK 25/223212

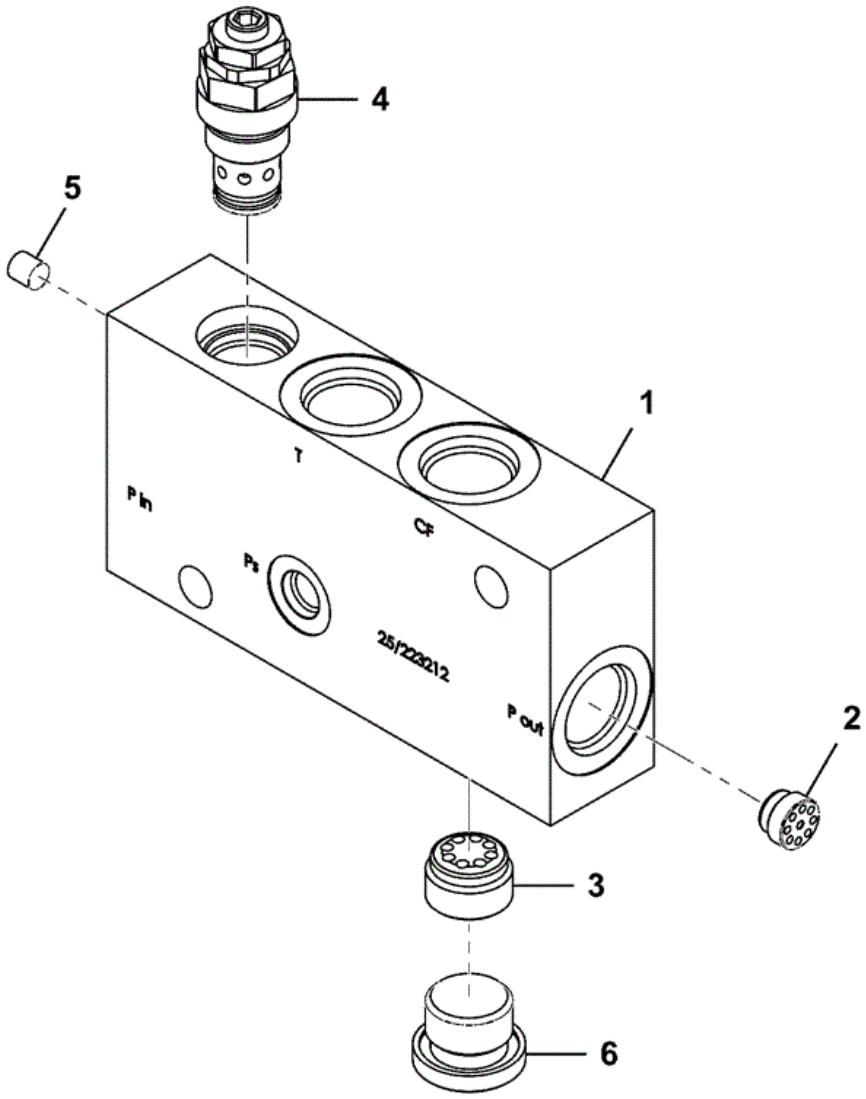

25-223212-1

Item	Part No	Change No	Description	Usage Code	QTY
A	25/223212		Manifold assembly		1
1	****		None serviced part		1

2	:25/222867		Valve check		1
3	:333/C2674		Valve check		1
4	:25/222870		Valve relief		1
5	:333/C2675		Plug		1
6	:333/C2676		Plug		1

Applicability Date Ranges:
From: , To:

9812/3020 E3-20-1 LUBRICANTS & FILTERS

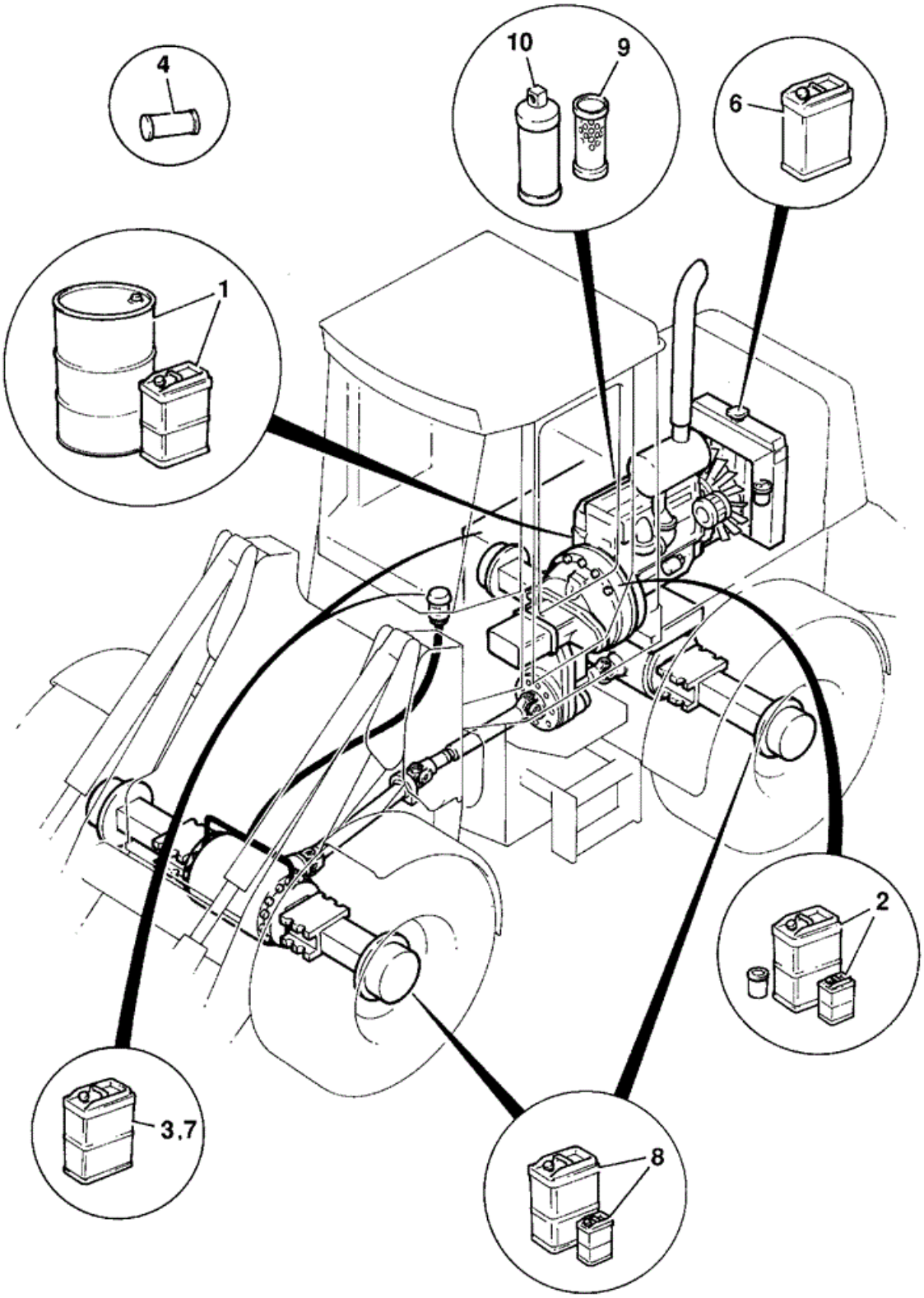

Item	Part No	Change No	Description	Usage Code	QTY

1	4001/1801		Oil EP Engine Oil 15W40, 5 Litres ENGINE		1
1	4001/1802		Oil EP Engine oil 15W40, 25 Litres		1
1	4001/1803		Oil EP Engine oil 15W40, 200 Litres		1
2	4000/2302		Fluid HP Universal ATF 15 25 Litres TRANSMISSION		1
2	4000/2303		Fluid HP Universal ATF 15 200 Litres		1
3	4002/1601		Fluid hydraulic, EP46 5 litres		1
3	4002/1602		Fluid hydraulic, EP46 25 litres		1
3	4002/1603		Fluid hydraulic, EP46 200 litres		1
4	4003/2005		Grease High Pressure 50kg		1
4	4003/2017		Grease High Pressure 400g x 24		1
4	4003/1501		Grease Cartridge Auto greasing only		1
4	4003/1506		Grease E.P. 12.5kg Auto greasing only		1
4	4003/1510		Grease E.P. 50Kg. Auto greasing only		1
6	4006/0102		Fluid anti-freeze 5 litre		1
6	4006/0103		Fluid anti-freeze 25 Ltr		1
6	4006/0104		Fluid anti-freeze 200 Ltr		1
7	****		'See Remark' Not required		1
8	4000/2203		Oil JCB HP Gear Oil 200 Litre 4000/2201 25L		0
9	581/18072		Filter hydraulic, assembly		1
10	:581/00012		Element filter 10 micron		1

9812/3020 E1-20-1 FILTER, HYDRAULIC



Item	Part No	Change No	Description	Usage Code	QTY
1	581/18072		Filter hydraulic, assembly		1
2	:581/00012		Element filter 10 micron		1
3	:581/06303		Bridge		1
3A	:581/05901		Coil		1
4	:581/05605		Ring packing		1
5	:581/05606		Nut acorn		4
6	:581/05602		O Ring		1
7	:581/05604		Seal		1
8	:581/06302		Seal filter element		1
9	:581/05610		Cover filter		1
10	:581/05611		Housing filter		1
11	:32/925357		Spring		1
12	:581/05613		Valve by-pass assembly		1
13	1420/0007Z	to 09/05/2011	Washer (M8)		4

13	1406/0008		Seal Washer Replaces 1420/0007Z		4
14	1315/0307Z		Setscrew M8 X 25		4
15	581/07101		Seal filter element		1
16	:332/C4746		Insert inc. top spring seal,column & rod		1

Applicability Date Ranges:
From: , To:

9812/3020 E3-30-1 VALVE LOAD SUSPENSION

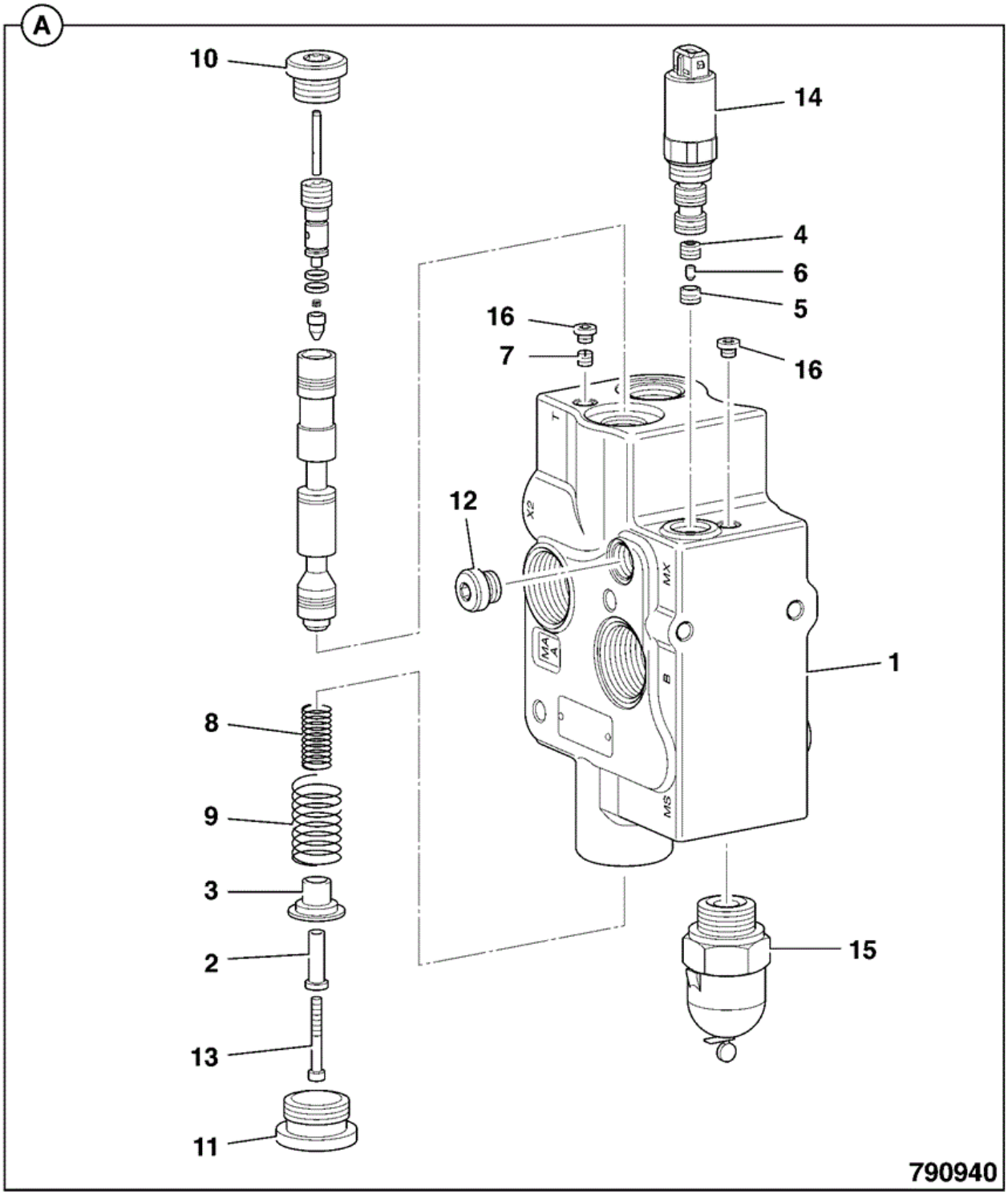

Item	Part No	Change No	Description	Usage Code	QTY
A	25/222127		Valve ride control		1
1	:25/222769		Housing		1

2	:25/222770		Socket		1
3	:25/222771		Disc spring		1
4	:25/222772		Seat valve		1
5	:25/222773		Seat valve		1
6	:25/222774		Pin throttle		1
7	:25/222775		Screw grub		1
8	:25/222776		Spring		1
9	:25/222777		Spring		1
10	:25/222778		Plug		1
11	:25/222779		Plug		1
12	:25/222780		Plug		1
13	:25/222781		Screw		1
14	:25/222782		Valve		1
15	:25/222783		Plug		1
16	:25/222784		Plug		1

Applicability Date Ranges:
From: , To: 06/02/2011

Product Catalog\WHEELED LOADERS\416 01243000-01243499,01317500-01317999,01472000-01472999,02095872-02095875 9812/3020 \E HYDRAULICS & AIR INCLUDING STEERING\E03 VALVES & HYDRAULIC FILTERS\E3-50-1 DIVERTER VALVE COMPONENTS 25/222711

9812/3020 E3-50-1 DIVERTER VALVE COMPONENTS 25/222711

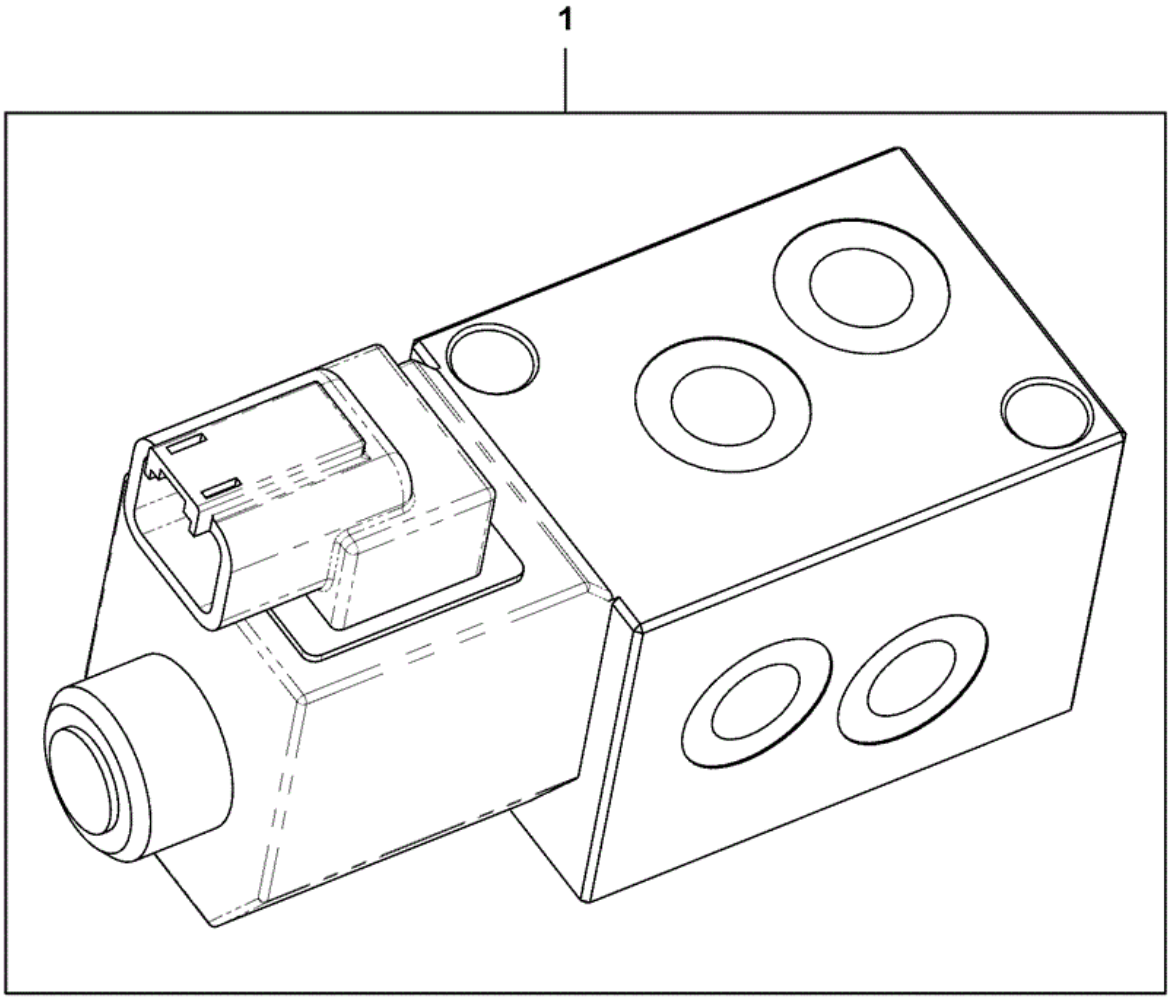

25-222711-2

Item	Part No	Change No	Description	Usage Code	QTY
A	25/222711		Valve diverter		1
1	:333/C9721		Coil 24v		1

Applicability Date Ranges:
From: , To:

Product Catalog\WHEELED LOADERS\416 01243000-01243499,01317500-01317999,01472000-01472999,02095872-02095875 9812/3020 \F AXLES, WHEELS & TRANSMISSION\F00 ASSEMBLIES\F0-0-1 AXLE ASSEMBLIES HEAVY DUTY, & STEER VALVE

9812/3020 F0-0-1 AXLE ASSEMBLIES HEAVY DUTY, & STEER VALVE

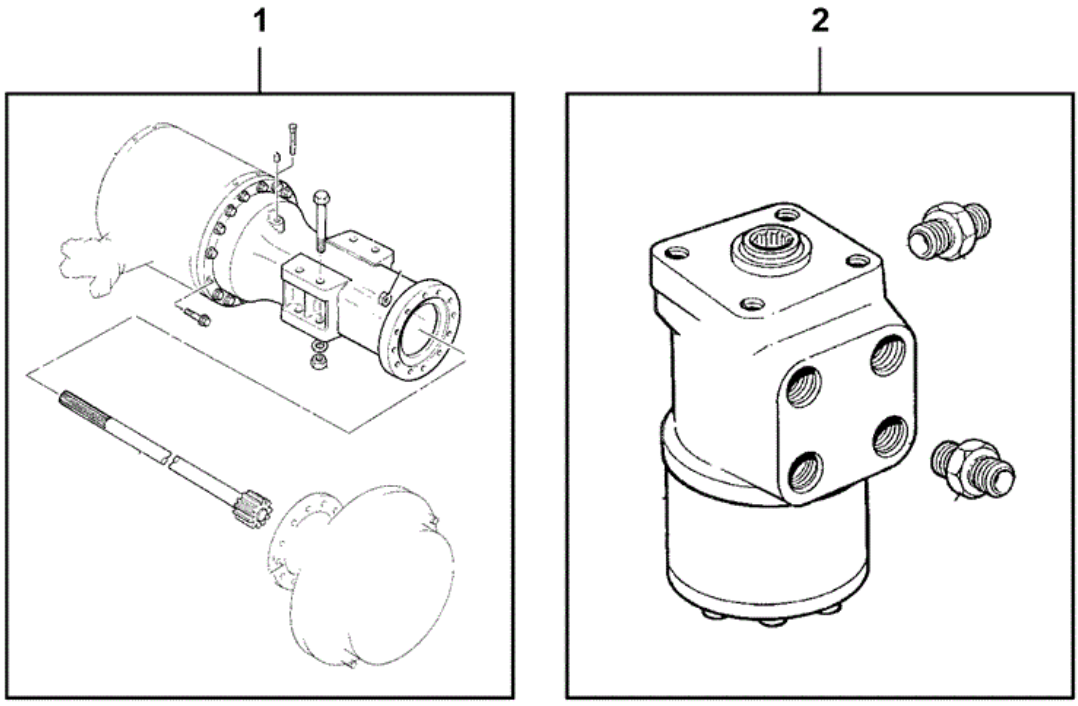

269-10537-1

Item	Part No	Change No	Description	Usage Code	QTY
1	****		Assembly axles H/D		1
2	****		Assembly steer valve		1

Applicability Date Ranges:
From: , To:

Product Catalog\WHEELED LOADERS\416 01243000-01243499,01317500-01317999,01472000-01472999,02095872-02095875 9812/3020 \F AXLES, WHEELS & TRANSMISSION\F00 ASSEMBLIES\F0-0-2 AXLE ASSEMBLIES HEAVY DUTY

9812/3020 F0-0-2 AXLE ASSEMBLIES HEAVY DUTY

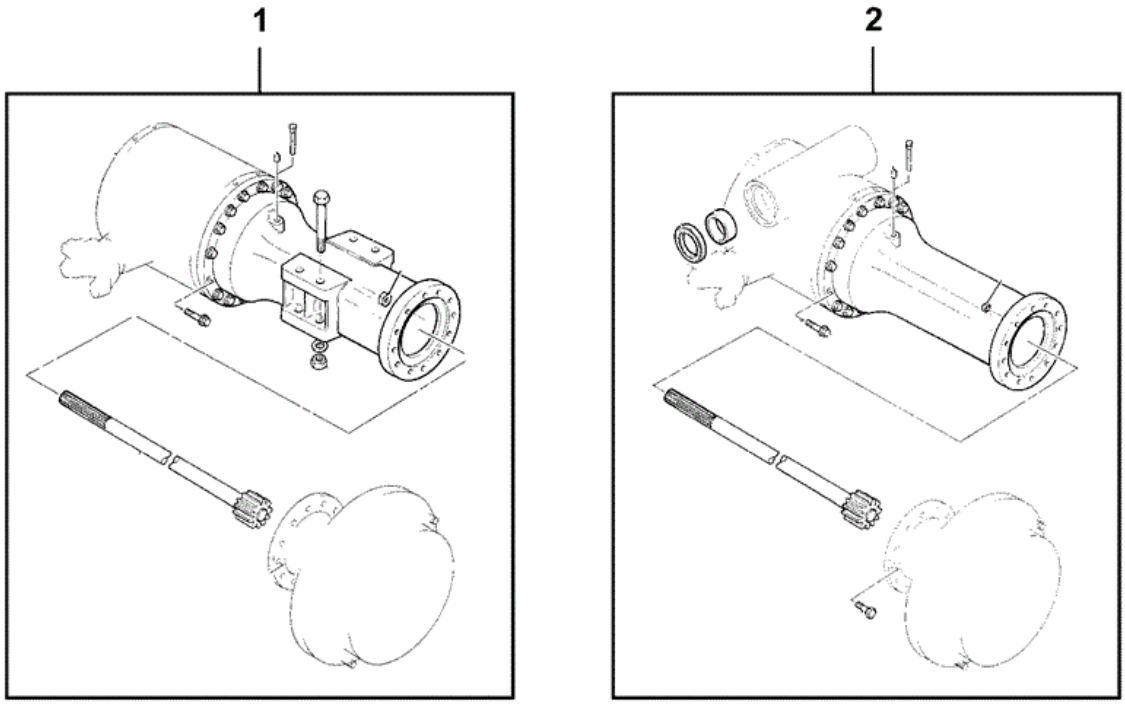

269-10524-1

Item	Part No	Change No	Description	Usage Code	QTY
1	450/43810		Axle rear PD90 STD.		1
2	450/38900		Axle front PD90 20.18:1 STD		1

Applicability Date Ranges:
From: , To:

Product Catalog\WHEELED LOADERS\416 01243000-01243499,01317500-01317999,01472000-01472999,02095872-02095875 9812/3020 \F AXLES, WHEELS & TRANSMISSION\F00 ASSEMBLIES\F0-0-5 AXLE ASSEMBLIES LSD HEAVY DUTY, 50KPH & STEER VALVE

9812/3020 F0-0-5 AXLE ASSEMBLIES LSD HEAVY DUTY, 50KPH & STEER VALVE

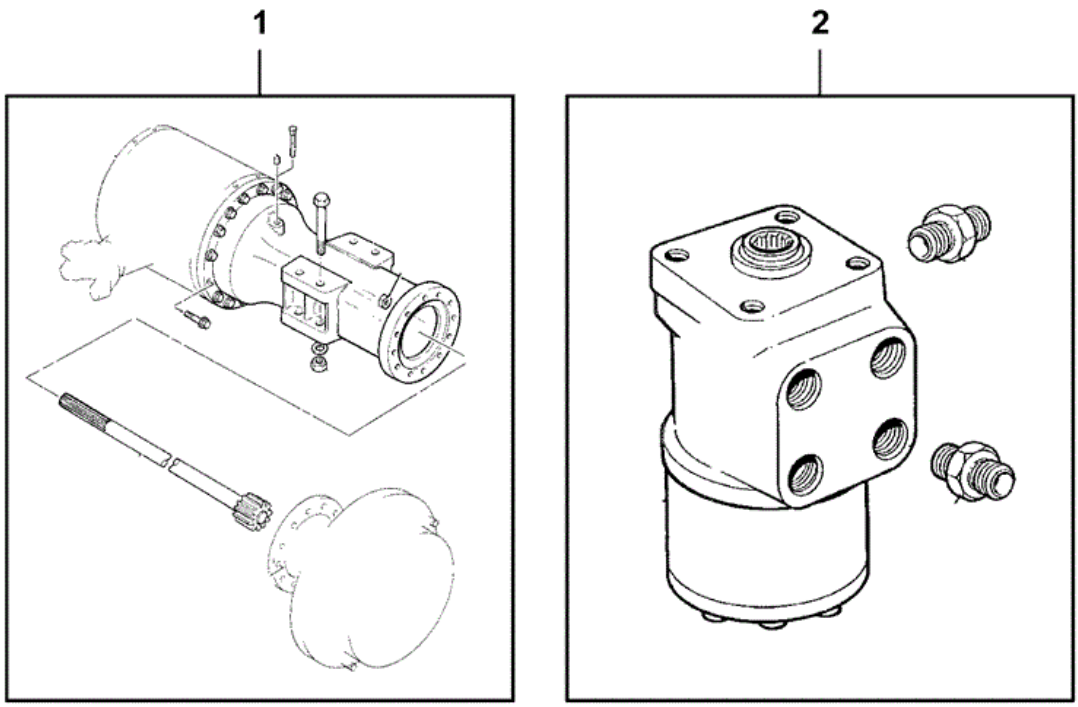

269-10537-1

Item	Part No	Change No	Description	Usage Code	QTY
1	****		Assembly axles 50KPH LSD		1

2	****		Assembly steer valve		1

Applicability Date Ranges:
From: , To:

Product Catalog\WHEELED LOADERS\416 01243000-01243499,01317500-01317999,01472000-01472999,02095872-02095875 9812/3020 \F AXLES, WHEELS & TRANSMISSION\F00 ASSEMBLIES\F0-0-10 AXLE ASSEMBLIES LSD HEAVY DUTY, 50KPH

9812/3020 F0-0-10 AXLE ASSEMBLIES LSD HEAVY DUTY, 50KPH

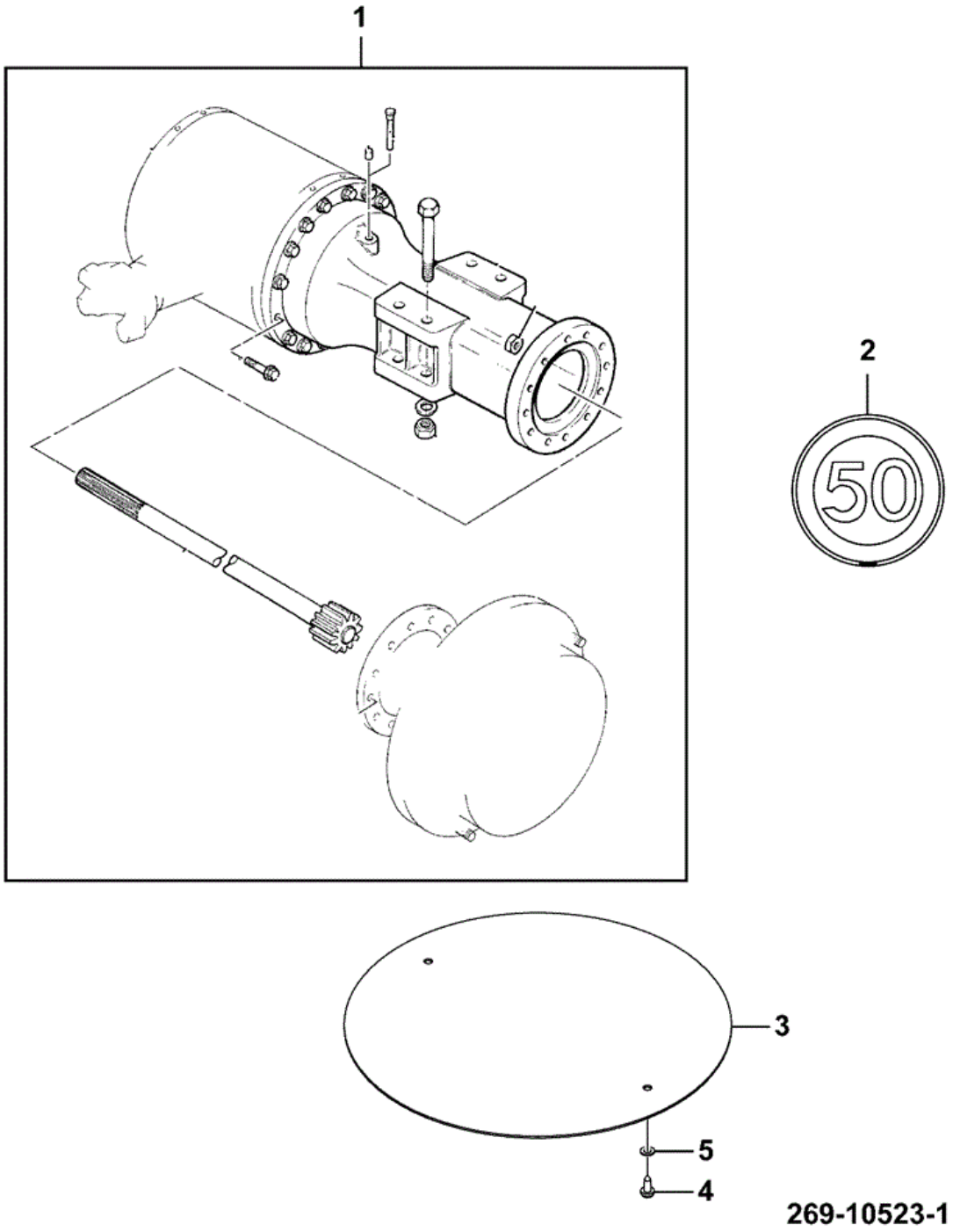

Item	Part No	Change No	Description	Usage Code	QTY
1	****		Assembly axles 50KPH LSD		1
2	817/17645		Label Speed limit 50 KPH		1

3	331/35457		Plate mounting 50 KPH label		1
4	1430/0302		Screw No.10 x 1/2" long		2
5	1420/0005Z		Washer (M5)		2

Applicability Date Ranges:
From: , To:

Product Catalog\WHEELED LOADERS\416 01243000-01243499,01317500-01317999,01472000-01472999,02095872-02095875 9812/3020 \F AXLES, WHEELS & TRANSMISSION\F00 ASSEMBLIES\F0-0-15 AXLE ASSEMBLIES LSD HEAVY DUTY, 50KPH

9812/3020 F0-0-15 AXLE ASSEMBLIES LSD HEAVY DUTY, 50KPH

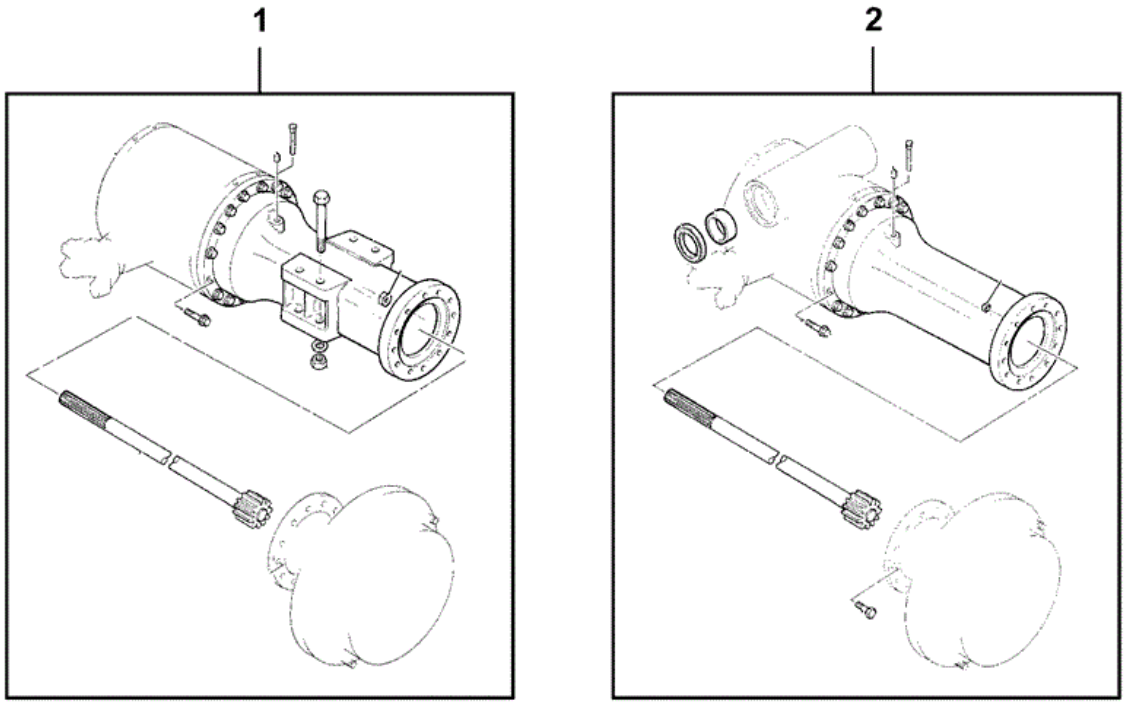

269-10524-1

Item	Part No	Change No	Description	Usage Code	QTY
1	450/44070		Axle front, PD90 15.23:1, LSD, 50 kph		1
2	450/44080		Axle assembly, 15.23:1 LSD, 50kph		1

Applicability Date Ranges:
From: , To:

Product Catalog\WHEELED LOADERS\416 01243000-01243499,01317500-01317999,01472000-01472999,02095872-02095875 9812/3020 \F AXLES, WHEELS & TRANSMISSION\F01 AXLES, FRONT\F1-1-1 AXLE ASSEMBLY FRONT STD PD90, 450/38900

9812/3020 F1-1-1 AXLE ASSEMBLY FRONT STD PD90, 450/38900

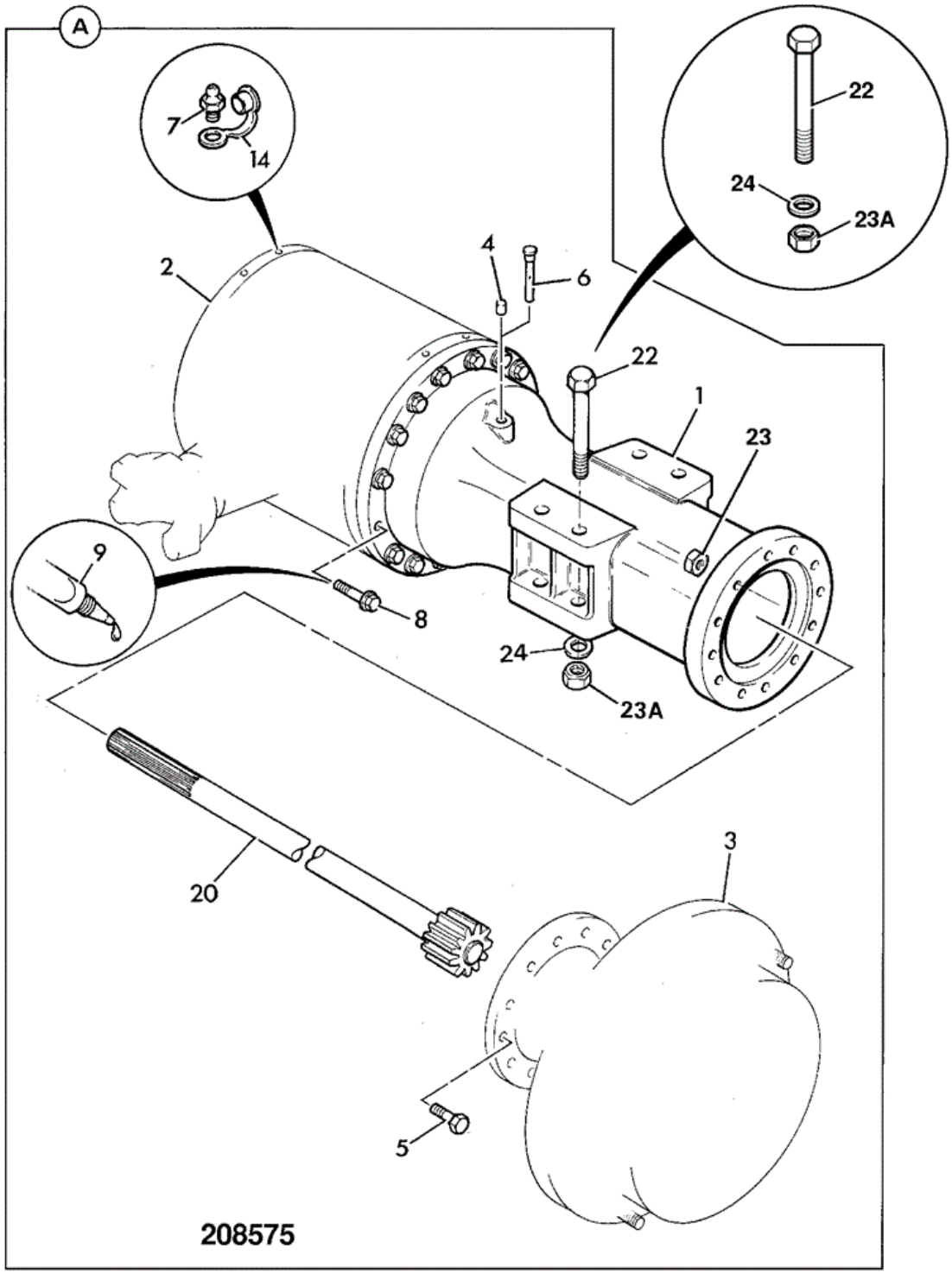

Item	Part No	Change No	Description	Usage Code	QTY
A	450/38900		Axle front PD90 20.18:1 STD Changed from yellow to black from M1243141		1
1	:450/22907	Superseded	Casing axle arm		2

1	:458/M2375		Casing axle arm		2
2	:458/11096		Differential assembly Page F1-2-1		1
3	:450/25900		Hub assembly		2
4	:450/13302		Plug Breather		1
5	:826/01504		Bolt M20 x 70mm long		32
6	:450/13001		Breather extension		1
6	:453/00303		Breather Nylon Black Replaces 450/13001		1
7	:816/60040		Nipple Screw		2
8	:1321/3716		Bolt M16x70L		28
9	:4102/1200		Sealant		1
14	:835/00017		Cap Grease Nipple		2
20	:450/29101		Shaft drive		2
21	:821/00216		Circlip external		2
22	826/10983		Bolt 250mm long Not included with axle assembly		8
23	1371/0701		Nut Used to secure Hub to axle arm		32
23A	1371/0703D		Nut Not included with axle assembly		8
24	823/10379		Washer hardened Not included with axle assembly		16
24	1422/0012D		Washer Hard Replaces 823/10379		16
24A	829/30839		Washer hardened, 15mm thick		8
99	269/10042		G.A.		1

Applicability Date Ranges:
From: , To: 06/09/2011

Product Catalog\WHEELED LOADERS\416 01243000-01243499,01317500-01317999,01472000-01472999,02095872-02095875 9812/3020 \F AXLES, WHEELS & TRANSMISSION\F01 AXLES, FRONT\F1-2-1 DRIVEHEAD, ASSEMBLY 458/11096

9812/3020 F1-2-1 DRIVEHEAD, ASSEMBLY 458/11096

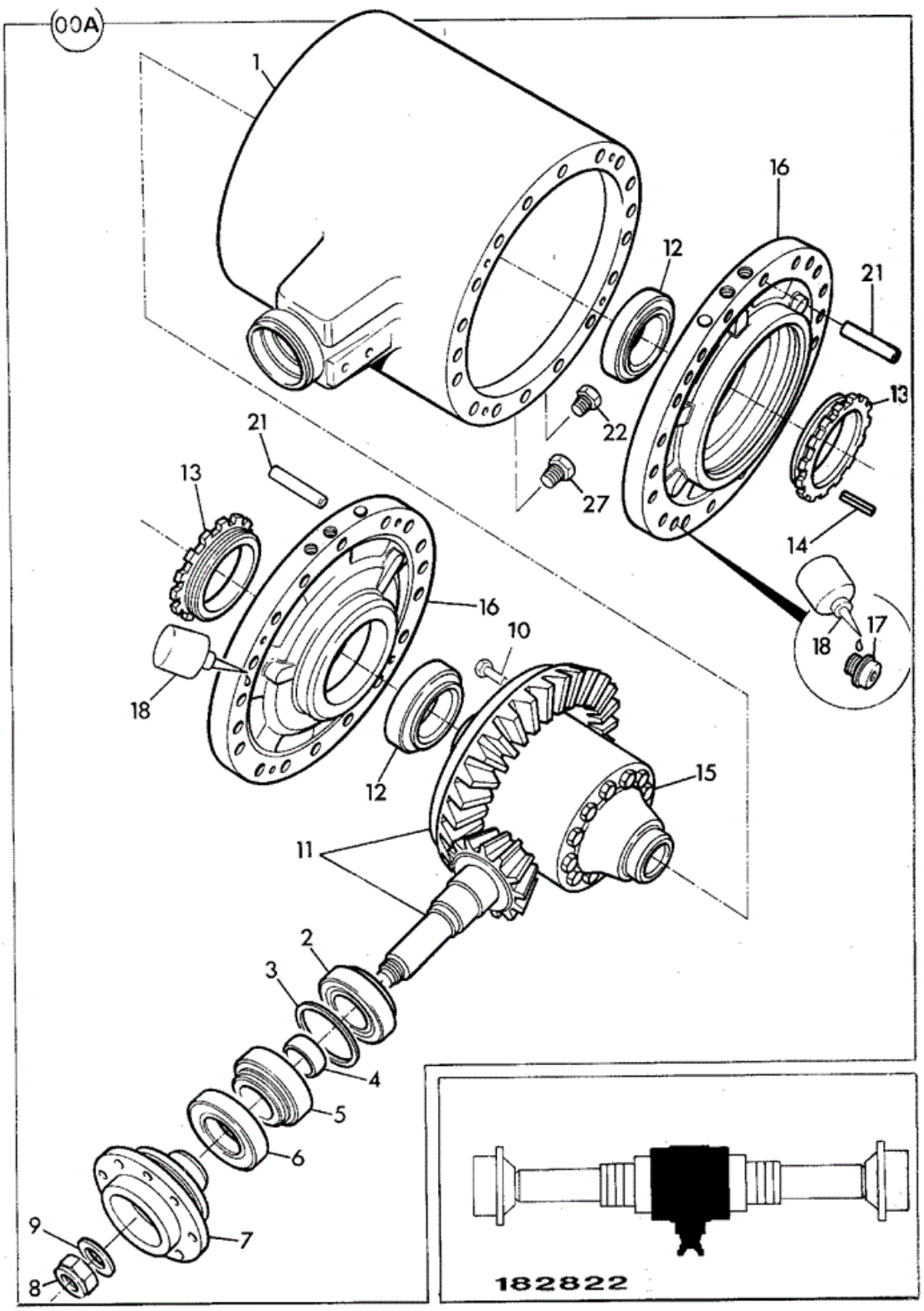

Item	Part No	Change No	Description	Usage Code	QTY

A	458/11096		Differential assembly		1
1	:453/30601		Casing differential		1
2	:907/09000		Bearing Roller		1
3	:921/01900		Kit-shim		1
4	921/53400		Kit set of spacers From 12.625 To 14.200 Thick		1
5	:907/08300		Bearing Taper Roller		1
6	:904/50023		Seal Triple Lip, To Suit 55.0/54.81 Shaft Blue		1
7	:458/20814		Yoke		1
8	:826/01744		Nut Stake M30		1
10	:826/01080		Bolt		12
11	:458/20672		Gear crown wheel & pinion 11/37T		1
12	:907/50100		Bearing Taper Roller		2
13	:450/10403		Nut Side Differential		2
14	:826/00818		Pin Tension		2
15	:450/28500		Differential assembly		1
16	:458/20238		Housing brake piston		2
17	:1392/3407		Capscrew M10 x 25mm		8
18	:4102/1200		Sealant		0
21	:826/00919		Dowel		4
22	:816/80012		Plug Magnetic 3/4"BSP		1
23	:1406/0021		Washer Bonded		2
27	:816/80037		Plug Filler 33mm Head, see TI GEN245		1

Applicability Date Ranges:
From: , To:

Product Catalog\WHEELED LOADERS\416 01243000-01243499,01317500-01317999,01472000-01472999,02095872-02095875 9812/3020 \F AXLES, WHEELS & TRANSMISSION\F01 AXLES, FRONT\F1-3-1 DIFFERENTIAL ASSEMBLY, 450/28500

9812/3020 F1-3-1 DIFFERENTIAL ASSEMBLY, 450/28500

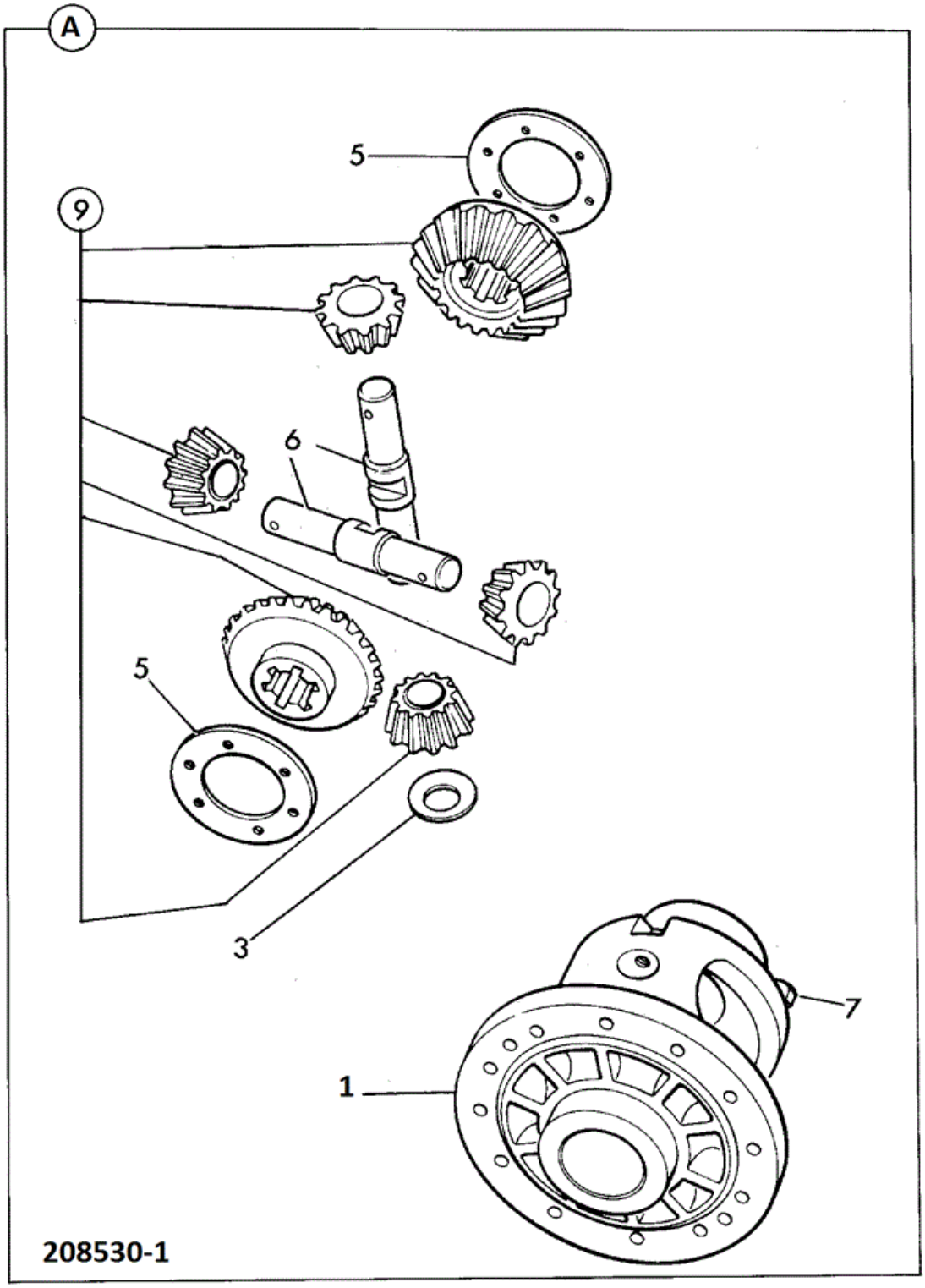

Item	Part No	Change No	Description	Usage Code	QTY

1	450/28500		Differential assembly		1
2	:450/28600		Casing differential		1
3	:808/00210		Washer thrust Pinion		4
5	:808/00346		Washer differential gear		2
6	:458/M3119	from MAY09	Pin Trunnion 151mm Long		2
6	:450/10903		Pin trunnion 163mm long Service replacement		2
7	:1315/3418		Bolt (M10 x 80)		8
9	:450/28700		Gear assembly		1

Applicability Date Ranges:
From: , To:

Product Catalog\WHEELED LOADERS\416 01243000-01243499,01317500-01317999,01472000-01472999,02095872-02095875 9812/3020 \F AXLES, WHEELS & TRANSMISSION\F01 AXLES, FRONT\F1-4-1 HUB & COMPONENTS 450/25900

9812/3020 F1-4-1 HUB & COMPONENTS 450/25900

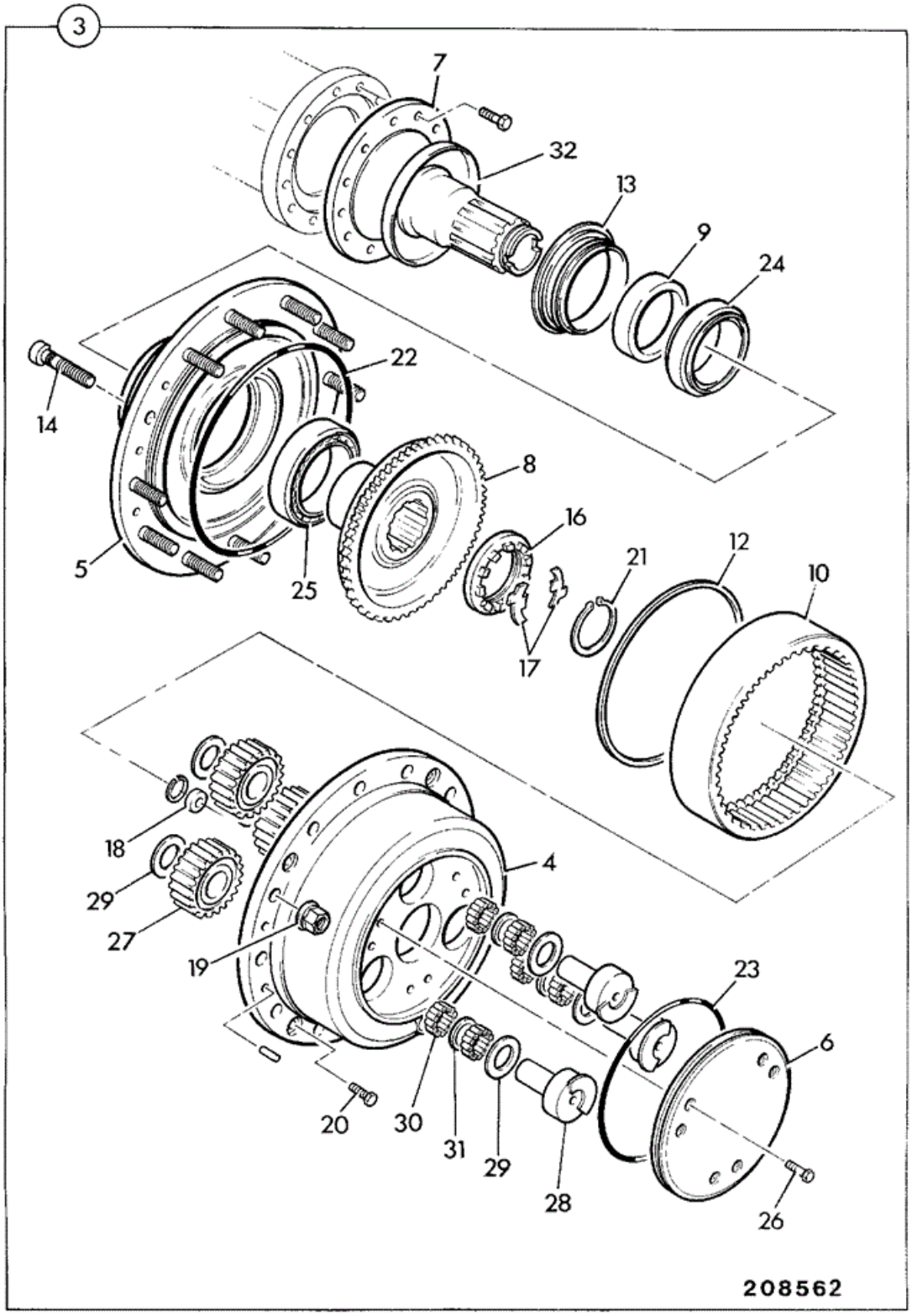

Item	Part No	Change No	Description	Usage Code	QTY

3	450/25900		Hub assembly		2
4	:450/24401		Carrier planetary hub		1
5	:450/24402		Housing bearing		1
6	:450/24403		Cover gears		1
7	:450/24404		Coupling hub		1
8	:450/24405		Carrier annulus		1
9	:450/24430		Kit Seal & spacer 127 x 160 x15.5		1
10	:450/24407		Gear annulus ring		1
12	:450/24409		Ring snap		1
13	:904/50032		Seal wheel hub 130 x 160 x15.5-18		1
13	450/24430		Kit Seal & spacer 127 x 160 x15.5 Replaces 504/90032		1
14	:450/24431		Stud wheel		12
16	:450/24413		Nut castle		2
17	:450/24414		Plate locking		2
18	:450/24415		Stop shaft		1
19	:826/01450		Nut wheel		12
19	826/11355		Nut Wheel Yellow Finish Yellow surface finish		12
20	:450/24417		Screw hex hd.		6
21	:450/24418		Ring snap		1
22	:450/24419		Seal oil		1
23	:450/24420		Seal oil		1
24	:450/24421		Bearing taper roller		1
25	:450/24422		Bearing taper roller		1
26	:450/24423		Bolt M8 x 25		4
27	:450/24425		Gear planet		3
28	:450/24428		Shaft planet gear		3
29	:450/24424		Washer thrust		6
30	:450/24426		Bearing needle roller 25 off/gear		150
31	:450/24427		Spacer		3
32	:450/24429		Cover dust		1
33	:10/906479		Plug C/w O ring		1

Applicability Date Ranges:
From: , To: 06/09/2011

Product Catalog\WHEELED LOADERS\416 01243000-01243499,01317500-01317999,01472000-01472999,02095872-02095875 9812/3020 \F AXLES, WHEELS & TRANSMISSION\F01 AXLES, FRONT\F1-11-1 AXLE ASSEMBLY FRONT L.S.D. PD90, 450/39300

9812/3020 F1-11-1 AXLE ASSEMBLY FRONT L.S.D. PD90, 450/39300

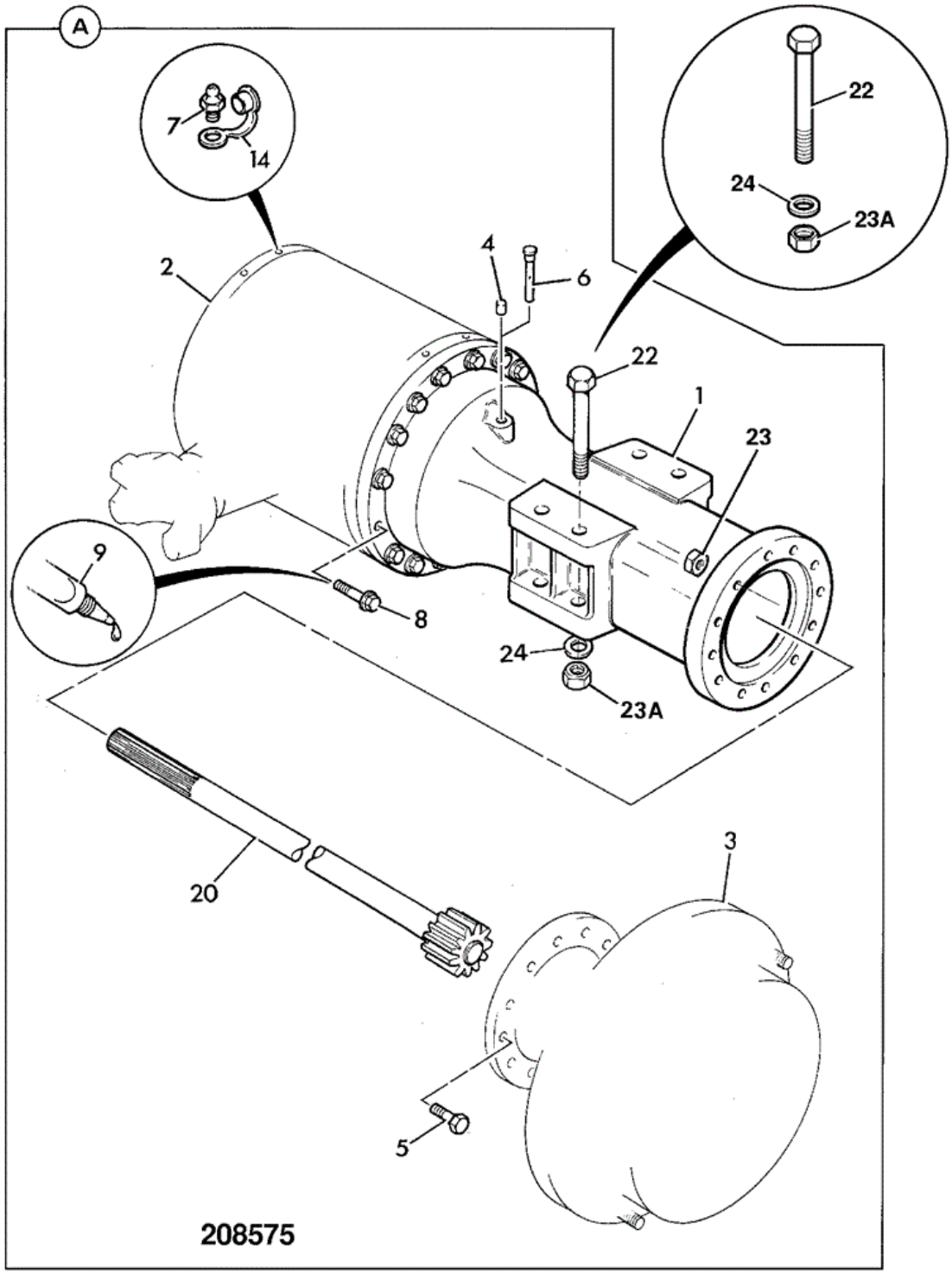

Item	Part No	Change No	Description	Usage Code	QTY
A	450/39300		Axle front PD90 20.18:1 LSD Changed from yellow to black from M1243141		1
1	:450/22907	Superseded	Casing axle arm		2

1	:458/M2375		Casing axle arm		2
2	:458/11097		Differential assembly 3.364:1 LSD See F1-12-1		1
3	:450/25900		Hub assembly		2
4	:450/13302		Plug Breather		1
5	:826/01504		Bolt M20 x 70mm long		32
6	:450/13001		Breather extension		1
6	:453/00303		Breather Nylon Black Replaces 450/13001		1
7	:816/60040		Nipple Screw		2
8	:1321/3716		Bolt M16x70L		28
9	:4102/1200		Sealant		0
14	:835/00017		Cap Grease Nipple		2
20	:450/29101		Shaft drive		2
21	:821/00216		Circlip external		2
22	:826/10857		Bolt 230mm long		8
23	:1371/0701		Nut Used to secure Hub to axle arm		32
23A	1370/0701D		Nut		8
24	823/10379		Washer hardened		16
24	1422/0012D		Washer Hard Replaces 823/10379		16
99	269/10043		G.A.		1

Applicability Date Ranges:
From: , To: 06/07/2011

Product Catalog\WHEELED LOADERS\416 01243000-01243499,01317500-01317999,01472000-01472999,02095872-02095875 9812/3020 \F AXLES, WHEELS & TRANSMISSION\F01 AXLES, FRONT\F1-12-1 DRIVEHEAD ASSEMBLY 458/11097

9812/3020 F1-12-1 DRIVEHEAD ASSEMBLY 458/11097

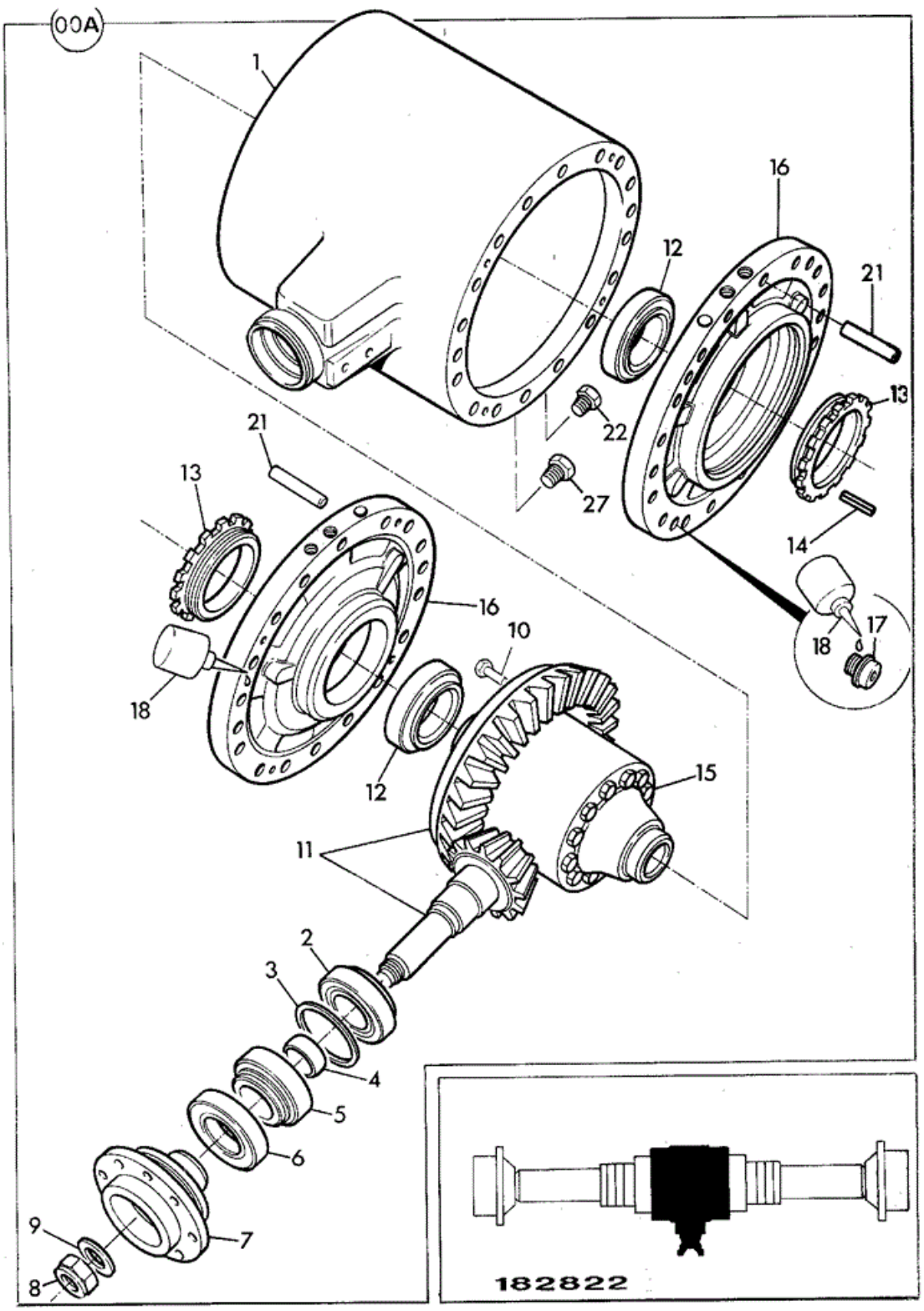

Item	Part No	Change No	Description	Usage Code	QTY

A	458/11097		Differential assembly 3.364:1 LSD		1
1	:450/17101		Casing differential		1
2	:907/09000		Bearing Roller		1
3	:921/01900		Kit-shim		1
4	921/53400		Kit set of spacers From 12.625 To 14.200 Thick		1
5	:907/08300		Bearing Taper Roller		1
6	:904/50023		Seal Triple Lip, To Suit 55.0/54.81 Shaft Blue		1
7	:458/20814		Yoke		1
8	:826/01744		Nut Stake M30		1
10	:826/01080		Bolt		12
11	:458/20672		Gear crown wheel & pinion 11/37T		1
12	:907/50100		Bearing Taper Roller		2
13	:450/10403		Nut Side Differential		2
14	:826/00818		Pin Tension		2
15	:450/28800		Differential assembly		1
16	:458/20238		Housing brake piston		2
17	:1392/3407		Capscrew M10 x 25mm		8
18	:4102/1200		Sealant		0
21	:826/00919		Dowel		4
22	:816/80012		Plug Magnetic 3/4"BSP		1
23	:1406/0021		Washer Bonded		2
27	:816/80037		Plug Filler 33mm Head, see TI GEN245		1

Applicability Date Ranges:
From: , To:

Product Catalog\WHEELED LOADERS\416 01243000-01243499,01317500-01317999,01472000-01472999,02095872-02095875 9812/3020 \F AXLES, WHEELS & TRANSMISSION\F01 AXLES, FRONT\F1-13-1 DIFFERENTIAL COMPONENTS, LSD 450/28800

9812/3020 F1-13-1 DIFFERENTIAL COMPONENTS, LSD 450/28800

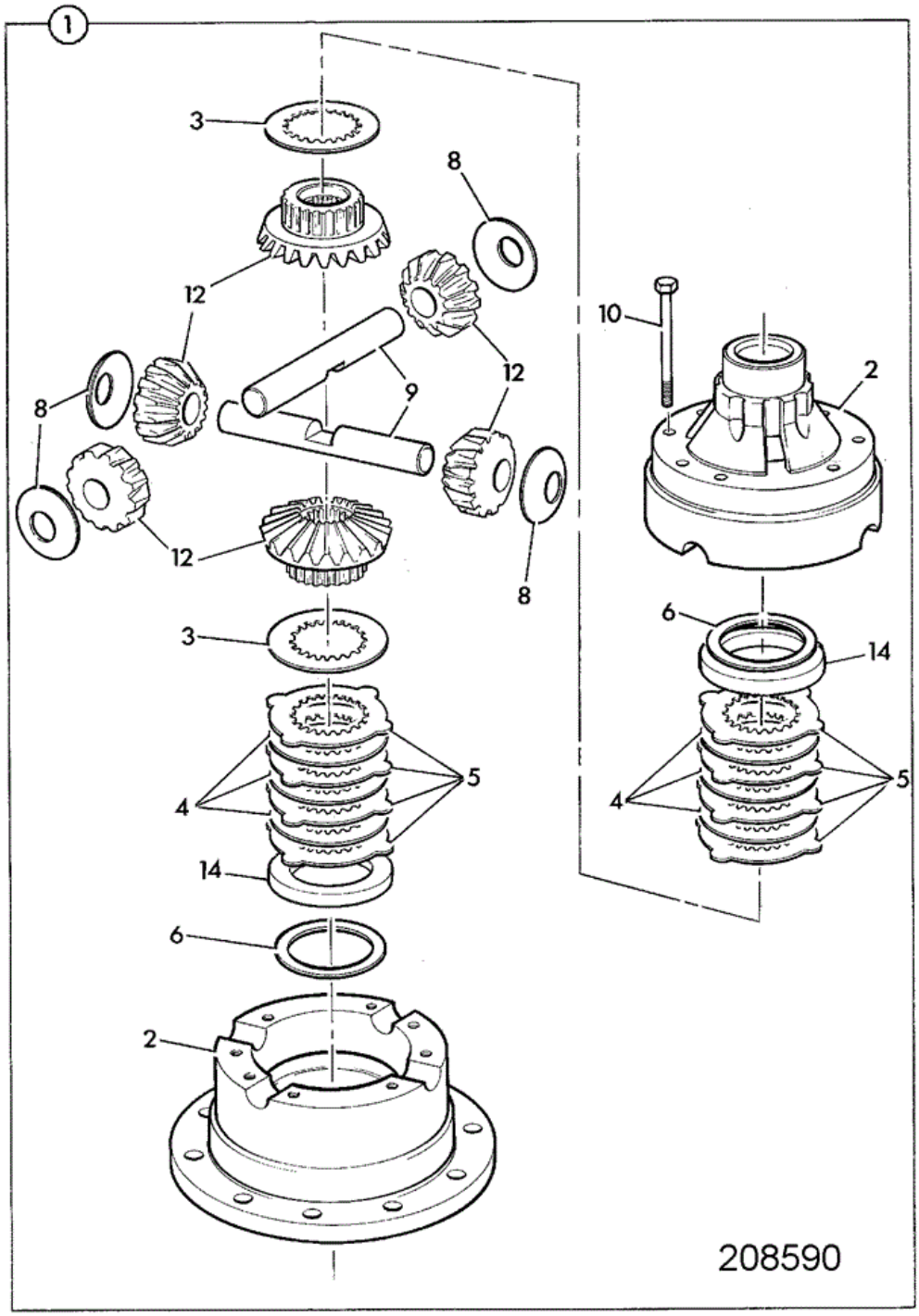

Item	Part No	Change No	Description	Usage Code	QTY
1	450/28800		Differential assembly		1
2	:450/28900	Superseded	Casing assembly differential		1

2	:458/M2844		Casing assembly differential Item 14 not required		1
3	:450/20401		Plate pressure		2
4	:450/20402		Plate friction		6
5	:450/20403		Plate counter		8
6	:921/52100		Kit shim		2
8	:808/00210		Washer thrust Pinion		4
9	:458/M3119	from MAY09	Pin Trunnion 151mm Long		2
9	:450/10903		Pin trunnion 163mm long Service replacement		2
10	:1315/3418		Bolt (M10 x 80)		8
12	:450/29000		Gear set differential		1
14	:450/26201		Spacer		2

Applicability Date Ranges:
From: , To:

Product Catalog\WHEELED LOADERS\416 01243000-01243499,01317500-01317999,01472000-01472999,02095872-02095875 9812/3020 \F AXLES, WHEELS & TRANSMISSION\F01 AXLES, FRONT\F1-14-1 HUB & COMPONENTS 450/25900

9812/3020 F1-14-1 HUB & COMPONENTS 450/25900

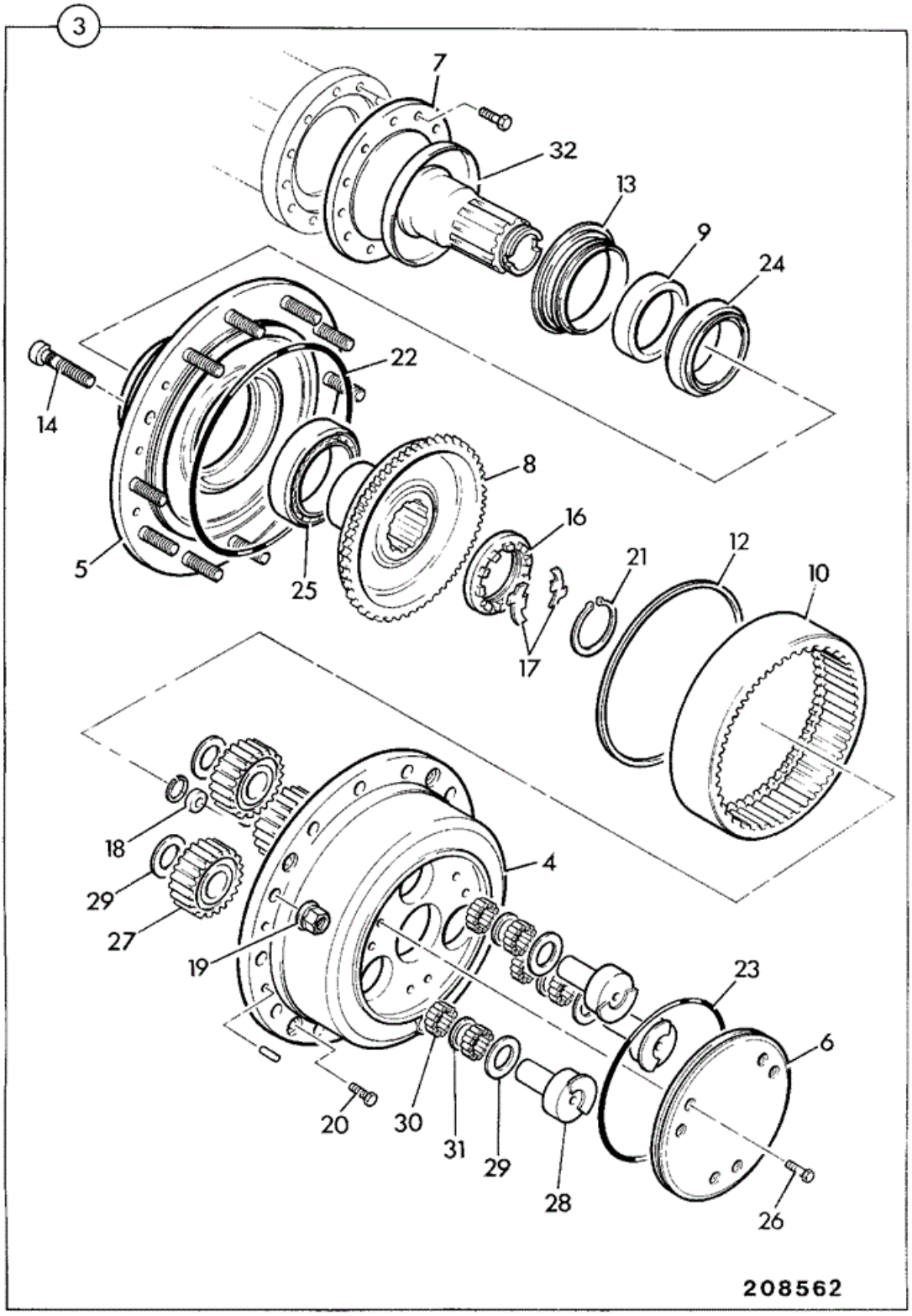

Item	Part No	Change No	Description	Usage Code	QTY

3	450/25900		Hub assembly		2
4	:450/24401		Carrier planetary hub		1
5	:450/24402		Housing bearing		1
6	:450/24403		Cover gears		1
7	:450/24404		Coupling hub		1
8	:450/24405		Carrier annulus		1
9	:450/24430		Kit Seal & spacer 127 x 160 x15.5		1
10	:450/24407		Gear annulus ring		1
12	:450/24409		Ring snap		1
13	:904/50032		Seal wheel hub 130 x 160 x15.5-18		1
13	450/24430		Kit Seal & spacer 127 x 160 x15.5 Replaces 904/50032		1
14	:450/24431		Stud wheel		12
16	:450/24413		Nut castle		2
17	:450/24414		Plate locking		2
18	:450/24415		Stop shaft		1
19	:826/01450		Nut wheel		12
19	826/11355		Nut Wheel Yellow Finish Yellow surface finish		12
20	:450/24417		Screw hex hd.		6
21	:450/24418		Ring snap		1
22	:450/24419		Seal oil		1
23	:450/24420		Seal oil		1
24	:450/24421		Bearing taper roller		1
25	:450/24422		Bearing taper roller		1
26	:450/24423		Bolt M8 x 25		4
27	:450/24425		Gear planet		3
28	:450/24428		Shaft planet gear		3
29	:450/24424		Washer thrust		6
30	:450/24426		Bearing needle roller 25 off/gear		150
31	:450/24427		Spacer		3
32	:450/24429		Cover dust		1
33	:10/906479		Plug C/w O ring		1

Applicability Date Ranges:
From: , To: 06/09/2011

Product Catalog\WHEELED LOADERS\416 01243000-01243499,01317500-01317999,01472000-01472999,02095872-02095875 9812/3020 \F AXLES, WHEELS & TRANSMISSION\F01 AXLES, FRONT\F1-36-1 BREATHER REMOTE AXLE & TRANSMISSION SALES SPECIAL

9812/3020 F1-36-1 BREATHER REMOTE AXLE & TRANSMISSION SALES SPECIAL

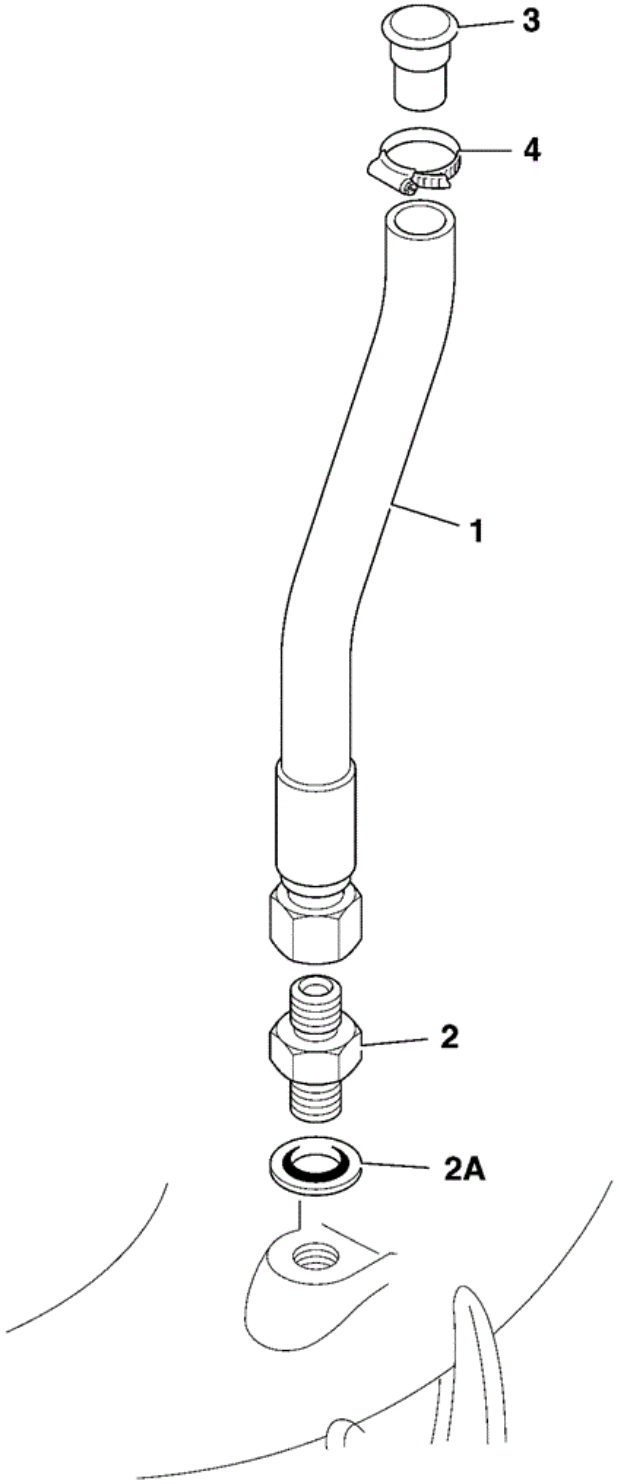

Item	Part No	Change No	Description	Usage Code	QTY
			Breather assembly		

A	970/61346		Sales special 7953, 9851 & 1227		2
1	648/21300		Hose		2
2	458/20611		Adapter		2
2A	****		'See Remark' Not fitted		2
3	478/02307		Breather		2
3	332/S7988		Breather Replaces 478/02307		2
4	821/00480		Clamp		2
5	826/01347		Tie Cable 160mm		8

Applicability Date Ranges:
From: , To:

Product Catalog\WHEELED LOADERS\416 01243000-01243499,01317500-01317999,01472000-01472999,02095872-02095875 9812/3020 \F AXLES, WHEELS & TRANSMISSION\F01 AXLES, FRONT\F1-51-1 AXLE ASSEMBLY FRONT, SWEDEN L.S.D. PD90, 450/44070, 50 KPH

9812/3020 F1-51-1 AXLE ASSEMBLY FRONT, SWEDEN L.S.D. PD90, 450/44070, 50 KPH

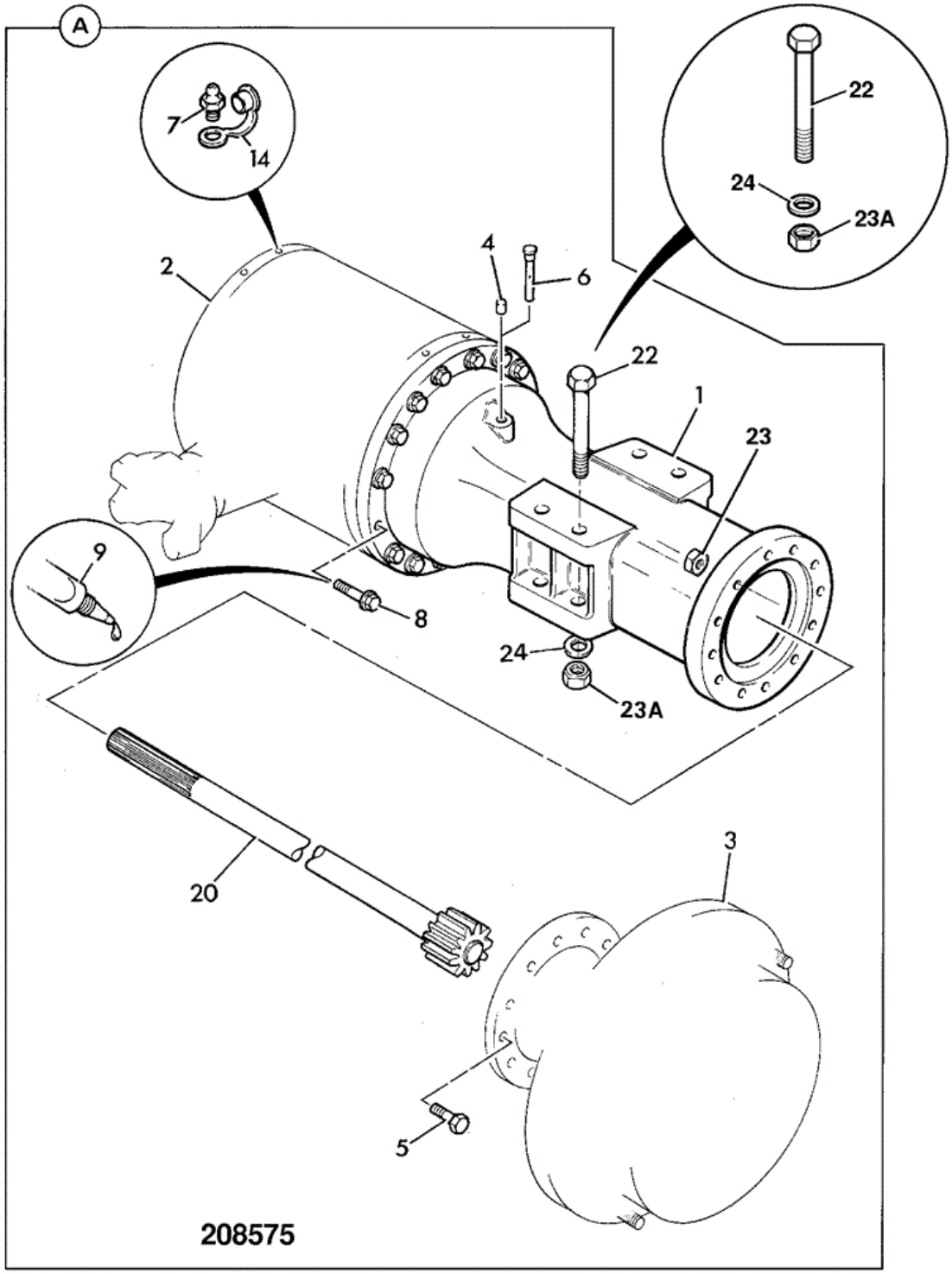

Item	Part No	Change No	Description	Usage Code	QTY
			Axle front, PD90 15.23:1, LSD, 50 kph		

A	450/44070		Changed from yellow to black from M1243141		1
1	:450/22907	Superseded	Casing axle arm		2
1	:458/M2375		Casing axle arm		2
2	:458/11064		Drivehead assembly,pad mount 2.538:1, LSD See F1-52-1 for components		1
3	:450/25900		Hub assembly		2
4	:450/13302		Plug Breather		1
5	:826/01504		Bolt M20 x 70mm long		32
6	:450/13001		Breather extension		1
6	:453/00303		Breather Nylon Black Replaces 450/13001		1
7	:816/60040		Nipple Screw		2
8	:1321/3716		Bolt M16x70L		28
9	:4102/1200		Sealant		0
14	:835/00017		Cap Grease Nipple		2
20	:450/29101		Shaft drive		2
21	:821/00216		Circlip external		2
22	:826/10857		Bolt 230mm long		8
23	:1371/0701		Nut Used to secure Hub to axle arm		32
23A	1370/0701D		Nut		8
24	823/10379		Washer hardened		16
24	1422/0012D		Washer Hard Replaces 823/10379		16
99	269/10043		G.A.		1

Applicability Date Ranges:
From: , To: 06/09/2011

Product Catalog\WHEELED LOADERS\416 01243000-01243499,01317500-01317999,01472000-01472999,02095872-02095875 9812/3020 \F AXLES, WHEELS & TRANSMISSION\F01 AXLES, FRONT\F1-52-1 DRIVEHEAD ASSEMBLY 458/11064

9812/3020 F1-52-1 DRIVEHEAD ASSEMBLY 458/11064

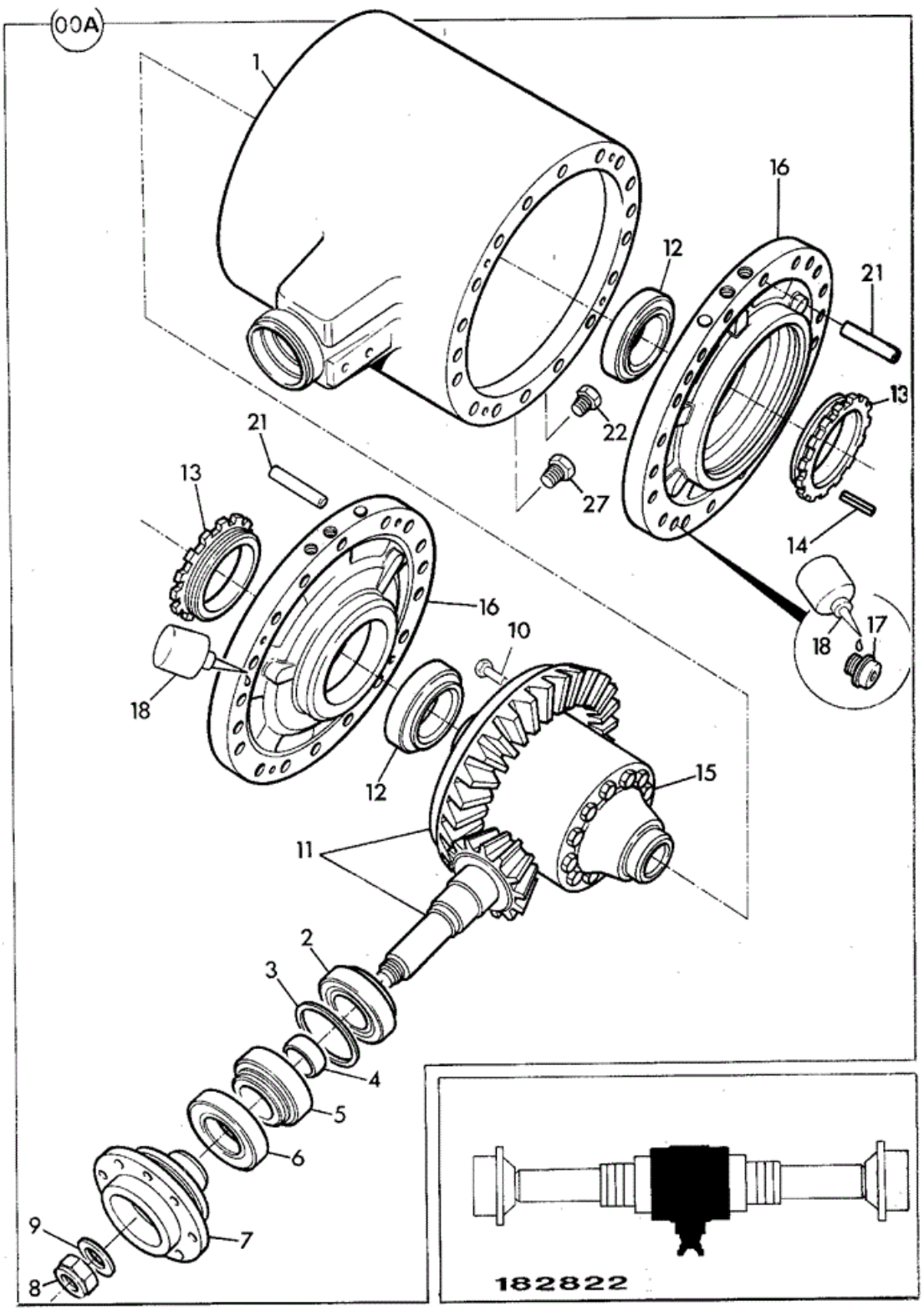

Item	Part No	Change No	Description	Usage Code	QTY

A	458/11064		Drivehead assembly,pad mount 2.538:1, LSD		1
1	:453/30601		Casing differential		1
2	:907/09000		Bearing Roller		1
3	:921/01900		Kit-shim		1
4	:921/53400		Kit set of spacers From 12.625 To 14.200 Thick		1
5	:907/08300		Bearing Taper Roller		1
6	:904/50023		Seal Triple Lip, To Suit 55.0/54.81 Shaft Blue		1
7	:458/20814		Yoke		1
8	:826/01744		Nut Stake M30		1
10	:826/01080		Bolt		12
11	:458/70260		Gear Crown Wheel & Pinion 13T/33T		1
12	:907/50100		Bearing Taper Roller		2
13	:450/10403		Nut Side Differential		2
14	:826/00818		Pin Tension		2
15	:450/28800		Differential assembly		1
16	:458/20238		Housing brake piston		2
17	:1392/3407		Capscrew M10 x 25mm		8
18	:4102/1200		Sealant		0
21	:826/00919		Dowel		4
22	:816/80012		Plug Magnetic 3/4"BSP		1
23	:1406/0021		Washer Bonded		2
27	:816/80037		Plug Filler 33mm Head, see TI GEN245		1

Applicability Date Ranges:
From: , To:

Product Catalog\WHEELED LOADERS\416 01243000-01243499,01317500-01317999,01472000-01472999,02095872-02095875 9812/3020 \F AXLES, WHEELS & TRANSMISSION\F02 AXLES, REAR\F2-1-1 AXLE ASSEMBLY REAR STD.PD90 H.DUTY, S.H.L 450/43810

9812/3020 F2-1-1 AXLE ASSEMBLY REAR STD.PD90 H.DUTY, S.H.L 450/43810

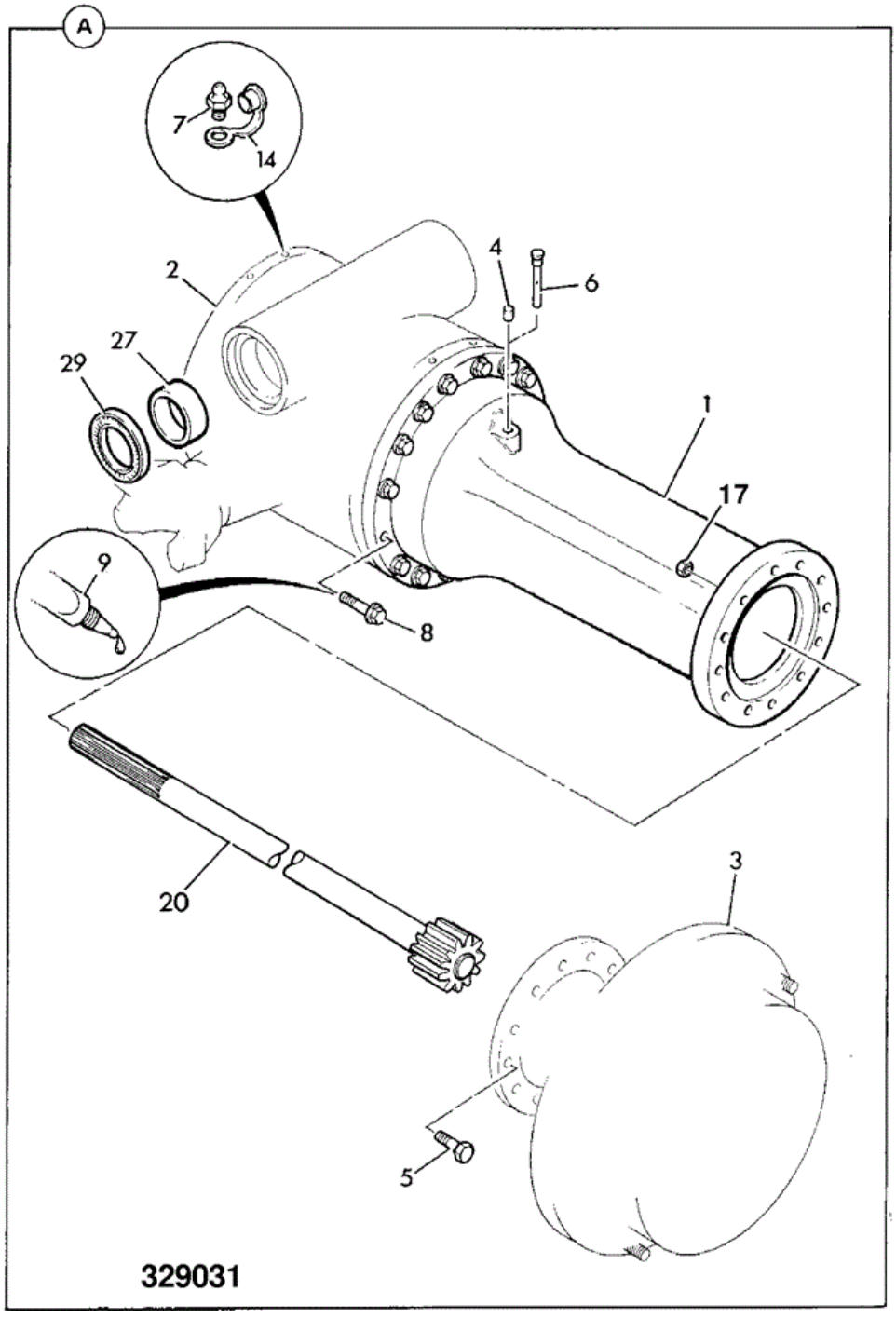

Item	Part No	Change No	Description	Usage Code	QTY
A	450/43810		Axle rear PD90 STD. Changed from yellow to black from M1243141		1

1	:450/23002	Superseded	Casing axle arm		2
1	:458/M2376		Casing axle arm		2
2	:458/11099	Superseded	Differential assembly rear See F2-2-1		1
2	:458/11204	>A/42810/5	Differential assembly rear See F2-2-2		1
3	:450/25900		Hub assembly		2
4	:450/13302		Plug Breather		1
5	:826/01504		Bolt M20 x 70mm long		32
6	:450/13001		Breather extension		1
6	:453/00303		Breather Nylon Black Replaces 450/13001		1
7	:816/60040		Nipple Screw		2
8	:826/01083		Bolt flanged		28
9	:4102/1200		Sealant		0
14	:835/00017		Cap Grease Nipple		2
17	:1371/0701		Nut		32
20	:450/29101		Shaft drive		2
21	:821/00216		Circlip external		2
23	:1371/0701		Nut		32
27	:808/00340		Bearing liner axle pivot		2
29	:904/50026		Seal axle pivot		2
99	****		Assembly axles H/D		1

Applicability Date Ranges:
From: , To: 06/09/2011

Product Catalog\WHEELED LOADERS\416 01243000-01243499,01317500-01317999,01472000-01472999,02095872-02095875 9812/3020 \F AXLES, WHEELS & TRANSMISSION\F02 AXLES, REAR\F2-2-1 DRIVEHEAD ASSEMBLY 458/11099

9812/3020 F2-2-1 DRIVEHEAD ASSEMBLY 458/11099

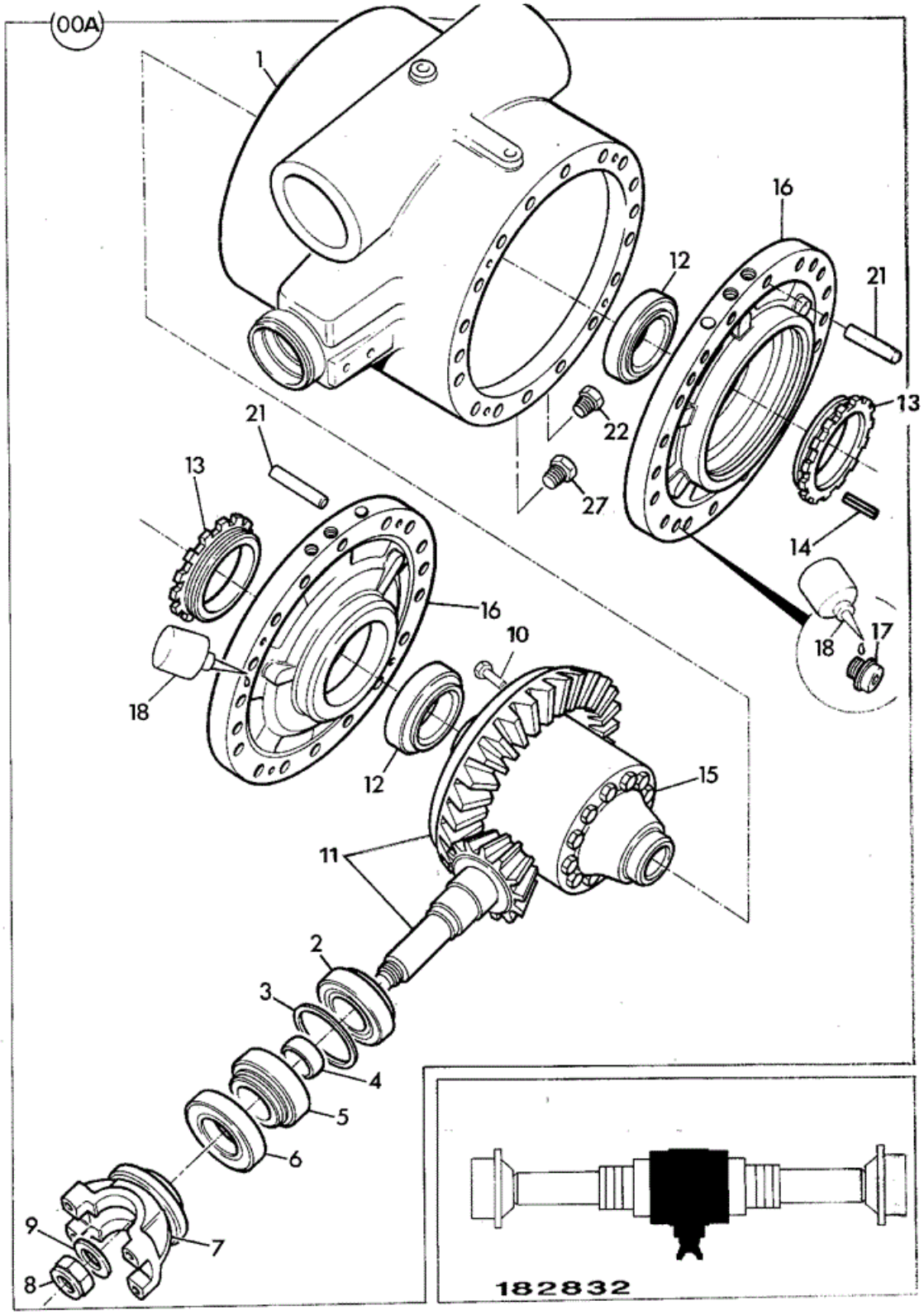

Item	Part No	Change No	Description	Usage Code	QTY

A	458/11099		Differential assembly rear		1
1	:450/24001		Casing differential		1
2	:907/09000		Bearing Roller		1
3	:921/01900		Kit-shim		1
4	:921/53400		Kit set of spacers From 12.625 To 14.200 Thick		1
5	:907/08300		Bearing Taper Roller		1
6	:904/50023		Seal Triple Lip, To Suit 55.0/54.81 Shaft Blue		1
7	:458/20814		Yoke		1
8	:826/01744		Nut Stake M30		1
9	****		'See Remark' Not reqd, part of item 8		1
10	:826/01080		Bolt		12
11	:458/20672		Gear crown wheel & pinion 11/37T		1
12	:907/50100		Bearing Taper Roller		2
13	:450/10403		Nut Side Differential		2
14	:826/00818		Pin Tension		2
15	:450/28500		Differential assembly		1
16	:458/20238		Housing brake piston		2
17	:1392/3407		Capscrew M10 x 25mm		8
18	:4102/1200		Sealant		0
21	:826/00919		Dowel		4
22	:816/80012		Plug Magnetic 3/4"BSP		1
23	:1406/0021		Washer Bonded		2
27	:816/80037		Plug Filler 33mm Head, see TI GEN245		1

Applicability Date Ranges:
From: , To:

Product Catalog\WHEELED LOADERS\416 01243000-01243499,01317500-01317999,01472000-01472999,02095872-02095875 9812/3020 \F AXLES, WHEELS & TRANSMISSION\F02 AXLES, REAR\F2-2-2 DRIVEHEAD ASSEMBLY 458/11204

9812/3020 F2-2-2 DRIVEHEAD ASSEMBLY 458/11204

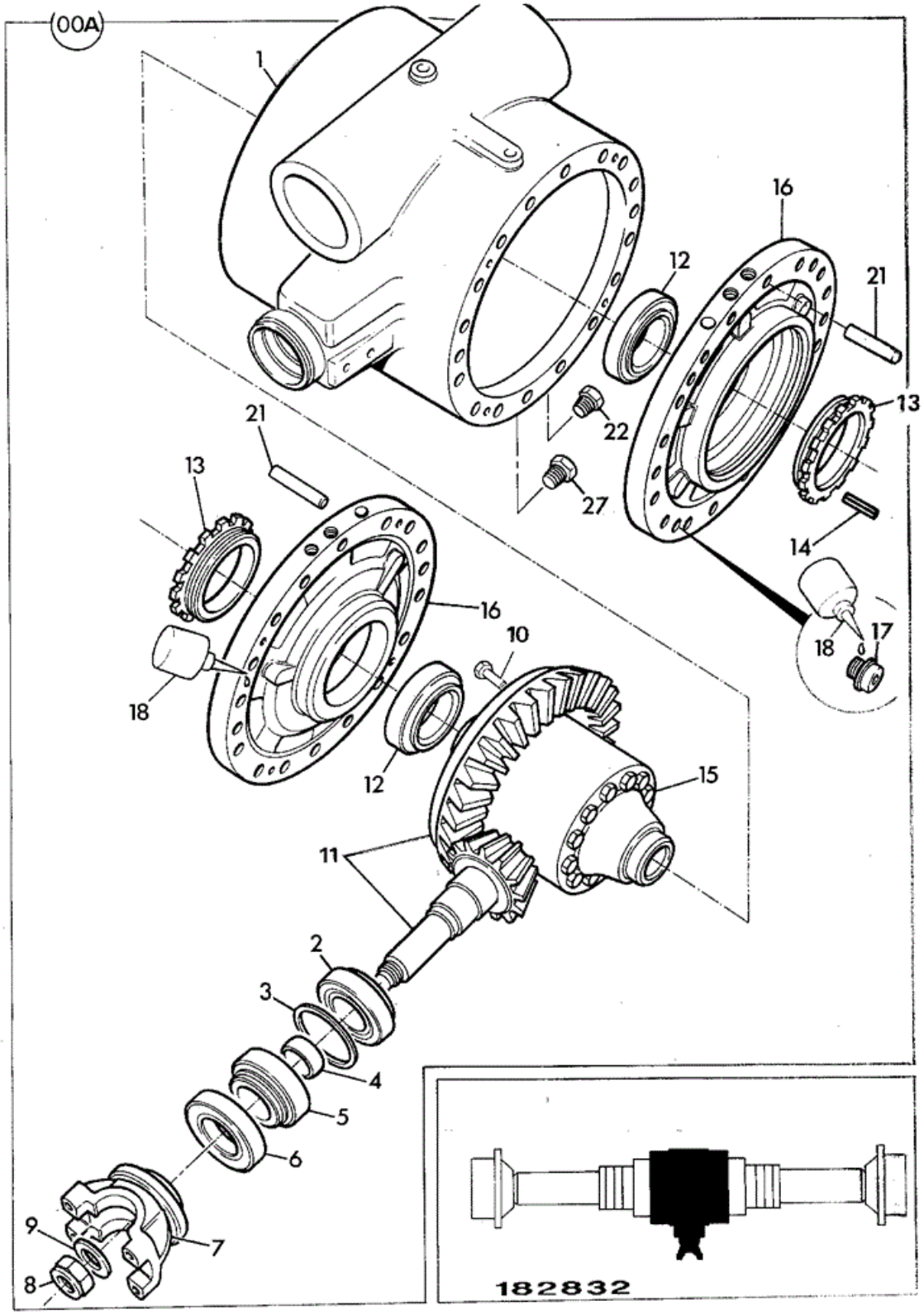

Item	Part No	Change No	Description	Usage Code	QTY

A	458/11204		Differential assembly rear		1
1	:450/24001		Casing differential		1
2	:907/09000		Bearing Roller		1
3	:921/01900		Kit-shim		1
4	:921/53400		Kit set of spacers From 12.625 To 14.200 Thick		1
5	:907/08300		Bearing Taper Roller		1
6	:904/50023		Seal Triple Lip, To Suit 55.0/54.81 Shaft Blue		1
7	:458/20814		Yoke		1
8	:826/01744		Nut Stake M30		1
9	****		'See Remark' Not reqd, part of item 8		1
10	:826/01080		Bolt		12
11	:458/70252		Gear crownwheel & pinion 11T/37T		1
12	:907/50100		Bearing Taper Roller		2
13	:450/10403		Nut Side Differential		2
14	:826/00818		Pin Tension		2
15	:450/28500		Differential assembly		1
16	:458/20238		Housing brake piston		2
17	:1392/3407		Capscrew M10 x 25mm		8
18	:4102/1200		Sealant		0
21	:826/00919		Dowel		4
22	:816/80012		Plug Magnetic 3/4"BSP		1
23	:1406/0021		Washer Bonded		2
27	:816/80037		Plug Filler 33mm Head, see TI GEN245		1

Applicability Date Ranges:
From: A/43810/5 , To:

Product Catalog\WHEELED LOADERS\416 01243000-01243499,01317500-01317999,01472000-01472999,02095872-02095875 9812/3020 \F AXLES, WHEELS & TRANSMISSION\F02 AXLES, REAR\F2-3-1 DIFFERENTIAL ASSEMBLY, 450/28500

9812/3020 F2-3-1 DIFFERENTIAL ASSEMBLY, 450/28500

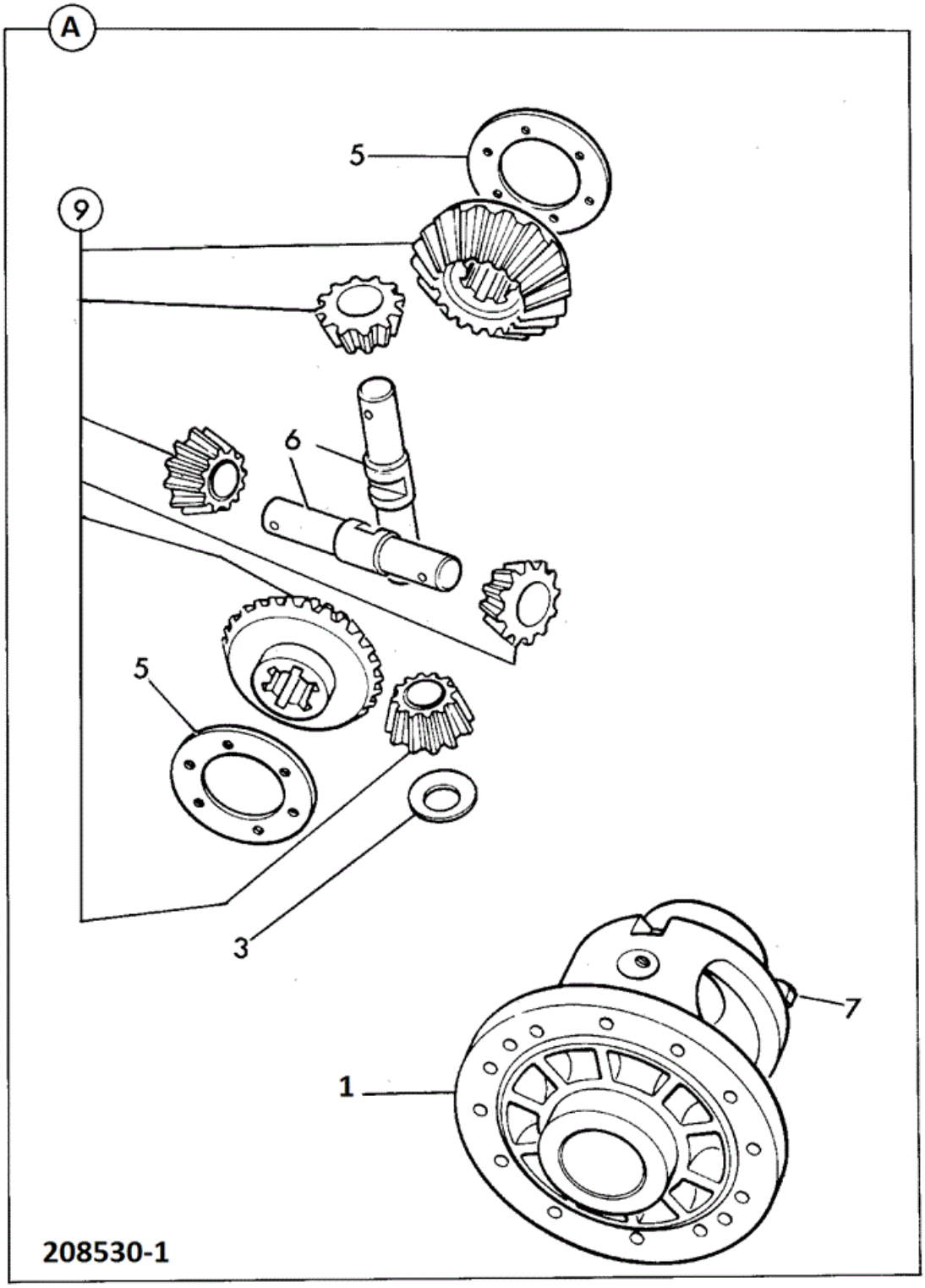

Item	Part No	Change No	Description	Usage Code	QTY

1	450/28500		Differential assembly		1
2	:450/28600		Casing differential		1
3	:808/00210		Washer thrust Pinion		4
5	:808/00346		Washer differential gear		2
6	:458/M3119	from MAY09	Pin Trunnion 151mm Long		2
6	:450/10903		Pin trunnion 163mm long Service replacement		2
7	:1315/3418		Bolt (M10 x 80)		8
9	:450/28700		Gear assembly		1

9812/3020 F1-3-1 DIFFERENTIAL ASSEMBLY, 450/28500

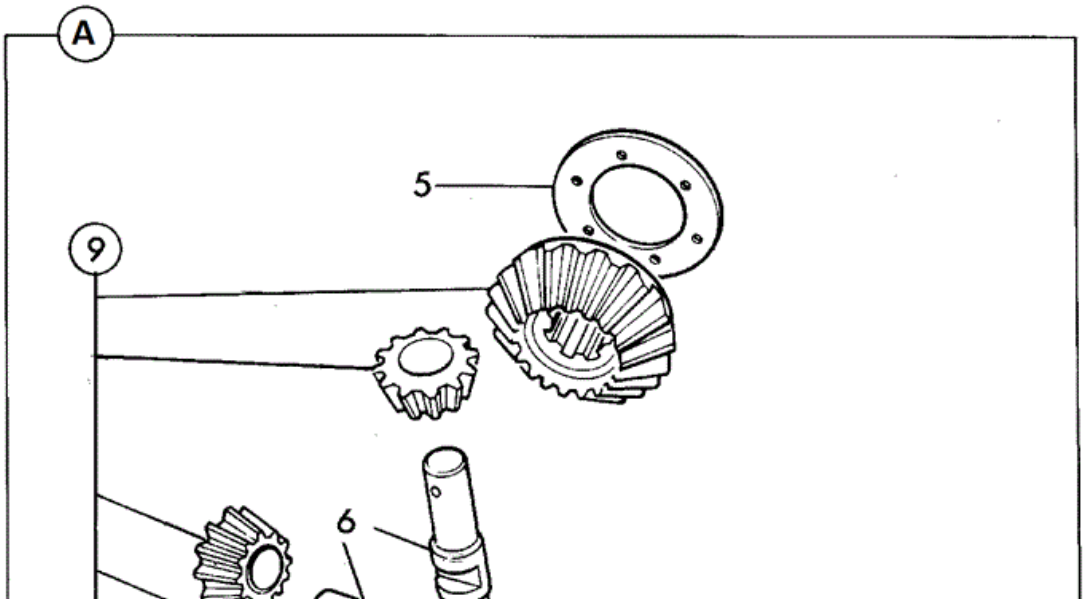

Item	Part No	Change No	Description	Usage Code	QTY
1	450/28500		Differential assembly		1
2	:450/28600		Casing differential		1
3	:808/00210		Washer thrust Pinion		4
5	:808/00346		Washer differential gear		2
6	:458/M3119	from MAY09	Pin Trunnion 151mm Long		2
6	:450/10903		Pin trunnion 163mm long Service replacement		2
7	:1315/3418		Bolt (M10 x 80)		8
9	:450/28700		Gear assembly		1

Applicability Date Ranges:
From: , To:

Product Catalog\WHEELED LOADERS\416 01243000-01243499,01317500-01317999,01472000-01472999,02095872-02095875 9812/3020 \F AXLES, WHEELS & TRANSMISSION\F02 AXLES, REAR\F1-3-1 DIFFERENTIAL ASSEMBLY, 450/28500

9812/3020 F2-3-1 DIFFERENTIAL ASSEMBLY, 450/28500

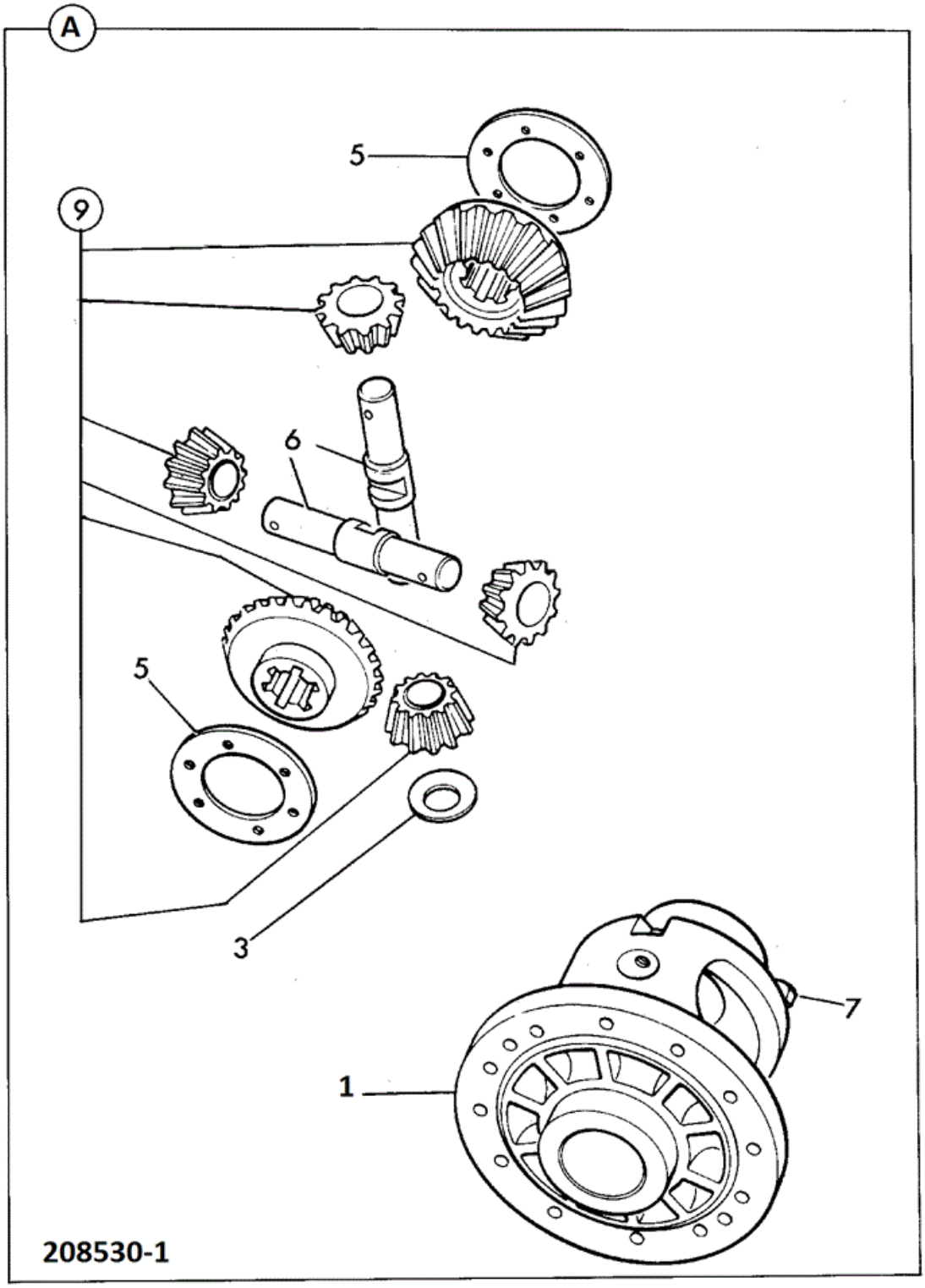

Item	Part No	Change No	Description	Usage Code	QTY

1	450/28500		Differential assembly		1
2	:450/28600		Casing differential		1
3	:808/00210		Washer thrust Pinion		4
5	:808/00346		Washer differential gear		2
6	:458/M3119	from MAY09	Pin Trunnion 151mm Long		2
6	:450/10903		Pin trunnion 163mm long Service replacement		2
7	:1315/3418		Bolt (M10 x 80)		8
9	:450/28700		Gear assembly		1

9812/3020 F1-3-1 DIFFERENTIAL ASSEMBLY, 450/28500

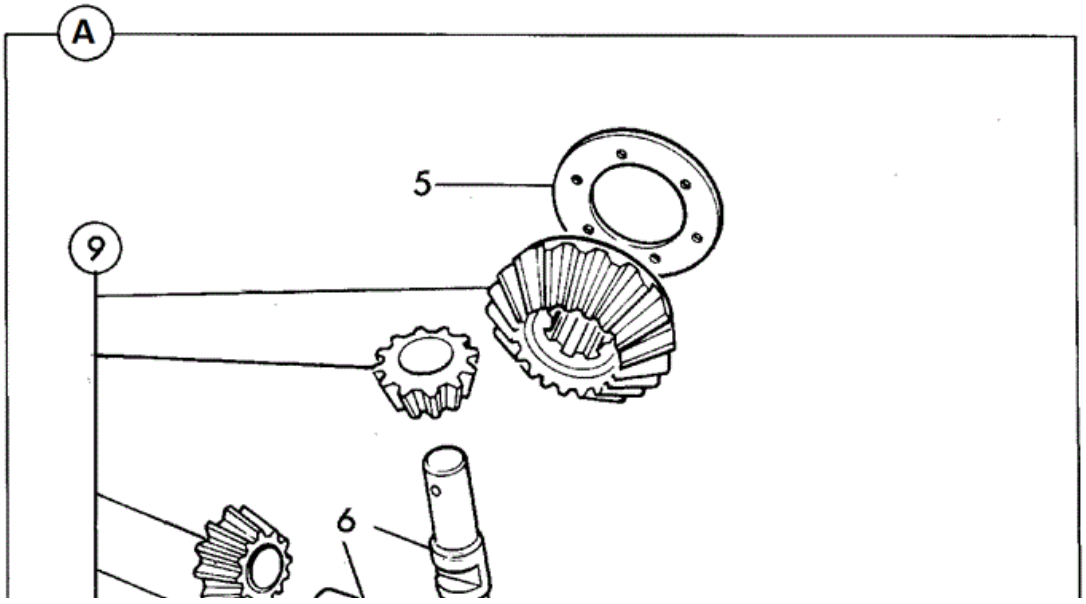

Item	Part No	Change No	Description	Usage Code	QTY
1	450/28500		Differential assembly		1
2	:450/28600		Casing differential		1
3	:808/00210		Washer thrust Pinion		4
5	:808/00346		Washer differential gear		2
6	:458/M3119	from MAY09	Pin Trunnion 151mm Long		2
6	:450/10903		Pin trunnion 163mm long Service replacement		2
7	:1315/3418		Bolt (M10 x 80)		8
9	:450/28700		Gear assembly		1

Applicability Date Ranges:
From: , To:

Product Catalog\WHEELED LOADERS\416 01243000-01243499,01317500-01317999,01472000-01472999,02095872-02095875 9812/3020 \F AXLES, WHEELS & TRANSMISSION\F02 AXLES, REAR\F2-4-1 HUB & COMPONENTS 450/25900

9812/3020 F2-4-1 HUB & COMPONENTS 450/25900

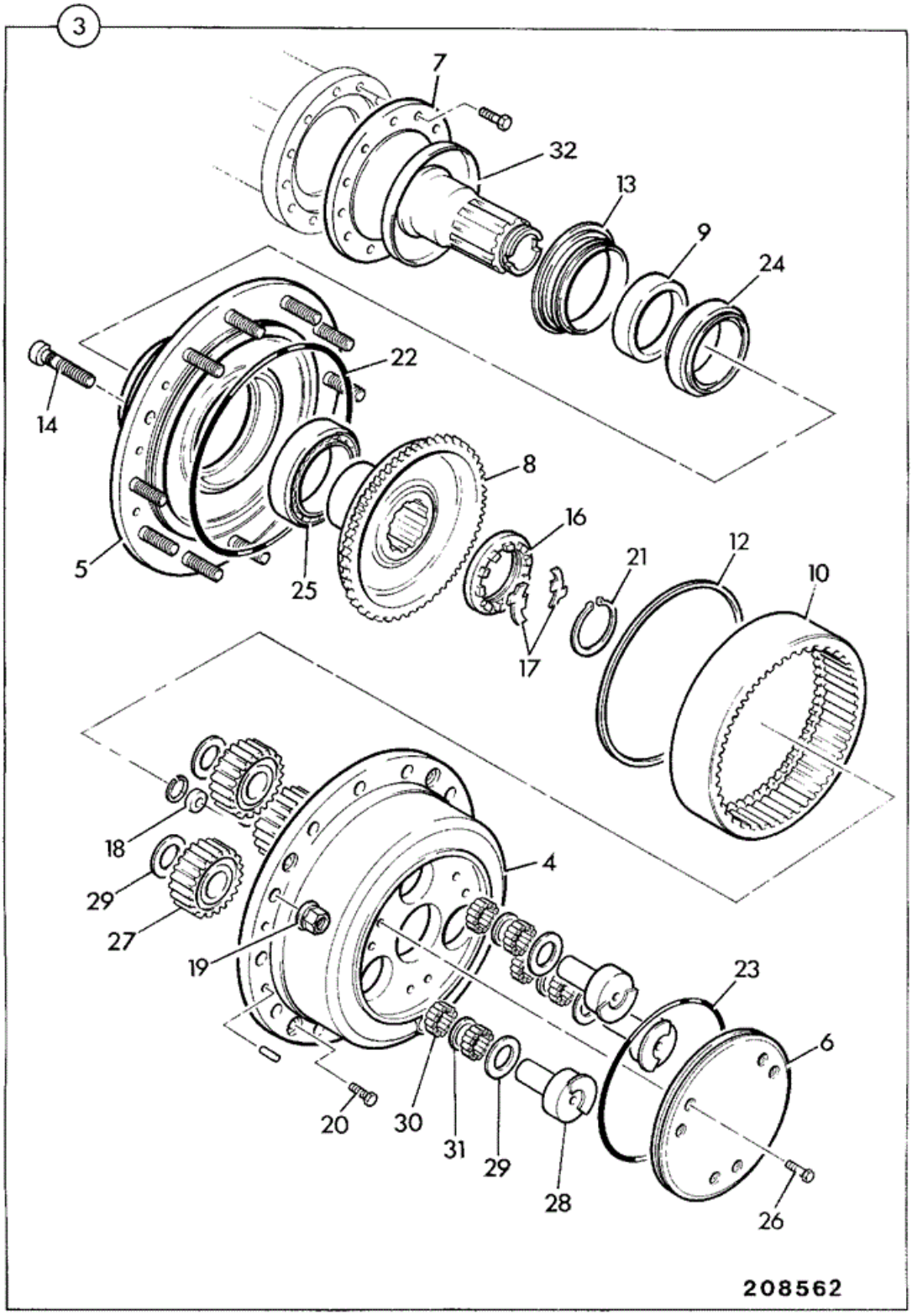

Item	Part No	Change No	Description	Usage Code	QTY

3	450/25900		Hub assembly		2
4	:450/24401		Carrier planetary hub		1
5	:450/24402		Housing bearing		1
6	:450/24403		Cover gears		1
7	:450/24404		Coupling hub		1
8	:450/24405		Carrier annulus		1
9	:450/24430		Kit Seal & spacer 127 x 160 x15.5		1
10	:450/24407		Gear annulus ring		1
12	:450/24409		Ring snap		1
13	:904/50032		Seal wheel hub 130 x 160 x15.5-18		1
13	450/24430		Kit Seal & spacer 127 x 160 x15.5 Replaces 904/50032		1
14	:450/24431		Stud wheel		12
16	:450/24413		Nut castle		2
17	:450/24414		Plate locking		2
18	:450/24415		Stop shaft		1
19	:826/11355		Nut Wheel Yellow Finish Yellow surface finish		12
20	:450/24417		Screw hex hd.		6
21	:450/24418		Ring snap		1
22	:450/24419		Seal oil		1
23	:450/24420		Seal oil		1
24	:450/24421		Bearing taper roller		1
25	:450/24422		Bearing taper roller		1
26	:450/24423		Bolt M8 x 25		4
27	:450/24425		Gear planet		3
28	:450/24428		Shaft planet gear		3
29	:450/24424		Washer thrust		6
30	:450/24426		Bearing needle roller 25 off/gear		150
31	:450/24427		Spacer		3
32	:450/24429		Cover dust		1
33	:10/906479		Plug C/w O ring		1

Applicability Date Ranges:
From: , To: 06/09/2011

Product Catalog\WHEELED LOADERS\416 01243000-01243499,01317500-01317999,01472000-01472999,02095872-02095875 9812/3020 \F AXLES, WHEELS & TRANSMISSION\F02 AXLES, REAR\F2-6-1 DIFFERENTIAL HOUSING ASSEMBLY REAR AXLE

9812/3020 F2-6-1 DIFFERENTIAL HOUSING ASSEMBLY REAR AXLE

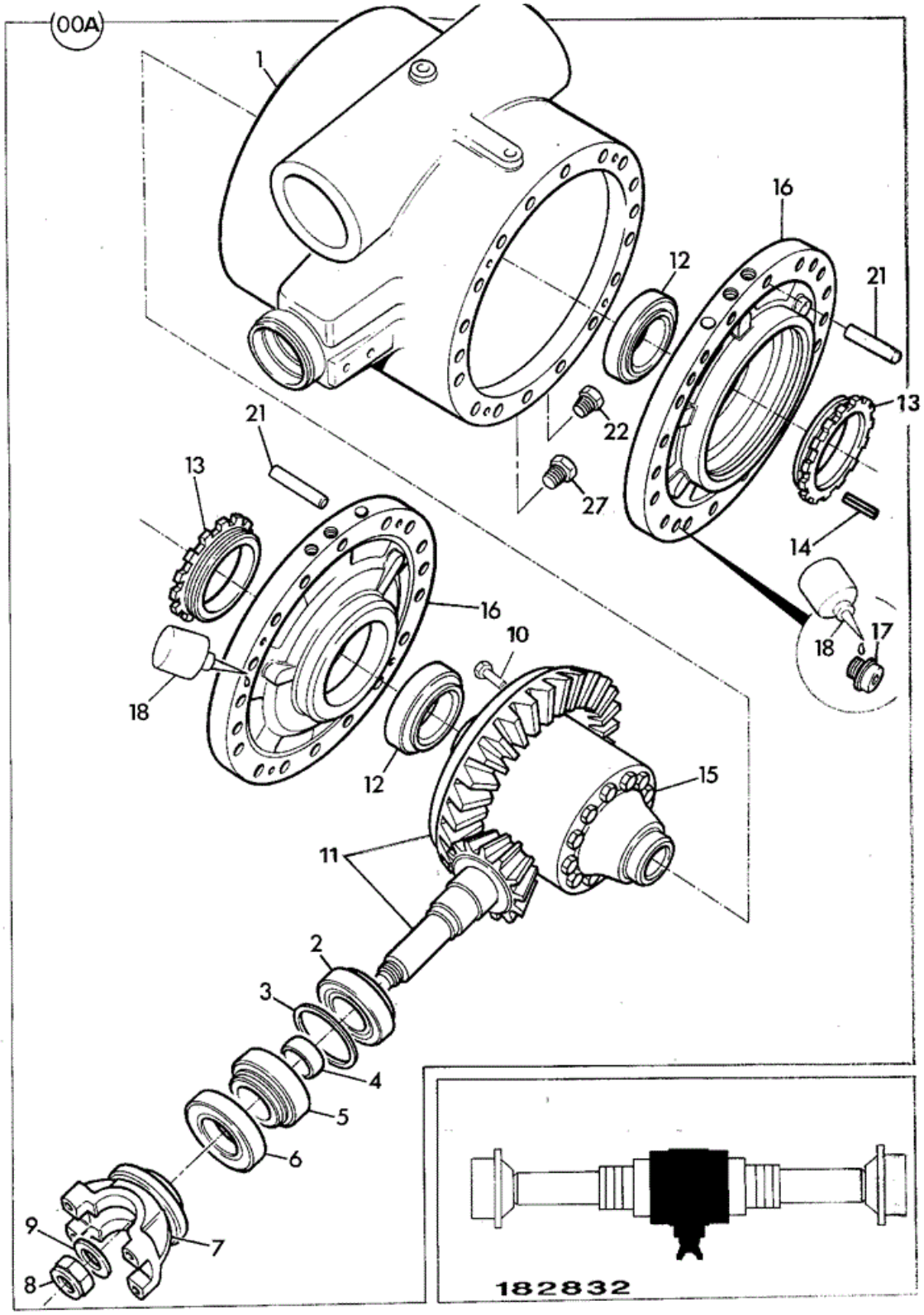

Item	Part No	Change No	Description	Usage Code	QTY

A	458/10164		Differential assembly rear.		1
1	:450/24001		Casing differential		1
2	:907/09000		Bearing Roller		1
3	:921/01900		Kit-shim		1
4	:445/03005	<A/0239	Spacer collapsible		1
4	****		'See Remark' see TI GEN106		1
5	:907/08300		Bearing Taper Roller		1
6	:904/50023		Seal Triple Lip, To Suit 55.0/54.81 Shaft Blue		1
7	:454/13100		Yoke		1
8	:826/01483		Nut stake and washer M24		1
9	:823/00328		Washer (25.25mm x 43.6mm x 4mm) Not reqd. when 826/01483 is fitted		1
10	:826/01080		Bolt		12
11	:453/00900		Gear crown wheel & pinion 11T/37T		1
12	:907/50100		Bearing Taper Roller		2
13	:450/10403		Nut Side Differential		2
14	:826/00818		Pin Tension		2
15	:450/28500		Differential assembly		1
16	:450/37202		Housing		2
17	:1392/3407		Capscrew M10 x 25mm		8
18	:4102/1200		Sealant		0
21	:826/00919		Dowel		4
22	:816/80012		Plug Magnetic 3/4"BSP		1
23	:1406/0021		Washer Bonded		2
27	:816/80037		Plug Filler 33mm Head, see TI GEN245		1

9812/3020 F1-3-1 DIFFERENTIAL ASSEMBLY, 450/28500

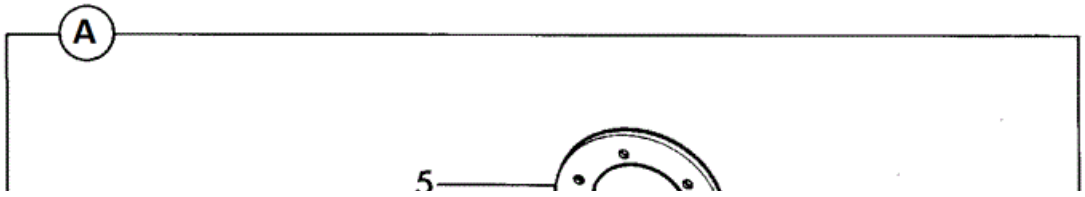

Item	Part No	Change No	Description	Usage Code	QTY
1	450/28500		Differential assembly		1
2	:450/28600		Casing differential		1
3	:808/00210		Washer thrust Pinion		4
5	:808/00346		Washer differential gear		2
6	:458/M3119	from MAY09	Pin Trunnion 151mm Long		2
6	:450/10903		Pin trunnion 163mm long Service replacement		2
7	:1315/3418		Bolt (M10 x 80)		8
9	:450/28700		Gear assembly		1

Applicability Date Ranges:
From: , To:

Product Catalog\WHEELED LOADERS\416 01243000-01243499,01317500-01317999,01472000-01472999,02095872-02095875 9812/3020 \F AXLES, WHEELS & TRANSMISSION\F02 AXLES, REAR\F1-3-1 DIFFERENTIAL ASSEMBLY, 450/28500

9812/3020 F2-6-1 DIFFERENTIAL HOUSING ASSEMBLY REAR AXLE

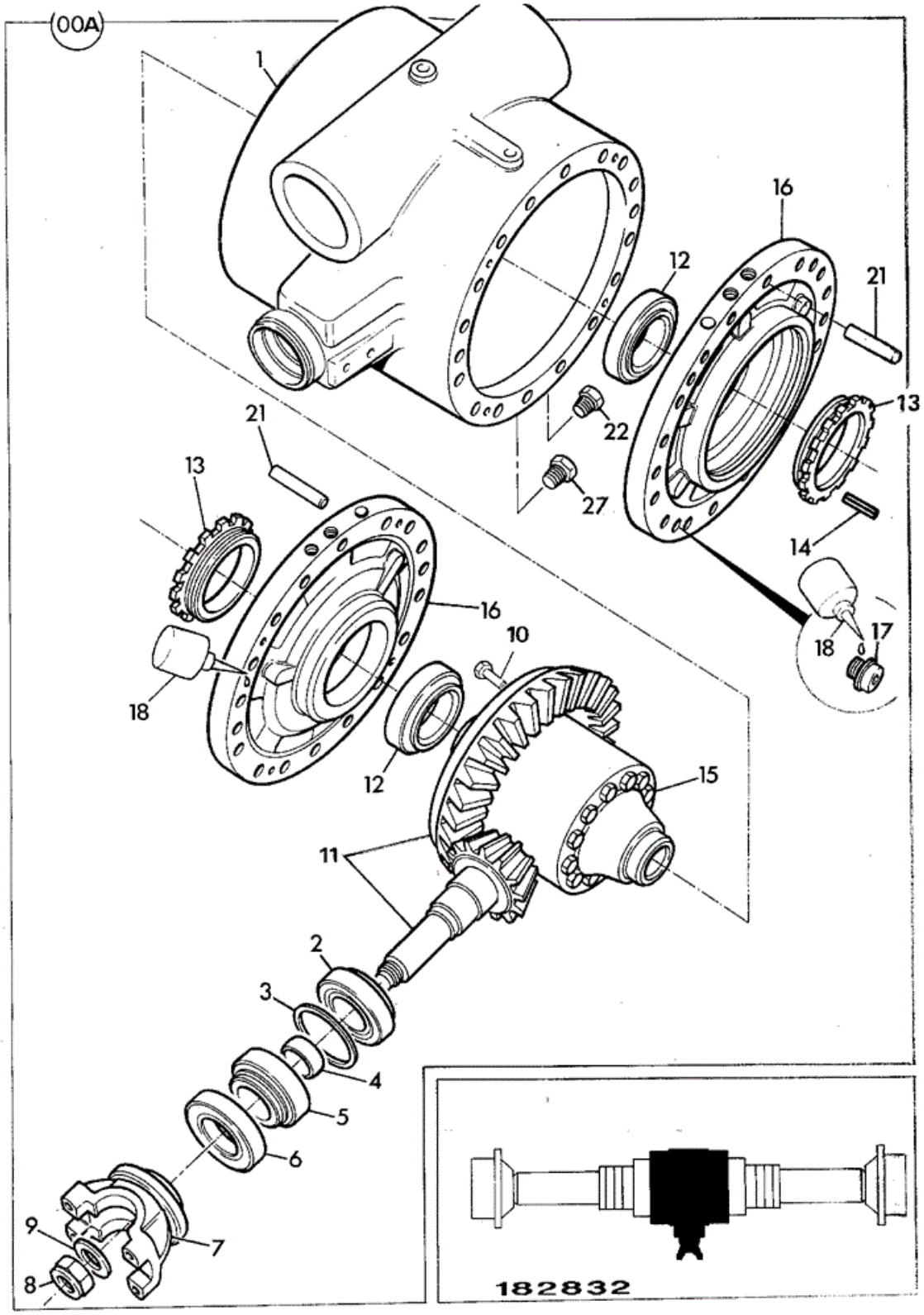

Item	Part No	Change No	Description	Usage Code	QTY

A	458/10164		Differential assembly rear.		1
1	:450/24001		Casing differential		1
2	:907/09000		Bearing Roller		1
3	:921/01900		Kit-shim		1
4	:445/03005	<A/0239	Spacer collapsible		1
4	****		'See Remark' see TI GEN106		1
5	:907/08300		Bearing Taper Roller		1
6	:904/50023		Seal Triple Lip, To Suit 55.0/54.81 Shaft Blue		1
7	:454/13100		Yoke		1
8	:826/01483		Nut stake and washer M24		1
9	:823/00328		Washer (25.25mm x 43.6mm x 4mm) Not reqd. when 826/01483 is fitted		1
10	:826/01080		Bolt		12
11	:453/00900		Gear crown wheel & pinion 11T/37T		1
12	:907/50100		Bearing Taper Roller		2
13	:450/10403		Nut Side Differential		2
14	:826/00818		Pin Tension		2
15	:450/28500		Differential assembly		1
16	:450/37202		Housing		2
17	:1392/3407		Capscrew M10 x 25mm		8
18	:4102/1200		Sealant		0
21	:826/00919		Dowel		4
22	:816/80012		Plug Magnetic 3/4"BSP		1
23	:1406/0021		Washer Bonded		2
27	:816/80037		Plug Filler 33mm Head, see TI GEN245		1

9812/3020 F1-3-1 DIFFERENTIAL ASSEMBLY, 450/28500

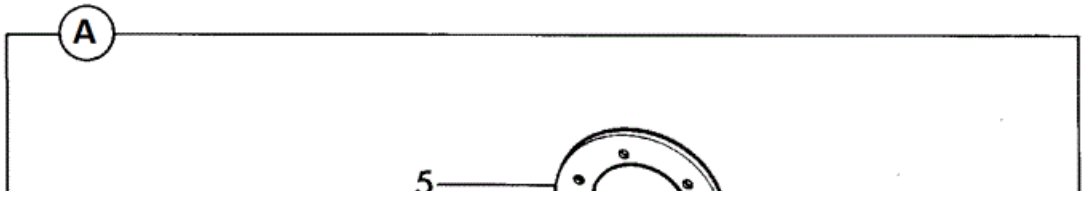

Item	Part No	Change No	Description	Usage Code	QTY
1	450/28500		Differential assembly		1
2	:450/28600		Casing differential		1
3	:808/00210		Washer thrust Pinion		4
5	:808/00346		Washer differential gear		2
6	:458/M3119	from MAY09	Pin Trunnion 151mm Long		2
6	:450/10903		Pin trunnion 163mm long Service replacement		2
7	:1315/3418		Bolt (M10 x 80)		8
9	:450/28700		Gear assembly		1

Applicability Date Ranges:
From: , To:

Product Catalog\WHEELED LOADERS\416 01243000-01243499,01317500-01317999,01472000-01472999,02095872-02095875 9812/3020 \F AXLES, WHEELS & TRANSMISSION\F02 AXLES, REAR\F2-11-1 AXLE ASSEMBLY REAR STD PD 90, 450/39100

9812/3020 F2-11-1 AXLE ASSEMBLY REAR STD PD 90, 450/39100

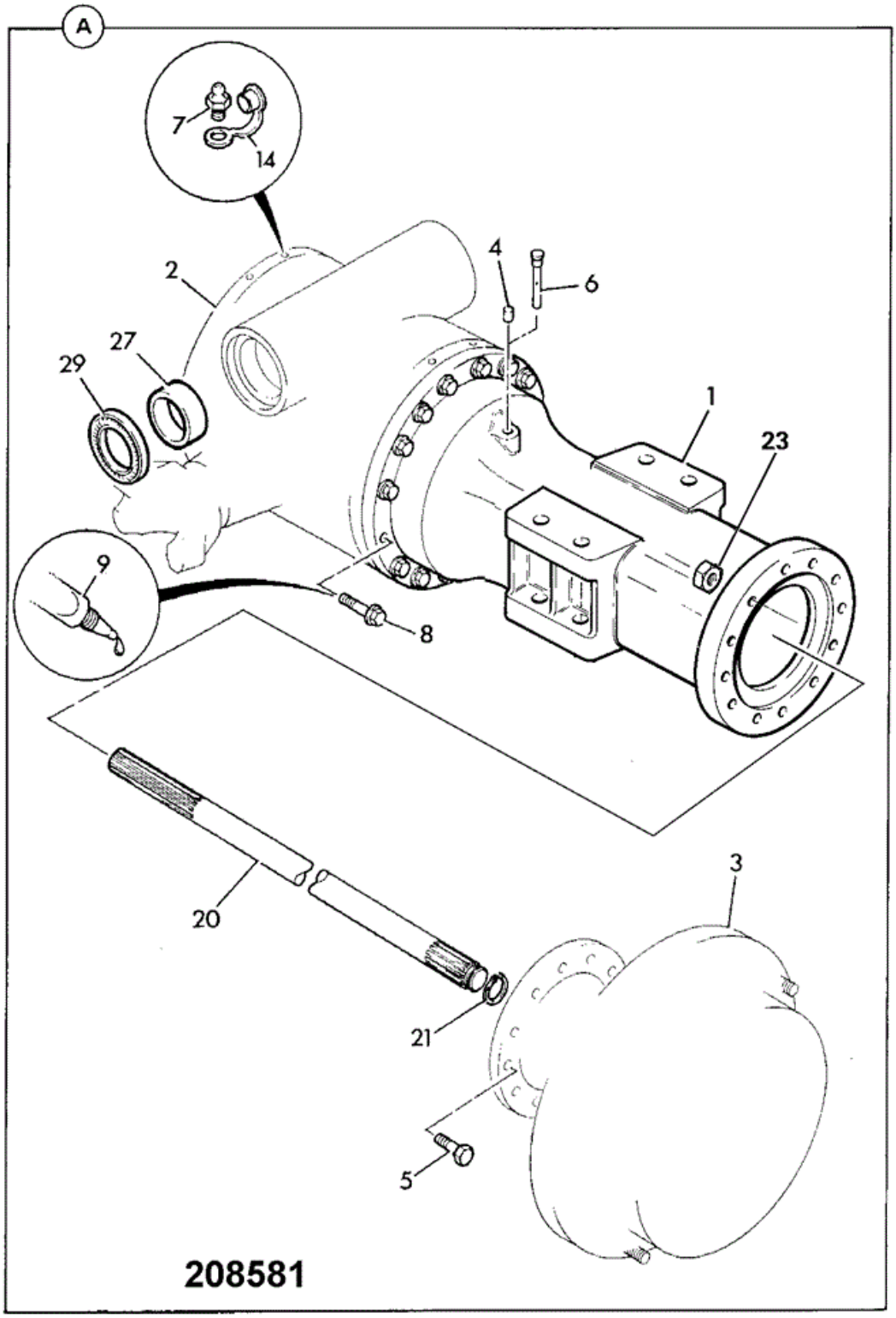

Item	Part No	Change No	Description	Usage Code	QTY

A	450/39100	Superseded	Axle rear PD90 20.18:1		1
A	450/43810		Axle rear PD90 STD. See page F2-1-1		1
1	:450/23002	Superseded	Casing axle arm		2
1	:458/M2376		Casing axle arm		2
2	:450/39200		Differential assembly rear 3.364:1		1
2A	458/11204		Differential assembly rear Use With 892/M4093	A	1
2B	892/M4093		Kit-service axle differentials	A	1
3	:450/24400		Hub assembly		2
4	:450/13302		Plug Breather		1
5	:826/01504		Bolt M20 x 70mm long		32
6	:450/13001		Breather extension		1
7	:816/60040		Nipple Screw		2
8	:826/01083		Bolt flanged		28
9	:4102/1200		Sealant		0
14	:835/00017		Cap Grease Nipple		2
17	:1371/0701		Nut		32
20	:450/22902		Shaft drive		2
21	:821/00216		Circlip external		2
23	:1371/0701		Nut		32
27	:808/00340		Bearing liner axle pivot		2
29	:904/50026		Seal axle pivot		2
99	269/10042		G.A.		1
99	269/10060		G.A.		1

Applicability Date Ranges:
From: , To:

Product Catalog\WHEELED LOADERS\416 01243000-01243499,01317500-01317999,01472000-01472999,02095872-02095875 9812/3020 \F AXLES, WHEELS & TRANSMISSION\F02 AXLES, REAR\F2-12-1 DIFFERENTIAL ASSEMBLY REAR, 450/39200

9812/3020 F2-12-1 DIFFERENTIAL ASSEMBLY REAR, 450/39200

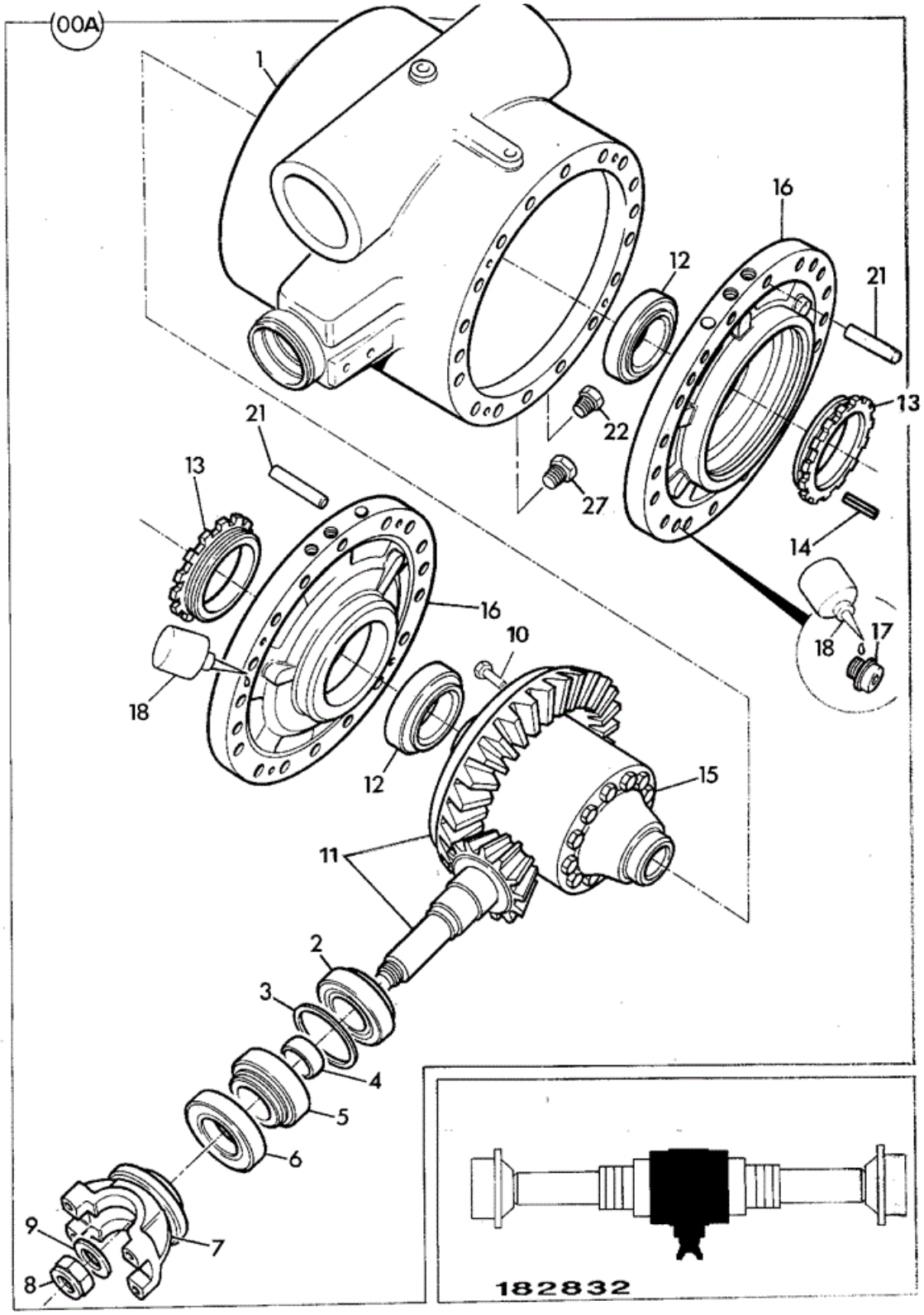

Item	Part No	Change No	Description	Usage Code	QTY

A	450/39200		Differential assembly rear 3.364:1		1
A1	458/11204		Differential assembly rear Use With 892/M4093	A	1
B1	892/M4093		Kit-service axle differentials	A	1
1	:450/24001		Casing differential		1
2	:907/09000		Bearing Roller		1
3	:921/01900		Kit-shim		1
4	:445/03005	to 450/39200/5	Spacer collapsible		1
4	:921/53400		Kit set of spacers From 12.625 To 14.200 Thick		1
5	:907/08300		Bearing Taper Roller		1
6	:904/50023		Seal Triple Lip, To Suit 55.0/54.81 Shaft Blue		1
7	:454/13100	to 450/39200/5	Yoke		1
7	:458/20814		Yoke		1
8	:826/01483	to 450/39200/5	Nut stake and washer M24		1
8	:826/01744		Nut Stake M30		1
10	:826/01080		Bolt		12
11	:458/70035	to 450/39200/5	Gear crown wheel & pinion 11T/37T see TI GEN209		1
11	:458/70252		Gear crownwheel & pinion 11T/37T		1
12	:907/50100		Bearing Taper Roller		2
13	:450/10403		Nut Side Differential		2
14	:826/00818		Pin Tension		2
15	:450/24800		Differential assembly		1
15A	450/28500		Differential assembly Use With 892/M4093	A	1
15B	892/M4093		Kit-service axle differentials	A	1
16	:458/20238		Housing brake piston		2
17	:1392/3407		Capscrew M10 x 25mm		8
18	:4102/1200		Sealant		0
21	:826/00919		Dowel		2
22	:816/80012		Plug Magnetic 3/4"BSP		1
23	:1406/0021		Washer Bonded		2
24	:458/20237	to 450/39200/5	Piston brake c/w 3 M6 holes 220mm x 57.5mm x 130mm bore See G1 section		2
24	:458/M2801		Piston brake c/w 3 M6 holes 220mm x 57.5mm x 134mm bore See G1 section		2
27	:816/80037		Plug Filler 33mm Head, see TI GEN245		1

Applicability Date Ranges:
From: , To:

9812/3020 F2-13-1 DIFFERENTIAL ASSEMBLY, 450/24800

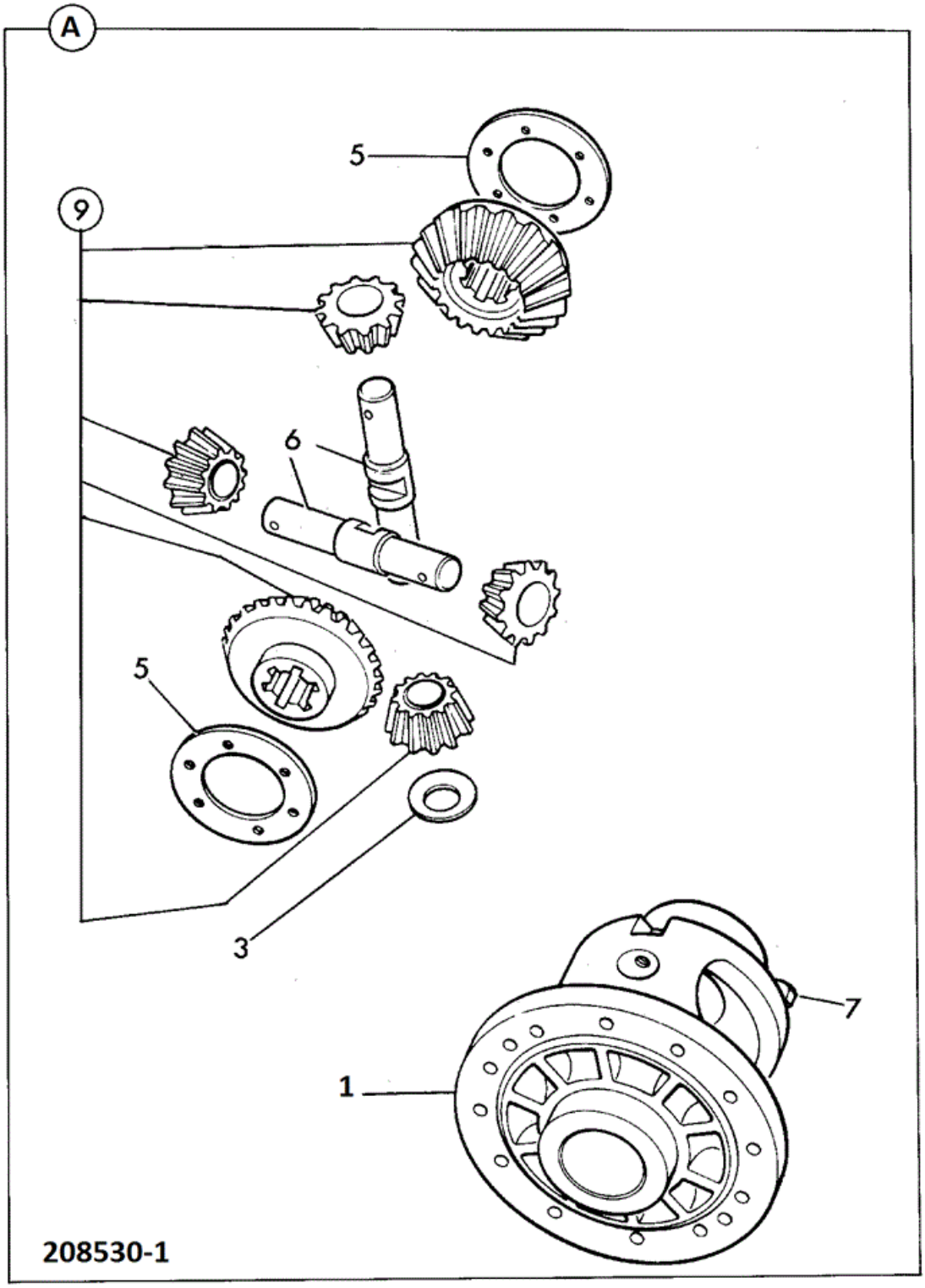

Item	Part No	Change No	Description	Usage Code	QTY

1	450/24800		Differential assembly		1
1A	450/28500		Differential assembly Use With 892/M4093	A	1
1B	892/M4093		Kit-service axle differentials	A	1
2	:450/24900		Casing differential		1
3	:808/00210		Washer thrust Pinion		4
5	:808/00346		Washer differential gear		2
6	:450/10903		Pin trunnion 163mm long		2
7	:1315/3418		Bolt (M10 x 80)		8
9	:450/25000		Gear assembly		1

9812/3020 F1-3-1 DIFFERENTIAL ASSEMBLY, 450/28500

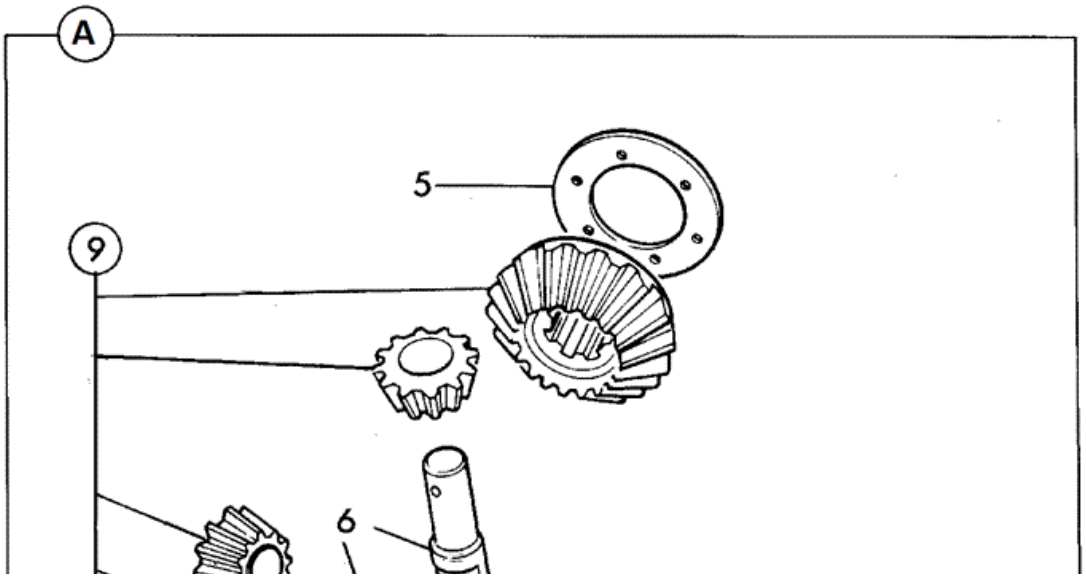

Item	Part No	Change No	Description	Usage Code	QTY
1	450/28500		Differential assembly		1
2	:450/28600		Casing differential		1
3	:808/00210		Washer thrust Pinion		4
5	:808/00346		Washer differential gear		2
6	:458/M3119	from MAY09	Pin Trunnion 151mm Long		2
6	:450/10903		Pin trunnion 163mm long Service replacement		2
7	:1315/3418		Bolt (M10 x 80)		8
9	:450/28700		Gear assembly		1

Applicability Date Ranges:
From: , To:

Product Catalog\WHEELED LOADERS\416 01243000-01243499,01317500-01317999,01472000-01472999,02095872-02095875 9812/3020 \F AXLES, WHEELS & TRANSMISSION\F02 AXLES, REAR\F1-3-1 DIFFERENTIAL ASSEMBLY, 450/28500

9812/3020 F2-13-1 DIFFERENTIAL ASSEMBLY, 450/24800

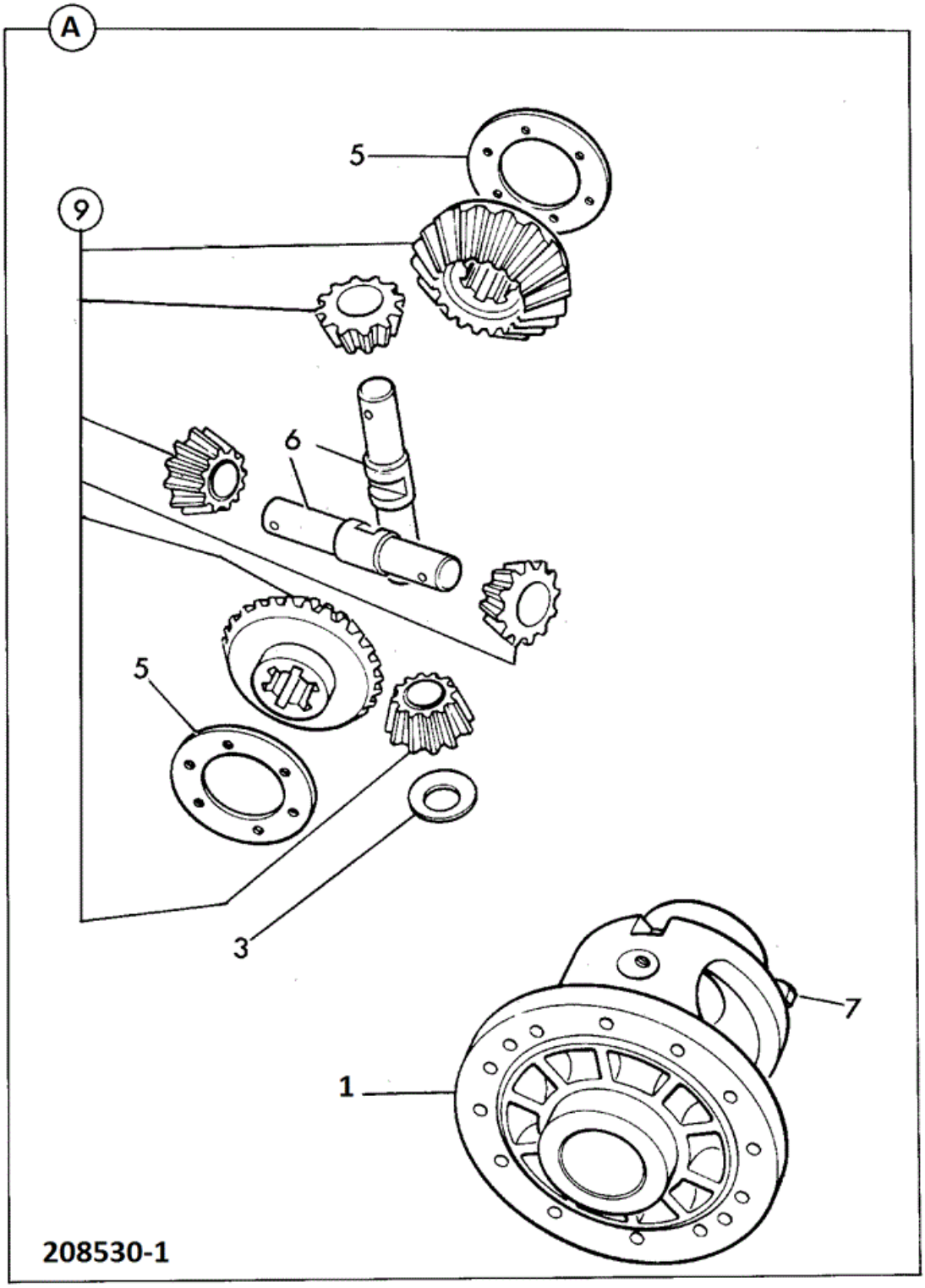

Item	Part No	Change No	Description	Usage Code	QTY

1	450/24800		Differential assembly		1
1A	450/28500		Differential assembly Use With 892/M4093	A	1
1B	892/M4093		Kit-service axle differentials	A	1
2	:450/24900		Casing differential		1
3	:808/00210		Washer thrust Pinion		4
5	:808/00346		Washer differential gear		2
6	:450/10903		Pin trunnion 163mm long		2
7	:1315/3418		Bolt (M10 x 80)		8
9	:450/25000		Gear assembly		1

9812/3020 F1-3-1 DIFFERENTIAL ASSEMBLY, 450/28500

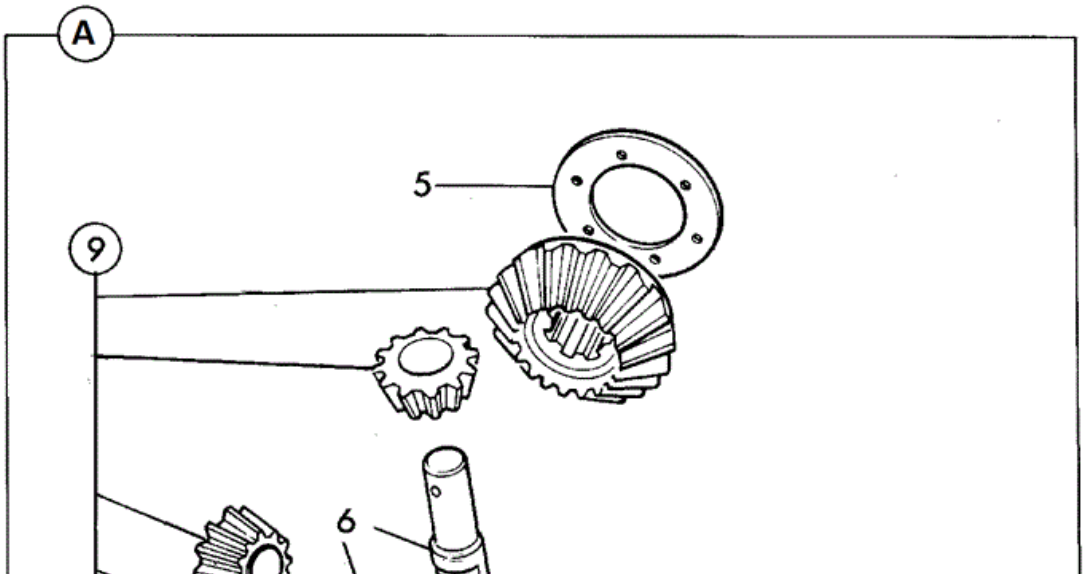

Item	Part No	Change No	Description	Usage Code	QTY
1	450/28500		Differential assembly		1
2	:450/28600		Casing differential		1
3	:808/00210		Washer thrust Pinion		4
5	:808/00346		Washer differential gear		2
6	:458/M3119	from MAY09	Pin Trunnion 151mm Long		2
6	:450/10903		Pin trunnion 163mm long Service replacement		2
7	:1315/3418		Bolt (M10 x 80)		8
9	:450/28700		Gear assembly		1

Applicability Date Ranges:
From: , To:

Product Catalog\WHEELED LOADERS\416 01243000-01243499,01317500-01317999,01472000-01472999,02095872-02095875 9812/3020 \F AXLES, WHEELS & TRANSMISSION\F02 AXLES, REAR\F2-14-1 HUB & COMPONENTS 450/24400

9812/3020 F2-14-1 HUB & COMPONENTS 450/24400

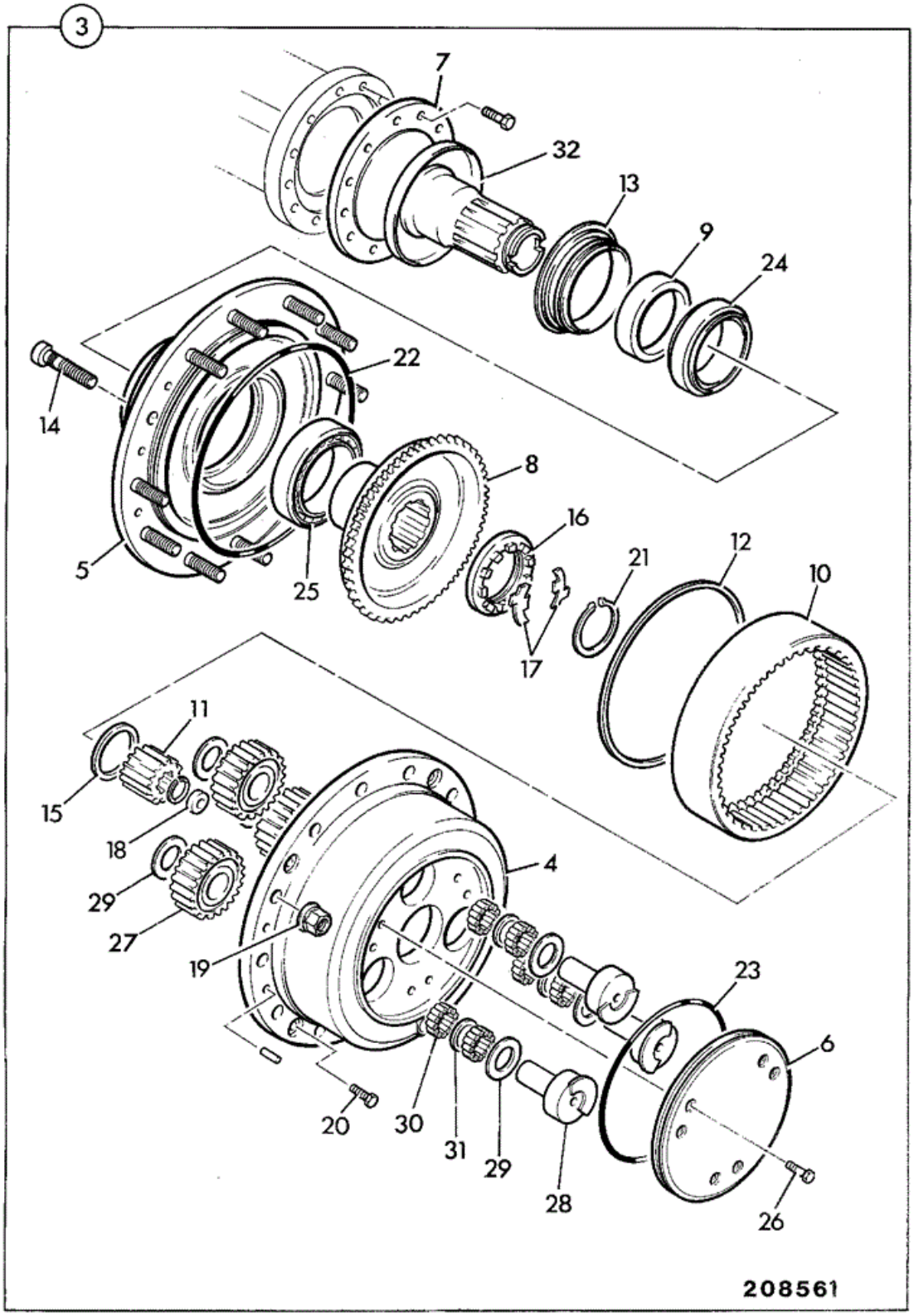

Item	Part No	Change No	Description	Usage Code	QTY

3	450/24400		Hub assembly		2
4	:450/24401		Carrier planetary hub		1
5	:450/24402		Housing bearing		1
6	:450/24403		Cover gears		1
7	:450/24404		Coupling hub		1
8	:450/24405		Carrier annulus		1
9	:450/24430		Kit Seal & spacer 127 x 160 x15.5		1
10	:450/24407		Gear annulus ring		1
11	:450/24408		Gear sun		1
12	:450/24409		Ring snap		1
13	:904/50032		Seal wheel hub 130 x 160 x15.5-18		1
14	:450/24431		Stud wheel		12
15	:450/24412		Washer thrust		1
16	:450/24413		Nut castle		2
17	:450/24414		Plate locking		2
18	:450/24415		Stop shaft		1
19	:826/01450		Nut wheel		12
19	826/11355		Nut Wheel Yellow Finish Yellow surface finish		12
20	:450/24417		Screw hex hd.		6
21	:450/24418		Ring snap		1
22	:450/24419		Seal oil		1
23	:450/24420		Seal oil		1
24	:450/24421		Bearing taper roller		1
25	:450/24422		Bearing taper roller		1
26	:450/24423		Bolt M8 x 25		4
27	:450/24425		Gear planet		3
28	:450/24428		Shaft planet gear		3
29	:450/24424		Washer thrust		6
30	:450/24426		Bearing needle roller 25 off/gear		150
31	:450/24427		Spacer		3
32	:450/24429		Cover dust		1
33	:10/906479		Plug C/w O ring		1

Applicability Date Ranges:
From: , To:

Product Catalog\WHEELED LOADERS\416 01243000-01243499,01317500-01317999,01472000-01472999,02095872-02095875 9812/3020 \F AXLES, WHEELS & TRANSMISSION\F02 AXLES, REAR\F2-21-1 AXLE ASSEMBLY REAR L.S.D. PD90, 450/43800

9812/3020 F2-21-1 AXLE ASSEMBLY REAR L.S.D. PD90, 450/43800

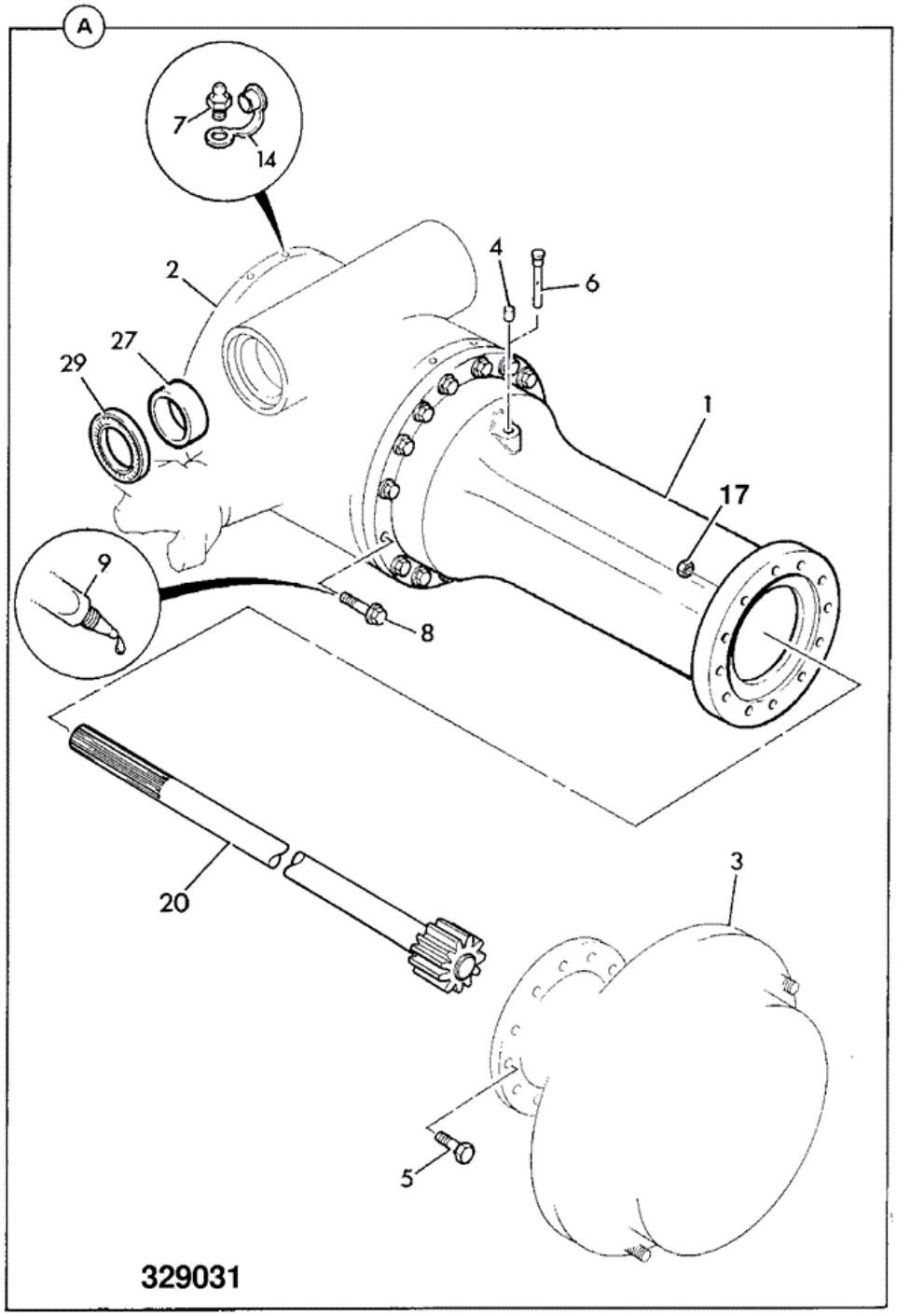

Item	Part No	Change No	Description	Usage Code	QTY
A	450/43800		Axle assemby PD90 PD90L 194P 51PXX3 Changed from yellow to black from M1243141		1
1	:450/23002	Superseded	Casing axle arm		2

1	:458/M2376		Casing axle arm		2
2	:458/11098	Superseded	Differential assembly rear See F2-22-1 for components		1
2	:458/11203	>A/43800/6	Differential assembly rear See F2-22-2 for components		1
3	:450/25900		Hub assembly		2
4	:450/13302		Plug Breather		1
5	:826/01504		Bolt M20 x 70mm long		32
6	:450/13001		Breather extension		1
6	:453/00303		Breather Nylon Black Replaces 450/13001		1
7	:816/60040		Nipple Screw		2
8	:826/01083		Bolt flanged		28
9	:4102/1200		Sealant		0
14	:835/00017		Cap Grease Nipple		2
17	:1371/0701		Nut		32
20	:450/29101		Shaft drive		2
21	:821/00216		Circlip external		2
23	:1371/0701		Nut		32
27	:808/00340		Bearing liner axle pivot		2
29	:904/50026		Seal axle pivot		2
99	269/10043		G.A.		1

Applicability Date Ranges:
From: , To: 06/09/2011

Product Catalog\WHEELED LOADERS\416 01243000-01243499,01317500-01317999,01472000-01472999,02095872-02095875 9812/3020 \F AXLES, WHEELS & TRANSMISSION\F02 AXLES, REAR\F2-22-1 DRIVEHEAD, ASSEMBLY 458/11098

9812/3020 F2-22-1 DRIVEHEAD, ASSEMBLY 458/11098

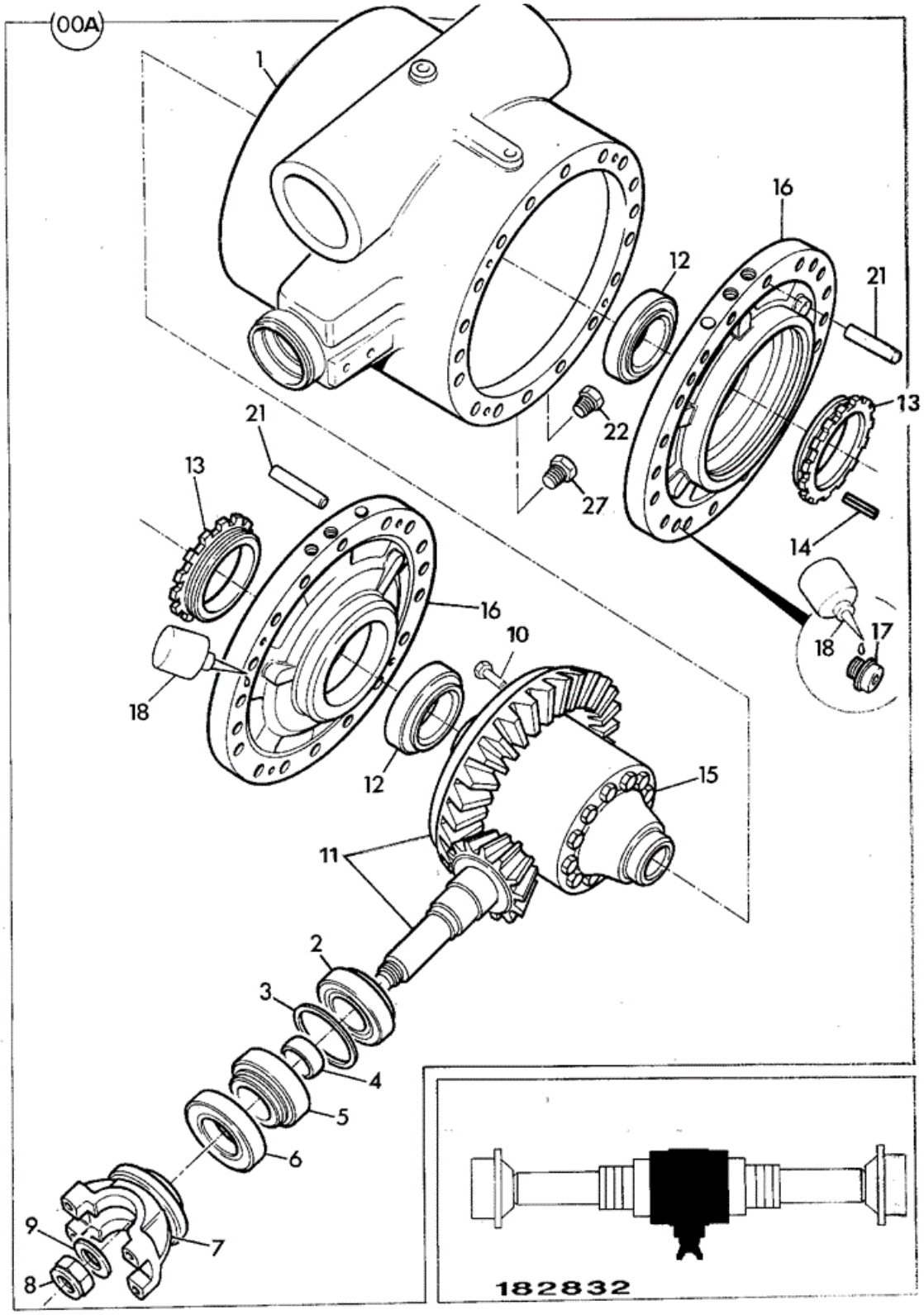

Item	Part No	Change No	Description	Usage Code	QTY

A	458/11098		Differential assembly rear		1
1	:450/24001		Casing differential		1
2	:907/09000		Bearing Roller		1
3	:921/01900		Kit-shim		1
4	:921/53400		Kit set of spacers From 12.625 To 14.200 Thick		1
5	:907/08300		Bearing Taper Roller		1
6	:904/50023		Seal Triple Lip, To Suit 55.0/54.81 Shaft Blue		1
7	:458/20814		Yoke		1
8	:826/01744		Nut Stake M30		1
9	****		'See Remark' Not reqd, part of item 8		1
10	:826/01080		Bolt		12
11	:458/20672		Gear crown wheel & pinion 11/37T		1
12	:907/50100		Bearing Taper Roller		2
13	:450/10403		Nut Side Differential		2
14	:826/00818		Pin Tension		2
15	:450/28800		Differential assembly		1
16	:458/20238		Housing brake piston		2
17	:1392/3407		Capscrew M10 x 25mm		8
18	:4102/1200		Sealant		0
21	:826/00919		Dowel		4
22	:816/80012		Plug Magnetic 3/4"BSP		1
23	:1406/0021		Washer Bonded		2
27	:816/80037		Plug Filler 33mm Head, see TI GEN245		1

Applicability Date Ranges:
From: , To:

Product Catalog\WHEELED LOADERS\416 01243000-01243499,01317500-01317999,01472000-01472999,02095872-02095875 9812/3020 \F AXLES, WHEELS & TRANSMISSION\F02 AXLES, REAR\F2-22-2 DRIVEHEAD, ASSEMBLY 458/11203

9812/3020 F2-22-2 DRIVEHEAD, ASSEMBLY 458/11203

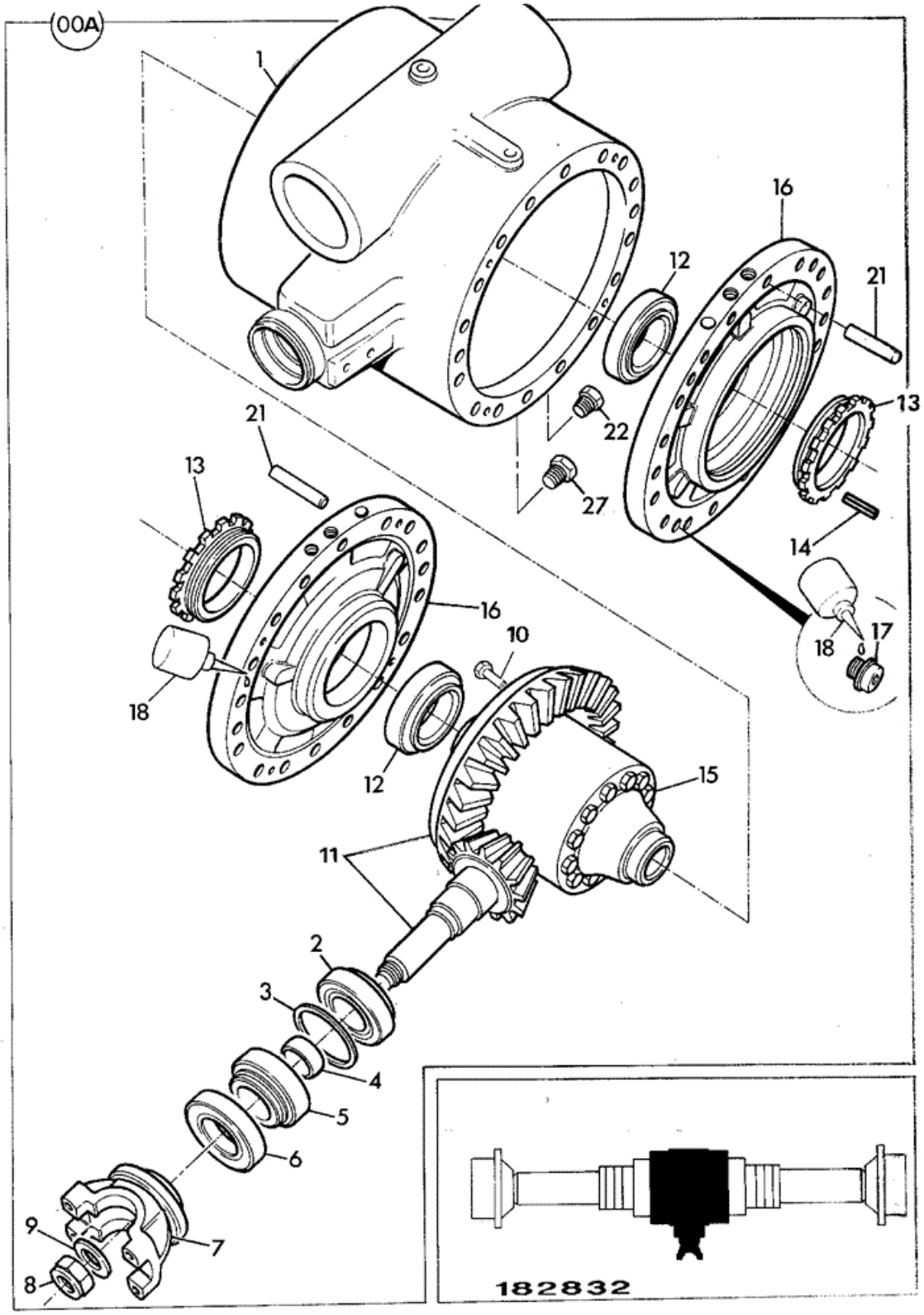

Item	Part No	Change No	Description	Usage Code	QTY

A	458/11203		Differential assembly rear		1
1	:450/24001		Casing differential		1
2	:907/09000		Bearing Roller		1
3	:921/01900		Kit-shim		1
4	:921/53400		Kit set of spacers From 12.625 To 14.200 Thick		1
5	:907/08300		Bearing Taper Roller		1
6	:904/50023		Seal Triple Lip, To Suit 55.0/54.81 Shaft Blue		1
7	:458/20814		Yoke		1
8	:826/01744		Nut Stake M30		1
9	****		'See Remark' Not reqd, part of item 8		1
10	:826/01080		Bolt		12
11	:458/70252		Gear crownwheel & pinion 11T/37T		1
12	:907/50100		Bearing Taper Roller		2
13	:450/10403		Nut Side Differential		2
14	:826/00818		Pin Tension		2
15	:450/28800		Differential assembly		1
16	:458/20238		Housing brake piston		2
17	:1392/3407		Capscrew M10 x 25mm		8
18	:4102/1200		Sealant		0
21	:826/00919		Dowel		4
22	:816/80012		Plug Magnetic 3/4"BSP		1
23	:1406/0021		Washer Bonded		2
27	:816/80037		Plug Filler 33mm Head, see TI GEN245		1

Applicability Date Ranges:
From: , To:

Product Catalog\WHEELED LOADERS\416 01243000-01243499,01317500-01317999,01472000-01472999,02095872-02095875 9812/3020 \F AXLES, WHEELS & TRANSMISSION\F02 AXLES, REAR\F2-23-1 DIFFERENTIAL COMPONENTS, LSD 450/28800

9812/3020 F2-23-1 DIFFERENTIAL COMPONENTS, LSD 450/28800

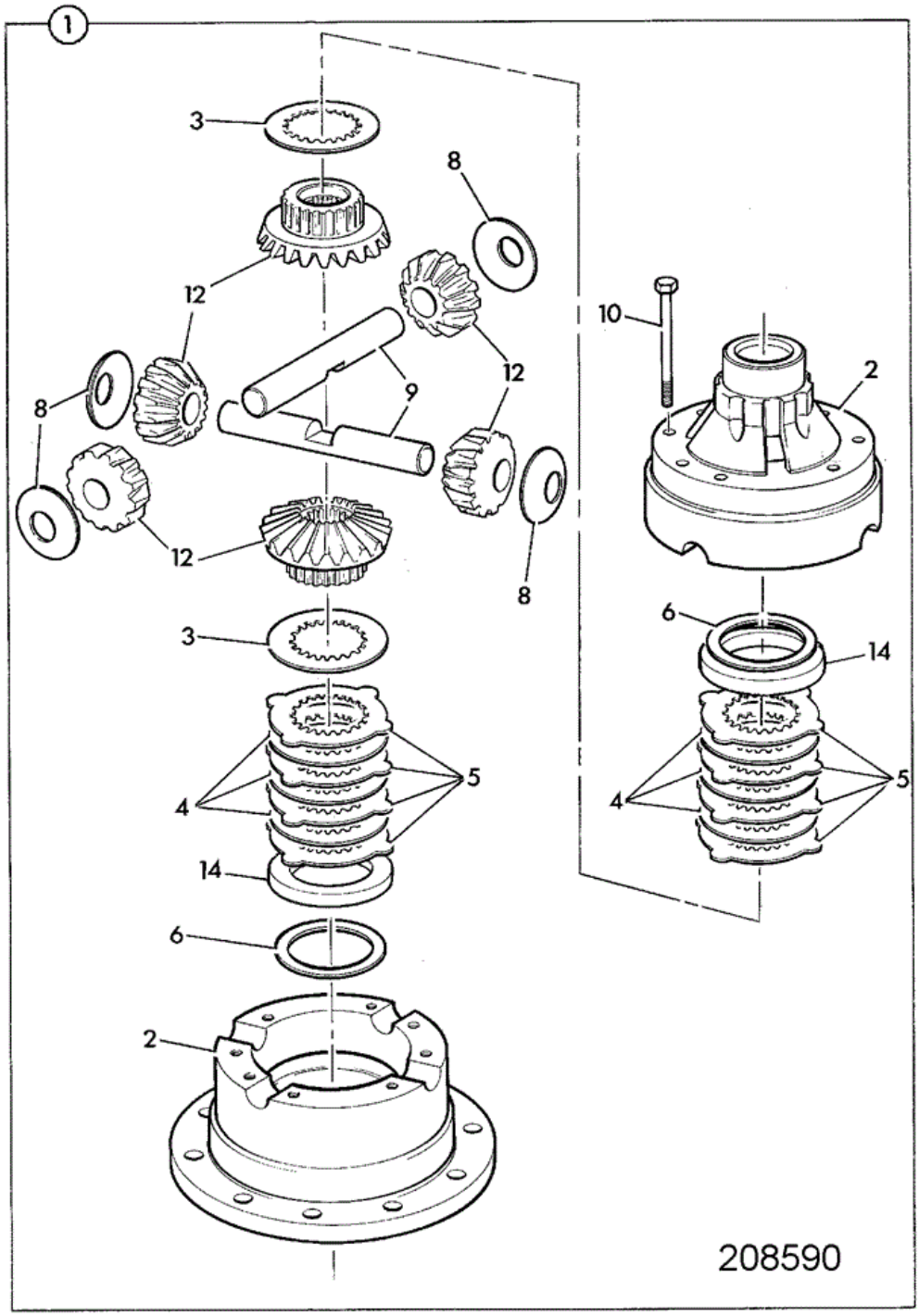

Item	Part No	Change No	Description	Usage Code	QTY
1	450/28800		Differential assembly		1
2	:450/28900	Superseded	Casing assembly differential		1

2	:458/M2844		Casing assembly differential Item 14 not required		1
3	:450/20401		Plate pressure		2
4	:450/20402		Plate friction		6
5	:450/20403		Plate counter		8
6	:921/52100		Kit shim		2
8	:808/00210		Washer thrust Pinion		4
9	:458/M3119	from MAY09	Pin Trunnion 151mm Long		2
9	:450/10903		Pin trunnion 163mm long Service replacement		2
10	:1315/3418		Bolt (M10 x 80)		8
12	:450/29000		Gear set differential		1
14	:450/26201		Spacer		2

Applicability Date Ranges:
From: , To:

Product Catalog\WHEELED LOADERS\416 01243000-01243499,01317500-01317999,01472000-01472999,02095872-02095875 9812/3020 \F AXLES, WHEELS & TRANSMISSION\F02 AXLES, REAR\F2-30-1 AXLE PIVOT REAR SMOOTHSHIFT

9812/3020 F2-30-1 AXLE PIVOT REAR SMOOTHSHIFT

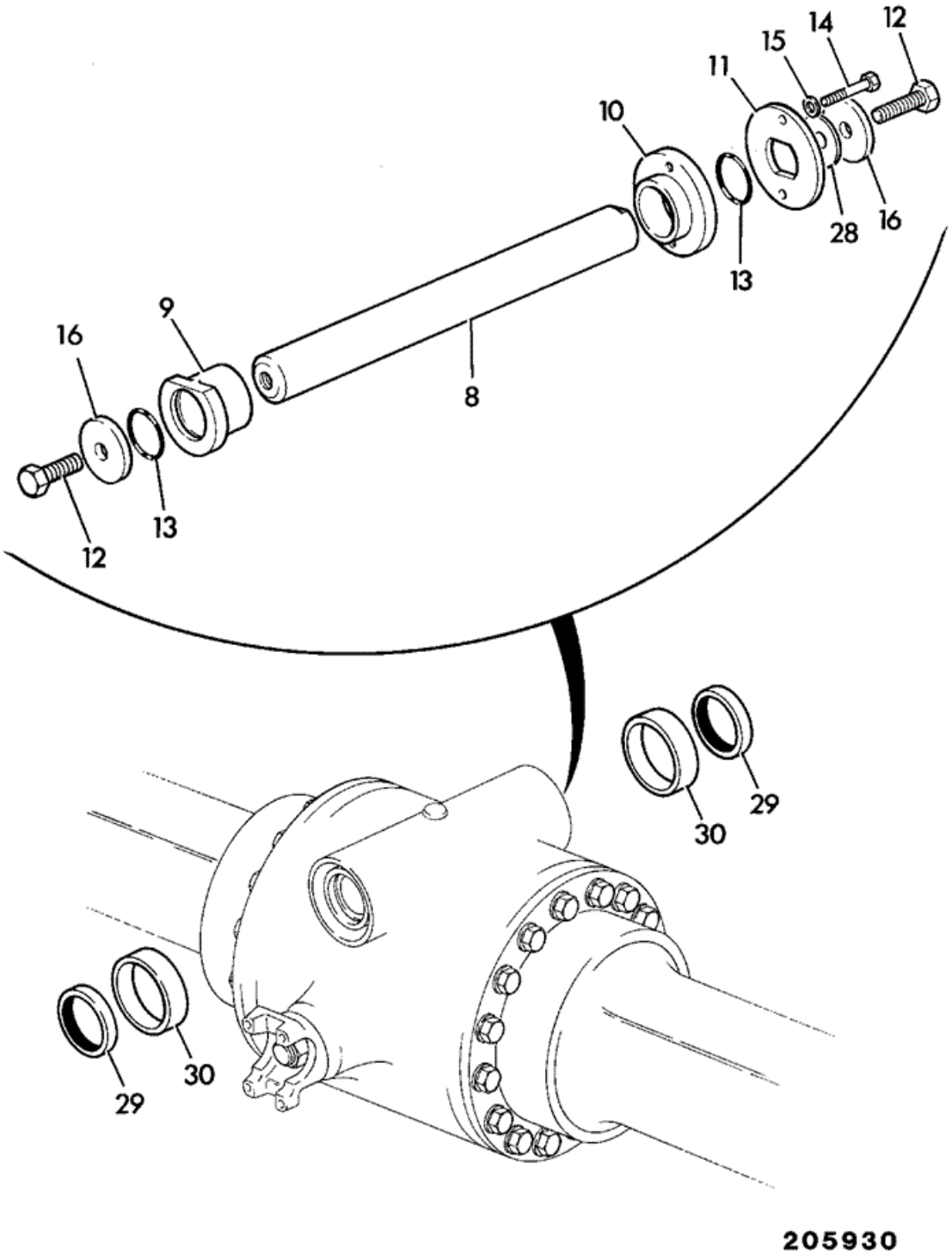

Item	Part No	Change No	Description	Usage Code	QTY

8	811/60034		Pin pivot rear axle		1
9	265/00228		Housing pivot pin axle		1
10	265/00231		Housing pivot pin axle		1
11	265/00232		Plate locking axle pin		1
12	1315/3816Z		Bolt M20 x 70		4
13	2302/0307		O Ring		2
14	1315/3516Z		Bolt M12 x 70mm		2
15	1420/0009Z		Washer (M12)		2
16	829/00437		Washer pivot pin		2
28	819/00095		Shim 54mmo/d x 21mmi/d x 0.5/0.6mm		0
29	****		'See Remark' See Rear Axle page for details		2
30	****		'See Remark' See Rear Axle page for details		2

Applicability Date Ranges:
From: , To:

Product Catalog\WHEELED LOADERS\416 01243000-01243499,01317500-01317999,01472000-01472999,02095872-02095875 9812/3020 \F AXLES, WHEELS & TRANSMISSION\F02 AXLES, REAR\F2-31-1 AXLE ASSEMBLY REAR L.S.D. PD90, 450/39500

9812/3020 F2-31-1 AXLE ASSEMBLY REAR L.S.D. PD90, 450/39500

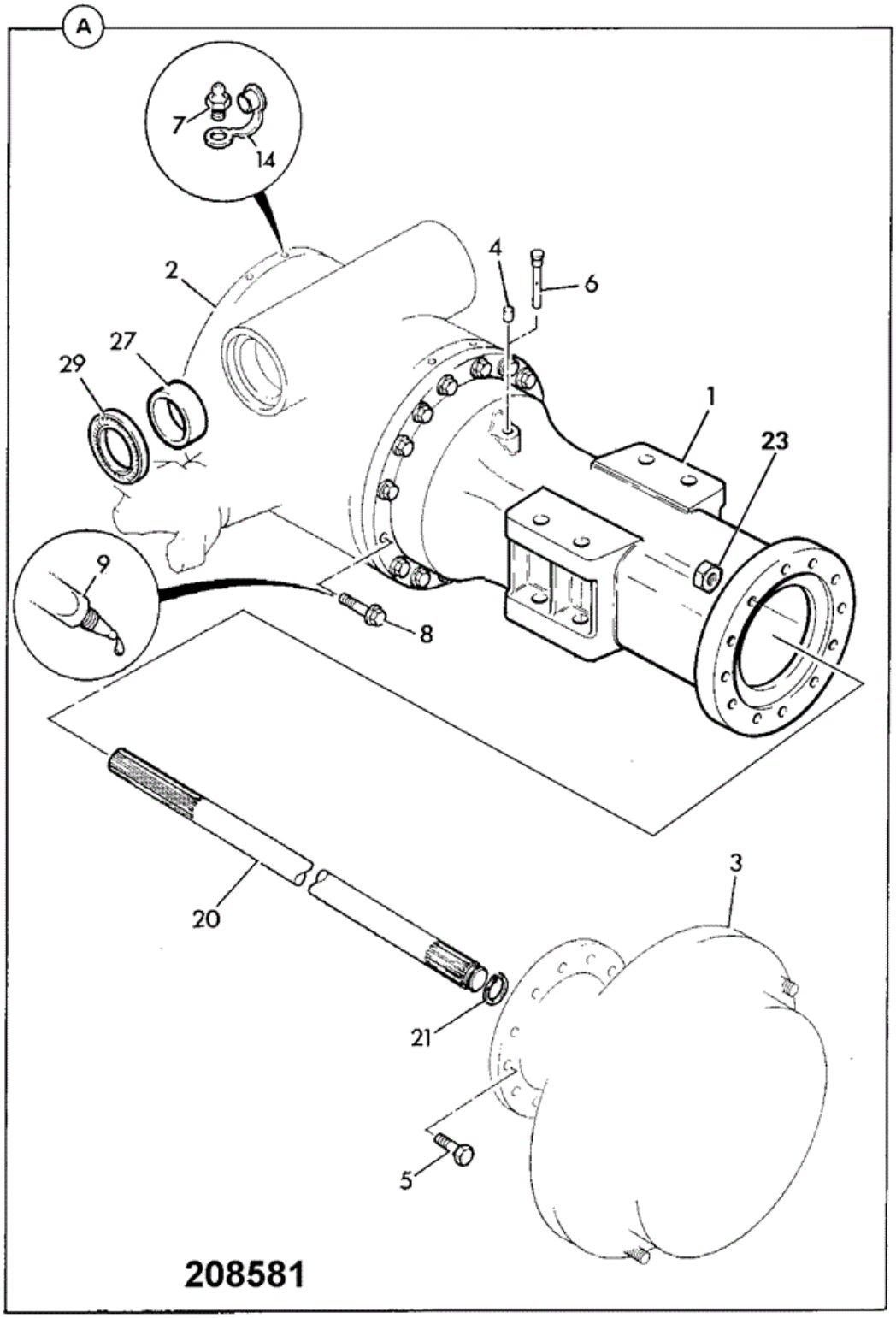

Item	Part No	Change No	Description	Usage Code	QTY

A	450/39500		Axle rear PD90 20.18:1		1
1	:450/23002	Superseded	Casing axle arm		2
1	:458/M2376		Casing axle arm		2
2	:450/39600		Differential assembly rear 3.364:1 LSD		1
3	:450/24400		Hub assembly		2
4	:450/13302		Plug Breather		1
5	:826/01504		Bolt M20 x 70mm long		32
6	:450/13001		Breather extension		1
7	:816/60040		Nipple Screw		2
8	:826/01083		Bolt flanged		28
9	:4102/1200		Sealant		0
14	:835/00017		Cap Grease Nipple		2
17	:1371/0701		Nut		32
20	:450/22902		Shaft drive		2
21	:821/00216		Circlip external		2
23	1371/0701		Nut		32
27	:808/00340		Bearing liner axle pivot		2
29	:904/50026		Seal axle pivot		2
99	269/10043		G.A.		1

Applicability Date Ranges:
From: , To:

Product Catalog\WHEELED LOADERS\416 01243000-01243499,01317500-01317999,01472000-01472999,02095872-02095875 9812/3020 \F AXLES, WHEELS & TRANSMISSION\F02 AXLES, REAR\F2-32-1 DRIVEHEAD, ASSEMBLY 450/39600

9812/3020 F2-32-1 DRIVEHEAD, ASSEMBLY 450/39600

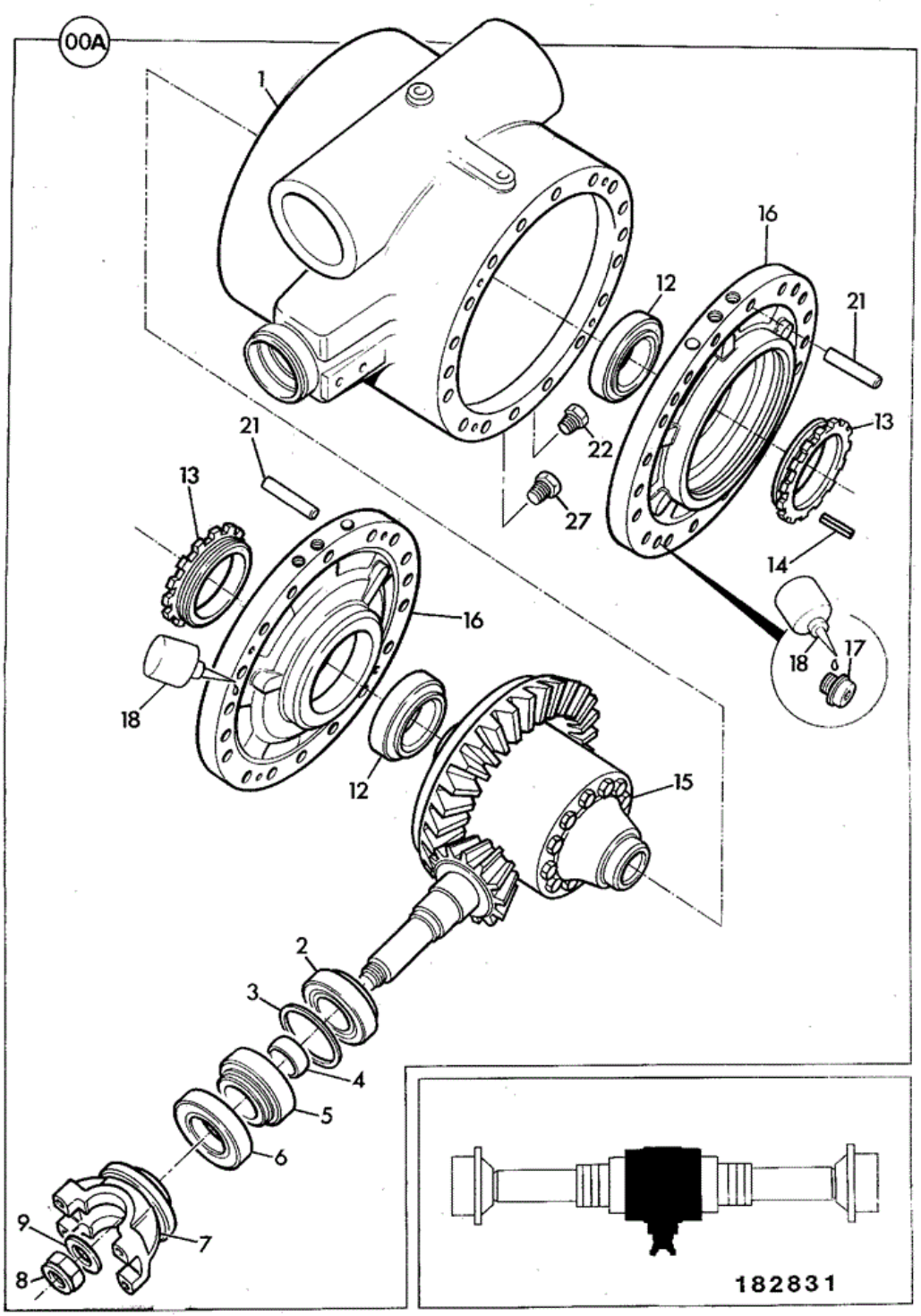

Item	Part No	Change No	Description	Usage Code	QTY
A	450/39600		Differential assembly rear 3.364:1 LSD		1
1	:450/24001		Casing differential		1

2	:907/09000		Bearing Roller		1
3	:921/01900		Kit-shim		1
4	:445/03005		Spacer collapsible		1
5	:907/08300		Bearing Taper Roller		1
6	:904/50023		Seal Triple Lip, To Suit 55.0/54.81 Shaft Blue		1
7	:454/13100		Yoke		1
8	:826/01483		Nut stake and washer M24		1
9	****		'See Remark' Not reqd, part of item 8		1
10	:826/01080		Bolt		12
11	:453/00900		Gear crown wheel & pinion 11T/37T		1
12	:907/50100		Bearing Taper Roller		2
13	:450/10403		Nut Side Differential		2
14	:826/00818		Pin Tension		2
15	:450/25100		Differential assembly		1
16	:458/20238		Housing brake piston		2
17	:1392/3407		Capscrew M10 x 25mm		8
18	:4102/1200		Sealant		0
21	:826/00919		Dowel		4
22	:816/80012		Plug Magnetic 3/4"BSP		1
23	:1406/0021		Washer Bonded		2
27	:816/80037		Plug Filler 33mm Head, see TI GEN245		1

Applicability Date Ranges:
From: , To: SEPT2011

9812/3020 F2-33-1 DIFFERENTIAL ASSEMBLY, 450/25100

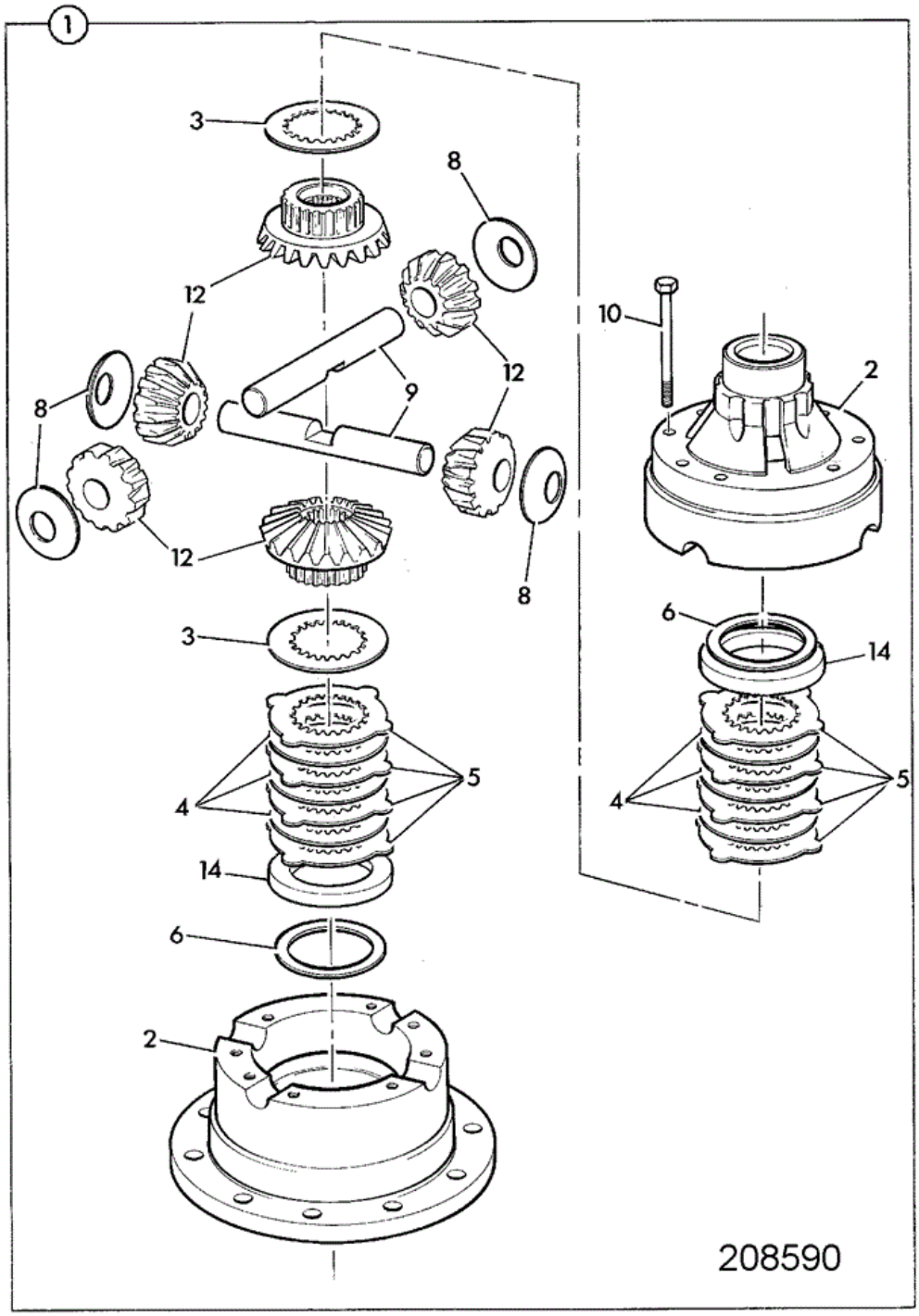

Item	Part No	Change No	Description	Usage Code	QTY
1	450/25100		Differential assembly		1
2	:450/20500		Casing NLA see bulletin GEN252		1

3	:450/20401		Plate pressure		2
4	:450/20402		Plate friction		6
5	:450/20403		Plate counter		8
6	:921/52100		Kit shim		2
8	:808/00210		Washer thrust Pinion		4
9	:450/10903		Pin trunnion 163mm long		2
10	:1315/3418		Bolt (M10 x 80)		8
12	:450/25200		Gear set differential		1
14	:450/26201		Spacer		2

Applicability Date Ranges:
From: , To:

Product Catalog\WHEELED LOADERS\416 01243000-01243499,01317500-01317999,01472000-01472999,02095872-02095875 9812/3020 \F AXLES, WHEELS & TRANSMISSION\F02 AXLES, REAR\F2-61-1 AXLE ASSEMBLY REAR, SWEDEN L.S.D. PD90, 450/44080, 50 KPH

9812/3020 F2-61-1 AXLE ASSEMBLY REAR, SWEDEN L.S.D. PD90, 450/44080, 50 KPH

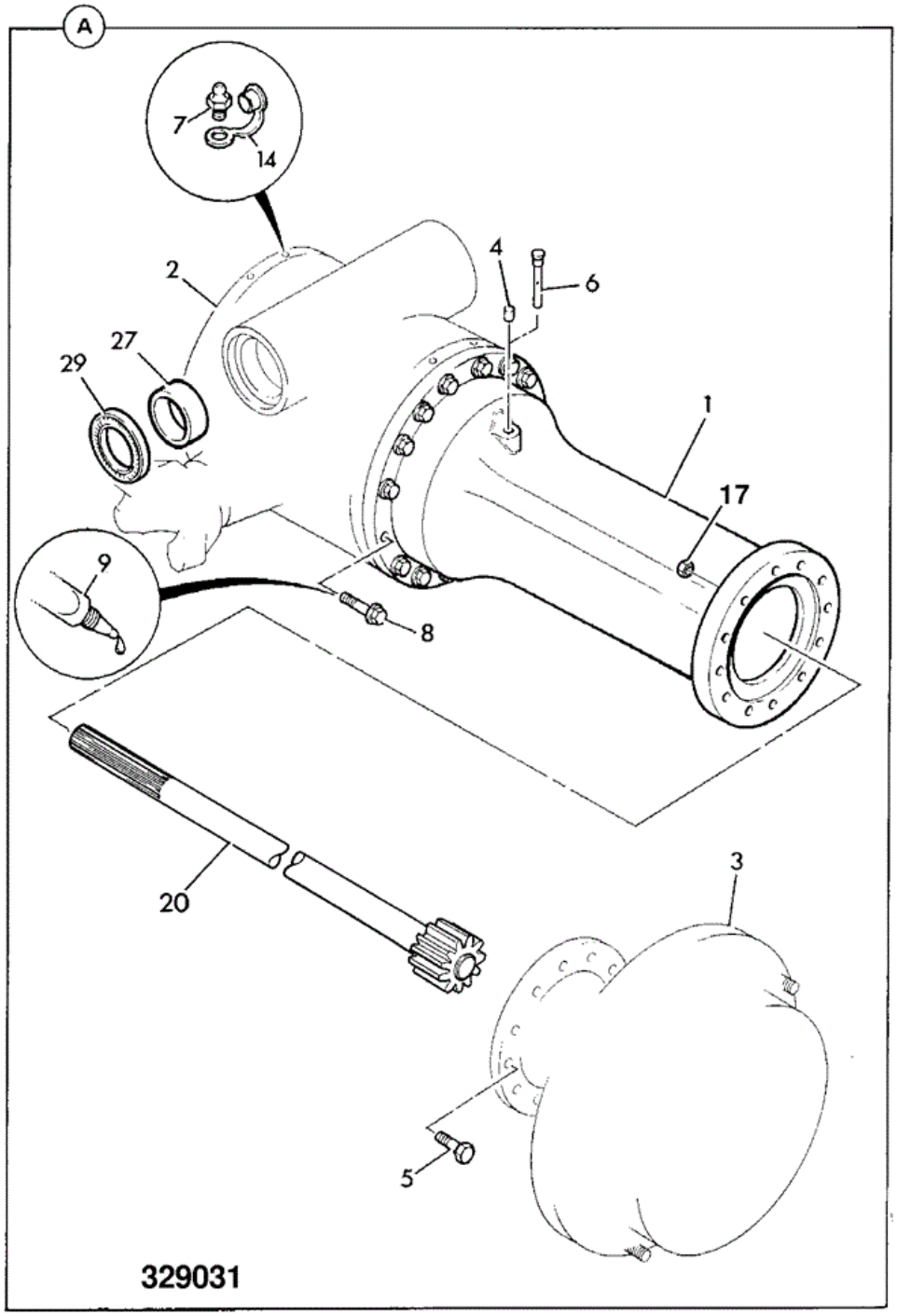

Item	Part No	Change No	Description	Usage Code	QTY
			Axle assembly, 15.23:1 LSD, 50kph		

A	450/44080		Changed from yellow to black from M1243141		1
1	:450/23002	Superseded	Casing axle arm		2
1	:458/M2376		Casing axle arm		2
2	:458/11065	Superseded	Drivehead assembly, pin mount 2.538:1, LSD See F2-62-1 for components		1
2	:458/11191	>A/44080/5	Drivehead assembly See F2-62-2 for components		1
3	:450/25900		Hub assembly		2
4	:450/13302		Plug Breather		1
5	:826/01504		Bolt M20 x 70mm long		32
6	:450/13001		Breather extension		1
6	:453/00303		Breather Nylon Black Replaces 450/13001		1
7	:816/60040		Nipple Screw		2
8	:826/01083		Bolt flanged		28
9	:4102/1200		Sealant		0
14	:835/00017		Cap Grease Nipple		2
17	:1371/0701		Nut		32
20	:450/29101		Shaft drive		2
21	:821/00216		Circlip external		2
27	:808/00340		Bearing liner axle pivot		2
29	:904/50026		Seal axle pivot		2
99	269/10043		G.A.		1

Applicability Date Ranges:
From: , To: 06/09/2011

Product Catalog\WHEELED LOADERS\416 01243000-01243499,01317500-01317999,01472000-01472999,02095872-02095875 9812/3020 \F AXLES, WHEELS & TRANSMISSION\F02 AXLES, REAR\F2-62-1 DRIVEHEAD, ASSEMBLY 458/11065

9812/3020 F2-62-1 DRIVEHEAD, ASSEMBLY 458/11065

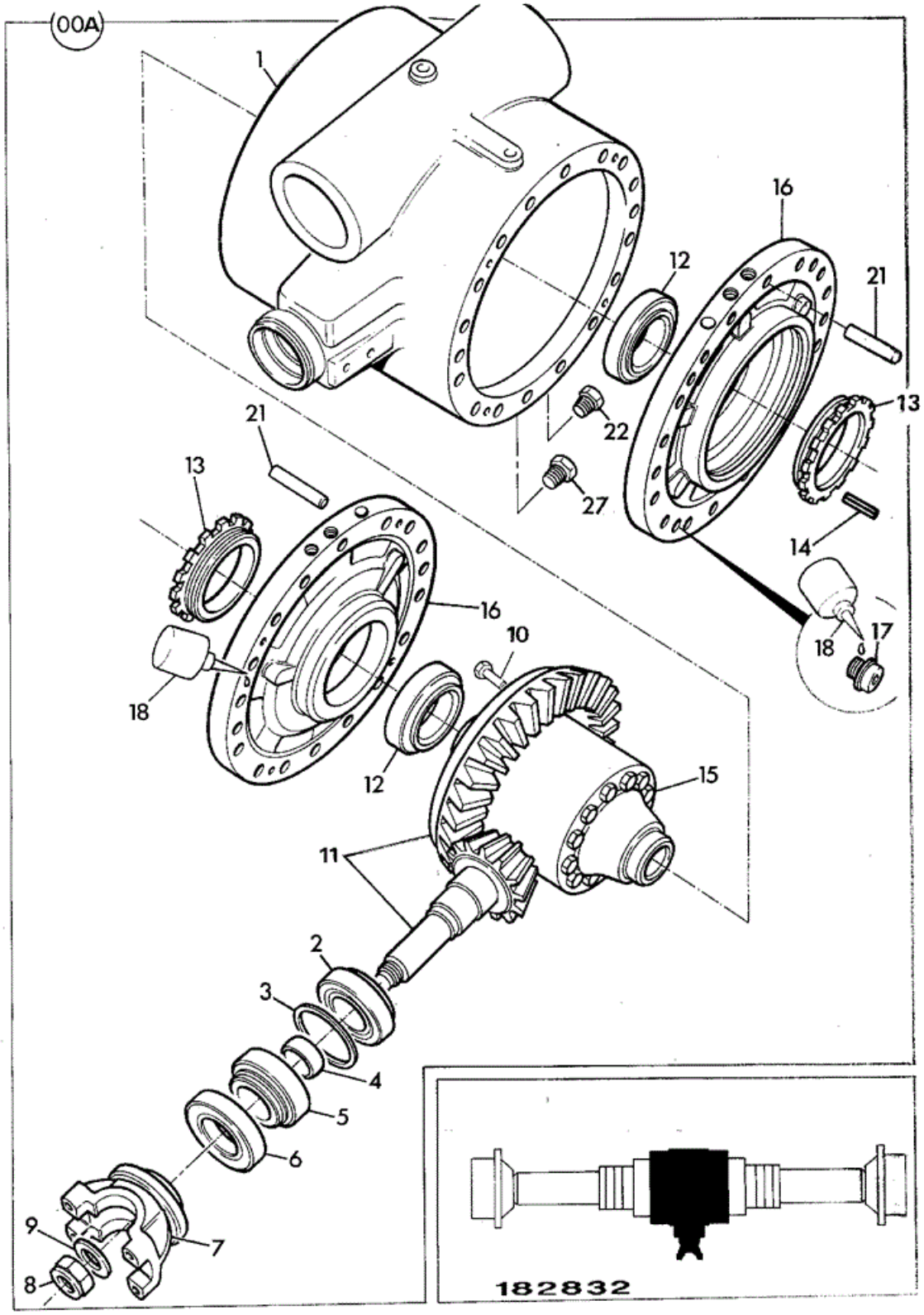

Item	Part No	Change No	Description	Usage Code	QTY

A	458/11065		Drivehead assembly, pin mount 2.538:1, LSD		1
1	:450/24001		Casing differential		1
2	:907/09000		Bearing Roller		1
3	:921/01900		Kit-shim		1
4	:921/53400		Kit set of spacers From 12.625 To 14.200 Thick		1
5	:907/08300		Bearing Taper Roller		1
6	:904/50023		Seal Triple Lip, To Suit 55.0/54.81 Shaft Blue		1
7	:458/20814		Yoke		1
8	:826/01744		Nut Stake M30		1
9	****		'See Remark' Not reqd, part of item 8		1
10	:826/01080		Bolt		12
11	:458/70260		Gear Crown Wheel & Pinion 13T/33T		1
12	:907/50100		Bearing Taper Roller		2
13	:450/10403		Nut Side Differential		2
14	:826/00818		Pin Tension		2
15	:450/28800		Differential assembly		1
16	:458/20238		Housing brake piston		2
17	:1392/3407		Capscrew M10 x 25mm		8
18	:4102/1200		Sealant		0
21	:826/00919		Dowel		4
22	:816/80012		Plug Magnetic 3/4"BSP		1
23	:1406/0021		Washer Bonded		2
27	:816/80037		Plug Filler 33mm Head, see TI GEN245		1

Applicability Date Ranges:
From: , To:

Product Catalog\WHEELED LOADERS\416 01243000-01243499,01317500-01317999,01472000-01472999,02095872-02095875 9812/3020 \F AXLES, WHEELS & TRANSMISSION\F02 AXLES, REAR\F2-62-2 DRIVEHEAD, ASSEMBLY 458/11191

9812/3020 F2-62-2 DRIVEHEAD, ASSEMBLY 458/11191

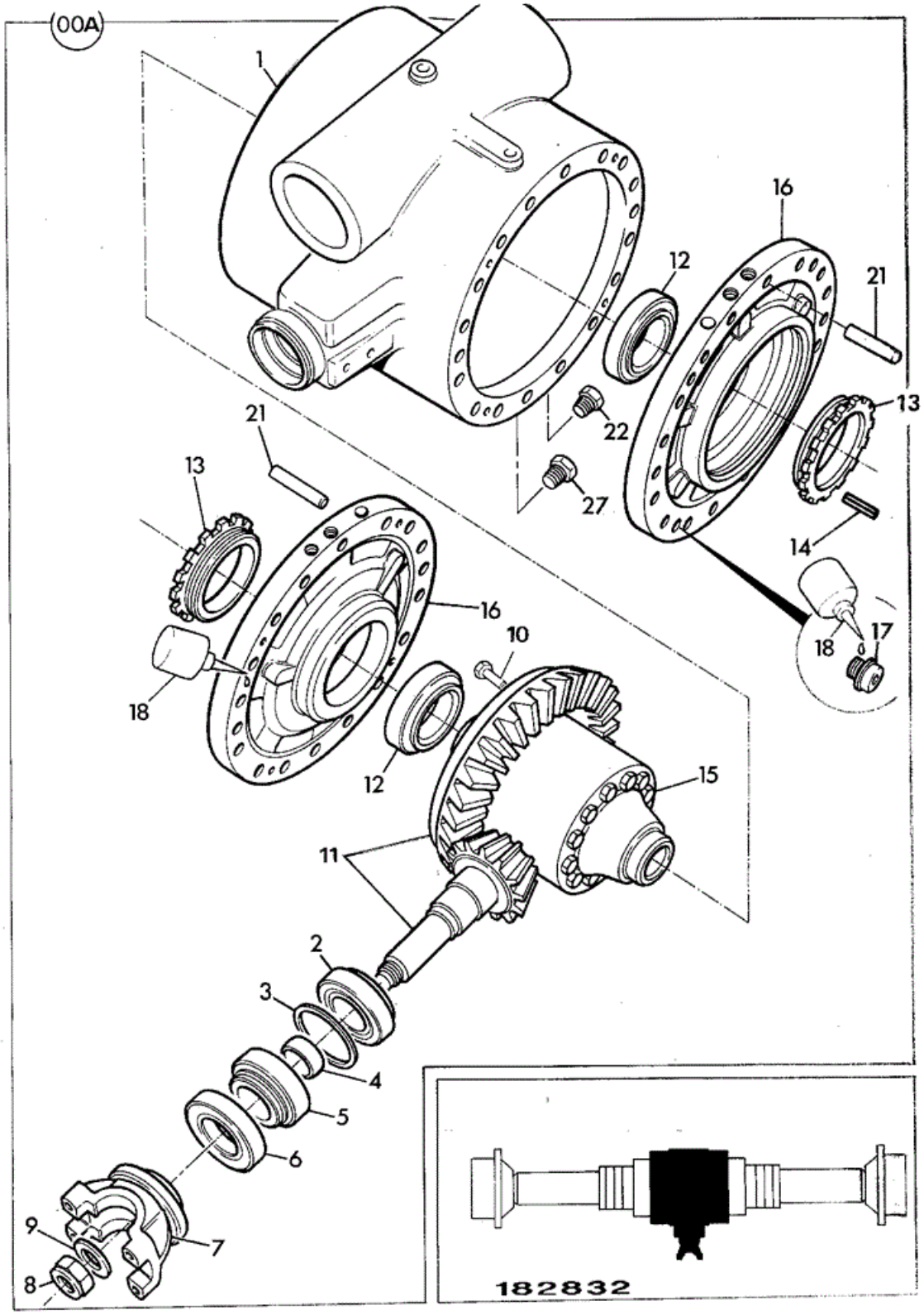

Item	Part No	Change No	Description	Usage Code	QTY

A	458/11191		Drivehead assembly		1
1	:450/24001		Casing differential		1
2	:907/09000		Bearing Roller		1
3	:921/01900		Kit-shim		1
4	:921/53400		Kit set of spacers From 12.625 To 14.200 Thick		1
5	:907/08300		Bearing Taper Roller		1
6	:904/50023		Seal Triple Lip, To Suit 55.0/54.81 Shaft Blue		1
7	:458/20814		Yoke		1
8	:826/01744		Nut Stake M30		1
9	****		'See Remark' Not reqd, part of item 8		1
10	:826/01080		Bolt		12
11	:458/70246		Gear Crown Wheel and Pinion, 13T/33T		1
12	:907/50100		Bearing Taper Roller		2
13	:450/10403		Nut Side Differential		2
14	:826/00818		Pin Tension		2
15	:450/28800		Differential assembly		1
16	:458/20238		Housing brake piston		2
17	:1392/3407		Capscrew M10 x 25mm		8
18	:4102/1200		Sealant		0
21	:826/00919		Dowel		4
22	:816/80012		Plug Magnetic 3/4"BSP		1
23	:1406/0021		Washer Bonded		2
27	:816/80037		Plug Filler 33mm Head, see TI GEN245		1

Applicability Date Ranges:
From: , To:

Product Catalog\WHEELED LOADERS\416 01243000-01243499,01317500-01317999,01472000-01472999,02095872-02095875 9812/3020 \F AXLES, WHEELS & TRANSMISSION\F03 WHEELS, TYRES & PROPSHAFTS\F3-1-1 WHEELS & TYRES

9812/3020 F3-1-1 WHEELS & TYRES

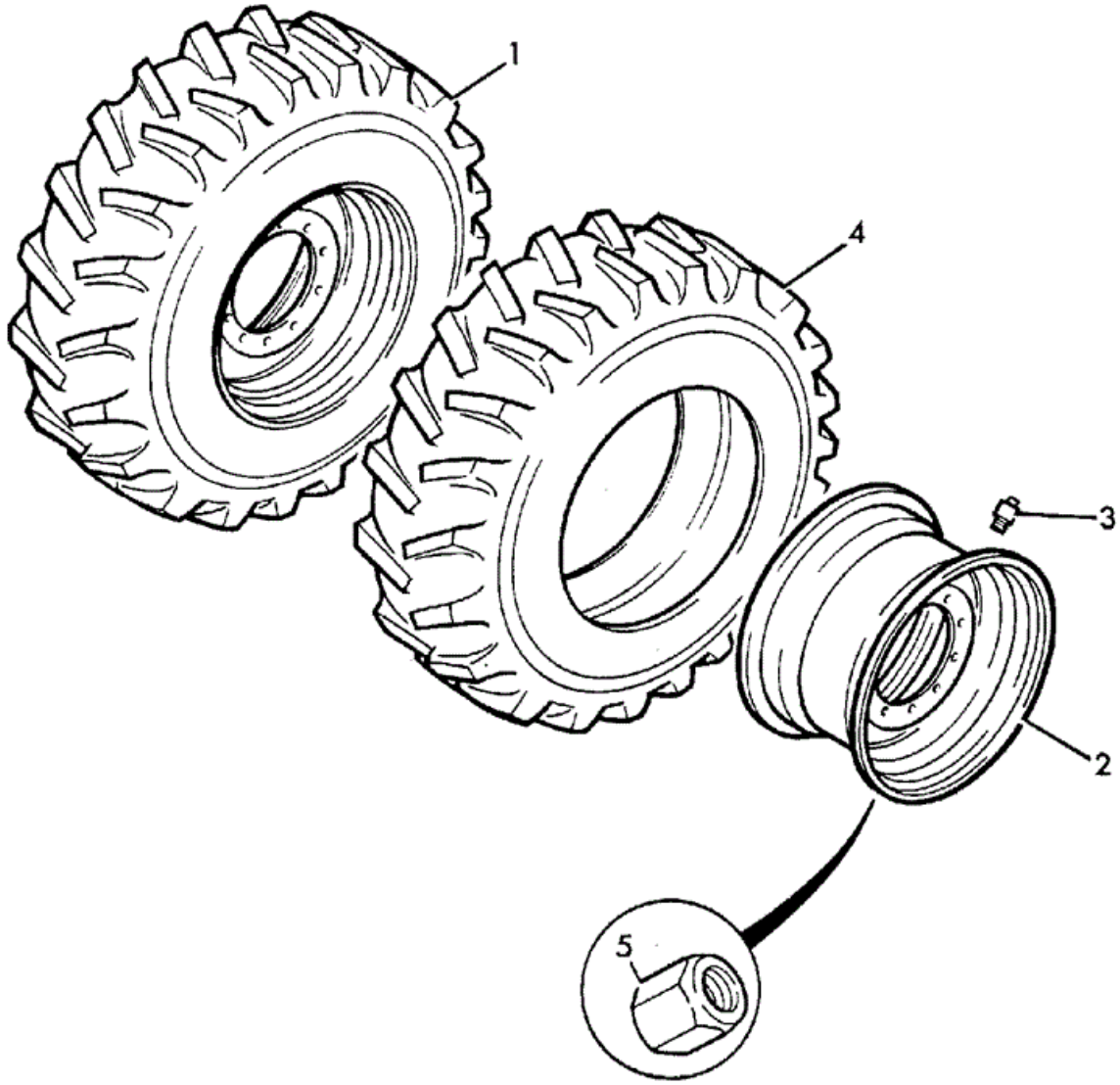

166130

Item	Part No	Change No	Description	Usage Code	QTY

1	269/10024		Wheel and tyre assembly Goodyear	A	1
1	269/10026		Wheel and tyre assembly Goodyear	B	1
1	269/10030		Wheel and tyre assembly Michelin	C	1
1	269/10027		Wheel and tyre assembly Michelin	D	1
1	269/10028		Wheel and tyre assembly Michelin	E	1
1	269/10031	<13/06/2011	Wheel and tyre assembly Michelin See page F3-7-1	G	1
1	269/10023		Wheel assembly	H	1
1	269/10141		Wheel and tyre assembly Goodyear	J	1
1	331/42490		Wheel & tyre assembly Goodyear	K	1
1	331/27442		Wheel and tyre assembly 17.5R25 XSNOPLUS,L2	L	4
1	331/28459		Wheel and tyre assembly 17.5 R25 VKT Uses 265/00500 valve	M	4
2	:265/00500		Valve Angled	A-EGHJKLN	1
2	:260/03701		Valve	EFG	1
3	:41/915500		Wheel	ABCDHJK	1
3	:41/915600		Wheel 3 piece	EGM	1
4	:42/400600		Tyre 17.5-25X12 ply Goodyear SGL	A	1
4	:42/410700		Tyre 17.5-25x16 ply Goodyear	B	1
4	:42/106800		Tyre Michelin 17.5 x 25 XTLA	C	1
4	:42/105800		Tyre Michelin XHA 17.5x25 1 star L3	D	1
4	:42/102000		Tyre 17.5-25x 1 star Michelin XRD1A	E	1
4	:42/104000	<13/06/2011	Tyre Michelin XMINED2 17.5-25x12PR L5 See page F3-7-1	G	1
4	:42/303400		Tyre 17.5-25x12 ply Firestone	H	1
4	:42/412000		Tyre 17.5R25 L2 GP-2B Goodyear	J	1
4	:42/925226		Tyre 17.5R25 RT-3B L3 Goodyear	K	1
4	:42/925132		Tyre 17.5R25 XSNOWPLUS	L	1
4	:42/925162		Tyre 17.5 R25 VKT	M	1
5	826/01450		Nut wheel		12
5	826/11355		Nut Wheel Yellow Finish Yellow surface finish		12

Applicability Date Ranges:
From: , To:

Product Catalog\WHEELED LOADERS\416 01243000-01243499,01317500-01317999,01472000-01472999,02095872-02095875 9812/3020 \F AXLES, WHEELS & TRANSMISSION\F03 WHEELS, TYRES & PROPSHAFTS\F3-3-1 WHEEL BRACE RETAINER

9812/3020 F3-3-1 WHEEL BRACE RETAINER

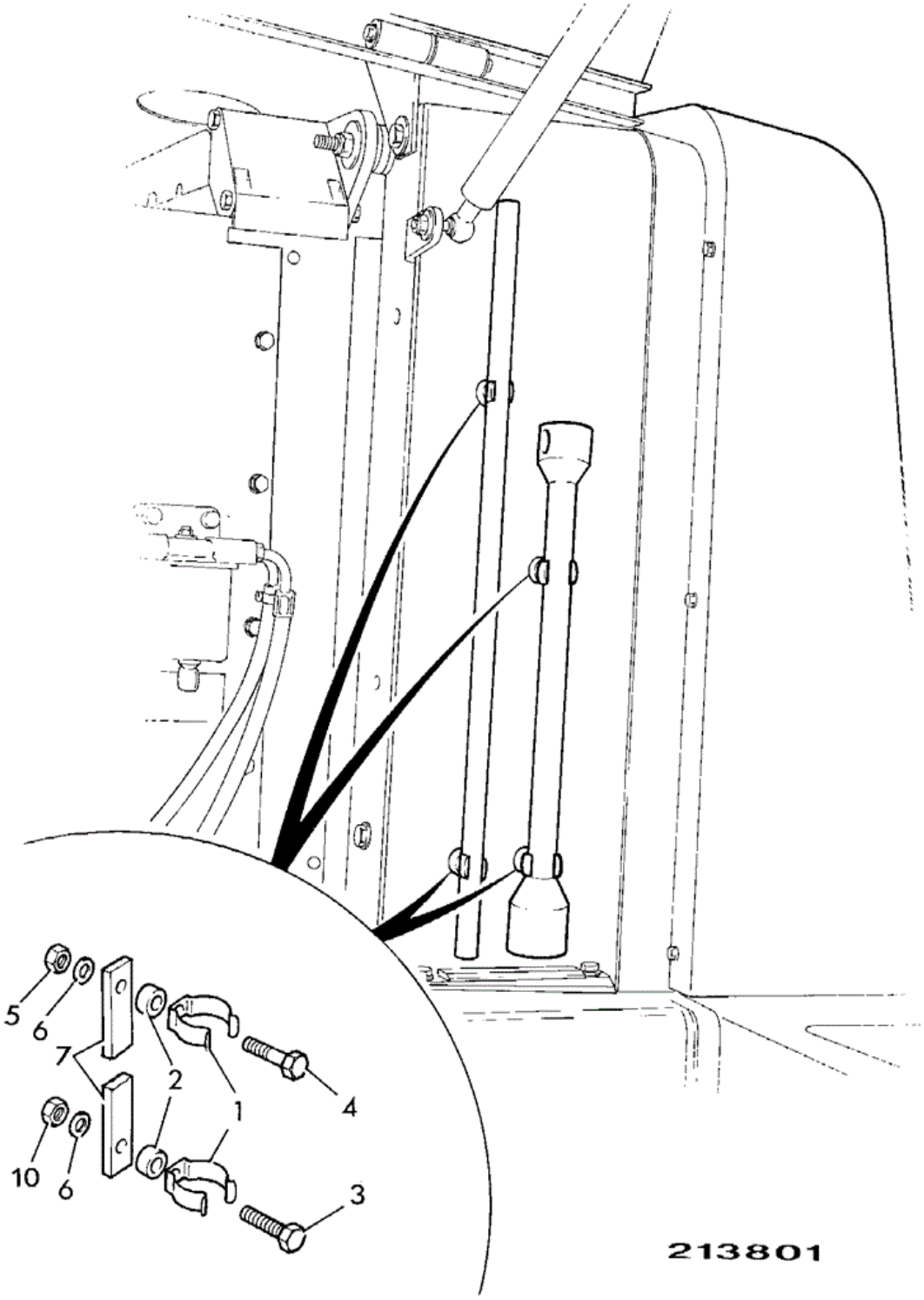

Item	Part No	Change No	Description	Usage Code	QTY
1	821/00223		Clip Retention Wheel brace		4
2	830/00623		Spacer		2

3	1315/0103Z		Screw		2
4	1315/0108Z		Setscrew Zinc		2
5	1370/0003Z		Nut Nut M5		2
6	1412/0001D		Washer (1/4" Large)		4
7	926/04700		Seal Strip 2 x 120mm long		0
8	****		'See Remark' See B2-27-1 wheel brace		1
9	****		'See Remark' See B2-27-1 tommy bar		1
10	1370/0003Z		Nut Nut M5		2

Applicability Date Ranges:
From: , To:

Product Catalog\WHEELED LOADERS\416 01243000-01243499,01317500-01317999,01472000-01472999,02095872-02095875 9812/3020 \F AXLES, WHEELS & TRANSMISSION\F03 WHEELS, TYRES & PROPSHAFTS\F3-4-1 TOOL KIT

9812/3020 F3-4-1 TOOL KIT

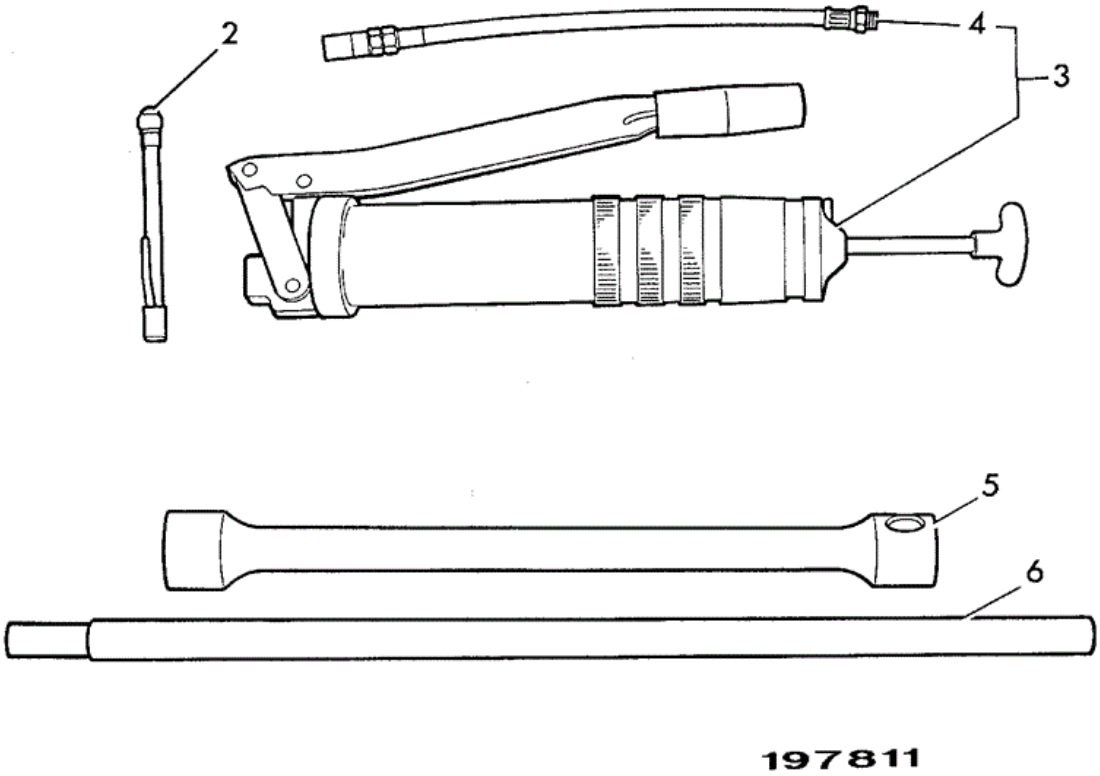

Item	Part No	Change No	Description	Usage Code	QTY
2	915/03600		Gauge tyre pressure		1
3	915/07300		Gun grease Sales option		1

4	:915/07301		Connector flexible		1
4	:4003/2017		Grease High Pressure 400g x 24 Sales option		1
5	825/99930		Socket wheel nut 32mm A/F See page F3-4-1 for location		1
6	825/99902		Bar tommy		1

Applicability Date Ranges:
From: , To:

Product Catalog\WHEELED LOADERS\416 01243000-01243499,01317500-01317999,01472000-01472999,02095872-02095875 9812/3020 \F AXLES, WHEELS & TRANSMISSION\F03 WHEELS, TYRES & PROPSHAFTS\F3-5-1 WHEELS & TYRES NOKIAN

9812/3020 F3-5-1 WHEELS & TYRES NOKIAN

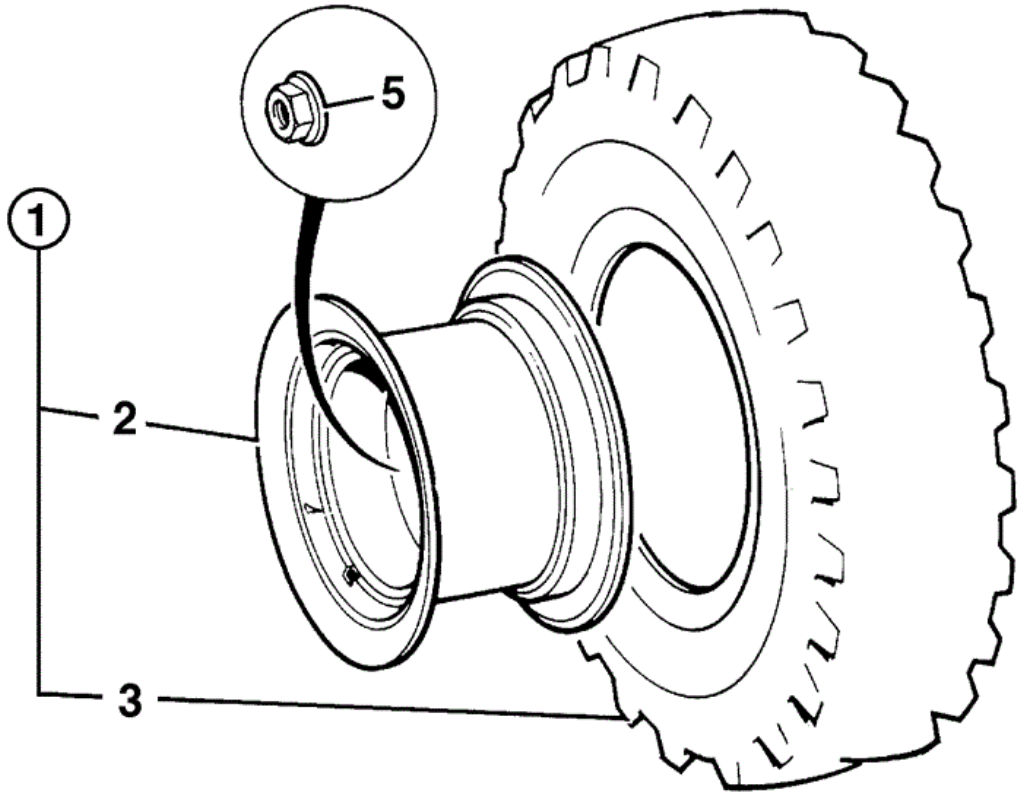

701200

Item	Part No	Change No	Description	Usage Code	QTY
1	331/61597		Wheel and tyre assembly 17.5R25 L-grip TL		4
2	:41/915500		Wheel		1

3	:42/925343		Tyre 17.5R25 L-Grip TL Nokian		1
4	:265/00500		Valve Angled		1
5	:826/01450		Nut wheel		6

Applicability Date Ranges:
From: , To:

Product Catalog\WHEELED LOADERS\416 01243000-01243499,01317500-01317999,01472000-01472999,02095872-02095875 9812/3020 \F AXLES, WHEELS & TRANSMISSION\F03 WHEELS, TYRES & PROPSHAFTS\F3-5-10 WHEELS & TYRES NOKIAN 17.5R25 GRS, SALES SPECIAL

9812/3020 F3-5-10 WHEELS & TYRES NOKIAN 17.5R25 GRS, SALES SPECIAL

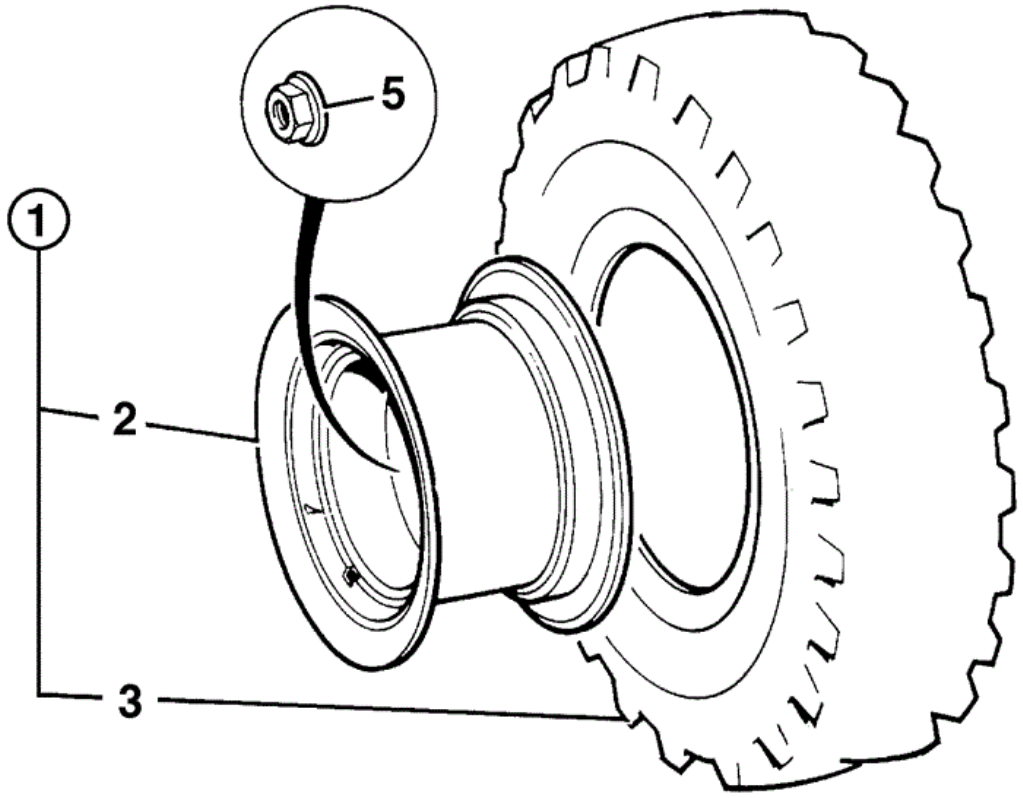

701200

Item	Part No	Change No	Description	Usage Code	QTY
			Wheel and tyre assembly Nokian 17.5 R25 GRS		

1	333/R7423		Sales special 3678		4
2	:41/915500		Wheel		1
3	:333/R7419		Tyre Nokian 17.5 R25 GRS		1
4	:265/00500		Valve Angled		1
5	826/11355		Nut Wheel Yellow Finish		12

Applicability Date Ranges:
From: , To:

Product Catalog\WHEELED LOADERS\416 01243000-01243499,01317500-01317999,01472000-01472999,02095872-02095875 9812/3020 \F AXLES, WHEELS & TRANSMISSION\F03 WHEELS, TYRES & PROPSHAFTS\F3-6-1 WHEELS & TYRES ALLIANCE

9812/3020 F3-6-1 WHEELS & TYRES ALLIANCE

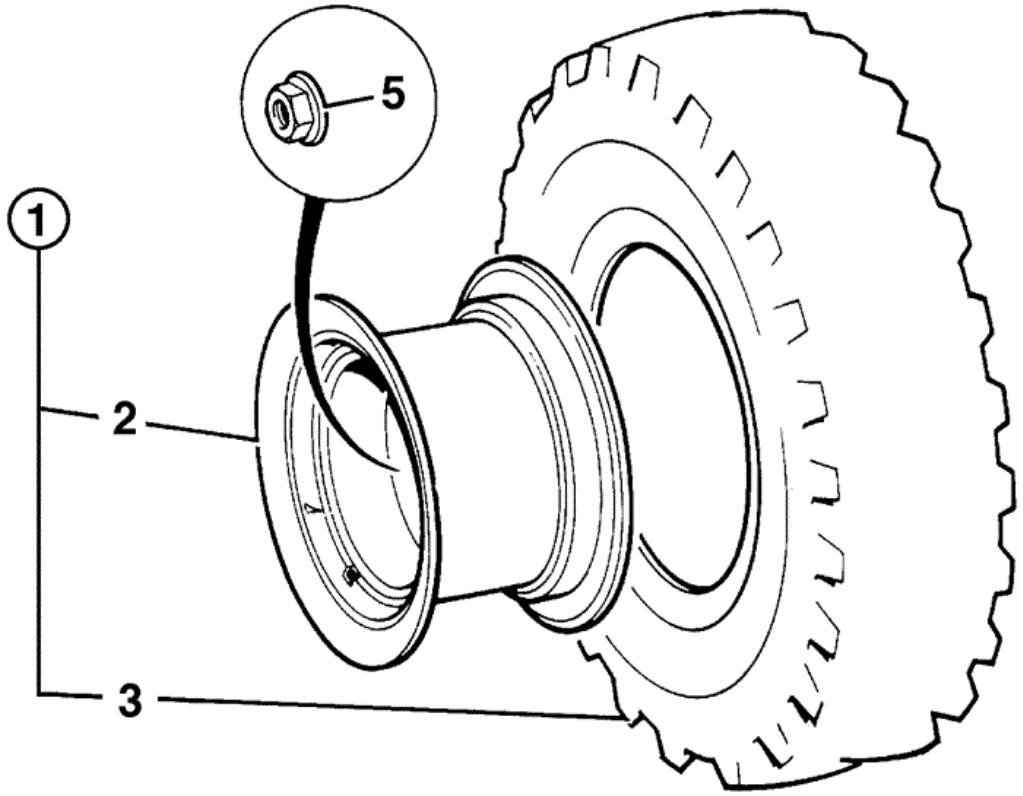

701200

Item	Part No	Change No	Description	Usage Code	QTY
1	331/59312		Wheel & tyre assembly Alliance17.5R25 724	A	4
1	332/U8201		Wheel & tyre assembly Alliance 17.5R25 GSR690	B	4

2	:41/915500		Wheel	A,B	1
3	:42/925328		Tyre Alliance17.5R25 724	A	1
3	:332/U8178		Tyre Allliance 17.5R25 GSR690	B	1
4	:265/00500		Valve Angled		1
5	:826/01450		Nut wheel		6

Applicability Date Ranges:
From: , To:

Product Catalog\WHEELED LOADERS\416 01243000-01243499,01317500-01317999,01472000-01472999,02095872-02095875 9812/3020 \F AXLES, WHEELS & TRANSMISSION\F03 WHEELS, TYRES & PROPSHAFTS\F3-7-1 WHEEL & TYRE MICHELIN 500/70R24 XMINE D2 2 STAR

9812/3020 F3-7-1 WHEEL & TYRE MICHELIN 500/70R24 XMINE D2 2 STAR

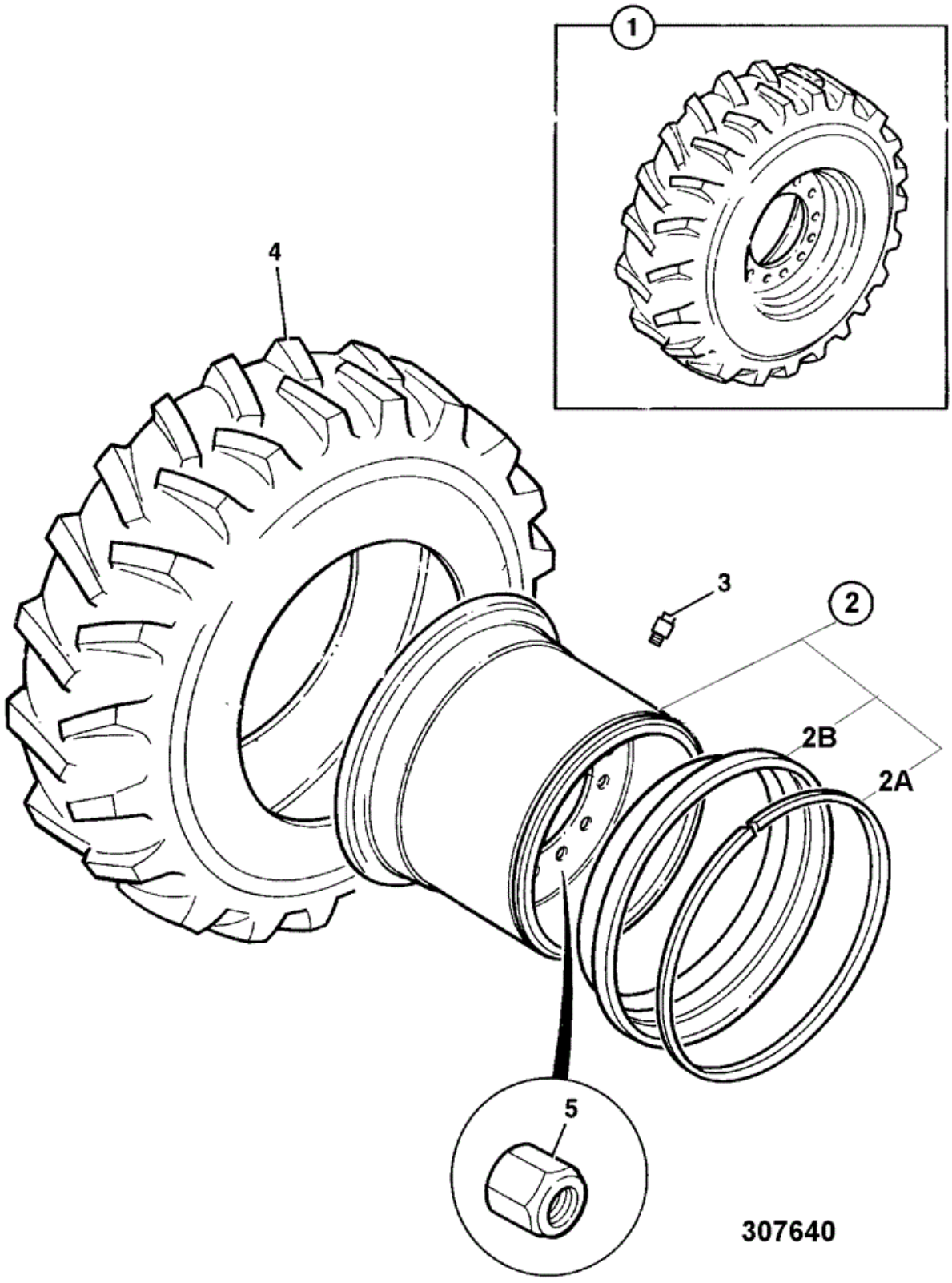

Item	Part No	Change No	Description	Usage Code	QTY
1	333/U1867		Wheel & tyre assembly Michelin		1
2	:41/915600		Wheel 3 piece		1
2A	::41/900502		Ring lock		1
2B	::41/900501		Flange		1
3	:265/00500		Valve Angled		1
4	:333/T9071		Tyre Michelin 23.5 R25 XHA 2 STAR		1
5	826/11355		Nut Wheel Yellow Finish		6

Applicability Date Ranges:
From: , To:

Product Catalog\WHEELED LOADERS\416 01243000-01243499,01317500-01317999,01472000-01472999,02095872-02095875 9812/3020 \F AXLES, WHEELS & TRANSMISSION\F03 WHEELS, TYRES & PROPSHAFTS\F3-9-1 WHEELS & TYRES BKT

9812/3020 F3-9-1 WHEELS & TYRES BKT

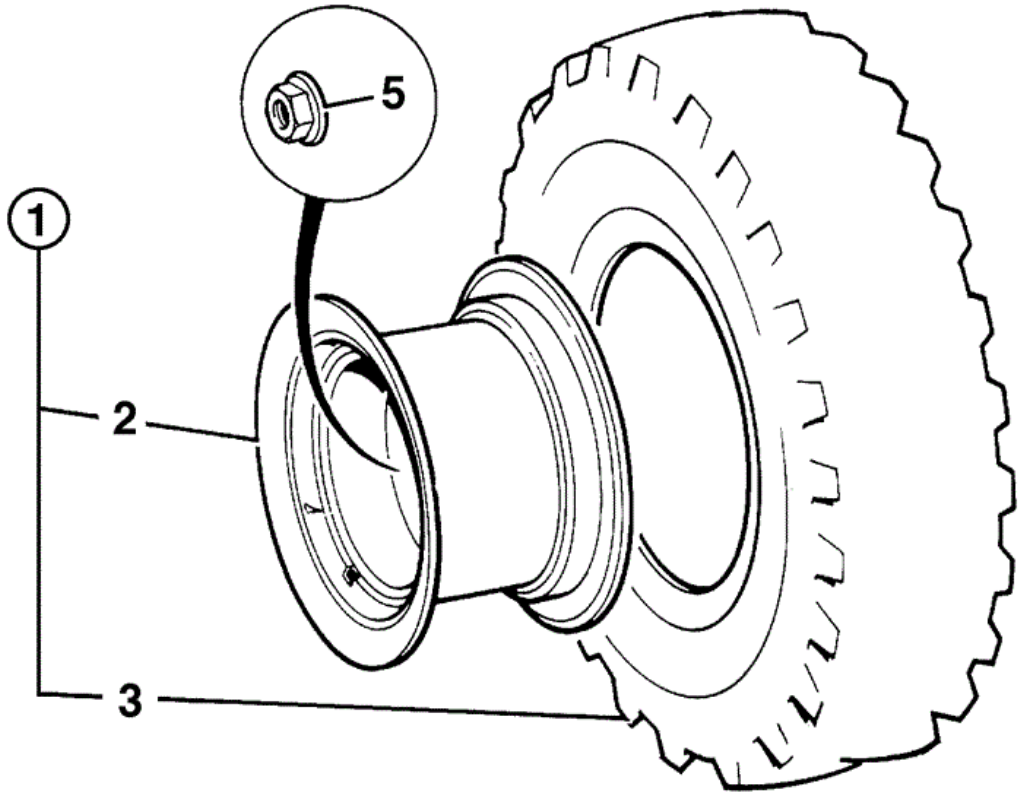

701200

Item	Part No	Change No	Description	Usage Code	QTY
1	331/58776		Wheel and tyre assembly XL grip		4
2	:41/915500		Wheel		1

3	:42/925322		Tyre BKT XL GRIP 17.5-25 16PR		1
4	:265/00500		Valve Angled		1
5	:826/01450		Nut wheel		6

Applicability Date Ranges:
From: , To:

Product Catalog\WHEELED LOADERS\416 01243000-01243499,01317500-01317999,01472000-01472999,02095872-02095875 9812/3020 \F AXLES, WHEELS & TRANSMISSION\F03 WHEELS, TYRES & PROPSHAFTS\F3-10-1 WHEEL & TYRE SOLID SALES SPECIAL

9812/3020 F3-10-1 WHEEL & TYRE SOLID SALES SPECIAL

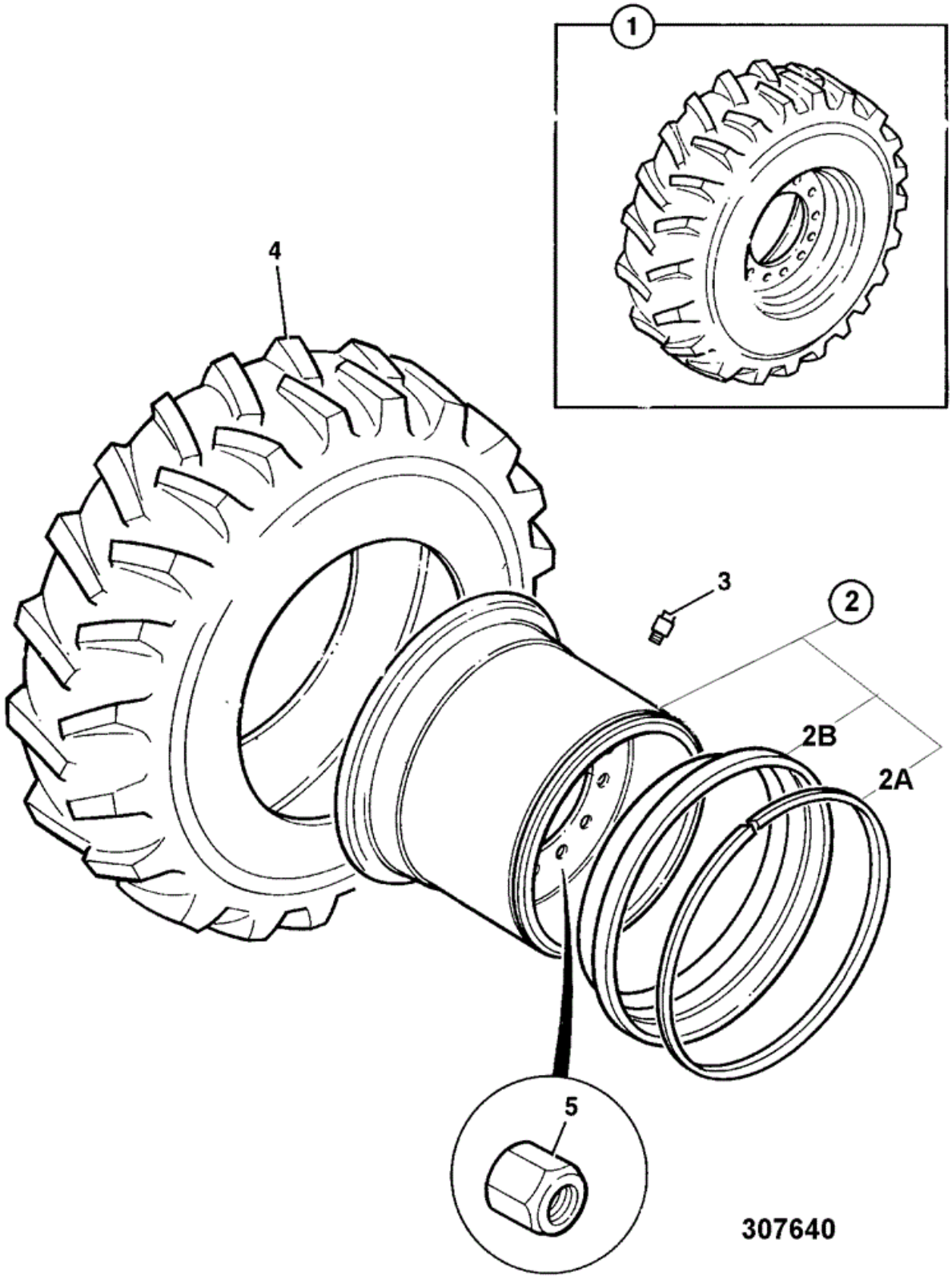

Item	Part No	Change No	Description	Usage Code	QTY

1	332/W5524		Wheel & tyre assembly cushion solid 17.5-25 Sales special 0751		4
2	:41/915600		Wheel 3 piece		1
2A	::41/900502		Ring lock		1
2B	::41/900501		Flange		1
3.	****		'See Remark' Not fitted		1
4	:332/W5518		Tyre solid 17.5-25 SG REV		1
5	826/01450		Nut wheel		6

Applicability Date Ranges:
From: , To:

Product Catalog\WHEELED LOADERS\416 01243000-01243499,01317500-01317999,01472000-01472999,02095872-02095875 9812/3020 \F AXLES, WHEELS & TRANSMISSION\F03 WHEELS, TYRES & PROPSHAFTS\F3-11-1 WHEELS & TYRES ALLIANCE 17.5R25, SALES SPECIAL

9812/3020 F3-11-1 WHEELS & TYRES ALLIANCE 17.5R25, SALES SPECIAL

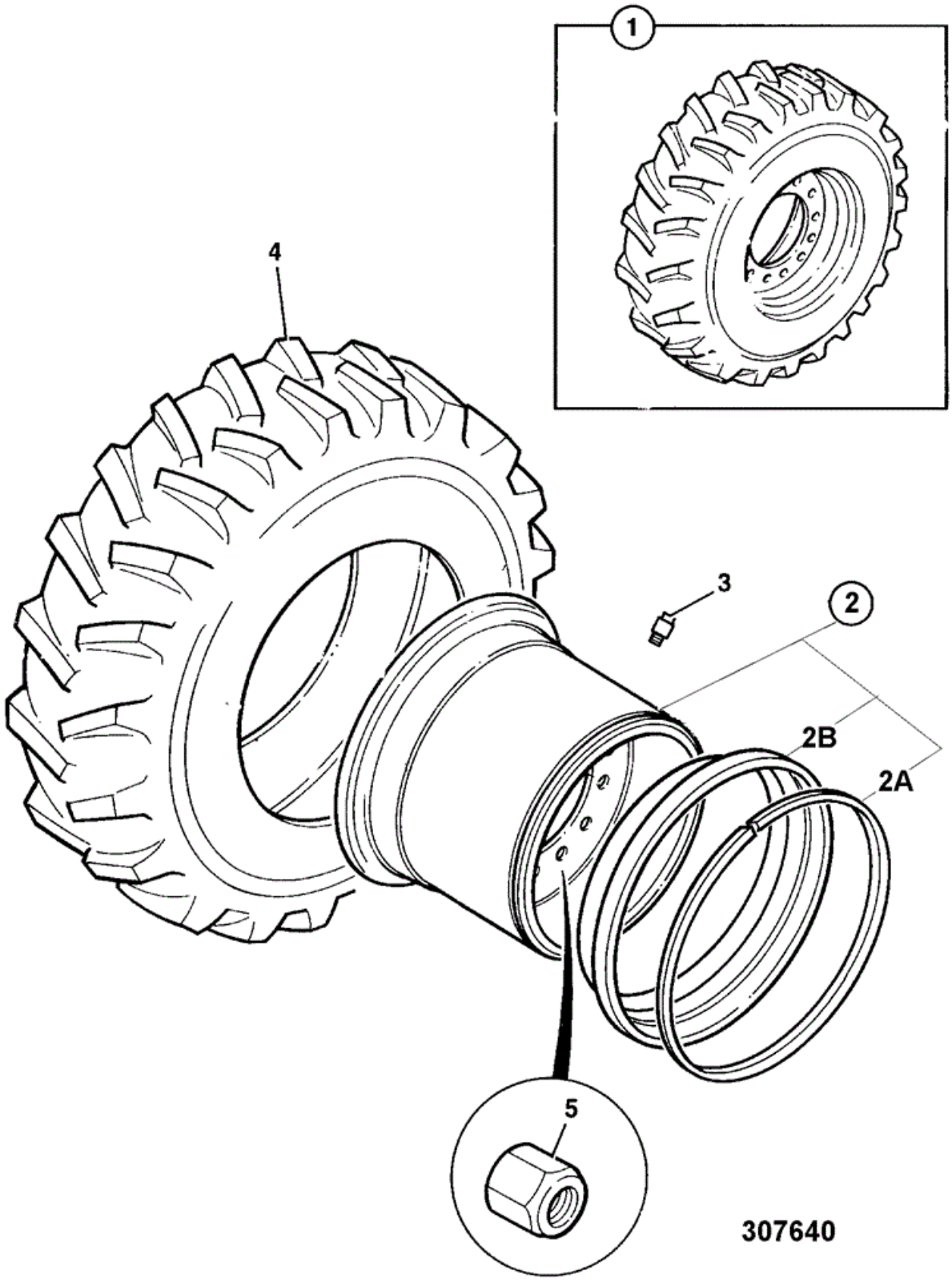

Item	Part No	Change No	Description	Usage Code	QTY
1	333/T0495		Wheel & tyre assembly Alliance 17.5R25 Sales special 2080		1
2	:41/915600		Wheel 3 piece		1
2A	::41/900502		Ring lock		1
2B	::41/900501		Flange		1
3	:265/00500		Valve Angled		1
4	:42/925328		Tyre Alliance17.5R25 724 Supply at 2.75 Bar		1
5	826/01450		Nut wheel		6

Applicability Date Ranges:
From: , To:

Product Catalog\WHEELED LOADERS\416 01243000-01243499,01317500-01317999,01472000-01472999,02095872-02095875 9812/3020 \F AXLES, WHEELS & TRANSMISSION\F03 WHEELS, TYRES & PROPSHAFTS\F3-12-1 WHEEL & TYRE SOLID SG REVOLUTION, SALES SPECIAL

9812/3020 F3-12-1 WHEEL & TYRE SOLID SG REVOLUTION, SALES SPECIAL

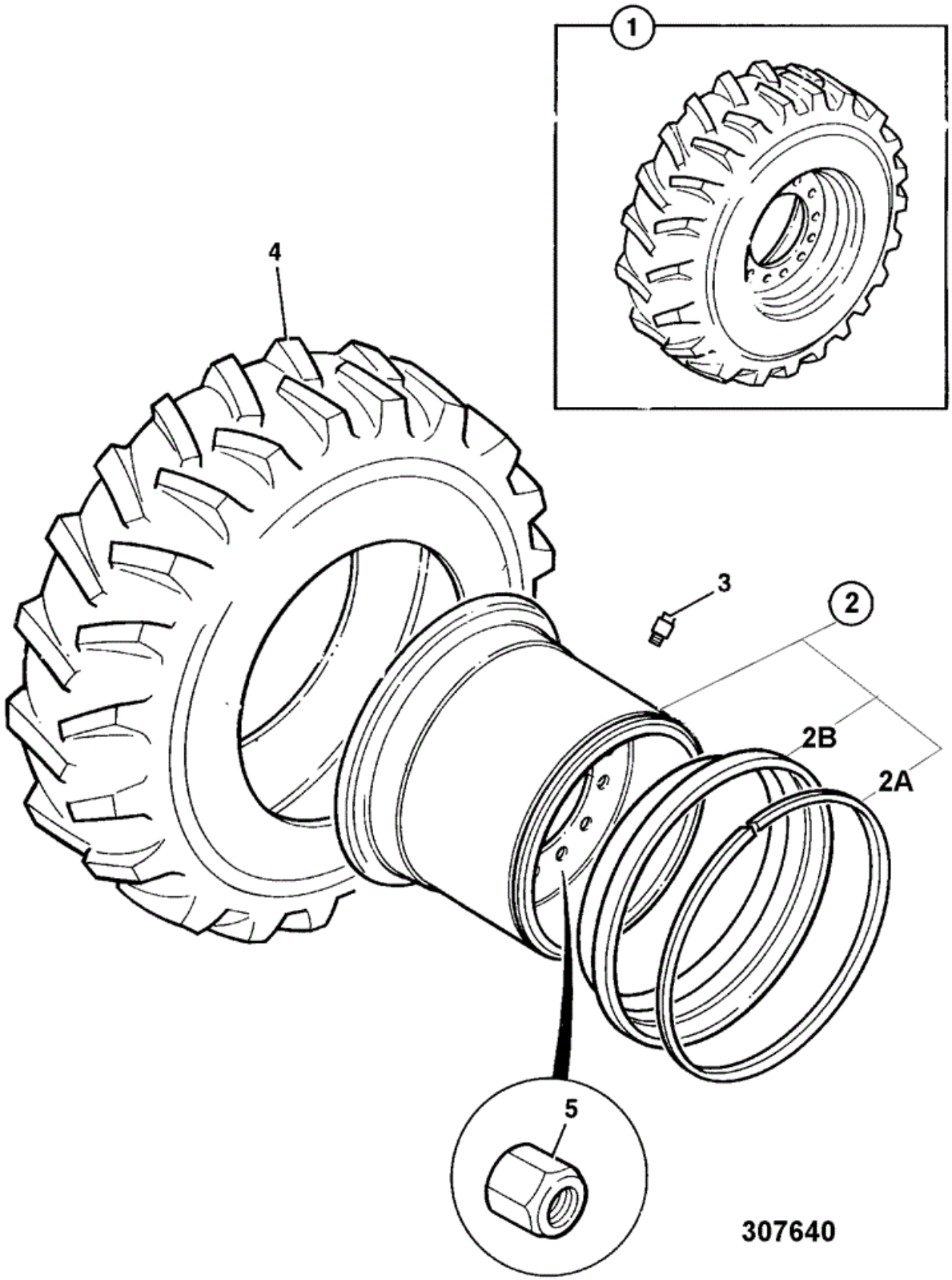

Item	Part No	Change No	Description	Usage Code	QTY
1	333/U0765		Wheel & tyre assembly 17.5-25 SG Revolution		1
2	:41/915600		Wheel 3 piece		1
2A	::41/900502		Ring lock		1
2B	::41/900501		Flange		1
3	****		'See Remark' Not fiited		1
4	:333/U0742		Tyre SG revolution 17.5-25 SE		1
5	826/01450		Nut wheel		6

Applicability Date Ranges:
From: , To:

Product Catalog\WHEELED LOADERS\416 01243000-01243499,01317500-01317999,01472000-01472999,02095872-02095875 9812/3020 \F AXLES, WHEELS & TRANSMISSION\F03 WHEELS, TYRES & PROPSHAFTS\F3-13-1 WHEEL & TYRE MICHELIN 500/70R24 XMCL, SALES SPECIAL

9812/3020 F3-13-1 WHEEL & TYRE MICHELIN 500/70R24 XMCL, SALES SPECIAL

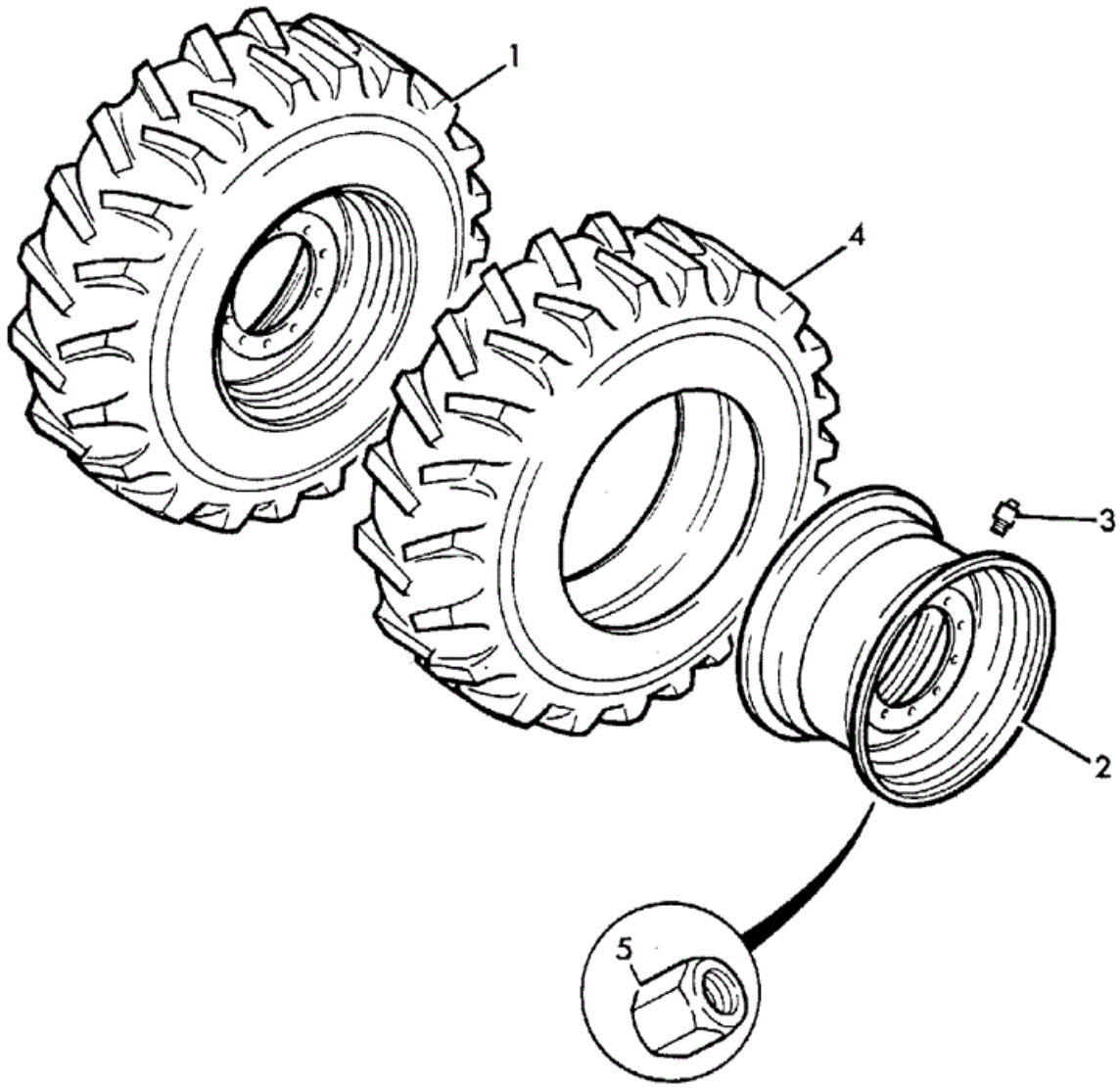

166130

Item	Part No	Change No	Description	Usage Code	QTY
1	331/67484		Wheel & tyre assembly Michelin XMCL Sales special 2609		4
2	:41/940365		Wheel DW16Lx24		1
3	:151/05201		Valve Tyre		1
4	:42/925370		Tyre 500/70 R24 Michelin XMCL		1
5	826/11355		Nut Wheel Yellow Finish		12

Applicability Date Ranges:
From: , To:

9812/3020 F3-14-1 WHEEL & TYRE GOODYEAR 500/70R24 IT530, SALES SPECIAL

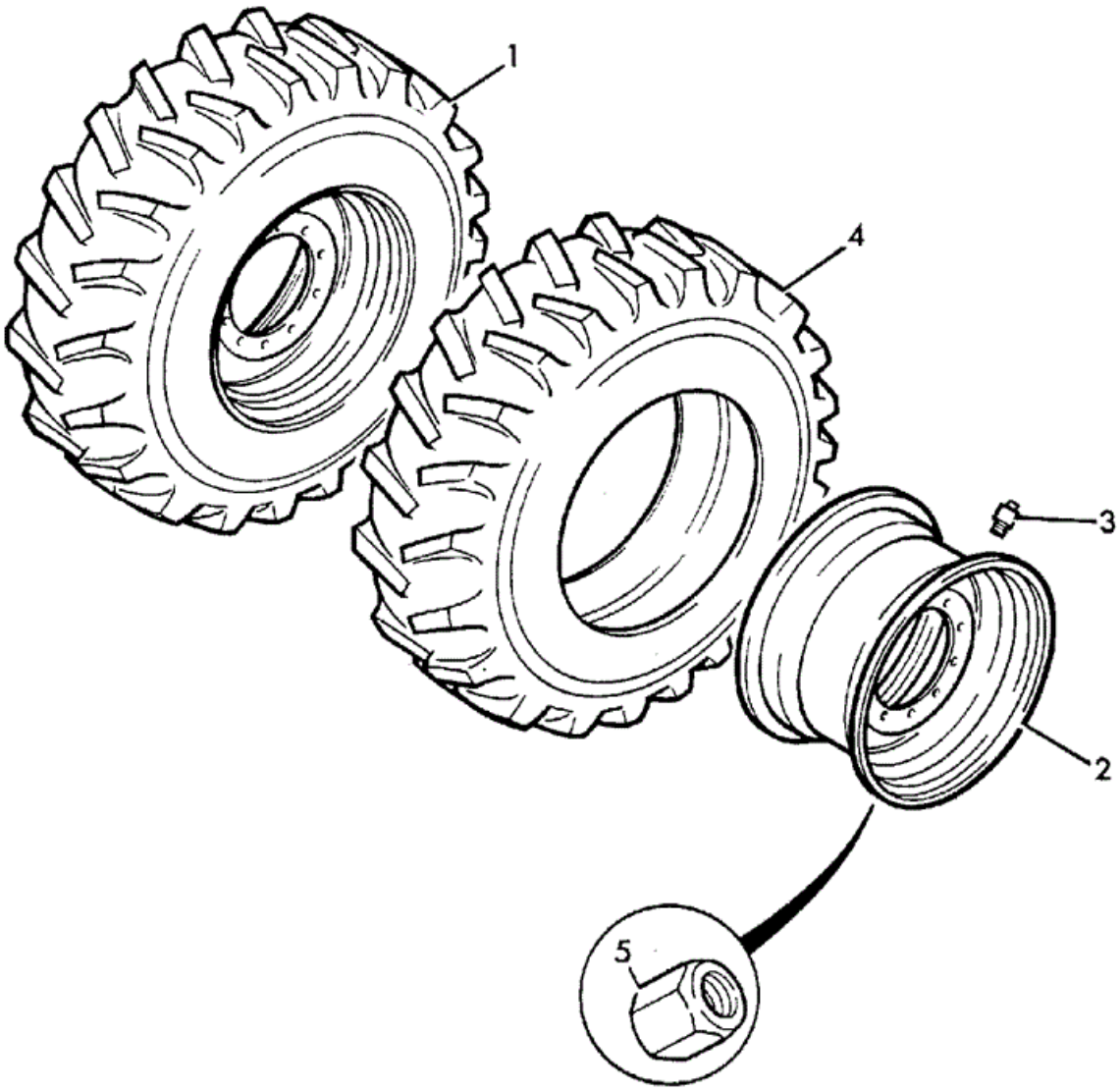

166130

Item	Part No	Change No	Description	Usage Code	QTY
1	333/T6559		Wheel & tyre assembly Goodyear 500/70R24 IT530 Sales special 2973		1
2	:41/940365		Wheel DW16Lx24		1
3	:151/05201		Valve Tyre		1
4	:42/925190		Tyre 500/70/R24 IT530 Goodyear		1
5	826/11355		Nut Wheel Yellow Finish		12

Applicability Date Ranges:
From: , To:

9812/3020 F3-15-1 MOUNTING TOOLS

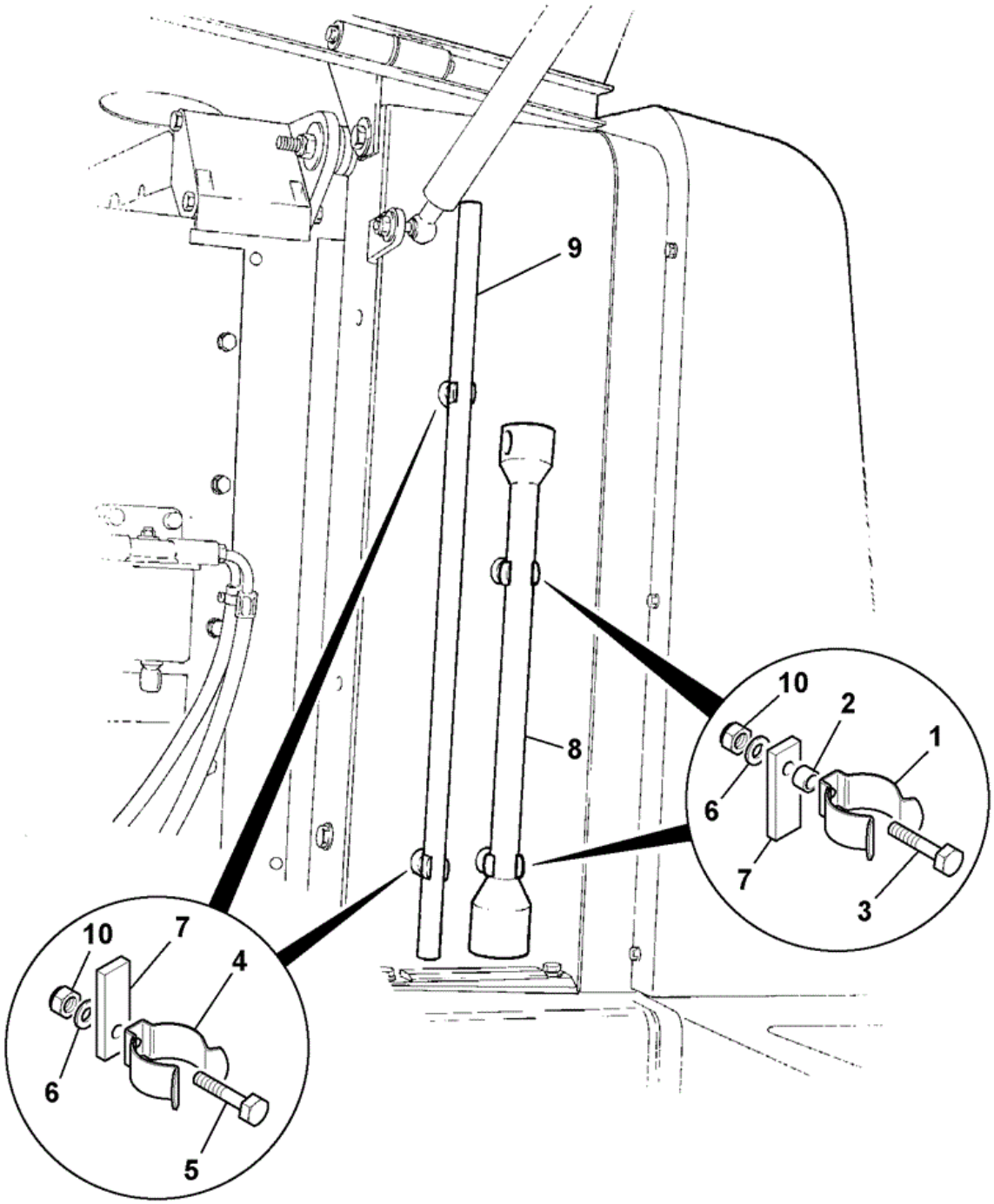

867610

Item	Part No	Change No	Description	Usage Code	QTY
1	821/00223		Clip Retention Wheel brace		2
2	830/00623		Spacer		2

3	1315/0108Z		Setscrew Zinc		2
4	821/00328		Clip For tommy bar		2
5	1315/0103Z		Screw		2
6	1414/0011Z		Washer (2BA)		4
7	926/04700		Seal Strip 2 x 120mm long		0
8	****		'See Remark' See B2-17-1 wheel brace		1
9	****		'See Remark' See B2-17-1 for Tommy Bar		1
10	1370/0003Z		Nut Nut M5		4

Applicability Date Ranges:
From: , To:

Product Catalog\WHEELED LOADERS\416 01243000-01243499,01317500-01317999,01472000-01472999,02095872-02095875 9812/3020 \F AXLES, WHEELS & TRANSMISSION\F03 WHEELS, TYRES & PROPSHAFTS\F3-20-1 TOOL KIT WHEEL HUB SERVICE KIT

9812/3020 F3-20-1 TOOL KIT WHEEL HUB SERVICE KIT

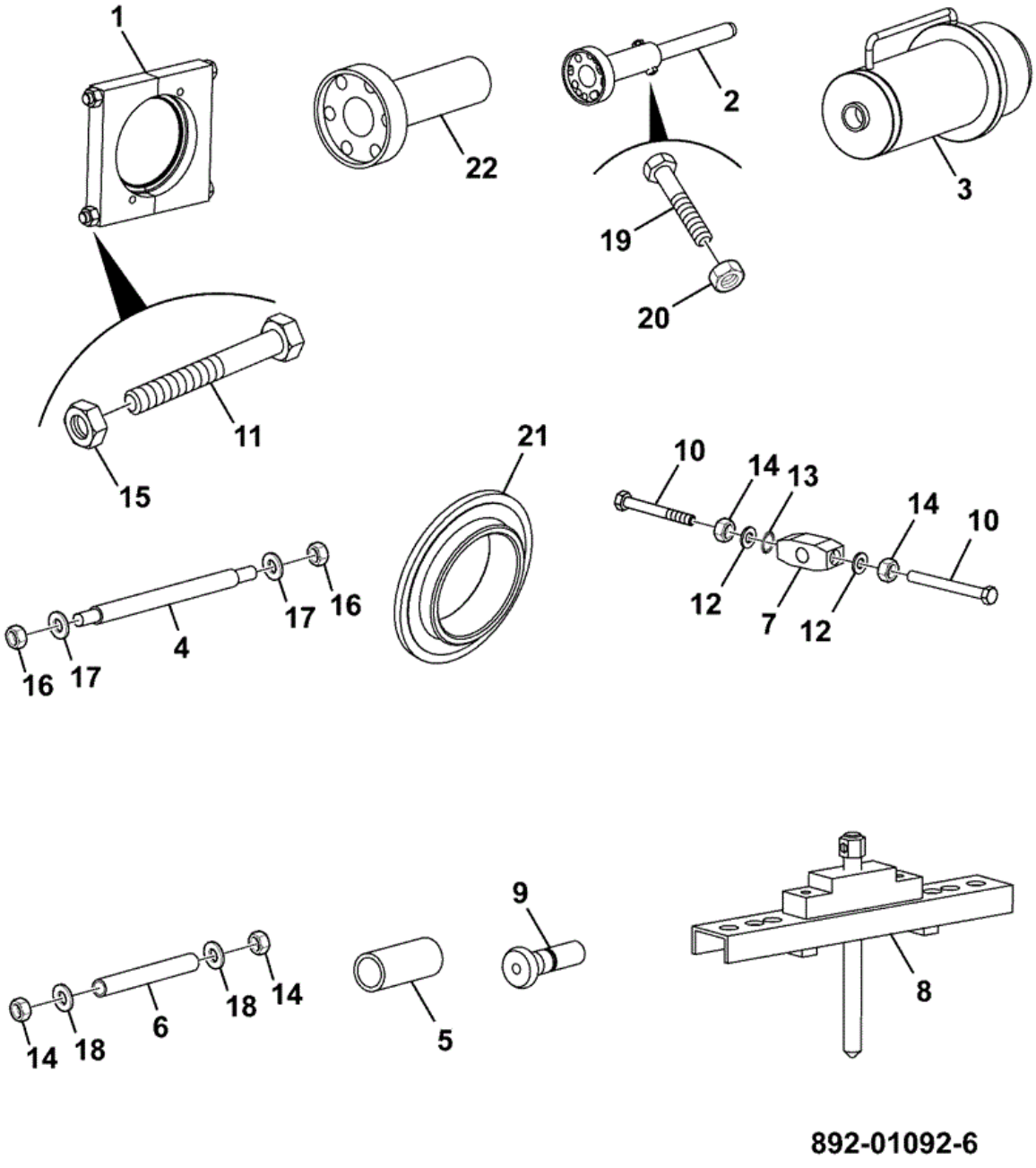

Item	Part No	Change No	Description	Usage Code	QTY
A	892/01092		Kit-service wheel hub		1
1	:998/10607		Plate puller		1

2	:998/10608		Tool puller bearing centre		1
3	:998/10609		Tube bearing refitting		1
4	:998/10610		Rod puller		2
5	:998/10614		Tube reaction		1
6	:998/10615		Rod puller		2
7	:998/10616		Nut puller handle		1
8	:998/10623	to 06/09/2011	Beam puller PD90 axle		1
8	:998/M5626		Beam puller PD87 axle		1
9	:998/10624		Stud		2
10	:1315/3833Z		Bolt M20x260lg		2
11	:1315/3731		Bolt		2
12	:445/12303		Washer Thrust		2
13	:917/02800		Bearing Thrust		1
14	:1370/0701		Nut plain		4
15	:1370/0601		Nut		2
16	:1370/0401Z		Nut		2
17	:1420/0009Z		Washer (M12)		2
18	:1420/0012Z		Washer M20		2
19	:1315/3414Z		Bolt M10x60		1
20	:1370/0301Z		Nut Plain, M10		1
21	:892/00891		Tool Pressure Test Clamp 4WD Clutch Pack		1
22	:998/M5629		Tool bearing centre puller PD87 axle		1

Applicability Date Ranges:
From: , To:

Product Catalog\WHEELED LOADERS\416 01243000-01243499,01317500-01317999,01472000-01472999,02095872-02095875 9812/3020 \F AXLES, WHEELS & TRANSMISSION\F04 PROPSHAFTS, TRANSMISSION\F4-1-1 PROPSHAFTS TRANSMISSION 416

9812/3020 F4-1-1 PROPSHAFTS TRANSMISSION 416

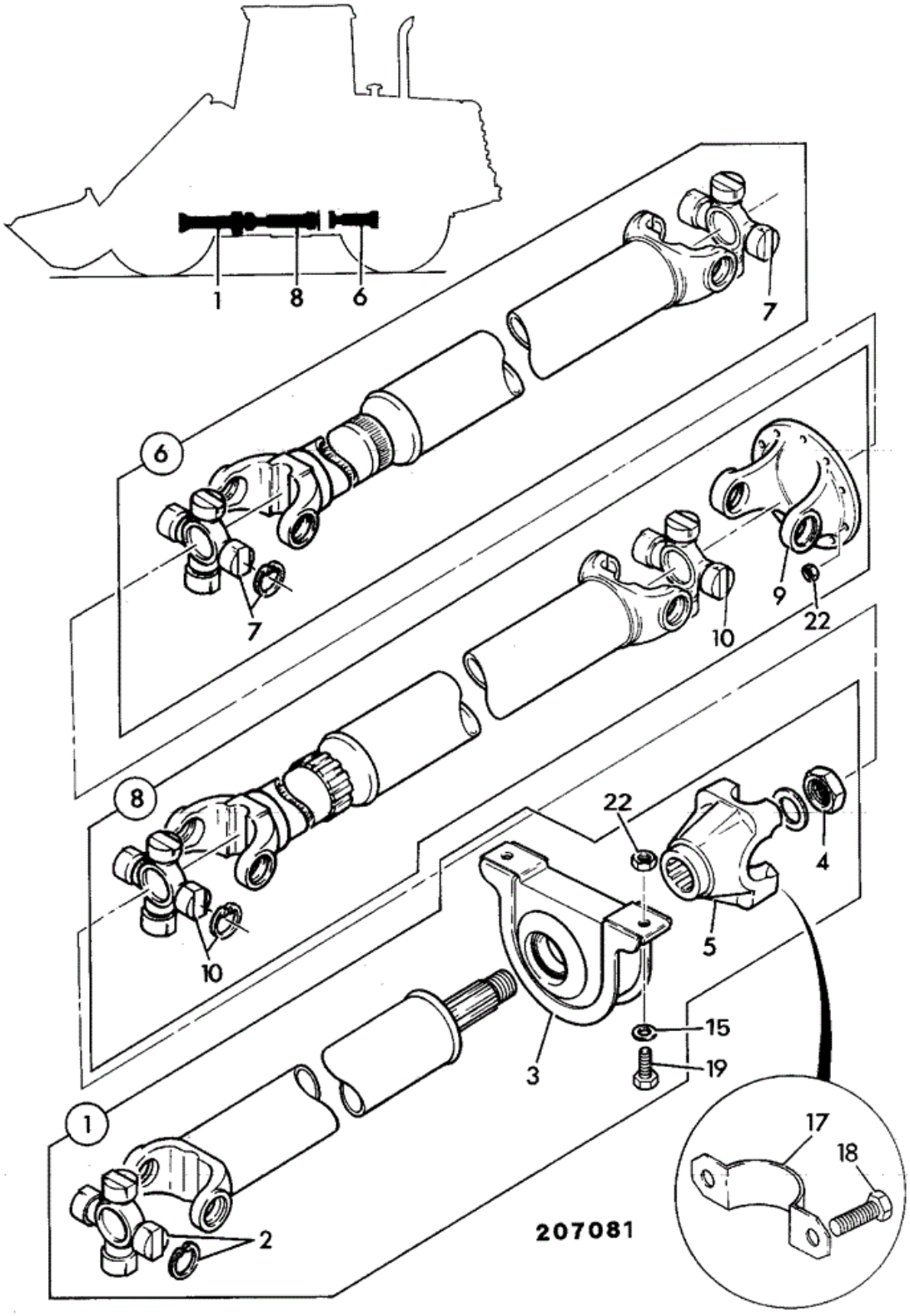

Item	Part No	Change No	Description	Usage Code	QTY

1	914/60234		Propshaft front		1
2	:914/30901		Kit-spider cap D=35mm x 125		1
3	:914/35101		Bearing centre housing		1
4	:914/33602		Nut		1
5	:914/44001		Yoke		1
6	914/44100		Propshaft rear		1
7	:914/30901		Kit-spider cap D=35mm x 125		2
8	914/60248		Propshaft intermediate		1
8	:914/44301		Cap end		1
9	:914/35102		Yoke flange		2
10	:914/30901		Kit-spider cap D=35mm x 125		2
15	1422/0009D		Washer hardened (M12)		4
17	116/00525		Strap		8
18	826/00892		Screw Special 3/8UNF X 3/4		16
19	1316/0509D		Screw M12x35 long		2
22	1371/0403D		Nut		10

Applicability Date Ranges:
From: , To:

Product Catalog\WHEELED LOADERS\416 01243000-01243499,01317500-01317999,01472000-01472999,02095872-02095875 9812/3020 \F AXLES, WHEELS & TRANSMISSION\F05 TRANSMISSIONS SYNCHROSHUTTLE\F5-0-1 TRANSMISSION ENGINE ASSEMBLIES

9812/3020 F5-0-1 TRANSMISSION ENGINE ASSEMBLIES

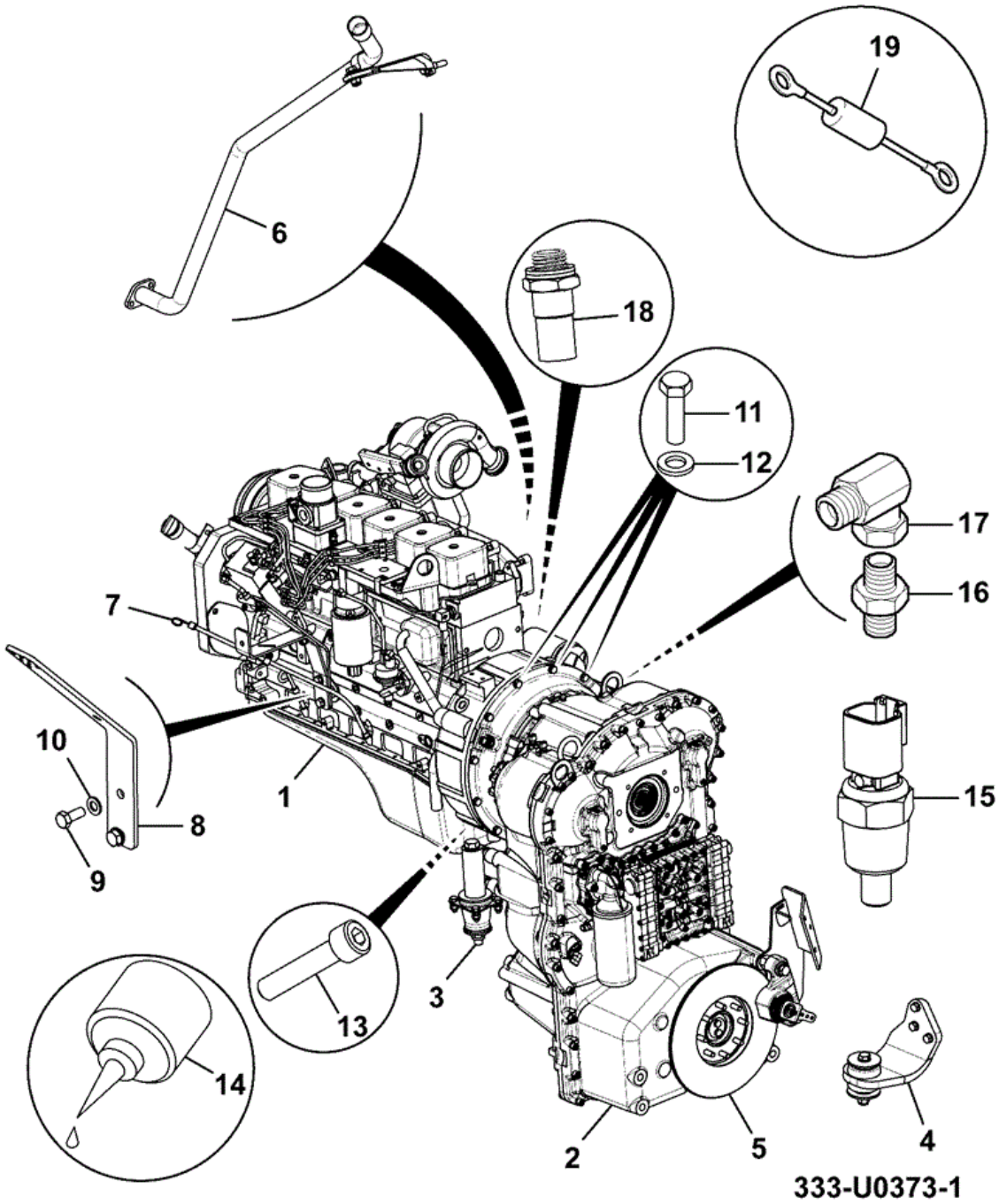

Item	Part No	Change No	Description	Usage Code	QTY
1	320/40294		Engine assembly 97kW-24v 130BHP TCA crT3		1
2	333/U2782		Transmission 4WG115		1

3	****		Assembly transmission mountings		1
4	****		Assembly engine mountings		1
5	****		Assembly park brake		1
6	****		Assembly transmission dipstick		1
12	1420/0009D		Washer (M12)		1
13	1315/0407D		Setscrew M10 x 25 Flywheel to converter		4
13A	1420/0008D		Washer (M10)		4
14	4101/0600		Sealant		0
16	1620/2061		Adaptor M/M Transmission hoses		2
17	816/90452		Adaptor Elbow Transmission hoses		2
20	****		Assembly direct drive fan		1
21	****		Installation drain engine sump		1
22	****		Installation Breather Crankcase		1
23	332/C9674		Software Engine		1

Applicability Date Ranges:
From: , To:

Product Catalog\WHEELED LOADERS\416 01243000-01243499,01317500-01317999,01472000-01472999,02095872-02095875 9812/3020 \F AXLES, WHEELS & TRANSMISSION\F05 TRANSMISSIONS SYNCHROSHUTTLE\F5-0-10 TRANSMISSION ENGINE ASSEMBLIES, EU (VCA) FLEX

9812/3020 F5-0-10 TRANSMISSION ENGINE ASSEMBLIES, EU (VCA) FLEX

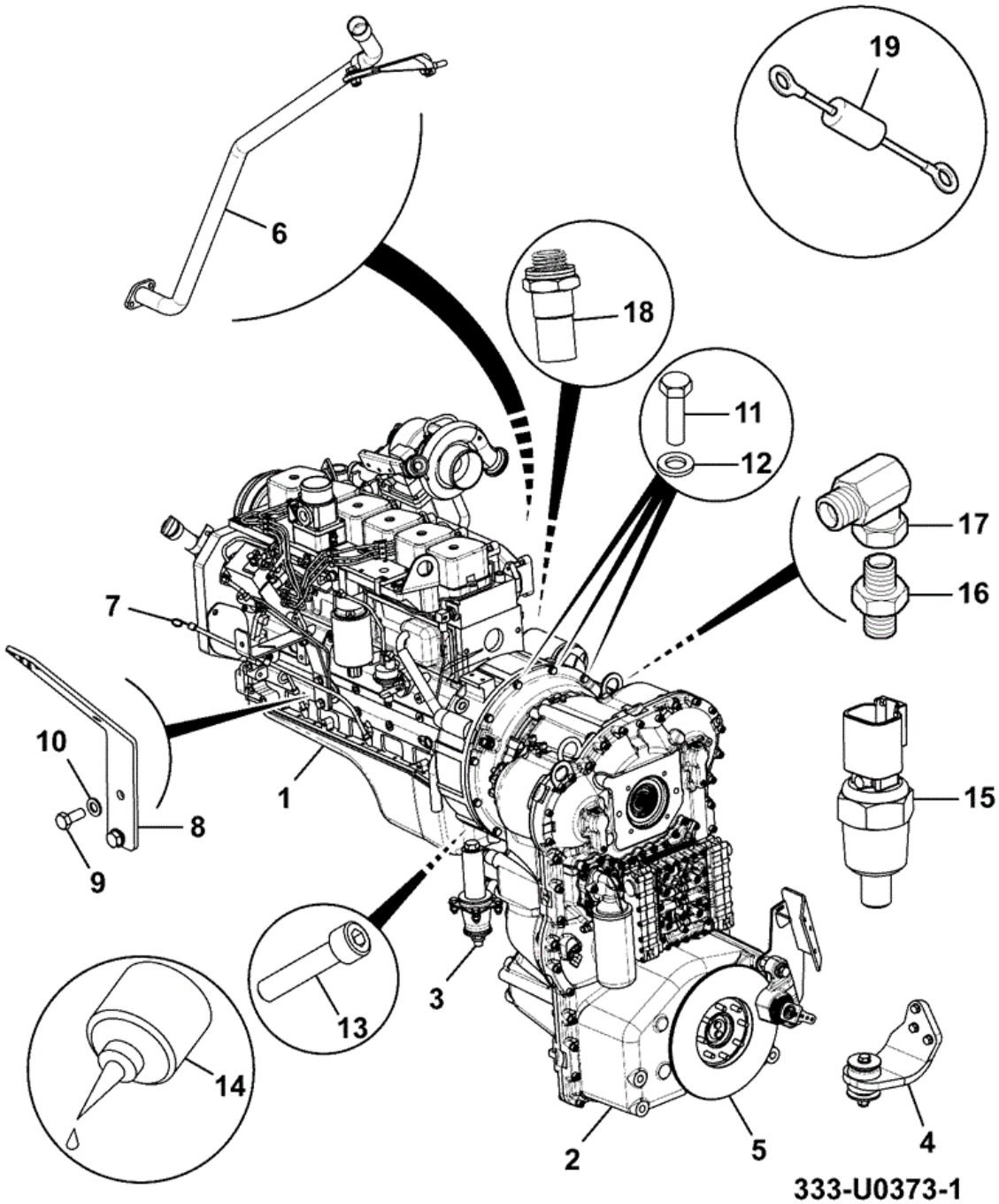

Item	Part No	Change No	Description	Usage Code	QTY
1	320/40418		Engine assembly TCA 97kw eT3 24v Flex EU		1

2	333/U2782		Transmission 4WG115		1
3	****		Assembly transmission mountings		1
4	****		Assembly engine mountings		1
5	****		Assembly park brake		1
6	****		Assembly transmission dipstick		1
12	1420/0009D		Washer (M12)		1
13	1315/0407D		Setscrew M10 x 25 Flywheel to converter		4
13A	1420/0008D		Washer (M10)		4
14	4101/0600		Sealant		0
16	1620/2061		Adaptor M/M Transmission cooler hoses		2
17	816/90452		Adaptor Elbow Transmission cooler hoses		2
20	****		Assembly direct drive fan		1
21	****		Installation drain engine sump		1
22	****		Installation Breather Crankcase		1
23	332/C9674		Software Engine		1
24	333/U0899		Dataplate flex EU		1

Applicability Date Ranges:
From: , To:

Product Catalog\WHEELED LOADERS\416 01243000-01243499,01317500-01317999,01472000-01472999,02095872-02095875 9812/3020 \F AXLES, WHEELS & TRANSMISSION\F05 TRANSMISSIONS SYNCHROSHUTTLE\F5-0-20 TRANSMISSION ENGINE ASSEMBLIES, USA (EPA) FLEX

9812/3020 F5-0-20 TRANSMISSION ENGINE ASSEMBLIES, USA (EPA) FLEX

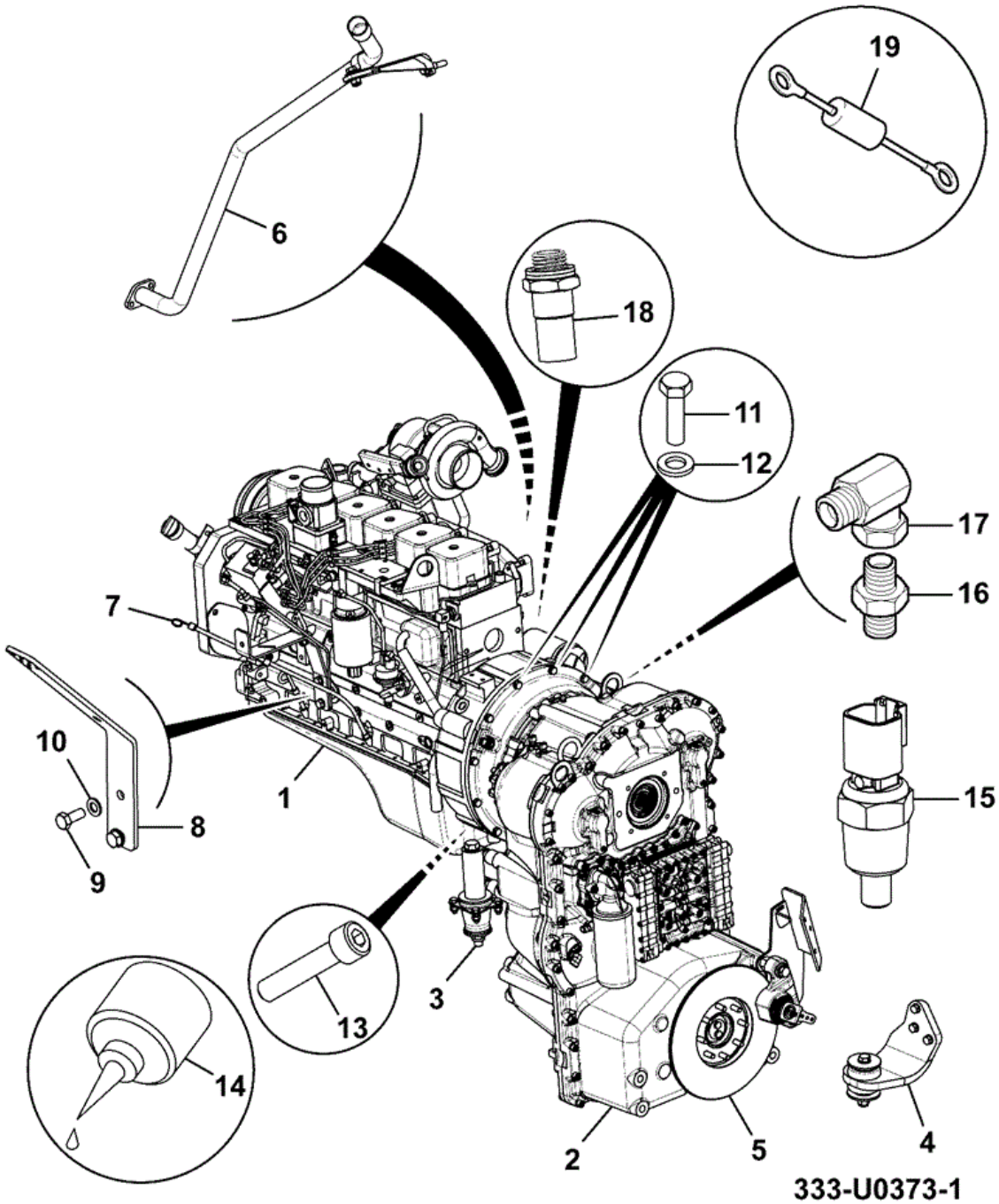

Item	Part No	Change No	Description	Usage Code	QTY
1	320/40419		Engine assembly TCA 97kw eT3 24v Flex EPA		1

2	333/U2782		Transmission 4WG115		1
3	****		Assembly transmission mountings		1
4	****		Assembly engine mountings		1
5	****		Assembly park brake		1
6	****		Assembly transmission dipstick		1
12	1420/0009D		Washer (M12)		1
13	1315/0407D		Setscrew M10 x 25 Flywheel to converter		4
14	4101/0600		Sealant		0
13A	1420/0008D		Washer (M10)		4
16	1620/2061		Adaptor M/M Transmission hoses		2
17	816/90452		Adaptor Elbow Transmission hoses		2
20	****		Assembly direct drive fan		1
21	****		Installation drain engine sump		1
22	****		Installation Breather Crankcase		1
23	332/C9674		Software Engine		1
24	****		Dataplate flex engine (2013)		1

Applicability Date Ranges:
From: , To:

Product Catalog\WHEELED LOADERS\416 01243000-01243499,01317500-01317999,01472000-01472999,02095872-02095875 9812/3020 \F AXLES, WHEELS & TRANSMISSION\F05 TRANSMISSIONS SYNCHROSHUTTLE\F5-0-30 TRANSMISSION ENGINE ASSEMBLIES, ROW

9812/3020 F5-0-30 TRANSMISSION ENGINE ASSEMBLIES, ROW

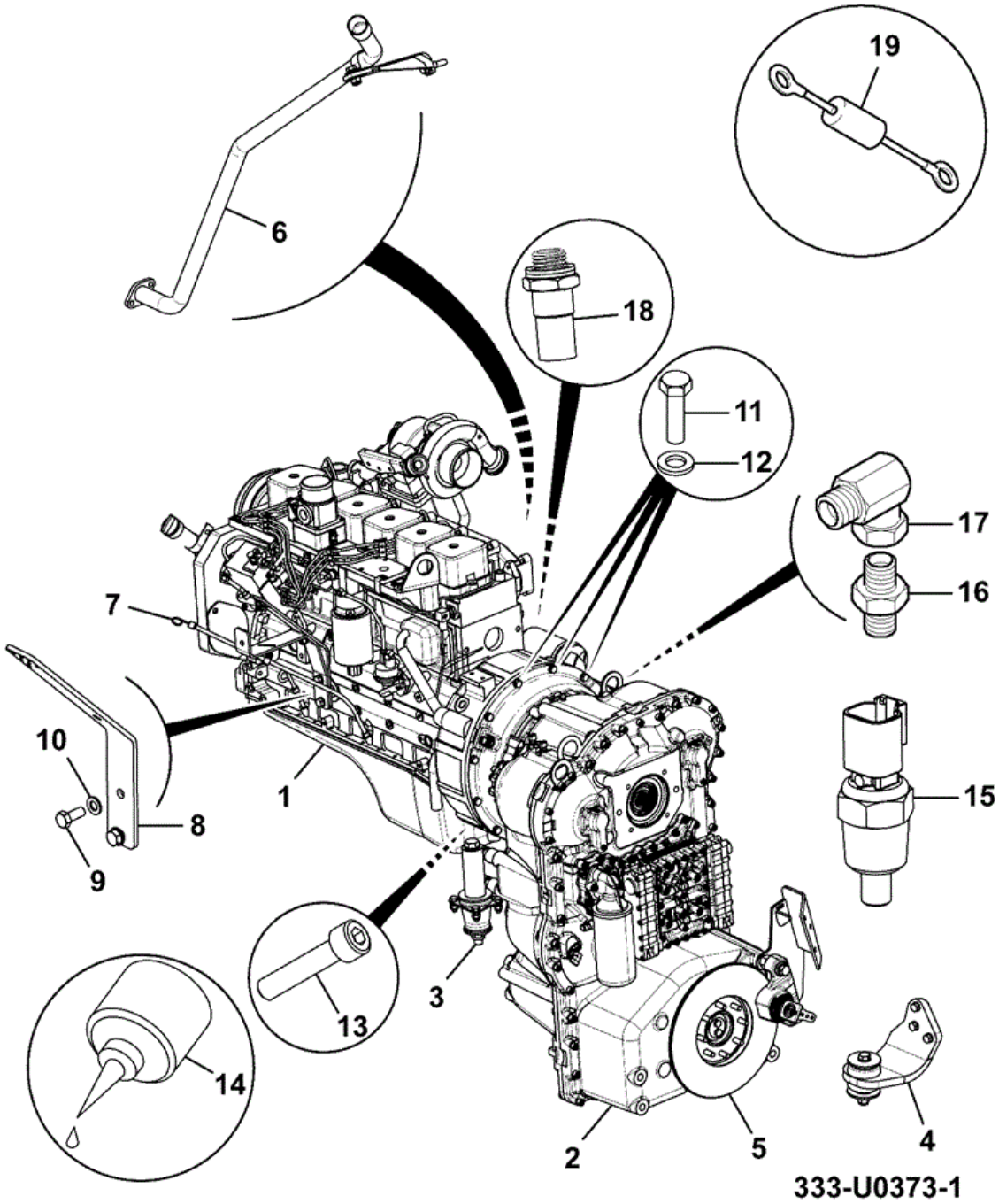

Item	Part No	Change No	Description	Usage Code	QTY
1	320/40417		Engine assembly TCA 97kw eT3 24v ROW		1
2	333/U2782		Transmission 4WG115		1

3	****		Assembly transmission mountings		1
4	****		Assembly engine mountings		1
5	****		Assembly park brake		1
6	****		Assembly transmission dipstick		1
12	1420/0009D		Washer (M12)		1
13	1315/0407D		Setscrew M10 x 25 Flywheel to converter		4
13A	1420/0008D		Washer (M10)		4
14	4101/0600		Sealant		0
16	1620/2061		Adaptor M/M Transmission cooler hoses		2
17	816/90452		Adaptor Elbow Transmission cooler hoses		2
20	****		Assembly direct drive fan		1
21	****		Installation drain engine sump		1
22	****		Installation Breather Crankcase		1
23	332/C9674		Software Engine		1

Applicability Date Ranges:
From: , To:

Product Catalog\WHEELED LOADERS\416 01243000-01243499,01317500-01317999,01472000-01472999,02095872-02095875 9812/3020 \F AXLES, WHEELS & TRANSMISSION\F05 TRANSMISSIONS SYNCHROSHUTTLE\F5-1-1 TRANSMISSION ASSEMBLY

9812/3020 F5-1-1 TRANSMISSION ASSEMBLY

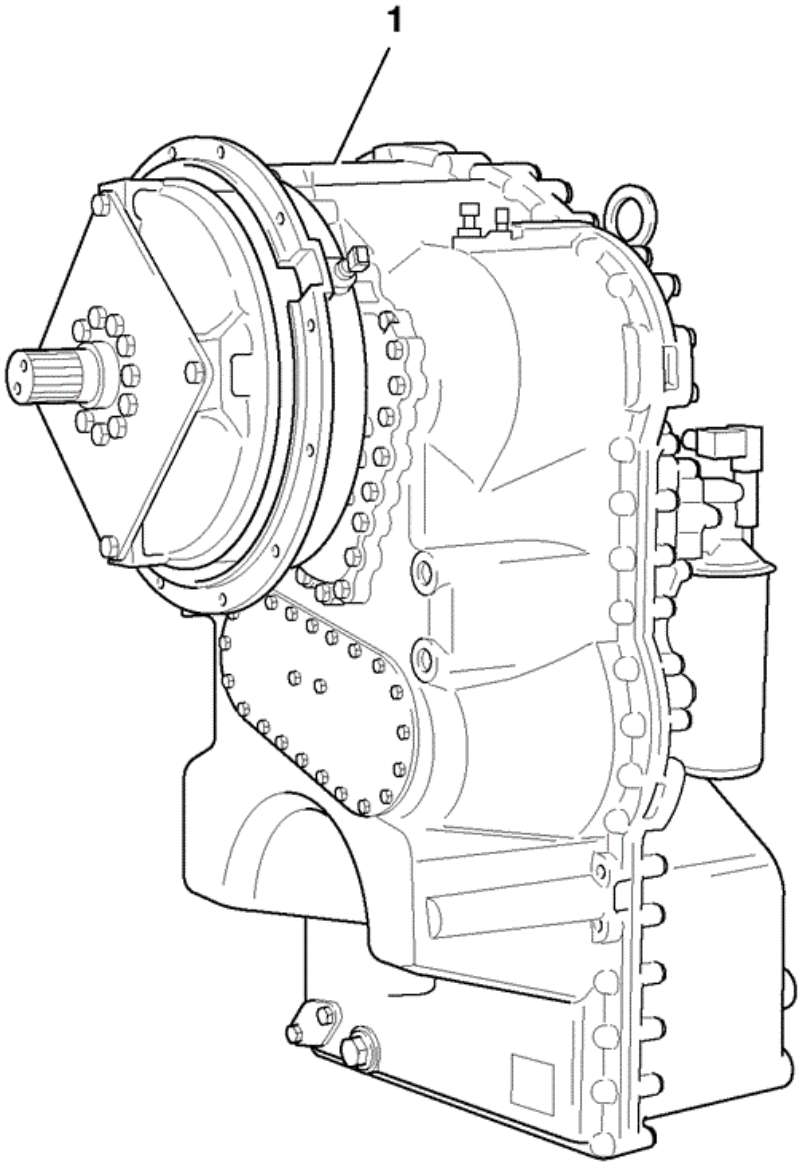

337220

Item	Part No	Change No	Description	Usage Code	QTY

1	04/600837	<M1317623	Transmission complete 4WG115 ZFreference 4656-004-010		1
1	332/S4492		Transmission complete 4WG115 ZF reference 4656-004-104		1

Applicability Date Ranges:
From: , To: 30/09/2011

Product Catalog\WHEELED LOADERS\416 01243000-01243499,01317500-01317999,01472000-01472999,02095872-02095875 9812/3020 \F AXLES, WHEELS & TRANSMISSION\F05 TRANSMISSIONS SYNCHROSHUTTLE\F5-1-2 TRANSMISSION ASSEMBLY

9812/3020 F5-1-2 TRANSMISSION ASSEMBLY

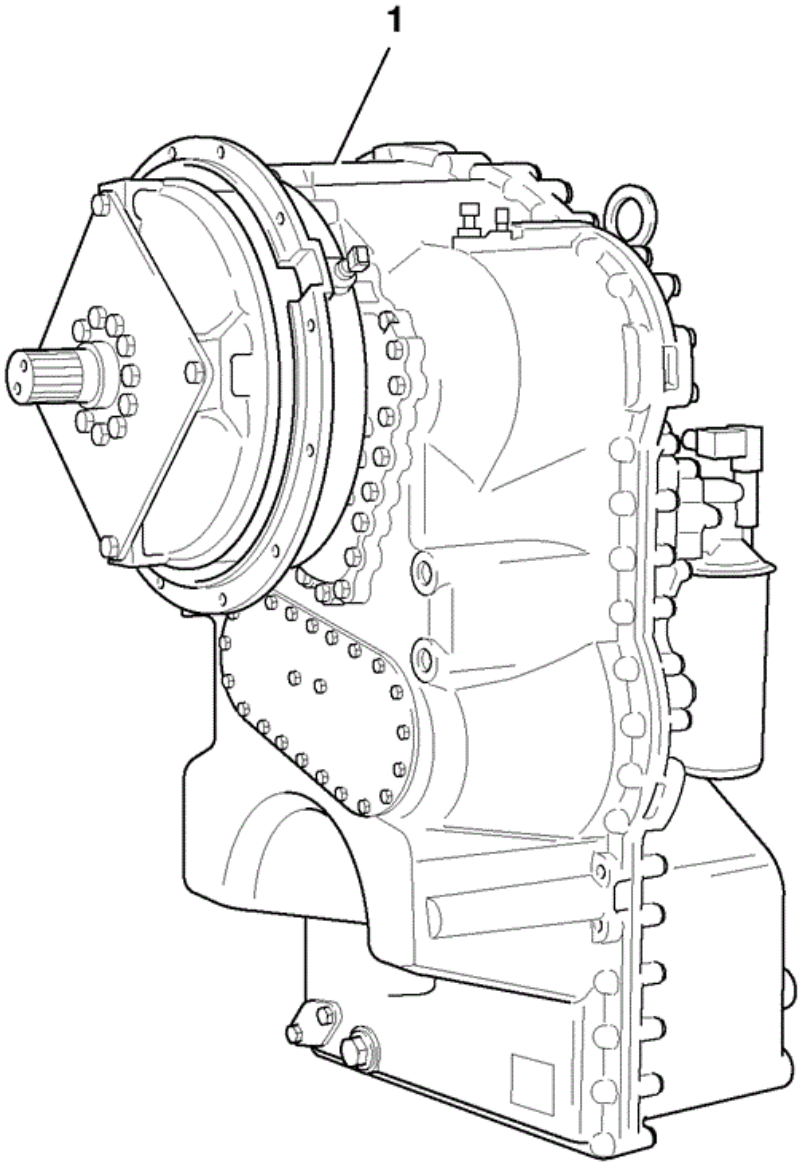

337220

Item	Part No	Change No	Description	Usage Code	QTY

A	333/U2782		Transmission 4WG115 ZF reference 4656-004-109		1
1	****		Assembly converter housing		1
3	:333/G7862		Assembly converter		1
4	****		Assembly input		1
5	****		Assembly gearbox housing		1
6	****		Assembly gearbox housing breather		1
7	****		Assembly coupling first		1
8	****		Assembly coupling second		1
9	****		Assembly coupling third		1
10	****		Assembly fourth coupling		1
11	****		Assembly fifth coupling		1
12	****		Assembly sixth coupling		1
13	****		Assembly output group		1
14	****		Assembly Yoke		1
15	:333/F8797		Assembly Flange		1
16	****		Assembly power take off		1
17	****		Assembly gearshift system		1
18	:333/G7871		Assembly gearshift system switch		1
19	****		Unit gearshift system		1
20	****		Assembly control unit plug		1
21	****		Assembly pressure regulator		1
22	:333/G7898		Assembly oil pump		1
23	:333/G7875		Assembly emergency steer pump cover		1
24	****		Assembly Filter		1
25	****		Assembly temperature sensor		1
26	****		Assembly gearshift system screw		1
27	****		Assembly Filter		1
28	:333/G7879		Assembly cover plates		1
29	:333/G7881		Assembly dipstick		1
30	****		Assembly gearshift lever		1

Applicability Date Ranges:
From: 01/10/2011 , To:

Product Catalog\WHEELED LOADERS\416 01243000-01243499,01317500-01317999,01472000-01472999,02095872-02095875 9812/3020 \F AXLES, WHEELS & TRANSMISSION\F05 TRANSMISSIONS SYNCHROSHUTTLE\F5-2-1 FILTER TRANSMISSION OIL

9812/3020 F5-2-1 FILTER TRANSMISSION OIL

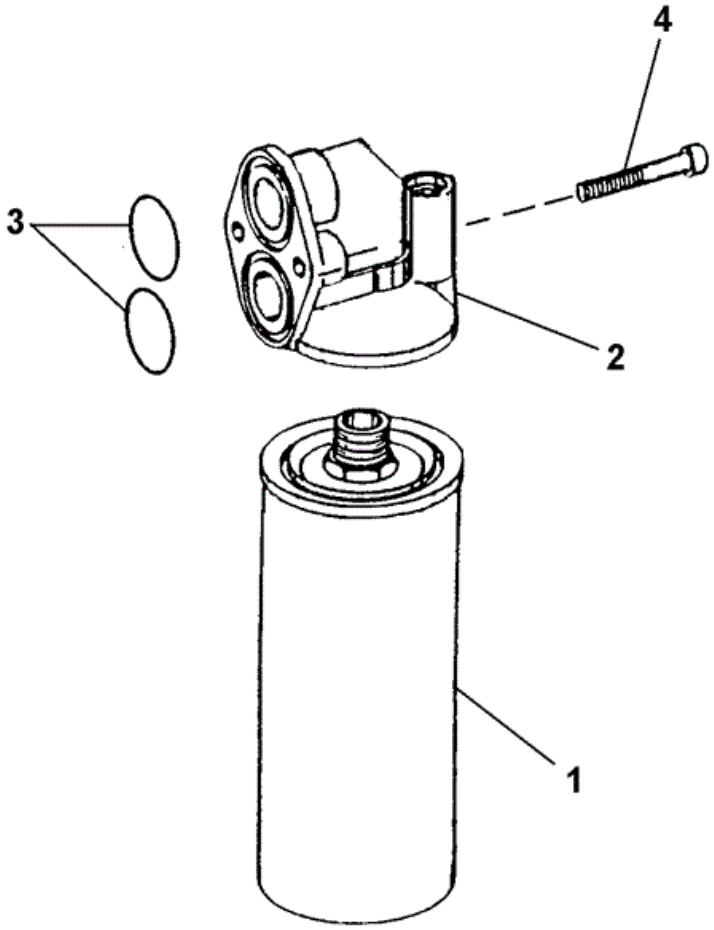

346780

Item	Part No	Change No	Description	Usage Code	QTY

1	32/925197	Superseded	Element filter		1
1	32/925905		Element filter Transmission		1
2	32/925238		Cover filter head		1
3	04/600146		O Ring		2
4	826/10447		Screw cap		2

Applicability Date Ranges:
From: , To:

Product Catalog\WHEELED LOADERS\416 01243000-01243499,01317500-01317999,01472000-01472999,02095872-02095875 9812/3020 \F AXLES, WHEELS & TRANSMISSION\F05 TRANSMISSIONS SYNCHROSHUTTLE\F5-2-10 FILTER TRANSMISSION OIL 333/U2782

9812/3020 F5-2-10 FILTER TRANSMISSION OIL 333/U2782

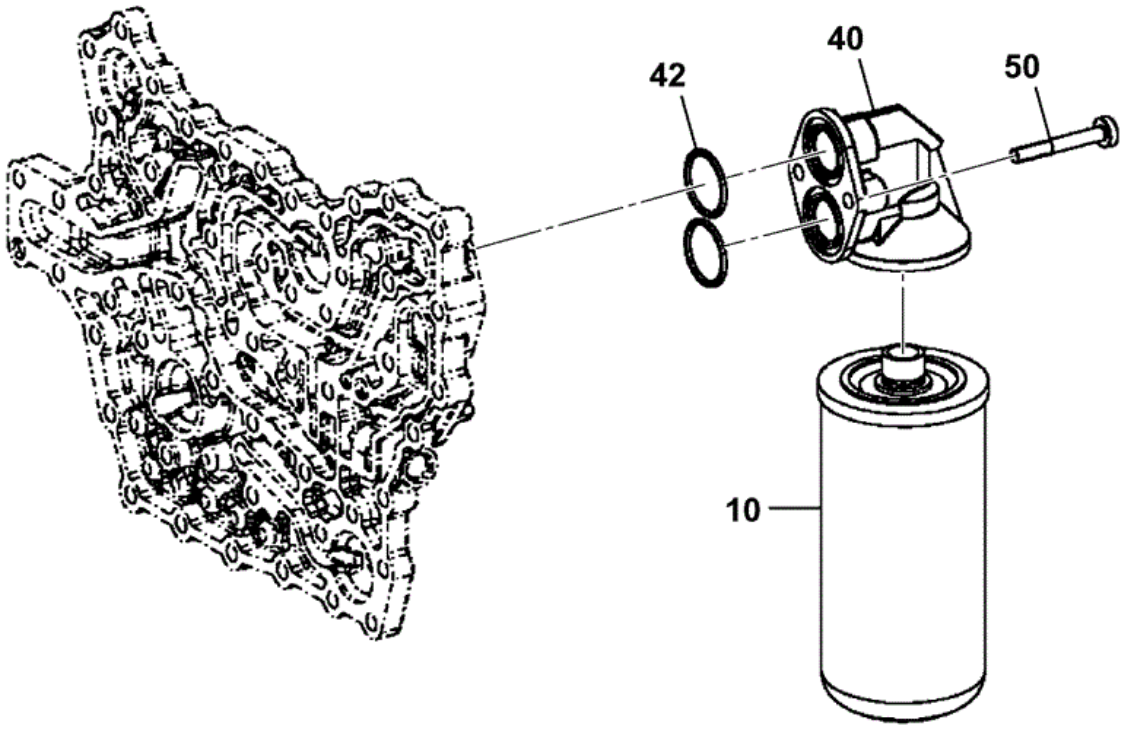

333-E6065-1

Item	Part No	Change No	Description	Usage Code	QTY
10	32/925905		Element filter Transmission		1
40	32/925238		Cover filter head		1

42	332/D6931		O Ring		2
50	335/E7079		Screw Torx, M8X60		2

Applicability Date Ranges:
From: , To:

Product Catalog\WHEELED LOADERS\416 01243000-01243499,01317500-01317999,01472000-01472999,02095872-02095875 9812/3020 \F AXLES, WHEELS & TRANSMISSION\F05 TRANSMISSIONS SYNCHROSHUTTLE\F5-3-1 TRANSMISSION MOUNTING

9812/3020 F5-3-1 TRANSMISSION MOUNTING

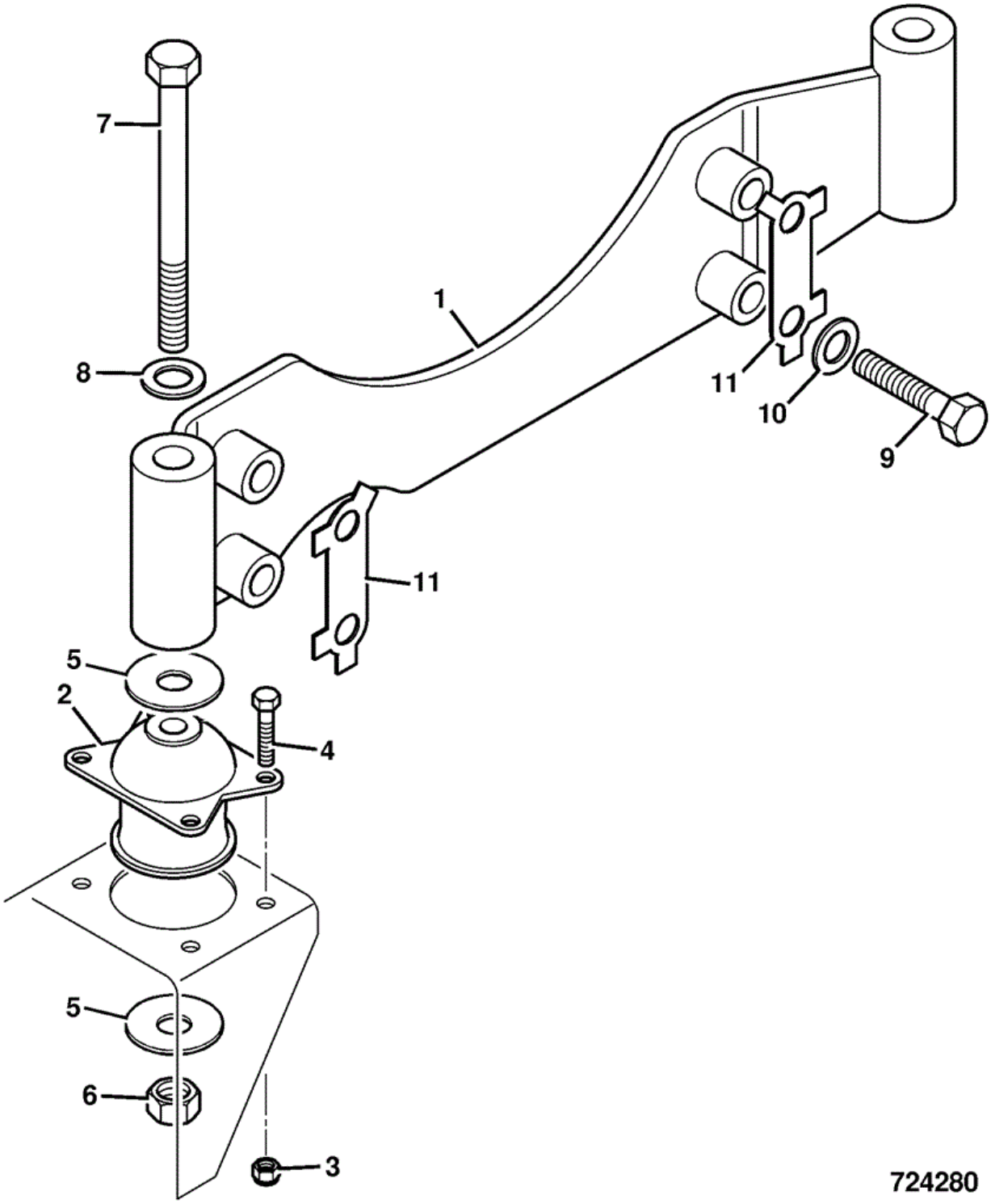

Item	Part No	Change No	Description	Usage Code	QTY
1	335/06220		Bracket transmission mount		1
2	331/39174		Mounting resilient		2

3	1370/0303D		Nut Self Lock M10		8
4	1315/0408D		Setscrew M10 x 30		8
5	120/16902		Plate Rebound		4
6	1370/0603D		Nut -Lock Nut, M16		2
7	1315/3729D		Bolt		2
8	1420/0011D		Washer (M16)		2
9	1316/3817D		Bolt		4
10	1422/0012D		Washer Hard		4
11	331/18683		Plate Locking		2
12	4101/0602		Fluid locking		0

Applicability Date Ranges:
From: , To:

Product Catalog\WHEELED LOADERS\416 01243000-01243499,01317500-01317999,01472000-01472999,02095872-02095875 9812/3020 \F AXLES, WHEELS & TRANSMISSION\F05 TRANSMISSIONS SYNCHROSHUTTLE\F5-4-1 TORQUE CONVERTER DRIVE PLATES

9812/3020 F5-4-1 TORQUE CONVERTER DRIVE PLATES

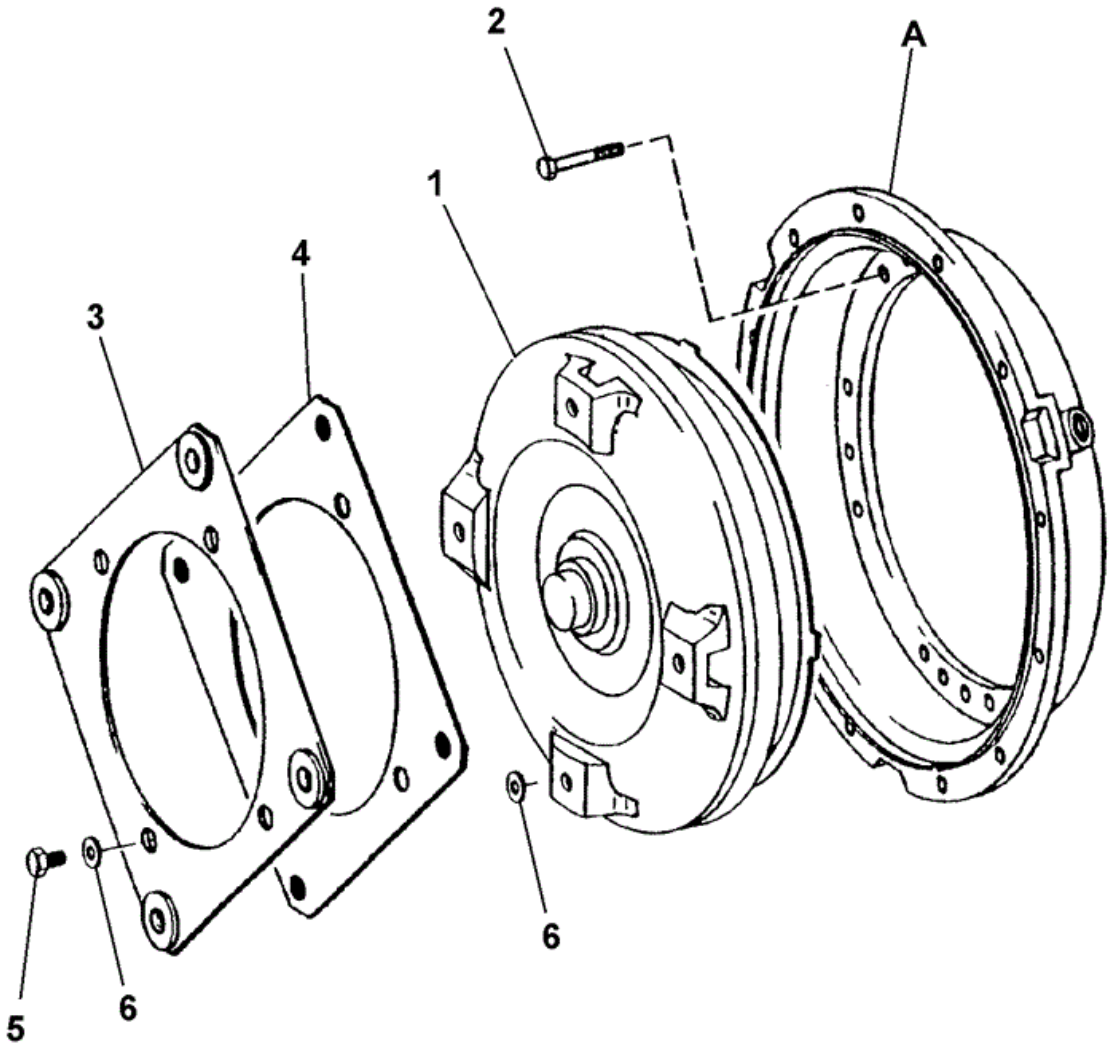

368560

	Part				

Item	No	Change No	Description	Usage Code	QTY
A	331/17650		Housing convertor		1
1	04/600806		Converter		1
2	04/600305		Bolt		18
3	331/42498		Diaphragm engine connect		1
4	331/42498		Diaphragm engine connect		1
5	826/10442		Bolt M12		4
6	04/600567		Washer		8

Applicability Date Ranges:
From: , To: M1317623

Product Catalog\WHEELED LOADERS\416 01243000-01243499,01317500-01317999,01472000-01472999,02095872-02095875 9812/3020 \F AXLES, WHEELS & TRANSMISSION\F05 TRANSMISSIONS SYNCHROSHUTTLE\F5-4-2 TORQUE CONVERTER DRIVE PLATES(3)

9812/3020 F5-4-2 TORQUE CONVERTER DRIVE PLATES(3)

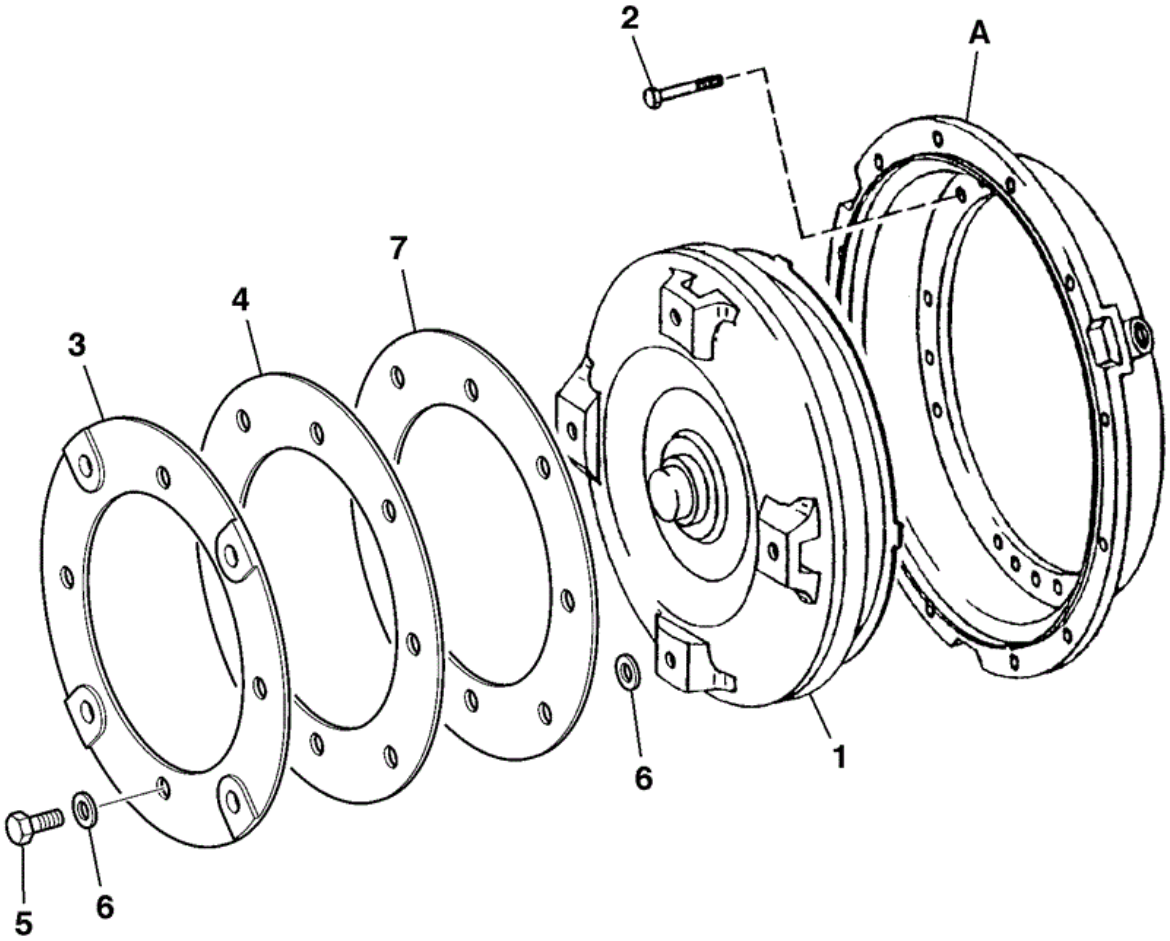

368562

Item	Part No	Change No	Description	Usage Code	QTY
A	331/17650		Housing convertor		1
			Converter		

1	332/C7388		See F5-5-2		1
2	04/600305		Bolt		18
3	332/C7395		Diaphragm		1
4	332/C7396		Diaphragm		1
5	826/10442		Bolt M12		4
6	332/C7387		Washer		8
7	332/C7397		Diaphragm		1

Applicability Date Ranges:
From: , To: M1317623

Product Catalog\WHEELED LOADERS\416 01243000-01243499,01317500-01317999,01472000-01472999,02095872-02095875 9812/3020 \F AXLES, WHEELS & TRANSMISSION\F05 TRANSMISSIONS SYNCHROSHUTTLE\F5-4-3 TORQUE CONVERTER DRIVE PLATES

9812/3020 F5-4-3 TORQUE CONVERTER DRIVE PLATES

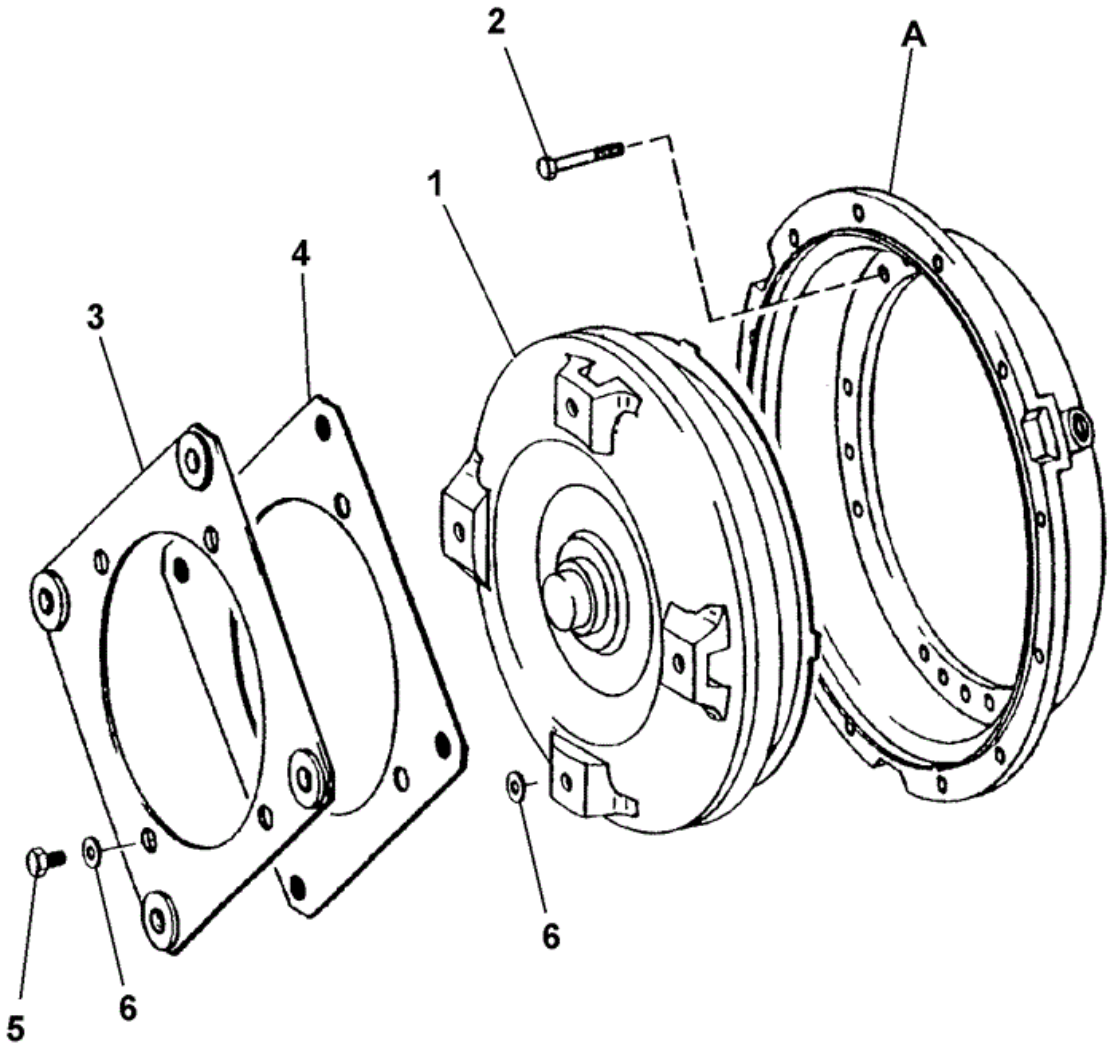

368560

	Part				

Item	No	Change No	Description	Usage Code	QTY
A	331/17650		Housing convertor		1
1	04/600806		Converter		1
2	04/600305		Bolt		18
3	332/F3161		Diaphragm assembly (3 plates)		1
4	****		'See Remark' Not fitted		1
5	826/10442		Bolt M12		4
6	04/600567		Washer		8

Applicability Date Ranges:
From: M1317624 , To:

Product Catalog\WHEELED LOADERS\416 01243000-01243499,01317500-01317999,01472000-01472999,02095872-02095875 9812/3020 \F AXLES, WHEELS & TRANSMISSION\F05 TRANSMISSIONS SYNCHROSHUTTLE\F5-5-1 TORQUE CONVERTER UNIT

9812/3020 F5-5-1 TORQUE CONVERTER UNIT

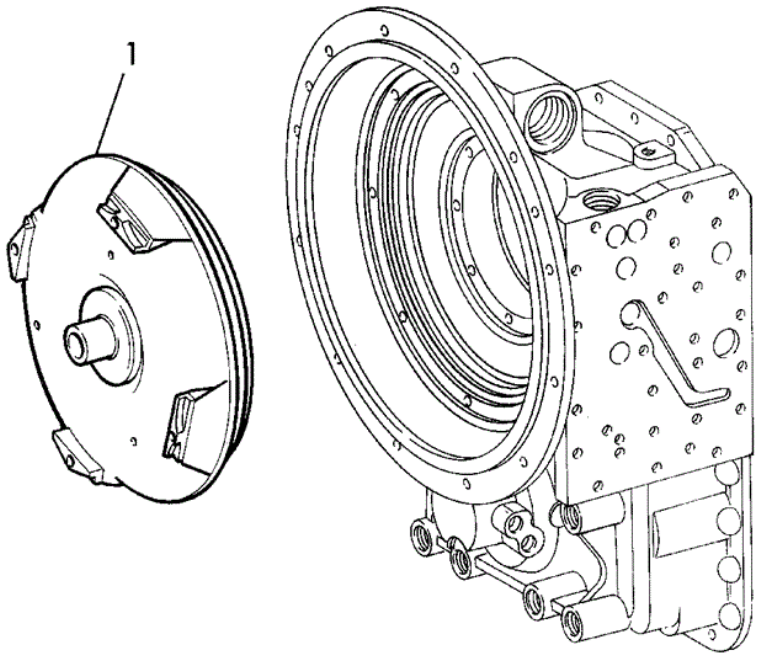

Item	Part No	Change No	Description	Usage Code	QTY
10	04/600806		Converter		1

Applicability Date Ranges:
From: , To:

Product Catalog\WHEELED LOADERS\416 01243000-01243499,01317500-01317999,01472000-01472999,02095872-02095875 9812/3020 \F AXLES, WHEELS & TRANSMISSION\F05 TRANSMISSIONS SYNCHROSHUTTLE\F5-5-10 TORQUE CONVERTER HOUSING 333/U2782

9812/3020 F5-5-10 TORQUE CONVERTER HOUSING 333/U2782

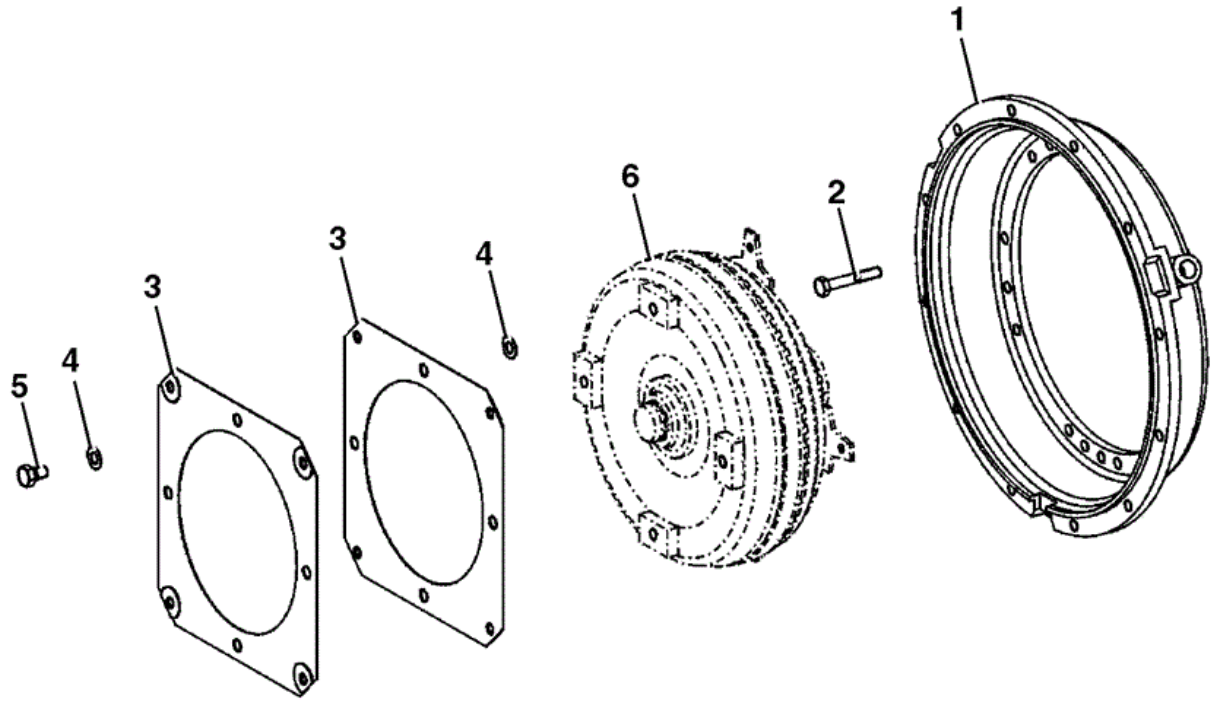

725320

Item	Part No	Change No	Description	Usage Code	QTY
1	331/17650		Housing convertor		1
2	333/F7494		Bolt M10 x 65mm		18

3	332/F3161		Diaphragm assembly (3 plates)		1
4	04/600567		Washer		8
5	333/F8943		Screw Hexagonal, M12X18		4
6	04/600806		Converter		1

Applicability Date Ranges:
From: , To:

Product Catalog\WHEELED LOADERS\416 01243000-01243499,01317500-01317999,01472000-01472999,02095872-02095875 9812/3020 \F AXLES, WHEELS & TRANSMISSION\F05 TRANSMISSIONS SYNCHROSHUTTLE\F5-9-1 INPUT GROUP

9812/3020 F5-9-1 INPUT GROUP

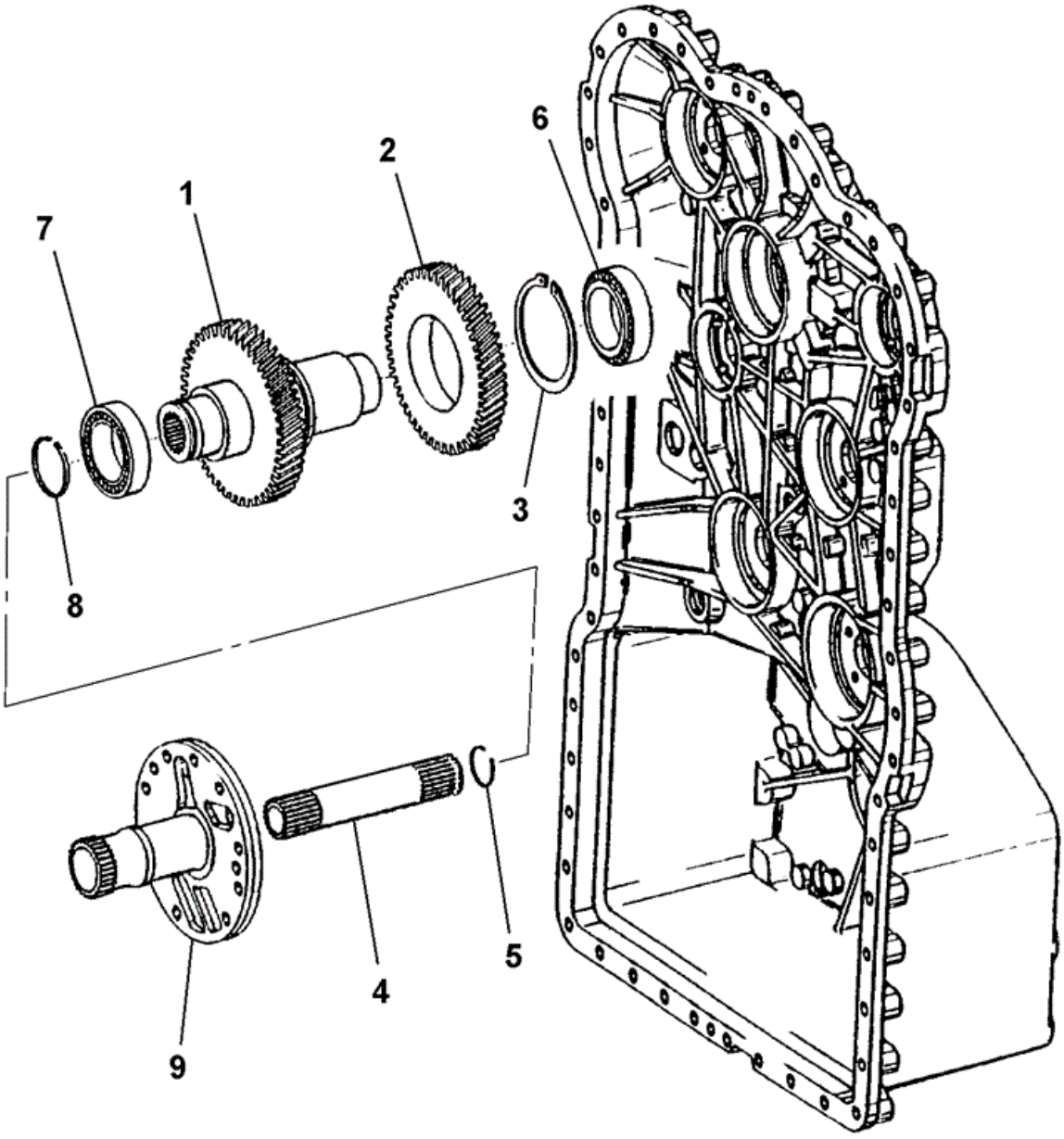

346610

Item	Part No	Change No	Description	Usage Code	QTY

1	331/42506		Shaft input		1
2	331/42509		Gear input		1
3	04/600320		Ring external retaining		1
4	914/60118		Shaft turbine		1
5	04/600318		Ring snap		1
6	907/20009		Bearing roller		2
7	907/20009		Bearing roller		1
8	04/600549		Ring piston		1
9	04/600686		Shaft stator		1

Applicability Date Ranges:
From: , To:

Product Catalog\WHEELED LOADERS\416 01243000-01243499,01317500-01317999,01472000-01472999,02095872-02095875 9812/3020 \F AXLES, WHEELS & TRANSMISSION\F05 TRANSMISSIONS SYNCHROSHUTTLE\F5-9-10 INPUT GROUP PARTS 333/U2782

9812/3020 F5-9-10 INPUT GROUP PARTS 333/U2782

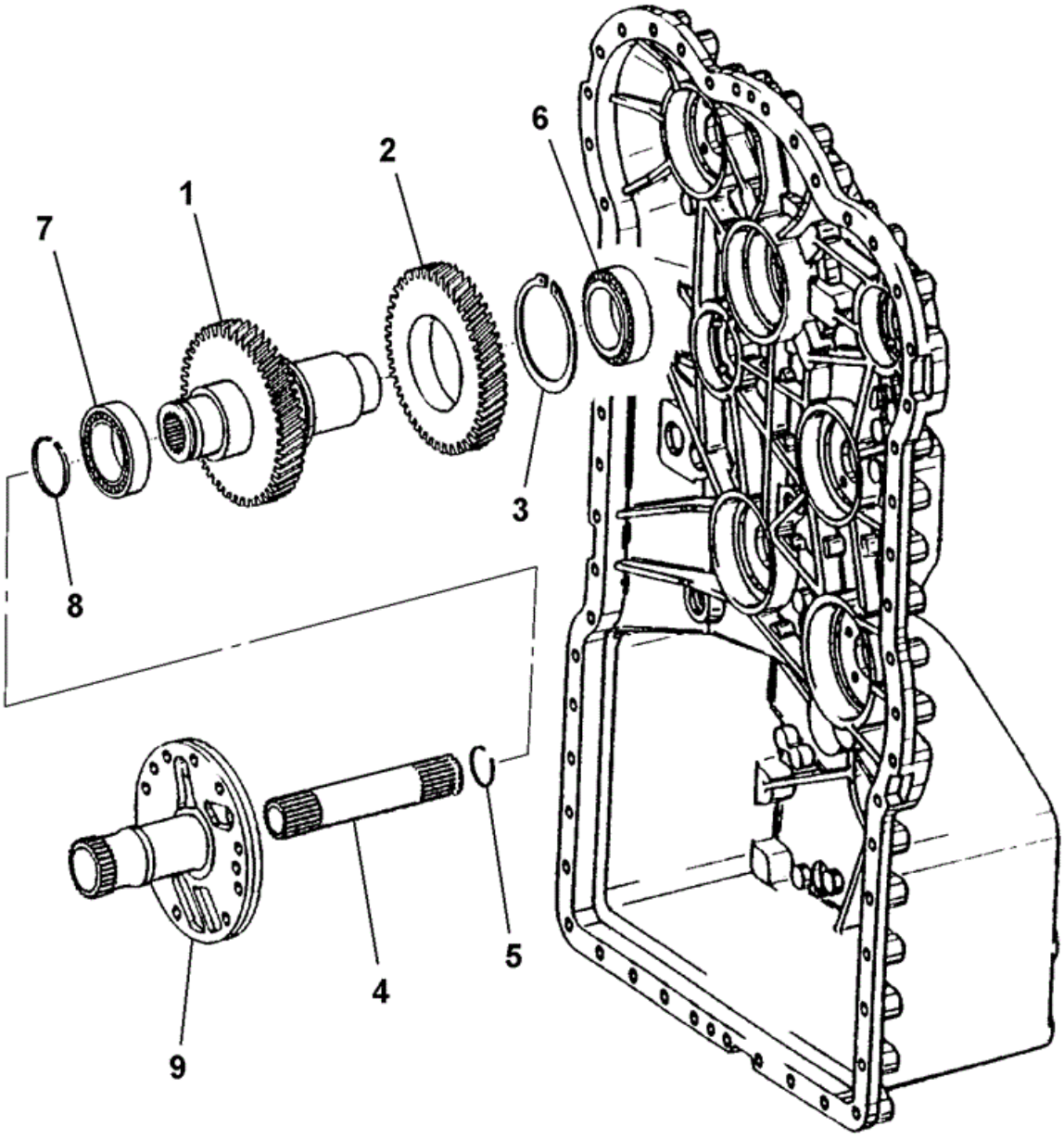

346610

Item	Part No	Change No	Description	Usage Code	QTY

1	331/42506		Shaft input		1
2	331/42509		Gear input		1
3	04/600320		Ring external retaining		1
4	914/60118		Shaft turbine		1
5	04/600318		Ring snap		1
6	907/20009		Bearing roller		2
7	907/20009		Bearing roller		1
8	04/600549		Ring piston		1
9	332/D6920		Shaft stator		1

Applicability Date Ranges:
From: , To:

Product Catalog\WHEELED LOADERS\416 01243000-01243499,01317500-01317999,01472000-01472999,02095872-02095875 9812/3020 \F AXLES, WHEELS & TRANSMISSION\F05 TRANSMISSIONS SYNCHROSHUTTLE\F5-10-1 GEARBOX HOUSING

9812/3020 F5-10-1 GEARBOX HOUSING

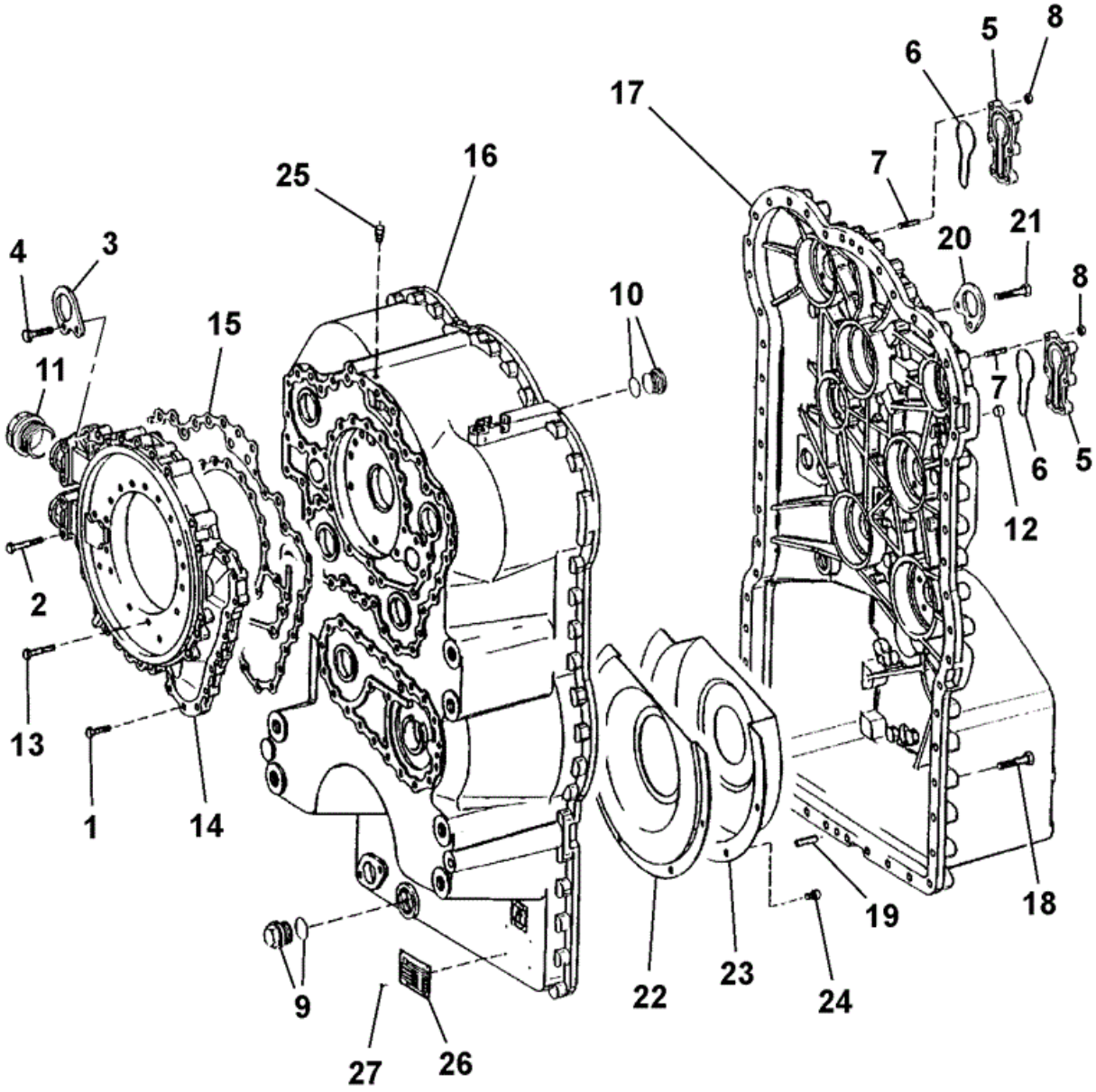

Item	Part No	Change No	Description	Usage Code	QTY

1	826/10446		Screw cap		15
2	826/10447		Screw cap		4
3	331/16378		Plate fixing		1
4	04/600323		Screw		2
5	331/16389		Cover		2
6	828/10173		O Ring		2
7	04/600345		Stud M8		12
8	04/600328		Nut		12
9	32/925198		Plug		1
9A	828/10175		O Ring		1
10	32/925199		Plug		1
10A	828/10175		O Ring		1
13	826/10445		Screw cap		21
14	331/16385		Housing oil feed		1
15	813/10126		Gasket housing		21
16	331/42510		Housing front		1
17	331/42511		Housing rear		1
18	04/600323		Screw		44
19	04/600322		Pin		2
20	331/16378		Plate fixing		1
21	04/600323		Screw		2
22	04/600431		Plate cover		1
23	04/600325		Plate cover		1
24	826/10450		Capscrew		4
25	04/800639		Breather		1
26	04/600326		Plate data		1
27	04/800645		Rivet		4

Applicability Date Ranges:
From: , To:

Product Catalog\WHEELED LOADERS\416 01243000-01243499,01317500-01317999,01472000-01472999,02095872-02095875 9812/3020 \F AXLES, WHEELS & TRANSMISSION\F05 TRANSMISSIONS SYNCHROSHUTTLE\F5-10-10 GEARBOX HOUSING 333/U2782

9812/3020 F5-10-10 GEARBOX HOUSING 333/U2782

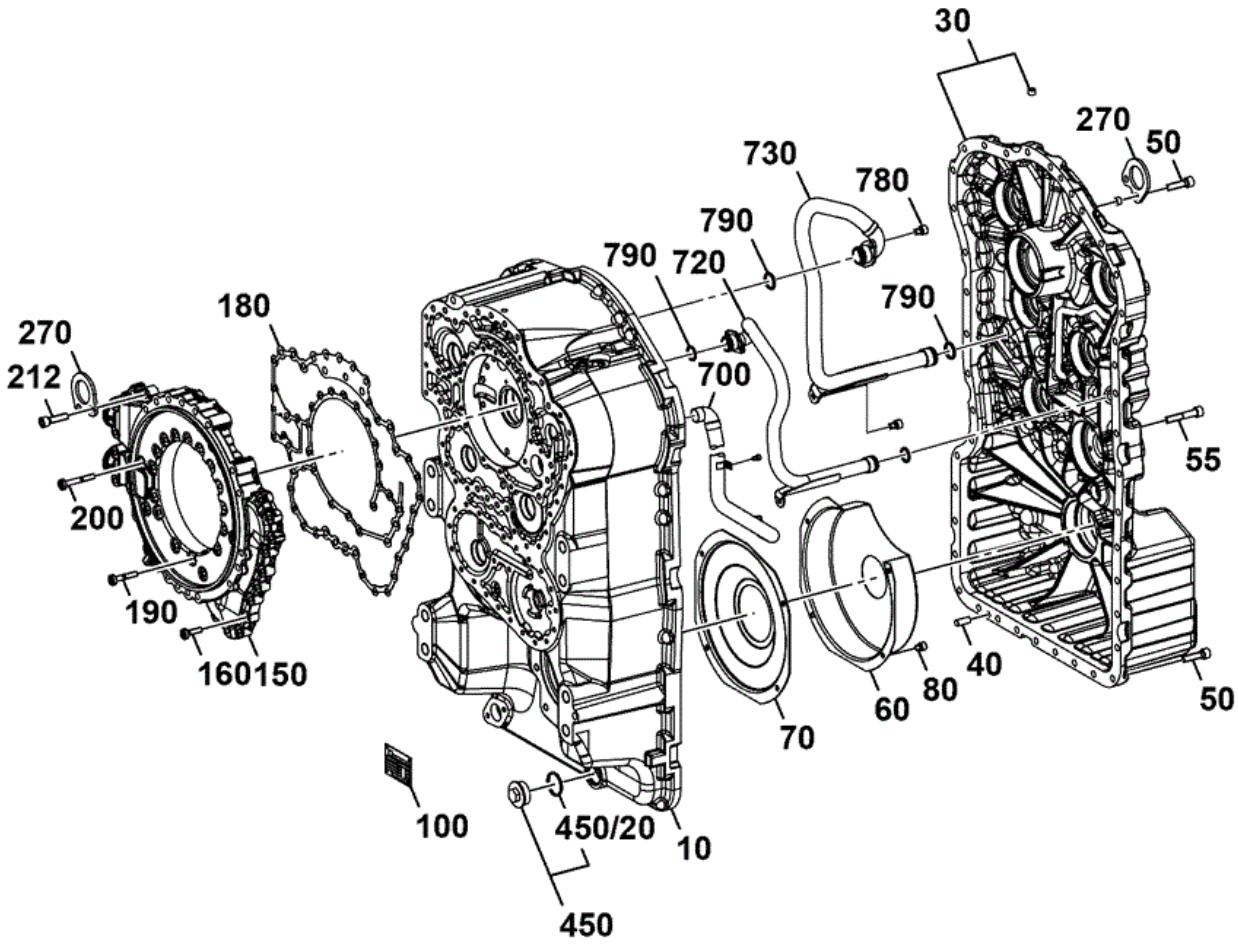

333-F8788-1

Item	Part No	Change No	Description	Usage Code	QTY
10	332/D6921		Housing gearbox front		1
30	333/F9108		Housing rear		1

30	333/F9109		Housing rear		1
40	04/600322		Pin		2
50	333/F8950		Capscrew		35
55	333/F8951		Capscrew		6
60	04/600325		Plate cover		1
70	04/600431		Plate cover		1
80	333/E6187		Capscrew M8 x 12mm		4
100	****		Plate Data		1
150	331/58791		Housing oil feed		1
160	333/E6254		Screw M6 x 76mm		15
180	813/10126		Gasket housing		1
190	335/E7078		Screw		21
200	335/E7079		Screw Torx, M8X60		4
212	333/F8950		Capscrew		2
270	331/16378		Plate fixing		2
450	333/F8953		Plug screw		1
450/20	828/10175		O Ring		1
700	333/F8954		Tube suction		1
720	331/42513		Pipe oil		1
730	331/42514		Pipe oil		1
780	333/E6187		Capscrew M8 x 12mm		7
790	828/10174		O Ring		4

Applicability Date Ranges:
From: , To:

Product Catalog\WHEELED LOADERS\416 01243000-01243499,01317500-01317999,01472000-01472999,02095872-02095875 9812/3020 \F AXLES, WHEELS & TRANSMISSION\F05 TRANSMISSIONS SYNCHROSHUTTLE\F5-10-20 GEARBOX HOUSING BREATHER 333/U2782

9812/3020 F5-10-20 GEARBOX HOUSING BREATHER 333/U2782

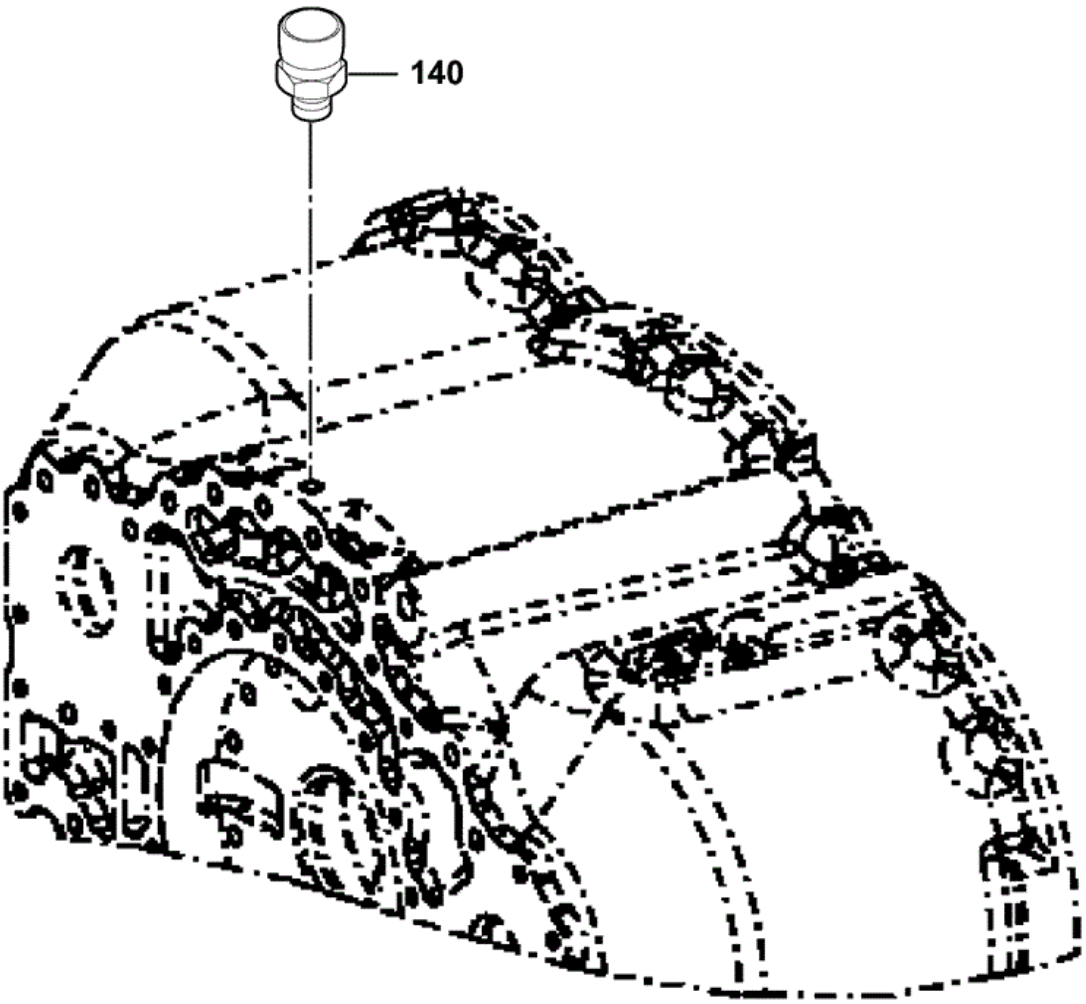

333-E6026-1

Item	Part No	Change No	Description	Usage Code	QTY
140	04/800639		Breather		1

Applicability Date Ranges:
From: , To:

Product Catalog\WHEELED LOADERS\416 01243000-01243499,01317500-01317999,01472000-01472999,02095872-02095875 9812/3020 \F AXLES, WHEELS & TRANSMISSION\F05 TRANSMISSIONS SYNCHROSHUTTLE\F5-10-30 GEARBOX HOUSING EMERGENCY STEER PUMP COVER, 333/U2782

9812/3020 F5-10-30 GEARBOX HOUSING EMERGENCY STEER PUMP COVER, 333/U2782

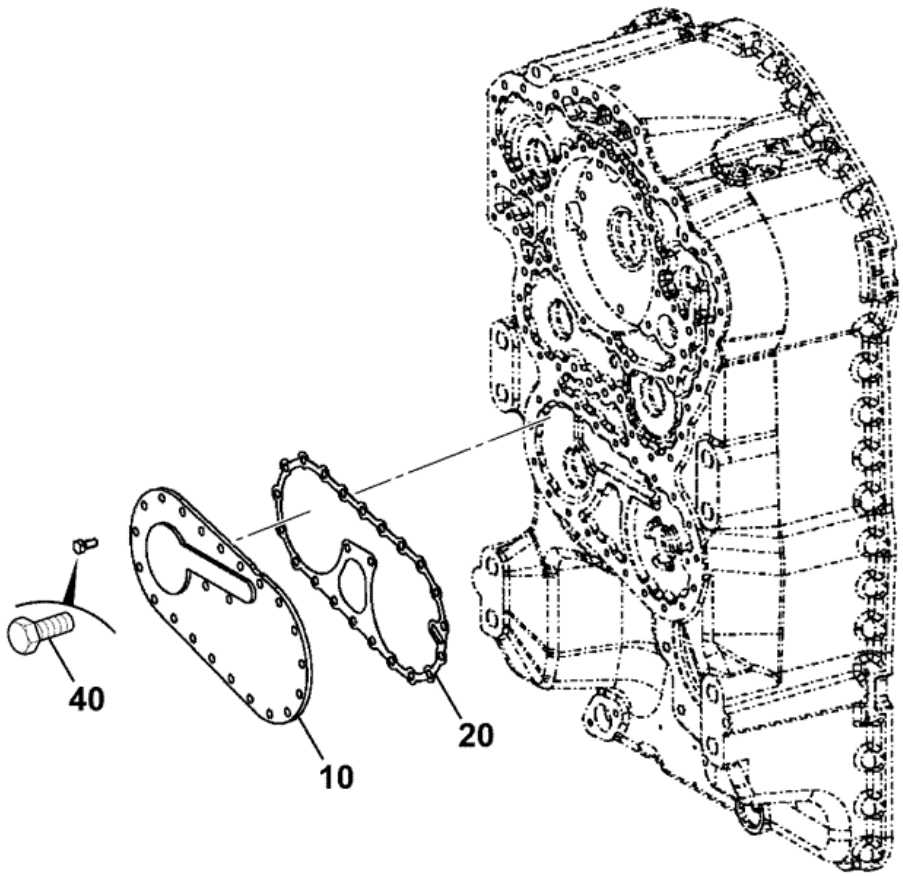

333-E6057-1

Item	Part No	Change No	Description	Usage Code	QTY
10	331/42605		Cover		1

20	04/600557		Gasket		1
40	333/E6262		Bolt M8 x 18mm		23

Applicability Date Ranges:
From: , To:

Product Catalog\WHEELED LOADERS\416 01243000-01243499,01317500-01317999,01472000-01472999,02095872-02095875 9812/3020 \F AXLES, WHEELS & TRANSMISSION\F05 TRANSMISSIONS SYNCHROSHUTTLE\F5-10-40 GEARBOX HOUSING COVER PLATE 333/U2782

9812/3020 F5-10-40 GEARBOX HOUSING COVER PLATE 333/U2782

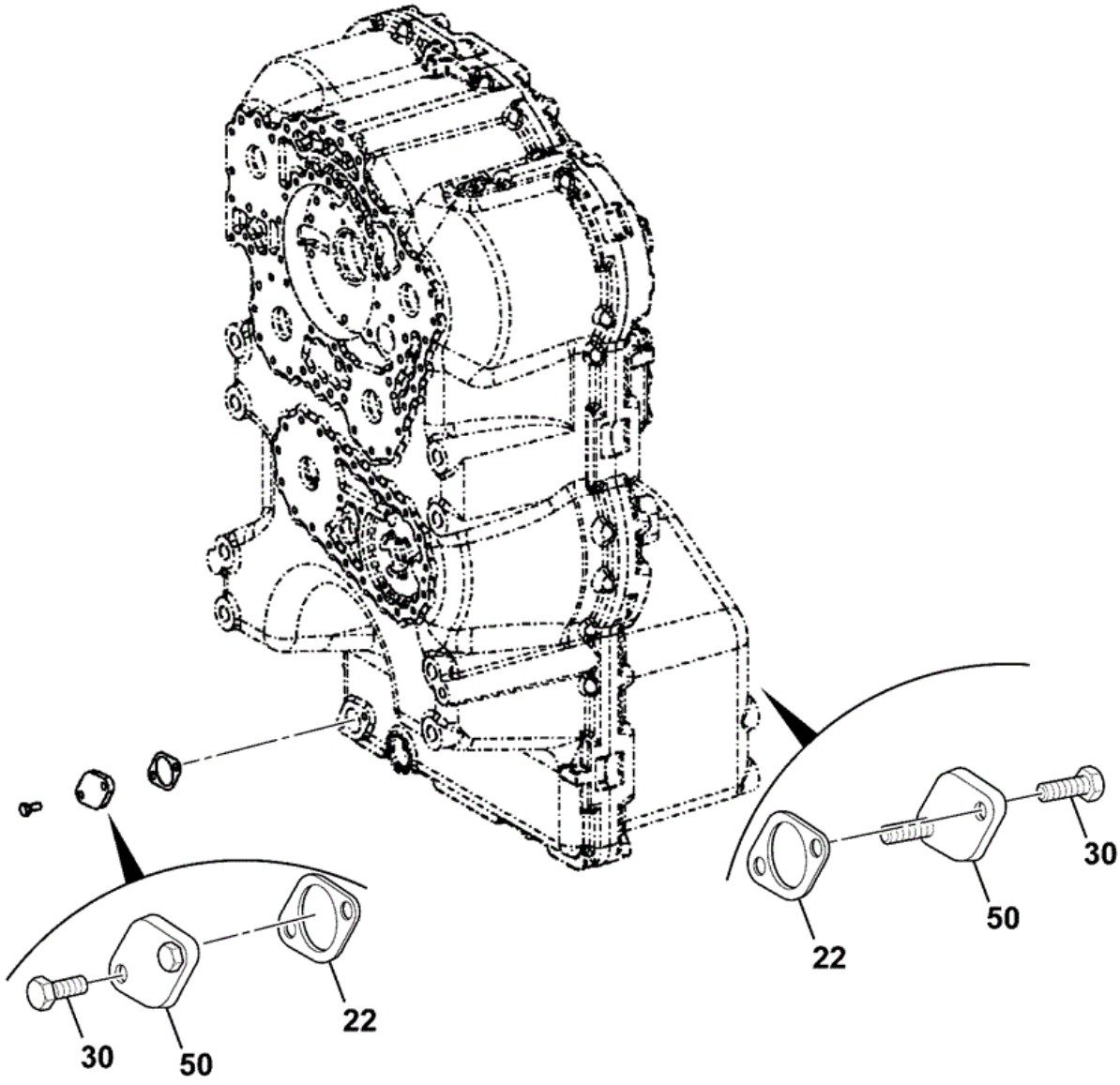

333-E6066-1

Item	Part No	Change No	Description	Usage Code	QTY
22	04/800423		Gasket		2
30	333/E6262		Bolt M8 x 18mm		4

50	04/800185		Plate cover		2

Applicability Date Ranges:
From: , To:

Product Catalog\WHEELED LOADERS\416 01243000-01243499,01317500-01317999,01472000-01472999,02095872-02095875 9812/3020 \F AXLES, WHEELS & TRANSMISSION\F05 TRANSMISSIONS SYNCHROSHUTTLE\F5-10-50 GEARBOX HOUSING CONTROL UNIT PLUG, 333/U2782

9812/3020 F5-10-50 GEARBOX HOUSING CONTROL UNIT PLUG, 333/U2782

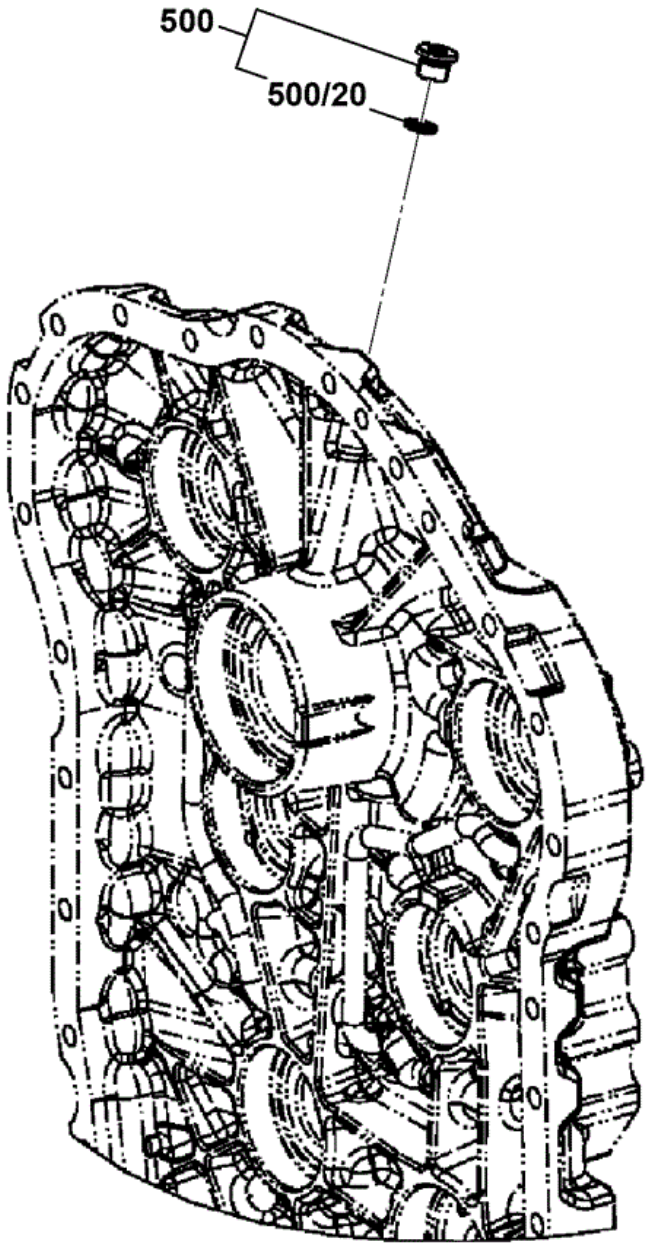

333-G7874-1

Item	Part No	Change No	Description	Usage Code	QTY
500	****		T.B.A		1

500/20	04/600253		O Ring		1

Applicability Date Ranges:
From: , To:

Product Catalog\WHEELED LOADERS\416 01243000-01243499,01317500-01317999,01472000-01472999,02095872-02095875 9812/3020 \F AXLES, WHEELS & TRANSMISSION\F05 TRANSMISSIONS SYNCHROSHUTTLE\F5-11-1 COUPLING GROUP FIRST

9812/3020 F5-11-1 COUPLING GROUP FIRST

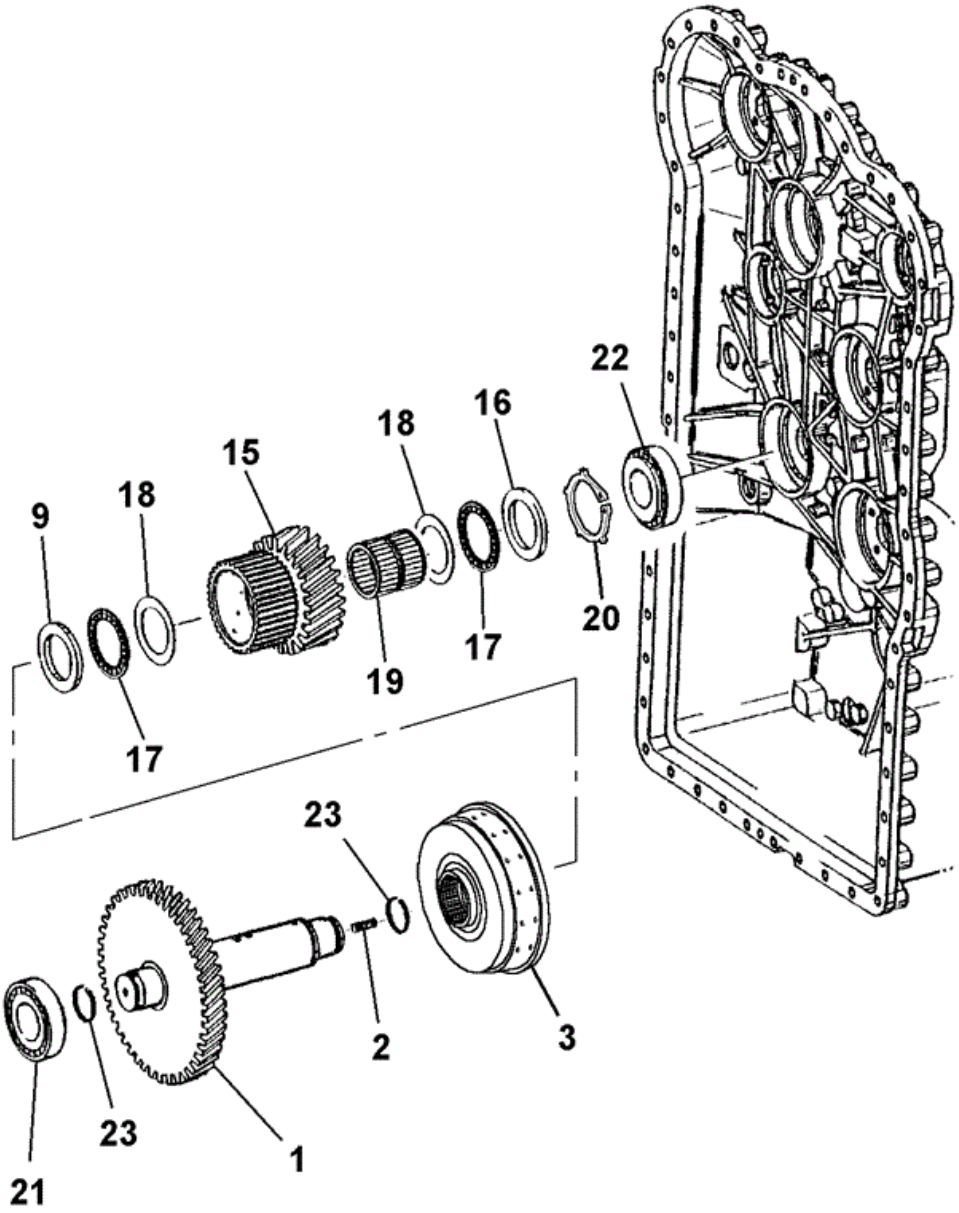

381930

Item	Part No	Change No	Description	Usage Code	QTY

1	04/600332		Shaft 68 teeth		1
2	826/10625		Stud		1
3	04/600850		Coupling		1
9	04/600179		Disc		1
15	04/600336		Gear Idler 26 teeth		1
16	04/600179		Disc		1
17	04/600180		Bearing needle		2
18	04/600181		Washer		2
19	04/600335		Bearing needle		1
20	04/600183		Ring retaining		1
21	04/600232		Bearing roller		1
22	04/600232		Bearing roller		1
23	04/600186		Ring piston		2

Applicability Date Ranges:
From: , To:

Product Catalog\WHEELED LOADERS\416 01243000-01243499,01317500-01317999,01472000-01472999,02095872-02095875 9812/3020 \F AXLES, WHEELS & TRANSMISSION\F05 TRANSMISSIONS SYNCHROSHUTTLE\F5-11-10 COUPLING GROUP FIRST 333/U2782

9812/3020 F5-11-10 COUPLING GROUP FIRST 333/U2782

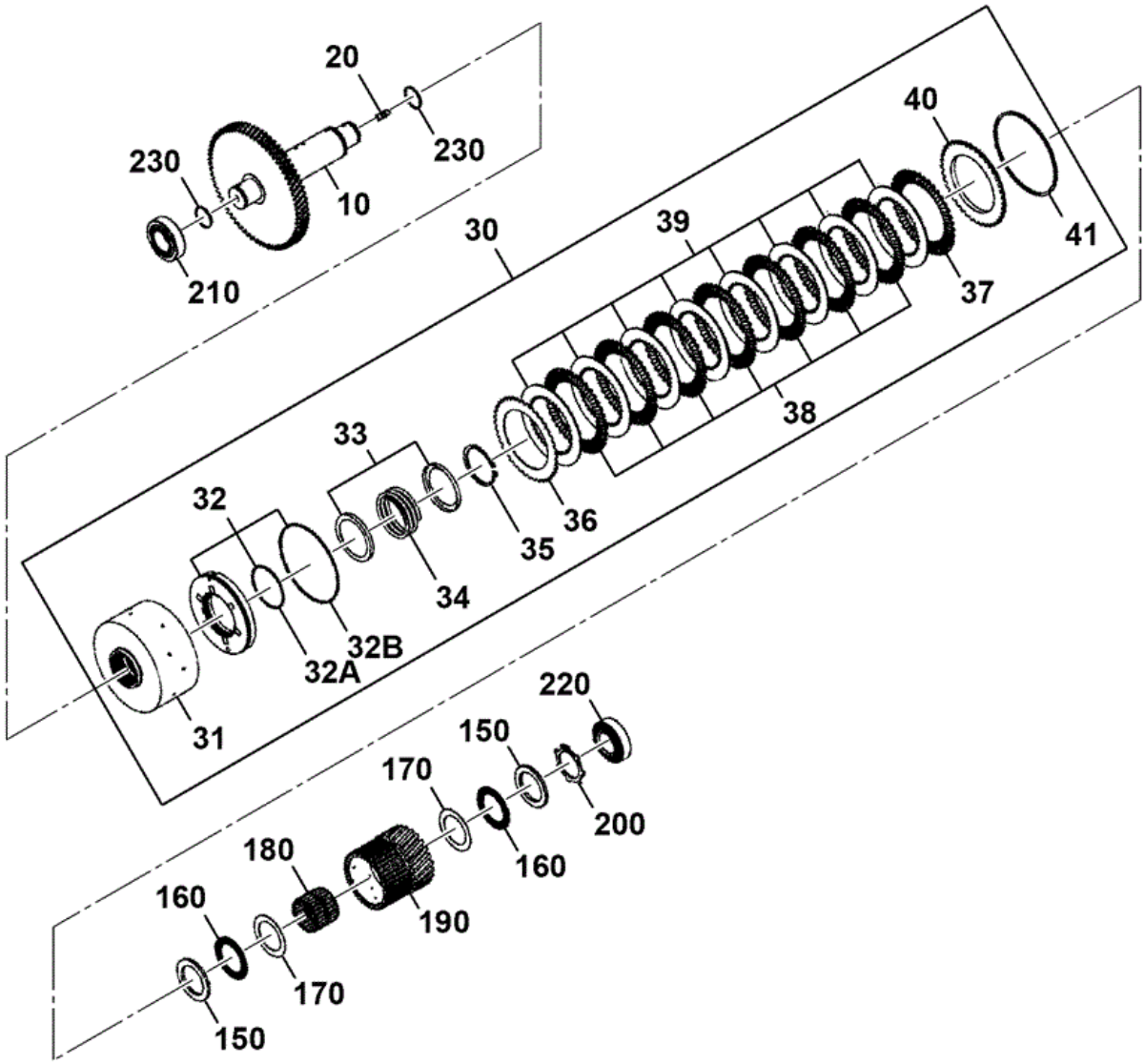

333-G7864-1

Item	Part No	Change No	Description	Usage Code	QTY
10	333/F9129		Shaft		1
20	826/10625		Stud		1

30	04/600849		Coupling		1
31	333/F8956		Carrier disc		1
32	04/600203		Piston piston		1
32A	04/600169		O Ring		1
32B	04/600204		O Ring		1
33	332/E3644		Ring guide		2
34	332/E3646		Spring compression		1
35	332/E3647		Ring retaining		1
36	04/600701		Disc clutch		1
37	04/600701		Disc clutch		1
38	04/600702		Disc clutch		7
39	04/600207		Disc clutch		8
40	333/E6236		Shim end		1
41	04/600209		Ring retaining 2.1mm		1
41	04/600210		Ring retaining, 2.25mm		1
41	04/600211		Ring retaining, 2.4mm		1
41	04/600212		Ring retaining, 2.55mm		1
41	04/600213		Ring retaining, 2.7mm		1
41	04/600214		Ring retaining, 2.85mm		1
41	04/600215		Ring retaining, 3.00mm		1
41	04/600216		Ring retaining, 3.15mm		1
41	04/600217		Ring retaining, 3.3mm		1
41	04/600218		Ring retaining, 3.45mm		1
41	04/600219		Ring retaining, 3.60mm		1
41	04/600220		Ring retaining, 3.75mm		1
41	04/600221		Ring retaining, 3.90mm		1
41	04/600222		Ring retaining, 4.05mm		1
41	04/600223		Ring retaining, 4.20mm		1
150	04/600179		Disc		2
160	04/600180		Bearing needle		2
170	04/600181		Washer		2
180	04/600335		Bearing needle		1
190	04/600336		Gear Idler 26 teeth		1
200	04/600183		Ring retaining		1
210	333/E6242		Bearing		1
220	333/E6242		Bearing		1
230	04/600186		Ring piston		2

From: , To:

Product Catalog\WHEELED LOADERS\416 01243000-01243499,01317500-01317999,01472000-01472999,02095872-02095875 9812/3020 \F AXLES, WHEELS & TRANSMISSION\F05 TRANSMISSIONS SYNCHROSHUTTLE\F5-12-1 COUPLING GROUP SECOND

9812/3020 F5-12-1 COUPLING GROUP SECOND

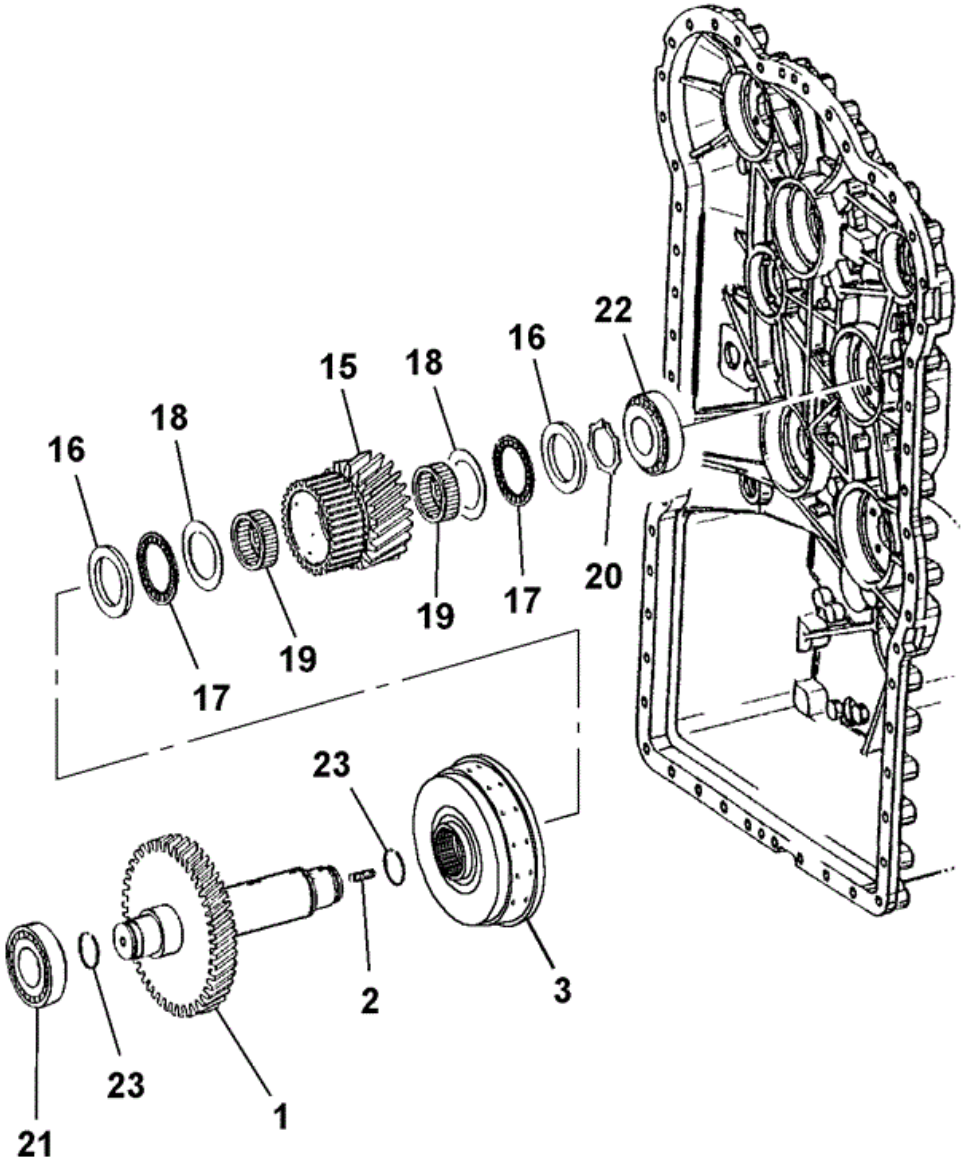

381940

Item	Part No	Change No	Description	Usage Code	QTY

1	04/600337		Shaft 56 teeth		1
2	826/10625		Stud		1
3	04/600853	Superseded	Coupling		1
3	331/42516		Coupling		1
15	04/600346		Gear Idler 25 teeth		1
16	04/600339		Disc		2
17	04/600340		Bearing		2
18	04/600343		Washer axial		2
19	04/600344		Bearing		2
20	04/600551		Ring retaining		1
21	04/600232		Bearing roller		1
22	04/600232		Bearing roller		1
23	04/600186		Ring piston		2

Applicability Date Ranges:
From: , To:

Product Catalog\WHEELED LOADERS\416 01243000-01243499,01317500-01317999,01472000-01472999,02095872-02095875 9812/3020 \F AXLES, WHEELS & TRANSMISSION\F05 TRANSMISSIONS SYNCHROSHUTTLE\F5-12-10 COUPLING GROUP SECOND 333/U2782

9812/3020 F5-12-10 COUPLING GROUP SECOND 333/U2782

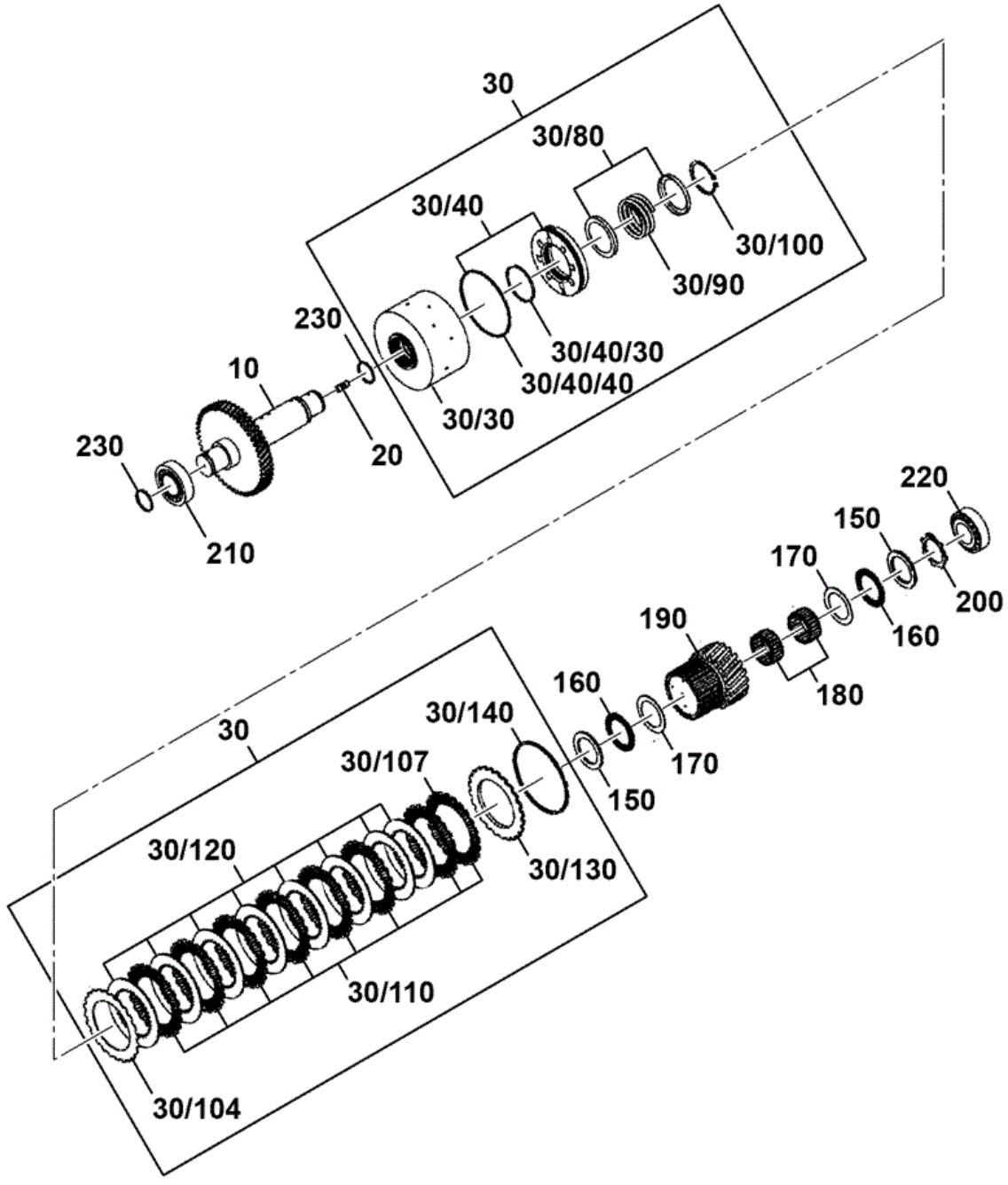

Item	Part No	Change No	Description	Usage Code	QTY
10	333/F8957		Shaft		1
20	826/10625		Stud		1

30	04/600853		Coupling		1
30/30	332/E3694		Carrier disc		1
30/40	332/E3648		Piston		1
30/40/30	332/E3649		O Ring		1
30/40/40	04/800727		O Ring		1
30/80	04/800284		Ring guide		2
30/90	04/800285		Spring		1
30/100	332/E3650		Ring retaining		1
30/104	04/600471		Disc		1
30-/107	04/600471		Disc		1
30/110	04/600469		Disc		7
30/120	332/E3651		Disc		8
30/130	333/F8959		Shim		1
30/140	04/801579		Ring snap 2.10 mm		1
30/140	04/800432		Ring snap 2.25 mm		1
30/140	04/800435		Ring snap 2.40 mm		1
30/140	332/E3653		Ring snap 2.55mm		1
30/140	332/E3654		Ring snap 2.70mm		1
30/140	332/E3656		Ring snap 2.85mm		1
30/140	332/E3657		Ring snap 3.00mm		1
30/140	332/E3661		Ring snap 3.15mm		1
30/140	332/E3662		Ring snap 3.30mm		1
30/140	332/E3663		Ring snap 3.45mm		1
30/140	332/E3664		Ring snap 3.60mm		1
30/140	332/E3665		Ring snap 3.75mm		1
30/140	332/E3666		Ring snap 3.90mm		1
30/140	332/E3667		Ring snap 4.05mm		1
30/140	332/E3668		Ring snap 4.20mm		1
150	04/600339		Disc		2
160	04/600340		Bearing		2
170	04/600343		Washer axial		2
180	04/600344		Bearing		2
190	04/600346		Gear Idler 25 teeth		1
200	04/600551		Ring retaining		1
210	333/E6242		Bearing		1
220	333/E6242		Bearing		1
230	04/600186		Ring piston		2

From: , To:

Product Catalog\WHEELED LOADERS\416 01243000-01243499,01317500-01317999,01472000-01472999,02095872-02095875 9812/3020 \F AXLES, WHEELS & TRANSMISSION\F05 TRANSMISSIONS SYNCHROSHUTTLE\F5-13-1 COUPLING GROUP THIRD

9812/3020 F5-13-1 COUPLING GROUP THIRD

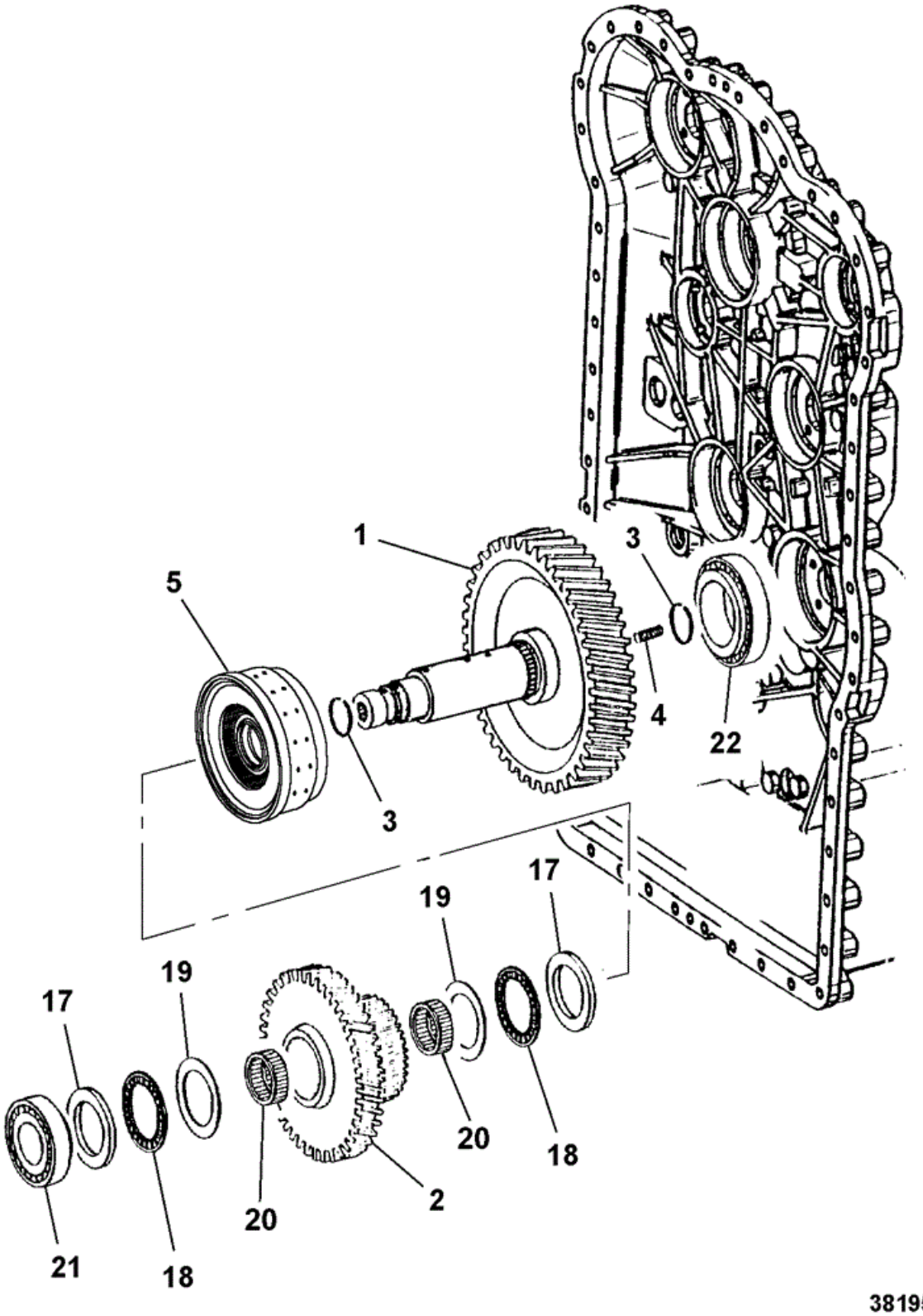

Item	Part No	Change No	Description	Usage Code	QTY

1	04/600348		Gear Disc Carrier 57 teeth		1
2	04/600349		Gear Idler 55 teeth		1
3	04/600186		Ring piston		2
4	826/10625		Stud		1
5	04/600853	Superseded	Coupling		1
5	331/42516		Coupling		1
17	04/600339		Disc		2
18	04/600340		Bearing		2
19	04/600343		Washer axial		2
20	04/600344		Bearing		2
21	04/600232		Bearing roller		1
22	907/20009		Bearing roller		1

Applicability Date Ranges:
From: , To:

Product Catalog\WHEELED LOADERS\416 01243000-01243499,01317500-01317999,01472000-01472999,02095872-02095875 9812/3020 \F AXLES, WHEELS & TRANSMISSION\F05 TRANSMISSIONS SYNCHROSHUTTLE\F5-13-10 COUPLING GROUP THIRD 333/U2782

9812/3020 F5-13-10 COUPLING GROUP THIRD 333/U2782

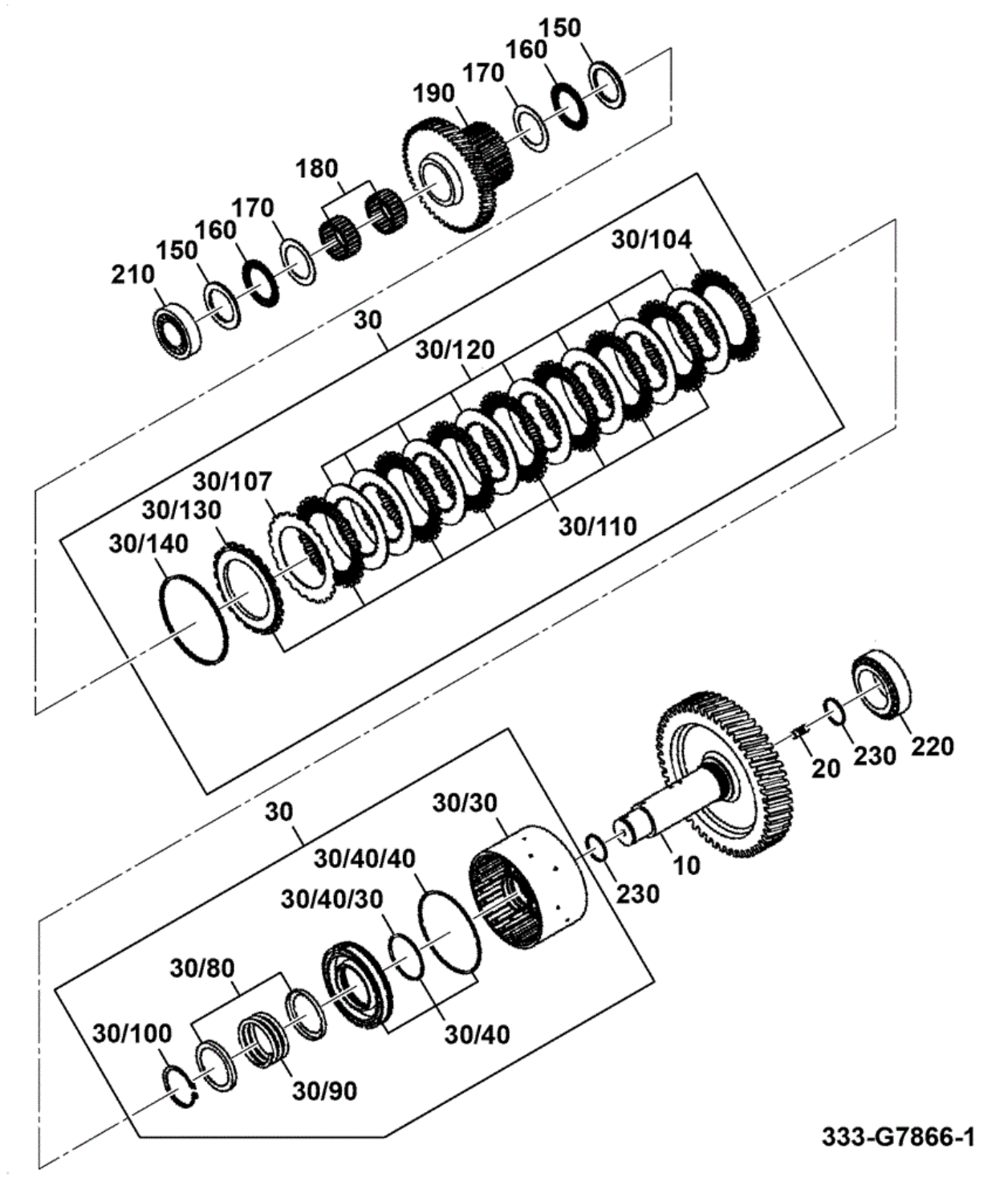

Item	Part No	Change No	Description	Usage Code	QTY
10	333/F9111		Shaft		1
20	826/10625		Stud		1

30	04/600853		Coupling		1
30/30	332/E3694		Carrier disc		1
30/40	332/E3648		Piston		1
30/40/30	332/E3649		O Ring		1
30/40/40	04/800727		O Ring		1
30/80	04/800284		Ring guide		2
30/90	04/800285		Spring		1
30/100	332/E3650		Ring retaining		1
30/104	04/600471		Disc		1
30/107	04/600471		Disc		1
30/110	04/600469		Disc		7
30/120	332/E3651		Disc		8
30/130	333/F8959		Shim		1
30/140	04/801579		Ring snap 2.10 mm		1
30/140	04/800432		Ring snap 2.25 mm		1
30/140	04/800435		Ring snap 2.40 mm		1
30/140	332/E3653		Ring snap 2.55mm		1
30/140	332/E3654		Ring snap 2.70mm		1
30/140	332/E3656		Ring snap 2.85mm		1
30/140	332/E3657		Ring snap 3.00mm		1
30/140	332/E3661		Ring snap 3.15mm		1
30/140	332/E3662		Ring snap 3.30mm		1
30/140	332/E3663		Ring snap 3.45mm		1
30/140	332/E3664		Ring snap 3.60mm		1
30/140	332/E3665		Ring snap 3.75mm		1
30/140	332/E3666		Ring snap 3.90mm		1
30/140	332/E3667		Ring snap 4.05mm		1
30/140	332/E3668		Ring snap 4.20mm		1
150	04/600339		Disc		2
160	04/600340		Bearing		2
170	04/600343		Washer axial		2
180	04/600344		Bearing		2
190	04/600349		Gear Idler 55 teeth		1
210	333/E6242		Bearing		1
220	907/20009		Bearing roller		1
230	04/600186		Ring piston		2

Applicability Date Ranges:
From: , To:

Product Catalog\WHEELED LOADERS\416 01243000-01243499,01317500-01317999,01472000-01472999,02095872-02095875 9812/3020 \F AXLES, WHEELS & TRANSMISSION\F05 TRANSMISSIONS SYNCHROSHUTTLE\F5-14-1 COUPLING GROUP FOURTH

9812/3020 F5-14-1 COUPLING GROUP FOURTH

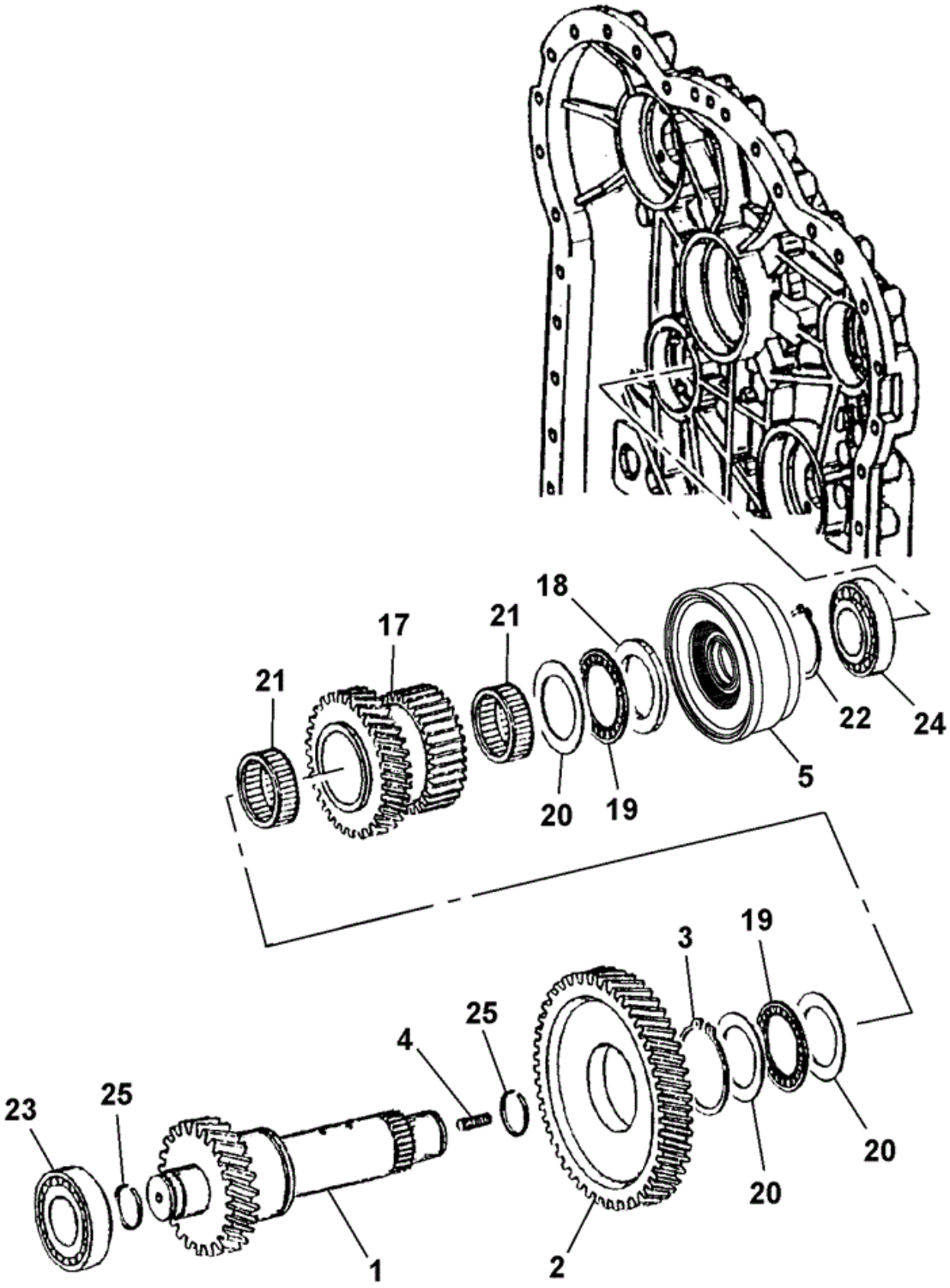

Item	Part No	Change No	Description	Usage Code	QTY

1	04/600350		Shaft gear 30 teeth		1
2	04/600351		Gear 61 teeth		1
3	04/600230		Ring retaining		1
4	826/10625		Stud		1
5	04/600855		Coupling		1
17	331/42589		Gear idler 42T		1
18	04/600339		Disc		1
19	04/600340		Bearing		2
20	04/600343		Washer axial		3
22	10/904344		Ring retaining		1
23	04/600232		Bearing roller		1
24	04/600232		Bearing roller		1
25	04/600186		Ring piston		2

Applicability Date Ranges:
From: , To:

Product Catalog\WHEELED LOADERS\416 01243000-01243499,01317500-01317999,01472000-01472999,02095872-02095875 9812/3020 \F AXLES, WHEELS & TRANSMISSION\F05 TRANSMISSIONS SYNCHROSHUTTLE\F5-14-10 COUPLING GROUP FOURTH 333/U2782

9812/3020 F5-14-10 COUPLING GROUP FOURTH 333/U2782

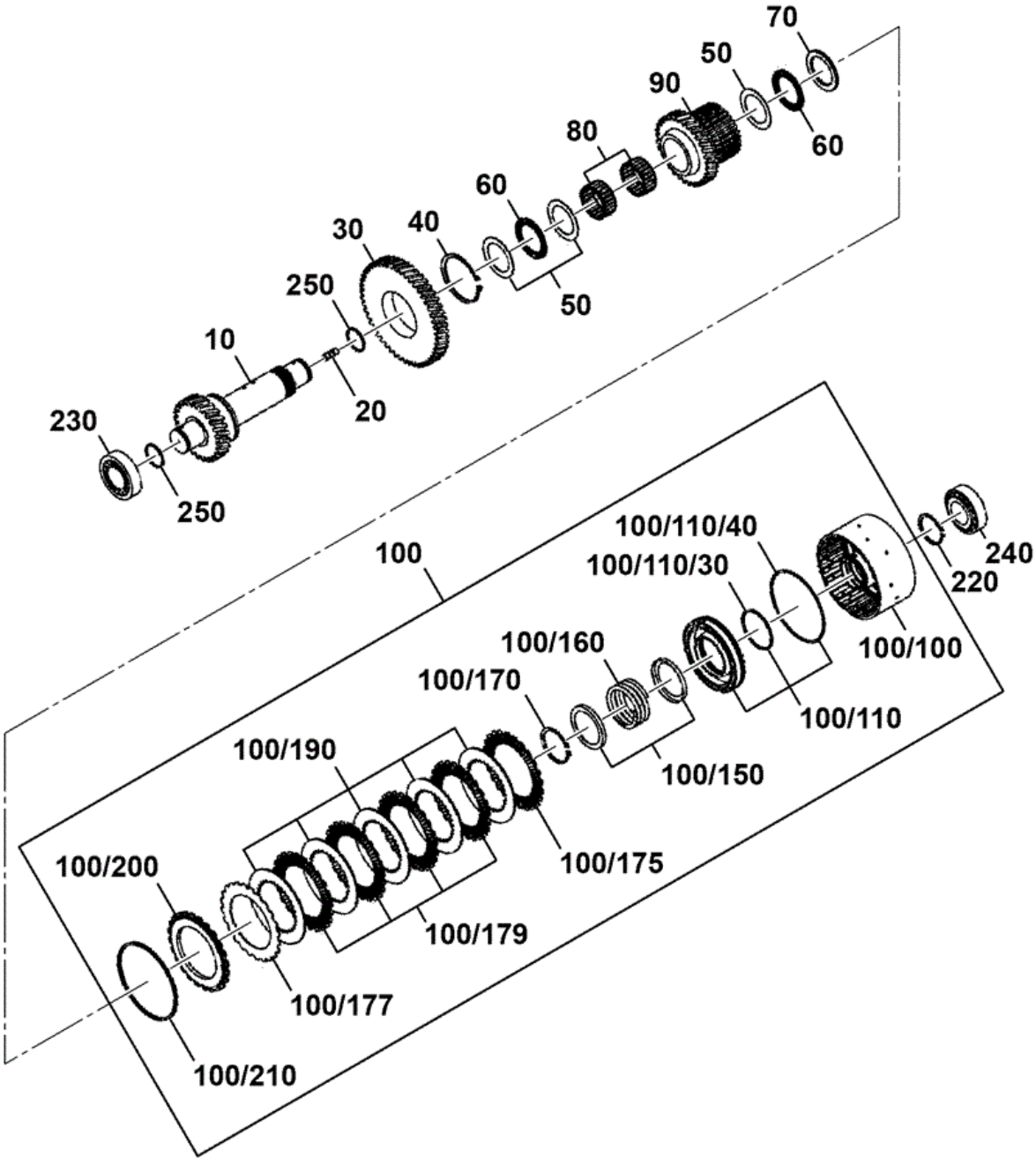

Item	Part No	Change No	Description	Usage Code	QTY
10	333/F9130		Shaft		1
20	826/10625		Stud		1

30	04/600351		Gear 61 teeth		1
40	04/600230		Ring retaining		1
50	04/600343		Washer axial		3
60	04/600340		Bearing		2
70	04/600339		Disc		1
80	04/600344		Bearing		2
90	331/42589		Gear idler 42T		1
100	04/600855		Coupling		1
100/100	333/F8962		Carrier disc		1
100/110	332/E3648		Piston		1
100/110/30	332/E3649		O Ring		1
100/110/40	04/800727		O Ring		1
100/150	04/800284		Ring guide		2
100/160	04/800285		Spring		1
100/170	332/E3650		Ring retaining		1
100/175	04/600471		Disc		1
100/177	04/600471		Disc		1
100/179	04/600469		Disc		4
100;/190	332/E3652		Shim		5
100/200	333/F8959		Shim		1
100/210	04/801579		Ring snap 2.10 mm		1
100/210	04/800432		Ring snap 2.25 mm		1
100/210	04/800435		Ring snap 2.40 mm		1
100/210	332/E3653		Ring snap 2.55mm		1
100/210	332/E3654		Ring snap 2.70mm		1
100/210	332/E3656		Ring snap 2.85mm		1
100/210	332/E3657		Ring snap 3.00mm		1
100/210	332/E3661		Ring snap 3.15mm		1
100/210	332/E3662		Ring snap 3.30mm		1
100/210	332/E3663		Ring snap 3.45mm		1
100/210	332/E3664		Ring snap 3.60mm		1
100/210	332/E3665		Ring snap 3.75mm		1
100/210	332/E3666		Ring snap 3.90mm		1
100/210	332/E3667		Ring snap 4.05mm		1
100/210	332/E3668		Ring snap 4.20mm		1
220	10/904344		Ring retaining		1
230	333/E6242		Bearing		1
240	333/E6242		Bearing		1
250	04/600186		Ring piston		2

Applicability Date Ranges:
From: , To:

Product Catalog\WHEELED LOADERS\416 01243000-01243499,01317500-01317999,01472000-01472999,02095872-02095875 9812/3020 \F AXLES, WHEELS & TRANSMISSION\F05 TRANSMISSIONS SYNCHROSHUTTLE\F5-15-1 COUPLING GROUP FORWARD

9812/3020 F5-15-1 COUPLING GROUP FORWARD

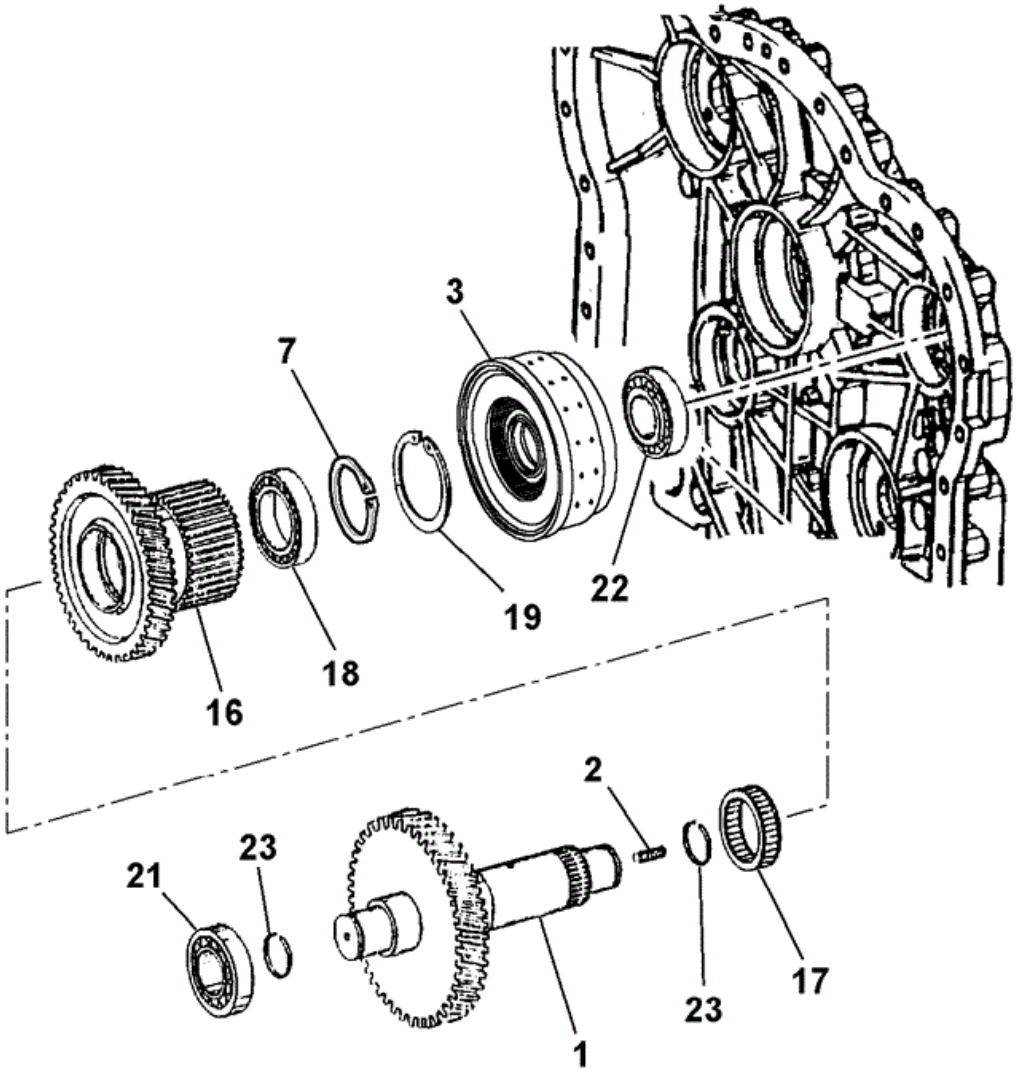

381970

Item	Part No	Change No	Description	Usage Code	QTY

1	04/600354		Gear shaft 55 teeth		1
2	826/10625		Stud		1
3	331/42594		Coupling		1
7	10/907409		Circlip		1
16	331/42593		Gear idler 51T		1
17	04/600236		Bearing needle		1
18	04/600552		Bearing ball		1
19	04/600238		Ring retaining 90X3		1
21	04/600232		Bearing roller		1
22	04/600232		Bearing roller		1
23	04/600186		Ring piston		2

Applicability Date Ranges:
From: , To:

9812/3020 F5-15-2 COUPLING GROUP REVERSE

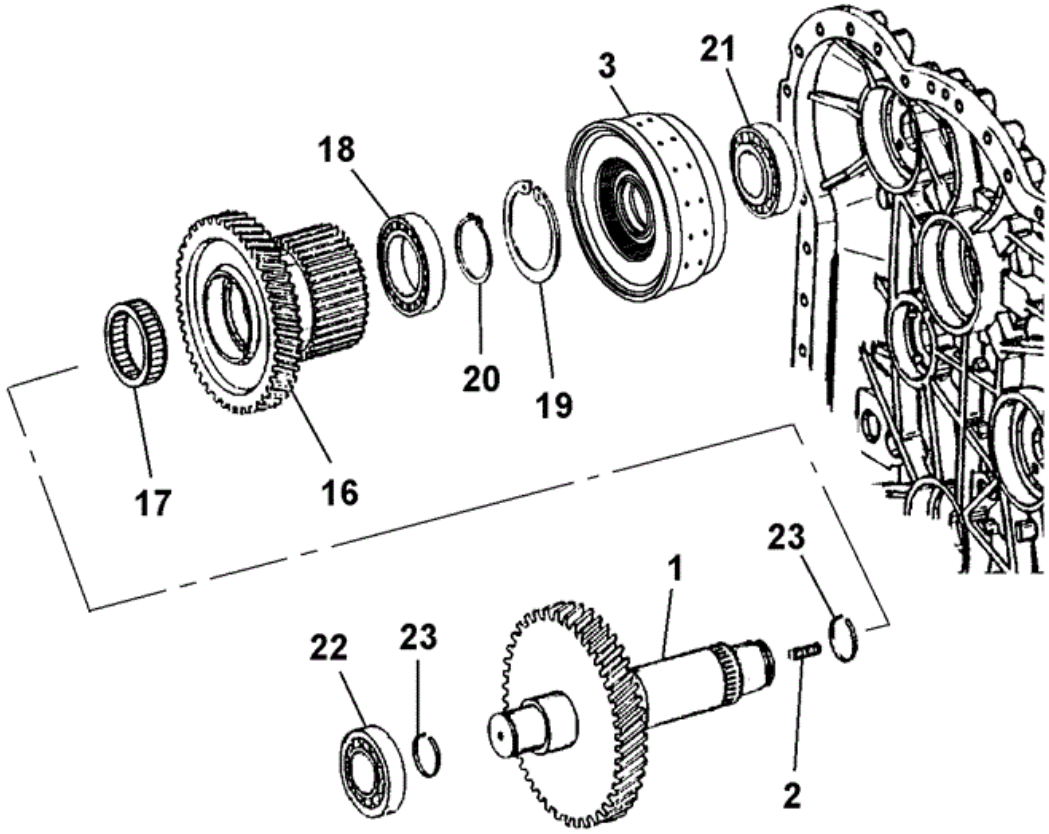

381990

Item	Part No	Change No	Description	Usage Code	QTY

1	04/600357		Gear shaft 58 teeth		1
2	826/10625		Stud		1
3	331/42594		Coupling		1
16	331/42593		Gear idler 51T		1
17	04/600236		Bearing needle		1
18	04/600552		Bearing ball		1
19	04/600238		Ring retaining 90X3		1
20	10/907409		Circlip		1
21	04/600232		Bearing roller		1
22	04/600232		Bearing roller		1
23	04/600186		Ring piston		2

Applicability Date Ranges:
From: , To:

Product Catalog\WHEELED LOADERS\416 01243000-01243499,01317500-01317999,01472000-01472999,02095872-02095875 9812/3020 \F AXLES, WHEELS & TRANSMISSION\F05 TRANSMISSIONS SYNCHROSHUTTLE\F5-15-10 COUPLING GROUP FORWARD 333/U2782

9812/3020 F5-15-10 COUPLING GROUP FORWARD 333/U2782

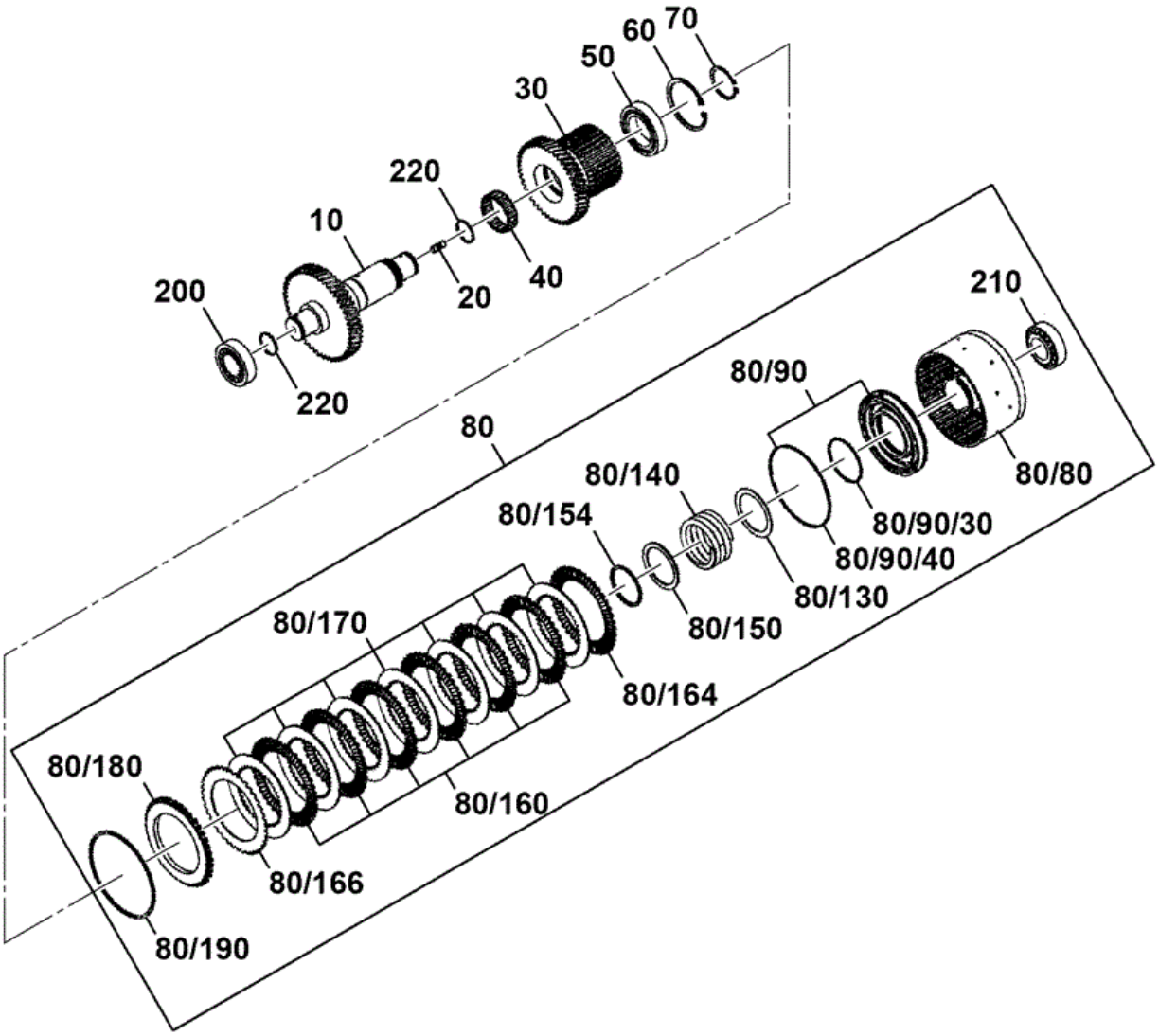

333-G7867-1

Item	Part No	Change No	Description	Usage Code	QTY
10	333/F8963		Shaft		1
20	826/10625		Stud		1

30	331/42593		Gear idler 51T		1
40	04/600236		Bearing needle		1
50	334/C0095		Bearing ball		1
60	04/600238		Ring retaining 90X3		1
70	10/907409		Circlip		1
80	332/G3404		Coupling		1
80/80	333/G8189		Carrier disc		1
80/90	04/600203		Piston piston		1
80/90/30	04/600169		O Ring		1
80/90/40	04/600204		O Ring		1
80/130	04/600239		Washer washer		1
80/140	04/600240		Spring spring compression		1
80/150	333/E6245		Shim support		1
80/154	333/E6196		Ring L		1
80/160	04/600702		Disc clutch		6
80/164	04/600701		Disc clutch		1
80/166	04/600701		Disc clutch		1
80/170	04/600207		Disc clutch		7
80/180	333/E6236		Shim end		1
80/190	04/600209		Ring retaining 2.1mm		1
80/190	04/600210		Ring retaining, 2.25mm		1
80/190	04/600211		Ring retaining, 2.4mm		1
80/190	04/600212		Ring retaining, 2.55mm		1
80/190	04/600213		Ring retaining, 2.7mm		1
80/190	04/600214		Ring retaining, 2.85mm		1
80/190	04/600215		Ring retaining, 3.00mm		1
80/190	04/600216		Ring retaining, 3.15mm		1
80/190	04/600217		Ring retaining, 3.3mm		1
80/190	04/600218		Ring retaining, 3.45mm		1
80/190	04/600219		Ring retaining, 3.60mm		1
80/190	04/600220		Ring retaining, 3.75mm		1
80/190	04/600221		Ring retaining, 3.90mm		1
80/190	04/600222		Ring retaining, 4.05mm		1
80/190	04/600223		Ring retaining, 4.20mm		1
200	333/E6242		Bearing		1
210	333/E6242		Bearing		1
220	04/600186		Ring piston		2

From: , To:

Product Catalog\WHEELED LOADERS\416 01243000-01243499,01317500-01317999,01472000-01472999,02095872-02095875 9812/3020 \F AXLES, WHEELS & TRANSMISSION\F05 TRANSMISSIONS SYNCHROSHUTTLE\F5-15-11 COUPLING GROUP REVERSE 333/U2782

9812/3020 F5-15-11 COUPLING GROUP REVERSE 333/U2782

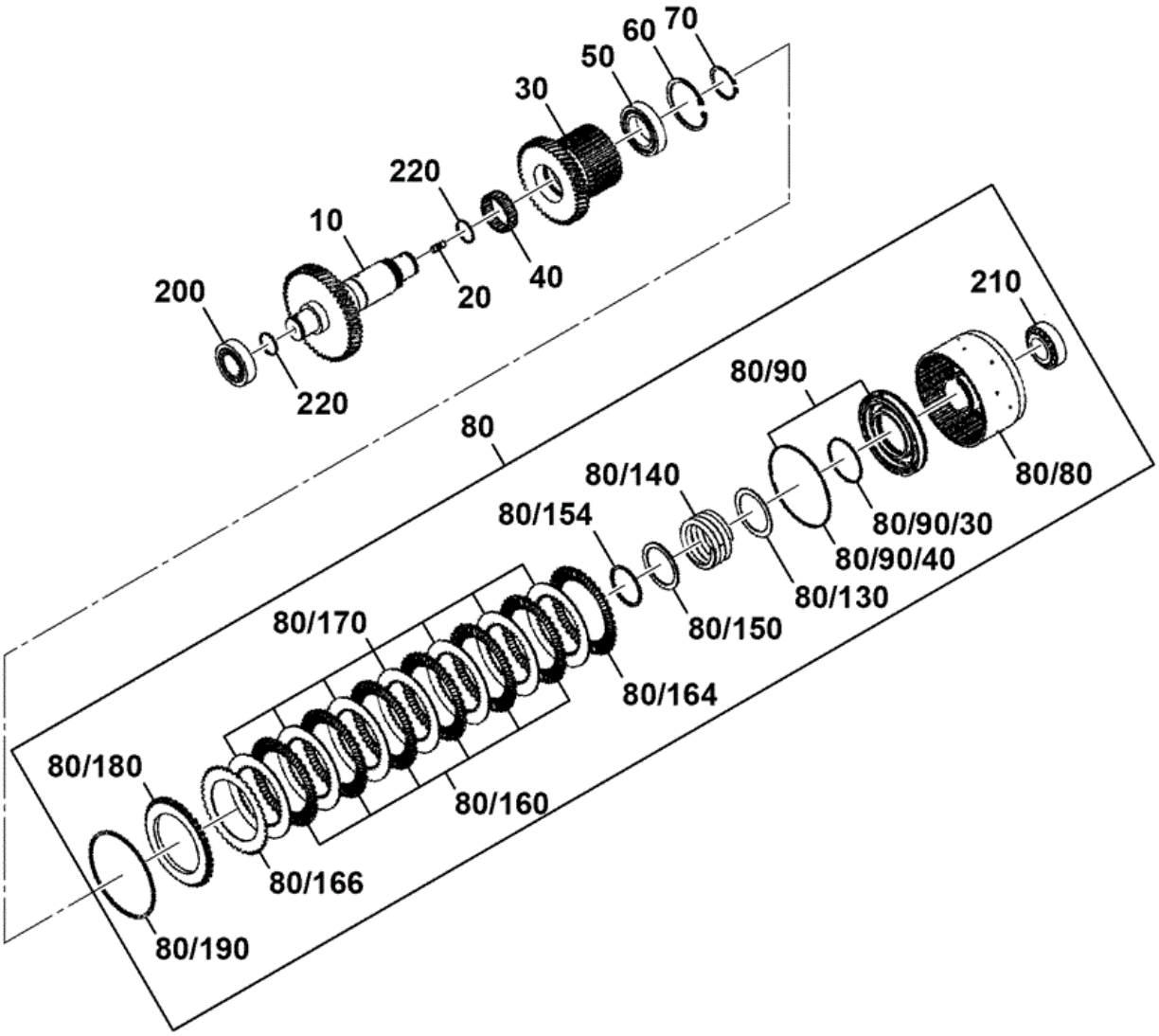

333-G7867-1

Item	Part No	Change No	Description	Usage Code	QTY
10	333/F8965		Shaft		1
20	826/10625		Stud		1

30	331/42593		Gear idler 51T		1
40	04/600236		Bearing needle		1
50	334/C0095		Bearing ball		1
60	04/600238		Ring retaining 90X3		1
70	10/907409		Circlip		1
80	332/G3404		Coupling		1
80/80	333/G8189		Carrier disc		1
80/90	04/600203		Piston piston		1
80/90/30	04/600169		O Ring		1
80/90/40	04/600204		O Ring		1
80/130	04/600239		Washer washer		1
80/140	04/600240		Spring spring compression		1
80/150	333/E6245		Shim support		1
80/154	333/E6196		Ring L		1
80/160	04/600702		Disc clutch		6
80/164	04/600701		Disc clutch		1
80/166	04/600701		Disc clutch		1
80/170	04/600207		Disc clutch		7
80/180	04/600226		Shim		1
80/190	04/600209		Ring retaining 2.1mm		1
80/190	04/600210		Ring retaining, 2.25mm		1
80/190	04/600211		Ring retaining, 2.4mm		1
80/190	04/600212		Ring retaining, 2.55mm		1
80/190	04/600213		Ring retaining, 2.7mm		1
80/190	04/600214		Ring retaining, 2.85mm		1
80/190	04/600215		Ring retaining, 3.00mm		1
80/190	04/600216		Ring retaining, 3.15mm		1
80/190	04/600217		Ring retaining, 3.3mm		1
80/190	04/600218		Ring retaining, 3.45mm		1
80/190	04/600219		Ring retaining, 3.60mm		1
80/190	04/600220		Ring retaining, 3.75mm		1
80/190	04/600221		Ring retaining, 3.90mm		1
80/190	04/600222		Ring retaining, 4.05mm		1
80/190	04/600223		Ring retaining, 4.20mm		1
200	333/E6242		Bearing		1
210	333/E6242		Bearing		1
220	04/600186		Ring piston		2

From: , To:

Product Catalog\WHEELED LOADERS\416 01243000-01243499,01317500-01317999,01472000-01472999,02095872-02095875 9812/3020 \F AXLES, WHEELS & TRANSMISSION\F05 TRANSMISSIONS SYNCHROSHUTTLE\F5-16-1 OUTPUT GROUP

9812/3020 F5-16-1 OUTPUT GROUP

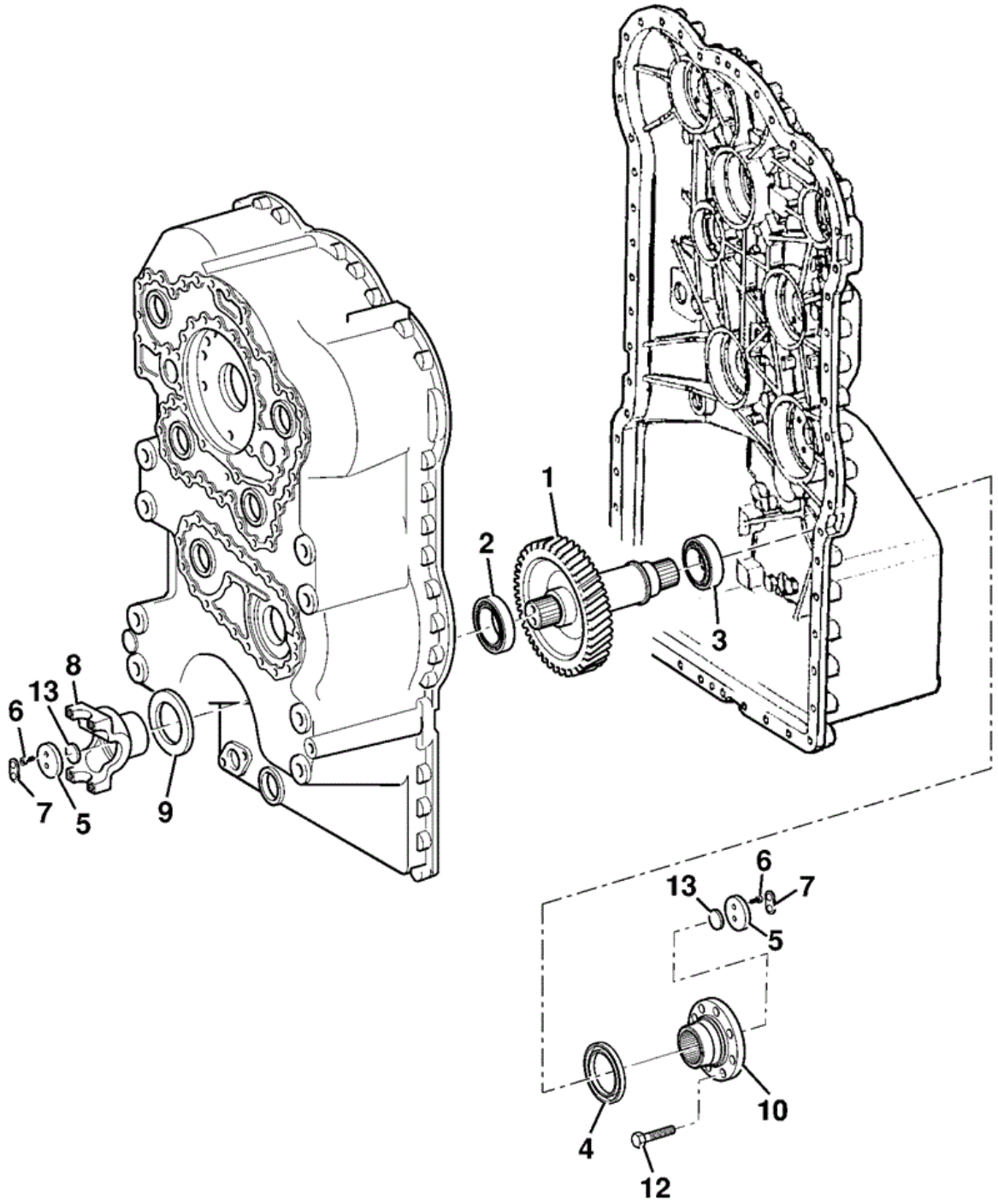

Item	Part No	Change No	Description	Usage Code	QTY
1	04/600554	Superseded	Shaft output		1
1	332/E3670		Shaft output		1

2	907/20009		Bearing roller		1
3	907/20009		Bearing roller		1
4	04/800373		Seal shaft		2
5	04/800248		Washer		2
6	04/600363		Screw M8		4
7	04/800247		Plate lock Not required with new ouput shaft		2
8	04/801251		Flange output		1
9	04/800373		Seal shaft		1
10	04/600358		Flange		1
11	04/600359		Screw M12 x 50mm		8
12	04/600359		Screw M12 x 50mm		8
13	10/906823		O Ring		2

Applicability Date Ranges:
From: , To:

9812/3020 F5-16-10 OUTPUT GROUP 333/U2782

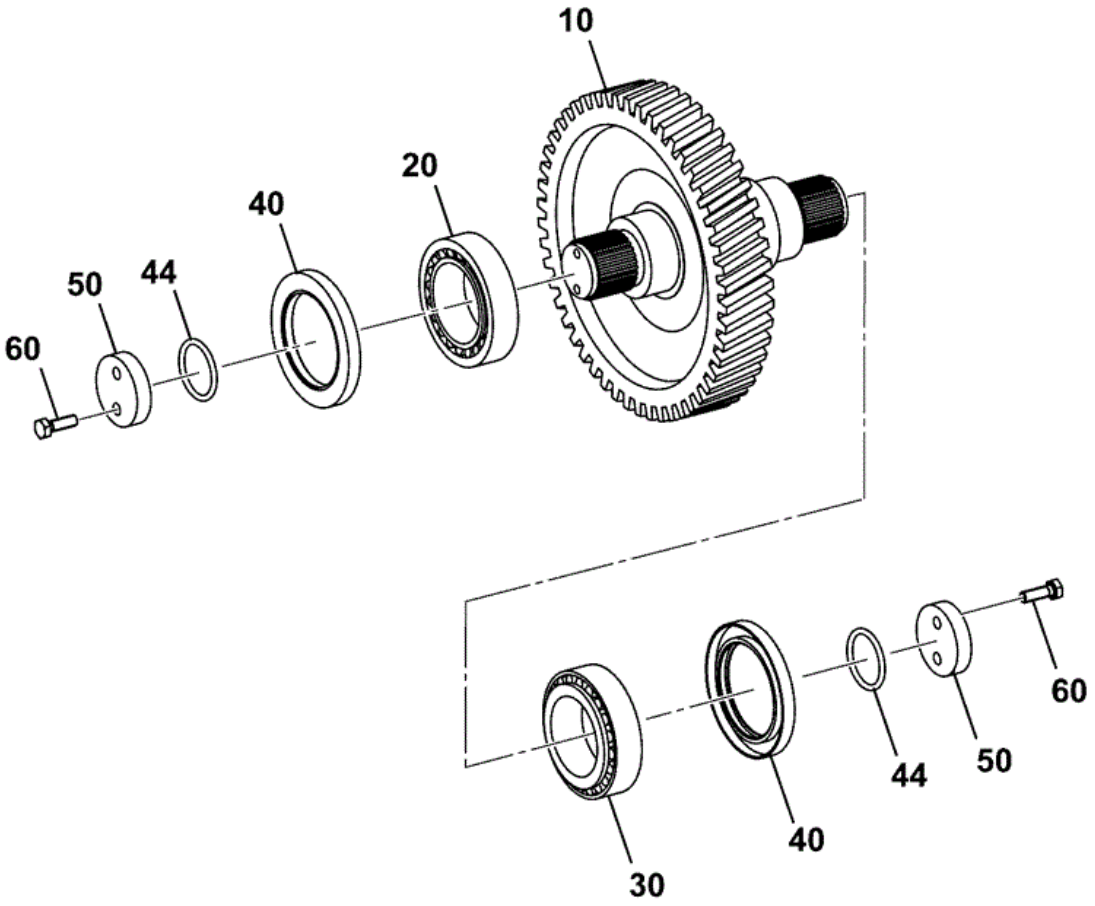

333-F8795-1

Item	Part No	Change No	Description	Usage Code	QTY
10	332/E3670		Shaft output		1
20	907/20009		Bearing roller		1

30	907/20009		Bearing roller		1
40	04/800373		Seal shaft		1
44	10/906823		O Ring		1
50	04/800248		Washer		1
60	335/E7100		Screw		1

Applicability Date Ranges:
From: , To:

Product Catalog\WHEELED LOADERS\416 01243000-01243499,01317500-01317999,01472000-01472999,02095872-02095875 9812/3020 \F AXLES, WHEELS & TRANSMISSION\F05 TRANSMISSIONS SYNCHROSHUTTLE\F5-16-20 OUTPUT GROUP YOKE, 333/U2782

9812/3020 F5-16-20 OUTPUT GROUP YOKE, 333/U2782

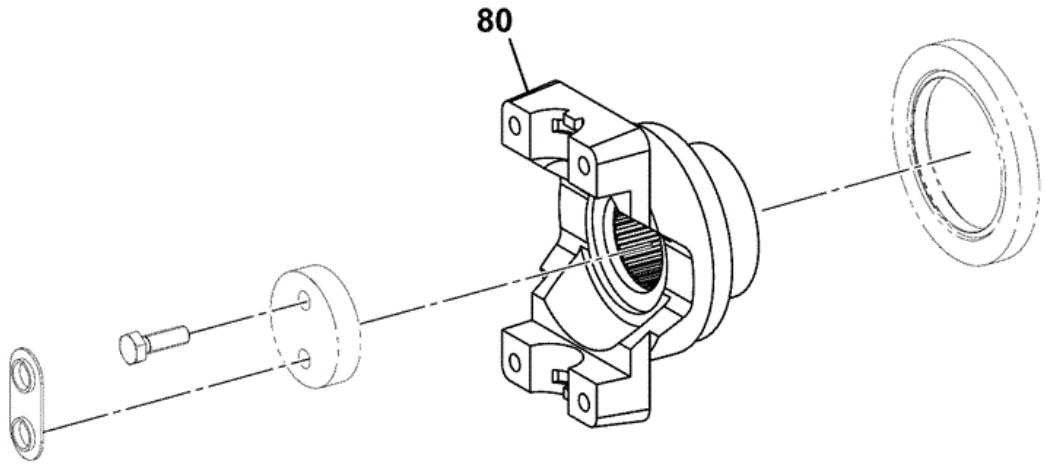

333-F8796-1

Item	Part No	Change No	Description	Usage Code	QTY
80	04/801251		Flange output		1

Applicability Date Ranges:
From: , To:

Product Catalog\WHEELED LOADERS\416 01243000-01243499,01317500-01317999,01472000-01472999,02095872-02095875 9812/3020 \F AXLES, WHEELS & TRANSMISSION\F05 TRANSMISSIONS SYNCHROSHUTTLE\F5-16-30 OUTPUT GROUP FLANGE 333/U2782

9812/3020 F5-16-30 OUTPUT GROUP FLANGE 333/U2782

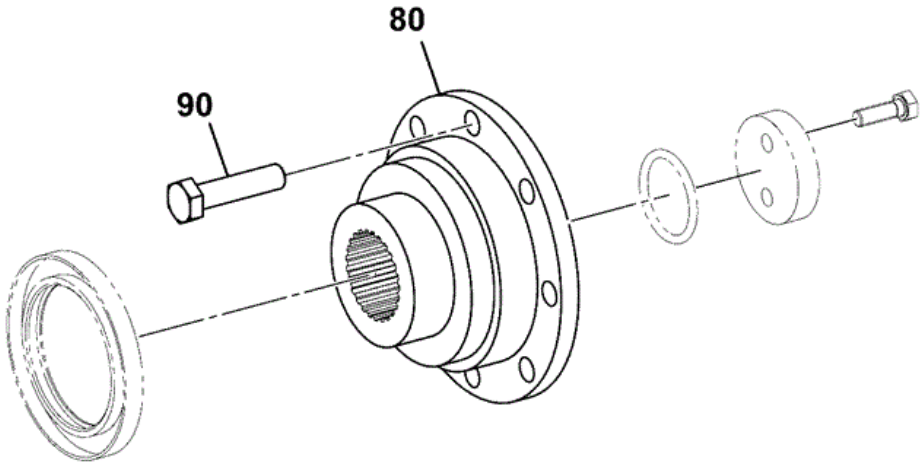

333-F8797-1

Item	Part No	Change No	Description	Usage Code	QTY
80	04/600358		Flange		1
90	04/600359		Screw M12 x 50mm		8

Applicability Date Ranges:
From: , To:

Product Catalog\WHEELED LOADERS\416 01243000-01243499,01317500-01317999,01472000-01472999,02095872-02095875 9812/3020 \F AXLES, WHEELS & TRANSMISSION\F05 TRANSMISSIONS SYNCHROSHUTTLE\F5-17-1 POWER TAKE-OFF

9812/3020 F5-17-1 POWER TAKE-OFF

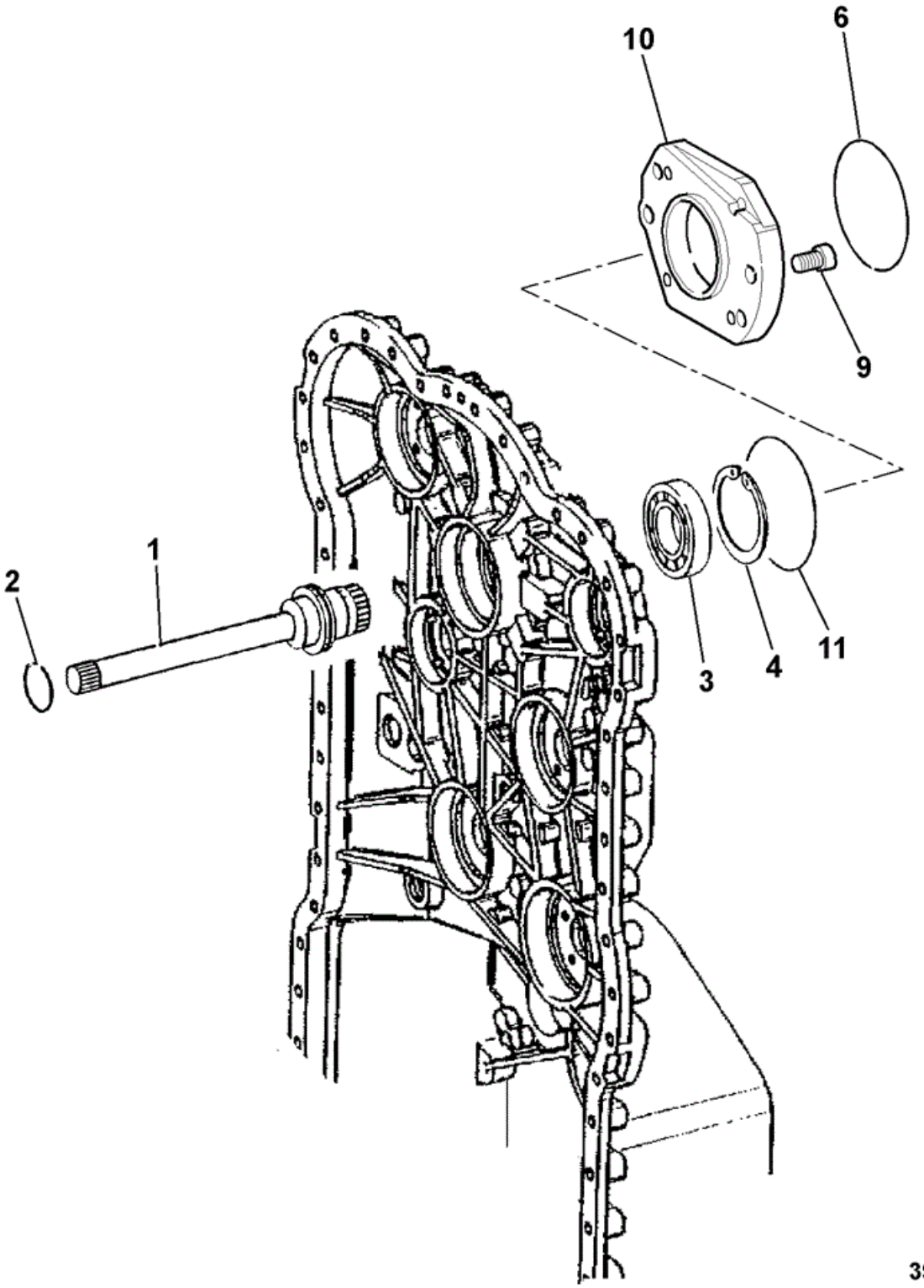

Item	Part No	Change No	Description	Usage Code	QTY

1	04/600562		Shaft pump		1
2	04/600399		Ring piston		1
3	04/800687		Bearing ball		1
4	04/600245		Ring retaining		1
6	04/600247		Seal 130mm x 3mm		1
9	04/600566		Screw cap		2
10	04/600565		Flange		1
11	04/600401		O Ring 104mm x 3mm		1

Applicability Date Ranges:
From: , To:

Product Catalog\WHEELED LOADERS\416 01243000-01243499,01317500-01317999,01472000-01472999,02095872-02095875 9812/3020 \F AXLES, WHEELS & TRANSMISSION\F05 TRANSMISSIONS SYNCHROSHUTTLE\F5-17-10 POWER TAKE-OFF 333/U2782

9812/3020 F5-17-10 POWER TAKE-OFF 333/U2782

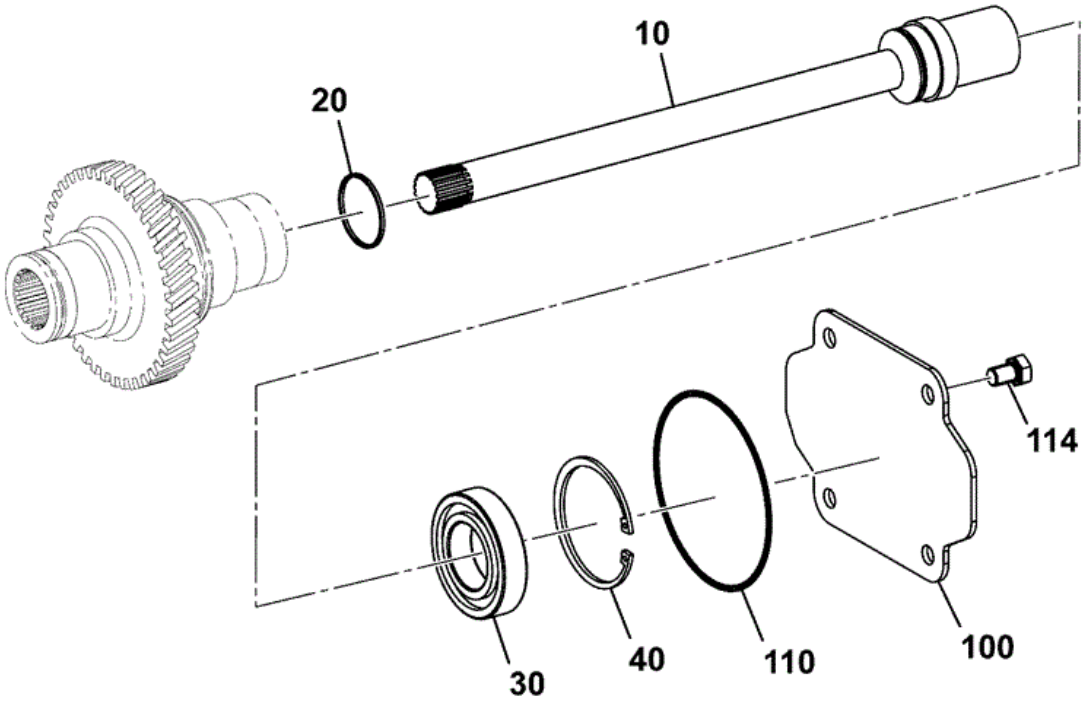

333-F8798-1

Item	Part No	Change No	Description	Usage Code	QTY
10	:04/600562		Shaft pump		1
20	:04/600399		Ring piston		1

30	:04/800687		Bearing ball		1
40	:04/600245		Ring retaining		1
100	:04/600246		Plate plate cover		1
110	:04/600247		Seal 130mm x 3mm		1
114	:333/F8943		Screw Hexagonal, M12X18		4

Applicability Date Ranges:
From: , To:

Product Catalog\WHEELED LOADERS\416 01243000-01243499,01317500-01317999,01472000-01472999,02095872-02095875 9812/3020 \F AXLES, WHEELS & TRANSMISSION\F05 TRANSMISSIONS SYNCHROSHUTTLE\F5-18-1 GEARSHIFT SYSTEM VALVE COMPONENTS

9812/3020 F5-18-1 GEARSHIFT SYSTEM VALVE COMPONENTS

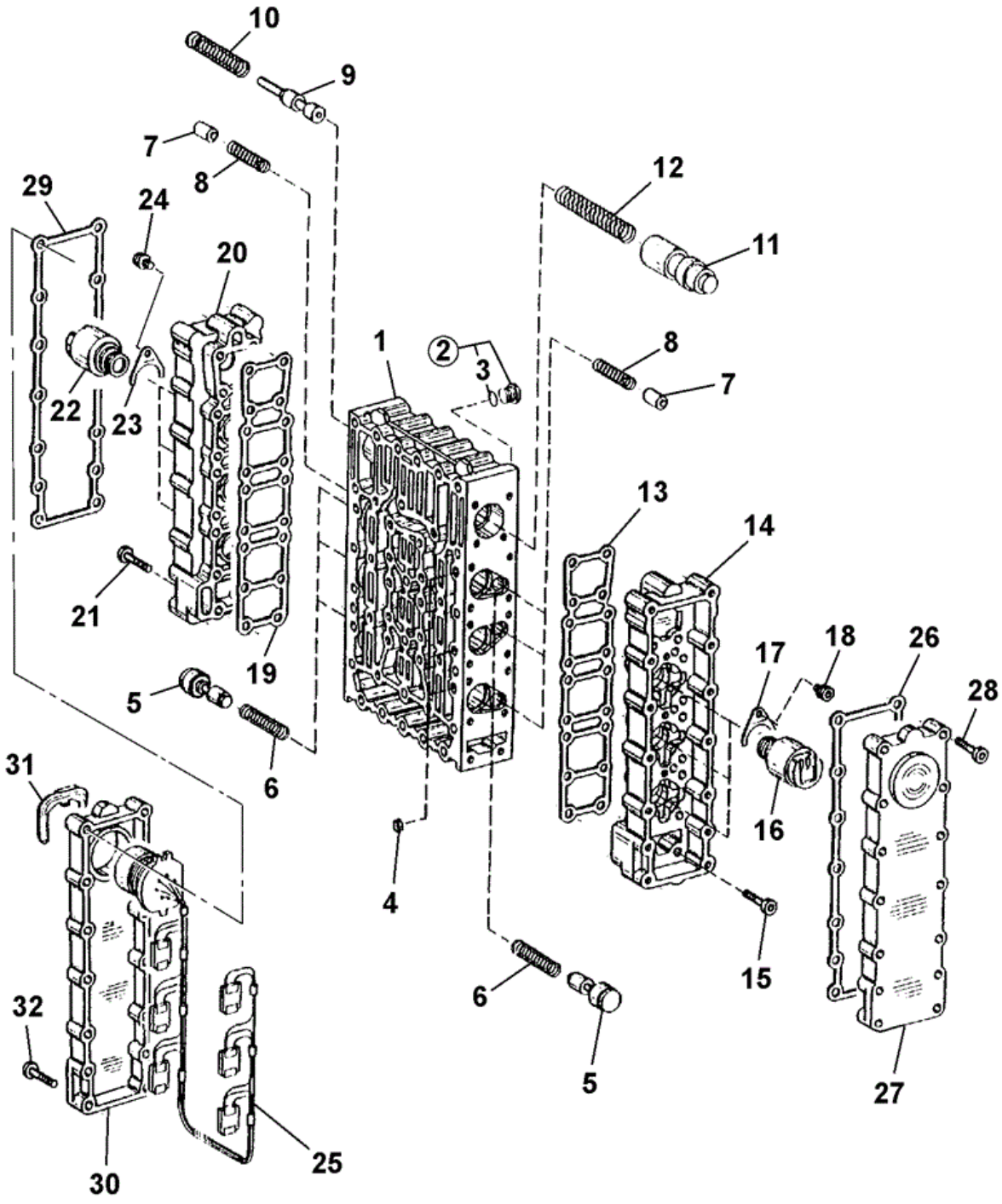

346740

Item	Part No	Change No	Description	Usage Code	QTY

1	928/60071		Valve body		1
2	04/600262		Plug		8
3	10/907341		O Ring		8
4	04/600260		Orifice		6
5	04/600261		Piston		6
6	04/600263		Spring		6
7	04/600264		Piston		6
8	04/600265		Spring		6
9	04/600266		Piston		1
10	04/600267		Spring		1
11	331/42602		Piston control		1
12	04/600269		Spring		1
13	331/42603		Gasket		1
14	04/600271		Housing		1
15	04/600407		Screw		18
16	04/600408		Regulator pressure c/w O ring		3
17	04/800543		Plate fixing		3
18	04/600410		Screw		3
19	331/42603		Gasket		1
20	04/600271		Housing		1
21	04/600407		Screw		18
22	04/600408		Regulator pressure c/w O ring O Ring 04/600409		3
23	04/800543		Plate fixing		3
24	04/600410		Screw		3
25	04/600411		Harness wiring		1
26	331/42604		Gasket		1
27	04/600274		Cover		1
28	04/600407		Screw		14
29	331/42604		Gasket		1
30	04/600412		Cover		1
31	04/600276		Clamp retaining		1
32	04/600407		Screw		14

Applicability Date Ranges:
From: , To:

Product Catalog\WHEELED LOADERS\416 01243000-01243499,01317500-01317999,01472000-01472999,02095872-02095875 9812/3020 \F AXLES, WHEELS & TRANSMISSION\F05 TRANSMISSIONS SYNCHROSHUTTLE\F5-18-10 GEARSHIFT SYSTEM VALVE COMPONENTS 333/U2782

9812/3020 F5-18-10 GEARSHIFT SYSTEM VALVE COMPONENTS 333/U2782

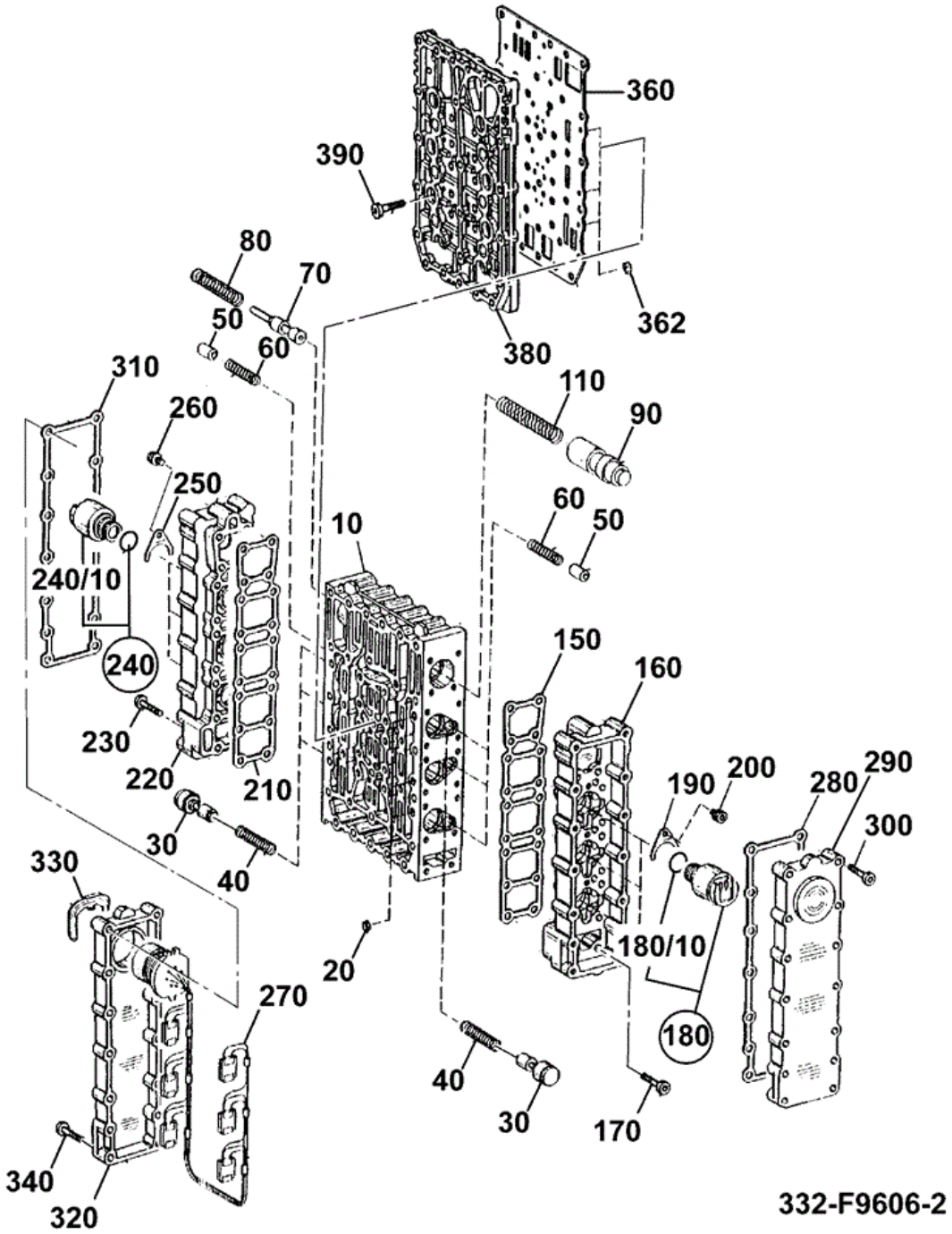

Item	Part No	Change No	Description	Usage Code	QTY
A	****		Unit gearshift system		1

10	332/D6928		Valve body		1
20	04/600260		Orifice		6
30	04/600261		Piston		6
40	04/600263		Spring		6
50	04/600264		Piston		6
60	04/600265		Spring		6
70	04/600266		Piston		1
80	04/600267		Spring		1
90	331/42602		Piston control		1
110	04/600269		Spring		1
150	331/42603		Gasket		1
160	04/600271		Housing		1
170	333/E6255		Screw M5 x 30mm		18
180	04/600408		Regulator pressure c/w O ring		3
180/10	04/600409		O Ring		1
190	04/800543		Plate fixing		3
200	04/600410		Screw		3
210	331/42603		Gasket		1
220	04/600271		Housing		1
230	333/E6255		Screw M5 x 30mm		18
240	04/600408		Regulator pressure c/w O ring		3
240/10	04/600409		O Ring		1
250	04/800543		Plate fixing		3
260	04/600410		Screw		3
270	04/600411		Harness wiring		1
280	331/42604		Gasket		1
290	04/600274		Cover		1
300	333/E6255		Screw M5 x 30mm		14
310	331/42604		Gasket		1
320	04/600412		Cover		1
330	04/600276		Clamp retaining		1
340	333/E6255		Screw M5 x 30mm		14
360	333/G8190		Plate intermediate		1
362	04/600278		Screen		6
380	04/600739		Duct plate, gearshift		1
390	333/E6257		Screw M6 x 23mm		18

Applicability Date Ranges:
From: , To:

Product Catalog\WHEELED LOADERS\416 01243000-01243499,01317500-01317999,01472000-01472999,02095872-02095875 9812/3020 \F AXLES, WHEELS & TRANSMISSION\F05 TRANSMISSIONS SYNCHROSHUTTLE\F5-19-1 GEARSHIFT SYSTEM PLATES AND GASKETS

9812/3020 F5-19-1 GEARSHIFT SYSTEM PLATES AND GASKETS

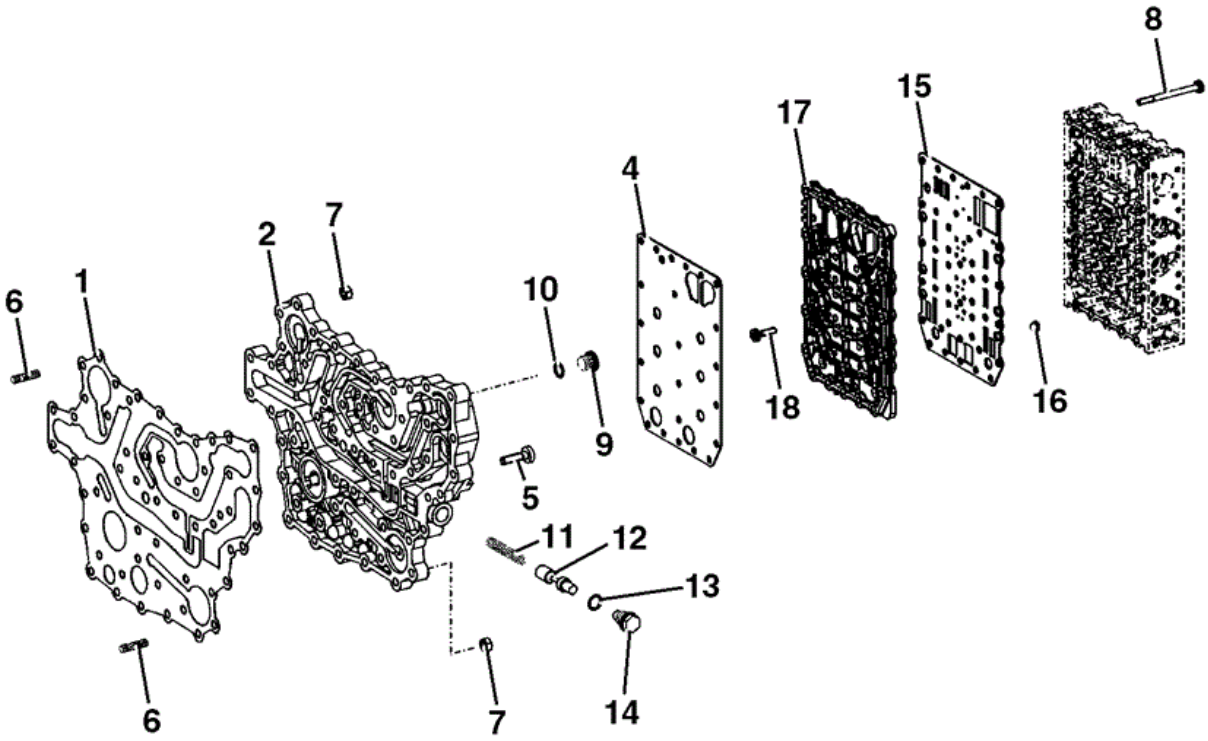

725430

Item	Part No	Change No	Description	Usage Code	QTY
1	331/42596		Gasket		1
2	331/42598		Plate duct		1

4	04/600734		Panel interm.-gearshift		1
5	826/10446		Screw cap		37
6	04/600345		Stud M8		14
7	04/600328		Nut		14
8	04/600735		Screw torx M6		23
9	04/600284		Plug		1
10	04/600253		O Ring		1
11	04/600255		Spring		1
12	331/42600		Piston		1
13	04/600253		O Ring		1
14	04/600252		Plug		1
15	04/600738		Panel interm.gearshift		1
16	04/600278		Screen		16
17	04/600739		Duct plate, gearshift		1
18	04/600740		Screw torx M6		18

Applicability Date Ranges:
From: , To:

Product Catalog\WHEELED LOADERS\416 01243000-01243499,01317500-01317999,01472000-01472999,02095872-02095875 9812/3020 \F AXLES, WHEELS & TRANSMISSION\F05 TRANSMISSIONS SYNCHROSHUTTLE\F5-19-10 GEARSHIFT SYSTEM PLATES AND GASKETS 333/U2782

9812/3020 F5-19-10 GEARSHIFT SYSTEM PLATES AND GASKETS 333/U2782

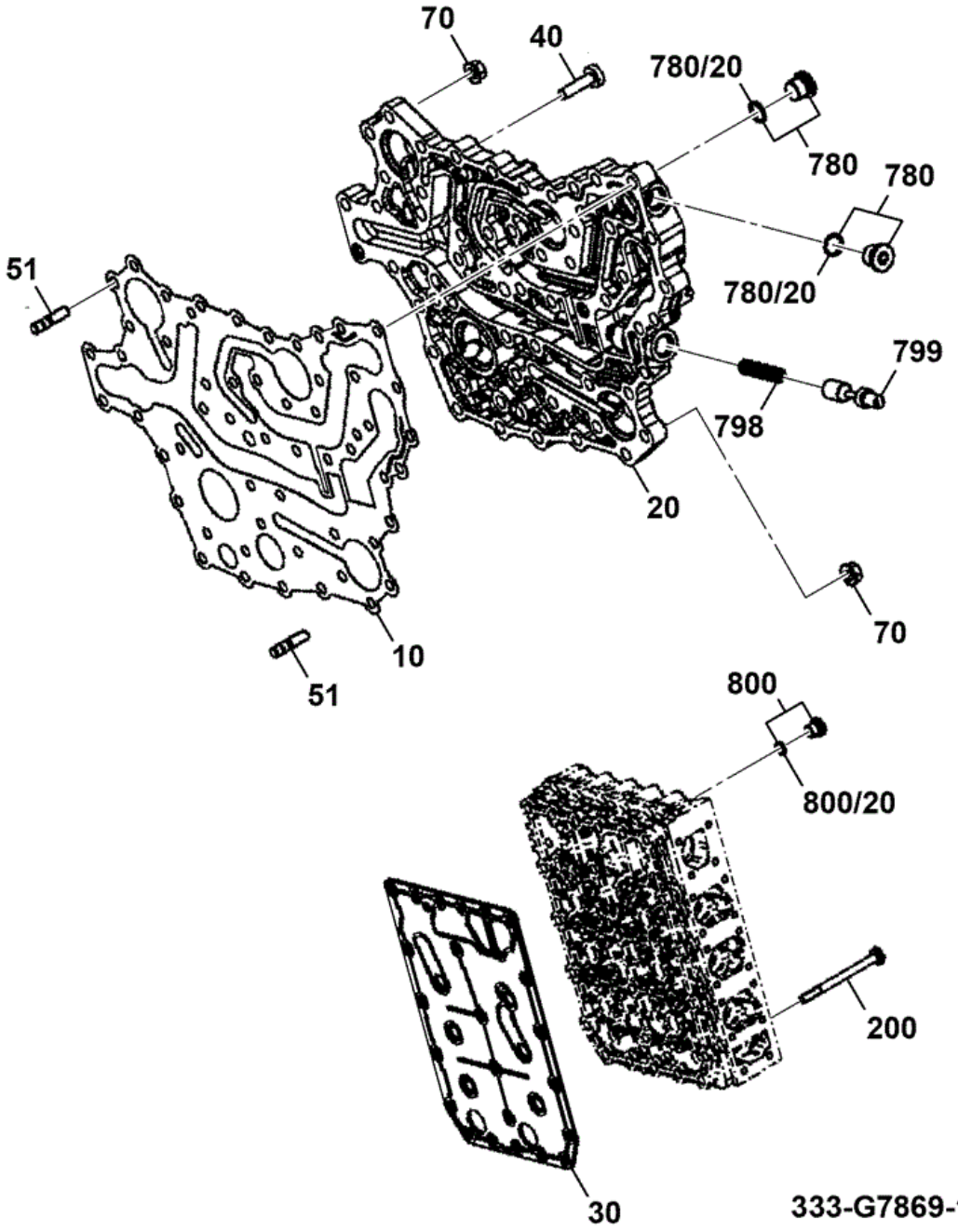

Item	Part No	Change No	Description	Usage Code	QTY
10	331/42596		Gasket		1

20	331/42598		Plate duct		1
30	333/E6253		Plate intermediate		1
40	333/E6254		Screw M6 x 76mm		1
51	333/F8974		Stud M8X25		14
70	333/F8975		Nut Hexagonal. M8		14
200	333/F8976		Screw		23
780	335/G8754		Plug Screw		2
780/20	04/600253		O Ring		1
798	04/600255		Spring		1
799	331/42600		Piston		1
800	335/E7097		Plug Screw, M10X1		8
800/20	10/907341		O Ring		1

Applicability Date Ranges:
From: , To:

Product Catalog\WHEELED LOADERS\416 01243000-01243499,01317500-01317999,01472000-01472999,02095872-02095875 9812/3020 \F AXLES, WHEELS & TRANSMISSION\F05 TRANSMISSIONS SYNCHROSHUTTLE\F5-19-20 GEARSHIFT SYSTEM PRESSURE SWITCH, 333/U2782

9812/3020 F5-19-20 GEARSHIFT SYSTEM PRESSURE SWITCH, 333/U2782

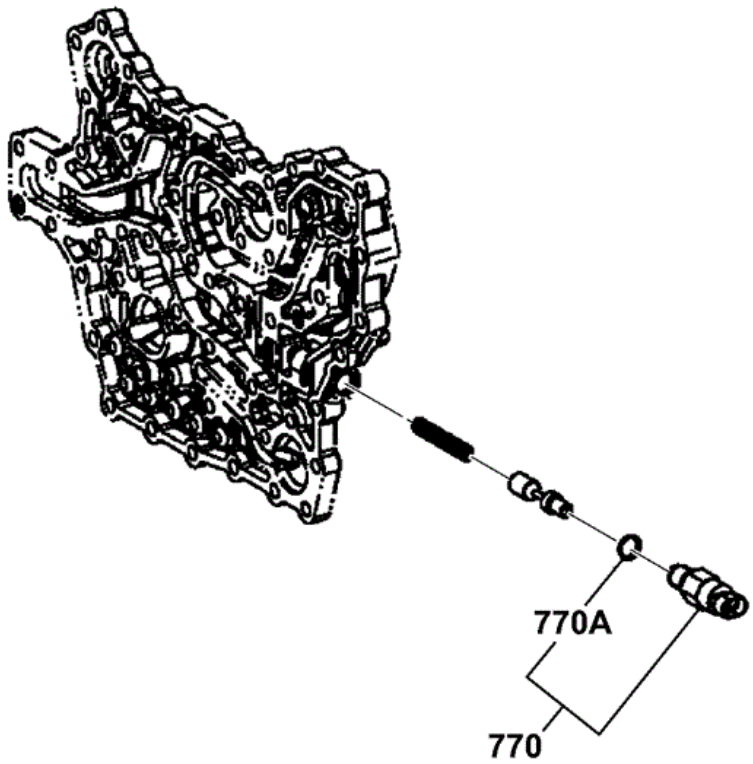

333-E6046-1

Item	Part No	Change No	Description	Usage Code	QTY
770	04/600405		Switch pressure		1

770A	10/906821		O Ring		1

Applicability Date Ranges:
From: , To:

Product Catalog\WHEELED LOADERS\416 01243000-01243499,01317500-01317999,01472000-01472999,02095872-02095875 9812/3020 \F AXLES, WHEELS & TRANSMISSION\F05 TRANSMISSIONS SYNCHROSHUTTLE\F5-19-30 GEARSHIFT SYSTEM SCREW, 333/U2782

9812/3020 F5-19-30 GEARSHIFT SYSTEM SCREW, 333/U2782

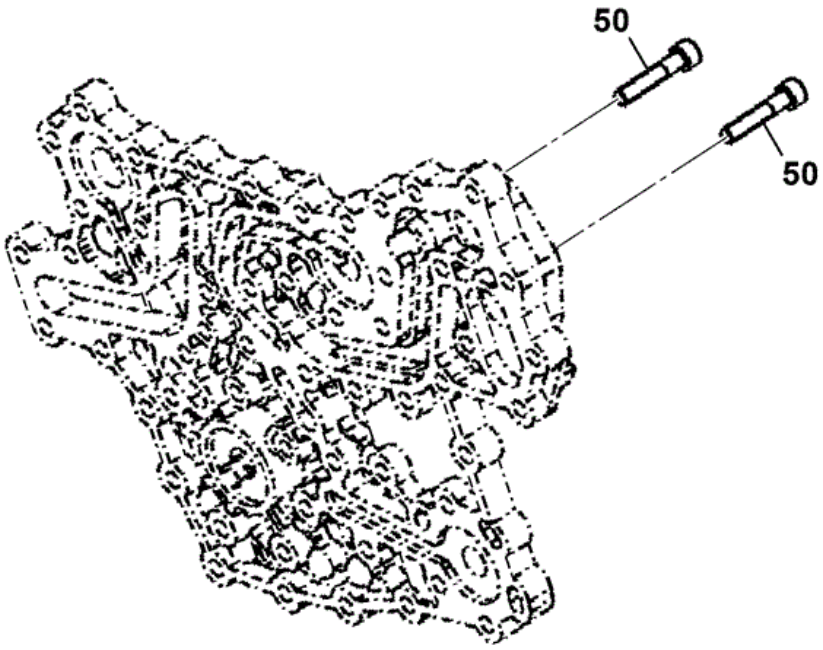

333-G7877-1

Item	Part No	Change No	Description	Usage Code	QTY
50	04/600489		Cap screw		2

Applicability Date Ranges:
From: , To:

Product Catalog\WHEELED LOADERS\416 01243000-01243499,01317500-01317999,01472000-01472999,02095872-02095875 9812/3020 \F AXLES, WHEELS & TRANSMISSION\F05 TRANSMISSIONS SYNCHROSHUTTLE\F5-21-1 DIPSTICK TRANSMISSION

9812/3020 F5-21-1 DIPSTICK TRANSMISSION

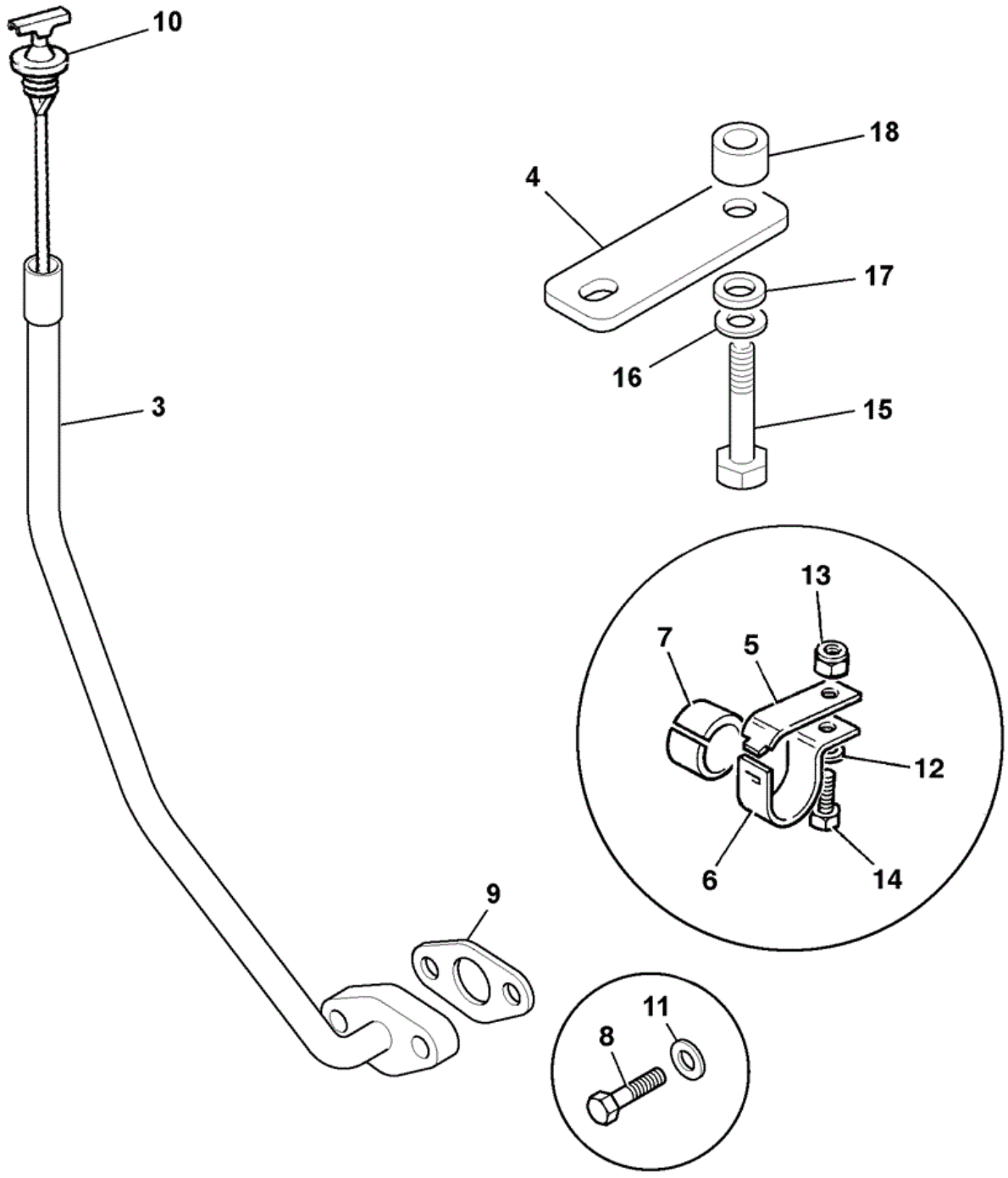

869871

Item	Part No	Change No	Description	Usage Code	QTY
3	830/13402	Superseded	Tube dipstick	A	1
3	M.S.S		Multi Supersession		1

3	332/T3980		Tube dipstick	B	1
3	332/T3977		Spacer		1
3	1315/3514D		Bolt M12 x 60mm long		1
4	331/61107		Bracket mounting		1
5	821/00183		Clamp Top		1
6	821/00184		Clamp Base		1
7	821/00185		Insert Clamp		1
8	1315/0309D		Setscrew M8 x 35 mm		2
9	04/800423		Gasket		1
10	04/800593		Dipstick		1
11	1420/0007D		Washer (M8)		2
12	1420/0008D		Washer (M10)		1
13	1370/0303D		Nut Self Lock M10		1
14	1315/0408D		Setscrew M10 x 30		1
15	1315/0512D		Setscrew	A	1
15	1315/3514D		Bolt M12 x 60mm long	B	1
16	1420/0009D		Washer (M12)		1
17	823/10763		Spacer		1
18	332/T3977		Spacer		1

Applicability Date Ranges:
From: , To:

Product Catalog\WHEELED LOADERS\416 01243000-01243499,01317500-01317999,01472000-01472999,02095872-02095875 9812/3020 \F AXLES, WHEELS & TRANSMISSION\F05 TRANSMISSIONS SYNCHROSHUTTLE\F5-21-10 DIPSTICK TRANSMISSION 333/U2782

9812/3020 F5-21-10 DIPSTICK TRANSMISSION 333/U2782

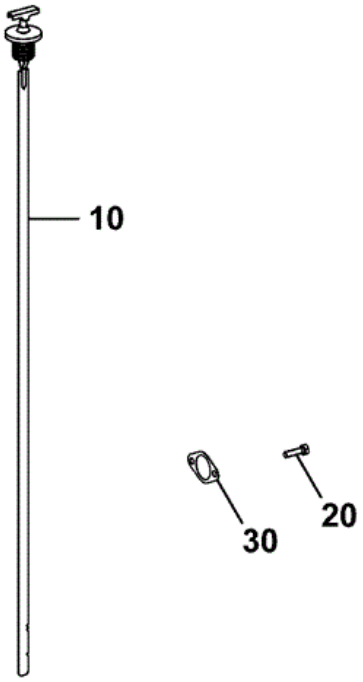

333-F8812-1

Item	Part No	Change No	Description	Usage Code	QTY
10	04/800593		Dipstick		1
20	333/F8983		Screw hexagon		2

30	04/800423		Gasket		1

Applicability Date Ranges:
From: , To:

Product Catalog\WHEELED LOADERS\416 01243000-01243499,01317500-01317999,01472000-01472999,02095872-02095875 9812/3020 \F AXLES, WHEELS & TRANSMISSION\F05 TRANSMISSIONS SYNCHROSHUTTLE\F5-22-1 PRESSURE REGULATOR

9812/3020 F5-22-1 PRESSURE REGULATOR

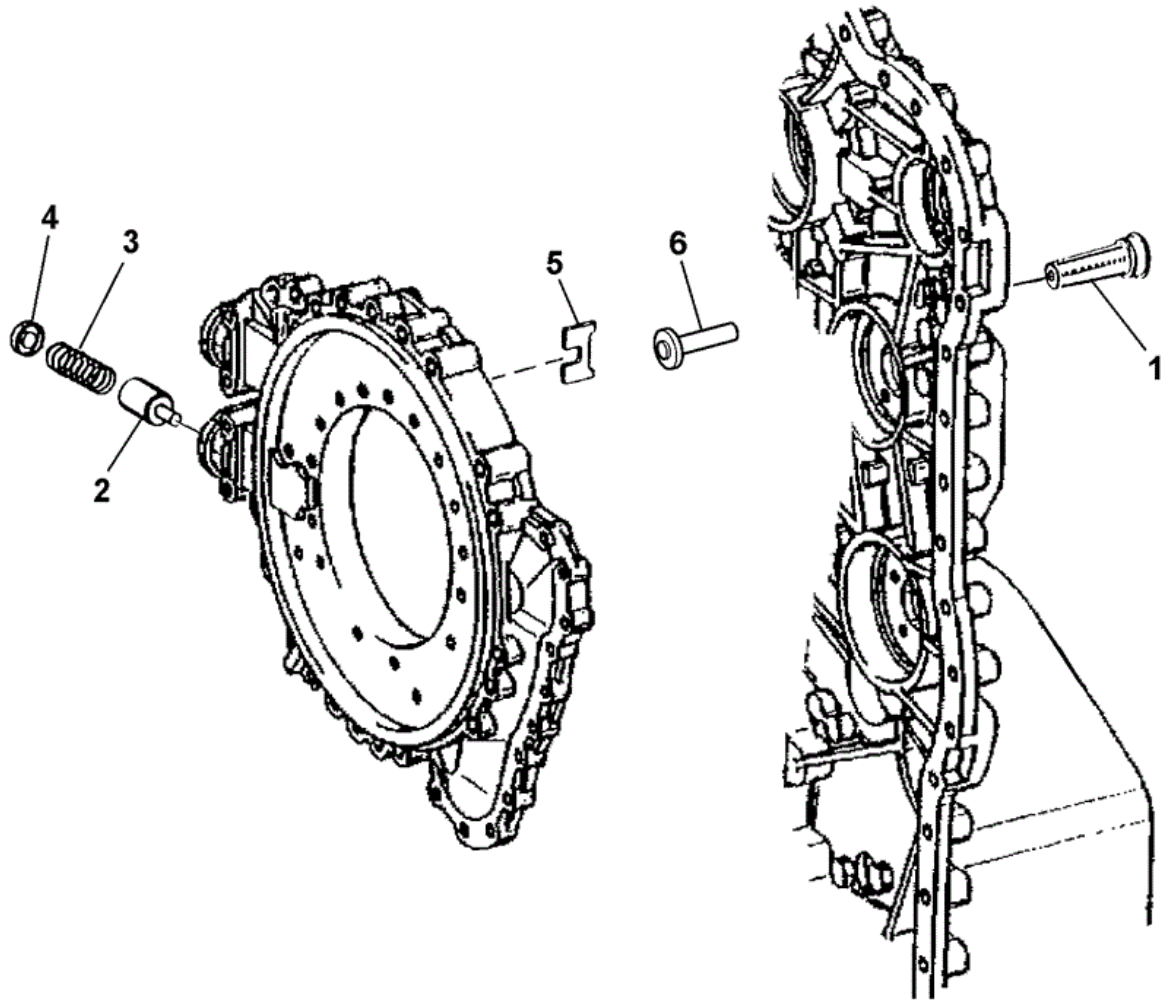

346771

Item	Part No	Change No	Description	Usage Code	QTY
1	04/600286		Valve		1
2	04/600287		Piston		1

3	04/600289		Spring compression		1
4	04/600288		Plate pressure		1
5	04/600290		Washer tab		1
6	04/600749		Valve Valve pressure relie		1

Applicability Date Ranges:
From: , To:

Product Catalog\WHEELED LOADERS\416 01243000-01243499,01317500-01317999,01472000-01472999,02095872-02095875 9812/3020 \F AXLES, WHEELS & TRANSMISSION\F05 TRANSMISSIONS SYNCHROSHUTTLE\F5-22-10 PRESSURE REGULATOR 333/U2782

9812/3020 F5-22-10 PRESSURE REGULATOR 333/U2782

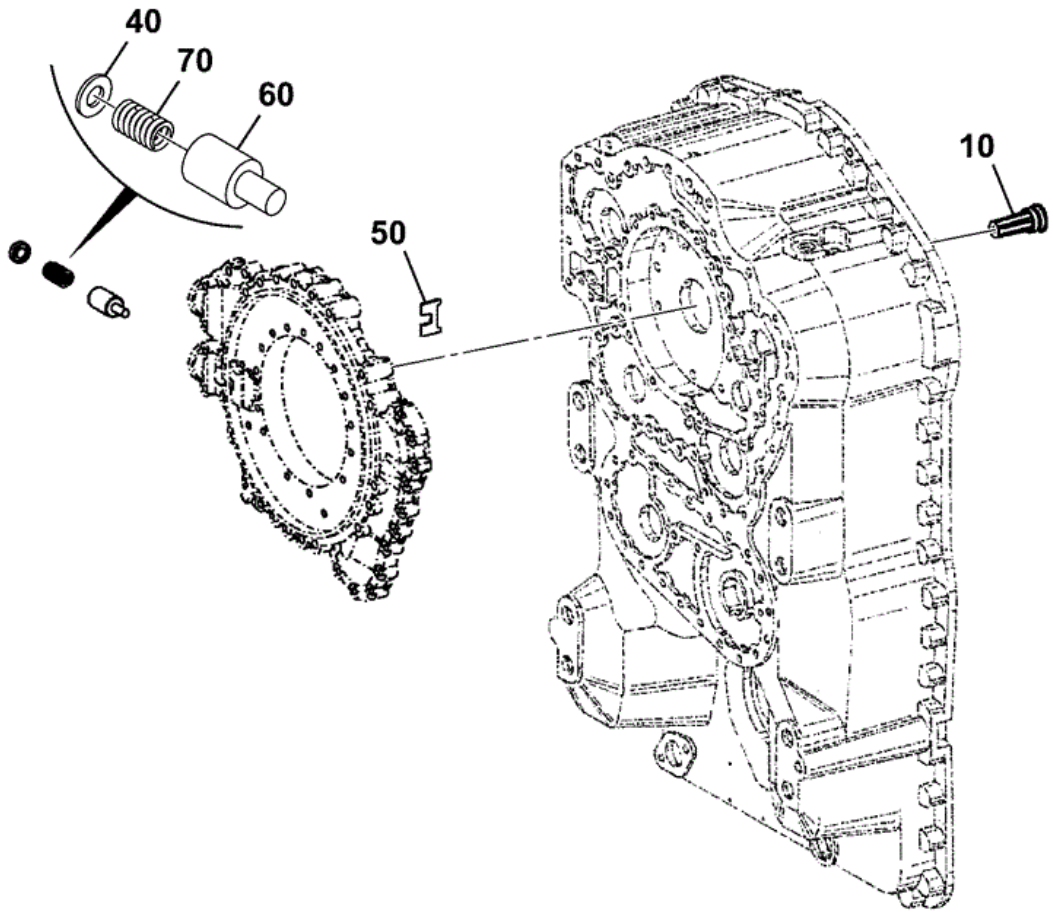

333-E6052-1

Item	Part No	Change No	Description	Usage Code	QTY
10	04/600286		Valve		1
40	04/600288		Plate pressure		1

50	04/600290		Washer tab		1
60	04/600287		Piston		1
70	04/600289		Spring compression		1

Applicability Date Ranges:
From: , To:

Product Catalog\WHEELED LOADERS\416 01243000-01243499,01317500-01317999,01472000-01472999,02095872-02095875 9812/3020 \F AXLES, WHEELS & TRANSMISSION\F05 TRANSMISSIONS SYNCHROSHUTTLE\F5-24-1 OIL PUMP

9812/3020 F5-24-1 OIL PUMP

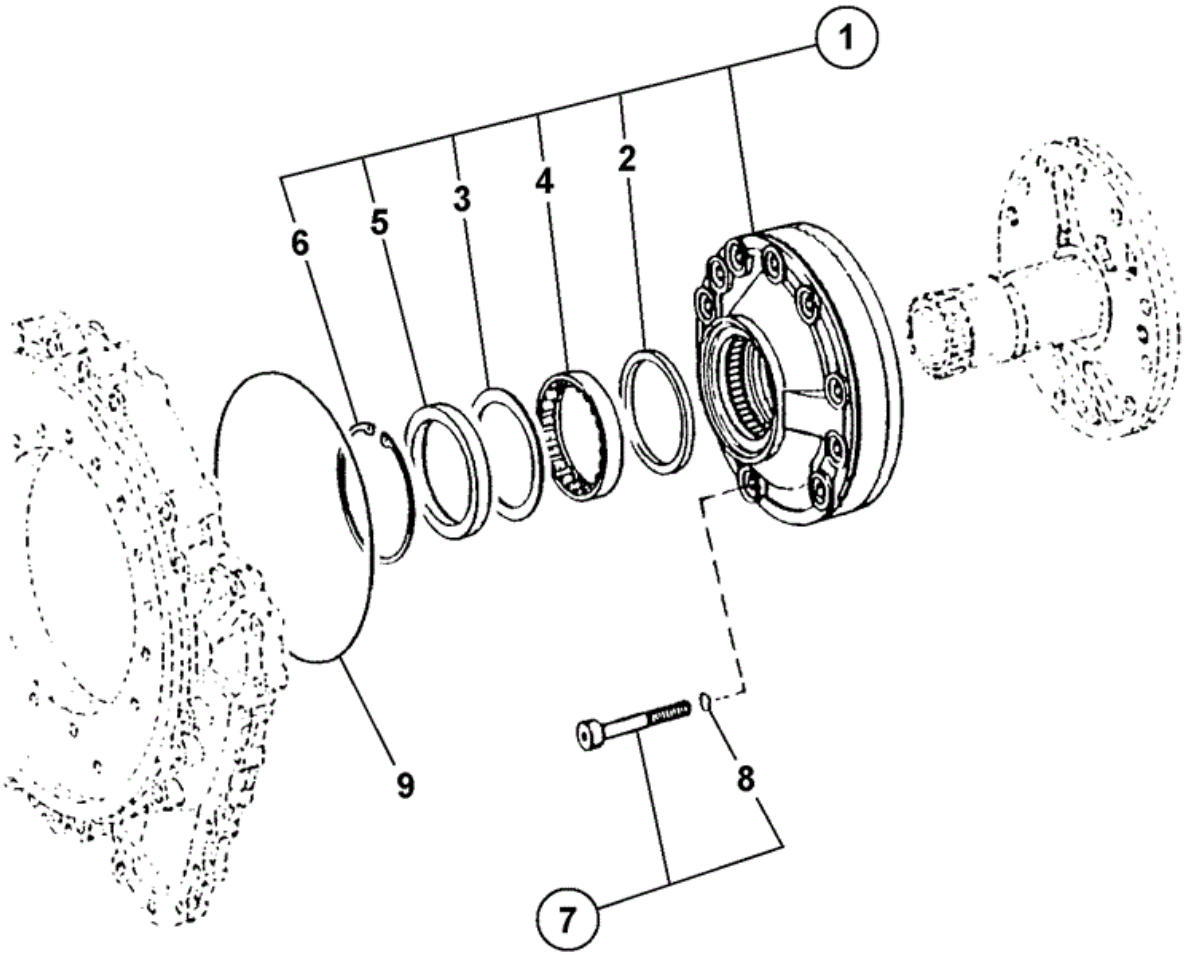

346620

Item	Part No	Change No	Description	Usage Code	QTY

1	04/600807	Superseded	Pump oil pressure		1
1	04/600812		Pump oil pressure		1
2	821/10061		Ring		1
3	823/10268		Shim support		1
4	917/10001		Bearing needle		1
5	904/20152		Seal shaft		1
6	821/10062		Ring snap		1
7	04/600416		Screw M10		10
8	828/10171		O Ring		10
9	828/10172		O Ring		1

Applicability Date Ranges:
From: , To:

Product Catalog\WHEELED LOADERS\416 01243000-01243499,01317500-01317999,01472000-01472999,02095872-02095875 9812/3020 \F AXLES, WHEELS & TRANSMISSION\F05 TRANSMISSIONS SYNCHROSHUTTLE\F5-24-10 OIL PUMP 333/U2782

9812/3020 F5-24-10 OIL PUMP 333/U2782

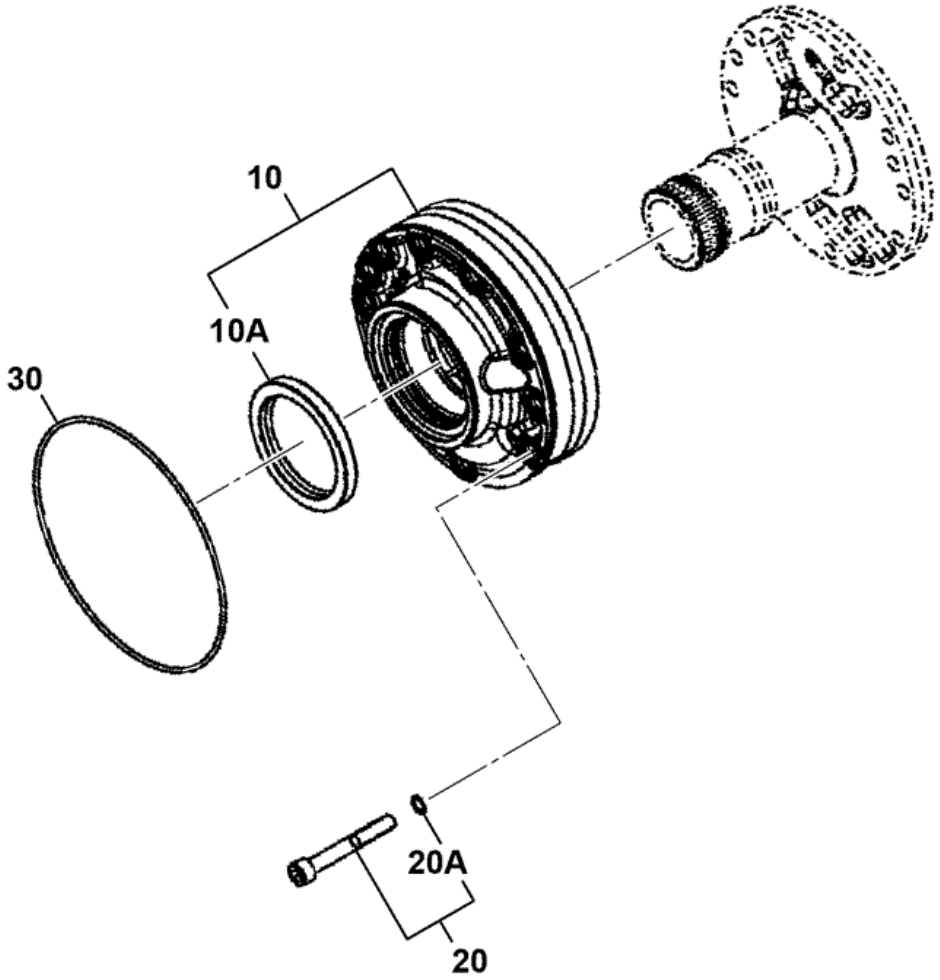

333-G7898-1

Item	Part No	Change No	Description	Usage Code	QTY
10	04/600812		Pump oil pressure		1
10A	904/20152		Seal shaft		1

20	04/600416		Screw M10		10
20A	828/10171		O Ring		10
30	332/D6929		O Ring		1

Applicability Date Ranges:
From: , To:

9812/3020 F5-25-1 PIPEWORK GEARBOX HOUSING

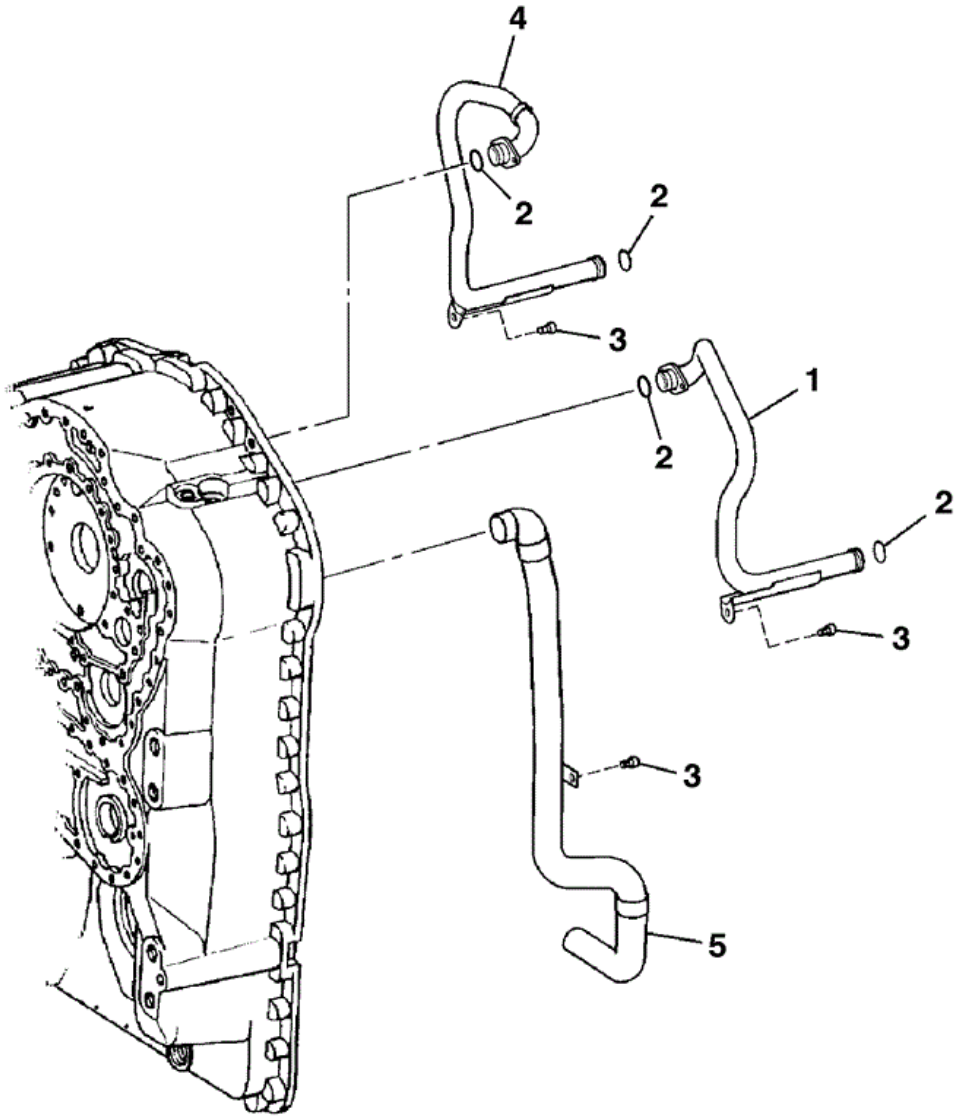

761490

Item	Part No	Change No	Description	Usage Code	QTY
1	331/42513		Pipe oil		1
2	828/10174		O Ring		4

3	826/10450		Capscrew		7
4	331/42514		Pipe oil		1
5	04/600329		Tube suction		1

Applicability Date Ranges:
From: , To:

9812/3020 F5-26-1 SENDERS TRANSMISSION

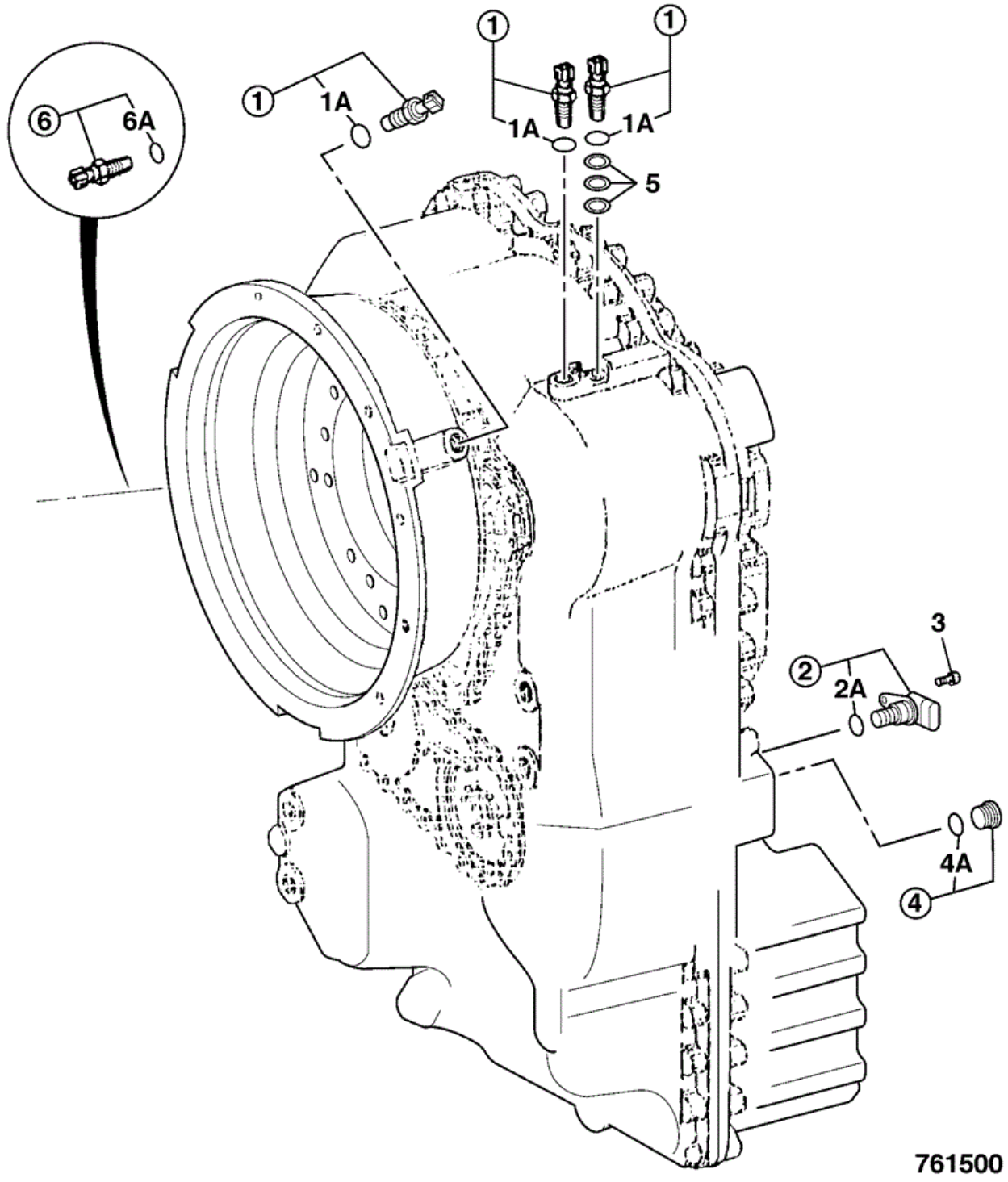

Item	Part No	Change No	Description	Usage Code	QTY
1	717/20065		Sensor speed		3
1A	:331/42606		O Ring		1

2	717/20066		Sensor speed		1
2A	:04/600417		O Ring		1
3	04/600558		Screw cap		1
4	04/600282		Plug		1
4A	:04/600283		O Ring		1
5	04/801517		Shim 1.00 mm		3
6	717/20072		Sender transmission oil temperature		1
6A	:828/10207		O Ring		1

Applicability Date Ranges:
From: , To:

Product Catalog\WHEELED LOADERS\416 01243000-01243499,01317500-01317999,01472000-01472999,02095872-02095875 9812/3020 \F AXLES, WHEELS & TRANSMISSION\F05 TRANSMISSIONS SYNCHROSHUTTLE\F5-26-10 SENDERS TRANSMISSION TEMPERATURE SENDER, 333/U2782

9812/3020 F5-26-10 SENDERS TRANSMISSION TEMPERATURE SENDER, 333/U2782

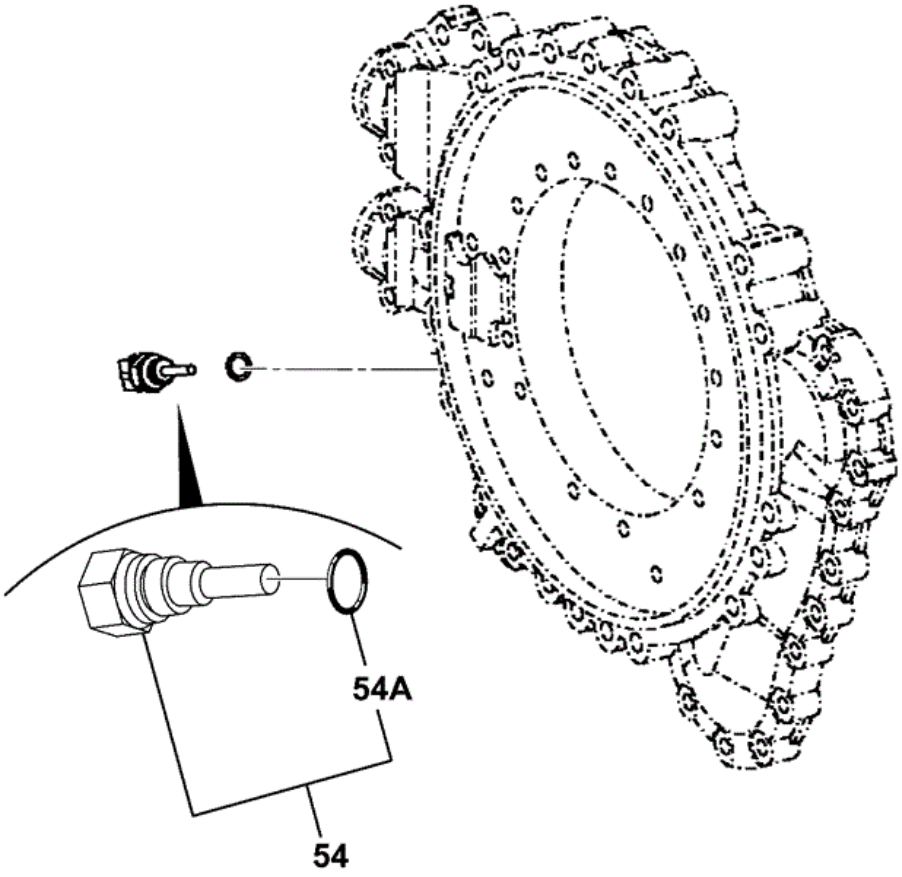

333-E6063-1

Item	Part No	Change No	Description	Usage Code	QTY
54	332/D6930		Sender transmission oil temperature		1

54A	828/10207		O Ring		1

Applicability Date Ranges:
From: , To:

Product Catalog\WHEELED LOADERS\416 01243000-01243499,01317500-01317999,01472000-01472999,02095872-02095875 9812/3020 \G BRAKES\G01 BRAKES\G1-0-1 BRAKE SYSTEM INSTALLATION ASSEMBLIES VARIABLE FLOW

9812/3020 G1-0-1 BRAKE SYSTEM INSTALLATION ASSEMBLIES VARIABLE FLOW

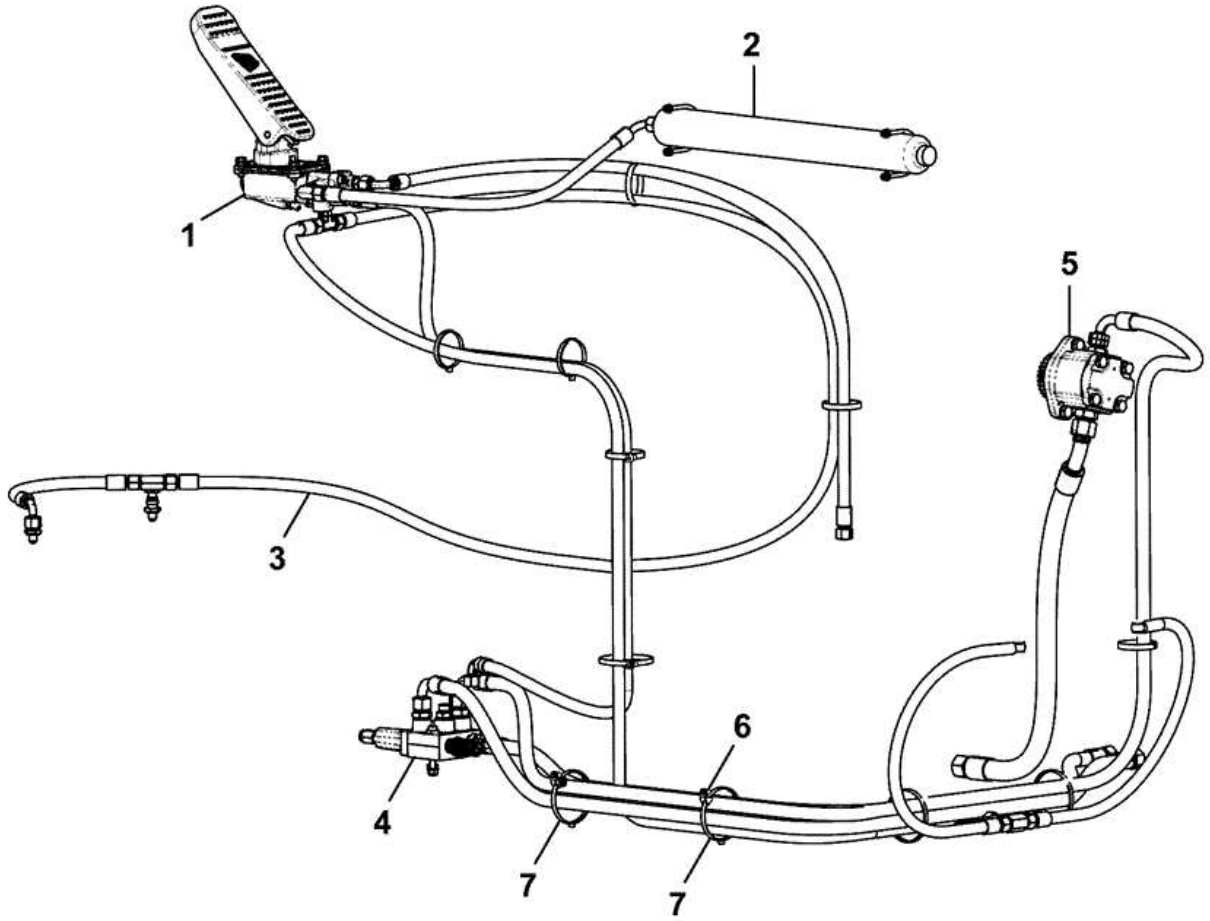

333-R2560-1

Item	Part No	Change No	Description	Usage Code	QTY
1	****		Assembly brake valve		1
2	****		Assembly accumulator		1

3	****		Assembly brake line		1
4	****		Assembly charge valve		1
5	****		Assembly brake pump		1
6	826/01274		Cradle Cable Tie Mount		7
7	121/77603		Tie Cable 300mm		11

Applicability Date Ranges:
From: 31/10/2010 , To:

9812/3020 G1-1-1 VALVE, BRAKE ADAPTERS & SWITCHES

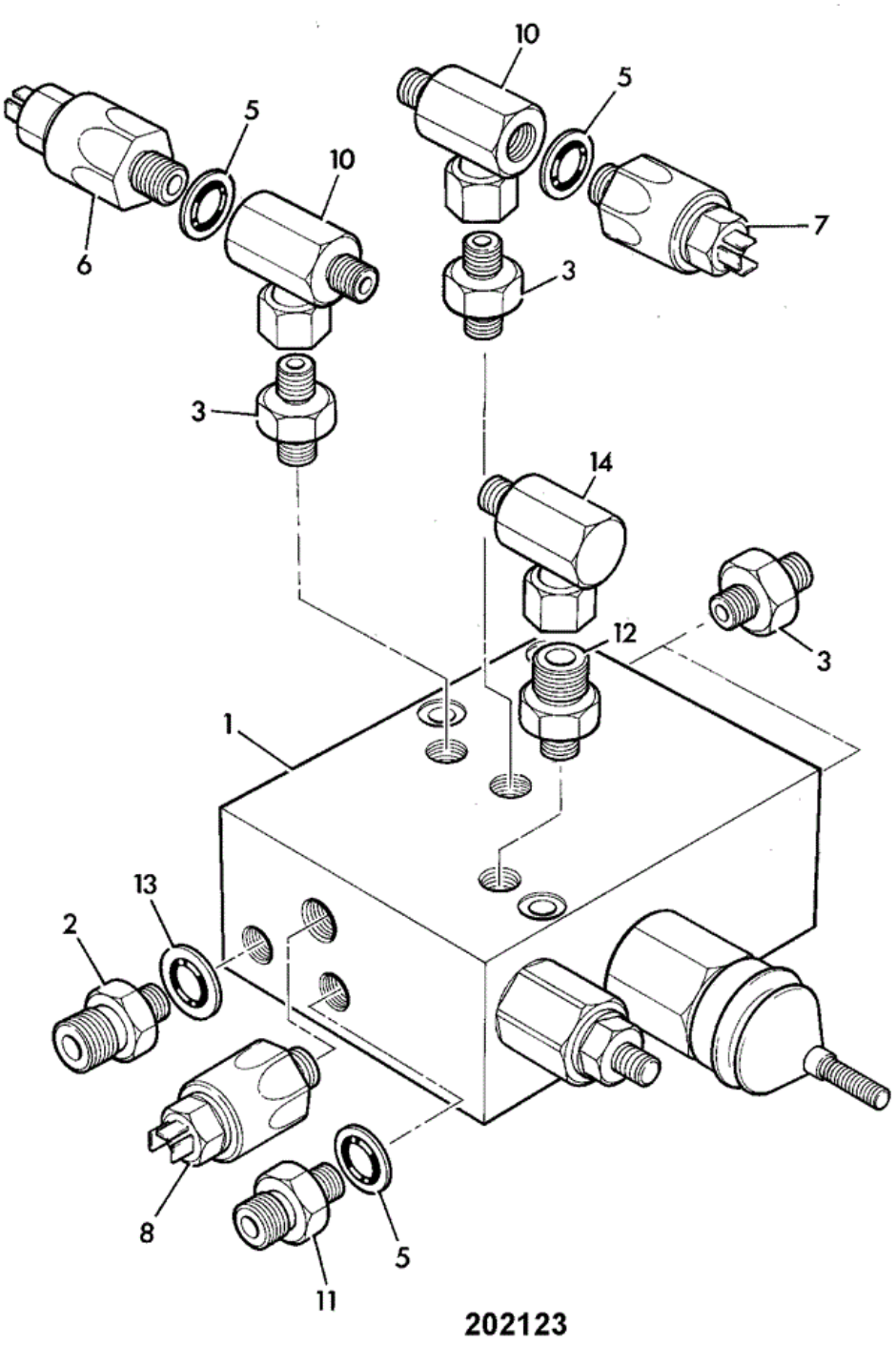

Item	Part No	Change No	Description	Usage Code	QTY
1	25/221212		Valve brake		1
2	816/15160		Adapter M18 x 3/8" BSP Ports P & N		1

2A	993/99008		Washer dowty M18		2
3	816/15119		Adapter M16x3/8 Ports S1,S2,BR1 & BR2		4
3A	1406/0015		Washer Bonded 3/8"		4
5	1406/0011		Washer Bonded (1/4")		3
6	701/74200	Superseded	Switch pressure, thread=M12 brake trans/dump Transmission dump		1
6	332/V8198		Switch Pressure		1
7	701/74100	Superseded	Switch pressure, thread=M12 brake light Brake light		1
7	332/V8196		Switch Pressure		1
8	701/80360	Superseded	Switch pressure low pressure		1
8	332/P9658		Switch pressure		1
8A	1406/0008		Seal Washer		1
9	816/40006		Adapter 90 Deg Port T		1
10	816/55057		Adapter Tee Ports BR1 & BR2		2
11	816/15160		Adapter M18 x 3/8" BSP Ports P & N		1
12	816/15132		Adapter Port T		1
13	993/99008		Washer dowty M18 Was 1 off		2
14	816/40016		Adapter ,90 Deg.		1
16	816/15182		Adapter male with restrictor		1
20	816/55038		Adapter tee pressure test		1
20	816/90758		Adapter tee pressure test stainless steel Sales special 9851		1

9812/3020 G1-1-2 VALVE, BRAKE COMPONENTS

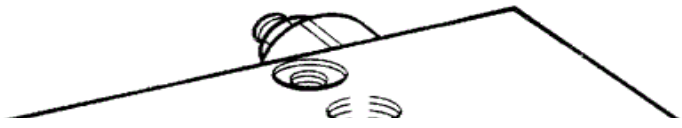

Item	Part No	Change No	Description	Usage Code	QTY
1	25/221212		Valve brake		1
2	:998/10681		Kit seal		1

Applicability Date Ranges:
From: , To: 30/10/2010

Product Catalog\WHEELED LOADERS\416 01243000-01243499,01317500-01317999,01472000-01472999,02095872-02095875 9812/3020 \G BRAKES\G01 BRAKES\G1-1-2 VALVE, BRAKE COMPONENTS

9812/3020 G1-1-1 VALVE, BRAKE ADAPTERS & SWITCHES

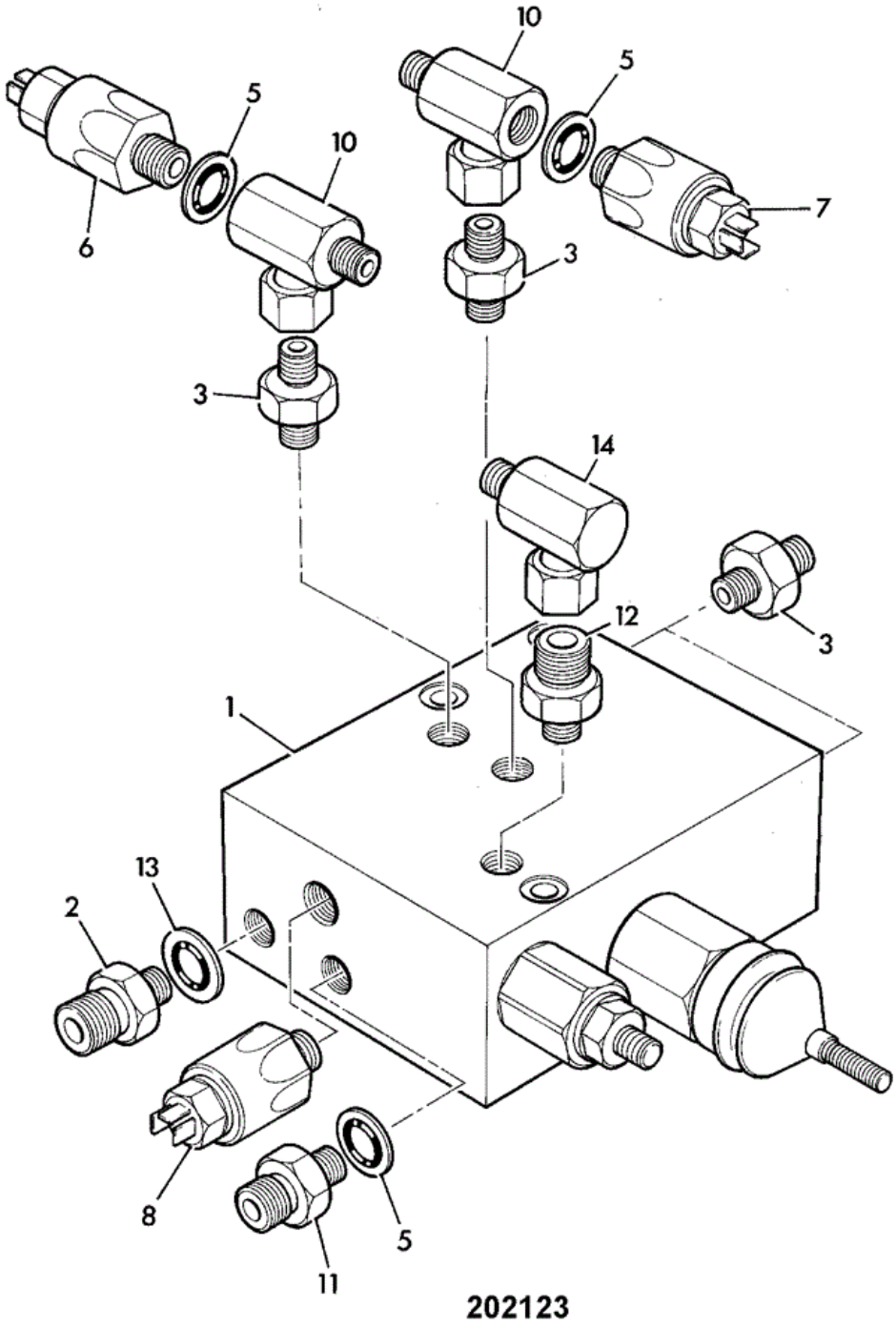

Item	Part No	Change No	Description	Usage Code	QTY
1	25/221212		Valve brake		1
2	816/15160		Adapter M18 x 3/8" BSP Ports P & N		1

2A	993/99008		Washer dowty M18		2
3	816/15119		Adapter M16x3/8 Ports S1,S2,BR1 & BR2		4
3A	1406/0015		Washer Bonded 3/8"		4
5	1406/0011		Washer Bonded (1/4")		3
6	701/74200	Superseded	Switch pressure, thread=M12 brake trans/dump Transmission dump		1
6	332/V8198		Switch Pressure		1
7	701/74100	Superseded	Switch pressure, thread=M12 brake light Brake light		1
7	332/V8196		Switch Pressure		1
8	701/80360	Superseded	Switch pressure low pressure		1
8	332/P9658		Switch pressure		1
8A	1406/0008		Seal Washer		1
9	816/40006		Adapter 90 Deg Port T		1
10	816/55057		Adapter Tee Ports BR1 & BR2		2
11	816/15160		Adapter M18 x 3/8" BSP Ports P & N		1
12	816/15132		Adapter Port T		1
13	993/99008		Washer dowty M18 Was 1 off		2
14	816/40016		Adapter ,90 Deg.		1
16	816/15182		Adapter male with restrictor		1
20	816/55038		Adapter tee pressure test		1
20	816/90758		Adapter tee pressure test stainless steel Sales special 9851		1

9812/3020 G1-1-2 VALVE, BRAKE COMPONENTS



Item	Part No	Change No	Description	Usage Code	QTY
1	25/221212		Valve brake		1
2	:998/10681		Kit seal		1

Applicability Date Ranges:
From: , To: 30/10/2010

Product Catalog\WHEELED LOADERS\416 01243000-01243499,01317500-01317999,01472000-01472999,02095872-02095875 9812/3020 \G BRAKES\G01 BRAKES\G1-1-2 VALVE, BRAKE COMPONENTS

9812/3020 G1-1-2 VALVE, BRAKE COMPONENTS

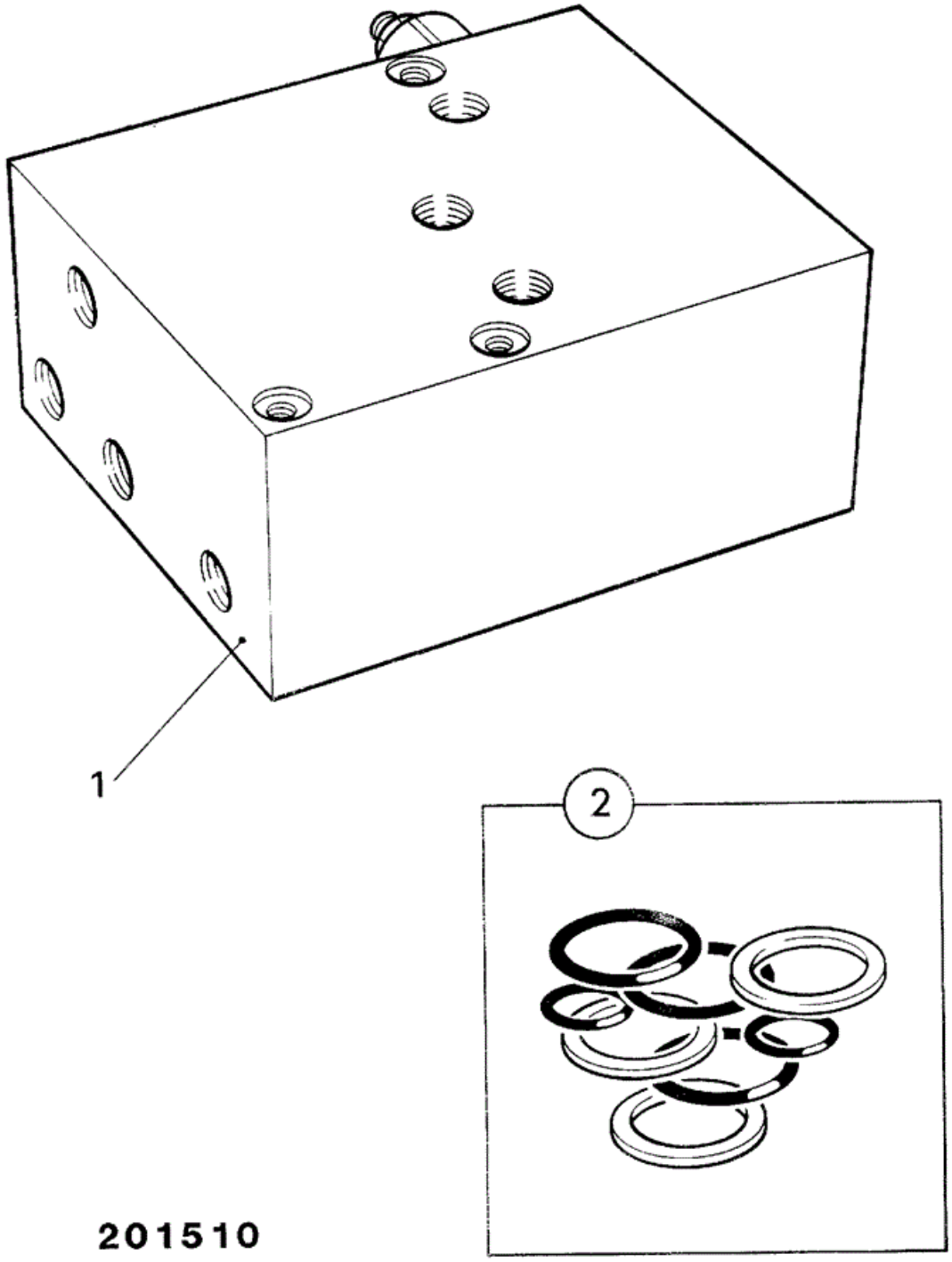

Item	Part No	Change No	Description	Usage Code	QTY

1	25/221212		Valve brake		1
2	:998/10681		Kit seal		1

Applicability Date Ranges:
From: , To: 30/10/2010

9812/3020 G1-1-10 HOSE AND PIPEWORK BRAKE VALVE

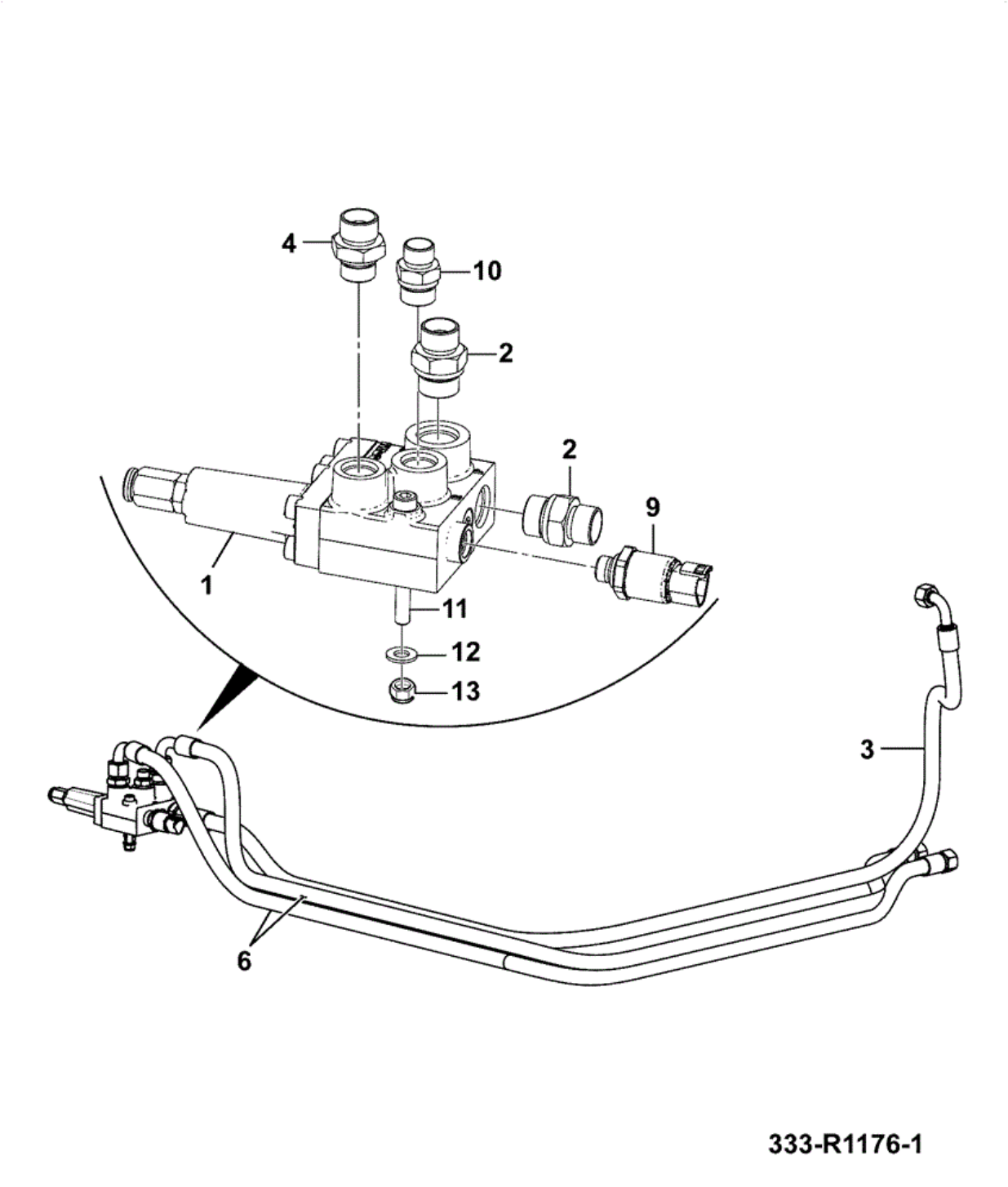

Item	Part No	Change No	Description	Usage Code	QTY
1	332/W7137		Valve charge		1
2	1620/2055		Adaptor 39.5mm Long. M/M 1/2"BSP x 7/8"SAE		2

3	332/E8853		Hose 1/2"BSP 2400mm		1
4	1620/2054		Adaptor 1/2BSP x 3/4 SAE		1
6	613/31200	to 29/11/2010	Hose 1/2"BSP x 1730mm		2
6	613/80175		Hose 1/2"BSP x 1630mm		2
9	333/R5180		Switch pressure		1
10	1620/2053		Adaptor 3/8BSPx3/4SAE		1
11	1391/3316D	to 29/11/2010	Capscrew M8 x 70mm		2
11	1391/3318D		Capscrew M8 x 80mm grade 12.9		2
12	1420/0007D		Washer (M8)		2
13	1370/0203D		Nut Lock M8		2

Applicability Date Ranges:
From: 31/10/2010 , To:

Product Catalog\WHEELED LOADERS\416 01243000-01243499,01317500-01317999,01472000-01472999,02095872-02095875 9812/3020 \G BRAKES\G01 BRAKES\G1-2-1 PARKING BRAKE CALIPER COMPONENTS

9812/3020 G1-2-1 PARKING BRAKE CALIPER COMPONENTS

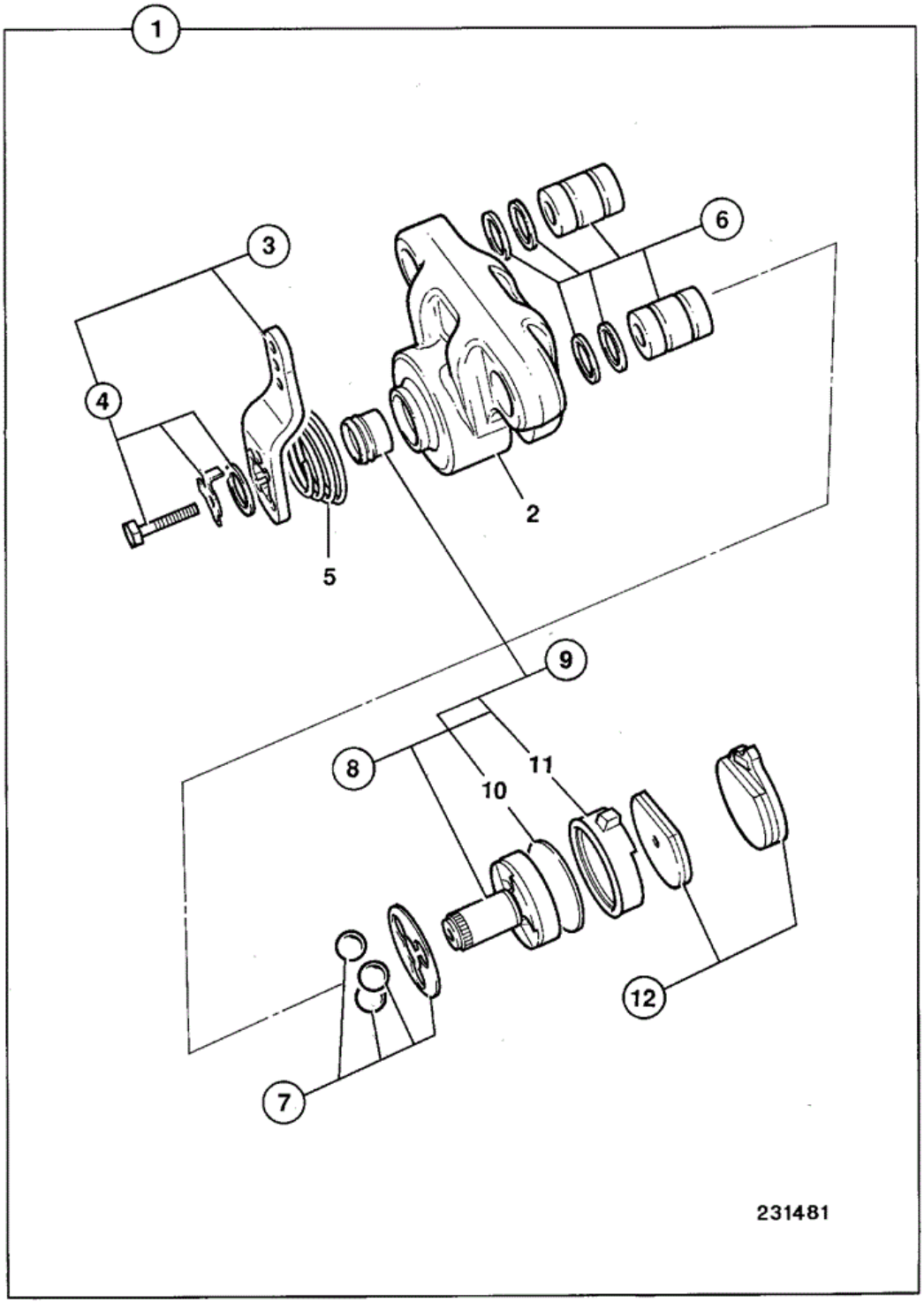

Item	Part No	Change No	Description	Usage Code	QTY
1	15/920272		Brake Caliper,Parkbrake	A	1
1	15/M04039		Brake Caliper Parkbrake Replaces 15/920272	B	1

2	****		None serviced part		1
3	:15/920314		Kit lever		1
4	::15/920289		Kit-bolt torx head		1
5	:15/920315		Kit spring		1
6	:15/920293		Kit-bush		1
7	:478/00844		Kit-bearing		1
8	:15/915204		Kit rotor		1
9	::15/920292		Kit-seal		1
10	:::N.L.A		No longer available Use item 9		1
11	:::N.L.A		No longer available Use item 9		1
12	:15/920103	Superseded	Kit-pad brake pad	A	1
12	:478/00849		Kit-brake pad	B	1

Applicability Date Ranges:
From: , To: M1317728

Product Catalog\WHEELED LOADERS\416 01243000-01243499,01317500-01317999,01472000-01472999,02095872-02095875 9812/3020 \G BRAKES\G01 BRAKES\G1-2-2 PARKING BRAKE CALIPER COMPONENTS

9812/3020 G1-2-2 PARKING BRAKE CALIPER COMPONENTS

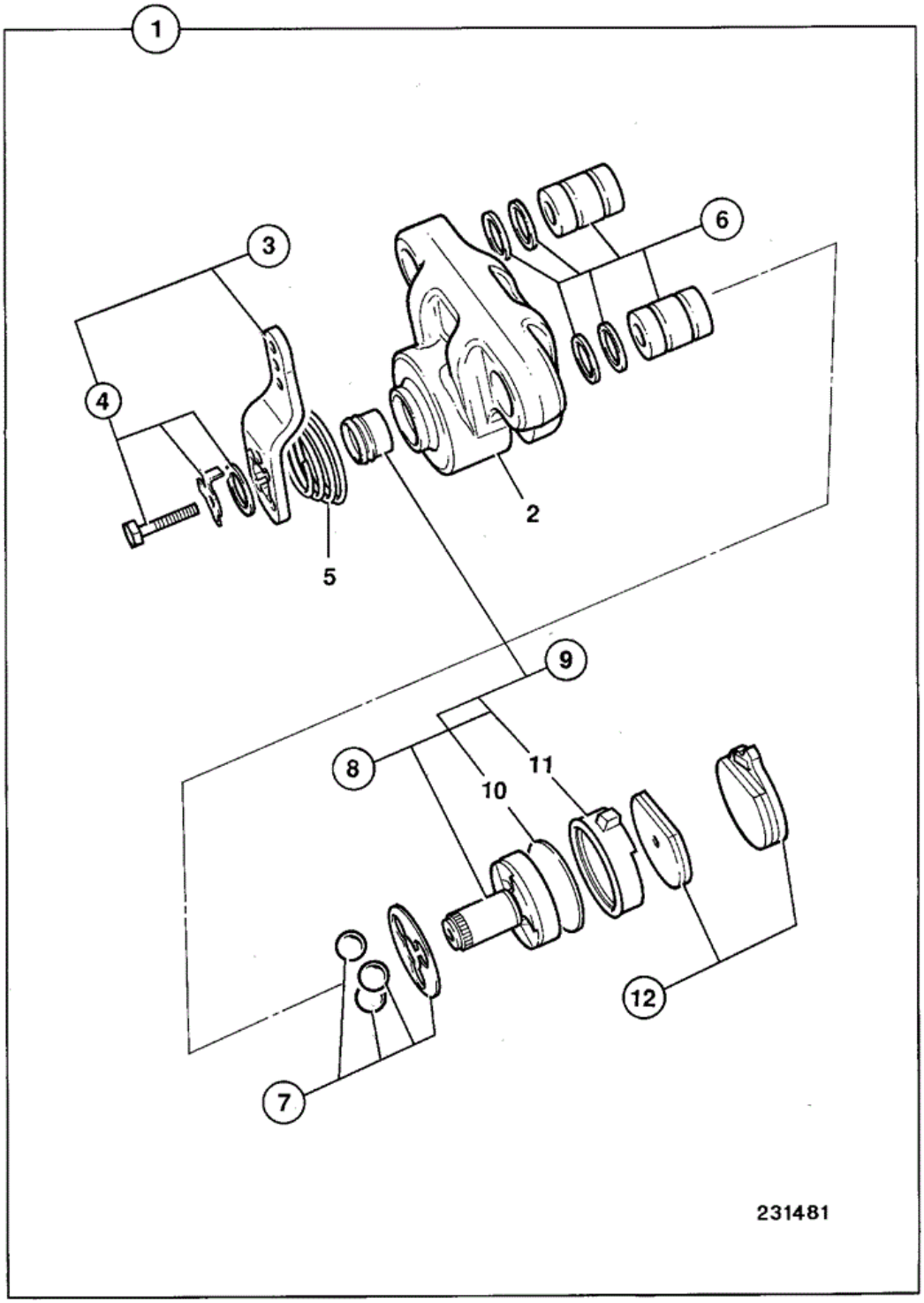

Item	Part No	Change No	Description	Usage Code	QTY
1	332/R7488		Brake Caliper,Parkbrake		1
2	****		None serviced part		1

3	:15/920290		Kit-lever		1
4	::15/920289		Kit-bolt torx head		1
5	:15/920315		Kit spring		1
6	:15/920293		Kit-bush		1
7	:478/00844		Kit-bearing		1
8	:15/915204		Kit rotor		1
9	::15/920292		Kit-seal		1
10	:::N.L.A		No longer available Use item 9		1
11	:::N.L.A		No longer available Use item 9		1
12	:15/920103		Kit-pad brake pad		1
12	:332/V9694		Kit-pad brake pad inc. pad retention clips Replaces 15/920103		1

Applicability Date Ranges:
From: M1317729 , To: M1317924

Product Catalog\WHEELED LOADERS\416 01243000-01243499,01317500-01317999,01472000-01472999,02095872-02095875 9812/3020 \G BRAKES\G01 BRAKES\G1-2-3 PARKING BRAKE CALIPER COMPONENTS

9812/3020 G1-2-3 PARKING BRAKE CALIPER COMPONENTS

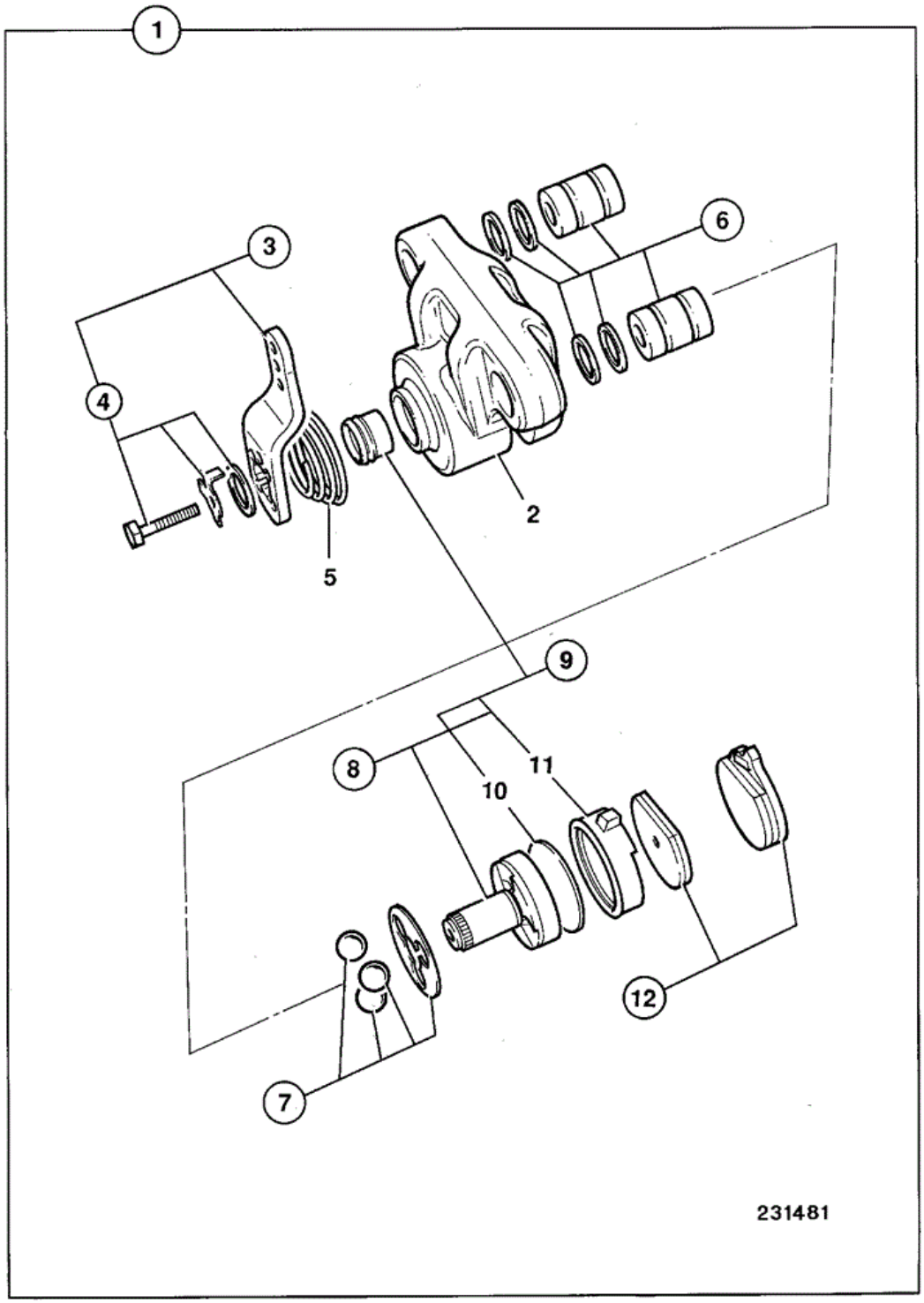

Item	Part No	Change No	Description	Usage Code	QTY
1	332/V9836		Brake Caliper Parkbrake		1
2	****		None serviced part		1

3	:15/920290		Kit-lever		1
4	::15/920289		Kit-bolt torx head		1
5	:15/920315		Kit spring		1
6	:15/920293		Kit-bush		1
7	:478/00844		Kit-bearing		1
8	:15/915204		Kit rotor		1
9	::15/920292		Kit-seal		1
10	:::N.L.A		No longer available Use item 9		1
11	:::N.L.A		No longer available Use item 9		1
12	:332/V9694		Kit-pad brake pad inc. pad retention clips		1

Applicability Date Ranges:
From: M1317925 , To: M1472140

Product Catalog\WHEELED LOADERS\416 01243000-01243499,01317500-01317999,01472000-01472999,02095872-02095875 9812/3020 \G BRAKES\G01 BRAKES\G1-2-4 PARKING BRAKE CALIPER COMPONENTS

9812/3020 G1-2-4 PARKING BRAKE CALIPER COMPONENTS

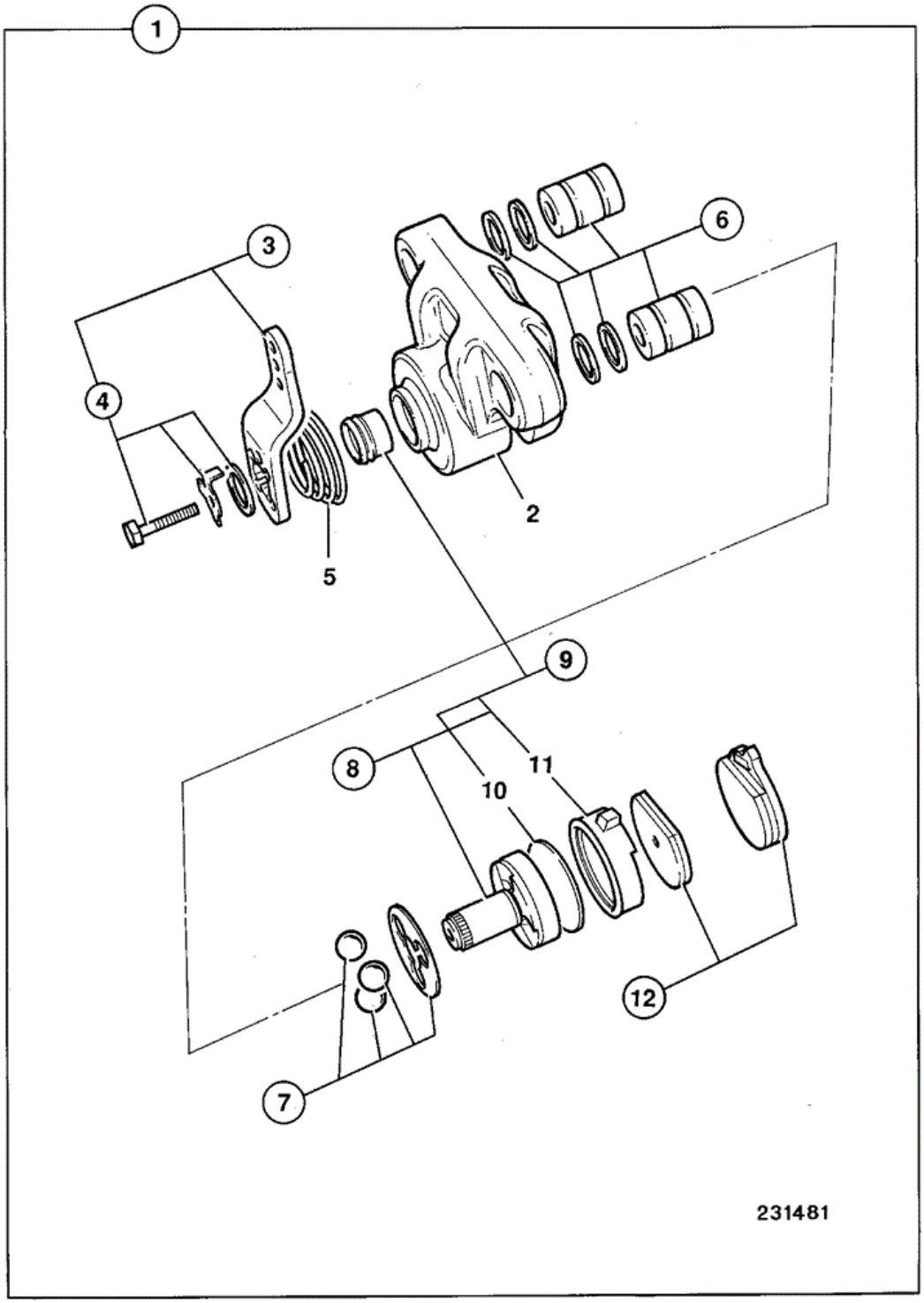

Item	Part No	Change No	Description	Usage Code	QTY
1	15/M04037		Brake Caliper Parkbrake		1
2	****		None serviced part		1

3	:15/920290		Kit-lever		1
4	::15/920289		Kit-bolt torx head		1
5	:15/920315		Kit spring		1
6	:15/920433		Kit-bush		1
7	:478/00844		Kit-bearing		1
8	:15/915204		Kit rotor		1
9	::15/920292		Kit-seal		1
10	:::N.L.A		No longer available Use item 9		1
11	:::N.L.A		No longer available Use item 9		1
12	:478/00849		Kit-brake pad		1

Applicability Date Ranges:
From: M1472141 , To:

9812/3020 G1-2-5 BRAKE CALIPER PARKING

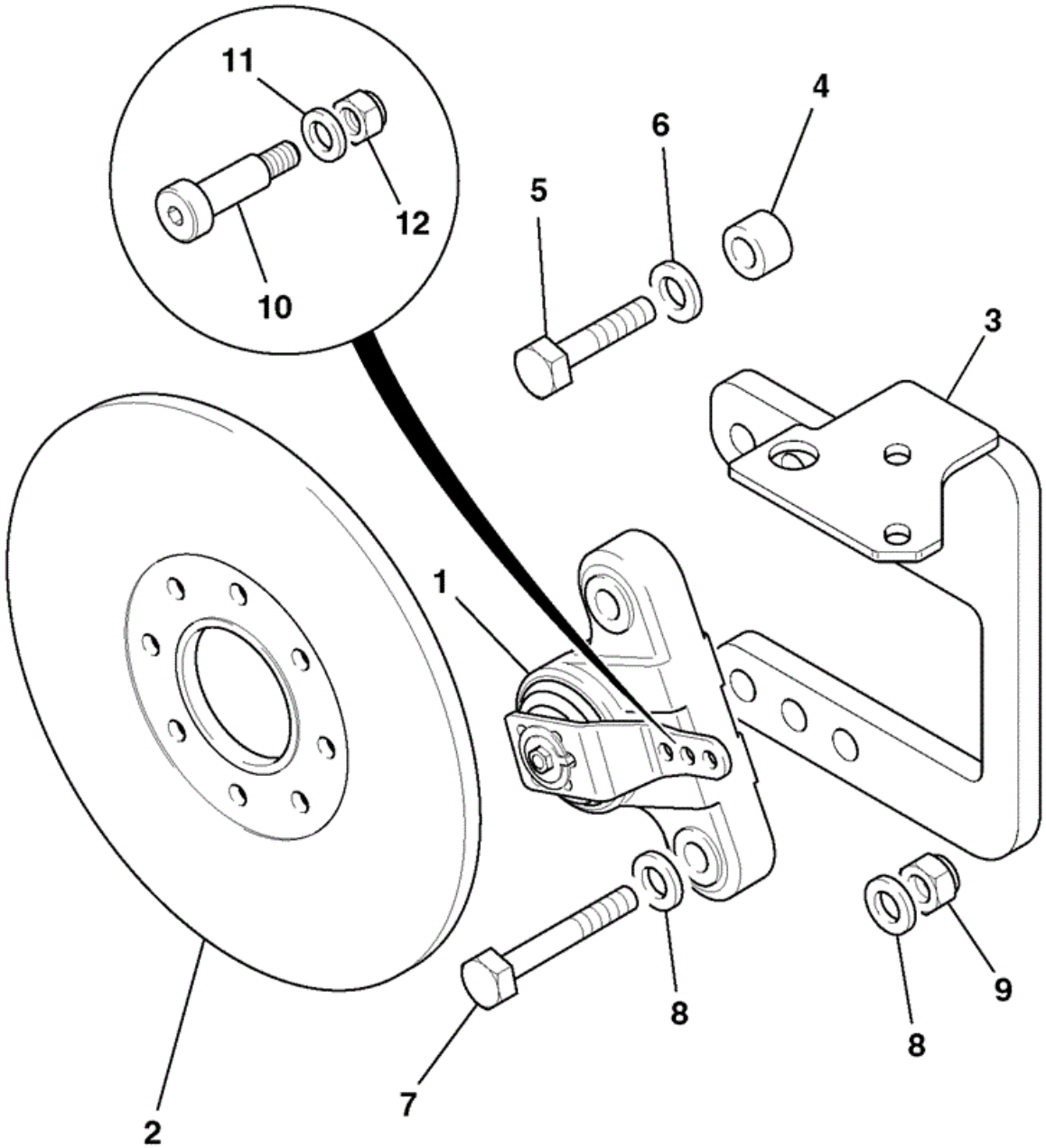

701310

Item	Part No	Change No	Description	Usage Code	QTY

1	15/920272	to M1317728	Brake Caliper,Parkbrake See G1-2-1		1
1	15/M04039		Brake Caliper Parkbrake See G1-2-1. Replaces 15/920272		1
1	332/R7488	Superseded	Brake Caliper,Parkbrake See G1-2-2		1
1	332/V9836	from M1317925	Brake Caliper Parkbrake See G1-2-3		1
1	15/M04037	from M1472141	Brake Caliper Parkbrake See G1-2-4		1
2	15/920120		Disc Parking Brake		1
3	335/05932	to M1317728	Bracket mounting		1
3	332/R7653		Bracket mounting		1
4	829/30428		Spacer		4
5	1315/3617D		Bolt		4
6	1420/0010D		Washer M14		4
7	1315/3718D		Bolt M16 x 80mm		2
8	1422/0011D		Washer (M16)		4
9	1370/0603D		Nut -Lock Nut, M16		2
10	826/10837		Screw Shouldered M6 x 30		1
11	1420/0006D		Washer (M6)		1
12	1370/0103D		Nut (M6)		1
13	4101/0602		Fluid locking		1

9812/3020 G1-2-1 PARKING BRAKE CALIPER COMPONENTS

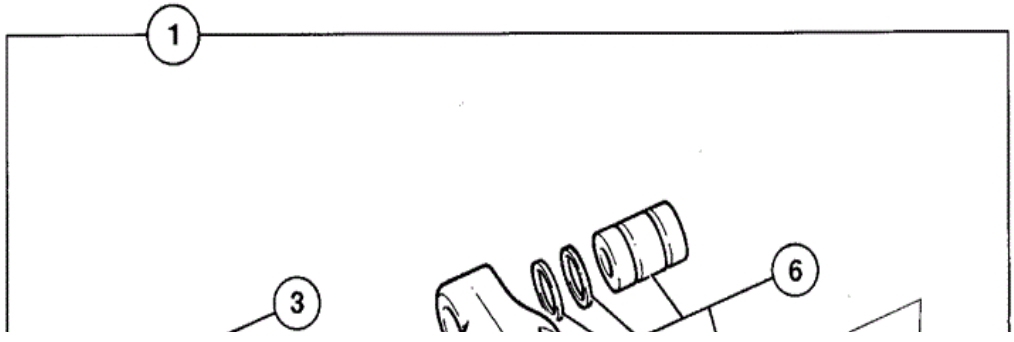

Item	Part No	Change No	Description	Usage Code	QTY
1	15/920272		Brake Caliper,Parkbrake	A	1
1	15/M04039		Brake Caliper Parkbrake Replaces 15/920272	B	1
2	****		None serviced part		1
3	:15/920314		Kit lever		1
4	::15/920289		Kit-bolt torx head		1
5	:15/920315		Kit spring		1
6	:15/920293		Kit-bush		1
7	:478/00844		Kit-bearing		1
8	:15/915204		Kit rotor		1
9	::15/920292		Kit-seal		1
10	:::N.L.A		No longer available Use item 9		1
11	:::N.L.A		No longer available Use item 9		1
12	:15/920103	Superseded	Kit-pad brake pad	A	1
12	:478/00849		Kit-brake pad	B	1

9812/3020 G1-2-2 PARKING BRAKE CALIPER COMPONENTS

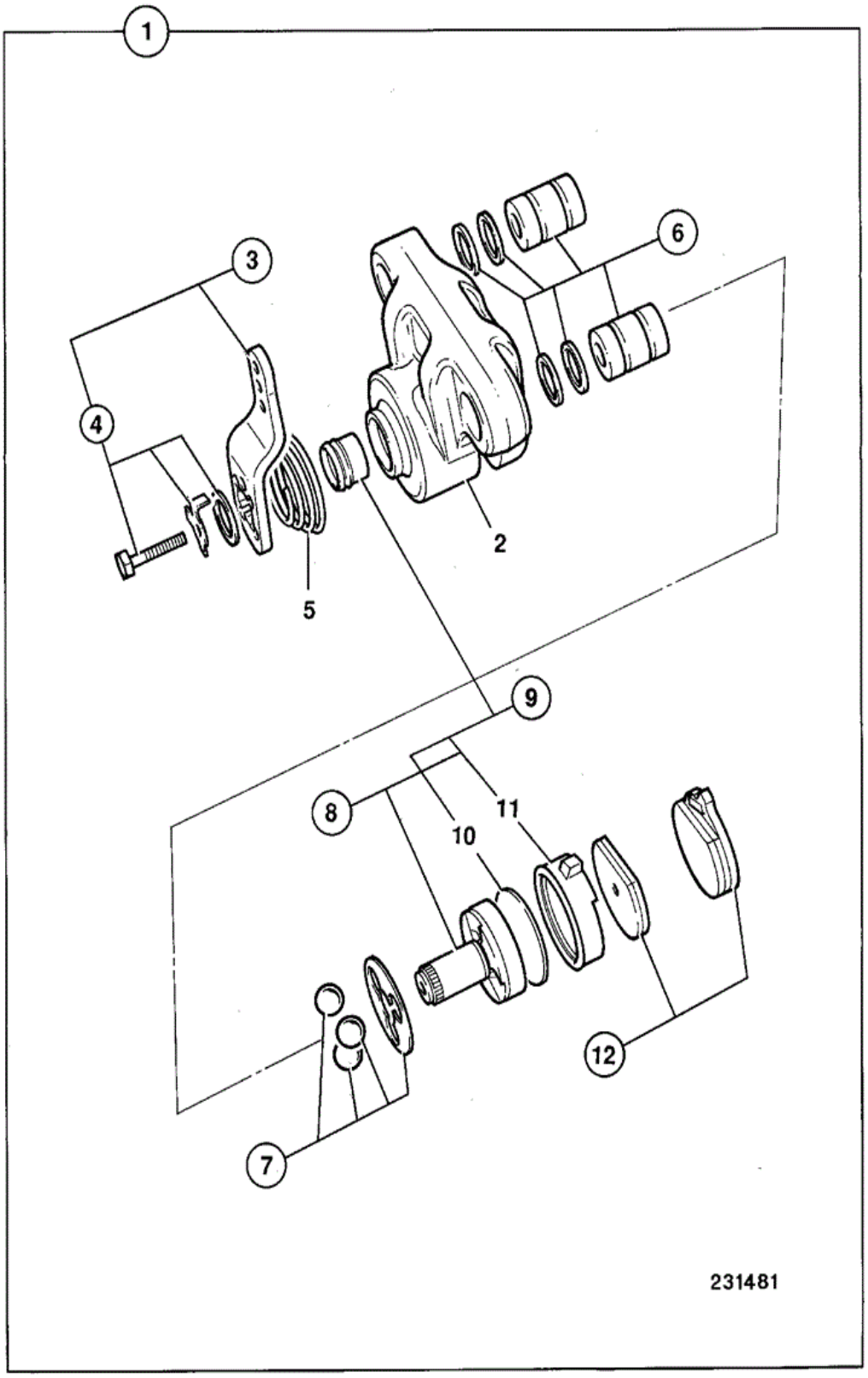

Item	Part No	Change No	Description	Usage Code	QTY
1	332/R7488		Brake Caliper,Parkbrake		1

2	****		None serviced part		1
3	:15/920290		Kit-lever		1
4	::15/920289		Kit-bolt torx head		1
5	:15/920315		Kit spring		1
6	:15/920293		Kit-bush		1
7	:478/00844		Kit-bearing		1
8	:15/915204		Kit rotor		1
9	::15/920292		Kit-seal		1
10	:::N.L.A		No longer available Use item 9		1
11	:::N.L.A		No longer available Use item 9		1
12	:15/920103		Kit-pad brake pad		1
12	:332/V9694		Kit-pad brake pad inc. pad retention clips Replaces 15/920103		1

9812/3020 G1-2-3 PARKING BRAKE CALIPER COMPONENTS

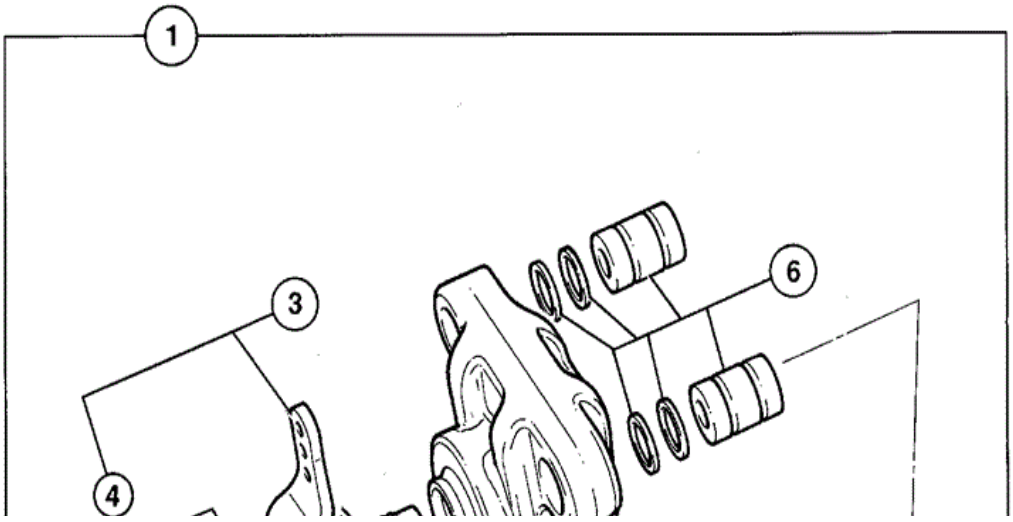

Item	Part No	Change No	Description	Usage Code	QTY
1	332/V9836		Brake Caliper Parkbrake		1
2	****		None serviced part		1
3	:15/920290		Kit-lever		1
4	::15/920289		Kit-bolt torx head		1
5	:15/920315		Kit spring		1
6	:15/920293		Kit-bush		1
7	:478/00844		Kit-bearing		1
8	:15/915204		Kit rotor		1
9	::15/920292		Kit-seal		1
10	:::N.L.A		No longer available Use item 9		1
11	:::N.L.A		No longer available Use item 9		1
12	:332/V9694		Kit-pad brake pad inc. pad retention clips		1

9812/3020 G1-2-4 PARKING BRAKE CALIPER COMPONENTS

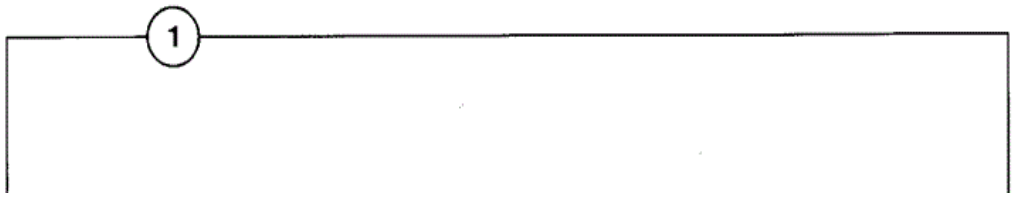

Item	Part No	Change No	Description	Usage Code	QTY
1	15/M04037		Brake Caliper Parkbrake		1
2	****		None serviced part		1
3	:15/920290		Kit-lever		1
4	::15/920289		Kit-bolt torx head		1
5	:15/920315		Kit spring		1
6	:15/920433		Kit-bush		1
7	:478/00844		Kit-bearing		1
8	:15/915204		Kit rotor		1
9	::15/920292		Kit-seal		1
10	:::N.L.A		No longer available Use item 9		1
			No longer available		

11	:::N.L.A		Use item 9		1
12	:478/00849		Kit-brake pad		1

Applicability Date Ranges:
From: , To: 30/09/2011

Product Catalog\WHEELED LOADERS\416 01243000-01243499,01317500-01317999,01472000-01472999,02095872-02095875 9812/3020 \G BRAKES\G01 BRAKES\G1-2-1 PARKING BRAKE CALIPER COMPONENTS

9812/3020 G1-2-5 BRAKE CALIPER PARKING

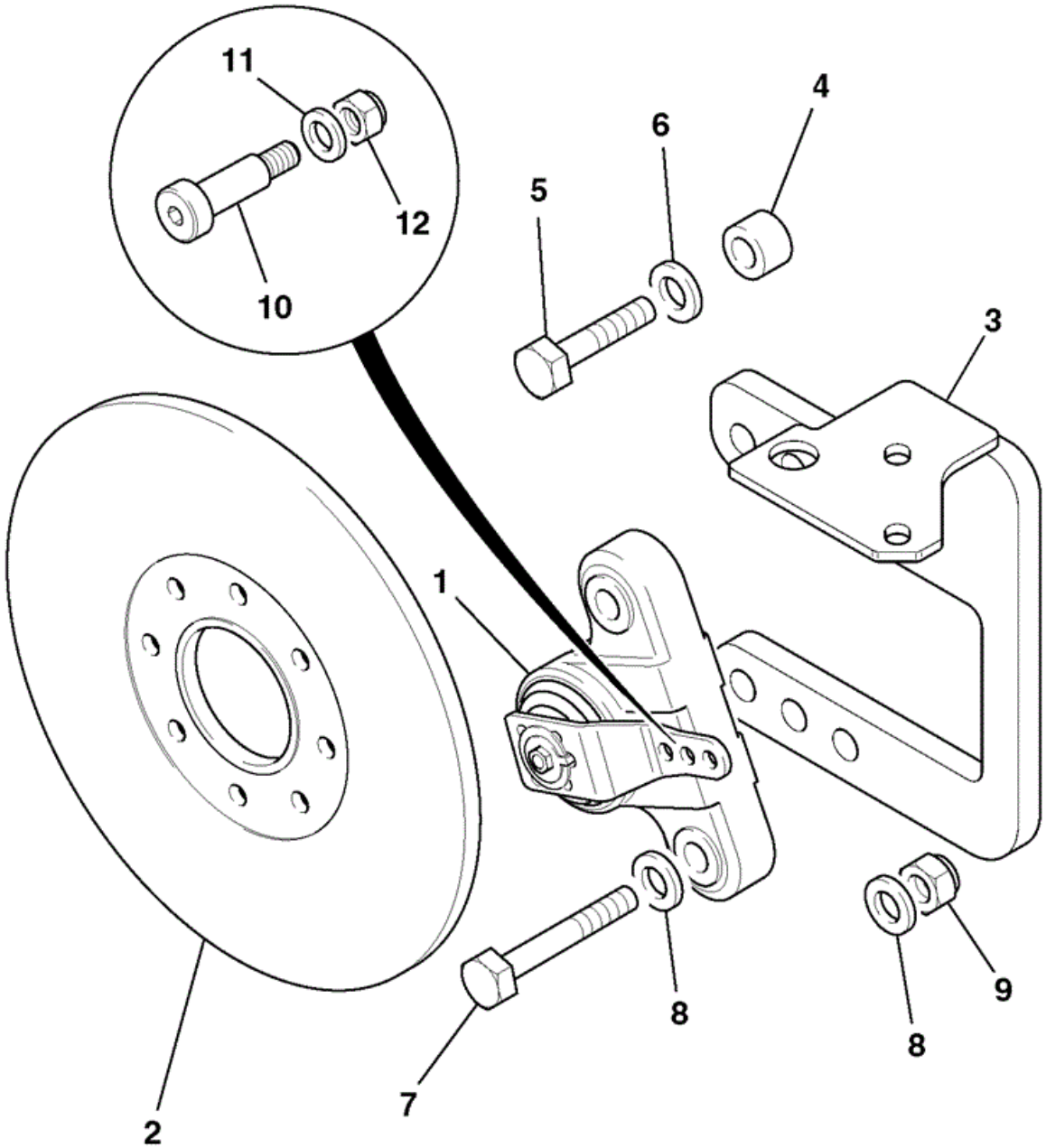

701310

Item	Part No	Change No	Description	Usage Code	QTY

1	15/920272	to M1317728	Brake Caliper,Parkbrake See G1-2-1		1
1	15/M04039		Brake Caliper Parkbrake See G1-2-1. Replaces 15/920272		1
1	332/R7488	Superseded	Brake Caliper,Parkbrake See G1-2-2		1
1	332/V9836	from M1317925	Brake Caliper Parkbrake See G1-2-3		1
1	15/M04037	from M1472141	Brake Caliper Parkbrake See G1-2-4		1
2	15/920120		Disc Parking Brake		1
3	335/05932	to M1317728	Bracket mounting		1
3	332/R7653		Bracket mounting		1
4	829/30428		Spacer		4
5	1315/3617D		Bolt		4
6	1420/0010D		Washer M14		4
7	1315/3718D		Bolt M16 x 80mm		2
8	1422/0011D		Washer (M16)		4
9	1370/0603D		Nut -Lock Nut, M16		2
10	826/10837		Screw Shouldered M6 x 30		1
11	1420/0006D		Washer (M6)		1
12	1370/0103D		Nut (M6)		1
13	4101/0602		Fluid locking		1

9812/3020 G1-2-1 PARKING BRAKE CALIPER COMPONENTS

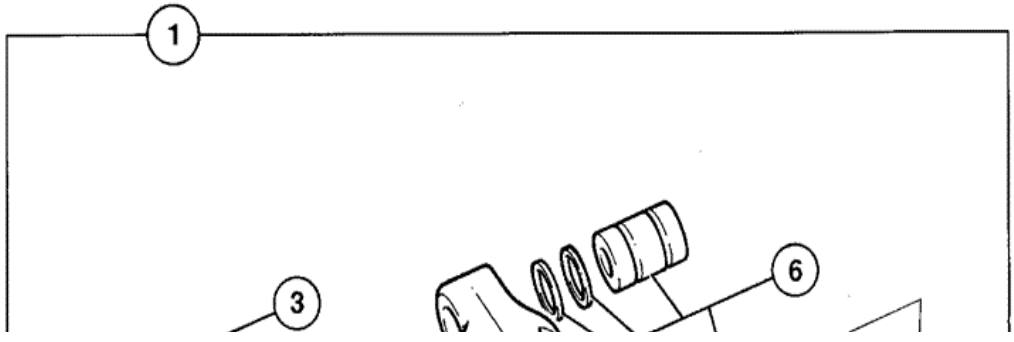

Item	Part No	Change No	Description	Usage Code	QTY
1	15/920272		Brake Caliper,Parkbrake	A	1
1	15/M04039		Brake Caliper Parkbrake Replaces 15/920272	B	1
2	****		None serviced part		1
3	:15/920314		Kit lever		1
4	::15/920289		Kit-bolt torx head		1
5	:15/920315		Kit spring		1
6	:15/920293		Kit-bush		1
7	:478/00844		Kit-bearing		1
8	:15/915204		Kit rotor		1
9	::15/920292		Kit-seal		1
10	:::N.L.A		No longer available Use item 9		1
11	:::N.L.A		No longer available Use item 9		1
12	:15/920103	Superseded	Kit-pad brake pad	A	1
12	:478/00849		Kit-brake pad	B	1

9812/3020 G1-2-2 PARKING BRAKE CALIPER COMPONENTS

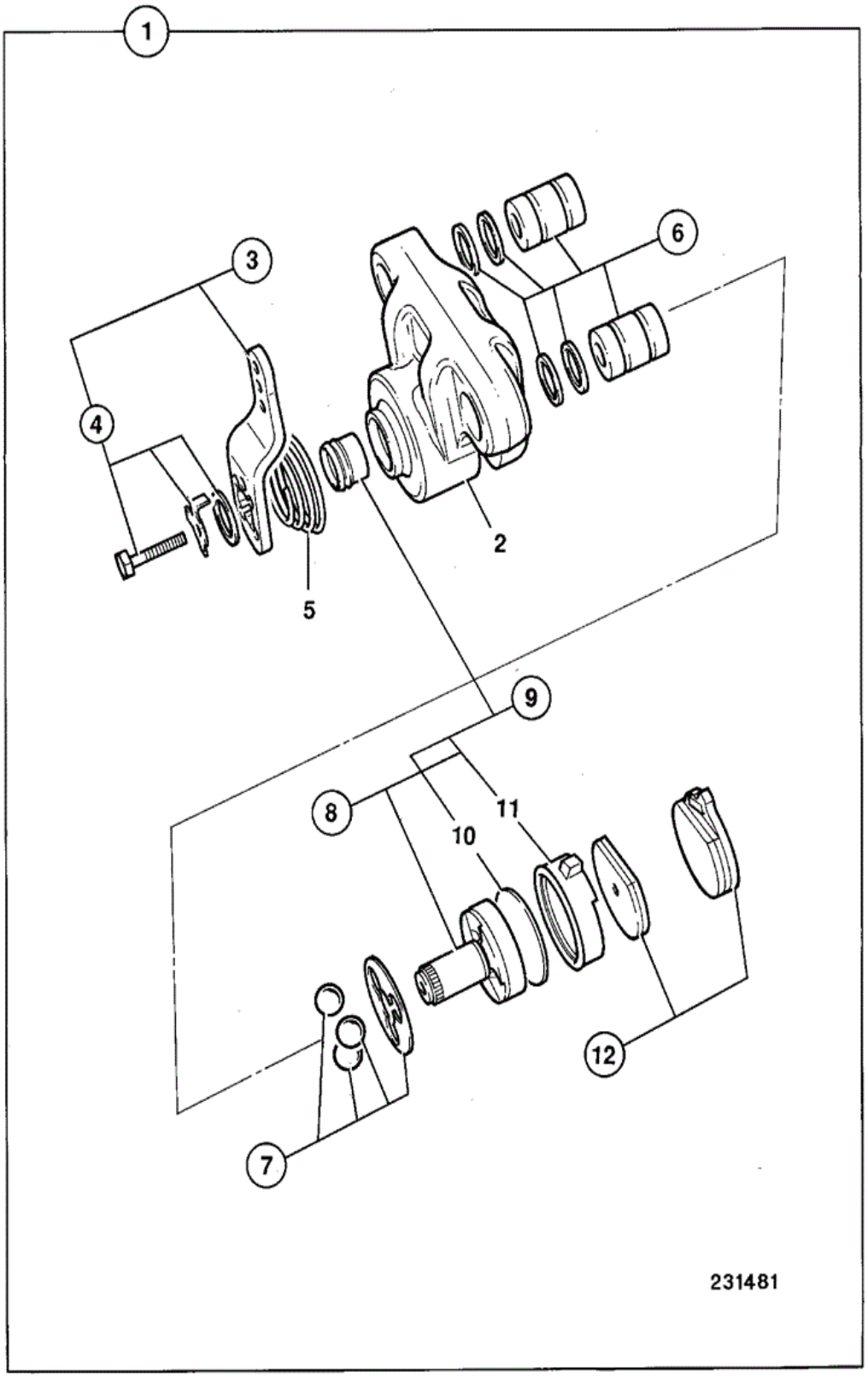

Item	Part No	Change No	Description	Usage Code	QTY
1	332/R7488		Brake Caliper,Parkbrake		1

2	****		None serviced part		1
3	:15/920290		Kit-lever		1
4	::15/920289		Kit-bolt torx head		1
5	:15/920315		Kit spring		1
6	:15/920293		Kit-bush		1
7	:478/00844		Kit-bearing		1
8	:15/915204		Kit rotor		1
9	::15/920292		Kit-seal		1
10	:::N.L.A		No longer available Use item 9		1
11	:::N.L.A		No longer available Use item 9		1
12	:15/920103		Kit-pad brake pad		1
12	:332/V9694		Kit-pad brake pad inc. pad retention clips Replaces 15/920103		1

9812/3020 G1-2-3 PARKING BRAKE CALIPER COMPONENTS

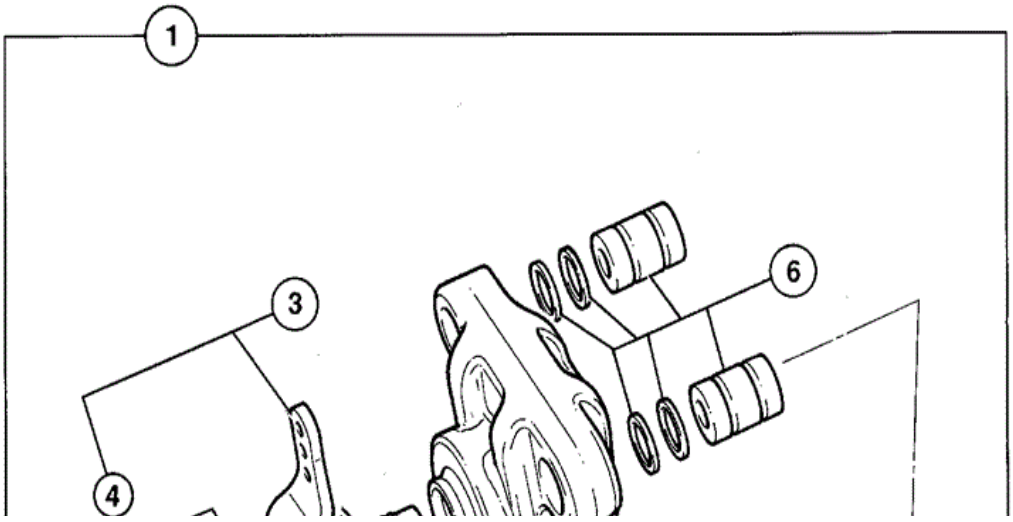

Item	Part No	Change No	Description	Usage Code	QTY
1	332/V9836		Brake Caliper Parkbrake		1
2	****		None serviced part		1
3	:15/920290		Kit-lever		1
4	::15/920289		Kit-bolt torx head		1
5	:15/920315		Kit spring		1
6	:15/920293		Kit-bush		1
7	:478/00844		Kit-bearing		1
8	:15/915204		Kit rotor		1
9	::15/920292		Kit-seal		1
10	:::N.L.A		No longer available Use item 9		1
11	:::N.L.A		No longer available Use item 9		1
12	:332/V9694		Kit-pad brake pad inc. pad retention clips		1

9812/3020 G1-2-4 PARKING BRAKE CALIPER COMPONENTS

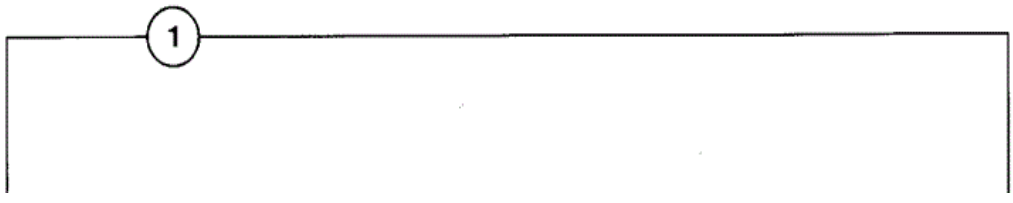

Item	Part No	Change No	Description	Usage Code	QTY
1	15/M04037		Brake Caliper Parkbrake		1
2	****		None serviced part		1
3	:15/920290		Kit-lever		1
4	::15/920289		Kit-bolt torx head		1
5	:15/920315		Kit spring		1
6	:15/920433		Kit-bush		1
7	:478/00844		Kit-bearing		1
8	:15/915204		Kit rotor		1
9	::15/920292		Kit-seal		1
10	:::N.L.A		No longer available Use item 9		1
			No longer available		

11	:::N.L.A		Use item 9		1
12	:478/00849		Kit-brake pad		1

Applicability Date Ranges:
From: , To: M1317728

9812/3020 G1-2-5 BRAKE CALIPER PARKING

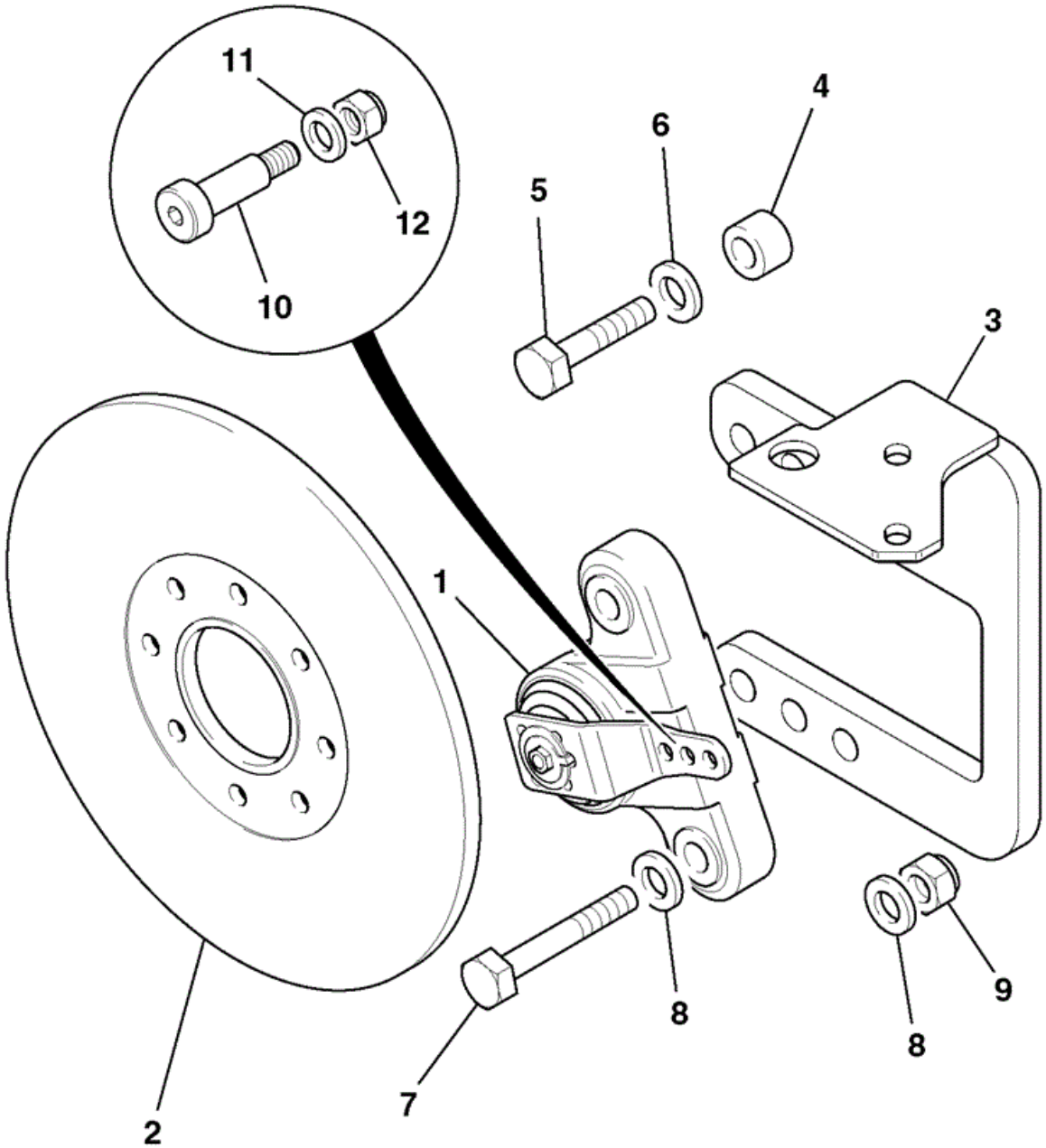

701310

Item	Part No	Change No	Description	Usage Code	QTY

1	15/920272	to M1317728	Brake Caliper,Parkbrake See G1-2-1		1
1	15/M04039		Brake Caliper Parkbrake See G1-2-1. Replaces 15/920272		1
1	332/R7488	Superseded	Brake Caliper,Parkbrake See G1-2-2		1
1	332/V9836	from M1317925	Brake Caliper Parkbrake See G1-2-3		1
1	15/M04037	from M1472141	Brake Caliper Parkbrake See G1-2-4		1
2	15/920120		Disc Parking Brake		1
3	335/05932	to M1317728	Bracket mounting		1
3	332/R7653		Bracket mounting		1
4	829/30428		Spacer		4
5	1315/3617D		Bolt		4
6	1420/0010D		Washer M14		4
7	1315/3718D		Bolt M16 x 80mm		2
8	1422/0011D		Washer (M16)		4
9	1370/0603D		Nut -Lock Nut, M16		2
10	826/10837		Screw Shouldered M6 x 30		1
11	1420/0006D		Washer (M6)		1
12	1370/0103D		Nut (M6)		1
13	4101/0602		Fluid locking		1

9812/3020 G1-2-1 PARKING BRAKE CALIPER COMPONENTS

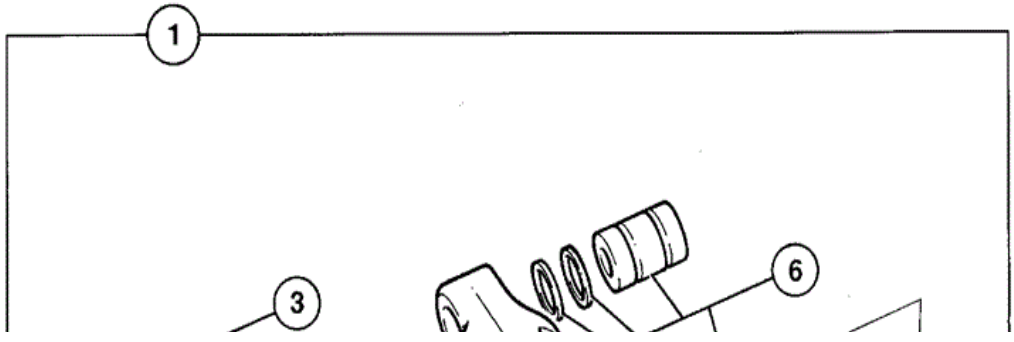

Item	Part No	Change No	Description	Usage Code	QTY
1	15/920272		Brake Caliper,Parkbrake	A	1
1	15/M04039		Brake Caliper Parkbrake Replaces 15/920272	B	1
2	****		None serviced part		1
3	:15/920314		Kit lever		1
4	::15/920289		Kit-bolt torx head		1
5	:15/920315		Kit spring		1
6	:15/920293		Kit-bush		1
7	:478/00844		Kit-bearing		1
8	:15/915204		Kit rotor		1
9	::15/920292		Kit-seal		1
10	:::N.L.A		No longer available Use item 9		1
11	:::N.L.A		No longer available Use item 9		1
12	:15/920103	Superseded	Kit-pad brake pad	A	1
12	:478/00849		Kit-brake pad	B	1

9812/3020 G1-2-2 PARKING BRAKE CALIPER COMPONENTS

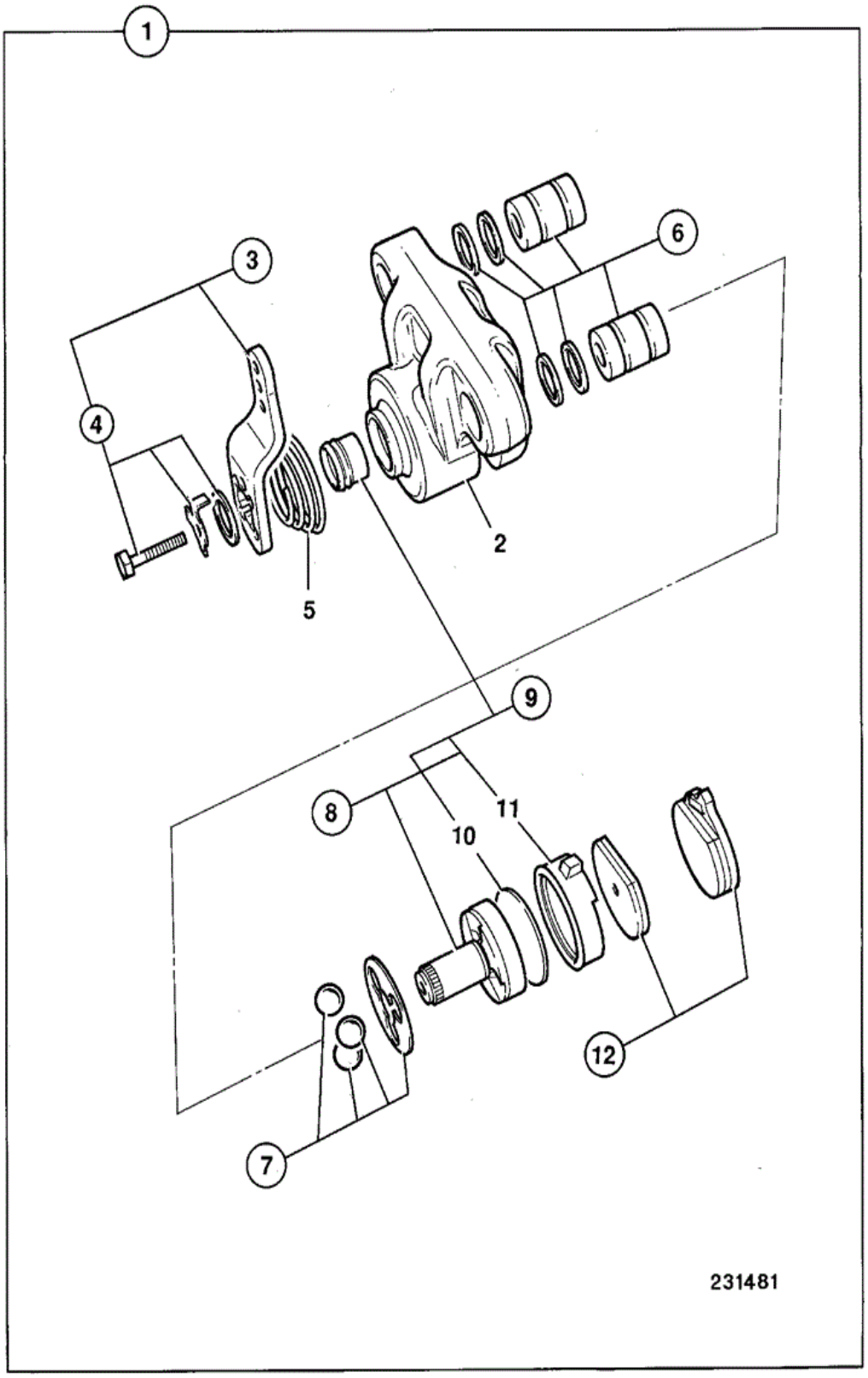

Item	Part No	Change No	Description	Usage Code	QTY
1	332/R7488		Brake Caliper,Parkbrake		1

2	****		None serviced part		1
3	:15/920290		Kit-lever		1
4	::15/920289		Kit-bolt torx head		1
5	:15/920315		Kit spring		1
6	:15/920293		Kit-bush		1
7	:478/00844		Kit-bearing		1
8	:15/915204		Kit rotor		1
9	::15/920292		Kit-seal		1
10	:::N.L.A		No longer available Use item 9		1
11	:::N.L.A		No longer available Use item 9		1
12	:15/920103		Kit-pad brake pad		1
12	:332/V9694		Kit-pad brake pad inc. pad retention clips Replaces 15/920103		1

9812/3020 G1-2-3 PARKING BRAKE CALIPER COMPONENTS

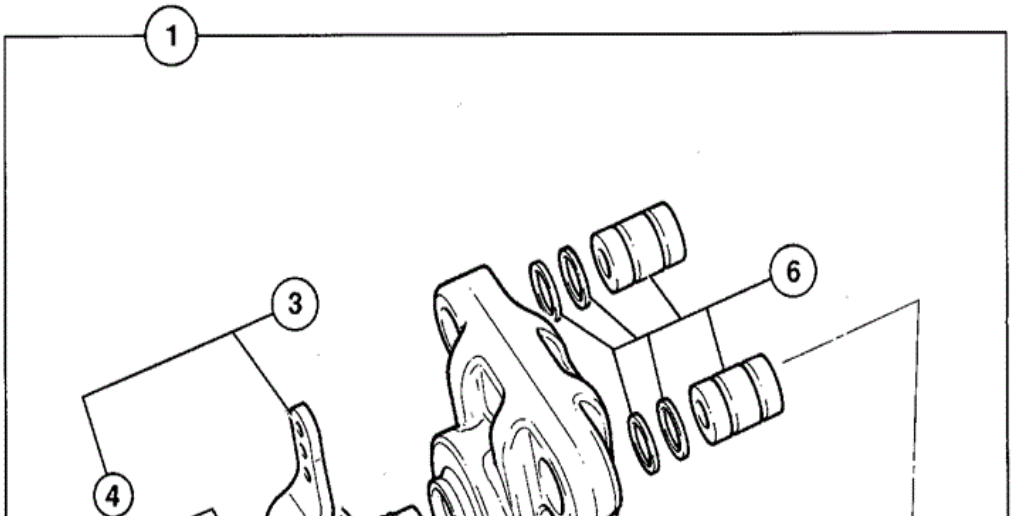

Item	Part No	Change No	Description	Usage Code	QTY
1	332/V9836		Brake Caliper Parkbrake		1
2	****		None serviced part		1
3	:15/920290		Kit-lever		1
4	::15/920289		Kit-bolt torx head		1
5	:15/920315		Kit spring		1
6	:15/920293		Kit-bush		1
7	:478/00844		Kit-bearing		1
8	:15/915204		Kit rotor		1
9	::15/920292		Kit-seal		1
10	:::N.L.A		No longer available Use item 9		1
11	:::N.L.A		No longer available Use item 9		1
12	:332/V9694		Kit-pad brake pad inc. pad retention clips		1

9812/3020 G1-2-4 PARKING BRAKE CALIPER COMPONENTS

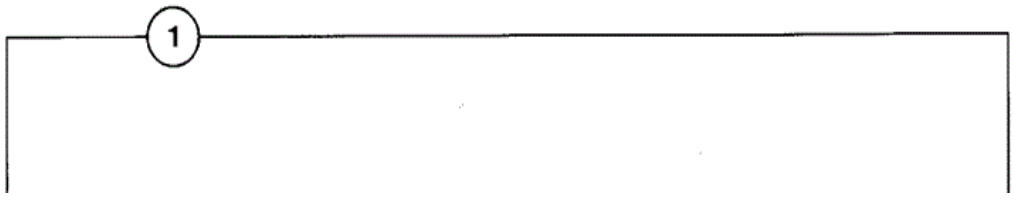

Item	Part No	Change No	Description	Usage Code	QTY
1	15/M04037		Brake Caliper Parkbrake		1
2	****		None serviced part		1
3	:15/920290		Kit-lever		1
4	::15/920289		Kit-bolt torx head		1
5	:15/920315		Kit spring		1
6	:15/920433		Kit-bush		1
7	:478/00844		Kit-bearing		1
8	:15/915204		Kit rotor		1
9	::15/920292		Kit-seal		1
10	:::N.L.A		No longer available Use item 9		1
			No longer available		

11	:::N.L.A		Use item 9		1
12	:478/00849		Kit-brake pad		1

Applicability Date Ranges:
From: M1317729 , To: M1317924

Product Catalog\WHEELED LOADERS\416 01243000-01243499,01317500-01317999,01472000-01472999,02095872-02095875 9812/3020 \G BRAKES\G01 BRAKES\G1-2-3 PARKING BRAKE CALIPER COMPONENTS

9812/3020 G1-2-5 BRAKE CALIPER PARKING

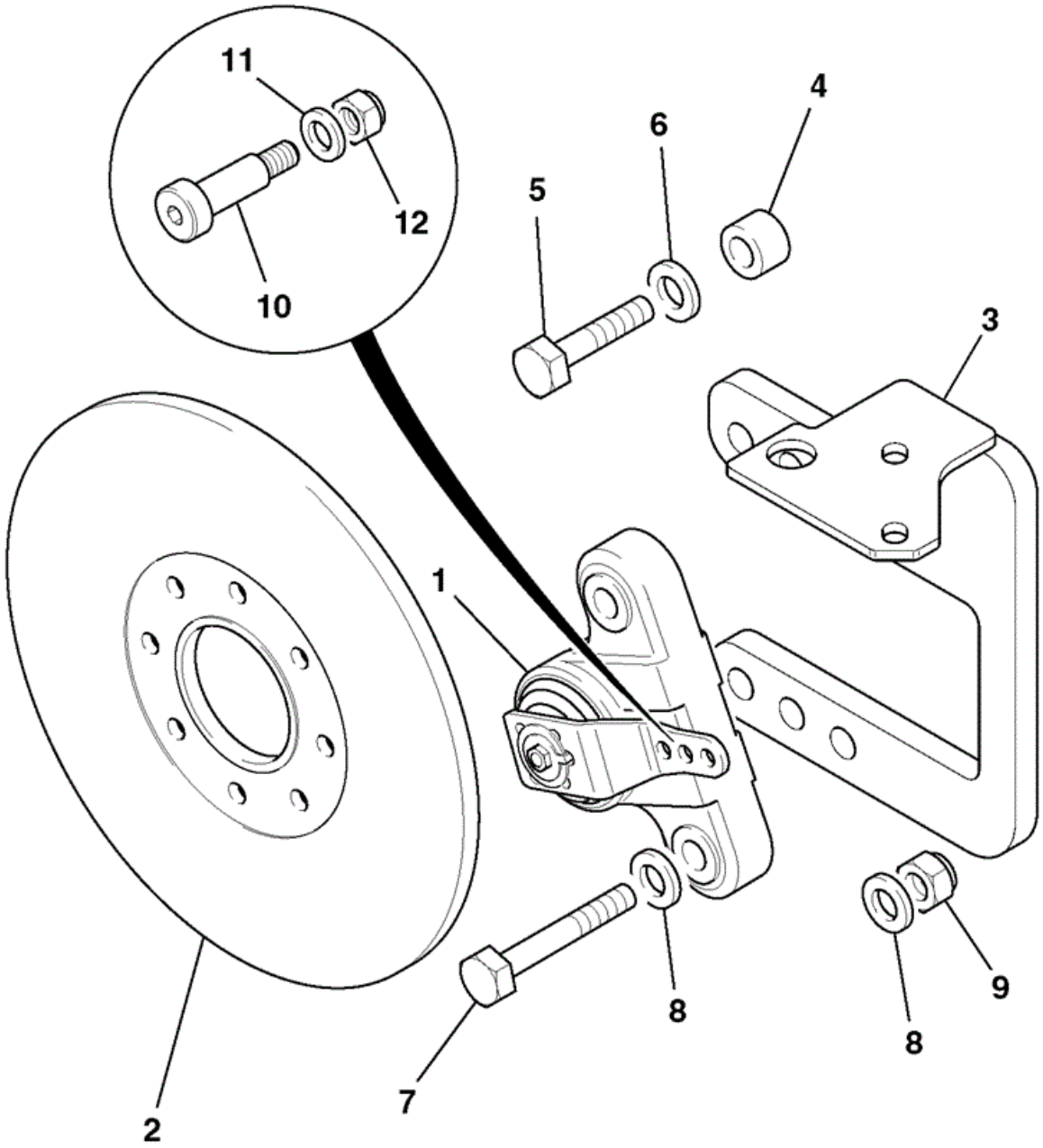

701310

Item	Part No	Change No	Description	Usage Code	QTY

1	15/920272	to M1317728	Brake Caliper,Parkbrake See G1-2-1		1
1	15/M04039		Brake Caliper Parkbrake See G1-2-1. Replaces 15/920272		1
1	332/R7488	Superseded	Brake Caliper,Parkbrake See G1-2-2		1
1	332/V9836	from M1317925	Brake Caliper Parkbrake See G1-2-3		1
1	15/M04037	from M1472141	Brake Caliper Parkbrake See G1-2-4		1
2	15/920120		Disc Parking Brake		1
3	335/05932	to M1317728	Bracket mounting		1
3	332/R7653		Bracket mounting		1
4	829/30428		Spacer		4
5	1315/3617D		Bolt		4
6	1420/0010D		Washer M14		4
7	1315/3718D		Bolt M16 x 80mm		2
8	1422/0011D		Washer (M16)		4
9	1370/0603D		Nut -Lock Nut, M16		2
10	826/10837		Screw Shouldered M6 x 30		1
11	1420/0006D		Washer (M6)		1
12	1370/0103D		Nut (M6)		1
13	4101/0602		Fluid locking		1

9812/3020 G1-2-1 PARKING BRAKE CALIPER COMPONENTS

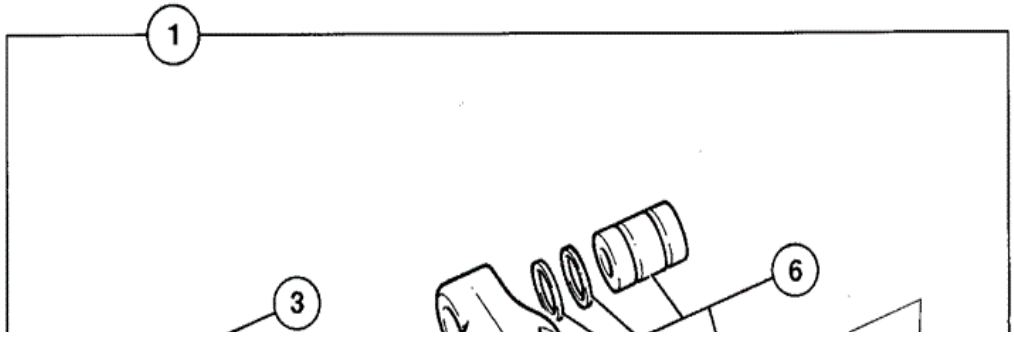

Item	Part No	Change No	Description	Usage Code	QTY
1	15/920272		Brake Caliper,Parkbrake	A	1
1	15/M04039		Brake Caliper Parkbrake Replaces 15/920272	B	1
2	****		None serviced part		1
3	:15/920314		Kit lever		1
4	::15/920289		Kit-bolt torx head		1
5	:15/920315		Kit spring		1
6	:15/920293		Kit-bush		1
7	:478/00844		Kit-bearing		1
8	:15/915204		Kit rotor		1
9	::15/920292		Kit-seal		1
10	:::N.L.A		No longer available Use item 9		1
11	:::N.L.A		No longer available Use item 9		1
12	:15/920103	Superseded	Kit-pad brake pad	A	1
12	:478/00849		Kit-brake pad	B	1

9812/3020 G1-2-2 PARKING BRAKE CALIPER COMPONENTS

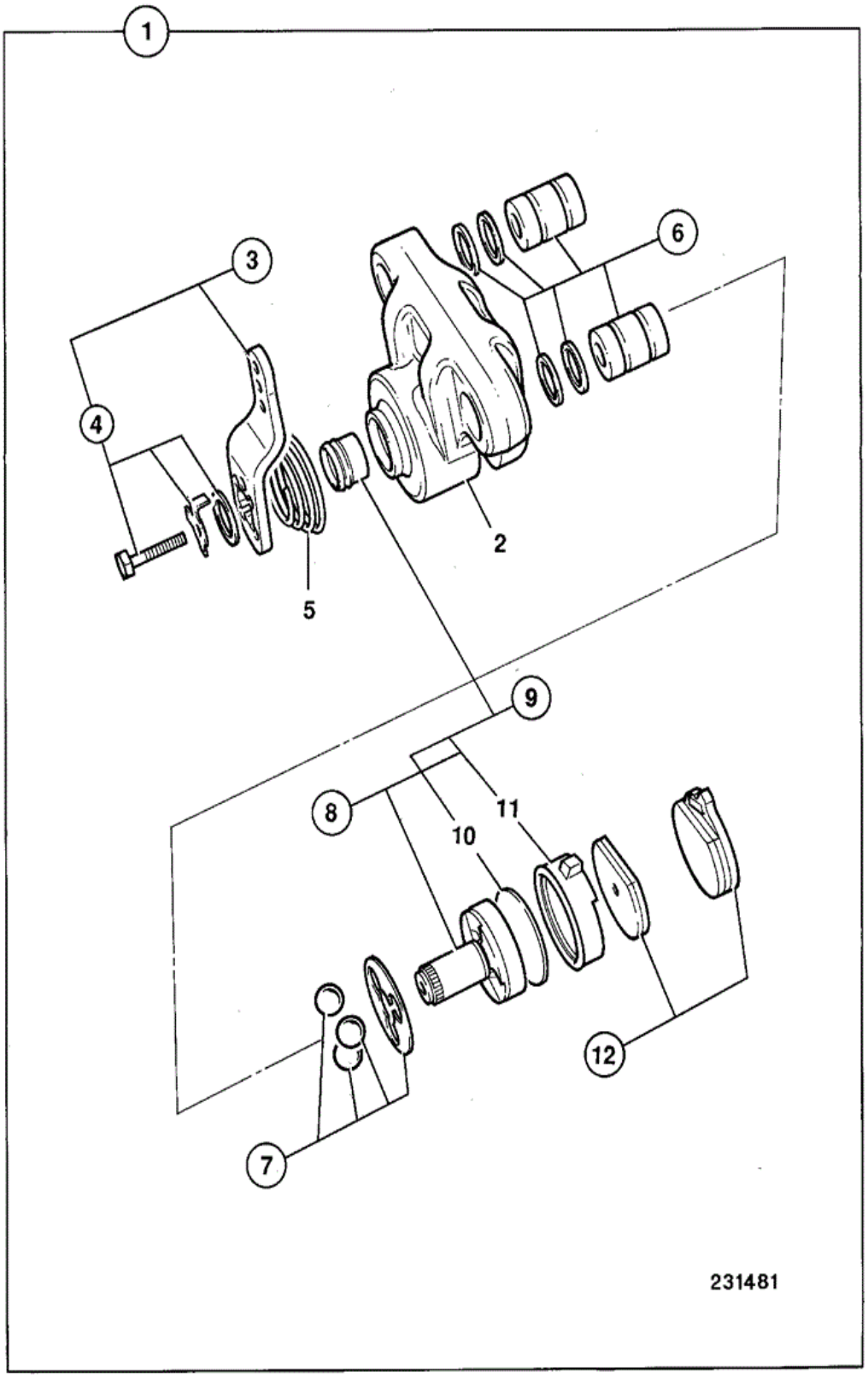

Item	Part No	Change No	Description	Usage Code	QTY
1	332/R7488		Brake Caliper,Parkbrake		1

2	****		None serviced part		1
3	:15/920290		Kit-lever		1
4	::15/920289		Kit-bolt torx head		1
5	:15/920315		Kit spring		1
6	:15/920293		Kit-bush		1
7	:478/00844		Kit-bearing		1
8	:15/915204		Kit rotor		1
9	::15/920292		Kit-seal		1
10	:::N.L.A		No longer available Use item 9		1
11	:::N.L.A		No longer available Use item 9		1
12	:15/920103		Kit-pad brake pad		1
12	:332/V9694		Kit-pad brake pad inc. pad retention clips Replaces 15/920103		1

9812/3020 G1-2-3 PARKING BRAKE CALIPER COMPONENTS

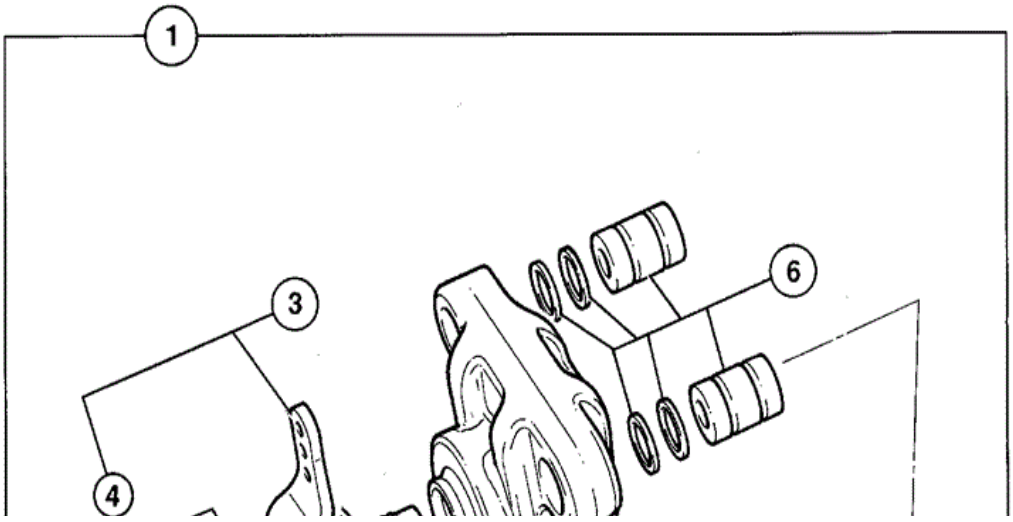

Item	Part No	Change No	Description	Usage Code	QTY
1	332/V9836		Brake Caliper Parkbrake		1
2	****		None serviced part		1
3	:15/920290		Kit-lever		1
4	::15/920289		Kit-bolt torx head		1
5	:15/920315		Kit spring		1
6	:15/920293		Kit-bush		1
7	:478/00844		Kit-bearing		1
8	:15/915204		Kit rotor		1
9	::15/920292		Kit-seal		1
10	:::N.L.A		No longer available Use item 9		1
11	:::N.L.A		No longer available Use item 9		1
12	:332/V9694		Kit-pad brake pad inc. pad retention clips		1

9812/3020 G1-2-4 PARKING BRAKE CALIPER COMPONENTS

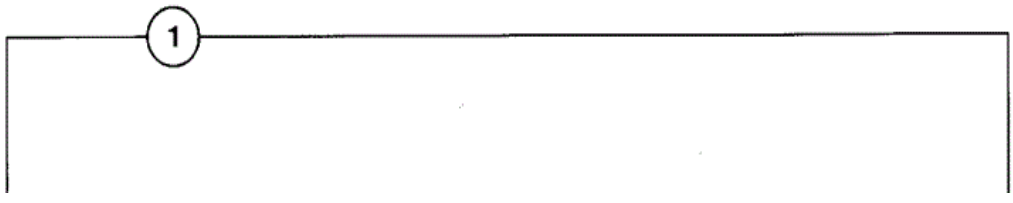

Item	Part No	Change No	Description	Usage Code	QTY
1	15/M04037		Brake Caliper Parkbrake		1
2	****		None serviced part		1
3	:15/920290		Kit-lever		1
4	::15/920289		Kit-bolt torx head		1
5	:15/920315		Kit spring		1
6	:15/920433		Kit-bush		1
7	:478/00844		Kit-bearing		1
8	:15/915204		Kit rotor		1
9	::15/920292		Kit-seal		1
10	:::N.L.A		No longer available Use item 9		1
			No longer available		

11	:::N.L.A		Use item 9		1
12	:478/00849		Kit-brake pad		1

Applicability Date Ranges:
From: M1317925 , To: M1472140

9812/3020 G1-2-5 BRAKE CALIPER PARKING

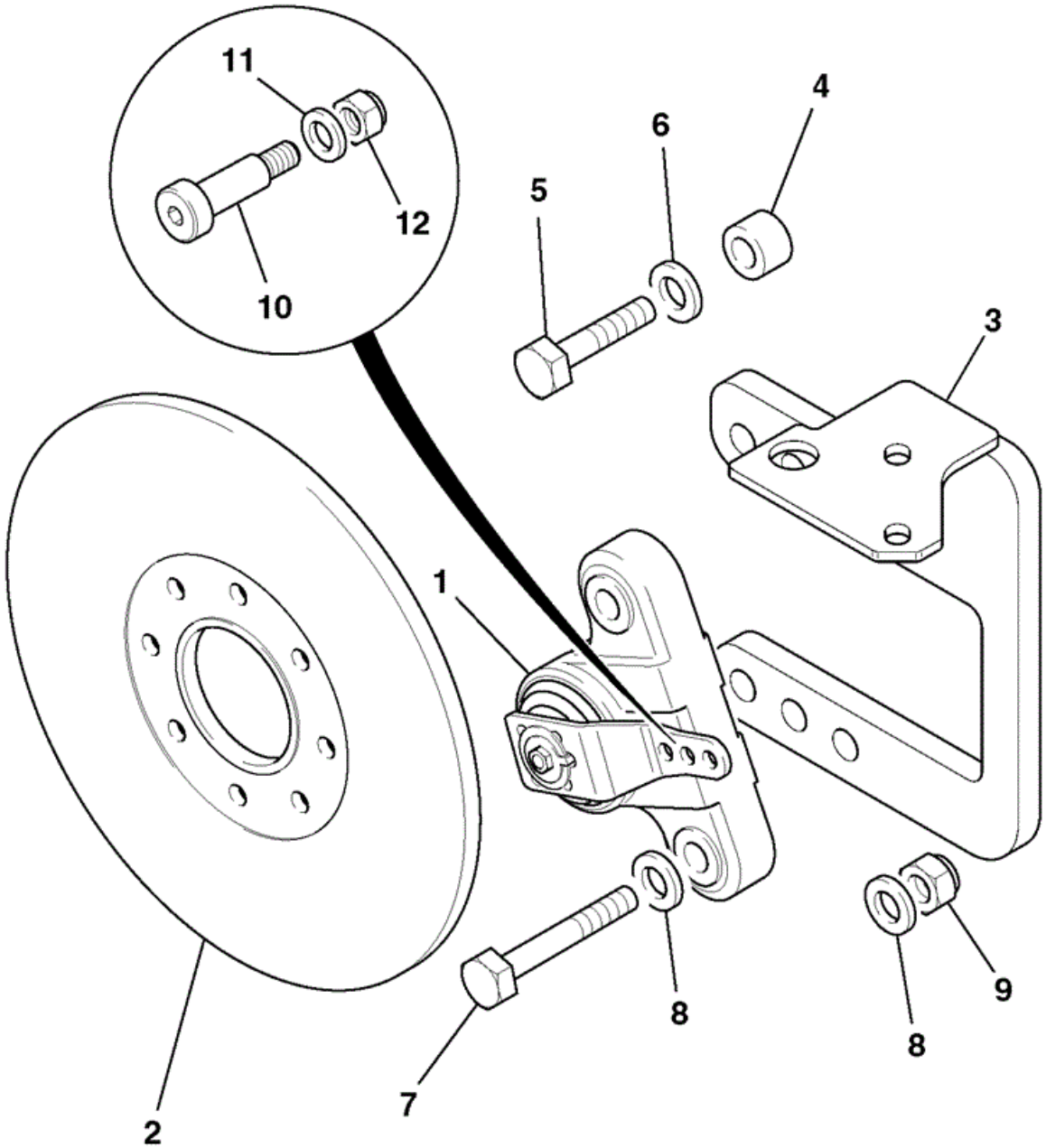

701310

Item	Part No	Change No	Description	Usage Code	QTY

1	15/920272	to M1317728	Brake Caliper,Parkbrake See G1-2-1		1
1	15/M04039		Brake Caliper Parkbrake See G1-2-1. Replaces 15/920272		1
1	332/R7488	Superseded	Brake Caliper,Parkbrake See G1-2-2		1
1	332/V9836	from M1317925	Brake Caliper Parkbrake See G1-2-3		1
1	15/M04037	from M1472141	Brake Caliper Parkbrake See G1-2-4		1
2	15/920120		Disc Parking Brake		1
3	335/05932	to M1317728	Bracket mounting		1
3	332/R7653		Bracket mounting		1
4	829/30428		Spacer		4
5	1315/3617D		Bolt		4
6	1420/0010D		Washer M14		4
7	1315/3718D		Bolt M16 x 80mm		2
8	1422/0011D		Washer (M16)		4
9	1370/0603D		Nut -Lock Nut, M16		2
10	826/10837		Screw Shouldered M6 x 30		1
11	1420/0006D		Washer (M6)		1
12	1370/0103D		Nut (M6)		1
13	4101/0602		Fluid locking		1

9812/3020 G1-2-1 PARKING BRAKE CALIPER COMPONENTS

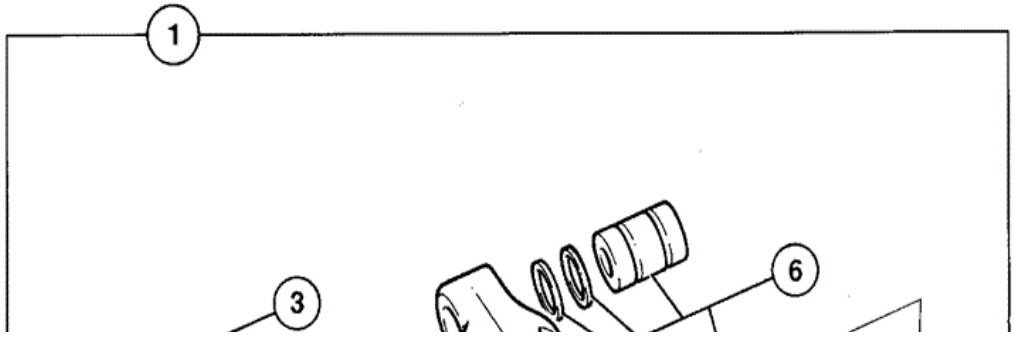

Item	Part No	Change No	Description	Usage Code	QTY
1	15/920272		Brake Caliper,Parkbrake	A	1
1	15/M04039		Brake Caliper Parkbrake Replaces 15/920272	B	1
2	****		None serviced part		1
3	:15/920314		Kit lever		1
4	::15/920289		Kit-bolt torx head		1
5	:15/920315		Kit spring		1
6	:15/920293		Kit-bush		1
7	:478/00844		Kit-bearing		1
8	:15/915204		Kit rotor		1
9	::15/920292		Kit-seal		1
10	:::N.L.A		No longer available Use item 9		1
11	:::N.L.A		No longer available Use item 9		1
12	:15/920103	Superseded	Kit-pad brake pad	A	1
12	:478/00849		Kit-brake pad	B	1

9812/3020 G1-2-2 PARKING BRAKE CALIPER COMPONENTS

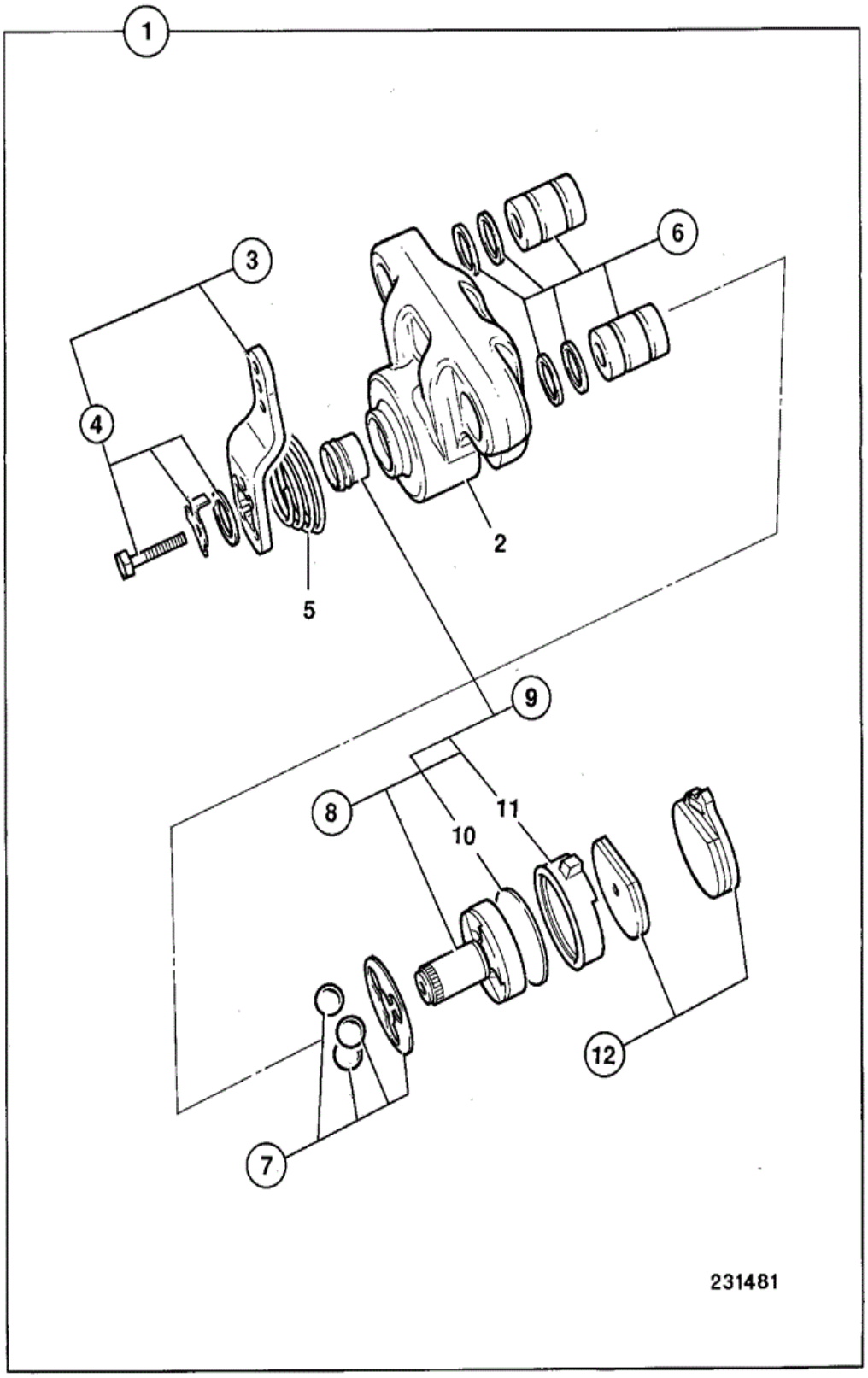

Item	Part No	Change No	Description	Usage Code	QTY
1	332/R7488		Brake Caliper,Parkbrake		1

2	****		None serviced part		1
3	:15/920290		Kit-lever		1
4	::15/920289		Kit-bolt torx head		1
5	:15/920315		Kit spring		1
6	:15/920293		Kit-bush		1
7	:478/00844		Kit-bearing		1
8	:15/915204		Kit rotor		1
9	::15/920292		Kit-seal		1
10	:::N.L.A		No longer available Use item 9		1
11	:::N.L.A		No longer available Use item 9		1
12	:15/920103		Kit-pad brake pad		1
12	:332/V9694		Kit-pad brake pad inc. pad retention clips Replaces 15/920103		1

9812/3020 G1-2-3 PARKING BRAKE CALIPER COMPONENTS

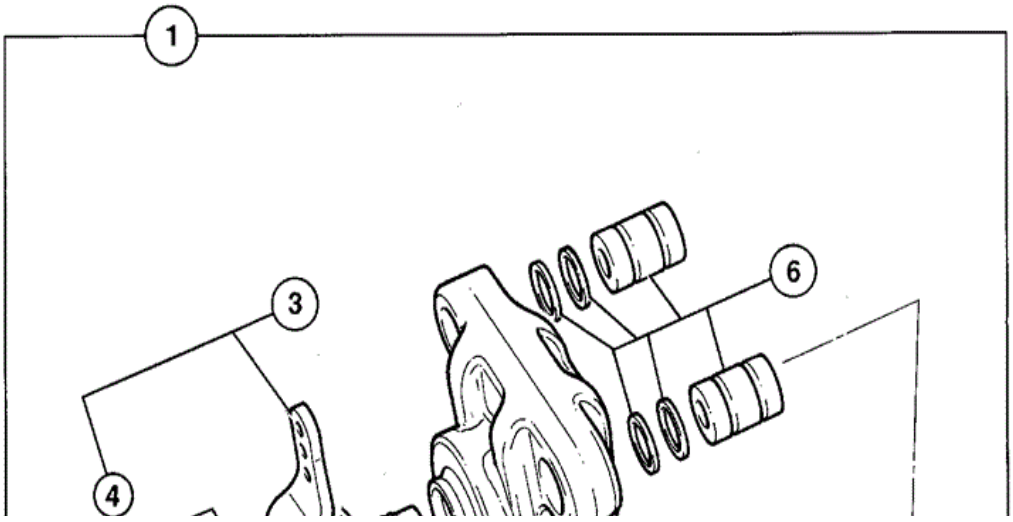

Item	Part No	Change No	Description	Usage Code	QTY
1	332/V9836		Brake Caliper Parkbrake		1
2	****		None serviced part		1
3	:15/920290		Kit-lever		1
4	::15/920289		Kit-bolt torx head		1
5	:15/920315		Kit spring		1
6	:15/920293		Kit-bush		1
7	:478/00844		Kit-bearing		1
8	:15/915204		Kit rotor		1
9	::15/920292		Kit-seal		1
10	:::N.L.A		No longer available Use item 9		1
11	:::N.L.A		No longer available Use item 9		1
12	:332/V9694		Kit-pad brake pad inc. pad retention clips		1

9812/3020 G1-2-4 PARKING BRAKE CALIPER COMPONENTS

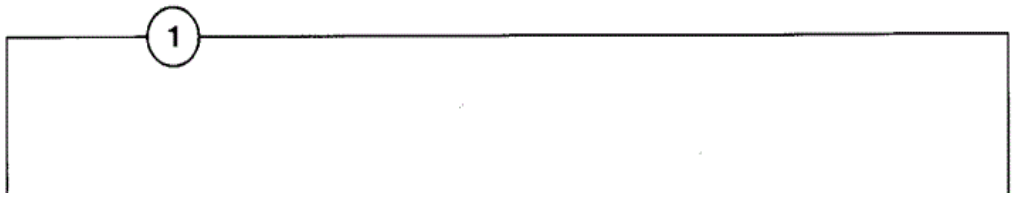

Item	Part No	Change No	Description	Usage Code	QTY
1	15/M04037		Brake Caliper Parkbrake		1
2	****		None serviced part		1
3	:15/920290		Kit-lever		1
4	::15/920289		Kit-bolt torx head		1
5	:15/920315		Kit spring		1
6	:15/920433		Kit-bush		1
7	:478/00844		Kit-bearing		1
8	:15/915204		Kit rotor		1
9	::15/920292		Kit-seal		1
10	:::N.L.A		No longer available Use item 9		1
			No longer available		

11	:::N.L.A		Use item 9		1
12	:478/00849		Kit-brake pad		1

Applicability Date Ranges:
From: M1472141 , To:

Product Catalog\WHEELED LOADERS\416 01243000-01243499,01317500-01317999,01472000-01472999,02095872-02095875 9812/3020 \G BRAKES\G01 BRAKES\G1-2-6 BRAKE CALIPER PARKING

9812/3020 G1-2-6 BRAKE CALIPER PARKING

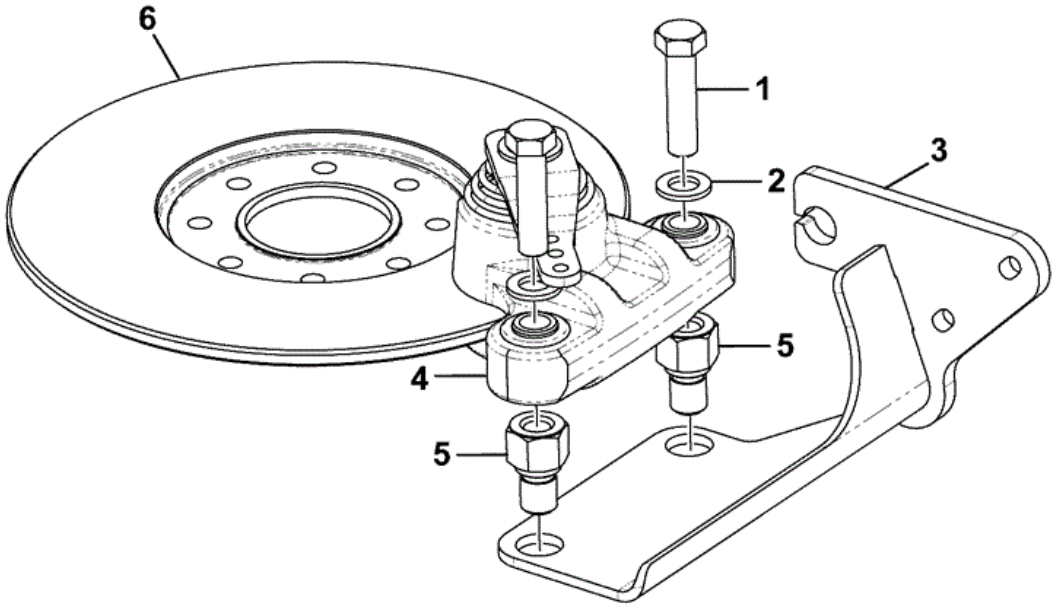

333-U2207-2

Item	Part No	Change No	Description	Usage Code	QTY
1	1315/3715D		Bolt M16 x 65mm		2
2	1420/0011D		Washer (M16)		2

3	333/T4624		Bracket caliper		1
4	15/M04037		Brake Caliper Parkbrake		1
5	333/T3570		Adapter M16-M20		2
6	333/U0071		Disc Brake		1

9812/3020 G1-2-4 PARKING BRAKE CALIPER COMPONENTS

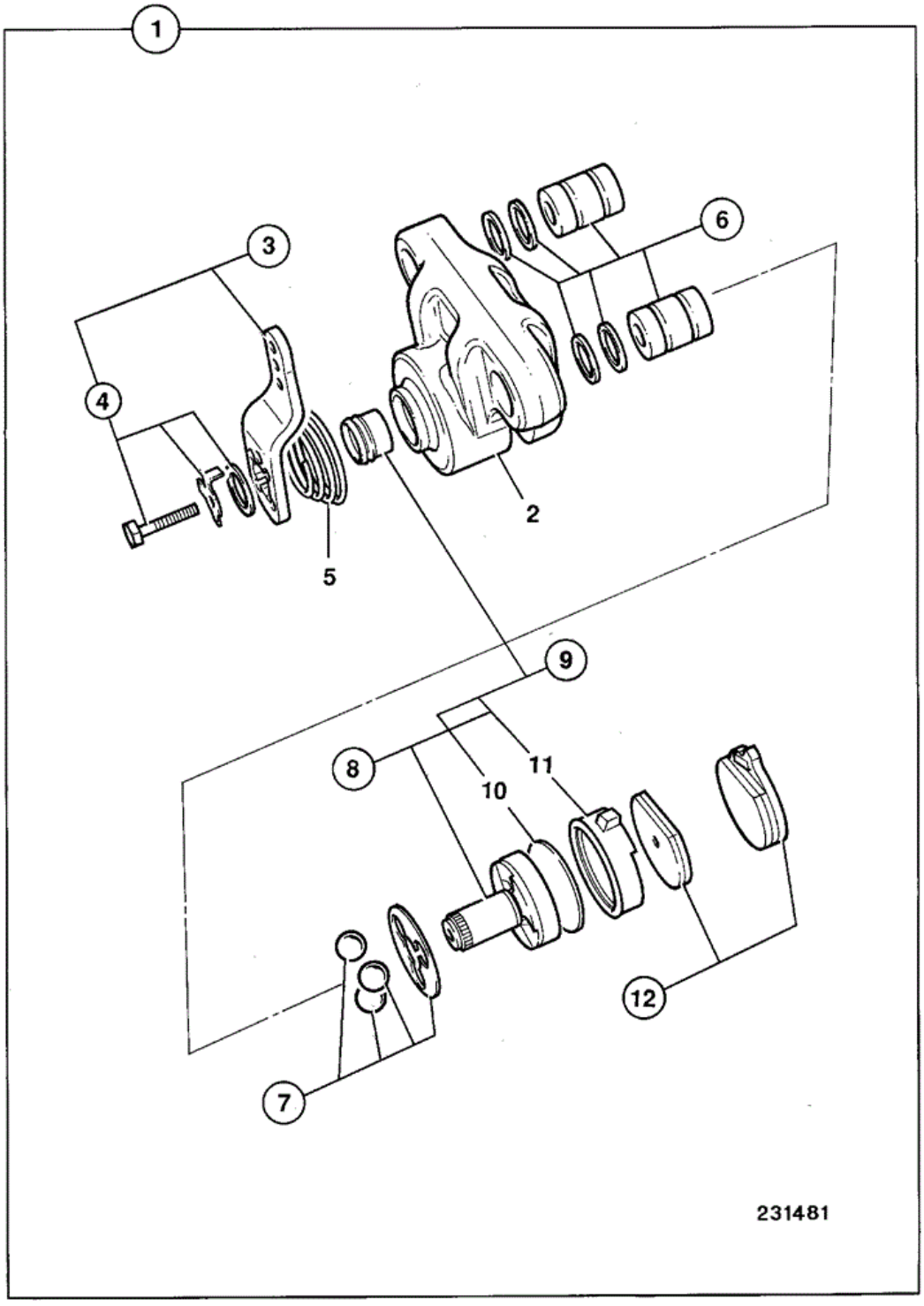

Item	Part No	Change No	Description	Usage Code	QTY
1	15/M04037		Brake Caliper Parkbrake		1
2	****		None serviced part		1
3	:15/920290		Kit-lever		1
4	::15/920289		Kit-bolt torx head		1
5	:15/920315		Kit spring		1
6	:15/920433		Kit-bush		1
7	:478/00844		Kit-bearing		1
8	:15/915204		Kit rotor		1
9	::15/920292		Kit-seal		1
10	:::N.L.A		No longer available Use item 9		1
11	:::N.L.A		No longer available Use item 9		1
12	:478/00849		Kit-brake pad		1

Applicability Date Ranges:
From: 01/10/2011 , To:

Product Catalog\WHEELED LOADERS\416 01243000-01243499,01317500-01317999,01472000-01472999,02095872-02095875 9812/3020 \G BRAKES\G01 BRAKES\G1-2-4 PARKING BRAKE CALIPER COMPONENTS

9812/3020 G1-2-6 BRAKE CALIPER PARKING

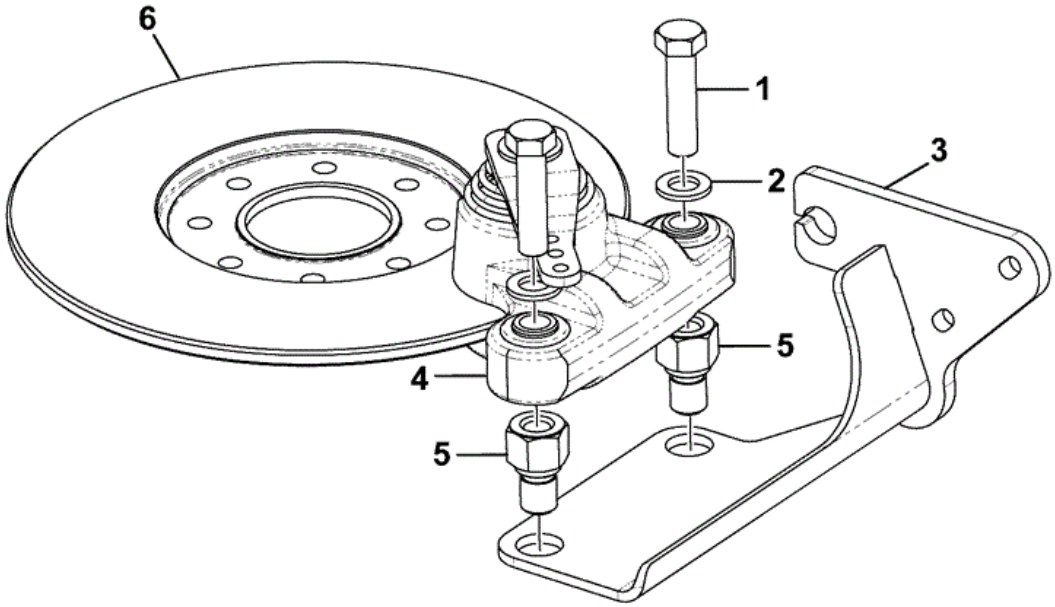

333-U2207-2

Item	Part No	Change No	Description	Usage Code	QTY
1	1315/3715D		Bolt M16 x 65mm		2
2	1420/0011D		Washer (M16)		2

3	333/T4624		Bracket caliper		1
4	15/M04037		Brake Caliper Parkbrake		1
5	333/T3570		Adapter M16-M20		2
6	333/U0071		Disc Brake		1

9812/3020 G1-2-4 PARKING BRAKE CALIPER COMPONENTS

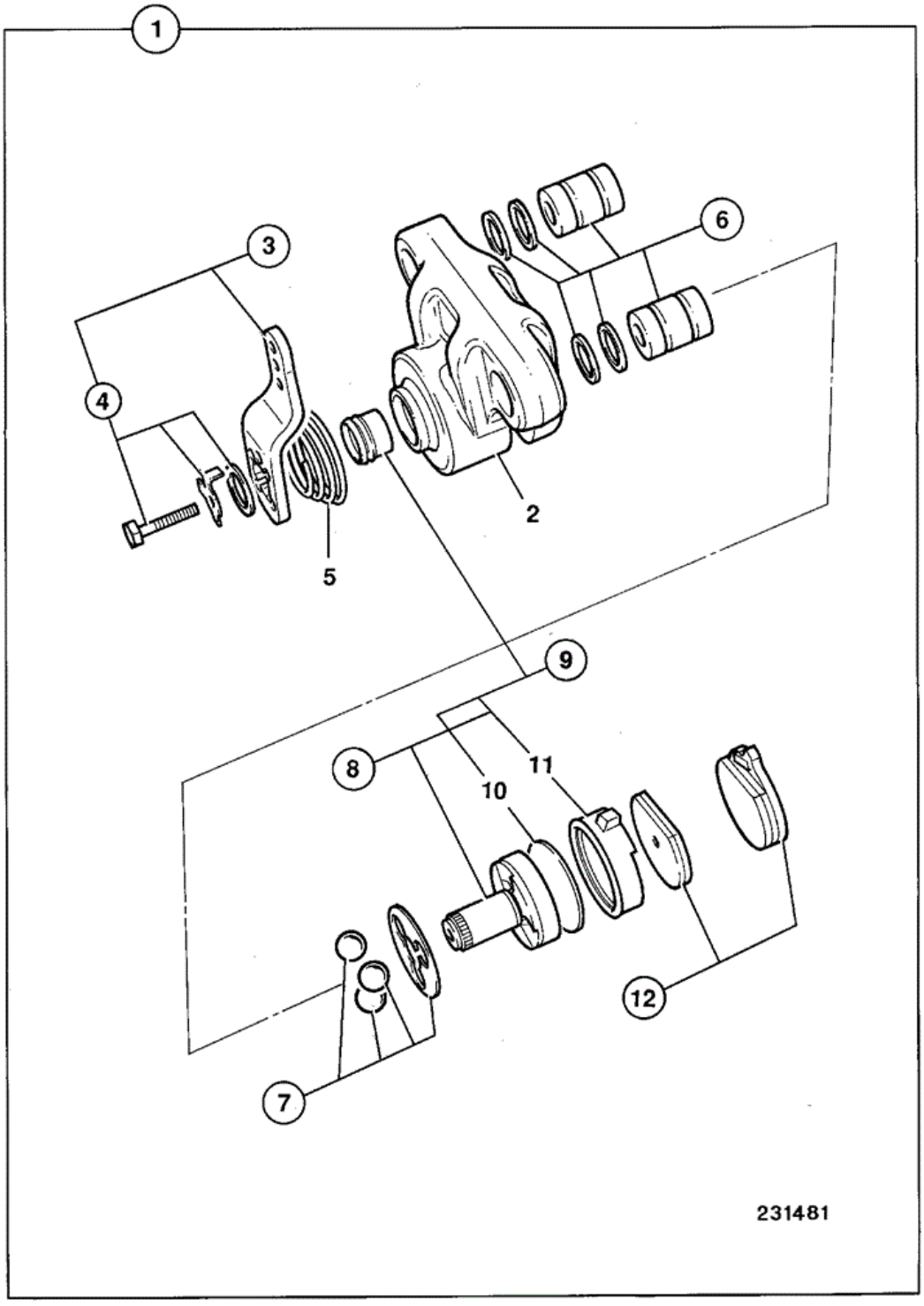

Item	Part No	Change No	Description	Usage Code	QTY
1	15/M04037		Brake Caliper Parkbrake		1
2	****		None serviced part		1
3	:15/920290		Kit-lever		1
4	::15/920289		Kit-bolt torx head		1
5	:15/920315		Kit spring		1
6	:15/920433		Kit-bush		1
7	:478/00844		Kit-bearing		1
8	:15/915204		Kit rotor		1
9	::15/920292		Kit-seal		1
10	:::N.L.A		No longer available Use item 9		1
11	:::N.L.A		No longer available Use item 9		1
12	:478/00849		Kit-brake pad		1

Applicability Date Ranges:
From: M1472141 , To:

9812/3020 G1-3-1 BRAKE, PARKING CONTROL

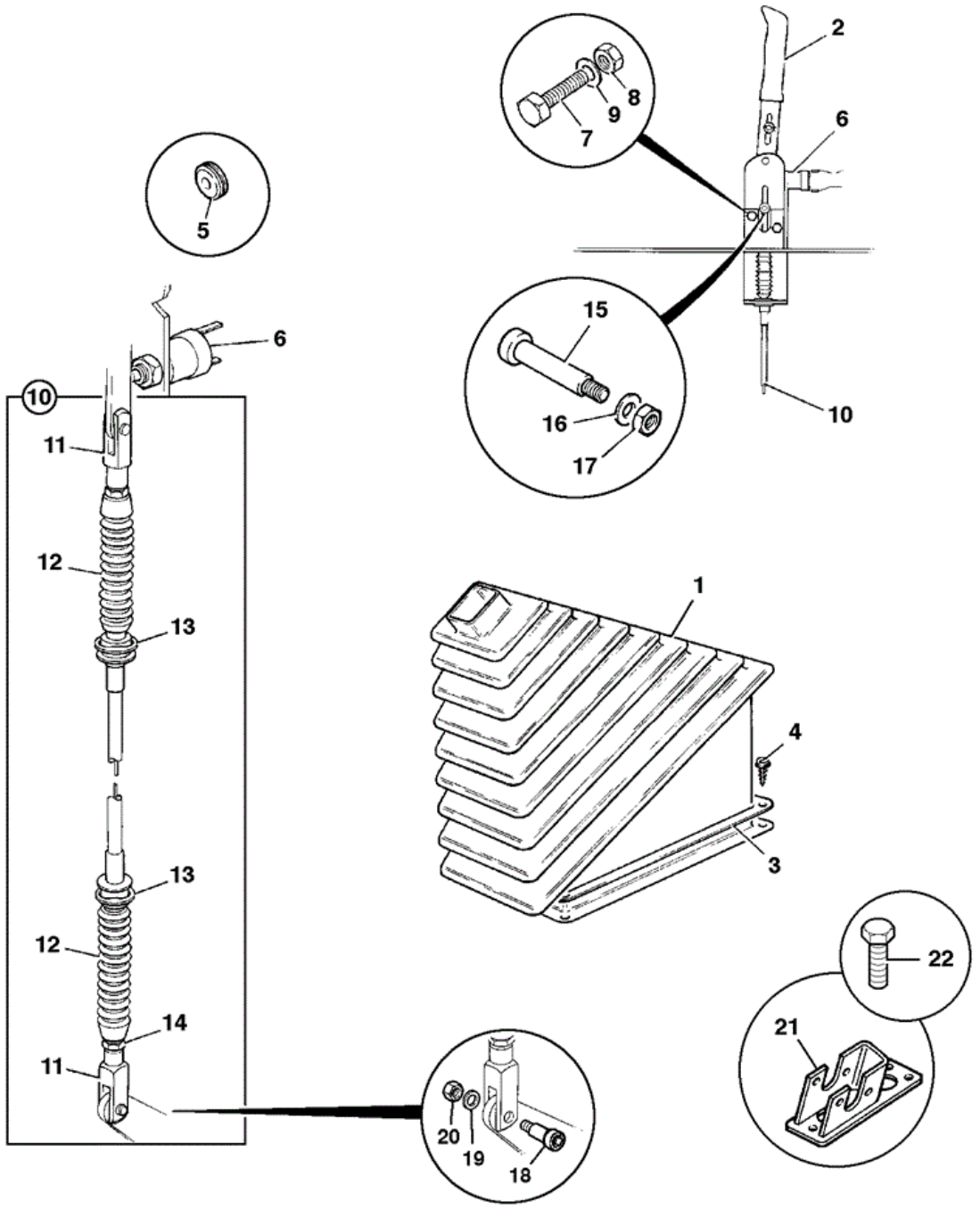

205483

Item	Part No	Change No	Description	Usage Code	QTY
1	331/21033		Gaiter Hand Brake		1
2	331/17991		Lever Parking Brake		1

2A	:252/18501		Grip hand black		1
3	331/21066		Plate Gaiter		1
4	826/01560		Screw M6x25		6
5	2410/1113		Grommet 31.8		2
6	701/72500		Switch Red Top		1
7	1315/3312D		Bolt (M8 x 50)		2
8	1370/0203D		Nut Lock M8		2
9	1420/0007D		Washer (M8)		2
10	910/60043		Cable parkbrake 1065mm		1
11	:913/02300		Clevis assembly		2
12	:2000/0030		Gaiter		2
13	:826/00627		Clip 'E'		2
14	:1340/0102Z		Nut		2
15	826/10836		Screw Shouldered		1
16	1420/0006D		Washer (M6)		1
17	1370/0103D		Nut (M6)		1
18	826/10837		Screw Shouldered M6 x 30		1
19	1420/0006D		Washer (M6)		1
20	1370/0103D		Nut (M6)		1
21	335/01751		Bracket Handbrake		1
22	1315/0305D		Setscrew M8 x 20mm		3

Applicability Date Ranges:
From: , To: M1317728

9812/3020 G1-3-2 BRAKE, PARKING CONTROL

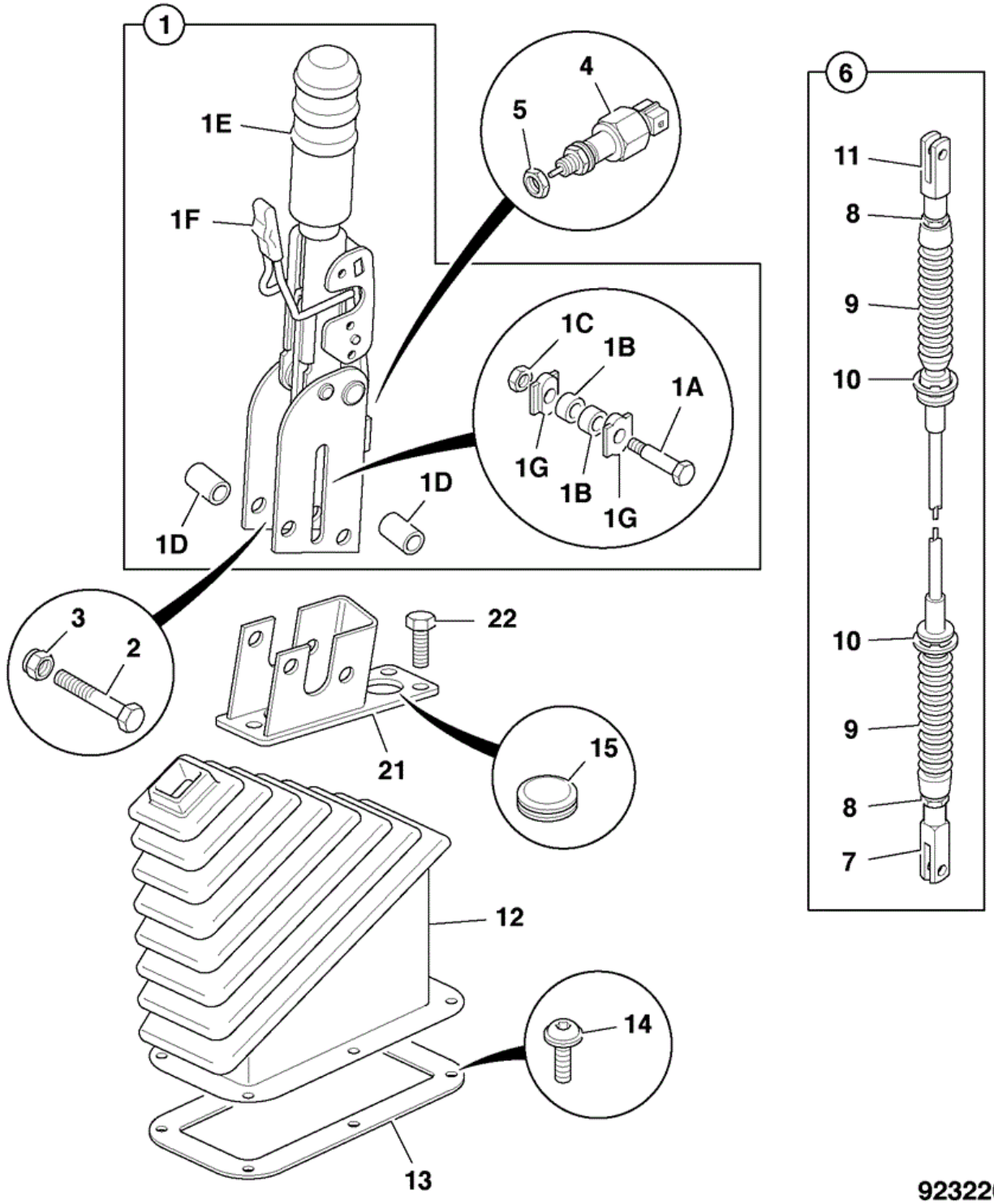

Item	Part No	Change No	Description	Usage Code	QTY
1	331/60900		Lever Handbrake		1
1A	:15/920191		Pin Treaded Clevis		1

1B	:15/920324		Spacer washer		2
1C	:331/44783		Nut		1
1D	:15/920188		Spacer		2
1E	:332/D2182		Grip handle large black		1
1F	:331/38797		Cover release handle-black		1
1G	:15/920189		Block Slide		2
2	1315/3312Z		Bolt M8x50		2
3	1370/0203Z		Nut Nut M8		2
4	701/72500		Switch Red Top		1
5	1340/0402Z		Nut Thin (1/2" UNF)		1
6	332/R7872		Cable parkbrake		1
7	:913/10094		Clevis Fork		1
8	:1340/0102Z		Nut		2
9	:2000/0080		Gaiter Bellows		2
10	:826/00627		Clip 'E'		2
11	:332/R7732		Clevis		1
12	331/21033		Gaiter Hand Brake		1
13	331/21066		Plate Gaiter		1
14	826/01560		Screw M6x25		6
15	2410/1113		Grommet 31.8		1
21	332/S7215		Bracket parkbrake		1
22	1315/0305D		Setscrew M8 x 20mm		3

Applicability Date Ranges:
From: M1317729 , To: 16/09/2012

Product Catalog\WHEELED LOADERS\416 01243000-01243499,01317500-01317999,01472000-01472999,02095872-02095875 9812/3020 \G BRAKES\G01 BRAKES\G1-3-3 BRAKE, PARKING CONTROL

9812/3020 G1-3-3 BRAKE, PARKING CONTROL

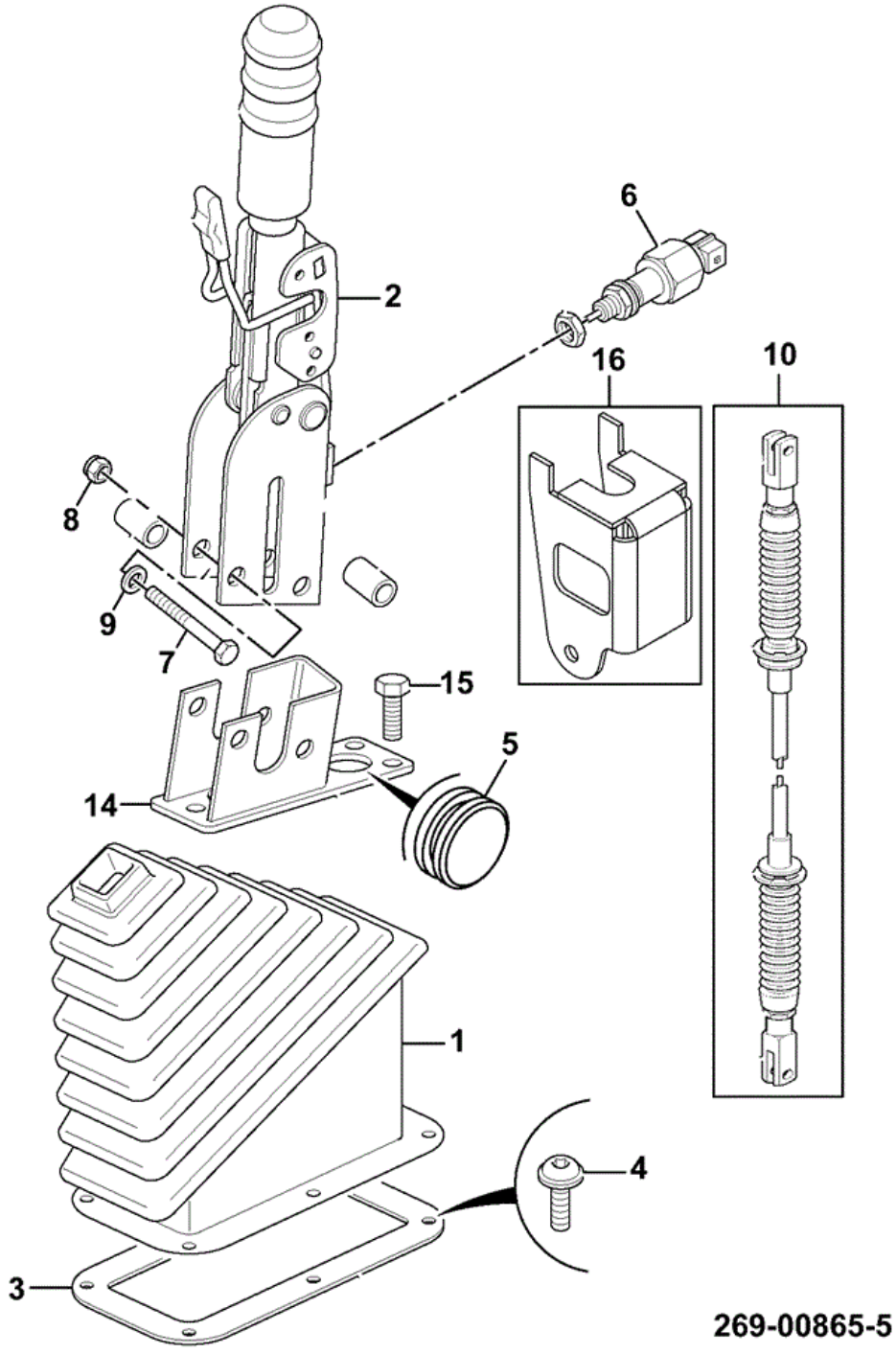

Item	Part No	Change No	Description	Usage Code	QTY
1	333/V1593		Gaiter handbrake		1
2	331/60900		Lever Handbrake		1

3	331/21066		Plate Gaiter		1
4	826/01560		Screw M6x25		6
5	2410/1113		Grommet 31.8		1
6	701/72500		Switch Red Top		1
7	1315/3312D		Bolt (M8 x 50)		2
8	1370/0203D		Nut Lock M8		2
9	1420/0007D		Washer (M8)		7
10	332/R7872		Cable parkbrake		1
14	332/S7215		Bracket parkbrake		1
15	1315/0305D		Setscrew M8 x 20mm		3
16	333/U6979		Bracket switch protection		1

Applicability Date Ranges:
From: 17/09/2012 , To:

Product Catalog\WHEELED LOADERS\416 01243000-01243499,01317500-01317999,01472000-01472999,02095872-02095875 9812/3020 \G BRAKES\G01 BRAKES\G1-6-1 BRAKE PEDAL

9812/3020 G1-6-1 BRAKE PEDAL

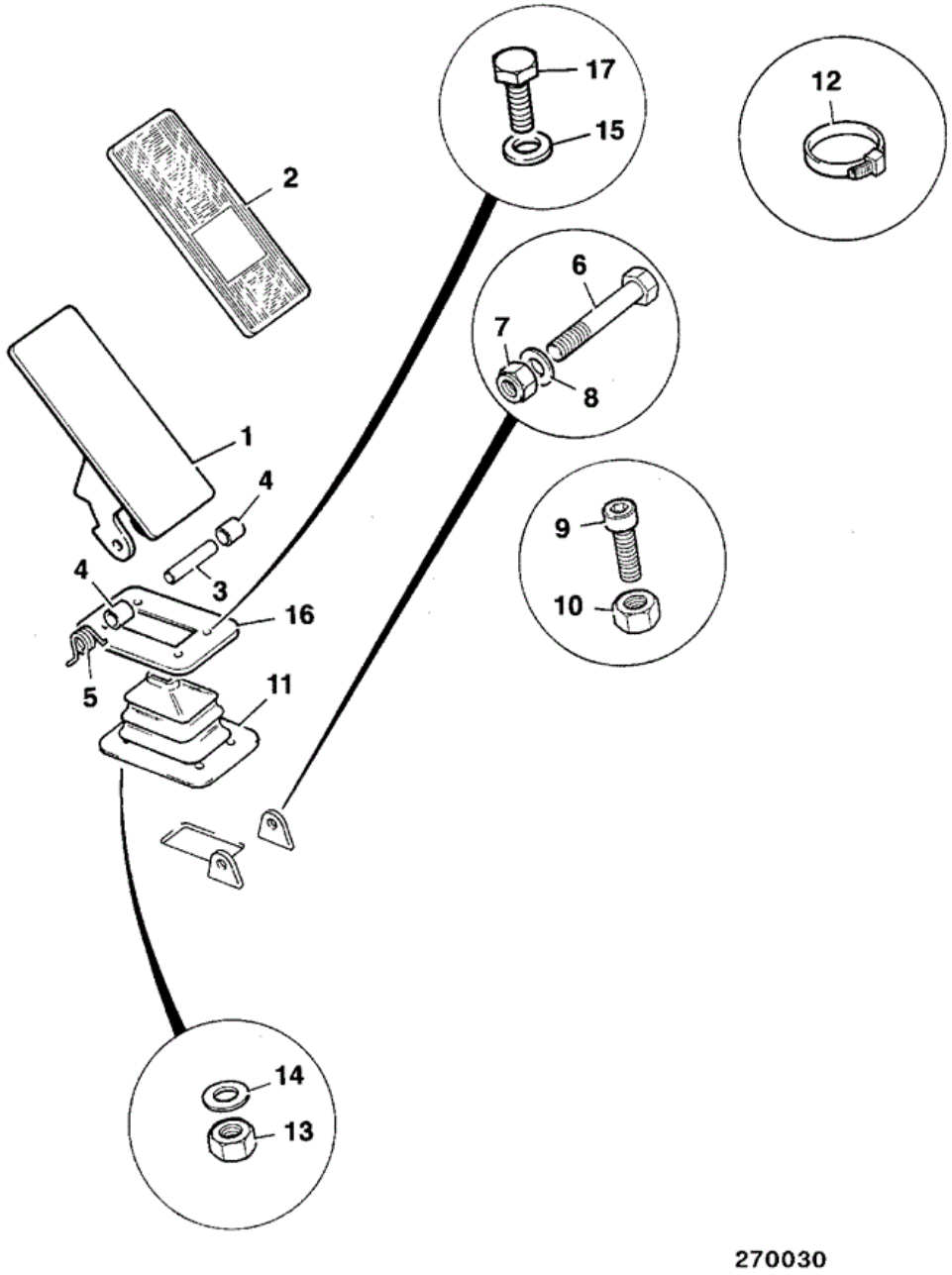

Item	Part No	Change No	Description	Usage Code	QTY
1	268/40142		Pedal Brake		1
2	265/00172		Pad Brake Pedal		1

3	830/00330		Tube Pivot		1
4	831/00064		Bush Self Lubricating		2
5	814/00376		Spring Brake Pedal		1
6	1315/3420Z		Bolt (M10 X 100)		1
7	1370/0303Z		Nut lock M10		1
8	1420/0008Z		Washer (M10)		1
9	1391/3307Z		Capscrew M8x25mm		1
10	1370/0202Z		Nut Thin (M8)		1
11	265/00286		Gaiter Single Lever		1
12	826/01144		Tie Cable 200mm		1
13	1315/3314Z		Bolt (M8 x 60)		1
14	1370/0201Z		Nut Standard M8		1
15	1414/0011Z		Washer (2BA)		4
16	157/25402		Plate Retaining Gaiter		1
17	1360/0202Z		Screw 2 B.A. x 1/2"		4

Applicability Date Ranges:
From: , To: 30/10/2010

9812/3020 G1-6-10 HOSE AND PIPEWORK BRAKE PEDAL

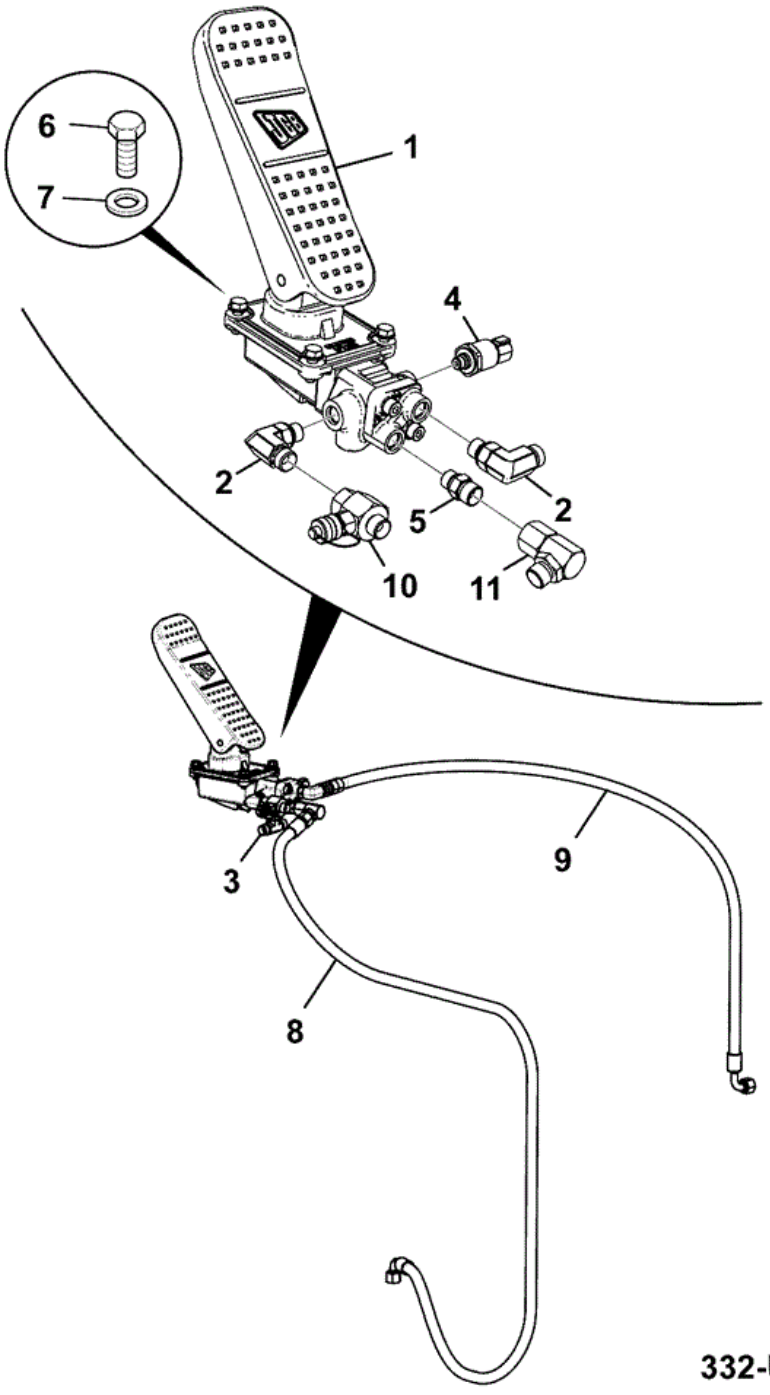

Item	Part No	Change No	Description	Usage Code	QTY
1	332/W7138		Valve brake		1
2	816/90548		Adaptor elbow M/M		2

3	816/55072		Adapter tee, 3/8BSPx9/16UNF		1
4	333/R4250	to DEC2014	Switch pressure 3 + 25 Bar		1
4	334/T0079		Switch pressure 3 + 25 Bar		1
5	1620/2052		Adaptor 3/8BSP X 9/16		1
6	1315/0307D		Setscrew M8 x 25 mm		4
7	1420/0007D		Washer (M8)		4
8	612/20900		Hose 3/8"BSP x 1750mm		1
9	612/30200		Hose 3/8BSP x 1145mm		1
10	816/55038		Adapter tee pressure test		1
11	816/90076		Adaptor 90 deg elbow, M/F		1
12	4103/2209		Adhesive 310ml Applied between casting and underside of gaiter		0

Applicability Date Ranges:
From: 31/10/2010 , To:

9812/3020 G1-7-1 BRAKE, SYSTEM

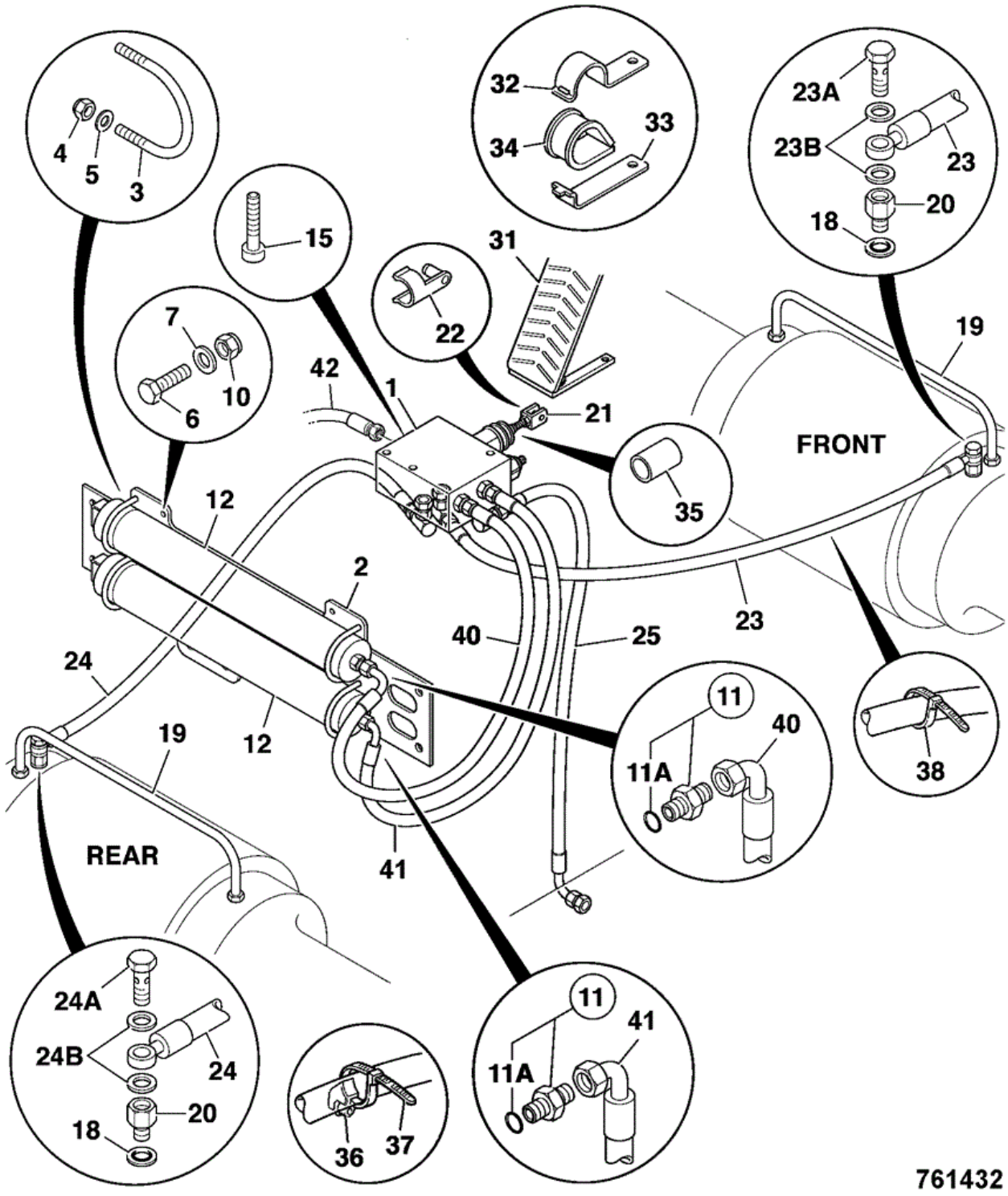

Item	Part No	Change No	Description	Usage Code	QTY
1	25/221212		Valve brake See page G1-1-1		1
2	331/37002		Bracket accumulator		1

3	826/01797		U Bolt M6		4
4	1370/0103D		Nut (M6)		8
5	1420/0006D		Washer (M6)		8
6	1315/0407D		Setscrew M10 x 25		4
7	1420/0008D		Washer (M10)		8
10	1370/0303D		Nut Self Lock M10		4
11	1620/0004		Adapter 3/4		2
11	1620/2053		Adaptor 3/8BSPx3/4SAE Replaces 1620/0004		2
11A	:2401/0505		O Ring		1
12	32/925846		Accumulator zero pressure version of 32/925793 Discharged		2
15	1391/3316D		Capscrew M8 x 70mm		3
18	823/00483		Washer dowty		2
19	265/00251		Pipe brake		2
19	265/02656		Pipe brake stainless steel Stainless steel alternative		2
20	816/25063		Adapter M12 x M16		2
21	913/00020		Clevis		1
22	913/00021		Pin Spring		1
23	629/21600		Hose Assembly		1
23A	:816/75018		Bolt banjo M16		1
23B	:823/00419		Washer		2
24	629/21700		Hose Assembly		1
24A	:816/75018		Bolt banjo M16		1
24B	:823/00419		Washer		2
25	633/30800		Hose 1/2" x 1220 lg. Port T to tank		1
31	268/40142		Pedal Brake See page G1-6-1		1
32	821/00180		Clamp Top		1
33	821/00181		Clamp Base		1
34	821/00182		Insert clamp		1
35	265/00826		Cover Heat Shrink		1
36	826/01274		Cradle Cable Tie Mount		3
37	121/77603		Tie Cable 300mm		8
38	121/77603		Tie Cable 300mm		4
39	264/36400		Plate Tie Harness		1
40	612/26400		Hose Port S1 to accumulator		1

41	612/27100		Hose 3/8"BSP 910 mm Port S2 to accumulator		1
42	612/27900		Hose Hydraulic Port N to filter return		1

9812/3020 G1-1-2 VALVE, BRAKE COMPONENTS

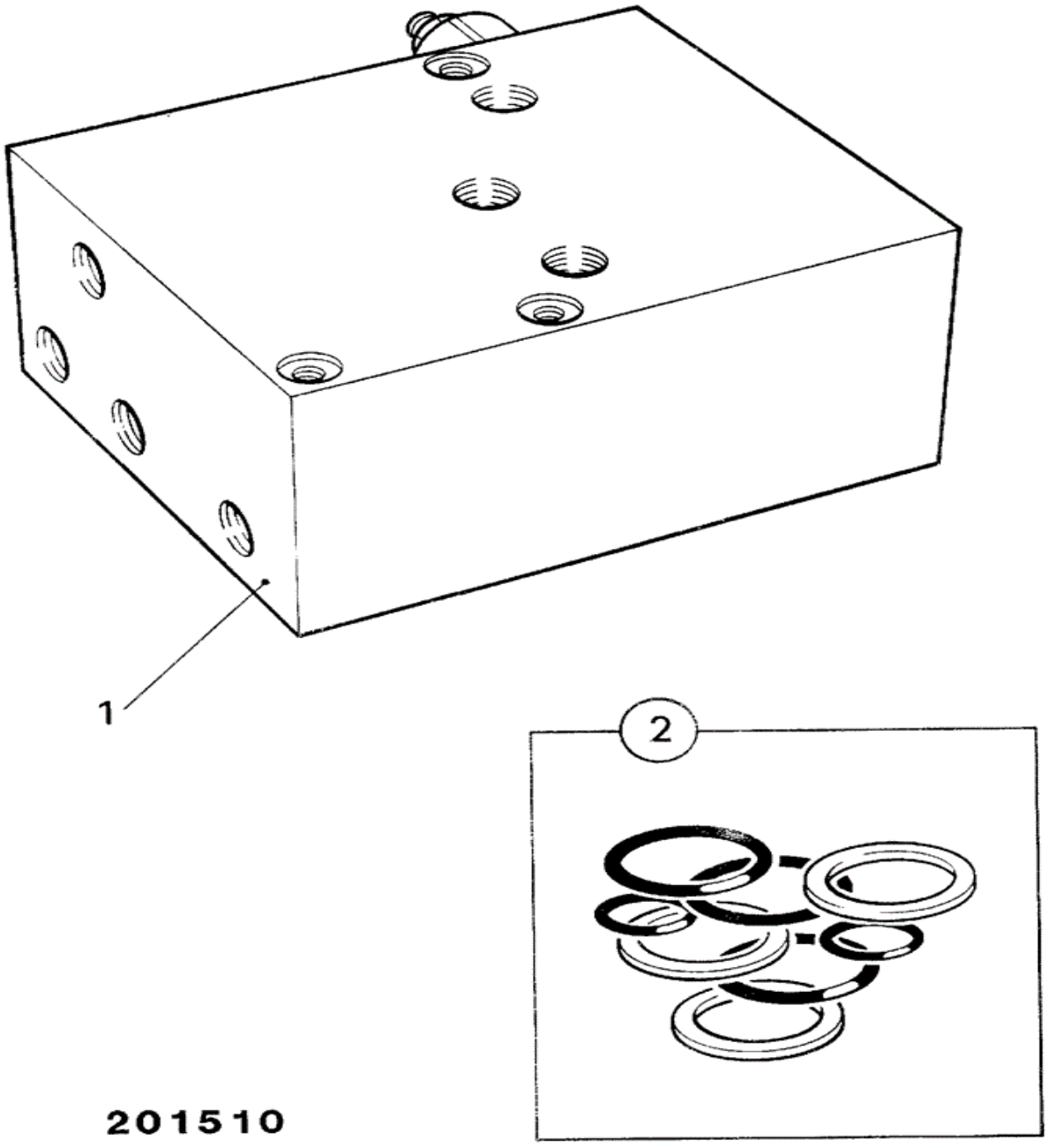

	Part				

Item	No	Change No	Description	Usage Code	QTY
1	25/221212		Valve brake		1
2	:998/10681		Kit seal		1

Applicability Date Ranges:
From: , To:

9812/3020 G1-7-10 HOSE AND PIPEWORK ACCUMULATOR

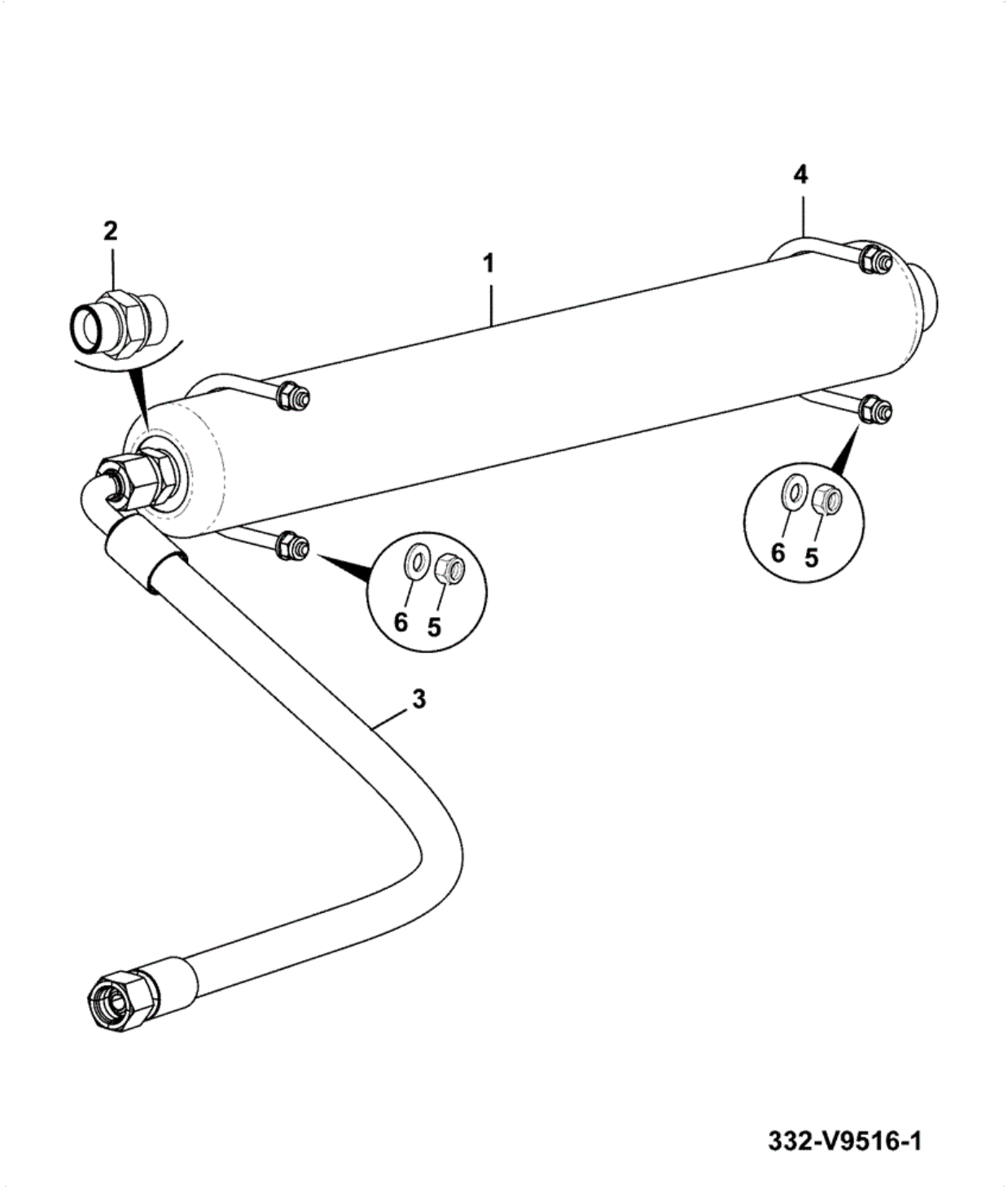

Item	Part No	Change No	Description	Usage Code	QTY
1	32/925798		Accumulator 0.95L 34Bar		1
2	1620/2053		Adaptor 3/8BSPx3/4SAE		1

3	612/35200		Hose 3/8"BSP x 630mm		1
4	826/01797		U Bolt M6		2
5	1370/0103D		Nut (M6)		4
6	1420/0006D		Washer (M6)		4

Applicability Date Ranges:
From: 31/10/2010 , To:

Product Catalog\WHEELED LOADERS\416 01243000-01243499,01317500-01317999,01472000-01472999,02095872-02095875 9812/3020 \G BRAKES\G01 BRAKES\G1-7-20 HOSE AND PIPEWORK BRAKE LINES

9812/3020 G1-7-20 HOSE AND PIPEWORK BRAKE LINES

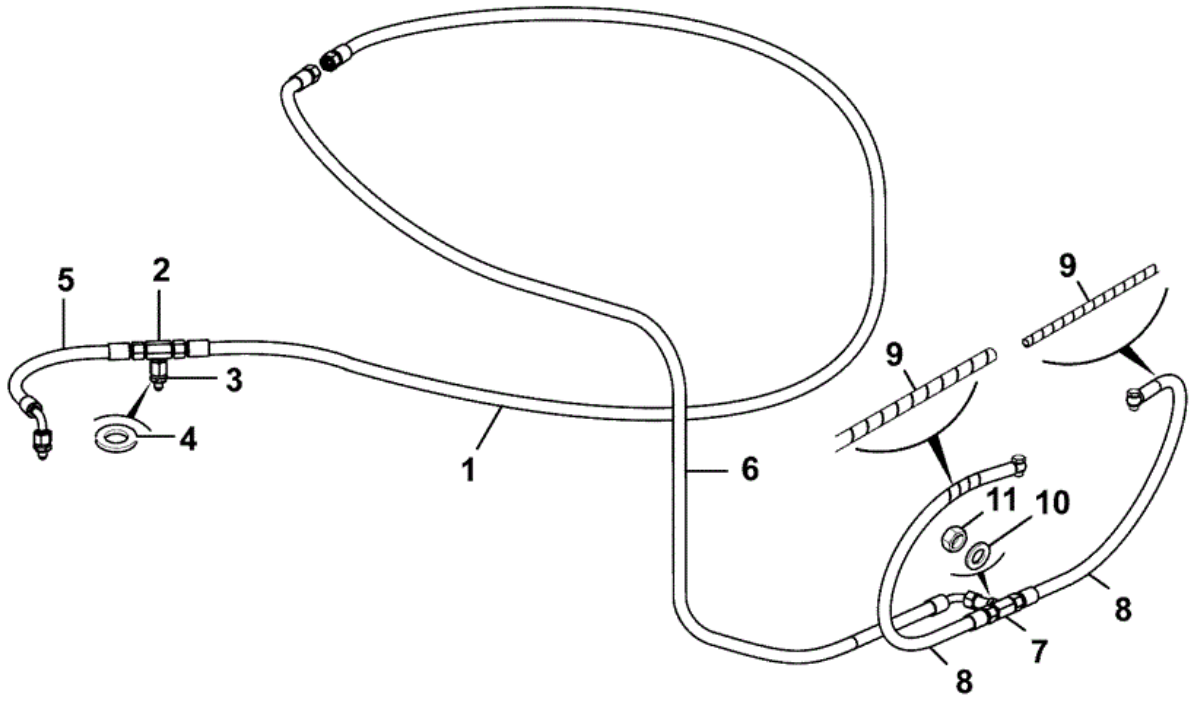

332-V9690-3

Item	Part No	Change No	Description	Usage Code	QTY
1	612/00500		Hose		1
2	816/90142		Adapter Tee		1

2A	816/90044		Cap blanking 3/8"BSP Female Sales special 2639. Fitted to T adapter on front axle		2
3	816/90794		Adaptor M12 x 3/8"BSP		2
4	1406/0011		Washer Bonded (1/4")		2
5	612/31700		Hose 3/8"BSP x 380mm		1
5	333/R9801		Hose 3/8"BSP x 380mm Sales special 2639		1
6	612/80224		Hose 3/8"BSP x 2310mm		1
7	816/50107		Adapter 3/8BSP tee		1
8	333/S8442		Hose 6mm bore x 750mm		2
8	265/02656		Pipe brake stainless steel Sales special 2639		2
9	333/R9481		Guard spiral 13mm I/D x 650mm		2
10	1420/0011D		Washer (M16)		1
11	1356/0203Z		Nut backing		1

Applicability Date Ranges:
From: 31/10/2010 , To:

9812/3020 G1-10-1 BRAKE, COMPONENTS

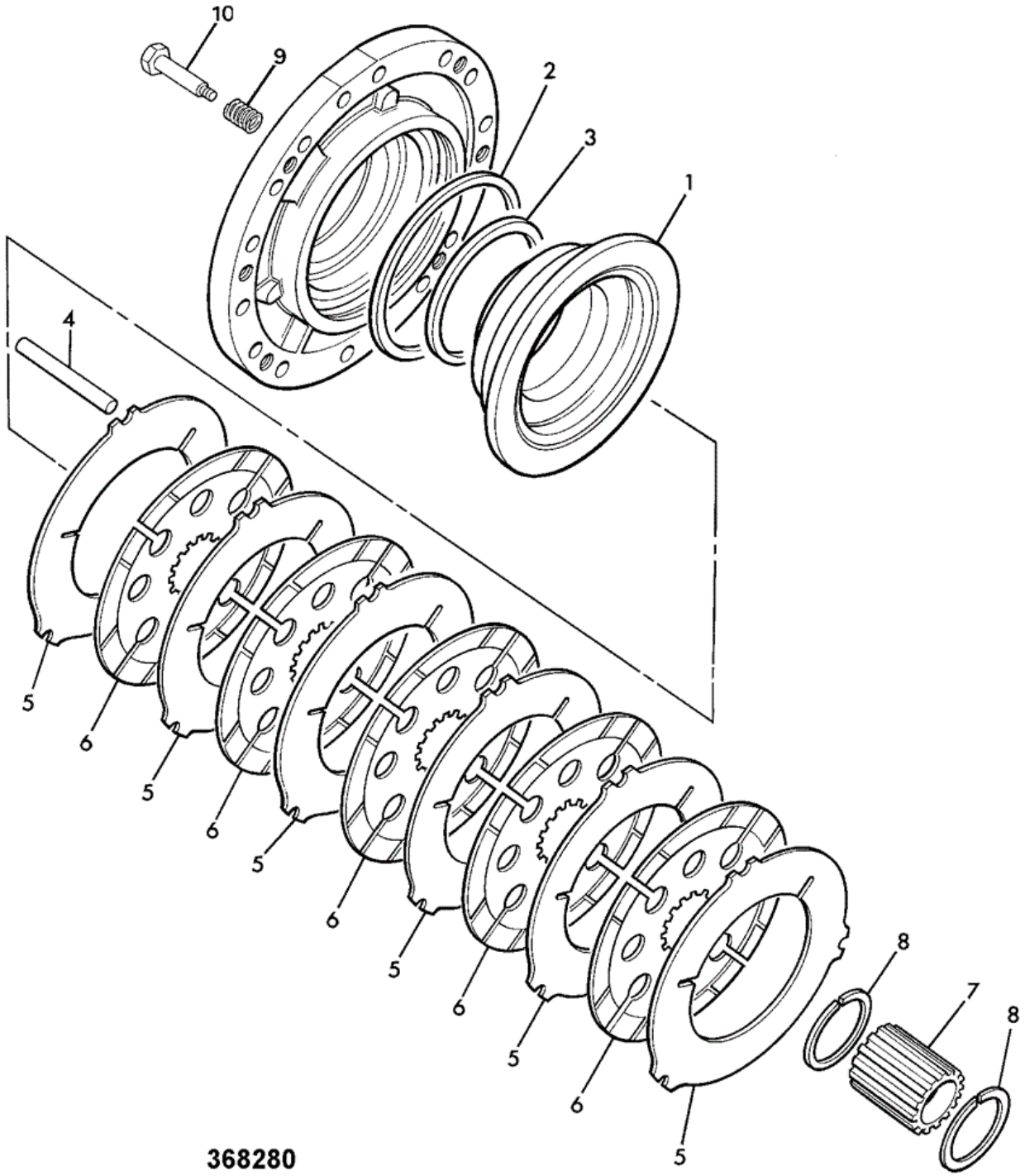

Item	Part No	Change No	Description	Usage Code	QTY
1	458/20237	Superseded	Piston brake c/w 3 M6 holes 220mm x 57.5mm x 130mm bore		2
1	458/20614	Superseded	Piston brake c/w 3 M6 holes 220mm x 57.5mm x 139.4mm bore		2

1	458/M2801		Piston brake c/w 3 M6 holes 220mm x 57.5mm x 134mm bore		2
2	813/50012		Seal Brake Piston		2
3	813/50026		Seal Brake Piston (square section)		2
4	450/10213		Pin reaction		6
5	458/20285		Plate brake counter		12
6	458/20316		Plate brake friction		10
7	450/22905		Coupling brake plate		2
8	2203/0074		Circlip external		4
9	814/00367		Spring compression		6
10	450/24303		Pin headed backoff		6

Applicability Date Ranges:
From: , To:

Product Catalog\WHEELED LOADERS\416 01243000-01243499,01317500-01317999,01472000-01472999,02095872-02095875 9812/3020 \G BRAKES\G01 BRAKES\G1-11-1 BRAKE, COMPONENTS 450/38900, 39100 39200,39300, 39500, 43810, 44070, 44080

9812/3020 G1-11-1 BRAKE, COMPONENTS 450/38900, 39100 39200,39300, 39500, 43810, 44070, 44080

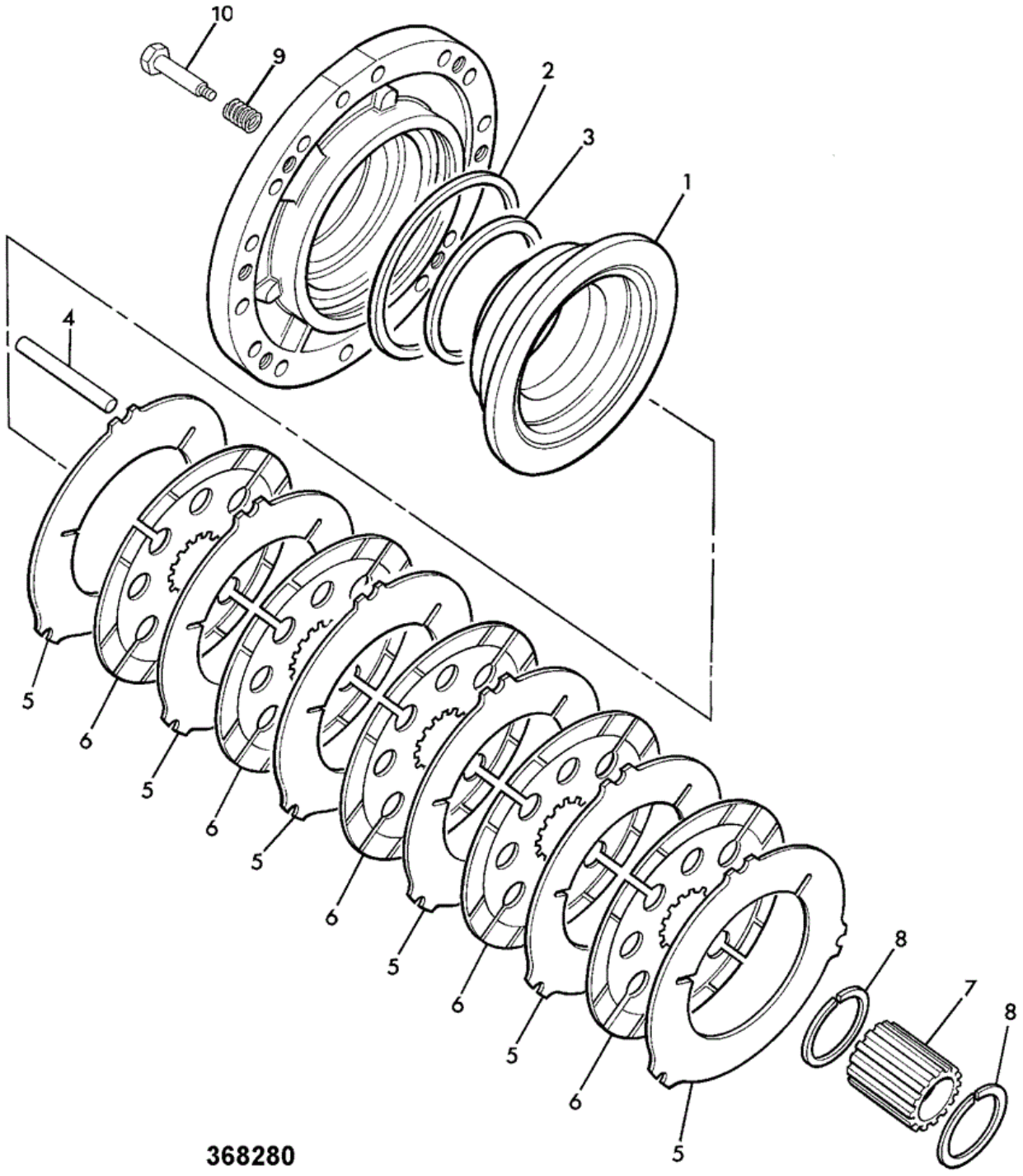

Item	Part No	Change No	Description	Usage Code	QTY
1	458/20237	Superseded	Piston brake c/w 3 M6 holes 220mm x 57.5mm x 130mm bore		2
1	458/20614		Piston brake c/w 3 M6 holes 220mm x 57.5mm x 139.4mm bore		2

1	458/M2801	>450/39200/6	Piston brake c/w 3 M6 holes 220mm x 57.5mm x 134mm bore		2
2	813/50012		Seal Brake Piston		2
3	813/50026		Seal Brake Piston (square section)		2
4	450/10213		Pin reaction		6
5	458/20285		Plate brake counter		12
6	458/20316		Plate brake friction		10
6	458/20353		Plate brake friction Used on 450/39100 axle assembly		10
7	450/22905		Coupling brake plate		2
8	2203/0074		Circlip external		4
9	814/00367		Spring compression		6
10	450/24303		Pin headed backoff		6

Applicability Date Ranges:
From: , To:

Product Catalog\WHEELED LOADERS\416 01243000-01243499,01317500-01317999,01472000-01472999,02095872-02095875 9812/3020 \G BRAKES\G01 BRAKES\G1-11-3 BRAKE, COMPONENTS 416SHL AXLE ASSEMBLY 450/38900, 43810, 39300 & 43800

9812/3020 G1-11-3 BRAKE, COMPONENTS 416SHL AXLE ASSEMBLY 450/38900, 43810, 39300 & 43800

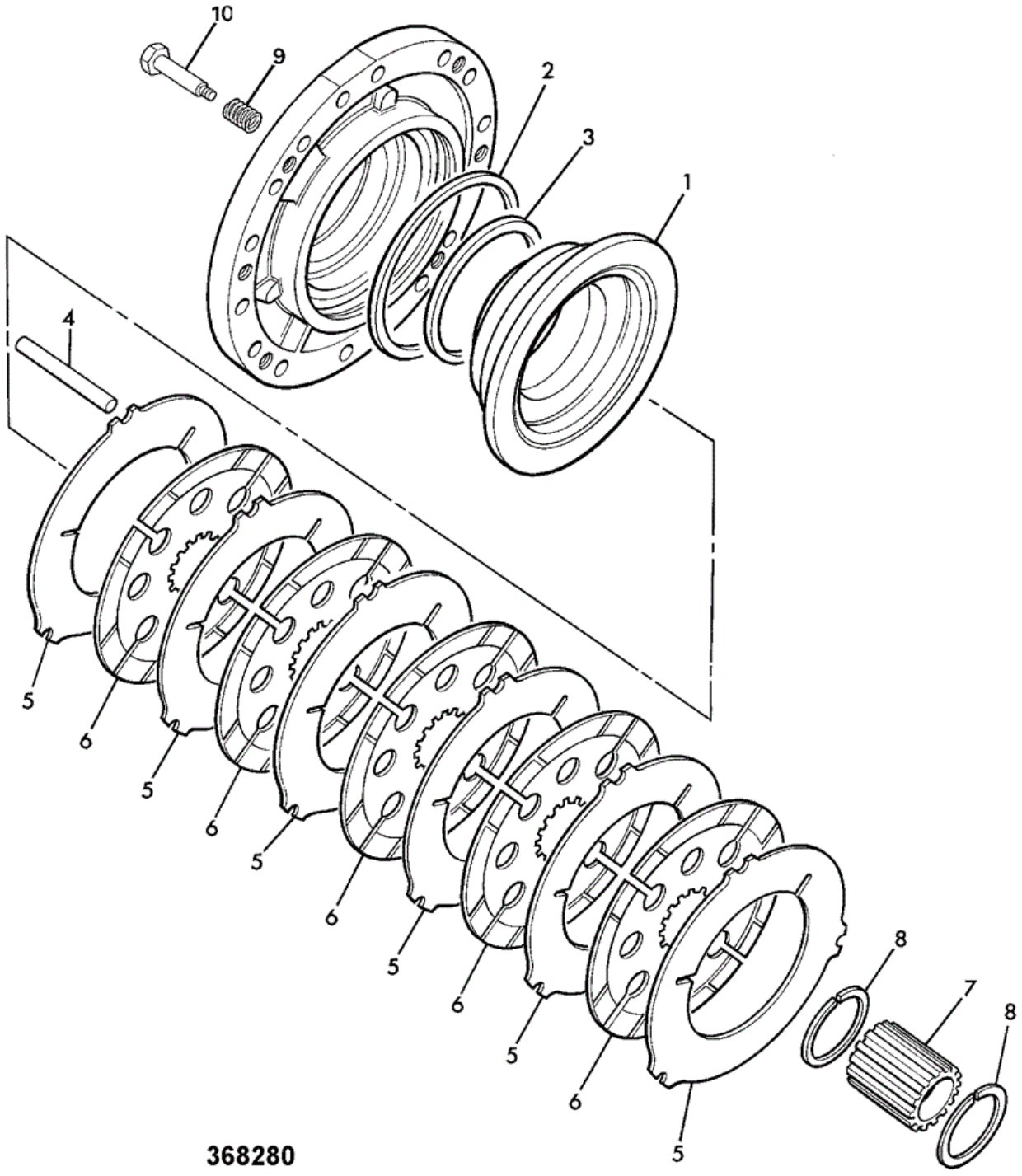

Item	Part No	Change No	Description	Usage Code	QTY
1	458/20237	Superseded	Piston brake c/w 3 M6 holes 220mm x 57.5mm x 130mm bore		2
1	458/20614	Superseded	Piston brake c/w 3 M6 holes 220mm x 57.5mm x 139.4mm bore		2

1	458/M2801		Piston brake c/w 3 M6 holes 220mm x 57.5mm x 134mm bore		2
2	813/50012		Seal Brake Piston		2
3	813/50026		Seal Brake Piston (square section)		2
4	450/10213		Pin reaction		6
5	458/20285		Plate brake counter		12
6	458/20316		Plate brake friction Front axles only		10
7	450/22905		Coupling brake plate		2
8	2203/0074		Circlip external		4
9	814/00367		Spring compression		6
10	450/24303		Pin headed backoff		6

Applicability Date Ranges:
From: , To:

Product Catalog\WHEELED LOADERS\416 01243000-01243499,01317500-01317999,01472000-01472999,02095872-02095875 9812/3020 \V JCB444 ENGINE INSTALLATION COMPONENTS\V41 ENGINE ASSEMBLYS\V41-1-1 ENGINE ASSEMBLY 320/40014,125BHP, T2 SEE CATALOGUE 9802/2940

9812/3020 V41-1-1 ENGINE ASSEMBLY 320/40014,125BHP, T2 SEE CATALOGUE 9802/2940

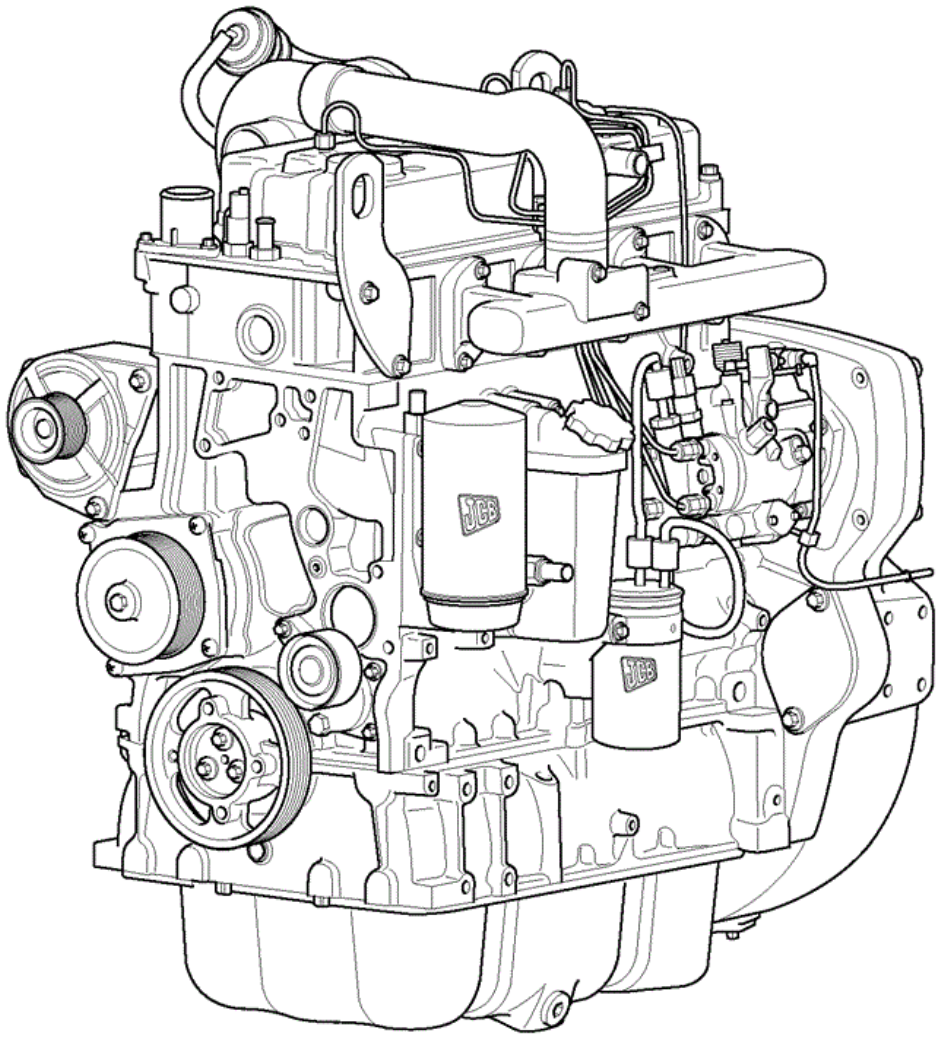

742570

Item	Part No	Change No	Description	Usage Code	QTY
			Engine assembly 93kW-24v turbo-A/C ZFT		

1	320/40014		For Service Parts, See Catalogue 9802/2940		1

Applicability Date Ranges:
From: M1243000 , To: M1243499

Product Catalog\WHEELED LOADERS\416 01243000-01243499,01317500-01317999,01472000-01472999,02095872-02095875 9812/3020 \V JCB444 ENGINE INSTALLATION COMPONENTS\V41 ENGINE ASSEMBLYS\V41-11-1 ENGINE ASSEMBLY 320/40102,130BHP, T3 SEE CATALOGUE 9812/2300

9812/3020 V41-11-1 ENGINE ASSEMBLY 320/40102,130BHP, T3 SEE CATALOGUE 9812/2300

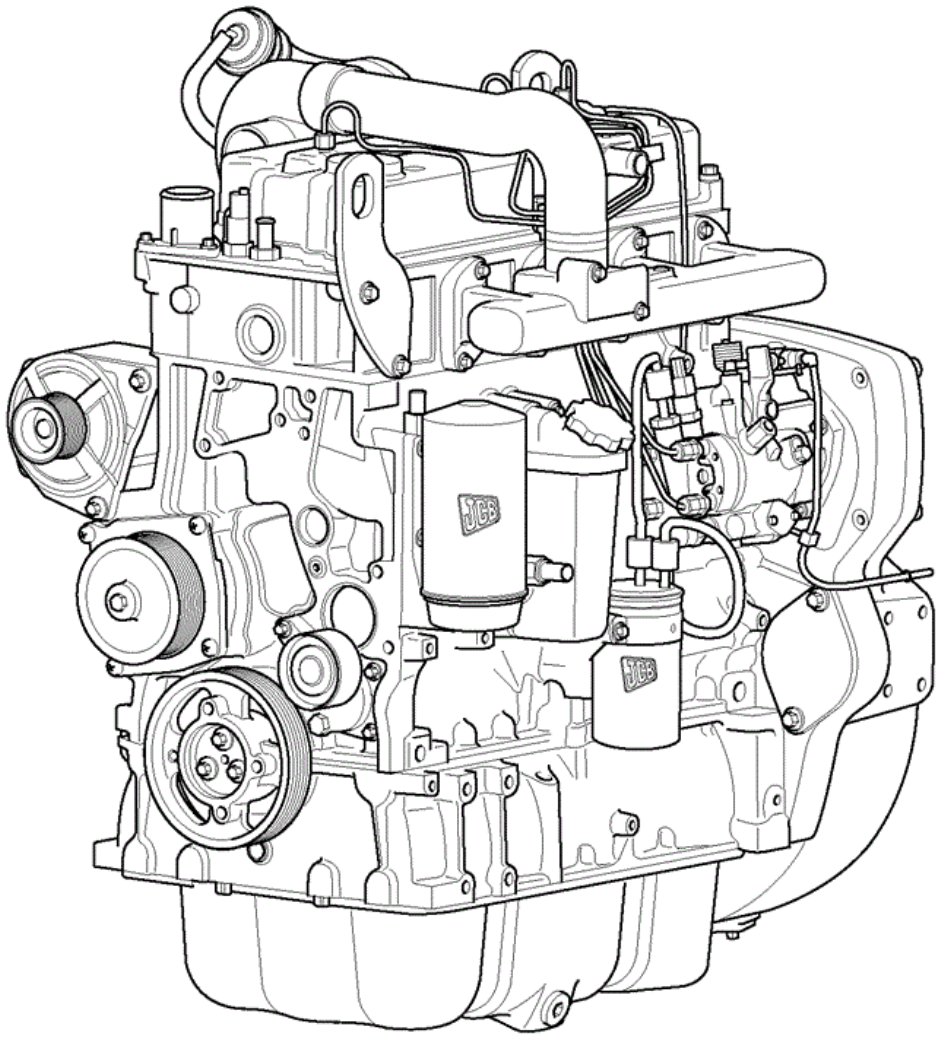

742570

Item	Part No	Change No	Description	Usage Code	QTY
			Engine Assembly 97kW 24V TCA		

1	320/40102		For Service Parts, See Catalogue 9812/2300		1

Applicability Date Ranges:
From: M1317500 , To: M1317999

Product Catalog\WHEELED LOADERS\416 01243000-01243499,01317500-01317999,01472000-01472999,02095872-02095875 9812/3020 \V JCB444 ENGINE INSTALLATION COMPONENTS\V41 ENGINE ASSEMBLYS\V41-12-1 ENGINE ASSEMBLY TCA 97kW-24V crT3

9812/3020 V41-12-1 ENGINE ASSEMBLY TCA 97kW-24V crT3

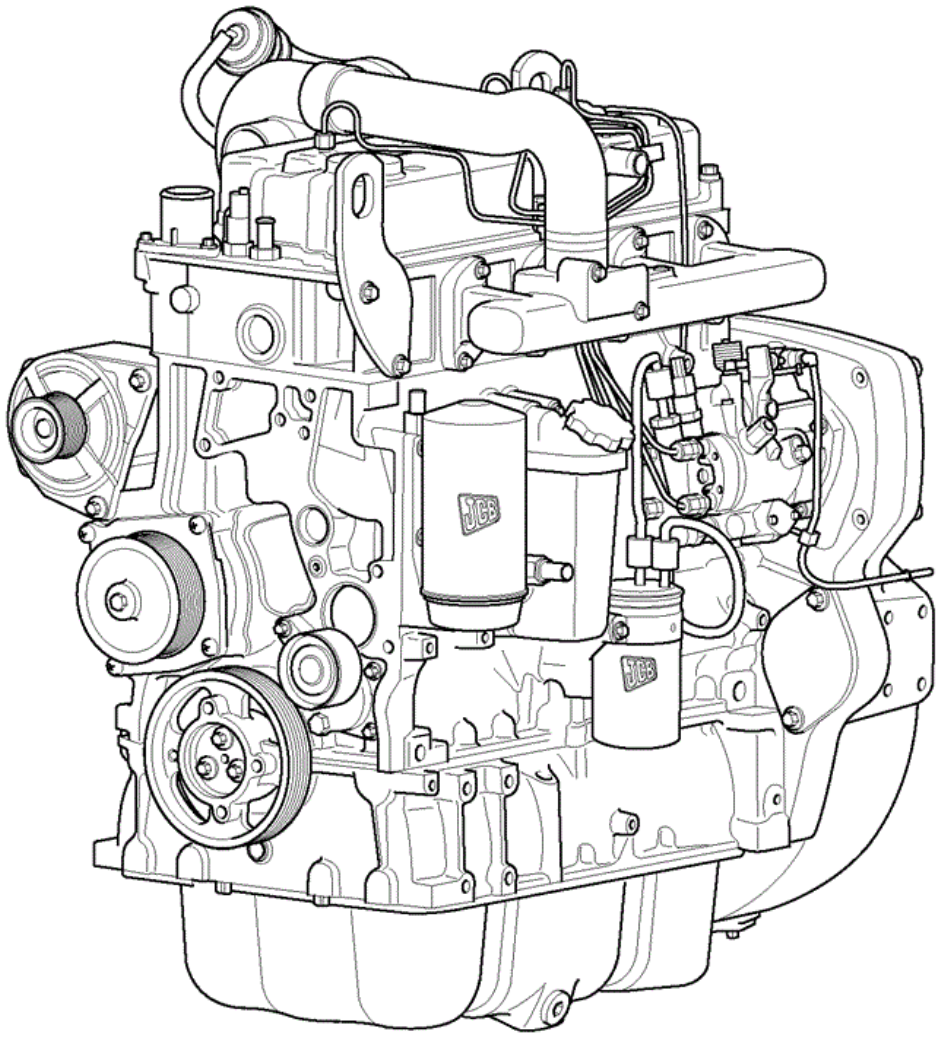

742570

Item	Part No	Change No	Description	Usage Code	QTY
1	320/40294		Engine assembly 97kW-24v 130BHP TCA crT3		1

Applicability Date Ranges:
From: , To:

Product Catalog\WHEELED LOADERS\416 01243000-01243499,01317500-01317999,01472000-01472999,02095872-02095875 9812/3020 \V JCB444 ENGINE INSTALLATION COMPONENTS\V41 ENGINE ASSEMBLYS\V41-13-1 ENGINE ASSEMBLY EU (VCA) FLEX

9812/3020 V41-13-1 ENGINE ASSEMBLY EU (VCA) FLEX

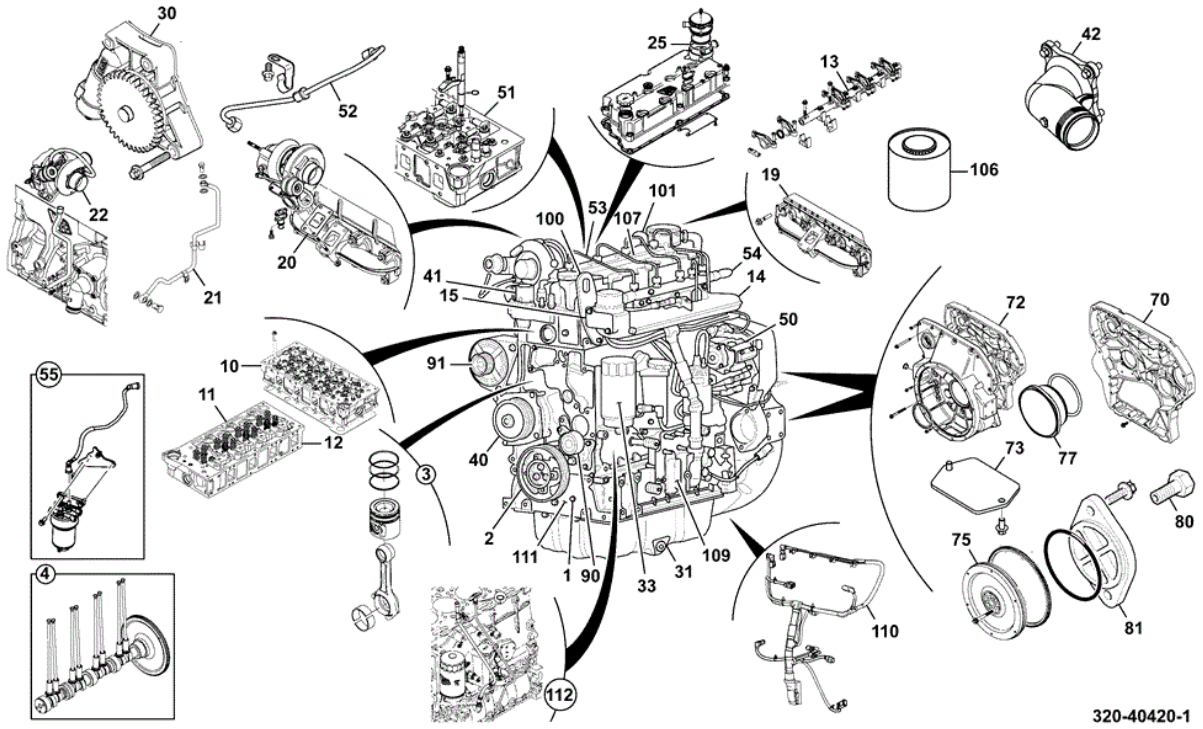

Item	Part No	Change No	Description	Usage Code	QTY
1	320/20661		Cylinder block Assembly		1
2	****		Crankshaft Assembly		1
3	****		Piston & Conrod Assembly		4
4	****		Camshaft Pushrods and Tappets		1
10	****		Cylinder Head Assembly		1
11	****		Valve Inlet Assembly		8
12	****		Valve Exhaust Assembly		8
13	****		Shaft Rocker Assembly		1
14	****		Manifold Inlet Assembly		1
15	****		Plate Blanking Heat Intake		1
19	****		Manifold Exhaust Assembly		1
20	****		Turbocharger		1
21	****		Turbocharger Lubrication Inlet		1
22	****		Turbocharger Lubrication Drain		1
25	****		Cover Rocker Assembly		1
30	****		Pump Oil Assembly		1
31	****		Sump Pan Oil		1

33	****		Filter Cooler Oil		1
40	****		Pump Water Assembly		1
41	320/20026		Thermostat Housing		1
42	****		Pipe Water Inlet Assembly		1
50	****		Pump Fuel Injection Assembly		1
51	****		Injector Fuel Assembly		4
52	****		Pipes Fuel High Pressure		1
53	****		Pipes Fuel Low Pressure		1
54	****		Rail Common Fuel		1
55	****		Filter Fuel		1
70	****		Casing Timing Gear		1
72	****		Housing Flywheel		1
73	****		Plate Flywheel Access		1
75	****		Flywheel		1
77	****		Cover FIP Gear Assembly		1
80	****		Plate idler blanking		1
81	****		Installation Blanking Plate SAE B		1
90	320/20046		Adjuster Autotensioner Assembly		1
91	****		Alternator 24V/55AMP		1
100	****		Bracket Lifting		1
101	****		Motor Starter Assembly		1
106	320/20122		Protection Engine Finish		1
107	****		Cover Injectors		1
109	****		Unit ECU - 97kW - CR		1
110	****		Harness Engine		1
112	****		Dipstick Short		1

Applicability Date Ranges:
From: , To:

Product Catalog\WHEELED LOADERS\416 01243000-01243499,01317500-01317999,01472000-01472999,02095872-02095875 9812/3020 \V JCB444 ENGINE INSTALLATION COMPONENTS\V41 ENGINE ASSEMBLYS\V41-14-1 ENGINE ASSEMBLY USA (EPA) FLEX

9812/3020 V41-14-1 ENGINE ASSEMBLY USA (EPA) FLEX

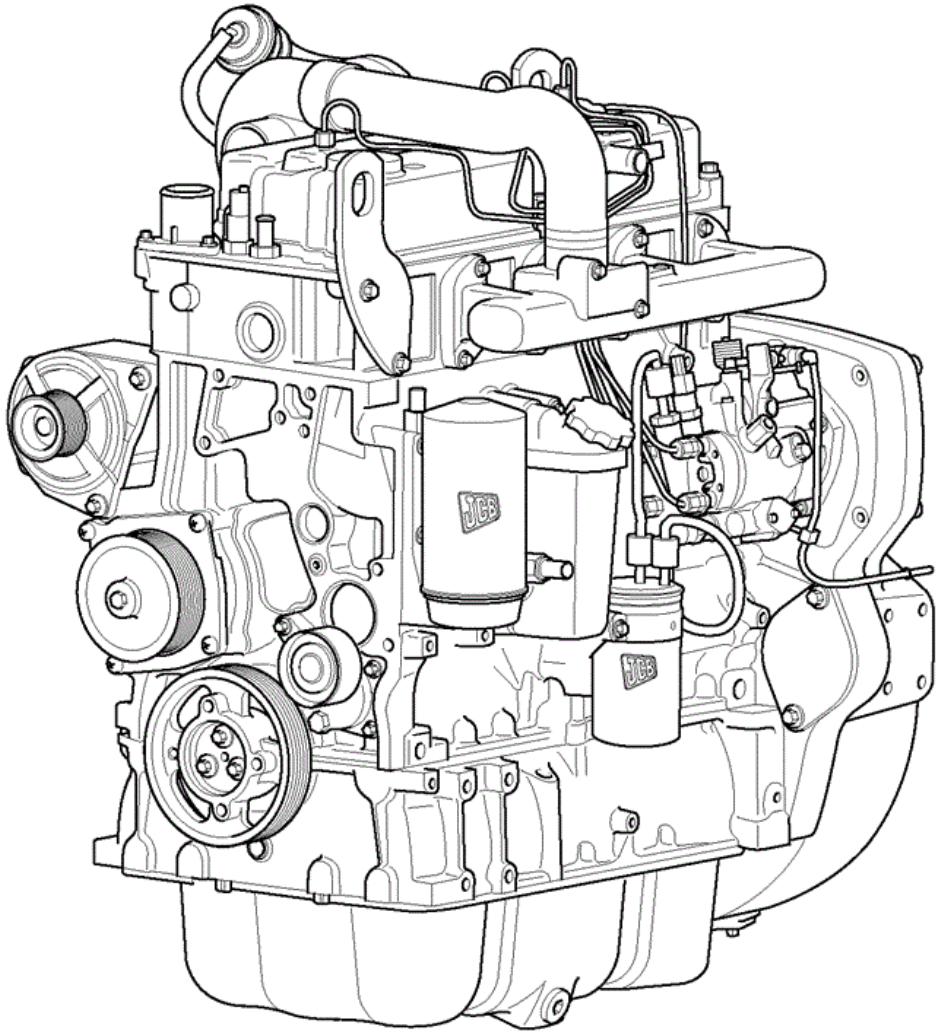

742570

Item	Part No	Change No	Description	Usage Code	QTY
A	320/40419		Engine assembly TCA 97kw eT3 24v Flex EPA		1
81	****		Installation Blanking Plate SAE B		1
111	****		Sensor kit		1

Applicability Date Ranges:
From: , To:

Product Catalog\WHEELED LOADERS\416 01243000-01243499,01317500-01317999,01472000-01472999,02095872-02095875 9812/3020 \V JCB444 ENGINE INSTALLATION COMPONENTS\V41 ENGINE ASSEMBLYS\V41-15-1 ENGINE ASSEMBLY ROW

9812/3020 V41-15-1 ENGINE ASSEMBLY ROW

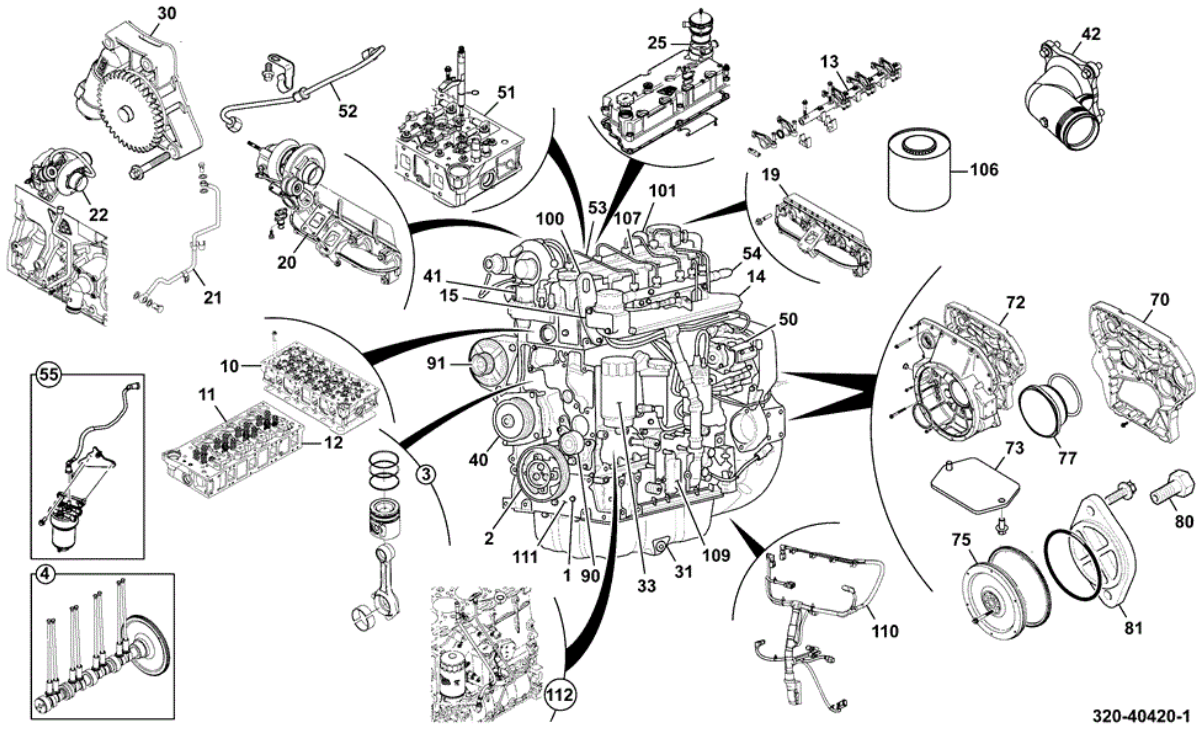

Item	Part No	Change No	Description	Usage Code	QTY
1	320/20661		Cylinder block Assembly		1
2	****		Crankshaft Assembly		1
3	****		Piston & Conrod Assembly		4
4	****		Camshaft Pushrods and Tappets		1
10	****		Cylinder Head Assembly		1
11	****		Valve Inlet Assembly		8
12	****		Valve Exhaust Assembly		8
13	****		Shaft Rocker Assembly		1
14	****		Manifold Inlet Assembly		1
15	****		Plate Blanking Heat Intake		1
19	****		Manifold Exhaust Assembly		1
20	****		Turbocharger		1
21	****		Turbocharger Lubrication Inlet		1
22	****		Turbocharger Lubrication Drain		1
25	****		Cover Rocker Assembly		1
30	****		Pump Oil Assembly		1
31	****		Sump Pan Oil		1

33	****		Filter Cooler Oil		1
40	****		Pump Water Assembly		1
41	320/20026		Thermostat Housing		1
42	****		Pipe Water Inlet Assembly		1
50	****		Pump Fuel Injection Assembly		1
51	****		Injector Fuel Assembly		4
52	****		Pipes Fuel High Pressure		1
53	****		Pipes Fuel Low Pressure		1
54	****		Rail Common Fuel		1
55	****		Filter Fuel		1
70	****		Casing Timing Gear		1
72	****		Housing Flywheel		1
73	****		Plate Flywheel Access		1
75	****		Flywheel		1
77	****		Cover FIP Gear Assembly		1
80	****		Plate idler blanking		1
81	****		Installation Blanking Plate SAE B		1
90	320/20046		Adjuster Autotensioner Assembly		1
91	****		Alternator 24V/55AMP		1
100	****		Bracket Lifting		1
101	****		Motor Starter Assembly		1
106	320/20122		Protection Engine Finish		1
107	****		Cover Injectors		1
109	****		Unit ECU - 97kW - CR		1
110	****		Harness Engine		1
112	****		Dipstick Short		1

Applicability Date Ranges:
From: , To:

Product Catalog\WHEELED LOADERS\416 01243000-01243499,01317500-01317999,01472000-01472999,02095872-02095875 9812/3020 \V JCB444 ENGINE INSTALLATION COMPONENTS\V42 ENGINE MOUNTINGS\V42-1-1 ENGINE MOUNTINGS TIER 2 & TIER 3

9812/3020 V42-1-1 ENGINE MOUNTINGS TIER 2 & TIER 3

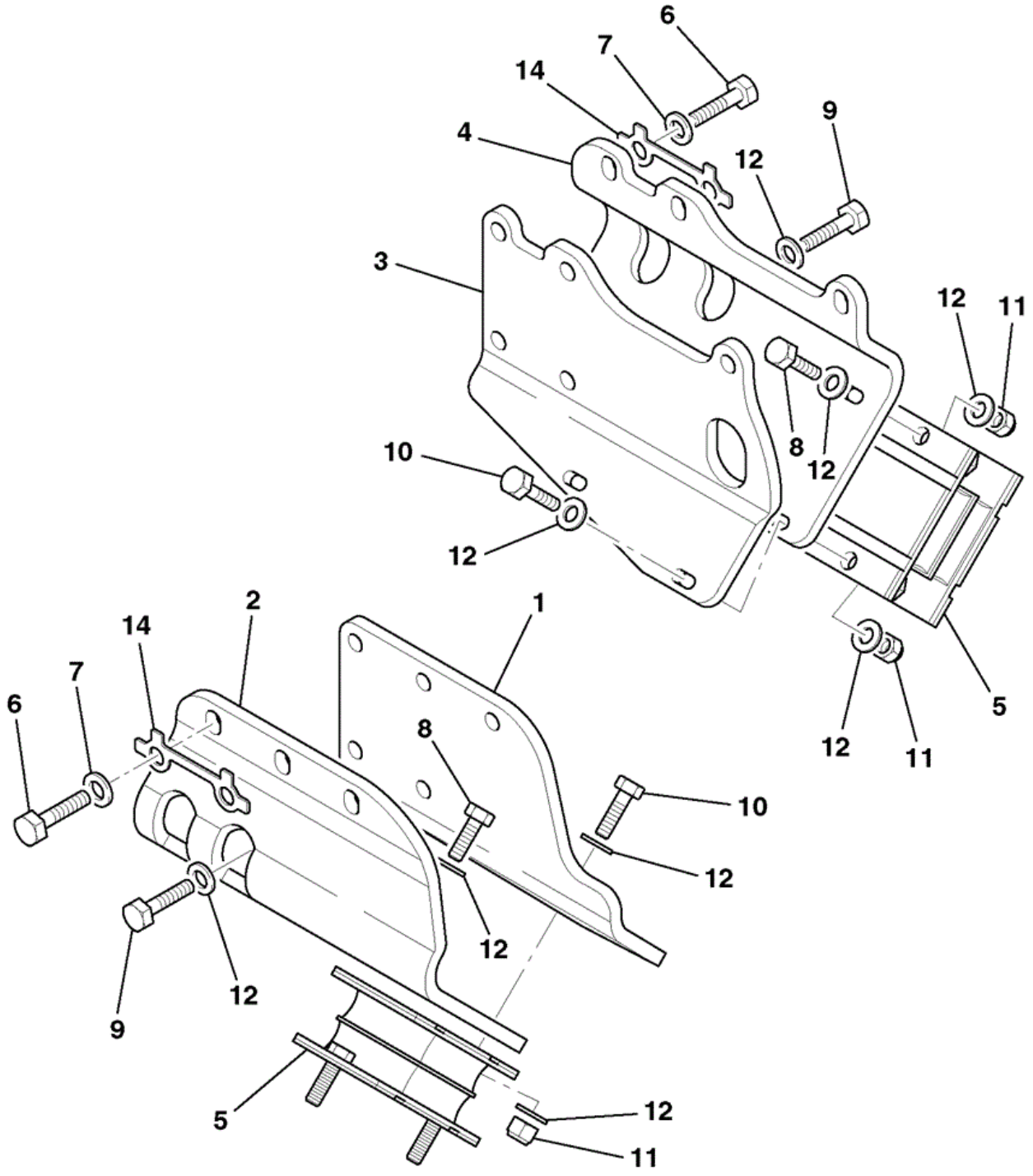

822301

Item	Part No	Change No	Description	Usage Code	QTY
1	331/60841		Mounting Bracket,engine, leftside,Inner		1
2	331/60842		Mounting Bracket,engine leftside,Outer		1

3	331/60843		Mounting Bracket,engine Rightside,Inner		1
4	331/60844		Mounting Bracket,engine, Rightside,Outer		1
5	331/21988		Mounting resiliant		2
6	1315/3511D		Bolt M12x45mm		8
7	1420/0009D		Washer (M12)		4
8	1315/3409D		Bolt M10 x 35mm long		2
9	1315/3410D		Bolt M10 x 40mm		4
10	1315/3411D		Bolt M10 x 45 mm Long		2
11	1370/0303D		Nut Self Lock M10		12
12	1411/0003D		Washer		16
12	1420/0008D		Washer (M10) Replaces 1411/0003D		16
13	4101/0651		Loctite 50ML		0
14	331/62903		Washer tab		2
15	926/08300		Strip Edging 90mm long		1

Applicability Date Ranges:
From: , To:

Product Catalog\WHEELED LOADERS\416 01243000-01243499,01317500-01317999,01472000-01472999,02095872-02095875 9812/3020 \V JCB444 ENGINE INSTALLATION COMPONENTS\V43 AIR FILTERS\V43-1-1 FILTER, AIR TIER 2 & TIER 3

9812/3020 V43-1-1 FILTER, AIR TIER 2 & TIER 3

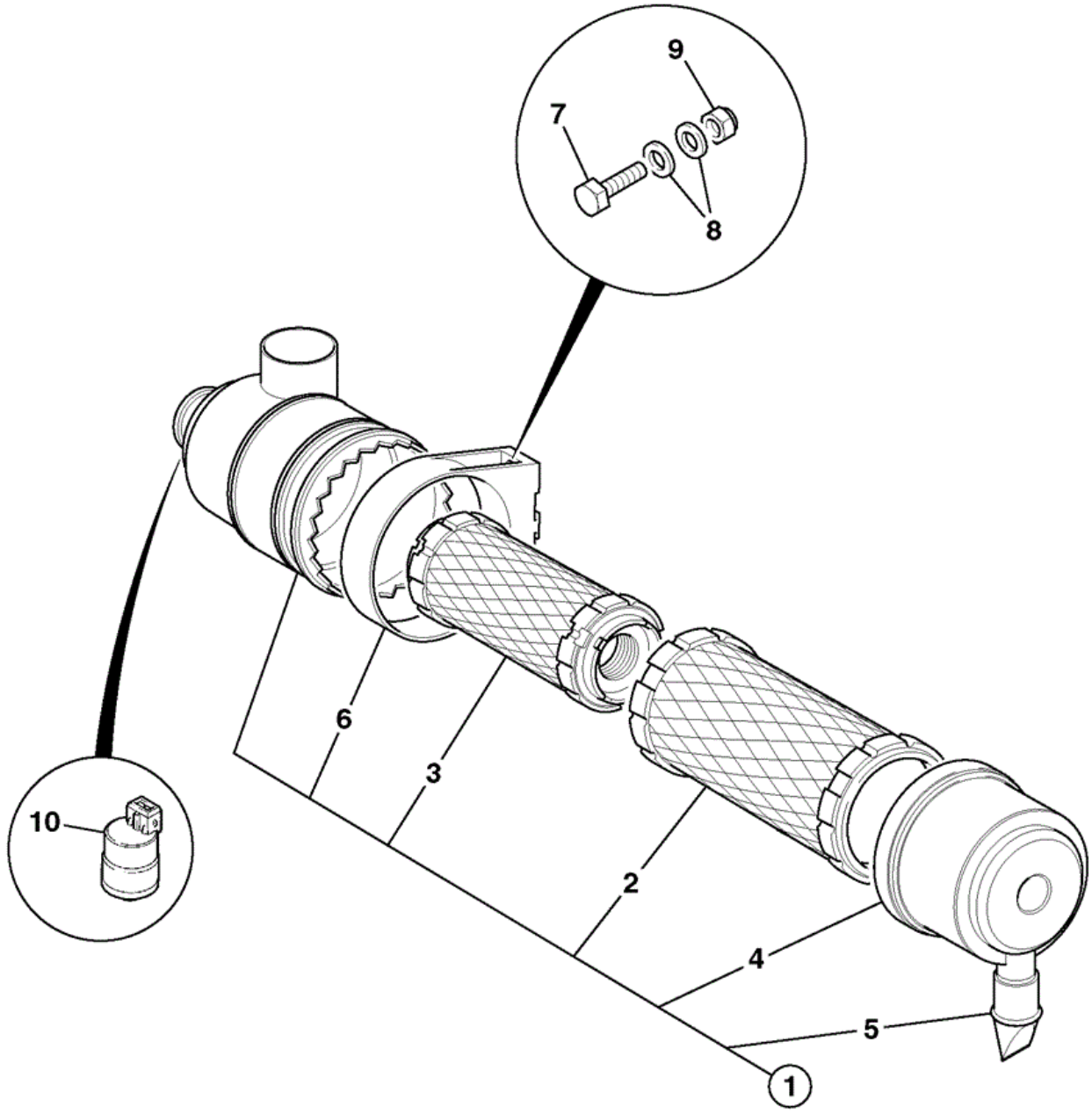

822350

Item	Part No	Change No	Description	Usage Code	QTY
1	580/12146		Filter air assembly		1
2	:32/925401		Element air filter main		1

3	:32/925402		Element air filter safety		1
4	:32/925403		Cover Cover end		1
5	:32/912905		Valve Dump		1
6	:32/925398		Bracket air filter mounting		1
7	1315/0305D		Setscrew M8 x 20mm		2
8	1420/0007D		Washer (M8)		4
9	1370/0203D		Nut Lock M8		2
10	701/58721	to 09/12/2012	Switch Vacuum Pressure		1
10	716/F2027		Switch vacuum 54 mBar		1

Applicability Date Ranges:
From: , To:

Product Catalog\WHEELED LOADERS\416 01243000-01243499,01317500-01317999,01472000-01472999,02095872-02095875 9812/3020 \V JCB444 ENGINE INSTALLATION COMPONENTS\V44 AIR INDUCTION HOSES\V44-1-1 AIR INDUCTION SYSTEM RAIN CAP TIER 2

9812/3020 V44-1-1 AIR INDUCTION SYSTEM RAIN CAP TIER 2

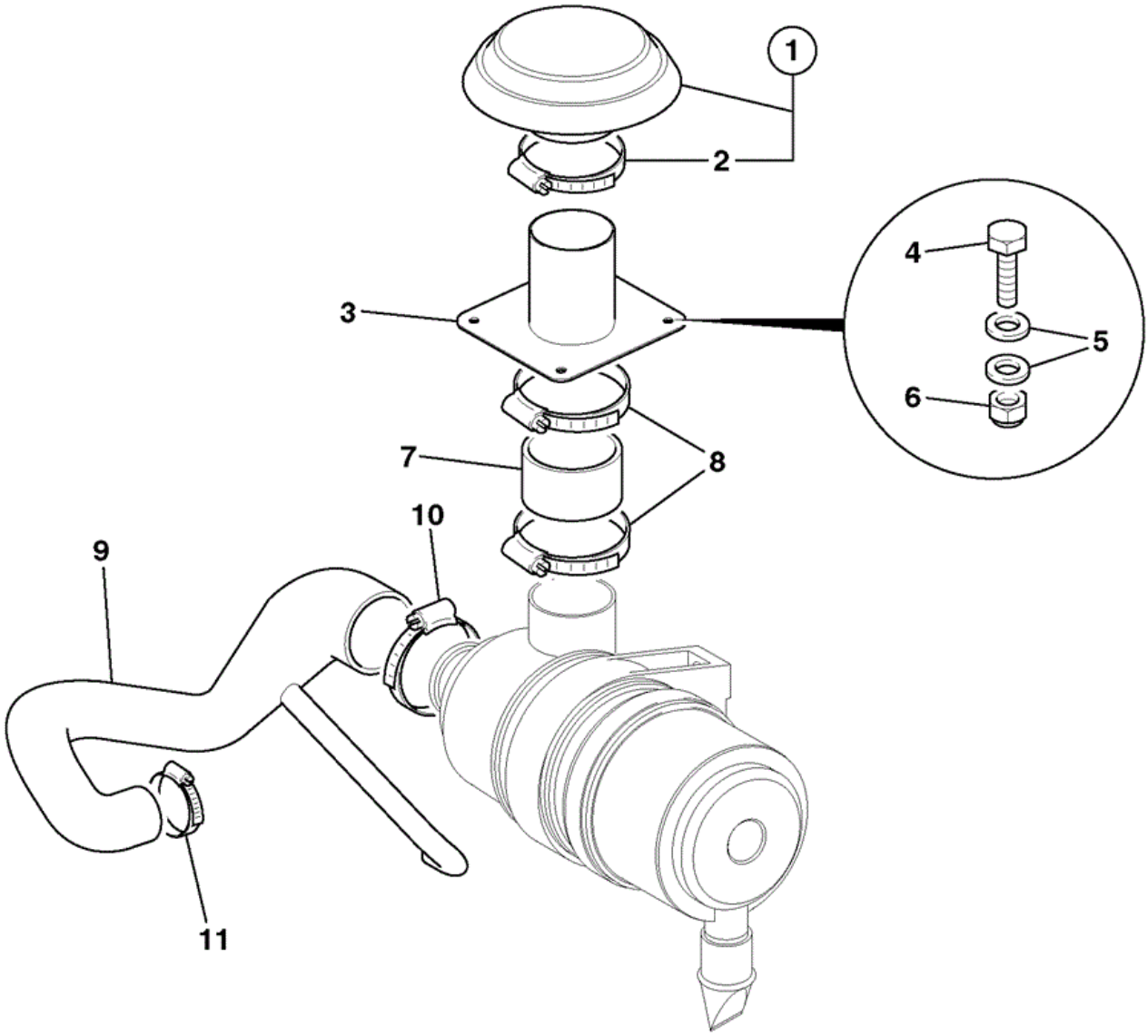

822380

Item	Part No	Change No	Description	Usage Code	QTY
1	32/925399		Cap rain		1
2	:32/925442		Clamp		1

3	335/04103		Mounting rain cap		1
4	1315/0407D		Setscrew M10 x 25		4
5	1420/0008D		Washer (M10)		8
6	1370/0303D		Nut Self Lock M10		4
7	834/10583		Hose air induction		1
8	2201/0017		Clip Worm Drive 110-140mm		2
9	834/11273		Hose turbo air intake		1
10	2201/0016		Clip Worm Drive 91-114mm		1
11	2201/0012		Clip Jubilee, 46/70mm		1

Applicability Date Ranges:
From: M1243000 , To: M1243499

Product Catalog\WHEELED LOADERS\416 01243000-01243499,01317500-01317999,01472000-01472999,02095872-02095875 9812/3020 \V JCB444 ENGINE INSTALLATION COMPONENTS\V44 AIR INDUCTION HOSES\V44-2-1 AIR INDUCTION SYSTEM PRE-CLEANER FILTER TIER 2

9812/3020 V44-2-1 AIR INDUCTION SYSTEM PRE-CLEANER FILTER TIER 2

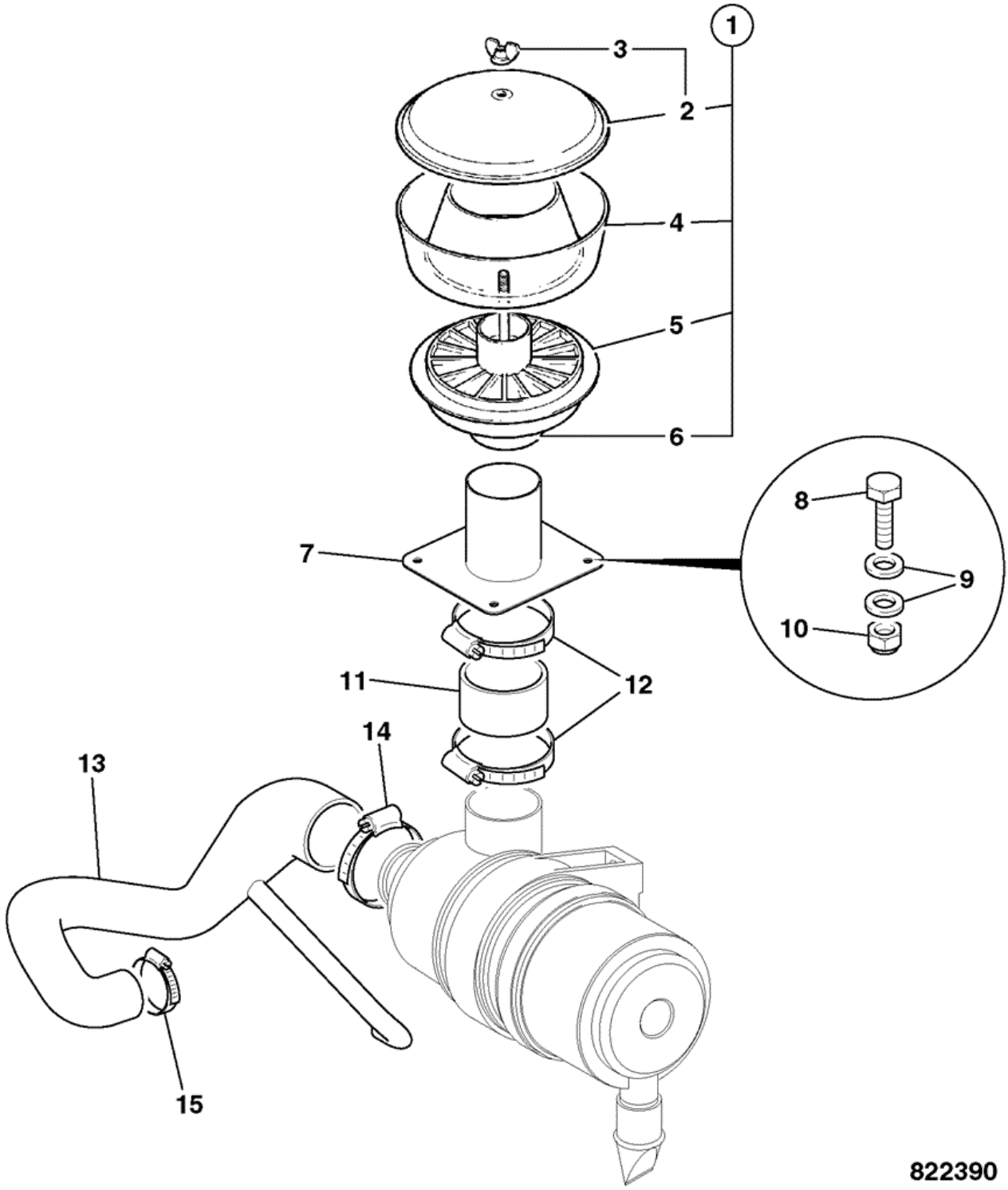

Item	Part No	Change No	Description	Usage Code	QTY
1	32/925400		Filter visibowl pre-cleaner assembly		1

2	:32/916801		Cover assembly		1
3	::32/916805		Nut wing		1
4	:32/916802		Bowl		1
5	:32/916803		Sleeve assembly		1
6	:32/925442		Clamp		1
7	335/04103		Mounting rain cap		1
8	1315/0407D		Setscrew M10 x 25		4
9	1420/0008D		Washer (M10)		8
10	1370/0303D		Nut Self Lock M10		4
11	834/10583		Hose air induction		1
12	2201/0017		Clip Worm Drive 110-140mm		2
13	834/11273		Hose turbo air intake		1
14	2201/0016		Clip Worm Drive 91-114mm		1
15	2201/0012		Clip Jubilee, 46/70mm		1

Applicability Date Ranges:
From: M1243000 , To: M1243499

9812/3020 V44-3-1 AIR INDUCTION SYSTEM TURBO 2 PRE-CLEANER FILTER, TIER 2

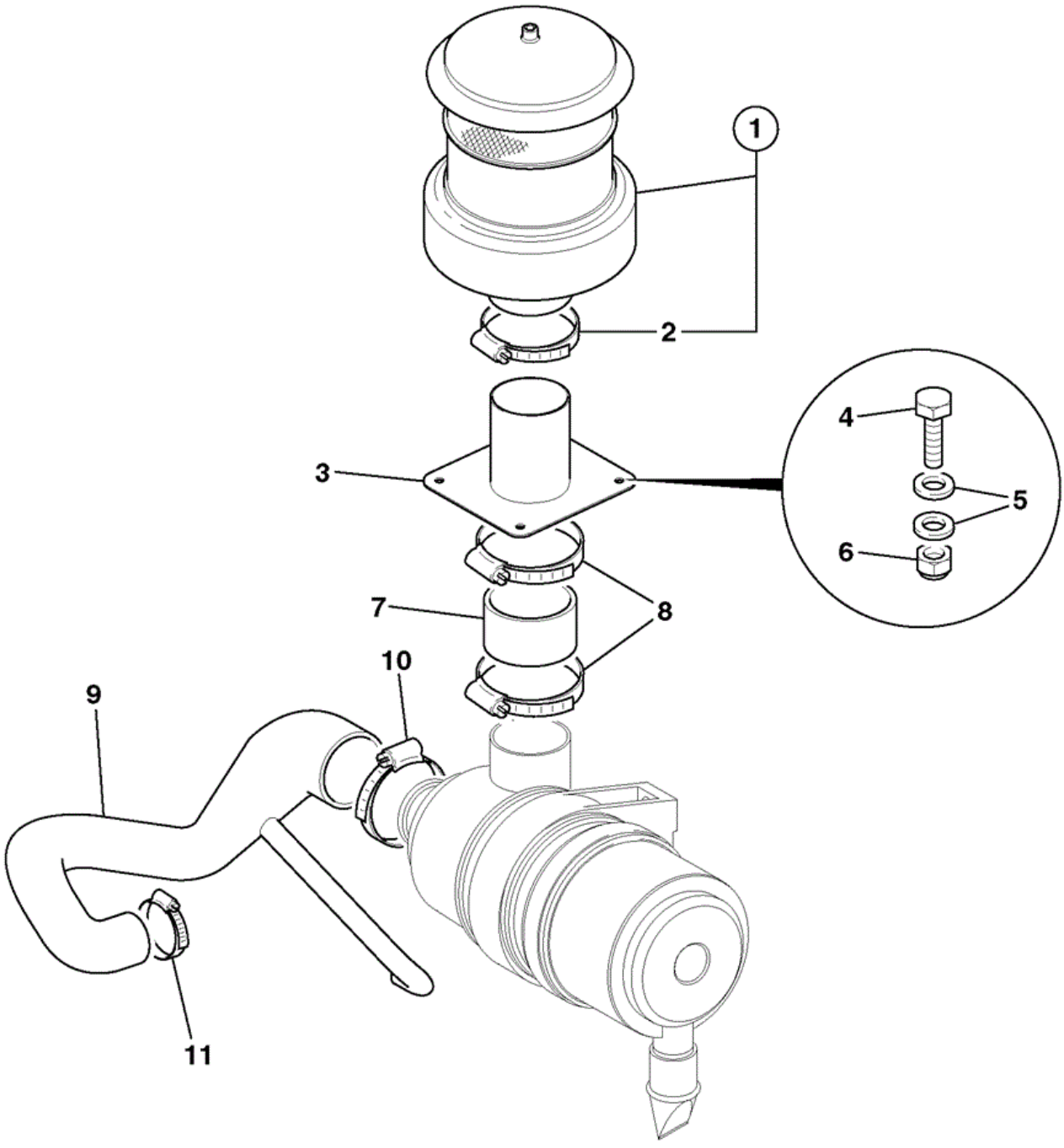

822400

Item	Part No	Change No	Description	Usage Code	QTY
1	265/02604		Filter pre-cleaner assembly		1

2	:32/925442		Clamp		1
3	335/04103		Mounting rain cap		1
4	1315/0407D		Setscrew M10 x 25		4
5	1420/0008D		Washer (M10)		8
6	1370/0303D		Nut Self Lock M10		4
7	834/10583		Hose air induction		1
8	2201/0017		Clip Worm Drive 110-140mm		2
9	834/11273		Hose turbo air intake		1
10	2201/0016		Clip Worm Drive 91-114mm		1
11	2201/0012		Clip Jubilee, 46/70mm		1

Applicability Date Ranges:
From: M1243000 , To: M1243499

Product Catalog\WHEELED LOADERS\416 01243000-01243499,01317500-01317999,01472000-01472999,02095872-02095875 9812/3020 \V JCB444 ENGINE INSTALLATION COMPONENTS\V44 AIR INDUCTION HOSES\V44-11-1 AIR INDUCTION SYSTEM RAIN CAP TIER 3

9812/3020 V44-11-1 AIR INDUCTION SYSTEM RAIN CAP TIER 3

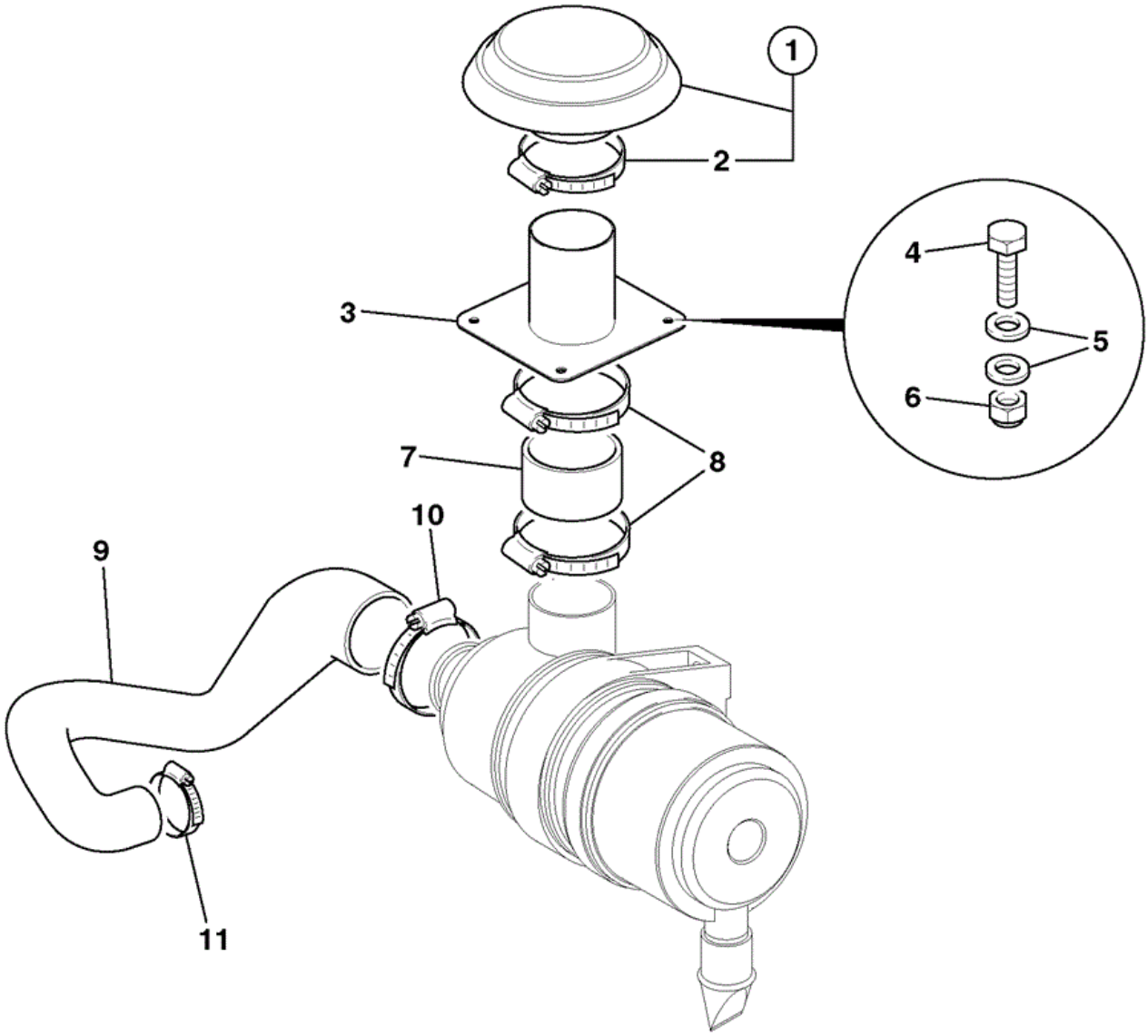

905070

Item	Part No	Change No	Description	Usage Code	QTY
1	32/925399		Cap rain		1
2	:32/925442		Clamp		1

3	335/04103		Mounting rain cap		1
4	1315/0407D		Setscrew M10 x 25		4
5	1420/0008D		Washer (M10)		8
6	1370/0303D		Nut Self Lock M10		4
7	834/10583		Hose air induction		1
8	2201/0017		Clip Worm Drive 110-140mm		2
9	834/11556		Hose air intake		1
10	2201/0016		Clip Worm Drive 91-114mm		1
11	2201/0012		Clip Jubilee, 46/70mm		1

Applicability Date Ranges:
From: M1317500 , To: M1317999

Product Catalog\WHEELED LOADERS\416 01243000-01243499,01317500-01317999,01472000-01472999,02095872-02095875 9812/3020 \V JCB444 ENGINE INSTALLATION COMPONENTS\V44 AIR INDUCTION HOSES\V44-12-1 AIR INDUCTION SYSTEM PRE-CLEANER FILTER TIER 3

9812/3020 V44-12-1 AIR INDUCTION SYSTEM PRE-CLEANER FILTER TIER 3

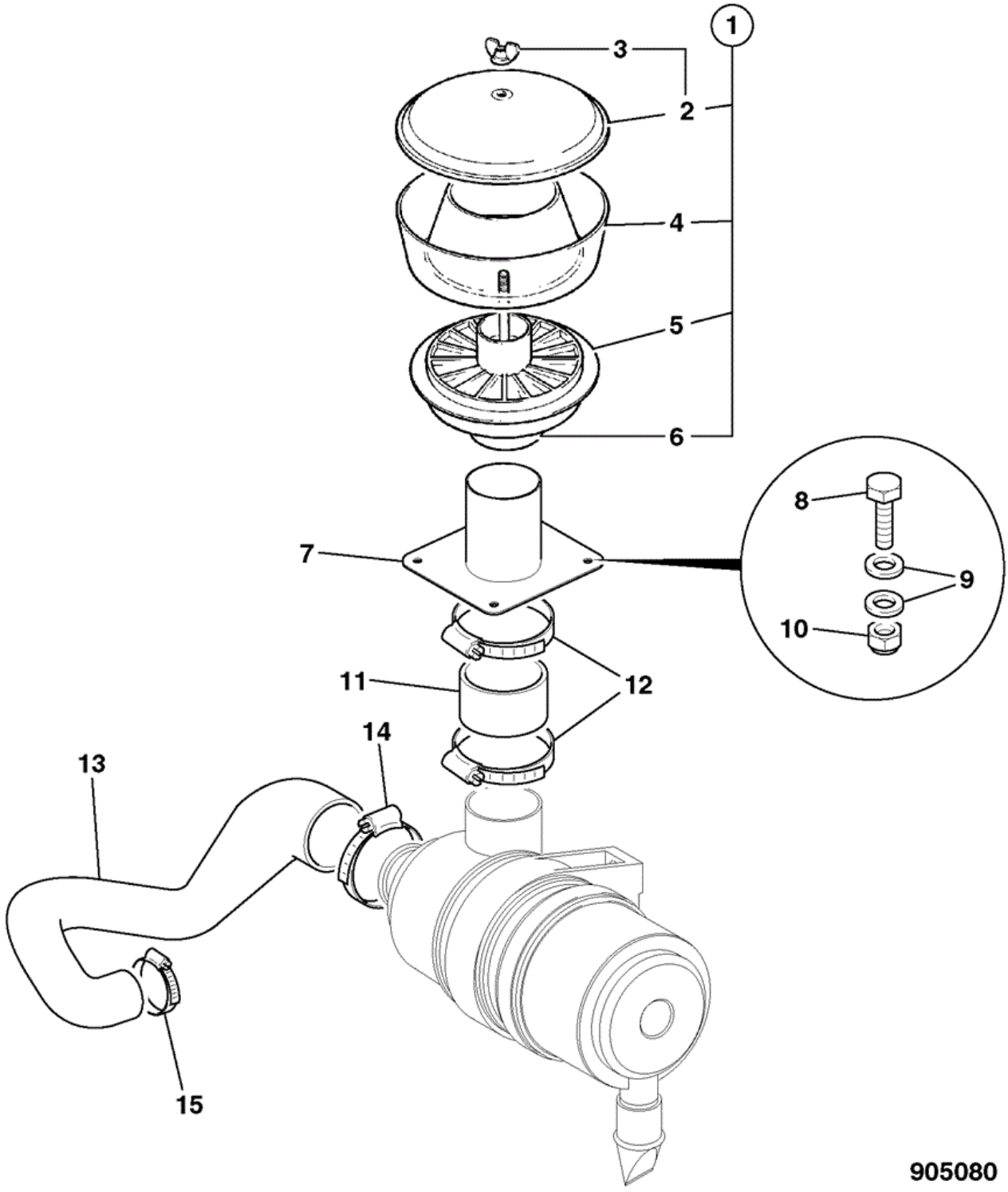

Item	Part No	Change No	Description	Usage Code	QTY
1	32/925400		Filter visibowl pre-cleaner assembly		1

2	:32/916801		Cover assembly		1
3	::32/916805		Nut wing		1
4	:32/916802		Bowl		1
5	:32/916803		Sleeve assembly		1
6	:32/925442		Clamp		1
7	335/04103		Mounting rain cap		1
8	1315/0407D		Setscrew M10 x 25		4
9	1420/0008D		Washer (M10)		8
10	1370/0303D		Nut Self Lock M10		4
11	834/10583		Hose air induction		1
12	2201/0017		Clip Worm Drive 110-140mm		2
13	834/11556		Hose air intake		1
14	2201/0016		Clip Worm Drive 91-114mm		1
15	2201/0012		Clip Jubilee, 46/70mm		1

Applicability Date Ranges:
From: M1317500 , To: M1317999

Product Catalog\WHEELED LOADERS\416 01243000-01243499,01317500-01317999,01472000-01472999,02095872-02095875 9812/3020 \V JCB444 ENGINE INSTALLATION COMPONENTS\V44 AIR INDUCTION HOSES\V44-13-1 AIR INDUCTION SYSTEM TURBO 2 PRE-CLEANER FILTER, TIER 3

9812/3020 V44-13-1 AIR INDUCTION SYSTEM TURBO 2 PRE-CLEANER FILTER, TIER 3

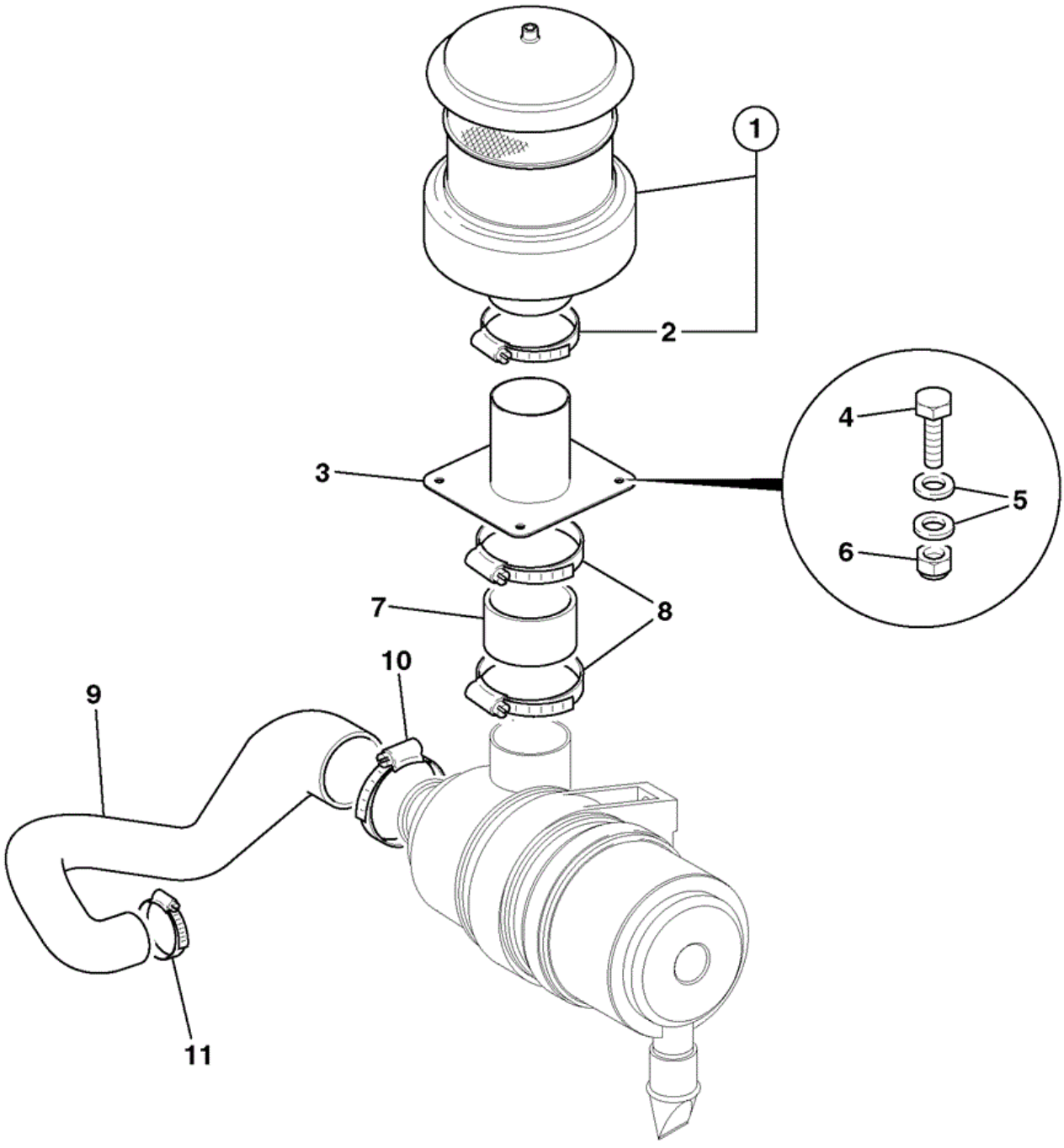

905090

Item	Part No	Change No	Description	Usage Code	QTY
1	265/02604		Filter pre-cleaner assembly		1

2	:32/925442		Clamp		1
3	335/04103		Mounting rain cap		1
4	1315/0407D		Setscrew M10 x 25		4
5	1420/0008D		Washer (M10)		8
6	1370/0303D		Nut Self Lock M10		4
7	834/10583		Hose air induction		1
8	2201/0017		Clip Worm Drive 110-140mm		2
9	834/11556		Hose air intake		1
10	2201/0016		Clip Worm Drive 91-114mm		1
11	2201/0012		Clip Jubilee, 46/70mm		1

Applicability Date Ranges:
From: M1317500 , To: M1317999

9812/3020 V44-21-1 OIL BREATHER HOSE CCV FILTER

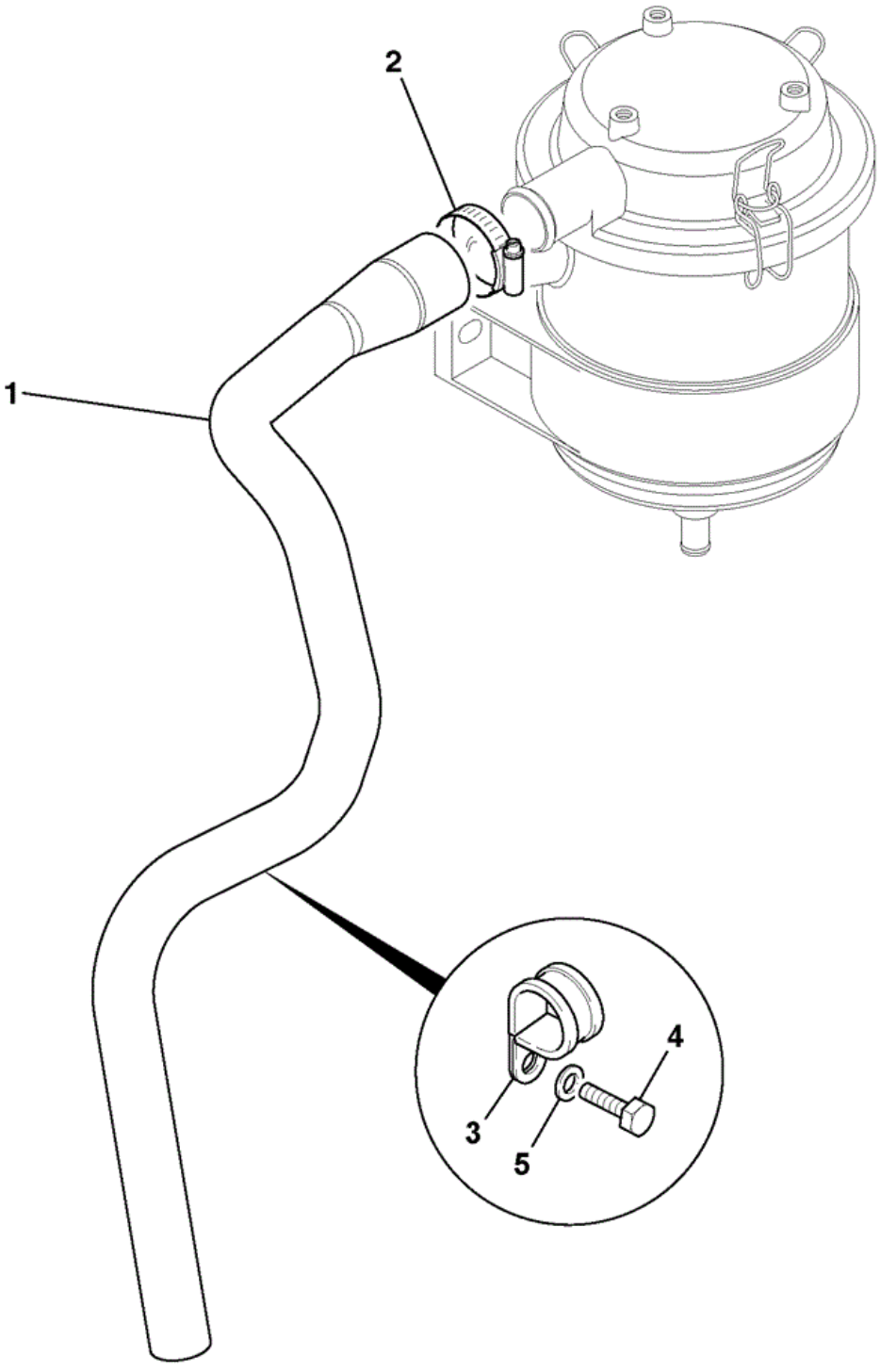

907010

Item	Part No	Change No	Description	Usage Code	QTY
1	834/11466		Hose oil breather		1
2	2201/0008		Clip Jubilee		1

3	821/00187		Clamp Base 25mm		1
4	1315/0505D		Screw M12 x 20mm long		1
5	1420/0009D		Washer (M12)		1

Applicability Date Ranges:
From: , To:

Product Catalog\WHEELED LOADERS\416 01243000-01243499,01317500-01317999,01472000-01472999,02095872-02095875 9812/3020 \V JCB444 ENGINE INSTALLATION COMPONENTS\V44 AIR INDUCTION HOSES\V44-22-1 CRANKCASE BREATHER CCV FILTER

9812/3020 V44-22-1 CRANKCASE BREATHER CCV FILTER

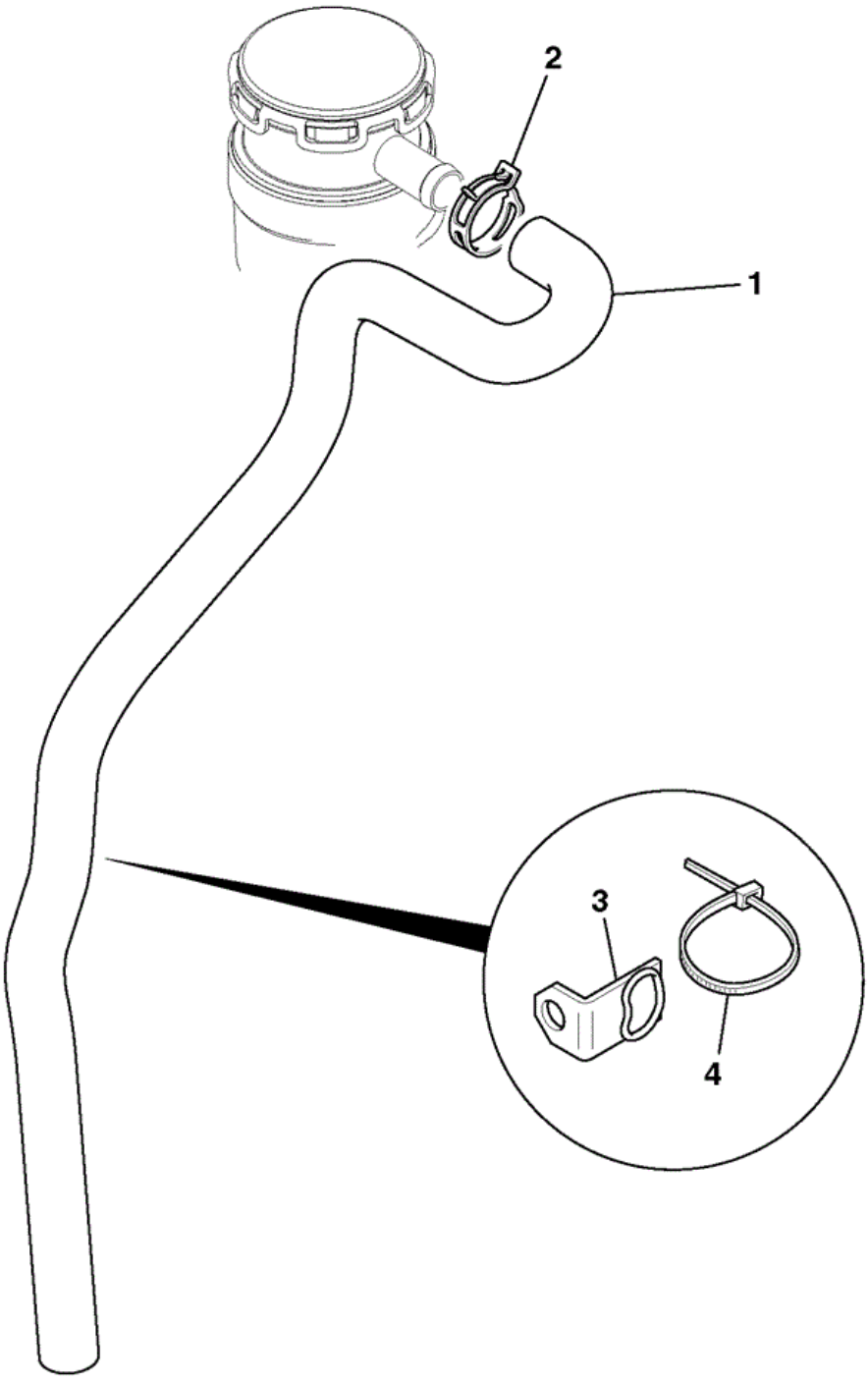

935360

Item	Part No	Change No	Description	Usage Code	QTY
1	320/07726		Hose CCV outlet		1
2	821/10477		Clamp hose springband		1

3	263/34900		Harness Clip		1
4	826/01144		Tie Cable 200mm		1
99	****		Installation Breather Crankcase		0

Applicability Date Ranges:
From: , To:

Product Catalog\WHEELED LOADERS\416 01243000-01243499,01317500-01317999,01472000-01472999,02095872-02095875 9812/3020 \V JCB444 ENGINE INSTALLATION COMPONENTS\V45 EXHAUST SYSTEMS\V45-1-1 SILENCER & EXTENSION TIER 2

9812/3020 V45-1-1 SILENCER & EXTENSION TIER 2

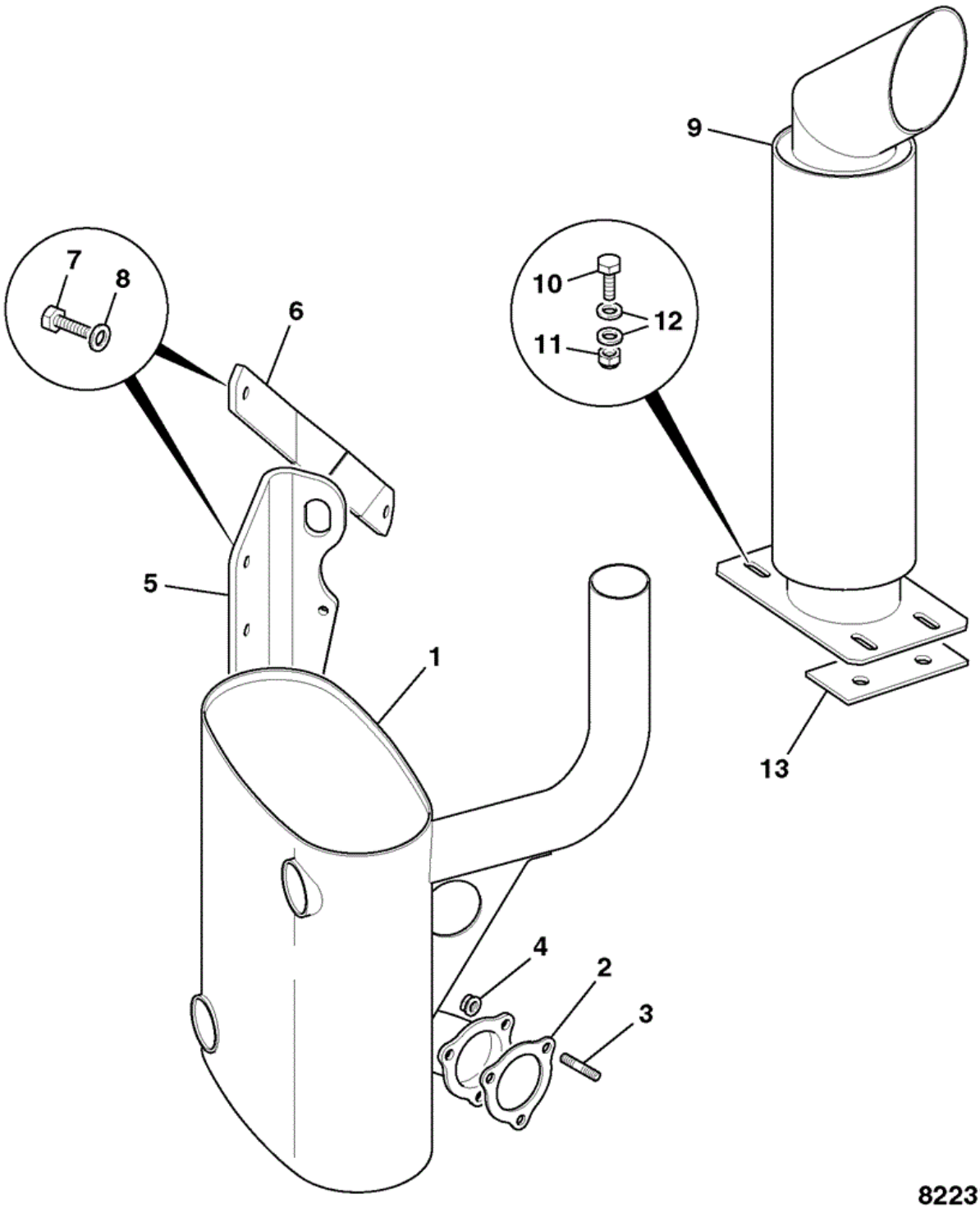

Item	Part No	Change No	Description	Usage Code	QTY
1	331/57246	Superseded	Silencer exhaust		1
1	332/W6154		Silencer Exhaust		1

2	813/10258		Gasket exhaust		1
3	826/11384		Stud M10 X 37		3
4	02/291135		Nut Manifold M10		3
5	331/57247		Bracket exhaust mounting		1
6	331/62177		Stay exhaust support		1
7	1315/0408D		Setscrew M10 x 30		4
8	1420/0008D		Washer (M10)		4
9	335/12285		Pipe exhaust extension silenced		1
10	1315/0410D		Setscrew M10 x 40mm		4
11	1370/0303D		Nut Self Lock M10		4
12	1411/0003D		Washer		8
13	331/61782		Plate spreader		1

Applicability Date Ranges:
From: M1243000 , To: M1243499

Product Catalog\WHEELED LOADERS\416 01243000-01243499,01317500-01317999,01472000-01472999,02095872-02095875 9812/3020 \V JCB444 ENGINE INSTALLATION COMPONENTS\V45 EXHAUST SYSTEMS\V45-11-1 SILENCER & EXTENSION TIER 3

9812/3020 V45-11-1 SILENCER & EXTENSION TIER 3

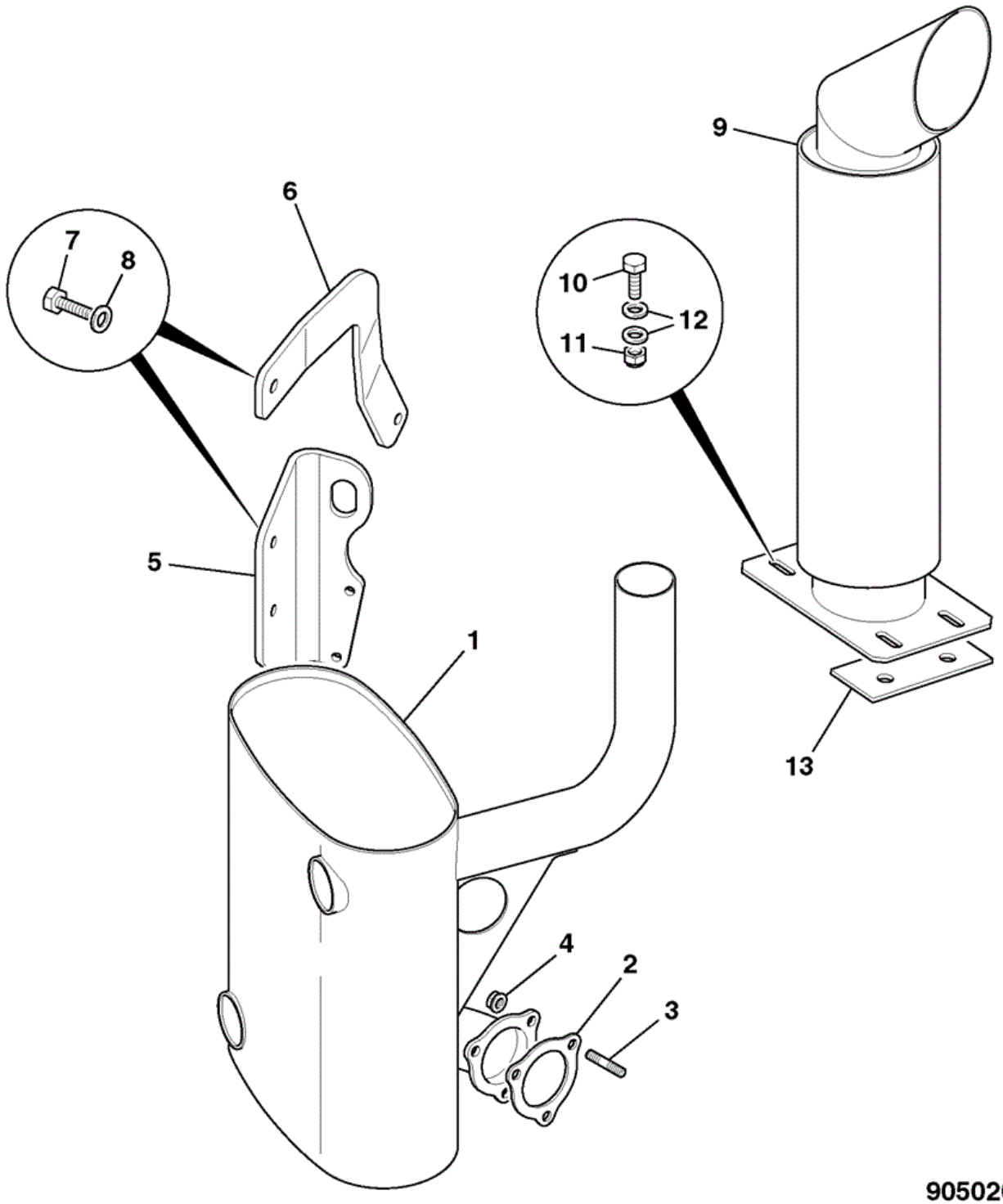

Item	Part No	Change No	Description	Usage Code	QTY
1	331/57246	Superseded	Silencer exhaust		1
1	332/W6154		Silencer Exhaust		1

2	813/10258		Gasket exhaust		1
3	826/11384		Stud M10 X 37		3
4	02/291135		Nut Manifold M10		3
5	331/57247		Bracket exhaust mounting		1
6	331/66612	Superseded	Stay exhaust stay		1
6	332/V5422		Bracket exhaust		1
7	1315/0408D		Setscrew M10 x 30		4
8	1420/0008D		Washer (M10)		4
9	335/12285		Pipe exhaust extension silenced		1
10	1315/0410D		Setscrew M10 x 40mm		4
11	1370/0303D		Nut Self Lock M10		4
12	1411/0003D		Washer		8
13	331/61782		Plate spreader		1

Applicability Date Ranges:
From: M1317500 , To: M1317999

Product Catalog\WHEELED LOADERS\416 01243000-01243499,01317500-01317999,01472000-01472999,02095872-02095875 9812/3020 \V JCB444 ENGINE INSTALLATION COMPONENTS\V46 RADIATOR FITTINGS & MOUNTINGS\V46-1-1 RADIATOR FITTINGS & MOUNTINGS

9812/3020 V46-1-1 RADIATOR FITTINGS & MOUNTINGS

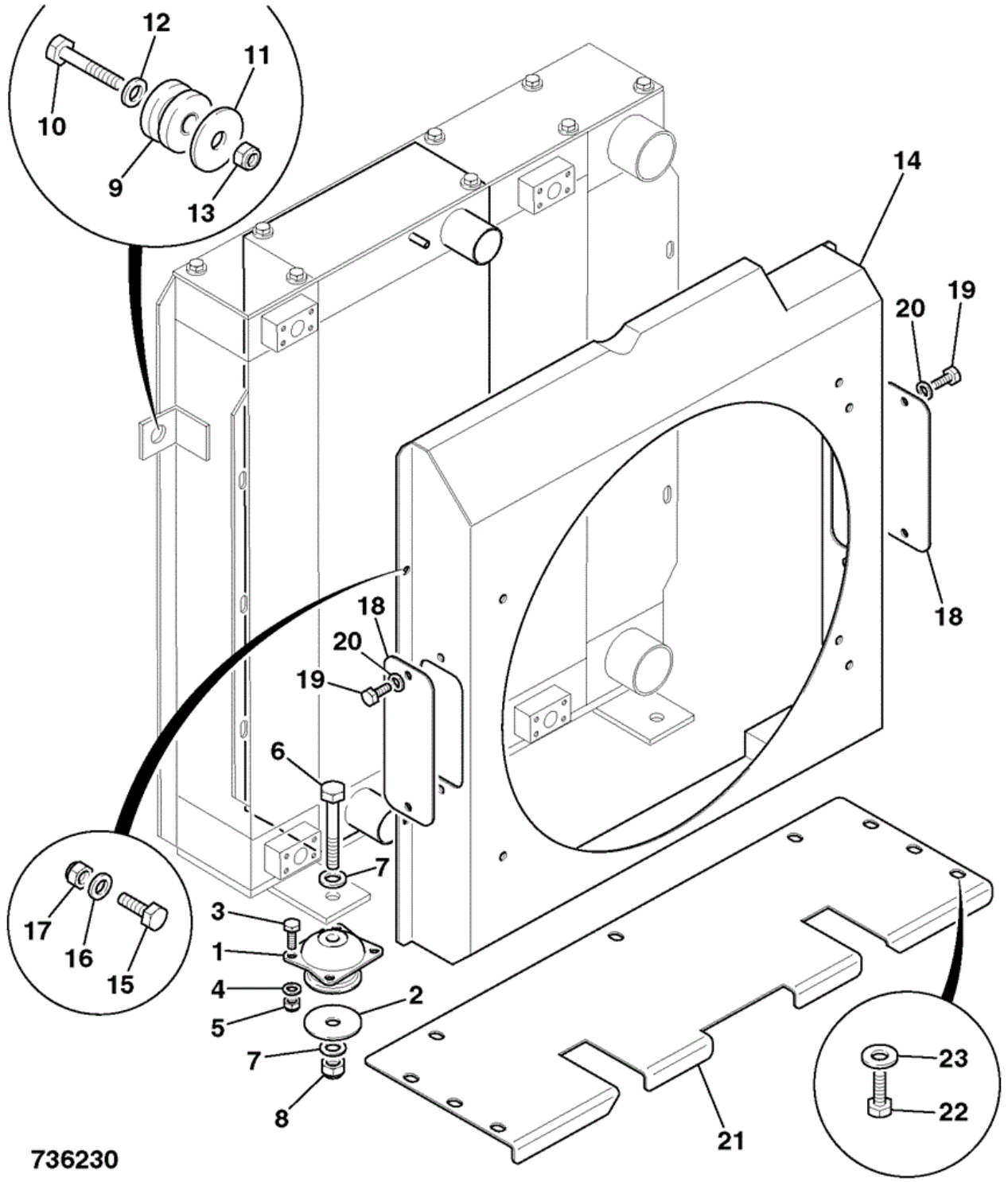

Item	Part No	Change No	Description	Usage Code	QTY
1	274/00233		Mounting Resilient		2
2	120/16902		Plate Rebound		2

3	1315/0409D		Setscrew M10 x 35mm		8
4	1420/0008D		Washer (M10)		8
5	1370/0303D		Nut Self Lock M10		8
6	1315/3721D		Bolt M16 x 110		2
7	1420/0011D		Washer (M16)		4
8	1370/0603D		Nut -Lock Nut, M16		4
9	257/16801		Mounting Rubber		2
10	1315/3516D		Bolt M12x70		2
11	1412/0005D		Washer (1/2" Large)		10
12	1420/0009D		Washer (M12)		2
13	1370/0403D		Nut Lock M12		2
14	335/07366		Cowling WA FANCOWL		1
14	332/U7891		Cowling fan (SS0062 modification) Used on Sales Special SS0062 only		1
14	332/W3750		Cowling fan Used on Sales Special SS0612 only		1
15	1315/0305D		Setscrew M8 x 20mm		6
16	1420/0007D		Washer (M8)		12
17	1370/0203D		Nut Lock M8		6
18	331/32022		Plate cover		2
19	1315/0405D		Setscrew M10 x 20		6
20	1411/0004Z		Washer (7/16")		6
21	331/40462		Plate anti-recirculation		1
22	1315/0408D		Setscrew M10 x 30		9
23	1412/0005D		Washer (1/2" Large)		9
24	2410/1103		Grommet Blind, 9.5mm x 3.5 mm		1
99	269/10742		G.A COOLING SYSTEM JCB 416 - P120		1
99	269/10716		Assembly GA COMBI COOLING PAC		1
99	269/20332		G.A COMBI COOLER MTG TIER 2		1

Applicability Date Ranges:
From: , To:

Product Catalog\WHEELED LOADERS\416 01243000-01243499,01317500-01317999,01472000-01472999,02095872-02095875 9812/3020 \V JCB444 ENGINE INSTALLATION COMPONENTS\V46 RADIATOR FITTINGS & MOUNTINGS\V46-2-1 FAN GUARDS

9812/3020 V46-2-1 FAN GUARDS

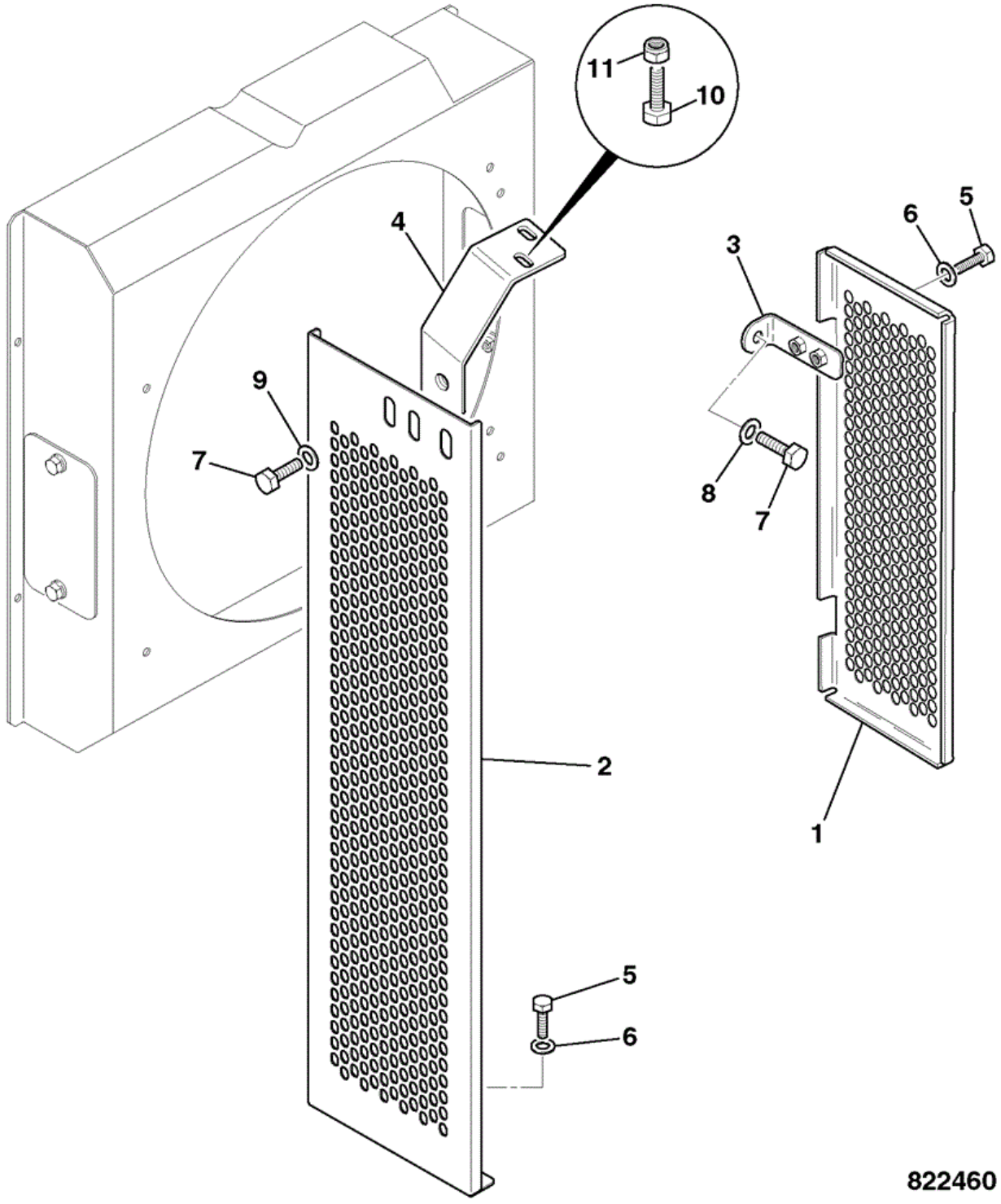

Item	Part No	Change No	Description	Usage Code	QTY
1	331/32780		Guard fan left hand		1
2	331/61722		Guard fan guard		1

3	335/04925		Bracket fan guard left hand		2
4	331/61868		Bracket fan guard right hand		1
5	1315/0303D		Setscrew M8 x 16mm		6
6	1420/0007D		Washer (M8)		10
7	1315/0405D		Setscrew M10 x 20		3
8	1420/0008D		Washer (M10)		2
9	1411/0004D		Washer Plain 7/16"Medium		1
10	1315/0305D		Setscrew M8 x 20mm		2
11	1370/0203D		Nut Lock M8		2

Applicability Date Ranges:
From: , To:

Product Catalog\WHEELED LOADERS\416 01243000-01243499,01317500-01317999,01472000-01472999,02095872-02095875 9812/3020 \V JCB444 ENGINE INSTALLATION COMPONENTS\V47 COMBINATION COOLERS\V47-1-1 COOLER ASSEMBLY

9812/3020 V47-1-1 COOLER ASSEMBLY

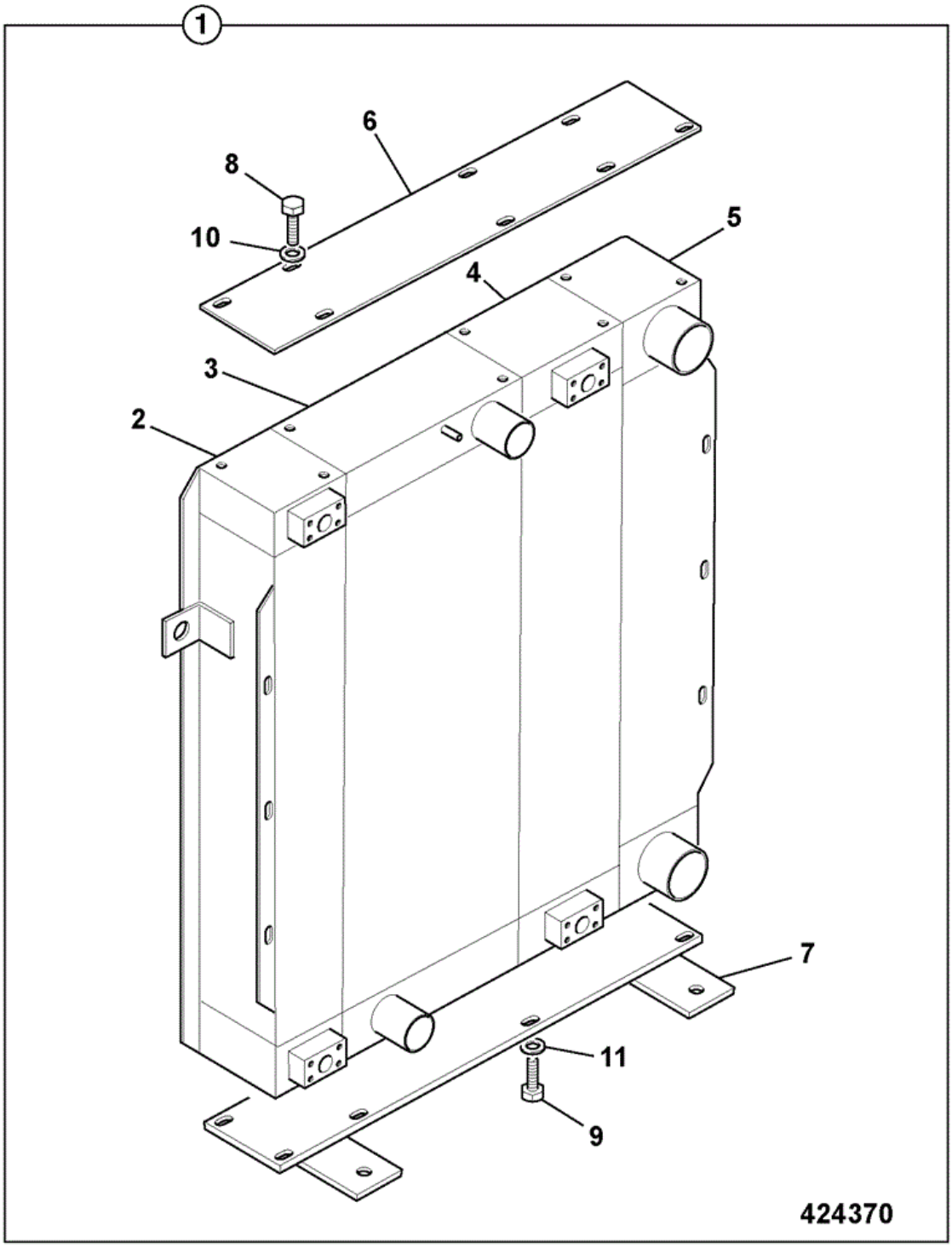

Item	Part No	Change No	Description	Usage Code	QTY
1	30/926196		Cooler combination assembly		1
2	:30/926143		Cooler hydraulic oil		1

3	:30/926145		Radiator assembly		1
4	:30/926261		Cooler transmission oil		1
5	:30/926262		Cooler charge air		1
6	:30/926263		Plate top		1
7	:30/926264		Plate base		1
8	:1315/0508Z		Setscrew M12 X 30		8
9	:1315/0507Z		Setscrew M12 x 25		7
10	:1420/0009Z		Washer (M12)		8
11	:1420/0009Z		Washer (M12)		7

Applicability Date Ranges:
From: , To: < 1317813

Product Catalog\WHEELED LOADERS\416 01243000-01243499,01317500-01317999,01472000-01472999,02095872-02095875 9812/3020 \V JCB444 ENGINE INSTALLATION COMPONENTS\V47 COMBINATION COOLERS\V47-1-2 COOLER ASSEMBLY

9812/3020 V47-1-2 COOLER ASSEMBLY

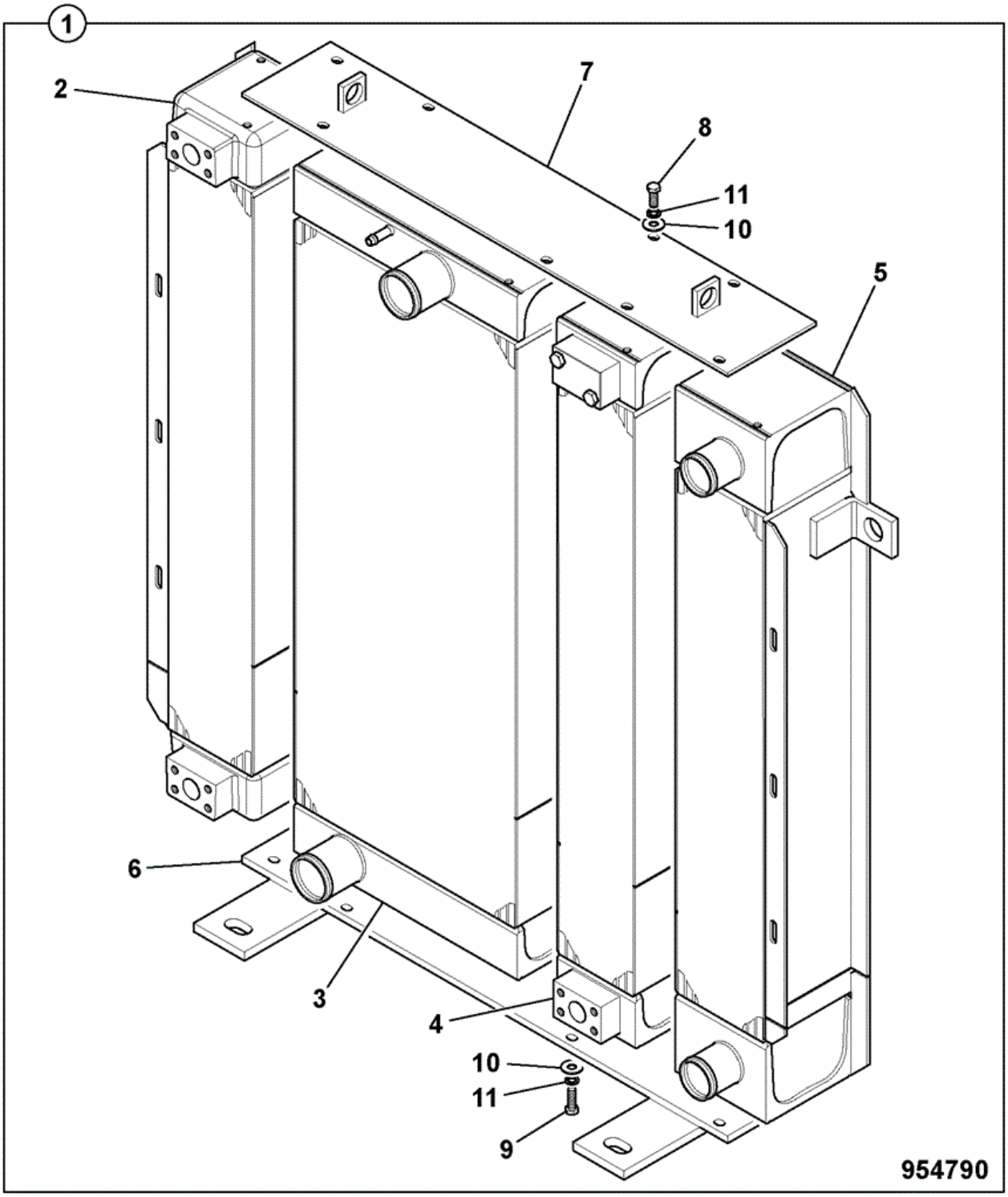

Item	Part No	Change No	Description	Usage Code	QTY
1	332/T9374		Cooler combination pack		1
2	:332/D2333		Cooler hydraulic oil		1

3	:332/D2349		Cooler water		1
4	:332/D2350		Cooler transmission oil		1
5	:332/D2360		Cooler charge air		1
6	:332/D2362		Plate bottom assy		1
7	:332/D2364		Plate top assy		1
8	:1315/0305Z		Setscrew M8 x 20		8
9	:1315/0307Z		Setscrew M8 X 25		8
10	:1420/0007Z		Washer (M8)		16
11	:1425/0008Z		Spring Washer		16

Applicability Date Ranges:
From: > 1317814 , To:

Product Catalog\WHEELED LOADERS\416 01243000-01243499,01317500-01317999,01472000-01472999,02095872-02095875 9812/3020 \V JCB444 ENGINE INSTALLATION COMPONENTS\V47 COMBINATION COOLERS\V47-2-1 COOLER ASSEMBLY EPOXY COATED

9812/3020 V47-2-1 COOLER ASSEMBLY EPOXY COATED

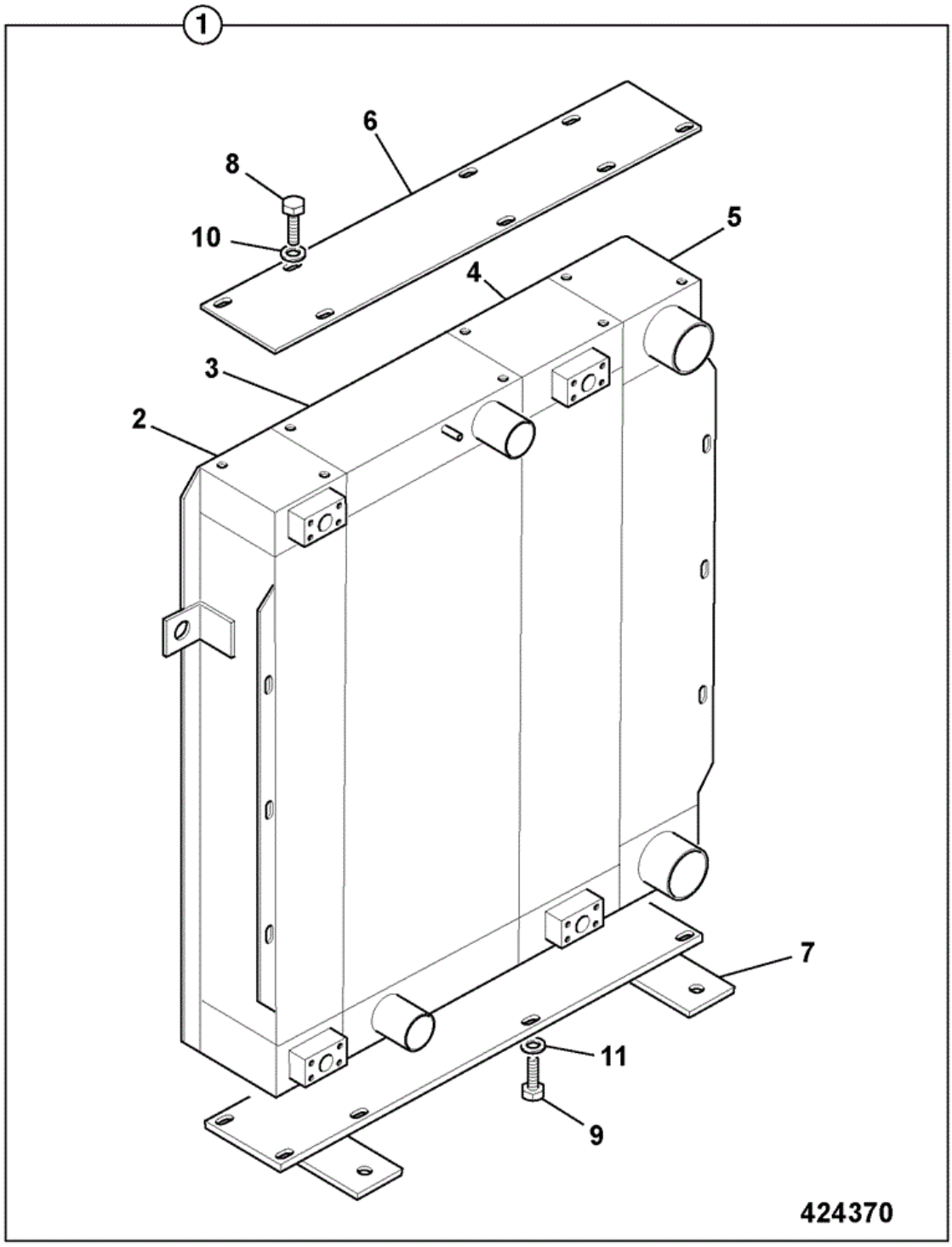

Item	Part No	Change No	Description	Usage Code	QTY
1	30/926214		Cooler combination epoxy coated		1
2	:30/926148		Cooler hydraulic oil epoxy coated		1

3	:30/926150		Radiator assembly epoxy coated		1
4	:30/926268		Cooler transmission oil epoxy coated		1
5	:30/926269		Cooler charge air epoxy coated		1
6	:30/926270		Plate top epoxy coated		1
7	:30/926271		Plate base epoxy coated		1
8	:1315/0508Z		Setscrew M12 X 30		8
9	:1315/0507Z		Setscrew M12 x 25		7
10	:1420/0009Z		Washer (M12)		8
11	:1420/0009Z		Washer (M12)		7

Applicability Date Ranges:
From: , To: < 1317813

Product Catalog\WHEELED LOADERS\416 01243000-01243499,01317500-01317999,01472000-01472999,02095872-02095875 9812/3020 \V JCB444 ENGINE INSTALLATION COMPONENTS\V47 COMBINATION COOLERS\V47-2-2 COOLER ASSEMBLY EPOXY COATED

9812/3020 V47-2-2 COOLER ASSEMBLY EPOXY COATED

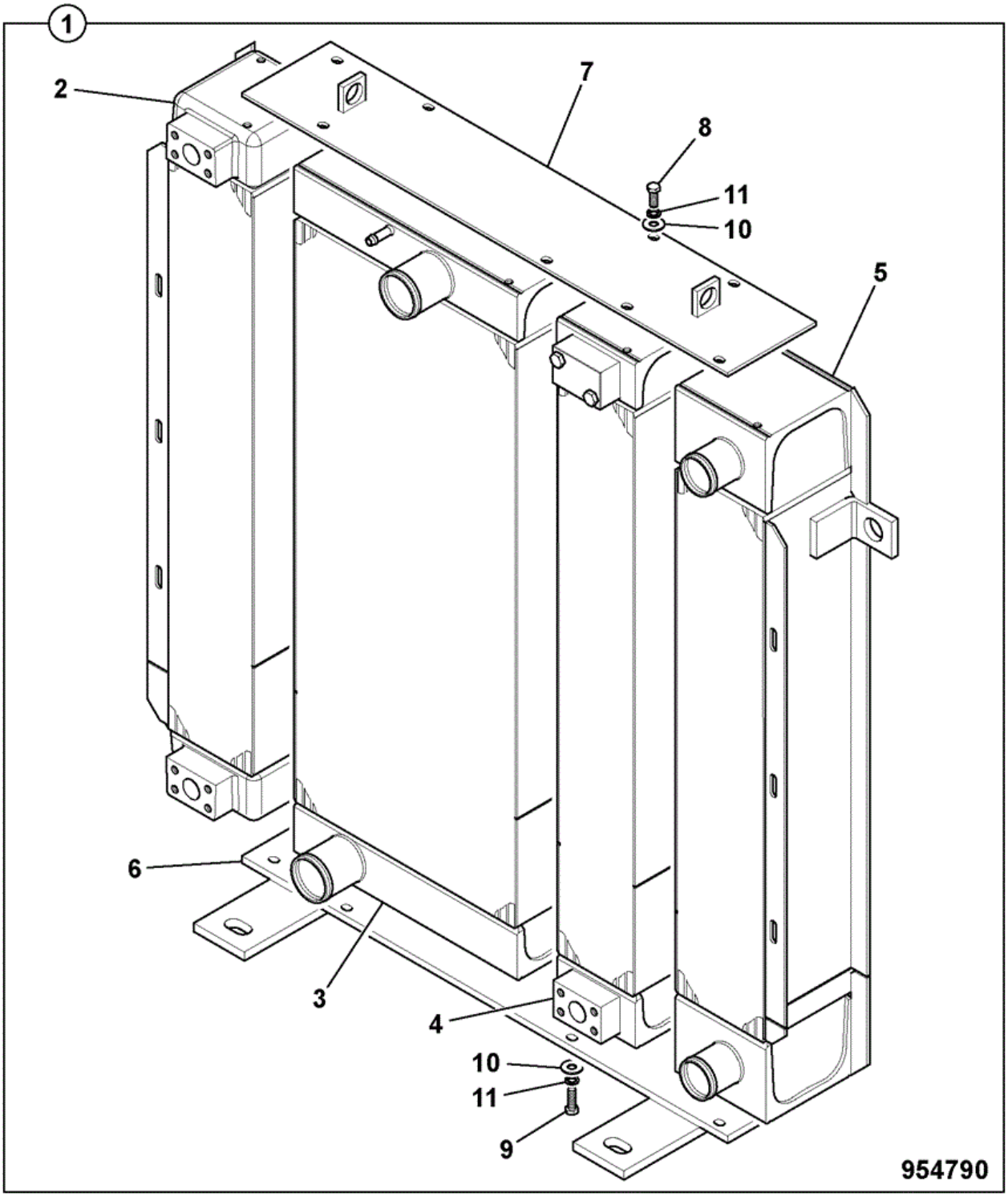

Item	Part No	Change No	Description	Usage Code	QTY
1	332/U7240		Cooler combination epoxy coated		1
2	:332/D2550		Cooler epoxy hyd oil		1

3	:332/D2567		Cooler epoxy water		1
4	:332/D2578		Cooler epoxy trans oil		1
5	:332/D2582		Cooler epoxy charge air		1
6	:332/D2362		Plate bottom assy		1
7	:332/D2364		Plate top assy		1
8	:1315/0305Z		Setscrew M8 x 20		8
9	:1315/0307Z		Setscrew M8 X 25		8
10	:1420/0007Z		Washer (M8)		16
11	:1425/0008Z		Spring Washer		16

Applicability Date Ranges:
From: > 1317814 , To:

Product Catalog\WHEELED LOADERS\416 01243000-01243499,01317500-01317999,01472000-01472999,02095872-02095875 9812/3020 \V JCB444 ENGINE INSTALLATION COMPONENTS\V47 COMBINATION COOLERS\V47-3-1 COOLER ASSEMBLY WIDECORE

9812/3020 V47-3-1 COOLER ASSEMBLY WIDECORE

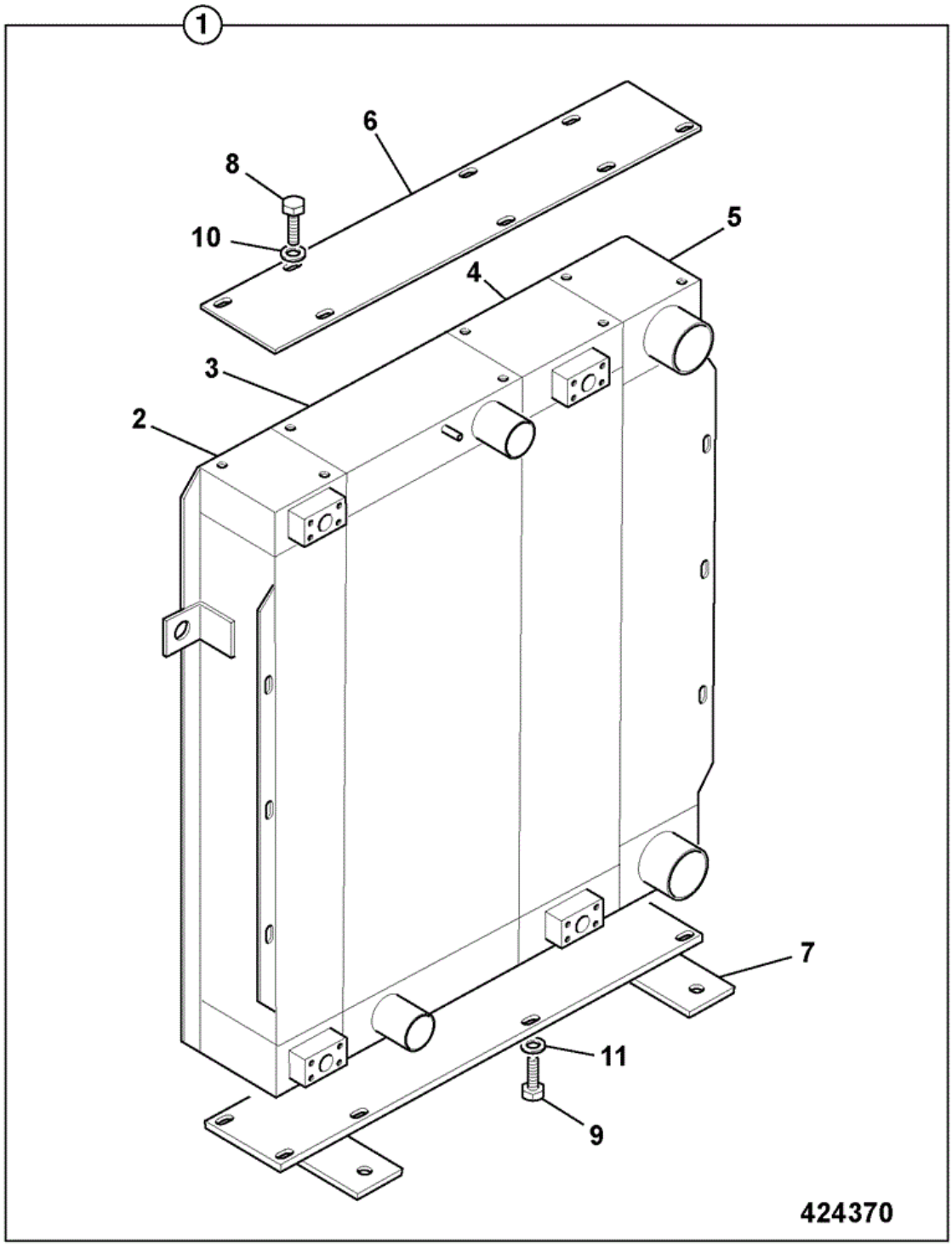

Item	Part No	Change No	Description	Usage Code	QTY
1	30/926699		Cooler widecore combination assembly		1

Applicability Date Ranges:
From: , To: < 1317813

Product Catalog\WHEELED LOADERS\416 01243000-01243499,01317500-01317999,01472000-01472999,02095872-02095875 9812/3020 \V JCB444 ENGINE INSTALLATION COMPONENTS\V47 COMBINATION COOLERS\V47-3-2 COOLER ASSEMBLY WIDECORE

9812/3020 V47-3-2 COOLER ASSEMBLY WIDECORE

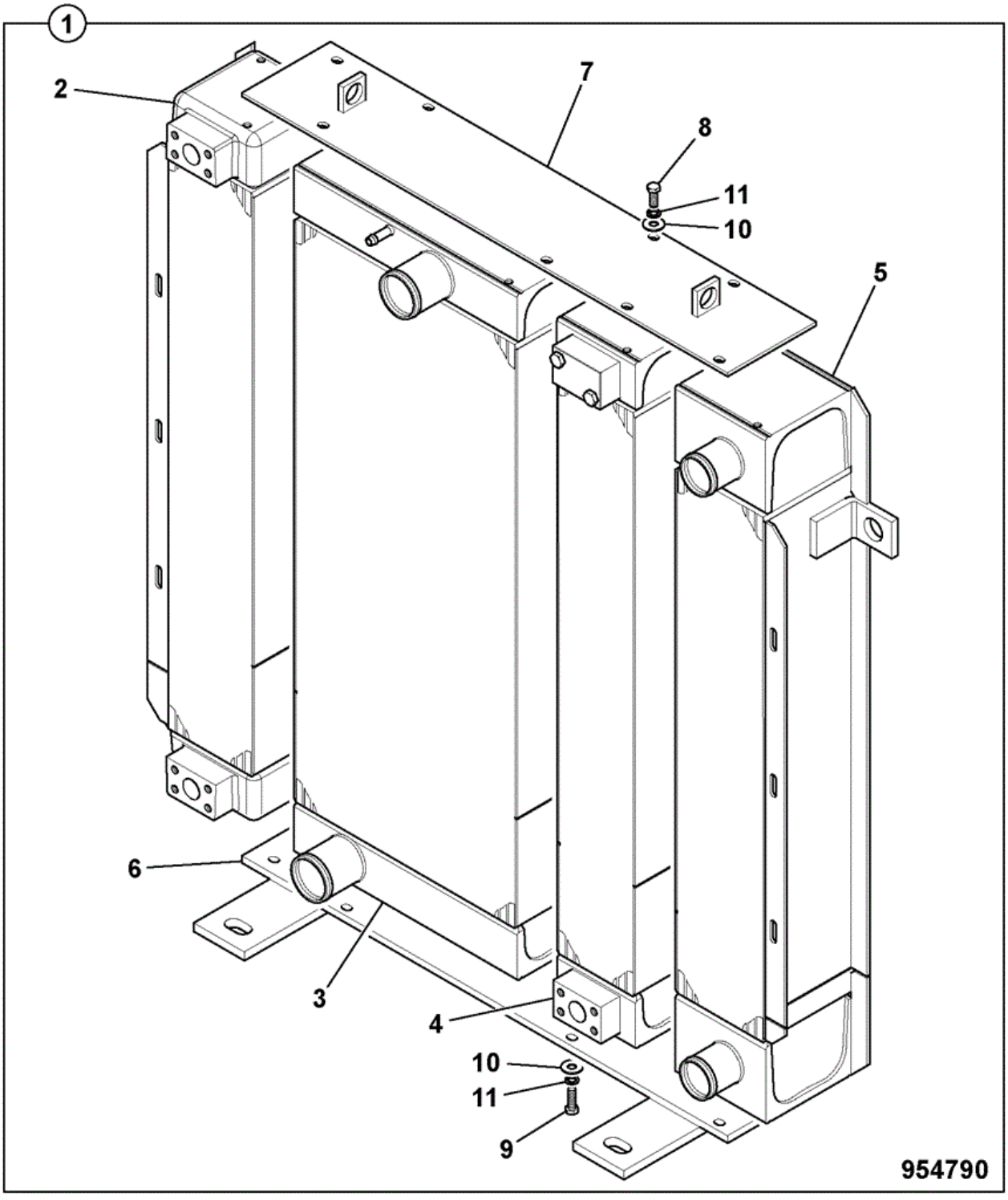

Item	Part No	Change No	Description	Usage Code	QTY
1	332/U7057		Cooler combination pack STD W/C		1
2	:332/D2916		Cooler hydraulic oil W/C		1

3	:332/D2921		Cooler water W/C		1
4	:332/D2927		Cooler trans oil W/C		1
5	:332/D2930		Cooler CAC W/C		1
6	:332/D2362		Plate bottom assy		1
7	:332/D2364		Plate top assy		1
8	:1315/0305Z		Setscrew M8 x 20		8
9	:1315/0307Z		Setscrew M8 X 25		8
10	:1420/0007Z		Washer (M8)		16
11	:1425/0008Z		Spring Washer		16

Applicability Date Ranges:
From: > 1317814 , To:

Product Catalog\WHEELED LOADERS\416 01243000-01243499,01317500-01317999,01472000-01472999,02095872-02095875 9812/3020 \V JCB444 ENGINE INSTALLATION COMPONENTS\V47 COMBINATION COOLERS\V47-4-1 COOLER ASSEMBLY EPOXY COATED WIDECORE

9812/3020 V47-4-1 COOLER ASSEMBLY EPOXY COATED WIDECORE

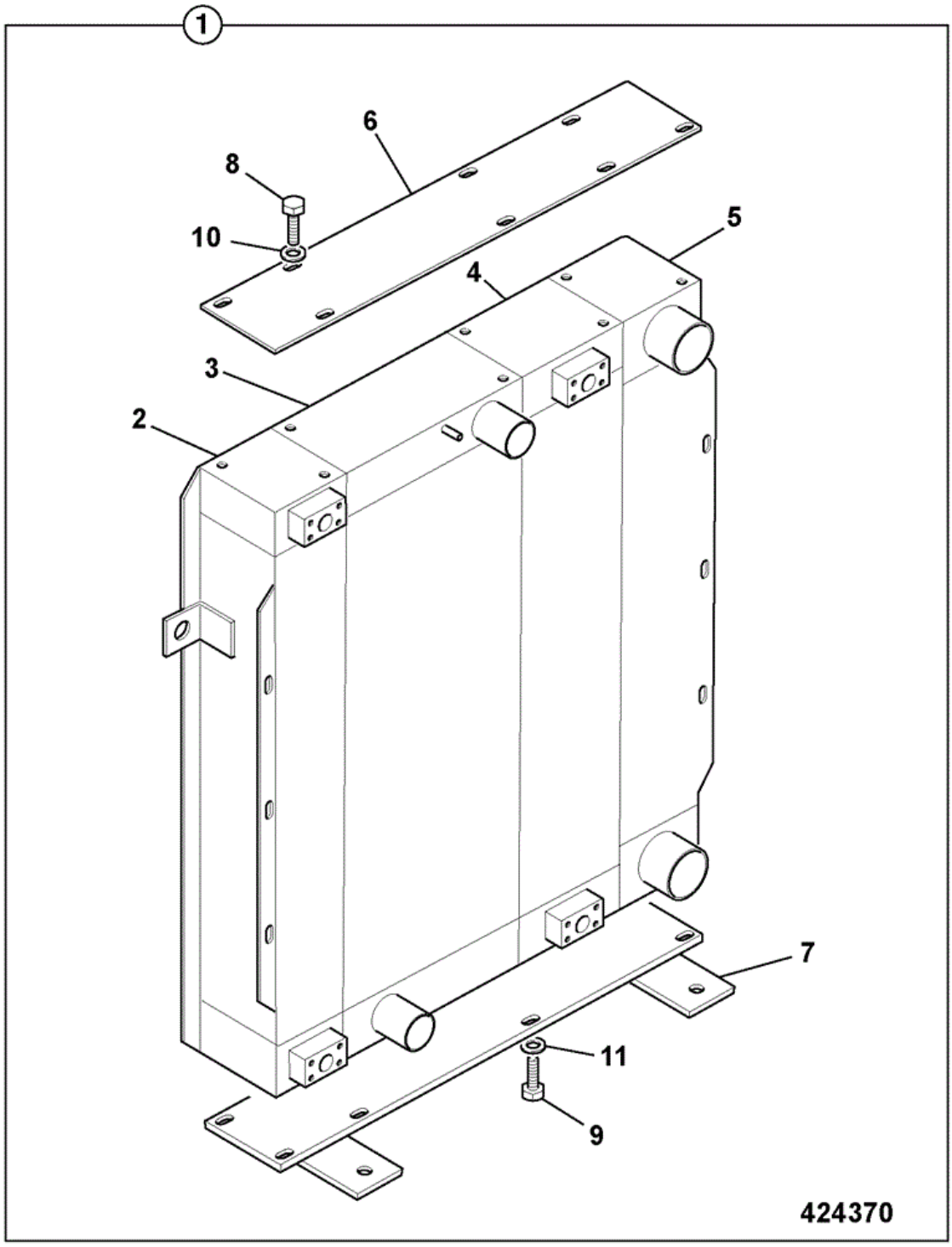

Item	Part No	Change No	Description	Usage Code	QTY
1	30/926700		Cooler widecore combination epoxy assembly		1

Applicability Date Ranges:
From: , To: < 1317813

Product Catalog\WHEELED LOADERS\416 01243000-01243499,01317500-01317999,01472000-01472999,02095872-02095875 9812/3020 \V JCB444 ENGINE INSTALLATION COMPONENTS\V47 COMBINATION COOLERS\V47-4-2 COOLER ASSEMBLY EPOXY COATED WIDECORE

9812/3020 V47-4-2 COOLER ASSEMBLY EPOXY COATED WIDECORE

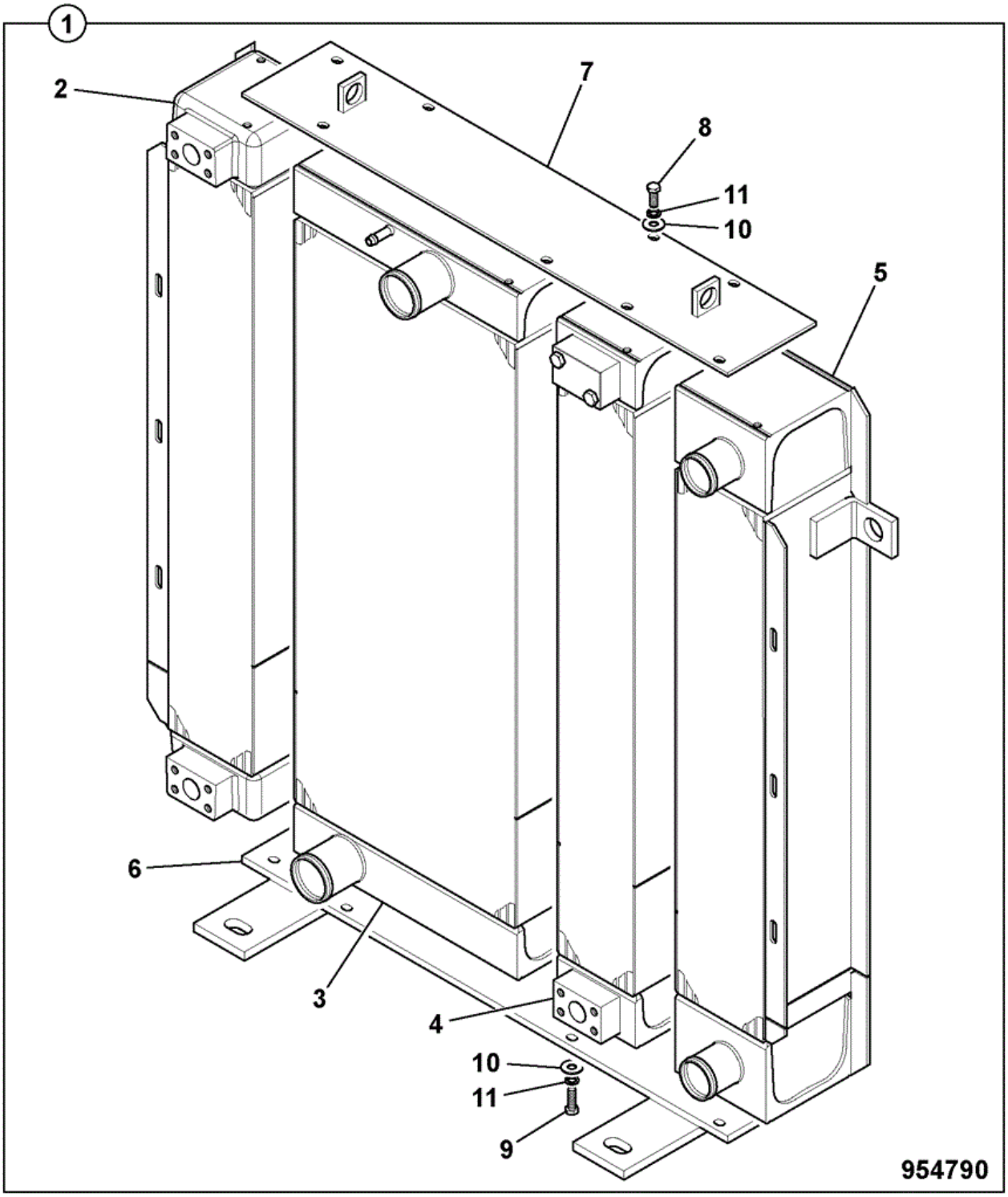

Item	Part No	Change No	Description	Usage Code	QTY
A	269/10778		G.A EPOXY COOLING PACk WIDECORE + AC JCB 41		0
1	332/U7230		Cooler pack epoxy W/C		1

2	:332/D2937		Cooler hyd oil W/C epoxy		1
3	:332/D2942		Cooler water W/C epoxy		1
4	:332/D2947		Cooler trans oil W/C epoxy		1
5	:332/D2965		Cooler CAC W/C epoxy		1
6	:332/D2362		Plate bottom assy		1
7	:332/D2364		Plate top assy		1
8	:1315/0305Z		Setscrew M8 x 20		8
9	:1315/0307Z		Setscrew M8 X 25		8
10	:1420/0007Z		Washer (M8)		16
11	:1425/0008Z		Spring Washer		16

Applicability Date Ranges:
From: > 1317814 , To:

Product Catalog\WHEELED LOADERS\416 01243000-01243499,01317500-01317999,01472000-01472999,02095872-02095875 9812/3020 \V JCB444 ENGINE INSTALLATION COMPONENTS\V48 COOLER CIRCUITS\V48-1-1 RADIATOR & HOSES

9812/3020 V48-1-1 RADIATOR & HOSES

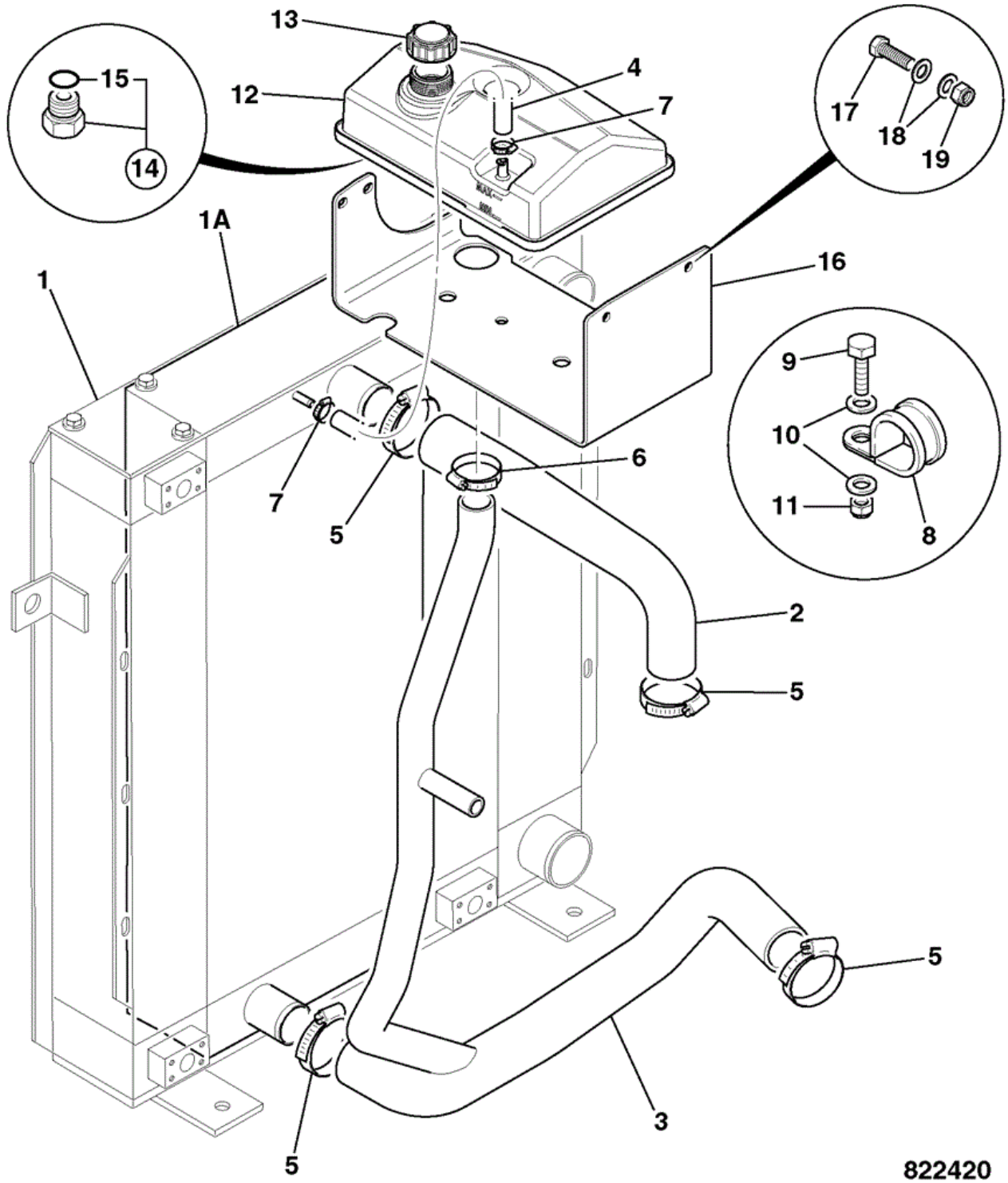

Item	Part No	Change No	Description	Usage Code	QTY
1	30/926196		Cooler combination assembly		1
1A	30/926214		Cooler combination epoxy coated		1

2	834/11274		Hose radiator top		1
3	834/11275		Hose radiator bottom		1
4	648/00426	to M1317912	Hose 9.5mm x 710mm long		1
4	332/V8929		Hose 9.5mm x 710mm long Replaces 648/00426		1
5	2201/0012		Clip Jubilee, 46/70mm		4
6	2201/0009		Clip Jubilee		1
7	2201/0005		Clip Worm Drive 14/27mm		2
8	821/00306		Clip 20mm		1
9	1315/0205D		Setscrew M6 x 20		1
10	1420/0006D		Washer (M6)		2
11	1370/0103D		Nut (M6)		1
12	332/E9125		Tank coolant expansion		1
13	477/00223		Cap Expansion Bottle		1
14	816/90702		Plug 1/2"UNF with O-Ring		1
15	:2401/0504		O Ring		1
16	331/59941		Bracket mounting header tank		1
17	1315/0407D		Setscrew M10 x 25		5
18	1420/0008D		Washer (M10)		10
19	1370/0303D		Nut Self Lock M10		5
99	269/10742		G.A COOLING SYSTEM JCB 416 - P120		1
99	****		Assembly bodywork		1
99	269/10713		G.A EPOXY COATED C/PACK		1
99	269/10714		G.A EPOXY COOLING KIT AIRON		1
99	****		Tank Assembly, Expansion		1
99	269/10716		Assembly GA COMBI COOLING PAC		1
99	269/10753		G.A WATER HOSES JCB 412s/416		1

Applicability Date Ranges:
From: , To:

Product Catalog\WHEELED LOADERS\416 01243000-01243499,01317500-01317999,01472000-01472999,02095872-02095875 9812/3020 \V JCB444 ENGINE INSTALLATION COMPONENTS\V48 COOLER CIRCUITS\V48-2-1 RADIATOR & HOSES WIDE CORE

9812/3020 V48-2-1 RADIATOR & HOSES WIDE CORE



Item	Part No	Change No	Description	Usage Code	QTY
1	30/926699		Cooler widecore combination assembly		1
1A	30/926700		Cooler widecore combination epoxy assembly		1

2	834/11274		Hose radiator top		1
3	834/11275		Hose radiator bottom		1
4	648/00426	to M1317912	Hose 9.5mm x 710mm long		1
4	332/V8929		Hose 9.5mm x 710mm long Replaces 648/00426		1
5	2201/0012		Clip Jubilee, 46/70mm		4
6	2201/0009		Clip Jubilee		1
7	2201/0005		Clip Worm Drive 14/27mm		2
8	821/00306		Clip 20mm		1
9	1315/0205D		Setscrew M6 x 20		1
10	1420/0006D		Washer (M6)		2
11	1370/0103D		Nut (M6)		1
12	332/E9125		Tank coolant expansion		1
13	477/00223		Cap Expansion Bottle		1
14	816/90702		Plug 1/2"UNF with O-Ring		1
15	:2401/0504		O Ring		1
16	331/59941		Bracket mounting header tank		1
17	1315/0407D		Setscrew M10 x 25		5
18	1420/0008D		Washer (M10)		10
19	1370/0303D		Nut Self Lock M10		5
99	269/10742		G.A COOLING SYSTEM JCB 416 - P120		1
99	****		Assembly bodywork		1
99	269/10778		G.A EPOXY COOLING PACk WIDECORE + AC JCB 41		1
99	269/10779		G.A GA WIDECORE COOLER JCB 412S/416		1
99	****		Tank Assembly, Expansion		1
99	269/10777		G.A EPOXY COOLING PAC WIDECORE JCB 412S/41		1
99	269/10753		G.A WATER HOSES JCB 412s/416		1

Applicability Date Ranges:
From: , To:

Product Catalog\WHEELED LOADERS\416 01243000-01243499,01317500-01317999,01472000-01472999,02095872-02095875 9812/3020 \V JCB444 ENGINE INSTALLATION COMPONENTS\V48 COOLER CIRCUITS\V48-3-1 COOLER AIR CHARGE HOSE & PIPEWORK, TIER 2

9812/3020 V48-3-1 COOLER AIR CHARGE HOSE & PIPEWORK, TIER 2

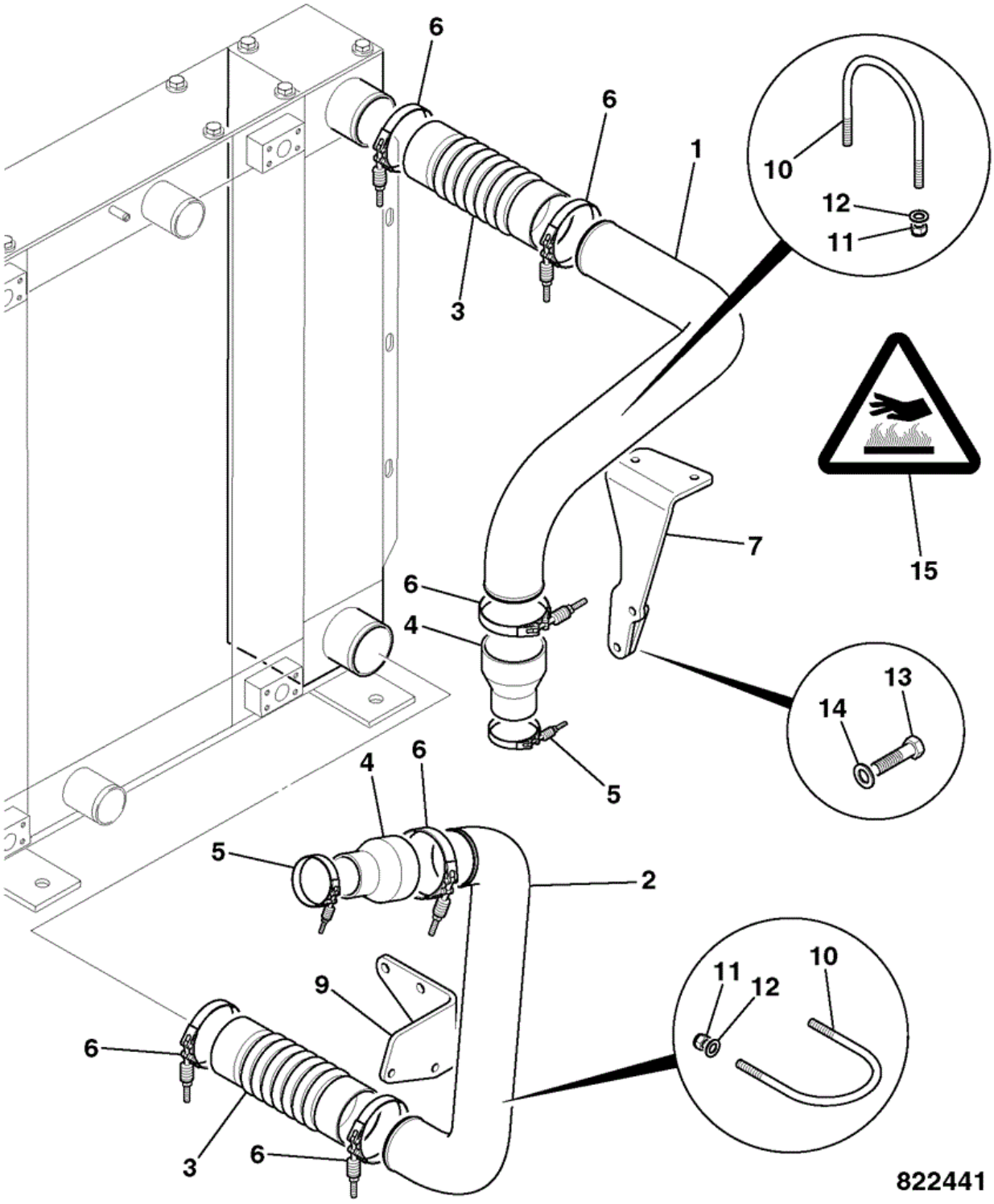

Item	Part No	Change No	Description	Usage Code	QTY
1	830/13113		Pipe CAC compressor to cooler		1
2	830/13114		Pipe CAC cooler to inlet		1

3	834/11283		Hose CAC flexible		2
4	834/11284		Hose CAC reducer		2
5	2205/0002		Clamp 'T' bolt Spring Loaded		2
6	821/10183		Clamp spring loaded T bolt		6
7	335/12713		Bracket cac pipe support		1
9	331/60912		Bracket CAC pipe support		1
10	821/00264		Clamp Exhaust D=79		2
11	1370/0203D		Nut Lock M8		4
12	1420/0007D		Washer (M8)		4
13	1315/3410D		Bolt M10 x 40mm		2
14	1420/0008D		Washer (M10)		2
15	817/18678		Decal Warning Hot Surface		1

Applicability Date Ranges:
From: M1243000 , To: M1243499

Product Catalog\WHEELED LOADERS\416 01243000-01243499,01317500-01317999,01472000-01472999,02095872-02095875 9812/3020 \V JCB444 ENGINE INSTALLATION COMPONENTS\V48 COOLER CIRCUITS\V48-13-1 COOLER AIR CHARGE HOSE & PIPEWORK, TIER 3

9812/3020 V48-13-1 COOLER AIR CHARGE HOSE & PIPEWORK, TIER 3

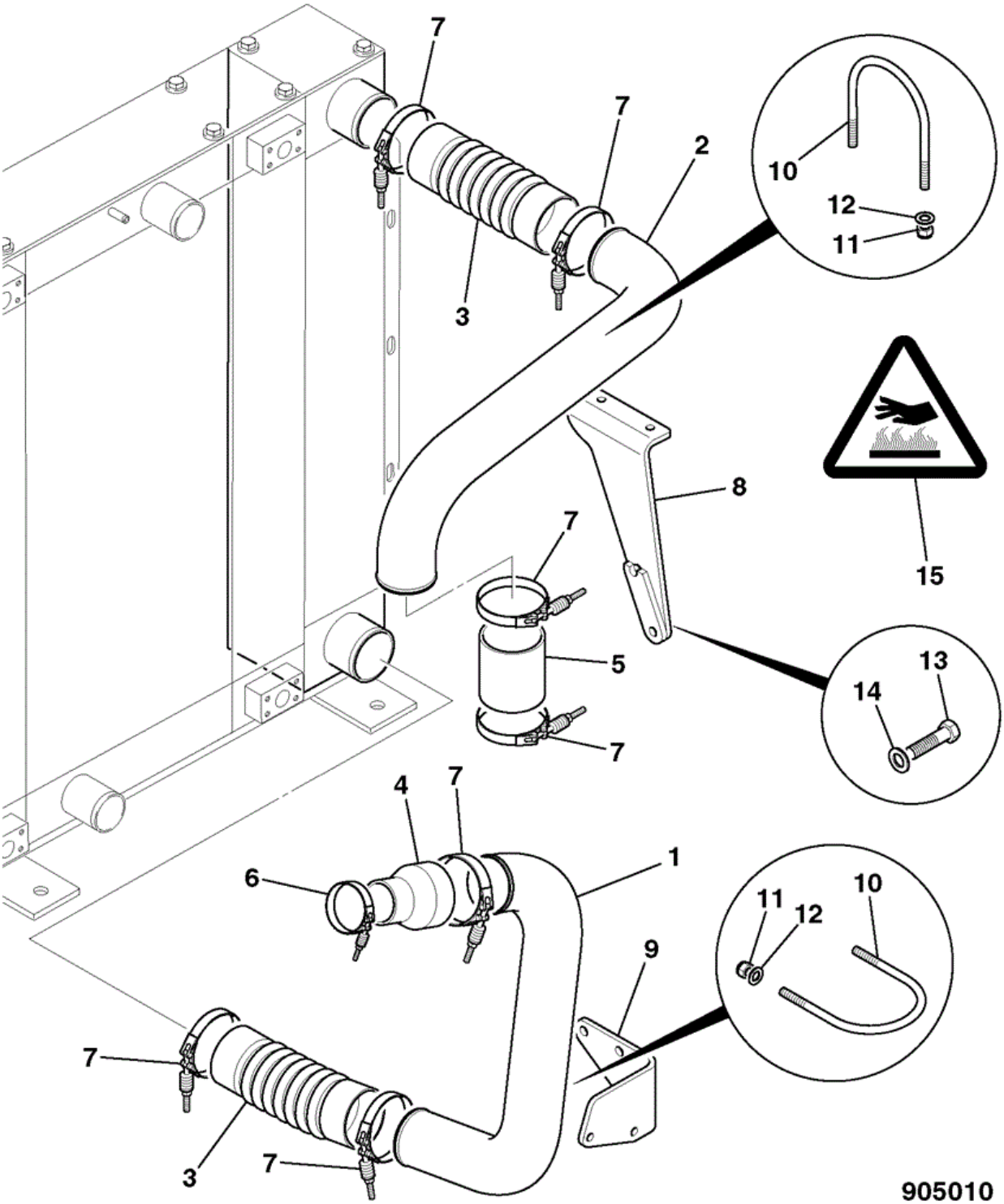

Item	Part No	Change No	Description	Usage Code	QTY
1	830/13920		Pipe CAC compressor to cooler		1

2	830/13921		Pipe CAC cooler inlet		1
3	834/10589		Hose flexible coupling		2
4	834/11284		Hose CAC reducer		2
5	834/10591		Hose flexible coupling		1
6	2205/0002		Clamp 'T' bolt Spring Loaded		1
7	821/10183		Clamp spring loaded T bolt		7
8	335/14373		Bracket CAC pipe support		1
9	331/60912		Bracket CAC pipe support		1
10	821/00264		Clamp Exhaust D=79		2
11	1370/0203D		Nut Lock M8		4
12	1420/0007D		Washer (M8)		4
13	1315/3410D		Bolt M10 x 40mm		2
14	1420/0008D		Washer (M10)		2
15	817/18678		Decal Warning Hot Surface		1

Applicability Date Ranges:
From: M1317500 , To: M1317813

Product Catalog\WHEELED LOADERS\416 01243000-01243499,01317500-01317999,01472000-01472999,02095872-02095875 9812/3020 \V JCB444 ENGINE INSTALLATION COMPONENTS\V48 COOLER CIRCUITS\V48-13-2 COOLER AIR CHARGE HOSE & PIPEWORK, TIER 3

9812/3020 V48-13-2 COOLER AIR CHARGE HOSE & PIPEWORK, TIER 3

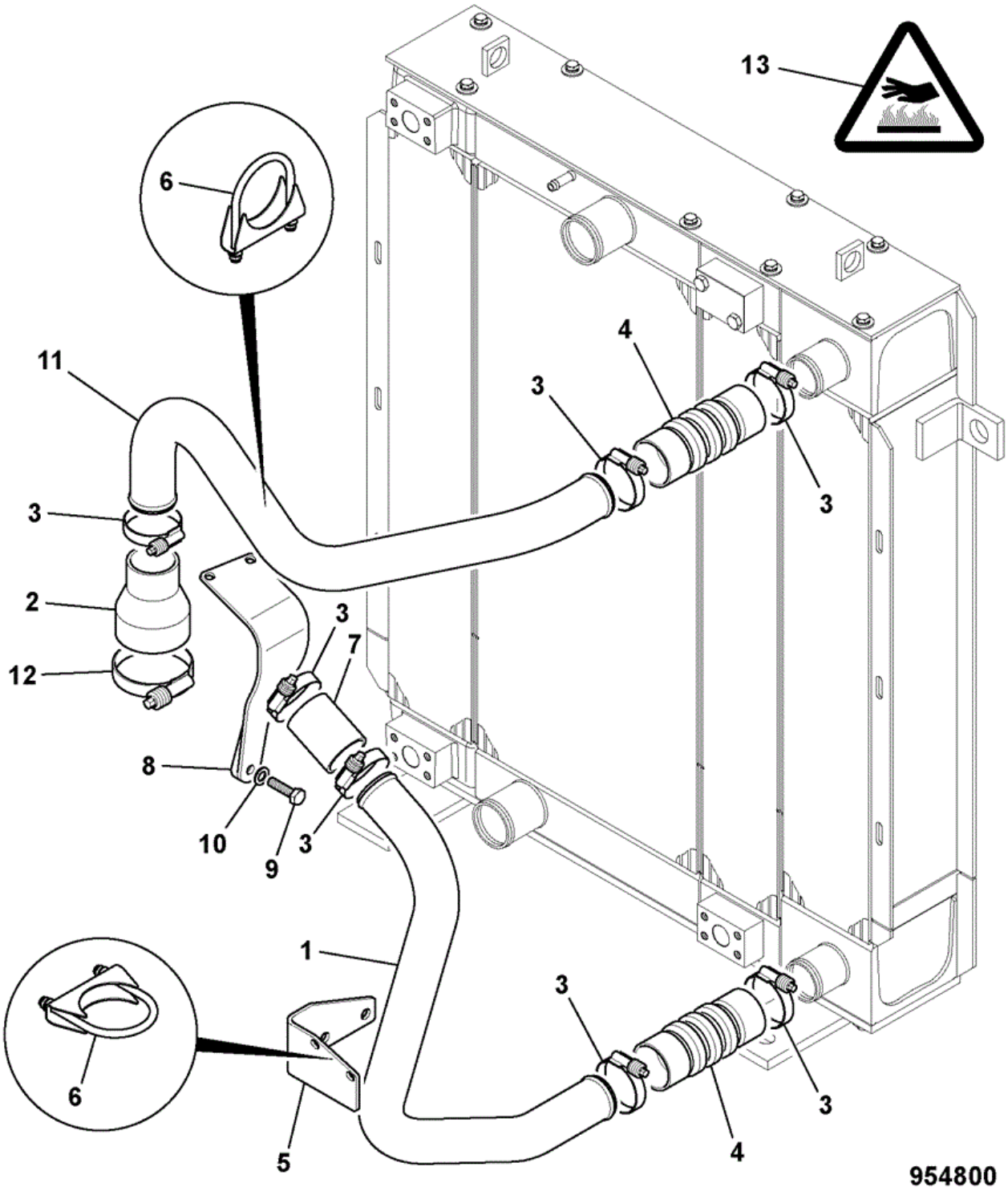

Item	Part No	Change No	Description	Usage Code	QTY
1	332/T9572	Superseded	Pipe CAC compressor to cooler		1

1	332/V7538		Pipe CAC compressor to cooler		1
2	834/11284		Hose CAC reducer		1
3	821/10236		Clip Worm Constant Torque		7
4	834/10717		Hose Moulded		2
5	331/65799		Bracket support CAC pipe		1
6	261/00202	to 13/06/2010	Clamp 'U'		2
6	332/W9939	to 17/10/2010	U Bolt clamp 2"		2
6	333/S4291		U Bolt clamp 2"		2
7	834/10644		Hose Silicone		1
8	335/13548	to 13/06/2010	Bracket WA		1
8	333/R2929		Bracket support WA		1
9	1315/3410D		Bolt M10 x 40mm		2
10	1420/0008D		Washer (M10)		2
11	830/13768		Pipe CAC cooler in		1
12	821/10192		Clip Breeze (70-93)		1
13	817/18678		Decal Warning Hot Surface		1

Applicability Date Ranges:
From: > 1317814 , To:

9812/3020 V49-1-1 COOLING FAN & SPACER

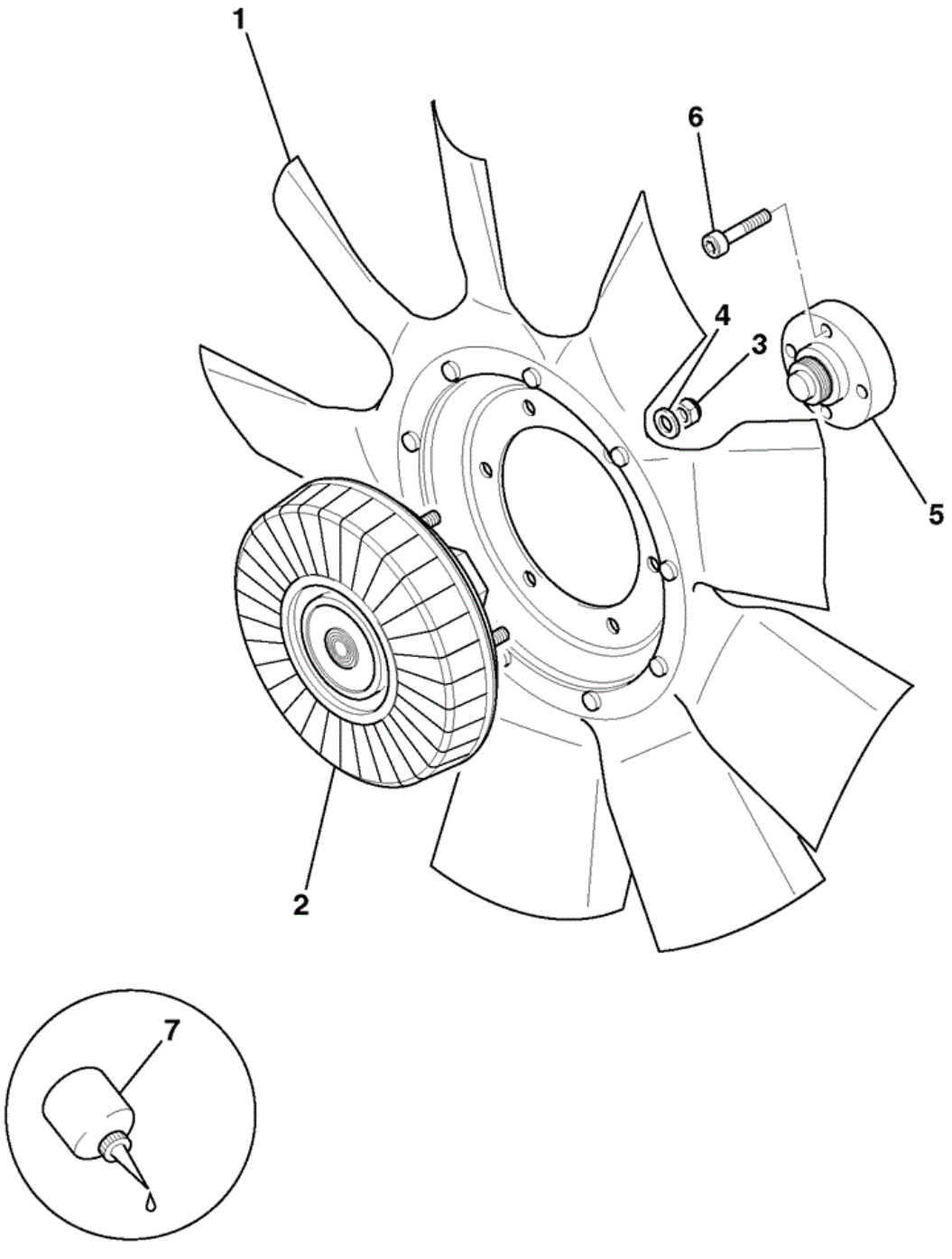

Item	Part No	Change No	Description	Usage Code	QTY
1	30/925608		Fan 24" cooling		1
2	30/926606		Coupling viscous fan drive		1

3	1370/0203D		Nut Lock M8		6
4	1420/0007D		Washer (M8)		6
5	331/56559		Flange adaptor		1
6	1391/3412D		Capscrew M10 X 50		4
7	4101/0251		Sealant Threadlock 50ml		0

Applicability Date Ranges:
From: , To: M1472049

Product Catalog\WHEELED LOADERS\416 01243000-01243499,01317500-01317999,01472000-01472999,02095872-02095875 9812/3020 \V JCB444 ENGINE INSTALLATION COMPONENTS\V49 FRONT END DRIVE\V49-1-2 COOLING FAN & SPACER

9812/3020 V49-1-2 COOLING FAN & SPACER

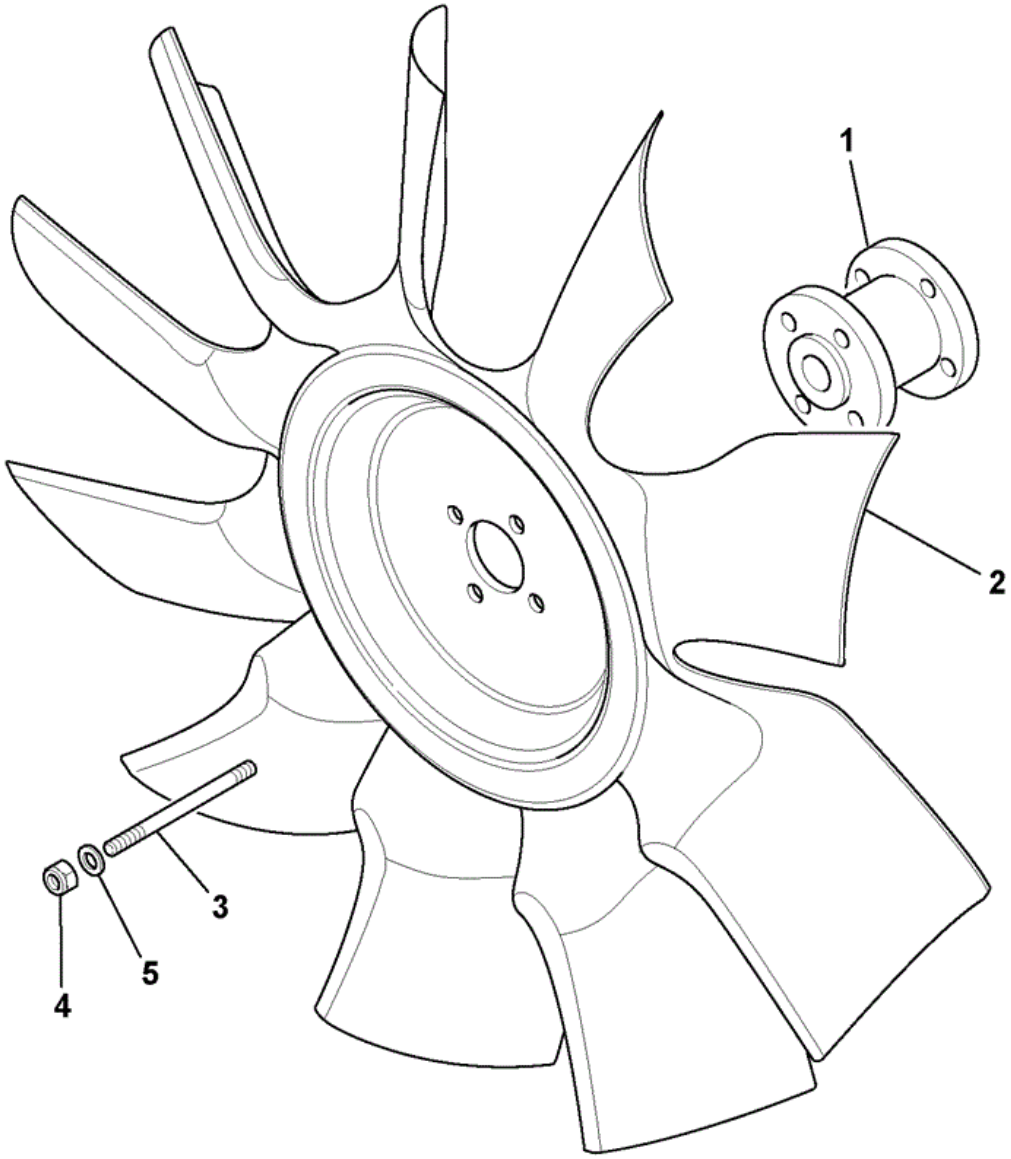

901610

Item	Part No	Change No	Description	Usage Code	QTY
1	331/64394		Spacer cooling fan		1
2	30/925560		Fan cooling 24"		1

3	826/11146		Stud M8 x 110mm		4
4	1420/0007D		Washer (M8)		4
5	1370/0203D		Nut Lock M8		4

Applicability Date Ranges:
From: M1472050 , To:

Product Catalog\WHEELED LOADERS\416 01243000-01243499,01317500-01317999,01472000-01472999,02095872-02095875 9812/3020 \V JCB444 ENGINE INSTALLATION COMPONENTS\V49 FRONT END DRIVE\V49-1-10 COOLING FAN REVERSE AIR OPERATED, SALES OPTION

9812/3020 V49-1-10 COOLING FAN REVERSE AIR OPERATED, SALES OPTION

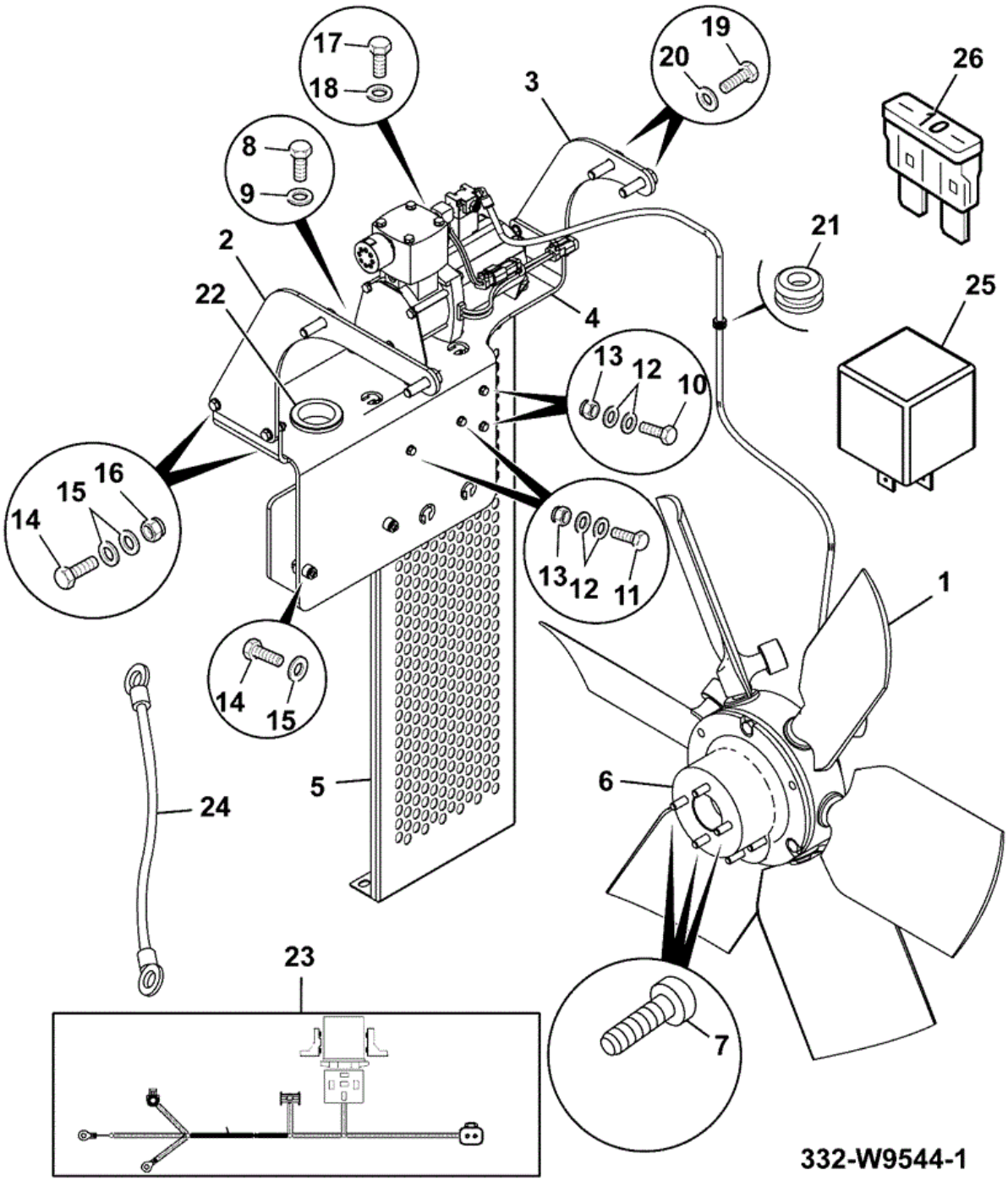

Item	Part No	Change No	Description	Usage Code	QTY
1	333/R0832		Kit FLEXXAIRE REVERSE FA		1

1A	:332/W7451		Fan pneumatic		1
1B	:332/W7463		Compressor unit		1
1C	:332/W7462		Timer unit		1
1D	:333/E0691		Hose 1/4 OD x 150"		1
2	332/V6768		Mounting FRONT MNTG PLATE		1
3	332/V6695		Mounting REAR MNTG PLATE		1
4	332/W9456		Mounting BOTTOM MOUNTING PLAT		1
5	332/V6880		Guard FAN GUARD		1
6	332/V4883		Adapter fan		1
7	1391/3315D		Capscrew		4
8	1391/9407		Capscrew		3
9	1420/0004D		Washer plain M4		3
10	1315/0105D		Setscrew M5 x 20 mm		2
11	1315/0107D		Screw setscrew M5x25		2
12	1420/0005D		Washer (M5)		8
13	1370/0001D		Nut (M5)		6
14	1315/0207D		Setscrew M6 x 25mm		6
15	1420/0006D		Washer (M6)		10
16	1370/0103D		Nut (M6)		4
17	1315/0307D		Setscrew M8 x 25 mm		2
18	1420/0007D		Washer (M8)		2
19	1315/0409D		Setscrew M10 x 35mm		4
20	1420/0008D		Washer (M10)		4
21	2410/0103		Grommet 9.5mm x 3.5mm		1
22	2410/0215		Grommet		1
23	333/R0772		Harness Reverse Fan Harness		1
24	332/W2625		Link wire		1
25	332/W1815		Relay 24V 30A		1
26	716/05705		Fuse 10 amp		1

Applicability Date Ranges:
From: , To:

Product Catalog\WHEELED LOADERS\416 01243000-01243499,01317500-01317999,01472000-01472999,02095872-02095875 9812/3020 \V JCB444 ENGINE INSTALLATION COMPONENTS\V49 FRONT END DRIVE\V49-3-1 FRONT END DRIVE ACCESSORY WITH COOLING FAN

9812/3020 V49-3-1 FRONT END DRIVE ACCESSORY WITH COOLING FAN

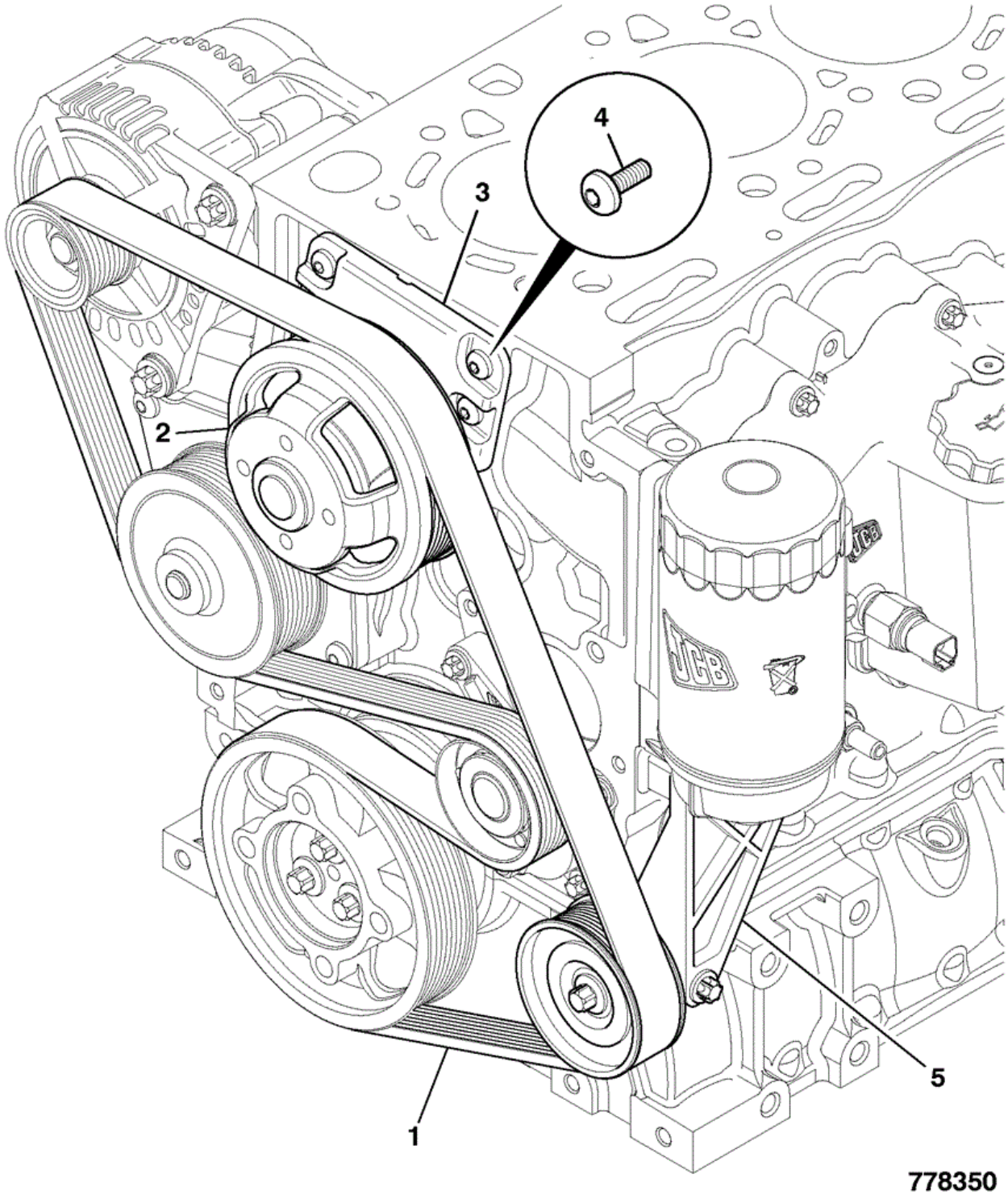

Item	Part No	Change No	Description	Usage Code	QTY
1	320/08599		Belt drive L=1855		1

2	320/08502		Pulley Fan,0.85:1 ratio 195mm		1
3	320/08550		Hub Fan Drive		1
4	320/08802		Screw M8x20 Pan hd Encapsulated		4
5	****		'See Remark' See frame V49-20-1		1

Applicability Date Ranges:
From: , To:

Product Catalog\WHEELED LOADERS\416 01243000-01243499,01317500-01317999,01472000-01472999,02095872-02095875 9812/3020 \V JCB444 ENGINE INSTALLATION COMPONENTS\V49 FRONT END DRIVE\V49-4-1 FRONT END DRIVE ACCESSORY WITH COOLING FAN & AIR CONDITIONING

9812/3020 V49-4-1 FRONT END DRIVE ACCESSORY WITH COOLING FAN & AIR CONDITIONING

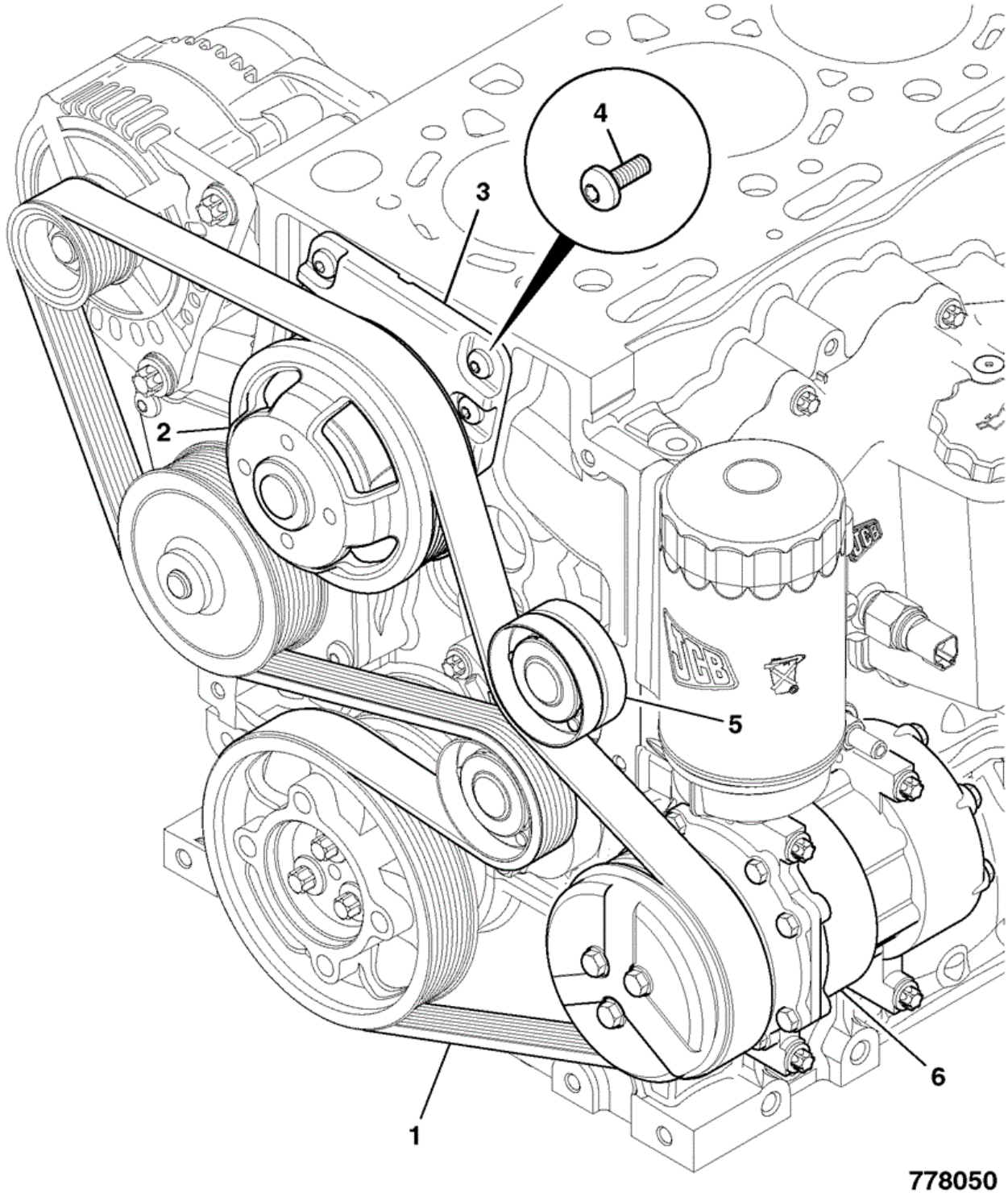

Item	Part No	Change No	Description	Usage Code	QTY
1	320/08604		Belt drive L=2011		1

2	320/08502		Pulley Fan,0.85:1 ratio 195mm		1
3	320/08550		Hub Fan Drive		1
4	320/08802		Screw M8x20 Pan hd Encapsulated		4
5	320/08530		Idler Pulley Long		1
6	****		'See Remark' See frame V56-1-1		1

Applicability Date Ranges:
From: , To:

Product Catalog\WHEELED LOADERS\416 01243000-01243499,01317500-01317999,01472000-01472999,02095872-02095875 9812/3020 \V JCB444 ENGINE INSTALLATION COMPONENTS\V49 FRONT END DRIVE\V49-20-1 LOWER IDLER PULLEY SMALL

9812/3020 V49-20-1 LOWER IDLER PULLEY SMALL

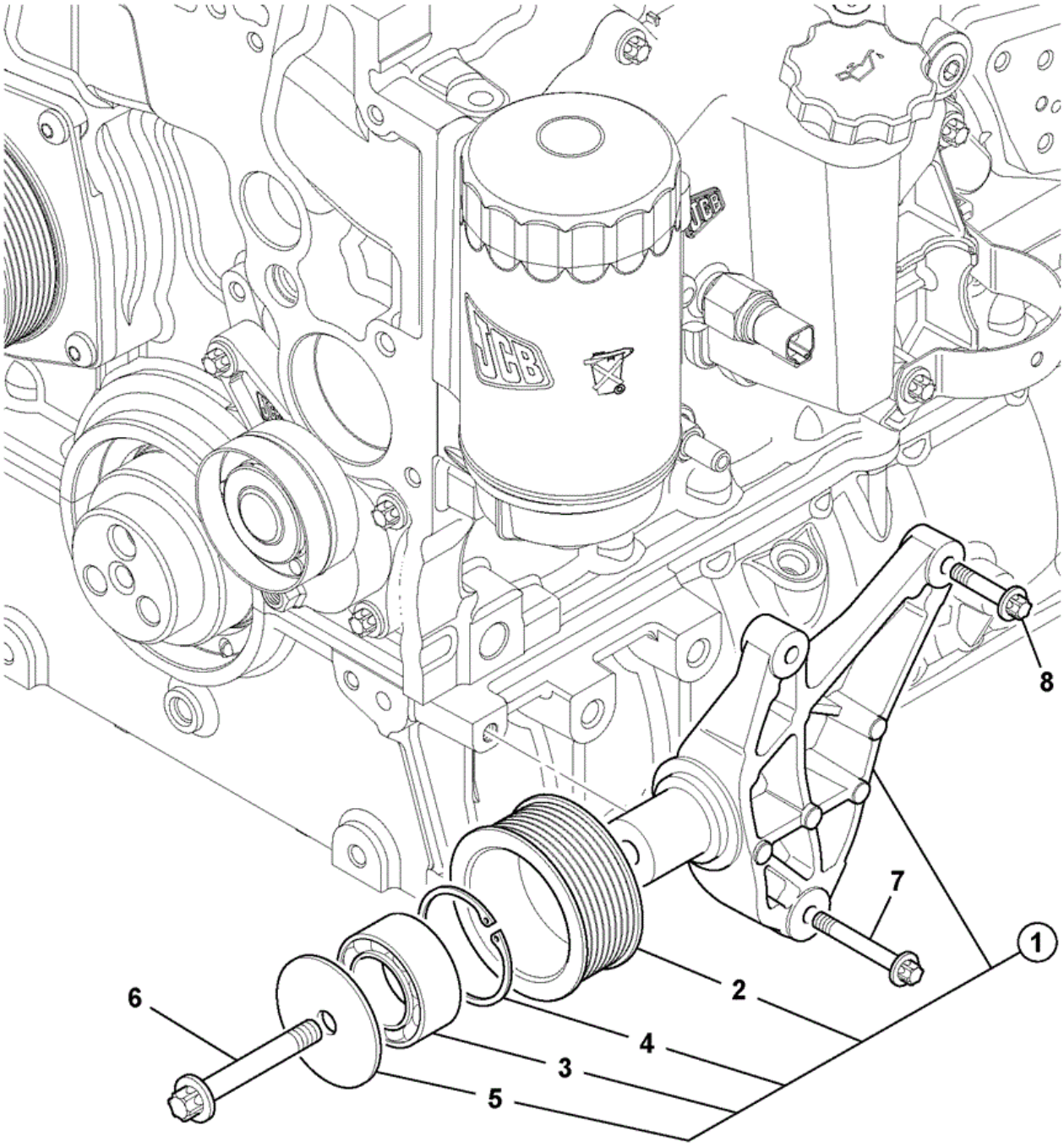

736420

Item	Part No	Change No	Description	Usage Code	QTY
1	320/08586		Idler Assembly , Non Aircon		1
2	****		None serviced part		1

3	:320/08595		Bearing Idler Pulley		1
4	:320/08594		Circlip		1
5	:320/08593		Washer idler retainer		1
6	826/10613		Screw flanged M10 X 50		1
7	1319/0309Z		Screw star drive M8 x 35		2
8	1319/0311Z		Screw star drive M8 x 45		1

Applicability Date Ranges:
From: , To:

Product Catalog\WHEELED LOADERS\416 01243000-01243499,01317500-01317999,01472000-01472999,02095872-02095875 9812/3020 \V JCB444 ENGINE INSTALLATION COMPONENTS\V50 LOW PRESSURE FUEL SYSTEM\V50-1-1 FUEL PIPES FUEL TANK TO FILTER TIER 2

9812/3020 V50-1-1 FUEL PIPES FUEL TANK TO FILTER TIER 2

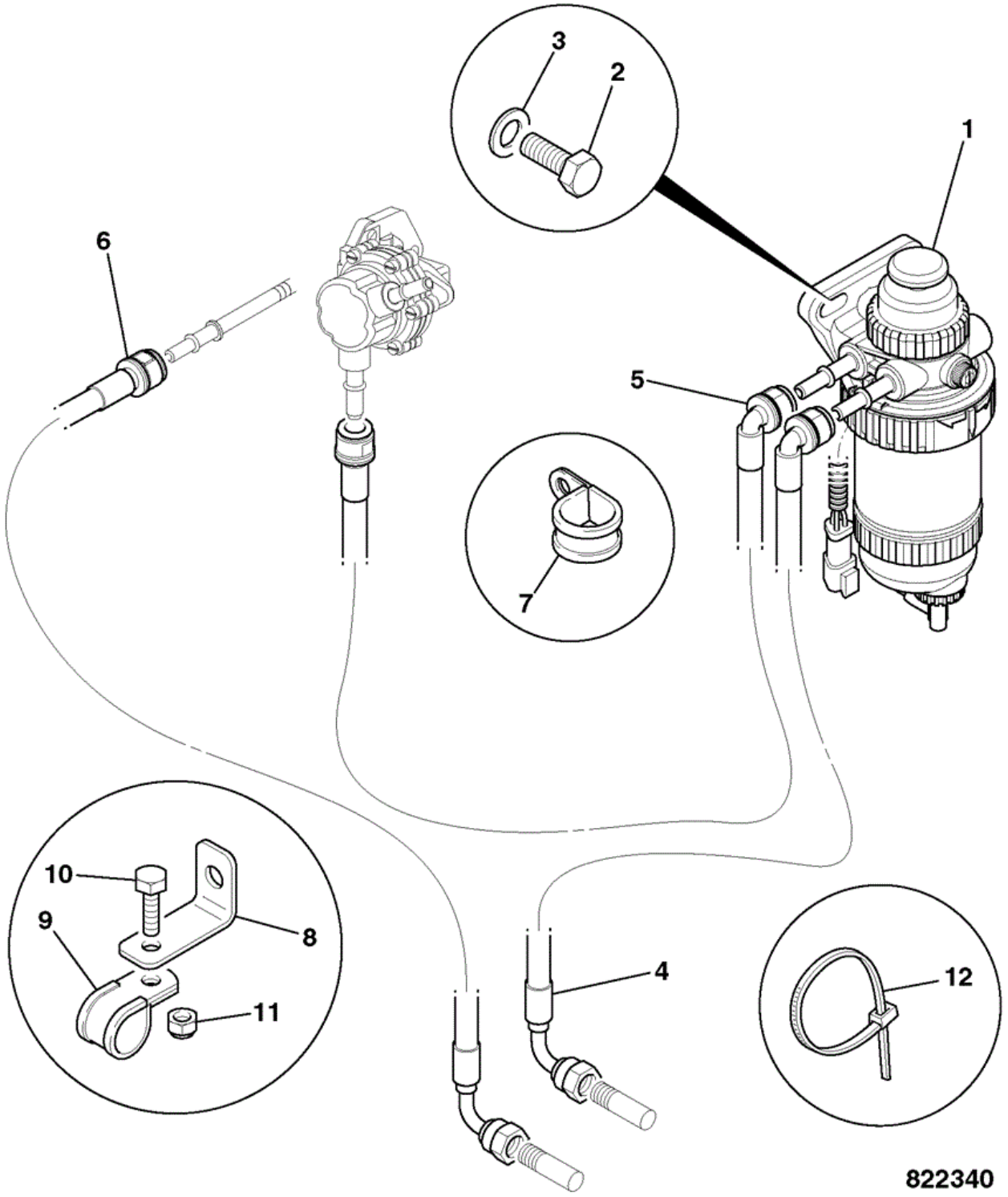

Item	Part No	Change No	Description	Usage Code	QTY
1	32/925903		Filter fuel 24V-30micron assembly		1
2	1315/0407D		Setscrew M10 x 25		2

3	1420/0008D		Washer (M10)		2
4	649/52129		Hose diesel fuel		1
5	649/52131		Hose diesel fuel		1
6	649/52130		Hose diesel fuel 3/8" x 840mm		1
7	821/00376		Clip 'P' 20mm diameter		3
8	265/02808		Bracket mounting P clip		2
9	821/00306		Clip 20mm		2
10	1315/0203D		Setscrew M6 x 16mm		2
11	1370/0103D		Nut (M6)		2
12	826/01453		Tie cable Double Head		4

Applicability Date Ranges:
From: M124300 , To: M1243499

Product Catalog\WHEELED LOADERS\416 01243000-01243499,01317500-01317999,01472000-01472999,02095872-02095875 9812/3020 \V JCB444 ENGINE INSTALLATION COMPONENTS\V50 LOW PRESSURE FUEL SYSTEM\V50-11-1 FUEL PIPES FUEL TANK TO FILTER TIER 3

9812/3020 V50-11-1 FUEL PIPES FUEL TANK TO FILTER TIER 3

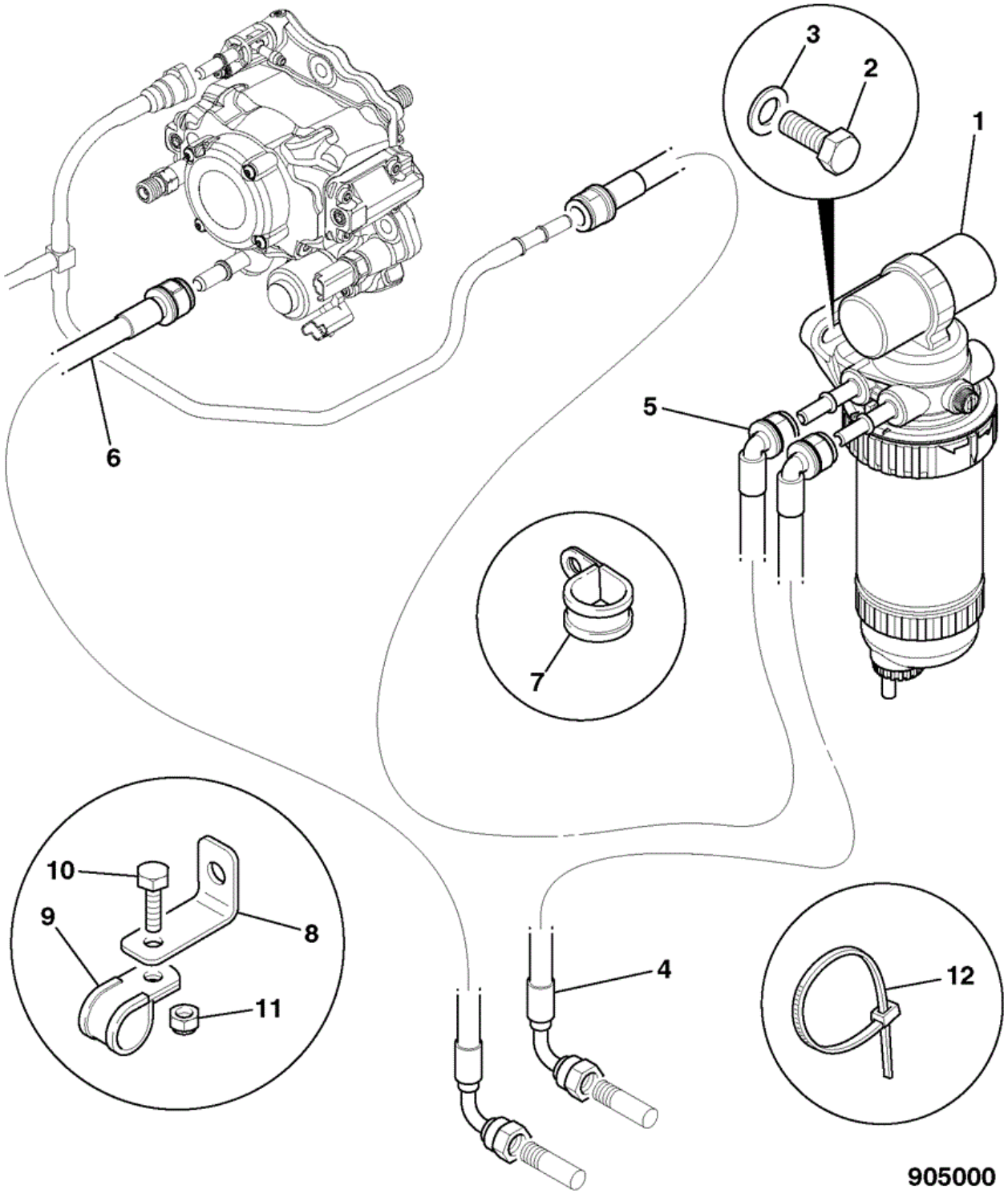

Item	Part No	Change No	Description	Usage Code	QTY
1	32/925949		Filter fuel lift pump assembly, 5 micron		1
2	1315/0407D		Setscrew M10 x 25		2

3	1420/0008D		Washer (M10)		2
4	649/52129		Hose diesel fuel		1
5	649/52206		Hose diesel fuel		1
6	649/52130		Hose diesel fuel 3/8" x 840mm		1
7	821/00376		Clip 'P' 20mm diameter		3
8	265/02808		Bracket mounting P clip		2
9	821/00306		Clip 20mm		2
10	1315/0203D		Setscrew M6 x 16mm		2
11	1370/0103D		Nut (M6)		2
12	826/01453		Tie cable Double Head		4

Applicability Date Ranges:
From: M1317500 , To: M1317999

Product Catalog\WHEELED LOADERS\416 01243000-01243499,01317500-01317999,01472000-01472999,02095872-02095875 9812/3020 \V JCB444 ENGINE INSTALLATION COMPONENTS\V50 LOW PRESSURE FUEL SYSTEM\V50-13-1 FUEL PIPES FUEL TANK TO FILTER VIA FUEL LUBRICITY FILTER, AWS

9812/3020 V50-13-1 FUEL PIPES FUEL TANK TO FILTER VIA FUEL LUBRICITY FILTER, AWS

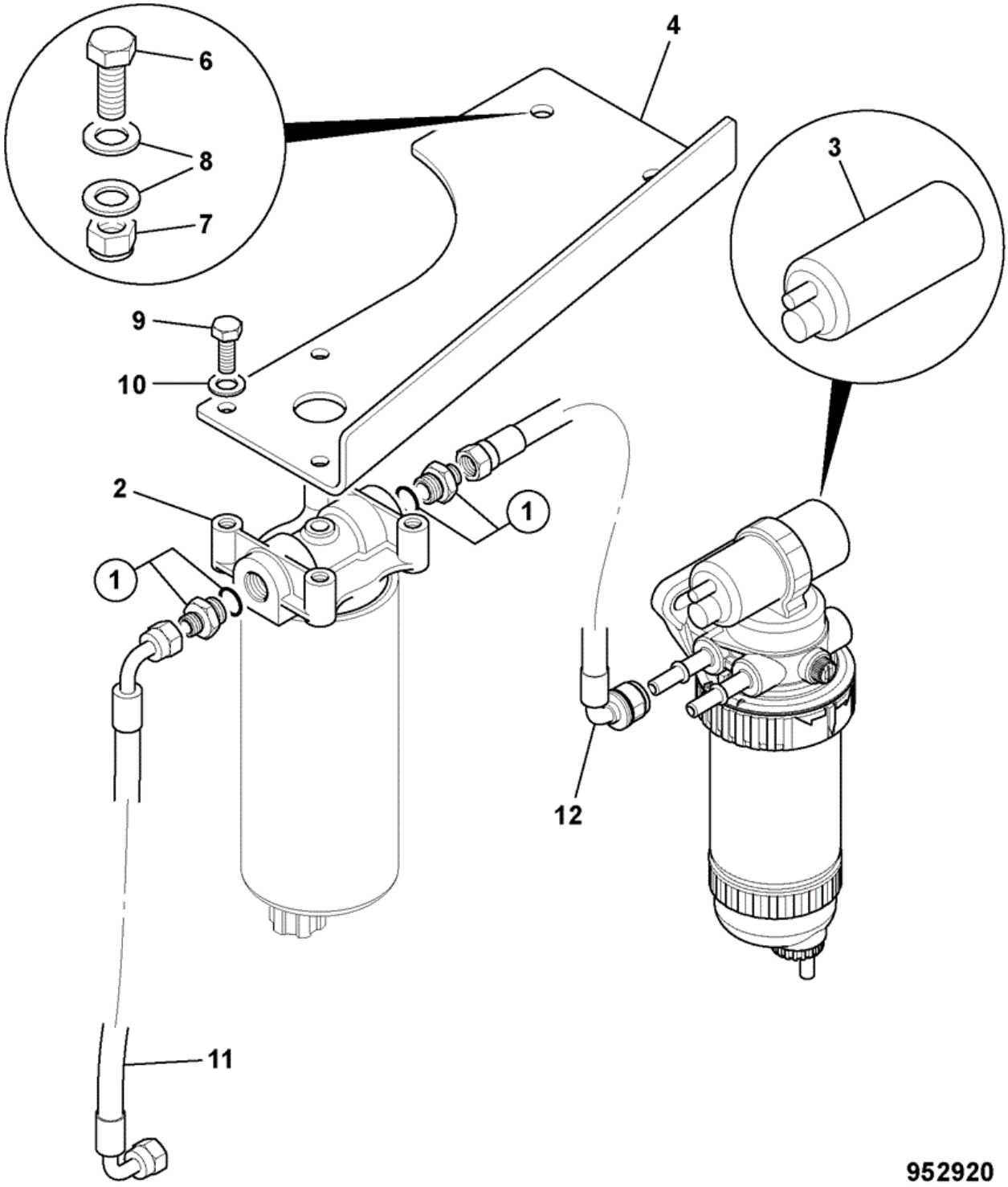

Item	Part No	Change No	Description	Usage Code	QTY
			Adapter		

1	816/60106		Sales special 0062		2
2	332/V8171		Head filter		1
3	332/U6368		Element fuel filter cartidge type		1
4	332/U7620		Bracket lubricity filter		1
4	332/W2721		Bracket WA Replaces 332/U7620		1
6	1315/0508D		Setscrew M12 x 30 mm		2
7	1370/0403D		Nut Lock M12		2
8	1420/0009D		Washer (M12)		4
9	1305/1706D		Setscrew 3/8 UNC x 1 in		4
10	1420/0008D		Washer (M10)		4
11	332/U9021		Hose fuel tank to lubricity filter		1
12	332/U9039		Hose lubricity filter to sediment filter		1

Applicability Date Ranges:
From: , To:

Product Catalog\WHEELED LOADERS\416 01243000-01243499,01317500-01317999,01472000-01472999,02095872-02095875 9812/3020 \V JCB444 ENGINE INSTALLATION COMPONENTS\V50 LOW PRESSURE FUEL SYSTEM\V50-13-2 FUEL PIPES FUEL TANK TO FILTER LUBRICITY FILTER, SALES OPTION

9812/3020 V50-13-2 FUEL PIPES FUEL TANK TO FILTER LUBRICITY FILTER, SALES OPTION

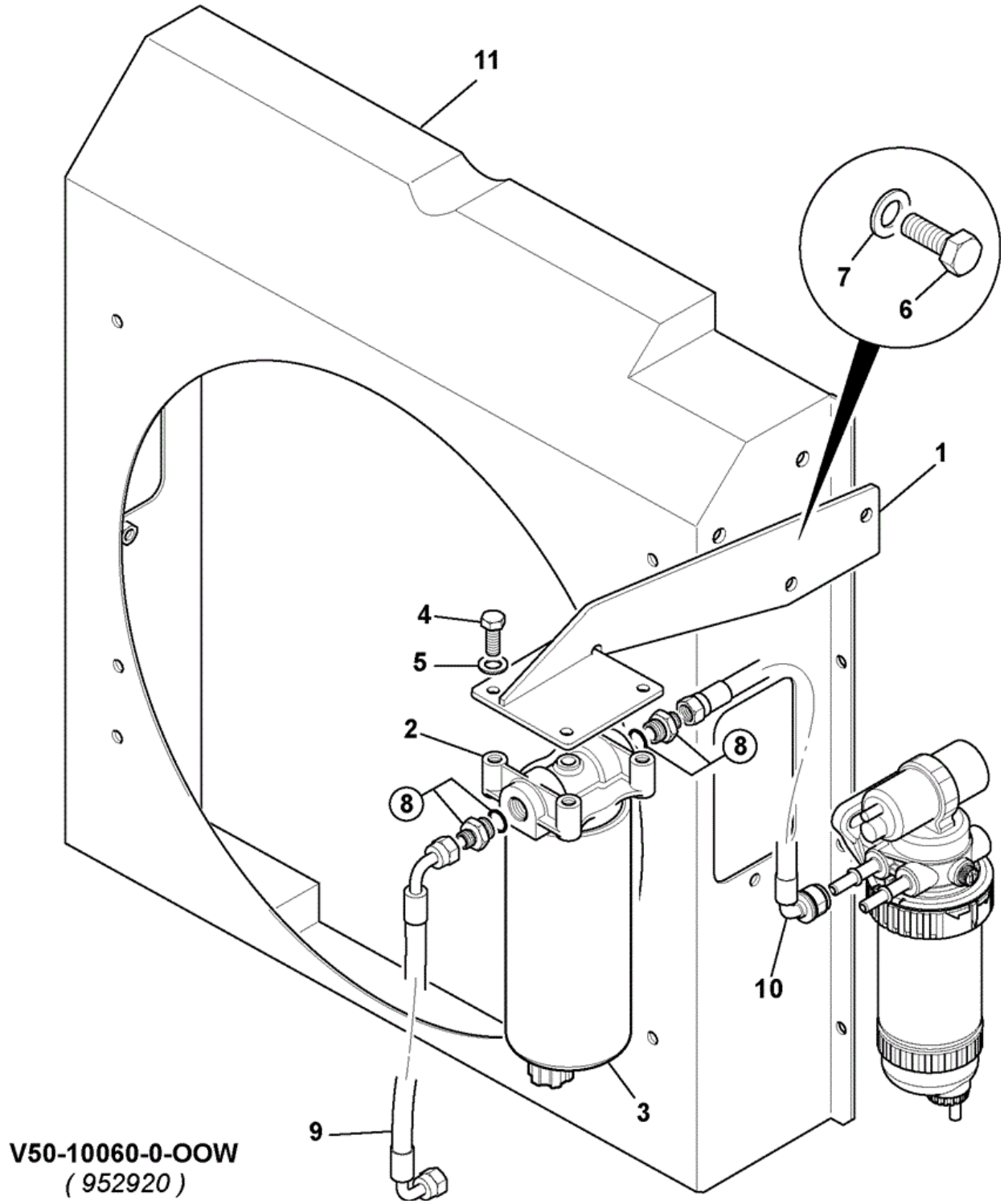

Item	Part No	Change No	Description	Usage Code	QTY
			Bracket WA		

1	332/W2721		Sales special 0062		1
2	332/V8171		Head filter		1
3	332/U6368		Element fuel filter cartidge type		1
4	1305/1706D		Setscrew 3/8 UNC x 1 in		4
5	1420/0008D		Washer (M10)		4
6	1315/0407D		Setscrew M10 x 25		2
7	1420/0008D		Washer (M10)		2
8	816/60106		Adapter		2
9	332/U9021		Hose fuel tank to lubricity filter		1
10	332/U9039		Hose lubricity filter to sediment filter		1
11	332/W3750		Cowling fan		1

Applicability Date Ranges:
From: , To:

Product Catalog\WHEELED LOADERS\416 01243000-01243499,01317500-01317999,01472000-01472999,02095872-02095875 9812/3020 \V JCB444 ENGINE INSTALLATION COMPONENTS\V50 LOW PRESSURE FUEL SYSTEM\V50-14-1 FUEL PIPES FUEL TANK TO FILTER PRE-FILTER, SALES OPTION

9812/3020 V50-14-1 FUEL PIPES FUEL TANK TO FILTER PRE-FILTER, SALES OPTION

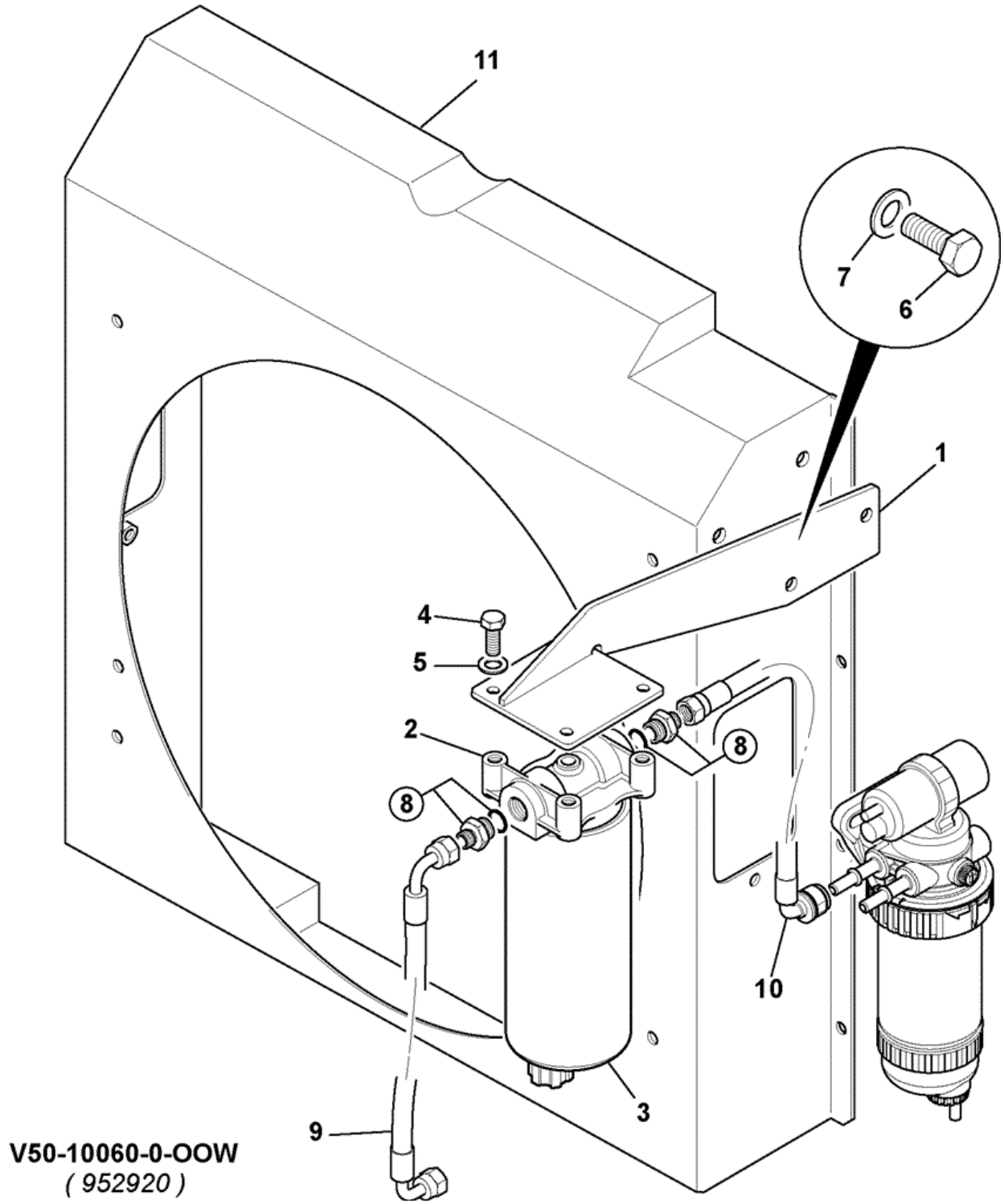

Item	Part No	Change No	Description	Usage Code	QTY
			Bracket WA		

1	332/W2721		Sales special 0612		1
2	332/W0793		Head filter		1
3	332/W0799		Filter cartridge		1
4	1305/1706D		Setscrew 3/8 UNC x 1 in		4
5	1420/0008D		Washer (M10)		4
6	1315/0407D		Setscrew M10 x 25		2
7	1420/0008D		Washer (M10)		2
8	816/60106		Adapter		2
9	332/U9021		Hose fuel tank to lubricity filter		1
10	332/U9039		Hose lubricity filter to sediment filter		1
11	332/W3750		Cowling fan		1

Applicability Date Ranges:
From: , To:

Product Catalog\WHEELED LOADERS\416 01243000-01243499,01317500-01317999,01472000-01472999,02095872-02095875 9812/3020 \V JCB444 ENGINE INSTALLATION COMPONENTS\V51 FUEL SEDIMENT FILTERS\V51-1-1 FILTER FUEL SEDIMENT TIER 2

9812/3020 V51-1-1 FILTER FUEL SEDIMENT TIER 2

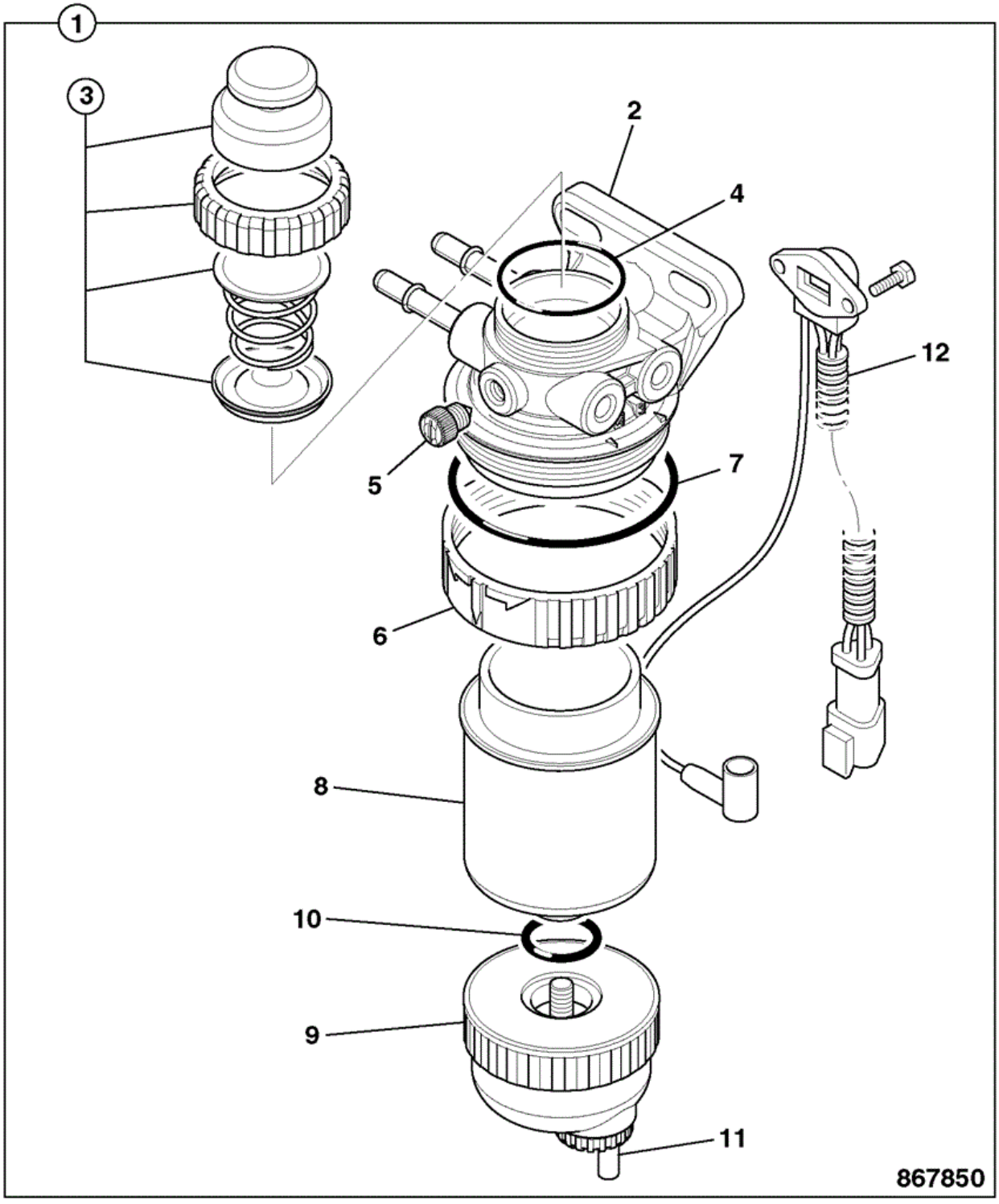

Item	Part No	Change No	Description	Usage Code	QTY
1	32/925903		Filter fuel 24V-30micron assembly		1
2	****		None serviced part		1

3	:32/925710		Kit-primer		1
4	:32/925906		Seal		1
5	:32/925973		O Ring		1
6	:32/921002		Ring Retaining		1
7	:32/921003		O Ring Dust		1
8	:32/925915		Element fuel filter reverse flow		1
9	:32/925708		Bowl Assembly		1
10	:32/925733		Seal O-Ring		1
11	:32/925818		Kit-drain valve C/W Wif Sensor & Seal		1
12	****		None serviced part		1

Applicability Date Ranges:
From: M1243000 , To: M1243499

Product Catalog\WHEELED LOADERS\416 01243000-01243499,01317500-01317999,01472000-01472999,02095872-02095875 9812/3020 \V JCB444 ENGINE INSTALLATION COMPONENTS\V51 FUEL SEDIMENT FILTERS\V51-11-1 FILTER FUEL SEDIMENT & LIFT PUMP ASSEMBLY, TIER 3

9812/3020 V51-11-1 FILTER FUEL SEDIMENT & LIFT PUMP ASSEMBLY, TIER 3

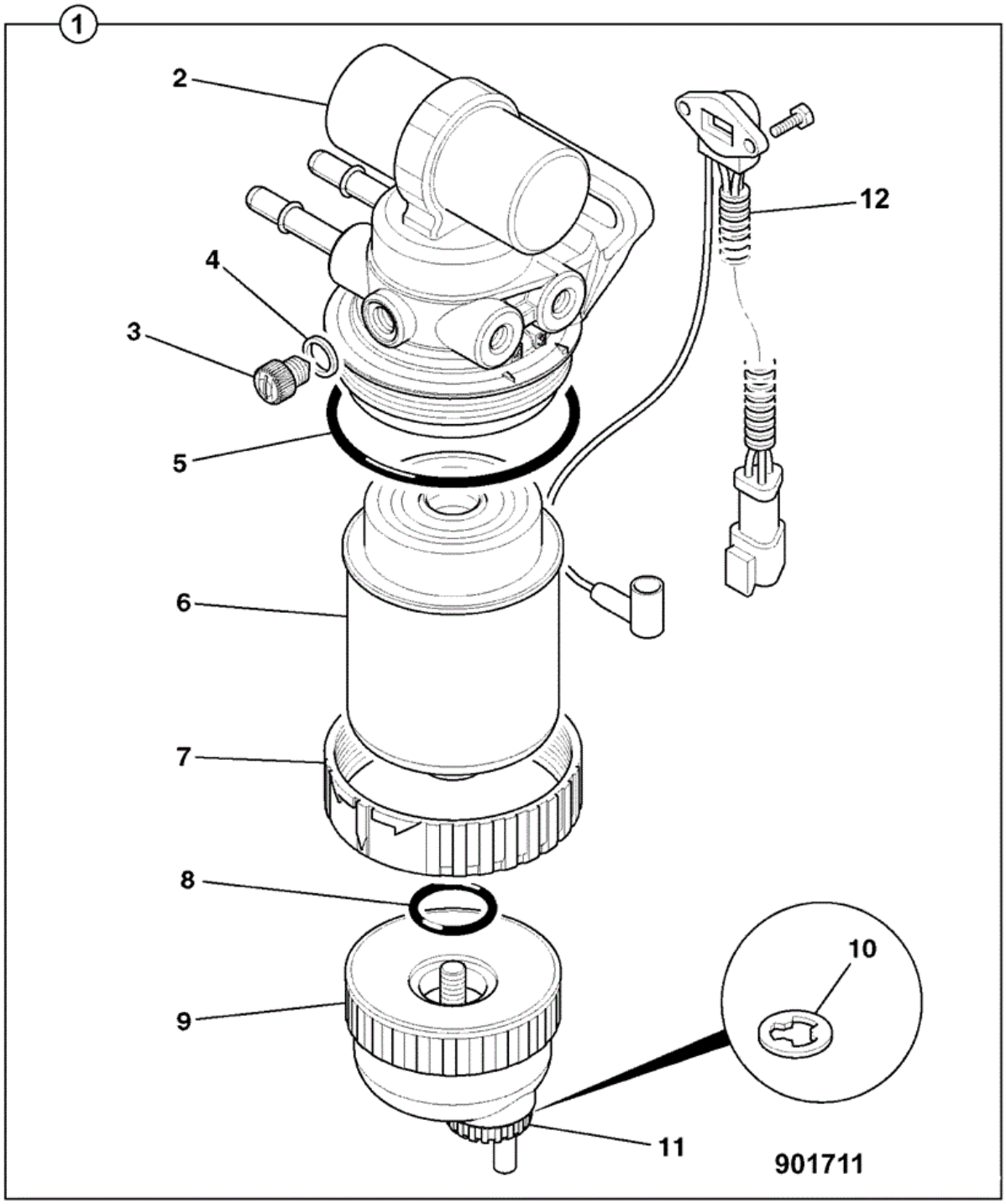

Item	Part No	Change No	Description	Usage Code	QTY
1	32/925949		Filter fuel lift pump assembly, 5 micron		1

2	****		None serviced part		1
3	:32/926040		Plug Air Vent		1
4	:32/925973		O Ring		1
5	:32/921003		O Ring Dust		1
6	:32/925950		Element fuel filter 5 micron		1
7	:32/921002		Ring Retaining		1
8	:32/925733		Seal O-Ring		1
9	:32/925708		Bowl Assembly		1
10	:32/926043		Washer wif seal		1
11	:32/926087		Kit-drain valve		1
12	:32/925709		Kit-sensor Water In Fuel		1

Applicability Date Ranges:
From: M1317500 , To: M1317999

Product Catalog\WHEELED LOADERS\416 01243000-01243499,01317500-01317999,01472000-01472999,02095872-02095875 9812/3020 \V JCB444 ENGINE INSTALLATION COMPONENTS\V55 OIL LEVEL DIPSTICK & TUBE\V55-1-1 OIL LEVEL DIPSTICK & TUBE

9812/3020 V55-1-1 OIL LEVEL DIPSTICK & TUBE

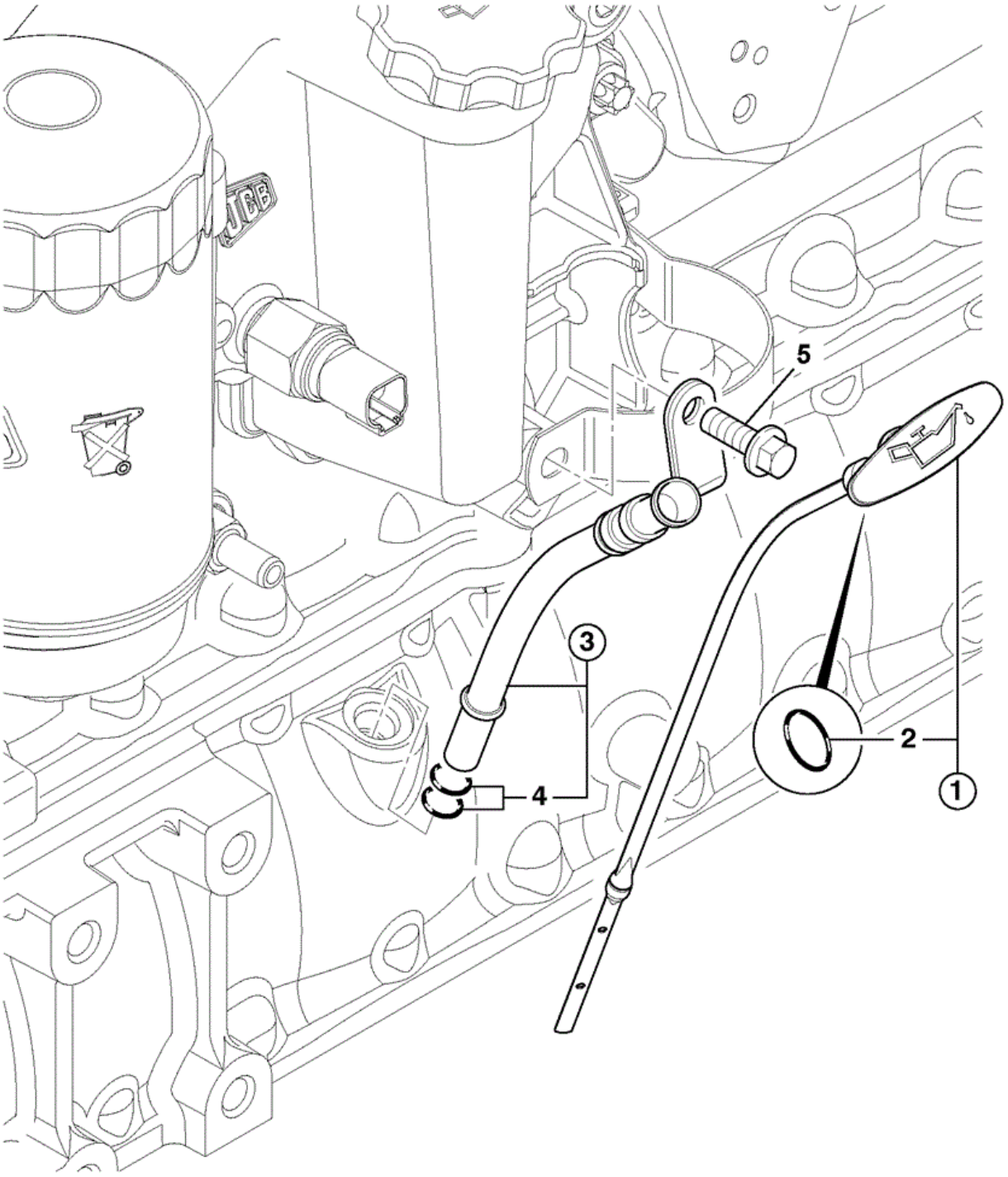

734741

Item	Part No	Change No	Description	Usage Code	QTY
1	160/15391	Superseded	Dipstick assembly		1
1	320/04271		Blade Dipstick		1

2	:320/04129		O Ring		1
3	830/13482		Tube engine oil dipstick		1
4	:320/04127		O Ring		2
6	1420/0009Z		Washer (M12)		1

Applicability Date Ranges:
From: , To: