RUTHZIL TRATOR COMERCIAL DE PEÇAS LTDA 11 97083-6812 ROLANDO CITRANGULO

PARTS CATALOG

SKID STEER
COMPACT TRACK LOADER

420
420CT
SERIES 3

APPLICABLE
ASN - N7M466710



BD07N497

TABLE OF CONTENTS

General Information
Section 2 – Engine
Section 3 – Fuel System
Section 4 – Electrical System
Section 6 – Power train
Section 7 – Brakes
Section 8 – Hydraulics
Section 9 – Chassis/Attachments
Index

Bur • Issued 01Jan08
Printed in U.S.A. • Book/Form Number 87632289 NA
Copyright © 2007. CNH America, LLC. All Rights Reserved.

CNH America, LLC reserves the right to make improvements in design or changes in specifications at any time without incurring any obligation to install them on units previously sold.

All data given in this publication is subject to production variations. Dimensions and weights are only approximate. Illustrations do not necessarily show products in standard condition. For exact information about any particular product, please consult your Dealer

This unit first became available 01-2008			
REVISION HISTORY			
Issue	Issue Date	Applicable Machines	Remarks
First Edition	01Jan 08	420, 420CT Series 3 Skid Steer/Compact Track Loader	87632289 NA

Any use of editorial or pictorial content is strictly prohibited without express written permission from
CNH America, LLC. Racine, WI 53403 U.S.A..

TABLE OF CONTENTS

02-00	FAN, RADIATOR/OIL COOLER - COOLANT RECOVERY SYSTEM
02-01	RADIATOR/OIL COOLER
02-02	ENGINE - EXHAUST SYSTEM
02-03	EXHAUST SYSTEM - ASPIRATOR
02-04	ENGINE - AIR CLEANER SYSTEM
02-05	ENGINE - MOUNTING AND THROTTLE, SERIES 3
02-06	ENGINE - MOUNTING (EUROPE)
02-07	ENGINE - DIPSTICK, OIL FILL
02-08	REMOTE OIL DRAIN
02-09	ENGINE - BLOCK HEATER
02-10	ENGINE ASSY (87546691)
02-11	CYLINDER BLOCK & RELATED PARTS (87546691)
02-12	OIL SUMP & RELATED PARTS (87546691)
02-13	ENGINE BLOCK FRONT COVER (87546691)
02-14	FLYWHEEL CASE (87546691)
02-15	ENGINE BREATHERS (87546691)
02-16	CYLINDER HEAD & RELATED PARTS (87546691)
02-17	CYLINDER HEAD COVERS (87546691)
02-18	ROCKER SHAFT (87546691)
02-19	INTAKE MANIFOLD (87546691)
02-20	HEAT EXCHANGER - ENGINE (87546691)
02-21	EXHAUST MANIFOLD (87546691)
02-22	CRANKSHAFT (87546691)
02-23	CONNECTING ROD (87546691)
02-24	PISTON - ENGINE (87546691)
02-25	ENGINE - FLYWHEEL (87546691)
02-26	PULLEY - CRANKSHAFT (87546691)
02-27	CAMSHAFT - TIMING CONTROL (87546691)
02-28	TURBOCHARGER (87546691)
02-29	PUMP, ENGINE OIL & RELATED PARTS (87546691)
02-30	FILTER ENGINE OIL (87546691)
02-31	OIL PUMP PIPING (87546691)
02-32	HEAT EXCHANGER (87546691)
02-33	WATER PUMP & RELATED PARTS (87546691)
02-34	PIPING - ENGINE COOLING SYSTEM (87546691)
02-35	TEMPERATURE CONTROL (THERMOSTAT) (87546691)
02-36	BELT PULLEY DRIVE & COVER (87546691)
02-37	HOOKS - ENGINE (87546691)
02-38	DIAGNOSTIC SENSOR (87546691)
02-39	MONITORING ELECTRICAL ACCESSORIES (87546691)
03-01	CONTROLS - FOOT AND HAND THROTTLE
03-02	FUEL LINES AND FUEL FILTER
03-03	INJECTION PUMP (87546691)
03-04	INJECTION EQUIPMENT - INJECTOR (87546691)
03-05	INJECTION EQUIPMENT - PIPING (87546691)
03-06	INJECTION EQUIPMENT - PIPING (87546691)
03-07	INJECTION EQUIPMENT - FUEL, RETURN (87546691)
03-08	FUEL FILTER (87546691)
03-09	FUEL PUMP (87546691)
03-10	PIPING - FUEL (87546691)
04-01	BATTERY - CABLES

TABLE OF CONTENTS

04-02	ENGINE, ALTERNATOR MOUNTING (87546691)
04-03	ENGINE ELECTRIC INSTALLATION (87546691)
04-04	ENGINE - ELECTRICAL (420)
04-05	ENGINE - ELECTRICAL (420CT)
04-06	CHASSIS - ELECTRICAL
04-07	ELECTRICAL - GRID HEATER
04-08	ELECTRIC - CAB
04-09	CONSOLE - RH
04-10	CONSOLE - LH
04-11	CONTROL HANDLE, RH - BASIC
04-12	CONTROL HANDLE, LH - BASIC
04-13	CONTROL HANDLE, RH - DELUXE W/O AUX ELECTRIC
04-14	CONTROL HANDLE, LH - DELUXE W/O AUX ELECTRIC
04-15	CONTROL HANDLE, RH - DELUXE
04-16	CONTROL HANDLE, LH - DELUXE
04-17	DISCONNECT SWITCH - REMOTE JUMP START
04-18	WORK LIGHTS - LH
04-19	WORK LIGHTS - RH
04-20	ELECTRICAL - ROAD LIGHTS (NA)
04-21	ELECTRICAL - ROAD LIGHTS (EUROPE)
04-22	HEADLAMP - RH
04-23	HEADLAMP - LH
04-24	REAR LIGHT AND MOUNTING
04-25	BACKUP ALARM
04-26	ELECTRICAL ACCESSORY SOCKET
04-27	ELECTRICAL ACCESSORY SOCKET (EUROPE)
04-28	HORN - MOUNTING
04-29	ELECTRIC, FRONT AUXILIARY
04-30	ROTATING BEACON
04-31	SPECIAL PARTS FOR ITALY - LICENSE PLATE LIGHT
04-33	STROBE LIGHT
06-01	JOYSTICK CONTROL PLUMBING - H PATTERN (WITH PILOT CONTROL)
06-02	JOYSTICK CONTROL PLUMBING - ISO PATTERN (420 WITH PILOT CONTROL)
06-03	JOYSTICK CONTROL PLUMBING - ISO PATTERN (420CT WITH PILOT CONTROL)
06-04	JOYSTICK CONTROL PLUMBING - ISO PATTERN (420CT WITH PILOT CONTROL)
06-05	JOYSTICK VALVE KITS - H PATTERN, LH (MODELS WITH PILOT CONTROL)
06-06	JOYSTICK VALVE KITS - H PATTERN, RH (MODELS WITH PILOT CONTROL)
06-07	JOYSTICK VALVE KITS - ISO PATTERN, LH
06-08	JOYSTICK VALVE KITS - ISO PATTERN, RH
06-09	JOYSTICK VALVE KITS - ISO PATTERN, LH
06-10	HYDROSTATICS - SUPPLY AND RETURN (420CT WITH PILOT CONTROL)
06-11	HYDROSTATICS - PUMP TO DRIVE MOTORS (420CT WITH PILOT CONTROL)
06-12	HYDROSTATICS - OVERRIDE AND BRAKE VALVE (420CT WITH PILOT CONTROL)
06-13	HYDROSTATICS - PUMP FITTINGS (420CT WITH PILOT CONTROL)
06-14	HYDROSTATICS - TWO SPEED, VALVE ASSY (420CT WITH PILOT CONTROL)
06-15	HYDROSTATICS - SUPPLY AND RETURN (420)
06-16	HYDROSTATICS - SUPPLY, RETURN AND DRAIN PLUMBING (420)
06-17	HYDROSTATICS - PUMP TO DRIVE MOTORS (420)
06-18	HYDROSTATICS - MULTI VALVE (420 WITH PILOT CONTROL)
06-19	HYDROSTATICS - PUMP FITTINGS (420 WITH PILOT CONTROL)
06-20	HYDROSTATICS - HOSES (420 WITH PILOT CONTROL)

TABLE OF CONTENTS

06-21	HYDROSTATICS - DRIVE MOTORS
06-22	HYDROSTATICS - SINGLE SPEED, DRIVE MOTORS (PILOT CONTROL)
06-23	HYDROSTATICS - TWO SPEED, DRIVE MOTORS (MECHANICAL CONTROL)
06-24	HYDROSTATICS - TWO SPEED, DRIVE MOTORS (PILOT CONTROL)
06-25	HYDROSTATICS - RESONATOR (EUROPE)
06-26	HYDROSTATICS - MULTI VALVE, PILOT (EUROPE)
06-27	HYDROSTATICS - MULTI VALVE ASSEMBLY
06-28	HYDROSTATICS - TWO SPEED, VALVE ASSY
06-29	HYDROSTATICS - TWO SPEED, VALVE ASSY (WITH PILOT CONTROL)
06-30	HYDRAULIC GEAR PUMP - WITHOUT HIGH FLOW
06-31	HYDRAULIC GEAR PUMP - HIGH FLOW
06-32	DRIVE LINE (420)
06-33	AXLE ASSY
06-34	WHEELS
06-35	WHEELS - SOLID FLEX
06-36	FINAL DRIVE (420CT)
06-37	TRACK (420CT)
06-38	PUMP, TANDEM - FRONT
06-39	PUMP, TANDEM - FRONT
06-40	PUMP, TANDEM - REAR
06-41	PUMP, TANDEM - REAR
06-42	PUMP, TANDEM - REAR
06-43	MOTOR ASSY - SINGLE SPEED
06-44	MOTOR ASSY - SINGLE SPEED
06-45	MOTOR ASSY - SINGLE SPEED
06-46	MOTOR ASSY - TWO SPEED
06-47	MOTOR ASSY - TWO SPEED
06-48	MOTOR ASSY - TWO SPEED
06-49	MOTOR ASSY - TWO SPEED TRACK DRIVE
06-50	PUMP, TANDEM - REXROTH A22 - 300BAR, 5.5MM ORF, 42.9CC
06-51	PUMP, TANDEM - REXROTH A22 - 300 BAR, 5.7MM ORF (87546976)
06-52	PUMP, TANDEM - PRESSURE RELIEF VALVE (87546976)
06-53	PUMP, TANDEM - PRESSURE RELIEF VALVE (87546976)
06-54	PUMP, TANDEM - INTERNAL GEAR PUMP (87546976)
06-55	PUMP, TANDEM - ROTARY GROUP, RIGHT HAND ROTATION (87546976)
06-56	PUMP, TANDEM - ROTARY GROUP, LEFT HAND ROTATION (87546976)
06-57	PUMP, TANDEM - CONTROL, HYDRAULIC (87546976)
06-58	PUMP, TANDEM - CONTROL CARTRIDGE WITH ORIFICE (87546976)
07-01	BRAKE SYSTEM - HYDRAULIC
08-01	HYDRAULICS - TILT
08-02	HYDRAULICS - LIFT
08-03	HYDRAULICS - CASE DRAIN
08-04	HYDRAULICS - SELF LEVELING
08-05	HYDRAULICS - SECONDARY FRONT AUXILIARY
08-06	HYDRAULICS - RIDE CONTROL
08-07	HYDRAULICS - ATTACHMENT, PROPORTIONAL (WITH PILOT CONTROL)
08-08	HYDRAULICS - ATTACHMENT (MECHANICAL CONTROL)
08-09	HYDRAULICS - COUPLER SYSTEM
08-10	HYDRAULICS - COUPLER SYSTEM
08-11	HYDRAULICS - COUPLER SYSTEM (ITALIAN)
08-12	HYDRAULICS - COUPLER SYSTEM (ITALIAN)

TABLE OF CONTENTS

08-13	CYLINDER - TILT
08-14	CYLINDER - LIFT
08-15	HIGH FLOW HYDRAULICS - PILOT CONTROL
08-16	CONTROL VALVE ASSEMBLY - HIGH FLOW
08-17	CONTROL VALVE - 87546975 VALVE ASSY
08-18	CONTROL VALVE - 87546974 VALVE ASSY (PILOT CONTROL)
08-19	CONTROL VALVE - 87583286 VALVE ASSY
08-20	CONTROL VALVE - 87583285 VALVE ASSY
08-21	CONTROL VALVE - SEAL REPLACEMENT KITS
08-22	CONTROL VALVE - SEAL KIT
08-23	CONTROL VALVE - MAIN RELIEF VALVE
08-24	CONTROL VALVE - RELIEF VALVES
08-25	CONTROL VALVE - SPOOL END GROUP
08-26	CONTROL VALVE - SPOOL END GROUP
08-27	CONTROL VALVE - SPOOL END GROUP
08-28	CONTROL VALVE - CHECK VALVE GROUP
08-29	CONTROL VALVE - SPOOL END GROUP, DETENT
08-30	CONTROL VALVE - SPOOL END GROUP
08-31	CONTROL VALVE - SPOOL END GROUP
08-32	CONTROL VALVE - SPOOL END GROUP
08-33	CONTROL VALVE - SPOOL END GROUP
08-34	CONTROL VALVE - SPOOL END GROUP
08-35	CONTROL VALVE - SPOOL END GROUP
08-36	CONTROL VALVE - SPOOL END GROUP, EHPV
08-37	CONTROL VALVE - SPOOL END GROUP, EHPV
08-38	SECONDARY FRONT AUXILIARY - VALVE ASSY
09-01	LOADER LIFT
09-02	LOADER ARM ADJUSTMENT BLOCKS
09-03	LIFT CYLINDER - COVERS
09-04	COUPLER - MECHANICAL
09-05	COUPLER - MECHANICAL (ITALIAN)
09-06	BUCKETS - LOADER, DIRT / FOUNDRY
09-07	BUCKETS - LOADER, LOW PROFILE, EXTENDED LOW PROFILE
09-08	BUCKETS - LOADER, UTILITY / LIGHT MATERIAL
09-09	BUCKETS - LOADER, HEAVY DIRT
09-10	BUCKET, CUTTING EDGE (BOLT-ON CUTTING EDGE)
09-11	SPECIAL PARTS FOR ITALY - GUARD, BUCKET
09-12	PALLET FORK
09-13	CHASSIS
09-14	CHASSIS
09-15	CONTROLLER - MOUNTING (PILOT CONTROL)
09-16	LOADER & GROUND DRIVE CONTROL - RH
09-17	LOADER & GROUND DRIVE CONTROL - LH
09-18	LOADER & GROUND DRIVE CONTROL - LINKAGE
09-19	CONTROLS - AUXILIARY HYDRAULICS
09-20	HOOD
09-21	HOOD - AIR CONDITIONING
09-22	REAR DOOR
09-23	REAR DOOR - LOUVERED (EUROPE)
09-24	LOCK - REAR DOOR
09-25	CAB - FRAME AND SEAT BAR

TABLE OF CONTENTS

09-26	CAB DOOR - MOUNTING
09-27	CAB DOOR - WASHER SYSTEM
09-28	CAB DOOR
09-29	CAB DOOR - VISOR
09-30	CAB DOOR - WIPER MOUNTING
09-31	CAB DOOR - HANDLE
09-32	DEMOLITION DOOR - MOUNTING
09-33	DEMOLITION DOOR
09-34	HEATER SYSTEM
09-35	HEATER SYSTEM
09-36	HEATER ASSEMBLY
09-37	AIR CONDITIONING SYSTEM
09-38	HEATER AND AIR CONDITIONING ASSEMBLY
09-39	SEAT BAR
09-40	SEAT BELT, LAP BELT (2 IN)
09-41	SEAT BELT, LAP BELT (3 IN)
09-42	SHOULDER BELT
09-43	SEAT MOUNTING - SUSPENSION SEAT
09-44	SEAT MOUNTING - DELUXE SUSPENSION SEAT
09-45	SEAT MOUNTING - STANDARD SEAT
09-46	FLOOR MAT
09-47	REAR VIEW MIRROR
09-48	SPECIAL PARTS FOR ITALY - MIRROR, REAR VIEW
09-49	TOP WINDOW
09-50	SIDE WINDOWS
09-51	HEADLINER - STANDARD
09-52	HEADLINER - HEATER AND AIR CONDITIONING
09-53	REAR WINDOW
09-54	REAR WINDOW - HEAT AND AIR CONDITIONING
09-55	HEAT SHIELD
09-56	INTERIOR TRIM
09-57	RADIO - SPEAKERS AND ANTENNA
09-58	RADIO - SPEAKERS AND HOUSING
09-59	SOUNDPROOFING - SEAL
09-62	NOISE CONTROL
09-63	LIFT HOOK - SINGLE POINT
09-64	LIFT HOOK
09-65	DECALS - ENGLISH
09-66	DECAL (420CT)
09-67	DECALS
09-68	DECALS
09-69	DECALS - DANISH, DUTCH, FINNISH
09-70	DECALS - FRENCH, GERMAN, GREEK
09-71	DECALS - ITALIAN, NORWEGIAN, POLISH
09-72	DECALS - PORTGUESE, SPANISH, SWEDISH
09-73	DECALS - BRAZILIAN PORTUGUESE, CANADIAN FRENCH, LATIN AMERICAN SPANISH

NOTES

GENERAL INFORMATION

PROPRIETARY NOTICE

The contents of this manual are proprietary data of this company. Reproduction or use of any part for other than the operation and maintenance of our equipment is permissible only if expressly authorized in writing.

Additional copies may be obtained from your dealer. Address requests for copies to your Dealer and refer to the publication part number appearing on the bottom of the rear catalog cover or on the title page.

COMPANY POLICY

Company policy, which is one of continuous improvement, reserves the right to change prices and to make changes in design and specification at any time without notice and without obligation to modify units previously built.

All data given in this book is subject to production variations. Dimensions and weights are approximate only and the illustrations do not necessarily show machines in standard condition. For exact information about any particular machine please consult your dealer.

PARTS AND ACCESSORIES

Genuine parts and accessories have been specifically designed for these machines.

We would like to point out that “non-genuine” parts and accessories have NOT been examined and released by the Company. The installation and or use of such products could have negative effects upon the design characteristics of your machine and thereby affect its safety. The company is not liable for any damage caused by the use of “non-genuine” parts and accessories.

IMPROVEMENTS

We are continually striving to improve our products. We reserve the right to make improvements or changes when it becomes practical and possible to do so, without incurring any obligation to make changes or additions to the equipment sold previously.

MODEL CODES

The range of machines listed may not be available in all countries or markets therefore, for the latest information consult your local dealer.

OWNER ASSISTANCE

We want you to be completely satisfied with your investment. Normally any problems with your equipment will be handled by your dealer's Service Department; however, misunderstandings can occur. If your problem has not been handled to your satisfaction, we suggest the following:

1. Contact the owner or General Manager of the dealership, explain the problem, and request assistance. When additional assistance is needed, your dealer has direct access to our office.
2. Provide your dealer with:
   - Your Name, Address, and Telephone number
   - Machine Model and Serial Number
   - Dealership Name and Address
   - Machine purchase date and amount of use
   - Nature of problem

Be aware that your problem will likely be resolved in the dealership using the dealer's facilities, equipment, and personnel. So it is important that your initial contact be with the dealer.

SPARE PARTS

To maintain operating efficiency, use original spare parts.

When ordering parts, give the following information:

- Machine Model
- Machine and Engine Serial Numbers
- Part Number from the Parts Catalog

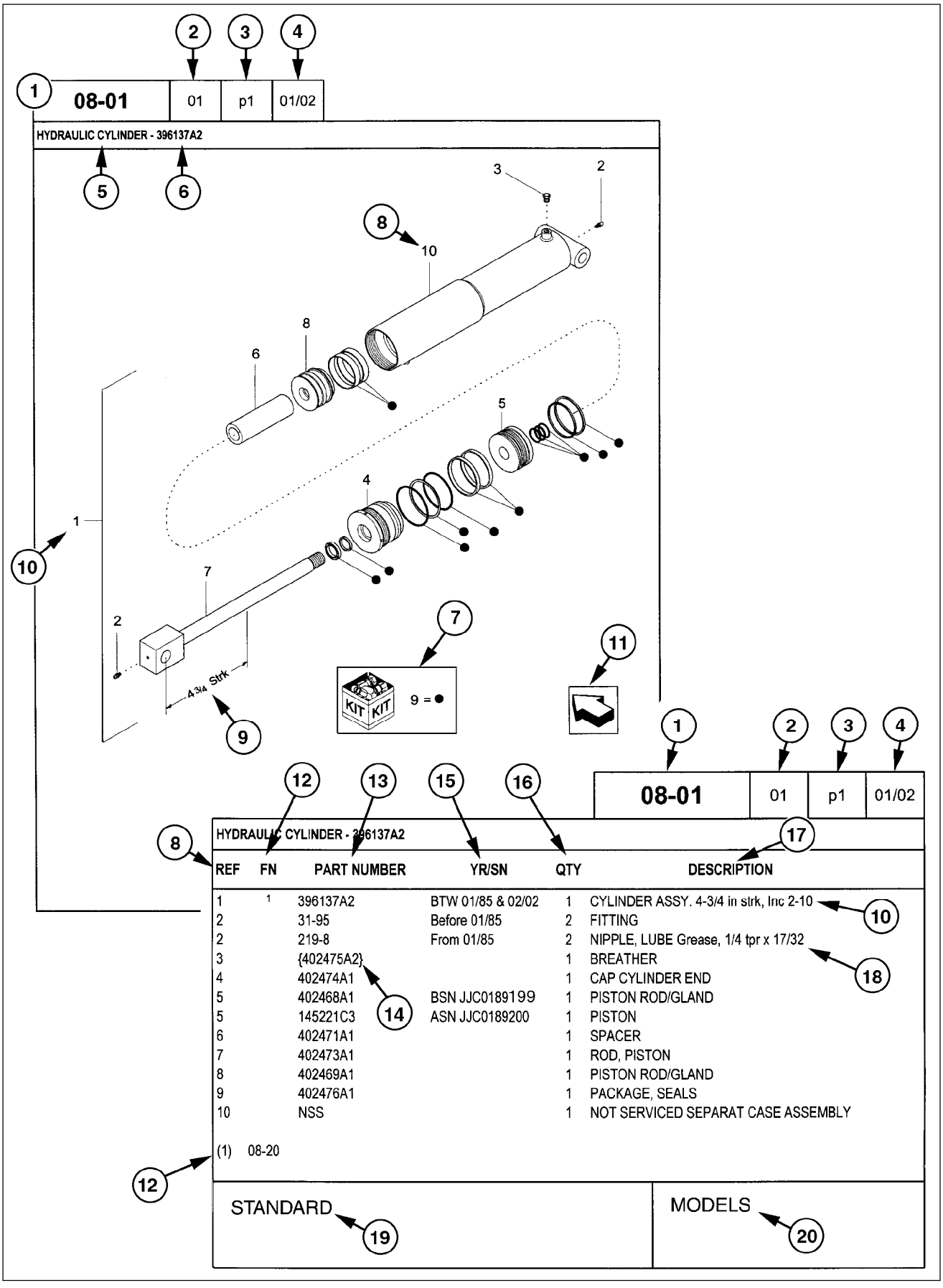

REF	FN	PART NUMBER	YR/SN	QTY	DESCRIPTION
1	1	396137A2	BTW 01/85 & 02/02	1	CYLINDER ASSY. 4-3/4 in strk, Inc 2-10
2		31-95	Before 01/85	2	FITTING
2		219-8	From 01/85	2	NIPPLE, LUBE Grease, 1/4 tpr x 17/32
3		{402475A2}		1	BREATHER
4		402474A1		1	CAP CYLINDER END
5		402468A1	BSN JJC0189199	1	PISTON ROD/GLAND
5		145221C3	ASN JJC0189200	1	PISTON
6		402471A1		1	SPACER
7		402473A1		1	ROD, PISTON
8		402469A1		1	PISTON ROD/GLAND
9		402476A1		1	PACKAGE, SEALS
10		NSS		1	NOT SERVICED SEPARAT CASE ASSEMBLY

(1) 08-20

HOW TO USE YOUR PARTS CATALOG

1. Figure Number
2. Sequence Code within the Figure Number
3. Page Number within the Sequence Code
4. Date of Printing (month / year)
5. Figure Description
6. General information regarding the figure
7. Parts supplied in repair kits per symbol reference
8. Figure call-out of the part number (REF)
9. Technical specifications relating to the part indicated
10. Figure call-out includes bracketed items, the included items may also be listed in the additional description area
11. Orientation - Arrow indicates front of the machine
12. Footnote - Additional information relating to the part number. In this example, 08-20 equals another figure that this part is shown on
13. Part Number
    NSS = Not Serviced Separately (Non-serviced parts)
    Bracketed numbers = not available as service parts in this market
14. Not Available as service part in this market
15. YR/SN

    Year
    Before 01/85 = Part valid for production January 1985 and before
    From 01/85 = Part valid for production from January 1985 and after
    BTW 01/85 & 02/02 = Part valid for machines produced between January 1985 and February 2002.

    Serial Number (P.I.N.)
    BSN JJC0268800 = Part valid for serial number JJC0268800 and below
    ASN JJC0268800 = Part valid for serial number JJC0268800 and above
    BTW JJC0178000 & JJC0179000 = Part valid for serial numbers between JJC0178000 & JJC0179000
16. Total Quantity of the Part referred to in the page. The quantity can be replaced by the following indications:
    AR = As Required
    X = As required
17. Part Description
18. Additional description of the part to help confirm identification
19. Figure Notes
20. Model Number(s)

RIGHT-HAND AND LEFT-HAND

The reference to right-hand and left-hand in this catalog is identified by the operator standing at the rear of the basic unit (without rear attachment), looking toward the front of the machine (in normal forward travel).

For pages covering any machine attachments, right-hand and left-hand are defined by the operator sitting in the position for proper operation of the attachment.

DIMENSIONS

Metric and U.S. hardware dimensions do not show the numeric designations of standard coarse threads. A number following a semi colon (;) is the class or grade of hardware. A comma (,) represents the decimal point (.) used in U.S. dimensions.

EXPLANATION OF ABBREVIATIONS

AC	Alternating Current
adj	adjustable
amp	ampere
AR	As required
ASN	Serial number and after P.I.N. and after
blkhd	bulkhead
br	branch
BSN	before Serial number before P.I.N.
BTW	between
cc	cubic centimetre
cl	class
cmprsn	compression
cn pt	cone point
cp pt	cup point
CRS	Chrome Alloy Steel
CST	Carbon Steel
cu yd	cubic yard
DC	Direct Current
deg	degree
dg pt	dog point
dia	diameter
dr type	drive type
fc	face
fc sl	face seal
fem	female
fem PT	female pipe thread
fl	flare
flat pt	flat point
ft	feet or foot
ga	gauge
gal	gallon or gallons
gpm	gallons per minute
gr	grade
hd	head
hdg pt	half dog point
hp	horsepower
ID	inside diameter
in	inch or inches
Incl.	Includes
inv fl	inverted flare
K	kilo
kg	kilogram
km/h	kilometers per hour
L	litre
lb	pounds
lb-ft	pound-foot
lg	long
LH	left-hand
LH thd	left-hand thread
M	(prefix) metric thread size
m	metre
ml	milliliter
mm	millimetre
NF	National Fine
No.	number
NPT	National Pipe Thread
NS	National Super Fine
OD	outside diameter
ohm	electrical unit of resistance
Or	O-ring
ORB	O-ring boss
ORFS	O-ring face seal
ov cntr	over center
ov pt	oval point
oz	ounce
P	pitch
psi	pounds per square inch
pt	pint
PT	pipe thread
rd	round
rd holes	round holes
RH	right-hand
RH thd	right-hand thread
rpm	revolutions per minute
sl	self-locking
sq	square
SST	Stainless Steel
st	self-tapping
strk	stroke
sw	swivel
T	teeth
thk	thick
tpr	taper
tube OD	tube outside diameter
V	volt or volts
W	watt or watts
X	as required
yd	yard

SECTION INDEX
Engine

02-00	FAN, RADIATOR/OIL COOLER - COOLANT RECOVERY SYSTEM
02-01	RADIATOR/OIL COOLER
02-02	ENGINE - EXHAUST SYSTEM
02-03	EXHAUST SYSTEM - ASPIRATOR
02-04	ENGINE - AIR CLEANER SYSTEM
02-05	ENGINE - MOUNTING AND THROTTLE, SERIES 3
02-06	ENGINE - MOUNTING (EUROPE)
02-07	ENGINE - DIPSTICK, OIL FILL
02-08	REMOTE OIL DRAIN
02-09	ENGINE - BLOCK HEATER
02-10	ENGINE ASSY (87546691)
02-11	CYLINDER BLOCK & RELATED PARTS (87546691)
02-12	OIL SUMP & RELATED PARTS (87546691)
02-13	ENGINE BLOCK FRONT COVER (87546691)
02-14	FLYWHEEL CASE (87546691)
02-15	ENGINE BREATHERS (87546691)
02-16	CYLINDER HEAD & RELATED PARTS (87546691)
02-17	CYLINDER HEAD COVERS (87546691)
02-18	ROCKER SHAFT (87546691)
02-19	INTAKE MANIFOLD (87546691)
02-20	HEAT EXCHANGER - ENGINE (87546691)
02-21	EXHAUST MANIFOLD (87546691)
02-22	CRANKSHAFT (87546691)
02-23	CONNECTING ROD (87546691)
02-24	PISTON - ENGINE (87546691)
02-25	ENGINE - FLYWHEEL (87546691)
02-26	PULLEY - CRANKSHAFT (87546691)
02-27	CAMSHAFT - TIMING CONTROL (87546691)
02-28	TURBOCHARGER (87546691)
02-29	PUMP, ENGINE OIL & RELATED PARTS (87546691)
02-30	FILTER ENGINE OIL (87546691)
02-31	OIL PUMP PIPING (87546691)
02-32	HEAT EXCHANGER (87546691)
02-33	WATER PUMP & RELATED PARTS (87546691)
02-34	PIPING - ENGINE COOLING SYSTEM (87546691)
02-35	TEMPERATURE CONTROL (THERMOSTAT) (87546691)
02-36	BELT PULLEY DRIVE & COVER (87546691)
02-37	HOOKS - ENGINE (87546691)
02-38	DIAGNOSTIC SENSOR (87546691)
02-39	MONITORING ELECTRICAL ACCESSORIES (87546691)

FAN, RADIATOR/OIL COOLER - COOLANT RECOVERY SYSTEM

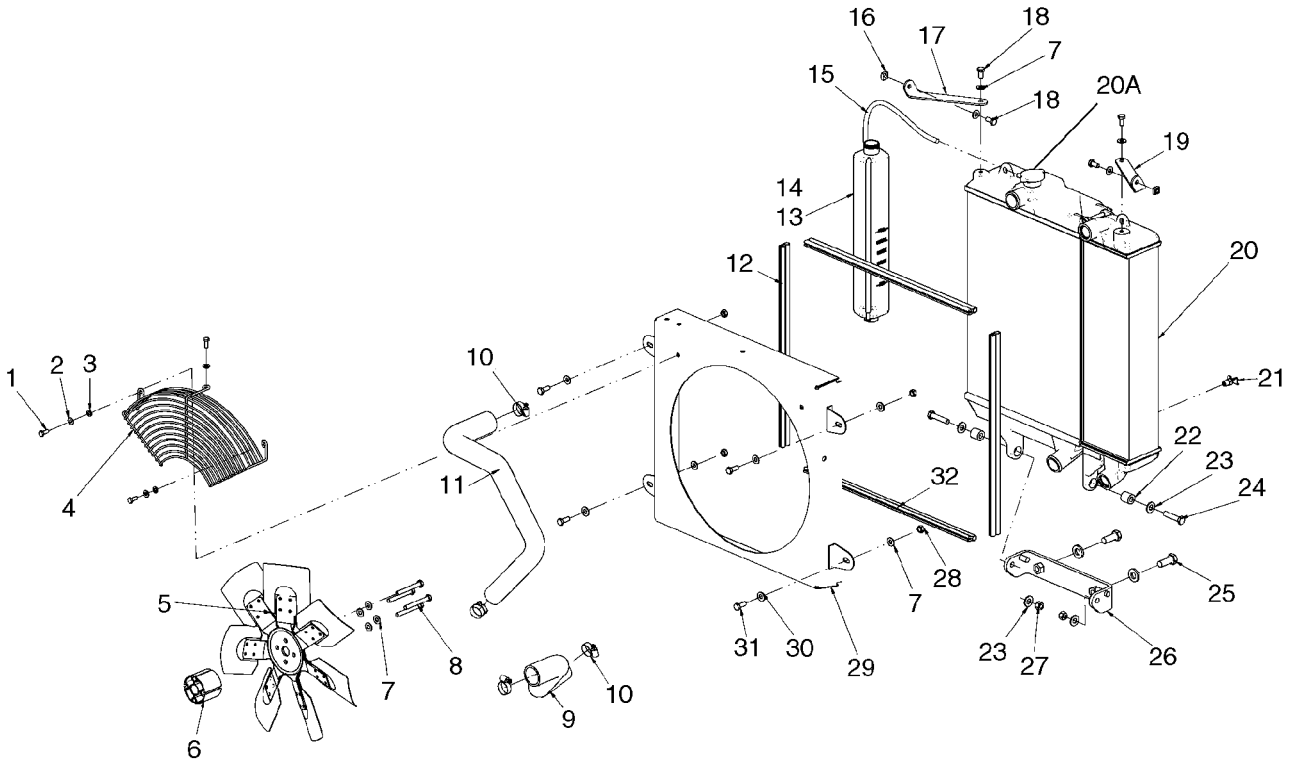

BS07J216

FAN, RADIATOR/OIL COOLER - COOLANT RECOVERY SYSTEM

REF	FN	PART NUMBER	YR/SN	QTY	DESCRIPTION
1		120104		3	SCREW, Hex, M8 x 20, 8.8
2		322358		3	WASHER, SPRING, Belleville, M8
3		86624184		3	WASHER, M8 x 16 x 1.6
4		{87594970}		1	Guard, Fan
5		87025470		1	FAN, Fan, 480mm (18 29/32 in.) Dia. Pusher
6		87565746		1	SPACER, Fan Spacer, 60mm Length
6		{87708428}		1	Fan Spacer, 80mm Length, Europe Only
7		140045		12	WASHER, SPRING, Belleville, M10
8		120075		4	BOLT, Hex, M10 x 100, 8.8, Used With Europe Fan Spacer
8		120073		4	BOLT, Hex, M10 x 80, 8.8
9		87661377		1	HOSE, Lower Radiator Hose
10		84674		4	CLAMP, HOSE, #28, 1.31/2.25 Type F Worm
11		87661376		1	HOSE, Upper Radiator Hose
12		{87648128}		2	Bulb Seal, 562mm (22 1/8 in.)
13		87020980		1	RESERVOIR, COOLANT EXPNSN, Coolant Recovery Bottle; Incl 14
14		257884A1		1	PLUG, Cap, Coolant Bottle
15		{87534725}		1	Hose, Coolant Recovery, 400mm (15 3/4 in.)
16		230427A1		2	NUT
17		87651799		1	BRACKET, Upper Radiator Mount, RH
18		43138		4	SCREW, Hex, M10 x 20, 8.8, Full Thd
19		87651800		1	BRACKET, Upper Radiator Mount, LH
20		87660842		1	RADIATOR, Radiator And Oil Cooler Module; See Fig 02-01
20A		87687375		1	RADIATOR, Radiator Cap
21		86625234		1	COCK, DRAIN
22		87626729		2	SPACER
23		86625254		4	WASHER, M12 x 28 x 2.5
24		87021825		2	BOLT, Hex, M12 x 55, 10.9
25		43168		2	BOLT, Hex, M16 x 40, 8.8
26		87676100		1	BRACKET, Lower Hinge Mount
27		{87533547}		2	Nut, M12 X 1.75 Cl10
28		86500689		4	NUT, M10, Cl 10
29		87660816		1	SHROUD, Fan Shroud

FAN, RADIATOR/OIL COOLER - COOLANT RECOVERY SYSTEM

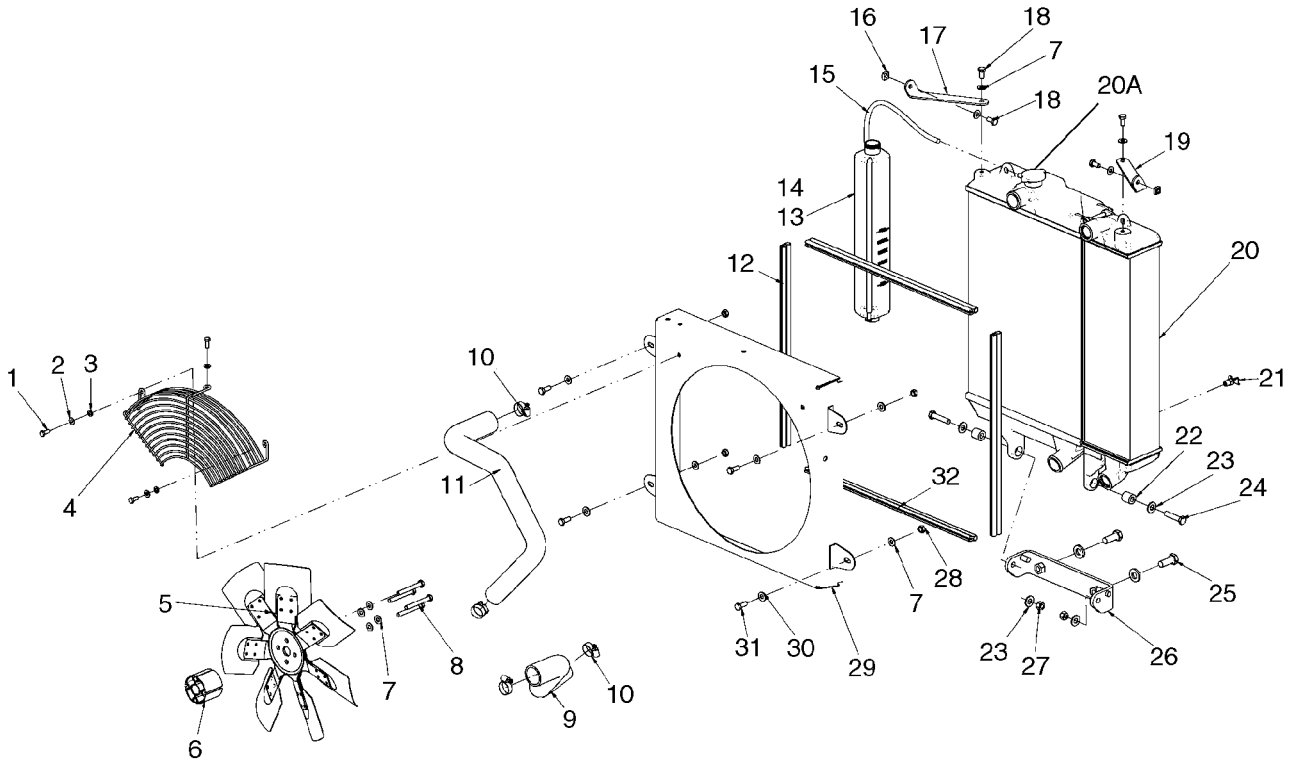

FAN, RADIATOR/OIL COOLER - COOLANT RECOVERY SYSTEM

REF	FN	PART NUMBER	YR/SN	QTY	DESCRIPTION
30		86625253		4	WASHER, M11 x 24 x 2
31		43139		4	SCREW
32		{87578980}		2	Bulb Seal, 590mm (23 1/4 in.)

RADIATOR/OIL COOLER

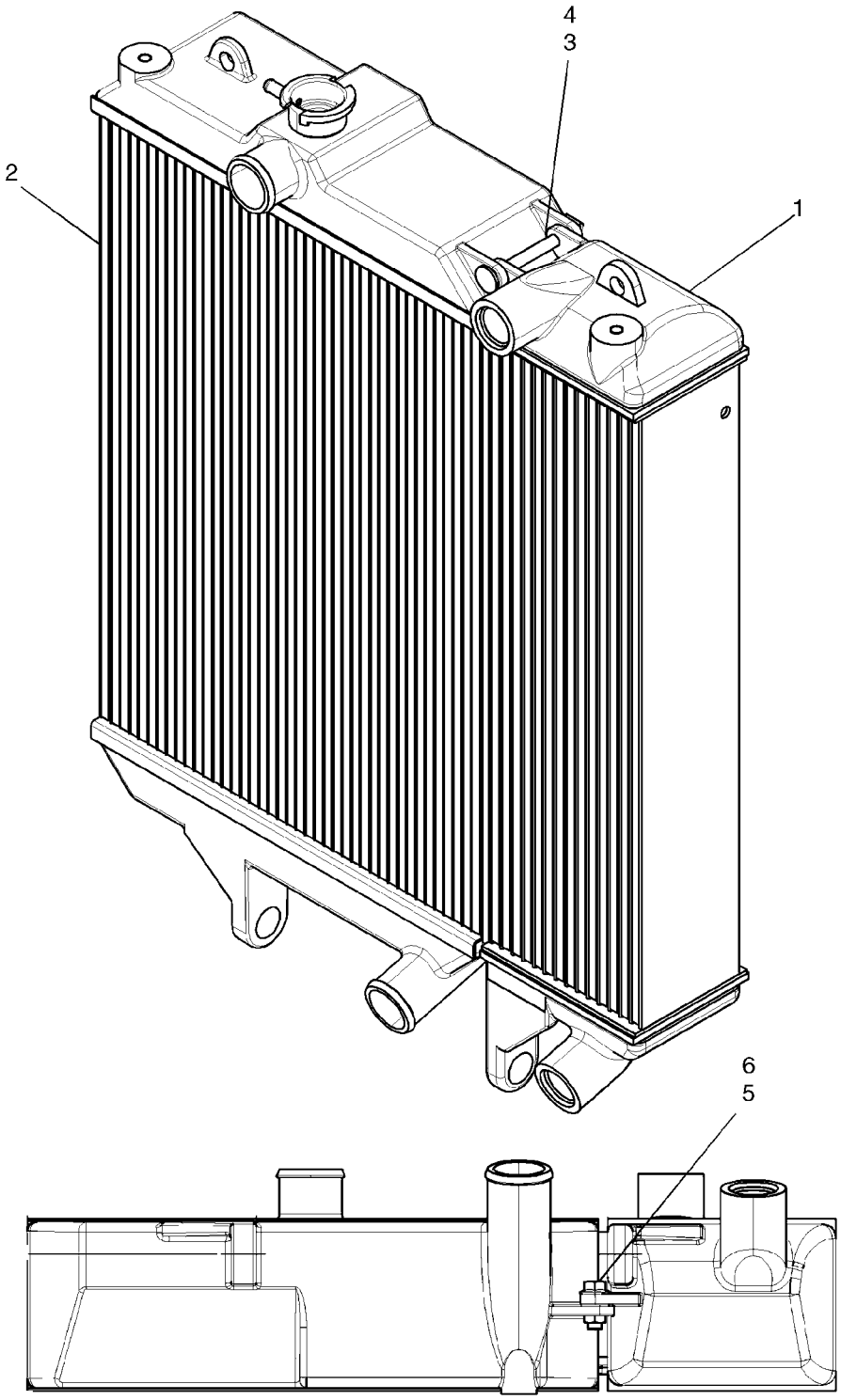

RADIATOR/OIL COOLER

REF	FN	PART NUMBER	YR/SN	QTY	DESCRIPTION
		87660842		1	RADIATOR, Incl 1 - 8
1		87687372		1	RADIATOR, Oil Cooler
1		87688650		1	COOLER, OIL, Low Fin Density Oil Cooler
2		87688523		1	RADIATOR, Standard Radiator And Decal
2		87688649		1	RADIATOR, Low Fin Density Radiator And Decal
3		87687373		1	RADIATOR, Pin
4		87687374		1	RADIATOR, Clip
5		9804262		1	BOLT, Hex Flg, M10 x 30, 8.8
6		9804278		1	NUT, M10 x 1.5, Flg, Cl 8
7		87687376		1	RADIATOR, Seal
8		87687375		1	RADIATOR, Radiator Cap; Not Illustrated

ENGINE - EXHAUST SYSTEM

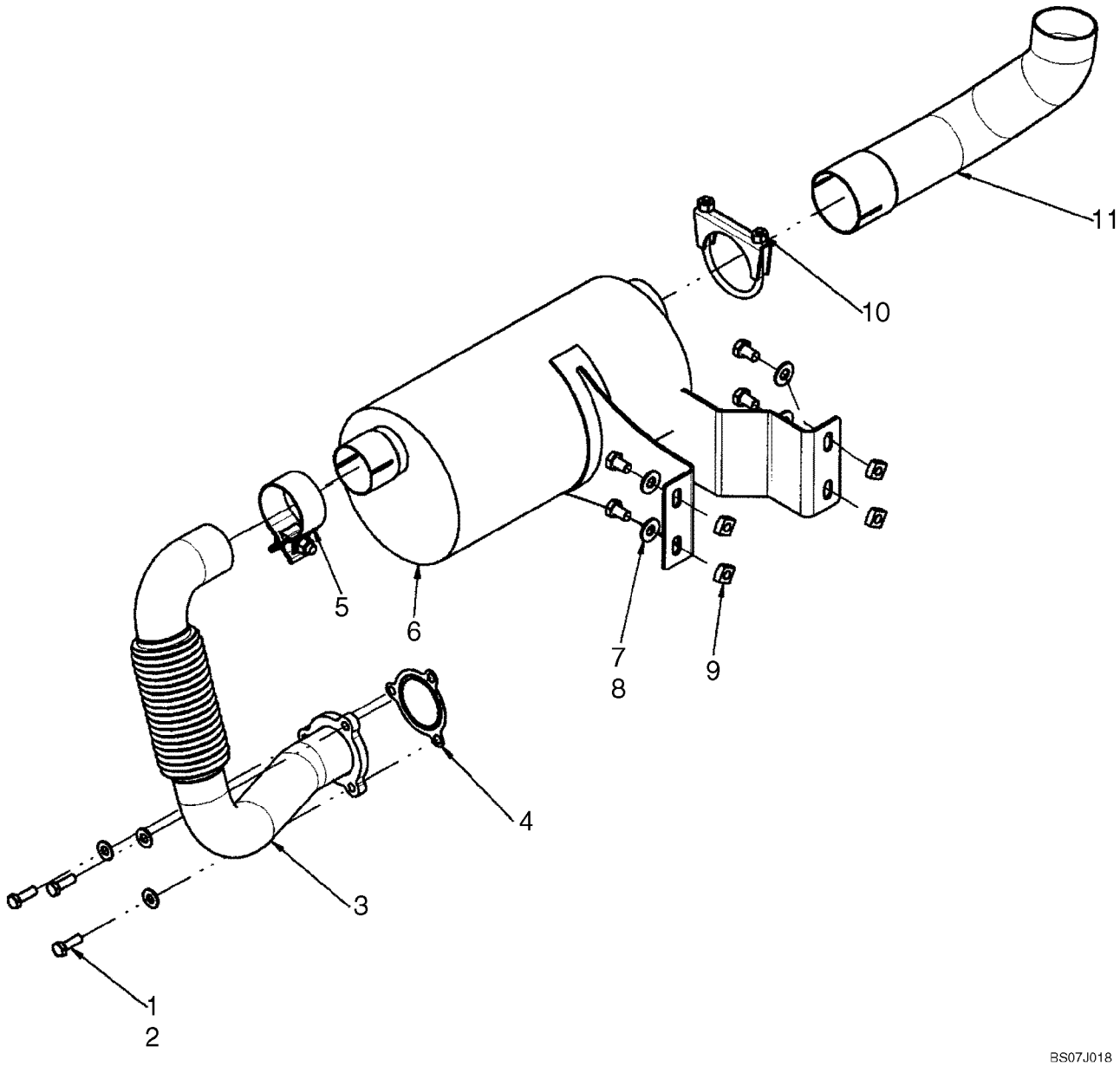

ENGINE - EXHAUST SYSTEM

REF	FN	PART NUMBER	YR/SN	QTY	DESCRIPTION
1		43127		7	BOLT, Hex, M8 x 25, 8.8
2		86625263		7	WASHER, M8 x 20 x 1.6
3		{87632396}		1	Flexible Exhaust Coupler
4		87611895		1	GASKET
5		87644690		1	CLAMP
6		87653888		1	MUFFLER
7		300383		4	BOLT, Hex, M10 x 16, 8.8, Full Thd
8		86625253		5	WASHER, M11 x 24 x 2
9		230427A1		4	NUT
10		87461995		1	CLAMP
11		87653890		1	PIPE, EXHAUST SYSTEM, Exhaust Tail Pipe
12		87696527		1	MUFFLER, Muffler Wrap, Europe; Not Illustrated
13		87393399		5	SPRING, Stainless Ties, Use To Secure Muffler Wrap; Not Illustrated

EXHAUST SYSTEM - ASPIRATOR

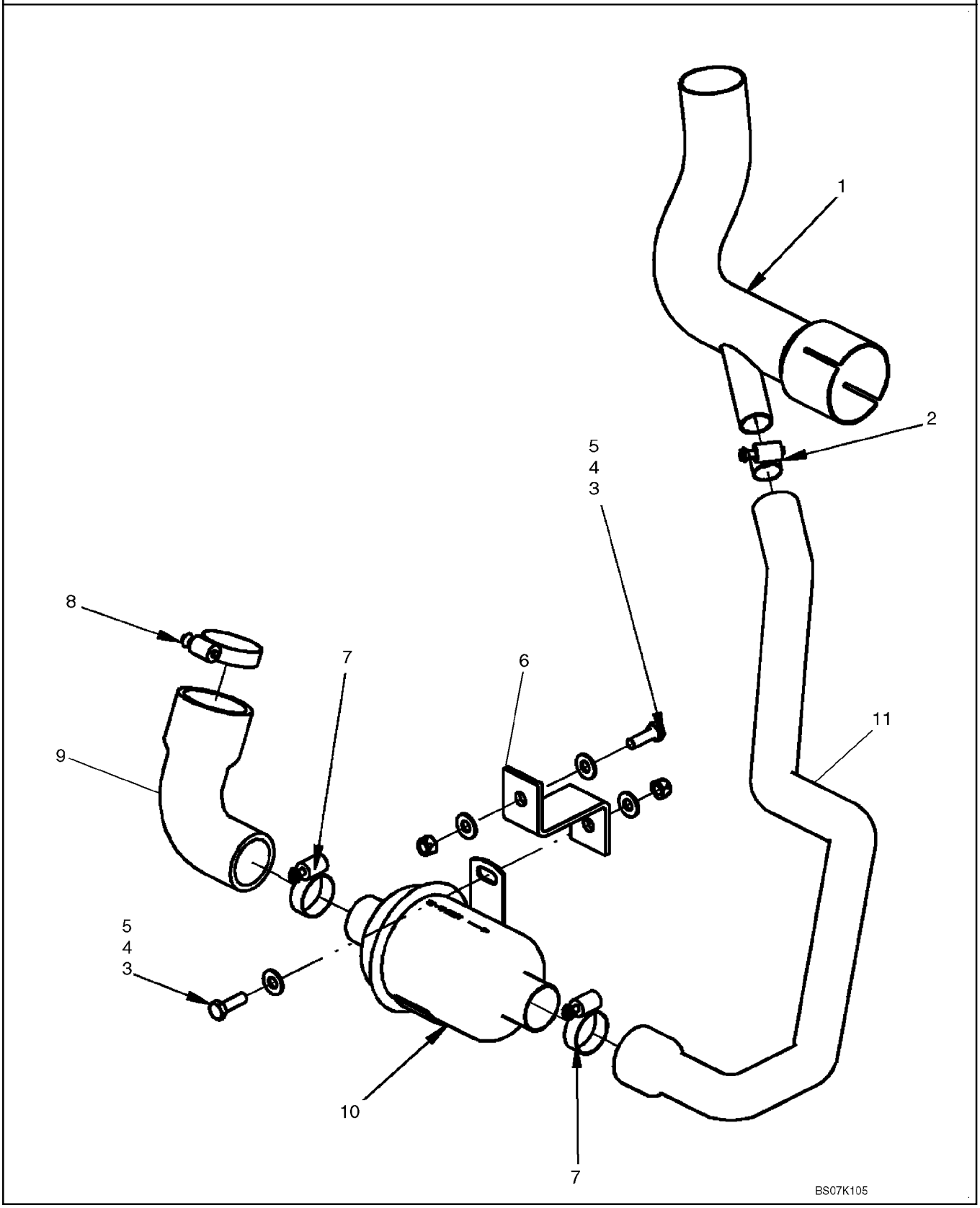

EXHAUST SYSTEM - ASPIRATOR

REF	FN	PART NUMBER	YR/SN	QTY	DESCRIPTION
		87638321		1	KIT, SERVICE, Kit, Aspirator; Incl 1 - 11
1		87653891		1	PIPE, EXHAUST SYSTEM, Exhaust Tailpipe, Aspirator
2		507586		1	CLAMP, HOSE, #20, 0.81/1.75 Type F Worm
3		43127		2	BOLT, Hex, M8 x 25, 8.8
4		86629542		2	NUT, LOCK, M8 x 1.25, Cl 8
5		86625263		4	WASHER, M8 x 20 x 1.6
6		87615741		1	BRACKET
7		84674		2	CLAMP, HOSE, #28, 1.31/2.25 Type F Worm
8		86624194		1	CLAMP, HOSE, #36, 1.81/2.75 Type F Worm
9		87615742		1	HOSE, Air Cleaner To Aspirator
10		406089A2		1	VALVE, Aspirator Check Valve
11		87653892		1	HOSE, Tail Pipe To Aspirator

ENGINE - AIR CLEANER SYSTEM

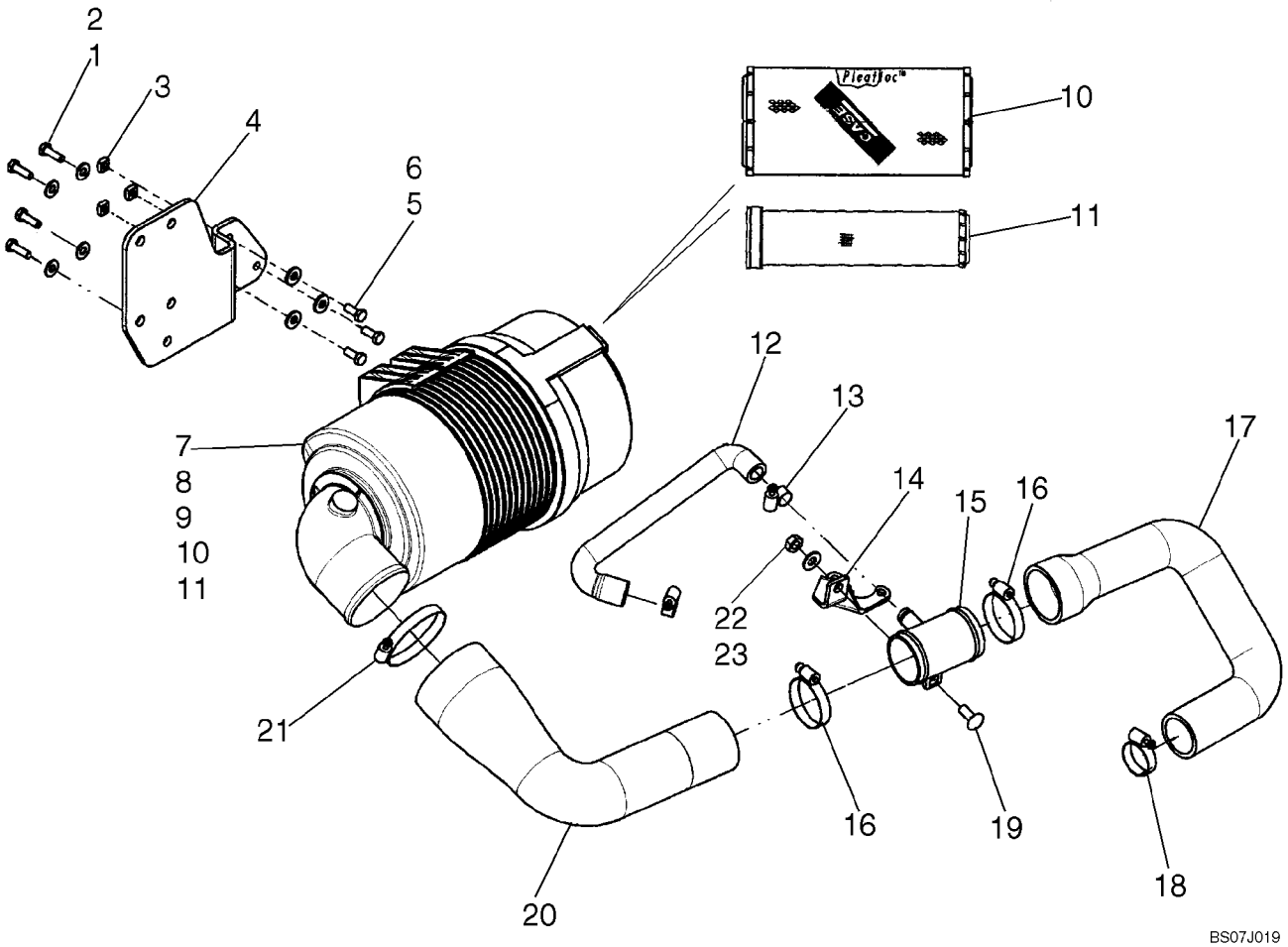

ENGINE - AIR CLEANER SYSTEM

REF	FN	PART NUMBER	YR/SN	QTY	DESCRIPTION
1		86625263		7	WASHER, M8 x 20 x 1.6
2		43127		7	BOLT, Hex, M8 x 25, 8.8
3		229197A1		3	NUT
4		87620930		1	BRACKET, Air Cleaner Mounting Bracket
5		120104		3	SCREW, Hex, M8 x 20, 8.8
6		87015284		3	WASHER, M8 x 21.5 x 2.5, HT
7		87641886		1	AIR CLEANER, Incl. 7 - 11
8		395792A1		1	COVER ASSY, Air Cleaner Cover Assembly
9		A184597		1	POPPET, VALVE, Vacuator Valve
10		222421A1		1	FILTER, AIR, Primary Filter
11		222422A1		1	FILTER, ELEMENT, Secondary Filter
12		87655495		1	HOSE, Formed Hose
13		86625021		2	CLAMP, HOSE, #12, 0.69/1.25 Type F Worm
14		87655497		1	BRACKET
15		87610560		1	HOSE, Air Cleaner Intake
16		86050197		2	CLAMP, HOSE
17		87655492		1	HOSE, Hose, Coupler To Turbo
18		86050202		1	CLAMP, HOSE, #32, 1.56/2.50 Type F Worm
19		86633356		1	BOLT, CARRIAGE, Short NK, M10 x 25, Cl8.8, Full Thd
20		87655493		1	HOSE, Hose, Air Cleaner To Coupler
21		381144		1	CLAMP, HOSE, #60, 3.31/4.25 Type F Worm
22		86625253		5	WASHER, M11 x 24 x 2
23		100016		1	NUT, M10, Cl 8

02-05		p1	11/07

ENGINE - MOUNTING AND THROTTLE, SERIES 3

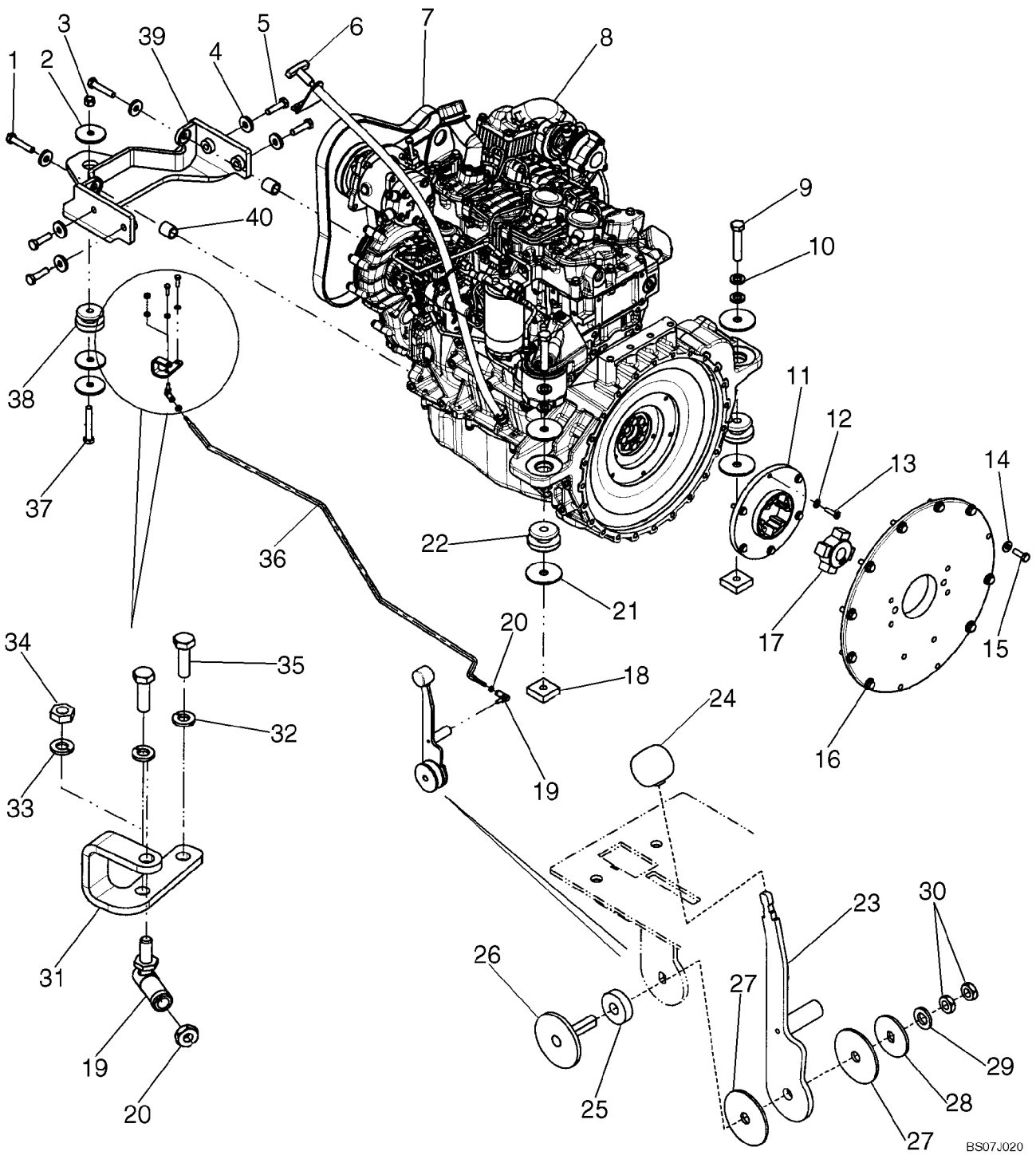

ENGINE - MOUNTING AND THROTTLE, SERIES 3

REF	FN	PART NUMBER	YR/SN	QTY	DESCRIPTION
1		43263		2	BOLT, Hex, M12 x 60, 10.9
2		87639792		3	WASHER, Washer, .531 X 2.50 X .188 ZND
3		412672		1	NUT, LOCK, M12 x 1.75, Cl 10
4		86592701		6	WASHER, M12 x 35 x 5, HT
5		412087		4	BOLT, Hex, M12 x 45, 10.9, Full Thd
6		REF		1	INSTRUCTION, Remote Dipstick; See Fig. 02-07
7		87621132		1	BELT, Belt, V Ribbed
8		87546691		1	ENGINE, Engine, F5C
9		86577946		2	BOLT, Hex, M16 x 80, 10.9
10		86625266		4	WASHER, M17.5 x 30 x 4, HT
11		87024539		1	ELEMENT
12		322358		6	WASHER, SPRING, Belleville, M8
13		43235		6	BOLT, Hex, M8 x 30, 10.9
14		86639325		10	WASHER, M10 x 24.5 x 3, HT
15		43140		10	BOLT, Hex, M10 x 30, 8.8, Full Thd
16		87547003		1	PLATE
17		87024588		1	HUB, Hub, Pump Drive
18		87535743		2	NUT
19		H169920		2	BALL JOINT
20		86976064		2	NUT, Jam, 1/4"-28, G5
21		{87630175}		4	Washer, .656 X 3.0 X .179 ZND
22		86550698		2	INSULATOR, Isolation Mount
23		87573756		1	LEVER, Hand Throttle Lever
24		A177436		1	KNOB
25		257973A1		1	WASHER
26		291244A1		1	LEVER, Throttle Pivot
27		1342374C1		2	DISC, Friction Disc
28		257971A1		1	WASHER, Slotted Washer
29		86625255		1	WASHER, M13.5 x 24.5 x 3, HT
30		323238		2	NUT, Thin, M12 x 1.75, Cl 05
31		{87643562}		1	Throttle Rod Bracket
32		86517328		2	WASHER, LOCK, M6
33		80682		1	WASHER, LOCK, 1/4"
34		88098		1	NUT, Jam, 1/4"-28, G2
35		120100		2	BOLT, Hex, M6 x 20, 8.8

ENGINE - MOUNTING AND THROTTLE, SERIES 3

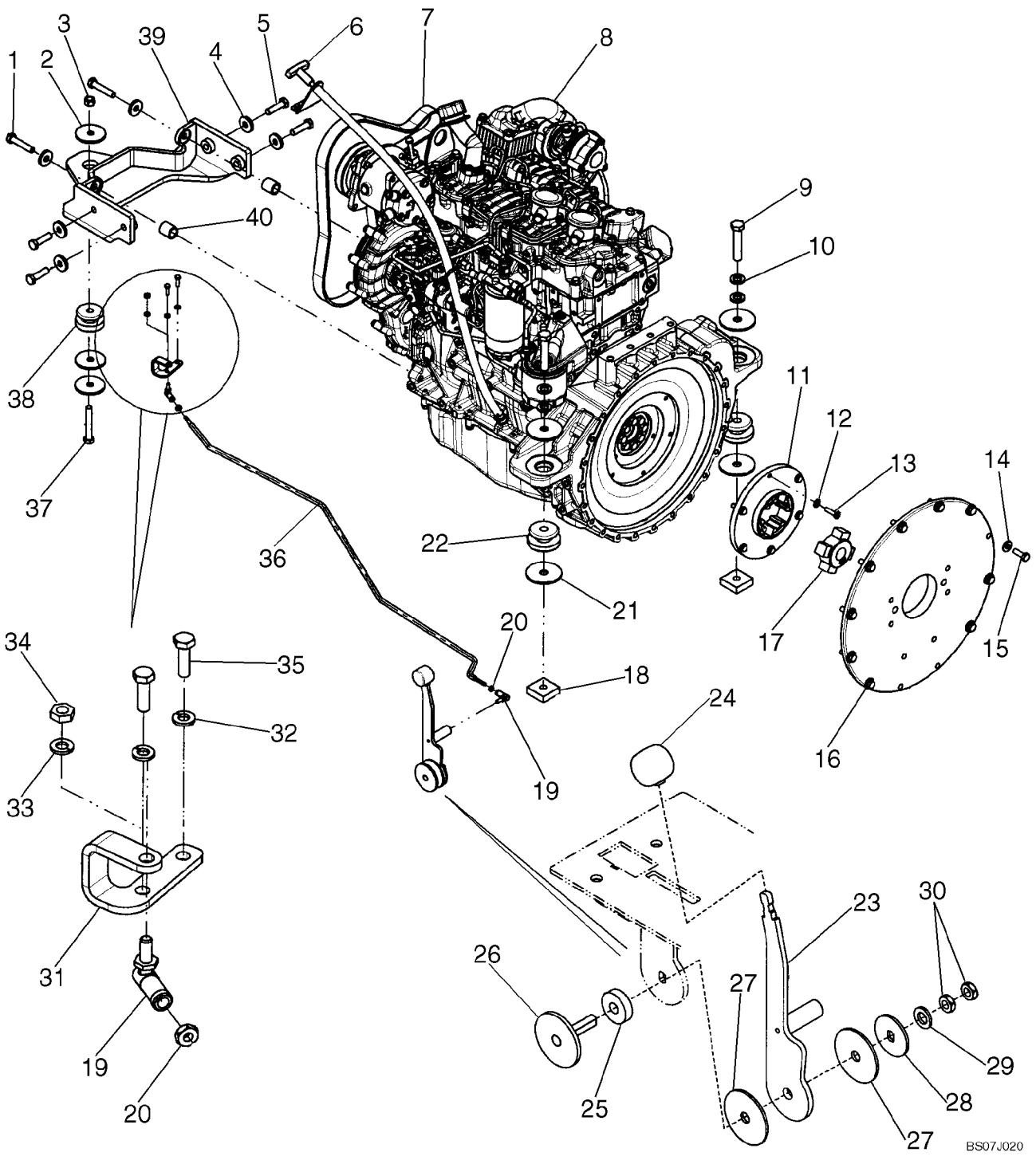

ENGINE - MOUNTING AND THROTTLE, SERIES 3

REF	FN	PART NUMBER	YR/SN	QTY	DESCRIPTION
36		{87639295}		1	Throttle Rod
37		412085		1	BOLT, Hex, M12 x 80, 10.9
38		D137185		1	MOUNTING PARTS
39		87573395		1	BRACKET
40		87578141		2	SPACER

ENGINE - MOUNTING (EUROPE)

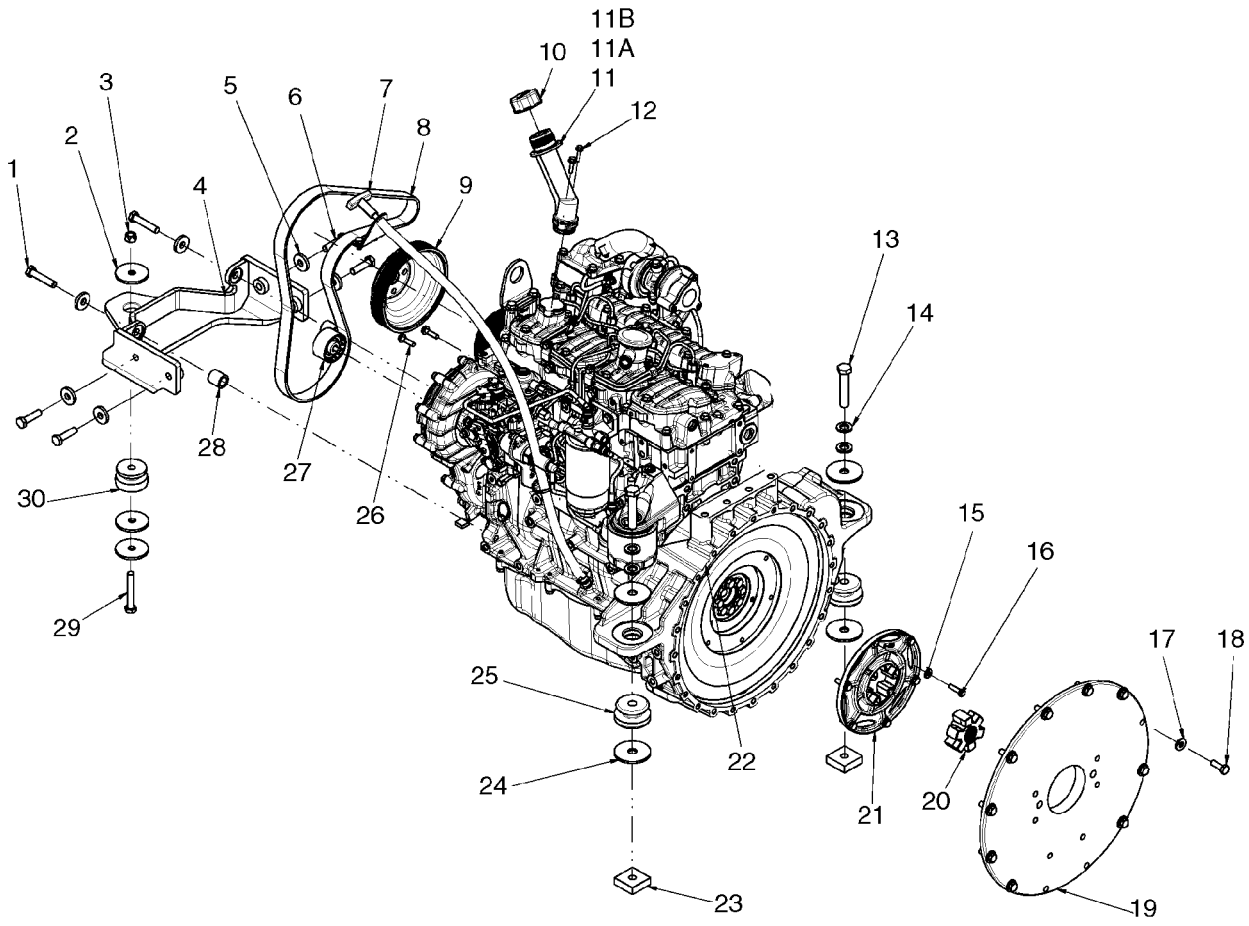

BS07N328

ENGINE - MOUNTING (EUROPE)

REF	FN	PART NUMBER	YR/SN	QTY	DESCRIPTION
1		43263		2	BOLT, Hex, M12 x 60, 10.9
2		87639792		3	WASHER
3		412672		1	NUT, LOCK, M12 x 1.75, Cl 10
4		87687525		1	BRACKET, Engine Mount, Fan Side
5		86592701		6	WASHER, M12 x 35 x 5, HT
6		412087		4	BOLT, Hex, M12 x 45, 10.9, Full Thd
7		REF		1	INSTRUCTION, Remote Dipstick; See Fig 02-07
8		87713097		1	BELT, Belt, V Ribbed
9		87693079		1	PULLEY, Fan Pulley (Europe)
10		87674802		1	CAP, Oil Fill Cap
11		{87689627}		1	Spacer, Oil Fill
11A		87674803		1	NECK FILLER
11B		86625096		1	O-RING, -127, 90 Duro, 1.424" ID x .103" Thk
12		9804257		2	BOLT, Hex Flg, M6 x 25, 8.8
13		86577946		2	BOLT, Hex, M16 x 80, 10.9
14		86625266		4	WASHER, M17.5 x 30 x 4, HT
15		322358		6	WASHER, SPRING, Belleville, M8
16		43235		6	BOLT, Hex, M8 x 30, 10.9
17		86639325		10	WASHER, M10 x 24.5 x 3, HT
18		43140		10	BOLT, Hex, M10 x 30, 8.8, Full Thd
19		87547003		1	PLATE, Pump Mounting Plate
20		87711337		1	COUPLING, Coupling, Drive Star
21		87692685		1	COUPLING, Flexible Coupling
22		87546691		1	ENGINE, Engine, F5C
23		87535743		2	NUT
24		87687021		4	FASTENER
25		86550698		2	INSULATOR
26		87717911		2	BOLT
27		{87698715}		1	Idler Pulley
28		87578141		2	SPACER
29		412085		1	BOLT, Hex, M12 x 80, 10.9
30		86541277		1	INSULATOR

ENGINE - DIPSTICK, OIL FILL

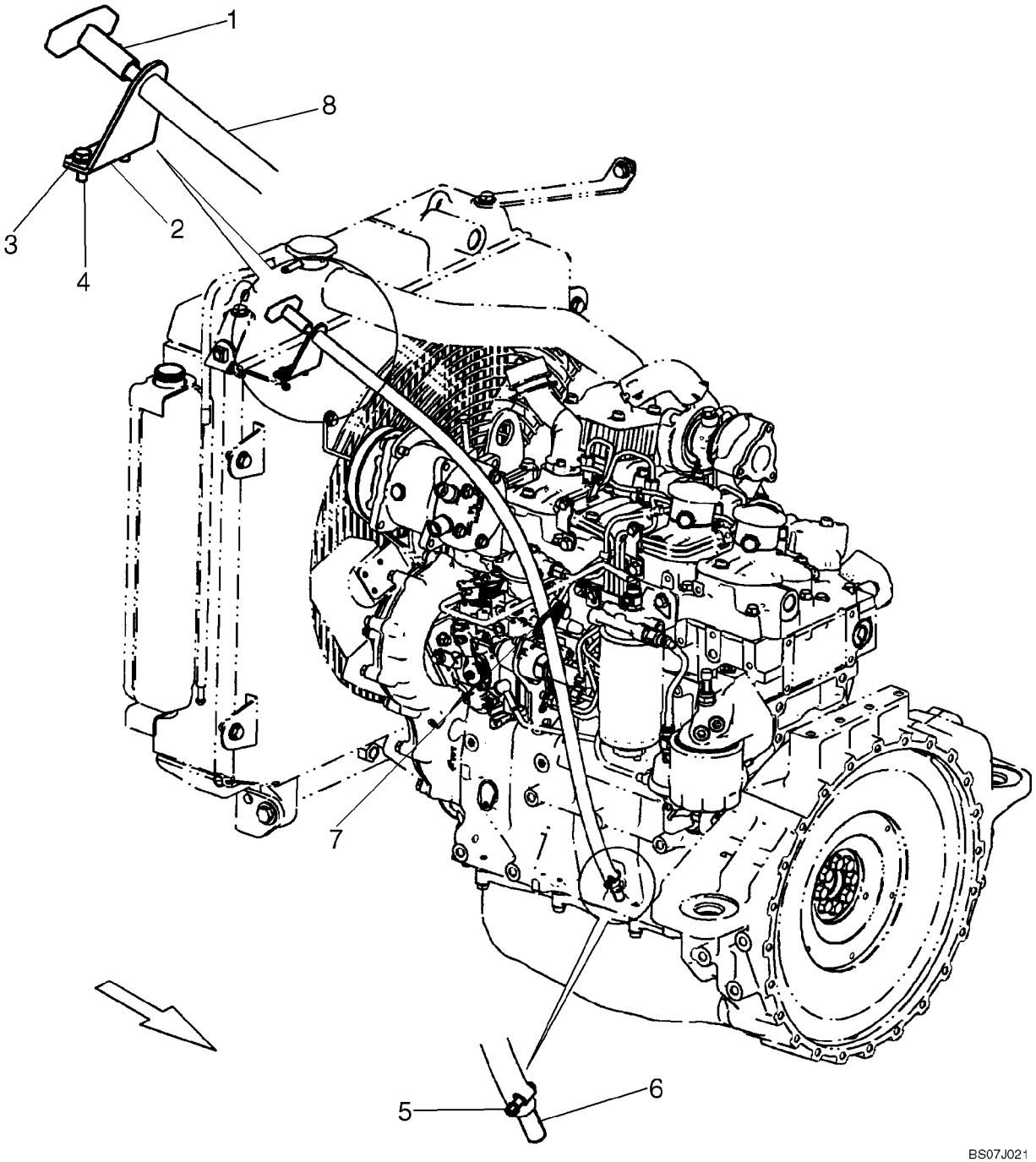

ENGINE - DIPSTICK, OIL FILL

REF	FN	PART NUMBER	YR/SN	QTY	DESCRIPTION
1		{87566701}		1	Dipstick, Engine Oil
2		87626718		1	BRACKET, Dipstick Tube Mounting Bracket
3		86624181		2	WASHER, M6
4		86508568		2	BOLT, Hex, M6 x 16, 8.8
5		574518		1	CLAMP, HOSE, #4, 0.25/0.62 Type M Worm
6		87578147		1	ADAPTER, Adapter, Block To Dipstick
7		L11541		1	STRAP, CABLE
8		{87669375}		1	Dipstick Hose, 918mm (36 5/32 in.)

REMOTE OIL DRAIN

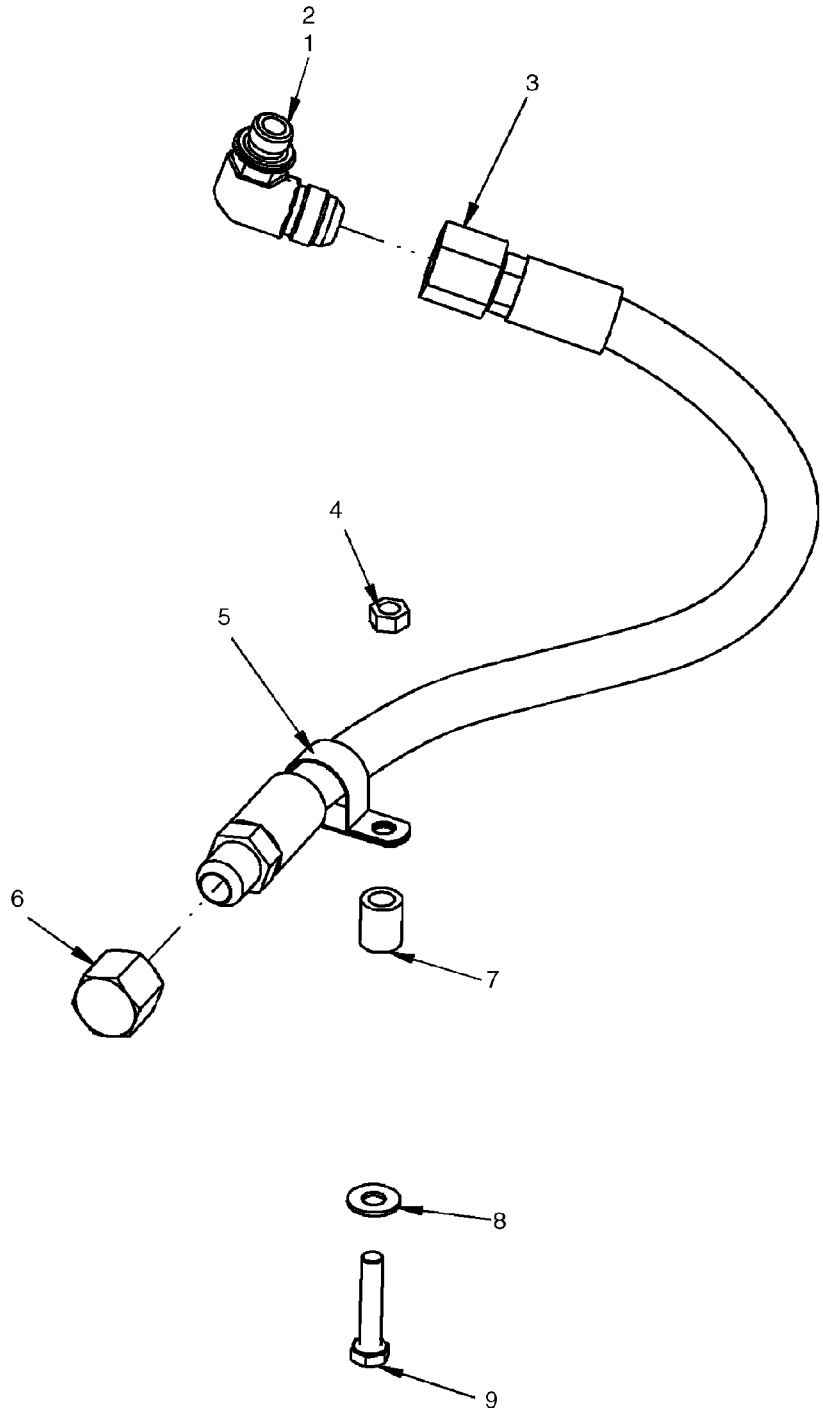

REMOTE OIL DRAIN

REF	FN	PART NUMBER	YR/SN	QTY	DESCRIPTION
1		87688478		1	FITTING, Oil Pan Fitting; Incl 2
2		86598102		1	O-RING, Cl 6, 19.3MM ID x 2.2 Thk
3		87694058		1	HOSE, Hose, Remote Oil Drain, 730mm (28 3/4 in.)
4		9706690		1	NUT, M8, Cl 8
5		87307884		1	CLAMP
6		129200		1	CAP, 37º, 7/8"-14
7		229398		1	SPACER
8		86625263		1	WASHER, M8 x 20 x 1.6
9		43129		1	BOLT, Hex, M8 x 40, 8.8

ENGINE - BLOCK HEATER

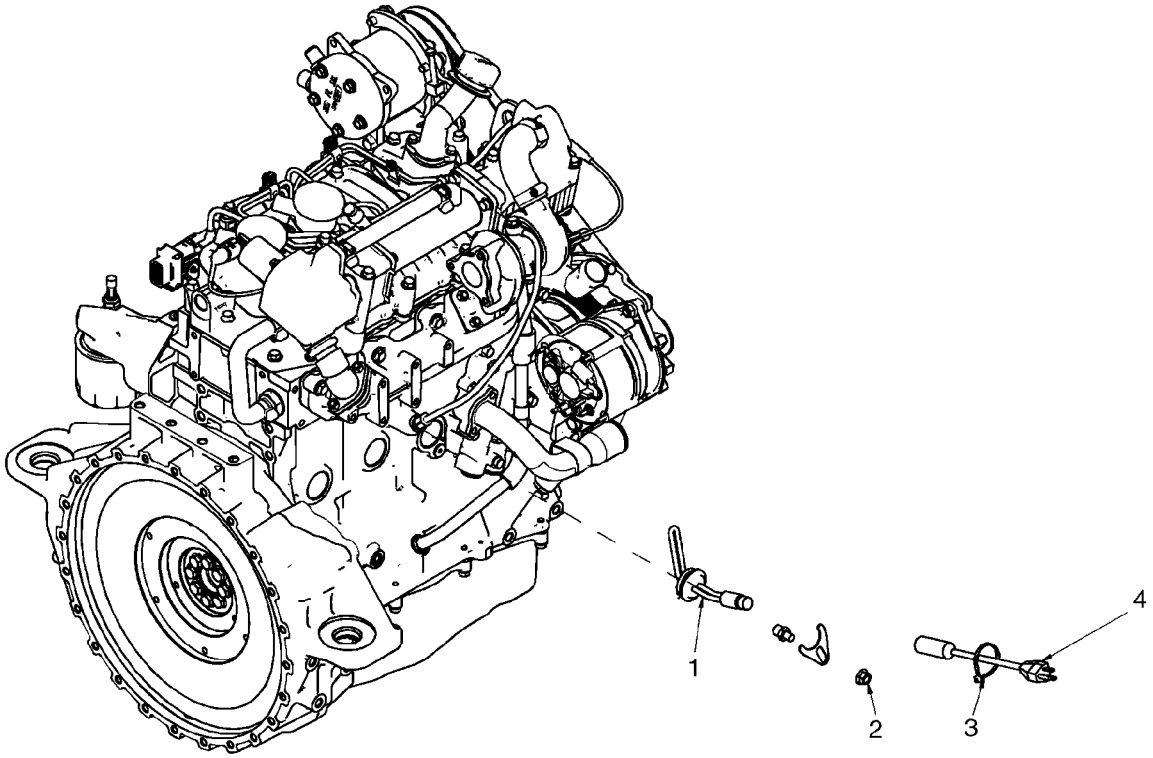

BS07K953

ENGINE - BLOCK HEATER

REF	FN	PART NUMBER	YR/SN	QTY	DESCRIPTION
		87717682		1	KIT, SERVICE, Kit, Block Heater; Incl 1 - 4
		87717684		1	KIT, SERVICE, Kit, Block Heater (Europe); Incl 1 - 4
1		87693857		1	HEATER UNIT, Heater Assembly
1		87719400		1	HEATER, Heater Assembly (Europe)
2		86050279		1	NUT, M10 x 1.5, Flg, Cl 10
3		L11541		1	STRAP, CABLE
4		87693858		1	CABLE, Block Heater Cable

ENGINE ASSY (87546691)

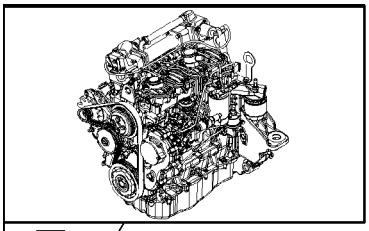

KIT 2
KIT KIT 3

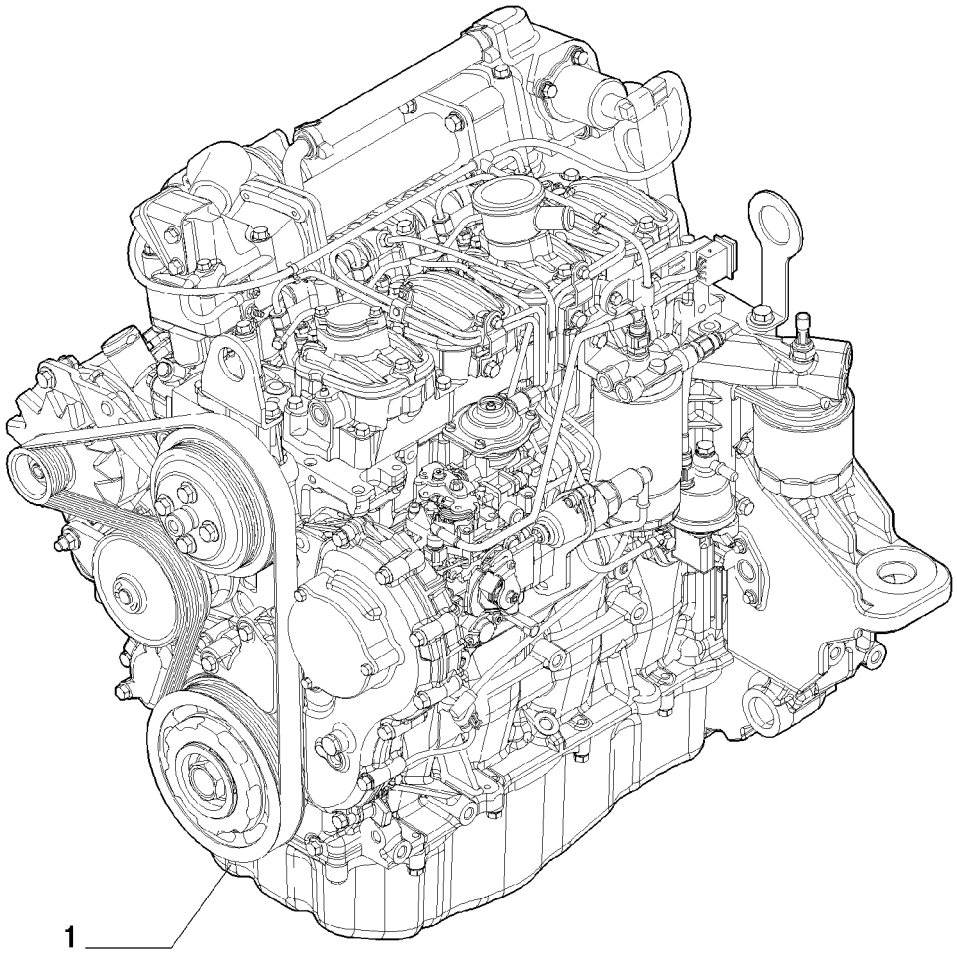

ENGINE ASSY (87546691)

REF	FN	PART NUMBER	YR/SN	QTY	DESCRIPTION
1		87546691		1	ENGINE, 55 kW, 73.7 HP; 296 mm Fan Center; Incl. Figures 02-10 - 02-39, 03-03 - 03-10, 02-02, 04-03; Order Alternater (Figure 04-02) And Belt (Figure 02-26) Separately.
		{8099019}		1	
2		8097550		1	KIT, ENGINE OVERHAUL, Kit, Engine Overhaul
3		8097551		1	KIT, ENGINE TOP GASKETS, Kit, Engine Top Gaskets

02-11		p1	01/08

CYLINDER BLOCK & RELATED PARTS (87546691)

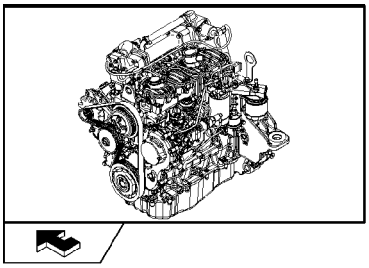

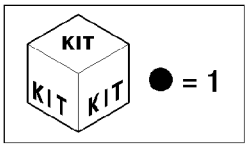

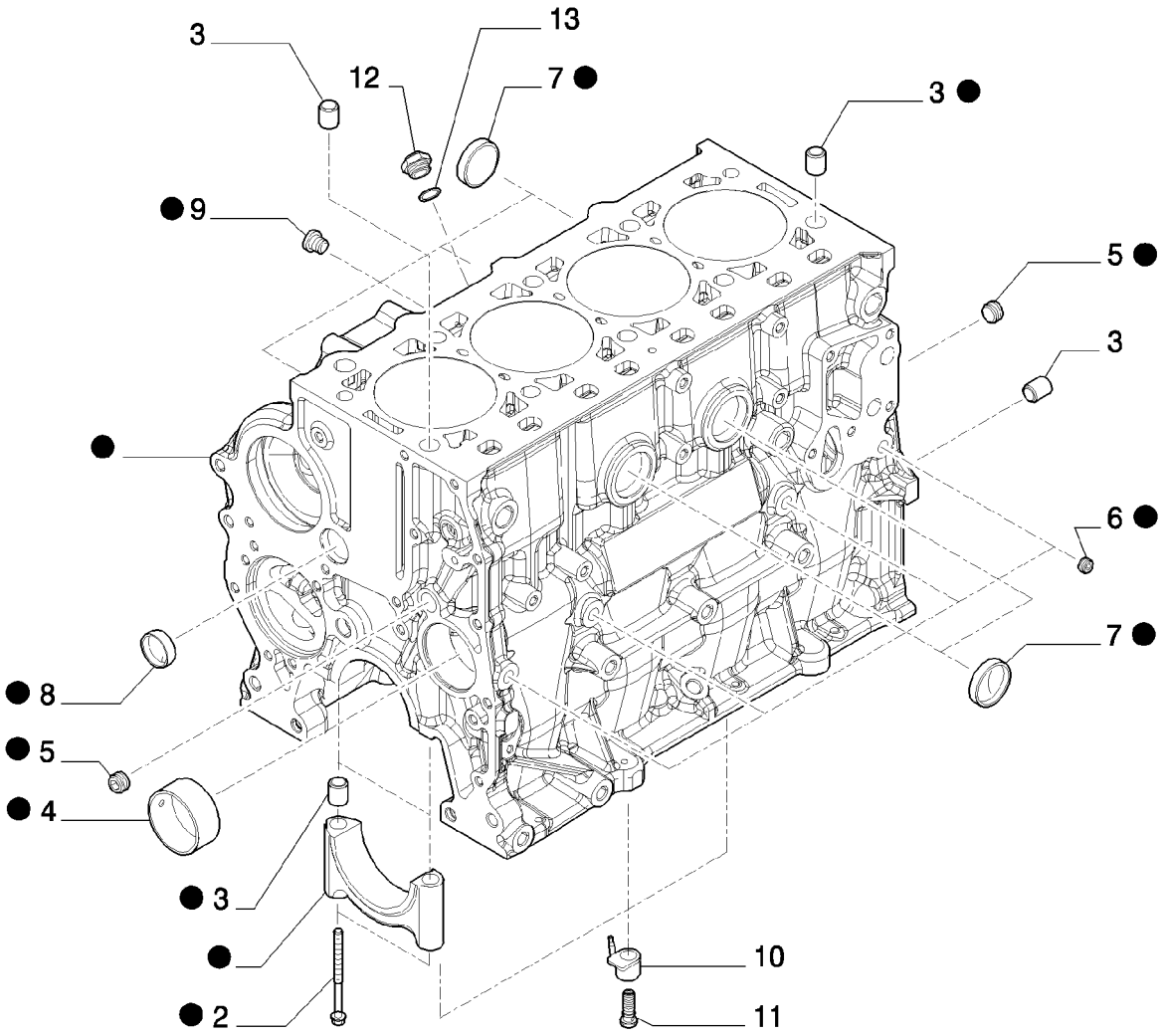

CYLINDER BLOCK & RELATED PARTS (87546691)

REF	FN	PART NUMBER	YR/SN	QTY	DESCRIPTION
1		504189766		1	CYLINDER BLOCK, Cylinder Block Assy
2		4891353		10	SCREW, Flg Hd, M12 x 1.5 x 120
3		7300019		14	SPACER
4		4895040		1	BUSHING
5		504051238		3	PLUG, D. 3/8"
6		504051236		4	PLUG, D. 1/8"
7		14329901		6	PLUG, M40, Tapered
8		16990970		1	PLUG, D. 30 mm
9		504016052		1	PLUG, M14X1,5
10		504156514		1	NOZZLE, LUB. OIL JET, Nozzle, Jet Oil Lub.
11		504173058		1	BOLT, BANJO, Bolt, Banjo
12		504033677		1	FITTING, Fitting
13		504077652		1	SEAL, Seal

OIL SUMP & RELATED PARTS (87546691)

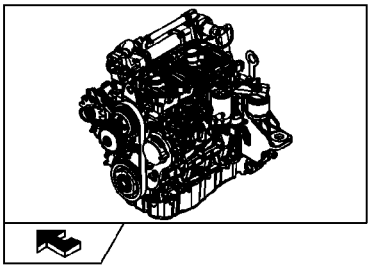

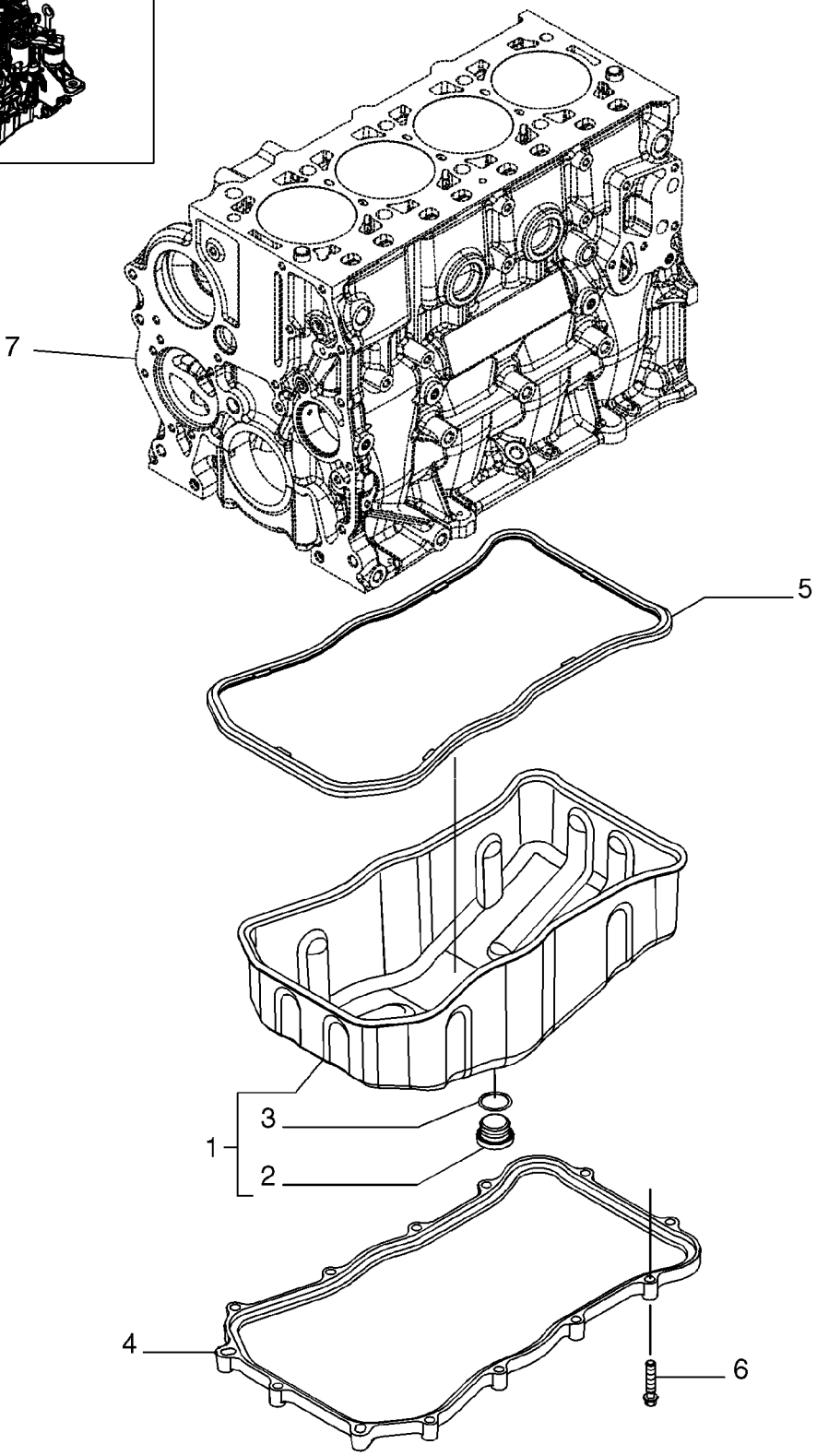

OIL SUMP & RELATED PARTS (87546691)

REF	FN	PART NUMBER	YR/SN	QTY	DESCRIPTION
1		504179445		1	PAN, ENGINE OIL
2		4894139		1	PLUG, M22 x 1,5 mm
3		2853728		1	O-RING
4		504179442		1	SPACER, Spacer
5		504179443		1	GASKET, Gasket
6		16586624		13	SCREW, M8 x 35 mm
7		REF			INSTRUCTION, See Figure 02-11, Cylinder Block And Related Parts

ENGINE BLOCK FRONT COVER (87546691)

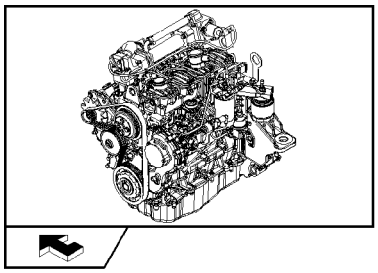

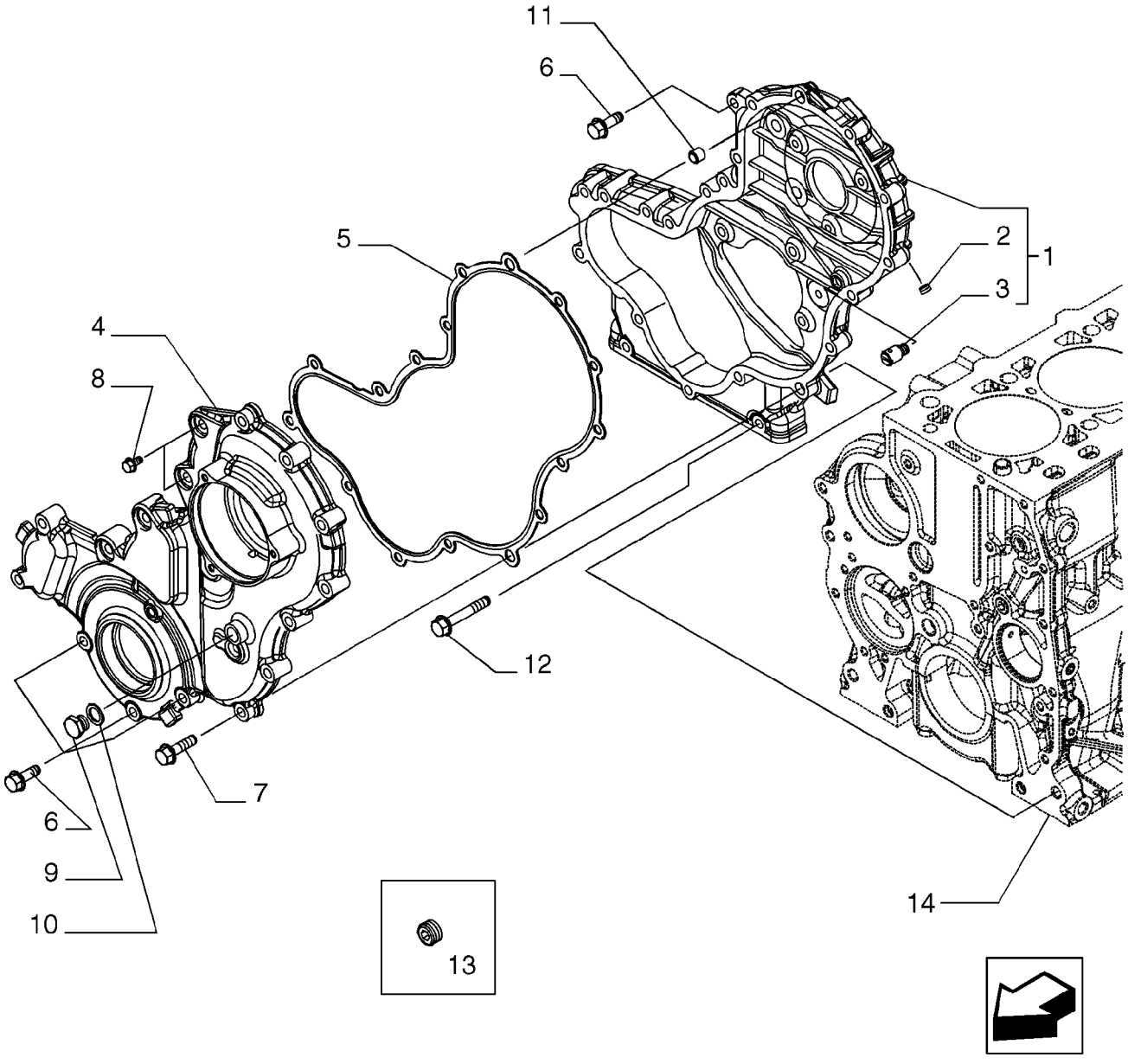

BS07N059

ENGINE BLOCK FRONT COVER (87546691)

REF	FN	PART NUMBER	YR/SN	QTY	DESCRIPTION
1		504244214		1	COVER, Cover
2		504051236		1	PLUG, D.=1/8"
3		504204989		1	NOZZLE, LUB. OIL JET, Nozzle, Lub. Oil Jet
4		504242762		1	COVER, Cover
5		504244287		1	GASKET, Gasket
6		16673735		3	SCREW, M8X25 mm
6		16586625		2	SCREW, M8X35 mm
6		16586925		6	SCREW, M8X50 mm
7		16586625		11	SCREW, M8X35 mm
8		4798845		2	SCREW
9		10300611		1	PLUG, M14 x 1.5 x 14, Cl5.8
10		4858608		1	SEAL, D. 14X20X1,5 mm
11		99435557		4	DOWEL, D. 8,5 mm
12		16673735		6	SCREW, M8X50 mm
13		16882515		1	PLUG
14		REF			INSTRUCTION, See Figure 02-11, Cylinder Block And Related Parts

FLYWHEEL CASE (87546691)

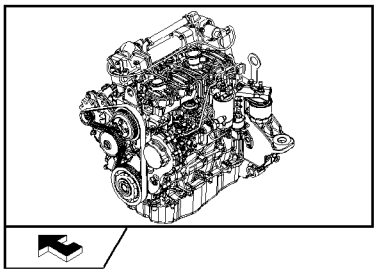

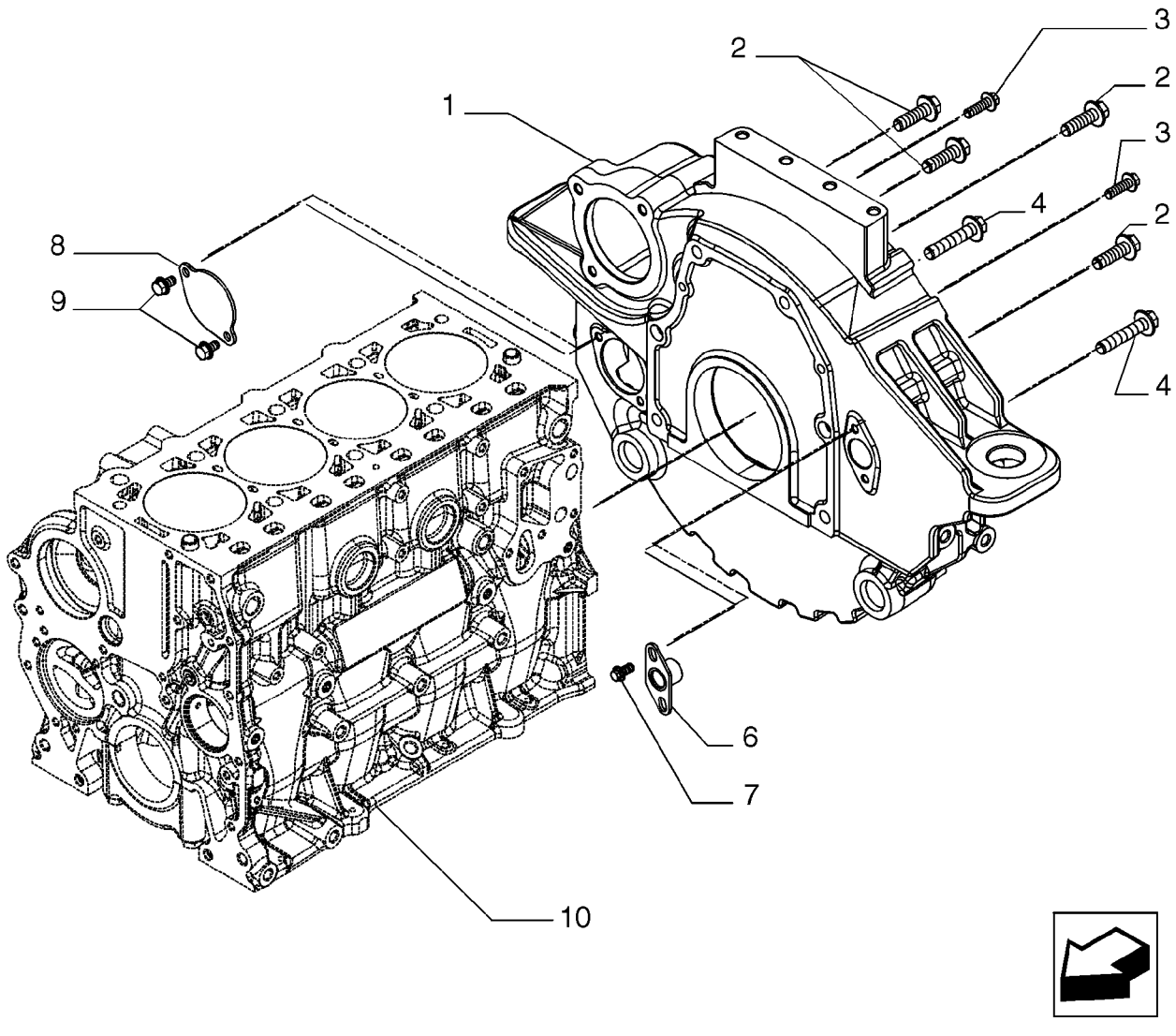

BS07N060

FLYWHEEL CASE (87546691)

REF	FN	PART NUMBER	YR/SN	QTY	DESCRIPTION
1		504178293		1	HOUSING, Housing
2		16588225		4	SCREW, M12X1,75X40 mm
3		16673735		2	SCREW, M8X25 mm
4		16588624		2	SCREW, M12X60 mm
6		504268669		1	PLATE, Plate
7		4798845		2	SCREW
8		4895155		1	COVER
9		16597924		2	SCREW, M8X14 mm
10		REF			INSTRUCTION, See Figure 02-11, Cylinder Block And Related Parts

02-15		p1	12/07

ENGINE BREATHERS (87546691)

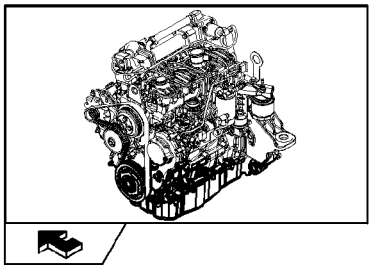

BS07N061

ENGINE BREATHERS (87546691)

REF	FN	PART NUMBER	YR/SN	QTY	DESCRIPTION
1		504216814		1	COVER, Cover
2		17291281		1	GASKET, D. 98,84 mm SP=3,53 mm
3		504254884		1	BREATHER
4		16597225		3	SCREW, M6X18 mm
5		REF			INSTRUCTION, See Figure 02-13, Engine Block Front Cover
6		REF			INSTRUCTION, See Figure 02-16, Cylinder Head And Related Parts
7		REF			INSTRUCTION, See Figure 02-17, Cylinder Head Covers
8		REF			INSTRUCTION, See Figure 02-11, Cylinder Block And Related Parts

CYLINDER HEAD & RELATED PARTS (87546691)

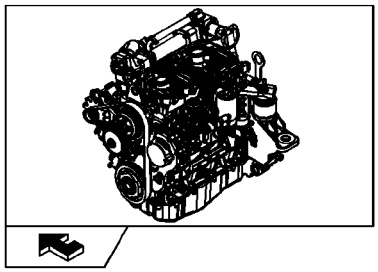

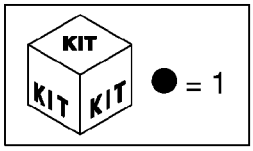

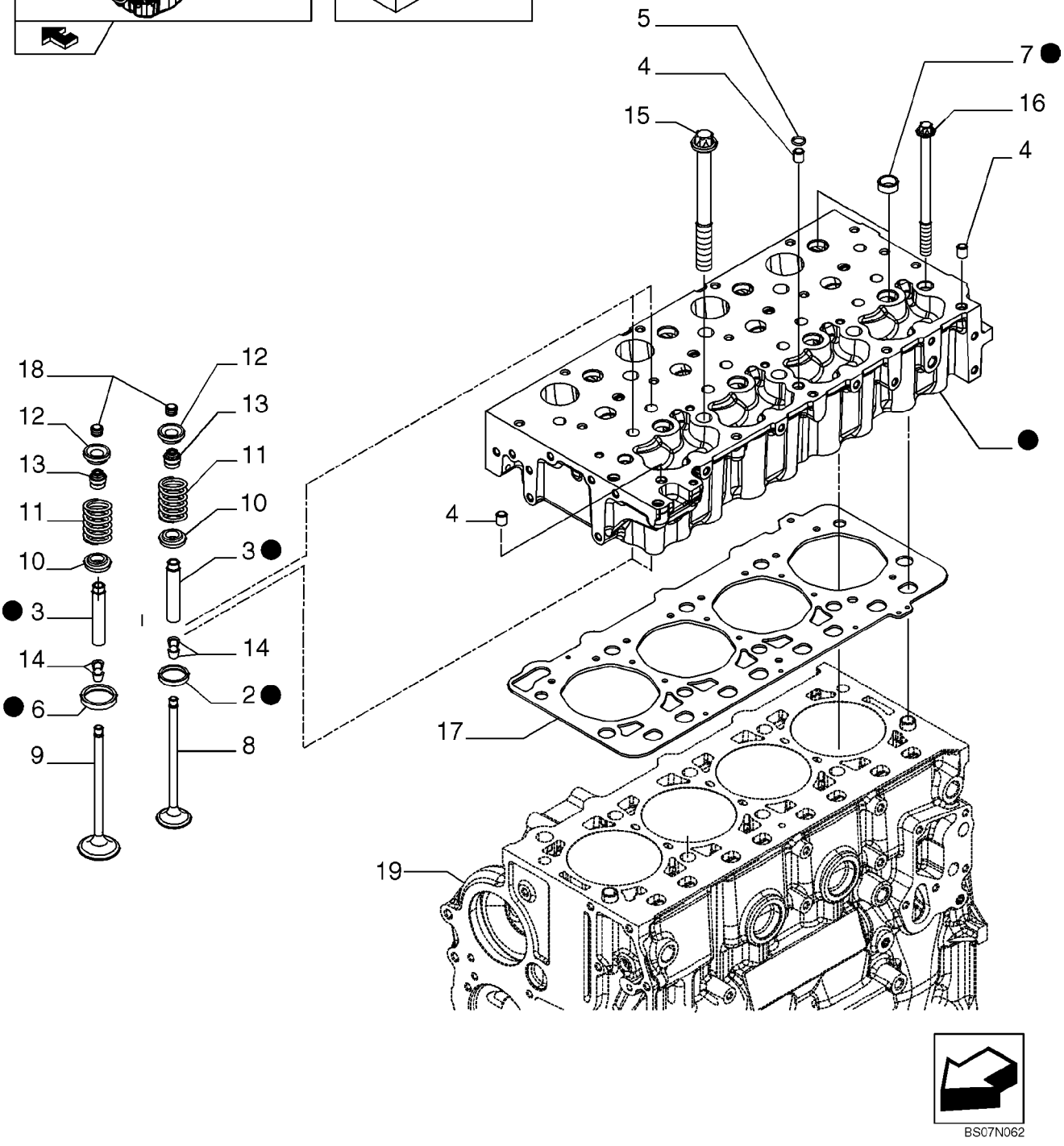

BS07N062

CYLINDER HEAD & RELATED PARTS (87546691)

REF	FN	PART NUMBER	YR/SN	QTY	DESCRIPTION
1		504254092		1	CYLINDER HEAD, Cylinder Head; Incl Ref 2,3,6,7
		8099020		1	CYLINDER HEAD, Cylinder Head; Incl Ref 8,9,10,11, 12,13,14,18
2		504162949		4	VALVE SEAT, Valve Seat
3		4749397		8	GUIDE, VALVE, Guide Valve; +0,05 mm
3		4749398		8	GUIDE, VALVE, Guide Valve; +0,1 mm
3		4749399		8	GUIDE, VALVE, Guide Valve; +0,25 mm
4		99435557		3	DOWEL, D. 8,5 mm
5		17281481		1	O-RING, D. 10,7 mm SP=2,6 mm
6		504254094		4	VALVE SEAT, Valve Seat
7		16988301		8	PLUG, D. 20 mm
8		504162958		4	VALVE, ENGINE, INLET, STD, Valve Engine Inlet, STD
9		504162959		4	VALVE, ENG EXHAUST, STD, Valve Engine Exhaust, STD
10		504178119		8	RETAINER CUP, Retainer Cup
11		4812347		8	SPRING
12		4780558		8	CUP
13		40101573		8	SEAL
14		4819891		16	COTTER, ROCKER ARM, D. 7,85 mm
15		504081521		6	SCREW, M15X1,5X193 mm
16		504081533		4	SCREW, M12X1,5X165 mm
17		504190831		1	GASKET, CYLINDER HEAD, Cotter, Rocker Arm
18		4838680		8	CAP
19		REF			INSTRUCTION, See Figure 02-11, Cylinder Block And Related Parts

CYLINDER HEAD COVERS (87546691)

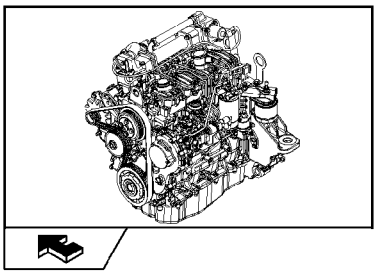

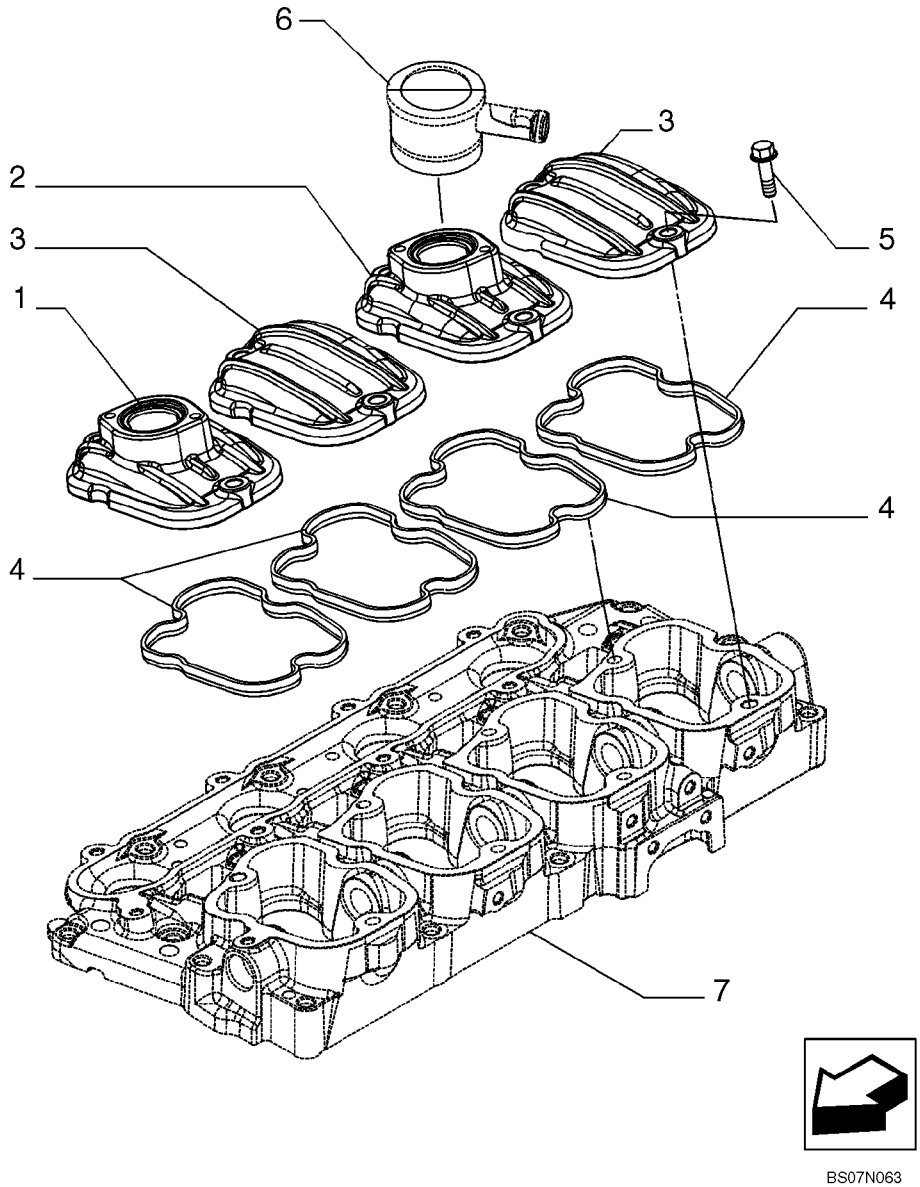

BS07N063

CYLINDER HEAD COVERS (87546691)

REF	FN	PART NUMBER	YR/SN	QTY	DESCRIPTION
1		{504245566}		1	Cover, Valve
2		504225812		1	COVER, VALVE, Cover, Valve
3		504221916		2	COVER, VALVE, Cover, Valve
4		504173590		4	GASKET, Gasket
5		2852247		8	SCREW, M8X30 mm
6		REF			INSTRUCTION, See Figure 02-15, Engine Breathers
7		REF			INSTRUCTION, See Figure 02-18, Rocker Shaft

ROCKER SHAFT (87546691)

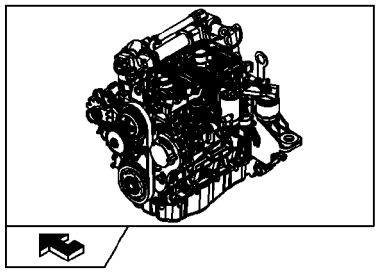

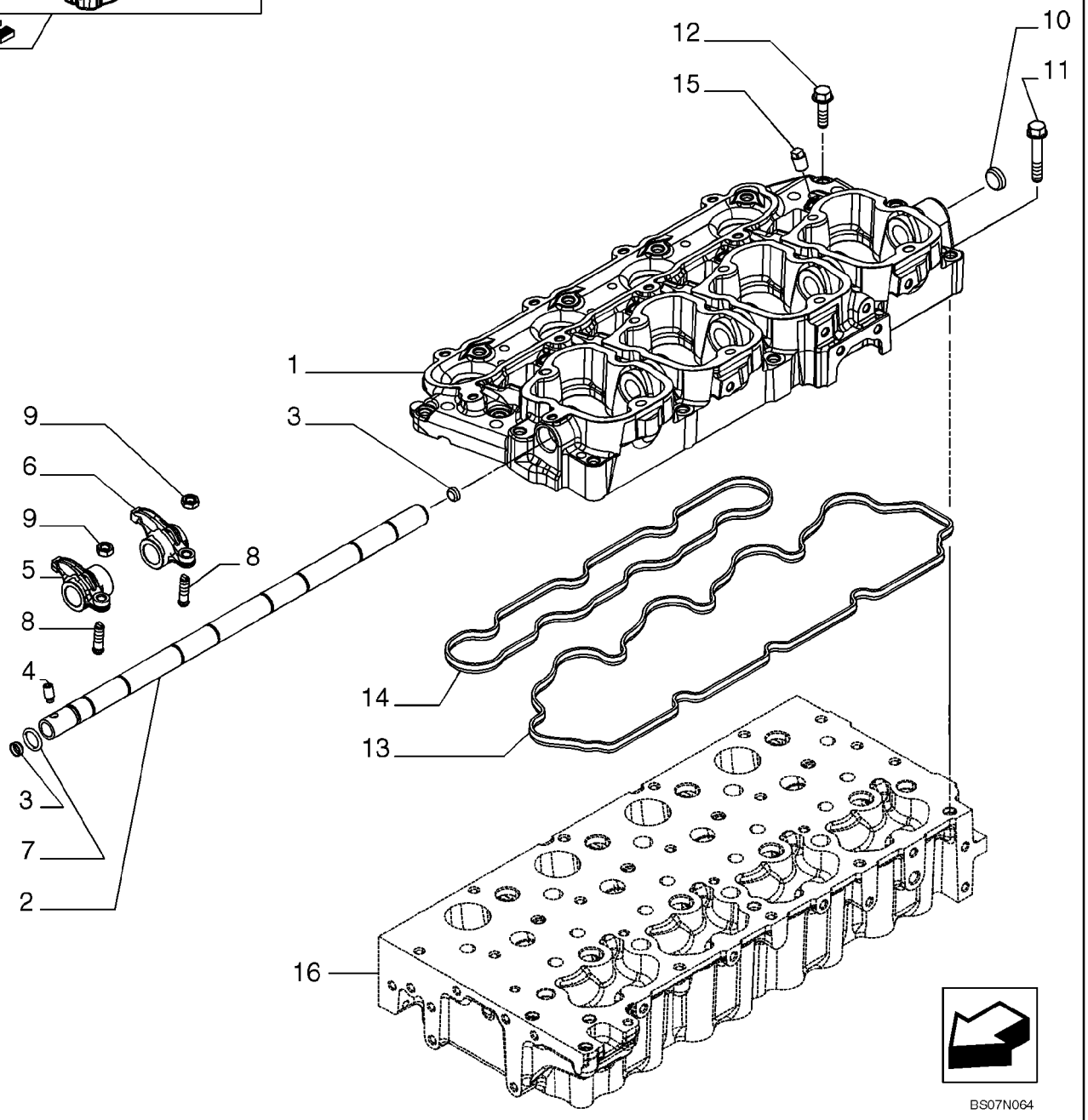

ROCKER SHAFT (87546691)

REF	FN	PART NUMBER	YR/SN	QTY	DESCRIPTION
1		504221907		1	SPACER, Spacer
2		504250345		1	SHAFT, Shaft
3		16987801		2	PLUG, D. 12 mm
4		99454296		1	SCREW, Screw
5		504221915		4	ROCKER ARM, Rocker Arm
6		504221914		4	ROCKER ARM, Rocker Arm
7		17281681		1	O-RING, D. 13,9 mm SP=2,6 mm
8		4699783		8	SCREW
9		4338920		8	NUT
10		2856468		1	PLUG, D. 22 mm
11		16586925		10	SCREW, M8X50 mm
12		16673835		11	SCREW, M8X30 mm
13		504163121		1	GASKET, Gasket
14		504177226		1	GASKET, Gasket
15		504273002		4	PLUG, M12X1,5 mm
16		REF			INSTRUCTION, See Figure 02-16, Cylinder Head And Related Parts

INTAKE MANIFOLD (87546691)

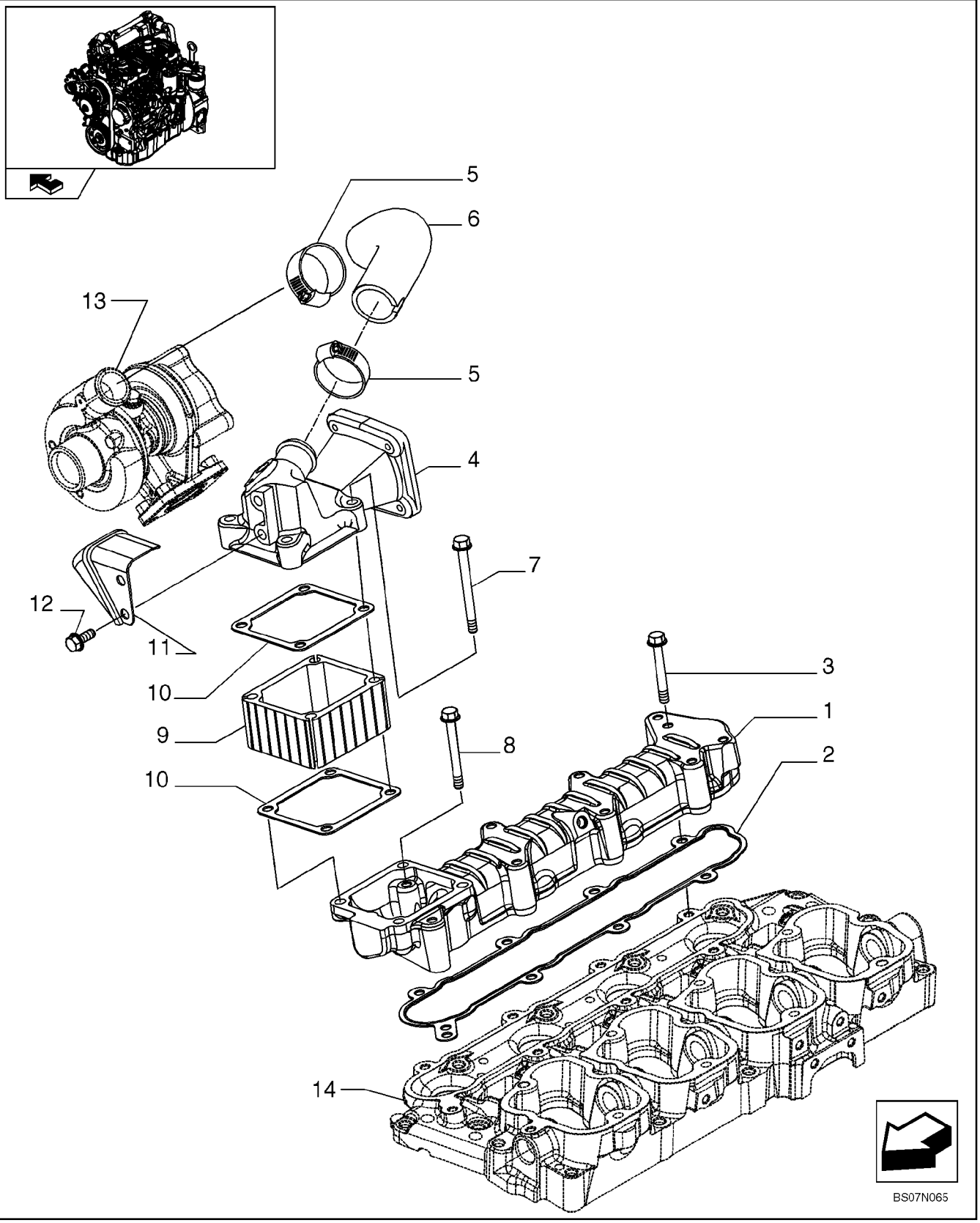

INTAKE MANIFOLD (87546691)

REF	FN	PART NUMBER	YR/SN	QTY	DESCRIPTION
1		504194598		1	MANIFOLD, INLET
2		504171144		1	GASKET, MANIFOLD
3		16592324		7	SCREW
4		504249195		1	DUCT, AIR
5		4899693		2	CLIP, HOSE
6		504249196		1	RUBBER SLEEVE
7		2852267		4	SCREW, M8X90 mm
8		16592224		1	SCREW, M8X55 mm
9		4895316		1	HEATER
10		4899921		2	GASKET
11		504283235		1	PROTECTION
12		16597925		2	SCREW, M8X14 mm
13		REF			INSTRUCTION, See Figure 02-28, TurboCharger
14		REF			INSTRUCTION, See Figure 02-18, Rocker Shaft

02-20		p1	12/07

HEAT EXCHANGER - ENGINE (87546691)

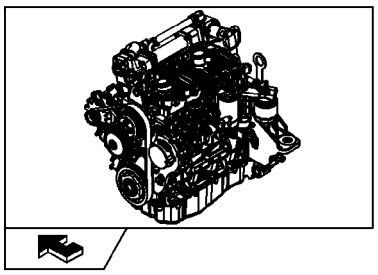

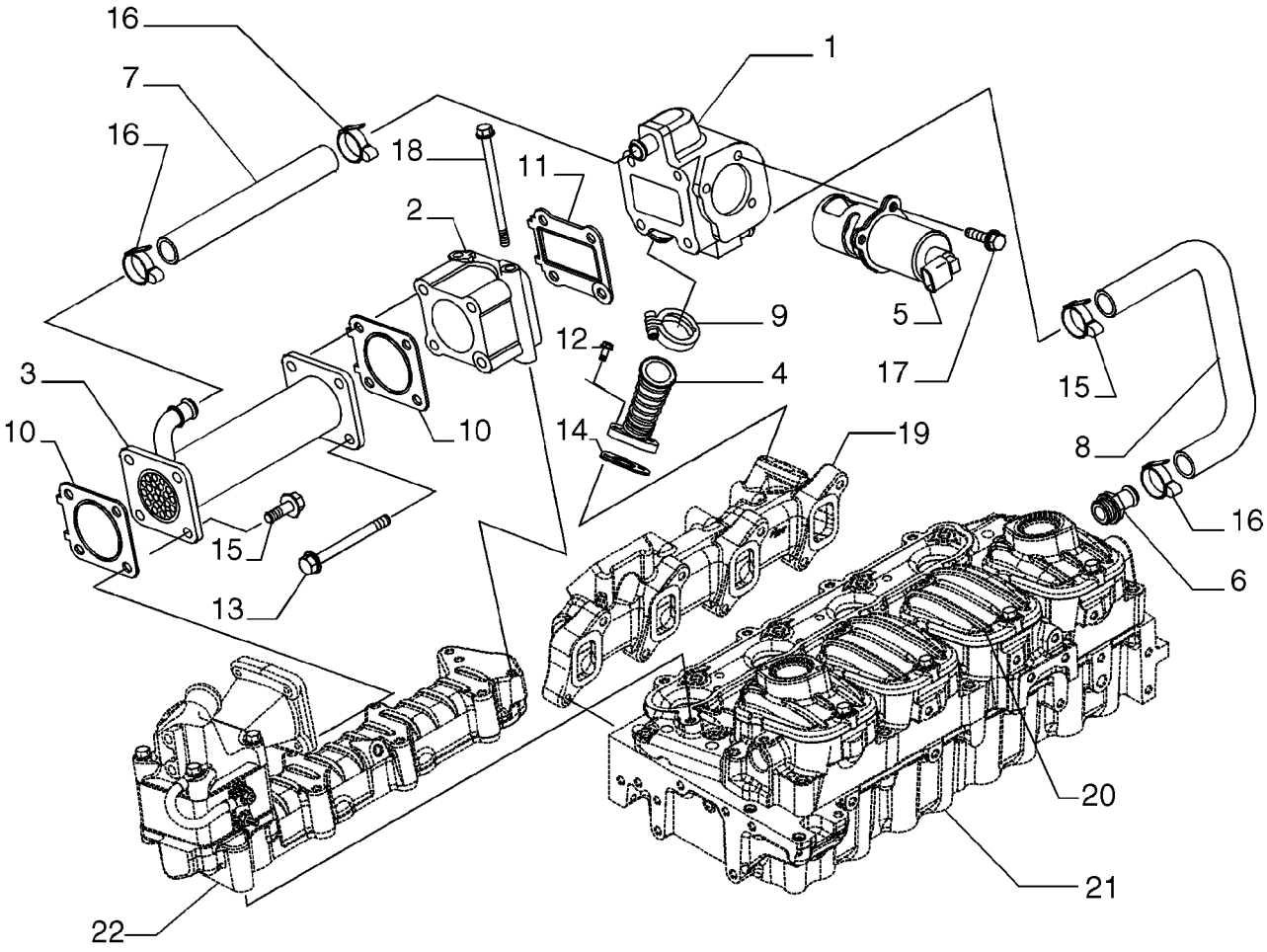

BS07N066

HEAT EXCHANGER - ENGINE (87546691)

REF	FN	PART NUMBER	YR/SN	QTY	DESCRIPTION
1		504220143		1	BRACKET
2		504249191		1	BRACKET
3		504250954		1	HEAT EXCHANGER
4		504220149		1	JUNCTION
5		504253059		1	VALVE, BY-PASS
6		504249332		1	FITTING
7		504220154		1	SLEEVE
8		504220156		1	SLEEVE
9		504196032		1	MOUNTING CLIP
10		504221516		2	GASKET
11		504221515		1	GASKET
12		4798845		2	SCREW
13		16598224		4	SCREW, M8X90 mm
14		504167862		1	GASKET
15		16673735		4	SCREW, M8X25 mm
16		18088392		4	MOUNTING CLIP
17		16597224		3	SCREW, M6X18 mm
18		16598524		2	SCREW, M8X120 mm
19		REF			INSTRUCTION, See Figure 02-21, Exhaust Manifold
20		REF			INSTRUCTION, See Figure 02-17, Cylinder Head Covers
21		REF			INSTRUCTION, See Figure 02-16, Cylinder Head And Related Parts
22		REF			INSTRUCTION, See Figure 02-19, Intake Manifold

EXHAUST MANIFOLD (87546691)

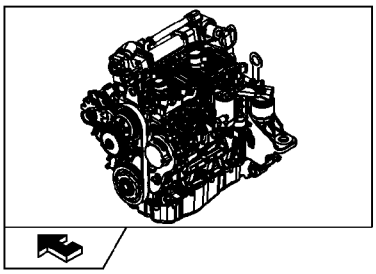

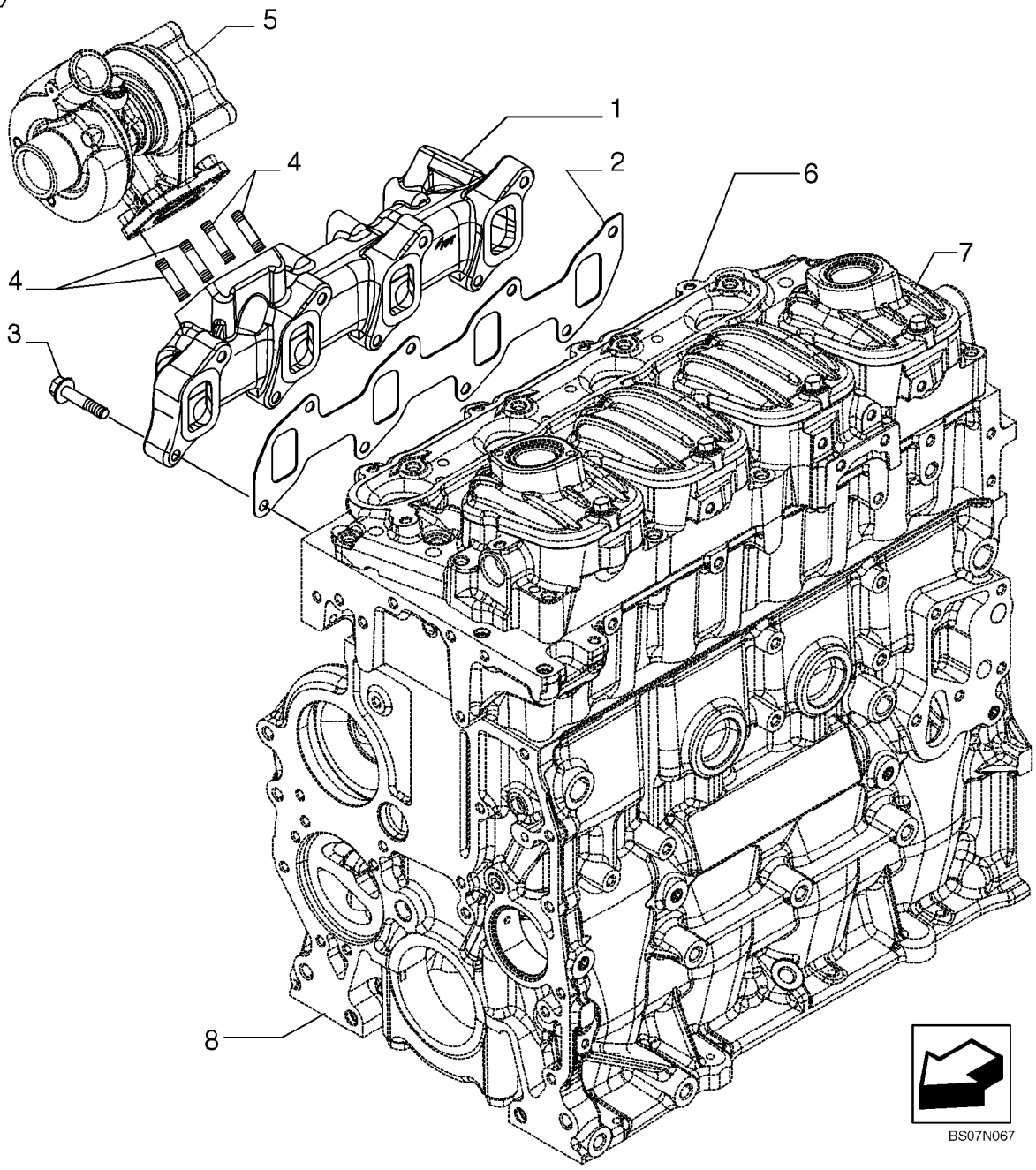

EXHAUST MANIFOLD (87546691)

REF	FN	PART NUMBER	YR/SN	QTY	DESCRIPTION
1		504202849		1	MANIFOLD, EXHAUST, Exhaust Manifold
2		504170332		1	GASKET, Gasket
3		16674034		8	SCREW
4		16729334		4	STUD, M8X20 mm
5		REF			INSTRUCTION, See Figure 02-28, Turbo Charger
6		REF			INSTRUCTION, See Figure 02-16, Cylinder Head And Related Parts
7		REF			INSTRUCTION, See Figure 02-17, Cylinder Head Covers
8		REF			INSTRUCTION, See Figure 02-11, Cylinder Block And Related Parts

CRANKSHAFT (87546691)

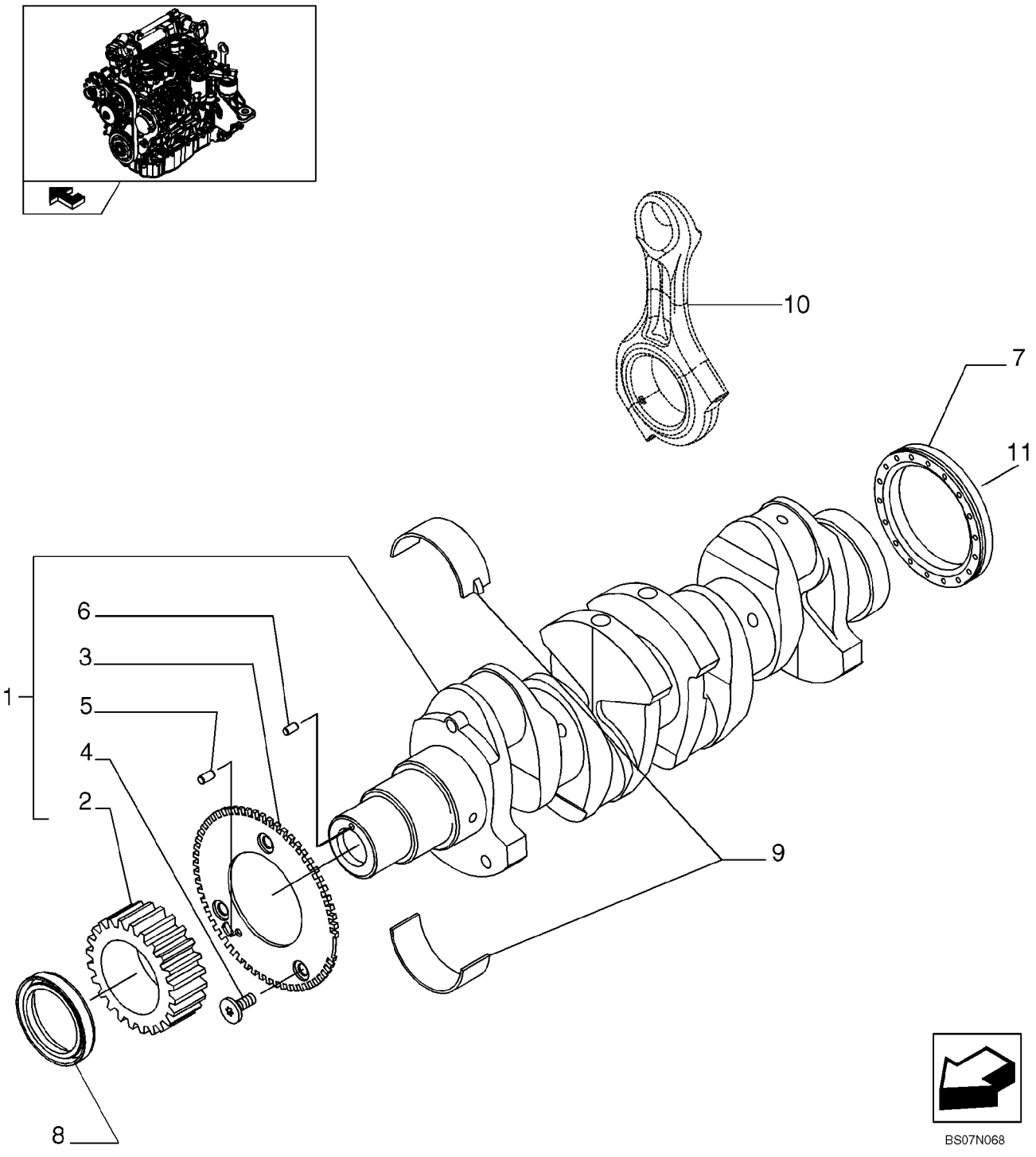

CRANKSHAFT (87546691)

REF	FN	PART NUMBER	YR/SN	QTY	DESCRIPTION
1		504213230		1	CRANKSHAFT
2		504240426		1	GEAR
3		504023782		1	GEAR
4		500374310		3	SCREW, M6X1
5		504006981		1	PIN, SPLIT (COTTER), D. 5,5 mm
6		17236324		1	SPLIT PIN
7		504180969		1	SEAL, SHAFT
8		504056152		1	SEAL, SHAFT
9		2995574		1	SET OF MAIN BRGS.STD, -0,0
9		2995575		1	SET OF MAIN BRGS -0.254, -0,2
9		2995576		1	SET OF MAIN BRGS - 0.762, -0,5
10		REF			INSTRUCTION, See Figure 02-23, Connecting Rod
11		REF			INSTRUCTION, See Figure 02-25, Engine, Flywheel

CONNECTING ROD (87546691)

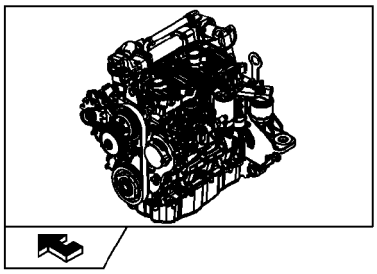

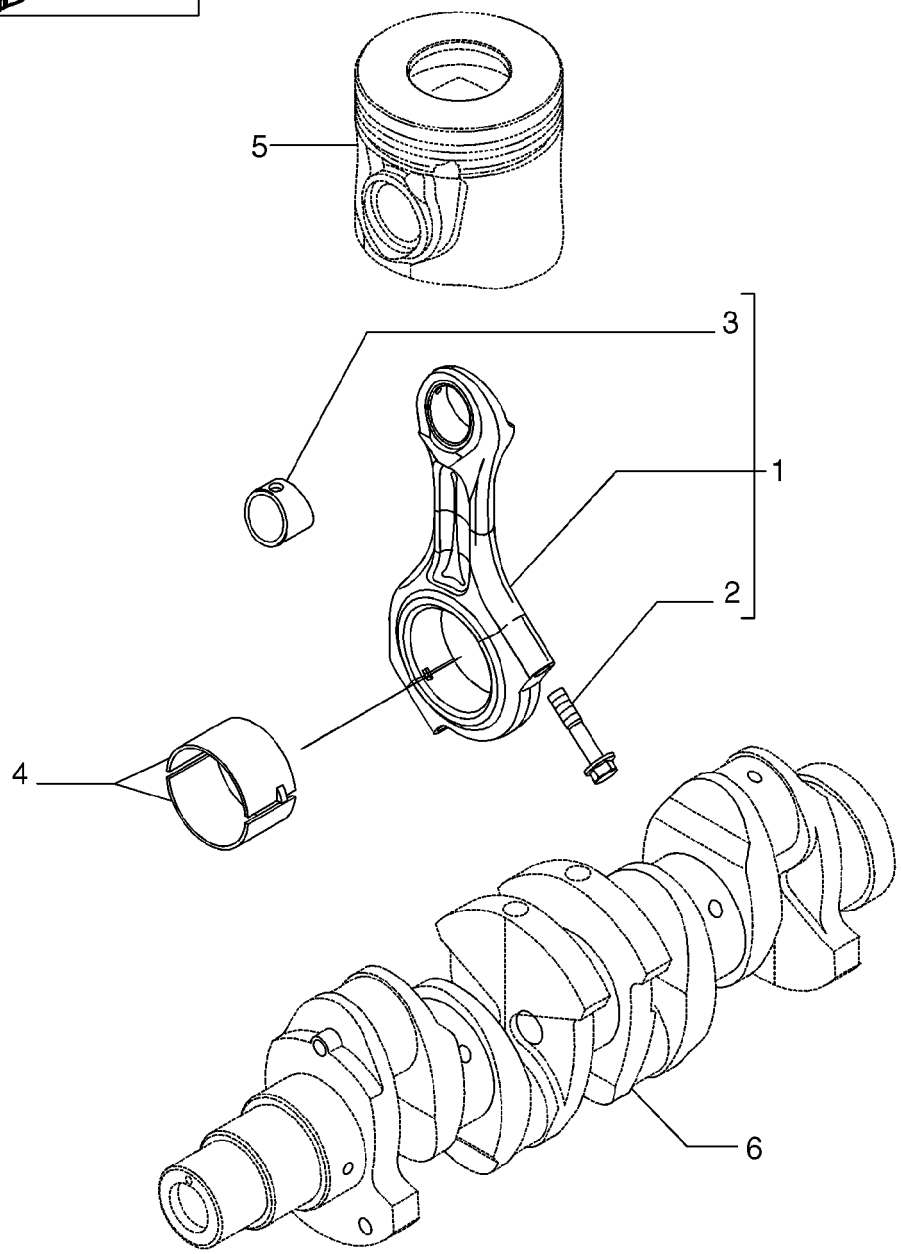

BS07N069

CONNECTING ROD (87546691)

REF	FN	PART NUMBER	YR/SN	QTY	DESCRIPTION
1		504113130		4	ROD, CONNECTING, Rod, Connecting
2		504015229		8	SCREW, Screw, M11X1,25X51 mm
3		504012226		4	SCREW, Screw
4		2995577		4	SET OF CONN ROD BRGS U/S, Set Of Connecting Rod BRGS U/S, -0.000
4		2995578		4	SET OF CONN ROD BRGS U/S, Set Of Connecting Rod BRGS U/S, -2,254
4		2995579		4	SET OF CONN ROD BRGS U/S, Set Of Connecting Rod BRGS U/S, -5,508
5		REF			INSTRUCTION, See Figure 02-24, Piston - Engine
6		REF			INSTRUCTION, See Figure 02-22, Crankshaft

PISTON - ENGINE (87546691)

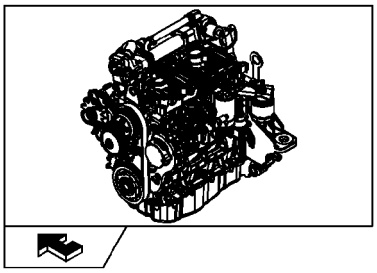

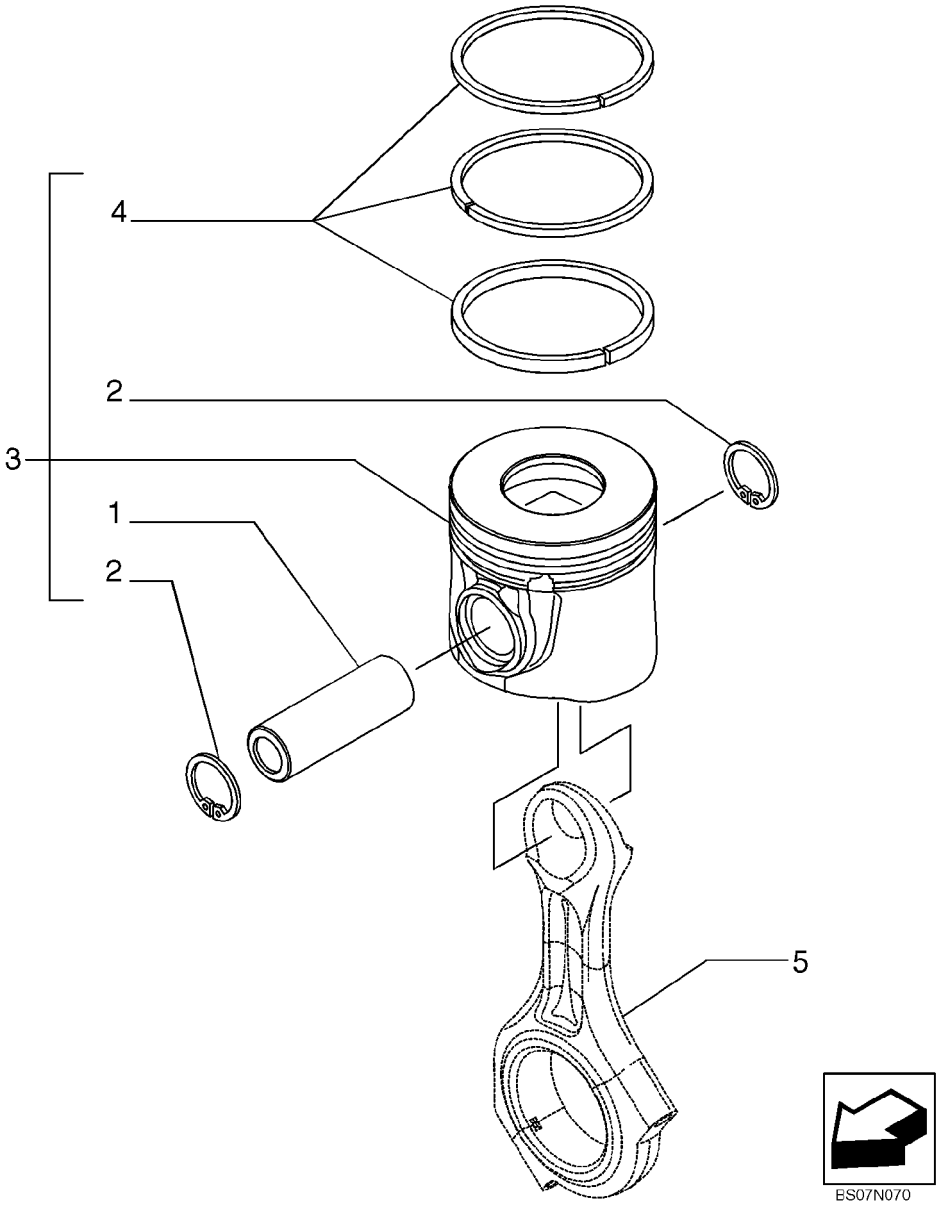

PISTON - ENGINE (87546691)

REF	FN	PART NUMBER	YR/SN	QTY	DESCRIPTION
1		504047720		4	PIN, PISTON
2		504051611		8	WASHER, LOCK
3		8097546		4	PISTON ASSY, + 0,0
3		8097548		4	PISTON ASSY +0.4, +0.4
4		8097545		4	SET, PISTON RINGS + 0.6, + 0,0
4		8097547		4	SET, PISTON RINGS + 0.4
5		REF			INSTRUCTION, See Figure 02-23, Connecting Rod

ENGINE - FLYWHEEL (87546691)

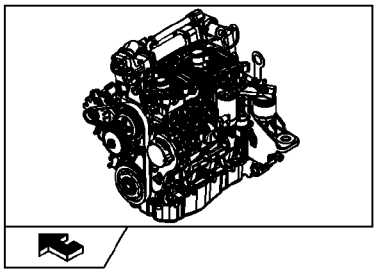

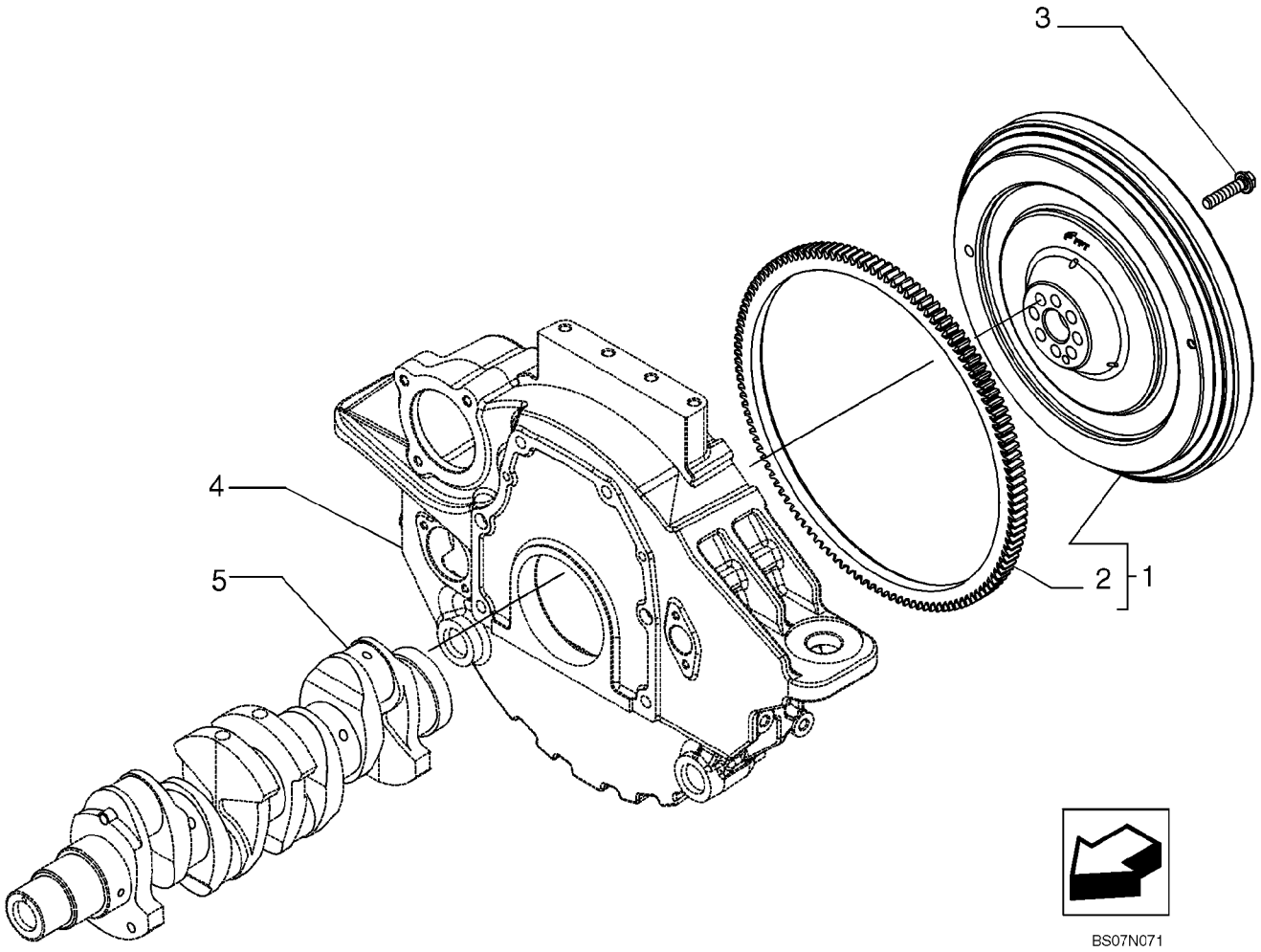

ENGINE - FLYWHEEL (87546691)

REF	FN	PART NUMBER	YR/SN	QTY	DESCRIPTION
1		504178292		1	FLYWHEEL, ENGINE
2		500388140		1	GEAR, RING
3		504027865		8	SCREW, M12 x 1,25 mm
4		REF			INSTRUCTION, See Figure 02-13, Engine Block Front Cover
5		REF			INSTRUCTION, See Figure 02-22, Crankshaft

PULLEY - CRANKSHAFT (87546691)

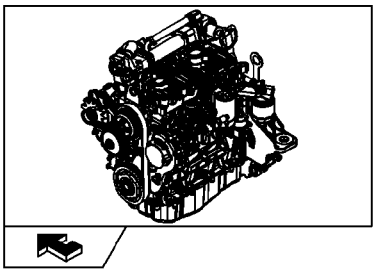

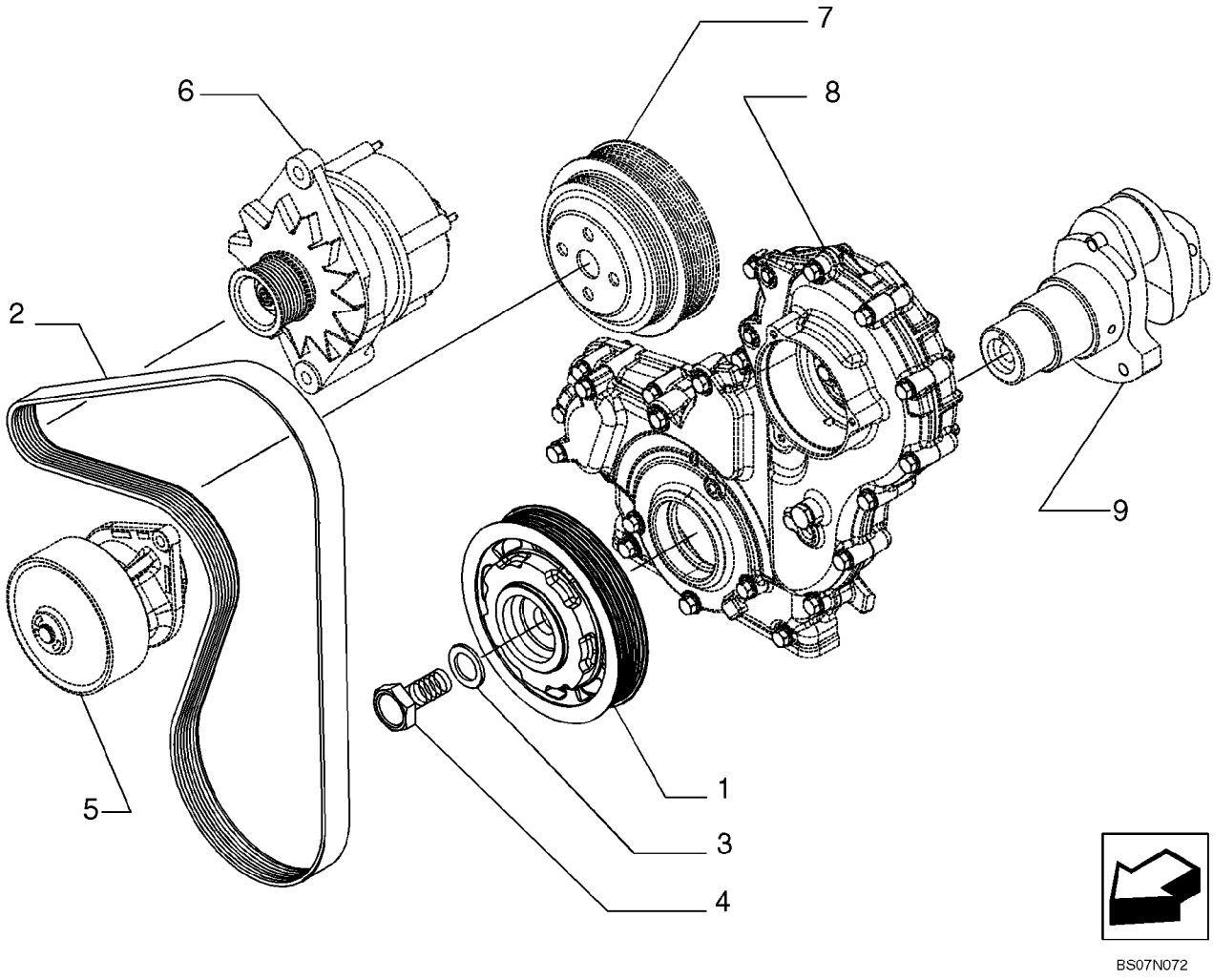

PULLEY - CRANKSHAFT (87546691)

REF	FN	PART NUMBER	YR/SN	QTY	DESCRIPTION
1		504202201		1	PULLEY
2		87608059		1	BELT, Belt
3		17092874		1	WASHER, THRUST
4		98419203		1	SCREW, M20 x 1,5 x 58 mm
5		REF			INSTRUCTION, See Figure 02-33, Water Pump And Related Parts
6		REF			INSTRUCTION, See Figure 04-02, Engine Alternater Mounting
7		REF			INSTRUCTION, See Figure 02-36, Belt Pulley Drive Mounting
8		REF			INSTRUCTION, See Figure 02-13, Engine Block Front Cover
9		REF			INSTRUCTION, See Figure 02-22, Crankshaft

CAMSHAFT - TIMING CONTROL (87546691)

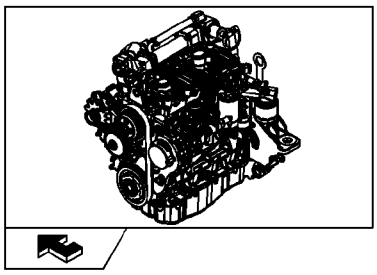

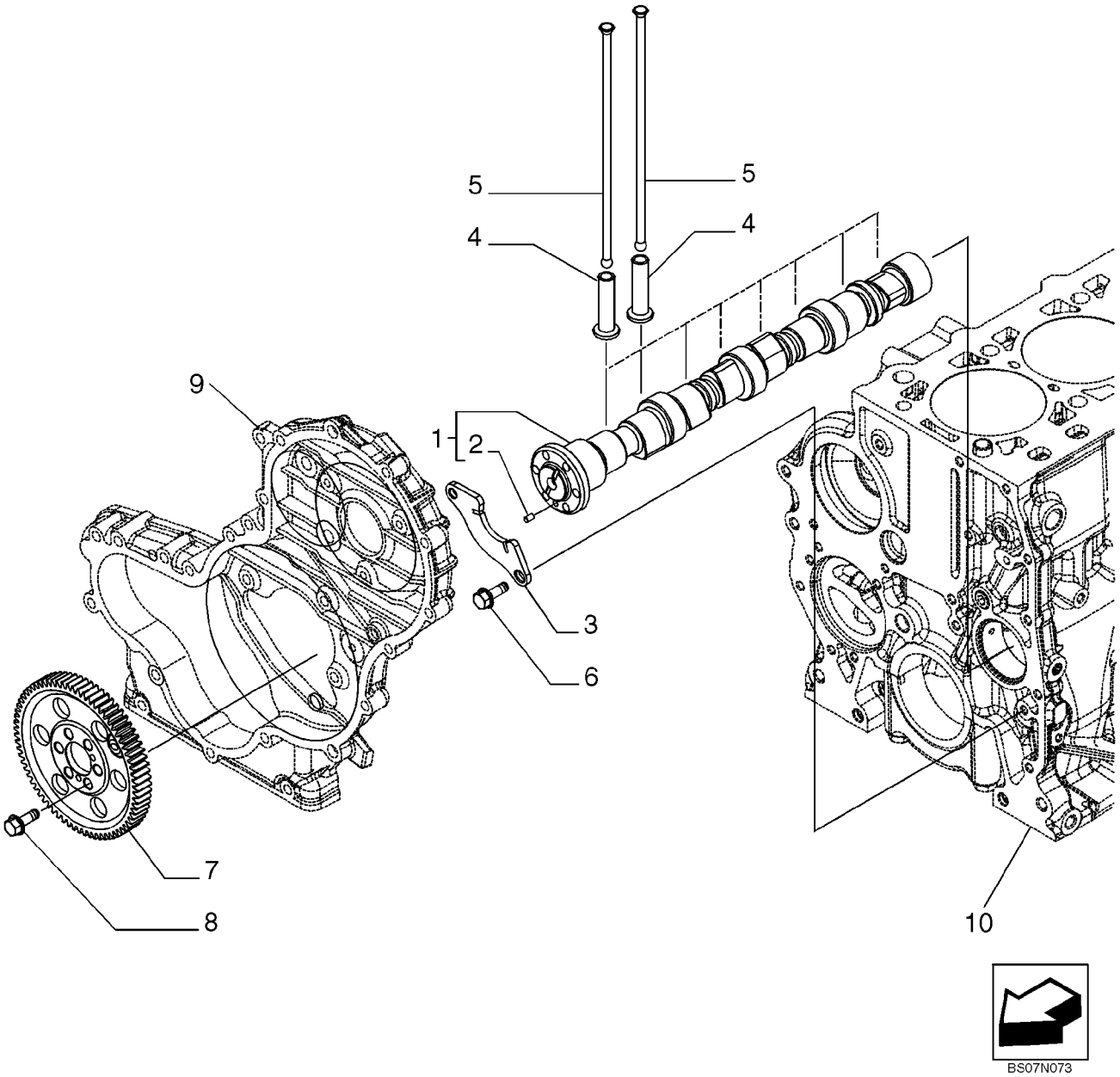

BS07N073

CAMSHAFT - TIMING CONTROL (87546691)

REF	FN	PART NUMBER	YR/SN	QTY	DESCRIPTION
1		504272265		1	CAMSHAFT
2		17275310		1	DOWEL
3		4897457		1	FLANGE
4		98471524		8	TAPPET, +0,0
5		504163240		8	ROD, PUSH
6		16673635		2	SCREW, M8 x 1,25 x 20 mm
7		504240396		1	GEAR
8		16673635		6	SCREW, M8 x 1,25 x 20 mm
9		REF			INSTRUCTION, See Figure 02-13, Engine Block Front Cover
10		REF			INSTRUCTION, See Figure 02-11, Cylinder Bock And Related Parts

TURBOCHARGER (87546691)

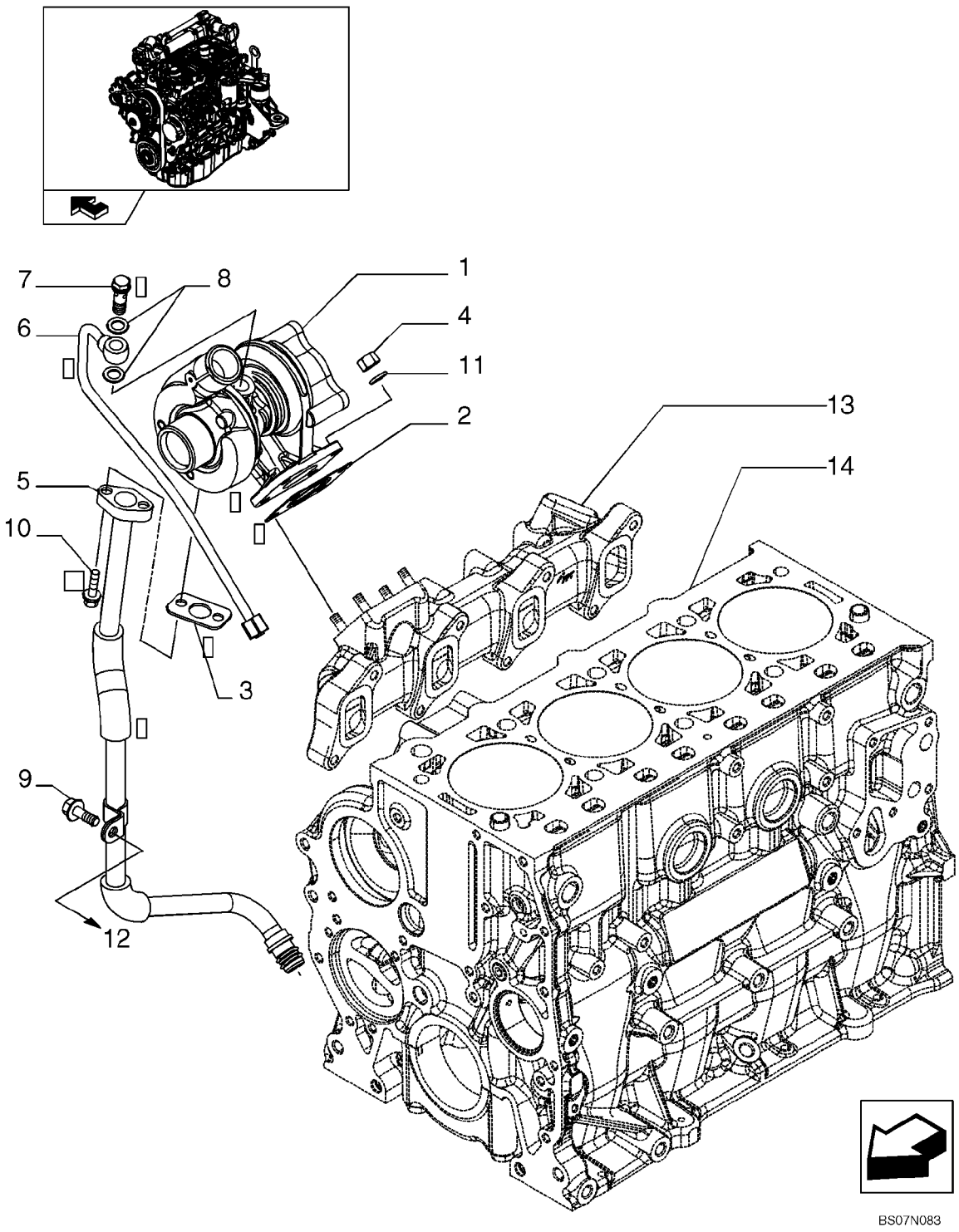

TURBOCHARGER (87546691)

REF	FN	PART NUMBER	YR/SN	QTY	DESCRIPTION
1		504242763		1	TURBOCHARGER
2		4899343		1	GASKET
3		500370706		1	GASKET
4		500322677		4	NUT, M8
5		504164226		1	PIPE, Pipe
6		504164224		1	PIPE, Pipe
7		4864080		1	BOLT, BANJO, M10X1,25
8		17750480		2	GASKET
9		16586225		1	SCREW, M8X1,25X16 mm
10		16585825		2	SCREW, M6X20 mm
11		17094914		4	WASHER, 8,4X16 mm
13		REF			INSTRUCTION, See Figure 02-20, Heat Exchanger
13		REF			INSTRUCTION, See Figure 02-21, Exhaust Manifold
14		REF			INSTRUCTION, See Figure 02-11, Cylinder Block And Related Parts

PUMP, ENGINE OIL & RELATED PARTS (87546691)

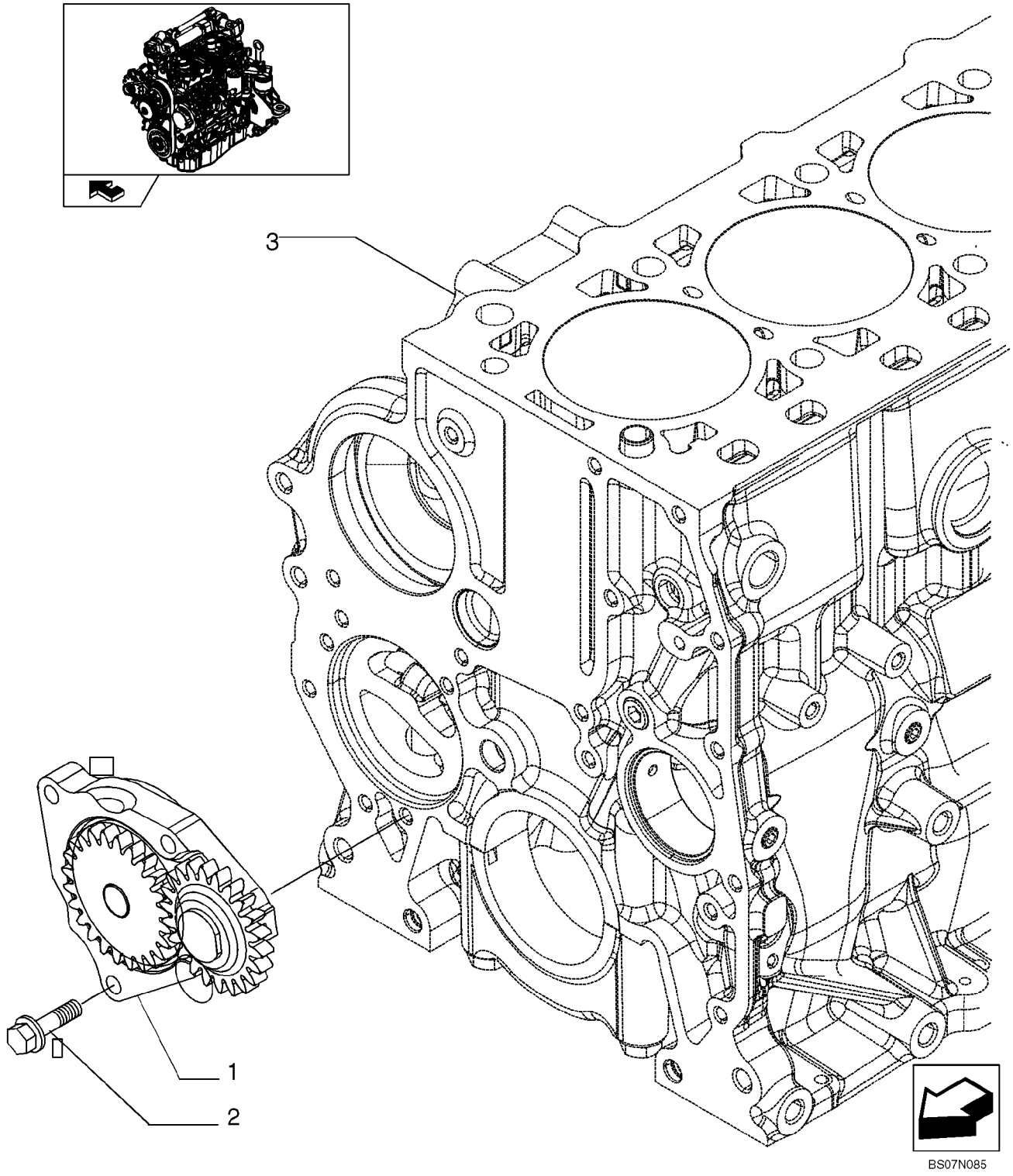

PUMP, ENGINE OIL & RELATED PARTS (87546691)

REF	FN	PART NUMBER	YR/SN	QTY	DESCRIPTION
1		504241684		1	PUMP, ENGINE OIL
2		4794007		3	SCREW
3		REF			INSTRUCTION, See Figure 02-11, Cylinder Block And Related Parts

02-30		p1	01/08

FILTER ENGINE OIL (87546691)

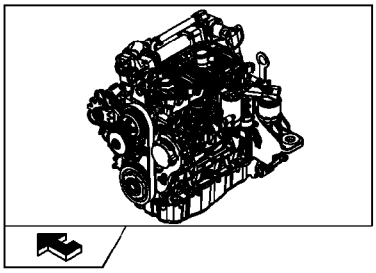

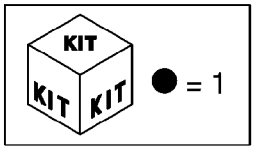

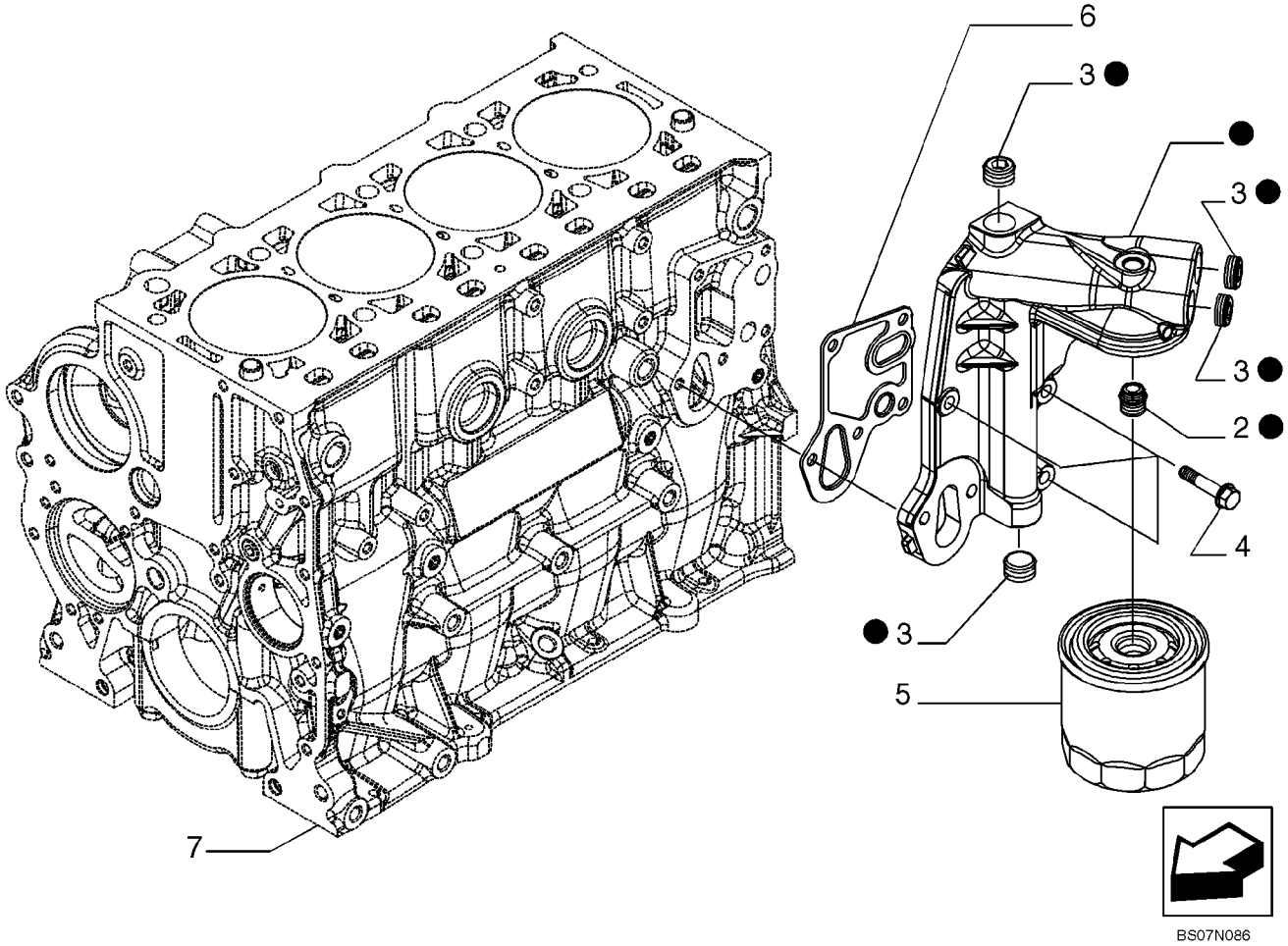

FILTER ENGINE OIL (87546691)

REF	FN	PART NUMBER	YR/SN	QTY	DESCRIPTION
1		504271928		1	FILTER, ENGINE OIL
2		4893391		1	ADAPTER
3		504113860		4	PLUG
4		16673835		2	SCREW, M8X30 mm
5		87679496		1	FILTER, ENGINE OIL
6		504235816		1	SEAL
7		REF			INSTRUCTION, See Figure 02-11, Cylinder Block And Related Parts

OIL PUMP PIPING (87546691)

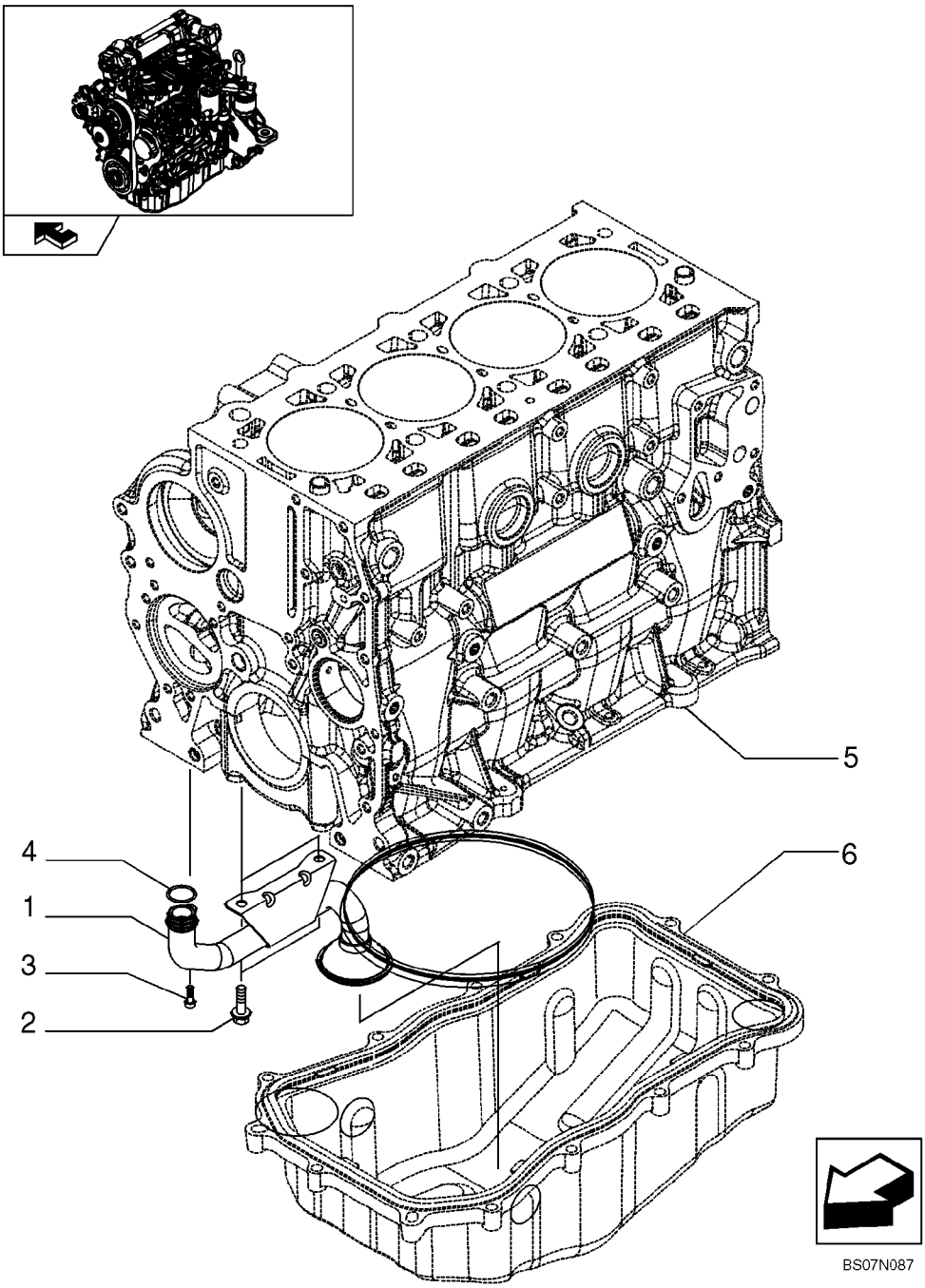

OIL PUMP PIPING (87546691)

REF	FN	PART NUMBER	YR/SN	QTY	DESCRIPTION
1		504179050		1	FILTER, STRAINER
2		16586225		2	SCREW, M8X1,25X16 mm
3		16689024		1	SCREW
4		17282281		1	O-RING, D. 23,4 mm SP=2,6 mm
5		REF			INSTRUCTION, See Figure 02-11, Cylinder Block And Related Parts
6		REF			INSTRUCTION, See Figure 02-12, Oill Sump And Related Parts

HEAT EXCHANGER (87546691)

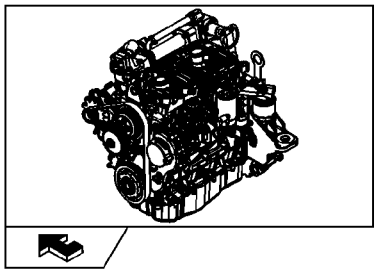

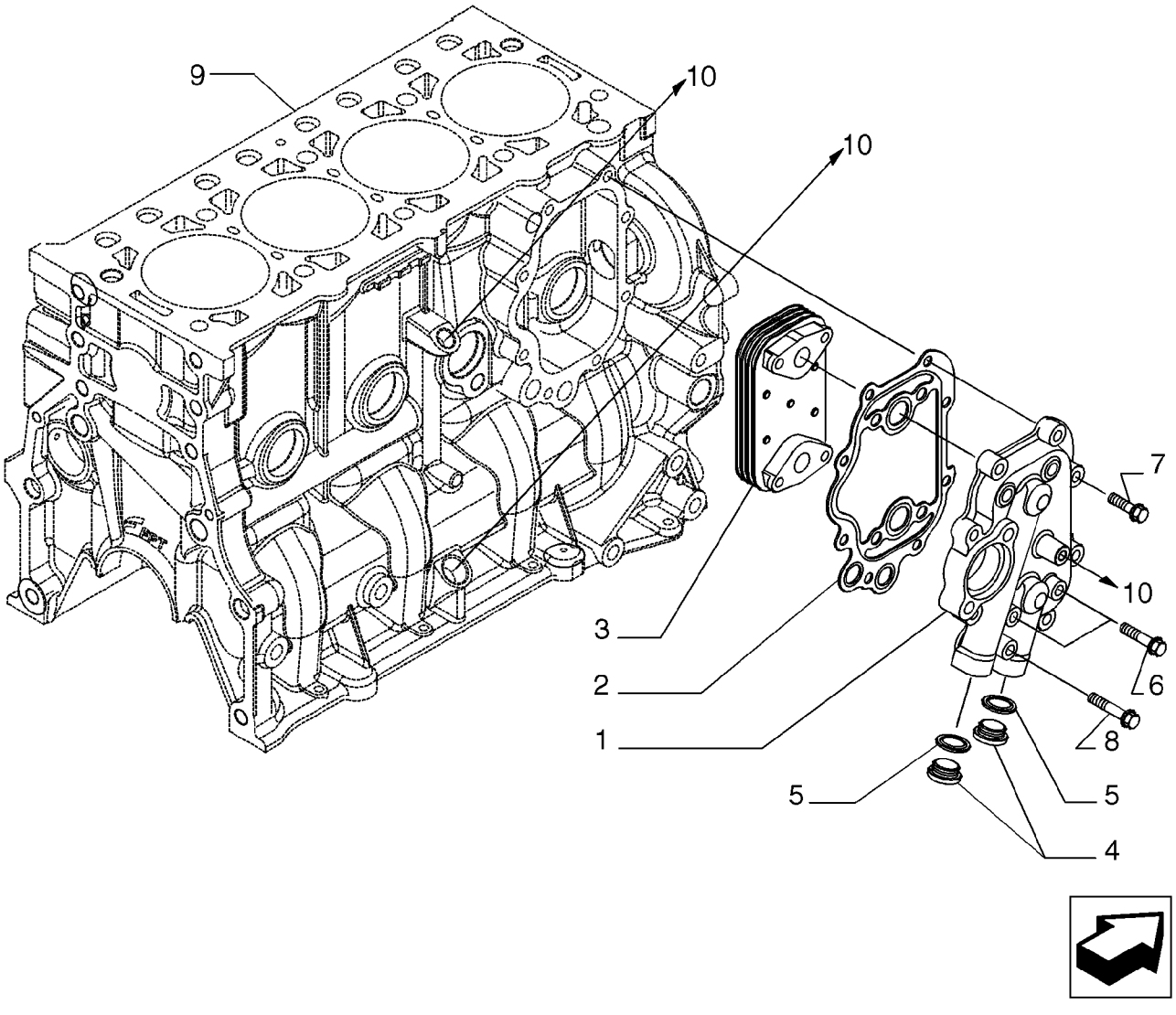

ES07N088

HEAT EXCHANGER (87546691)

REF	FN	PART NUMBER	YR/SN	QTY	DESCRIPTION
1		504155542		1	CASE
2		504155544		1	GASKET
3		504164307		1	COOLER, OIL
4		16993411		2	PLUG, M22X1,5 mm
5		16570660		2	GASKET, D. 22 mm
6		16586725		2	SCREW, M8X1,25X40 mm
7		16673835		9	SCREW, M8X30 mm
8		16586925		1	SCREW, M8X50 mm
9		REF			INSTRUCTION, See Figure 02-11, Cylinder Block And Related Parts
10		REF			INSTRUCTION, See Figure 02-28, Turbo Charger

WATER PUMP & RELATED PARTS (87546691)

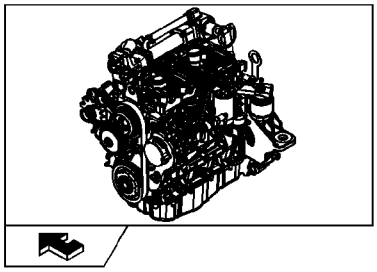

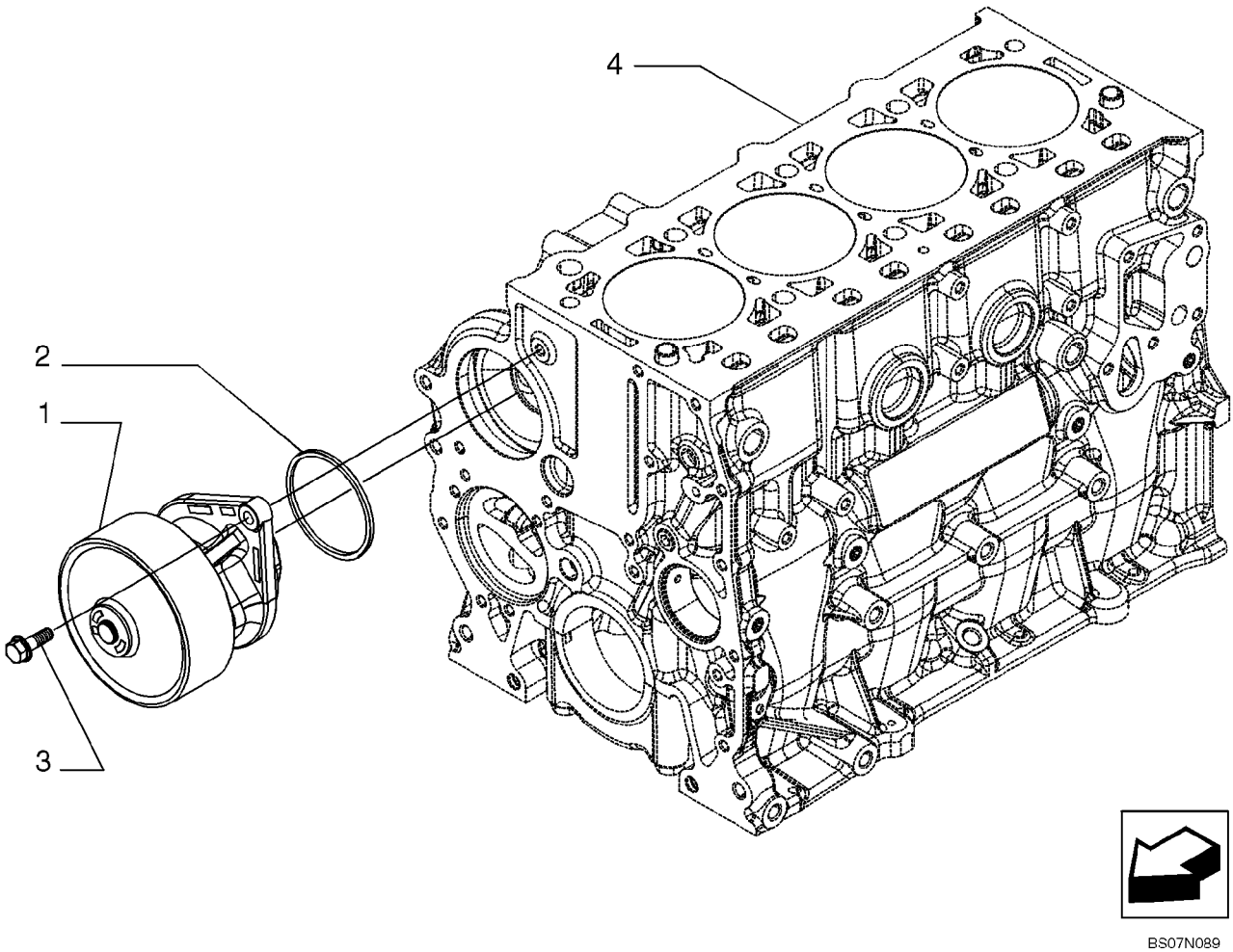

BS07N089

WATER PUMP & RELATED PARTS (87546691)

REF	FN	PART NUMBER	YR/SN	QTY	DESCRIPTION
1		504216828		1	PUMP, WATER
2		2852047		1	GASKET
3		16673735		2	SCREW, M8X25 mm
4		REF			INSTRUCTION, See Figure 02-11, Cylinder Block And Related Parts

PIPING - ENGINE COOLING SYSTEM (87546691)

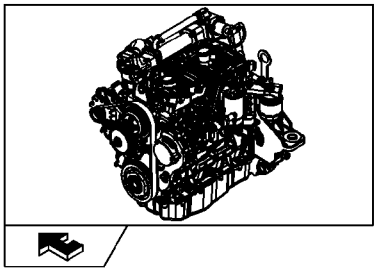

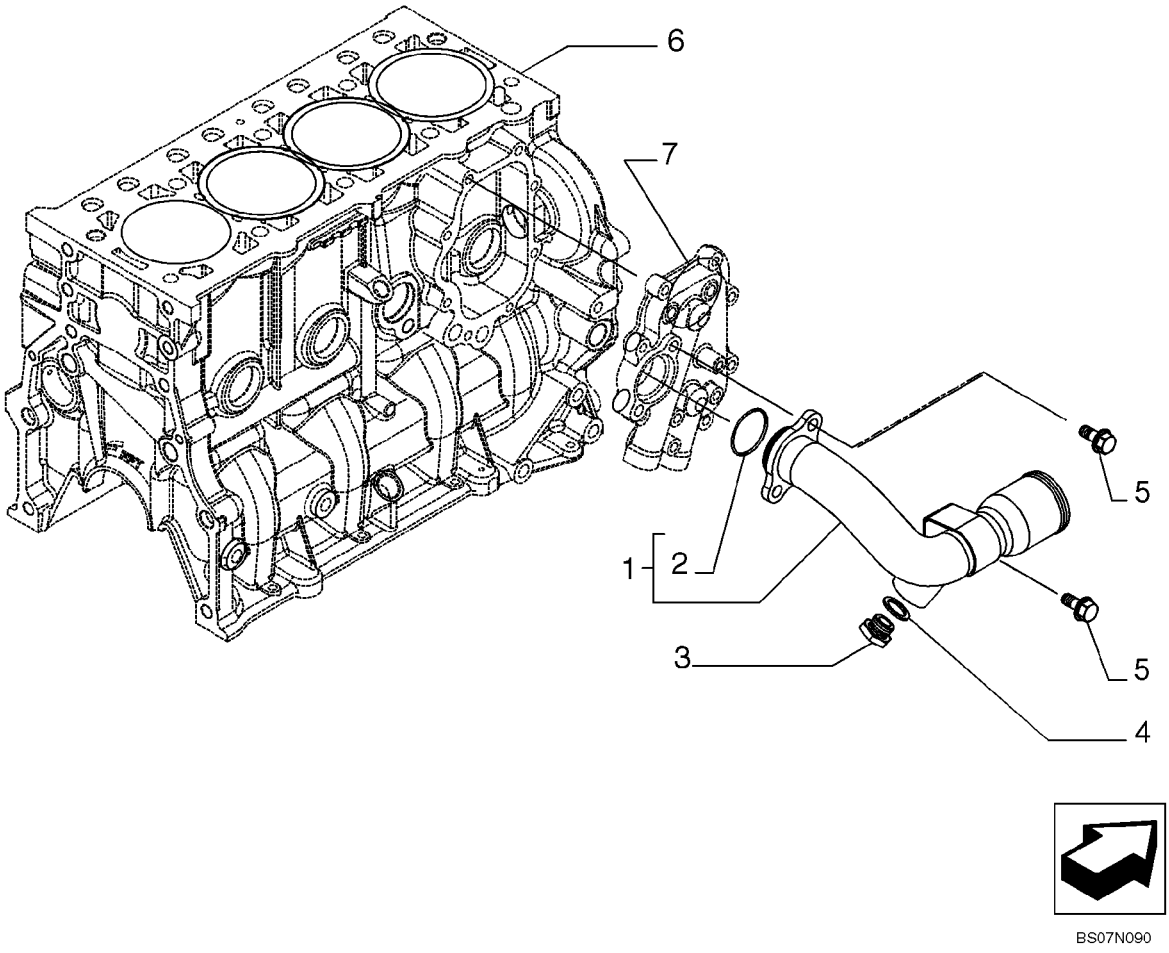

BS07N090

PIPING - ENGINE COOLING SYSTEM (87546691)

REF	FN	PART NUMBER	YR/SN	QTY	DESCRIPTION
1		504182961		1	PIPE
2		17289081		1	O-RING, D. 31,34 x 3,53 mm
3		16992415		1	PLUG, M16 x 1,5
4		16508260		1	GASKET, D. 16 x 22 mm SP=1,5 mm
5		2854311		1	SCREW, M8 x 1,25 x 18 mm
		16508260		1	GASKET
		10265160		1	WASHER, COPPER, M35.4 x 41 x 1.5, Copper, M35.4 x 41 x 1.5
6		REF			INSTRUCTION, See Figure 02-11, Cylinder Block And Related Parts
7		REF			INSTRUCTION, See Figure 02-20, Heat Exchanger

TEMPERATURE CONTROL (THERMOSTAT) (87546691)

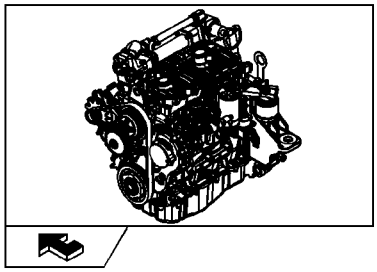

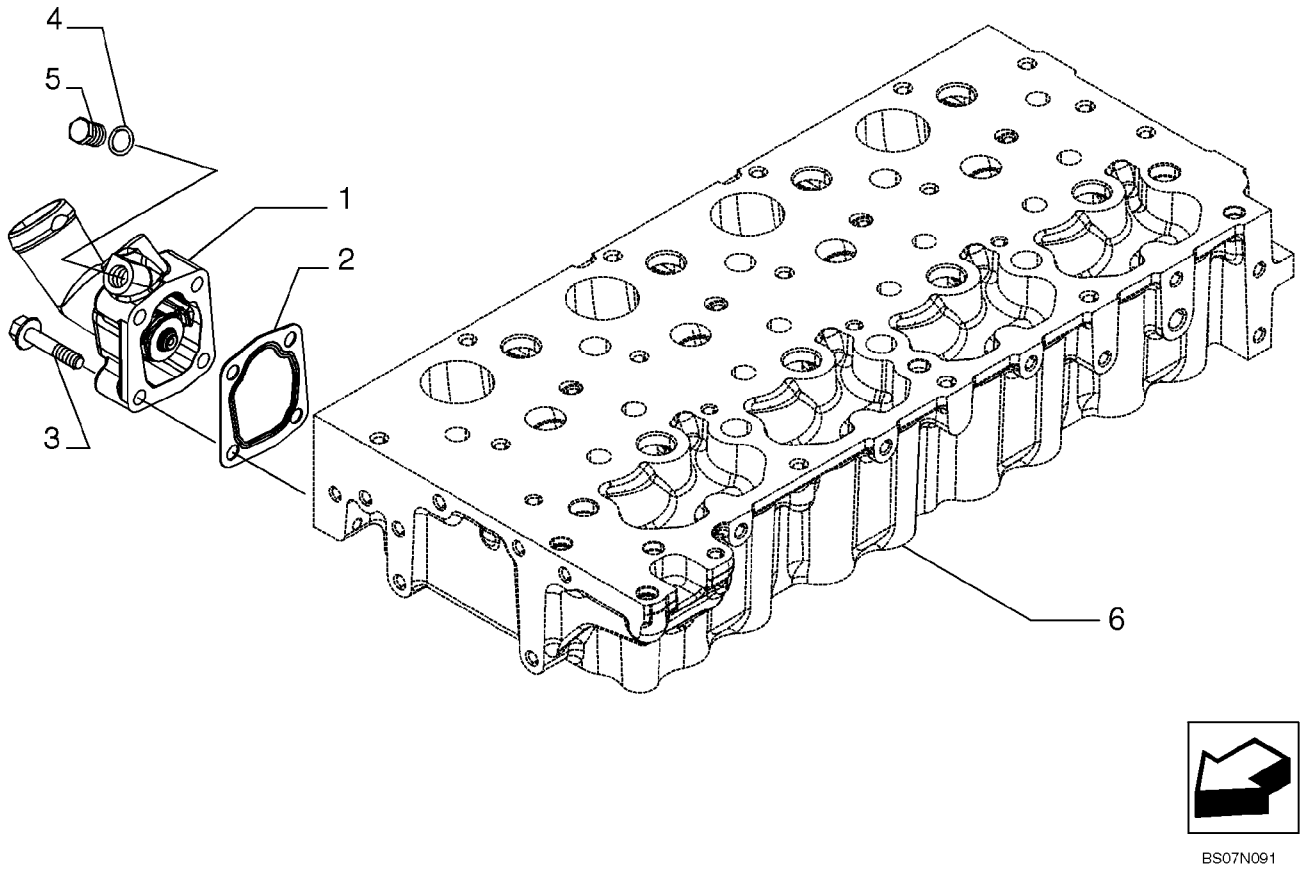

BS07N091

TEMPERATURE CONTROL (THERMOSTAT) (87546691)

REF	FN	PART NUMBER	YR/SN	QTY	DESCRIPTION
1		504209127		1	THERMOSTAT
2		504164205		1	GASKET
3		16586725		4	SCREW, M8X1,25X40 mm
4		10284460		1	WASHER, COPPER, M10.2 x 16 x 1.5, Copper
5		11903111		1	PLUG, M10 x 1.25 x 11, Cl5.8
6		REF			INSTRUCTION, See Figure 02-16, Cylinder Head And Related Parts

BELT PULLEY DRIVE & COVER (87546691)

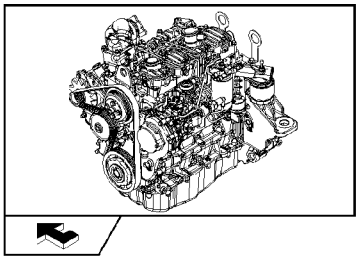

KIT KIT KIT ● = 1

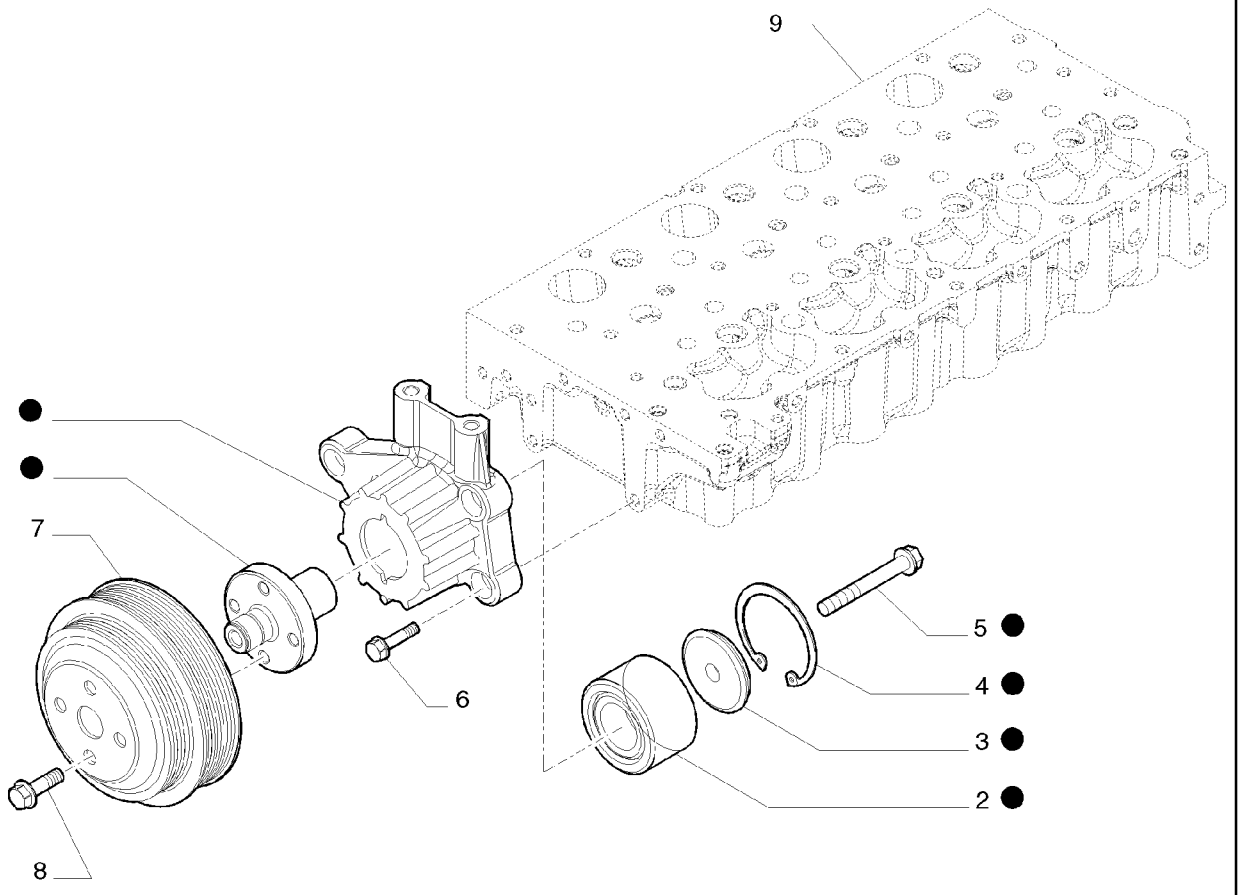

BS07N891

BELT PULLEY DRIVE & COVER (87546691)

REF	FN	PART NUMBER	YR/SN	QTY	DESCRIPTION
1		{504255374}		1	- ASSY
2		4892732		1	BEARING, BALL
3		4890732		1	RETAINER
4		2852171		1	CIRCLIP
5		2854424		1	SCREW, M10X70 mm
6		2852247		5	SCREW, M8X30 mm
7		504255370		1	PULLEY
8		2853674		4	SCREW, M10X20 mm
9		REF			INSTRUCTION, See Figure 02-16, Cylinder Head And Related Parts

HOOKS - ENGINE (87546691)

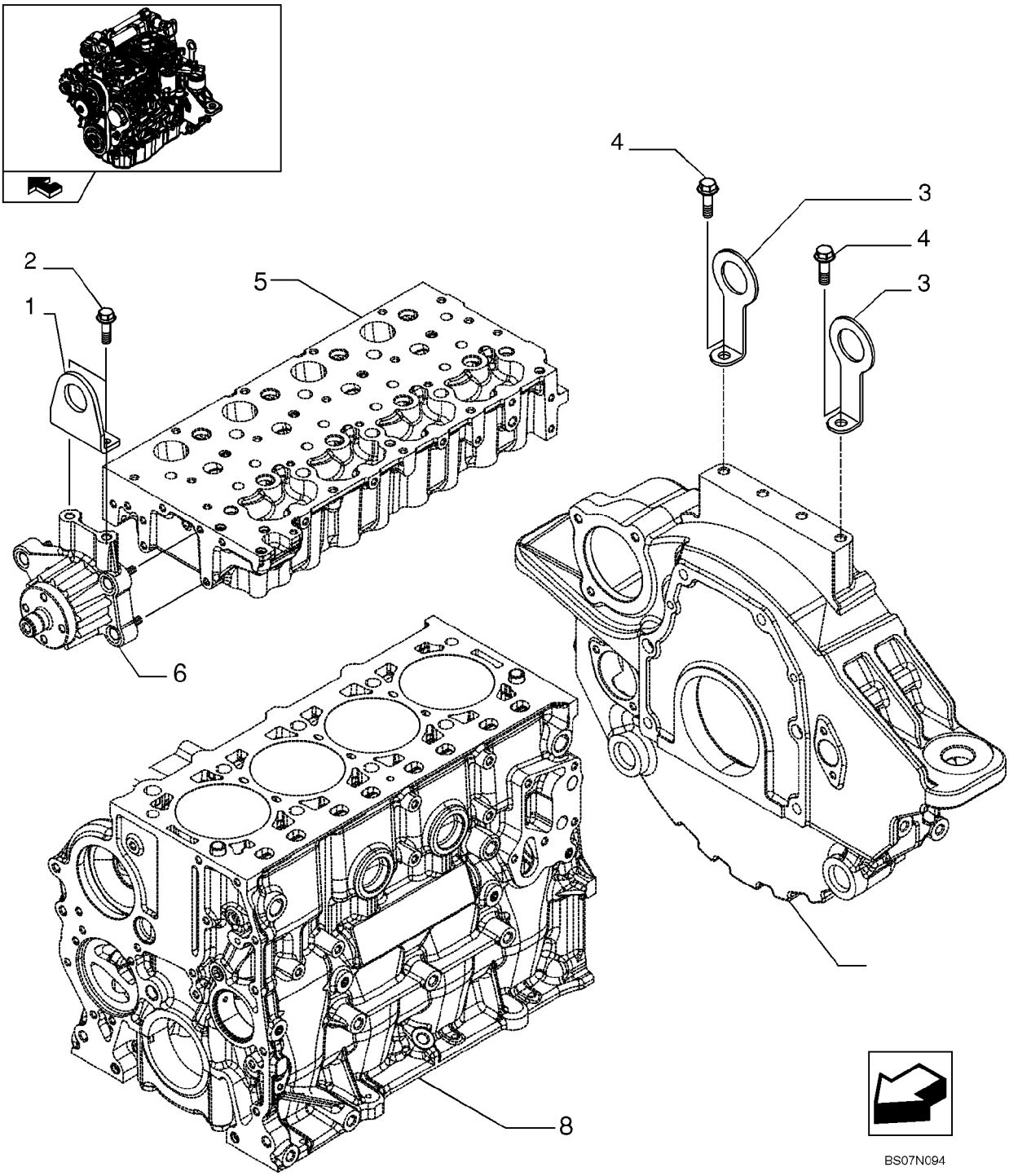

HOOKS - ENGINE (87546691)

REF	FN	PART NUMBER	YR/SN	QTY	DESCRIPTION
1		2853667		1	BRACKET
2		18139424		2	SCREW, M10X20 mm
3		504239237		1	HOOK
4		16587925		2	BOLT
5		REF			INSTRUCTION, See Figure 02-16, Cylinder Head And Related Parts
6		REF			INSTRUCTION, See Figure 02-36, Belt Pulley Drive And Cover
7		REF			INSTRUCTION, See Figure 02-25, Flywheel Case
8		REF			INSTRUCTION, See Figure 02-11, Cylinder Block And Related Parts

DIAGNOSTIC SENSOR (87546691)

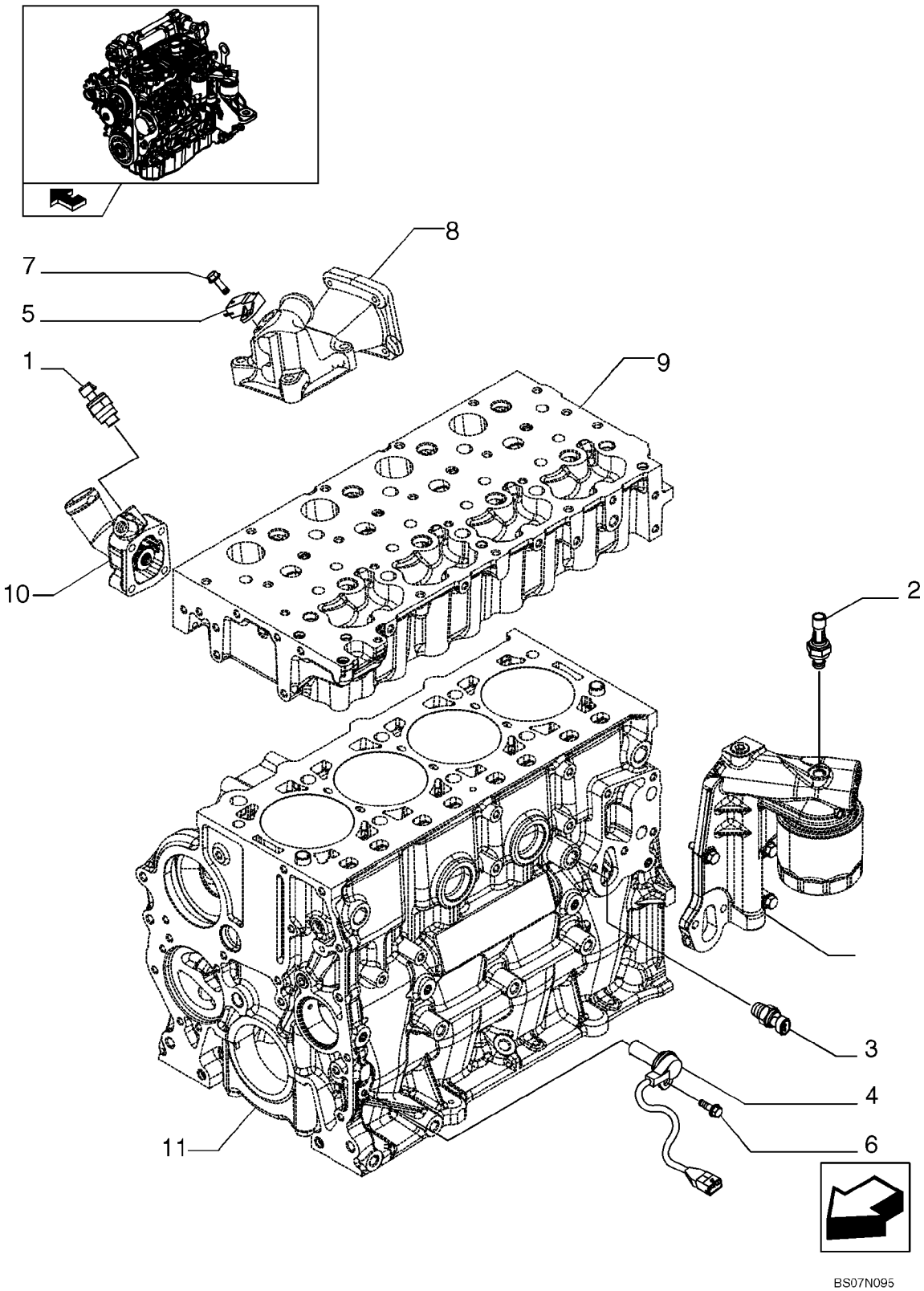

DIAGNOSTIC SENSOR (87546691)

REF	FN	PART NUMBER	YR/SN	QTY	DESCRIPTION
1		2852157		1	SENDER, TEMPERATURE, Water
2		2852889		1	SWITCH, PRESSURE
3		2852087		1	SENSOR, Water temperature KSB
4		500374763		1	TRANSMITTER, Crankshaft
5		504088431		1	SENSOR, Air press. & temperature
6		16585625		1	BOLT, M6X12 mm
7		16585825		1	SCREW, M6X20 mm
8		REF			INSTRUCTION, See Figure 02-19, Intake Manifold
9		REF			INSTRUCTION, See Figure 02-16, Cylinder Head And Related Parts
10		REF			INSTRUCTION, See Figure 02-35, Temperature Control
11		REF			INSTRUCTION, See Figure 02-11, Cylinder Block And Related Parts
12		REF			INSTRUCTION, See Figure 02-30, Filter Engine Oil

MONITORING ELECTRICAL ACCESSORIES (87546691)

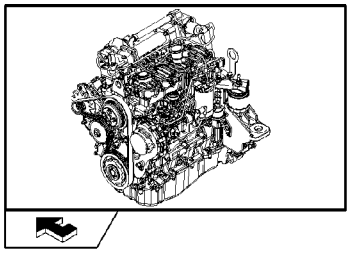

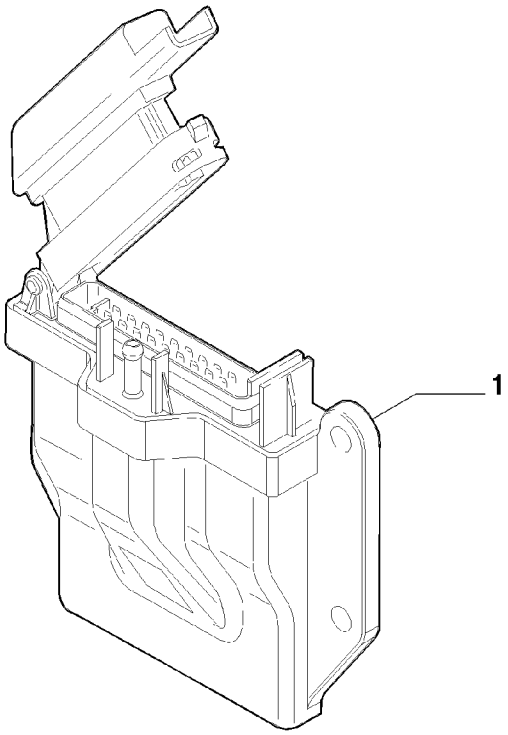

MONITORING ELECTRICAL ACCESSORIES (87546691)

REF	FN	PART NUMBER	YR/SN	QTY	DESCRIPTION
1		504245406		1	CONTROL UNIT, Control Unit

NOTES

SECTION INDEX
Fuel System

03-01	CONTROLS - FOOT AND HAND THROTTLE
03-02	FUEL LINES AND FUEL FILTER
03-03	INJECTION PUMP (87546691)
03-04	INJECTION EQUIPMENT - INJECTOR (87546691)
03-05	INJECTION EQUIPMENT - PIPING (87546691)
03-06	INJECTION EQUIPMENT - PIPING (87546691)
03-07	INJECTION EQUIPMENT - FUEL, RETURN (87546691)
03-08	FUEL FILTER (87546691)
03-09	FUEL PUMP (87546691)
03-10	PIPING - FUEL (87546691)

03-01		p1	11/07

CONTROLS - FOOT AND HAND THROTTLE

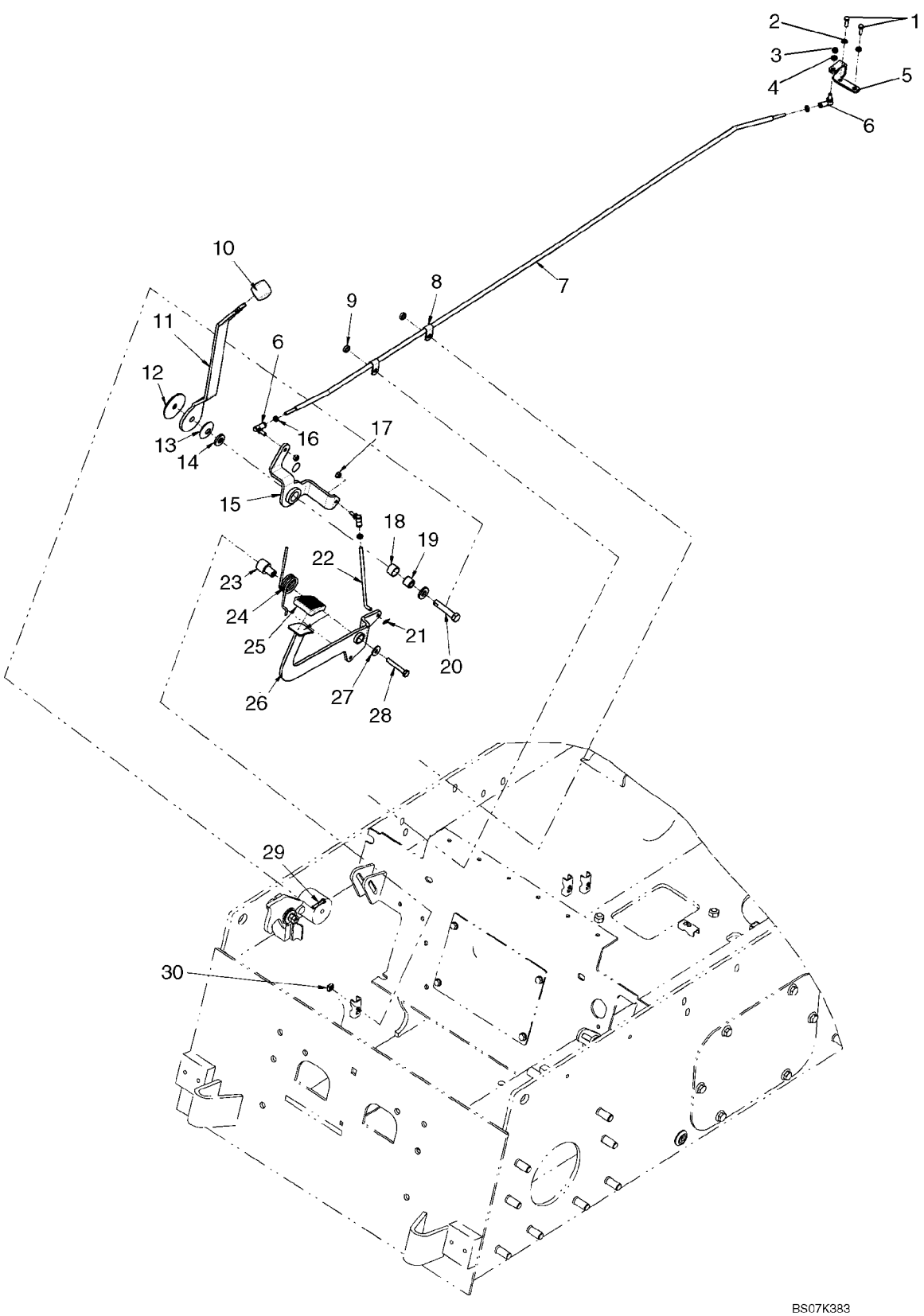

CONTROLS - FOOT AND HAND THROTTLE

REF	FN	PART NUMBER	YR/SN	QTY	DESCRIPTION
1		120100		2	BOLT, Hex, M6 x 20, 8.8
2		86517328		2	WASHER, LOCK, M6
3		88098		1	NUT, Jam, 1/4"-28, G2
4		80682		1	WASHER, LOCK, 1/4"
5		{87643562}		1	Throttle Rod Bracket
6		H169920		3	BALL JOINT
7		87655050		1	ROD, Throttle Rod
8		87028524		2	CLAMP
9		694371		2	SPACER
10		A177436		1	KNOB, Control Lever Knob
11		87712373		1	THROTTLE CONTROL, Throttle Handle
12		1342374C1		1	DISC, Friction Disc
13		R14771		1	WASHER
14		86625256		2	WASHER, M12 x 28.5 x 4, HT
15		87712376		1	THROTTLE CONTROL, Control, Throttle
16		86976064		3	NUT, Jam, 1/4"-28, G5
17		86509309		2	NUT, 1/4"-28, G5
18		186905A1		1	BUSHING
19		187035A2		1	BUSHING, LARGE
20		87612749		1	FASTENER
21		D131983		1	PIN
22		87650094		1	ROD, Rod, Foot Throttle
23		87424095		1	SLEEVE
24		87416539		1	TORSION SPRING
25		323657A1		1	PAD
26		{87650090}		1	Pedal, Foot Throttle
27		86639313		1	WASHER, M8 x 20 x 1.6
28		16044321		1	BOLT, Hex, M8 x 55, 8.8
29		43117		1	BOLT, Hex, M6 x 30, 8.8
30		229197A1		1	NUT

03-02		p1	11/07

FUEL LINES AND FUEL FILTER

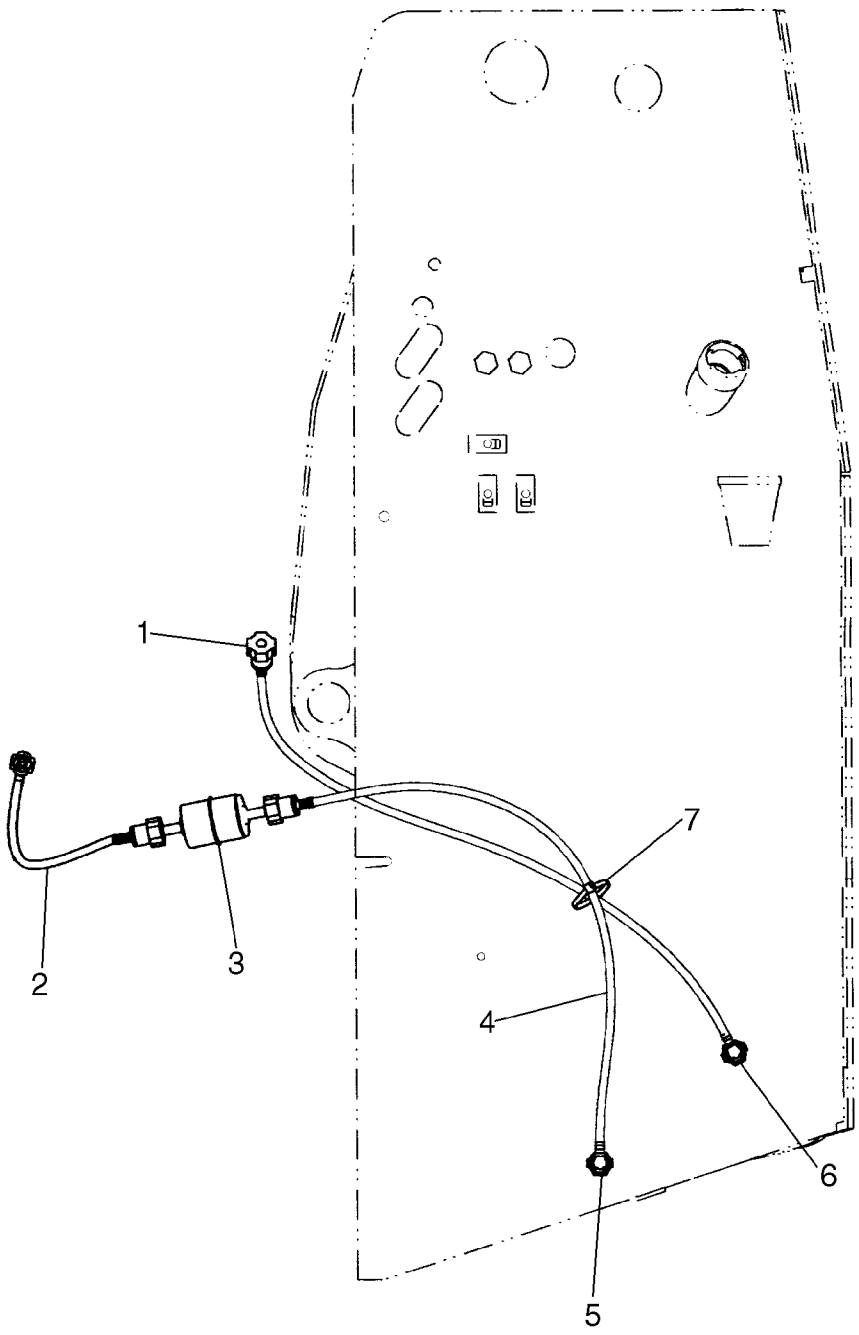

FUEL LINES AND FUEL FILTER

REF	FN	PART NUMBER	YR/SN	QTY	DESCRIPTION
1		87530713		1	LINE, Fuel Line, 750mm (29 1/2 in.)
2		87624874		1	LINE, Fuel Line, 300mm (11 13/16 in.)
3		87548612		1	FILTER, FUEL, Inline Fuel Filter
4		87524605		1	LINE, Fuel Line, 625mm (24 5/8 in.)
5		87436610		1	ADAPTER, Fuel Line Adapter With Flow Stop
6		86601756		1	CONNECTOR, HYD.

INJECTION PUMP (87546691)

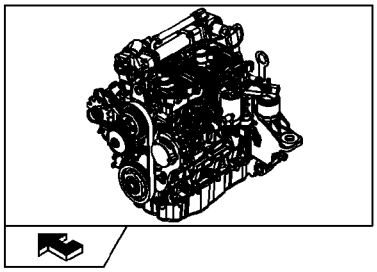

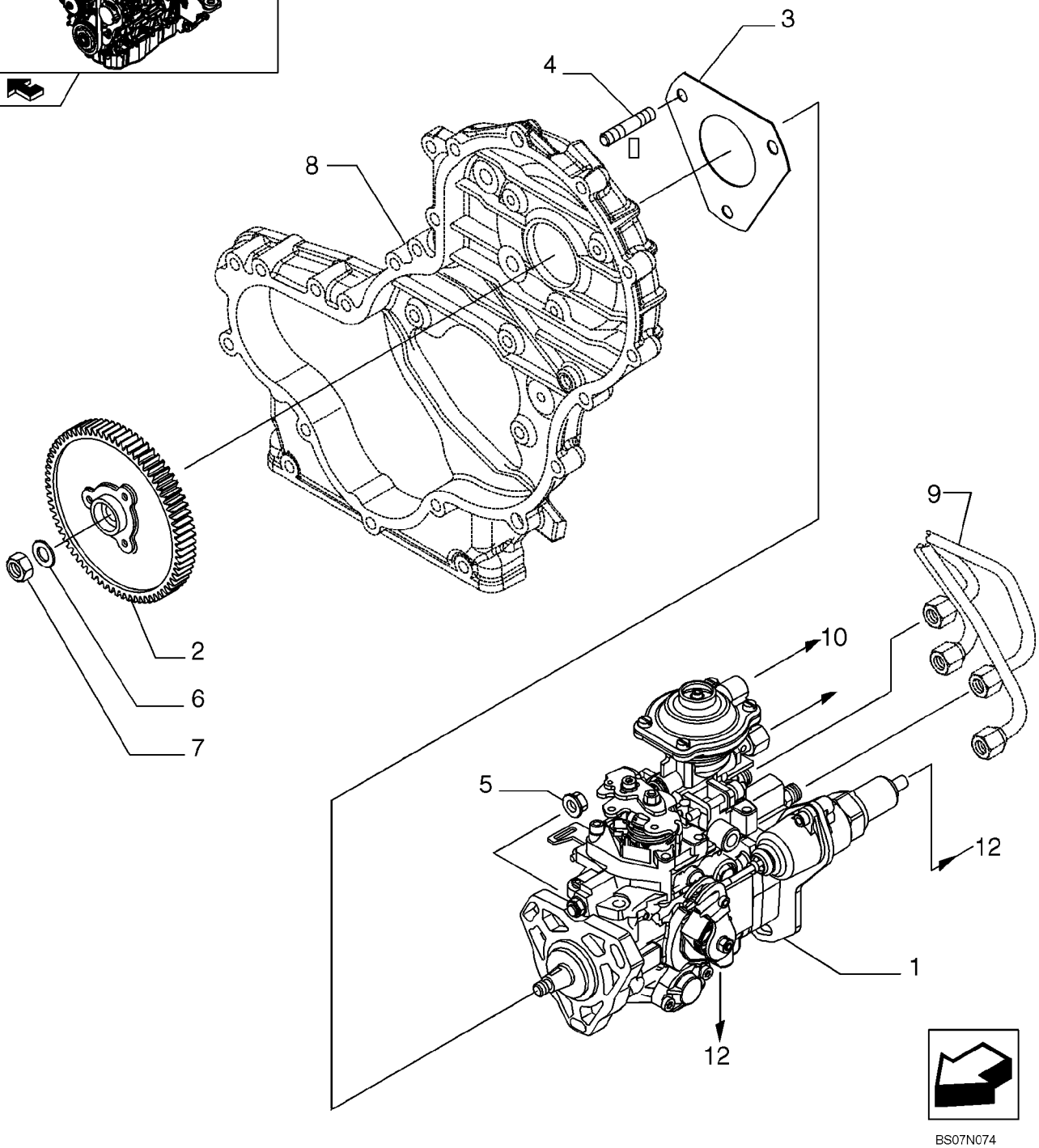

INJECTION PUMP (87546691)

REF	FN	PART NUMBER	YR/SN	QTY	DESCRIPTION
1		504246319		1	PUMP, FUEL INJECTION
2		504240405		1	GEAR
3		2852885		1	GASKET
4		2852294		3	STUD, M8X30 mm
5		500368408		3	NUT, M8X1,25
6		17095404		1	WASHER
7		16980331		1	NUT, M14X1,5
8		REF			INSTRUCTION, See Figure 02-41, Engine Block Front Cover
9		REF			INSTRUCTION, See Figure 03-06A, Injection Equipment Piping
10		REF			INSTRUCTION, See Figure 03-05A, Injection Equipment Piping
11		REF			INSTRUCTION, See Figure 03-07A, Injection Equipment - Fuel, Return
12		REF			INSTRUCTION, See Figure 04-21, Engine Electric Installation

INJECTION EQUIPMENT - INJECTOR (87546691)

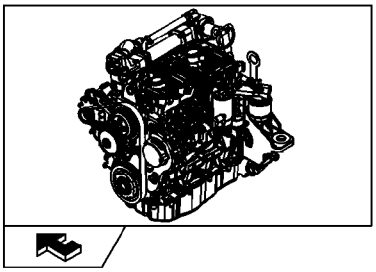

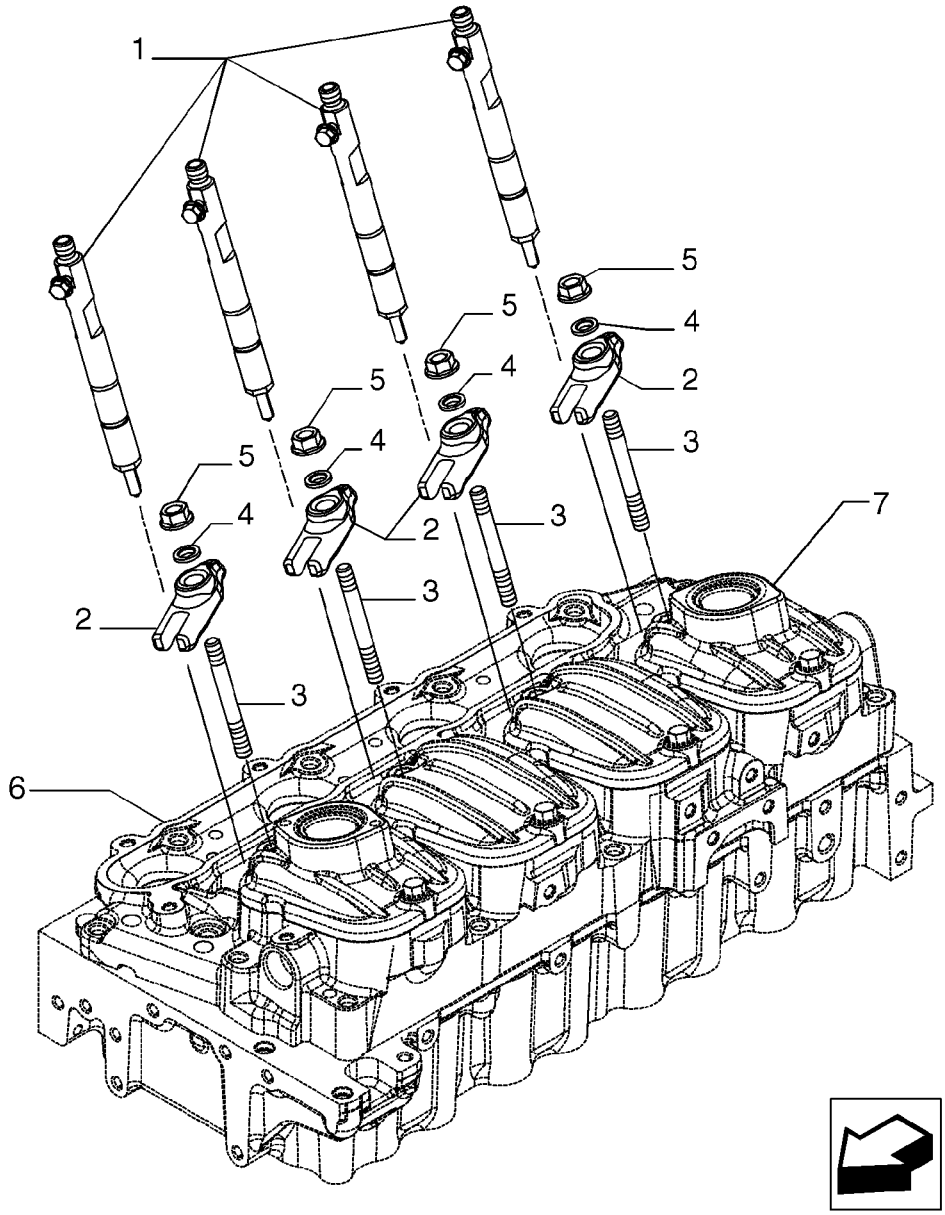

BS07N075

INJECTION EQUIPMENT - INJECTOR (87546691)

REF	FN	PART NUMBER	YR/SN	QTY	DESCRIPTION
1		504275234		4	INJECTOR, FUEL SYSTEM
2		504174745		4	BRACKET
3		16747424		4	STUD, M8X16X60
4		500353601		4	WASHER
5		17044735		4	NUT, M8
6		REF			INSTRUCTION, See Figure 02-16, Cylinder Head And Related Parts
7		REF			INSTRUCTION, See Figure 02-17, Cylinder Head Covers

INJECTION EQUIPMENT - PIPING (87546691)

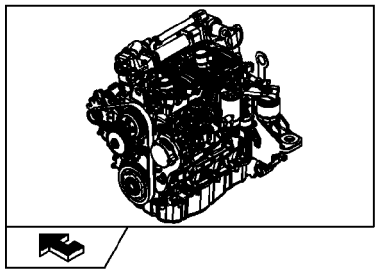

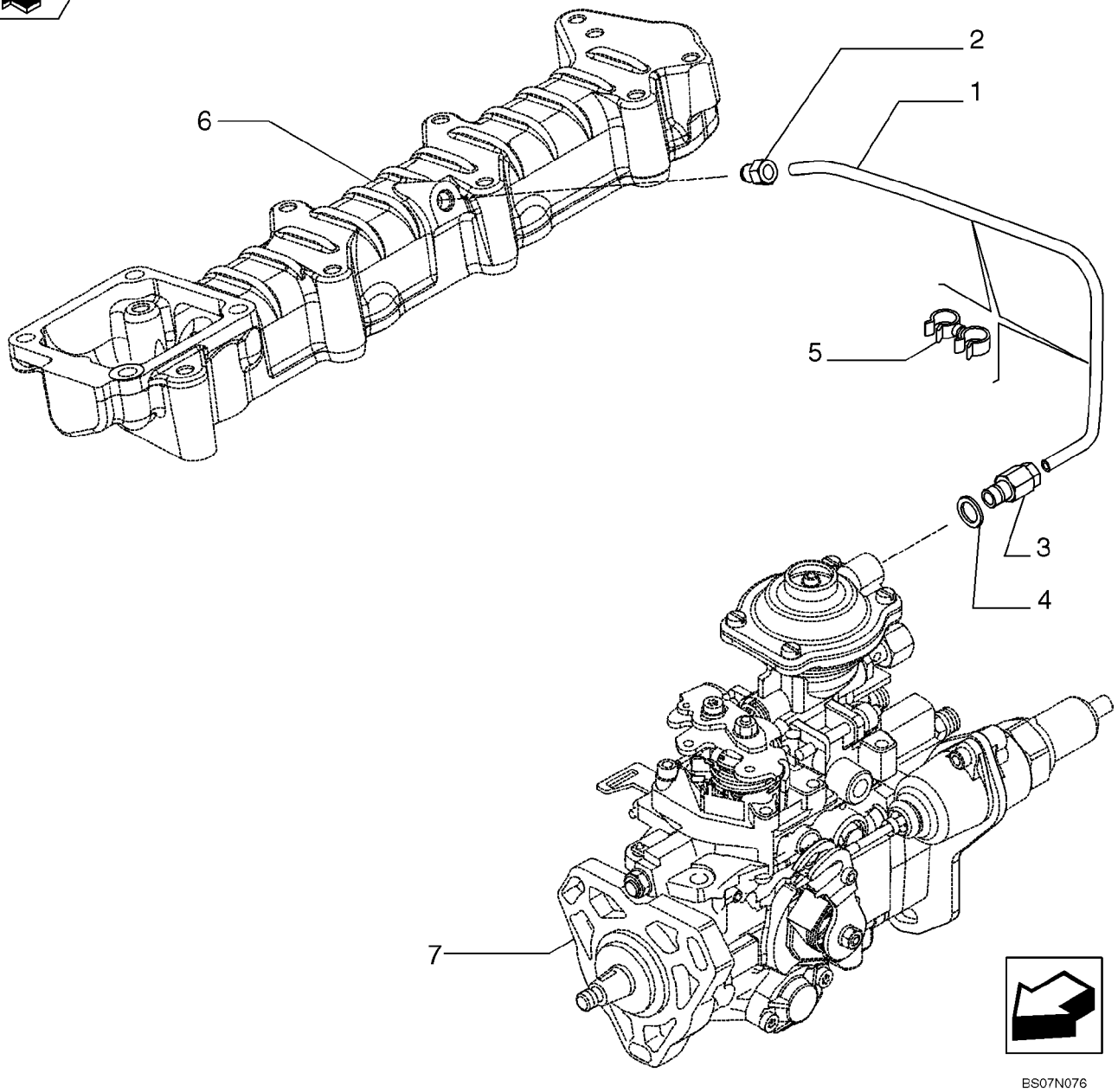

INJECTION EQUIPMENT - PIPING (87546691)

REF	FN	PART NUMBER	YR/SN	QTY	DESCRIPTION
1		504253448		1	PIPE
2		4896770		1	FITTING, M10X1
3		4893518		1	FITTING, M8X1
4		4858605		1	SEAL, D. 8X12 mm
5		98429625		2	CLAMP
6		REF			INSTRUCTION, See Figure 02-19, Intake Manifold
7		REF			INSTRUCTION, See Figure 03-03, Injection Pump

INJECTION EQUIPMENT - PIPING (87546691)

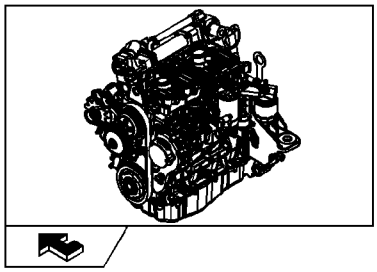

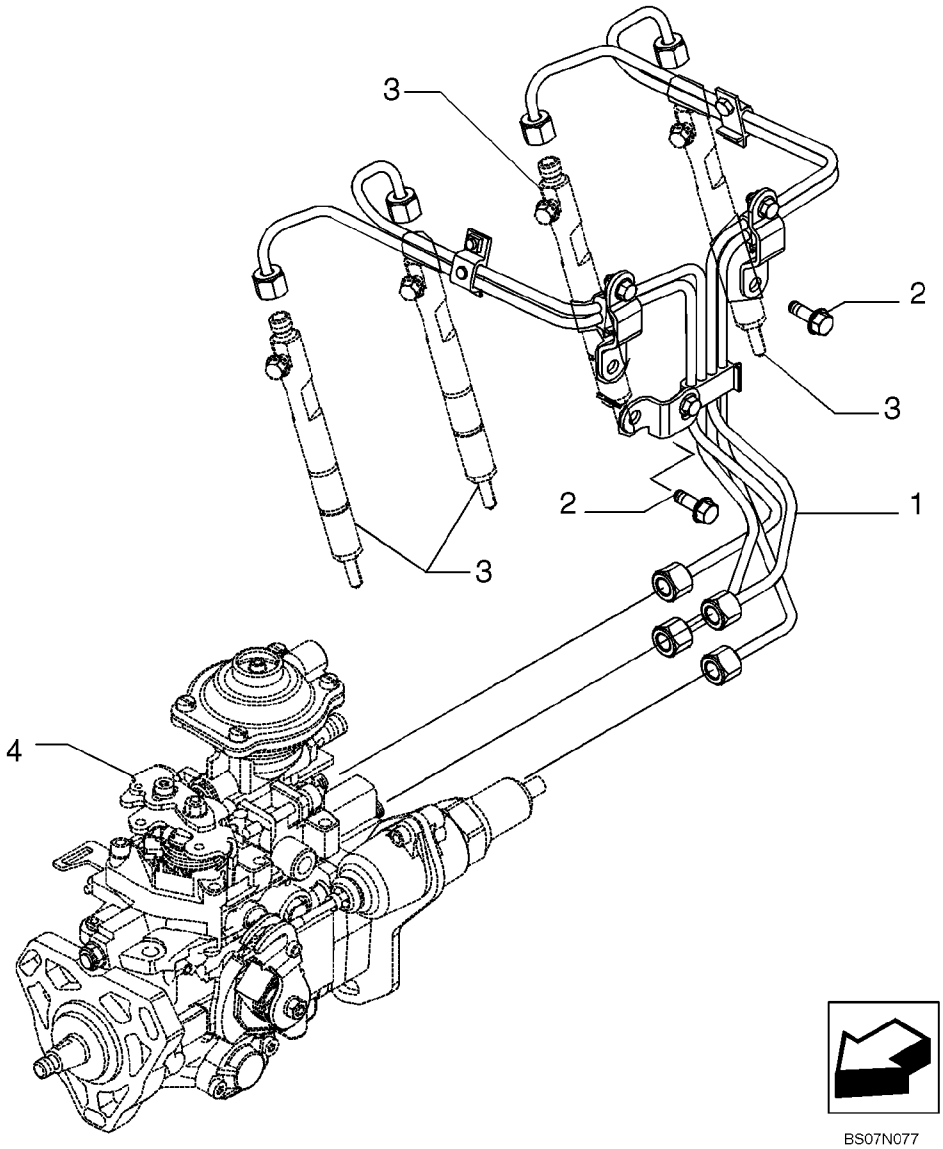

BS07N077

INJECTION EQUIPMENT - PIPING (87546691)

REF	FN	PART NUMBER	YR/SN	QTY	DESCRIPTION
1		504216298		1	PIPE INJECTION
2		2852323		3	SCREW, M8X14 mm
3		REF			INSTRUCTION, See Figure 03-04, Injection Equipment - Injector
4		REF			INSTRUCTION, See Figure 03-03, Injection Pump

INJECTION EQUIPMENT - FUEL, RETURN (87546691)

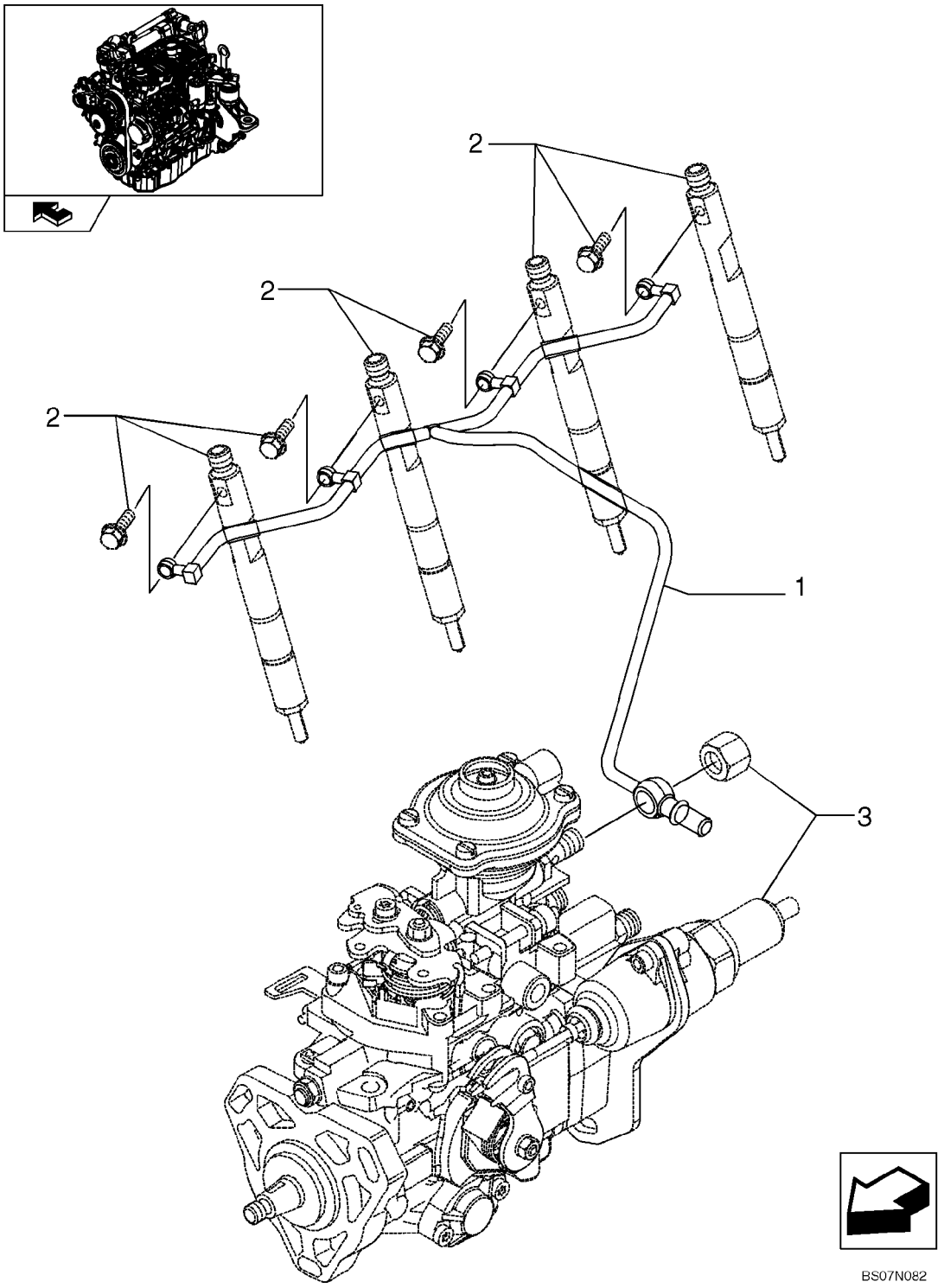

INJECTION EQUIPMENT - FUEL, RETURN (87546691)

REF	FN	PART NUMBER	YR/SN	QTY	DESCRIPTION
1		504207952		1	PIPE, RETURN
2		REF			INSTRUCTION, See Figure 03-04, Injection Equipment - Injector
3		REF			INSTRUCTION, See Figure 03-03, Injection Pump

03-08		p1	01/08

FUEL FILTER (87546691)

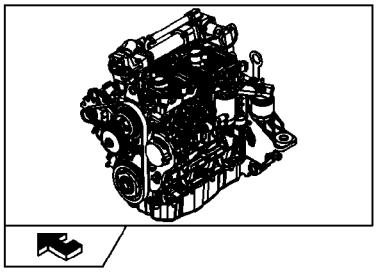

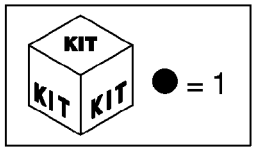

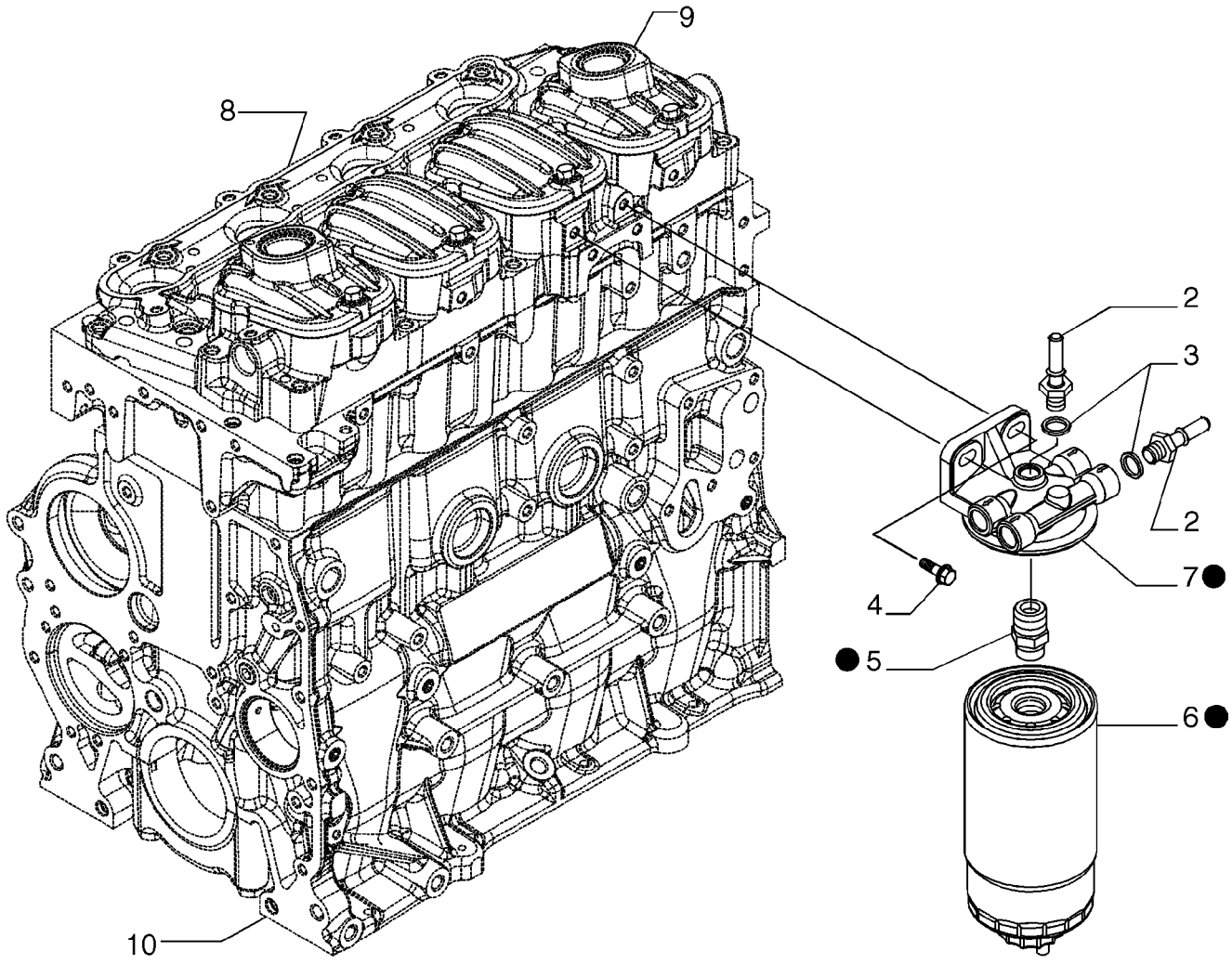

BS07N079

FUEL FILTER (87546691)

REF	FN	PART NUMBER	YR/SN	QTY	DESCRIPTION
1		504182845		1	FILTER, FUEL
2		500344936		2	FITTING, Fitting, M14X1,5
3		4894721		2	WASHER, SEALING
4		16673735		2	SCREW, M8X25 mm
5		42545574		1	UNION
6		87679502		1	FILTER, FUEL
7		504287001		1	HEAD, FILTER
8		REF			INSTRUCTION, See Figure 02-16, Cylinder Head And Related Parts
9		REF			INSTRUCTION, See Figure 02-17, Cylinder Head Covers
10		REF			INSTRUCTION, See Figure 02-11, Cylinder Block And Related Parts

03-09		p1	01/08

FUEL PUMP (87546691)

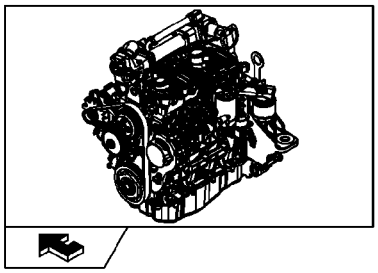

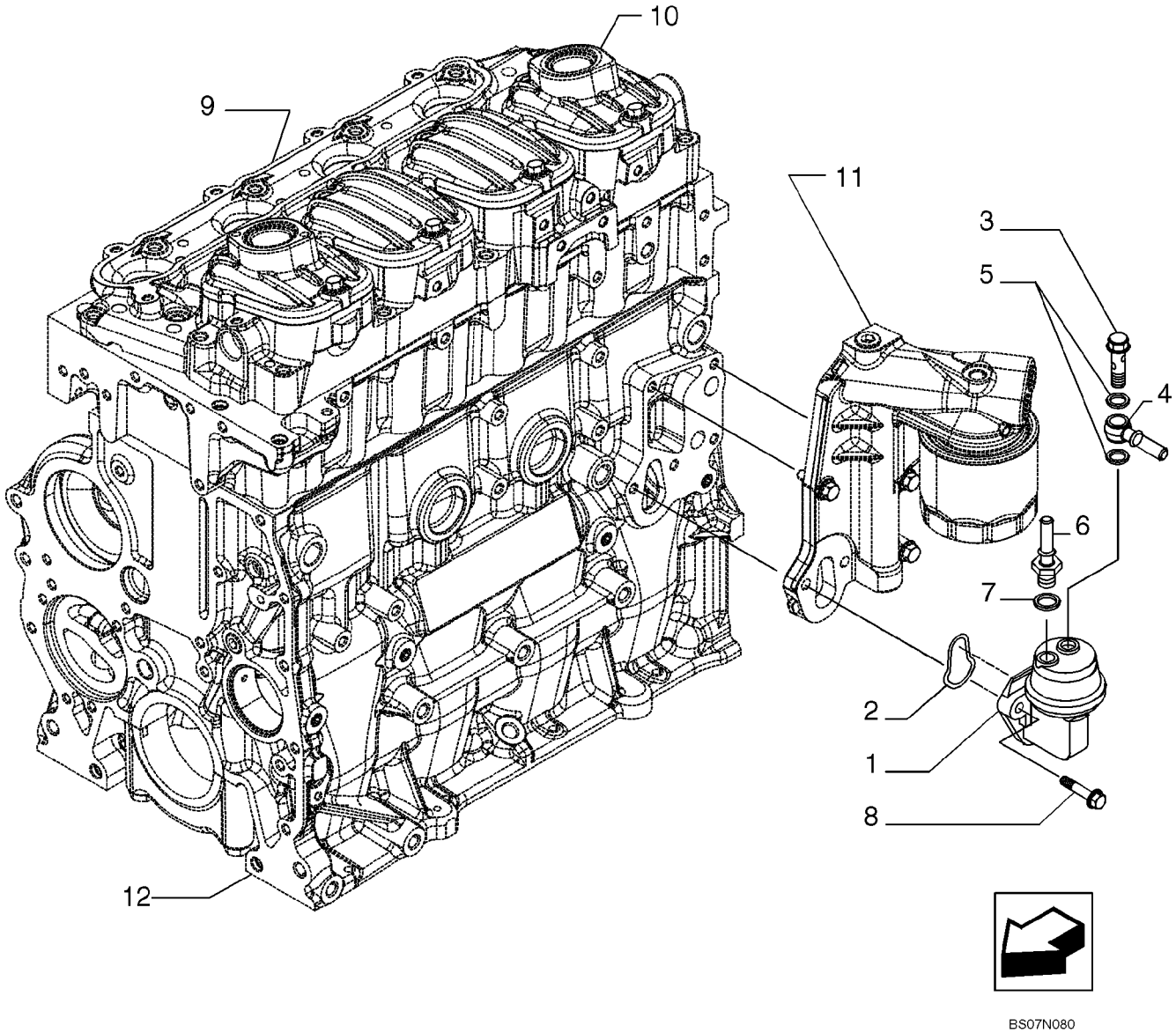

BS07N080

FUEL PUMP (87546691)

REF	FN	PART NUMBER	YR/SN	QTY	DESCRIPTION
1		2830122		1	PUMP, FUEL
2		2830156		1	GASKET
3		504218933		1	BOLT, BANJO
4		504218931		1	FITTING
5		17750480		2	GASKET
6		504197289		1	FITTING
7		4894721		1	WASHER, SEALING
8		16586725		2	SCREW, M8X1,25X40 mm
9		REF			INSTRUCTION, See Figure 02-16, Cylinder Head And Related Parts
10		REF			INSTRUCTION, See Figure 02-17, Cylinder Head Covers
11		REF			INSTRUCTION, See Figure 02-30, Filter, Engine Oil
12		REF			INSTRUCTION, See Figure 02-11, Cylinder Block And Related Parts

03-10		p1	01/08

PIPING - FUEL (87546691)

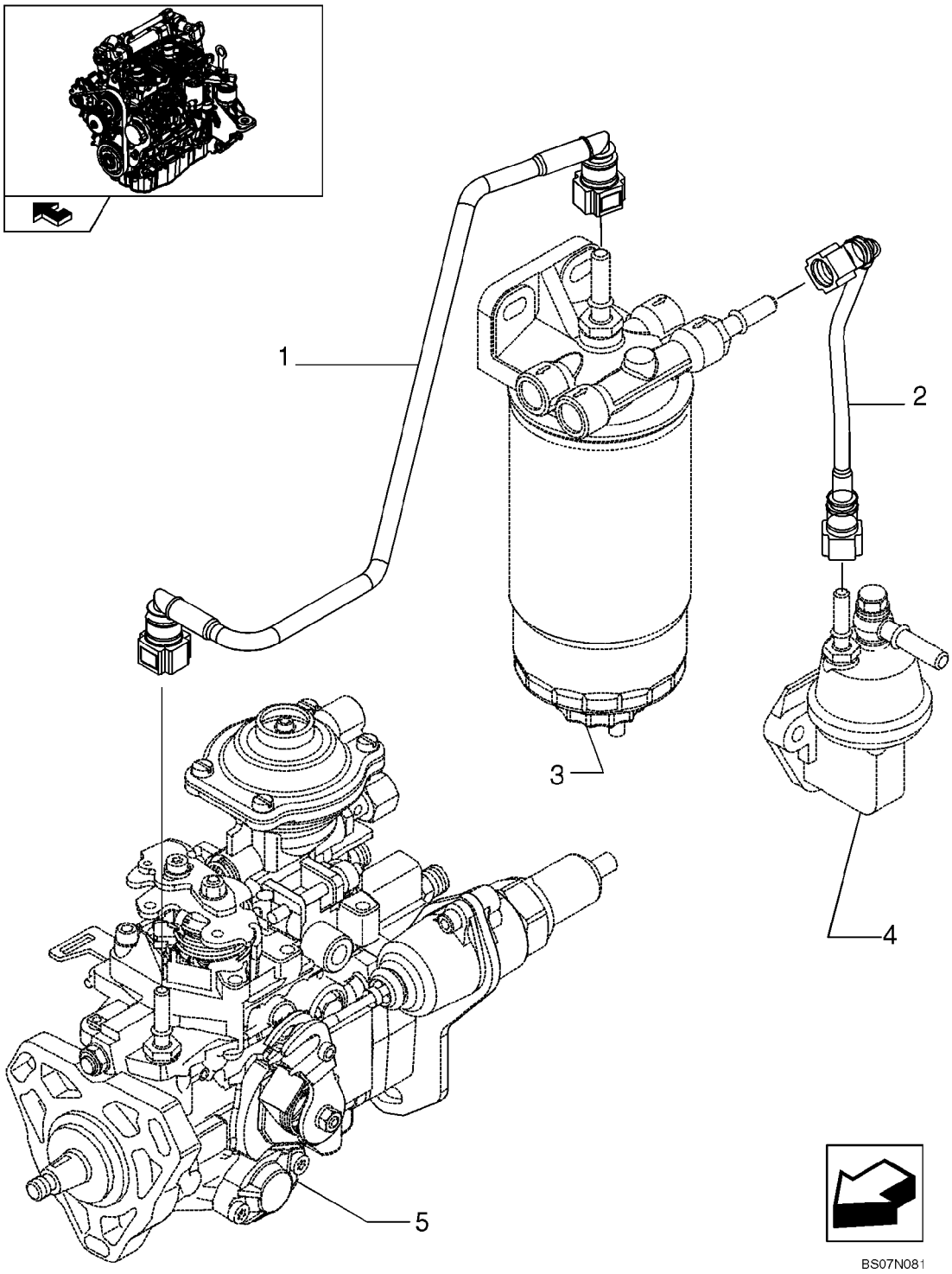

PIPING - FUEL (87546691)

REF	FN	PART NUMBER	YR/SN	QTY	DESCRIPTION
1		504207948		1	PIPE INJECTION
2		504184992		1	PIPE INJECTION
3		REF			INSTRUCTION, See Figure 03-08, Fuel Filter
4		REF			INSTRUCTION, See Figure 03-09, Fuel Pump
5		REF			INSTRUCTION, See Figure 03-03, Injection Pump

NOTES

SECTION INDEX
Electrical System

04-01	BATTERY - CABLES
04-02	ENGINE, ALTERNATOR MOUNTING (87546691)
04-03	ENGINE ELECTRIC INSTALLATION (87546691)
04-04	ENGINE - ELECTRICAL (420)
04-05	ENGINE - ELECTRICAL (420CT)
04-06	CHASSIS - ELECTRICAL
04-07	ELECTRICAL - GRID HEATER
04-08	ELECTRIC - CAB
04-09	CONSOLE - RH
04-10	CONSOLE - LH
04-11	CONTROL HANDLE, RH - BASIC
04-12	CONTROL HANDLE, LH - BASIC
04-13	CONTROL HANDLE, RH - DELUXE W/O AUX ELECTRIC
04-14	CONTROL HANDLE, LH - DELUXE W/O AUX ELECTRIC
04-15	CONTROL HANDLE, RH - DELUXE
04-16	CONTROL HANDLE, LH - DELUXE
04-17	DISCONNECT SWITCH - REMOTE JUMP START
04-18	WORK LIGHTS - LH
04-19	WORK LIGHTS - RH
04-20	ELECTRICAL - ROAD LIGHTS (NA)
04-21	ELECTRICAL - ROAD LIGHTS (EUROPE)
04-22	HEADLAMP - RH
04-23	HEADLAMP - LH
04-24	REAR LIGHT AND MOUNTING
04-25	BACKUP ALARM
04-26	ELECTRICAL ACCESSORY SOCKET
04-27	ELECTRICAL ACCESSORY SOCKET (EUROPE)
04-28	HORN - MOUNTING
04-29	ELECTRIC, FRONT AUXILIARY
04-30	ROTATING BEACON
04-31	SPECIAL PARTS FOR ITALY - LICENSE PLATE LIGHT
04-33	STROBE LIGHT

04-01		p1	11/07

BATTERY - CABLES

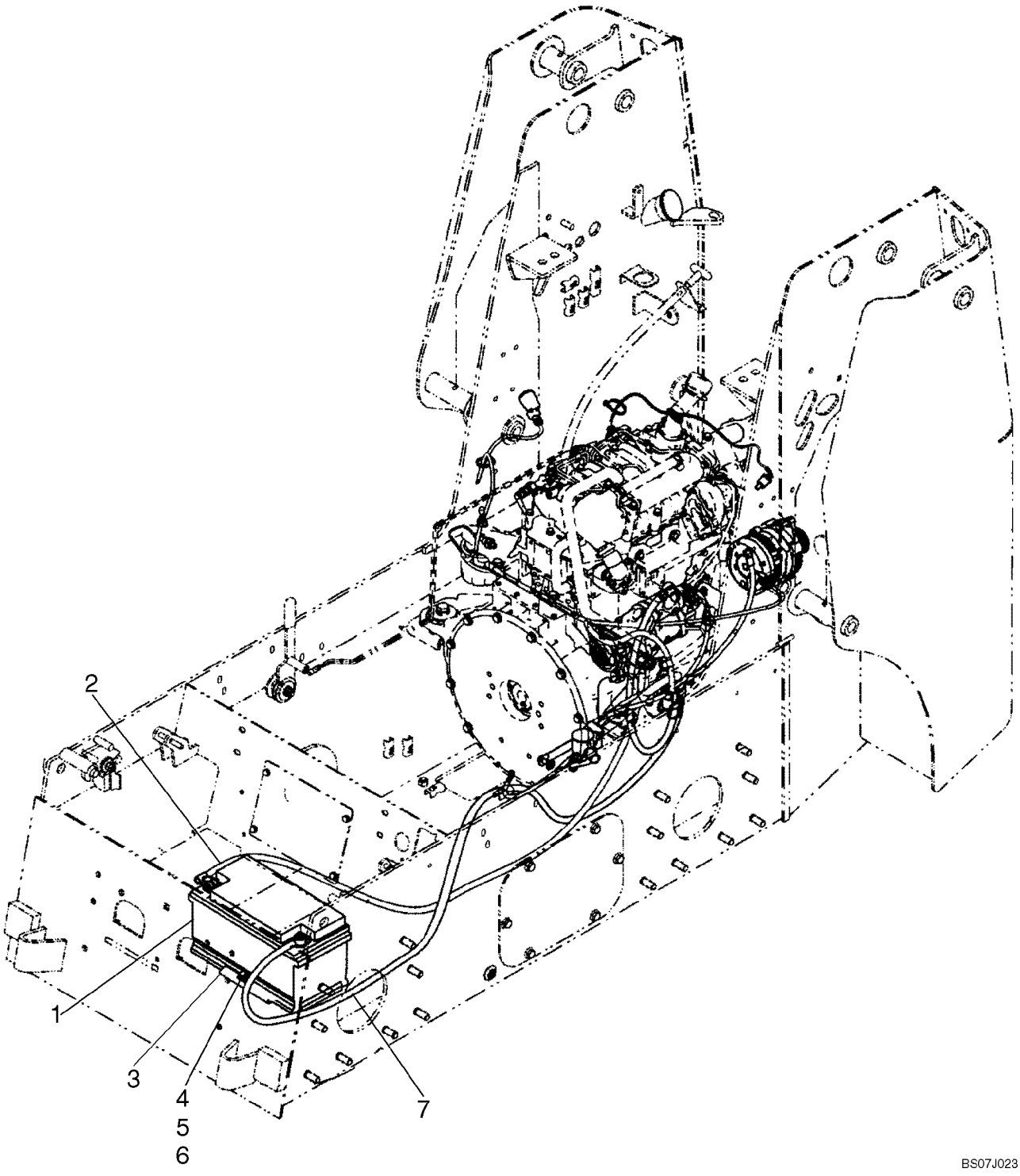

BATTERY - CABLES

REF	FN	PART NUMBER	YR/SN	QTY	DESCRIPTION
1		87403835		1	BATTERY, WET, Battery, 850 CCA
2		338030A1		1	CABLE ASSY., Battery Cable, Negative
3		87450956		1	ANGLE, Battery Hold Down
4		43362		1	NUT, M8, Cl 10
5		120106		1	BOLT, Hex, M8 x 40, 8.8, Full Thd
6		86625074		1	NUT
7		87052670		1	CABLE ASSY., Battery Cable, Positive

ENGINE, ALTERNATOR MOUNTING (87546691)

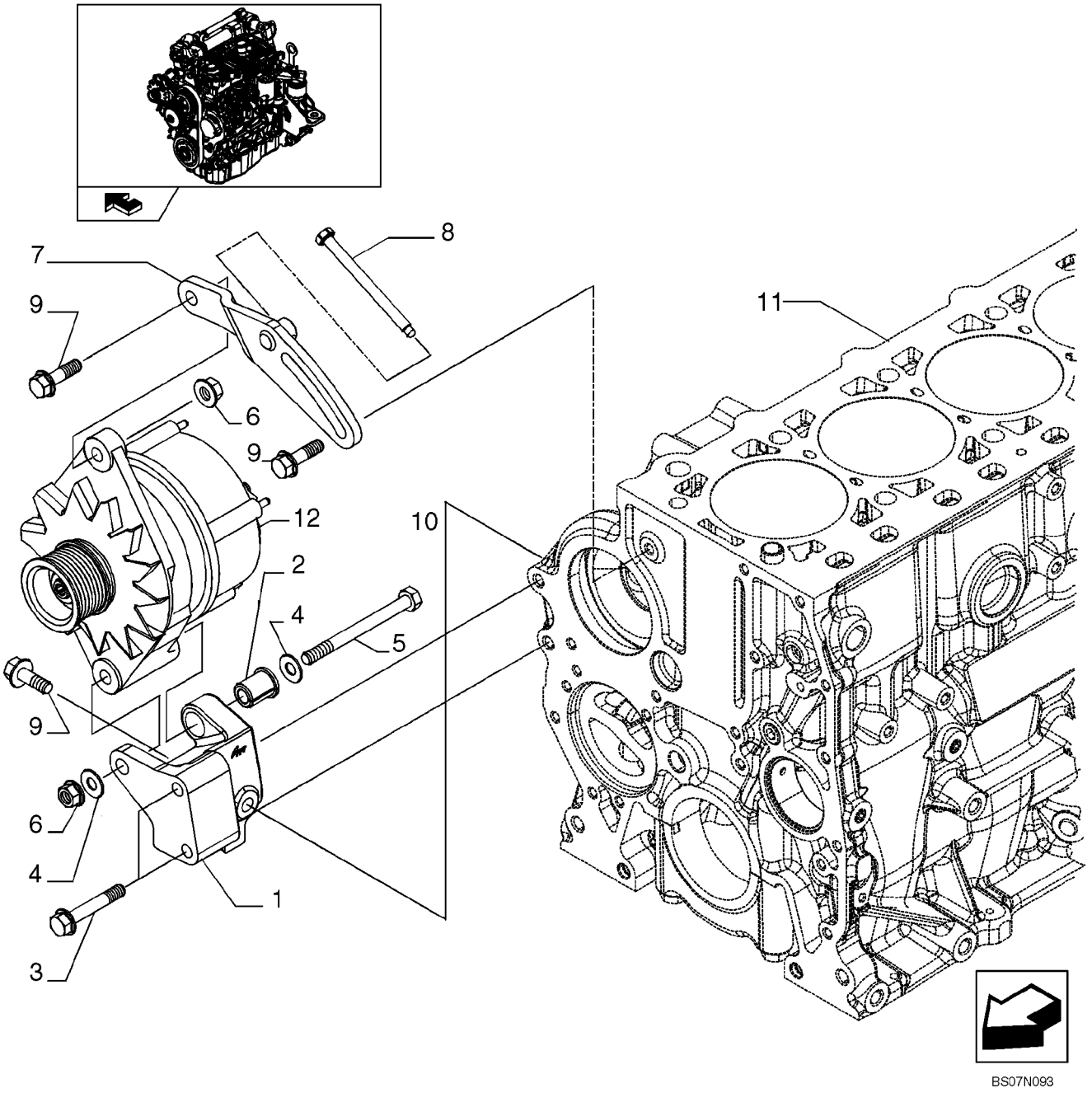

ENGINE, ALTERNATOR MOUNTING (87546691)

REF	FN	PART NUMBER	YR/SN	QTY	DESCRIPTION
1		504276997		1	BRACKET, SUPPORTING
2		2852181		1	SPACER
3		16587824		2	SCREW, M10X1,5X60 mm
4		17097124		2	WASHER, D. 10X21X2 mm
5		16609024		1	SCREW
6		17044825		2	NUT, M10
7		504243953		1	TENSIONER, BELT
8		504010032		1	SCREW
9		16587325		3	SCREW, M10X35 mm
10		87042118		1	ALTERNATOR, Service Breakdown Not Available At Time Of Printing
11		REF			INSTRUCTION, See Figure 02-39, Cylinder Block And Related Parts

ENGINE ELECTRIC INSTALLATION (87546691)

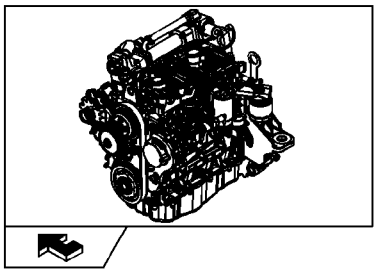

ENGINE ELECTRIC INSTALLATION (87546691)

REF	FN	PART NUMBER	YR/SN	QTY	DESCRIPTION
1		504264648		1	HARNESS
2		504264644		1	HARNESS
3		504272778		1	BRACKET
4		2852323		2	SCREW, M8X14 mm
5		REF			INSTRUCTION, See Figure 02-10, Engine Assy
6		REF			INSTRUCTION, See Figure 02-38 Diagnostic Sensor

ENGINE - ELECTRICAL (420)

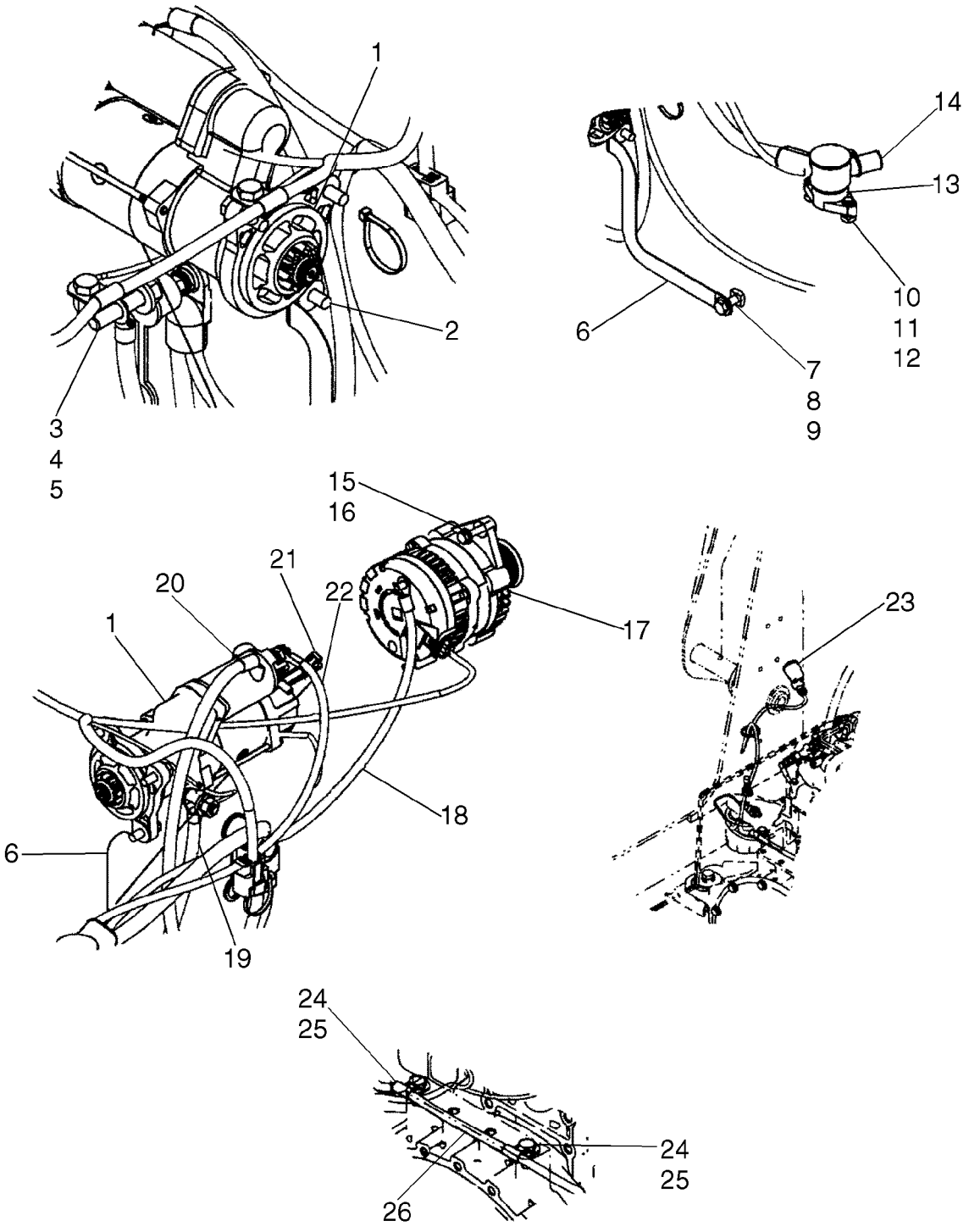

ENGINE - ELECTRICAL (420)

REF	FN	PART NUMBER	YR/SN	QTY	DESCRIPTION
1		87366159		1	MOTOR, STARTER
2		9804262		3	BOLT, Hex Flg, M10 x 30, 8.8
3		9706685		1	NUT, M12, Cl 8
4		86625256		1	WASHER, M12 x 28.5 x 4, HT
5		87458961		1	STUD
6		87648689		1	STRAP, GROUND
7		43140		1	BOLT, Hex, M10 x 30, 8.8, Full Thd
8		86625253		1	WASHER, M11 x 24 x 2
9		309096A1		1	NUT
10		322357		2	WASHER, SPRING, Belleville, M6
11		86977786		2	BOLT, Hex, M6 x 25, 8.8
12		87404992		2	NUT
13		87630124		1	POST, Power Distribution Stud
14		87630125		1	BOOT, Battery Cable Boot
15		322358		1	WASHER, SPRING, Belleville, M8
16		386045		1	BOLT, Hex, M8 x 45, 8.8
17		87042118		1	ALTERNATOR
18		87620458		1	CABLE, Harness, Starter To Alternator/Start Relay
19		338030A1		1	CABLE ASSY., Battery Cable, Negative
20		87052670		1	CABLE ASSY., Battery Cable, Positive
21		87053083		1	HARNESS, Harness, Starter Jumper
22		87652238		1	CABLE, Starter To Power Distribution Block
23		87013666		1	SWITCH, Switch, Air Restriction
24		300388		2	SCREW, Hex, M12 x 25, 8.8
25		87301588		2	CLAMP, Clamp, Insulated 11.1mm X M12 Bolt
26		87620452		1	HARNESS, Harness, F5C Engine

ENGINE - ELECTRICAL (420CT)

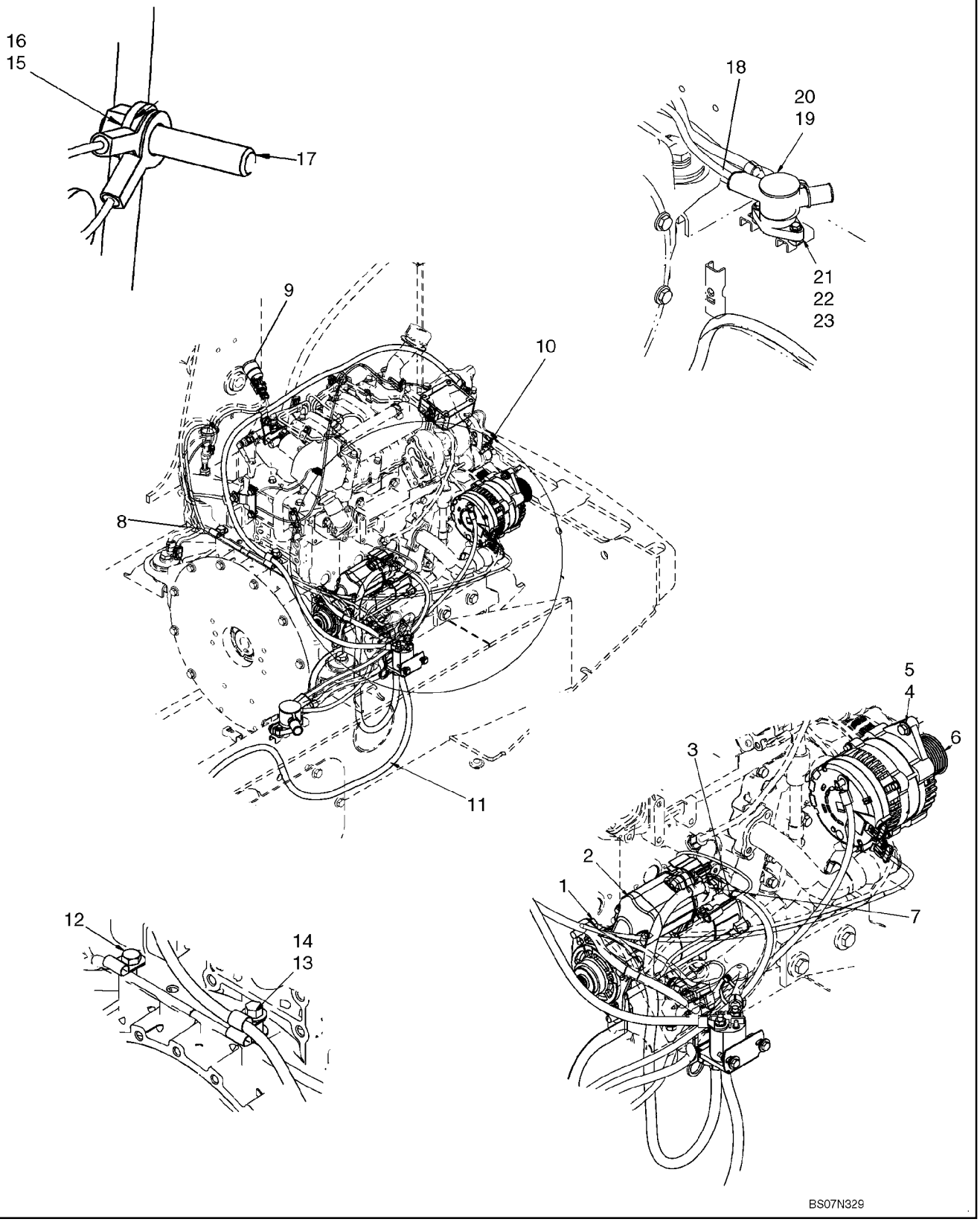

ENGINE - ELECTRICAL (420CT)

REF	FN	PART NUMBER	YR/SN	QTY	DESCRIPTION
1		9804262		3	BOLT, Hex Flg, M10 x 30, 8.8
2		87638510		1	MOTOR, STARTER
3		87053083		1	HARNESS, Harness, Starter Jumper
4		322358		1	WASHER, SPRING, Belleville, M8
5		386045		1	BOLT, Hex, M8 x 45, 8.8
6		87042118		1	ALTERNATOR, Alternator, CASE Service
7		87707133		1	CABLE, BATTERY (NEG), Cable, Starter To Power Distribution Point
8		87720457		1	HARNESS, Harness, F5C Engine
9		87013666		1	SWITCH, Air Restriction Switch
10		87688409		1	SENDER, TEMPERATURE, Water Temperature Sending Unit
11		87052670		1	CABLE ASSY., Battery Cable, Positive
12		300388		1	SCREW, Hex, M12 x 25, 8.8
13		86594406		1	CLAMP, 5/8", Insul, 3/8" Bolt
14		87301588		2	CLAMP, Clamp, Insul 11.1mm, M12 Bolt
15		9706685		1	NUT, M12, Cl 8
16		86625256		1	WASHER, M12 x 28.5 x 4, HT
17		87458961		1	STUD
18		87713728		1	CABLE, Cable, Alternator To Power Distribution Point
19		87630125		1	BOOT, Power Distribution Cover
20		87630124		1	POST, Single Point Power Distribution Block
21		87404992		2	NUT
22		86977786		2	BOLT, Hex, M6 x 25, 8.8
23		322357		2	WASHER, SPRING, Belleville, M6

CHASSIS - ELECTRICAL

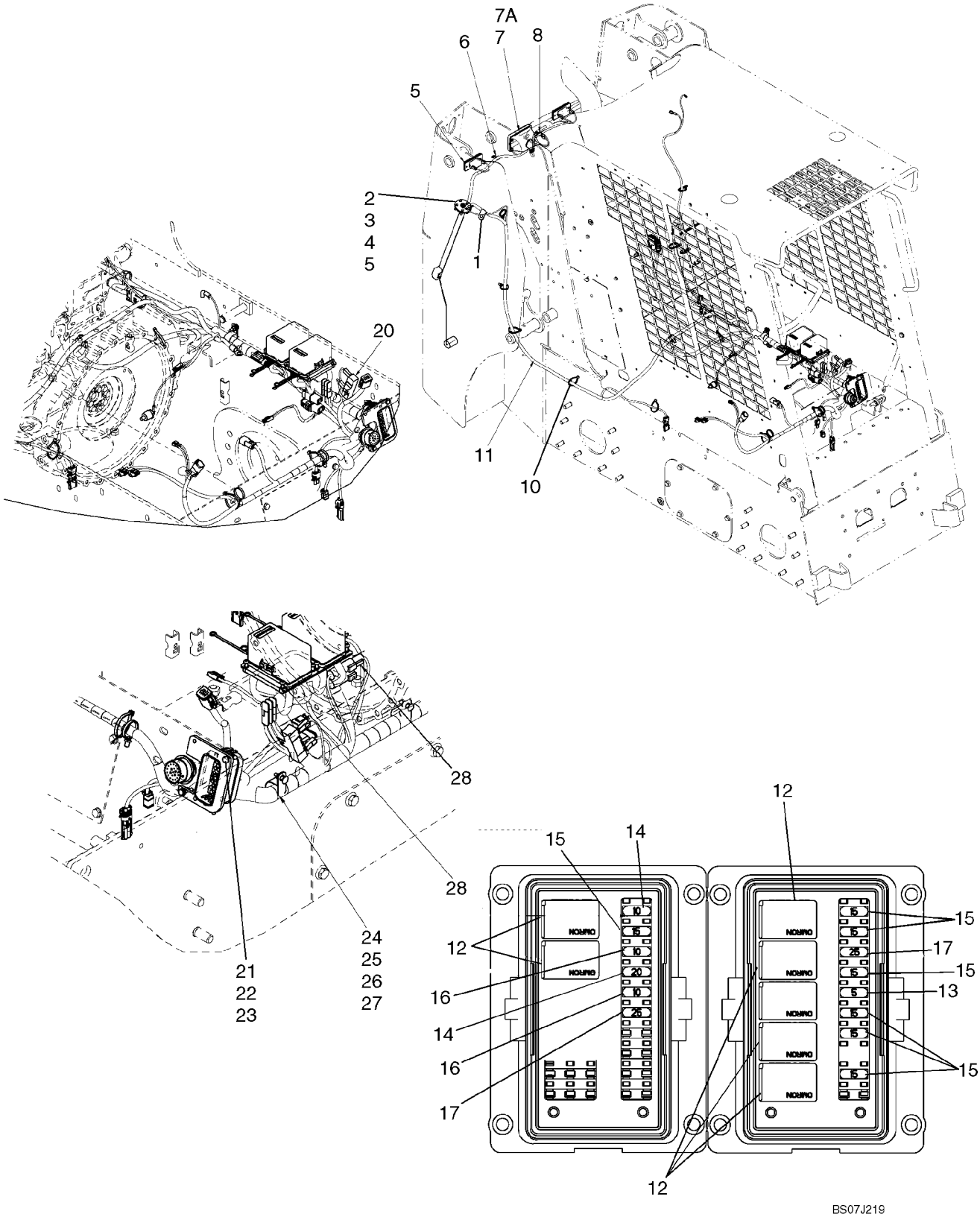

CHASSIS - ELECTRICAL

REF	FN	PART NUMBER	YR/SN	QTY	DESCRIPTION
1		87301588		1	CLAMP, Clamp,Closed 11.1mm Insulated 1/2 Bolt
2		376843A4		1	SENDER UNIT, Fuel Level Sender Unit
3		528359R4		1	GASKET, Sender Unit Gasket
4		87308282		5	SCREW, Hex Hd, #10-32 x 3/4"
5		196985A1		5	THREADED ROD
6		87016870		1	CLAMP, J, 7/16" Insul, 5/16" Bolt
7		222004A2		1	HEADLIGHT, Low Profile Halogen Lamp; Incl 7A
7A		259702A1		1	BULB, Light Bulb, 50W 12.8V Halogen
8		86637978		1	CLAMP, 3/8", Insul, 5/16" Bolt
9		87668737		6	STRAP, Strap, Fir Tree
10		87000312		8	STRAP, CABLE, Cable Tie
11		87661493		1	HARNESS, Chassis Harness; Incl 12 - 18
12		{87655334}		7	Relay,35A N.O.
13		121410A1		1	FUSE, Fuse, 5A
14		121412A1		3	FUSE, Fuse, 10A
15		121413A1		7	FUSE, Fuse, 15A
16		121414A1		1	FUSE, Fuse, 20A
17		121415A1		2	FUSE, Fuse, 25A
18		L71879		3	DIODE-ELEMENT, 3A Diode Connector
19		A166057		1	SENDER, TEMPERATURE, Oil Temperature Sending Unit
20		86705351		1	RESISTOR
21		86977786		2	BOLT, Hex, M6 x 25, 8.8
22		86588450		4	WASHER, M6
23		87030561		2	NUT, LOCK, M6 x 1, Cl 8
24		87035382		3	CLAMP, 1 3/16", Insul, 3/8" Bolt
25		374891		3	BOLT, CARRIAGE, Short NK, M6 x 25, Cl8.8, Full Thd
26		86500688		3	NUT, M6, Cl 10
27		322357		3	WASHER, SPRING, Belleville, M6
28		87020181		8	SCREW

ELECTRICAL - GRID HEATER

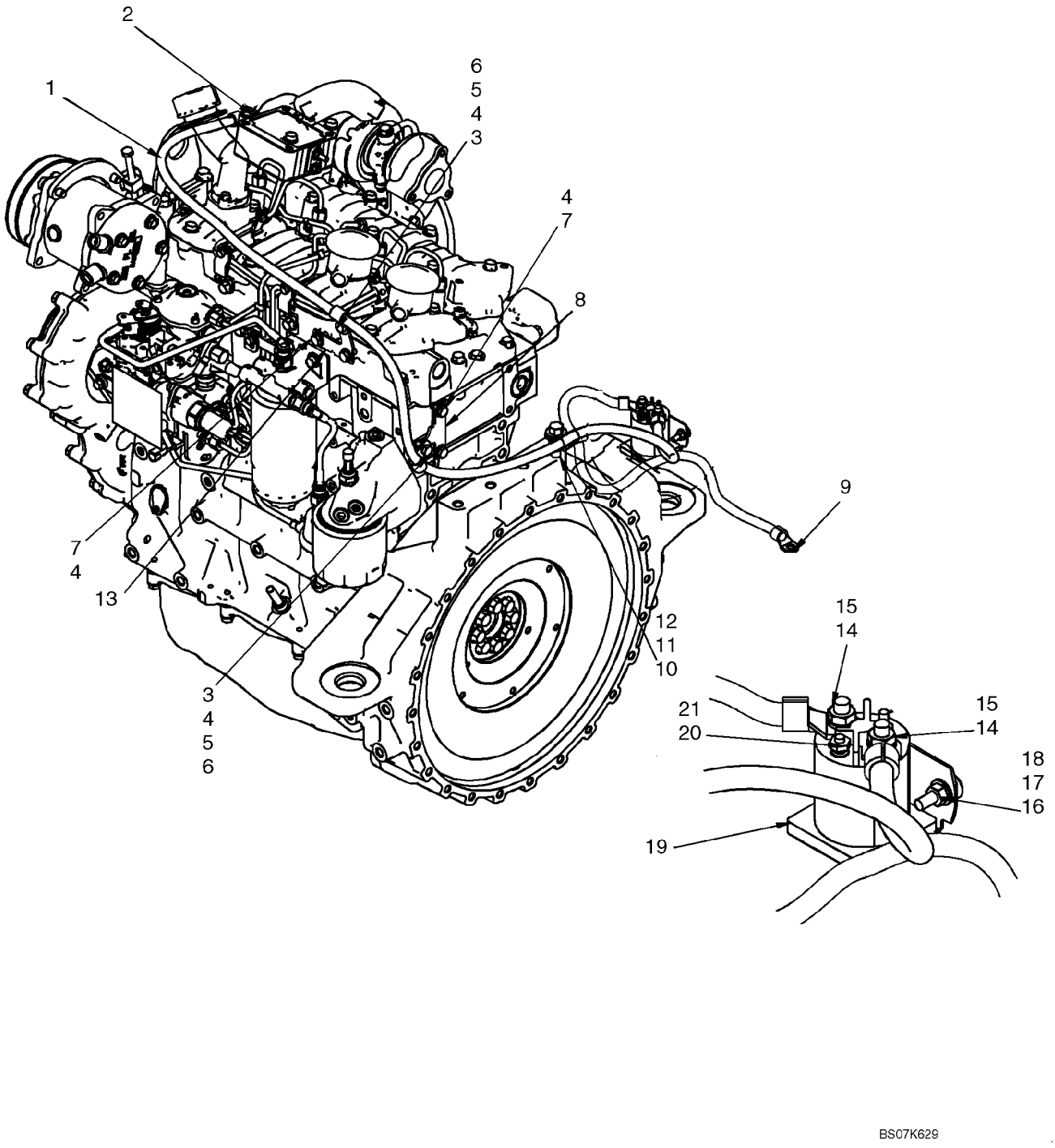

ELECTRICAL - GRID HEATER

REF	FN	PART NUMBER	YR/SN	QTY	DESCRIPTION
1		87709058		1	CABLE, BATTERY (NEG), Cable, Grid Heater, 1528mm (60 5/32 in.)
2		86511444		1	NUT, M6, Flg Ser
3		86625000		2	BOLT, Hex, M8 x 18, 8.8, Full Thd
4		322358		6	WASHER, SPRING, Belleville, M8
5		9706690		2	NUT, M8, Cl 8
6		86594406		2	CLAMP, 5/8", Insul, 3/8" Bolt
7		120103		4	BOLT, Hex, M8 x 16, 8.8
8		87591548		1	BRACKET
9		87047862		1	CABLE, Cable, Grid Heater, 595mm (23 7/16 in.)
10		9670288		1	BOLT, Hex Flg, M12 x 35, 8.8
11		87305403		1	SPACER
12		86632595		1	CLAMP, 1/2", Insul, 1/2" Bolt
13		87591549		1	BRACKET
14		9626568		2	NUT, Jam, 5/16"-18, G2
15		80681		2	WASHER, LOCK, 5/16"
16		9706755		2	NUT, M6, Cl 8
17		322357		2	WASHER, SPRING, Belleville, M6
18		374891		2	BOLT, CARRIAGE, Short NK, M6 x 25, Cl8.8, Full Thd
19		87406968		1	SWITCH, SOLENOID
20		80684		1	WASHER, LOCK, #10
21		87825		1	NUT, #10-32
22		629086		1	DECAL, Decal, Danger

ELECTRIC - CAB

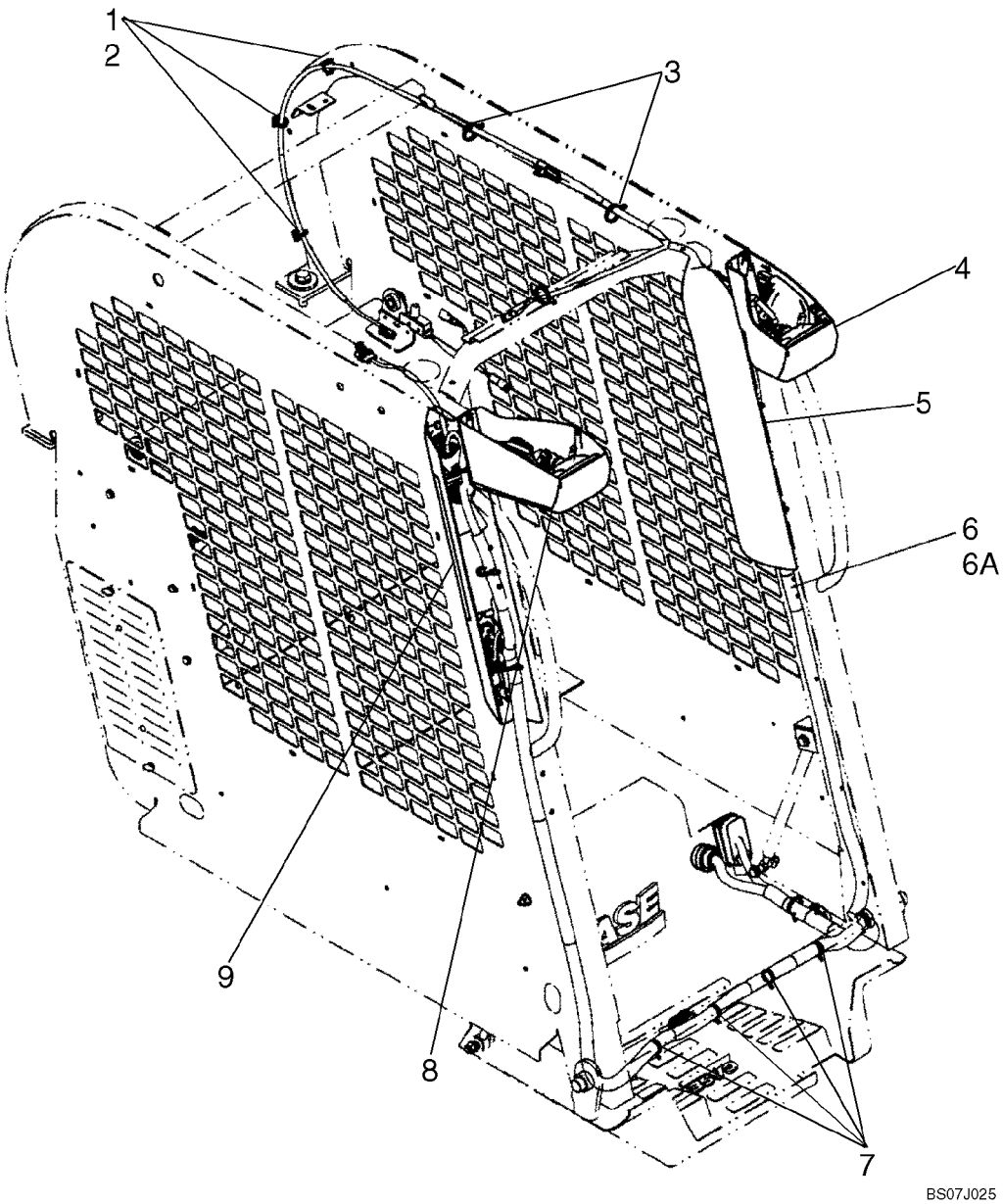

ELECTRIC - CAB

REF	FN	PART NUMBER	YR/SN	QTY	DESCRIPTION
1		87642914		3	BASE, Strap Mount
2		87642915		3	STRAP, CABLE
3		87668737		10	STRAP, Strap With Mount
4		87650097		1	LIGHT, Work Light, LH; See Fig. 04-18
5		87627050		1	CONSOLE, Console, LH; See Fig. 04-10
6		87668728		1	HARNESS, Harness, Cab; Incl 6A
6A		{87618013}		1	6A Diode
7		263117		4	STRAP, CABLE, .14" x 11 1/2"
8		87650098		1	LIGHT, Work Light, RH; See Fig. 04-19
9		REF		1	INSTRUCTION, Console, RH; See Fig. 04-09

CONSOLE - RH

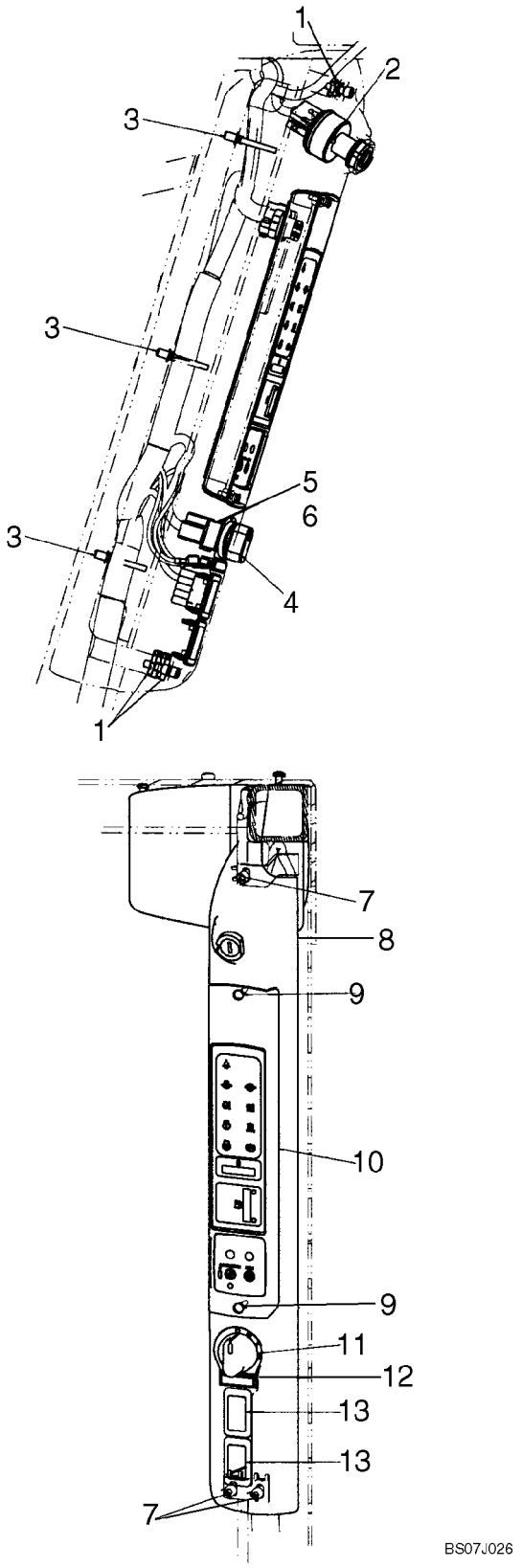

CONSOLE - RH

REF	FN	PART NUMBER	YR/SN	QTY	DESCRIPTION
1		86521425		3	NUT, Tinn, U, 1/4"-20
2		282775A1		1	SWITCH, IGNITION, Ignition Switch And 2 Keys
3		87668737		10	STRAP, Strap With Fastener
4		86729670		1	KNOB
5		86729669		1	SWITCH, FAN, Fan Speed Switch
6		87310592		1	NUT, Jam, 7/16"-28, G5
7		280272		3	SCREW, Hex Soc Hd, 1/4"-20 x 3/4"
8		{87665327}		1	Console, RH
9		86511042		2	SCREW, Cross Pan Hd, M4 x 16
10		87638864		1	PANEL, INSTRUMENTS, Instrument Panel, Standard (Shown In Illustration)
10		87638865		1	PANEL, INSTRUMENTS, Instrument Panel, Deluxe
11		{87677739}		1	Decal, Light Switch
12		86627432		1	PLASTIC PLUG
13		126844A1		2	PLUG, Switch Hole Cover

CONSOLE - LH

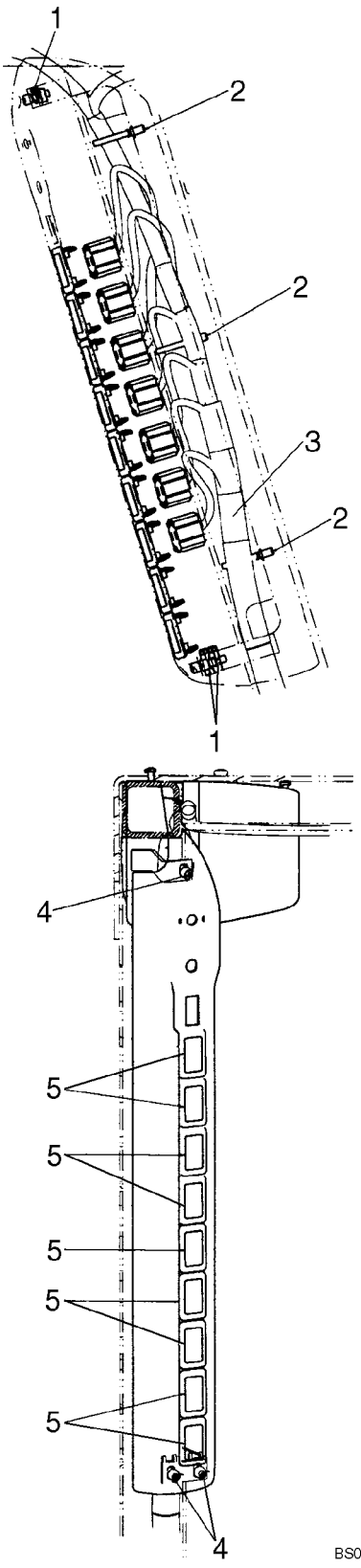

CONSOLE - LH

REF	FN	PART NUMBER	YR/SN	QTY	DESCRIPTION
		87627050		1	CONSOLE, Console, LH
1		86521425		3	NUT, Tinn, U, 1/4"-20
2		87668737		3	STRAP, Strap With Mount
3		87668728		1	HARNESS, Cab Harness
4		280272		3	SCREW, Hex Soc Hd, 1/4"-20 x 3/4"
5		126844A1		11	PLUG, Switch Hole Cover

04-11		p1	12/07

CONTROL HANDLE, RH - BASIC

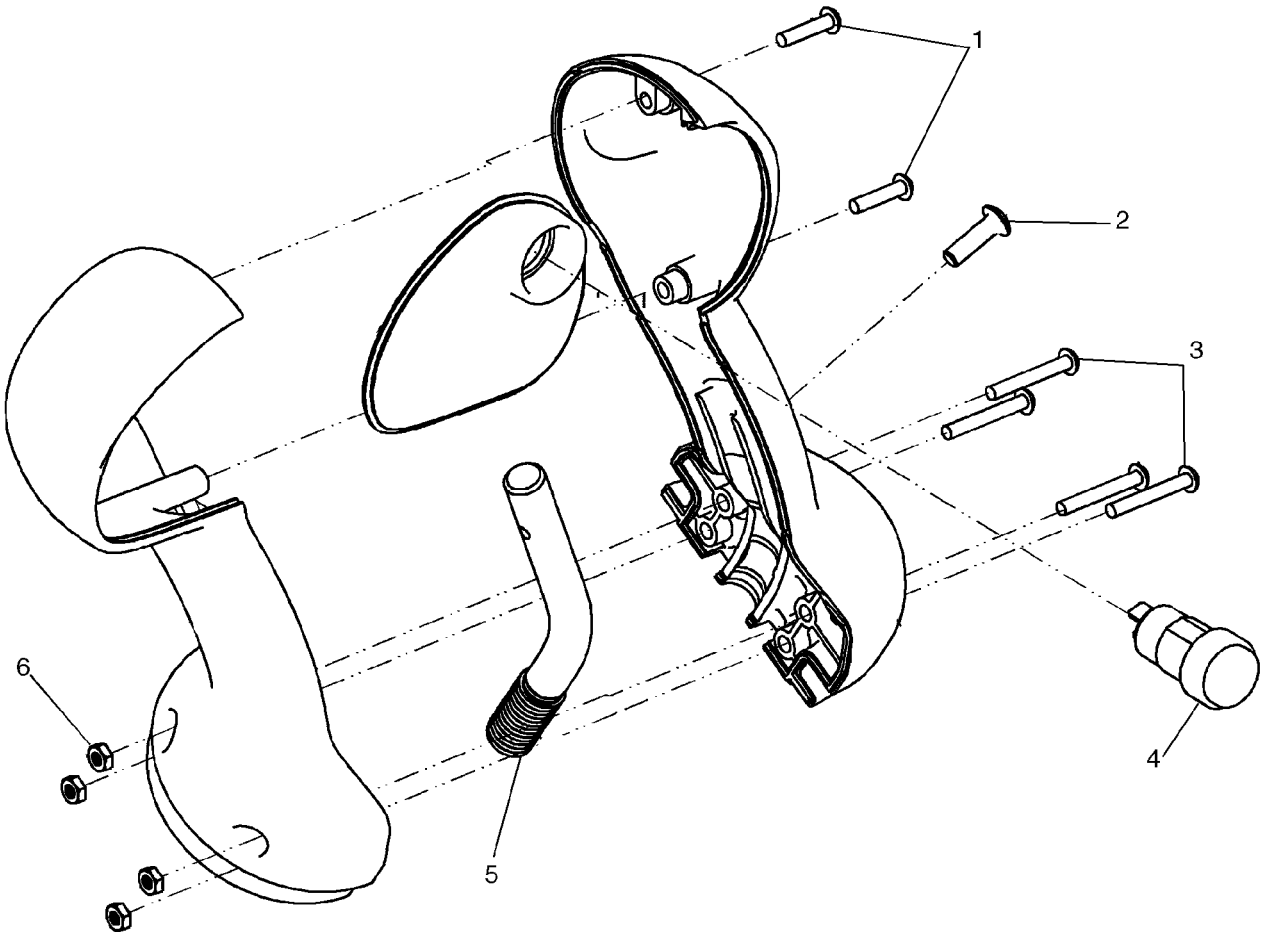

CONTROL HANDLE, RH - BASIC

REF	FN	PART NUMBER	YR/SN	QTY	DESCRIPTION
		87656868		1	HANDLE GRIP, Handle, RH - Basic; Incl 1 - 6
1		86637783		2	SCREW, SELF TAP, Cross Pan Hd, #6 x 5/8"
2		87534744		1	FASTENER
3		281045		4	SCREW, Cross Pan Hd, #6-32 x 1"
4		87630127		1	SWITCH, Parking Brake
5		{87652816}		1	Handle Mounting Rod
6		{87667726}		4	Nut, #6 - 32

04-12		p1	12/07

CONTROL HANDLE, LH - BASIC

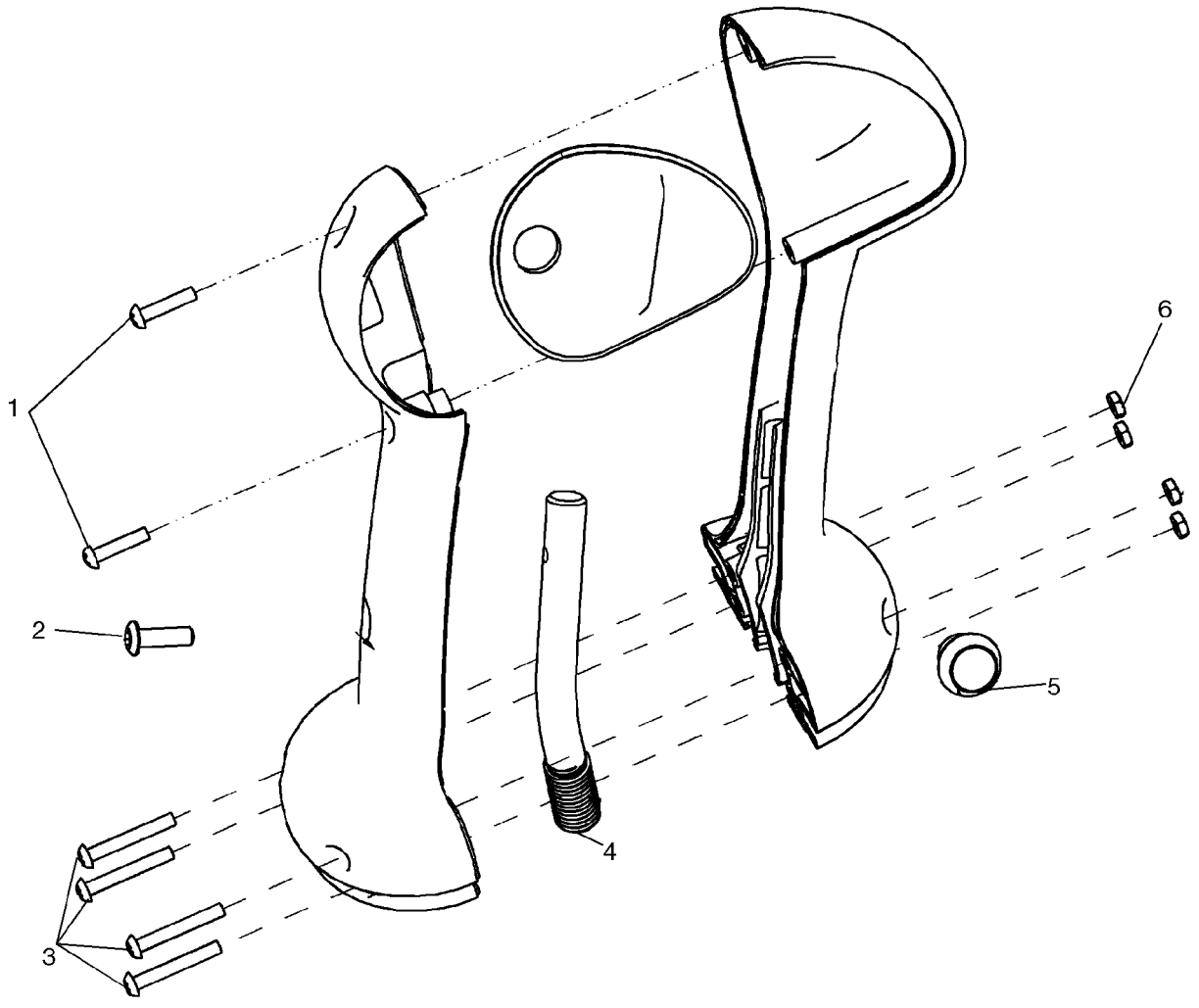

BS07J364

CONTROL HANDLE, LH - BASIC

REF	FN	PART NUMBER	YR/SN	QTY	DESCRIPTION
		87656866		1	HANDLE GRIP, Handle, LH - Basic; Incl 1 - 6
1		86637783		2	SCREW, SELF TAP, Cross Pan Hd, #6 x 5/8"
2		87534744		1	FASTENER
3		281045		4	SCREW, Cross Pan Hd, #6-32 x 1"
4		{87652818}		1	Handle Mounting Rod
5		87630126		1	SWITCH, Horn
6		{87667726}		4	Nut, #6 - 32

04-13		p1	12/07

CONTROL HANDLE, RH - DELUXE W/O AUX ELECTRIC

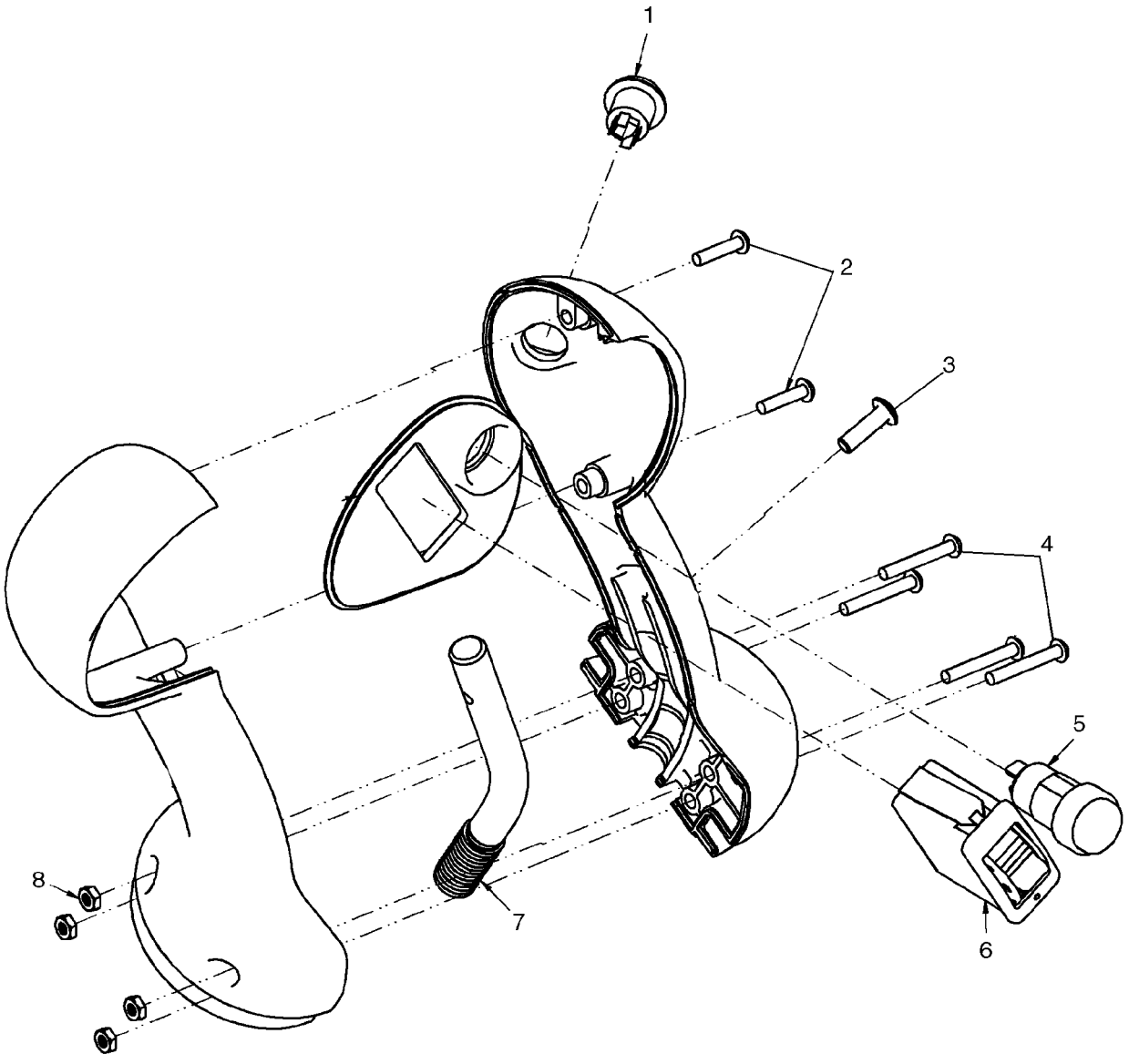

BS07J363

CONTROL HANDLE, RH - DELUXE W/O AUX ELECTRIC

REF	FN	PART NUMBER	YR/SN	QTY	DESCRIPTION
		87656872		1	HANDLE GRIP, Handle, RH - Deluxe Without Aux Electric; Incl 1 - 8
1		87630129		1	SWITCH, Ride Control
2		86637783		2	SCREW, SELF TAP, Cross Pan Hd, #6 x 5/8"
3		87534744		1	FASTENER
4		281045		4	SCREW, Cross Pan Hd, #6-32 x 1"
5		87630127		1	SWITCH, Parking Brake
6		87642913		1	SWITCH, Auxiliary Hydraulic
7		{87652816}		1	Handle Mounting Rod
8		{87667726}		4	Nut, #6 - 32

CONTROL HANDLE, LH - DELUXE W/O AUX ELECTRIC

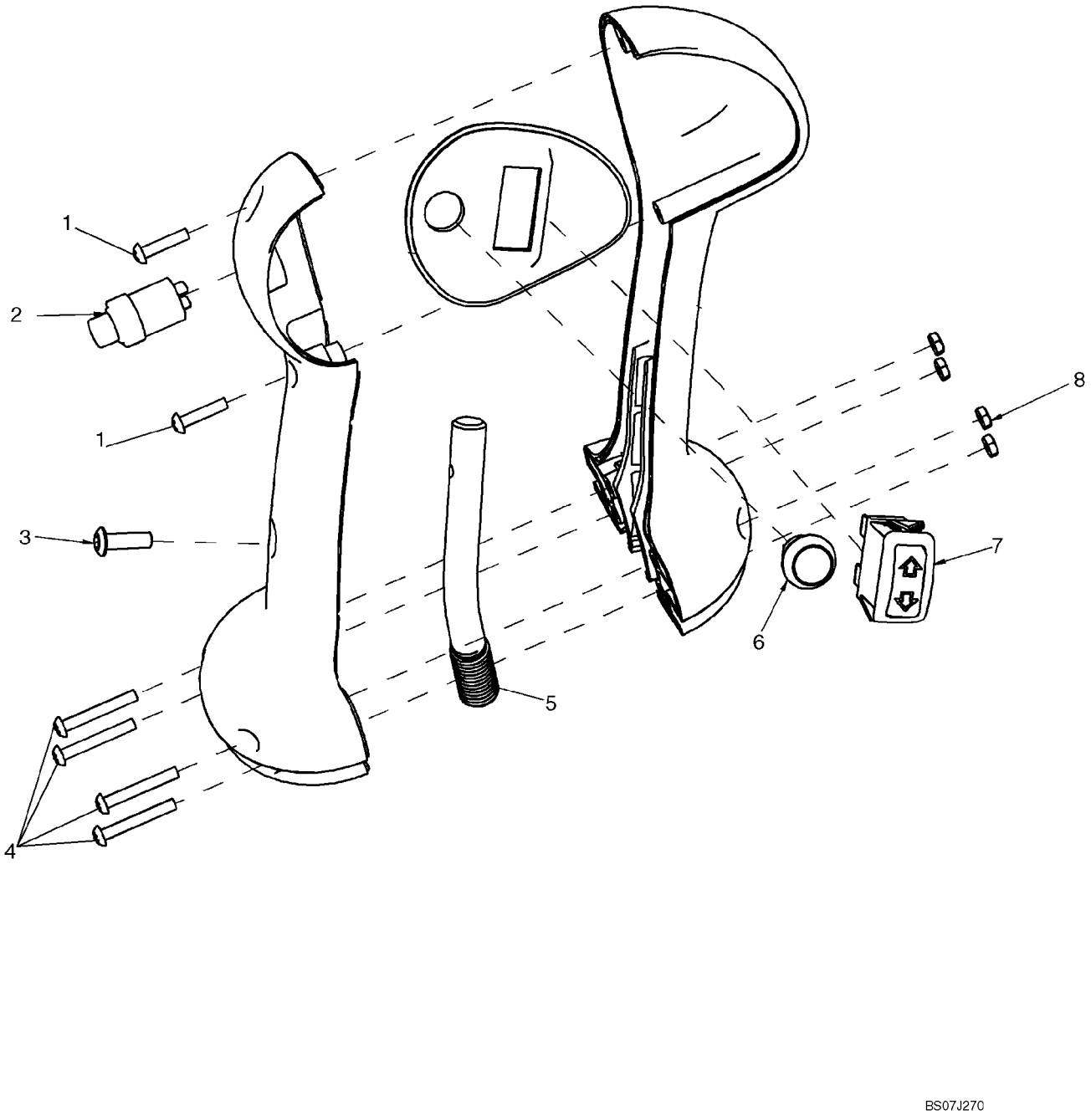

CONTROL HANDLE, LH - DELUXE W/O AUX ELECTRIC

REF	FN	PART NUMBER	YR/SN	QTY	DESCRIPTION
		87656870		1	HANDLE GRIP, Handle, LH - Deluxe Without Aux Electric
1		86637783		2	SCREW, SELF TAP, Cross Pan Hd, #6 x 5/8"
2		87630130		1	SWITCH, Two Speed
3		87534744		1	FASTENER
4		281045		4	SCREW, Cross Pan Hd, #6-32 x 1"
5		{87652818}		1	Handle Mounting Rod
6		87630126		1	SWITCH, Horn
7		87630128		1	SWITCH, Turn Signal
8		{87667726}		4	Nut, #6 - 32

04-15		p1	12/07

CONTROL HANDLE, RH - DELUXE

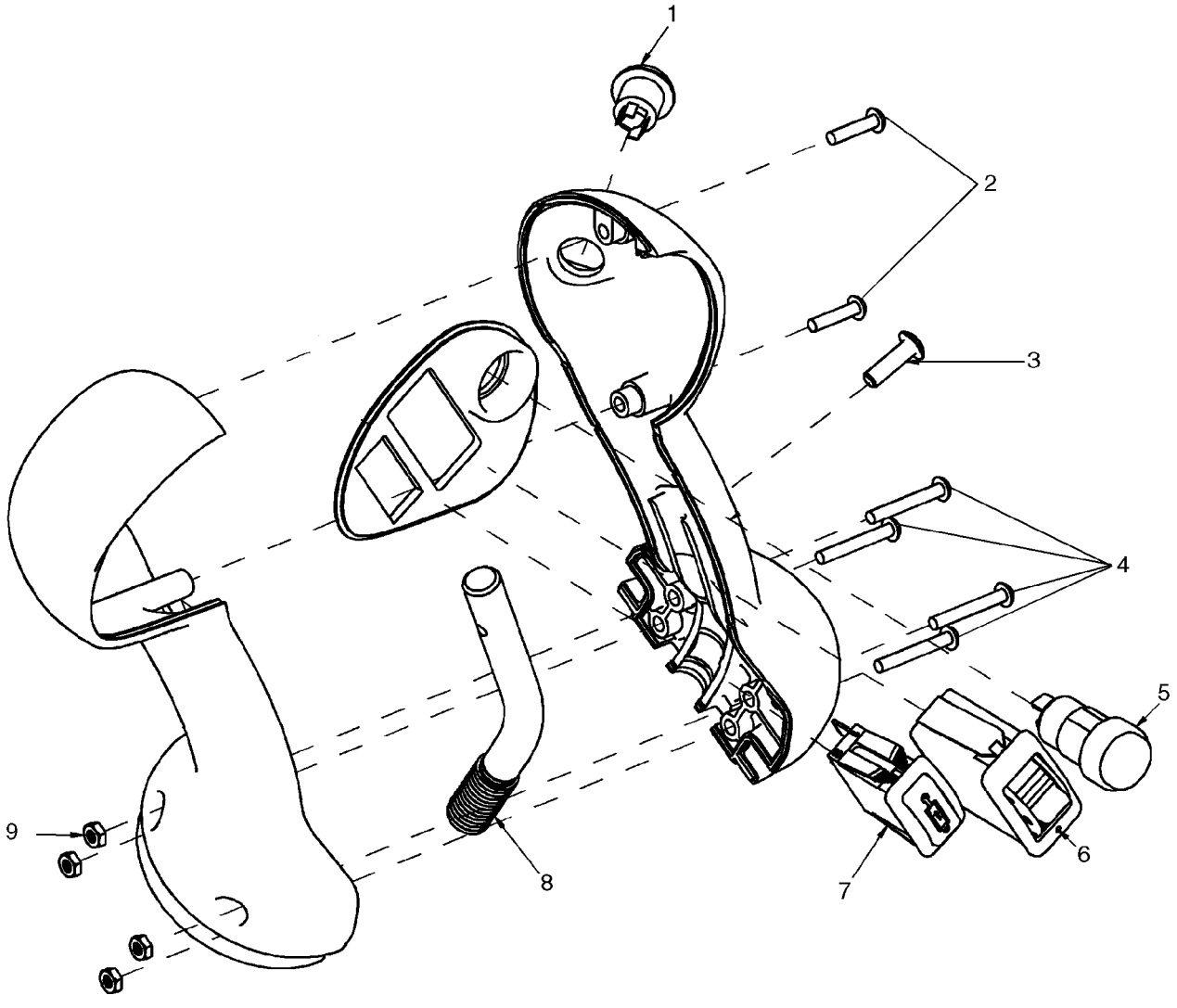

BS07J269

CONTROL HANDLE, RH - DELUXE

REF	FN	PART NUMBER	YR/SN	QTY	DESCRIPTION
		87641948		1	HANDLE GRIP, Handle, RH - Deluxe
1		87630129		1	SWITCH, Ride Control
2		86637783		2	SCREW, SELF TAP, Cross Pan Hd, #6 x 5/8"
3		87534744		1	FASTENER
4		281045		4	SCREW, Cross Pan Hd, #6-32 x 1"
5		87630127		1	SWITCH, Parking Brake
6		87642913		1	SWITCH, Auxiliary Hydraulic
7		87427685		1	SWITCH, Switch Hyd M-O-M
8		{87652816}		1	Handle Mounting Rod
9		{87667726}		4	Nut, #6 - 32

04-16		p1	12/07

CONTROL HANDLE, LH - DELUXE

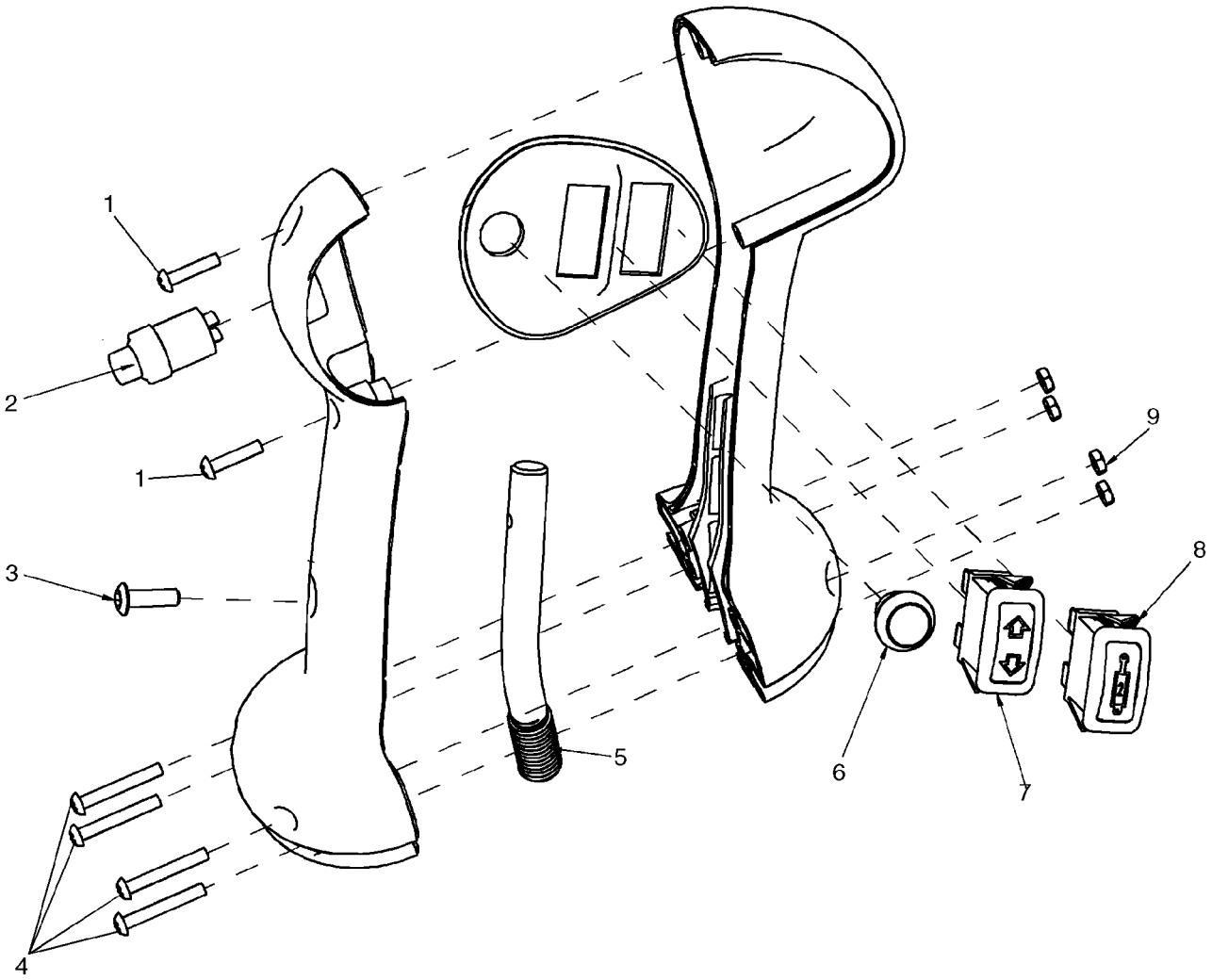

BS07J268

CONTROL HANDLE, LH - DELUXE

REF	FN	PART NUMBER	YR/SN	QTY	DESCRIPTION
		87641947		1	HANDLE GRIP, Handle, LH - Deluxe
1		86637783		2	SCREW, SELF TAP, Cross Pan Hd, #6 x 5/8"
2		87630130		1	SWITCH, Two Speed
3		87534744		1	FASTENER
4		281045		4	SCREW, Cross Pan Hd, #6-32 x 1"
5		{87652818}		1	Handle Mounting Rod
6		87630126		1	SWITCH, Horn
7		87630128		1	SWITCH, Turn Signal
8		87427686		1	SWITCH, Hyd M-O-M
9		{87667726}		4	Nut, #6 - 32

04-17		p1	12/07

DISCONNECT SWITCH - REMOTE JUMP START

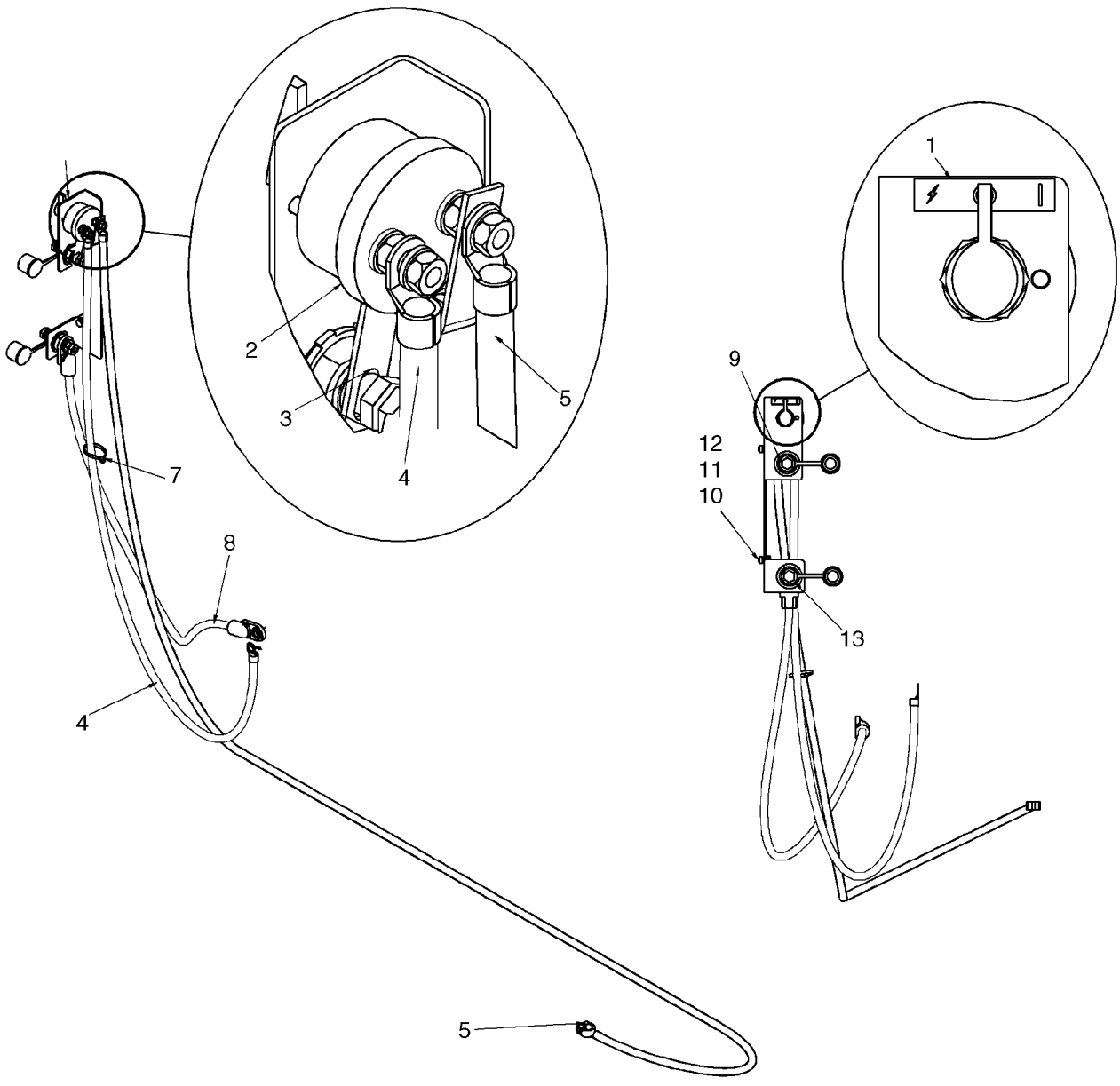

DISCONNECT SWITCH - REMOTE JUMP START

REF	FN	PART NUMBER	YR/SN	QTY	DESCRIPTION
		87638342		1	KIT, SERVICE, Kit, Battery Disconnect And Remote Jump Start; Incl 1 - 13
1		176332A1		1	DECAL, Decal, Battery Disconnect
2		87458467		1	SWITCH, Master Disconnect Switch
3		399665A2		1	ANCHOR, Strip, Battery Jump Start
4		{87622960}		1	Battery Cable, Negative, 1200mm (47 1/4 in.)
5		87444992		1	CABLE ASSY., Battery Cable, Negative, 2900mm (114 3/16 in.)
6		87624401		1	BRACKET, Remote Jump Start Bracket
7		L11541		1	STRAP, CABLE
8		87052671		1	CABLE ASSY., Battery Cable, Positive
9		399384A1		1	TERMINAL CONNECTOR, Terminal, Negative Remote Jump Start
10		120103		2	BOLT, Hex, M8 x 16, 8.8
11		86624185		2	WASHER, M8 x 17.5 x 2, HT
12		229197A1		2	NUT
13		399383A1		1	TERMINAL CONNECTOR, Terminal, Positive Remote Jump Start

WORK LIGHTS - LH

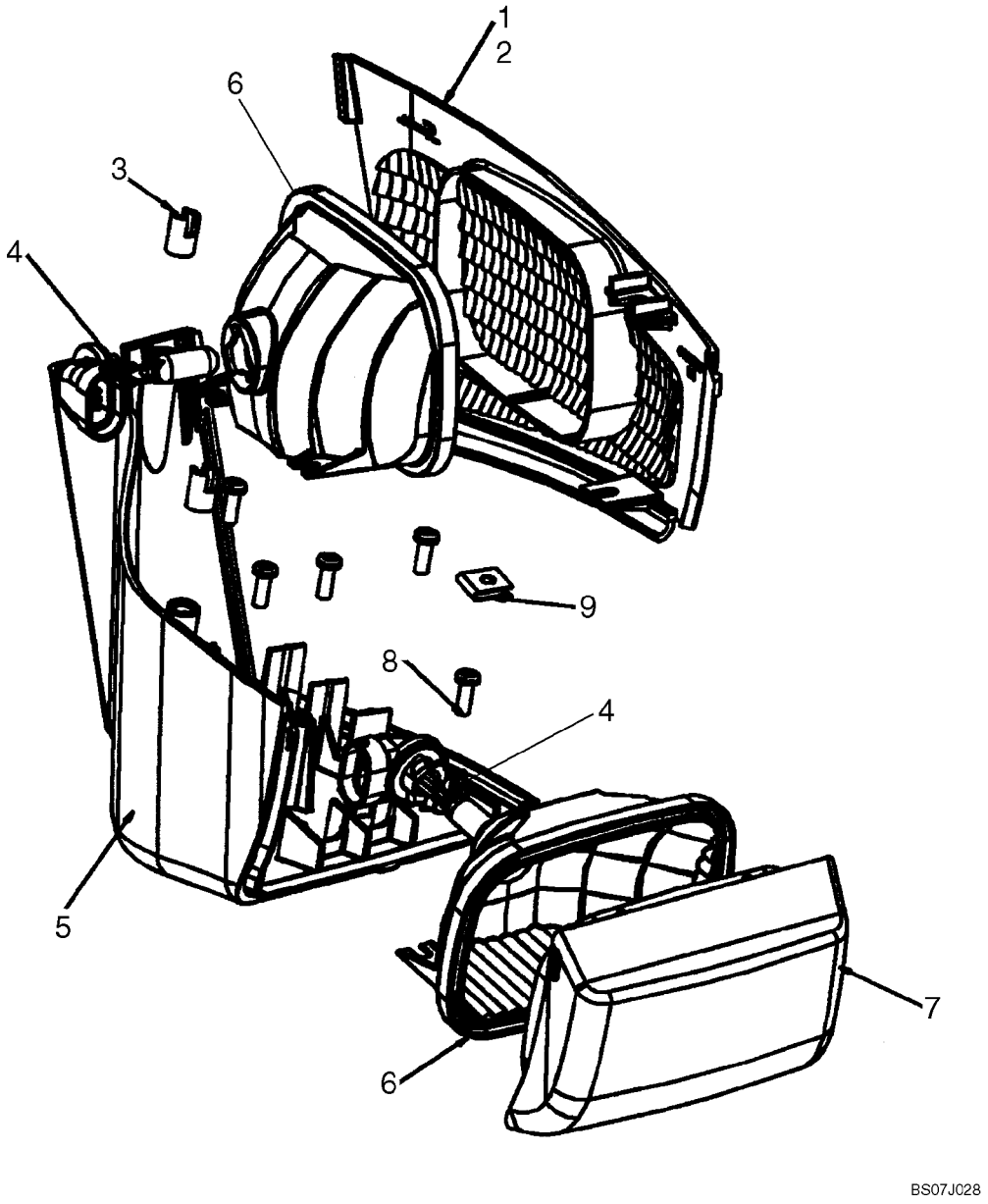

WORK LIGHTS - LH

REF	FN	PART NUMBER	YR/SN	QTY	DESCRIPTION
		87650097		1	LIGHT, Work Light, LH; Incl 1 - 9
1		NSS		AR	NOT SERVICED SEPARATELY, Adhesive Sealant
2		NSS		1	NOT SERVICED SEPARATELY, Side Lens, Clear
3		NSS		2	NOT SERVICED SEPARATELY, Threaded Brass Insert, M5 X 10
4		NSS		2	NOT SERVICED SEPARATELY, Bulb, 12.8V 50W Halogen
5		NSS		2	NOT SERVICED SEPARATELY, Housing
6		NSS		2	NOT SERVICED SEPARATELY, Reflector
7		NSS		1	NOT SERVICED SEPARATELY, Front Lens, Clear
8		NSS		5	NOT SERVICED SEPARATELY, Screw
9		NSS		1	NOT SERVICED SEPARATELY, Nut

WORK LIGHTS - RH

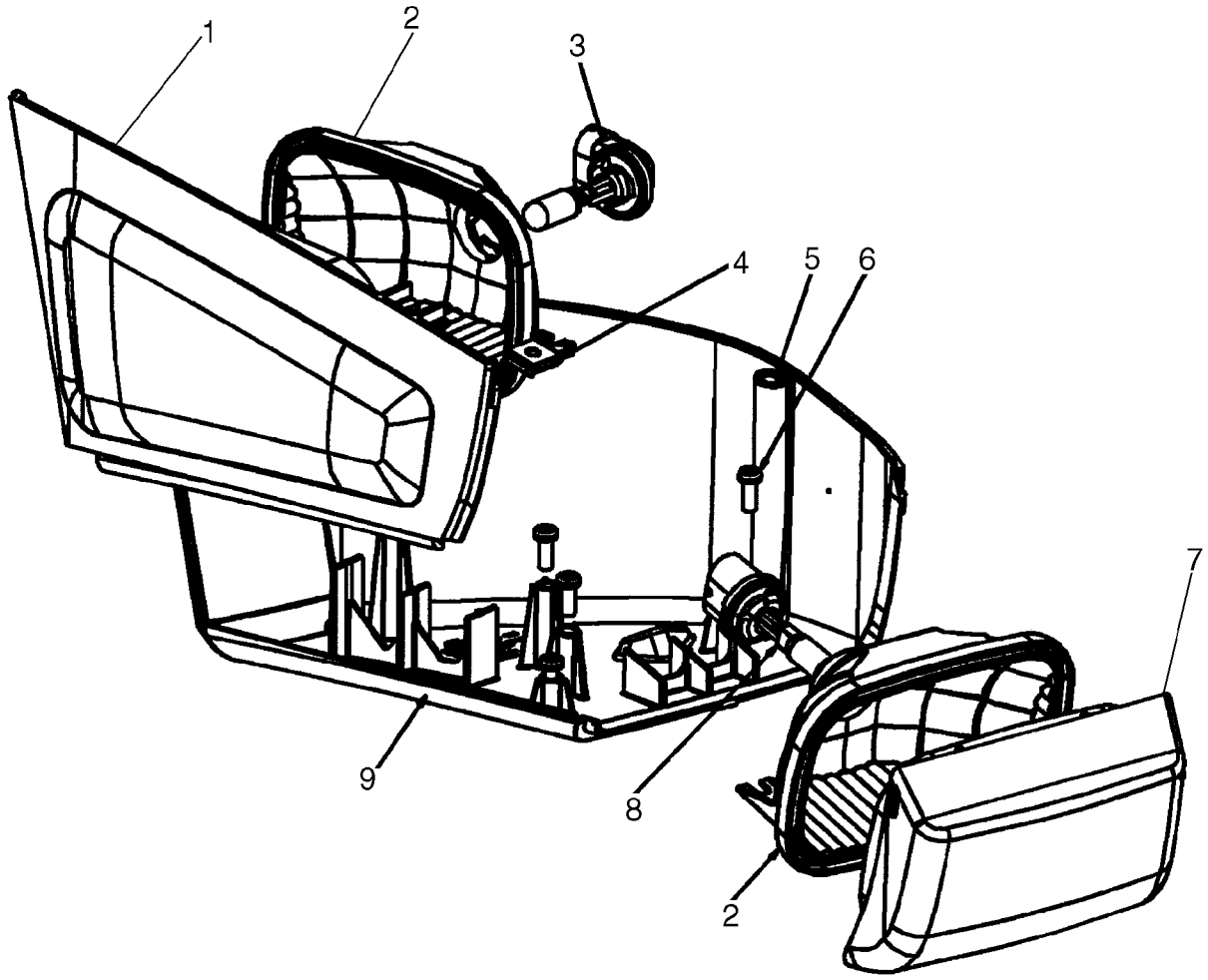

BS07J029

WORK LIGHTS - RH

REF	FN	PART NUMBER	YR/SN	QTY	DESCRIPTION
		87650098		1	LIGHT, Work Light, RH; Incl 1 - 9
1		NSS		1	NOT SERVICED SEPARATELY, Side Lens, Clear
2		NSS		2	NOT SERVICED SEPARATELY, Reflector
3		NSS		1	NOT SERVICED SEPARATELY, Bulb, 12.8V 50W Halogen
4		NSS		1	NOT SERVICED SEPARATELY, Nut
5		NSS		2	NOT SERVICED SEPARATELY, Threaded Brass Insert, M5 X 10
6		NSS		5	NOT SERVICED SEPARATELY, Screw
7		NSS		1	NOT SERVICED SEPARATELY, Front Lens, Clear
8		NSS		1	NOT SERVICED SEPARATELY, Bulb, 12V 50W
9		NSS		1	NOT SERVICED SEPARATELY, Housing

ELECTRICAL - ROAD LIGHTS (NA)

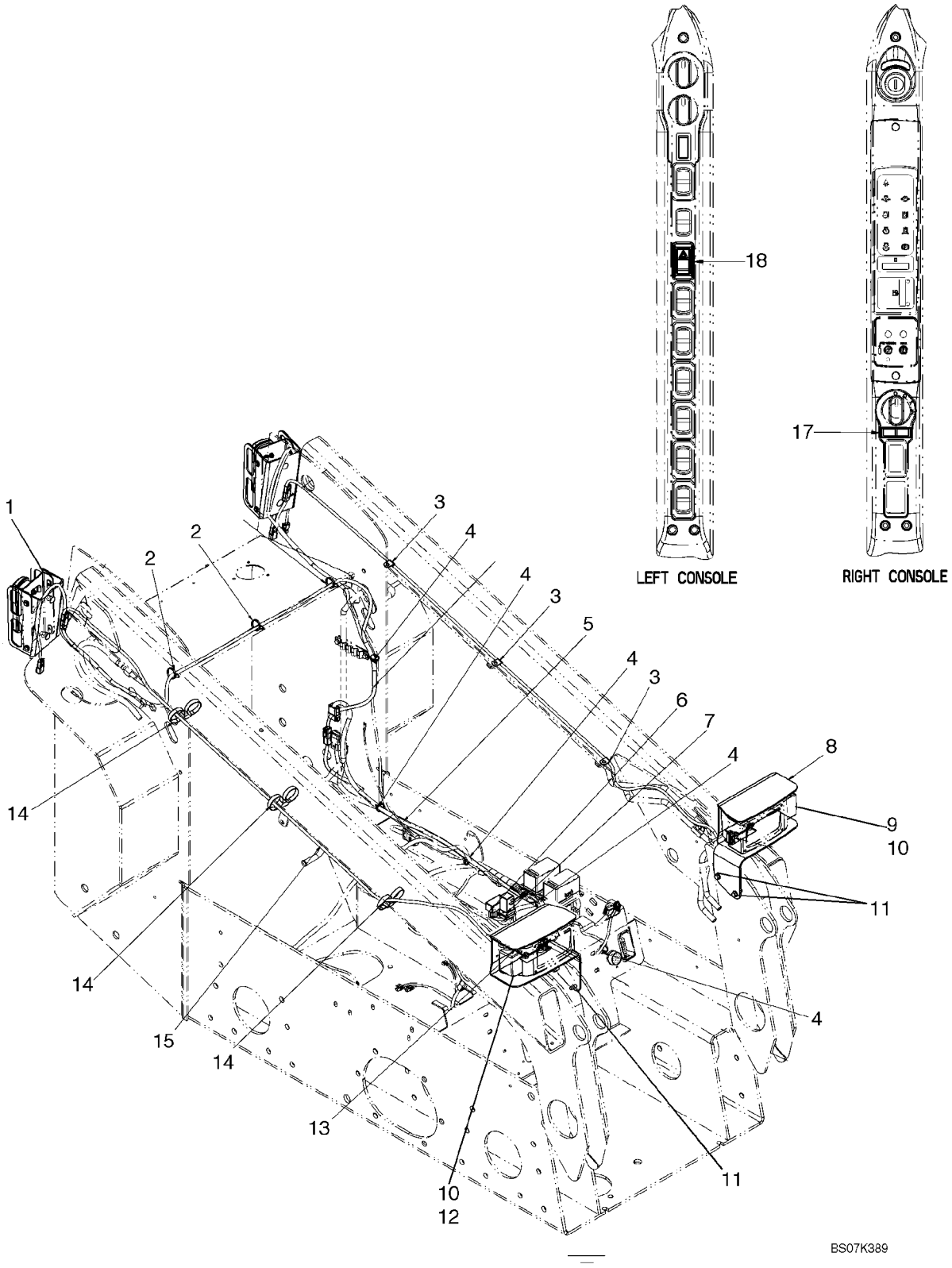

ELECTRICAL - ROAD LIGHTS (NA)

REF	FN	PART NUMBER	YR/SN	QTY	DESCRIPTION
		87676259		1	KIT, SERVICE, Kit, Road Lights (NA); Incl 1 - 18
1		REF		2	INSTRUCTION, Rear Lights; See Fig 04-24
2		87668737		3	STRAP
3		853765		3	CLAMP, 5/16", Insul, 3/8" Bolt
4		263117		5	STRAP, CABLE, .14" x 11 1/2"
5		87673072		1	HARNESS, Harness, Road Lights
6		83982664		1	RELAY, Turn Signal Relay
7		9821783		1	FLASHER UNIT
8		87720246		1	BRACKET, Bracket, LH
9		85821385		1	HEADLAMP, LH, See Fig 04-23
10		43435		4	NUT, M10, Flg Ser
11		280476		4	SCREW, SELF TAP, Hex Wash Hd, 3/8" x 1"
12		85821384		1	HEADLAMP, RH, See Fig 04-22
13		87720245		1	BRACKET, Bracket, RH
14		87659208		3	CIRCLIP, Strap, Dual Tie Releasable
15		87673079		2	HARNESS, Harness, Turn Signal
16		{87655334}		2	Relay
17		86604657		1	INDICATOR, TURN SIGNAL
18		87634133		1	SWITCH, Rocker Switch, Hazard Lights

ELECTRICAL - ROAD LIGHTS (EUROPE)

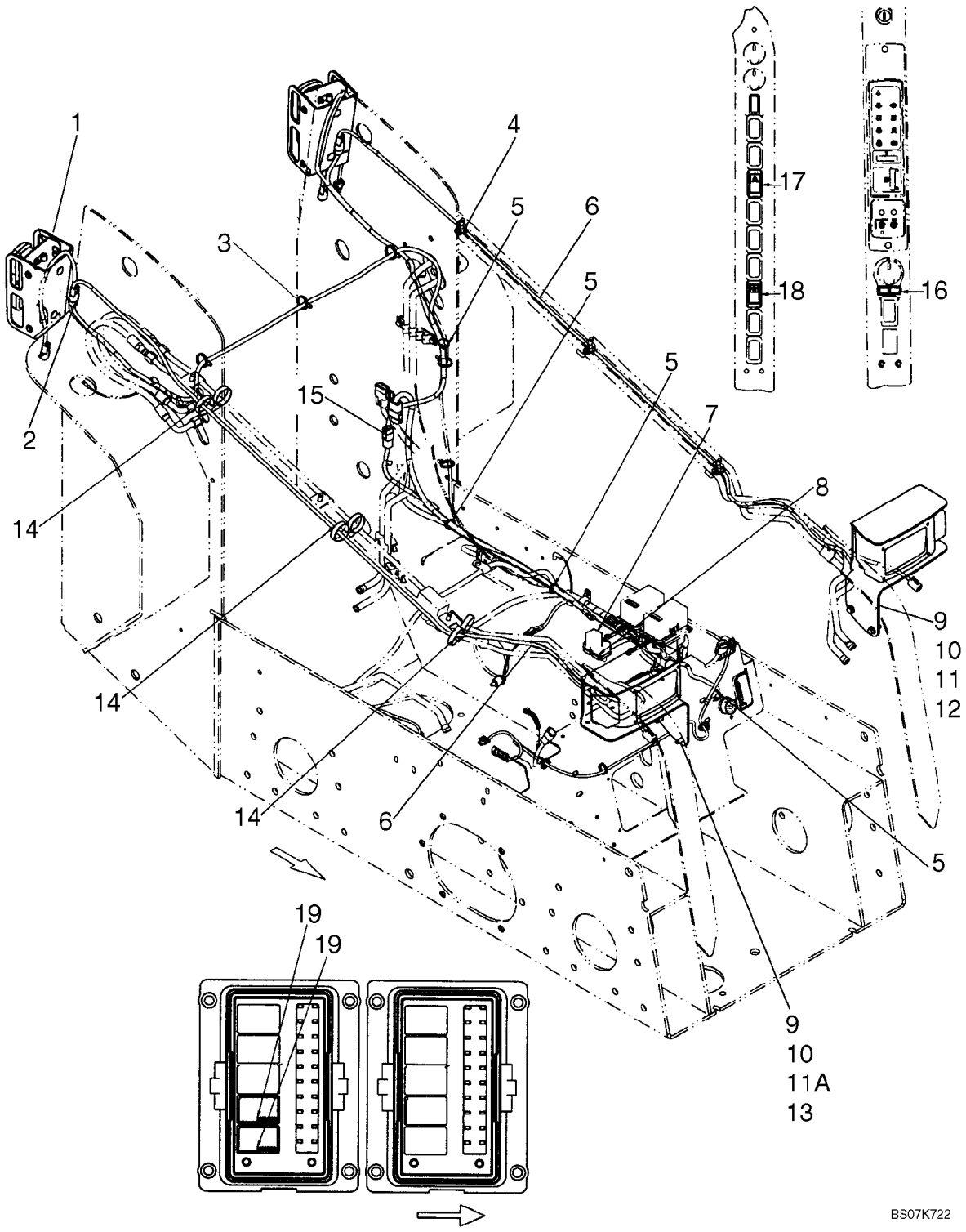

ELECTRICAL - ROAD LIGHTS (EUROPE)

REF	FN	PART NUMBER	YR/SN	QTY	DESCRIPTION
		87676260		1	KIT, SERVICE, Kit, Road Lights (EU); Incl 1 - 19
1		REF		2	INSTRUCTION, Rear Lights; See Fig 04-24
2		87673077		1	HARNESS, Harness, Turn Signal
3		87668737		3	STRAP
4		853765		3	CLAMP, 5/16", Insul, 3/8" Bolt
5		263117		4	STRAP, CABLE, .14" x 11 1/2"
6		87673079		2	HARNESS, Harness, Turn Signal Loader Arm
7		388457A1		1	RELAY, Time Delay, Road Lights, Europe
8		9821783		1	FLASHER UNIT
9		43435		4	NUT, M10, Flg Ser
10		280476		4	SCREW, SELF TAP, Hex Wash Hd, 3/8" x 1"
11		85821385		1	HEADLAMP, LH, See Fig 04-23
11A		85821384		1	HEADLAMP, RH, See Fig 04-22
12		87720246		1	BRACKET, Bracket, LH
13		87720245		1	BRACKET, Bracket, RH
14		87659208		3	CIRCLIP, Strap, Dual Tie Releasable
15		87673070		1	HARNESS, Harness, EU Adapter
16		86604657		1	INDICATOR, TURN SIGNAL
17		87634133		1	SWITCH, Rocker Switch, Hazard Lights
18		87642912		1	SWITCH, Rocker Switch, Loader Lock
19		{87655334}		2	Relay, 35A, Road Lights

HEADLAMP - RH

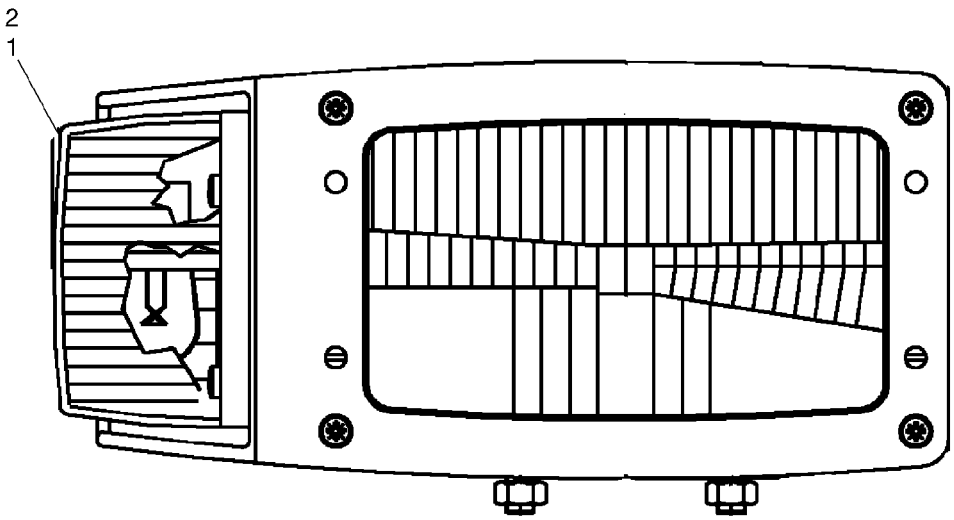

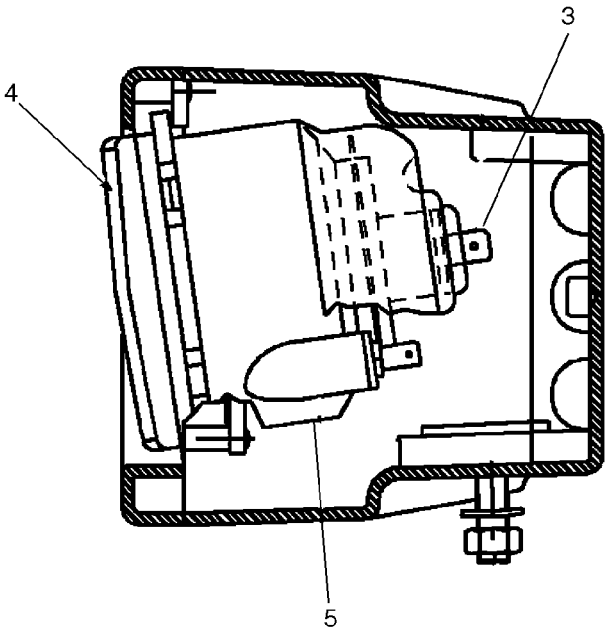

BS07K390

HEADLAMP - RH

REF	FN	PART NUMBER	YR/SN	QTY	DESCRIPTION
		85821384		1	HEADLAMP, RH, Incl. 1 - 5
1		9969431		1	LENS
2		14148190		1	BULB, Bulb, 12V 21W
3		14152090		1	BULB, Bulb, 12V 60/55 W
4		NSS		1	NOT SERVICED SEPARATELY, Lamp
5		14142390		1	BULB, Bulb, 12V-4W

HEADLAMP - LH

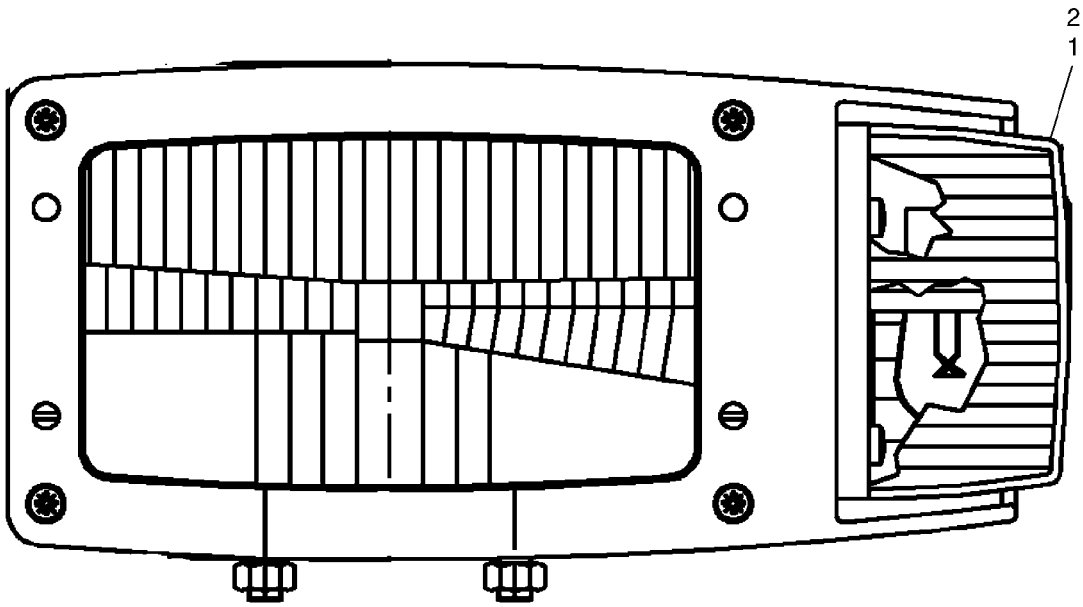

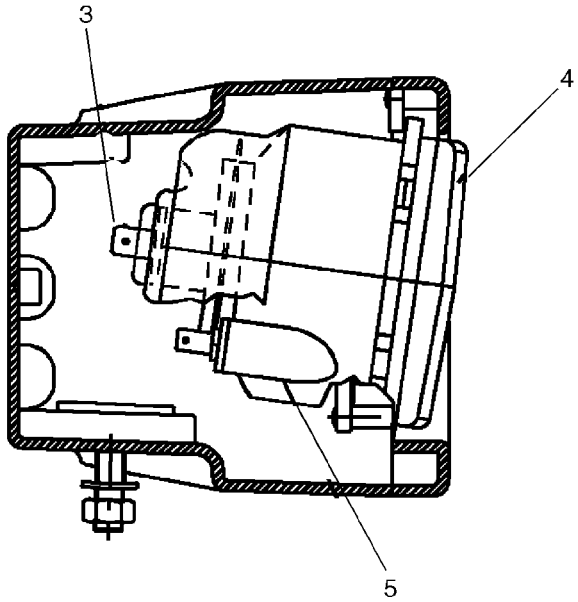

BS07K391

HEADLAMP - LH

REF	FN	PART NUMBER	YR/SN	QTY	DESCRIPTION
		85821385		1	HEADLAMP, LH, Incl 1 - 5
1		9969430		1	LENS
2		14148190		1	BULB, Bulb, 12V 21W
3		14152090		1	BULB, Bulb, 12V 60/55 W
4		NSS		1	NOT SERVICED SEPARATELY, Lamp
5		14142390		1	BULB, Bulb, 12V 4W

REAR LIGHT AND MOUNTING

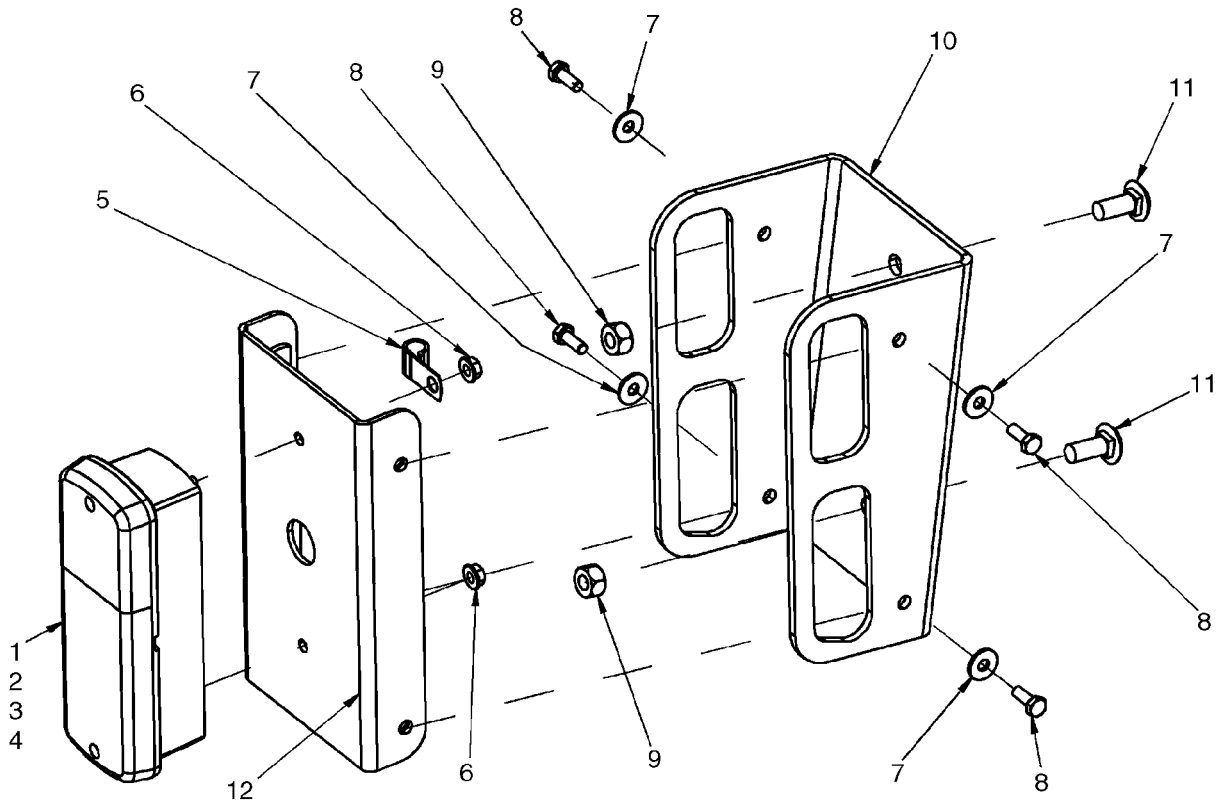

BS07K392

REAR LIGHT AND MOUNTING

REF	FN	PART NUMBER	YR/SN	QTY	DESCRIPTION
1		177239A2		2	LIGHT, TAIL, Incl 2 - 4
2		187140A1		2	LENS
3		3131227R1		2	BULB, P25-1, 12V, 25W
4		3131234R1		2	BULB, P25-2, 12V, 5W
5		87016870		2	CLAMP, J, 7/16" Insul, 5/16" Bolt
6		86511444		4	NUT, M6, Flg Ser
7		86624182		8	WASHER, M6 x 18 x 1.6
8		86508568		8	BOLT, Hex, M6 x 16, 8.8
9		87030549		4	NUT, LOCK, M10 x 1.5, Cl 10
10		419431A1		2	BRACKET, Rear Turn Signal Bracket
11		86633356		4	BOLT, CARRIAGE, Short NK, M10 x 25, Cl8.8, Full Thd
12		427180A1		2	BRACKET

BACKUP ALARM

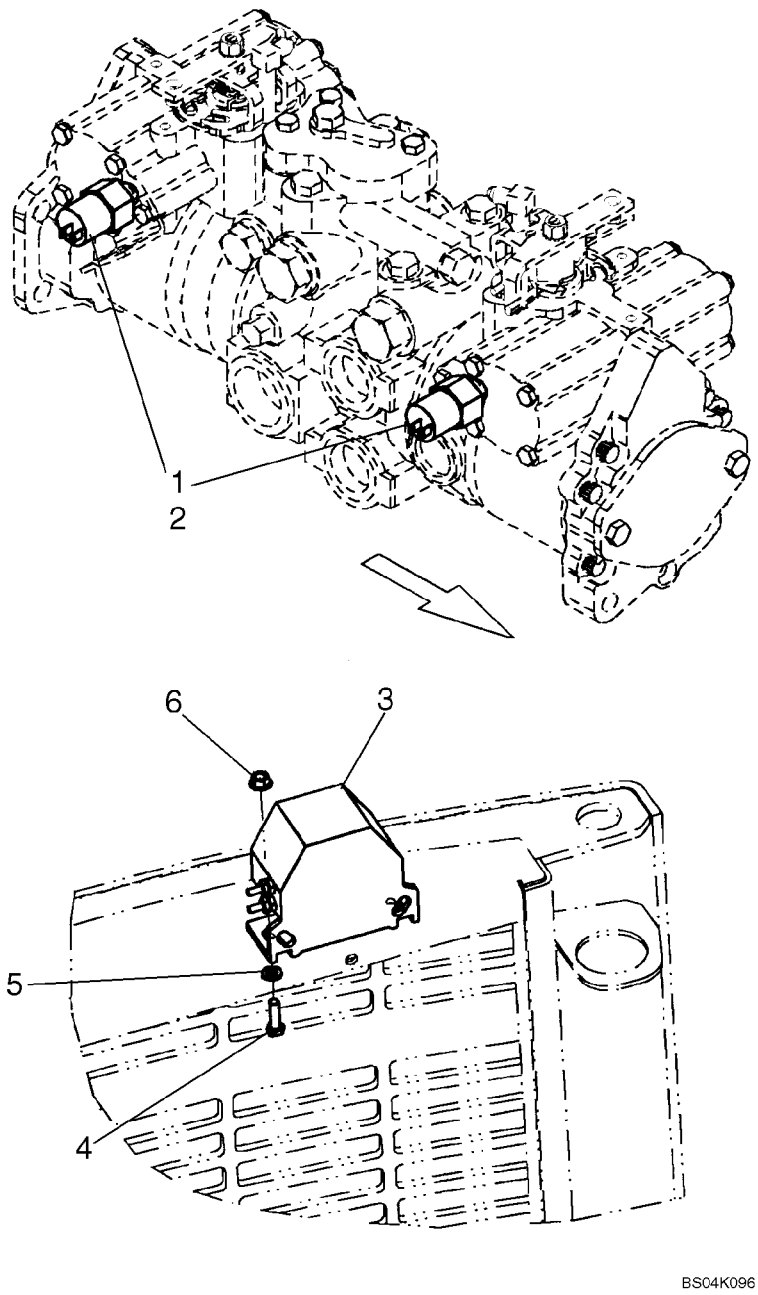

BACKUP ALARM

REF	FN	PART NUMBER	YR/SN	QTY	DESCRIPTION
1		87029843		2	SWITCH, PRESSURE, 600 PSI; Backup Alarm Control; Incl. 2; If Used
1		87370805		2	SWITCH, PRESSURE, 2000 PSI; Backup Alarm Control; Incl. O-Ring 9617873; Replaces 87461545; If Used
2		9617873		1	O-RING, 6-1, 90 Duro, .468" ID x .078" Thk
3		324299A1		1	ALARM, For Service Order 325258A1
3		325258A1		1	KIT, SERVICE, Backup Alarm
4		120100		2	BOLT, Hex, M6 x 20, 8.8
5		86624182		2	WASHER, M6 x 18 x 1.6
6		86511444		2	NUT, M6, Flg Ser

ELECTRICAL ACCESSORY SOCKET

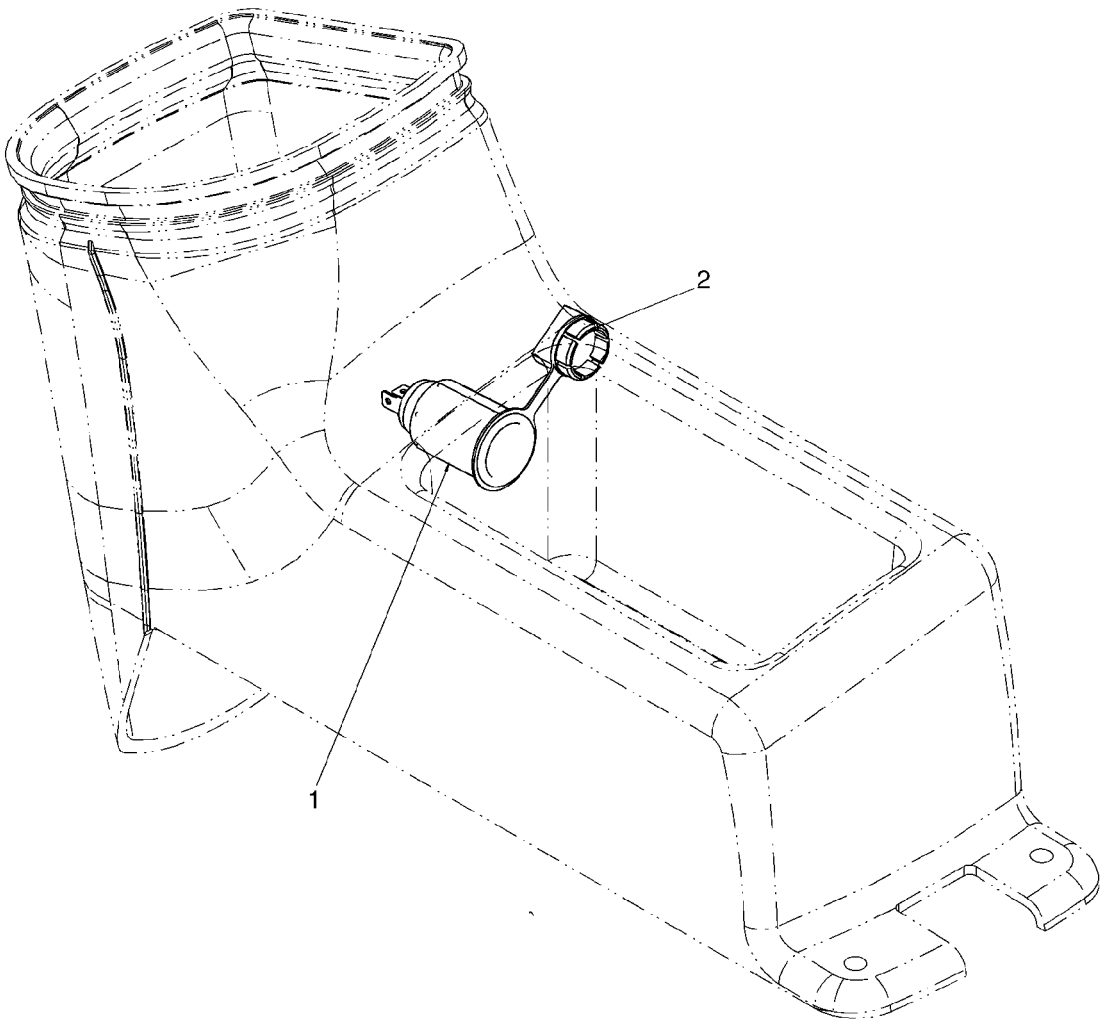

BS07K960

ELECTRICAL ACCESSORY SOCKET

REF	FN	PART NUMBER	YR/SN	QTY	DESCRIPTION
1		283779A1		1	OUTLET, Power Outlet
2		283781A1		1	CAP

ELECTRICAL ACCESSORY SOCKET (EUROPE)

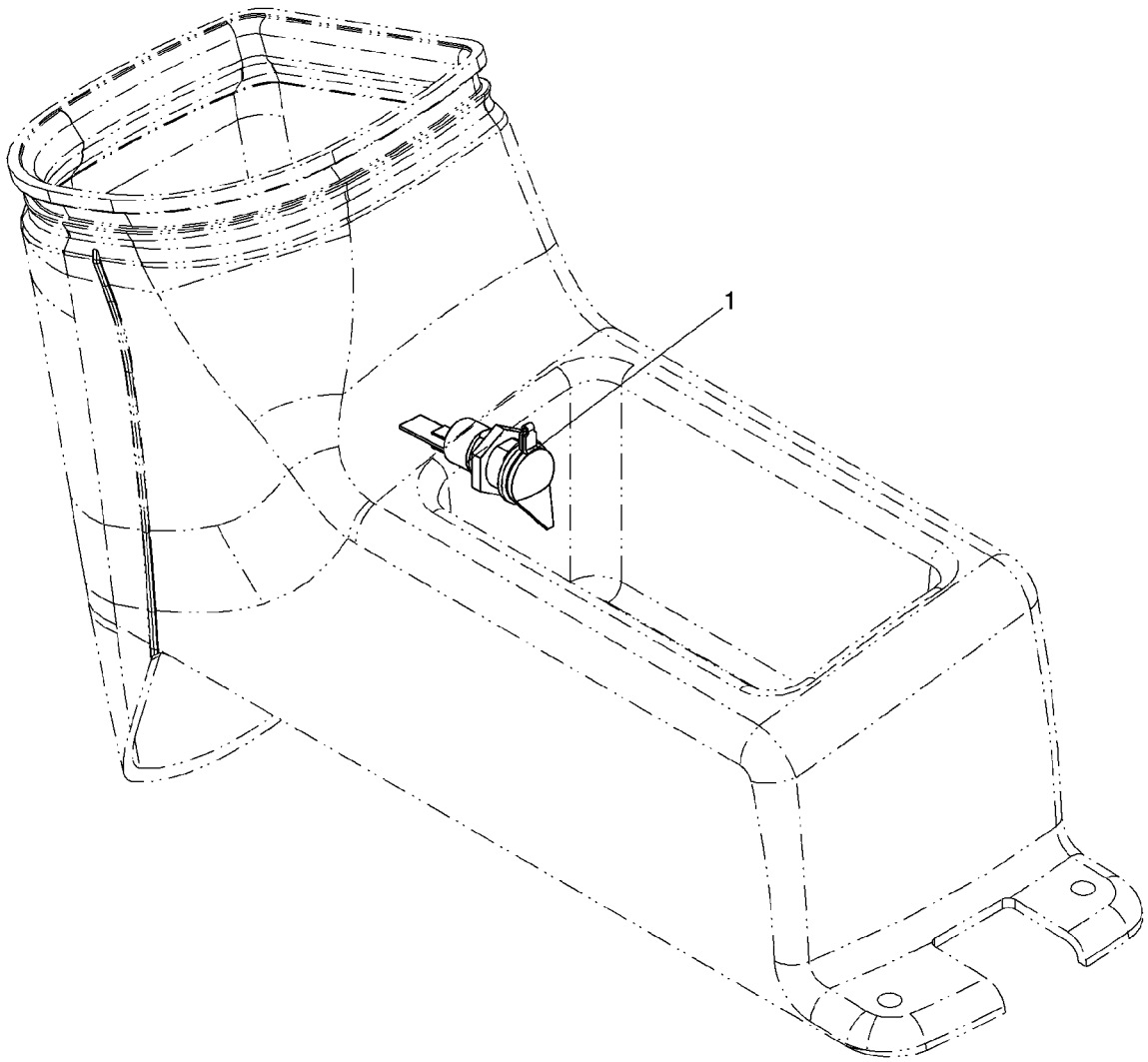

BS07K962

ELECTRICAL ACCESSORY SOCKET (EUROPE)

REF	FN	PART NUMBER	YR/SN	QTY	DESCRIPTION
1		142211A1		1	SOCKET

HORN - MOUNTING

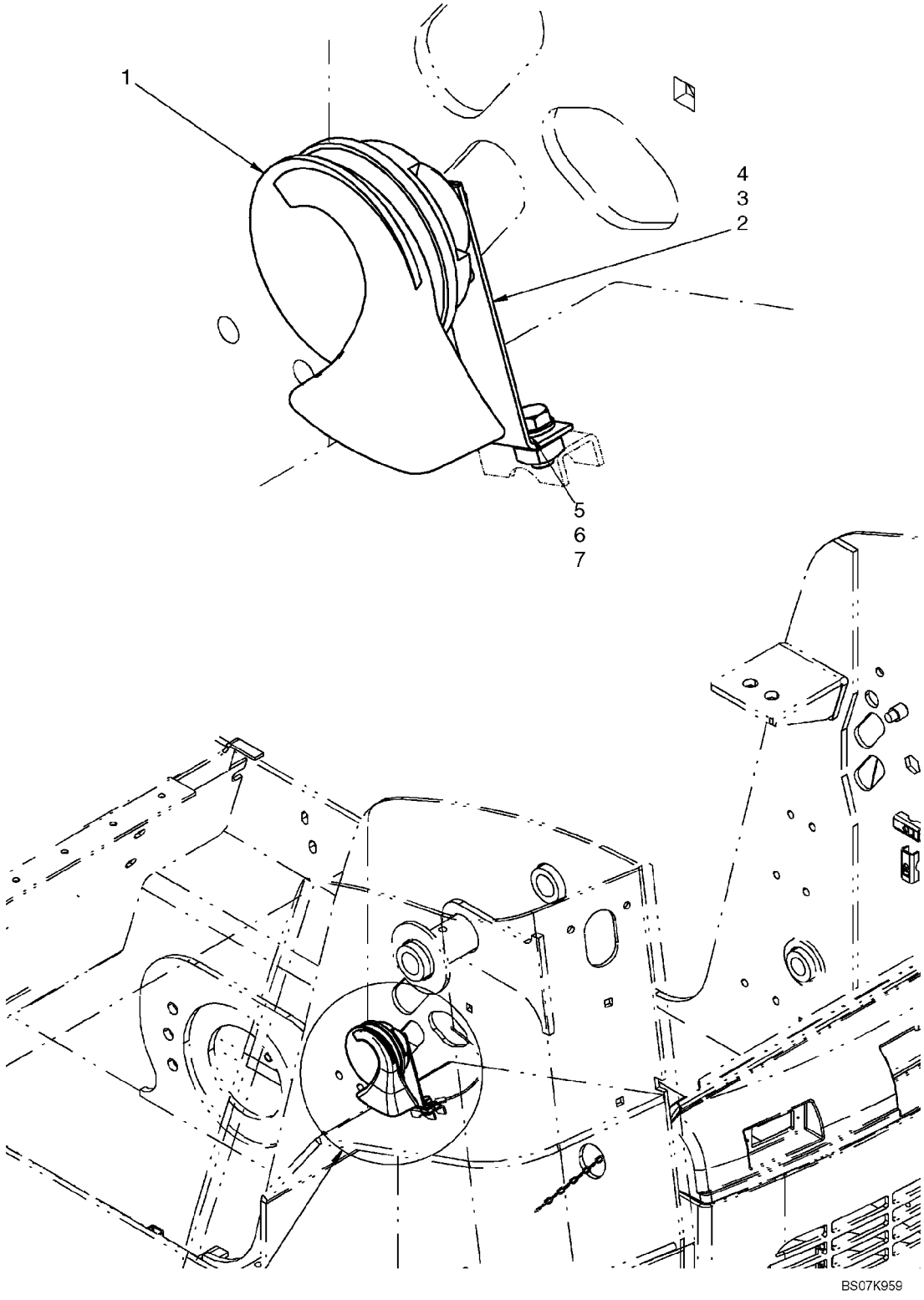

HORN - MOUNTING

REF	FN	PART NUMBER	YR/SN	QTY	DESCRIPTION
1		254130A1		1	HORN
2		406938A2		1	ANGLE, Horn Mounting Bracket
3		87030561		1	NUT, LOCK, M6 x 1, Cl 8
4		86632601		2	WASHER, LOCK, Ext Tooth, M8
5		86624184		1	WASHER, M8 x 16 x 1.6
6		120103		1	BOLT, Hex, M8 x 16, 8.8
7		229197A1		1	NUT

04-29		p1	12/07

ELECTRIC, FRONT AUXILIARY

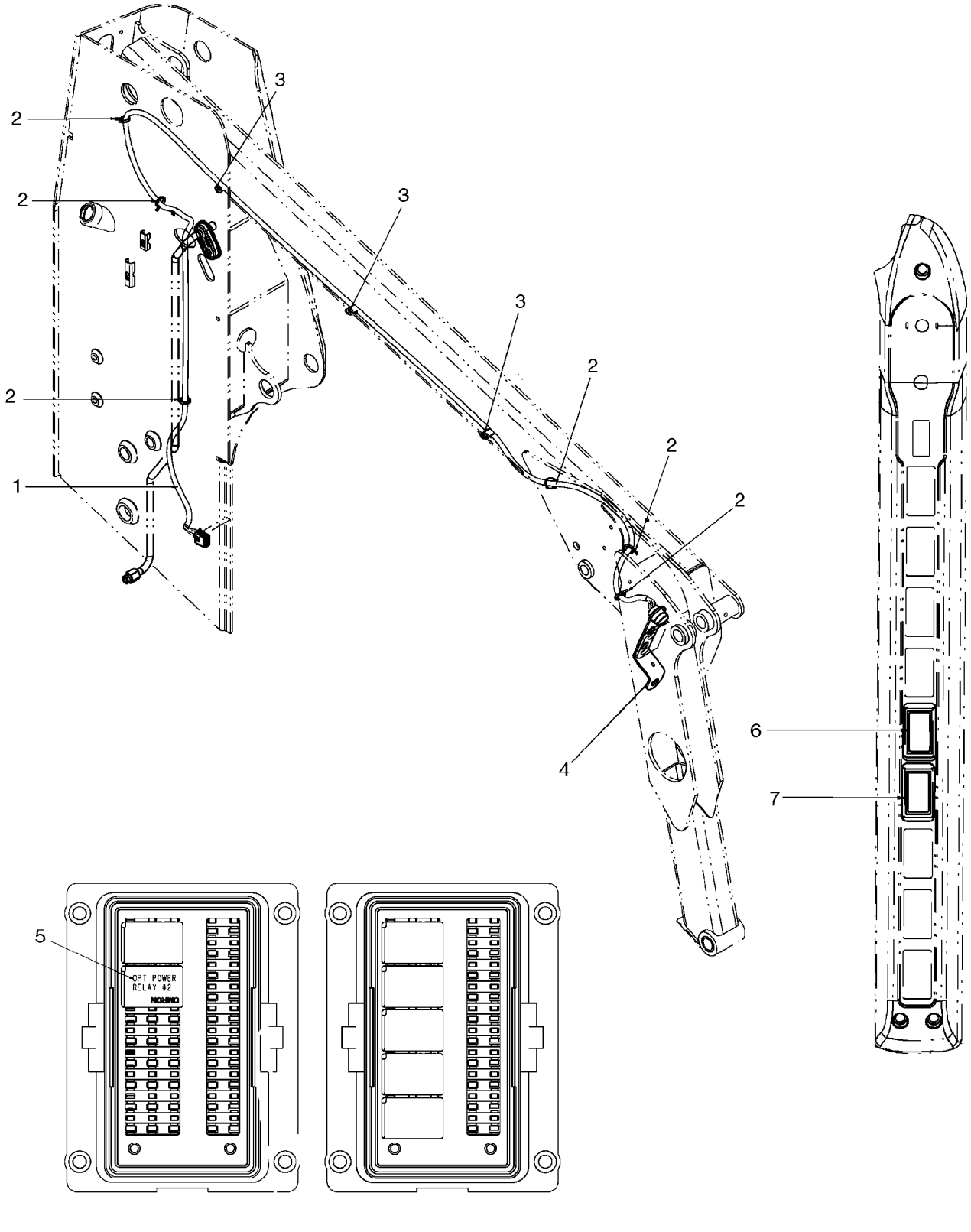

ELECTRIC, FRONT AUXILIARY

REF	FN	PART NUMBER	YR/SN	QTY	DESCRIPTION
		87640048		1	KIT, SERVICE, Kit, Front Auxiliary Electric; Incl 1 - 11
1		87441574		1	HARNESS, WIRE, Front Auxiliary Harness
2		263117		6	STRAP, CABLE, .14" x 11 1/2"
3		87028524		3	CLAMP
4		87023530		1	BRACKET
5		{87655334}		1	Relay
6		87634134		1	SWITCH, Rocker Switch, Auxiliary Electric I/O
7		87634135		1	SWITCH, Rocker Switch, Auxiliary Electric F/R
8		9706704		1	BOLT, Hex, M10 x 35, 8.8, Full Thd, Not Illustrated
9		87449992		1	BRACKET, Bracket, Auxiliary Electric; Not Illustrated
10		87453780		1	BRACKET, Bracket, Auxiliary Electric With Case Drain; Not Illustrated
11		87458118		1	BRACKET, Bracket, Auxiliary Electric Mount; Not Illustrated

ROTATING BEACON

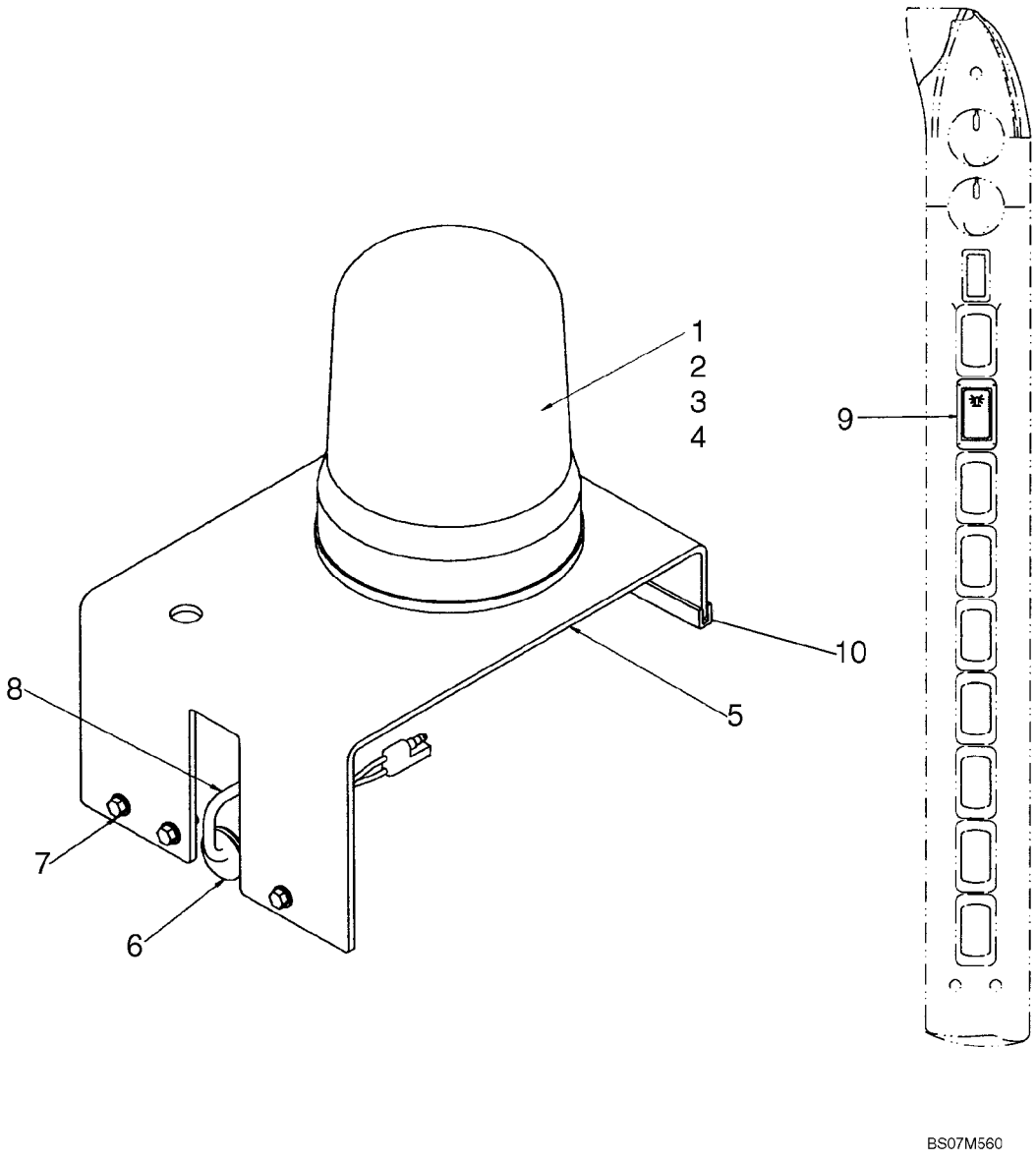

ROTATING BEACON

REF	FN	PART NUMBER	YR/SN	QTY	DESCRIPTION
		87638500		1	KIT, SERVICE, Kit, Rotating Beacon; Incl 1- 10
1		E99128		1	BEACON, Rotating Beacon; Incl 2 - 4
2		E99208		1	LENS
3		3125705R1		1	BULB
4		E38908		1	SEAL
5		87682712		1	BRACKET, Beacon Support
6		87530614		1	GROMMET, Grommet
7		86625224		3	SCREW, Screw, Hex Head #1/4-20 X 3/4
8		293828A1		1	HARNESS, Harness, Rotating Beacon
9		133714A1		1	SWITCH, Rocker Switch, Rotating Beacon
10		293470A1		1	STRIP, ORNAMENTAL, Edge Trim

SPECIAL PARTS FOR ITALY - LICENSE PLATE LIGHT

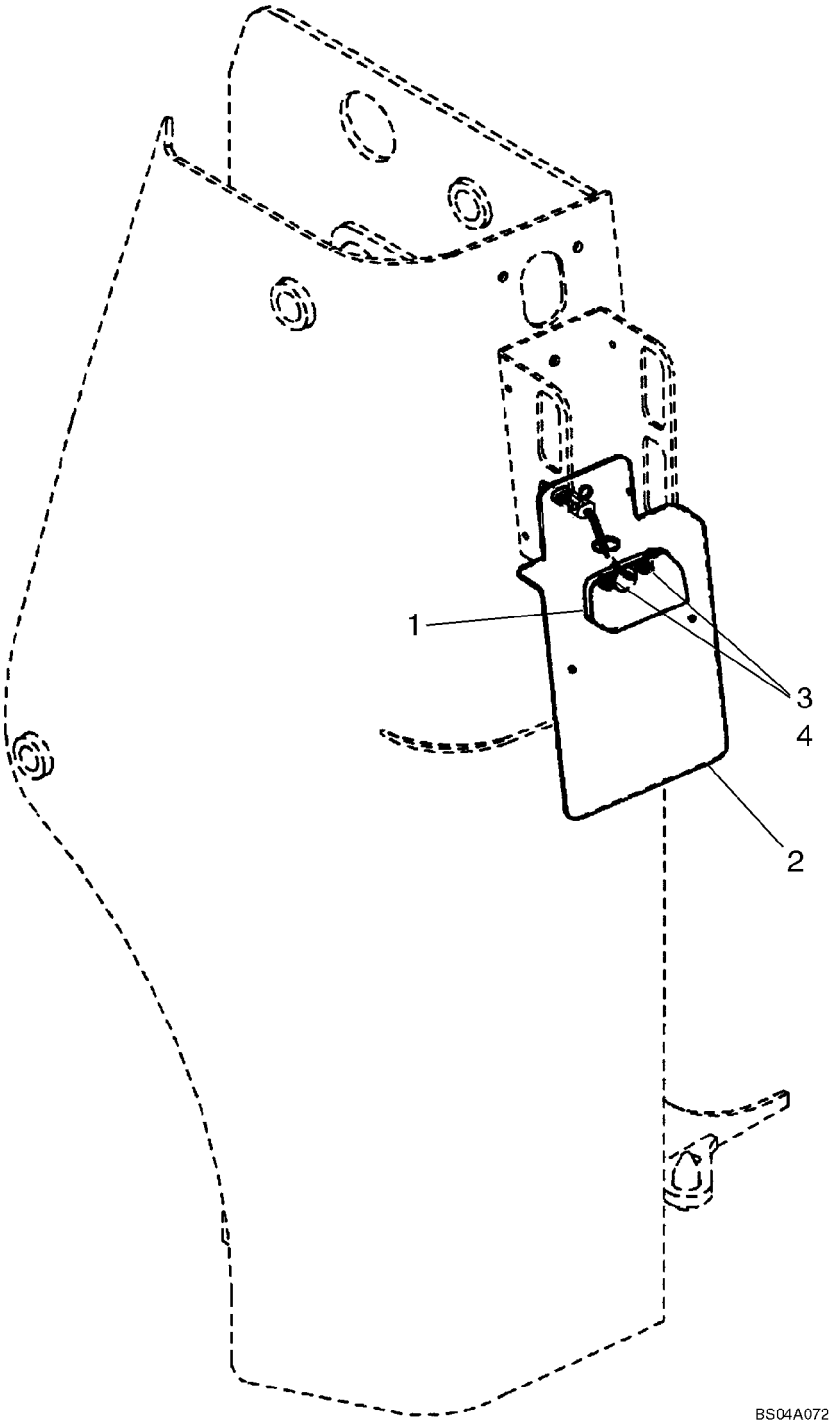

SPECIAL PARTS FOR ITALY - LICENSE PLATE LIGHT

REF	FN	PART NUMBER	YR/SN	QTY	DESCRIPTION
1		120229A1		1	LIGHT
2		428239A2		1	PLATE ASSY., License Plate Mounting
3		825-5146		2	NUT, M6, Flg Ser
4		840-1616		2	SCREW, Cross Pan Hd, M6 x 16

STROBE LIGHT

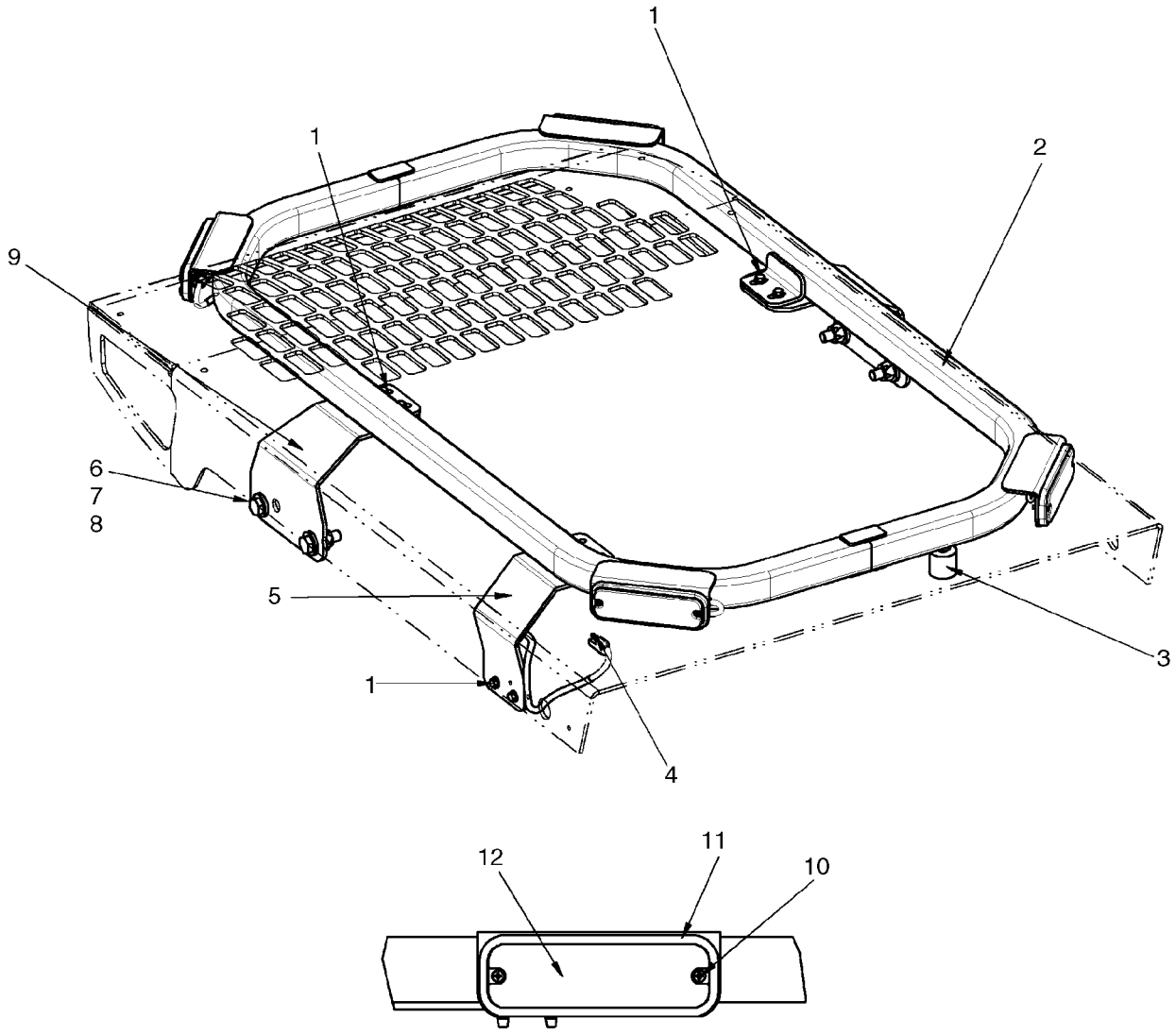

STROBE LIGHT

REF	FN	PART NUMBER	YR/SN	QTY	DESCRIPTION
		87652336		1	KIT, SERVICE, Kit, Strobe Light; Incl 1 - 12
1		86625224		6	SCREW
2		87727417		1	FRAME
3		87727414		1	BUMPER, Rubber Feet
4		87723831		1	HARNESS, Harness, Strobe
5		NSS		1	NOT SERVICED SEPARATELY, Wire Guard
6		337563		4	BOLT, Hex, M12 x 40, 10.9, Full Thd
7		412672		4	NUT, LOCK, M12 x 1.75, Cl 10
8		86625256		8	WASHER, M12 x 28.5 x 4, HT
9		87727413		2	BRACKET, Strobe Mounting Bracket
10		86637783		8	SCREW, SELF TAP, Cross Pan Hd, #6 x 5/8"
11		87728345		4	BEZEL, Strobe Light
12		87634137		4	HARNESS, Amber Strobe, LED

NOTES

SECTION INDEX
Power Train

06-01	JOYSTICK CONTROL PLUMBING - H PATTERN (WITH PILOT CONTROL)
06-02	JOYSTICK CONTROL PLUMBING - ISO PATTERN (420 WITH PILOT CONTROL)
06-03	JOYSTICK CONTROL PLUMBING - ISO PATTERN (420CT WITH PILOT CONTROL)
06-04	JOYSTICK CONTROL PLUMBING - ISO PATTERN (420CT WITH PILOT CONTROL)
06-05	JOYSTICK VALVE KITS - H PATTERN, LH (MODELS WITH PILOT CONTROL)
06-06	JOYSTICK VALVE KITS - H PATTERN, RH (MODELS WITH PILOT CONTROL)
06-07	JOYSTICK VALVE KITS - ISO PATTERN, LH
06-08	JOYSTICK VALVE KITS - ISO PATTERN, RH
06-09	JOYSTICK VALVE KITS - ISO PATTERN, LH
06-10	HYDROSTATICS - SUPPLY AND RETURN (420CT WITH PILOT CONTROL)
06-11	HYDROSTATICS - PUMP TO DRIVE MOTORS (420CT WITH PILOT CONTROL)
06-12	HYDROSTATICS - OVERRIDE AND BRAKE VALVE (420CT WITH PILOT CONTROL)
06-13	HYDROSTATICS - PUMP FITTINGS (420CT WITH PILOT CONTROL)
06-14	HYDROSTATICS - TWO SPEED, VALVE ASSY (420CT WITH PILOT CONTROL)
06-15	HYDROSTATICS - SUPPLY AND RETURN (420)
06-16	HYDROSTATICS - SUPPLY, RETURN AND DRAIN PLUMBING (420)
06-17	HYDROSTATICS - PUMP TO DRIVE MOTORS (420)
06-18	HYDROSTATICS - MULTI VALVE (420 WITH PILOT CONTROL)
06-19	HYDROSTATICS - PUMP FITTINGS (420 WITH PILOT CONTROL)
06-20	HYDROSTATICS - HOSES (420 WITH PILOT CONTROL)
06-21	HYDROSTATICS - DRIVE MOTORS
06-22	HYDROSTATICS - SINGLE SPEED, DRIVE MOTORS (PILOT CONTROL)
06-23	HYDROSTATICS - TWO SPEED, DRIVE MOTORS (MECHANICAL CONTROL)
06-24	HYDROSTATICS - TWO SPEED, DRIVE MOTORS (PILOT CONTROL)
06-25	HYDROSTATICS - RESONATOR (EUROPE)
06-26	HYDROSTATICS - MULTI VALVE, PILOT (EUROPE)
06-27	HYDROSTATICS - MULTI VALVE ASSEMBLY
06-28	HYDROSTATICS - TWO SPEED, VALVE ASSY
06-29	HYDROSTATICS - TWO SPEED, VALVE ASSY (WITH PILOT CONTROL)
06-30	HYDRAULIC GEAR PUMP - WITHOUT HIGH FLOW
06-31	HYDRAULIC GEAR PUMP - HIGH FLOW
06-32	DRIVE LINE (420)
06-33	AXLE ASSY
06-34	WHEELS
06-35	WHEELS - SOLID FLEX
06-36	FINAL DRIVE (420CT)
06-37	TRACK (420CT)
06-38	PUMP, TANDEM - FRONT
06-39	PUMP, TANDEM - FRONT
06-40	PUMP, TANDEM - REAR
06-41	PUMP, TANDEM - REAR
06-42	PUMP, TANDEM - REAR
06-43	MOTOR ASSY - SINGLE SPEED
06-44	MOTOR ASSY - SINGLE SPEED
06-45	MOTOR ASSY - SINGLE SPEED
06-46	MOTOR ASSY - TWO SPEED
06-47	MOTOR ASSY - TWO SPEED
06-48	MOTOR ASSY - TWO SPEED
06-49	MOTOR ASSY - TWO SPEED TRACK DRIVE
06-50	PUMP, TANDEM - REXROTH A22 - 300BAR, 5.5MM ORF, 42.9CC
06-51	PUMP, TANDEM - REXROTH A22 - 300 BAR, 5.7MM ORF (87546976)

SECTION INDEX
Power Train

06-52	PUMP, TANDEM - PRESSURE RELIEF VALVE (87546976)
06-53	PUMP, TANDEM - PRESSURE RELIEF VALVE (87546976)
06-54	PUMP, TANDEM - INTERNAL GEAR PUMP (87546976)
06-55	PUMP, TANDEM - ROTARY GROUP, RIGHT HAND ROTATION (87546976)
06-56	PUMP, TANDEM - ROTARY GROUP, LEFT HAND ROTATION (87546976)
06-57	PUMP, TANDEM - CONTROL, HYDRAULIC (87546976)
06-58	PUMP, TANDEM - CONTROL CARTRIDGE WITH ORIFICE (87546976)

NOTES

JOYSTICK CONTROL PLUMBING - H PATTERN (WITH PILOT CONTROL)

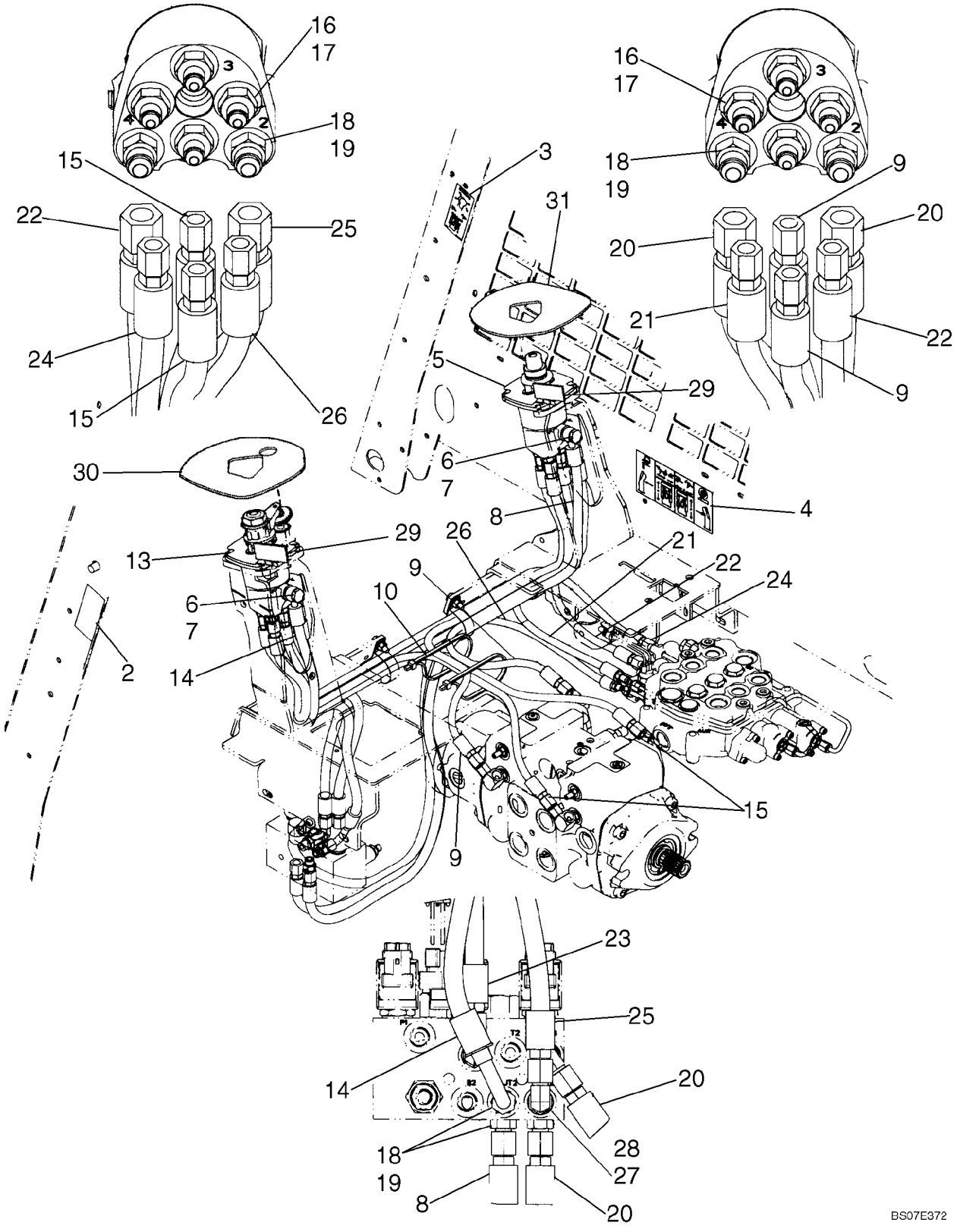

JOYSTICK CONTROL PLUMBING - H PATTERN (WITH PILOT CONTROL)

REF	FN	PART NUMBER	YR/SN	QTY	DESCRIPTION
1		87638349		1	KIT, SERVICE, H Pattern Controls; Incl. 2 - 28
2		87573275		1	DECAL, H Pattern, Left Hand
3		87573276		1	DECAL, H Pattern, Right Hand
4		87644222		1	DECAL, Control Identification
5		87357241		1	VALVE, HYDRAULIC, H Pattern Joystick Valve, Right Hand; See Fig. 06-06
6		933610R1		4	WASHER, SEALING, M14 x 18 x 1.8
7		87622364		2	BOLT, Banjo Bolt, 10 Banjo 3/4 Hole
8		87575289		1	HOSE, Joystick Supply; 1260 mm, 49.61 in. Length
9		87584064		2	HOSE, Pilot; 845mm (33 1/4 in.)
10		L18331		2	STRAP, CABLE
13		87357240		1	VALVE, HYDRAULIC, H Pattern Joystick Valve, Left Hand; See Fig 06-05
14		87575290		1	HOSE, Joystick Supply; 776 mm, 30.55 in. Length
15		87584065		2	HOSE, Pilot; 975mm (38 3/8 in.)
16		139398		8	CONNECTOR, HYD., 7/16"-20, 37º x 9/16"-18, O-Ring, Incl. 17
17		9617873		8	O-RING, 6-1, 90 Duro, .468" ID x .078" Thk
18		76350		6	CONNECTOR, HYD., 9/16"-18, 37º x 9/16"-18, O-Ring, Incl. 19
19		9617873		6	O-RING, 6-1, 90 Duro, .468" ID x .078" Thk
20		87604068		2	HOSE, Joystick Supply Or Drain; 1240 mm, 48.82 in. Length
21		87604062		1	HOSE, Pilot; 590 mm, 23.23 in. Length
22		87604069		1	HOSE, Pilot; 490 mm, 19.29 in. Length
23		87604066		1	HOSE, Joystick Drain; 660 mm, 26.00 in. Length
24		87604061		1	HOSE, Pilot; 1055 mm, 41.54 in. Length
25		87604067		1	HOSE, Joystick Supply; 730 mm, 28.74 in. Length
26		87604063		1	HOSE, Pilot; 930 mm, 36.61 in. Length
27		86526		1	ELBOW, 90º, 9/16"-18, 37º x 9/16"-18, LG, Incl. 28
28		9617873		1	O-RING, 6-1, 90 Duro, .468" ID x .078" Thk
29		87621155		2	STRIP-GASKET
30		87618659		1	INSULATION, FOAM, Seal, RH
31		87618658		1	INSULATION, FOAM, Seal, LH

JOYSTICK CONTROL PLUMBING - ISO PATTERN (420 WITH PILOT CONTROL)

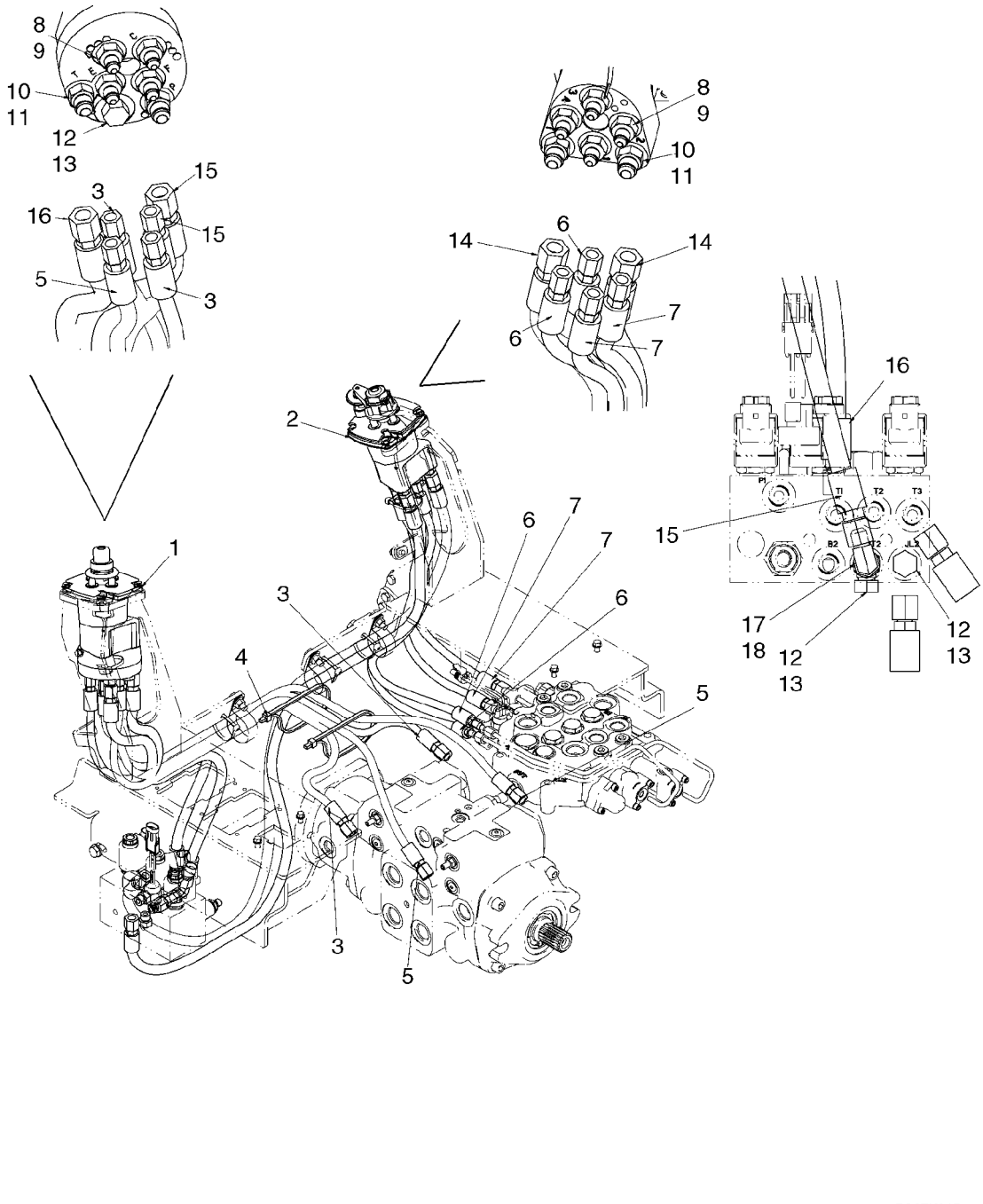

JOYSTICK CONTROL PLUMBING - ISO PATTERN (420 WITH PILOT CONTROL)

REF	FN	PART NUMBER	YR/SN	QTY	DESCRIPTION
		87616983		1	KIT, SERVICE, Kit, ISO Pattern Controls; Incl 1 - 18
1		87600622		1	VALVE, Joystick Valve, ISO Pattern, LH; See Fig. 06-09
2		87600623		1	VALVE, Joystick Valve, ISO Pattern, RH; See Fig. 06-08
3		87584064		2	HOSE, Pilot Hose, 845mm (33 1/4 in.)
4		L18331		2	STRAP, CABLE
5		87584065		2	HOSE, Pilot Hose, 975mm (38 3/8 in.)
6		87604062		2	HOSE, Pilot Hose, 590mm (23 7/32 in.)
7		87604069		2	HOSE, Pilot Hose, 490mm (19 9/32 in.)
8		139398		8	CONNECTOR, HYD., 7/16"-20, 37º x 9/16"-18, O-Ring, Incl 9
9		9617873		8	O-RING, 6-1, 90 Duro, .468" ID x .078" Thk
10		76350		4	CONNECTOR, HYD., 9/16"-18, 37º x 9/16"-18, O-Ring, Incl 11
11		9617873		4	O-RING, 6-1, 90 Duro, .468" ID x .078" Thk
12		76349		3	PLUG, Hex Hd, 9/16"-18 ORB, Incl 13
13		9617873		3	O-RING, 6-1, 90 Duro, .468" ID x .078" Thk
14		87684218		2	HOSE, Hose, Joystick Supply/Drain, 1300mm (51 3/16 in.)
15		87604071		1	HOSE, Joystick Supply, 680mm (26 3/4 in.)
16		87684180		1	HOSE, Hose, Joystick Drain, 620mm (24 13/32 in.)
17		86526		1	ELBOW, 90º, 9/16"-18, 37º x 9/16"-18, LG, Incl 18
18		9617873		1	O-RING, 6-1, 90 Duro, .468" ID x .078" Thk

JOYSTICK CONTROL PLUMBING - ISO PATTERN (420CT WITH PILOT CONTROL)

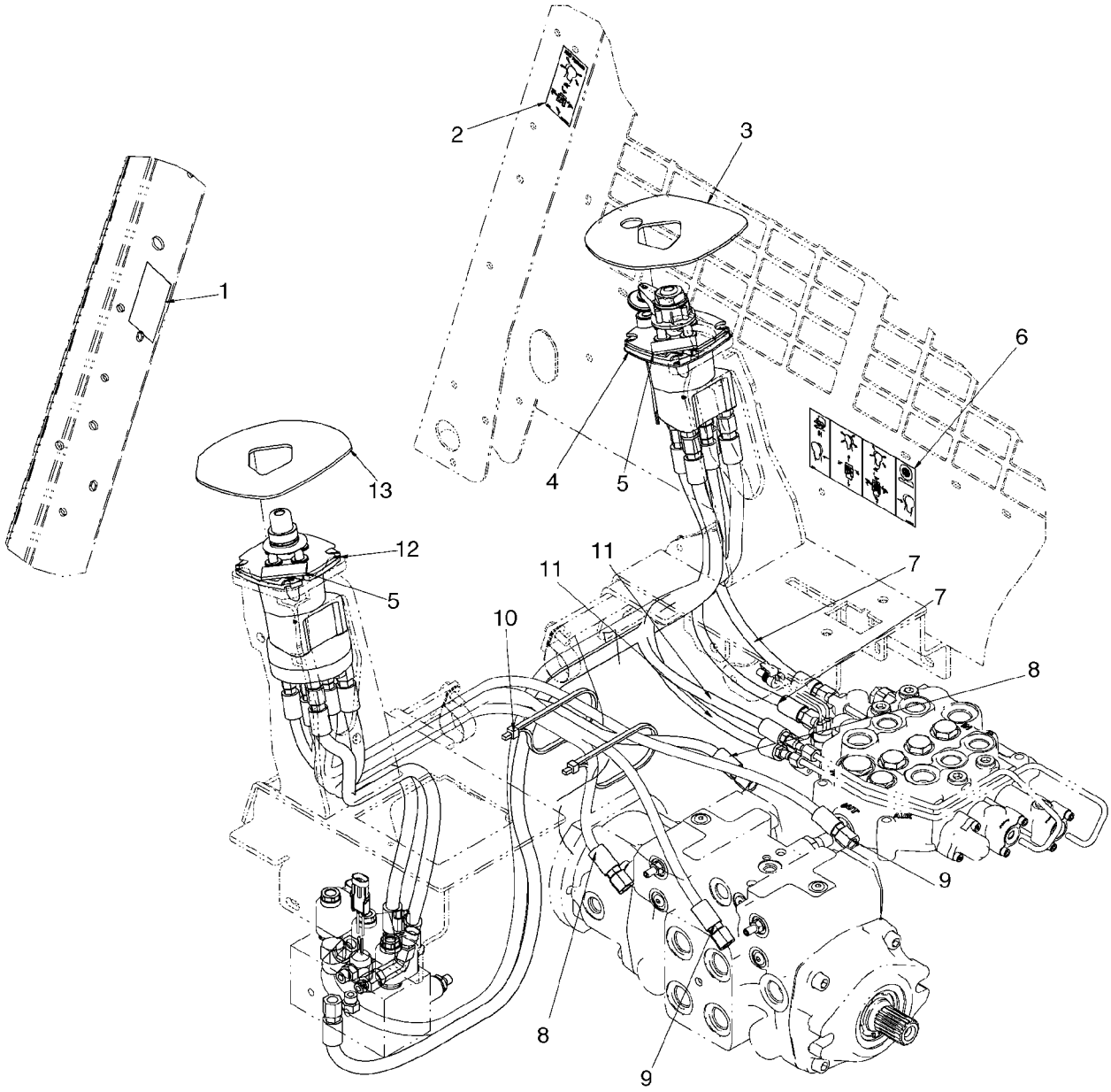

JOYSTICK CONTROL PLUMBING - ISO PATTERN (420CT WITH PILOT CONTROL)

REF	FN	PART NUMBER	YR/SN	QTY	DESCRIPTION
		87676261		1	KIT, SERVICE, Kit, ISO Pattern Controls (420CT); Incl 1 - 13 And Fig 06-04
1		87573277		1	DECAL, ISO Pattern, LH
2		87573278		1	DECAL, ISO Pattern, RH
3		87618657		1	INSULATION, FOAM, Seal, RH
4		87600623		1	VALVE, Joystick Valve, ISO Pattern RH; See Fig 06-08
5		87621155		2	STRIP-GASKET
6		87573274		1	DECAL, Control Identification, ISO
7		87604069		2	HOSE, 490mm (19 5/16 in.)
8		87584064		2	HOSE, 845mm (33 1/4 in.)
9		87584065		2	HOSE, 975mm (38 3/8 in.)
10		L18331		2	STRAP, CABLE
11		87604062		2	HOSE, 590mm (23 1/4 in.)
12		87611854		1	VALVE, Joystick Valve, ISO Pattern LH; See Fig 06-07
13		87618653		1	INSULATION, FOAM, Seal, LH

JOYSTICK CONTROL PLUMBING - ISO PATTERN (420CT WITH PILOT CONTROL)

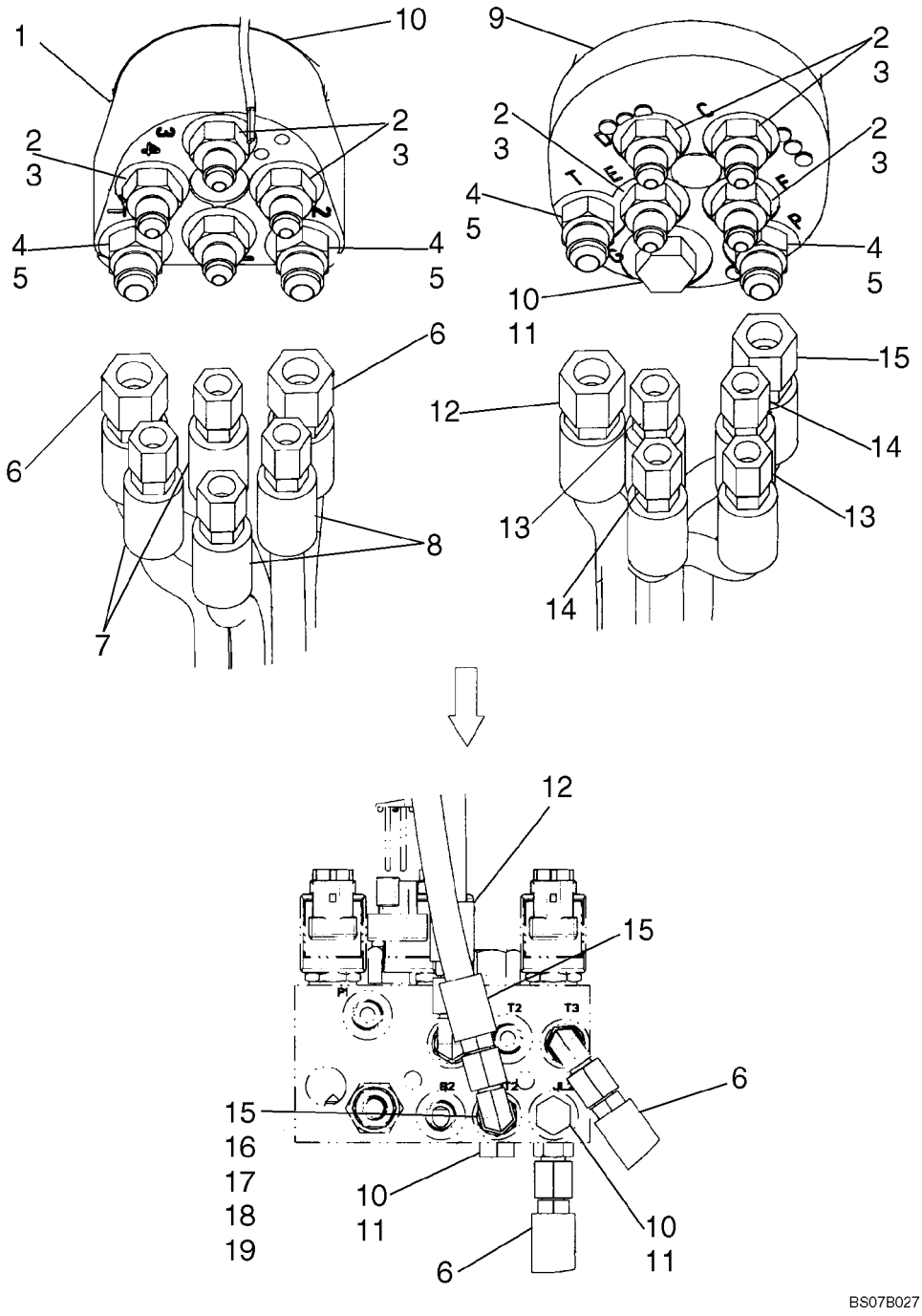

JOYSTICK CONTROL PLUMBING - ISO PATTERN (420CT WITH PILOT CONTROL)

REF	FN	PART NUMBER	YR/SN	QTY	DESCRIPTION
1		87600623		1	VALVE, Joystick Valve, ISO Pattern RH; See Fig 06-08
2		139398		8	CONNECTOR, HYD., 7/16"-20, 37º x 9/16"-18, O-Ring, Incl. 3
3		9617873		8	O-RING, 6-1, 90 Duro, .468" ID x .078" Thk
4		76350		4	CONNECTOR, HYD., 9/16"-18, 37º x 9/16"-18, O-Ring, Incl. 5
5		9617873		4	O-RING, 6-1, 90 Duro, .468" ID x .078" Thk
6		87604068		2	HOSE, Joystick Supply, 1240 mm, 48.82 in. Length
7		87604062		2	HOSE, 590 mm, 23.23 in. Length
8		87604069		2	HOSE, 490 mm, 19.29 in. Length
9		87611854		1	VALVE, Joystick Valve, ISO Pattern LH; See Fig 06-07
10		76349		3	PLUG, Hex Hd, 9/16"-18 ORB, Incl. 11
11		86598100		3	O-RING, Cl 6, 13.3MM ID x 2.2 Thk
12		87604066		1	HOSE, Joystick Drain, 660 mm, 26.00 in. Length
13		87584064		2	HOSE, Hose, 845mm (33 1/4 in.)
14		87584065		2	HOSE, Hose, 975mm (38 3/8 in.)
15		87573371		1	ADAPTER, Connector, .38 OD Male X .38 OD Female; Incl. 16,17
16		9617873		1	O-RING, 6-1, 90 Duro, .468" ID x .078" Thk
17		9993141		1	O-RING, -012, 90 Duro, .364" ID x .070" Thk
18		86526		1	ELBOW, 90º, 9/16"-18, 37º x 9/16"-18, LG, Incl. 19
19		9617873		1	O-RING, 6-1, 90 Duro, .468" ID x .078" Thk

JOYSTICK VALVE KITS - H PATTERN, LH (MODELS WITH PILOT CONTROL)

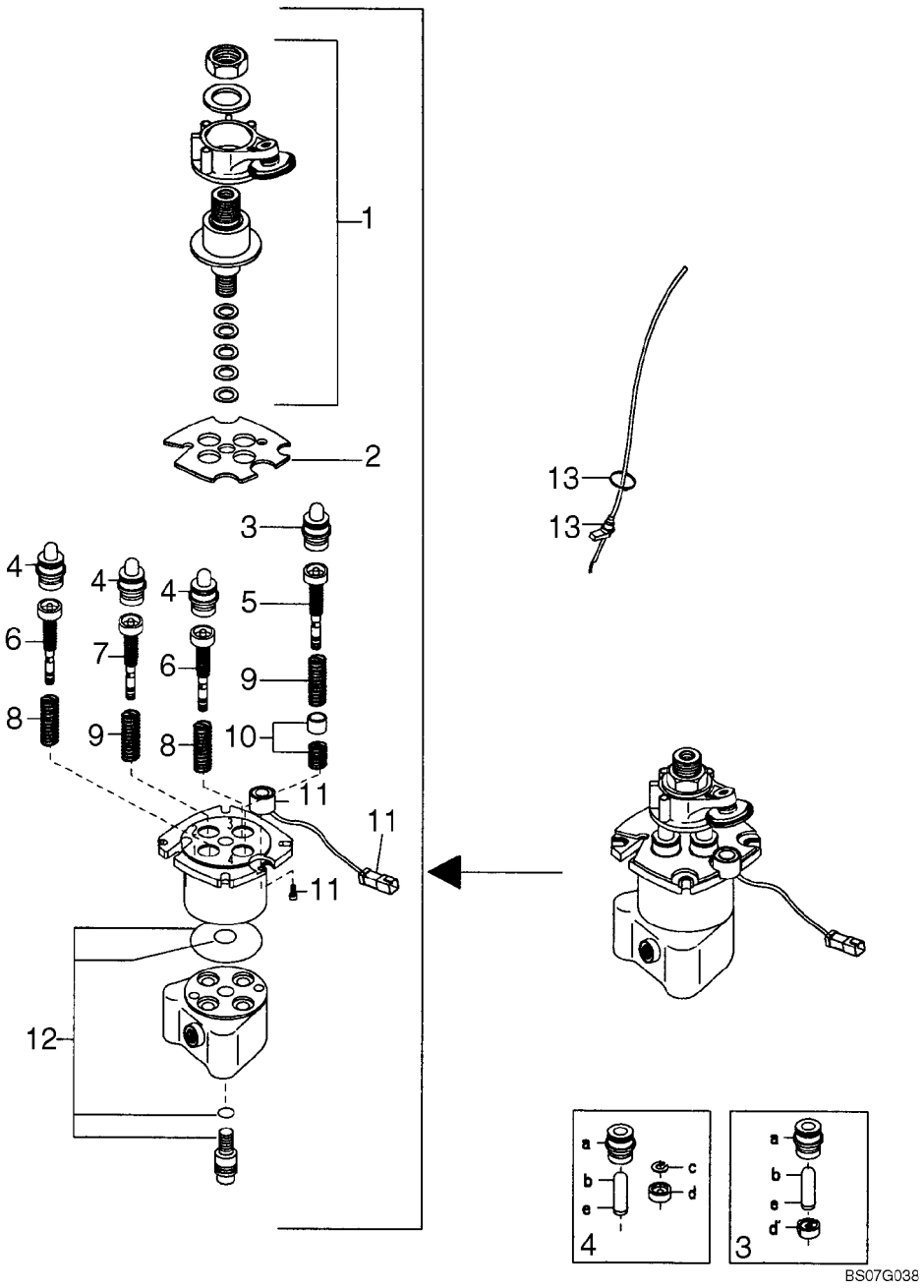

JOYSTICK VALVE KITS - H PATTERN, LH (MODELS WITH PILOT CONTROL)

REF	FN	PART NUMBER	YR/SN	QTY	DESCRIPTION
		REF			INSTRUCTION, MODELS WITH PILOT CONTROL
		87357240		1	VALVE, HYDRAULIC, Joystick Control; H Pattern Left Hand; Incl. 1 - 13
1		87548834		1	KIT, SERVICE, Cardan With Detent
2		87548836		1	KIT, SERVICE, Retaining Plate, Detent
3		87548839		1	KIT, SERVICE, Full Plunger Prefeeling
4		{87548828}		3	Hollow Plunger
5		87614018		1	REGULATOR
6		87614017		2	REGULATOR, With Plunger
7		87614016		1	REGULATOR
8		87614020		1	SPRING, Medium
9		87614019		1	SPRING, Heavy
10		87548846		1	KIT, SERVICE, Prefeeling Point
11		87548847		1	KIT, SERVICE, Solenoid
12		87548848		1	KIT, SERVICE, Standard Seal
13		87548874		1	KIT, SERVICE, Cable

JOYSTICK VALVE KITS - H PATTERN, RH (MODELS WITH PILOT CONTROL)

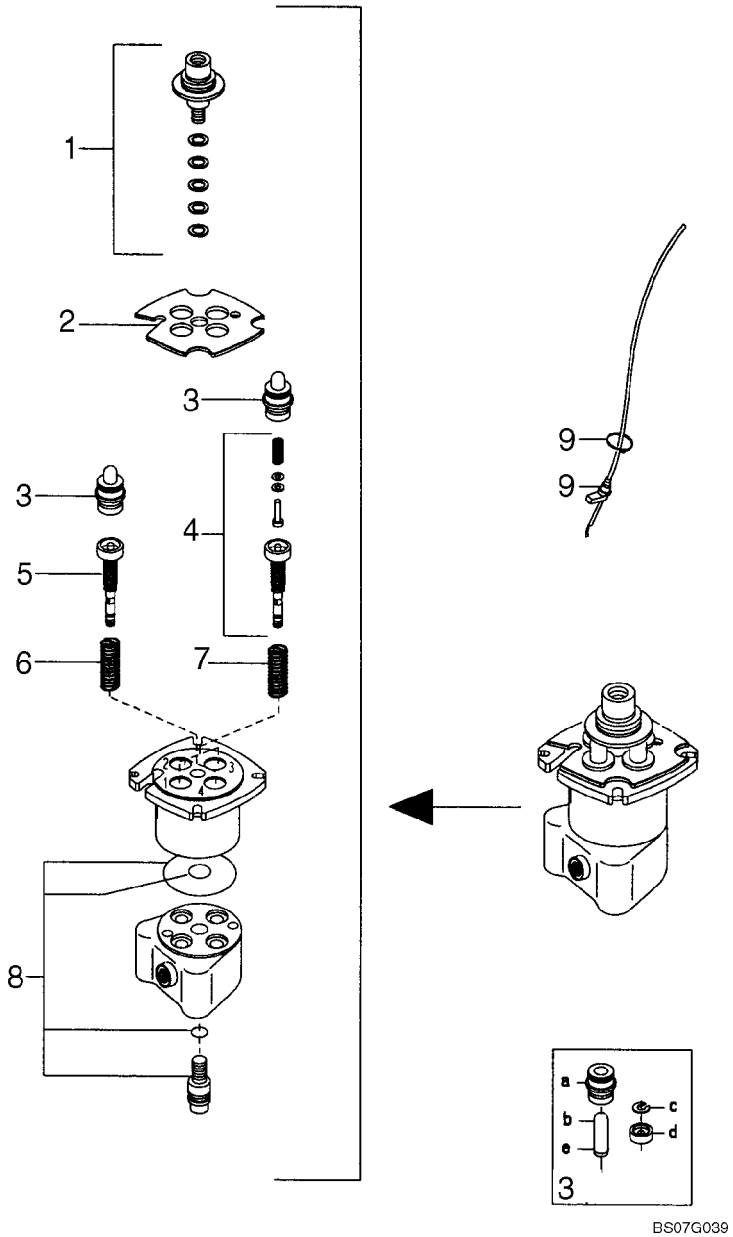

JOYSTICK VALVE KITS - H PATTERN, RH (MODELS WITH PILOT CONTROL)

REF	FN	PART NUMBER	YR/SN	QTY	DESCRIPTION
		REF			INSTRUCTION, MODELS WITH PILOT CONTROL
		87357241		1	VALVE, HYDRAULIC, Joystick Control; H Pattern Right Hand; Incl. 1 - 9
1		87548833		1	KIT, SERVICE, Bent Lever Cardan
2		87548835		1	PLATE, Retaining Plate, Standard
3		87614023		2	PLUNGER, Hollow Plunger
4		87614017		2	REGULATOR, With Plunger
5		87614024		1	REGULATOR
6		87614019		1	SPRING, Heavy
7		87614020		1	SPRING, Medium
8		87548848		1	KIT, SERVICE, Standard Seal
9		87548874		1	KIT, SERVICE, Cable

JOYSTICK VALVE KITS - ISO PATTERN, LH

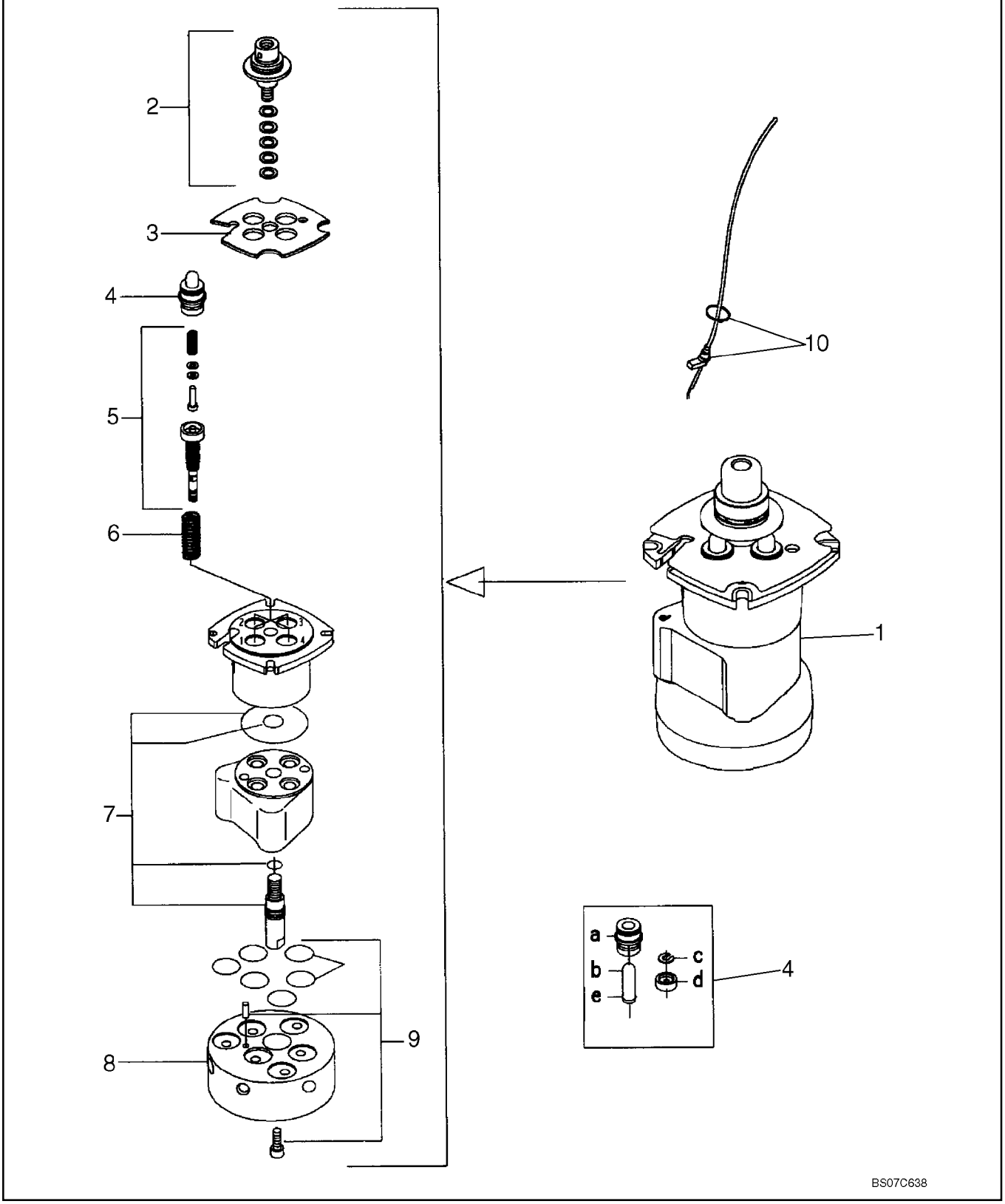

JOYSTICK VALVE KITS - ISO PATTERN, LH

REF	FN	PART NUMBER	YR/SN	QTY	DESCRIPTION
1		87611854		1	VALVE, Joystick Valve, ISO Pattern LH
2		87548833		1	KIT, SERVICE, Bent Lever Cardan
3		87548835		1	PLATE, Retaining Plate, Standard
4		87614023		2	PLUNGER, Kit, Hollow Plunger
5		87614017		4	REGULATOR, Kit, Reg. Unit With Plunger C227
6		87614020		2	SPRING, Kit, Medium Spring
7		{87548871}		1	Seal With Screw
8		{87548872}		1	
9		{87548873}		1	Flange Seal
10		87548874		1	KIT, SERVICE, Cable

JOYSTICK VALVE KITS - ISO PATTERN, RH

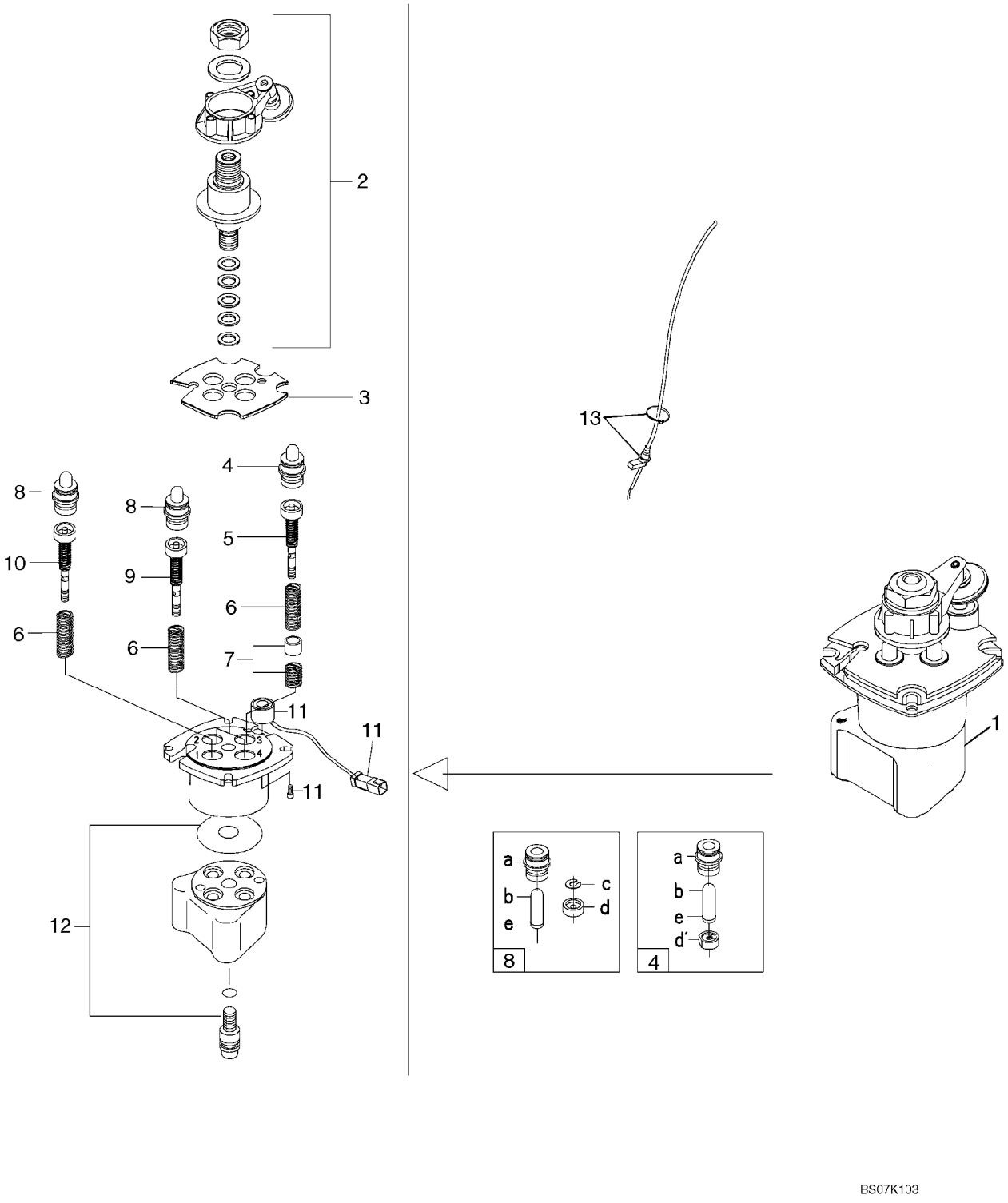

JOYSTICK VALVE KITS - ISO PATTERN, RH

REF	FN	PART NUMBER	YR/SN	QTY	DESCRIPTION
1		87600623		1	VALVE, Joystick Valve, ISO Pattern, RH; Incl. 2 - 13
2		87548834		1	KIT, SERVICE, Kit, Cardan With Detent
3		87548836		1	KIT, SERVICE, Retaining Plate, Detent
4		87548839		1	KIT, SERVICE, Kit, Full Plunger Prefeeling
5		{87548843}		1	Kit, Regulation Unit Prefeeling Point
6		87614020		2	SPRING, Kit, Medium Spring
7		87548846		1	KIT, SERVICE, Kit, Prefeeling Point
8		{87548838}		3	Kit, Hollow Plunger
9		{87594866}		2	Kit, Regulation Unit
10		{87548840}		1	Kit, Regulation Unit
11		87548847		1	KIT, SERVICE, Kit, Solenoid
12		87548848		1	KIT, SERVICE, Kit, Standard Seal
13		87548874		1	KIT, SERVICE, Kit, Cable

06-09		p1	11/07

JOYSTICK VALVE KITS - ISO PATTERN, LH

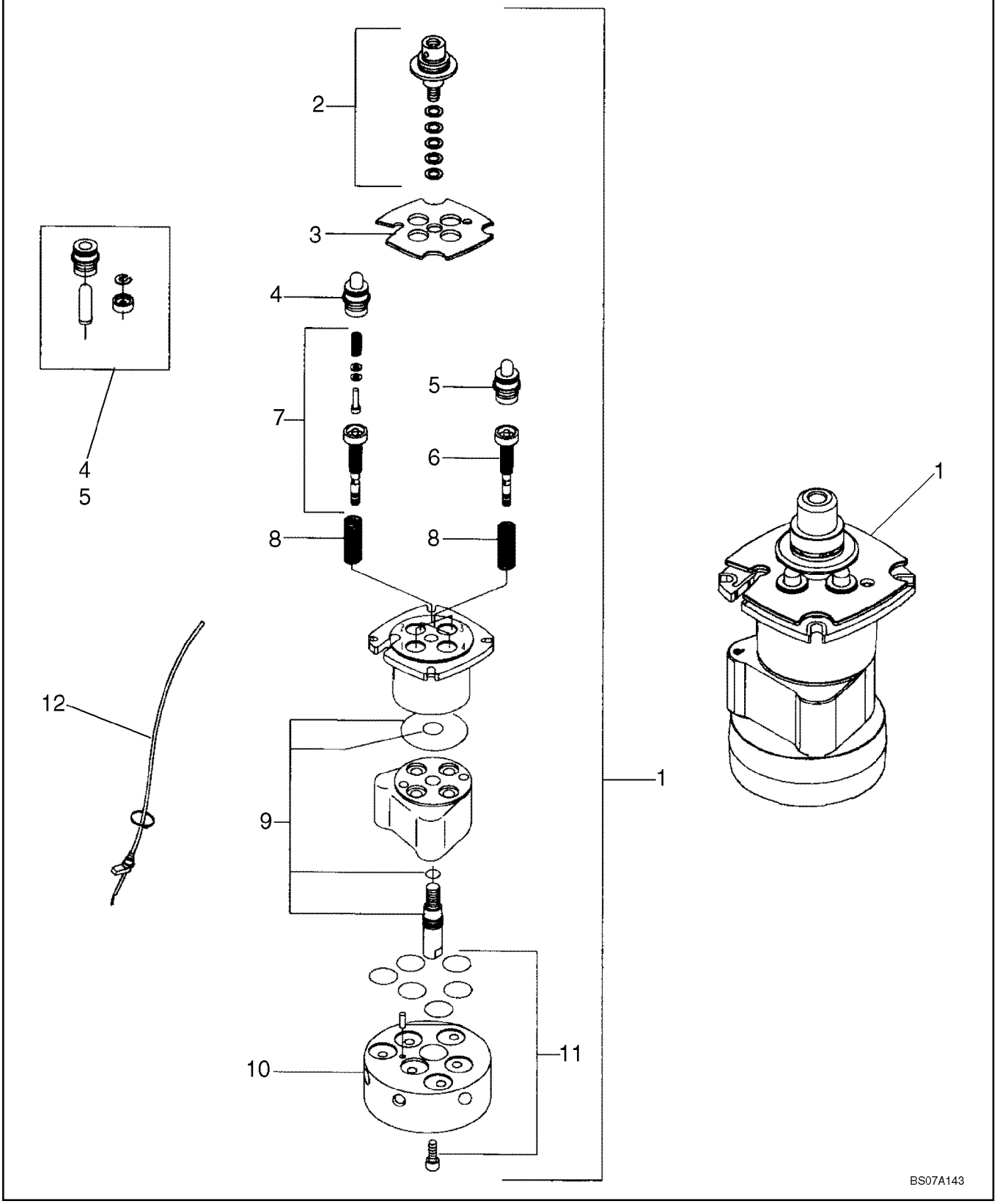

JOYSTICK VALVE KITS - ISO PATTERN, LH

REF	FN	PART NUMBER	YR/SN	QTY	DESCRIPTION
1		87600622		1	VALVE, Joystick Valve, ISO Pattern
2		87548833		1	KIT, SERVICE, Kit, Bent Lever Cardan
3		87548835		1	PLATE, Retaining Plate, Standard
4		87614023		2	PLUNGER, Kit, Hollow Plunger, Use On Ports 1, 3
5		87614023		2	PLUNGER, Kit, Hollow Plunger, Use On Ports 2, 4
6		87627518		2	REGULATOR, Kit, Reg Unit PP C229, Use On Ports 2, 4
7		87614017		2	REGULATOR, Kit, Reg Unit With Plunger, Use On Ports 1, 3
8		87614020		1	SPRING, Kit, Medium Spring
9		{87548871}		1	Kit, Seal
10		{87548872}		1	
11		{87548873}		1	Kit, Flange Seal
12		87548874		1	KIT, SERVICE, Kit, Cable

HYDROSTATICS - SUPPLY AND RETURN (420CT WITH PILOT CONTROL)

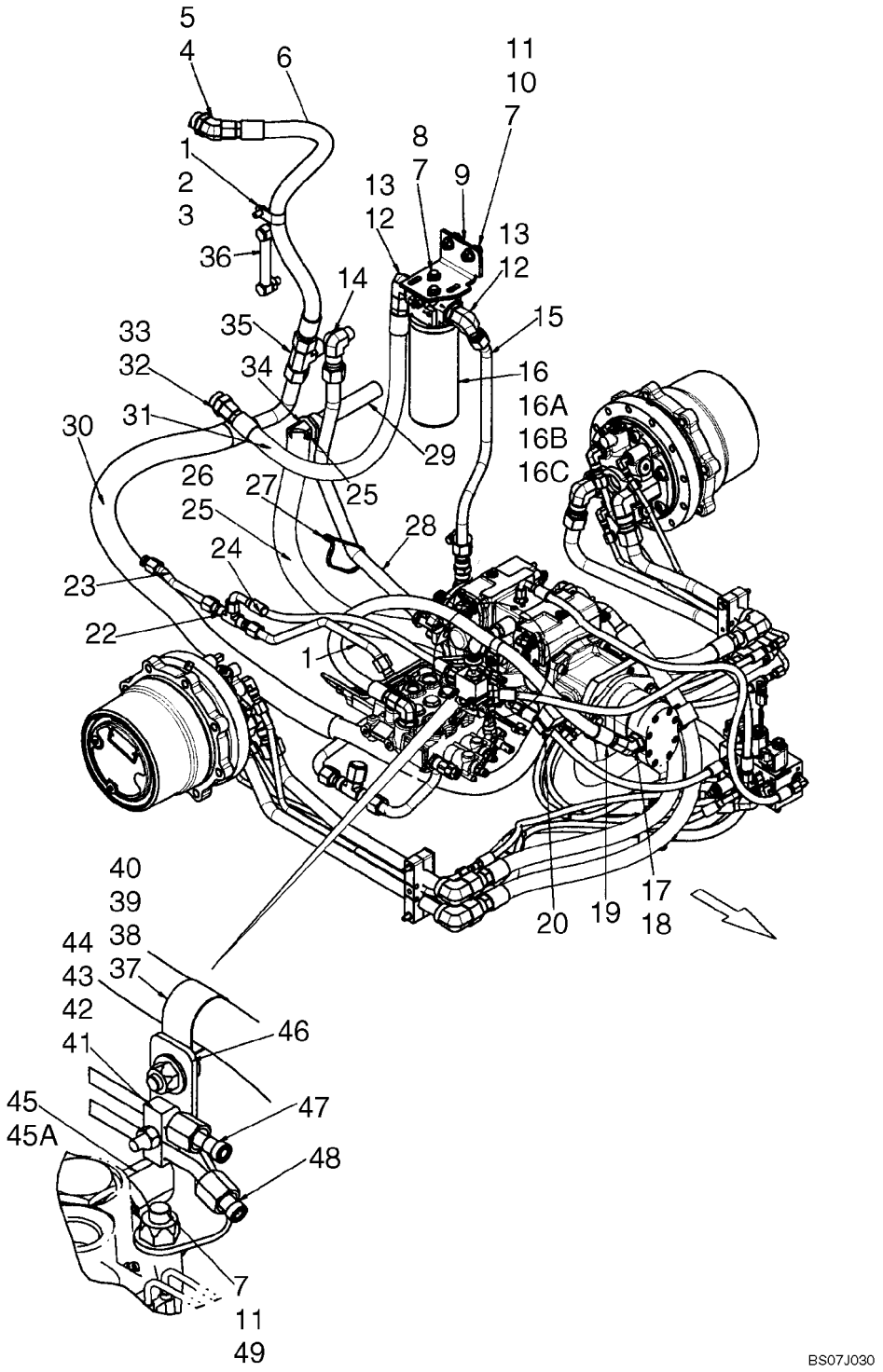

HYDROSTATICS - SUPPLY AND RETURN (420CT WITH PILOT CONTROL)

REF	FN	PART NUMBER	YR/SN	QTY	DESCRIPTION
1		43138		1	SCREW, Hex, M10 x 20, 8.8, Full Thd
2		140045		1	WASHER, SPRING, Belleville, M10
3		86639001		1	CLAMP, 1 3/16", Insul, 7/16" Bolt
4		{87657980}		1	Elbow, 45 37FL 3/4 X 1.0 Tube; Incl 5
5		167268		1	O-RING, 16-1, 90 Duro, 1.171" ID x .116" Thk
6		87653980		1	HOSE, Upper Cooler Hose, 810mm (31 7/8 in.)
7		86639325		7	WASHER, M10 x 24.5 x 3, HT
8		43139		2	SCREW
9		87020901		1	BRACKET, SUPPORTING, Filter Mounting Bracket
10		9706704		2	BOLT, Hex, M10 x 35, 8.8, Full Thd
11		86512554		3	NUT, LOCK, M10 x 1.5, Cl 10
12		570024		2	ELBOW, 90º, 1 1/16"-12, 37º x 1 5/16"-12, O-Ring, Incl 13
13		167268		2	O-RING, 16-1, 90 Duro, 1.171" ID x .116" Thk
14		9615396		1	ELBOW, 90º, 1 5/16"-12, 37º x 3/4"-14, NPTF
15		87660856		1	TUBE, RIGID, Tube, Valve To Filter
16		87430661		1	FILTER, Incl 16A, 16B, 16C
16A		N13268		1	SWITCH, PRESSURE, Pressure Indicator
16B		87439984		1	HEAD, FILTER, Head Assembly
16C		87010593		1	ELEMENT, Spin On Filter Element, Case
17		100197		1	ELBOW, 45º, 7/8"-14 x 1 1/16"-12, O-Ring, Incl 18
18		167266		1	O-RING, 12-1, 90 Duro, .924 ID x .116" Thk
19		87547070		1	HOSE, Valve Supply, 1000mm (39 3/8 in.)
20		86536660		1	CLAMP, HOSE, #16, 0.81/1.50 Type F Worm
21		87563998		1	TUBE, HYD, Dump Valve Drain
22		87644290		1	CONNECTOR, HYD.
23		87564000		1	TUBE, HYD, Dump Valve Drain
24		87625890		1	HOSE, Dump Valve Supply, 559mm (22 in.)
25		87039085		2	CLAMP, HOSE, 1.25/2.125 HD Worm
26		87022438		1	HOSE ASSY., Gear Suction Hose, 1610mm (63 3/8 in.)
27		L18331		3	STRAP, CABLE
28		87364616		1	TUBE, Case Drain
29		H151399		1	FILTER CARTRIDGE
30		87583080		1	HOSE, Charge Suction Hose, 1875mm (73 13/16 in.)

HYDROSTATICS - SUPPLY AND RETURN (420CT WITH PILOT CONTROL)

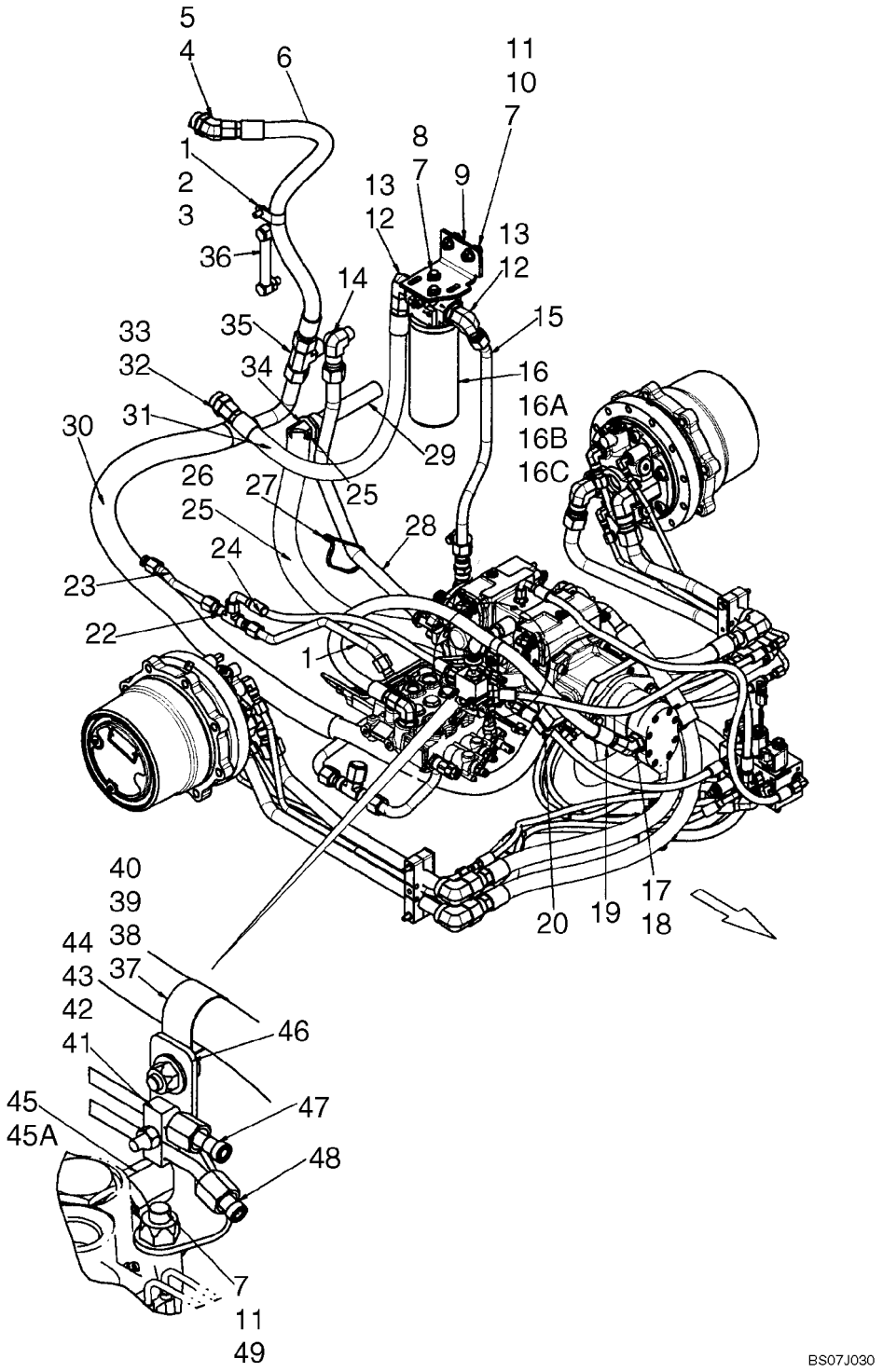

HYDROSTATICS - SUPPLY AND RETURN (420CT WITH PILOT CONTROL)

REF	FN	PART NUMBER	YR/SN	QTY	DESCRIPTION
31		87653981		1	HOSE, Lower Cooler, 750mm (29 1/2 in.)
32		233705		1	CONNECTOR, HYD., 1 1/16"-12, 37º x 1 5/16"-12, O-Ring, Incl. 33
33		167268		1	O-RING, 16-1, 90 Duro, 1.171" ID x .116" Thk
34		87033823		1	FITTING, 1/4" Hose x 1/8" NPTF, Fem, Barbed
35		9790547		1	TEE, 1 5/16"-12, 37º x 1"-11 1/2, NPTF Br
36		87374752		1	GAUGE, Liquid Level Gauge
37		86625263		2	WASHER, M8 x 20 x 1.6
38		9628098		1	NUT, LOCK, M8 x 1.25, Cl 10
39		120104		1	SCREW, Hex, M8 x 20, 8.8
40		9827902		1	CLAMP, 1", Insul, 3/8" Bolt
41		86588450		3	WASHER, M6
42		80120101		1	SCREW
43		87030561		1	NUT, LOCK, M6 x 1, Cl 8
44		608089		1	CLAMP
45		322894		1	ELBOW, 90º, 1 1/16"-12, 37º x 1 1/16"-12, O-Ring, Incl 45A
45A		167266		1	O-RING, 12-1, 90 Duro, .924 ID x .116" Thk
46		87564009		1	BRACKET, Hose Support Bracket
47		87563969		1	TUBE, HYD
48		87563968		1	TUBE, HYD
49		43144		1	SCREW, Hex, M10 x 70, 8.8

HYDROSTATICS - PUMP TO DRIVE MOTORS (420CT WITH PILOT CONTROL)

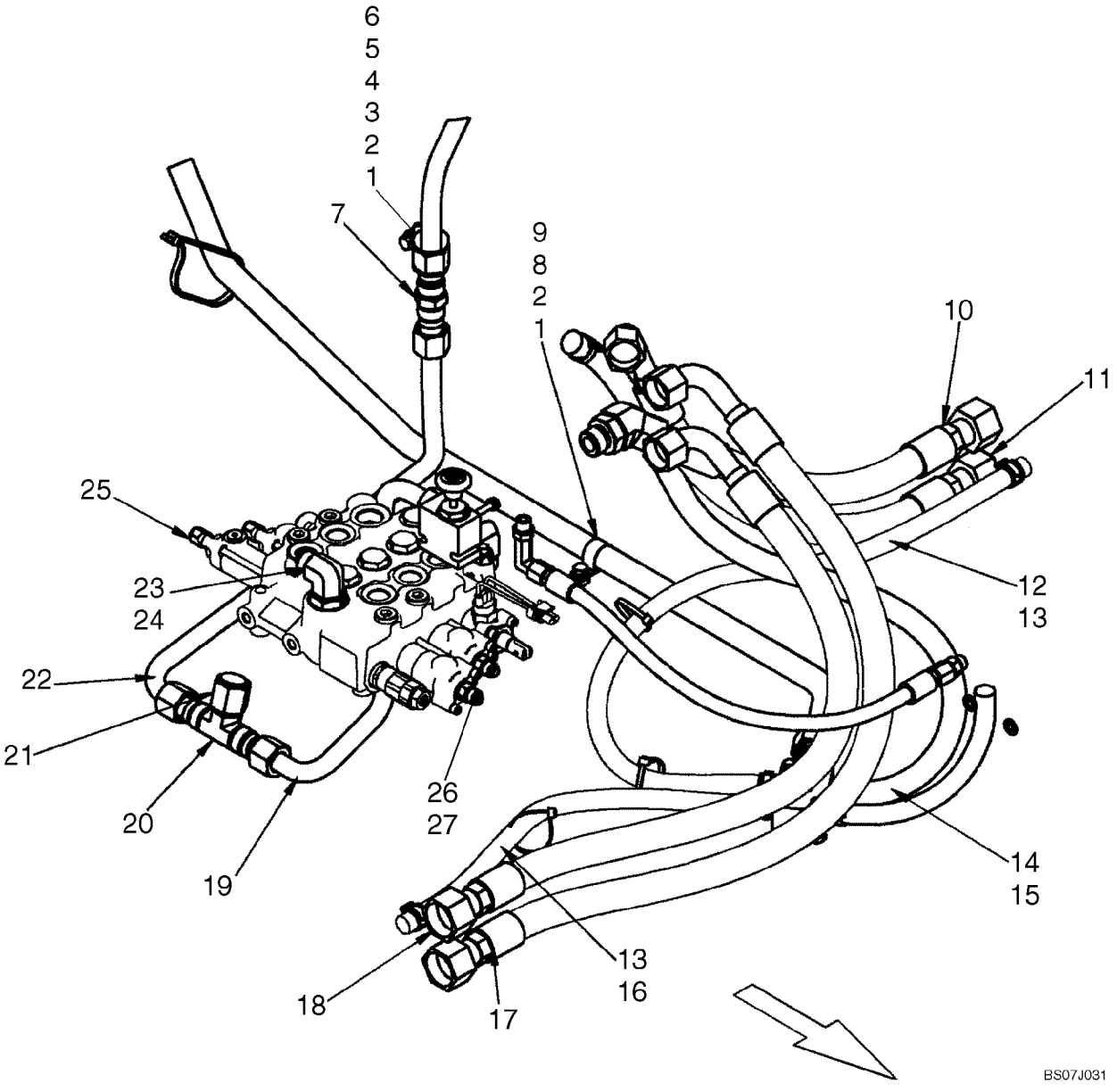

HYDROSTATICS - PUMP TO DRIVE MOTORS (420CT WITH PILOT CONTROL)

REF	FN	PART NUMBER	YR/SN	QTY	DESCRIPTION
1		86624184		4	WASHER, M8 x 16 x 1.6
2		229197A1		4	NUT
3		87042897		1	SPACER
4		87301359		1	CLAMP, 1 1/8", 3/8" Bolt
5		87445136		1	ISOLATOR
6		43128		1	BOLT, Hex, M8 x 30, 8.8
7		144121		1	UNION, 1 1/16"-12, 37º x 1 1/16"-12, 37º
8		86637977		1	CLAMP, 1", Insul, 5/16" Bolt
9		120103		1	BOLT, Hex, M8 x 16, 8.8
10		87583069		1	HOSE, 385mm (15 1/8 in.)
11		87583070		1	HOSE, 500mm (19 11/16 in.)
12		87369082		1	HOSE, Case Drain Hose, LH, 808mm (31 13/16 in.)
13		87443510		6	CLAMP, HOSE
14		87357018		1	HOSE ASSY., 790mm (31 1/8 in.)
15		87443511		2	CLAMP
16		87583073		1	HOSE, 650mm (25 5/8 in.)
17		87583072		1	HOSE, 1025mm (40 3/8 in.)
18		87583071		1	HOSE, 950mm (37 3/8 in.)
19		87446248		1	TUBE ASSY., Valve To Filter
20		15694		1	TEE, 1 1/16"-12 37º
21		219606		1	CAP, 37º, 1 1/16"-12
22		87445138		1	TUBE ASSY., Valve To Filter
23		84570		1	ELBOW, 90º, 7/8"-14, 37º x 1 1/16"-12, O-Ring, Incl 24
24		167266		1	O-RING, 12-1, 90 Duro, .924 ID x .116" Thk
25		87575684		2	CONNECTOR, HYD.

HYDROSTATICS - OVERRIDE AND BRAKE VALVE (420CT WITH PILOT CONTROL)

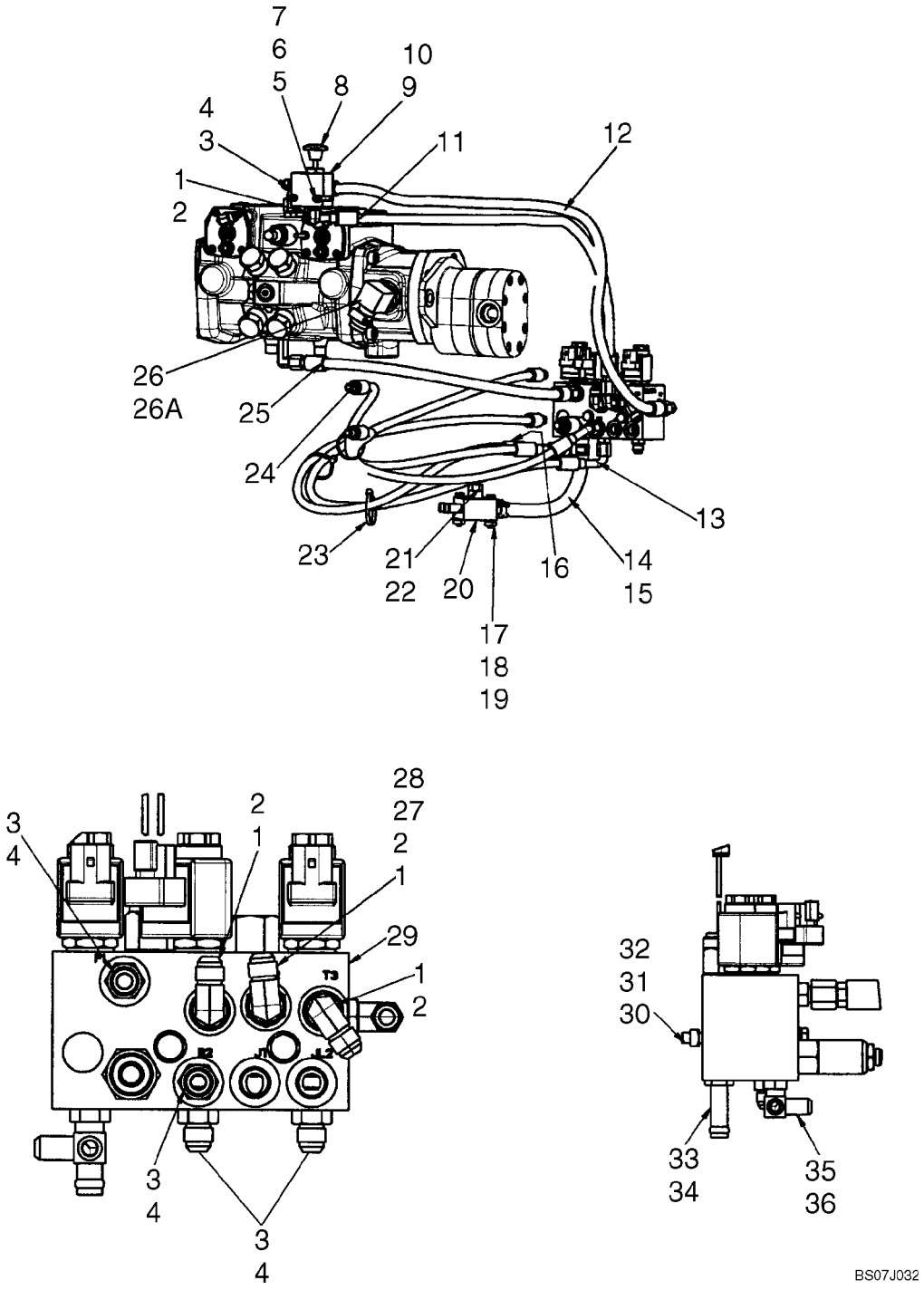

HYDROSTATICS - OVERRIDE AND BRAKE VALVE (420CT WITH PILOT CONTROL)

REF	FN	PART NUMBER	YR/SN	QTY	DESCRIPTION
1		76344		5	ELBOW, 90º, 9/16"-18, 37º x 9/16"-18, O-Ring, Incl 2
2		9617873		5	O-RING, 6-1, 90 Duro, .468" ID x .078" Thk
3		76350		5	CONNECTOR, HYD., 9/16"-18, 37º x 9/16"-18, O-Ring, Incl 4
4		9617873		5	O-RING, 6-1, 90 Duro, .468" ID x .078" Thk
5		86624181		2	WASHER, M6
6		86512440		2	NUT, LOCK
7		120056		2	BOLT, Hex, M6 x 50, 8.8
8		87568435		1	DECAL, Boom Overide
9		87604076		1	VALVE, EXHAUST, OVERSIZE, Boom Overide Valve; Components Not Serviced At This Time
11		87563992		1	HOSE, Dump Valve Drain, 820mm (32 9/32 in.)
12		87583075		1	HOSE, 950mm (37 13/32 in.)
13		87364806		1	HOSE, Brake, LH, 1200mm (47 1/4 in.)
14		87563996		1	HOSE, Multi-Valve Drain, 244mm (9 19/32 in.)
15		87443510		6	CLAMP, HOSE
16		87583076		1	HOSE, Two Speed, LH, 1050mm (41 11/32 in.)
17		86588450		3	WASHER, M6
18		86977790		2	BOLT, Hex, M6 x 45, 8.8
19		87404992		2	NUT
20		87437351		1	MANIFOLD, Return Oil Manifold
21		76349		1	PLUG, Hex Hd, 9/16"-18 ORB, Incl 22
22		9617873		1	O-RING, 6-1, 90 Duro, .468" ID x .078" Thk
23		L11541		3	STRAP, CABLE
24		87583077		2	HOSE, Two Speed, RH, 775mm (30 1/2 in.)
25		{87026844}		1	Hose, 551mm (21 11/16 in.)
26		87393628		1	ADAPTER, Incl 26A
26A		218-5010		1	O-RING, 16-1, 90 Duro, 1.171" ID x .116" Thk
27		87573371		1	ADAPTER, Incl 28
28		9617873		1	O-RING, 6-1, 90 Duro, .468" ID x .078" Thk
29		87577076		1	VALVE, PILOT, See Fig. 06-14
30		229197A1		4	NUT
31		86624184		4	WASHER, M8 x 16 x 1.6
32		86508571		2	BOLT, Hex, M8 x 90, 8.8
33		86705988		1	FITTING, 1/2" Hose x 9/16"-18 ORB, Beaded, Incl 34

HYDROSTATICS - OVERRIDE AND BRAKE VALVE (420CT WITH PILOT CONTROL)

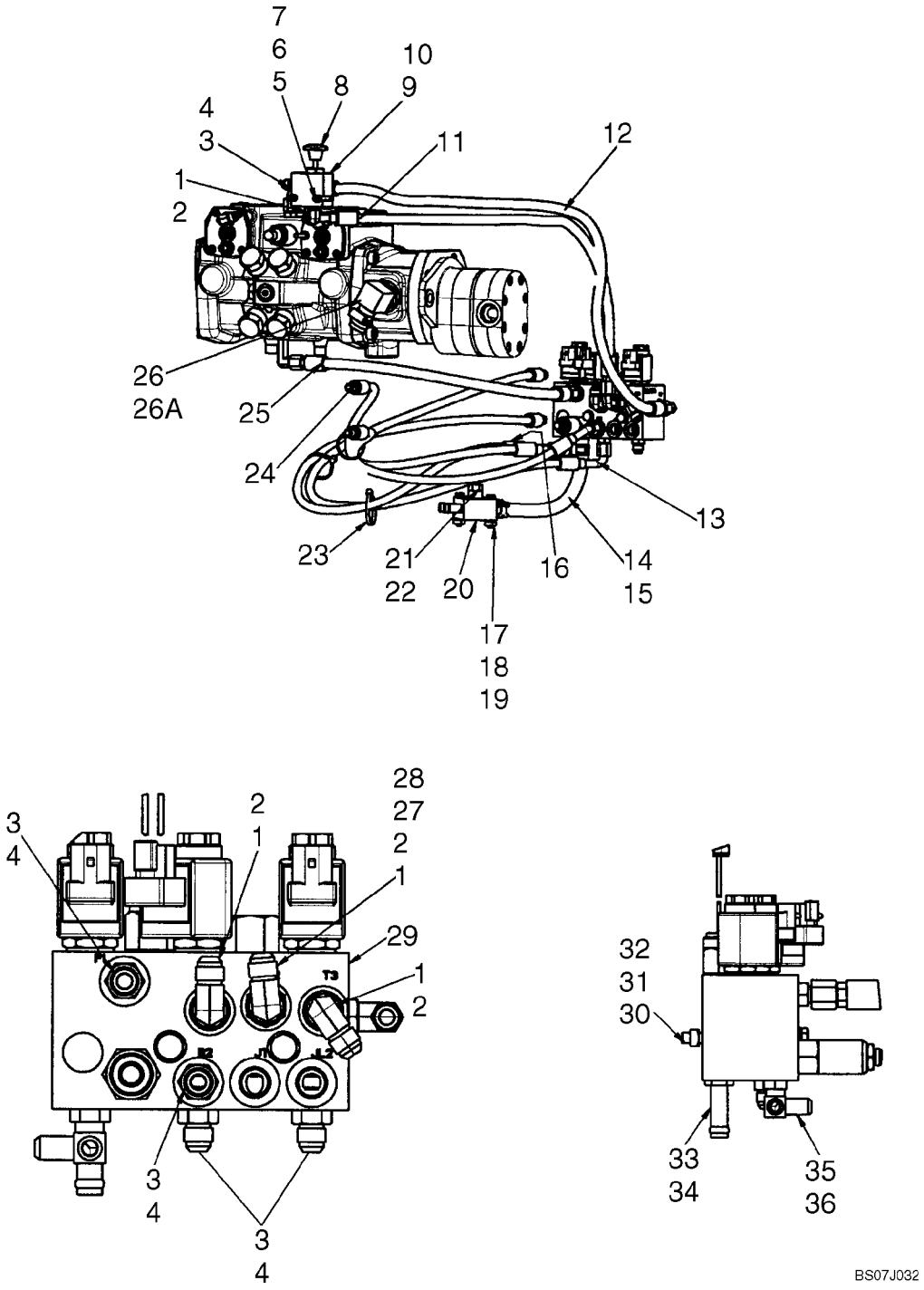

HYDROSTATICS - OVERRIDE AND BRAKE VALVE (420CT WITH PILOT CONTROL)

REF	FN	PART NUMBER	YR/SN	QTY	DESCRIPTION
34		9617873		1	O-RING, 6-1, 90 Duro, .468" ID x .078" Thk
35		L104616		1	TEE, Incl 36
36		9617873		2	O-RING, 6-1, 90 Duro, .468" ID x .078" Thk

HYDROSTATICS - PUMP FITTINGS (420CT WITH PILOT CONTROL)

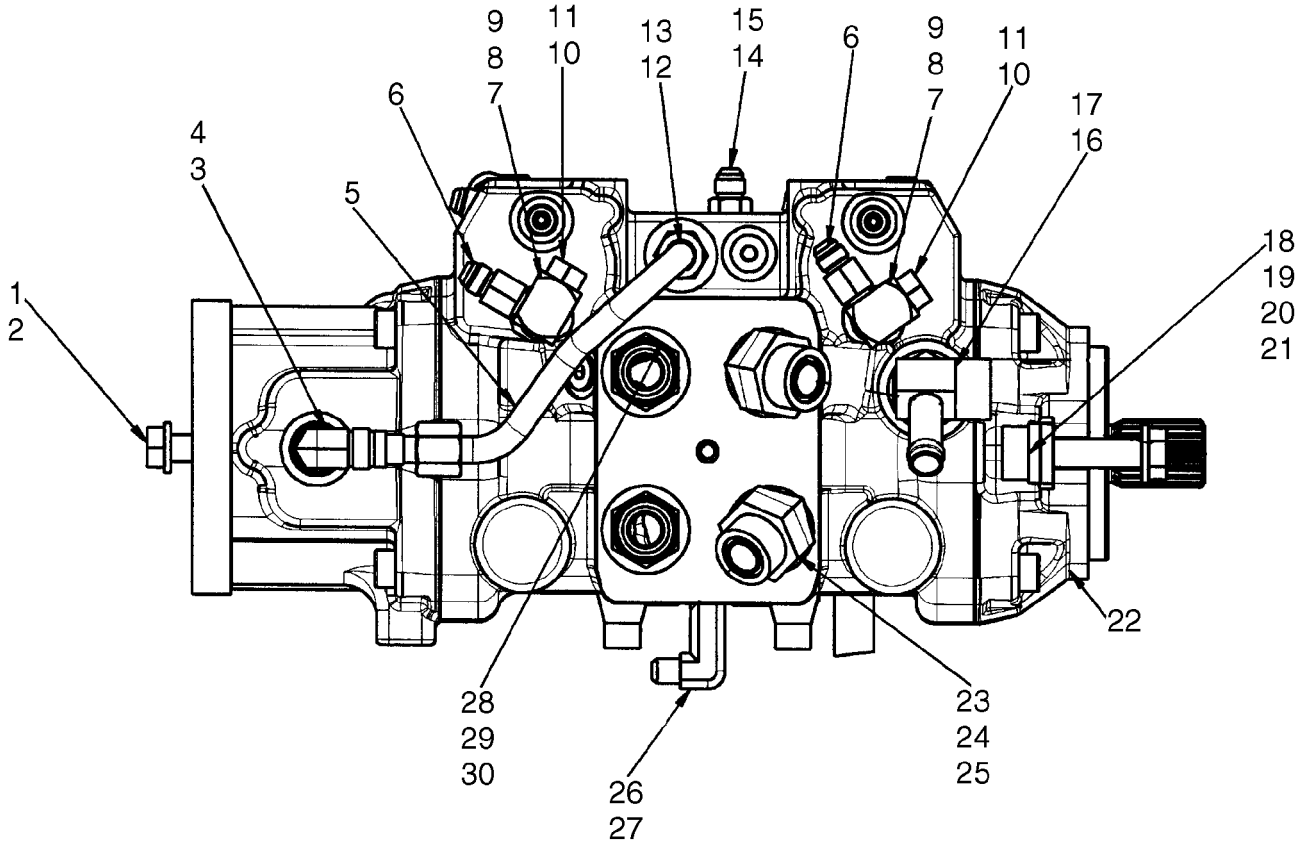

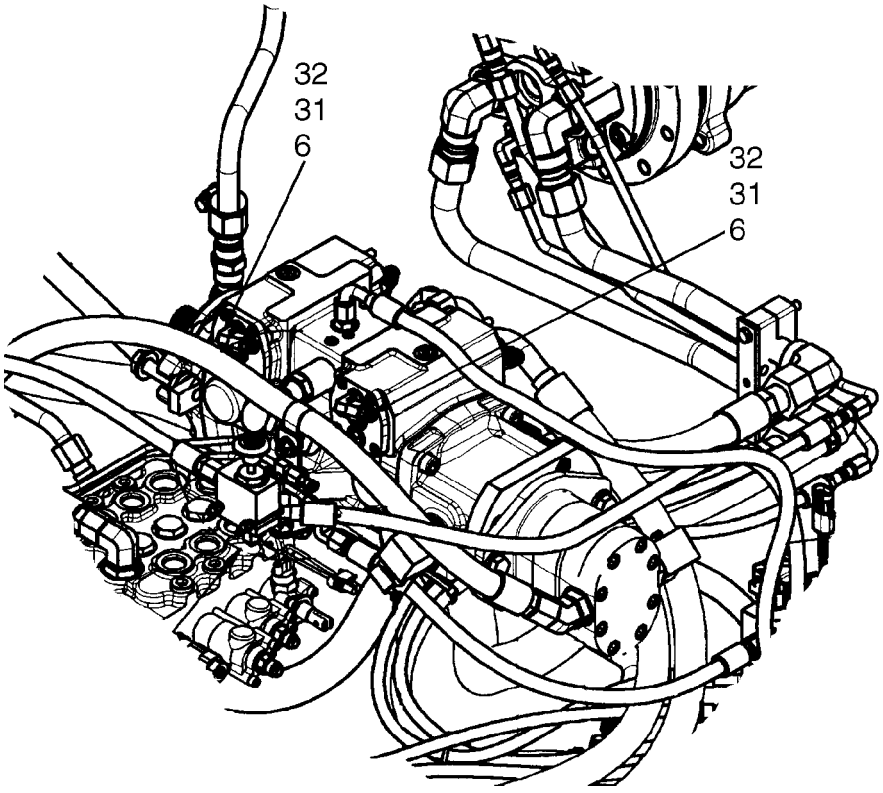

BS07J033

HYDROSTATICS - PUMP FITTINGS (420CT WITH PILOT CONTROL)

REF	FN	PART NUMBER	YR/SN	QTY	DESCRIPTION
1		86625255		2	WASHER, M13.5 x 24.5 x 3, HT
2		87670		2	BOLT, Hex, 1/2"-13 x 1 1/4", G5, Full Thd
3		128830		1	ELBOW, 90º, 3/4"-16, 37º x 3/4"-16, O-Ring, Incl 4
4		128825		1	O-RING, 8-1, 90 Duro, .644" ID x .087" Thk
5		87554297		1	TUBE, HYD, Tube, Tandem Pump Supply
6		87604074		4	ADAPTER, Connector, 6FJ X 6MJ With 1.2mm Orifice
7		87546979		2	ADAPTER, Incl 8, 9
8		9617873		2	O-RING, 6-1, 90 Duro, .468" ID x .078" Thk
9		165202		2	O-RING, 4-1, 90 Duro, .351" ID x .072" Thk
10		76349		3	PLUG, Hex Hd, 9/16"-18 ORB, Incl 11
11		9617873		3	O-RING, 6-1, 90 Duro, .468" ID x .078" Thk
12		128818		1	CONNECTOR, HYD., 3/4"-16, 37º x 3/4"-16, O-Ring, Incl 13
13		128825		1	O-RING, 8-1, 90 Duro, .644" ID x .087" Thk
14		76350		1	CONNECTOR, HYD., 9/16"-18, 37º x 9/16"-18, O-Ring, Incl 15
15		9617873		1	O-RING, 6-1, 90 Duro, .468" ID x .078" Thk
16		87571937		1	ADAPTER, Incl 17
17		167266		1	O-RING, 12-1, 90 Duro, .924 ID x .116" Thk
18		87637186		2	NUT
19		{87564723}		4	Washer, 15.3 X 28.5 X 6mm
20		{87556906}		2	Bolt, Hex Head M14 X 70 10.9 ZND
21		87016615		2	WASHER, M12 x 28.5 x 3, HT
22		87546976		1	PUMP, Rexroth Pump, A22, 300 Bar 5.7mm Orifice; See Fig 06-51
23		9846870		2	ELBOW, 45º, 1 3/16"-12 x 1 1/16"-12. Adj, ORFS, Incl 24, 25
24		9991976		2	O-RING, -018, 90 Duro, .739" ID x .070" Thk
25		167266		2	O-RING, 12-1, 90 Duro, .924 ID x .116" Thk
26		86526		1	ELBOW, 90º, 9/16"-18, 37º x 9/16"-18, LG, Incl 27
27		9617873		1	O-RING, 6-1, 90 Duro, .468" ID x .078" Thk
28		86900673		2	CONNECTOR, HYD., 1 3/16"-12 ORFS x 1 1/16"-12 ORB, Incl 29, 30
29		9991976		2	O-RING, -018, 90 Duro, .739" ID x .070" Thk
30		167266		2	O-RING, 12-1, 90 Duro, .924 ID x .116" Thk

HYDROSTATICS - PUMP FITTINGS (420CT WITH PILOT CONTROL)

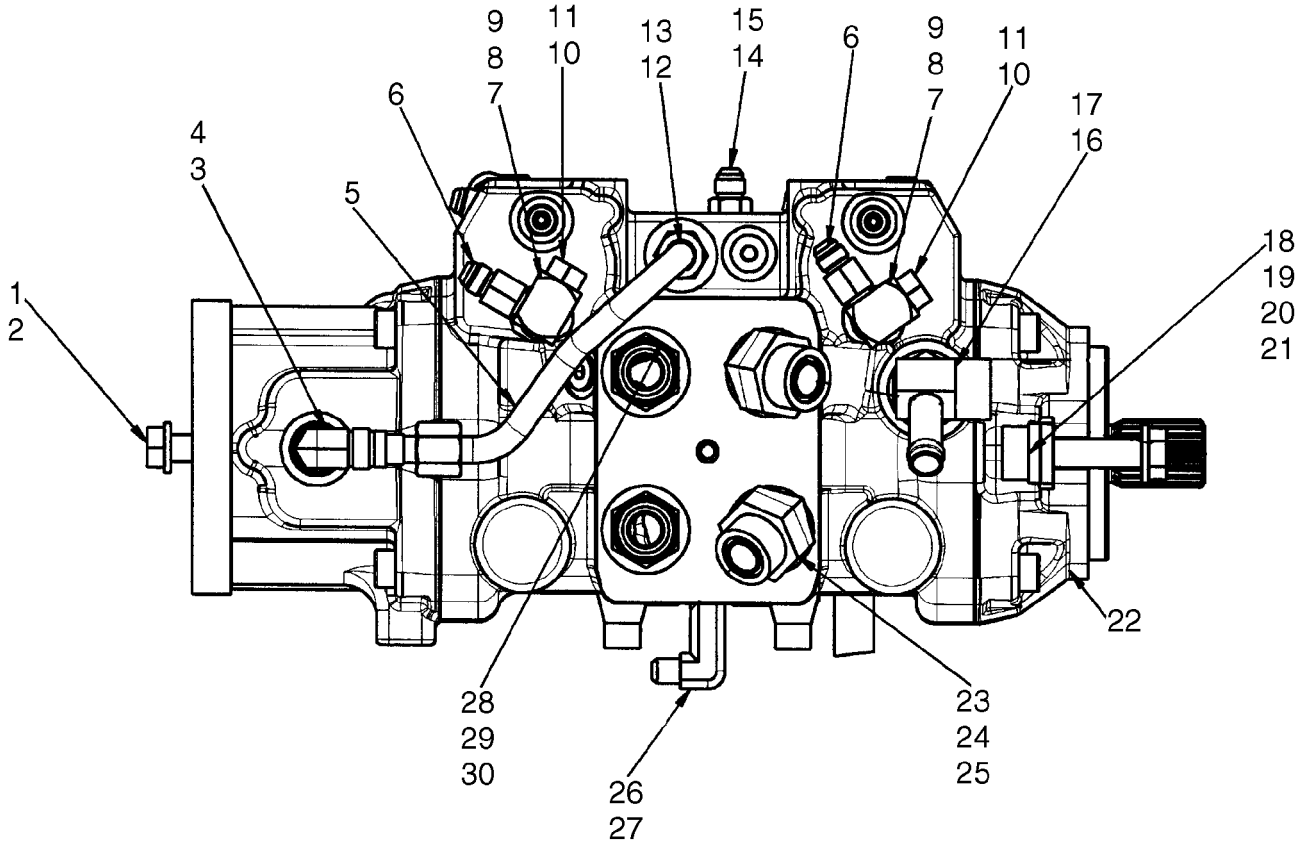

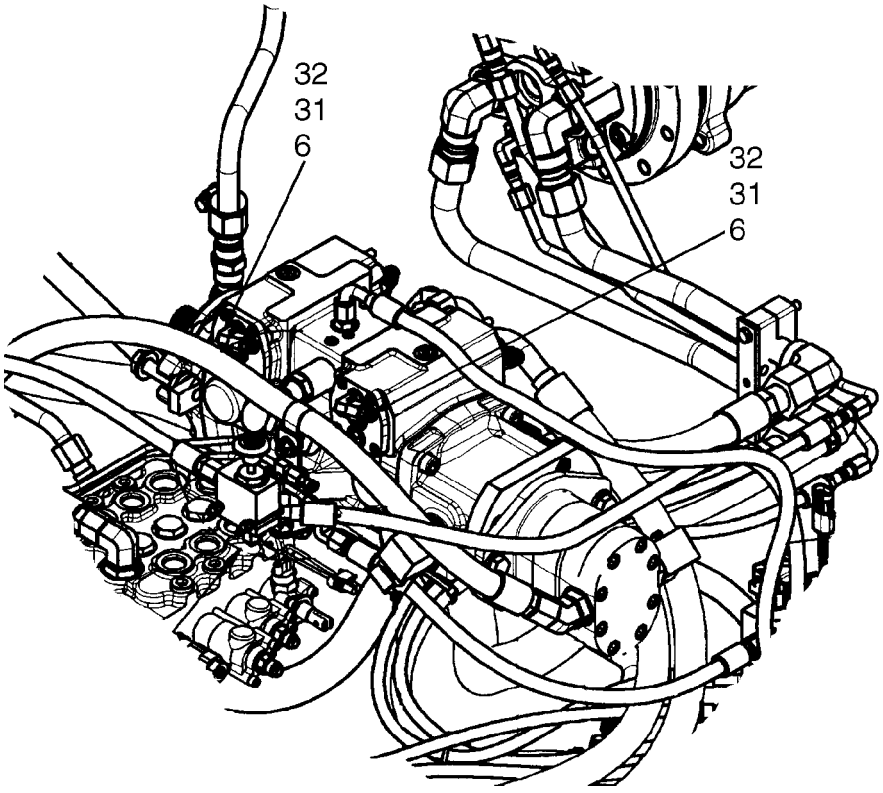

BS07J033

HYDROSTATICS - PUMP FITTINGS (420CT WITH PILOT CONTROL)

REF	FN	PART NUMBER	YR/SN	QTY	DESCRIPTION
31		86512936		2	ELBOW, 90º, 9/16"-18, 37º x 7/16"-20, O-Ring, Incl 32
32		165202		2	O-RING, 4-1, 90 Duro, .351" ID x .072" Thk

HYDROSTATICS - TWO SPEED, VALVE ASSY (420CT WITH PILOT CONTROL)

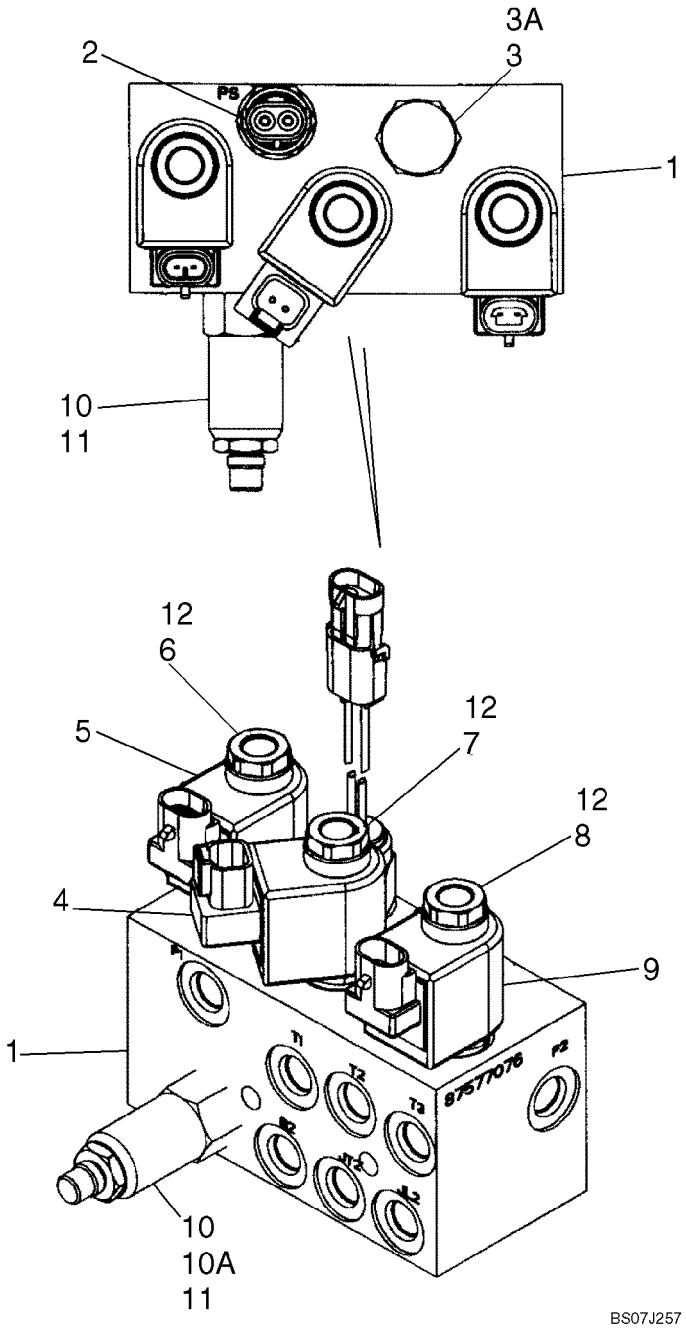

HYDROSTATICS - TWO SPEED, VALVE ASSY (420CT WITH PILOT CONTROL)

REF	FN	PART NUMBER	YR/SN	QTY	DESCRIPTION
1		87577076		1	VALVE, PILOT, Brake Valve; Two Speed; Incl. 1 - 12
2		87458061		1	SWITCH, PRESSURE, Brake Valve
3		87614009		1	VALVE, Cartridge Valve
3A		87614015		1	KIT, SEALS, Seal Kit For Cartridge Valve
4		87588596		1	SOLENOID
5		87588597		1	SOLENOID
6		87588585		1	VALVE, SOLENOID
7		87588579		1	VALVE, SOLENOID
8		87614011		1	VALVE, SOLENOID
9		87614012		1	COIL
10		87352527		1	VALVE, Sequence
11		87426545		1	ORIFICE, .017 Sauer
12		87614013		1	KIT, SEALS, Solenoid Valve

HYDROSTATICS - SUPPLY AND RETURN (420)

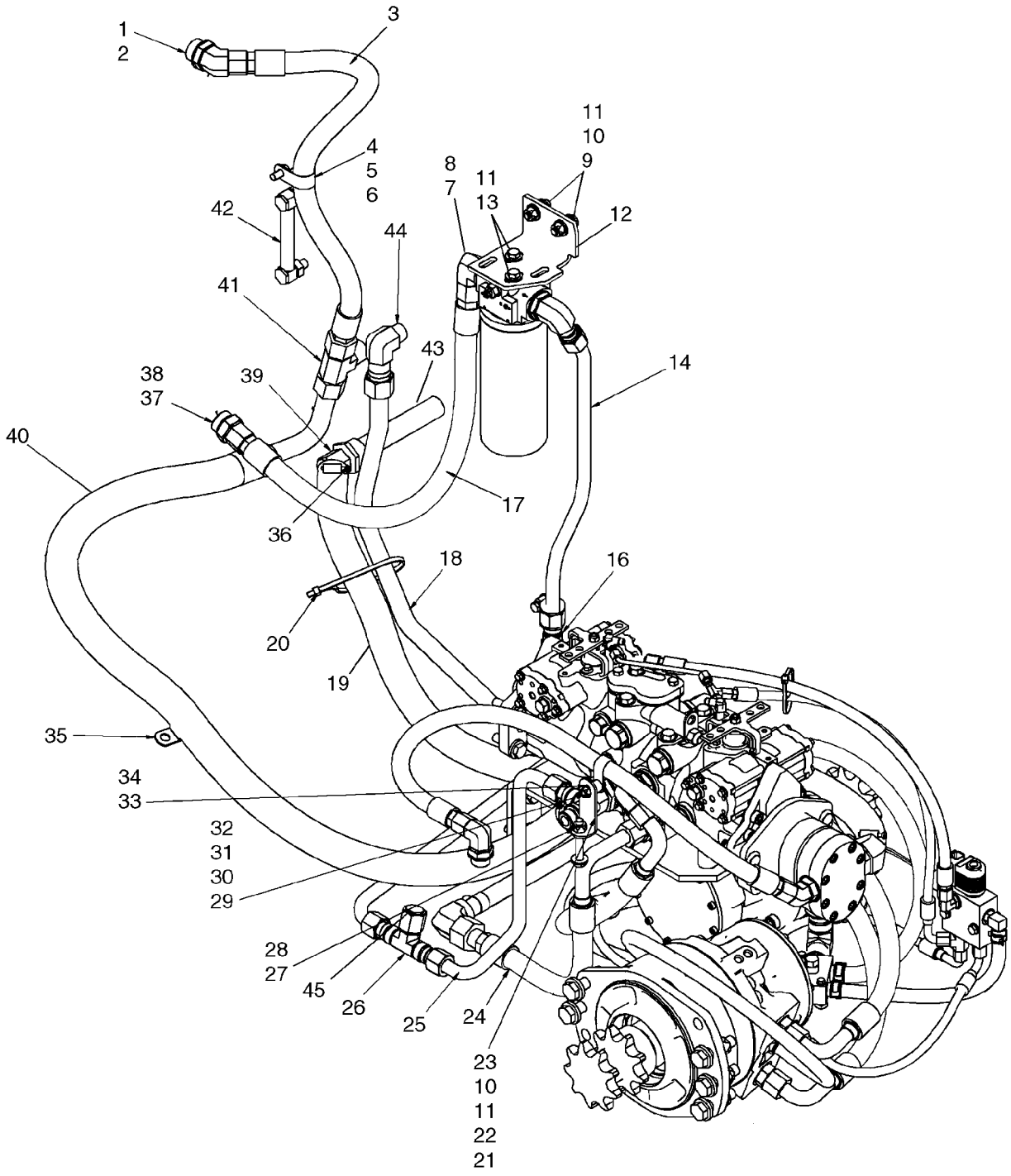

HYDROSTATICS - SUPPLY AND RETURN (420)

REF	FN	PART NUMBER	YR/SN	QTY	DESCRIPTION
2		167268		1	O-RING, 16-1, 90 Duro, 1.171" ID x .116" Thk
3		87653980		1	HOSE, Upper Cooler Hose, 810mm (31 7/8 in.)
4		86639001		1	CLAMP, 1 3/16", Insul, 7/16" Bolt
5		140045		1	WASHER, SPRING, Belleville, M10
6		43138		1	SCREW, Hex, M10 x 20, 8.8, Full Thd
7		87021824		2	ELBOW, 90º, 1 1/16"-12, 37º x 1 5/16"-12, O-Ring, Incl 8
8		167268		2	O-RING, 16-1, 90 Duro, 1.171" ID x .116" Thk
9		9706704		2	BOLT, Hex, M10 x 35, 8.8, Full Thd
10		86512554		3	NUT, LOCK, M10 x 1.5, Cl 10
11		86639325		4	WASHER, M10 x 24.5 x 3, HT
12		87020901		1	BRACKET, SUPPORTING
13		43139		2	SCREW
14		87660856		1	TUBE, RIGID, Tube, Valve To Filter
15		87430661		1	FILTER, Long Hydraulic Filter; Incl 16 - 18
16		87439984		1	HEAD, FILTER, Filter Head Assembly
17		87010593		1	ELEMENT, Filter Element, Case
18		N13268		1	SWITCH, PRESSURE
19		87396043		1	HOSE, 1560mm (61 13/32 in.)
20		L18331		2	STRAP, CABLE
21		87458997		1	BRACKET
22		43144		1	SCREW, Hex, M10 x 70, 8.8
23		P24576		1	SPACER, 3/8" Pipe x 11/16"
24		87549652		1	HOSE, Hose, 500mm (19 11/16 in.)
25		87446248		1	TUBE ASSY., Valve Out To Filter
26		15694		1	TEE, 1 1/16"-12 37º
27		322894		1	ELBOW, 90º, 1 1/16"-12, 37º x 1 1/16"-12, O-Ring, Incl 28
28		167266		1	O-RING, 12-1, 90 Duro, .924 ID x .116" Thk
29		9628098		1	NUT, LOCK, M8 x 1.25, Cl 10
30		86625263		1	WASHER, M8 x 20 x 1.6
31		120104		1	SCREW, Hex, M8 x 20, 8.8
32		9827902		1	CLAMP, 1", Insul, 3/8" Bolt
33		87418259		1	FITTING, 90 Deg Elbow; Incl 34

HYDROSTATICS - SUPPLY AND RETURN (420)

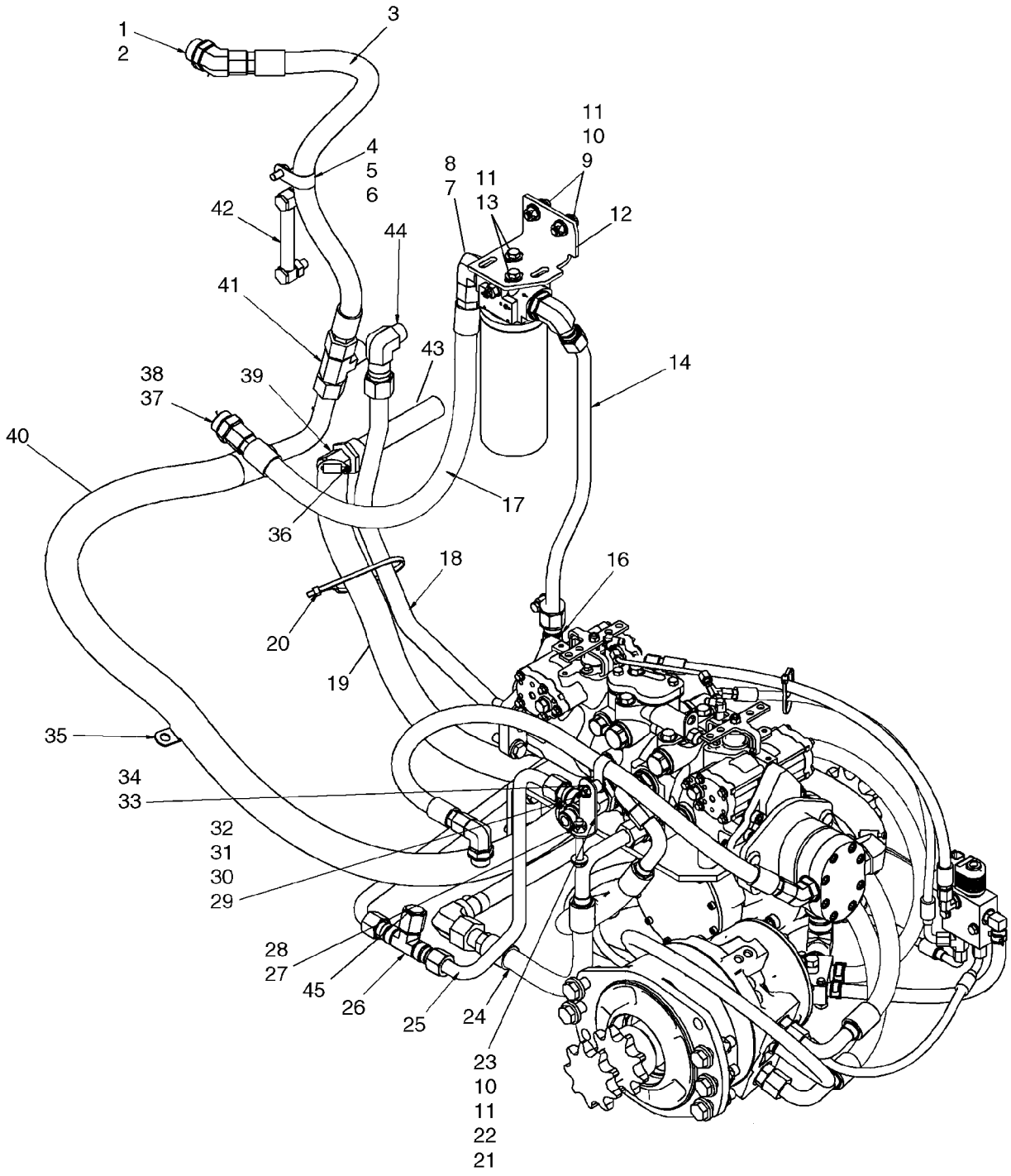

HYDROSTATICS - SUPPLY AND RETURN (420)

REF	FN	PART NUMBER	YR/SN	QTY	DESCRIPTION
34		570186		1	O-RING, 20-1, 90 Duro, 1.475" ID x .116" Thk
35		86639006		1	CLAMP, 1 1/2", Insul, 1/2" Bolt
36		87039085		2	CLAMP, HOSE, 1.25/2.125 HD Worm
37		233705		2	CONNECTOR, HYD., 1 1/16"-12, 37º x 1 5/16"-12, O-Ring, Incl 38
38		167268		2	O-RING, 16-1, 90 Duro, 1.171" ID x .116" Thk
39		87033823		1	FITTING, 1/4" Hose x 1/8" NPTF, Fem, Barbed
40		{87516031}		1	Hose, 1690mm (66 17/32 in.)
41		9790547		1	TEE, 1 5/16"-12, 37º x 1"-11 1/2, NPTF Br
42		87374752		1	GAUGE, Liquid Level Gauge
43		H151399		1	FILTER CARTRIDGE
44		9615396		1	ELBOW, 90º, 1 5/16"-12, 37º x 3/4"-14, NPTF

HYDROSTATICS - SUPPLY, RETURN AND DRAIN PLUMBING (420)

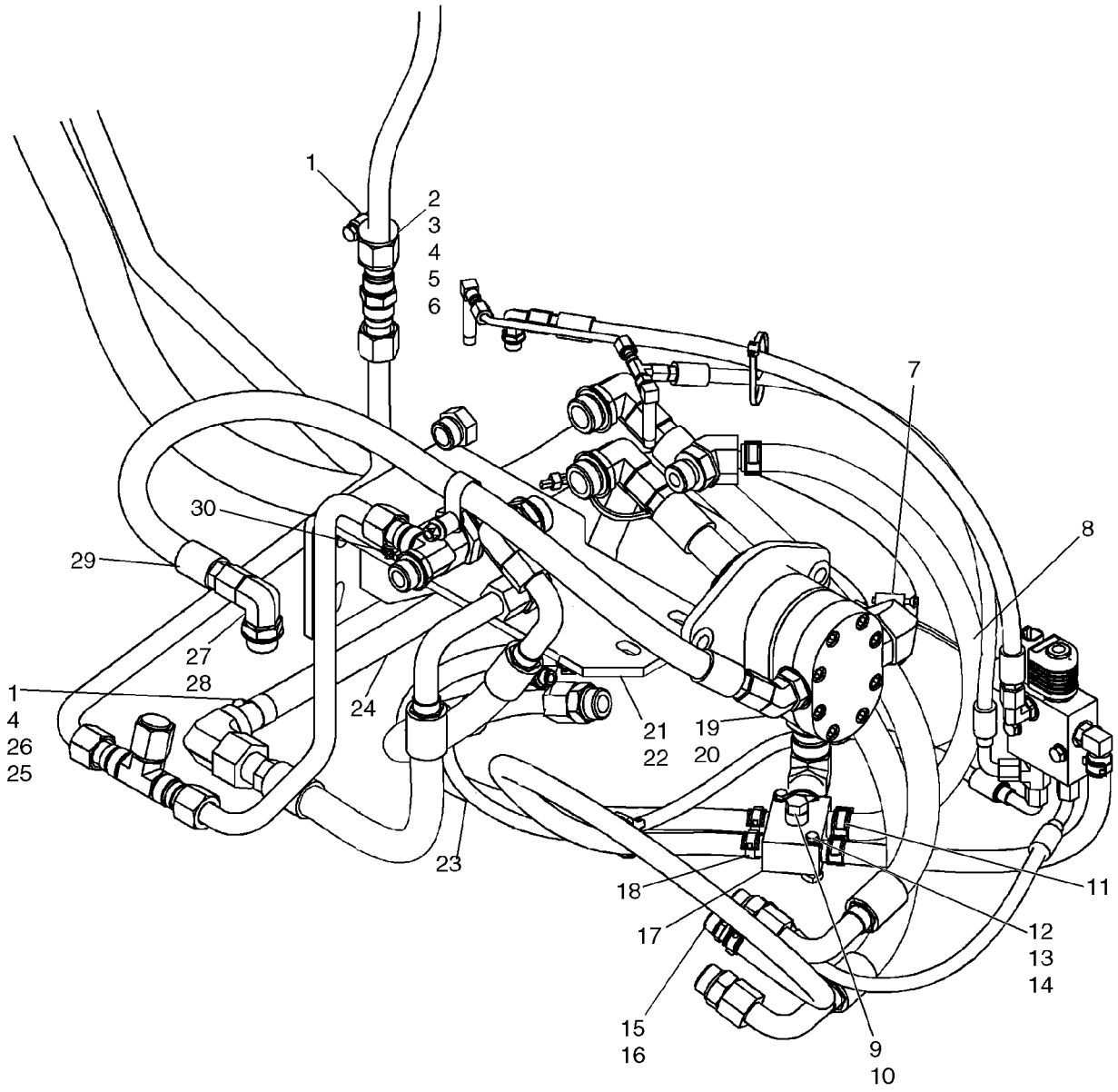

HYDROSTATICS - SUPPLY, RETURN AND DRAIN PLUMBING (420)

REF	FN	PART NUMBER	YR/SN	QTY	DESCRIPTION
1		87030567		3	NUT
2		87445136		1	ISOLATOR
3		87042897		1	SPACER
4		86624184		3	WASHER, M8 x 16 x 1.6
5		43128		1	BOLT, Hex, M8 x 30, 8.8
6		87301359		1	CLAMP, 1 1/8", 3/8" Bolt
7		87039085		2	CLAMP, HOSE, 1.25/2.125 HD Worm
8		{87516030}		1	Hose, Pump Case Drain, 545mm (21 15/32 in.)
9		76349		1	PLUG, Hex Hd, 9/16"-18 ORB, Incl 10
10		9617873		1	O-RING, 6-1, 90 Duro, .468" ID x .078" Thk
11		87443511		2	CLAMP
12		86977790		2	BOLT, Hex, M6 x 45, 8.8
13		87404992		2	NUT
14		86588450		2	WASHER, M6
15		87010108		2	FITTING, 1/2" Hose x 3/4"-16 ORB, Beaded, Incl 16
16		128825		2	O-RING, 8-1, 90 Duro, .644" ID x .087" Thk
17		87437351		1	MANIFOLD, Return Oil Manifold
18		87443510		4	CLAMP, HOSE
19		100197		1	ELBOW, 45º, 7/8"-14 x 1 1/16"-12, O-Ring, Incl 20
20		167266		1	O-RING, 12-1, 90 Duro, .924 ID x .116" Thk
21		87303844		1	CONNECTOR, HYD., 1 7/16"-12 ORFS x 1 1/16"-12 ORB, Incl 22
22		167266		1	O-RING, 12-1, 90 Duro, .924 ID x .116" Thk
23		87022175		1	HOSE ASSY., Case Drain, 600mm (23 5/8 in.)
24		87549661		1	TUBE, RIGID, Tube, Loop
25		86637977		2	CLAMP, 1", Insul, 5/16" Bolt
26		120103		2	BOLT, Hex, M8 x 16, 8.8
27		84570		1	ELBOW, 90º, 7/8"-14, 37º x 1 1/16"-12, O-Ring, Incl 28
28		167266		1	O-RING, 12-1, 90 Duro, .924 ID x .116" Thk
29		87547070		1	HOSE, Valve Supply, 1000mm (39 3/8 in.)
30		86536660		1	CLAMP, HOSE, #16, 0.81/1.50 Type F Worm

HYDROSTATICS - PUMP TO DRIVE MOTORS (420)

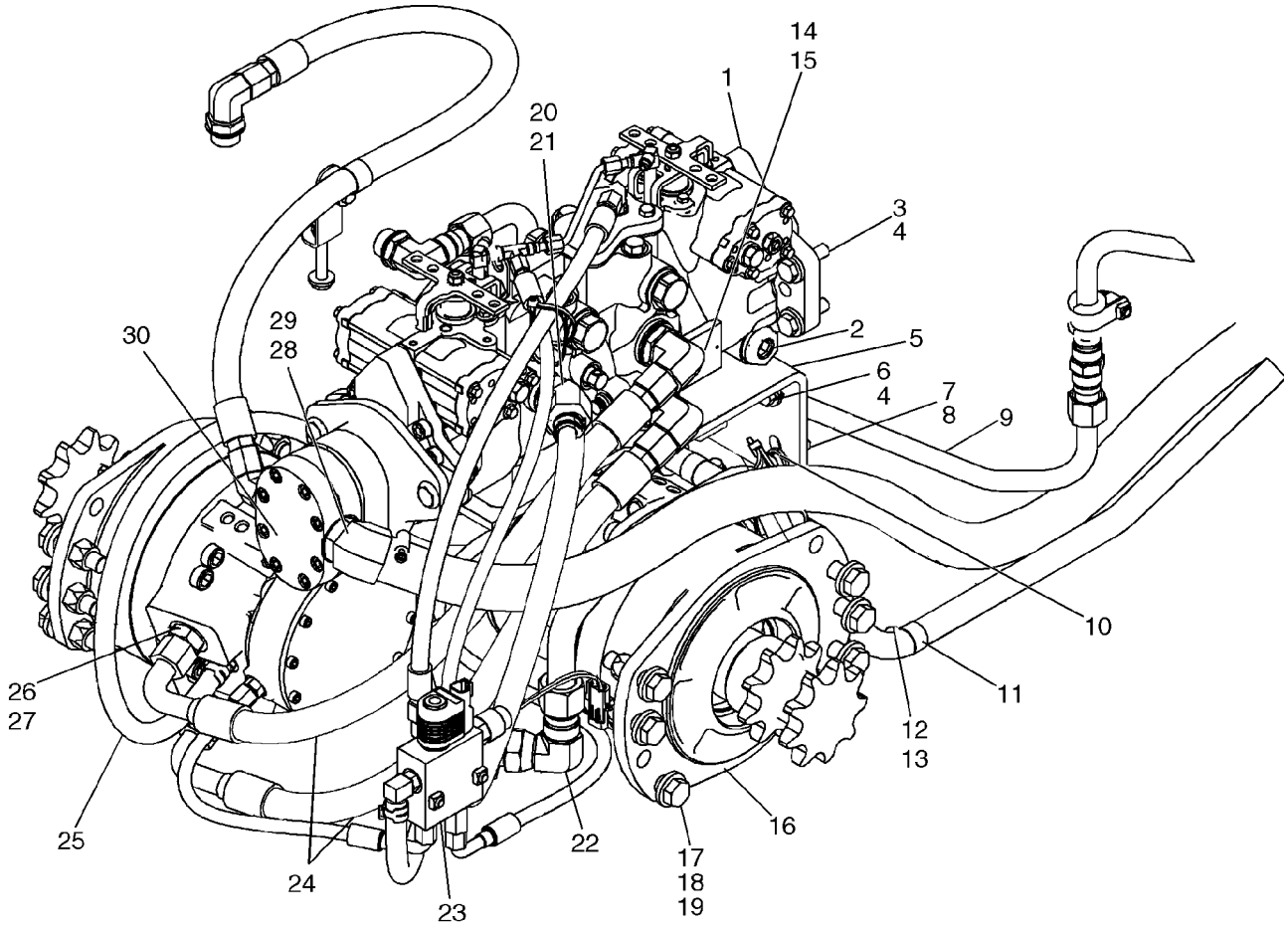

HYDROSTATICS - PUMP TO DRIVE MOTORS (420)

REF	FN	PART NUMBER	YR/SN	QTY	DESCRIPTION
		87033027		1	ADAPTER
1		87643160		1	PUMP, M46 Tandem Pump; See Fig 06-38 - 06-42
3		412087		4	BOLT, Hex, M12 x 45, 10.9, Full Thd
4		86625256		8	WASHER, M12 x 28.5 x 4, HT
5		87627383		1	SUPPORT, Pump Support
6		43260		4	BOLT, Hex, M12 x 30, 10.9
7		43248		2	BOLT, Hex, M10 x 40, 10.9, Full Thd
8		86639325		9	WASHER, M10 x 24.5 x 3, HT
9		87445138		1	TUBE ASSY., Valve Out To Filter
10		L18331		2	STRAP, CABLE
11		86637977		2	CLAMP, 1", Insul, 5/16" Bolt
12		120103		2	BOLT, Hex, M8 x 16, 8.8
13		87030567		3	NUT
14		87021824		2	ELBOW, 90º, 1 1/16"-12, 37º x 1 5/16"-12, O-Ring, Incl 15
15		167268		2	O-RING, 16-1, 90 Duro, 1.171" ID x .116" Thk
16		87035341		2	MOTOR, HYDRAULIC, Drive Motor, MCR05 SAHR 28 CID 9 TOOTH; See Fig 06-43 - 06-45
17		9828248		12	BOLT, Hex, M16 x 60, 10.9
18		86512555		12	NUT, LOCK, M16 x 2, Cl 10
19		86625258		12	WASHER, M16 x 34.5 x 5, HT
20		87021779		1	FITTING, 45º, 5/8" Hose x 1 1/16"-12 ORB Beaded, Incl 21
21		167266		1	O-RING, 12-1, 90 Duro, .924 ID x .116" Thk
22		86050288		1	ELBOW, 90º, 1 5/16"-12, 37º x 1 5/16"-12, 37º Fem Sw
23		REF		1	INSTRUCTION, Brake System; See Fig. 07-01
24		87516012		2	HOSE, Hose, 670mm (26 3/8 in.)
25		87022174		1	HOSE ASSY., Case Drain Hose, 950mm (37 13/32 in.)
26		322896		3	CONNECTOR, HYD., 1 1/16"-12, 37º x 1 1/16"-12, O-Ring, Incl 27
27		167266		3	O-RING, 12-1, 90 Duro, .924 ID x .116" Thk
28		87033824		1	FITTING, 45º, 1 1/4" Hose x 1 5/16"-12 ORB Beaded, Incl 29

HYDROSTATICS - PUMP TO DRIVE MOTORS (420)

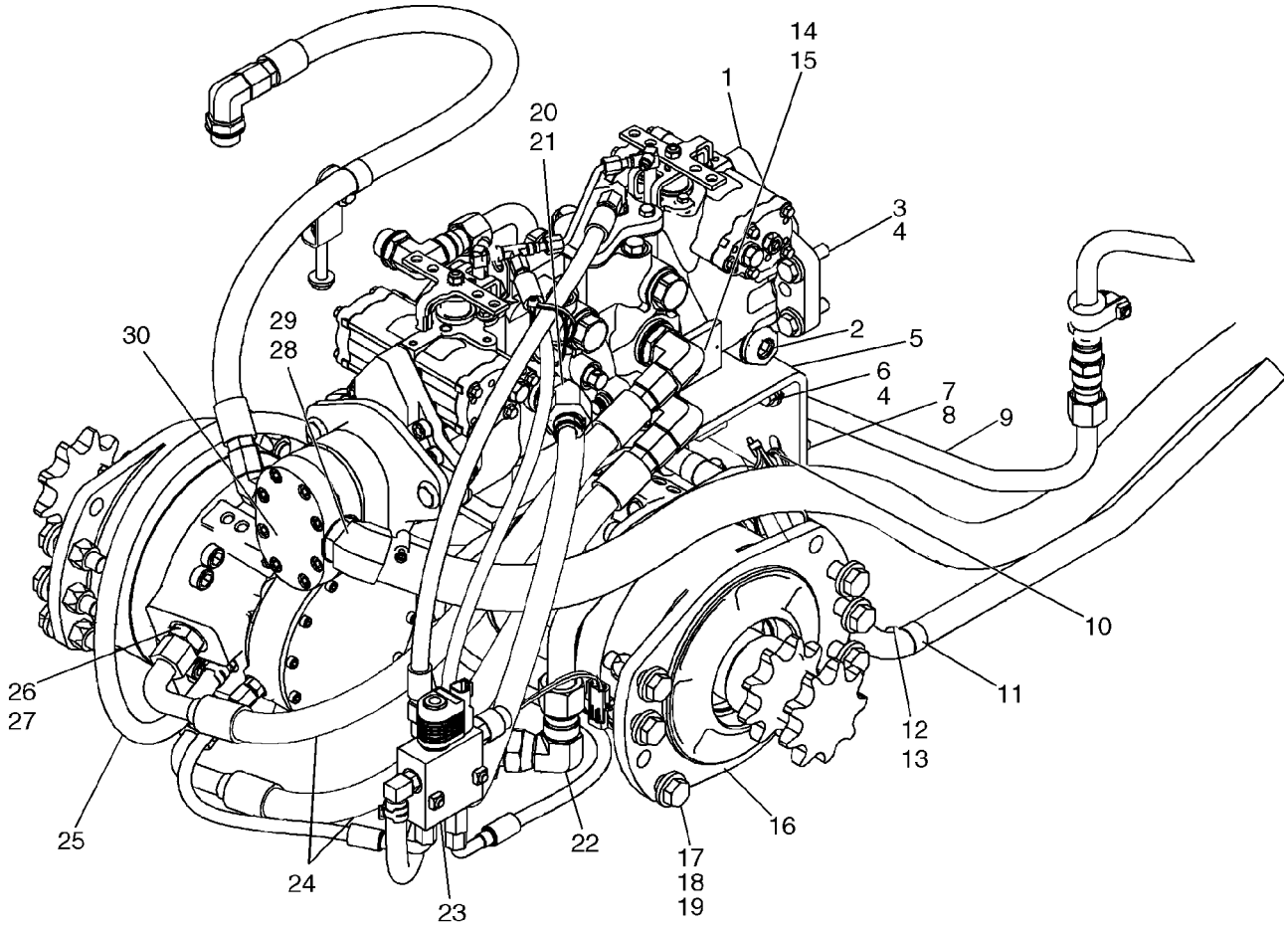

HYDROSTATICS - PUMP TO DRIVE MOTORS (420)

REF	FN	PART NUMBER	YR/SN	QTY	DESCRIPTION
29		570186		1	O-RING, 20-1, 90 Duro, 1.475" ID x .116" Thk
30		87024695		1	PUMP, Gear Pump; See Fig. 06-30

HYDROSTATICS - MULTI VALVE (420 WITH PILOT CONTROL)

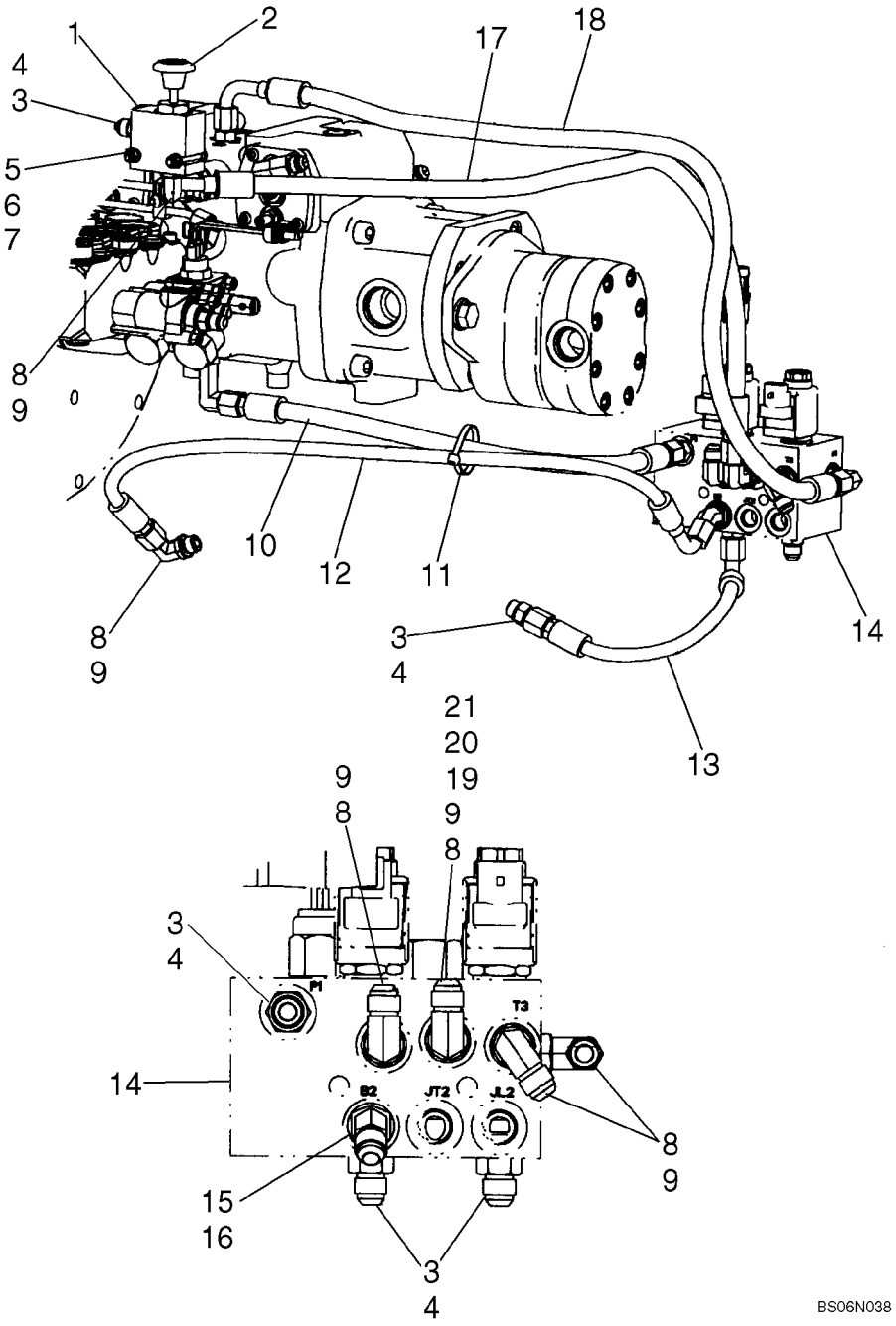

HYDROSTATICS - MULTI VALVE (420 WITH PILOT CONTROL)

REF	FN	PART NUMBER	YR/SN	QTY	DESCRIPTION
1		87604076		1	VALVE, EXHAUST, OVERSIZE, Boom Overide
2		87568435		1	DECAL, Boom Override
3		76350		6	CONNECTOR, HYD., 9/16"-18, 37º x 9/16"-18, O-Ring, Incl. 4
4		9617873		6	O-RING, 6-1, 90 Duro, .468" ID x .078" Thk
5		86588450		7	WASHER, M6
6		86512440		2	NUT, LOCK
7		120056		2	BOLT, Hex, M6 x 50, 8.8
8		76344		6	ELBOW, 90º, 9/16"-18, 37º x 9/16"-18, O-Ring, Includes 9
9		9617873		6	O-RING, 6-1, 90 Duro, .468" ID x .078" Thk
10		{87026844}		1	Hose, 551mm (21 11/16 in.)
11		L11541		1	STRAP, CABLE
12		{87563975}		1	Hose, Left Hand Brake; 800 mm, 31.50 in. Length
13		87563977		1	HOSE, Right Hand Brake; 371 mm, 14.61 in. Length
14		87546971		1	VALVE, HYDRAULIC, See Fig. 06-27
15		330346		1	ELBOW, 45º, 9/16"-18, 37º x 9/16"-18, O-Ring, Incl. 16
16		9617873		1	O-RING, 6-1, 90 Duro, .468" ID x .078" Thk
17		87563992		1	HOSE, Dump Valve Drain; 820 mm, 32.28 in. Length
18		87583075		1	HOSE, DA Pressure; 950mm (37 13/32 in.)

HYDROSTATICS - PUMP FITTINGS (420 WITH PILOT CONTROL)

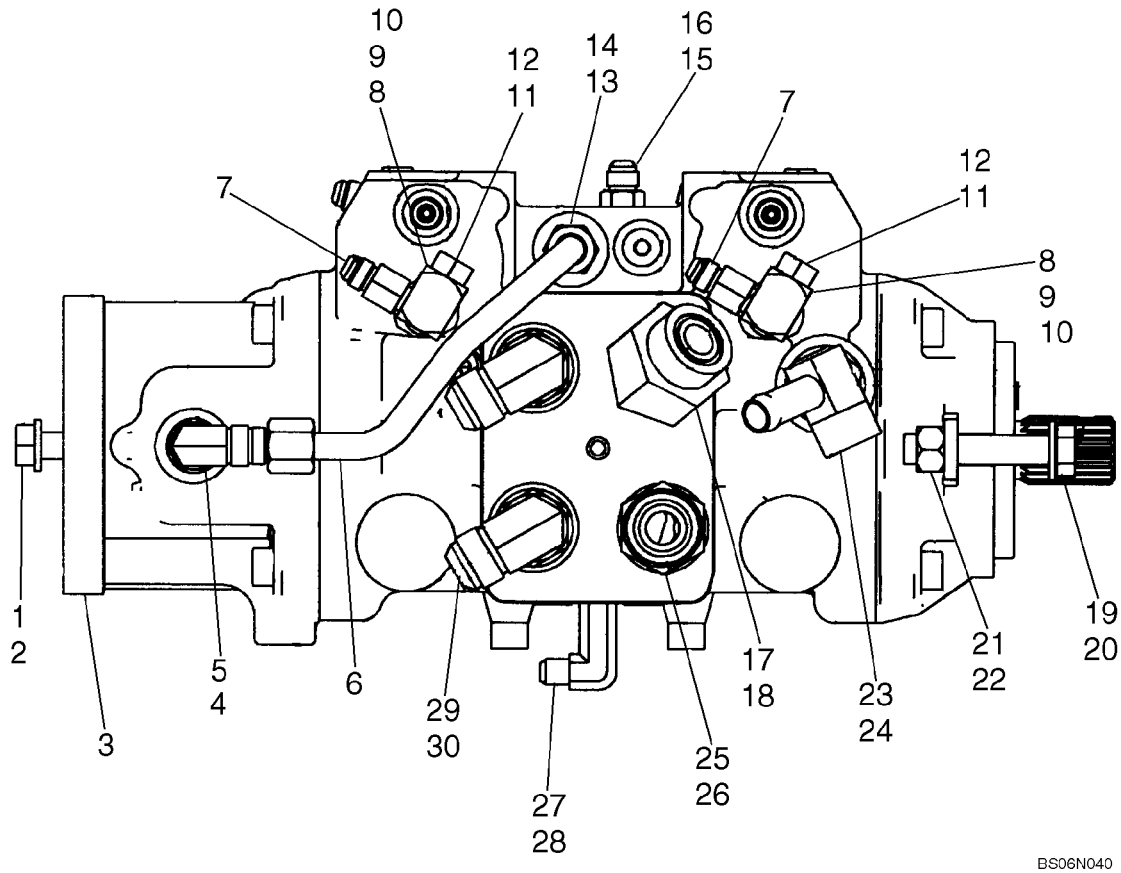

HYDROSTATICS - PUMP FITTINGS (420 WITH PILOT CONTROL)

REF	FN	PART NUMBER	YR/SN	QTY	DESCRIPTION
1		86625255		2	WASHER, M13.5 x 24.5 x 3, HT
2		87670		2	BOLT, Hex, 1/2"-13 x 1 1/4", G5, Full Thd
3		87619378		1	PUMP, Pump, A22-300BAR, 5.5MM ORF, 42.9CC, Pilot Control; See Fig 06-50
4		128830		1	ELBOW, 90º, 3/4"-16, 37º x 3/4"-16, O-Ring, Incl. 5
5		128825		1	O-RING, 8-1, 90 Duro, .644" ID x .087" Thk
6		87554297		1	TUBE, HYD, Tube, Tandem Pump Supply
7		87604075		4	ADAPTER, Connector With 1.0 mm Orifice
8		87546979		2	ADAPTER, Incl. 9, 10
9		165202		2	O-RING, 4-1, 90 Duro, .351" ID x .072" Thk
10		9617873		2	O-RING, 6-1, 90 Duro, .468" ID x .078" Thk
11		76349		3	PLUG, Hex Hd, 9/16"-18 ORB, Incl. 12
12		9617873		3	O-RING, 6-1, 90 Duro, .468" ID x .078" Thk
13		128818		1	CONNECTOR, HYD., 3/4"-16, 37º x 3/4"-16, O-Ring, Incl. 14
14		128825		1	O-RING, 8-1, 90 Duro, .644" ID x .087" Thk
15		76350		6	CONNECTOR, HYD., 9/16"-18, 37º x 9/16"-18, O-Ring, Incl. 16
16		9617873		6	O-RING, 6-1, 90 Duro, .468" ID x .078" Thk
17		{87302733}		1	Elbow 45 Adj. 1.0 ORFS-ORB 3/4; Incl. 18
18		167266		1	O-RING, 12-1, 90 Duro, .924 ID x .116" Thk
19		{87556906}		2	Bolt, Hex Head M14 x 70 ZND
20		87016615		2	WASHER, M12 x 28.5 x 3, HT
21		{87564740}		2	Nut, M14 ZND
22		{87564723}		2	Washer
23		87571937		1	ADAPTER, Incl. 24
24		167266		1	O-RING, 12-1, 90 Duro, .924 ID x .116" Thk
25		87303844		1	CONNECTOR, HYD., 1 7/16"-12 ORFS x 1 1/16"-12 ORB, Incl. 26
26		167266		1	O-RING, 12-1, 90 Duro, .924 ID x .116" Thk
27		86526		1	ELBOW, 90º, 9/16"-18, 37º x 9/16"-18, LG
28		9617873		1	O-RING, 6-1, 90 Duro, .468" ID x .078" Thk
29		322894		4	ELBOW, 90º, 1 1/16"-12, 37º x 1 1/16"-12, O-Ring, Incl. 30
30		167266		4	O-RING, 12-1, 90 Duro, .924 ID x .116" Thk

HYDROSTATICS - HOSES (420 WITH PILOT CONTROL)

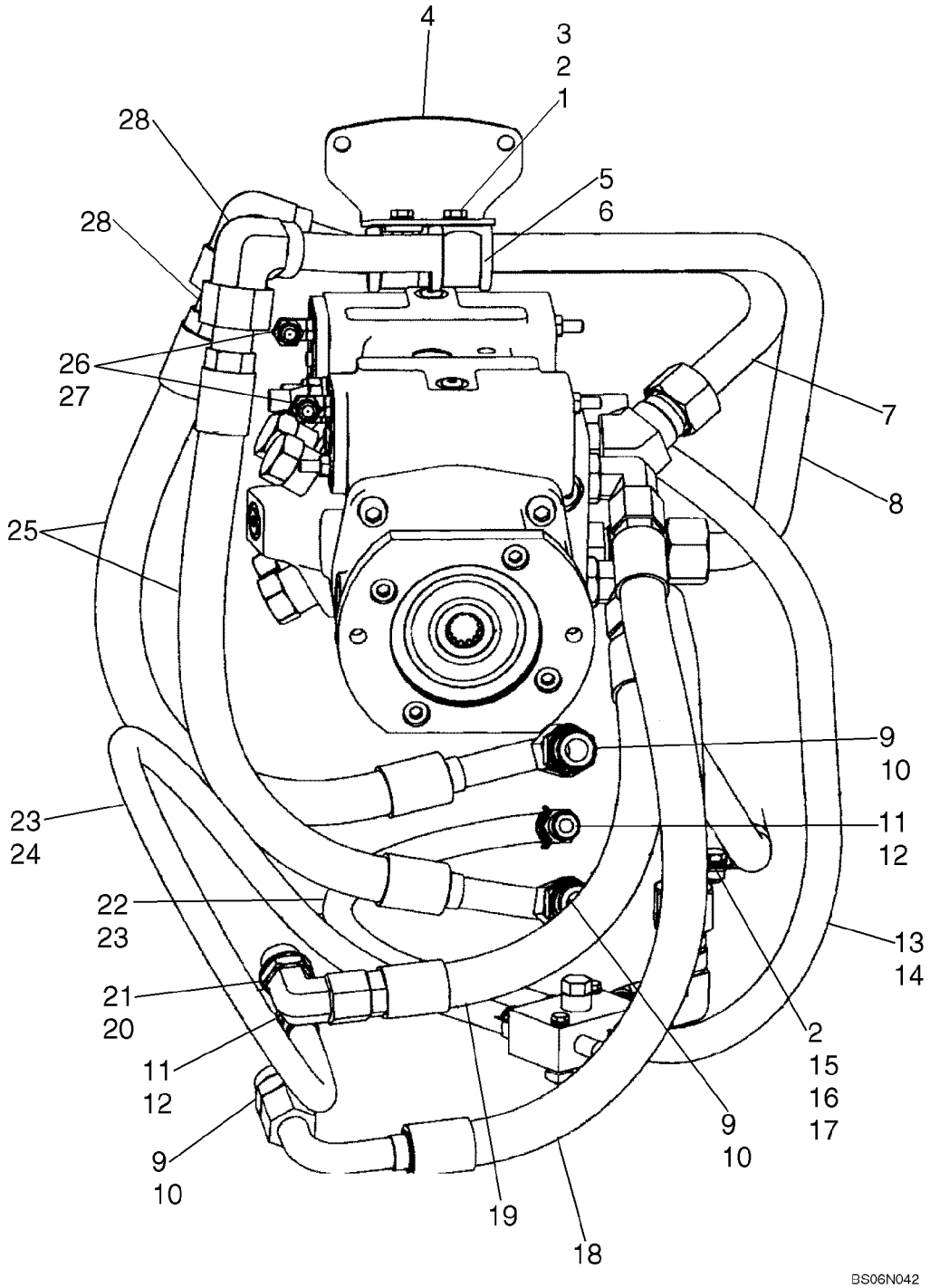

HYDROSTATICS - HOSES (420 WITH PILOT CONTROL)

REF	FN	PART NUMBER	YR/SN	QTY	DESCRIPTION
1		9628098		3	NUT, LOCK, M8 x 1.25, Cl 10
2		86624184		4	WASHER, M8 x 16 x 1.6
3		86625001		2	BOLT, Hex, M8 x 22, 8.8, Full Thd, If Used
3		43127		2	BOLT, Hex, M8 x 25, 8.8, If Used
4		87564008		1	CLAMP BRACKET
5		D67297		2	BLOCK, Isolation
6		D68846		2	CLAMP
7		87547068		1	TUBE, HYD, Motor To Pump Loop
8		87600630		1	TUBE, HYD, Motor To Pump Loop
9		322896		3	CONNECTOR, HYD., 1 1/16"-12, 37º x 1 1/16"-12, O-Ring, Incl. 10
10		167266		3	O-RING, 12-1, 90 Duro, .924 ID x .116" Thk
11		87010108		2	FITTING, 1/2" Hose x 3/4"-16 ORB, Beaded, Incl. 12
12		128825		2	O-RING, 8-1, 90 Duro, .644" ID x .087" Thk
13		87584062		1	HOSE, Case Drain, 725mm (28 17/32 in.) Length
14		87443511		2	CLAMP
15		120103		1	BOLT, Hex, M8 x 16, 8.8
16		86637977		1	CLAMP, 1", Insul, 5/16" Bolt
17		229197A1		2	NUT
18		87584059		1	HOSE, Motor To Pump Loop, 715mm (28 5/32 in.) Length
19		87021266		1	HOSE ASSY., Motor To Pump Loop, 560mm (22 in.) Length
20		322894		4	ELBOW, 90º, 1 1/16"-12, 37º x 1 1/16"-12, O-Ring, Incl. 21
21		167266		4	O-RING, 12-1, 90 Duro, .924 ID x .116" Thk
22		87022175		1	HOSE ASSY., Case Drain, 600mm (23 5/8 in.) Length
23		87443510		4	CLAMP, HOSE
24		87022174		1	HOSE ASSY., Case Drain, 950mm (37 13/32 in.) Length
25		87623664		2	HOSE, Motor To Pump Loop, 610mm (24 in.) Length
26		87604075		4	ADAPTER, Connector With 1.0 mm Orifice
27		86512936		2	ELBOW, 90º, 9/16"-18, 37º x 7/16"-20, O-Ring, Incl. 28
28		165202		2	O-RING, 4-1, 90 Duro, .351" ID x .072" Thk

HYDROSTATICS - DRIVE MOTORS

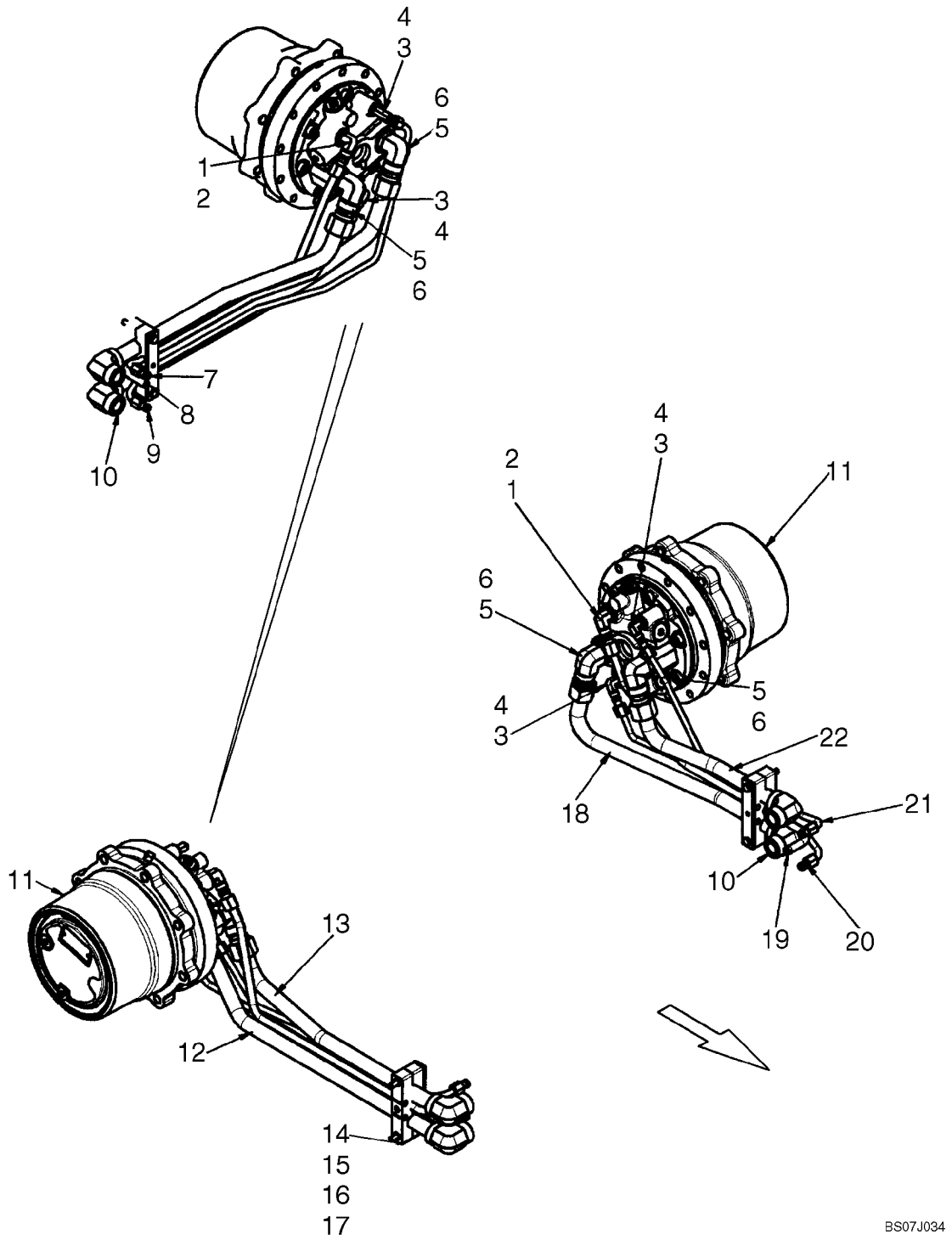

HYDROSTATICS - DRIVE MOTORS

REF	FN	PART NUMBER	YR/SN	QTY	DESCRIPTION
1		128830		2	ELBOW, 90º, 3/4"-16, 37º x 3/4"-16, O-Ring, Incl 2
2		128825		2	O-RING, 8-1, 90 Duro, .644" ID x .087" Thk
3		76344		4	ELBOW, 90º, 9/16"-18, 37º x 9/16"-18, O-Ring, Incl 4
4		9617873		4	O-RING, 6-1, 90 Duro, .468" ID x .078" Thk
5		286217		4	ELBOW, 90º, 1 5/16"-12, 37º x 1 1/16"-12, O-Ring, Incl 6
6		167266		4	O-RING, 12-1, 90 Duro, .924 ID x .116" Thk
7		87647575		1	TUBE, HYD, Two Speed, RH
8		87647571		1	TUBE, HYD, Case Drain, RH
9		87647573		1	TUBE, HYD, Brake, RH
10		9824050		4	O-RING, -021, 90 Duro, .926" ID x .070" Thk
11		87588897		2	MOTOR-PUMP, Two Speed Drive Motor, Track Drive; See Fig. 06-49
12		87647526		1	TUBE, HYD, Bottom Loop, RH
13		87647525		1	TUBE, HYD, Top Loop, RH
14		120062		4	BOLT, Hex, M8 x 70, 8.8
15		87452146		2	BAR, Top Bar Clamp
16		87302564		4	SPACER, 1/4 Pipe X 2.00 in. ZND
17		87452108		4	CLAMP
18		87647570		1	TUBE, HYD, Bottom Loop, LH
19		87647572		1	TUBE, HYD, Case Drain, LH
20		87647578		1	TUBE, HYD, Two Speed, LH
21		87647574		1	TUBE, HYD, Brake, LH
22		87647569		1	TUBE, HYD, Top Loop, LH

HYDROSTATICS - SINGLE SPEED, DRIVE MOTORS (PILOT CONTROL)

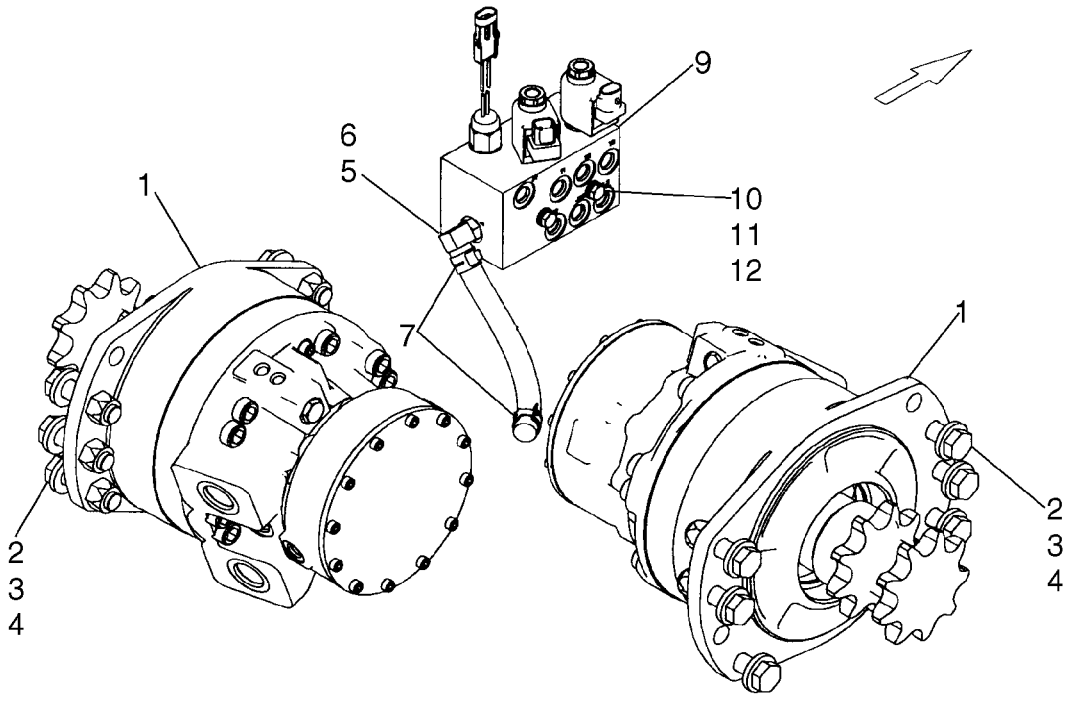

HYDROSTATICS - SINGLE SPEED, DRIVE MOTORS (PILOT CONTROL)

REF	FN	PART NUMBER	YR/SN	QTY	DESCRIPTION
1		87035341		2	MOTOR, HYDRAULIC, See Figure 06-43 - 06-45
2		86625258		12	WASHER, M16 x 34.5 x 5, HT
3		9828248		12	BOLT, Hex, M16 x 60, 10.9
4		86512555		12	NUT, LOCK, M16 x 2, Cl 10
5		86705580		1	FITTING, 90º, 1/2" Hose x 9/16"-18 ORB Beaded, Incl. 6
6		9617873		1	O-RING, 6-1, 90 Duro, .468" ID x .078" Thk
7		87443510		2	CLAMP, HOSE, 20 mm
8		87563994		1	HOSE, 190 mm (7.48 in) Multi-Valve Drain
9		87546971		1	VALVE, HYDRAULIC, See Figure 06-27
10		86508571		2	BOLT, Hex, M8 x 90, 8.8
11		86624184		4	WASHER, M8 x 16 x 1.6
12		229197A1		2	NUT

HYDROSTATICS - TWO SPEED, DRIVE MOTORS (MECHANICAL CONTROL)

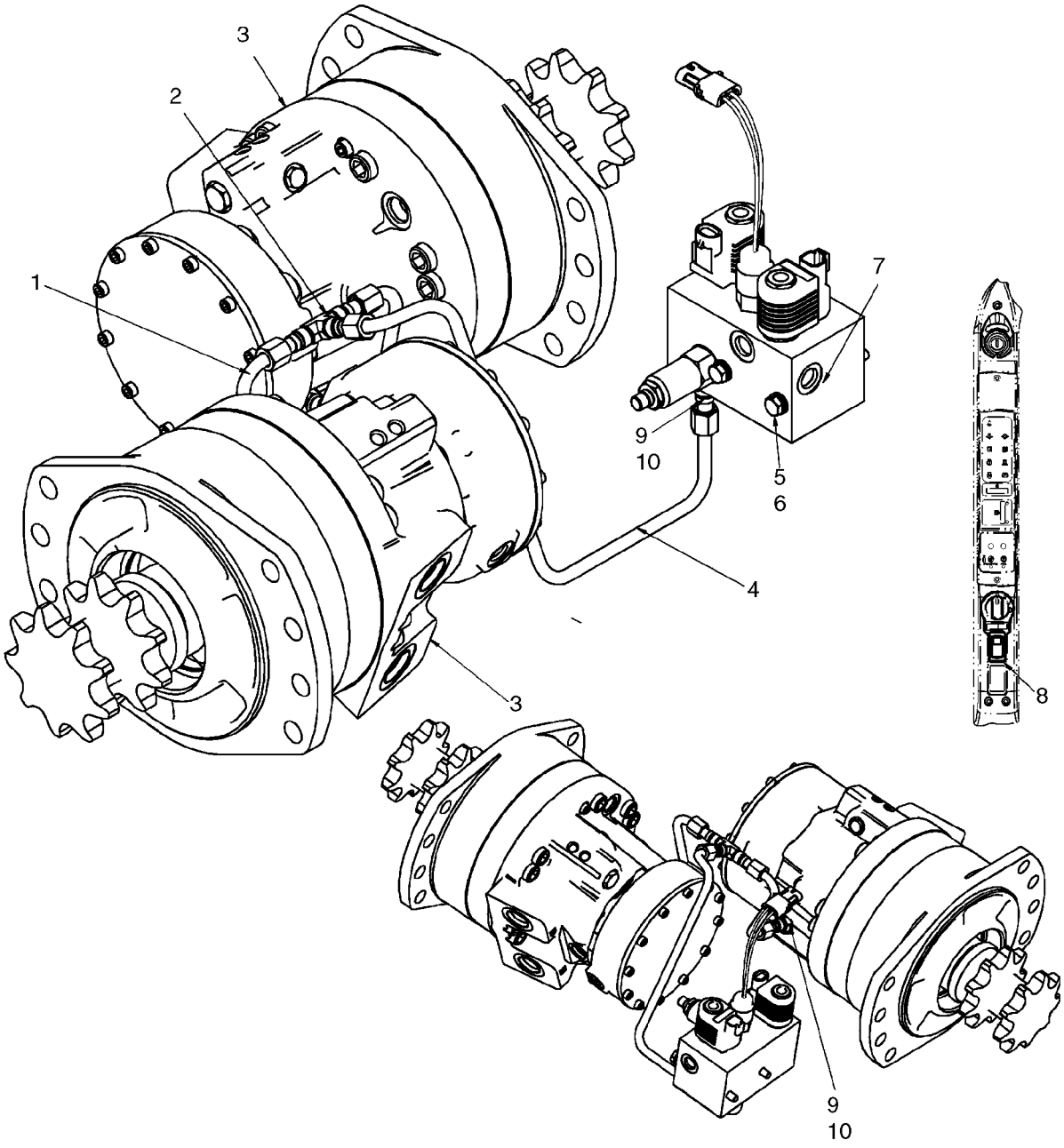

HYDROSTATICS - TWO SPEED, DRIVE MOTORS (MECHANICAL CONTROL)

REF	FN	PART NUMBER	YR/SN	QTY	DESCRIPTION
1		87430855		2	TUBE ASSY.
2		76355		1	TEE, 9/16"-18, 37º
3		87035342		2	MOTOR, HYDRAULIC, See Fig 06-46 - 06-48
4		87455412		1	TUBE ASSY.
5		140016		4	WASHER, M8 x 16 x 1.6
6		86508571		2	BOLT, Hex, M8 x 90, 8.8
7		87429625		1	VALVE, HYDRAULIC, See Fig 06-28
8		87634136		1	SWITCH, Indicator, High Speed
9		76350		3	CONNECTOR, HYD., 9/16"-18, 37º x 9/16"-18, O-Ring, Incl 10
10		9617873		3	O-RING, 6-1, 90 Duro, .468" ID x .078" Thk

HYDROSTATICS - TWO SPEED, DRIVE MOTORS (PILOT CONTROL)

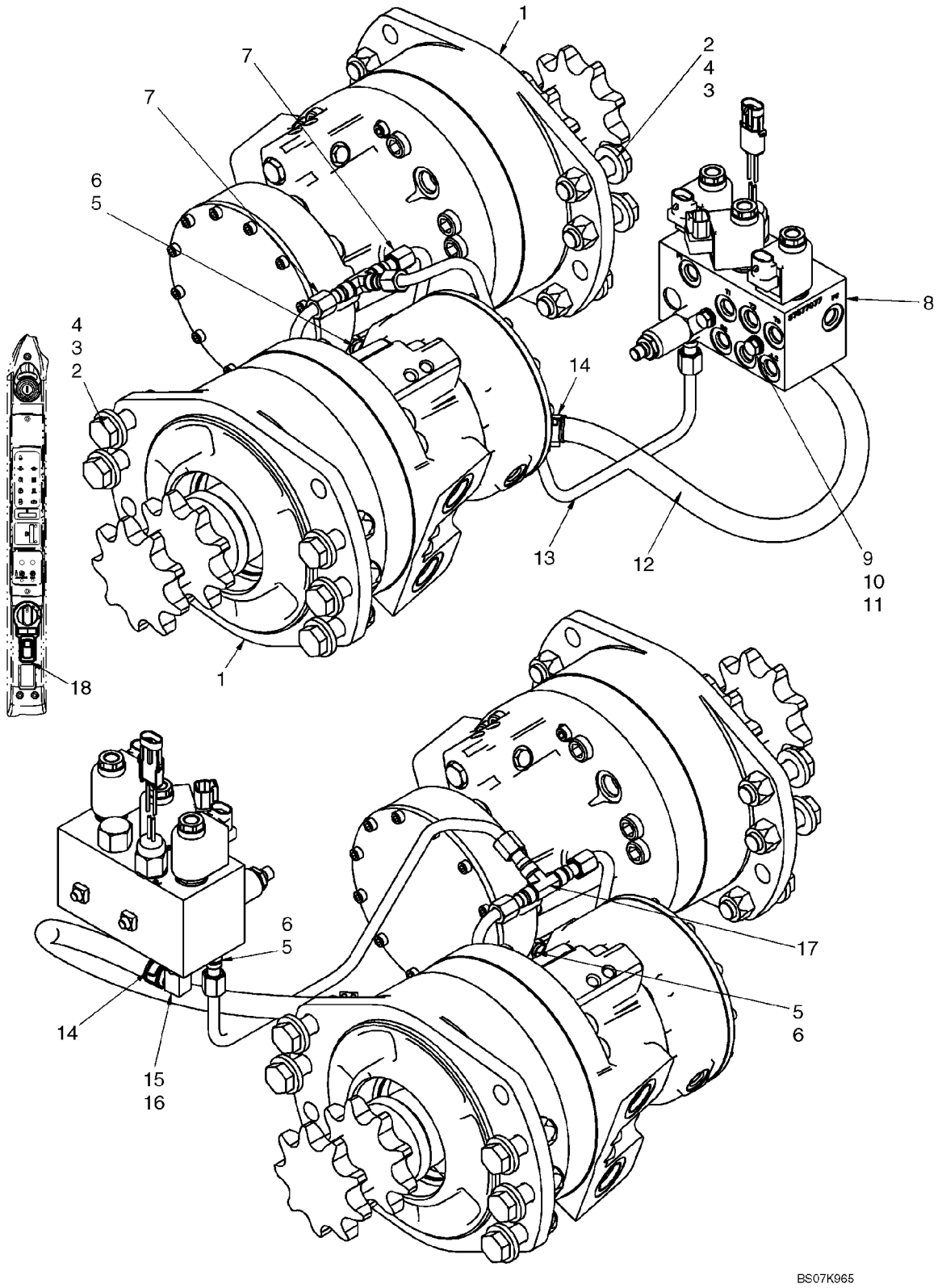

HYDROSTATICS - TWO SPEED, DRIVE MOTORS (PILOT CONTROL)

REF	FN	PART NUMBER	YR/SN	QTY	DESCRIPTION
1		87035342		2	MOTOR, HYDRAULIC, See Fig 06-46 - 06-48
2		86512555		12	NUT, LOCK, M16 x 2, Cl 10
3		86625258		12	WASHER, M16 x 34.5 x 5, HT
4		9828248		12	BOLT, Hex, M16 x 60, 10.9
5		76350		3	CONNECTOR, HYD., 9/16"-18, 37º x 9/16"-18, O-Ring, Incl 6
6		9617873		3	O-RING, 6-1, 90 Duro, .468" ID x .078" Thk
7		87430855		2	TUBE ASSY.
8		87577077		1	VALVE, PILOT, Pilot, Brake/Two Speed; See Fig 06-29
9		86508571		2	BOLT, Hex, M8 x 90, 8.8
10		86624184		4	WASHER, M8 x 16 x 1.6
11		229197A1		2	NUT
12		87547047		1	HOSE, Hose, Multi Valve Drain, 520mm (20 1/2 in.)
13		87455412		1	TUBE ASSY.
14		87443510		2	CLAMP, HOSE
15		86705580		1	FITTING, 90º, 1/2" Hose x 9/16"-18 ORB Beaded, Incl 16
16		9617873		1	O-RING, 6-1, 90 Duro, .468" ID x .078" Thk
17		76355		1	TEE, 9/16"-18, 37º
18		87634136		1	SWITCH, Indicator High Speed

HYDROSTATICS - RESONATOR (EUROPE)

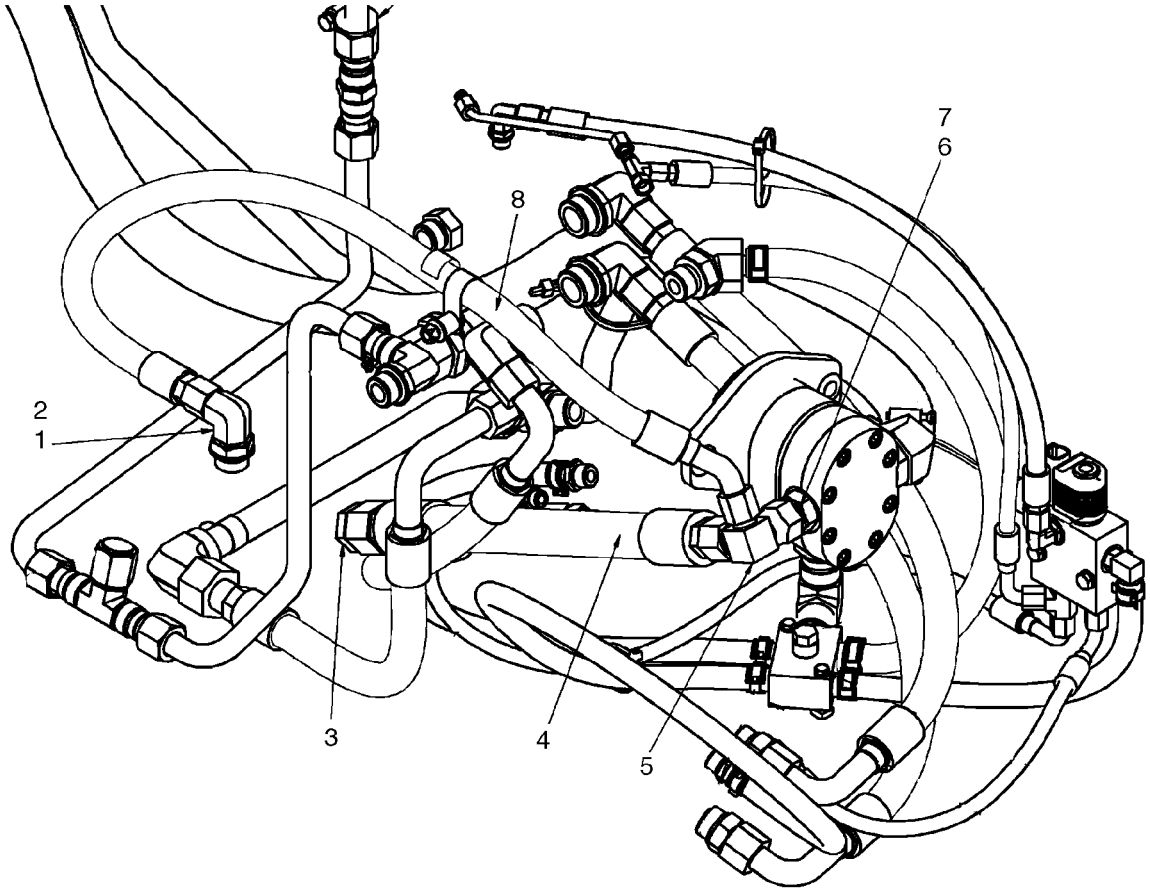

BS07N331

HYDROSTATICS - RESONATOR (EUROPE)

REF	FN	PART NUMBER	YR/SN	QTY	DESCRIPTION
1		84570		1	ELBOW, 90º, 7/8"-14, 37º x 1 1/16"-12, O-Ring, Incl 2
2		167266		1	O-RING, 12-1, 90 Duro, .924 ID x .116" Thk
3		9790527		1	PLUG, 1 5/16"-12, 37º
4		87717826		1	HOSE, Hose, Resonator
5		87441649		1	ADAPTER
6		322896		1	CONNECTOR, HYD., 1 1/16"-12, 37º x 1 1/16"-12, O-Ring, Incl 7
7		167266		1	O-RING, 12-1, 90 Duro, .924 ID x .116" Thk
8		87720912		1	HOSE, Hose, Valve Supply
9		87353205		1	PAD, Right Tower Pad; Not Illustrated

HYDROSTATICS - MULTI VALVE, PILOT (EUROPE)

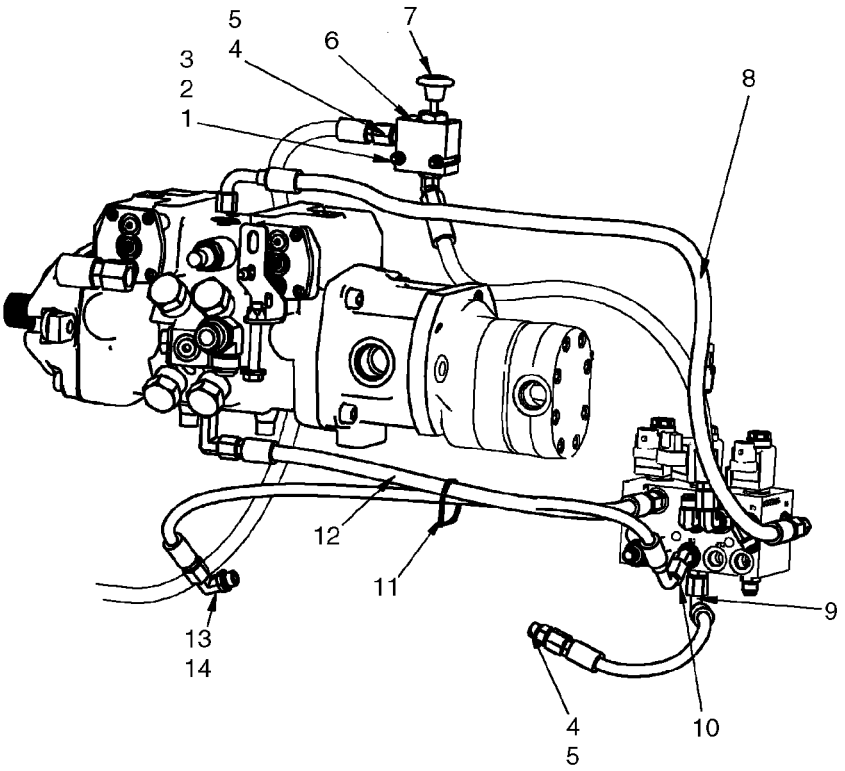

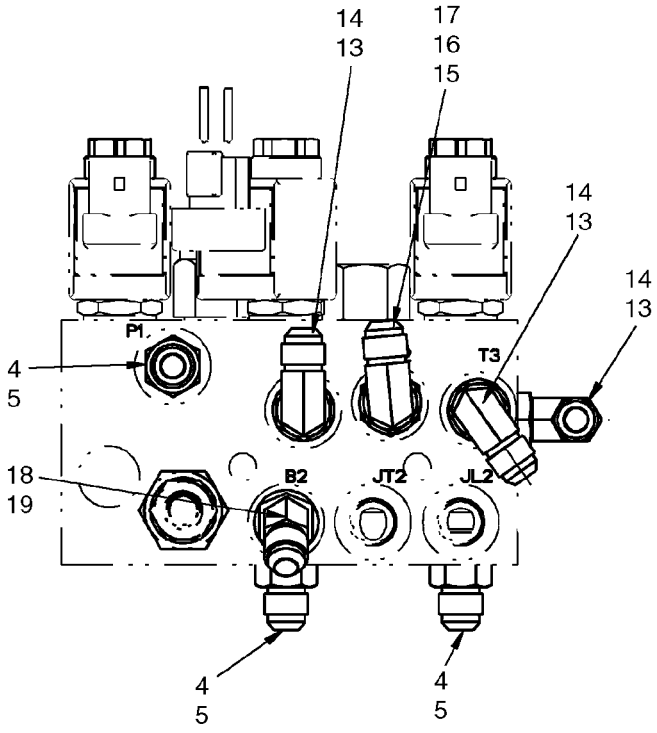

BS07N333

HYDROSTATICS - MULTI VALVE, PILOT (EUROPE)

REF	FN	PART NUMBER	YR/SN	QTY	DESCRIPTION
1		86588450		7	WASHER, M6
2		86512440		2	NUT, LOCK
3		120056		2	BOLT, Hex, M6 x 50, 8.8
4		76350		5	CONNECTOR, HYD., 9/16"-18, 37º x 9/16"-18, O-Ring, Incl 5
5		9617873		5	O-RING, 6-1, 90 Duro, .468" ID x .078" Thk
6		87604076		1	VALVE, EXHAUST, OVERSIZE
7		87568435		1	DECAL, Decal, Boom Override
8		87583075		1	HOSE, Hose, DA Pressure
9		87563977		1	HOSE, Hose, RH Brake
10		{87563975}		1	Hose, LH Brake
11		L11541		1	STRAP, CABLE
12		{87026844}		1	Hose, 551mm (21 11/16 in.)
13		76344		5	ELBOW, 90º, 9/16"-18, 37º x 9/16"-18, O-Ring, Incl 14
14		9617873		5	O-RING, 6-1, 90 Duro, .468" ID x .078" Thk
15		87573371		1	ADAPTER, Incl 16, 17
16		9617873		1	O-RING, 6-1, 90 Duro, .468" ID x .078" Thk
17		9993141		1	O-RING, -012, 90 Duro, .364" ID x .070" Thk
18		330346		1	ELBOW, 45º, 9/16"-18, 37º x 9/16"-18, O-Ring, Incl 19
19		9617873		1	O-RING, 6-1, 90 Duro, .468" ID x .078" Thk

HYDROSTATICS - MULTI VALVE ASSEMBLY

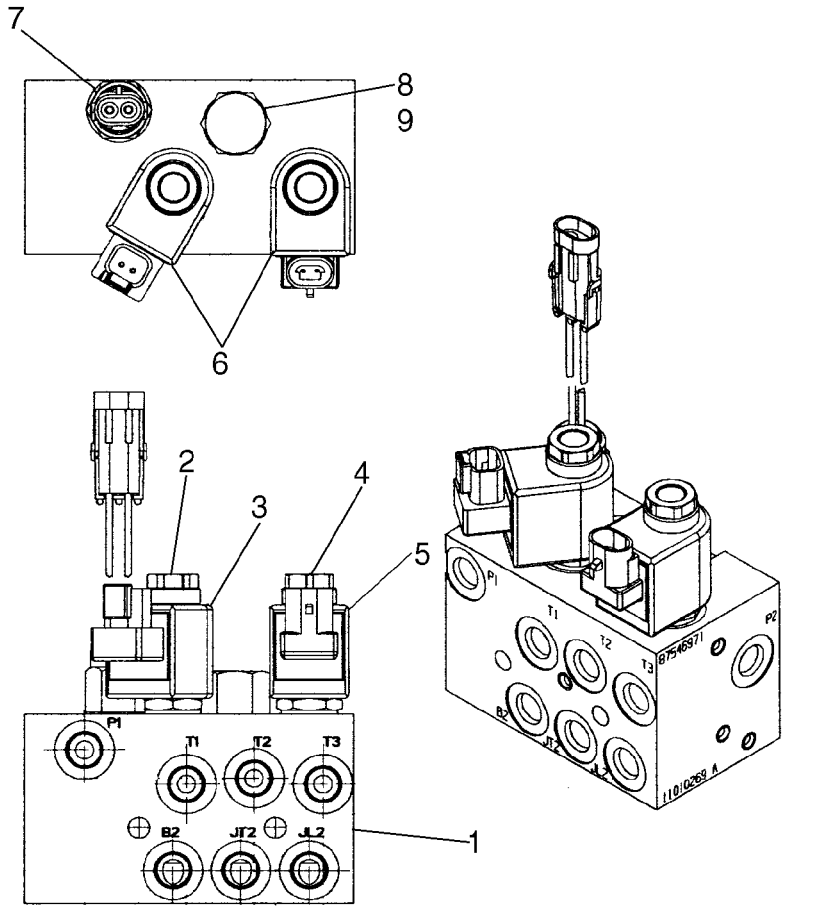

BS07G071

HYDROSTATICS - MULTI VALVE ASSEMBLY

REF	FN	PART NUMBER	YR/SN	QTY	DESCRIPTION
1		87546971		1	VALVE, HYDRAULIC, Pilot Control, Brake; Incl. 2 - 9
2		87588579		1	VALVE, SOLENOID
3		87588596		1	SOLENOID, Coil
4		87614011		1	VALVE, SOLENOID
5		87614012		1	COIL
6		87614013		1	KIT, SEALS, Solenoid Valve
7		87458061		1	SWITCH, PRESSURE, Charge Pressure
8		87614009		1	VALVE, Cartridge Valve
9		87614015		1	KIT, SEALS, Cartridge Valve

HYDROSTATICS - TWO SPEED, VALVE ASSY

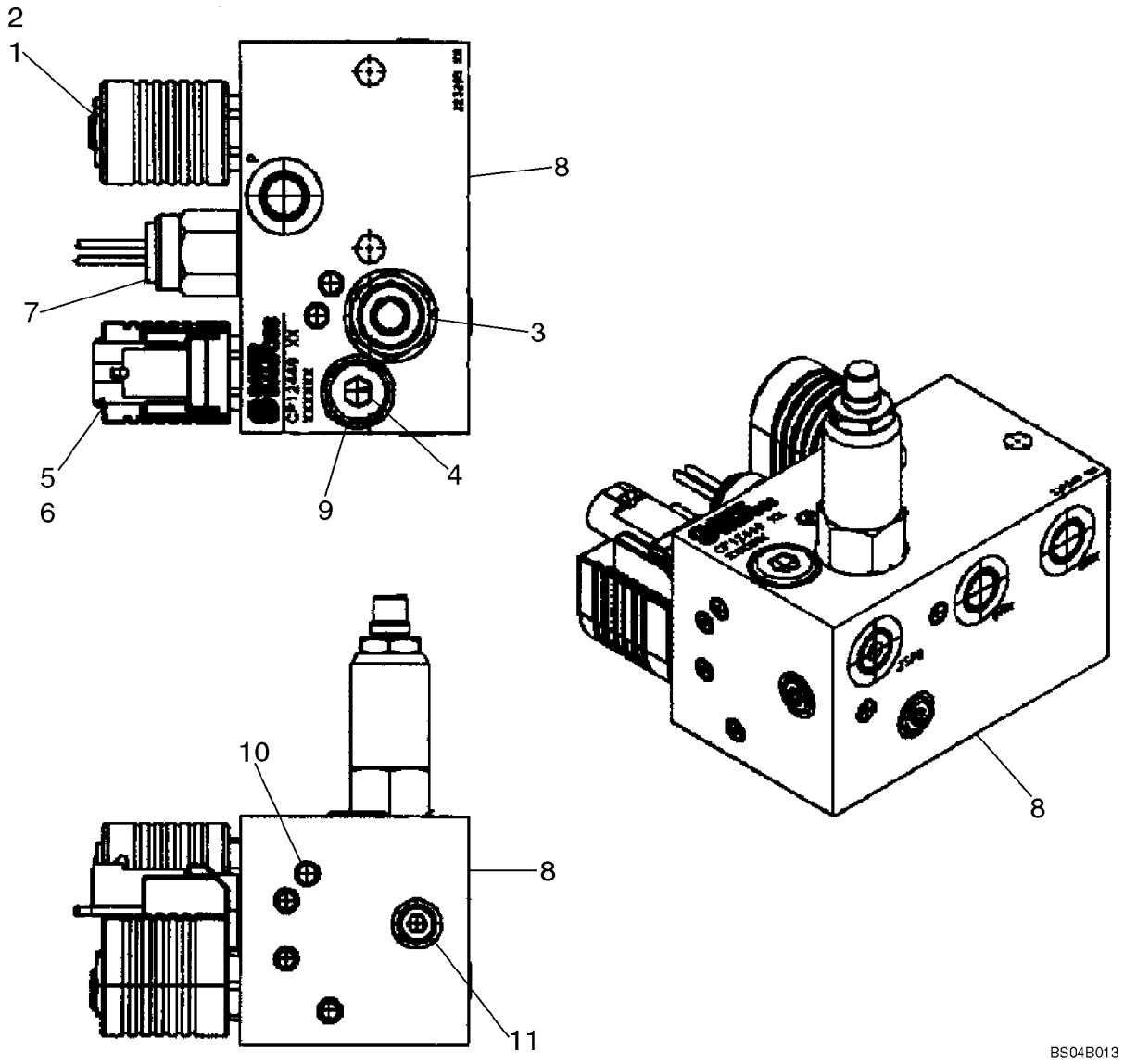

HYDROSTATICS - TWO SPEED, VALVE ASSY

REF	FN	PART NUMBER	YR/SN	QTY	DESCRIPTION
		87429625		1	VALVE, HYDRAULIC, Two Speed; Incl. 1 - 11
		87352524		1	VALVE, BRAKE, Two Speed; Incl. 1 - 11
1		87424182		1	VALVE, BRAKE
2		87433496		X	COIL, Not Illustrated Separately
3		87433497		1	VALVE, Sequence; Part of 87429625
3		87352527		1	VALVE, Sequence; Part of 87352524
4		87426545		1	ORIFICE, M12
5		87433495		1	VALVE, SOLENOID, Hydraulic Valve
6		87433499		X	COIL, Not Illustrated Separately
7		87019943		1	SWITCH, PRESSURE, Hydraulic Valve
8		NSS		1	NOT SERVICED SEPARATELY, Body
9		NSS		1	NOT SERVICED SEPARATELY, Plug
10		NSS		11	NOT SERVICED SEPARATELY, Expansion Plug
11		NSS		3	NOT SERVICED SEPARATELY, Plug

HYDROSTATICS - TWO SPEED, VALVE ASSY (WITH PILOT CONTROL)

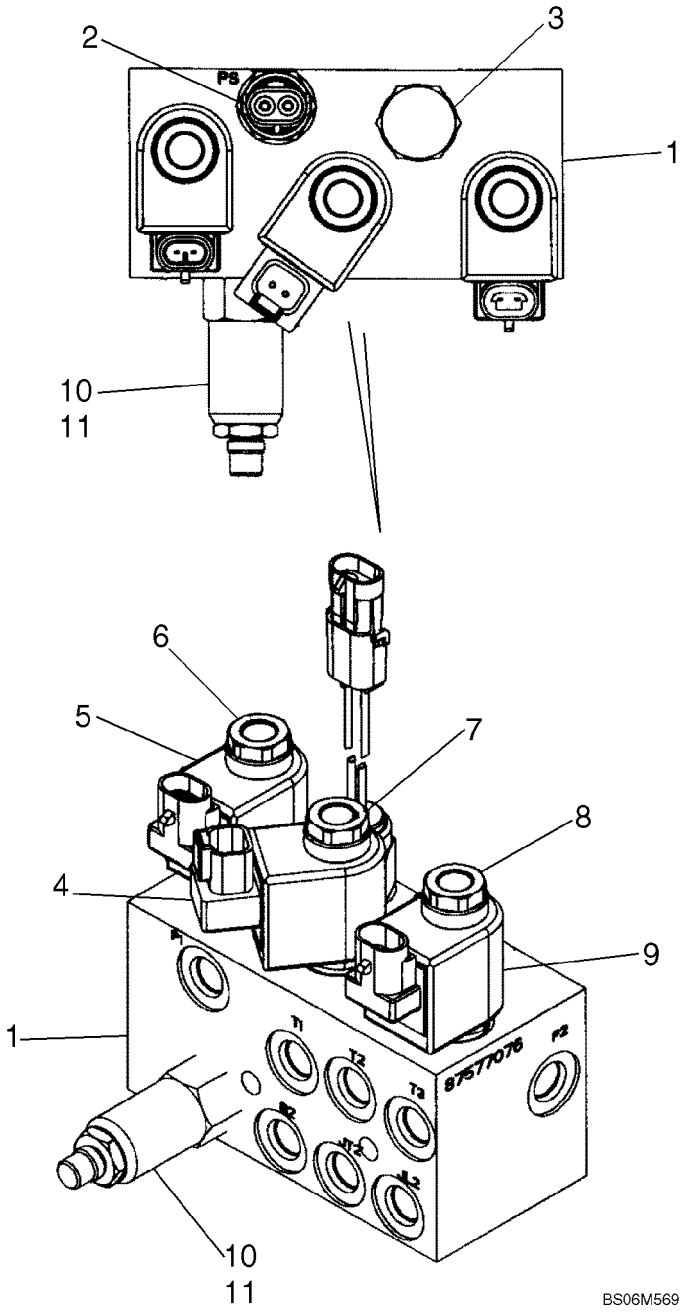

HYDROSTATICS - TWO SPEED, VALVE ASSY (WITH PILOT CONTROL)

REF	FN	PART NUMBER	YR/SN	QTY	DESCRIPTION
1		87577077		1	VALVE, PILOT, Brake Valve; Two Speed; Incl. 1 - 11
2		87458061		1	SWITCH, PRESSURE, Brake Valve
3		NSS		1	NOT SERVICED SEPARATELY, Cartridge Valve
4		NSS		1	NOT SERVICED SEPARATELY, Coil
5		NSS		1	NOT SERVICED SEPARATELY, Coil
6		NSS		1	NOT SERVICED SEPARATELY, Sol Valve
7		NSS		1	NOT SERVICED SEPARATELY, Sol Valve
8		NSS		1	NOT SERVICED SEPARATELY, Sol Valve
9		NSS		1	NOT SERVICED SEPARATELY, Coil
10		87433497		1	VALVE, Sequence
11		87426545		1	ORIFICE, .017 Sauer

HYDRAULIC GEAR PUMP - WITHOUT HIGH FLOW

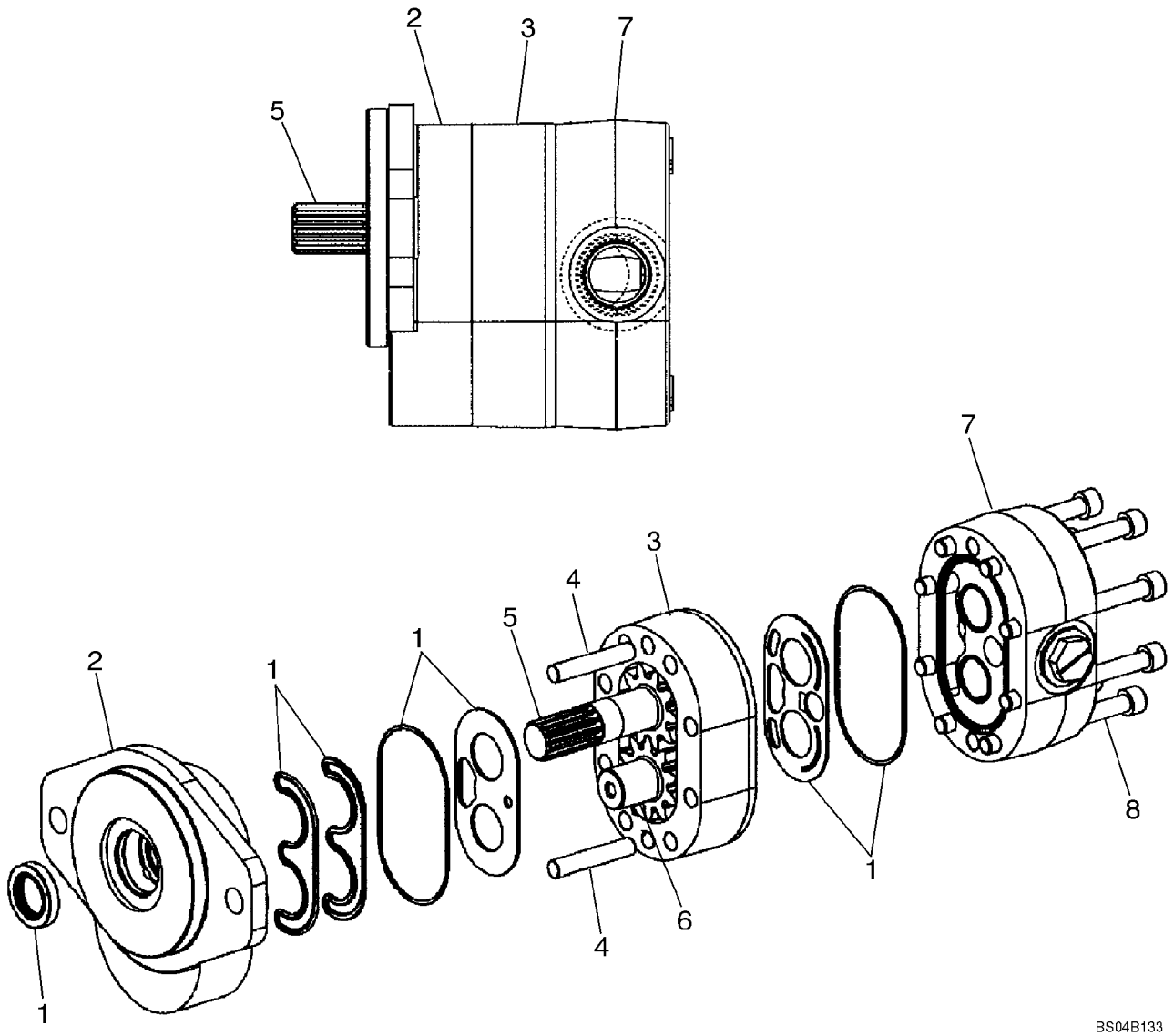

HYDRAULIC GEAR PUMP - WITHOUT HIGH FLOW

REF	FN	PART NUMBER	YR/SN	QTY	DESCRIPTION
		87024695		1	PUMP, Incl. 1 - 8; Models Without High Flow
1		87042214		1	KIT, SEALS, Seal Kit
2		NSS		1	NOT SERVICED SEPARATELY, Cover
3		NSS		1	NOT SERVICED SEPARATELY, Plate, Gear
4		NSS		2	NOT SERVICED SEPARATELY, Pin, Dowel
5		NSS		1	NOT SERVICED SEPARATELY, Shaft, Drive
6		NSS		1	NOT SERVICED SEPARATELY, Shaft, Idler
7		NSS		1	NOT SERVICED SEPARATELY, Cover
8		NSS		8	NOT SERVICED SEPARATELY, Screw

HYDRAULIC GEAR PUMP - HIGH FLOW

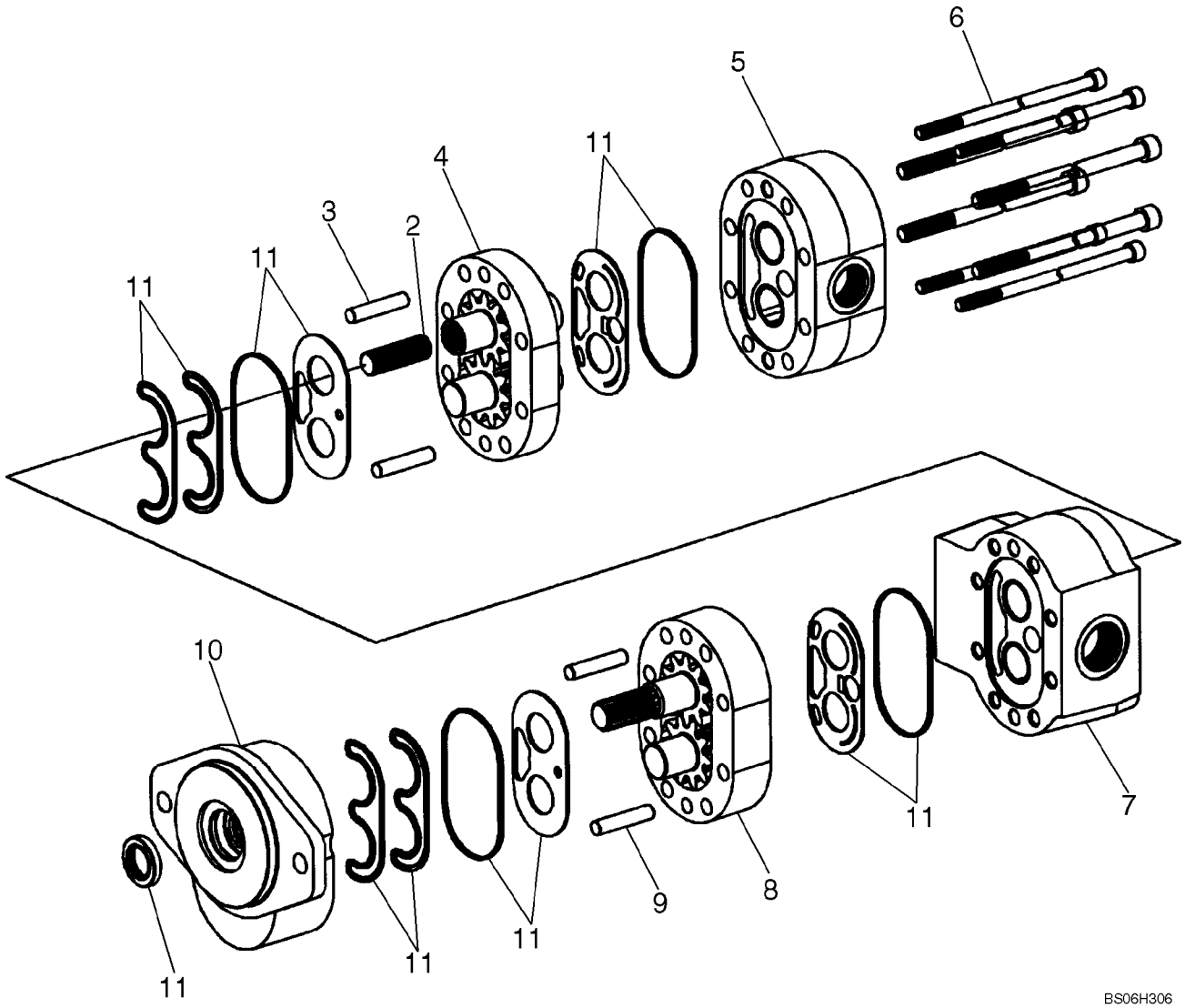

HYDRAULIC GEAR PUMP - HIGH FLOW

REF	FN	PART NUMBER	YR/SN	QTY	DESCRIPTION
1		87551795		1	PUMP, Tandem Gear; Incl. 2 - 11
2		NSS		1	NOT SERVICED SEPARATELY, Shaft
3		NSS		2	NOT SERVICED SEPARATELY, Dowel Pin
4		NSS		1	NOT SERVICED SEPARATELY, Housing, Gear
5		NSS		1	NOT SERVICED SEPARATELY, Housing
6		NSS		8	NOT SERVICED SEPARATELY, Bolt
7		NSS		1	NOT SERVICED SEPARATELY, Housing
8		NSS		1	NOT SERVICED SEPARATELY, Housing, Gear
9		NSS		2	NOT SERVICED SEPARATELY, Dowel Pin
10		NSS		1	NOT SERVICED SEPARATELY, Housing, Shaft End
11		87658431		1	KIT, SEALS, Seal Gear Pump

DRIVE LINE (420)

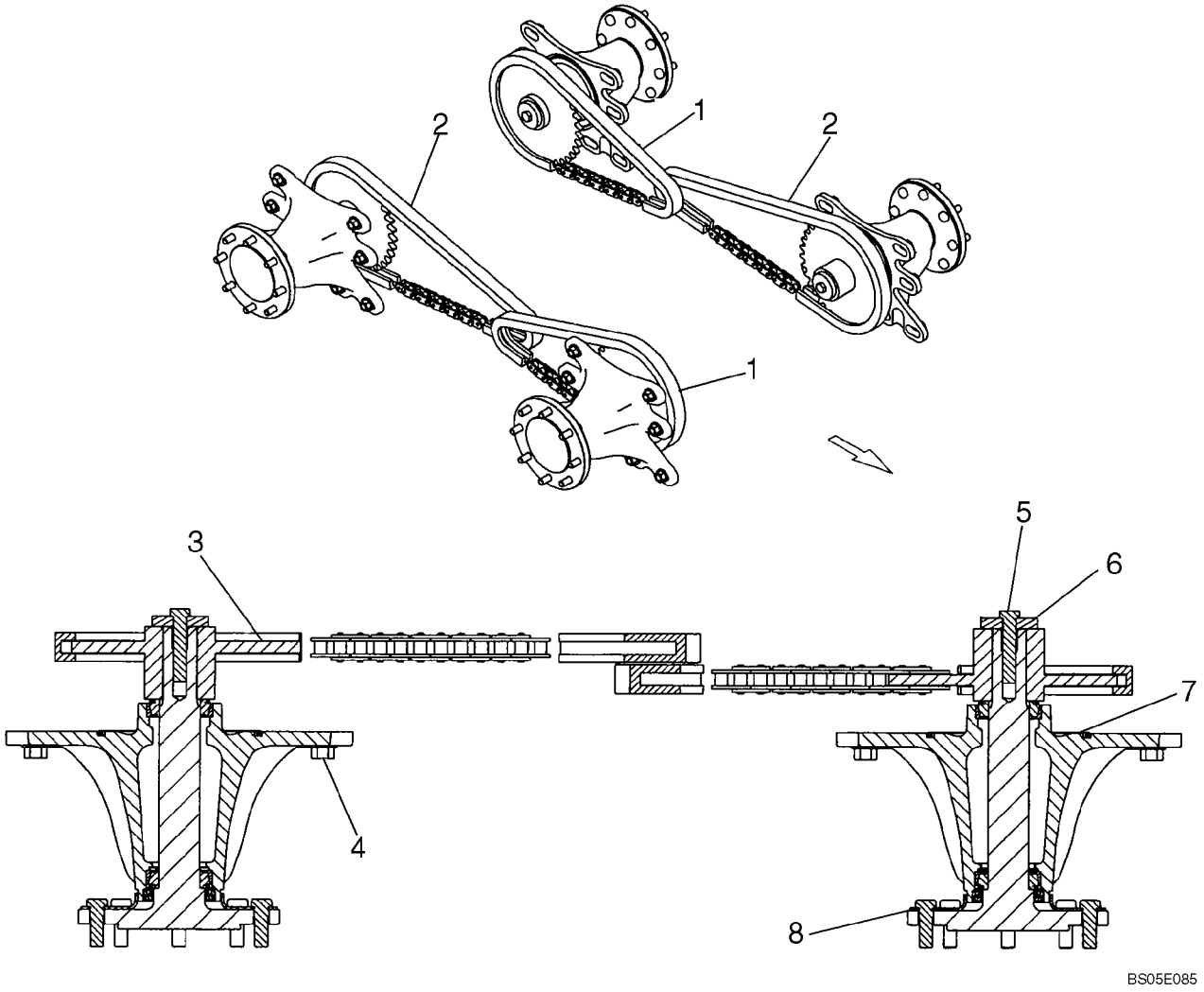

DRIVE LINE (420)

REF	FN	PART NUMBER	YR/SN	QTY	DESCRIPTION
1		87428143		2	CHAIN ASSY.(CE), 80/58P
2		364181A1		2	CHAIN ASSY.(CE), 80/70P
3		228141A2		4	SPROCKET ASSY., 35T
4		86512498		32	NUT, M16 x 2, Flg, Cl 10
5		86577946		4	BOLT, Hex, M16 x 80, 10.9
6		429233A1		4	WASHER, Use Permatex ZPX24210
7		238-5443		4	O-RING, -443, 70 Duro, 7.500" ID x .275" Thk
8		REF		4	INSTRUCTION, AXLE ASSY; Used in Production; See Figure 06-33

AXLE ASSY

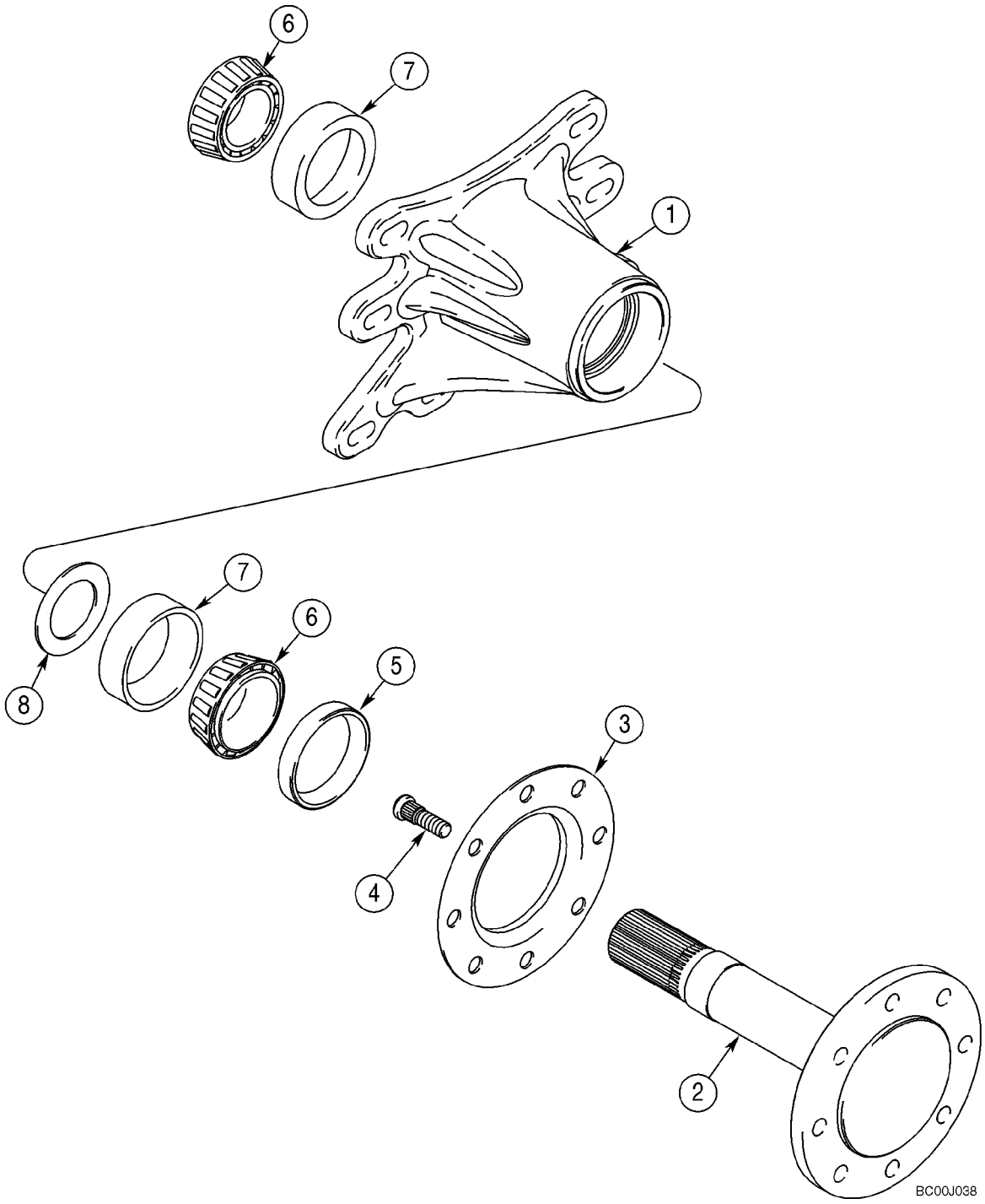

AXLE ASSY

REF	FN	PART NUMBER	YR/SN	QTY	DESCRIPTION
1		338551A2		1	HUB
		338550A4		1	WHEEL SHAFT, Incl. 2 - 4
2		NSS		1	NOT SERVICED SEPARATELY, Shaft, Axle
3		189995A1		1	FLANGE
4		191048A2		8	STUD, M16; Plain; Grade 9.8; If Used
4		{87618650}		8	M16; Phosphate Coated; Grade 9.8; If Used
5		341837A2		1	SEAL
6		D63653		2	BEARING
7		R32216		2	CUP, 3-1/4 OD
8		197805A1		1	WASHER

WHEELS

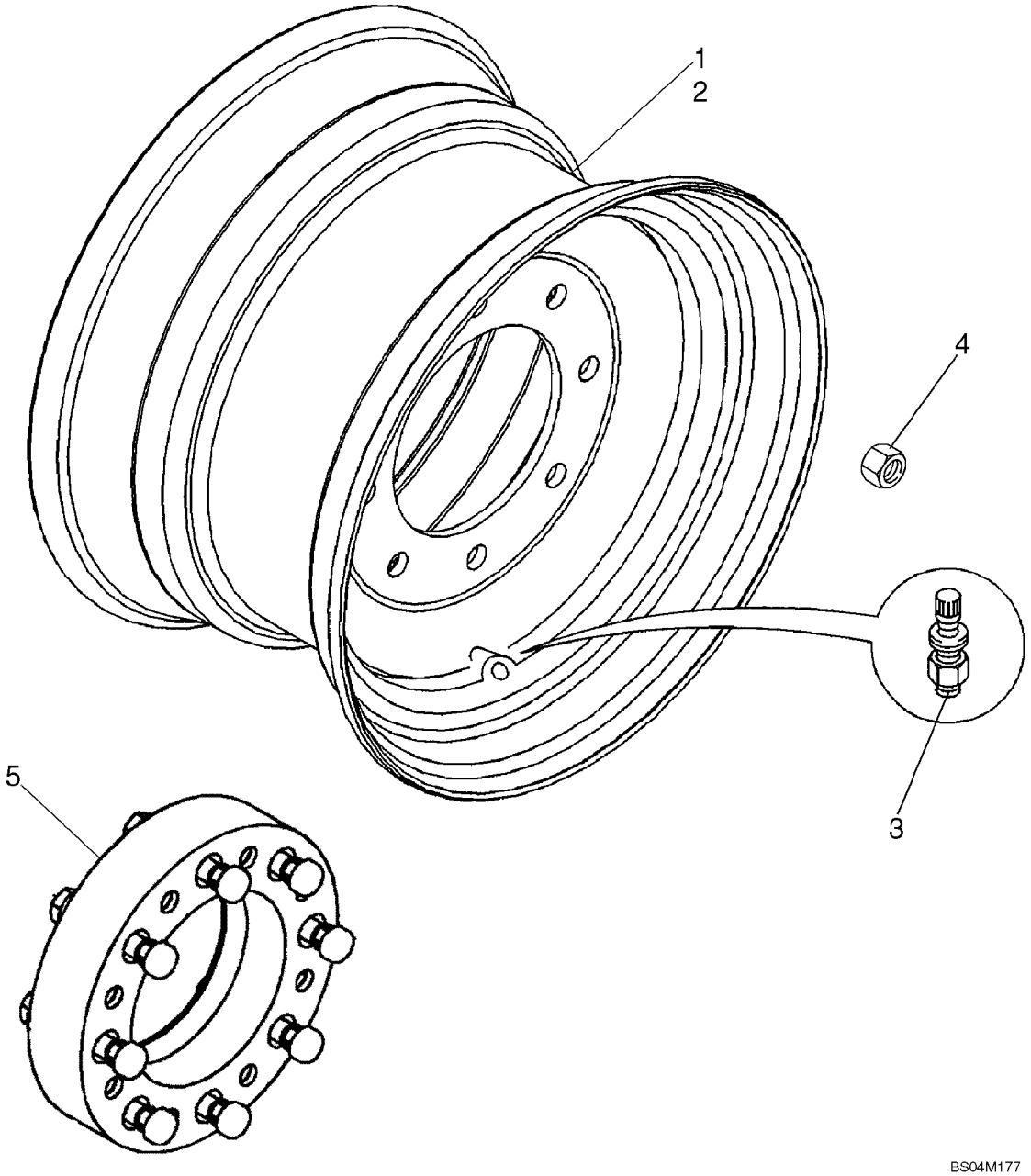

WHEELS

REF	FN	PART NUMBER	YR/SN	QTY	DESCRIPTION
1		408450A1		4	RIM, Stamped Center; 16.5 x 9.75; Used With 31.5 x 13.0 x 16.5 in. Tire
2		87534386		4	RIM, Stamped Center; 16.5 x 8.25 Full Center; Used With 10 x 16.5 in. Tire
3		294579A1		4	VALVE STEM, Used With Ref. 1, 2
4		408127A1		32	NUT, Lug, Hex, M16, 90 Degree Taper, Shown; Use With Wheel Ref. 1
4		86512498		32	NUT, M16 x 2, Flg, Cl 10, Lug Nut, M16, Flanged Nut, Not Illustrated; Use With Wheel Ref. 2
5		451855A1		1	SPACER, WHEEL SPACER KIT; Includes (4) Spacers, (32) 5/8 x 2-1/8 NF Hex Flange Bolts, (32) 5/8 NF Hex Flange Nuts
6		87534391		1	WHEEL ASSY, Wheel Assembly; 10 X 16.5 Galaxy 8 Ply Tire Mounted On 16.5 X 8.25 Full Center Rim, 53mm Offset
7		87534392		1	WHEEL ASSY, Wheel Assembly; 10 X 16.5 Galaxy "Hulk" 10 Ply Tire Mounted On 16.5 X 8.25 Full Center Rim, 53mm Offset
8		{408451A1}		1	Wheel Assembly; 31.5/13.00 X 16.5 Galaxy "Hippo" 10 Ply Tire Mounted On 16.50 X 9.75 Stamped Center Rim
9		{87654516}		1	Wheel Assembly; 10 X 16.5 Galaxy "XD2002" Tire Mounted On 16.5 X 8.25 Stamped Center Rim
10		{87684518}		1	Wheel Assembly; 12 X 16.5 Galaxy "XD2002" Tire Mounted On 16.5 X 9.75 Stamped Center Rim

WHEELS - SOLID FLEX

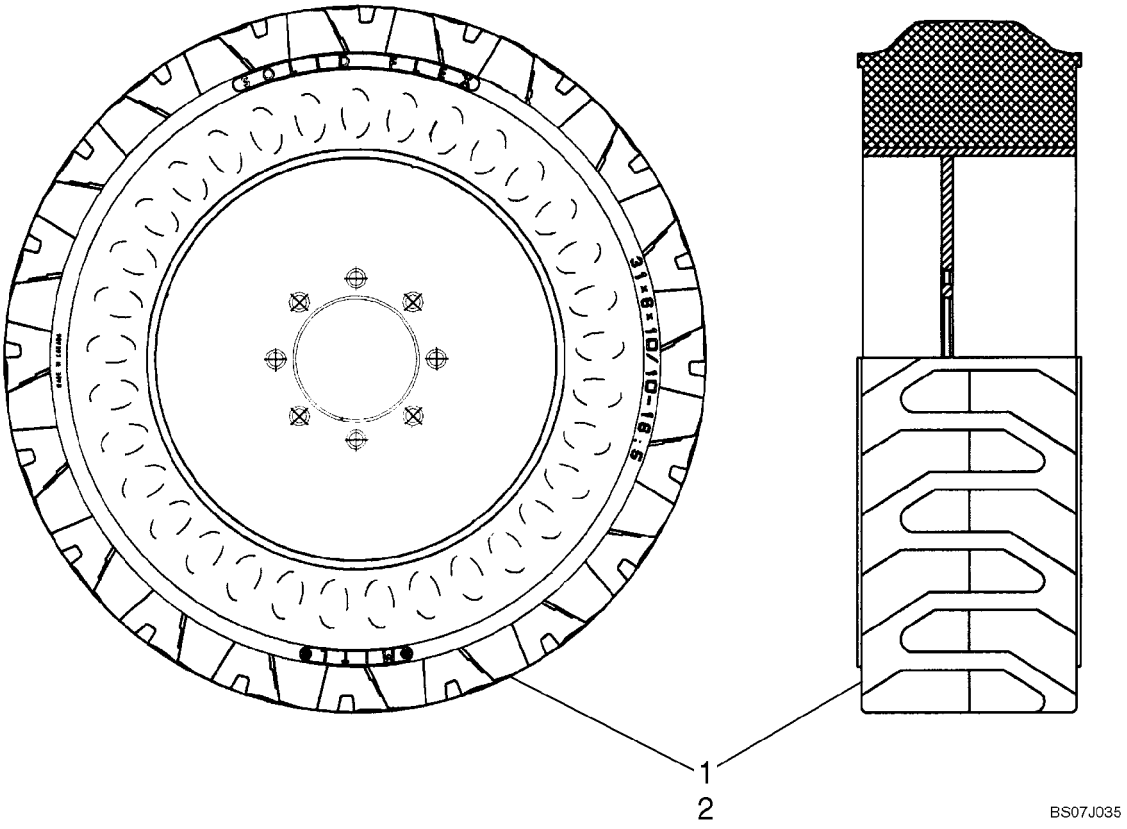

WHEELS - SOLID FLEX

REF	FN	PART NUMBER	YR/SN	QTY	DESCRIPTION
1		{87686720}		2	Tire, LH - 10 X 16.5 Galaxy Solid Flex
2		{87686719}		2	Tire, RH - 10 X 16.5 Galaxy Solid Flex

FINAL DRIVE (420CT)

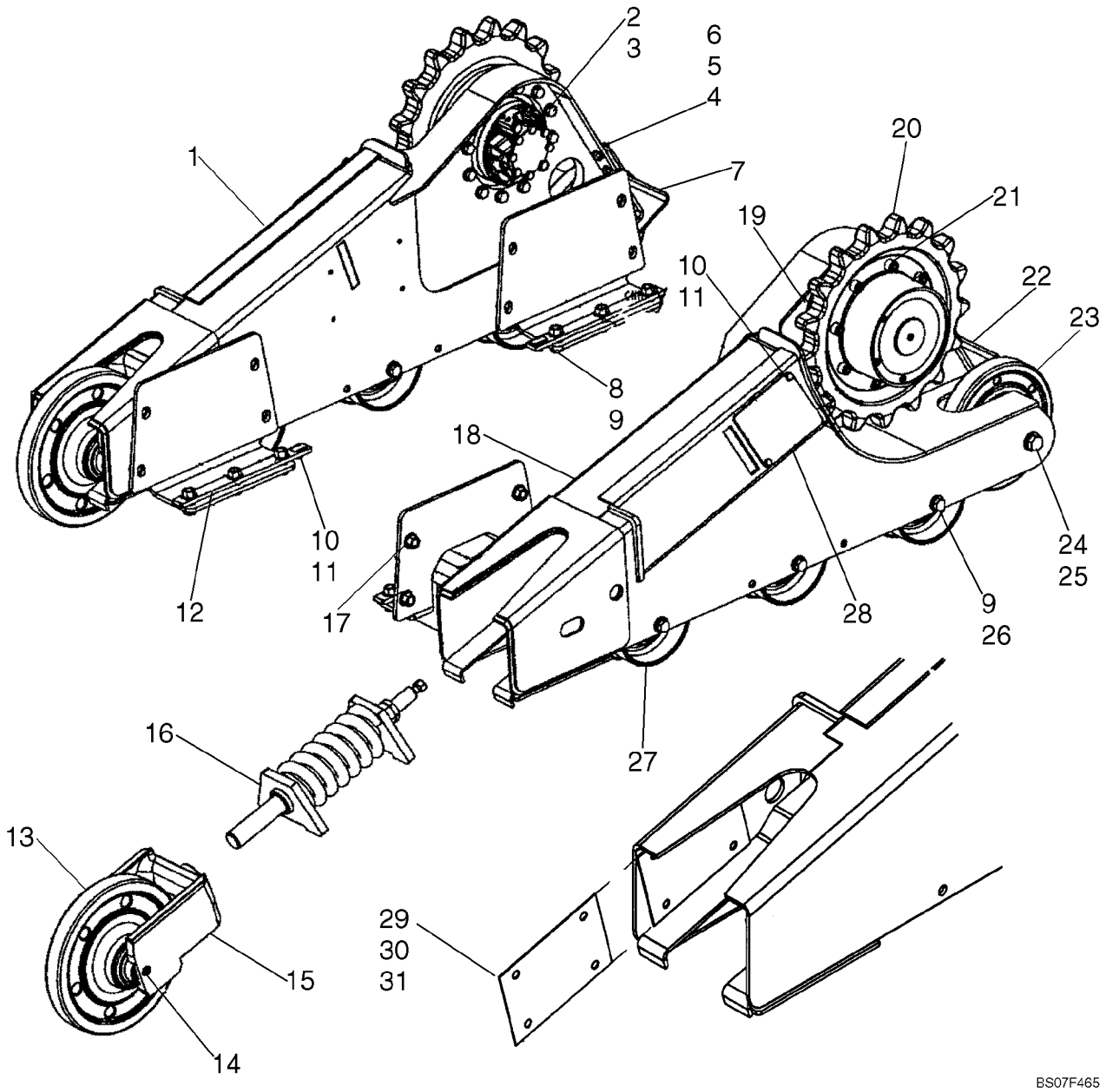

FINAL DRIVE (420CT)

REF	FN	PART NUMBER	YR/SN	QTY	DESCRIPTION
		87563155		1	KIT, Roller And Idler; Includes Ref. 9, 13, 14, 23 - 26, 27 And Instructions
1		87669337		1	FRAME, Frame; Right Hand
2		11116431		24	BOLT, Hex, M14 x 60, 10.9
3		87016615		24	WASHER, M12 x 28.5 x 3, HT
4		43260		8	BOLT, Hex, M12 x 30, 10.9
5		337475		8	NUT, M12, Cl 10
6		86625255		8	WASHER, M13.5 x 24.5 x 3, HT
7		87459518		1	SCRAPER, Scraper Plate, Right Hand
8		86508624		12	BOLT, Hex, M16 x 45, 10.9
9		86639326		24	WASHER, M17.5 x 34 x 5, HT
10		43127		4	BOLT, Hex, M8 x 25, 8.8
11		86511315		8	WASHER, M8 x 16 x 1.6
12		87364613		4	BAR, Bar W/Undercarriage Mount
13		87535298		2	IDLER, FRONT, 350 mm, Front; Replaces 87462176
14		14301821		4	SCREW, Hex Soc Hd, M10 x 16, 8.8
15		87462287		2	YOKE, Front Idler
16		87602985		2	TENSIONER, Spring, Tension; Replaces 87458724
		87602988		2	ROD, Piston Rod; Piston For Track Tensioner, Ref. 16
		87602987		2	KIT, SERVICE, Seal Kit For Track Tensioner; Incl. Scraper, Spacer And O-Ring
		87356572		1	VALVE, Grease Valve For Tension Spring Ref 16
17		86512498		16	NUT, M16 x 2, Flg, Cl 10
18		87669345		1	FRAME, Frame, Left Hand
19		87363008		2	SPACER, Motor Spacer
20		87460888		2	SPROCKET, 17 Tooth - 86 Pitch
21		{87619750}		16	Screw, Socket Head M16 X 45 12.9 ZND
22		87459517		1	SCRAPER, Plate, Left Hand
23		87535299		2	IDLER, 290 mm, Rear; Replaces 87447230
24		9512573		4	BOLT, Hex, M20 x 40, 10.9
25		86629891		4	WASHER, M18 x 41.5 x 5, HT
26		374835		12	BOLT, Hex, M16 x 40, 10.9
27		87535297		6	TRACK ROLLER, Replaces 87447228
28		87354210		2	COVER, Plate, Zerk Cover

FINAL DRIVE (420CT)

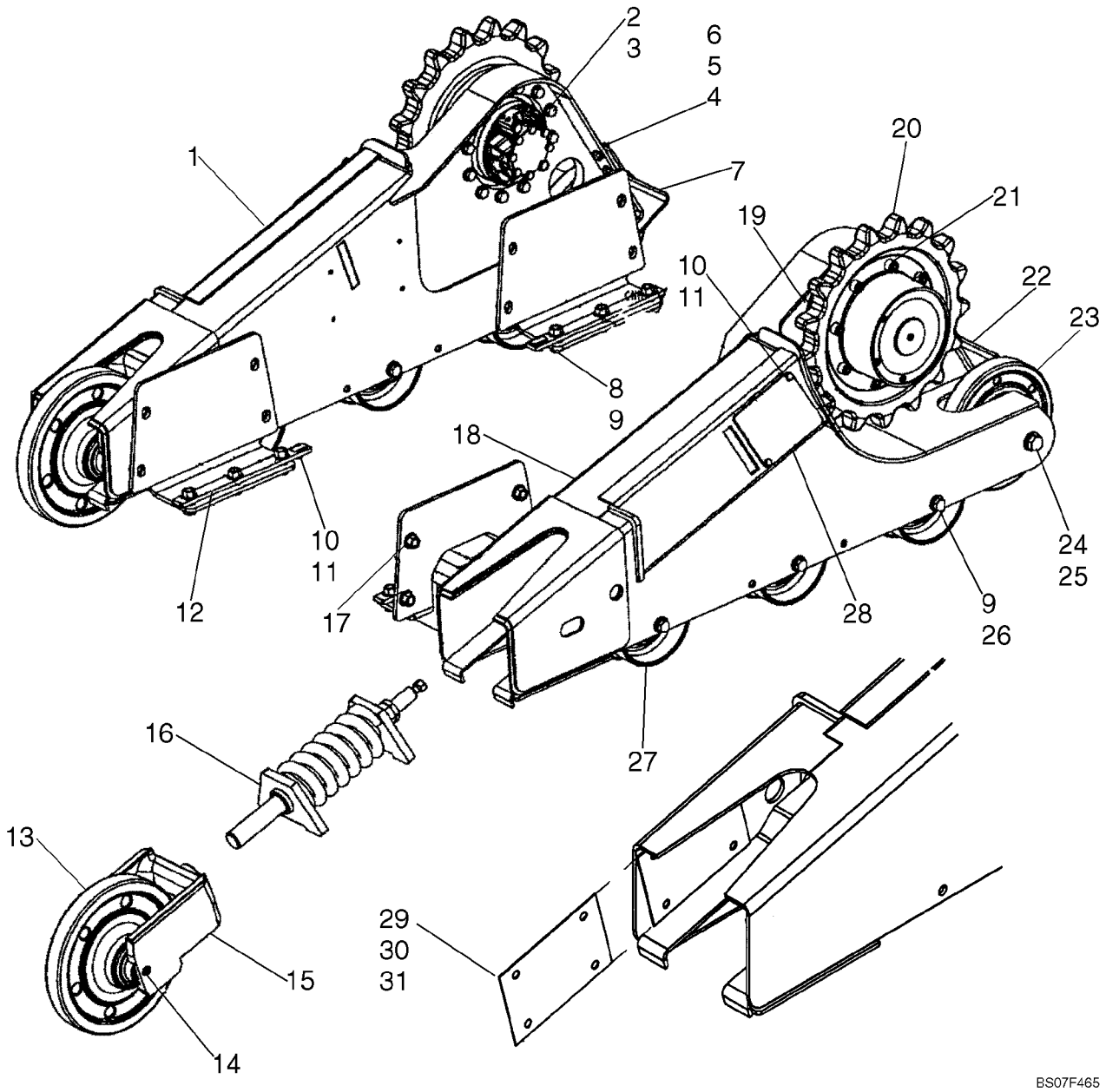

FINAL DRIVE (420CT)

REF	FN	PART NUMBER	YR/SN	QTY	DESCRIPTION
29		87650011		1	KIT, SERVICE, Yoke Shim Kit; Incl. 30, 31 And Instructions
30		87650010		2	PLATE, 16 Gage Shim
31		87650009		2	PLATE, 12 Gage Shim

TRACK (420CT)

ART

NOT

AVAILABLE

TRACK (420CT)

REF	FN	PART NUMBER	YR/SN	QTY	DESCRIPTION
		87541113		2	RUBBER TRACK, 320 Wide 50 x 86

PUMP, TANDEM - FRONT

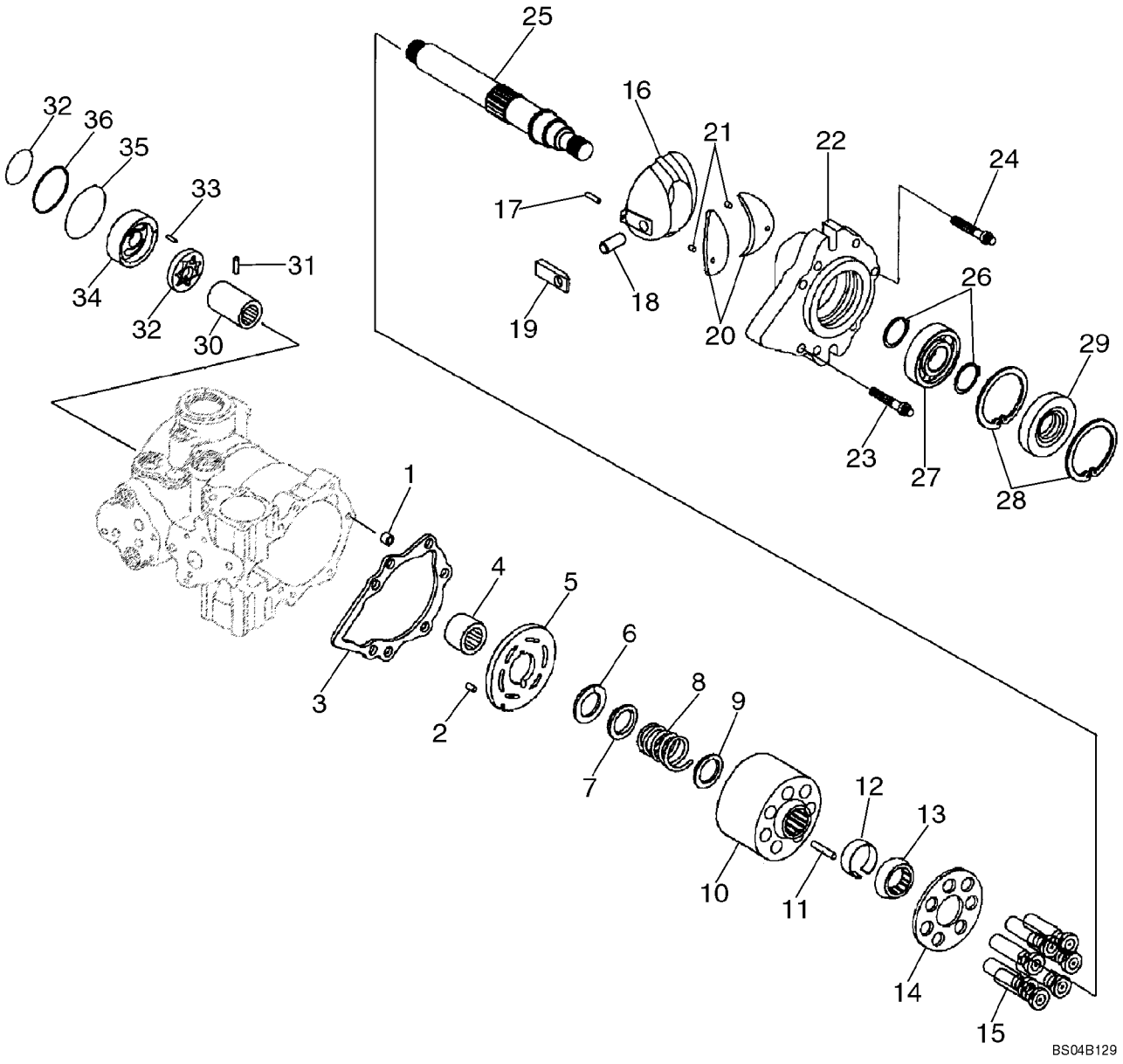

PUMP, TANDEM - FRONT

REF	FN	PART NUMBER	YR/SN	QTY	DESCRIPTION
					Front Pump
		87643160		1	PUMP, Incl. 1 - 37
1		N13994		1	SPACER
2		38-11207		1	PIN, LOCK, 3/16" x 7/16", Slotted
3		H436704		1	GASKET, Included in 140008A1 Seal Kit
4		278563		1	BEARING, NEEDLE
5		86019214		1	PLATE
		87051278		1	KIT, HYD PUMP REPAIR, Cylinder Block; Kit Includes Cylinder Block Parts For Rear Pump; Incl. 6 - 13
6		NSS		2	NOT SERVICED SEPARATELY, Ring, Retaining
7		115950A1		2	DISC, Washer
8		115948A1		2	SPRING
9		115946A1		2	DISC, Washer
10		NSS		2	NOT SERVICED SEPARATELY, Block, Cylinder
11		110873A1		6	PIN, LARGE
12		115943A1		2	RING, LOCKING, Ring, Retaining
13		115942A1		2	GUIDE
14		NSS		2	NOT SERVICED SEPARATELY, Retainer
15		NSS		14	NOT SERVICED SEPARATELY, Piston
16		87050523		1	PLATE ASSY., Variable Swash Plate
17		324610A1		1	PIN, LARGE
18		N13254		1	PIN
19		N13224		1	SLEEVE
		87051277		1	COVER ASSY, Incl. 20 - 22
20		87050524		2	BEARING ASSY
21		86529088		2	PIN
22		87050525		1	COVER ASSY, Incl 20, 21
23		223677A1		6	SCREW, 7/16 in
24		223680A1		1	BOLT, SPECIAL, 3/8 in
25		N13244		1	SHAFT
26		9671424		2	RING, SNAP, #137, Ext
27		37203		2	BEARING, BALL
28		103-21281		1	RING, SNAP, 2.812", Int, #281
29		N14103		1	SEAL, Lip; Included in 140008A1 Seal Kit

PUMP, TANDEM - FRONT

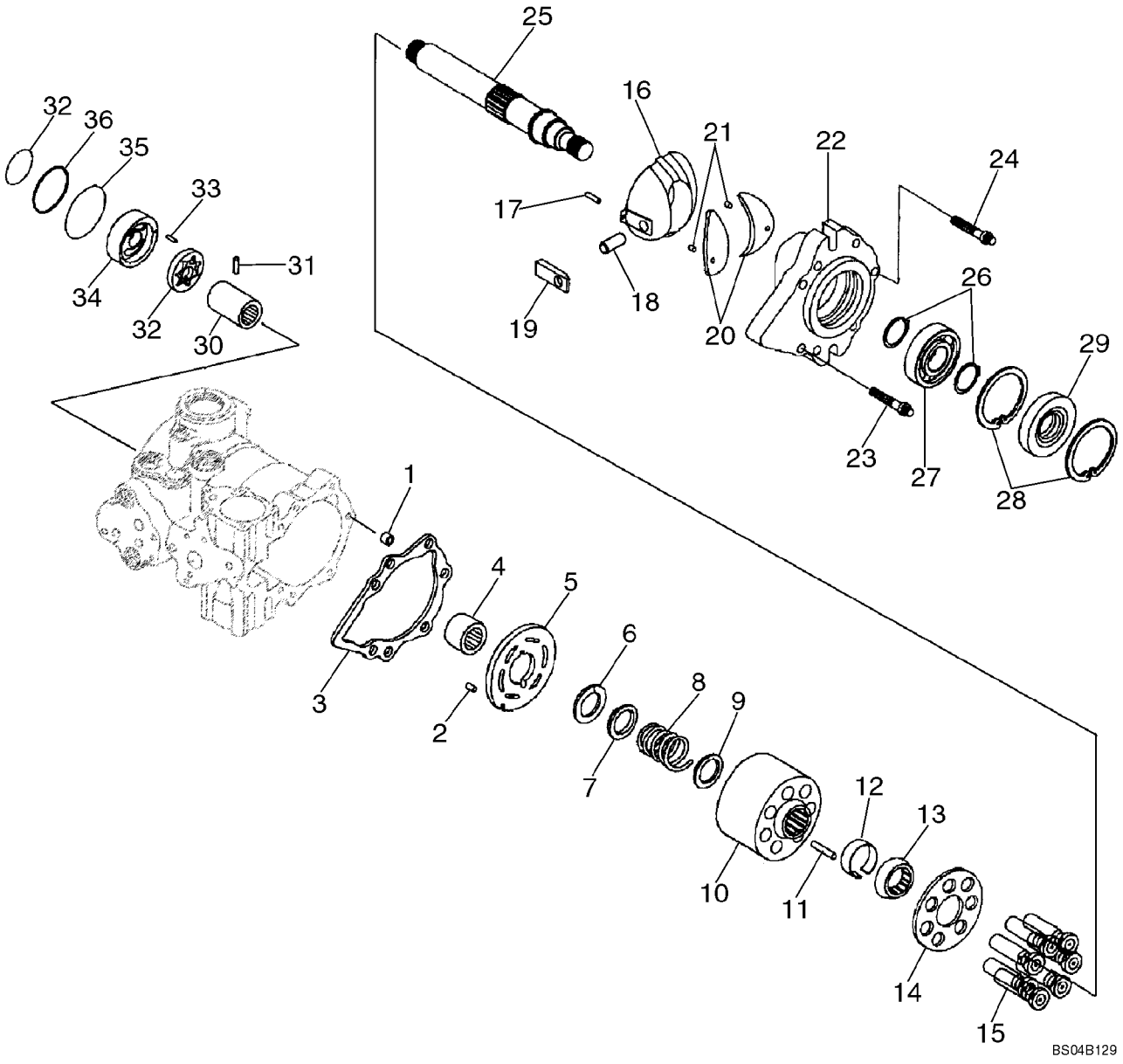

PUMP, TANDEM - FRONT

REF	FN	PART NUMBER	YR/SN	QTY	DESCRIPTION
30		N13234		1	COUPLING, BREAK AWAY
31		N13262		2	PIN
32		N13247		1	GEAR-SET
33		181680A1		1	PIN
34		N13999		1	PLATE
35		H437190		1	O-RING, Included in 140008A1 Seal Kit
36		70923607		1	O-RING, -238, 90 Duro, 3.484" ID x .139" Thk, Included in 140008A1 Seal Kit
37		H435776		1	O-RING, Included in 140008A1 Seal Kit

06-39		p1	12/07

PUMP, TANDEM - FRONT

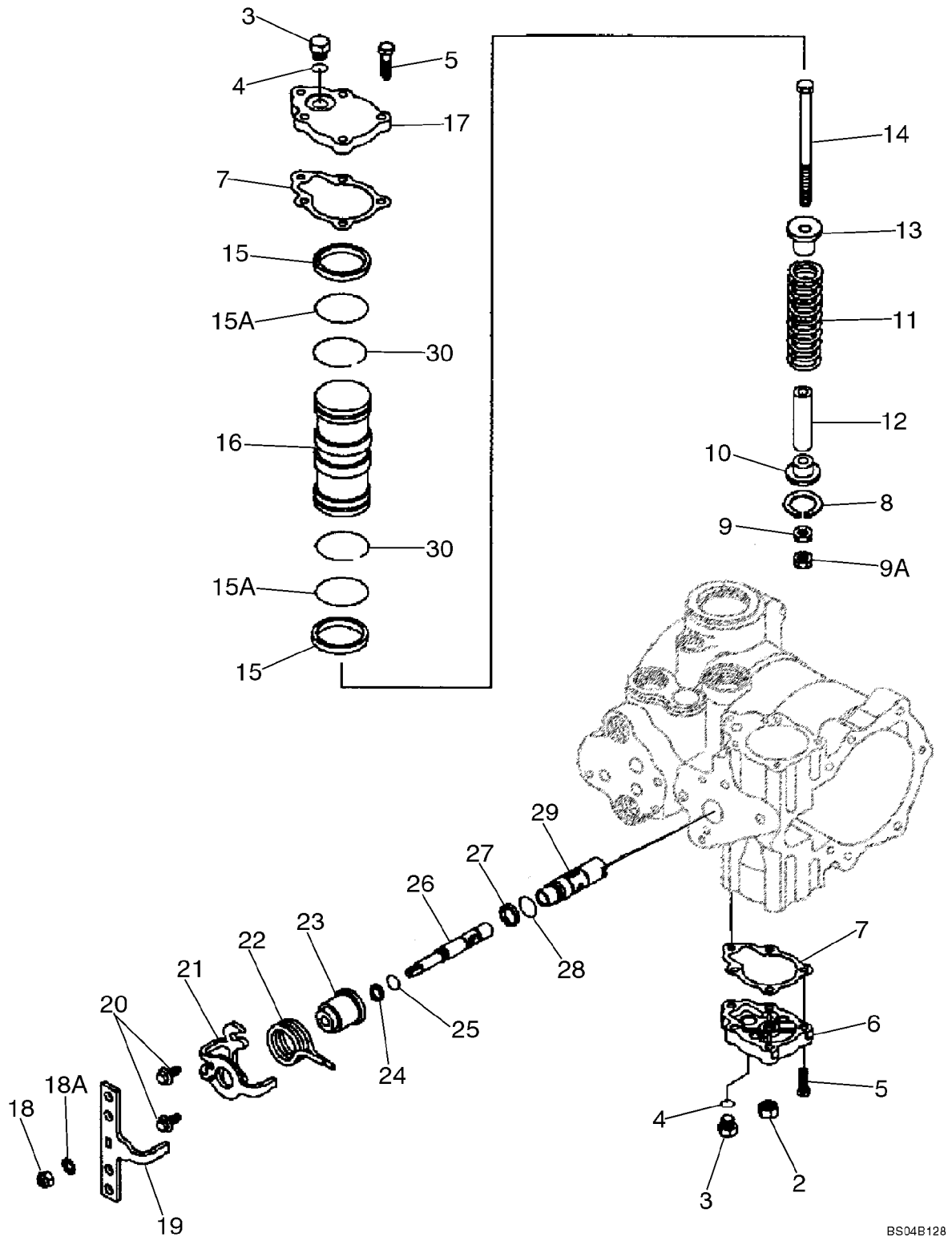

PUMP, TANDEM - FRONT

REF	FN	PART NUMBER	YR/SN	QTY	DESCRIPTION
					Front Pump
		87643160		1	PUMP, Incl. 2 - 30
2		N13260		1	NUT, 5/8 NF
3		76349		2	PLUG, Hex Hd, 9/16"-18 ORB, 9/16 Or; Incl. 4
4		9617873		1	O-RING, 6-1, 90 Duro, .468" ID x .078" Thk
5		H438321		10	BOLT, 1/4 x 1-1/4; 8
6		H436065		1	COVER
7		N14063		2	GASKET
8		N13255		1	RING
9		86509310		1	NUT, 3/8"-24, G5
9B		324604A1		1	NUT, 3/8 in
10		N13241		1	GUIDE
11		N13226		1	SPRING
12		N13242		1	SLEEVE
13		N14666		1	GUIDE
14		370531A1		1	SCREW
		H673773		1	KIT, Incl. 15, 15A; Incl. Rings For Rear Pump Pistons
15		N14668		4	RING, PISTON, Included in 140008A1 Seal Kit
15A		511212		2	O-RING, -131, 70 Duro, 1.674" ID x .103" Thk, Included in 140008A1 Seal Kit
		140008A1		1	KIT, GASKET, Overhaul Seal And Gasket Kit; Incl. (10) Rings, (4) Bearings, (20) O-Rings, (6) Gaskets, (2) Seals; Incl. Ref 7, 15, 15A, 24, 25, 27, 28, 30
16		87039622		1	PISTON ASSY, Incl. 15, 15A, 30
17		H436053		1	COVER
18		H436054		1	NUT
18A		280278		1	WASHER, LOCK, Ext Tooth, 5/16"
19		436415A1		1	HANDLE
20		H435770		2	SCREW
21		436416A1		1	BRACKET
22		407060A1		1	SPRING
23		87039613		1	GUIDE
24		86993484		1	RING, Included in 140008A1 Seal Kit
25		86993475		1	O-RING, Included in 140008A1 Seal Kit
26		87039614		1	SPOOL, Incl. 24, 25

PUMP, TANDEM - FRONT

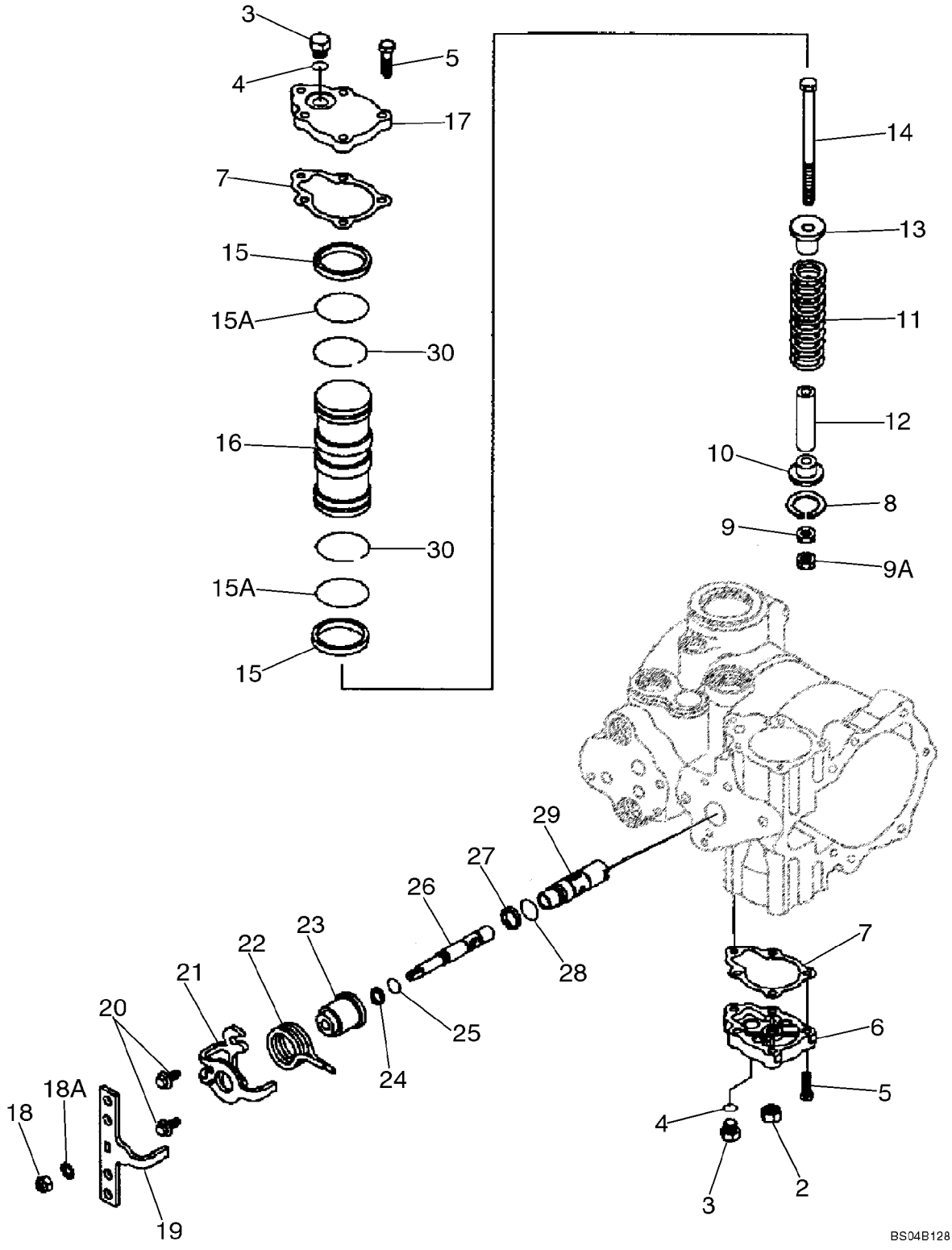

PUMP, TANDEM - FRONT

REF	FN	PART NUMBER	YR/SN	QTY	DESCRIPTION
27		86993483		1	RING, Included in 140008A1 Seal Kit
28		NSS		1	NOT SERVICED SEPARATELY, O-Ring; Included in 140008A1 Seal Kit
29		87039615		1	SLEEVE, Incl. 27, 28
30		100536A1		2	RING, Included in 140008A1 Seal Kit

PUMP, TANDEM - REAR

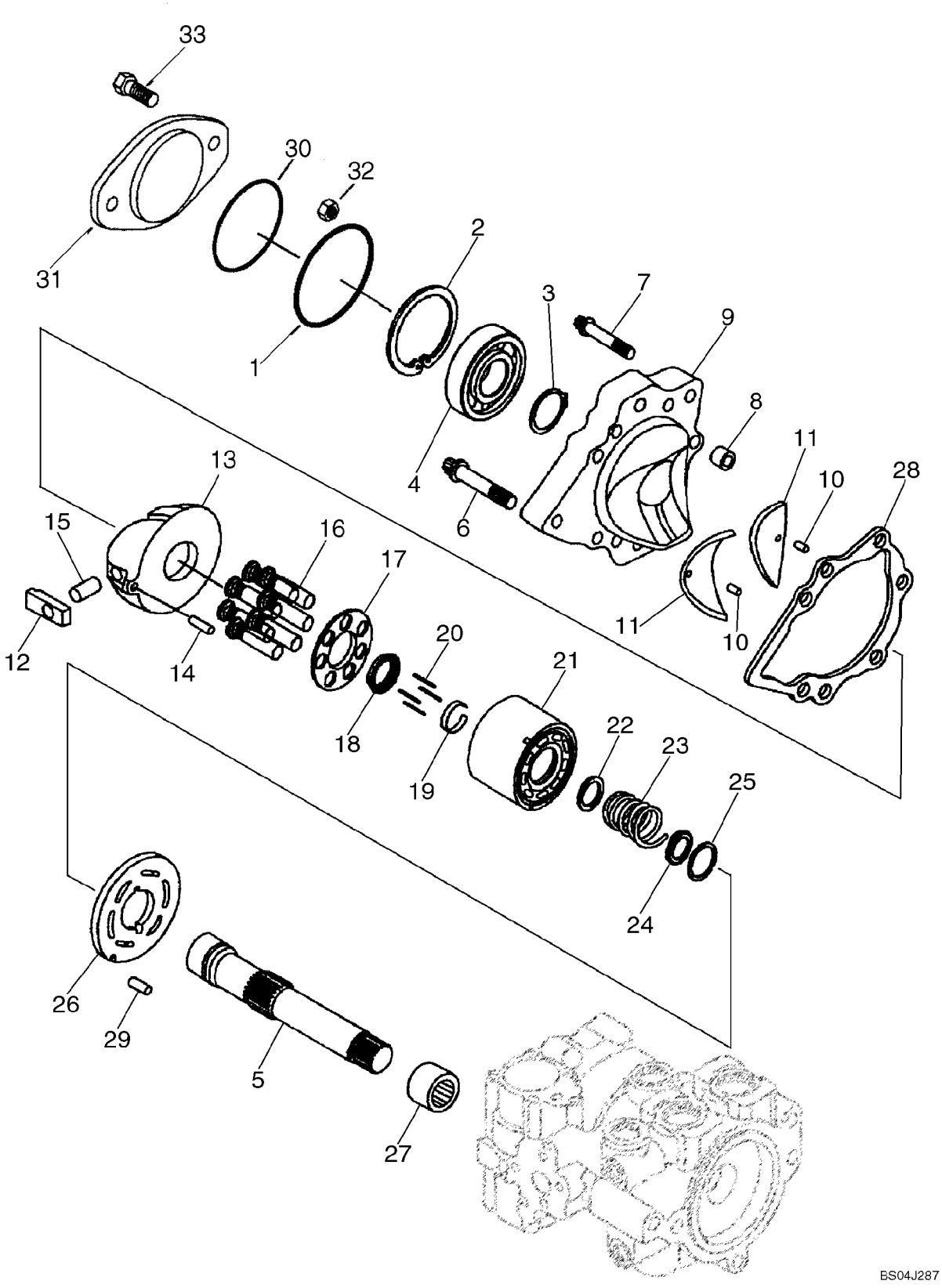

PUMP, TANDEM - REAR

REF	FN	PART NUMBER	YR/SN	QTY	DESCRIPTION
					Rear Pump
		87643160		1	PUMP, Incl. 2 - 32
1		NSS		1	NOT SERVICED SEPARATELY, O-Ring
2		103-21281		1	RING, SNAP, 2.812", Int, #281
3		100-11137		1	RING, SNAP, #137, Ext
4		A29183		1	BEARING, BALL
5		87039623		1	SHAFT
6		223677A1		6	SCREW, 7/16 in
7		223680A1		1	BOLT, SPECIAL, 3/8 in
8		N13994		1	SPACER
		87050526		1	COVER ASSY, Incl. Ref 9 - 11
9		NSS		1	NOT SERVICED SEPARATELY, Cover; Incl. 10, 11
10		193494A1		2	PIN, ROLL
11		87050524		2	BEARING ASSY
12		N13224		1	SLEEVE
13		87050523		1	PLATE ASSY.
14		324610A1		1	PIN, LARGE
15		N13254		1	PIN
		87051278		1	KIT, HYD PUMP REPAIR, Cylinder Block; Components Not Serviced Separately; Incl. 16 - 25
16		NSS		14	NOT SERVICED SEPARATELY, Piston
17		NSS		2	NOT SERVICED SEPARATELY, Retainer
18		115942A1		2	GUIDE, Guide
19		115943A1		2	RING, LOCKING, Ring, Retaining
20		110873A1		6	PIN, LARGE, Pin
21		NSS		2	NOT SERVICED SEPARATELY, Block, Cylinder
22		115946A1		2	DISC
23		115948A1		2	SPRING
24		115950A1		2	DISC
25		NSS		2	NOT SERVICED SEPARATELY, Ring, Retaining
26		128929A1		1	PLATE, LARGE
27		278563		1	BEARING, NEEDLE, Bearing, Needle
28		H436704		1	GASKET
29		38-11207		1	PIN, LOCK, 3/16" x 7/16", Slotted

PUMP, TANDEM - REAR

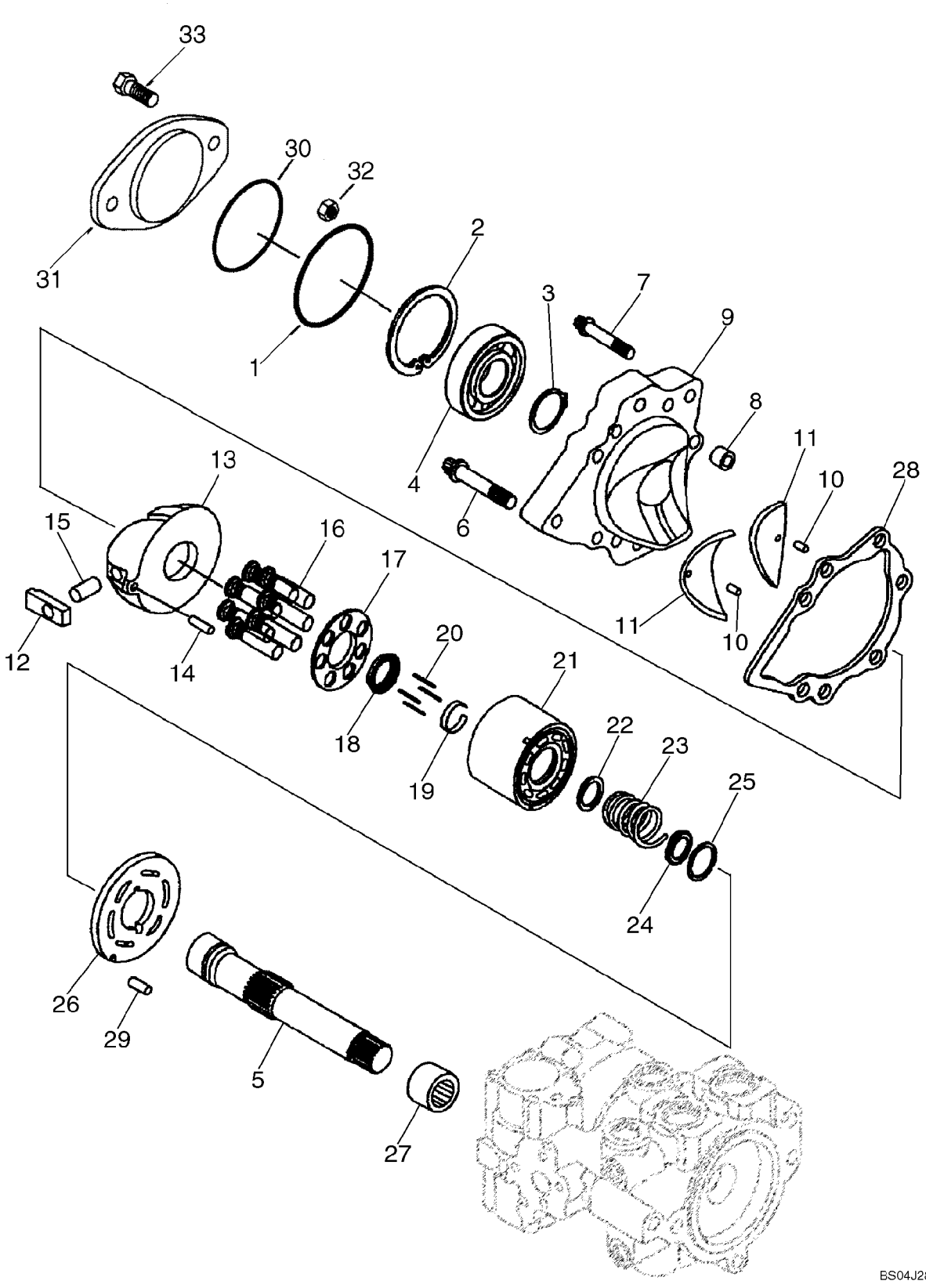

PUMP, TANDEM - REAR

REF	FN	PART NUMBER	YR/SN	QTY	DESCRIPTION
30		87013729		1	O-RING, -044, 70 Duro, 3.739" ID x .070" Thk, Included in 140008A1 Seal Kit
31		100703A1		2	PLATE, SPACER
32		425-108		2	NUT, 1/2"-13, G5
33		13-836		2	BOLT, Hex, 1/2"-13 x 2 1/4", G5
		140008A1		1	KIT, GASKET, Overhaul Seal And Gasket Kit; Incl. (10) Rings, (4) Bearings, (20) O-Rings, (6) Gaskets, (2) Seals; Incl. Ref 34

PUMP, TANDEM - REAR

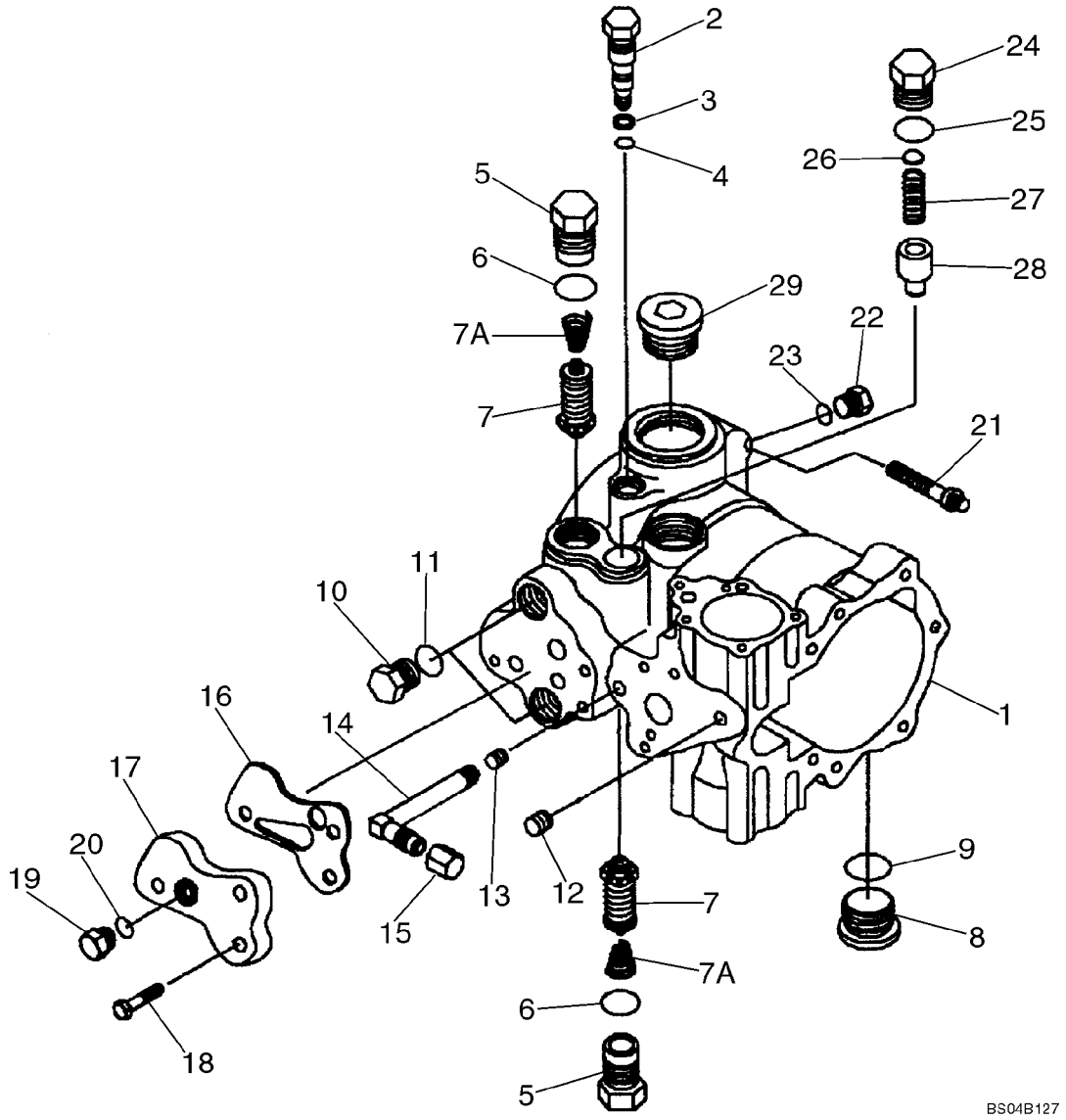

PUMP, TANDEM - REAR

REF	FN	PART NUMBER	YR/SN	QTY	DESCRIPTION
					Front Pump
		87643160		1	PUMP, Incl. 1 - 29
1		402364A1		1	HOUSING, Incl. 1277297C1, 38-11207, 9672438
		1277297C1		1	BEARING
		38-11207		1	PIN, LOCK, 3/16" x 7/16", Slotted
		9672438		1	PLUG, Hex Hd, 7/16"-20 ORB
2		87039612		1	VALVE, BY-PASS, Incl. Ref 3, 4
3		S99877		1	RING
4		86993475		1	O-RING, 3/8 ID x 1/16; Included in 140008A1 Seal Kit
5		N14848		1	VALVE, PRESSURE RELIEF, Plug; Incl 5 - 7A
6		167266		1	O-RING, 12-1, 90 Duro, .924 ID x .116" Thk, Included in 140008A1 Seal Kit
7		NSS		1	NOT SERVICED SEPARATELY, Valve, Relief
7A		86993468		1	SPRING
8		9841223		2	PLUG, Hex Soc, 1 1/16"-12 ORB, Incl. 9
9		167266		1	O-RING, 12-1, 90 Duro, .924 ID x .116" Thk
10		76349		2	PLUG, Hex Hd, 9/16"-18 ORB, Incl. 11
11		9617873		1	O-RING, 6-1, 90 Duro, .468" ID x .078" Thk
12		F23137		1	PLUG
13		86993479		1	PLUG, Pipe
14		86993480		1	ELBOW
15		86993467		1	CAP
16		303709A1		1	SEAL, Filter Adapter; Included in 140008A1 Seal Kit
17		101462A1		1	ADAPTER, Suction Line Filter
18		326-516		3	BOLT, Hex, 5/16"-18 x 1", G8, Full Thd
19		76349		1	PLUG, Hex Hd, 9/16"-18 ORB, Incl. Ref 20
		140008A1		1	KIT, GASKET, Overhaul Seal And Gasket Kit; Incl. (10) Rings, (4) Bearings, (20) O-Rings, (6) Gaskets, (2) Seals; Incl. Ref 3, 4, 6, 16, 25
20		9617873		1	O-RING, 6-1, 90 Duro, .468" ID x .078" Thk
21		26044R1		2	SCREW, 12 Pt Flg, 1/2"-13 x 2"
22		9672438		1	PLUG, Hex Hd, 7/16"-20 ORB, Incl. 23
23		9617873		1	O-RING, 6-1, 90 Duro, .468" ID x .078" Thk
24		87039611		1	PLUG, Charge Relief; Incl. 25

PUMP, TANDEM - REAR

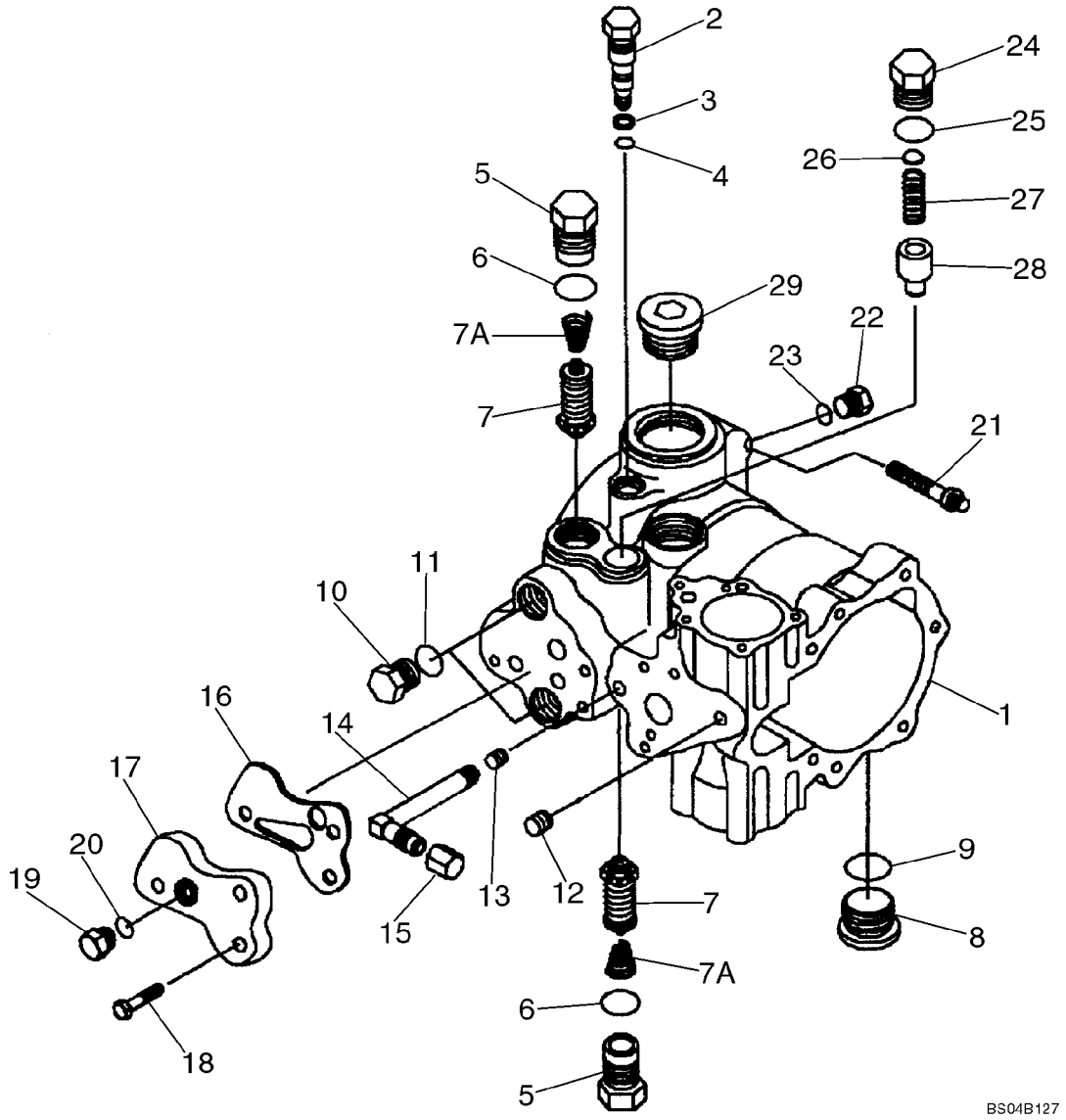

PUMP, TANDEM - REAR

REF	FN	PART NUMBER	YR/SN	QTY	DESCRIPTION
25		167269		1	O-RING, 10-1, 90 Duro, .755" ID x .097" Thk, Included in 140008A1 Seal Kit
26		H407767		1	KIT, Shim
27		244898A1		1	SPRING
28		188571		1	VALVE, PRESSURE RELIEF, Charge Relief
29		NSS		1	NOT SERVICED SEPARATELY, Plug

PUMP, TANDEM - REAR

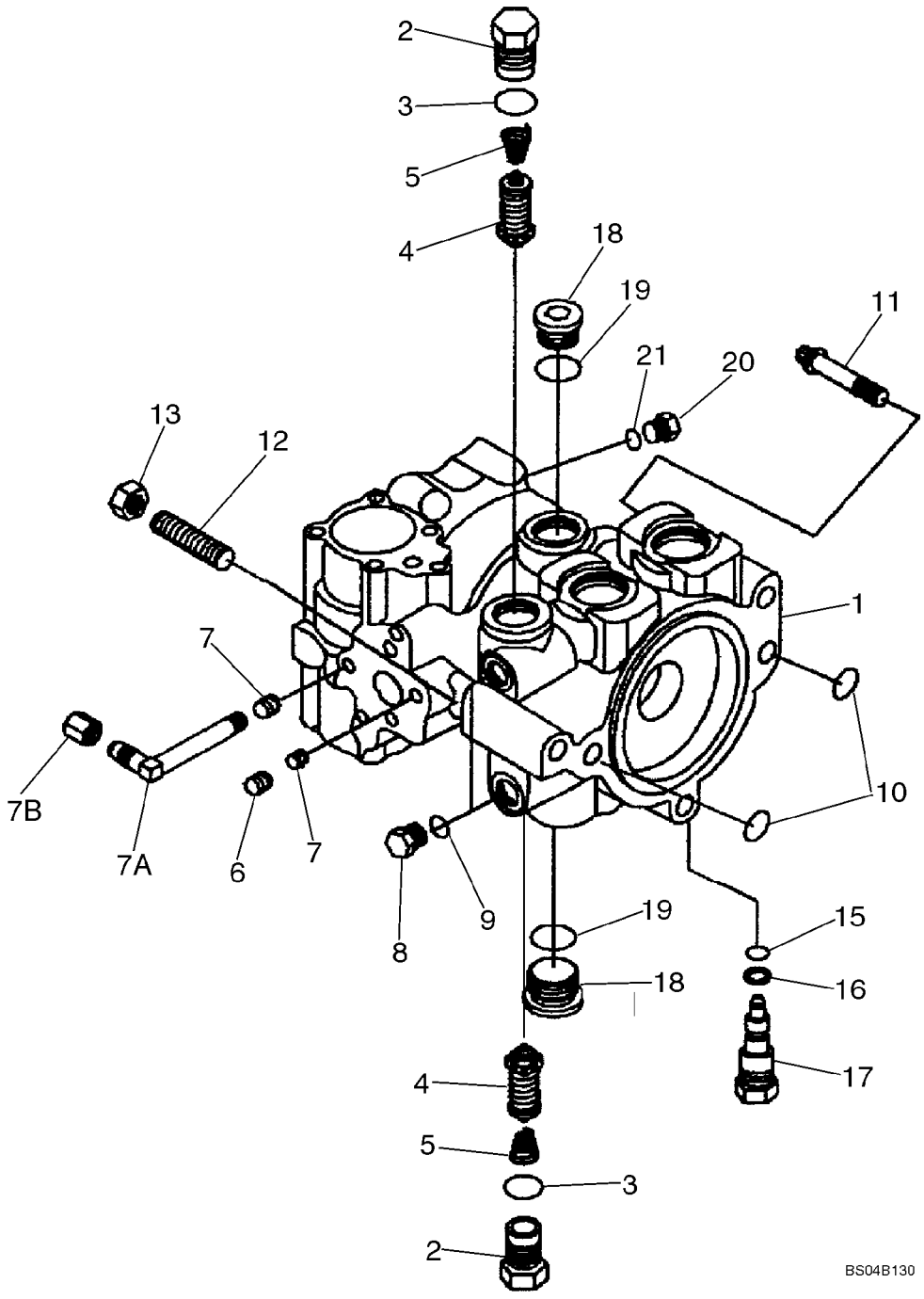

PUMP, TANDEM - REAR

REF	FN	PART NUMBER	YR/SN	QTY	DESCRIPTION
					Rear Pump
		87643160		1	PUMP, Incl. 1 - 21
1		402365A1		1	HOUSING, Incl. 1277297C1, 138-217, 9672438
		1277297C1		1	BEARING
		138-217		1	PIN, LOCK, 3/16" x 7/16", Slotted
		9672438		1	PLUG, Hex Hd, 7/16"-20 ORB
		N14848		2	VALVE, PRESSURE RELIEF, Incl. 2 - 5
2		NSS		1	NOT SERVICED SEPARATELY, Plug
3		237-6012		1	O-RING, 12-1, 90 Duro, .924 ID x .118" Thk, Included in 140008A1 Seal Kit
4		NSS		1	NOT SERVICED SEPARATELY, Valve, Relief
5		86993468		1	SPRING
6		F23137		1	PLUG
7		86993479		2	PLUG
7A		86993480		1	ELBOW, 90 deg
7B		86993467		1	CAP
		140008A1		1	KIT, GASKET, Overhaul Seal And Gasket Kit; Incl. (10) Rings, (4) Bearings, (20) O-Rings, (6) Gaskets, (2) Seals; Incl. Ref 3, 10, 15, 16
8		76349		2	PLUG, Hex Hd, 9/16"-18 ORB, Incl. 9
9		237-6006		1	O-RING, 6-1, 90 Duro, .468" ID x .078" Thk
10		238-6116		2	O-RING, -116, 90 Duro, .737" ID x .103" Thk, Included in 140008A1 Seal Kit
11		166-89		1	SCREW, 12 Pt Flg, 1/2"-13 x 2", G8
12		K608432		1	STUD, Hex, M10 x 70, 8.8
13		425-108		1	NUT, 1/2"-13, G5
15		86993475		1	O-RING, Included in 140008A1 Seal Kit
16		S99877		1	RING, Included in 140008A1 Seal Kit
17		87039612		1	VALVE, BY-PASS, Incl. Ref 15, 16
18		9841223		2	PLUG, Hex Soc, 1 1/16"-12 ORB, Incl. 19
19		237-6012		1	O-RING, 12-1, 90 Duro, .924 ID x .118" Thk
20		9672438		1	PLUG, Hex Hd, 7/16"-20 ORB, Incl. 21
21		237-6006		1	O-RING, 6-1, 90 Duro, .468" ID x .078" Thk

MOTOR ASSY - SINGLE SPEED

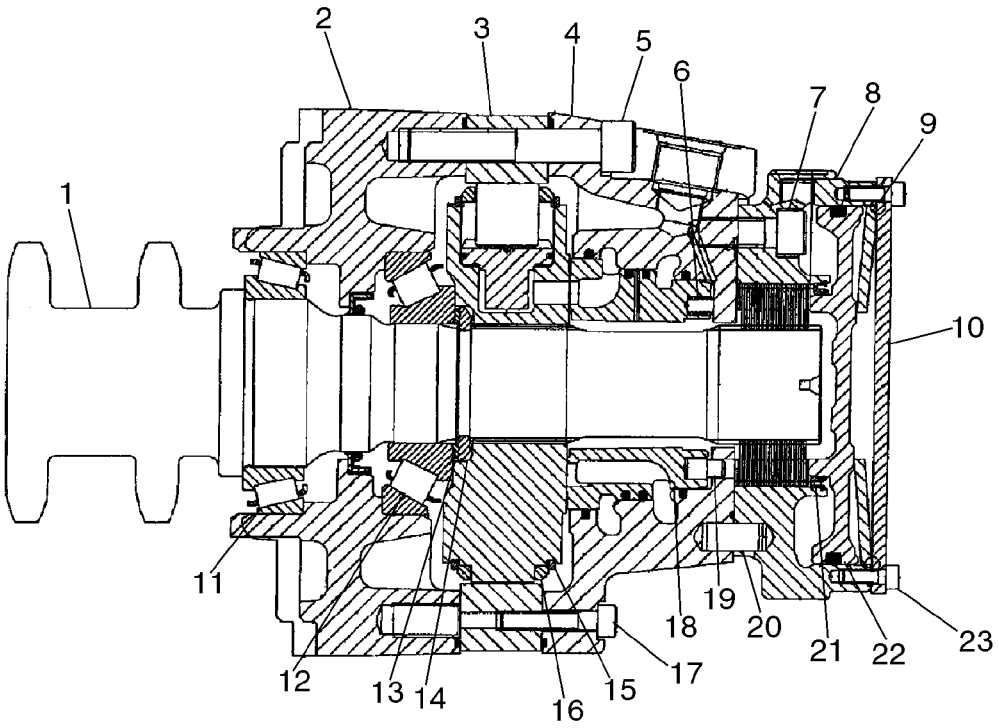

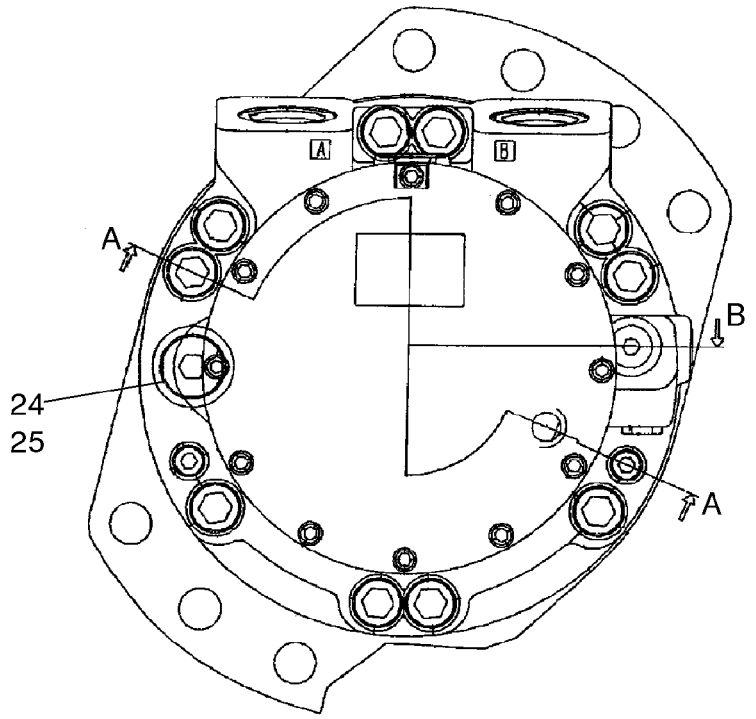

MOTOR ASSY - SINGLE SPEED

REF	FN	PART NUMBER	YR/SN	QTY	DESCRIPTION
		87035341		2	MOTOR, HYDRAULIC, One Speed
1		87039359		1	KIT, Shaft And Bearing
2		87042941		1	CASE, Front
3		87042908		1	CAM, 680/470
4		87042953		1	CASE, Rear
5		861-14080		10	SCREW, Hex Soc Hd, M14 x 80, 12.9
6		87042912		9	SPRING
7		86512142		5	SCREW, Hex Soc Hd, M12 x 30, 12.9
8		87042921		1	HOUSING, Brake
9		87042926		1	SPRING, Disc
10		87042923		1	COVER, End
11		87042904		1	BEARING, 70 x 110 x 25
12		87042905		1	BEARING, 50 x 110 x 29.25
13		87042903		1	KIT, Washer
14		87042906		1	RING, Split Ring
15		NSS			NOT SERVICED SEPARATELY
16		NSS			NOT SERVICED SEPARATELY
17		861-8040		2	SCREW, Hex Soc Hd, M8 x 40, 12.9
18		87042954		1	RING, Distributor
19		87042911		1	PIN, Stop
20		87042927		3	PIN, 12 x 25
21		87042925		1	CLIP, 87 ID
22		87042922		1	PISTON, Brake Piston
23		86512134		12	SCREW, Hex Soc Hd, M6 x 16, 12.9
24		214389		1	PLUG, Hex Hd, 3/4"-16 ORB, Incl. Ref. 25
25		237-6008		1	O-RING, 8-1, 90 Duro, .644" ID x .087" Thk

MOTOR ASSY - SINGLE SPEED

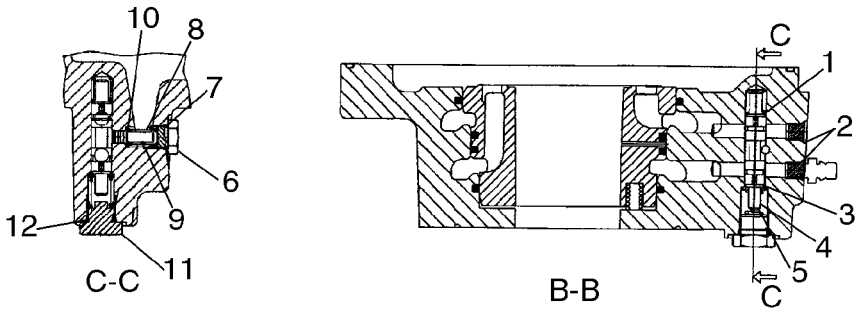

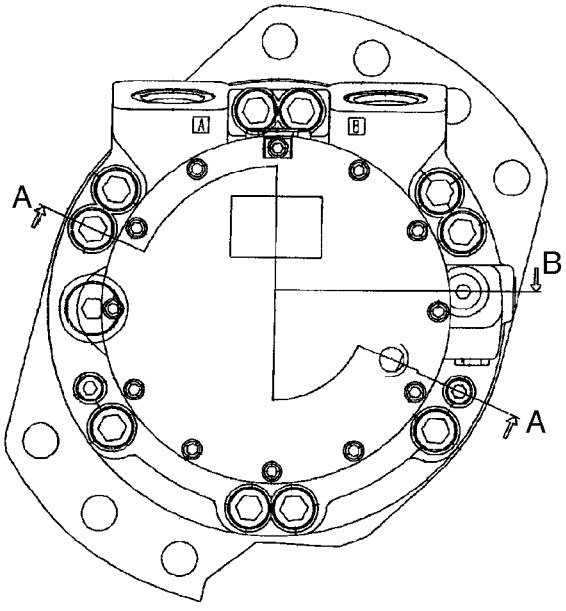

MOTOR ASSY - SINGLE SPEED

REF	FN	PART NUMBER	YR/SN	QTY	DESCRIPTION
		87035341		2	MOTOR, HYDRAULIC, One Speed
1		87042934		1	SPRING, Flushing Side A
2		NSS		2	NOT SERVICED SEPARATELY, Shear Plug; M8
3		87042929		1	WASHER, 1.5 Thick
4		87042935		1	SPRING, Flushing Side B
5		87042928		1	SPOOL, Flushing
6		87042933		1	POPPET, Plug; 7/16
7		NSS		1	NOT SERVICED SEPARATELY, O-Ring; 8.92 x 1.83; Included In 87039370, Seal Kit, See Figure 06-45
8		87042931		1	POPPET, 1.7 Orifice
9		87042932		1	SPRING, Flushing
10		87042930		1	SHIM, 0.6
11		214389		1	PLUG, Hex Hd, 3/4"-16 ORB
12		NSS		1	NOT SERVICED SEPARATELY, O-Ring; 11.90 x 1.98; Incl. In 87039370, Seal Kit, See Figure 06-45

MOTOR ASSY - SINGLE SPEED

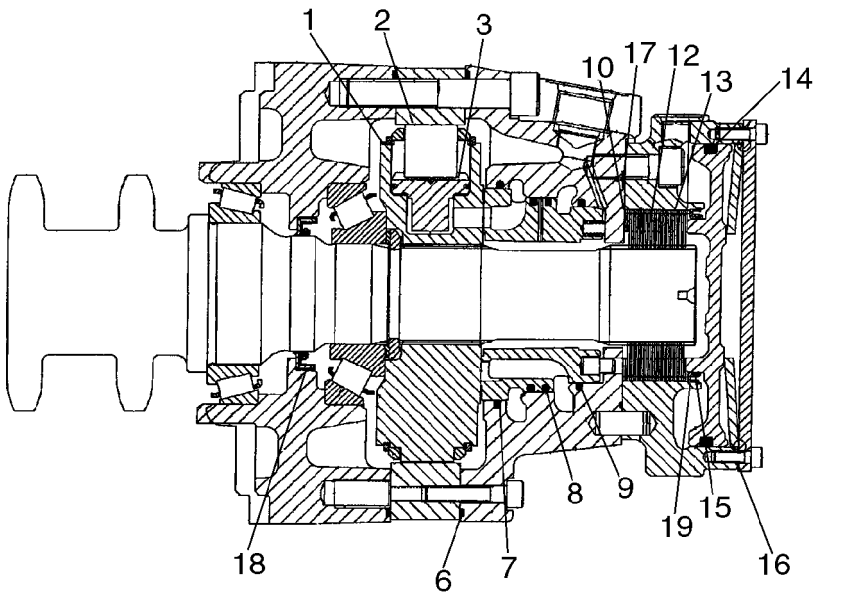

MOTOR ASSY - SINGLE SPEED

REF	FN	PART NUMBER	YR/SN	QTY	DESCRIPTION
		87035341		2	MOTOR, HYDRAULIC, One Speed
		87039368		1	KIT, Brake; Incl. 1 - 3
1		NSS		1	NOT SERVICED SEPARATELY, Cylinder Block
2		NSS		8	NOT SERVICED SEPARATELY, Roll
3		NSS		8	NOT SERVICED SEPARATELY, Piston S/A
		87039370		1	KIT, Seal; Incl. 4 - 9
4		NSS		1	NOT SERVICED SEPARATELY, O-Ring; 11.90 x 1.98; For Illustration, See Figure 06-44, Ref 12
5		NSS		1	NOT SERVICED SEPARATELY, O-Ring; 8.92 x 1.83; For Illustration, See Figure 06-44, Ref 7
6		NSS		2	NOT SERVICED SEPARATELY, Square Ring; 213 x 2.51
7		NSS		1	NOT SERVICED SEPARATELY, Rod Seal; 105
8		NSS		1	NOT SERVICED SEPARATELY, Piston Seal; 96.5
9		NSS		1	NOT SERVICED SEPARATELY, Rod Seal; 87.15
		87039372		1	KIT, Rotating; Incl. 10 - 16
10		NSS		1	NOT SERVICED SEPARATELY, Shim; 80 x 63 x 0.1
11		NSS		1	NOT SERVICED SEPARATELY, Shim; 80 x 63 x 0.3
12		NSS		14	NOT SERVICED SEPARATELY, Inner Plate
13		NSS		16	NOT SERVICED SEPARATELY, Outer Plate
14		NSS		1	NOT SERVICED SEPARATELY, Square Ring; 139.07 x 5.16
15		NSS		1	NOT SERVICED SEPARATELY, O-ring; 75.92 x 1.78
16		NSS		1	NOT SERVICED SEPARATELY, Gasket; 0.5
17		87042919		1	O-RING, 107.67 x 1.78
18		87042907		1	SEAL, SHAFT, 57.15
19		87042924		1	RING, Brake Seal

MOTOR ASSY - TWO SPEED

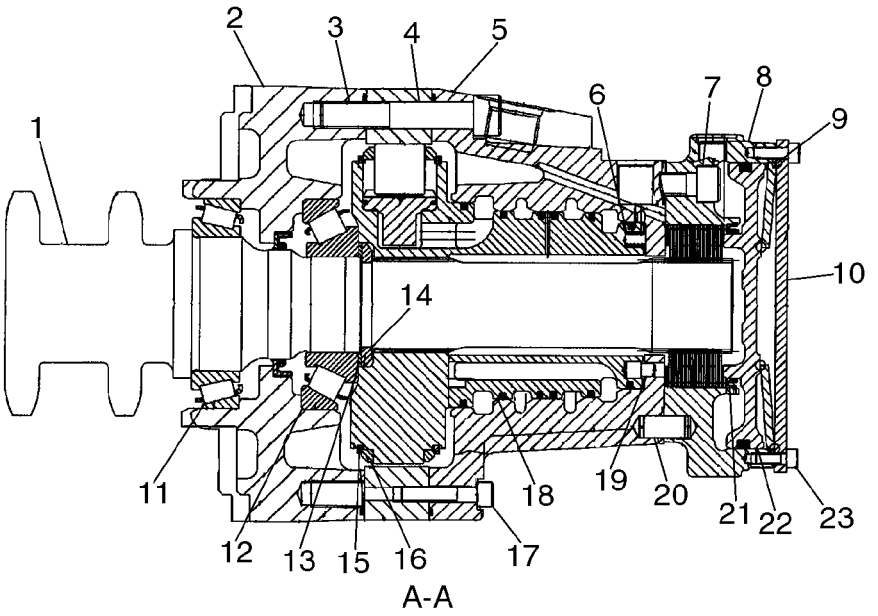

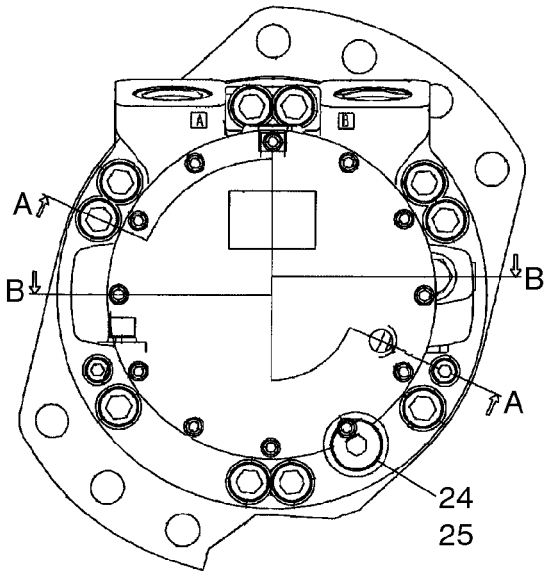

BS04B178

MOTOR ASSY - TWO SPEED

REF	FN	PART NUMBER	YR/SN	QTY	DESCRIPTION
		87035342		2	MOTOR, HYDRAULIC, Two Speed
1		87039360		1	KIT, Shaft And Bearing
2		87042941		1	CASE, Front
3		861-14080		10	SCREW, Hex Soc Hd, M14 x 80, 12.9
4		87042908		1	CAM, MCR3/5
5		87042909		1	CASE
6		87042912		16	SPRING
7		86512142		5	SCREW, Hex Soc Hd, M12 x 30, 12.9
8		87042921		1	HOUSING, Brake Housing
9		87042926		1	SPRING, Disc
10		87042923		1	COVER, End
11		87042904		1	BEARING, 70 x 110 x 25
12		87042905		1	BEARING, 50 x 110 x 29.25
13		87042903		1	KIT, Washer
14		87042906		1	RING, Split
15		NSS			NOT SERVICED SEPARATELY
16		NSS			NOT SERVICED SEPARATELY
17		861-8040		2	SCREW, Hex Soc Hd, M8 x 40, 12.9
18		87042910		1	DISTRIBUTOR
19		87042911		1	PIN, Stop
20		87042927		3	PIN, 12 x 25
21		87042925		1	CLIP, 87 ID
22		87042922		1	PISTON, Brake
23		86512134		12	SCREW, Hex Soc Hd, M6 x 16, 12.9
24		214389		1	PLUG, Hex Hd, 3/4"-16 ORB, Incl. 25
25		128825		1	O-RING, 8-1, 90 Duro, .644" ID x .087" Thk

MOTOR ASSY - TWO SPEED

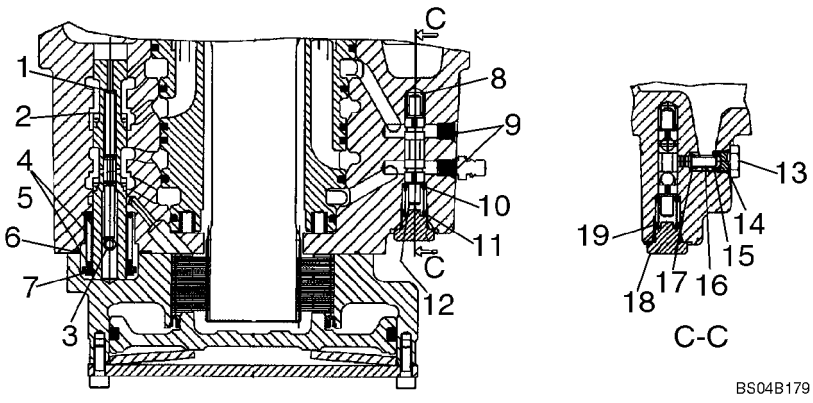

MOTOR ASSY - TWO SPEED

REF	FN	PART NUMBER	YR/SN	QTY	DESCRIPTION
		87035342		2	MOTOR, HYDRAULIC, Two Speed
1		87042918		1	SPRING, Shut Off
2		87042913		1	SPOOL
3		87042917		1	SPRING, 6 x 16
4		87042914		1	KIT, Washer And Spring Kit; Incl. 5
5		NSS		1	NOT SERVICED SEPARATELY, Washer
6		87042916		1	O-RING, 34.65 x 1.78
7		87042915		1	CLIP, 18 dia
8		87042934		1	SPRING, Flushing Side A
9		NSS		2	NOT SERVICED SEPARATELY, Shear Plug; M8
10		87042929		1	WASHER, 1.5 Thick
11		87042935		1	SPRING, Flushing Side B
12		87042928		1	SPOOL, Flushing
13		87042933		1	POPPET, 7/16
14		NSS		1	NOT SERVICED SEPARATELY, O-Ring; 8.92 x 1.83; Included In 87039371, Seal Kit, See Figure 06-48
15		87042931		1	POPPET, 1.7 Orifice
16		87042932		1	SPRING, Flushing
17		87042930		1	SHIM, 0.6
18		214389		1	PLUG, Hex Hd, 3/4"-16 ORB
19		NSS		1	NOT SERVICED SEPARATELY, O-Ring 11.90 x 1.98; Included In 87039371 Seal Kit; See Figure 06-48

MOTOR ASSY - TWO SPEED

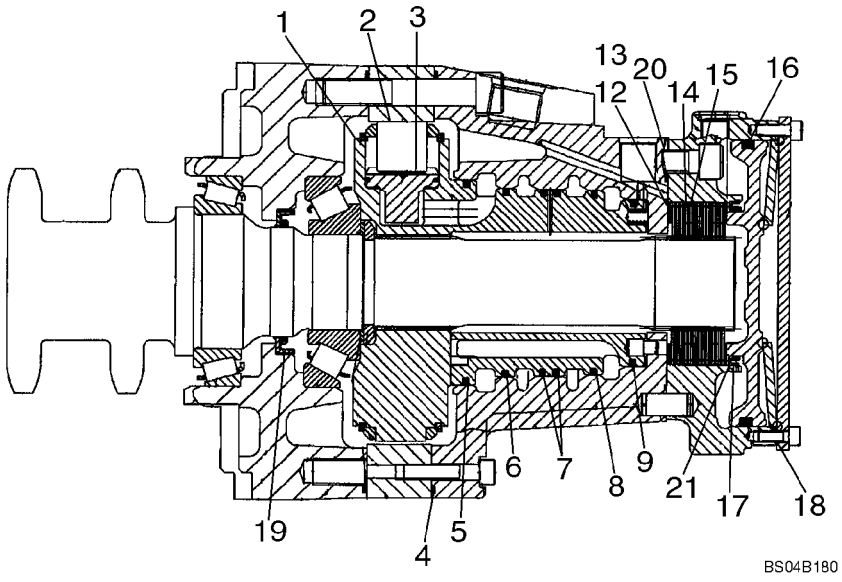

MOTOR ASSY - TWO SPEED

REF	FN	PART NUMBER	YR/SN	QTY	DESCRIPTION
		87035342		2	MOTOR, HYDRAULIC, Two Speed
		87039369		1	KIT, Rotating; Incl. 1 - 3
1		NSS		1	NOT SERVICED SEPARATELY, Cylinder Block
2		NSS		8	NOT SERVICED SEPARATELY, Roll
3		NSS		8	NOT SERVICED SEPARATELY, Piston S/A
		87039371		1	KIT, SEALS, Incl. 4 - 11, 19
4		NSS		2	NOT SERVICED SEPARATELY, Square Ring; 213 x 2.51
5		NSS		1	NOT SERVICED SEPARATELY, Piston Seal; 107.25
6		NSS		1	NOT SERVICED SEPARATELY, Piston Seal; 98.725
7		NSS		2	NOT SERVICED SEPARATELY, Piston Seal; 97.725
8		NSS		1	NOT SERVICED SEPARATELY, Piston Seal; 96.725
9		NSS		1	NOT SERVICED SEPARATELY, Piston Seal; 87.25
10		NSS		1	NOT SERVICED SEPARATELY, O-Ring; 11.90 x 1.98; For Illustration, See Figure 06-47, Ref 19
11		NSS		1	NOT SERVICED SEPARATELY, O-Ring; 8.92 x 1.83; For Illustration, See Figure 06-47, Ref 14
		87039372		1	KIT, Brake; Incl. 12 - 18
12		NSS		1	NOT SERVICED SEPARATELY, Shim; 80 x 63 x 0.1
13		NSS		1	NOT SERVICED SEPARATELY, Shim; 80 x 63 x 0.3
14		NSS		14	NOT SERVICED SEPARATELY, Inner Plate
15		NSS		16	NOT SERVICED SEPARATELY, Outer Plate
16		NSS		1	NOT SERVICED SEPARATELY, Square Ring; 139.07 x 5.16
17		NSS		1	NOT SERVICED SEPARATELY, O-ring; 75.92 x 1.78
18		NSS		1	NOT SERVICED SEPARATELY, Gasket; 0.5
19		87042907		1	SEAL, SHAFT, 57.15
20		87042919		1	O-RING, 107.67 x 1.78
21		87042924		1	RING, Brake Seal Ring

MOTOR ASSY - TWO SPEED TRACK DRIVE

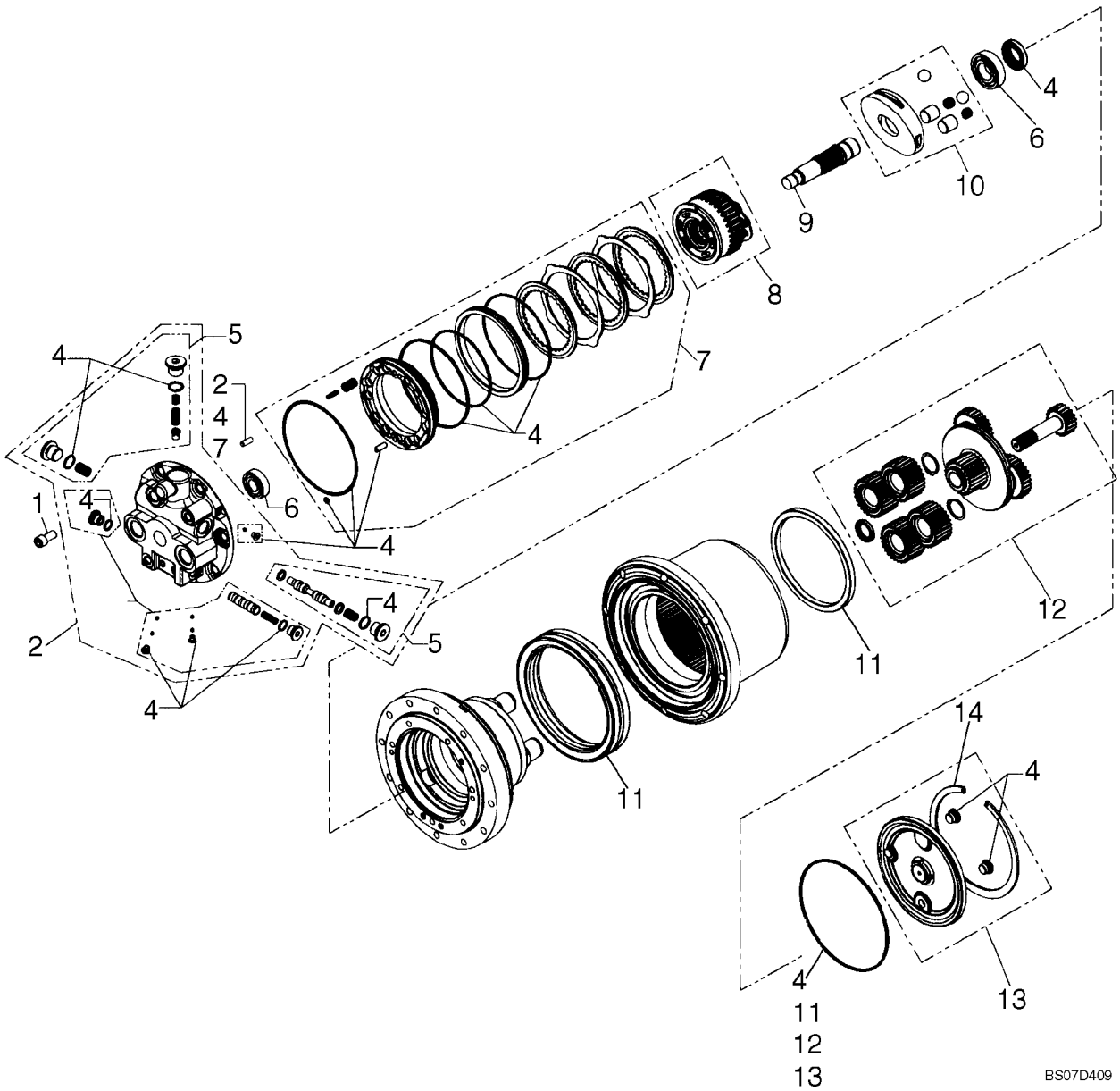

MOTOR ASSY - TWO SPEED TRACK DRIVE

REF	FN	PART NUMBER	YR/SN	QTY	DESCRIPTION
		87588897		1	MOTOR-PUMP, Drive Motor, Two Speed Track Drive
1		{87619899}		1	M12
2		{87619902}		1	Kit, Base Plate Assembly; Incl. (1) 87619914 Flushing Kit, (1) 87619905 Second Speed Spool Kit, (3) Plugs, (1) Orifice, And (2) Pins
3		{87619905}		1	Kit, Second Speed Spool; Incl. (1) Spool, (1) Spring, (2) O-rings, (4) Plugs, (4) Orifices
4		{87619920}		1	Kit, Repair; Incl. (13) O-rings, (1) Motor Seal Ring, (1) Orifice, (5) Plugs, (2) Pins, (1) Quad Ring
5		{87619914}		1	Kit, Flushing; Incl. (1) Plunger, (3) Spring Seat, (3) Springs, (4) O-rings, (2) Plugs, (1) Poppet
6		{87619918}		1	Kit, Bearings; Incl. (2) Bearings
7		{87619919}		1	Kit, Parking Brake; Incl. (3) Brake Discs, (2) Steel Discs, (1) Spacer, (1) Brake Piston, (2) Pins, (24) Springs, (7) O-rings, (2) Pins
8		{87619915}		1	Kit, Cylinder Block Assembly; Incl. (9) Pistons, (1) Retainer Plate, (1) Spherical Bushing, (3) Pins, (1) Cylinder Block, (1) Spring Holder, (1) Spring, (1) Collar Washer, (1) Circlip, (1) Valve Plate
9		{87619917}		1	Motor Shaft Assembly
10		{87619916}		1	Kit, Swash Plate; Incl. (2) Springs, (2) Pistons, (2) Balls, (1) Swash Plate
11		{87619901}		1	Kit, Seal Nut; Incl. (1) Nut, (1) Seal, (1) 87619896 Quad Ring
12		{87619900}		1	Kit, Reduction Assembly; Incl. (1) Gear, (1) First Reduction Assy, (4) Circlips, (4) Planetary Assy, (1) Centering Ring, (1) Quad Ring
13		{87619883}		1	Kit, Cover Assembly; Incl. (2) 87619884 Plugs, (1) 87619885 Circlips, (1) Cover, (1) Pad, (1) 87619896 Quad Ring
14		{87619885}		1	

PUMP, TANDEM - REXROTH A22 - 300BAR, 5.5MM ORF, 42.9CC

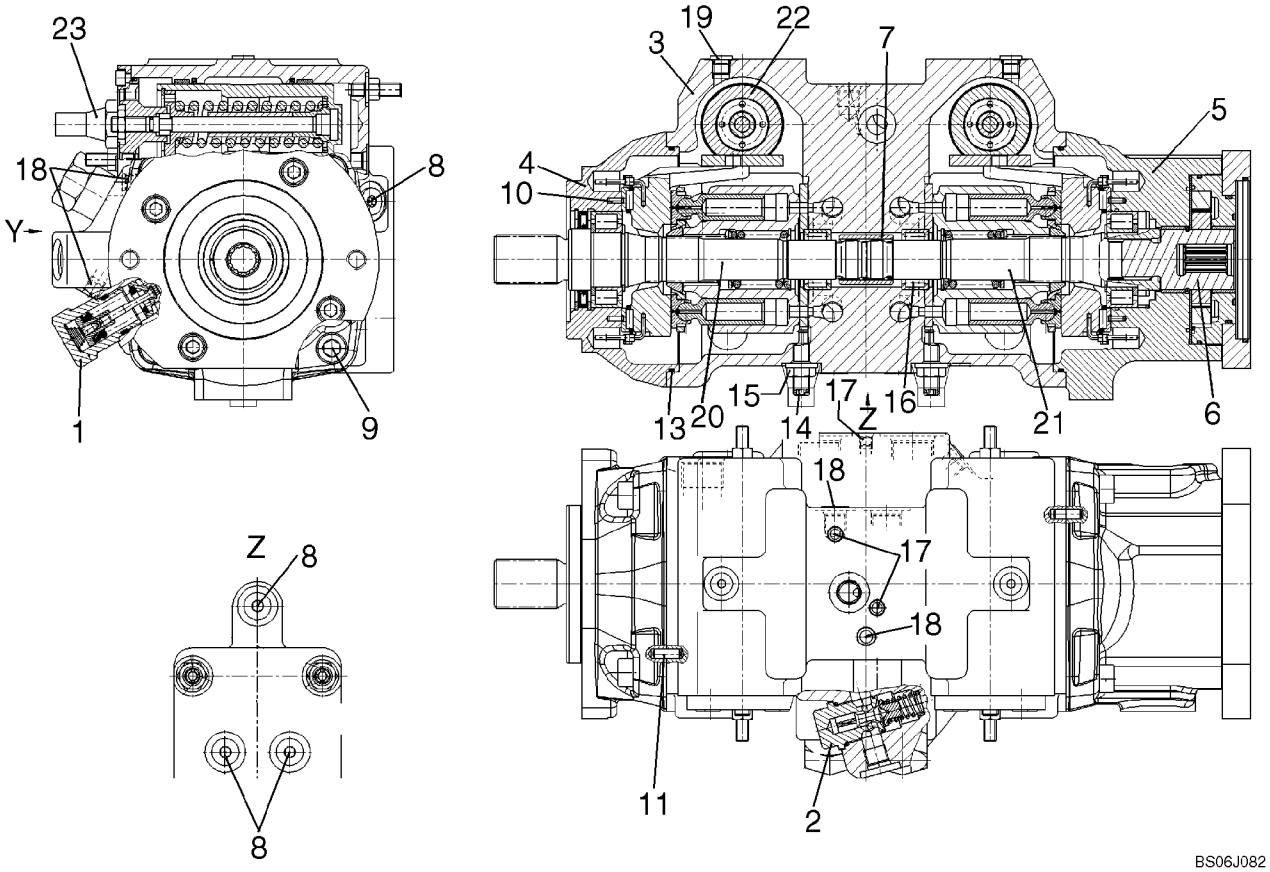

BS06J082

PUMP, TANDEM - REXROTH A22 - 300BAR, 5.5MM ORF, 42.9CC

REF	FN	PART NUMBER	YR/SN	QTY	DESCRIPTION
		87619378			PUMP, Rexroth Pump
1		87614028		4	VALVE, PRESSURE RELIEF, Pressure Relief Valve, 300 Bar; See Fig. 06-52
2		87553604		1	VALVE, PRESSURE RELIEF, Pressure Relief Valve, 15 - 30 Bar R-Ring Viton; See Fig. 06-53
3		87553605		1	HOUSING, Pump Housing
4		87553606		1	FLANGE, Bearing, Flange
5		87614029		1	BEARING, Bearing, Flange With Bushing
6		87553608		1	PUMP, Internal Gear Pump; See Fig. 06-54
7		87553609		1	COUPLING, Through Drive Coupling
8		87553611		5	SCREW, LOCK, Locking Screw, 9/16 - 18UNF
9		87553613		8	SCREW, Socket Head Screw
10		87553614		4	PIN, Clamping Pin
11		87553615		2	PIN, Cylinder Pin
12		87553616		1	O-RING, O-ring; Not Illustrated
13		87553617		2	O-RING, O-ring
14		87553618		2	SCREW, Eccentric Screw
15		87553619		2	NUT, LOCK, Seal, Lock Nut
16		87553620		2	BEARING, ROLLER, Plain Roller Bearing
17		87553621		2	PIN, Double Break Off Pin
18		87553622		2	PIN, Double Break Off Pin
19		87553612		2	SCREW, LOCK, Locking Screw, 7/16 - 20UNF
20		87553599		1	KIT, SERVICE, Rotary Group, RH Rotation; See Fig. 06-55
21		87553600		1	KIT, SERVICE, Rotary Group, LH Rotation; See Fig. 06-56
22		87553601		2	CONTROL, Control, Hydraulic; See Fig. 06-57
23		87614027		1	CARTRIDGE, Control Cartridge With Orfice; See Fig. 06-58
24		87627399		1	CAP, Service Caps
25		87553610		1	BEARING, Bearing, Bushing; Not Illustrated

PUMP, TANDEM - REXROTH A22 - 300 BAR, 5.7MM ORF (87546976)

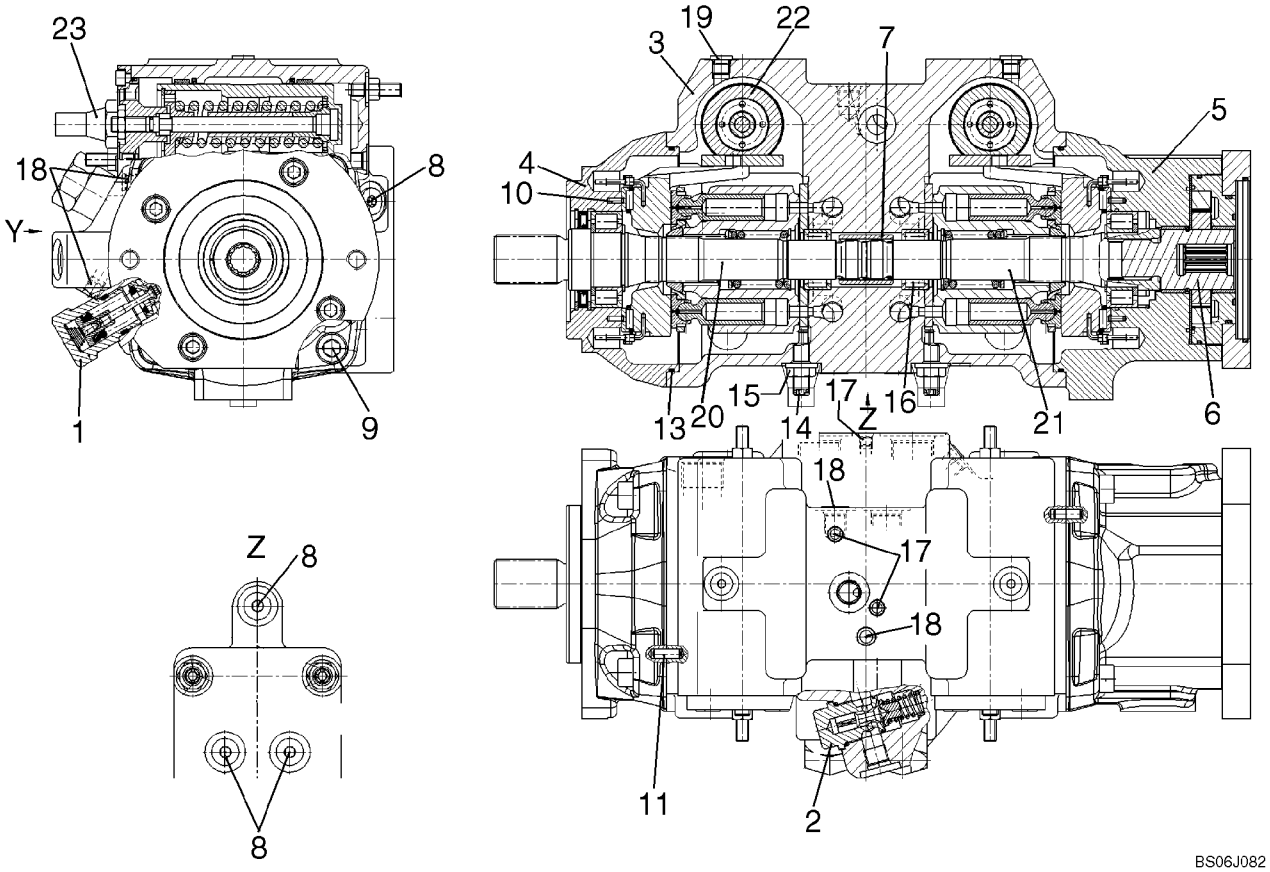

BS06J082

PUMP, TANDEM - REXROTH A22 - 300 BAR, 5.7MM ORF (87546976)

REF	FN	PART NUMBER	YR/SN	QTY	DESCRIPTION
		87546976			PUMP, Rexroth Pump A22
1		87614028		4	VALVE, PRESSURE RELIEF, HD 300 Bar; See Fig. 06-52
2		87553604		1	VALVE, PRESSURE RELIEF, 15 - 30 Bar R-Ring Viton; See Fig. 06-53
3		87553605		1	HOUSING, Pump
4		87553606		1	FLANGE, Bearing
5		87614029		1	BEARING, With Bushing
6		87553608		1	PUMP, Internal Gear Pump; See Fig. 06-54
7		87553609		1	COUPLING, Through Drive
8		87553611		5	SCREW, LOCK, 9/16 - 18UNF
9		87553613		8	SCREW, Socket Head
10		87553614		4	PIN, Clamping
11		87553615		2	PIN, Cylinder
12		87553616		1	O-RING, Not Illustrated
13		87553617		2	O-RING
14		87553618		2	SCREW, Eccentric Screw
15		87553619		2	NUT, LOCK, Seal
16		87553620		2	BEARING, ROLLER, Plain
17		87553621		2	PIN, Double Break Off
18		87553622		2	PIN, Double Break Off
19		87553612		2	SCREW, LOCK, 7/16 - 20UNF
20		87553599		1	KIT, SERVICE, Rotary Group, RH Rotation; See Fig. 06-55
21		87553600		1	KIT, SERVICE, Rotary Group, LH Rotation; See Fig. 06-56
22		87553601		2	CONTROL, Hydraulic; See Fig. 06-57
23		87614027		1	CARTRIDGE, With Orifice; See Fig. 06-58
		87553610		1	BEARING, Bushing
		87627399		3	CAP

PUMP, TANDEM - PRESSURE RELIEF VALVE (87546976)

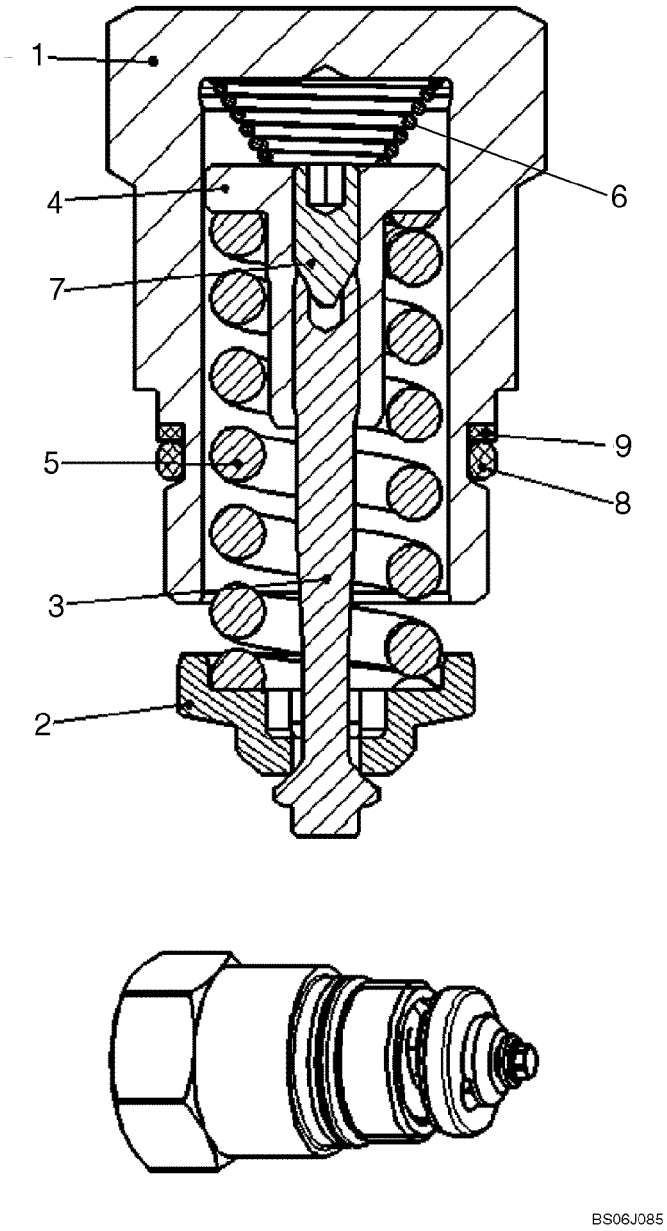

BS06J085

PUMP, TANDEM - PRESSURE RELIEF VALVE (87546976)

REF	FN	PART NUMBER	YR/SN	QTY	DESCRIPTION
		87614028		1	VALVE, PRESSURE RELIEF, Incl. 1 - 9
1		NSS		1	NOT SERVICED SEPARATELY, Locking Screw
2		NSS		1	NOT SERVICED SEPARATELY, Valve Collar
3		NSS		1	NOT SERVICED SEPARATELY, Valve Spindle
4		NSS		1	NOT SERVICED SEPARATELY, Spring Loading Nut
5		NSS		1	NOT SERVICED SEPARATELY, Pressure Spring
6		NSS		1	NOT SERVICED SEPARATELY, Spring, Cone Shaped
7		NSS		1	NOT SERVICED SEPARATELY, Threaded Pin
8		87597284		1	O-RING
9		87597285		1	RING, Back Up

PUMP, TANDEM - PRESSURE RELIEF VALVE (87546976)

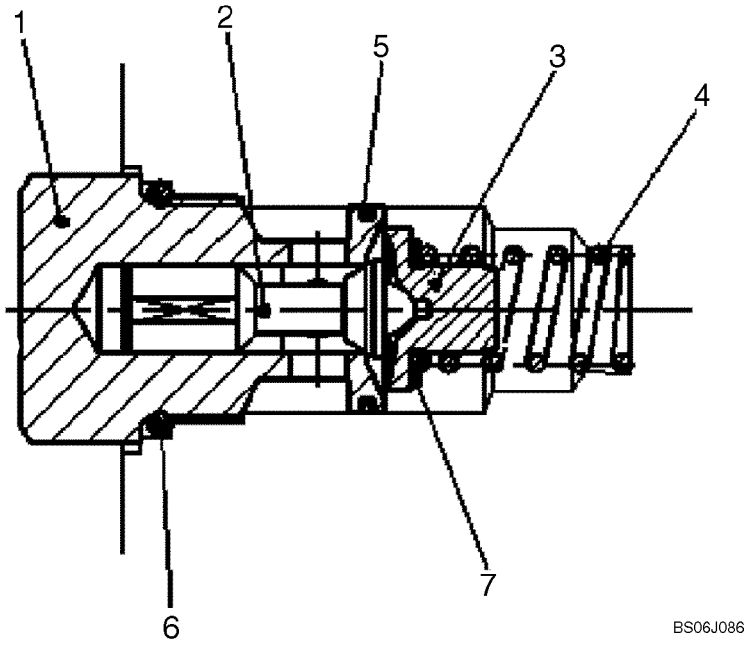

PUMP, TANDEM - PRESSURE RELIEF VALVE (87546976)

REF	FN	PART NUMBER	YR/SN	QTY	DESCRIPTION
		87553604		1	VALVE, PRESSURE RELIEF, Pressure Relief Valve; Incl. 1 - 7
1		NSS		1	NOT SERVICED SEPARATELY, Locking Screw
2		NSS		1	NOT SERVICED SEPARATELY, Valve Piston
3		NSS		1	NOT SERVICED SEPARATELY, Spring Collar
4		NSS		1	NOT SERVICED SEPARATELY, Pressure Spring
5		NSS		1	NOT SERVICED SEPARATELY, Steel Sealing Spring
6		87597286		1	O-RING, O-ring
7		NSS		1	NOT SERVICED SEPARATELY, Shim

PUMP, TANDEM - INTERNAL GEAR PUMP (87546976)

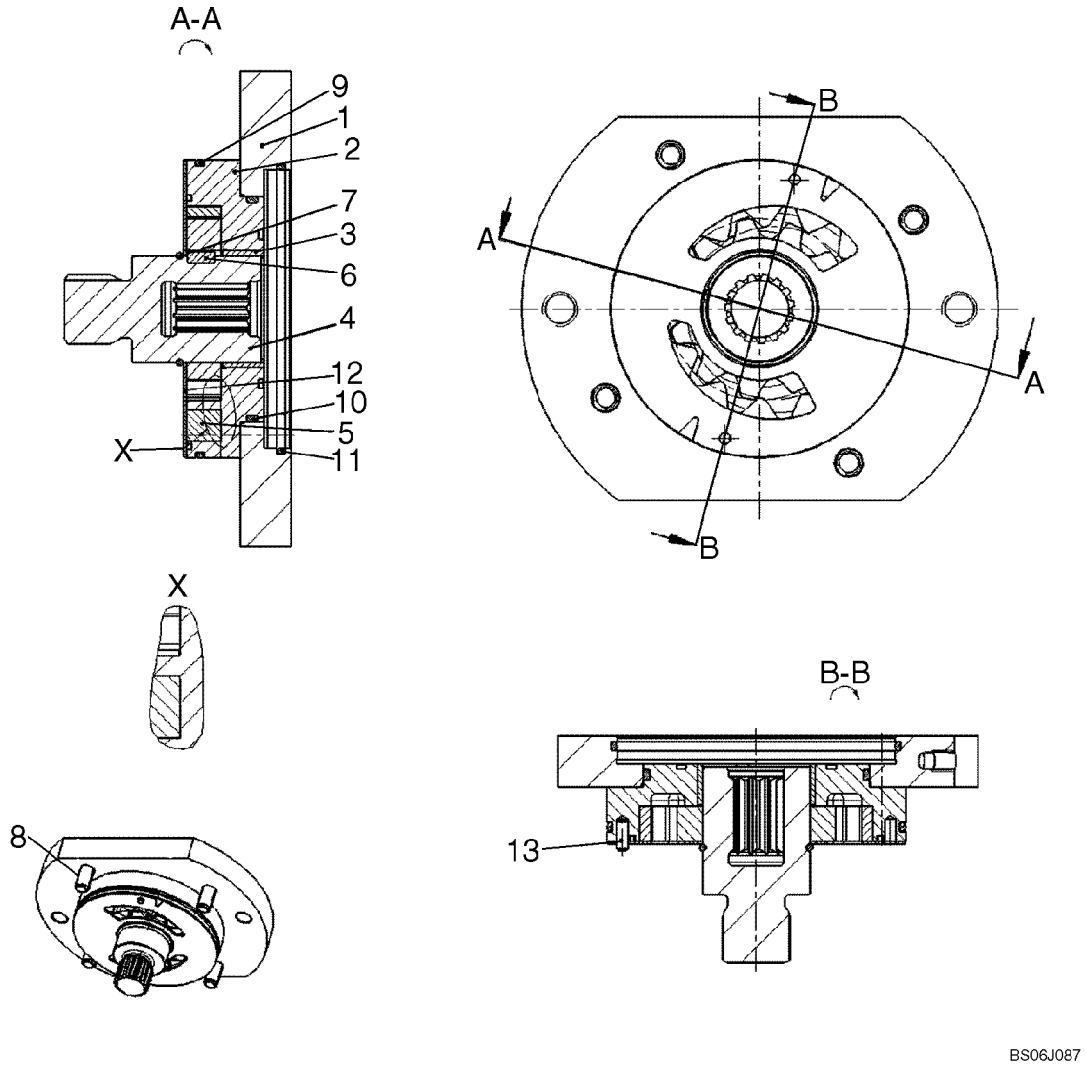

PUMP, TANDEM - INTERNAL GEAR PUMP (87546976)

REF	FN	PART NUMBER	YR/SN	QTY	DESCRIPTION
		87553608		1	PUMP, Internal Gear Pump; Incl. 1 - 13
1		87597287		1	FLANGE, Intermediate Flange
2		87597288		1	HOUSING, IZP Housing
3		87553610		1	BEARING, Bearing Bushing
4		87597289		1	COUPLING, Through Drive Coupling
5		87597290		1	WHEEL SET, Wheel Set
6		87597291		1	KEY, Shaft Key
7		87597292		1	RING, SNAP, Snap Ring
8		87597293		4	SCREW, Socket Head Screw
9		87597294		1	O-RING, O-ring
10		87597295		1	O-RING, O-ring
11		87553616		1	O-RING, O-ring
12		87597296		1	PLATE, Wear Plate
13		87597297		1	PIN, Cylinder Pin

PUMP, TANDEM - ROTARY GROUP, RIGHT HAND ROTATION (87546976)

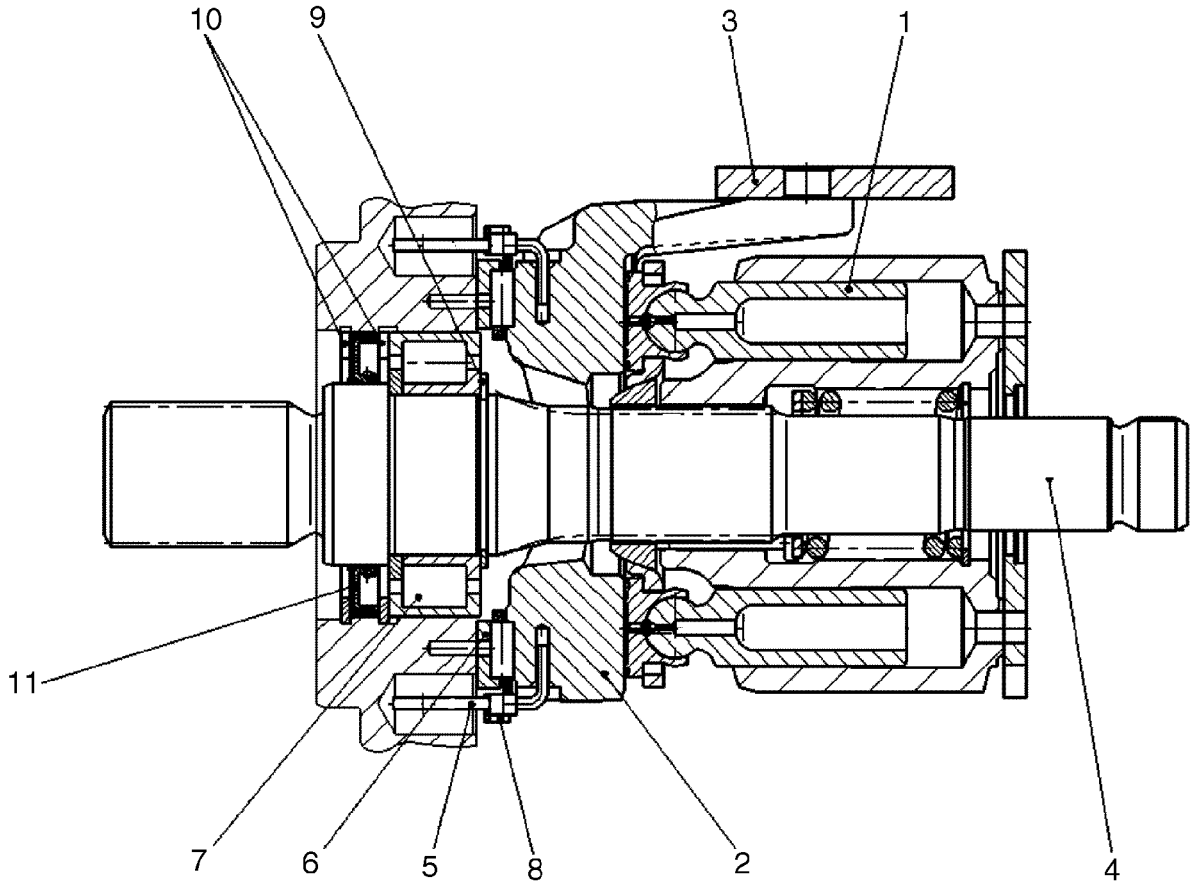

BS06J126

PUMP, TANDEM - ROTARY GROUP, RIGHT HAND ROTATION (87546976)

REF	FN	PART NUMBER	YR/SN	QTY	DESCRIPTION
		87553599		1	KIT, SERVICE, Rotary Group, Right Hand Rotation; Incl. 1 - 11
1		87553623		1	VALVE SECTION, Rotary Group, Hydraulic Section
2		87597259		1	CRADLE
3		87597260		1	SLIDE, Ring
4		87597261		1	SHAFT, DRIVE
5		87597262		2	WIRE, With Coil
6		87597263		1	BEARING LINER, Pair
7		87597264		1	BEARING, Plain Roller Bearing
8		87597265		1	CRADLE, Bearing Assembly (set)
9		87597266		1	RING, Retaining Ring
10		87597267		2	RING, Seeger V-ring
11		87597268		1	RING, Shaft Seal Ring

PUMP, TANDEM - ROTARY GROUP, LEFT HAND ROTATION (87546976)

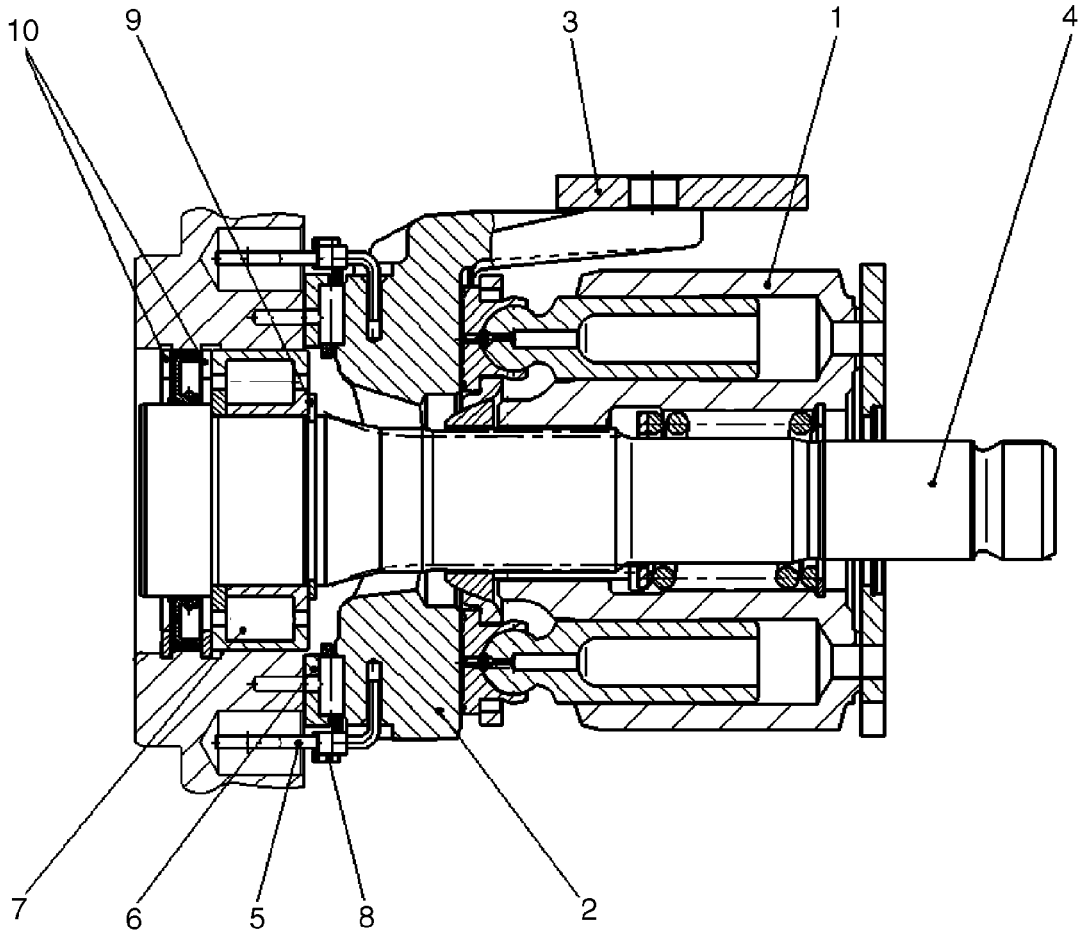

BS06J127

PUMP, TANDEM - ROTARY GROUP, LEFT HAND ROTATION (87546976)

REF	FN	PART NUMBER	YR/SN	QTY	DESCRIPTION
		87553600		1	KIT, SERVICE, Rotary Group, Left Hand Rotation; Incl. 1 - 10
1		87597269		1	VALVE SECTION, HYD, Rotary Group, Hydraulic Section
2		87597259		1	CRADLE, Cradle
3		87597260		1	SLIDE, Ring
4		87597271		1	SHAFT, DRIVE
5		87597262		2	WIRE, With Coil
6		87597263		1	BEARING LINER, Pair
7		87597264		1	BEARING, Plain Roller Bearing
8		87597265		1	CRADLE, Bearing Assembly (set)
9		87597266		1	RING, Retaining Ring
10		87597267		2	RING, Seeger V-ring

PUMP, TANDEM - CONTROL, HYDRAULIC (87546976)

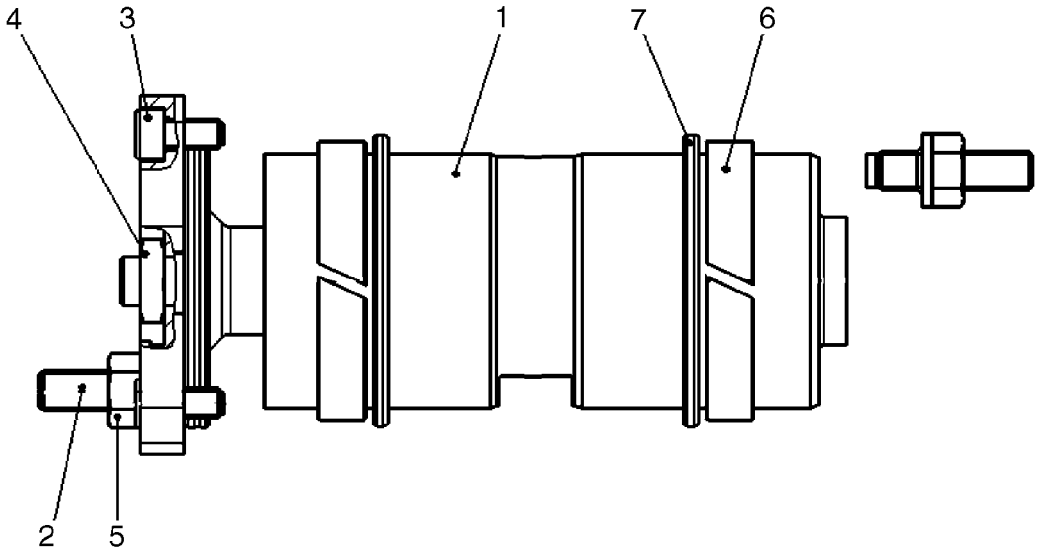

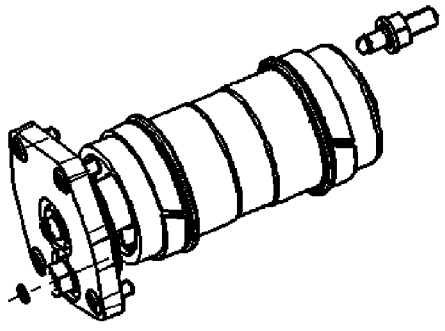

BS06J128

PUMP, TANDEM - CONTROL, HYDRAULIC (87546976)

REF	FN	PART NUMBER	YR/SN	QTY	DESCRIPTION
		87553601		1	CONTROL, Control, Hydraulic; Incl. 1 - 7
1		87597272		1	PISTON, Positioning Piston, Complete
2		87597274		2	PIN, Threaded Pin
3		87597275		4	SCREW, Socket Head Screw
4		87597276		1	NUT, Hexagon Nut
5		87597277		2	NUT, Seal, Lock Nut
6		87597281		2	RING, GUIDE, Guide Ring
7		87597282		2	KIT, SERVICE, Rod Seal Kit

PUMP, TANDEM - CONTROL CARTRIDGE WITH ORIFICE (87546976)

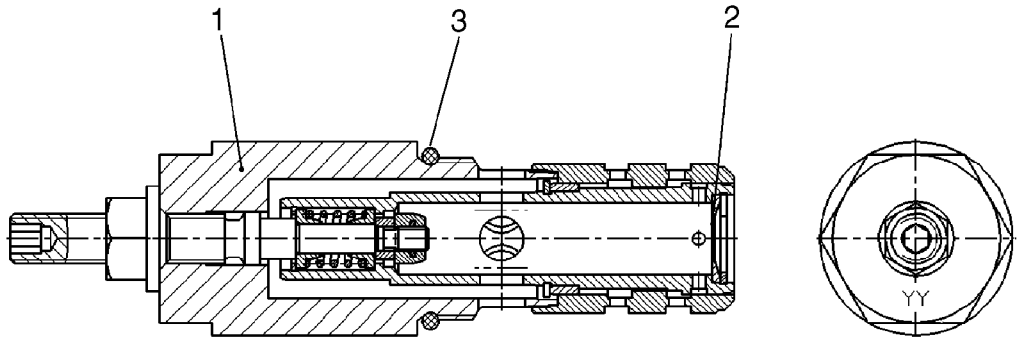

BS07A093

PUMP, TANDEM - CONTROL CARTRIDGE WITH ORIFICE (87546976)

REF	FN	PART NUMBER	YR/SN	QTY	DESCRIPTION
		87614027		1	CARTRIDGE, Control Cartridge With Orifice; Incl. 1 - 3
1		87597283		1	CARTRIDGE, Control Cartridge Without Orifice
2		87614030		1	ORIFICE
3		87597284		1	O-RING, O-Ring

NOTES

SECTION INDEX
Brakes

07-01 BRAKE SYSTEM - HYDRAULIC

BRAKE SYSTEM - HYDRAULIC

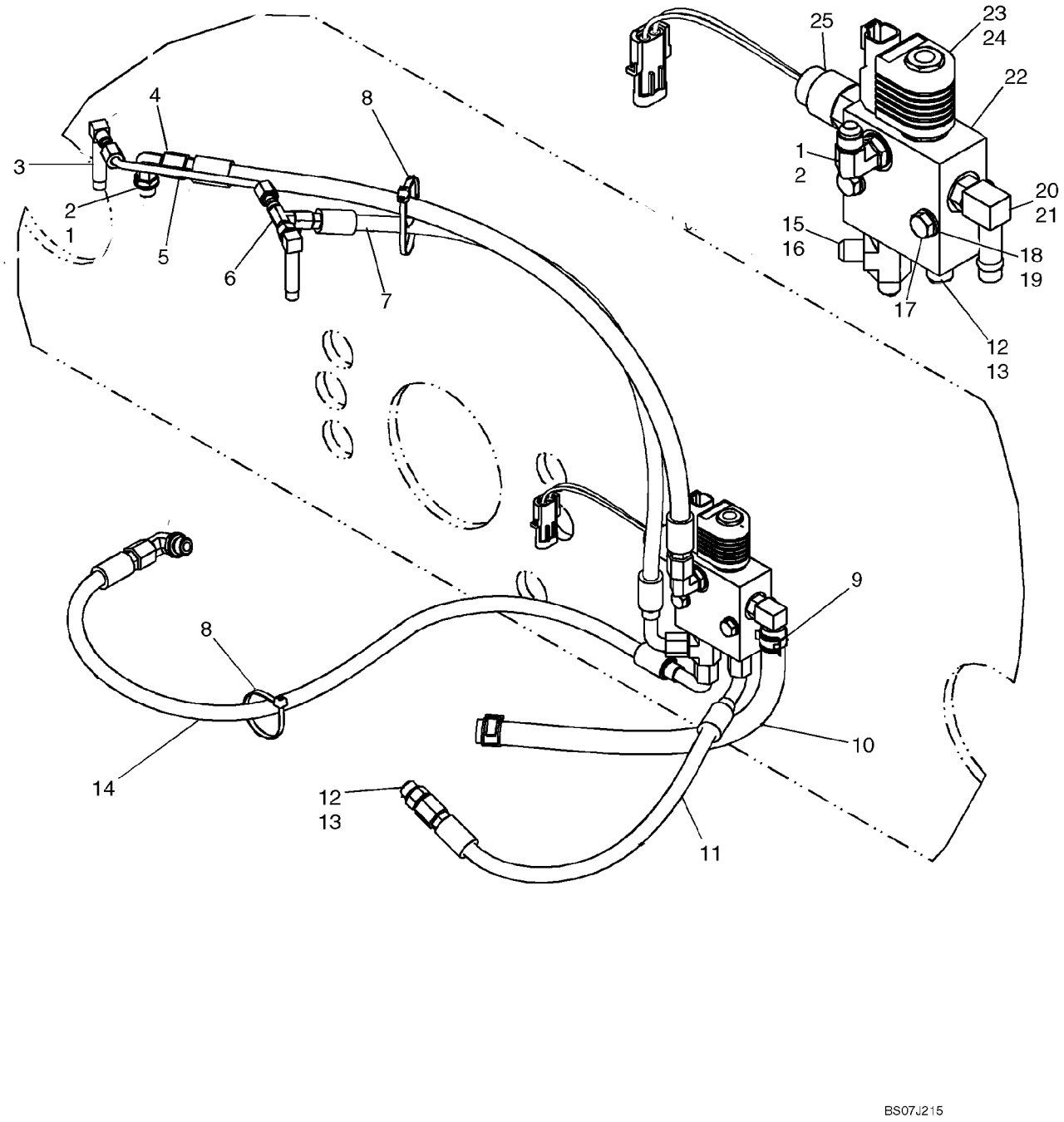

BRAKE SYSTEM - HYDRAULIC

REF	FN	PART NUMBER	YR/SN	QTY	DESCRIPTION
1		76344		3	ELBOW, 90º, 9/16"-18, 37º x 9/16"-18, O-Ring, Incl 2
2		9617873		3	O-RING, 6-1, 90 Duro, .468" ID x .078" Thk
3		H331884		2	ELBOW, 90 Deg. Elbow, Long
4		{87516039}		1	Hose, Charge To Brake, 649mm (25 9/16 in.)
5		87021277		1	TUBE ASSY.
6		86513653		1	TEE, 37º, 7/16"-20 x 7/16"-20, Fem Sw Run
7		{87516040}		1	Hose, 600mm (23 5/8 in.)
8		L11541		2	STRAP, CABLE
9		87443510		2	CLAMP, HOSE
10		87022177		1	HOSE ASSY., Drain Hose, 340mm (13 3/8 in.)
11		87022437		1	HOSE ASSY., Brake Hose, 420mm (16 17/32 in.)
12		76350		2	CONNECTOR, HYD., 9/16"-18, 37º x 9/16"-18, O-Ring, Incl 13
13		9617873		2	O-RING, 6-1, 90 Duro, .468" ID x .078" Thk
14		87022436		1	HOSE ASSY., Brake Hose, 815mm (32 3/32 in.)
15		86513020		1	TEE, 9/16"-18, 37º x 9/16"-18, O-Ring Run, Incl 16
16		9617873		1	O-RING, 6-1, 90 Duro, .468" ID x .078" Thk
17		43130		2	BOLT, Hex, M8 x 50, 8.8
18		140016		2	WASHER, M8 x 16 x 1.6
19		87030567		2	NUT
20		86705580		1	FITTING, 90º, 1/2" Hose x 9/16"-18 ORB Beaded, Incl 21
21		9617873		1	O-RING, 6-1, 90 Duro, .468" ID x .078" Thk
22		87021047		1	VALVE, BRAKE, Incl 23 - 25
23		87424182		1	VALVE, BRAKE, Solenoid Valve
24		87433496		1	COIL
25		87458061		1	SWITCH, PRESSURE

NOTES

SECTION INDEX
Hydraulics

08-01	HYDRAULICS - TILT
08-02	HYDRAULICS - LIFT
08-03	HYDRAULICS - CASE DRAIN
08-04	HYDRAULICS - SELF LEVELING
08-05	HYDRAULICS - SECONDARY FRONT AUXILIARY
08-06	HYDRAULICS - RIDE CONTROL
08-07	HYDRAULICS - ATTACHMENT, PROPORTIONAL (WITH PILOT CONTROL)
08-08	HYDRAULICS - ATTACHMENT (MECHANICAL CONTROL)
08-09	HYDRAULICS - COUPLER SYSTEM
08-10	HYDRAULICS - COUPLER SYSTEM
08-11	HYDRAULICS - COUPLER SYSTEM (ITALIAN)
08-12	HYDRAULICS - COUPLER SYSTEM (ITALIAN)
08-13	CYLINDER - TILT
08-14	CYLINDER - LIFT
08-15	HIGH FLOW HYDRAULICS - PILOT CONTROL
08-16	CONTROL VALVE ASSEMBLY - HIGH FLOW
08-17	CONTROL VALVE - 87546975 VALVE ASSY
08-18	CONTROL VALVE - 87546974 VALVE ASSY (PILOT CONTROL)
08-19	CONTROL VALVE - 87583286 VALVE ASSY
08-20	CONTROL VALVE - 87583285 VALVE ASSY
08-21	CONTROL VALVE - SEAL REPLACEMENT KITS
08-22	CONTROL VALVE - SEAL KIT
08-23	CONTROL VALVE - MAIN RELIEF VALVE
08-24	CONTROL VALVE - RELIEF VALVES
08-25	CONTROL VALVE - SPOOL END GROUP
08-26	CONTROL VALVE - SPOOL END GROUP
08-27	CONTROL VALVE - SPOOL END GROUP
08-28	CONTROL VALVE - CHECK VALVE GROUP
08-29	CONTROL VALVE - SPOOL END GROUP, DETENT
08-30	CONTROL VALVE - SPOOL END GROUP
08-31	CONTROL VALVE - SPOOL END GROUP
08-32	CONTROL VALVE - SPOOL END GROUP
08-33	CONTROL VALVE - SPOOL END GROUP
08-34	CONTROL VALVE - SPOOL END GROUP
08-35	CONTROL VALVE - SPOOL END GROUP
08-36	CONTROL VALVE - SPOOL END GROUP, EHPV
08-37	CONTROL VALVE - SPOOL END GROUP, EHPV
08-38	SECONDARY FRONT AUXILIARY - VALVE ASSY

HYDRAULICS - TILT

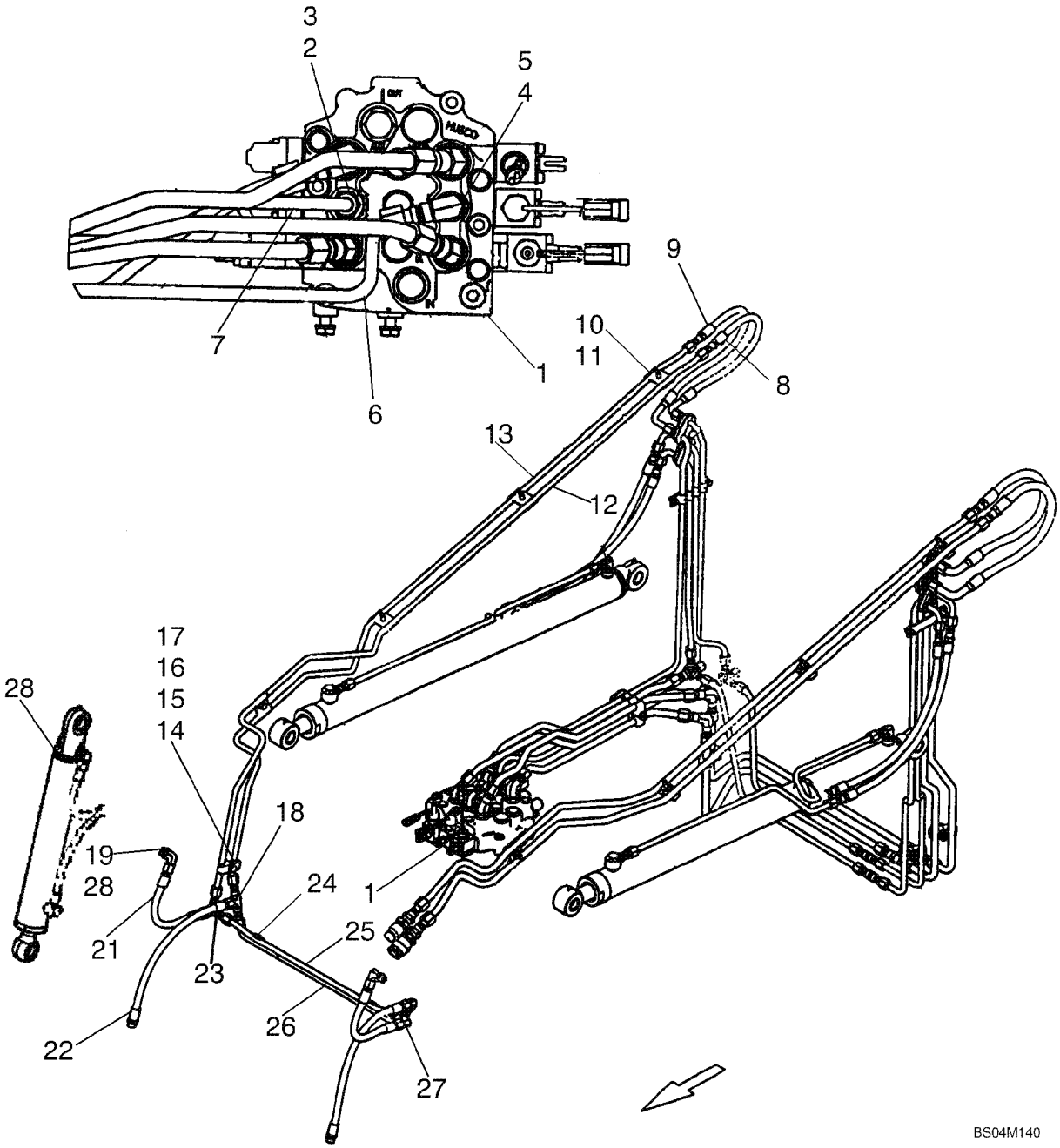

HYDRAULICS - TILT

REF	FN	PART NUMBER	YR/SN	QTY	DESCRIPTION
1		87583285		1	VALVE, Control Valve, Mechanical Units; See Fig. 08-20
1		87546974		1	VALVE, HYDRAULIC, Control Valve, Pilot Units; See Fig. 08-18
2		128819		1	CONNECTOR, HYD., 3/4"-16, 37º x 7/8"-14, O-Ring, Incl. 3
3		128825		1	O-RING, 8-1, 90 Duro, .644" ID x .087" Thk
4		9617891		1	ELBOW, 90º, 3/4"-16, 37º x 7/8"-14, O-Ring, Incl. 5
5		167269		1	O-RING, 10-1, 90 Duro, .755" ID x .097" Thk
6		87423368		1	TUBE ASSY., 1/2 Tube, Curl
7		87445747		1	TUBE ASSY., 1/2 Tube, Dump
8		406242A1		1	HOSE ASSY., 580 mm (22.83 in)
9		406088A1		1	HOSE ASSY., 600 mm (23.62 in)
10		86501706		4	CLAMP, Double
11		280476		4	SCREW, SELF TAP, Hex Wash Hd, 3/8" x 1"
12		87531091		1	TUBE, HYD, 1/2 Tube, Dump
13		406336A1		1	TUBE ASSY., 1/2 Tube, Curl
14		9706704		1	BOLT, Hex, M10 x 35, 8.8, Full Thd
15		230427A1		1	NUT, M10 -1.5
16		140017		1	WASHER, M10 x 20 x 2
17		D120679		1	CLAMP, 1/2 in
18		128996		1	TEE, 3/4"-16, 37º
19		128830		2	ELBOW, 90º, 3/4"-16, 37º x 3/4"-16, O-Ring, Incl. 20
20		128825		1	O-RING, 8-1, 90 Duro, .644" ID x .087" Thk
21		87387193		2	HOSE ASSY., 355 mm, 14 in; Dump
22		373241A3		2	HOSE ASSY., Curl
23		D124661		1	ELBOW, Side Outlet
24		H434900		2	CLAMP
25		373223A3		1	TUBE ASSY., Dump
26		373225A3		1	TUBE ASSY., Curl
27		216791		1	ELBOW, 90º, 3/4"-16, 37º x 3/4"-16, 37º
28		87438187		2	CYLINDER ASSY., Tilt; See Figure 08-13

HYDRAULICS - LIFT

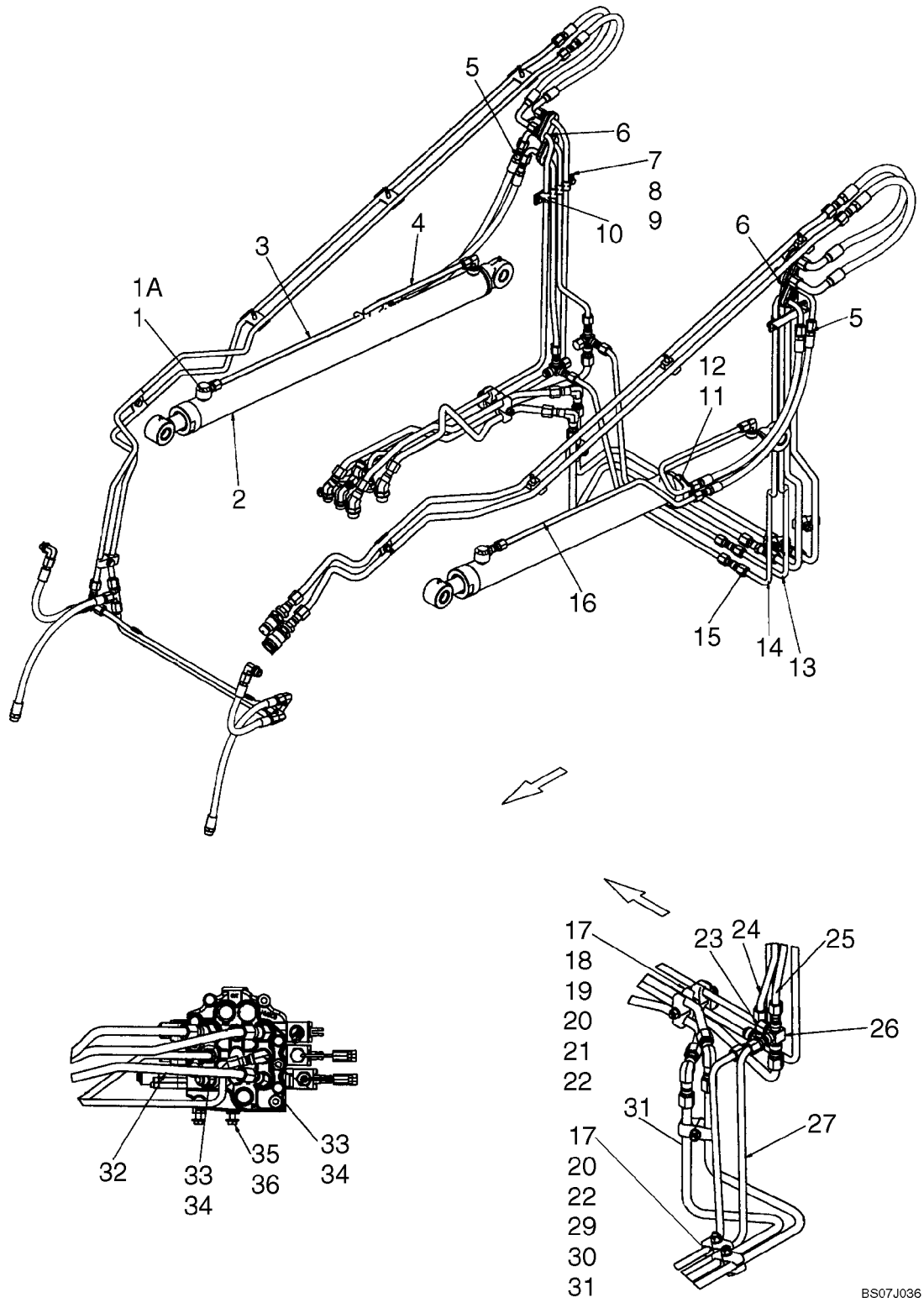

HYDRAULICS - LIFT

REF	FN	PART NUMBER	YR/SN	QTY	DESCRIPTION
1		81827427		2	CONNECTOR, HYD., Incl 1A
1A		128825		2	O-RING, 8-1, 90 Duro, .644" ID x .087" Thk
2		87438190		2	CYLINDER ASSY., Lift Cylinder; See Fig 08-14
3		406342A1		1	TUBE ASSY., Tube, Lift Cylinder, RH (Lower)
4		396243A2		2	TUBE ASSY., Tube, Lift Cylinder (Raise)
5		390211A1		4	HOSE ASSY., Hose, 575mm (22 5/8 in.) (Raise)
6		376523A2		6	SUPPORT, Hydraulic Tube Support
7		406940A1		1	BAR, Bar Clamp, Back
8		87029930		1	SCREW
9		406941A1		1	BAR, Bar Clamp, Face
10		87385021		1	FASTENER, Screw, Hex Washer Head 5/16 X 1/2
11		R24703		2	SUPPORT
12		86625033		2	CLAMP, HOSE, #56, 3.06/4.00 Type F Worm
13		87405135		1	TUBE ASSY., Tube, Lift LH (Lower)
14		87405137		1	TUBE ASSY., Tube, Lift LH (Raise)
15		128822		2	UNION, 3/4"-16, 37º x 3/4"-16, 37º
16		406344A1		1	TUBE ASSY., Tube, Lift Cylinder LH (Lower)
17		D120614		2	CLAMP
18		87040707		1	FASTENER, Washer, .531 X 2.25 X .179 in.
19		D120613		1	CLAMP
20		D120679		4	CLAMP
21		86500689		1	NUT, M10, Cl 10
22		86624176		9	WASHER, M10 x 20 x 2
23		262159		2	CAP, 37º, 3/4"-16
24		87405141		1	TUBE ASSY., Tube, Lift RH (Raise)
25		87593416		1	TUBE, HYD, Tube, Lift RH (Raise)
26		87404825		2	TEE
27		87593417		1	TUBE, HYD, Tube, Lift LH (Lower)
29		86512554		1	NUT, LOCK, M10 x 1.5, Cl 10
30		120069		1	BOLT, Hex, M10 x 50, 8.8
31		87624736		1	TUBE, HYD, Tube, Lift LH (Raise)
32		87593415		1	TUBE, HYD, Tube, Lift (Lower)
33		330345		2	ELBOW, 45º, 7/8"-14 x 7/8"-14, O-Ring, Incl 34
34		167269		2	O-RING, 10-1, 90 Duro, .755" ID x .097" Thk
35		43138		2	SCREW, Hex, M10 x 20, 8.8, Full Thd

HYDRAULICS - LIFT

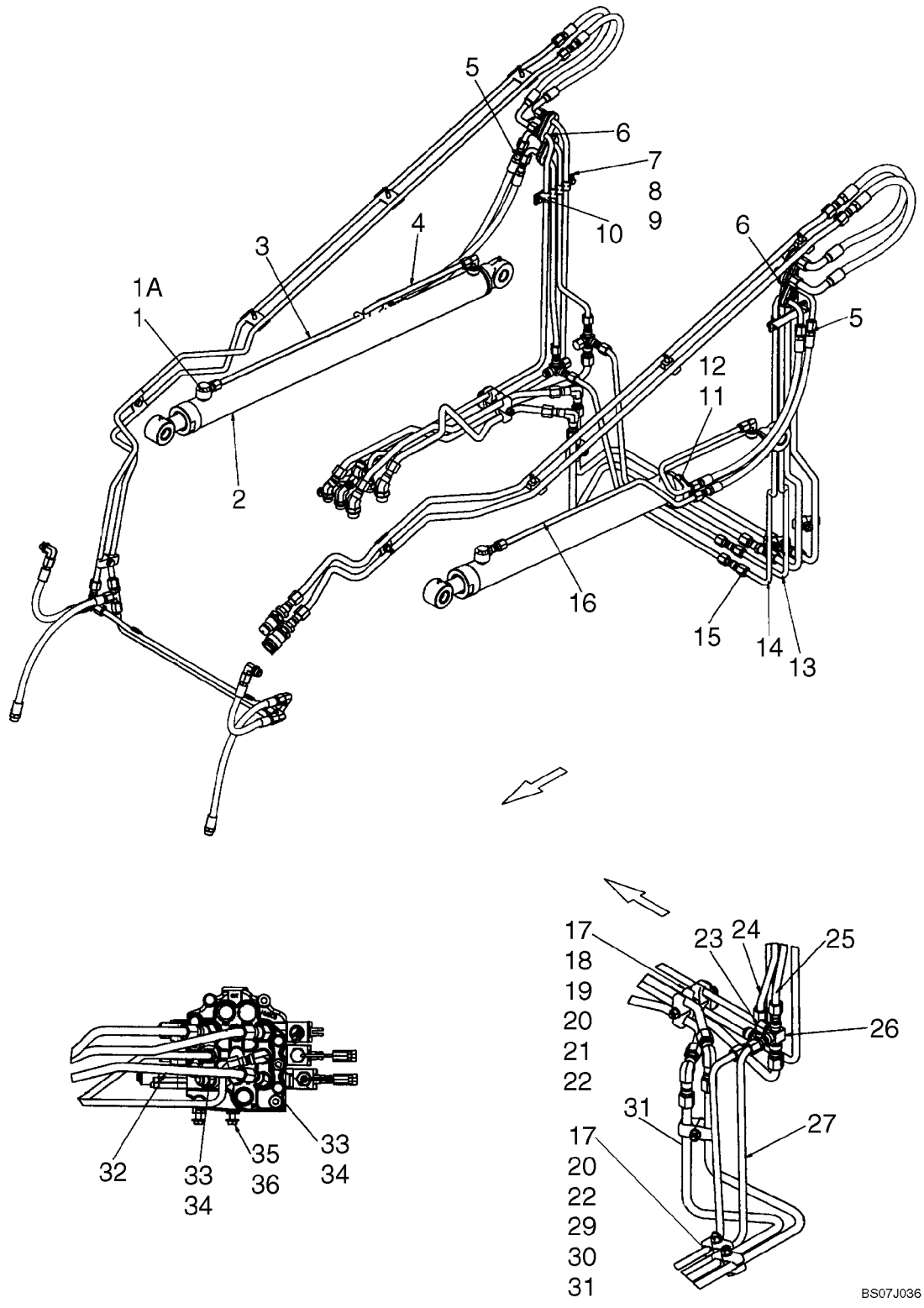

HYDRAULICS - LIFT

REF	FN	PART NUMBER	YR/SN	QTY	DESCRIPTION
36		86639325		2	WASHER, M10 x 24.5 x 3, HT
37		{87659996}		1	Tube; High Flow

HYDRAULICS - CASE DRAIN

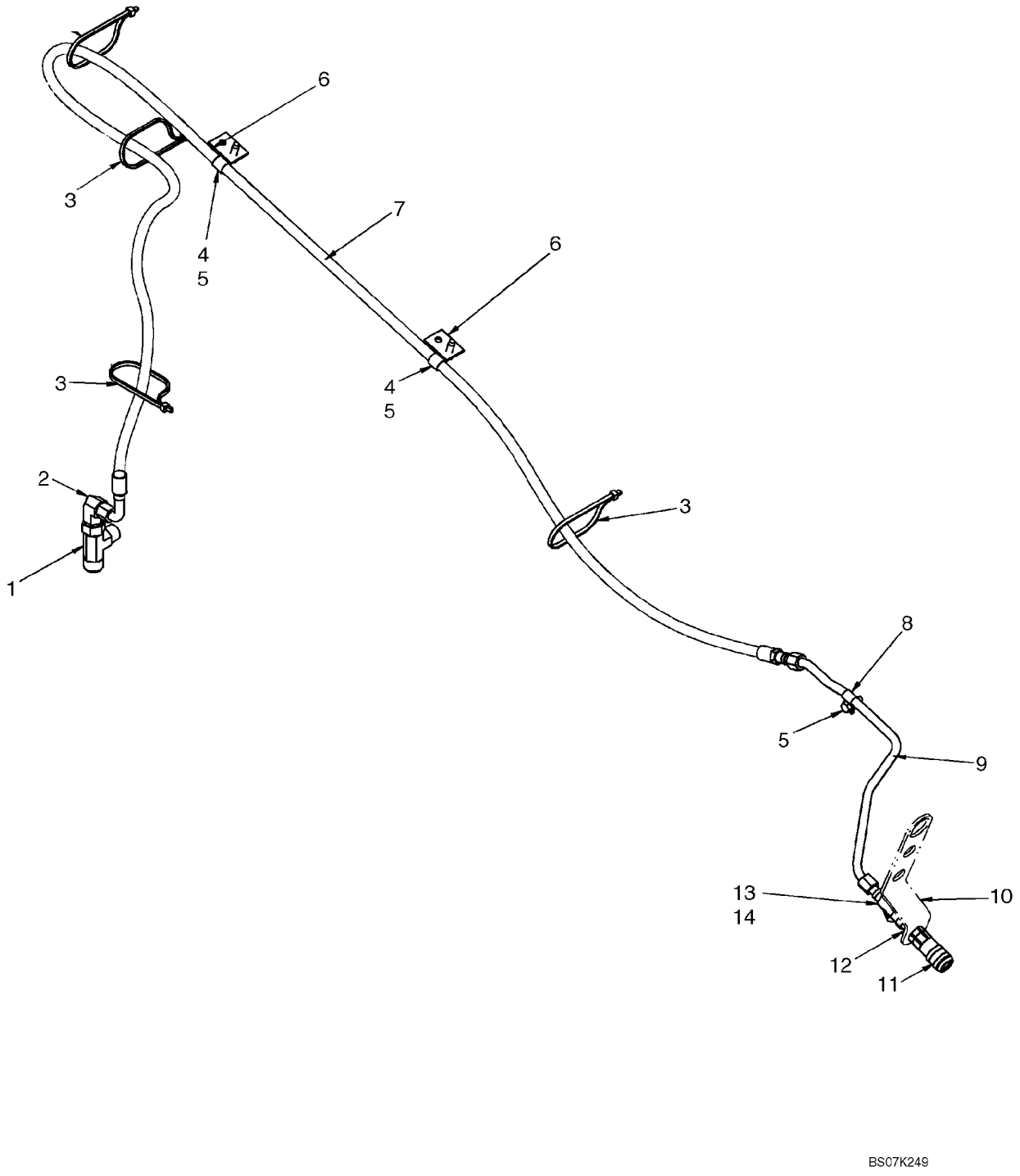

HYDRAULICS - CASE DRAIN

REF	FN	PART NUMBER	YR/SN	QTY	DESCRIPTION
		87685962		1	KIT, SERVICE, Kit, Loader Arm Case Drain; Incl 1 - 14
1		{87690479}		1	Tee, Male Branch 1.0 X 3/4 X 3/4 NP
2		86624011		1	ELBOW, 90º, 3/4"-16, 37º x 1 1/16"-12, 37º Fem Sw
3		L18331		4	STRAP, CABLE
4		86624005		2	CLAMP, 3/4", Insul, 3/8" Bolt
5		280476		3	SCREW, SELF TAP, Hex Wash Hd, 3/8" x 1"
6		87447813		2	BRACKET
7		87659253		1	HOSE, Hose, Loader Arm Case Drain, 2880mm (113 13/32 in.)
8		86010402		1	CLAMP, 1/2", Insul, 3/8" Bolt
9		87024208		1	TUBE ASSY.
10		87023530		1	BRACKET
11		87019286		1	COUPLING, FF Coupler .38 Female 8MFB
12		524036		1	NUT, LOCK, Blkhd, 3/4"-16
13		87426293		1	TEE, Tee, Swivel 37Fl 1/2 X 1/2 X 1/2
14		262159		1	CAP, 37º, 3/4"-16

HYDRAULICS - SELF LEVELING

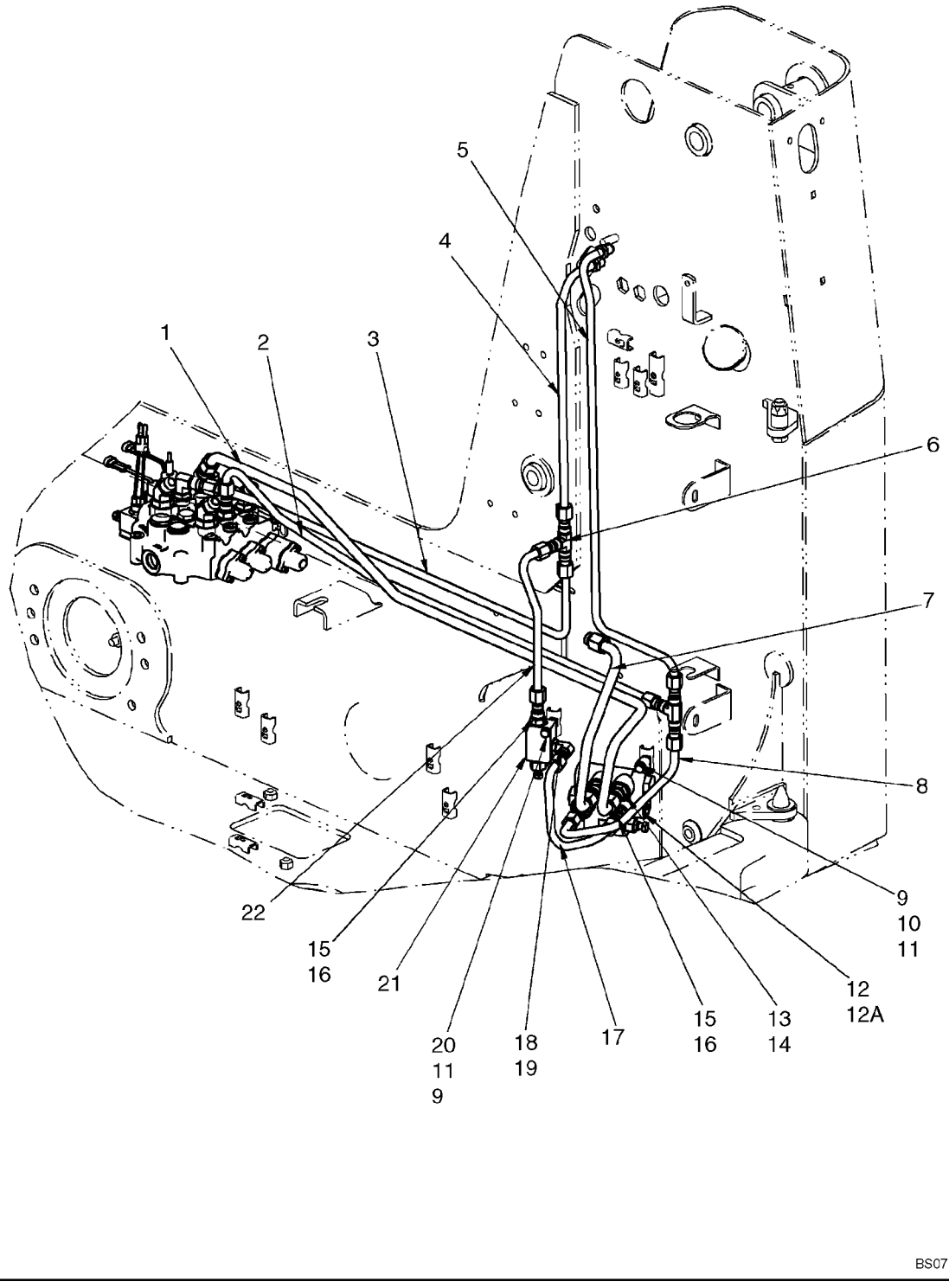

HYDRAULICS - SELF LEVELING

REF	FN	PART NUMBER	YR/SN	QTY	DESCRIPTION
		87638293		1	KIT, SERVICE, Kit, Single Hydraulic Self Level; Incl 1 - 22
1		87446001		1	TUBE ASSY., Tube, Lift (Lower)
2		87593420		1	TUBE, HYD, Tube, Tip (Dump)
3		87436668		1	TUBE ASSY., Tube, Tip (Curl)
4		87436539		1	TUBE ASSY., Tube, Tip (Curl)
5		87593421		1	TUBE, HYD, Tube, Tip (Dump)
6		128996		2	TEE, 3/4"-16, 37º
7		87593425		1	TUBE, HYD, Valve Out
8		87593422		1	TUBE, HYD, Tube, Valve To Bucket Base
9		86624184		3	WASHER, M8 x 16 x 1.6
10		412479		2	BOLT, Hex, M8 x 35, 8.8
11		229197A1		3	NUT
12		87447793		1	VALVE, Self Level; Incl 12A
12A		87535230		1	VALVE KIT, Kit, Seal
13		86071		2	CONNECTOR, HYD., 7/8"-14, 37º x 3/4"-16, O-Ring, Incl 14
14		128825		2	O-RING, 8-1, 90 Duro, .644" ID x .087" Thk
15		128818		3	CONNECTOR, HYD., 3/4"-16, 37º x 3/4"-16, O-Ring, Incl 16
16		128825		3	O-RING, 8-1, 90 Duro, .644" ID x .087" Thk
17		87421454		1	TUBE ASSY., Self Level To Relief
18		128830		1	ELBOW, 90º, 3/4"-16, 37º x 3/4"-16, O-Ring, Incl 19
19		128825		1	O-RING, 8-1, 90 Duro, .644" ID x .087" Thk
20		386045		1	BOLT, Hex, M8 x 45, 8.8
21		294650A1		1	VALVE, Relief Valve
22		87445306		1	TUBE ASSY.

HYDRAULICS - SECONDARY FRONT AUXILIARY

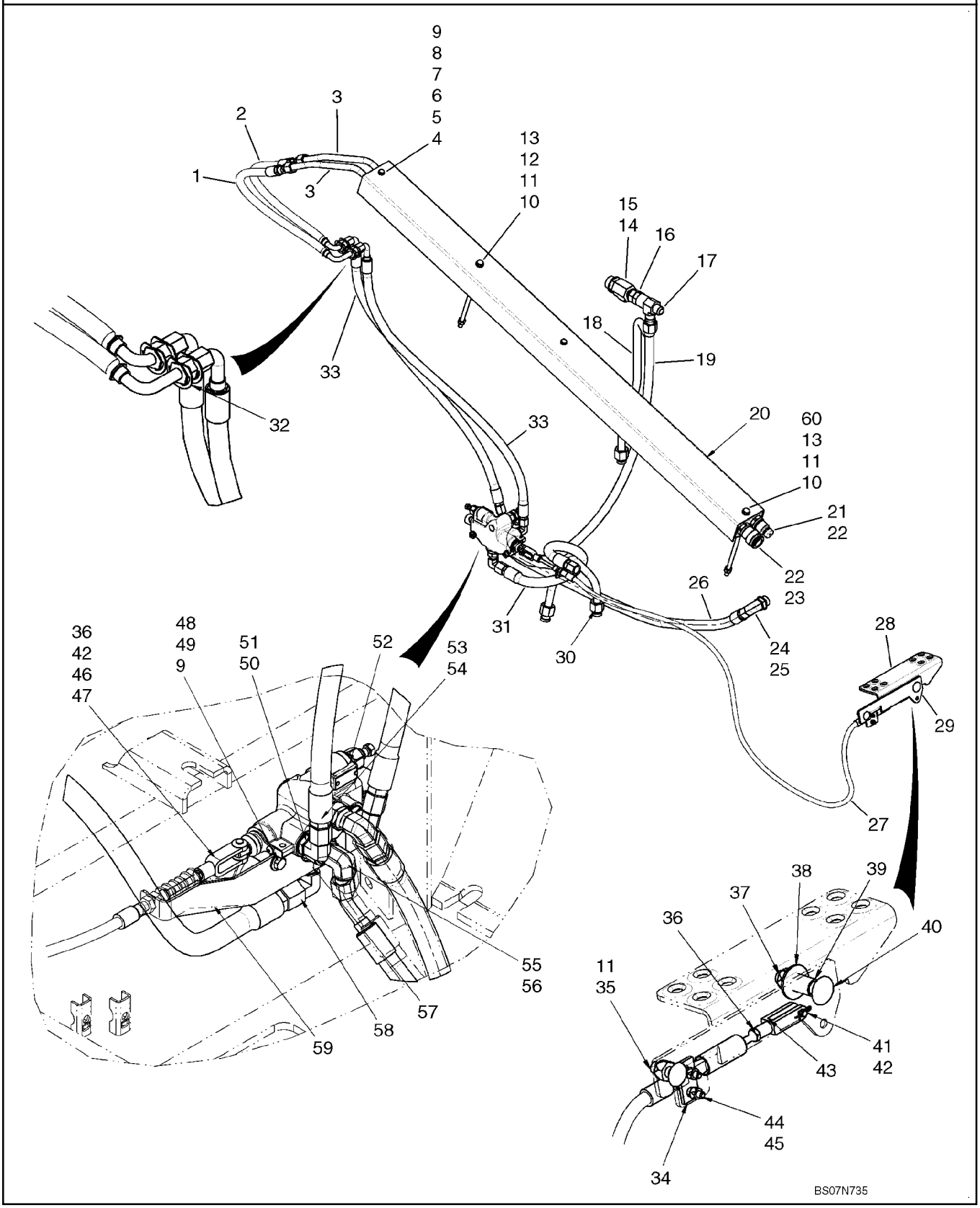

HYDRAULICS - SECONDARY FRONT AUXILIARY

REF	FN	PART NUMBER	YR/SN	QTY	DESCRIPTION
		87638872		1	KIT, SERVICE, Kit, Secondary Front Auxiliary; Incl 1 - 60
1		87462215		1	HOSE ASSY., Hose, Secondary Auxiliary, 633mm (24 15/16 in.)
2		87444373		1	HOSE ASSY., Hose, Secondary Auxiliary, 583mm (23 in.)
3		87444371		2	TUBE ASSY., Tube, Secondary Auxiliary
4		257859A1		2	PLATE, SPACER
5		194739A1		2	PLATE, LEDGER
6		257857A1		2	CLAMP
7		259905A1		2	SPACER, Spacer, 1/4 Sch 40 Pipe X 31 1/4 Lg
8		86624184		2	WASHER, M8 x 16 x 1.6
9		16044321		4	BOLT, Hex, M8 x 55, 8.8
10		86624977		2	BOLT, Hex, M10 x 245, 8.8
11		86512554		3	NUT, LOCK, M10 x 1.5, Cl 10
12		87447010		1	SPACER
13		86624176		2	WASHER, M10 x 20 x 2
14		86624131		1	TEE, 37º, 1 1/16"-12, 1 5/16"-12 O-Ring Run, 1 1/16"-12, Incl 15
15		167268		1	O-RING, 16-1, 90 Duro, 1.171" ID x .116" Thk
16		87301344		1	REDUCER, 37º, 1 1/16"-12, Fem x 7/8"-14 Male
17		87698812		1	CONNECTOR, HYD., Tee, Swivel Run 37Fl 3/4 X 1 X 3.4
18		87730806		1	TUBE, RIGID, Tube, Valve To Filter - Bypass
19		87728981		1	HOSE, Hose, Tank Return, 1064mm (41 7/8 in.)
20		87447965		1	COVER, Cover, Secondary Auxiliary Tube
21		87417308		1	COUPLING, BREAK AWAY, Coupler, 1/2 Male Quick Disconnect
22		595460		2	NUT, LOCK, Blkhd, 7/8"-14
23		393394A1		1	COUPLING, BREAK AWAY, Coupler, 1/2 Female Quick Disconnect
24		84570		1	ELBOW, 90º, 7/8"-14, 37º x 1 1/16"-12, O-Ring, Incl 25
25		167266		1	O-RING, 12-1, 90 Duro, .924 ID x .116" Thk

HYDRAULICS - SECONDARY FRONT AUXILIARY

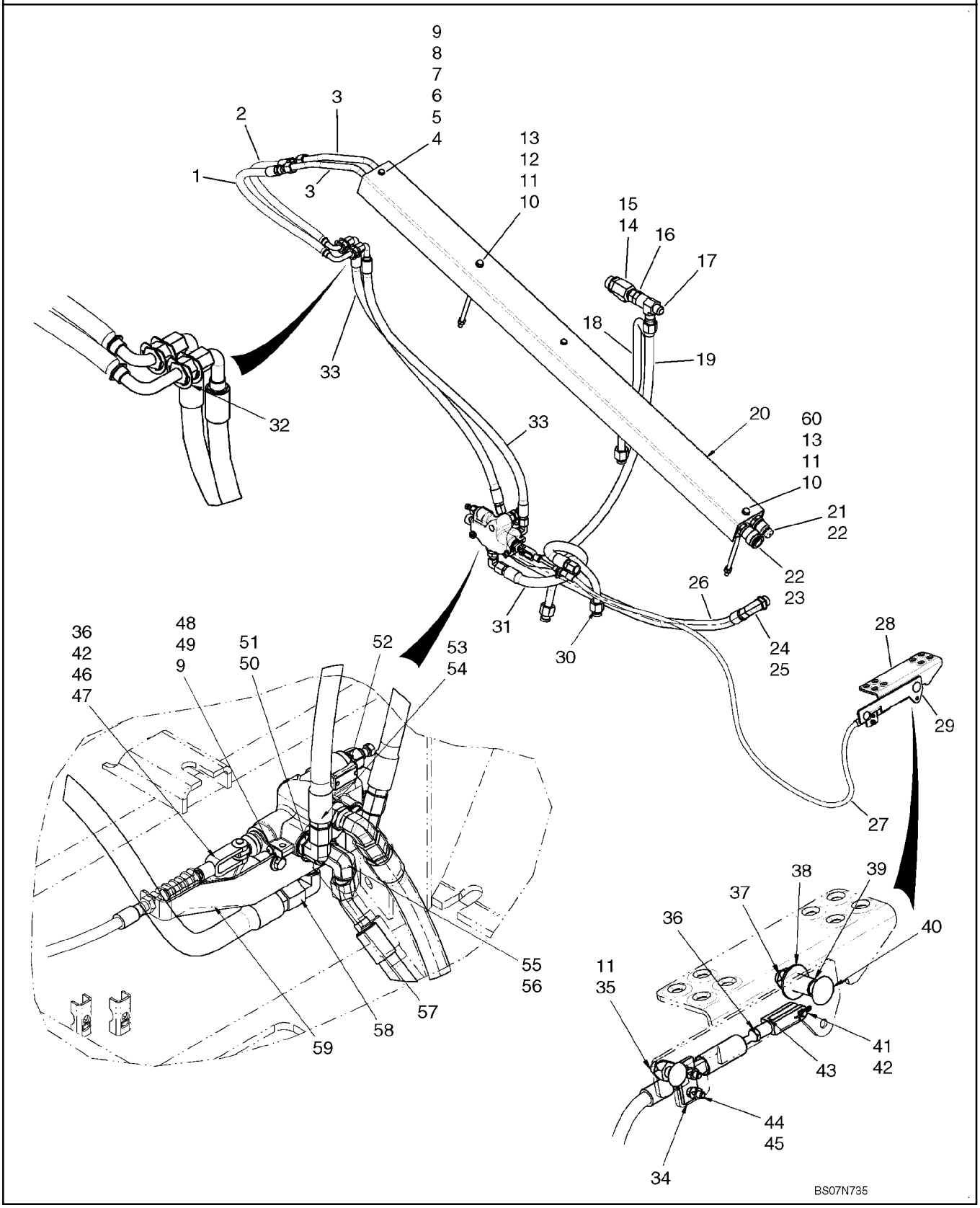

HYDRAULICS - SECONDARY FRONT AUXILIARY

REF	FN	PART NUMBER	YR/SN	QTY	DESCRIPTION
26		87728988		1	HOSE, Hose, Secondary Auxiliary Inlet, 1260mm (49 5/8 in.)
27		87739944		1	CABLE, Secondary Auxiliary
28		87423833		1	PEDAL ASSY., Pedal, Auxiliary Hydraulic
29		87715341		1	PLATE, Mounting Plate
30		87728999		1	TUBE, RIGID, Tube, High Flow Valve To Filter
31		87728989		1	HOSE, Hose, Secondary Auxiliary Outlet, 694mm (27 5/16 in.)
32		87301328		4	RING, LOCKING, Retaining Ring, External "E" Style #98 Plated
33		87729003		2	HOSE, Hose, Secondary Auxiliary, 992mm (39 1/16 in.)
34		H373779		1	PLATE, LARGE, Spacer
35		86512446		1	BOLT, CARRIAGE, Short NK, M10 x 30, Cl8.8, Full Thd
36		86976064		2	NUT, Jam, 1/4"-28, G5
37		412672		1	NUT, LOCK, M12 x 1.75, Cl 10
38		81541		1	WASHER, 7/16"
39		L14781		1	BUSHING, Bronze Bushing
40		87033290		1	BOLT, CARRIAGE, Short NK, M12 x 55, Cl8.8
41		87597960		1	PIN, CLEVIS
42		D131983		2	PIN
43		86520436		1	CLEVIS, ADJUSTABLE, 1/4"-28
44		87442439		1	ROD
45		86512440		2	NUT, LOCK
46		H32961		1	CLEVIS COUPLING
47		87444160		1	CLEVIS
48		229197A1		2	NUT
49		86625263		2	WASHER, M8 x 20 x 1.6
50		128830		2	ELBOW, 90º, 3/4"-16, 37º x 3/4"-16, O-Ring, Incl 51
51		128825		2	O-RING, 8-1, 90 Duro, .644" ID x .087" Thk
52		87017348		1	VALVE, Secondary Auxiliary Valve; See Fig 08-38
53		144124		1	CONNECTOR, HYD., 1 1/16"-12, 37º x 7/8"-14, O-Ring, Incl 54
54		167269		1	O-RING, 10-1, 90 Duro, .755" ID x .097" Thk

HYDRAULICS - SECONDARY FRONT AUXILIARY

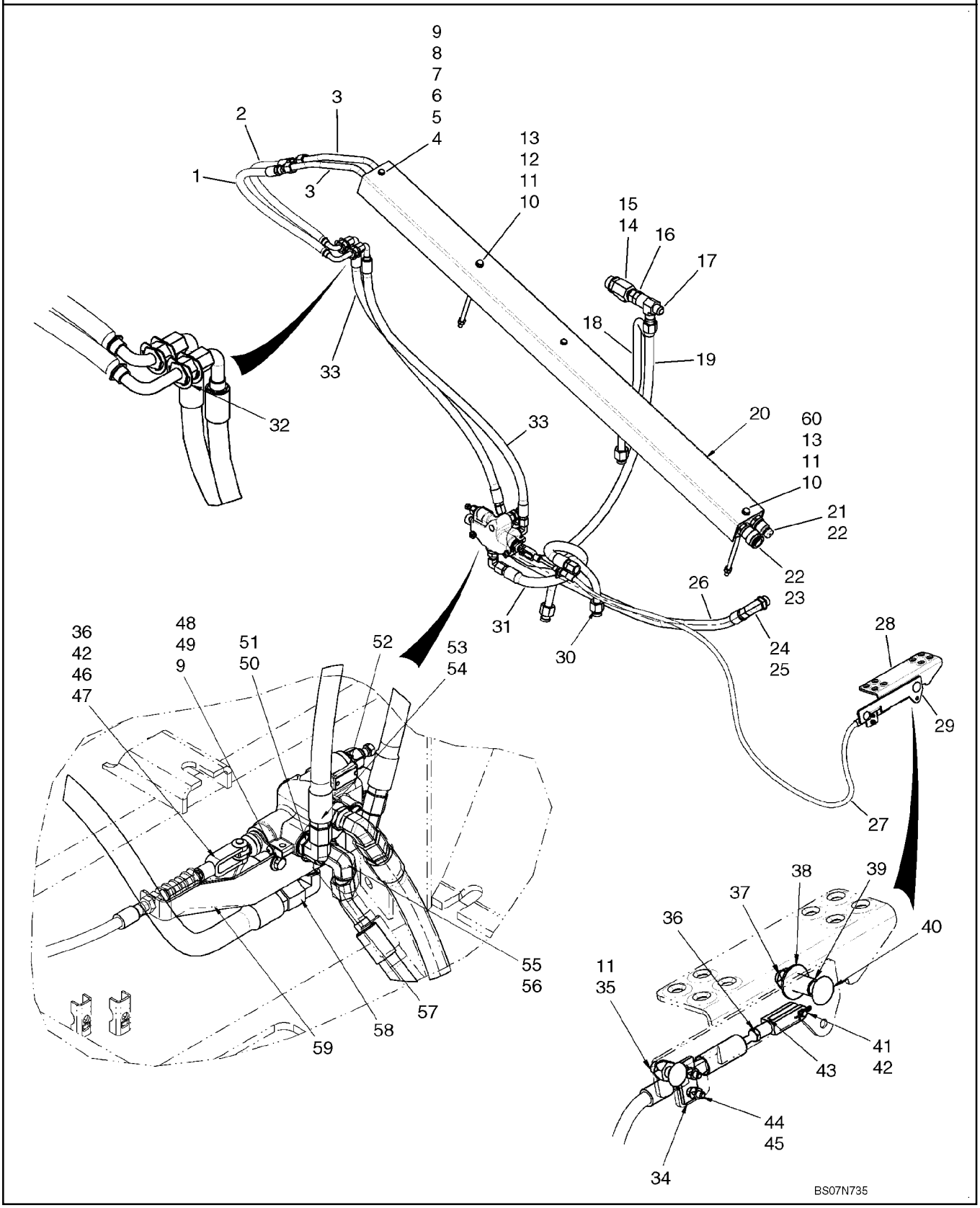

HYDRAULICS - SECONDARY FRONT AUXILIARY

REF	FN	PART NUMBER	YR/SN	QTY	DESCRIPTION
55		9617891		1	ELBOW, 90º, 3/4"-16, 37º x 7/8"-14, O-Ring, Incl 56
56		167269		1	O-RING, 10-1, 90 Duro, .755" ID x .097" Thk
57		129878A1		1	FITTING
58		182977		2	ELBOW, 90º, 7/8"-14, 37º x 7/8"-14, 37º Fem Sw
59		87739947		1	BRACKET
60		87447009		1	BRACKET

HYDRAULICS - RIDE CONTROL

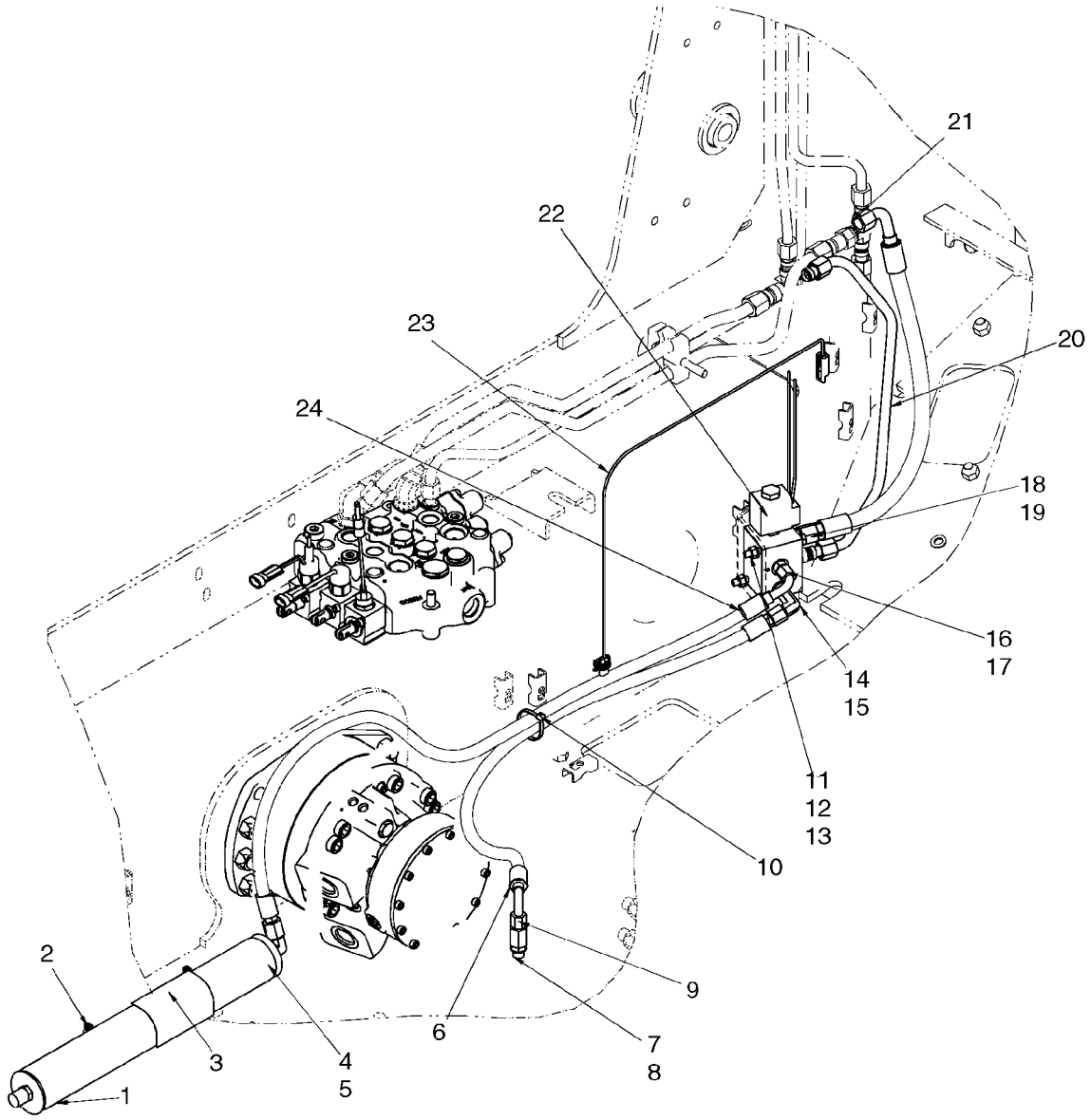

HYDRAULICS - RIDE CONTROL

REF	FN	PART NUMBER	YR/SN	QTY	DESCRIPTION
		87638304		1	KIT, SERVICE, Kit, Ride Control; Incl 1 - 26
1		87403797		1	ACCUMULATOR, Hydraulic Accumulator
2		86624194		2	CLAMP, HOSE, #36, 1.81/2.75 Type F Worm
3		384260A1		1	DECAL, Warning, Pressurized System
4		128830		1	ELBOW, 90º, 3/4"-16, 37º x 3/4"-16, O-Ring, Incl 5
5		128825		1	O-RING, 8-1, 90 Duro, .644" ID x .087" Thk
6		87456974		1	HOSE ASSY., 970mm (38 3/16 in.)
7		86513020		1	TEE, 9/16"-18, 37º x 9/16"-18, O-Ring Run, Incl 8
8		9617873		1	O-RING, 6-1, 90 Duro, .468" ID x .078" Thk
9		574342		1	CAP, 37º, 9/16"-18
10		L11541		1	STRAP, CABLE
11		9706690		2	NUT, M8, Cl 8
12		140016		4	WASHER, M8 x 16 x 1.6
13		43133		2	BOLT, Hex, M8 x 80, 8.8
14		86526		1	ELBOW, 90º, 9/16"-18, 37º x 9/16"-18, LG, Incl 15
15		9617873		1	O-RING, 6-1, 90 Duro, .468" ID x .078" Thk
16		76350		1	CONNECTOR, HYD., 9/16"-18, 37º x 9/16"-18, O-Ring, Incl 17
17		9617873		1	O-RING, 6-1, 90 Duro, .468" ID x .078" Thk
18		86509028		2	CONNECTOR, HYD., 3/4"-16, 37º x 9/16"-18, O-Ring, Incl 19
19		9617873		2	O-RING, 6-1, 90 Duro, .468" ID x .078" Thk
20		87588929		1	TUBE, HYD, Valve To Cylinder Base
21		87588930		1	HOSE, 550mm (21 5/8 in.)
22		87428444		1	VALVE, Solenoid Valve, Ride Control
23		310838A1		1	HARNESS, Ride Control Harness
24		87588928		1	HOSE, Hose, Valve To Accumulator, 1200mm (47 1/4 in.)
25		304083A1		2	DECAL, Decal, Ride Control; Not Illustrated
26		255927A1		1	DECAL, Warning, Ride Control; Not Illustrated

HYDRAULICS - ATTACHMENT, PROPORTIONAL (WITH PILOT CONTROL)

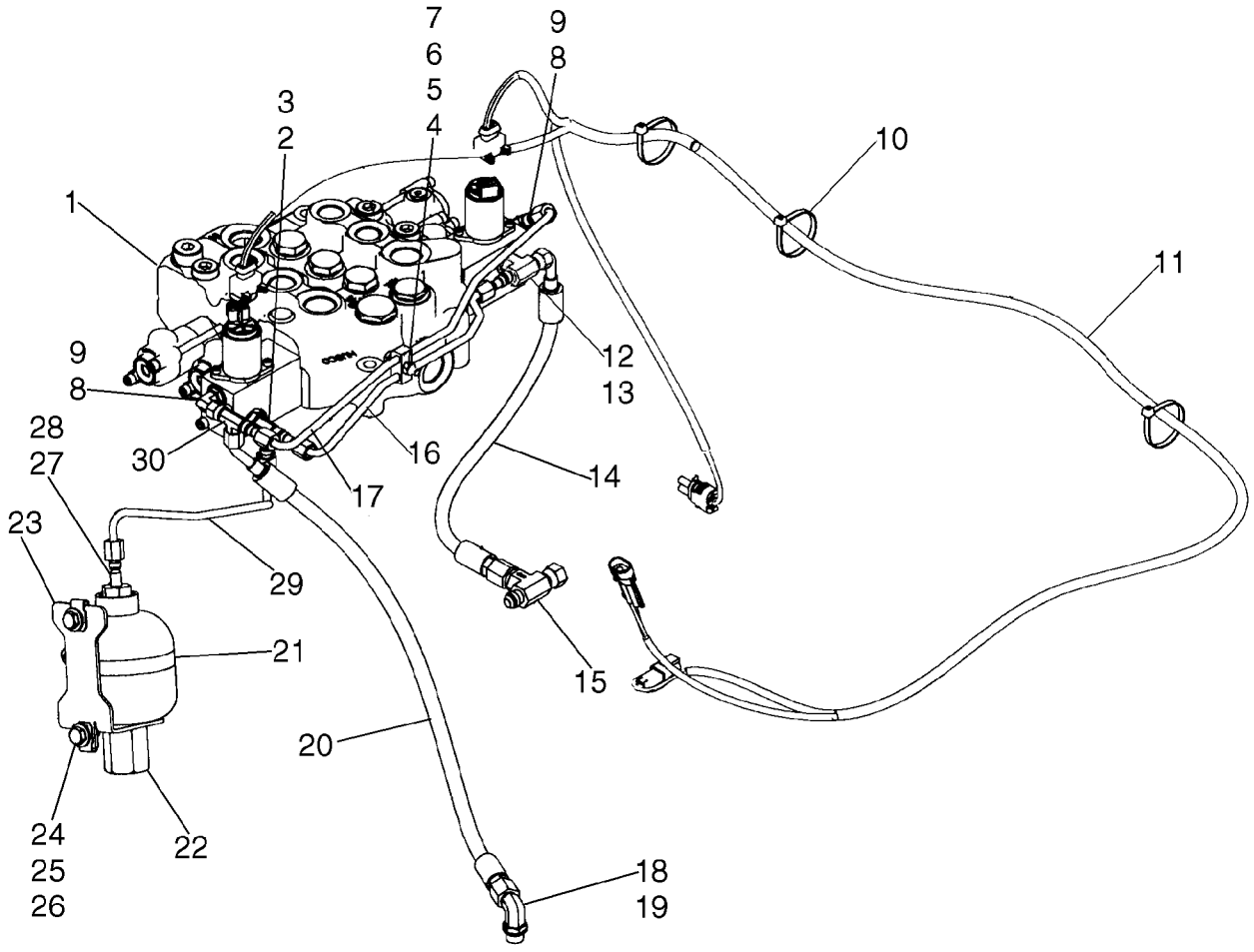

HYDRAULICS - ATTACHMENT, PROPORTIONAL (WITH PILOT CONTROL)

REF	FN	PART NUMBER	YR/SN	QTY	DESCRIPTION
		87638361		1	KIT, SERVICE, Kit, EH Proportional Auxiliary Pilot Control; Incl. 1 - 30
1		87546975		1	VALVE, HYDRAULIC, Pilot Control Models With Hydraulic Attachment; See Fig 08-17
2		86513019		1	TEE, 7/16"-20, 37º x 7/16"-20, O-Ring Run, Incl. 3
3		165202		1	O-RING, 4-1, 90 Duro, .351" ID x .072" Thk
4		608089		1	CLAMP
5		86624181		1	WASHER, M6
6		120101		1	BOLT, Hex, M6 x 30, 8.8, Full Thd, If Used
7		87030561		1	NUT, LOCK, M6 x 1, Cl 8
6		80120101		1	SCREW, If Used
8		216773		2	ELBOW, 90º, 7/16"-20, 37º x 7/16"-20, O-Ring, Incl. 9
9		165202		2	O-RING, 4-1, 90 Duro, .351" ID x .072" Thk
10		L11541		3	STRAP, CABLE
11		87447970		1	HARNESS
12		16989		1	TEE, 7/16"-20, 37º x 7/8"-14, O-Ring Br, Incl. 13
13		165202		1	O-RING, 4-1, 90 Duro, .351" ID x .072" Thk
14		87612875		1	HOSE, 350mm (22 13/16 in.)
15		87438766		1	TEE, Tee With Check Valve
16		87563970		1	TUBE, HYD, Pilot Pressure
17		87564001		1	TUBE, HYD, Drain
18		76344		1	ELBOW, 90º, 9/16"-18, 37º x 9/16"-18, O-Ring, Includes 19
19		9617873		1	O-RING, 6-1, 90 Duro, .468" ID x .078" Thk
20		87460042		1	HOSE, Case Drain
21		86625034		1	CLAMP, HOSE, #64, 3.56/4.50 Type F Worm
22		86624732		1	ACCUMULATOR
23		87440253		1	ANGLE, Mounting Bracket
24		120104		2	SCREW, Hex, M8 x 20, 8.8
25		122158A1		2	NUT, M8, U
26		86625263		2	WASHER, M8 x 20 x 1.6
27		87010110		1	CONNECTOR, HYD., Straight; Incl. 28
28		128825		1	O-RING, 8-1, 90 Duro, .644" ID x .087" Thk
29		87447764		1	TUBE ASSY., Pilot Pressure
30		86513653		1	TEE, 37º, 7/16"-20 x 7/16"-20, Fem Sw Run

HYDRAULICS - ATTACHMENT (MECHANICAL CONTROL)

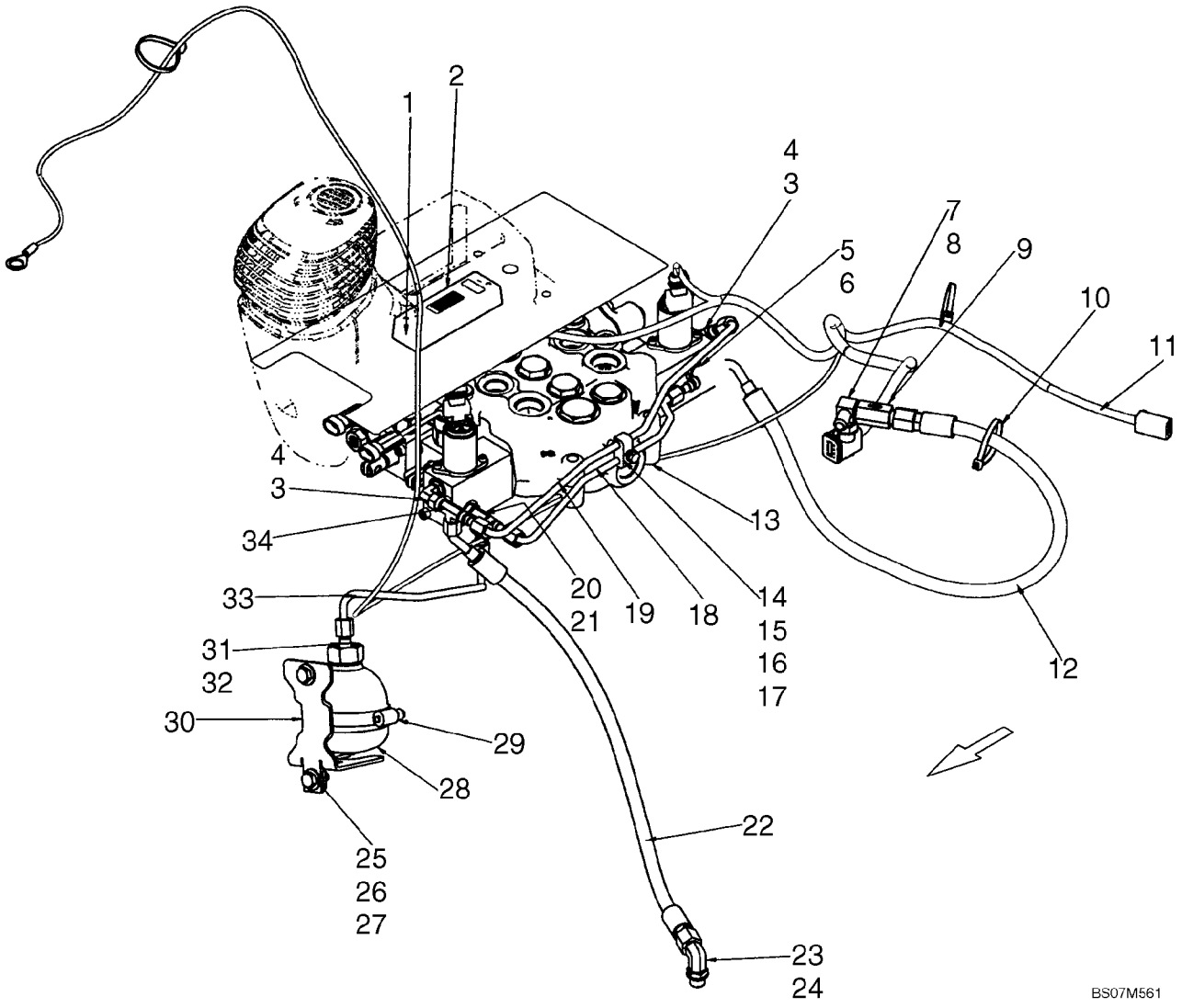

HYDRAULICS - ATTACHMENT (MECHANICAL CONTROL)

REF	FN	PART NUMBER	YR/SN	QTY	DESCRIPTION
		87617017		1	KIT, SERVICE, Kit, EH Proportional Auxiliary, Mechanical Controls; Incl 1 - 34
1		100012		2	NUT, M4, Cl 8
2		87657080		1	VALVE, PWM Driver
3		216773		2	ELBOW, 90º, 7/16"-20, 37º x 7/16"-20, O-Ring, Incl 4
4		165202		2	O-RING, 4-1, 90 Duro, .351" ID x .072" Thk
5		16989		1	TEE, 7/16"-20, 37º x 7/8"-14, O-Ring Br, Incl 6
6		165202		1	O-RING, 4-1, 90 Duro, .351" ID x .072" Thk
7		L104616		1	TEE, Incl 8
8		9617873		1	O-RING, 6-1, 90 Duro, .468" ID x .078" Thk
9		87441786		1	VALVE, In Line Check Valve
10		L11541		3	STRAP, CABLE
11		87668739		1	HARNESS, Harness, Electro-Hydraulic Auxiliary
12		87516044		1	HOSE, Hose, 750mm (29 1/2 in.)
13		87583286		1	VALVE, Control Valve, Manual Control; See Fig 08-19
14		608089		1	CLAMP
15		80120101		1	SCREW
16		86624181		1	WASHER, M6
17		87030561		1	NUT, LOCK, M6 x 1, Cl 8
18		87563970		1	TUBE, HYD, Tube, Pilot Pressure
19		87564001		1	TUBE, HYD, Tube, Drain
20		86513019		1	TEE, 7/16"-20, 37º x 7/16"-20, O-Ring Run, Incl 21
21		165202		1	O-RING, 4-1, 90 Duro, .351" ID x .072" Thk
22		87460042		1	HOSE, Hose, Case Drain 580mm (22 13/16 in.)
23		76344		1	ELBOW, 90º, 9/16"-18, 37º x 9/16"-18, O-Ring, Incl 24
24		9617873		1	O-RING, 6-1, 90 Duro, .468" ID x .078" Thk
25		120104		2	SCREW, Hex, M8 x 20, 8.8
26		86625263		2	WASHER, M8 x 20 x 1.6
27		122158A1		2	NUT, M8, U
28		87376969		1	ACCUMULATOR
29		86625032		1	CLAMP, HOSE, #48, 2.56/3.50 Type F Worm
30		87621245		1	ANGLE
31		139398		1	CONNECTOR, HYD., 7/16"-20, 37º x 9/16"-18, O-Ring, Incl 32
32		9617873		1	O-RING, 6-1, 90 Duro, .468" ID x .078" Thk

HYDRAULICS - ATTACHMENT (MECHANICAL CONTROL)

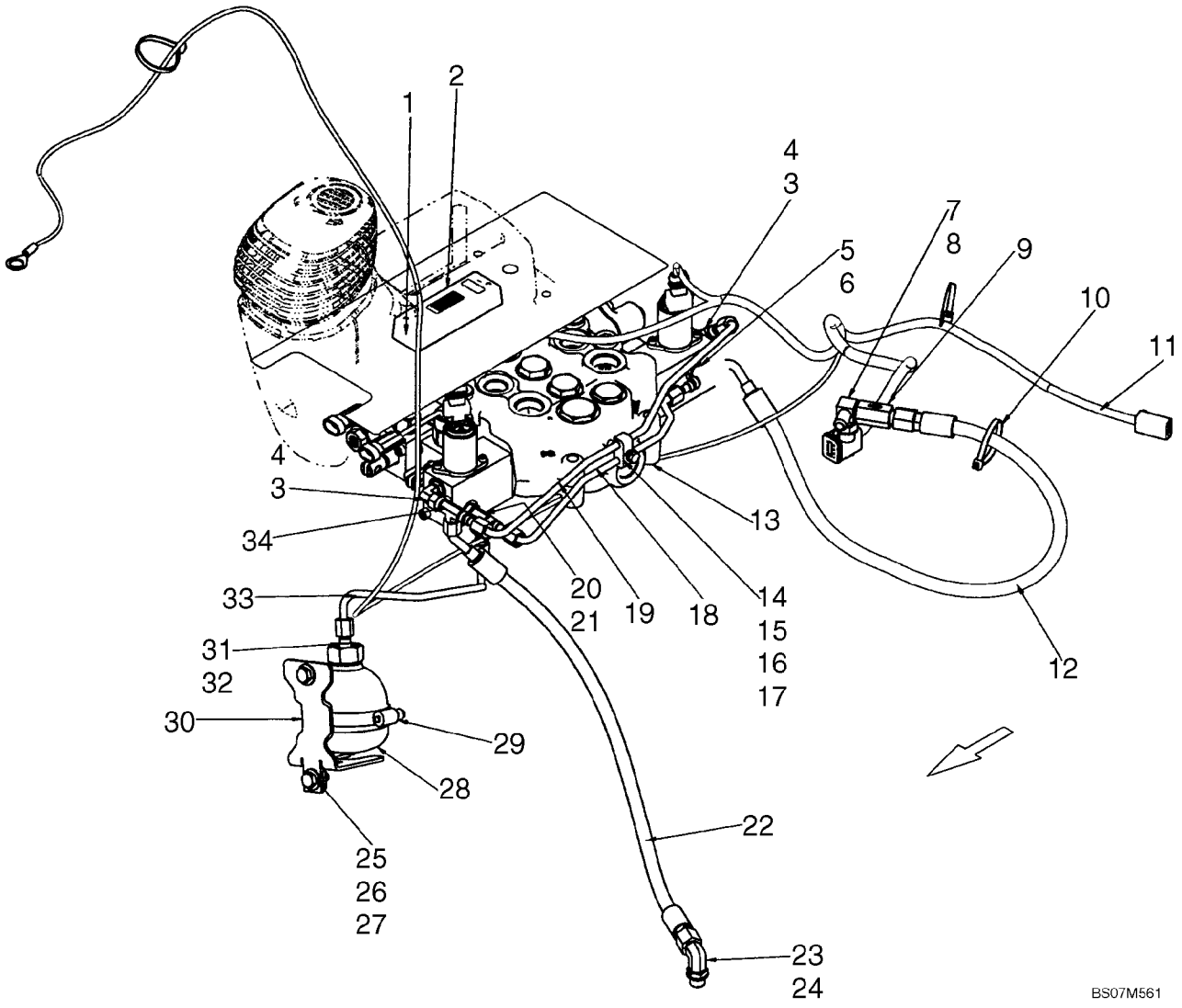

HYDRAULICS - ATTACHMENT (MECHANICAL CONTROL)

REF	FN	PART NUMBER	YR/SN	QTY	DESCRIPTION
33		87447764		1	TUBE ASSY., Tube, Pilot Pressure
34		86513653		1	TEE, 37º, 7/16"-20 x 7/16"-20, Fem Sw Run

HYDRAULICS - COUPLER SYSTEM

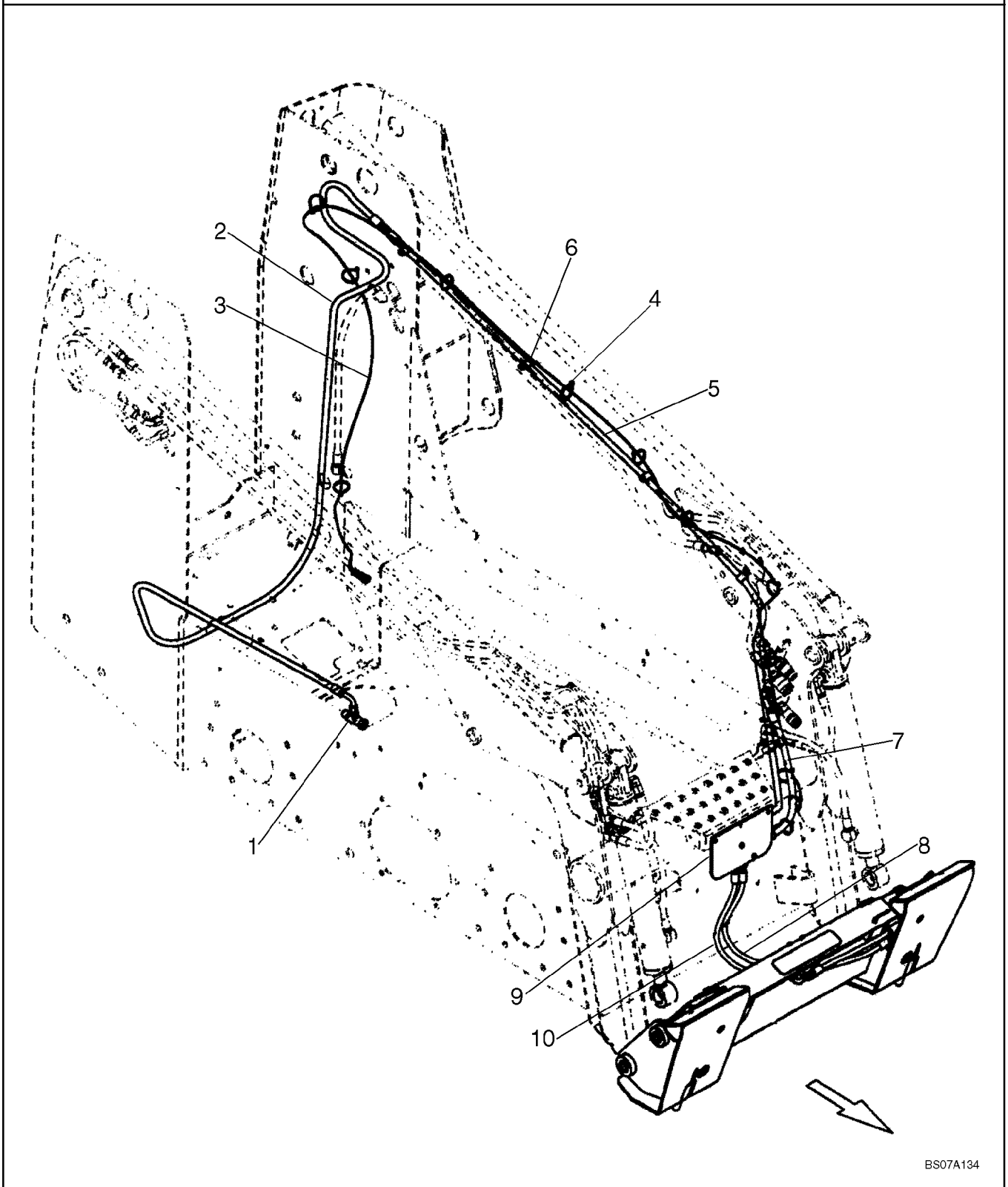

HYDRAULICS - COUPLER SYSTEM

REF	FN	PART NUMBER	YR/SN	QTY	DESCRIPTION
		87638893		1	KIT, SERVICE, Kit, Hydraulic Coupler; Incl 1 - 10
		87388074		1	KIT, CONVERSION, Kit To Convert From Connection Into Bucket Circuit To Connection Between Gear Pump And Loader Valve; Incl. Ref 1, 2, 4, 5, 6
		REF			INSTRUCTION, See Figure 08-10; Coupler Frame
1		87446825		1	TEE
2		87367444		1	HOSE
3		87446983		1	HARNESS, WIRE
4		L11541		8	STRAP, CABLE
5		87367445		1	HOSE
6		86624005		4	CLAMP, 3/4", Insul, 3/8" Bolt
7		87413436		1	HOSE ASSY., Case Drain
8		87440565		1	HOSE ASSY., Step To Coupler
9		87423807		1	PLATE
10		87440564		1	HOSE ASSY., Step To Coupler

HYDRAULICS - COUPLER SYSTEM

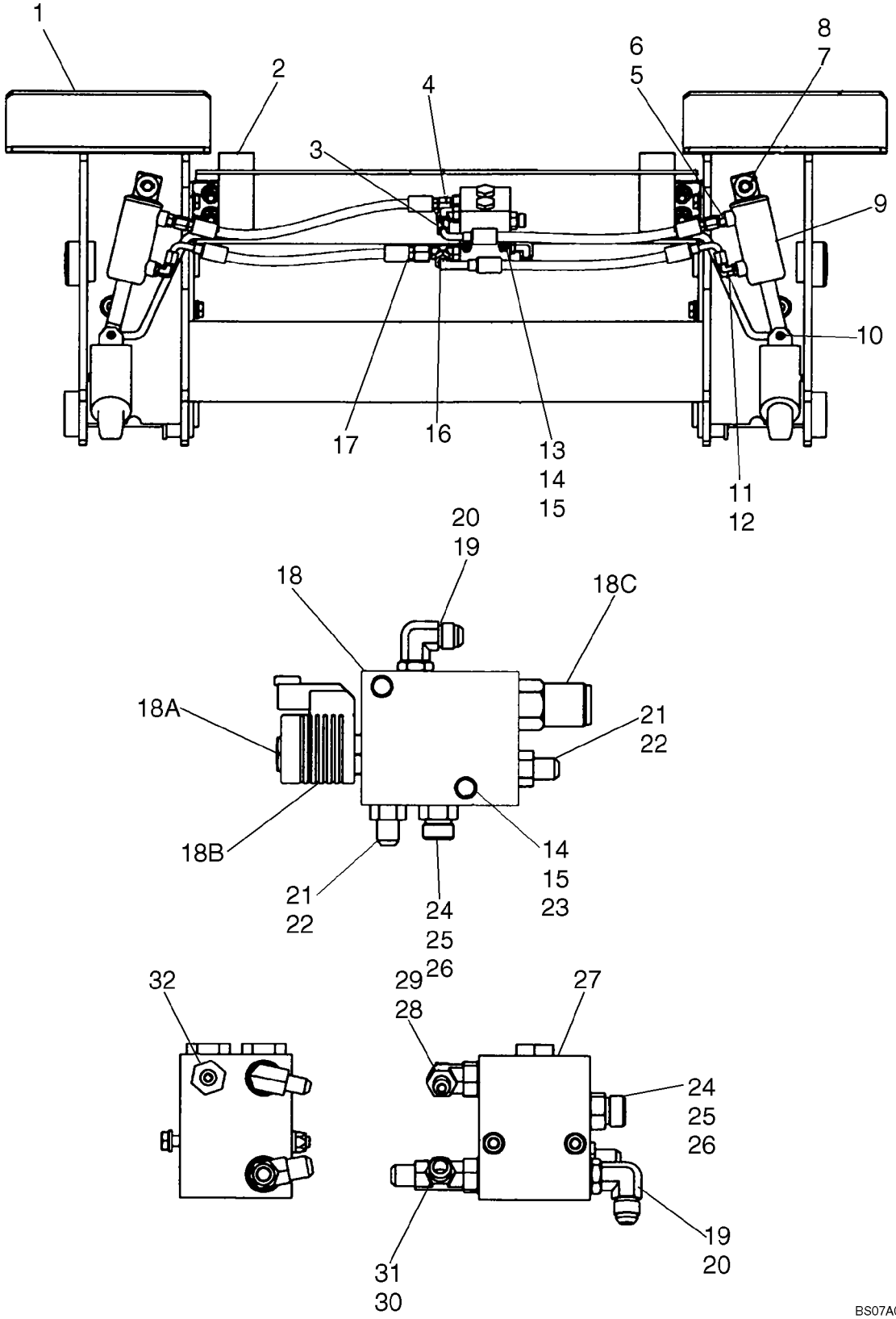

HYDRAULICS - COUPLER SYSTEM

REF	FN	PART NUMBER	YR/SN	QTY	DESCRIPTION
1		REF		1	INSTRUCTION, Coupler Frame; See Figure 08-09
2		396052A2		2	FLAG
3		87440569		1	HOSE ASSY., Left Hand; Base End
4		87440566		1	HOSE ASSY., Right Hand; Base End
5		265235		2	CONNECTOR, HYD., 7/16"-20, 37º x 7/16"-20, O-Ring, Incl. 6
6		165202		1	O-RING, 4-1, 90 Duro, .351" ID x .072" Thk
7		100-1650		2	RING, SNAP, #50, Ext
8		87387540		2	RETAINER, Handle Pivot
9		87442337		2	CYLINDER, Component Parts Not Serviced Separately
10		87610718		2	PIN
11		216773		2	ELBOW, 90º, 7/16"-20, 37º x 7/16"-20, O-Ring, Incl. 12
12		165202		1	O-RING, 4-1, 90 Duro, .351" ID x .072" Thk
13		86508570		2	BOLT, Hex, M6 x 80, 8.8
14		86512440		4	NUT, LOCK
15		86588450		8	WASHER, M6
16		87440570		1	HOSE ASSY., Left Hand; Rod End
17		87440568		1	HOSE ASSY., Right Hand; Rod End
18		87421480		1	VALVE, HYDRAULIC, Hydraulic Coupler; Incl.18A - 18C
18A		87562926		1	VALVE, Sequence Valve Sauer No. CP538-1-U-0-12D-DE
18B		87433496		1	COIL, Sauer No. 322113
18C		87562923		1	VALVE, Sequence Valve Sauer No. CP240-21-B-0-A-C-270
19		76344		2	ELBOW, 90º, 9/16"-18, 37º x 9/16"-18, O-Ring, Includes 20
20		9617873		1	O-RING, 6-1, 90 Duro, .468" ID x .078" Thk
21		76350		2	CONNECTOR, HYD., 9/16"-18, 37º x 9/16"-18, O-Ring, Incl. 22
22		9617873		1	O-RING, 6-1, 90 Duro, .468" ID x .078" Thk
23		338413		2	BOLT, Hex, M6 x 60, 8.8

HYDRAULICS - COUPLER SYSTEM

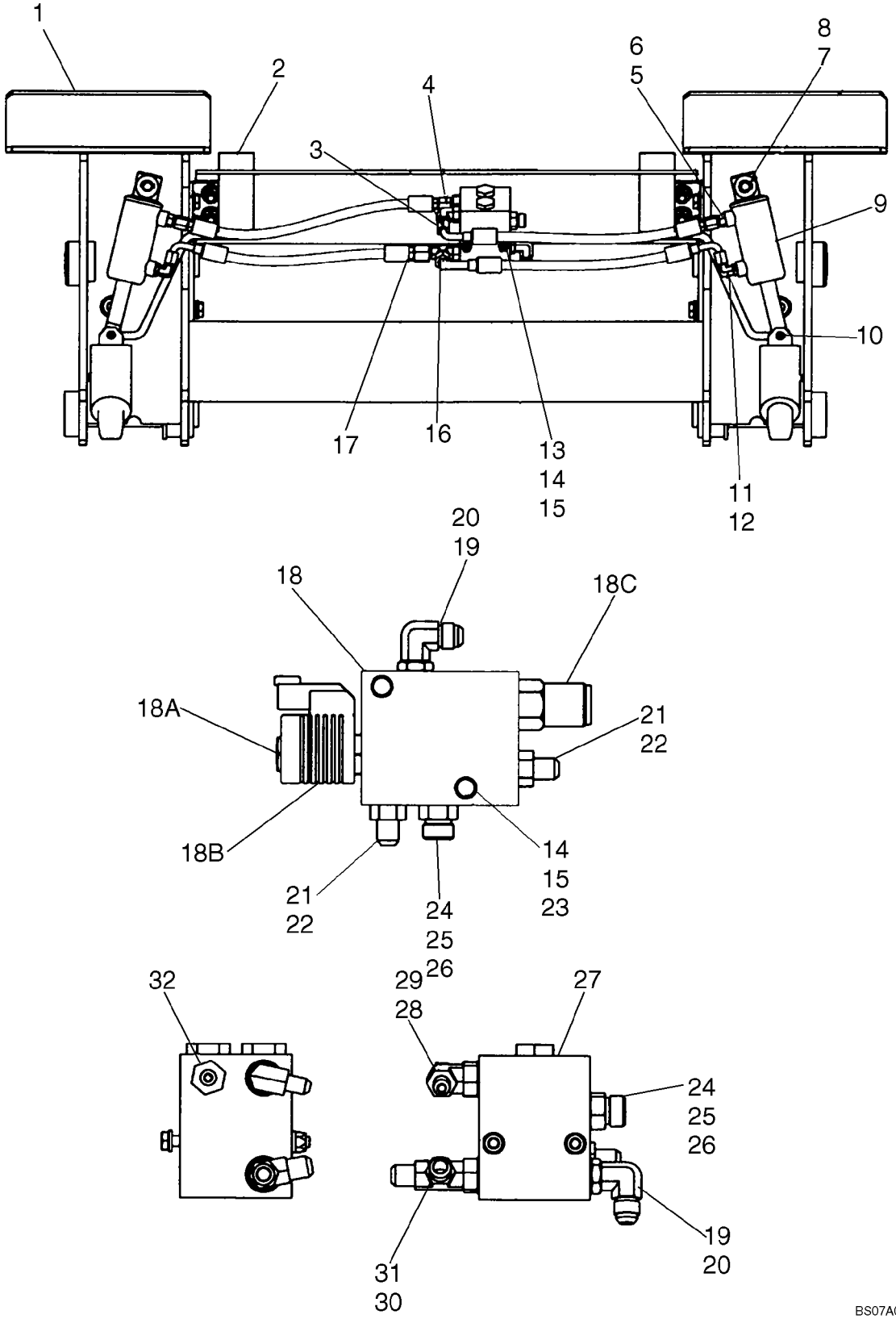

HYDRAULICS - COUPLER SYSTEM

REF	FN	PART NUMBER	YR/SN	QTY	DESCRIPTION
24		9993143		2	CONNECTOR, HYD., 11/16"-16 ORFS x 9/16"-18 ORB, Incl. 25, 26
25		9993141		1	O-RING, -012, 90 Duro, .364" ID x .070" Thk
26		9617873		1	O-RING, 6-1, 90 Duro, .468" ID x .078" Thk
27		294741A1		1	VALVE, CHECK, Component Parts Not Serviced Separately
28		86512934		1	ELBOW, 90º, 7/16"-20, 37º x 9/16"-18, O-Ring, Incl. 29
29		9617873		1	O-RING, 6-1, 90 Duro, .468" ID x .078" Thk
30		86513020		1	TEE, 9/16"-18, 37º x 9/16"-18, O-Ring Run, Incl. 31
31		9617873		1	O-RING, 6-1, 90 Duro, .468" ID x .078" Thk
32		139398		1	CONNECTOR, HYD., 7/16"-20, 37º x 9/16"-18, O-Ring, Incl. 9617873
		9617873		1	O-RING, 6-1, 90 Duro, .468" ID x .078" Thk

HYDRAULICS - COUPLER SYSTEM (ITALIAN)

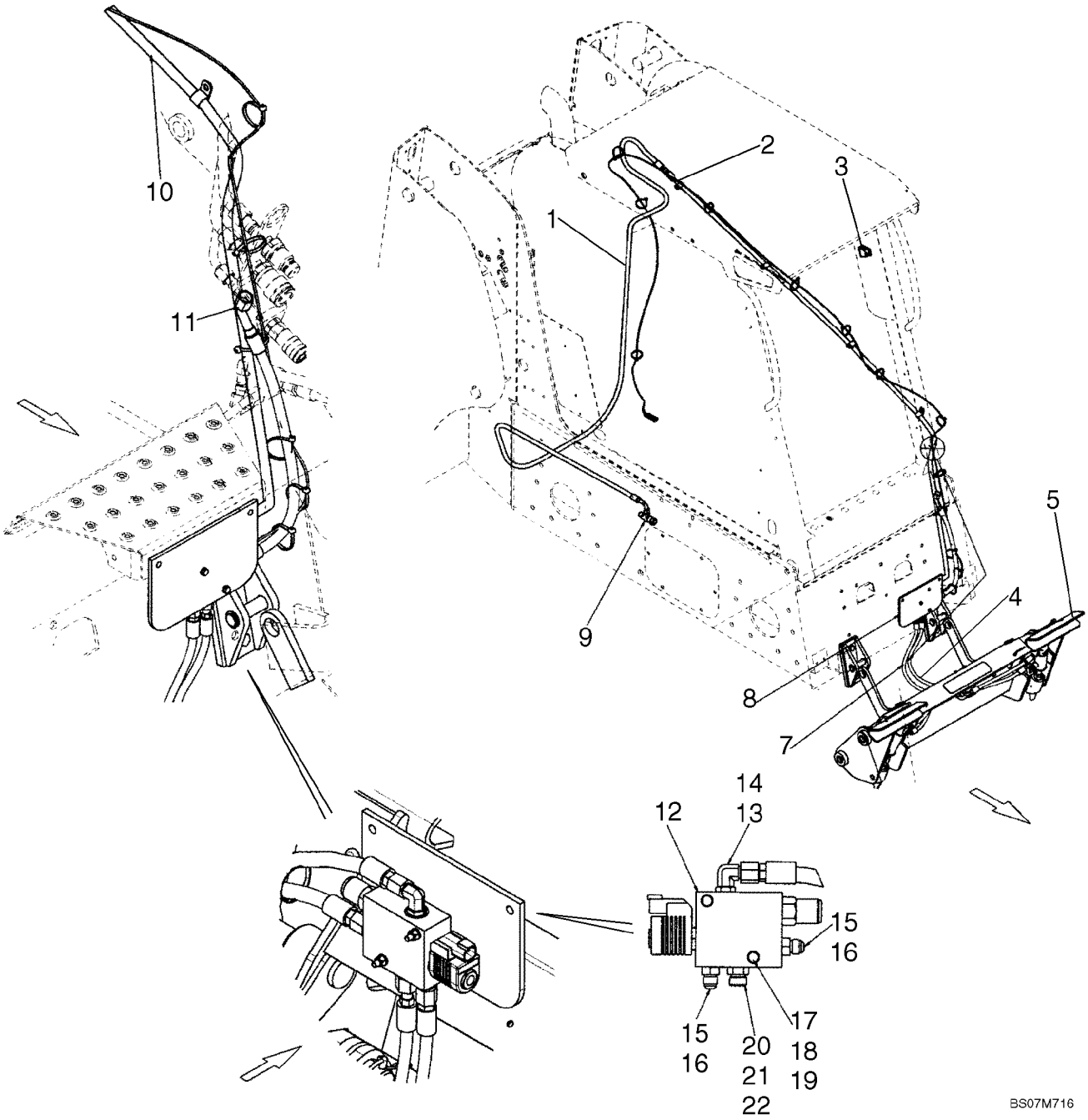

HYDRAULICS - COUPLER SYSTEM (ITALIAN)

REF	FN	PART NUMBER	YR/SN	QTY	DESCRIPTION
1		87367444		1	HOSE, Hose, Hydraulic Coupler, 3305mm (130 1/8 in.)
2		86624005		4	CLAMP, 3/4", Insul, 3/8" Bolt
3		87642911		1	SWITCH, Rocker Switch, Hydraulic Coupler
4		87440565		1	HOSE ASSY., Hose, Step To Coupler, 720mm (28 11/32 in.)
5		REF		1	INSTRUCTION, Coupler; See Fig 08-12
6		80710		4	NIPPLE, LUBE, 1/8"-27 x .66 lg
7		87440564		1	HOSE ASSY., Hose, Step To Coupler, 690mm (27 3/16 in.)
8		87423807		1	PLATE
9		87446825		1	TEE
10		87367445		1	HOSE, Hose, Hydraulic Coupler, 2482mm (97 11/16 in.)
11		87413436		1	HOSE ASSY., Hose, Case Drain, 655mm (25 13/16 in.)
12		87421480		1	VALVE, HYDRAULIC
13		76344		2	ELBOW, 90º, 9/16"-18, 37º x 9/16"-18, O-Ring, Incl 14
14		9617873		2	O-RING, 6-1, 90 Duro, .468" ID x .078" Thk
15		76350		2	CONNECTOR, HYD., 9/16"-18, 37º x 9/16"-18, O-Ring, Incl 16
16		9617873		2	O-RING, 6-1, 90 Duro, .468" ID x .078" Thk
17		338413		2	BOLT, Hex, M6 x 60, 8.8
18		86512440		4	NUT, LOCK
19		86588450		8	WASHER, M6
20		9993143		1	CONNECTOR, HYD., 11/16"-16 ORFS x 9/16"-18 ORB, Incl 21, 22
21		9617873		1	O-RING, 6-1, 90 Duro, .468" ID x .078" Thk
22		9993141		1	O-RING, -012, 90 Duro, .364" ID x .070" Thk

HYDRAULICS - COUPLER SYSTEM (ITALIAN)

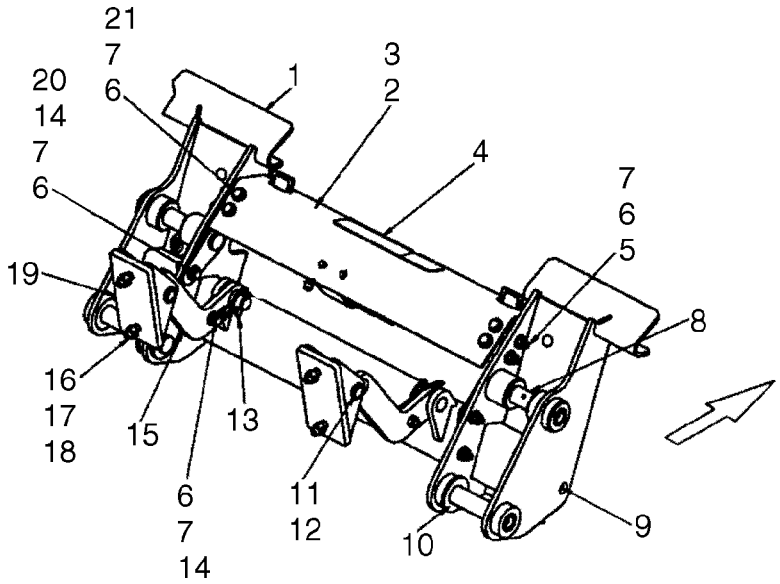

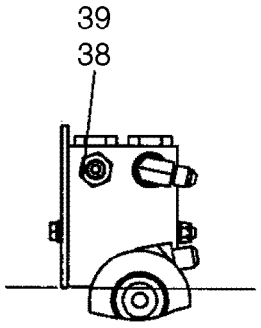

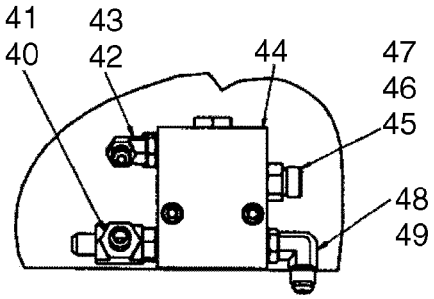

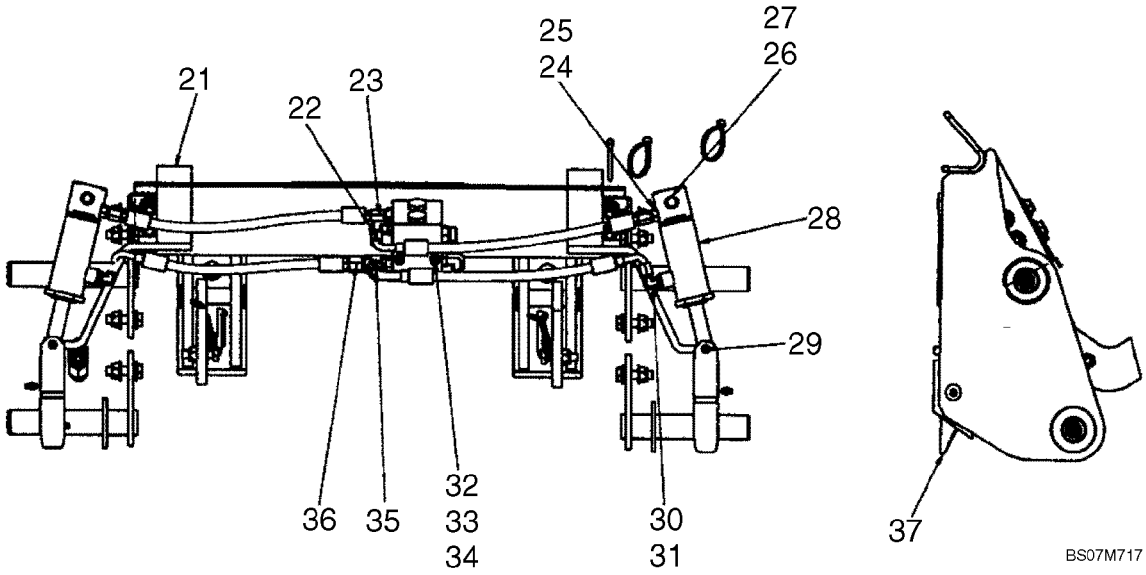

HYDRAULICS - COUPLER SYSTEM (ITALIAN)

REF	FN	PART NUMBER	YR/SN	QTY	DESCRIPTION
1		417779A3		1	FRAME ASSY, Coupler Frame, Italian
2		87620412		1	PLATE, Cover
3		409783A1		2	BRACKET
4		D55216		1	STRIP, ANTI-SKID
5		9706704		4	BOLT, Hex, M10 x 35, 8.8, Full Thd
6		86512554		14	NUT, LOCK, M10 x 1.5, Cl 10
7		86625253		26	WASHER, M11 x 24 x 2
8		87659406		4	PIN
9		87414		2	NIPPLE, LUBE, 1/4"-28 x .56" lg, Drive
10		86512837		2	WASHER, 1 1/4", SAE
11		D138889		2	PIN
12		{86625151}		4	Retaining Ring, External #87
13		A30338		2	PIN, Klik Pin
14		120112		6	BOLT, Hex, M10 x 40, 8.8, Full Thd
15		398194A1		2	LINK, Bucket Lock
16		120080		4	BOLT, Hex Head, M12 X 45 Cl 8.8
17		86625255		4	WASHER, M13.5 x 24.5 x 3, HT
18		412672		4	NUT, LOCK, M12 x 1.75, Cl 10
19		398196A1		2	BRACKET
20		906091R1		4	SPACER
21		43139		4	SCREW
22		87440569		1	HOSE ASSY., Hose, Base End LH, 365mm (14 3/8 in.)
23		87440566		1	HOSE ASSY., Hose, Base End RH, 372mm (14 21/32 in.)
24		265235		2	CONNECTOR, HYD., 7/16"-20, 37º x 7/16"-20, O-Ring, Incl 25
25		165202		2	O-RING, 4-1, 90 Duro, .351" ID x .072" Thk
26		87387540		2	RETAINER
27		{87612753}		2	Retaining Ring, External #50
28		87442337		2	CYLINDER
29		87610718		2	PIN
30		216773		2	ELBOW, 90º, 7/16"-20, 37º x 7/16"-20, O-Ring, Incl 31
31		165202		2	O-RING, 4-1, 90 Duro, .351" ID x .072" Thk
32		86508570		2	BOLT, Hex, M6 x 80, 8.8

HYDRAULICS - COUPLER SYSTEM (ITALIAN)

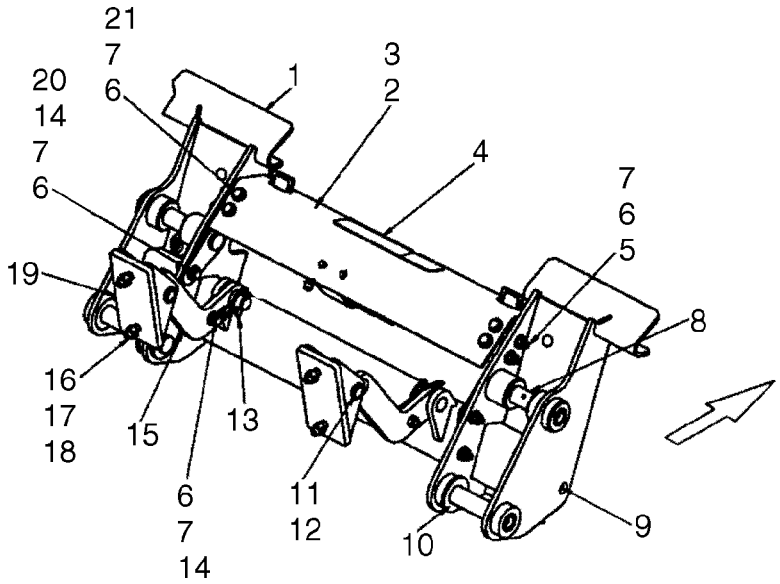

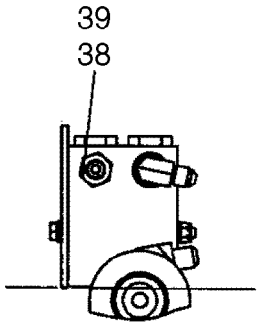

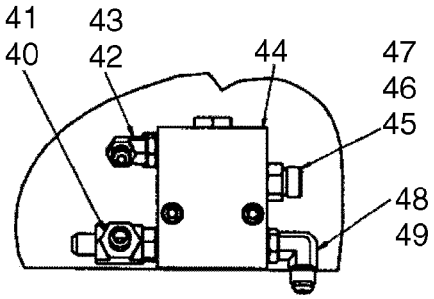

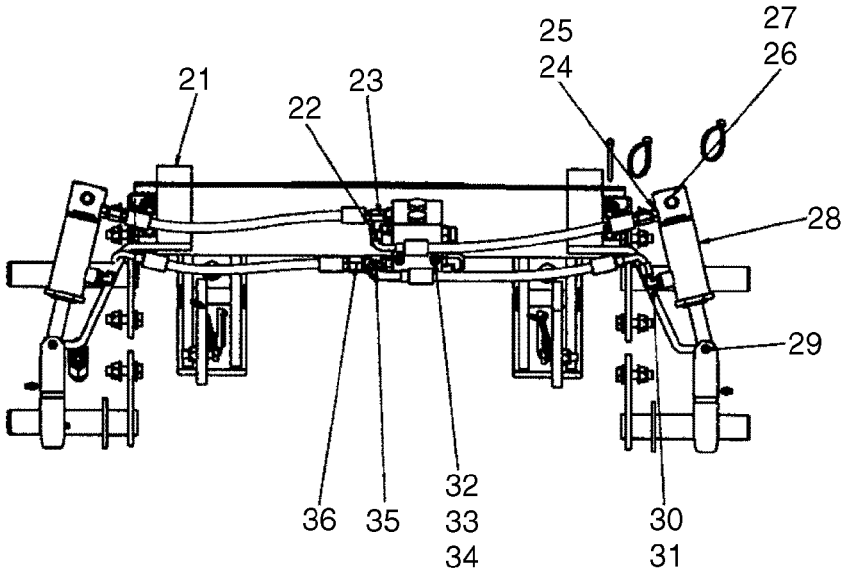

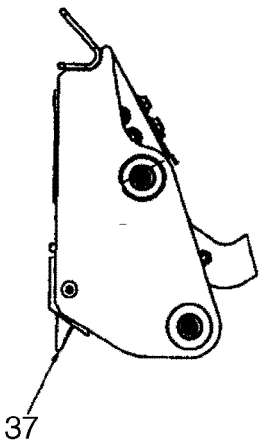

BS07M717

HYDRAULICS - COUPLER SYSTEM (ITALIAN)

REF	FN	PART NUMBER	YR/SN	QTY	DESCRIPTION
33		86512440		4	NUT, LOCK
34		86588450		8	WASHER, M6
35		87440570		1	HOSE ASSY., Hose, Rod End LH, 363mm (14 9/32 in.)
36		87440568		1	HOSE ASSY., Hose, Rode End RH, 337mm (13 1/4 in.)
37		87413030		2	PIN
38		139398		1	CONNECTOR, HYD., 7/16"-20, 37º x 9/16"-18, O-Ring, Incl 39
39		9617873		1	O-RING, 6-1, 90 Duro, .468" ID x .078" Thk
40		86513020		1	TEE, 9/16"-18, 37º x 9/16"-18, O-Ring Run, Incl 41
41		9617873		1	O-RING, 6-1, 90 Duro, .468" ID x .078" Thk
42		86512934		1	ELBOW, 90º, 7/16"-20, 37º x 9/16"-18, O-Ring, Incl 43
43		9617873		1	O-RING, 6-1, 90 Duro, .468" ID x .078" Thk
44		294741A1		1	VALVE, CHECK
45		9993143		1	CONNECTOR, HYD., 11/16"-16 ORFS x 9/16"-18 ORB, Incl 46,47
46		9617873		1	O-RING, 6-1, 90 Duro, .468" ID x .078" Thk
47		9993141		1	O-RING, -012, 90 Duro, .364" ID x .070" Thk
48		76344		2	ELBOW, 90º, 9/16"-18, 37º x 9/16"-18, O-Ring, Incl 49
49		9617873		2	O-RING, 6-1, 90 Duro, .468" ID x .078" Thk

CYLINDER - TILT

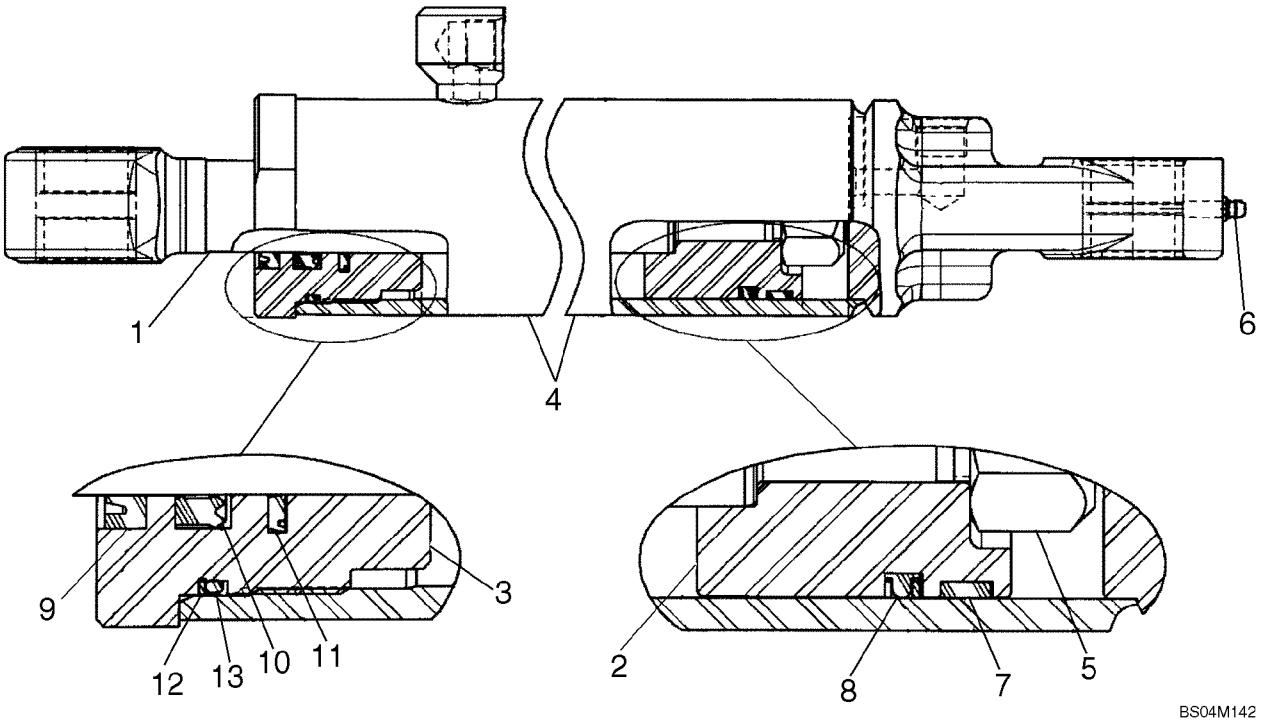

CYLINDER - TILT

REF	FN	PART NUMBER	YR/SN	QTY	DESCRIPTION
		87438187		2	CYLINDER ASSY., Tilt; 2.750 Bore, 14.56 Stroke; Incl. 1 - 6 and Seal Kit 86613643 Ref 7 - 13
1		87442323		1	ROD ASSY., 34.9 Dia, 31.8; Incl. Bushings, 86624450
		86624450		2	BUSHING
2		87442321		1	PISTON
3		86611141		1	CYLINDER HEAD, 2.5 x 1.38
4		86611135		1	CYLINDER, Incl. Bushings, 86624450
		86624450		2	BUSHING
5		87301258		1	NUT, LOCK, 1"-14, GC, 1.00-14
6		87414		1	NIPPLE, LUBE, 1/4"-28 x .56" lg, Drive
		86613643		1	KIT, Seal, 2.75 x 1.38; Incl. 7 - 13
7		773784		1	RING
8		86563840		1	GASKET, 2.75 Piston
9		86631609		1	SEAL, 1.38 Wiper
10		86631606		1	SEAL, 1.38 Rod
11		86631615		1	SEAL, 1.38 Buffer
12		86536100		1	WASHER
13		271622		1	O-RING, O-Ring

CYLINDER - LIFT

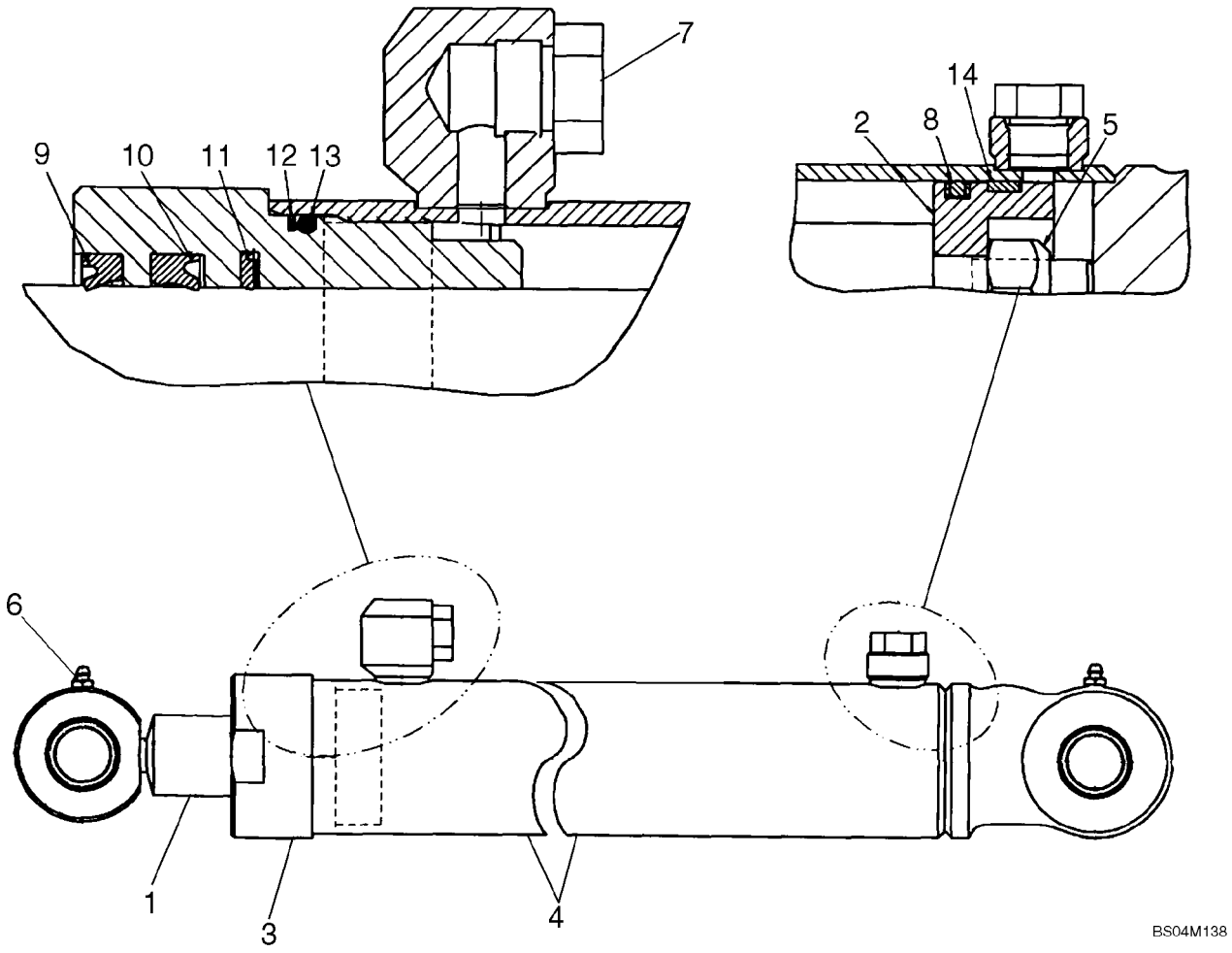

CYLINDER - LIFT

REF	FN	PART NUMBER	YR/SN	QTY	DESCRIPTION
		87438190		2	CYLINDER ASSY., 2.50 Bore, 35.83 Stroke; Incl. 1 - 7 And Seal Kit 86631598 Ref 8 - 14
1		86611742		1	ROD, Piston, Incl. Bushings 86624451
		86624451		2	BUSHING
2		848220		1	PISTON
3		86631597		1	CYLINDER HEAD, 2.5 x 1.25
4		86611740		1	CYLINDER, Incl. Bushings 86624450
		86624450		2	BUSHING
5		280724		1	NUT, LOCK, 3/4"-16, GC
6		87414		2	NIPPLE, LUBE, 1/4"-28 x .56" lg, Drive
7		214389		2	PLUG, Hex Hd, 3/4"-16 ORB, 1/2" OD Tube
		86631598		1	KIT, Seal, Incl. 8 - 14
8		86563839		1	SEAL, 2.5
9		86631610		1	SEAL, 1.5 Wiper
10		86631607		1	SEAL, 1.5 Rod
11		86631616		1	SEAL, 1.5 Buffer
12		86512008		1	BACK-UP RING
13		52419		1	O-RING, -229, 70 Duro, 2.359" ID x .139" Thk
14		783874		1	RING, WEAR

HIGH FLOW HYDRAULICS - PILOT CONTROL

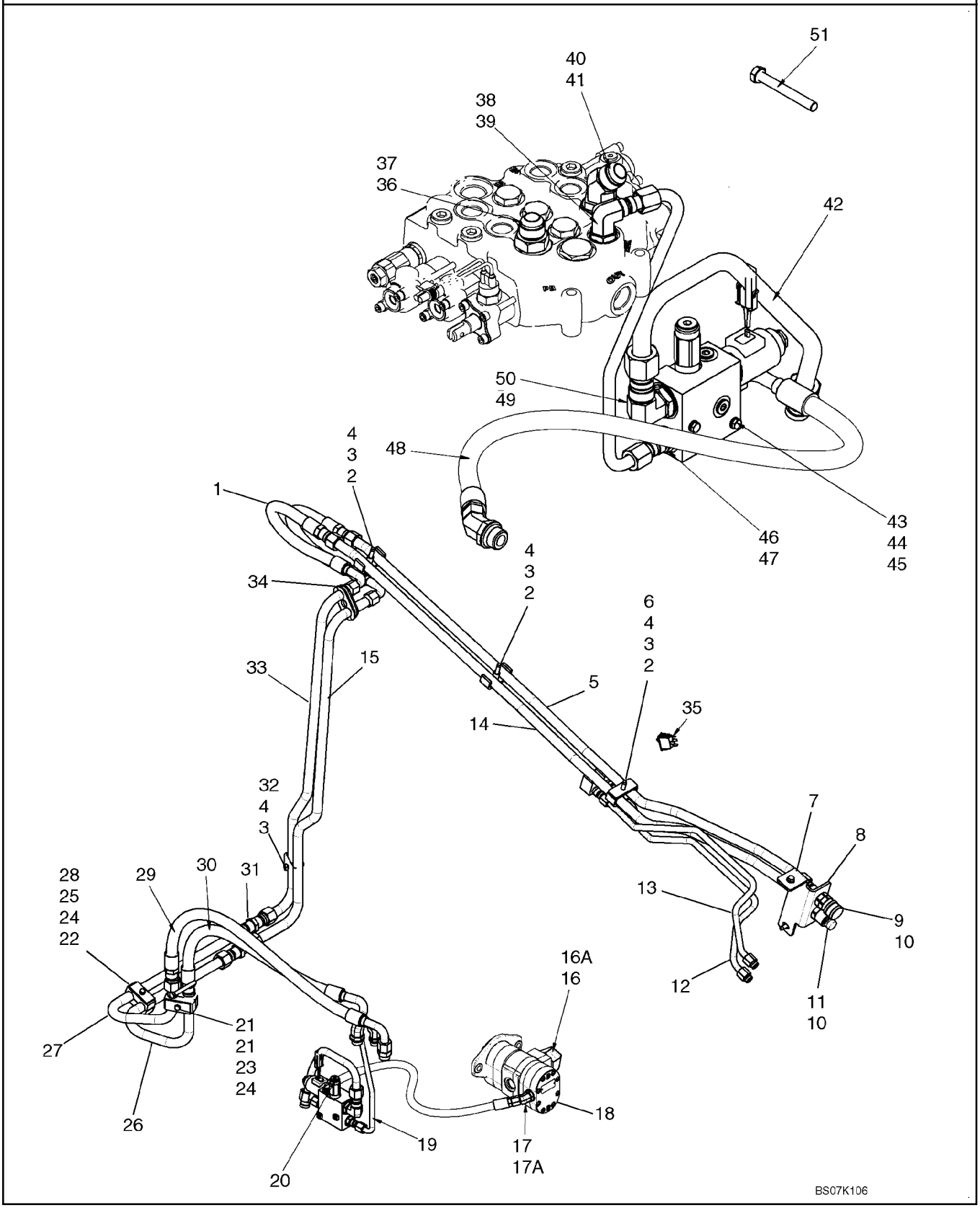

HIGH FLOW HYDRAULICS - PILOT CONTROL

REF	FN	PART NUMBER	YR/SN	QTY	DESCRIPTION
		87638363		1	KIT, SERVICE, Kit, High Flow Bi-Directional Gear; Incl 1 - 50
1		87020048		2	HOSE, 675mm (26 9/16 in.)
2		87025275		3	SCREW
3		87022737		4	SPACER
4		87020743		4	BRACKET
5		87023470		1	TUBE ASSY.
6		87023483		1	PLATE
7		280476		2	SCREW, SELF TAP, Hex Wash Hd, 3/8" x 1"
8		87023398		1	BRACKET
9		87022671		1	COUPLING, 5/8 Female Coupler
10		86513144		2	NUT, LOCK, Blkhd, 1 5/16"-12
11		87022672		1	COUPLING, 5/8 Male Coupler
12		87023472		1	TUBE ASSY.
13		87023471		1	TUBE ASSY.
14		87023469		1	TUBE ASSY.
15		87554200		1	TUBE, HYD, High Flow Auxiliary
16		{87599598}		1	Stem 45 Bead Hose 1.25 ID X 1 5/8 - 12; Incl 16A
16A		570186		1	O-RING, 20-1, 90 Duro, 1.475" ID x .116" Thk
17		9610689		1	ELBOW, 45º, 3/4"-16 x 7/8"-14, O-Ring, Incl 17A
17A		167269		1	O-RING, 10-1, 90 Duro, .755" ID x .097" Thk
18		87551795		1	PUMP, Gear Pump; See Fig 06-31
19		87549658		1	TUBE, RIGID, Tube, High Flow Supply
20		87012669		1	VALVE, See Fig. 08-16
21		120061		1	BOLT, Hex, M8 x 60, 8.8
22		80681		2	WASHER, LOCK, 5/16"
23		9628098		1	NUT, LOCK, M8 x 1.25, Cl 10
24		257859A1		3	PLATE, SPACER
25		1546028C1		2	CLAMP
26		87026696		1	TUBE ASSY.
27		87026695		1	TUBE ASSY.
28		43130		1	BOLT, Hex, M8 x 50, 8.8
29		87453999		1	HOSE ASSY., 1020mm (40 5/32 in.)
30		87454000		1	HOSE ASSY., 860mm (33 7/8 in.)
31		9790526		2	UNION

HIGH FLOW HYDRAULICS - PILOT CONTROL

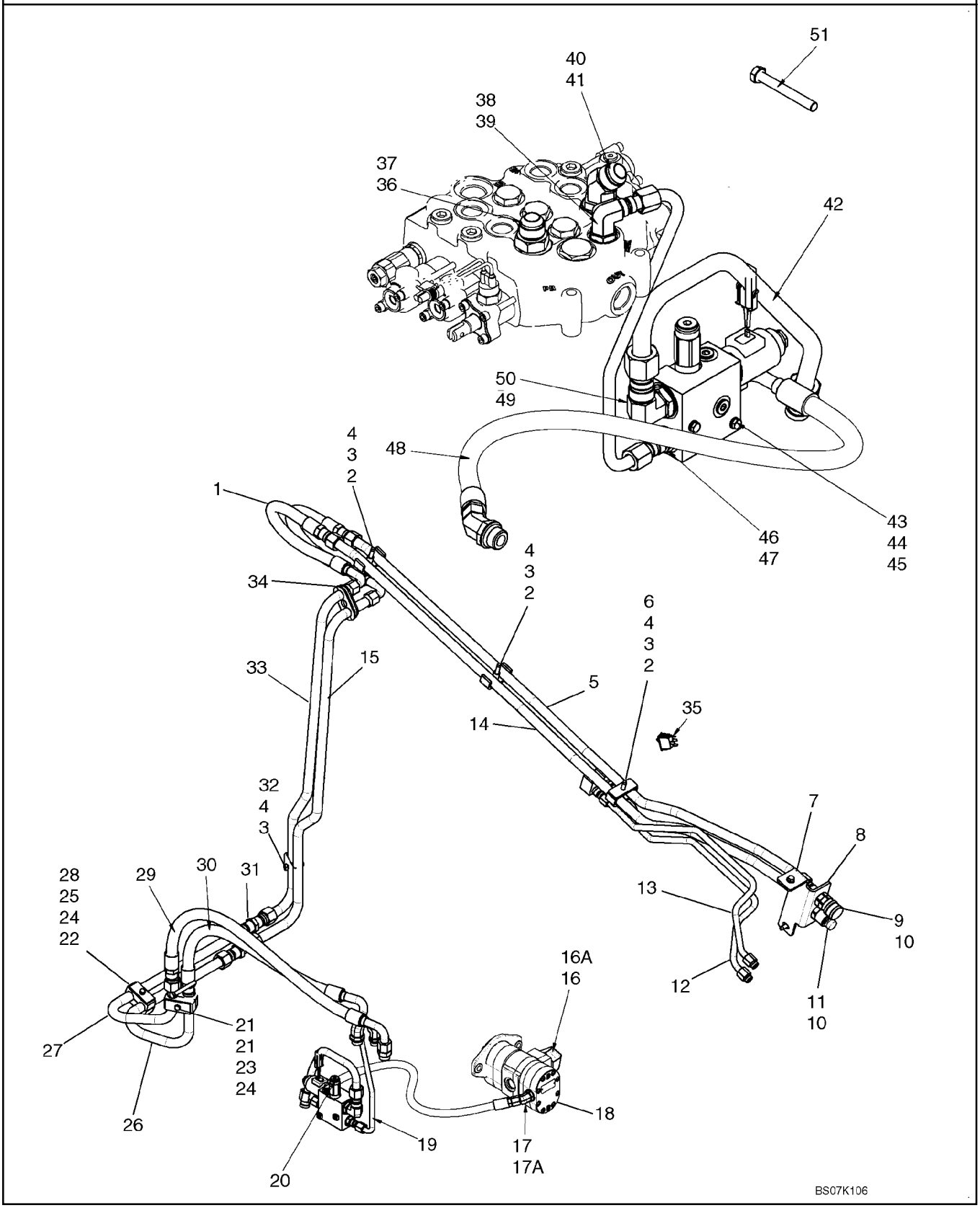

HIGH FLOW HYDRAULICS - PILOT CONTROL

REF	FN	PART NUMBER	YR/SN	QTY	DESCRIPTION
32		325829		1	BOLT, Hex, M10 x 45, 8.8
33		87554226		1	TUBE, HYD, High Flow Auxiliary
34		87017999		2	SUPPORT
35		87414769		1	SWITCH, Rocker Switch, High Flow
36		322896		1	CONNECTOR, HYD., 1 1/16"-12, 37º x 1 1/16"-12, O-Ring, Incl 37
37		167266		1	O-RING, 12-1, 90 Duro, .924 ID x .116" Thk
38		9617891		1	ELBOW, 90º, 3/4"-16, 37º x 7/8"-14, O-Ring, Incl 39
39		167269		1	O-RING, 10-1, 90 Duro, .755" ID x .097" Thk
40		330344		1	ELBOW, 45º, 1 1/16"-12 x 1 1/16"-12, O-Ring, Incl 41
41		167266		1	O-RING, 12-1, 90 Duro, .924 ID x .116" Thk
42		87584569		1	HOSE, High Flow Valve To Filter
43		338413		2	BOLT, Hex, M6 x 60, 8.8
44		86588450		2	WASHER, M6
45		87404992		2	NUT
46		128818		2	CONNECTOR, HYD., 3/4"-16, 37º x 3/4"-16, O-Ring, Incl 47
47		128825		2	O-RING, 8-1, 90 Duro, .644" ID x .087" Thk
48		87516042		1	HOSE, 900mm (35 7/16 in.)
49		322894		1	ELBOW, 90º, 1 1/16"-12, 37º x 1 1/16"-12, O-Ring, Incl 50
50		167266		1	O-RING, 12-1, 90 Duro, .924 ID x .116" Thk

CONTROL VALVE ASSEMBLY - HIGH FLOW

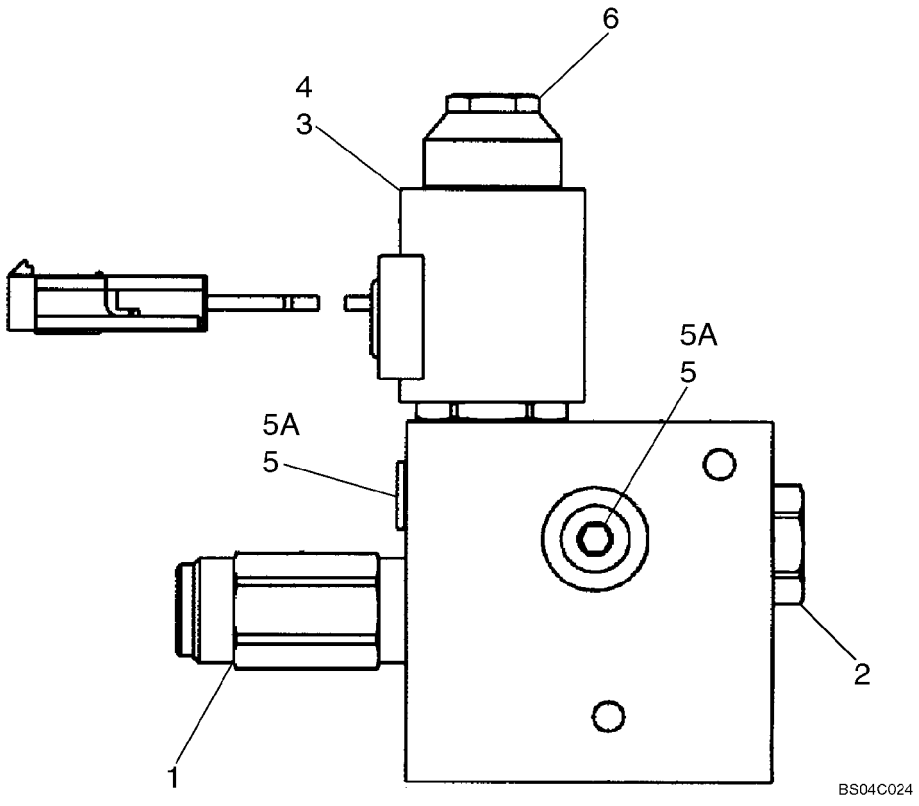

CONTROL VALVE ASSEMBLY - HIGH FLOW

REF	FN	PART NUMBER	YR/SN	QTY	DESCRIPTION
		87012669		1	VALVE, Combination Valve; High Flow; Incl. 1 - 6 And Seal Kit 86527863
1		87447123		1	VALVE, Relief Valve; Component Parts Not Serviced Separately
2		86527866		1	VALVE, HYDRAULIC, Check Valve; Component Parts Not Serviced Separately
3		86527861		1	VALVE, HYDRAULIC, Cartridge; Component Parts Not Serviced Separately
4		87447124		1	SOLENOID
5		76349		2	PLUG, Hex Hd, 9/16"-18 ORB, Incl. 5A
5A		9617873		1	O-RING, 6-1, 90 Duro, .468" ID x .078" Thk
6		86527865		1	NUT
		86527863		1	KIT, SEALS, Not Illustrated

CONTROL VALVE - 87546975 VALVE ASSY

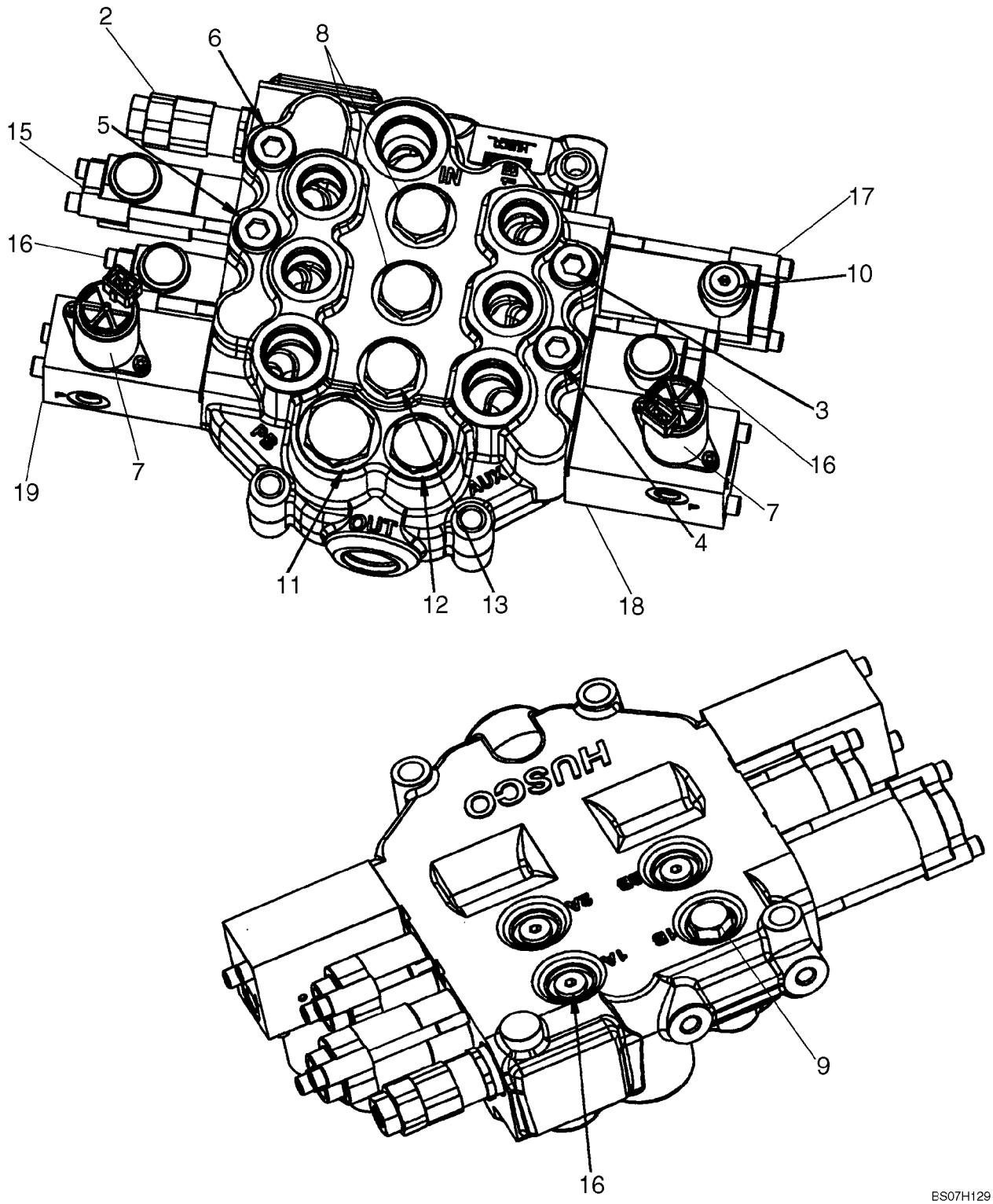

CONTROL VALVE - 87546975 VALVE ASSY

REF	FN	PART NUMBER	YR/SN	QTY	DESCRIPTION
		87546975		1	VALVE, HYDRAULIC, Manual Control Valve; Pilot Control Models With Hydraulic Attachment
1		87610517		1	KIT, SEALS, Seal Replacement Kit; See Fig. 08-21
2		87610350		1	VALVE, Main Relief Valve, 210 Bar (3050 psi); See Fig. 08-23
3		87576153		1	VALVE, Workport Relief Valve, 215 Bar; See Fig. 08-24
4		87445935		1	VALVE, Workport Relief Valve, 230 Bar; See Fig. 08-24
5		87445943		1	VALVE, Workport Relief Valve, 260 Bar; See Fig. 08-24
6		87445932		1	VALVE, Workport Anti-Cavitation; See Fig. 08-24
7		87576154		2	VALVE, SOLENOID, High Flow Solenoids For EH Auxiliary; See Fig. 08-36
8		87576157		2	VALVE, DAMPING, Check Valve Group; See Fig. 08-28
9		87610351		1	VALVE, Check Valve Group; See Fig. 08-28
10		87610530		1	PLUG, Plug Assy
11		87576158		1	PLUG, Assembly; See Fig. 08-28
12		87576160		1	PLUG, Assembly; See Fig. 08-28
13		87576161		1	PLUG, Assembly
14		87576162		1	PLUG, Assembly, Metric; Not Illustrated; See Fig. 08-268
15		87610531		1	SPOOL, Spool End Group; See Fig. 08-32
16		87610532		1	SPOOL, Spool End Group; See Fig. 08-33
17		87610533		1	SPOOL, Spool End Group; See Fig. 08-34
18		87611845		1	SPOOL, Spool End Group; EHPV; Incl. Ref 7; See Fig. 08-36
19		87611846		1	SPOOL, Spool End Group; EHPV; Incl. Ref 7; See Fig. 08-37

CONTROL VALVE - 87546974 VALVE ASSY (PILOT CONTROL)

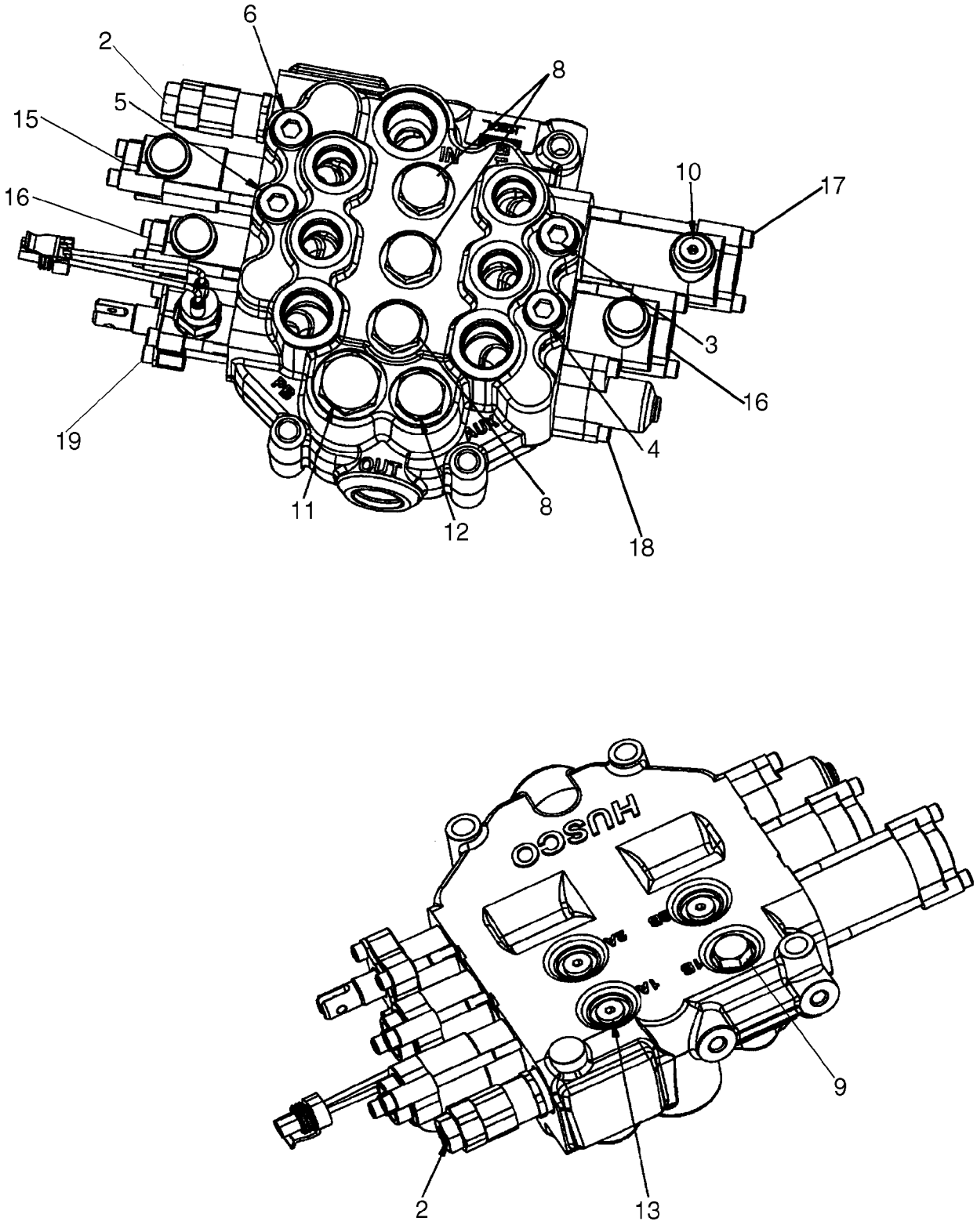

CONTROL VALVE - 87546974 VALVE ASSY (PILOT CONTROL)

REF	FN	PART NUMBER	YR/SN	QTY	DESCRIPTION
		87546974		1	VALVE, HYDRAULIC, Manual Control Valve; Models With Pilot Control
1		87610517		1	KIT, SEALS, Seal Replacement Kit; See Fig. 08-21
2		87610350		1	VALVE, Main Relief Valve, 210 Bar (3050 psi); See Fig. 08-23
3		87576153		1	VALVE, Workport Relief Valve, 215 Bar; See Fig. 08-24
4		87445935		1	VALVE, Workport Relief Valve, 230 Bar; See Fig. 08-24
5		87445943		1	VALVE, Workport Relief Valve, 260 Bar; See Fig. 08-24
6		87445932		1	VALVE, Workport Anti-Cavitation; See Fig. 08-24
7		87446617		1	SWITCH, Auxiliary Spool Interlock Switch; See Fig. 08-27
8		87576157		3	VALVE, DAMPING, Check Valve Group; See Fig. 08-28
9		87610351		1	VALVE, Check Valve Group; See Fig. 08-28
10		87610530		1	PLUG, Plug Assy
11		87576158		1	PLUG, Plug Assembly; See Fig. 08-28
12		87576160		1	PLUG, Plug Assembly; See Fig. 08-28
13		87610352		3	PLUG, Plug Assembly
14		87576162		1	PLUG, Plug Assembly, Metric; Not Illustrated; See Fig. 08-28
15		87610531		1	SPOOL, Spool End Group; See Fig. 08-32
16		87610532		1	SPOOL, Spool End Group; See Fig. 08-33
17		87610533		1	SPOOL, Spool End Group; See Fig. 08-34
18		87576168		1	SPOOL, Spool End Group; See Fig. 08-30
19		87611850		1	SPOOL, Spool End Group; See Fig. 08-35

CONTROL VALVE - 87583286 VALVE ASSY

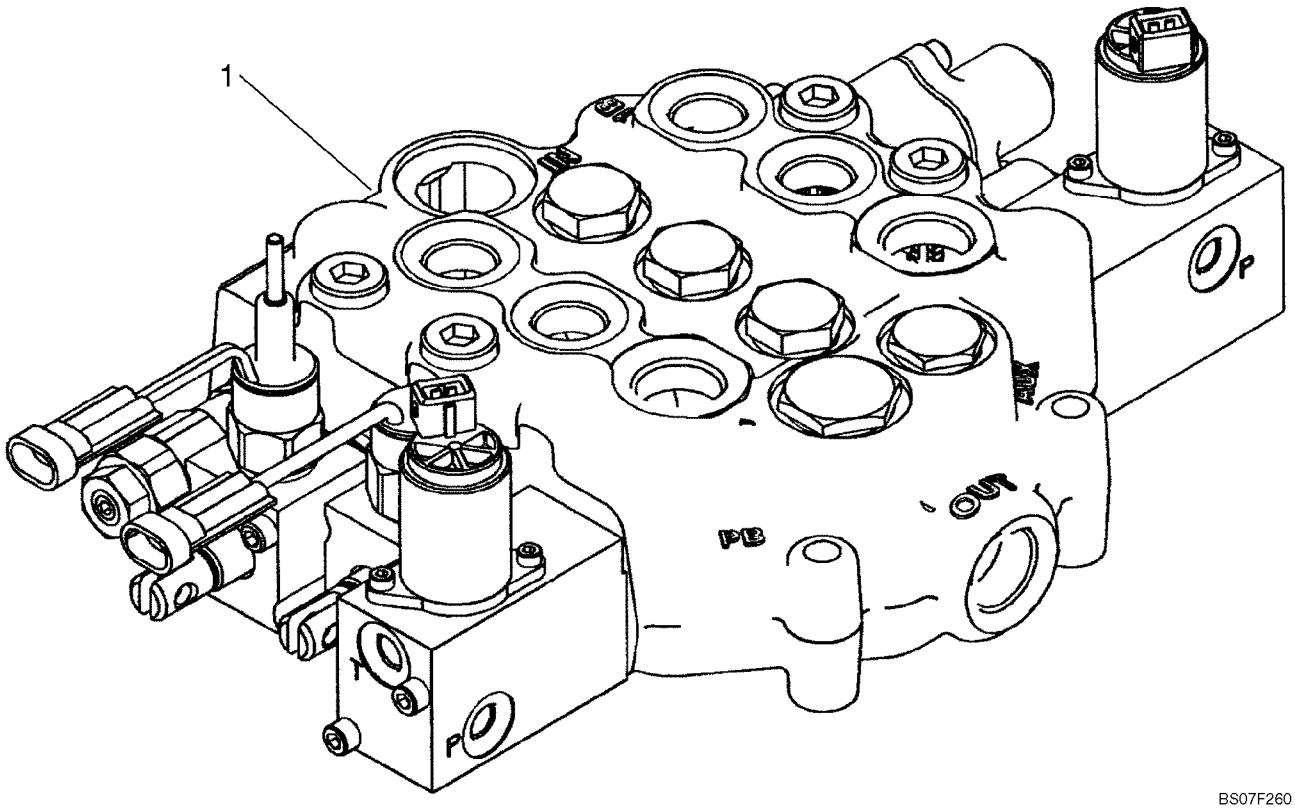

BS07F260

CONTROL VALVE - 87583286 VALVE ASSY

REF	FN	PART NUMBER	YR/SN	QTY	DESCRIPTION
1		87583286		1	VALVE, Incl. 2 - 23
2		87610349		1	KIT, SEALS, Seal Replacement Kit; See Fig 08-22
3		87610350		1	VALVE, Main Relief Valve; See Fig 08-23
4		87576153		1	VALVE, Workport Relief Valve; See Fig 08-24
5		87445935		1	VALVE, Workport Relief Valve; See Fig 08-24
6		87445943		1	VALVE, Workport Relief Valve; See Fig 08-24
7		87445932		1	VALVE, Workport Anti-Cavitation; See Fig 08-24
8		87445988		1	SOLENOID, Spool Lock Out Solenoid Manual; See Fig 08-25
9		87445987		1	SOLENOID, Spool Lock Out Solenoid Non-Manual; See Fig 08-26
10		87576154		2	VALVE, SOLENOID, Hi-Flow Solenoids For EH Auxiliary; See Fig 08-36
11		87576157		3	VALVE, DAMPING, Check Valve Group; See Fig 08-28
12		87610351		1	VALVE, Check Valve Group; See Fig 08-28
13		87576158		1	PLUG, See Fig 08-28
14		87576160		1	PLUG, See Fig 08-28
15		87576161		1	PLUG
16		87610352		3	PLUG, Plug
17		87576162		1	PLUG, See Fig 08-28
18		87576163		1	SPOOL, Detent
19		87576169		1	SPOOL
20		87611845		1	SPOOL, EHPV; See Fig 08-36
21		87611846		1	SPOOL, EHPV; See Fig 08-37
22		87611848		1	SPOOL, Spool; See Fig 08-26
23		87611849		1	SPOOL, See Fig 08-25

CONTROL VALVE - 87583285 VALVE ASSY

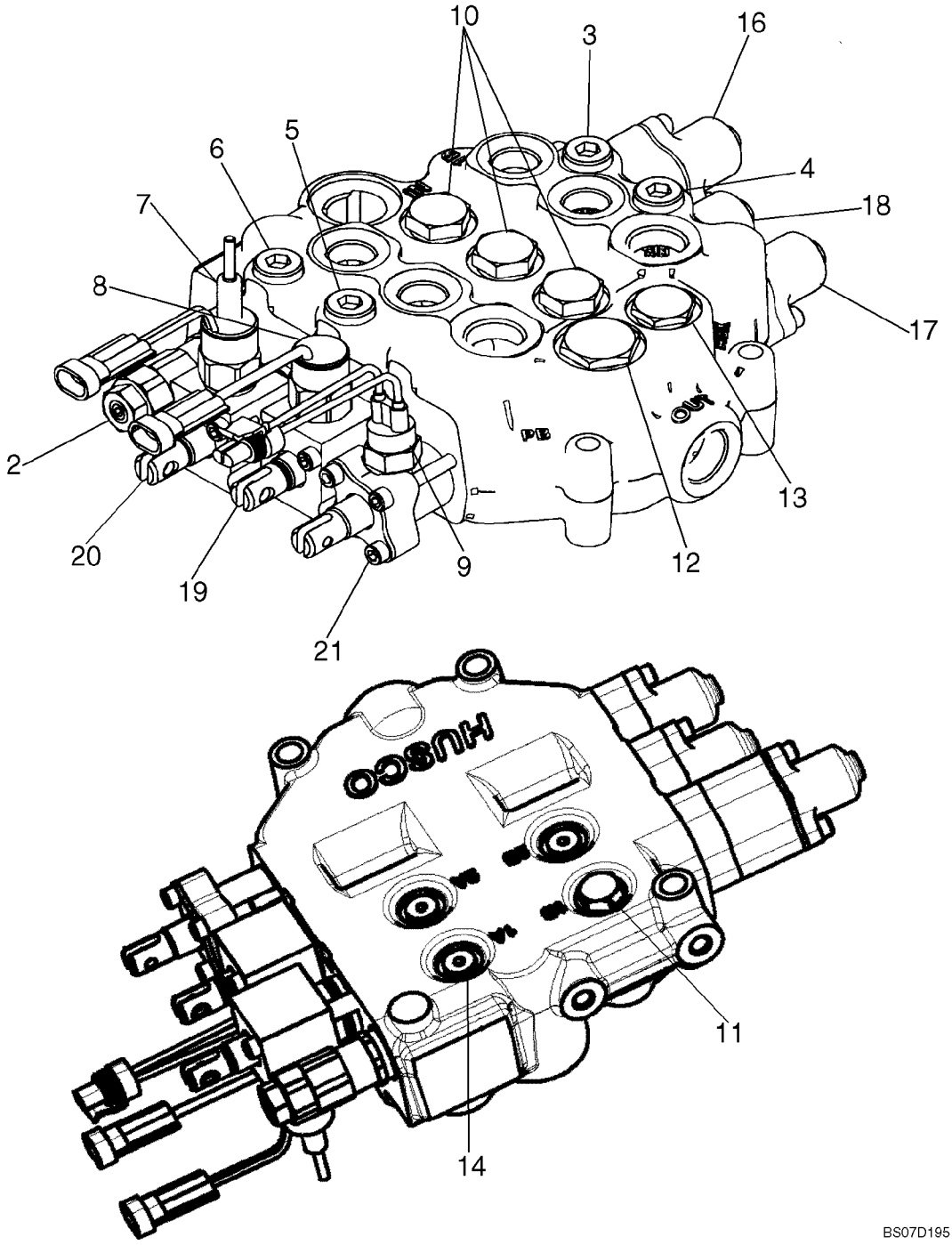

CONTROL VALVE - 87583285 VALVE ASSY

REF	FN	PART NUMBER	YR/SN	QTY	DESCRIPTION
		87583285		1	VALVE, Manual Control Valve
1		87610349		1	KIT, SEALS, Seal Replacement Kit; See Fig. 08-22
2		87610350		1	VALVE, Main Relief Valve, 210 Bar (3050 psi); See Fig. 08-23
3		87576153		1	VALVE, Workport Relief Valve, 215 Bar; See Fig. 08-24
4		87445935		1	VALVE, Workport Relief Valve, 230 Bar; See Fig. 08-24
5		87445943		1	VALVE, Workport Relief Valve, 260 Bar; See Fig. 08-24
6		87445932		1	VALVE, Workport Anti-Cavitation; See Fig. 08-24
7		87445988		1	SOLENOID, Spool Lock Out Solenoid, Manual; See Fig. 08-25
8		87445987		1	SOLENOID, Spool Lock Out Solenoid, Non-Manual; See Fig. 08-26
9		87446617		1	SWITCH, Auxiliary Spool Interlock Switch; See Fig. 08-27
10		87576157		3	VALVE, DAMPING, Check Valve Group; See Fig. 08-28
11		87610351		1	VALVE, Check Valve Group; See Fig. 08-28
12		87576158		1	PLUG, Plug Assembly; See Fig. 08-28
13		87576160		1	PLUG, Plug Assembly; See Fig. 08-28
14		87610352		3	PLUG, Plug Assembly
15		87576162		1	PLUG, Plug Assembly, Metric; Not Illustrated; See Fig. 08-28
16		87576163		1	SPOOL, Spool End Group, Detent; See Fig. 08-29
17		87576168		1	SPOOL, Spool End Group; See Fig. 08-30
18		87576169		1	SPOOL, Spool End Group; See Fig. 08-31
19		87611848		1	SPOOL, Spool End Group; See Fig. 08-26
20		87611849		1	SPOOL, Spool End Group; See Fig. 08-25
21		87611850		1	SPOOL, Spool End Group; See Fig. 08-35

CONTROL VALVE - SEAL REPLACEMENT KITS

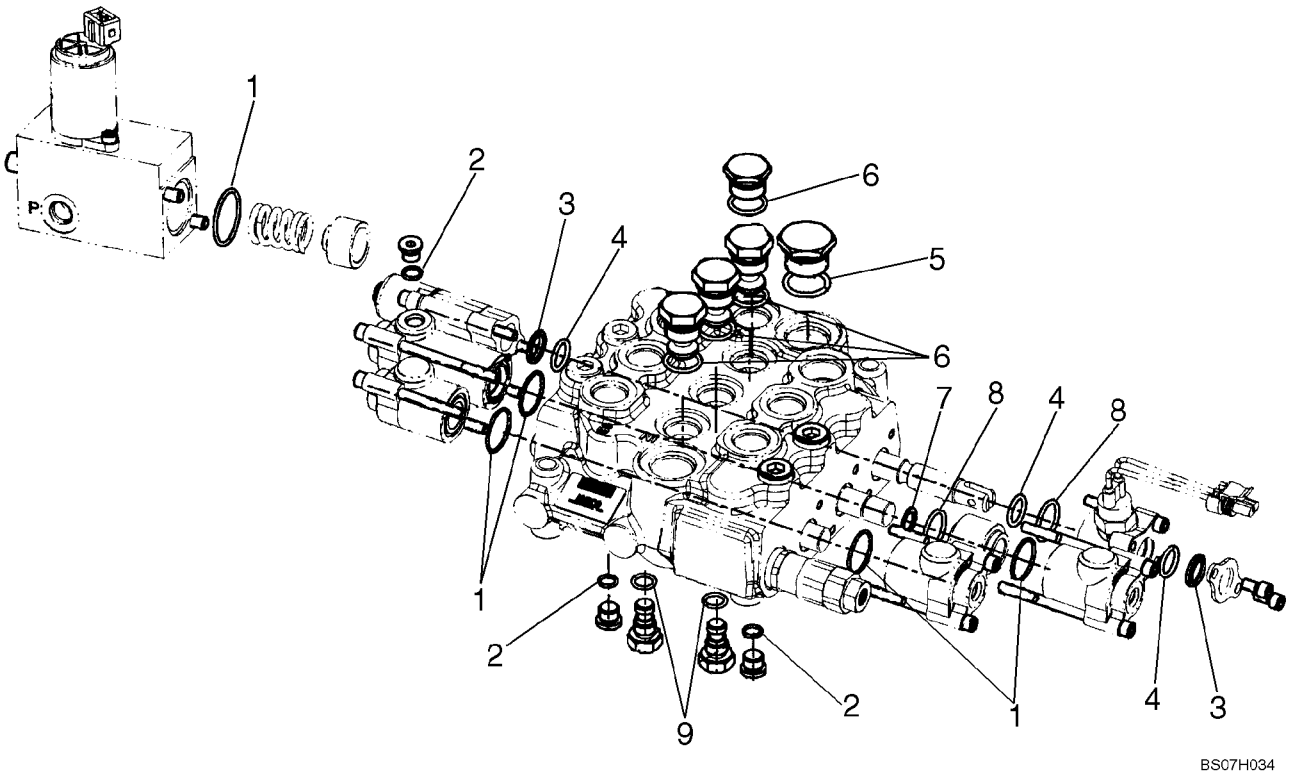

CONTROL VALVE - SEAL REPLACEMENT KITS

REF	FN	PART NUMBER	YR/SN	QTY	DESCRIPTION
		87610517		1	KIT, SEALS, Kit, Seal Replacement; Incl. 1 - 8
1		NSS		6	NOT SERVICED SEPARATELY, O-ring, 1.129 OD
2		NSS		3	NOT SERVICED SEPARATELY, O-ring, .498 OD
3		NSS		2	NOT SERVICED SEPARATELY, Wiper, .796 OD
4		NSS		3	NOT SERVICED SEPARATELY, O-ring, .818 OD
5		NSS		1	NOT SERVICED SEPARATELY, O-ring, 1.156 OD
6		NSS		4	NOT SERVICED SEPARATELY, O-ring, .949 OD
7		NSS		1	NOT SERVICED SEPARATELY, Back Up Ring, .673 OD
8		NSS		2	NOT SERVICED SEPARATELY, O-ring, 1.063 OD
9		NSS		2	NOT SERVICED SEPARATELY, O-ring, .614 OD

CONTROL VALVE - SEAL KIT

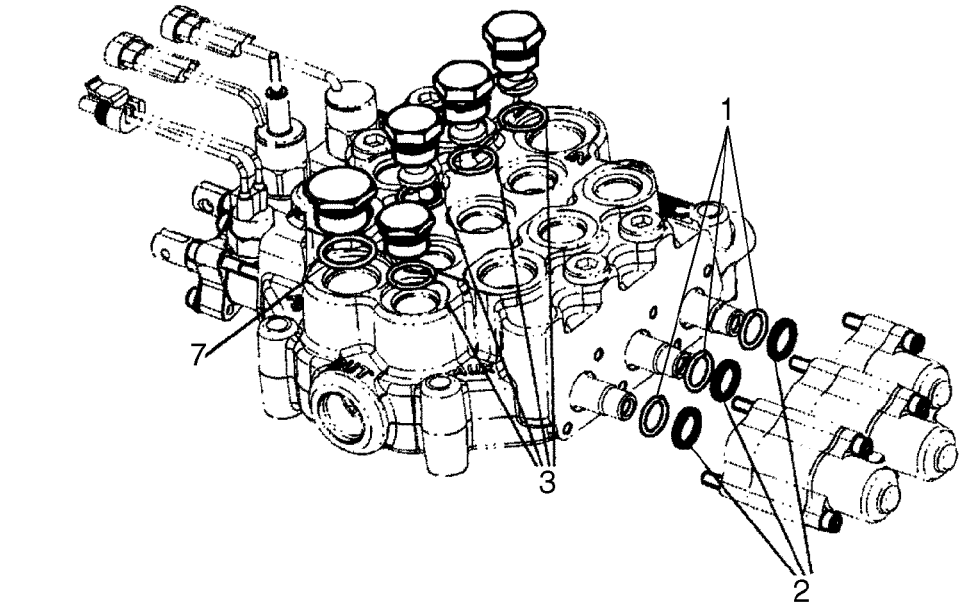

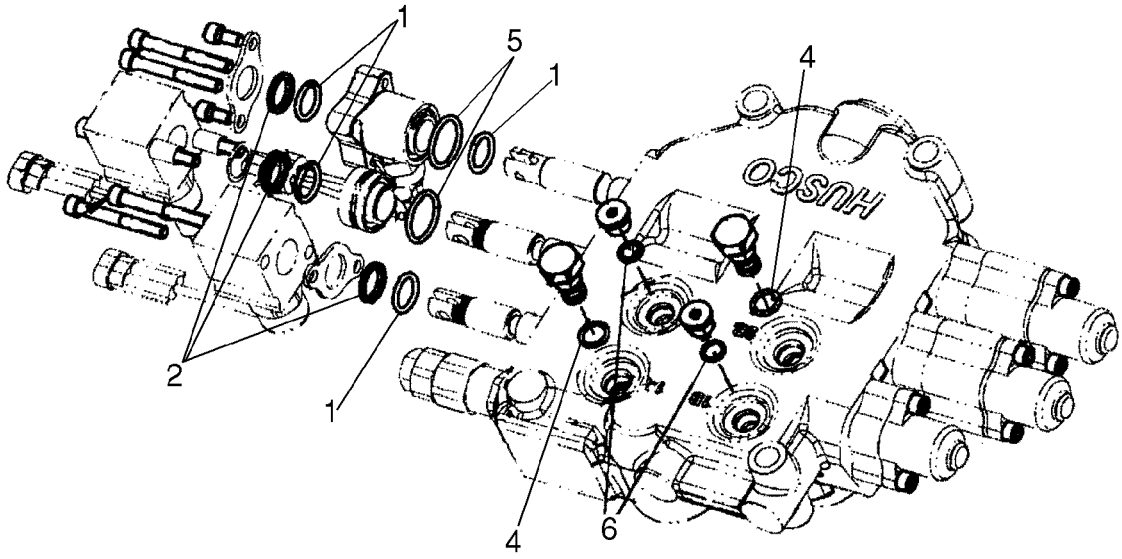

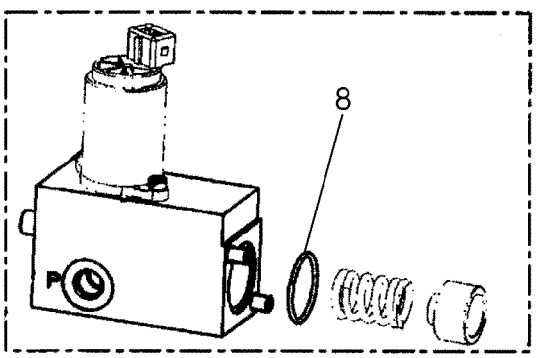

BS07D196

CONTROL VALVE - SEAL KIT

REF	FN	PART NUMBER	YR/SN	QTY	DESCRIPTION
		87610349		1	KIT, SEALS, Kit, Seal Replacement; Incl. 1 - 8
1		NSS		7	NOT SERVICED SEPARATELY, O-ring, .818 OD
2		NSS		6	NOT SERVICED SEPARATELY, Wiper, .796 OD
3		NSS		4	NOT SERVICED SEPARATELY, O-ring, .949 OD
4		NSS		2	NOT SERVICED SEPARATELY, O-ring, .614 OD
5		NSS		2	NOT SERVICED SEPARATELY, O-ring, 1.063 OD
6		NSS		3	NOT SERVICED SEPARATELY, O-ring, .498 OD
7		NSS		1	NOT SERVICED SEPARATELY, O-ring, 1.156 OD
8		NSS		2	NOT SERVICED SEPARATELY, O-ring, 1.129 OD

CONTROL VALVE - MAIN RELIEF VALVE

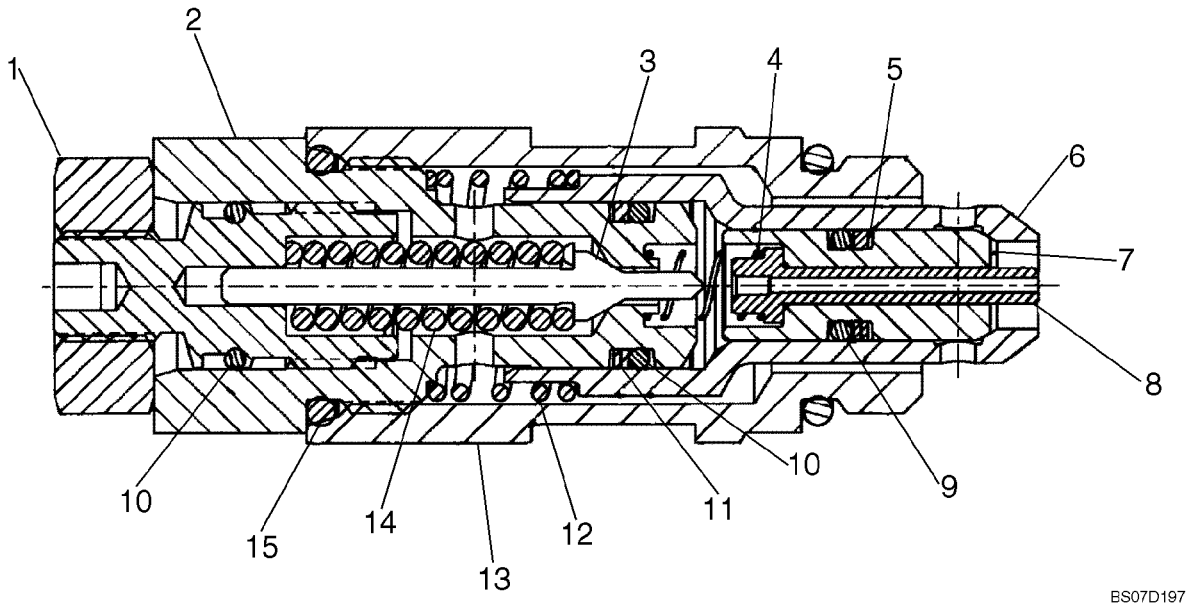

CONTROL VALVE - MAIN RELIEF VALVE

REF	FN	PART NUMBER	YR/SN	QTY	DESCRIPTION
		87610350		1	VALVE, Main Relief Valve, 3050 PSI; Incl. 1 - 16
1		NSS		1	NOT SERVICED SEPARATELY, Nut
2		NSS		1	NOT SERVICED SEPARATELY, Plug
3		NSS		1	NOT SERVICED SEPARATELY, Poppet
4		NSS		1	NOT SERVICED SEPARATELY, Spring
5		NSS		1	NOT SERVICED SEPARATELY, Back-Up Ring
6		NSS		1	NOT SERVICED SEPARATELY, Poppet
7		NSS		1	NOT SERVICED SEPARATELY, Poppet
8		NSS		1	NOT SERVICED SEPARATELY, Piston
9		NSS		1	NOT SERVICED SEPARATELY, O-Ring
10		NSS		2	NOT SERVICED SEPARATELY, O-Ring
11		NSS		1	NOT SERVICED SEPARATELY, Back-Up Ring
12		NSS		1	NOT SERVICED SEPARATELY, Spring
13		NSS		1	NOT SERVICED SEPARATELY, Body
14		NSS		1	NOT SERVICED SEPARATELY, Spring
15		NSS		2	NOT SERVICED SEPARATELY, O-Ring
16		NSS		1	NOT SERVICED SEPARATELY, Adjust Screw

CONTROL VALVE - RELIEF VALVES

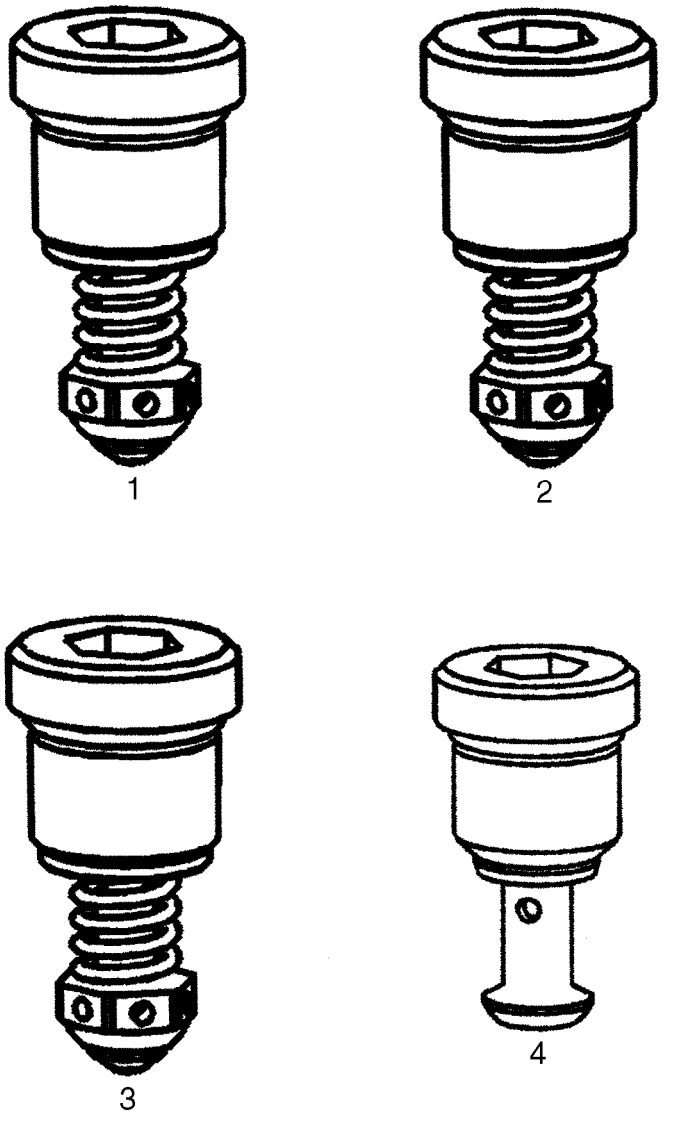

CONTROL VALVE - RELIEF VALVES

REF	FN	PART NUMBER	YR/SN	QTY	DESCRIPTION
1		87576153		1	VALVE, Workport Relief Valve, Non-Adjustable 215 Bar
2		{87448935}		1	Workport Relief Valve, Non-Adjustable 230 Bar
3		87445943		1	VALVE, Workport Relief Valve, Non-Adjustable 260 Bar
4		87445932		1	VALVE, Workport Anti-Cavitation Valve

CONTROL VALVE - SPOOL END GROUP

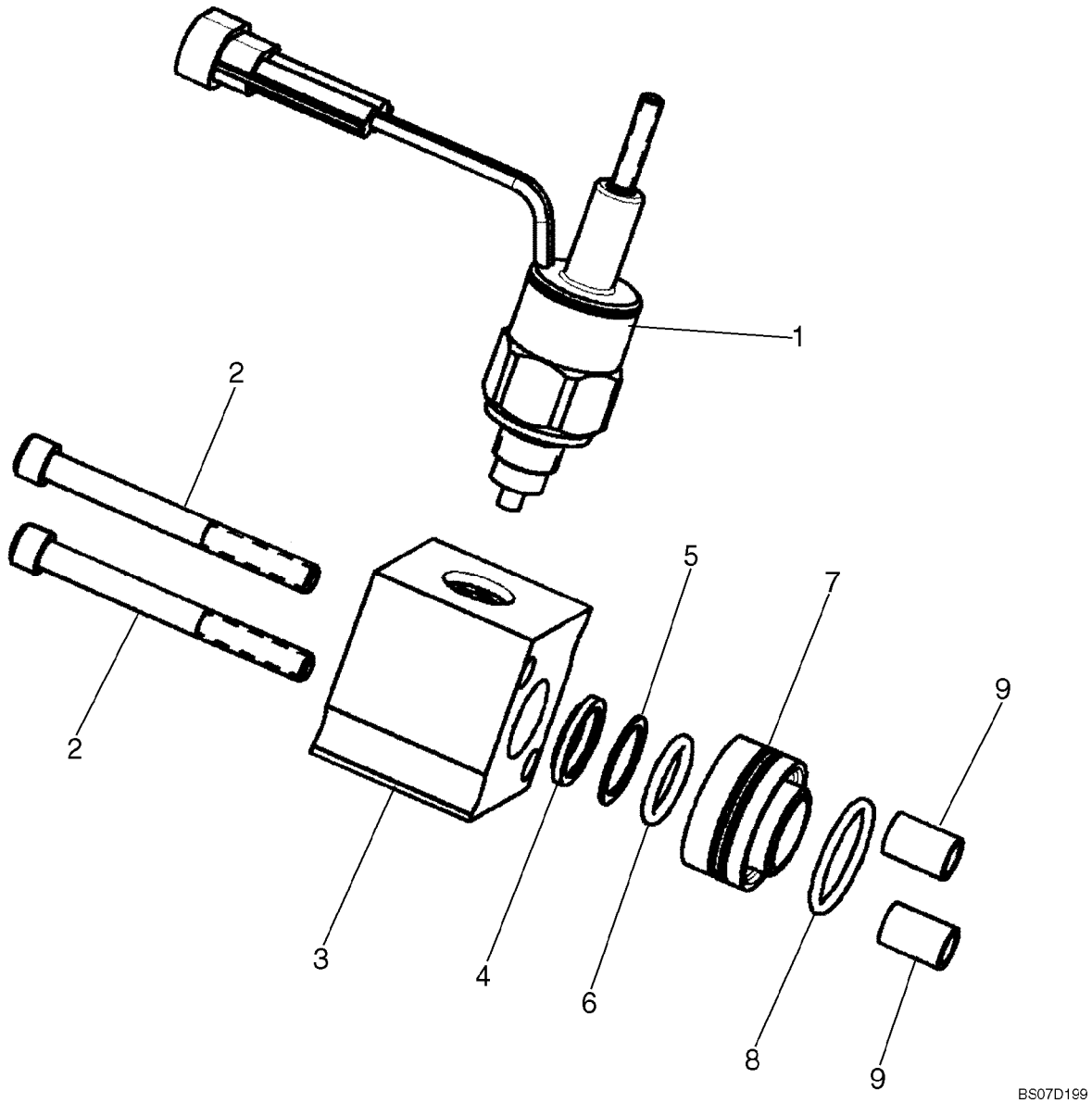

CONTROL VALVE - SPOOL END GROUP

REF	FN	PART NUMBER	YR/SN	QTY	DESCRIPTION
		87611849		1	SPOOL, Spool End Group; Incl. 1 - 9
1		87445988		1	SOLENOID, Spool Lockout Solenoid With Manual Overide
2		NSS		2	NOT SERVICED SEPARATELY, Cap Screw
3		NSS		1	NOT SERVICED SEPARATELY, Spool Cap
4		NSS		1	NOT SERVICED SEPARATELY, Wiper
5		NSS		1	NOT SERVICED SEPARATELY, Washer
6		NSS		1	NOT SERVICED SEPARATELY, O-Ring
7		NSS		1	NOT SERVICED SEPARATELY, Spool Spacer
8		NSS		1	NOT SERVICED SEPARATELY, O-Ring
9		NSS		2	NOT SERVICED SEPARATELY, Spacer

CONTROL VALVE - SPOOL END GROUP

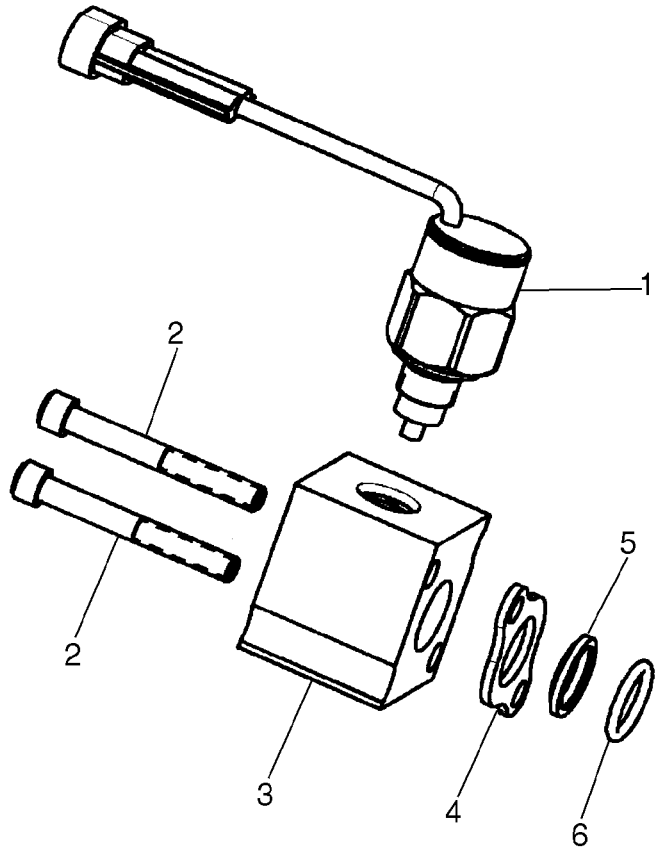

CONTROL VALVE - SPOOL END GROUP

REF	FN	PART NUMBER	YR/SN	QTY	DESCRIPTION
		87611848		1	SPOOL, Spool End Group With Solenoid; Incl. 1 - 6
1		87445987		1	SOLENOID, Spool Lockout Solenoid, Non-Manual Overide
2		NSS		2	NOT SERVICED SEPARATELY, Cap Screw
3		NSS		1	NOT SERVICED SEPARATELY, Spool Cap
4		NSS		1	NOT SERVICED SEPARATELY, Seal Plate
5		NSS		1	NOT SERVICED SEPARATELY, Wiper
6		NSS		1	NOT SERVICED SEPARATELY, O-Ring

CONTROL VALVE - SPOOL END GROUP

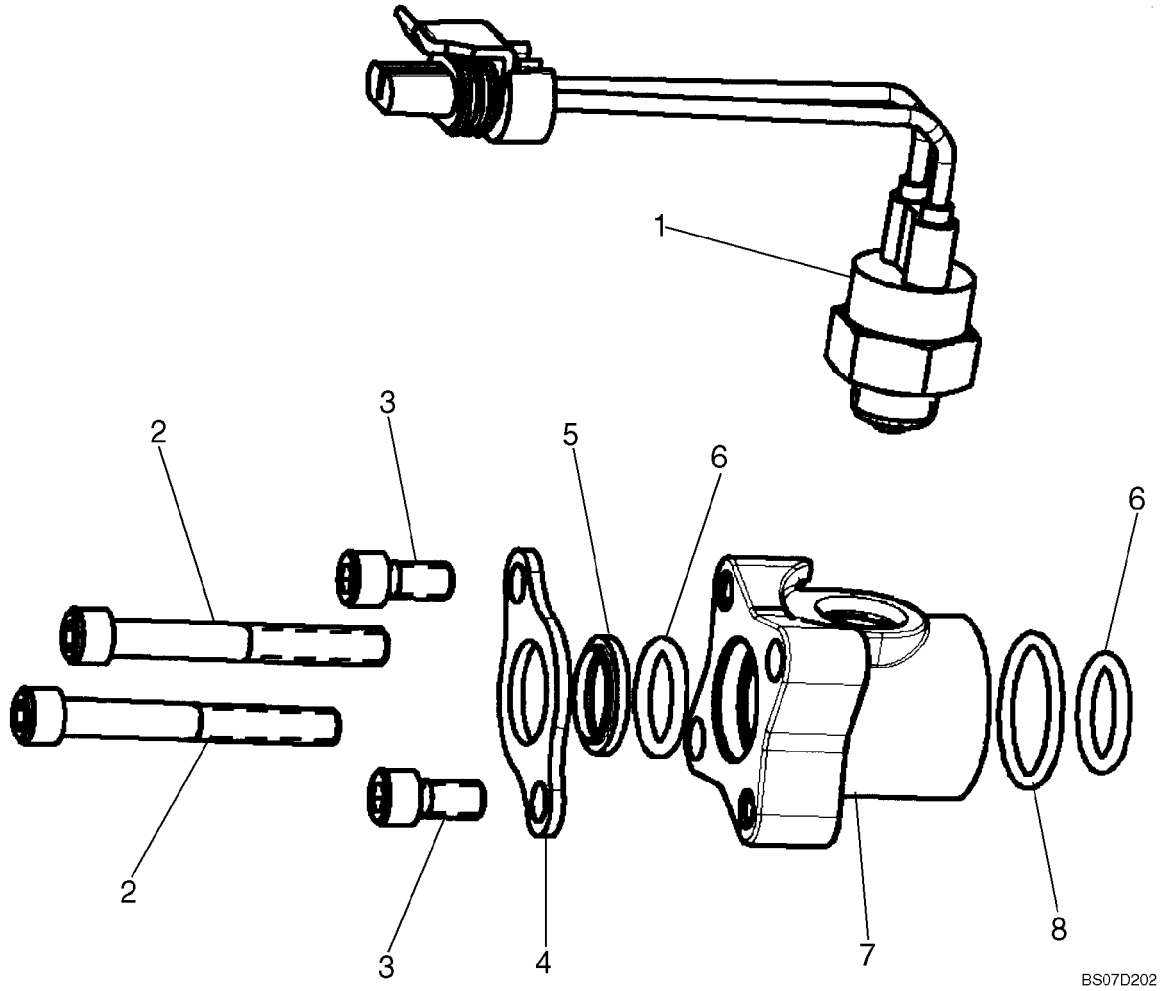

CONTROL VALVE - SPOOL END GROUP

REF	FN	PART NUMBER	YR/SN	QTY	DESCRIPTION
		87611850		1	SPOOL, Spool End Group With Switch; Incl. 1 - 8
1		87446617		1	SWITCH, Auxiliary Spool Ball Switch
2		NSS		2	NOT SERVICED SEPARATELY, Cap Screw
3		NSS		2	NOT SERVICED SEPARATELY, Cap Screw
4		NSS		1	NOT SERVICED SEPARATELY, Seal Plate
5		NSS		1	NOT SERVICED SEPARATELY, Wiper
6		NSS		2	NOT SERVICED SEPARATELY, O-Ring
7		NSS		1	NOT SERVICED SEPARATELY, Spool Cap
8		NSS		1	NOT SERVICED SEPARATELY, O-Ring

CONTROL VALVE - CHECK VALVE GROUP

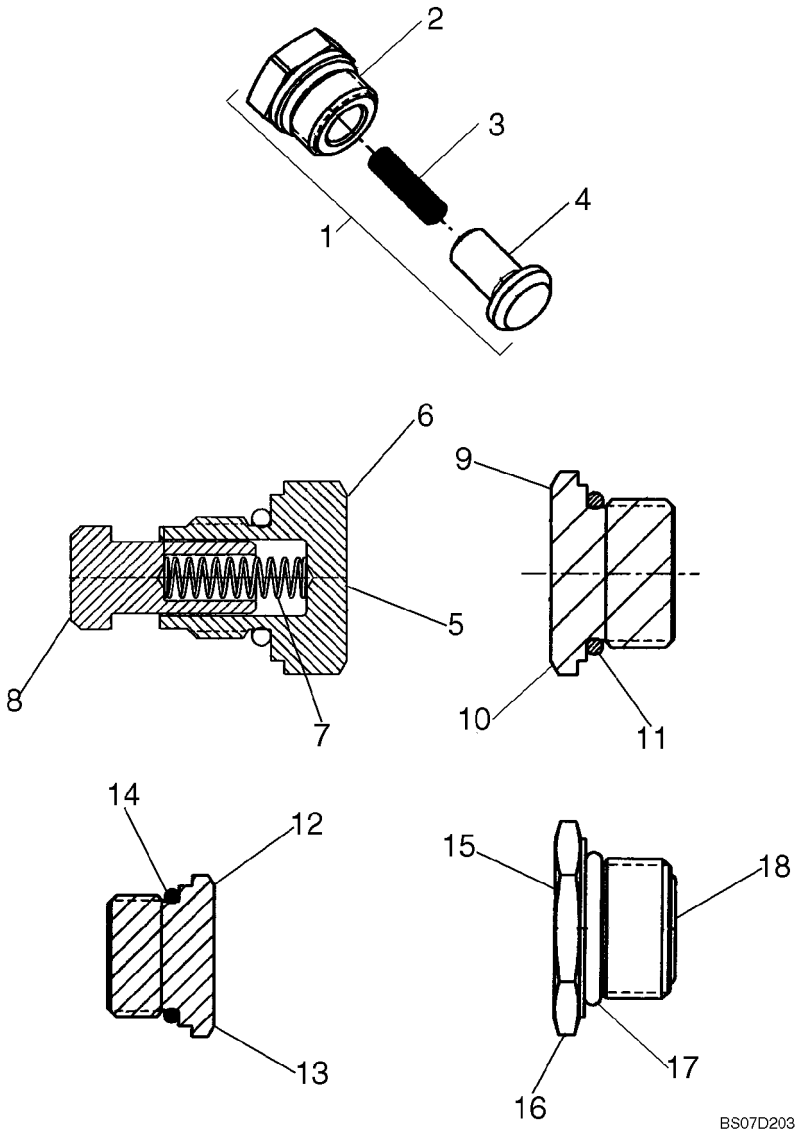

CONTROL VALVE - CHECK VALVE GROUP

REF	FN	PART NUMBER	YR/SN	QTY	DESCRIPTION
1		87576157		1	VALVE, DAMPING, Check Valve; Incl. 2 - 4
2		NSS		1	NOT SERVICED SEPARATELY, Plug
3		NSS		1	NOT SERVICED SEPARATELY, Spring
4		NSS		1	NOT SERVICED SEPARATELY, Poppet
5		87610351		1	VALVE, Check Valve; Incl. 6 - 8
6		NSS		1	NOT SERVICED SEPARATELY, Plug, M14 X 1.5-6G Thd.
7		NSS		1	NOT SERVICED SEPARATELY, Spring
8		NSS		1	NOT SERVICED SEPARATELY, Poppet
9		87576158		1	PLUG, Plug Assembly, 1-1/16 - 12UN-2A Thd.; Incl. 10, 11
10		NSS		1	NOT SERVICED SEPARATELY, Plug, 1-1/16 - 12UN-2A Thd.
11		NSS		1	NOT SERVICED SEPARATELY, O-Ring
12		87576160		1	PLUG, Plug Assembly, 7/8 - 14UNF - 2A Thd.; Incl. 13, 14
13		NSS		1	NOT SERVICED SEPARATELY, Plug, 7/8 - 14UNF - 2A Thd.
14		NSS		1	NOT SERVICED SEPARATELY, O-Ring
15		87576162		1	PLUG, Plug Assembly, M18 X 1.5-6H Thd.; Incl. 16 - 18
16		NSS		1	NOT SERVICED SEPARATELY, Plug, M18 X 1.5-6H Thd.
17		NSS		1	NOT SERVICED SEPARATELY, O-Ring
18		NSS		1	NOT SERVICED SEPARATELY, O-Ring

CONTROL VALVE - SPOOL END GROUP, DETENT

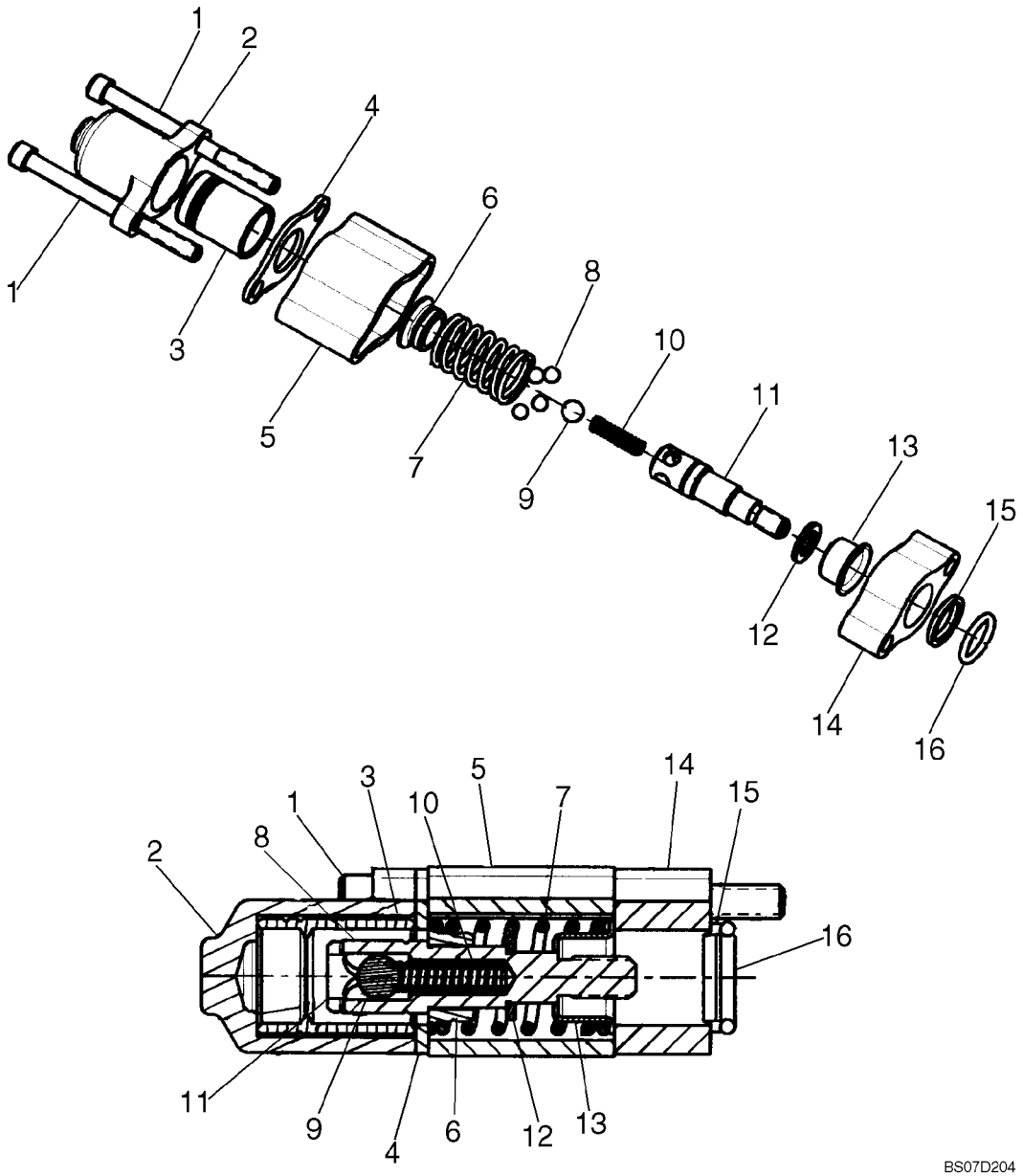

CONTROL VALVE - SPOOL END GROUP, DETENT

REF	FN	PART NUMBER	YR/SN	QTY	DESCRIPTION
		87576163		1	SPOOL, Spool End Group - Detent; Incl. 1 - 16
1		NSS		2	NOT SERVICED SEPARATELY, Cap Screw
2		NSS		1	NOT SERVICED SEPARATELY, Spool Cap
3		NSS		1	NOT SERVICED SEPARATELY, Sleeve - Detent
4		NSS		1	NOT SERVICED SEPARATELY, Seal Plate
5		NSS		1	NOT SERVICED SEPARATELY, Spacer
6		NSS		1	NOT SERVICED SEPARATELY, Spring Seat
7		NSS		1	NOT SERVICED SEPARATELY, Spring
8		NSS		4	NOT SERVICED SEPARATELY, Ball
9		NSS		1	NOT SERVICED SEPARATELY, Ball
10		NSS		1	NOT SERVICED SEPARATELY, Spring
11		NSS		1	NOT SERVICED SEPARATELY, Spool End, Detent Pin
12		NSS		1	NOT SERVICED SEPARATELY, Washer
13		NSS		1	NOT SERVICED SEPARATELY, Spring Seat
14		NSS		1	NOT SERVICED SEPARATELY, Plate Seal
15		NSS		1	NOT SERVICED SEPARATELY, Wiper
16		NSS		1	NOT SERVICED SEPARATELY, O-Ring

CONTROL VALVE - SPOOL END GROUP

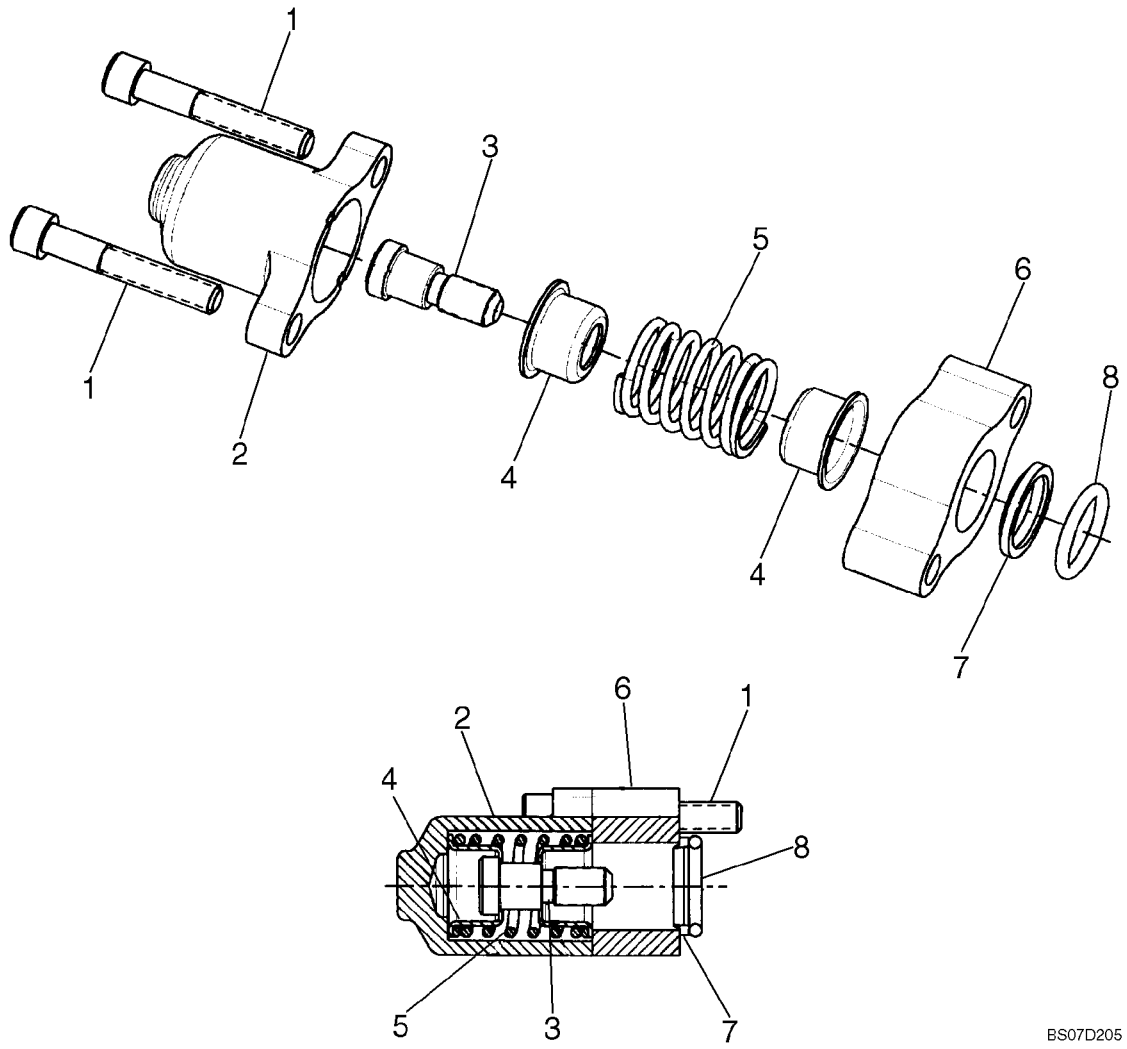

CONTROL VALVE - SPOOL END GROUP

REF	FN	PART NUMBER	YR/SN	QTY	DESCRIPTION
		87576168		1	SPOOL, Spool End Group; Incl. 1 - 8
1		NSS		2	NOT SERVICED SEPARATELY, Cap Screw
2		NSS		1	NOT SERVICED SEPARATELY, Spool Cap
3		NSS		1	NOT SERVICED SEPARATELY, Spool End
4		NSS		2	NOT SERVICED SEPARATELY, Spring Seat
5		NSS		1	NOT SERVICED SEPARATELY, Spring
6		NSS		1	NOT SERVICED SEPARATELY, Plate - Seal
7		NSS		1	NOT SERVICED SEPARATELY, Wiper
8		NSS		1	NOT SERVICED SEPARATELY, O-Ring

CONTROL VALVE - SPOOL END GROUP

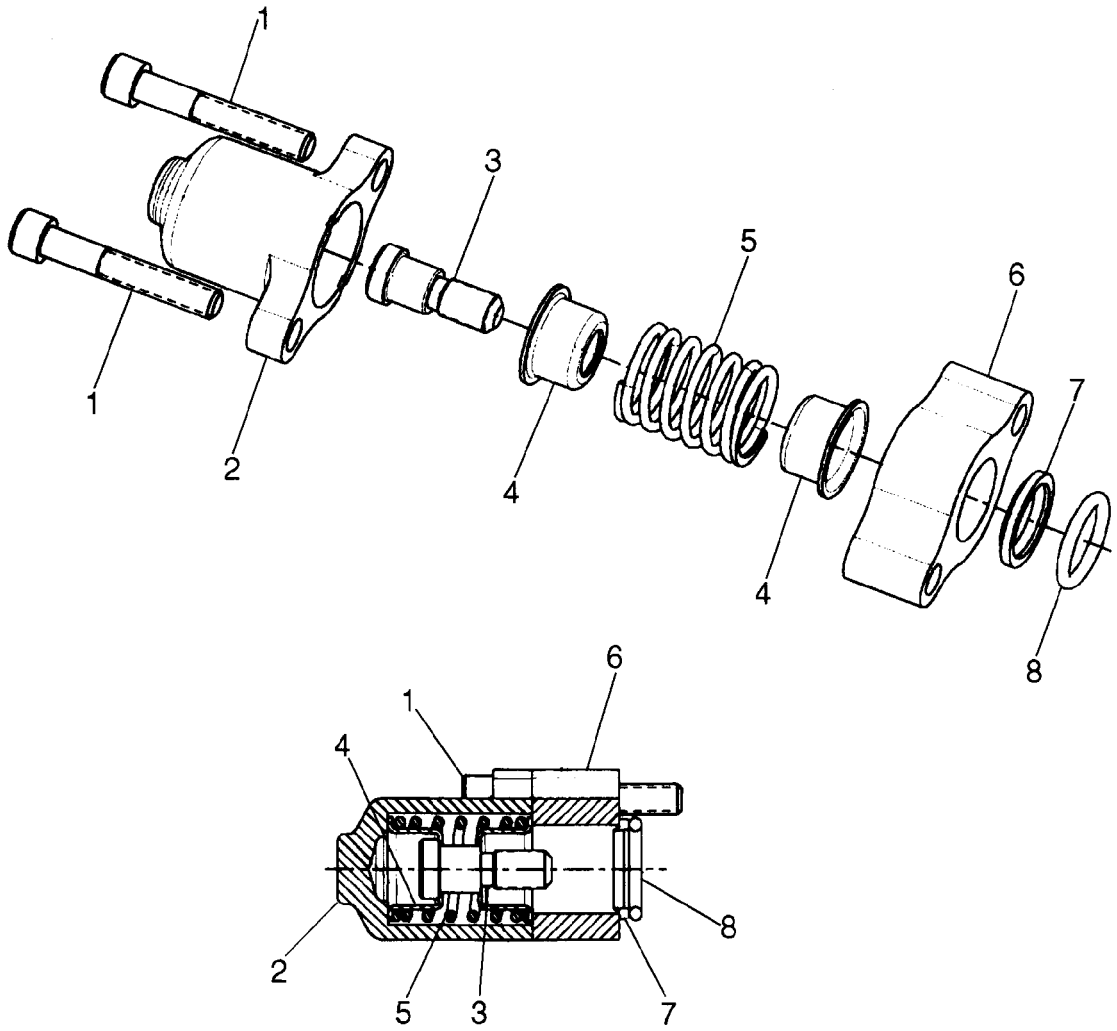

CONTROL VALVE - SPOOL END GROUP

REF	FN	PART NUMBER	YR/SN	QTY	DESCRIPTION
		87576169		1	SPOOL, Spool End Group; Incl. 1 - 8
1		NSS		2	NOT SERVICED SEPARATELY, Cap Screw
2		NSS		1	NOT SERVICED SEPARATELY, Spool Cap
3		NSS		1	NOT SERVICED SEPARATELY, Spool End
4		NSS		2	NOT SERVICED SEPARATELY, Spring Seat
5		NSS		1	NOT SERVICED SEPARATELY, Spring
6		NSS		1	NOT SERVICED SEPARATELY, Plate, Seal
7		NSS		1	NOT SERVICED SEPARATELY, Wiper
8		NSS		1	NOT SERVICED SEPARATELY, O-Ring

CONTROL VALVE - SPOOL END GROUP

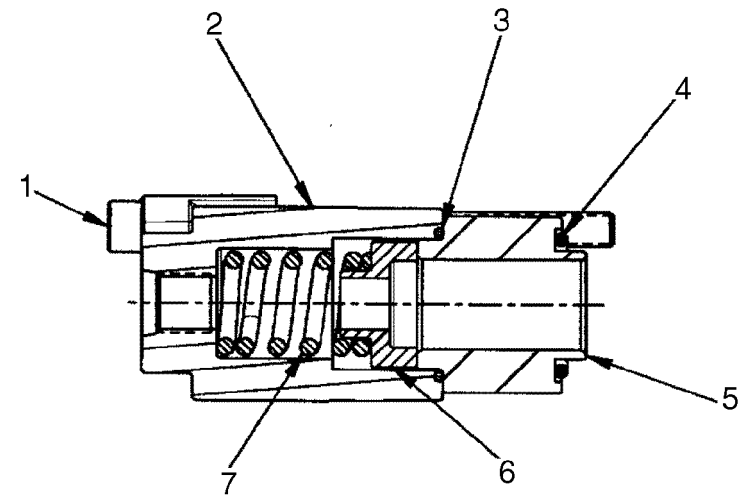

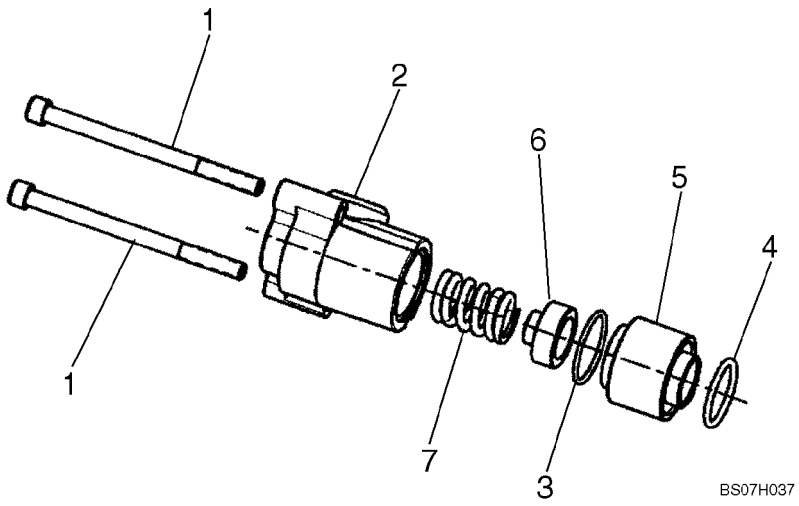

CONTROL VALVE - SPOOL END GROUP

REF	FN	PART NUMBER	YR/SN	QTY	DESCRIPTION
		87610533		1	SPOOL, Spool End Group; Incl. 1 - 7
1		NSS		2	NOT SERVICED SEPARATELY, Cap Screw
2		NSS		1	NOT SERVICED SEPARATELY, Spool Cap
3		NSS		1	NOT SERVICED SEPARATELY, O-Ring
4		NSS		1	NOT SERVICED SEPARATELY, O-Ring
5		NSS		1	NOT SERVICED SEPARATELY, Retainer
6		NSS		1	NOT SERVICED SEPARATELY, Spring Seat
7		NSS		1	NOT SERVICED SEPARATELY, Spring

CONTROL VALVE - SPOOL END GROUP

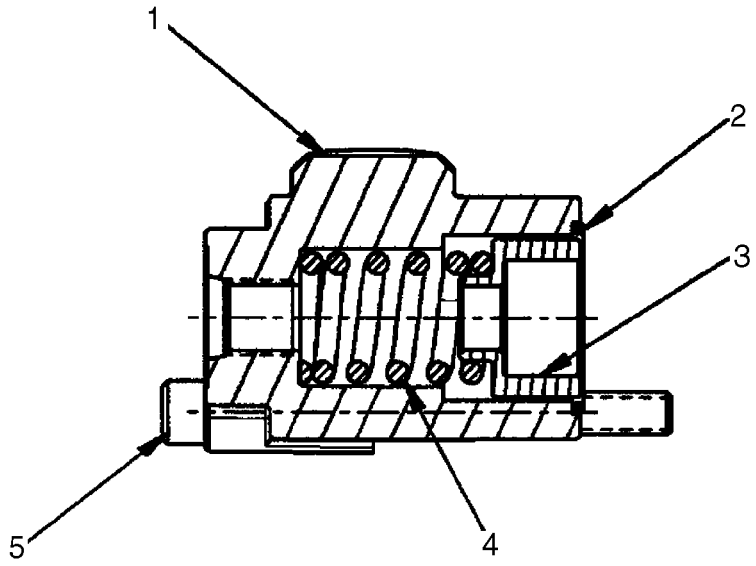

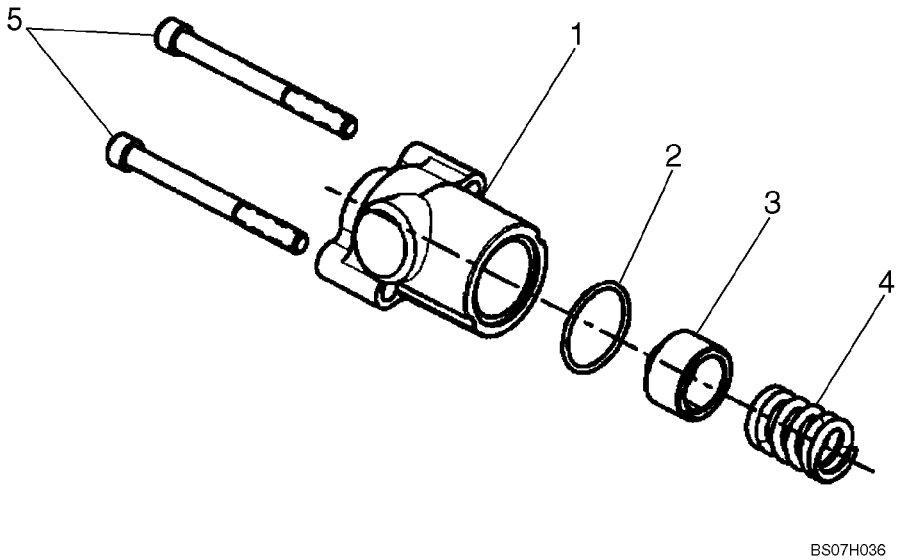

BS07H036

CONTROL VALVE - SPOOL END GROUP

REF	FN	PART NUMBER	YR/SN	QTY	DESCRIPTION
		87610532		1	SPOOL, Spool End Group; Incl. 1 - 5
1		NSS		1	NOT SERVICED SEPARATELY, Spool Cap
2		NSS		1	NOT SERVICED SEPARATELY, O-Ring
3		NSS		1	NOT SERVICED SEPARATELY, Spring Seat
4		NSS		1	NOT SERVICED SEPARATELY, Spring
5		NSS		2	NOT SERVICED SEPARATELY, Cap Screw

CONTROL VALVE - SPOOL END GROUP

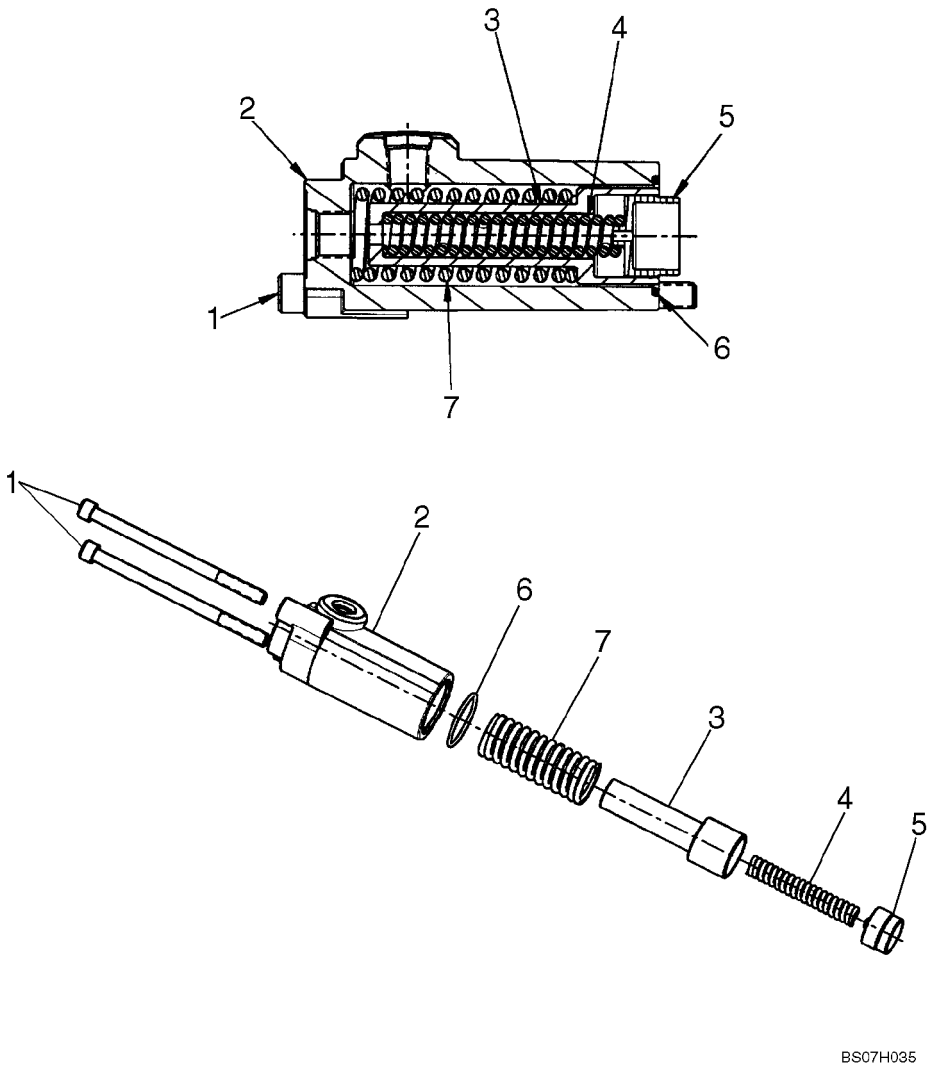

CONTROL VALVE - SPOOL END GROUP

REF	FN	PART NUMBER	YR/SN	QTY	DESCRIPTION
		87610533		1	SPOOL, Spool End Group; Incl. 1 - 7
1		NSS		2	NOT SERVICED SEPARATELY, Cap Screw
2		NSS		1	NOT SERVICED SEPARATELY, Spool Cap
3		NSS		2	NOT SERVICED SEPARATELY, Spring Seat
4		NSS		1	NOT SERVICED SEPARATELY, Spring
5		NSS		2	NOT SERVICED SEPARATELY, Spring Seat
6		NSS		1	NOT SERVICED SEPARATELY, O-Ring
7		NSS		1	NOT SERVICED SEPARATELY, Spring

CONTROL VALVE - SPOOL END GROUP

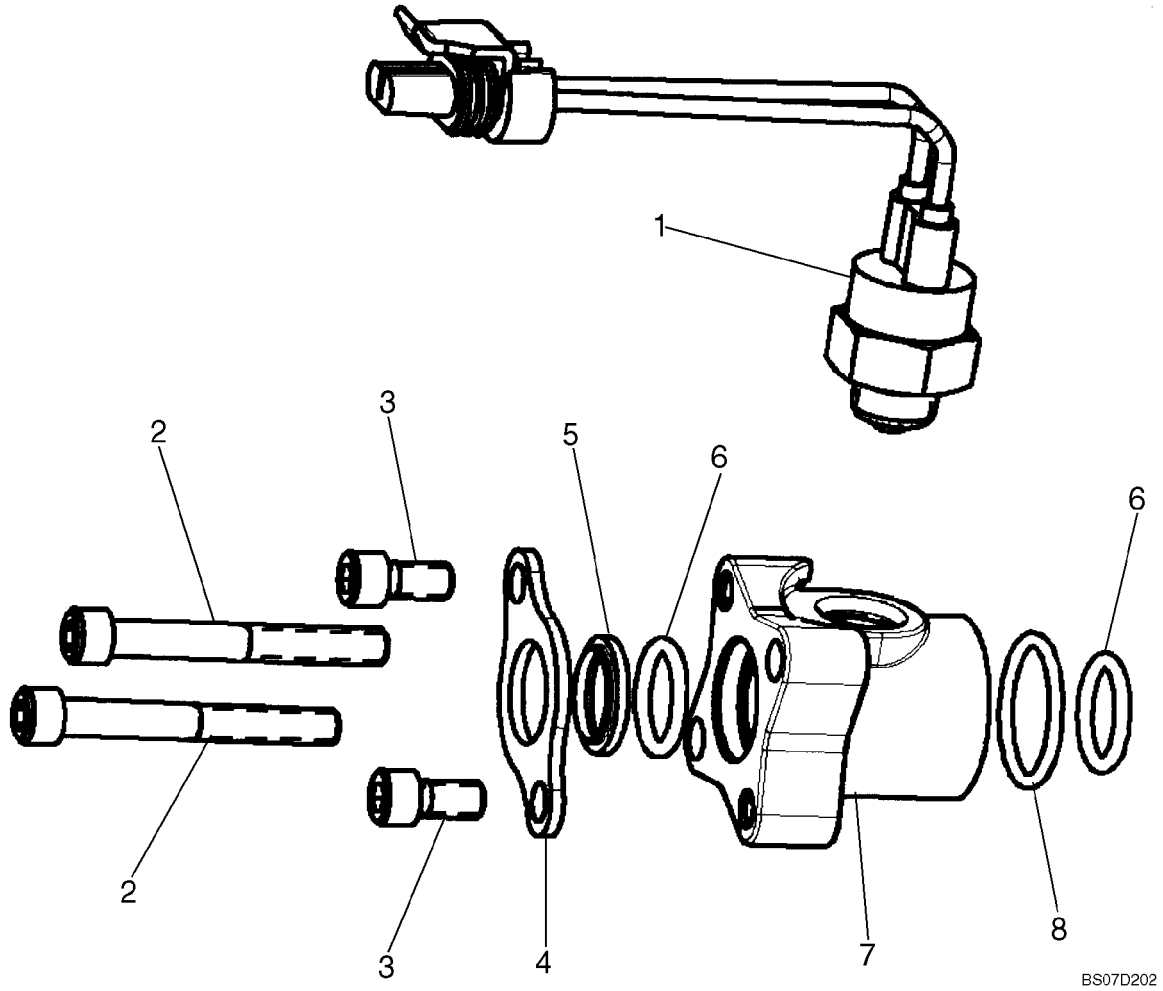

CONTROL VALVE - SPOOL END GROUP

REF	FN	PART NUMBER	YR/SN	QTY	DESCRIPTION
		87611850		1	SPOOL, Spool End Group With Switch; Incl. 1 - 8
1		87446617		1	SWITCH, Auxiliary Spool Ball Switch
2		NSS		2	NOT SERVICED SEPARATELY, Cap Screw
3		NSS		2	NOT SERVICED SEPARATELY, Cap Screw
4		NSS		1	NOT SERVICED SEPARATELY, Seal Plate
5		NSS		1	NOT SERVICED SEPARATELY, Wiper
6		NSS		2	NOT SERVICED SEPARATELY, O-Ring
7		NSS		1	NOT SERVICED SEPARATELY, Spool Cap
8		NSS		1	NOT SERVICED SEPARATELY, O-Ring

CONTROL VALVE - SPOOL END GROUP, EHPV

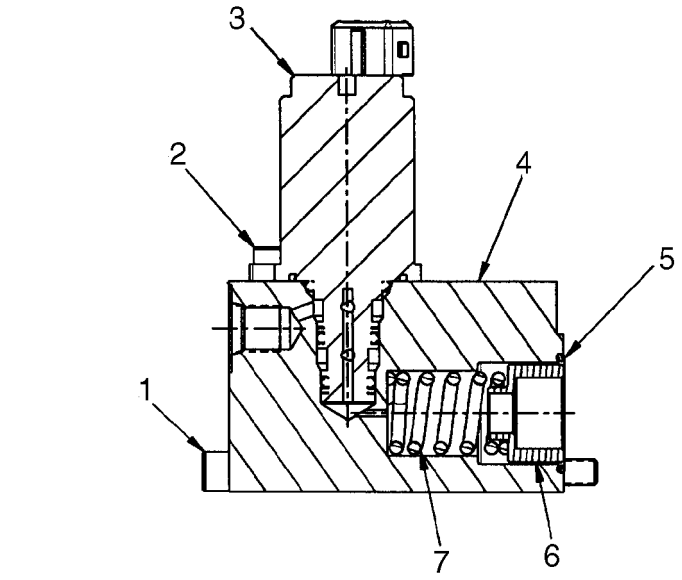

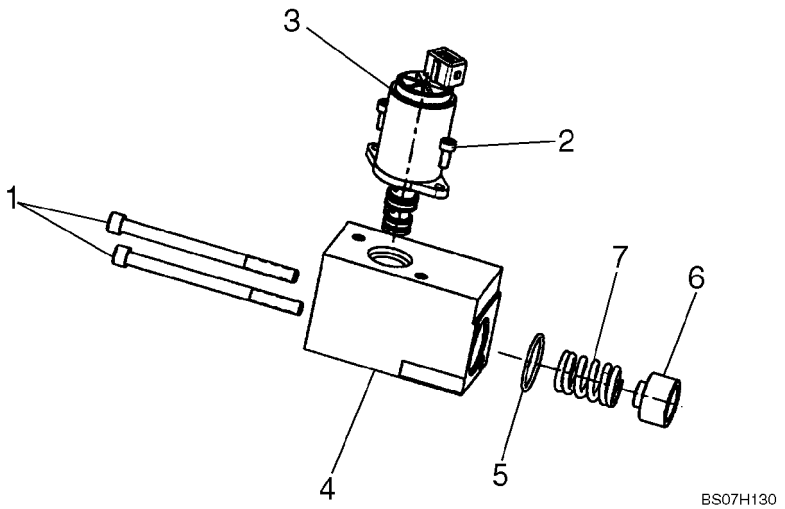

CONTROL VALVE - SPOOL END GROUP, EHPV

REF	FN	PART NUMBER	YR/SN	QTY	DESCRIPTION
		87611845		1	SPOOL, Spool End Group, EHPV; Incl. 1 - 7
1		NSS		2	NOT SERVICED SEPARATELY, Cap Screw
2		NSS		2	NOT SERVICED SEPARATELY, Cap Screw
3		87576154		1	VALVE, SOLENOID, Proportional Pressure Reducing
4		NSS		1	NOT SERVICED SEPARATELY, End Cap
5		NSS		1	NOT SERVICED SEPARATELY, O-Ring
6		NSS		1	NOT SERVICED SEPARATELY, Spring Seat
7		NSS		1	NOT SERVICED SEPARATELY, Spring

CONTROL VALVE - SPOOL END GROUP, EHPV

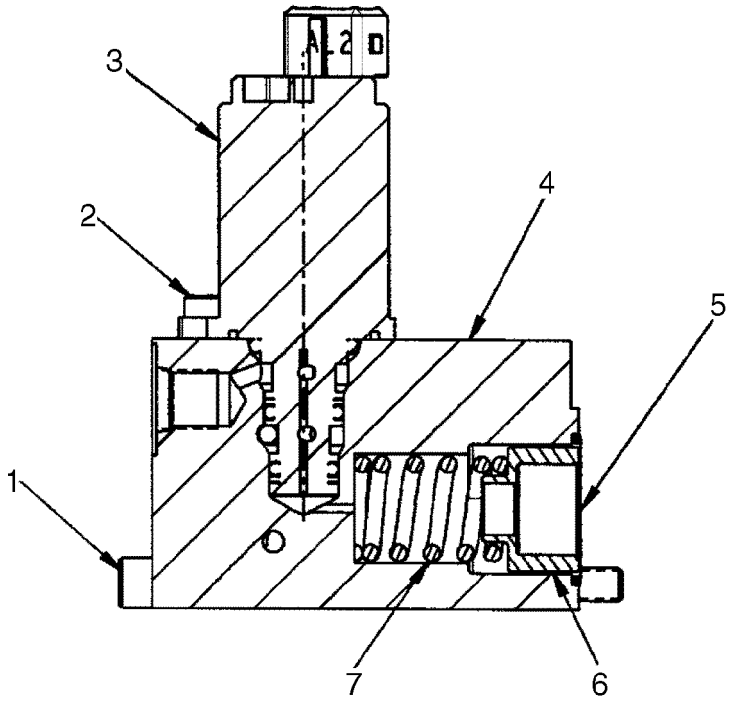

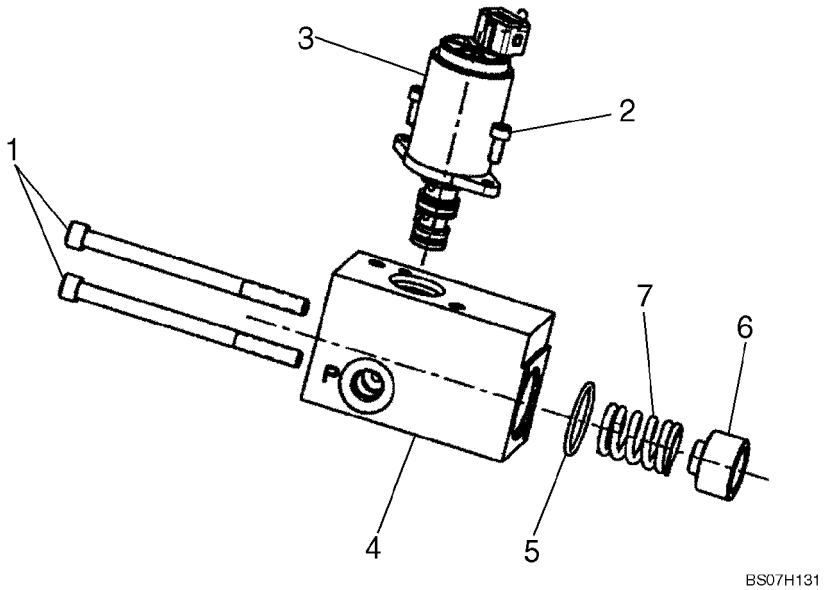

CONTROL VALVE - SPOOL END GROUP, EHPV

REF	FN	PART NUMBER	YR/SN	QTY	DESCRIPTION
		87546975		1	VALVE, HYDRAULIC, Manual Control Valve; Pilot Control Models With Hydraulic Attachment
		87611846		1	SPOOL, Spool End Group, EHPV; Incl. 1 - 7
1		NSS		2	NOT SERVICED SEPARATELY, Cap Screw
2		NSS		2	NOT SERVICED SEPARATELY, Cap Screw
3		87576154		1	VALVE, SOLENOID, Proportional Pressure Reducing
4		NSS		1	NOT SERVICED SEPARATELY, End Cap
5		NSS		1	NOT SERVICED SEPARATELY, O-Ring
6		NSS		1	NOT SERVICED SEPARATELY, Spring Seat
7		NSS		1	NOT SERVICED SEPARATELY, Spring

SECONDARY FRONT AUXILIARY - VALVE ASSY

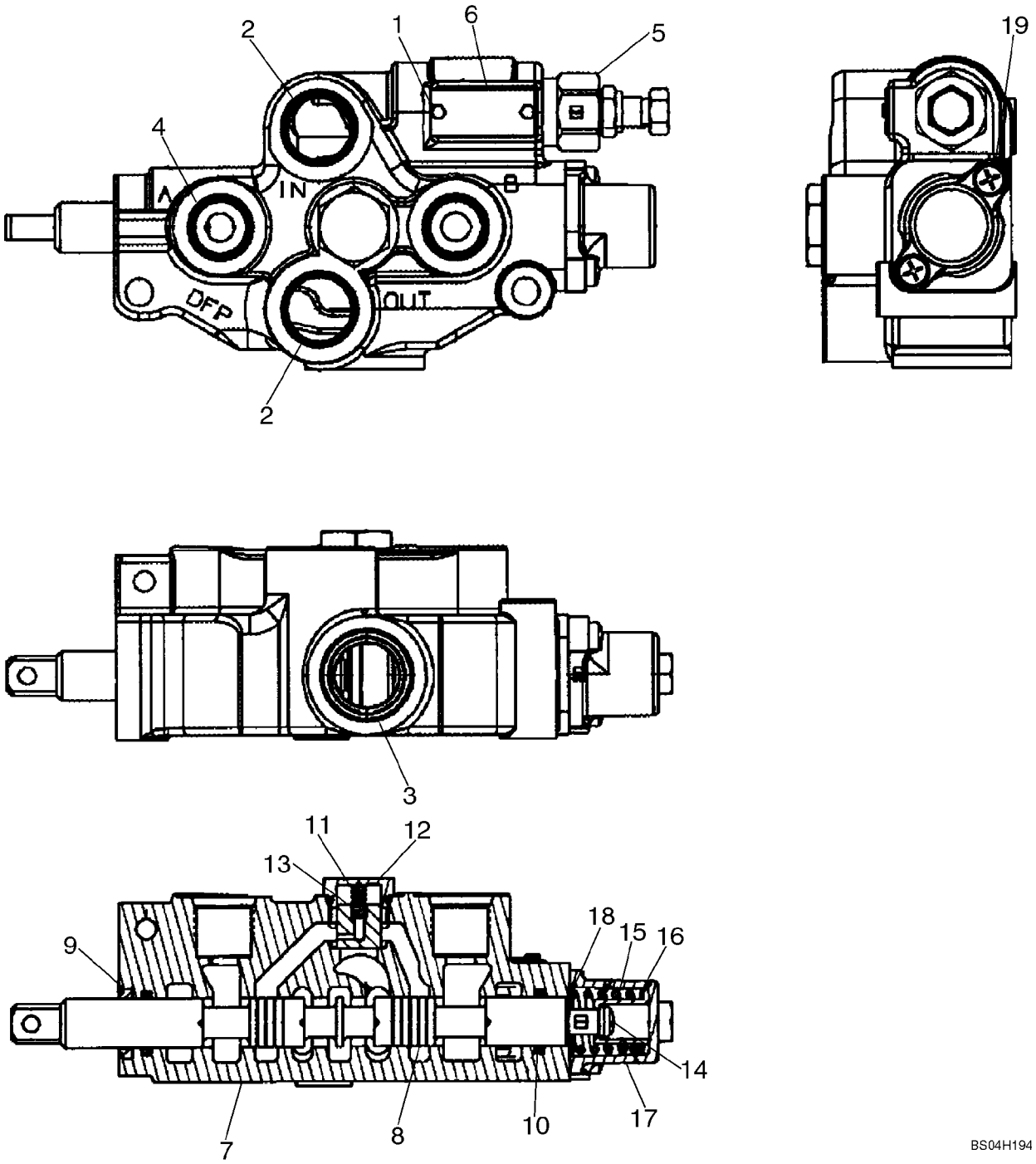

SECONDARY FRONT AUXILIARY - VALVE ASSY

REF	FN	PART NUMBER	YR/SN	QTY	DESCRIPTION
		87017348		1	VALVE, Secondary Auxiliary Valve; Incl. 1 - 19
1		NSS		2	NOT SERVICED SEPARATELY, Screw, Drive
2		NSS		2	NOT SERVICED SEPARATELY, Shipping Plug
3		NSS		1	NOT SERVICED SEPARATELY, Shipping Plug
4		NSS		2	NOT SERVICED SEPARATELY, Shipping Plug
5		NSS		1	NOT SERVICED SEPARATELY, Relief Valve Assy
6		NSS		1	NOT SERVICED SEPARATELY, Name Plate
7		NSS		1	NOT SERVICED SEPARATELY, Body
8		NSS		1	NOT SERVICED SEPARATELY, Spool
		87455258		1	KIT, SEALS, Incl. 9, 10
9		NSS		1	NOT SERVICED SEPARATELY, Ring, Wiper
10		NSS		2	NOT SERVICED SEPARATELY, O-Ring
		87455257		1	KIT, Load Check Kit; Incl. 11 - 13
11		NSS		1	NOT SERVICED SEPARATELY, Spring
12		NSS		1	NOT SERVICED SEPARATELY, Load Check Plug Assy
13		NSS		1	NOT SERVICED SEPARATELY, Poppet, Load Check
		87455274		1	KIT, SPRING, Spring Center Kit; Incl. 14 - 19
14		NSS			NOT SERVICED SEPARATELY, Screw With Lock Washer
15		NSS			NOT SERVICED SEPARATELY, Spring
16		NSS			NOT SERVICED SEPARATELY, Spacer
17		NSS			NOT SERVICED SEPARATELY, End Cap
18		NSS			NOT SERVICED SEPARATELY, Washer
19		NSS			NOT SERVICED SEPARATELY, Screw With Lock Washer

NOTES

SECTION INDEX
Chassis

09-01	LOADER LIFT
09-02	LOADER ARM ADJUSTMENT BLOCKS
09-03	LIFT CYLINDER - COVERS
09-04	COUPLER - MECHANICAL
09-05	COUPLER - MECHANICAL (ITALIAN)
09-06	BUCKETS - LOADER, DIRT / FOUNDRY
09-07	BUCKETS - LOADER, LOW PROFILE, EXTENDED LOW PROFILE
09-08	BUCKETS - LOADER, UTILITY / LIGHT MATERIAL
09-09	BUCKETS - LOADER, HEAVY DIRT
09-10	BUCKET, CUTTING EDGE (BOLT-ON CUTTING EDGE)
09-11	SPECIAL PARTS FOR ITALY - GUARD, BUCKET
09-12	PALLET FORK
09-13	CHASSIS
09-14	CHASSIS
09-15	CONTROLLER - MOUNTING (PILOT CONTROL)
09-16	LOADER & GROUND DRIVE CONTROL - RH
09-17	LOADER & GROUND DRIVE CONTROL - LH
09-18	LOADER & GROUND DRIVE CONTROL - LINKAGE
09-19	CONTROLS - AUXILIARY HYDRAULICS
09-20	HOOD
09-21	HOOD - AIR CONDITIONING
09-22	REAR DOOR
09-23	REAR DOOR - LOUVERED (EUROPE)
09-24	LOCK - REAR DOOR
09-25	CAB - FRAME AND SEAT BAR
09-26	CAB DOOR - MOUNTING
09-27	CAB DOOR - WASHER SYSTEM
09-28	CAB DOOR
09-29	CAB DOOR - VISOR
09-30	CAB DOOR - WIPER MOUNTING
09-31	CAB DOOR - HANDLE
09-32	DEMOLITION DOOR - MOUNTING
09-33	DEMOLITION DOOR
09-34	HEATER SYSTEM
09-35	HEATER SYSTEM
09-36	HEATER ASSEMBLY
09-37	AIR CONDITIONING SYSTEM
09-38	HEATER AND AIR CONDITIONING ASSEMBLY
09-39	SEAT BAR
09-40	SEAT BELT, LAP BELT (2 IN)
09-41	SEAT BELT, LAP BELT (3 IN)
09-42	SHOULDER BELT
09-43	SEAT MOUNTING - SUSPENSION SEAT
09-44	SEAT MOUNTING - DELUXE SUSPENSION SEAT
09-45	SEAT MOUNTING - STANDARD SEAT
09-46	FLOOR MAT
09-47	REAR VIEW MIRROR
09-48	SPECIAL PARTS FOR ITALY - MIRROR, REAR VIEW
09-49	TOP WINDOW
09-50	SIDE WINDOWS
09-51	HEADLINER - STANDARD

SECTION INDEX
Chassis

09-52	HEADLINER - HEATER AND AIR CONDITIONING
09-53	REAR WINDOW
09-54	REAR WINDOW - HEAT AND AIR CONDITIONING
09-55	HEAT SHIELD
09-56	INTERIOR TRIM
09-57	RADIO - SPEAKERS AND ANTENNA
09-58	RADIO - SPEAKERS AND HOUSING
09-59	SOUNDPROOFING - SEAL
09-62	NOISE CONTROL
09-63	LIFT HOOK - SINGLE POINT
09-64	LIFT HOOK
09-65	DECALS - ENGLISH
09-66	DECAL (420CT)
09-67	DECALS
09-68	DECALS
09-69	DECALS - DANISH, DUTCH, FINNISH
09-70	DECALS - FRENCH, GERMAN, GREEK
09-71	DECALS - ITALIAN, NORWEGIAN, POLISH
09-72	DECALS - PORTGUESE, SPANISH, SWEDISH
09-73	DECALS - BRAZILIAN PORTUGUESE, CANADIAN FRENCH, LATIN AMERICAN SPANISH

NOTES

09-01		p1	12/07

LOADER LIFT

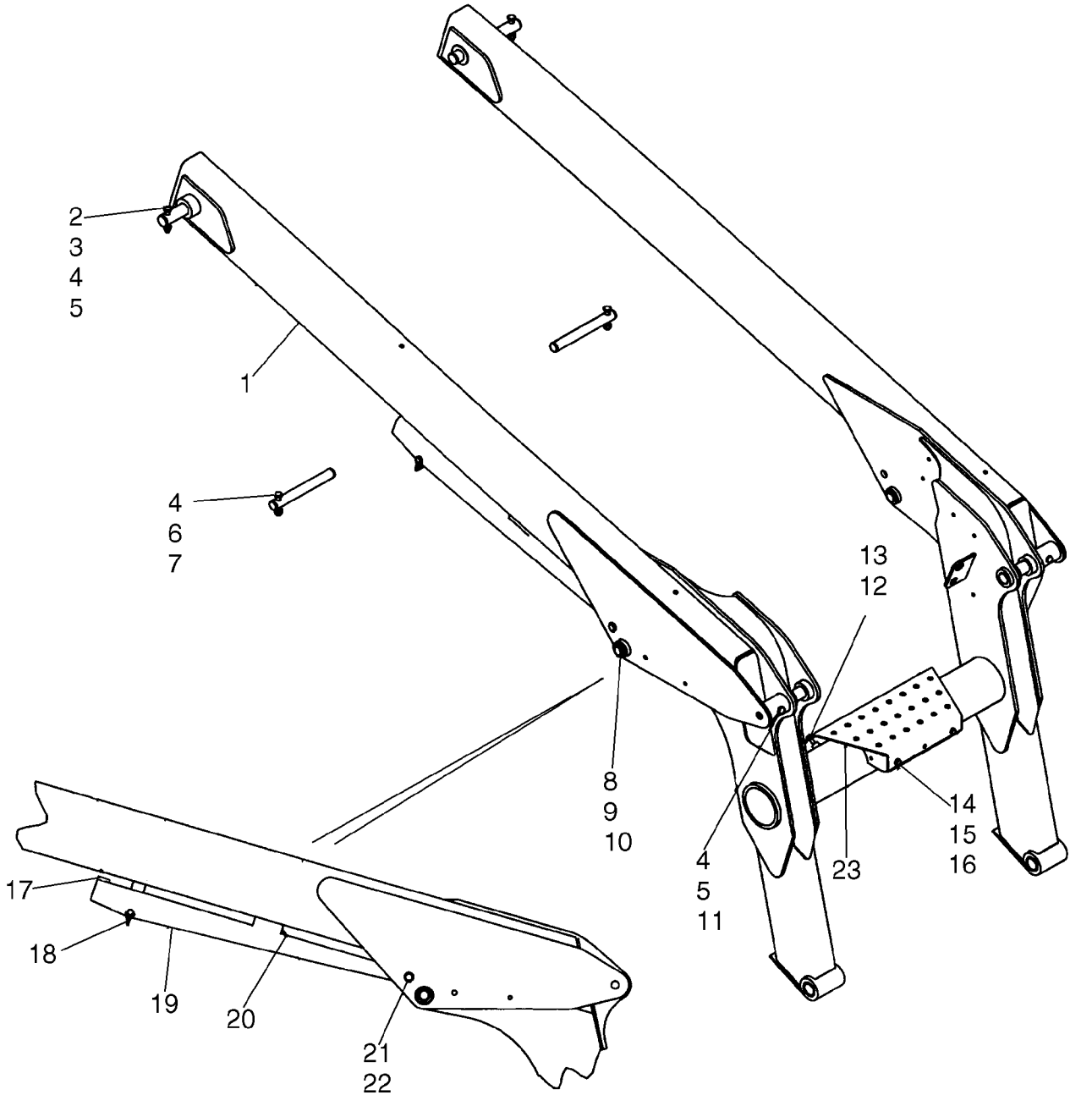

LOADER LIFT

REF	FN	PART NUMBER	YR/SN	QTY	DESCRIPTION
		87448095		1	FRAME ASSY, Loader Arm Kit; Order From Machinery Price List; Incl. Ref 1 Loader Frame, Plus The Following Decals, 321-7029, 398796A1, 398798A1, (2) 87389371; See Decal Pages For Illustration
1		{87417448}		1	Loader; Incl. (4) D33827 Bushings; Used In Production
2		382837A1		2	PIN, Lift Arm
3		{87019498}		2	Lube, 1/8" x .62" lg, Drive
4		86512554		6	NUT, LOCK, M10 x 1.5, Cl 10
5		43144		4	SCREW, Hex, M10 x 70, 8.8
6		382838A1		2	PIN, Lift Cylinder
7		120070		2	BOLT, Hex, M10 x 60, 8.8
8		{87602935}		10	WASHER, 1.0625 x 1.625 x 0.065
9		405853A1		2	PIN
10		87019495		4	RING, SNAP, #98, Ext
11		393742A1		2	PIN, Cylinder
12		120104		2	SCREW, Hex, M8 x 20, 8.8
13		896-15008		2	WASHER, M8 x 21.5 x 2.5, HT
14		86624184		2	WASHER, M8 x 16 x 1.6
15		43127		2	BOLT, Hex, M8 x 25, 8.8
16		9628098		2	NUT, LOCK, M8 x 1.25, Cl 10
17		{87599604}		1	Grommet
18		87711364		1	PIN, Pin
19		87711366		1	STRUT, Strut, Loader Support
20		87599718		1	INSULATION, FOAM, Loader Strut; One Piece
21		405854A1		1	PIN, Cylinder
22		{87599605}		2	Ring
23		409422A1		1	STEP

09-02		p1	11/07

LOADER ARM ADJUSTMENT BLOCKS

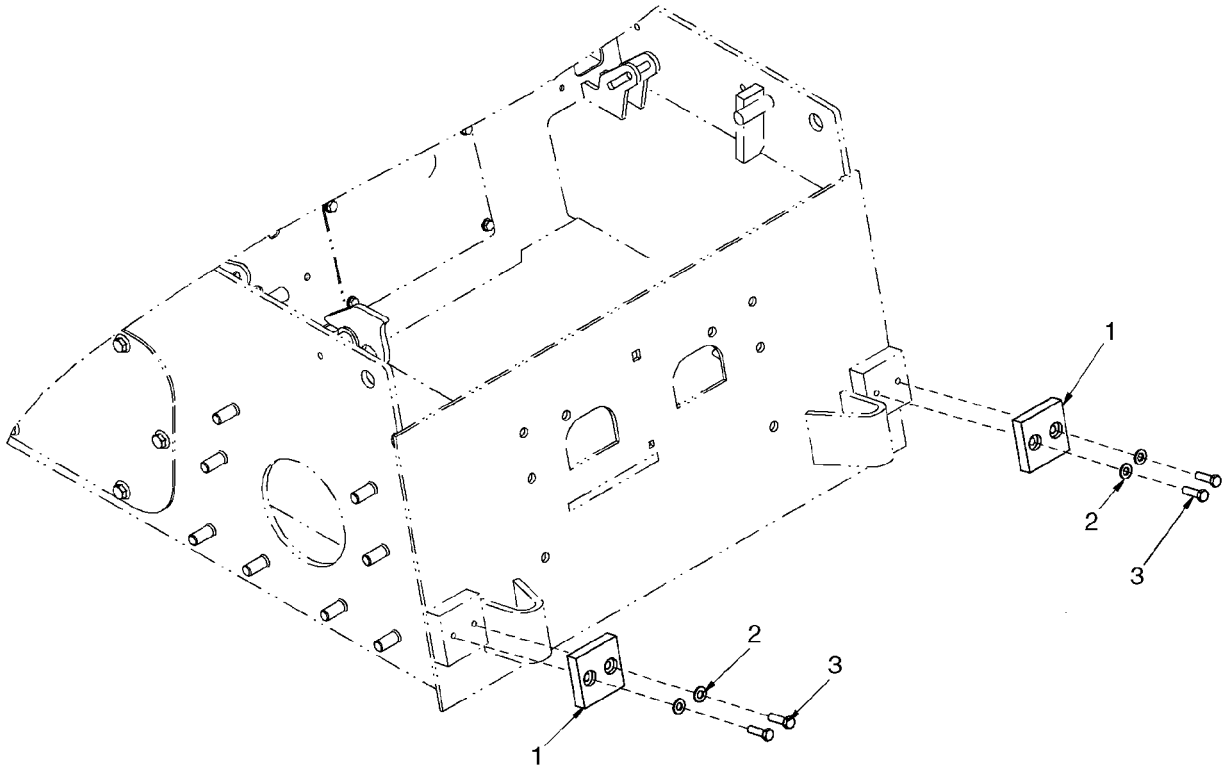

BS07K247

LOADER ARM ADJUSTMENT BLOCKS

REF	FN	PART NUMBER	YR/SN	QTY	DESCRIPTION
1		87663103		2	BLOCK, Block, Loader Arm Stop
2		86632588		4	WASHER, 13/32" x 13/16" x .065", HDN
3		280165		4	BOLT, Hex, 3/8"-16 x 1 1/4", G8, Full Thd

LIFT CYLINDER - COVERS

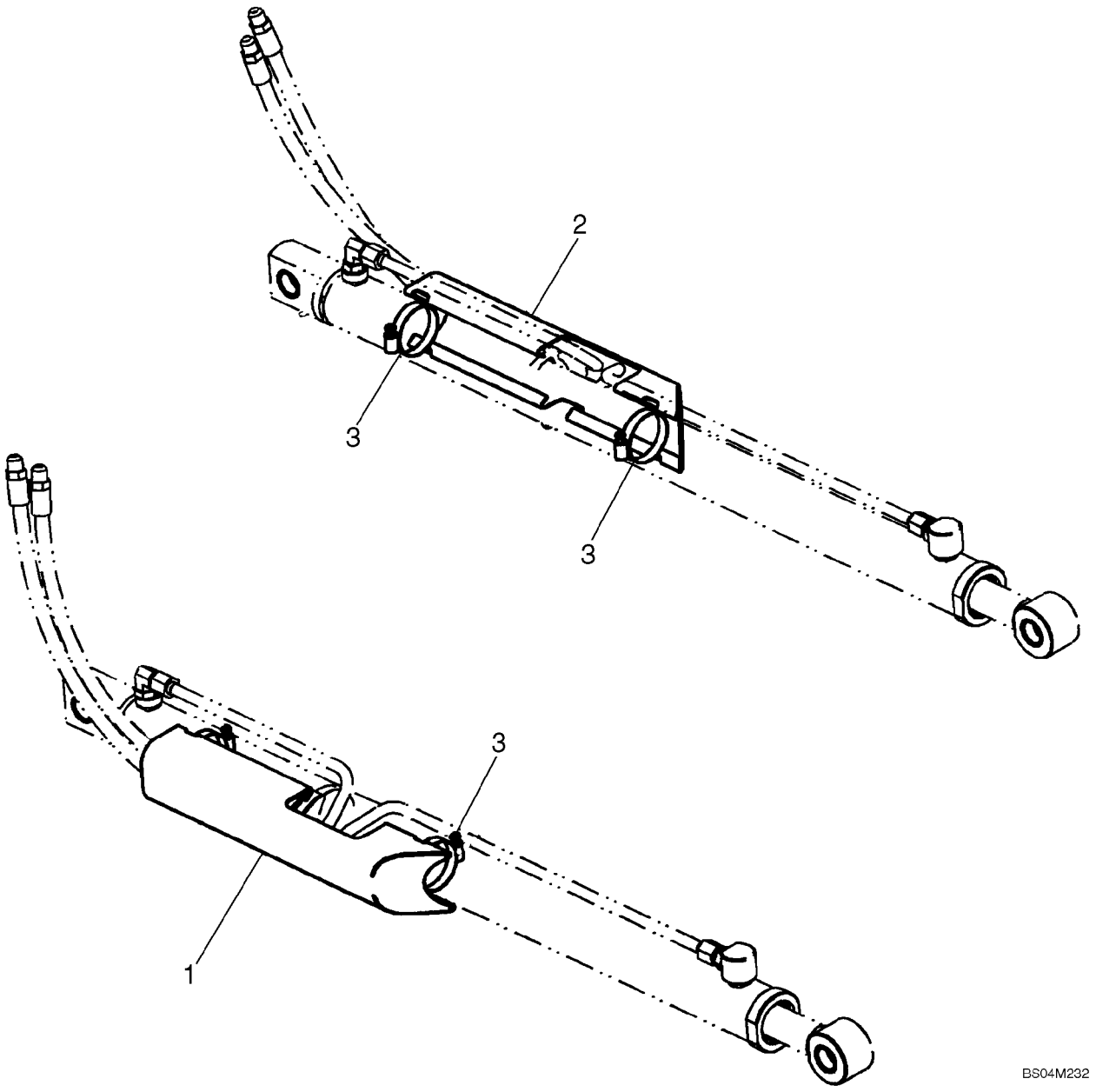

LIFT CYLINDER - COVERS

REF	FN	PART NUMBER	YR/SN	QTY	DESCRIPTION
		450051A1		1	DIA KIT, ADDITIONAL PROD., Kit, Lift Cylinder Covers; Incl 1 - 3
1		429619A1		1	COVER, Right Hand
2		429620A1		1	COVER, Left Hand
3		214-1444		4	CLAMP, HOSE, #44, 2.31/3.25 Type F Worm, Type F #44

09-04		p1	12/07

COUPLER - MECHANICAL

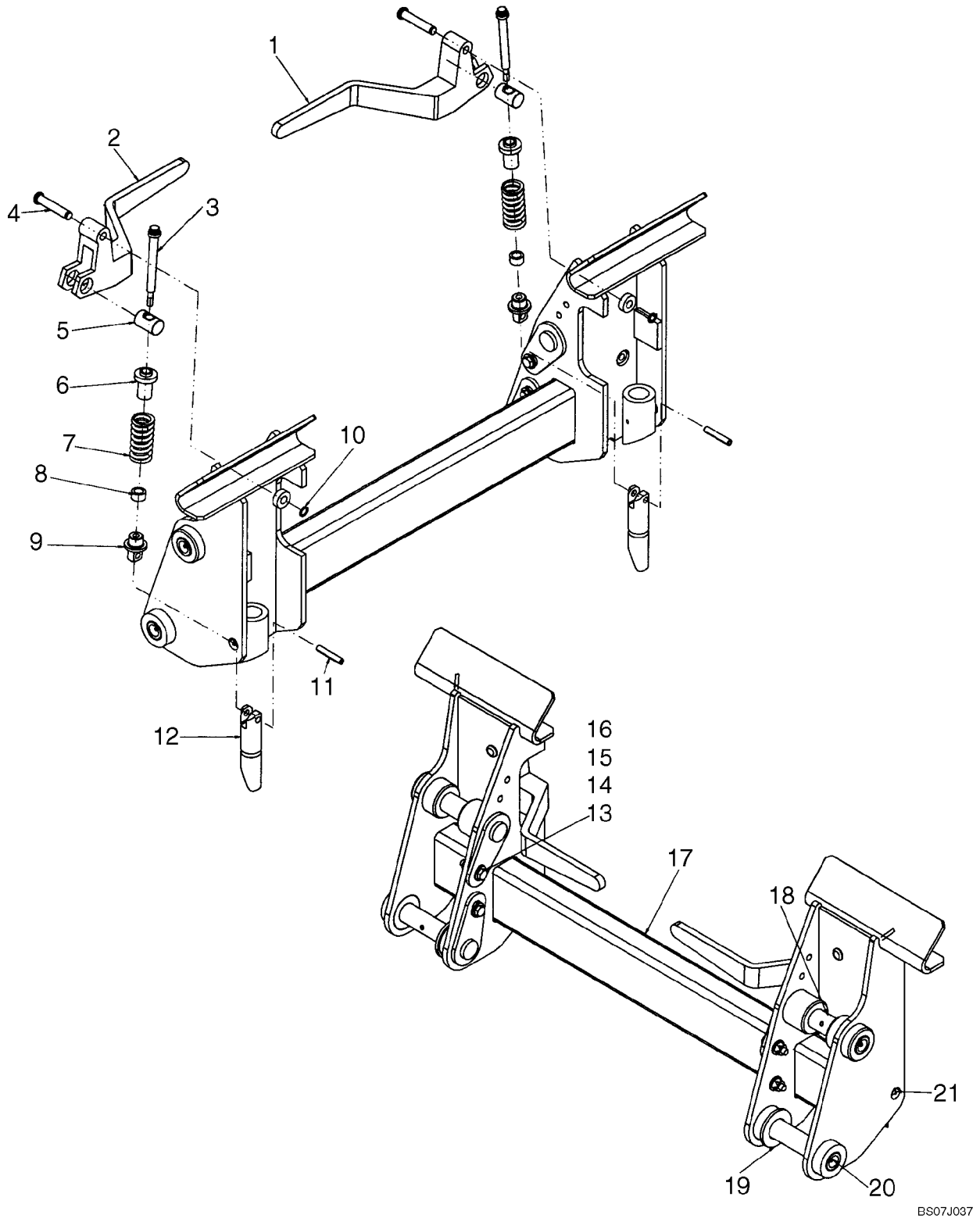

COUPLER - MECHANICAL

REF	FN	PART NUMBER	YR/SN	QTY	DESCRIPTION
1		86633195		1	HANDLE, Handle, LH
2		86633196		1	HANDLE, Handle, RH
3		87533223		2	PIN, CS12PT Shoulder Bolt, 1/2 X 4.0
4		87387540		2	RETAINER
5		9829733		2	PIN
6		86610166		2	GUIDE, Spring Guide
7		86610167		2	SPRING
8		87412041		2	SPACER, Bushing Spacer
9		87579303		2	PIN, Pin
10		{87612753}		2	Retaining Ring, External #50 PLN
11		86624092		2	PIN, 3/8" x 2", Coiled
12		87413030		2	PIN, Latch Pin
13		120112		4	BOLT, Hex, M10 x 40, 8.8, Full Thd
14		86625253		8	WASHER, M11 x 24 x 2
15		86512554		4	NUT, LOCK, M10 x 1.5, Cl 10
16		906091R1		4	SPACER, 3/8" Pipe X 3/8" Length
17		404599A5		1	FRAME ASSY
18		87659406		4	PIN
19		86512837		2	WASHER, 1 1/4", SAE
20		80710		4	NIPPLE, LUBE, 1/8"-27 x .66 lg
21		87414		2	NIPPLE, LUBE, 1/4"-28 x .56" lg, Drive

09-05		p1	12/07

COUPLER - MECHANICAL (ITALIAN)

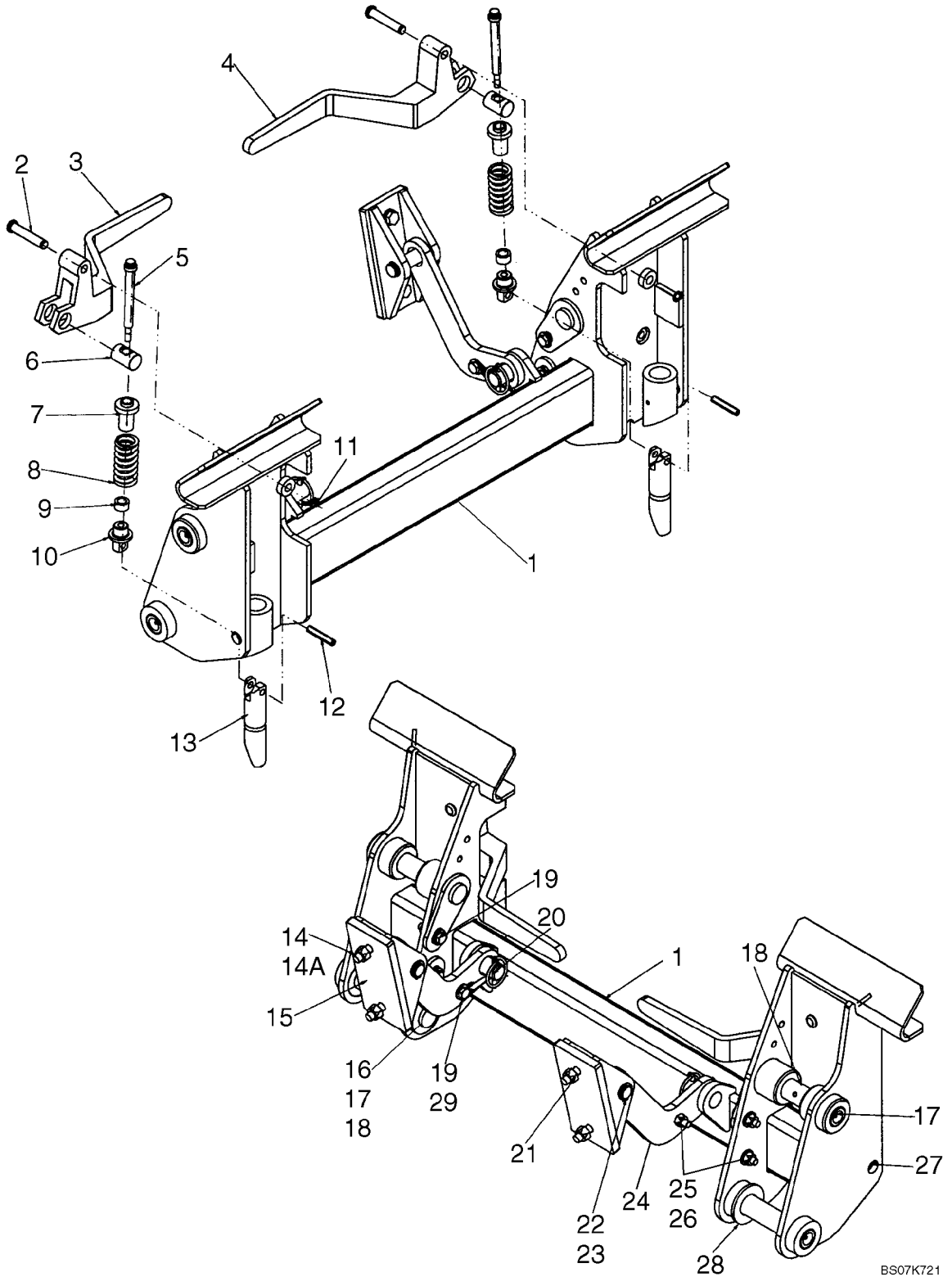

COUPLER - MECHANICAL (ITALIAN)

REF	FN	PART NUMBER	YR/SN	QTY	DESCRIPTION
1		417779A3		1	FRAME ASSY, Coupler, Italian On Road
2		87387540		2	RETAINER, Handle Pivot
3		86633196		1	HANDLE, Right Hand
4		86633195		1	HANDLE, Left Hand
5		87533223		2	PIN, CS12PT SHO PH .5 x 4.0
6		9829733		2	PIN
7		86610166		2	GUIDE
8		86610167		2	SPRING, Compression
9		87412041		2	SPACER, Bushing
10		87579303		2	PIN, Pin
11		{87612753}		2	Retaining Ring # 50
12		86624092		2	PIN, 3/8" x 2", Coiled, Coiled Spring
13		87413030		2	PIN, Latch
14		412672		4	NUT, LOCK, M12 x 1.75, Cl 10
14A		86625255		4	WASHER, M13.5 x 24.5 x 3, HT
15		398196A1		2	BRACKET, Bucket Lock
16		906091R1		4	SPACER, 3/8 x 0.375 x Strg Pipe
17		80710		4	NIPPLE, LUBE, 1/8"-27 x .66 lg
18		87659406		4	PIN
19		120112		4	BOLT, Hex, M10 x 40, 8.8, Full Thd
20		A30338		2	PIN
21		120080		4	BOLT
22		D138889		2	PIN, Lift Cylinder Pivot
23		{86625151}		4	Retaining Ring EXT HD #87
24		398194A1		2	LINK, Bucket Lock
25		86625253		10	WASHER, M11 x 24 x 2
26		86512554		6	NUT, LOCK, M10 x 1.5, Cl 10
27		87414		2	NIPPLE, LUBE, 1/4"-28 x .56" lg, Drive
28		86512837		2	WASHER, 1 1/4", SAE
29		L78786		2	RETAINER, CABLE

BUCKETS - LOADER, DIRT / FOUNDRY

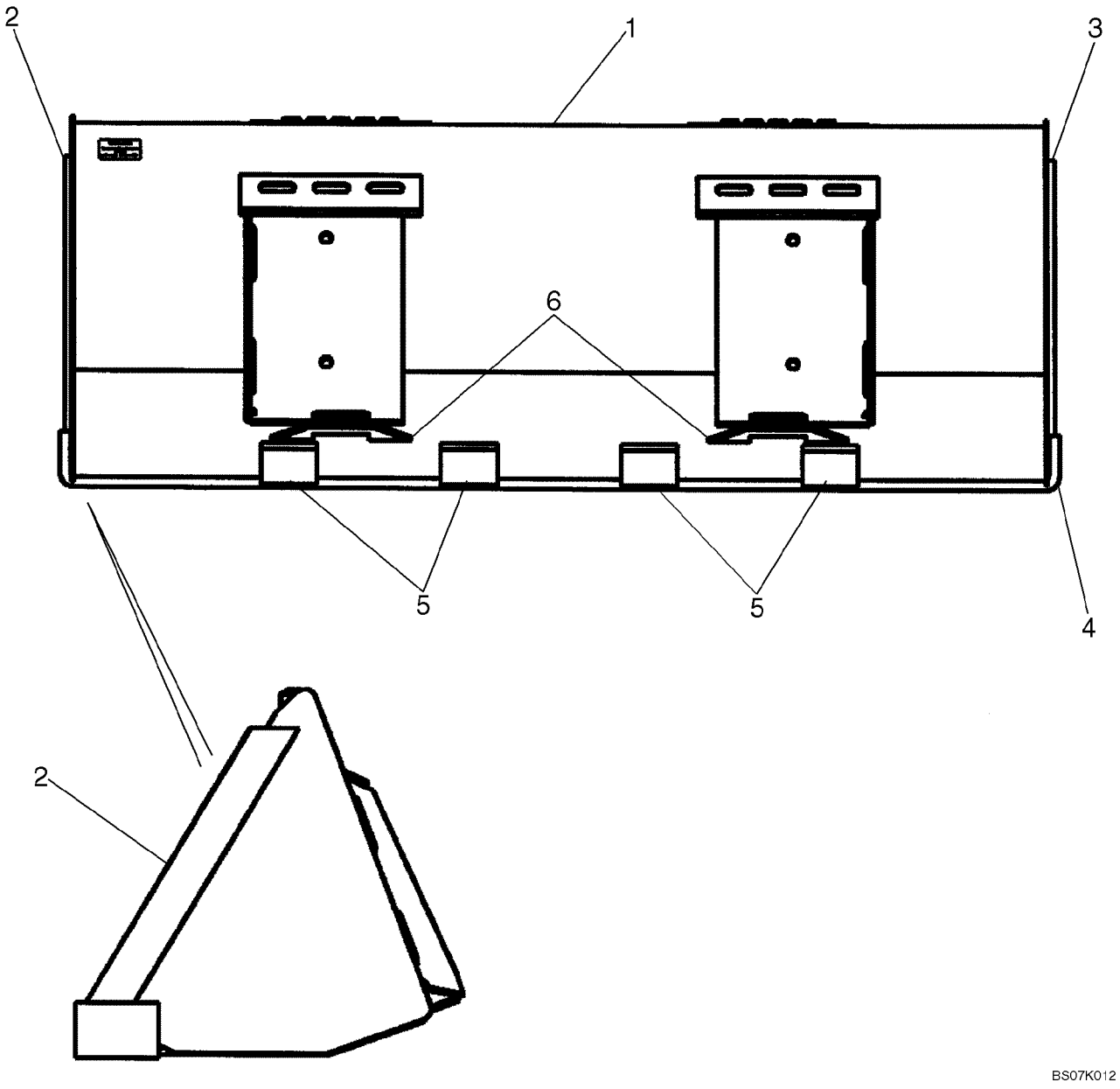

BUCKETS - LOADER, DIRT / FOUNDRY

REF	FN	PART NUMBER	YR/SN	QTY	DESCRIPTION
		REF			INSTRUCTION, DIRT / FOUNDRY
1		86618349		1	BUCKET, 1524 mm (60 Inch); Order From Machinery Price List; Incl 2 - 6
2		9841636		1	EDGE, CUTTING, LH Cutter
3		9841637		1	EDGE, CUTTING, RH Cutter
4		86577164		1	EDGE, CUTTING, Weld On Blade 60 in
5		86501841		3	BAR, Skid Bar
6		9822175		2	PLATE
1		{86618350}		1	BUCKET, 1676 mm (66 Inch); Order From Machinery Price List; Incl 2 - 6
2		87014505		1	CUTTING BLADE, LH Cutter
3		87014504		1	CUTTING BLADE, RH Cutter
4		86577166		1	EDGE, CUTTING, Weld On Blade 66 in
5		87016983		3	BAR, Skid Bar
6		9822175		2	PLATE
1		86618351		1	BUCKET, 1829 mm (72 Inch); Order From Machinery Price List; Incl 2 - 6
2		87014505		1	CUTTING BLADE, LH Cutter
3		87014504		1	CUTTING BLADE, RH Cutter
4		86577168		1	EDGE, CUTTING, Weld On Blade 72 in
5		87016983		4	BAR, Skid Bar
6		9822175		2	PLATE
1		{86633060}		1	BUCKET, 1981mm (78 Inch); Order From Machinery Price List; Incl 2 - 6
2		87014505		1	CUTTING BLADE, LH Cutter
3		87014504		1	CUTTING BLADE, RH Cutter
4		86577170		1	EDGE, CUTTING, Weld On Blade 78 in
5		87016983		4	BAR, Skid Bar
6		9822175		2	PLATE

BUCKETS - LOADER, LOW PROFILE, EXTENDED LOW PROFILE

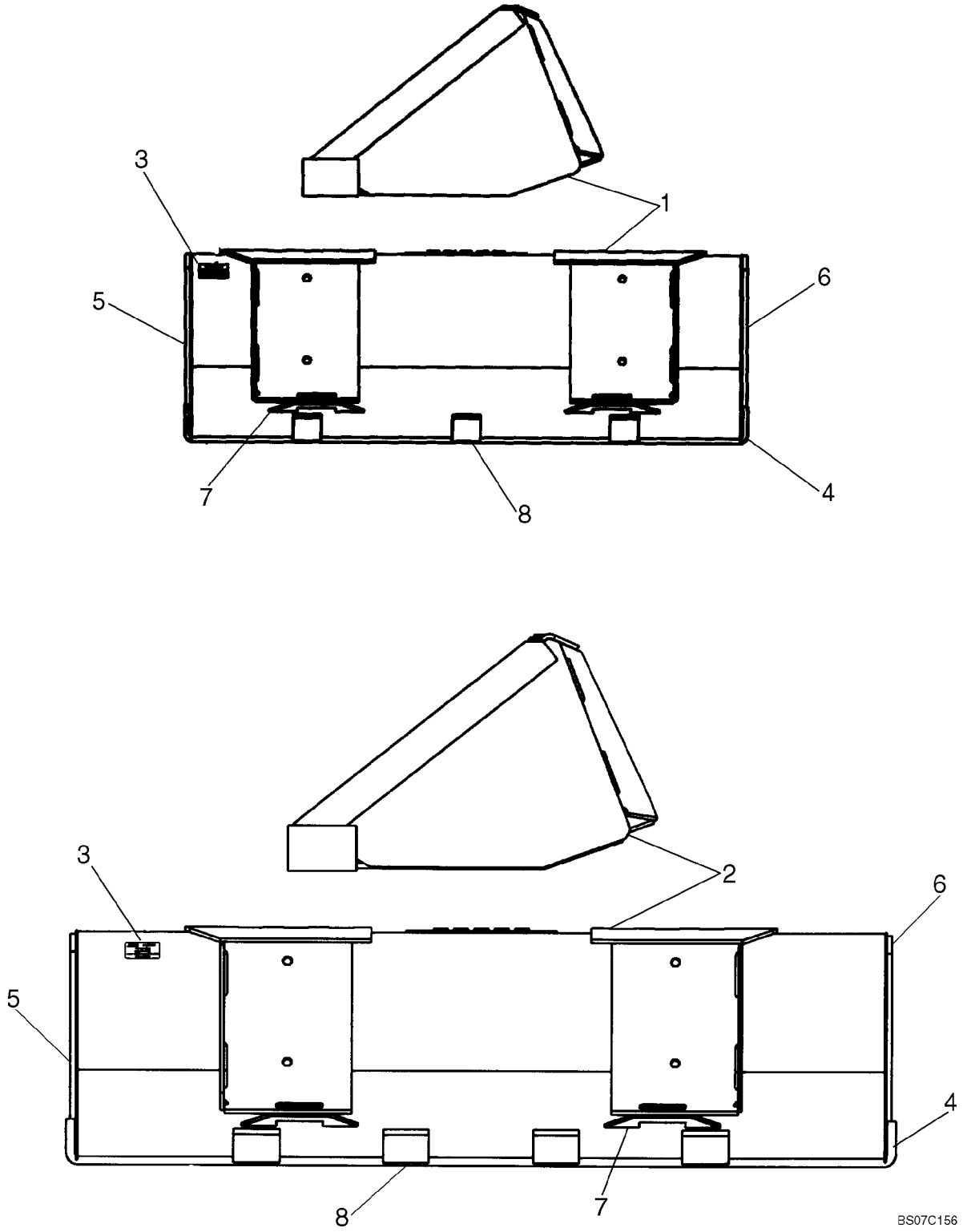

BUCKETS - LOADER, LOW PROFILE, EXTENDED LOW PROFILE

REF	FN	PART NUMBER	YR/SN	QTY	DESCRIPTION
		REF			INSTRUCTION, LOW PROFILE, EXTENDED LOW PROFILE
1		87010190		1	BUCKET, Low Profile; 1524 mm (60 Inch); Order From Machinery Price List; Incl. 3 - 8
3		NSS		1	NOT SERVICED SEPARATELY, Decal
4		86577164		1	EDGE, CUTTING, Weld On Blade
5		9829784		1	EDGE, CUTTING, Cutter Left Hand
6		9829783		1	EDGE, CUTTING, Cutter Right Hand
7		9822175		2	PLATE
8		86501840		3	BAR, Skid
1		86618363		1	BUCKET, Low Profile; 1676 mm (66 Inch); Order From Machinery Price List; Incl. 3 - 8
3		NSS		1	NOT SERVICED SEPARATELY, Decal
4		86577166		1	EDGE, CUTTING, Weld On Blade
5		9829784		1	EDGE, CUTTING, Cutter Left Hand
6		9829783		1	EDGE, CUTTING, Cutter Right Hand
7		9822175		2	PLATE
8		9829786		3	BAR, Skid
1		86618364		1	BUCKET, Low Profile; 1820 mm (72 Inch); Order From Machinery Price List; Incl. 3 - 8
3		NSS		1	NOT SERVICED SEPARATELY, Decal
4		86577168		1	EDGE, CUTTING, Weld On Blade
5		9829784		1	EDGE, CUTTING, Cutter Left Hand
6		9829783		1	EDGE, CUTTING, Cutter Right Hand
7		9822175		2	PLATE
8		9829786		4	BAR, Skid
2		86618353		1	BUCKET, Extended Low Profile; 1524 mm (60 Inch); Order From Machinery Price List; Incl. 3 - 8
3		NSS		1	NOT SERVICED SEPARATELY, Decal
4		86577164		1	EDGE, CUTTING, Weld On Blade
5		86510316		1	EDGE, CUTTING, Cutter Left Hand
6		86510315		1	EDGE, CUTTING, Cutter Right Hand
7		9822175		2	PLATE
8		86510313		3	BAR, Skid

BUCKETS - LOADER, LOW PROFILE, EXTENDED LOW PROFILE

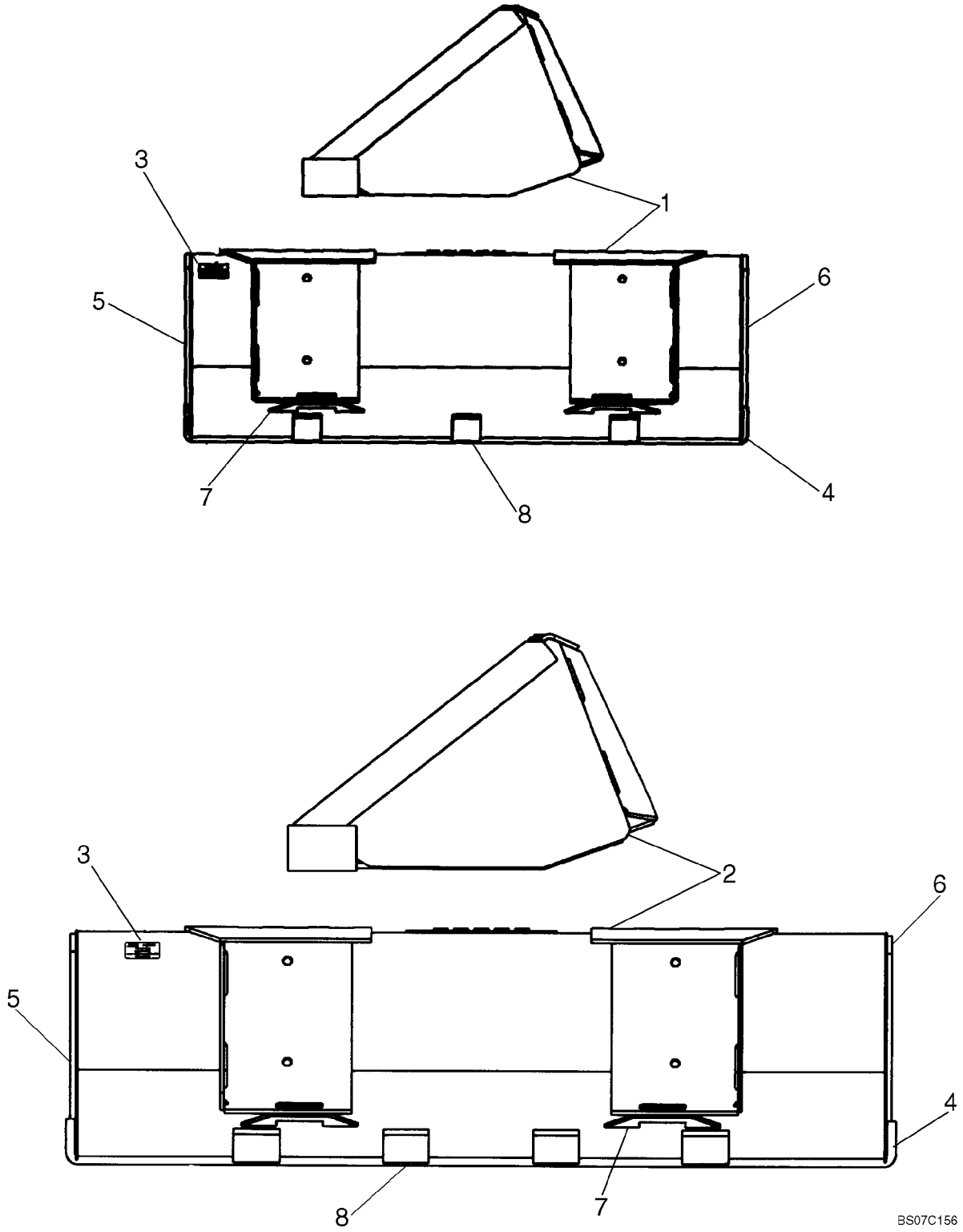

BUCKETS - LOADER, LOW PROFILE, EXTENDED LOW PROFILE

REF	FN	PART NUMBER	YR/SN	QTY	DESCRIPTION
2		86618354		1	BUCKET, Extended Low Profile; 1676 mm (66 Inch); Order From Machinery Price List; Incl. 3 - 8
3		NSS		1	NOT SERVICED SEPARATELY, Decal
4		86577166		1	EDGE, CUTTING, Weld On Blade
5		9829784		1	EDGE, CUTTING, Cutter Left Hand
6		9829783		1	EDGE, CUTTING, Cutter Right Hand
7		9822175		2	PLATE
8		9829786		3	BAR, Skid
2		86618355		1	BUCKET, 1829 mm (72 Inch); Order From Machinery Price List; Incl. 3 - 8
3		NSS		1	NOT SERVICED SEPARATELY, Decal
4		86577168		1	EDGE, CUTTING, Weld On Blade
5		86510316		1	EDGE, CUTTING, Cutter Left Hand
6		86510315		1	EDGE, CUTTING, Cutter Right Hand
7		9822175		2	PLATE
8		86510314		3	BAR, Skid

BUCKETS - LOADER, UTILITY / LIGHT MATERIAL

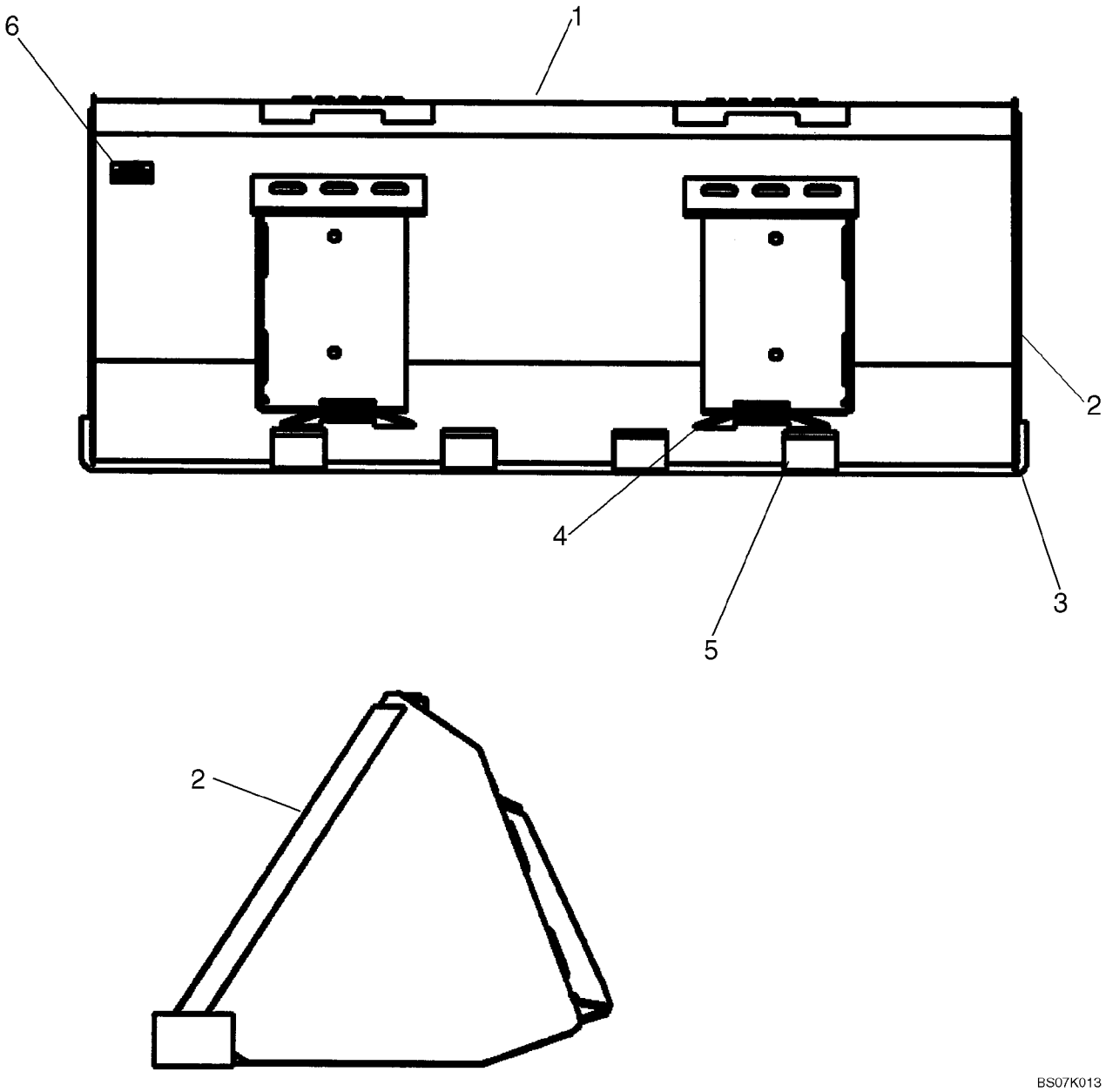

BUCKETS - LOADER, UTILITY / LIGHT MATERIAL

REF	FN	PART NUMBER	YR/SN	QTY	DESCRIPTION
		REF			INSTRUCTION, UTILITY / LIGHT MATERIAL
1		{87010187}		1	BUCKET, 1524 mm (60 Inch); Order From Machinery Price List; Incl 2 - 6
2		86501801		2	EDGE, CUTTING
3		86577164		1	EDGE, CUTTING, 60 in
4		9822175		2	PLATE
5		86501839		3	BAR, Skid Bar
6		NSS		1	NOT SERVICED SEPARATELY, Decal
1		{87010188}		1	BUCKET, 1829 mm (72 Inch); Order From Machinery Price List; Incl 2 - 6
2		86501801		2	EDGE, CUTTING
3		86577168		1	EDGE, CUTTING, 72 in
4		9822175		2	PLATE
5		86501815		4	BAR, Skid Bar
6		NSS		1	NOT SERVICED SEPARATELY, Decal
1		{87010189}		1	BUCKET, 2134 mm (84 Inch); Order From Machinery Price List; Incl 2 - 6
2		86501801		2	EDGE, CUTTING
3		86900574		1	EDGE, CUTTING, 84 in
4		9822175		2	PLATE
5		86501815		5	BAR, Skid Bar
6		NSS		1	NOT SERVICED SEPARATELY, Decal

BUCKETS - LOADER, HEAVY DIRT

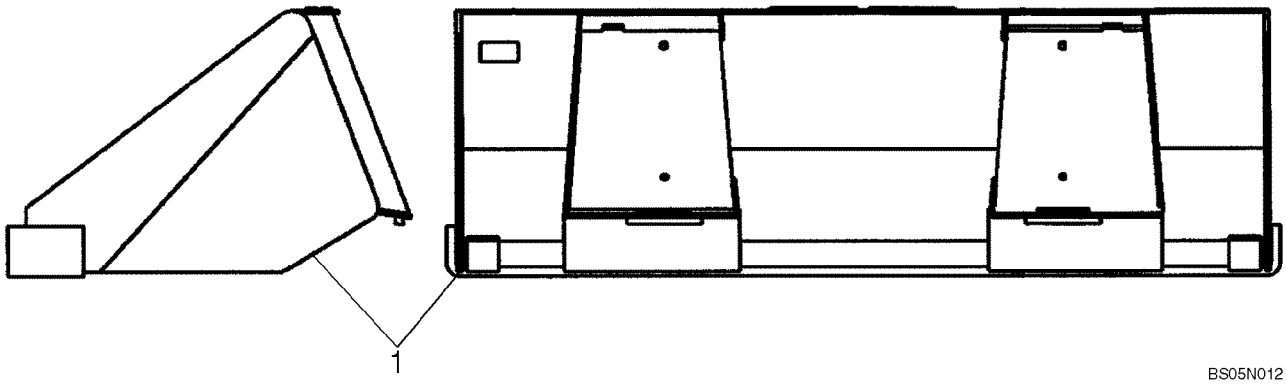

BUCKETS - LOADER, HEAVY DIRT

REF	FN	PART NUMBER	YR/SN	QTY	DESCRIPTION
1		87430022		1	BUCKET, 60" Heavy Dirt Bucket
1		87438564		1	BUCKET, 66" Heavy Duty Dirt: Incl 87015514
		87015514		1	EDGE, CUTTING, 66" Blade
1		87438566		1	BUCKET, 72" Heavy Duty Dirt; Incl 86577168
		86577168		1	EDGE, CUTTING, 72" Blade
1		87430292		1	BUCKET, 78" Heavy Duty Dirt; Incl 86577170
		86577170		1	EDGE, CUTTING, 78" Blade

BUCKET, CUTTING EDGE (BOLT-ON CUTTING EDGE)

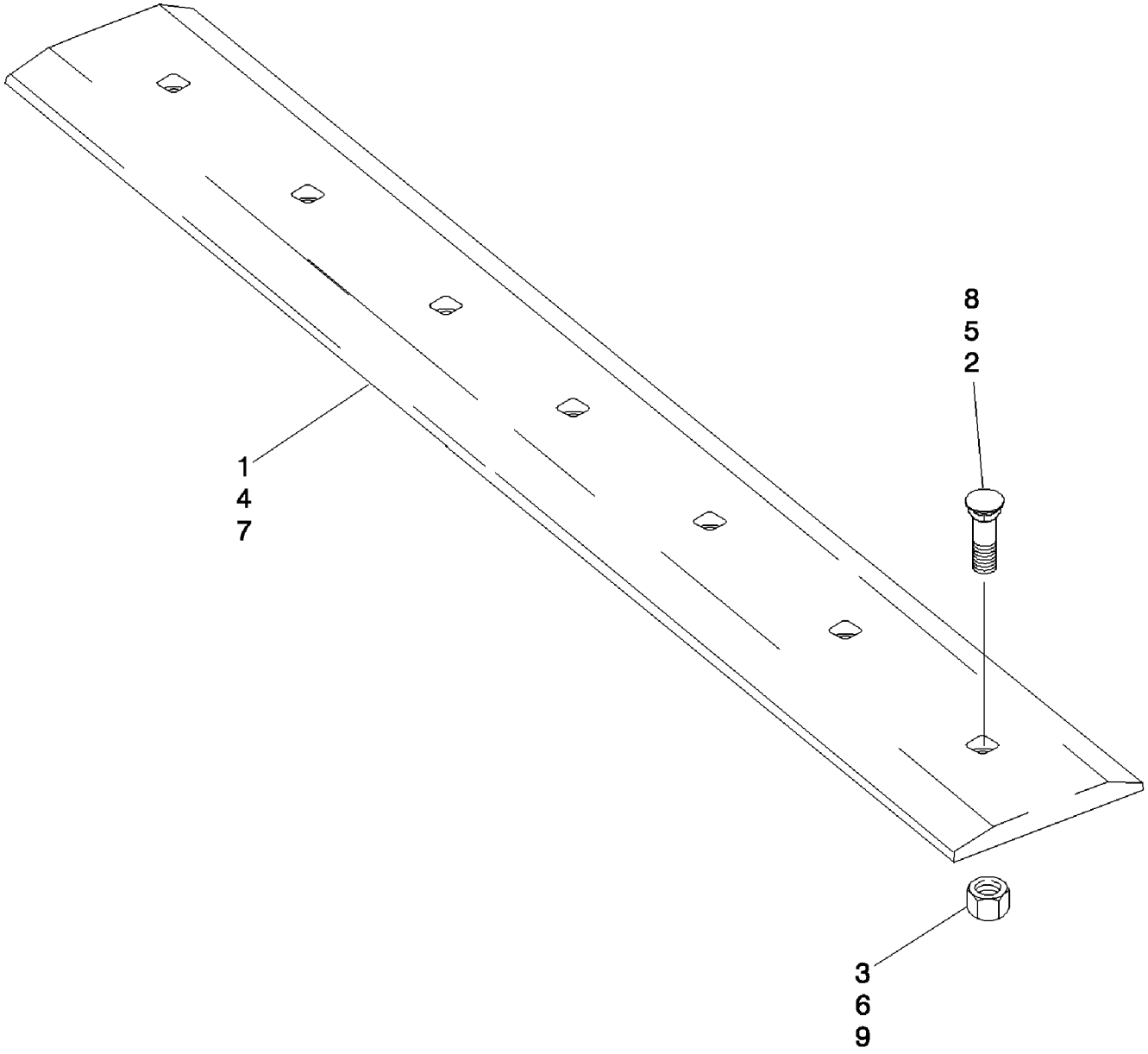

BS04A101

BUCKET, CUTTING EDGE (BOLT-ON CUTTING EDGE)

REF	FN	PART NUMBER	YR/SN	QTY	DESCRIPTION
		430497A1		1	EDGE, CUTTING, Kit; 60 Inch; Incl. Ref 1 - 3; Order Components
1		87454489		1	EDGE, CUTTING, 1524 mm (60 inch)
2		86548338		7	BOLT, PLOW, 5/8"-11 x 2", G5
3		425-1010		7	NUT, 5/8"-11, G5
		430498A1		1	EDGE, CUTTING, Kit; 66 Inch; Incl. Ref 4 - 6; Order Components
4		87454483		1	EDGE, CUTTING, 1676 mm (66 inch)
5		86548338		7	BOLT, PLOW, 5/8"-11 x 2", G5
6		425-1010		7	NUT, 5/8"-11, G5
		430499A1		1	EDGE, CUTTING, Kit; 72 Inch; Incl. Ref 7 - 9; Order Components
7		87454488		1	EDGE, CUTTING, 1829 mm (72 inch)
8		86548338		7	BOLT, PLOW, 5/8"-11 x 2", G5
9		425-1010		7	NUT, 5/8"-11, G5
		434817A1		1	EDGE, CUTTING, Kit; 78 Inch; Incl. Ref 7 - 9
7		87454489		1	EDGE, CUTTING
8		86548338		7	BOLT, PLOW, 5/8"-11 x 2", G5
9		280374		7	NUT, 5/8"-11, G5
		430500A1		1	EDGE, CUTTING, Kit; 84 Inch; Incl. Ref 7 - 9; Order Components
7		86577173		1	EDGE, CUTTING, 2134 mm (84 inch)
8		420-21032		9	BOLT, CARRIAGE, 5/8"-11 x 2", G8, Full Thd
9		329-1010		9	NUT, 5/8"-11, G8

SPECIAL PARTS FOR ITALY - GUARD, BUCKET

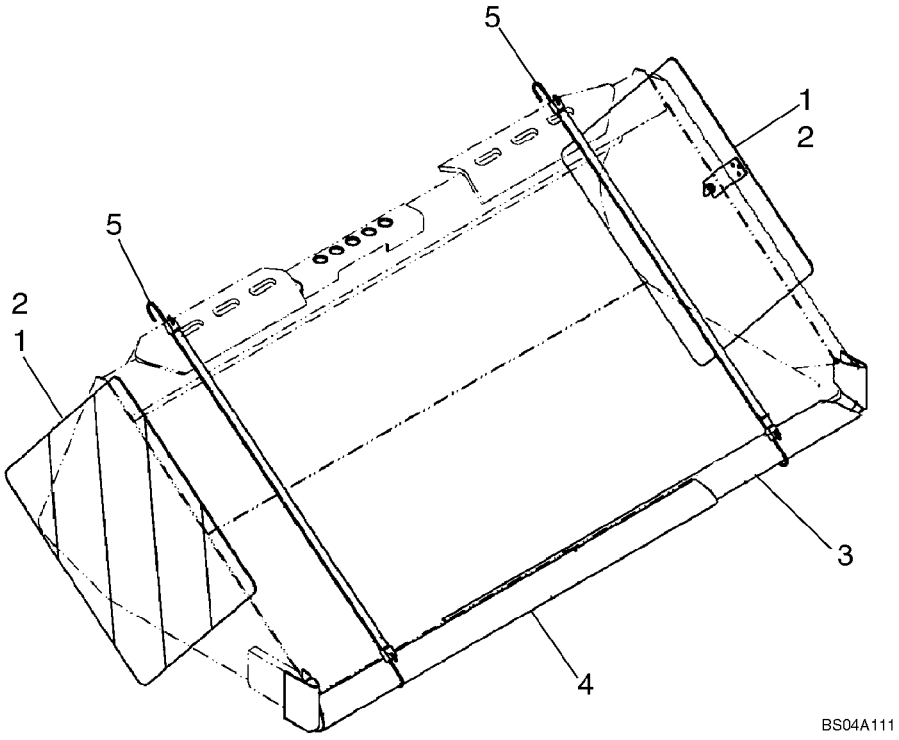

SPECIAL PARTS FOR ITALY - GUARD, BUCKET

REF	FN	PART NUMBER	YR/SN	QTY	DESCRIPTION
1		631816		2	SCREW
2		86530079		2	GUARD, Bucket
3		86565640		1	GUARD, Right Hand
4		86565641		1	GUARD, Left Hand
5		434346A1		2	ELASTIC STRAP

09-12		p1	12/07

PALLET FORK

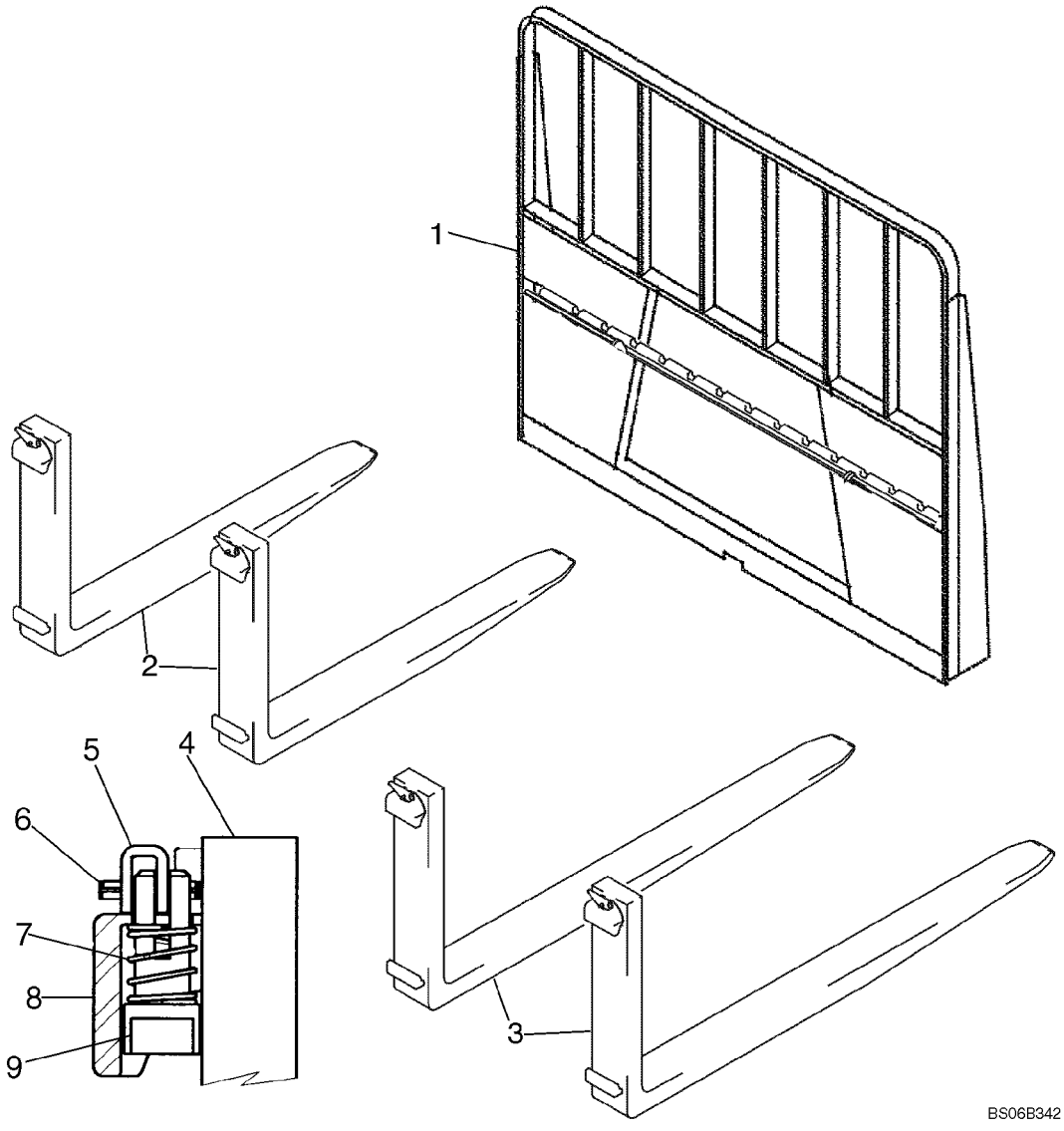

PALLET FORK

REF	FN	PART NUMBER	YR/SN	QTY	DESCRIPTION
1		86639773		1	MOUNTING PARTS, Pallet Fork
2		86589764		1	FORK, 42 in. Pallet Fork Set; Incl. 86574054
		86574054		2	FORK, BUCKET, Fork Assy; 42 in.; Incl. 4 - 9
3		86589765		1	DIA, Construction, 48 in. Pallet Fork Set; Incl. 86574055
		86574055		2	FORK, BUCKET, Fork Assy; 48 in.; Incl. 4 - 9
4		NSS		1	NOT SERVICED SEPARATELY, Fork Arm
5		226129		1	HANDLE
6		118827		1	PIN, 3/16" x 1", Slotted
7		9800081		1	SPRING
8		NSS		1	NOT SERVICED SEPARATELY, Top Hook
9		226130		1	PIN

09-13		p1	12/07

CHASSIS

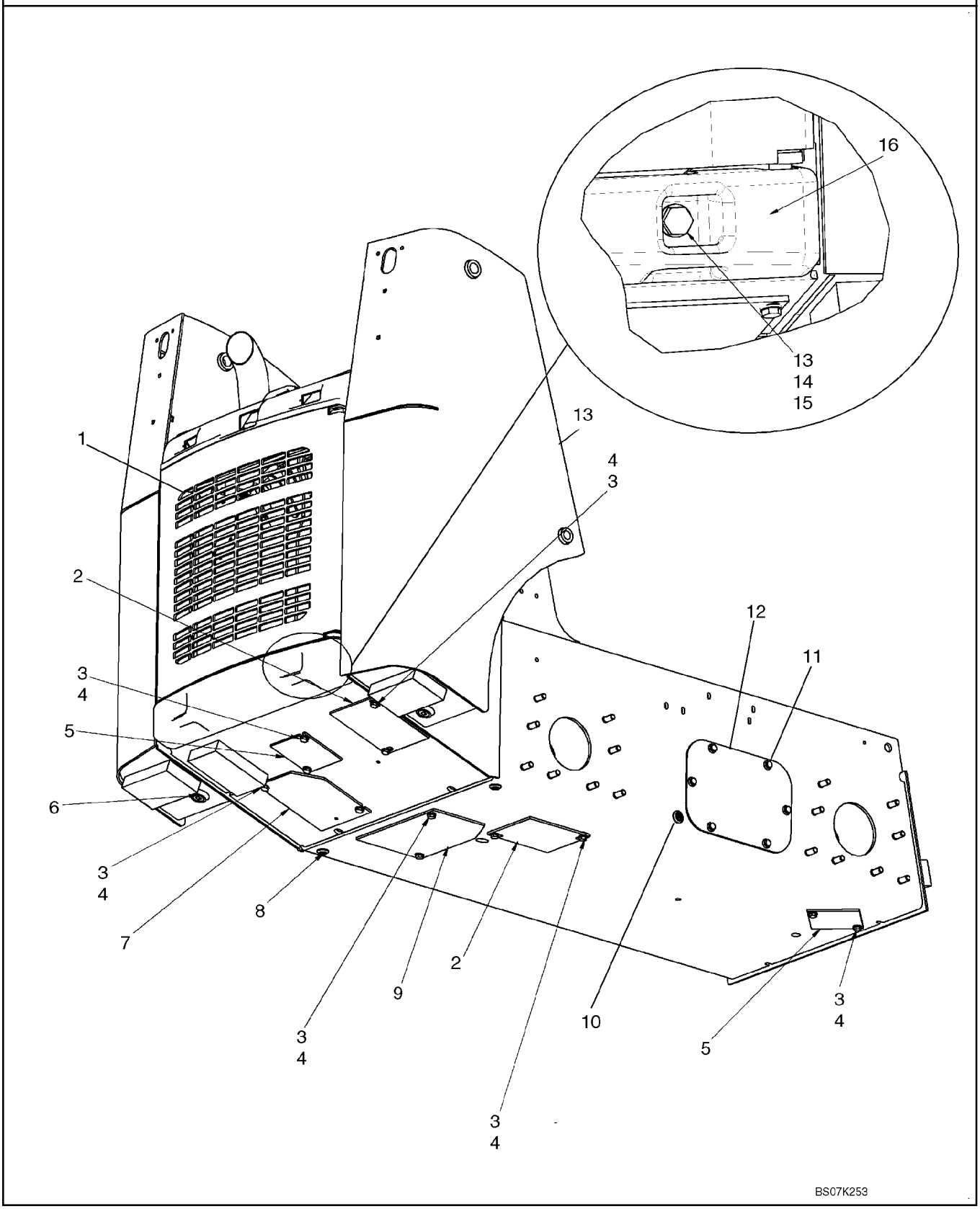

CHASSIS

REF	FN	PART NUMBER	YR/SN	QTY	DESCRIPTION
1		REF		1	INSTRUCTION, Standard Rear Door; See Fig. 09-18
1		REF		1	INSTRUCTION, Europe Louvered Rear Door; See Fig 09-23
2		87458642		2	PLATE, Plumbing Access Plate
3		86625255		16	WASHER, M13.5 x 24.5 x 3, HT
4		9824642		12	BOLT, Hex, M12 x 35, 10.9
5		H436914		2	PLATE, LARGE
6		87432221		2	PLUG, Magnetic Plug
7		87666074		1	PLATE, COVER, Plumbing Access Plate
8		236622		2	PLUG, 3/8 - 18 NPTF
9		87648094		1	PLATE, Oil Drain Cover
10		{647429}		2	Plug, 1/2 - 14 NPTF
11		87030508		12	BOLT, Hex Flg, M12 x 30, 10.9, Full Thd
12		87411208		2	PLATE, COVER
13		87617090		1	KIT, SERVICE, Frame; Incl Ref 6, 8, 10 And Fig 09-13 Ref 17 (Non Locking Cap), 18, Fuel Sender And Gasket
14		86625260		2	WASHER, M20 x 37.5 x 4, HT
15		86536985		2	NUT, LOCK, M20 x 2.5, Cl 10
16		87626717		1	WEIGHT, COUNTER, Bumper, Counterweight

09-14		p1	12/07

CHASSIS

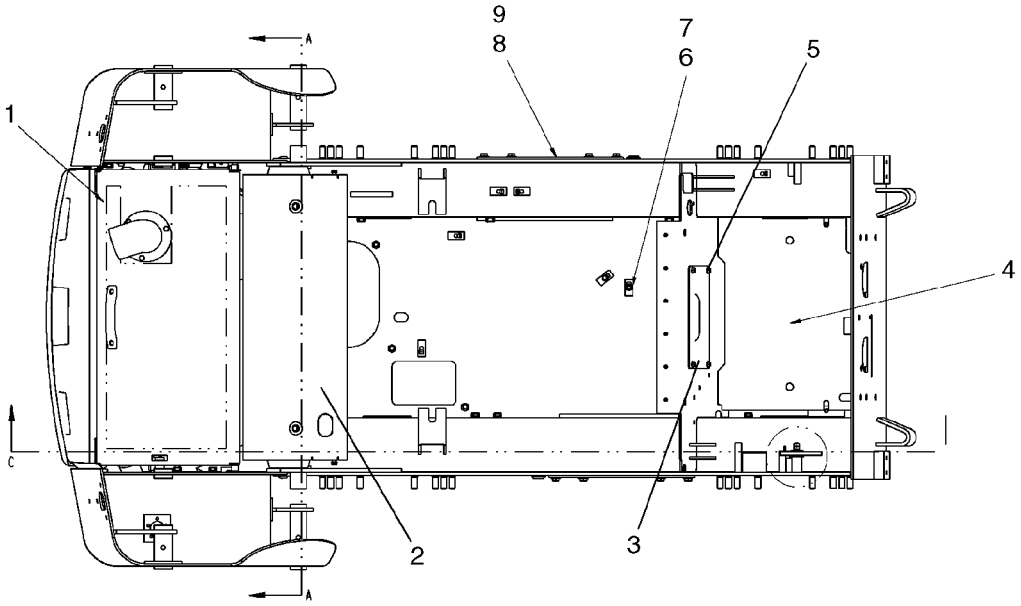

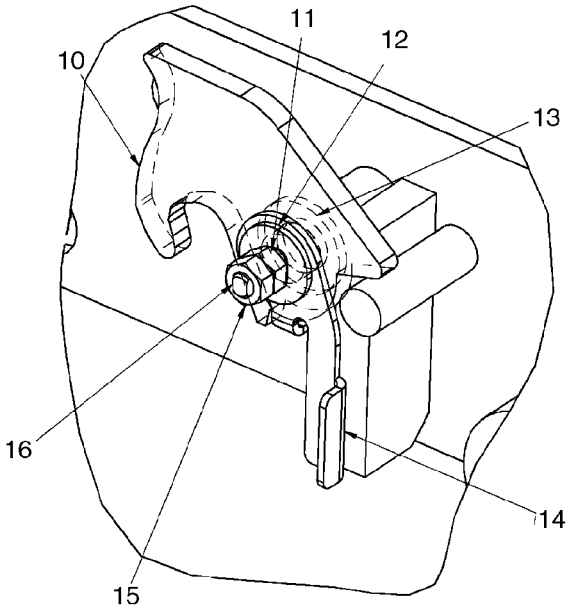

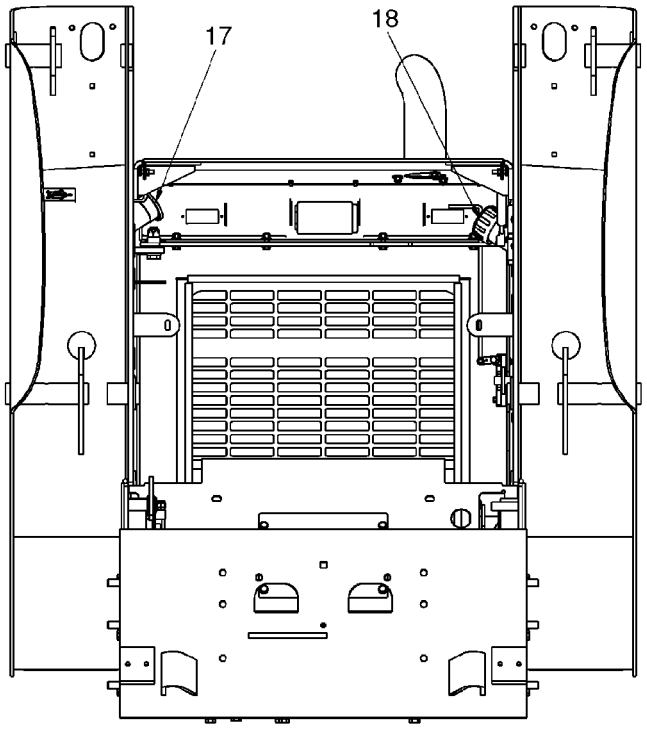

BS07K252

CHASSIS

REF	FN	PART NUMBER	YR/SN	QTY	DESCRIPTION
1		REF		1	INSTRUCTION, Rear Hood; See Fig. 09-20
2		{87661301}		1	Panel, Heat Shield Extension
3		87430679		1	PLATE, Cover Plate
4		{87659972}		1	Floor Plate - Tan
5		86545825		4	SCREW, SELF TAP, Hex Wash Hd, 5/16" x 5/8"
6		86508569		2	BOLT, Hex, M6 x 70, 8.8
7		87022737		2	SPACER
8		87030508		12	BOLT, Hex Flg, M12 x 30, 10.9, Full Thd
9		87411208		2	PLATE, COVER
10		390516A3		1	LATCH, ROPS Latch Plate
11		278332A1		1	WASHER
12		294967A1		1	WASHER
13		87381		1	WASHER, 3/4", SAE
14		294911A2		1	HOOK, Latch Return Plate
15		86500689		2	NUT, M10, Cl 10
16		294943A1		1	STUD, Latch Mounting Stud
17		H436887		1	CAP, FILLER, Fuel Cap, Non Locking
17		108925A1		1	CAP, FILLER, Fuel Cap, Locking; Incl 2 Keys
18		257448A1		1	CAP, Hydraulic Fill Cap

CONTROLLER - MOUNTING (PILOT CONTROL)

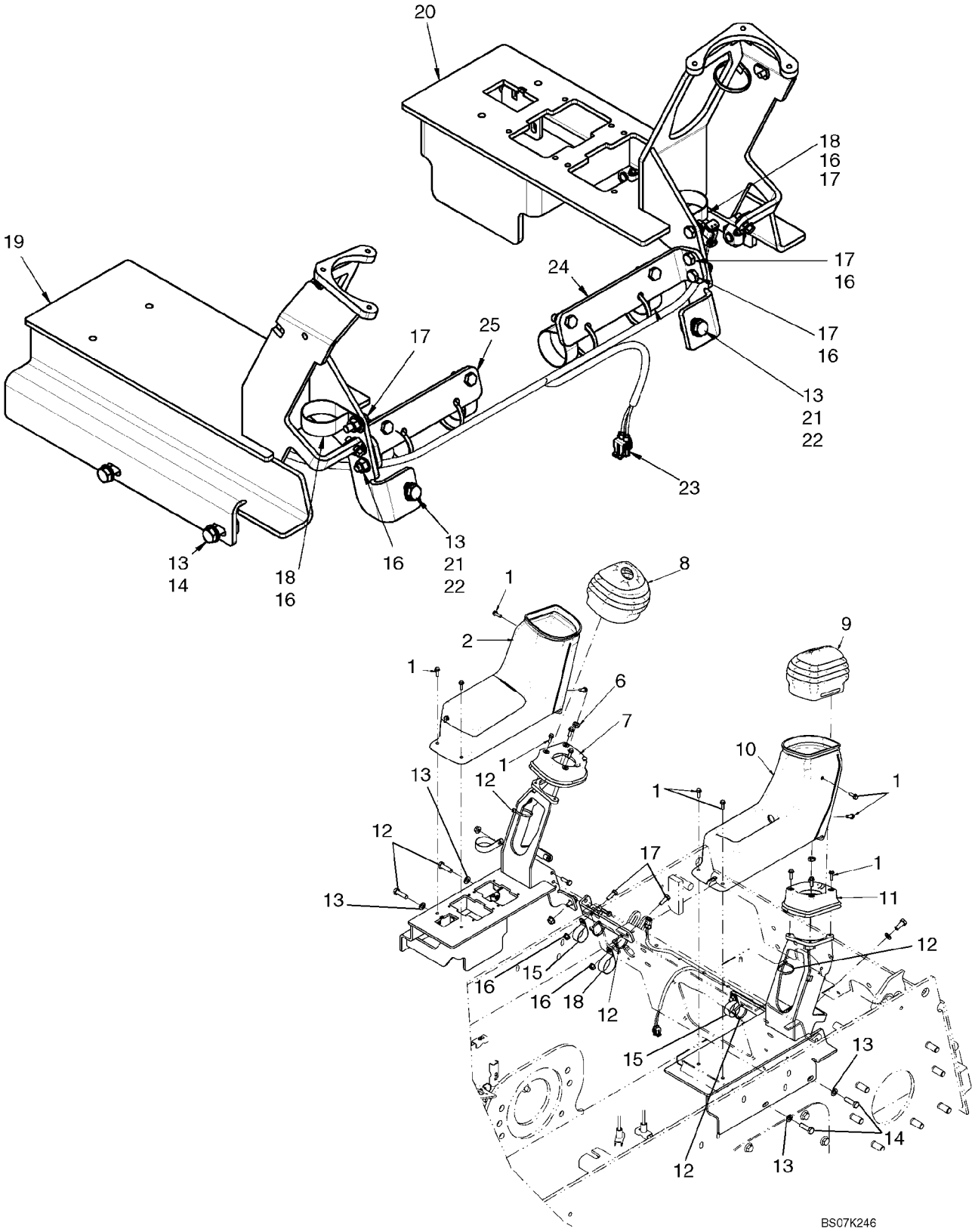

CONTROLLER - MOUNTING (PILOT CONTROL)

REF	FN	PART NUMBER	YR/SN	QTY	DESCRIPTION
1		87556251		14	SCREW, Screw, 1/4-20 X 3/4
2		87665545		1	CONSOLE, Console, LH
3		87647723		1	COVER, Fuse Cover
4		87568437		1	NUT, WING, Knob, Latch
5		236535A1		1	CLIP, ELECTRICAL, Clip, Latch
6		323238		2	NUT, Thin, M12 x 1.75, Cl 05
7		87646402		1	SEAL, RUBBER, Seal, LH
8		87568426		1	RUBBER SLEEVE, Boot, LH
9		87568427		1	RUBBER SLEEVE, Boot, RH
10		87665543		1	CONSOLE, Console, RH
11		87646401		1	SEAL, RUBBER, Seal, RH
12		L11541		6	STRAP, CABLE
13		86624176		6	WASHER, M10 x 20 x 2
14		9706704		4	BOLT, Hex, M10 x 35, 8.8, Full Thd
15		86637998		3	CLAMP, 1 1/2", Insul, 3/8" Bolt
16		86505868		10	NUT, M8, Flg Ser
17		43127		6	BOLT, Hex, M8 x 25, 8.8
18		603022		3	CLAMP, 1 3/4", Insul, 3/8" Bolt
19		NSS		1	NOT SERVICED SEPARATELY, Console, RH
20		NSS		1	NOT SERVICED SEPARATELY, Console, LH
21		43139		2	SCREW
22		43435		2	NUT, M10, Flg Ser
23		87568434		1	HARNESS, Pilot Harness
24		NSS		1	NOT SERVICED SEPARATELY, Hose Support, LH
25		NSS		1	NOT SERVICED SEPARATELY, Hose Support, RH

09-16		p1	12/07

LOADER & GROUND DRIVE CONTROL - RH

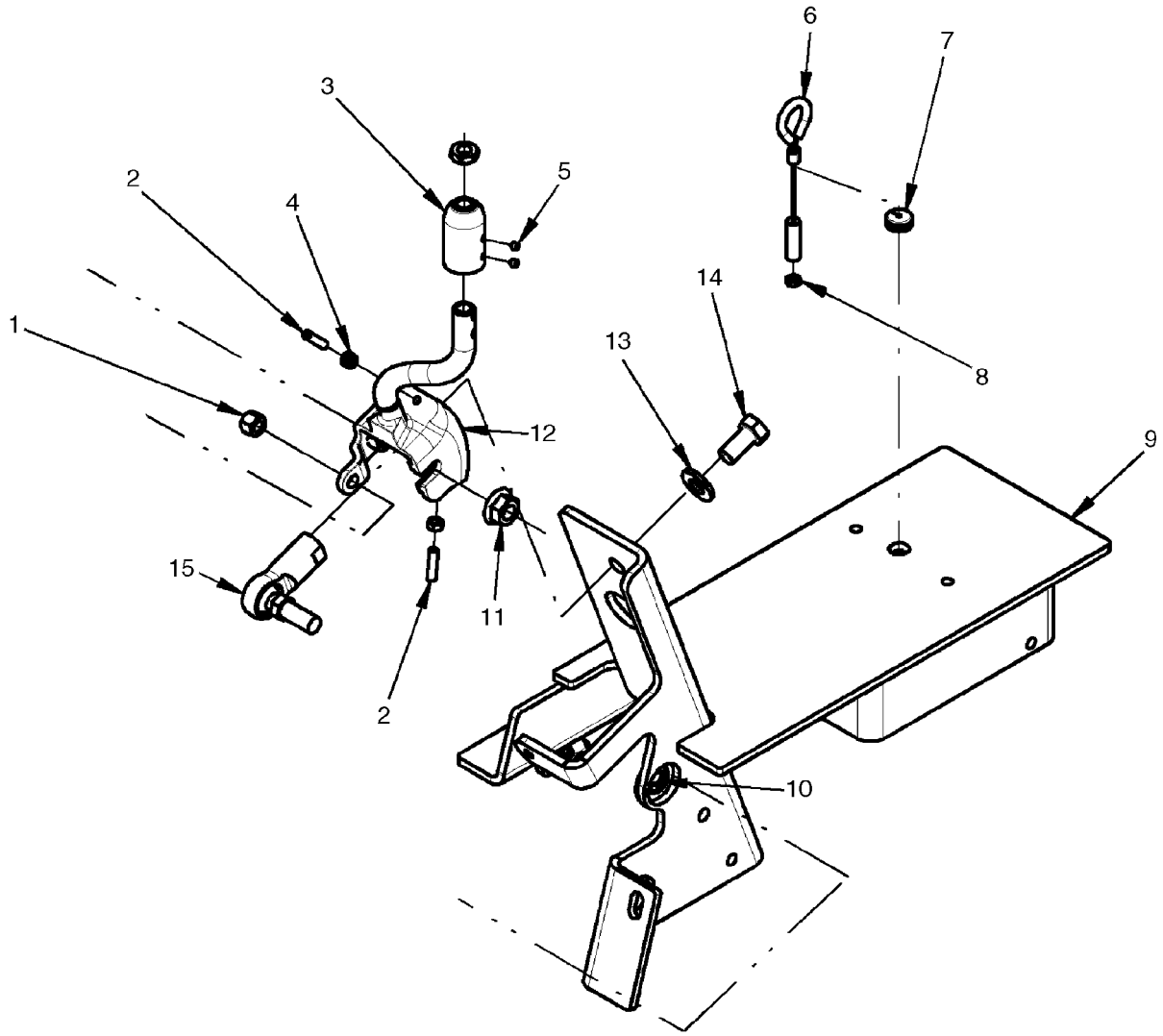

LOADER & GROUND DRIVE CONTROL - RH

REF	FN	PART NUMBER	YR/SN	QTY	DESCRIPTION
1		80855		4	NUT, LOCK, 3/8"-24, GC
2		405103A1		2	SCREW
3		{87662429}		1	Handle Mounting Adapter
4		86500688		5	NUT, M6, Cl 10
5		87564724		2	SCREW, Set Screw, #10-32 X 1/4
6		87462741		1	CABLE, Cable, Override
7		87036285		1	GROMMET, 1/8" ID x 9/16" Groove Dia, Str Cut
8		87825		1	NUT, #10-32
9		{87684388}		1	Frame, Control RH
10		87309725		4	RING, SNAP, Retaining Ring, External "E" Style #62
11		87033645		2	NUT, LOCK, Flg, 1/2"-20
12		{87662357}		1	Control Lever, RH
13		87364		2	WASHER, 1/2", SAE
14		87848		2	BOLT, Hex, 1/2"-20 x 1", G5, Full Thd
15		443241A1		1	BEARING

LOADER & GROUND DRIVE CONTROL - LH

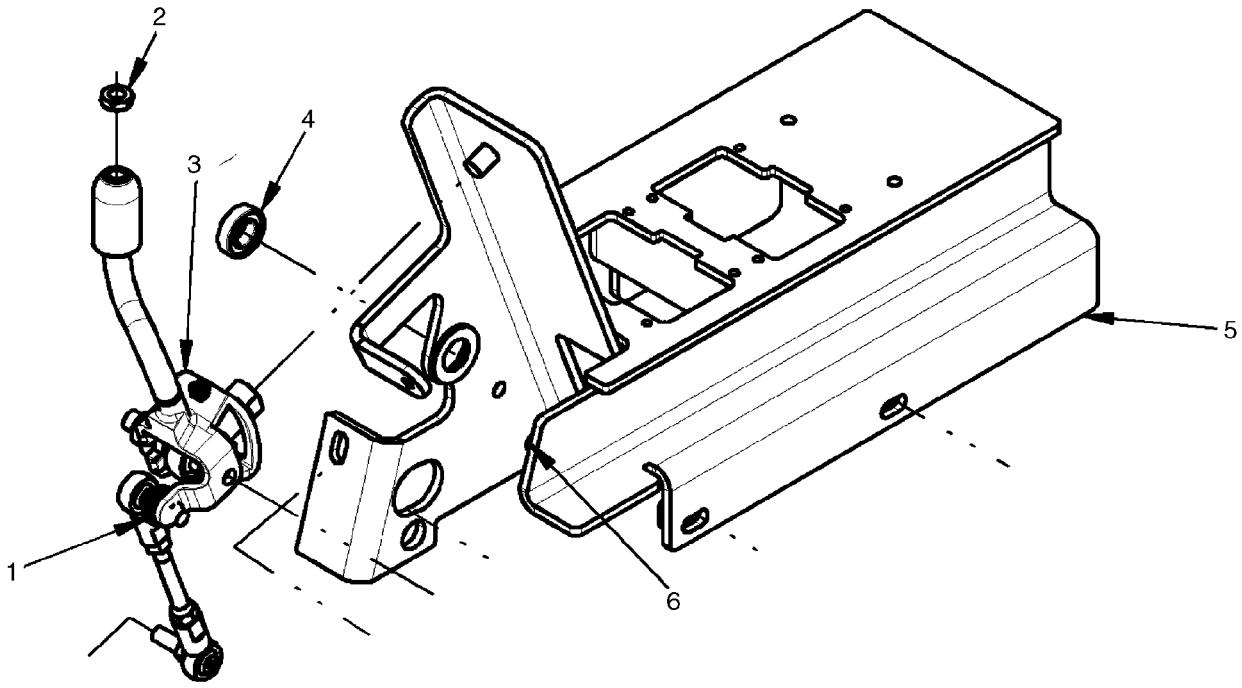

BS07J220

LOADER & GROUND DRIVE CONTROL - LH

REF	FN	PART NUMBER	YR/SN	QTY	DESCRIPTION
1		86639325		3	WASHER, M10 x 24.5 x 3, HT
2		323238		2	NUT, Thin, M12 x 1.75, Cl 05
3		{87662349}		1	Control Lever, LH
4		87458664		2	BEARING, BALL
5		{87684387}		1	Frame, Control LH
6		87030561		1	NUT, LOCK, M6 x 1, Cl 8

09-18		p1	12/07

LOADER & GROUND DRIVE CONTROL - LINKAGE

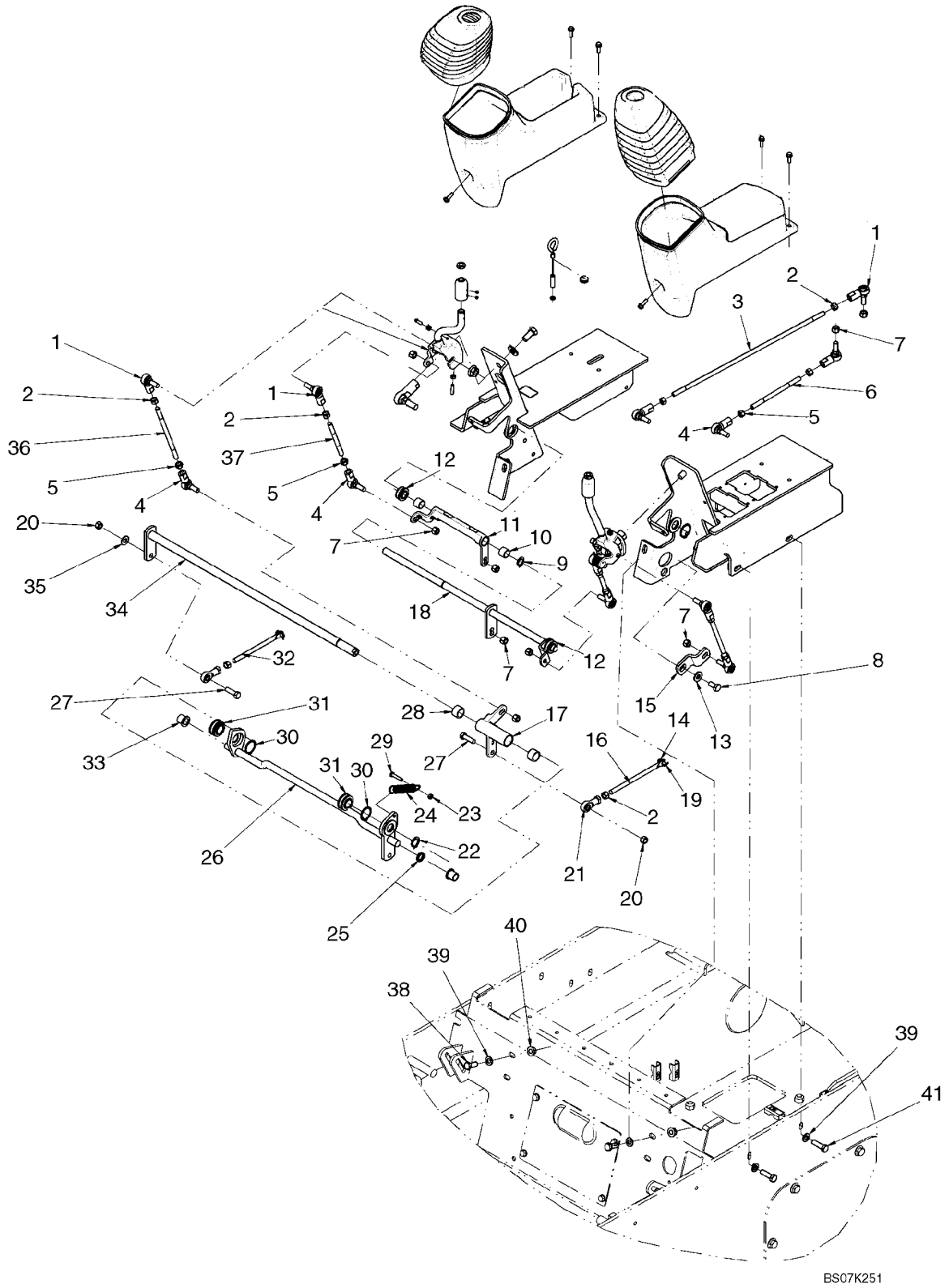

LOADER & GROUND DRIVE CONTROL - LINKAGE

REF	FN	PART NUMBER	YR/SN	QTY	DESCRIPTION
1		230425A1		6	BALL JOINT
2		86509310		8	NUT, 3/8"-24, G5
3		{87548973}		1	Linkage Rod, 439mm (17 9/32 in.) Length
4		230426A1		6	BALL JOINT
5		87030547		6	NUT, 3/8"-24, G5, LH
6		{87548972}		1	Linkage Rod, 148mm (5 13/16 in.) Length
7		80855		12	NUT, LOCK, 3/8"-24, GC
8		43138		1	SCREW, Hex, M10 x 20, 8.8, Full Thd
9		{87034506}		1	Retaining Ring, External, #62
10		409844A1		2	BEARING, NEEDLE, 15.88 ID X 20.64 OD X 15.9 Wide
11		367585A2		1	CRANK
12		409846A3		2	BEARING, NYLON, Spherical Bearing, 5/8 Shaft
13		86639325		3	WASHER, M10 x 24.5 x 3, HT
14		234726		2	PIN, CLEVIS, 1/4" x .770"
15		377410A2		1	LEVER
16		87458662		1	ROD
17		385783A3		1	CRANK
18		367583A4		1	LEVER ASSY.
19		D131983		2	PIN
20		9628503		2	NUT, 3/8"-16, G5
21		86500348		2	BALL JOINT
22		87034507		1	RING, SNAP, #75, Ext
23		86500688		5	NUT, M6, Cl 10
24		120952A1		1	SPRING
25		409856A1		1	SPACER
26		87458511		1	SHAFT
27		88011		2	BOLT, Hex, 3/8"-16 x 1 1/4", G5, Full Thd
28		409845A1		2	BEARING, NEEDLE, 19.05 ID X 25.40 OD X 15.9 Wide
29		43117		1	BOLT, Hex, M6 x 30, 8.8
30		{87034509}		4	Retaining Ring, External #118
31		409847A3		2	BEARING, NYLON, Spherical Bearing, 3/4 Shaft
32		87458660		1	ROD
33		367582A1		2	BUSHING, Flanged

09-18		p2	12/07

LOADER & GROUND DRIVE CONTROL - LINKAGE

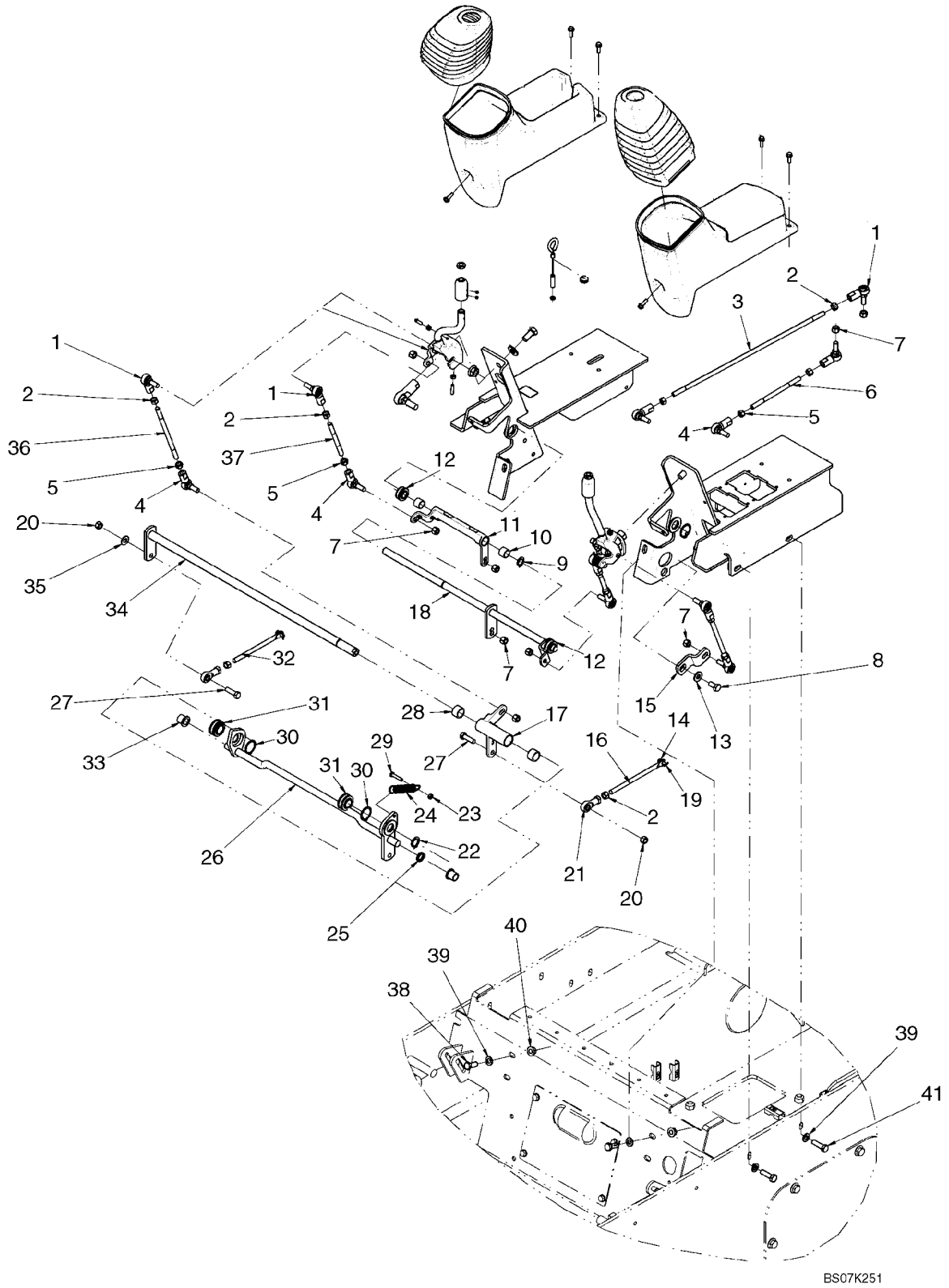

LOADER & GROUND DRIVE CONTROL - LINKAGE

REF	FN	PART NUMBER	YR/SN	QTY	DESCRIPTION
34		385784A2		1	ROD ASSY., Loader Control Rod
35		140045		1	WASHER, SPRING, Belleville, M10
36		180682A1		2	STEM, Linkage Rod, 185.5mm (7 5/16 in.) Length
37		249367A2		2	PIN, LARGE, Rod, 115mm (4 33/64 in.) Length
38		43139		2	SCREW
39		86624176		6	WASHER, M10 x 20 x 2
40		43435		2	NUT, M10, Flg Ser
41		9706704		4	BOLT, Hex, M10 x 35, 8.8, Full Thd

CONTROLS - AUXILIARY HYDRAULICS

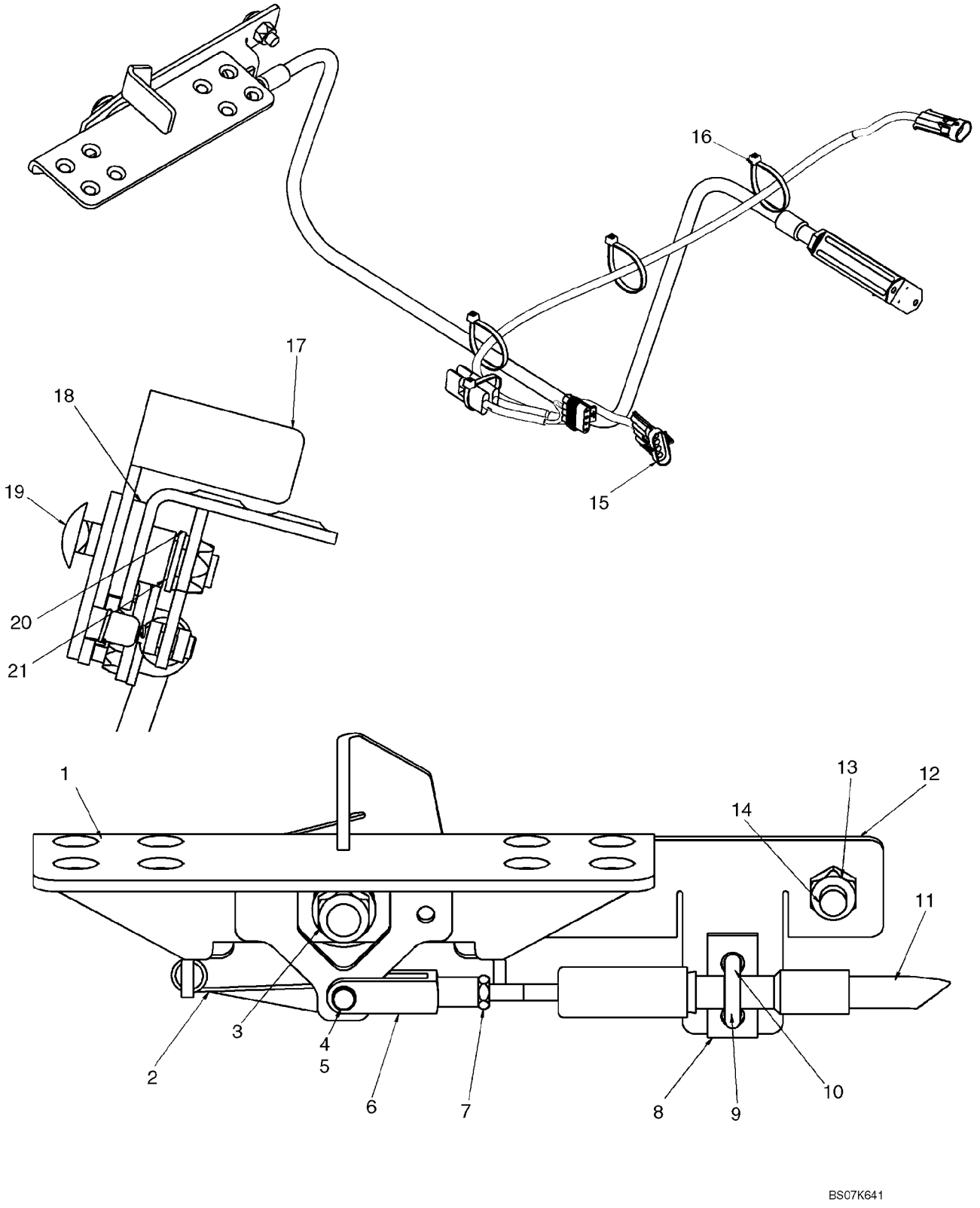

CONTROLS - AUXILIARY HYDRAULICS

REF	FN	PART NUMBER	YR/SN	QTY	DESCRIPTION
1		87423833		1	PEDAL ASSY.
2		302960A2		1	SPRING
3		412672		1	NUT, LOCK, M12 x 1.75, Cl 10
4		D131983		1	PIN
5		234726		1	PIN, CLEVIS, 1/4" x .770"
6		86520436		1	CLEVIS, ADJUSTABLE, 1/4"-28
7		86976064		1	NUT, Jam, 1/4"-28, G5
8		H373779		1	PLATE, LARGE, Spacer
9		87442439		1	ROD
10		86512440		2	NUT, LOCK
11		87423856		1	CABLE ASSY.
12		NSS		1	NOT SERVICED SEPARATELY, Mounting Plate
13		86512554		1	NUT, LOCK, M10 x 1.5, Cl 10
14		86512446		1	BOLT, CARRIAGE, Short NK, M10 x 30, Cl8.8, Full Thd
15		87715731		1	HARNESS, Auxiliary Interlock Harness; Incl 15A
15A		774735		1	DIODE
16		L11541		3	STRAP, CABLE
17		87446614		1	LEVER, Pedal Lock Lever
18		283839A1		1	SPACER, Rubber Spacer
19		87033290		1	BOLT, CARRIAGE, Short NK, M12 x 55, Cl8.8
20		140018		1	WASHER, M12 x 24 x 2.5
21		L14781		1	BUSHING

09-20		p1	12/07

HOOD

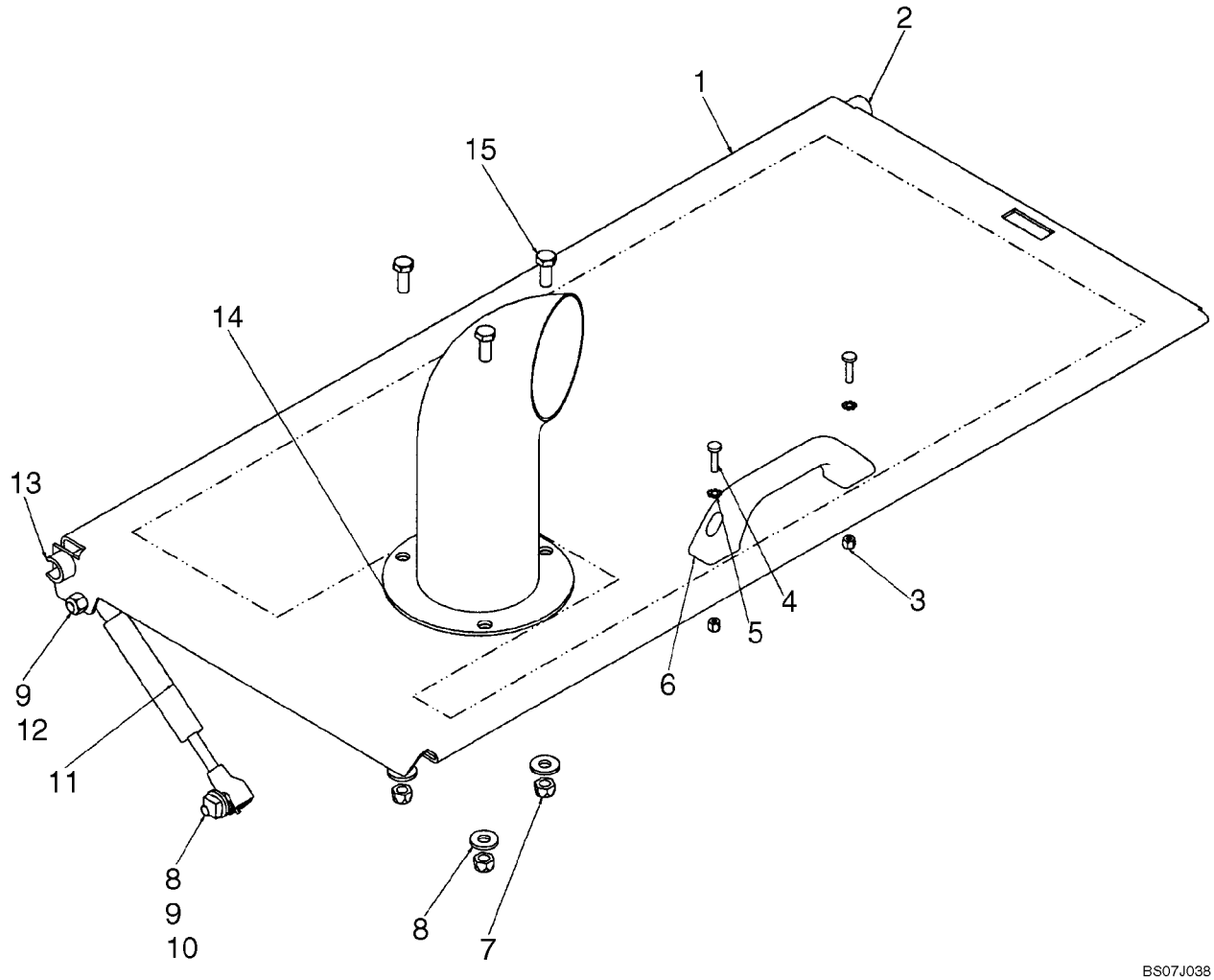

HOOD

REF	FN	PART NUMBER	YR/SN	QTY	DESCRIPTION
1		{87636798}		1	Frame, Rear Hood
2		435396A1		1	SPACER
3		86639241		2	NUT, LOCK, M5 x .8, Cl 8
4		86511827		2	SCREW, Cross Pan Hd, M5 x 20
5		86625264		2	WASHER, LOCK, Ext Tooth, M5
6		406256A1		1	HANDLE
7		9628098		3	NUT, LOCK, M8 x 1.25, Cl 10
8		87015284		4	WASHER, M8 x 21.5 x 2.5, HT
9		189609A1		2	STUD
10		229197A1		1	NUT
11		400473A1		1	CYLINDER ASSY.
12		412250		1	NUT, LOCK, M8 x 1.25, Cl 8
13		87429698		1	SPACER
14		87381264		1	PIPE
15		120104		3	SCREW, Hex, M8 x 20, 8.8

09-21		p1	12/07

HOOD - AIR CONDITIONING

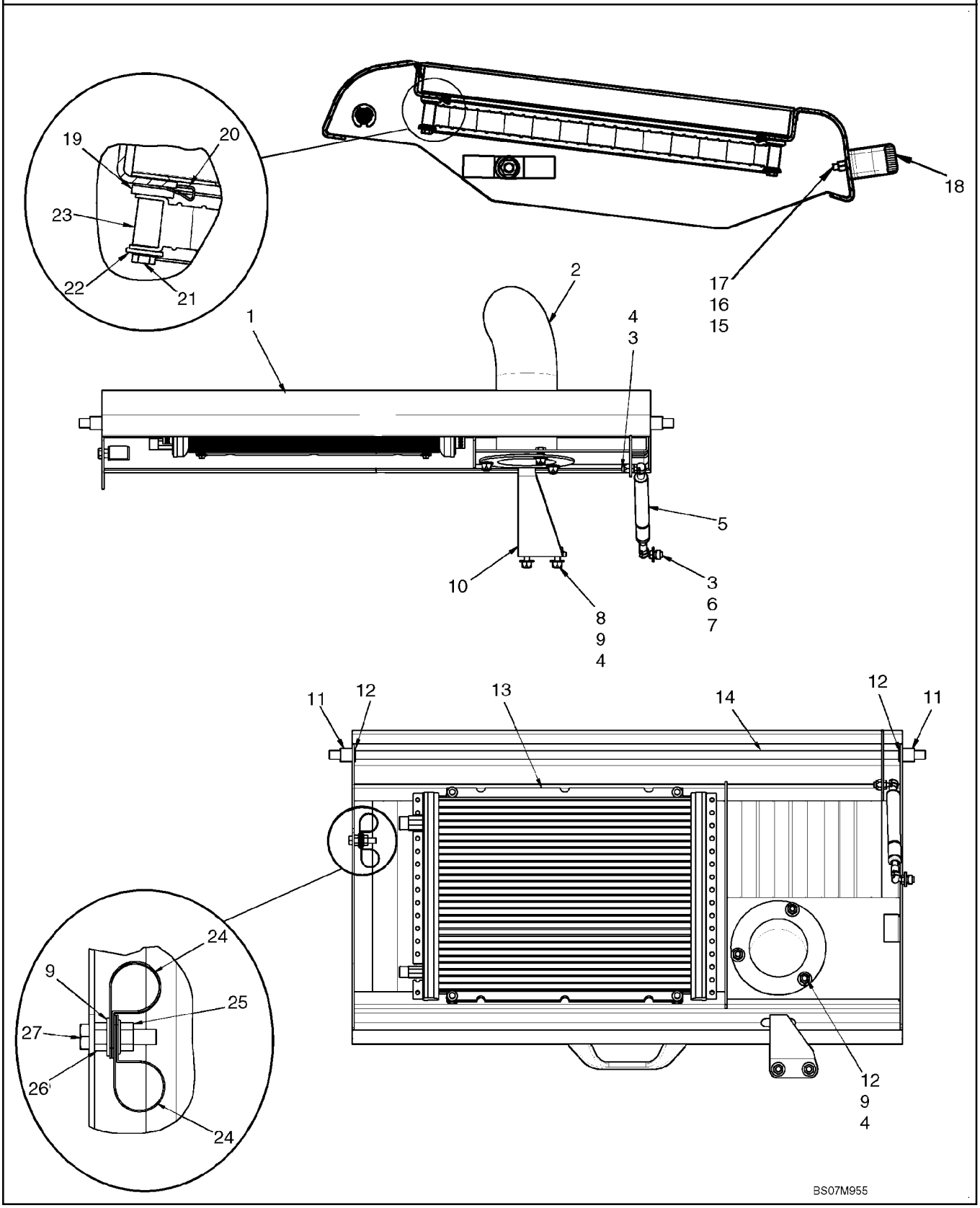

HOOD - AIR CONDITIONING

REF	FN	PART NUMBER	YR/SN	QTY	DESCRIPTION
1		87707135		1	DOOR, Rear Hood, Air Conditioning
2		87381264		1	PIPE, Exhaust Extension
3		189609A1		2	STUD, Ball Stud
4		9628098		6	NUT, LOCK, M8 x 1.25, Cl 10
5		87449854		1	SUPPORT
6		87015284		1	WASHER, M8 x 21.5 x 2.5, HT
7		229197A1		1	NUT
8		43127		2	BOLT, Hex, M8 x 25, 8.8
9		86625263		8	WASHER, M8 x 20 x 1.6
10		87459076		1	BAR, LOCKING
11		87305403		2	SPACER
12		9635806		2	CIRCLIP, #50, .392" Dia, E-Type
13		87563692		1	CONDENSER, Air Conditioning Condensor
14		87459075		1	ROD
15		86639241		2	NUT, LOCK, M5 x .8, Cl 8
16		86625264		2	WASHER, LOCK, Ext Tooth, M5
17		86511827		2	SCREW, Cross Pan Hd, M5 x 20
18		406256A1		1	HANDLE
19		86592710		4	WASHER, M6 x 17 x 3
20		87301324		4	NUT, M5, U
21		86025725		4	BOLT, Hex, M5 x 40, 8.8
22		87013357		4	WASHER, M5 x 15 x 1.6
23		87574372		4	SPACER
24		9827902		2	CLAMP, 1", Insul, 3/8" Bolt
25		9804277		1	NUT, M8 x 1.25, Flg, Cl 8
26		9706690		1	NUT, M8, Cl 8
27		300381		1	BOLT, Hex, M8 x 35, 8.8

09-22		p1	12/07

REAR DOOR

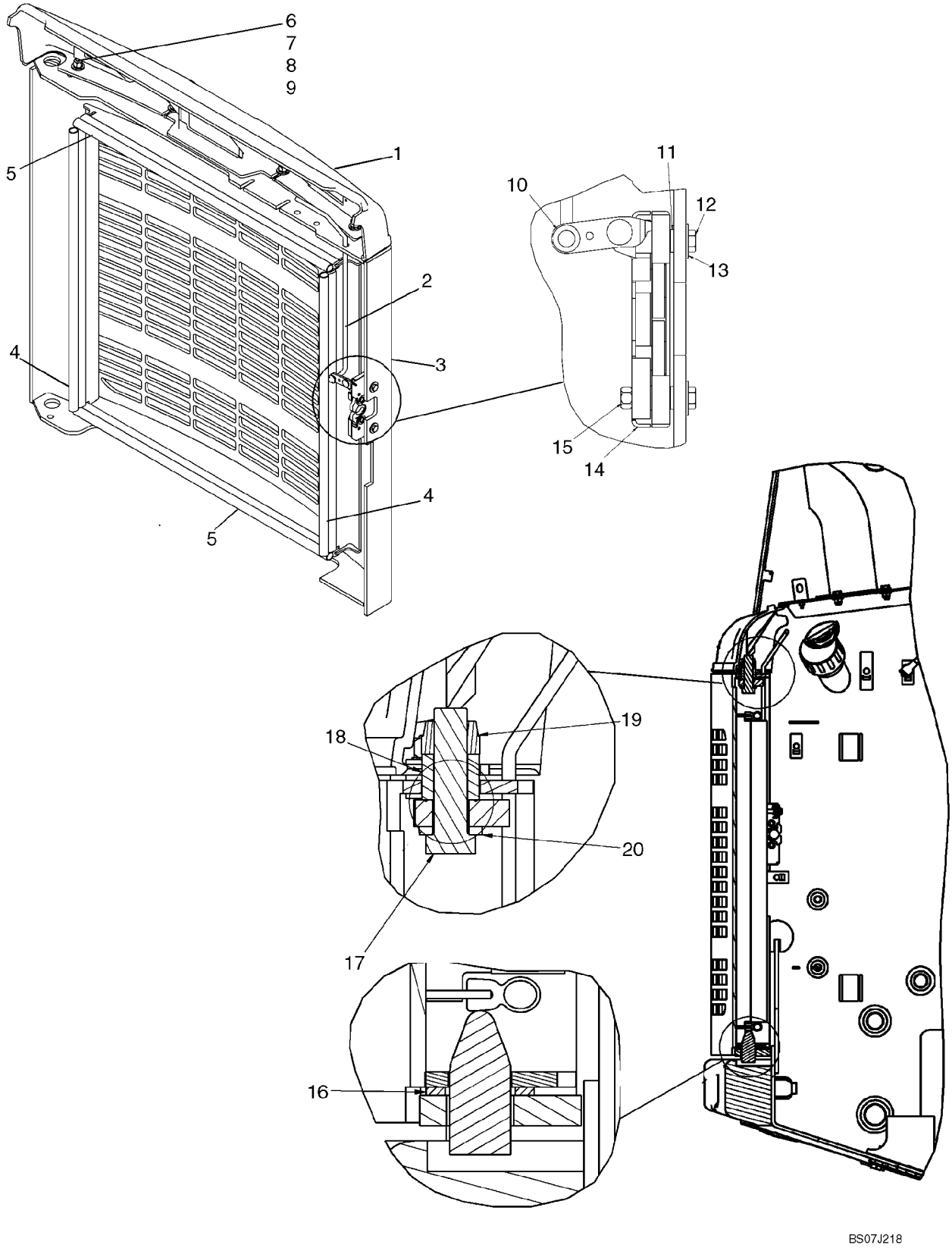

REAR DOOR

REF	FN	PART NUMBER	YR/SN	QTY	DESCRIPTION
1		87461604		1	FAIRING, LIGHT, Fairing, Rear Door Top
2		87440124		1	ROD, Latch Pull Rod
3		87660800		1	DOOR, Rear Door
4		{87648128}		2	Bulb Seal, 562mm (22 1/8 in.)
5		{87578980}		2	Bulb Seal, 590mm (23 7/32 in.)
6		43128		4	BOLT, Hex, M8 x 30, 8.8
7		86632601		4	WASHER, LOCK, Ext Tooth, M8
8		412250		4	NUT, LOCK, M8 x 1.25, Cl 8
9		87015284		12	WASHER, M8 x 21.5 x 2.5, HT
10		380751A1		1	NUT
11		86588450		2	WASHER, M6
12		86977789		2	BOLT, Hex, M6 x 35, 8.8
13		86624182		2	WASHER, M6 x 18 x 1.6
14		87437076		1	LATCH
15		87030561		2	NUT, LOCK, M6 x 1, Cl 8
16		248988A1		1	WASHER, Rear Door Thrust Washer
17		9828248		1	BOLT, Hex, M16 x 60, 10.9
18		248461A1		1	BUSHING, LARGE, Door Hinge Bushing
19		86512555		1	NUT, LOCK, M16 x 2, Cl 10
20		86625266		1	WASHER, M17.5 x 30 x 4, HT

REAR DOOR - LOUVERED (EUROPE)

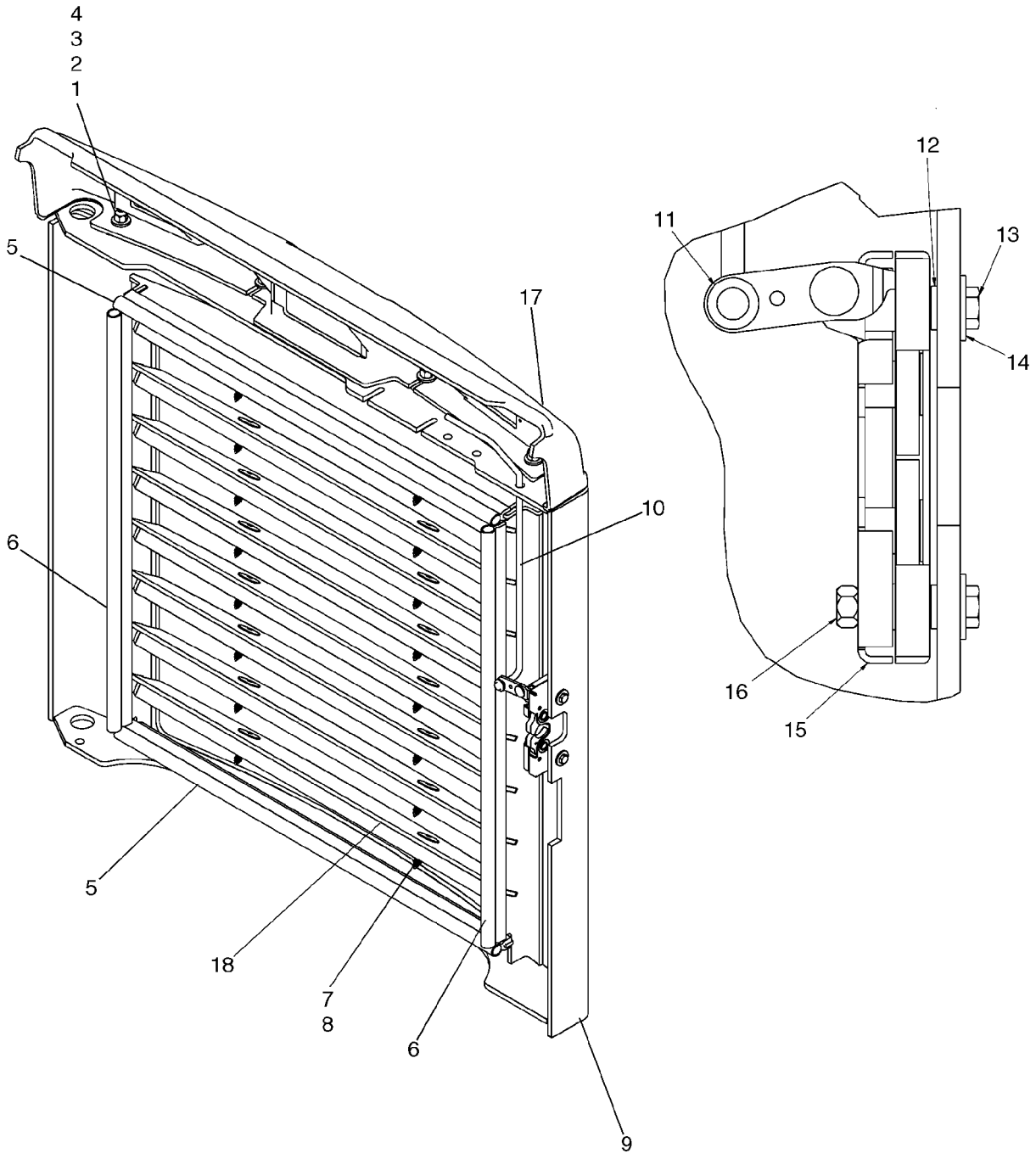

REAR DOOR - LOUVERED (EUROPE)

REF	FN	PART NUMBER	YR/SN	QTY	DESCRIPTION
1		43128		4	BOLT, Hex, M8 x 30, 8.8
2		86632601		4	WASHER, LOCK, Ext Tooth, M8
3		412250		4	NUT, LOCK, M8 x 1.25, Cl 8
4		87015284		8	WASHER, M8 x 21.5 x 2.5, HT
5		{87578980}		2	Bulb Seal, Top And Bottom
6		{87648128}		2	Bulb Seal, Side
7		348452A1		16	SCREW
8		348434A1		16	WASHER
9		87671495		1	DOOR, Euro Louvered Door
10		87440124		1	ROD, Latch Pull Rod
11		380751A1		1	NUT
12		86588450		2	WASHER, M6
13		86977789		2	BOLT, Hex, M6 x 35, 8.8
14		86624182		2	WASHER, M6 x 18 x 1.6
15		87437076		1	LATCH
16		87030561		2	NUT, LOCK, M6 x 1, Cl 8
17		87461604		1	FAIRING, LIGHT
18		{87671496}		8	Sound Pad

LOCK - REAR DOOR

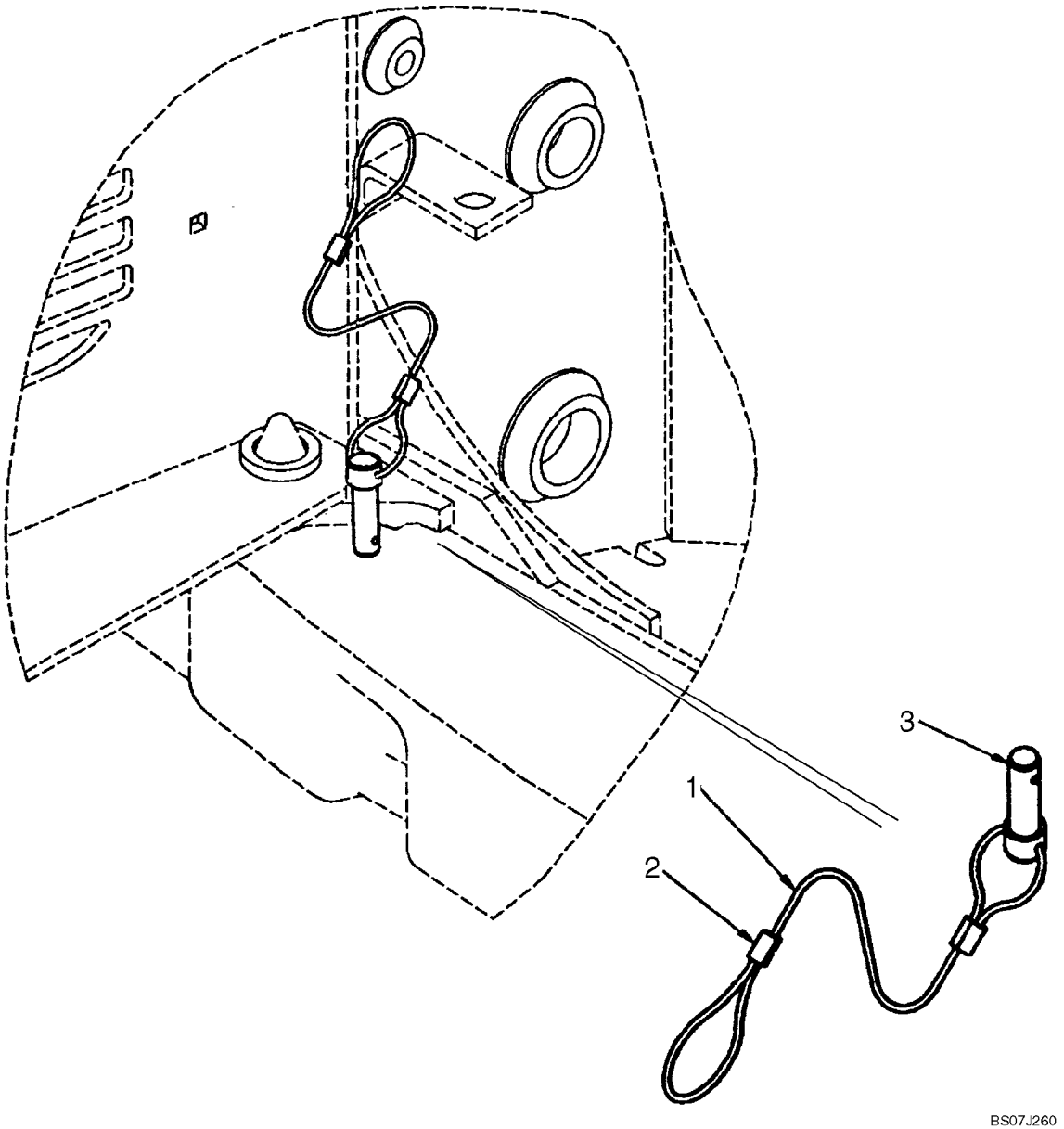

LOCK - REAR DOOR

REF	FN	PART NUMBER	YR/SN	QTY	DESCRIPTION
1		297245A1		1	CABLE, Rear Door Lock; Incl. 2 - 4
2		297244A1		1	CABLE
3		297246A1		2	SLEEVE
4		H439276		1	PIN, LARGE

09-25		p1	12/07

CAB - FRAME AND SEAT BAR

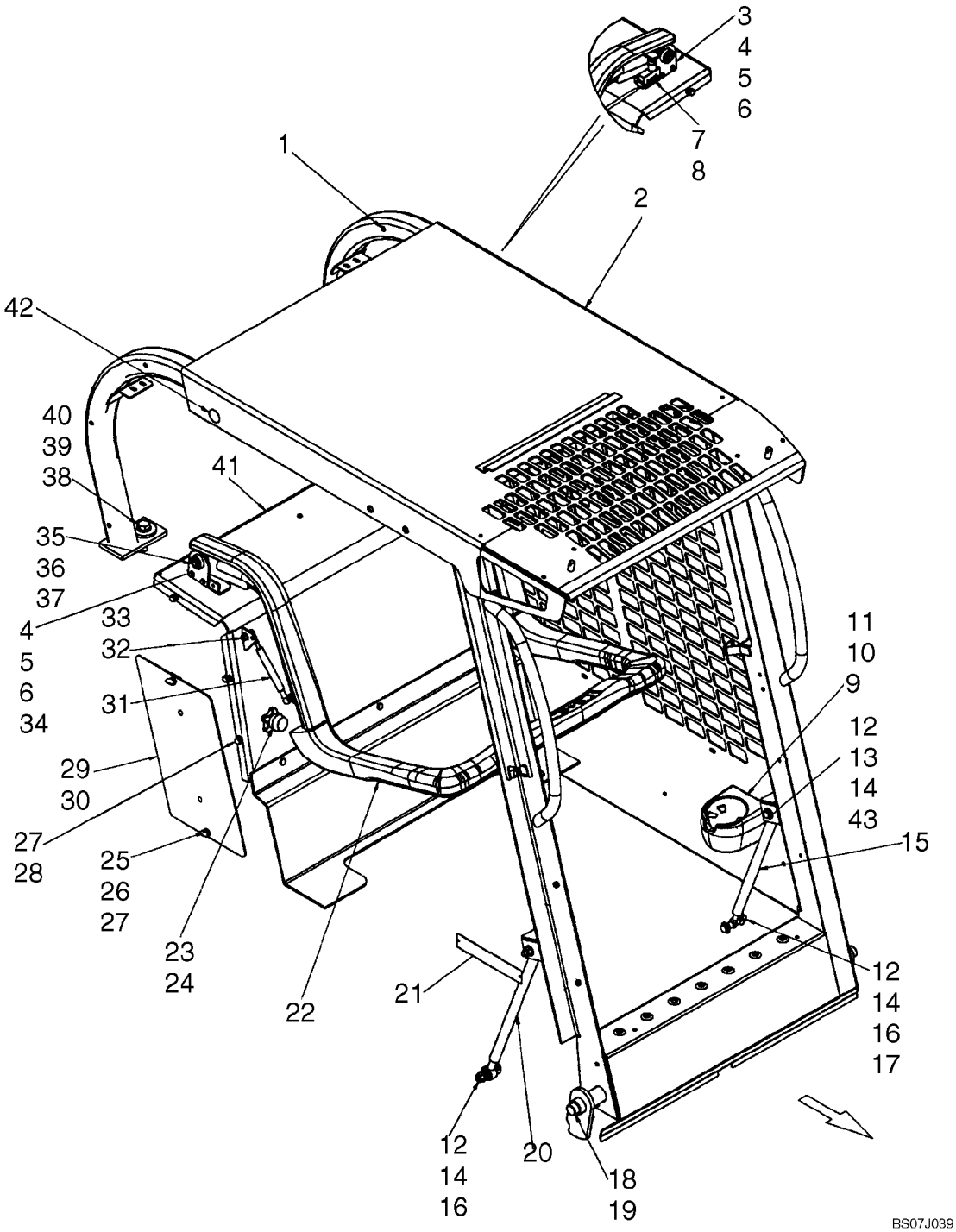

CAB - FRAME AND SEAT BAR

REF	FN	PART NUMBER	YR/SN	QTY	DESCRIPTION
1		419434A1		16	INSERT, Threaded Insert, M6
2		87635242		1	KIT, SERVICE, Cab, ROPS; Incl ROPS Structure, (1) Decal - Exiting, (1) Decal - Warning, General Instructions, (1) ROPS Model And Approval Plate
3		87645119		1	PLATE, PIVOT, Seat Bar Pivot, LH
4		120100		4	BOLT, Hex, M6 x 20, 8.8
5		86511444		4	NUT, M6, Flg Ser
6		86588450		4	WASHER, M6
7		87051110		1	SWITCH, DOOR, Seat Bar Switch
8		H435814		1	U-BOLT
9		{87672170}		1	Cup Holder
10		86637935		2	BOLT, Hex, 1/4"-20 x 1", G8, Full Thd
11		87016587		2	WASHER, 1/4"
12		100037		4	NUT, M10 x 1.5, Cl 8
13		83931335		2	BOLT, Hex, M10 x 75, 8.8
14		86625253		8	WASHER, M11 x 24 x 2
15		376669A1		1	GAS STRUT, ROPS Pivot Assist
15		87706925		1	KIT, SERVICE, Kit, Gas Strut; Incl 14 - 17 And 43
16		120070		2	BOLT, Hex, M10 x 60, 8.8
17		254697A1		2	SPACER, Pivot Spacer
18		373836A1		1	PIN, PIVOT
19		827695C1		2	RING
20		282002A2		1	GAS STRUT, ROPS Pivot Assist
21		NSS		1	NOT SERVICED SEPARATELY, ROPS Plate, Model And Approval
22		REF		1	INSTRUCTION, Seat Restraint; See Fig. 09-39
23		{87639912}		2	Knob
24		{87639914}		2	Seat Bar Stop
25		442856A1		4	WASHER
26		408117A2		4	SCREW, Thumb Screw, M8
27		140016		10	WASHER, M8 x 16 x 1.6
28		43128		6	BOLT, Hex, M8 x 30, 8.8
29		86625127		4	PLUG, Dome, .375" hole, Nylon
30		87460732		2	PANEL, Access Panel
31		87639899		1	CYLINDER, Seat Bar; Gas Strut

CAB - FRAME AND SEAT BAR

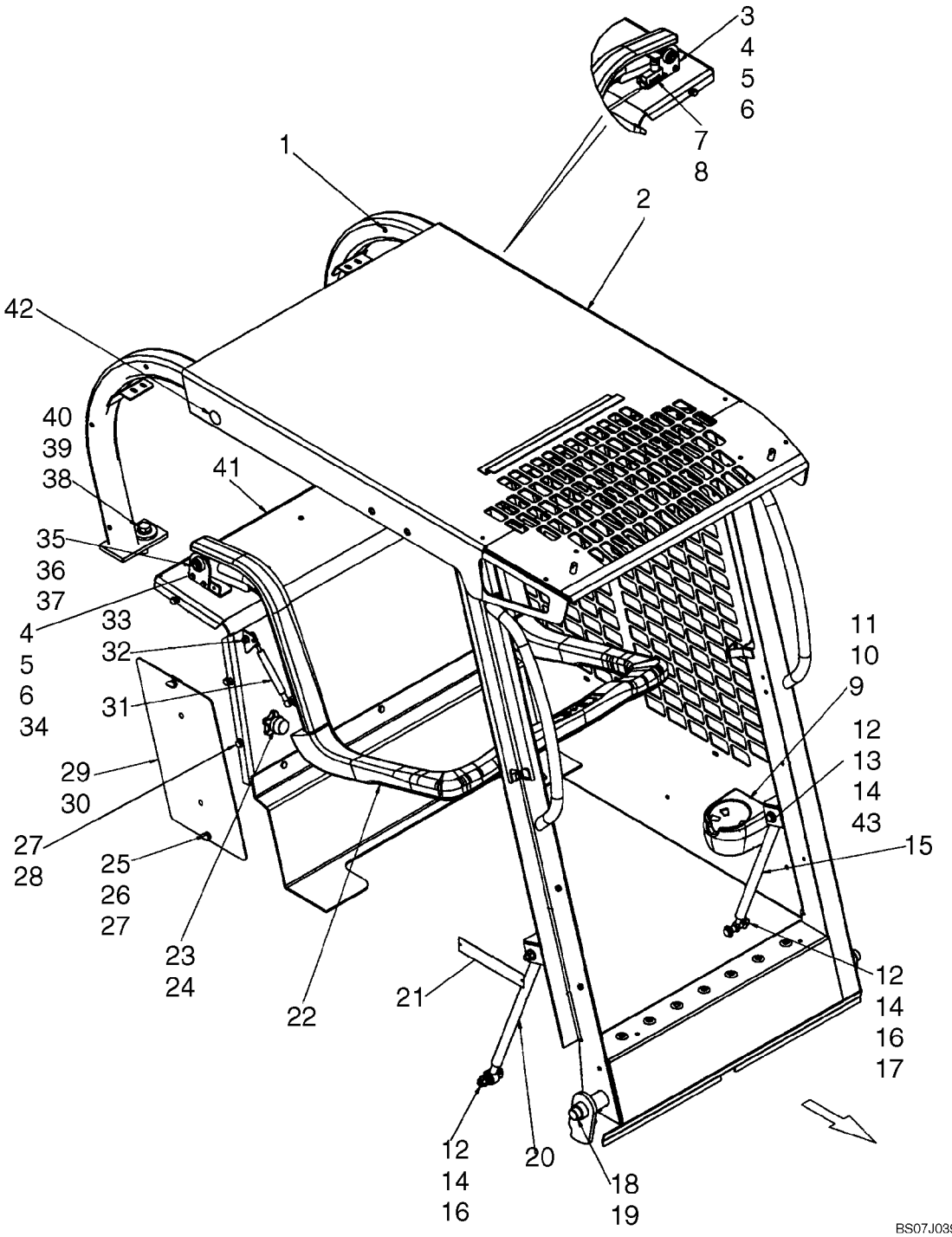

CAB - FRAME AND SEAT BAR

REF	FN	PART NUMBER	YR/SN	QTY	DESCRIPTION
32		86505868		11	NUT, M8, Flg Ser
33		189609A1		2	STUD, Metric Ball Stud, M8 X 1.25 Thd
34		{87645115}		1	Seat Bar Pivot, RH
35		87620895		2	BUSHING
36		86632589		2	WASHER
37		D143415		2	RING
38		86625266		2	WASHER, M17.5 x 30 x 4, HT
39		391703A2		2	WASHER
40		9828248		2	BOLT, Hex, M16 x 60, 10.9
41		{87668682}		1	Shield, Gray
42		86625129		2	PLUG, Dome, 1.000" hole, Nylon
43		254698A1		2	SPACER

CAB DOOR - MOUNTING

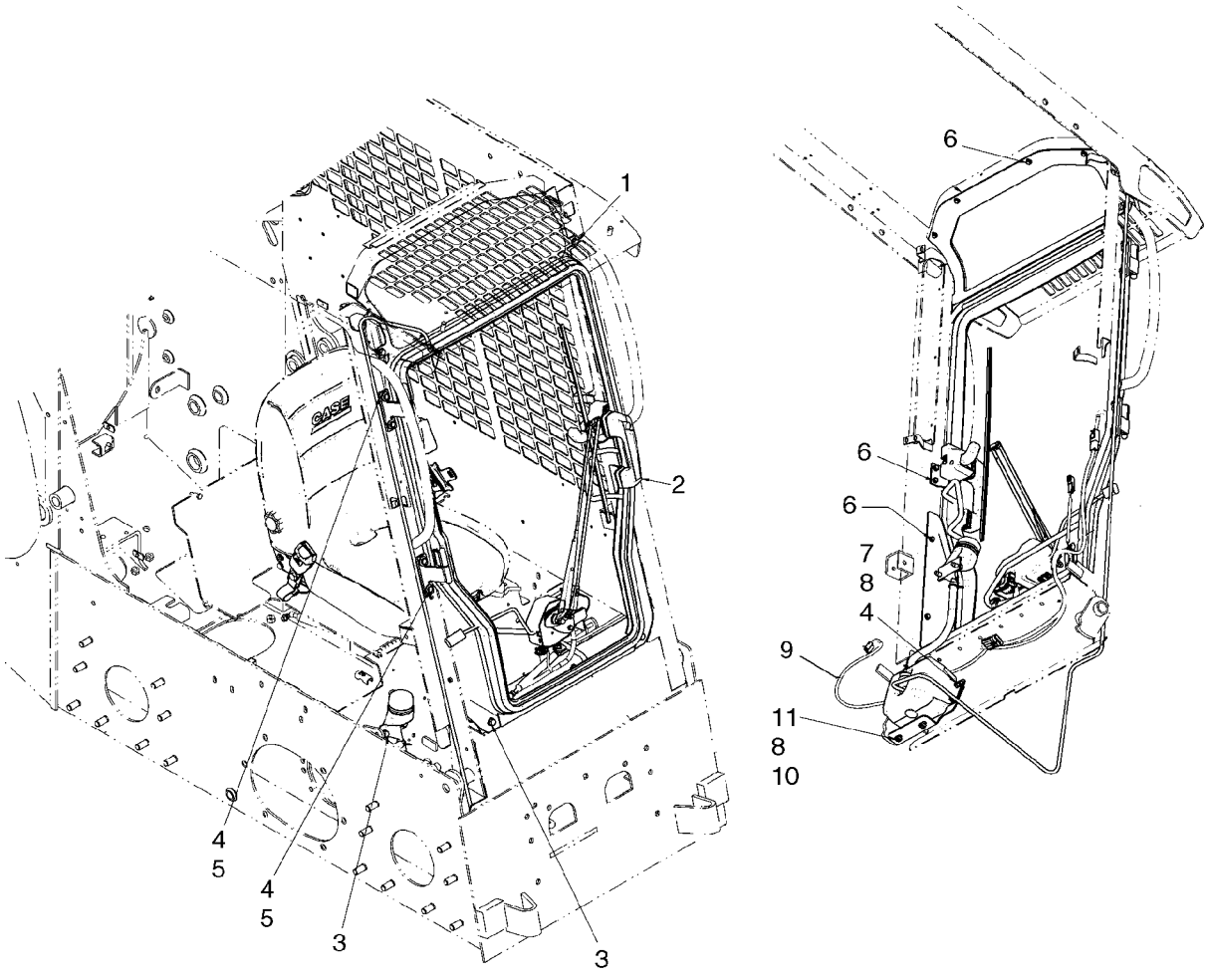

CAB DOOR - MOUNTING

REF	FN	PART NUMBER	YR/SN	QTY	DESCRIPTION
1		9804258		2	BOLT, Hex Flg, M8 x 20, 8.8
		87635322		1	KIT, SERVICE, Kit, Front Door; Incl 1 - 11
2		87627051		1	DOOR, See Fig. 09-27
3		637964		4	SCREW, SELF TAP
4		120104		8	SCREW, Hex, M8 x 20, 8.8
5		86639313		4	WASHER, M8 x 20 x 1.6
6		87015862		10	BOLT, Hex Flg, M6 x 20, 8.8, Full Thd
7		43362		4	NUT, M8, Cl 10
8		86624184		10	WASHER, M8 x 16 x 1.6
9		87659212		1	HARNESS, Door Jumper Harness
10		229197A1		2	NUT
11		120103		2	BOLT, Hex, M8 x 16, 8.8

CAB DOOR - WASHER SYSTEM

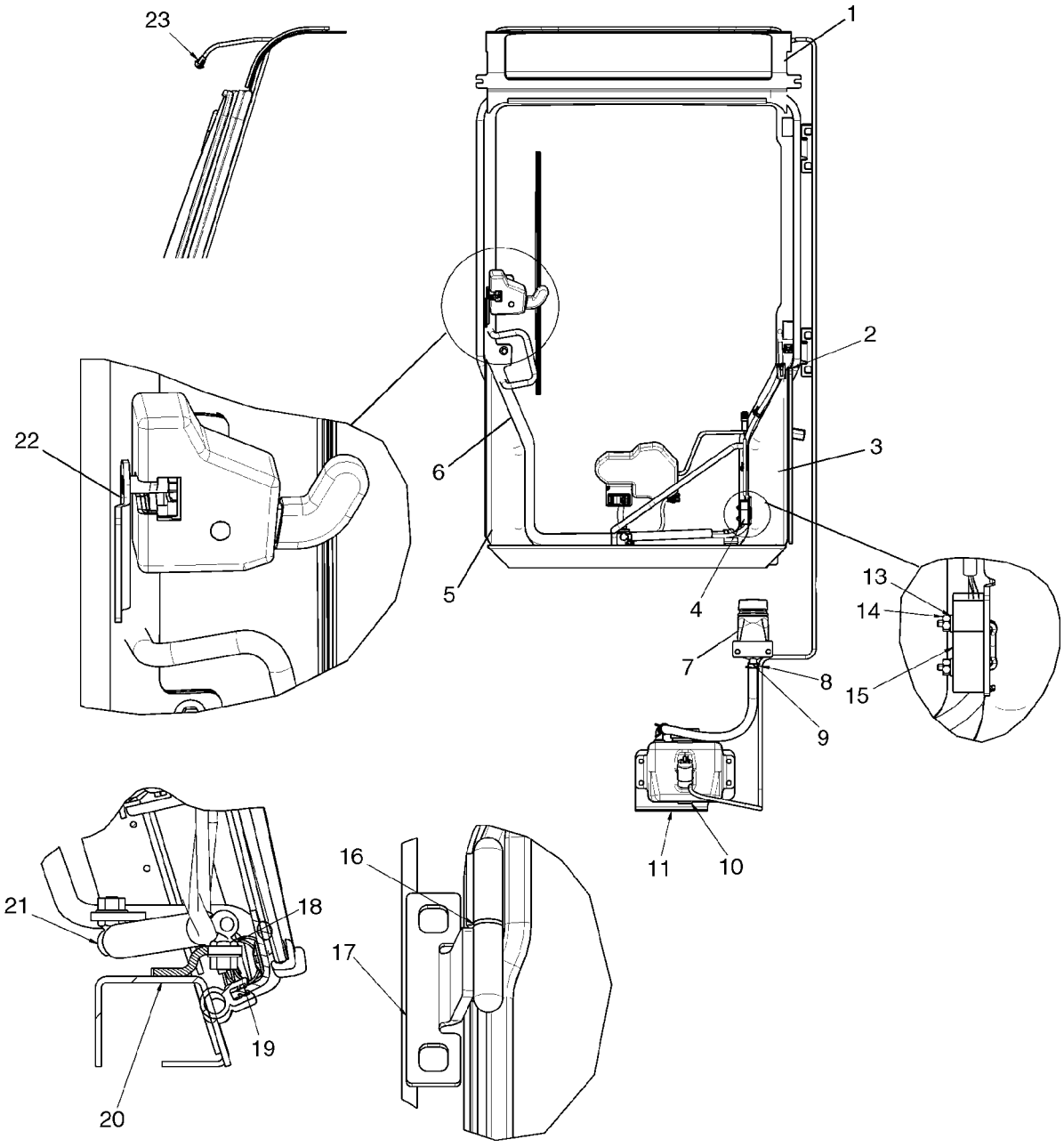

CAB DOOR - WASHER SYSTEM

REF	FN	PART NUMBER	YR/SN	QTY	DESCRIPTION
1		REF		1	INSTRUCTION, Visor; See Fig 09-29
2		{87669915}		1	Spacer Plate, Black
3		{87717215}		1	Door Bracket, Lower RH
4		{87680073}		1	U-Bolt, Switch Mount
5		{87717210}		1	Door Bracket, Lower LH
6		87627706		1	DOOR, See Fig 09-28
7		87655055		1	FILLER, Remote Washer Fill
8		{87712606}		1	Windshield Washer Tubing
9		{87712605}		1	Hose, Remote Fill
10		{87714131}		1	Washer Bottle
11		{87672011}		1	Washer Bracket
12		516742		2	CLAMP
13		87529123		2	WASHER, WASHER, 0.156 X 0.375 X 0.049 in.
14		{87622767}		2	Nut
15		87051110		1	SWITCH, DOOR, Switch, Door Open
16		{87599753}		2	Bushing
17		{87717283}		2	Door Hinge
18		{87581669}		1	Ball Stud
19		9804277		1	NUT, M8 x 1.25, Flg, Cl 8
20		{87722347}		1	Threshold, Black
21		{87642437}		1	Gas Spring
22		{87642394}		1	Striker Latch

CAB DOOR

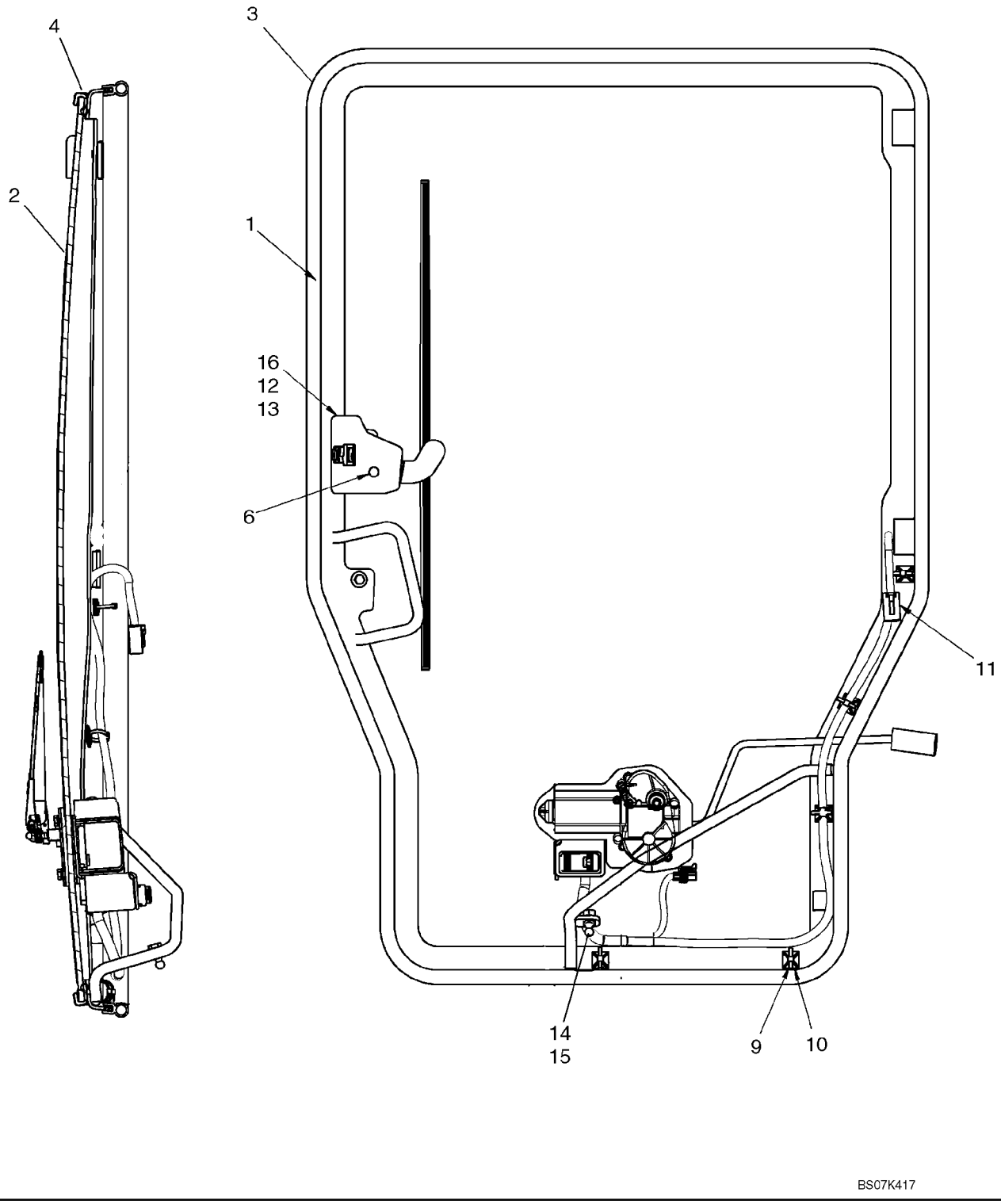

CAB DOOR

REF	FN	PART NUMBER	YR/SN	QTY	DESCRIPTION
1		87627520		1	DOOR, Door With Glass; Incl. 2 - 8
2		87717689		1	KIT, SERVICE, Kit, Front Door Glass; Incl 2, 4
2		87624640		1	GLASS, Front Door Glass
3		NSS		1	NOT SERVICED SEPARATELY, Door, Black
4		NSS		1	NOT SERVICED SEPARATELY, Trim, Glass Seal
5		{87660180}		AR	Window Adhesive
6		{87600221}		8	Glue Spacer; Not Illustrated
7		87642453		1	SEAL, Handle Mounting Seal, Lower; Not Illustrated
8		87642449		1	SEAL, Handle Mounting Seal, Upper; Not Illustrated
9		87642915		5	STRAP, CABLE
10		87642914		5	BASE, Base, Cable Tie
11		87718119		1	HARNESS, Door Harness
12		{86512463}		3	Screw, M6 X 25 4.8 ZND
13		86619800		2	NUT, LOCK, M6 x 1, Flg, Cl 8
14		9804277		1	NUT, M8 x 1.25, Flg, Cl 8
15		86634307		1	STUD, Ball Stud
16		87678399		1	LATCH, Rotary Latch; Includes Latch And Cover
17		87624641		1	SEAL, Bulb Seal

CAB DOOR - VISOR

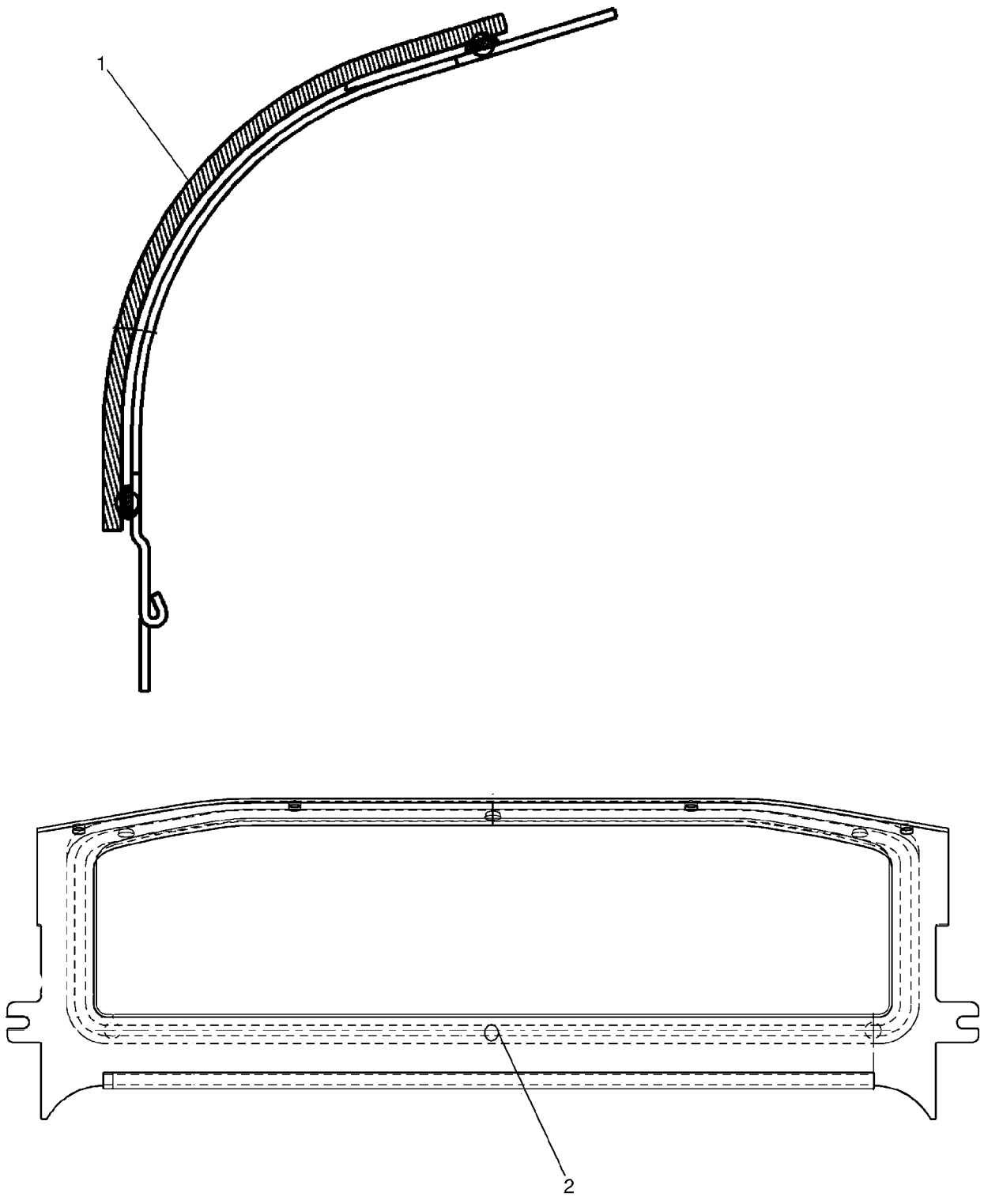

CAB DOOR - VISOR

REF	FN	PART NUMBER	YR/SN	QTY	DESCRIPTION
		{87627521}		1	Visor; Incl 1 - 4
1		87624623		1	GLASS, Glass, Visor
2		{87600221}		6	Glue Spacer
3		{87660180}		1	Window, Adhesive
4		{87669333}		1	Visor Frame, Black

CAB DOOR - WIPER MOUNTING

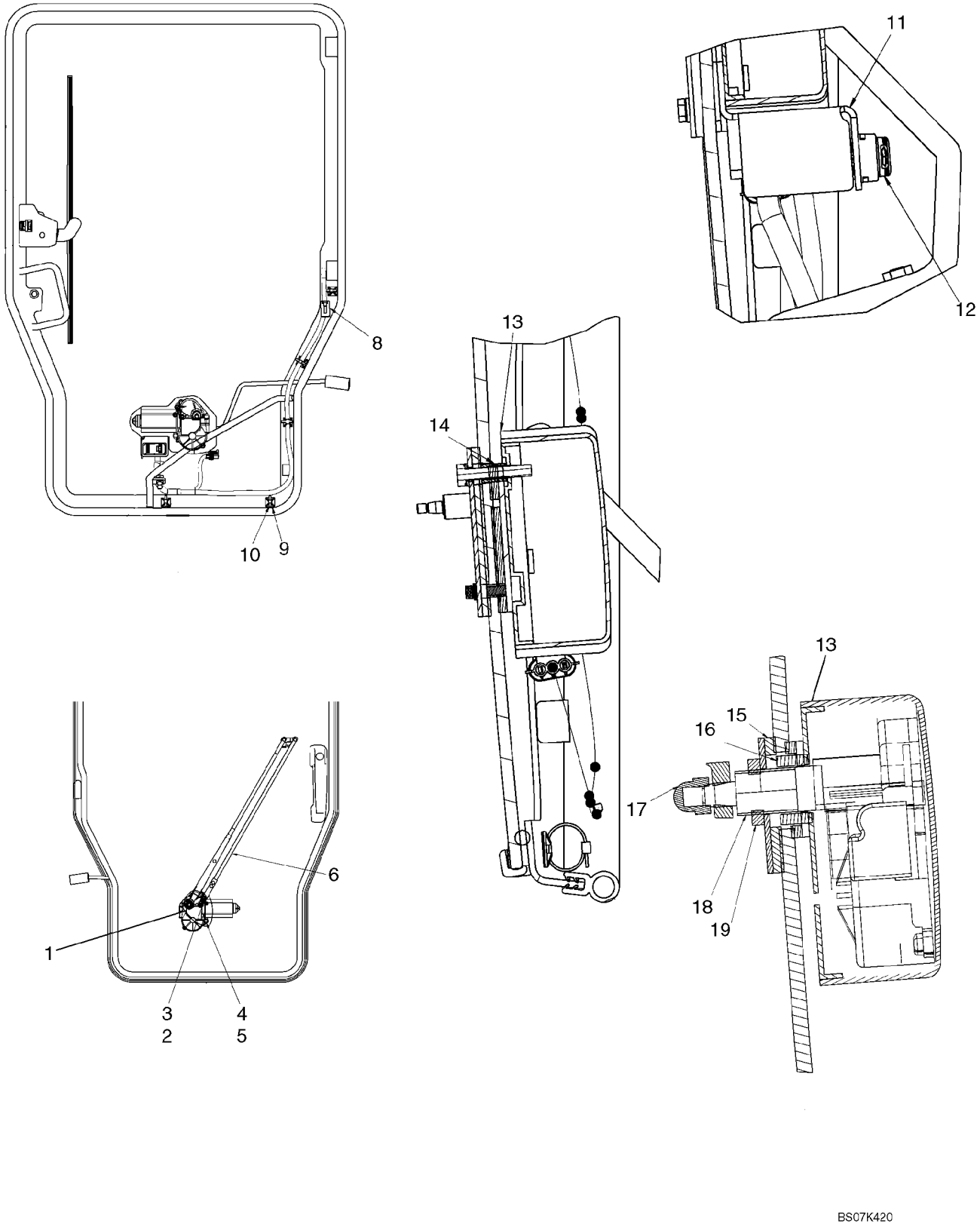

CAB DOOR - WIPER MOUNTING

REF	FN	PART NUMBER	YR/SN	QTY	DESCRIPTION
1		87716728		1	ADAPTER, Adapter, Pantograph
2		{87698769}		5	Bolt, M6 X 35
3		{86642465}		2	Washer, 6.6 X 12 X 1.6 MM
4		87680190		1	SPACER, Wiper Motor Spacer
5		87642543		1	SEAL, Wiper Switch Seal
6		87642544		1	WIPER ARM
7		87642545		1	WIPER BLADE
8		87718119		1	HARNESS, Door Harness
9		87642914		5	BASE, Mounting Base
10		87642915		5	STRAP, CABLE
11		87671857		1	BRACKET, Wiper Switch Bracket
12		87335499		1	SWITCH, Rocker Switch, Windshield Wiper/Washer
13		{87581666}		1	Wiper Motor Cover
14		87642540		1	SPACER, Wiper Motor Spacer
15		87716731		1	ADAPTER, Pantograph Adapter Seal
16		87642536		1	BUSHING, Wiper Motor Bushing
17		{412326}		1	Nut, Crown Dome M8
18		87678400		1	WIPER MOTOR
19		{87607505}		1	Wiper Nut, M18

CAB DOOR - HANDLE

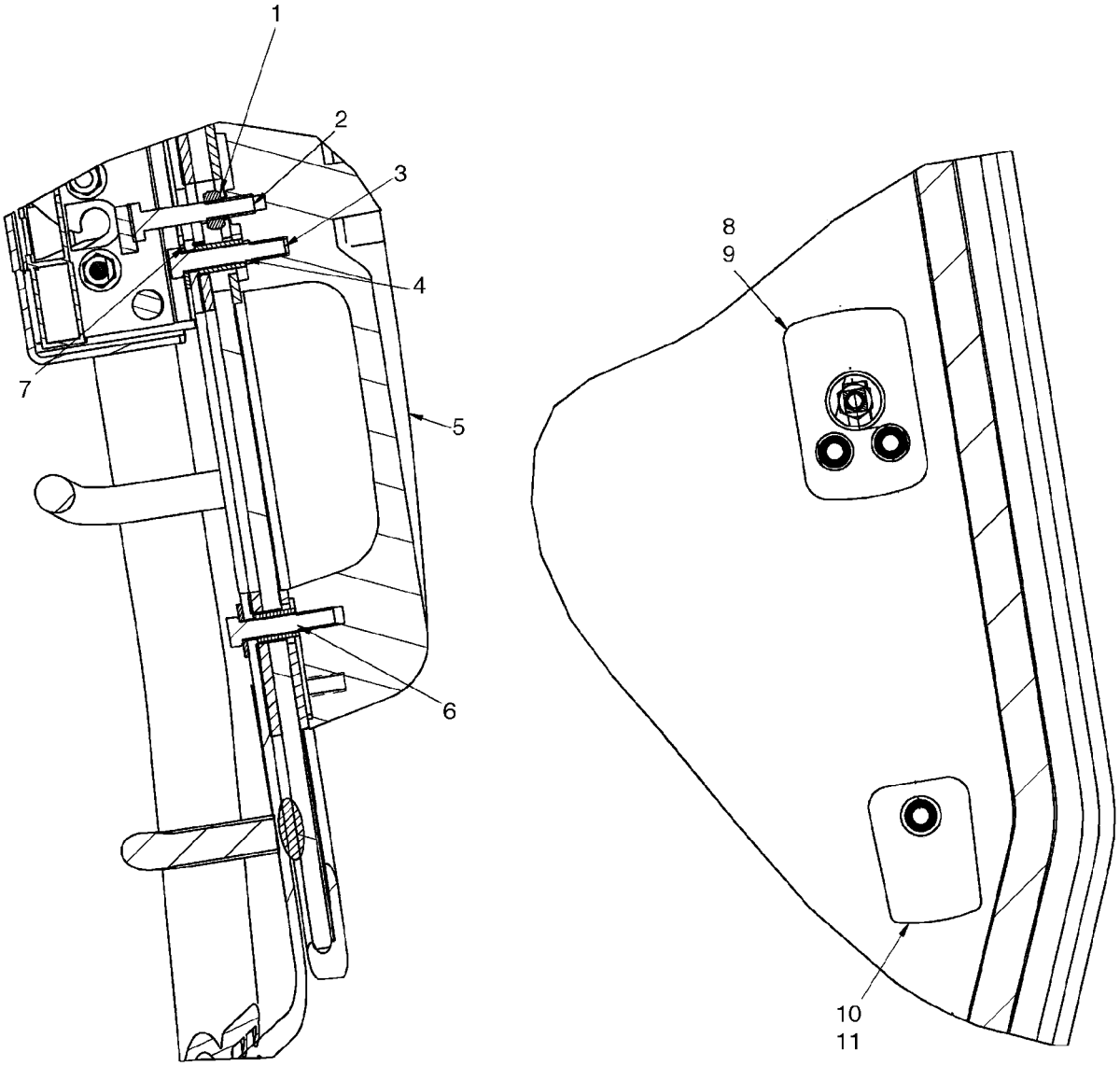

CAB DOOR - HANDLE

REF	FN	PART NUMBER	YR/SN	QTY	DESCRIPTION
1		1369		1	NUT, 1/4"-20, G5
2		280112		1	BOLT, Hex, 1/4"-20 x 1 1/2", G5
3		{87698769}		5	Bolt, M6 X 35
4		87642514		2	SPACER, Handle Mounting Spacer, Upper
5		60-7083T1		1	HANDLE, Cab Door Handle
6		87642529		1	SPACER, Handle Mounting Spacer, Lower
7		86624182		3	WASHER, M6 x 18 x 1.6
8		87642449		1	SEAL, Handle Mount Seal, Upper
9		87517940		1	GASKET, Door Handle Gasket, Upper
10		87517937		1	GASKET, Door Handle Gasket, Lower
11		87642453		1	SEAL, Handle Mount Seal, Lower

DEMOLITION DOOR - MOUNTING

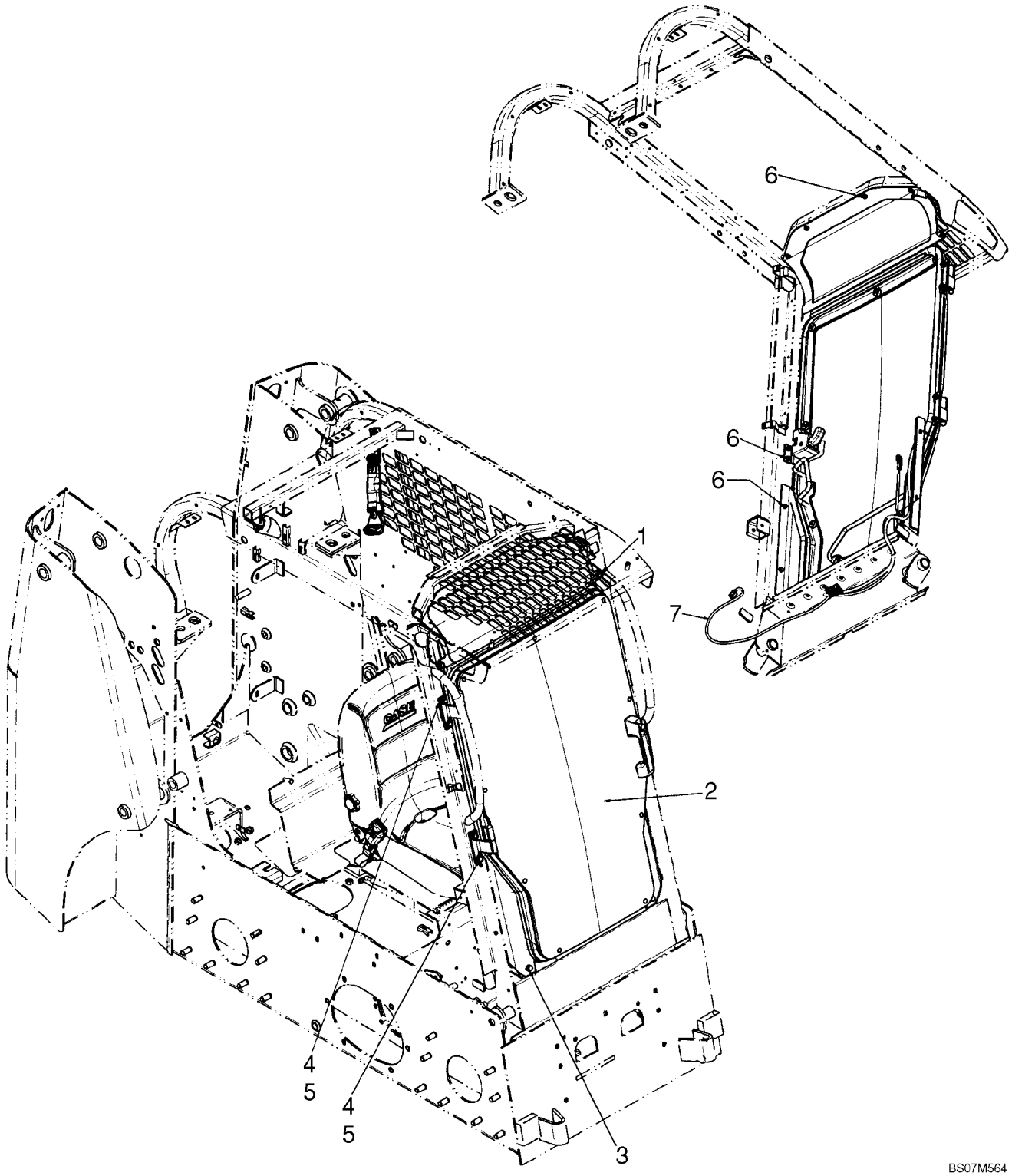

DEMOLITION DOOR - MOUNTING

REF	FN	PART NUMBER	YR/SN	QTY	DESCRIPTION
1		9804258		2	BOLT, Hex Flg, M8 x 20, 8.8
		87651126		1	KIT, SERVICE, Kit, Demolition Door; Incl 1 - 7
2		REF		1	INSTRUCTION, Demolition Door; See Fig 09-33
3		637964		2	SCREW, SELF TAP
4		120104		4	SCREW, Hex, M8 x 20, 8.8
5		86639313		4	WASHER, M8 x 20 x 1.6
6		87015862		10	BOLT, Hex Flg, M6 x 20, 8.8, Full Thd
7		87659212		1	HARNESS, Harness, Door Jumper

DEMOLITION DOOR

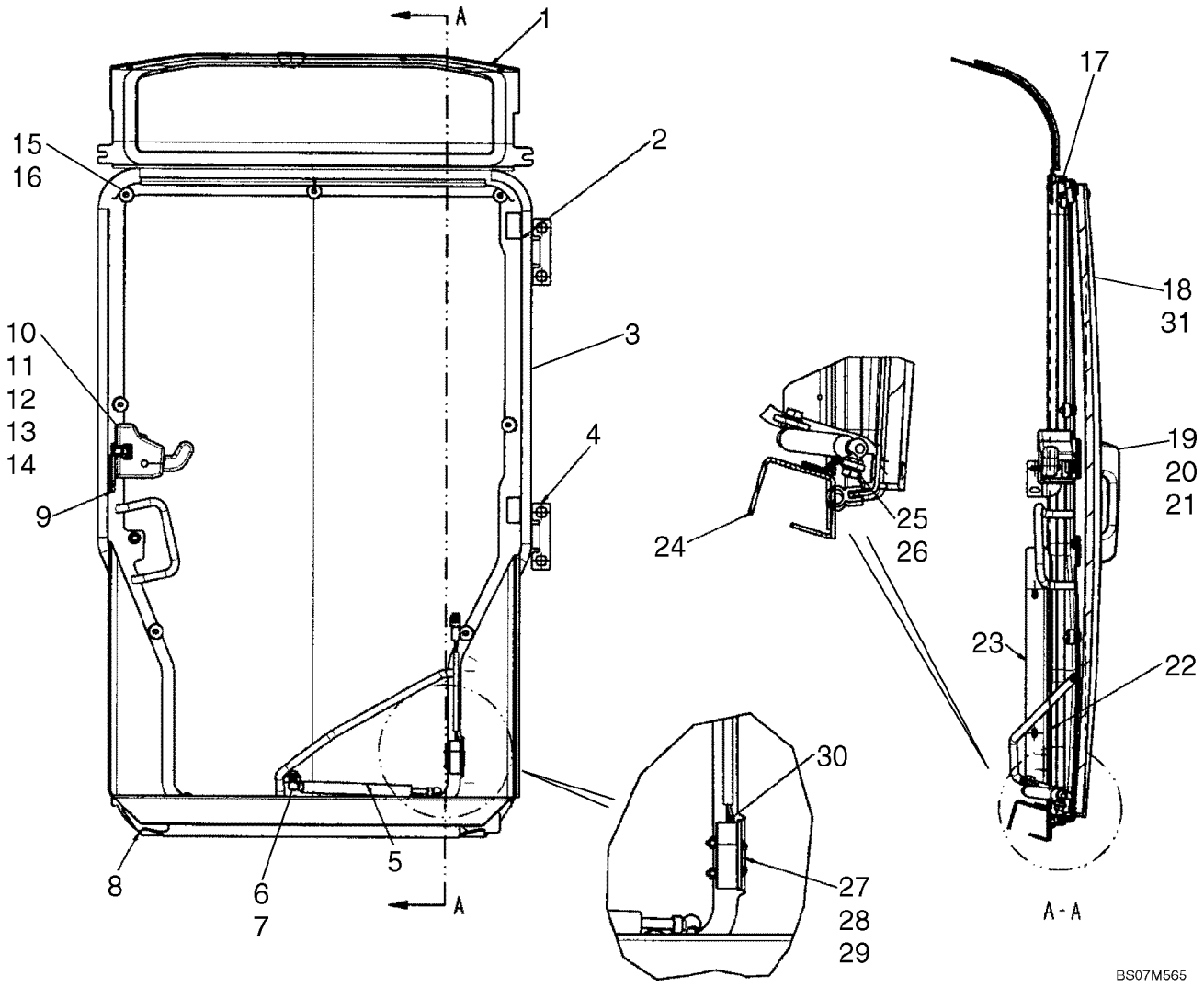

DEMOLITION DOOR

REF	FN	PART NUMBER	YR/SN	QTY	DESCRIPTION
1		REF		1	INSTRUCTION, Visor; See Fig 09-29
2		{87599753}		2	Bushing
3		NSS		1	NOT SERVICED SEPARATELY, Frame, Demolition Door
4		{87717283}		2	Door Hinge
5		{87642437}		1	Gas Spring
6		86619801		1	NUT, LOCK, M8 x 1.25, Flg, Cl 8
7		{87581669}		1	Ball Stud
8		{87717210}		1	Bracket, Lower Door LH
9		{87642394}		1	Stiker Latch
10		87678399		1	LATCH, Rotary Latch
11		{86512463}		3	Screw, M6 X 25
12		87642540		3	SPACER
13		{87698769}		3	Bolt, M6 X 35
14		86619800		2	NUT, LOCK, M6 x 1, Flg, Cl 8
15		NSS		9	NOT SERVICED SEPARATELY, Quick Release Knob
16		412327		9	BOLT, CARRIAGE, Short NK, M6 x 40, Cl8.8
17		87624641		1	SEAL, Bulb Seal
18		NSS		1	NOT SERVICED SEPARATELY, Polycarbonate Door
18		87640046		1	KIT, SERVICE, Kit, Demolition Door; Incl 15, 16, 18, 31
19		60-7083T1		1	HANDLE, Door Handle
20		{87723784}		2	Handle Seal, Lower
21		{87723771}		2	Handle Seal, Upper
22		{87717215}		1	Lower Door Bracket, RH
23		{87669915}		1	Spacer
24		{87722347}		1	Threshold
25		86619801		1	NUT, LOCK, M8 x 1.25, Flg, Cl 8
26		{87581669}		1	Ball Stud
27		NSS		1	NOT SERVICED SEPARATELY, U Bolt, Switch Mounting
28		87529123		2	WASHER, Washer, .156 X .375 X .049 in.
29		{87622767}		2	Nut, #6-32
30		87051110		1	SWITCH, DOOR, Seat Bar Switch
31		NSS		1	NOT SERVICED SEPARATELY, Foam Gasket

HEATER SYSTEM

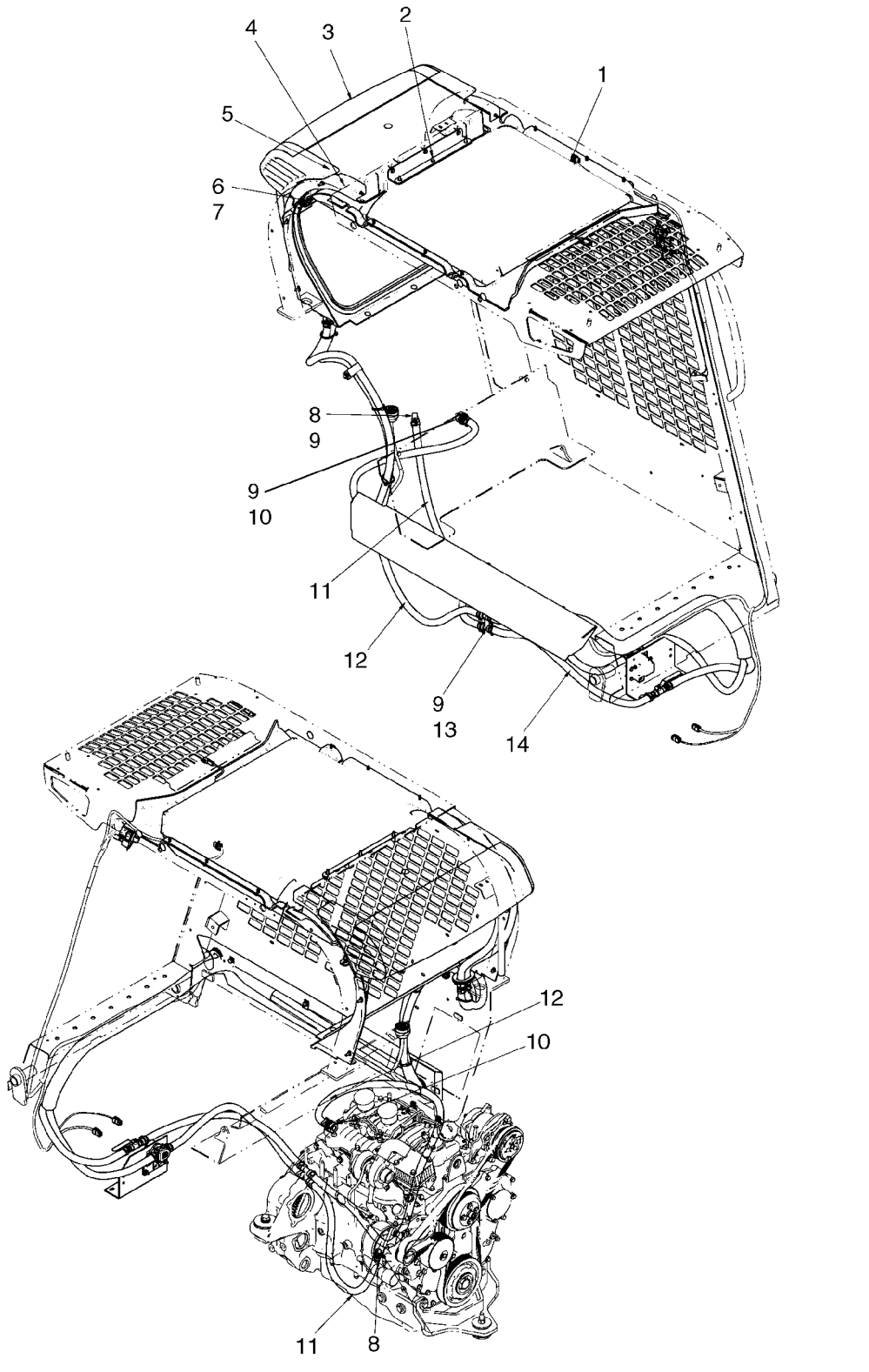

HEATER SYSTEM

REF	FN	PART NUMBER	YR/SN	QTY	DESCRIPTION
		87638259		1	KIT, SERVICE, Kit, Deluxe Heater; Incl 1 - 14
1		REF		1	INSTRUCTION, Heater System; See Fig 09-35
2		9804256		3	BOLT, Hex Flg, M6 x 20, 8.8
3		87653394		1	HEATER, Heater Assembly; See Fig 09-36
4		87450833		2	TAPE, ADHESIVE
5		291308		AR	STRIP, SEALING, 580mm (22 13/16 in.)
6		9804257		2	BOLT, Hex Flg, M6 x 25, 8.8
7		86619800		2	NUT, LOCK, M6 x 1, Flg, Cl 8
8		642560		1	FITTING, 5/8" Hose X 3/8" NPTF Beaded
9		87443511		6	CLAMP
10		87570215		1	CONNECTOR, HYD.
11		87717213		1	HOSE, Hose, Heater Return
12		87717216		1	HOSE, Hose, Heater Supply
13		87610315		1	TUBE
14		87717212		2	HOSE, Hose, Heater

09-35		p1	12/07

HEATER SYSTEM

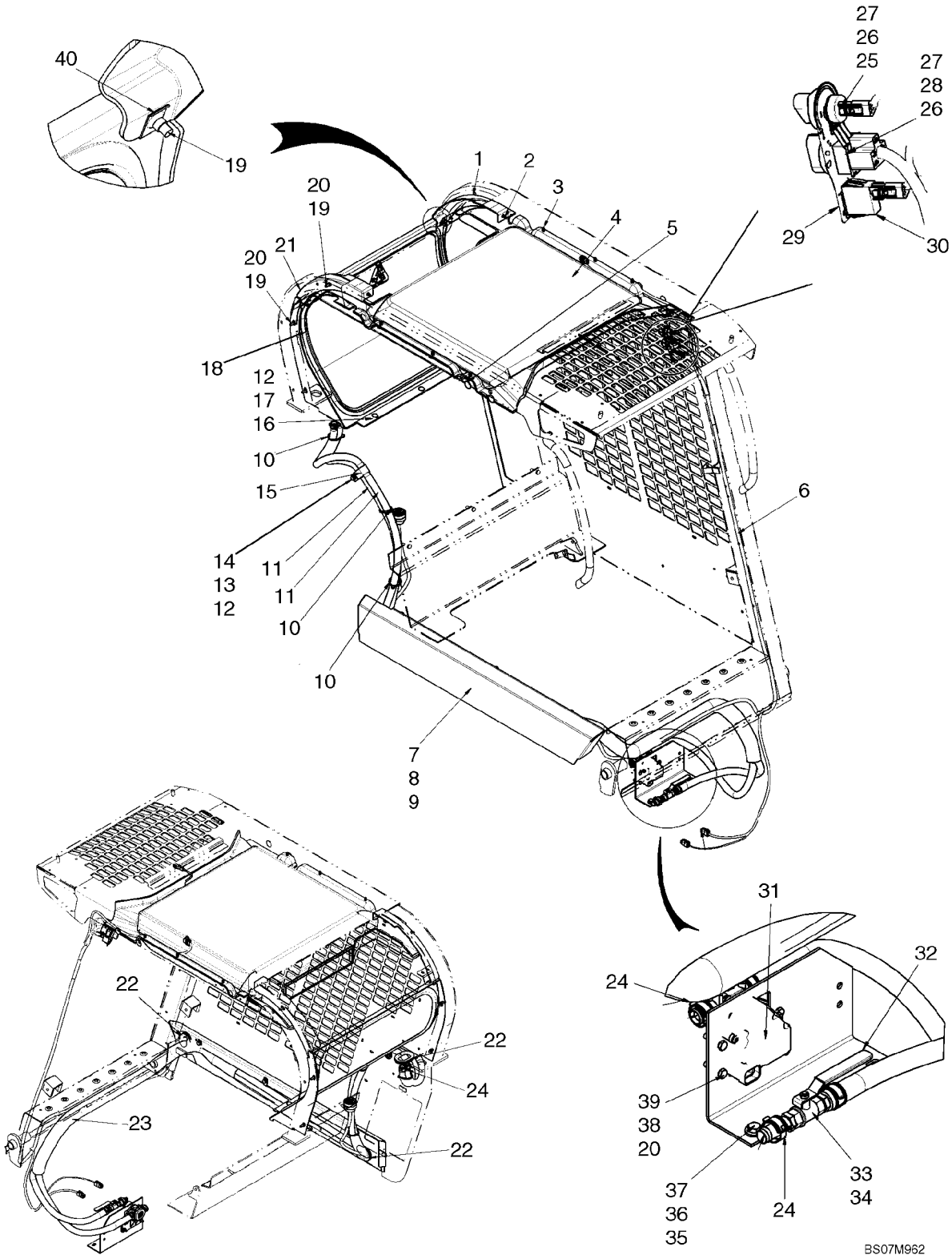

HEATER SYSTEM

REF	FN	PART NUMBER	YR/SN	QTY	DESCRIPTION
1		87705419		1	GLASS, Filler, Rear Window LH
2		87712706		2	FASTENER, Fastener, Push In
3		87713668		6	FASTENER, Fastener, Push In
4		REF		1	INSTRUCTION, Headliner, Heat And A/C; See Fig 09-52
5		414635A1		4	COVER, Lexan Cover, 25mm (1 in.) Dia.
6		87718151		1	HARNESS, Harness, HVAC
7		87703530		1	COVER, Hose Cover, RH
8		9804258		3	BOLT, Hex Flg, M8 x 20, 8.8
9		87016586		3	NUT, M8, U
10		L11541		3	STRAP, CABLE
11		87717211		2	HOSE, Heater Hose
12		86624184		4	WASHER, M8 x 16 x 1.6
13		86505868		1	NUT, M8, Flg Ser
14		120104		1	SCREW, Hex, M8 x 20, 8.8
15		H434289		1	MOUNTING CLIP
16		43362		3	NUT, M8, Cl 10
17		86507486		3	BOLT, CARRIAGE, Short NK, M8 x 20, Cl8.8, Full Thd
18		REF		1	INSTRUCTION, Rear Window, HVAC; See Fig 09-54
19		9804256		8	BOLT, Hex Flg, M6 x 20, 8.8
20		86588450		10	WASHER, M6
21		87705420		1	GLASS, Filler, Rear Window RH
22		87439844		3	GUARD
23		87441006		1	GUARD, Guard, A/C Hose
24		87443511		6	CLAMP
25		86729675		1	POTENTIOMETER
26		87310592		2	NUT, Jam, 7/16"-28, G5
27		86729670		2	KNOB
28		86729669		1	SWITCH, FAN, Blower Switch
29		{87687236}		1	Decal, HVAC Control
30		87555249		1	SWITCH, A/C Switch
31		87520839		1	VALVE
32		87462631		1	BRACKET, Water Valve And Dryer Bracket
33		87441937		1	VALVE, Heater Hose Ball Valve
34		642560		2	FITTING, 5/8" Hose X 3/8" NPTF Beaded

HEATER SYSTEM

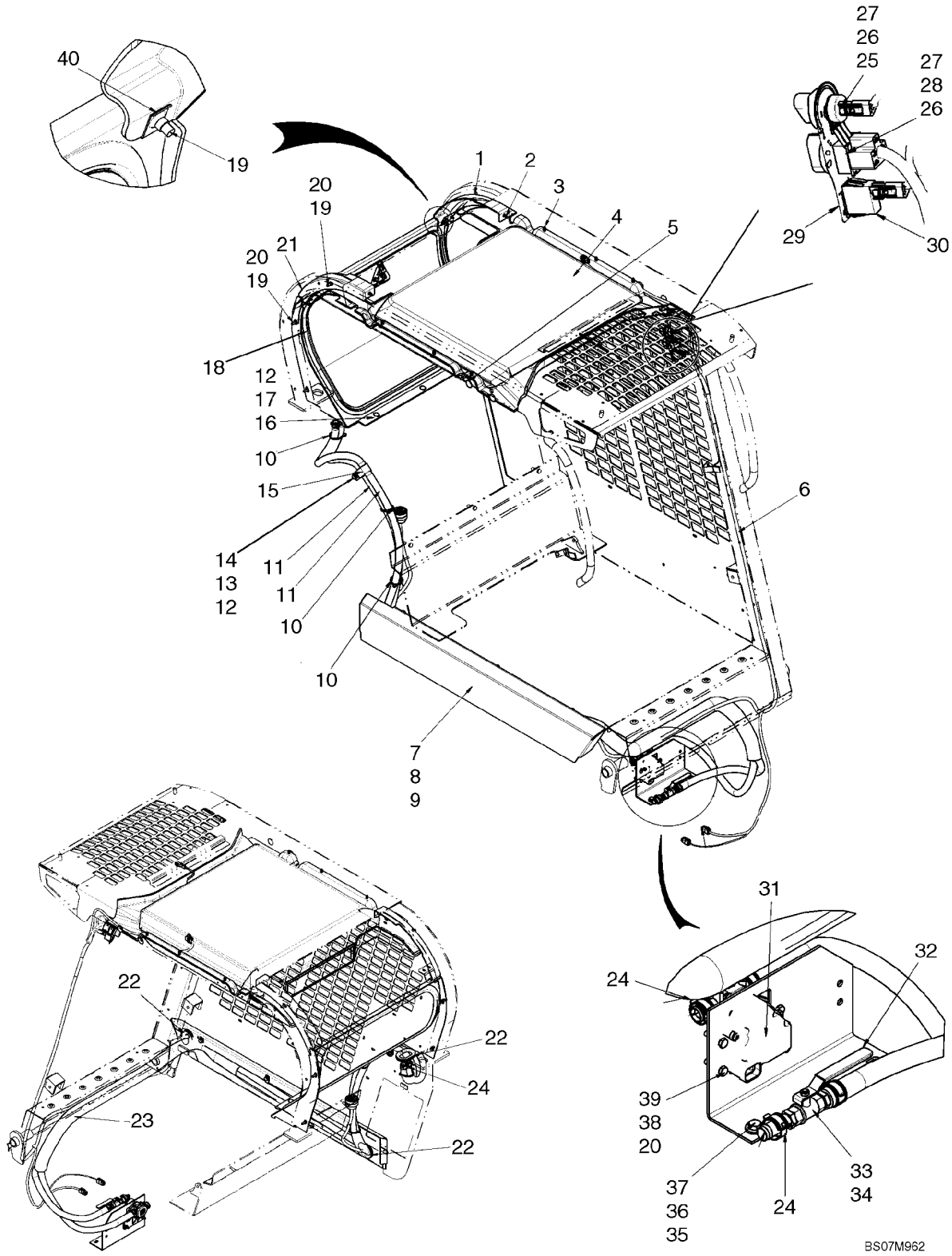

HEATER SYSTEM

REF	FN	PART NUMBER	YR/SN	QTY	DESCRIPTION
35		229197A1		2	NUT
36		87015284		2	WASHER, M8 x 21.5 x 2.5, HT
37		120103		2	BOLT, Hex, M8 x 16, 8.8
38		86511444		4	NUT, M6, Flg Ser
39		86977786		4	BOLT, Hex, M6 x 25, 8.8
40		87016585		2	NUT
41		{}			

09-36		p1	12/07

HEATER ASSEMBLY

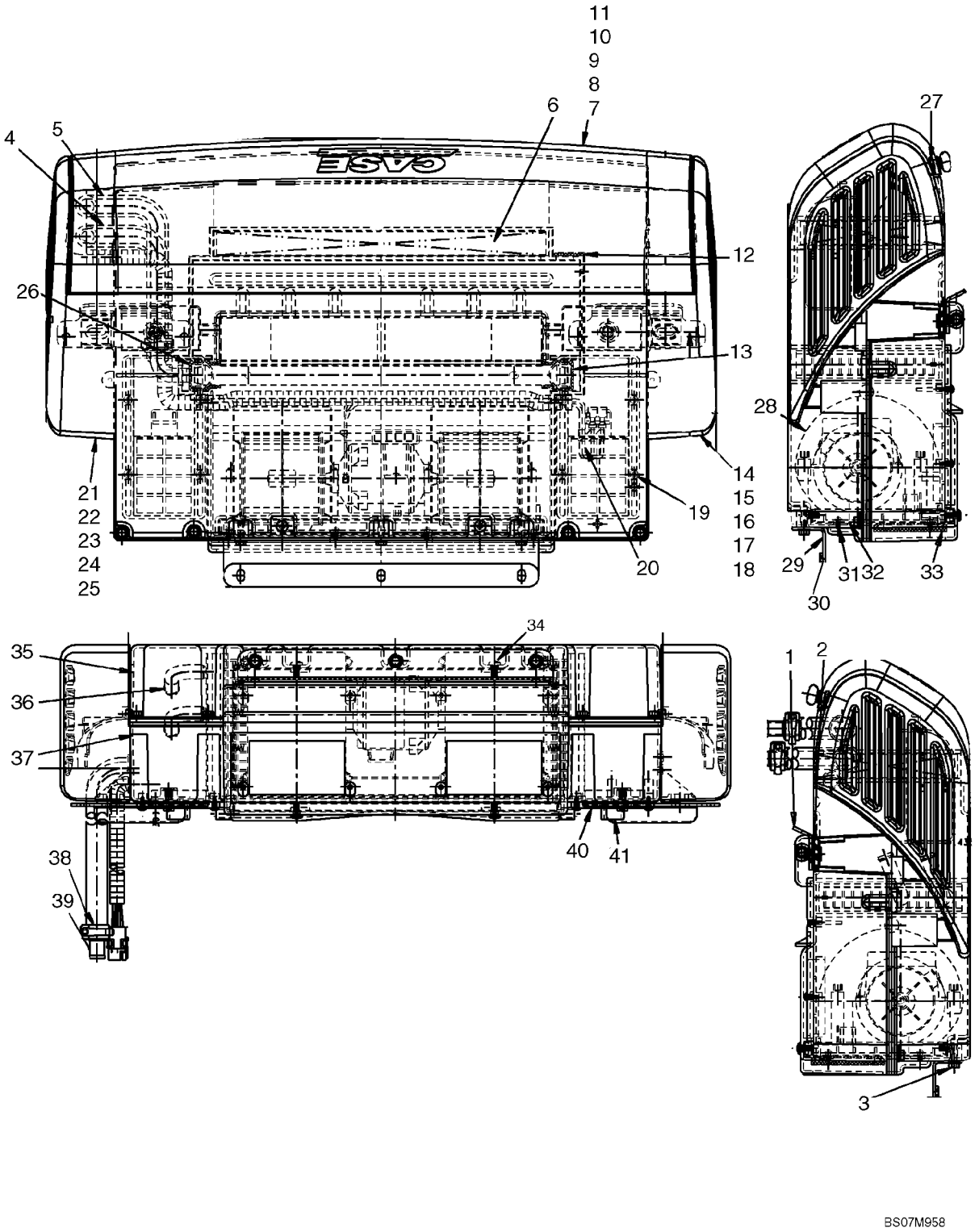

HEATER ASSEMBLY

REF	FN	PART NUMBER	YR/SN	QTY	DESCRIPTION
1		87656095		2	BRACKET, Bottom Bracket
2		87656096		2	GASKET, Neoprene Gasket, Bottom
3		NSS		5	NOT SERVICED SEPARATELY, Screw, M6 X 20
4		87656099		1	HOSE, Formed Hose, Short
5		87656098		1	HOSE, Formed Hose, Long
6		87656118		1	FILTER, Charcoal Filter
7		87656129		1	COVER, REAR, Rear Cover Assembly; Incl 8 - 11
8		87656125		3	SCREW, Wing Head Screw
9		87591148		3	RETAINER, Black Nylon Retainer
10		87656114		1	COVER, Rear Cover
11		87656130		1	FOAM, Foam Seal
12		NSS		1	NOT SERVICED SEPARATELY, Seal
13		NSS		1	NOT SERVICED SEPARATELY, Tank Seal
14		87656121		1	CAP, End Cap Assembly, LH; Incl 15 - 18
15		87656109		1	CAP, End Cap, LH
16		87656123		1	CAP, Partition
17		87591148		2	RETAINER, Black Nylon Retainer
18		87656127		2	SCREW
19		NSS		8	NOT SERVICED SEPARATELY, Screw
20		87656120		1	HARNESS, WIRE
21		87656122		1	CAP, End Cap Assembly, RH; Incl 22 - 25
22		87656105		1	CAP, End Cap, RH
23		87656124		1	CAP, Partition
24		87591148		2	RETAINER, Black Nylon Retainer
25		87656127		2	SCREW
26		NSS		1	NOT SERVICED SEPARATELY, Tank Seal, Tubes
27		87656126		7	CLIP, Recepticle, "U" Type
28		86592107		1	BLOWER, ELECTRIC
29		87656106		1	BRACKET, Front Bracket
30		87656097		1	GASKET, Neoprene Gasket, Front
31		NSS		8	NOT SERVICED SEPARATELY, Screw
32		87656107		1	PLATE, Blower Mount Plate
33		87656108		1	GASKET, Gasket, Blower Outlet
34		NSS		4	NOT SERVICED SEPARATELY, Screw
35		87658710		1	CASE, Top Case

HEATER ASSEMBLY

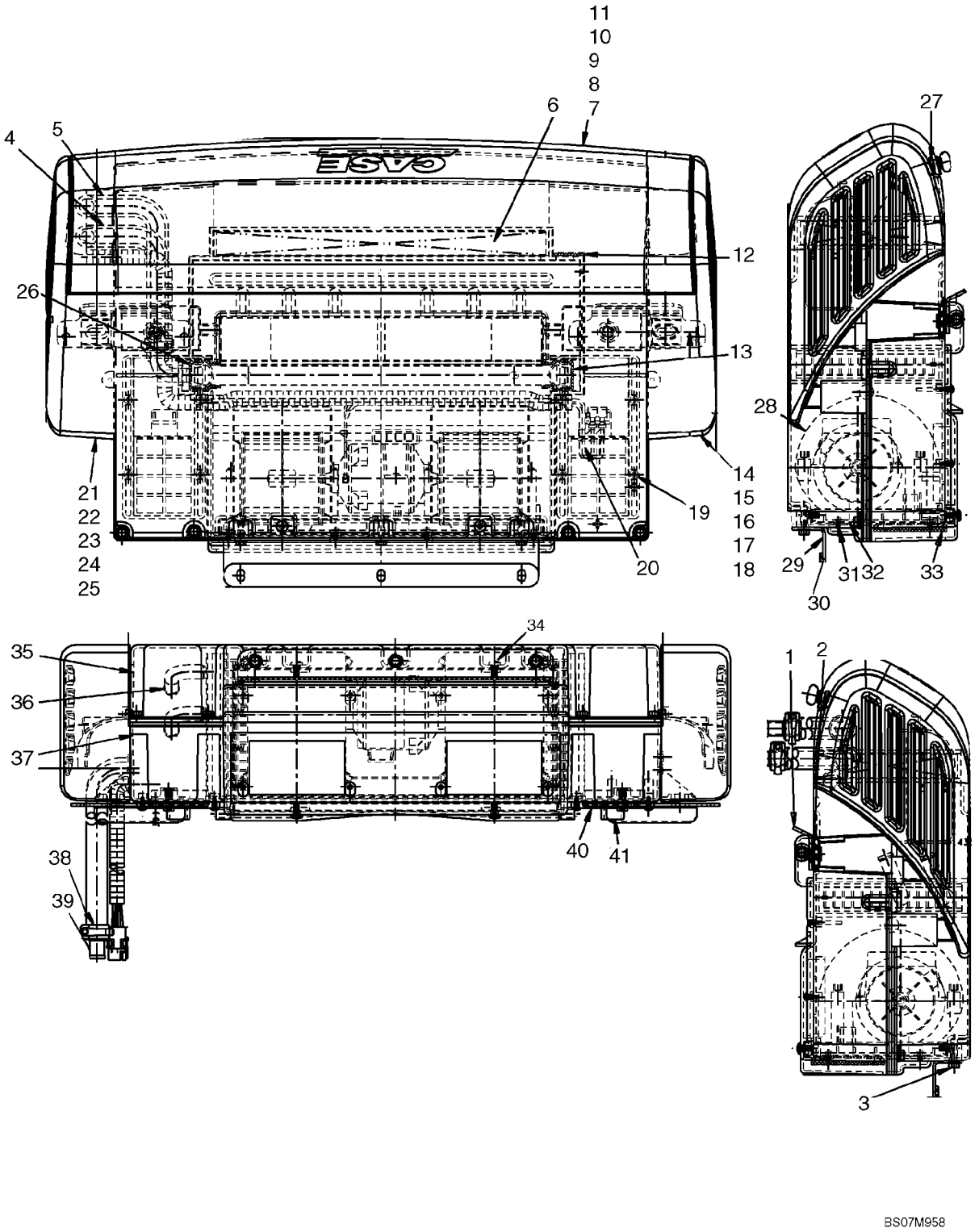

HEATER ASSEMBLY

REF	FN	PART NUMBER	YR/SN	QTY	DESCRIPTION
36		87656103		1	CORE, Heater Core
37		87658709		1	CASE, Bottom Case
38		NSS		4	NOT SERVICED SEPARATELY, Hose Clamp
39		87035457		2	TUBE
40		87656101		2	COVER
41		87656100		2	COVER

AIR CONDITIONING SYSTEM

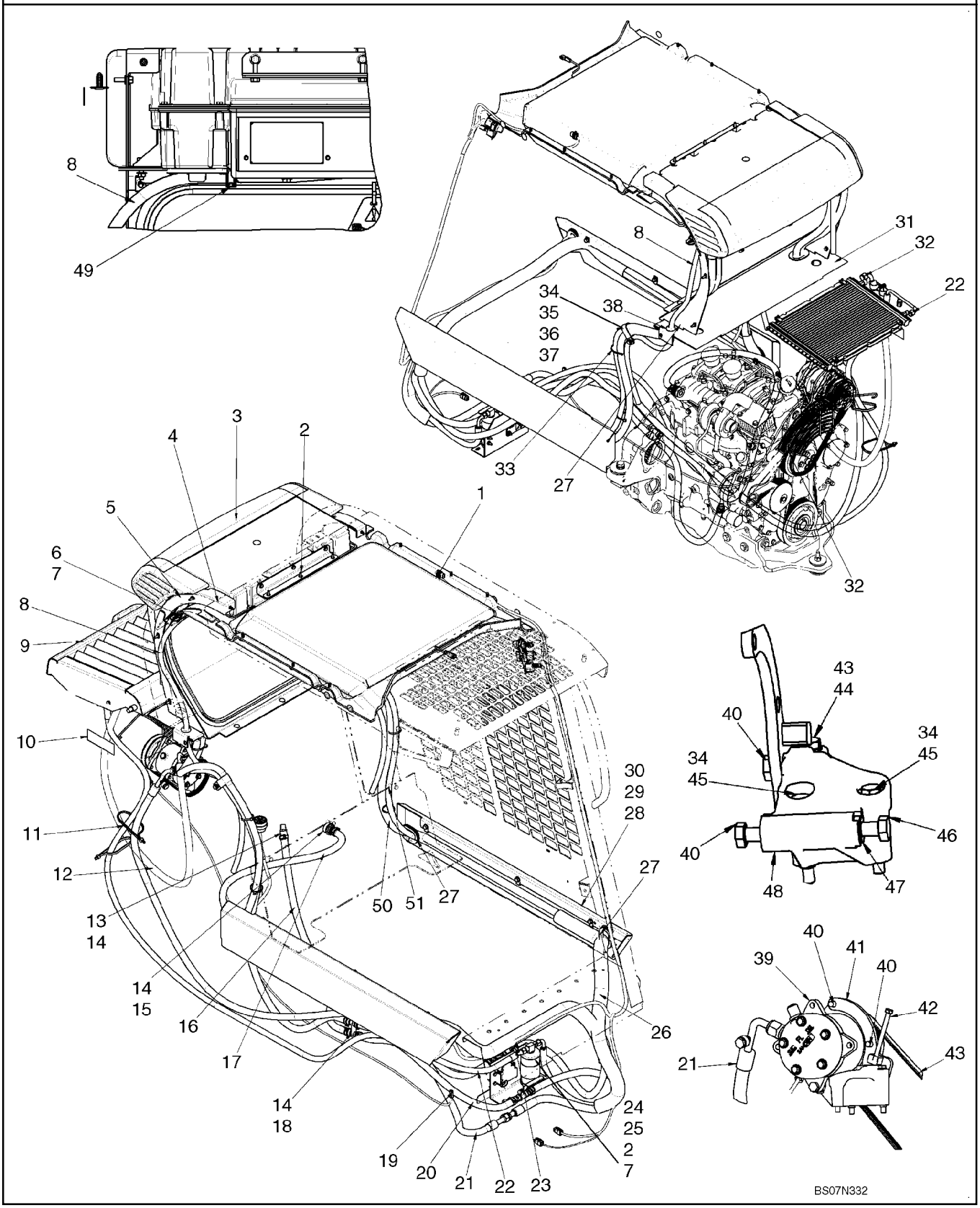

AIR CONDITIONING SYSTEM

REF	FN	PART NUMBER	YR/SN	QTY	DESCRIPTION
		87638450		1	KIT, SERVICE, Kit, Deluxe Heater And Air Conditioning; Incl 1 - 51
1		REF		1	INSTRUCTION, Heater System; See Fig 09-35
2		9804256		5	BOLT, Hex Flg, M6 x 20, 8.8
3		87653393		1	HEATER, Heat And Air Conditioning Assembly; See Fig 09-38
4		87450833		2	TAPE, ADHESIVE
5		291308		AR	STRIP, SEALING, 580mm (22 13/16 in.)
6		9804257		2	BOLT, Hex Flg, M6 x 25, 8.8
7		86619800		4	NUT, LOCK, M6 x 1, Flg, Cl 8
8		87691473		2	HOSE, Tube, A/C Drain
9		REF		1	INSTRUCTION, A/C Hood; See Fig 09-21
10		86639409		1	DECAL, Decal, Air Conditioning Specifications
11		L18331		2	STRAP, CABLE
12		87452009		1	HOSE ASSY.
13		642560		1	FITTING, 5/8" Hose X 3/8" NPTF Beaded
14		87443511		6	CLAMP
15		87570215		1	CONNECTOR, HYD.
16		87717213		1	HOSE, Hose, Heater Return
17		87717216		1	HOSE, Hose, Heater Supply
18		87610315		1	TUBE
19		87445908		1	HARNESS, Harness, Compressor
20		87717212		2	HOSE, Hose, Heater
21		87436118		1	HOSE ASSY.
22		87717220		1	HOSE, Hose, A/C Liquid
23		86625515		1	SWITCH, PRESSURE, Switch, A/C Pressure
24		86625481		1	RECEIVER-DRYER
25		87437501		1	BRACKET
26		87441006		1	GUARD
27		87439844		3	GUARD
28		87703555		1	COVER, Hose Cover, LH
29		87016586		3	NUT, M8, U
30		9804258		3	BOLT, Hex Flg, M8 x 20, 8.8
31		87716582		1	PANEL, INSULATING, Heat Shield Extension
32		87594971		1	GUARD, Fan Guard, A/C

AIR CONDITIONING SYSTEM

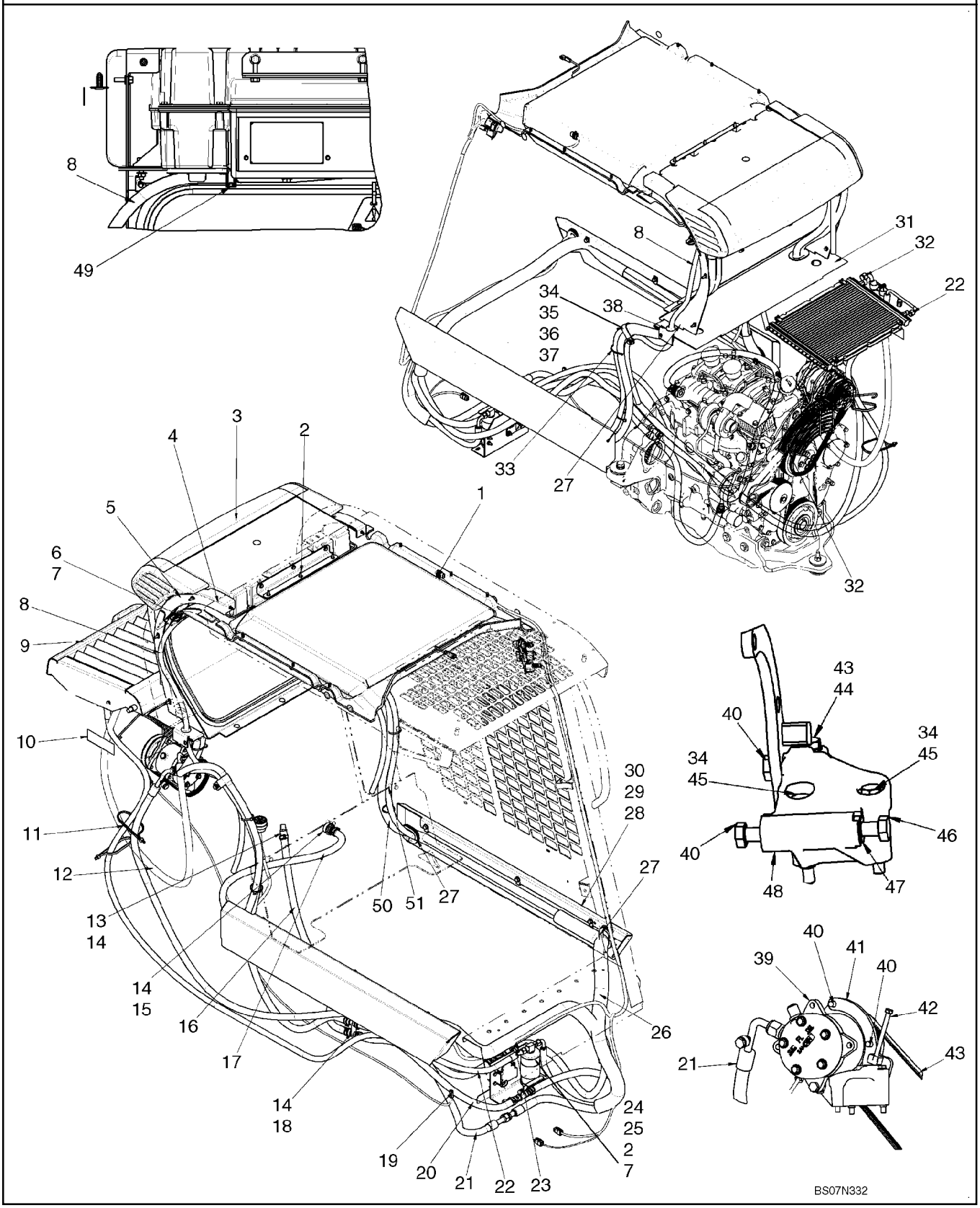

AIR CONDITIONING SYSTEM

REF	FN	PART NUMBER	YR/SN	QTY	DESCRIPTION
33		L11541		3	STRAP, CABLE
34		86624184		4	WASHER, M8 x 16 x 1.6
35		86505868		1	NUT, M8, Flg Ser
36		120104		1	SCREW, Hex, M8 x 20, 8.8
37		H434289		1	MOUNTING CLIP
38		87307909		2	GROMMET
39		87649991		1	COMPRESSOR, AIRCOND
40		{87032782}		4	Bolt, M10 X 30 Cl 8.8
41		87711926		1	BRACKET, Tensioner Bracket
42		87649979		1	BOLT
43		87625599		1	BELT, Belt, A/C Drive
44		120108		1	BOLT, Hex, M8 x 80, 8.8, Full Thd
45		120061		2	BOLT, Hex, M8 x 60, 8.8
46		412160		1	BOLT, Hex, M10 x 1.25 x 30, Cl8.8, Full Thd
47		87649990		1	BUSHING, THREADED
48		87649945		1	BRACKET
49		{87584302}		2	Clamp
50		87691470		1	HOSE, Hose, A/C Suction
51		87691471		1	HOSE, Hose, A/C Liquid

HEATER AND AIR CONDITIONING ASSEMBLY

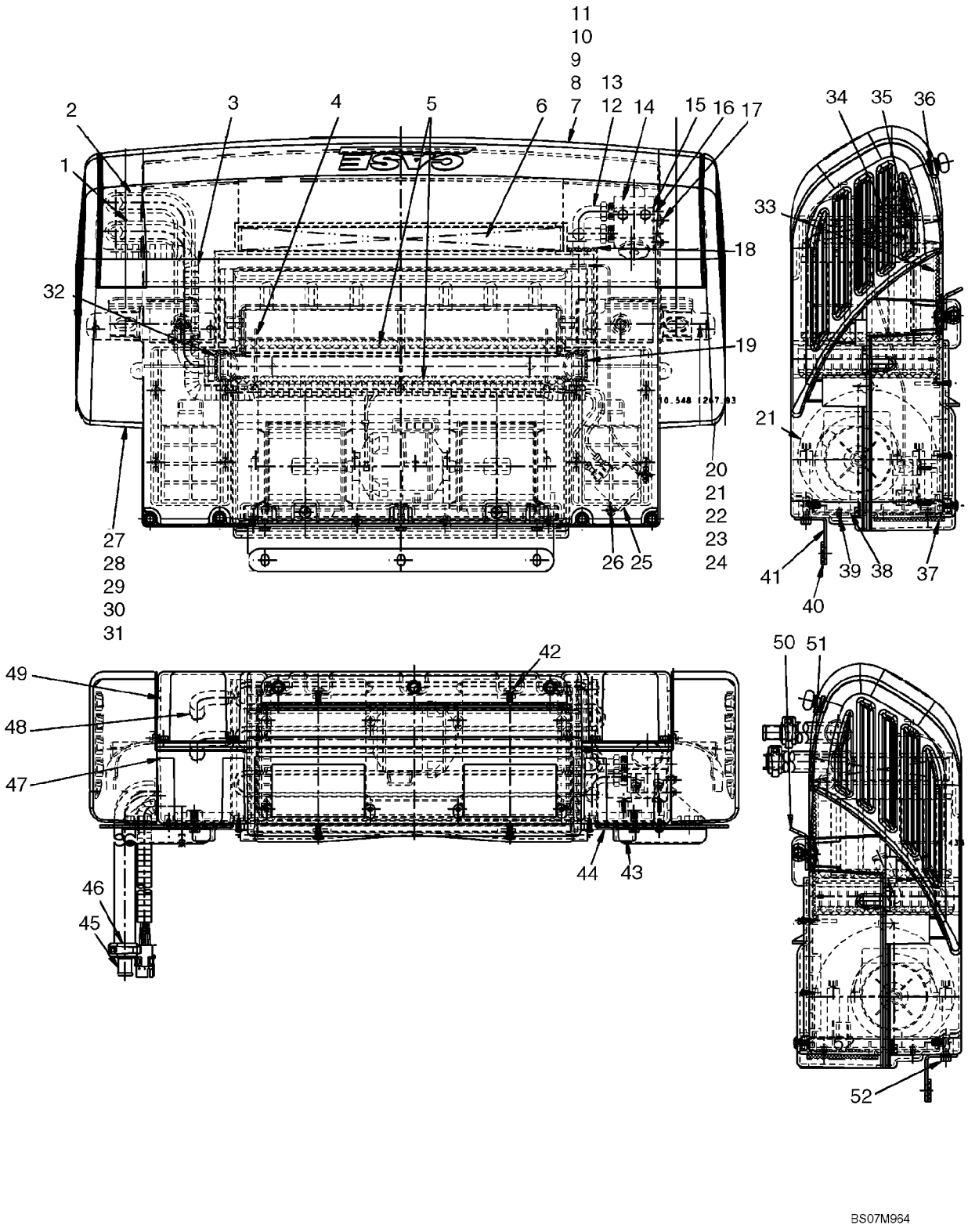

HEATER AND AIR CONDITIONING ASSEMBLY

REF	FN	PART NUMBER	YR/SN	QTY	DESCRIPTION
1		87656098		1	HOSE, Formed Hose, Long
2		87656099		1	HOSE, Formed Hose, Short
3		87656120		1	HARNESS, WIRE
4		NSS		6	NOT SERVICED SEPARATELY, Plastic Pick
5		87656119		2	INSULATION, FOAM, Foam Filter
6		87656118		1	FILTER, Charcoal Filter
7		87656129		1	COVER, REAR, Rear Cover Assembly; Incl 8 - 11
8		87656125		3	SCREW, Wing Head Screw
9		87591148		3	RETAINER, Black Nylon Retainer
10		87656114		1	COVER, Rear Cover
11		87656130		1	FOAM, Foam Seal, Filter
12		87656113		1	EVAPORATOR, Incl 13
13		87035782		1	VALVE, Expansion Valve
14		NSS		AR	NOT SERVICED SEPARATELY, Black Tar Tape, 610mm (24 in.) Required
15		87656112		1	BRACKET
16		87656111		1	GASKET, Expansion Valve Gasket
17		NSS		2	NOT SERVICED SEPARATELY, Screw
18		NSS		1	NOT SERVICED SEPARATELY, Tube Seal, Evaporator
19		NSS		1	NOT SERVICED SEPARATELY, Tank Seal
20		87656121		1	CAP, End Cap Assembly, LH; Incl 21 - 24
21		87656109		1	CAP, End Cap, LH
22		87656123		1	CAP, Partition
23		87591148		2	RETAINER, Black Nylon Retainer
24		87656127		2	SCREW
25		86625480		1	THERMOSTAT
26		NSS		10	NOT SERVICED SEPARATELY, Screw
27		87656122		1	CAP, End Cap Assembly, RH; Incl 28 - 31
28		87656105		1	CAP, End Cap, RH
29		87656124		1	CAP, Partition
30		87591148		2	RETAINER, Black Nylon Retainer
31		87656127		2	SCREW
32		NSS		1	NOT SERVICED SEPARATELY, Tank Seal, Tubes
33		87656110		1	FOAM, Foam, Drain Pan

HEATER AND AIR CONDITIONING ASSEMBLY

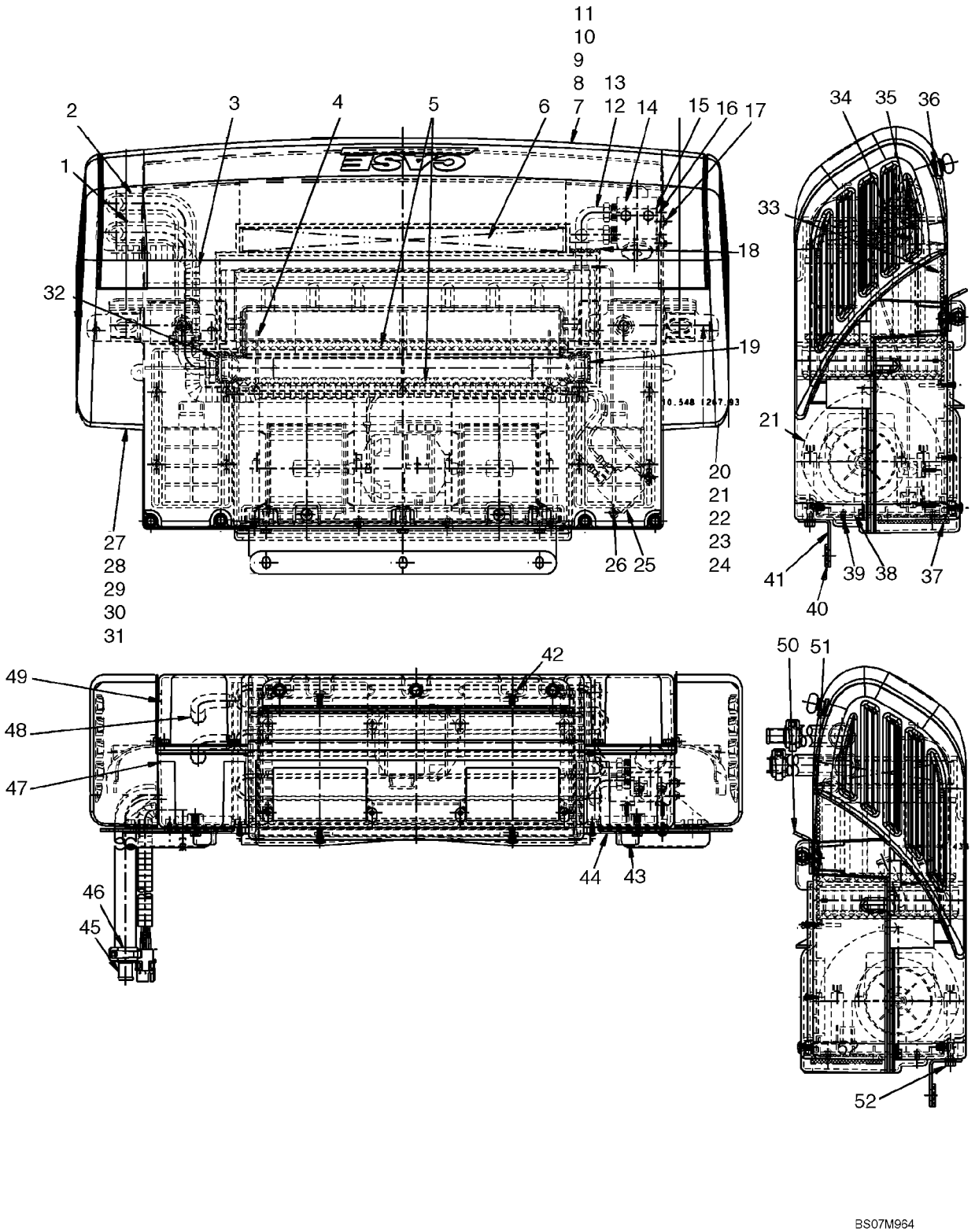

HEATER AND AIR CONDITIONING ASSEMBLY

REF	FN	PART NUMBER	YR/SN	QTY	DESCRIPTION
34		NSS		2	NOT SERVICED SEPARATELY, Bolt
35		NSS		2	NOT SERVICED SEPARATELY, Hex Nut
36		87656126		7	CLIP, Recepticle "U" Type
37		87656108		1	GASKET, Gasket, Blower Outlet
38		87656107		1	PLATE, Blower Mount Plate
39		NSS		8	NOT SERVICED SEPARATELY, Screw
40		87656097		1	GASKET, Neoprene Gasket, Front
41		87656106		1	BRACKET, Front Bracket
42		NSS		4	NOT SERVICED SEPARATELY, Screw
43		87656100		2	COVER
44		87656101		2	COVER
45		87035457		2	TUBE
46		NSS		4	NOT SERVICED SEPARATELY, Hose Clamp
47		87656102		1	BOTTOM, Bottom Case Half
48		87656103		1	CORE, Heater Core
49		87656104		1	TOP, Top Case Half
50		87656095		2	BRACKET
51		87656096		2	GASKET, Neoprene Gasket, Bottom
52		NSS		5	NOT SERVICED SEPARATELY, Screw

SEAT BAR

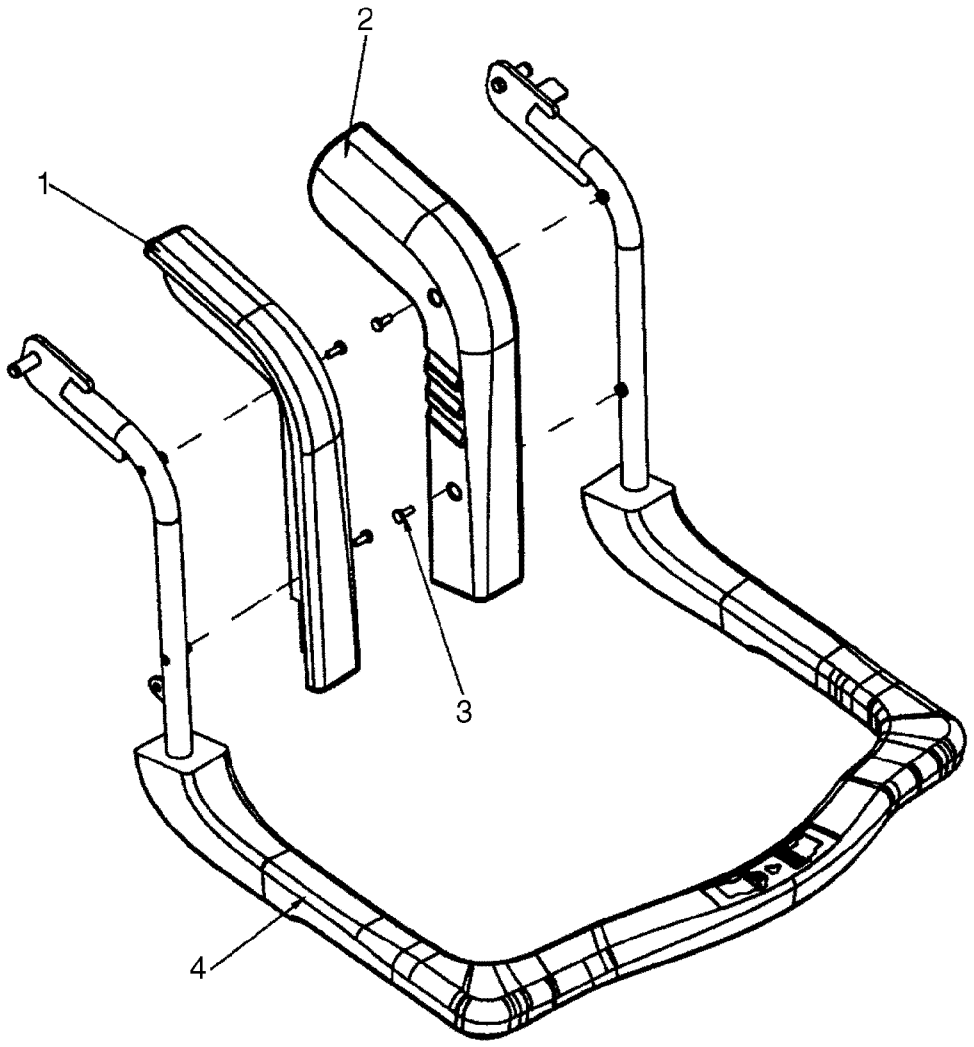

BS07J040

SEAT BAR

REF	FN	PART NUMBER	YR/SN	QTY	DESCRIPTION
1		87619938		1	SEAT, Arm, Upper Lap Bar, RH
2		87619939		1	SEAT, Arm, Upper Lap Bar, LH
3		86511829		4	SCREW, Cross Pan Hd, M6 x 16
4		87619935		1	SEAT, Lap Bar, Lower Section

SEAT BELT, LAP BELT (2 IN)

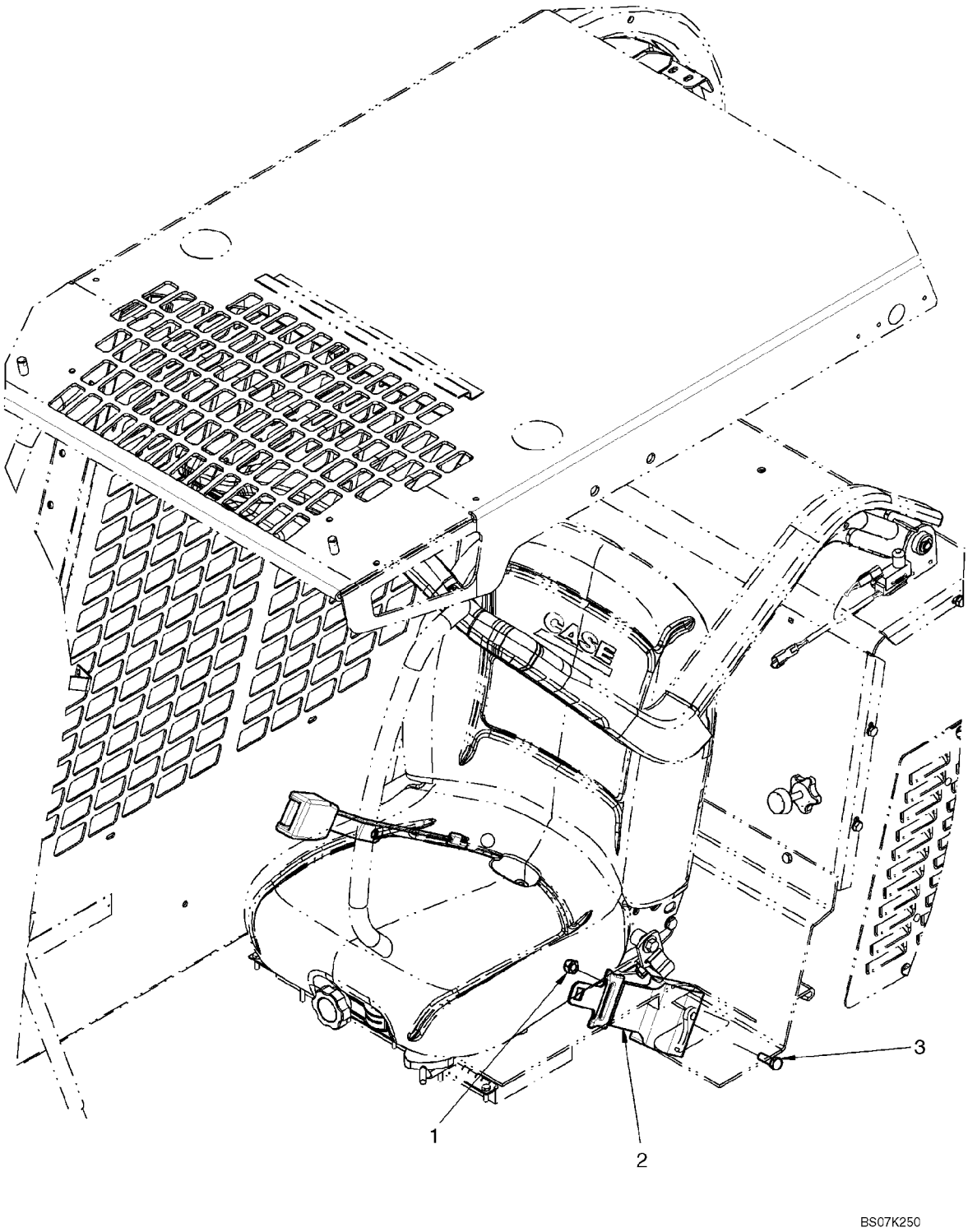

SEAT BELT, LAP BELT (2 IN)

REF	FN	PART NUMBER	YR/SN	QTY	DESCRIPTION
1		86512554		1	NUT, LOCK, M10 x 1.5, Cl 10
2		{87652259}		1	2" Lap Seat Belt
3		43140		1	BOLT, Hex, M10 x 30, 8.8, Full Thd

SEAT BELT, LAP BELT (3 IN)

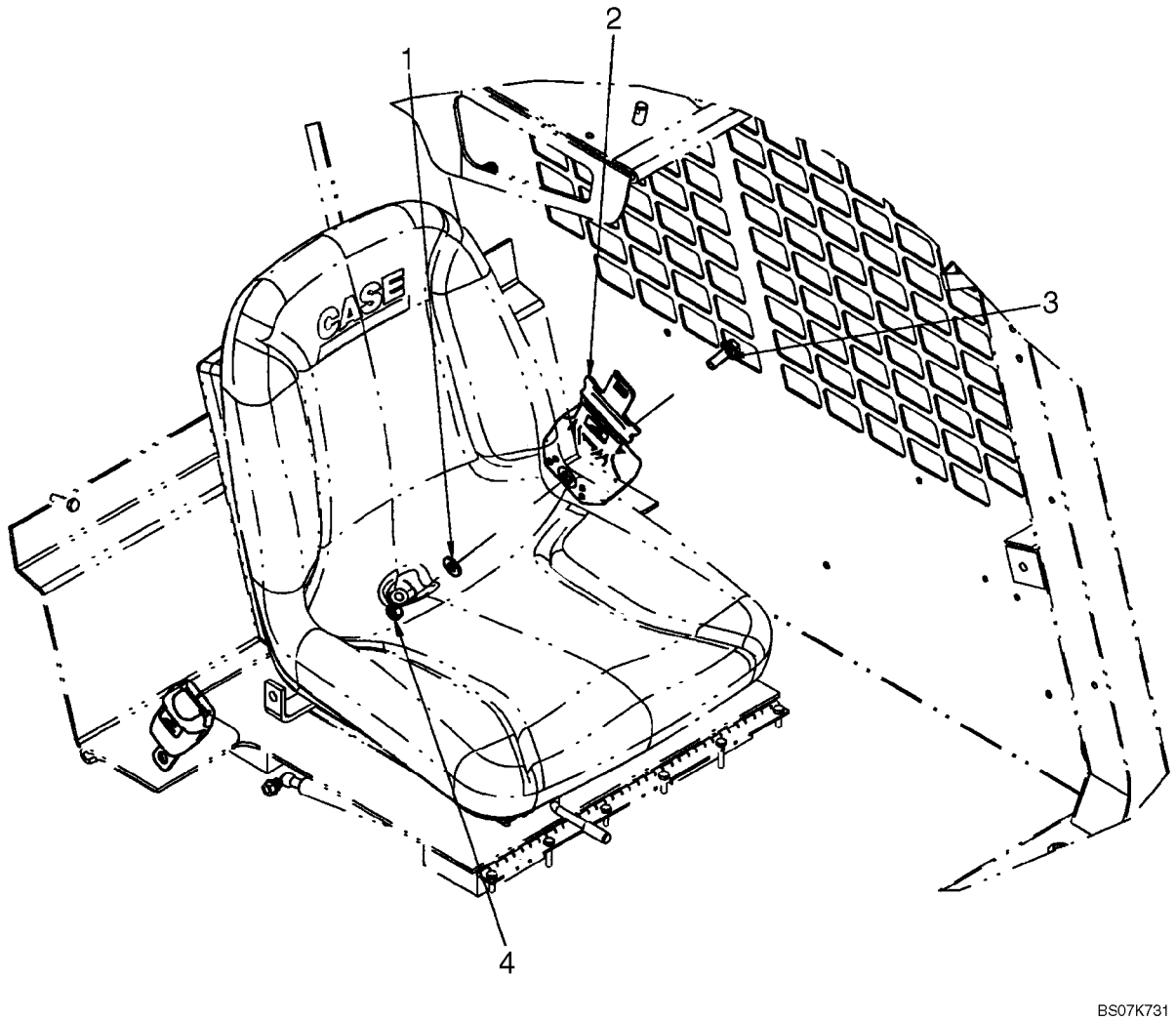

SEAT BELT, LAP BELT (3 IN)

REF	FN	PART NUMBER	YR/SN	QTY	DESCRIPTION
		87717673		1	KIT, SERVICE, Kit, 3 in. Lap Belt; Incl 1 - 4
1		86625253		1	WASHER, M11 x 24 x 2
2		87702506		1	SEAT BELT, 3" Lap Seat Belt
3		9804262		1	BOLT, Hex Flg, M10 x 30, 8.8
4		87030549		1	NUT, LOCK, M10 x 1.5, Cl 10

09-42		p1	12/07

SHOULDER BELT

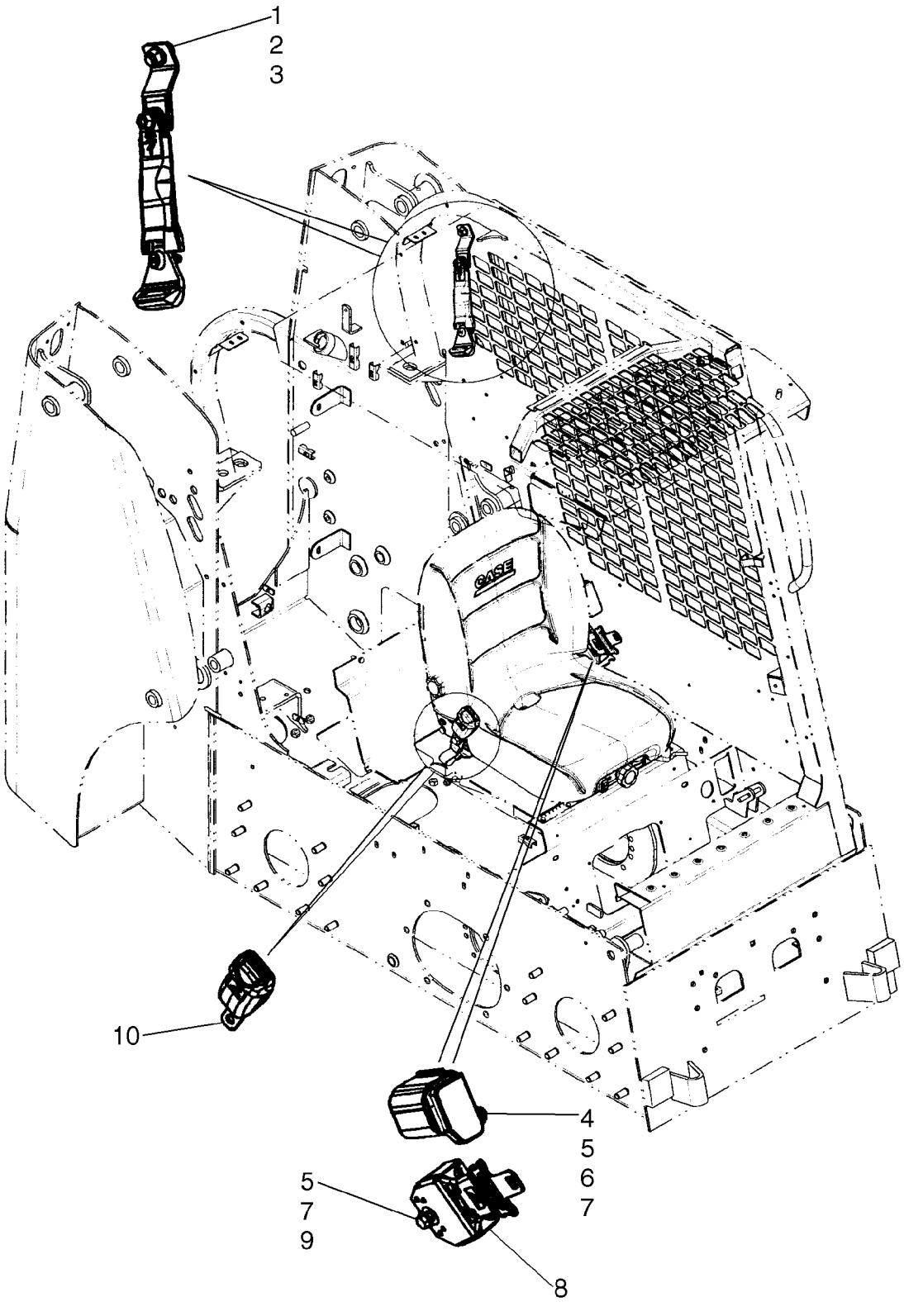

SHOULDER BELT

REF	FN	PART NUMBER	YR/SN	QTY	DESCRIPTION
		87717671		1	KIT, SERVICE, Kit, 2 in. Shoulder Belt; Incl 1 - 10
1		9804266		1	BOLT, Hex Flg, M12 x 25, 8.8
2		86625255		1	WASHER, M13.5 x 24.5 x 3, HT
3		9706685		1	NUT, M12, Cl 8
4		325829		1	BOLT, Hex, M10 x 45, 8.8
5		86625253		3	WASHER, M11 x 24 x 2
6		87047451		1	SPACER
7		87030549		2	NUT, LOCK, M10 x 1.5, Cl 10
8		87702278		1	SEAT BELT, 2 in Shoulder Belt Assy
9		9804262		1	BOLT, Hex Flg, M10 x 30, 8.8
10		REF			INSTRUCTION, Buckle Mounts To Seat Frame With Bolt And Washer Provided With Seat

SEAT MOUNTING - SUSPENSION SEAT

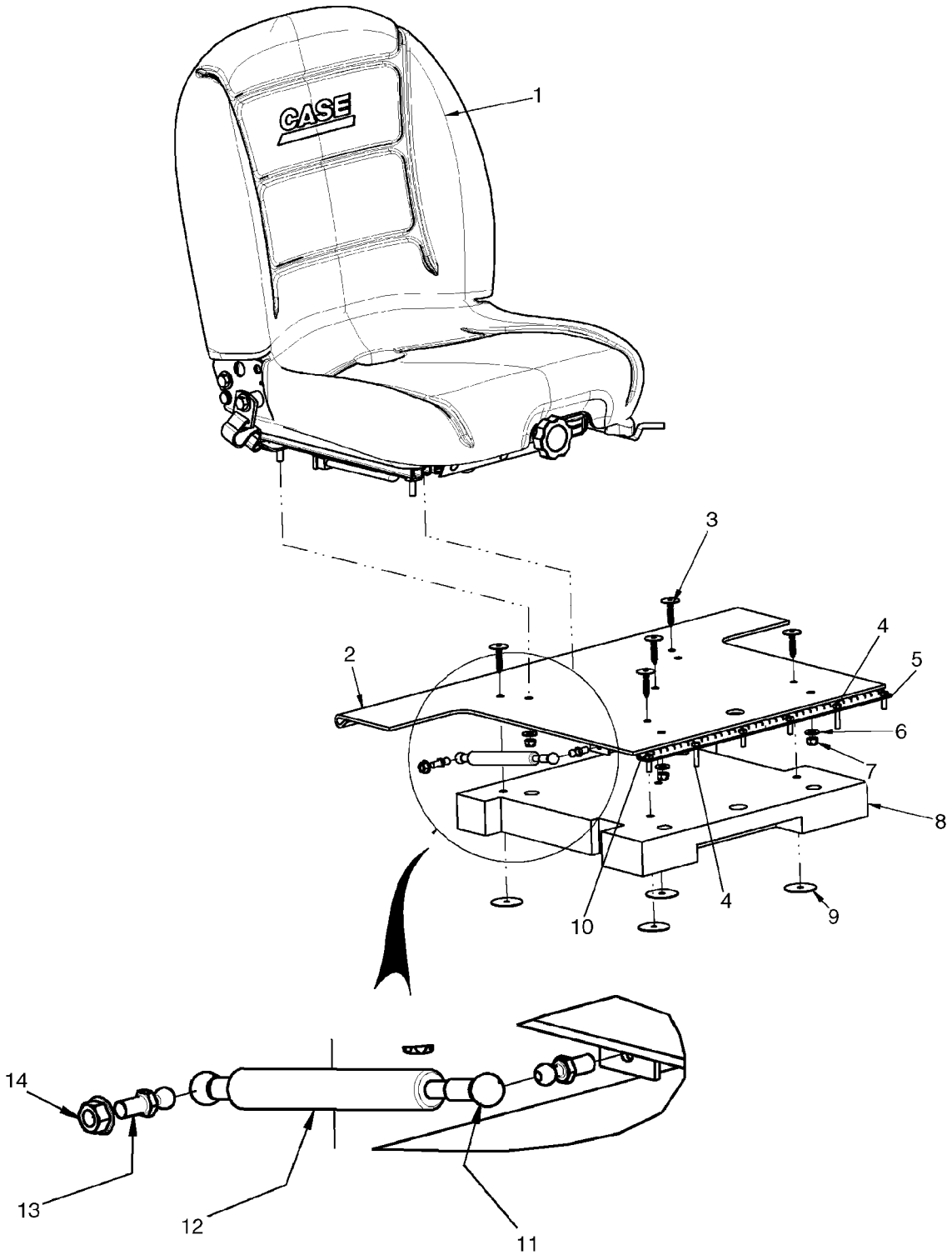

SEAT MOUNTING - SUSPENSION SEAT

REF	FN	PART NUMBER	YR/SN	QTY	DESCRIPTION
1		87662513		1	SEAT, Suspension Seat Assembly, Wheat Color
2		{87676122}		1	Seat Hinge Plate
3		348452A1		5	SCREW, Push In Fastener
4		80120101		2	SCREW, M6 X 30, 8.8 ZND
5		120100		4	BOLT, Hex, M6 x 20, 8.8
6		86625263		4	WASHER, M8 x 20 x 1.6
7		9628098		4	NUT, LOCK, M8 x 1.25, Cl 10
8		{87676124}		1	Pad, Seat Noise Control
9		348434A1		5	WASHER
10		{87676121}		1	Seat Hinge Stiffener
11		254307A1		2	RING, SPECIAL
12		189787A2		1	SHOCK ABSORBER
13		189609A1		2	STUD, Ball Stud, 10mm Ball X M8 X 1.25 Thd
14		86505868		2	NUT, M8, Flg Ser

SEAT MOUNTING - DELUXE SUSPENSION SEAT

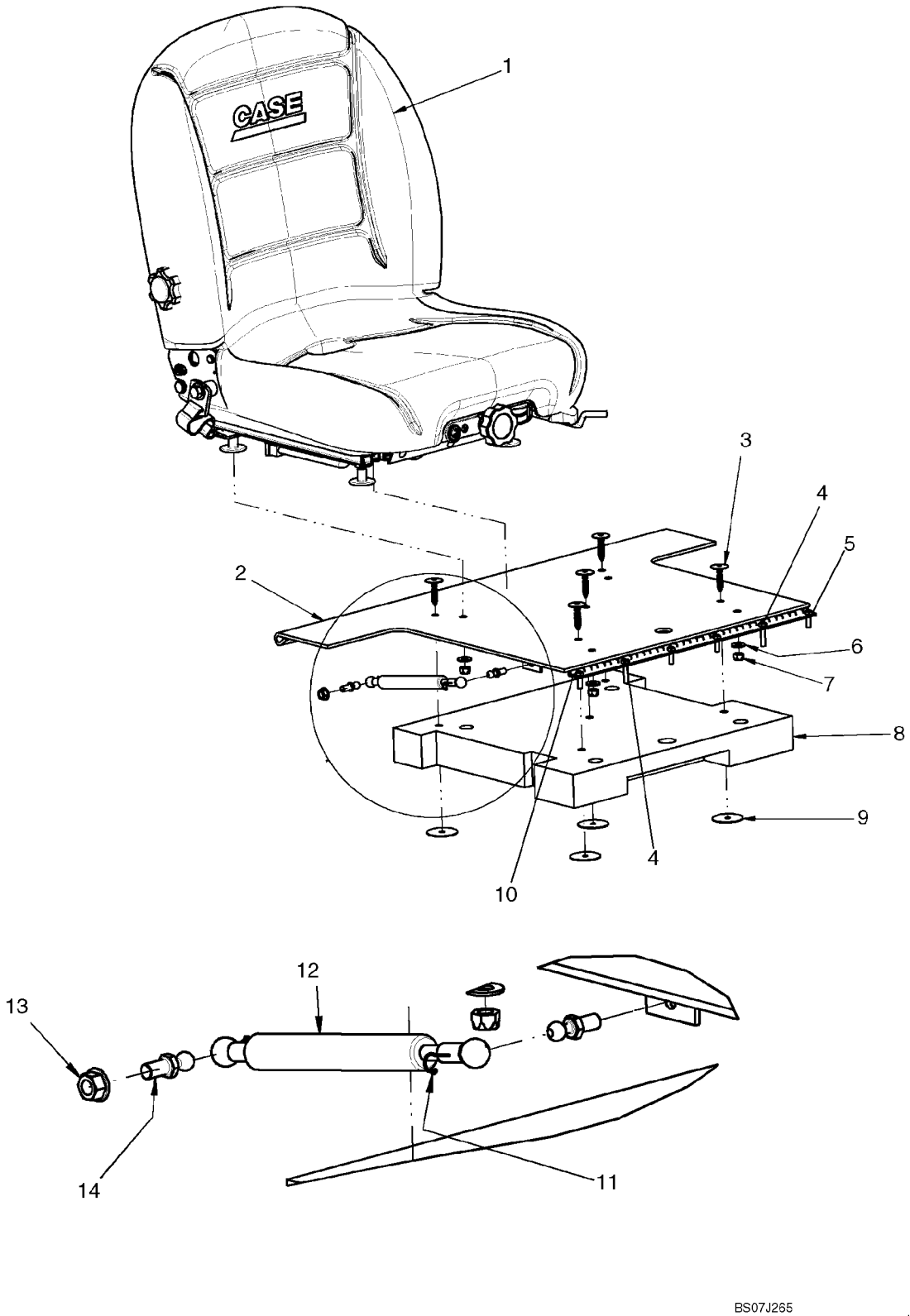

SEAT MOUNTING - DELUXE SUSPENSION SEAT

REF	FN	PART NUMBER	YR/SN	QTY	DESCRIPTION
1		87662514		1	SEAT, Suspension Seat Assembly - Deluxe, Cloth Seat
2		{87676122}		1	Seat Hinge Plate
3		348452A1		5	SCREW, Push In Fastener
4		80120101		2	SCREW, M6 X 30, 8.8
5		120100		4	BOLT, Hex, M6 x 20, 8.8
6		86625263		4	WASHER, M8 x 20 x 1.6
7		9628098		4	NUT, LOCK, M8 x 1.25, Cl 10
8		{87676124}		1	Pad, Seat Noise Control
9		348434A1		5	WASHER
10		{87676121}		1	Seat Hinge Stiffener
11		254307A1		2	RING, SPECIAL
12		189787A2		1	SHOCK ABSORBER
13		86505868		2	NUT, M8, Flg Ser
14		189609A1		2	STUD, Ball Stud, 10mm Ball X M8 X 1.25 Thd

SEAT MOUNTING - STANDARD SEAT

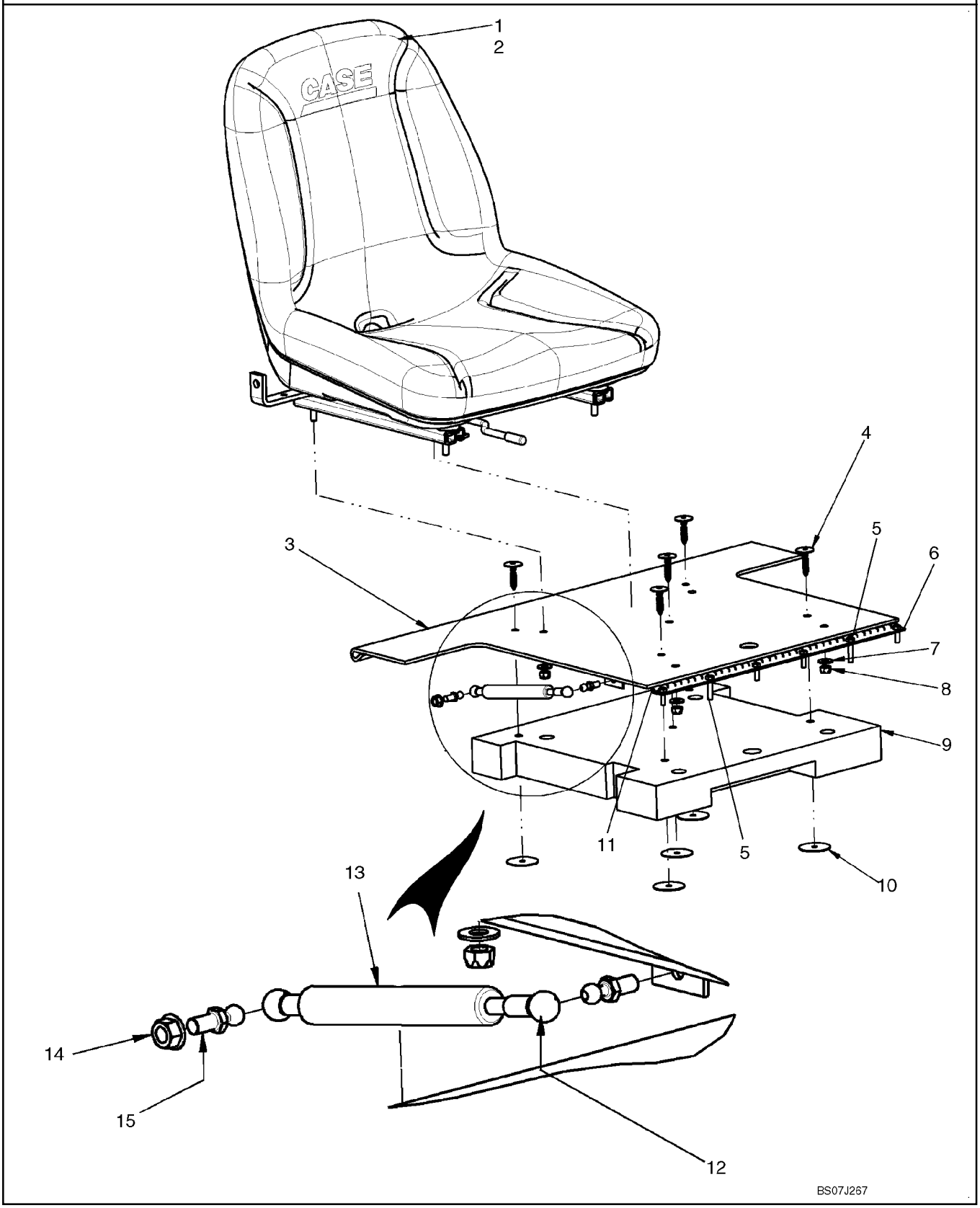

SEAT MOUNTING - STANDARD SEAT

REF	FN	PART NUMBER	YR/SN	QTY	DESCRIPTION
1		87405117		1	SEAT, Seat, Mid-Back - Wheat Color; Incl. 2, 2A
2		86603490		1	SWITCH, Operator Presence
2A		302137A2		1	HARNESS, Operator Presence Switch Harness With 2 Connectors; Not Illustrated
3		{87676122}		1	Seat Hinge Plate
4		348452A1		5	SCREW, Push In Fastener
5		80120101		2	SCREW, M6 x 30, 8.8 ZND
6		120100		4	BOLT, Hex, M6 x 20, 8.8
7		86625263		4	WASHER, M8 x 20 x 1.6
8		9628098		4	NUT, LOCK, M8 x 1.25, Cl 10
9		{87676124}		1	Pad, Seat Noise Control
10		348434A1		5	WASHER
11		{87676121}		1	Seat Hinge Stiffener
12		254307A1		2	RING, SPECIAL
13		189787A2		1	SHOCK ABSORBER
14		86505868		2	NUT, M8, Flg Ser
15		189609A1		2	STUD, Metric Ball Stud, 10mm Ball x M8 X 1.25 Thd

FLOOR MAT

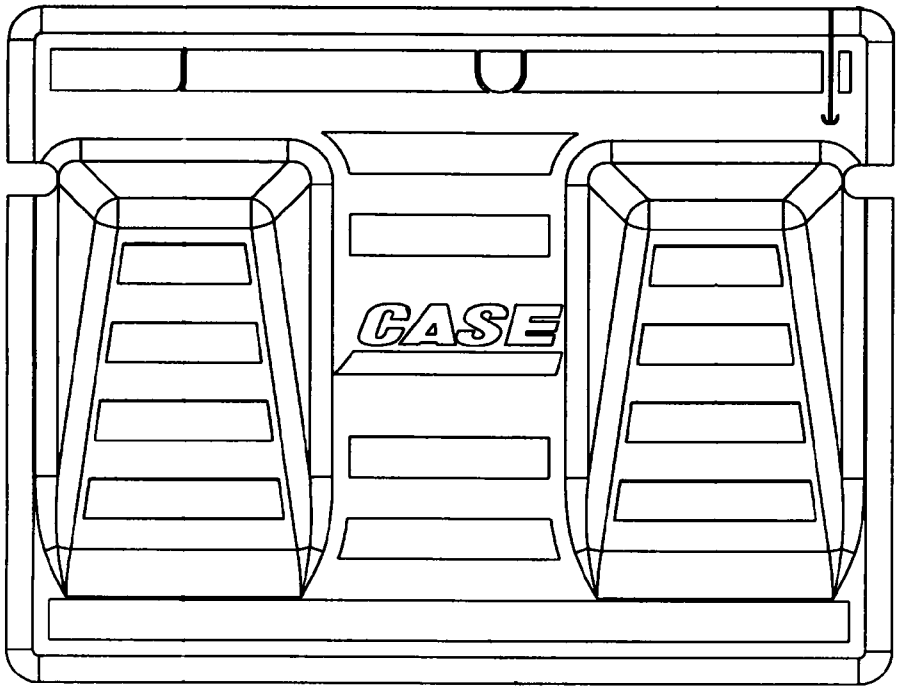

1

BS05D044

FLOOR MAT

REF	FN	PART NUMBER	YR/SN	QTY	DESCRIPTION
1		87461561		1	MAT, FLOOR, Rubber; Molded Foot Rests

REAR VIEW MIRROR

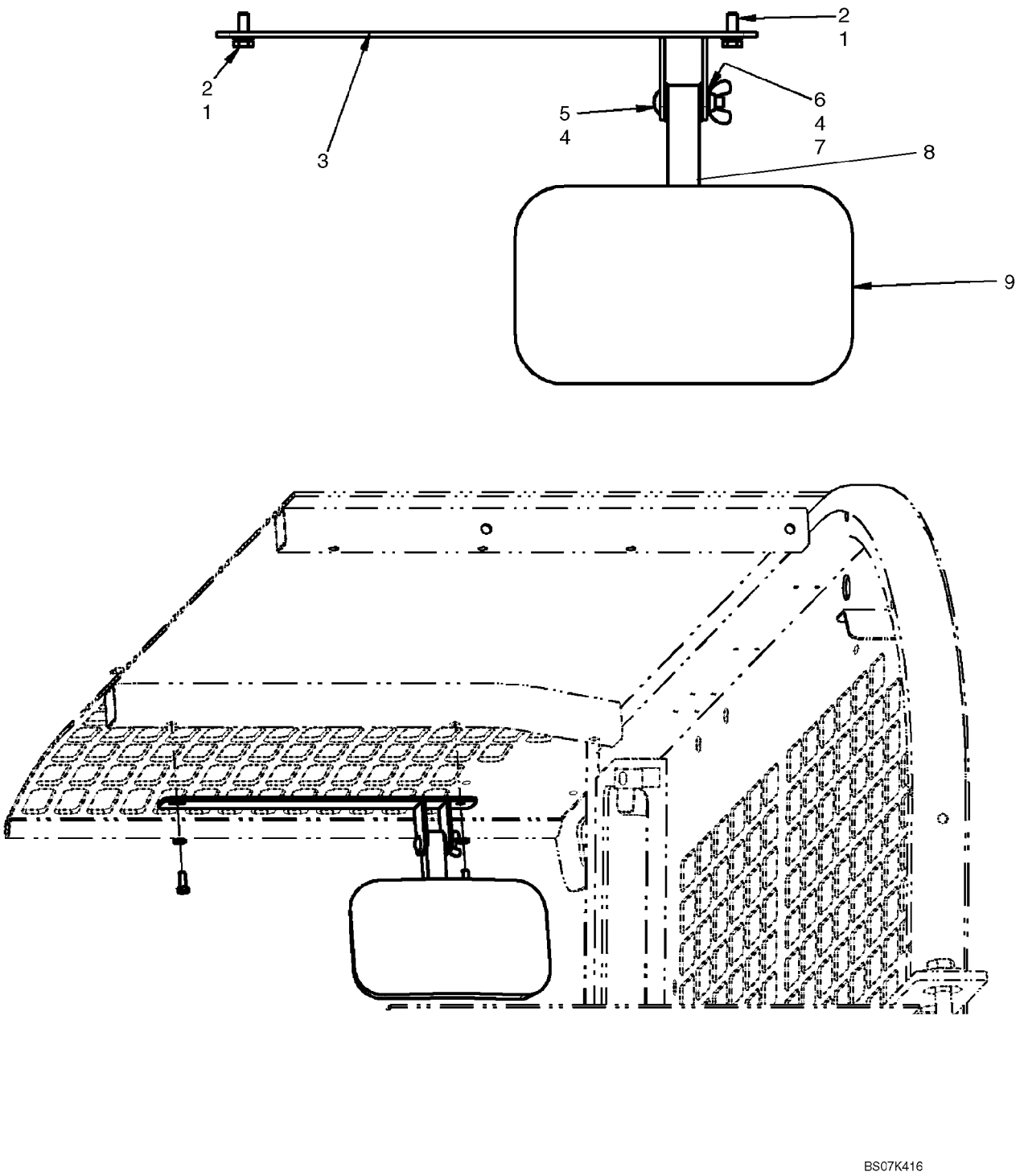

REAR VIEW MIRROR

REF	FN	PART NUMBER	YR/SN	QTY	DESCRIPTION
		87636518		1	KIT, SERVICE, Kit, Interior Mirror; Incl 1 - 9
1		86517328		2	WASHER, LOCK, M6
2		86508568		2	BOLT, Hex, M6 x 16, 8.8
3		87684661		1	PLATE, MOUNTING, Rear View Mirror Mount
4		NSS		2	NOT SERVICED SEPARATELY, Nylon Washer
5		9849641		1	BOLT, CARRIAGE, Short NK, 1/4"-20 x 1 1/2", G5
6		87016587		1	WASHER, 1/4"
7		126177		1	DISC, Wing Nut
8		87684681		1	TUBE, Tube, Rear View Mirror Support
9		87441735		1	MIRROR ASSY.

SPECIAL PARTS FOR ITALY - MIRROR, REAR VIEW

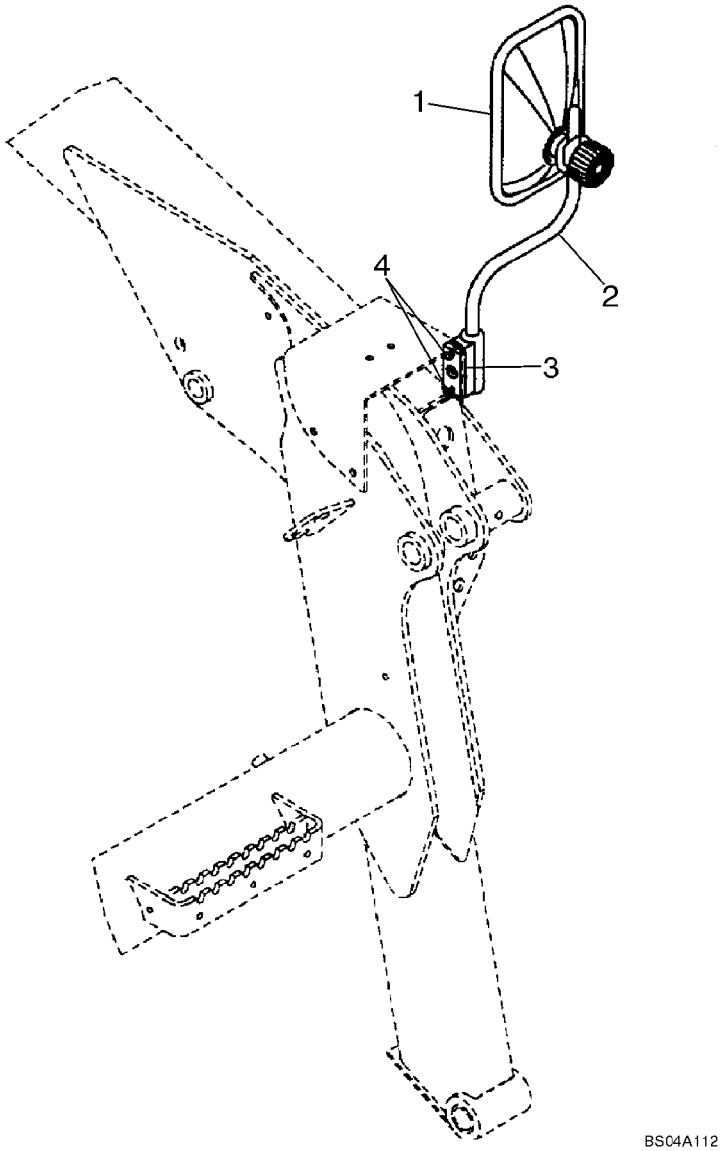

SPECIAL PARTS FOR ITALY - MIRROR, REAR VIEW

REF	FN	PART NUMBER	YR/SN	QTY	DESCRIPTION
1		235994A1		1	MIRROR
2		310860A1		1	SUPPORT
3		432895A1		1	SPACER
4		614-6025		2	BOLT, Hex, M6 x 25, 8.8, M6 x 25

TOP WINDOW

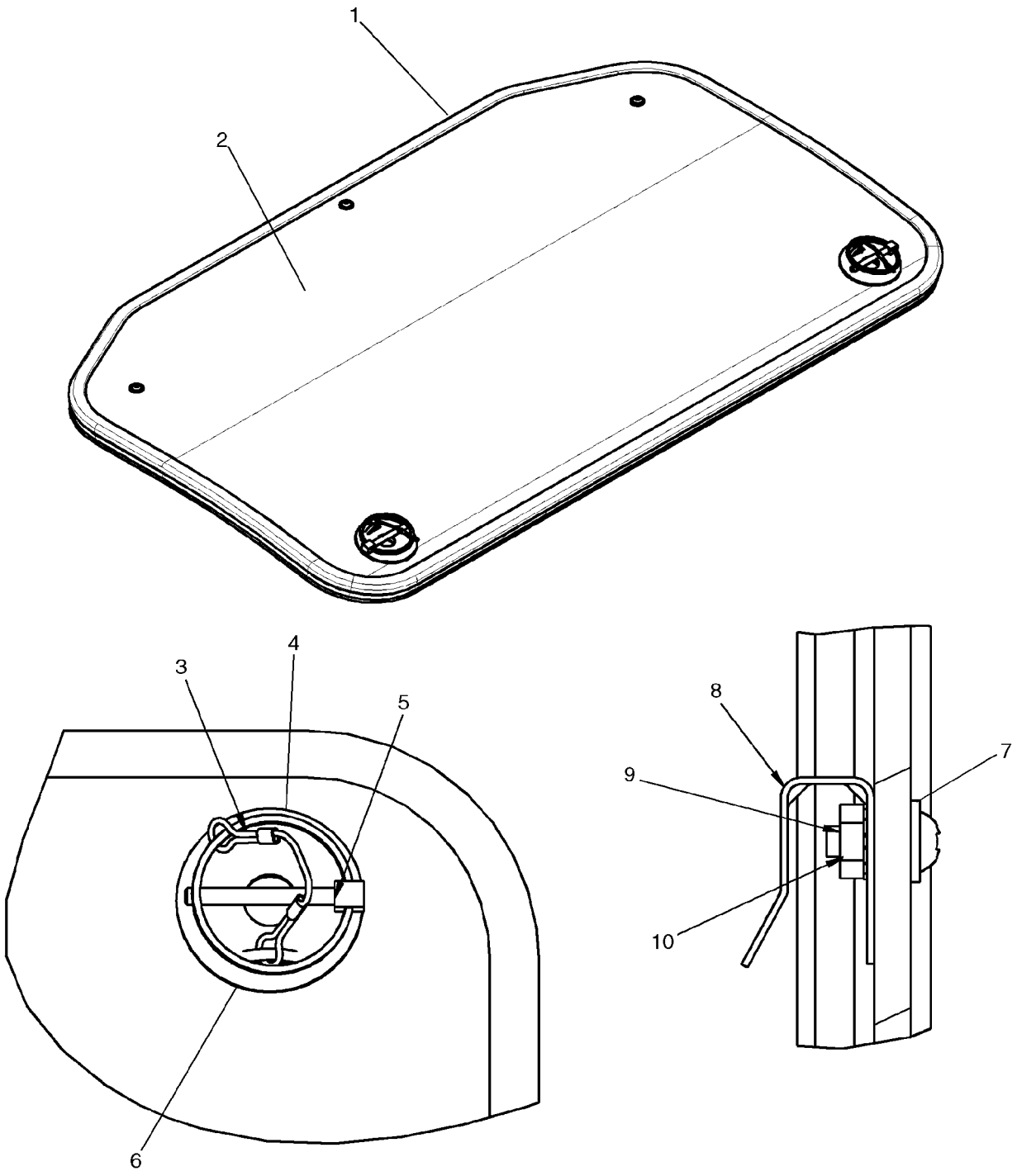

TOP WINDOW

REF	FN	PART NUMBER	YR/SN	QTY	DESCRIPTION
		87715833		1	PLASTIC, Top Window; Incl. 1 - 10
1		NSS		1	NOT SERVICED SEPARATELY, Bulb Seal
2		NSS		1	NOT SERVICED SEPARATELY, Window
3		NSS		2	NOT SERVICED SEPARATELY, Cable
4		NSS		4	NOT SERVICED SEPARATELY, Cable Crimp
5		NSS		2	NOT SERVICED SEPARATELY, Linch Pin
6		NSS		2	NOT SERVICED SEPARATELY, Mount, Skylight Pin
7		280299		3	WASHER, #8
8		NSS		3	NOT SERVICED SEPARATELY, Clip
9		NSS		3	NOT SERVICED SEPARATELY, Nut, #8-32 UNC
10		81822758		3	SCREW, Cross Pan Hd, #8-32 x 1/2"

SIDE WINDOWS

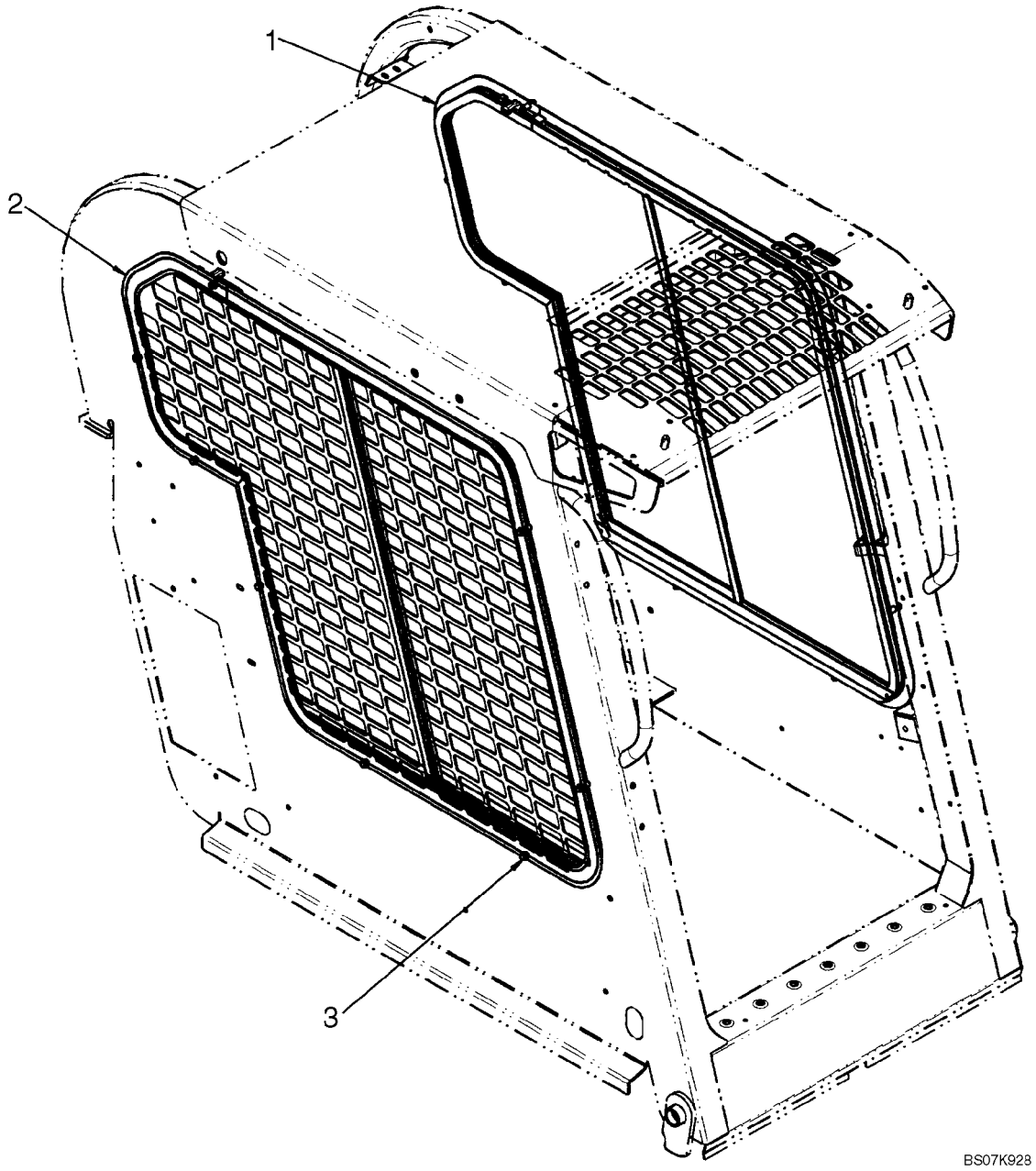

SIDE WINDOWS

REF	FN	PART NUMBER	YR/SN	QTY	DESCRIPTION
		87638358		1	KIT, SERVICE, Kit, Side Windows; Incl. 1 - 3 And Instructions
1		87657669		1	WINDOW, LH Side
2		87657670		1	WINDOW, RH Side
3		87030555		16	BOLT, Hex Flange Head M6 x 16 8.8 PHC

HEADLINER - STANDARD

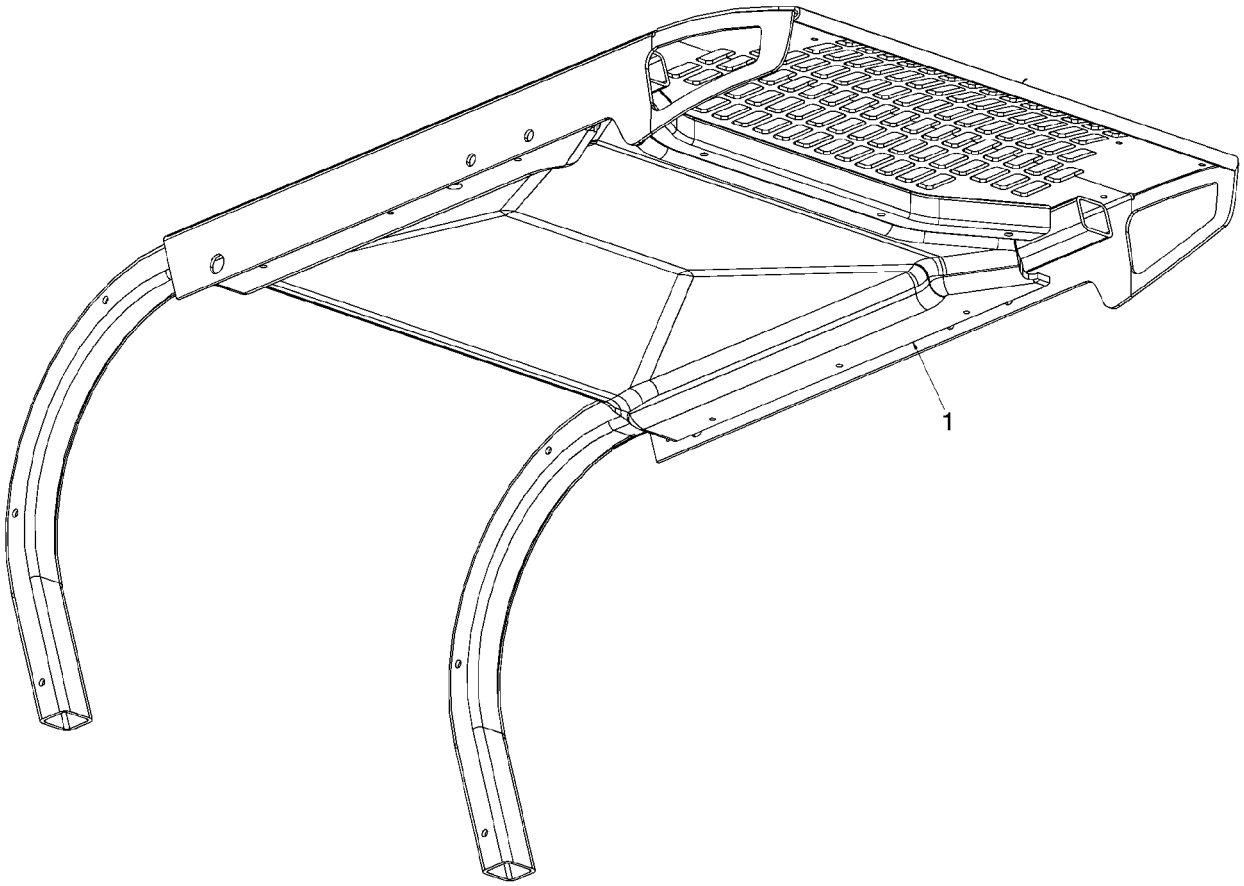

BS07K108

HEADLINER - STANDARD

REF	FN	PART NUMBER	YR/SN	QTY	DESCRIPTION
1		{87669944}		1	Headliner, Standard

HEADLINER - HEATER AND AIR CONDITIONING

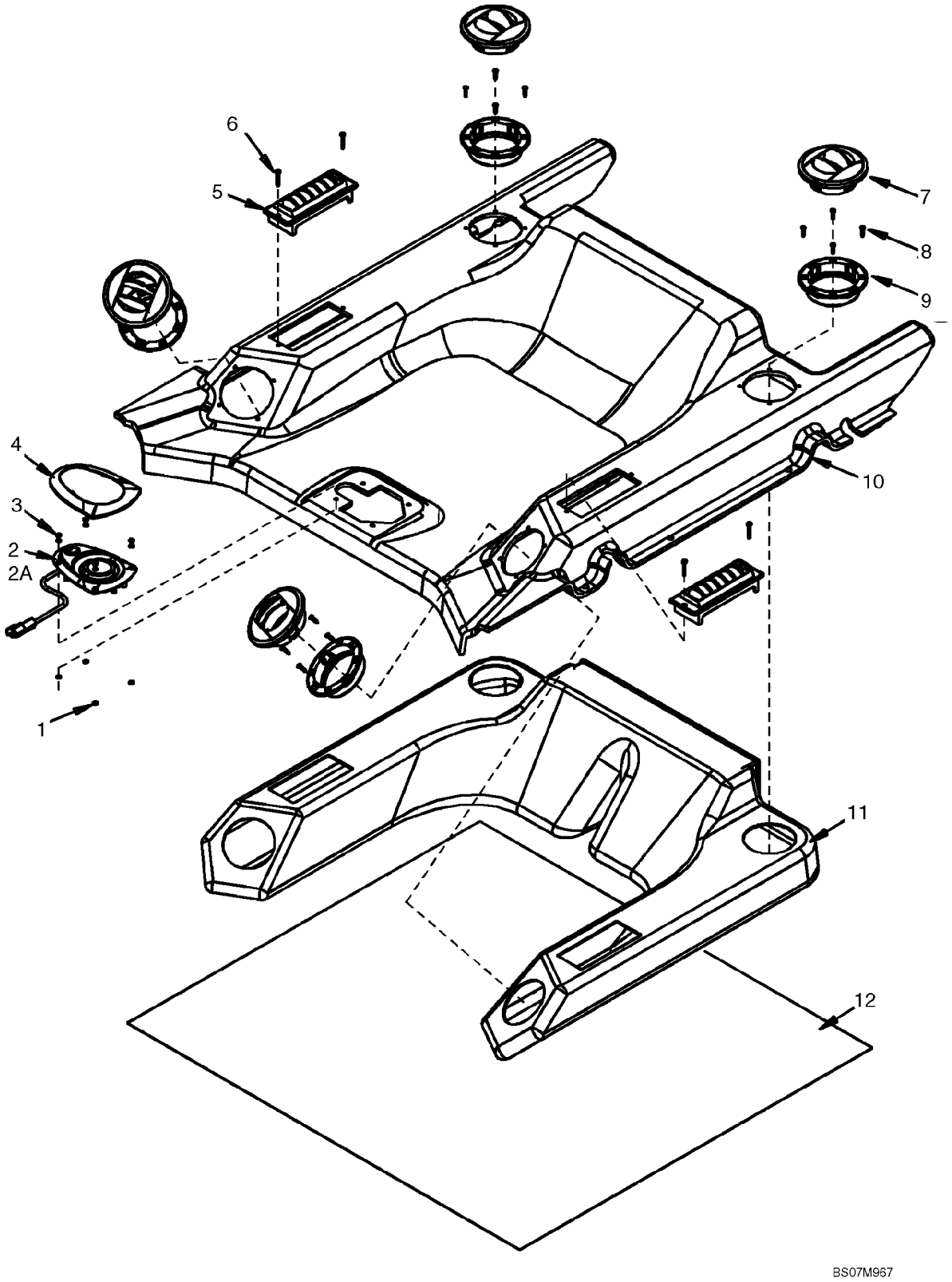

HEADLINER - HEATER AND AIR CONDITIONING

REF	FN	PART NUMBER	YR/SN	QTY	DESCRIPTION
1		NSS		4	NOT SERVICED SEPARATELY, Washer
2		87414959		1	LAMP, Incl 2A
2A		373114A1		1	BULB
3		NSS		4	NOT SERVICED SEPARATELY, Pop Rivet
4		NSS		1	NOT SERVICED SEPARATELY, Dome Light Bezel
5		86620864		2	VENT
6		NSS		4	NOT SERVICED SEPARATELY, Screw
7		NSS		4	NOT SERVICED SEPARATELY, Louver
8		NSS		16	NOT SERVICED SEPARATELY, Screw
9		NSS		4	NOT SERVICED SEPARATELY, Louver Housing
10		NSS		1	NOT SERVICED SEPARATELY, Headliner, CPXT
11		NSS		1	NOT SERVICED SEPARATELY, Duct
12		NSS		1	NOT SERVICED SEPARATELY, Insulation Wrap

REAR WINDOW

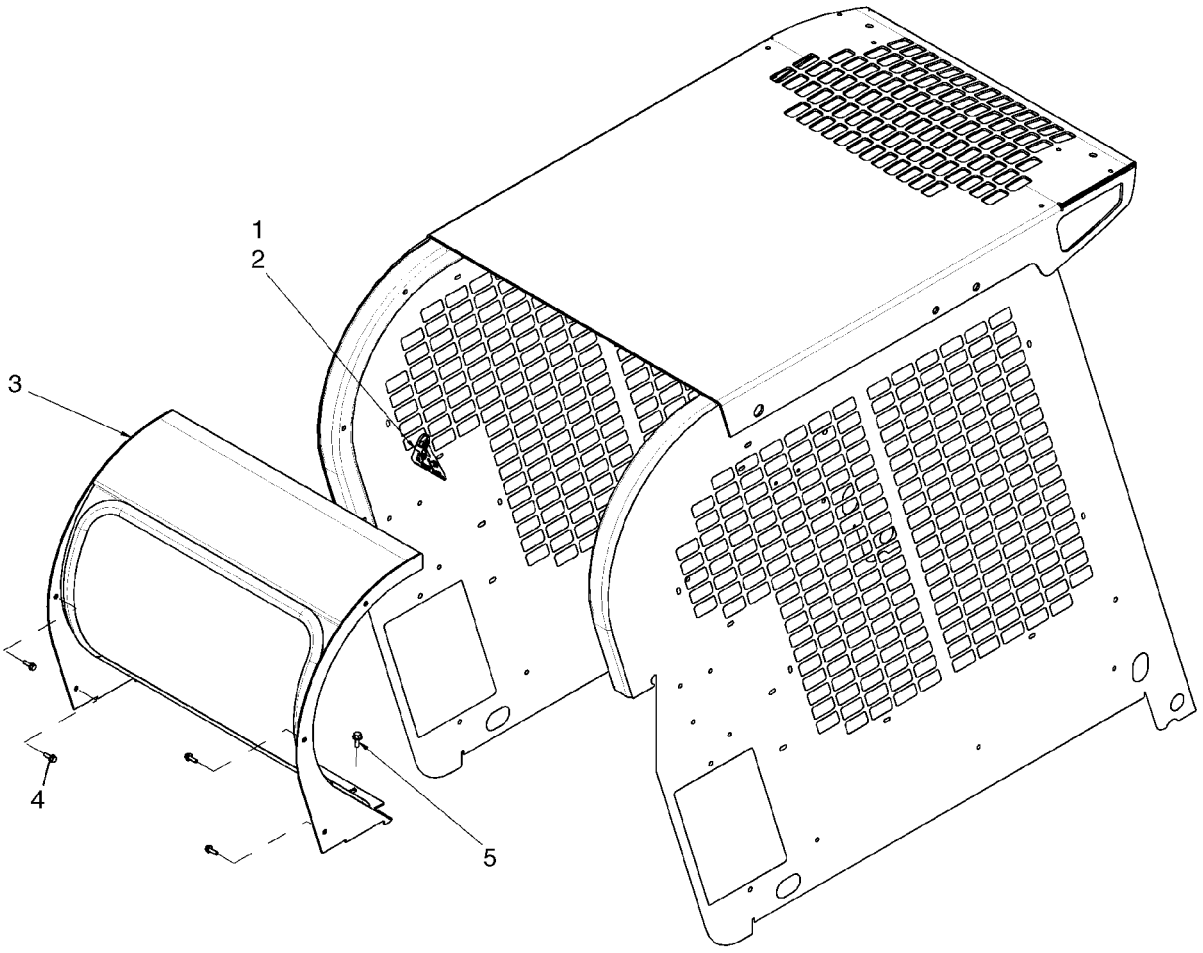

BS07K248

REAR WINDOW

REF	FN	PART NUMBER	YR/SN	QTY	DESCRIPTION
1		263117		1	STRAP, CABLE, .14" x 11 1/2"
2		87026871		1	PLASTIC SIGN, Exit Tag
3		87626406		1	WINDOW, Rear Window
4		9804256		9	BOLT, Hex Flg, M6 x 20, 8.8
5		9804258		3	BOLT, Hex Flg, M8 x 20, 8.8

REAR WINDOW - HEAT AND AIR CONDITIONING

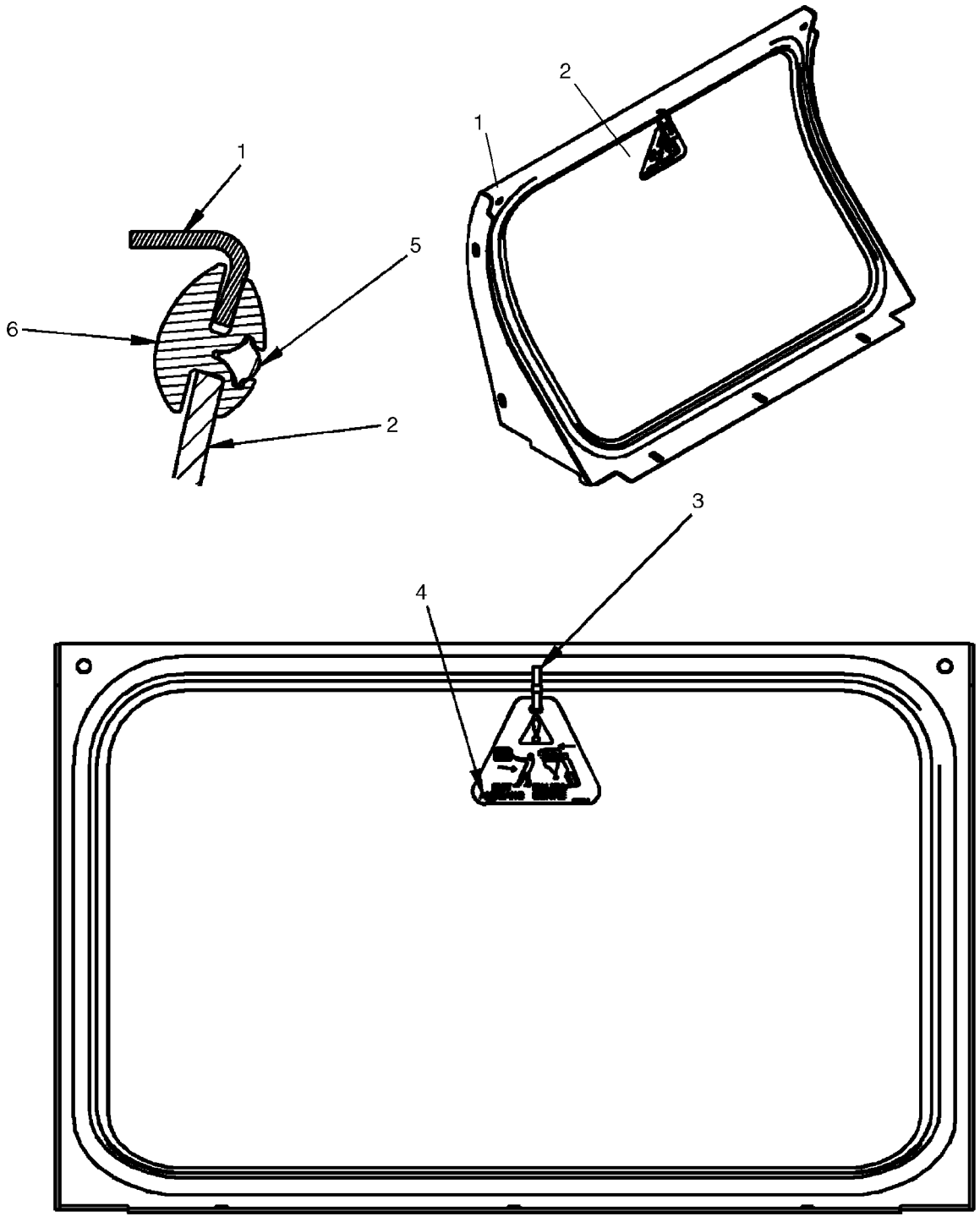

REAR WINDOW - HEAT AND AIR CONDITIONING

REF	FN	PART NUMBER	YR/SN	QTY	DESCRIPTION
1		{87705428}		1	Frame, Rear HVAC Window
2		{87641703}		1	Glass, Rear HVAC Window
3		263117		1	STRAP, CABLE, .14" x 11 1/2"
4		87026871		1	PLASTIC SIGN, Exit Tag
5		{87643808}		1	Key, Locking
6		{87641704}		1	Seal, H Channel HVAC Window

09-55		p1	12/07

HEAT SHIELD

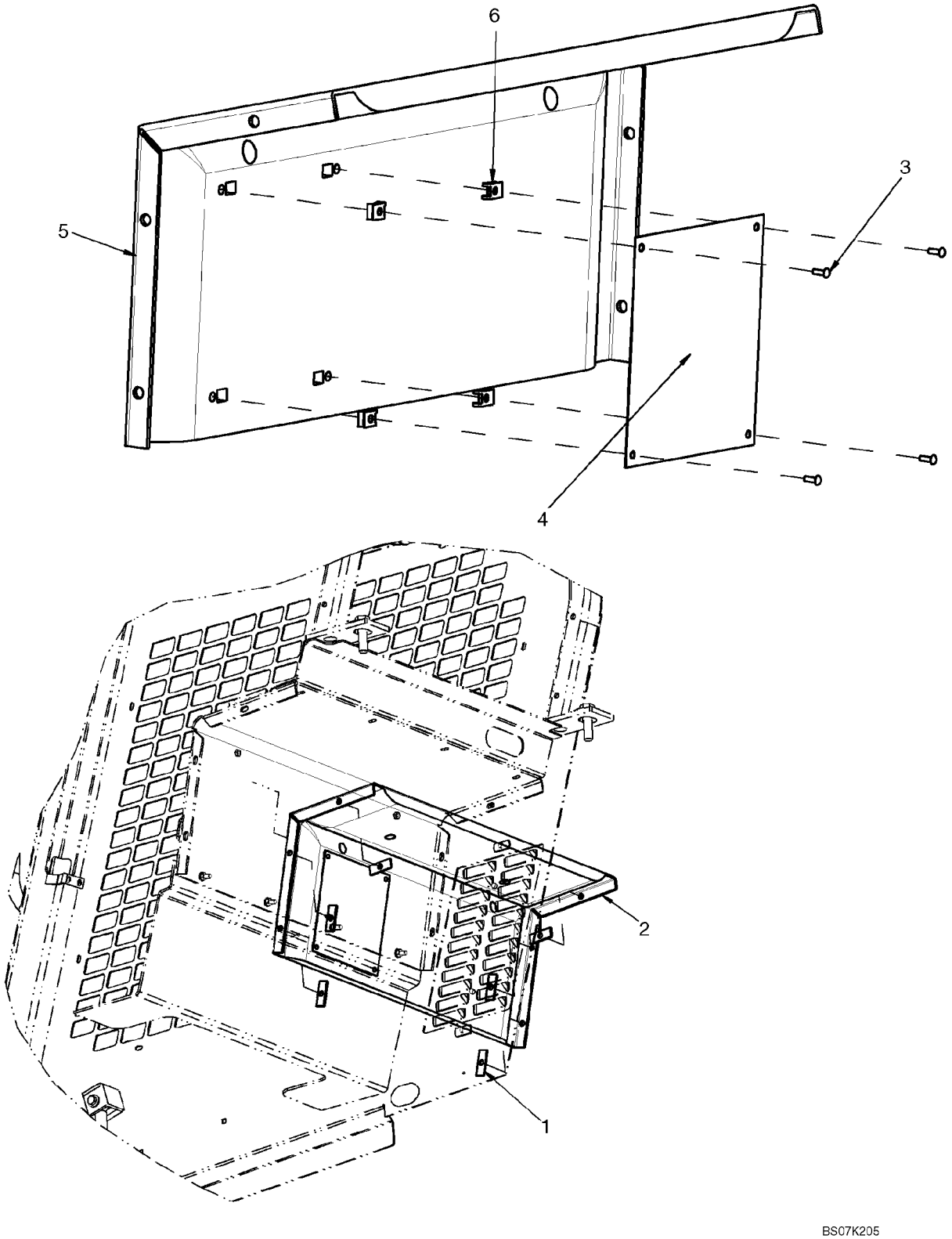

HEAT SHIELD

REF	FN	PART NUMBER	YR/SN	QTY	DESCRIPTION
1		87460558		6	BAR, Mounting Bar
2		{87679671}		1	Heat Shield
3		NSS		4	NOT SERVICED SEPARATELY, Screw, Pan Head #8 X 1/2 in.
4		NSS		1	NOT SERVICED SEPARATELY, Heat Shield
5		NSS		1	NOT SERVICED SEPARATELY, Heat Shield Insulation
6		NSS		4	NOT SERVICED SEPARATELY, Spring Nut

INTERIOR TRIM

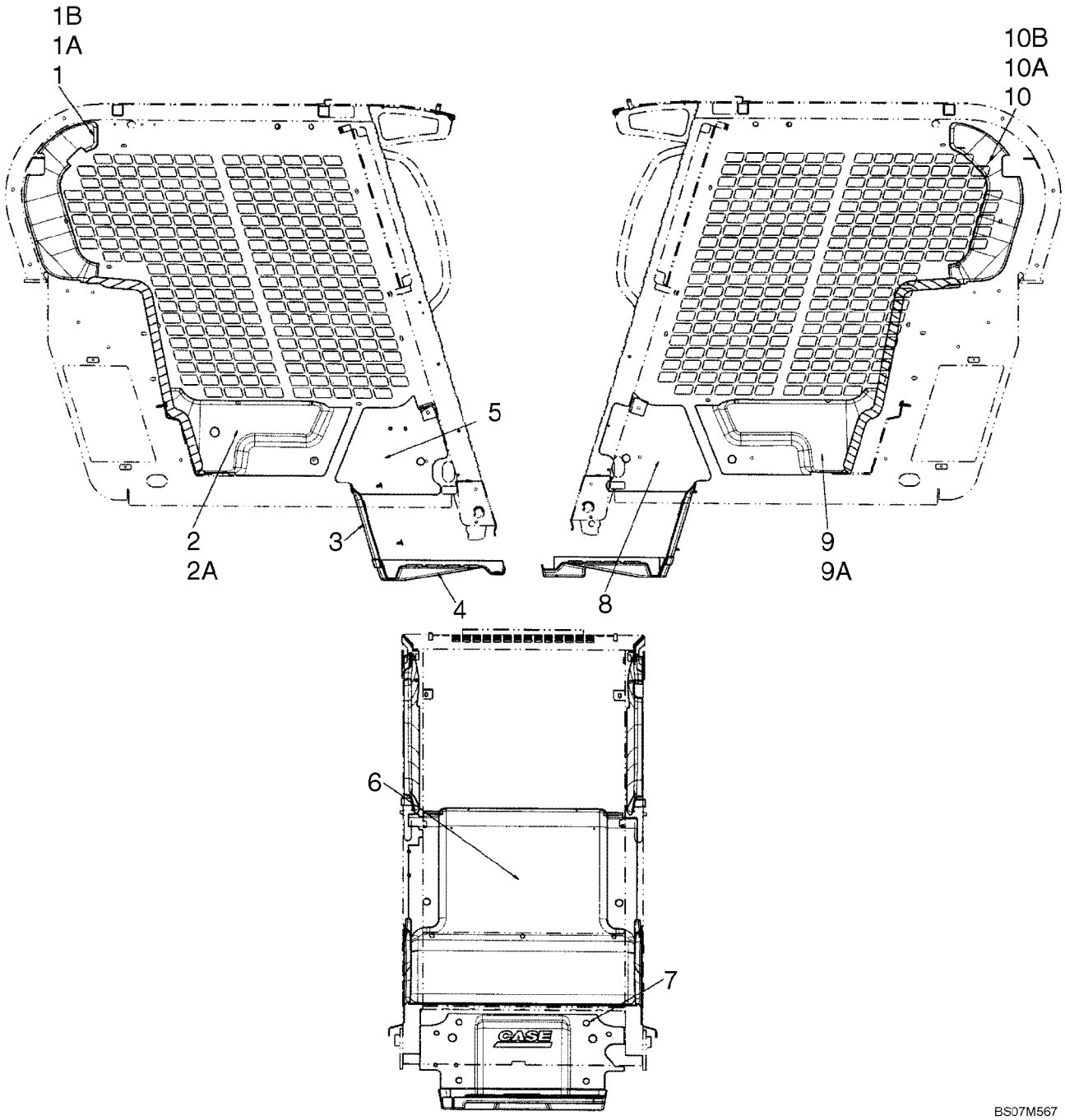

INTERIOR TRIM

REF	FN	PART NUMBER	YR/SN	QTY	DESCRIPTION
1		87685891		1	LINER, Panel, Upper Right Rear; Incl 1A, 1B
		87638514		1	KIT, SERVICE, Kit, Interior Trim; Incl 1 - 10B
1A		87685911		1	FOAM, Retainer, Foam Block
1B		87685909		1	FOAM, Retainer, Foam Block
2		87730070		1	LINER, Panel, Lower Right Rear
2A		87685909		1	FOAM, Retainer, Foam Block
3		87730822		1	MAT, FLOOR, Mat, Heel Plate
4		87712700		1	MAT, FLOOR, Floor Mat
5		87727752		1	LINER, Interior Trim, Bottom RH
6		87672098		1	LINER, Trim, Interior Heat Shield
7		87712706		4	FASTENER, Fastener, Push In
8		87727748		1	LINER, Interior Trim, Bottom LH
9		87730069		1	LINER, Panel, Lower Left Rear
9A		87685909		1	FOAM, Retainer, Foam Block
10		87685888		1	LINER, Panel, Upper Left Rear
10A		87685911		1	FOAM, Retainer, Foam Block
10B		87685909		1	FOAM, Retainer, Foam Block

RADIO - SPEAKERS AND ANTENNA

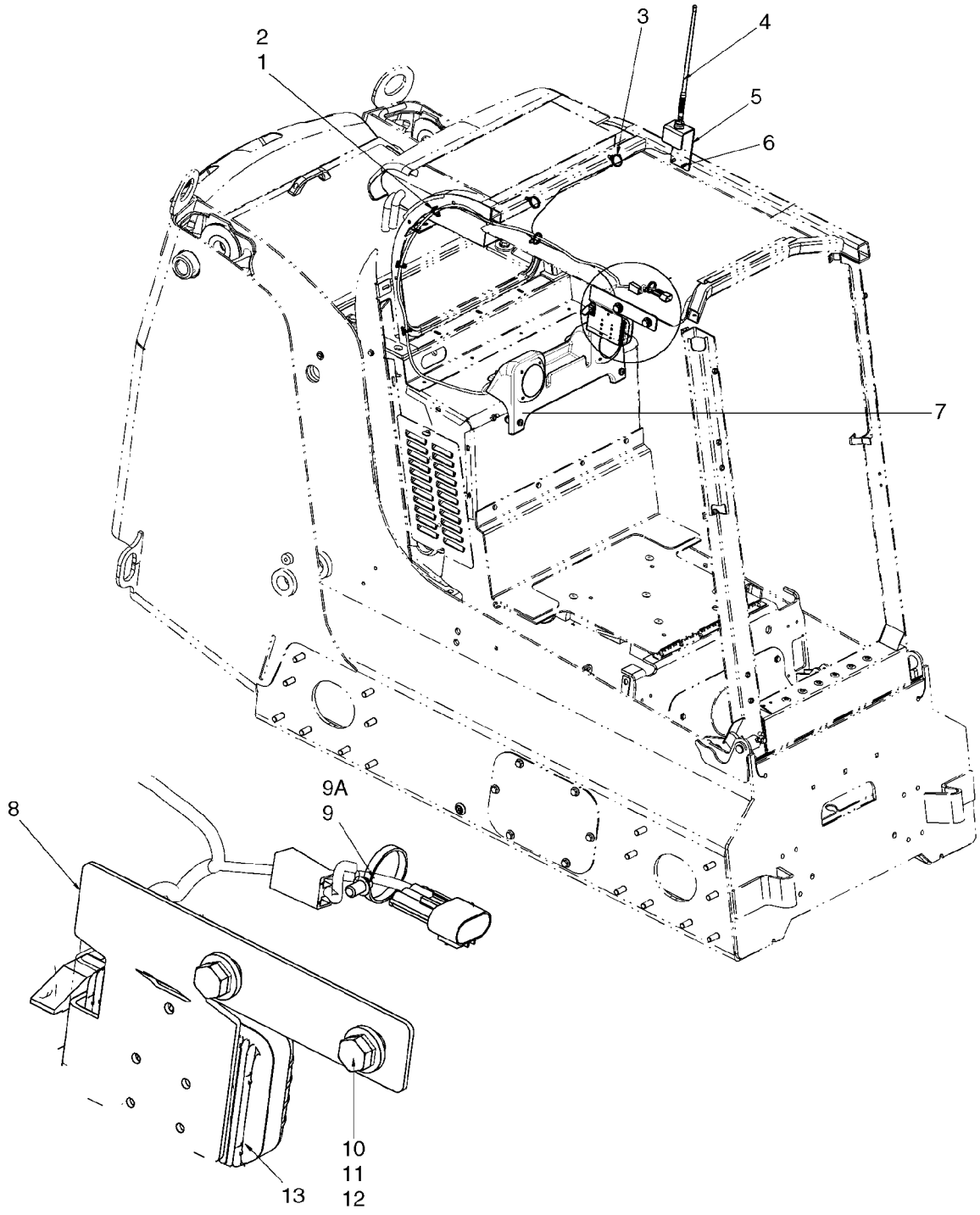

RADIO - SPEAKERS AND ANTENNA

REF	FN	PART NUMBER	YR/SN	QTY	DESCRIPTION
		87652337		1	KIT, SERVICE, Kit, Radio; Incl 1 - 13
1		87642915		3	STRAP, CABLE
2		87642914		3	BASE
3		87668737		4	STRAP
4		87668735		1	ANTENNA, Antenna, Rubber Mast
5		87682711		1	BRACKET, Antenna, Bracket
6		86625224		2	SCREW, Screw, 1/4-20 X 3/4 Hex Head
7		REF		1	INSTRUCTION, Speakers And Housing; See Fig 09-58
8		NSS		1	NOT SERVICED SEPARATELY, Radio Mounting Bracket
9		87658636		1	HARNESS, Radio Harness; Incl 9A
9A		A149796		1	FUSE, Fuse, 3A
10		43260		2	BOLT, Hex, M12 x 30, 10.9
11		412672		2	NUT, LOCK, M12 x 1.75, Cl 10
12		86625256		4	WASHER, M12 x 28.5 x 4, HT
13		NSS		1	NOT SERVICED SEPARATELY, Mini Radio, AM/FM/WX

RADIO - SPEAKERS AND HOUSING

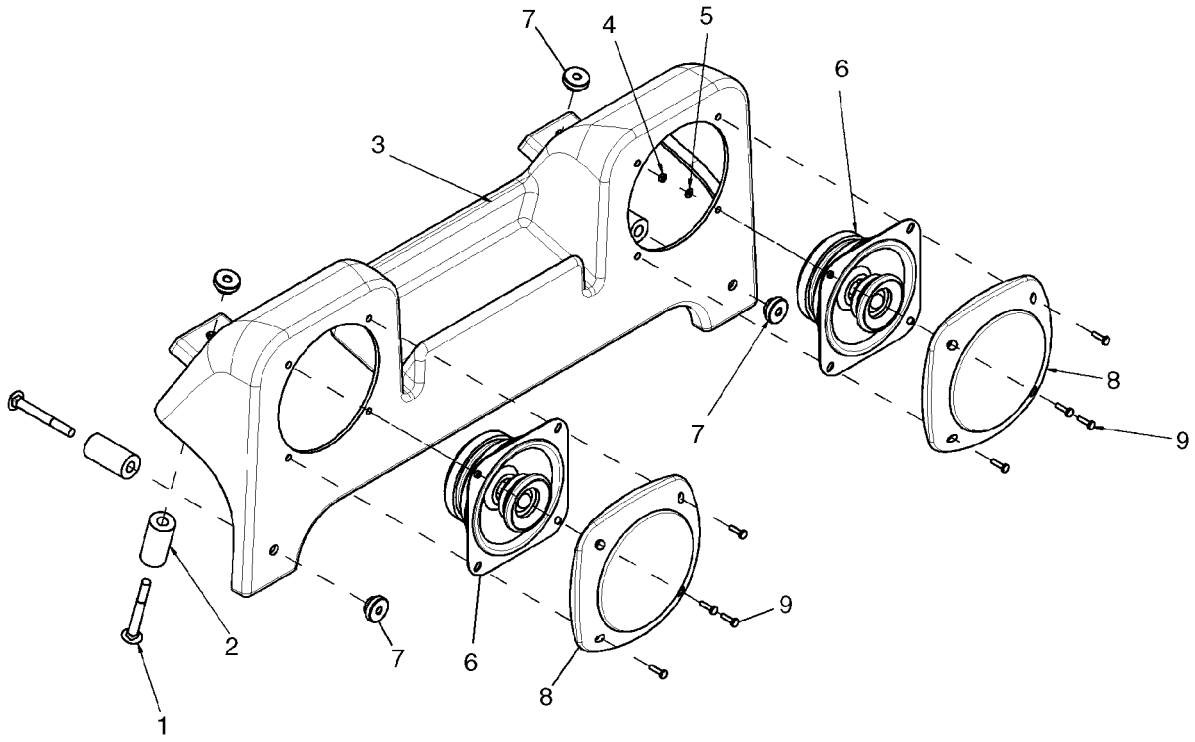

RADIO - SPEAKERS AND HOUSING

REF	FN	PART NUMBER	YR/SN	QTY	DESCRIPTION
1		280498		4	BOLT, CARRIAGE, Short NK, 1/4"-20 x 2 1/4", G5
2		87668006		4	SPACER, Spacer, 8.26 ID X 19.05 OD X 38.1 Length
3		87627524		1	HOUSING, Speaker Housing
4		86508812		8	NUT, M3, Cl 8
5		86639310		8	WASHER, M3
6		87672222		2	RADIO, Speaker, 4 in.
7		87667727		4	NUT, Nut, Plastic Thumb
8		87672257		2	RADIO, Speaker Grill
9		86599775		8	SCREW, Cross Pan Hd, M3 x 12

SOUNDPROOFING - SEAL

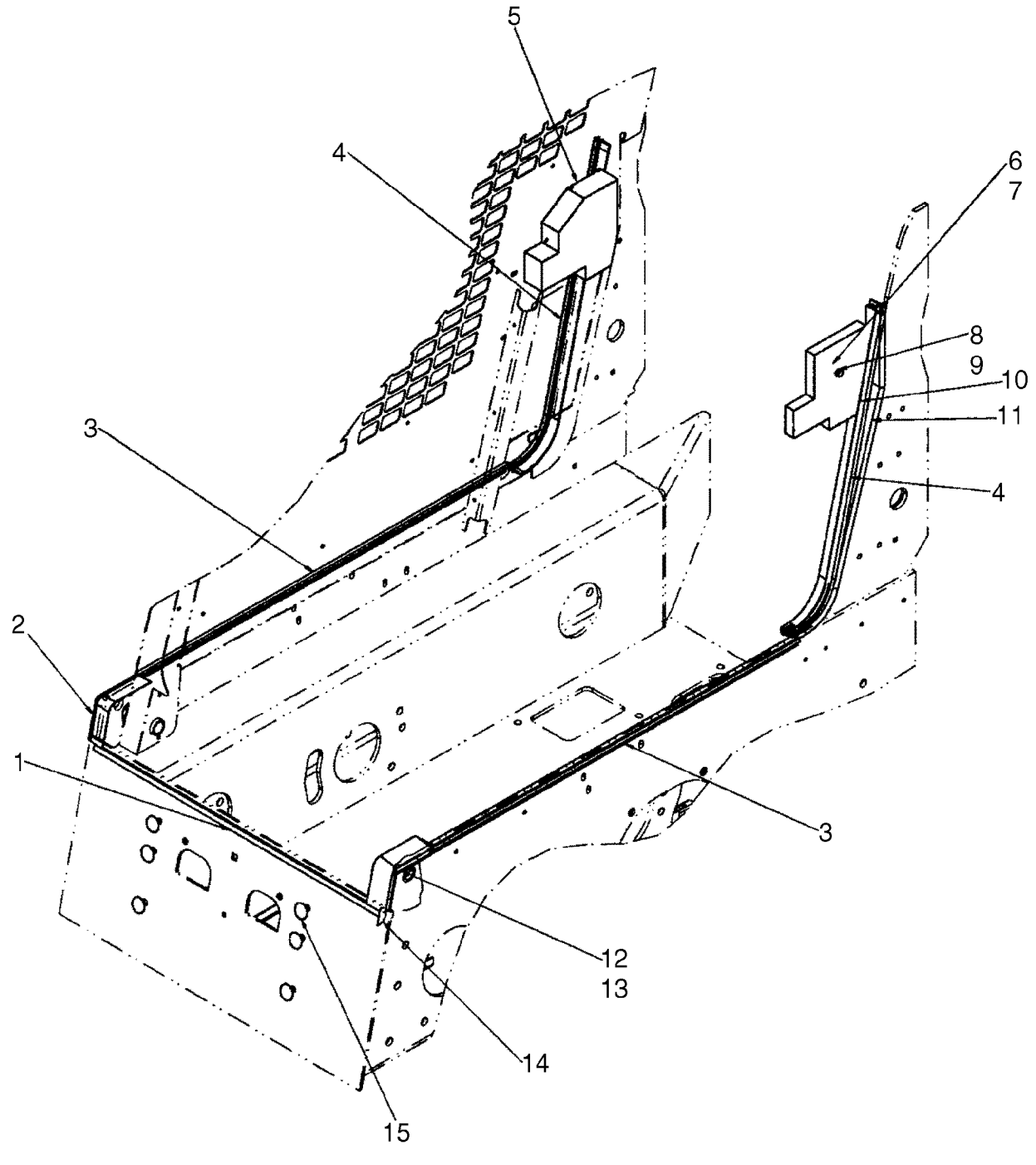

SOUNDPROOFING - SEAL

REF	FN	PART NUMBER	YR/SN	QTY	DESCRIPTION
1		381176A2		1	SEAL, Breast Plate Seal, 844mm (33 1/4 in.)
2		87719784		1	INSULATION, FOAM, Seal, Pivot RH
3		87719782		2	INSULATION, FOAM, Seal, Joggle
4		87719792		2	SEAL, Seal, Rear Cab
5		87714956		1	INSULATION, FOAM, Pad, ROPS RH
6		86639313		1	WASHER, M8 x 20 x 1.6
7		9628098		1	NUT, LOCK, M8 x 1.25, Cl 10
8		300381		1	BOLT, Hex, M8 x 35, 8.8
9		86624184		1	WASHER, M8 x 16 x 1.6
10		87714955		1	INSULATION, FOAM, Pad, ROPS LH
11		394745A2		1	SEAL, Seal, ROPS Wing
12		87719789		1	SEAL, Seal, Pivot LH
13		414010A1		1	STRIP, PROTECTION
14		394748A1		1	SEAL
15		299274A2		6	COVER

NOISE CONTROL

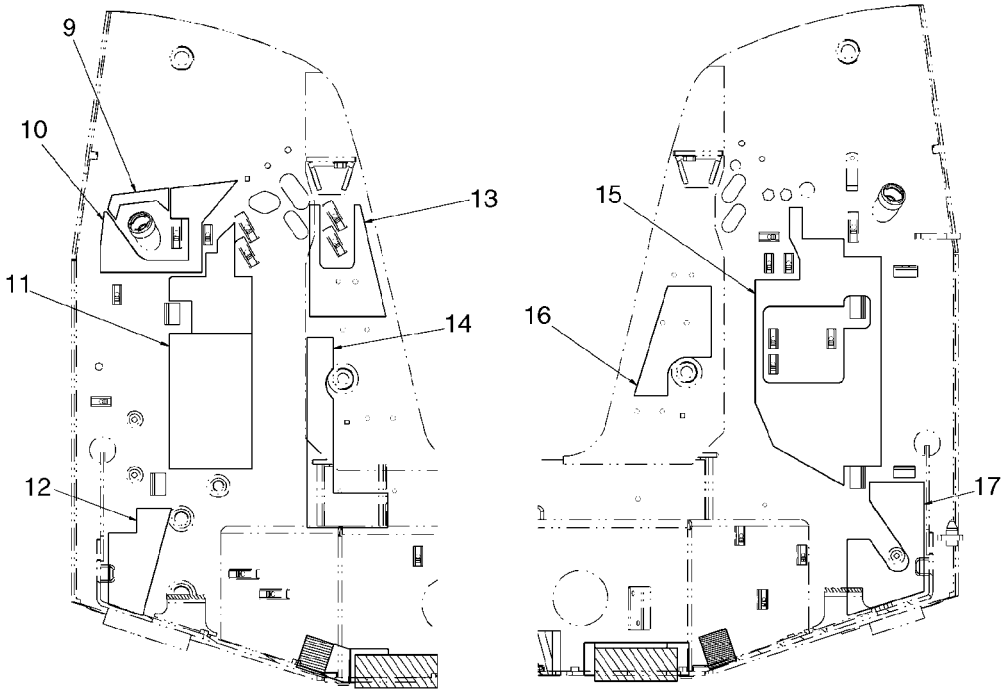

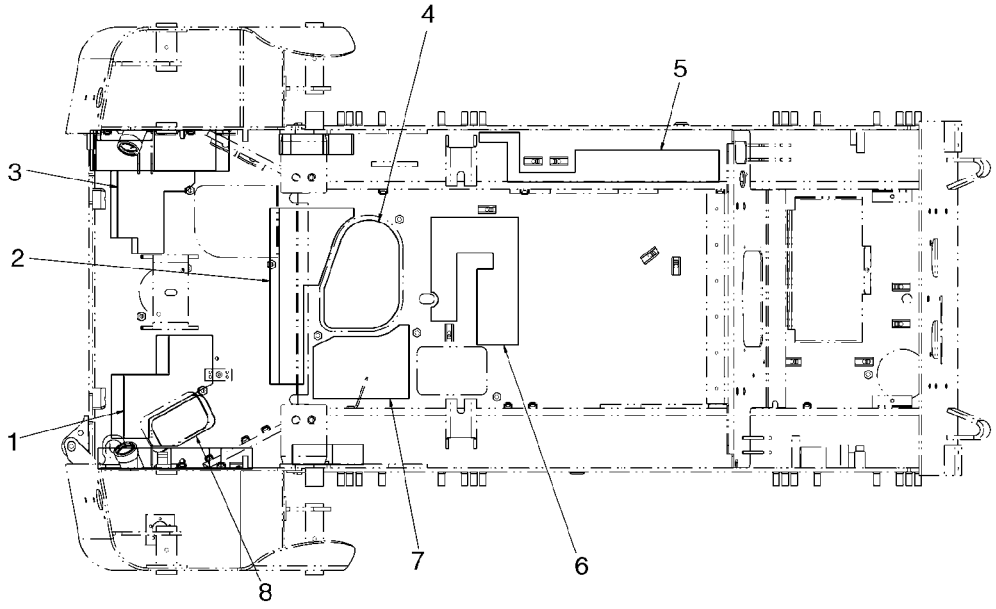

BS07N336

NOISE CONTROL

REF	FN	PART NUMBER	YR/SN	QTY	DESCRIPTION
1		87584434		1	PAD
2		87584431		1	PAD
3		87702962		1	INSULATION, FOAM
4		87713118		1	INSULATION, FOAM
5		87702963		1	INSULATION, FOAM, Pad, Left Chain Tank
6		87713120		1	INSULATION, FOAM
7		87713119		1	INSULATION, FOAM
8		87584435		1	PAD
9		87698867		1	INSULATION, FOAM, Left Tower
10		87702959		1	INSULATION, FOAM, Left Tower
11		87702957		1	INSULATION, FOAM, Left Tower
12		87460167		1	PAD, Left Tower
13		87703637		1	INSULATION, FOAM, Left Tower
14		87713117		1	INSULATION, FOAM, Left Tower
15		87702960		1	INSULATION, FOAM, Right Tower
16		87559703		1	PAD, Right Tower
17		87713783		1	INSULATION, FOAM, Right Tower

LIFT HOOK - SINGLE POINT

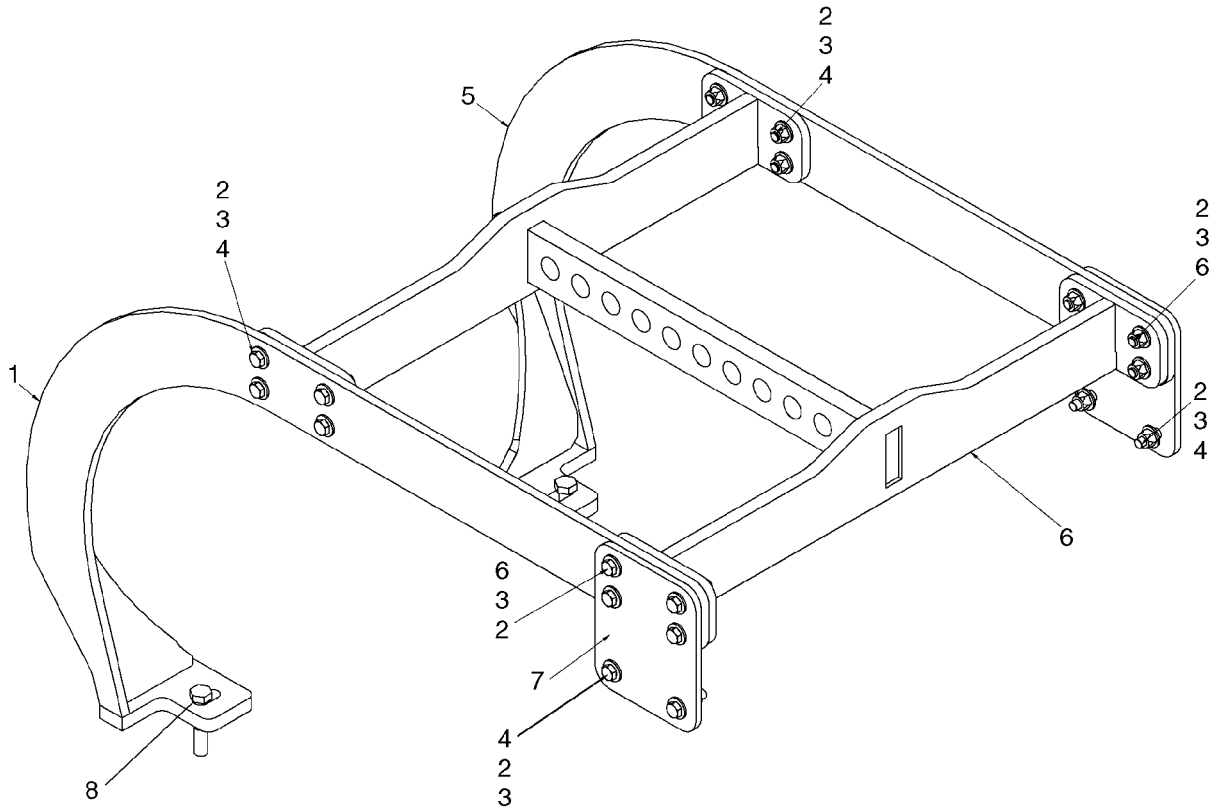

LIFT HOOK - SINGLE POINT

REF	FN	PART NUMBER	YR/SN	QTY	DESCRIPTION
		87673642		1	KIT, SERVICE, Kit, Lift Hook - Single Point; Incl 1 - 8
1		NSS		1	NOT SERVICED SEPARATELY, Lifter, RH
2		100038		20	NUT, M12 x 1.75, Cl 8
3		86625254		40	WASHER, M12 x 28 x 2.5
4		9628065		12	BOLT, Hex, M12 x 45, 8.8
5		NSS		1	NOT SERVICED SEPARATELY, Lifter, LH
6		NSS		1	NOT SERVICED SEPARATELY, Lifter, Top
7		NSS		2	NOT SERVICED SEPARATELY, Plate, Mounting
8		86577946		2	BOLT, Hex, M16 x 80, 10.9

LIFT HOOK

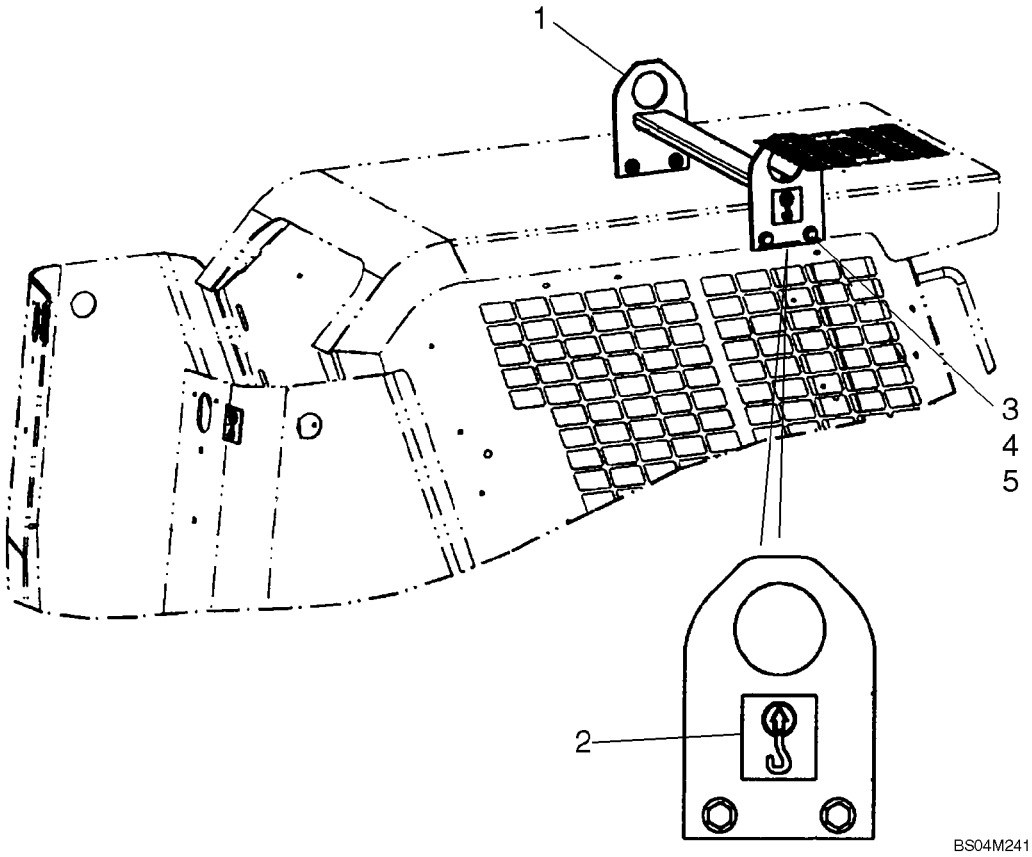

LIFT HOOK

REF	FN	PART NUMBER	YR/SN	QTY	DESCRIPTION
		87638451		1	KIT, SERVICE, Kit, Lift Hook - Front; Incl 1 - 5
1		87684094		1	BRACKET, Lift Hook
2		139729A1		4	DECAL
3		337563		4	BOLT, Hex, M12 x 40, 10.9, Full Thd
4		86625256		8	WASHER, M12 x 28.5 x 4, HT
5		412672		4	NUT, LOCK, M12 x 1.75, Cl 10

DECALS - ENGLISH



1



2



3

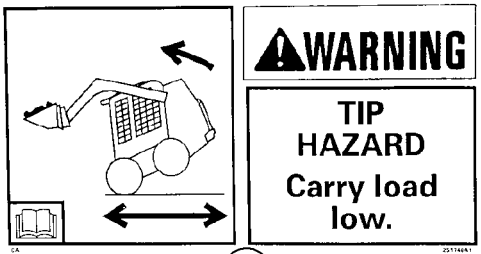

4

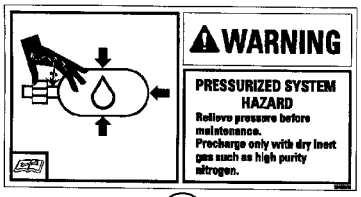

5

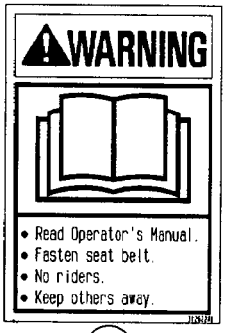

6



7

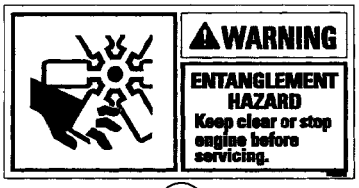

8

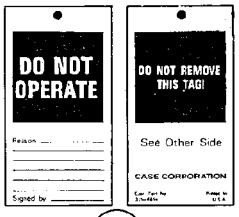

9

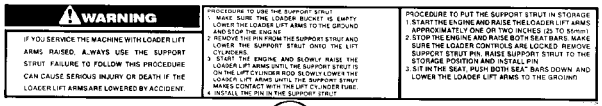

10



11



12



13



14

BS07A313

DECALS - ENGLISH

REF	FN	PART NUMBER	YR/SN	QTY	DESCRIPTION
1		433957A1		1	DECAL, Danger, Exiting
2		251745A1		1	DECAL, Danger, Crush Hazard
3		D137186		1	DECAL, Caution, Always Inspect
4		251748A1		1	DECAL, Warning, Tip Hazard
5		384260A1		1	DECAL, Warning, Ride Control, Pressurized System
6		382622A1		1	DECAL, Warning, Read The Operator's Manual
7		321-7040		1	DECAL, Danger, Starting In Gear
8		384267A1		1	DECAL, Warning, Keep Clear
9		321-4614		1	DECAL, Tag, Do Not Operate
10		321-7029		1	DECAL, Warning, Safety Strut
11		176332A1		1	DECAL, Battery
12		304083A1		1	DECAL, Ride Control
13		255927A1		1	DECAL, Warning, Do Not Turn Ride Control On
14		629086		1	DECAL, Ether Warning

DECAL (420CT)

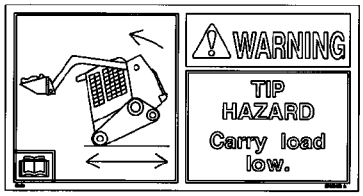

1

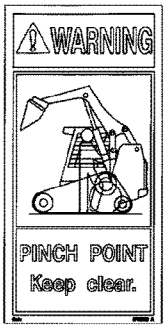

2



3

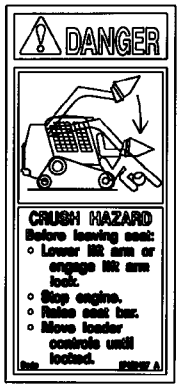

4

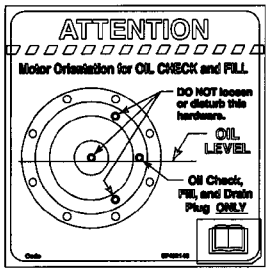

7

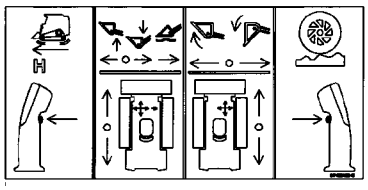

5



6

BS05C088

DECAL (420CT)

REF	FN	PART NUMBER	YR/SN	QTY	DESCRIPTION
1		87459440		1	DECAL, Warning Tip Hazard
2		87459439		2	DECAL, Warning Pinch Point
3		87459438		1	DECAL, Danger Crush Hazard Under Arm
4		87459437		1	DECAL, Danger Crush Hazard Before Leaving Seat
5		87459429		1	DECAL, Control Identification
6		87673472		2	DECAL, Warning- Grease Spring
7		87673471		2	DECAL, Attention - Oil Fill

DECALS

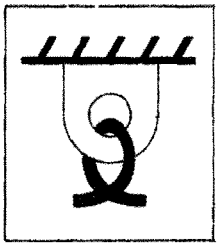
1

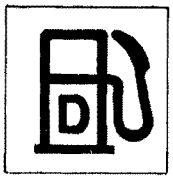
2


3

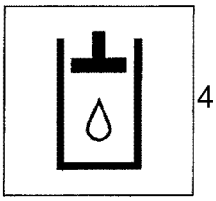
4

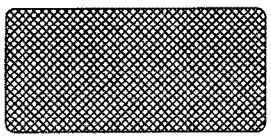
5

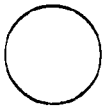
6


7


8

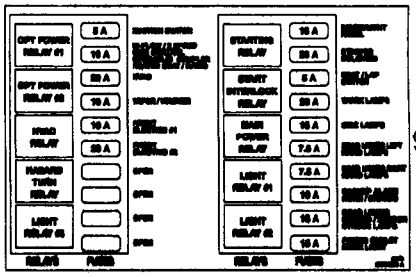
9

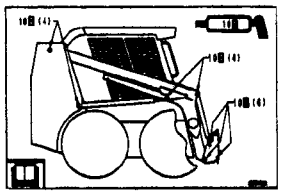
10

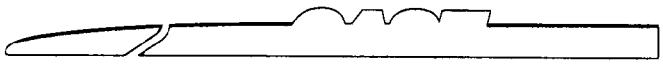
11

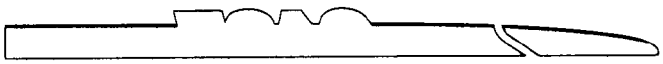
12

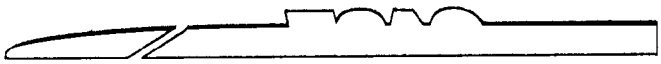
13

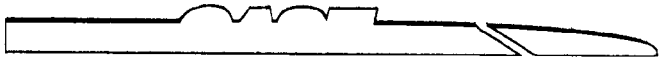
14

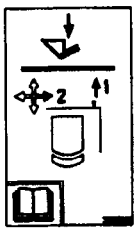
15

BS07M573

DECALS

REF	FN	PART NUMBER	YR/SN	QTY	DESCRIPTION
1		139728A1		1	DECAL, Decal, Tie Down
2		139879A1		1	DECAL, Decal, Diesel Fuel
3		251752A1		1	DECAL, Decal, Throttle
4		251753A1		1	DECAL, Decal, Hydraulic Fluid
5		294752A1		1	REFLECTOR, Decal, Reflector, Red
6		429630A2		1	COVER, CAP, Decal, Lexan Cover
7		87389371		1	DECAL, Decal, CASE Logo
8		87429186		1	EMBLEM, Decal, CASE Engine
9		87734526		1	DECAL, Decal, Fuse Box Layout
10		373248A2		1	DECAL, Decal, Lubrication Points
11		398798A1		1	DECAL, Decal, Case Stripe LH; Used On 410, 420/420CT
12		398796A1		1	DECAL, Decal, Case Stripe RH; Used On 410, 420/420CT
13		411516A1		1	DECAL, Decal, Case Stripe LH; Used On 430, 440/440CT
14		411515A1		1	DECAL, Decal, Case Stripe RH; Used On 430, 440/440CT
15		398728A2		1	DECAL, Decal, Lift Arm Bypass; Used On 420CT, 440CT

DECALS



1



2

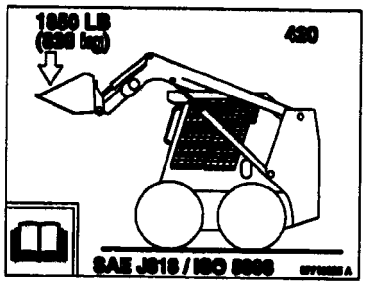

3

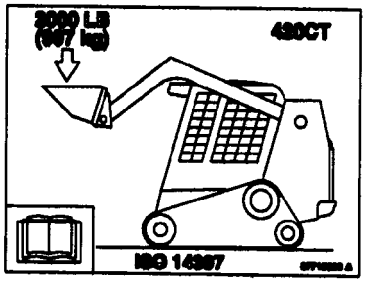

4

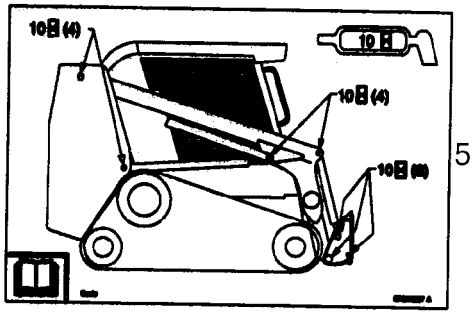

5

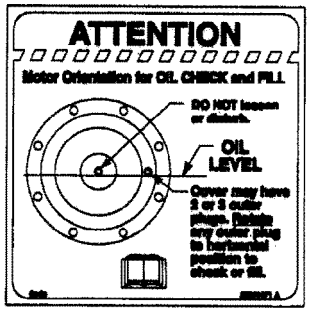

6



7

BS07M574

DECALS

REF	FN	PART NUMBER	YR/SN	QTY	DESCRIPTION
1		87710954		1	DECAL, Decal, 420
2		87710955		1	DECAL, Decal, 420CT
3		87715635		1	DECAL, Decal, Operating Capacity, 420
4		87715636		1	DECAL, Decal, Operating Capacity, 420CT
5		87372867		1	DECAL, Decal, Lubrication Points, 420CT
6		87673471		1	DECAL, Decal, Oil Fill And Check, 420CT
7		87673472		1	DECAL, Decal, Grease Spring Warning, 420CT

DECALS - DANISH, DUTCH, FINNISH



1

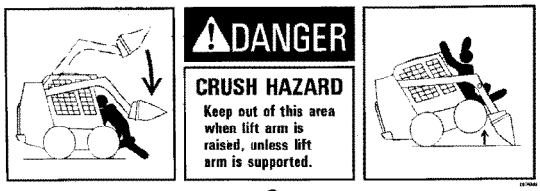

2



3

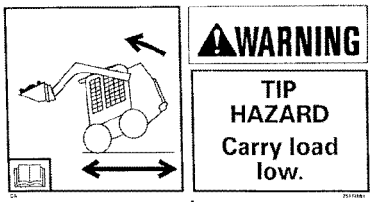

4



5

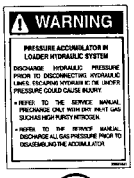

6

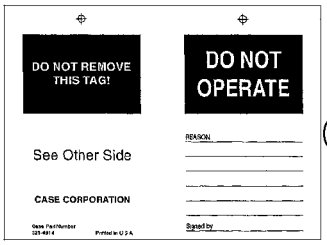

7

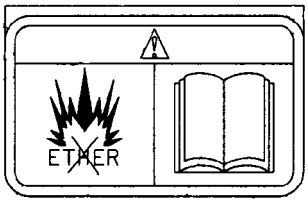

8

BS07A315

DECALS - DANISH, DUTCH, FINNISH

REF	FN	PART NUMBER	YR/SN	QTY	DESCRIPTION
		REF			INSTRUCTION, DANISH
1		434006A1		1	DECAL, Danger, Crush Hazard
2		297391A1		1	DECAL, Danger, Crush Hazard
3		175492A1		1	DECAL, Caution, Always Inspect
4		297377A1		1	DECAL, Warning, Tip Hazard
5		256455A1		1	ADHESIVE, Warning, Ride Control
6		256466A1		1	ADHESIVE, Warning, Accumulator
7		182609A1		1	DECAL, Do Not Operate
8		87802167		1	DECAL, Ether Warning
		REF			INSTRUCTION, DUTCH
1		434007A1		1	DECAL, Danger, Crush Hazard
2		297392A1		1	DECAL, Danger, Crush Hazard
3		175493A1		1	DECAL, Caution, Always Inspect
4		297378A1		1	DECAL, Warning, Tip Hazard
5		256463A1		1	ADHESIVE, Warning, Ride Control
6		256474A1		1	ADHESIVE, Warning, Accumulator
7		182596A1		1	NUT, Do Not Operate
8		87802167		1	DECAL, Ether Warning
		REF			INSTRUCTION, FINNISH
1		434008A1		1	DECAL, Danger, Crush Hazard
2		297393A1		1	DECAL, Danger, Crush Hazard
3		297409A1		1	DECAL, Caution, Always Inspect
4		297379A1		1	DECAL, Warning, Tip Hazard
5		256461A1		1	DECAL, Warning, Ride Control
6		256472A1		1	ADHESIVE, Warning, Accumulator
7		197380A1		1	TAG, Do Not Operate
8		87802167		1	DECAL, Ether Warning

DECALS - FRENCH, GERMAN, GREEK



1

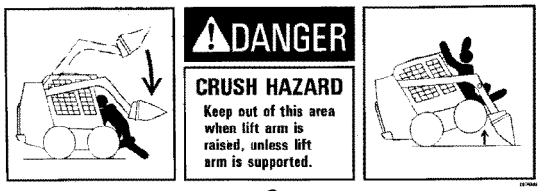

2



3

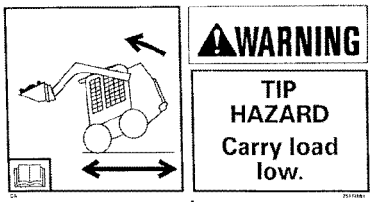

4



5



6

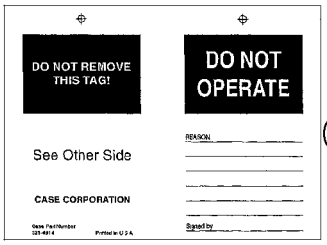

7



8

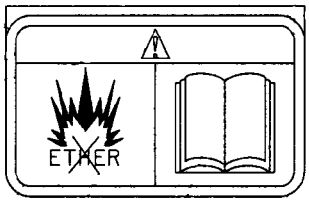

9

BS07A316

DECALS - FRENCH, GERMAN, GREEK

REF	FN	PART NUMBER	YR/SN	QTY	DESCRIPTION
		REF			INSTRUCTION, FRENCH
1		434009A1		1	DECAL, Danger, Crush Hazard
2		297394A1		1	DECAL, Danger, Crush Hazard
3		321-6861		1	DECAL, Caution, Always Inspect
4		297381A1		1	DECAL, Warning, Tip Hazard
5		256453A1		1	ADHESIVE, Warning, Ride Control
6		256464A1		1	ADHESIVE, Warning, Accumulator
7		321-5675		1	DECAL, Do Not Operate
8		682683		1	DECAL, Ether Warning
		REF			INSTRUCTION, GERMAN
1		434010A1		1	DECAL, Danger, Crush Hazard
2		297396A1		1	DECAL, Danger, Crush Hazard
3		321-6863		1	DECAL, Caution, Always Inspect
4		297382A1		1	DECAL, Warning, Tip Hazard
5		256454A1		1	ADHESIVE, Warning, Ride Control
6		256465A1		1	ADHESIVE, Warning, Accumulator
7		321-5676		1	DECAL, Do Not Operate
9		87802167		1	DECAL, Ether Warning
		REF			INSTRUCTION, GREEK
1		434011A1		1	DECAL, Danger, Crush Hazard
2		297397A1		1	DECAL, Danger, Crush Hazard
3		175495A1		1	DECAL, Caution, Always Inspect
4		297383A1		1	DECAL, Warning, Tip Hazard
5		256460A1		1	ADHESIVE, Warning, Ride Control
6		256471A1		1	ADHESIVE, Warning, Accumulator
7		182611A1		1	DECAL, Do Not Operate
9		87802167		1	DECAL, Ether Warning

DECALS - ITALIAN, NORWEGIAN, POLISH



1

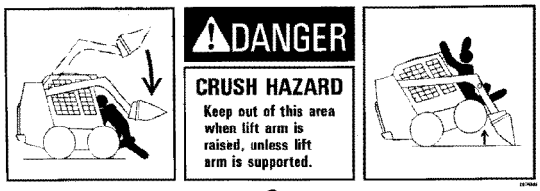

2



3

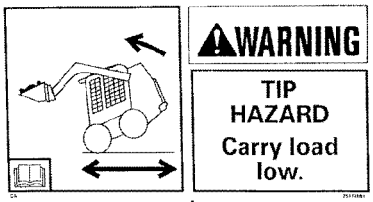

4



5

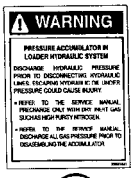

6

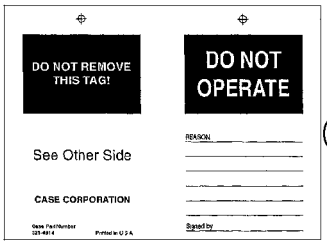

7

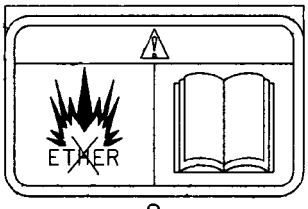

8

BS07A317

DECALS - ITALIAN, NORWEGIAN, POLISH

REF	FN	PART NUMBER	YR/SN	QTY	DESCRIPTION
		REF			INSTRUCTION, ITALIAN
1		434012A1		1	DECAL, Danger, Crush Hazard
2		297398A1		1	DECAL, Danger, Crush Hazard
3		321-7004		1	DECAL, Caution, Always Inspect
4		297384A1		1	DECAL, Warning, Tip Hazard
5		256457A1		1	ADHESIVE, Warning, Ride Control; If Used
6		256468A1		1	ADHESIVE, Warning, Accumulator
7		E137085		1	DECAL, Do Not Operate
8		87802167		1	DECAL, Ether Warning
		REF			INSTRUCTION, NORWEGIAN
1		434013A1		1	DECAL, Danger, Crush Hazard
2		297399A1		1	DECAL, Danger, Crush Hazard
3		297411A1		1	DECAL, Caution, Always Inspect
4		297385A1		1	DECAL, Warning, Tip Hazard
5		256462A1		1	DECAL, Warning, Ride Control
6		256473A1		1	DECAL, Warning, Accumulator
7		197381A1		1	TAG, Do Not Operate
8		87802167		1	DECAL, Ether Warning
		REF			INSTRUCTION, POLISH
1		434017A1		1	DECAL, Danger, Crush Hazard
2		297400A1		1	DECAL, Danger, Crush Hazard
3		297412A1		1	DECAL, Caution, Always Inspect
4		297386A1		1	DECAL, Warning, Tip Hazard
5		396700A1		1	DECAL, Warning, Ride Control
6		396701A1		1	DECAL, Warning, Accumulator
7		298520A1		1	TAG, Do Not Operate
8		87802167		1	DECAL, Ether Warning

DECALS - PORTGUESE, SPANISH, SWEDISH



1

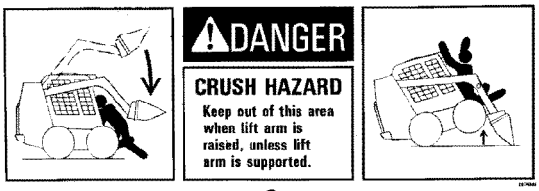

2



3

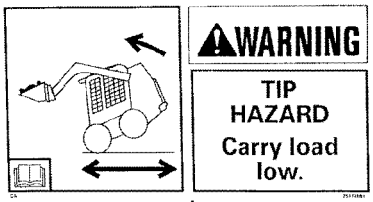

4



5

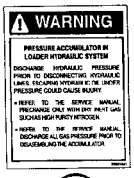

6

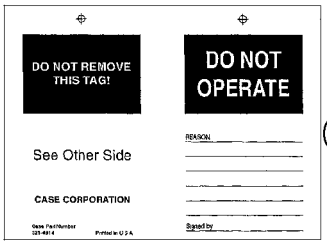

7

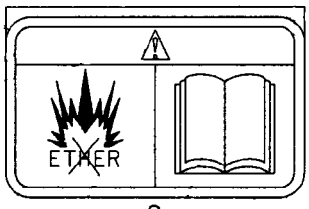

8



9



10

BS07A318

DECALS - PORTGUESE, SPANISH, SWEDISH

REF	FN	PART NUMBER	YR/SN	QTY	DESCRIPTION
		REF			INSTRUCTION, PORTUGUESE
1		434014A1		1	DECAL, Danger, Crush Hazard
2		297401A1		1	DECAL, Danger, Crush Hazard
3		175494A1		1	DECAL, Caution, Always Inspect
4		297387A1		1	DECAL, Warning, Tip Hazard
5		256459A1		1	ADHESIVE, Warning, Ride Control
6		256470A1		1	ADHESIVE, Warning, Accumulator
7		182610A1		1	DECAL, Do Not Operate
10		87527676		1	DECAL, Ether Warning
		REF			INSTRUCTION, SPANISH
1		434015A1		1	DECAL, Danger, Crush Hazard
2		297402A1		1	DECAL, Danger, Crush Hazard
3		321-6862		1	DECAL, Caution, Always Inspect
4		297388A1		1	DECAL, Warning, Tip Hazard
5		256456A1		1	ADHESIVE, Warning, Ride Control
6		256467A1		1	ADHESIVE, Warning, Accumulator
7		321-5677		1	DECAL, Do Not Operate
9		86600617		1	DECAL, Ether Warning
		REF			INSTRUCTION, SWEDISH
1		434016A1		1	DECAL, Danger, Crush Hazard
2		297404A1		1	DECAL, Danger, Crush Hazard
3		297414A1		1	DECAL, Caution, Always Inspect
4		297390A1		1	DECAL, Warning, Tip Hazard
5		256458A1		1	ADHESIVE, Warning, Ride Control
6		256469A1		1	ADHESIVE, Warning, Accumulator
7		197379A1		1	TAG, Do Not Operate
8		87802167		1	DECAL, Ether Warning

DECALS - BRAZILIAN PORTUGUESE, CANADIAN FRENCH, LATIN AMERICAN SPANISH

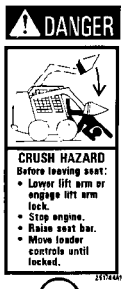

1

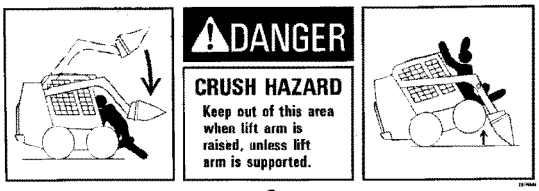

2



3

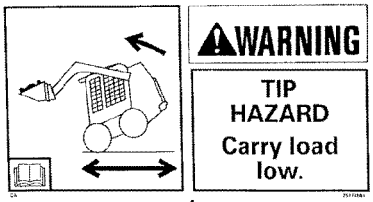

4



5

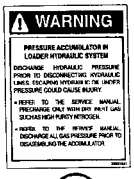

6

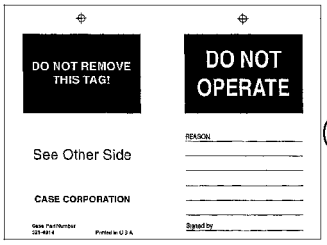

7



8



9



10

BS07A314

DECALS - BRAZILIAN PORTUGUESE, CANADIAN FRENCH, LATIN AMERICAN SPANISH

REF	FN	PART NUMBER	YR/SN	QTY	DESCRIPTION
		REF			INSTRUCTION, BRAZILIAN PORTUGUESE
1		434019A1		1	DECAL, Danger, Exiting
2		297408A1		1	DECAL, Danger, Crush Hazard
3		297406A1		1	DECAL, Caution, Always Inspect
4		297407A1		1	DECAL, Warning, Tip Hazard
5		353240A1		1	DECAL, Warning, Ride Control
6		353243A1		1	DECAL, Warning, Accumulator
7		298518A1		1	ADHESIVE, Do Not Operate
8		87527676		1	DECAL, Ether Warning
		REF			INSTRUCTION, CANADIAN FRENCH
1		434020A1		1	DECAL, Danger, Exiting
2		297394A1		1	DECAL, Danger, Crush Hazard
3		297410A1		1	DECAL, Caution, Always Inspect
4		297380A1		1	DECAL, Warning, Tip Hazard
5		353239A1		1	DECAL, Warning, Ride Control
6		353242A1		1	DECAL, Warning, Accumulator
7		321-5675		1	DECAL, Do Not Operate
9		682683		1	DECAL, Ether Warning
		REF			INSTRUCTION, LATIN AMERICAN SPANISH
1		434018A1		1	DECAL, Danger, Exiting
2		297403A2		1	DECAL, Danger, Crush Hazard
3		297413A1		1	DECAL, Caution, Always Inspect
4		297388A1		1	DECAL, Warning, Tip Hazard; Replaces 297389A1
5		353238A1		1	DECAL, Warning, Ride Control
6		353241A1		1	DECAL, Warning, Accumulator
7		298521A1		1	TAG, Do Not Operate
10		86600617		1	DECAL, Ether Warning

Number	Figure	Sequence	Ref.
{}	09-35		41
{408451A1}	06-34		8
{412326}	09-30		17
{504245566}	02-17		1
{504255374}	02-36		1
{647429}	09-13		10
{8099019}	02-10		
{86512463}	09-28		12
	09-33		11
{86618350}	09-06		1
{86625151}	08-12		12
	09-05		23
{86633060}	09-06		1
{86642465}	09-30		3
{87010187}	09-08		1
{87010188}	09-08		1
{87010189}	09-08		1
{87019498}	09-01		3
{87026844}	06-12		25
	06-18		10
	06-26		12
{87032782}	09-37		40
{87034506}	09-18		9
{87034509}	09-18		30
{87302733}	06-19		17
{87417448}	09-01		1
{87448935}	08-24		2
{87516030}	06-16		8
{87516031}	06-15		40
{87516039}	07-01		4
{87516040}	07-01		7
{87533547}	02-00		27
{87534725}	02-00		15
{87548828}	06-05		4
{87548838}	06-08		8
{87548840}	06-08		10
{87548843}	06-08		5
{87548871}	06-07		7
	06-09		9
{87548872}	06-07		8
	06-09		10
{87548873}	06-07		9
	06-09		11
{87548972}	09-18		6
{87548973}	09-18		3
{87556906}	06-13		20
	06-19		19
{87563975}	06-18		12
	06-26		10
{87564723}	06-13		19
	06-19		22
{87564740}	06-19		21
{87566701}	02-07		1
{87578980}	02-00		32
	09-22		5
	09-23		5
{87581666}	09-30		13
{87581669}	09-27		18
	09-33		26
	09-33		7
{87584302}	09-37		49
{87594866}	06-08		9
{87594970}	02-00		4
{87599598}	08-15		16
{87599604}	09-01		17
{87599605}	09-01		22
{87599753}	09-27		16
	09-33		2
{87600221}	09-28		6
	09-29		2
{87602935}	09-01		8
{87607505}	09-30		19
{87612753}	08-12		27
	09-04		10
	09-05		11
{87618013}	04-08		6A
{87618650}	06-33		4
{87619750}	06-36		21
{87619883}	06-49		13
{87619885}	06-49		14
{87619899}	06-49		1
{87619900}	06-49		12
{87619901}	06-49		11
{87619902}	06-49		2
{87619905}	06-49		3
{87619914}	06-49		5
{87619915}	06-49		8
{87619916}	06-49		10
{87619917}	06-49		9
{87619918}	06-49		6
{87619919}	06-49		7
{87619920}	06-49		4
{87622767}	09-27		14
	09-33		29
{87622960}	04-17		4
{87627521}	09-29		
{87630175}	02-05		21
{87632396}	02-02		3
{87636798}	09-20		1
{87639295}	02-05		36
{87639912}	09-25		23
{87639914}	09-25		24
{87641703}	09-54		2
{87641704}	09-54		6
{87642394}	09-27		22
	09-33		9
{87642437}	09-27		21
	09-33		5
{87643562}	02-05		31
	03-01		5
{87643808}	09-54		5
{87645115}	09-25		34
{87648128}	02-00		12
	09-22		4
	09-23		6
{87650090}	03-01		26
{87652259}	09-40		2
{87652816}	04-11		5
	04-13		7
	04-15		8
{87652818}	04-12		4
	04-14		5
	04-16		5
{87654516}	06-34		9
{87655334}	04-06		12
	04-20		16
	04-21		19
	04-29		5
{87657980}	06-10		4
{87659972}	09-14		4
{87659996}	08-02		37
{87660180}	09-28		5
	09-29		3
{87661301}	09-14		2
{87662349}	09-17		3
{87662357}	09-16		12
{87662429}	09-16		3
{87665327}	04-09		8
{87667726}	04-11		6
	04-12		6
	04-13		8
	04-14		8
	04-15		9
	04-16		9
{87668682}	09-25		41
{87669333}	09-29		4
{87669375}	02-07		8
{87669915}	09-27		2
	09-33		23
{87669944}	09-51		1
{87671496}	09-23		18
{87672011}	09-27		11
{87672170}	09-25		9
{87676121}	09-43		10
	09-44		10
	09-45		11

Number	Figure	Sequence	Ref.
{87676122}	09-43		2
	09-44		2
	09-45		3
{87676124}	09-43		8
	09-44		8
	09-45		9
{87677739}	04-09		11
{87679671}	09-55		2
{87680073}	09-27		4
{87684387}	09-17		5
{87684388}	09-16		9
{87684518}	06-34		10
{87686719}	06-35		2
{87686720}	06-35		1
{87687236}	09-35		29
{87689627}	02-06		11
{87690479}	08-03		1
{87698715}	02-06		27
{87698769}	09-30		2
	09-31		3
	09-33		13
{87705428}	09-54		1
{87708428}	02-00		6
{87712605}	09-27		9
{87712606}	09-27		8
{87714131}	09-27		10
{87717210}	09-27		5
	09-33		8
{87717215}	09-27		3
	09-33		22
{87717283}	09-27		17
	09-33		4
{87722347}	09-27		20
	09-33		24
{87723771}	09-33		21
{87723784}	09-33		20
100-11137	06-40		3
100-1650	08-10		7
100012	08-08		1
100016	02-04		23
100037	09-25		12
100038	09-63		2
100197	06-10		17
	06-16		19
100536A1	06-39		30
100703A1	06-40		31
101462A1	06-41		17
10265160	02-34		
10284460	02-35		4
103-21281	06-38		28
	06-40		2
10300611	02-13		9
108925A1	09-14		17
110873A1	06-38		11
	06-40		20
11116431	06-36		2
115942A1	06-38		13
	06-40		18
115943A1	06-38		12
	06-40		19
115946A1	06-38		9
	06-40		22
115948A1	06-38		8
	06-40		23
115950A1	06-38		7
	06-40		24
118827	09-12		6
11903111	02-35		5
120056	06-12		7
	06-18		7
	06-26		3
120061	08-15		21
	09-37		45
120062	06-21		14
120069	08-02		30
120070	09-01		7
	09-25		16
120073	02-00		8
120075	02-00		8
120080	08-12		16
	09-05		21
120100	02-05		35
	03-01		1
	04-25		4
	09-25		4
	09-43		5
	09-44		5
	09-45		6
120101	08-07		6
120103	04-07		7
	04-17		10
	04-28		6
	06-11		9
	06-16		26
	06-17		12
	06-20		15
	09-26		11
	09-35		37
120104	02-00		1
	02-04		5
	06-10		39
	06-15		31
	08-07		24
	08-08		25
	09-01		12
	09-20		15
	09-26		4
	09-32		4
	09-35		14
	09-37		36
120106	04-01		5
120108	09-37		44
120112	08-12		14
	09-04		13
	09-05		19
120229A1	04-31		1
120952A1	09-18		24
121410A1	04-06		13
121412A1	04-06		14
121413A1	04-06		15
121414A1	04-06		16
121415A1	04-06		17
122158A1	08-07		25
	08-08		27
126177	09-47		7
126844A1	04-09		13
	04-10		5
1277297C1	06-41		
	06-42		
128818	06-13		12
	06-19		13
	08-04		15
	08-15		46
128819	08-01		2
128822	08-02		15
128825	06-13		13
	06-13		4
	06-16		16
	06-19		14
	06-19		5
	06-20		12
	06-21		2
	06-46		25
	08-01		20
	08-01		3
	08-02		1A
	08-04		14
	08-04		16
	08-04		19
	08-05		51
	08-06		5
	08-07		28
	08-15		47
128830	06-13		3
	06-19		4
	06-21		1

Number	Figure	Sequence	Ref.	Number	Figure	Sequence	Ref.
128830	08-01		19	16586625	02-13		7
	08-04		18	16586725	02-32		6
	08-05		50		02-35		3
	08-06		4		03-09		8
128929A1	06-40		26	16586925	02-13		6
128996	08-01		18		02-18		11
	08-04		6		02-32		8
129200	02-08		6	16587325	04-02		9
129878A1	08-05		57	16587824	04-02		3
13-836	06-40		33	16587925	02-37		4
133714A1	04-30		9	16588225	02-14		2
1342374C1	02-05		27	16588624	02-14		4
	03-01		12	16592224	02-19		8
1369	09-31		1	16592324	02-19		3
138-217	06-42			16597224	02-20		17
139398	06-01		16	16597225	02-15		4
	06-02		8	16597924	02-14		9
	06-04		2	16597925	02-19		12
	08-08		31	16598224	02-20		13
	08-10		32	16598524	02-20		18
	08-12		38	166-89	06-42		11
139728A1	09-67		1	16609024	04-02		5
139729A1	09-64		2	16673635	02-27		6
139879A1	09-67		2		02-27		8
140008A1	06-39			16673735	02-13		12
	06-40				02-13		6
	06-41				02-14		3
	06-42				02-20		15
140016	06-23		5		02-33		3
	07-01		18		03-08		4
	08-06		12	16673835	02-18		12
	09-25		27		02-30		4
140017	08-01		16		02-32		7
140018	09-19		20	16674034	02-21		3
140045	02-00		7	16689024	02-31		3
	06-10		2	167266	06-10		18
	06-15		5		06-10		45A
	09-18		35		06-11		24
14142390	04-22		5		06-13		17
	04-23		5		06-13		25
14148190	04-22		2		06-13		30
	04-23		2		06-15		28
14152090	04-22		3		06-16		20
	04-23		3		06-16		22
142211A1	04-27		1		06-16		28
14301821	06-36		14		06-17		21
14329901	02-11		7		06-17		27
144121	06-11		7		06-19		18
144124	08-05		53		06-19		24
1546028C1	08-15		25		06-19		26
15694	06-11		20		06-19		30
	06-15		26		06-20		10
16044321	03-01		28		06-20		21
	08-05		9		06-21		6
16508260	02-34				06-25		2
	02-34		4		06-25		7
165202	06-13		32		06-41		6
	06-13		9		06-41		9
	06-19		9		08-05		25
	06-20		28		08-15		37
	08-07		13		08-15		41
	08-07		3		08-15		50
	08-07		9	167268	06-10		13
	08-08		21		06-10		33
	08-08		4		06-10		5
	08-08		6		06-15		2
	08-10		12		06-15		38
	08-10		6		06-15		8
	08-12		25		06-17		15
	08-12		31		08-05		15
16570660	02-32		5	167269	06-41		25
16585625	02-38		6		08-01		5
16585825	02-28		10		08-02		34
	02-38		7		08-05		54
16586225	02-28		9		08-05		56
	02-31		2		08-15		17A
16586624	02-12		6		08-15		39
16586625	02-13		6	16729334	02-21		4

Number	Figure	Sequence	Ref.	Number	Figure	Sequence	Ref.
16747424	03-04		3	222422A1	02-04		11
16882515	02-13		13	223677A1	06-38		23
16980331	03-03		7		06-40		6
16987801	02-18		3	223680A1	06-38		24
16988301	02-16		7		06-40		7
16989	08-07		12	226129	09-12		5
	08-08		5	226130	09-12		9
16990970	02-11		8	228141A2	06-32		3
16992415	02-34		3	229197A1	02-04		3
16993411	02-32		4		03-01		30
17044735	03-04		5		04-17		12
17044825	04-02		6		04-28		7
17092874	02-26		3		06-11		2
17094914	02-28		11		06-12		30
17095404	03-03		6		06-20		17
17097124	04-02		4		06-22		12
17236324	02-22		6		06-24		11
17275310	02-27		2		08-04		11
17281481	02-16		5		08-05		48
17281681	02-18		7		09-20		10
17282281	02-31		4		09-21		7
17289081	02-34		2		09-26		10
17291281	02-15		2		09-35		35
175492A1	09-69		3	229398	02-08		7
175493A1	09-69		3	230425A1	09-18		1
175494A1	09-72		3	230426A1	09-18		4
175495A1	09-70		3	230427A1	02-00		16
176332A1	04-17		1		02-02		9
	09-65		11		08-01		15
177239A2	04-24		1	233705	06-10		32
17750480	02-28		8		06-15		37
	03-09		5	234726	09-18		14
180682A1	09-18		36		09-19		5
18088392	02-20		16	235994A1	09-48		1
18139424	02-37		2	236535A1	09-15		5
181680A1	06-38		33	236622	09-13		8
182596A1	09-69		7	237-6006	06-42		21
182609A1	09-69		7		06-42		9
182610A1	09-72		7	237-6008	06-43		25
182611A1	09-70		7	237-6012	06-42		19
182977	08-05		58		06-42		3
186905A1	03-01		18	238-5443	06-32		7
187035A2	03-01		19	238-6116	06-42		10
187140A1	04-24		2	244898A1	06-41		27
188571	06-41		28	248461A1	09-22		18
189609A1	09-20		9	248988A1	09-22		16
	09-21		3	249367A2	09-18		37
	09-25		33	251745A1	09-65		2
	09-43		13	251748A1	09-65		4
	09-44		14	251752A1	09-67		3
	09-45		15	251753A1	09-67		4
189787A2	09-43		12	254130A1	04-28		1
	09-44		12	254307A1	09-43		11
	09-45		13		09-44		11
189995A1	06-33		3		09-45		12
191048A2	06-33		4	254697A1	09-25		17
193494A1	06-40		10	254698A1	09-25		43
194739A1	08-05		5	255927A1	08-06		26
196985A1	04-06		5		09-65		13
197379A1	09-72		7	256453A1	09-70		5
197380A1	09-69		7	256454A1	09-70		5
197381A1	09-71		7	256455A1	09-69		5
197805A1	06-33		8	256456A1	09-72		5
214-1444	09-03		3	256457A1	09-71		5
214389	06-43		24	256458A1	09-72		5
	06-44		11	256459A1	09-72		5
	06-46		24	256460A1	09-70		5
	06-47		18	256461A1	09-69		5
	08-14		7	256462A1	09-71		5
216773	08-07		8	256463A1	09-69		5
	08-08		3	256464A1	09-70		6
	08-10		11	256465A1	09-70		6
	08-12		30	256466A1	09-69		6
216791	08-01		27	256467A1	09-72		6
218-5010	06-12		26A	256468A1	09-71		6
219606	06-11		21	256469A1	09-72		6
222004A2	04-06		7	256470A1	09-72		6
222421A1	02-04		10	256471A1	09-70		6

Number	Figure	Sequence	Ref.	Number	Figure	Sequence	Ref.
256472A1	09-69		6	293828A1	04-30		8
256473A1	09-71		6	294579A1	06-34		3
256474A1	09-69		6	294650A1	08-04		21
257448A1	09-14		18	294741A1	08-10		27
257857A1	08-05		6		08-12		44
257859A1	08-05		4	294752A1	09-67		5
	08-15		24	294911A2	09-14		14
257884A1	02-00		14	294943A1	09-14		16
257971A1	02-05		28	294967A1	09-14		12
257973A1	02-05		25	297244A1	09-24		2
259702A1	04-06		7A	297245A1	09-24		1
259905A1	08-05		7	297246A1	09-24		3
26044R1	06-41		21	297377A1	09-69		4
262159	08-02		23	297378A1	09-69		4
	08-03		14	297379A1	09-69		4
263117	04-08		7	297380A1	09-73		4
	04-20		4	297381A1	09-70		4
	04-21		5	297382A1	09-70		4
	04-29		2	297383A1	09-70		4
	09-53		1	297384A1	09-71		4
	09-54		3	297385A1	09-71		4
265235	08-10		5	297386A1	09-71		4
	08-12		24	297387A1	09-72		4
271622	08-13		13	297388A1	09-72		4
278332A1	09-14		11		09-73		4
278563	06-38		4	297390A1	09-72		4
	06-40		27	297391A1	09-69		2
280112	09-31		2	297392A1	09-69		2
280165	09-02		3	297393A1	09-69		2
280272	04-09		7	297394A1	09-70		2
	04-10		4		09-73		2
280278	06-39		18A	297396A1	09-70		2
280299	09-49		7	297397A1	09-70		2
280374	09-10		9	297398A1	09-71		2
280476	04-20		11	297399A1	09-71		2
	04-21		10	297400A1	09-71		2
	08-01		11	297401A1	09-72		2
	08-03		5	297402A1	09-72		2
	08-15		7	297403A2	09-73		2
280498	09-58		1	297404A1	09-72		2
280724	08-14		5	297406A1	09-73		3
281045	04-11		3	297407A1	09-73		4
	04-12		3	297408A1	09-73		2
	04-13		4	297409A1	09-69		3
	04-14		4	297410A1	09-73		3
	04-15		4	297411A1	09-71		3
	04-16		4	297412A1	09-71		3
282002A2	09-25		20	297413A1	09-73		3
282775A1	04-09		2	297414A1	09-72		3
2830122	03-09		1	298518A1	09-73		7
2830156	03-09		2	298520A1	09-71		7
283779A1	04-26		1	298521A1	09-73		7
283781A1	04-26		2	299274A2	09-59		15
283839A1	09-19		18	2995574	02-22		9
2852047	02-33		2	2995575	02-22		9
2852087	02-38		3	2995576	02-22		9
2852157	02-38		1	2995577	02-23		4
2852171	02-36		4	2995578	02-23		4
2852181	04-02		2	2995579	02-23		4
2852247	02-17		5	300381	09-21		27
	02-36		6		09-59		8
2852267	02-19		7	300383	02-02		7
2852294	03-03		4	300388	04-04		24
2852323	03-06		2		04-05		12
	04-03		4	302137A2	09-45		2A
2852885	03-03		3	302960A2	09-19		2
2852889	02-38		2	303709A1	06-41		16
2853667	02-37		1	304083A1	08-06		25
2853674	02-36		8		09-65		12
2853728	02-12		3	309096A1	04-04		9
2854311	02-34		5	310838A1	08-06		23
2854424	02-36		5	310860A1	09-48		2
2856468	02-18		10	3125705R1	04-30		3
286217	06-21		5	3131227R1	04-24		3
291244A1	02-05		26	3131234R1	04-24		4
291308	09-34		5	321-4614	09-65		9
	09-37		5	321-5675	09-70		7
293470A1	04-30		10		09-73		7

Number	Figure	Sequence	Ref.	Number	Figure	Sequence	Ref.
321-5676	09-70		7	373241A3	08-01		22
321-5677	09-72		7	373248A2	09-67		10
321-6861	09-70		3	373836A1	09-25		18
321-6862	09-72		3	374835	06-36		26
321-6863	09-70		3	374891	04-06		25
321-7004	09-71		3		04-07		18
321-7029	09-65		10	376523A2	08-02		6
321-7040	09-65		7	376669A1	09-25		15
322357	04-04		10	376843A4	04-06		2
	04-05		23	377410A2	09-18		15
	04-06		27	38-11207	06-38		2
	04-07		17		06-40		29
322358	02-00		2		06-41		
	02-05		12	380751A1	09-22		10
	02-06		15		09-23		11
	04-04		15	381144	02-04		21
	04-05		4	381176A2	09-59		1
	04-07		4	382622A1	09-65		6
322894	06-10		45	382837A1	09-01		2
	06-15		27	382838A1	09-01		6
	06-19		29	384260A1	08-06		3
	06-20		20		09-65		5
	08-15		49	384267A1	09-65		8
322896	06-17		26	385783A3	09-18		17
	06-20		9	385784A2	09-18		34
	06-25		6	386045	04-04		16
	08-15		36		04-05		5
323238	02-05		30		08-04		20
	09-15		6	388457A1	04-21		7
	09-17		2	390211A1	08-02		5
323657A1	03-01		25	390516A3	09-14		10
324299A1	04-25		3	391703A2	09-25		39
324604A1	06-39		9B	393394A1	08-05		23
324610A1	06-38		17	393742A1	09-01		11
	06-40		14	394745A2	09-59		11
325258A1	04-25		3	394748A1	09-59		14
325829	08-15		32	395792A1	02-04		8
	09-42		4	396052A2	08-10		2
326-516	06-41		18	396243A2	08-02		4
329-1010	09-10		9	396700A1	09-71		5
330344	08-15		40	396701A1	09-71		6
330345	08-02		33	398194A1	08-12		15
330346	06-18		15		09-05		24
	06-26		18	398196A1	08-12		19
337475	06-36		5		09-05		15
337563	04-33		6	398728A2	09-67		15
	09-64		3	398796A1	09-67		12
338030A1	04-01		2	398798A1	09-67		11
	04-04		19	399383A1	04-17		13
338413	08-10		23	399384A1	04-17		9
	08-11		17	399665A2	04-17		3
	08-15		43	400473A1	09-20		11
338550A4	06-33			40101573	02-16		13
338551A2	06-33		1	402364A1	06-41		1
341837A2	06-33		5	402365A1	06-42		1
348434A1	09-23		8	404599A5	09-04		17
	09-43		9	405103A1	09-16		2
	09-44		9	405853A1	09-01		9
	09-45		10	405854A1	09-01		21
348452A1	09-23		7	406088A1	08-01		9
	09-43		3	406089A2	02-03		10
	09-44		3	406242A1	08-01		8
	09-45		4	406256A1	09-20		6
353238A1	09-73		5		09-21		18
353239A1	09-73		5	406336A1	08-01		13
353240A1	09-73		5	406342A1	08-02		3
353241A1	09-73		6	406344A1	08-02		16
353242A1	09-73		6	406938A2	04-28		2
353243A1	09-73		6	406940A1	08-02		7
364181A1	06-32		2	406941A1	08-02		9
367582A1	09-18		33	407060A1	06-39		22
367583A4	09-18		18	408117A2	09-25		26
367585A2	09-18		11	408127A1	06-34		4
370531A1	06-39		14	408450A1	06-34		1
37203	06-38		27	409422A1	09-01		23
373114A1	09-52		2A	409783A1	08-12		3
373223A3	08-01		25	409844A1	09-18		10
373225A3	08-01		26	409845A1	09-18		28

Number	Figure	Sequence	Ref.	Number	Figure	Sequence	Ref.
409846A3	09-18		12	43140	02-05		15
409847A3	09-18		31		02-06		18
409856A1	09-18		25		04-04		7
411515A1	09-67		14		09-40		3
411516A1	09-67		13	43144	06-10		49
412085	02-05		37		06-15		22
	02-06		29		09-01		5
412087	02-05		5	43168	02-00		25
	02-06		6	43235	02-05		13
	06-17		3		02-06		16
412160	09-37		46	43248	06-17		7
412250	09-20		12	43260	06-17		6
	09-22		8		06-36		4
	09-23		3		09-57		10
412327	09-33		16	43263	02-05		1
412479	08-04		10		02-06		1
412672	02-05		3	432895A1	09-48		3
	02-06		3	43362	04-01		4
	04-33		7		09-26		7
	08-05		37		09-35		16
	08-12		18	4338920	02-18		9
	09-05		14	433957A1	09-65		1
	09-19		3	434006A1	09-69		1
	09-57		11	434007A1	09-69		1
	09-64		5	434008A1	09-69		1
414010A1	09-59		13	434009A1	09-70		1
414635A1	09-35		5	434010A1	09-70		1
417779A3	08-12		1	434011A1	09-70		1
	09-05		1	434012A1	09-71		1
419431A1	04-24		10	434013A1	09-71		1
419434A1	09-25		1	434014A1	09-72		1
420-21032	09-10		8	434015A1	09-72		1
425-1010	09-10		3	434016A1	09-72		1
	09-10		6	434017A1	09-71		1
	09-10		9	434018A1	09-73		1
425-108	06-40		32	434019A1	09-73		1
	06-42		13	434020A1	09-73		1
42545574	03-08		5	434346A1	09-11		5
427180A1	04-24		12	43435	04-20		10
428239A2	04-31		2		04-21		9
429233A1	06-32		6		09-15		22
429619A1	09-03		1		09-18		40
429620A1	09-03		2	434817A1	09-10		
429630A2	09-67		6	435396A1	09-20		2
430497A1	09-10			436415A1	06-39		19
430498A1	09-10			436416A1	06-39		21
430499A1	09-10			442856A1	09-25		25
430500A1	09-10			443241A1	09-16		15
43117	03-01		29	450051A1	09-03		
	09-18		29	451855A1	06-34		5
43127	02-02		1	4699783	02-18		8
	02-03		3	4749397	02-16		3
	02-04		2	4749398	02-16		3
	06-20		3	4749399	02-16		3
	06-36		10	4780558	02-16		12
	09-01		15	4794007	02-29		2
	09-15		17	4798845	02-13		8
	09-21		8		02-14		7
43128	06-11		6		02-20		12
	06-16		5	4812347	02-16		11
	09-22		6	4819891	02-16		14
	09-23		1	4838680	02-16		18
	09-25		28	4858605	03-05		4
43129	02-08		9	4858608	02-13		10
43130	07-01		17	4864080	02-28		7
	08-15		28	4890732	02-36		3
43133	08-06		13	4891353	02-11		2
43138	02-00		18	4892732	02-36		2
	06-10		1	4893391	02-30		2
	06-15		6	4893518	03-05		3
	08-02		35	4894139	02-12		2
	09-18		8	4894721	03-08		3
43139	02-00		31		03-09		7
	06-10		8	4895040	02-11		4
	06-15		13	4895155	02-14		8
	08-12		21	4895316	02-19		9
	09-15		21	4896770	03-05		2
	09-18		38	4897457	02-27		3

Number	Figure	Sequence	Ref.	Number	Figure	Sequence	Ref.
4899343	02-28		2	504220143	02-20		1
4899693	02-19		5	504220149	02-20		4
4899921	02-19		10	504220154	02-20		7
500322677	02-28		4	504220156	02-20		8
500344936	03-08		2	504221515	02-20		11
500353601	03-04		4	504221516	02-20		10
500368408	03-03		5	504221907	02-18		1
500370706	02-28		3	504221914	02-18		6
500374310	02-22		4	504221915	02-18		5
500374763	02-38		4	504221916	02-17		3
500388140	02-25		2	504225812	02-17		2
504006981	02-22		5	504235816	02-30		6
504010032	04-02		8	504239237	02-37		3
504012226	02-23		3	504240396	02-27		7
504015229	02-23		2	504240405	03-03		2
504016052	02-11		9	504240426	02-22		2
504023782	02-22		3	504241684	02-29		1
504027865	02-25		3	504242762	02-13		4
504033677	02-11		12	504242763	02-28		1
504047720	02-24		1	504243953	04-02		7
504051236	02-11		6	504244214	02-13		1
	02-13		2	504244287	02-13		5
504051238	02-11		5	504245406	02-39		1
504051611	02-24		2	504246319	03-03		1
504056152	02-22		8	504249191	02-20		2
504077652	02-11		13	504249195	02-19		4
504081521	02-16		15	504249196	02-19		6
504081533	02-16		16	504249332	02-20		6
504088431	02-38		5	504250345	02-18		2
504113130	02-23		1	504250954	02-20		3
504113860	02-30		3	504253059	02-20		5
504155542	02-32		1	504253448	03-05		1
504155544	02-32		2	504254092	02-16		1
504156514	02-11		10	504254094	02-16		6
504162949	02-16		2	504254884	02-15		3
504162958	02-16		8	504255370	02-36		7
504162959	02-16		9	504264644	04-03		2
504163121	02-18		13	504264648	04-03		1
504163240	02-27		5	504268669	02-14		6
504164205	02-35		2	504271928	02-30		1
504164224	02-28		6	504272265	02-27		1
504164226	02-28		5	504272778	04-03		3
504164307	02-32		3	504273002	02-18		15
504167862	02-20		14	504275234	03-04		1
504170332	02-21		2	504276997	04-02		1
504171144	02-19		2	504283235	02-19		11
504173058	02-11		11	504287001	03-08		7
504173590	02-17		4	507586	02-03		2
504174745	03-04		2	511212	06-39		15A
504177226	02-18		14	516742	09-27		12
504178119	02-16		10	524036	08-03		12
504178292	02-25		1	52419	08-14		13
504178293	02-14		1	528359R4	04-06		3
504179050	02-31		1	570024	06-10		12
504179442	02-12		4	570186	06-15		34
504179443	02-12		5		06-17		29
504179445	02-12		1		08-15		16A
504180969	02-22		7	574342	08-06		9
504182845	03-08		1	574518	02-07		5
504182961	02-34		1	595460	08-05		22
504184992	03-10		2	60-7083T1	09-31		5
504189766	02-11		1		09-33		19
504190831	02-16		17	603022	09-15		18
504194598	02-19		1	608089	06-10		44
504196032	02-20		9		08-07		4
504197289	03-09		6		08-08		14
504202201	02-26		1	614-6025	09-48		4
504202849	02-21		1	629086	04-07		22
504204989	02-13		3		09-65		14
504207948	03-10		1	631816	09-11		1
504207952	03-07		1	637964	09-26		3
504209127	02-35		1		09-32		3
504213230	02-22		1	642560	09-34		8
504216298	03-06		1		09-35		34
504216814	02-15		1		09-37		13
504216828	02-33		1	682683	09-70		8
504218931	03-09		4		09-73		9
504218933	03-09		3	694371	03-01		9

Number	Figure	Sequence	Ref.	Number	Figure	Sequence	Ref.
70923607	06-38		36	84674	02-03		7
7300019	02-11		3	848220	08-14		2
76344	06-12		1	853765	04-20		3
	06-18		8		04-21		4
	06-21		3	85821384	04-20		12
	06-26		13		04-21		11A
	07-01		1		04-22		
	08-07		18	85821385	04-20		9
	08-08		23		04-21		11
	08-10		19		04-23		
	08-11		13	86010402	08-03		8
	08-12		48	86019214	06-38		5
76349	06-02		12	86025725	09-21		21
	06-04		10	86050197	02-04		16
	06-12		21	86050202	02-04		18
	06-13		10	86050279	02-09		2
	06-16		9	86050288	06-17		22
	06-19		11	86071	08-04		13
	06-39		3	861-14080	06-43		5
	06-41		10		06-46		3
	06-41		19	861-8040	06-43		17
	06-42		8		06-46		17
	08-16		5	86500348	09-18		21
76350	06-01		18	86500688	04-06		26
	06-02		10		09-16		4
	06-04		4		09-18		23
	06-12		3	86500689	02-00		28
	06-13		14		08-02		21
	06-18		3		09-14		15
	06-19		15	86501706	08-01		10
	06-23		9	86501801	09-08		2
	06-24		5		09-08		2
	06-26		4		09-08		2
	07-01		12	86501815	09-08		5
	08-06		16		09-08		5
	08-10		21	86501839	09-08		5
	08-11		15	86501840	09-07		8
76355	06-23		2	86501841	09-06		5
	06-24		17	86505868	09-15		16
773784	08-13		7		09-25		32
774735	09-19		15A		09-35		13
783874	08-14		14		09-37		35
80120101	06-10		42		09-43		14
	08-07		6		09-44		13
	08-08		15		09-45		14
	09-43		4	86507486	09-35		17
	09-44		4	86508568	02-07		4
	09-45		5		04-24		8
80681	04-07		15		09-47		2
	08-15		22	86508569	09-14		6
80682	02-05		33	86508570	08-10		13
	03-01		4		08-12		32
80684	04-07		20	86508571	06-12		32
80710	08-11		6		06-22		10
	09-04		20		06-23		6
	09-05		17		06-24		9
80855	09-16		1	86508624	06-36		8
	09-18		7	86508812	09-58		4
8097545	02-24		4	86509028	08-06		18
8097546	02-24		3	86509309	03-01		17
8097547	02-24		4	86509310	06-39		9
8097548	02-24		3		09-18		2
8097550	02-10		2	86510313	09-07		8
8097551	02-10		3	86510314	09-07		8
8099020	02-16			86510315	09-07		6
81541	08-05		38		09-07		6
81822758	09-49		10	86510316	09-07		5
81827427	08-02		1		09-07		5
825-5146	04-31		3	86511042	04-09		9
827695C1	09-25		19	86511315	06-36		11
83931335	09-25		13	86511444	04-07		2
83982664	04-20		6		04-24		6
840-1616	04-31		4		04-25		6
84570	06-11		23		09-25		5
	06-16		27		09-35		38
	06-25		1	86511827	09-20		4
	08-05		24		09-21		17
84674	02-00		10	86511829	09-39		3

Number	Figure	Sequence	Ref.	Number	Figure	Sequence	Ref.
86512008	08-14		12	86550698	02-05		22
86512134	06-43		23		02-06		25
	06-46		23	86563839	08-14		8
86512142	06-43		7	86563840	08-13		8
	06-46		7	86565640	09-11		3
86512440	06-12		6	86565641	09-11		4
	06-18		6	86574054	09-12		
	06-26		2	86574055	09-12		
	08-05		45	86577164	09-06		4
	08-10		14		09-07		4
	08-11		18		09-07		4
	08-12		33		09-08		3
	09-19		10	86577166	09-06		4
86512446	08-05		35		09-07		4
	09-19		14		09-07		4
86512498	06-32		4	86577168	09-06		4
	06-34		4		09-07		4
	06-36		17		09-07		4
86512554	06-10		11		09-08		3
	06-15		10		09-09		
	08-02		29	86577170	09-06		4
	08-05		11		09-09		
	08-12		6	86577173	09-10		7
	09-01		4	86577946	02-05		9
	09-04		15		02-06		13
	09-05		26		06-32		5
	09-19		13		09-63		8
	09-40		1	86588450	04-06		22
86512555	06-17		18		06-10		41
	06-22		4		06-12		17
	06-24		2		06-16		14
	09-22		19		06-18		5
86512837	08-12		10		06-26		1
	09-04		19		08-10		15
	09-05		28		08-11		19
86512934	08-10		28		08-12		34
	08-12		42		08-15		44
86512936	06-13		31		09-22		11
	06-20		27		09-23		12
86513019	08-07		2		09-25		6
	08-08		20		09-35		20
86513020	07-01		15	86589764	09-12		2
	08-06		7	86589765	09-12		3
	08-10		30	86592107	09-36		28
	08-12		40	86592701	02-05		4
86513144	08-15		10		02-06		5
86513653	07-01		6	86592710	09-21		19
	08-07		30	86594406	04-05		13
	08-08		34		04-07		6
86517328	02-05		32	86598100	06-04		11
	03-01		2	86598102	02-08		2
	09-47		1	86599775	09-58		9
86520436	08-05		43	86600617	09-72		9
	09-19		6		09-73		10
86521425	04-09		1	86601756	03-02		6
	04-10		1	86603490	09-45		2
86526	06-01		27	86604657	04-20		17
	06-02		17		04-21		16
	06-04		18	86610166	09-04		6
	06-13		26		09-05		7
	06-19		27	86610167	09-04		7
	08-06		14		09-05		8
86527861	08-16		3	86611135	08-13		4
86527863	08-16			86611141	08-13		3
86527865	08-16		6	86611740	08-14		4
86527866	08-16		2	86611742	08-14		1
86529088	06-38		21	86613643	08-13		
86530079	09-11		2	86618349	09-06		1
86536100	08-13		12	86618351	09-06		1
86536660	06-10		20	86618353	09-07		2
	06-16		30	86618354	09-07		2
86536985	09-13		15	86618355	09-07		2
86541277	02-06		30	86618363	09-07		1
86545825	09-14		5	86618364	09-07		1
86548338	09-10		2	86619800	09-28		13
	09-10		5		09-33		14
	09-10		8		09-34		7
	09-10		8		09-37		7

Number	Figure	Sequence	Ref.
86619801	09-33		25
	09-33		6
86620864	09-52		5
86624005	08-03		4
	08-09		6
	08-11		2
86624011	08-03		2
86624092	09-04		11
	09-05		12
86624131	08-05		14
86624176	08-02		22
	08-05		13
	09-15		13
	09-18		39
86624181	02-07		3
	06-12		5
	08-07		5
	08-08		16
86624182	04-24		7
	04-25		5
	09-22		13
	09-23		14
	09-31		7
86624184	02-00		3
	04-28		5
	06-11		1
	06-12		31
	06-16		4
	06-20		2
	06-22		11
	06-24		10
	08-04		9
	08-05		8
	09-01		14
	09-26		8
	09-35		12
	09-37		34
	09-59		9
86624185	04-17		11
86624194	02-03		8
	08-06		2
86624450	08-13		
	08-13		
	08-14		
86624451	08-14		
86624732	08-07		22
86624977	08-05		10
86625000	04-07		3
86625001	06-20		3
86625021	02-04		13
86625032	08-08		29
86625033	08-02		12
86625034	08-07		21
86625074	04-01		6
86625096	02-06		11B
86625127	09-25		29
86625129	09-25		42
86625224	04-30		7
	04-33		1
	09-57		6
86625234	02-00		21
86625253	02-00		30
	02-02		8
	02-04		22
	04-04		8
	08-12		7
	09-04		14
	09-05		25
	09-25		14
	09-41		1
	09-42		5
86625254	02-00		23
	09-63		3
86625255	02-05		29
	06-13		1
	06-19		1
	06-36		6
	08-12		17
86625255	09-05		14A
	09-13		3
	09-42		2
86625256	03-01		14
	04-04		4
	04-05		16
	04-33		8
	06-17		4
	09-57		12
	09-64		4
86625258	06-17		19
	06-22		2
	06-24		3
86625260	09-13		14
86625263	02-02		2
	02-03		5
	02-04		1
	02-08		8
	06-10		37
	06-15		30
	08-05		49
	08-07		26
	08-08		26
	09-21		9
	09-43		6
	09-44		6
	09-45		7
86625264	09-20		5
	09-21		16
86625266	02-05		10
	02-06		14
	09-22		20
	09-25		38
86625480	09-38		25
86625481	09-37		24
86625515	09-37		23
86627432	04-09		12
86629542	02-03		4
86629891	06-36		25
86631597	08-14		3
86631598	08-14		
86631606	08-13		10
86631607	08-14		10
86631609	08-13		9
86631610	08-14		9
86631615	08-13		11
86631616	08-14		11
86632588	09-02		2
86632589	09-25		36
86632595	04-07		12
86632601	04-28		4
	09-22		7
	09-23		2
86633195	09-04		1
	09-05		4
86633196	09-04		2
	09-05		3
86633356	02-04		19
	04-24		11
86634307	09-28		15
86637783	04-11		1
	04-12		1
	04-13		2
	04-14		1
	04-15		2
	04-16		1
	04-33		10
86637935	09-25		10
86637977	06-11		8
	06-16		25
	06-17		11
	06-20		16
86637978	04-06		8
86637998	09-15		15
86639001	06-10		3
	06-15		4
86639006	06-15		35
86639241	09-20		3

Number	Figure	Sequence	Ref.	Number	Figure	Sequence	Ref.
86639241	09-21		15	87015284	09-35		36
86639310	09-58		5	87015514	09-09		
86639313	03-01		27	87015862	09-26		6
	09-26		5		09-32		6
	09-32		5	87016585	09-35		40
	09-59		6	87016586	09-35		9
86639325	02-05		14		09-37		29
	02-06		17	87016587	09-25		11
	06-10		7		09-47		6
	06-15		11	87016615	06-13		21
	06-17		8		06-19		20
	08-02		36		06-36		3
	09-17		1	87016870	04-06		6
	09-18		13		04-24		5
86639326	06-36		9	87016983	09-06		5
86639409	09-37		10		09-06		5
86639773	09-12		1		09-06		5
86705351	04-06		20	87017348	08-05		52
86705580	06-22		5		08-38		
	06-24		15	87017999	08-15		34
	07-01		20	87019286	08-03		11
86705988	06-12		33	87019495	09-01		10
86729669	04-09		5	87019943	06-28		7
	09-35		28	87020048	08-15		1
86729670	04-09		4	87020181	04-06		28
	09-35		27	87020743	08-15		4
86729675	09-35		25	87020901	06-10		9
86900574	09-08		3		06-15		12
86900673	06-13		28	87020980	02-00		13
86976064	02-05		20	87021047	07-01		22
	03-01		16	87021266	06-20		19
	08-05		36	87021277	07-01		5
	09-19		7	87021779	06-17		20
86977786	04-04		11	87021824	06-15		7
	04-05		22		06-17		14
	04-06		21	87021825	02-00		24
	09-35		39	87022174	06-17		25
86977789	09-22		12		06-20		24
	09-23		13	87022175	06-16		23
86977790	06-12		18		06-20		22
	06-16		12	87022177	07-01		10
86993467	06-41		15	87022436	07-01		14
	06-42		7B	87022437	07-01		11
86993468	06-41		7A	87022438	06-10		26
	06-42		5	87022671	08-15		9
86993475	06-39		25	87022672	08-15		11
	06-41		4	87022737	08-15		3
	06-42		15		09-14		7
86993479	06-41		13	87023398	08-15		8
	06-42		7	87023469	08-15		14
86993480	06-41		14	87023470	08-15		5
	06-42		7A	87023471	08-15		13
86993483	06-39		27	87023472	08-15		12
86993484	06-39		24	87023483	08-15		6
87000312	04-06		10	87023530	04-29		4
87010108	06-16		15		08-03		10
	06-20		11	87024208	08-03		9
87010110	08-07		27	87024539	02-05		11
87010190	09-07		1	87024588	02-05		17
87010593	06-10		16C	87024695	06-17		30
	06-15		17		06-30		
87012669	08-15		20	87025275	08-15		2
	08-16			87025470	02-00		5
87013357	09-21		22	87026695	08-15		27
87013666	04-04		23	87026696	08-15		26
	04-05		9	87026871	09-53		2
87013729	06-40		30		09-54		4
87014504	09-06		3	87028524	03-01		8
	09-06		3		04-29		3
	09-06		3	87029843	04-25		1
87014505	09-06		2	87029930	08-02		8
	09-06		2	87030508	09-13		11
	09-06		2		09-14		8
87015284	02-04		6	87030547	09-18		5
	09-20		8	87030549	04-24		9
	09-21		6		09-41		4
	09-22		9		09-42		7
	09-23		4	87030555	09-50		3

Number	Figure	Sequence	Ref.
87030561	04-06		23
	04-28		3
	06-10		43
	08-07		7
	08-08		17
	09-17		6
	09-22		15
	09-23		16
87030567	06-16		1
	06-17		13
	07-01		19
87033027	06-17		
87033290	08-05		40
	09-19		19
87033645	09-16		11
87033823	06-10		34
	06-15		39
87033824	06-17		28
87034507	09-18		22
87035341	06-17		16
	06-22		1
	06-43		
	06-44		
	06-45		
87035342	06-23		3
	06-24		1
	06-46		
	06-47		
	06-48		
87035382	04-06		24
87035457	09-36		39
	09-38		45
87035782	09-38		13
87036285	09-16		7
87039085	06-10		25
	06-15		36
	06-16		7
87039359	06-43		1
87039360	06-46		1
87039368	06-45		
87039369	06-48		
87039370	06-45		
87039371	06-48		
87039372	06-45		
	06-48		
87039611	06-41		24
87039612	06-41		2
	06-42		17
87039613	06-39		23
87039614	06-39		26
87039615	06-39		29
87039622	06-39		16
87039623	06-40		5
87040707	08-02		18
87042118	04-02		10
	04-04		17
	04-05		6
87042214	06-30		1
87042897	06-11		3
	06-16		3
87042903	06-43		13
	06-46		13
87042904	06-43		11
	06-46		11
87042905	06-43		12
	06-46		12
87042906	06-43		14
	06-46		14
87042907	06-45		18
	06-48		19
87042908	06-43		3
	06-46		4
87042909	06-46		5
87042910	06-46		18
87042911	06-43		19
	06-46		19
87042912	06-43		6
	06-46		6
87042913	06-47		2
87042914	06-47		4
87042915	06-47		7
87042916	06-47		6
87042917	06-47		3
87042918	06-47		1
87042919	06-45		17
	06-48		20
87042921	06-43		8
	06-46		8
87042922	06-43		22
	06-46		22
87042923	06-43		10
	06-46		10
87042924	06-45		19
	06-48		21
87042925	06-43		21
	06-46		21
87042926	06-43		9
	06-46		9
87042927	06-43		20
	06-46		20
87042928	06-44		5
	06-47		12
87042929	06-44		3
	06-47		10
87042930	06-44		10
	06-47		17
87042931	06-44		8
	06-47		15
87042932	06-44		9
	06-47		16
87042933	06-44		6
	06-47		13
87042934	06-44		1
	06-47		8
87042935	06-44		4
	06-47		11
87042941	06-43		2
	06-46		2
87042953	06-43		4
87042954	06-43		18
87047451	09-42		6
87047862	04-07		9
87050523	06-38		16
	06-40		13
87050524	06-38		20
	06-40		11
87050525	06-38		22
87050526	06-40		
87051110	09-25		7
	09-27		15
	09-33		30
87051277	06-38		
87051278	06-38		
	06-40		
87052670	04-01		7
	04-04		20
	04-05		11
87052671	04-17		8
87053083	04-04		21
	04-05		3
87301258	08-13		5
87301324	09-21		20
87301328	08-05		32
87301344	08-05		16
87301359	06-11		4
	06-16		6
87301588	04-04		25
	04-05		14
	04-06		1
87302564	06-21		16
87303844	06-16		21
	06-19		25
87305403	04-07		11
	09-21		11
87307884	02-08		5
87307909	09-37		38

Number	Figure	Sequence	Ref.	Number	Figure	Sequence	Ref.
87308282	04-06		4	87421454	08-04		17
87309725	09-16		10	87421480	08-10		18
87310592	04-09		6		08-11		12
	09-35		26	87423368	08-01		6
87335499	09-30		12	87423807	08-09		9
87352524	06-28				08-11		8
87352527	06-14		10	87423833	08-05		28
	06-28		3		09-19		1
87353205	06-25		9	87423856	09-19		11
87354210	06-36		28	87424095	03-01		23
87356572	06-36			87424182	06-28		1
87357018	06-11		14		07-01		23
87357240	06-01		13	87426293	08-03		13
	06-05			87426545	06-14		11
87357241	06-01		5		06-28		4
	06-06				06-29		11
87363008	06-36		19	87427685	04-15		7
87364	09-16		13	87427686	04-16		8
87364613	06-36		12	87428143	06-32		1
87364616	06-10		28	87428444	08-06		22
87364806	06-12		13	87429186	09-67		8
87366159	04-04		1	87429625	06-23		7
87367444	08-09		2		06-28		
	08-11		1	87429698	09-20		13
87367445	08-09		5	87430022	09-09		1
	08-11		10	87430292	09-09		1
87369082	06-11		12	87430661	06-10		16
87370805	04-25		1		06-15		15
87372867	09-68		5	87430679	09-14		3
87374752	06-10		36	87430855	06-23		1
	06-15		42		06-24		7
87376969	08-08		28	87432221	09-13		6
87381	09-14		13	87433495	06-28		5
87381264	09-20		14	87433496	06-28		2
	09-21		2		07-01		24
87385021	08-02		10		08-10		18B
87387193	08-01		21	87433497	06-28		3
87387540	08-10		8		06-29		10
	08-12		26	87433499	06-28		6
	09-04		4	87436118	09-37		21
	09-05		2	87436539	08-04		4
87388074	08-09			87436610	03-02		5
87389371	09-67		7	87436668	08-04		3
87393399	02-02		13	87437076	09-22		14
87393628	06-12		26		09-23		15
87396043	06-15		19	87437351	06-12		20
87403797	08-06		1		06-16		17
87403835	04-01		1	87437501	09-37		25
87404825	08-02		26	87438187	08-01		28
87404992	04-04		12		08-13		
	04-05		21	87438190	08-02		2
	06-12		19		08-14		
	06-16		13	87438564	09-09		1
	08-15		45	87438566	09-09		1
87405117	09-45		1	87438766	08-07		15
87405135	08-02		13	87439844	09-35		22
87405137	08-02		14		09-37		27
87405141	08-02		24	87439984	06-10		16B
87406968	04-07		19		06-15		16
87411208	09-13		12	87440124	09-22		2
	09-14		9		09-23		10
87412041	09-04		8	87440253	08-07		23
	09-05		9	87440564	08-09		10
87413030	08-12		37		08-11		7
	09-04		12	87440565	08-09		8
	09-05		13		08-11		4
87413436	08-09		7	87440566	08-10		4
	08-11		11		08-12		23
87414	08-12		9	87440568	08-10		17
	08-13		6		08-12		36
	08-14		6	87440569	08-10		3
	09-04		21		08-12		22
	09-05		27	87440570	08-10		16
87414769	08-15		35		08-12		35
87414959	09-52		2	87441006	09-35		23
87416539	03-01		24		09-37		26
87417308	08-05		21	87441574	04-29		1
87418259	06-15		33	87441649	06-25		5

Number	Figure	Sequence	Ref.	Number	Figure	Sequence	Ref.
87441735	09-47		9	87450833	09-37		4
87441786	08-08		9	87450956	04-01		3
87441937	09-35		33	87452009	09-37		12
87442321	08-13		2	87452108	06-21		17
87442323	08-13		1	87452146	06-21		15
87442337	08-10		9	87453780	04-29		10
	08-12		28	87453999	08-15		29
87442439	08-05		44	87454000	08-15		30
	09-19		9	87454483	09-10		4
87443510	06-11		13	87454488	09-10		7
	06-12		15	87454489	09-10		1
	06-16		18		09-10		7
	06-20		23	87455257	08-38		
	06-22		7	87455258	08-38		
	06-24		14	87455274	08-38		
	07-01		9	87455412	06-23		4
87443511	06-11		15		06-24		13
	06-16		11	87456974	08-06		6
	06-20		14	87458061	06-14		2
	09-34		9		06-27		7
	09-35		24		06-29		2
	09-37		14		07-01		25
87444160	08-05		47	87458118	04-29		11
87444371	08-05		3	87458467	04-17		2
87444373	08-05		2	87458511	09-18		26
87444992	04-17		5	87458642	09-13		2
87445136	06-11		5	87458660	09-18		32
	06-16		2	87458662	09-18		16
87445138	06-11		22	87458664	09-17		4
	06-17		9	87458961	04-04		5
87445306	08-04		22		04-05		17
87445747	08-01		7	87458997	06-15		21
87445908	09-37		19	87459075	09-21		14
87445932	08-17		6	87459076	09-21		10
	08-18		6	87459429	09-66		5
	08-19		7	87459437	09-66		4
	08-20		6	87459438	09-66		3
	08-24		4	87459439	09-66		2
87445935	08-17		4	87459440	09-66		1
	08-18		4	87459517	06-36		22
	08-19		5	87459518	06-36		7
	08-20		4	87460042	08-07		20
87445943	08-17		5		08-08		22
	08-18		5	87460167	09-62		12
	08-19		6	87460558	09-55		1
	08-20		5	87460732	09-25		30
	08-24		3	87460888	06-36		20
87445987	08-19		9	87461561	09-46		1
	08-20		8	87461604	09-22		1
	08-26		1		09-23		17
87445988	08-19		8	87461995	02-02		10
	08-20		7	87462215	08-05		1
	08-25		1	87462287	06-36		15
87446001	08-04		1	87462631	09-35		32
87446248	06-11		19	87462741	09-16		6
	06-15		25	87516012	06-17		24
87446614	09-19		17	87516042	08-15		48
87446617	08-18		7	87516044	08-08		12
	08-20		9	87517937	09-31		10
	08-27		1	87517940	09-31		9
	08-35		1	87520839	09-35		31
87446825	08-09		1	87524605	03-02		4
	08-11		9	87527676	09-72		10
87446983	08-09		3		09-73		8
87447009	08-05		60	87529123	09-27		13
87447010	08-05		12		09-33		28
87447123	08-16		1	87530614	04-30		6
87447124	08-16		4	87530713	03-02		1
87447764	08-07		29	87531091	08-01		12
	08-08		33	87533223	09-04		3
87447793	08-04		12		09-05		5
87447813	08-03		6	87534386	06-34		2
87447965	08-05		20	87534391	06-34		6
87447970	08-07		11	87534392	06-34		7
87448095	09-01			87534744	04-11		2
87449854	09-21		5		04-12		2
87449992	04-29		9		04-13		3
87450833	09-34		4		04-14		3

Number	Figure	Sequence	Ref.	Number	Figure	Sequence	Ref.
87534744	04-15		3	87553608	06-54		
	04-16		3	87553609	06-50		7
87535230	08-04		12A		06-51		7
87535297	06-36		27	87553610	06-50		25
87535298	06-36		13		06-51		
87535299	06-36		23		06-54		3
87535743	02-05		18	87553611	06-50		8
	02-06		23		06-51		8
87541113	06-37			87553612	06-50		19
87546691	02-05		8		06-51		19
	02-06		22	87553613	06-50		9
	02-10		1		06-51		9
87546971	06-18		14	87553614	06-50		10
	06-22		9		06-51		10
	06-27		1	87553615	06-50		11
87546974	08-01		1		06-51		11
	08-18			87553616	06-50		12
87546975	08-07		1		06-51		12
	08-17				06-54		11
	08-37			87553617	06-50		13
87546976	06-13		22		06-51		13
	06-51			87553618	06-50		14
87546979	06-13		7		06-51		14
	06-19		8	87553619	06-50		15
87547003	02-05		16		06-51		15
	02-06		19	87553620	06-50		16
87547047	06-24		12		06-51		16
87547068	06-20		7	87553621	06-50		17
87547070	06-10		19		06-51		17
	06-16		29	87553622	06-50		18
87548612	03-02		3		06-51		18
87548833	06-06		1	87553623	06-55		1
	06-07		2	87554200	08-15		15
	06-09		2	87554226	08-15		33
87548834	06-05		1	87554297	06-13		5
	06-08		2		06-19		6
87548835	06-06		2	87555249	09-35		30
	06-07		3	87556251	09-15		1
	06-09		3	87559703	09-62		16
87548836	06-05		2	87562923	08-10		18C
	06-08		3	87562926	08-10		18A
87548839	06-05		3	87563155	06-36		
	06-08		4	87563692	09-21		13
87548846	06-05		10	87563968	06-10		48
	06-08		7	87563969	06-10		47
87548847	06-05		11	87563970	08-07		16
	06-08		11		08-08		18
87548848	06-05		12	87563977	06-18		13
	06-06		8		06-26		9
	06-08		12	87563992	06-12		11
87548874	06-05		13		06-18		17
	06-06		9	87563994	06-22		8
	06-07		10	87563996	06-12		14
	06-08		13	87563998	06-10		21
	06-09		12	87564000	06-10		23
87549652	06-15		24	87564001	08-07		17
87549658	08-15		19		08-08		19
87549661	06-16		24	87564008	06-20		4
87551795	06-31		1	87564009	06-10		46
	08-15		18	87564724	09-16		5
87553599	06-50		20	87565746	02-00		6
	06-51		20	87568426	09-15		8
	06-55			87568427	09-15		9
87553600	06-50		21	87568434	09-15		23
	06-51		21	87568435	06-12		8
	06-56				06-18		2
87553601	06-50		22		06-26		7
	06-51		22	87568437	09-15		4
	06-57			87570215	09-34		10
87553604	06-50		2		09-37		15
	06-51		2	87571937	06-13		16
	06-53				06-19		23
87553605	06-50		3	87573274	06-03		6
	06-51		3	87573275	06-01		2
87553606	06-50		4	87573276	06-01		3
	06-51		4	87573277	06-03		1
87553608	06-50		6	87573278	06-03		2
	06-51		6	87573371	06-04		15

Number	Figure	Sequence	Ref.	Number	Figure	Sequence	Ref.
87573371	06-12		27	87584065	06-01		15
	06-26		15		06-02		5
87573395	02-05		39		06-03		9
87573756	02-05		23		06-04		14
87574372	09-21		23	87584431	09-62		2
87575289	06-01		8	87584434	09-62		1
87575290	06-01		14	87584435	09-62		8
87575684	06-11		25	87584569	08-15		42
87576153	08-17		3	87588579	06-14		7
	08-18		3		06-27		2
	08-19		4	87588585	06-14		6
	08-20		3	87588596	06-14		4
	08-24		1		06-27		3
87576154	08-17		7	87588597	06-14		5
	08-19		10	87588897	06-21		11
	08-36		3		06-49		
	08-37		3	87588928	08-06		24
87576157	08-17		8	87588929	08-06		20
	08-18		8	87588930	08-06		21
	08-19		11	87591148	09-36		17
	08-20		10		09-36		24
	08-28		1		09-36		9
87576158	08-17		11		09-38		23
	08-18		11		09-38		30
	08-19		13		09-38		9
	08-20		12	87591548	04-07		8
	08-28		9	87591549	04-07		13
87576160	08-17		12	87593415	08-02		32
	08-18		12	87593416	08-02		25
	08-19		14	87593417	08-02		27
	08-20		13	87593420	08-04		2
	08-28		12	87593421	08-04		5
87576161	08-17		13	87593422	08-04		8
	08-19		15	87593425	08-04		7
87576162	08-17		14	87594971	09-37		32
	08-18		14	87597259	06-55		2
	08-19		17		06-56		2
	08-20		15	87597260	06-55		3
	08-28		15		06-56		3
87576163	08-19		18	87597261	06-55		4
	08-20		16	87597262	06-55		5
	08-29				06-56		5
87576168	08-18		18	87597263	06-55		6
	08-20		17		06-56		6
	08-30			87597264	06-55		7
87576169	08-19		19		06-56		7
	08-20		18	87597265	06-55		8
	08-31				06-56		8
87577076	06-12		29	87597266	06-55		9
	06-14		1		06-56		9
87577077	06-24		8	87597267	06-55		10
	06-29		1		06-56		10
87578141	02-05		40	87597268	06-55		11
	02-06		28	87597269	06-56		1
87578147	02-07		6	87597271	06-56		4
87579303	09-04		9	87597272	06-57		1
	09-05		10	87597274	06-57		2
87583069	06-11		10	87597275	06-57		3
87583070	06-11		11	87597276	06-57		4
87583071	06-11		18	87597277	06-57		5
87583072	06-11		17	87597281	06-57		6
87583073	06-11		16	87597282	06-57		7
87583075	06-12		12	87597283	06-58		1
	06-18		18	87597284	06-52		8
	06-26		8		06-58		3
87583076	06-12		16	87597285	06-52		9
87583077	06-12		24	87597286	06-53		6
87583080	06-10		30	87597287	06-54		1
87583285	08-01		1	87597288	06-54		2
	08-20			87597289	06-54		4
87583286	08-08		13	87597290	06-54		5
	08-19		1	87597291	06-54		6
87584059	06-20		18	87597292	06-54		7
87584062	06-20		13	87597293	06-54		8
87584064	06-01		9	87597294	06-54		9
	06-02		3	87597295	06-54		10
	06-03		8	87597296	06-54		12
	06-04		13	87597297	06-54		13

Number	Figure	Sequence	Ref.	Number	Figure	Sequence	Ref.
87597960	08-05		41	87611848	08-26		
87599718	09-01		20	87611849	08-19		23
87600622	06-02		1		08-20		20
	06-09		1		08-25		
87600623	06-02		2	87611850	08-18		19
	06-03		4		08-20		21
	06-04		1		08-27		
	06-08		1		08-35		
87600630	06-20		8	87611854	06-03		12
87602985	06-36		16		06-04		9
87602987	06-36				06-07		1
87602988	06-36			87611895	02-02		4
87604061	06-01		24	87612749	03-01		20
87604062	06-01		21	87612875	08-07		14
	06-02		6	87614009	06-14		3
	06-03		11		06-27		8
	06-04		7	87614011	06-14		8
87604063	06-01		26		06-27		4
87604066	06-01		23	87614012	06-14		9
	06-04		12		06-27		5
87604067	06-01		25	87614013	06-14		12
87604068	06-01		20		06-27		6
	06-04		6	87614015	06-14		3A
87604069	06-01		22		06-27		9
	06-02		7	87614016	06-05		7
	06-03		7	87614017	06-05		6
	06-04		8		06-06		4
87604071	06-02		15		06-07		5
87604074	06-13		6		06-09		7
87604075	06-19		7	87614018	06-05		5
	06-20		26	87614019	06-05		9
87604076	06-12		9		06-06		6
	06-18		1	87614020	06-05		8
	06-26		6		06-06		7
87608059	02-26		2		06-07		6
87610315	09-34		13		06-08		6
	09-37		18		06-09		8
87610349	08-19		2	87614023	06-06		3
	08-20		1		06-07		4
	08-22				06-09		4
87610350	08-17		2		06-09		5
	08-18		2	87614024	06-06		5
	08-19		3	87614027	06-50		23
	08-20		2		06-51		23
	08-23				06-58		
87610351	08-17		9	87614028	06-50		1
	08-18		9		06-51		1
	08-19		12		06-52		
	08-20		11	87614029	06-50		5
	08-28		5		06-51		5
87610352	08-18		13	87614030	06-58		2
	08-19		16	87615741	02-03		6
	08-20		14	87615742	02-03		9
87610517	08-17		1	87616983	06-02		
	08-18		1	87617017	08-08		
	08-21			87617090	09-13		13
87610530	08-17		10	87618653	06-03		13
	08-18		10	87618657	06-03		3
87610531	08-17		15	87618658	06-01		31
	08-18		15	87618659	06-01		30
87610532	08-17		16	87619378	06-19		3
	08-18		16		06-50		
	08-33			87619935	09-39		4
87610533	08-17		17	87619938	09-39		1
	08-18		17	87619939	09-39		2
	08-32			87620412	08-12		2
	08-34			87620452	04-04		26
87610560	02-04		15	87620458	04-04		18
87610718	08-10		10	87620895	09-25		35
	08-12		29	87620930	02-04		4
87611845	08-17		18	87621132	02-05		7
	08-19		20	87621155	06-01		29
	08-36				06-03		5
87611846	08-17		19	87621245	08-08		30
	08-19		21	87622364	06-01		7
	08-37			87623664	06-20		25
87611848	08-19		22	87624401	04-17		6
	08-20		19	87624623	09-29		1

Number	Figure	Sequence	Ref.	Number	Figure	Sequence	Ref.
87624640	09-28		2	87642514	09-31		4
87624641	09-28		17	87642529	09-31		6
	09-33		17	87642536	09-30		16
87624736	08-02		31	87642540	09-30		14
87624874	03-02		2		09-33		12
87625599	09-37		43	87642543	09-30		5
87625890	06-10		24	87642544	09-30		6
87626406	09-53		3	87642545	09-30		7
87626717	09-13		16	87642911	08-11		3
87626718	02-07		2	87642912	04-21		18
87626729	02-00		22	87642913	04-13		6
87627050	04-08		5		04-15		6
	04-10			87642914	04-08		1
87627051	09-26		2		09-28		10
87627383	06-17		5		09-30		9
87627399	06-50		24		09-57		2
	06-51			87642915	04-08		2
87627518	06-09		6		09-28		9
87627520	09-28		1		09-30		10
87627524	09-58		3		09-57		1
87627706	09-27		6	87643160	06-17		1
87630124	04-04		13		06-38		
	04-05		20		06-39		
87630125	04-04		14		06-40		
	04-05		19		06-41		
87630126	04-12		5		06-42		
	04-14		6	87644222	06-01		4
	04-16		6	87644290	06-10		22
87630127	04-11		4	87644690	02-02		5
	04-13		5	87645119	09-25		3
	04-15		5	87646401	09-15		11
87630128	04-14		7	87646402	09-15		7
	04-16		7	87647525	06-21		13
87630129	04-13		1	87647526	06-21		12
	04-15		1	87647569	06-21		22
87630130	04-14		2	87647570	06-21		18
	04-16		2	87647571	06-21		8
87634133	04-20		18	87647572	06-21		19
	04-21		17	87647573	06-21		9
87634134	04-29		6	87647574	06-21		21
87634135	04-29		7	87647575	06-21		7
87634136	06-23		8	87647578	06-21		20
	06-24		18	87647723	09-15		3
87634137	04-33		12	87648094	09-13		9
87635242	09-25		2	87648689	04-04		6
87635322	09-26			87649945	09-37		48
87636518	09-47			87649979	09-37		42
87637186	06-13		18	87649990	09-37		47
87638259	09-34			87649991	09-37		39
87638293	08-04			87650009	06-36		31
87638304	08-06			87650010	06-36		30
87638321	02-03			87650011	06-36		29
87638342	04-17			87650094	03-01		22
87638349	06-01		1	87650097	04-08		4
87638358	09-50				04-18		
87638361	08-07			87650098	04-08		8
87638363	08-15				04-19		
87638450	09-37			87651126	09-32		
87638451	09-64			87651799	02-00		17
87638500	04-30			87651800	02-00		19
87638510	04-05		2	87652238	04-04		22
87638514	09-56			87652336	04-33		
87638864	04-09		10	87652337	09-57		
87638865	04-09		10	87653393	09-37		3
87638872	08-05			87653394	09-34		3
87638893	08-09			87653888	02-02		6
87639792	02-05		2	87653890	02-02		11
	02-06		2	87653891	02-03		1
87639899	09-25		31	87653892	02-03		11
87640046	09-33		18	87653980	06-10		6
87640048	04-29				06-15		3
87641886	02-04		7	87653981	06-10		31
87641947	04-16			87655050	03-01		7
87641948	04-15			87655055	09-27		7
87642449	09-28		8	87655492	02-04		17
	09-31		8	87655493	02-04		20
87642453	09-28		7	87655495	02-04		12
	09-31		11	87655497	02-04		14

Number	Figure	Sequence	Ref.
87656095	09-36		1
	09-38		50
87656096	09-36		2
	09-38		51
87656097	09-36		30
	09-38		40
87656098	09-36		5
	09-38		1
87656099	09-36		4
	09-38		2
87656100	09-36		41
	09-38		43
87656101	09-36		40
	09-38		44
87656102	09-38		47
87656103	09-36		36
	09-38		48
87656104	09-38		49
87656105	09-36		22
	09-38		28
87656106	09-36		29
	09-38		41
87656107	09-36		32
	09-38		38
87656108	09-36		33
	09-38		37
87656109	09-36		15
	09-38		21
87656110	09-38		33
87656111	09-38		16
87656112	09-38		15
87656113	09-38		12
87656114	09-36		10
	09-38		10
87656118	09-36		6
	09-38		6
87656119	09-38		5
87656120	09-36		20
	09-38		3
87656121	09-36		14
	09-38		20
87656122	09-36		21
	09-38		27
87656123	09-36		16
	09-38		22
87656124	09-36		23
	09-38		29
87656125	09-36		8
	09-38		8
87656126	09-36		27
	09-38		36
87656127	09-36		18
	09-36		25
	09-38		24
	09-38		31
87656129	09-36		7
	09-38		7
87656130	09-36		11
	09-38		11
87656866	04-12		
87656868	04-11		
87656870	04-14		
87656872	04-13		
87657080	08-08		2
87657669	09-50		1
87657670	09-50		2
87658431	06-31		11
87658636	09-57		9
87658709	09-36		37
87658710	09-36		35
87659208	04-20		14
	04-21		14
87659212	09-26		9
	09-32		7
87659253	08-03		7
87659406	08-12		8
	09-04		18
	09-05		18

Number	Figure	Sequence	Ref.
87660800	09-22		3
87660816	02-00		29
87660842	02-00		20
	02-01		
87660856	06-10		15
	06-15		14
87661376	02-00		11
87661377	02-00		9
87661493	04-06		11
87662513	09-43		1
87662514	09-44		1
87663103	09-02		1
87665543	09-15		10
87665545	09-15		2
87666074	09-13		7
87667727	09-58		7
87668006	09-58		2
87668728	04-08		6
	04-10		3
87668735	09-57		4
87668737	04-06		9
	04-08		3
	04-09		3
	04-10		2
	04-20		2
	04-21		3
	09-57		3
87668739	08-08		11
87669337	06-36		1
87669345	06-36		18
87670	06-13		2
	06-19		2
87671495	09-23		9
87671857	09-30		11
87672098	09-56		6
87672222	09-58		6
87672257	09-58		8
87673070	04-21		15
87673072	04-20		5
87673077	04-21		2
87673079	04-20		15
	04-21		6
87673471	09-66		7
	09-68		6
87673472	09-66		6
	09-68		7
87673642	09-63		
87674802	02-06		10
87674803	02-06		11A
87676100	02-00		26
87676259	04-20		
87676260	04-21		
87676261	06-03		
87678399	09-28		16
	09-33		10
87678400	09-30		18
87679496	02-30		5
87679502	03-08		6
87680190	09-30		4
87682711	09-57		5
87682712	04-30		5
87684094	09-64		1
87684180	06-02		16
87684218	06-02		14
87684661	09-47		3
87684681	09-47		8
87685888	09-56		10
87685891	09-56		1
87685909	09-56		10B
	09-56		1B
	09-56		2A
	09-56		9A
87685911	09-56		10A
	09-56		1A
87685962	08-03		
87687021	02-06		24
87687372	02-01		1
87687373	02-01		3

Number	Figure	Sequence	Ref.
87687374	02-01		4
87687375	02-00		20A
	02-01		8
87687376	02-01		7
87687525	02-06		4
87688409	04-05		10
87688478	02-08		1
87688523	02-01		2
87688649	02-01		2
87688650	02-01		1
87691470	09-37		50
87691471	09-37		51
87691473	09-37		8
87692685	02-06		21
87693079	02-06		9
87693857	02-09		1
87693858	02-09		4
87694058	02-08		3
87696527	02-02		12
87698812	08-05		17
87698867	09-62		9
87702278	09-42		8
87702506	09-41		2
87702957	09-62		11
87702959	09-62		10
87702960	09-62		15
87702962	09-62		3
87702963	09-62		5
87703530	09-35		7
87703555	09-37		28
87703637	09-62		13
87705419	09-35		1
87705420	09-35		21
87706925	09-25		15
87707133	04-05		7
87707135	09-21		1
87709058	04-07		1
87710954	09-68		1
87710955	09-68		2
87711337	02-06		20
87711364	09-01		18
87711366	09-01		19
87711926	09-37		41
87712373	03-01		11
87712376	03-01		15
87712700	09-56		4
87712706	09-35		2
	09-56		7
87713097	02-06		8
87713117	09-62		14
87713118	09-62		4
87713119	09-62		7
87713120	09-62		6
87713668	09-35		3
87713728	04-05		18
87713783	09-62		17
87714955	09-59		10
87714956	09-59		5
87715341	08-05		29
87715635	09-68		3
87715636	09-68		4
87715731	09-19		15
87715833	09-49		
87716582	09-37		31
87716728	09-30		1
87716731	09-30		15
87717211	09-35		11
87717212	09-34		14
	09-37		20
87717213	09-34		11
	09-37		16
87717216	09-34		12
	09-37		17
87717220	09-37		22
87717671	09-42		
87717673	09-41		
87717682	02-09		
87717684	02-09		
87717689	09-28		2
87717826	06-25		4
87717911	02-06		26
87718119	09-28		11
	09-30		8
87718151	09-35		6
87719400	02-09		1
87719782	09-59		3
87719784	09-59		2
87719789	09-59		12
87719792	09-59		4
87720245	04-20		13
	04-21		13
87720246	04-20		8
	04-21		12
87720457	04-05		8
87720912	06-25		8
87723831	04-33		4
87727413	04-33		9
87727414	04-33		3
87727417	04-33		2
87727748	09-56		8
87727752	09-56		5
87728345	04-33		11
87728981	08-05		19
87728988	08-05		26
87728989	08-05		31
87728999	08-05		30
87729003	08-05		33
87730069	09-56		9
87730070	09-56		2
87730806	08-05		18
87730822	09-56		3
87734526	09-67		9
87739944	08-05		27
87739947	08-05		59
87802167	09-69		8
	09-69		8
	09-69		8
	09-70		9
	09-70		9
	09-71		8
	09-71		8
	09-71		8
	09-72		8
87825	04-07		21
	09-16		8
87848	09-16		14
88011	09-18		27
88098	02-05		34
	03-01		3
896-15008	09-01		13
906091R1	08-12		20
	09-04		16
	09-05		16
933610R1	06-01		6
9512573	06-36		24
9610689	08-15		17
9615396	06-10		14
	06-15		44
9617873	04-25		2
	06-01		17
	06-01		19
	06-01		28
	06-02		11
	06-02		13
	06-02		18
	06-02		9
	06-04		16
	06-04		19
	06-04		3
	06-04		5
	06-12		2
	06-12		22
	06-12		28
	06-12		34
	06-12		36
	06-12		4

Number	Figure	Sequence	Ref.	Number	Figure	Sequence	Ref.
9617873	06-13		11	9706685	09-42		3
	06-13		15	9706690	02-08		4
	06-13		27		04-07		5
	06-13		8		08-06		11
	06-16		10		09-21		26
	06-18		16	9706704	04-29		8
	06-18		4		06-10		10
	06-18		9		06-15		9
	06-19		10		08-01		14
	06-19		12		08-12		5
	06-19		16		09-15		14
	06-19		28		09-18		41
	06-21		4	9706755	04-07		16
	06-22		6	9790526	08-15		31
	06-23		10	9790527	06-25		3
	06-24		16	9790547	06-10		35
	06-24		6		06-15		41
	06-26		14	9800081	09-12		7
	06-26		16	9804256	09-34		2
	06-26		19		09-35		19
	06-26		5		09-37		2
	06-39		4		09-53		4
	06-41		11	9804257	02-06		12
	06-41		20		09-34		6
	06-41		23		09-37		6
	07-01		13	9804258	09-26		1
	07-01		16		09-32		1
	07-01		2		09-35		8
	07-01		21		09-37		30
	08-06		15		09-53		5
	08-06		17	9804262	02-01		5
	08-06		19		04-04		2
	08-06		8		04-05		1
	08-07		19		09-41		3
	08-08		24		09-42		9
	08-08		32	9804266	09-42		1
	08-08		8	9804277	09-21		25
	08-10				09-27		19
	08-10		20		09-28		14
	08-10		22	9804278	02-01		6
	08-10		26	9821783	04-20		7
	08-10		29		04-21		8
	08-10		31	9822175	09-06		6
	08-11		14		09-06		6
	08-11		16		09-06		6
	08-11		21		09-06		6
	08-12		39		09-07		7
	08-12		41		09-07		7
	08-12		43		09-07		7
	08-12		46		09-07		7
	08-12		49		09-07		7
	08-16		5A		09-07		7
9617891	08-01		4		09-08		4
	08-05		55		09-08		4
	08-15		38		09-08		4
9626568	04-07		14	9824050	06-21		10
9628065	09-63		4	9824642	09-13		4
9628098	06-10		38	9827902	06-10		40
	06-15		29		06-15		32
	06-20		1		09-21		24
	08-15		23	9828248	06-17		17
	09-01		16		06-22		3
	09-20		7		06-24		4
	09-21		4		09-22		17
	09-43		7		09-25		40
	09-44		7	9829733	09-04		5
	09-45		8		09-05		6
	09-59		7	9829783	09-07		6
9628503	09-18		20		09-07		6
9635806	09-21		12		09-07		6
9670288	04-07		10		09-07		6
9671424	06-38		26	9829784	09-07		5
9672438	06-41				09-07		5
	06-41		22		09-07		5
	06-42				09-07		5
	06-42		20	9829786	09-07		8
9706685	04-04		3		09-07		8
	04-05		15		09-07		8

Number	Figure	Sequence	Ref.
9841223	06-41		8
	06-42		18
9841636	09-06		2
9841637	09-06		3
98419203	02-26		4
98429625	03-05		5
9846870	06-13		23
98471524	02-27		4
9849641	09-47		5
99435557	02-13		11
	02-16		4
99454296	02-18		4
9969430	04-23		1
9969431	04-22		1
9991976	06-13		24
	06-13		29
9993141	06-04		17
	06-26		17
	08-10		25
	08-11		22
	08-12		47
9993143	08-10		24
	08-11		20
	08-12		45
A149796	09-57		9A
A166057	04-06		19
A177436	02-05		24
	03-01		10
A184597	02-04		9
A29183	06-40		4
A30338	08-12		13
	09-05		20
D120613	08-02		19
D120614	08-02		17
D120679	08-01		17
	08-02		20
D124661	08-01		23
D131983	03-01		21
	08-05		42
	09-18		19
	09-19		4
D137185	02-05		38
D137186	09-65		3
D138889	08-12		11
	09-05		22
D143415	09-25		37
D55216	08-12		4
D63653	06-33		6
D67297	06-20		5
D68846	06-20		6
E137085	09-71		7
E38908	04-30		4
E99128	04-30		1
E99208	04-30		2
F23137	06-41		12
	06-42		6
H151399	06-10		29
	06-15		43
H169920	02-05		19
	03-01		6
H32961	08-05		46
H331884	07-01		3
H373779	08-05		34
	09-19		8
H407767	06-41		26
H434289	09-35		15
	09-37		37
H434900	08-01		24
H435770	06-39		20
H435776	06-38		37
H435814	09-25		8
H436053	06-39		17
H436054	06-39		18
H436065	06-39		6
H436704	06-38		3
	06-40		28
H436887	09-14		17
H436914	09-13		5
H437190	06-38		35
H438321	06-39		5
H439276	09-24		4
H673773	06-39		
K608432	06-42		12
L104616	06-12		35
	08-08		7
L11541	02-07		7
	02-09		3
	04-17		7
	06-12		23
	06-18		11
	06-26		11
	07-01		8
	08-06		10
	08-07		10
	08-08		10
	08-09		4
	09-15		12
	09-19		16
	09-35		10
	09-37		33
L14781	08-05		39
	09-19		21
L18331	06-01		10
	06-02		4
	06-03		10
	06-10		27
	06-15		20
	06-17		10
	08-03		3
	09-37		11
L71879	04-06		18
L78786	09-05		29
N13224	06-38		19
	06-40		12
N13226	06-39		11
N13234	06-38		30
N13241	06-39		10
N13242	06-39		12
N13244	06-38		25
N13247	06-38		32
N13254	06-38		18
	06-40		15
N13255	06-39		8
N13260	06-39		2
N13262	06-38		31
N13268	06-10		16A
	06-15		18
N13994	06-38		1
	06-40		8
N13999	06-38		34
N14063	06-39		7
N14103	06-38		29
N14666	06-39		13
N14668	06-39		15
N14848	06-41		5
	06-42		
NSS	04-18		1
	04-18		2
	04-18		3
	04-18		4
	04-18		5
	04-18		6
	04-18		7
	04-18		8
	04-18		9
	04-19		1
	04-19		2
	04-19		3
	04-19		4
	04-19		5
	04-19		6
	04-19		7
	04-19		8
	04-19		9
	04-22		4
	04-23		4

Number	Figure	Sequence	Ref.	Number	Figure	Sequence	Ref.
NSS	04-33		5	NSS	06-48		16
	06-28		10		06-48		17
	06-28		11		06-48		18
	06-28		8		06-48		2
	06-28		9		06-48		3
	06-29		3		06-48		4
	06-29		4		06-48		5
	06-29		5		06-48		6
	06-29		6		06-48		7
	06-29		7		06-48		8
	06-29		8		06-48		9
	06-29		9		06-52		1
	06-30		2		06-52		2
	06-30		3		06-52		3
	06-30		4		06-52		4
	06-30		5		06-52		5
	06-30		6		06-52		6
	06-30		7		06-52		7
	06-30		8		06-53		1
	06-31		10		06-53		2
	06-31		2		06-53		3
	06-31		3		06-53		4
	06-31		4		06-53		5
	06-31		5		06-53		7
	06-31		6		08-21		1
	06-31		7		08-21		2
	06-31		8		08-21		3
	06-31		9		08-21		4
	06-33		2		08-21		5
	06-38		10		08-21		6
	06-38		14		08-21		7
	06-38		15		08-21		8
	06-38		6		08-21		9
	06-39		28		08-22		1
	06-40		1		08-22		2
	06-40		16		08-22		3
	06-40		17		08-22		4
	06-40		21		08-22		5
	06-40		25		08-22		6
	06-40		9		08-22		7
	06-41		29		08-22		8
	06-41		7		08-23		1
	06-42		2		08-23		10
	06-42		4		08-23		11
	06-43		15		08-23		12
	06-43		16		08-23		13
	06-44		12		08-23		14
	06-44		2		08-23		15
	06-44		7		08-23		16
	06-45		1		08-23		2
	06-45		10		08-23		3
	06-45		11		08-23		4
	06-45		12		08-23		5
	06-45		13		08-23		6
	06-45		14		08-23		7
	06-45		15		08-23		8
	06-45		16		08-23		9
	06-45		2		08-25		2
	06-45		3		08-25		3
	06-45		4		08-25		4
	06-45		5		08-25		5
	06-45		6		08-25		6
	06-45		7		08-25		7
	06-45		8		08-25		8
	06-45		9		08-25		9
	06-46		15		08-26		2
	06-46		16		08-26		3
	06-47		14		08-26		4
	06-47		19		08-26		5
	06-47		5		08-26		6
	06-47		9		08-27		2
	06-48		1		08-27		3
	06-48		10		08-27		4
	06-48		11		08-27		5
	06-48		12		08-27		6
	06-48		13		08-27		7
	06-48		14		08-27		8
	06-48		15		08-28		10

Number	Figure	Sequence	Ref.	Number	Figure	Sequence	Ref.
NSS	08-28		11	NSS	08-37		4
	08-28		13		08-37		5
	08-28		14		08-37		6
	08-28		16		08-37		7
	08-28		17		08-38		1
	08-28		18		08-38		10
	08-28		2		08-38		11
	08-28		3		08-38		12
	08-28		4		08-38		13
	08-28		6		08-38		14
	08-28		7		08-38		15
	08-28		8		08-38		16
	08-29		1		08-38		17
	08-29		10		08-38		18
	08-29		11		08-38		19
	08-29		12		08-38		2
	08-29		13		08-38		3
	08-29		14		08-38		4
	08-29		15		08-38		5
	08-29		16		08-38		6
	08-29		2		08-38		7
	08-29		3		08-38		8
	08-29		4		08-38		9
	08-29		5		09-07		3
	08-29		6		09-07		3
	08-29		7		09-07		3
	08-29		8		09-07		3
	08-29		9		09-07		3
	08-30		1		09-07		3
	08-30		2		09-08		6
	08-30		3		09-08		6
	08-30		4		09-08		6
	08-30		5		09-12		4
	08-30		6		09-12		8
	08-30		7		09-15		19
	08-30		8		09-15		20
	08-31		1		09-15		24
	08-31		2		09-15		25
	08-31		3		09-19		12
	08-31		4		09-25		21
	08-31		5		09-28		3
	08-31		6		09-28		4
	08-31		7		09-33		15
	08-31		8		09-33		18
	08-32		1		09-33		27
	08-32		2		09-33		3
	08-32		3		09-33		31
	08-32		4		09-36		12
	08-32		5		09-36		13
	08-32		6		09-36		19
	08-32		7		09-36		26
	08-33		1		09-36		3
	08-33		2		09-36		31
	08-33		3		09-36		34
	08-33		4		09-36		38
	08-33		5		09-38		14
	08-34		1		09-38		17
	08-34		2		09-38		18
	08-34		3		09-38		19
	08-34		4		09-38		26
	08-34		5		09-38		32
	08-34		6		09-38		34
	08-34		7		09-38		35
	08-35		2		09-38		39
	08-35		3		09-38		4
	08-35		4		09-38		42
	08-35		5		09-38		46
	08-35		6		09-38		52
	08-35		7		09-47		4
	08-35		8		09-49		1
	08-36		1		09-49		2
	08-36		2		09-49		3
	08-36		4		09-49		4
	08-36		5		09-49		5
	08-36		6		09-49		6
	08-36		7		09-49		8
	08-37		1		09-49		9
	08-37		2		09-52		1

Number	Figure	Sequence	Ref.
NSS	09-52		10
	09-52		11
	09-52		12
	09-52		3
	09-52		4
	09-52		6
	09-52		7
	09-52		8
	09-52		9
	09-55		3
	09-55		4
	09-55		5
	09-55		6
	09-57		13
	09-57		8
	09-63		1
	09-63		5
	09-63		6
	09-63		7
P24576	06-15		23
R14771	03-01		13
R24703	08-02		11
R32216	06-33		7
REF	02-05		6
	02-06		7
	02-12		7
	02-13		14
	02-14		10
	02-15		5
	02-15		6
	02-15		7
	02-15		8
	02-16		19
	02-17		6
	02-17		7
	02-18		16
	02-19		13
	02-19		14
	02-20		19
	02-20		20
	02-20		21
	02-20		22
	02-21		5
	02-21		6
	02-21		7
	02-21		8
	02-22		10
	02-22		11
	02-23		5
	02-23		6
	02-24		5
	02-25		4
	02-25		5
	02-26		5
	02-26		6
	02-26		7
	02-26		8
	02-26		9
	02-27		10
	02-27		9
	02-28		13
	02-28		13
	02-28		14
	02-29		3
	02-30		7
	02-31		5
	02-31		6
	02-32		10
	02-32		9
	02-33		4
	02-34		6
	02-34		7
	02-35		6
	02-36		9
	02-37		5
	02-37		6
	02-37		7
	02-37		8
REF	02-38		10
	02-38		11
	02-38		12
	02-38		8
	02-38		9
	03-03		10
	03-03		11
	03-03		12
	03-03		8
	03-03		9
	03-04		6
	03-04		7
	03-05		6
	03-05		7
	03-06		3
	03-06		4
	03-07		2
	03-07		3
	03-08		10
	03-08		8
	03-08		9
	03-09		10
	03-09		11
	03-09		12
	03-09		9
	03-10		3
	03-10		4
	03-10		5
	04-02		11
	04-03		5
	04-03		6
	04-08		9
	04-20		1
	04-21		1
	06-05		
	06-06		
	06-17		23
	06-32		8
	08-09		
	08-10		1
	08-11		5
	09-06		
	09-07		
	09-08		
	09-13		1
	09-13		1
	09-14		1
	09-25		22
	09-27		1
	09-32		2
	09-33		1
	09-34		1
	09-35		18
	09-35		4
	09-37		1
	09-37		9
	09-42		10
	09-57		7
	09-69		
	09-69		
	09-69		
	09-70		
	09-70		
	09-70		
	09-71		
	09-71		
	09-71		
	09-72		
	09-72		
	09-72		
	09-73		
	09-73		
	09-73		
S99877	06-41		3
	06-42		16

NOTES