Perkins engines

workshop manual
for diesel engines

D4203 - 4203 - 4192

RUTHZIL TRATOR COMERCIAL DE PEÇAS LTDA 11 97083-6812 ROLANDO CITRANGULO

D4.203

4.203

4.192

PRINTED U.S.A.

workshop manual for 4.192, 4.203 & D4.203 diesel engines

U.S.A.

Perkins Engines, Inc.
P.O. Box 697
32500 Van Born Road
Wayne, Michigan 48184
Phone: (313) 595-9600

©

1979

CANADA

Perkins Engines Canada Limited
425 Horner Ave.
Toronto, Ontario M8W 4W3
Phone: (416) 593-3934

Publication no. 601SER03791010

This publication supersedes the previous edition numbered 601SER02771010

This publication is written for world wide use. In territories where legal requirements govern engine smoke emission, noise, safety factors etc., then all instructions, data and dimensions given must be applied in such a way that, after servicing (preventive maintenance) or repairing an engine, it does not contravene the local regulations when in use.

PERKINS COMPANIES

AUSTRALIA
Perkins Engines Australia Pty. Ltd.,
P.O. Box 156, Dandenong, Victoria 3175, Australia.
Telephone: 792-0431. Telex: 30816. Cables: 'Perkoil' Melbourne.

BRAZIL
Motores Perkins S.A.
Caixa Postal 30.028, 01000 Sao Paulo, SP-Brazil.
Telephone: 448-1499. Telex: 0114013 e 0114292. Cables: 'Perkoil' Sao Paulo.

CANADA
Perkins Engines Canada Limited
425 Horner Ave.
Toronto, Ontario M8W 4W3
Phone: (416) 593-3934

FRANCE
Moteurs Perkins S.A.
55 Boulevard Ornano, Boite Postale 93, 93203 Saint-Denis, Cedex 1, France.
Telephone: 243-04:40. Telex: 620251 Saint-Denis. Cables: 'Perkoil' Paris.

GERMANY
Perkins Motoren G.m.b.H.
8752 Kleinostheim, Postfach 1180, Germany.
Telephone: 06027/8081. Telex: 4188869.

GREAT BRITAIN
Perkins Engines Limited
Peterborough, England PE1 5NA.
Telephone: Peterborough 67474. Telex: 32501. Cables: 'Perkoil' Peterborough.

ITALY
Motori Perkins S.p.A.
Via Gorizia 11, P.O. Box 12, 22070 Portichetto/Luisaga, (Como) Italy.
Telephone: (031) 927364. Telex: 380658.

JAPAN
Perkins Engines (North Pacific) Ltd.,
6th Floor, Reinansaka Building, 14-2 Akasaka 1-Chome, Minato-Ku, Tokyo 107, Japan.
Telephone: (03) 586-7377. Telex: 24292 Tokyo.

SOUTH AFRICA
Perkins Engines (Pty.) Ltd.,
P.O. Box 31285, 6th Floor, Noswal Hall, Braamfontein, 20017 Johannesburg, South Africa.
Telephone: Johannesburg 725-5715. Telex: 5430037. Cables: 'Perkoil'.

U.S.A.
Perkins Engines, Inc.
32500 Van Born Road
P.O. Box 697 ● Wayne, Michigan 48184 ● U.S.A.
Tel.: (313) 493-8500 ● Telex: 23-4002

Perkins Engines Latin America Inc.,
2600 Douglas Road, Suite 600, Coral Gables, Florida 33134 U.S.A.
Telephone (305) 4484884. Telex: 515880. Cables: 'Perklac'.

ASSOCIATE COMPANIES & MANUFACTURING LICENSEES

ARGENTINA
Perkins Argentina S.A.I.C.
Bolivar 368, Buenos Aires, Argentina.
Telephone: 338231. Telex: 121162. Cables: 'Perkinsa'.

KOREA
Hyundai Motor Co. Ltd.,
Hyundai Building, 178 Sejong-Ro, Jongro-Ku, Seoul, Korea.
Telephone: 74-8311 & 75-6511. Telex: Hdmoco K2391.

MEXICO
Motores Perkins S.A.
Antiguo Camina San Lorenzo S/N., Apartado Postal 194, Toluca, Estado de Mexico.
Telephone: Toluca 4-4455. Telex: 00178493. Cables: 'Mopesa' Toluca.

PERU
Motores Diesel Andinos S.A.,
Antero Aspillaga No. 585, Apartado 111 79, Lima 14, Peru.
Telephone: 406882. Telex: 21076.

SINGAPORE
Perkins Engines Eastern Ltd.,
549 Upper Thomson Road, Singapore 20.
Telephone: 4524471/4521841. Telex: Perkoil R23360.

SPAIN
Motor Iberica S.A. (Division Zona 2).
Carretera del Aero-Club, Carabanchel Alto, Madrid, Spain.
Telephone: 203 52-40. 208 96-40. 208 98-40. Telex: 27324. Cables: 'Perki-e' Madrid.

URUGUAY
Perkins Rio de la Plata S.A.,
Av. Juan Carlos Gomez 1492, Montevideo, Uruguay.
Telephone: 290-726. Telex: 278. Cables: 'Perkins' Montevideo.

YUGOSLAVIA
Industrija Motora Rakovica.
Patrijarha Dimitrija 7-13,
Rakovica, Belgrade, Yugoslavia.
Telephone: 562-043/562-322/562-992. Telex: 11341 YU IMR.
Cables: 'Indmotor' Beograd.

In addition to the above, there are Perkins Distributors in the majority of countries throughout the world. For further details, apply to Perkins Engines Ltd., Peterborough or to one of the above companies.

CONTENTS

FOREWORD	
ENGINE VIEWS	A
TECHNICAL DATA	B
OPERATING AND MAINTENANCE	C
FAULT FINDING	D
CYLINDER HEAD	E
PISTONS AND CONNECTING RODS	F
CYLINDER BLOCK AND LINERS	G
CRANKSHAFT AND MAIN BEARINGS	H
TIMING CASE AND DRIVE	J
TIMING	K
LUBRICATING SYSTEM	L
COOLING SYSTEM	M
FUEL SYSTEM AND AIR CLEANERS	N
FLYWHEEL AND FLYWHEEL HOUSING	P
ALTERNATOR, DYNAMO AND STARTER MOTOR	Q
EXHAUSTER	R
LUBRICATING OILS	Appendix
APPROVED SERVICE TOOLS	Appendix
SERVICE FACILITIES	Appendix
INDEX	Appendix

Unified Threads and Engine No. Location

All threads used on 4.192, 4.203 and D4.203 Engines, except on proprietary equipment are Unified Series, and American Pipe Series.

Unified threads are not interchangeable with B.S.F. and although B.S.W. have the same number of threads per inch as Unified Coarse Series, interchanging is not recommended, due to a difference in thread form.

The engine number is stamped on the cylinder block as shown in the illustrations. The number position and composition have been changed at various times as detailed below.

With early engines, the number was stamped on either side of the cylinder block — on the camshaft side near the fuel lift pump or on the fuel pump side near the final fuel filter. The number consisted of seven digits commencing with the letters 25 for 4.192 engines or 26 for 4.203 engines.

Later engine numbers were positioned as above, but a typical number is 203U2541.

With current engines, the engine number is stamped on a pad on the centre of the camshaft side of the cylinder block and a typical number would be JE18279U510312D. For a very few applications, the engine number is stamped on the rear face of the cylinder block towards the top.

When requesting information or ordering parts, always quote all the letters and numbers in the same sequence as they are stamped on the block.

The illustrations below indicate where the engine number may be found for the first systems mentioned above.

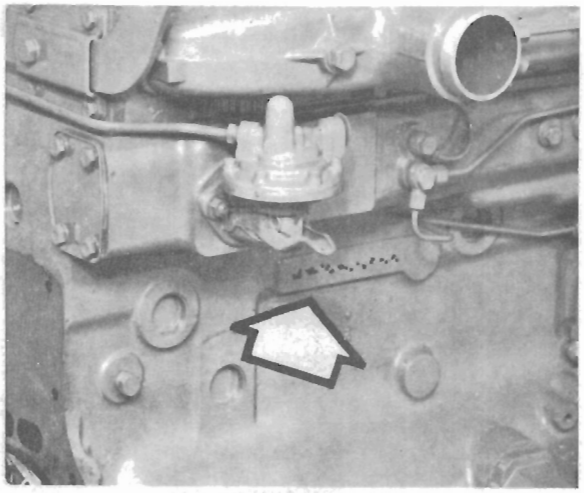

Current Engine Number Location.

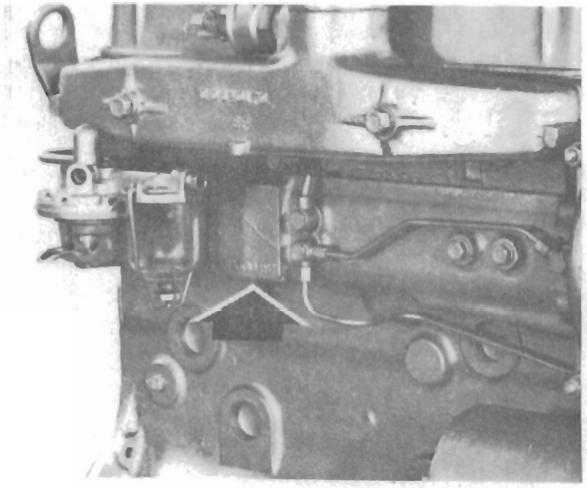

Engine No. Location on Camshaft Side of Engine

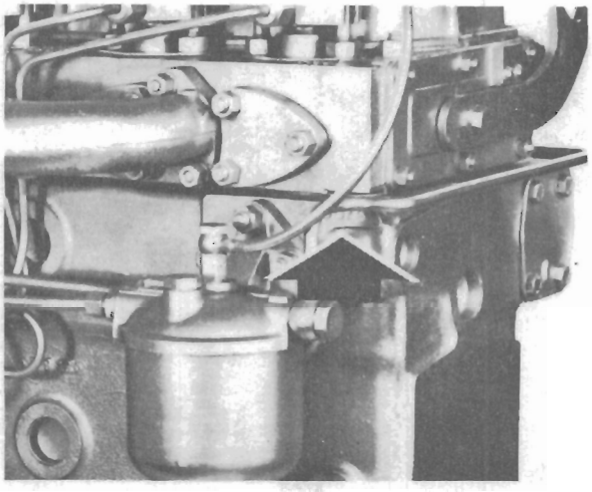

Engine No. Location on Fuel Pump Side of Engine.

FOREWORD

This manual is designed to be of assistance to all personnel concerned with the maintenance and overhaul of the Perkins Diesel Engine. It presents a complete and detailed description of the Engine, together with precise instructions on servicing and overhaul procedure also a schedule covering manufacturing data and dimensions which should be closely followed when overhauling any part of the Engine to the Manufacturers standards.

Unless specified otherwise, the information given applies to both 4.192, 4.203 and D4.203 engines. Where the information given differs for engines built for Massey Ferguson applications reference is made in the text.

Throughout this manual, whenever the "left" or "right" hand side of the engine is referred to, it is that side of the engine when viewed from the flywheel end.

Division of the manual into sections is intended to simplify the task of locating any specific information contained therein.

Page and illustration numbers are not accumulative, but start afresh with each section, preceded by the appropriate reference letter for that section, for example, Page C.2. and Figure C.3. are page and illustration numbers respectively, under Section C.

Effective maintenance can only be carried out if the personnel concerned are fully conversant with the various components of the engine. Before maintenance operations are commenced, therefore, this manual should be carefully studied, and it should at all time be kept where it will be needed in the workshop.

Certain operations described herein require the use of special Tools. These tools are manufactured and distributed by:—

Messrs. V. L. Churchill & Co. Ltd.

Full details are given in the appendix.

A School of Instruction is maintained at Peterborough, where the staff employed by Distributors and Operators of Perkins powered applications are given instructions on Diesel engine maintenance, with regard to the special characteristics of Perkins Engines.

In the event of difficulty, Distributors are recommended to communicate with one of the Companies given on Page 2.

Throughout this manual where it is considered necessary to use abbreviations, they are in accordance with those recommended by the British Standards Institute.

ENGINE PARTS

Wherever parts are ordered for Perkins Engines it is essential that the fullest information possible is given, always quote the engine number, type of application, and where possible the part number and description.

This Publication is produced by the Service Publications Department of Perkins Engines Ltd., and every endeavour is made to ensure that the information contained in this Manual is correct at the date of publication but due to continuous developments, the manufacturers reserve the right to make alterations without notice.

USE ONLY GENUINE PERKINS PARTS

TO ENSURE YOU OBTAIN THE BEST RESULTS FROM YOUR ENGINE AND TO SAFEGUARD YOUR OWN GUARANTEE, FIT ONLY GENUINE PERKINS PARTS. THESE ARE READILY OBTAINABLE THROUGHOUT THE WORLD.

SECTION A
Engine Views

Perkins engines are built to individual requirements to suit the applications for which they are intended and the following engine views do not necessarily typify any particular specification.

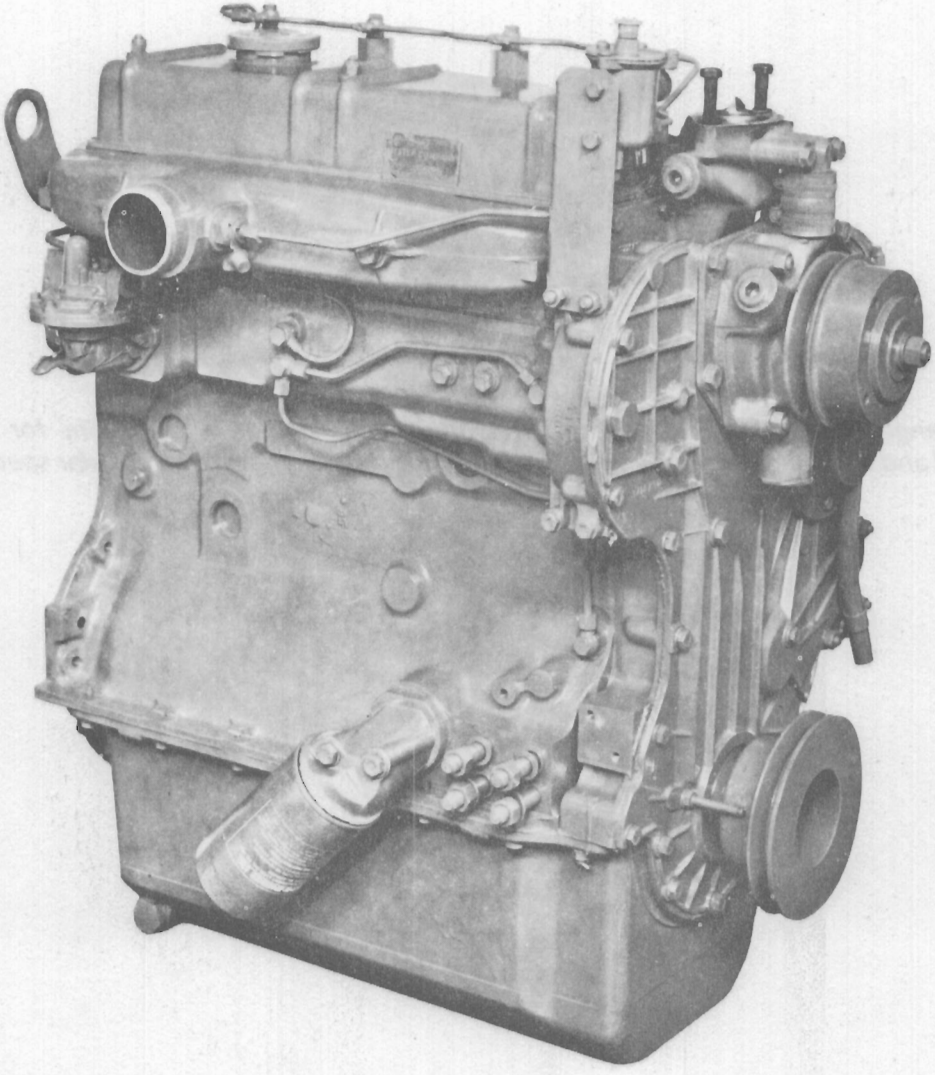

View of Front Right Hand Side of Engine.

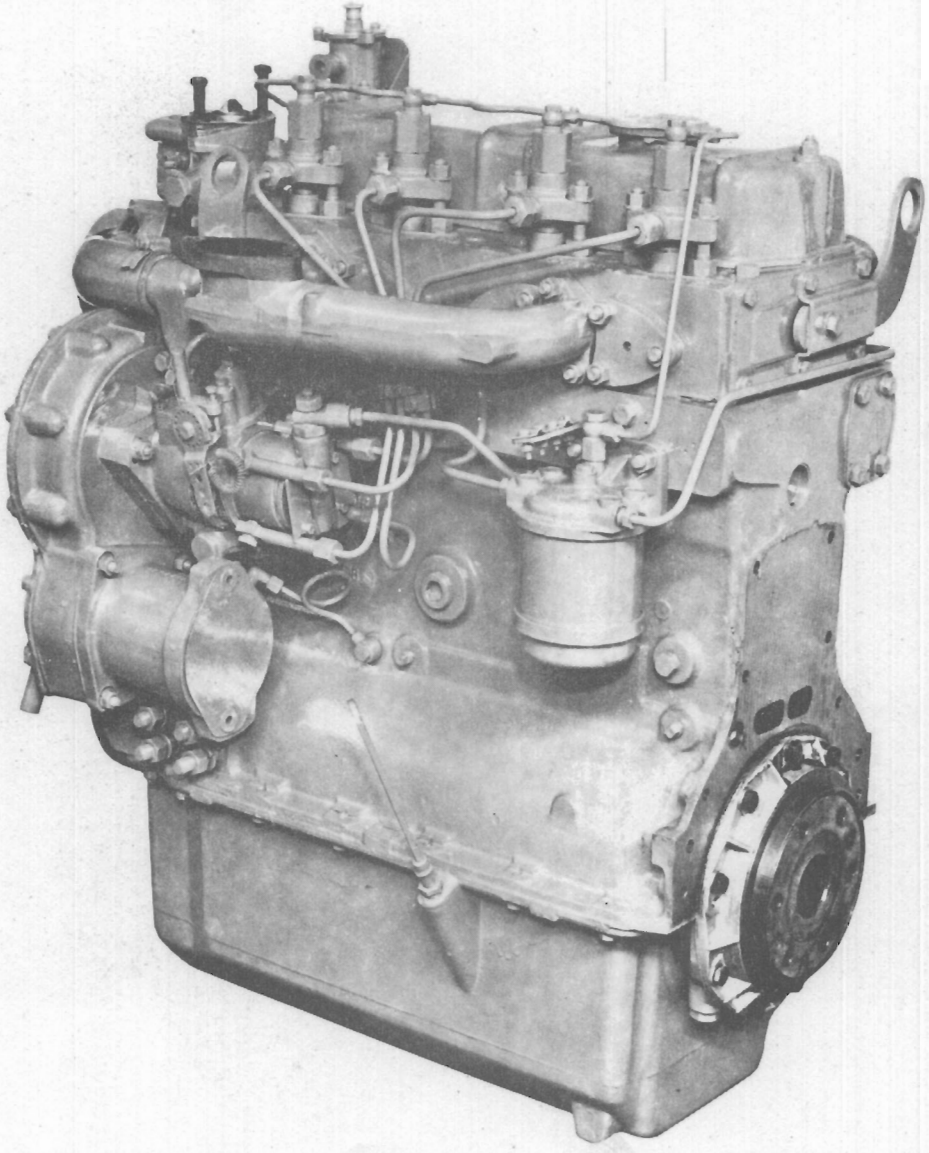

View of Rear Left Hand Side of Engine.

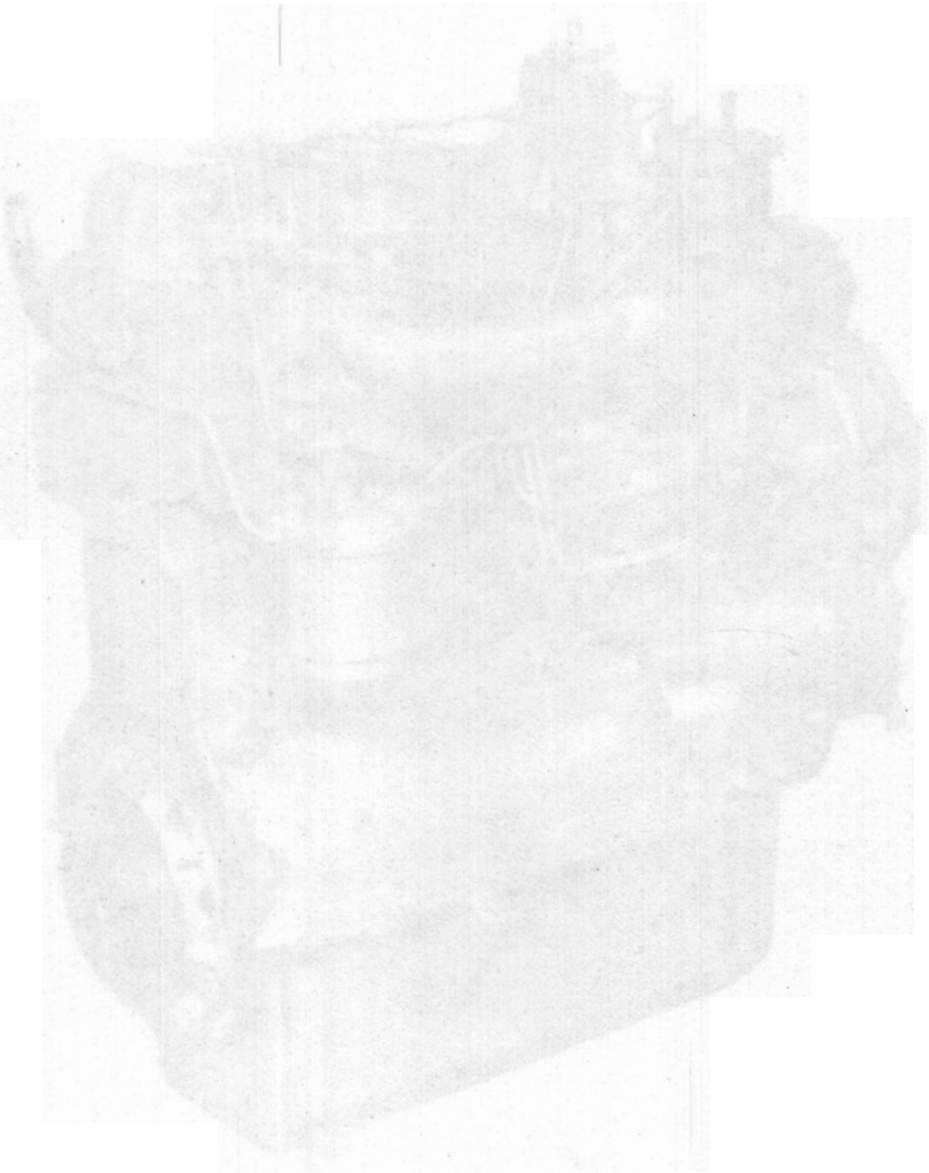

SECTION B
Technical Data

Type	Four Cylinder, Four Stroke
Combustion System 4.192/4.203	Indirect Injection
Combustion System D4.203	Direct Injection
Bore 4.203/D4.203	3.6 in (91,44 mm)*
Bore 4.192	3.5 in (88,9 mm)*
Stroke	5 in (127 mm)
Cubic Capacity 4.203/D4.203	203 in³ (3,33 Litres)
Cubic Capacity 4.192	192 in³ (3,14 Litres)
Compression Ratio 4.192	16.5 : 1
Compression Ratio 4.203	17.4 : 1
Compression Ratio D4.203	18.5 : 1
Firing Order	1, 3, 4, 2.
Tappet Clearances	0.012 in (0,30 mm) Cold

*Nominal—for actual bore size, refer to inside diameter of finished liner. Page B.3.

Engine Ratings

4.192

Vehicle Engine ..... 60 bhp (45 kW) at 2,600 rev/min
Maximum Torque ..... 143 lbf ft (19,7 kgf m)
Agricultural Engine ..... 54 bhp (40 kW) at 2,250 rev/min
Maximum Torque ..... 143 lbf ft (19,7 kgf m)
*Industrial Engine (Mech. Governor) ..... 50 bhp (37 kW) at 2,000 rev/min
Maximum Torque ..... 143 lbf ft (19,7 kgf m)
*Industrial Engine (Hyd. Governor) ..... 58 bhp (43 kW) at 2,400 rev/min
Maximum Torque ..... 143 lbf ft (19,7 kgf m)
*Maximum intermittent rating varies according to application.

4.203

Vehicle Engine ..... 63 bhp (47 kW) at 2,600 rev/min
Maximum Torque ..... 147 lbf ft (20,3 kgf m)
Agricultural Engine ..... 57 bhp (42 kW) at 2,250 rev/min
Maximum Torque ..... 151 lbf ft (20,9 kgf m)
*Industrial Engine (Hyd. Governor) ..... 60 bhp (45 kW) at 2,400 rev/min
Maximum Torque ..... 141 lbf ft (19,5 kgf m)
*Industrial Engine (Mech. Governor) ..... 53 bhp (39 kW) at 2,000 rev/min
Maximum Torque ..... 151 lbf ft (20,9 kgf m)
*Maximum intermittent rating varies according to application.

D4.203

Agricultural Engine ..... 56 bhp (41 kW) at 2,000 rev/min
Maximum Torque ..... 161 lbf ft (22,2 kgf m)

Recommended Torque Tensions

	lbf ft	kgf m	Nm
Cylinder Head utilising nuts only	60	8,3	81
Cylinder Head utilising nuts and setscrews	70	9,7	95
Connecting Rod Nuts (Cadmium Plated)	45	6,2	61
Connecting Rod Nuts (non-plated self locking)	70	9,7	95
Main Bearing Setscrews	115	15,9	156
Camshaft Gear to Camshaft Setscrew	21	2,9	28
Idler Gear Hub Retaining Nuts	21	2,9	28
Flywheel Setscrews	80	11,1	108
Water Pump Pulley Retaining Nut	55	7,6	74
Crankshaft Pulley Retaining Setscrew	110	15,2	149
Atomiser Securing Nuts	12	1,6	16
High Pressure Fuel Pipe Nuts	15	2,1	20
Thermostart with Adaptor	10	1,4	13

Engine Weights, Dry

4.192, 4,203 and D4.203 engines with standard basic accessories, i.e. water pump, fuel pump and generator.

Approximate weights	4.192		4.203	
Vehicle (non exhauster) and Vehicle based	lb.	(kg)	lb.	(kg)
Industrial and Agricultural engines	477	216,5	477	216,5
Industrial engines with standard cast iron sump	520	236	520	236
Agricultural engines with standard cast iron sump	520	236	520	236

Typical weights, dry, of standard, basic engines plus flywheel, housing, starter motor, air cleaner, fan and filters.

	4.192		4.203		D4.203	
	lb.	(kg)	lb.	(kg)	lb.	(kg)
Vehicle engines	635	288	635	288		
Agricultural engines with cast iron sump	744	338	745	338,4	745	338,4
Industrial engines with cast iron sump	712	323	712	323		

De-Rating for Altitude

Where engines are called upon to operate in rarefied atmospheres occasioned by altitude, such engines should be de-rated.

The following table is given as a general guide which may be applied on a percentage basis where specific figures for a particular engine rating are not available.

Altitude	Maximum fuel delivery de-rating*
0— 2,000 ft (600 metre)	No change
2,000— 4,000 ft (1200 metre)	6%
4,000— 6,000 ft (1800 metre)	12%
6,000— 8,000 ft (2400 metre)	18%
8,000—10,000 ft (3,000 metre)	24%
10,000—12,000 ft (3600 metre)	30%

*Measured at the pump setting speed as given in the Fuel Pump Setting Code.

Any necessary adjustments in this respect to the fuel pump should be carried out by the C.A.V. dealer for the territory concerned.

For any further information, apply to Service Department, Perkins Engines Ltd., Peterborough, or to those Overseas Companies listed on page 2.

MANUFACTURING DATA & DIMENSIONS

The data regarding clearances and tolerances are given as a guide for personnel engaged upon major overhauls and the figures given are those used in the factory for production purposes. A list of various worn limits is given at the end of this section.

Cylinder Block—4.192

Height of Cylinder Block between Top and Bottom Faces	13.7395/13.7445 in (348,98/349,11 mm)
Parent Bore Diameter for Cylinder Liner	3.6865/3.6875 in /93,64/93,66 mm)
Main Bearing Parent Bore	2.9165/2.9175 in (74,08/74,10 mm)
No. 1 Bore (bushed) for Camshaft	1.872/1.874 in (47,55/47,60 mm)
No. 2 Bore for Camshaft	1.864/1.867 in (47,34/37,42 mm)
No. 3 Bore for Camshaft	1.844/1.847 in (46,84/46,91 mm)

Cylinder Block—4.203 and D4.203

Height of Cylinder Block between Top and Bottom Faces	13.7405/13.7435 in (349,01/349,08 mm)
Parent Bore Diameter for Cylinder Liner	3.6875/3.6885 in (93,66/93,69 mm)
Depth of Recess for Liner Flange (Chrome Liners) ...	0.046/0.049 in (1.17/1,24 mm)
Depth of Earlier Recess for Liner Flange (Cast Iron Liners)	0.150/0.154 in (3,81/3,91 mm)
Depth of Current Recess for Liner Flange (Cast Iron Liners)	0.148/0.152 in (3,76/3,86 mm)
Dia. of Recess for Liner Flange (Chrome Liners) ...	3.820/3.825 in (97,03/97,16 mm)
Dia. of Recess for Liner Flange (Cast Iron Liners) ...	3.820/3.825 in (97,03/97,16 mm)
Main Bearing Parent Bore	2.9165/2.9175 in (74,08/74,10 mm)
No. 1 Bore (bushed) for camshaft	1.872/1.874 in (47,55/47,60 mm)
No. 2 Bore for Camshaft	1.864/1.867 in (47,34/47,42 mm)
No. 3 Bore for Camshaft	1.844/1.847 in (46,84/46,91 mm)

Cylinder Liners — 4.192

Type	Dry — Interference Fit
Outside Diameter of Liner	3.6895/3.6905 in (93,71/93,74 mm)
Interference Fit of Liner	0.002/0.004 in (0,05/0,10 mm)
Flange Thickness	0.1855/0.1875 in (4,71/4,76 mm)
Outside Diameter of Flange	3.71475/3.71675 in (94,35/94,40 mm)
Depth of Liner Flange below Top Face of Cylinder Block	0.003/0.008 in (0,08/0,20 mm)
Inside Diameter of Finished Liner in Cylinder Block ...	3.501/3.502 in (88,92/88,95 mm)

Cylinder Liners — 4.203 and D4.203

Chromard

Type	Dry — Transition Fit
Outside Diameter of Liner	3.6875/3.6885 in (93,66/93,69 mm)
Transition Fit of Liner in Cylinder Block	0.001/0.001 in (0,03/0,03 mm)
Flange Thickness	0.042/0.045 in (1,07/1,14 mm)
Outside Diameter of Flange	3.805/3.810 in (96,65/96,77 mm)
Depth of Liner Flange below Top Face of Cylinder Block	0.001/0.007 in (0,03/0,18 mm)
Inside Diameter of Finished Liner in Cylinder Block ...	3.6015/3.6025 in (91,48/91,50 mm)

Cylinder Liners — 4.203 and D4.203

Service Cast Iron

Type	Dry — Transition Fit
Outside Diameter of Liner	3.6875/3.6885 in (93,66/93,69 mm)
Transition Fit in Cylinder Block	0.001/0.001 in (0,03/0,03 mm)
Flange Thickness	0.148/0.150 in (3,76/3,81 mm)
Outside Diameter of Flange	3.803/3.808 in (96,60/96,72 mm)
Depth of Liner below Earlier Cylinder Block Top Face	0.000/0.006 in (0,00/0,15 mm)
Relationship of Liner Flange to Current Cylinder Block Top Face	0.002 in (0,05 mm) ABOVE to 0.004 in (0,10 mm) BELOW
Inside Diameter of Finished Liner in Cylinder Block	3.6015/3.6025 in (91,48/91,50 mm)

Cylinder Liners — 4.203 and D4.203

Production Cast Iron

Type	Dry — Interference Fit
Outside Diameter of Liner	3.6895/3.6905 in (93,71/93,74 mm)
Interference Fit of Liner in Cylinder Block	0.001/0.003 in (0,03/0,08 mm)
Flange Thickness	0.148/0.150 in (3,76/3,81 mm)
Outside Diameter of Flange	3.803/3.808 in (96,60/96,72 mm)
Depth of Liner Flange below Earlier Top Face of Cylinder Block	0.000/0.006 in (0,00/0,15 mm)
Relationship of Liner Flange to Current Cylinder Block Top Face	0.002 in (0,05 mm) ABOVE to 0.004 in (0,10 mm) BELOW
Inside diameter of Finished Liner in Cylinder Block	3.6015/3.6025 in (91,48/91,50 mm)

Pistons — 4.192

Type	Flat Topped
Overall Height — Skirt to Crown	4.250/4.257 in (107,95/108,19 mm)
Centre Line of Gudgeon Pin to Piston Crown	2.250/2.257 in (57,15/57,33 mm)
Piston Skirt Diameter — across Thrust	3.4965/3.4975 in (88,81/88,84 mm)
Piston Height in relation to Cylinder Block Top Face (BELOW)	0.000/0.005 in (0,00/0,13 mm)
Bore Diameter for Gudgeon Pin	1.24975/1.250 in (31,74/31,75 mm)
Compression Ring Grooves 1st and 2nd	0.0957/0.0967 in (2,43/2,46 mm)
Compression Ring Groove 3rd	0.127/0.128 in (3,23/3,25 mm)
Scraper Ring Groove 4th and 5th	0.252/0.253 in (6,40/6,42 mm)

Pistons — 4.203

Type	Flat Topped
Overall Height — Skirt to Crown	4.250/4.257 in (107,95/108,19 mm)
Centre Line of Gudgeon Pin to Piston Crown	2.250/2.257 in (57,15/57,33 mm)
Piston Skirt Diameter — across Thrust	3.5936/3.5946 in (91,28/91,29 mm)
Piston Height in relation to Cylinder Block Top Face (BELOW)	0.000/0.005 in (0,00/0,13 mm)
Bore Diameter for Gudgeon Pin	1.24975/1.250 in (31,74/31,75 mm)
Compression Ring Grooves 1st and 2nd	0.0957/0.0967 in (2,43/2,46 mm)
Compression Ring Groove 3rd	0.127/0.128 in (3,23/3,25 mm)
Scraper Ring Grooves 4th and 5th	0.252/0.253 in (6,40/6,42 mm)

Pistons — D4.203

Type	Toroidal Cavity in Crown
Overall Height — Skirt to Crown	4.314/4.316 in (109,58/109,63 mm)
Centre Line of Gudgeon Pin to Piston Crown ...	2.439/2.441 in (61,95/62,00 mm)
Piston Skirt Diameter — across Thrust	3.593 in (91,26 mm)
Piston Height in relation to Cylinder Block Top Face ...	0.003 in (0,08 mm) BELOW/0.005 in (0,13 mm) ABOVE
Bore Diameter for Gudgeon Pin	1.2500/1.2502 in (31,75/31,76 mm)
Compression Ring Grooves 1st and 2nd	0.0957/0.0967 in (2,43/2,46 mm)
Compression Ring Groove 3rd	0.127/0.128 in (3,23/3,25 mm)
Scraper Ring Grooves 4th and 5th	0.252/0.253 in (6,40/6,43 mm)

Piston Rings - 4.192

Top Compression	Parallel Faced — Chrome Insert
Second Compression	Parallel Faced — Cast Iron
Third Compression	Laminated Segment — Four Segments
Fourth Oil Control	Laminated Spring
Fifth Oil Control	Slotted Groove

In some applications, the fifth ring is also used in the fourth groove.

Top and Second Compression Ring Width	0.0928/0.0938 in (2,36/2,38 mm)
Ring Clearance in Grooves	0.0019/0.0039 in (0,05/0,10 mm)
Fifth Oil Control Ring Width	0.249/0.250 in (6,32/6,35 mm)
Ring Clearance in Groove	0.002/0.004 in (0,05/0,10 mm)
Ring Gap Closed — Top	0.014/0.027 in (0,36/0,69 mm)
Ring Gap Closed — Second	0.011/0.024 in (0,28/0,61 mm)
Ring Gap Closed — Fifth	0.011/0.024 in (0,28/0,61 mm)

Piston Rings— 4.203

Top Compression	Parallel Faced — Cast Iron
Second Compression	Taper Faced
Third Compression	Laminated Segment — Four Segments
Oil Control, Fourth and Fifth	Cast Iron Slotted Scraper
Top and Second Compression Ring Width	0.0928/0.0938 in (2,36/2,38 mm)
Ring Clearance in Groove	0.0019/0.0039 in (0,05/0,10 mm)
Fourth and Fifth Oil Control Ring Width	0.249/0.250 in (6,32/6,35 mm)
Ring Clearance in Groove	0.002/0.004 in (0,05/0,10 mm)
Ring Gap Closed — Top and Second	0.011/0.024 in (0,28/0,61 mm)
Ring Gap Closed — Fourth and Fifth	0.011/0.024 in (0,28/0,61 mm)

Piston Rings — D4.203

Top and Second Compression	Parallel Faced — Cast Iron
Third Compression	Laminated Segment — Four Segments
Fourth Oil Control	Laminated Spring
Fifth Oil Control	Slotted Scraper
Top and Second Compression Ring Width	0.0928/0.0938 in (2,36/2,38 mm)

Ring Clearance in Groove	0.0019/0.0039 in (0,05/0,10 mm)
Fifth Oil Control Ring Width	0.249/0.250 in (6,32/6,35 mm)
Ring Clearance in Groove	0.002/0.004 in (0,05/0,10 mm)
Ring Gap Closed — Top and Second	0.011/0.024 in (0,28/0,61 mm)
Ring Gap Closed — Fifth	0.011/0.024 in (0,28/0,61 mm)

Gudgeon Pin — 4.192, 4.203, D4.203

Type	Fully Floating
Outside Diameter	1.24975/1.250 in (31,74/31,75 mm)
Fit in Piston Boss	Transition
Clearance in Small End Bush	0.0005/0.00175 in (0,01/0,04 mm)
Length	2.9606/2.9646 in (75,2/75,3 mm)

Small End Bush — 4.192, 4.203, D4.203

Type	Steel Backed, Lead Bronze Lined
Outside Diameter	1.3785/1.380 in (35,01/35,05 mm)
Length	1.0475/1.0575 in (26,61/26,86 mm)
Inside Diameter after Reaming	1.2505/1.2515 in (31,76/31,79 mm)

Connecting Rod — 4.192, 4.203, D4.203

Type	"H" Section
Big End Parent Bore Diameter	2.395/2.3955 in (60,83/60,85 mm)
Small End Parent Bore Diameter	1.37475/1.3762 in (34,92/34,95 mm)
Big End Width	1.5502/1.5525 in (39,37/39,43 mm)
Big End Side Clearance on Crankpin... ...	0.0095/0.0148 in (0,24/0,38 mm)

Connecting rod nuts if removed should be replaced by new ones.

Connecting Rod Alignment

Large and small end connecting rod bores must be square and parallel with each other within the limit of + / — 0.010 in (0,25 mm) measured 5 in (127 mm) each side of the axis of the rod on test mandrel as shown in Fig. B1. With the small end bush fitted, the limit of + / — 0.010 in (0,25 mm) is reduced to + / — 0.0025 in (0,06 mm).

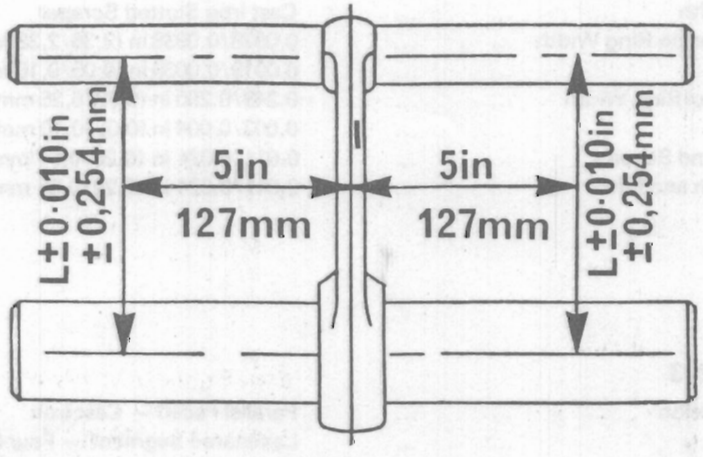

Fig. B.1.

Crankshaft — 4.192, 4.203

Main Journal Diameter	2.7485/2.7493 in (69,81/69,83 mm)
Rear Main Journal Width (rope seals only)	1.874/1.876 in (47,60/47,65 mm)
Rear Main Journal Width (lip seals only)	1.8427/1.8457 in (46,80/46,88 mm)
*Fillet Radii, Main Journals, Nos. 1, 2 and 4	0.0938/0,1094 in (2,38/2,78 mm)
*Fillet Radii, Main Journals, Centre and Rear	0.125/0.135 in (3,17/3,43 mm)
§Fillet Radii, Main Journals Nos. 1, 2 and 4	0.125/0.140 in (3,17/3,56 mm)
§ Fillet Radii, Main Journals, Centre and Rear	0.156/0.166 in (3,96/4,22 mm)
Crankpin Diameter	2.2484/2.2492 in (57,11/57,12 mm)
Crankpin Width	1.562/1.565 in (39,67/39,75 mm)
*Fillet Radii, Crankpins	0.1562/0.1719 in (3,97/4,37 mm)
§Fillet Radii, Crankpins	0.1875/0.2031 in (4,76/5,16 mm)
Surface Finish, all Pins and Journals	8 to 16 micro-inches (0,2 to 0,4 microns)
Oil Seal Helix Diameter (rope seals only)	To run out no more than 0.001 in (0,03 mm) T.I.R. with rear main bearing journal.
Depth of Helix	0.004/0.008 in (0,10/0,20 mm)
Depth of Spigot Bearing Recess	1.375 in (34,92 mm)
Bore of Spigot Bearing Recess	1.7495/1.751 in (44,44/44,48 mm)
Crankshaft End Float	0.002/0.014 in (0,05/0,26 mm)
Regrind Undersizes, Mains and Pins	0.010 in (0,25 mm), 0.020 in (0,51 mm) 0.030 in (0,76 mm)

*Earlier crankshafts
§Current crankshafts

Crankshaft — D4.203

Main Journal Diameter	2.7485/2.7493 in (69,81/69,83 mm)
Rear Main Journal Width (rope seals only)	1.874/1.876 in (47,60/47,65 mm)
Rear Main Journal Width (lip seals only)	1.8427/1.8457 in (46,80/46,88 mm)
Fillet Radii, Main Journals, Nos. 1, 2 and 4	0.125/0.140 in (3,17/3,56 mm)
Fillet Radii, Main Journals, Centre and Rear	0.1562/0.1662 in (3,97/4,22 mm)
Crankpin Diameter	2.2484/2.2492 in (57,11/57,12 mm)
Crankpin Width	1.562/1.565 in (39,67/39,75 mm)
Fillet Radii, Crankpins	0.1875/0.2031 in (4,76/5,16 mm)
Surface Finish, All Pins and Journals	8 to 16 micro inches (0,2 to 0,4 microns)
Oil Seal Helix Diameter (rope seals onyl)	To run out no more than 0.001 in (0,03 mm) T.I.R. with rear main bearing journal
Depth of Helix	0.004/0.008 in (0,10/0,20 mm)
Crankshaft End Float	0.002/0.014 in (0,05/0,26 mm)
Regrind Undersizes, Mains and Pins	0.010 in (0,25 mm), 0.020 in (0,51 mm) 0.030 in (0,76 mm)

Crankshaft Thrust Washers — 4.192, 4.203, D4.203

Type	Aluminium Tin, Steel Backed
Position in Engine	Cylinder block, Rear Main Bearing Housing
Thrust Washer Thickness (STD)	0.121/0.123 in (3,07/3,12 mm)
Thrust Washer Thickness (O/S)	0.1285/0.1305 in (3,26/3,31 mm)

Main Bearings — 4.192, 4.203

Type	Steel Backed, Aluminium Tin Lined
Shell Width, Centre and Rear	1.595/1.605 in (40,51/40,77 mm)
Shell Width No. 1	1.295/1.305 in (32,89/33,15 mm)
Shell Width Nos. 2 and 4	0.990/1.000 in (25,15/25,40 mm)
Inside Diameter, Fitted	2.752/2.7535 in (69,90/69,94 mm)
Main Bearing Running Clearance	0.003/0.005 in (0,08/0,13 mm)

Main Bearings - D.4.203

Type	Steel Backed, Aluminium Tin
Shell Width, Centre and Rear	1.532/1.542 in (38,91/39,17 mm)
Shell Width, No. 1	1.264/1.274 in (32,11/32,36 mm)
Shell Width, Nos. 2 and 4	0.927/0.937 in (23,55/23,80 mm)
Inside Diameter, Fitted	2.752/2.7535 in (69,90/69,94 mm)
Main Bearing Running Clearance	0.003/0.005 in (0,08/0,13 mm)

Inside diameters for main bearings quoted are for standard sizes. For undersizes, subtract 0.010 in (0,25 mm), 0.020 in (0,51 mm) or 0.030 in (0,76 mm).

Connecting Rod Bearings — 4.192, 4.203, D4.203

Type	Pre-finished, Steel backed, Aluminium Tin Lined
Inside Diameter	2,251/2.252 in (57,17/57,20 mm)
Bearing Running Clearance	0.002/0.0035 in (0,05/0,09 mm)
For Undersizes, subtract	0.010 in (0,25 mm), 0.020 in (0,51 mm) or 0.030 in (0,76 mm)

Camshaft — 4.192, 4.203, D4.203

No. 1 Journal Diameter	1.869/1.870 in (47,47/47,50 mm)
Running Clearance	0.002/0.005 in (0,05/0,13 mm)
No. 2 Journal Diameter	1.859/1.860 in (47,22/47,24 mm)
Running Clearance	0.004/0.008 in (0,10/0,20 mm)
No. 3 Journal Diameter	1.839/1.840 in (46,71/46,74 mm)
Running Clearance	0.004/0.008 in (0,10/0,20 mm)
Cam Lift	0.308/0.322 in (7,82/8,18 mm)
Diameter of Camshaft Spigot	1.9985/1.9995 in (50,76/50,79mm)

Cylinder Head — 4.192, 4.203

Skimming Allowance on Head Face	Head thickness may be reduced to a minimum dimension of 2.980 in (75,69 mm)
Leak Test	30 lbf/in² (2,11 kgf/cm²)
Valve Seat Angle	45°
Valve Head Depth below Cylinder Head Face	0.066/0.080 in (1,68/2,03 mm). Not to exceed 0.140 in (3,56 mm) after regrinding or 0.090 in (2,29 mm) for engines conforming to BSAU141a1971 (See page E.5).
Tappet Bore Diameter	0.6245/0.62575 in (15,85/15,89 mm)

Cylinder Head — D4.203

Skimming Allowance on Head Face	A maximum of 0.012 in (0,30 mm) may be removed from the head face providing the atomiser nozzle protrusion does not exceed 0.181 in (4,60 mm)
Leak Test	30 lbf/in² (2,11 kgf/cm²)
Valve Seat Angle	45°
Valve Depth below Cylinder Head Face	0.060/0.073 in (1,52/1,85 mm) Not to exceed 0.084 in (2,13 mm) after regrinding. (See Page E.5).
Tappet Bore Diameter	0.6245/0.62575 in (15,86/15,89 mm)

Valve Guides — 4.192, 4.203, D4.203

Inside Diameter	0.3141/0.3155 in (7,98/8,01 mm)
Outside Diameter	0.5021/0.5026 in (12,75/12,77 mm)
Overall Length	2.440 in (61,98 mm)
Guide Protrusion above Cylinder Head Top Face	0.584/0.594 in (14,83/15,08 mm)

Inlet and Exhaust Valves - 4.192, 4.203, D4.203

Valve Stem Diameter	0.311/0.312 in (7,90/7,92 mm)
Clearance Fit of Valve in Guide	0.0021/0.0045 in (0,05/0,11 mm)
Valve Face Angle	45°

Inner Valve Springs - 4.192, 4.203, D4.203

Fitted Length	1.1875 in (30,16 mm)
Load at Fitted Length	8.0 lb + / — 1 lb (3,63 kg + / — 0,45 kg)
Free Length	1.365/1.405 in (34,67/35,68 mm)

Outer Valve Springs 4.192, 4.203, D4.203

Fitted Length	1.500 in (38,10 mm)
Load at Fitted Length	22.75 lb + / — 2 lb (10,34 kg + / — 0,90 kg)
Free Length	1.783/1.803 in (45,29/45,80 mm)

Tappets — 4.192, 4.203, D4.203

Tappet Shank Diameter	0.62225/0.62375 in (15,80/15,84 mm)
Running Clearance in Cylinder Head	0.00075/0.0035 in (0,02/0,09 mm)
Outside Diameter of Tappet Foot	1.125 in (28,57 mm)

Rocker Shaft — 4.192, 4.203, D4.203

Outside Diameter	0.62225/0.62375 in (15,80/15,84 mm)
Overall Length of Shaft	16,875 in (428,62 mm)

Rocker Lever — 4.192, 4.203, D4.203

Bush Bore Diameter	0.6245/0.62575 in (15,86/15,89 mm)
Running Clearance of Bush on Shaft	0.00075/0.0035 in (0,02/0,09 mm)

Valve Timing — 4.192, 4.203, D4.203

Refer to Page K.3.

Camshaft Gear — 4.192, 4.203, D4.203

Diameter of Gear Bore	2.000/2.0012 in (50,80/50,83 mm)
Clearance of Gear on Camshaft Spigot	0.0005/0.0027 in (0,01/0,07 mm)

Upper Idler Gear and Hub 4.192, 4.203, D4.203

Idler Gear Hub Diameter	1.996/1.997 in (50,70/50,72 mm)
Diameter of Gear Bore	1.9998/2.0007 in (50,79/50,82 mm)
Running Clearance of Gear on Hub	0.0028/0.0047 in (0,07/0,12 mm)
Idler Gear End Float	0.001/0.007 in (0,02/0,18 mm)

Lower Idler Gear, Bush and Hub — 4.192, 4.203, D4.203

Idler Gear Hub Diameter	1.996/1.997 in (50,70/50,72 mm)
Diameter of Gear Bush Bore	1.9998/2.0007 in (50,79/50,82 mm)
Running Clearance of Gear on Hub	0.0028/0.0047 in (0,07/0,12 mm)
Hub Width	1.1905/1.1935 in (30,24/30,31 mm)
Width of Gear with Bushes	1.1865/1.1875 in (30,14/30,16 mm)
Idler Gear End Float	0.001/0.007 in (0,03/0,18 mm)

Note: The bore and faces of bushes to be turn finished in situ to dimensions quoted.

Fuel Pump Gear, Hub, Carrier and Adaptor — 4.192, 4.203

Fuel Pump Carrier Diameter	1.6225/1.6238 in (41,21/41,24 mm)
Diameter of Hub Bore	1.6245/1.626 in (41,26/41,30 mm)
Running Clearance of Hub Carrier	0.0007/0.0035 in (0,02/0,09 mm)
Diameter of Gear Bore	2.6250/2.6262 in (66,67/66,70 mm)
Outside Diameter of Gear Adaptor	2.623/2.624 in (66,62/66,65 mm)
Clearance Fit of Gear on Adaptor	0.001/0.0032 in (0,03/0,08 mm)
End Float of Hub on Carrier	0.004/0.015 in (0,10/0,38 mm)

Fuel Pump Gear — D4.203

Diameter of Gear Bore	1.750/1.751 in (44,45/44,47 mm)
Outside Diameter of Fuel Pump Shaft	1.748/1.7488 in (44,40/44.42 mm)
Clearance Fit of Gear on Shaft	0.0012/0.003 in (0,03/0,08mm)

Crankshaft Gear — 4.192, 4.203, D4.203

Diameter of Gear Bore	1.4995/1.501 in (38,09/38,13 mm)
Diameter of Crankshaft for Gear	1.500/1.5005 in (38,10/38,11 mm)
Transition Fit of Gear on Shaft	0.001/0.001 in (0,03/0,03 mm)

Timing Gear Backlash

All Gears	0.003 in (0,08 mm) minimum

Lubrication System

Lubricating Oil Pressure	30/60 lbf/in² (2,1/4,2 kgf/cm²) 207/414 kN/m² at max. engine speed and normal working temperature.

Sump Capacity

The lubricating oil level should be maintained in accordance with the marks on the dipstick. Only approved oils as listed in the appendix should be used.

Actual sump capacities vary according to application and for further details, apply to Service Department, Perkins Engines Ltd., Peterborough.

Lubricating Oil Pump Idler Gear, Bush and Shaft — 4.192, 4.203, D4.203

Diameter of Gear Bore	0.750/0.751 in (19,05/19,07 mm)
Outside Diameter of Bush	0.7522/0.7532 in (19,10/19,13 mm)
Interference Fit of Bush in Gear	0.0012/0.0032 in (0,03/0,08 mm)
Outside Diameter of Idler Gear Shaft	0.6547/0.6553 in (16,663/16,64 mm)
Inside Diameter of Bush	0.6562/0.6572 in (16,67/16,69 mm)
Running Fit of Bush on Shaft	0.0009/0.0025 in (0,02/0,06 mm)

Lubricating Oil Pump Assembly — 4.192, 4.203, D4.203

Type	Rotor
No. of Lobes — Drive Rotor	Three or Four
No. of Lobes — Driven Rotor	Four or Five

Oil Pump Clearances

Pump Part Nos. 41314042, 41314088	Manufacturer — Hobourn Eaton
Between Inner and Outer Rotors	0.001/0.006 in (0,03/0,15 mm)
Between Outer Rotor and Pump Body	0.0055/0.010 in (0,14/0,25 mm)
Between Rotors and End Plate	0.001/0.005 in (0,03/0,13 mm)
Pump Part Nos. 41314033, 41314087	Manufacturer— Concentric
Between Inner and Outer Rotors	0.0005/0.0025 in (0,01/0,06 mm)
Inner Rotor End Clearance	0.0015/0.003 in (0,04/0,08 mm)
Outer Rotor End Clearance	0.0005/0.0025 in (0,01/0,06 mm)
Outer Rotor to Pump Body	0.001/0.003 in (0,03/0,08 mm)

Lubricating Oil Pump Relief Valve — 4.192, 4.203, D4.203

Type	Plunger
Pressure Setting	50/65 lbf/in² (3,52/4,57 kgf/cm²) 345/448 kN/m²

Lubricating Oil Filter — 4.192, 4.203, D4.203

Type	Full Flow
Element	Paper, replaceable or replaceable canister
By-Pass Valve Setting	13/17 lbf/in² (0,91/1,2 kgf/cm²) 90/117 kN/m²

Cooling System 4.192, 4.203, D4.203

Type	
Cylinder Head	Water Pump Circulation
Cylinder Block	Thermo-syphon
Cooling System Capacity, engine only	10.5 U.K. pt. (6,0 litres)

Thermostat — 4.192, 4.203, D4.203

Type	Bellows or Wax
Opening Temperature	180°F (82°C)
Fully Open	203°F (95°C)

Note: If the thermostat does not function properly, replace with a new unit.

Water Pump — 4.192, 4.203, D4.203

Type	Centrifugal
Outside Diameter of Shaft for Pulley	0.5905/0.5908 in (15,00/15,01 mm)
Inside Diameter of Pulley Bore	0.588/0.589 in (14,93/14,96 mm)
Interference Fit of Pulley on Shaft	0.0015/0.0028 in (0,04/0,07 mm)
Outside Diameter of Shaft for Impeller	0.6262/0.6267 in (15,90/15,92 mm)
Inside Diameter of Impeller Bore	0.6249/0.6257 in (15,87/15,89 mm)
Interference Fit of Impeller on Shaft	0.0005/0.0018 in (0,01/0,05 mm)
Impeller to Body Clearance	0.015/0.025 in (0,38/0,64 mm)

Fuel System

Fuel Oil Specifications

United Kingdom	BS.2869 : 1967	Class A.1 or A.2
United States	VV-F-800a	Grades DF-A, DF-1 or DF-2
	A.S.T.M./D975-66T	Nos. 1-D or 2-D
France	(J.O. 14/9/57)	Gas Oil or Fuel Domestique
India	IS : 1460/1968	Grade Special or Grade A
Germany	DIN-51601 (1967)	,,
Italy	CUNA-gas Oil NC-630-01 (1957)	,,
Sweden	SIS. 15 54 32 (1969)	,,
Switzerland	Federal Military Spec. 9140-335-1404 (1965)	,,

Fuel oils available in territories other than those listed above which are to an equivalent specification may be used.

Fuel Lift Pump - 4.192, 4.203, D4.203

Type	AC Delco
Method of Drive...	Eccentric on Camshaft
Delivery Pressure	5/8 lbf in² (0,35/0,56 kgf/cm²)
Diaphragm Spring Colour...	Blue

Fuel Filter — 4.192, 4.203, D4.203

Element Type	Paper
Valve Type	Orifice Controlled Vent Valve

Fuel Injection Pump

Make	C.A.V.
Type	D.P.A.
Pump Rotation — all types	Anti-Clockwise
Plunger Diameter — 4.192 and 4.203 Hydraulic Governor	7 mm
Plunger Diameter — 4.192 and 4.203 Mechanical Governor	7.5 mm
Plunger Diameter — D4.203 Mechanical Governor	8.5 mm
Timing Letter — 4.192 and 4.203 Hydraulic Governor	"A"
Timing Letter — 4.192 and 4.203 Mechanical Governor	"C"
Timing Letter D4.203 — Mechanical Governor	"B"
No. 1 Cylinder Outlet — all types	"W"

Fuel Pump Static Checking Angles

The static timing and checking angles can be found by reference to the prefix letters and figures of the setting code adjacent to the word "Set" on the fuel pump identification plate and the table given below. The engine checking and fuel pump marking angles are for use with timing tool MS67B.

Prefix Letters	Engine Checking Angle (Degrees) (with engine at TDC compression)	Fuel Pump Marking Angle (Degrees)	Static Timing BTDC (Degrees)	Piston Displacement
AF37	287	277	20	0.192 in (4,88 mm)
AF44E	287	277	20	0.192 in (4,88 mm)
AF46/600/0/2800	285	277	16	0.124 in (3,15 mm)
AF46/600/0/2920	286	277	18	0.155 in (3,94 mm)
AF49E	287	277	20	0.192 in (4,88 mm)
AF50	287	277	20	0.192 in (4,88 mm)
AF53	287	277	20	0.192 in (4,88 mm)
AF56	289	279	20	0.192 in (4,88 mm)
BF41E	290	281	18	0.155 in (3,94 mm)
BF51	290	281	18	0.155 in (3,94 mm)
LF48	289	279	20	0.192 in (4,88 mm)
LF51	289	279	20	0.192 in (4,88 mm)
LF56	289	279	20	0.192 in (4,88 mm)
LF59	289	279	20	0.192 in (4,88 mm)
LP55	287	275	24	0.273 in (6,93 mm)
MP50	290	277	26	0.316 in (8,03 mm)
MP54	293	280	26	0.316 in (8,03 mm)
MP55	293	280	26	0.316 in (8,03 mm)
MP57	293	280	26	0.316 in (8,03 mm)

Atomisers

Make		CAV		Setting Pressure		Working Pressure	
Engine Type	Code	Holder	Nozzle	atm	kgf/cm²	atm	kgf/cm²
4.192	H	BKB32S5141	BDL110S6267	125	129	120	124
	BC	BKB35SD5260	BDL110S6133	135	139	120	124
	U	BKB32SD5141	BDL110S6133	175	181	160	165
P4.192Y	E	BKB32SD5141	BDL110S6267	135	139	120	124
4.192Y	M	BKB32SD5026	BDL110S6257	155	160	140	145
4.203	BM	BKB35S5260	BDL110S6267	125	129	120	124
	BC	BKB35SD5260	BDL110S6133	135	139	120	124
	H	BKB32S5141	BDL110S6267	125	129	120	124
	J	BKB32SD5141	BDL110S6133	135	139	120	124
	TC	BKB35SD5259	BDL110S6709	185	191	170	175
	GB	BKB35SD5260	BDL110S6709	185	191	170	175
	FJ	BKB35SD5259	BDL110S6267	185	191	170	176
	EV	BKB35SD5260	BDL110S6267	195	201	180	186
	FM	BKB35SD5260	BDL110S6685	185	191	170	176
	FR	BKB35SD5260	BDL110S6267	185	191	170	176
	GC	BKB35SD5259	BDL110S6709	185	191	170	176
	GW	BKB35SD5258	BDL110S6709	185	191	170	176
D4.203	AV	BKBL67SD5151	BDLL50S6372	185	191	170	176
	Z	BKBL67SD5151	BDLL50S6355	185	191	170	176
	EC	RKBL67S5268	RDLL150S6554	185	191	165	171
	FS	BKBL67S5299	BDLL150S6674	185	191	170	176
	DN	BKBL67S5299	BDLL150S6554	185	191	170	176
	EG	BKBL67S5299	BDLL150S6600	210	217	195	201
	GM	BKBL67S5299	BDLL150S6743	185	191	175	181

Electrical System

Voltage — 4.192, 4.203, D4.203	12 volt

Alternator — 4.203 and D4.203

Type	15ACR	17ACR	17ACR(derated)
Maximum Output	28A	36A	25A

Dynamo — 4.192

	Veh.	Ind.	T.A.
Type	Lucas C40L	Lucas C40A	
Maximum Output	25 amps	11 amps	

Dynamo 4.203 and D4.203

Type	Lucas C40L	Lucas C40A	Lucas C40A
Maximum Output	25 amps	11 amps	11 amps

Starter Motor — 4.192, 4.203, D4.203

Type	Lucas M45G, M50 or CAV CA45
Maximum Current	855 amps

Cold Starting Aid 4.192, 4.203, D4.203

Type	CAV Thermostart
Voltage	12 volt

Service Wear Limits

The following "wear limits" indicate the condition when it is recommended that the respective items should be serviced or replaced.

Cylinder Head Bow	
Transverse	0.003 in (0,08 mm)
Longitudinal	0.006 in (0,15 mm)
Maximum Bore Wear (where new liners are necessary)	0.007 in (0,18 mm)
Maximum Top Piston Ring Clearance in Groove	0.007 in (0,18 mm)
Crankshaft, Main and Big End Journals Ovality and Wear	0.0015 in (0,04 mm)
Maximum Crankshaft End Float	0.020 in (0,51 mm)
Valve Stem to Guide Bore Clearance	
Inlet	0.006 in (0,15 mm)
Exhaust	0.0055 in (0,14 mm)
Rocker Clearance on Shaft	0.005 in (0,13 mm)
Camshaft Journals, Ovality and Wear	0.002 in (0,05 mm)
Idler Gear End Float	0.010 in (0,25 mm)

SECTION C
Operating and Maintenance

Preparation for Starting

Check the radiator water level.
Check the engine sump oil level.
See that there is fuel oil in the tank.
Ensure that the starter battery is fully charged and that all electrical connections are properly made and all circuits are in order.

Starting the Engine

If the engine is warm and has only been stopped for a little while, place the engine speed control in the fully open position and engage the starter motor by turning the starter switch in a clockwise direction to "heat start" position. (See Fig. C.1).

If the battery is well up, enough to turn the starter motor quickly, the engine should start.

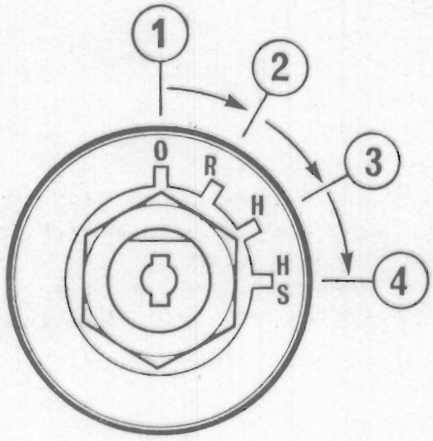

Fig. C.1.
Combined Heat/Start Switch.

1. Off Position.
2. Run Position.
3. Heat Position.
4. Heat and Start Position.

To Stop the Engine

A spring loaded control is located near the normal engine controls and functions by cutting off the fuel supply at the fuel injection pump.

To operate, pull the knob and hold in this position until the engine ceases to rotate, ensure that the control returns to the run position otherwise difficulty may be experienced in restarting the engine.

Cold Starting Aids

Two different type starting aids have been fitted to the 4.192, 4.203 and D4.203 engines, the Mk. I to the early engines and the Mk. III to the later types.

Description — Mk. I.

Referring to Figs. C.2 and C.3 the unit consists of a core (3), a solenoid (6) a spring loaded plunger (4) fitted with a special rubber insert (5) which abuts on a valve seat (7). The coil carrier (8) bears two heater coils (9, 10), and a circular shield surrounding the coils has large perforations (11) on one side, small perforations (13) on the other and a small flange (12) running along its outer surface.

Gravity fed fuel oil fills the adaptor (1), filter (2) hollow plunger (4) and the groove in the surface of the plunger. When the switch on the application control panel is operated, the solenoid (6) and coils (9, 10) are energised. Magnetism induced in the plunger (4) and adaptor (1) by the solenoid draws the plunger and rubber insert off the valve seat (7). Fuel oil then flows at a controlled rate along the coil (9) which causes the liquid to be vapourised. Coil (10) reaches the ignition temperature of the fuel vapour.

As soon as the engine is turned over by means of the starter motor, fresh air drawn into the inlet manifold enters the circular shield through the small perforations (13) and mixes with the vapourised fuel within. The resultant mixture is ignited by the coil (10) and so heats the air to facilitate combustion by promoting easier ignition of the fuel injected into the engine cylinders.

The flange (12) running along the outer surface of the shield provides a sheltered zone around the outlet holes (11) and protects the flame from the incoming air stream.

Maintenance

Very little attention is required by the unit, but no re-conditioning is possible. When in service the unit should be occasionally checked to ensure that it is firmly screwed and located in the manifold, with the arrow on the casing pointing in the direction of the airflow. It should also be ensured that the electrical lead wire is tightly fixed to the terminal, that the fuel banjo is tight and that there is no leakage.

To clean the unit, remove connections and withdraw from the inlet manifold. Wash components in cleaning fluid and brush off any carbon which may have accumulated on the circular sheath, ensuring that all

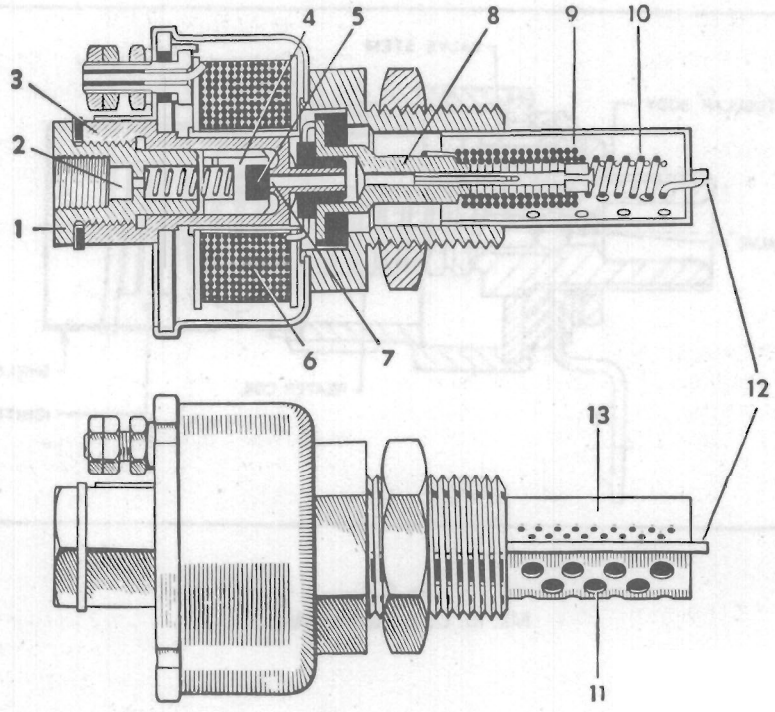

Figs. C.2 and C.3
Mk. I Cold Starting Aid

holes are clear. While no mechanical attempt should be made to remove or clean the internal filter (2), compressed air may be used to remove any foreign matter which may have been extracted from the fuel oil.

Dry the dismantled components and before re-assembling, examine the plunger (4) and rubber insert (5). Should there be any apparent damage, particularly in the case of the insert, the whole assembly must be rejected and replaced by a new unit.

Description — Mk. III.

Referring to Fig. C.4, the cold start unit comprises a tubular valve body carried in a holder which screws into the inlet manifold and surrounded by a heater coil, an extension of which forms an igniter coil. The valve body houses a valve stem which holds a ball valve in position against its seating. The whole is surrounded by an open perforated shield. Fuel oil from the container or filter enters through an adaptor.

When the unit is cold, the ball valve is held closed. On switching on the coil, the valve body is heated and expands, opening the ball valve and permitting the entry of fuel. The fuel is vaporised by the heat of the valve body and when the engine is cranked and air drawn into the manifold, the vapour is ignited by the coil extension and continues to burn, thus heating the inlet air.

When the coil is switched off, the flow of air in the manifold cools the valve body rapidly and the valve closes.

The cold start aid is a sealed unit and cannot be dismantled. If the unit ceases to function, it must be renewed.

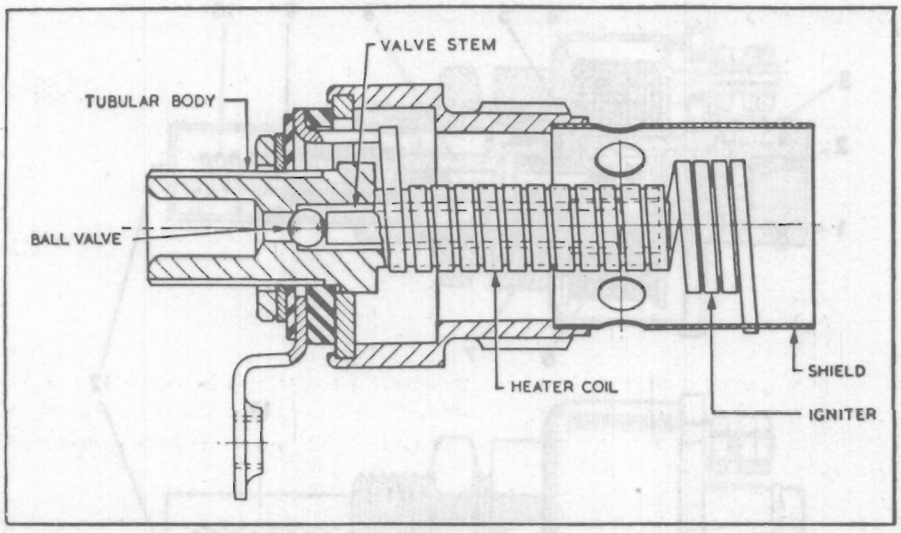

Fig. C.4.
Mk. III. Cold Starting Aid.

Using the Equipment

Switch on, ensuring the engine stop control is in the "run" position.

Turn the start switch to "heat" position for fifteen to twenty seconds. See Fig. C.1.

With the engine speed control in the fully open position, turn the switch in a clockwise direction, to "heat start", thereby engaging the starter motor.

If the engine does not start after fifteen seconds, return switch to "heat" position for ten seconds and then re-engage starter motor.

As soon as the engine starts, the switch should be returned to the "run" position.

NOTE: The above procedure is not necessary when the engine is hot. To re-start, turn the switch in a clockwise direction to "heat start" which will engage the starter motor.

Extended use of the cold starting equipment above the time periods already stated should be avoided, otherwise the cold start aid in the induction manifold may be damaged.

In the event of difficult starting, ensure that fuel is reaching the cold starting aid in the induction manifold by unscrewing the inlet fuel union. If fuel is reaching it satisfactorily, then it may be that the cold starting aid itself is not working correctly. This can be checked by removing the air cleaner and watching the cold starting aid while the equipment is used. When the starting switch is turned to the heat position, the element should become red hot and on engagement of the starter motor, it should burst into flame.

The 4.192, 4.203 and D4.203 engines are fitted with efficient cold starting equipment and no responsibility can be accepted for any damage arising from the use of unauthorised starting aids.

Things to Note

Always be sure that the starter pinion and flywheel have stopped rotating before re-engaging the starter otherwise the ring or pinion may be damaged.

Ensure that the electrical connection to the cold starting aid is correctly made.

Always ensure that the fuel feed to the cold starting aid is fully primed and not leaking.

Running In

It is not necessary to gradually run-in a new or factory rebuilt engine and any prolonged light load running during the early life of the engine can in fact prove harmful to the bedding in of piston rings and liners.

Full load can be applied on a new or factory rebuilt engine as soon as the engine is used, **provided that the engine is first allowed to reach a temperature of at least 140°F (60°C).**

PREVENTIVE MAINTENANCE

Operators of engines are reminded that the following preventive maintenance periods are general in application. They should be compared with the schedules specified by the manufacturer of the application to which the engine is fitted and where necessary, the shorter periods should be adopted.

With vehicles operating on stop-start low mileage work, the hours worked are more important than the miles run.

Whilst we have given specific periods for preventive maintenance, you should have due regard for the local regulations concerning your vehicle or machine and ensure that the engine is operating within those regulations.

Daily or Every 8 hours (Whichever occurs first)

Check coolant level.

Check sump level.

Check oil pressures (where gauge fitted).

In extreme dust conditions, clean oil bath air cleaner or empty dust bowl on dry type air cleaner.

Every 200 hours, 5,000 Miles (7,500 km) or 4 months (Whichever occurs first)

Drain and renew engine lubricating oil. (See list of approved lubricating oils in appendix).

Renew lubricating oil filter element or canister.

Clean oil bath air cleaner or empty dust bowl on dry type air cleaner.

Check drive belt tension.

Check for oil, water or fuel leaks.

Clean fuel water trap (where fitted).

Lubricate dynamo rear bush (where fitted).

Clean lift pump pre-filter (where fitted).

Every 400 hours, 10,000 Miles (15,000 km) — (Whichever occurs first)

Renew final fuel element (Agricultural and Industrial).

Check hoses and clips.

Clean element of dry type air cleaner or renew (if not indicated earlier).

Every 800 hours, 20,000 Miles (30,000 km) — (Whichever occurs first)

Renew final fuel filter element (vehicle applications).

Every 2,400 hours, 60,000 Miles (90,000 km) (Whichever occurs first)

Arrange for examination and service of proprietary equipment i.e. compressor/exhauster, starter motor, generator etc.

Service atomisers.

Check and adjust tappets.

POST-DELIVERY CHECKOVER

After a customer has taken delivery of his Perkins Diesel engine, it is advisable, in his own interest, that a general checkover of the engine be carried out after the first 500/1,000 miles (800/1,600 km) or 25/50 hours in service.

It is also recommended that the following procedure be adopted where an engine has been laid up for a considerable period before it is again put into service.

The checkover should comprise the following points:—

1. Drain lubricating oil sump and re-fill up to the full mark on the dipstick with new clean oil (Do not overfill). See list of Approved Lubricating Oils in Appendix. When the sump is drained and it is possible to gain access to the sump strainer, it should be removed and cleaned.
2. Renew the lubricating oil filter element or canister.
3. Check external nuts for tightness.
4. Warm up engine: then shut down and remove rocker assembly. Retighten cylinder head nuts in the sequence shown in Fig. E.13 or E.14 and to the correct torque as given on Page B.2. Replace rocker assembly and adjust tappet clearance to 0.012 in (0,30 mm) with the engine cold (see Page E.10).
5. Check fuel pipes from tank to fuel injection pump for leaks.
6. Examine engine for lubricating oil leaks, and rectify if necessary.
7. Check cooling system for leaks and inspect radiator water level.
8. Check fan belt for tension.
9. Check engine mounting bolts for tightness.
10. Carry out test to check general performance of engine.

It is assumed that electrical equipment will have already been checked for such points as generator rate of charge, effectiveness of connections and circuits, etc.

Thereafter maintenance periods should be in accordance with the instructions given on page C.5.

PRESERVATION OF LAID-UP ENGINES

Where an application which is powered by a Perkins engine is to be laid-up for several months it is advisable that some measure of protection be afforded the engine to ensure that it suffers no ill effect during the intervening period before operations are recommenced.

It is recommended, therefore, that the following procedure be adopted and applied immediately the unit is withdrawn from service.

1. Thoroughly clean all external parts of the engine.
2. Run the engine until warmed through. Stop the engine and drain lubricating oil sump.
3. Remove and clean gauze strainer in sump and renew lubricating oil filter element or canister.
4. Clean out engine breather.
5. After replacing filters fill sump to correct level with clean, new lubricating oil or with a suitable preservative fluid.
6. If a preservative fuel oil is to be used, drain all fuel oil from fuel tank and filters. Put into the fuel tank at least one gallon (4,5 litre) of one of the oils listed under "Recommended Oils for Preservation of the Fuel System". If, because of the construction of the fuel tank, this quantity of oil is inadequate, break the fuel feed line before the first filter and connect a small capacity auxiliary tank. Prime the fuel system as detailed in Section N.
7. Run the engine at half speed for at least 15 minutes to circulate the oil.
8. Seal the air vent in the fuel tank or filler cap with waterproof adhesive tape.
9. Drain water from radiator and engine cylinder block.
10. Remove atomisers and spray into cylinder bores a ¼-pint (0,14 litre) of lubricating oil divided between the cylinders.
11. Turn engine slowly over compressions, and replace atomisers.
12. Remove air cleaner and any intake pipe which may be fitted between the air cleaner and air intake. Carefully seal air intake orifice with waterproof adhesive tape or some other suitable medium.
13. Remove exhaust pipe and seal opening in manifold as in '12'.
14. Disconnect battery and store in fully charged condition. Before storing the battery, terminals should be treated to prevent corrosion.
15. Remove fan belt and store for re-fitment to engine before return to service.

The fuel system may either be drained and charged with a suitable preservative or alternatively, it may be left primed with normal fuel oil.

Where the latter course is taken it should be noted that deterioration of the fuel oil may be occasioned during the months the application is idle.

If this occurs, the fuel oil may become contaminated with a wax-like substance which will quickly clog the fuel filtering arrangement once the engine is returned to service.

Therefore, before commencing operations in respect of a unit primed with normal fuel oil which has lain idle for several months it is recommended that the fuel tank be drained and the interior of the tank thoroughly cleaned. The fuel oil drained off should be discarded as unfit for further use.

Fuel oil contained in the remainder of the fuel system should also be dispelled and the paper element in the final fuel filter renewed, following which the system may then be recharged with fresh clean fuel oil.

Where a preservative is used in the lubricating oil sump, this should be drained off and replaced by normal lubricant prior to re-starting the engine at the end of the storage period. In the case of a preservative being

utilised to charge the fuel system, this need not necessarily be drained off before returning the engine to service. Therefore, where a preservative is used in this respect, the relevant manufacturers of the fluid should be contacted seeking their guidance as to whether their product should be drained away prior to re-starting the engine.

Preparations for starting the engine should then be in accordance with instructions contained on page C.2.

Before starting the engine, the engine should be cranked over by the starter motor with the stop control in the off position until oil pressure is recorded or the oil warning light is extinguished. Do not rapidly accelerate the engine after initial start, allow it to run at slow speed for approximately two minutes to ensure good oil circulation before accelerating to higher speeds.

Recommended Oils for Preservation of the Fuel System*

	Lowest Temperature
Esso IL815	25°F (— 4°C)
Esso IL4017	0°F (—18°C)
Shell Calibration Fluid "C" (U.K.)	0°F (—18°C)
Shell Calibration Fluid "B" (Overseas)	—70°F (—57°C)
Shell Fusus "A"	—15°F (—26°C)
Shell Fusus "A" R1476 (old type)	25°F (— 4°C)

No attempt should be made to restart the engine until the temperature has been at least 15°F (8°C) above that shown in the table for not less than 24 hours; otherwise there may be difficulty in obtaining a free flow of fuel.

*The proprietary brands of oils listed are recommended for the purpose by the oil companies.

They may not be available in all parts of the world, but suitable oils may be obtained by reference to the oil companies. The specification should include the following:—

Viscosity: Should not be greater than 22 centistokes at the lowest ambient temperature likely to be experienced on restarting.

Pour Point: Must be at least 15°F (8°C) lower than the lowest ambient temperature likely to be experienced on restarting and should preferably be lower than the lowest temperature likely to be met during the lay-up period.

The oils selected are not necessarily suitable for calibrating or testing pumps.

FROST PRECAUTIONS

Precautions against damage by frost should be taken if the engine is to be left exposed to inclement weather either by adequately draining the water system or where this is not convenient, an anti-freeze of reputable make and incorporating a suitable corrosion inhibitor may be used.

Should it be the policy to protect engines from frost damage by adding anti-freeze to the cooling system, it is advisable that the manufacturers of the relevant mixture be contacted to ascertain whether their products are suitable for use in Perkins engines and also to ensure that their products will have no harmful effect on the cooling system generally. It is our experience that the best results are obtained from an anti-freeze which conforms to British Standard 3151 or has been tested in accordance with BS5117 Clause 5 to give at least as good a result as BS3151.

The coolant solution containing 25 per cent antifreeze manufactured to BS3151 in water in a properly maintained engine should maintain its antifreeze and anti-corrosive properties throughout the winter season in the U.K. and in general, a safe life of 12 months may reasonably be expected.

When draining the water circulating system it is not enough merely to open the radiator drain tap or plug. The one on the cylinder block must also be opened. This tap or plug is on the near side of the cylinder block, near the flywheel housing.

Where a pressurised radiator filler cap is fitted, this should be removed slowly, before draining the cooling system.

When draining coolant, ensure engine is level.

When the engine is drained, in the majority of applications the water pump is also drained, but rotation of the pump may be prevented by:

(a) Locking of the impeller by ice due to the pump drain hole being blocked by sediment.

(b) The locking of the seal through the freezing of globules of moisture between the seal and the gland.

Operators are therefore advised to take these precautions when operating in temperatures below freezing point.

1. Before starting the engine, turn the fan and water pump by hand; this will indicate if freezing has taken place. If so, this should free any ice formation.

2. If it is impossible to turn the pump by hand, the radiator and engine should be filled with warm water. Do not run the engine without coolant.

After an anti-freeze solution has been used, the cooling system should be thoroughly flushed in accordance with the manufacturer's instructions before refilling with normal coolant.

If the foregoing action is taken, no harmful effects should be experienced, but Perkins Engines Ltd., cannot be held responsible for any frost damage or corrosion which may be incurred.

SECTION D
Fault Finding

Fault Finding Chart

Fault	Possible Cause
Low cranking speed	1, 2, 3, 4.
Will not start	5, 6, 7, 8, 9, 10, 12, 13, 14, 15, 16, 17, 18, 19, 20, 22, 31, 32, 33.
Difficult starting	5, 7, 8, 9, 10, 11, 12, 13, 14, 15, 16, 18, 19, 20, 21, 22, 24, 29, 31, 32, 33.
Lack of power	8, 9, 10, 11, 12, 13, 14, 18, 19, 20, 21, 22, 23, 24, 25, 26, 27, 31, 32, 33.
Misfiring	8, 9, 10, 12, 13, 14, 16, 18, 19, 20, 25, 26, 28, 29, 30, 32.
Excessive fuel consumption	11, 13, 14, 16, 18, 19, 20, 22, 23, 24, 25, 27, 28, 29, 31, 32, 33.
Black exhaust	11, 13, 14, 16, 18, 19, 20, 22, 24, 25, 27, 28, 29, 31, 32, 33.
Blue/white exhaust	4, 16, 18, 19, 20, 25, 27, 31, 33, 34, 35, 45, 56.
Low oil pressure	4, 36, 37, 39, 40, 42, 43, 44, 58.
Knocking	9, 14, 16, 18, 19, 22, 26, 28, 29, 31, 33, 35, 36, 45, 46, 59.
Erratic running	7, 8, 9, 10, 11, 12, 13, 14, 16, 20, 21, 23, 26, 28, 29, 30, 33, 35, 45, 59.
Vibration	13, 14, 20, 23, 25, 26, 29, 30, 33, 45, 47, 48, 49.
High oil pressure	4, 38, 41.
Overheating	11, 13, 14, 16, 18, 19, 24, 25, 45, 50, 51, 52, 53, 54, 57.
Excessive crankcase pressure	25, 31, 33, 34, 45, 55.
Poor compression	11, 19, 25, 28, 29, 31, 32, 33, 34, 46, 59.
Starts and stops	10, 11, 12.

Key to Fault Finding Chart

1. Battery capacity low
2. Bad electrical connections.
3. Faulty starter motor.
4. Incorrect grade of lubricating oil.
5. Low cranking speed.
6. Fuel tank empty.
7. Faulty stop control operation.
8. Blocked fuel feed pipe.
9. Faulty fuel lift pump.
10. Choked fuel filter.
11. Restriction in air cleaner or induction system.
12. Air in fuel system.
13. Faulty fuel injection pump.
14. Faulty atomisers or incorrect type.
15. Incorrect use of cold start equipment.
16. Faulty cold starting equipment.
17. Broken fuel injection pump drive.
18. Incorrect fuel pump timing.
19. Incorrect valve timing.
20. Poor compression.
21. Blocked fuel tank vent.
22. Incorrect type or grade of fuel.
23. Sticking throttle or restricted movement.
24. Exhaust pipe restriction.
25. Cylinder head gasket leaking.
26. Overheating.
27. Cold running.
28. Incorrect tappet adjustment.
29. Sticking valves.
30. Incorrect high pressure pipes.
31. Worn cylinder bores.
32. Pitted valves and seats.
33. Broken, worn or sticking piston ring/s.
34. Worn valve stems and guides.
35. Overfull air cleaner or use of incorrect grade of oil.
36. Worn or damaged bearings.
37. Insufficient oil in sump.
38. Inaccurate gauge.
39. Oil pump worn.
40. Pressure relief valve sticking open.
41. Pressure relief valve sticking closed.
42. Broken relief valve spring.
43. Faulty suction pipe.
44. Choked oil filter.
45. Piston seizure/pick up.
46. Incorrect piston height.
47. Damaged fan.
48. Faulty engine mounting (Housing).
49. Incorrect aligned flywheel housing, or flywheel.
50. Faulty thermostat.
51. Restriction in water jacket.
52. Loose fan belt.
53. Choked radiator.
54. Faulty water pump.
55. Choked breather pipe.
56. Damaged valve stem oil deflectors (if fitted).
57. Coolant level too low.
58. Blocked sump strainer.
59. Broken valve spring.

SECTION E
Cylinder Head

CYLINDER HEAD—E.2

The Diesel engine rarely requires the removal of the cylinder head since, unlike its petrol counterpart, carbon deposits beyond a superficial coating do not accumulate in the combustion chambers. After a period, depending on the conditions under which the engine is operated, the valves and valve seats may need attention, this being indicated by a loss of power. A top overhaul is then necessary.

To Remove the Cylinder Head from the Engine

Ensure that the cooling system is completely drained. Drain taps or plugs are provided, one on the left hand side of the cylinder block and one usually at the base of the radiator.

Disconnect the water outlet hose from the thermostat housing.

Disconnect the exhaust pipe flange from the exhaust manifold.

Remove the lub. oil pipe between the camshaft chamber and the cylinder head.

Remove the air cleaner connection from the air intake and disconnect the fuel oil supply pipe and the electrical connection from the cold starting aid.

Remove the fuel injection pipes taking care to cover the fuel injection pump outlets with suitable caps or clean non fluffy cloth.

Disconnect the atomiser leak-off pipes and remove the atomisers.

Disconnect fuel pipe support clip from rear of cylinder head (where fitted).

Remove the rocker cover and rocker assembly together with its lub. oil supply pipe.

Remove the cylinder head securing nuts and/or set-screws slackening off in the reverse order to that shown in Fig. E.13 or E.14.

When removing the cylinder head, it is advisable not to force steel wedges (i.e. screwdrivers etc.) between the cylinder head and the cylinder block, otherwise damage may be caused to the machined faces.

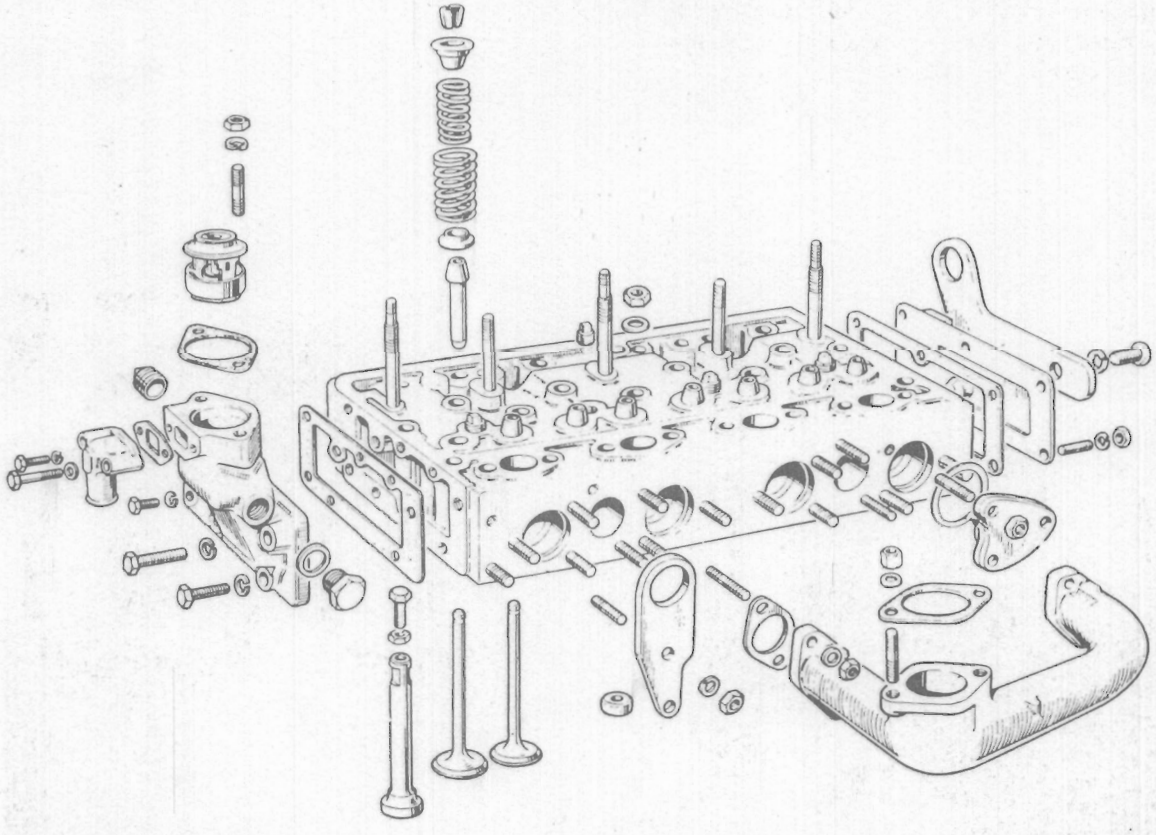

Fig. E.1.
Exploded view of Cylinder Head Assembly.

To Overhaul the Cylinder Head

Remove the induction and exhaust manifolds.

Valves

Using a suitable tool, remove the valves from the cylinder head by depressing the valve springs and retaining caps and removing the split collets (Fig. E.2).

Layout of the valve springs, spring retainer, collets and locating washer is shown in Fig. E.3.

Remove all traces of carbon from the valves, valve guides, and cylinder head ports.

Examine the valve stems for wear and the faces for burning or pitting. If the valve face is found to be unduly pitted or distorted it should be refaced on a suitable valve grinding machine to an angle of 45 degrees. This operation should continue only until the face is clean and true, as the removal of an excessive amount of metal may reduce the thickness of the edge of the valve head to such an extent that it will burn or distort under operating conditions, the valve may be unduly lowered in its seating in the cylinder head and "pocketing" will result. If a valve is deemed to be beyond reclaiming it should be renewed and the corresponding number stamped on the head of the new valve. See Fig. E.4.

Note: With later engines, valves are no longer numbered. Where these valves are to be re-used, they should be suitably marked to ensure they are replaced in their respective positions.

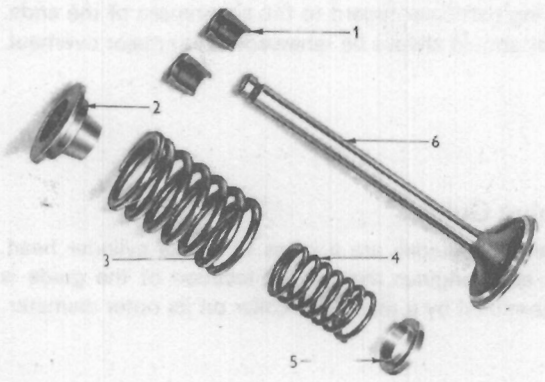

Fig. E.3.
Valve and Valve Spring Assembly.

1. Half-Conical Collets.
2. Spring Cap.
3. Outer Spring.
4. Inner Spring.
5. Locating Washer.
6. Valve.

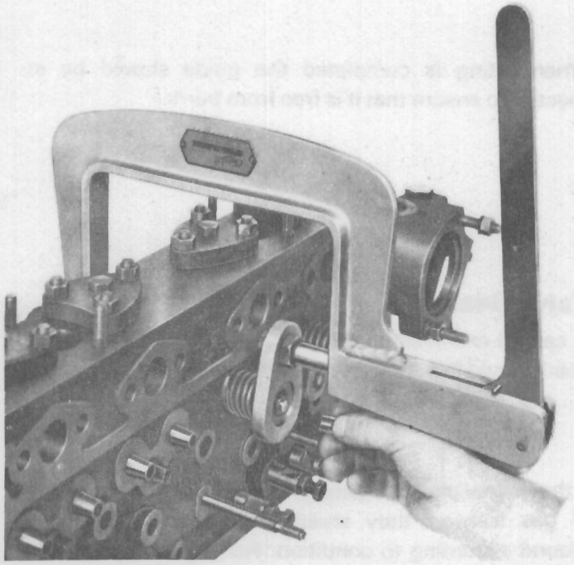

Fig. E.2.
Removing Valve from Cylinder Head.

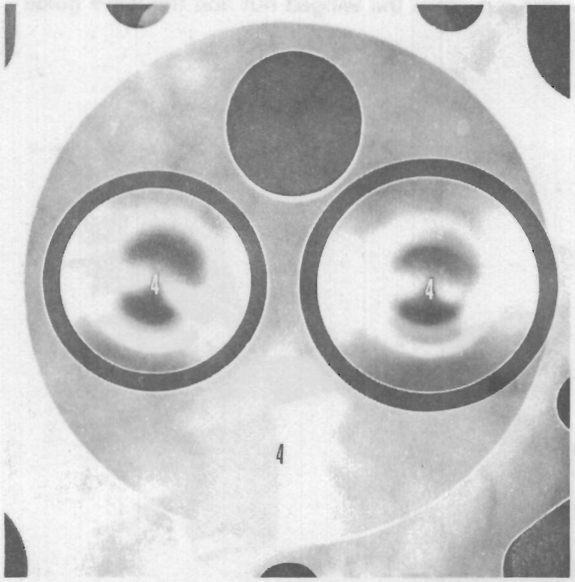

Fig. E.4.
Close up of Valves showing Identification numbers.

Valve Springs

According to application, either one or two valve springs are fitted to each valve and they are similar for both inlet and exhaust valves.

Before being refitted they should be carefully examined paying particular regard to the squareness of the ends. They should always be renewed during major overhaul.

Valve Guides

The valve guides are a press fit in the cylinder head. On early engines the vertical location of the guide is determined by a machined collar on its outer diameter.

All the guides should be examined for damage or wear on the internal bore.

Removal of a valve guide is accomplished by use of a special tool. Pass the rod of the tool through the valve guide from the top face of the cylinder head until the step on the rod abuts against the top of the valve guide. Fit the spacer to the lower end of the rod and screw on the knurled retainer. Turn the winged nut on the main tool and the guide will be drawn from the cylinder head.

Replacement of a valve guide is accomplished by use of the same tool but using the angled adaptor. (See Fig. E.5). Pass the rod of the tool through the valve guide bore from the cylinder head bottom face so that the angled adaptor fitted into the main tool body abuts against the valve seat in the cylinder head. Locate the valve guide on the rod and retain in position with the knurled nut. Turn the winged nut and the valve guide will be drawn into its bore in the cylinder head. Ensure that the machined collar is drawn firmly against the cylinder head. A light application of engine oil to the valve guide will facilitate its entry into the parent bore.

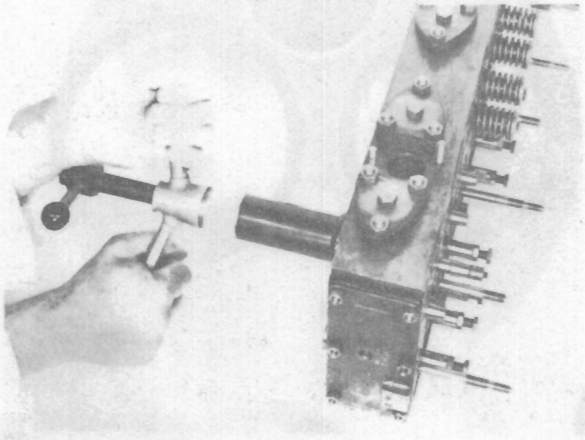

Fig. E.5.
Fitting Valve Guides.

On later engines, shoulderless valve guides are fitted. With these, both ends are chamfered, one at 45°, the other at 20°. The end which is chamfered at 20° is also recessed in the bore. This end should be inserted into the cylinder head top face and pulled into its parent bore until the opposite end (chamfered at 45°) protrudes 0.584/0.594 in (14,83/15,08 mm) above the top face.

When fitting later type valve guides, ensure that the correct valve spring washer is fitted as these washers are not interchangeable between shoulder and shoulderless guides.

N.B.—WHERE A NEW VALVE GUIDE IS FITTED, IT IS ESSENTIAL THAT THE VALVE SEATING IN THE CYLINDER HEAD BE RECUT TO ENSURE CONCENTRICITY OF THE SEAT WITH THE GUIDE.

When fitting is completed the guide should be inspected to ensure that it is free from burrs.

Valve Seats

A careful examination of the valve seats in the cylinder head should be made.

If they show signs of pitting, burning or other evidence of gas leakage they should be machined or hand ground according to condition. Hand grinding is only a finishing process and on no account should prolonged grinding be attempted otherwise seat angles may be altered and seat widths increased excessively.

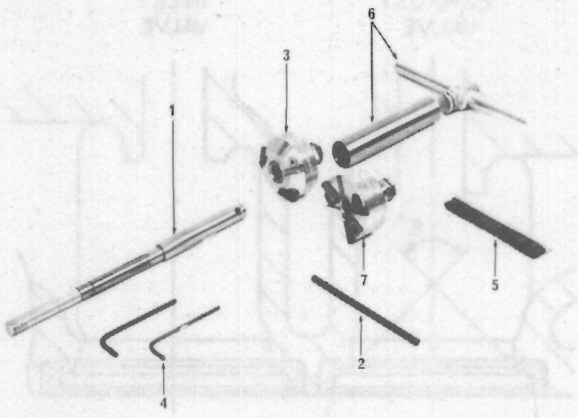

Fig..E6
Valve Seat Cutting Tool.

1. Pilot
2. Puller Pin
3. Valve Seat Cutter
4. Keys
5. Brush
6. Valve Seat Cutter Handle
7. Valve Seat Width Reducer

Where the valve guides are to be renewed, the new guides should be fitted before the valve seats are re-worked.

The valve seats can be recut using the appropriate cutter from the adjustable cutter set MS73. These cutters give an included valve seat angle of 88° to provide a differential valve seat and it is not necessary to lap in the valves after cutting the seats.

Position the appropriate sized pilot (1, Fig. E6) in the valve guide with the expandable section of the pilot inside the guide and the shoulder of the pilot approximately 1/8 in (3 mm) above the guide. Tighten the pilot in the guide using the knurled nut with the puller pin (2) in the pilot hole. Select the appropriate cutter (3), adjust the blades to approximately the same locations in their slots and tighten the blade screws, finger tight only, using the small key (4). Clean the blades with the brush (5) before using the cutter.

Lower the cutter into position on the pilot, with the 46° blades towards the seat — do not drop the cutter on to the seat as the blades are brittle and can easily be chipped. Fit the handle (6) to the cutter and cut the seat by turning the cutter clockwise using only very light hand pressure and ensuring that the pressure is applied centrally above the pilot. Only very few turns should be necessary to achieve a good seat which will have a velvety finish not polished or shiny.

If, after cutting the seat, the seat width exceeds 3/32 in (2,4 mm), the shoulder should be cut down (where applicable) using the seat reducer (7). Do not reduce seat width below 1/16 in (1,5 mm).

N.B.—WHEN RECUTTING VALVE SEATS IT IS ESSENTIAL THAT THE MINIMUM AMOUNT OF METAL BE REMOVED, OTHERWISE THE MAXIMUM VALVE RECESSION TOLERANCE MAY BE EXCEEDED.

On completion of this work, a check should be made to ensure that the depth of the valve head below the level of the cylinder head face is not less than 0.066 in (1,676 mm) and not more than 0.140 in (3,56 mm) for 4.192 or 4.203 engines and not less than 0.058 in (1,47 mm) and not more than 0.084 in (2,13 mm) on D4.203 engines.

Where engines have to conform to the smoke density regulation B.S.A.U. 141a : 1971, then the maximum depth for 4.203 engines must not exceed 0.090 in (2,29 mm) and for D4.203 engines, the production limits as given on Page B.8 should not be exceeded.

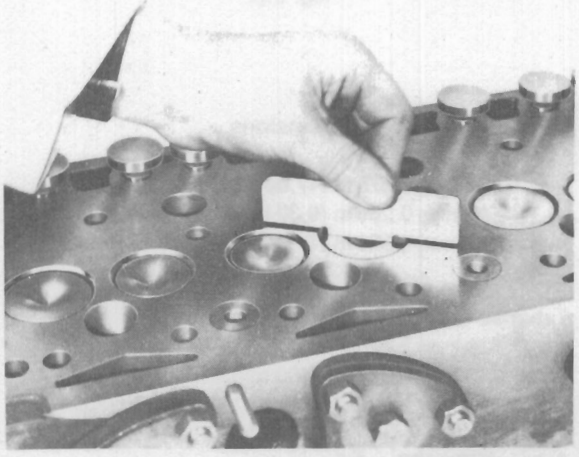

Fig. E.7.
Checking Valve Depths.

Valve Seat Inserts

It is permissible to fit valve seat inserts where the original seating has become unserviceable due to damage or to the maximum valve recession tolerance having been exceeded. With D4.203 engines, inserts can only be fitted to exhaust valve seats. This should prove successful providing that the listed tolerances are strictly adhered to and that Genuine Perkins Parts are used.

This operation must never be attempted with a worn valve guide in position. All machining must be completed from the bore of a new valve guide.

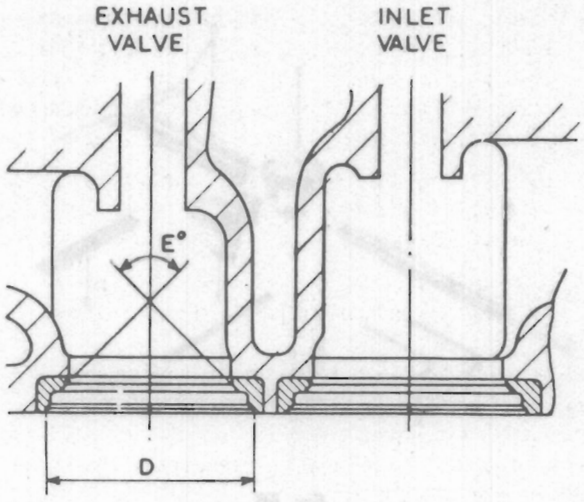

Fig. E.9.

Operation

1. Press out the old valve guide and clean the parent bore.
2. Press in new valve guide to act as a pilot for subsequent operations.
3. Using a suitable cutting tool, the old seats should be cut away to the dimensions shown in Fig. E8. Care should be taken that the cutting is clean, and that all the swarf is removed.

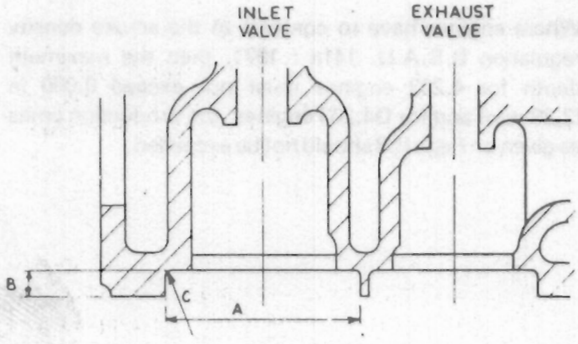

Fig. E.8.

Valve Seat Cutting Dimensions
Inlet
A— 1.874 in to 1.875 in (47,60 to 47,62 mm)
B— 0.248 in to 0.250 in (6,30 to 6,35 mm)
C— 0.040 in to 0.050 in (1,02 to 1,27 mm) Radius

Exhaust
A— 1.624 in to 1.625 in (41,25 to 41,27 mm)
B— 0.248 in to 0.250 in (6,30 to 6,35 mm)
C— 0.040 in to 0.050 in (1,02 to 1,27 mm) Radius

Exhaust (D4.203 only)
A— 1.678 to 1.679 in (42,62 to 42,64 mm)
B— 0.310 in to 0.312 in (7,87 to 7,92 mm)
C— 0.015 in (0,38 mm) Max. Radius

Valve Insert Finished Dimensions
Inlet
D— 1.704 in to 1.714 in (43,28 to 43,30 mm)
E— 90°

Exhaust
D— 1.485 in to 1.495 in (37,72 to 37,97 mm)
E— 90°

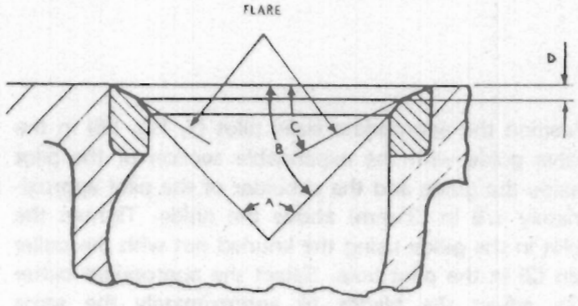

Valve Insert Finished Dimension (D4.203)

Exhaust (D4.203)

A— 90°
B— 45°
C— 30°
D— 0.130 to 0.138 in (3,30 to 3,51 mm)

4. Using a dolly machined to the dimensions Fig. E.10), again using the valve guide bore as a pilot, press home the insert using steady pressure from a hand or hydraulic press. Under no circumstances should the insert be hammered in or lubricated.
5. Visually inspect to ensure that the insert is pressed in squarely and is flush with the bottom of the recess. See Fig. E.9.
6. Re-cut the valve seat so that the valve head recession is within limits specified on page E.5.

To Replace an Existing Insert

In the case of damage to an existing insert, this may be replaced in conjunction with the above procedure but it should not of course, be necessary to bore out the accommodating recess.

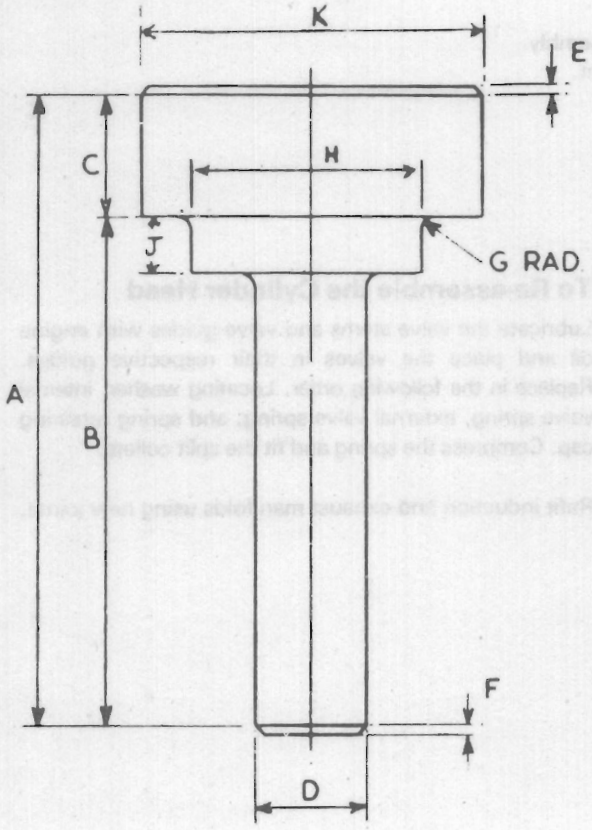

Fig. E.10.

Press Tool for Valve Seat Inserts
Inlet Dimensions
A— 2 3/4 in (69,85 mm)
B— 2 in (50,8 mm)
C— 3/4 in (19,05 mm)
D— 0.309 in to 0.310 in (7,85 to 7,87 mm)
E— 1/16 in (1,59 mm) at 45°
F— 1/16 in (1,59 mm) at 45°
G 1/32 in (0,79 mm) Radius
H— 1.401 in to 1.402 in (35,58 to 35,61 mm)
J— 0.212 in to 0.215 in (5,38 to 5,46 mm)
K— 1.855 in to 1.865 in (47,12 to 47,37 mm)

Exhaust Dimensions
A— 2 3/4 in (69,85 mm)
B— 2 in (50,8 mm)
C— 3/4 in (19,05 mm)
D— 0.309 in to 0.310 in (7,85 to 7,87 mm)
E— 1/16 in (1,59 mm) at 45°
F— 1/16 in (1,59 mm) at 45°
G— 1/32 in (0,79 mm) Radius
H— 1.182 in to 1.183 in (30,02 to 30,04 mm)
J— 0.212 in to 0.215 in (5,38 to 5,46 mm)
K— 1.605 in to 1.615 in (40,77 to 41,02 mm)

Exhaust Dimensions (D4.203 only)
A— 3½ in (88,90 mm)
B— 2 3/4 in (69,85 mm)
C— 3/4 in (19,05 mm)
D— 0.309 in to 0.310 in (7,85 to 7,87 mm)
E— 1/16 in (1,59 mm) at 45°
F— 1/16 in (1,59 mm) at 45°
G— 1/32 in (0,79 mm) Radius
H— 1.200 in to 1.201 in (30,48 to 30,50 mm)
J— 0.250 in (6,35 mm)
K— 1.667 in to 1.677 in (42,34 to 42,59 mm)

Material EN32A Case Hardened and Ground

Should the cylinder head bottom face have been skimmed since the fitting of the original insert, this could result in insufficient depth of the recess. In this case it is permissible to surface grind the back of the insert to give a flush fitting with the cylinder head face. After grinding, the insert must be rechamfered on its back as it was prior to grinding, i.e., 0.050/0.070 in (1,27/1,78 mm) at 45°.

Skimming of Cylinder Head

If the bottom face of the cylinder head is bowed or damaged, then it may be skimmed providing the overall thickness is not reduced below 2.980 in (75,69 mm). See Page B.8 for D4.203 engines.

Tappets

The tappets are of the mushroom foot type and operate directly in the cylinder head. They are made of cast iron, the face of the mushroom which runs on the camshaft being chill hardened. Hardened setscrews with locknuts are provided to effect the setting of valve clearances.

These should be examined for wear and to ensure that they can operate freely.

Rocker Assembly

Before attempting to dismantle the rocker assembly (Fig. E11) it should be noted that the slot in the end of the rocker shaft is in line with a punch mark on the support bracket. When this slot is positioned vertically then the minimum oil flow to the rocker assembly is obtained. In production the slot is set at 30 degrees before the vertical and this position is indicated by the punch mark on the rear support bracket.

To dismantle the rocker gear assembly, remove the circlips from the ends of the rocker shaft and slide off the components noting the positions of support brackets, rocker arms, springs, spacers and lub. oil supply pipe.

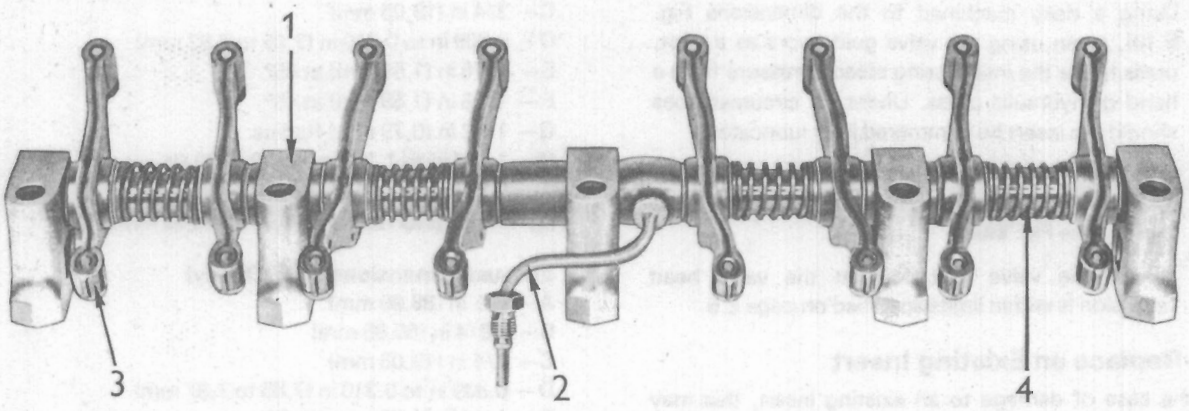

Fig. E.11
Rocker Shaft Assembly.

1. Rocker Shaft Support Bracket.
2. Oil Feed Pipe.
3. Rocker Lever.
4. Spring.

If on inspection it is found that rocker arms are worn or damaged, or the bushes are worn, then replacement arms must be fitted since the bushes are not re-placeable. When ordering it is essential to note whether left handed or right handed rocker arms are required.

When re-assembling ensure that all components are fitted to the rocker shaft in the correct order (Fig. E.12) and that new circlips are fitted to the ends of the shaft.

Combustion Caps (4.192, 4.203)

These are bolted to the left hand side of the cylinder head, part of the combustion chamber being formed in the cylinder head and part in the cap. Removal of these caps will facilitate cleaning of the combustion chambers should this be necessary. When refitting it is essential to use new copper washers and to tighten down the three securing nuts evenly.

To Re-assemble the Cylinder Head

Lubricate the valve stems and valve guides with engine oil and place the valves in their respective guides. Replace in the following order. Locating washer, internal valve spring, external valve spring, and spring retaining cap. Compress the spring and fit the split collets.

Refit induction and exhaust manifolds using new joints.

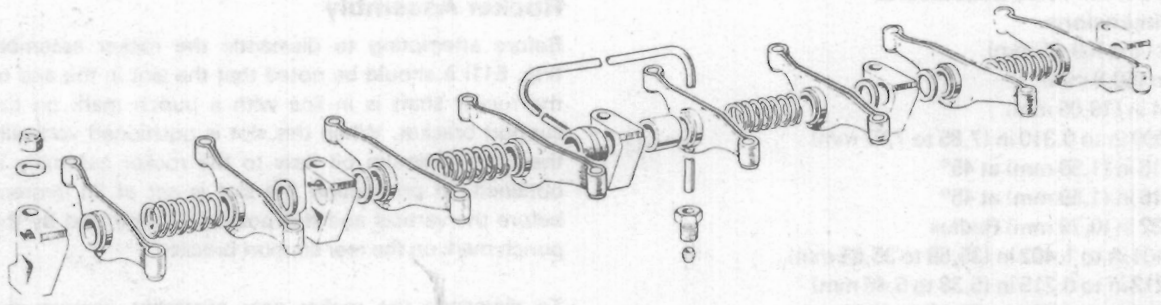

Fig. E.12.
Exploded view of Rocker Shaft Assembly.

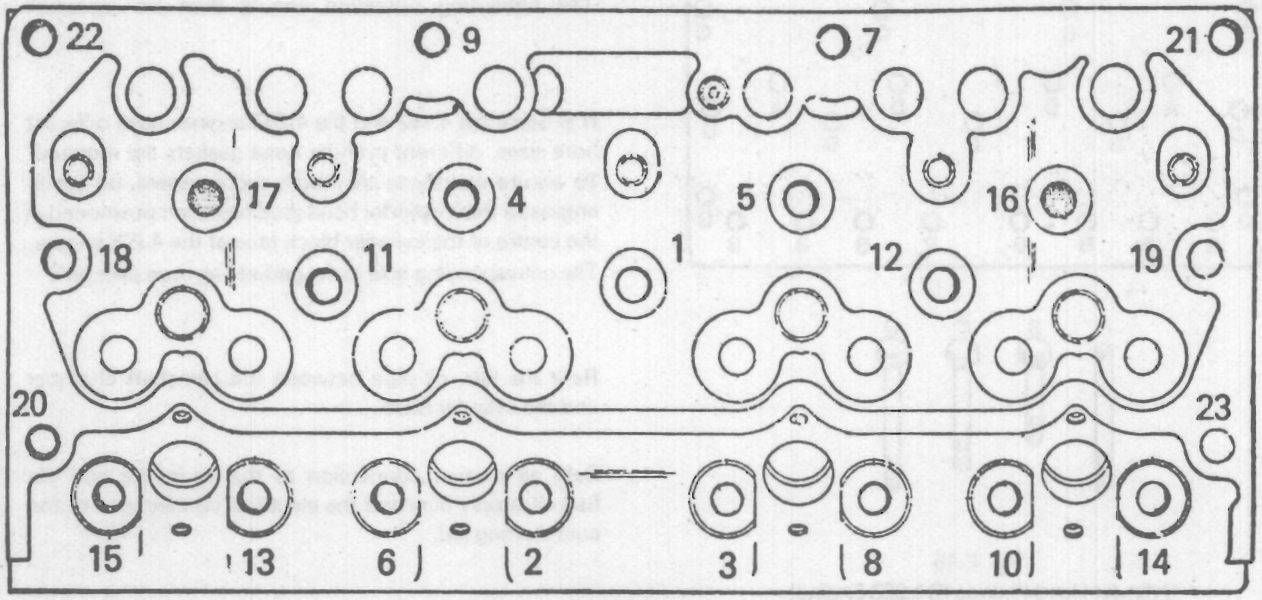

Fig. E.13. Cylinder Head Tightening Sequence (D4.203 Engine)

Cylinder Head Retaining

As from the following engine numbers the cylinder head retaining nuts were changed to nuts and setscrews (the exception being flame proofed engines which still retain all nuts):

203U 93838 CL
203U 6963DL
203UA130434 DL

On D4.203 engines, all but two of the original studs have been changed to setscrews.

The two retained studs are fitted to the front and rear holes in the cylinder block looking from the rear, adjacent to the cylinder bores (Nos. 16 and 17 in Fig. E.13).

On 4.203 engines, the same two studs are retained (Nos. 10 and 11 in Fig. E.14) as well as eight special retaining studs which also retain the atomisers.

It is essential that if these two studs are ever removed, then they must be replaced in their correct positions as they locate the cylinder head gasket prior to fitting the cylinder head and setscrews.

The tightening torque for the cylinder head retaining setscrews and nuts has been raised from:—

60 lbf ft (8,3 kgf m) 81 Nm
to —70 lbf ft (9,7 kgf m) 95 Nm

To Refit the Cylinder Head to the Engine

Remove all traces of old jointing compound, carbon, etc., from the face of the cylinder block.

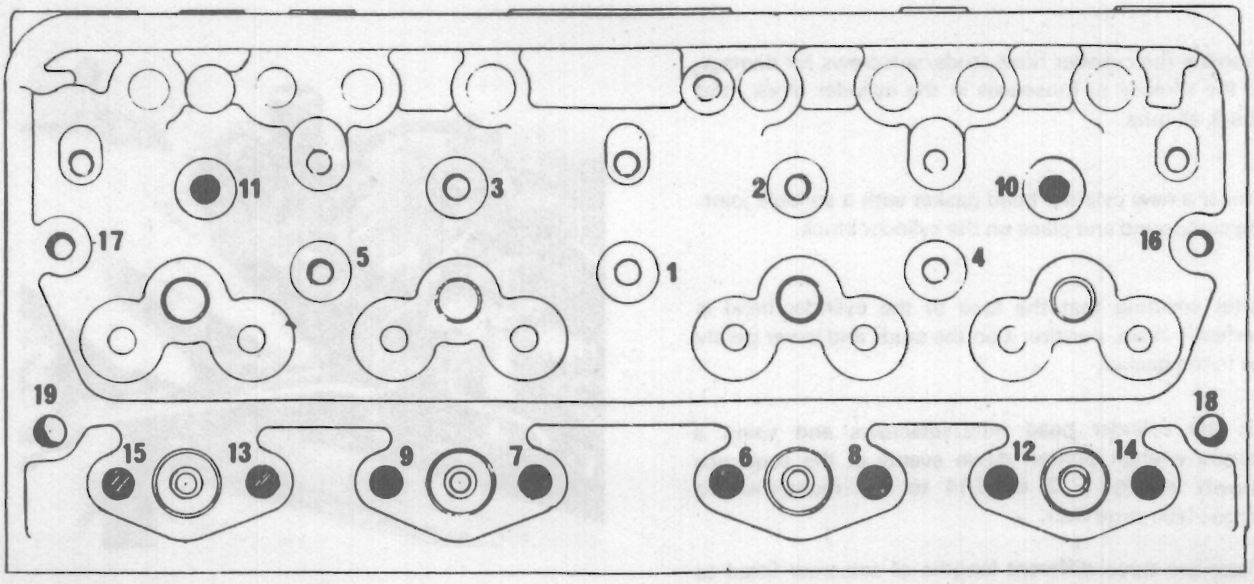

Fig. E.14 Cylinder Head Tightening Sequence (4.192 and 4.203 engines)

Nos. 1 to 5 inclusive — setscrews
6 to 15 inclusive — nuts 16 to 19 inclusive — setscrews

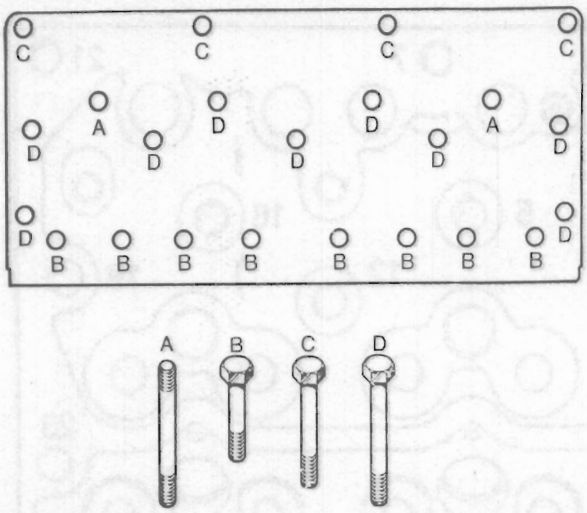

Fig. E.15
Cylinder Head Fixings (D4.203 Engine).

A. Studs.
B. Setscrews 3¼ in (83 mm) long.
C. Setscrews 3.5/8 in (92 mm) long.
D. Setscrews 3. 7/8 in (98 mm) long.

Remove all carbon from the tops of the pistons leaving them clean and bright. During this operation it is advisable to lower the piston in its bore, smear some grease around the top of the bore and then bring the piston to T.D.C.

The grease will then form an effective seal and prevent carbon from reaching the piston rings.

Thoroughly clean, paying particular attention to the areas around the bases of the cylinder head studs, removing them from the block if considered necessary.

Examine the cylinder head studs/setscrews for damage to the threads or looseness in the cylinder block, and check all nuts.

Smear a new cylinder head gasket with a suitable jointing compound and place on the cylinder block.

After ensuring that the face of the cylinder head is perfectly clean, position it on the studs and lower gently on to the gasket.

Fit the cylinder head nuts/setscrews and using a torque wrench tighten down evenly in the sequence shown in Fig. E.13 or E.14 to the recommended torque (see page B.2).

There are three different lengths of setscrew fitted to D4.203 engines and these must be fitted in their correct positions as shown in Fig. E.15.

The tightening operation should then be repeated.

N.B. Since the 4.192 and the 4.203 engines have different bore sizes, different cylinder head gaskets are required. To ensure that these are readily recognisable, on earlier engines a thick cylinder head stud has been positioned in the centre of the cylinder block face of the 4.203 engine. The corresponding hole in the gasket has been enlarged.

Refit the lub. oil pipe between the camshaft chamber and the cylinder head.

Refit air cleaner connection to the air intake and the fuel oil supply pipe and the electrical connections to the cold starting aid.

Replace the rocker assembly, tighten down evenly and reconnect the lub. oil supply pipe.

Reset the tappet clearances (Fig. E.16). These can be done in the following sequence. With the valves of No. 4 cylinder rocking, set both valves of No. 1 cylinder to 0.012 in (0,30 mm).

With the valves of No. 2 cylinder rocking, set both valves of No. 3 cylinder.

With the valves of No. 1 cylinder rocking, set both valves of No. 4 cylinder.

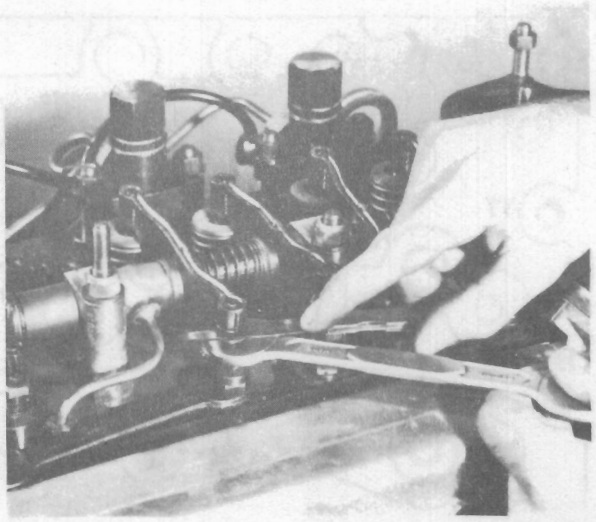

Fig. E.16.
Adjusting the Tappets.

With the valves of No. 3 cylinder rocking, set both valves of No. 2 cylinder.

Refit the atomisers with new washers and connect up the leak-off pipes.

Reconnect the water outler hose to the thermostat housing.

Refill the cooling system.

Bleed out all air from the fuel system.

Start the engine and ensure that lub. oil is reaching the rocker shaft.

Replace the rocker cover using a new joint.

After warming up, the engine should be shut down and the rocker assembly removed. Retighten cylinder head nuts/setscrews in the sequence shown in Fig. E.13 or E.14 and to the correct torque as given on Page B.2. Replace rocker assembly and adjust tappet clearances to 0.012 in (0,030 mm) with engine cold.

The cylinder head setscrews/nuts should be tightened again, as detailed above, after completion of 25 hours or 500 miles (800 km) running following cylinder head fitment.

SECTION F
Pistons and Connecting Rods

PISTONS AND CONNECTING RODS—F.2

The pistons are of high silicon aluminium and are not graded to bore size. They are not interchangeable between the 4.192 and the 4.203 engine due to difference in bore size. Grooves are provided to take three compression rings and one oil control ring above the gudgeon pin and one oil control ring below the gudgeon pin. (See Fig. F.1).

Pistons for D4.203 have a toroidal cavity in the crown.

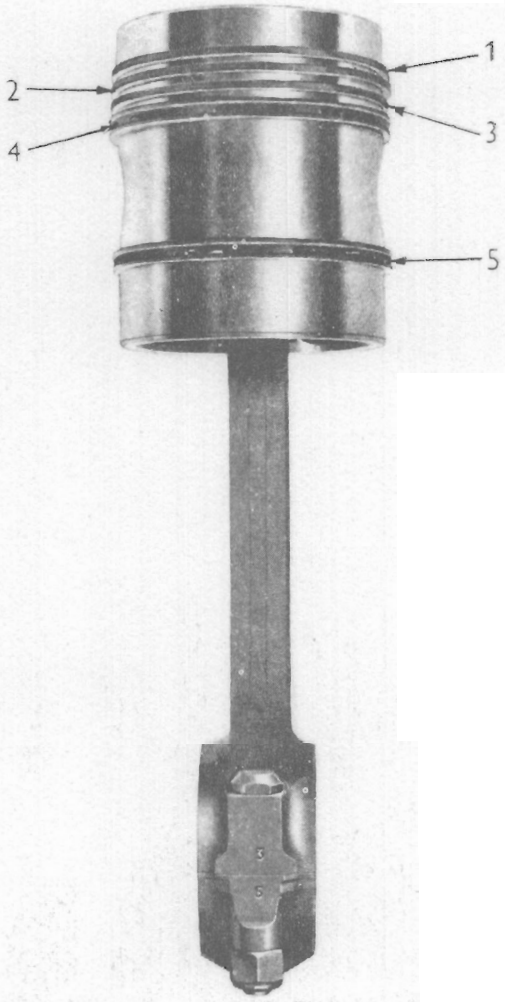

Fig. F.1.
Connecting Rod Assembly.

1. Top Compression Ring.
2. 2nd Compression Ring.
3. 3rd Compression Ring.
4. Upper Oil Control Ring.
5. Lower Oil Control Ring.

Pistons for the 4.192 engine can be obtained in two sizes, standard and plus 0.030 in (0,76 mm), it being possible to rebore the cast iron cylinder liners.

Pistons for the 4.203 and D4.203 can only be obtained in one size—standard—no reboring of the chrome or thin wall cast iron liners being possible.

The connecting rods are of high tensile steel 'H' section forgings. The big end is split at right angles to the axis of the rod, the cap being secured by two fitted bolts, secured by nuts. Thin wall pre-finished, steel backed plated, copper lead lined or aluminium tin lined big end bearings and lead bronze lined, steel backed wrapped small end bushes are fitted.

The connecting rods are numbered on cap and rod, (See Fig. F.1 and F.4) when fitted to the engine in production and the assembly is fitted to the crankshaft so that these numbers are on the fuel pump side of the engine. Always fit the cap to the connecting rod so that the numbers are both on the same side. Never re-assemble the cap to the connecting rod incorrectly.

It is advisable when removing a piston assembly from the engine to check whether or not the connecting rod and cap has been suitably marked, as they may have been replaced at some time after the engine left the factory, in which case the numbering may not have been carried out. Such connecting rods and caps should be suitably marked.

To Remove a Connecting Rod and Piston Assembly

1. Remove the cylinder head assembly.
2. Remove the sump.
3. Turn the crankshaft until the piston to be removed is at the bottom of its stroke.
4. If necessary, remove the oil pump suction and delivery pipes.
5. Carefully remove any carbon that may have formed at the top of the cylinder bore.
6. Release and remove the nuts from the connecting rod bolts and remove the cap, bottom half of the big end bearings and the connecting rod bolts.
7. Turn the crankshaft until the piston is at the top of its stroke, push the piston and its connecting rod up the bore sufficiently to enable removal of the top half of the big end bearing. Continue to push the piston and connecting rod up and out of its bore. (See Fig. F.2).
8. Reassemble the bearings and cap to the connecting rod.



Fig. F.2.
Withdrawing a Piston and Connecting Rod.

To Replace a Piston and Connecting Rod

1. Clean out the cylinder bore with a clean dry non-fluffy rag and apply a liberal coating of lubricating oil to the cylinder bore.

2. Ensure the piston is thoroughly clean and free from scoring, and liberally oil.

3. Fit the piston rings to the piston in the correct order as given on Page F.6.

4. Position the ring gaps around the piston so that they are equally spaced.

5. Fit the piston assembly ring on the piston, entering it over the connecting rod end with the chamfer up towards the piston.

6. Ensure that the connecting rod number is on the fuel pump side of the engine and insert the connecting rod and piston into its bore.

7. Push the piston down into its bore through the assembly ring. (See Fig. F.3).

8. Turn the crankshaft until the relevant big end journal is at the bottom centre.

9. Liberally oil and fit the top half bearing in the connecting rod, ensuring that the tongue on the bearing engages in the machined recess in the big end bore.

10. Pull the connecting rod to the crankshaft and refit the big end bolts ensuring that they are fully located. The bolt head is machined so that the bolt locates in the connecting rod in one position only.

11. Liberally oil and locate the lower half bearings in the cap with the tongue registering in the machined recess and fit the cap to the connecting rod with the stamped numbers together. (See Figs F.1 and F.4).

12. Using new nuts, secure the cap to the connecting rod and tighten to the recommended torque (see page B.2).

13. Where necessary replace the lubricating oil suction and delivery pipes.

14. Refit the sump.

15. Replace the cylinder head assembly in the reverse order to that of dismantling.

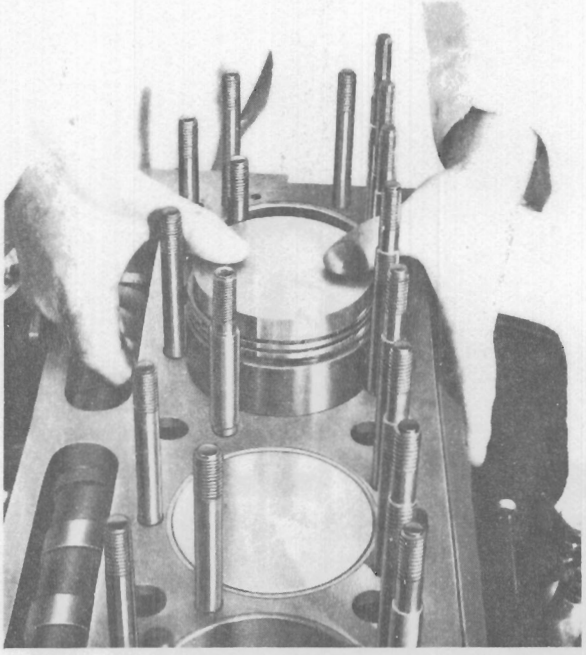

Fig. F.3.
Fitting a Piston.

Piston Gudgeon Pin

The piston gudgeon pins are fully floating and are located in the pistons by circlips, one each end.

To Remove a Piston from a Connecting Rod

In production, the crown of each piston is stamped with a number denoting its position in the engine, No. 1 piston being at the front. The D4.203 piston is marked with the letter "F", the word "Front". or an arrow. The piston should be fitted with this mark towards the front of the engine. The number on the piston crown is the same as that on the corresponding connecting rod and cap.

1. Remove the piston and connecting rod as previously described.

2. Ensure that the piston is numbered, as it may have been installed at some time after the engine left the factory without being marked, and if the piston removed is to be used again ensure that it is marked relative to the connecting rod so that it can be replaced in the same position on the rod.

3. Remove the two circlips retaining the gudgeon pin in the piston.

4. Warm the piston in hot water or oil and push out the gudgeon pin.

To Replace a Piston on a Connecting Rod

1. With the piston thoroughly clean, fit one new circlip in position in the piston to serve as a location for the gudgeon pin on replacement.

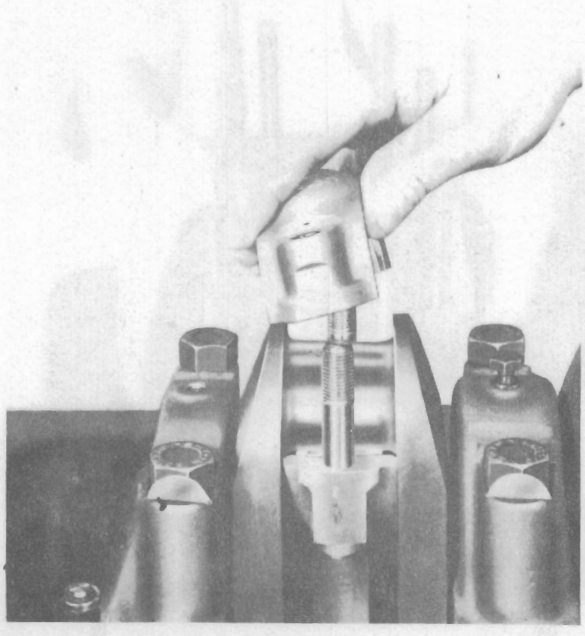

Fig. F.4.
Fitting a Connecting Rod Bearing Cap.

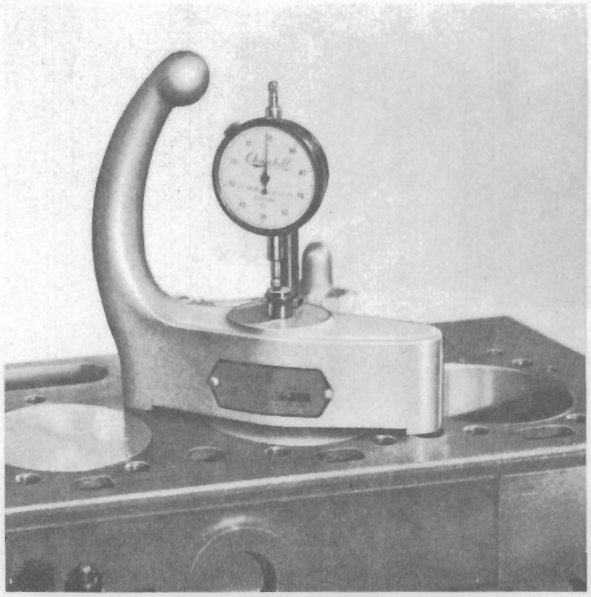

Fig. F.5.
Checking Piston Height.

2. Heat the piston in hot water or oil to allow easy replacement of the pin.

3. Insert the connecting rod between the piston bosses so that the marks made at the time of dismantling are in line. If a new piston is being used it may be fitted to the connecting rod, either way round for 4.192 and 4.203 engines, but for D4.203 engines the piston should be fitted so that the letter "F", the word "Front" or the arrow is towards the front of the engine when the connecting rod number is towards the fuel injection pump side.

4. Insert the gudgeon pin and fit the second circlip into the piston.

5. Ensure both circlips are fully located in their grooves.

6. Oil the component parts and reassemble to the engine as described in the appropriate Section.

When a new piston is fitted, it is necessary to machine the piston crown to provide the correct clearance for 4.192 and 4.203 engines of 0.000/0.005 in (0,00/0,13 mm) below the top face of the cylinder block with the piston at T.D.C. With D4.203 engines, the piston height is 0.003 in (0,08 mm) below to 0.005 in (0,13 mm) above the block face at T.D.C.

This operation should be carried out as follows:

1. The piston and connecting rod must be re-assembled and refitted as detailed.

2. Turn the crankshaft until the piston is at top dead centre and measure the distance between the top face of the cylinder block and the piston crown using the Piston Height Gauge. (See Fig. F.5).

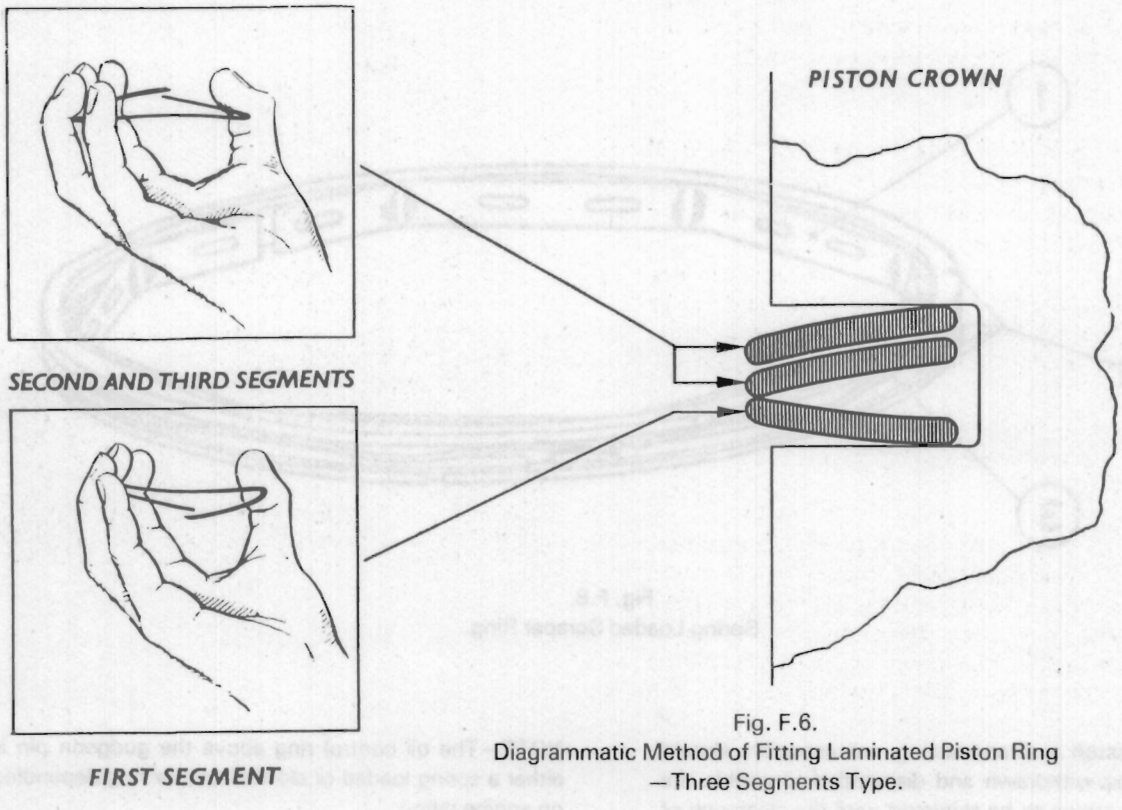

Fig. F.6.
Diagrammatic Method of Fitting Laminated Piston Ring
—Three Segments Type.

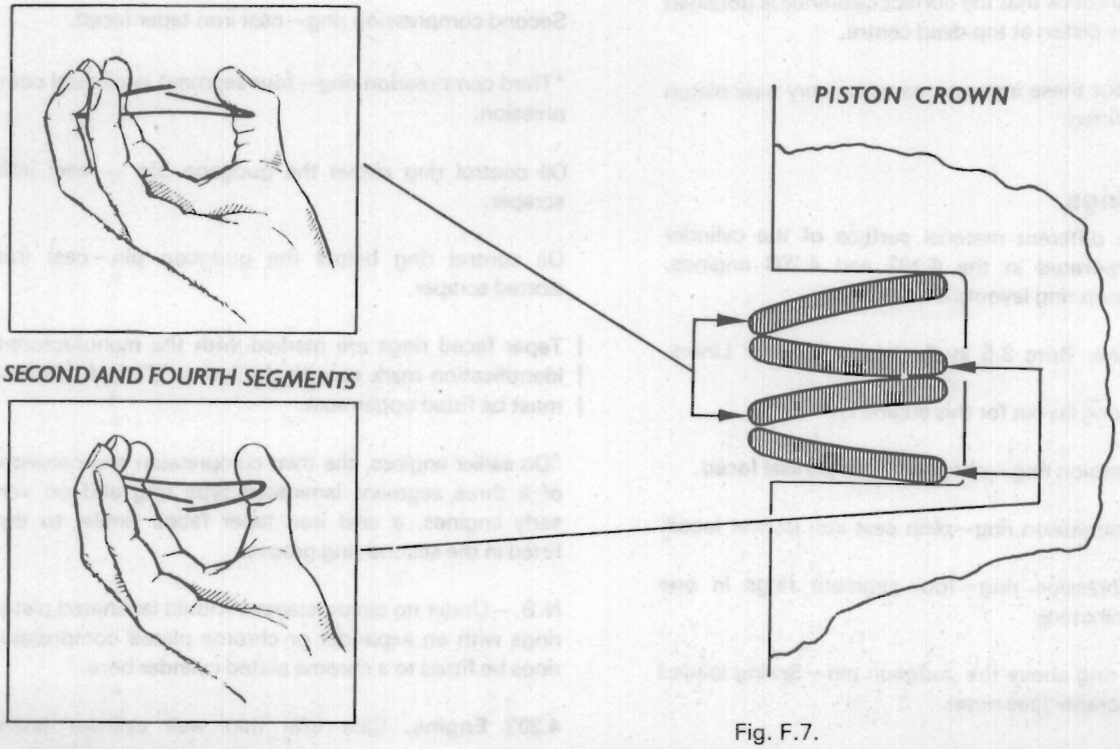

Fig. F.7.
Diagrammatic Method of Fitting Laminated Piston Ring
—Four Segment Type

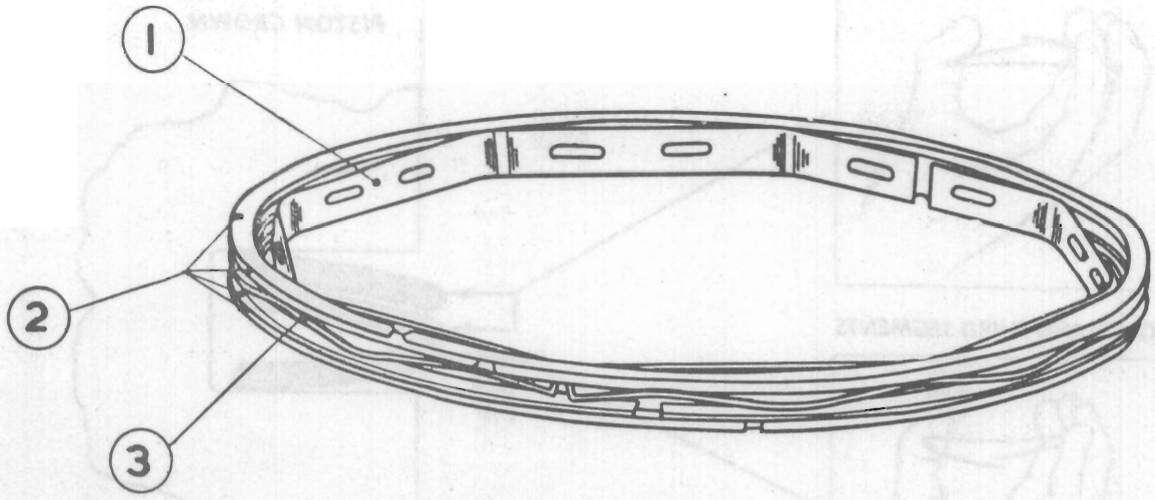

Fig. F.8.
Spring Loaded Scraper Ring.

3. The piston and connecting rod assembly should then be withdrawn and dismantled to enable the piston crown to be skimmed until the clearance of 0.000/0.005 in (0,00/0,127 mm) below or in the case of the D4.203 engine 0.003 in (0,08 mm) below or 0.005 in (0,13 mm) above is obtained between the cylinder block top face and the piston crown.

4. Re-assemble and refit the piston and connecting rod and check that the correct clearance is obtained with the piston at top dead centre.

5. Carry out these instructions with every new piston that is fitted.

Piston Rings

Due to the different material surface of the cylinder liners incorporated in the 4.192 and 4.203 engines, different piston ring layouts are used.

4.192 Engine. Bore 3.5 in Cast Iron Cylinder Liners.

The piston ring layout for this engine is:—

Top compression ring—chrome plated parallel faced.

Second compression ring—plain cast iron parallel faced.

Third compression ring—four segment rings in one groove (laminated).

Oil control ring above the gudgeon pin—Spring loaded or slotted scraper (see note).

Oil control ring below the gudgeon pin—cast iron slotted scraper.

NOTE—The oil control ring above the gudgeon pin is either a spring loaded or slotted scraper ring depending on engine rating.

4.203 Engine. Bore 3.6 in. Chromed thin wall Cylinder Liners.

The piston ring layout for this engine is:—

Top compression ring—cast iron parallel.

Second compression ring—cast iron taper faced.

*Third compression ring—four segment laminated compression.

Oil control ring above the gudgeon pin — cast iron scraper.

Oil control ring below the gudgeon pin—cast iron slotted scraper.

Taper faced rings are marked with the manufacturers identification mark or with the letter "T" and this face must be fitted uppermost.

*On earlier engines, the third compression ring consisted of a three segment laminated type ring and on very early engines, a cast iron taper faced similar to that fitted in the second ring groove.

N.B.—Under no circumstances should laminated piston rings with an expander or chrome plated compression rings be fitted to a chrome plated cylinder bore.

4.203 Engine. Cast Iron thin wall cylinder liners.

The piston ring layout for this engine is:—

Top compression ring—plain cast iron parallel faced.

Second compression ring—plain cast iron parallel faced.

Third compression ring—four segment rings in one groove (laminated).

Oil control ring above gudgeon pin — Spring loaded laminated scraper.

Oil control ring below gudgeon pin — cast iron slotted scraper.

D4.203 Engines. Cast Iron Liners
Top compression ring—chrome plated.

2nd compression ring—cast iron parallel faced.

3rd compression ring—laminated comprising four segments.

4th laminated scraper.

5th Slotted scraper.

D4.203 Engines (Prior to Eng. No. 2650285) Chrome Plated Liners

Top compression ring—plain parallel faced cast iron.

2nd compression ring—Taper faced cast iron.

3rd compression ring—laminated comprising three segments.

4th Slotted scraper.

5th Slotted scraper.

To Remove the Piston Rings

Remove the connecting rod and piston assembly from the engine as previously detailed.

Carefully remove the rings using either guide strips or piston expanders, removing the top ring first. Where taper faced rings are fitted and it is intended to use them again, a check should be made before removal to ensure that the 'Top' marking is still legible, otherwise difficulty may be experienced in re-assembling them on the piston correctly.

Remove all carbon from the piston crown and grooves, taking care not to damage the piston.

Checking Piston Ring Gaps

Insert the piston ring in a 3.501 or 3.6015 in (88,93 or 91,48 mm) piston ring gauge depending on the engine type or alternatively in a clean unworn part of the cylinder bore.

Place the gauge on a flat metal surface, centralising the ring by means of a piston until it is at the bottom.

The gap may then be checked with a set of feeler gauges to ensure that it is within the specified limits. See pages B.5 and B.6.

Fitting Piston Rings to Pistons

Ensure that all piston rings and piston ring grooves are perfectly clean, that the grooves are not damaged, or the pistons scored.

Parallel faced piston rings should be fitted to their respective grooves and checked to ensure that they are quite free.

Taper faced rings should be similarly fitted ensuring that the face marked with the manufacturers identification mark or with the letter "T" is uppermost.

To Fit the Laminated Compression Ring (Three Segment Type). See Fig. F.6.

Fit the first segment to the piston so that when held horizontally in the palm of the hand and radially compressed, the ring ends point downwards. Position this ring at the bottom of the groove with the gap over the gudgeon pin bore.

Fit the second segment on top of the first so that when held compressed as described above, the ring ends point upwards. Position the gap at 180° to the first segment gap.

The third segment should be fitted on top of the second so that when held and compressed as described, the ring ends point upwards. Position the gap immediately above that of the first segment.

To Fit the Laminated Compression Ring. (Four Segment Type). See Fig. F.7.

Fit the first segment to the piston so that when held horizontally in the palm of the hand and radially compressed the ring ends point downwards. Position this ring at the bottom of the groove with the gap over the gudgeon pin bore.

Fit the second segment on the top of the first, so that when held compressed as detailed above, the ring ends point upwards. Position the gap at 180° to the first segment gap.

The third segment should be fitted on the top of the second so that when compressed as described, the ring ends point downwards. Position the gap immediately above that of the first segment.

Fit the fourth segment on top of the third so that when held and compressed the ring ends point upwards. Position the gap above that of the second segment.

To Fit Spring Loaded Scraper Ring.

The spring loaded scraper ring comprises one internal expander ring (1), two rail rings (2) each side of the spiral ring (3). See Fig. F.8.

1. Fit internal expander ring.
2. Fit lower two rail rings.
3. Fit spiral rings.
4. Fit upper two rail rings.

When fitting the lower and upper rail rings, the ring gaps should be staggered around the piston ring groove.

To Fit Spring Loaded Scraper Ring (Fig. F.9).

This spring loaded scraper ring is an alternative to that shown in Fig. F.8 and consists of 4 flat segments, one cupped segment and a spacer.

1. Fit the two flat segments.
2. Fit the spacer.
3. Fit the cupped segment with the cup down, immediately above the spacer.
4. Fit the remaining flat segments above the cupped segment.

The segment gaps should be equally spaced around the piston.

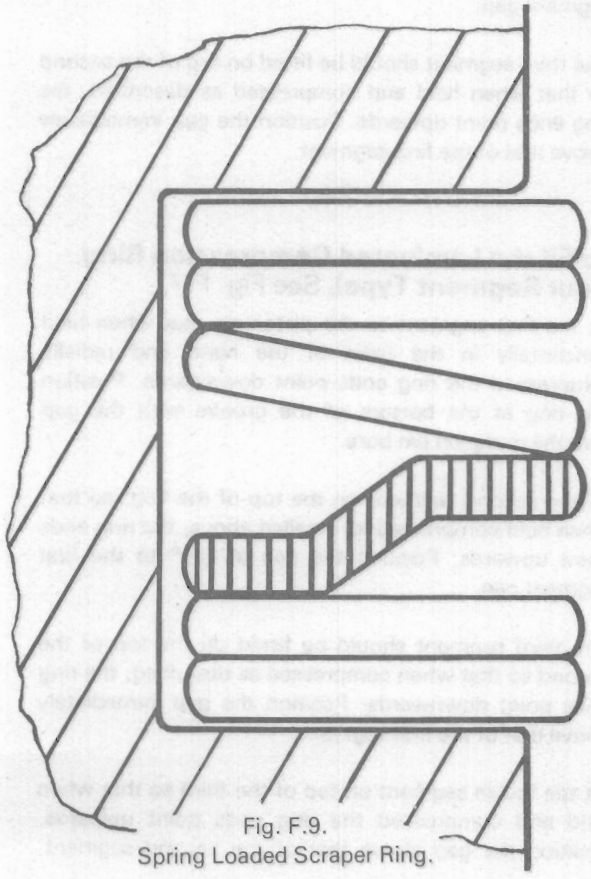

Fig. F.9.
Spring Loaded Scraper Ring.

Renewing Connecting Rod Bearings

Connecting Rod Big End Bearings may be renewed without removing the piston and connecting rod from the engine. The bearings are available in standard sizes and in undersizes of 0.010 in, 0.020 in and 0.030 in (0,25, 0,51 and 0,76 mm).

1. Remove the sump.
2. Turn the crankshaft to bring the required big end to bottom centre and if necessary remove the oil pump suction and delivery pipes.
3. Remove the nuts and detach the cap.
4. Push up the connecting rod sufficiently to clear the crankpin and move the big end to one side. The upper half of the bearing may now be removed from the connecting rod and the new one inserted with the tongue of the bearing locating in the machined recess in the big end bore.
5. The lower half of the bearing may now be extracted from the cap and a new one inserted engaging the tongue of the bearing in the machined recess of the cap.
6. Liberally lubricate the top half bearing in the connecting rod and fit the connecting rod to the crankpin taking care not to dislodge the bearing.
7. Liberally lubricate the bottom half bearing and replace the big end cap with the stamped numbers together. Ensure the cap bolts are fully located with the bolt heads against the sides of the rod.
8. Fit new nuts and tighten to the recommended torque — see page B.2.
9. Where necessary replace the oil pump suction and delivery pipes.
10. Refit the sump.

To Fit Small End Bushes

The small end bushes are a press fit in the connecting rods.

Press out the old bushes using a suitable press.

Remove any sharp edges around the connecting rod small end parent bores.

Press in the new bushes using a suitable dolly, at the same time ensuring that the oil holes in the bushes coincide with the holes in the top of the connecting rods.

Ream out the new bushes in situ to suit their respective gudgeon pins (see Page B.6) and check for parallelism and twist.

SECTION G
Cylinder Block and Liners

CYLINDER BLOCK AND LINERS—G.2

The cylinder block is cast integral with the crankcase in high duty cast iron alloy, the crankcase joint face being co-planer with the crankshaft centre-line.

An exploded view of the cylinder block assembly is shown in Fig. G.1.

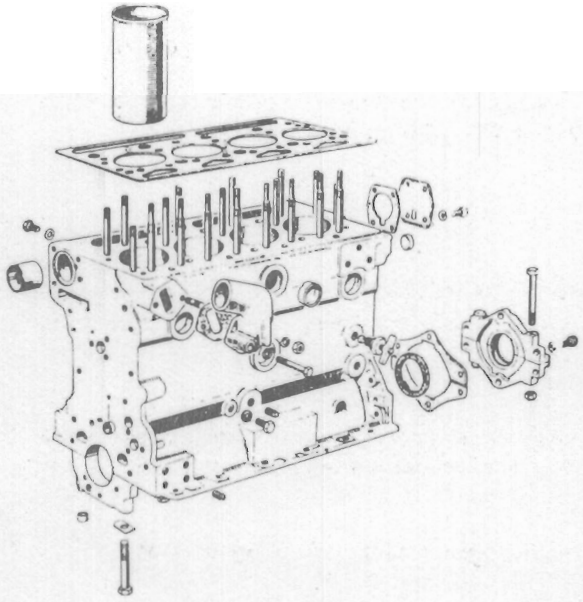

Fig. G.1.
Exploded view of Cylinder Block Assembly.

4.203 and D4.203 Engines

4.203 and D4.203 engines are fitted with renewable pre-finished thin wall cast iron or chrome plated steel cylinder liners. It should be noted that cast iron or chrome plated liners are not interchangeable due to the difference in liner flange dimensions and the accommodating recess in the cylinder block.

Neither type of cylinder liner can be rebored. When they are worn to an extent whereby engine performance is affected, they should be renewed.

(a) To Remove Liners

1. Remove cylinder head as detailed in Section E.

2. Remove the piston and connecting rod assemblies, crankshaft and all component parts of the cylinder block as detailed in the appropriate sections of this manual.

3. Remove cylinder head studs from the cylinder block.

4. Press the liners out through the top of the cylinder block, ensuring that no damage is done to the parent bore.

   (Cast iron production liners are an interference fit and should be removed with a heavy duty press).

(b) Preparation for Fitting Pre-finished Service Liners

Great care must be taken in handling, transit and storage of new pre-finished plated liners, as the slightest burr or damage to this thin wall liner is sufficient to cause considerable local distortion of the liner bore when fitted.

After removal of the old liners, the parent bore must be thoroughly cleaned both in the top recess for the liner flange and in the parent bore itself. A check must be made to ensure that the whole areas of contact with the liners in the cylinder block are free from burrs, corrosion or damage. Remove any burrs present.

Ensure that the new liner is thoroughly clean before fitting. If cleaning fluid is used to wash the liner, it is important that the liner be thoroughly dried and well oiled before fitting.

Throughout the whole operation, extreme cleanliness is essential as the entry of the smallest particle of grit or other foreign matter is sufficient to cause local distortion of the liner bore.

(c) To Fit New Liners

1. Lubricate the outside diameter of the liners with clean oil which should be applied by means of a pressure can. The use of a brush is not recommended.

2. Press in the new liners using a suitable shouldered *metal disc ensuring that the flanges at the top of* liners do not foul the counter-bore at the top of the parent bore thus causing distortion at the top of the internal diameter of the liner.

   When fully home, the top of the cast iron liner flange should be 0.000/0.006 in (0,00/0,15 mm) below the top face of the cylinder block when fitted in earlier blocks or between 0.002 in (0,05 mm) above and 0.004 in (0,10 mm) below the block face when fitted in the later blocks. The top of the Chromard liner flange should be 0.001/0.007 in (0,03/0,18 mm) below the top face of the cylinder block.

   In order to effect this, it may be necessary to use shims under the cylinder liner flange. 0.005 in (0,13 mm) shims (Part No. 33127107) are available for this purpose. Before fitting a new cylinder liner, the depth of the flange and the appropriate recess in

the cylinder block should first be measured so as to ascertain whether a shim or shims are required to give the correct liner height in relation to the cylinder block top face. The fit of the new liners in the parent bore is a transition fit, that is the limits extend from minus 0.001 in (0,03 mm) to plus 0.001 in (0,03 mm).

3. It is advisable to allow a settling period to elapse before checking the fitted internal bore diameter of the liner. The acceptable limit is 3.6015/3.6025 in (91,48/91,50 mm). If it is found that a pre-finished service cast iron liner is below the limits quoted, it should be honed to the correct bore size. Each new liner should be checked in three positions — top, centre and bottom; the readings being taken transversely and parallel to the centre line of the cylinder block at each position.

4. Having fitted the new liners, the remainder of the re-assembly operations are a reversal of the removal procedure.

NOTE: — The removal and refitting of cylinder liners can be carried out under special circumstances with the crankshaft in position by using a special tool. Care must be taken not to damage the crankshaft during this operation.

Unbored Cast Iron Liners

If desired and where the necessary boring equipment is available, unbored cast iron liners (as used in factory production) may be used to replace existing cast iron cylinder liners. These are an interference fit in the cylinder block as compared with the transitional fit of pre-finished liners and require boring and honing in situ to a diameter of 3.6015/3.6025 in (91,48/91,50 mm).

4.192 Engines

The above procedures do not apply to 4.192 engines which are fitted with renewable high duty cast iron liners. These can either be rebored to plus 0.030 in (0,762 mm) or renewed as desired.

When reboring is carried out, begin by assembling a set of 0.030 in (0,762 mm) oversized pistons and rings.

During reboring, it is most important to take care that the true alignment of the bores relative to the crankshaft axis be maintained.

The correct finished bore size should be 3.531/3.532 in (89,687/89,712 mm) when 0.030 in (0,762 mm) oversize pistons are used.

NOTE—When fitting 0.030 in (0,762 mm) oversized pistons the dimension between the piston crown and the cylinder block face must be maintained at 0.000 to 0.005 in (0,00—0,127 mm) below the block face.

To Renew Cylinder Liners

Obtain a new set of liners and a set of standard pistons and rings.

Remove all component parts from cylinder block (See appropriate sections for removal of these).

Remove cylinder head studs from cylinder block.

Press out old liners.

Ensure that the cylinder block parent bores are perfectly clean, and that the outside diameters of the new liners are also perfectly clean, and lightly coated with oil.

Press in new liners releasing the load several times during the first inch, so as to allow the liner to centralise itself in the cylinder block parent bore.

The depth of the liner flange below the top face of the cylinder block should be 0.003/0.008 in (0,076/0,203 mm).

The liners can now be finish bored in situ, to 3.501/3.502 in (88,925/88,95 mm)

Check new rings for size and correct gap, (see page B.5 and assemble to pistons.

Fit new pistons ensuring that the dimension between the piston crown and cylinder block face is maintained. (0.000 to 0.005 in (0,00—0,127 mm).

Re-assemble engine as required to instructions given for various components.

SECTION H
Crankshaft and Main Bearings

The Crankshaft

This is a one piece forging of chrome-molybdenum steel, the main and big end journals of which are hardened by the induction or in certain instances by the Nitrided or Tufftrided process. Details of grinding limits and surface finish are listed in this section.

The rear end of the shaft is machined to provide an oil thrower, an oil return groove which works in conjuntion with a rope type oil seal.

Later 4.203 and D4.203 crankshafts work in conjunction with a lip type seal which locates around the flywheel locating flange.

The front end of the shaft is machined to accept a key-located flanged pulley, and is provided with a threaded counterbore into which is screwed the pulley retaining setscrew.

End float of the crankshaft is provided by four thrust washers which fit on both sides of the rear main bearing housing. 0.0075 in (0,19 mm) oversize thrust washers are available which may be combined with standard thrust washers to give an adjustment of 0.0075 in (0,19 mm) or when used on both sides of the bearing housing give an adjustment of 0.015 in (0,38 mm).

Certain D4.203 and 4.203 engines are fitted with either a Nitrided or Tuftrided crankshaft.

Before commencing to regrind a worn crankshaft, it should be identified by reference to the part number which may be found stamped on the front end, usually on the No. 1 web.

In most cases, the part number will appear in full, but in some only the last three digits may appear.

The following list of crankshaft part numbers will identify the relevant hardening process.

31315143	Nitrided (60 hour)
31316017	Nitrided (60 hour)
31315144	Tufftrided
31315148	Tufftrided
31315149	Tufftrided
31315151	Tufftrided
31315168	Tufftrided
31315169	Tufftrided
31315171	Tufftrided
31315183	Tufftrided
31315184	Tufftrided
31315185	Tufftrided
31316018	Tufftrided
31316023	Tufftrided
31316024	Tufftrided
31316025	Tufftrided
31316028	Tufftrided
31316029	Tufftrided
31316031	Tufftrided
31316053	Tufftrided
31316054	Tufftrided
31316055	Tufftrided

It is important that the information given in the sub-section headed "To Regrind Crankshaft" relevant to Nitrided or Tufftrided crankshafts is adhered to.

Main Bearing Caps

The main bearing caps are of high duty cast iron, and are located on ring dowels in the cylinder block. Two high tensile setscrews are fitted per cap. These setscrews were originally locked with tabwashers, but these have been deleted and can be disregarded in service.

In production the main bearing parent bores are machined with the caps in position. If, therefore, for any reason a main bearing cap becomes damaged and replacement is desired, it will be necessary to replace the cylinder block complete with main bearing caps.

The caps must always be replaced in their correct position on the cylinder block and the correct way round. Each cap is numbered with its appropriate position to the block with No. 1 at the front of the engine. On each cap also is stamped, a serial number. This number will be seen stamped on one side of the bottom face of the cylinder block, and the serial number on the cap must be on the same side as this. See Fig. H.2.

Main Bearings

The main bearings are steel backed plated copper lead lined, or aluminium tin lined detachable shells, held in position by tongues which register with suitably machined locations in the cylinder block and cap, to prevent them from turning or moving out of position.

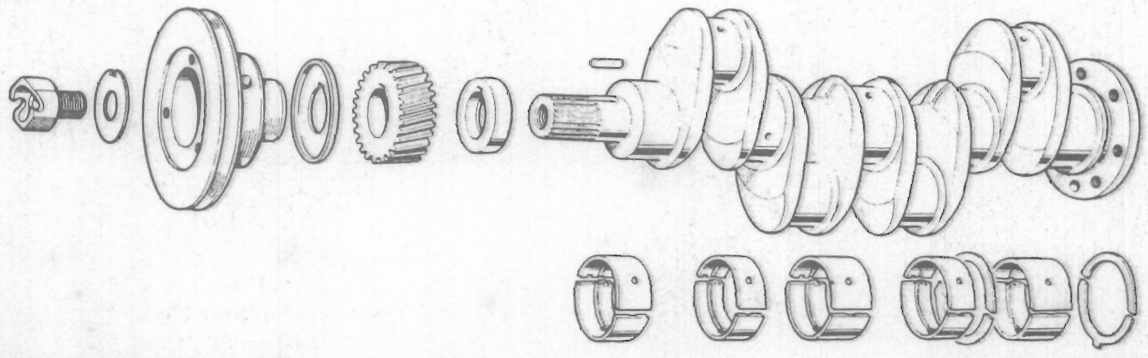

Fig. H.1.
Exploded view of Crankshaft and Main Bearing.
Assembly.

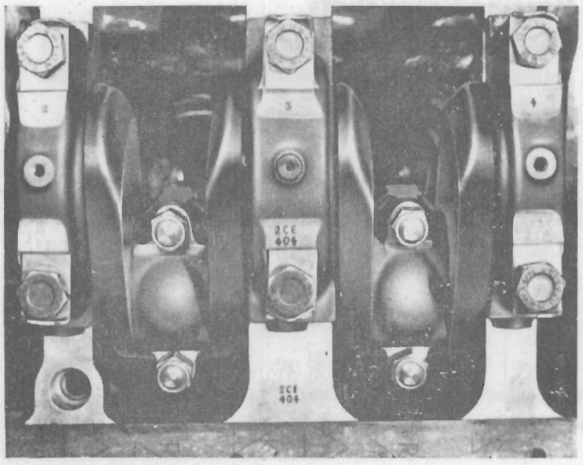

Fig. H.2.
View of Crankcase showing serial numbers and identification numbers.

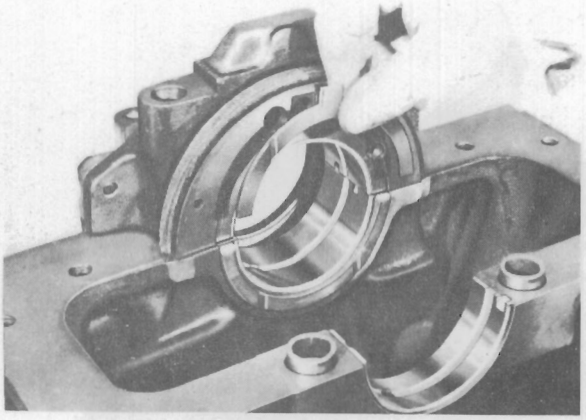

Fig. H.4.
Showing correct location of Crankshaft Thrust Washers (Crankshaft Removed).

Replacement bearings can be supplied 0.010 in (0,25 mm), 0.020 in (0,508 mm) and 0.030 in (0,762 mm) undersize.

Crankshaft End Float

The crankshaft end float is controlled by detachable thrust washers fitted each side of the rear main bearing cap and the cylinder block half housing. The lower halves of these thrust washers fitted in the rear main bearing cap have suitable locating lugs to prevent them from turning out of position. Fit the crankshaft thrust washers to each side of the bearing housing with the vertical oil grooves facing outwards. See Figs. H.4 and H.5.

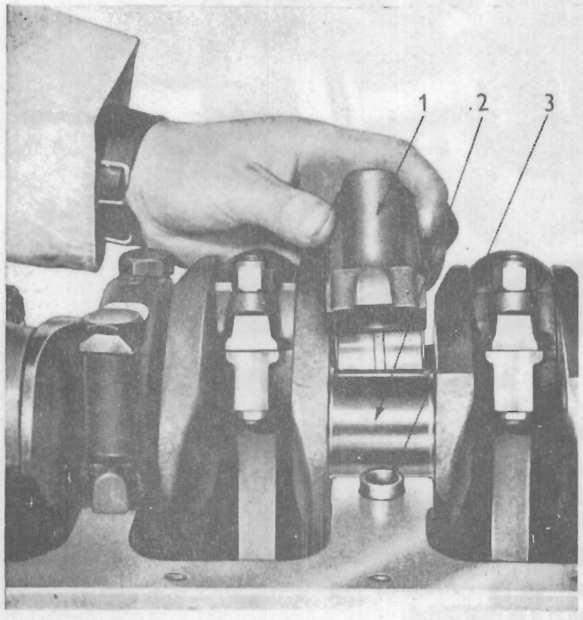

Fig. H.3.
1. Main Bearing Cap. 2. Main Bearing Journal. 3. Dowel.

To check the crankshaft end float, push the crankshaft forward as far as it will go and using feeler gauges check the gap between the machined shoulder on the crankshaft web and the crankshaft thrust washer. See Fig. H.6.

Check the gap on the other side of the rear main bearing with the bottom half housing of the oil seal removed and the crankshaft pushed back as far as it will go.

The clearances both sides of the bearing should be identical. The manufacturers production limits for the crankshaft end float are given in the Technical Data.

To Remove Crankshaft

1. Remove the engine from its application.

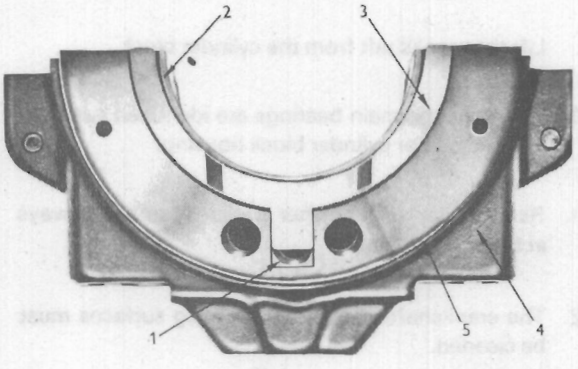

Fig. H.5.
Rear Main Bearing Cap.
1. Oil Drain Holes.
2. Bearing Shell.
3. Thrust Washer.
4. Bearing Cap.
5. Cork Seal.

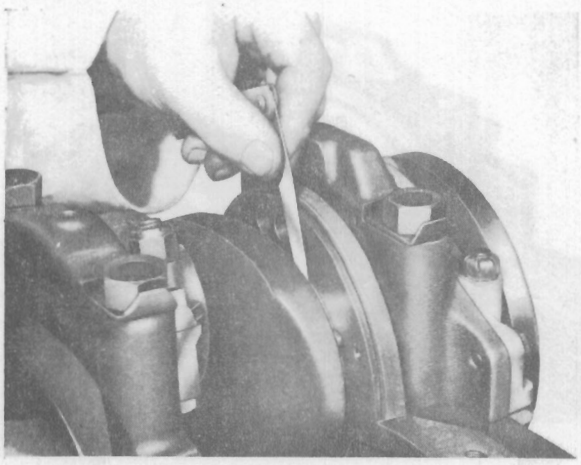

Fig. H.6.
Checking Crankshaft End Float.

2. Remove the clutch assembly, flywheel, starter motor and transmission housing adaptor plate. See Section P.

3. Remove the water pump, crankshaft pulley, generator and front timing case cover.

4. Remove the lubricating oil sump and oil pump suction and delivery pipes.

5. Remove the oil seal housing.

6. Remove the connecting rod caps and big end bearings.

7. Remove the main bearing setscrews.

8. Detach the main bearing caps taking care not to drop either the bearing shells or thrust washers. The lubricating oil pump may remain affixed to No. 1 main bearing cap.

9. Lift the crankshaft from the cylinder block.

10. Ensure all the main bearings are identified with the relevant cap or cylinder block housing.

11. Remove the main oil filter and clean all the oilways in the cylinder block.

12. The crankshaft oilways and bearing surfaces must be cleaned.

13. Examine the main bearing setscrews for stretch and thread damage.

14. Where necessary remove the half housings of the rear main oil seal from the cylinder block and rear main bearing cap.

To Regrind Crankshaft

1. Check the crankshaft main bearing and crankpin journals for wear to determine to which size the crankshaft must be reground.

2. Crack detect the crankshaft.

3. Demagnetise before proceeding with the regrinding.

4. The data and machine information is given on page H.5.

It is most important that the radii on the main journals are maintained to the figures quoted.

The main journal fillet radii varies between earlier and current crankshafts. This necessitates different bearing shell widths. Ensure the correct shells are used with the appropriate crankshaft.

Nitrided Crankshafts

Nitrided Crankshafts can be identified by the part numbers given on Page H.2. If facilities are not available for Nitriding, a replacement shaft should be obtained.

If it is necessary to regrind the journals, then they may be reground to 0.010 in (0,25 mm) undersize without re-processing. If reground to 0.020 in (0,51 mm) or 0.030 in (0,76 mm) undersize, then they must be re-Nitrided for a 60 hour period.

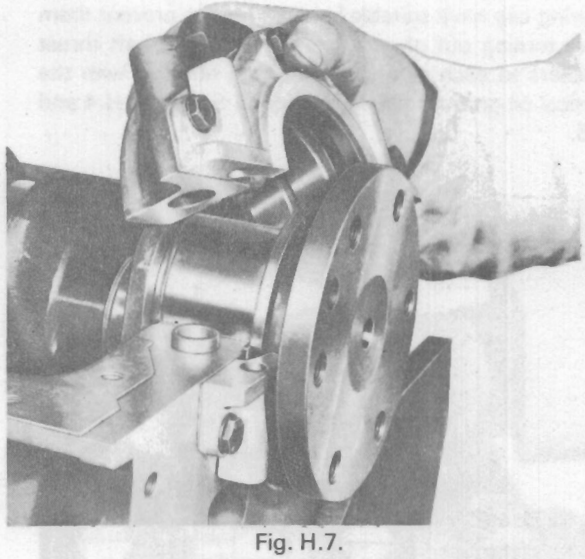

Fig. H.7.
Removing the Rear Main Bearing Cap.

Tufftrided Crankshafts

Tufftrided crankshafts can be identified by the part numbers given on Page H.2.

If it is necessary to regrind the journals, the crankshafts must be re-Tufftrided regardless of the diameter to which it is reground.

If facilities are not available for re-Tufftriding, a replacement shaft should be obtained.

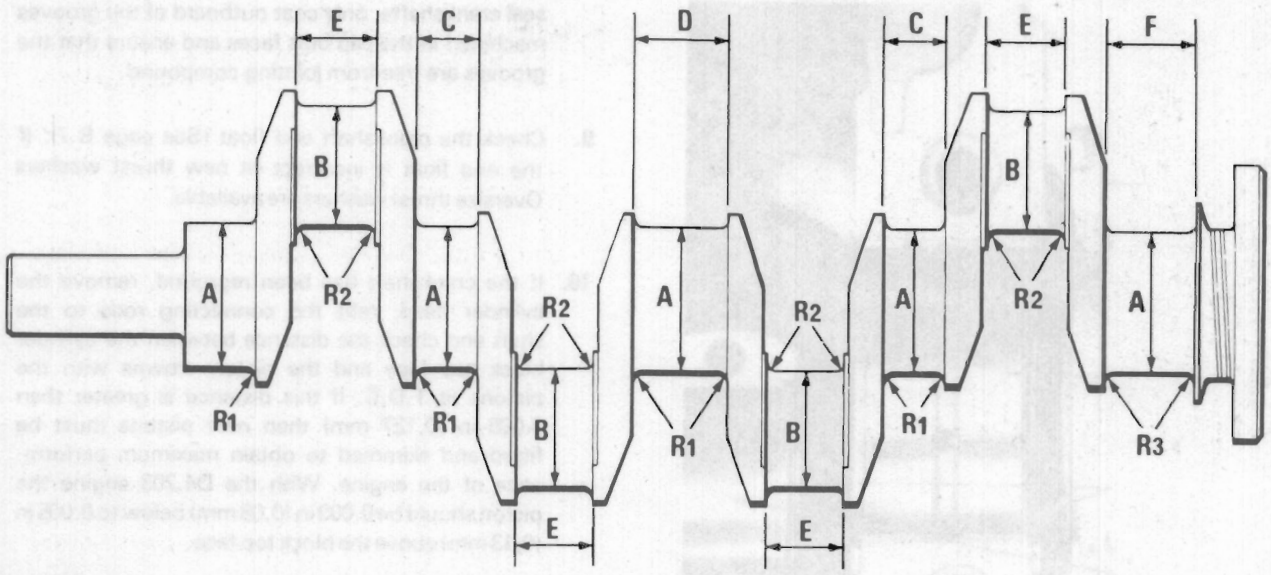

Crankshaft Data

	0.010 in (0,25 mm) Undersize	0.020 in (0,51 mm) Undersize	0.030 in (0,76 mm) Undersize
A	2.7385/2.7393 in (69,56/69,58 mm)	2.7285/2.7293 in (69,30/69,32 mm)	2.7185/2.7193 (69,05/69,07 mm)
B	2.2384/2.2392 in (56,86/56,88 mm)	2.2284/2.2292 in (56,60/56,62 mm)	2.2184/2.2192 in (56,35/56,37 mm)

C 1.2277 in (31,18 mm) maximum
D 1.8527 in (47,06 mm) maximum
E 1.570 in (39,88 mm) maximum
F 1.892 in (48,06 mm) maximum for crankshafts with rope type rear seal
1.861 in (47,27 mm) maximum for crankshafts with lip type rear seal

R1 *0.0938/0.1094 in (2,38/ 2,78 mm) four journals
R2 *0.1563/0.1719 in (3,97/4,37 mm) all crankpins
R3 *§0.125/0.135 in (3,17/3,43 mm) rear journal only
Radii on rear journal only to be burnished rolled after polishing. (No longer necessary with 4.203 series crankshafts.)
Surface finish of crankpins, journals and fillet radii 16 to 8 micro inches (0,4/0,2 microns) C.L.A.

*The following radius dimensions apply to crankshafts with Part numbers: —

31315145	31315167	31316019	31316027
31315148	31315168	31316023	31316028
31315149	31315169	31316024	31316029
31315166	31315171	31316026	31316031

0.125/0.140 in (3,17/3,56 mm) radius on all journals except centre and rear.
0.1875/0.2031 in (4,76/5,16 mm) radius on all crankpins.
0.1562/0.1662 in (3,97/4,22 mm) radius on centre and rear journals only.
§With crankshaft part numbers 31315151 and 31316025: 0.125/0.135 in (3,17/3,43 mm) centre and rear journals only.

To Replace Crankshaft

1. Locate the upper halves of the main bearings in their block positions. Ensure that all oilways and passages are clear, and lubricate the bearings.

   If new bearings are being fitted, ensure that they are the correct type for the crankshaft fillet radii. The earlier wide bearings must not be fitted with later crankshafts having larger fillet radii. Ensure that the bearings are fitted in their correct positions and that the oilways are not blanked off.

2. Locate the upper halves of the crankshaft thrust washers on either side of the rear wall of the cylinder block housing with the oil grooves outwards. The upper halves of the thrust washers do not have locating tabs.

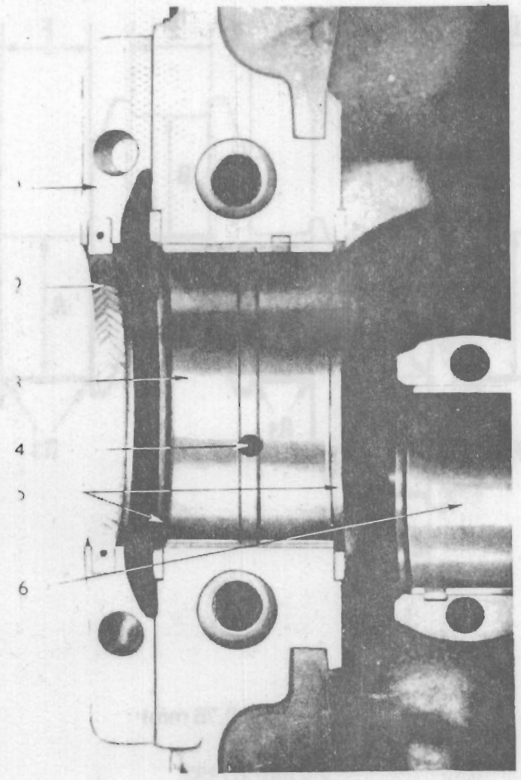

Fig. H.8.
Rear Main Bearing and Crankshaft Seal.

1. Seal Housing.
2. Rope Seal.
3. Rear Main Bearing Shell.
4. Oil Feed Hole.
5. Thrust Washers.
6. Big End Bearing Shell.

3 See that the ends of the thrust washers are level with the cylinder block face, otherwise there may be distortion when fitting the bearing cap. A light coating of grease will assist in holding the thrust washers in place until the crankshaft is fitted.

4 Ensure that the bearings are seating correctly in their caps with the tongues engaging in the machined recesses and that the thrust washers are located either side of the rear main bearing and cap, with the vertical oil grooves facing outwards.

5 Carefully lower the crankshaft on to the top half main bearings.

6 Refit the main bearing caps in their correct positions ensuring the serial number is to the same side as the corresponding number on the cylinder block bottom face. See Fig. H.2.

7 Renew the rear main bearing cap "O" rings (lip seal crankshafts only).

8 Lightly coat the rear main bearing cap butt faces with Perkins (Hylomar) Jointing Compound. For lip seal crankshafts, only coat outboard of the grooves machined in the cap butt faces and ensure that the grooves are free from jointing compound.

9. Check the crankshaft end float (See page B.7). If the end float is incorrect fit new thrust washers Oversize thrust washers are available.

10. If the crankshaft has been reground, remove the cylinder head, refit the connecting rods to the shaft and check the distance between the cylinder block top face and the piston crowns with the pistons at T.D.C. If this distance is greater than 0.005 in (0,127 mm) then new pistons must be fitted and skimmed to obtain maximum performance of the engine. With the D4.203 engine the piston should be 0.003 in (0,08 mm) below to 0.005 in (0,13 mm) above the block top face.

11. Refit the rear main bearing oil seal housings as described below.

12. The main bearing cap setscrews should be tightened to the torque given on page B.2.

13. Re-assemble the engine in accordance with the instructions supplied in the various sections of this manual.

Rope Type Crankshaft Rear Oil Seal

The crankshaft rear oil seal, Fig. H.8, is of the rubber cored asbestos rope type. It consists of two die cast half housings, suitable grooved to accept the two rope inserts, and clamped together by two long bolts fitted with self locking nuts. When fitted to the engine, the rope inserts directly contact that part of the crankshaft on which the oil return thread is machined.

To Remove

1. Separate engine from transmision housing.
2. Remove clutch assembly and flywheel.
3. Remove the adaptor plate from the cylinder block and engine sump.
4. Release and remove the self-locking nuts from the two clamping bolts that pass through the half housings of the crankshaft rear oil seal retainers remove the bolts.
5. Unscrew the three setscrews from each half housing and remove the housings from the cylinder block and rear main bearing cap.

To Replace

To fit new seals proceed as follows:—

1. Set up in turn, one half housing in a vice with the seal recess uppermost.

2. Press approximately one inch of the new asbestos strip into each end of the groove in the housing, allowing the strip to project 0.010/0.020 in (0,254/0,51 mm) beyond either end of the joint face.

3. The middle of the strip will bulge out of the groove and should be pushed in with the fingers, working from the centre, until well bedded in the groove. Use a round bar of metal to further bed in the strip by rolling and pressing ensuring that the strip projections at each end remain as set.

4. Fit seal to other half housing in a similar manner.

5. Remove all traces of old joint when re-fitting the housings and use new joints and jointing compound. Lightly coat with liquid jointing compound the joint faces between the two half housings and smear the exposed inside diameter of the asbestos strips with lubricating oil of a minimum consistency of S.A.E. 40 before assembly.

6. Replace the half housings and retain them loosely in position with the six setscrews and washers.

7. Refit the two long clamping bolts and self-locking nuts and fully tighten.

8. Fully tighten the six setscrews securing the half housings of the oil seal retainer to the rear main bearing cap and cylinder block.

9. Replace the transmission adaptor plate on the dowels at the rear of the cylinder block and secure in position.

10. Refit the flywheel and check the run-out (Section P).

Lip Type Crankshaft Rear End Oil Seal

With later engines, a circular spring loaded lip type seal may be fitted which locates around the periphery of the flange of the crankshaft. This seal is very easily damaged and extreme care should be taken to prevent damage when handling or fitting.

On production, this seal is fitted with its rear face flush with the rear face of the single piece housing.

When renewing the seal, check the crankshaft flange and if it is found to be grooved, the seal should be pressed further into the housing; in the first instance 1/8 in (3,17 mm) and later to ¼ in (6,35 mm) from the housing rear face (See Fig. H.9). If all three positions have been used, it may be permissible to machine the worn sealing area of the crankshaft flange, but not the spigot area on which the flywheel locates, — see Fig. H.10. When a new seal is fitted to a new or reconditioned crankshaft, it should be fitted with its rear face flush with the housing.

Before pressing the seal into its housing, the outside of the seal and the inside of the housing should be lubricated with clean engine oil.

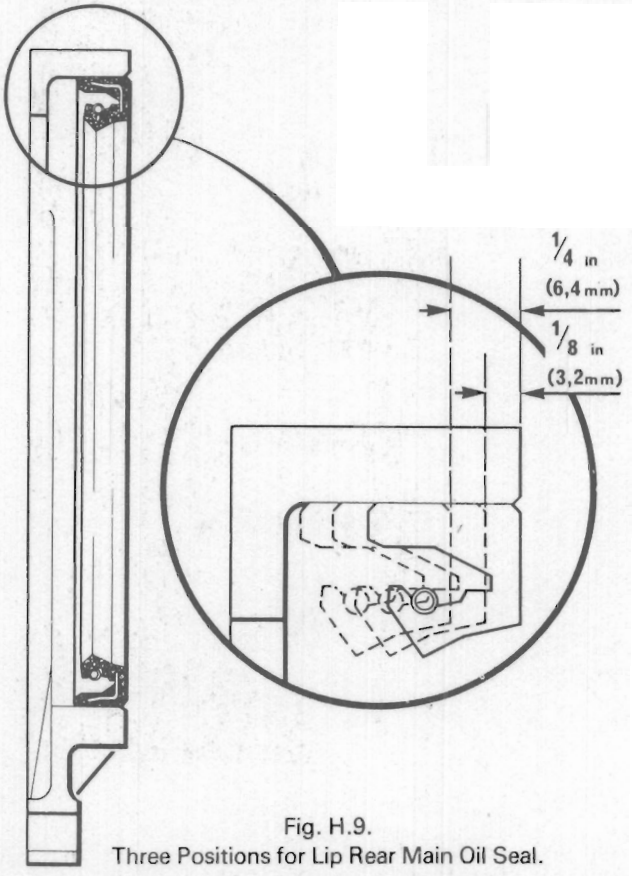

Fig. H.9.
Three Positions for Lip Rear Main Oil Seal.

Lubricating oil should also be used to lubricate the crankshaft flange periphery before fitting the seal assembly to the crankshaft. Seal guide PD145 will prevent damage to the seal.

Using a new joint coated with Perkins Hylomar jointing compound, secure the housing to the cylinder block, tightening the securing setscrews progressively.

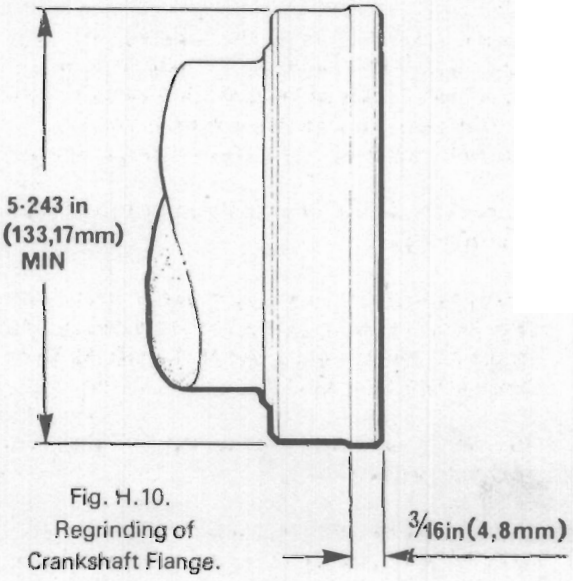

Fig. H.10.
Regrinding of
Crankshaft Flange.

SECTION J
Timing Case and Drive

To Remove the Timing Case Cover

Depending on the application to which the engine is fitted, the water pump may be mounted either on the front of the cylinder head, (high position type) or alternatively, on the front of the timing case cover, (low position type).

(a) In the case of an engine fitted with a low position water pump, proceed as follows:—

1 Slacken the generator mounting bolts, remove the adjusting arm completely and ease the fan belt off the pulleys.

2 Where necessary bend back the lock washer on the crankshaft dognut and unscrew the nut which has a normal right hand thread. Later engines have a crankshaft pulley setscrew, fitted with a plain washer.

3 Withdraw the crankshaft pulley.

4 Release the clips on the hoses from the water pump except those on the by-pass pipe from the thermostat housing to the pump.

Here it is advisable to remove the two setscrews securing the by-pass adaptor to the thermostat housing.

5. Undo the one setscrew and three nuts securing the water pump to the timing case cover and remove the pump complete with back-plate and the by-pass adaptor.

NOTE:—The water pump must be removed so that access may be gained to all the setscrews securing the cover to the timing case.

6. Remove the 14 setscrews including the one securing the breather pipe clip to the cover, the 5 nuts on the bottom of the case and the one truss-headed screw at the top.

7. Remove the timing case cover taking care not to damage the crankshaft oil seal which is located in it.

(b) If the engine is fitted with a high position water pump, removal of the timing case cover should be as follows:—

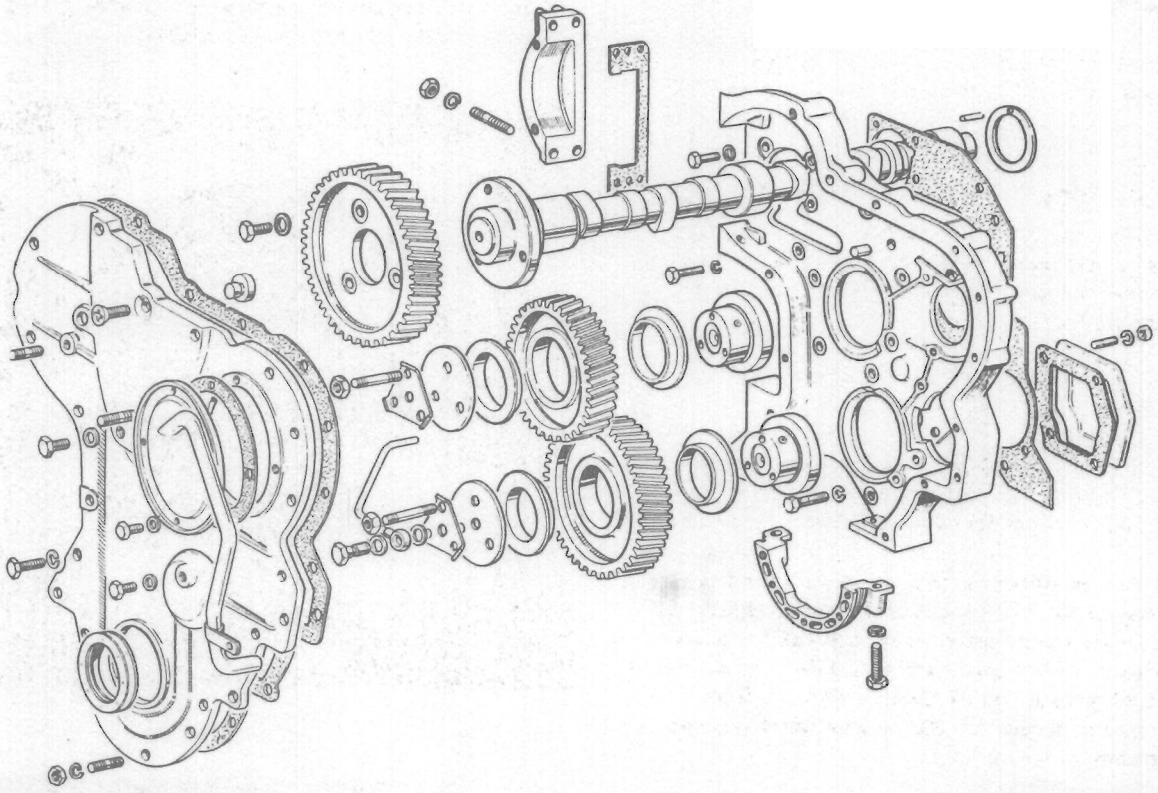

Fig. J.1.
Exploded view of Timing Case, Camshaft and Drive.

1. Slacken the generator mounting bolts, remove the adjusting arm completely and ease the fan belt off the pulleys.

2. Where necessary bend back the lock washer on the crankshaft dognut and unscrew the nut which has a normal right hand thread. On later engines the crankshaft pulley is secured by a setscrew and plain washer.

3. Withdraw the crankshaft pulley.

4. Release the clips and remove the hoses connected to the water pump.

5. Disconnect the temperature gauge capillary tube and the heater connections (if fitted).

6. Remove the three small setscrews located at the back of the water pump back plate and then release the three large setscrews which pass through the body of the pump, and screw into the cylinder head.

   NOTE:—These setscrews cannot be removed from the water pump body while the pulley is still fitted, and it is therefore necessary to ease the pump away from its back plate while the setscrews are being unscrewed.

7. Remove the setscrews including the one securing the breather pipe clip to the cover, the 5 nuts on the bottom of the case and the one truss-headed screw at the top.

8. Remove the timing case cover taking care not to damage the crankshaft oil seal which is located in it.

To Renew the Crankshaft Front Oil Seal

1. Carefully extract the oil seal from the timing case cover by tapping it evenly around from the back. The seal will come out through the front of the timing case cover.

2. Locate the new seal in the bore of the cover from the front.

3. Tap the new seal into position using a suitable dolly. The seal should normally be pressed in flush with the rear hub face of the timing case cover.

Where a red silicone rubber seal with a wind back groove on the lip of the seal is used to replace a black nitrile rubber seal on 4.192 and 4.203 engines, a spacer washer part number 33176137 must be used to replace the oil thrower fitted in front of the crankshaft gear. D4.203 engines do not have an oil thrower or spacer fitted.

To Replace the Timing Case Cover

1. Clean the joint faces of the timing case and its cover.

2. Using a new joint, refit the cover and slide the crankshaft pulley into position thus ensuring concentricity of pulley and oil seal. Tighten some of the setscrews and then if necessary remove the pulley to gain access to the nuts at the bottom of the cover.

3. Refit the water pump with hoses, and by pass adaptor (low position type)

4. Replace the crankshaft pulley, setscrew and plain washer or dog nut and lock washer which must be bent over one of the flats of the nut once the latter has been tightened

5. Bolt the generator adjusting arm to its stud on the timing case and having fitted the fan belt and set it at the correct tension (See Section M) tighten the locking setscrew

Timing Gears

The camshaft and fuel pump are gear driven by a hardened steel gear on the crankshaft through two idler gears mounted on hubs, bolted to the front of the cylinder block. Industrial applications are fitted with heavy duty idler gears. The fuel pump camshaft and idler gears are machined from high duty cast iron and if an exhauster or auxiliary hydraulic pump is fitted this is driven by a steel gear running in mesh with the lower idler gear. The cast aluminium timing case has bolted to it, an aluminium half moon bridge piece and is itself bolted to the front of the cylinder block. Around the outside of the bridge piece is fitted a cork sealing strip against which the lubricating oil sump seals

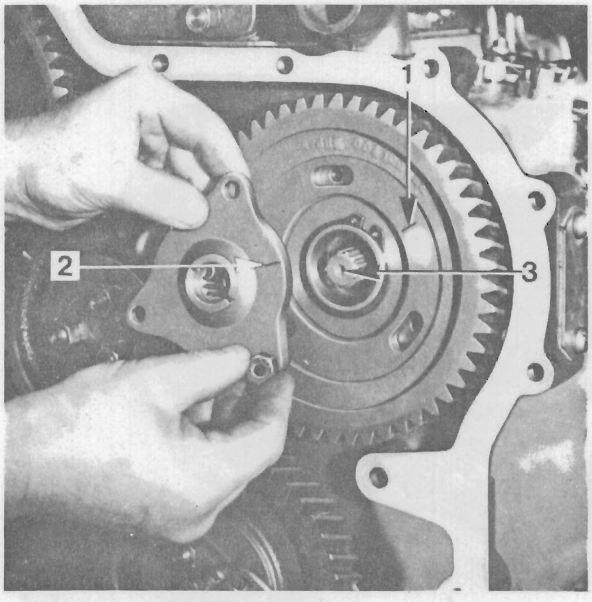

Fig. J.2.
Fitting Fuel Pump Gear Adaptor

1 Timing Mark on Fuel Pump Gear
2. Timing Mark on Gear Adaptor 3. Quill Shaft

By removing the inspection cover, to which the engine breather pipe is attached, access can be gained to the fuel pump drive gear to allow adjustment to the fuel pump timing. This is provided for by slotted holes in the fuel pump gear, Fig. J.2 allowing movement between it and the gear adaptor, once the securing setscrews are slackened. On D4.203 engines the fuel pump gear is fixed in position by a dowel and no adjustment is possible. All the timing gears are suitably marked. These marks must be aligned when No. 1 piston is at top dead centre on its compression stroke. (See Fig. K.1). It will be appreciated that these timing marks will not align at every rotation of the crankshaft when No. 1 piston is at top dead centre on compression.

To Check Timing Gear Back-Lash

1. Remove the timing case cover.

2. Check the back-lash between the gears as seen in Fig. J.3 using a feeler gauge. The back-lash should be a minimum 0.003 in (0,076 mm). On certain applications floating hubs are fitted and timing gear back-lash must be set from 0.003 in to 0.006 in (0,076 mm to 0,125 mm) before the gear and hub assembly is finally tightened.

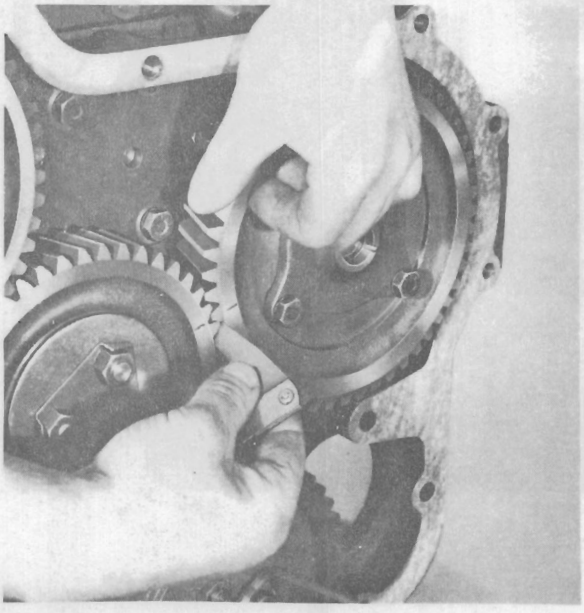

Fig. J.3.
Checking Backlash between Timing Gears.

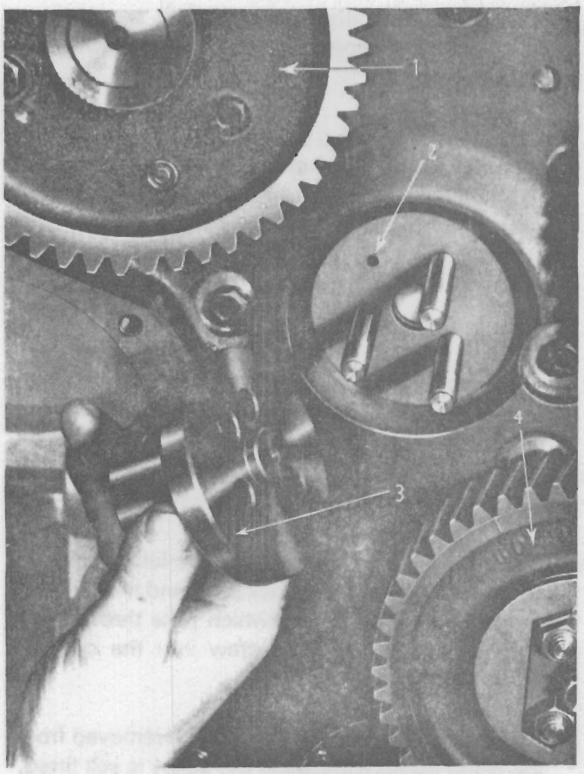

Fig. J.4.
Idler Gear Hub, removed from its studs.

1. Camshaft Gear.
2. Upper Idler Oil Feed Hole.
3. Upper Idler Gear Hub.
4. Lower Idler Gear.

3. If the back-lash of the timing gears is within these limits, replace the timing case cover. If not, replacement gears, which are premarked on production, should be fitted, where necessary.

To Remove the Idler Gears and Hubs

1. Remove the locking wire on the banjo bolt securing the oil pipe to the lower idler gear hub.

2. Release the banjo bolt and remove the oil pipe by withdrawing it from its locating hole in the back of the timing case.

3. Knock back the tab washers and remove the three securing nuts.

4. Remove the locking washer and idler gear retaining plate.

5. Remove the lower idler gear.

6. Remove the upper idler gear in a similar manner.

7. The idler gear hubs may now be removed from the studs located in the front of the cylinder block (See Fig. J.4).

8. Where necessary, replace idler gear bushes. These should be finished bored to 1.9998/2.0007 in (50,79/50,82 mm) and faced to 1.1865/1.1875 in (30,137/30,163 mm) overall width.

To Replace the Idler Gears and Hubs

1. The studs on which the hubs locate, are so positioned that the hubs will fit in one position only and the boss at the rear of the hub locates in the machined face of the cylinder block. Fit the lower and upper idler gear hubs which are interchangeable.

2. Remove the rocker cover and release the rocker assembly.

3. Turn the crankshaft to T.D.C. No. 1 and No. 4 cylinders, i.e. with the key-way at the front of the crankshaft uppermost.

4. Replace the two idler gears, ensuring that all timing marks align.

5. Replace the idler gear retaining plates, which will only fit in one position on the studs. The lower retaining plate has a threaded hole to take the oil pipe banjo bolt.

6. Fit new locking washers and replace the securing nuts. Bend the tab washers to lock the nuts.

7. Replace the oil pipe and banjo bolt to the lower idler gear retaining plate. The upper end of the oil pipe must locate in a hole in the back of the timing case immediately above the lower idler gear.

8. Secure the banjo bolt with locking wire.

9. Secure the rocker assembly, adjust the tappets and fit the rocker cover.

To Remove the Fuel Pump Gear (4.192, 4.203 engines)

1. Remove the upper idler gear and release the rocker assembly.

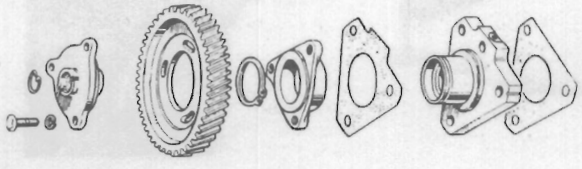

Fig. J.5.
Exploded view of Fuel Pump Drive.

2. Remove the three securing setscrews and spring washers on the fuel pump gear.

3. Remove the driving gear adaptor leaving the splined quill shaft in the fuel pump (See Fig. J.2). A circlip which retains the fuel injection pump quill shaft in position is located in the front of the adaptor. Fig. J.6 shows the removal of the quill shaft.

4. The fuel pump drive may now be removed from the hub, which may also be withdrawn from the carrier by hand, once the retaining circlip has been removed, See Fig. J.7.

To Replace the Fuel Pump Gear

1. Fit the fuel pump gear to the hub.

2. A timing mark will be seen scribed on the gear adaptor. This mark must align with the timing mark on the inner front face of the fuel pump gear. Replace the gear adaptor to the gear taking care to engage the master spline on the fuel pump quill shaft within the corresponding spline in the adaptor.

3. With the timing marks aligned, replace and secure the setscrews and washers.

4. Replace the upper idler gear ensuring all timing marks align. Secure the rocker assembly and reset the tappets.

To Remove the Fuel Pump Gear (D4.203 engines)

D4.203 engines have no fuel pump carrier plate fitted.

1. Remove the upper idler gear and release the rocker assembly.

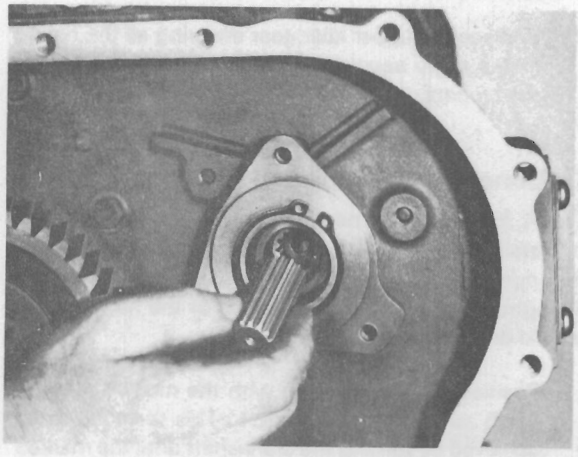

Fig. J.6.
Removing the Fuel Pump Quill Shaft.

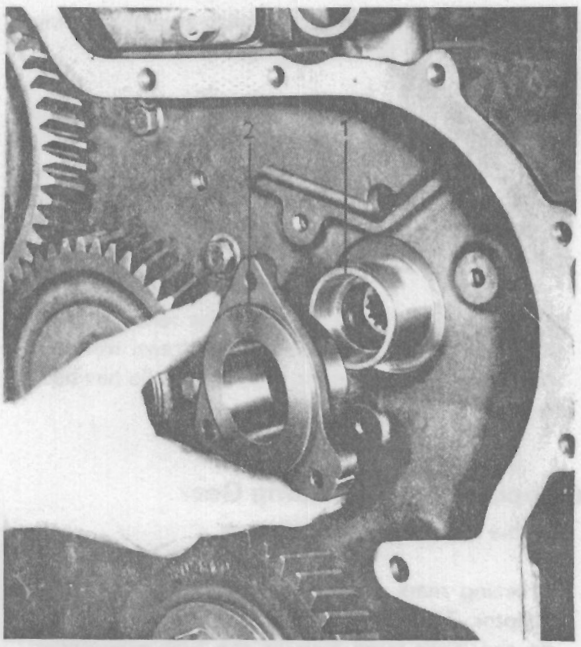

Fig. J.7.
Fuel Pump Gear Hub removed from its Carrier.
1. Gear Carrier. 2. Gear Hub.

2. Where necessary knock back the tabs of the locking washer on the fuel pump driving gear and remove the three securing setscrews. On later engines, the setscrews are fitted with spring washers.
3. Remove gear from its dowelled location on the fuel pump shaft.

To Replace the Fuel Pump Gear (D4.203 engine)

1. Fit the fuel pump gear to the fuel pump shaft, locating the dowel in the gear wheel into the slotted location of the fuel pump shaft.
2. Using a new locking washer where applicable, secure the gear to the pump shaft and lock the setscrews with the tabs of the locking washer. On later engines, the setscrews are fitted with spring washers.
3. Replace the upper idler gear ensuring all the timing marks align; secure the rocker assembly and reset the tappets.

To Renew the Fuel Pump Gear

On D4.203 engines, a new fuel pump gear can be fitted as detailed previously for removing and replacing the fuel pump gear. On 4.192 and 4.203 engines, as the timing mark will not be on the face of the new gear, it should be fitted as detailed below.

1. Position the timing gears with the marked teeth in mesh as shown in Fig. K.1. This is most easily achieved by turning the crankshaft until the marked teeth of the crankshaft gears are both in mesh with the idler gears, removing the idler gears and refitting with all the marked teeth in mesh.
2. Remove the fuel pump gear drive adaptor and the fuel pump gear.
3. Fit the new fuel pump gear and the drive adaptor with the marked tooth in mesh with the marked teeth of the upper idler gear and the securing setscrews positioned centrally in the slots in the gear.
4. Check the fuel pump timing by one of the two methods given in Section K and accurately position the adaptor on the gear. Mark the front face of the gear in line with the adaptor mark (see Fig. J.2).

To Renew the Fuel Pump Gear Drive Adaptor (4.192 and 4.203 Engines)

As the timing mark on a new adaptor may be in a different position to the mark on the existing adaptor, it should be fitted as detailed below.

1. Fit a new circlip in the adaptor to retain the quill shaft.
2. Remove the old adaptor and fit the new one with the setscrews central in the slots of the gear.
3. Check the fuel pump timing by one of the two methods given in Section K and accurately position the adaptor on the gear. Where necessary, remark the front face of the gear in line with the adaptor mark (see Fig. J.2) after defacing the original mark.

To Remove the Camshaft Gear and Camshaft

1. Remove timing case cover.
2. Turn engine to T.D.C. No. 1 cylinder on compression with all timing marks aligned as already detailed.
3. Remove the rocker shaft assembly.
4. Unscrew the three setscrews securing the camshaft gear and remove the latter.
5. Lift the tappets and remove the camshaft from its location in the cylinder block, taking care not to damage the journals, cams, or the tappets. See Fig. J.8.

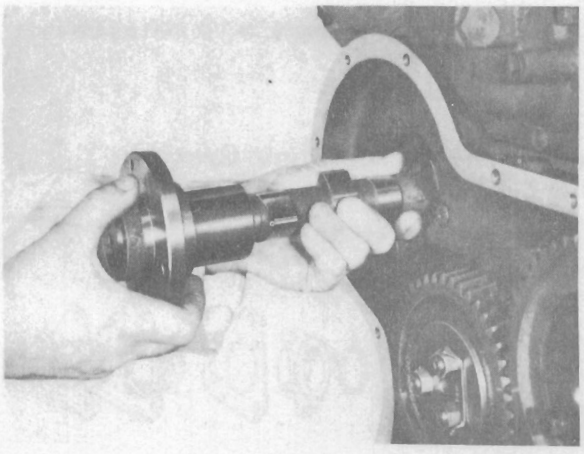

Fig. J.8.
Removing the Camshaft.

To Replace the Camshaft and Camshaft Gear

1. Ensure that the camshaft thrust washer is correctly located in the cylinder block, the dowel in the block fitting in the corresponding hole in the thrust washer.

2. Lift the tappets and carefully replace the camshaft, turning it continually and taking care not to damage the journals, cams or tappets.

3. With the engine still at T.D.C. No. 1 piston on compression, position the camshaft so that when its timing gear is replaced with the timing mark aligned with that of the upper idler gear, the letter "D" on the camshaft hub will line up with the letter "D" on the front face of the gear. When this condition has been attained, replace the three securing setscrews and tighten them.

4. Replace the timing case cover.

5. Refit the rocker shaft and reset the tappets.

6. Replace the cylinder head cover using a new cork joint if the existing one is damaged or compressed.

Camshaft Thrust

The camshaft end float is taken up by a boss on the timing case cover and a thrust washer in the cylinder block. Access to the thrust washer is gained by removing the camshaft and timing case. The thrust washer may then be removed from its locating dowel.

The thrust washer may be located in the cylinder block up to 0.008 in (0,2 mm) proud of the block face and not more than 0.003 in (0,076 mm) below.

To Remove the Timing Case

1. Drain the lubricating oil from the sump.

2. Remove the timing case front cover.

3. Remove the dynamo or alternator.

4. Release the high pressure and low pressure fuel pipes and remove the fuel injection pump and quill shaft. Fig. J.9. On D4.203 engines it will be necessary to remove the fuel pump gear before the fuel pump can be removed from the rear of the timing case.

5. Disconnect the vacuum pipe and oil feed pipe from the exhauster which should next be removed. It is secured to the timing case by four nuts and once these are removed it may be withdrawn.

6. Remove the rocker shaft assembly and two idler gears.

7. Lift the tappets and withdraw the camshaft, (See Fig. J.8).

8. Remove the fuel pump gear adaptor, gear, carrier and hub (4.192, 4.203 engines).

9 Remove the sump, which will come away from the half moon bridge piece at the front leaving the latter attached to the timing case.

10. Remove the setscrews securing the timing case to the block and tap the case lightly from the back to free it.

11. Remove the camshaft thrust washer.

To Replace the Timing Case

1. Clean the front and bottom faces of the cylinder block and remove the cork seals from around the half moon bridge piece and rear main bearing cap.

2. Replace the camshaft thrust washer taking care to locate it on its dowel.

3. Fit a new timing case joint to the front of the cylinder block, and replace the timing case tightening all the securing setscrews.

4. Using a new sump joint and cork seals refit the sump.

5. Fit the lower idler gear with the crankshaft at T.D.C. aligning the relevant timing marks.

6. Refit the camshaft with its gear attached turning it until the tappets of No. 4 cylinder are "rocking". In this position the gear will be approximately positioned for aligning the timing marks.

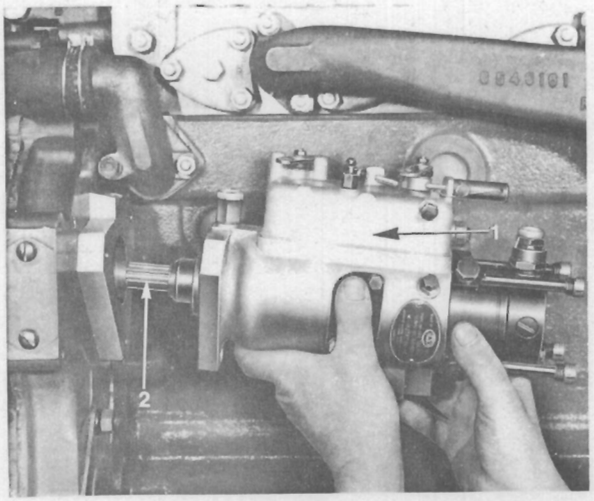

Fig. J.9.
Removing the Fuel Injection Pump.
1. Fuel Injection Pump. 2. Quill Shaft.

7. Refit the fuel timing gear mechanism in the reverse order to that of dismantling, aligning the timing marks on the adaptor and gear. On D4.203 engines locate the dowel on the fuel pump drive gear into the slotted location of the fuel pump shaft and line up the timing case and fuel pump flange timing marks before tightening setscrews.

8. Fit the fuel injection pump and quill shaft passing the setscrews through the front of the pump and the carrier plate, so that they locate in the timing case. Line up the timing marks on the fuel pump flange, and the carrier flange before tightening the setscrews. (See Fig. K.2 or K.3).

9. Fit the upper idler gear, aligning all the timing marks.

10. The remainder of the assembly procedure may now be carried out in the reverse order to dismantling.

If a new timing case has been fitted, the fuel injection pump timing mark should be scribed on the rear face to line up with the corresponding mark on the pump adaptor plate or flange after the pump timing has been checked by one of the two methods detailed in Section K.

Hydraulic Pump Gear Backlash

If a hydraulic pump is being fitted to the top right hand side of the timing case, ensure that there is at least 0.003 in (0,08 mm) backlash between the hydraulic pump and camshaft gears. This can be checked after the timing case cover has been removed or on later engines through an access hole after removal of the blanking plug fitted in the cover. The backlash can be increased by fitting one or two extra joints provided that the total number of joints does not exceed three.

SECTION K
Timing

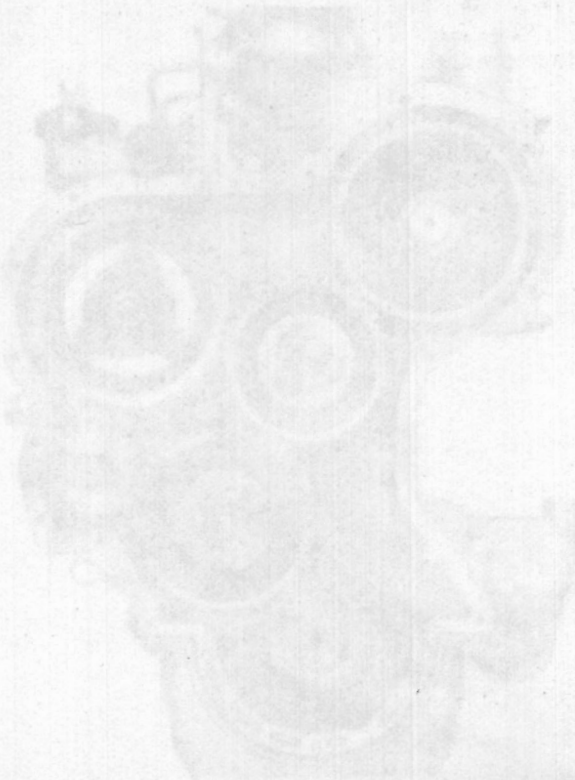

General

The timing or re-setting of the timing of the 4.192, 4.203 and D4.203 engines can simply and quickly be carried out if the following instructions are borne in mind.

It is well to remember that the removal of the cylinder head does not in any way affect the timing of engine.

Timing Marks

When the engine is timed at the factory, certain marks are stamped on the gears so that if for any reason the timing has to be disturbed, the engine can easily be re-set to its original timing.

The method of marking is as follows: —

With the engine timing correctly set, the engine is turned until No. 1 piston is at Top Dead Centre on its compression stroke. In this position, markings are made on the idler gears which coincide with corresponding marks on camshaft, fuel pump and crankshaft gears (see Fig. K.1).

A further marking (4.192, 4.203 engines) is made on the fuel pump drive gear which, when it coincides with the mark on the fuel pump gear adaptor, denotes the original positions of these two components.

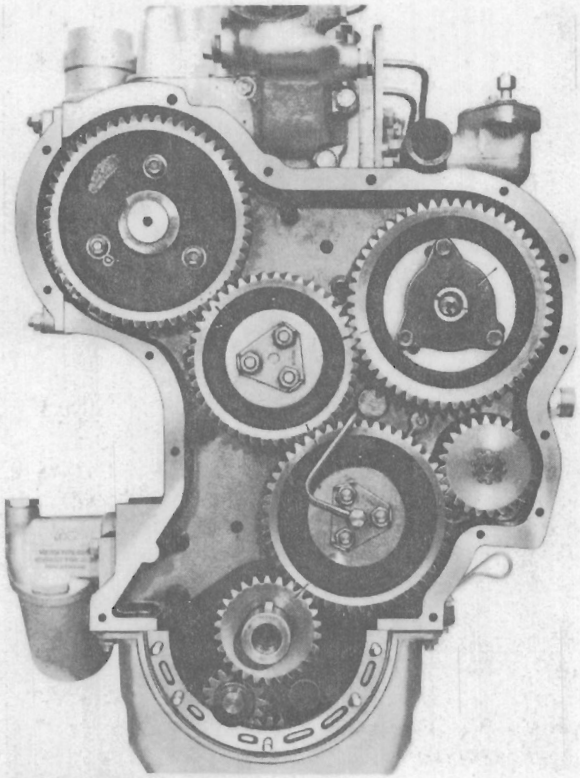

Fig. K.1.
Arrangement of Timing Gears showing Timing Marks.

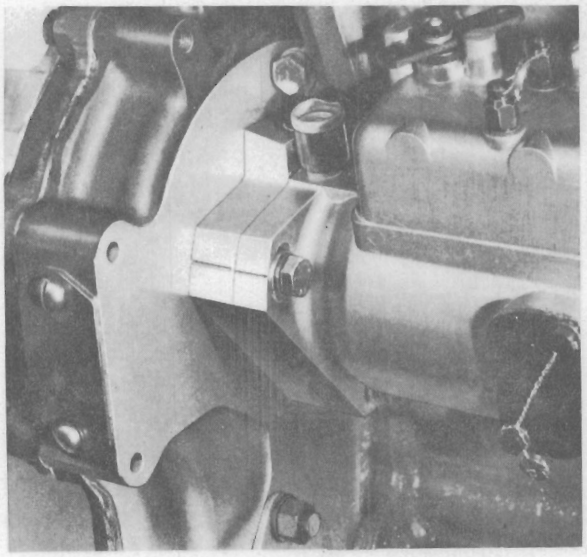

Fig. K.2.
The Fuel Injection Pump fitted, with the Timing marks on the Flange aligned.

Fuel Pump Timing Marks

On the fuel pump mounting flange is a scribed line which, when the fuel pump is fitted, should coincide with the scribed line on the fuel pump carrier plate (see Fig. K.2). Providing these scribed lines are in alignment and the fuel pump gear correctly fitted and aligned (see previous remarks), then the fuel pump timing should be correct. On D4.203 engines the scribed line on the fuel pump mounting flange should be lined up with a scribed line on the rear of the timing case (see Fig. K.3).

To Re-Set Engine Timing

1. Remove atomisers and rocker shaft.

2. Position the crankshaft so that No. 1 piston is at T.D.C. At this point the crankshaft pulley key-way will be uppermost and the T.D.C. mark on the flywheel front face will align with the mark at the side of the inspection hole in the transmission adaptor plate.

3. Fit the camshaft gear, ensuring that the letter "D" stamped adjacent to one of the setscrews holes aligns with the corresponding "D" on the hub.

4. Fit the fuel pump gear and adaptor with the two scribed lines in alignment. See Fig. J.2.

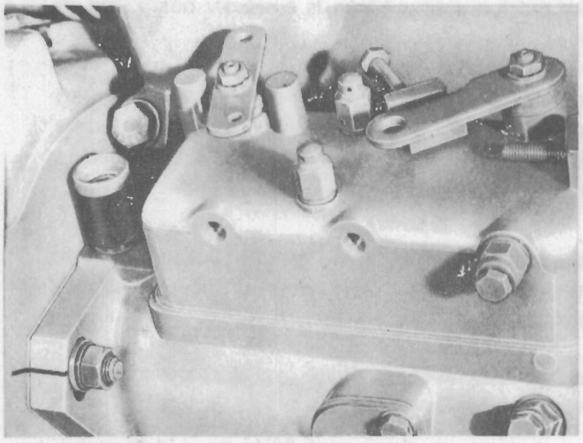

Fig. K.3.
D4.203 Fuel Injection Pump timing case marks aligned on flange and timing case.

5. See that the fuel pump is correctly fitted with the scribed lines on the mounting flange carrier plate and timing case in-line. (See Fig. K.2. D4.203 see Fig. K.3.

6. With the crankshaft gear fitted, replace the two idler gears, ensuring that the timing marks coincide (See Fig. K.1).

7. After testing the engine, final adjustments may be necessary to find the most suitable injection point.

To Re-Set Fuel Pump Timing

In the event of a new fuel pump gear or fuel pump gear adaptor being fitted, the fuel pump gear will be pre-marked in respect of the scribed line which coincides with the line on the upper idler gear, but as no markings denoting the original position of the fuel pump drive gear and adaptor will be provided, it will be necessary to re-set the fuel pump timing using the timing marks inside the pump itself.

On the fuel pump rotor; inside the fuel pump body are a number of scribed lines, each one bearing an individual letter. Inside the fuel pump body a timing circlip has to be set so that when the appropriate scribed line on the rotor is coincident with the squared end of the circlip (the other being round) the pump is then at the commencement of injection for No. 1 cylinder. (Static timing point). On earlier models the circlip had a scribed line and timing was carried out by bringing the appropriate scribe lines coincident.

To set the timing circlip, it is necessary to remove the pump from the engine and fix the position of the circlip by connecting No. 1 cylinder outlet connection (marked "W") to an atomiser tester and pump up to 30 atm (31 kgf/cm² or 440 lbf/in). Turn the pump by hand in the normal direction of rotation until it locks up. The squared end of the circlip should now be adjusted until it lines up with the appropriate letter on the pump rotor.

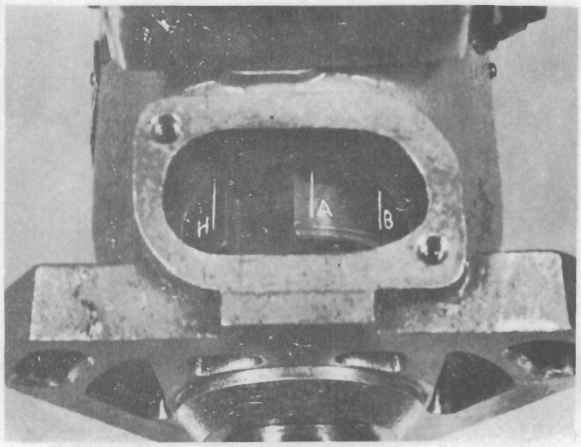

Fig. K.4.
Timing Marks on Fuel Pump Rotor.

On mechanically governed pumps, the letter "C" is utilised on the fuel pump rotor, and in the case of hydraulically governed pumps, the letter "A" should be used. On D4.203 engines the letter "B" should be used.

To obtain access to the fuel pump rotor markings, it is necessary to remove the inspection plate on the side of mechanically governed pumps or the plate on the top of hydraulically governed pumps which also embodies the fuel pump return connection to the fuel filter.

To Check Timing Valve Timing

Turn the engine until the valves of No. 4 cylinder are rocking, i.e., both valves have equal lift.

In this position, set the clearance between rocker lever and No. 1 cylinder inlet valve to 0.043 in (1,09 mm).

Now turn the engine in the normal direction of rotation until the tappet of No. 1 inlet valve just tightens.

At this point, No. 1 piston should be at T.D.C. This can be checked by examining the T.D.C. mark on the engine flywheel or, on some applications, by unscrewing a timing pin fitted in the timing case cover which, when unscrewed, should enter a drilling in the rear face of the crankshaft pulley. The tolerance for valve timing is plus or minus 2½°.

It should be noted that no adjustment is provided in respect of valve timing. If the timing is found to be incorrect and the camshaft gear is correctly fitted to the camshaft, then the gear must be one or more teeth out of correct mesh.

When the valve timing is found to be correct, adjust the valve clearance on No. 1 inlet valve to 0.012 in (0,30 mm) cold.

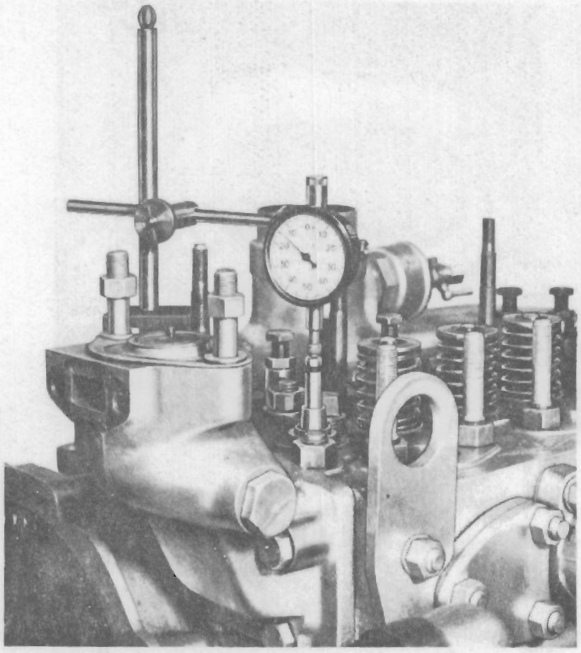

Fig. K.5.
Setting the Crankshaft at T.D.C. by dropping a Valve on to the Piston.

To Check Fuel Pump Timing Using Pump Rotor Marks

A circlip is provided inside the pump for timing purposes and when correctly set the squared end of this circlip should line up with the relevant scribed line on the fuel pump rotor at the commencement of injection to No. 1 cylinder (Static Timing Position). On earlier pumps, the circlip has a line scribed on it for timing purposes. Each scribed line on the pump rotor has an identifying letter adjacent to it (See Fig. K.4).

To obtain access to these timing marks, it is necessary to remove the inspection plate on the left hand side of mechanically governed pumps or the plate at the top front of hydraulically governed pumps.

To set the timing circlip, it is necessary to remove the pump from the engine and fix the position of the circlip by connecting No. 1 cylinder outlet connection (marked "W") to an atomiser tester and pump up to 30atm (31kgf/cm² or 440lbf/in²). Turn the pump by hand in the normal direction of rotation until it locks up. The squared end of the circlip should now be adjusted until it lines up with the appropriate letter on the pump rotor.

On mechanically governed pumps, the letter "C" is used and on hydraulically governed pumps the letter "A" is used. On D4.203 engines, the letter "B" is used.

Check the pump timing as follows:—

Ensure the fuel pump circlip is correctly positioned as previously described.

With No. 1 piston at T.D.C. on compression, i.e with valves of No. 4 cylinder rocking, remove the valve springs from No. 1 inlet valve and allow the valve to drop onto the piston crown.

Secure a piece of wire or string around the valve stem to prevent the valve from dropping into the cylinder bore.

Mount a dial indicator gauge on the top of No. 1 inlet valve stem (See Fig. K.5) and zero at T.D.C.

Turn the engine in opposite direction to rotation approximately 1/8th of a revolution.

Then turn crankshaft in normal direction of rotation until piston is at the correct piston displacement B.T.D.C., as indicated in the table on Page B.13.

At this point, the scribed line on the fuel pump rotor marked with the letter "A" for hydraulically governed pumps or "C" for mechanically governed pumps should be in line with the squared end of the circlip (see Fig. K.4), Note: For D4.203 engines, a letter "B" is used on the fuel pump rotor.

If the appropriate line on the fuel pump rotor does not align with the timing circlip, then the necessary adjustment should be made on the fuel pump gear adaptor (4.192 and 4.203 engines) or by turning the fuel pump in the required direction on the rear of the timing case (D4.203 engines).

To Check Fuel Pump Timing Using Tools MS67B and Adaptor PD67B-1

D4.203 Engines

1. Turn engine in normal direction of rotation until No. 1 piston is at T.D.C. on compression stroke, i.e. with valves of No. 4 cylinder rocking. The T.D.C. position can be obtained, on some applications, by means of a marked position on the flywheel or by use of a timing pin fitted to the timing case cover which, when unscrewed, enters a timing drilling in the rear face of the crankshaft pulley. If neither of these methods is available, T.D.C. can be found by using a dial indicator gauge on the top of a valve as detailed in the previous timing checking method.

2. Fit adaptor PD67B-1 (see Fig. K.6) to fuel pump gear so the dowel of gear locates in slot of adaptor and shaft of adaptor is towards rear of engine. Secure adaptor to gear using setscrews.

3. Release screw (5, Fig. K.7) of timing tool MS67B and remove splined shaft. The adaptor ring (1) is not used with this engine type.

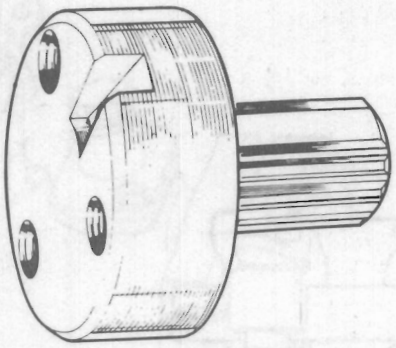

Fig. K.6.
Timing Tool Adaptor PD67B-1

4. Ensure slotted pointer (2) of timing tool is positioned with slot to front of tool and chamfered sides of slot outwards. At this stage, slotted end of pointer should be kept well back from front of body. Ensure that flat of washer fitted behind pointer securing screw (3) is located over pointer.

5. Release the bracket securing screw (4) and set the bracket so that the chamfered edge is in line with the relevant engine checking angle (see Page B.13).

6. Pressing the fuel pump gear and adaptor towards the rear, locate splined shaft of adaptor into timing tool with master spline engaged and lock adaptor shaft in timing tool with rear face of adaptor abutting front face of timing tool (see Fig. K.8).

7. Move tool forward, complete with gear so that register of tool locates in pump aperture of timing case. If pointer is 180° out, engine is on wrong stroke and tool should be removed and engine set on correct stroke. The fuel pump gear should be held centrally whilst the engine is turned.

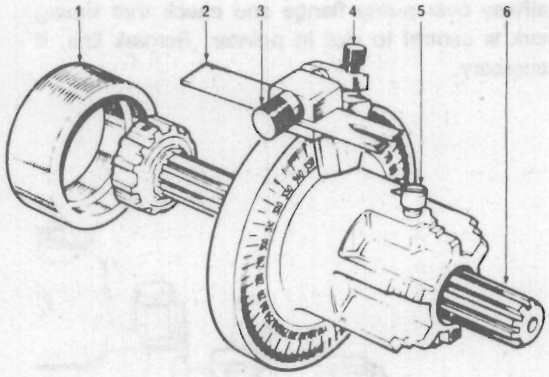

Fig. K.7.
Timing Tool MS67B

1. Adaptor Ring Not Applicable.
2. Slotted Pointer.
3. Pointer Securing Screw.
4. Angle Bracket Securing Screw.
5. Shaft Securing Screw.
6. Splined Shaft.

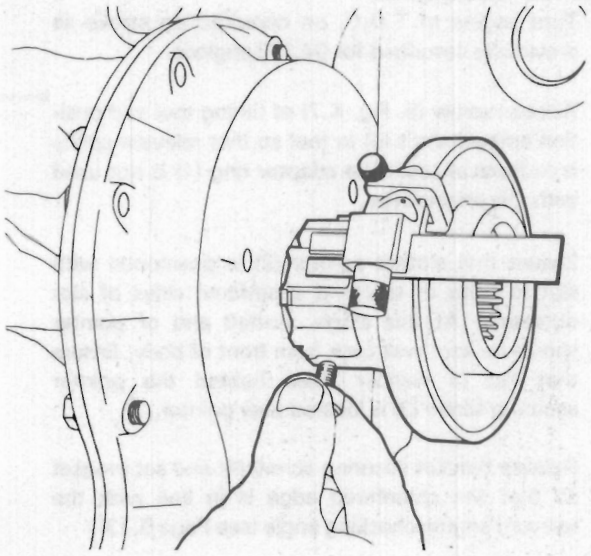

Fig. K.8.
Locking Timing Tool on Adaptor.

8. Slide slotted pointer forward to reach rear face of timing case and lock into position.

9. Take up backlash by turning tool against normal direction of rotation (shown on pump nameplate) and check that the scribed line on the rear of the timing case coincides with the centre of the slot in the pointer (see Fig. K.9). Remark line if necessary or, if no line exists, scribe a line outwards from centre of slot. If line is 7° or more from slot, this would probably indicate that timing gears are incorrectly fitted and gears should be refitted.

10. Remove tool and adaptor from the fuel pump gear and fit fuel pump to engine as detailed on Page N.4.

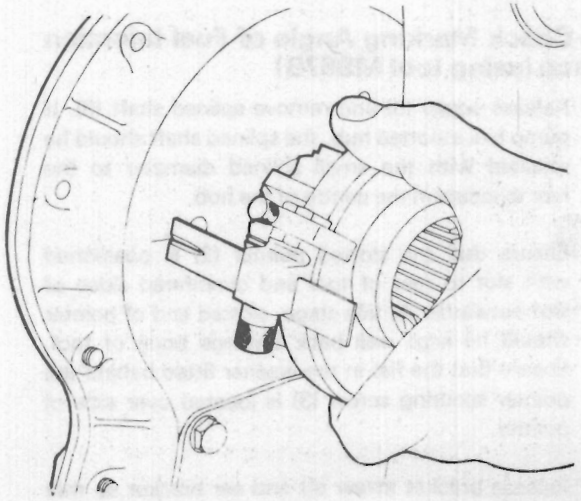

Fig. K.9.
Checking Timing Mark Position.

4.192 and 4.203 Engines

1. Turn engine to T.D.C. on compression stroke as previously described for D4.203 engines.

2. Release screw (5, Fig. K.7) of timing tool and position splined shaft (6) in tool so that relevant spline is to front of tool. The adaptor ring (1) is not used with this engine type.

3. Ensure that slotted pointer (2) is positioned with slot to front of tool and chamfered sides of slot outwards. At this stage, slotted end of pointer should be kept well back from front of body. Ensure that flat in washer fitted behind the pointer securing screw (3) is located over pointer.

4. Release bracket securing screw (4) and set bracket so that the chamfered edge is in line with the relevant engine checking angle (see Page B.13).

5. Fit timing tool to engine in fuel pump position ensuring firstly that splined shaft with master spline engaged is fully located in pump drive shaft and then that the register of tool is seated in fuel pump locating aperture. Lock splined shaft in tool. If pointer is 180° out, engine is probably on wrong stroke in which case, remove tool and set engine on correct stroke.

6. Slide slotted pointer forward so that slot is half way over fuel pump gear adaptor.

7. Turn timing tool by hand in opposite direction to pump rotation (shown on pump nameplate) to take up backlash and check that scribed line on adaptor coincides with centre of slot in pointer. Adjust, if necessary, by moving the fuel pump gear drive adaptor. If line is 7° or more from slot, this would probably indicate that timing gears are incorrectly fitted and should be refitted correctly.

8. Remove tool and fit fuel pump as detailed on Page N.4.

To Check Marking Angle of Fuel Injection Pump (using tool MS67B)

1. Release screw (5) and remove splined shaft (6). If pump has a slotted hub, the splined shaft should be retained with the small splined diameter to the rear to locate in the centre of the hub.

2. Ensure that the slotted pointer (2) is positioned with slot to rear of tool and chamfered sides of slot outwards. At this stage, slotted end of pointer should be kept well back towards body of tool. Ensure that the flat in the washer fitted behind the pointer securing screw (3) is located over side of pointer.

3. Release bracket screw (4) and set bracket so that the chamfered edge is in line with the relevant marking angle (see Page B.13).

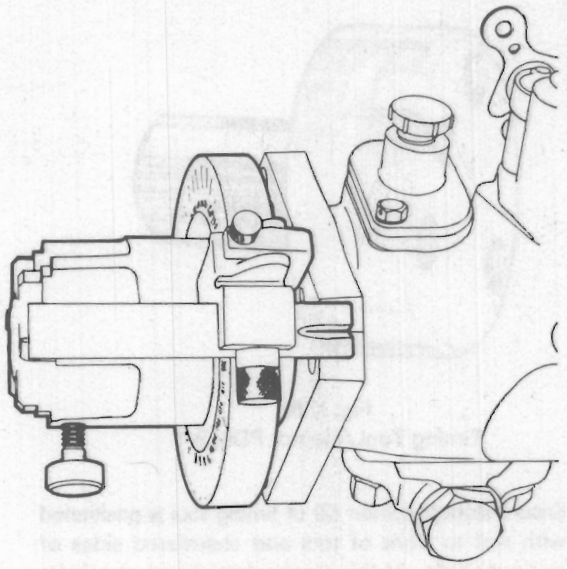

Fig. K.10.
Checking Fuel Pump Marking Angle
(Splined Drive).

4. Position timing tool on pump drive shaft with master splines engaged and tool locating on spigot (see Fig. K.10). With dowel drive pumps, locate splined shaft in hub, slide tool towards pump to rest on end of hub and lock shaft in tool (see Fig. K.11).

5. Connect No. 1 outlet of pump body to an atomiser test rig and pump up to 30 atmospheres (31 kgf/cm²) or 440 lbf/in²). If a pressurising valve is fitted this must be removed.

6. Turn pump in normal direction of rotation as shown on pump nameplate, until it locks.

7. In this position, slide pointer forward until it is halfway over pump flange and check that timing mark is central to slot in pointer. Remark line, if necessary.

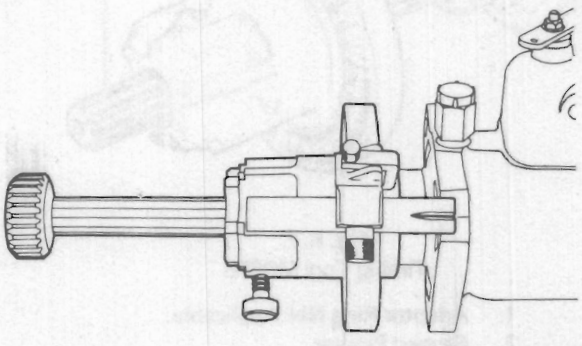

Fig. K.11.
Checking Fuel Pump Marking Angle
(Dowelled Drive)

SECTION L
Lubricating System

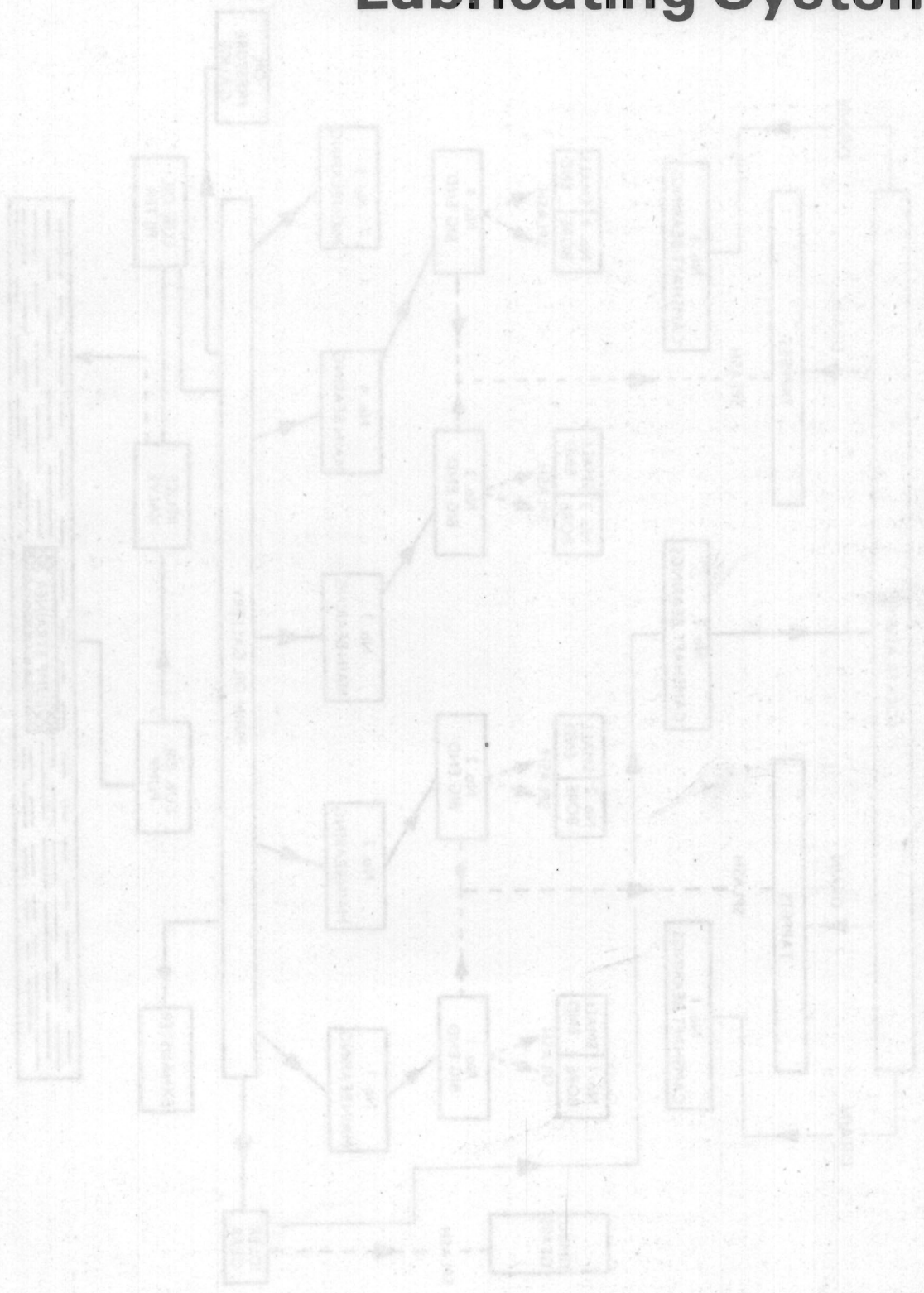

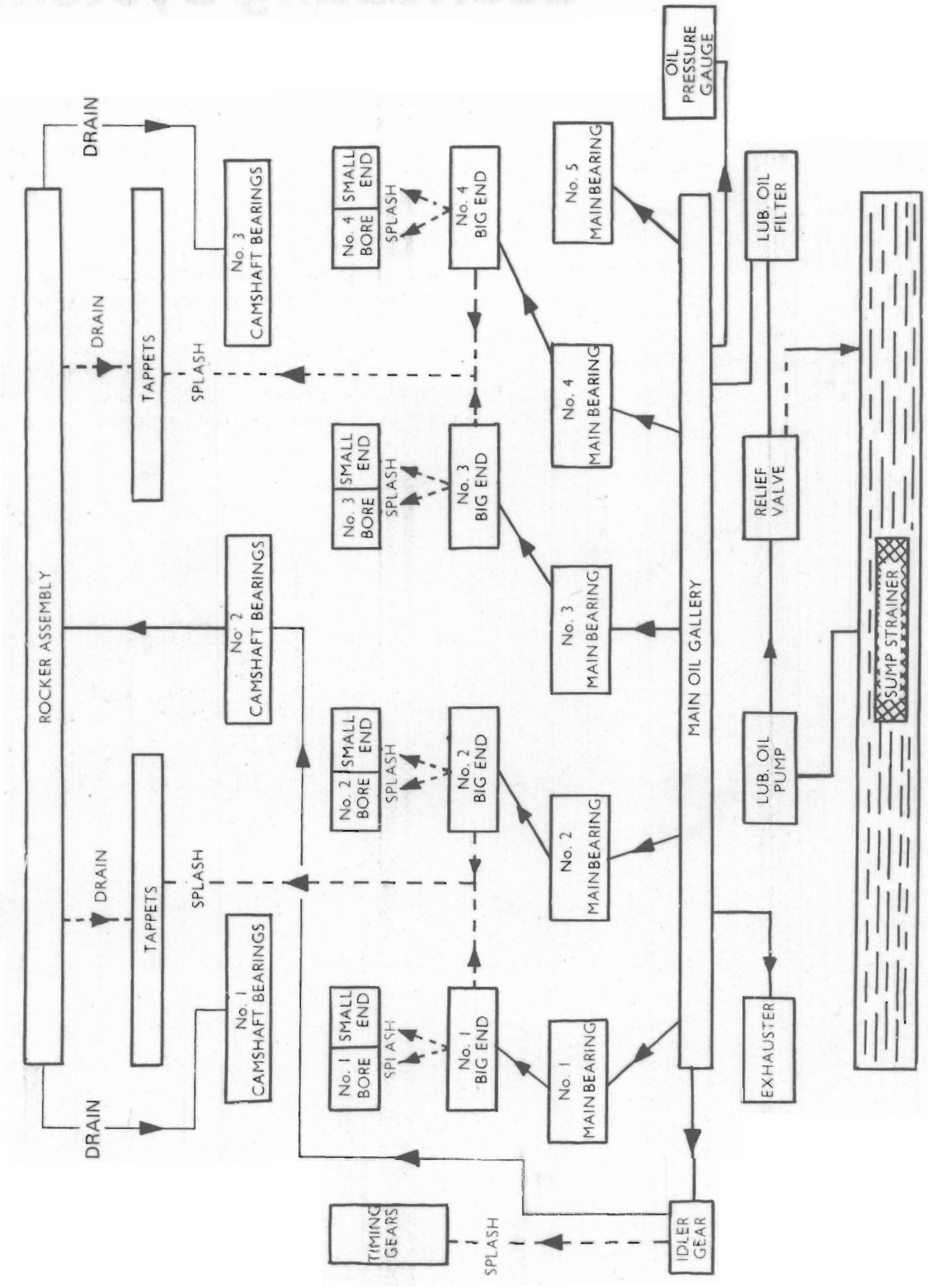

Fig. L.1. Lubricating Oil Diagram.

Description

The lubricating system is of the forced feed type, the oil being circulated, under pressure, by a rotor type pump bolted to the front main bearing cap and driven via an idler gear by the crankshaft gear. Oil is drawn through a sump filter screen and a suction pipe before entering the oil pump. It is then pumped through a pipe to a drilling in the cylinder block and then to a full flow filter on the camshaft side of the engine.

A plunger type relief valve is provided in the lubricating oil pump body to control the maximum oil pressure.

From the full flow filter the oil then passes by way of a crosswise drilling to the main oil gallery drilled lengthwise through the fuel pump side of the crankcase.

Passages through the main bearing housing webs, carry the oil from the gallery to the main bearings. The oil then passes through drilled holes in the crankshaft to the big end bearings.

The cylinder bores and gudgeon pins are splash lubricated from the big ends.

Lubrication of the timing gear idler hubs is by a force feed.

Lower Hub

A drilling from the front face of the cylinder block into the main bearing oil gallery, is aligned with a drilling which passes through the axis of the hub, connecting with a transverse hole in the hub, through which oil is fed to the bearing surfaces of the hub and gear.

Secured to the gear retaining plate is a pipe, the other end of which is located in a blind hole in the timing case to prevent the pipe from turning. A small hole in the pipe allows oil to spray on to the teeth of the lower idler gear.

Upper Hub

A transverse drilling across the front of the cylinder block from the main oil gallery feeds oil under pressure to an external pipe located on the camshaft side of the engine. This pipe in turn is coupled to another transverse drilling, which connects with the oil passage in the rear face of the upper hub, from which the bearing surface of the hub is lubricated.

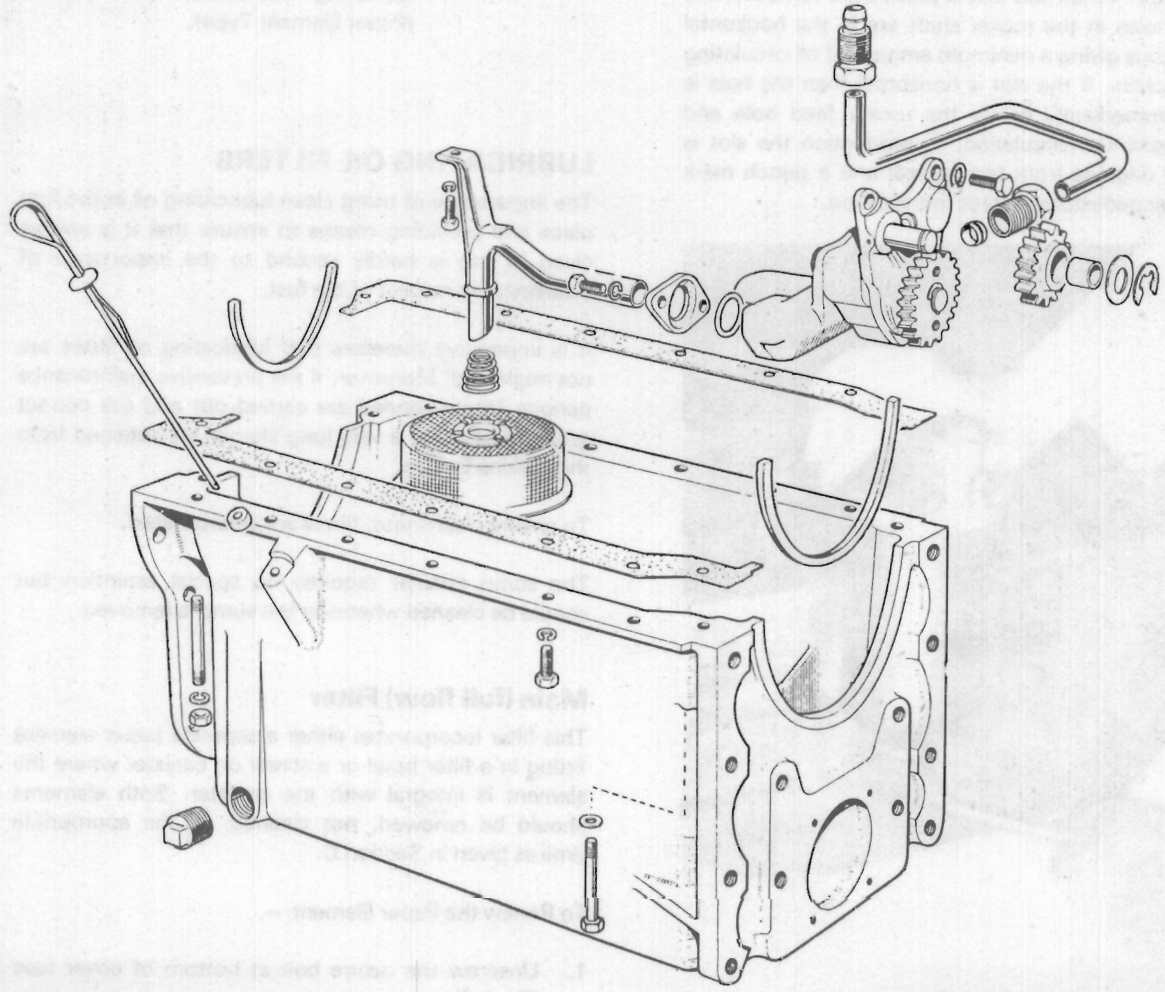

Fig. L.2.
Exploded view of Lubricating Oil Sump and Oil Pump.

An extension pipe from the idler hub lubrication system feeds oil to the centre camshaft bearing and also to the front camshaft bearing, when a bush is fitted in the front of the cylinder block. A machined slot in the centre camshaft journal allows oil under pressure to be fed to the rocker shaft by means of a drilling in the cylinder head, once every revolution of the camshaft, i.e. each time the slot and the drillings in the camshaft bearing are in line.

Oil escaping through a hole in the centre of the rocker arm lubricates the valves, guides and tappets.

The camshaft is lubricated by oil draining down from the rocker assembly. The level of the oil is controlled by weirs either side of the centre camshaft bearing. The rear weir in the camshaft tunnel allows oil to spill over into the sump and the front weir allows oil to pass to the timing case by way of a cored hole in the cylinder block.

Apart from being splash lubricated the timing gears have oil, pressure fed to them, through drillings in the idler gear hubs.

The amount of oil circulating to the rocker assembly is adjustable by means of a slot in the rear end of the rocker shaft. When this slot is positioned vertically, the oil feed holes in the rocker shaft are in the horizontal position thus giving a minimum amount of oil circulating to the rockers. If the slot is horizontal then the hole is located immediately below the rocker feed hole and allows maximum circulation. In production the slot is set at 30 degrees from the vertical and a punch mark on the rear pedestal indicates this position.

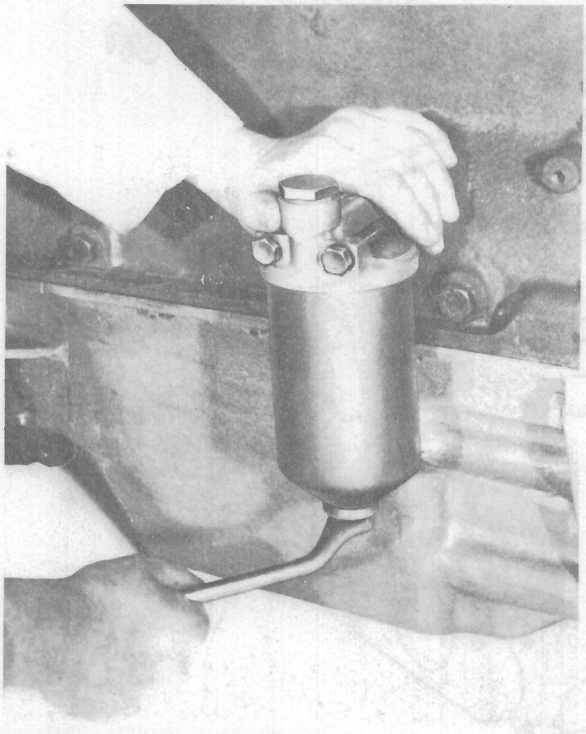

Fig. L.3.
Unscrewing Bolt from Lubricating Oil Filter Bowl.
(Paper Element Type).

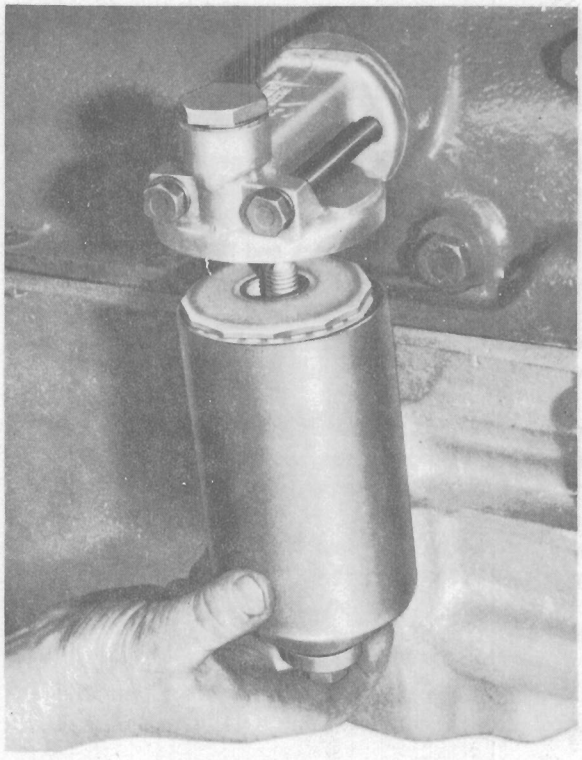

Fig. L.4.
Lowering Filter Bowl.
(Paper Element Type).

LUBRICATING OIL FILTERS

The importance of using clean lubricating oil in the first place and providing means to ensure that it is always clean in use is hardly second to the importance of cleanliness in respect of the fuel.

It is imperative therefore that lubricating oil filters are not neglected. Moreover, if the preventive maintenance periods recommended are carried out and the correct grade of oil used, a very long life can be obtained from the Perkins Engine.

To ensure cleanliness, filters are incorporated.

The sump strainer requires no special attention but should be cleaned whenever the sump is removed.

Main (full flow) Filter

This filter incorporates either a separate paper element fitting in a filter bowl or a screw on canister where the element is integral with the canister. Both elements should be renewed, not cleaned, at the appropriate time as given in Section C.

To Renew the Paper Element:—

1. Unscrew the centre bolt at bottom of cover (see Fig. L.3).

2. Lower filter bowl clear (see Fig. L.4).

3. Remove element and discard.

4. Before fitting new element, clean inside of filter bowl with cleaning fluid.

5. Ensure that the rubber joints are in good condition. If not, replace by new ones.

6. Start the engine and check for leaks. Check oil level after running and top up as necessary.

The bolt securing the filter bowl should be checked for tightness after the first 25 hours of running.

To Renew the Canister:—

1. Unscrew and discard old oil canister (see Fig. L.5).

2. Clean the filter head and the threaded adaptor.

3. Using clean engine lubricating oil, liberally oil the top seal of replacement canister.

4. Fill new canister with clean lubricating oil allowing time for the oil to filter through the element. Screw the replacement canister on to the filter head until seal just touches the head and then tighten by hand as detailed in the instructions on the canister. Where a tool is available, tighten to 15 lbf ft (2,07 kgf m).

5. Run the engine and check for leaks. Check the oil level after running and top up as necessary.

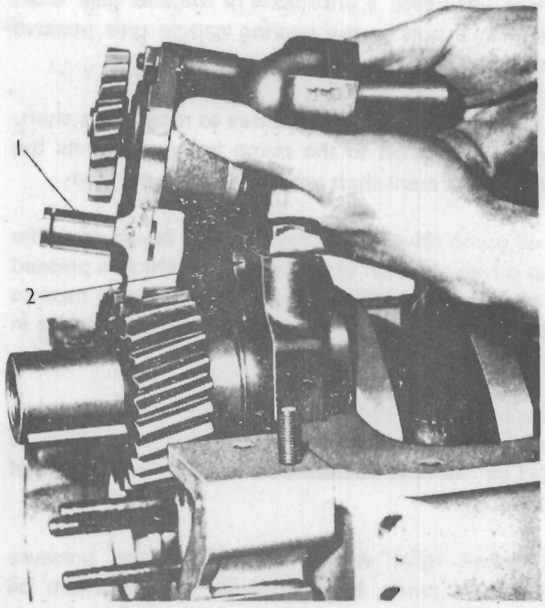

Fig. L.6.
Removing the Lubricating Oil Pump from the Front Main Bearing Cap.
1. Idler Shaft Protrusion. 2. Dowel Hole.



Fig. L.5.
Removing Filter Bowl.
(Screw-on Canister Type).

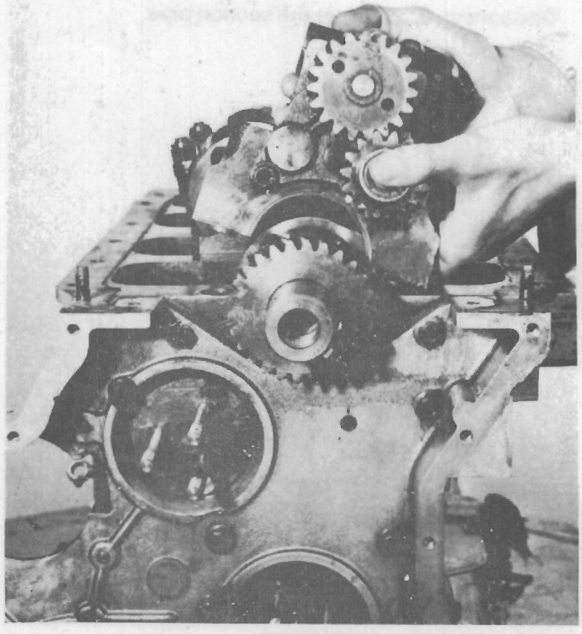

Fig. L.7.
Removing the Lubricating Oil Pump complete with Main Bearing Cap.

The Oil Pump

The oil pump is secured to the front main bearing cap by three setscrews, a protrusion of the idler gear shaft locating in a hole in the bearing cap to give positive location.

The bushed idler gear which is free to rotate on a shaft, pressed and pinned to the pump body, transmits the drive from the crankshaft gear to the oil pump gear.

The oil pump drive gear is pressed and keyed on to the pump driven shaft on the other end of which is pressed and pinned a four lobed drive rotor. This rotor meshes with a five lobed driven rotor, which is free to rotate in the cast iron pump body.

As the pump rotors rotate, the pockets formed between the rotor lobes increase and then decrease in volume to propel oil from the suction side to the pressure side of the pump.

A pressure relief valve mounted on the pressure side of the pump body controls the maximum oil pressure at 50 to 65 lbf/in² (3,52—4,57 kgf/cm²) 345/448 kN/m² any excess oil returning direct to the sump.

The lubricating oil pump and gear drive may be dismantled with just the sump removed, but this entails removing the pump complete with the front main bearing cap. If, on the other hand, the timing case cover is removed, the pump may be unbolted from the bearing cap leaving the latter in position.

To Remove the Pump from the Bearing Cap

1. Remove the sump.
2. Disconnect and remove the suction pipe.

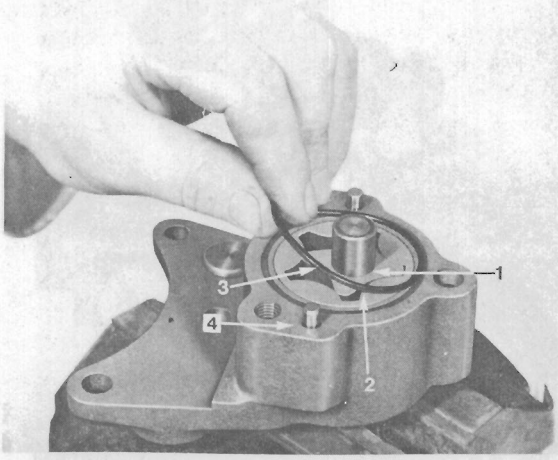

Fig. L.8.
Removing the "O" Sealing Ring.
1. Inner Rotor.
2. Outer Rotor.
3. "O" Sealing Ring.
4. Pump Body.

3. Disconnect and remove the pressure pipe between the pump and the cylinder block drilling.
4. Remove timing case cover, see page J.2.
5. Remove the half-moon bridge piece.
6. Remove the idler gear circlip, the idler gear and thrust washer.
7. Remove the three setscrews securing the pump to the No. 1 main bearing cap.
8. Remove the pump. See Fig. L.6.

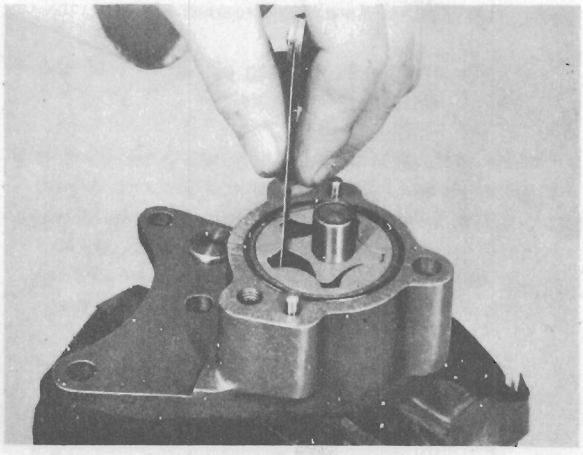

Fig. L.9.
Checking Clearance between the Inner and Outer Rotor.

To Remove the Pump complete with Main Bearing Cap

1. Remove the sump.
2. Disconnect the suction pipe and remove it.
3. Disconnect and remove the pressure pipe between the pump and the cylinder block drilling.
4. Remove the half-moon bridge piece.
5. Remove No. 1 main bearing cap screws.
6. Remove No. 1 main bearing cap and pump as one assembly. (See Fig. L.7).
7. Remove the idler gear circlip and withdraw the idler gear and thrust washer.
8. Remove the three setscrews securing the pump to No. 1 main bearing cap.
9. Separate the oil pump from the No. 1 main bearing cap.

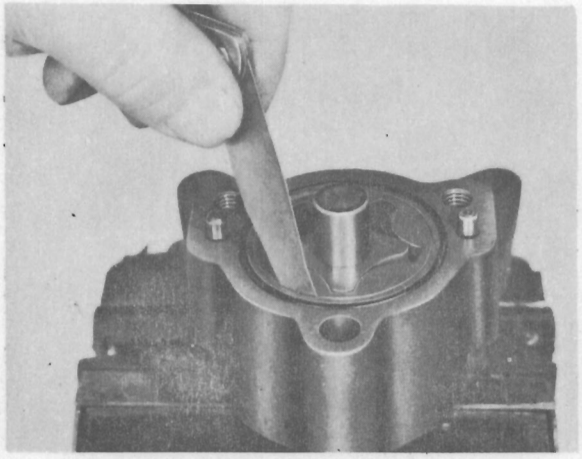

Fig. L.10.
Checking the Clearance between the Outer Rotor and the Pump Body.

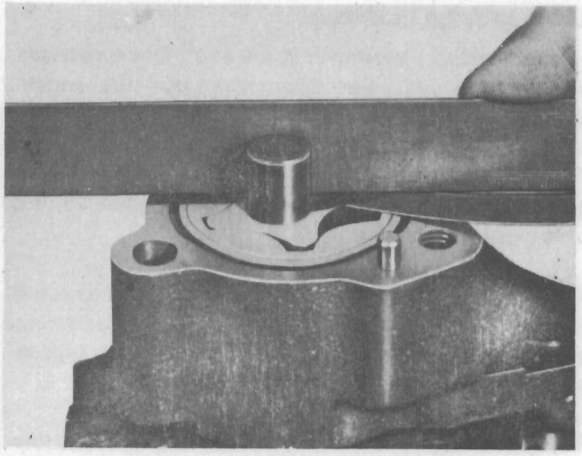

Fig. L.11.
Checking the Clearance between the top of the Rotors and the surface of the Pump.

To Dismantle

As the pump is only serviced as an assembly, the drive gear should not be removed as this could destroy the interference fit between the gear and the shaft. The pump should be checked for wear and damage with the gear in position and, if defective, the pump assembly should be renewed.

1. Unscrew the two truss-headed screws and the nut securing the end plate to the pump body.
2. Remove the end cover and relief valve.
3. Carefully remove driven rotor from the pump body.
4. Dismantle the relief valve by removing the split pin and shims (where fitted), the spring retaining cap, spring and plunger type relief valve.
5. Remove the "O" sealing ring from the pump body. See Fig. L.8.

Inspection

1. Thoroughly clean all the parts and inspect the rotors for cracks or scores.
2. Install the driven rotor in the pump body and check the clearance between the maximum diameter of the inner rotor and the minimum diameter of the outer or driven rotor at all points. The chamfered edge of the outer rotor enters the pump body first. The manufacturing clearances are given on Page B.11. See Fig. L.9.
3. Check the clearance between the driven rotor and the pump body, see Fig. L.10.
4. Check the clearance between the top of the rotors and the surface of the pump body with a feeler gauge and straight edge. See Fig. L.11.

To Assemble

1. Fit the driven rotor in the body entering the chamfered end of the outer rotor to the body first. Using a new "O" sealing ring, fit end plate.
2. Refit the two truss-headed screws and securing nut.
3. Replace the relief valve component parts and ensure that the relief valve lifts at 50 to 65 lbf/in² (3.52—4.57 kgf/cm²) 345/448 kN/m² either by a suitable test rig or by blanking off the outlet port and applying an air pressure suitably measured.

To Replace the Oil Pump

1. Fit the oil pump to the No. 1 main bearing cap with the protrusion of the idler shaft fully locating in the machined dowel hole in the cap.
2. Replace the idler gear, washer and circlip.
3. If the pump has been removed with No. 1 bearing cap, then it will be necessary to refit the latter and the setscrews tightened to the recommended torque (see page B.2.).
4. Prime the pump with clean engine oil and replace the oil delivery pipe and suction pipe complete with its support bracket.

Lubricating Oil Sump

The lubricating oil sump may be of different patterns with varying capacities depending upon the engine application.

The front seal is made on a cork insert fitted in a groove in a half-moon bridge piece, bolted to the base of the timing case.

The side flanges bolt directly to the crankcase with the appropriate joints inserted, and the semi-circular cut away at the rear seals on a cork insert fitted in a groove in the rear main bearing cap.

The dipstick provided with each application will show the correct oil level, but as this may differ in various applications, care should be taken that only the correct dipstick is used.

SECTION M
Cooling System

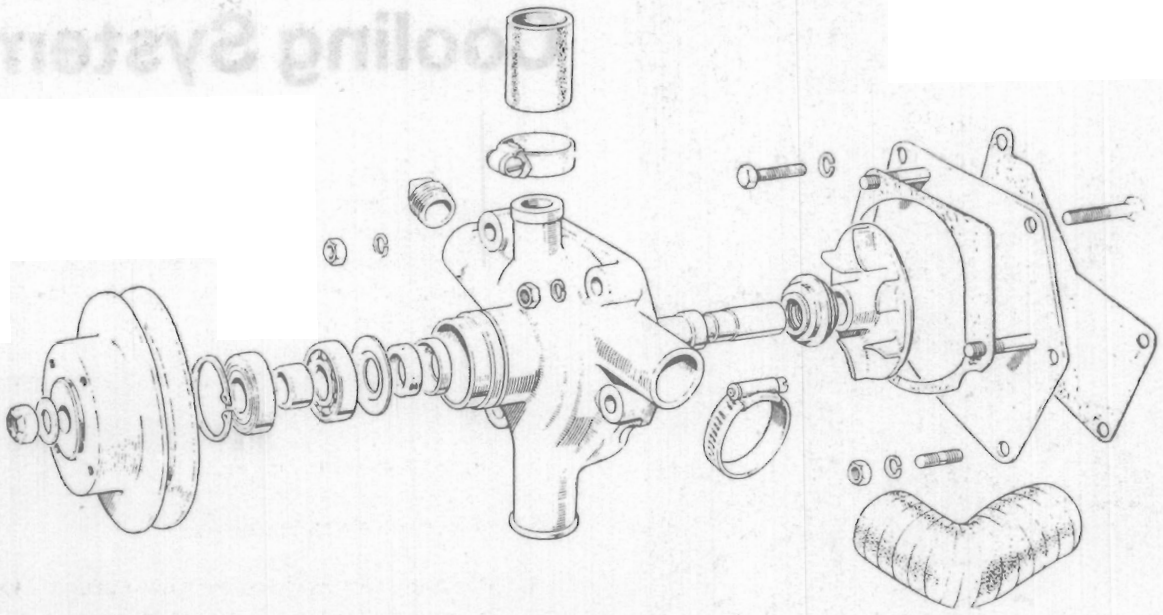

Fig. M.1.
Exploded view of Low Position Type Water Pump.

A centrifugal type water pump is fitted to the timing case front cover or on the front of the cylinder head depending on application, and is belt driven from the crankshaft pully. Provision is made on the water pump pulley for the fitment of a pressed steel fan.

The cooling water circulation is from the pump, via a cored passage, cast in the left hand side of the cylinder block, the coolant being directed to the cylinder head through cored holes.

The cylinder block is subsequently cooled by thermo-syphon action.

The water outlet from the cylinder head is taken through a thermostat housing mounted at the front of the cylinder head, the housing incorporating a by-pass return to the water pump.

To Remove the Water Pump (High Position Type)

1. Release the hose clips and remove the hoses connected to the pump.
2. Remove the temperature gauge capillary tube and the cab heater connections (if fitted).
3. Undo the generator stay bracket and ease the fan belt off the pulley.
4. Unscrew the three small setscrews located at the back of the water pump back plate.
5. Release the three setscrews which pass through the pump body into the cylinder head. These cannot be removed from the body while the pulley is still fitted, so the pump must be eased from the back plate while the setscrews are being unscrewed.

To Remove Water Pump (Low Position Type)

1. Release the clips on the hoses from the water pump except those on the by-pass pipe from the thermostat housing to the pump. Here it is advisable to remove the two setscrews securing the by-pass adaptor to the thermostat housing.
2. Release the securing bolt on the dynamo adjusting arm and remove the fan belt.
3. Disconnect the temperature gauge capillary tube and cab heater connections (if fitted).
4. Undo the one setscrew, and three nuts, securing the water pump to the timing case cover, and remove the pump complete with back plate and by-pass adaptor. See Fig. M.2.

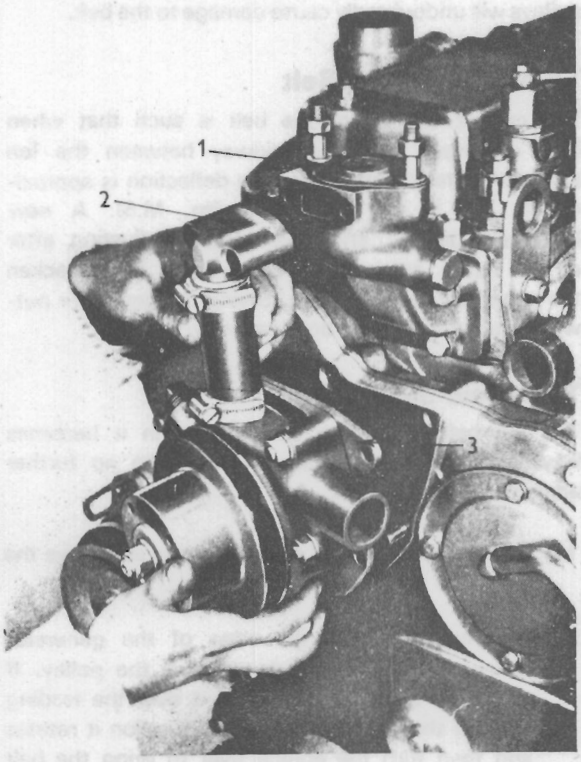

Fig. M.2.
Removing Water Pump.
1. Thermostat. 2. By-pass Adaptor.
3. Water Pump Back Plate.

To Dismantle Water Pump

1. Remove the nut securing the water pump pulley to the shaft and remove with washers.

2. Remove the water pump pulley from the front of the shaft. See Fig. M.3.

3. Press the shaft complete with impeller out of the body.

4. Remove the front bearing circlip.

5. Press out the bearings and distance piece.

6. Extract the rear seal.

Inspection

If the water pump shaft shows signs of wear in the region of the bearings, the shaft must be renewed, for a shaft worn in this region will allow the inner race of the bearings to rotate on it.

Clean the impeller and examine it for cracks and broken blades.

Examine the casing for cracks.

Wash the bearings in thin lubricating oil, examine them for pitting, corrosion or wear and if necessary renew them.

To Re-assemble the Water Pump

1. Fit the felt seal and seal housing in the body followed by the seal retaining plate which is "dished" and must be fitted so that the centre of the plate will not contact the rear bearings when the latter is fitted.

2. Smear the bearings, and half fill the space between them, with high melting point grease and then press the bearings and distance piece as one assembly into the body, ensuring that the bearing end covers face outwards, i.e. towards the ends of the shaft.

3. Re-fit the bearing retaining circlip in its groove forward of the front bearing.

4. Press the shaft into the pump.

5. Press the shaft into the pulley.

6. Re-fit the rear seal and turn the pulley by hand to ensure that there is no resistance to motion. If the shaft appears to be tight, tap the rear end of it with a hide hammer.

7. Press the impeller on to the shaft until the clearance between the blades and the body is 0.015/0.025 in (0,38/0,64 mm). With low position pumps this clearance between the front of the impeller can be checked with a feeler gauge as shown in Fig. M.4. With high position pumps the impeller should be pressed on until the rear face of the impeller is 0.551/0.556 in (14,00/14,12 mm) below the rear face of the water pump.

8. Re-fit the washers and pulley nut, tightening the latter to a torque of 60 lbf ft (8,3 kgf m).

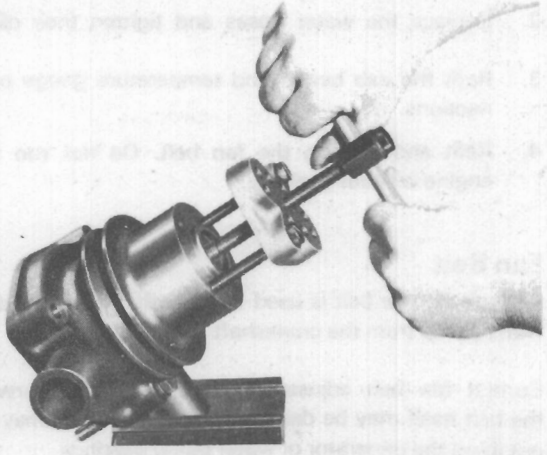

Fig. M.3.
Withdrawing the Water Pump Pulley.

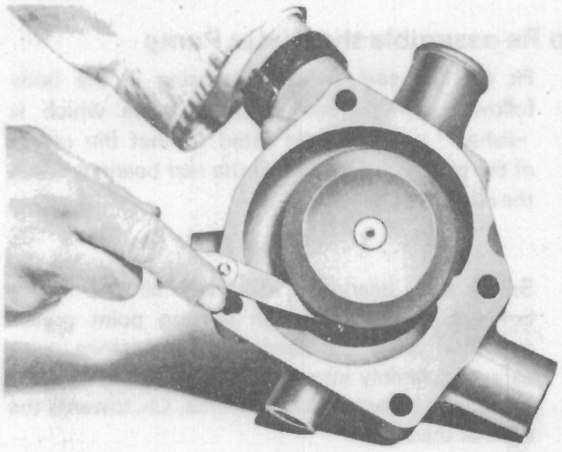

Fig. M.4.
Checking Impeller Clearance.

To Replace the Water Pump (Low Position Type)

1. Clean the back face of the pump body, and employing a new joint, refit the pump, locating the hoses as the pump is offered to the front cover A new joint should also be fitted between the by-pass adaptor and the thermostat housing.

2. Securely tighten the clips on the water hoses.

3. Refit the cab heater and temperature gauge connections (where applicable).

4. Fit the fan belt on to the pulleys and adjust the position of the dynamo or alternator to tension the belt. Do not run the engine without coolant.

To Replace the Water Pump (High Position Type)

1. Using a new joint, locate the pump to its back plate and having secured the front setscrews, screw in the three smaller ones from the back of the back plate.

2. Replace the water hoses and tighten their clips.

3. Refit the cab heater and temperature gauge connections.

4. Refit and tension the fan belt. Do not run the engine without coolant.

Fan Belt

A single V-type belt is used to drive the generator and water pump from the crankshaft pulley.

Correct fan belt adjustment is important, otherwise the belt itself may be damaged or undue strain may be put upon the generator or water pump bearings.

There is provision for fan belt adjustment by moving the generator on its mounting and it is important that this adjustment be released when a new fan belt is fitted, for any attempt to strain the belt over the pulleys will undoubtedly cause damage to the belt.

To Adjust the Fan Belt

The correct tension of the belt is such that when it is depressed by hand midway between the fan pulley and crankshaft pulley, the deflection is approximately 3/8 in (10 mm) (see Fig. M.5). A new belt will "bed-in" and may require adjusting after a few hours service. To tighten the belt, slacken the generator securing bolts. Swing the generator outwards and retighten the bolts securely.

To Renew the Fan Belt

The fan belt should be renewed when it becomes frayed, or stretched to an extent where no further adjustment can be made.

1. Slacken the generator mounting bolts and move the generator towards the engine.

2. Slip the belt over the edge of the generator pulley taking care not to damage the pulley. If necessary slide the belt up and over the leading edge of the pulley in the same direction it rotates and then turn the engine over to bring the belt off the pulley. The belt may then be taken from the water pump pulley and crankshaft pulley.

3. Pass the new belt around the water pump and crankshaft pulleys and engage it in the generator pulley. Readjust the belt tension as previously described and tighten the generator mounting bolts.

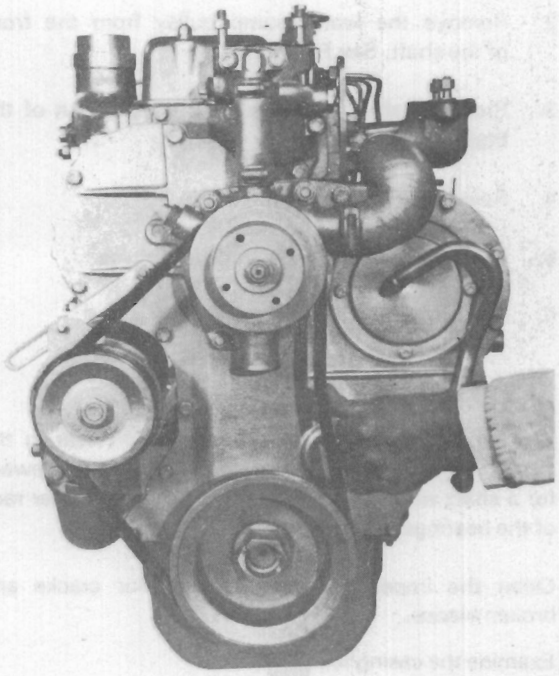

Fig. M.5.
Checking Fan Belt Tension.

Thermostat

A bellows or wax type thermostat is fitted in the water outlet body.

The engine should not be operated without the thermostat, otherwise overheating of the engine may occur.

To Remove

1. Remove the water hose between the top of the radiator and the water outler connection adaptor, or water pump in the case of the high position type.

2. Remove the two nuts and washers securing the adaptor to the thermostat housing, or water pump.

3. Remove the adaptor and joint thereby disclosing the thermostat.

4. Remove the thermostat from the recess in the housing.

Testing the Thermostat

If it is suspected that the thermostat is not operating correctly it may be tested in the following manner:

Immerse the thermostat in a suitable container of water and gradually heat. Check the water temperature at frequent intervals with an accurate thermometer. The valve should commence to open at 180°F (82°C).

If the thermostat does not function properly no attempt should be made to adjust it. Replace with a new unit.

SECTION N
Fuel System and Air Cleaners

Important Note: The type of fuel pump, fuel injection pipes and atomisers fitted to the 4.192, 4.203 and D4.203 engines may vary according to application and engine rating. Reference should therefore be made to the appropriate parts Literature to ensure correct replacements are fitted in service.

Diesel fuel is drawn from the main supply tank and passed into the system by means of a diaphragm type lift pump. Before reaching the fuel injection pump, it is passed through a series of filters to ensure absolute cleanliness. The fuel injection pump then meters the fuel in pre-determined quantities and delivers it at timed intervals to the atomisers. The utmost cleanliness should always be observed in storage and transference of the fuel to the fuel tank. This will eliminate undue stress on the lift pump valves and the fuel filters and obviate one potential cause of engine failure. It is recommended that special attention be paid at all times to fuel filter maintenance if the costly, precision built, fuel injection pump is to be protected and allowed to give the lengthy, trouble free period of service of which it is capable. Approved fuel oil specifications will be found on page B.12.

FUEL OIL FILTERS

Great care has been taken in the design of the engine to ensure that only clean fuel oil reaches the fuel pump.

Fuel oil filters are provided as well as a dirt trap in the fuel tank.

The first filter is a gauze trap in the filler of the fuel tank. This must not be removed when fuel is being poured into the tank.

If there is no filter in the filler, the fuel should be poured through a fine gauze strainer when filling the tank.

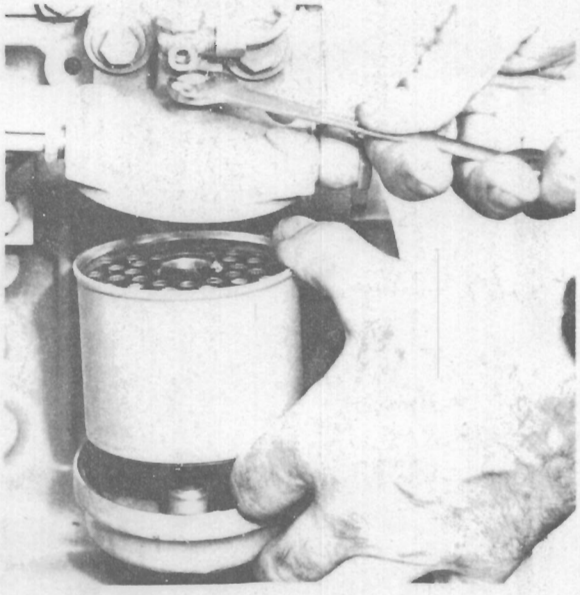

Fig. N.1.

The second filter is usually a water trap or pre-filter with a comparatively coarse element.

This filter and element should be cleaned in accordance with preventive maintenance unless the condition of the fuel oil warrants more regular attention.

When re-assembling after cleaning, ensure that a good joint is made between the top of the bowl and the filter body as any leakage of air here may cause air locks in the fuel system.

The third and final filter is a paper element type filter. It is not possible to clean the paper element. It should be renewed in accordance with the schedule outlined in preventive maintenance on page C.5.

The element is either an encapsulated element held between the filter head and bottom cover or a loose element fitted inside a bowl.

To renew the element:—

1. Thoroughly clean the exterior of the filter assembly.
2. Unscrew the setscrew in the centre of the filter head or bowl.
3. Lower the element and the bottom cover or the bowl clear (Fig. N.1) and discard the element.
4. Clean the filter head and the bottom cover or bowl. Check that the seals are serviceable and renew, where necessary.
5. Place the element centrally in the bottom cover or bowl and hold the assembly central to the filter head whilst the securing setscrew is tightened.
6. Bleed the fuel system as detailed below.

Priming the Fuel System

In the case of a new engine or an engine which has been standing idle for any length of time, it is important that the fuel system is "bled".

To bleed the system, proceed as follows:—

Slacken the air vent screw on the front side of the governor control cover (Mechanical governor) see Fig. N.2 or the top of the control gear housing (Hydraulic governor) Fig. N.3.

Slacken the vent screw in the hydraulic head locking screw (Fig. N.4) on the side of the pump body.

Where a vent screw is provided on the top of the filter head, unscrew it by two or three turns. Some filters are self-venting and do not have a vent screw.

Operate the priming lever on the fuel lift pump, and when fuel, free from air bubbles, issues from each venting point, tighten the screws in the following order:

1. Filter cover vent screw (where applicable).
2. Head locking screw.
3. Governor vent screw.

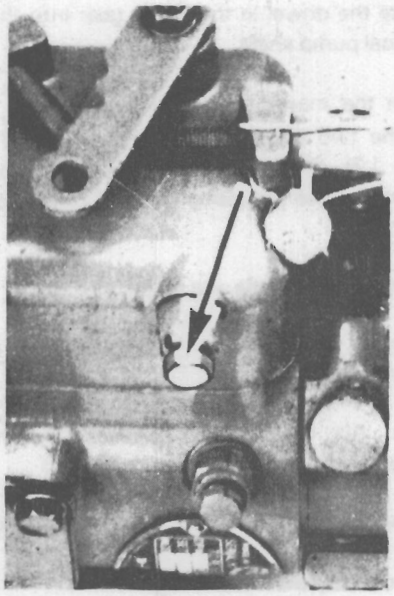

Fig. N.2.
Air Vent Screw on Governor Housing
(Mechanically Governed Pump).

Slacken the pipe union nut (Fig. N.5) at the pump inlet, operate the priming device and re-tighten when oil, free from air bubbles, issues from around the threads.

Slacken the unions at the atomiser ends of two of the high pressure pipes.

Set the engine speed control at the fully open position and ensure that the "stop" control is in the "run" position.

Turn the engine until fuel oil, free from air bubbles, issues from both fuel pipes.

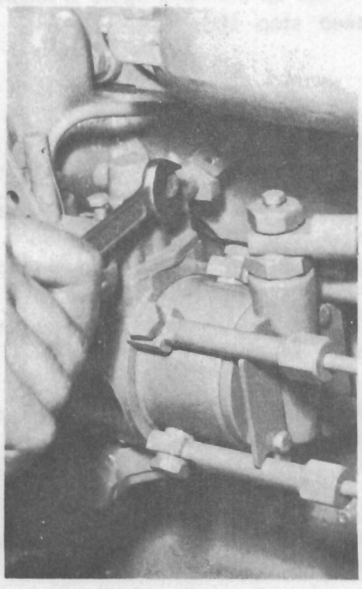

Fig. N.3.
Sackening Vent Screw on Fuel
Injection Pump Governor Housing
(Hydraulically Governed Pump).

Tighten the unions on the fuel pipes, and the engine is ready for starting.

It should be noted that if the cam on the camshaft driving the fuel lift pump is on maximum lift, then it will not be possible to operate the hand primer. If such a condition arises, then the engine should be turned until the hand primer can be operated.

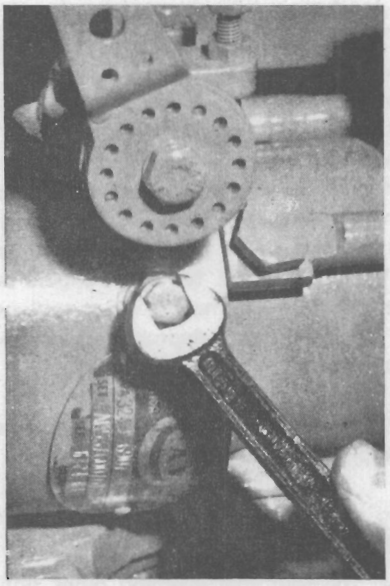

Fig. N.4.
Slackening the Vent Screw on
Hydraulic Head Locking Screw on
Fuel Injection Pump.

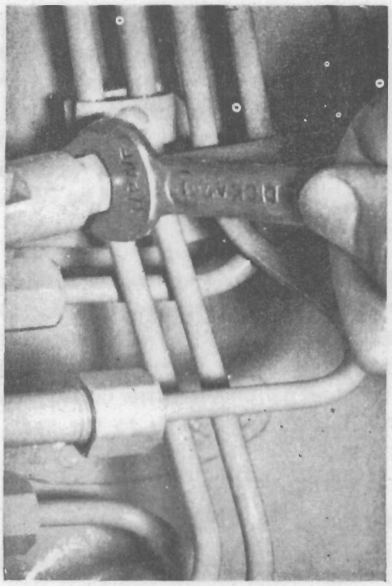

Fig. N.5.
Slackening Pipe Union Nut at Fuel
Injection Pump Inlet.

Fuel Injection Pump

This is a D.P.A. type distributor pump of British manufacture. Governing is by either mechanical or hydraulic equipment which is built into the pump. It is flange mounted and is secured to the timing cover together with the fuel pump carrier plate by three screws. The type, serial number, and direction of rotation of the pump are indicated on an identification plate attached to the pump body. On variable speed applications an Advance and Retard mechanism is fitted to provide automatic variations of the injection timing in conjunction with variations in loading of the engine. Drive is obtained by means of a splined quill shaft from the fuel pump gear adaptor, Fig. J.2. On D4.203 engines the fuel pump drive shaft is located directly onto the fuel pump drive gear. To simplify removal and refitting of the pump, the quill shaft has a master spline and external marks are provided on the pump mounting flange, Fig. K.2. No effort should be made to interfere with the pump mechanism or settings unless the proper facilities and the appropriate manufacturer's literature are available.

Where service is required, this should be obtained from the fuel pump manufacturer's agents.

To Remove the Fuel Pump

1. Remove the four fuel injection pipes noting the index letter "W" stamped adjacent to No. 1 outlet union.

2. Remove the fuel supply and return pipes.

N.B.—Suitable caps should be fitted to all pump connections to prevent the ingress of foreign matter.

3. Disconnect the engine speed and stop control linkage from the levers.

4. Remove the two nuts and capscrew from the pump mounting flange and withdraw the pump from the engine (Fig. J.9). The capscrew is fitted in the inner position and can be removed using tool PD.130A. Where the pump is fitted with a detachable quill shaft, this should be kept with its respective pump.

   On D4.203 engines remove the lubricating oil filler inspection plate and remove the three setscrews holding the pump gear to the three setscrews holding the pump gear to the shaft. The injection pump can now be removed after undoing the three securing nuts, holding it on to the back of the timing case

To Replace the Fuel Pump

1. Fit a new joint to the face of the carrier plate.

2. Fit the quill shaft to the pump and position the master spline so that when the pump is offered up to the engine it will engage with the splines in the fuel pump gear adaptor. On D4.203 engines locate the dowel in the pump gear into the slot of the fuel pump shaft.

3. Align the marks on the hub and pump flanges. Fit the two nuts and the capscrew and tighten (Fig. J.2). On D4.203 engines align scribed marks on timing case and pump flange. Tighten setscrews and nuts.

4. Connect the throttle and stop controls.

5. Connect the fuel supply pipes and fuel injection pipes.

6. Bleed the fuel system as described earlier in this section.

To check the fuel pump timing refer to Section K.

Maximum Speed Setting

The maximum speed screw is set and sealed by the manufacturers and must not be altered in any way unless factory authority is first obtained. Any adjustments should be carried out be experienced fuel pump technicians. The unauthorised removal of any seals on the pump may render the guarantee void.

When a fuel pump is supplied as a direct replacement, the governor maximum speed is set to a nominal figure only, and final adjustment must be made after the pump is fitted to the engine. In order to establish the correct setting which varies according to application, reference must be made to the setting code symbol, stamped on the plate fastened to the pump body.

For the purpose of setting the maximum speed stop, the last four figures shown on the fuel pump setting code is the maximum no load engine speed. Warm the engine and run up until this figure is reached; the maximum speed stop should then be set at this figure.

Fuel Lift Pump (See Fig. N.6).

This is positioned on the right hand side of the engine, and is fixed to a flange on the camshaft chamber by two studs and nuts. Operation is by the pump lever contacting a cam on the engine camshaft.

The pump is of the diaphragm type and incorporates a glass bowl pre-filter.

A hand-primer is fitted to enable the fuel system to be bled when the engine is stationary.

Testing the Lift Pump Fitted to the Engine

1. Ensure that the starter battery is fully charged.
2. Remove the fuel pipe from the lift pump to the filter and crank the engine to check that fuel flows from the lift pump. If no fuel flows, ensure that there is fuel in the tank and that the pipe from

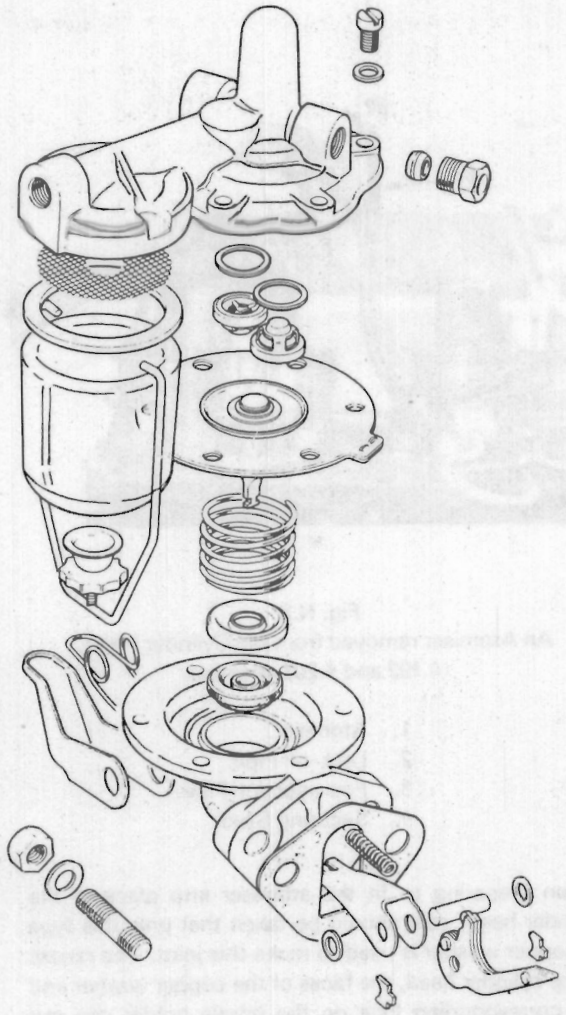

Fig. N.6.

the tank to the pump is clear. If the pump still does not deliver fuel, it should be removed and rectified.

3. Fit a 0-10 lbf/in² (0-0,7 kgf/cm²) 0-70 kN/m² pressure gauge to the lift pump outlet. Ensure that there are no leaks between the pump and gauge.
4. Crank the engine for 10 seconds and note the maximum pressure recorded on the gauge. If the pressure is less than 3.75 lbf/in² (0,26 kgf/cm²) 25,8 kN/m², then the pump should be rectified. Also observe the rate at which the pressure drops to half the maximum figure obtained when cranking has ceased and, if this is less than 30 seconds, the pump should be rectified.

To Remove the Lift Pump

Disconnect the fuel pipe, from the inlet and outlet ports.

Remove the nuts and spring washers which secure the pump to the cylinder block, and withdraw the pump.

To Dismantle the Lift Pump

Remove the glass filter bowl by unscrewing the knurled nut at the bottom of the bowl, the joint and strainer gauze can then be taken from the headcasting.

Before dismantling, make a file mark across the two flanges for location purposes when the pump is being reassembled. Remove the six cover screws and separate the two main parts, then remove the diaphragm assembly from the lower half by turning the diaphragm through 90° in either direction.

The valves are "staked-in", and can be prised out by using a screwdriver or other suitable tool. Clean the casting so that new valves can be correctly seated. Press valves into position using a suitable "dolly" Stake the casting around the valves in six places.

The rocker arm pin can be removed by securing the rocker arm in a vice, and tapping the face of the body with a soft mallet until the retainers are dis lodged. The rocker, pin, lever and return spring can now be examined for wear.

On earlier engines, the valves were secured to the headcasting by means of a rotating plate which was held in place by two screws.

To Re-assemble the Lift Pump

Fit the rocker arm assembly into the bottom half of the lift pump. Fit the rocker arm return spring making sure that is seats properly.

Tap new retainers into the grooves in the casting, and stake over the open ends of the grooves.

Place the diaphragm assembly over the spring, with the pull rod downwards, locating the top of the spring in the diaphragm protector washer. Position the rod so that the notched blade locates into the rocker arm link. Press downwards on the diaphragm assembly so that the notches on the pull rod align with the rocker arm link and twist it through 90° in either direction, this action will engage and retain the pull rod in the fork of the link.

When re-assembling the two pump halves, push the rocker arm towards the pump until the diaphragm is level with the body flanges. The cover assembly can now be placed in position, with the file marks aligned. Maintaining the pressure on rocker arm, fit the securing screws and washers and tighten evenly.

Clean the filter bowl, joint and strainer gauze and refit them to the lift pump headcasting.

Service Repair Kits are available for the reconditioning of fuel lift pumps.

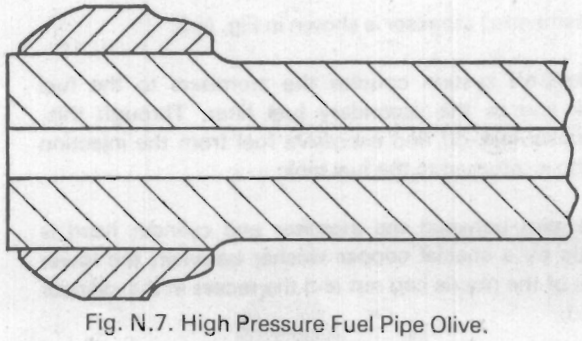

Fig. N.7. High Pressure Fuel Pipe Olive.

To Refit the Fuel Lift Pump

Ensure that the pump flange and cylinder block pump mounting face is clean, and using a new joint, enter the pump operating lever into the aperture in the block. Fit the pump onto the mounting studs and secure with nuts and spring washers.

Fuel Pipes

These are formed of high pressure steel tubing, suitably shaped for each individual cylinder, and fitted with nuts and nipples in production. They are serviced as an assembly and if faulty should be replaced complete.

For standardisation purposes, high pressure fuel pipe assemblies are now supplied with olives fitted as shown in Fig. N.7. The earlier type pipe assemblies with olives fitted in the reversed position are still satisfactory.

When fitting, no bending should be necessary. Offer both nipples to their respective unions and tighten the nuts alternately a little at a time.

Never slacken one end of a fuel pipe (e.g. when changing atomisers) leaving the other end tight. Always remove the pipe entirely.

Never use undue force on a union nut in an attempt to obtain a seal This will only result in damage to the nipple. union nut, and thread.

Atomisers

Each atomiser consists of a steel body, held to the cylinder head by means of a flange and two studs, Fig. N.8.

The joint between the atomiser and cylinder head is made by a copper washer between the lower face of the nozzle cap nut and the recess in the cylinder head.

Identification is by lettered tab washers fixed to the atomiser body or the code stamped on the atomiser body

No attempt should be made to interfere with the atomiser or its settings unless the proper facilities and the appropriate manufacturer's literature are available.

A dismantled atomiser is shown in Fig. N.9.

A leak-off system couples the atomisers to the fuel tank and to the secondary fuel filter. Through this, atomiser leak-off and excessive fuel from the injection pump is returned to the fuel tank.

The joint between the atomiser and cylinder head is made by a special copper washer between the lower face of the nozzle cap nut and the recess in the cylinder head.

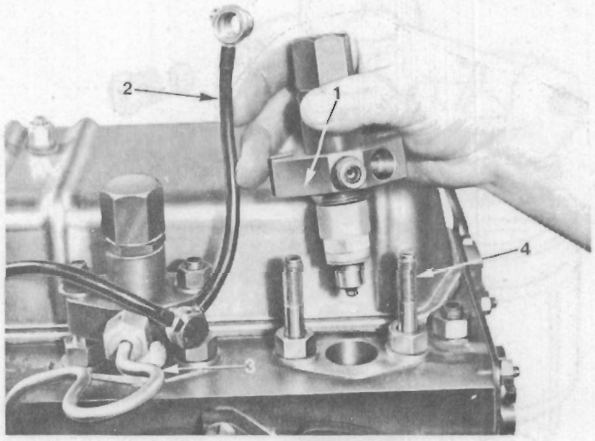

Fig. N.8.
An Atomiser removed from the Cylinder Head.
(4.192 and 4.203 engines).

1. Atomiser.
2. Leak-off Pipe.
3. Fuel Injection Pipe.
4. Securing Stud.

When preparing to fit the atomiser into place in the cylinder head, care should be taken that only this type of copper washer is used to make this joint. The recess in the cylinder head, the faces of the copper washer and the corresponding face on the nozzle holder cap nut should be perfectly clean if a leakproof joint is to result.

It is advisable to fit a new joint washer when the atomiser is replaced, after having been removed for any reason.

Ensure that the old washer has been removed from the cylinder head or atomiser.

This joint washer should be an easy, but not loose fit for the atomiser nozzle and it is because this is such an important feature that only washers specially made for the purpose should be used and none other. On no account should ordinary sparking plug washers be used.

The atomiser can now be fitted in place, care being taken to see that it is an easy fit in the cylinder head and on the holding down studs, so that it can be placed down on the copper joint without force of any kind. The nuts on the flange should then be tightened down evenly in order to prevent the atomiser nozzle being canted and so "nipped" in the cylinder head.

Maintenance

Atomisers should be taken out for examination at regular intervals. How long this interval should be is difficult to advise, because of the different conditions under which engines operate.

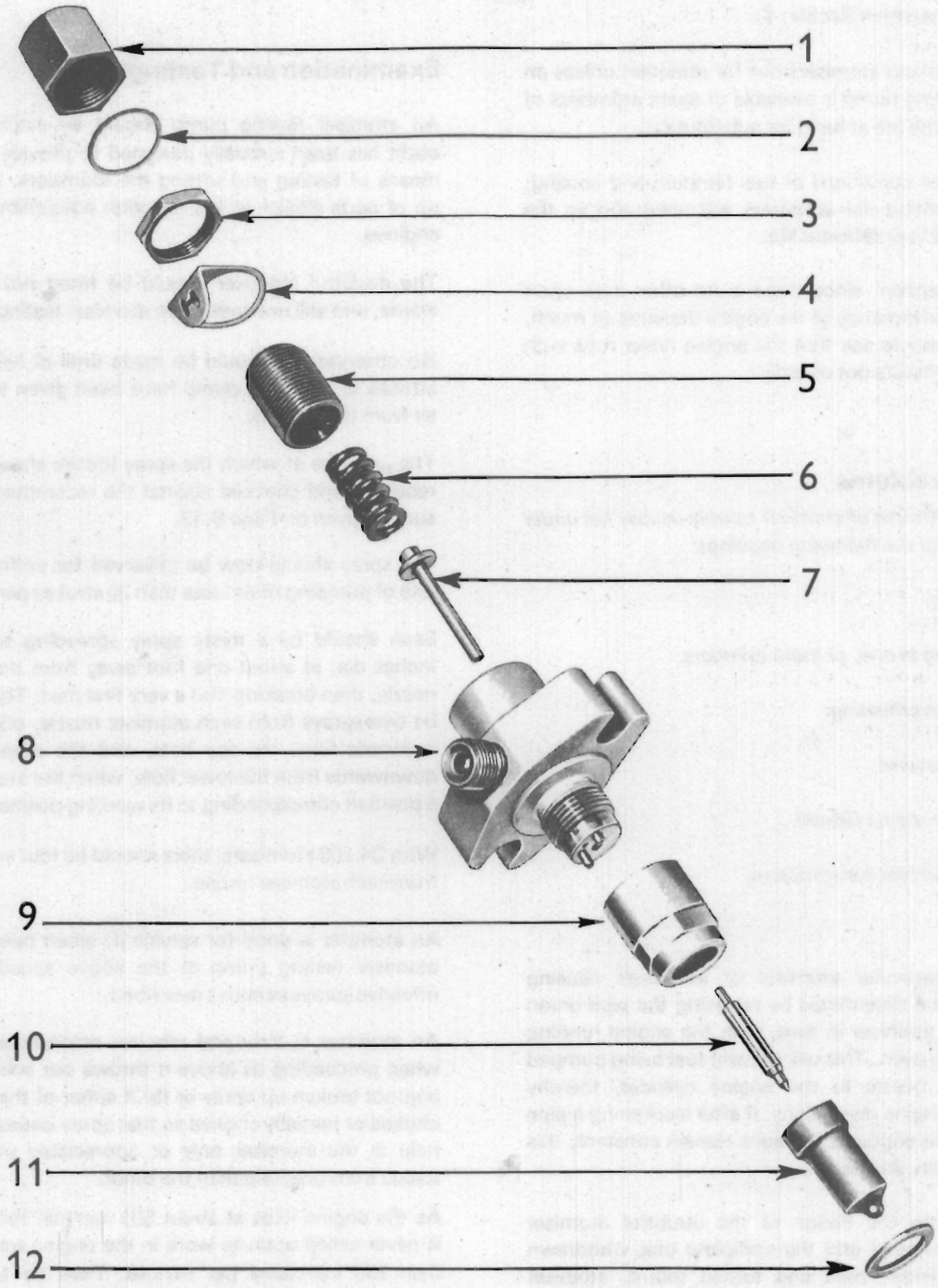

Fig. N9

Exploded View of an Atomiser

1. Nozzle Holder Cap Nut.
2. Cap Nut Washer.
3. Locknut.
4. Identification Tab Washer.
5. Spring Cap.
6. Spring.
7. Spindle.
8. Nozzle Body.
9. Nozzle Cap Nut.
10. Needle.
11. Nozzle.
12. Copper Washer.

When combustion conditions in the engine are good and the fuel tank and filtering system are maintained in first class order, it is often sufficient if the atomisers are tested twice yearly. For detailed times refer to Preventive Maintenance Section C.

It is no use taking atomisers out for attention unless an atomiser testing pump is available or spare atomisers of the correct type are at hand for substitution.

The better the conditions of fuel filtration and cooling, the less attention the atomisers will need and so the longer will be their efficient life.

In this connection, since there is no other item upon which the performance of the engine depends so much, it pays the user to see that the engine never runs with any of its atomisers out of order.

Service Problems

The first symptoms of atomiser trouble usually fall under one or more of the following headings:

1. *Misfiring.*
2. *Knocking in one, or more cylinders.*
3. *Engine overheating.*
4. *Loss of power.*
5. *Smoky exhaust (black).*
6. *Increased fuel consumption.*

Often the particular atomiser or atomisers causing trouble may be determined by releasing the pipe union nut on each atomiser in turn, with the engine running at a fast 'Tick-over' This will prevent fuel being pumped through the nozzle to the engine cylinder, thereby altering the engine revolutions. If after slackening a pipe union nut, the engine revolutions remain constant, this denotes a faulty atomiser.

The nuts from the flange of the doubtful atomiser should be removed and the complete unit withdrawn from the cylinder head and turned round, atomiser nozzle outwards, and the unions re-tightened.

After slackening the unions of the atomiser pipes (to avoid the possibility of the engine starting), the engine should be turned until the nozzle sprays into the air, when it will be seen at once if the spray is in order. If the spray is unduly 'wet' or 'streaky' or obviously to one side, or the atomiser nozzle 'dribbles' then the complete unit should be replaced, the faulty atomiser being securely wrapped in clean greaseproof paper or rag with the protection cap on the nozzle for attention on the maintenance bench.

Great care should be taken to prevent the hand from getting into contact with the spray, as the working pressure will cause the oil to penetrate the skin with ease.

Examination and Testing

An atomiser testing pump should be available. This outfit has been specially designed to provide a reliable means of testing and setting the atomisers. It is made up of parts similar to the injection equipment fitted to engines.

The doubtful atomiser should be fitted nozzle downwards, and still unwiped to an atomiser testing pump.

No observations should be made until at least ten full strokes of the hand pump have been given to expel all air from the system.

The pressure at which the spray breaks should then be recorded and checked against the recommended pressure as given on Page B.13.

The spray should now be observed for uniformity at a rate of pumping of not less than 20 strokes per minute.

Each should be a misty spray spreading to about 3 inches dia. at about one foot away from the atomiser nozzle, then breaking into a very fine mist. There should be two sprays from each atomiser nozzle, one pointing outwards from the top hole, and the other pointing downwards from the lower hole, when the atomiser is in a position corresponding to its working position.

With D4.203 atomisers, there should be four such sprays from each atomiser nozzle.

An atomiser is good for service if, when operating the atomiser testing pump at the above speed, it gives effective sprays as above described.

An atomiser is dirty and requires reconditioning if (a) when proceeding as above it throws out solid wet jets and not broken up spray or (b) if either of the holes are choked or partially choked so that spray issues from one hole in the atomiser only or appreciably more spray issues from one hole than the other.

As the engine idles at about 500 rev/min the atomiser is never called upon to work in the engine more slowly than 250 injections per minute. Thus by taking the atomiser spray at 20 strokes per minute, ample margin is allowed.

When removing an atomiser from the testing pump, close the valve by rotating the hand-wheel and screw off the union nut a little at a time so that the pressure falls gradually.

All atomisers are set at the correct pressure before leaving the works. After the atomiser has been in service for some time the "breaking" pressure tends to fall slightly, but provided that this "breaking" pressure does not fall below the "working" pressure, re-adjustment is not necessary.

NO ATTEMPT SHOULD BE MADE TO ADJUST INJECTION PRESSURE WITHOUT A PROPER TESTING PUMP AND PRESSURE GAUGE AS DESCRIBED ABOVE. IT IS QUITE IMPOSSIBLE TO ADJUST THE SETTING OF ATOMISERS WITH ANY DEGREE OF ACCURACY WITHOUT PROPER EQUIPMENT.

Atomiser Identification

Atomisers have a tab washer fitted below the Body Cap Nut and are stamped with an Identification Code Letter or alternatively, the code letter is stamped on the atomiser body (see Page B.13).

Re-conditioned atomisers will have their body cap nuts painted green, new atomisers will be unpainted.

AIR CLEANERS

Operating conditions play an important part in deciding how frequently it is necessary to service the air cleaner. If you are working in dusty conditions then the air cleaner should be attended to every day, as indicated under "Preventive Maintenance".

If not already fitted, you should consider the fitting of a 18 in water gauge RESTRICTION INDICATOR in the air trunking between the air cleaner and the engine induction manifold. It indicates by means of a visual signal when the air cleaner element needs servicing.

A means of visual signalling for the "Rotopamic" type air cleaner failure is the use of the "DUST SIGHT". A window in this device becomes cloudy when the system has failed, but this type of indicator is usually only used with the two stage extreme heavy duty cleaners.

The type of air cleaner fitted to your vehicle or machine depends upon the manufacturer of your equipment. Usually, guidance for the method of servicing is shown on the body of the air cleaner, but the following advice will also help.

Dry Type Two Stage "Cyclopac" See Fig. N.10.

The dust bowl collects the heavier particles which are thrown out by the centrifuge path of the air. This dust enters the bowl by the slot in the baffle plate. The level of dust in the bowl must not be allowed to reach to within half an inch of this slot in the baffle plate.

With horizontal installations the slot in the baffle is located at the top.

Remove the dust bowl by releasing the pinch screwed clamp. Remove the baffle from the interior of the dust cup by lifting it out, which gives access to the dust for removal. The element can be removed by releasing the wing nut.

Renew the element or clean by back flow air pressure no more than 100 lbf/in² or washing in a non foaming detergent as recommended by the air cleaner manufacturers. Allow the element to soak for at least ten minutes and then gently agitate. Rinse the element with clean water and allow to dry. Do not use oven heat.

WARNING. There is a danger that some of the dust remaining in the element after it is washed will be pulled through into the engine if the element is replaced in a wet condition. The reason for this is that the water acts as a carrier for the dust.

Inspect the element by placing a bright light in its centre. Any pin holes, thin spots or ruptures render the element unfit for further use. This cleaning procedure reduces the effective life of the element.

With all dry type elements, they should be renewed after six cleanings or once a year, whichever occurs first.

Never use petrol (gasoline) for cleaning.

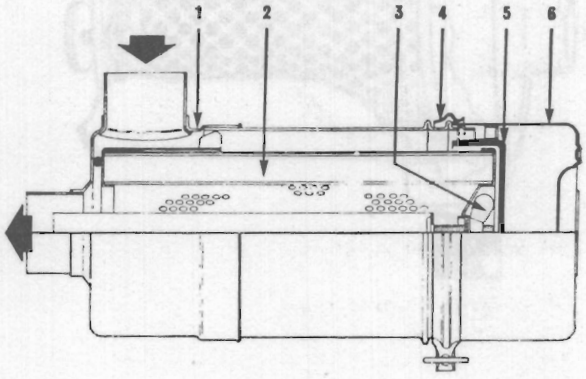

Fig. N.10.
Dry Type Two Stage Air Cleaner.

1. Body Assembly.
2. Element Assembly.
3. Nut and Gasket Assembly.
4. Clamp Assembly.
5. Baffle Skirt.
6. Cup Assembly.

Dry Type Two Stage "Cyclone" See Fig. N.11.

The AUTOMATIC DUST EJECTOR should always be kept clean and the lips of the rubber ejector checked to see that they close but do not adhere together.

To service the element, unscrew the clamping screw and remove the element retaining strip. Remove the seal plate (if fitted) and element.

If the element is contaminated by dry dust, clean by carefully tapping by hand or by directing low pressure compressed air on to the clean side of the element. If the element is contaminted by oil or soot, it can be cleaned by washing in a suitable non-foaming, deter-

gent. After washing, rinse out thoroughly by directing clean water to clean air side of element and allow to dry — do not oven dry.

Inspect cleaned element by placing a bright light inside and looking through element. Any thin spots, pin holes or other damage will render the element unfit for further use.

The element should be renewed after six detergent washes or annually, whichever occurs first. Clean the inside of the body and dry thoroughly. Inspect joints, hoses and clips and renew where necessary.

Re-assemble cleaner ensuring that all joints are leak proof.

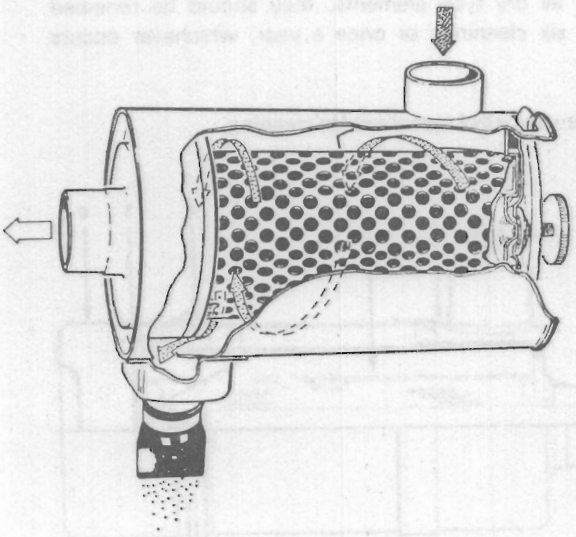

Fig. N.11.
Dry Type Two Stage Air Cleaner.

Extreme Heavy Duty Two Stage, with Multiple Elements "Rotopamic" — See Fig. N.12.

The "Rotopamic" type air cleaner may be fitted where the application is designed to work in the heavy concentrations of dust and a restriction indicator must be fitted.

The air cleaner elements are replaceable and no attempts should be made to clean or re-use dirty elements or cartridges.

For cartridge replacement, unclamp and remove the moisture eliminator or pre-cleaner panel, pull out the dirty cartridges and insert the new ones.

Refit the pre-cleaner.

Never use petrol (gasoline) for cleaning any of the air induction system.

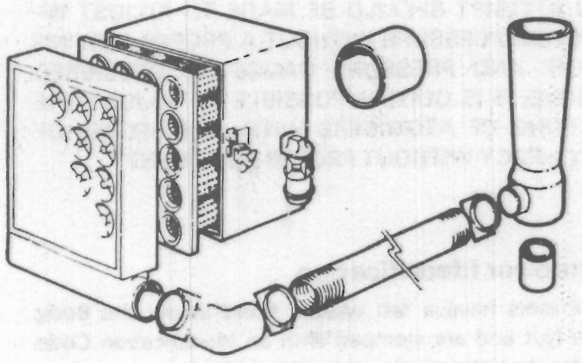

Fig. N.12.
Heavy Duty, Multiple Element Air Cleaner.

OIL BATH AIR CLEANERS — See Fig. N.13

To service the oil bath type cleaner, the lid should be removed and the element lifted out. The oil in the container should be drained out and the dirt and sludge thoroughly cleaned out with a proprietary cleaning fluid or Kerosene. Refill the container with clean new engine lubricating oil to the indicated level. The woven filter element should be cleaned in a bath of Kerosene. Do not use petrol (gasoline) as this highly volatile fuel could cause explosive damage within the engine. The indicated filling mark level should never be exceeded, otherwise oil can be drawn up into the engine which could lead to uncontrolled engine speeds, and excessive engine wear.

The heavy duty oil bath air cleaners are usually fitted with a centrifugal pre-cleaner mounted on top of the main cleaner, this should be removed and the air inlet vanes in the bottom plate of the assembly, the ejection slots on the side of the cone and the vanes in the outlet tube, cleaned of dust and dirt. The detachable element is accessible by lowering the oil container which may be attached by clips or a pinch screwed clamp.

Thoroughly clean the container and refill to the indicated level with new engine lubricating oil.

The separate element should be cleaned in a Kerosene bath.

The upper element which is permanently attached inside the body should be periodically cleaned by washing in a Kerosene bath. Drain the element thoroughly before reassembly and do not use petrol (gasoline) for cleaning purposes.

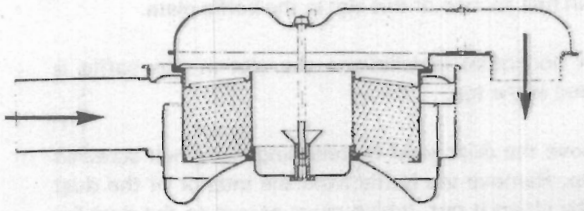

Fig. N.13.
Oil Bath Air Cleaner.

SECTION P
Flywheel and Flywheel Housing

To Remove the Flywheel

1. Remove gearbox and bell housing.
2. Evenly unscrew the setscrews securing the clutch assembly and detach the unit.
3. Knock back the tabs of the locking washers of the flywheel securing setscrews.
4. Remove the flywheel. To facilitate safe removal, it is recommended that two diametrically opposed securing setscrews are removed and in their place, fit two suitably sized studs, finger tight only. The remaining setscrews can now be removed and the flywheel withdrawn under control.
5. Remove the clutch pilot bearing (if fitted).

To Renew the Flywheel Ring Gear

The flywheel ring gear is shrunk on to the flywheel and to remove it partly cut through the gear and chisel cut it from the flywheel. Alternatively, localised heat in a flame form would expand the ring gear sufficiently to tap it off the flywheel.

1. Clean the location of the flywheel front face.
2. Heat the new ring gear to an approximate temperature of 475°F. (246°C).
3. Fit the gear over the flywheel with the lead-in on the teeth facing the front of the flywheel and allow to cool.

Alignment of the Flywheel Housing

Where a flywheel housing is fitted, it is most important that it be correctly aligned with the crankshaft. Misalignment may give rise to difficulty in changing gear, etc. If the housing has been removed, as is necessary for a complete overhaul, the greatest care must be taken on replacement to ensure accuracy of alignment. The appropriate procedure is as follows: —

See that the face of both the rear of the cylinder block and flywheel housing are perfectly clean and free from burrs.

Set the housing on to the studs and tighten, but not overtight so as to allow adjustment.

Alignment of the Flywheel Housing Bore

Secure the base of a "clock" gauge to the flange of the crankshaft.

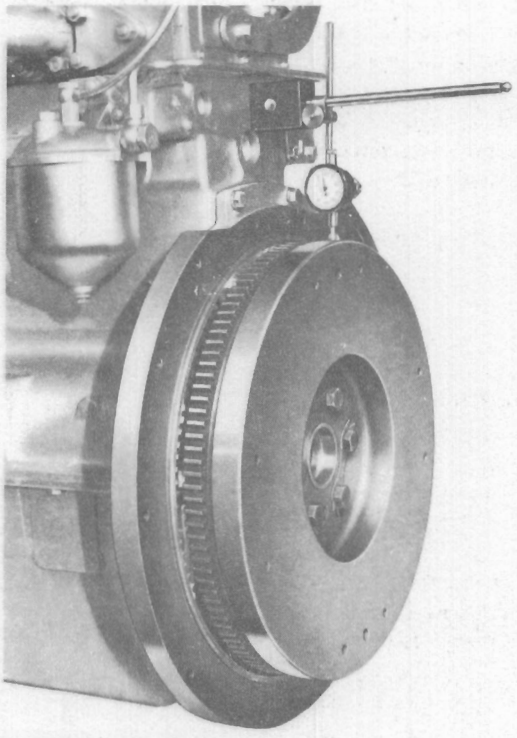

Fig. P.1.
Checking Flywheel Periphery Run-out.

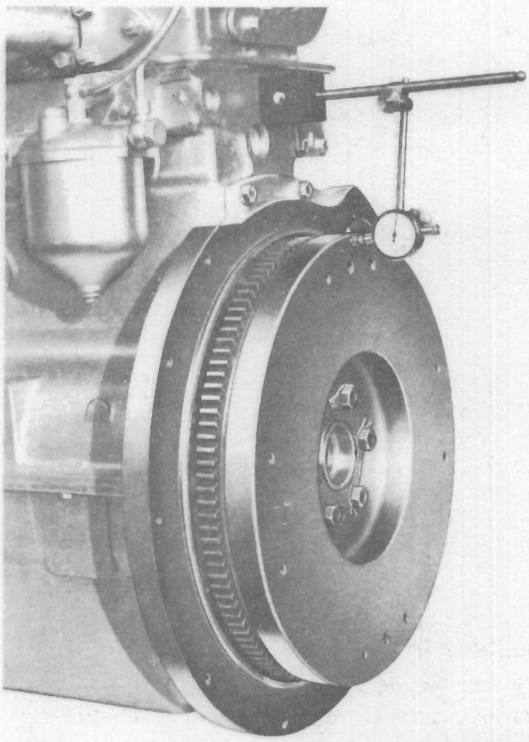

Fig. P.2.
Checking Flywheel Back-face Run-out.

Set the needle of the gauge to the interior of the bored hole in the flywheel housing.

Turn the crankshaft and check that this hole is truly central. The housing is adjusted until the bored hole is central.

For convenience in turning the engine it is advisable to release (but not remove) the nuts holding the atomisers in place.

The hole in the flywheel housing should be truly central with the crankshaft within the following limits (total indicator reading).

Diameter of housing	Deviation
Up to 14.25 in (362 mm)	0.006 in (0,15 mm)
14.25 to 20.125 in (362 to 511 mm)	0.008 in (0,20 mm)
20.125 to 25.5 in (511 to 648 mm)	0.010 in (0,25 mm)
25.5 to 31.0 in (648 to 787 mm)	0.012 in (0,30 mm)

Alignment of the Flywheel Housing Face

With the face of the 'clock gauge' still bolted to the crankshaft flange, adjust the 'clock' so as to set the needle against the vertical machined face of the flywheel housing, and again, turning the crankshaft, check that this face is perpendicular to the crankshaft axis.

This facing should be within the following limits (total indicator reading) of being truly at right angles to the crankshaft axis.

Diameter of housing	Deviation
Up to 14.25 in (362 mm)	0.006 in (0,15 mm)
14.25 to 20.125 in (362 to 511 mm)	0.008 in (0,20 mm)
20.125 to 25.5 in (511 to 648 mm)	0.010 in (0,25 mm)
25.5 to 31.0 in (648 to 787 mm)	0.012 in (0,30 mm)

All adjustments to bring the flywheel housing within the limits must be on the flywheel housing and under NO CONDITIONS must the rear of the cylinder block be interfered with.

When the housing is properly aligned to the above limits, tighten the securing nuts evenly.

Ream the dowel holes and fit the correct length and size dowels.

To Replace the Flywheel

1. It is most essential before fitting a flywheel that the crankshaft flange face and periphery are perfectly clean and free from burrs. The mating faces of the flywheel must also be absolutely clean and free from burrs. Failure to observe these conditions may result, in the flywheel running out of balance.

2. It will be noted that there is a seventh untapped hole in the crankshaft flange, which is at bottom centre when the crankshaft is at T.D.C. Nos. 1 and 4 pistons. With the aid of guide studs mount the flywheel to the crankshaft flange so that the untapped hole in the flange is in line with the seventh, un-used smaller hole in the flywheel. This ensures the flywheel timing marks are in a correct position in relation to the crankshaft.

3. Engage the six securing setscrews with three new locking washers and tighten sufficiently to hold the flywheel to the crankshaft.

4. It is most important that the flywheel run out be checked to ensure that it will not run out of balance, so before tightening the six setscrews, secure the base of a 'clock' gauge to the cylinder block. Then, with the flywheel at top centre, set the plunger of the 'clock' on the periphery at T.D.C. See Fig. P.1.

5. Turn the crankshaft and check the run out. The flywheel should run truly within 0.012 in (0,30 mm) total indicator reading.

6. With the base of the 'clock' gauge secured to the cylinder block, set the clock so that the plunger rests against the vertical machined face of the flywheel. See Fig. P.2.

7. Again turn the crankshaft and check the run out, at the same time pressing a hammer shaft or similar tool against the flywheel to take up the crankshaft end float. The flywheel should be within 0.0005 in per inch (0,005 mm per cm) of flywheel diameter (total indicator reading) of being truly at right angles to the crankshaft axis.

8. Using a suitable torque wrench tighten the six securing setscrews to the recommended torque (see page B.2).

9. Lock the setscrews with the tab washers.

Sealed Back Ends

Certain engines have a sealed back end arrangement consisting of a spring loaded rubber seal fitted in the engine backplate which locates around a spigot on the front face of the flywheel.

When fitting this seal, always ensure that the lip of the seal is towards the flywheel side and fitted flush with the front side of the backplate.

SECTION Q
Alternator Dynamo and Starter Motor

ALTERNATOR
MODELS 15ACR and 17ACR

1. Precautions

The diodes in the alternator function as one-way valves and the transistors in the regulator/control box operate as fast switches. Both are accurate and sensitive.

They do not wear out and seldom require adjustment, because they are sensitive to voltage changes and high temperature, the precautions are vital to prevent them from being destroyed.

(a) DO NOT disconnect the battery whilst the engine is running. This will cause a voltage surge in the alternator charging system that will immediately ruin the diodes or transistors.

(b) DO NOT disconnect a lead without first stopping the engine and turning all electrical switches to the off position.

(c) DO NOT cause a short circuit by connecting leads to incorrect terminals. Always identify a lead to its correct terminal. A short circuit or wrong connection giving reverse polarity will immediately and permanently ruin transistors or diodes.

(d) DO NOT connect a battery into the system without checking for correct polarity and voltage.

(e) DO NOT "flash" connections to check for current flow. No matter how brief the contact the transistors may be ruined.

2. Maintenance

The alternator charging system will normally require very little attention, but it should be kept free from build-up of dirt, and a check made if it fails to keep the battery charged.

(a) Regularly inspect the driving belts for wear and correct tension. It is important to ensure that all belts on a multiple belt drive have equal tension and are each carrying their share of the load. Slack belts will wear rapidly and cause slip which will not drive the alternator at the required speed. Drive belts which are too tight impose severe side thrust on the alternator bearings and shorten their life. Periodically ensure that the alternator is correctly aligned to the drive.

(b) Do not replace faulty belts individually in a multi-belt system. A complete matched set of drive belts must always be used.

(c) Keep the alternator clean with a cloth moistened in kerosene or cleaning fluids. Ensure that ventilation slots and air spaces are clear and unobstructed.

(d) Remove any dirt accumulated on the regulator/control box housing, and ensure that cooling air can pass freely over the casing.

Testing the 15ACR and 17ACR in Position

First check the driving belt for condition and tension. The nominal hot outputs at 6,000 rev/min (alternator speed) are 28 amps and 36 amps for 15ACR and 17ACR respectively. These figures may be exceeded slightly when the alternator is running cold. To avoid misleading results, the following test procedure should therefore be caried out with the alternator running as near as possible to its normal operating temperature.

NOTE: De-rated 17ACR alternators, giving a hot output of 25 amps may be fitted to combine harvesters and similar applications where the engine is operating in dusty conditions.

Alternator Output Test with Regulator Inoperative

Withdraw the cable connector(s) from the alternator, remove the moulded cover (secured by two screws) and earth the regulator green lead or connector strip to frame.

Connect an external test circuit to the alternator output terminals as shown in Fig. Q.1, Q.2, or Q.3.

Value of components in Figs. Q.1, Q.2 and Q.3 are as follows:—

1. 12 volt 2.2 watt bulb.
2. 0—60 ammeter.
3. 12 volt battery.
4. 0—20 moving coil voltmeter.
5. 0—15 ohm 35 amp variable resistor.

Observe carefully the polarity of battery and alternator terminals — reversed connections will damage the alternator diodes.

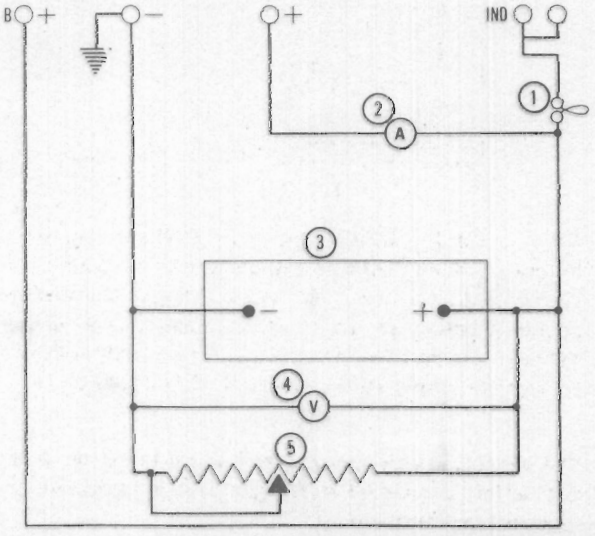

Fig. Q.1.
Test Circuit for 15ACR and 17 ACR Alternators.
Standard terminations, battery-sensed.

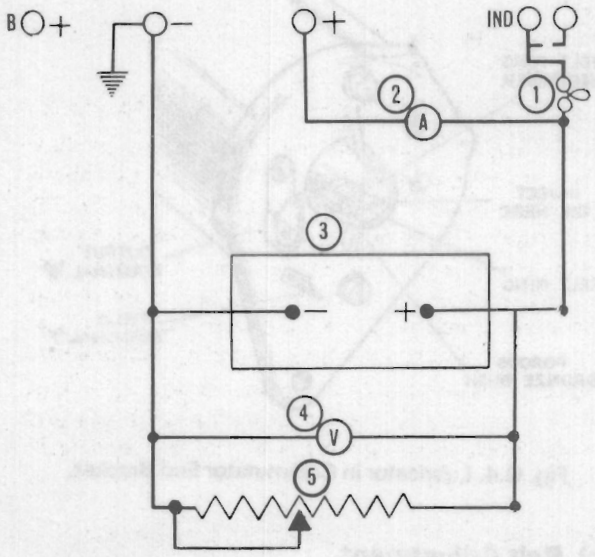

Fig. Q.2.
Test Circuit for 15ACR and 17ACR alternators with standard terminals and two piece connection plug (machine-sensed).

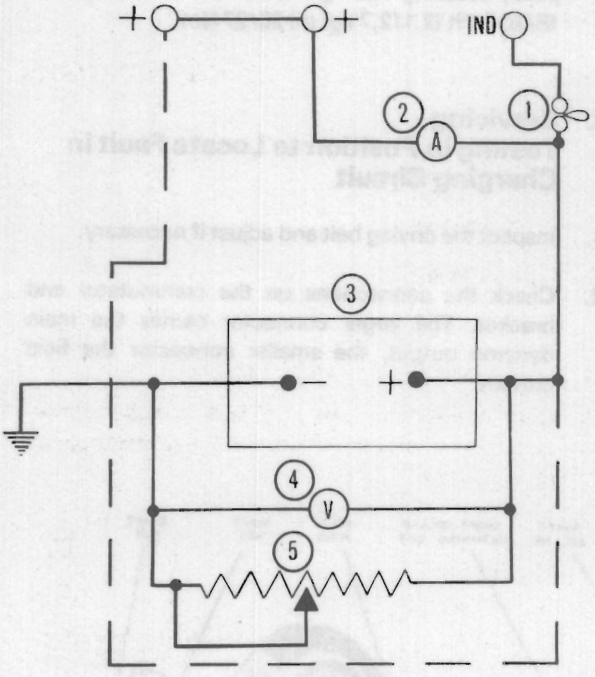

Fig. Q.3.

Test Circuit for 15ACR and 17ACR alternators with European terminations and single 3 terminal connector plug (machine-sensed). Broken line cable connection applies to battery-sensed, in which case, the connections between the two '+' terminals will not apply and the broken line terminal will be marked "S" instead of "+".

The variable resistor across the battery terminals must not be left connected for longer than is necessary to carry out the following test.

Start the engine. At 1,500 rev/min (alternator speed), the test circuit bulb should be extinguished. Increase engine speed until the alternator is running at 6,000 rev/min approximately, and adjust the variable resistance until the voltmeter reads 13.6 volts. The ammeter reading should then be approximately equal to the rated output (see previous heading). Any appreciable deviation from this figure will necessitate the alternator being removed from the engine for further examination.

Failure of one or more of the diodes will be indicated in the above test by effect on alternator output, and also in some instances by abnormally high alternator temperature and noise level.

Regulator Test

The following test assumes the alternator to have been tested and found satisfactory.

Disconnect the variable resistor and remove the earth connection from the regulator green lead or connector strip to frame.

With the remainder of the test circuit connected as for the alternator output test, start the engine and again run the alternator up to 6,000 rev/min until the ammeter shows an output current of less than 10 amperes. The voltmeter should then give a reading of 13,6 — 14,4 volts. Any appreciable deviation from this (regulating) voltage means that the regulator is not functioning properly and must be replaced.

If the foregoing tests show the alternator and regulator to be satisfactorily performing, disconnect the test circuit and reconnect the alternator terminal connector. Now connect a low range voltmeter between the positive terminal of the alternator (the moulded terminal connector is open ended to facilitate this) and the positive terminal of the battery. Switch on battery load (headlights etc), start the engine and increase speed until the alternator runs at approximately 6,000 rev/min. Note the voltmeter reading.

Transfer the voltmeter connections to the negative terminals of the alternator and battery and again note the meter reading.

If the reading exceeds 0.5 volt on the positive side or 0.25 volt on the negative side, there is a high resistance in the charging circuit which must be traced and remedied.

DYNAMO
Models C40A and C40L

1. General

The following information concerns the two types of dynamo fitted as standard equipment, namely, the Lucas C40A and C40L models. If information concerning another type of dynamo is required, the relevant manufacturer should be contacted.

The C40A is a non-ventilated unit. It will be found fitted to applications such as agricultural machines, which operate under exposed service conditions. The

C40L is a ventilated dynamo and will be found on applications such as road vehicles, which operate under cleaner and more normal conditions.

Both types are shunt-wound two-pole two-brush machines arranged to work in conjunction with a compensated voltage control regulator unit. A ball bearing supports the armature at the driving end and a porous bronze bush at the rear supports the commutator end.

The output of the dynamo is controlled by the regulator unit and is dependent on the state of charge of the battery and the loading of the electrical equipment in use. When the battery is in a low state of charge, the dynamo gives a high output, whereas if the battery is fully charged, the dynamo gives only sufficient output to keep the battery in good condition without any possibility of overcharging. An increase in output is given to balance the current taken by lamps and other accessories when in use.

When fitting a new control box, it is important to use only an authorised replacement. An incorrect replacement can result in damage to the dynamo.

2. Routine Maintenance

(a) Lubrication

Every 5,000 miles (7,500 km) or 200 running hours, inject a few drops of high quality S.A.E. 30 engine oil into the hole marked "OIL" at the commutator end bearing housing (see Fig. Q.4).

(b) Inspection of Brush Gear

Every 20,000 miles (30,000 km) or 800 running hours, the dynamo should be removed from the engine and the brushgear inspected by a competent electrician.

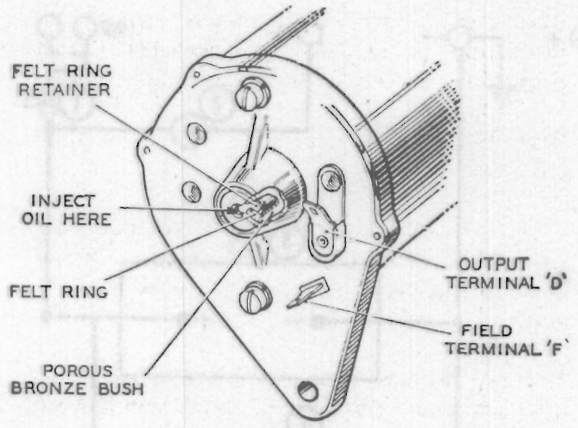

Fig. Q.4. Lubricator in Commutator End Bracket.

(c) Belt Adjustment

Occasionally inspect the dynamo driving belt, and if necessary adjust to take up any slackness by turning the dynamo on its mounting. Care should be taken to avoid overtightening the belt (see Page M.4). At the same time check the dynamo pulley securing nut tightness. Pull to a torque of 15/20 lbf ft (2,1/2,7 kgf m) 20/27 Nm.

3. Servicing
Testing in Position to Locate Fault in Charging Circuit

1. Inspect the driving belt and adjust if necessary.
2. Check the connections on the commutator end bracket. The larger connector carries the main dynamo output, the smaller connector the field current.

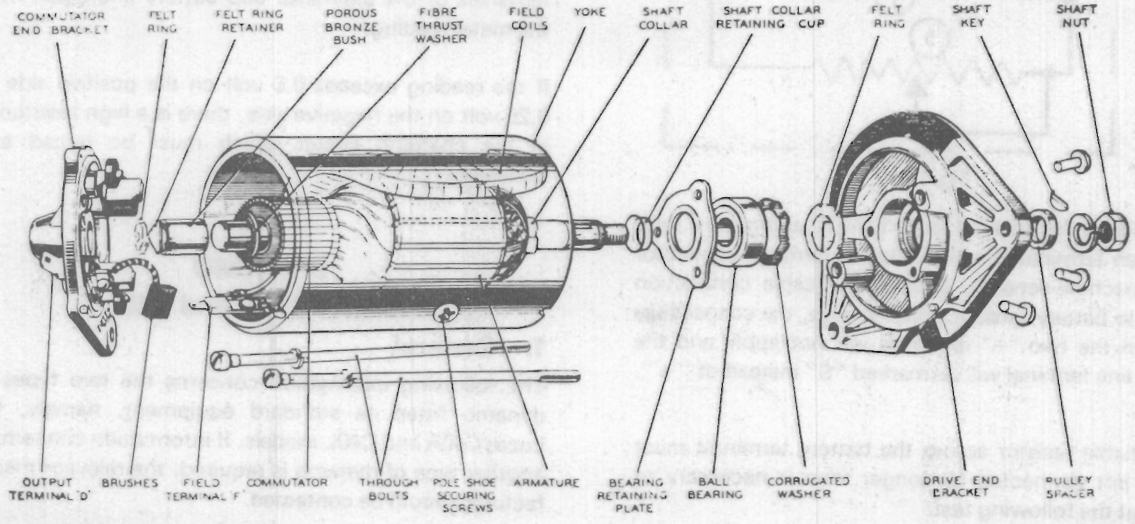

Fig. Q.5. Dynamo Dismantled.

3. Switch off all lights and accessories, take off the cables from the terminals of the dynamo and connect the two terminals with a short length of wire.

4. Start the engine and set to run at normal idling speed.

5. Clip the negative lead of a moving coil type voltmeter, calibrated 0/20 volts, to one dynamo terminal and the positive lead to a good earthing point on the yoke.

6. Gradually increase the engine speed, when the voltmeter reading should rise rapidly and without fluctuation. Do not allow the volt meter reading to reach 20 volts, and do not race the engine in an attempt to increase the voltage. It is sufficient to run the dynamo up to a speed of 1,000 rev/min. If the voltage does not rise rapidly and without fluctuation the unit must be dismantled for internal examination. Excessive sparking at the commutator in the above test indicates a defective armature which should be replaced.

STARTER MOTOR MODEL M45G

1. GENERAL

This starter motor is a four-pole, four-brush earth return machine with series-parallel connected field coils.

A solenoid-operated pre-engaged drive assembly is carried on an extension of the armature shaft. The main features of this type of drive are as follows:—

(a) Positive pinion engagement preventing the pinion being thrown out of mesh whilst starting.

(b) Dual-purpose plate-clutch incorporated in the drive assembly giving over-speed and overload protection.

(c) Self-indexing pinion to ensure smooth engagement between the pinion and the flywheel teeth before the starter motor begins to rotate.

(d) Armature braking system to ensure rapid return to rest when the starter button is released.

2. ROUTINE MAINTENANCE

(a) The starter motor requires no routine maintenance beyond the occasional inspection of the electrical connection which must be clean and tight, the brush gear, and the commutator.

(b) After the starter motor has been in service for some time, remove the starter motor from the engine and submit it to a thorough bench inspection.

1. Brush wear (this is a fair indication of the amount of work done). Renew brushes worn to, or approaching, 5/16 in (7,9 mm) in length.

2. Brush spring tension. Correct tension is 30/40 ozf (0,85/1,13 kgf) 8,3/11,1 N. Renew springs if tension has dropped below 25 ozf (0,71 kgf) 6,9 N.

3. Skim commutator if it is pitted or badly worn.

4. Check bearings for excessive side play of armature shaft.

5. Check pinion movement.

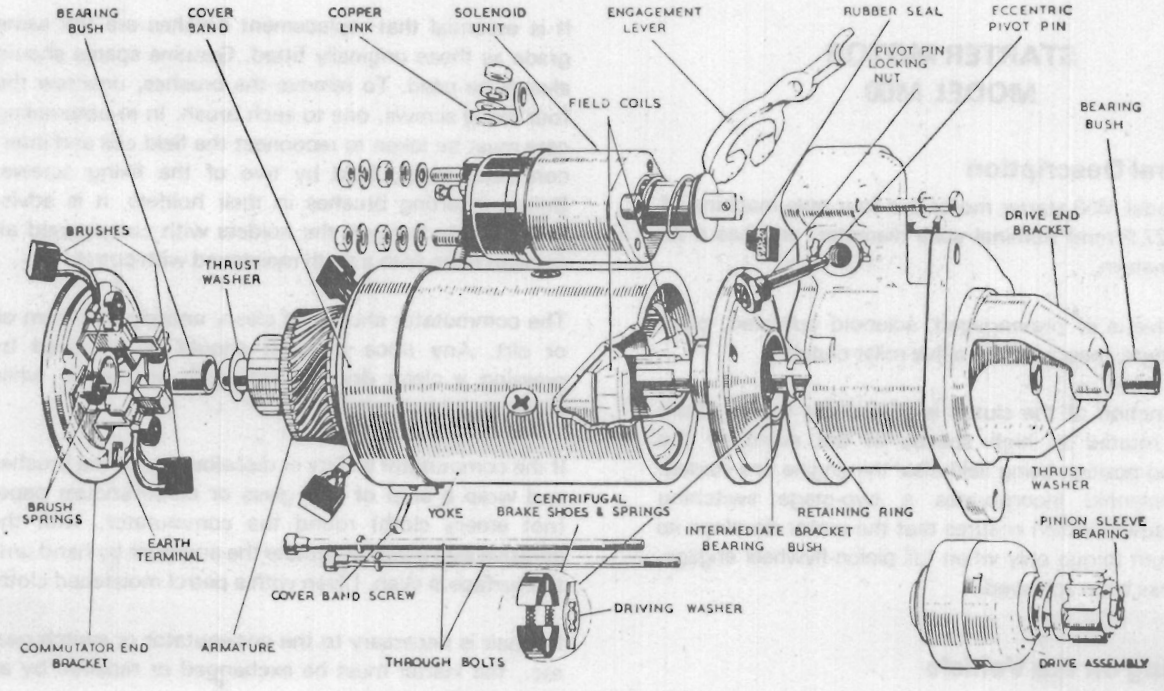

Fig. Q.6 M45G Starter Motor Dismantled.

6. Clean and lubricate the indented bearing inside the pinion sleeve using Shell SB2628 grease for temperate and cold climates or Shell Retinex grease for hot climates.

7. Clean and lubricate the indented bronze bearing in the intermediate bracket. Use Ragosine 'Molypad' Molybdenised non-creep oil for the purpose.

3. SERVICING

Testing in Position

Switch on the lamps. If the vehicle is not equipped with lighting, then connect a 0/20 voltmeter across the battery terminals before preceeding. Operate the starter control and watch for the following symptoms: —

1. The lamps dim (or voltmeter reading drops to about 6 volts), and the motor does not crank the engine.

   Check battery (must be at least half-charged) and battery lugs (clean and a good earth connection).

2. The lamps do not dim, the voltmeter reading remains steady at about 12 volts, and the motor does not crank the engine. Connect voltmeter from from solenoid terminal 'BAT,' and starter yoke, operate starter; No volts indicated.

   (a) Poor lug connections at battery.

   (b) Bad earth connection.

   (c) Broken starter lead, battery to starter.

   Full volts i.e., 12/14 volts indicated.

   (a) Faulty solenoid switch.

   (B) Open circuit in starter — check brushes.

STARTER MOTOR MODEL M50

General Description

The model M50 starter motor is a four pole machine of 5 in (127,0 mm) nominal yoke diameter, and has a 21 slot armature.

The drive is of pre-engaged, solenoid operated, push screw type, incorporating a five roller clutch.

The function of the clutch is to prevent the armature being rotated at high speeds in the event of the engaged position being held after the engine has started. The solenoid incorporates a two-stage switching arrangement which ensures that the motor develops its maximum torque only when full pinion-flywheel engagement has been achieved.

Testing on the Vehicle

Ensure that the battery is in a charged condition. Switch on the lamps and operate the starter button. If the starter fails to function, but the lights maintain full brilliance, check the switch and battery connections to the starter and all external leads. Sluggish action of the starter can be caused by a poor or faulty connection.

Difficulty in smooth engagement between starter and engine flywheel is probably due to dirt on the starter-shaft helices preventing free pinion movement. The shaft should be thoroughly cleaned with cleaning fluid followed by the application of a small quantity of Shell SB2628 grease for temperate and cold climates or Shell Retinex grease for hot climates.

MAINTENANCE

Brush Gear and Commutator

Inspect the brushes at intervals to ensure that they are free in their guides and that the leads are quite free for movement, by easing the brush springs and pulling gently on the flexible connections. If a brush is inclined to stick, remove it from its holder and clean the sides with a petrol moistened cloth.

Be sure to refit the brushes in their original positions to retain the "bedding". The brushes should be well bedded (i.e. worn to the commutator periphery) but if not, wrap a strip of very fine glass or carborundum paper firmly around the commutator with the abrasive side outwards. With the brushes in position, rotate the armature by hand in the normal working direction of rotation; until the correct brush shape is obtained. If the brushes are worn down so that the springs are no longer providing effective pressure, they should be renewed. Check the brush spring pressure by hooking a spring balance under the spring lip. The correct tension is 30/40 ozf (0,85/1,13 kgf) 8,3/11,1 N.

It is essential that replacement brushes are the same grade as those originally fitted. Genuine spares shouid always be used. To remove the brushes, unscrew the four fixing screws, one to each brush. In re-assembling care must be taken to reconnect the field coil and interconnector leads, held by two of the fixing screws. Before inserting brushes in their holders, it is advisable to blow through the holders with compressed air or clean them with a cloth moistened with petrol.

The commutator should be clean, entirely free from oil or dirt. Any trace of such should be removed by pressing a clean dry fluffless cloth against it, while armature is hand rotated.

If the commutator is dirty or discoloured, tilt the brushes and wrap a strip of fine glass or carborundum paper (not emery cloth) round the commutator, with the abrasive side inwards. Rotate the armature by hand until the surface is even. Clean with a petrol moistened cloth.

If repair is necessary to the commutator or switch gear etc., the starter must be exchanged or repaired by an authorised agent.

SECTION R
Exhauster

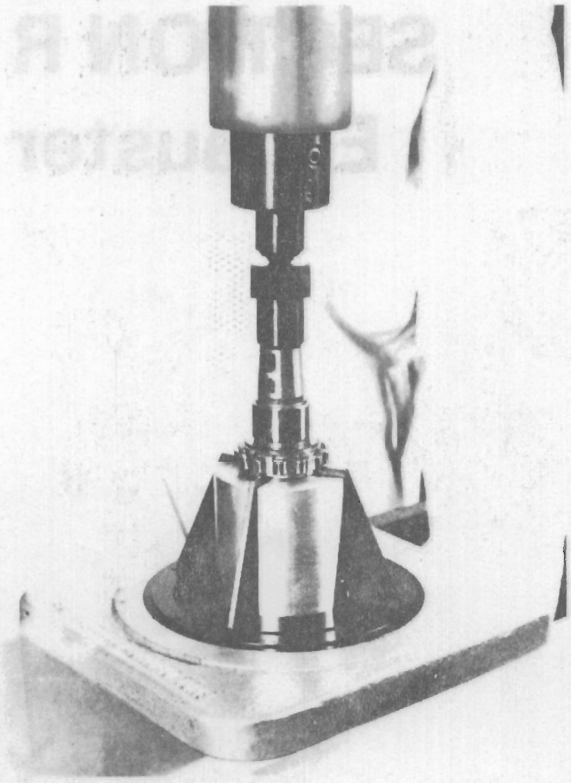

Fig. R.1.
Removing Bearing and Shaft Collar.

Description

The A.350 type exhauster, which is fitted to certain 4.192, and 4.203 engines, is a rotary sliding vane pump, with an eccentrically mounted rotor

The exhauster body and end covers are of cast iron, and house an aluminium rotor, die cast on to a steel shaft. The rotor has four equi-spaced slots to accommodate fibre blades.

The shaft runs in a sintered bronze plain bearing in the rear end cover, and a roller race in the drive end cover, or, alternatively, two sintered bronze bearings. Drive end covers with a roller race have two shaft seals which contact a hardened steel collar pressed on to the rotor shaft. The seals are arranged to prevent ingress of air and dirt, and leakage of oil from the exhauster. Drive end covers with a plain bearing have only one seal, preventing oil leakage.

The shaft drive end is splined to take the drive gear.

The intake port in the exhauster is pipe-connected to the vacuum reservoir. The outlet port formed in the end cover of the exhauster aligns with the aperture in the timing case.

Lubrication is by engine pressure feed, oil entering through a connection in the rear end cover to an annular groove in the bearing housing. The oil passes through a hole in the bearing to oilways in the rotor shaft communicating with the slots in the rotor. The oil passes through the end of the rotor slots to lubricate the drive end roller bearing. When a plain bearing is fitted in the drive end cover, it receives oil through an extension of the main oilway in the rotor shaft. A passage in the drive end cover to the vacuum side of the pump relieves oil pressure on the seal.

Operation

At all speeds the rotor blade are kept in contact with the bore of the body by centrifugal force, assisted by the hydraulic action of the oil beneath the blades. When the rotor turns, the spaces between the blades vary because of the eccentric mounting of the rotor in the exhauster body. As a blade passes the inlet port, the space between it and the following blade is increasing and air is drawn from the vacuum reservoir. This air is then compressed and expelled, with the lubricating oil, through the outlet port to the engine timing case.

Servicing of Exhauster
Periodic Inspections and Preventive Maintenance
Weekly or Every 1,000 Miles

Check the vacuum lines and fittings. (Vacuum leakage may occur through the line, or reservoir mounted non-return valve if the valve seat is dirty or pitted). Examine the exhauster for evidence of oil leakage, particularly at end cover joints, and at shaft oil seal.

Check the oil supply line for leaks at fittings and connections.

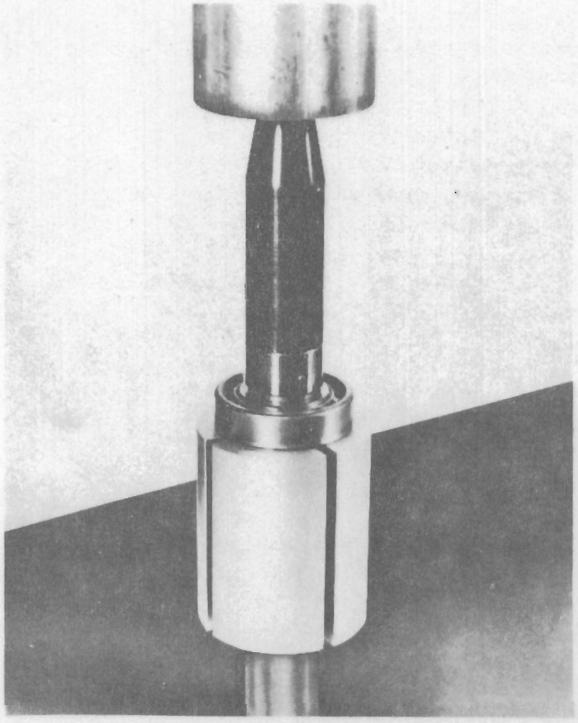

Fig. R.2.
Pressing Bearing onto Rotor Shaft.

Every 5,000 Miles

Check the mounting and end cover nuts and bolts for tightness.

Every 50,000 Miles

Remove and dismantle exhauster, thoroughly clean all parts and inspect for wear and damage. Repair or replace the exhauster with a Factory Replacement Unit.

Removal

Disconnect oil and vacuum pipes at the exhauster and plug open ends to prevent the entry of foreign matter.

Undo the four nuts that secure the exhauster to the timing case, and withdraw the unit complete with its driving gear, from the studs.

Dismantling

Remove the two thrust plates from the front of the exhauster and remove the driving gear.

Mark the end covers in relation to the body to ensure location on re-assembly.

Unscrew four setscrews and remove rear end cover with rubber sealing ring.

Mark the blades in relation to the rotor.

Withdraw the rotor and fibre blades from the body.

Unscrew four socket screws, and remove drive end cover, with joint or rubber ring.

Remove rear end cover circlip, blanking disc, and rubber oil seal ring, if fitted.

NOTE:—Further dismantling of the rotor assembly need be undertaken only if, after inspection, it is found necessary to renew the bearing or shaft collar.

Cleaning and Inspection

Cleaning

Wash the roller bearing, where fitted, in thin flushing oil or white spirit and blow dry with compressed air. Spinning the bearing with compressed air should be avoided, otherwise damage to the rollers and race will occur.

Wash the remaining components in cleaning solvent, and clear the rotor and drive end cover oilways with compressed air.

Inspection of Parts

Examine the roller bearings, where fitted, for discolouration, wear, pitting and cracked races. Rotate slowly to examine for roughness. To renew, see "Overhaul" Section. Premature failure may have been caused by shortage of oil.

Examine plain bearing(s) for excessive wear. To renew, see "Overhaul" Section.

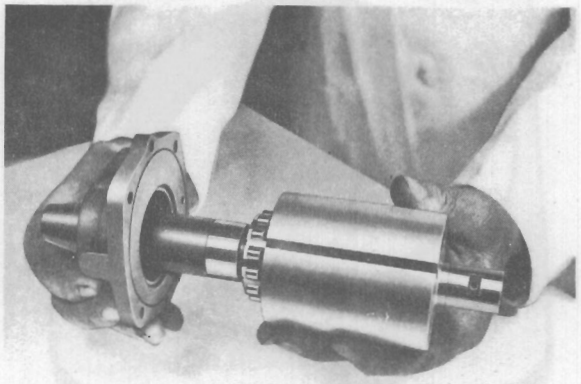

Fig. R.3.

Inspect rotor and shaft for cracks and damage, and the shaft seal collar for wear. To renew collar, see "Overhaul" Section.

Check fit of blades in rotor slot; replace any worn or damaged blades.

Examine the seal(s) carefully to see that the sealing edge is pliable, intact and sharp. Wear or deteroiration is caused primarily by dirty oil and grit. Ineffective seals should be replaced. See "Overhaul" Section.

Examine the body for cracks and damage, and the bore for longitudinal ripples or lines. If these are only slight the body is still serviceable, if excessive the body should be renewed.

Examine the end covers, and replace if cracked or scored.

Overhaul

End Cover Bearings and Seals — To Renew

Roller outer race: Tap end cover face several times on to a wooden block, suitably recessed to accommodate the race. Press new race fully into housing.

Seals: Remove circlip, if fitted, and seal outer back plate, and remove seals from cover. Fit new seals with inner seal lip facing inwards, and the other outwards. Replace back plate and circlip.

With recessed end cover, remove bearing outer race as above, and withdraw inner back plate. Press outer back plate and seals from cover using a bar or tube 1 $\frac{5}{16}$ in. diameter. Inspect back plates for damage and renew if necessary. Insert outer back plate, press in new seals arranged as above, replace inner back plate, smaller diameter first, and press race into housing.

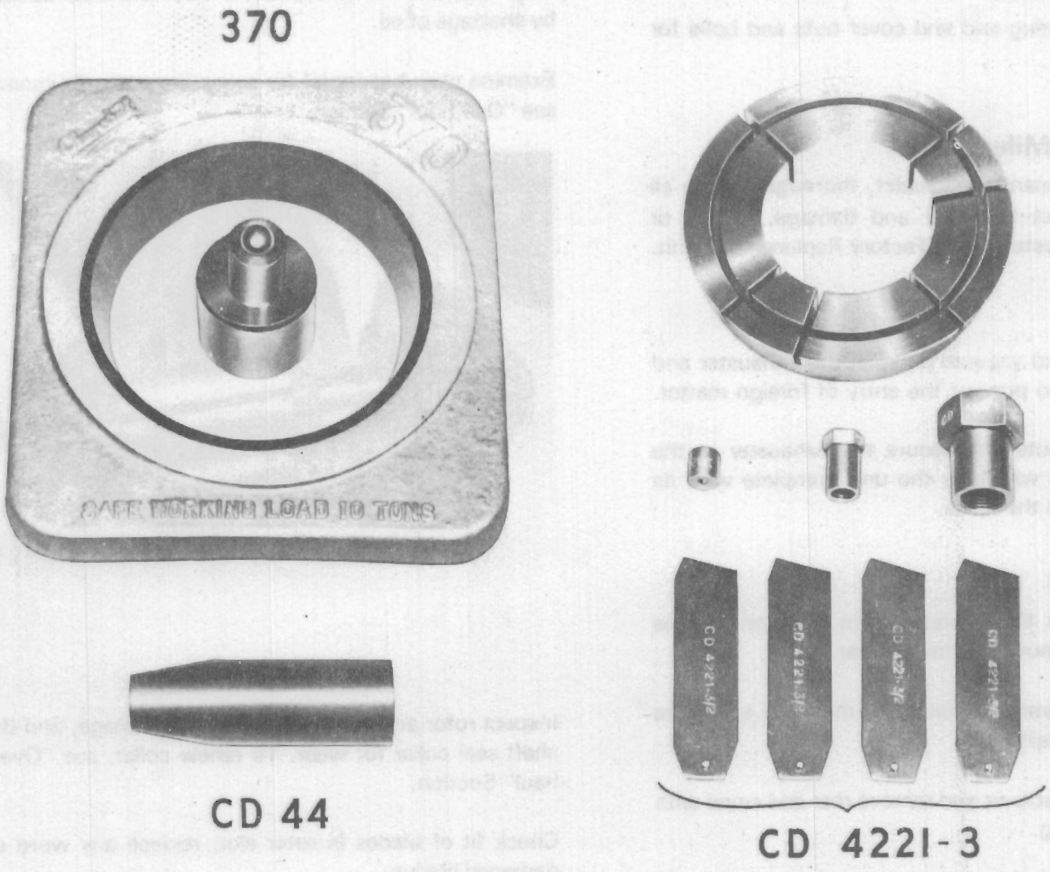

Fig. R.4.
Churchill Tools for Exhauster.

Where cover has one oil seal, fit new seal with lip facing inwards.

Plain Bearings. When bearing is housed in a blanked off cover, remove circlip, blanking disc, rubber ring, and press bearing out of cover using a bar or tube 1 1/16 in (26,99 mm) diameter. Press new bearing into housing until 1/8 in (3,17 mm) below cover face. Similar action should be taken for a plain bearing in drive end cover.

If the bearing is housed in a blank end cover, it should be extracted, or machined out, taking care not to damage the housing. In an emergency, it may be removed by cutting a groove along the bearing, using half round chisel. Inspect housing, and remove any burrs. Press new bush fully into cover.

Roller Bearing and Shaft Collar—To Renew

Withdraw roller bearing inner race and shaft collar using the Churchill Universal Taper Base C.D. 370, and special withdrawal tool C.D. 4221-3 Fig. R.4.

Insert the adaptor into the taper base as shown in Fig. R.1. Position the rotor in the adaptor, drive end up, and insert four "fingers" in the slots with the pegged ends set in the adaptor, and the other ends, against the bearing inner race. Place or screw the appropriate Thrust Block on to the shaft, and, while supporting the rotor under the Taper Base, press the bearing and collar off the shaft.

Lightly grease the shaft, and, using the Installer C.D. 44, press bearing inner race on to shaft.

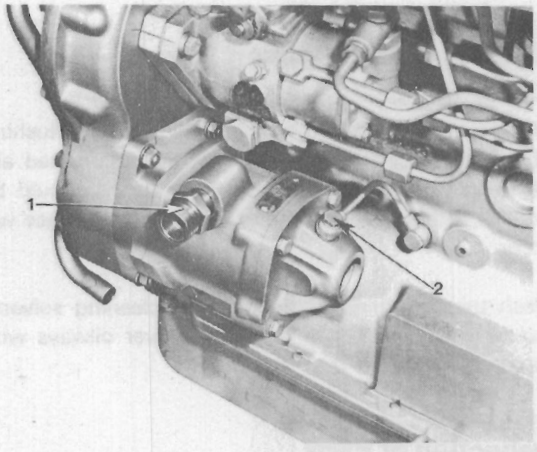

Fig. R.5.
Exhauster Mounted on Engine.
1. Vacuum Pipe Union. 2. Oil Feed.

NOTE:—There will be a slight clearance between the bearing and the rotor face. See Fig. R.2.

Similarly fit collar with recessed shoulder against the bearing.

NOTE:—The rotor assembly should be supported on the bed of the press by a tubular spacer placed over the shaft, and not by the rotor or shaft itself.

Re-assembly

Lubricate all moving parts with clean engine oil and renew joint and/or rubber ring(s).

NOTE:—No special tools are required to re-assemble exhausters having one oil seal. With exhausters having two seals, use Installer C.D.44.

Where applicable, place the Installer on the shaft to guide the seals on to the collar. (See Fig. R.3). Smear the rollers with grease to hold them against the inner race, and insert the end of the rotor assembly into the drive end cover.

Assemble cover to body as originally fitted, with rubber ring or joint, and secure. Dowel pins ensure correct location.

Hold the body, drive end downwards, and replace blades into rotor slots, making sure that marks made during dismantling correspond.

Install rear end cover on to body, with rubber ring, and secure.

Rotate the rotor by hand to be sure that it turns without binding, and tighten the socket headed screws.

Fig. R.4 illustrates the special Churchill tools for this exhauster.

INSTALLATION

Refit the driving gear to rotor shaft and secure with two thrust plates which secure to front of exhauster. Replace the joint and remount the exhauster, aligning the hole in the joint with the air/oil discharge passage. and tighten the four securing nuts.

Reconnect the oil and vacuum pipes, see Fig. R.5.

LUBRICATING OILS

Lubricating oils should meet the requirements of the U.S. Ordnance Specifications MIL-L-46152 or MIL-L-2104C. The lubricating oils for use in Perkins engines should have a **minimum** Viscosity Index of 80.

Some of these oils are listed below. Any other oils which meet these specifications are also suitable.

MIL-L-46152 OILS

Company	Brand	S.A.E. Designation		
		0°F (-18°C) to 30°F (-1°C)	30°F (-1°C) to 80°F (27°C)	Over 80°F (27°C)
B.P. Ltd.	Vanellus M	10W	20W	30
	Vanellus M		20W/50	20W/50
Castrol Ltd.	Castrol/Deusol CRX	10W	20	30
	Castrol/Deusol CRX	10W/30	10W/30	10W/30
	Castrol/Deusol CRX		20W/50	20W/50
	Deusol/RX Super		20W/40	20W/40
A. Duckham & Co. Ltd.	Fleetol HDX	10	20	30
	Q Motor Oil		20W/50	20W/50
	Fleetol Multi V		20W/50	20W/50
	Fleetol Multilite	10W/30	10W/30	10W/30
	Farmadcol HDX		20	30
Esso Petroleum Co. Ltd.	Essolube XD-3	10W	20W	30
	Essolube XD-3		15W/40	15W/40
Mobil Oil Co. Ltd.	Delvac 1200 Series	1210	1220	1230
	Delvac Special	10W/30	10W/30	10W/30
Shell	Rimula X	10W	20W/20	30
	Rimula X	10W/30	10W/30	10W/30
	Rimula X		15W/40	15W/40
	Rimula X		20W/40	20W/40
	Rotella TX	10W	20W/20	30
	Rotella TX		20W/40	20W/40
Total Oil Co. Ltd.	Total Super HD		20W/20	30
	Total HD2-M	10W/30	20W/40	20W/50
	Total HD3-C (Rubia S)	10W	20W/20	30
	Total HD3-C (Rubia TM)		15W/40	15W/40
	Total Universal Tractor Oil (Multagri)		20W/30	20W/30
	Total Super Universal Tractor Oil (Multagri TM)		20W/30	20W/30

MIL-L-2104C OILS

Company	Brand	S.A.E. Designation		
		0°F (-18°C) to 30°F (-1°C)	30°F (-1°C) to 80°F (27°C)	Over 80°F (27°C)
B.P. Ltd.	Vanellus C3	10W	20W/20	30
Castrol Ltd.	Castrol/Deusol CRD	10W	20	30
	Deusol/RX Super		20W/40	20W/40
	Agricastrol HDD	10W	20	30
	Agricastrol MP		20W/30	20W/30
	Agricastrol MP		20W/40	20W/40
A. Duckham & Co. Ltd.	Fleetol 3	3/10	3/20	3/30
	Farmadcol 3	3/10	3/20	3/30
Esso Petroleum Co. Ltd.	Essolube D-3HP	10W	20W	30
	Essolube XD-3	10W	20W	30
	Essolube XD-3		15W/40	15W/40
Mobil Oil Co. Ltd.	Delvac 1300 Series	1310	1320	1330
Shell	Rimula CT	10W	20W/20	30
	Rimula X	10W	20W/20	30
	Rimula X	10W/30	10W/30	10W/30
	Rimula X		15W/40	15W/40
	Rimula X		20W/40	20W/40
	Rotella TX	10W	20W/20	30
	Rotella TX		20W/40	20W/40
Total Oil Co. Ltd.	Total HD3-C (Rubia S)	10W	20W/20	30
	Total HD3-C (Rubia TM)		15W/40	15W/40
	Total Super Universal Tractor Oil (Multagri TM)		20W/30	20W/30

Where oils to the MIL-L-46152 or MIL-L-2104C specification are not available, then oils to the previous specification MIL-L-2104B may continue to be used providing they give satisfactory service.

The above specifications are subject to alteration without notice.

APPROVED SERVICE TOOLS

Available from V. L. Churchill & Co. Ltd., Daventry, Northamptonshire, NN11 4NF, England.

	Tool No.	Description
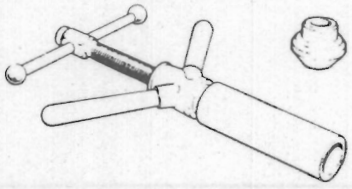	PD.1D	VALVE GUIDE REMOVER AND REPLACER (MAIN TOOL)
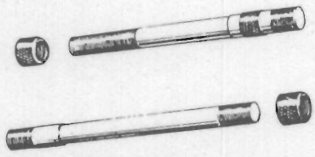	PD.1D-1A	ADAPTOR FOR PD.1D A pair of puller bars fitted with knurled nuts. Suitable for 5/16 in and 3/8 in guides. The necessary distance piece from the adaptors below should also be used.
	PD.1D-4	ADAPTOR FOR PD.1D A 15 mm (19/32 in) distance piece used to replace valve guides to a set height.
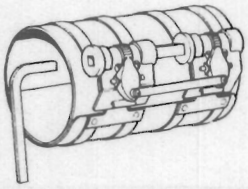	No. 8	PISTON RING SQUEEZER
	PD.41B	PISTON HEIGHT AND VALVE DEPTH GAUGE A simple method of quickly checking piston height.
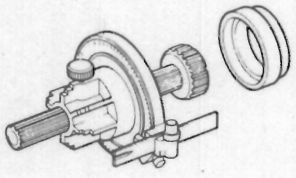	MS67B	UNIVERSAL TIMING GAUGE
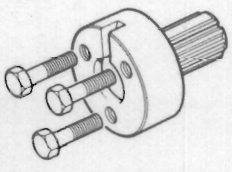	PD.67B-1	ADAPTOR FOR MS67B Used on D4.203 engines.

Tool No.	Description
 MS.73	ADJUSTABLE VALVE SEAT CUTTERS
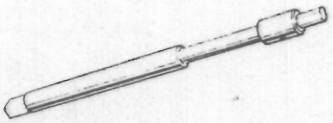 PD.130A	FUEL PUMP ALLEN SCREW KEY Assists access to the otherwise inaccessible screws on D.P.A. pump
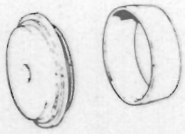 PD.145	CRANKSHAFT REAR OIL SEAL REPLACER ADAPTOR (LIP TYPE SEAL)
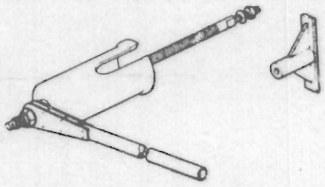 PD.150A	CYLINDER LINER REMOVER/ REPLACER (MAIN TOOL) For Field Service replacement of single liners. Not advised for complete overhaul. For this work use adaptors with a hydraulic ram unit.
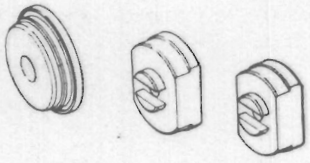 PD.150-1B	ADAPTORS FOR PD.150 Suitable for cylinders of 3.6" dia. and 3.87" dia. Removal and replacement.
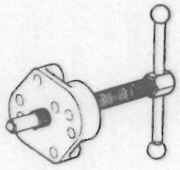 155B	BASIC PULLER The cruciform head with multiple holes at different centres is used with adaptors listed below.
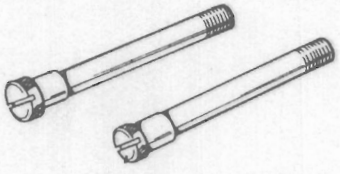 PD.155-1	ADAPTORS FOR PD.155A Used to remove water pump pulleys.
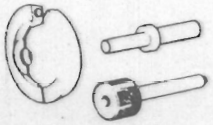 MF.200-26	WATER PUMP OVERHAUL KIT Used with 370 Taper Base and Press.

	Tool No.	Description
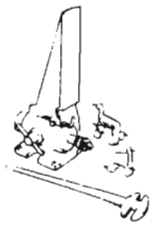	335	CON ROD JIG & 336 MASTER ARBOR
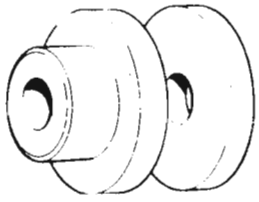	336-102	ARBOR ADAPTOR Used with 335
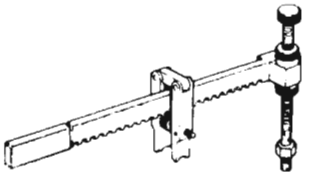	6118B	VALVE SPRING COMPRESSOR
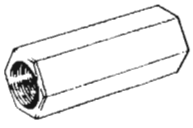	PD.6118-3	ADAPTOR FOR 6118B

Service Publications

The following Service Literature may be purchased through your local Perkins Distributor.

Operators Handbooks,

Crankshaft Regrinding,

Fault Finding Guide,

Installation and Maintenance Guide for Static Standby Engines,

Etcetera.

Service Instruction

Perkins Engines, Inc.
32500 Van Born Road
P.O. Box 697 • Wayne, Michigan 48184 • U.S.A.
Tel.: (313) 595-9600 • Telex: 23-4002

Index

Air Cleaner N.9
Alternator
  Data B.14
  Maintenance Q.2
  Output Test Q.2
  Regulator Test Q.3
  Testing in Position Q.2
Altitude, De-Rating B.2
Atomisers
  Data B.13
  General N.6
  Maintenance N.6
  Troubles in Service N.8
  Pressures B.13

Bearing, Main
  Data B.7 and B.8
  Fitting H.5
Belt, Fan, Adjustment M.4
Bush, Small End
  Data B.6
  To Fit F.8

Camshaft
  Data B.8
  To Remove J.6
  To Replace J.7
  Thrust J.7
Case, Timing
  To Remove J.7
  To Replace J.7
Case, Timing Cover
  To Remove J.2
  To Replace J.3
Cold Start Aid C.2
Combustion Chamber Caps E.8
Crankshaft
  Data B.7
  To Remove H.3
  Regrinding H.4
  To Replace H.5
Cylinder Head
  Data B.8
  To Remove E.2
  To Replace E.9

Data, Engine B.1
Dynamo
  Data B.14
  Routine Maintenance Q.4
  Servicing Q.4

Engine
  Starting C.2
  Stopping C.2
Exhauster
  Servicing R.2
  Overhaul R.3

Fault Finding D.2
Filters
  Fuel Oil N.2
  Lubricating Oil L.4
Flywheel Alignment P.3
Foreword 5
Frost Precautions C.7
Fuel Oil Specification B.12
Fuel System, Bleeding N.2

Gear, Camshaft
  Data B.9
  To Remove J.6
  To Replace J.7
Gear, Idler
  Data B.9 and B.10
  To Remove J.4
  To Replace J.5
Gear, Fuel Pump
  Data B.10
  To Remove J.5
  To Renew J.6
  To Replace J.5
Gears, Timing J.3
Gudgeon Pin
  Data B.6
  To Remove F.4

Housing, Flywheel Alignment P.2

Liners, Cylinder
  Data B.7
  To Remove G.2
  To Refit G.2
Lubricating Oil Circulation L.3
Lubricating Oil Pressure B.10
Lubricating Oil Pressure Relief Valve L.6
Lubricating Oil Sump
  Strainer L.4

Number, Engine Location 4

Overseas Companies 2

Pipes, Fuel N.6
Piston
  Data B.4 and B.5
  To Remove F.4
  To Assemble F.4
  To Replace F.4
  To Renew F.4
Piston Rings
  Data B.5
  Fitting F.6
Post Delivery Checkover C.6
Preservation of Laid Up Engine C.6
Preventive Maintenance C.5
Pump, Fuel Injection
  Data B.12
  To Remove N.4
  To Refit N.4

Pump, Fuel Lift
- Data B.12
- Testing N.4
- To Remove N.5
- To Dismantle N.5
- To Re-assemble N.5
- To Refit N.6

Pump, Lubricating Oil
- Data B.11
- To Remove L.6
- To Dismantle L.7
- Inspection L.7
- To-Re-assemble L.7
- To Refit L.7

Pump, Water
- Data B.11
- To Remove M.2
- To Dismantle M.3
- To Re-assemble M.3
- To Refit M.4

Rating Details B.1
Rocker Levers E.7
Running In C.4

Seal, Crankshaft Front End, Oil
- To Renew J.3

Seal, Crankshaft Rear End, Oil
- Lip Type H.7
- Rope Type H.6

Starter Motor
- General Q.5
- Routine Maintenance Q.5
- Servicing Q.6

Tappets E.7
- Adjustment E.10
- General E.7

Thermostat
- Data B.11
- General M.5

Timing
- Marks K.2
- Static Position B.13
- Valve, Checking K.3
- Fuel Pump Checking K.4

Torque, Recommended Tensions B.2

Valve Guides
- Data B.8
- General E.4

Valve Seat Inserts E.6

Valve
- Data B.9
- To Remove E.3

Wear Limits B.14
Weights, Engine Dry B.2