RUTHZIL TRATOR COMERCIAL DE PEÇAS LTDA 11 97083-6812 ROLANDO

INTRODUCTION

This Parts Book has been published for the special benefit of the operator to simplify the servicing of parts for the Perkins 4.203 Industrial Engine, commencing Engine Number 2600251.

As much detail as possible has been incorporated in this list, and if the procedure outlined below is followed, supplies will be obtained with the minimum of delay.

SOURCE OF SUPPLY.

Parts are available from the following sources :—

1. The distributive organisations of manufacturers installing this engine as first equipment.
2. Approved Perkins Service Signholders and Overseas Distributors.
3. Recognised Motor Traders.

We are unable to deal with operators direct from the factory, and therefore supplies should be obtained by placing firm orders with one of the aforementioned sources of supply. To ensure you obtain the best results from your engine and to safeguard your own guarantee, FIT ONLY GENUINE PERKINS PARTS. These are readily obtainable throughout the world.

INFORMATION REQUIRED.

Whenever parts are ordered it is essential that full information is given to the supplier to enable him to identify your requirements. Complete descriptions and part numbers should always be stated, and in case of parts required for an individual engine, the engine type and number with vehicle details must be included.

SPECIAL PARTS.

This Book covers only standard 4.203 Industrial Engine parts and does not incorporate conversion or special parts supplied with engines. Supplements covering certain applications are published, but if a Supplement is not available, you should as in all instances quote full details outlined above to ensure you receive the correct parts.

INTRODUCTION *(Continued)*

ENGINE CLASSIFICATION.

Four Type of Basic Engines are incorporated in this list as follows :—

List No. 187 Engines with water pump mounted on timing gear housing front cover 13—7/16″ crs. (Low position).

List No. 188 Engines with water pump mounted on cylinder head at 16—1/16″ crs. (high position.)

List No. 189 Engines with water pump mounted on timing gear housing front cover at 13—7/16″ crs. (low position.)

List No. 190 Engines with water pump mounted on cylinder head at 16—1/16″ crs. (high position.)

Parts which are peculiar to any one engine specification are marked with the list number.

IMPORTANT NOTE.

All screw threads on this engine, except on certain items of proprietary equipment and the crankshaft, are unified series and American Pipe Series.

The items illustrated and described in the parts book are correct at the time of publication, but as developments are made, we reserve the right to alter or withdraw items without notice.

INDEX

		Page
SECTION 'A'	CYLINDER BLOCK Including :— Liners ; plugs ; studs ; crankshaft rear end cover and water inlet connection.	5
SECTION 'B'	CYLINDER HEAD Including :— Studs ; guides ; valves ; springs ; tappets ; combustion chamber cap ; lifting plate ; exhaust manifold ; water outlet body by pass connection and thermostat (For list No. 187 and 189 only).	9
SECTION 'C'	CRANKSHAFT Including :— Starting dog ; flange ; pulley ; key ; main bearings ; connecting rods ; big end bearings : pistons and rings.	13
SECTION 'D'	CYLINDER HEAD COVER Including :— Rocker shaft ; springs ; brackets and levers.	17
SECTION 'E'	AIR INDUCTION SYSTEM Including :— Air filter, induction manifold and cold starting heater.	19
SECTION 'F'	TIMING GEAR Including :— Camshaft ; gears ; hubs ; housing ; front cover ; inspection cover and hydraulic pump facing cover.	21
SECTION 'G'	LUBRICATING OIL SYSTEM Including :— Sump ; strainer ; dipstick ; suction pipe ; pump ; delivery pipes ; filter ; pressure feed piping and idler gear spray pipe.	25
SECTION 'H'	WATER PUMP Including :— Mounting plate on timing gear housing front cover (For list Nos. 187 and 189 only) Mounting plate on cylinder head and thermostat (For list Nos. 188 and 190 only).	31
SECTION 'I'	FUEL INJECTION EQUIPMENT Including :— Lift pump ; filter and piping ; injection pump ; injection pipes and atomisers.	35
SECTION 'J'	ELECTRICAL EQUIPMENT Including :— Dynamo ; pulley ; belt ; support bracket and adjusting lever.	43
SECTION 'K'	JOINTS & GASKETS	45
	NUMERICAL INDEX	47

IMPORTANT
Always quote Engine Number when ordering Parts

FIT ONLY GENUINE PERKINS PARTS

PLATE "A"

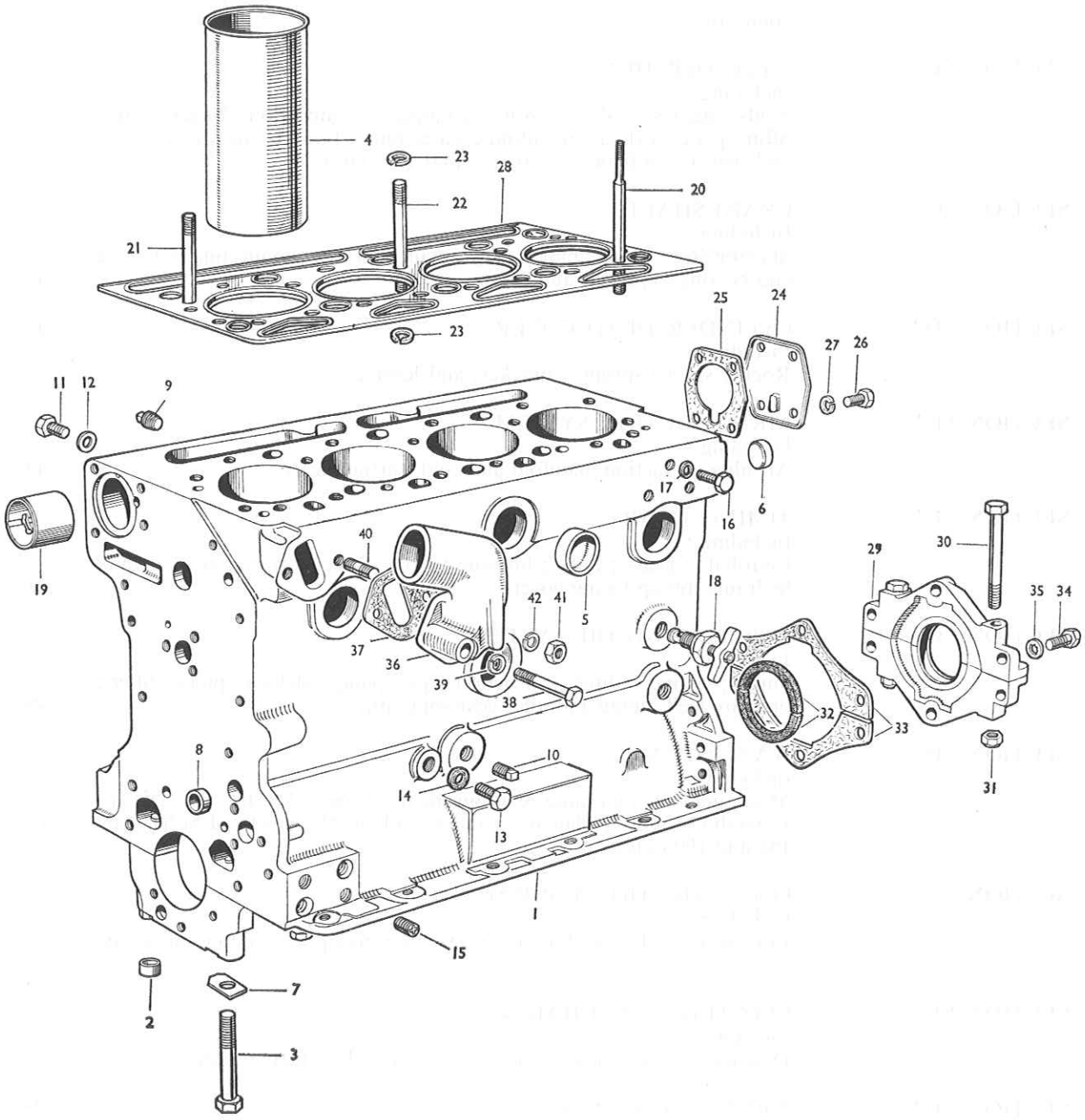
4
23
28
22
20
21
23
25
24
27
26
11
12
9
17
16
6
19
40
29
30
18
42
41
5
35
34
37
36
39
38
32
33
8
10
14
13
31
1
15
2
7
3

SECTION "A"

Cylinder Block

Plate Ref.	Part No.	Description	Qty.	Remarks
1	**57563**	CYLINDER BLOCK (ASSEMBLY)	1	
		Including:—		
		Cap, crankshaft main bearing—Front		Not Serviced
		Cap, crankshaft main bearing—Inter.		
		Cap, crankshaft main bearing—Middle		
		Cap, crankshaft main bearing—Rear		
2	0870001	Thimble, crankshaft main bearing cap to cylinder block ...	10	
3	0745105	Setscrew, crankshaft main bearing cap to cylinder block ...	10	
4	31358308	Liner, cylinder block	4	
5	0650710	Plug, cylinder block water jacket	9	
6		Plug, cylinder block water rail		No longer fitted
7	0921108	Tab-washer, crankshaft main bearing cap setscrew	10	
	33117118	Washer, crankshaft main bearing cap shim	10	Eng. No. 2603772 onwards
8	0650566	Plug, cylinder block pressure rail—Front and Rear	2	
9	0650593	Plug, cylinder block—alt. drain cock position R.H. side of block ...	1	
10	0650594	Plug, cylinder block—lub. oil pressure switch boss	2	
11	0746251	Plug, cylinder block—alternative dynamo position	2	
12	0920106	Washer, cylinder block—alterative dynamo position plug	2	
13	0746451	Plug, cylinder block—exhauster feed pipe hole	1	
14	0920109	Washer, cylinder block—exhauster feed pipe hole plug	1	
15	0650738	Plug, cylinder block—bearer facings	4	
16	0746451	Plug, cylinder block—top hole fuel filter facing	1	Eng. No. 2601108 onwards
17	0920109	Washer, cylinder block—top hole fuel filter facing plug	1	
18	31419	Cock, cylinder block drain	1	
19	31134119	Bush, cylinder block—No. 1 camshaft bearing	1	
	32754411	Stud, cylinder block to cylinder head—long (also secures atomisers) ...	8	Prior to Eng. No. 2606694
	0826624	Stud, cylinder block to cylinder head	10	
	0826622	Stud, cylinder block to cylinder head	1	
20	32754414	Stud, cylinder block to cylinder head—Long (also secures atomisers)...	8	Eng. No. 2606694 onwards
21	32524131	Stud, cylinder block to cylinder head	10	
22	32524128	Stud, cylinder block to cylinder head—Long	1	
23	2726194	Gripring, cylinder block to cylinder head stud	2	
24	**0240765**	COVER, CAMSHAFT END	1	
25	0490699	Joint, camshaft end cover to cylinder block	1	
26	0746253	Setscrew, camshaft end cover to cylinder block	4	
27	0920053	Washer, camshaft end cover to cylinder block setscrew	4	
28	36812125	Gasket, cylinder head (Replaces 36812113)	1	

SECTION "A" Continued

Cylinder Block

Plate Ref.	Part No.	Description	Qty.	Remarks
29	**54361**	COVER, CRANKSHAFT REAR END OIL SEAL (ASSEMBLY) Including:—	1	
30	0096243	Bolt, crankshaft rear end cover clamping	2	
31	0574211	Nut, crankshaft, rear end cover clamping bolt	2	
32	0730080	Seal, crankshaft rear end oil	2	
33	0490628	Joint, crankshaft rear end oil seal cover to cylinder block	2	Obsolete—Use 36817134
	36817134	Joint, crankshaft rear end oil seal cover to cylinder block	1	
34	0746354	Setscrew, crankshaft rear end oil seal cover to cylinder block and main bearing cap	6	
	33114118	Shim, crankshaft rear end oil seal cover setscrew	6	
35	0920299	Washer, crankshaft rear end oil seal cover setscrew	6	
36	**0201373**	CONNECTION, CYLINDER BLOCK WATER INLET ...	1	List Nos. 187 and 189 only
	0201493	CONNECTION, CYLINDER BLOCK WATER INLET ...	1	List Nos. 188 and 190 only
37	0490692	Joint, water inlet connection to cylinder block	1	
38	0096236	Setscrew, water inlet connection to cylinder block	1	
39	0920053	Washer, water inlet connection setscrew	1	
40	0826203	Stud, water inlet connection to cylinder block	1	Obsolete—Use 0746255/0920106
41	0576002	Nut, water inlet connection retaining	1	Used only with 0826203
42	0920053	Washer, water inlet connection retaining nut	1	Used only with 0826203
	0746255	Setscrew, water inlet connection to cylinder block	1	
	0920106	Washer, water inlet connection setscrew	1	

NOTES



PLATE "B"

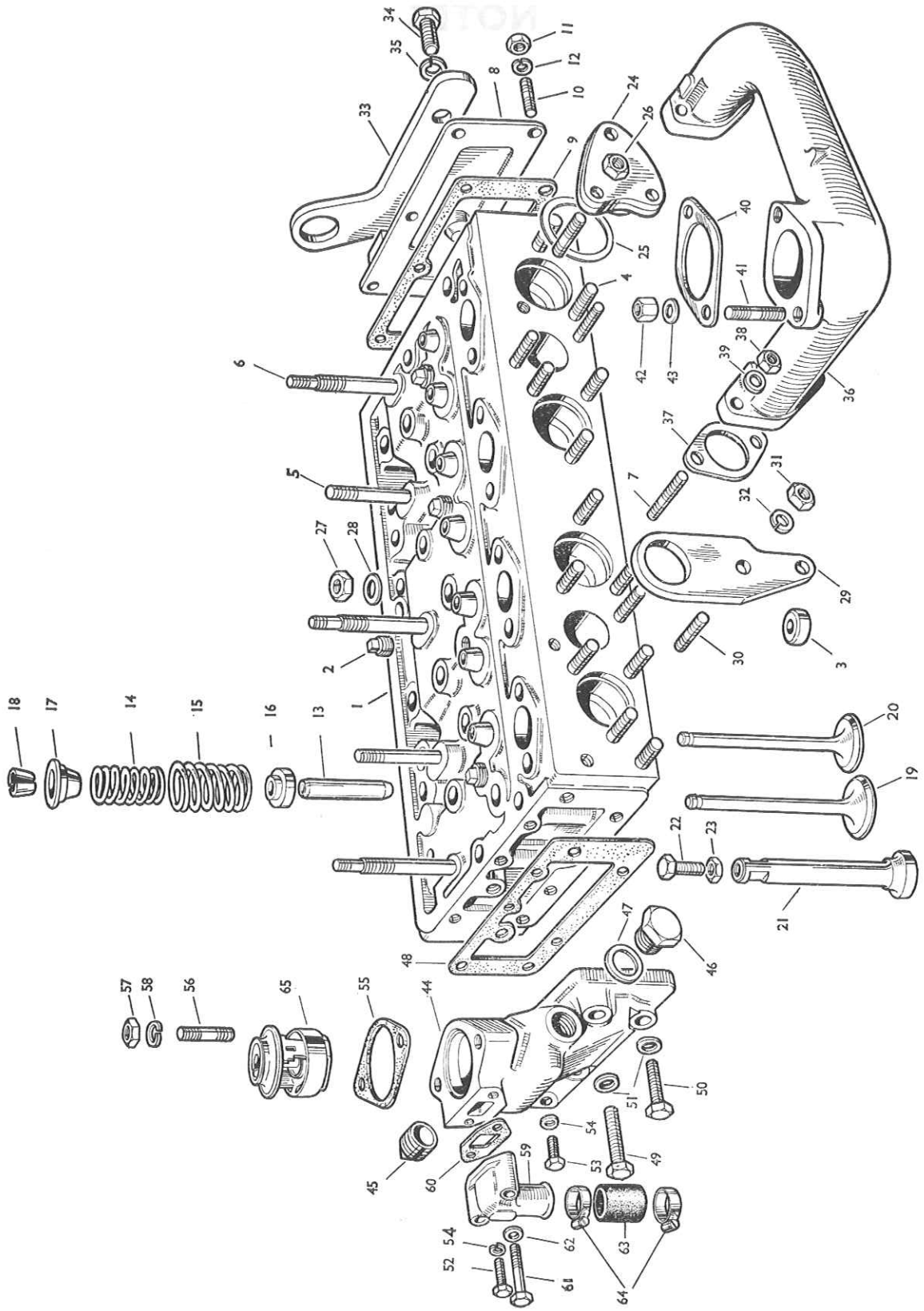
1
2
3
4
5
6
7
8
9
10
11
12
13
14
15
16
17
18
19
20
21
22
23
24
25
26
27
28
29
30
31
32
33
34
35
36
37
38
39
40
41
42
43
44
45
46
47
48
49
50
51
52
53
54
55
56
57
58
59
60
61
62
63
64
65

SECTION "B"

Cylinder Head

Plate Ref.	Part No.	Description	Qty.	Remarks
	58400	CYLINDER HEAD (ASSEMBLY)	1	Prior to Eng. No. 2601103 Obsolete—Use 82611/33411107
1	82611	CYLINDER HEAD (ASSEMBLY)	1	Eng. No. 2601103 onwards
		Including:—		
2	0650590	Plug, cylinder head water jacket	4	
3	0650685	Plug, cylinder head water port	3	
4	0825258	Stud, cylinder head to combustion chamber cap	12	
5	0826479	Stud, cylinder head to rocker shaft bracket ... Not incl. ...	2	
6	0825241	Stud, cylinder head to rocker shaft bracket—Long in assy. ...	3	Also secure cylinder head cover
7	0826232	Stud, cylinder head to exhaust manifold	4	
8	0941118	Cover, cylinder head rear end	1	
9	0490485	Joint, cylinder head rear end cover	1	Replaces 0490029
10	0826002	Stud, cylinder head rear end cover to cylinder head Not incl. ...	6	Obsolete—Use 0746052
11	0576001	Nut, cylinder head rear end cover retaining ... in assy. ...	6	Used only with 0826002
	0746052	Setscrew, cylinder head rear end cover to cylinder head ...	6	
12	0920052	Washer, cylinder head rear end cover setscrew	6	
	0420002	Guide, inlet and exhaust valve	8	Used only with 58400
13	33261723	Guide, inlet and exhaust valve	8	Used only with 80123
14	0780007	Spring, inlet and exhaust valve—Inner	8	
15	0780006	Spring, inlet and exhaust valve—Outer	8	
	0920516	Washer, inlet and exhaust valve spring locating	8	Used only with 0420002
16	33411107	Washer, inlet and exhaust valve spring locating	8	Used only with 33261723
17	0150008	Cap, inlet and exhaust valve spring locating	8	
18	0230001	Cotters, inlet and exhaust valve spring	8	pairs
19	31431261	Valve, inlet	4	
20	0910002	Valve, exhaust	4	
21	0860012	Tappet	8	
22	0720677	Screw, tappet adjusting	8	
23	0576052	Nut, tappet adjusting screw locking	8	
24	37416203	Cap, combustion chamber	4	
25	0490115	Joint, combustion chamber cap to cylinder head	4	Obsolete—Use 0490023
	0490023	Joint, combustion chamber cap to cylinder head	4	
		Stud, combustion chamber cap to cylinder head		See Cyl. Head (Assembly)
26	0576051	Nut, combustion chamber cap retaining	12	
		Gasket, cylinder head		See Section 'A'
		Stud, cylinder head to cylinder block		
	0576054	Nut, cylinder head retaining	19	Prior to Eng. No. 2606694
27	33221312	Nut, cylinder head retaining	19	Eng. No. 2606694 onwards
28	0920006	Washer, cylinder head retaining nut	1	Middle Stud
29	**0941083**	PLATE, ENGINE LIFTING—FRONT	1	Obsolete—Use 36475706
	36475706	PLATE, ENGINE LIFTING—FRONT	1	
30	0826466	Stud, engine front lifting plate to cylinder head	2	Obsolete—Use 0746453
31	0576051	Nut, engine front lifting plate retaining	2	Used only with 0826466
	0746453	Setscrew, engine front lifting plate to cylinder head	2	
32	0920054	Washer, engine front lifting plate setscrew/nut	2	
33	**0940192**	PLATE, ENGINE LIFTING—REAR	1	
34	0746452	Setscrew, engine rear lifting plate to end cover	1	
35	0920054	Washer, engine rear lifting plate setscrew	1	

SECTION " B " Continued

Cylinder Head

Plate Ref.	Part No.	Description	Qty.	Remarks
36	**0540175**	MANIFOLD, EXHAUST	1	
37	0490044	Joint, exhaust manifold to cylinder head	2	
		Stud, exhaust manifold to cylinder head		See Cyl. Head (Assembly)
38	0576031	Nut, exhaust manifold retaining	4	
39	0920003	Washer, exhaust manifold retaining nut	4	
		FLANGE, EXHAUST MANIFOLD OUTLET		Quote Engine Number
40	0490032	Joint, outlet flange to exhaust manifold	1	
41	0826408	Stud, outlet flange to exhaust manifold	2	
42	0576030	Nut, outlet flange retaining	2	
43	0920004	Washer, outlet flange retaining nut	2	
44	**37766321**	BODY, CYLINDER HEAD WATER OUTLET (Prior to Eng. No. 2602867 Obsolete—Use 37766322/0746052)	1	
	37766322	BODY, CYLINDER HEAD WATER OUTLET (Eng. No. 2602867 onwards)	1	
45	0650540	Plug, cylinder head water outlet body	1	
46	0650203	Plug, cylinder head water outlet body	1	
47	2411157	Washer, cylinder head water outlet body plug	1	
48	0490701	Joint, cylinder head water outlet body to cylinder head	1	
49	0746459	Setscrew, cylinder head water outlet body to cylinder head—Long ...	1	
50	0746455	Setscrew, cylinder head water outlet body to cylinder head	1	
51	0920155	Washer, cylinder head water outlet body setscrew	2	
52	0746054	Setscrew, cylinder head water outlet body to cylinder head—Top two holes	2	
53	0746053	Setscrew, cylinder head water outlet body to cylinder head—Bottom two holes (Replace 0746153) (Used only with 37766231) ...	2	List No's. 187 and 189 only
	0746052	Setscrew, cylinder head water outlet body to cylinder head—Bottom two holes (Used only with 37766322)	2	
54	0920052	Washer, cylinder head water outlet body setscrew	4	
		CONNECTION, CYLINDER HEAD WATER OUTLET BODY—TOP (QUOTE ENGINE NUMBER)		
55	0490184	Joint, cylinder head top water outlet connection to outlet body ...	1	
56	0826419	Stud, cylinder head top water outlet connection to outlet body ...	2	
57	0576051	Nut, cylinder head top water outlet connection retaining	2	
58	0920054	Washer, cylinder head top water outlet connection retaining nut ...	2	
59	**37733191**	CONNECTION, CYLINDER HEAD WATER OUTLET BODY BY-PASS	1	
60	36862119	Joint, cylinder head water outlet body by-pass connection to body	1	
61	0096235	Setscrew, cylinder head water outlet body by-pass connection to body	2	
62	0920106	Washer, cylinder head water outlet body by-pass setscrew	2	
63	0200080	Hose, cylinder head water outlet body by-pass to water pump ...	1	
64	0180066	Clip, by-pass pipe hose	2	
65	32550	Thermostat (Alternative 33841)	1	
		PIPE, LUB. OIL—CAMSHAFT CHAMBER TO CYLINDER HEAD		See Section 'G'

NOTES

PLATE "C"

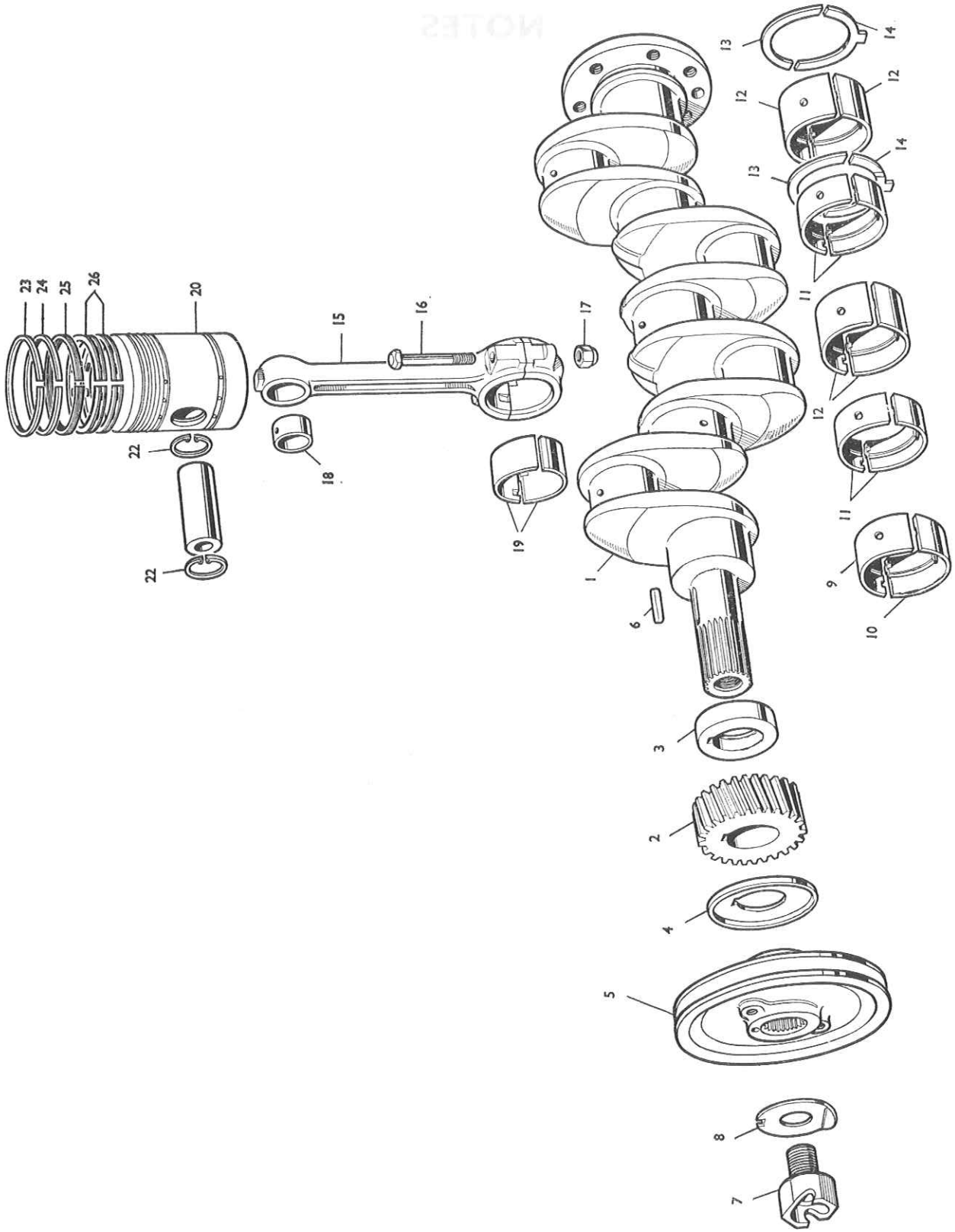
13
14
12
12
14
13
11
11
12
11
9
10
23
24
25
26
20
15
16
17
22
18
19
22
1
6
3
2
4
5
8
7

SECTION "C"

Crankshaft

Plate Ref.	Part No.	Description	Qty.	Remarks
1	**31315134**	CRANKSHAFT	1	Prior to Eng. No. 2601788 Obsolete—Use 31315137/59617
	31315137	CRANKSHAFT	1	Eng. No. 2601788 onwards
2	0410228	Gear, crankshaft	1	
3	0330934	Distance-piece, crankshaft gear	1	
4	33176308	Flange, crankshaft oil thrower	1	
5	31148615	Pulley, crankshaft	1	List No's. 187 and 189 only
	31143675	Pulley, crankshaft	1	List No's. 188 and 190 only
6	0500168	Key, crankshaft gear	1	
7	0340025	Dog, starter	1	
8	31733508	Tab-washer, starting dog	1	Replaces 0920835
	***58704**	BEARINGS, CRANKSHAFT MAIN COMPLETE SET STD. SIZE (Pre-Finished)	1	Prior to Eng. No. 2601788
	***59617**	BEARINGS, CRANKSHAFT MAIN COMPLETE SET STD. SIZE (Pre-Finished)	1	Eng. No. 2601788 onwards
		Comprising:—		
9	31122321	Bearing, crankshaft front main top half std. size (Pre-Finished)	1	Alternative 31122331
10	31122311	Bearing, crankshaft front main bottom half std. size (Pre-Finished)	1	Alternative 31122341
11	31121221	Bearing, crankshaft inter main top and bottom half std. size (Pre-Finished)	4	Alternative 31121231
	31123241	Bearing, crankshaft middle and rear main—Top and bottom half std. size (Pre-Finished) (Used only with 58704)	4	Alternative 31123251
12	31123271	Bearing, crankshaft middle and rear main top and bottom half std. size (Pre-Finished) (Used only with 59617)	4	Alternative 31123261

For Engine Sets of Crankshaft Main Bearing .010″ u/s, .020″ u/s or .030″ u/s add suffix "A," "B" or "C" to part number 58704/59617.

For Individual Crankshaft Main Bearing .010″ u/s, .020″ u/s or .030″ u/s quote the following part numbers.

e.g.

31122321 Std. Size
31122322 .010″ u/s.
31122323 .020″ u/s.
31122324 .030″ u/s.

13	31137191	Washer, crankshaft main bearing thrust—Top	2	Replace 0920849
	31137192	Washer, crankshaft main bearing thrust—Top—.007″ o/s approx.	as reqd.	Replace 0920849A
14	31137201	Washer, crankshaft main bearing thrust—Bottom	2	Replace 31137171
	31137202	Washer, crankshaft main bearing thrust—Bottom—.007″ o/s approx.	as reqd.	Replace 31137172

SECTION "C" Continued

Crankshaft

Plate Ref.	Part No.	Description	Qty.	Remarks
	58705	CONNECTING ROD (ASSEMBLY)—MAJOR	4	
		Comprising:—		
15	**52813**	CONNECTING ROD (ASSEMBLY)—MINOR	4	
16	0095250	Bolt, connecting rod to cap }	8	
17	2211155	Nut, connecting rod to cap bolt } Included in 52813	8	Replace 0571276
18	0050119	Bush, connecting rod small end }	4	
19	***31131171**	BEARING, CONNECTING ROD BIG END TOP AND BOTTOM STD. SIZE (Pre-Finished)	8	Alternative 31131191
		For Big End Bearings .010″ u/s, .020″ u/s or .030″ u/s quote the following part numbers:—		
		e.g.		
		31131171 Std. Size		
		31131172 .010″ u/s.		
		31131173 .020″ u/s.		
		31131174 .030″ u/s.		
	†**59635**	PISTON (ASSEMBLY)—MAJOR (Replace 55779)	4	Prior to Eng. No. 2606630 Obsolete—Use 81870
	†**81870**	PISTON (ASSEMBLY)—MAJOR	4	Eng. No. 2606630 onwards
		Comprising:—		
20	†**55778**	PISTON (ASSEMBLY)—MINOR	4	Used only with 59635 Obsolete—Use 81565 and 16 off 31365181
	†**81565**	PISTON (ASSEMBLY)—MINOR	4	Used only with 81870
21	0610516	Pin, gudgeon } Included in 55778/	4	
22	0170001	Circlip, gudgeon pin retaining } 81565	8	
23	0640135	Ring, piston compression—Plain	4	Top Groove
24	0640136	Ring, piston compression—Taper	4	2nd Groove
25	31365181	Ring, piston compression	16	3rd Groove—12 off with 55778
26	0640134	Ring, piston scraper—Maxigroove	8	4th and 5th Grooves
	81869	PISTON, RING KIT—SINGLE PISTON	1	Prior to Eng. No. 2606630— Used only with 55778
		Comprising:—		
	31362271	Ring, piston compression	1	Top Groove
	31366511	Ring, piston compression	2	2nd and 3rd Groove
	31377201	Ring, piston scraper	1	4th Groove
	31372171	Ring, piston scraper	1	5th Groove
	0997282	Leaflet, fitting instruction	1	
	82133	PISTON, RING KIT—SINGLE PISTON	1	Eng. No. 2606630 onwards Used only with 81565
		Comprising:—		
	31362271	Ring, piston compression	1	Top Groove
	31366511	Ring, piston compression	1	2nd Groove
	31366521	Ring, piston compression	1	3rd Groove
	31377201	Ring, piston scraper	1	4th Groove
	31372171	Ring, piston scraper	1	5th Groove
	31812901	Leaflet, fitting instruction	1	

NOTES:—

***Pre-Finished Bearing are to size stated, and require no final fitting by hand.**

†Pistons require topping before final assembly—refer to Service Literature.

NOTES

PLATE "D"

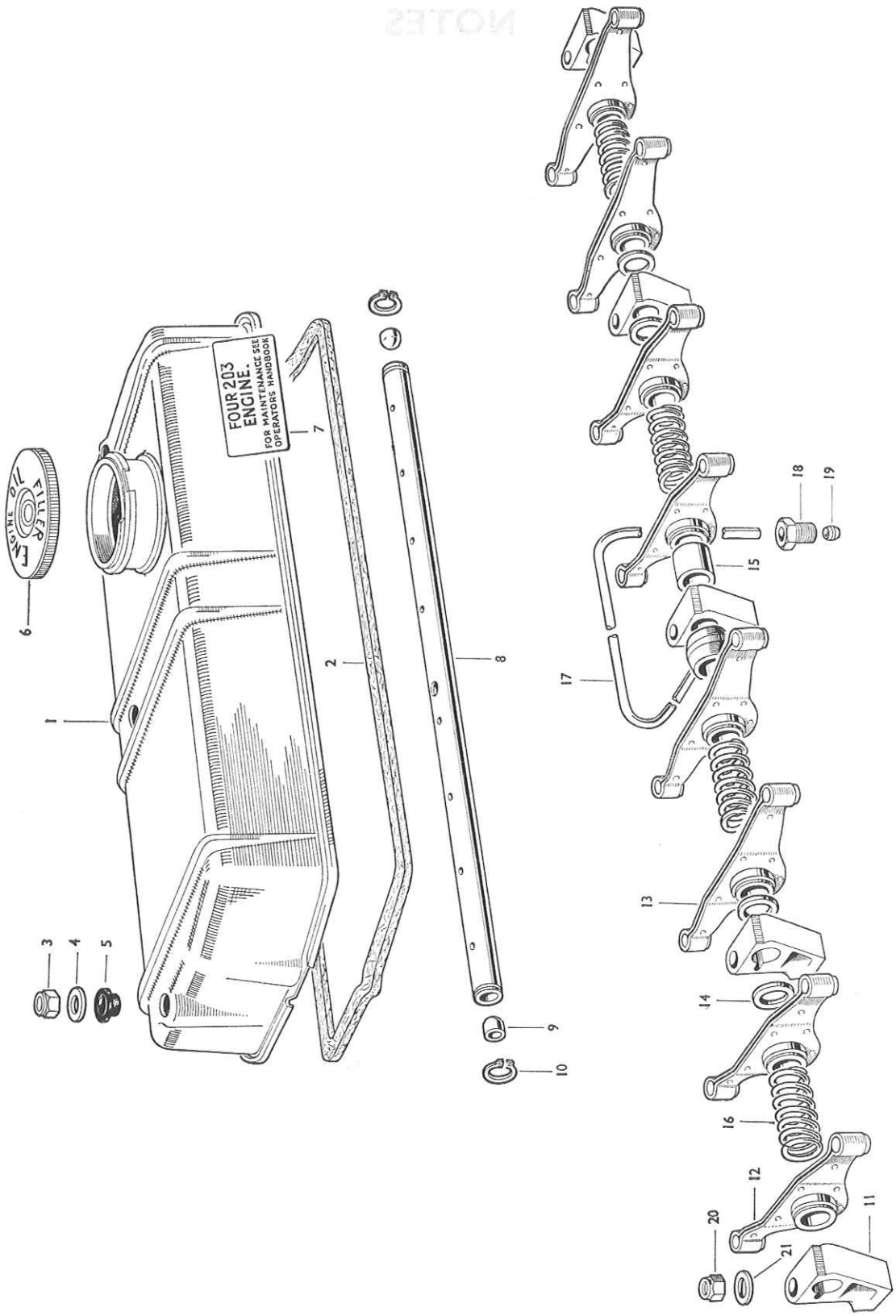
FOUR 203
ENGINE.
FOR MAINTENANCE SEE
OPERATORS HANDBOOK
ENGINE OIL FILLER
1
2
3
4
5
6
7
8
9
10
11
12
13
14
15
16
17
18
19
20
21

SECTION "D"

Cylinder Head Cover

Plate Ref.	Part No.	Description	Qty.	Remarks
1	**37188514**	COVER, CYLINDER HEAD	1	
2	0490704	Joint, cylinder head cover to cylinder head	1	
		Stud, cylinder head cover to cylinder head		See Section 'A'
3	0576102	Nut, cylinder head cover retaining	3	
4	0920497	Washer, cylinder head cover retaining nut	3	Replace 0920003
5	0921337	Washer, cylinder head cover retaining nut	3	
6	30476	Cap, lub. oil filler	1	
7	31815519	Label, engine name	1	
	55437	SHAFT, ROCKER (ASSEMBLY)	1	
		Comprising:—		
8	52703	Shaft, rocker c/w plugs	1	
9	0650507	Plug, rocker shaft	2	
10	0170033	Circlip, rocker shaft locating	2	
11	0101138	Bracket, rocker shaft	5	
	0760001	Shim, rocker shaft		As Req.
12	0520430	Lever, rocker R.H.	4	
13	0520429	Lever, rocker L.H.	4	
14	0330517	Distance-piece, rocker shaft—Short	4	
15	0330510	Distance-piece, rocker shaft—Long	1	
16	0780009	Spring, rocker shaft	4	
17	0994748	Pipe, rocker shaft oil feed	1	
18	0571351	Nut, rocker shaft oil feed	1	To Cylinder Head
19	0566002	Olive, rocker shaft oil feed pipe	1	To Cylinder Head
		Stud, rocker shaft bracket to cylinder head		See Section 'B'
20	0576104	Nut, rocker shaft bracket retaining	5	
21	0920004	Washer, rocker shaft bracket retaining nut	5	

PLATE "E"

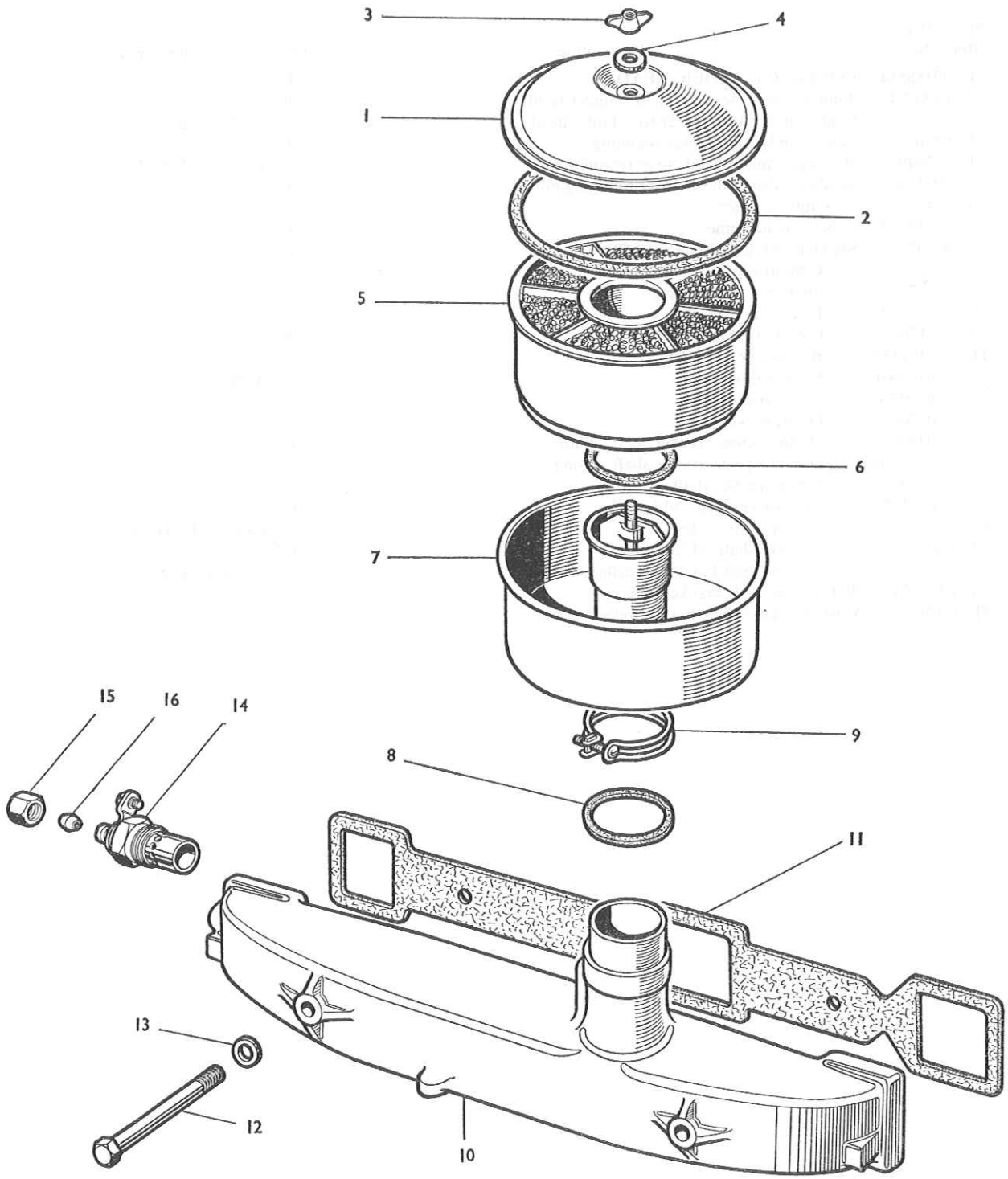

SECTION "E"

Air Induction System

Plate Ref.	Part No.	Description	Qty.	Remarks
	30399	AIR FILTER (ASSEMBLY)—(Alternative 35254)	1	For List No's. 187 and 188 only
		Comprising:—		
1	26510007	Cover, air filter	1	
2	0490188	Joint, air filter cover to element	1	
3	0571095	Wing-nut, air filter cover retaining	1	
4	0920002	Washer, air filter cover retaining nut...	1	
5	26510006	Element, air filter	1	
6	0490189	Joint, air filter element sealing	1	
7	26510005	Container, air filter element	1	
8	0490579	Joint, air filter element container seating	1	
9	0180116	Clip, air filter clamping	1	
	35254	AIR FILTER (ASSEMBLY)—(ALTERNATIVE TO 30399) ...	1	For List No's. 187 and 188 only
		Comprising:—		
	32546	Elbow, air filter	1	
	0571099	Nut, air filter	1	
	32547	Element, air filter	1	
	0490609	Joint, cover to container—Outer	1	
	0490226	Joint, air filter element seating	1	
	32548	Container, air filter	1	
	32549	Silencer, air filter	1	
10	**37786563**	MANIFOLD, INDUCTION	1	For List No's. 187 and 188 only
	37786573	MANIFOLD, INDUCTION	1	For List No's. 189 and 190 only
11	0490042	Joint, induction manifold to cylinder head	1	
12	0096640	Setscrew, induction manifold to cylinder head	2	
13	0920500	Washer, induction manifold to cylinder head setscrew	2	Replace 0920055
14	*2666103	Heater, cold starting fuel oil—Type 357-5	1	Replaces 2666102
15	0576111	Nut, cold starting fuel oil heater pipe	1	
16	0566002	Olive, cold starting fuel oil heater pipe	1	

NOTE:—

***Component Parts supplied by Messrs. C.A.V. Ltd.**

PLATE "F"

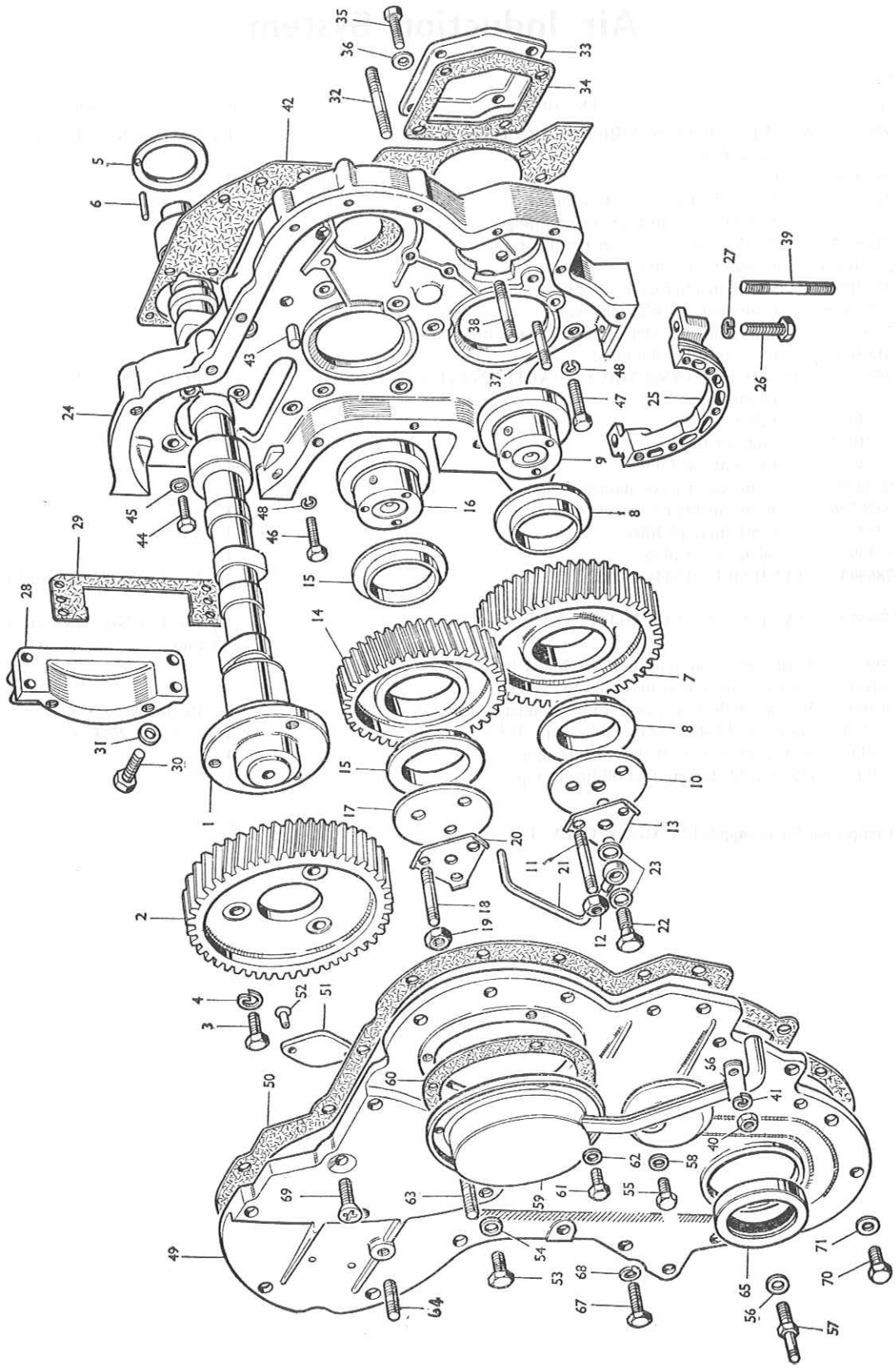

SECTION "F"

Timing Gear

Plate Ref.	Part No.	Description	Qty.	Remarks
1	**0140034**	CAMSHAFT	1	
2	0410231	Gear, camshaft	1	
3	0746254	Setscrew, camshaft gear to camshaft	3	
4	0920053	Washer, camshaft gear setscrew	3	
5	0941081	Plate, camshaft thrust	1	
6	0610904	Pin, camshaft thrust plate locating	1	
7	**41115004**	GEAR, LOWER—IDLER C/W BUSHES	1	
8	0050345	Bush, lower idler gear	2	
9	0450035	Hub, lower idler gear	1	
10	0941091	Plate, lower idler gear retaining	1	
11	0826475	Stud, lower idler gear plate and hub to cylinder block	3	
12	0576051	Nut, lower idler gear plate and hub retaining	3	
13	0921246	Tab-washer, lower idler gear plate and hub retaining nut	1	
14	**41115005**	GEAR, UPPER—IDLER C/W BUSHES	1	
15	0050345	Bush, upper idler gear	2	
16	0450035	Hub, upper idler gear	1	
17	0941082	Plate, upper idler gear retaining	1	
18	0826434	Stud, upper idler gear plate and hub to cylinder block	3	
19	0576051	Nut, upper idler gear plate and hub retaining	3	
20	0921246	Tab-washer, upper idler gear plate and hub retaining nut	1	
21	**35521144**	PIPE, LUB. OIL IDLER GEAR SPRAY	1	
22	0095345	Bolt, lub. oil pipe banjo	1	
23	0921168	Washer, lub. oil pipe banjo bolt	2	
	0930001	Lockwire, lub. oil pipe banjo bolt	1	
	57578	HOUSING, TIMING GEAR (ASSEMBLY)	1	
		Comprising:—		
24	37161562	Housing, timing gear—bare	1	
25	37354361	Cover, timing gear housing bottom	1	
26	0748418	Setscrew, timing gear housing bottom cover to housing	2	
27	0920053	Washer, timing gear housing bottom cover setscrew	2	
28	37534531	Cover, timing gear housing power take off facing	1	
29	36853105	Joint, timing gear housing power take off facing cover	1	
30	0748416	Setscrew, timing gear housing power take off facing cover to timing gear housing	4	
31	0920106	Washer, timing gear housing power take off facing cover setscrew	4	
32	0827609	Stud, timing gear housing to fuel pump and drive gear carrier	2	Also detailed on Section 'I'
33	**37556125**	COVER, TIMING GEAR HOUSING HYDRAULIC PUMP FACING	1	Prior to Eng. No. 2610381 Obsolete—Use 37556146/ 36866428
	37556146	COVER, TIMING GEAR HOUSING HYDRAULIC PUMP FACING	1	Eng. No. 2610381 onwards
	36866428	Joint, timing gear housing hydraulic pump facing cover to housing	1	Used only with 37556146
34	36866424	Joint, timing gear housing hydraulic pump facing cover to housing	1	Used only with 37556125
35	0748412	Setscrew, hydraulic pump facing cover to timing gear housing	4	
36	0920106	Washer, hydraulic pump facing cover setscrew	4	
37	0827613	Stud, timing gear housing front cover to housing	2	Fitted in hydraulic pump gear pocket
38	0827614	Stud, timing gear housing front cover to housing (Also secures breather pipe clip)—long	1	Fitted in hydraulic pump gear pocket
39	32532306	Stud, timing gear housing to lub. oil sump	2	Also detailed on Section 'G'
40	0576002	Nut, timing gear housing front cover retaining	3	
41	0920053	Washer, timing gear housing front cover retaining nut	3	
42	36814112	Joint, timing gear housing to cylinder block	1	
43	0350017	Dowel, timing gear housing to cylinder block	2	
44	0746355	Setscrew, timing gear housing to cylinder block	4	To Camshaft Chamber
45	0920299	Washer, timing gear housing to cylinder block	4	To Camshaft Chamber

SECTION "F" Continued

Timing Gear

Plate Ref.	Part No.	Description	Qty.	Remarks
46	0746255	Setscrew, timing gear housing to cylinder block	10	
47	0746257	Setscrew, timing gear housing to cylinder block	1	
48	0920053	Washer, timing gear housing setscrew	11	
	57539	COVER, TIMING GEAR HOUSING—FRONT (ASSEMBLY) } List No's. 187 and 189 only	1	Prior to Eng. No. 2602591
	81219	COVER, TIMING GEAR HOUSING—FRONT (ASSEMBLY) } List No's. 187 and 189 only	1	Eng. No. 2602591 onwards
	57594	COVER, TIMING GEAR HOUSING—FRONT (ASSEMBLY) } List No's. 188 and 190 only	1	Prior to Eng. No. 2607236
	82210	COVER, TIMING GEAR HOUSING—FRONT (ASSEMBLY) } List No's. 188 and 190 only	1	Eng. No. 2607236 onwards
		Comprising:—		
	37167613	Cover, timing gear housing front—Bare	1	Used only with 57539
49	37167693	Cover, timing gear housing front—Bare	1	Used only with 81219
	37167694	Cover, timing gear housing front—Bare	1	Used only with 57594/82210
	0748411	Plug, timing gear housing front cover	1	Used only with 82210
	0920106	Washer, timing gear housing front cover plug	1	Used only with 82210
50	36813117	Joint, timing gear housing front cover to housing	1	
51	36171114	Plate, camshaft thrust—Front	1	
52	0690061	Rivet, camshaft thrust plate retaining	2	
53	32151113	Plug, timing gear housing front cover	1	
54	0920109	Washer, timing gear housing front cover plug	1	Used only with 57539/81219
55	0748351	Plug, timing gear housing front cover	1	Used only with 57539/81219
56	0920101	Washer, timing gear housing front cover plug	1	Used only with 57539/81219
57	32186114	Pin, engine timing	1	Used only with 81219
58	0920101	Washer, engine timing pin	1	Used only with 81219
	32186112	Pin, engine timing	1	Used only with 57594/82210
	0920101	Washer, engine timing pin	1	Used only with 57594/82210
59	37556137	COVER, FUEL PUMP GEAR INSPECTION C/W BREATHER PIPE	1	Replaces 37556127
60	33825409	Joint, fuel pump gear inspection cover to front cover } Not Included in 82210 (Assembly)	1	
61	0748351	Setscrew, fuel pump gear inspection cover to front cover } Not Included in 82210 (Assembly)	4	
62	0920101	Washer, fuel pump gear inspection cover setscrew } Not Included in 82210 (Assembly)	4	
63		Stud, timing gear housing front cover to water pump mounting plate } Not Included in 82210 (Assembly)		See Section 'H'
64	0827604	Stud, timing gear housing front cover to dynamo adjusting lever (also detailed on section 'J')	1	Used only with 57539/81219/57594
65	2414111	Seal, timing gear housing front cover oil	1	
66	36644139	Clip, timing gear housing breather pipe	1	To timing gear housing front cover setscrew
67	0748414	Setscrew, timing gear housing front cover to housing	10	9 off with 82210
	0748415	Setscrew, timing gear housing power—take off cover—lower hole —also secures dynamo adjusting lever	1	Used only with 82210
68	0920053	Washer, timing gear housing front cover setscrew	10	
	0748524	Setscrew, timing gear housing front cover to housing	2	List No's. 188 and 190 only
	0920054	Washer, timing gear housing front cover setscrew	2	List No's. 188 and 190 only
69	2227063	Screw, timing gear housing front cover to housing	1	
70	0748413	Setscrew, timing gear housing front cover to bottom cover	5	
71	2411152	Washer, timing gear housing front cover to bottom cover setscrew	5	

NOTES



PLATE "G1"

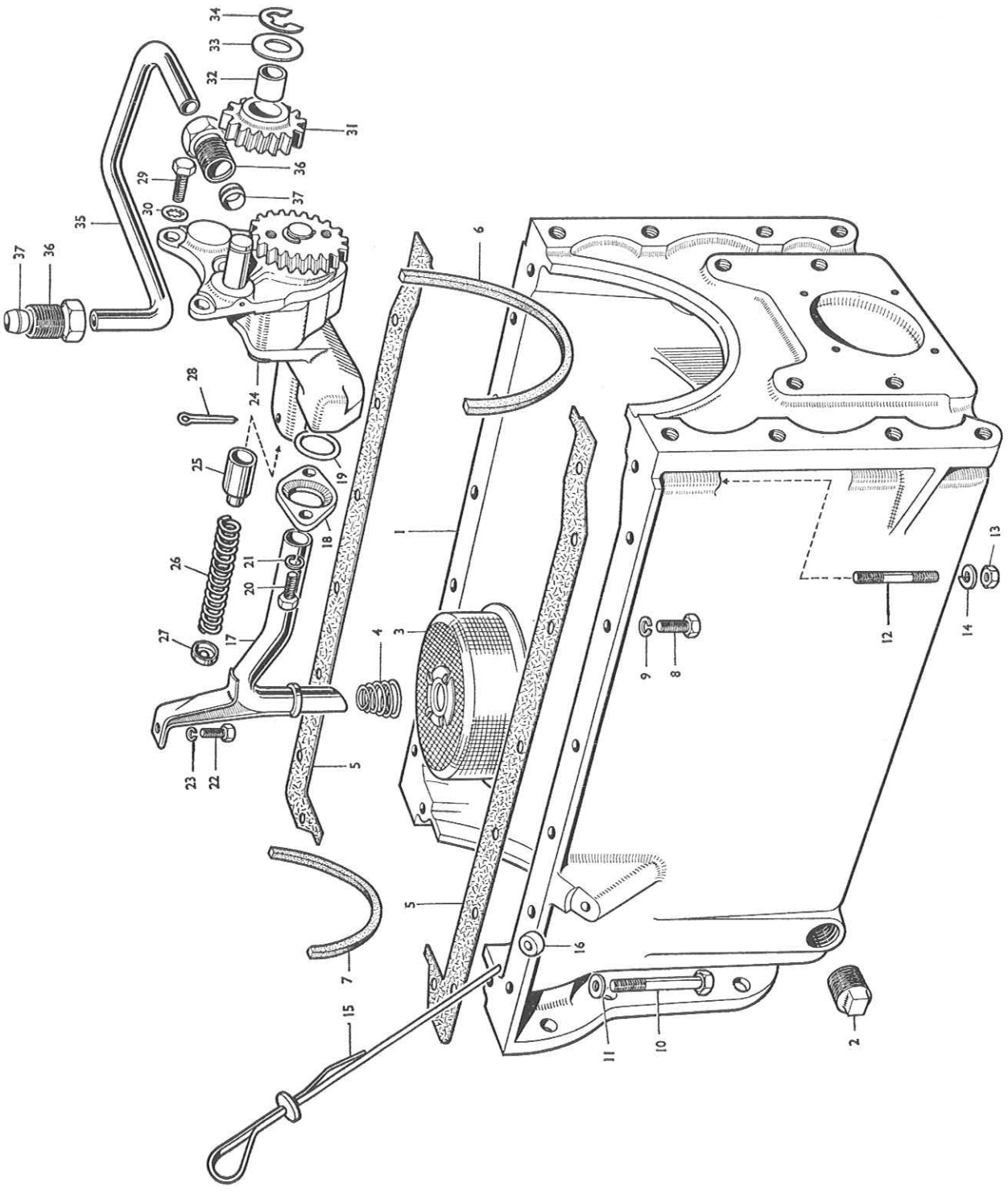

34
33
32
31
36
29
37
30
35
37
36
6
28
24
25
19
18
1
26
21
20
27
17
4
3
9
8
12
14
13
23
22
5
5
16
7
15
11
10
2

SECTION "G"

Lubricating Oil System

Plate Ref.	Part No.	Description	Qty.	Remarks
1	**37171351**	SUMP, LUB. OIL	1	
2	0650540	Plug, lub. oil sump drain	1	
3	**37725432**	STRAINER, LUB. OIL	1	
4	31747109	Spring, lub. oil strainer positioning	1	
5	41424201	Joint, lub. oil sump to cylinder block—Sides	1	pair
6	36884107	Joint, lub. oil sump—Front	1	
7	0490019	Joint, lub. oil sump—Rear	1	
8	0746254	Setscrew, lub. oil sump to cylinder block	12	
9	0920053	Washer, lub. oil sump to cylinder block setscrew	12	
10	0096238	Setscrew, lub. oil sump to cylinder block—Long	2	
11	0920108	Washer, lub. oil sump to cylinder block setscrew	2	Rear two setscrews
12	32532306	Stud, lub. oil sump to timing gear housing	2	Also detailed on Section 'F'
13	0576002	Nut, lub. oil sump retaining	2	
14	0920053	Washer, lub. oil sump retaining nut	2	
15	**0320105**	DIPSTICK, LUB. OIL SUMP	1	
16	0920336	Washer, lub. oil dipstick sealing	1	
17	**35732446**	PIPE, LUB. OIL SUCTION	1	
18	36174115	Flange, lub. oil suction pipe	1	
19	0640144	Seal, lub. oil suction pipe to flange	1	
20	0746254	Setscrew, lub. oil suction pipe flange to pump housing	2	
21	0920053	Washer, lub. oil suction pipe flange setscrew	2	
22	0746051	Setscrew, lub. oil suction pipe clip to bearing cap	1	
23	0920052	Washer, lub. oil suction pipe clip setscrew	1	
24	**41314019**	PUMP, LUB. OIL (ASSEMBLY)	1	Obsolete—Use 41314042
	41314042	PUMP, LUB. OIL (ASSEMBLY)	1	**Alternative 41314033**
		Including:—		
25	0630082	Plunger, lub. oil relief valve	1	
26	0780312	Spring, lub. oil relief valve	1	
27	0150144	Cap, lub. oil relief valve spring seating	1	
28	0610011	Split-pin, lub. oil relief valve spring retaining	1	
29	0746254	Setscrew, lub. oil pump to main bearing cap	3	
30	0920299	Washer, lub. oil pump to main bearing cap	3	
31	**0994967**	GEAR, LUB. OIL PUMP IDLER C/W BUSH	1	
		Including:—		
32	0050344	Bush, lub. oil pump idler gear	1	
33	0921241	Washer, lub. oil pump idler gear	1	
34	0180831	Clip, lub. oil. pump idler gear retaining	1	
35	**34715124**	PIPE, LUB. OIL DELIVERY TO CYLINDER BLOCK	1	
36	33532121	Nut, lub. oil pump delivery pipe to cylinder block and lub. oil pump	2	
37	0560244	Olive, lub. oil pump delivery pipe to cylinder block and lub. oil pump	2	

PLATE "G2"

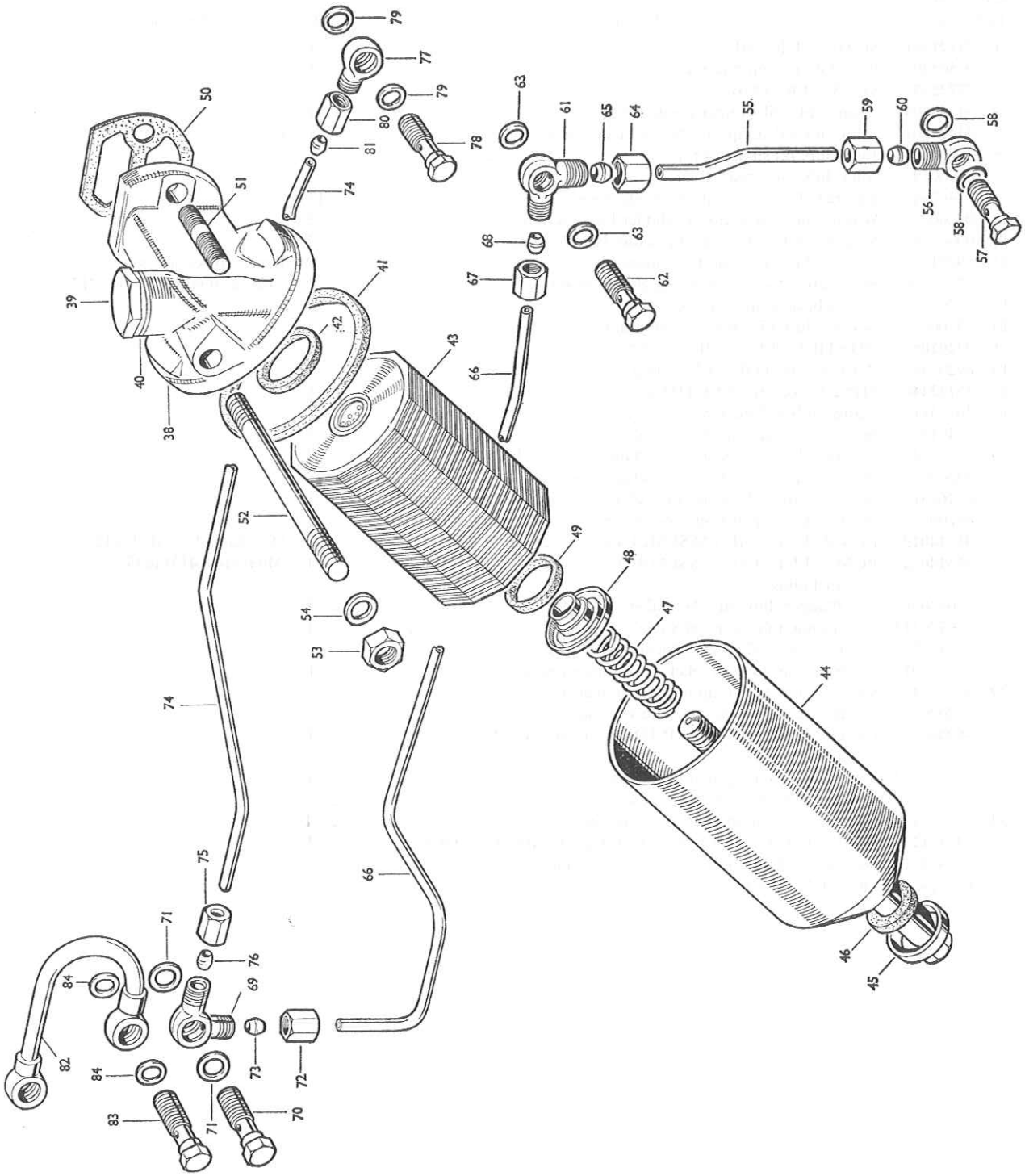

79
77
79
80
81
78
74
50
51
39
40
38
41
42
43
63
61
65
64
55
59
60
58
56
58
57
68
63
67
62
66
52
49
48
47
54
53
44
74
75
66
71
76
84
69
82
84
73
72
83
71
70
46
45

SECTION "G" Continued

Lubricating Oil System

Plate Ref.	Part No.	Description	Qty.	Remarks
	32591	FILTER, LUB. OIL (ASSEMBLY)	1	
		Comprising:—		
38	**32598**	COVER, LUB. OIL FILTER (ASSEMBLY)	1	
39	0650690	Plug, lub. oil filter relief valve	1	
40	0490595	Joint-washer, lub. oil filter relief valve plug	1	
	0780243	Spring, lub. oil filter relief valve — Included in	1	
	0020011	Ball, lub. oil filter relief valve — 32598	1	
41	0490520	Joint, lub. oil filter cover to container	1	
	0470622	Insert, lub. oil filter element top seal seat	1	
42	0730103	Seal, lub. oil filter element top	1	
43	35289	Element, lub. oil filter	1	
	32528	CONTAINER, LUB. OIL FILTER (ASSEMBLY)	1	
44	0840052	Container, lub. oil filter—Bare	1	
45	32529	Bolt, lub. oil filter	1	
46	0921061	Washer, lub. oil filter bolt sealing — Comprise	1	
47	26540022	Spring, lub. oil filter element pressure — 32528	1	
48	0730104	Retainer, lub. oil filter element pressure	1	
49	0730103	Seal, lub. oil filter element lower	1	
50	0490514	Joint, lub. oil filter to cylinder block	1	
51	0826425	Stud, lub. oil filter to cylinder block	1	Obsolete—Use 0746454/
52	0826476	Stud, lub. oil filter to cylinder block—Long	1	0096446
53	0576051	Nut, lub. oil filter retaining	2	Used only with 0826425/0826476
	0746454	Setscrew, lub. oil filter to cylinder block	1	
	0096446	Setscrew, lub. oil filter to cylinder block—Long	1	
54	0920054	Washer, lub. oil filter setscrew	2	
55	**0623402**	PIPE, LUB. OIL—PRESSURE RAIL TO UPPER IDLER GEAR FEED	1	
56	0201399	Banjo, lub. oil pipe	1	
57	0095350	Bolt, lub. oil pipe banjo	1	
58	0920126	Washer, lub. oil pipe banjo bolt — To Pressure Rail	2	
59	0576112	Nut, lub. oil pipe	1	
60	0566003	Olive, lub. oil pipe	1	
61	0201397	Banjo, lub. oil pipe	1	
62	0095350	Bolt, lub. oil pipe banjo	1	
63	0920126	Washer, lub. oil pipe banjo bolt — To Idler Gear Feed	2	
64	0576112	Nut, lub. oil pipe	1	
65	0566003	Olive, lub. oil pipe	1	
66	**34421408**	PIPE, LUB. OIL—UPPER IDLER GEAR FEED TO CAMSHAFT CHAMBER	1	
67	0576111	Nut, lub. oil pipe — To Idler Gear Feed	1	
68	0566002	Olive, lub. oil pipe — To Idler Gear Feed	1	
69	0201467	Connection, lub. oil pipe	1	
70	0095350	Bolt, lub. oil pipe connection	1	
71	0920126	Washer, lub. oil pipe connection bolt — To Camshaft Chamber	2	
72	0576111	Nut, lub. oil pipe	1	
73	0566002	Olive, lub. oil pipe	1	

SECTION "G" Continued

Lubricating Oil System

Plate Ref.	Part No.	Description	Qty.	Remarks
74	**34417116**	PIPE, LUB. OIL—CAMSHAFT CHAMBER TO NO. 1 CAMSHAFT BEARING	1	
75	0576111	Nut, lub. oil pipe — To Camshaft Chamber Connection	1	
76	0566002	Olive, lub. oil pipe — To Camshaft Chamber Connection	1	
77	0201398	Connection, lub. oil pipe — To No. 1 Camshaft Bearing	1	
78	0095350	Bolt, lub. oil pipe banjo — To No. 1 Camshaft Bearing	1	
79	0920126	Washer, lub. oil pipe banjo bolt — To No. 1 Camshaft Bearing	2	
80	0576111	Nut, lub. oil pipe — To No. 1 Camshaft Bearing	1	
81	0566002	Olive, lub. oil pipe — To No. 1 Camshaft Bearing	1	
	0990572	PIPE, LUB. OIL—CAMSHAFT CHAMBER TO CYLINDER HEAD	1	Prior to Eng. No. 2601109 Obsolete—Use 35551503
82	**35551503**	PIPE, LUB. OIL—CAMSHAFT CHAMBER TO CYLINDER HEAD	1	Eng. No. 2601109 onwards
83	0095350	Bolt, lub. oil pipe	2	
84	0920126	Washer, lub. oil pipe bolt	4	
		PIPE, LUB. OIL—IDLER GEAR SPRAY		See Section 'F'

NOTES

PLATE "H1"

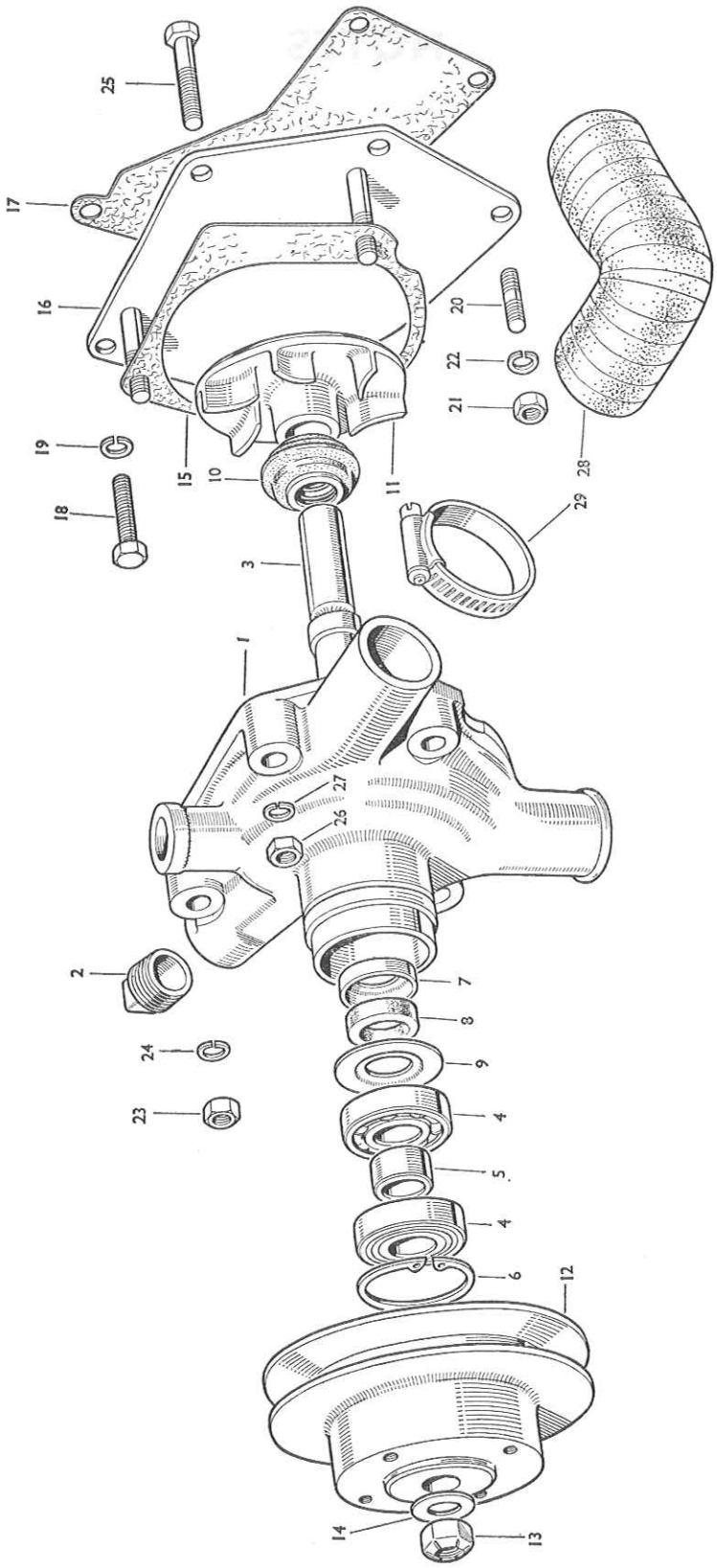
25
17
16
20
22
21
19
15
10
11
28
18
29
3
1
27
26
2
7
8
24
9
23
4
5
4
6
12
14
13

SECTION "H"

Water Pump
(List Nos. 187 & 189 Only)

Plate Ref.	Part No.	Description	Qty.	Remarks
	41312038	WATER PUMP (ASSEMBLY)	1	Prior to Eng. No. 2600393 Obsolete—Use 41312064
	41312064	WATER PUMP (ASSEMBLY)	1	Eng. No. 2600393 onwards
		Comprising:—		
1	37711291	Body, water pump	1	
2	0650540	Plug, water pump body	1	
	0750368	Shaft, water pump drive	1	Used only with 41312038
3	32753412*	Shaft, water pump drive	1	Used only with 41312064
4	0040057*	Bearing, water pump	2	
5	0330927*	Distance-piece, water pump bearing	1	
6	0170046*	Circlip, water pump bearing locating	1	
7	0380098*	Housing, water pump bearing seal	1	
8	0730046*	Seal, water pump bearing	1	
9	0380164*	Plate, water pump bearing seal	1	
10	2415207*	Seal, water pump impeller—Rear	1	Alternative 2415208
11	37447511*	Impeller, water pump	1	
	31146701	Pulley, water pump	1	Used only with 41312038
12	31146702	Pulley, water pump	1	Used only with 41312064
13	0576103	Nut, water pump pulley retaining	1	
14	0920007	Washer, water pump pulley retaining nut	1	
15	36866415	Joint, water pump body to mounting plate	1	
16	**38611108**	PLATE, WATER PUMP MOUNTING C/W STUDS	1	
17	36865104	Joint, water pump mounting plate to timing gear housing front cover	1	
18	0748525	Setscrew, water pump mounting plate and timing gear housing front cover to timing gear housing	2	
19	0920054	Washer, water pump mounting plate and timing gear housing front cover setscrew	2	
20	0827812	Stud, water pump mounting plate to timing gear housing front cover	2	Obsolete—Use 0748521/0920109
	0748521	Setscrew, water pump mounting plate to timing gear housing front cover	2	
	0920109	Washer, water pump mounting plate setscrew	2	Used only with 0920109
21	0576051	Nut, water pump mounting plate retaining	2	Used only with 0827812
22	0920054	Washer, water pump mounting plate retaining nut	2	
23	0576051	Nut, water pump body retaining	3	
24	0920054	Washer, water pump body retaining nut	3	
25	0096435	Bolt, water pump body to mounting plate	1	
26	0576051	Nut, water pump body retaining	1	
27	0920054	Washer, water pump body retaining nut	1	
28	34821416	Hose, water pump outlet to cylinder block water inlet connection ...	1	
29	0180067	Clip, water connection hose	2	
		HOSE, WATER PUMP BODY TO BY-PASS CONNECTION ...		See Section 'B'
		BELT, WATER PUMP AND DYNAMO DRIVE		See Section 'J'
	58740	WATER PUMP REPAIR KIT, WITH BEARINGS (INCLUDES ITEMS MARKED *)	1	
	58739	WATER PUMP REPAIR KIT, LESS BEARINGS	1	

PLATE " H2 "

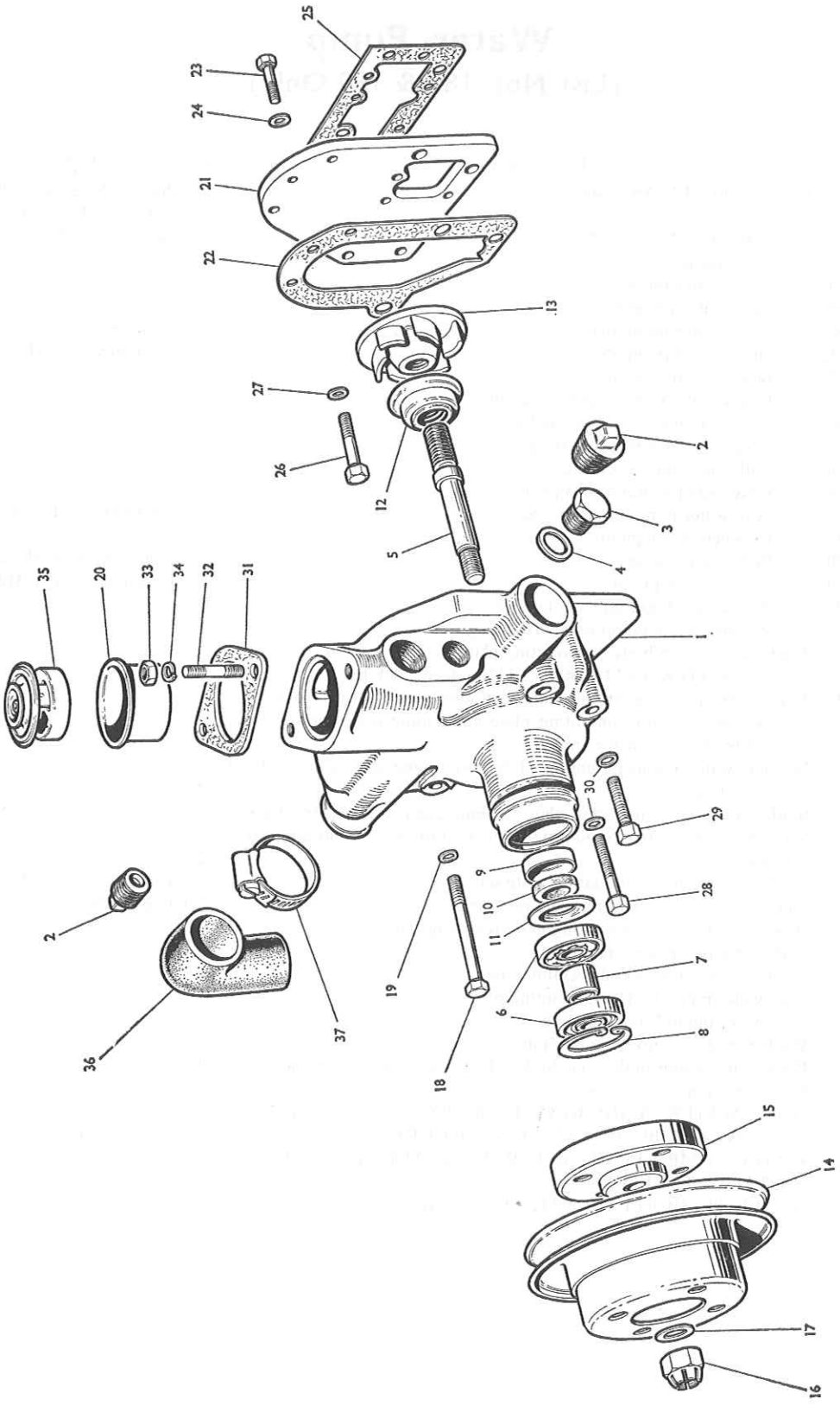
25
23
24
21
22
13
27
26
12
5
2
3
4
1
35
20
33
34
32
31
30
29
28
9
10
11
7
6
8
19
18
2
36
37
15
14
17
16

SECTION "H" Continued

Water Pump
(List Nos. 188 & 190 Only)

Plate Ref.	Part No.	Description	Qty.	Remarks
	59930	WATER PUMP (ASSEMBLY)	1	
		Comprising:—		
1	37712281	Body, water pump	1	
2	0650540	Plug, water pump body	2	
3	0650203	Plug, water pump body	1	
4	2411157	Washer, water pump body plug	1	
	32753409	Shaft, water pump drive	1	Prior to Eng. No. 2600393 Obsolete—Use 32753411/ 33426508
5	32753411*	Shaft, water pump drive	1	Eng. No. 2600393 onwards
6	0040057*	Bearing, water pump	2	
7	0330875*	Distance-piece, water pump bearing	1	
8	0170046*	Circlip, water pump bearing locating	1	
9	0380098*	Housing, water pump bearing front seal	1	
10	0730046*	Seal, water pump bearing—Front	1	
11	0380164*	Plate, water pump bearing—Front seal retaining	1	
12	32274	Seal, water pump impeller—Rear	1	Obsolete—Use 2415207
	2415207*	Seal, water pump impeller—Rear	1	Alternative 2415208
13	0460035*	Impeller, water pump	1	
14	31146402	Pulley, water pump	1	Obsolete—Use 31146911
15	33426508	Hub, water pump pulley	1	Used only with 32753411
	31146911	Pulley, water pump	1	
	33426507	Hub, water pump pulley	1	Used only with 32753409
16	0576103	Nut, water pump pulley retaining	1	Alternative 0574210
17	0920007	Washer, water pump pulley retaining nut	1	
18	32155117	Setscrew, water pump body to cylinder head	1	
19	0920155	Washer, water pump body setscrew	1	
20	0900043	Sleeve, water pump	1	
21	36236706	Plate, water pump mounting	1	
22	36866711	Joint, water pump body to mounting plate	1	
23	0746052	Setscrew, mounting plate to water pump body	3	
24	0920103	Washer, mounting plate setscrew	3	
25	0490024	Joint, water pump mounting plate to cylinder head	1	
26	0746052	Setscrew, water pump mounting plate to cylinder head	5	Replace 0746152
27	0920052	Washer, water pump mounting plate setscrew	5	
28	0096441	Setscrew, water pump body to cylinder head—Long	1	
29	0096439	Setscrew, water pump body to cylinder head	1	
30	0920155	Washer, water pump body setscrew	2	
		CONNECTION, WATER PUMP OUTLET		Quote Engine Number
31	0490184	Joint, water pump outlet connection	1	
32	0826419	Stud, water pump body to outlet connection	2	
33	0576051	Nut, water pump outlet connection retaining	2	
34	0920054	Washer, water pump outlet connection retaining nut	2	
35	32550	Thermostat	1	
36	34824404	Hose, water pump outlet to cylinder block water inlet connection ...	1	
37	0180067	Clip, water connection hose	2	
		BELT, WATER PUMP AND DYNAMO DRIVE		See Section 'J'
	58307	WATER PUMP REPAIR KIT WITH BEARINGS INCLUDES ITEMS MARKED *	1	
	58308	WATER PUMP REPAIR KIT LESS BEARINGS	1	

PLATE "I1"

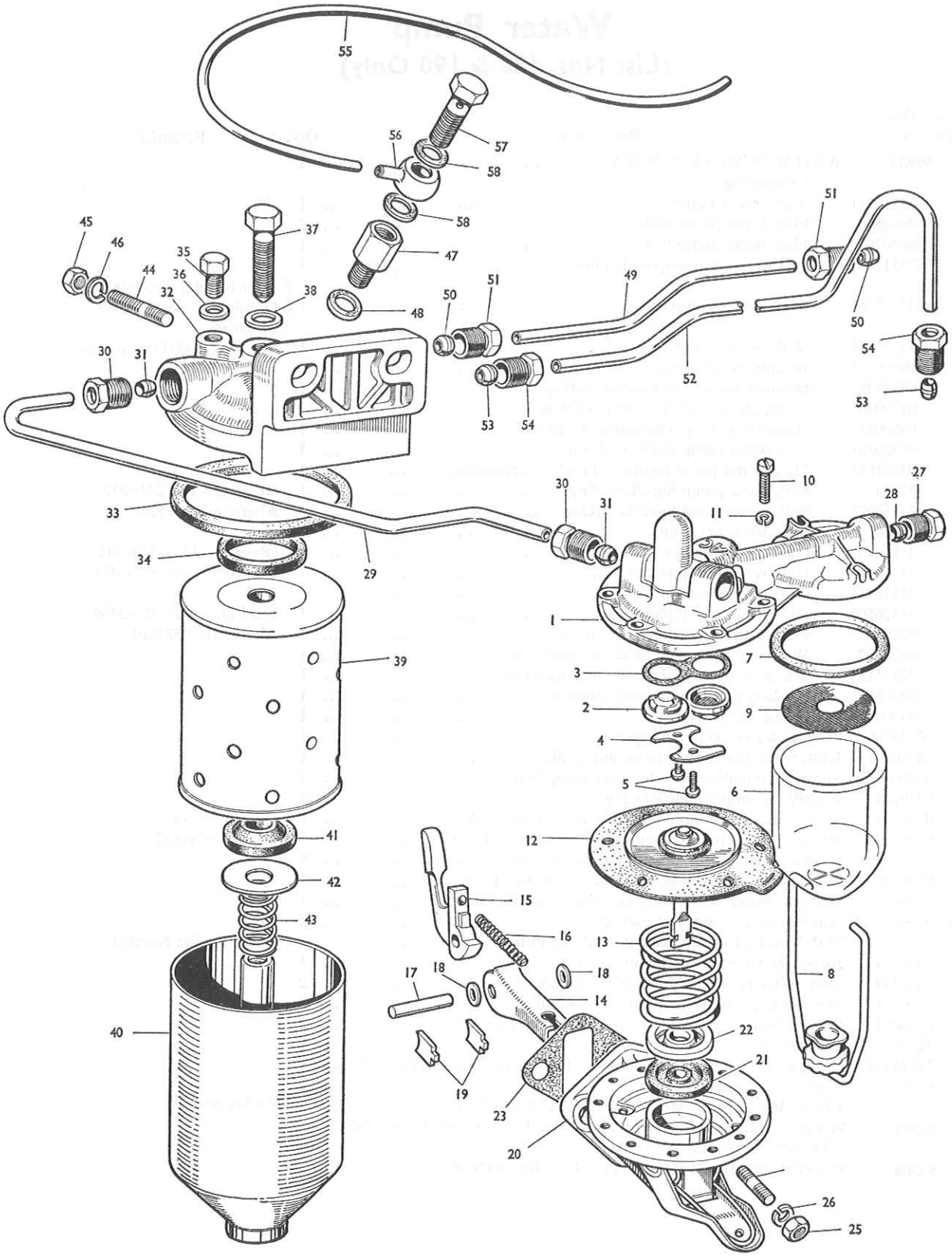
55
56
57
58
58
47
45
46
44
35
36
32
37
38
48
51
50
49
51
50
54
53
52
53
54
30
31
33
34
29
30
31
10
11
27
28
1
7
3
2
9
4
5
6
39
41
42
43
12
15
16
13
18
17
18
14
8
40
22
21
19
23
20
26
25

SECTION "I"

Fuel Oil Injection Equipment

Plate Ref.	Part No.	Description	Qty.	Remarks
				Prior to Eng. No. 2609350
	32589	LIFT PUMP, FUEL OIL (ASSEMBLY)	1	Obsolete—Use 2641345/0826251
	2641345	LIFT PUMP, FUEL OIL (ASSEMBLY)	1	Eng. No. 2609350 onwards
		Comprising:—		
	32597	HOUSING, LIFT PUMP INLET & OUTLET VALVE (ASSEMBLY)	1	
1	0240731	Housing, lift pump inlet and outlet valve	1	
2	32517	Valve, lift pump inlet and outlet	2	
3	0490559	Joint, lift pump inlet and outlet to housing	1	
4	0910058	Plate, lift pump inlet and outlet valve retaining	1	
5	0720708	Screw, lift pump valve retaining plate to housing (Comprise 32597)	2	
6	0995260	Bowl, lift pump inlet filter sediment—Glass	1	
7	0490538	Joint, sediment bowl to lift pump valve housing	1	
8	30428	Stirrup, sediment bowl to lift pump valve housing retaining	1	
9	0800044	Filter-screen, lift pump inlet gauze	1	
10	0720709	Screw, lift pump inlet and outlet valve to body	6	
11	0921018	Washer, lift pump inlet and outlet valve housing screw	6	
12	2641491	Diaphragm, lift pump	1	Replaces 32518
13	0780224	Spring, lift pump diaphragm return	1	
14	0520368	Lever, lift pump diaphragm operating	1	Used only with 32589
	0520580	Lever, lift pump diaphragm operating	1	Used only with 2641345
15	0520528	Rocker arm, lift pump actuating	1	
16	0780225	Spring, lift pump actuating rocker arm return	1	
17	0610847	Pin, lift pump actuating rocker arm and diaphragm operating lever	1	
18	0921019	Washer, lift pump actuating rocker arm and diaphragm operating lever	2	
19	26410006	Retainer, lift pump actuating rocker arm and diaphragm operating lever pin	2	
20	32573	Body, lift pump c/w priming lever and spring	1	Used only with 32589
	26410047	Body, lift pump c/w priming lever and spring	1	Used only with 2641345
21	0730128	Oil seal, lift pump body	1	
22	0997129	Retainer, lift pump body oil seal	1	
23	36862126	Joint, fuel oil lift pump to cylinder block	2	Replace 0490547
24	0826251	Stud, fuel oil lift pump to cylinder block	2	Replace 0826222
25	33221115	Nut, fuel oil lift pump retaining	2	Replace 0576102
26	0920053	Washer, fuel oil lift pump retaining nut	2	
27	33533112	Nut, fuel oil pipe (To Lift Pump Inlet Port)	1	
28	0566003	Olive, fuel oil pipe (To Lift Pump Inlet Port)	1	
	34522125	PIPE, FUEL OIL—LIFT PUMP TO FILTER	1	Prior to Eng. No. 2601108
29	**35355821**	PIPE, FUEL OIL—LIFT PUMP TO FILTER	1	Eng. No. 2601108 onwards
	0571346	Nut, fuel oil pipe (To Lift Pump)	1	
	0566004	Olive, fuel oil pipe (To Lift Pump)	1	
	0201500	Banjo, fuel oil pipe (To Filter)	1	
	0095031	Bolt, fuel oil pipe banjo (To Filter)	1	Used only with 34522125
	0920154	Washer, fuel oil pipe banjo bolt (To Filter)	2	
	0576113	Nut, fuel oil pipe (To Filter)	1	
	0566004	Olive, fuel oil pipe (To Filter)	1	
30	33533112	Nut, fuel oil pipe	2	Used only with 35355821
31	0566003	Olive, fuel oil pipe	2	

SECTION "1" Continued

Fuel Oil Injection Equipment

Plate Ref.	Part No.	Description	Qty.	Remarks
	*35532	FILTER, FUEL OIL (ASSEMBLY) (TYPE F4B/2)	1	Prior to Eng. No. 2601108
	2656653	FILTER, FUEL OIL (ASSEMBLY) (TYPE 7961090)	1	Eng. No. 2601108 onwards
		Comprising:—		
	26560006	COVER, FUEL OIL FILTER (ASSEMBLY)	1	
32	26560007	Cover, fuel oil filter—bare	1	
33	0490520	Joint, fuel oil filter cover to container	1	
34	26560003	Seal, fuel oil filter element seating	1	
35	0650702	Plug, fuel oil filter cover ... ... Comprise	1	
36	0921080	Washer, fuel oil filter cover plug ... ... 26560006 ...	1	
37	0095292	Bolt, fuel oil filter cover to container	1	
38	0921079	Washer, fuel oil filter cover to container bolt	1	
39	32543	ELEMENT, FUEL OIL FILTER	1	
40	26560008	CONTAINER, FUEL OIL FILTER ELEMENT (ASSEMBLY)	1	
41	26560010	Joint, fuel oil filter element pressure spring	1	
42	26560009	Washer, fuel oil filter element pressure spring Included in	1	
43	26560004	Spring, fuel oil filter element pressure ... 26560008 ...	1	
	0826443	Stud, fuel oil filter to cylinder block	3	Used only with 35532
44	0826409	Stud, fuel oil filter to cylinder block	2	Used only with 2656653
45	0576051	Nut, fuel oil filter retaining	2	3 off each used with
46	0920054	Washer, fuel oil filter retaining nut	2	0826443
47	33423	Non-return valve, fuel oil filter overflow	1	Eng. No. 2601108 onwards
48	0920146	Washer, non-return valve	1	
	0623754	PIPE, FUEL OIL—FILTER TO FUEL PUMP List No's. 187 and	1	Prior to Eng. No. 2601108
49	35351412	PIPE, FUEL OIL—FILTER TO FUEL PUMP 188 only ...	1	Eng. No. 2601108 onwards
	35353177	PIPE, FUEL OIL—FILTER TO FUEL PUMP List No's. 189 and	1	Prior to Eng. No. 2603732
	35353207	PIPE, FUEL OIL—FILTER TO FUEL PUMP 190 only ...	1	Eng. No. 2603732 onwards
	33555319	Union, fuel oil pipe	1	
	0920154	Washer, fuel oil pipe union ... To	1	Used only with 0623754
	0576113	Nut, fuel oil pipe ... ... Filter	1	
	0566004	Olive, fuel oil pipe	1	
50	0566003	Olive, fuel oil pipe	2	Used only with 35351412/
51	33533112	Nut, fuel oil pipe	2	35353177/35353207
	0623723	PIPE, FUEL OIL—FUEL PUMP TO FILTER RETURN ... List No's. 187 and	1	Prior to Eng. No. 2601108
52	35355805	PIPE, FUEL OIL—FUEL PUMP TO FILTER RETURN ... 188 only	1	Eng. No. 2601108 onwards
	35355807	PIPE, FUEL OIL—FUEL PUMP TO FILTER RETURN ... List No's. 189 and	1	Prior to Eng. No. 2603732
	35355837	PIPE, FUEL OIL—FUEL PUMP TO FILTER RETURN ... 190 only	1	Eng. No. 2603732 onwards
	33555319	Union, fuel oil pipe	1	
	0920154	Washer, fuel oil pipe union ... To	1	Used only with 0623723
	0576113	Nut, fuel oil pipe ... ... Filter	1	
	0566004	Olive, fuel oil pipe	1	
53	0566003	Olive, fuel oil pipe	2	Used only with 35355805/
54	33533112	Nut, fuel oil pipe	2	35355807/35355837
55	0623778	PIPE, FILTER OVERFLOW CONNECTION TO NO. 4 ATOMISER LEAK-OFF BANJO	1	
	0999253	Connection, fuel oil—Filter leak-off banjo	1	Prior to Eng. No. 2601108
56	31721211	Connection, fuel oil—Filter leak-off banjo	1	Eng. No. 2601108 onwards
57	0095344	Bolt, fuel oil—Filter leak-off banjo	1	
58	0920146	Washer, fuel oil—Filter leak-off banjo bolt	2	

NOTE:—

*Component Parts supplied by Messrs. C.A.V. Ltd.

NOTES

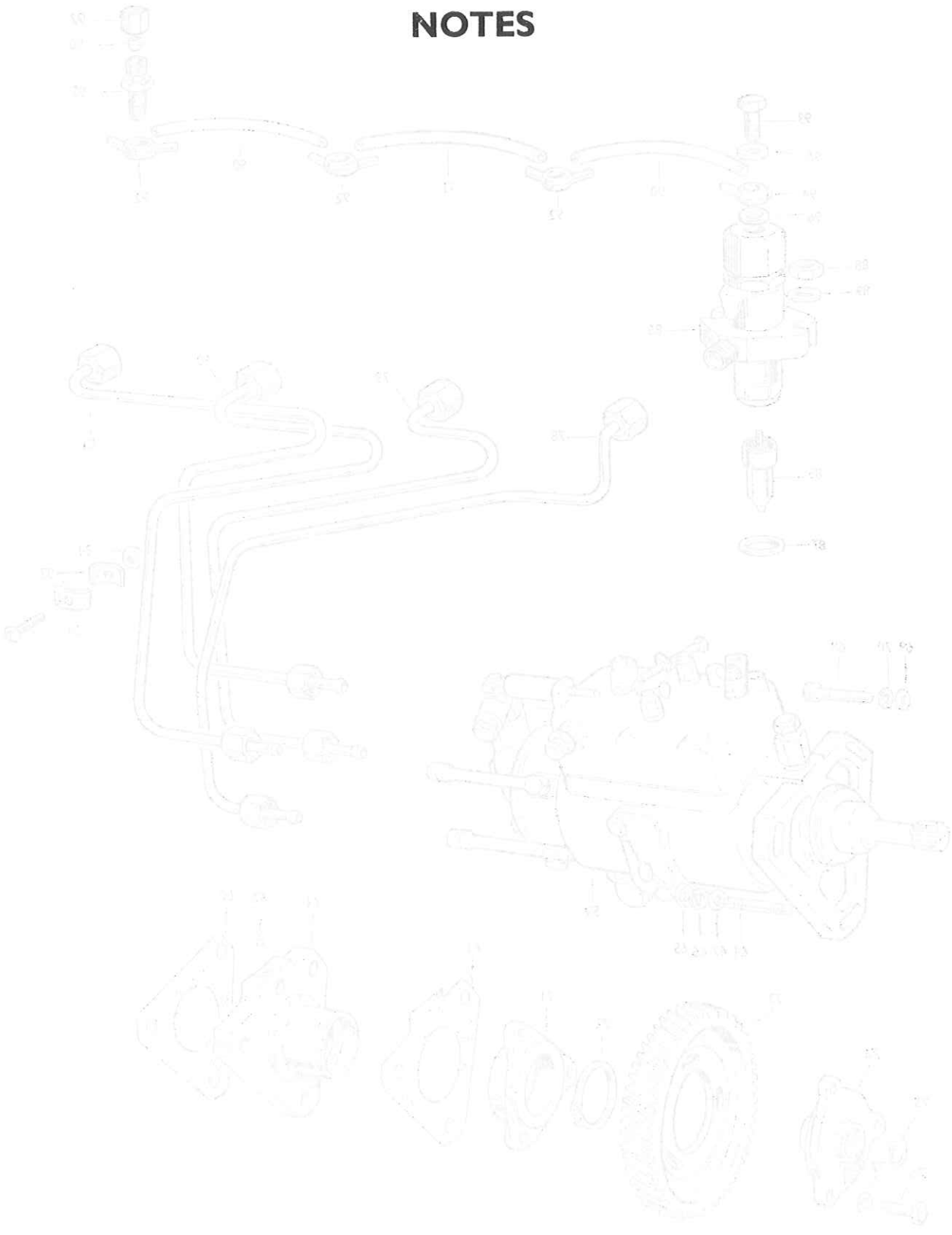

PLATE "12"

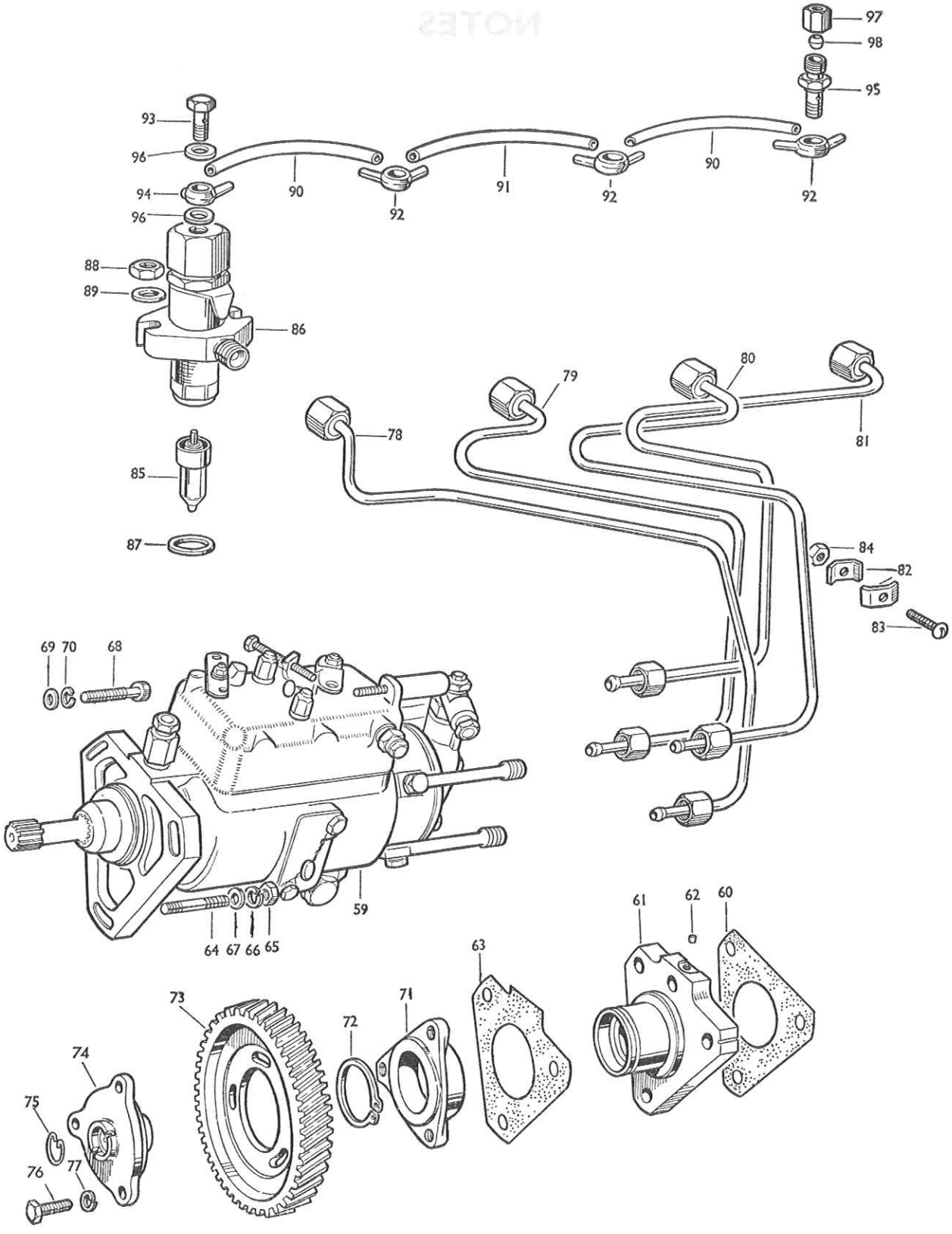
97
98
95
93
96
90
92
91
92
90
92
94
96
88
89
86
85
87
79
80
78
81
84
82
83
69
70
68
59
64
67
66
65
61
62
60
63
73
72
71
74
75
76
77

SECTION "I" Continued

Fuel Oil Injection Equipment

Plate Ref.	Part No.	Description	Qty.	Remarks
59	*36394	PUMP, FUEL INJECTION (ASSEMBLY) C/W THROTTLE AND STOP CONTROL LEVERS (TYPE 3243021A)	1	List No's. 187 and 188 only (Replaces 36020/36319)
	*36030	PUMP, FUEL INJECTION (ASSEMBLY) C/W THROTTLE AND STOP CONTROL LEVERS (TYPE 3246375)	1	Prior to Eng. No. 2603732 Obsolete—Use 36143 See Note**
	*36143	PUMP, FUEL INJECTION (ASSEMBLY) C/W THROTTLE AND STOP CONTROL LEVERS (TYPE 3246376)	1	List No's. 189and 190 only — Eng. No. 2603732 to 2611736 Obsolete—Use 36463
	0650756	Plug, fuel pump	1	
	*36463	PUMP, FUEL INJECTION (ASSEMBLY) C/W THROTTLE AND STOP CONTROL LEVERS (TYPE 3246817)	1	Engine No. 2611737 onwards
60	0490685	Joint, fuel pump to carrier	1	
61	0450036	Carrier, fuel pump and drive gear	1	
62	0650599	Plug, fuel pump and drive gear carrier	1	
63	0490706	Joint, fuel pump and drive gear carrier to timing gear housing ...	1	
64	0827609	Stud, fuel pump and drive gear carrier to timing gear housing ...	2	Also detailed on Section 'F'
65	0576002	Nut, fuel pump and drive gear carrier retaining	2	
66	0920053	Washer, fuel pump and drive gear carrier retaining nut	2	
67	0920003	Washer, fuel pump and drive gear carrier retaining nut	2	
68	0720844	Capscrew, fuel pump and drive gear carrier to timing gear housing ...	1	Innermost hole
69	0920003	Washer, fuel pump and drive gear carrier capscrew—Plain ...	1	
70	0920053	Washer, fuel pump and drive gear carrier capscrew—Spring ...	1	
71	**0450034**	HUB, FUEL PUMP DRIVE GEAR	1	
72	0170044	Circlip, fuel pump drive gear hub retaining	1	
73	0410232	Gear, fuel pump	1	
74	0940868	Adaptor, fuel pump gear	1	Obsolete—Use 37427443
	37427443	Adaptor, fuel pump gear	1	
75	0170129	Circlip, fuel pump gear adaptor	1	
76	0746256	Setscrew, fuel pump gear and adaptor to drive gear hub	3	
77	0920053	Washer, fuel pump gear and adaptor setscrew	3	
	57494	PIPES, FUEL INJECTION (ASSEMBLY) ... ... Comprising:—	1	List No's. 187 and 188 only
78	35355183	Pipe, fuel injection c/w nuts and olives No. 1 Cylinder	1	
79	35355184	Pipe, fuel injection c/w nuts and olives No. 2 Cylinder	1	
80	35355185	Pipe, fuel injection c/w nuts and olives No. 3 Cylinder	1	
81	35355186	Pipe, fuel injection c/w nuts and olives No. 4 Cylinder	1	
	57569	PIPES, FUEL INJECTION (ASSEMBLY) ... ... Comprising:—	1	List No's. 189 and 190 only— Prior to Eng. No. 2603732
	35355181	Pipe, fuel injection c/w nuts and olives No. 1 Cylinder	1	
	35355179	Pipe, fuel injection c/w nuts and olives No. 2 Cylinder	1	
	35355182	Pipe, fuel injection c/w nuts and olives No. 3 Cylinder	1	
	35353159	Pipe, fuel injection c/w nuts and olives No. 4 Cylinder	1	
	81669	PIPES, FUEL INJECTION (ASSEMBLY) ... ... Comprising:—	1	List No's. 189 and 190 only. Eng. No. 2603732 onwards
	35355237	Pipe, fuel injection c/w nuts and olives No. 1 Cylinder	1	
	35355238	Pipe, fuel injection c/w nuts and olives No. 2 Cylinder	1	
	35355239	Pipe, fuel injection c/w nuts and olives No. 3 Cylinder	1	
	35355241	Pipe, fuel injection c/w nuts and olives No. 4 Cylinder	1	
82	0180637	Clip, fuel injection pipe clamping	6	List No's. 187 and 188 only
83	0726264	Bolt, fuel injection pipe clip clamping	3	
84	0571350	Nut, fuel injection pipe clip clamping bolt	3	

SECTION "1" Continued

Fuel Oil Injection Equipment

Plate Ref.	Part No.	Description	Qty.	Remarks
	0180574	Clip, fuel injection pipes clamping (Clips 2, 3, and 4 injection pipes together)	2	List No's. 189 and 190 only
	0180637	Clip, fuel injection pipes clamping (Clips 1 and 2 injection pipes together)	2	
	0726264	Bolt, fuel injection pipe clip clamping	3	
	0571350	Nut, fuel injection pipe clip clamping bolt	3	
	2646144	ATOMISER, FUEL OIL INJECTION (ASSEMBLY) (DESPATCH NO. 5307201)	4	List No's. 187 and 188 only
		Comprising:—		
85	*31990	Nozzle, fuel injection atomiser	4	
86	*2646442	Holder, fuel injection atomiser	4	
87	0920113	Washer, fuel injection atomiser	4	
	0999603	ATOMISER, FUEL OIL INJECTION (ASSEMBLY) (DESPATCH NO. 5307001)	4	List No's. 189 and 190 only
		Comprising:—		
	*35504	Nozzle, fuel injection atomiser	4	
	*33497	Holder, fuel injection atomiser	4	
	0920113	Washer, fuel injection atomiser	4	
		Stud, fuel injection atomiser to cylinder head		See Section 'A'
88	0576051	Nut, fuel injection atomiser retaining	8	
89	0920004	Washer, fuel injection atomiser retaining nut	8	
90	**0623769**	PIPE, FUEL INJECTION ATOMISER LEAK-OFF	2	From No. 1 to No. 2 and No. 3 to No. 4 Atomisers
91	**0623777**	PIPE, FUEL INJECTION ATOMISER LEAK-OFF	1	From No. 2 to No. 3 Atomisers
92	0201520	Connection, fuel injection atomiser leak-off pipe	3	
93	0095315	Bolt, leak-off pipe connection to atomiser	3	
94	0201521	Connection, fuel injection atomiser leak-off pipe	1	For No. 1 Atomiser
95	0201526	Bolt, leak-off pipe banjo connection to atomiser	1	Fitted in No. 4 Atomiser holder
96	0920107	Washer, leak-off pipe banjo connection bolt	8	Replace 2411152
97	0576111	Nut, leak-off pipe connection	1	For return pipe
98	0566002	Olive, leak-off pipe connection	1	

NOTE:—

***Component Parts supplied by Messrs. C.A.V. Ltd.**

****Fuel Injection Pump 36143 replaces 36030 for Engines prior to Eng. No. 2603732 on List No's. 189 and 190 providing Pipes 81669/35353207/35355837 are also fitted.**

NOTES



PLATE "J"

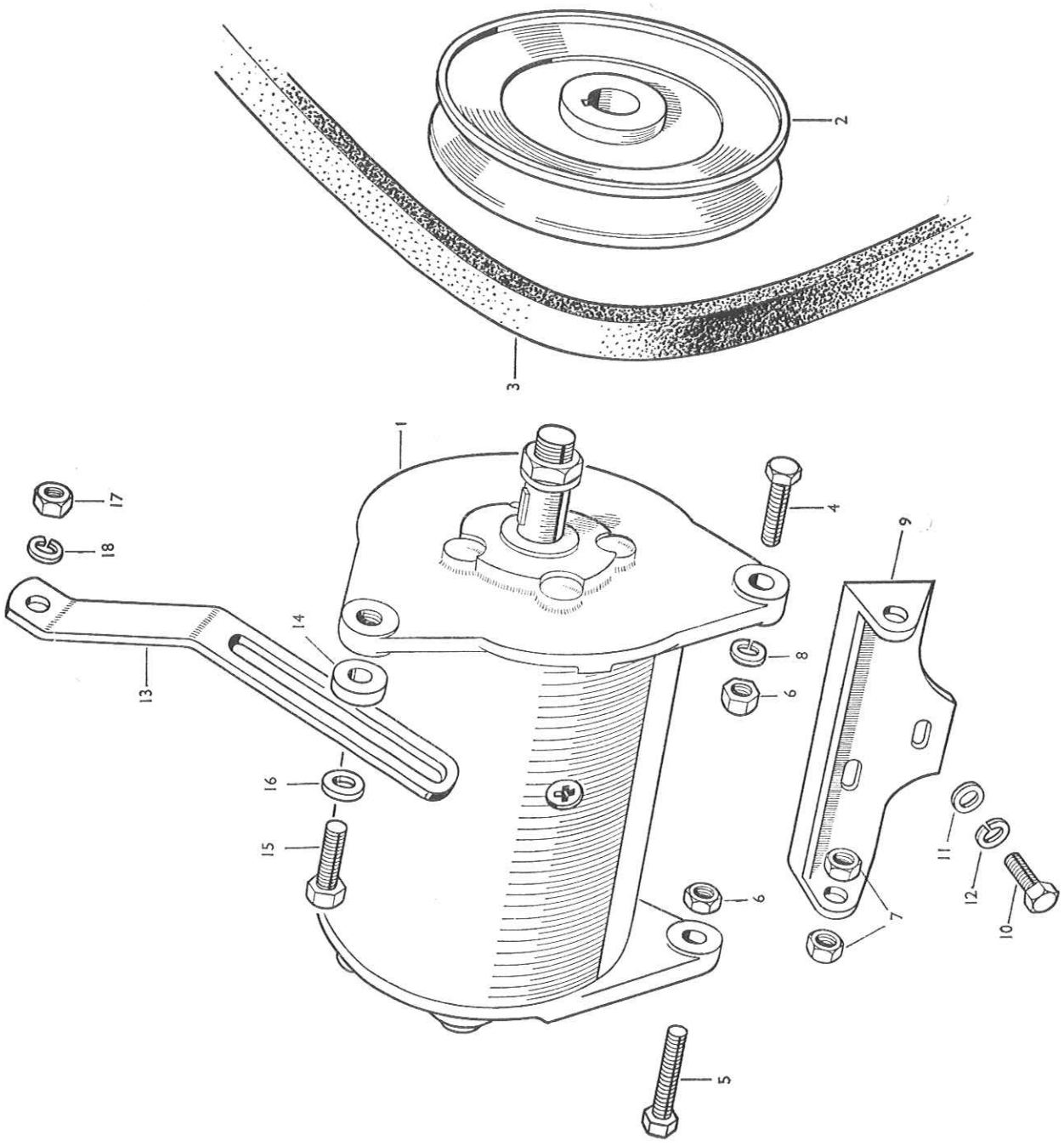

SECTION "J"

Electrical Equipment
(List Nos. 187 & 189 Only)

Plate Ref.	Part No.	Description	Qty.	Remarks
1		DYNAMO C/W NUT AND KEY (TYPE C39P2—DESPATCH NO. 22259E)	1	Prior to Eng. No. 2607236—Serviced directly by Messrs. J. Lucas Ltd.
	2871170	DYNAMO C/W NUT AND KEY (TYPE C40A—DESPATCH NO. 22703)	1	Eng. No. 2607236 onwards
2	31141408	Pulley, dynamo drive	1	
3	2612421	Belt, dynamo and water pump drive	1	
4	0746357	Bolt, dynamo to support bracket—Front	1	
5	0746259	Bolt, dynamo to support bracket—Rear	1	Prior to Eng. No. 2607236
	0746260	Bolt, dynamo to support bracket—Rear	1	Eng. No. 2607236 onwards
6	0576002	Nut, dynamo retaining	2	
7	0576151	Locknut, dynamo and support bracket securing	2	
8	0920053	Washer, dynamo retaining nut—Spring	2	1 off prior to Eng. No. 2607236
	0920497	Washer, dynamo retaining nut—Plain	3	2 off prior to Eng. No. 2607236
9	**38164423**	BRACKET, DYNAMO SUPPORT	1	
10	0748414	Setscrew, dynamo support bracket to timing gear housing ...	2	
11	0920003	Washer, dynamo support bracket setscrew—Plain	2	
12	0920053	Washer, dynamo support bracket setscrew—Spring	2	
13	**36542318**	LEVER, DYNAMO ADJUSTING	1	Prior to Eng. No. 2607236
	36545117	LEVER, DYNAMO ADJUSTING	1	Eng. No. 2607236 onwards
14	33134418	Distance-piece, dynamo adjusting lever to dynamo	1	
15	0745045	Setscrew, dynamo adjusting lever to dynamo	1	
16	0920497	Washer, dynamo adjusting lever setscrew	1	Replaces 0920003
		Stud, dynamo adjusting lever to timing gear housing front cover ...		See Section 'F'
17	0576002	Nut, dynamo adjusting lever retaining	1	
18	0920053	Washer, dynamo adjusting lever retaining nut—Spring	1	

SECTION "J" Continued

Electrical Equipment
(List Nos. 188 & 190 Only)
PRIOR TO ENGINE NUMBER 2607236

Plate Ref.	Part No.	Description	Qty.	Remarks
		DYNAMO C/W NUT AND KEY (TYPE C39P2 DESPATCH NO. 22259E)	1	Serviced directly by Messrs. J. Lucas Ltd.
	31141408	Pulley, dynamo	1	
	0070111	Belt, dynamo and water pump drive	1	Replaces 0070112
	0746357	Bolt, dynamo to support bracket—Front	1	
	0746259	Bolt, dynamo to support bracket—Rear	1	
	0576002	Nut, dynamo retaining	2	
	0576151	Locknut, dynamo and support bracket securing	2	
	0920053	Washer, dynamo retaining nut—Spring	1	
	0920497	Washer, dynamo retaining nut—Plain	1	
	38164424	BRACKET, DYNAMO SUPPORT	1	
	0746254	Setscrew, dynamo support bracket to cylinder block	1	
	0748413	Setscrew, dynamo support bracket to timing gear housing	2	
	0920003	Washer, dynamo support bracket setscrew—Plain	3	
	0920053	Washer, dynamo support bracket setscrew—Spring	3	
	36541418	LEVER, DYNAMO ADJUSTING	1	Prior to Eng. No. 2601069. Obsolete—Use 36541426
	36541426	LEVER, DYNAMO ADJUSTING	1	Eng. No. 2601069 onwards
	0745045	Setscrew, dynamo adjusting lever to dynamo	1	
	0920497	Washer, dynamo adjusting lever setscrew	2	
		Stud, dynamo adjusting lever to timing gear housing front cover ...		See Section 'F'
	0576002	Nut, dynamo adjusting lever retaining	1	
	0920053	Washer, dynamo adjusting lever retaining nut—Spring	1	

LIST No's. 188 AND 190 ONLY
ENGINE NUMBER 2607236 ONWARDS

	†2871170	DYNAMO C/W NUT AND KEY (TYPE C40A—DESPATCH NO. 22703)	1
	31141417	Pulley, dynamo	1
	0070113	Belt, dynamo and water pump drive	1
	0746257	Bolt, dynamo to support bracket	2
	0576002	Nut, dynamo retaining	2
	0920053	Washer, dynamo retaining nut—Spring	2
	0920497	Washer, dynamo retaining nut—Plain	2
	36513707	BRACKET, DYNAMO SUPPORT	1
	0746255	Setscrew, dynamo support bracket to cylinder block	1
	0748414	Setscrew, dynamo support bracket to timing gear housing	1
	0920003	Washer, dynamo support bracket setscrew—Plain	2
	0920053	Washer, dynamo support bracket setscrew—Spring	2
	36545118	LEVER, DYNAMO ADJUSTING	1
	0745045	Setscrew, dynamo adjusting lever to dynamo	1
	0920497	Washer, dynamo adjusting lever setscrew	2

Note:—

†Component Parts supplied by Messrs J. Lucas Ltd.

SECTION "K"

Joints and Gaskets

Part No.	Description	Qty.	Remarks
	LIST No. 187 ONLY		
57935	JOINTS AND GASKETS	1	Set
	JOINT, WATER PUMP MOUNTING PLATE TO TIMING GEAR HOUSING FRONT COVER ... Complete Engine Set ...	1	See Section 'H'
	JOINT, TIMING GEAR HOUSING HYDRAULIC PUMP FACING COVER TO HOUSING	1	See Section 'F'
57934	JOINTS AND GASKETS—REMOVAL OF HEAD ...	1	Set
	LIST No. 188 ONLY		
57932	JOINTS AND GASKETS—COMPLETE ENGINE SET ...	1	
57931	JOINTS AND GASKETS—REMOVAL OF HEAD ...	1	Set
	LIST No. 189 ONLY		
57935	JOINTS AND GASKETS ... ... Complete Engine Set ...	1	Set
	JOINT, WATER PUMP MOUNTING PLATE TO TIMING GEAR HOUSING FRONT COVER ...	1	See Section 'H'
57934	JOINTS AND GASKETS—REMOVAL OF HEAD ...	1	Set
	LIST No. 190 ONLY		
80074	JOINTS AND GASKETS—COMPLETE ENGINE SET	1	
80075	JOINTS AND GASKETS—REMOVAL OF HEAD ...	1	Set
	LIST No's. 187, 188, 189, 190		
57930	JOINTS—REMOVAL OF SUMP	1	Set

187/188/189/190/CMC/9953

NOTES

Numerical Index

Part No.	Page
30399	19
30428	35
30476	17
31419	5
31990	40
32274	33
32517	35
32518	See 2641491
32528	27
32529	27
32543	36
32546	19
32547	19
32548	19
32549	19
32550	10,33
32573	35
32589	35
32591	27
32597	35
32598	27
33423	36
33497	40
33841	See 32550
35254	19
35289	27
35504	40
35532	36
36020	See 36394
36030	39
36143	39
36319	See 36394
36394	39
36463	39
52703	17
52813	14
54361	6
55437	17
55778	14
55779	See 59635
57494	39
57539	22
57563	5
57569	39
57578	21
57594	22
57930	45
57931	45
57932	45
57934	45
57935	45
58307	33
58308	33
58400	9
58704	13
58705	14
58739	31
58740	31
59617	13
59635	14
59930	33
80074	45
80075	45
81219	22
81565	14
81669	39
81869	14
81870	14
82133	14
82210	22
82611	9
0020011	27
0040057	31, 33
0050119	14
0050344	25
0050345	21
0070111	44
0070113	44
0095031	35
0095250	14
0095292	36
0095315	40
0095344	36
0095345	21
0095350	27, 28
0096235	10
0096236	6
0096238	25
0096243	6
0096435	31
0096439	33
00096441	33
0096446	27
0096640	19
0101138	17
0140034	21
0150008	9
0150144	25
0170001	14
0170033	17
0170044	39
0170046	31, 33
0170129	39
0180066	10
0180067	31, 33
0180116	19
0180574	40
0180637	39, 40
0180831	25
0200080	10
0201373	6
0201397	27
0201398	28
0201399	27
0201467	27
0201493	6
0201500	35
0201520	40
0201521	40
0201526	40
0230001	9
0240731	35
0240765	5
0320105	25
0330510	17
0330517	17
0330875	33
0330927	31
0330934	13
0340025	13
0350017	21
0380098	31, 33
0380164	31, 33
0410228	13
0410231	21
0410232	39
0420002	9
0450034	39
0450035	21
0450036	39
0460035	33
0470622	27
0490019	25
0490023	9
0490024	33
0490032	10
0490042	19
0490044	10
0490115	9
0490184	10, 33
0490188	19
0490189	19
0490226	19
0490485	9
0490514	27
0490520	27, 36
0490538	35
0490547	See 36862126
0490559	35
0490579	19
0490595	27
0490609	19
0490628	6
0490685	39
0490692	6
0490699	5
0490701	10
0490704	17
0490706	39
0500168	13
0520368	35
0520429	17
0520430	17
0520528	35
0520580	35
0540175	10
0560244	25
0566002	17, 19, 27, 28, 40
0566003	27, 35, 36
0566004	35, 36
0571095	19
0571099	19
0571346	35
0571350	39, 40
0571351	17
0574211	6
0576001	9
0576002	6, 21, 25, 39, 43, 44
0576030	10
0576031	10
0576051	9, 10, 21, 27, 31, 33, 36, 40
0576052	9
0576054	9
0576102	17
0576103	31, 33
0576104	17
0576111	19, 27, 28, 40
0576112	27
0576113	35, 36
0576151	43, 44
0610011	25
0610516	14
0610847	35
0610904	21
0623402	27
0623723	36
0623754	36
0623769	40
0623777	40
0623778	36
0630082	25
0640134	14
0640135	14
0640136	14
0640144	25
0650203	10, 33
0650507	17
0650540	10, 25, 31, 33
0650566	5
0650590	9
0650593	5
0650594	5
0650599	39
0650685	9
0650690	27

Numerical Index

Part No.	Page
0650702	36
0650710	5
0650738	5
0650756	39
0690061	22
0720677	9
0720708	35
0720709	35
0720844	39
0726264	39, 40
0730046	31, 33
0730080	6
0730103	27
0730104	27
0730128	35
0745045	43, 44
0745105	5
0746051	25
0746052	9, 10, 33
0746053	10
0746054	10
0746251	5
0746253	5
0746254	21, 25, 44
0746255	6, 22, 44
0746256	39
0746257	22, 44
0746259	43, 44
0746260	43
0746354	6
0746355	21
0746357	43, 44
0746451	5
0746452	9
0746453	9
0746454	27
0746455	10
0746459	10
0748351	22
0748411	22
0748412	21
0748413	22, 44
0748414	22, 43, 44
0748415	22
0748416	21
0748418	21
0748521	31
0748524	22
0748525	31
0750368	31
0760001	17
0780006	9
0780007	9
0780009	17
0780224	35
0780225	35
0780243	27
0780312	25
0800044	35
0825241	9
0825258	9
0826002	9
0826203	6
0826232	9
0826251	35
0826408	10
0826409	36
0826419	10, 33
0826425	27
0826434	21
0826443	36
0826466	9
0826475	21
0826476	27
0826479	9
0826622	5
0826624	5
0827604	22
0827609	21, 39
0827613	21
0827614	21
0827812	31
0840052	27
0860012	9
0870001	5
0900043	33
0910002	9
0910058	35
0920002	19
0920003	10, 39, 43, 44
0920004	10, 17, 40
0920006	9
0920007	31, 33
0920052	9, 10, 25, 33
0920053	5, 6, 21, 22, 25, 35, 39, 43, 44
0920054	9, 10, 22 ,27, 31, 33, 36
0920101	22
0920103	33
0920106	5, 6, 10, 21, 22
0920107	40
0920108	25
0920109	5, 22, 31
0920113	40
0920126	27, 28
0920146	36
0920154	35, 36
0920155	10, 33
0920299	6, 21, 25
0920336	25
0920497	17, 43, 44
0920500	19
0920516	9
0920849	See 31137191
0920849A	See 31137192
0921018	35
0921019	35
0921061	27
0921079	36
0921080	36
0921108	5
0921168	21
0921241	25
0921246	21
0921337	17
0930001	21
0940192	9
0940868	39
0941081	21
0941082	21
0941083	9
0941091	21
0941118	9
0990572	28
0994748	17
0994967	25
0995260	35
0997129	35
0997282	14
0999253	36
0999603	40
2211155	14
2227063	22
2411152	22
2411157	10, 33
2414111	22
2415207	31, 33
2415208	See 2415207
2612421	43
2641345	35
2641491	35
2646144	40
2646442	40
2656653	36
2666102	See 2666103
2666103	19
26410006	35
26410047	35
26510005	19
26510006	19
26510007	19
26540022	27
26560003	36
26560004	36
26560006	35
26560007	35
26560008	36
26560009	36
26560010	36
2726194	5
2871170	43, 44
31121221	13
31121231	See 31121221
31122311	13
31122321	13
31122331	See 31122321
31122341	See 31122311
31123241	13
31123251	See 31123241
31123261	See 31123271
31123271	13
31131171	14
31131191	See 31131171
31134119	5
31137171	See 31137201
31137172	See 31137202
31137191	13
31137192	13
31137201	13
31137202	13
31141408	43, 44
31141417	44
31143675	13
31146402	33
31146701	31
31146702	31
31146911	33
31148615	13
31315134	13
31315137	13
31358308	5
31362271	14
31365181	14
31366511	14
31366521	14
31372171	14
31377201	14
31431261	9
31721211	36
31733508	13
31747109	25
31812901	14
31815519	17
32151113	22
32155117	33
32186112	22
32186114	22
32524128	5
32524131	5
32532306	21, 25
32753409	33
32753411	33
32753412	31
32754411	5
32754414	5
33114118	6
33117118	5
33134418	43

IMPORTANT
Always quote Engine Number when ordering Parts

FIT ONLY GENUINE PERKINS PARTS

Numerical Index

Part No.	Page
33176308	13
33221115	35
33221312	9
33261723	9
33411107	9
33426507	33
33426508	33
33532121	25
33533112	35, 36
33555319	36
33825409	22
34417116	28
34421408	27
34522125	35
34715124	25
34821416	31
34824404	33
35351412	36
35353159	39
35353177	36
35353207	36
35355179	39
35355181	39
35355182	39
35355183	39
35355184	39
35355185	39
35355186	39
35355237	39
35355238	39
35355241	39
35355805	36
35355807	36
35355821	35
35355837	36
35521144	21
35551503	28
35732446	25
36171114	22
36174115	25
36236706	33
36475706	9
36513707	44
36541418	44
36541426	44
36542318	43
36545117	43
36545118	44
36644139	22
36812113	See 36812125
36812125	5
36813117	22
36814112	21
36817134	6
36853105	21
36862119	10
36862126	35
36865104	31
36866415	31
36866424	21
36866428	21
36866711	33
36884107	25
37161562	21
37167613	22
37167693	22
37167694	22
37171351	25
37188514	17
37354361	21
37416203	9
37427443	39
37447511	31
37534531	21
37556125	21
37556137	22
37556146	21
37711291	31
37712281	33
37725432	25
37733191	10
37766321	10
37766322	10
37786563	19
37786573	19
38164423	43
38164424	44
38611108	31
41115004	21
41115005	21
41312038	31
41312064	31
41314019	25
41314033	See 41314042
41314042	25
41424201	25