CATERPILLAR®

SEBP3994
December 2003

RUTHZIL TRATOR COMERCIAL DE PEÇAS LTDA 11 97083-6812 ROLANDO

Parts Manual

SIS

See "General Information" for New Parts Manual Features.

420D Backhoe Loader

FDP18400-Up (Machine)
CRS1-Up (Engine)

Powered By 3054C Engine
This Parts Manual is also Available in .PDF Format on Compact Disc(CD-ROM)-Caterpillar Form No. SERP3994

Product and Dealer Information

Note: For product identification plate locations, see the section “Product Identification Information” in the Operation and Maintenance Manual.

Delivery Date: _____

Product Information

Model: _____

Product Identification Number: _____

Engine Serial Number: _____

Transmission Serial Number: _____

Generator Serial Number: _____

Attachment Serial Numbers: _____

Attachment Information: _____

Customer Equipment Number: _____

Dealer Equipment Number: _____

Dealer Information

Name: _____ Branch: _____

Address: _____

_____

_____

	Dealer Contact	Phone Number	Hours
Sales:	_____	_____	_____
Parts:	_____	_____	_____
Service:	_____	_____	_____

Informations produit et concessionnaire

Nota: Voir l'emplacement de la plaque signalétique du produit au chapitre "Informations produit" du guide d'utilisation et d'entretien.

Date de livraison: _____

Informations produit

Modèle: _____

Numéro d'identification produit: _____

Numéro de série du moteur: _____

Numéro de série de la boîte de vitesses: _____

Numéro de série de l'alternateur: _____

Numéros de série d'équipement: _____

Informations sur l'équipement: _____

Numéro matériel client: _____

Numéro matériel concessionnaire: _____

Informations concessionnaire

Nom: _____ Agence: _____

Adresse: _____

_____

_____

	Contact concessionnaire	Numéro de téléphone	Heures
Ventes:			
Pièces:			
Service:			

Información del Producto/Distribuidor

Nota: Para saber la ubicación de las placas de identificación del producto, ver la sección “Información sobre identificación del producto” en el Manual de Operación y Mantenimiento.

Fecha de entrega: _____

Información del producto

Modelo: _____

Número de identificación del producto: _____

Número de serie del motor: _____

Número de serie de la transmisión: _____

Número de serie del generador: _____

Números de serie de los accesorios: _____

Información sobre los accesorios: _____

Número del equipo del cliente: _____

Número del equipo del distribuidor: _____

Información del distribuidor

Nombre: _____ Sucursal: _____

Dirección: _____

_____

_____

	Comunicación con el distribuidor	Número de teléfono	Horas
Ventas:	_____	_____	_____
Piezas:	_____	_____	_____
Servicio:	_____	_____	_____

Informações Sobre Produto e Revendedor

Nota: Para localizações da placa de identificação do produto, consulte a seção, “Informações Sobre Identificação do Produto” no Manual de Operação e Manutenção.

Data de Entrega: _____

Informações Sobre o Produto

Modelo: _____

Número de Identificação do Produto: _____

Número de Série do Motor: _____

Número de Série da Transmissão: _____

Número de Série do Gerador: _____

Números de Série de Acessórios: _____

Informações Sobre Acessórios: _____

Número do Equipamento do Cliente: _____

Número do Equipamento do Revendedor: _____

Informações Sobre o Revendedor

Nome: _____ Filial: _____

Endereço: _____

_____

_____

	Contato do Revendedor	Telefone	Horas
Vendas:	_____	_____	_____
Peças:	_____	_____	_____
Serviço:	_____	_____	_____

Produkt- und Händlerinformation

Anmerkung: Für die Lage der Produkt-Identnummer und Seriennummern siehe Abschnitt "Produkt-Identinformation" im Betriebs- und Wartungshandbuch.

Lieferdatum: _____

Produkt-Identinformation

Modell: _____

Produkt-Identnummer: _____

Seriennummer des Motors: _____

Seriennummer des Getriebes: _____

Seriennummer des Generators: _____

Seriennummern der Arbeitsgeräte: _____

Arbeitsgeräteinformation: _____

Kundennummer: _____

Händlernummer: _____

Händlerinformation

Name: _____ Niederlassung: _____

Adresse: _____

_____

_____

	Kontaktperson beim Händler	Telefon	Dienststunden
Verkauf:	_____	_____	_____
Ersatzteile:	_____	_____	_____
Service:	_____	_____	_____

MEMORANDA

TABLE OF CONTENTS

Name	Page
GENERAL INFORMATION	A23
REPAIR ALTERNATIVES	A42
SUPPLEMENTAL COOLANT ADDITIVES	A47
MAINTENANCE PARTS	A52
INDEX	A78
MACHINE ARRANGEMENT	1
BACKHOE AR-EXTENDABLE STICK	1
BACKHOE AR	5
BACKHOE AR-STANDARD STICK	5
BACKHOE AR	6
BACKHOE AR-STANDARD STICK	7
BACKHOE AR	8
CHASSIS AR	10
COMMON AR	10
ENGINE ARRANGEMENT	11
ENGINE AR	11
ENGINE AR-PRIMARY	12
BASIC ENGINE	13
CAMSHAFT GP	13
COVER GP-VALVE MECHANISM	14
CRANKSHAFT GP	16
CYLINDER BLOCK GP	18
CYLINDER HEAD GP	21
DRIVE GP-FAN	23
FLYWHEEL GP	24
HOUSING GP-FLYWHEEL	25
HOUSING GP-FRONT	26
LIFTING GP-ENGINE	28
MOUNTING GP-ENGINE	29
MOUNTING GP-ENGINE & TMSN	30
PAN GP-OIL	32
PISTON & ROD GP	34
PLUG GP-ENGINE	35
PULLEY GP-CRANKSHAFT	37
VALVE MECHANISM GP	38
LUBRICATION SYSTEM	39
BREATHER GP	39
FILLER GP-ENGINE OIL	47
PUMP GP-ENGINE OIL	49
COOLING SYSTEM	50
CONNECTION GP-WATER	50
COOLER GP-FLTR BASE & ENG OIL	51
COOLING AR	53
FAN GP-SUCTION	55
FITTING GP-HEATER & AIR COND	58
LINES GP-POWER TRAIN COOLER	59
PUMP GP-WATER	63
RADIATOR & FAN GP	65
RADIATOR & HYD OIL COOLER GP	67
AIR INLET AND EXHAUST SYSTEM	75
AIR CLEANER GP	75
COVER GP-AIR INLET	78
EXTENSION GP-EXHAUST	79
INDICATOR GP-AIR FILTER CHANGE	80
MUFFLER GP	84
TURBOCHARGER GP	85
FUEL SYSTEM	87
CONTROL GP-GOV & ACCELERATOR	87
FILTER GP-FUEL	89
FILTER GP-WATER SEP & FUEL	91
LINES GP-FUEL	92
PUMP GP-FUEL INJECTION	94
PUMP GP-FUEL PRIMING	97
SEPARATOR GP-WATER	98
TANK & MTG GP-FUEL	102
TANK GP-FUEL	103
ELECTRICAL AND STARTING SYSTEM	106
ALTERNATOR GP-CHARGING	106
BATTERY GP	107
GLOW PLUG GP	115
HEATER GP-JACKET WATER	116
INSTALLATION GP-SECURITY	119
LAMP GP-FLOOD	123
LAMP GP-SIGNAL	124
LAMP GP-STOP & TAIL	125
LAMP GP-WARNING BEACON	126
LIGHTING GP-FLOOD & SIGNAL	128
LIGHTING GP-WARNING BEACON	131
STARTING MOTOR GP-ELECTRIC	133
SWITCH GP-PRESSURE	136
SWITCH GP-TEMPERATURE	137
WIRING GP-AIR CONDITIONER	138
WIRING GP-AUTOSHIFT	145
WIRING GP-CAB	150
WIRING GP-CONSOLE	157
WIRING GP-ENGINE	171
WIRING GP-HEATER	175
WIRING GP-PLATFORM	177
WIRING GP-POWER RECEPTACLE	183
WIRING GP-REAR	184
WIRING GP-RIDE CONTROL	187
WIRING GP-SENSOR	193
WIRING GP-STABILIZER	194
WIRING GP-STABILIZER ALARM	196
WIRING GP-STEERING	198

TABLE OF CONTENTS

Name	Page
POWER TRAIN	199
AXLE & MTG GP-REAR	199
AXLE GP-DRIVE & STEERING	201
AXLE GP-REAR	204
CONTROL GP-DIFFERENTIAL LOCK	209
CONTROL GP-TRANSMISSION	210
DIFFERENTIAL & BEVEL GEAR GP	211
DIFFERENTIAL GP	213
DRIVE AR-BACKHOE LOADER	214
DRIVE GP-FLEXIBLE COUPLING	215
FILLER GP-POWER TRAIN OIL	216
FLANGE GP-WHEEL	225
HOUSING & FLANGE GP-AXLE	226
PLANETARY GP-FINAL DRIVE	230
POWER TRAIN AR	231
SHAFT GP-DRIVE	240
TRANSMISSION & MOUNTING GP	243
TRANSMISSION AR-DIRECT DRIVE	246
TRANSMISSION AR-POWER SHIFT	246
TRANSMISSION GP-DIRECT DRIVE	247
TRANSMISSION GP-POWER SHIFT	259
VALVE GP-RELIEF	268
VALVE GP-SOLENOID	269
VALVE GP-TIRE	274
WHEEL & TIRE AR	275
WHEEL & TIRE GP	277
BRAKING SYSTEM	285
BRAKE GP-PARKING	285
CONTROL GP-PARKING BRAKE	286
CONTROL GP-SERVICE BRAKE	288
LEVER GP-HAND CONTROL	291
RESERVOIR GP-BRAKE	292
STEERING SYSTEM	293
AXLE GP-FRONT	293
CONTROL GP-STEERING	296
KNOB GP-STEERING	297
LINES GP-STEERING	298
STEERING WHEEL GP	303
VALVE GP-PRIORITY	304
FRAME AND BODY	305
BOX GP-BATTERY	305
BUMPER GP-FRONT	309
COUNTERWEIGHT GP	310
DOOR GP-BATTERY	315
FENDER GP-FRONT	316
FENDER GP-REAR	317
FLOORPLATE GP	318
FRAME GP-LOADER	321
FRAME GP-SWING	322
GUARD GP-DRIVE SHAFT	324
HOOD & GUARD GP	325
HOOD GP-ENGINE	327

Name	Page
HYDRAULIC SYSTEM	330
ACCUMULATOR GP-RIDE CONTROL	330
ACCUMULATOR GP-STABILIZER	332
CONNECTOR GP-VALVE	333
CONTROL AR-HYDRAULIC	336
CONTROL AR-RIDE	336
CONTROL GP-HYDRAULIC HAND	338
CONTROL GP-HYDRAULIC PEDAL	345
CONTROL GP-JOYSTICK	349
CONVERSION AR-CUSHION SWING	353
CONVERSION GP-AUXILIARY LINES	355
CONVERSION GP-CONTROL VALVE	365
CONVERSION GP-EXTENDABLE STICK	366
COUPLING GP	367
COVER GP-CONTROL VALVE	368
CYLINDER & LINES GP-THUMB	369
CYLINDER GP-BACKHOE BUCKET	370
CYLINDER GP-BOOM	374
CYLINDER GP-EXTENDABLE STICK	376
CYLINDER GP-LIFT	379
CYLINDER GP-MULTIPURPOSE BUKT	380
CYLINDER GP-STABILIZER	381
CYLINDER GP-STICK	383
CYLINDER GP-SWING	384
CYLINDER GP-THUMB	385
CYLINDER GP-TILT	386
FILTER GP-OIL	387
GUARD GP-STABILIZER CYLINDER	388
HYDRAULIC AR	391
INSTALLATION AR-BANK VALVE	395
KICKOUT & POSITIONER GP	396
KIT-RIDE CONTROL	398
LINES GP-BACKHOE AUXILIARY	399
LINES GP-BOOM	424
LINES GP-BUCKET CYLINDER	428
LINES GP-EXTENDABLE STICK	432
LINES GP-LIFT CYLINDER	437
LINES GP-LOAD CONTROL VALVE	440
LINES GP-LOADER AUXILIARY	447
LINES GP-MULTIPURPOSE BUCKET	449
LINES GP-PILOT	453
LINES GP-PUMP	463
LINES GP-RETURN	472
LINES GP-RIDE CONTROL	476
LINES GP-STABILIZER	480
LINES GP-STICK	482
LINES GP-SWING	487
LINES GP-TILT CYLINDER	491
LOCK GP-HYDRAULIC HAND CONTROL	493
MOUNTING GP-BACKHOE CONTROL	494
MOUNTING GP-BANK VALVE	496
MOUNTING GP-CYLINDER	498

TABLE OF CONTENTS

Name	Page
MOUNTING GP-HYDRAULIC CONTROL	500
MOUNTING GP-HYDRAULIC PUMP	502
MOUNTING GP-LINES	503
PUMP GP-PISTON	509
ROTATING GP-PUMP	512
SHAFT GP-POWER TAKE-OFF	513
STABILIZER AR	514
TANK GP-HYDRAULIC	515
VALVE & MTG GP-BANK	517
VALVE & MTG GP-SOLENOID	518
VALVE AR-BANK 4	519
VALVE AR-BANK 5	519
VALVE AR-BANK 6	519
VALVE GP-BANK 2	520
VALVE GP-BANK 3	524
VALVE GP-BANK 4	526
VALVE GP-BANK 5	527
VALVE GP-BANK 6	528
VALVE GP-CHECK	530
VALVE GP-CONTROL	533
VALVE GP-LOAD CONTROL	555
VALVE GP-PILOT	558
VALVE GP-PUMP CONTROL	570
VALVE GP-SHUTTLE	573
VALVE GP-SOLENOID	574
IMPLEMENTS	575
ARM GP-LIFT	575
BOOM GP	577
BRACE GP-LIFT CYLINDER	579
BRACKET GP-TRANSPORT	580
HOUSING AS-EXTENDABLE STICK	581
LINK GP-THUMB	582
LINKAGE GP-BACKHOE BUCKET	583
LINKAGE GP-LOADER BUCKET	585
LOADER AR	587
LOCK GP-TRANSPORT	588
MOUNTING GP-STICK	592
PAD & GUARD GP-STABILIZER	593
PAD & MTG GP-STABILIZER	597
PAD GP-STABILIZER	600
STABILIZER GP-BACKHOE	602
STICK GP-EXTENDABLE	604
STICK GP-HOE	606
WORK TOOLS	608
BUCKET AR-MULTIPURPOSE	608
BUCKET AS-GENERAL PURPOSE	611
BUCKET AS-HOE	616
BUCKET GP-GENERAL PURPOSE	626
BUCKET GP-HOE	628
BUCKET GP-MULTIPURPOSE	687
COUPLER AR-QUICK	691
COUPLER GP-QUICK	692
EDGE GP-CUTTING	697
FORK AR	699
FORK GP	700
GUARD GP-BUCKET	701
KIT-ADAPTER TIP	703
MOUNTING GP-BUCKET	705
MOUNTING GP-FORK	707
PIN GP-COUPLER	708
SHIPPING AR-BUCKET	710
STOP GP-BUCKET	711
THUMB AR	712
THUMB GP	715
TOOTH GP-UNI	716
OPERATOR STATION	717
ACCUMULATOR GP-REFRIGERANT	717
AIR CONDITIONER & MOUNTING GP	718
AIR CONDITIONER AR	722
AIR CONDITIONER GP	723
ARMREST GP	725
CAB AR	726
CAB AS	733
CAB GP	738
CANOPY AR	742
CANOPY AS	746
CANOPY GP-OPEN ROPS	753
COMPARTMENT GP-LITERATURE	755
COMPRESSOR GP-REFRIGERANT	756
CONDENSER & MTG GP-REFRIGERANT	760
CONSOLE GP-FRONT	761
CONSOLE GP-OPERATOR	764
CONSOLE GP-SIDE	766
COVER GP-CONSOLE	775
COVER GP-FIREWALL	778
COVER GP-POST	780
DOOR GP-LH	782
DOOR GP-RH	784
DUCT GP-AIR	786
FLOOR MAT GP	790
FOOTREST GP	794
HEATER & MTG GP-CAB	795
HEATER GP-CAB	797
HORN GP-ELECTRIC	799
KIT-PEDAL GUARD	800
LATCH GP-CONSOLE	801
LEVER GP-GOVERNOR CONTROL	802
LINES GP-HEATER	803
LINES GP-HEATER & AIR COND	805
MIRROR GP-REAR VIEW	810
MODULE GP-WARNING INDICATOR	811
MOTOR GP-WINDOW WIPER	813
MOUNTING GP-INSTRUMENT PANEL	814
PANEL GP-INSTRUMENT	819
PEDAL GP-GOVERNOR	820

TABLE OF CONTENTS

Name	Page	Name	Page
SEAT BELT GP	821		
SEAT GP	823		
SEAT GP-SUSPENSION	830		
SUPPRESSION GP-SOUND	836		
SUSPENSION GP-SEAT	838		
TACHOMETER GP-ELECTRIC	840		
TRIM GP-CAB	842		
VISOR GP-CAB	843		
WASHER GP-WINDOW	844		
WINDOW GP-CAB	848		
WINDOW GP-DOOR	854		
WIPER GP-WINDOW	858		
SERVICE EQUIPMENT AND SUPPLIES	861		
FILM GP	861		
INSTALLATION AR-WHEEL CHOCK	862		
LOCK GP-VANDALISM	863		
PLATE & FILM GP	864		
PART NUMBER INDEX	B1		

TABLE DES MATIÈRES

Désignation	Page
GÉNÉRALITÉS	A26
OPTIONS DE RÉPARATION	A43
ADDITIFS POUR LIQUIDE DE REFROIDISSEMENT	A48
PIÈCES DE RECHANGE	A57
INDEX	A90
VERSION DE MACHINE	1
PELLE RÉTRO - BRAS TÉLESCOPIQUE (VERSION)	1
PELLE RÉTRO (VERSION)	5
*BACKHOE AR-STANDARD STICK	5
PELLE RÉTRO (VERSION)	6
*BACKHOE AR-STANDARD STICK	7
PELLE RÉTRO (VERSION)	8
VERSION DE CHASSIS	10
VERSION NORMALE	10
VERSION DE MOTEUR	11
MOTEUR (VERSION)	11
MOTEUR (VERSION PRINCIPALE)	12
MOTEUR STANDARD	13
ARBRE A CAMES (ASS)	13
CACHE-SOUPAPES (ASS)	14
VILEBREQUIN (ASS)	16
BLOC-CYLINDRES (ASS)	18
CULASSE (ASS)	21
ENTRAÎNEMENT DE VENTILATEUR (ASS)	23
VOLANT MOTEUR (ASS)	24
CARTER DE VOLANT (ASS)	25
CARTER AV (ASS)	26
OEILLETONS DE LEVAGE MOTEUR (ASS)	28
MONTAGE DE MOTEUR (ASS)	29
MONTAGE DE MOTEUR ET BOÎTE (ASS)	30
HUILE MOTEUR - CARTER (ASS)	32
PISTON ET BIELLE (ASS)	34
BOUCHON DE MOTEUR (ASS)	35
VILEBREQUIN - POULIE (ASS)	37
CULBUTERIE (ASS)	38
CIRCUIT DE GRAISSAGE	39
RENIFLARD (ASS)	39
BOUCHON DE REMPLISSAGE D'HUILE MOTEUR (ASS)	47
POMPE A HUILE MOTEUR (ASS)	49
CIRCUIT DE REFROIDISSEMENT	50
RACCORD D'EAU (ASS)	50
SUPPORT DE FILTRE ET REFROIDISSEUR D'HUILE MOTEUR	51
REFROIDISSEMENT (VERSION)	53
VENTILATEUR ASPIRANT (ASS)	55
RACCORD-RÉCHAUFFEUR ET CLIMATISEUR (ASS)	58
CANALISATIONS DE REFROIDIS. DE TRANSMISSION	59
POMPE A EAU (ASS)	63
RADIATEUR ET VENTILATEUR (ASS)	65
RADIATEUR ET REFROIDISSEUR D'HUILE HYDRAULIQUE (ASS)	67
CIRCUIT D'ADMISSION D'AIR ET D'ÉCHAPPEMENT	75
FILTRE A AIR (ASS)	75
COUVERCLE DE COLLECTEUR D'ADMISSION (ASS)	78
RALLONGE D'ÉCHAPPEMENT (ASS)	79
INDICATEUR DE COLMATAGE DE FILTRE À AIR (ASS)	80
SILENCIEUX (ASS)	84
TURBOCOMPRESSEUR (ASS)	85
CIRCUIT DE CARBURANT	87
COMMANDE DE RÉGULATEUR ET D'ACCÉLÉRATEUR (ASS)	87
FILTRE A CARBURANT (ASS)	89
FILTRE DE SÉPARATEUR D'EAU ET DE CARBURANT (ASS)	91
CANALISATIONS DE CARBURANT (ASS)	92
POMPE D'INJECTION DE CARBURANT (ASS)	94
POMPE D'AMORÇAGE DE CARBURANT (ASS)	97
SÉPARATEUR D'EAU (ASS)	98
RÉSERVOIR DE CARBURANT ET MONTAGE (ASS)	102
RÉSERVOIR DE CARBURANT (ASS)	103
CIRCUIT ÉLECTRIQUE ET DE DÉMARRAGE	106
ALTERNATEUR DE CHARGE (ASS)	106
BATTERIE (ASS)	107
BOUGIE DE PRÉCHAUFFAGE (ASS)	115
EAU DES CHEMISES - RECHAUFFEUR (ASS)	116
MONTAGE-SÉCURITÉ (ASS)	119
LAMPE - PHARE (ASS)	123

* TRADUCTION NON DISPONIBLE AU MOMENT DE LA PUBLICATION

TABLE DES MATIÈRES

Désignation	Page
LAMPE - CLIGNOTANT DE DIRECTION (ASS)	124
FEUX ARRIÈRE ET FEUX D'ARRÊT	125
LAMPE - GYROPHARE (ASS)	126
ÉCLAIRAGE - PROJECTEURS ET CLIGNOTANTS (ASS)	128
ÉCLAIRAGE - GYROPHARE (ASS)	131
DÉMARREUR ÉLECTRIQUE (ASS)	133
MANOCONTACT	136
BOUTON DE TEMPÉRATURE	137
CABLAGE - CLIMATISEUR (ASS)	138
CABLAGE DE CHANGEMENT DE VITESSES AUTOMATIQUE (ASS)	145
CABLAGE DE CABINE (ASS)	150
CABLAGE DE CONSOLE (ASS)	157
CABLAGE DE MOTEUR (ASS)	171
CABLAGE DU CHAUFFAGE DE CABINE (ASS)	175
CABLAGE - PLATE-FORME (ASS)	177
CABLAGE DE PRISE DE FORCE	183
CABLAGE AR (ASS)	184
CÂBLAGE DE COMMANDE DE TRANSLATION (ASS)	187
CABLAGE - CAPTEUR (ASS)	193
CABLAGE DE STABILISATEUR (ASS)	194
CABLAGE D'AVERTISSEUR DE STABILISATEUR (ASS)	196
CABLAGE DE DIRECTION (ASS)	198
TRANSMISSION	199
ESSIEU ET MONTAGE -ARRIÈRE (ASS)	199
ESSIEU MOTEUR ET DIRECTEUR (ASS)	201
ESSIEU AR (ASS)	204
COMMANDE DE DIFFÉRENTIEL - VERROUILLAGE (ASS)	209
COMMANDE DE BOITE DE VITESSES (ASS)	210
COURONNE ET DIFFERENTIEL (ASS)	211
DIFFERENTIEL (ASS)	213
VERSION D'ENTRAÎNEMENT DE CHARGEUSE-PELLETEUSE	214
ENTRAÎNEMENT D'ACCOUPLEMENT FLEXIBLE (ASS)	215
GOULOTTE DE REMPLISSAGE D'HUILE DE TRANSMISSION	216
BOUDIN DE ROUE (ASS)	225
CARTER ET BRIDE D'ESSIEU (ASS)	226
TRAINS PLANÉTAIRES-RÉDUCTEURS (ASS)	230
TRANSMISSION (VERSION)	231
ARBRE D'ENTRAÎNEMENT (ASS)	240
BOITE DE VITESSES ET MONTAGE (ASS)	243
BOITE MECANIQUE (VERSION)	246
BOÎTE POWER SHIFT (VERSION)	246
BOÎTE MÉCANIQUE (ASS)	247
BOÎTE POWER SHIFT (ASS)	259
CLAPET DE DECHARGE (ASS)	268
SOUPAPE - SOLÉNOÏDE (ASS)	269
PNEU - GROUPE DE VALVE	274
ROUE ET PNEU (VERSION)	275
ROUE ET PNEU (ASS)	277
CIRCUIT DE FREINAGE	285
FREIN DE STATIONNEMENT (ASS)	285
COMMANDE DE FREIN DE STATIONNEMENT (ASS)	286
FREIN DE MANOEUVRE - COMMANDE (ASS)	288
LEVIER DE COMMANDE MANUELLE	291
RÉSERVOIR-FREIN (ASS)	292
CIRCUIT DE DIRECTION	293
ESSIEU AV (ASS)	293
COMMANDE DE DIRECTION (ASS)	296
BOUTON DE DIRECTION (ASS)	297
CANALISATIONS DE DIRECTION (ASS)	298
VOLANT DE DIRECTION (ASS)	303
SOUPAPE DE PRIORITE (ASS)	304
CHÂSSIS ET BENNE	305
COMPARTIMENT DE BATTERIE (ASS)	305
PARE-CHOCS AV (ASS)	309
CONTREPOIDS (ASS)	310
PORTE DE BATTERIE (ASS)	315
GARDE-BOUE AV (ASS)	316
GARDE-BOUE AR (ASS)	317
TÔLE DE PLANCHER (ASS)	318
BATI - CHARGEUSE (ASS)	321
BÂTI D'ORIENTATION (ASS)	322
BLINDAGE D'ARBRE DE TRANSMISSION (ASS)	324
CAPOT ET PROTECTION (ASS)	325
CAPOT DU MOTEUR (ASS)	327
CIRCUIT HYDRAULIQUE	330
ACCUMULATEUR - COMMANDE DE TRANSLATION (ASS)	330
ACCUMULATEUR DE STABILISATEUR (ASS)	332
RACCORD DE SOUPAPE (ASS)	333

* TRADUCTION NON DISPONIBLE AU MOMENT DE LA PUBLICATION

TABLE DES MATIÈRES

Désignation	Page
COMMANDE HYDRAULIQUE (VERSION)	336
COMMANDE DE TRANSLATION (VERSION)	336
COMMANDE HYDRAULIQUE MANUELLE (ASS)	338
COMMANDE HYDRAULIQUE DE PÉDALE (ASS)	345
PALONNIER - GROUPE DE COMMANDE (ASS)	349
VERSION DE TRANSFORMATION D'ORIENTATION D'AMORTISSEUR	353
TRANSFORMATION DE CANALISATIONS AUXILIAIRES (ASS)	355
TRANSFORMATION - DISTRIBUTEUR (ASS)	365
GROUPE DE TRANSFORMATION - BRAS TÉLESCOPIQUE (ASS)	366
ACCOUPLEMENT (ASS)	367
COUVERCLE DE DISTRIBUTEUR (ASS)	368
VÉRIN ET CANALISATIONS DE SERRE-JOINT (ASS)	369
VÉRIN DE GODET RÉTRO (ASS)	370
VERIN DE FLECHE (ASS)	374
VÉRIN DU BRAS TELESCOPIQUE (ASS)	376
VÉRIN DE LEVAGE (ASS)	379
VÉRIN - GODET TOUS-TRAVAUX (ASS)	380
VERIN DE STABILISATEUR (ASS)	381
VERIN DE BRAS (ASS)	383
VÉRIN D'ORIENTATION (ASS)	384
VÉRIN DE SERRE-JOINT (ASS)	385
VÉRIN D'INCLINAISON (ASS)	386
FILTRE A HUILE (ASS)	387
PROTECTEUR DE VÉRIN DE STABILISATEUR (ASS)	388
VERSION HYDRAULIQUE	391
VERSION MONTAGE-RANGÉE DE DISTRIBUTEURS	395
LIMITEUR DE LEVAGE ET RETOUR À L'ANGLE DE CAVAGE	396
KIT - COMMANDE DE TRANSLATION	398
CANALISATIONS SECONDAIRES DE PELLE RÉTRO (ASS)	399
FLECHE - CANALISATIONS	424
CANALISATIONS DE VÉRIN DE GODET (ASS)	428
CANALISATIONS DU BRAS TELESCOPIQUE (ASS)	432
CANALISATIONS DE VÉRIN DE LEVAGE (ASS)	437
CANALISATIONS-VALVE DE CONTROLE DE CHARGE	440
CANALISATIONS-CHARGEUSE AUXILIAIRE (ASS)	447
CANALISATIONS - GODET TOUS-TRAVAUX (ASS)	449
CANALISATIONS A COMMANDE PILOTE (ASS)	453
CANALISATIONS DE POMPE (ASS)	463
CANALISATIONS DE RETOUR (ASS)	472
CANALISATIONS DE COMMANDE DE MARCHE	476
CANALISATIONS DE STABILISATEUR (ASS)	480
CANALISATIONS DE BRAS (ASS)	482
CANALISATIONS D'ORIENTATION (ASS)	487
CANALISATIONS DU VÉRIN D'INCLINAISON (ASS)	491
VERROUILLAGE DE COMMANDE MANUELLE HYDRAUL. (ASS)	493
MONTAGE DE COMMANDE DE PELLE RÉTRO	494
MONTAGE-DISTRIBUTEUR (ASS)	496
MONTAGE DE VÉRIN (ASS)	498
MONTAGE DE COMMANDE HYDRAULIQUE (ASS)	500
MONTAGE - POMPE HYDRAULIQUE (ASS)	502
MONTAGE DE CANALISATIONS (ASS)	503
POMPE A PISTONS (ASS)	509
GROUPE DE ROTATION DE POMPE	512
ARBRE DE PRISE DE FORCE (ASS)	513
STABILISATEUR (VERSION)	514
RÉSERVOIR HYDRAULIQUE (ASS)	515
DISTRIBUTEURS ET MONTAGE (ASS)	517
SOUPAPE ET MONTAGE - SOLÉNOÏDE	518
DISTRIBUTEUR 4 ÉLÉMENTS (VERSION)	519
DISTRIBUTEUR 5 ÉLÉMENTS (VERSION)	519
DISTRIBUTEUR 6 ÉLÉMENTS (VERSION)	519
DISTRIBUTEUR DOUBLE ÉLÉMENT (ASS)	520
DISTRIBUTEUR TRIPLE ÉLÉMENT (ASS)	524
DISTRIBUTEUR 4 ÉLÉMENTS (ASS)	526
DISTRIBUTEUR 5 ÉLÉMENTS (ASS)	527
DISTRIBUTEUR 6 ÉLÉMENTS (ASS)	528
CLAPET DE RETENUE (ENS)	530

* TRADUCTION NON DISPONIBLE AU MOMENT DE LA PUBLICATION

TABLE DES MATIÈRES

Désignation	Page
*VALVE GP-CHECK	531
CLAPET DE RETENUE (ENS)	532
DISTRIBUTEUR (ASS)	533
DISTRIBUTEUR DE CHARGE (ASS)	555
SOUPAPE PILOTE (ASS)	558
*VALVE GP-PUMP CONTROL	570
VANNE PILOTE (ASS)	573
SOUPAPE - SOLÉNOÏDE (ASS)	574
ÉQUIPEMENTS	575
BRAS DE LEVAGE (ASS)	575
FLECHE (ASS)	577
TIRANT DE VÉRIN DE LEVAGE (ASS)	579
SUPPORT D'EXPÉDITION (ASS)	580
CARTER DE BRAS TÉLESCOPIQUE (ENS)	581
BIELLETTE DE SERRE-JOINT (ASS)	582
TIMONERIE DE GODET RÉTRO (ASS)	583
TIMONERIE DE GODET DE CHARGEUSE (ASS)	585
CHARGEUSE (VERSION)	587
VERROUILLAGE POUR L'EXPÉDITION (ASS)	588
MONTAGE DE BRAS (ASS)	592
SEMELLE ET PROTECTION DE STABILISATEUR (ASS)	593
SEMELLE ET MONTAGE DE STABILISATEUR	597
SEMELLE DE STABILISATEUR	600
PELLE RÉTRO - STABILISATEUR (ASS)	602
BRAS TÉLESCOPIQUE (ASS)	604
BRAS DE PELLE RETRO (ASS)	606
OUTILS DE TRAVAIL	608
GODET TOUS-TRAVAUX (VERSION)	608
GODET NORMAL (ENS)	611
GODET RETRO (ENS)	616
GODET NORMAL (ASS)	626
GODET RETRO (ASS)	628
GODET TOUS-TRAVAUX (ASS)	687
COUPLEUR EXPRESS (VERSION)	691
COUPLEUR EXPRESS (ASS)	692
LAME DE COUPE (ASS)	697
FOURCHE (VERSION)	699
FOURCHE (ASS)	700
PROTECTION DE GODET (ASS)	701
*KIT-ADAPTER TIP	703
GODET - MONTAGE (ASS)	705
MONTAGE FOURCHE (ASS)	707
AXE DU COUPLER (ASS)	708
GODET - VERSION D'EXPÉDITION	710
ARRÊT-GODET (ASS)	711
VERSION DE SERRE-JOINT	712
SERRE-JOINT (ASS)	715
DENT MONOBLOC (ASS)	716
POSTE DE CONDUITE	717
ACCUMULATEUR - CLIMATISEUR (ASS)	717
CLIMATISEUR ET MONTAGE (ASS)	718
CLIMATISEUR (VERSION)	722
CLIMATISEUR (ASS)	723
ACCOUDOIR (ASS)	725
CABINE (VERSION)	726
CABINE (ENS)	733
CABINE (ASS)	738
TOIT (VERSION)	742
TOIT (ENS)	746
TOIT-ROPS OUVERT (ASS)	753
POCHE A DOCUMENTS (ASS)	755
COMPRESSEUR DE REFRIGERANT (ASS)	756
CONDENSATEUR ET MONTAGE (RÉFRIGÉRANT)	760
CONSOLE AV (ASS)	761
CONSOLE DE CONDUITE (ASS)	764
CONSOLE LATÉRALE (ASS)	766
COUVERCLE DE LA CONSOLE (ASS)	775
COUVERCLE-CLOISON PARE-FEU (ENS)	778
COUVERCLE (ASS) MONTANT	780
PORTIERE GAUCHE (ASS)	782
PORTIERE DROITE (ASS)	784
GAINE D'AIR (ASS)	786
TAPIS DU PLANCHER (ASS)	790
*FOOTREST GP	794
CHAUFFAGE ET MONTAGE - CABINE (ASS)	795
CHAUFFAGE DE CABINE (ASS)	797
KLAXON ÉLECTRIQUE (ASS)	799
KIT DE PROTECTION DE PÉDALE	800
LOQUET (GR)-CONSOLE	801
LEVIER DE COMMANDE DE REGULATEUR (ASS)	802
CANALISATIONS DE CHAUFFAGE (ASS)	803
CANALISATIONS-RÉCHAUFFEUR ET CLIMATISEUR (ASS)	805
RÉTROVISEUR (ASS)	810
MODULE - TÉMOIN (ASS)	811
MOTEUR D'ESSUIE-GLACE (ASS)	813
MONTAGE DU TABLEAU DE BORD (ASS)	814
TABLEAU DE BORD (ASS)	819
RÉGULATEUR - PÉDALE (ASS)	820

* TRADUCTION NON DISPONIBLE AU MOMENT DE LA PUBLICATION

TABLE DES MATIÈRES

Désignation	Page	Désignation	Page
CEINTURE DE SECURITE (ASS)	821		
SIÈGE (ASS)	823		
SIÈGE AVEC SUSPENSION (ASS)	830		
INSONORISATION (ASS)	836		
SIÈGE AVEC SUSPENSION (ASS)	838		
COMPTE-TOURS ÉLECTRIQUE (ASS)	840		
GARNITURE POUR CABINE (ASS)	842		
RETROVISEUR - CABINE (ASS)	843		
LAVE-GLACE - VITRE (ASS)	844		
VITRE DE CABINE (ASS)	848		
GLACE DE PORTIÈRE (ASS)	854		
ESSUIE-GLACE (ASS)	858		
MATÉRIEL ET FOURNITURES D'ENTRETIEN	861		
PLAQUE SIGNALÉTIQUE (ASS)	861		
MONTAGE DE CALE DE ROUE (VERSION)	862		
VERROUILLAGE ANTI-VANDALISME (ASS)	863		
PLAQUES SIGNALETIQUES ET AUTOCOLLANTS (ASS)	864		
INDEX DE NUMÉROS DE PIÈCES	B1		

* TRADUCTION NON DISPONIBLE AU MOMENT DE LA PUBLICATION

CONTENIDO

Nombre	Página
INFORMACIÓN GENERAL	A30
ALTERNATIVAS DE REPARACIÓN	A44
ADITIVOS DE REFRIGERANTE SUPLEMENTARIOS	A49
PIEZAS DE MANTENIMIENTO	A62
INDICE	A102
CONFIGURACIÓN DE MÁQUINA	1
BRAZO EXTENDIBLE DE RETROEXCAVADOR (CONFIG)	1
RETROEXCAVADOR (CONFIG)	5
*BACKHOE AR-STANDARD STICK	5
RETROEXCAVADOR (CONFIG)	6
*BACKHOE AR-STANDARD STICK	7
RETROEXCAVADOR (CONFIG)	8
CHASIS (CONFIG)	10
CONFIGURACIÓN COMÚN	10
CONFIGURACIÓN DE MOTOR	11
CONFIGURACIÓN DE MOTORES	11
MOTOR PRIMARIO (CONFIG)	12
MOTOR BÁSICO	13
ÁRBOL DE LEVAS (GR)	13
TAPA DEL MECANISMO DE VÁLVULAS (GR)	14
CIGÜEÑAL (GR)	16
BLOQUE MOTOR (GR)	18
CULATA DE CILINDROS (GR)	21
IMPULSOR DE VENTILADOR (GR)	23
VOLANTE (GR)	24
VOLANTE - CAJA DE (GR)	25
CAJA DELANTERA (GR)	26
CÁNCAMOS DE LEVANTAMIENTO DEL MOTOR (GR)	28
MONTAJE DEL MOTOR (GR)	29
MONTAJE DEL MOTOR Y LA TRANSMISIÓN (GR)	30
CÁRTER - COLECTOR DEL (GR)	32
PISTÓN Y BIELA (GR)	34
TAPÓN DEL MOTOR (GR)	35
CIGÜEÑAL - POLEA DE (GR)	37
MECANISMO DE VÁLVULAS (GR)	38
SISTEMA DE LUBRICACIÓN	39
RESPIRADERO (GR)	39
TUBO DE LLENADO DE ACEITE (GR)	47
BOMBA DE ACEITE DEL MOTOR (GR)	49
SISTEMA DE ENFRIAMIENTO	50
AGUA - CONEXIÓN DE (GR)	50
ENFRIADOR DE ACEITE DEL MOTOR Y BASE DEL FILTRO	51
CONFIGURACIÓN DE ENFRIAMIENTO	53
SUCCIÓN - VENTILADOR DE (GR)	55
CONEXION DE CALENTADOR Y ACOND. DE AIRE (GR)	58
TUBERÍAS DEL ENFRIADOR DEL TREN DE FUERZA (GR)	59
BOMBA DE AGUA (GR)	63
RADIADOR Y VENTILADOR (GR)	65
RADIADOR Y ENFRIADOR DE ACEITE HIDRÁULICO (GR)	67
SISTEMA DE ADMISIÓN Y ESCAPE	75
FILTRO DE AIRE (GR)	75
TAPA DE ADMISIÓN DE AIRE (GR)	78
EXTENSIÓN DEL ESCAPE (GR)	79
INDICADOR DE CAMBIO DE FILTRO DE ACEITE (GR)	80
SILENCIADOR (GR)	84
TURBOCOMPRESOR (GR)	85
SISTEMA DE COMBUSTIBLE	87
CONTROL DEL REGULADOR Y ACELERADOR (GR)	87
FILTRO DE COMBUSTIBLE (GR)	89
FILTRO DE COMBUSTIBLE Y SEPARADOR DE AGUA (GR)	91
TUBERÍAS DE COMBUSTIBLE (GR)	92
BOMBA DE INYECCIÓN DE COMBUSTIBLE (GR)	94
BOMBA DE CEBADO DE COMBUSTIBLE (GR)	97
SEPARADOR DE AGUA (GR)	98
TANQUE DE COMBUSTIBLE Y GRUPO DE MONTAJE	102
COMBUSTIBLE - TANQUE DE (GR)	103
SISTEMA ELÉCTRICO Y DE ARRANQUE	106
CARGA - ALTERNADOR DE (GR)	106
BATERÍA (GR)	107
BUJÍA INCANDESCENTE (GR)	115
AGUA DE LAS CAMISAS - CALENTADOR DEL (GR)	116
INSTALACION DE SEGURIDAD (GR)	119
REFLECTOR (GR)	123
LUZ DE SEÑAL DE GIRO (GR)	124
LUCES DE PARADA Y COLA (GR)	125

* NO HAY TRADUCCION DISPONIBLE EN EL MOMENTO DE LA IMPRESION

CONTENIDO

Nombre	Página
LÁMPARA DE BALIZA DE ADVERTENCIA (GR)	126
LUCES DE REFLECTOR Y CAMBIO DE DIRECCION (GR)	128
LUZ DE BALIZA (GR)	131
MOTOR DE ARRANQUE ELÉCTRICO (GR)	133
INTERRUPTOR DE PRESIÓN (GR)	136
INTERRUPTOR PARA LA TEMPERATURA (GR)	137
CABLES DEL ACONDICIONADOR DE AIRE (GR)	138
CABLES DE CAMBIO AUTOMATICO (GR)	145
CABLES DE LA CABINA (GR)	150
CABLES DE LA CONSOLA (GR)	157
CABLES DEL MOTOR (GR)	171
CABLES DE CALEFACCIÓN (GR)	175
CABLES DE LA PLATAFORMA (GR)	177
CABLES DEL RECEPTÁCULO DE FUERZA (GR)	183
CABLES POSTERIORES (GR)	184
CABLES DE CONTROL DE AMORTIGUACIÓN (GR)	187
CABLES DE SENSOR (GR)	193
CABLES ESTABILIZADORES (GR)	194
CABLES DE LA ALARMA DEL ESTABILIZADOR (GR)	196
CABLES DE LA DIRECCIÓN (GR)	198
TREN DE FUERZA	199
MONTAJE DEL EJE TRASERO (GR)	199
EJE DE IMPULSIÓN Y DE DIRECCIÓN (GR)	201
EJE TRASERO (GR)	204
CONTROL DE TRABA DEL DIFERENCIAL (GR)	209
CONTROL DE LA TRANSMISIÓN (GR)	210
DIFERENCIAL Y CORONA (GR)	211
DIFERENCIAL (GR)	213
CONFIG. DEL MANDO, CARGADOR RETROEXCAVADORA	214
ACOPLAMIENTO FLEXIBLE - MANDO DE (GR)	215
TUBO DE LLENADO DE ACEITE DE LA TRANSMISIÓN (GR)	216
GRUPO DE PESTAÑA, RUEDA	225
GRUPO DE PESTAÑA Y RESINTO, EJE	226
GRUPO PLANETARIO, MANDO FINAL	230
TREN DE FUERZA (CONFIG)	231
EJE DE MANDO (GR)	240
MONTAJE Y TRANSMISIÓN(GR)	243
TRANSMISION DIRECTA (CONFIG)	246
SERVOTRANSMISIÓN (CONFIG)	246
TRANSMISIÓN DIRECTA (GR)	247
SERVOTRANSMISIÓN (GR)	259
VÁLVULA DE ALIVIO (GR)	268
VÁLVULA DE SOLENOIDE (GR)	269
VÁLVULA DEL NEUMÁTICO (GR)	274
RUEDA Y LLANTA (CONFIG)	275
RUEDA Y NEUMÁTICO (GR)	277
SISTEMA DE FRENOS	285
FRENO DE ESTACIONAMIENTO (GR)	285
CONTROL DEL FRENO DE ESTACIONAMIENTO	286
FRENO DE SERVICIO - CONTROL (GR)	288
CONTROL MANUAL DE PALANCA (GR)	291
TANQUE DEL SISTEMA DE FRENOS (GR)	292
SISTEMA DE DIRECCIÓN	293
EJE DELANTERO (GR)	293
CONTROL DE DIRECCIÓN (GR)	296
GRUPO PERILLA, DIRECCIÓN	297
TUBERÍAS DE DIRECCIÓN (GR)	298
VOLANTE DE DIRECCIÓN (GR)	303
PRIORIDAD - VÁLVULA DE (GR)	304
BASTIDOR Y CAJA	305
CAJA DE BATERÍA	305
PARAGOLPES DELANTERO	309
CONTRAPESO (GR)	310
TAPA DE LA BATERÍA (GR)	315
GUARDABARROS DELANTERO (GR)	316
GUARDABARROS TRASERO (GR)	317
PLANCHA DEL PISO (GR)	318
BASTIDOR DEL CARGADOR (GR)	321
BASTIDOR DE ROTACIÓN (GR)	322
PROTECTOR DEL EJE IMPULSOR (GR)	324
CAPO Y PROTECTOR (GR)	325
CAPÓ DEL MOTOR (GR)	327
SISTEMA HIDRÁULICO	330
ACUMULADOR DE CONTROL DE AMORTIGUACION (GR)	330
ACUMULADOR ESTABILIZADOR (GR)	332
CONECTOR DE VALVULA (GR)	333
CONTROL HIDRÁULICO (CONFIG)	336
CONTROL DE AMORTIGUACIÓN (CONFIG)	336

* NO HAY TRADUCCION DISPONIBLE EN EL MOMENTO DE LA IMPRESION

CONTENIDO

Nombre	Página
CONTROL HIDRÁULICO MANUAL (GR)	338
GRUPO DE CONTROL DE PEDAL HIDRÁULICO	345
PALANCA UNIVERSAL DE CONTROL (GR)	349
CONVERSIÓN DE ROTACIÓN AMORTIGUADA (CONFIG)	353
GRUPO DE CONVERSIÓN, TUBERIAS AUXILIARES	355
CONVERSIÓN DE LA VÁLVULA DE CONTROL (GR)	365
TRANSFORMACION DEL BRAZO ENTENSIBLE (GR)	366
ACOPLAMIENTO (GR)	367
TAPA DE VÁLVULA DE CONTROL (GR)	368
CILINDRO Y TUBERIAS GR - PULGAR	369
CILINDRO DE CUCHARÓN RETROEXCAVADOR (GR)	370
CILINDRO DE LA PLUMA (GR)	374
CILINDRO DEL BRAZO EXTENSIBLE (GR)	376
CILINDRO DE LEVANTAMIENTO (GR)	379
CILINDRO DE CUCHARÓN DE USO MÚLTIPLE (GR)	380
CILINDRO ESTABILIZADOR (GR)	381
CILINDRO DEL BRAZO (GR)	383
CILINDRO DE ROTACIÓN (GR)	384
CILINDRO GR - PULGAR	385
INCLINACIÓN HORIZONTAL - CILINDRO DE (GR)	386
FILTRO DE ACEITE (GR)	387
PROTECTOR DE CILINDRO ESTABILIZADOR (GR)	388
HIDRÁULICA (CONFIG)	391
INSTALACION DE GRUPO DE VALVULAS (CONFIG)	395
POSICIONADOR DEL CUCHARÓN Y DESCONEXIÓN (GR)	396
JUEGO DE CONTROL DE OPERACION	398
TUBERIAS AUXILIARES-RETROEXCAVADORA (GR)	399
TUBERÍAS DE LA PLUMA (GR)	424
TUBERÍAS DEL CILINDRO DEL CUCHARÓN (GR)	428
TUBERÍAS DE LA PALANCA EXTENDIBLE (GR)	432
CILINDRO DE LEVANTAMIENTO - TUBERÍAS DEL (GR)	437
TUBERIAS DE VALVULA DE CONTROL DE CARGA (GR)	440
TUBERIAS DE AUXILIAR DE CARGADOR (GR)	447
TUBERÍAS DEL CUCHARÓN DE USO MÚLTIPLE	449
TUBERÍAS CON SERVOMANDO (GR)	453
BOMBA - TUBERÍAS DE (GR)	463
TUBERÍAS DE RETORNO (GR)	472
TUBERIAS DE CONTROL DE LA SUSPENSIÓN (GR)	476
TUBERÍAS DEL ESTABILIZADOR (GR)	480
TUBERÍAS DEL BRAZO (GR)	482
TUBERÍAS DE GIRO (GR)	487
TUBERÍAS DEL CILINDRO DE INCLINACIÓN (GR)	491
TRABA DE CONTROL HIDRÁULICO MANUAL (GR)	493
GRUPO DE MONTAJE-CONTROL DE RETROEXCAVADORA	494
MONTAJE DE BANCADA DE VALVULA (GR)	496
MONTAJE DE CILINDRO (GR)	498
MONTAJE DEL CONTROL HIDRÁULICO (GR)	500
MONTAJE DE LA BOMBA HIDRÁULICA (GR)	502
MONTAJE DE TUBERIAS (GR)	503
BOMBA DE PISTONES (GR)	509
GRUPO GIRATORIO DE BOMBA	512
EJE DE TOMA DE FUERZA (GR)	513
ESTABILIZADOR (CONFIG)	514
TANQUE HIDRÁULICO (GR)	515
MONTAJE Y VALVULA DEL BANCO(GR)	517
VALVULA DE SOLENOIDE Y MONTAJE (GR	518
GRUPO DE CUATRO VALVULAS (CONFIG)	519
GRUPO DE 5 VALVULAS (CONFIG)	519
GRUPO DE 6 VALVULAS (CONFIG)	519
VÁLVULAS HIDRÁULICAS - GRUPO DE 2	520
GRUPO DE 3 VÁLVULAS HIDRÁULICAS	524
GRUPO DE 4 VÁLVULAS HIDRÁULICAS	526
BANCADA 5 (GR)	527
VÁLVULAS HIDRÁULICAS - GRUPO DE 6	528
VÁLVULA DE RETENCIÓN (GR)	530
*VALVE GP-CHECK	531
VÁLVULA DE RETENCIÓN (GR)	532
VÁLVULA DE CONTROL (GR)	533

* NO HAY TRADUCCION DISPONIBLE EN EL MOMENTO DE LA IMPRESION

CONTENIDO

Nombre	Página
VÁLVULA DE CONTROL DE CARGA (GR)	555
VÁLVULA PILOTO (GR)	558
*VALVE GP-PUMP CONTROL	570
VÁLVULA DE LANZADERA (GR)	573
VÁLVULA DE SOLENOIDE (GR)	574
IMPLEMENTOS	575
GRUPO DE BRAZO DE LEVANTAMIENTO	575
PLUMA (GR)	577
SOPORTE DEL CILINDRO DE LEVANTAMIENTO (GR)	579
SOPORTE PARA EL TRANSPORTE	580
CAJA DE BRAZO EXTENSIBLE (CONJ)	581
VARILLAJE GR-PULGAR	582
VARILLAJE DEL CUCHARÓN RETROEXCAVADOR (GR)	583
VARILLAJE DE CUCHARÓN CARGADOR (GR)	585
CARGADOR (CONFIG)	587
TRABA DE TRANSPORTE DE LA MÁQUINA (GR)	588
MONTAJE DEL BRAZO (GR)	592
ZAPATA Y PROTECTOR DEL ESTABILIZADOR	593
ALMOHADILLA Y MONTAJE DEL ESTABILIZADOR (GR)	597
ZAPATA DE ESTABILIZADOR (GR)	600
RETROEXCAVADOR - ESTABILIZADOR DEL (GR)	602
BRAZO EXTENSIBLE (GR)	604
BRAZO DE RETROEXCAVADOR (GR)	606
HERRAMIENTAS	608
CUCHARÓN DE USO MÚLTIPLE (CONFIG)	608
CUCHARÓN DE USO GENERAL (CONJ)	611
CUCHARÓN EXCAVADOR (CONJ)	616
CUCHARÓN DE USO GENERAL (GR)	626
CUCHARÓN RETROEXCAVADOR (GR)	628
CUCHARÓN DE USO MÚLTIPLE (GR)	687
ACOPLADOR RÁPIDO (CONFIG)	691
ACOPLADOR RÁPIDO (GR)	692
CUCHILLA (GR)	697
HORQUILLA (CONFIG)	699
HORQUILLA (GR)	700
GRUPO DE PROTECTOR DEL CUCHARON	701
*KIT-ADAPTER TIP	703
MONTAJE DEL CUCHARÓN (GR)	705
HORQUILLA - GRUPO DE MONTAJE DE LA	707
PASADOR DE ACOPLADOR (GR)	708
CUCHARÓN DE EMBARQUE (CONFIG)	710
TOPE DE CUCHARON (GR)	711
PULGAR CONFIG.	712
PULGAR GR	715
DIENTE DE UNA PIEZA (UNI-TOOTH) (GR)	716
PUESTO DEL OPERADOR	717
ACUMULADOR DEL ACONDICIONADOR DE AIRE (GR)	717
ACONDICIONADOR DE AIRE Y MONTAJE (GR)	718
ACONDICIONADOR DE AIRE (CONFIG)	722
ACONDICIONADOR DE AIRE (GR)	723
POSABRAZOS (GR)	725
CABINA (CONFIG)	726
CABINA (CONJ)	733
CABINA (GR)	738
TECHO (CONFIG)	742
PABELLON (CONJ)	746
TECHO ROPS ABIERTO (GR)	753
COMPARTIMIENTO DE LITERATURA DE SERVICIO (GR)	755
COMPRESOR DE REFRIGERANTE (GR)	756
CONDENSADOR DEL REFRIGERANTE Y MONTAJE (GR)	760
CONSOLA DELANTERA (GR)	761
CONSOLA DEL OPERADOR (GR)	764
CONSOLA LATERAL (GR)	766
TAPA DE LA CONSOLA (GR)	775
TAPA DE MAMPARA PARAFUEGO (GR)	778
TAPA DE POSTE (GR)	780
PUERTA IZQUIERDA (GR)	782
PUERTA DERECHA (GR)	784
CONDUCTO DE AIRE (GR)	786
ALFOMBRILLA DEL PISO (GR)	790
*FOOTREST GP	794
CALEFACCIÓN Y MONTAJE DE LA CABINA (GR)	795
CALEFACCIÓN DE LA CABINA (GR)	797
BOCINA ELÉCTRICA (GR)	799
JUEGO-PROTECCIÓN DE PEDAL	800
PESTILLO DE CONSOLA (GR)	801
PALANCA DE CONTROL DEL REGULADOR (GR)	802

* NO HAY TRADUCCION DISPONIBLE EN EL MOMENTO DE LA IMPRESION

CONTENIDO

Nombre	Página	Nombre	Página
TUBERÍAS DE LA CALEFACCIÓN (GR)	803		
TUBERIAS DE CALENTEDOR Y ACONDICIONADOR DE AIRE (GR)	805		
RETROVISOR (GR)	810		
MÓDULO INDICADOR DE ADVERTENCIA (GR)	811		
MOTOR-LIMPIAPARABRISAS (GR)	813		
MONTAJE DEL TABLERO DE INSTRUMENTOS (GR)	814		
TABLERO DE INSTRUMENTOS (GR)	819		
REGULADOR - PEDAL DEL (GR)	820		
CINTURÓN DE SEGURIDAD (GR)	821		
ASIENTO (GR)	823		
SUSPENSIÓN - ASIENTO CON (GR)	830		
INSONORIZADOR (GR)	836		
ASIENTO CON SUSPENSIÓN (GR)	838		
TACÓMETRO ELÉCTRICO (GR)	840		
GUARNICIONES DE LA CABINA (GR)	842		
VISERA (GR)	843		
LAVAPARABRISAS DE LA VENTANA (GR)	844		
VENTANA DE LA CABINA (GR)	848		
VENTANA DE LA PUERTA (GR)	854		
LIMPIAPARABRISAS DE LA VENTANA (GR)	858		
EQUIPOS Y SUMINISTRO DE SERVICIOS	861		
ETIQUETA DE ADVERTENCIA (GR)	861		
INSTALACIÓN DE LA TRABA DE LA RUEDA	862		
TRABA CONTRA EL VANDALISMO (GR)	863		
CALCOMANÍAS Y PLACAS DE IDENTIFICACIÓN (GR)	864		
INDICE DE NUMEROS DE PIEZA	B1		

* NO HAY TRADUCCION DISPONIBLE EN EL MOMENTO DE LA IMPRESION

ÍNDICE

Designação	Página
INFORMAÇÃO GERAL	A34
ALTERNATIVAS DE REPARO	A45
ADITIVOS SUPLEMENTARES DO LÍQUIDO ARREFECEDOR	A50
PEÇAS DE MANUTENÇÃO	A67
ÍNDICE	A115
ARRANJO DA MÁQUINA	1
RETROESCAVADEIRA - BRAÇO ESTENDÍVEL	1
RETROESCAVADORA	5
*BACKHOE AR-STANDARD STICK	5
RETROESCAVADORA	6
*BACKHOE AR-STANDARD STICK	7
RETROESCAVADORA	8
CHASSI	10
ARRANJO BÁSICO	10
ARRANJO DO MOTOR	11
MOTOR	11
MOTOR PRIMÁRIO	12
MOTOR BÁSICO	13
EIXO-COMANDO DE VÁLVULA	13
TAMPA - MECANISMO DAS VÁLVULAS	14
VIRABREQUIM	16
BLOCO DO MOTOR	18
CABEÇOTE DO MOTOR	21
COMANDO DO VENTILADOR	23
VOLANTE DO MOTOR	24
CAIXA DO VOLANTE DO MOTOR	25
CAIXA DIANTEIRA	26
LEVANTAMENTO DO MOTOR	28
MONTAGEM - MOTOR	29
MONTAGEM - MOTOR E TRANSMISSÃO	30
CÁRTER DO ÓLEO DO MOTOR	32
PISTÃO E BIELA	34
BUJÃO DO MOTOR	35
POLIA DO VIRABREQUIM	37
MECANISMO DAS VÁLVULAS	38
SISTEMA DE LUBRIFICAÇÃO	39
RESPIRO	39
BOCAL DE ENCHIMENTO DE ÓLEO DO MOTOR	47
BOMBA DE ÓLEO - MOTOR	49

Designação	Página
SISTEMA DE ARREFECIMENTO	50
CONEXÃO - TUBO D'ÁGUA	50
ARREFECEDOR DE ÓLEO DO MOTOR E BASE DO FILTRO	51
ARREFECIMENTO	53
VENTILADOR DE SUCÇÃO	55
CONEXÃO-AQUECEDOR & AR CONDICIONADO	58
TUBOS - ARREFECEDOR DO TREM DE FORÇA	59
BOMBA DE ÁGUA	63
RADIADOR E VENTILADOR	65
RADIADOR E ARREFECEDOR DO ÓLEO HIDRÁULICO	67
SISTEMA DE ADMISSÃO E ESCAPE DE AR	75
PURIFICADOR DE AR	75
TAMPA - ADMISSÃO DE AR	78
EXTENSÃO DO TUBO DE ESCAPE	79
INDICADOR - TROCA DO FILTRO DE AR	80
SILENCIADOR	84
TURBOALIMENTADOR	85
SISTEMA DO COMBUSTÍVEL	87
CONTROLE DO GOVERNADOR E ACELERADOR	87
FILTRO - COMBUSTÍVEL	89
FILTRO DE COMBUSTÍVEL E SEPARADOR DE ÁGUA	91
TUBOS - COMBUSTÍVEL	92
BOMBA DE INJEÇÃO DO COMBUSTÍVEL	94
BOMBA DE ESCORVA DO COMBUSTÍVEL	97
SEPARADOR DE ÁGUA	98
TANQUE DE COMBUSTÍVEL E MONTAGEM	102
TANQUE DE COMBUSTÍVEL	103
SISTEMA ELÉTRICO DE PARTIDA	106
ALTERNADOR DE CORRENTE	106
BATERIA	107
VELA DE AQUECIMENTO; VELA INCANDESCENTE	115
AQUECEDOR DA ÁGUA DO MOTOR	116
INSTALAÇÃO-SEGURANÇA	119
LÂMPADA - FAROL	123
LÂMPADA - SINALIZAÇÃO	124
LUZ TRASEIRA E DE FREIO	125
LUZ GIRATÓRIA DE ALARME	126

* TRADUÇÃO NÃO DISPONÍVEL NO MOMENTO DA IMPRESSÃO

ÍNDICE

Designação	Página
SISTEMA DE ILUMINAÇÃO - FARÓIS E SINAL	128
SIST. DE ILUMINAÇÃO - PISCA-PISCA GIRATÓRIO DE ADVERTÊNCIA	131
MOTOR ELÉTRICO DE PARTIDA	133
INTERRUPTOR - PRESSÃO	136
INTERRUPTOR - TEMPERATURA	137
CABOS/FIOS ELÉTRICOS - AR CONDICIONADO	138
CABOS/FIOS ELÉTRICOS - CONTROLE ELET. DAS MARCHAS	145
CABOS/FIOS ELÉTRICOS - CABINE	150
CABOS/FIOS ELÉTRICOS DO CONSOLE	157
CABOS/FIOS ELÉTRICOS - MOTOR	171
CABOS/FIOS ELÉTRICOS - AQUECEDOR	175
CABOS/FIOS ELÉTRICOS - PLATAFORMA	177
CABOS/FIOS ELÉTRICOS - TOMADA DE FORÇA	183
CABOS/FIOS ELÉTRICOS - TRASEIROS	184
CABOS/FIOS ELÉTRICOS - ABSORÇÃO DE IMPACTOS	187
CABOS/FIOS ELÉTRICOS - SENSOR	193
CABOS/FIOS ELÉTRICOS - ESTABILIZADOR	194
CABOS/FIOS ELÉTRICOS - ALARME DO ESTABILIZADOR	196
CABOS/FIOS ELÉTRICOS - DIREÇÃO	198
TREM DE FORÇA	199
EIXO TRASEIRO E MONTAGEM	199
EIXO DE PROPULSÃO E DIREÇÃO	201
SEMI-EIXO TRASEIRO	204
CONTROLE DA TRAVA DO DIFERENCIAL	209
CONTROLE DA TRANSMISSÃO	210
DIFERENCIAL E COROA	211
DIFERENCIAL	213
COMANDO - RETROESCAVADEIRA	214
COMANDO - ACOPLAMENTO FLEXÍVEL	215
BOCAL DE ENCHIMENTO DE ÓLEO DO TREM DE FORÇA	216
FLANGE - RODA	225
ALOJAMENTO E FLANGE - EIXO	226
GR. PLANETÁRIO - COMANDO FINAL	230
TREM DE FORÇA	231
EIXO DE TRANSMISSÃO	240
TRANSMISSÃO E MONTAGEM	243
TRANSMISSÃO DIRETA	246
SERVO-TRANSMISSÃO	246
TRANSMISSÃO DIRETA	247
SERVOTRANSMISSÃO	259
VÁLVULA DE ALÍVIO	268
VÁLVULA SOLENÓIDE	269
VÁLVULA DE PNEU	274
RODA E PNEU	275
SISTEMA DE FREIOS	285
FREIO DE ESTACIONAMENTO	285
CONTROLE DO FREIO DE ESTACIONAMENTO	286
CONTROLE DO FREIO DE SERVIÇO	288
ALAVANCA DE CONTROLE MANUAL	291
TANQUE DO FREIO	292
SISTEMA DE DIREÇÃO	293
EIXO DIANTEIRO	293
CONTROLE DE DIREÇÃO	296
BOTÃO - DIREÇÃO	297
TUBOS - DIREÇÃO	298
VOLANTE	303
VÁLVULA DE PRIORIDADE	304
CHASSI E CARCAÇA	305
CAIXA - BATERIA	305
PÁRA-CHOQUE DIANTEIRO	309
CONTRAPESO	310
TAMPA - ACESSO À BATERIA	315
PÁRA-LAMA DIANTEIRO	316
PÁRA-LAMA TRASEIRO	317
CHAPA DO PISO	318
CHASSI DIANTEIRO	321
ARMAÇÃO OSCILANTE	322
PROTETOR - EIXO DE TRANSMISSÃO	324
CAPÔ E PROTETOR	325
CAPÔ DO MOTOR	327
SISTEMA HIDRÁULICO	330
ACUMULADOR DO SISTEMA DE ABSORÇÃO DE IMPACTOS	330
ACUMULADOR - ESTABILIZADOR	332
VÁLVULA DO CONECTOR	333
CONTROLE HIDRÁULICO	336
SISTEMA DE ABSORÇÃO DE IMPACTOS	336
CONTROLE HIDRÁULICO MANUAL	338
CONTROLE - PEDAL HIDRÁULICO	345
CONTROLE - ALAVANCA	349
GRUPO DE CONVERSÃO - ESTOFAMENTO DE GIRO	353

* TRADUÇÃO NÃO DISPONÍVEL NO MOMENTO DA IMPRESSÃO

ÍNDICE

Designação	Página
CONVERSÃO - TUBULAÇÕES AUXILIARES	355
GR. DE CONVERSÃO - VÁLVULA DE CONTROLE	365
GR. DE CONVERSÃO - BRAÇO EXTENSÍVEL	366
ACOPLAMENTO	367
TAMPA - VÁLVULA DE CONTROLE	368
CILINDRO E TUBULAÇÕES-POLEGAR	369
CILINDRO DA CAÇAMBA RETROESCAVADEIRA	370
CILINDRO DA LANÇA	374
CILINDRO DO BRAÇO ESTENDÍVEL	376
CILINDRO DE LEVANTAMENTO	379
CILINDRO - CAÇAMBA DE MÚLTIPLAS APLICAÇÕES	380
CILINDRO DO ESTABILIZADOR	381
CILINDRO DO BRAÇO	383
CILINDRO DE GIRO	384
CILINDRO - POLEGAR	385
CILINDRO DE INCLINAÇÃO	386
FILTRO - ÓLEO	387
PROTETOR - CILINDRO DO ESTABILIZADOR	388
COMANDO HIDRÁULICO	391
INSTALAÇÃO DE GRUPO DE VÁLVULAS	395
DESENGATE E POSICIONADOR DA CAÇAMBA	396
JOGO - SISTEMA DE ABSORÇÃO DE IMPACTOS	398
TUBOS AUXILIARES - RETROESCAVADEIRA	399
TUBOS - LANÇA	424
TUBOS - CILINDRO DA CAÇAMBA	428
TUBOS - BRAÇO COM EXTENSÃO	432
TUBOS - CILINDRO DE LEVANTAMENTO	437
TUBOS - VÁLVULA DE CONTROLE DE CARGA	440
TUBOS AUXILIARES	447
TUBOS - CAÇAMBA DE MÚLTIPLAS APLICAÇÕES	449
TUBOS - CIRCUITO PILOTO	453
TUBOS - BOMBA	463
TUBOS - RETORNO	472
TUBOS - ABSORÇÃO DE IMPACTOS	476
TUBOS - ESTABILIZADOR	480
TUBOS - BRAÇO	482
TUBOS - GIRO	487
TUBOS - CILINDRO DE INCLINAÇÃO	491
TRAVA - CONTROLE MANUAL HIDRÁULICO	493
MONTAGEM - CONTROLE DA RETROESCAVADEIRA	494
MONTAGEM - BANCO DE VÁLVULAS	496
MONTAGEM - CILINDRO	498
MONTAGEM - CONTROLE HIDRÁULICO	500
MONTAGEM - BOMBA HIDRÁULICA	502
MONTAGEM - TUBOS	503
BOMBA DE PISTÃO	509
GRUPO ROTATIVO DA BOMBA	512
EIXO DA TOMADA DE FORÇA	513
ESTABILIZADOR	514
TANQUE HIDRÁULICO	515
VÁLVULA DE CONTROLE E MONTAGEM	517
VALVULA DO SOLENOIDE E MONTAGEM	518
CONJUNTO DE 4 VÁLVULAS	519
GRUPO DE VÁLVULAS - 5	519
GRUPO DE VÁLVULAS - SEIS	519
GRUPO DE VÁLVULAS DE CONTROLE - DUPLO	520
GRUPO DE VÁLVULAS DE CONTROLE - TRIPLO	524
GRUPO DE VÁLVULAS DE CONTROLE - QUÁDRUPLO	526
GRUPO DE VÁLVULAS DE CONTROLE - CINCO	527
GRUPO DE VÁLVULAS DE CONTROLE - SEIS	528
VÁLVULA DE RETENÇÃO	530
*VALVE GP-CHECK	531
VÁLVULA DE RETENÇÃO	532
VÁLVULA DE CONTROLE	533
VÁLVULA - CONTROLE DE CARGA	555
VÁLVULA DE CONTROLE PILOTO	558
*VALVE GP-PUMP CONTROL	570
VÁLVULA DE SEPARAÇÃO	573
VÁLVULA SOLENÓIDE	574
ACESSÓRIOS	575
BRAÇO DE LEVANTAMENTO	575
LANÇA	577
TIRANTE DO CILINDRO DE LEVANTAMENTO	579
SUPORTE PARA TRANSPORTE	580
ALOJAMENTO DO BRAÇO EXTENSÍVEL	581
ELO - POLEGAR	582
ARTICULAÇÃO DA CAÇAMBA DA RETROESCAVADEIRA	583

* TRADUÇÃO NÃO DISPONÍVEL NO MOMENTO DA IMPRESSÃO

ÍNDICE

Designação	Página
ARTICULAÇÃO DAS CAÇAMBAS DAS CARREGADEIRAS	585
CAÇAMBA DIANTEIRA	587
TRAVA - TRANSPORTE	588
MONTAGEM - BRAÇO	592
COXIM E PROTETOR DO ESTABILIZADOR	593
CALÇO DO ESTABILIZADOR E MONTAGEM	597
CALÇO DO ESTABILIZADOR	600
ESTABILIZADOR - RETROESCAVADEIRA	602
BRAÇO ESTENDÍVEL	604
BRAÇO - CAÇAMBA RETRO-ESCAVADORA	606
FERRAMENTAS DE TRABALHO	608
CAÇAMBA DE MÚLTIPLAS APLICAÇÕES	608
CAÇAMBA PARA APLICAÇÃO GERAL	611
CAÇAMBA - RETRO-ESCAVADORA	616
CAÇAMBA PARA APLICAÇÃO GERAL	626
CAÇAMBA RETROESCAVADORA	628
CAÇAMBA DE MÚLTIPLAS APLICAÇÕES	687
ACOPLADOR RÁPIDO	691
BORDA CORTANTE	697
GARFO	699
PROTETOR - CAÇAMBA	701
*KIT-ADAPTER TIP	703
MONTAGEM - CAÇAMBA	705
MONTAGEM - GARFO	707
PINO-ACOPLADOR	708
AR. DE EMBARQUE DA CAÇAMBA	710
BATENTE - CAÇAMBA	711
POLEGAR	712
UNI-DENTE	716
POSTO DO OPERADOR	717
ACUMULADOR - AR CONDICIONADO	717
CONDICIONADOR DE AR E MONTAGEM	718
CONDICIONADOR DE AR	722
BRAÇO DO ASSENTO	725
CABINE	726
TOLDO	742
COBERTA TOLDO	746
TOLDO - ESTRUTURA ROPS ABERTA	753
COMPARTIMENTO PARA LITERATURA	755
COMPRESSOR DE REFRIGERANTE	756
CONDENSADOR DO REFRIGERANTE E MONTAGEM	760
POSTO DE CONTROLE/CONSOLE DIANTEIRO	761
CONSOLE DO OPERADOR	764
CONSOLE LATERAL	766
TAMPA - CONSOLO	775
TAMPA-PAINEL TRASEIRO DO MOTOR	778
TAMPA-COLUNA	780
PORTA - LADO ESQUERDO	782
PORTA - LADO DIREITO	784
DUCTO DE AR	786
TAPETE	790
*FOOTREST GP	794
AQUECEDOR DA CABINE E MONTAGEM	795
AQUECEDOR DA CABINE	797
BUZINA ELÉTRICA	799
JOGO - PROTETOR DO PEDAL	800
TRINCO DE CONSOLE	801
ALAVANCA DE CONTROLE DO GOVERNADOR	802
TUBOS - AQUECEDOR	803
TUBULAÇÕES - AQUECEDOR E AR CONDICIONADO	805
ESPELHO RETROVISOR	810
MÓDULO - INDICADOR DE ALARME	811
MOTOR - LIMPADOR DO VIDRO	813
MONTAGEM - PAINEL DE INSTRUMENTOS	814
PAINEL DE INSTRUMENTOS	819
PEDAL DO GOVERNADOR	820
CINTO DE SEGURANÇA	821
ASSENTO	823
ASSENTO COM SUSPENSÃO	830
REDUÇÃO DE RUÍDO	836
SUSPENSÃO - ASSENTO	838
TACÔMETRO - ELÉTRICO	840
LISTRA DA CABINE	842
PÁRA-SOL DA CABINE	843
LAVADOR DO VIDRO	844
JANELA DA CABINE	848
VIDRO DA PORTA	854
LIMPADOR DO VIDRO	858
EQUIPAMENTOS DE SERVIÇO E SUPRIMENTOS	861
DECALQUE	861
GR. DE INSTALAÇÃO - CALÇO DA RODA	862
CADEADO CONTRA VANDALISMO	863
PLACA E DECALQUE	864
ÍNDICE DE NÚMERO DE PEÇA	B1

* TRADUÇÃO NÃO DISPONÍVEL NO MOMENTO DA IMPRESSÃO

INHALTSVERZEICHNIS

Bezeichnung	Seite
ALLGEMEINE HINWEISE	A38
REPARATURALTERNATIVEN	A46
KÜHLMITTELZUSATZ	A51
WARTUNGSTEILE	A73
STICHWORTVERZEICHNIS	A127
MASCHINE	1
HECKBAGGER-TELESKOPSTIEL	1
HECKBAGGER	5
*BACKHOE AR-STANDARD STICK	5
HECKBAGGER	6
*BACKHOE AR-STANDARD STICK	7
HECKBAGGER	8
FAHRWERK	10
GRUNDAUSFÜHRUNG	10
MOTOR	11
MOTORAUSFÜHRUNG	11
MOTOR (GRUNDAUSFÜHRUNG)	13
NOCKENWELLE	13
VENTILDECKEL	14
KURBELWELLE	16
MOTORBLOCK	18
ZYLINDERKOPF	21
LÜFTERANTRIEB	23
SCHWUNGRAD	24
SCHWUNGRADGEHÄUSE	25
STIRNRADGEHÄUSE	26
MOTORHUBÖSE	28
MOTORAUFLAGER	29
MOTOR- UND GETRIEBEAUFLAGER	30
ÖLWANNE	32
PLEUELSTANGE UND KOLBEN	34
MOTORSTOPFEN	35
KURBELWELLEN-RIEMENSCHEIBE	37
VENTILSTEUERUNG	38
SCHMIERSYSTEM	39
ENTLÜFTER	39
MOTORÖLEINFÜLLSTUTZEN	47
SCHMIERPUMPE	49
KÜHLSYSTEM	50
KÜHLWASSERANSCHLUSS	50
MOTORÖLKÜHLER UND FILTER-SOCKEL	51
KÜHLSYSTEM	53
SAUGLÜFTER	55
ANSCHLUSS - HEIZUNG U. KLIMAANLAGE	58
ÖLKÜHLERLEITUNGEN (KRAFTÜBERTRAGUNG)	59
KÜHLWASSERPUMPE	63
KÜHLER UND LÜFTER	65
KÜHLER UND HYDRAULIKÖLKÜHLER	67
LUFTANSAUG- UND ABGASSYSTEM	75
LUFTREINIGER	75
LUFTEINLASSDECKEL	78
AUSPUFFROHRVERLÄNGERUNG	79
LUFTFILTERWARTUNGSANZEIGE	80
SCHALLDÄMPFER	84
TURBOLADER	85
KRAFTSTOFFSYSTEM	87
REGLER- UND GASPEDALGESTÄNGE	87
KRAFTSTOFFILTER	89
WASSERABSCHEIDER- U. KRAFTSTOFFILTER	91
KRAFTSTOFFLEITUNGEN	92
KRAFTSTOFFEINSPRITZPUMPE	94
KRAFTSTOFF-ENTLÜFTUNGSPUMPE	97
WASSERABSCHEIDER	98
KRAFTSTOFFTANK U. BEFESTIGUNG	102
KRAFTSTOFFTANK	103
ELEKTRISCHE ANLAGE UND STARTSYSTEM	106
DREHSTROMGENERATOR	106
BATTERIE	107
GLÜHKERZE	115
UMLAUFKÜHLWASSERHEIZUNG	116
SICHERHEITSEINBAUSATZ	119
ARBEITSLEUCHTEN	123
BLINKLEUCHTE	124
BREMS- UND RÜCKLEUCHTE	125
RUNDUM-KENNLEUCHTE	126
ARBEITS- U. SIGNALLEUCHTE	128
RUNDUM-KENNLEUCHTE	131
STARTERMOTOR	133
DRUCKSCHALTER	136
TEMPERATURSCHALTER	137
KLIMAANLAGENVERDRAHTUNG	138
SCHALTAUTOMATIKVERDRAHTUNG	145
FAHRERHAUSVERDRAHTUNG	150
KONSOLENVERDRAHTUNG	157
MOTORVERDRAHTUNG	171

* ÜBERSETZUNG ZUM ZEITPUNKT DER DRUCKLEGUNG NICHT VORHANDEN

INHALTSVERZEICHNIS

Bezeichnung	Seite
HEIZUNGSVERDRAHTUNG	175
FAHRERPLATTFORMVERDRAHTUNG	177
STECKDOSENVERDRAHTUNG	183
VERDRAHTUNG, HINTEN	184
SCHWINGUNGSDÄMPFUNGSVERDRAHTUNG	187
SENSORVERDRAHTUNG	193
SEITENSTÜTZENVERDRAHTUNG	194
SEITENSTÜTZENALARMVERDRAHTUNG	196
LENKVERDRAHTUNG	198
KRAFTÜBERTRAGUNG	199
HINTERACHSE U. BEFESTIGUNG	199
ANTRIEBS- UND LENKACHSE	201
HINTERACHSE	204
DIFFERENTIALSPERRENGESTÄNGE	209
GETRIEBESTEUERUNG	210
DIFFERENTIAL UND TELLERRAD	211
DIFFERENTIAL	213
ANTRIEB - BAGGERLADER	214
KUPPLUNGSANTRIEB, ELAST.	215
GETRIEBEÖLFÜLLSTUTZEN	216
RADFLANSCH	225
ACHSGEHÄUSEFLANSCH	226
SEITENANTRIEB - PLANETENGETRIEBE	230
KRAFTÜBERTRAGUNG	231
ANTRIEBSWELLE	240
GETRIEBE U. BEFESTIGUNG	243
MECHANISCHES GETRIEBE	246
LASTSCHALTGETRIEBE	246
WECHSELGETRIEBE	247
LASTSCHALTGETRIEBE	259
ÜBERDRUCKVENTIL	268
MAGNETVENTIL	269
REIFENVENTIL	274
RAD UND REIFEN	275
BREMSSYSTEM	285
FESTSTELLBREMSE	285
FESTSTELLBREMSGESTÄNGE	286
BREMSGESTÄNGE	288
HANDSTEUERHEBEL	291
BREMSTANK	292
LENKSYSTEM	293
VORDERACHSE	293
LENKBETÄTIGUNG	296
LENKKNOPF	297
LENKÖLLEITUNGEN	298
LENKRAD	303
VORRANGVENTIL	304
RAHMEN UND FAHRGESTELL	305
BATTERIEKASTEN	305
FRONTSTOSSSTANGE	309
GEGENGEWICHT	310
BATTERIEDECKEL	315
SCHUTZBLECHE, VORNE	316
SCHUTZBLECHE, HINTEN	317
BODENBLECH	318
LADERRAHMEN	321
SCHWENKRAHMEN	322
ANTRIEBSWELLENVERKLEIDUNG	324
MOTORHAUBE UND VERKLEIDUNG	325
MOTORHAUBE	327
HYDRAULIKSYSTEM	330
DRUCKSPEICHER, HYDRAULISCHE SCHWINGUNGSDÄMPFUNG	330
STÜTZEN-DRUCKSPEICHER	332
VERBINDUNGSVENTIL	333
HYDRAULIKSTEUERUNG	336
HYDRAULISCHE SCHWINGUNGSDÄMPFUNG	336
HYDRAULIKHANDSTEUERUNG	338
HYDRAULIKPEDALSTEUERUNG	345
JOYSTICK -STEUERUNG	349
UMRÜSTSATZ - GEFEDERETE SCHWENKVORRICHTUNG	353
UMRÜSTSATZ - ZUSATZHYDRAULIKLEITUNGEN	355
UMBAUSATZ - STEUERVENTIL	365
UMBAUSATZ -TELESKOPSTIEL	366
ANSCHLUSS	367
STEUERVENTILDECKEL	368
DAUMEN - ZYLINDER U. LEITUNGEN	369
HECKBAGGERLÖFFELZYLINDER	370
AUSLEGERZYLINDER	374
TELESKOPSTIELZYLINDER	376
HUBZYLINDER	379
KOMBISCHAUFELZYLINDER	380
SEITENSTÜTZENZYLINDER	381
STIELZYLINDER	383
SCHWENKZYLINDER	384
DAUMENZYLINDER	385
KIPPZYLINDER	386
ÖLFILTER	387
SEITENSTÜTZENZYLINDERSCHUTZ	388
HYDRAULIKSYSTEM	391
VENTILEINBAUSATZ	395
SCHAUFELAUSSCHALTER UND -EINSTELLER	396

* ÜBERSETZUNG ZUM ZEITPUNKT DER DRUCKLEGUNG NICHT VORHANDEN

INHALTSVERZEICHNIS

Bezeichnung	Seite
HYDRAULISCHE SCHWINGUNGSDÄMPFUNG - EINBAUSATZ	398
TIEFLÖFFEL-HYDRAULIKNOTLEITUNGEN	399
AUSLEGERLEITUNGEN	424
LÖFFELZYLINDERLEITUNGEN	428
TELESKOPSTIELLEITUNGEN	432
HUBZYLINDERLEITUNGEN	437
LASTSTEUERVENTILLEITUNGEN	440
LADERZUSATZLEITUNGEN	447
KOMBISCHAUFELLEITUNGEN	449
VORSTEUERLEITUNGEN	453
HYDRAULIKPUMPE UND LEITUNGEN	463
RÜCKLAUFLEITUNG	472
SCHWINGUNGSDÄMPFUNGSLEITUNGEN	476
SEITENSTÜTZENLEITUNGEN	480
STIELZYLINDERLEITUNGEN	482
SCHWENKLEITUNGEN	487
NEIGEZYLINDERLEITUNGEN	491
HYDRAULIKSPERRE (HANDBEDIENUNG)	493
HECKBAGGERSTEURUNG - AUFHÄNGUNG	494
VENTILANORDNUNGS-BEFESTIGUNGSSATZ	496
ZYLINDERAUFHÄNGUNG	498
HYDRAULIKSTEUERUNGSAUFHÄNGUNG	500
HYDRAULIKPUMPENBEFESTIGUNG	502
LEITUNGS-BEFESTIGUNGSTEILE	503
KOLBENPUMPE	509
KOLBENPUMPENUMLAUFSATZ	512
ZAPFWELLE	513
SEITENSTÜTZEN	514
HYDRAULIKTANK	515
VENTILBLOCK U. BEFESTIGUNG	517
SOLENOIDVENTIL U. BEFESTIGUNGSTEILE	518
4-BLOCK-VENTILSATZ	519
5-VENTIL-BLOCK	519
6-FACH-VENTILBLOCK	519
VENTILSATZ (2-VENTIL)	520
VENTILSATZ (3-VENTIL)	524
VENTILSATZ (4-VENTIL)	526
VENTILSATZ (5-VENTIL)	527
VENTILSATZ (6-VENTIL)	528
SPERRVENTIL	530
*VALVE GP-CHECK	531
SPERRVENTIL	532
STEUERVENTIL	533
LASTSTEUERVENTIL	555
VORSTEUERVENTIL	558
*VALVE GP-PUMP CONTROL	570
PENDELVENTIL	573
MAGNETVENTIL	574
ARBEITSGERÄTE	575
HUBARM	575
AUSLEGER	577
HUBZYLINDER-HALTERUNG	579
TRANSPORTHALTERUNG	580
GEHÄUSE - AUSFAHRBARER STIEL	581
DAUMENGESTÄNGE	582
HECKBAGGERLÖFFELGESTÄNGE	583
SCHAUFELGESTÄNGE	585
LADESCHAUFEL	587
TRANSPORTSPERRE	588
STIELAUFHÄNGUNG	592
SEITENSTÜTZENPLATTEN UND SCHUTZABDECKUNG	593
STÜTZPLATTEN U. BEFESTIGUNG	597
SEITENSTÜTZENPLATTEN	600
SEITENSTÜTZEN	602
TELESKOPSTIEL	604
LÖFFELSTIEL	606
ARBEITSGERÄTE	608
KOMBISCHAUFEL	608
UNIVERSALSCHAUFEL	611
HECKBAGGERLÖFFEL	616
UNIVERSALSCHAUFEL	626
HECKBAGGERLÖFFEL	628
KOMBISCHAUFEL	687
SCHNELLWECHSELVORRICHTUNG	691
SCHNELLWECHSELEINRICHTUNG	692
SCHNEIDMESSER	697
GABEL	699
PALETTENGABEL	700
SCHAUFELSCHUTZ	701
*KIT-ADAPTER TIP	703
SCHAUFELAUFHÄNGUNG	705
GABELBEFESTIGUNG	707
KUPPLUNGSBOLZEN	708
SCHAUFELTRANSPORTAUSFÜHRUNG	710
SCHAUFELANSCHLAG	711
DAUMEN	712
UNIVERSAL-ZAHNSPITZE	716
FAHRERHAUS	717
KLIMAANLAGENDRUCKSPEICHER	717
KLIMAANLAGE UND AUFHÄNGUNG	718
KLIMAANLAGE	722
ARMLEHNE	725

* ÜBERSETZUNG ZUM ZEITPUNKT DER DRUCKLEGUNG NICHT VORHANDEN

INHALTSVERZEICHNIS

Bezeichnung	Seite
FAHRERHAUS	726
WETTERDACH	742
SCHUTZDACHSATZ	746
FAHRERHAUS M. OFFENEM ÜBERROLLSCHUTZ	753
LITERATURABLAGE	755
KÄLTEMITTELKOMPRESSOR	756
KÄLTEMITTELKONDENSATOR U. BEFESTIGUNGSTEILE	760
FRONTSTEUERPULT	761
STEUERKONSOLE	764
SEITENKONSOLE	766
STEUERKONSOLENABDECKUNG	775
FEUERWANDABDECKUNG	778
PFOSTENABDECKUNG	780
FAHRERHAUSTÜR (LINKS)	782
FAHRERHAUSTÜR (RECHTS)	784
LUFTKANAL	786
FUSSMATTE	790
*FOOTREST GP	794
FAHRERHAUSHEIZUNG U. BEFESTIGUNGSTEILE	795
FAHRERHAUSHEIZUNG	797
WARNHORN, ELEKTR.	799
PEDALSCHUTZ	800
KONSOLENVERRIEGELUNG	801
DREHZAHLREGLER - STEUERHEBEL	802
HEIZUNGSLEITUNGEN	803
HEIZUNGS- U. KLIMAANLAGENLEITUNGEN	805
RÜCKSPIEGEL	810
WARNANZEIGEMODUL	811
SCHEIBENWISCHERMOTOR	813
INASTRUMENTENTAFEL-EINBAUSATZ	814
INSTRUMENTENTAFEL	819
GASPEDAL	820
SICHERHEITSGURT	821
FAHRERSITZ	823
SCHWINGSITZ	830
SCHALLDÄMPFUNG	836
FAHRERSITZFEDERUNG	838
DREHZAHLMESSER, ELEKTR.	840
FAHRERHAUS - HALTETEILE	842
FAHRERHAUS, SONNENBLENDE	843
SCHEIBENWASCHANLAGE	844
FAHRERHAUSFENSTER	848
TÜRFENSTER	854
SCHEIBENWISCHER	858
WARTUNGSAUSRÜSTUNG UND -ZUBEHÖR	861
AUFKLEBER	861
UNTERLEGKEIL - EINBAUSATZ	862
VORHÄNGESCHLOSS	863
SCHILD UND AUFKLEBER	864
ERSATZTEILNUMMERNINDEX	B1

* ÜBERSETZUNG ZUM ZEITPUNKT DER DRUCKLEGUNG NICHT VORHANDEN

1. MACHINE IDENTIFICATION

Caterpillar machines are identified by Product Identification Numbers (PIN). Some components included in a machine may be identified by Serial Numbers (S/N). Typical components that will be serialized include engines, transmissions, bulldozers, and rippers. The machine and engine are further identified by arrangement numbers and in some cases modification numbers. These numbers are shown on the product identification plate(s) and on the master plate in the operator's compartment.

Caterpillar dealers need all of these numbers to determine accurate parts identification.

SIS *New Feature*

Effective First Quarter 2001 the Caterpillar Product Identification Number (PIN) changed from 8 to 17 characters. In an effort to provide uniform equipment identification, Caterpillar and other construction equipment manufacturers are moving to comply with the latest version of the product identification numbering standard. Non-road machine PINs are defined by ISO 10261. The new PIN format will apply to all Caterpillar machines and generator sets. The PIN plates and frame marking will display the 17 character PIN. The new format will look like the following:

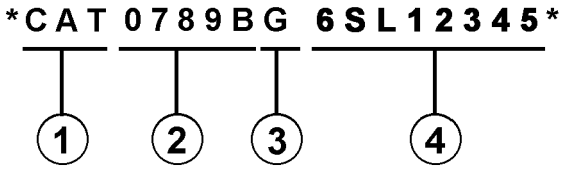

Where:

1. Caterpillar's World Manufacturing Code (characters 1-3)

2. Machine Descriptor (characters 4-8)

3. Check Character (character 9)

4. Machine Indicator Section (MIS) or Product Sequence Number (characters 10-17). These were previously referred to as the Serial Number.

Machines and generator sets produced before First Quarter 2001 will maintain their 8 character PIN format.

Components such as engines, transmissions, axles, etc. and work tools will continue to use an 8 character Serial Number (S/N).

2. ORDERING PARTS

⚠ WARNING

When replacement parts are required for this product Caterpillar recommends using Caterpillar replacement parts or parts with equivalent specifications including, but not limited to, physical dimensions, type, strength and material.

Failure to heed this warning can lead to premature failures, product damage, personal injury or death.

Quality Caterpillar replacement parts are available from Caterpillar dealers throughout the world. Their parts inventories are up to date and include all parts normally required to protect your investment in Caterpillar machines. Dealers may offer repair kits or remanufactured parts to allow selection of the most effective repair alternative for a particular situation. When ordering parts, your order should specify the quantity, part number, part name, and the serial number/product identification number of the machine for which the parts are needed.

3. PARTS MANUAL ORGANIZATION

Product information in this manual is presented as "information elements" that represent all of the components for the specific model. Engine Arrangement and Seat Group are examples of information elements. The information elements are organized alphabetically by part name and secondarily by part number within each major section of the manual.

4. TABLE OF CONTENTS

A table of contents (TOC) is found at the beginning of the manual. The TOC lists each section of the manual with a complete list of all information elements organized as they appear in the manual. Page numbers are provided for quick reference to detailed parts identification illustrations and serviceable consist lists.

5. MAINTENANCE PARTS INDEX

The Maintenance Parts Index, located near the beginning of the manual, references most frequently used maintenance part numbers, providing description, quantity, usage and page number. This information is organized alphabetically by part description.

6. INDEX

The index located near the front of the manual is an alphabetical listing of all information elements included in the manual. Page numbers are provided for quick reference to detailed parts identification illustrations and serviceable consist lists.

7. PART NUMBER INDEX

A numerical index listing all part numbers and the corresponding page number(s) appears at the back of the manual.

8. CAPTIONS

Captions located at the beginning of each information element identify the part number and part name along with additional descriptive information. PIN and S/N information found in each caption should be used to select correct information for a specific machine. Field replacement options, identification of optional attachment components, and where used ("part of") information is also provided.

The first line of a caption is shown in larger type font to indicate the beginning of an information element. Captions for additional pages that may be required to illustrate an information element will be shown in standard type font and will include the term *(contd.)* .

9. NON-SERVICED PARTS

In some instances it is necessary to display non-serviced parts that are a link to a lower level serviceable consist lists. These non-serviced part numbers are shown in *italic* type indicating that they are not available.

10. PARTS LIST REFERENCE NUMBERS

Numbers shown in the Ref No column correspond to numbers used in the associated graphic(s). An alphabetic suffix may be added to a reference number to identify lower level consist items. Numbers shown in the Graphic Ref column refer to the graphic number identifier displayed in the lower left corner of each illustration. The Graphic Ref number may be used in combination with the item Ref No to determine the correct part number. There may be intentional omission of a Ref No in a consist list as information is updated to reflect the latest serviceable part numbers.

11. INDENTED PART NAMES

When a part name is indented in a parts list, it is part of (included in) the group or assembly under which it is indented.

12. ILLUSTRATION REFERENCE LETTERS

When necessary, illustrations contain reference letters (A, B, C etc.) that are intended to track lines and harnesses from one point to another. They are also used to show where to reconnect illustrations that have been separated.

13. ABBREVIATIONS AND SYMBOLS

O.D. – Outside Diameter
I.D. – Inside Diameter
A – Not Part Of This Group
B – Use As Required
C – Change From Previous Type
D – Order By The Meter
E – Order By The Centimeter
F – Not Shown
G – Order By The Inch
I – See Hose Fabrication Guide
M – Metric Part
R – Remfg Part May Be Available
Y – Separate Illustration
Z – Not Serviced Separately

SIS *New Feature*

14.<END>

This symbol indicates the end of an information element.

NOTE:

Continuing improvement and advancement of product design may cause changes to your machine which may not be included in this publication. Whenever a question arises regarding your caterpillar product or this publication, please consult your caterpillar dealer for the latest available information.

FRAME AND BODY

8E-3299 PLATFORM GP-CAB

PIN 38K1-09999

SMCS-7253 100090751

NOTE	REF NO	GRAPHIC REF	PART NUMBER	QTY	PART NAME (1 2 3 4 5 6 PRODUCT LEVEL)	SEE PAGE
	1	1	3T-3953	1	PLATE AS	
	2	1	5B-2992	25	BOLT (3/8-16X.750IN)	
	3	1	6P-1075	41	WASHER-HARD (3MM THK)	
	4	1	6P-1444	2	SUPPORT AS-FOOT	
	5	1	6P-2229	19	BOLT (1/2-13X1IN)	
		1	6P-[illegible]4	19	WASHER-HARD (4MM THK)	
	6	1	8E-8136	1	COVER AS-LH	
		1	9F-2979	6	NUT-WELD (3/8-16 THD)	
		1	1P-8188	1	CLIP	
	7	1	7S-3411	4	COVER	
	8	1	6J-0488	18	SCREW-HEAD (3/8-16X.875IN)	
	9	1	[illegible]-4474	1	COVER	
		1	8E-8[illegible]7		GASKET	
	10	1	8E-3248	1	[illegible]	
		1	8E-3250	1	GASKET	
	11	1	3T-3835	1	HANDHOLD	
	12	1	8E-8678	1	COVER AS	
		1	9F-2979	8	NUT-WELD (3/8-16 THD)	
		1	8E-8078	1	GASKET	
	13	1	7T-0131	1	FLOORPLATE AS	
		1	1F-0748	4	NUT-WELD (1/2-13 THD)	
	14	1	7Y-8087	1	PLUG-BUTTON	
	15	1	7T-0136	1	PLATE AS	
		1	9F-2978	6	NUT-WELD (3/8-16 THD)	
	16	1	7T-8086	1	COVER	
		1	7T-0779	1	GASKET	
	17	1	3T-3981	1	PLATE AS	
	18	1	6T-9364	4	BOLT (1/4-20X.625IN)	
M		1	6T-4205	4	WASHER-HARD (2MM THK)	
	19	1	6L-8484	1	FLOOR MAT	
	20	1	9E-8946	1	MODULE AS-OPERATOR	
	21	1	3T-3834	1	HANDHOLD	
	22	1	9P-8571	2	PLUG	
	23	2	6T-9364	4	BOLT (1/4-20X.625IN)	
M		2	6T-4205	4	WASHER-HARD (2MM THK)	
	24	2	5B-3062	17	BOLT (3/8-16X.750IN)	
	26	2	6P-1075	21	WASHER-HARD (3MM THK)	
	26	2	7T-0135	1	SEAL	
	27	2	7X-0378	2	BOLT (3/4-10X5IN)	
		2	7X-0682	2	WASHER-HARD (6MM THK)	
	28	2	3T-3482	2	PLATE	
	29	2	3T-8280	1	PLATE AS	
		2	7S-0038	8	SPACER	
	30	2	3T-8281	1	SEAL	
	31	2	7S-0017	1	GASKET	
	32	2	7S-0016	1	COVER AS	
		2	2R-2276	2	WASHER	
		2	6P-0028	2	SCREW-KNURLED	
	33	2	9W-3429	1	COVER	
	34	2	8E-0697	1	COVER	
	35	2	9D-3031	8	SCREW-SOCKET HEAD	
	36	2	9W-3142	8	MOUNTING	
	37	2	9W-9027	2	PLATE	
	38	2	7X-0390	2	BOLT (7/8-9X5IN)	
		2	7X-0672	2	WASHER-HARD	
	39	2	4L-8454	4	BOLT (3/8-16X1.0IN)	
	40	2	3T-4788	1	COVER	

12 FRAME AND BODY 1 of 4 SELP4570-01

FRAME AND BODY

8E-3299 PLATFORM GP-CAB (contd.)

100090751

NOTE	REF NO	GRAPHIC REF	PART NUMBER	QTY	PART NAME (1 2 3 4 5 6 PRODUCT LEVEL)	SEE PAGE
	41	2	8E-3515	1	COVER	
	42	2	7T-0134	1	PLATE	
	43	2	7T-0139	1	GASKET	
	44	2	7S-0724	1	GASKET	
	45	2	7S-0723	1	COVER	
	46	2	6V-1969	2	PLUG-BUTTON	

M-METRIC PART

SELP4570-01 2 of 4 FRAME AND BODY 13

FRAME AND BODY

8E-3299 PLATFORM GP-CAB (contd.)

100090751

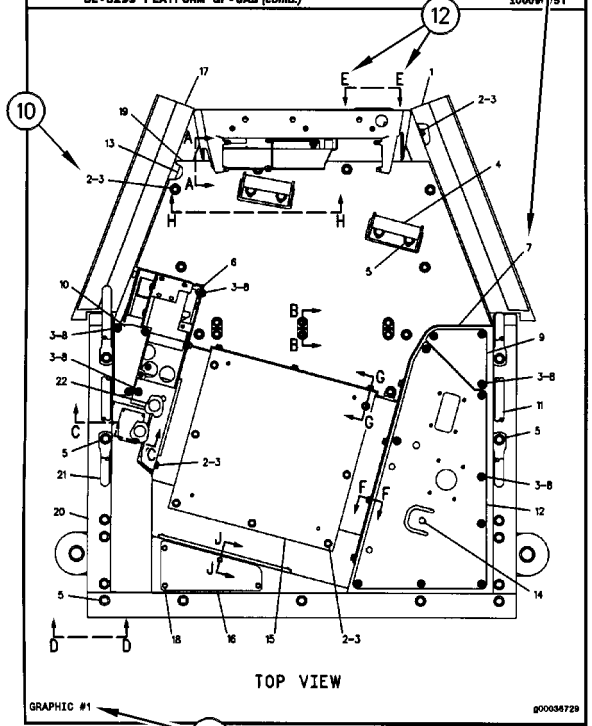

GRAPHIC #1 g00036729

14 FRAME AND BODY 3 of 4 SELP4570-01

FRAME AND BODY

8E-3299 PLATFORM GP-CAB (contd.)

100090751

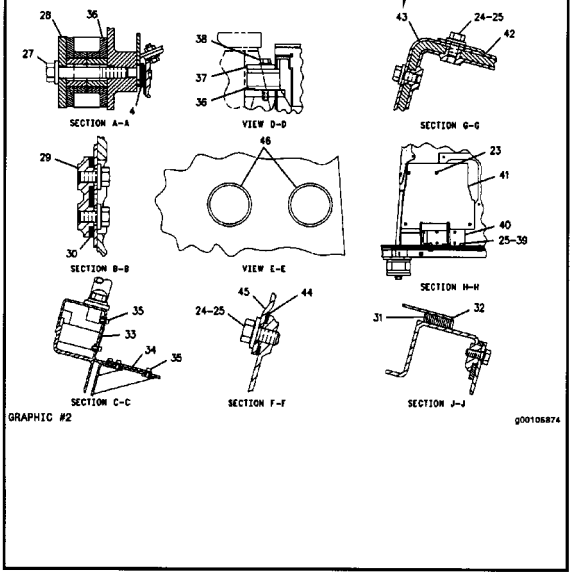

GRAPHIC #2 g00105874

SELP4570-01 4 of 4 FRAME AND BODY 15

1. IDENTIFICATION DE LA MACHINE

Toutes les machines Caterpillar portent un numéro d'identification (PIN). Certains composants des machines peuvent porter des numéros de série (S/N). En général, parmi les composants qui portent des numéros de série il y a les moteurs, les transmissions, les bulldozers et les rippers. En plus, la machine et le moteur peuvent recevoir des numéros de version, et dans certains cas, de modification. Ces numéros figurent sur les plaques de numéro de série et sur la plaque signalétique principale qui se trouve dans le poste de conduite.

Les concessionnaires Caterpillar doivent connaître tous ces numéros pour identifier correctement les pièces.

SIS ***Nouvelle Caractéristique***

À partir du premier trimestre 2001, le numéro d'identification produit (PIN) Caterpillar passe de 8 à 17 caractères. Afin de permettre une identification uniforme des matériels, Caterpillar et d'autres constructeurs de machines de travaux publics s'efforcent de se conformer à la norme la plus récente portant sur les numéros d'identification des produits. Les numéros d'identification (PIN) de machines de chantier sont définis par la norme ISO 10261. Le nouveau format du numéro d'identification est valable pour toutes les machines et tous les groupes électrogènes Caterpillar. Le numéro d'identification produit (PIN) figurant sur la plaque et sur le châssis se composera de 17 caractères. Le nouveau format ressemblera à ceci:

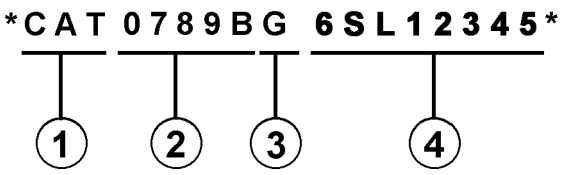

Il se décomposera de la façon suivante:

1. Code international de fabrication de Caterpillar (caractères 1 à 3)

2. Descriptif de la machine (caractères 4 à 8)

3. Contrôle (caractère 9)

4. Indicateur machine (MIS) ou numéro de séquence produit (caractères 10 à 17). Ceux-ci étaient auparavant désignés sous le terme de numéro de série.

Les machines et les groupes électrogènes construits avant le premier trimestre 2001 garderont le format à 8 caractères du numéro d'identification produit (PIN).

Les organes tels que les moteurs, les boîtes de vitesses, les essieux, etc., continueront d'être désignés par un numéro de série (S/N) à 8 caractères.

2. COMMANDE DE PIÈCES

⚠ DANGER

Lorsqu'il faut remplacer des pièces de rechange pour ce produit Caterpillar recommande d'utiliser les pièces de rechange Caterpillar ou les pièces qui ont des spécifications équivalentes dont les dimensions physiques, le type, la force et le matériau. Ces équivalences ne se limitent pas à l'énoncé précédent.

L'inobservation de cette mise en garde peut entraîner des défaillances prématurées, des dommages au produit, des blessures ou même la mort.

Les concessionnaires Caterpillar fournissent dans le monde entier des pièces de rechange de qualité Caterpillar. Leurs stocks de pièces sont constamment réapprovisionnés et comptent toutes les pièces nécessaires pour assurer la bonne marche de vos machines Caterpillar. Certains concessionnaires proposent également des kits de réparation ou des pièces rénovées, ce qui permet de choisir la solution la plus économique dans une situation donnée. Lors des commandes de pièces, mentionner la quantité, le numéro et la désignation des pièces ainsi que le numéro de série ou le numéro d'identification (PIN) de la machine pour laquelle ces pièces sont requises.

3. ORGANISATION DU CATALOGUE DE PIÈCES

Les renseignements sur les produits sont présentés sous forme de "Information element" (élément d'information) représentant tous les composants d'un modèle donné. "Engine Arrangement" (version de moteur) et "Seat Group" (assemblage de siège)" sont des exemples d'éléments d'information. Les éléments d'information sont classés par ordre alphabétique par la désignation standard des pièces et par numéros de pièces dans chaque partie importante du manuel.

4. TABLE DES MATIÈRES

Nouvelle Caractéristique

La table des matières se trouve au début du manuel. La table des matières fournit la liste de tous les chapitres du manuel avec une liste complète de tous les éléments d'information classés par ordre d'apparition dans le manuel. Les numéros de page sont fournis afin que l'utilisateur puisse trouver rapidement les illustrations détaillées concernant l'identification des pièces et les listes des pièces d'entretien.

5. INDEX DES PIÈCES D'ENTRETIEN

La rubrique "Index des pièces d'entretien" qui se trouve au début du manuel renvoie aux pièces d'entretien les plus fréquemment utilisées en précisant la désignation, la quantité, là où la pièce est utilisée et le numéro de page. Ces pièces sont classés par ordre alphabétique.

6. INDEX

L'index qui se trouve vers le début du manuel est une liste alphabétique de tous les éléments d'information du manuel. Les numéros de page sont fournis afin que l'utilisateur puisse trouver rapidement les illustrations détaillées concernant l'identification des pièces et les listes des pièces d'entretien.

7. INDEX DES NUMÉROS DE PIÈCES

Une liste numérique de tous les numéros de pièces et des pages correspondantes se trouve à la fin du manuel.

8. LÉGENDES

Les légendes qui se trouvent en haut de chaque page de chaque élément d'information fournissent le numéro de pièce, la désignation ainsi que des renseignements supplémentaires sur les pièces. Les renseignements concernant les numéros de série (S/N) qui se trouvent dans chaque légende doivent être utilisés pour sélectionner les informations correctes pour un moteur donné. Les informations concernant les options de remplacement sur le chantier, l'identification des composants des équipements offerts en option et les lieux d'application sont aussi fournies.

Nouvelle Caractéristique

Les lettres de la première ligne d'une légende sont présentées en police plus grande afin d'indiquer le début d'une unité d'information. Les légendes qui pourraient être requises pour des pages supplémentaires afin d'illustrer une unité d'information seront présentées en police standard et comprendront le terme (à suivre).

9. PIÈCES NON FOURNIES

Nouvelle Caractéristique

Dans certains cas, il est nécessaire d'indiquer les pièces non fournies qui sont en aval de la liste des pièces d'entretien. Les numéros des pièces non fournies dans la liste des pièces et les légendes seront en italique pour signaler qu'ils ne sont pas disponibles.

10. NUMÉROS DE RÉFÉRENCE DE LA LISTE DES PIÈCES

Nouvelle Caractéristique

Les numéros indiqués dans la colonne des numéros de références correspondent aux numéros utilisés dans les illustrations auxquelles ils sont associés. Un suffixe alphabétique peut être ajouté à un numéro de référence pour identifier la liste des articles en aval. Les numéros indiqués dans la colonne de référence de l'illustration renvoient à l'identification du numéro affiché dans le coin inférieur gauche de chaque illustration. Le numéro de référence de l'illustration pourrait être utilisé avec le numéro de référence de l'article pour déterminer le numéro de pièce correct. Il peut y avoir une omission intentionnelle d'un numéro de référence dans une liste de pièces suite à la mise à jour des informations en vue de refléter les numéros de pièces les plus récentes.

11. DÉSIGNATIONS DE PIÈCES EN RETRAIT

Lorsqu'une désignation de pièce est en retrait, cela veut dire que l'article en regard fait partie de l'ensemble sous lequel il figure.

12. LETTRES DE RÉFÉRENCE DES ILLUSTRATIONS

Quand cela est nécessaire, les illustrations comportent des lettres de référence (A, B, C, etc.) pour montrer le trajet des canalisations et faisceaux de câbles d'un point à l'autre. Elles sont utilisées également pour indiquer où relier les illustrations séparées auparavant.

13. ABRÉVIATIONS ET SYMBOLES

O.D. – Diamètre extérieur
I.D. – Diamètre intérieur
A – Ne fait pas partie de ce groupe
B – Utiliser selon besoin
C – Modification
D – Commander par mètre
E – Commander par centimètre
F – Non représenté
G – Commander par pouce
I – Voir "Hose Fabrication Guide"
M – Pièce métrique
R – Pièce rénovée éventuellement disponible
Y – Illustration séparée
Z – Non fourni séparément

NOTA:

En raison du progrès technique et des améliorations continuelles apportées au matériel, votre machine comporte peut-être des modifications qui n'apparaissent pas dans la présente publication. En cas de doute sur un détail de votre machine Caterpillar ou sur le texte de la présente publication, adressez-vous à votre concessionnaire Caterpillar.

FRAME AND BODY

8E-3299 PLATFORM GP-CAB

PIN 3SK1-09999

SMCS-7253 100090751

NOTE	REF NO	GRAPHIC REF	PART NUMBER	QTY	PART NAME (1 2 3 4 5 6 PRODUCT LEVEL)	SEE PAGE
	1	1	3T-3963	1	PLATE AS	
	2	1	5B-2992	25	BOLT (3/8-16X.750IN)	
	3	1	6P-1075	41	WASHER-HARD (3MM THK)	
	4	1	9P-1444	2	SUPPORT AS-FOOT	
	5	1	9P-2229	19	BOLT (1/2-13X1IN)	
		1	5C-[illegible]4	19	WASHER-HARD (4MM THK)	
	6	1	8E-8136	1	COVER AS-LH	
		1	9F-2979	6	NUT-WELD (3/8-16 THD)	
		1	1P-8188	1	CLIP	
	7	1	7S-3411	4	COVER	
	8	1	6J-0488	18	SCREW-HEAD (3/8-16X.875IN)	
	9	1	[illegible]-4474	1	COVER	
		1	8E-8[illegible]7		GASKET	
	10	1	8E-3248	1	[illegible]	
		1	8E-3250	1	GASKET	
	11	1	3T-3835	1	HANDHOLD	
	12	1	8E-8878	1	COVER AS	
		1	9F-2979	8	NUT-WELD (3/8-16 THD)	
		1	8E-8078	1	GASKET	
	13	1	7T-0131	1	FLOORPLATE AS	
		1	1F-0748	4	NUT-WELD (1/2-13 THD)	
	14	1	7Y-8087	1	PLUG-BUTTON	
	15	1	7T-0136	1	PLATE AS	
		1	9F-2978	6	NUT-WELD (3/8-16 THD)	
	16	1	7T-8086	1	COVER	
		1	7T-0779	1	GASKET	
	17	1	3T-3981	1	PLATE AS	
	18	1	6T-9364	4	BOLT (1/4-20X.625IN)	
M		1	6T-4205	4	WASHER-HARD (2MM THK)	
	19	1	6L-8484	1	FLOOR MAT	
	20	1	9E-8946	1	MODULE AS-OPERATOR	
	21	1	3T-3834	1	HANDHOLD	
	22	1	9P-8571	2	PLUG	
	23	2	6T-9364	4	BOLT (1/4-20X.625IN)	
M		2	6T-4205	4	WASHER-HARD (2MM THK)	
	24	2	5B-3062	17	BOLT (3/8-16X.750IN)	
	26	2	6F-1075	21	WASHER-HARD (3MM THK)	
	26	2	7T-0135	1	SEAL	
	27	2	7X-0378	2	BOLT (3/4-10X5IN)	
		2	7X-0682	2	WASHER-HARD (6MM THK)	
	28	2	3T-3482	2	PLATE	
	29	2	3T-8280	1	PLATE AS	
		2	7S-0038	8	SPACER	
	30	2	3T-8281	1	SEAL	
	31	2	7S-0017	1	GASKET	
	32	2	7S-0016	1	COVER AS	
		2	2R-2276	2	WASHER	
		2	6P-0028	2	SCREW-KNURLED	
	33	2	9W-3429	1	COVER	
	34	2	8E-0697	1	COVER	
	35	2	9D-3031	8	SCREW-SOCKET HEAD	
	36	2	9W-3142	8	MOUNTING	
	37	2	9W-9027	2	PLATE	
	38	2	7X-0390	2	BOLT (7/8-9X5IN)	
		2	7X-0672	2	WASHER-HARD	
	39	2	4L-8454	4	BOLT (3/8-16X1.0IN)	
	40	2	3T-4788	1	COVER	

12 FRAME AND BODY 1 of 4 SELP4570-01

FRAME AND BODY

8E-3299 PLATFORM GP-CAB (contd.)

100090751

NOTE	REF NO	GRAPHIC REF	PART NUMBER	QTY	PART NAME (1 2 3 4 5 6 PRODUCT LEVEL)	SEE PAGE
	41	2	8E-3515	1	COVER	
	42	2	7T-0134	1	PLATE	
	43	2	7T-0139	1	GASKET	
	44	2	7S-0724	1	GASKET	
	45	2	7S-0723	1	COVER	
	46	2	6Y-1969	2	PLUG-BUTTON	

M-METRIC PART

SELP4570-01 2 of 4 FRAME AND BODY 13

FRAME AND BODY

8E-3299 PLATFORM GP-CAB (contd.)

100090751

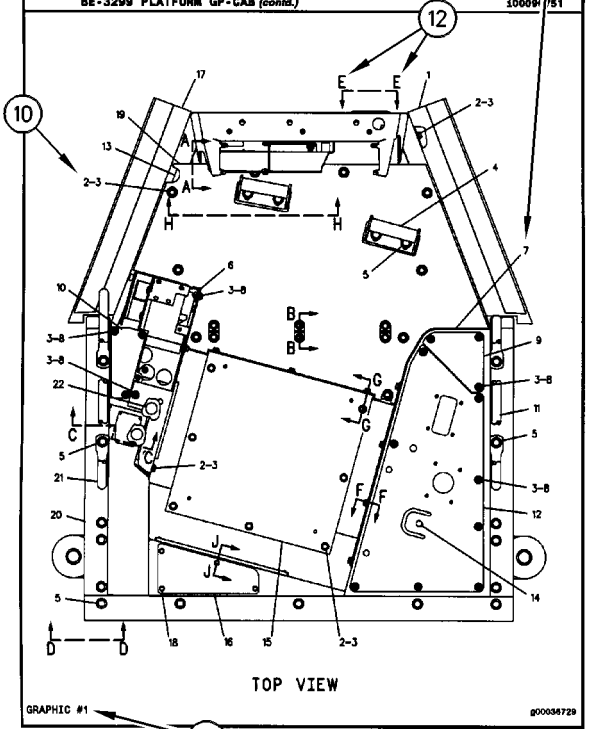

GRAPHIC #1 g00036729

14 FRAME AND BODY 3 of 4 SELP4570-01

FRAME AND BODY

8E-3299 PLATFORM GP-CAB (contd.)

100090751

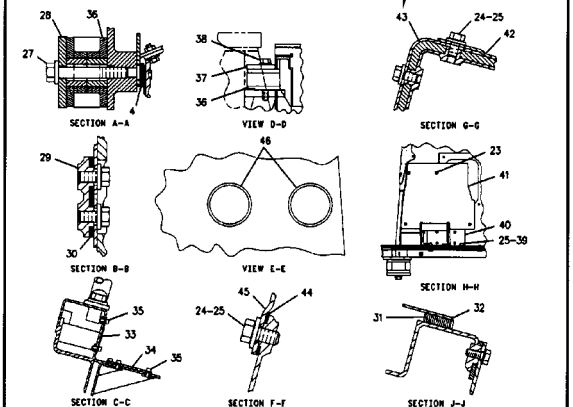

GRAPHIC #2 g00105874

SELP4570-01 4 of 4 FRAME AND BODY 15

1. MÁQUINAS

Las máquinas Caterpillar se identifican con Números de Identificación del Producto (PIN). Algunos componentes incluídos en la máquina pueden estar identificados con Números de Serie (N/S). Los componentes que tienen típicamente esta identificación incluyen motores, transmisiones, hojas topadoras y desgarradores. La máquina y el motor se identifican además con Números de Configuración y en algunos casos, Números de Modificación. Estos números están en las placas de identificación del producto o en la placa principal en la cabina del operador.

Los distribuidores Caterpillar necesitan estos números para identificar con exactitud los números de piezas de repuesto.

SIS *Nueva Característica*

A partir del primer trimestre del 2001, el Número de Identificación de Producto (PIN) de Caterpillar cambió de 8 a 17 caracteres. Para hacer más uniforme el método de identificación de equipos, Caterpillar y otros fabricantes de equipo de construcción han tomado medidas para cumplir con la versión más reciente de la norma de numeración de identificación de productos. Los Números de Identificación de Producto para máquinas que no se operan en carreteras son definidos por la norma ISO 10261. El nuevo formato PIN corresponderá a todas las máquinas y grupos electrógenos Caterpillar. Las placas y los caracteres PIN estampados en el bastidor mostrarán el PIN de 17 caracteres. El nuevo formato tendrá la apariencia siguiente:

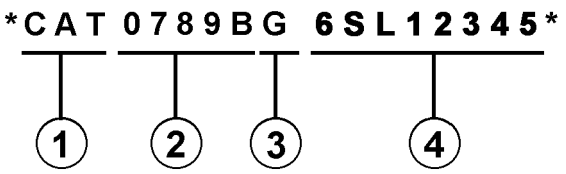

Significado de los caracteres:

1. Código de Fabricación Mundial de Caterpillar (caracteres 1-3)

2. Sección Descriptor de la Máquina (caracteres 4-8)

3. Carácter de Verificación (carácter 9)

4. Sección Indicador de la Máquina (MIS) o Número de Secuencia de Producto (caracteres 10-17). Anteriormente, estos caracteres constituían el Número de Serie.

Las máquinas y grupos electrógenos producidos antes del primer semestre del 2001 mantendrán su formato PIN de 8 caracteres.

Los componentes como motores, transmisiones, ejes, herramientas de trabajo, etc., continuarán usando un Número de Serie (S/N) de 8 caracteres.

2. COMO PEDIR REPUESTOS

⚠ ADVERTENCIA

Cuando se necesiten piezas de repuesto para este producto, Caterpillar recomienda usar piezas de repuesto Caterpillar o piezas que tengan especificaciones equivalentes incluyendo, pero sin estar limitadas a, dimensiones físicas, tipo, fortaleza y material.

El no hacer caso de esta advertencia puede llevar a fallas prematuras, daños al producto y lesiones graves o mortales.

Las piezas de repuesto Caterpillar de calidad están a la disposición de los distribuidores Caterpillar en todo el mundo. Sus existencias actualizadas incluyen todas las piezas normalmente requeridas para proteger su inversión en máquinas Caterpillar. Los distribuidores pueden tener juegos de reparación o piezas remanufacturadas para permitir la selección de la mejor alternativa de reparación en un caso en particular. Al pedir piezas de repuesto, especifique en su pedido la cantidad, el número de pieza, el nombre de la pieza y el número de serie/número de identificación del producto, de la máquina para la cual se necesitan estas piezas.

3. ORGANIZACION DEL MANUAL DE PIEZAS

La información sobre el producto, se presenta en este manual, como "elementos de información" que representan todos los componentes de un modelo específico. Las configuraciones de motores y los grupos de asientos son ejemplos de elementos de información. Los elementos de información están organizados primeramente por nombres de piezas en orden alfabético y en segundo lugar, por el número de pieza dentro de cada sección principal del manual.

4. CONTENIDO

La página de Contenido se encuentra al principio del manual. El Contenido indica cada sección del manual con una lista completa de todos los elementos de información organizados en el orden que aparecen en el manual. Los números de página proporcionan una referencia rápida a las ilustraciones detalladas de identificación de piezas y a las listas de componentes de repuesto de dichas piezas.

5. ÍNDICE DE PIEZAS DE MANTENIMIENTO

Al principio de este catálogo se encuentra un índice de los números de piezas utilizadas más frecuentemente para el mantenimiento, que incluye descripción, cantidad necesaria, lugar de utilización y número de página. Esta información está organizada alfabéticamente, por descripción de la pieza.

6. ÍNDICE

El Índice, ubicado cerca del principio del manual, es una lista en orden alfabético de todos los elementos de información incluídos en el manual. Los números de página proporcionan una referencia rápida a las ilustraciones detalladas de identificación de piezas y a las listas de componentes de repuesto de dichas piezas.

7. INDICE NUMÉRICO DE PIEZAS

Un índice numérico de piezas con el correspondiente número de página aparece al final de este catálogo.

8. TÍTULOS

Los títulos ubicados al principio de cada elemento de información identifican el número y el nombre de la pieza junto con información descriptiva. Se debe usar información sobre los Números de Identificación de Pieza (PIN) y los números de serie (S/N) para seleccionar la información que corresponda a una máquina en particular. También se suministra información sobre las opciones de reparación en el campo, la identificación de componentes de accesorios optativos y el lugar de ubicación de la pieza ("es parte de").

La primera línea del título se muestra con un tipo de letra más grande para indicar el comienzo de un elemento de información. Si se requieren páginas adicionales para ilustrar un elemento de información, los títulos se muestran con un tipo de letra normal y la continuación se indica entre paréntesis.

9. PIEZAS QUE NO SE SUMINISTRAN COMO REPUESTO

En algunos casos es necesario indicar piezas que no se suministran como repuesto pero que pueden estar conectadas a listas de componentes de otras piezas de repuesto. En tal caso, dichas piezas se muestran en cursiva para indicar que no son piezas disponibles.

10. NÚMEROS DE REFERENCIA

Los números en la columna de No. de Referencia corresponden a los números indicados en la ilustración que pertenece a ese número de pieza. Los números que tienen un sufijo alfabético identifican artículos de las listas de componentes de piezas. Los números en la columna de Referencia de la ilustración se identifican en la esquina inferior izquierda de cada ilustración. Para determinar el número de pieza correcto se puede utilizar tanto el No. de Referencia de la ilustración como el No. de Referencia del artículo. A medida que se actualiza la información para indicar los más recientes números de piezas de repuesto, puede omitirse intencionalmente un No. de Referencia en una lista de componentes de piezas.

11. NOMBRES DE PIEZA SANGRADOS

Cuando el nombre de una pieza está sangrado en una lista, significa que esta pieza forma parte del grupo o conjunto del renglón inmediatamente superior.

12. LETRAS DE REFERENCIA DE ILUSTRACIONES

Las ilustraciones contienen algunas veces letras de referencia (A, B, C etc.) cuyo propósito es seguir el trayecto de líneas y mazos de cables de un punto a otro. También se utilizan para mostrar dónde volver a unir ilustraciones que se habían separado.

13. ABREVIATURAS Y SIMBOLOS

O.D. – Diámetro exterior
I.D. – Diámetro interior
A – No es pieza de este grupo
B – Utilizado según la demanda
C – Indica cambio
D – Se pide por metro
E – Se pide por centímetro
F – No se muestra
G – Se pide por pulgada
I – Ver "Hose Fabrication Guide"
M – Pieza métrica
R – Puede estar disponible como pieza remanufacturada
Y – Ilustración separada
Z – No se suministra por separado

SIS *Nueva Característica*

14.<END>

Este símbolo indica el final de un elemento de información.

NOTA:

Las contínuas mejoras y adelantos en diseño podrían originar cambios a su máquina que no se incluyen en esta publicación. Cuando tenga alguna pregunta acerca de su producto Caterpillar o de esta publicación, consulte al distribuidor Caterpillar para obtener la información más reciente.

FRAME AND BODY

8E-3299 PLATFORM GP-CAB

PIN 3SK1-09999

SMCS-7253 100090751

NOTE	REF NO	GRAPHIC REF	PART NUMBER	QTY	PART NAME (1 2 3 4 5 6 PRODUCT LEVEL)	SEE PAGE
	1	1	3T-3953	1	PLATE AS	
	2	1	5B-2992	25	BOLT (3/8-16X.750IN)	
	3	1	6P-1075	41	WASHER-HARD (3MM THK)	
	4	1	9P-1444	2	SUPPORT AS-FOOT	
	5	1	9P-2229	19	BOLT (1/2-13X1IN)	
		1	6P-[illegible]4	19	WASHER-HARD (4MM THK)	
	6	1	9E-9136	1	COVER AS-LH	
		1	9F-2979	6	NUT-WELD (3/8-16 THD)	
		1	1P-0188	1	CLIP	
	7	1	7S-3411	4	COVER	
	8	1	6J-0488	18	SCREW-HEAD (3/8-16X.875IN)	
	9	1	[illegible]-4474	1	COVER	
		1	9E-9[illegible]7	[illegible]	GASKET	
	10	1	9E-3249	1	[illegible]	
		1	9E-3250	1	GASKET	
	11	1	3T-3935	1	HANDHOLD	
	12	1	9E-9078	1	COVER AS	
		1	9F-2979	8	NUT-WELD (3/8-16 THD)	
		1	9E-9079	1	GASKET	
	13	1	7T-0131	1	FLOORPLATE AS	
		1	1F-0748	4	NUT-WELD (1/2-13 THD)	
	14	1	7Y-9087	1	PLUG-BUTTON	
	15	1	7T-0136	1	PLATE AS	
		1	9F-2979	6	NUT-WELD (3/8-16 THD)	
	16	1	7T-9096	1	COVER	
		1	7T-9779	1	GASKET	
	17	1	3T-3981	1	PLATE AS	
	18	1	6T-9364	4	BOLT (1/4-20X.625IN)	
M		1	6T-4205	4	WASHER-HARD (2MM THK)	
	19	1	6L-9484	1	FLOOR MAT	
	20	1	9E-9946	1	MODULE AS-OPERATOR	
	21	1	3T-3934	1	HANDHOLD	
	22	1	9P-8571	2	PLUG	
	23	2	6T-9364	4	BOLT (1/4-20X.625IN)	
M		2	6T-4205	4	WASHER-HARD (2MM THK)	
	24	2	5B-3062	17	BOLT (3/8-16X.750IN)	
	26	2	6F-1075	21	WASHER-HARD (3MM THK)	
	26	2	7T-9126	1	SEAL	
	27	2	7X-9378	2	BOLT (3/4-10X5IN)	
		2	7X-0682	2	WASHER-HARD (6MM THK)	
	28	2	3T-3482	2	PLATE	
	29	2	3T-5290	1	PLATE AS	
		2	7S-0028	6	SPACER	
	30	2	3T-5281	1	SEAL	
	31	2	7S-9017	1	GASKET	
	32	2	7S-9016	1	COVER AS	
		2	2R-2276	2	WASHER	
		2	6P-9028	2	SCREW-KNURLED	
	33	2	9W-3429	1	COVER	
	34	2	9E-9697	1	COVER	
	35	2	9D-3031	8	SCREW-SOCKET HEAD	
	36	2	9W-3142	8	MOUNTING	
	37	2	9W-9027	2	PLATE	
	38	2	7X-0390	2	BOLT (7/8-9X5IN)	
		2	7X-0672	2	WASHER-HARD	
	39	2	4L-9454	4	BOLT (3/8-16X1.0IN)	
	40	2	3T-4788	1	COVER	

FRAME AND BODY

8E-3299 PLATFORM GP-CAB (contd.)

100090751

NOTE	REF NO	GRAPHIC REF	PART NUMBER	QTY	PART NAME (1 2 3 4 5 6 PRODUCT LEVEL)	SEE PAGE
	41	2	8E-3515	1	COVER	
	42	2	7T-0134	1	PLATE	
	43	2	7T-0139	1	GASKET	
	44	2	7S-9724	1	GASKET	
	45	2	7S-9723	1	COVER	
	46	2	6Y-1969	2	PLUG-BUTTON	

M-METRIC PART

FRAME AND BODY

8E-3299 PLATFORM GP-CAB (contd.)

100090751

TOP VIEW

GRAPHIC #1 g00036729

FRAME AND BODY

8E-3299 PLATFORM GP-CAB (contd.)

100090751

SECTION A-A VIEW D-D SECTION G-G

SECTION B-B VIEW E-E SECTION H-H

SECTION C-C SECTION F-F SECTION J-J

GRAPHIC #2 g00105874

INFORMAÇÃO GERAL

1. IDENTIFICAÇÃO DA MÁQUINA

As máquinas Caterpillar são identificadas pelos Números de Informação do Produto (PIN). Alguns componentes incluídos numa máquina podem ser identificados por Números de Série (S/N). Componentes típicos que serão enumerados com números de série incluem motores, transmissões, lâminas e ríperes. Além do número de série, a máquina e o motor são ainda identificados por números de arranjo e, em alguns casos, números de modificações. Tais números encontram-se na(s) placa(s) de identificação do produto e na placa mestre no compartimento do operador.

SIS ***Novidades***

A partir do primeiro trimestre de 2001 o Número de Identificação de Produto da Caterpillar (PIN) precisa ser mudado de 8 para 17 caracteres. Esforçando-se para fornecer uma identificação uniforme de equipamentos, a Caterpillar e outros fabricantes de equipamento de construção estão mudando para atender a versão mais atualizada do padrão de identificação de produtos. Os números de PIN para produtos de aplicações não rodoviárias são definidos pela ISO 10261. O novo formato de número PIN será adotado em todas as máquinas e grupos geradores Caterpillar. As placas e as marcações do chassi mostrarão os 17 dígitos de PIN. O novo formato terá a seguinte disposição:

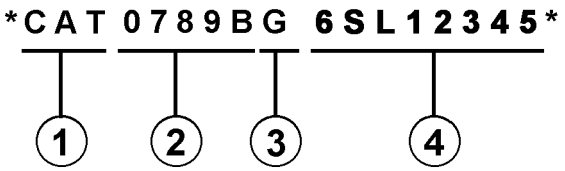

Onde:

1. Código de Fabricação Mundial da Caterpillar (dígitos 1-3)

2. Descrição da Máquina (dígitos 4-8)

3. Dígito de Verificação (dígito 9)

4. Seção de Indicador da Máquina (MIS) ou Número de Seqüência de Produto (dígitos 10-17). Estes eram anteriormente chamados de Número de Série.

Máquinas e grupos geradores produzidos antes do primeiro trimestre de 2001 manterão o formato de 8 caracteres de PIN.

Componentes como motores, transmissões, eixos, ferramentas de trabalho, etc. continuarão a usar Número de Série (S/N) com oito caracteres.

2. COMO OBTER PEÇAS

⚠ CUIDADO

Quando peças de substituição são exigidas para este produto, a Caterpillar recomenda a utilização de peças de substituição Caterpillar ou peças com as especificações equivalentes incluindo, mas não limitadas, à dimensões físicas, tipos, resistência e materiais.

A inobservância desta advertência poderá resultar em falhas prematuras, danos ao produto, ferimentos ou morte.

As Peças de Reposição de Qualidade Caterpillar encontram-se disponíveis nos revendedores Caterpillar no mundo inteiro. Seus estoques de peças são atualizados e incluem todas as peças normalmente necessárias para proteger seu investimento em máquinas Caterpillar. Alguns revendedores podem oferecer jogos de reparo ou peças de troca/remanufaturadas disponíveis como uma opção da alternativa de reparo mais eficaz para uma situação específica. Ao encomendar peças, seu pedido deve especificar a quantidade, o número e o nome da peça e o número de série/número de identificação do produto referentes à máquina para a qual as peças se destinam.

3. ORGANIZAÇÃO DO MANUAL DE PEÇAS

A informação do produto neste manual é apresentada em forma de "elementos de informação" que representam todos os componentes para o modelo específico. Arranjo de Motor e Grupo de Assento são exemplos de elementos de informação. Os elementos de informação são organizados em ordem alfabética por nome de peça ou secundariamente, por número de peça incluído em cada seção principal do manual.

4. LISTA DE CONTEÚDOS

A Lista de Conteúdos (TOC) se encontra no princípio do manual. A Lista de Conteúdos (TOC) relaciona em cada seção do manual uma lista completa com todos os elementos de informação organizados conforme aparecem no manual. Números de página são fornecidos para que se tenha referência rápida de ilustrações de peças detalhadas e listas de conteúdos que podem receber serviço de manutenção.

5. ÍNDICE DE PEÇAS DE MANUTENÇÃO

O Índice de Peças de Manutenção, localizado perto do princípio do manual, faz referência aos números de peça de manutenção usados com maior frequência, fornecendo uma descrição, a quantidade, o uso e o número de página. Esta informação é organizada com a descrição da peça em ordem alfabética.

6. ÍNDICE

O Índice localizado perto do princípio do manual, consiste de uma lista em ordem alfabética de todos os elementos de informação incluídos no manual. Números de página são fornecidos para que se tenha referência rápida de ilustrações de peças detalhadas e listas de conteúdos que podem receber serviço de manutenção.

7. ÍNDICE DE NÚMERO DE PEÇA

Um índice numérico relacionando todos os números de peça e a(s) página(s) correspondentes, aparece no final do manual.

8. LEGENDAS

As legendas localizadas no início de cada elemento de informação identificam o número e o nome de peça, juntamente com informação descritiva adicional. Informações sobre o Número de Informação do Produto (PIN) e o Número de Série (S/N) encontradas em cada legenda devem ser usadas para selecionar a informação correta sobre uma máquina específica. Opções de substituição no campo, identificação de componentes de acessórios opcionais e informações sobre onde são utilizados ("parte de") são também fornecidas.

A primeira linha de uma legenda é indicada em tipo maior para indicar o princípio de um elemento de informação. Legendas para páginas adicionais que podem ser necessárias para ilustrar um elemento de informação serão apresentadas em tipo padrão e incluirão o termo *(continua)* .

9. NÃO DISPONÍVEL SEPARADAMENTE

Em alguns casos, é necessário mostrar peças não disponíveis separadamente que têm uma ligação com listas de conteúdos de nível inferior que podem receber serviço de manutenção. Os números de peça destes componentes não disponíveis aparecerão em *itálico* , a fim de indicar que não estão disponíveis.

10. NÙMEROS DE REFERÊNCIA À LISTA DE PEÇAS

Os números indicados na coluna Ref No (No. de Referência) correspondem-se aos números usados no(s) gráfico(s) correspondente(s). Um sufixo com letras pode ser acrescentado a um número de referência para identificar itens de conteúdo de nível inferior. Os números indicados na coluna Graphic Ref (Referência de Gráfico) referem-se ao identificador de número de gráfico presente no canto esquerdo inferior de cada ilustração. O número de Referência de Gráfico pode ser usado em combinação com o item Ref No para determinar-se o número de peça correto. Poderá haver omissão intencional de um número de referência (Ref No) de uma lista de conteúdos uma vez que as informações são atualizadas para refletir os números de peça mais recentes que podem receber serviço de manutenção.

11. NOMES DE PEÇAS DESALINHADOS

Quando um nome de peça encontra-se desalinhado numa lista de peças, significa que tal item faz parte do (está incluído no) grupo ou conjunto sob o qual está relacionado.

12. LETRAS DE REFERÊNCIA NAS ILUSTRAÇÕES

Quando necessário, as ilustrações contêm letras de referência (A, B, C, etc.) que são utilizadas para seguir tubulações e cabos elétricos de um ponto a outro. Também foram utilizadas para indicar onde se pode reconectar as ilustrações que foram separadas.

13. ABREVIAÇÕES E SÍMBOLOS

O.D. – "Outside Diameter" (Diâmetro Externo)
I.D. – "Inside Diameter" (Diâmetro Interno)
A – Não faz parte deste grupo
B – Use conforme necessário
C – Indica modificação
D – Vendido por metro
E – Vendido por centímetro
F – Não ilustrado
G – Vendido por polegada
I – Consulte o seu revendedor quanto a mangueira
M – Peça métrica
R – Peça remanufaturada pode estar disponível; consulte o seu revendedor Cat
Y – Ilustração separada
Z – Não disponível separadamente

SIS *Novidades*

14. <END>

Este símbolo indica o final de um elemento de informação.

INFORMAÇÃO GERAL

NOTA:

Os contínuos aperfeiçoamentos e avanços no projeto do produto podem ocasionar modificações em sua máquina que talvez ainda não estejam incluídas nesta publicação. Sempre que surgirem dúvidas quanto a um produto Caterpillar ou quanto à presente publicação, consulte o seu revendedor Caterpillar para obter as informações mais recentes disponíveis.

FRAME AND BODY

8E-3299 PLATFORM GP-CAB

PIN 3SK1-09999

SMCS-7253 100090751

NOTE	REF NO	GRAPHIC REF	PART NUMBER	QTY	PART NAME (1 2 3 4 5 6 PRODUCT LEVEL)	SEE PAGE
	1	1	3T-3963	1	PLATE AS	
	2	1	5B-3992	25	BOLT (3/8-16X.750IN)	
	3	1	6P-1075	41	WASHER-HARD (3MM THK)	
	4	1	9P-1444	2	SUPPORT AS-FOOT	
	5	1	9P-2228	19	BOLT (1/2-13X1IN)	
		1	5C-[illegible]4	19	WASHER-HARD (4MM THK)	
	6	1	8E-8136	1	COVER AS-LH	
		1	9F-2978	6	NUT-WELD (3/8-16 THD)	
		1	1P-8188	1	CLIP	
	7	1	7S-3411	4	COVER	
	8	1	6J-0488	18	SCREW-HEAD (3/8-16X.875IN)	
	9	1	[illegible]-4474	1	COVER	
		1	8E-8[illegible]7		GASKET	
	10	1	8E-3248	1	[illegible]	
		1	8E-3250	1	GASKET	
	11	1	3T-3835	1	HANDHOLD	
	12	1	8E-8078	1	COVER AS	
		1	9F-2978	8	NUT-WELD (3/8-16 THD)	
		1	8E-8078	1	GASKET	
	13	1	7T-0131	1	FLOORPLATE AS	
		1	1F-0748	4	NUT-WELD (1/2-13 THD)	
	14	1	7Y-8087	1	PLUG-BUTTON	
	15	1	7T-0136	1	PLATE AS	
		1	9F-2978	6	NUT-WELD (3/8-16 THD)	
	16	1	7T-8086	1	COVER	
		1	7T-8779	1	GASKET	
	17	1	3T-3981	1	PLATE AS	
	18	1	6T-9364	4	BOLT (1/4-20X.625IN)	
M		1	6T-4205	4	WASHER-HARD (2MM THK)	
	19	1	6L-8484	1	FLOOR MAT	
	20	1	9E-8946	1	MODULE AS-OPERATOR	
	21	1	3T-3834	1	HANDHOLD	
	22	1	9P-8571	2	PLUG	
	23	2	6T-9364	4	BOLT (1/4-20X.625IN)	
M		2	6T-4205	4	WASHER-HARD (2MM THK)	
	24	2	5B-3982	17	BOLT (3/8-16X.750IN)	
	26	2	6F-1075	21	WASHER-HARD (3MM THK)	
	26	2	7T-0135	1	SEAL	
	27	2	7X-0378	2	BOLT (3/4-10X5IN)	
		2	7X-0682	2	WASHER-HARD (5MM THK)	
	28	2	3T-3482	2	PLATE	
	29	2	3T-8280	1	PLATE AS	
		2	7S-8038	8	SPACER	
	30	2	3T-8281	1	SEAL	
	31	2	7S-8017	1	GASKET	
	32	2	7S-8016	1	COVER AS	
		2	2R-2276	2	WASHER	
		2	6P-8028	2	SCREW-KNURLED	
	33	2	9W-3429	1	COVER	
	34	2	8E-8007	1	COVER	
	35	2	9D-3031	8	SCREW-SOCKET HEAD	
	36	2	9W-3142	8	MOUNTING	
	37	2	9W-9027	2	PLATE	
	38	2	7X-0390	2	BOLT (7/8-9X5IN)	
		2	7X-0672	2	WASHER-HARD	
	39	2	4L-8454	4	BOLT (3/8-16X1.0IN)	
	40	2	3T-4788	1	COVER	

12 FRAME AND BODY 1 of 4 SELP4570-01

FRAME AND BODY

8E-3299 PLATFORM GP-CAB (contd.)

100090751

NOTE	REF NO	GRAPHIC REF	PART NUMBER	QTY	PART NAME (1 2 3 4 5 6 PRODUCT LEVEL)	SEE PAGE
	41	2	8E-3515	1	COVER	
	42	2	7T-0134	1	PLATE	
	43	2	7T-0139	1	GASKET	
	44	2	7S-8724	1	GASKET	
	45	2	7S-8723	1	COVER	
	46	2	6Y-1969	2	PLUG-BUTTON	

M-METRIC PART

SELP4570-01 2 of 4 FRAME AND BODY 13

FRAME AND BODY

8E-3299 PLATFORM GP-CAB (contd.)

100090751

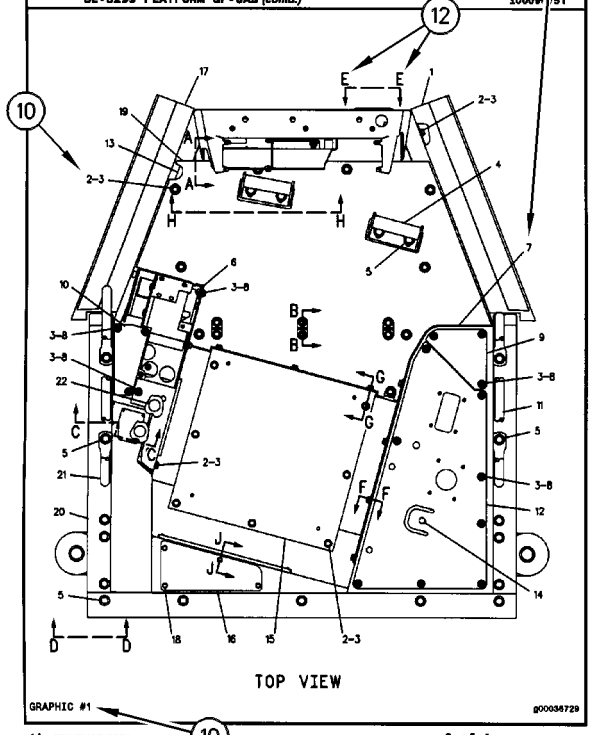

GRAPHIC #1 g00036729

14 FRAME AND BODY 3 of 4 SELP4570-01

FRAME AND BODY

8E-3299 PLATFORM GP-CAB (contd.)

100090751

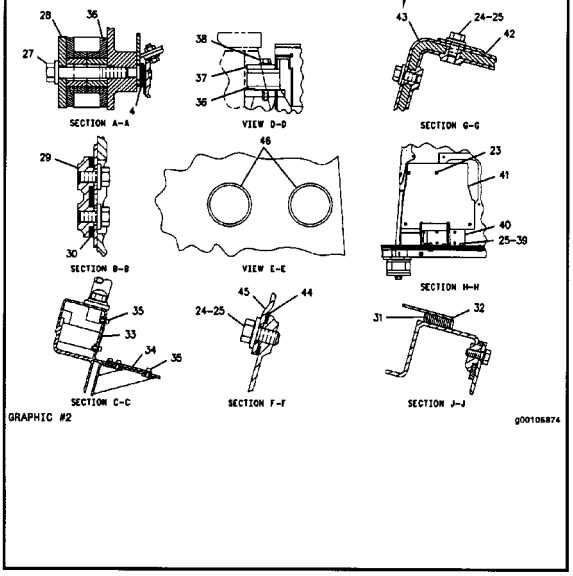

GRAPHIC #2 g00105874

SELP4570-01 4 of 4 FRAME AND BODY 15

ALLGEMEINE HINWEISE

1. MASCHINENKENNZEICHNUNG

Caterpillar-Maschinen sind mit PRODUCT IDENTIFICATION NUMBERS (PIN) (Produkt-Identnummern) gekennzeichnet. Einige Baugruppen, z.B. Motoren, Getriebe, Planierschilde und Aufreißer, sind mit SERIAL NUMBERS (S/N) (Seriennummern) gekennzeichnet. An der Maschine und am Motor befinden sich außerdem ARRANGEMENT NUMBERS (Ausrüstungsnummern) sowie in einigen Fällen MODIFICATION NUMBERS (Änderungsnummern). Sie befinden sich auf den PIN-Schildern und auf dem Typenschild im Fahrerhaus.

Bei Ersatzteilbestellungen müssen dem Händler alle diese Nummern zur Verfügung gestellt werden.

SIS ***Neu im Parts Manual***

Vom ersten Quartal 2001 ab wurde die Caterpillar Produkt-Identnummer (PIN) von 8 auf 17 Zeichen geändert. Um zur Standardisierung der Produkt-Identnummer beizutragen, sind Caterpillar und andere Baumaschinenhersteller bestrebt, die aktuellste Norm zur Produkt-Identnummerierung einzuführen. Produkt-Identnummern für Baumaschinen sind durch ISO 10261 definiert. Das neue Format der Produkt-Identnummern gilt für alle Caterpillar-Maschinen und -Stromaggregate. Die Produkt-Identschilder und -Identrahmenmarkierung enthalten die aus 17 Zeichen bestehende Identnummer. Das neue Format hat folgende Abschnitte:

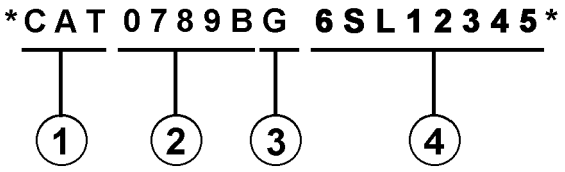

Abschnitte:

1. Caterpillars weltweiter Herstellungscode (Zeichen 1-3)

2. Modell (Zeichen 4-8)

3. Kontrollzeichen (Zeichen 9)

4. Maschinenspezifische Kennung (MIS) oder Produktsequenznummer (Zeichen 10-17). Diese wurde früher als Seriennummer bezeichnet.

Für vor dem ersten Quartal 2001 hergestellte Maschinen und Stromaggregate wird das aus 8 Zeichen bestehende PIN-Format beibehalten.

Bauteile wie z.B. Motoren, Getriebe, Achsen sowie Arbeitsgeräte werden weiterhin eine aus 8 Zeichen bestehende Seriennummer (S/N) aufweisen.

2. BESTELLEN VON ERSATZTEILEN

⚠ WARNUNG

Wenn für diese Maschine Ersatzteile benötigt werden, empfiehlt Caterpillar, ausschließlich Caterpillar-Ersatzteile oder solche zu verwenden, die die gleichen technischen Merkmale hinsichtlich Typ, Festigkeit, Werkzeugeigenschaften und die gleichen Maße aufweisen.

Bei Nichtbeachtung dieser Warnung besteht Verletzungs- oder sogar Lebensgefahr! Ferner kann Nichtbeachtung vorzeitige Ausfälle der Teile und Beschädigung der Maschine zur Folge haben.

Original Caterpillar-Ersatzteile können weltweit bei jedem Caterpillar-Händlern bestellt werden. Die umfangreichen Händlerlager enthalten normalerweise alle Teile, die Sie für Ihre Caterpillar-Maschine benötigen. Einige Händler bieten Reparatursätze, Austausch- oder werküberholte Teile an, so daß Sie eine Auswahl unter verschiedenen Reparaturmöglichkeiten treffen können. Ihre Bestellung muß folgende Angaben enthalten: Anzahl der benötigten Teile, Bestellnummer, Bezeichnung des Teils, Serien-Nr./Produkt-Ident-Nr., Ausrüstungs-Nr. und Änderungs-Nr. der Maschine, für die diese Teile benötigt werden.

3. AUFBAU DES PARTS MANUAL

Die Produktinformationen für alle Komponenten eines bestimmten Modells sind in INFORMATION ELEMENTS (Informationseinheiten) gegliedert. ENGINE ARRANGEMENT (Motorausführung) und SEAT GROUP (Fahrersitz) sind Beispiele für solche Informationseinheiten. Sie sind innerhalb jeder Gruppe alphabetisch, entsprechend der Ersatzteilbezeichnung, und zusätzlich numerisch, entsprechend der Ersatzteilnummer, geordnet.

4. INHALTSVERZEICHNIS

Das Inhaltsverzeichnis befindet sich am Anfang des Buches. Im Inhaltsverzeichnis werden die einzelnen Abschnitte des Buches aufgeführt. Die Abschnitte enthalten eine vollständige Aufstellung aller Informationseinheiten. Diese sind entsprechend ihrem Erscheinen im Buch geordnet. Das Inhaltsverzeichnis enthält Seitenangaben für Schnellverweise auf detaillierte Abbildungen und Teillisten.

5. INDEX FÜR WARTUNGSTEILE

Der Index für Wartungsteile vorn im Buch enthält die Bestellnummern, Seitenangaben, Mengenangaben und Informationen über den Einsatzbereich für die am häufigsten benötigten Ersatzteile. Die Angaben sind alphabetisch entsprechend der Teilebezeichnung geordnet.

6. INDEX

Der Index vorn im Buch enthält eine alphabetische Liste aller Informationseinheiten. Er enthält Seitenangaben für Schnellverweise auf detaillierte Abbildungen und Teillisten.

7. INDEX FÜR BESTELLNUMMERN

Hinten im Buch befindet sich ein numerischer Index, mit allen Bestellnummern und dem Hinweis auf die Seite, auf der sich die betreffende Abbildung befindet.

8. ÜBERSCHRIFTEN

Die Überschriften, die sich am Anfang jeder der Informationseinheiten befinden, enthalten Bestellnummern, Ersatzteilbezeichnungen und zusätzliche beschreibende Informationen. Produkt-Ident- und Seriennummern in den Überschriften sollten zur Auswahl der richtigen Informationen für die betreffende Maschine verwendet werden. Die Überschriften enthalten außerdem Informationen über möglichen Außendienstersatz, mögliche Baugerätekomponenten und die Baugruppe, zu der das Teil gehört.

Die erste Zeile einer Überschrift erscheint in einer größeren Schriftart, um den Anfang einer Informationseinheit zu kennzeichnen. Überschriften für zusätzliche Seiten, die zur Erläuterung einer Informationseinheit notwendig sind, erscheinen in normaler Schriftart und enthalten den Begriff "(contd.)".

9. NICHT EINZELN LIEFERBARE TEILE

In einigen Fällen ist es notwendig nicht lieferbare Teile, die selbst mit einer eigenen Teilliste im Buch vertreten sind, aufzuführen. Die Bestellnummern dieser nicht einzeln lieferbaren Teile erscheinen kursiv, wodurch angezeigt wird, daß sie nur in Verbindung mit anderen Teilen lieferbar sind.

10. REFERENZNUMMER FÜR ERSATZTEILE

Die Zahlen, die in der Spalte "Ref No" aufgeführt sind, stimmen mit den Zahlen in den beigefügten Abbildungen überein. Ein Buchstaben-Suffix kann zu einer Referenznummer hinzugefügt werden, um zu kennzeichnen, daß das Teil mit einer eigenen Teilliste im Buch aufgeführt ist. Die in der Spalte "Graphic Ref" angeführten Zahlen verweisen auf die Identifikationsnummer der Abbildung, die sich in der linken unteren Ecke der Abbildung befindet. Diese Nummer kann zusammen mit der Referenznummer des Teils angegeben werden, um die richtige Ersatzteilnummer zu ermitteln. Referenznummern können absichtlich weggelassen werden, da die Nummern der lieferbaren Ersatzteile ständig aktualisiert werden.

11. EINGERÜCKTE BEZEICHNUNGEN

Wenn eine Bezeichnung eingerückt ist, wird dadurch angezeigt, daß das Teil zu einer Baugruppe gehört, unter deren Bezeichnung es eingerückt ist.

12. REFERENZBUCHSTABEN

Falls erforderlich sind in den Abbildungen Referenzbuchstaben enthalten (z.B. A, B, C, usw.), die Leitungen und Kabelbäume von einem Punkt zum anderen verfolgen. Außerdem geben sie die Stelle an, an der getrennte Abbildungen fortgesetzt werden.

13. ABKÜRZUNGEN UND SYMBOLE

O.D. – Außendurchmesser
I.D. – Innendurchmesser
A – kein Teil dieser Gruppe
B – nach Bedarf verwenden
C – Hinweis auf eine Änderung
D – in Meter-Länge bestellen
E – in Zentimeter-Länge bestellen
F – nicht gezeigt
G – in Zoll-Länge bestellen
I – siehe "Hose Fabrication Guide"
M – metrisches Teil
R – werküberholtes Teil unter Umständen lieferbar
Y – separate Abbildung
Z – nicht einzeln lieferbar

SIS *Neu im Parts Manual*

14. <END>

Dieses Symbol zeigt das Ende eines Informationselements an.

ALLGEMEINE HINWEISE

ANMERKUNG:

Ständig vorgenommene Verbesserungen und Weiterentwicklungen an Ihrer Maschine können Änderungen verursachen, die in der vorliegenden Ausgabe noch nicht berücksichtigt sind. Fragen zu Ihrer Caterpillar-Maschine oder diesem Ersatzteilbuch beantwortet Ihr Caterpillar-Händler.

ALLGEMEINE HINWEISE

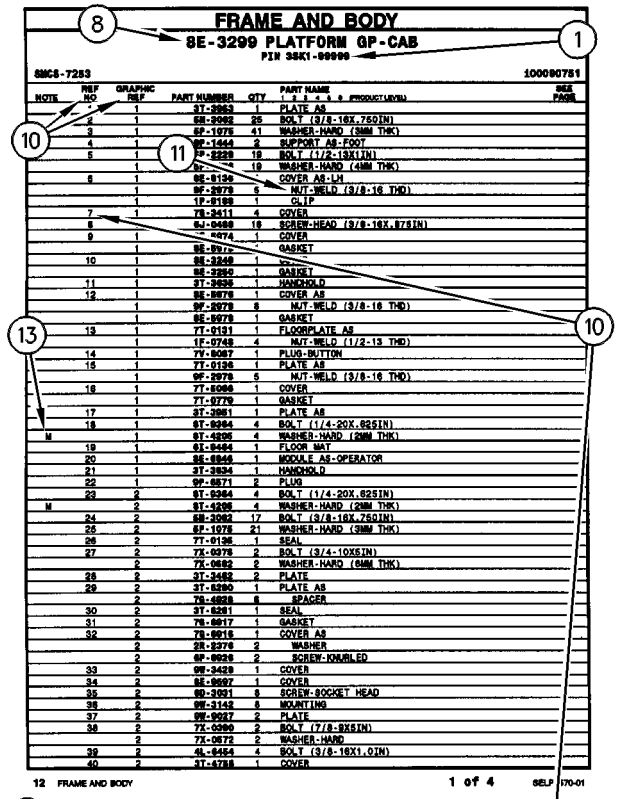

FRAME AND BODY

8E-3299 PLATFORM GP-CAB

PIN 38K1-09999

SMCS-7253 100090751

NOTE	REF NO	GRAPHIC REF	PART NUMBER	QTY	PART NAME (1 2 3 4 5 6 PRODUCT LEVEL)	SEE PAGE
	1	1	3T-2953	1	PLATE AS	
	2	1	5B-2992	25	BOLT (3/8-16X.750IN)	
	3	1	6P-1075	41	WASHER-HARD (3MM THK)	
	4	1	9P-1444	2	SUPPORT AS-FOOT	
	5	1	9P-2228	19	BOLT (1/2-13X1IN)	
		1	9P-[illegible]4	19	WASHER-HARD (4MM THK)	
	6	1	9E-9136	1	COVER AS-LH	
		1	9F-2979	6	NUT-WELD (3/8-16 THD)	
		1	1P-0188	1	CLIP	
	7	1	7S-3411	4	COVER	
	8	1	6J-0488	18	SCREW-HEAD (3/8-16X.875IN)	
	9	1	9[illegible]4	1	COVER	
		1	9E-9[illegible]		GASKET	
	10	1	9E-3249	1	[illegible]	
		1	9E-3250	1	GASKET	
	11	1	3T-3935	1	HANDHOLD	
	12	1	9E-9078	1	COVER AS	
		1	9F-2979	8	NUT-WELD (3/8-16 THD)	
		1	9E-9079	1	GASKET	
	13	1	7T-0131	1	FLOORPLATE AS	
		1	1F-0748	4	NUT-WELD (1/2-13 THD)	
	14	1	7Y-9087	1	PLUG-BUTTON	
	15	1	7T-0136	1	PLATE AS	
		1	9F-2979	6	NUT-WELD (3/8-16 THD)	
	16	1	7T-9096	1	COVER	
		1	7T-9779	1	GASKET	
	17	1	3T-3981	1	PLATE AS	
	18	1	6T-9364	4	BOLT (1/4-20X.625IN)	
M		1	6T-4205	4	WASHER-HARD (2MM THK)	
	19	1	6L-9484	1	FLOOR MAT	
	20	1	9E-9946	1	MODULE AS-OPERATOR	
	21	1	3T-3934	1	HANDHOLD	
	22	1	9P-8571	2	PLUG	
	23	2	6T-9364	4	BOLT (1/4-20X.625IN)	
M		2	6T-4205	4	WASHER-HARD (2MM THK)	
	24	2	5B-3062	17	BOLT (3/8-16X.750IN)	
	26	2	6F-1075	21	WASHER-HARD (3MM THK)	
	26	2	7T-9125	1	SEAL	
	27	2	7X-9378	2	BOLT (3/4-10X5IN)	
		2	7X-0682	2	WASHER-HARD (6MM THK)	
	28	2	3T-3482	2	PLATE	
	29	2	3T-5290	1	PLATE AS	
		2	7S-0028	8	SPACER	
	30	2	3T-5281	1	SEAL	
	31	2	7S-9017	1	GASKET	
	32	2	7S-9018	1	COVER AS	
		2	2R-2276	2	WASHER	
		2	6P-9028	2	SCREW-KNURLED	
	33	2	9W-3429	1	COVER	
	34	2	9E-9697	1	COVER	
	35	2	9D-3031	8	SCREW-SOCKET HEAD	
	36	2	9W-3142	8	MOUNTING	
	37	2	9W-9027	2	PLATE	
	38	2	7X-0390	2	BOLT (7/8-9X5IN)	
		2	7X-0672	2	WASHER-HARD	
	39	2	4L-9454	4	BOLT (3/8-16X1.0IN)	
	40	2	3T-4788	1	COVER	

12 FRAME AND BODY 1 of 4 SELP4570-01

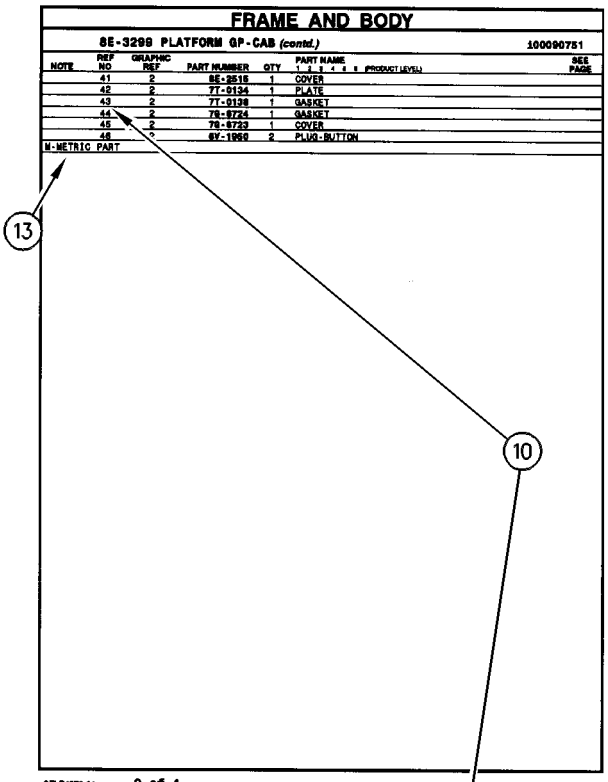

FRAME AND BODY

8E-3299 PLATFORM GP-CAB (contd.) 100090751

NOTE	REF NO	GRAPHIC REF	PART NUMBER	QTY	PART NAME (1 2 3 4 5 6 PRODUCT LEVEL)	SEE PAGE
	41	2	8E-3515	1	COVER	
	42	2	7T-0134	1	PLATE	
	43	2	7T-0139	1	GASKET	
	44	2	7S-9724	1	GASKET	
	45	2	7S-9723	1	COVER	
	46	2	6Y-1969	2	PLUG-BUTTON	

M-METRIC PART

SELP4570-01 2 of 4 FRAME AND BODY 13

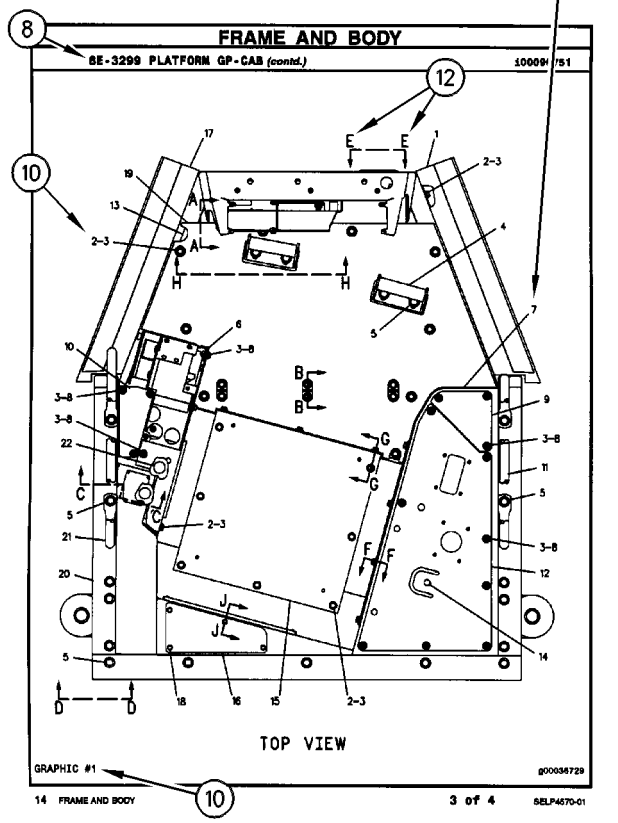

FRAME AND BODY

8E-3299 PLATFORM GP-CAB (contd.) 100090751

TOP VIEW

GRAPHIC #1 g00036729

14 FRAME AND BODY 3 of 4 SELP4570-01

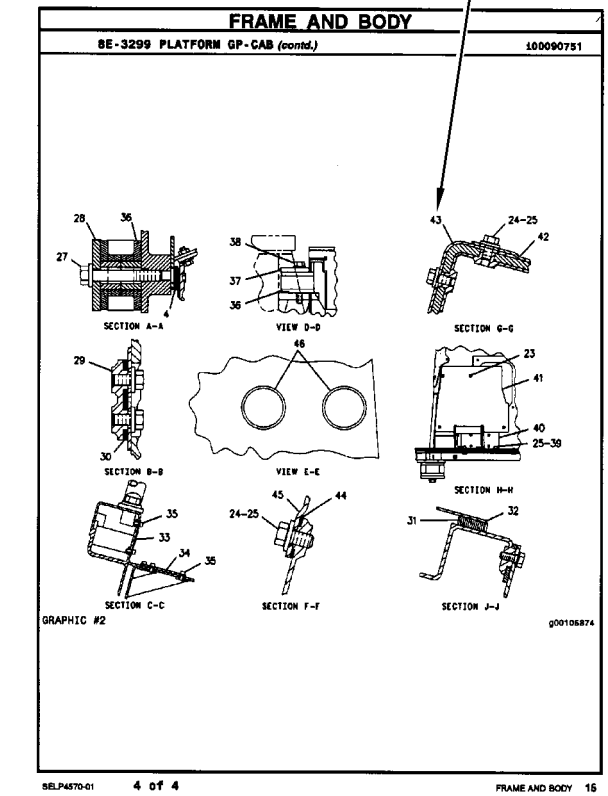

FRAME AND BODY

8E-3299 PLATFORM GP-CAB (contd.) 100090751

SECTION A-A VIEW D-D SECTION G-G

SECTION B-B VIEW E-E SECTION H-H

SECTION C-C SECTION F-F SECTION J-J

GRAPHIC #2 g00105874

SELP4570-01 4 of 4 FRAME AND BODY 15

REMANUFACTURED COMPONENTS

As an option when making repairs consider Caterpillar Remanufactured Components. Components that are available through the Caterpillar Remanufactured Program are identified three ways in the parts book:

- with the letter R in the note field of the parts list
- with an R* at the beginning of the first line of the caption
- with an *R at the end of the first line of the caption

Typical components included in the Remanufacturing Program include:

ALTERNATORS
CONNECTING RODS
CRANKSHAFTS - UNDERSIZE
CRANKSHAFTS - UPGRADE TO NEW
CYLINDER HEADS
ELECTRONIC CONTROL MODULES (ECM)
ELECTRONIC SENSORS
FUEL INJECTORS
FUEL NOZZLES
FUEL PUMPS
GOVERNORS
OIL PUMPS
PISTONS
SHORT BLOCKS
STARTERS
TURBOCHARGERS - COMPLETE
TURBOCHARGER CARTRIDGES
WATER PUMPS

Caterpillar Remanufactured engines for many engine arrangements are also available.

OPTIONS DE RÉPARATION

COMPOSANTS RÉNOVÉS

Comme option de réparation, considérer les composants rénovés Caterpillar. Les composants disponibles dans le cadre du programme Caterpillar de composants rénovés sont identifiés de trois façons dans le catalogue de pièces:

- avec la lettre "R" dans l'espace note de la liste des pièces
- avec R* au début de la première ligne des légendes
- avec *R à la fin de la première ligne des légendes

Les composants suivants figurent parmi les composants typiques du programme de rénovation:

ALTERNATEURS
BIELLES
VILEBREQUINS - SOUS-DIMENSIONNÉS
VILEBREQUINS - REMIS À NEUF
CULASSES
MODULES DE COMMANDE ÉLECTRONIQUE (ECM)
CAPTEURS ÉLECTRONIQUES
INJECTEURS
TÊTES D'INJECTEURS
POMPES À CARBURANT
RÉGULATEURS
POMPES À HUILE
PISTONS
BLOCS EMBIELLÉS
DÉMARREURS
TURBOCOMPRESSEURS - COMPLETS
CARTOUCHES DE TURBOCOMPRESSEUR
POMPES À EAU

Des moteurs rénovés sont aussi disponibles pour plusieurs versions de moteur.

ALTERNATIVAS DE REPARACIÓN

COMPONENTES REMANUFACTURADOS

Al hacer reparaciones, tenga en cuenta la opción de Componentes Remanufacturados Caterpillar. Los componentes que están disponibles por medio del programa de Productos Remanufacturados Caterpillar se identifican de tres maneras en el manual de piezas:

- con la letra R en el espacio de Nota de la lista de piezas
- con una R* al comienzo de la primera línea de la leyenda
- con una *R al final de la primera línea de la leyenda

Los componentes que se incluyen típicamente en el Programa de Productos Remanufacturados son:

ALTERNADORES
BIELAS
CIGÜEÑALES - BAJOMEDIDA
CIGÜEÑALES - REMANUFACTURADOS A NUEVO
CULATAS
MÓDULOS DE CONTROL ELECTRÓNICO (ECM)
SENSORES ELECTRONICOS
INYECTORES
BOQUILLAS
BOMBAS DE COMBUSTIBLE
REGULADORES
BOMBAS DE ACEITE
PISTONES
MONOBLOQUES
MOTORES DE ARRANQUE
TURBOCOMPRESORES - COMPLETOS
NÚCLEOS DE TURBOCOMPRESOR
BOMBAS DE AGUA

También hay disponibles motores Remanufacturados Caterpillar para muchas de las configuraciones de motores.

COMPONENTES REMANUFATURADOS

Considere o uso de Componentes Remanufaturados Caterpillar ao efetuar reparos. Os componentes disponíveis através do Programa de Remanufatura Caterpillar são identificados de três formas no manual de peças:

- com um R na área da nota da lista de peças
- com um R* no princípio da primeira linha da legenda
- com um *R no final da primeira linha da legenda

Os componentes típicos que constam no Programa de Remanufatura incluem:

ALTERNADORES
BIELAS
VIRABREQUINS - SUBMEDIDAS
VIRABREQUINS - ATUALIZAÇÃO
CABEÇOTES
MÓDULOS DE CONTROLE ELETRÔNICO (ECM)
SENSORES ELETRÔNICOS
INJETORES DE COMBUSTÍVEL
BICOS DE ABASTECIMENTO DE COMBUSTÍVEL
BOMBAS DE COMBUSTÍVEL
GOVERNADORES
BOMBAS DE ÓLEO
PISTÕES
BLOCOS BÁSICOS DO MOTOR
MOTORES DE PARTIDA
TURBOALIMENTADORES - COMPLETOS
CARTUCHOS DE TURBOALIMENTADORES
BOMBAS D'ÁGUA

Motores Remanufaturados Caterpillar também encontram-se disponíveis para diversos arranjos de motor.

REPARATURALTERNATIVEN

WERKÜBERHOLTE AT-PRODUKTE

Bei Reparaturen sollten werküberholte AT-Produkte von Caterpillar in Betracht gezogen werden. Die durch das AT-Programm von Caterpillar erhältlichen Teile sind im Parts Book auf drei verschiedene Arten gekennzeichnet:

- mit dem Buchstaben R in der Spalte NOTE der Ersatzteilliste
- mit einem R* am Anfang der ersten Zeile der Überschrift
- mit einem *R am Ende der ersten Zeile der Überschrift

Das AT-Programm umfaßt u.a. folgende Produkte:

DREHSTROMGENERATOREN
PLEUELSTANGEN
KURBELWELLEN - MIT UNTERMASS
KURBELWELLEN - MIT ORIGINALMASS
ZYLINDERKÖPFE
ELEKTRONISCHE STEUEREINHEITEN (EMC)
ELEKTRONISCHE SENSOREN
PUMPENDÜSEN
EINSPRITZDÜSEN
KRAFTSTOFFPUMPEN
DREHZAHLREGLER
ÖLPUMPEN
KOLBEN
TEILMOTOREN
ANLASSER
TURBOLADER - KOMPLETT
TURBOLADERLAUFZEUGE
KÜHLWASSERPUMPEN

Viele Motoren können durch werküberholte AT-Motoren von Caterpillar ersetzt werden.

SUPPLEMENTAL COOLANT ADDITIVES

CUSTOMER BENEFITS:

Protects against cavitation, foam, erosion, corrosion, and scale buildup in cooling systems.

- Provides measured coolant conditioner.

DESCRIPTION:

Additives deplete from the coolant with normal operation. For this reason, Supplemental Coolant Additives (SCA) must be added to all heavy duty coolants at regular intervals. In addition, when not using a fully formulated, pre-charged antifreeze, like Caterpillar's DEAC, an initial charge of SCA must be added to the cooling system. The amount of SCA added to the system is dependent on the capacity of the system.

The SCA for initial fill is provided as a liquid. SCA's for maintenance intervals are available in liquid form and as a spin-on element. (No Spin-on available for 3600 Family of Engines)

NOTE:

The amount of SCA added at initial fill is not the same as the amount added at maintenance intervals.

The coolant additive elements can be used with any ethylene or propylene glycol type antifreeze which meets ASTM D4985 or ASTM D5345 Specifications.

NOTE:

For use with standard heavy duty coolant only, not for use with Extended Life Coolant.

PARTS NEEDED:

Cooling System Capacity		Liquid SCA at Initial Fill	Liquid SCA at Maintenance*	Spin-on SCA Maintenance Element*
Liters	Gallons			
22-30	(6-8)	3P-2044 (1)	6V-3542 (1)	111-2370 (1)
30-38	(8-10)	3P-2044 (1) 6V-3542 (1)	111-2372 (1)	111-2369 (1)
38-49	(10-13)	3P-2044 (1) 8T-1589 (1)	111-2372 (1)	111-2369 (1)
49-64	(13-17)	3P-2044 (2)	8T-1589 (1)	9N-3368 (1)
64-83	(17-22)	3P-2044 (2) 8T-1589 (1)	111-2372 (1) 6V-3542 (1)	111-2371 (1)
83-114	(22-30)	3P-2044 (3) 8T-1589 (1)	3P-2044 (1)	9N-3718 (1)
114-163	(30-43)	3P-2044 (5)	3P-2044 (1) 6V-3542 (1)	111-2371 (2)
163-242	(43-64)	3P-2044 (8)	3P-2044 (2)	9N-3718 (2)

** Normal maintenance period is 250 hrs. See your Operation and Maintenance Manual for complete coolant maintenance instructions.*

( ) Indicates quantity required.

ADDITIFS POUR LIQUIDE DE REFROIDISSEMENT

AVANTAGES POUR LE CLIENT

L'additif protège contre la cavitation, la mousse, l'érosion, la corrosion et l'accumulation de dépôts dans le circuit de refroidissement.

- L'additif complémentaire fournit une quantité mesurée d'additif.

DESCRIPTION:

Les additifs s'épuisent pendant l'utilisation du moteur. C'est pourquoi l'on doit ajouter de l'additif au liquide de refroidissement/antigel pour moteurs diesel à intervalles réguliers. En plus, si l'on n'utilise pas de l'antigel entièrement formulé et pré-chargé comme le liquide de refroidissement/antigel Caterpillar pour moteurs diesel, une quantité initiale d'additif doit être ajoutée au circuit de refroidissement. La quantité d'additif à ajouter au circuit dépend de la contenance du circuit.

L'additif pour le remplissage initial est fourni sous forme liquide. L'additif pour l'entretien ultérieur est disponible sous forme liquide et sous forme d'élément à visser. (Il n'y a pas d'élément à visser pour les moteurs de la famille 3600).

NOTA:

La quantité d'additif à ajouter au remplissage initial diffère de la quantité à ajouter aux intervalles d'entretien.

Les éléments d'additif peuvent être utilisés avec tout antigel de type éthylène ou propylène-glycol conforme à la norme ASTM D4985 ou ASTM D5345.

NOTA:

A utiliser uniquement avec du liquide de refroidissement pour moteurs diesel et non avec le liquide de refroidissement longue durée.

PIÈCES NÉCESSAIRES:

Contenance du circuit de refroidissement		Additif liquide au remplissage initial	Additif liquide aux intervalles d'entretien*	Elément d'additif à visser aux intervalles d'entretien*
Litres	Gallons U.S.			
22-30	(6-8)	3P-2044 (1)	6V-3542 (1)	111-2370 (1)
30-38	(8-10)	3P-2044 (1) 6V-3542 (1)	111-2372 (1)	111-2369 (1)
38-49	(10-13)	3P-2044 (1) 8T-1589 (1)	111-2372 (1)	111-2369 (1)
49-64	(13-17)	3P-2044 (2)	8T-1589 (1)	9N-3368 (1)
64-83	(17-22)	3P-2044 (2) 8T-1589 (1)	111-2372 (1) 6V-3542 (1)	111-2371 (1)
83-114	(22-30)	3P-2044 (3) 8T-1589 (1)	3P-2044 (1)	9N-3718 (1)
114-163	(30-43)	3P-2044 (5)	3P-2044 (1) 6V-3542 (1)	111-2371 (2)
163-242	(43-64)	3P-2044 (8)	3P-2044 (2)	9N-3718 (2)

** L'intervalle d'entretien normal est de 250 heures-service. Voir le Guide d'utilisation et d'entretien pour de plus amples renseignements concernant l'entretien du circuit de refroidissement.*

( ) Indique la quantité exigée.

ADITIVOS DE REFRIGERANTE SUPLEMENTARIOS

VENTAJAS PARA EL USUARIO:

Protegen contra la cavitación, la formación de espuma, la corrosión y la acumulación de escamas en los sistemas de enfriamiento.

- Suministra un acondicionador dosificado de refrigerante.

DESCRIPCIÓN:

Los aditivos en el refrigerante se agotan con la operación normal. Por esta razón, se debe agregar Aditivo de refrigerante suplementario (SCA) a todos los refrigerantes para servicio pesado, a intervalos regulares. Además, cuando no se usa un anticongelante de precarga completo, tal como el DEAC de Caterpillar, es necesario agregar una cantidad de aditivo de refrigerante suplementario inicial al sistema de enfriamiento. La cantidad de aditivo que se debe agregar depende de la capacidad del sistema.

El SCA de llenado inicial es líquido. El que se usa para el mantenimiento está disponible tanto en líquido como en un elemento enroscable. (No hay elemento enroscable disponible para la Familia de Motores 3600).

NOTA:

La cantidad de aditivo de llenado inicial no es la misma que se agrega en los intervalos de mantenimiento.

Los elementos de aditivo de refrigerante se pueden usar con cualquier anticongelante de tipo glicol etilénico o propílico que esté de acuerdo con las especificaciones de las normas ASTM D4985 o ASTM D5345.

NOTA:

Se debe utilizar únicamente con refrigerante estándar para servicio pesado; no se debe usar con Refrigerante de Larga Duración.

PIEZAS NECESARIAS:

Capacidad del Sistema de Enfriamiento		SCA líquido de llenado inicial	SCA líquido de mantenimiento*	Elemento de mantenimiento enroscable*
litros	gal EE.UU.			
22-30	6-8	3P-2044 (1)	6V-3542 (1)	111-2370 (1)
30-38	8-10	3P-2044 (1) 6V-3542 (1)	111-2372 (1)	111-2369 (1)
38-49	10-13	3P-2044 (1) 8T-1589 (1)	111-2372 (1)	111-2369 (1)
49-64	13-17	3P-2044 (2)	8T-1589 (1)	9N-3368 (1)
64-83	17-22	3P-2044 (2) 8T-1589 (1)	111-2372 (1) 6V-3542 (1)	111-2371 (1)
83-114	22-30	3P-2044 (3) 8T-1589 (1)	3P-2044 (1)	9N-3718 (1)
114-163	30-43	3P-2044 (5)	3P-2044 (1) 6V-3542 (1)	111-2371 (2)
163-242	43-64	3P-2044 (8)	3P-2044 (2)	9N-3718 (2)

** El período normal de mantenimiento es de 250 horas. Para ver las instrucciones completas sobre el mantenimiento del refrigerante, consulte el Manual de Operación y Mantenimiento.*

( ) Indica la cantidad necesaria.

ADITIVOS SUPLEMENTARES DO LÍQUIDO ARREFECEDOR

BENEFÍCIOS PARA O CLIENTE:

Protege contra cavitação, espuma, erosão, corrosão e acúmulo de crostas nos sistemas de arrefecimento.

- Fornece uma quantidade pré-determinada de condicionador de arrefecimento.

DESCRIÇÃO:

Com a operação normal, os aditivos se esgotam do líquido arrefecedor. Por isso, Aditivos Suplementares do Líquido Arrefecedor (SCA) devem ser acrescentados a todos os líquidos arrefecedores para serviço pesado em intervalos regulares. Além disso, quando um anticongelante pré-carregado, totalmente formulado não for usado, como o DEAC Caterpillar, uma carga inicial de SCA deve ser acrescentada ao sistema de arrefecimento. A quantidade de SCA acrescentada ao sistema depende da capacidade do sistema.

O SCA para abastecimento inicial é fornecido em forma de líquido. Os aditivos suplementares (SCA) para intervalos de manutenção estão à disposição em forma líquida e como um elemento com roscas. (Exceto os Motores da Família 3600)

NOTA:

A quantidade de SCA adicionada no abastecimento inicial não é a mesma que a acrescentada nos intervalos de manutenção.

Os elementos do aditivo do líquido arrefecedor podem ser usados com qualquer tipo de anticongelante etileno ou propileno que satisfaz as Especificações ASTM D4985 ou ASTM D5345.

NOTA:

Para uso apenas com líquido arrefecedor para serviço pesado padrão, não deve ser usado com Líquido Arrefecedor de Vida Longa.

PEÇAS NECESSÁRIAS:

Capacidade do Sistema de Arrefecimento		Líquido SCA Durante Abastecimento Inicial	Líquido SCA Durante Manutenção*	Elemento de Manutenção de SCA com Roscas*
Litros	Galões			
22-30	6-8	3P-2044 (1)	6V-3542 (1)	111-2370 (1)
30-38	8-10	3P-2044 (1) 6V-3542 (1)	111-2372 (1)	111-2369 (1)
38-49	10-13	3P-2044 (1) 8T-1589 (1)	111-2372 (1)	111-2369 (1)
49-64	13-17	3P-2044 (2)	8T-1589 (1)	9N-3368 (1)
64-83	17-22	3P-2044 (2) 8T-1589 (1)	111-2372 (1) 6V-3542 (1)	111-2371 (1)
83-114	22-30	3P-2044 (3) 8T-1589 (1)	3P-2044 (1)	9N-3718 (1)
114-163	30-43	3P-2044 (5)	3P-2044 (1) 6V-3542 (1)	111-2371 (2)
163-242	43-64	3P-2044 (8)	3P-2044 (2)	9N-3718 (2)

** O período normal de manutenção é de 250 horas. Consulte o Manual de Operação e Manutenção para obter instruções completas quanto à manutenção do líquido arrefecedor.*

( ) Indica a quantidade exigida.

KÜHLMITTELZUSATZ

VORTEILE FÜR DEN KUNDEN:

Schutz gegen Kavitation, Schaumbildung, Erosion, Korrosion und Kesselsteinbildung in Kühlsystemen.

- Richtig dosierter Kühlmittelzusatz

BESCHREIBUNG:

Additive erschöpfen sich während des Motorbetriebs. Deshalb muß allen HD-Kühlmitteln regelmäßig Kühlmittelzusatz beigefügt werden. Wenn bei Erstfüllung kein vollwertiges Fertigkühlmittel, wie das Frostschutz- und Kühlmittel für Dieselmotoren von Caterpiller (DEAC), verwendet wird, muß bei Erstfüllung Kühlmittelzusatz beigefügt werden. Wieviel Kühlmittelzusatz beigefügt werden muß, hängt vom Inhalt des Kühlsystems ab.

Für Erstfüllung ist Kühlmittelzusatz nur in flüssiger Form erhältlich. Für Wartungsintervalle ist Kühlmittelzusatz in flüssiger Form und als Zusatzelement erhältlich. (Für die Motorbaureihe 3600 sind keine Zusatzelemente erhältlich.)

ANMERKUNG:

Die Kühlmittelmenge bei Erstfüllung ist nicht die gleiche Menge, die bei Wartungsintervallen beigefügt werden muß.

Die Kühlmittelzusatzelemente können mit allen Frostschutzmitteln auf Ethylen- oder Propylenglykolbasis verwendet werden, die den Standards nach ASTM D4985 oder ASTM D5345 entsprechen.

ANMERKUNG:

Den Kühlmittelzusatz nicht mit Langzeitkühlmittel (ELC) von Caterpillar verwenden. Der Kühlmittelzusatz ist nur für HD-Kühlmittel bestimmt.

TEILEBEZEICHNUNG:

Kühlsysteminhalt		Kühlmittelzusatz bei Erstfüllung	Flüssiger Kühlmittelzusatz bei Wartung*	Kühlmittelzusatzelement bei Wartung*
Liter	US-Gall.			
22-30	(6-8)	3P-2044 (1)	6V-3542 (1)	111-2370 (1)
30-38	(8-10)	3P-2044 (1) 6V-3542 (1)	111-2372 (1)	111-2369 (1)
38-49	(10-13)	3P-2044 (1) 8T-1589 (1)	111-2372 (1)	111-2369 (1)
49-64	(13-17)	3P-2044 (2)	8T-1589 (1)	9N-3368 (1)
64-83	(17-22)	3P-2044 (2) 8T-1589 (1)	111-2372 (1) 6V-3542 (1)	111-2371 (1)
83-114	(22-30)	3P-2044 (3) 8T-1589 (1)	3P-2044 (1)	9N-3718 (1)
114-163	(30-43)	3P-2044 (5)	3P-2044 (1) 6V-3542 (1)	111-2371 (2)
163-242	(43-64)	3P-2044 (8)	3P-2044 (2)	9N-3718 (2)

** Der normale Wartungsintervall beträgt 250 Betriebsstunden. Für vollständige Anweisungen zur Wartung des Kühlsystems, siehe Betriebs- und Wartungshandbuch.*

( ) Erforderliche Anzahl

MAINTENANCE PARTS

DESCRIPTION	PART NUMBER	QTY	WHERE USED	PAGE
AIR INLET AND EXHAUST SYSTEM				
INDICATOR GP-AIR FILTER CHANGE	8N-2694	1	INDICATOR GP-AIR FILTER CHANGE	82
INDICATOR-SERVICE (AIR FILTER)	7W-7417	1	INDICATOR GP-AIR FILTER CHANGE	80
BASIC ENGINE				
HOSE (BREATHER)	198-8645	1	COVER GP-VALVE MECHANISM	14
PLUG-SUMP DRAIN	7C-0351	2	PAN GP-OIL	32
SEAL-O-RING (ENGINE OIL DRAIN)	5P-6718	2	PAN GP-OIL	32
SPRING (BREATHER HOSE)	162-1565	1	COVER GP-VALVE MECHANISM	14
COOLING SYSTEM				
CAP AS (RADIATOR)	227-4376	1	RADIATOR & HYD OIL COOLER GP	71
		1	RADIATOR & HYD OIL COOLER GP	74
CAP-RADIATOR	006-8865	1	RADIATOR & HYD OIL COOLER GP	68
HOSE-RADIATOR	140-3637	1	RADIATOR & HYD OIL COOLER GP	67
	140-3638	1	RADIATOR & HYD OIL COOLER GP	67
LAMP (12-VOLT)	122-7137	1	COOLING AR	53
REGULATOR-WATER TEMPERATURE	225-6908	1	CONNECTION GP-WATER	50
SEAL-O-RING (WATER TEMPERATURE REGULATOR)	225-6909	1	CONNECTION GP-WATER	50
V-BELT (REFRIGERANT COMPRESSOR)	1N-3743	1	COOLING AR	53
V-BELT SET (INCLUDES 2 BELTS)	4N-8597	1	COOLING AR	53
		1	COOLING AR	54
	7W-3896	1	COOLING AR	53
		1	COOLING AR	54

MAINTENANCE PARTS

DESCRIPTION	PART NUMBER	QTY	WHERE USED	PAGE
ELECTRICAL AND STARTING SYSTEM				
BATTERY (12 VOLT, HEAVY DUTY)	230-6368	1	BATTERY GP	111
BATTERY (12-VOLT, HEAVY DUTY)	230-6368	1	BATTERY GP	113
BATTERY (12-VOLT, 750-AMPERE) (750 AMP)	3T-5760	2	BATTERY GP	107
		1	BATTERY GP	109
BELT-DRIVE	9X-8139	1	LAMP GP-WARNING BEACON	126
		1	LAMP GP-WARNING BEACON	127
FILTER AS-OIL (HYDRAULIC)	126-1817	1	WIRING GP-CONSOLE	160
FUSE (10 AMP)	3K-8782	1	LAMP GP-WARNING BEACON	126
		1	LAMP GP-WARNING BEACON	127
	113-8490	1	WIRING GP-AIR CONDITIONER	142
		1	WIRING GP-POWER RECEPTACLE	183
		1	WIRING GP-RIDE CONTROL	191
		1	WIRING GP-STABILIZER	194
FUSE (10-AMPERE)	113-8490	2	LIGHTING GP-FLOOD & SIGNAL	128
		1	WIRING GP-AIR CONDITIONER	138
		1	WIRING GP-RIDE CONTROL	187
		1	WIRING GP-RIDE CONTROL	189
FUSE (15 AMP)	113-8491	1	WIRING GP-CAB	153
FUSE (15-AMPERE)	113-8491	2	LIGHTING GP-FLOOD & SIGNAL	128
		1	WIRING GP-CAB	154
FUSE (20-AMPERE)	113-8492	2	WIRING GP-CAB	150
FUSE (5 AMP)	141-2759	1	WIRING GP-STEERING	198
FUSE (5-AMPERE)	141-2759	1	WIRING GP-CAB	150
GLOW PLUG	232-6662	4	GLOW PLUG GP	115
HOLDER AS-BRUSH	7T-6092	1	STARTING MOTOR GP-ELECTRIC	133
LAMP AS (12-VOLT)	165-5655	1	INSTALLATION GP-SECURITY	119
		1	INSTALLATION GP-SECURITY	122
LAMP (12 VOLT)	7X-9065	1	WIRING GP-CONSOLE	157
		1	WIRING GP-CONSOLE	160
	9X-8118	1	LAMP GP-WARNING BEACON	127
		1	LAMP GP-WARNING BEACON	126
LAMP (12-VOLT)	7X-9065	1	WIRING GP-CONSOLE	167
		1	WIRING GP-CONSOLE	169
	122-7137	1	WIRING GP-AIR CONDITIONER	141
LAMP (12-VOLT, 24-WATT)	9W-3326	1	LAMP GP-SIGNAL	124
LAMP (12 VOLT, 55 WATT)	9W-0607	1	LAMP GP-FLOOD	123
LAMP (12-VOLT, 55-WATT)	9W-0607	1	LIGHTING GP-FLOOD & SIGNAL	128
LAMP (12 VOLT/21 WATT)	9W-3326	1	LAMP GP-STOP & TAIL	125
LAMP (12VOLT/21/5WATT)	3C-6516	1	LAMP GP-STOP & TAIL	125
LENS	174-8958	1	LAMP GP-STOP & TAIL	125
LENS (AMBER)	174-8957	1	LAMP GP-SIGNAL	124
LENS-AMBER	9X-8121	1	LAMP GP-WARNING BEACON	126
		1	LAMP GP-WARNING BEACON	127
LENS AS (FLOOD)	202-6614	1	LAMP GP-FLOOD	123
FRAME AND BODY				
FITTING-GREASE (1/8-27 THD)	3B-8488	2	FRAME GP-LOADER	321
	3B-8489	2	FRAME GP-LOADER	321
		6	FRAME GP-SWING	322

MAINTENANCE PARTS

DESCRIPTION	PART NUMBER	QTY	WHERE USED	PAGE
FUEL SYSTEM				
CAP-FUEL	201-0330	1	TANK GP-FUEL	104
ELEMENT-FILTER (FUEL)	228-9130	1	PUMP GP-FUEL PRIMING	97
FILTER ELEMENT AS-FUEL	1R-1804	1	FILTER GP-FUEL	89
FILTER ELEMENT AS-FUEL (WATER SEPARATOR)	131-1812	1	FILTER GP-WATER SEP & FUEL	91
		1	SEPARATOR GP-WATER	99
HYDRAULIC SYSTEM				
CAP-DUST	6V-0852	1	CONNECTOR GP-VALVE	333
		1	LINES GP-PILOT	453
CAP-FILL (HYDRAULIC OIL)	237-3797	1	TANK GP-HYDRAULIC	515
FILTER	4T-4520	1	VALVE GP-CONTROL	533
		1	VALVE GP-CONTROL	535
		1	VALVE GP-CONTROL	537
		1	VALVE GP-CONTROL	539
		1	VALVE GP-CONTROL	543
		1	VALVE GP-CONTROL	553
FILTER AS-HYDRAULIC	134-3014	1	FILTER GP-OIL	387
FILTER AS-OIL (CLEANOUT, HIGH EFFICIENCY)	126-1817	1	HYDRAULIC AR	394
FILTER AS-OIL (HYDRAULIC) (FIRE RESISTANT)	134-3014	1	HYDRAULIC AR	394
FILTER (HYDRAULIC TANK BREATHER)	9R-9925	1	TANK GP-HYDRAULIC	515
FITTING-GREASE	3B-8489	2	CYLINDER GP-THUMB	385
		4	MOUNTING GP-CYLINDER	498
PLUG	9S-4183	1	CONVERSION GP-AUXILIARY LINES	358
		1	VALVE AR-BANK 6	519
SEAL-O-RING	2M-9780	1	LINES GP-EXTENDABLE STICK	432
IMPLEMENTS				
FITTING-GREASE	3B-8488	3	BOOM GP	577
		3	BOOM GP	578
FITTING-GREASE (1/8-27 THD)	3B-8488	4	ARM GP-LIFT	575
		1	STICK GP-HOE	606
	3B-8489	5	ARM GP-LIFT	575
		7	LINKAGE GP-LOADER BUCKET	585
		2	MOUNTING GP-STICK	592
		4	STABILIZER GP-BACKHOE	602
		2	STICK GP-HOE	606
PAD AS	9R-5555	2	PAD GP-STABILIZER	600
		2	PAD GP-STABILIZER	601
	141-5150	4	PAD & GUARD GP-STABILIZER	595

MAINTENANCE PARTS

DESCRIPTION	PART NUMBER	QTY	WHERE USED	PAGE
LUBRICATION SYSTEM				
CANISTER AS-BREATHER	165-4021	1	BREATHER GP	40
		1	BREATHER GP	42
		1	BREATHER GP	44
CAP AS (ENGINE OIL FILLER)	236-6651	1	FILLER GP-ENGINE OIL	47
FILTER AS-ENGINE OIL	7W-2326	1	FILLER GP-ENGINE OIL	47
HOSE (CRANKCASE BREATHER VALVE COVER)	218-2685	1	BREATHER GP	42
HOSE (109CM CRANKCASE BREATHER OPEN)	136-1955		BREATHER GP	42
HOSE (90CM CRANKCASE BREATHER SUMP)	5P-1505		BREATHER GP	42
SEAL (BREATHER)	185-6643	1	BREATHER GP	40
		1	BREATHER GP	42
		1	BREATHER GP	44
OPERATOR STATION				
BLADE	101-0745	1	WIPER GP-WINDOW	860
BLADE AS	102-2940	2	WIPER GP-WINDOW	858
CAP AS (AIR CONDITIONER)	3E-4052	1	LINES GP-HEATER & AIR COND	805
FILTER-AIR (AIR CONDITIONER)	170-7272	1	AIR CONDITIONER & MOUNTING GP	718
		1	AIR CONDITIONER GP	723
FILTER-AIR (CAB)	170-7272	1	HEATER GP-CAB	797
FILTER (AIR CONDITIONER)	206-7514	1	AIR CONDITIONER & MOUNTING GP	718
		1	AIR CONDITIONER & MOUNTING GP	720
FILTER (HEATER)	206-7514	1	HEATER & MTG GP-CAB	795
LAMP	189-3610	1	MODULE GP-WARNING INDICATOR	812
LAMP (12 VOLT)	122-7137	1	TACHOMETER GP-ELECTRIC	841
LAMP (12-VOLT)	122-7137	1	TACHOMETER GP-ELECTRIC	840
LAMP (12-VOLT, 10-WATT)	6R-7490	1	SUPPRESSION GP-SOUND	836
V-BELT (AIR CONDITIONER)	1W-2934	1	COMPRESSOR GP-REFRIGERANT	759
V-BELT SET (INCLUDES 2 BELTS)	3N-1491	1	CAB AR	729
		1	CAB AR	731
	5L-3308	1	CAB AR	728
		1	CAB AR	730
		1	CANOPY AR	744
		1	CANOPY AR	745

MAINTENANCE PARTS

DESCRIPTION	PART NUMBER	QTY	WHERE USED	PAGE
POWER TRAIN				
BREATHER (AXLE)	197-9155	1	AXLE GP-DRIVE & STEERING	201
BREATHER (TRANSMISSION)	7T-3251	1	TRANSMISSION GP-DIRECT DRIVE	249
		1	TRANSMISSION GP-DIRECT DRIVE	254
		1	TRANSMISSION GP-POWER SHIFT	261
CAP	2D-2633	1	VALVE GP-TIRE	274
		1	VALVE GP-TIRE	275
CAP-DUST	6V-0852	2	FILLER GP-POWER TRAIN OIL	216
		2	FILLER GP-POWER TRAIN OIL	218
		2	FILLER GP-POWER TRAIN OIL	220
FILTER AS-OIL (TRANSMISSION)	119-4740	1	TRANSMISSION AR-DIRECT DRIVE	246
		1	TRANSMISSION AR-POWER SHIFT	246
PLUG-MAGNETIC	9R-6602	2	AXLE GP-REAR	206
	152-6144	3	AXLE GP-DRIVE & STEERING	201
		1	DIFFERENTIAL & BEVEL GEAR GP	211
STRAINER	7T-2651	1	TRANSMISSION GP-DIRECT DRIVE	249
		1	TRANSMISSION GP-DIRECT DRIVE	255
		1	TRANSMISSION GP-POWER SHIFT	261
VALVE AS-RELIEF (AIR VENT)	5F-5434	1	AXLE & MTG GP-REAR	199
SERVICE EQUIPMENT AND SUPPLIES				
KEY	5P-8500	1	LOCK GP-VANDALISM	863
PADLOCK GP	5P-8502	2	LOCK GP-VANDALISM	863
STEERING SYSTEM				
HOSE (53CM)	5P-1505		LINES GP-STEERING	298
			LINES GP-STEERING	301
WORK TOOLS				
FITTING-GREASE	3B-8489	2	BUCKET GP-MULTIPURPOSE	689
		2	THUMB GP	715
FITTING-GREASE (1/8-27 THD)	3B-8489	2	BUCKET GP-MULTIPURPOSE	687
		2	BUCKET GP-MULTIPURPOSE	688
		2	BUCKET GP-MULTIPURPOSE	690
REFLECTOR	101-4415	1	GUARD GP-BUCKET	701

PIÈCES DE RECHANGE

DESCRIPTION	NUMÉRO DE PIECÈS	QTÉ	DOMAINE D'APPLICATION	PAGE
CHÂSSIS ET BENNE				
GRAISSEUR (FILET 1/8-27)	3B-8488	2	BATI - CHARGEUSE (ASS)	321
	3B-8489	2	BATI - CHARGEUSE (ASS)	321
		6	BÂTI D'ORIENTATION (ASS)	322
CIRCUIT D'ADMISSION D'AIR ET D'ÉCHAPPEMENT				
INDICATEUR DE COLMATAGE DE FILTRE À AIR (ASS)	8N-2694	1	INDICATEUR DE COLMATAGE DE FILTRE À AIR (ASS)	82
INDICATEUR D'ENTRETIEN (FILTRE À AIR)	7W-7417	1	INDICATEUR DE COLMATAGE DE FILTRE À AIR (ASS)	80
CIRCUIT DE CARBURANT				
BOUCHON DE CARBURANT	201-0330	1	RÉSERVOIR DE CARBURANT (ASS)	104
ÉLÉMENT DE FILTRE (CARBURANT)	228-9130	1	POMPE D'AMORÇAGE DE CARBURANT (ASS)	97
ÉLÉMENT DE FILTRE (ENS)-CARBURANT	1R-1804	1	FILTRE A CARBURANT (ASS)	89
ÉLÉMENT DE FILTRE (ENS)-CARBURANT (SÉPARATEUR D'EAU)	131-1812	1	FILTRE DE SÉPARATEUR D'EAU ET DE CARBURANT (ASS)	91
		1	SÉPARATEUR D'EAU (ASS)	99
CIRCUIT DE DIRECTION				
FLEXIBLE (53CM)	5P-1505		CANALISATIONS DE DIRECTION (ASS)	298
			CANALISATIONS DE DIRECTION (ASS)	301
CIRCUIT DE GRAISSAGE				
BOÎTIER-RENIFLARD	165-4021	1	RENIFLARD (ASS)	40
		1	RENIFLARD (ASS)	42
		1	RENIFLARD (ASS)	44
BOURRELET D'ÉTANCHÉITÉ (RENIFLARD)	185-6643	1	RENIFLARD (ASS)	40
		1	RENIFLARD (ASS)	42
		1	RENIFLARD (ASS)	44
CHAPEAU (ENS) (GOULOTTE DE REMPLISSAGE D'HUILE MOTEUR)	236-6651	1	BOUCHON DE REMPLISSAGE D'HUILE MOTEUR (ASS)	47
FILTRE A HUILE MOTEUR (ENS)	7W-2326	1	BOUCHON DE REMPLISSAGE D'HUILE MOTEUR (ASS)	47
FLEXIBLE (CACHE-SOUPAPE DE RENIFLARD DE CARTER)	218-2685	1	RENIFLARD (ASS)	42
FLEXIBLE (RENIFLARD DE CARTER 90 CM OUVERT)	136-1955		RENIFLARD (ASS)	42
FLEXIBLE (RENIFLARD DE CARTER 90CM)	5P-1505		RENIFLARD (ASS)	42

PIÈCES DE RECHANGE

DESCRIPTION	NUMÉRO DE PIECÈS	QTÉ	DOMAINE D'APPLICATION	PAGE
CIRCUIT DE REFROIDISSEMENT				
AMPOULE (12 VOLTS)	122-7137	1	REFROIDISSEMENT (VERSION)	53
CHAPEAU - RADIATEUR	006-8865	1	RADIATEUR ET REFROIDISSEUR D'HUILE HYDRAULIQUE (ASS)	68
CHAPEAU (ENS) (RADIATEUR)	227-4376	1	RADIATEUR ET REFROIDISSEUR D'HUILE HYDRAULIQUE (ASS)	71
		1	RADIATEUR ET REFROIDISSEUR D'HUILE HYDRAULIQUE (ASS)	74
COURROIE TRAPEZOIDALE (COMPRESSEUR DE RÉFRIGÉRANT)	1N-3743	1	REFROIDISSEMENT (VERSION)	53
FLEXIBLE DE RADIATEUR	140-3637	1	RADIATEUR ET REFROIDISSEUR D'HUILE HYDRAULIQUE (ASS)	67
	140-3638	1	RADIATEUR ET REFROIDISSEUR D'HUILE HYDRAULIQUE (ASS)	67
JEU DE COURROIES TRAPEZOIDALES (COMPREND 2 COURROIES)	4N-8597	1	REFROIDISSEMENT (VERSION)	53
		1	REFROIDISSEMENT (VERSION)	54
	7W-3896	1	REFROIDISSEMENT (VERSION)	53
		1	REFROIDISSEMENT (VERSION)	54
JOINT TORIQUE (RÉGULATEUR DE TEMPÉRATURE D'EAU)	225-6909	1	RACCORD D'EAU (ASS)	50
THERMOSTAT-TEMPÉRATURE D'EAU	225-6908	1	RACCORD D'EAU (ASS)	50
CIRCUIT ÉLECTRIQUE ET DE DÉMARRAGE				
AMPOULE (12 VOLTS)	7X-9065	1	CABLAGE DE CONSOLE (ASS)	157
		1	CABLAGE DE CONSOLE (ASS)	160
		1	CABLAGE DE CONSOLE (ASS)	167
		1	CABLAGE DE CONSOLE (ASS)	169
	9X-8118	1	LAMPE - GYROPHARE (ASS)	127
	122-7137	1	CABLAGE - CLIMATISEUR (ASS)	141
	9X-8118	1	LAMPE - GYROPHARE (ASS)	126
AMPOULE (12 VOLTS/ 21 WATTS)	9W-3326	1	FEUX ARRIÈRE ET FEUX D'ARRÊT	125
AMPOULE (12 VOLTS, 55 WATTS)	9W-0607	1	LAMPE - PHARE (ASS)	123
AMPOULE (12V, 24W)	9W-3326	1	LAMPE - CLIGNOTANT DE DIRECTION (ASS)	124
AMPOULE (12V, 55W)	9W-0607	1	ÉCLAIRAGE - PROJECTEURS ET CLIGNOTANTS (ASS)	128
AMPOULE (12VOLTS/ 21/ 5WATTS)	3C-6516	1	FEUX ARRIÈRE ET FEUX D'ARRÊT	125
BATTERIE (12V, GRANDE CAPACITÉ)	230-6368	1	BATTERIE (ASS)	113
BATTERIE (12V, INDUSTRIELLE)	230-6368	1	BATTERIE (ASS)	111
BATTERIE (12V, 750A) (750A)	3T-5760	2	BATTERIE (ASS)	107
		1	BATTERIE (ASS)	109
BOUGIE DE PRECHAUFFAGE	232-6662	4	BOUGIE DE PRÉCHAUFFAGE (ASS)	115
ENTRAÎNEMENT POUR COURROIE	9X-8139	1	LAMPE - GYROPHARE (ASS)	126
		1	LAMPE - GYROPHARE (ASS)	127
FILTRE À HUILE (ENS) (HYDRAULIQUE)	126-1817	1	CABLAGE DE CONSOLE (ASS)	160
FUSIBLE (10A)	3K-8782	1	LAMPE - GYROPHARE (ASS)	126
		1	LAMPE - GYROPHARE (ASS)	127
	113-8490	1	CABLAGE - CLIMATISEUR (ASS)	138
		1	CABLAGE - CLIMATISEUR (ASS)	142
		1	CÂBLAGE DE COMMANDE DE TRANSLATION (ASS)	187
		1	CÂBLAGE DE COMMANDE DE TRANSLATION (ASS)	189

PIÈCES DE RECHANGE

DESCRIPTION	NUMÉRO DE PIECÈS	QTÉ	DOMAINE D'APPLICATION	PAGE
		1	CÂBLAGE DE COMMANDE DE TRANSLATION (ASS)	191
		1	CABLAGE DE PRISE DE FORCE	183
		1	CABLAGE DE STABILISATEUR (ASS)	194
		2	ÉCLAIRAGE - PROJECTEURS ET CLIGNOTANTS (ASS)	128
FUSIBLE (15A)	113-8491	2	ÉCLAIRAGE - PROJECTEURS ET CLIGNOTANTS (ASS)	128
		1	CABLAGE DE CABINE (ASS)	153
		1	CABLAGE DE CABINE (ASS)	154
FUSIBLE (20A)	113-8492	2	CABLAGE DE CABINE (ASS)	150
FUSIBLE (5A)	141-2759	1	CABLAGE DE CABINE (ASS)	150
		1	CABLAGE DE DIRECTION (ASS)	198
LAMPE (ENS) (12 VOLTS)	165-5655	1	MONTAGE-SÉCURITÉ (ASS)	119
		1	MONTAGE-SÉCURITÉ (ASS)	122
LENTILLE	174-8958	1	FEUX ARRIÈRE ET FEUX D'ARRÊT	125
LENTILLE (ENS) (PROJECTEUR)	202-6614	1	LAMPE - PHARE (ASS)	123
LENTILLE (JAUNE)	174-8957	1	LAMPE - CLIGNOTANT DE DIRECTION (ASS)	124
LENTILLE ORANGE	9X-8121	1	LAMPE - GYROPHARE (ASS)	126
		1	LAMPE - GYROPHARE (ASS)	127
PORTE-BALAIS (ENS)	7T-6092	1	DÉMARREUR ÉLECTRIQUE (ASS)	133
CIRCUIT HYDRAULIQUE				
BOUCHON DE REMPLISSAGE (HUILE HYDRAULIQUE)	237-3797	1	RÉSERVOIR HYDRAULIQUE (ASS)	515
BOUCHON FILETÉ	9S-4183	1	DISTRIBUTEUR 6 ÉLÉMENTS (VERSION)	519
		1	TRANSFORMATION DE CANALISATIONS AUXILIAIRES (ASS)	358
FILTRE	4T-4520	1	DISTRIBUTEUR (ASS)	533
		1	DISTRIBUTEUR (ASS)	535
		1	DISTRIBUTEUR (ASS)	537
		1	DISTRIBUTEUR (ASS)	539
		1	DISTRIBUTEUR (ASS)	543
		1	DISTRIBUTEUR (ASS)	553
FILTRE À HUILE (ENS) (HYDRAULIQUE) (ININFLAMMABLE)	134-3014	1	VERSION HYDRAULIQUE	394
FILTRE À HUILE (ENS) (NETTOYAGE, GRANDE EFFICACITÉ)	126-1817	1	VERSION HYDRAULIQUE	394
FILTRE HYDRAULIQUE (ENS)	134-3014	1	FILTRE A HUILE (ASS)	387
FILTRE (RENIFLARD DE RÉSERVOIR HYDRAULIQUE)	9R-9925	1	RÉSERVOIR HYDRAULIQUE (ASS)	515
GRAISSEUR	3B-8489	4	MONTAGE DE VÉRIN (ASS)	498
		2	VÉRIN DE SERRE-JOINT (ASS)	385
JOINT TORIQUE	2M-9780	1	CANALISATIONS DU BRAS TELESCOPIQUE (ASS)	432
PARE-POUSSIERE	6V-0852	1	CANALISATIONS A COMMANDE PILOTE (ASS)	453
		1	RACCORD DE SOUPAPE (ASS)	333

PIÈCES DE RECHANGE

DESCRIPTION	NUMÉRO DE PIECÈS	QTÉ	DOMAINE D'APPLICATION	PAGE
ÉQUIPEMENTS				
GRAISSEUR	3B-8488	3	FLECHE (ASS)	577
		3	FLECHE (ASS)	578
GRAISSEUR (FILET 1/8-27)	3B-8488	4	BRAS DE LEVAGE (ASS)	575
		1	BRAS DE PELLE RETRO (ASS)	606
	3B-8489	5	BRAS DE LEVAGE (ASS)	575
		2	BRAS DE PELLE RETRO (ASS)	606
		2	MONTAGE DE BRAS (ASS)	592
		4	PELLE RÉTRO - STABILISATEUR (ASS)	602
		7	TIMONERIE DE GODET DE CHARGEUSE (ASS)	585
PATIN (ENS)	9R-5555	2	SEMELLE DE STABILISATEUR	600
		2	SEMELLE DE STABILISATEUR	601
	141-5150	4	SEMELLE ET PROTECTION DE STABILISATEUR (ASS)	595
MATÉRIEL ET FOURNITURES D'ENTRETIEN				
CADENAS (ASS)	5P-8502	2	VERROUILLAGE ANTI-VANDALISME (ASS)	863
CLÉ	5P-8500	1	VERROUILLAGE ANTI-VANDALISME (ASS)	863
MOTEUR STANDARD				
BOUCHON-VIDANGE DU CARTER	7C-0351	2	HUILE MOTEUR - CARTER (ASS)	32
FLEXIBLE (RENIFLARD)	198-8645	1	CACHE-SOUPAPES (ASS)	14
JOINT TORIQUE (VIDANGE D'HUILE MOTEUR)	5P-6718	2	HUILE MOTEUR - CARTER (ASS)	32
RESSORT (FLEXIBLE DE RENIFLARD)	162-1565	1	CACHE-SOUPAPES (ASS)	14
OUTILS DE TRAVAIL				
GRAISSEUR	3B-8489	2	GODET TOUS-TRAVAUX (ASS)	689
		2	SERRE-JOINT (ASS)	715
GRAISSEUR (FILET 1/8-27)	3B-8489	2	GODET TOUS-TRAVAUX (ASS)	687
		2	GODET TOUS-TRAVAUX (ASS)	688
		2	GODET TOUS-TRAVAUX (ASS)	690
RÉFLECTEUR	101-4415	1	PROTECTION DE GODET (ASS)	701

PIÈCES DE RECHANGE

DESCRIPTION	NUMÉRO DE PIECÈS	QTÉ	DOMAINE D'APPLICATION	PAGE
POSTE DE CONDUITE				
AMPOULE	189-3610	1	MODULE - TÉMOIN (ASS)	812
AMPOULE (12 VOLTS)	122-7137	1	COMPTE-TOURS ÉLECTRIQUE (ASS)	840
		1	COMPTE-TOURS ÉLECTRIQUE (ASS)	841
AMPOULE (12V, 10W)	6R-7490	1	INSONORISATION (ASS)	836
BALAI D'ESSUIE-GLACE (ENS)	102-2940	2	ESSUIE-GLACE (ASS)	858
CHAPEAU (ENS) (CLIMATISEUR)	3E-4052	1	CANALISATIONS-RÉCHAUFFEUR ET CLIMATISEUR (ASS)	805
COURROIE TRAPEZOIDALE (CLIMATISEUR)	1W-2934	1	COMPRESSEUR DE REFRIGERANT (ASS)	759
FILTRE À AIR (CABINE)	170-7272	1	CHAUFFAGE DE CABINE (ASS)	797
FILTRE À AIR (CLIMATISEUR)	170-7272	1	CLIMATISEUR (ASS)	723
		1	CLIMATISEUR ET MONTAGE (ASS)	718
FILTRE (CLIMATISEUR)	206-7514	1	CLIMATISEUR ET MONTAGE (ASS)	720
		1	CLIMATISEUR ET MONTAGE (ASS)	718
FILTRE (RÉCHAUFFEUR)	206-7514	1	CHAUFFAGE ET MONTAGE - CABINE (ASS)	795
JEU DE COURROIES TRAPEZOIDALES (COMPREND 2 COURROIES)	3N-1491	1	CABINE (VERSION)	729
		1	CABINE (VERSION)	731
	5L-3308	1	CABINE (VERSION)	728
		1	CABINE (VERSION)	730
		1	TOIT (VERSION)	744
		1	TOIT (VERSION)	745
LAME	101-0745	1	ESSUIE-GLACE (ASS)	860
TRANSMISSION				
BOUCHON AIMANTÉ	9R-6602	2	ESSIEU AR (ASS)	206
	152-6144	1	COURONNE ET DIFFERENTIEL (ASS)	211
		3	ESSIEU MOTEUR ET DIRECTEUR (ASS)	201
CHAPEAU	2D-2633	1	PNEU - GROUPE DE VALVE	274
		1	PNEU - GROUPE DE VALVE	275
CLAPET DE DECHARGE (PURGEUR D'AIR)	5F-5434	1	ESSIEU ET MONTAGE -ARRIÈRE (ASS)	199
CREPINE	7T-2651	1	BOÎTE MÉCANIQUE (ASS)	255
		1	BOÎTE MÉCANIQUE (ASS)	249
		1	BOÎTE POWER SHIFT (ASS)	261
FILTRE À HUILE (ENS) (BOîTE DE VITESSES)	119-4740	1	BOITE MECANIQUE (VERSION)	246
		1	BOÎTE POWER SHIFT (VERSION)	246
PARE-POUSSIERE	6V-0852	2	GOULOTTE DE REMPLISSAGE D'HUILE DE TRANSMISSION	216
		2	GOULOTTE DE REMPLISSAGE D'HUILE DE TRANSMISSION	218
		2	GOULOTTE DE REMPLISSAGE D'HUILE DE TRANSMISSION	220
RENIFLARD (BOîTE DE VITESSES)	7T-3251	1	BOÎTE MÉCANIQUE (ASS)	249
		1	BOÎTE MÉCANIQUE (ASS)	254
		1	BOÎTE POWER SHIFT (ASS)	261
RENIFLARD (ESSIEU)	197-9155	1	ESSIEU MOTEUR ET DIRECTEUR (ASS)	201

PIEZAS DE MANTENIMIENTO

DESCRIPCION	NUMERO DE PIEZA	CANT	SE UTILIZA EN	PAGINA
BASTIDOR Y CAJA				
CONEXIÓN DE ENGRASE (ROSCA DE 1/8-27)	3B-8488	2	BASTIDOR DEL CARGADOR (GR)	321
	3B-8489	6	BASTIDOR DE ROTACIÓN (GR)	322
		2	BASTIDOR DEL CARGADOR (GR)	321
EQUIPOS Y SUMINISTRO DE SERVICIOS				
CANDADO (GR)	5P-8502	2	TRABA CONTRA EL VANDALISMO (GR)	863
LLAVE	5P-8500	1	TRABA CONTRA EL VANDALISMO (GR)	863
HERRAMIENTAS				
CONEXIÓN DE ENGRASE	3B-8489	2	CUCHARÓN DE USO MÚLTIPLE (GR)	689
		2	PULGAR GR	715
CONEXIÓN DE ENGRASE (ROSCA DE 1/8-27)	3B-8489	2	CUCHARÓN DE USO MÚLTIPLE (GR)	687
		2	CUCHARÓN DE USO MÚLTIPLE (GR)	688
		2	CUCHARÓN DE USO MÚLTIPLE (GR)	690
REFLECTOR	101-4415	1	GRUPO DE PROTECTOR DEL CUCHARON	701
IMPLEMENTOS				
ALMOHADILLA (CONJ)	9R-5555	2	ZAPATA DE ESTABILIZADOR (GR)	600
		2	ZAPATA DE ESTABILIZADOR (GR)	601
	141-5150	4	ZAPATA Y PROTECTOR DEL ESTABILIZADOR	595
CONEXIÓN DE ENGRASE	3B-8488	3	PLUMA (GR)	577
		3	PLUMA (GR)	578
CONEXIÓN DE ENGRASE (ROSCA DE 1/8-27)	3B-8488	4	GRUPO DE BRAZO DE LEVANTAMIENTO	575
	3B-8489	5	GRUPO DE BRAZO DE LEVANTAMIENTO	575
		2	MONTAJE DEL BRAZO (GR)	592
		7	VARILLAJE DE CUCHARÓN CARGADOR (GR)	585
	3B-8488	1	BRAZO DE RETROEXCAVADOR (GR)	606
	3B-8489	2	BRAZO DE RETROEXCAVADOR (GR)	606
		4	RETROEXCAVADOR - ESTABILIZADOR DEL (GR)	602
MOTOR BÁSICO				
MANGUERA (RESPIRADERO)	198-8645	1	TAPA DEL MECANISMO DE VÁLVULAS (GR)	14
RESORTE (RESPIRADERO DE MANGUERA)	162-1565	1	TAPA DEL MECANISMO DE VÁLVULAS (GR)	14
SELLO ANULAR (DRENAJE DE ACEITE DE MOTOR)	5P-6718	2	CÁRTER - COLECTOR DEL (GR)	32
TAPON DE DRENAJE DE SUMIDERO	7C-0351	2	CÁRTER - COLECTOR DEL (GR)	32

PIEZAS DE MANTENIMIENTO

DESCRIPCION	NUMERO DE PIEZA	CANT	SE UTILIZA EN	PAGINA
PUESTO DEL OPERADOR				
CORREA TRAPEZOIDAL (AIRE ACONDICIONADO)	1W-2934	1	COMPRESOR DE REFRIGERANTE (GR)	759
FILTRO (AIRE ACONDICIONADO)	206-7514	1	ACONDICIONADOR DE AIRE Y MONTAJE (GR)	718
		1	ACONDICIONADOR DE AIRE Y MONTAJE (GR)	720
FILTRO (CALEFACTOR)	206-7514	1	CALEFACCIÓN Y MONTAJE DE LA CABINA (GR)	795
FILTRO DE AIRE (AIRE ACONDICIONADO)	170-7272	1	ACONDICIONADOR DE AIRE (GR)	723
		1	ACONDICIONADOR DE AIRE Y MONTAJE (GR)	718
FILTRO DE AIRE (CABINA)	170-7272	1	CALEFACCIÓN DE LA CABINA (GR)	797
HOJA	101-0745	1	LIMPIAPARABRISAS DE LA VENTANA (GR)	860
HOJA DE LIMPIAPARABRISAS (CONJ)	102-2940	2	LIMPIAPARABRISAS DE LA VENTANA (GR)	858
JUEGO DE CORREAS TRAPEZOIDALES (INCLUYE 2 CORREAS)	3N-1491	1	CABINA (CONFIG)	729
		1	CABINA (CONFIG)	731
	5L-3308	1	CABINA (CONFIG)	728
		1	CABINA (CONFIG)	730
		1	TECHO (CONFIG)	744
		1	TECHO (CONFIG)	745
LÁMPARA	189-3610	1	MÓDULO INDICADOR DE ADVERTENCIA (GR)	812
LÁMPARA (12 VOLTIOS)	122-7137	1	TACÓMETRO ELÉCTRICO (GR)	840
		1	TACÓMETRO ELÉCTRICO (GR)	841
LÁMPARA (12 VOLTIOS, 10 VATIOS)	6R-7490	1	INSONORIZADOR (GR)	836
TAPÓN (CONJ) (ACONDICIONADOR DE AIRE)	3E-4052	1	TUBERIAS DE CALENTEDOR Y ACONDICIONADOR DE AIRE (GR)	805
SISTEMA DE ADMISIÓN Y ESCAPE				
INDICADOR DE CAMBIO DE FILTRO DE ACEITE (GR)	8N-2694	1	INDICADOR DE CAMBIO DE FILTRO DE ACEITE (GR)	82
INDICADOR DE SERVICIO (FILTRO DE AIRE)	7W-7417	1	INDICADOR DE CAMBIO DE FILTRO DE ACEITE (GR)	80
SISTEMA DE COMBUSTIBLE				
ELEMENTO DE FILTRO (COMBUSTIBLE)	228-9130	1	BOMBA DE CEBADO DE COMBUSTIBLE (GR)	97
ELEMENTO DE FILTRO DE COMBUSTIBLE (CONJ)	1R-1804	1	FILTRO DE COMBUSTIBLE (GR)	89
ELEMENTO DE FILTRO DE COMBUSTIBLE (CONJ) (SEPARADOR DE AGUA)	131-1812	1	FILTRO DE COMBUSTIBLE Y SEPARADOR DE AGUA (GR)	91
		1	SEPARADOR DE AGUA (GR)	99
TAPA PARA EL COMBUSTIBLE	201-0330	1	COMBUSTIBLE - TANQUE DE (GR)	104
SISTEMA DE DIRECCIÓN				
MANGUERA (53 CM)	5P-1505		TUBERÍAS DE DIRECCIÓN (GR)	298
			TUBERÍAS DE DIRECCIÓN (GR)	301

PIEZAS DE MANTENIMIENTO

DESCRIPCION	NUMERO DE PIEZA	CANT	SE UTILIZA EN	PAGINA
SISTEMA DE ENFRIAMIENTO				
CORREA TRAPEZOIDAL (COMPRESOR DE REFRIGERANTE)	1N-3743	1	CONFIGURACIÓN DE ENFRIAMIENTO	53
JUEGO DE CORREAS TRAPEZOIDALES (INCLUYE 2 CORREAS)	4N-8597	1	CONFIGURACIÓN DE ENFRIAMIENTO	53
		1	CONFIGURACIÓN DE ENFRIAMIENTO	54
	7W-3896	1	CONFIGURACIÓN DE ENFRIAMIENTO	53
		1	CONFIGURACIÓN DE ENFRIAMIENTO	54
LÁMPARA (12 VOLTIOS)	122-7137	1	CONFIGURACIÓN DE ENFRIAMIENTO	53
MANGUERA DE RADIADOR	140-3637	1	RADIADOR Y ENFRIADOR DE ACEITE HIDRÁULICO (GR)	67
	140-3638	1	RADIADOR Y ENFRIADOR DE ACEITE HIDRÁULICO (GR)	67
REGULADOR DE TEMPERATURA DEL AGUA	225-6908	1	AGUA - CONEXIÓN DE (GR)	50
SELLO ANULAR (REGULADOR DE TEMPERATURA DEL AGUA)	225-6909	1	AGUA - CONEXIÓN DE (GR)	50
TAPA DEL RADIADOR	006-8865	1	RADIADOR Y ENFRIADOR DE ACEITE HIDRÁULICO (GR)	68
TAPÓN (CONJ) (RADIADOR)	227-4376	1	RADIADOR Y ENFRIADOR DE ACEITE HIDRÁULICO (GR)	71
		1	RADIADOR Y ENFRIADOR DE ACEITE HIDRÁULICO (GR)	74
SISTEMA DE LUBRICACIÓN				
FILTRO DE ACEITE DEL MOTOR (CONJ)	7W-2326	1	TUBO DE LLENADO DE ACEITE (GR)	47
LATA DE RESPIRADERO (CONJ)	165-4021	1	RESPIRADERO (GR)	42
		1	RESPIRADERO (GR)	44
		1	RESPIRADERO (GR)	40
MANGUERA (TAPA DE VÁLVULA DEL RESPIRADERO DEL CARTER)	218-2685	1	RESPIRADERO (GR)	42
MANGUERA (109 CM DEL RESPIRADERO DEL CARTER ABIERTO)	136-1955		RESPIRADERO (GR)	42
MANGUERA (90 CM DE SUMIDERO DE RESPIRADERO DEL CARTER DEL MOTOR)	5P-1505		RESPIRADERO (GR)	42
SELLO (RESPIRADERO)	185-6643	1	RESPIRADERO (GR)	40
		1	RESPIRADERO (GR)	42
		1	RESPIRADERO (GR)	44
TAPÓN (CONJ) (LLENADO DE ACEITE DE MOTOR)	236-6651	1	TUBO DE LLENADO DE ACEITE (GR)	47
SISTEMA ELÉCTRICO Y DE ARRANQUE				
BATERÍA (12 VOLTIOS, SERVICIO PESADO)	230-6368	1	BATERÍA (GR)	111
		1	BATERÍA (GR)	113
BATERÍA (12-VOLTIOS, 750-AMPERIOS) (750AMP)	3T-5760	2	BATERÍA (GR)	107
		1	BATERÍA (GR)	109
BUJÍA INCANDESCENTE	232-6662	4	BUJÍA INCANDESCENTE (GR)	115
CRISTAL	174-8958	1	LUCES DE PARADA Y COLA (GR)	125
CRISTAL (AMBAR)	174-8957	1	LUZ DE SEÑAL DE GIRO (GR)	124

PIEZAS DE MANTENIMIENTO

DESCRIPCION	NUMERO DE PIEZA	CANT	SE UTILIZA EN	PAGINA
FILTRO DE ACEITE (CONJ) (HIDRÁULICO)	126-1817	1	CABLES DE LA CONSOLA (GR)	160
FUSIBLE (10 A)	3K-8782	1	LÁMPARA DE BALIZA DE ADVERTENCIA (GR)	126
		1	LÁMPARA DE BALIZA DE ADVERTENCIA (GR)	127
	113-8490	1	CABLES DE CONTROL DE AMORTIGUACIÓN (GR)	191
		1	CABLES DEL ACONDICIONADOR DE AIRE (GR)	142
		1	CABLES DEL RECEPTÁCULO DE FUERZA (GR)	183
		1	CABLES ESTABILIZADORES (GR)	194
FUSIBLE (10-AMPERIOS)	113-8490	1	CABLES DEL ACONDICIONADOR DE AIRE (GR)	138
		1	CABLES DE CONTROL DE AMORTIGUACIÓN (GR)	187
		1	CABLES DE CONTROL DE AMORTIGUACIÓN (GR)	189
		2	LUCES DE REFLECTOR Y CAMBIO DE DIRECCION (GR)	128
FUSIBLE (15 A)	113-8491	1	CABLES DE LA CABINA (GR)	153
FUSIBLE (15 AMPERIOS)	113-8491	1	CABLES DE LA CABINA (GR)	154
		2	LUCES DE REFLECTOR Y CAMBIO DE DIRECCION (GR)	128
FUSIBLE (20-AMPERIOS)	113-8492	2	CABLES DE LA CABINA (GR)	150
FUSIBLE (5 AMP)	141-2759	1	CABLES DE LA DIRECCIÓN (GR)	198
FUSIBLE (5-AMPERIOS)	141-2759	1	CABLES DE LA CABINA (GR)	150
LÁMPARA (CONJ) (12 VOLTIOS)	165-5655	1	INSTALACION DE SEGURIDAD (GR)	119
		1	INSTALACION DE SEGURIDAD (GR)	122
LÁMPARA (12 VOLTIOS)	7X-9065	1	CABLES DE LA CONSOLA (GR)	157
		1	CABLES DE LA CONSOLA (GR)	160
		1	CABLES DE LA CONSOLA (GR)	167
		1	CABLES DE LA CONSOLA (GR)	169
	9X-8118	1	LÁMPARA DE BALIZA DE ADVERTENCIA (GR)	126
		1	LÁMPARA DE BALIZA DE ADVERTENCIA (GR)	127
	122-7137	1	CABLES DEL ACONDICIONADOR DE AIRE (GR)	141
LÁMPARA (12 VOLTIOS, 24 VATIOS)	9W-3326	1	LUZ DE SEÑAL DE GIRO (GR)	124
LÁMPARA (12 VOLTIOS, 55 VATIOS)	9W-0607	1	REFLECTOR (GR)	123
		1	LUCES DE REFLECTOR Y CAMBIO DE DIRECCION (GR)	128
LÁMPARA (12 VOLTIOS/21 VATIOS)	9W-3326	1	LUCES DE PARADA Y COLA (GR)	125
LÁMPARA (12 VOLTIOS/21/5 VATIOS)	3C-6516	1	LUCES DE PARADA Y COLA (GR)	125
LENTE AMBAR	9X-8121	1	LÁMPARA DE BALIZA DE ADVERTENCIA (GR)	126
		1	LÁMPARA DE BALIZA DE ADVERTENCIA (GR)	127
MANDO DE CORREA	9X-8139	1	LÁMPARA DE BALIZA DE ADVERTENCIA (GR)	126
		1	LÁMPARA DE BALIZA DE ADVERTENCIA (GR)	127

PIEZAS DE MANTENIMIENTO

DESCRIPCION	NUMERO DE PIEZA	CANT	SE UTILIZA EN	PAGINA
PORTAESCOBILLAS (CONJ)	7T-6092	1	MOTOR DE ARRANQUE ELÉCTRICO (GR)	133
VIDRIO (CONJ) (REFLECTOR)	202-6614	1	REFLECTOR (GR)	123
SISTEMA HIDRÁULICO				
CONEXIÓN DE ENGRASE	3B-8489	2	CILINDRO GR - PULGAR	385
		4	MONTAJE DE CILINDRO (GR)	498
FILTRO	4T-4520	1	VÁLVULA DE CONTROL (GR)	533
		1	VÁLVULA DE CONTROL (GR)	535
		1	VÁLVULA DE CONTROL (GR)	537
		1	VÁLVULA DE CONTROL (GR)	539
		1	VÁLVULA DE CONTROL (GR)	543
		1	VÁLVULA DE CONTROL (GR)	553
FILTRO DE ACEITE (CONJ) (FILTRO, ALTA EFICIENCIA)	126-1817	1	HIDRÁULICA (CONFIG)	394
FILTRO DE ACEITE (CONJ) (HIDRAULICO) (RESISTENTE AL FUEGO)	134-3014	1	HIDRÁULICA (CONFIG)	394
FILTRO HIDRÁULICO (CONJ)	134-3014	1	FILTRO DE ACEITE (GR)	387
FILTRO (RESPIRADERO DEL TANQUE)	9R-9925	1	TANQUE HIDRÁULICO (GR)	515
SELLO ANULAR	2M-9780	1	TUBERÍAS DE LA PALANCA EXTENDIBLE (GR)	432
TAPA CONTRA EL POLVO	6V-0852	1	CONECTOR DE VALVULA (GR)	333
		1	TUBERÍAS CON SERVOMANDO (GR)	453
TAPA, LLENADO (ACEITE HIDRÁULICO)	237-3797	1	TANQUE HIDRÁULICO (GR)	515
TAPÓN	9S-4183	1	GRUPO DE CONVERSIÓN, TUBERIAS AUXILIARES	358
		1	GRUPO DE 6 VALVULAS (CONFIG)	519
TREN DE FUERZA				
COLADOR	7T-2651	1	SERVOTRANSMISIÓN (GR)	261
		1	TRANSMISIÓN DIRECTA (GR)	249
		1	TRANSMISIÓN DIRECTA (GR)	255
FILTRO DE ACEITE (CONJ) (TRANSMISION)	119-4740	1	SERVOTRANSMISIÓN (CONFIG)	246
		1	TRANSMISION DIRECTA (CONFIG)	246
RESPIRADERO (EJE)	197-9155	1	EJE DE IMPULSIÓN Y DE DIRECCIÓN (GR)	201
RESPIRADERO (TRANSMISION)	7T-3251	1	SERVOTRANSMISIÓN (GR)	261
		1	TRANSMISIÓN DIRECTA (GR)	249
		1	TRANSMISIÓN DIRECTA (GR)	254
TAPA	2D-2633	1	VÁLVULA DEL NEUMÁTICO (GR)	274
		1	VÁLVULA DEL NEUMÁTICO (GR)	275
TAPA CONTRA EL POLVO	6V-0852	2	TUBO DE LLENADO DE ACEITE DE LA TRANSMISIÓN (GR)	216
		2	TUBO DE LLENADO DE ACEITE DE LA TRANSMISIÓN (GR)	218
		2	TUBO DE LLENADO DE ACEITE DE LA TRANSMISIÓN (GR)	220
TAPÓN MAGNÉTICO	9R-6602	2	EJE TRASERO (GR)	206
	152-6144	1	DIFERENCIAL Y CORONA (GR)	211
		3	EJE DE IMPULSIÓN Y DE DIRECCIÓN (GR)	201
VALVULA (RESPIRADERO DE AIRE)	5F-5434	1	MONTAJE DEL EJE TRASERO (GR)	199

PEÇAS DE MANUTENÇÃO

DESCRIÇÃO	NÚMERO DE PEÇA	QUANT	UTILIZADA EM	PÁGINA
ACESSÓRIOS				
CALCO	9R-5555	2	CALÇO DO ESTABILIZADOR	600
		2	CALÇO DO ESTABILIZADOR	601
	141-5150	4	COXIM E PROTETOR DO ESTABILIZADOR	595
GRAXEIRA	3B-8488	3	LANÇA	577
		3	LANÇA	578
GRAXEIRA (ROSCA 1/8-27 POL)	3B-8488	1	BRAÇO - CAÇAMBA RETRO-ESCAVADORA	606
		4	BRAÇO DE LEVANTAMENTO	575
	3B-8489	7	ARTICULAÇÃO DAS CAÇAMBAS DAS CARREGADEIRAS	585
		2	BRAÇO - CAÇAMBA RETRO-ESCAVADORA	606
		5	BRAÇO DE LEVANTAMENTO	575
		4	ESTABILIZADOR - RETROESCAVADEIRA	602
		2	MONTAGEM - BRAÇO	592
CHASSI E CARCAÇA				
GRAXEIRA (ROSCA 1/8-27 POL)	3B-8488	2	CHASSI DIANTEIRO	321
	3B-8489	6	ARMAÇÃO OSCILANTE	322
		2	CHASSI DIANTEIRO	321
EQUIPAMENTOS DE SERVIÇO E SUPRIMENTOS				
CADEADO	5P-8502	2	CADEADO CONTRA VANDALISMO	863
CHAVE	5P-8500	1	CADEADO CONTRA VANDALISMO	863
FERRAMENTAS DE TRABALHO				
GRAXEIRA	3B-8489	2	CAÇAMBA DE MÚLTIPLAS APLICAÇÕES	689
		2	POLEGAR	715
GRAXEIRA (ROSCA 1/8-27 POL)	3B-8489	2	CAÇAMBA DE MÚLTIPLAS APLICAÇÕES	687
		2	CAÇAMBA DE MÚLTIPLAS APLICAÇÕES	688
		2	CAÇAMBA DE MÚLTIPLAS APLICAÇÕES	690
REFLETOR	101-4415	1	PROTETOR - CAÇAMBA	701
MOTOR BÁSICO				
BUJÃO - DRENAGEM DO RESERVATÓRIO	7C-0351	2	CÁRTER DO ÓLEO DO MOTOR	32
MANGUEIRA (RESPIRO)	198-8645	1	TAMPA - MECANISMO DAS VÁLVULAS	14
MOLA (MANGUEIRA DO RESPIRO)	162-1565	1	TAMPA - MECANISMO DAS VÁLVULAS	14
RETENTOR DE ANEL-O (DRENO DO ÓLEO DO MOTOR)	5P-6718	2	CÁRTER DO ÓLEO DO MOTOR	32

PEÇAS DE MANUTENÇÃO

DESCRIÇÃO	NÚMERO DE PEÇA	QUANT	UTILIZADA EM	PÁGINA
POSTO DO OPERADOR				
CORREIA EM V (AR CONDICIONADO)	1W-2934	1	COMPRESSOR DE REFRIGERANTE	759
FILTRO - AR (AR CONDICIONADO)	170-7272	1	CONDICIONADOR DE AR	723
		1	CONDICIONADOR DE AR E MONTAGEM	718
FILTRO - AR (CABINE)	170-7272	1	AQUECEDOR DA CABINE	797
FILTRO (AQUECEDOR)	206-7514	1	AQUECEDOR DA CABINE E MONTAGEM	795
FILTRO (AR CONDICIONADO)	206-7514	1	CONDICIONADOR DE AR E MONTAGEM	718
		1	CONDICIONADOR DE AR E MONTAGEM	720
JOGO DE CORREIAS EM V (INCLUI 2 CORREIAS)	3N-1491	1	CABINE	729
		1	CABINE	731
	5L-3308	1	CABINE	728
		1	CABINE	730
		1	TOLDO	744
		1	TOLDO	745
LAMINA	101-0745	1	LIMPADOR DO VIDRO	860
LÂMINA	102-2940	2	LIMPADOR DO VIDRO	858
LÂMPADA	189-3610	1	MÓDULO - INDICADOR DE ALARME	812
LÂMPADA (12 V)	122-7137	1	TACÔMETRO - ELÉTRICO	841
LÂMPADA (12-VOLTS)	122-7137	1	TACÔMETRO - ELÉTRICO	840
LÂMPADA (12-VOLTS, 10-WATTS)	6R-7490	1	REDUÇÃO DE RUÍDO	836
TAMPA (CONDICIONADOR DE AR)	3E-4052	1	TUBULAÇÕES - AQUECEDOR E AR CONDICIONADO	805
SISTEMA DE ADMISSÃO E ESCAPE DE AR				
INDICADOR - MANUTENÇÃO (FILTRO DE AR)	7W-7417	1	INDICADOR - TROCA DO FILTRO DE AR	80
INDICADOR - TROCA DO FILTRO DE AR	8N-2694	1	INDICADOR - TROCA DO FILTRO DE AR	82

PEÇAS DE MANUTENÇÃO

DESCRIÇÃO	NÚMERO DE PEÇA	QUANT	UTILIZADA EM	PÁGINA
SISTEMA DE ARREFECIMENTO				
CORREIA EM V (COMPRESSOR DO GÁS REFRIGERANTE)	1N-3743	1	ARREFECIMENTO	53
JOGO DE CORREIAS EM V (INCLUI 2 CORREIAS)	4N-8597	1	ARREFECIMENTO	53
		1	ARREFECIMENTO	54
	7W-3896	1	ARREFECIMENTO	53
		1	ARREFECIMENTO	54
LÂMPADA (12-VOLTS)	122-7137	1	ARREFECIMENTO	53
MANGUEIRA - RADIADOR	140-3637	1	RADIADOR E ARREFECEDOR DO ÓLEO HIDRÁULICO	67
	140-3638	1	RADIADOR E ARREFECEDOR DO ÓLEO HIDRÁULICO	67
REGULADOR DE TEMPERATURA DA ÁGUA	225-6908	1	CONEXÃO - TUBO D'ÁGUA	50
RETENTOR DE ANEL-O (REGULADOR DA TEMPERATURA DA ÁGUA)	225-6909	1	CONEXÃO - TUBO D'ÁGUA	50
TAMPA - RADIADOR	006-8865	1	RADIADOR E ARREFECEDOR DO ÓLEO HIDRÁULICO	68
TAMPA (RADIADOR)	227-4376	1	RADIADOR E ARREFECEDOR DO ÓLEO HIDRÁULICO	71
		1	RADIADOR E ARREFECEDOR DO ÓLEO HIDRÁULICO	74
SISTEMA DE DIREÇÃO				
MANGUEIRA (53CM)	5P-1505		TUBOS - DIREÇÃO	298
			TUBOS - DIREÇÃO	301
SISTEMA DE LUBRIFICAÇÃO				
FILTRO - ÓLEO DO MOTOR	7W-2326	1	BOCAL DE ENCHIMENTO DE ÓLEO DO MOTOR	47
LATA - RESPIRO	165-4021	1	RESPIRO	40
		1	RESPIRO	42
		1	RESPIRO	44
MANGUEIRA (TAMPA DA VÁLVULA DO RESPIRO DO CÁRTER)	218-2685	1	RESPIRO	42
MANGUEIRA (109CM - ABERTURA DO RESPIRO DO CÁRTER)	136-1955		RESPIRO	42
MANGUEIRA (90 CM - RESERVATÓRIO DO RESPIRO DO CÁRTER)	5P-1505		RESPIRO	42
RETENTOR (RESPIRO)	185-6643	1	RESPIRO	40
		1	RESPIRO	42
		1	RESPIRO	44
TAMPA (BOCAL DE ENCHIMENTO DO OLEO DO MOTOR)	236-6651	1	BOCAL DE ENCHIMENTO DE ÓLEO DO MOTOR	47
SISTEMA DO COMBUSTÍVEL				
ELEMENTO - FILTRANTE (COMBUSTÍVEL)	228-9130	1	BOMBA DE ESCORVA DO COMBUSTÍVEL	97
ELEMENTO - FILTRO DE COMBUSTÍVEL	1R-1804	1	FILTRO - COMBUSTÍVEL	89
ELEMENTO - FILTRO DE COMBUSTÍVEL (SEPARADOR DE ÁGUA)	131-1812	1	FILTRO DE COMBUSTÍVEL E SEPARADOR DE ÁGUA	91
		1	SEPARADOR DE ÁGUA	99
TAMPA - TANQUE DE COMBUSTÍVEL	201-0330	1	TANQUE DE COMBUSTÍVEL	104

PEÇAS DE MANUTENÇÃO

DESCRIÇÃO	NÚMERO DE PEÇA	QUANT	UTILIZADA EM	PÁGINA
SISTEMA ELÉTRICO DE PARTIDA				
BATERIA (12 VOLTS, SERVIÇO PESADO)	230-6368	1	BATERIA	111
		1	BATERIA	113
BATERIA (12 VOLTS, 750 AMPERES) (750 A)	3T-5760	2	BATERIA	107
		1	BATERIA	109
CORREIA DE COMANDO	9X-8139	1	LUZ GIRATÓRIA DE ALARME	126
		1	LUZ GIRATÓRIA DE ALARME	127
FILTRO - ÓLEO (HIDRÁULICO)	126-1817	1	CABOS/FIOS ELÉTRICOS DO CONSOLE	160
FUSÍVEL (10 A)	3K-8782	1	LUZ GIRATÓRIA DE ALARME	126
		1	LUZ GIRATÓRIA DE ALARME	127
	113-8490	1	CABOS/FIOS ELÉTRICOS - ABSORÇÃO DE IMPACTOS	191
		1	CABOS/FIOS ELÉTRICOS - AR CONDICIONADO	142
		1	CABOS/FIOS ELÉTRICOS - ESTABILIZADOR	194
		1	CABOS/FIOS ELÉTRICOS - TOMADA DE FORÇA	183
FUSÍVEL (10 AMPERES)	113-8490	1	CABOS/FIOS ELÉTRICOS - ABSORÇÃO DE IMPACTOS	187
		1	CABOS/FIOS ELÉTRICOS - ABSORÇÃO DE IMPACTOS	189
		1	CABOS/FIOS ELÉTRICOS - AR CONDICIONADO	138
		2	SISTEMA DE ILUMINAÇÃO - FARÓIS E SINAL	128
FUSÍVEL (15 A)	113-8491	1	CABOS/FIOS ELÉTRICOS - CABINE	153
FUSÍVEL (15 AMPERES)	113-8491	2	SISTEMA DE ILUMINAÇÃO - FARÓIS E SINAL	128
		1	CABOS/FIOS ELÉTRICOS - CABINE	154
FUSÍVEL (20-AMPERES)	113-8492	2	CABOS/FIOS ELÉTRICOS - CABINE	150
FUSÍVEL (5 AMP)	141-2759	1	CABOS/FIOS ELÉTRICOS - DIREÇÃO	198
FUSÍVEL (5 AMPÈRES)	141-2759	1	CABOS/FIOS ELÉTRICOS - CABINE	150
LÂMPADA (12 V)	7X-9065	1	CABOS/FIOS ELÉTRICOS DO CONSOLE	157
		1	CABOS/FIOS ELÉTRICOS DO CONSOLE	160
	9X-8118	1	LUZ GIRATÓRIA DE ALARME	126
		1	LUZ GIRATÓRIA DE ALARME	127
LÂMPADA (12-VOLTS)	7X-9065	1	CABOS/FIOS ELÉTRICOS DO CONSOLE	167
		1	CABOS/FIOS ELÉTRICOS DO CONSOLE	169
	122-7137	1	CABOS/FIOS ELÉTRICOS - AR CONDICIONADO	141
	165-5655	1	INSTALAÇÃO-SEGURANÇA	119
		1	INSTALAÇÃO-SEGURANÇA	122
LÂMPADA (12-VOLTS, 24-WATTS)	9W-3326	1	LÂMPADA - SINALIZAÇÃO	124
LÂMPADA (12 VOLTS, 55 WATTS)	9W-0607	1	LÂMPADA - FAROL	123
LÂMPADA (12-VOLTS, 55-WATTS)	9W-0607	1	SISTEMA DE ILUMINAÇÃO - FARÓIS E SINAL	128
LÂMPADA (12 VOLTS/21 WATTS)	9W-3326	1	LUZ TRASEIRA E DE FREIO	125

PEÇAS DE MANUTENÇÃO

DESCRIÇÃO	NÚMERO DE PEÇA	QUANT	UTILIZADA EM	PÁGINA
LÂMPADA (12 VOLTS/21/5 WATTS)	3C-6516	1	LUZ TRASEIRA E DE FREIO	125
LENTE	174-8958	1	LUZ TRASEIRA E DE FREIO	125
LENTE ÂMBAR	9X-8121	1	LUZ GIRATÓRIA DE ALARME	126
		1	LUZ GIRATÓRIA DE ALARME	127
LENTE (ÂMBER)	174-8957	1	LÂMPADA - SINALIZAÇÃO	124
LENTE (FAROL)	202-6614	1	LÂMPADA - FAROL	123
SUPORTE - ESCOVA	7T-6092	1	MOTOR ELÉTRICO DE PARTIDA	133
VELA DE AQUECIMENTO; VELA INCANDESCENTE	232-6662	4	VELA DE AQUECIMENTO; VELA INCANDESCENTE	115
SISTEMA HIDRÁULICO				
FILTRO	4T-4520	1	VÁLVULA DE CONTROLE	533
		1	VÁLVULA DE CONTROLE	535
		1	VÁLVULA DE CONTROLE	537
		1	VÁLVULA DE CONTROLE	539
		1	VÁLVULA DE CONTROLE	543
		1	VÁLVULA DE CONTROLE	553
FILTRO - HIDRÁULICO	134-3014	1	FILTRO - ÓLEO	387
FILTRO - ÓLEO (HIDRÁULICO) (RESISTENTE A FOGO)	134-3014	1	COMANDO HIDRÁULICO	394
FILTRO - ÓLEO (LIMPEZA, ALTA EFICIÊNCIA)	126-1817	1	COMANDO HIDRÁULICO	394
FILTRO (RESPIRO DO TANQUE HIDRAULICO)	9R-9925	1	TANQUE HIDRÁULICO	515
GRAXEIRA	3B-8489	2	CILINDRO - POLEGAR	385
		4	MONTAGEM - CILINDRO	498
RETENTOR DE ANEL-O	2M-9780	1	TUBOS - BRAÇO COM EXTENSÃO	432
TAMPA - ENCHIMENTO (ÓLEO HIDRÁULICO)	237-3797	1	TANQUE HIDRÁULICO	515
TAMPA CONTRA POEIRA	6V-0852	1	TUBOS - CIRCUITO PILOTO	453
		1	VÁLVULA DO CONECTOR	333
TAMPÃO	9S-4183	1	CONVERSÃO - TUBULAÇÕES AUXILIARES	358
		1	GRUPO DE VÁLVULAS - SEIS	519

PEÇAS DE MANUTENÇÃO

DESCRIÇÃO	NÚMERO DE PEÇA	QUANT	UTILIZADA EM	PÁGINA
TREM DE FORÇA				
BUJÃO MAGNÉTICO	9R-6602	2	SEMI-EIXO TRASEIRO	206
	152-6144	1	DIFERENCIAL E COROA	211
		3	EIXO DE PROPULSÃO E DIREÇÃO	201
FILTRO - ÓLEO (TRANSMISSÃO)	119-4740	1	SERVO-TRANSMISSÃO	246
		1	TRANSMISSÃO DIRETA	246
RESPIRO (EIXO)	197-9155	1	EIXO DE PROPULSÃO E DIREÇÃO	201
RESPIRO (TRANSMISSÃO)	7T-3251	1	SERVOTRANSMISSÃO	261
		1	TRANSMISSÃO DIRETA	249
		1	TRANSMISSÃO DIRETA	254
TAMPA	2D-2633	1	VÁLVULA DE PNEU	274
		1	VÁLVULA DE PNEU	275
TAMPA CONTRA POEIRA	6V-0852	2	BOCAL DE ENCHIMENTO DE ÓLEO DO TREM DE FORÇA	216
		2	BOCAL DE ENCHIMENTO DE ÓLEO DO TREM DE FORÇA	218
		2	BOCAL DE ENCHIMENTO DE ÓLEO DO TREM DE FORÇA	220
TELA FILTRANTE	7T-2651	1	SERVOTRANSMISSÃO	261
		1	TRANSMISSÃO DIRETA	249
		1	TRANSMISSÃO DIRETA	255
VÁLVULA DE ALÍVIO (RESPIRO DE AR)	5F-5434	1	EIXO TRASEIRO E MONTAGEM	199

WARTUNGSTEILE

BESCHREIBUNG	ERSATZTEIL-NUMMER	MENGE	VERWENDET IN	SEITE
ARBEITSGERÄTE				
POLSTER	9R-5555	2	SEITENSTÜTZENPLATTEN	600
		2	SEITENSTÜTZENPLATTEN	601
	141-5150	4	SEITENSTÜTZENPLATTEN UND SCHUTZABDECKUNG	595
REFLEKTOR	101-4415	1	SCHAUFELSCHUTZ	701
SCHMIERNIPPEL	3B-8488	3	AUSLEGER	577
		3	AUSLEGER	578
	3B-8489	2	DAUMEN	715
		2	KOMBISCHAUFEL	689
SCHMIERNIPPEL (1/8-27-GEWINDE)	3B-8488	4	HUBARM	575
		1	LÖFFELSTIEL	606
	3B-8489	5	HUBARM	575
		2	KOMBISCHAUFEL	687
		2	KOMBISCHAUFEL	688
		2	KOMBISCHAUFEL	690
		2	LÖFFELSTIEL	606
		7	SCHAUFELGESTÄNGE	585
		4	SEITENSTÜTZEN	602
		2	STIELAUFHÄNGUNG	592

WARTUNGSTEILE

BESCHREIBUNG	ERSATZTEIL-NUMMER	MENGE	VERWENDET IN	SEITE
ELEKTRISCHE ANLAGE UND STARTSYSTEM				
ABDECKGLAS	174-8958	1	BREMS- UND RÜCKLEUCHTE	125
ABDECKGLAS (ARBEITSSCHEIN-WERFER)	202-6614	1	ARBEITSLEUCHTEN	123
ABDECKGLAS (GELB)	9X-8121	1	RUNDUM-KENNLEUCHTE	126
		1	RUNDUM-KENNLEUCHTE	127
	174-8957	1	BLINKLEUCHTE	124
BATTERIE (12 V, HD)	230-6368	1	BATTERIE	111
BATTERIE (12V, DH)	230-6368	1	BATTERIE	113
BATTERIE (12V, 750 A) (750 A)	3T-5760	2	BATTERIE	107
		1	BATTERIE	109
BELEUCHTUNGSANLAGE (12 V)	165-5655	1	SICHERHEITSEINBAUSATZ	119
		1	SICHERHEITSEINBAUSATZ	122
BÜRSTENHALTER	7T-6092	1	STARTERMOTOR	133
GLÜHKERZE	232-6662	4	GLÜHKERZE	115
LAUFBAND UND ANTRIEB	9X-8139	1	RUNDUM-KENNLEUCHTE	126
		1	RUNDUM-KENNLEUCHTE	127
LEUCHTE (12 V)	7X-9065	1	KONSOLENVERDRAHTUNG	157
		1	KONSOLENVERDRAHTUNG	160
		1	KONSOLENVERDRAHTUNG	167
		1	KONSOLENVERDRAHTUNG	169
	9X-8118	1	RUNDUM-KENNLEUCHTE	126
		1	RUNDUM-KENNLEUCHTE	127
	122-7137	1	KLIMAANLAGENVERDRAHTUNG	141
LEUCHTE (12 V/ 21/5 W)	3C-6516	1	BREMS- UND RÜCKLEUCHTE	125
LEUCHTE (12 V, 24 W)	9W-3326	1	BLINKLEUCHTE	124
LEUCHTE (12 V, 55 W)	9W-0607	1	ARBEITSLEUCHTEN	123
		1	ARBEITS- U. SIGNALLEUCHTE	128
LEUCHTE (12 V/21 W)	9W-3326	1	BREMS- UND RÜCKLEUCHTE	125
ÖLFILTER (HYDRAULIK)	126-1817	1	KONSOLENVERDRAHTUNG	160
SICHERUNG (10 A)	3K-8782	1	RUNDUM-KENNLEUCHTE	126
		1	RUNDUM-KENNLEUCHTE	127
	113-8490	2	ARBEITS- U. SIGNALLEUCHTE	128
		1	KLIMAANLAGENVERDRAHTUNG	138
		1	KLIMAANLAGENVERDRAHTUNG	142
		1	SCHWINGUNGSDÄMPFUNGSVER-DRAHTUNG	187
		1	SCHWINGUNGSDÄMPFUNGSVER-DRAHTUNG	189
		1	SCHWINGUNGSDÄMPFUNGSVER-DRAHTUNG	191
		1	SEITENSTÜTZENVERDRAHTUNG	194
		1	STECKDOSENVERDRAHTUNG	183
SICHERUNG (15 A)	113-8491	2	ARBEITS- U. SIGNALLEUCHTE	128
		1	FAHRERHAUSVERDRAHTUNG	153
		1	FAHRERHAUSVERDRAHTUNG	154
SICHERUNG (20 A)	113-8492	2	FAHRERHAUSVERDRAHTUNG	150
SICHERUNG (5 A)	141-2759	1	FAHRERHAUSVERDRAHTUNG	150
		1	LENKVERDRAHTUNG	198

WARTUNGSTEILE

BESCHREIBUNG	ERSATZTEIL-NUMMER	MENGE	VERWENDET IN	SEITE
FAHRERHAUS				
FILTER (HEIZUNG)	206-7514	1	FAHRERHAUSHEIZUNG U. BEFESTIGUNGSTEILE	795
FILTER (KLIMAANLAGE)	206-7514	1	KLIMAANLAGE UND AUFHÄNGUNG	718
		1	KLIMAANLAGE UND AUFHÄNGUNG	720
KAPPE (KLIMAANLAGE)	3E-4052	1	HEIZUNGS- U. KLIMAANLAGENLEITUNGEN	805
KEILRIEMEN (KLIMAANLAGE)	1W-2934	1	KÄLTEMITTELKOMPRESSOR	759
KEILRIEMENSATZ (EINSCHL. 2 RIEMEN)	3N-1491	1	FAHRERHAUS	729
		1	FAHRERHAUS	731
	5L-3308	1	FAHRERHAUS	728
		1	FAHRERHAUS	730
		1	WETTERDACH	744
		1	WETTERDACH	745
LEUCHTE	189-3610	1	WARNANZEIGEMODUL	812
LEUCHTE (12 V)	122-7137	1	DREHZAHLMESSER, ELEKTR.	840
		1	DREHZAHLMESSER, ELEKTR.	841
LEUCHTE (12 V, 10 W)	6R-7490	1	SCHALLDÄMPFUNG	836
LUFTFILTER (FAHRERHAUS)	170-7272	1	FAHRERHAUSHEIZUNG	797
LUFTFILTER (KLIMAANLAGE)	170-7272	1	KLIMAANLAGE	723
		1	KLIMAANLAGE UND AUFHÄNGUNG	718
SCHEIBENWISCHERBLATT	102-2940	2	SCHEIBENWISCHER	858
SCHILD	101-0745	1	SCHEIBENWISCHER	860
HYDRAULIKSYSTEM				
EINFÜLLKAPPE (HYDRAULIKÖL)	237-3797	1	HYDRAULIKTANK	515
FILTER	4T-4520	1	STEUERVENTIL	533
		1	STEUERVENTIL	535
		1	STEUERVENTIL	537
		1	STEUERVENTIL	539
		1	STEUERVENTIL	543
		1	STEUERVENTIL	553
FILTER (HYDRAULIKTANKENTLÜFTER)	9R-9925	1	HYDRAULIKTANK	515
HYDRAULIKFILTER	134-3014	1	ÖLFILTER	387
O-RING-DICHTUNG	2M-9780	1	TELESKOPSTIELLEITUNGEN	432
ÖLFILTER (HOCHLEISTUNGSREINIGUNG)	126-1817	1	HYDRAULIKSYSTEM	394
ÖLFILTER (HYDRAULISCH) (SCHWER ENTFLAMMBAR)	134-3014	1	HYDRAULIKSYSTEM	394
SCHMIERNIPPEL	3B-8489	2	DAUMENZYLINDER	385
		4	ZYLINDERAUFHÄNGUNG	498
SCHRAUBE	9S-4183	1	UMRÜSTSATZ - ZUSATZHYDRAULIKLEITUNGEN	358
		1	6-FACH-VENTILBLOCK	519
STAUBKAPPE	6V-0852	1	VERBINDUNGSVENTIL	333
		1	VORSTEUERLEITUNGEN	453

WARTUNGSTEILE

BESCHREIBUNG	ERSATZTEIL-NUMMER	MENGE	VERWENDET IN	SEITE
KRAFTSTOFFSYSTEM				
FILTER (KRAFTSTOFF)	228-9130	1	KRAFTSTOFF-ENTLÜFTUNGSPUMPE	97
KRAFTSTOFFFILTEREINSATZ	1R-1804	1	KRAFTSTOFFILTER	89
KRAFTSTOFFFILTEREINSATZ (WASSERABSCHEIDER)	131-1812	1	WASSERABSCHEIDER	99
		1	WASSERABSCHEIDER- U. KRAFTSTOFFILTER	91
KRAFTSTOFFTANKKAPPE	201-0330	1	KRAFTSTOFFTANK	104
KRAFTÜBERTRAGUNG				
DRUCKBEGRENZUNGSVENTIL (ENTLÜFTUNGSVORRICHTUNG)	5F-5434	1	HINTERACHSE U. BEFESTIGUNG	199
ENTLÜFTER (ACHSE)	197-9155	1	ANTRIEBS- UND LENKACHSE	201
ENTLÜFTER (GETRIEBE)	7T-3251	1	LASTSCHALTGETRIEBE	261
		1	WECHSELGETRIEBE	249
		1	WECHSELGETRIEBE	254
KAPPE	2D-2633	1	REIFENVENTIL	274
		1	REIFENVENTIL	275
MAGNETSTOPFEN	9R-6602	2	HINTERACHSE	206
	152-6144	3	ANTRIEBS- UND LENKACHSE	201
		1	DIFFERENTIAL UND TELLERRAD	211
ÖLFILTER (GETRIEBE)	119-4740	1	LASTSCHALTGETRIEBE	246
		1	MECHANISCHES GETRIEBE	246
SIEB	7T-2651	1	LASTSCHALTGETRIEBE	261
		1	WECHSELGETRIEBE	249
		1	WECHSELGETRIEBE	255
STAUBKAPPE	6V-0852	2	GETRIEBEÖLFÜLLSTUTZEN	216
		2	GETRIEBEÖLFÜLLSTUTZEN	218
		2	GETRIEBEÖLFÜLLSTUTZEN	220
KÜHLSYSTEM				
KAPPE (KÜHLER)	227-4376	1	KÜHLER UND HYDRAULIKÖLKÜHLER	71
		1	KÜHLER UND HYDRAULIKÖLKÜHLER	74
KEILRIEMEN (KÄLTEMITTELKOMPRESSOR)	1N-3743	1	KÜHLSYSTEM	53
KEILRIEMENSATZ (EINSCHL. 2 RIEMEN)	4N-8597	1	KÜHLSYSTEM	53
		1	KÜHLSYSTEM	54
	7W-3896	1	KÜHLSYSTEM	54
	4N-8597	1	KÜHLSYSTEM	53
	7W-3896	1	KÜHLSYSTEM	53
KÜHLERKAPPE	006-8865	1	KÜHLER UND HYDRAULIKÖLKÜHLER	68
KÜHLERSCHLAUCH	140-3637	1	KÜHLER UND HYDRAULIKÖLKÜHLER	67
	140-3638	1	KÜHLER UND HYDRAULIKÖLKÜHLER	67
LEUCHTE (12 V)	122-7137	1	KÜHLSYSTEM	53
O-RING-DICHTUNG (KÜHLWASSERTHERMOSTAT)	225-6909	1	KÜHLWASSERANSCHLUSS	50
WASSERTEMPERATURREGLER	225-6908	1	KÜHLWASSERANSCHLUSS	50
LENKSYSTEM				
SCHLAUCHLEITUNG (53CM)	5P-1505		LENKÖLLEITUNGEN	298
			LENKÖLLEITUNGEN	301

WARTUNGSTEILE

BESCHREIBUNG	ERSATZTEIL-NUMMER	MENGE	VERWENDET IN	SEITE
LUFTANSAUG- UND ABGASSYSTEM				
LUFTFILTERWARTUNGSANZEIGE	8N-2694	1	LUFTFILTERWARTUNGSANZEIGE	82
WARTUNGSANZEIGE (LUFTFILTER)	7W-7417	1	LUFTFILTERWARTUNGSANZEIGE	80
MOTOR (GRUNDAUSFÜHRUNG)				
FEDER (ENTLÜFTERSCHLAUCH)	162-1565	1	VENTILDECKEL	14
O-RING-DICHTUNG (MOTORÖLABLASS)	5P-6718	2	ÖLWANNE	32
ÖLWANNEN-ABLASSSCHRAUBE	7C-0351	2	ÖLWANNE	32
SCHLAUCHLEITUNG (ENTLÜFTER)	198-8645	1	VENTILDECKEL	14
RAHMEN UND FAHRGESTELL				
SCHMIERNIPPEL (1/8-27-GEWINDE)	3B-8488	2	LADERRAHMEN	321
	3B-8489	2	LADERRAHMEN	321
		6	SCHWENKRAHMEN	322
SCHMIERSYSTEM				
DICHTUNG (ENTLÜFTER)	185-6643	1	ENTLÜFTER	40
		1	ENTLÜFTER	42
		1	ENTLÜFTER	44
ENTLÜFTERPATRONE	165-4021	1	ENTLÜFTER	40
		1	ENTLÜFTER	42
		1	ENTLÜFTER	44
KAPPE (MOTORÖLEINFÜLLUNG)	236-6651	1	MOTORÖLEINFÜLLSTUTZEN	47
ÖLFILTER	7W-2326	1	MOTORÖLEINFÜLLSTUTZEN	47
SCHLAUCHLEITUNG (KUREBLGEHÄ-SUEENTLÜFTERVENTILDECKEL)	218-2685	1	ENTLÜFTER	42
SCHLAUCHLEITUNG (109CM KURBELGEHÄUSEENTLÜFTER OFFEN)	136-1955		ENTLÜFTER	42
SCHLAUCHLEITUNG (90CM KURBELWELLENENTLÜFTERSUMPF)	5P-1505		ENTLÜFTER	42
WARTUNGSAUSRÜSTUNG UND -ZUBEHÖR				
SCHLÜSSEL	5P-8500	1	VORHÄNGESCHLOSS	863
VORHÄNGESCHLOSS	5P-8502	2	VORHÄNGESCHLOSS	863

INDEX

Name	Page
A	
ACCUMULATOR GP-AIR CONDITIONER	805
ACCUMULATOR GP-REFRIGERANT–CHARGED	717
ACCUMULATOR GP-RIDE CONTROL–CHARGED	330
ACCUMULATOR GP-RIDE CONTROL–UNCHARGED	331
ACCUMULATOR GP-STABILIZER	332
AIR CLEANER GP	75
	77
AIR CONDITIONER & MOUNTING GP	718
	720
AIR CONDITIONER AR	722
AIR CONDITIONER GP	723
ALTERNATOR GP-CHARGING	106
ARM GP-LIFT	575
ARMREST GP	725
	823
	825
AXLE & MTG GP-REAR	199
	200
AXLE GP-DRIVE & STEERING	203
AXLE GP-DRIVE & STEERING–FRONT	201
AXLE GP-FRONT	293
	295
AXLE GP-REAR	204
B	
BACKHOE AR	5
	6
	8
	9
BACKHOE AR–MECHANICAL CONTROLS	9
BACKHOE AR-EXTENDABLE STICK	1
	2
	3
	4
BACKHOE AR-EXTENDABLE STICK–MECHANICAL CONTROLS	4
BACKHOE AR-STANDARD STICK	5
	6
	7
	8
BATTERY GP	107
	109
	111
BATTERY GP–HEAVY DUTY	113
BATTERY (12 VOLT, HEAVY DUTY)	111
BATTERY (12-VOLT, HEAVY DUTY)	113
BATTERY (12-VOLT, 750-AMPERE) (750 AMP)	107
	109
BELT-DRIVE	126
	127
BLADE	860
BLADE AS	858
BOOM GP	577
	578
BOOT	394
	561
	562
	565
	566
	567
	568
BOX GP-BATTERY	305
	306
	307
	308
BRACE GP-LIFT CYLINDER	579
BRACKET AS	107
	109
BRACKET GP-TRANSPORT	580
BRAKE GP-PARKING	285
BREATHER (AXLE)	201
BREATHER GP	39
	40
	42
	44
BREATHER GP–KIT	46
BREATHER (TRANSMISSION)	249
	254
BREATHER (TRANSMISSION)	261
BUCKET AR-MULTIPURPOSE	608
	609
	610
BUCKET AS-GENERAL PURPOSE	611
	612
	614
	615
BUCKET AS-HOE–DITCH CLEANING	616
	617
	618
	619
	620
	621
	622
	623
	624
	625
BUCKET GP-GENERAL PURPOSE	626
	627
BUCKET GP-HOE–CORAL	668
	669
	670
	671
	674

INDEX

Name	Page
BUCKET GP-HOE–DITCH CLEANING	646
	647
BUCKET GP-HOE–HEAVY DUTY	633
	634
	635
	636
	637
	643
	653
	654
	655
	656
	657
	658
	673
	676
	677
	678
	679
	680
BUCKET GP-HOE–HIGH CAPACITY	638
	639
	640
	641
	659
	660
	661
	662
	681
	682
	683
	684
	685
	686
BUCKET GP-HOE–ROCK	663
	664
	665
	666
	667
	675
BUCKET GP-HOE–STANDARD DUTY	628
	629
	630
	631
	632
	642
	648
	649
	650
	651
	652
	672
BUCKET GP-HOE–UTILITY	644
	645
BUCKET GP-MULTIPURPOSE	687
	688
	689
	690
BUMPER GP-FRONT	309

C

Name	Page
CAB AR	726
	727
	728
	729
	730
	731
	732
CAB AS	733
	735
CAB GP	738
	740
CAMSHAFT GP	13
CANISTER AS-BREATHER	40
	42
	44
CANOPY AR	742
	744
	745
CANOPY AR–MECHANICAL CONTROL	743
CANOPY AS	746
	749
	750
CANOPY GP-OPEN ROPS	753
	754
CAP	274
	275
CAP AS	399
CAP AS (AIR CONDITIONER)	805
CAP AS (ENGINE OIL FILLER)	47
CAP AS (RADIATOR)	71
	74
CAP-DUST	216
	218
	220
	333
	453
CAP-FILL (HYDRAULIC OIL)	515
CAP-FUEL	104
CAP-RADIATOR	68
CHASSIS AR	10
COMMON AR	10
COMPARTMENT GP-LITERATURE	755
COMPRESSOR GP-REFRIGERANT	756
	757
	759
CONDENSER & MTG GP-REFRIGERANT	760
CONNECTION GP-WATER	50
CONNECTOR GP-VALVE	333

INDEX

Name	Page
CONSOLE GP-FRONT	761
	762
	763
CONSOLE GP-OPERATOR	764
CONSOLE GP-OPERATOR–RH	765
CONSOLE GP-SIDE	766
	767
	768
	769
	770
	771
CONSOLE GP-SIDE–LH, AIR CONDITIONING	772
	773
CONTROL AR-HYDRAULIC	336
CONTROL AR-RIDE	336
	337
CONTROL AR-RIDE–AUTOSHIFT	337
CONTROL AR-RIDE–KIT	337
CONTROL GP-DIFFERENTIAL LOCK	209
CONTROL GP-GOV & ACCELERATOR	87
CONTROL GP-HYDRAULIC HAND	338
	340
CONTROL GP-HYDRAULIC HAND–LEVER	344
CONTROL GP-HYDRAULIC HAND–LOADER	342
CONTROL GP-HYDRAULIC PEDAL	345
CONTROL GP-HYDRAULIC PEDAL–BACKHOE	347
CONTROL GP-JOYSTICK	349
	351
CONTROL GP-PARKING BRAKE	286
	287
CONTROL GP-SERVICE BRAKE	288
CONTROL GP-STEERING	296
CONTROL GP-TRANSMISSION	210
CONTROL GP-UNPROGRAMMED (SECURITY)	121
CONTROL GP-UNPROGRAMMED (SECURITY)	119
CONVERSION AR-CUSHION SWING–KIT	353
CONVERSION GP-AUXILIARY LINES–BACKHOE	355
	358
	362
CONVERSION GP-CONTROL VALVE	365
CONVERSION GP-CONTROL VALVE–KIT	365
	366
CONVERSION GP-EXTENDABLE STICK–KIT	366
COOLANT HEATER LINES	803
	805
	808
COOLER GP-ENGINE OIL	51
COOLER GP-FLTR BASE & ENG OIL	51
COOLING AR	53
	54
COUNTERWEIGHT GP	310
	311
	312
	313
	314
COUPLER AR-QUICK	691
COUPLER GP-QUICK	692
	693
	694
	695
	696
COUPLING GP	367
COVER GP-AIR INLET	78
COVER GP-CONSOLE	775
	776
COVER GP-CONTROL VALVE	368
COVER GP-FIREWALL	778
	779
COVER GP-POST–RH	780
	781
COVER GP-VALVE MECHANISM	14
CRANKSHAFT GP	16
CYLINDER & LINES GP-THUMB–STANDARD STICK	369
CYLINDER AS	288
CYLINDER BLOCK GP	18
	20
CYLINDER GP-BACKHOE BUCKET	370
CYLINDER GP-BACKHOE BUCKET–EXTENDABLE STICK	372
CYLINDER GP-BOOM	374
CYLINDER GP-EXTENDABLE STICK	376
	377
CYLINDER GP-LIFT	379
CYLINDER GP-MULTIPURPOSE BUKT	380
CYLINDER GP-STABILIZER	381
	382
CYLINDER GP-STICK	383
CYLINDER GP-SWING	384
CYLINDER GP-THUMB	385
CYLINDER GP-TILT	386
CYLINDER HEAD GP	21
	22

D

DIFFERENTIAL & BEVEL GEAR GP	211
DIFFERENTIAL GP	211
	213
DOOR GP-BATTERY	315
DOOR GP-LH	782
DOOR GP-RH	784
DRIVE AR-BACKHOE LOADER–2 WHEEL STEER, ALL WHEEL DRIVE	214

INDEX

Name	Page
DRIVE AR-BACKHOE LOADER– 2 WHEEL STEER, 2 WHEEL DRIVE	214
DRIVE GP-FAN	23
DRIVE GP-FLEXIBLE COUPLING	215
DUCT GP-AIR	786
	788
	789
E	
EDGE GP-CUTTING	697
	698
ELEMENT-FILTER (FUEL)	97
ENGINE AR	11
ENGINE AR-PRIMARY	12
EXTENSION GP-EXHAUST	79
F	
FAN AS	723
	797
FAN GP-SUCTION	55
	56
	57
FENDER GP-FRONT	316
FENDER GP-REAR	317
FILLER GP-ENGINE OIL	47
FILLER GP-POWER TRAIN OIL	216
	218
	220
	222
	223
	224
FILM (AIR RECIRCULATION)	723
	797
FILM (AUX PEDAL CONTROL)	345
FILM-AWS	874
FILM (BUCKET)	776
FILM (BUCKET CONTROL)	338
	340
	874
FILM (BUCKET CONTROL)	776
FILM (BUCKET INDICATOR)	396
FILM-BUCKET INDICATOR	874
FILM (BUCKET MULTIPURPOSE)	776
FILM-CAT	327
FILM (CATERPILLAR)	727
	728
	729
	730
	731
	732
	745
FILM (CATERPILLAR) (WINDSHIELD SUN VISOR)	726
FILM (CENTER PIVOT, BOOM LOCK)	874
FILM-CONTROL (AIR CONDITIONER)	718
	720
	795
	874
FILM (CONTROL PILOT LOADER)	776
FILM GP	861
FILM-IDENTIFICATION (FUSE PANEL)	214
FILM-IDENTIFICATION (FUSE PANEL)	874
FILM (IGNITION SWITCH)	119
	122
FILM (INDICATOR)	157
FILM-INDICATOR	165
	874
FILM-INDICATOR (BUCKET)	608
	609
	610
FILM-INSTRUCTION	358
	362
	875
FILM-INSTRUCTION (AUXILIARY)	776
FILM-INSTRUCTION (BUCKET CONTROL)	391
	392
	394
	875
FILM-INSTRUCTION (EXTENDABLE STICK)	340
	875
FILM-INSTRUCTION (LUBRICANTS)	327
FILM-INSTRUCTION (NO STEP)	874
FILM-INSTRUCTION (RETURN FLOW)	355
	401
	404
	408
	412
	417
	420
	874
FILM-LIFT	864
FILM (LIFT EYE LOCATION)	873
FILM (MULTIPURPOSE BUCKET)	391
	392
	874
FILM (PEDAL CONTROL AND E-STICK)	345
FILM (PLATE-NAME)	330
FILM (RIDE CONTROL)	337
	398
FILM (SECURITY)	122
FILM (SECURITY) (MACHINE SECURITY SYSTEM)	119
FILM (STABILIZER CONTROL/BOOM LOCK)	501
FILM (START) (MACHINE SECURITY SYSTEM)	122
FILM (START SWITCH)	874
FILM (STD CROSS PATTERN)	874
FILM-STRIPE (399CM)	726

INDEX

Name	Page
	727
	728
	729
FILM-TIE DOWN	864
FILM (VARIABLE SPEED)	87
	874
FILM-WARNING (HIGH PRESSURE CYLINDER)	355
FILTER	533
	535
	537
	539
	543
	553
FILTER-AIR (AIR CONDITIONER)	718
	723
FILTER-AIR (CAB)	797
FILTER (AIR CONDITIONER)	718
	720
FILTER AS-ENGINE OIL	47
FILTER AS-HYDRAULIC	387
FILTER AS-OIL (CLEANOUT, HIGH EFFICIENCY)	394
FILTER AS-OIL (HYDRAULIC)	160
FILTER AS-OIL (HYDRAULIC) (FIRE RESISTANT)	394
FILTER AS-OIL (TRANSMISSION)	246
FILTER BASE & ENG OIL COOLER	51
FILTER ELEMENT AS-FUEL	89
FILTER ELEMENT AS-FUEL (WATER SEPARATOR)	91
	99
FILTER GP-FUEL	89
FILTER GP-OIL–HYDRAULIC	387
FILTER GP-WATER SEP & FUEL	91
FILTER (HEATER)	795
FILTER (HYDRAULIC TANK BREATHER)	515
FITTING GP-HEATER & AIR COND	58
FITTING-GREASE	385
	498
	577
	578
	689
	715
FITTING-GREASE (1/8-27 THD)	321
	322
	575
	585
	592
	602
	606
	687
	688
	690
FLANGE GP-WHEEL	225
FLASHER AS	179
FLOOR MAT GP	790
	791
	792
	793
FLOORPLATE GP	318
	319
FLYWHEEL GP	24
FOOTREST GP	794
FORK AR	699
FORK GP	700
FRAME GP-LOADER–SINGLE TILT	321
FRAME GP-SWING	322
FUSE (10 AMP)	126
	127
	142
	183
	191
	194
FUSE (10-AMPERE)	128
	138
	187
	189
FUSE (15 AMP)	153
FUSE (15-AMPERE)	128
	154
FUSE (20-AMPERE)	150
FUSE (5 AMP)	198
FUSE (5-AMPERE)	150

G

Name	Page
GEAR GP-BEVEL & PINION	211
GLOW PLUG	115
GLOW PLUG GP	115
GUARD GP-BUCKET	702
GUARD GP-BUCKET–FRONT BUCKET	701
GUARD GP-DRIVE SHAFT	324
GUARD GP-STABILIZER CYLINDER	388
	389

H

Name	Page
HEATER & MTG GP-CAB	795
HEATER GP-CAB	797
HEATER GP-JACKET WATER	116
	117
	118
HOLDER AS-BRUSH	133
HOOD & GUARD GP	325
HOOD GP-ENGINE	327
HORN GP-ELECTRIC	799
HOSE (BREATHER)	14
HOSE (CRANKCASE BREATHER VALVE COVER)	42

INDEX

Name	Page
HOSE-RADIATOR	67
HOSE (109CM CRANKCASE BREATHER OPEN)	42
HOSE (53CM)	298
	301
HOSE (90CM CRANKCASE BREATHER SUMP)	42
HOUSING & FLANGE GP-AXLE–LH	228
HOUSING & FLANGE GP-AXLE–RH	226
HOUSING AS-EXTENDABLE STICK	581
HOUSING GP-DIFFERENTIAL	211
HOUSING GP-FLYWHEEL	25
HOUSING GP-FRONT	26
HYDRAULIC AR	391
	392
	393
	394

I

INDICATOR AS (HYDRAULIC)	169
INDICATOR GP-AIR FILTER CHANGE	80
	81
	82
	83
INDICATOR-SERVICE (AIR FILTER)	80
INSTALLATION AR-BANK VALVE–FIVE	395
INSTALLATION AR-BANK VALVE–FOUR	395
INSTALLATION AR-BANK VALVE–SIX	395
INSTALLATION AR-WHEEL CHOCK	862
INSTALLATION GP-SECURITY	119
	121
	122

K

KEY	863
KEY AS-ELECTRONIC (GRAY)	119
	121
KEY AS-ELECTRONIC (YELLOW)	119
	121
KICKOUT & POSITIONER GP	396
KIT-ACCUMULATOR SERVICE	330
KIT-ADAPTER TIP	703
	704
KIT-ADJUSTER (ARMREST)	725
KIT-BEARING	204
KIT-BRAKE CALIPER	285
KIT-BRAKE LINING	285
KIT-CAM (COUNTERCLOCKWISE)	285
KIT-CONNECTING PLUG (12 PIN)	160
KIT-CONNECTING PLUG (12 PIN)	157
KIT-CONNECTING PLUG (2 PIN)	157
	160
	191
	194
	196
	269
	723
KIT-CONNECTING PLUG (2 PIN)	287
KIT-CONNECTING PLUG (2-PIN)	142
	179
KIT-CONNECTING PLUG (2-PIN)	148
KIT-CONNECTING PLUG (3 PIN)	160
	191
KIT-CONNECTING PLUG (4 PIN)	157
	160
	191
	194
	196
KIT-CONNECTING PLUG (6 PIN)	157
	160
	191
KIT-CONTACT (STARTING MOTOR)	133
KIT-CUSHION (ARMREST)	725
KIT-GEAR (STARTING MOTOR)	133
KIT-PEDAL GUARD	800
KIT-PLANETARY CARRIER	230
KIT-RECEPTACLE (12 PIN)	160
KIT-RECEPTACLE (2 PIN)	177
	191
	194
	196
	198
	261
	270
	271
	272
	273
	342
	539
	553
	574
	756
KIT-RECEPTACLE (2-PIN)	210
KIT-RECEPTACLE (3 PIN)	99
	157
	191
	270
	272
	273
	844
KIT-RECEPTACLE (3 PIN)	160
KIT-RECEPTACLE (4 PIN)	160
	191
	194
KIT-RECEPTACLE (4 PIN)	125
KIT-RECEPTACLE (6 PIN)	191
	813
	858

INDEX

Name	Page
KIT-RECEPTACLE (8 PIN)	812
KIT-REPAIR	858
KIT-RIDE CONTROL	398
KIT-ROLLER BEARING	230
KIT-SEAL	118
	349
	351
	454
	555
KIT-SEAL (STEERING METERING PUMP)	214
KIT-SERVICE	820
KIT-SERVICE METER	165
KIT-SLIDER BLOCK	830
	832
	834
KIT-SPIDER	201
KIT-SPIDER & BEARING	240
	241
	242
KIT-WATER BASE	91
	99
KNOB GP-STEERING	297

L

LAMP	812
LAMP AS (12-VOLT)	119
	122
LAMP GP-DOME	836
LAMP GP-FLOOD	123
LAMP GP-SIGNAL	124
LAMP GP-STOP & TAIL	125
LAMP GP-WARNING BEACON	126
	127
LAMP (12 VOLT)	126
	127
	157
	160
	841
LAMP (12-VOLT)	53
	141
	167
	840
LAMP (12-VOLT)	169
LAMP (12-VOLT, 10-WATT)	836
LAMP (12-VOLT, 24-WATT)	124
LAMP (12 VOLT, 55 WATT)	123
LAMP (12-VOLT, 55-WATT)	128
LAMP (12 VOLT/21 WATT)	125
LAMP (12VOLT/21/5WATT)	125
LATCH GP-CONSOLE–BACKHOE	801
LENS	125
LENS (AMBER)	124
LENS-AMBER	126
	127
LENS AS (FLOOD)	123
LEVER GP-GOVERNOR CONTROL	802
LEVER GP-HAND CONTROL	291
LIFTING GP-ENGINE	28
LIGHTING GP-FLOOD & SIGNAL	128
LIGHTING GP-WARNING BEACON	131
	132
LINES GP-BACKHOE AUXILIARY	399
	401
	404
	408
	412
	415
LINES GP-BACKHOE AUXILIARY–1-WAY	420
LINES GP-BACKHOE AUXILIARY–1 WAY LINES	417
LINES GP-BOOM	424
	426
LINES GP-BUCKET CYLINDER	428
	430
LINES GP-EXTENDABLE STICK	432
	433
	435
LINES GP-FUEL	92
LINES GP-HEATER	803
LINES GP-HEATER & AIR COND	805
	808
LINES GP-LIFT CYLINDER	437
	439
LINES GP-LOAD CONTROL VALVE	440
LINES GP-LOAD CONTROL VALVE–BACKHOE	444
LINES GP-LOADER AUXILIARY	447
LINES GP-MULTIPURPOSE BUCKET	449
	451
LINES GP-PILOT	453
	456
	460
LINES GP-PILOT–BACKHOE	454
LINES GP-POWER TRAIN COOLER	59
	61
LINES GP-PUMP	463
	465
	466
	467
	470
	471
LINES GP-RETURN	472
	473
	474
	475
LINES GP-RIDE CONTROL	476
	478
LINES GP-STABILIZER	480
LINES GP-STEERING	298

INDEX

Name	Page
	301
LINES GP-STICK	482
	483
	484
LINES GP-SWING	487
	489
LINES GP-TILT CYLINDER	491
LINK GP-THUMB	582
LINKAGE GP-BACKHOE BUCKET	583
LINKAGE GP-LOADER BUCKET	585
LOADER AR	587
LOCK GP-HYDRAULIC HAND CONTROL	493
LOCK GP-TRANSPORT	588
	589
	590
	591
LOCK GP-VANDALISM	863

M

MIRROR GP-REAR VIEW	810
MODULE GP-WARNING INDICATOR	811
	812
MOTOR GP-WINDOW WIPER	813
MOUNTING GP-BACKHOE CONTROL	494
MOUNTING GP-BANK VALVE–BACKHOE	497
MOUNTING GP-BANK VALVE–LOADER	496
MOUNTING GP-BUCKET	705
	706
MOUNTING GP-CYLINDER	498
	499
MOUNTING GP-ENGINE	29
MOUNTING GP-ENGINE & TMSN	30
	31
MOUNTING GP-FORK	707
MOUNTING GP-HYDRAULIC CONTROL	501
MOUNTING GP-HYDRAULIC CONTROL–STABILIZER	500
MOUNTING GP-HYDRAULIC PUMP	502
MOUNTING GP-INSTRUMENT PANEL	814
	815
	817
MOUNTING GP-INSTRUMENT PANEL–SIDE CONSOLE	816
MOUNTING GP-LINES	503
	504
	505
	506
	507
	508
MOUNTING GP-STICK	592
MUFFLER GP	84

P

PAD & GUARD GP-STABILIZER	593
	594
	595
PAD & MTG GP-STABILIZER–FLIPOVER	598
PAD & MTG GP-STABILIZER–GROUSER	599
PAD & MTG GP-STABILIZER–STREET	597
PAD AS	595
	600
	601
PAD GP-STABILIZER	600
	601
PADLOCK GP	863
PAN GP-OIL	32
PANEL GP-INSTRUMENT–SIDE	819
PEDAL GP-GOVERNOR	820
PIN GP-AXLE	201
PIN GP-COUPLER	708
	709
PISTON & ROD GP	34
PLANETARY GP-FINAL DRIVE	230
PLATE & FILM GP	864
	870
	873
PLATE & FILM GP–ARABIC	869
PLATE & FILM GP–CZECH	871
PLATE & FILM GP–DANISH	868
PLATE & FILM GP–DUTCH	872
PLATE & FILM GP–FINNISH	870
PLATE & FILM GP–FRENCH	864
PLATE & FILM GP–GERMAN	866
PLATE & FILM GP–GREEK	873
PLATE & FILM GP–HEBREW	871
PLATE & FILM GP–ITALIAN	867
PLATE & FILM GP–POLISH	872
PLATE & FILM GP–PORTUGUESE	865
PLATE & FILM GP–SPANISH	865
PLATE & FILM GP–SWEDISH	869
PLUG	358
	519
PLUG GP-ENGINE	35
	36
PLUG-MAGNETIC	201
	206
	211
PLUG-SUMP DRAIN	32
POWER TRAIN AR–ALL WHEEL DRIVE, AUTOSHIFT	231
	233
	236
	239
POWER TRAIN AR–ALL WHEEL DRIVE, STANDARD SHIFT	232
	234

INDEX

Name	Page
	236
	237
	238
POWER TRAIN AR–2 WHEEL DRIVE	231
POWER TRAIN AR– 2 WHEEL DRIVE, STANDARD SHIFT	233
	234
	235
	237
	238
PULLEY GP-CRANKSHAFT	37
PUMP GP-ENGINE OIL	49
PUMP GP-FUEL INJECTION	94
PUMP GP-FUEL PRIMING	89
	97
PUMP GP-PISTON	509
PUMP GP-TRANSMISSION	248
	255
	259
PUMP GP-WATER	63

R

RADIATOR & FAN GP	65
	66
RADIATOR & HYD OIL COOLER GP	67
	68
	69
	70
	71
	72
	74
REDUCER GP	476
REFLECTOR	701
REGULATOR-WATER TEMPERATURE	50
RELAY AS (12 VOLT)	128
	148
	153
	198
RELAY AS (12 VOLT)	142
RELAY AS (12-VOLT)	119
	138
	141
	145
	150
	154
	171
	175
	187
	189
RELAY AS (12-VOLT)	138
	175
RELAY AS (12-VOLT)	122
RELAY AS (12 VOLT) (HIGH SPEED)	142
RESERVOIR GP-BRAKE	292
ROTATING GP-PUMP	512

S

SEAL (BREATHER)	40
	42
	44
SEAL-O-RING	432
SEAL-O-RING (ENGINE OIL DRAIN)	32
SEAL-O-RING (WATER TEMPERATURE REGULATOR)	50
SEAT BELT GP	821
	822
SEAT GP	823
	825
	827
SEAT GP-SUSPENSION	830
	832
	834
	835
SENDER-TEMPERATURE	171
SEPARATOR GP-WATER	98
	99
	100
	101
SHAFT GP-DRIVE–FRONT	241
	242
SHAFT GP-DRIVE–REAR	240
SHAFT GP-POWER TAKE-OFF	513
SHIPPING AR-BUCKET	710
SLEEVE-CABLE SPLICE	755
SPEAKER	836
SPRING (BREATHER HOSE)	14
STABILIZER AR	514
STABILIZER GP-BACKHOE	602
STARTING MOTOR GP-ELECTRIC	133
	135
STEERING WHEEL GP	303
STICK GP-EXTENDABLE	604
STICK GP-HOE	606
STOP GP-BUCKET	711
STRAINER	249
	255
	261
STRAP-CABLE	148
	460
SUN VISOR	843
SUPPRESSION GP-SOUND	836
SUSPENSION GP-SEAT	838
SWITCH AS (HEATER)	175
SWITCH AS (HORN)	165
SWITCH AS (HYDRAULIC LOCK)	391
SWITCH AS (HYDRAULIC LOCKS)	391
SWITCH AS-KEY START	819
SWITCH AS-LIMIT (BRAKE)	288

INDEX

Name	Page
SWITCH AS (NEUTRA; LOCK)	165
SWITCH AS-PRESSURE	138
	187
	189
SWITCH AS-PRESSURE (HIGH - LOW)	142
SWITCH AS-PRESSURE (HYDRAULIC OIL BYPASS)	160
SWITCH AS-PUSH BUTTON	342
SWITCH AS-PUSH BUTTON (NEUTRALIZER)	210
SWITCH AS-ROCKER (FRONT FLOOD)	128
SWITCH AS-ROCKER (HAZARD)	165
SWITCH AS-ROCKER (HEATER FAN SPEED)	138
	142
	175
SWITCH AS-ROCKER (REAR FLOOD)	128
SWITCH AS-ROCKER (RIDE CONTROL)	187
	189
	337
SWITCH AS-ROLLER	193
SWITCH AS-TEMPERATURE (HYDRAULIC OIL)	160
SWITCH AS (TURN SIGNAL)	152
SWITCH GP (HYDRAULIC LOCK)	391
SWITCH GP (HYDRAULIC LOCKS)	391
SWITCH GP-PRESSURE	136
SWITCH GP-TEMPERATURE	137
SWITCH-THERMOSTAT (AIR CONDITIONER)	723
SWITCH (40-DEG) (TIMING ADVANCE)	94
SYNCHRONIZER GP	247
	253

T

TACHOMETER GP-ELECTRIC	728
	729
	730
	731
	744
	745
	840
	841
TANK & MTG GP-FUEL	102
TANK GP-FUEL	103
	104
TANK GP-HYDRAULIC	515
THUMB AR	712
THUMB AR–HEAVY DUTY	712
	713
	714
THUMB AR–ROCK	713
	714
THUMB GP	715
TOOTH GP-UNI	716
TRANSMISSION & MOUNTING GP	243
	244
	245
TRANSMISSION AR-DIRECT DRIVE	246
TRANSMISSION AR-POWER SHIFT	246
TRANSMISSION GP-DIRECT DRIVE	247
	253
TRANSMISSION GP-POWER SHIFT	259
TRIM GP-CAB	842
TURBOCHARGER GP	85

V

V-BELT (AIR CONDITIONER)	759
V-BELT (REFRIGERANT COMPRESSOR)	53
V-BELT SET (INCLUDES 2 BELTS)	53
	54
	728
	729
	730
	731
	744
	745
VALVE & MTG GP-BANK–STABILIZER	517
VALVE & MTG GP-SOLENOID	518
VALVE AR-BANK 4	519
VALVE AR-BANK 5	519
VALVE AR-BANK 6	519
VALVE AS-RELIEF (AIR VENT)	199
VALVE AS (WATER)	718
	720
	795
VALVE-GAS	330
VALVE GP-BANK 2	522
	523
VALVE GP-BANK 2–STABILIZER	520
VALVE GP-BANK 3	524
	525
VALVE GP-BANK 4	526
VALVE GP-BANK 5	527
VALVE GP-BANK 6	528
VALVE GP-CHECK	532
VALVE GP-CHECK–BACK PRESSURE	531
VALVE GP-CHECK–RETURN OIL	530
VALVE GP-CONTROL	545
	547
	549
	551
VALVE GP-CONTROL–CLAM	533
VALVE GP-CONTROL–EXTENDABLE STICK	543
VALVE GP-CONTROL–EXTENDABLE STICK;AUXILIARY	537
VALVE GP-CONTROL–LIFT	535
VALVE GP-CONTROL–STABILIZER	541
VALVE GP-CONTROL–TILT	539

INDEX

Name	Page
	553
VALVE GP-LOAD CONTROL	555
	557
VALVE GP-PILOT	558
	569
VALVE GP-PILOT–STABILIZER	559
	560
	561
	562
	563
	564
	565
	566
	567
	568
VALVE GP-PRIORITY–STEERING	304
VALVE GP-PUMP CONTROL–POWER COMPENSATOR	570
VALVE GP-PUMP CONTROL–PRESSURE,FLOW COMPENSATOR	571
VALVE GP-RELIEF	247
	253
	259
	268
	304
	533
	545
	553
VALVE GP-RELIEF (AIR CONDITIONER)	756
VALVE GP-SHUTTLE	573
VALVE GP-SOLENOID	269
	271
	272
	273
	574
VALVE GP-SOLENOID–TRANSMISSION–FORWARD, NEUTRAL, REVERSE	270
VALVE GP-SOLENOID (12 V)	94
VALVE GP-TIRE	274
	275
VALVE MECHANISM GP	38
VALVE-SHUTOFF	58
	467
VISOR GP-CAB	843

W

Name	Page
WASHER GP-WINDOW	844
	846
WHEEL & TIRE AR–A WHEEL DRIVE	276
WHEEL & TIRE AR–ALL WHEEL DRIVE	275
	277
WHEEL & TIRE AR–ALL WHEEL DRIVE, 2 WHEEL STEER	277
WHEEL & TIRE AR–2 WHEEL DRIVE	275
	276
WHEEL & TIRE AR–2 WHEEL DRIVE, ALL WHEEL DRIVE	276
	277
WHEEL & TIRE GP–FRONT	277
	281
	282
	283
	284
WHEEL & TIRE GP–LH	278
	280
	282
	283
WHEEL & TIRE GP–REAR	278
	279
	280
WHEEL & TIRE GP–RH	278
	279
	280
	281
	282
	283
WINDOW GP-CAB–LH	850
WINDOW GP-CAB–REAR	852
WINDOW GP-CAB–RH	848
WINDOW GP-DOOR–LH	856
WINDOW GP-DOOR–RH	854
WIPER GP-WINDOW	858
	860
WIRING GP-AIR CONDITIONER	138
	141
	142
WIRING GP-AUTOSHIFT	145
	148
WIRING GP-CAB	150
	152
	153
	154
WIRING GP-CONSOLE	157
	160
	167
WIRING GP-CONSOLE–FRONT	165
WIRING GP-CONSOLE–SIDE, DELUXE	169
WIRING GP-ENGINE	171
WIRING GP-HEATER	175
WIRING GP-PLATFORM	177
	179
WIRING GP-POWER RECEPTACLE	183
WIRING GP-REAR	184
WIRING GP-RIDE CONTROL	187
	189
	191
WIRING GP-SENSOR	193
WIRING GP-STABILIZER	194
WIRING GP-STABILIZER ALARM	196

INDEX

Name	Page	Name	Page
WIRING GP-STEERING	198		

INDEX

Désignation	Page

A

ACCOUDOIR (ASS)	725, 823, 825
ACCOUPLEMENT (ASS)	367
ACCUMULATEUR - CLIMATISEUR (ASS)	717
ACCUMULATEUR - COMMANDE DE TRANSLATION (ASS)	330, 331
ACCUMULATEUR DE CLIMATISEUR (ASS)	805
ACCUMULATEUR DE STABILISATEUR (ASS)	332
ALTERNATEUR DE CHARGE (ASS)	106
AMPOULE	812
AMPOULE (12 VOLTS)	53, 126, 127, 157, 160, 167, 169, 840, 841
AMPOULE (12 VOLTS)	141
AMPOULE (12 VOLTS/ 21 WATTS)	125
AMPOULE (12 VOLTS, 55 WATTS)	123
AMPOULE (12V, 10W)	836
AMPOULE (12V, 24W)	124
AMPOULE (12V, 55W)	128
AMPOULE (12VOLTS/ 21/ 5WATTS)	125
ARBRE A CAMES (ASS)	13
ARBRE DE PRISE DE FORCE (ASS)	513
ARBRE D'ENTRAÎNEMENT (ASS)	240, 241, 242
ARRÊT-GODET (ASS)	711
AUTOCOLLANT - DIRECTION INTÉGRALE	874
AUTOCOLLANT (ALTERNANCE DIAGONALE STANDARD)	874
AUTOCOLLANT-ARRIMAGE	864
AUTOCOLLANT (ARTICULATION CENTRALE, VERROUILLAGE DE FLÈCHE)	874
AUTOCOLLANT-CAT	327
AUTOCOLLANT (CATERPILLAR)	727, 728, 729, 730, 731, 732, 745
AUTOCOLLANT (CATERPILLAR) (PARE-SOLEIL DE PARE-BRISE)	726
AUTOCOLLANT-COMMANDE (CLIMATISEUR)	795, 874
AUTOCOLLANT-COMMANDE (CLIMATISEUR)	718, 720
AUTOCOLLANT (COMMANDE DE GODET)	340, 776, 874
AUTOCOLLANT (COMMANDE DE GODET)	338
AUTOCOLLANT (COMMANDE DE PÉDALE AUXILIAIRE)	345
AUTOCOLLANT (COMMANDE DE PÉDALE ET BRAS TÉLESCOPIQUE)	345
AUTOCOLLANT (COMMANDE DE STABILISATEUR/ VERROUILLAGE DE FLÈCHE)	501
AUTOCOLLANT (COMMANDE DE TRANSLATION)	337, 398
AUTOCOLLANT (COMMANDE PILOTE DE CHARGEUSE)	776
AUTOCOLLANT (CONTACTEUR D'ALLUMAGE)	119, 122
AUTOCOLLANT (CONTACTEUR DE DÉMARRAGE)	874
AUTOCOLLANT DE MISE EN GARDE (VÉRIN HAUTE PRESSION)	355
AUTOCOLLANT (DÉMARRAGE) (SYSTÈME DE SÉCURITÉ DE LA MACHINE)	122
AUTOCOLLANT D'IDENTIFICATION (PANNEAU DE FUSIBLES)	214, 874
AUTOCOLLANT (EMPLACEMENT D'OEILLETON DE LEVAGE)	873
AUTOCOLLANT (GODET)	776
AUTOCOLLANT (GODET TOUS-TRAVAUX)	391, 392, 874
AUTOCOLLANT (GODET TOUT USAGE)	776
AUTOCOLLANT-INDICATEUR DE GODET	874
AUTOCOLLANT-LEVAGE	864
AUTOCOLLANT (PLAQUE-NOM)	330
AUTOCOLLANT (RECIRCULATION D'AIR)	723, 797
AUTOCOLLANT (SÉCURITÉ)	122
AUTOCOLLANT (SÉCURITÉ) (SYSTÈME DE SÉCURITÉ DE LA MACHINE)	119
AUTOCOLLANT (TÉMOIN)	157
AUTOCOLLANT (TÉMOIN DE GODET)	396
AUTOCOLLANT (VITESSE VARIABLE)	87, 874
AXE D'ESSIEU (ASS)	201
AXE DU COUPLER (ASS)	708, 709

INDEX

Désignation	Page
B	
*BACKHOE AR-STANDARD STICK	5
	6
	7
	8
BALAI D'ESSUIE-GLACE (ENS)	858
BANDE AUTOCOLLANTE (399CM)	726
	727
	728
	729
BATI - CHARGEUSE (ASS)	321
BÂTI D'ORIENTATION (ASS)	322
BATTERIE (ASS)	107
BATTERIE (ASS)	109
	111
	113
BATTERIE (12V, GRANDE CAPACITÉ)	113
BATTERIE (12V, INDUSTRIELLE)	111
BATTERIE (12V, 750A) (750A)	107
	109
BIELLETTE DE SERRE-JOINT (ASS)	582
BLINDAGE D'ARBRE DE TRANSMISSION (ASS)	324
BLOC-CYLINDRES (ASS)	18
	20
BOITE DE VITESSES ET MONTAGE (ASS)	243
	244
	245
BOÎTE MÉCANIQUE (ASS)	253
BOÎTE MÉCANIQUE (ASS)	247
BOITE MECANIQUE (VERSION)	246
BOITE MECANIQUE (VERSION)	246
BOÎTE POWER SHIFT (ASS)	259
BOÎTE POWER SHIFT (VERSION)	246
BOÎTIER-RENIFLARD	40
	42
	44
BOUCHON AIMANTÉ	201
	206
	211
BOUCHON DE CARBURANT	104
BOUCHON DE MOTEUR (ASS)	35
	36
BOUCHON DE REMPLISSAGE D'HUILE MOTEUR (ASS)	47
BOUCHON DE REMPLISSAGE (HUILE HYDRAULIQUE)	515
BOUCHON FILETÉ	358
	519
BOUCHON-VIDANGE DU CARTER	32
BOUDIN DE ROUE (ASS)	225
BOUGIE DE PRECHAUFFAGE	115
BOUGIE DE PRÉCHAUFFAGE (ASS)	115
BOURRELET D'ÉTANCHÉITÉ (RENIFLARD)	40
	42
	44
BOUTON DE DIRECTION (ASS)	297
BOUTON DE TEMPÉRATURE	137
BRAS DE LEVAGE (ASS)	575
BRAS DE PELLE RETRO (ASS)	606
BRAS TÉLESCOPIQUE (ASS)	604
C	
CABINE (ASS)	738
	740
CABINE (ENS)	733
	735
CABINE (VERSION)	727
	728
	729
	730
	731
	732
CABINE (VERSION)	726
CABLAGE - CAPTEUR (ASS)	193
CABLAGE - CLIMATISEUR (ASS)	141
	142
CABLAGE - CLIMATISEUR (ASS)	138
CABLAGE - PLATE-FORME (ASS)	177
CABLAGE - PLATE-FORME (ASS)	179
CABLAGE AR (ASS)	184
CABLAGE D'AVERTISSEUR DE STABILISATEUR (ASS)	196
CABLAGE DE CABINE (ASS)	150
	152
	153
	154
CABLAGE DE CHANGEMENT DE VITESSES AUTOMATIQUE (ASS)	145
	148
CÂBLAGE DE COMMANDE DE TRANSLATION (ASS)	187
	189
	191
CABLAGE DE CONSOLE (ASS)	157
	160
	165
CABLAGE DE CONSOLE (ASS)	167
CABLAGE DE CONSOLE (ASS)	169
CABLAGE DE DIRECTION (ASS)	198
CABLAGE DE MOTEUR (ASS)	171
CABLAGE DE PRISE DE FORCE	183
CABLAGE DE STABILISATEUR (ASS)	194
CABLAGE DU CHAUFFAGE DE CABINE (ASS)	175
CÂBLE DE COURROIE	148
	460
CACHE-SOUPAPES (ASS)	14

INDEX

Désignation	Page
CADENAS (ASS)	863
CANALISATIONS - GODET TOUS-TRAVAUX (ASS)	449
	451
CANALISATIONS A COMMANDE PILOTE (ASS)	453
	454
	456
	460
CANALISATIONS-CHARGEUSE AUXILIAIRE (ASS)	447
CANALISATIONS DE BRAS (ASS)	482
	483
	484
CANALISATIONS DE CARBURANT (ASS)	92
CANALISATIONS DE CHAUFFAGE (ASS)	803
CANALISATIONS DE COMMANDE DE MARCHE	476
	478
CANALISATIONS DE DIRECTION (ASS)	298
	301
CANALISATIONS DE POMPE (ASS)	463
	465
	466
	467
	470
	471
CANALISATIONS DE RÉCHAUFFEUR DE LIQUIDE DE REFROIDISSEMENT	803
	805
	808
CANALISATIONS DE REFROIDIS. DE TRANSMISSION	59
	61
CANALISATIONS DE RETOUR (ASS)	472
	473
	474
	475
CANALISATIONS DE STABILISATEUR (ASS)	480
CANALISATIONS DE VÉRIN DE GODET (ASS)	428
	430
CANALISATIONS DE VÉRIN DE LEVAGE (ASS)	437
	439
CANALISATIONS D'ORIENTATION (ASS)	487
	489
CANALISATIONS DU BRAS TELESCOPIQUE (ASS)	432
	433
	435
CANALISATIONS DU VÉRIN D'INCLINAISON (ASS)	491
CANALISATIONS-RÉCHAUFFEUR ET CLIMATISEUR (ASS)	805
	808
CANALISATIONS SECONDAIRES DE PELLE RÉTRO (ASS)	399
	401
CANALISATIONS SECONDAIRES DE PELLE RÉTRO (ASS)	404
	408
	412
	415
	417
	420
CANALISATIONS-VALVE DE CONTROLE DE CHARGE	440
	444
CAPOT DU MOTEUR (ASS)	327
CAPOT ET PROTECTION (ASS)	325
CARTER AV (ASS)	26
CARTER DE BRAS TÉLESCOPIQUE (ENS)	581
CARTER DE DIFFÉRENTIEL (ASS)	211
CARTER DE VOLANT (ASS)	25
CARTER ET BRIDE D'ESSIEU (ASS)	226
	228
CEINTURE DE SECURITE (ASS)	821
	822
CHAPEAU	274
	275
CHAPEAU - RADIATEUR	68
CHAPEAU (ENS)	399
CHAPEAU (ENS) (CLIMATISEUR)	805
CHAPEAU (ENS) (GOULOTTE DE REMPLISSAGE D'HUILE MOTEUR)	47
CHAPEAU (ENS) (RADIATEUR)	71
	74
CHARGEUSE (VERSION)	587
CHAUFFAGE DE CABINE (ASS)	797
CHAUFFAGE ET MONTAGE - CABINE (ASS)	795
CLAPET DE DECHARGE (ASS)	253
	268
	304
	553
CLAPET DE DECHARGE (ASS)	247
CLAPET DE DECHARGE (ASS)	259
CLAPET DE DECHARGE (ASS)	545
CLAPET DE DECHARGE (ASS)	533
CLAPET DE DECHARGE (ASS) (CLIMATISEUR)	756
CLAPET DE DECHARGE (PURGEUR D'AIR)	199
CLAPET DE RETENUE (ENS)	530
	532
CLAPET (ENS) (EAU)	718
	720
	795
CLÉ	863
CLÉ ÉLECTRONIQUE (ENS) (GRIS)	119
	121

INDEX

Désignation	Page
CLÉ ÉLECTRONIQUE (ENS) (JAUNE)	119
	121
CLIGNOTANT (ENS)	179
CLIMATISEUR (ASS)	723
CLIMATISEUR ET MONTAGE (ASS)	720
CLIMATISEUR ET MONTAGE (ASS)	718
CLIMATISEUR (VERSION)	722
COMMANDE DE BOITE DE VITESSES (ASS)	210
COMMANDE DE DIFFÉRENTIEL - VERROUILLAGE (ASS)	209
COMMANDE DE DIRECTION (ASS)	296
COMMANDE DE FREIN DE STATIONNEMENT (ASS)	286
	287
COMMANDE DE RÉGULATEUR ET D'ACCÉLÉRATEUR (ASS)	87
COMMANDE DE TRANSLATION (VERSION)	336
	337
COMMANDE HYDRAULIQUE DE PÉDALE (ASS)	347
COMMANDE HYDRAULIQUE DE PÉDALE (ASS)	345
COMMANDE HYDRAULIQUE MANUELLE (ASS)	338
	340
	342
	344
COMMANDE HYDRAULIQUE (VERSION)	336
COMMANDE NON PROGRAMMEE (ASS) (SÉCURITÉ)	121
COMMANDE NON PROGRAMMEE (ASS) (SÉCURITÉ)	119
COMPARTIMENT DE BATTERIE (ASS)	305
	306
	307
	308
COMPRESSEUR DE REFRIGERANT (ASS)	757
	759
COMPRESSEUR DE REFRIGERANT (ASS)	756
COMPTE-TOURS ÉLECTRIQUE (ASS)	729
	730
	731
	744
	745
	840
	841
COMPTE-TOURS ÉLECTRIQUE (ASS)	728
CONDENSATEUR ET MONTAGE (RÉFRIGÉRANT)	760
CONSOLE AV (ASS)	761
	762
	763
CONSOLE DE CONDUITE (ASS)	764
	765
CONSOLE LATÉRALE (ASS)	766
	767
	768
	769
	770
	771
	772
	773
CONTACTEUR DE DÉMARRAGE À CLÉ (ENS)	819
CONTACTEUR (ENS) (CLIGNOTANT DE DIRECTION)	152
CONTACTEUR (ENS) (KLAXON)	165
CONTACTEUR (ENS) (NEUTRE, VERROUILLAGE)	165
CONTACTEUR (ENS) (RÉCHAUFFEUR)	175
CONTACTEUR (ENS) (VERROUILLAGE HYDRAULIQUE)	391
CONTACTEUR (ENS) (VERROUS HYDRAULIQUES)	391
CONTREPOIDS (ASS)	310
	311
	312
	313
	314
COUPLEUR EXPRESS (ASS)	692
	693
	694
	695
	696
COUPLEUR EXPRESS (VERSION)	691
COURONNE CONIQUE ET PIGNON	211
COURONNE ET DIFFERENTIEL (ASS)	211
COURROIE TRAPEZOIDALE (CLIMATISEUR)	759
COURROIE TRAPEZOIDALE (COMPRESSEUR DE RÉFRIGÉRANT)	53
COUVERCLE (ASS) MONTANT	780
	781
COUVERCLE-CLOISON PARE-FEU (ENS)	778
	779
COUVERCLE DE COLLECTEUR D'ADMISSION (ASS)	78
COUVERCLE DE DISTRIBUTEUR (ASS)	368
COUVERCLE DE LA CONSOLE (ASS)	775
	776
CREPINE	249
	255
	261
CULASSE (ASS)	21
	22
CULBUTERIE (ASS)	38

D

DÉMARREUR ÉLECTRIQUE (ASS)	133

INDEX

Désignation	Page
	135
DENT MONOBLOC (ASS)	716
DIFFERENTIEL (ASS)	211
	213
DISJONCTEUR DE SECURITE (ENS) (FREIN)	288
DISTRIBUTEUR (ASS)	533
	535
	537
	539
	541
	543
	545
	547
	549
	551
	553
DISTRIBUTEUR DE CHARGE (ASS)	555
	557
DISTRIBUTEUR DOUBLE ÉLÉMENT (ASS)	520
	522
	523
DISTRIBUTEUR TRIPLE ÉLÉMENT (ASS)	524
	525
DISTRIBUTEUR 4 ÉLÉMENTS (ASS)	526
DISTRIBUTEUR 4 ÉLÉMENTS (VERSION)	519
DISTRIBUTEUR 5 ÉLÉMENTS (ASS)	527
DISTRIBUTEUR 5 ÉLÉMENTS (VERSION)	519
DISTRIBUTEUR 6 ÉLÉMENTS (ASS)	528
DISTRIBUTEUR 6 ÉLÉMENTS (VERSION)	519
DISTRIBUTEURS ET MONTAGE (ASS)	517

E

EAU DES CHEMISES - RECHAUFFEUR (ASS)	116
	117
	118
ÉCLAIRAGE - GYROPHARE (ASS)	131
	132
ÉCLAIRAGE - PROJECTEURS ET CLIGNOTANTS (ASS)	128
ÉLÉMENT DE FILTRE (CARBURANT)	97
ÉLÉMENT DE FILTRE (ENS)-CARBURANT	89
ÉLÉMENT DE FILTRE (ENS)-CARBURANT (SÉPARATEUR D'EAU)	99
ÉLÉMENT DE FILTRE (ENS)-CARBURANT (SÉPARATEUR D'EAU)	91
ENTRAÎNEMENT D'ACCOUPLEMENT FLEXIBLE (ASS)	215
ENTRAÎNEMENT DE VENTILATEUR (ASS)	23
ENTRAÎNEMENT POUR COURROIE	126
	127
ESSIEU AR (ASS)	204
ESSIEU AV (ASS)	293
	295
ESSIEU ET MONTAGE -ARRIÈRE (ASS)	199
	200
ESSIEU MOTEUR ET DIRECTEUR (ASS)	201
	203
ESSUIE-GLACE (ASS)	858
	860

F

FEUX ARRIÈRE ET FEUX D'ARRÊT	125
FILTRE	533
	535
	537
	539
	543
	553
FILTRE A AIR (ASS)	75
	77
FILTRE À AIR (CABINE)	797
FILTRE À AIR (CLIMATISEUR)	718
FILTRE À AIR (CLIMATISEUR)	723
FILTRE A CARBURANT (ASS)	89
FILTRE A HUILE (ASS)	387
FILTRE À HUILE (ENS) (BOÎTE DE VITESSES)	246
FILTRE À HUILE (ENS) (HYDRAULIQUE)	160
FILTRE À HUILE (ENS) (HYDRAULIQUE) (ININFLAMMABLE)	394
FILTRE À HUILE (ENS) (NETTOYAGE, GRANDE EFFICACITÉ)	394
FILTRE A HUILE MOTEUR (ENS)	47
FILTRE (CLIMATISEUR)	718
	720
FILTRE DE SÉPARATEUR D'EAU ET DE CARBURANT (ASS)	91
FILTRE HYDRAULIQUE (ENS)	387
FILTRE (RÉCHAUFFEUR)	795
FILTRE (RENIFLARD DE RÉSERVOIR HYDRAULIQUE)	515
FLECHE - CANALISATIONS	424
	426
FLECHE (ASS)	577
	578
FLEXIBLE (CACHE-SOUPAPE DE RENIFLARD DE CARTER)	42
FLEXIBLE DE RADIATEUR	67
FLEXIBLE (RENIFLARD)	14
FLEXIBLE (RENIFLARD DE CARTER 90 CM OUVERT)	42
FLEXIBLE (RENIFLARD DE CARTER 90CM)	42
FLEXIBLE (53CM)	298
	301
*FOOTREST GP	794
FOURCHE (ASS)	700

INDEX

Désignation	Page
FOURCHE (VERSION)	699
FREIN DE MANOEUVRE - COMMANDE (ASS)	288
FREIN DE STATIONNEMENT (ASS)	285
FUSIBLE (10A)	126
	127
	128
	183
	191
	194
FUSIBLE (10A)	138
	142
	187
	189
FUSIBLE (15A)	128
	153
	154
FUSIBLE (20A)	150
FUSIBLE (5A)	150
	198

G

GAINE	394
	561
	562
	565
	566
	567
	568
GAINE D'AIR (ASS)	786
	788
	789
GARDE-BOUE AR (ASS)	317
GARDE-BOUE AV (ASS)	316
GARNITURE POUR CABINE (ASS)	842
GLACE DE PORTIÈRE (ASS)	854
	856
GODET - MONTAGE (ASS)	705
	706
GODET - VERSION D'EXPÉDITION	710
GODET NORMAL (ASS)	626
	627
GODET NORMAL (ENS)	611
	612
	614
	615
GODET RETRO (ASS)	628
	629
	630
	631
	632
	633
	634
	635
	636
	637
	638
	639
	640
	641
	642
	643
	644
	645
	646
	647
	648
	649
	650
	651
	652
	653
	654
	655
	656
	657
	658
	659
	660
	661
	662
	663
	664
	665
	666
	667
	668
	669
	670
	671
	672
	673
	674
	675
	676
	677
	678
	679
	680
	681
	682
	683
	684
	685
	686
GODET RETRO (ENS)	616
	617
	618
	619

INDEX

Désignation	Page
	620
	621
	622
	623
	624
	625
GODET TOUS-TRAVAUX (ASS)	687
	688
	689
	690
GODET TOUS-TRAVAUX (VERSION)	608
GODET TOUS-TRAVAUX (VERSION)	609
	610
GOULOTTE DE REMPLISSAGE D'HUILE DE TRANSMISSION	216
	218
	220
	222
	223
	224
GRAISSEUR	385
	498
	577
	578
	689
	715
GRAISSEUR (FILET 1/8-27)	575
	585
	592
	602
	606
GRAISSEUR (FILET 1/8-27)	321
	322
GRAISSEUR (FILET 1/8-27)	687
	688
	690
GROUPE DE ROTATION DE POMPE	512
GROUPE DE TRANSFORMATION - BRAS TÉLESCOPIQUE (ASS)	366

H

HAUT-PARLEUR	836
HUILE MOTEUR - CARTER (ASS)	32

I

INDICATEUR DE COLMATAGE DE FILTRE À AIR (ASS)	80
	81
	82
	83
INDICATEUR D'ENTRETIEN (FILTRE À AIR)	80
INDICATEUR (ENS) (HYDRAULIQUE)	169
INSONORISATION (ASS)	836
INTERRUPTEUR - BOUTON-POUSSOIR (ENS)	342
INTERRUPTEUR - BOUTON-POUSSOIR (ENS) (NEUTRALISATION)	210
INTERRUPTEUR - CONTACTEUR (40-DEG) (AVANCE À L'INJECTION)	94
INTERRUPTEUR - THERMOSTAT (CLIMATISEUR)	723
INTERRUPTEUR (ASS) (VERROUILLAGE HYDRAULIQUE)	391
INTERRUPTEUR (ASS) (VERROUS HYDRAULIQUES)	391
INTERRUPTEUR BALANCIER (ENS) (COMMANDE DE TRANSLATION)	187
	189
	337
INTERRUPTEUR BALANCIER (ENS) (FEUX DE DÉTRESSE)	165
INTERRUPTEUR BALANCIER (ENS) (PROJECTEUR ARRIÈRE)	128
INTERRUPTEUR BALANCIER (ENS) (PROJECTEUR AVANT)	128
INTERRUPTEUR BALANCIER (ENS) (VITESSE DE VENTILATEUR DE RÉCHAUFFEUR)	175
INTERRUPTEUR BALANCIER (ENS) (VITESSE DE VENTILATEUR DE RÉCHAUFFEUR)	138
	142
INTERRUPTEUR ROTATIF	193

J

JEU DE COURROIES TRAPEZOIDALES (COMPREND 2 COURROIES)	53
	54
	728
	729
	730
	731
	744
	745
JEU DE COURROIES TRAPEZOIDALES (COMPREND 2 COURROIES)	53
JOINT TORIQUE	432
JOINT TORIQUE (RÉGULATEUR DE TEMPÉRATURE D'EAU)	50
JOINT TORIQUE (VIDANGE D'HUILE MOTEUR)	32

K

KIT - COMMANDE DE TRANSLATION	398
KIT - COUSSIN (ACCOUDOIR)	725
*KIT-ADAPTER TIP	703
	704
KIT DE BLOC COULISSANT	830

INDEX

Désignation	Page
	832
	834
KIT DE BOUGIE (12 BROCHES)	157
	160
KIT DE BOUGIE (2 BROCHES)	142
	148
	157
	160
	179
	191
	194
	196
	287
KIT DE BOUGIE (2 BROCHES)	269
KIT DE BOUGIE (2 BROCHES)	723
KIT DE BOUGIE (3 BROCHES)	160
	191
KIT DE BOUGIE (4 BROCHES)	157
	160
	191
	196
KIT DE BOUGIE (4 BROCHES)	194
KIT DE BOUGIE (6 BROCHES)	157
	160
	191
KIT DE CAME (SENS INVERSE D'HORLOGE)	285
KIT DE COMPTEUR D'ENTRETIEN	165
KIT DE CONTACTEUR (DÉMARREUR)	133
KIT DE COUSSINET	204
KIT DE CROISILLON	201
KIT DE CROISILLON ET ROULEMENT	240
	241
	242
KIT DE GARNITURE DE FREIN	285
KIT DE JOINTS	118
	349
	351
	454
	555
KIT DE JOINTS (POMPE DOSEUSE DE DIRECTION)	214
KIT DE PORTEUR PLANÉTAIRE	230
KIT DE PRISE FEMELLE (12 BROCHES)	160
KIT DE PRISE FEMELLE (2 BROCHES)	191
	194
	196
	198
	210
	261
	539
	553
KIT DE PRISE FEMELLE (2 BROCHES)	177
	342
	756
KIT DE PRISE FEMELLE (2 BROCHES)	270
	271
	272
	273
	574
KIT DE PRISE FEMELLE (3 BROCHES)	99
	157
	191
	844
KIT DE PRISE FEMELLE (3 BROCHES)	270
	272
	273
KIT DE PRISE FEMELLE (3 BROCHES)	160
KIT DE PRISE FEMELLE (4 BROCHES)	160
	191
	194
KIT DE PRISE FEMELLE (4 BROCHES)	125
KIT DE PRISE FEMELLE (6 BROCHES)	191
	813
	858
KIT DE PRISE FEMELLE (8 BROCHES)	812
KIT DE PROTECTION DE PÉDALE	800
KIT DE REGLAGE (ACCOUDOIR)	725
KIT DE RÉPARATION	858
KIT DE ROULEMENT À GALETS	230
KIT D'ENGRENAGE (DÉMARREUR)	133
KIT D'ENTRETIEN	820
KIT D'ENTRETIEN D'ACCUMULATEUR	330
KIT D'ETRIER DE FREIN	285
KLAXON ÉLECTRIQUE (ASS)	799

L

LAME	860
LAME DE COUPE (ASS)	697
	698
LAMPE - CLIGNOTANT DE DIRECTION (ASS)	124
LAMPE - GYROPHARE (ASS)	126
	127
LAMPE - PHARE (ASS)	123
LAMPE (ENS) (12 VOLTS)	119
LAMPE (ENS) (12 VOLTS)	122
LAVE-GLACE - VITRE (ASS)	844
	846
LENTILLE	125
LENTILLE (ENS) (PROJECTEUR)	123
LENTILLE (JAUNE)	124
LENTILLE ORANGE	126
	127
LEVIER DE COMMANDE DE REGULATEUR (ASS)	802
LEVIER DE COMMANDE MANUELLE	291
LIMITEUR DE LEVAGE ET RETOUR À L'ANGLE DE CAVAGE	396
LOQUET (GR)-CONSOLE	801

INDEX

Désignation	Page
M	
MANCHON DE JONCTION DE CABLES	755
MANOCONTACT	136
MANOCONTACT (ENS)	138
	187
	189
MANOCONTACT (ENS) (DÉRIVATION D'HUILE HYDRAULIQUE)	160
MANOCONTACT (ENS) (HAUTE - BASSE)	142
MODULE - TÉMOIN (ASS)	811
	812
MONTAGE - POMPE HYDRAULIQUE (ASS)	502
MONTAGE DE BRAS (ASS)	592
MONTAGE DE CALE DE ROUE (VERSION)	862
MONTAGE DE CANALISATIONS (ASS)	503
	504
	505
	506
	507
	508
MONTAGE DE COMMANDE DE PELLE RÉTRO	494
MONTAGE DE COMMANDE HYDRAULIQUE (ASS)	500
	501
MONTAGE DE MOTEUR (ASS)	29
MONTAGE DE MOTEUR ET BOÎTE (ASS)	30
	31
MONTAGE DE VÉRIN (ASS)	498
	499
MONTAGE-DISTRIBUTEUR (ASS)	496
	497
MONTAGE DU TABLEAU DE BORD (ASS)	814
	815
	816
	817
MONTAGE FOURCHE (ASS)	707
MONTAGE-SÉCURITÉ (ASS)	119
	121
	122
MOTEUR D'ESSUIE-GLACE (ASS)	813
MOTEUR (VERSION)	11
MOTEUR (VERSION PRINCIPALE)	12
O	
OEILLETONS DE LEVAGE MOTEUR (ASS)	28
P	
PALONNIER - GROUPE DE COMMANDE (ASS)	349
	351
PARE-CHOCS AV (ASS)	309
PARE-POUSSIERE	216
	218
	220
	333
	453
PARE-SOLEIL	843
PATIN (ENS)	595
	600
	601
PELLE RÉTRO - BRAS TÉLESCOPIQUE (VERSION)	1
	2
	3
	4
PELLE RÉTRO - STABILISATEUR (ASS)	602
PELLE RÉTRO (VERSION)	5
	6
	8
	9
PISTON ET BIELLE (ASS)	34
PLAFONNIER (ASS)	836
PLAQUE SIGNALETIQUE	165
	874
PLAQUE SIGNALÉTIQUE (ASS)	861
PLAQUE SIGNALETIQUE (GODET)	608
	609
	610
PLAQUES SIGNALETIQUES ET AUTOCOLLANTS (ASS)	864
	865
	866
	867
	868
	869
	870
	871
	872
	873
PNEU - GROUPE DE VALVE	274
	275
POCHE A DOCUMENTS (ASS)	755
POMPE A EAU (ASS)	63
POMPE A HUILE MOTEUR (ASS)	49
POMPE A PISTONS (ASS)	509
POMPE D'AMORÇAGE DE CARBURANT (ASS)	97
POMPE D'AMORÇAGE DE CARBURANT (ASS)	89
POMPE DE BOÎTE DE VITESSES (ASS)	248
	255
	259
POMPE D'INJECTION DE CARBURANT (ASS)	94
PORTE-BALAIS (ENS)	133
PORTE DE BATTERIE (ASS)	315

INDEX

Désignation	Page
PORTIERE DROITE (ASS)	784
PORTIERE GAUCHE (ASS)	782
PROTECTEUR DE VÉRIN DE STABILISATEUR (ASS)	388
	389
PROTECTION DE GODET (ASS)	701
	702

R

RACCORD DE SOUPAPE (ASS)	333
RACCORD D'EAU (ASS)	50
RACCORD-RÉCHAUFFEUR ET CLIMATISEUR (ASS)	58
RADIATEUR ET REFROIDISSEUR D'HUILE HYDRAULIQUE (ASS)	67
	68
	69
	70
	71
RADIATEUR ET REFROIDISSEUR D'HUILE HYDRAULIQUE (ASS)	72
	74
RADIATEUR ET VENTILATEUR (ASS)	65
	66
RALLONGE D'ÉCHAPPEMENT (ASS)	79
REDUCTEUR (ASS)	476
RÉFLECTEUR	701
REFROIDISSEMENT (VERSION)	53
	54
REFROIDISSEMENT (VERSION)	53
REFROIDISSEUR D'HUILE MOTEUR (ASS)	51
REFROIDISSEUR HUILE MOTEUR ET SUPPORT DE FILTRE	51
RÉGULATEUR - PÉDALE (ASS)	820
RELAIS (ENS) (12 VOLTS)	119
	128
	138
	141
	142
	145
	150
	153
	154
	171
	175
	187
	189
	198
RELAIS (ENS) (12 VOLTS)	148
RELAIS (ENS) (12 VOLTS)	122
RELAIS (ENS) (12 VOLTS) (VITESSE RAPIDE)	142
RENIFLARD (ASS)	39
	40
	42
	46
RENIFLARD (ASS)	44
RENIFLARD (BOÎTE DE VITESSES)	249
	254
	261
RENIFLARD (ESSIEU)	201
RÉSERVOIR DE CARBURANT (ASS)	103
	104
RÉSERVOIR DE CARBURANT ET MONTAGE (ASS)	102
RÉSERVOIR-FREIN (ASS)	292
RÉSERVOIR HYDRAULIQUE (ASS)	515
RESSORT (FLEXIBLE DE RENIFLARD)	14
RETROVISEUR - CABINE (ASS)	843
RÉTROVISEUR (ASS)	810
ROTATION DE LA ROUE DU VENTILATEUR SOUFFLANT	358
	362
	875
ROTATION DE LA ROUE DU VENTILATEUR SOUFFLANT (AUXILIAIRE)	776
ROTATION DE LA ROUE DU VENTILATEUR SOUFFLANT (BRAS TÉLESCOPIQUE)	340
	875
ROTATION DE LA ROUE DU VENTILATEUR SOUFFLANT (COMMANDE DE GODET)	391
	392
	394
	875
ROTATION DE LA ROUE DU VENTILATEUR SOUFFLANT (COMMANDE DE GODET)	391
ROTATION DE LA ROUE DU VENTILATEUR SOUFFLANT (DÉBIT DE RETOUR)	401
	404
	408
	412
	417
	420
	874
ROTATION DE LA ROUE DU VENTILATEUR SOUFFLANT (DÉBIT DE RETOUR)	355
ROTATION DE LA ROUE DU VENTILATEUR SOUFFLANT (LUBRIFIANTS)	327
ROTATION DE LA ROUE DU VENTILATEUR SOUFFLANT (N. D'ÉTAPE)	874
ROUE ET PNEU (ASS)	277
	278
	279
	280
	281
	282
	283
	284
ROUE ET PNEU (VERSION)	275

INDEX

Désignation	Page
	276
	277
S	
SEMELLE DE STABILISATEUR	600
	601
SEMELLE ET MONTAGE DE STABILISATEUR	597
	598
	599
SEMELLE ET PROTECTION DE STABILISATEUR (ASS)	593
	594
	595
SÉPARATEUR D'EAU (ASS)	98
	99
	100
	101
SERRE-JOINT (ASS)	715
SIÈGE (ASS)	823
SIÈGE (ASS)	825
	827
SIÈGE AVEC SUSPENSION (ASS)	830
	832
	834
	835
	838
SILENCIEUX (ASS)	84
SONDE THERMIQUE	171
SOUPAPE - GAZ (CIRCUIT DE FREINAGE)	330
SOUPAPE - SOLÉNOÏDE (ASS)	271
	272
	273
	574
SOUPAPE - SOLÉNOÏDE (ASS)	270
SOUPAPE - SOLÉNOÏDE (ASS)	269
SOUPAPE - SOLÉNOÏDE (ASS) (12 VOLTS)	94
SOUPAPE D'ARRÊT	58
	467
SOUPAPE DE PRIORITE (ASS)	304
SOUPAPE ET MONTAGE - SOLÉNOÏDE	518
SOUPAPE PILOTE (ASS)	558
	559
	560
	561
	562
	563
	564
	565
	566
	567
	568
	569
STABILISATEUR (VERSION)	514
SUPPORT DE FILTRE ET REFROIDISSEUR D'HUILE MOTEUR	51
SUPPORT DE SÉPARATEUR D'EAU	99
SUPPORT DE SÉPARATEUR D'EAU	91
SUPPORT D'EXPÉDITION (ASS)	580
SUPPORT (ENS)	107
	109
SYNCHRONISEUR (ASS)	247
	253
T	
TABLEAU DE BORD (ASS)	819
TAPIS DU PLANCHER (ASS)	790
	791
	792
	793
THERMOCONTACT (ENS) (HUILE HYDRAULIQUE)	160
THERMOSTAT-TEMPÉRATURE D'EAU	50
TIMONERIE DE GODET DE CHARGEUSE (ASS)	585
TIMONERIE DE GODET RÉTRO (ASS)	583
TIRANT DE VÉRIN DE LEVAGE (ASS)	579
TOIT (ENS)	746
	749
	750
TOIT-ROPS OUVERT (ASS)	753
	754
TOIT (VERSION)	742
	743
	744
	745
TÔLE DE PLANCHER (ASS)	318
	319
TRAINS PLANÉTAIRES-RÉDUCTEURS (ASS)	230
TRANSFORMATION - DISTRIBUTEUR (ASS)	365
	366
TRANSFORMATION DE CANALISATIONS AUXILIAIRES (ASS)	355
	358
	362
TRANSMISSION (VERSION)	231
	232
	233
	234
	235
	236
	237
	238
	239
TURBOCOMPRESSEUR (ASS)	85

INDEX

Désignation	Page
V	
*VALVE GP-CHECK	531
*VALVE GP-PUMP CONTROL	570
	571
VANNE PILOTE (ASS)	573
VENTILATEUR ASPIRANT (ASS)	55
	56
	57
VENTILATEUR (ENS)	723
	797
VÉRIN - GODET TOUS-TRAVAUX (ASS)	380
VERIN DE BRAS (ASS)	383
VERIN DE FLECHE (ASS)	374
VÉRIN DE GODET RÉTRO (ASS)	370
	372
VÉRIN DE LEVAGE (ASS)	379
VÉRIN DE SERRE-JOINT (ASS)	385
VERIN DE STABILISATEUR (ASS)	381
	382
VÉRIN D'INCLINAISON (ASS)	386
VÉRIN D'ORIENTATION (ASS)	384
VÉRIN DU BRAS TELESCOPIQUE (ASS)	376
	377
VERIN (ENS)	288
VÉRIN ET CANALISATIONS DE SERRE-JOINT (ASS)	369
VERROUILLAGE ANTI-VANDALISME (ASS)	863
VERROUILLAGE DE COMMANDE MANUELLE HYDRAUL. (ASS)	493
VERROUILLAGE POUR L'EXPÉDITION (ASS)	588
	589
	590
	591
VERSION DE CHASSIS	10
VERSION DE SERRE-JOINT	712
	713
	714
VERSION DE TRANSFORMATION D'ORIENTATION D'AMORTISSEUR	353
VERSION D'ENTRAÎNEMENT DE CHARGEUSE-PELLETEUSE	214
VERSION HYDRAULIQUE	391
	392
	393
	394
VERSION MONTAGE-RANGÉE DE DISTRIBUTEURS	395
VERSION NORMALE	10
VILEBREQUIN - POULIE (ASS)	37
VILEBREQUIN (ASS)	16
VITRE DE CABINE (ASS)	848
	850
	852
VOLANT DE DIRECTION (ASS)	303
VOLANT MOTEUR (ASS)	24

INDICE

Nombre	Página

A

ACONDICIONADOR DE AIRE (CONFIG)	722
ACONDICIONADOR DE AIRE (GR)	723
ACONDICIONADOR DE AIRE Y MONTAJE (GR)	718 720
ACOPLADOR RÁPIDO (CONFIG)	691
ACOPLADOR RÁPIDO (GR)	692 693 694 695 696
ACOPLAMIENTO FLEXIBLE - MANDO DE (GR)	215
ACOPLAMIENTO (GR)	367
ACUMULADOR DE CONTROL DE AMORTIGUACION (GR)	330 331
ACUMULADOR DEL ACONDICIONADOR DE AIRE (GR)	717
ACUMULADOR ESTABILIZADOR (GR)	332
AGUA - CONEXIÓN DE (GR)	50
AGUA DE LAS CAMISAS - CALENTADOR DEL (GR)	116 117 118
ALFOMBRILLA DEL PISO (GR)	790 791 792 793
ALMOHADILLA (CONJ)	595 600 601
ALMOHADILLA Y MONTAJE DEL ESTABILIZADOR (GR)	597 598 599
ALOJAMIENTO GR-DIFERENCIAL	211
ALTAVOZ	836
ÁRBOL DE LEVAS (GR)	13
ASIENTO CON SUSPENSIÓN (GR)	838
ASIENTO (GR)	823
ASIENTO (GR)	825 827

B

*BACKHOE AR-STANDARD STICK	5 6 7 8
BANCADA 5 (GR)	527
BASE DEL FILTRO Y ACEITE REFRIGERANTE DE MOTOR	51
BASTIDOR DE ROTACIÓN (GR)	322
BASTIDOR DEL CARGADOR (GR)	321
BATERÍA (GR)	107 109 111 113
BATERÍA (12 VOLTIOS, SERVICIO PESADO)	111 113
BATERÍA (12-VOLTIOS, 750-AMPERIOS) (750AMP)	107 109
BLOQUE DESLIZANTE-JUEGO	830 832 834
BLOQUE MOTOR (GR)	18 20
BOCINA ELÉCTRICA (GR)	799
BOMBA - TUBERÍAS DE (GR)	463 465 466 467 470 471
BOMBA DE ACEITE DEL MOTOR (GR)	49
BOMBA DE AGUA (GR)	63
BOMBA DE CEBADO DE COMBUSTIBLE (GR)	89 97
BOMBA DE INYECCIÓN DE COMBUSTIBLE (GR)	94
BOMBA DE LA TRANSMISIÓN (GR)	255 259
BOMBA DE LA TRANSMISIÓN (GR)	248
BOMBA DE PISTONES (GR)	509
BRAZO DE RETROEXCAVADOR (GR)	606
BRAZO EXTENDIBLE DE RETROEXCAVADOR (CONFIG)	1 2 3 4
BRAZO EXTENSIBLE (GR)	604
BUJÍA INCANDESCENTE	115
BUJÍA INCANDESCENTE (GR)	115

C

CABINA (CONFIG)	726 727 728 729 730

* NO HAY TRADUCCION DISPONIBLE EN EL MOMENTO DE LA IMPRESION

INDICE

Nombre	Página
	731
	732
CABINA (CONJ)	733
	735
CABINA (GR)	738
	740
CABLES DE CALEFACCIÓN (GR)	175
CABLES DE CAMBIO AUTOMATICO (GR)	145
	148
CABLES DE CONTROL DE AMORTIGUACIÓN (GR)	187
	189
	191
CABLES DE LA ALARMA DEL ESTABILIZADOR (GR)	196
CABLES DE LA CABINA (GR)	150
	152
	153
	154
CABLES DE LA CONSOLA (GR)	157
	160
	165
CABLES DE LA CONSOLA (GR)	167
CABLES DE LA CONSOLA (GR)	169
CABLES DE LA DIRECCIÓN (GR)	198
CABLES DE LA PLATAFORMA (GR)	177
	179
CABLES DE SENSOR (GR)	193
CABLES DEL ACONDICIONADOR DE AIRE (GR)	138
CABLES DEL ACONDICIONADOR DE AIRE (GR)	141
	142
CABLES DEL MOTOR (GR)	171
CABLES DEL RECEPTÁCULO DE FUERZA (GR)	183
CABLES ESTABILIZADORES (GR)	194
CABLES POSTERIORES (GR)	184
CAJA DE BATERÍA	305
	306
	307
	308
CAJA DE BRAZO EXTENSIBLE (CONJ)	581
CAJA DELANTERA (GR)	26
CALCOMANIA-AMARRAR	864
CALCOMANÍA (ARRANQUE) (SISTEMA DE SEGURIDAD DE LA MÁQUINA)	122
CALCOMANÍA (CATERPILLAR)	727
	728
	729
	730
	731
	732
	745
CALCOMANÍA (CATERPILLAR) (VISERA DE PARABRISAS)	726
CALCOMANÍA (CONTROL DE AMORTIGUACION)	337
	398
CALCOMANÍA (CONTROL DE CUCHARÓN)	338
	340
	874
CALCOMANÍA (CONTROL DE PEDAL Y PALANCA ELECTRONICA)	345
CALCOMANÍA (CONTROL DEL CUCHARON)	776
CALCOMANÍA (CONTROL ESTABILIZADOR/TRABA DE LA PLUMA)	501
CALCOMANÍA (CONTROL PILOTO DEL CARGADOR)	776
CALCOMANÍA (CUCHARÓN)	776
CALCOMANÍA (CUCHARÓN DE USO MULTIPLE)	391
	392
	776
	874
CALCOMANÍA DE ADVERTENCIA	358
	362
	875
CALCOMANÍA DE ADVERTENCIA (AUXILIAR)	776
CALCOMANÍA DE ADVERTENCIA (CILINDRO PARA ALTA PRESION)	355
CALCOMANÍA DE ADVERTENCIA (CONTROL DE CUCHARÓN)	391
	392
	394
	875
CALCOMANÍA DE ADVERTENCIA (*EXTENDABLE STICK)	340
	875
CALCOMANÍA DE ADVERTENCIA (FLUJO DE RETORNO)	401
	404
	408
	412
	417
	420
	874
CALCOMANÍA DE ADVERTENCIA (FLUJO DE RETORNO)	355
CALCOMANÍA DE ADVERTENCIA (LUBRICANTES)	327
CALCOMANÍA DE ADVERTENCIA (NO PISAR)	874
CALCOMANÍA DE IDENTIFICACIÓN (TABLERO DE FUSIBLES)	214

* NO HAY TRADUCCION DISPONIBLE EN EL MOMENTO DE LA IMPRESION

INDICE

Nombre	Página
	874
CALCOMANÍA DE RAYAS (399CM)	726
	727
	728
	729
CALCOMANÍA-DIRECCIÓN EN TODAS LAS RUEDAS	874
CALCOMANÍA (INDICADOR)	157
CALCOMANIA-INDICADOR DE CUCHARON	874
CALCOMANÍA (INDICADOR DE CUCHARÓN)	396
CALCOMANÍA (INTERRUPTOR DE ARRANQUE)	874
CALCOMANÍA (INTERRUPTOR DE ENCENDIDO)	119
	122
CALCOMANIA-LEVANTAR	864
CALCOMANÍA (PATRON ESTANDAR/ CRUZADO)	874
CALCOMANÍA (PEDAL DE CONTROL AUXILIAR)	345
CALCOMANÍA (PIVOTE CENTRAL, TRABA DE LA PLUMA)	874
CALCOMANÍA (PLACA, NOMBRE)	330
CALCOMANÍA (RECIRCULACIÓN DE AIRE)	723
	797
CALCOMANÍA (SEGURIDAD)	122
CALCOMANÍA (SEGURIDAD) (SISTEMA DE SEGURIDAD DE LA MÁQUINA)	119
CALCOMANÍA (UBICACIÓN DEL CONECTOR DE LEVANTAMIENTO)	873
CALCOMANÍA (VELOCIDAD VARIABLE)	87
	874
CALCOMANÍAS Y PLACAS DE IDENTIFICACIÓN (GR)	864
	865
	866
	867
	868
	869
	870
	871
	872
	873
CALEFACCIÓN DE LA CABINA (GR)	797
CALEFACCIÓN Y MONTAJE DE LA CABINA (GR)	795
CÁNCAMOS DE LEVANTAMIENTO DEL MOTOR (GR)	28
CANDADO (GR)	863
CAPÓ DEL MOTOR (GR)	327
CAPO Y PROTECTOR (GR)	325
CARGA - ALTERNADOR DE (GR)	106
CARGADOR (CONFIG)	587
CÁRTER - COLECTOR DEL (GR)	32
CHASIS (CONFIG)	10
CIGÜEÑAL - POLEA DE (GR)	37
CIGÜEÑAL (GR)	16
CILINDRO (CONJ)	288
CILINDRO DE CUCHARÓN DE USO MÚLTIPLE (GR)	380
CILINDRO DE CUCHARÓN RETROEXCAVADOR (GR)	370
	372
CILINDRO DE LA PLUMA (GR)	374
CILINDRO DE LEVANTAMIENTO - TUBERÍAS DEL (GR)	437
	439
CILINDRO DE LEVANTAMIENTO (GR)	379
CILINDRO DE ROTACIÓN (GR)	384
CILINDRO DEL BRAZO EXTENSIBLE (GR)	376
	377
CILINDRO DEL BRAZO (GR)	383
CILINDRO ESTABILIZADOR (GR)	381
	382
CILINDRO GR - PULGAR	385
CILINDRO Y TUBERIAS GR - PULGAR	369
CINTURÓN DE SEGURIDAD (GR)	821
	822
COLADOR	249
	255
	261
COMBUSTIBLE - TANQUE DE (GR)	103
	104
COMPARTIMIENTO DE LITERATURA DE SERVICIO (GR)	755
COMPRESOR DE REFRIGERANTE (GR)	756
COMPRESOR DE REFRIGERANTE (GR)	757
	759
CONDENSADOR DEL REFRIGERANTE Y MONTAJE (GR)	760
CONDUCTO DE AIRE (GR)	786
	788
	789
CONECTOR DE VALVULA (GR)	333
CONEXION DE CALENTADOR Y ACOND. DE AIRE (GR)	58
CONEXIÓN DE ENGRASE	385
	498
	577
	578
	689
	715
CONEXIÓN DE ENGRASE (ROSCA DE 1/8-27)	321
	322

* NO HAY TRADUCCION DISPONIBLE EN EL MOMENTO DE LA IMPRESION

INDICE

Nombre	Página
	575
	592
	602
	606
	687
	688
	690
CONEXIÓN DE ENGRASE (ROSCA DE 1/8-27)	585
CONFIG. DEL MANDO, CARGADOR RETROEXCAVADORA	214
CONFIGURACIÓN COMÚN	10
CONFIGURACIÓN DE ENFRIAMIENTO	53
	54
CONFIGURACIÓN DE MOTORES	11
CONJUNTO DE DESTELLADOR	179
CONJUNTO DE LLAVE, ELECTRONICA (AMARILLO)	119
	121
CONJUNTO DE LLAVE, ELECTRONICA (*GRAY)	119
	121
CONSOLA DEL OPERADOR (GR)	764
	765
CONSOLA DELANTERA (GR)	761
	762
	763
CONSOLA LATERAL (GR)	766
	767
	768
	769
	770
	771
	772
	773
CONTRAPESO (GR)	310
	311
	312
	313
	314
CONTROL DE AMORTIGUACIÓN (CONFIG)	336
	337
CONTROL DE DIRECCIÓN (GR)	296
CONTROL DE LA TRANSMISIÓN (GR)	210
CONTROL DE TRABA DEL DIFERENCIAL (GR)	209
CONTROL DEL FRENO DE ESTACIONAMIENTO	286
	287
CONTROL DEL REGULADOR Y ACELERADOR (GR)	87
CONTROL HIDRÁULICO (CONFIG)	336
CONTROL HIDRÁULICO MANUAL (GR)	338
	340
	342
	344
CONTROL MANUAL DE PALANCA (GR)	291
CONTROL NO PROGRAMADO (GR) (SEGURIDAD)	119
	121
CONVERSIÓN DE LA VÁLVULA DE CONTROL (GR)	365
	366
CONVERSIÓN DE ROTACIÓN AMORTIGUADA (CONFIG)	353
CORREA PARA CABLES	148
	460
CORREA TRAPEZOIDAL (AIRE ACONDICIONADO)	759
CORREA TRAPEZOIDAL (COMPRESOR DE REFRIGERANTE)	53
CRISTAL	125
CRISTAL (AMBAR)	124
CUCHARÓN DE EMBARQUE (CONFIG)	710
CUCHARÓN DE USO GENERAL (CONJ)	611
	612
	614
	615
CUCHARÓN DE USO GENERAL (GR)	626
	627
CUCHARÓN DE USO MÚLTIPLE (CONFIG)	608
	609
	610
CUCHARÓN DE USO MÚLTIPLE (GR)	688
	689
	690
CUCHARÓN DE USO MÚLTIPLE (GR)	687
CUCHARÓN EXCAVADOR (CONJ)	616
	617
	618
	619
	620
	621
	622
	623
	624
	625
CUCHARÓN RETROEXCAVADOR (GR)	628
	629
	630
	631
	632
	633
	634
	635
	636

* NO HAY TRADUCCION DISPONIBLE EN EL MOMENTO DE LA IMPRESION

INDICE

Nombre	Página
	637
	638
	639
	640
	641
	642
	643
	644
	645
	646
	647
	648
	649
	650
	651
	652
	653
	654
	655
	656
	657
	658
	659
	660
	661
	662
	663
	664
	665
	666
	667
	668
	669
	670
	671
	672
	673
	674
	675
	676
	677
	678
	679
	680
	681
	682
	683
	684
	685
	686
CUCHILLA (GR)	697
	698
CULATA DE CILINDROS (GR)	21
	22

D

DETECTOR DE TEMPERATURA	171
DIENTE DE UNA PIEZA (UNI-TOOTH) (GR)	716
DIFERENCIAL (GR)	211
	213
DIFERENCIAL Y CORONA (GR)	211

E

EJE DE IMPULSIÓN Y DE DIRECCIÓN (GR)	201
	203
EJE DE MANDO (GR)	240
	241
	242
EJE DE TOMA DE FUERZA (GR)	513
EJE DELANTERO (GR)	293
	295
EJE TRASERO (GR)	204
ELEMENTO DE FILTRO (COMBUSTIBLE)	97
ELEMENTO DE FILTRO DE COMBUSTIBLE (CONJ)	89
ELEMENTO DE FILTRO DE COMBUSTIBLE (CONJ) (SEPARADOR DE AGUA)	99
ELEMENTO DE FILTRO DE COMBUSTIBLE (CONJ) (SEPARADOR DE AGUA)	91
ENFRIADOR DE ACEITE DEL MOTOR (GR)	51
ENFRIADOR DE ACEITE DEL MOTOR Y BASE DEL FILTRO	51
ENGRANAJE DE CORONA Y PIÑÓN (GR)	211
ESTABILIZADOR (CONFIG)	514
ETIQUETA DE ADVERTENCIA (GR)	861
EXTENSIÓN DEL ESCAPE (GR)	79

F

FILTRO	533
	535
	537
	539
	543
	553
FILTRO (AIRE ACONDICIONADO)	718
	720
FILTRO (CALEFACTOR)	795
FILTRO DE ACEITE (CONJ) (FILTRO, ALTA EFICIENCIA)	394
FILTRO DE ACEITE (CONJ) (HIDRÁULICO)	160
FILTRO DE ACEITE (CONJ) (HIDRAULICO) (RESISTENTE AL FUEGO)	394
FILTRO DE ACEITE (CONJ) (TRANSMISION)	246

* NO HAY TRADUCCION DISPONIBLE EN EL MOMENTO DE LA IMPRESION

INDICE

Nombre	Página
FILTRO DE ACEITE (CONJ) (TRANSMISION)	246
FILTRO DE ACEITE DEL MOTOR (CONJ)	47
FILTRO DE ACEITE (GR)	387
FILTRO DE AIRE (AIRE ACONDICIONADO)	718
	723
FILTRO DE AIRE (CABINA)	797
FILTRO DE AIRE (GR)	75
	77
FILTRO DE COMBUSTIBLE (GR)	89
FILTRO DE COMBUSTIBLE Y SEPARADOR DE AGUA (GR)	91
FILTRO HIDRÁULICO (CONJ)	387
FILTRO (RESPIRADERO DEL TANQUE)	515
*FOOTREST GP	794
FRENO DE ESTACIONAMIENTO (GR)	285
FRENO DE SERVICIO - CONTROL (GR)	288
FUNDA	394
	561
	562
	565
	566
	567
	568
FUSIBLE (10 A)	126
	127
	142
	183
	191
	194
FUSIBLE (10-AMPERIOS)	138
	187
	189
FUSIBLE (10-AMPERIOS)	128
FUSIBLE (15 A)	153
FUSIBLE (15 AMPERIOS)	154
FUSIBLE (15 AMPERIOS)	128
FUSIBLE (20-AMPERIOS)	150
FUSIBLE (5 AMP)	198
FUSIBLE (5-AMPERIOS)	150

G

Nombre	Página
GRUPO DE ACUMULADOR-ACONDICIONADOR DE AIRE	805
GRUPO DE BRAZO DE LEVANTAMIENTO	575
GRUPO DE CLAVIJA, EJE	201
GRUPO DE CONTROL DE PEDAL HIDRÁULICO	345
	347
GRUPO DE CONVERSIÓN, TUBERIAS AUXILIARES	355
	358
	362
GRUPO DE CUATRO VALVULAS (CONFIG)	519
GRUPO DE MONTAJE-CONTROL DE RETROEXCAVADORA	494
GRUPO DE PESTAÑA, RUEDA	225
GRUPO DE PESTAÑA Y RESINTO, EJE	226
	228
GRUPO DE PROTECTOR DEL CUCHARON	701
	702
GRUPO DE 3 VÁLVULAS HIDRÁULICAS	524
	525
GRUPO DE 4 VÁLVULAS HIDRÁULICAS	526
GRUPO DE 5 VALVULAS (CONFIG)	519
GRUPO DE 6 VALVULAS (CONFIG)	519
GRUPO GIRATORIO DE BOMBA	512
GRUPO PERILLA, DIRECCIÓN	297
GRUPO PLANETARIO, MANDO FINAL	230
GUARDABARROS DELANTERO (GR)	316
GUARDABARROS TRASERO (GR)	317
GUARNICIONES DE LA CABINA (GR)	842

H

Nombre	Página
HIDRÁULICA (CONFIG)	391
	392
	393
	394
HIDRÁULICA (CONFIG)	391
	392
HOJA	860
HOJA DE LIMPIAPARABRISAS (CONJ)	858
HORQUILLA - GRUPO DE MONTAJE DE LA	707
HORQUILLA (CONFIG)	699
HORQUILLA (GR)	700

I

Nombre	Página
IMPULSOR DE VENTILADOR (GR)	23
INCLINACIÓN HORIZONTAL - CILINDRO DE (GR)	386
INDICADOR (CONJ) (HIDRÁULICO)	169
INDICADOR DE CAMBIO DE FILTRO DE ACEITE (GR)	80
	81
	82
	83
INDICADOR DE SERVICIO (FILTRO DE AIRE)	80
INSONORIZADOR (GR)	836
INSTALACION DE GRUPO DE VALVULAS (CONFIG)	395
INSTALACIÓN DE LA TRABA DE LA RUEDA	862
INSTALACION DE SEGURIDAD (GR)	119
	121
	122

* NO HAY TRADUCCION DISPONIBLE EN EL MOMENTO DE LA IMPRESION

INDICE

Nombre	Página
INTERRUPTOR (CONJ) (BOCINA)	165
INTERRUPTOR (CONJ) (CALEFACTOR)	175
INTERRUPTOR (CONJ) (SEÑAL DE VIRAJE)	152
INTERRUPTOR (CONJ) (TRABA HIDRÁULICA)	391
INTERRUPTOR (CONJ) (TRABA NEUTRAL)	165
INTERRUPTOR DE ARRANQUE CON LLAVE (CONJ)	819
INTERRUPTOR DE LÍMITE (CONJ) (FRENO)	288
INTERRUPTOR DE PRESIÓN (CONJ)	138 187 189
INTERRUPTOR DE PRESIÓN (CONJ) (ALTA - BAJA)	142
INTERRUPTOR DE PRESIÓN (CONJ) (DERIVACIÓN DE ACEITE HIDRÁULICO)	160
INTERRUPTOR DE PRESIÓN (GR)	136
INTERRUPTOR DE RODILLO (CONJ)	193
INTERRUPTOR DE TEMPERATURA (CONJ) (ACEITE HIDRÁULICO)	160
INTERRUPTOR DE VOLQUETE (CONJ) (CONTROL DE AMORTIGUACION)	337
INTERRUPTOR DE VOLQUETE (CONJ) (LUZ DE TRABAJO DELANTERA)	128
INTERRUPTOR DE VOLQUETE (CONJ) (*REAR FLOOD)	128
INTERRUPTOR DE VOLQUETE (CONJ) (*RIDE CONTROL)	187 189
INTERRUPTOR DE VOLQUETE (CONJ) (RIESGO)	165
INTERRUPTOR DE VOLQUETE (CONJ) (VELOCIDAD DEL VENTILADOR DEL CALENTADOR)	175
INTERRUPTOR DE VOLQUETE (CONJ) (VELOCIDAD DEL VENTILADOR DEL CALENTADOR)	142
INTERRUPTOR DE VOLQUETE (CONJ) (VELOCIDAD DEL VENTILADOR DEL CALENTADOR)	138
INTERRUPTOR DEL TERMOSTATO (AIRE ACONDICIONADO)	723
INTERRUPTOR (GR) (TRABA HIDRÁULICA)	391
INTERRUPTOR PARA LA TEMPERATURA (GR)	137
INTERRUPTOR PULSADOR (CONJ)	342
INTERRUPTOR PULSADOR (CONJ) (NEUTRALIZADOR)	210
INTERRUPTOR (40 GRADOS) (AVANCE DE SINCRONIZACION)	94

J

Nombre	Página
JUEGO-ACUMULADOR DE SERVICIO	330
JUEGO DE AJUSTE DEL ASIENTO (POSABRAZO)	725
JUEGO DE AMORTIGUADOR (POSABRAZO)	725
JUEGO DE BASE DEL SEPARADOR DE AGUA	91 99
JUEGO DE COJINETE DE RODILLOS	230
JUEGO DE COJINETES	204
JUEGO DE CONTACTOR (MOTOR DE ARRANQUE)	133
JUEGO DE CONTROL DE OPERACION	398
JUEGO DE CORREAS TRAPEZOIDALES (INCLUYE 2 CORREAS)	53 54
JUEGO DE CORREAS TRAPEZOIDALES (INCLUYE 2 CORREAS)	728 729 730 731 744 745
JUEGO DE CORREAS TRAPEZOIDALES (INCLUYE 2 CORREAS)	53
JUEGO DE CRUCETA	201
JUEGO DE CRUCETA Y COJINETE	240 241 242
JUEGO DE ENCHUFE (12 CLAVIJAS)	157 160
JUEGO DE ENCHUFE (2 CLAVIJAS)	142 157 160 191 194 196 269 287 723
JUEGO DE ENCHUFE (2 CLAVIJAS)	148
JUEGO DE ENCHUFE (2 CLAVIJAS)	179
JUEGO DE ENCHUFE (3 CLAVIJAS)	160 191
JUEGO DE ENCHUFE (4 CLAVIJAS)	157 160 191 194 196
JUEGO DE ENCHUFE (6 CLAVIJAS)	157 160 191

* NO HAY TRADUCCION DISPONIBLE EN EL MOMENTO DE LA IMPRESION

INDICE

Nombre	Página
JUEGO DE ENGRANAJES (MOTOR DE ARRANQUE)	133
JUEGO DE FRENO DE HORQUILLA	285
JUEGO DE LEVA (ROTACIÓN HACIA LA IZQUIERDA)	285
JUEGO DE MEDIDOR DE SERVICIO	165
JUEGO DE RECEPTÁCULO (12 CLAVIJAS)	160
JUEGO DE RECEPTÁCULO (2 CLAVIJAS)	177 191 194 196 198 261 270 271 272 273 539 553 756
JUEGO DE RECEPTÁCULO (2 CLAVIJAS)	210
JUEGO DE RECEPTÁCULO (2 CLAVIJAS)	342 574
JUEGO DE RECEPTÁCULO (3 CLAVIJAS)	99 157 191 270 272 273
JUEGO DE RECEPTÁCULO (3 CLAVIJAS)	844
JUEGO DE RECEPTÁCULO (3 CLAVIJAS)	160
JUEGO DE RECEPTÁCULO (4 CLAVIJAS)	160 191 194
JUEGO DE RECEPTÁCULO (4 CLAVIJAS)	125
JUEGO DE RECEPTÁCULO (6 CLAVIJAS)	191 858
JUEGO DE RECEPTÁCULO (6 CLAVIJAS)	813
JUEGO DE RECEPTÁCULO (8 CLAVIJAS)	812
JUEGO DE REPARACIÓN (TUBERÍAS DEL FRENO)	858
JUEGO DE REVESTIMIENTO DE FRENO	285
JUEGO DE SELLOS	118 349 351 454 555
JUEGO DE SELLOS (*STEERING METERING PUMP)	214
JUEGO DE SERVICIO	820
JUEGO-PORTA PLANETARIO	230
JUEGO-PROTECCIÓN DE PEDAL	800

K

Nombre	Página
*KIT-ADAPTER TIP	703 704

L

Nombre	Página
LÁMPARA	812
LÁMPARA (CONJ) (12 VOLTIOS)	119 122
LÁMPARA DE BALIZA DE ADVERTENCIA (GR)	126 127
LÁMPARA DEL TECHO (GR)	836
LÁMPARA (12 VOLTIOS)	53 126 127 141 157 160 167 840 841
LÁMPARA (12 VOLTIOS)	169
LÁMPARA (12 VOLTIOS, 10 VATIOS)	836
LÁMPARA (12 VOLTIOS, 24 VATIOS)	124
LÁMPARA (12 VOLTIOS, 55 VATIOS)	123 128
LÁMPARA (12 VOLTIOS/21 VATIOS)	125
LÁMPARA (12 VOLTIOS/21/5 VATIOS)	125
LATA DE RESPIRADERO (CONJ)	40 42 44
LAVAPARABRISAS DE LA VENTANA (GR)	844 846
LENTE AMBAR	126 127
LIMPIAPARABRISAS DE LA VENTANA (GR)	860
LIMPIAPARABRISAS DE LA VENTANA (GR)	858
LLAVE	863
LUCES DE PARADA Y COLA (GR)	125
LUCES DE REFLECTOR Y CAMBIO DE DIRECCION (GR)	128
LUZ DE BALIZA (GR)	131 132
LUZ DE SEÑAL DE GIRO (GR)	124

M

Nombre	Página
MANDO DE CORREA	126 127
MANGUERA DE RADIADOR	67
MANGUERA (RESPIRADERO)	14

* NO HAY TRADUCCION DISPONIBLE EN EL MOMENTO DE LA IMPRESION

INDICE

Nombre	Página
MANGUERA (TAPA DE VÁLVULA DEL RESPIRADERO DEL CARTER)	42
MANGUERA (109 CM DEL RESPIRADERO DEL CARTER ABIERTO)	42
MANGUERA (53 CM)	298 301
MANGUERA (90 CM DE SUMIDERO DE RESPIRADERO DEL CARTER DEL MOTOR)	42
MANGUITO DE EMPALME DE CABLE	755
MECANISMO DE VÁLVULAS (GR)	38
MÓDULO INDICADOR DE ADVERTENCIA (GR)	811 812
MONTAJE DE BANCADA DE VALVULA (GR)	496 497
MONTAJE DE CILINDRO (GR)	498 499
MONTAJE DE LA BOMBA HIDRÁULICA (GR)	502
MONTAJE DE TUBERIAS (GR)	503 504 505 506 507 508
MONTAJE DEL BRAZO (GR)	592
MONTAJE DEL CONTROL HIDRÁULICO (GR)	500 501
MONTAJE DEL CUCHARÓN (GR)	705 706
MONTAJE DEL EJE TRASERO (GR)	199 200
MONTAJE DEL MOTOR (GR)	29
MONTAJE DEL MOTOR Y LA TRANSMISIÓN (GR)	30 31
MONTAJE DEL TABLERO DE INSTRUMENTOS (GR)	814 815 816 817
MONTAJE Y TRANSMISIÓN(GR)	243 244 245
MONTAJE Y VALVULA DEL BANCO(GR)	517
MOTOR DE ARRANQUE ELÉCTRICO (GR)	133 135
MOTOR-LIMPIAPARABRISAS (GR)	813
MOTOR PRIMARIO (CONFIG)	12

P

Nombre	Página
PABELLON (CONJ)	746 749 750
PALANCA DE CONTROL DEL REGULADOR (GR)	802
PALANCA UNIVERSAL DE CONTROL (GR)	349 351
PARAGOLPES DELANTERO	309
PASADOR DE ACOPLADOR (GR)	708 709
PESTILLO DE CONSOLA (GR)	801
PISTÓN Y BIELA (GR)	34
PLACA-CAT	327
PLACA DE CONTROL (ACONDICIONADOR DE AIRE)	718 720 874
PLACA DE CONTROL (ACONDICIONADOR DE AIRE)	795
PLACA INDICADORA	165 874
PLACA INDICADORA (CUCHARÓN)	608 609 610
PLANCHA DEL PISO (GR)	318 319
PLUMA (GR)	577 578
PORTAESCOBILLAS (CONJ)	133
POSABRAZOS (GR)	725 823 825
POSICIONADOR DEL CUCHARÓN Y DESCONEXIÓN (GR)	396
PRIORIDAD - VÁLVULA DE (GR)	304
PROTECTOR DE CILINDRO ESTABILIZADOR (GR)	388 389
PROTECTOR DEL EJE IMPULSOR (GR)	324
PUERTA DERECHA (GR)	784
PUERTA IZQUIERDA (GR)	782
PULGAR CONFIG.	712 713 714
PULGAR GR	715

R

Nombre	Página
RADIADOR Y ENFRIADOR DE ACEITE HIDRÁULICO (GR)	67 68 69

* NO HAY TRADUCCION DISPONIBLE EN EL MOMENTO DE LA IMPRESION

INDICE

Nombre	Página
	70
	71
	72
	74
RADIADOR Y VENTILADOR (GR)	65
	66
REDUCTOR (GR)	476
REFLECTOR	701
REFLECTOR (GR)	123
REGULADOR - PEDAL DEL (GR)	820
REGULADOR DE TEMPERATURA DEL AGUA	50
RELÉ (CONJ) (12 VOLTIOS)	122
	128
	138
	141
	142
	145
	148
	150
	153
	154
	171
	175
	187
	189
	198
RELÉ (CONJ) (12 VOLTIOS)	119
RELÉ (CONJ) (12 VOLTIOS) (ALTA VELOCIDAD)	142
RESORTE (RESPIRADERO DE MANGUERA)	14
RESPIRADERO (EJE)	201
RESPIRADERO (GR)	39
	40
	42
	44
	46
RESPIRADERO (TRANSMISION)	261
RESPIRADERO (TRANSMISION)	249
RESPIRADERO (TRANSMISION)	254
RETROEXCAVADOR - ESTABILIZADOR DEL (GR)	602
RETROEXCAVADOR (CONFIG)	5
	6
	8
	9
RETROVISOR (GR)	810
RUEDA Y LLANTA (CONFIG)	275
	276
	277
RUEDA Y NEUMÁTICO (GR)	277
	278
	279
	280
	281
	282
	283
	284

S

SELLO ANULAR	432
SELLO ANULAR (DRENAJE DE ACEITE DE MOTOR)	32
SELLO ANULAR (REGULADOR DE TEMPERATURA DEL AGUA)	50
SELLO (RESPIRADERO)	40
	42
	44
SEPARADOR DE AGUA (GR)	98
	99
SEPARADOR DE AGUA (GR)	100
	101
SERVOTRANSMISIÓN (CONFIG)	246
SERVOTRANSMISIÓN (GR)	259
SILENCIADOR (GR)	84
SINCRONIZADOR (GR)	247
	253
SOPORTE (CONJ)	107
	109
SOPORTE DEL CILINDRO DE LEVANTAMIENTO (GR)	579
SOPORTE PARA EL TRANSPORTE	580
SUCCIÓN - VENTILADOR DE (GR)	55
	56
	57
SUSPENSIÓN - ASIENTO CON (GR)	830
	832
	834
	835

T

TABLERO DE INSTRUMENTOS (GR)	819
TACÓMETRO ELÉCTRICO (GR)	728
	729
	730
	731
	744
	745
TACÓMETRO ELÉCTRICO (GR)	840
	841
TANQUE DE COMBUSTIBLE Y GRUPO DE MONTAJE	102
TANQUE DEL SISTEMA DE FRENOS (GR)	292
TANQUE HIDRÁULICO (GR)	515

* NO HAY TRADUCCION DISPONIBLE EN EL MOMENTO DE LA IMPRESION

INDICE

Nombre	Página
TAPA	274
	275
TAPA CONTRA EL POLVO	216
	218
	220
	333
	453
TAPA DE ADMISIÓN DE AIRE (GR)	78
TAPA DE LA BATERÍA (GR)	315
TAPA DE LA CONSOLA (GR)	775
	776
TAPA DE MAMPARA PARAFUEGO (GR)	778
	779
TAPA DE POSTE (GR)	780
	781
TAPA DE VÁLVULA DE CONTROL (GR)	368
TAPA DEL MECANISMO DE VÁLVULAS (GR)	14
TAPA DEL RADIADOR	68
TAPA, LLENADO (ACEITE HIDRÁULICO)	515
TAPA PARA EL COMBUSTIBLE	104
TAPÓN	358
	519
TAPÓN (CONJ)	399
TAPÓN (CONJ) (ACONDICIONADOR DE AIRE)	805
TAPÓN (CONJ) (LLENADO DE ACEITE DE MOTOR)	47
TAPÓN (CONJ) (RADIADOR)	71
	74
TAPON DE DRENAJE DE SUMIDERO	32
TAPÓN DEL MOTOR (GR)	35
	36
TAPÓN MAGNÉTICO	201
	206
	211
TECHO (CONFIG)	745
TECHO (CONFIG)	742
	743
	744
TECHO ROPS ABIERTO (GR)	753
	754
TOPE DE CUCHARON (GR)	711
TRABA CONTRA EL VANDALISMO (GR)	863
TRABA DE CONTROL HIDRÁULICO MANUAL (GR)	493
TRABA DE TRANSPORTE DE LA MÁQUINA (GR)	588
	589
	590
	591
TRANSFORMACION DEL BRAZO ENTENSIBLE (GR)	366
TRANSMISION DIRECTA (CONFIG)	246
TRANSMISIÓN DIRECTA (GR)	253
TRANSMISIÓN DIRECTA (GR)	247
TREN DE FUERZA (CONFIG)	231
	232
	233
	234
	235
	236
	237
	238
	239
TUBERIAS AUXILIARES-RETROEXCAVADORA (GR)	399
	401
	404
	408
	412
	415
	417
	420
TUBERÍAS CON SERVOMANDO (GR)	453
	454
	456
	460
TUBERIAS DE AUXILIAR DE CARGADOR (GR)	447
TUBERIAS DE CALEFACCION	803
	805
	808
TUBERIAS DE CALENTEDOR Y ACONDICIONADOR DE AIRE (GR)	805
	808
TUBERÍAS DE COMBUSTIBLE (GR)	92
TUBERIAS DE CONTROL DE LA SUSPENSIÓN (GR)	476
	478
TUBERÍAS DE DIRECCIÓN (GR)	298
	301
TUBERÍAS DE GIRO (GR)	487
	489
TUBERÍAS DE LA CALEFACCIÓN (GR)	803
TUBERÍAS DE LA PALANCA EXTENDIBLE (GR)	432
	433
	435
TUBERÍAS DE LA PLUMA (GR)	424
	426
TUBERÍAS DE RETORNO (GR)	472
	473
	474
	475
TUBERIAS DE VALVULA DE CONTROL DE CARGA (GR)	440

* NO HAY TRADUCCION DISPONIBLE EN EL MOMENTO DE LA IMPRESION

INDICE

Nombre	Página
	444
TUBERÍAS DEL BRAZO (GR)	482
	483
	484
TUBERÍAS DEL CILINDRO DE INCLINACIÓN (GR)	491
TUBERÍAS DEL CILINDRO DEL CUCHARÓN (GR)	428
	430
TUBERÍAS DEL CUCHARÓN DE USO MÚLTIPLE	449
	451
TUBERÍAS DEL ENFRIADOR DEL TREN DE FUERZA (GR)	59
	61
TUBERÍAS DEL ESTABILIZADOR (GR)	480
TUBO DE LLENADO DE ACEITE DE LA TRANSMISIÓN (GR)	216
	218
	220
	222
	223
	224
TUBO DE LLENADO DE ACEITE (GR)	47
TURBOCOMPRESOR (GR)	85

V

*VALVE GP-CHECK	531
*VALVE GP-PUMP CONTROL	570
	571
VÁLVULA (CONJ) (AGUA)	718
	720
	795
VÁLVULA DE ALIVIO (GR)	247
	253
	268
	304
	533
	545
VÁLVULA DE ALIVIO (GR)	553
VÁLVULA DE ALIVIO (GR)	259
VÁLVULA DE ALIVIO (GR) (AIRE ACONDICIONADO)	756
VÁLVULA DE CONTROL DE CARGA (GR)	555
	557
VÁLVULA DE CONTROL (GR)	533
	541
	543
	545
VÁLVULA DE CONTROL (GR)	535
	537
	539
	547
	549
	551
	553
VÁLVULA DE CORTE	58
	467
VÁLVULA DE GAS	330
VÁLVULA DE LANZADERA (GR)	573
VÁLVULA DE RETENCIÓN (GR)	530
	532
VÁLVULA DE SOLENOIDE (GR)	269
	270
	271
	272
	273
	574
VÁLVULA DE SOLENOIDE (GR) (12 VOLTIOS)	94
VALVULA DE SOLENOIDE Y MONTAJE (GR	518
VÁLVULA DEL NEUMÁTICO (GR)	274
	275
VÁLVULA PILOTO (GR)	558
	559
	560
	561
	562
	563
	564
	565
	566
	567
	568
	569
VALVULA (RESPIRADERO DE AIRE)	199
VÁLVULAS HIDRÁULICAS - GRUPO DE 2	520
	522
	523
VÁLVULAS HIDRÁULICAS - GRUPO DE 6	528
VARILLAJE DE CUCHARÓN CARGADOR (GR)	585
VARILLAJE DEL CUCHARÓN RETROEXCAVADOR (GR)	583
VARILLAJE GR-PULGAR	582
VENTANA DE LA CABINA (GR)	848
	850
	852
VENTANA DE LA PUERTA (GR)	854
	856
VENTILADOR (CONJ)	723
	797
VIDRIO (CONJ) (REFLECTOR)	123
VISERA	843
VISERA (GR)	843

* NO HAY TRADUCCION DISPONIBLE EN EL MOMENTO DE LA IMPRESION

INDICE

Nombre	Página	Nombre	Página
VOLANTE - CAJA DE (GR)	25		
VOLANTE DE DIRECCIÓN (GR)	303		
VOLANTE (GR)	24		

Z

ZAPATA DE ESTABILIZADOR (GR)	600
	601
ZAPATA Y PROTECTOR DEL ESTABILIZADOR	593
	594
	595

* NO HAY TRADUCCION DISPONIBLE EN EL MOMENTO DE LA IMPRESION

ÍNDICE

Designação	Página

A

ACOPLADOR RÁPIDO 691 692 693 694 695 696
ACOPLAMENTO 367
ACUMULADOR - AR CONDICIONADO 717 805
ACUMULADOR - ESTABILIZADOR 332
ACUMULADOR DO SISTEMA DE ABSORÇÃO DE IMPACTOS 330 331
ALAVANCA DE CONTROLE DO GOVERNADOR 802
ALAVANCA DE CONTROLE MANUAL 291
ALCA FIXADOR DE CABO 148 460
ALOJAMENTO - DIFERENCIAL 211
ALOJAMENTO DO BRAÇO EXTENSÍVEL 581
ALOJAMENTO E FLANGE - EIXO 226 228
ALTERNADOR DE CORRENTE 106
ALTO-FALANTE 836
AQUECEDOR DA ÁGUA DO MOTOR 116 117 118
AQUECEDOR DA CABINE 797
AQUECEDOR DA CABINE E MONTAGEM 795
AR. DE EMBARQUE DA CAÇAMBA 710
ARMAÇÃO OSCILANTE 322
ARRANJO BÁSICO 10
ARREFECEDOR - ÓLEO DO MOTOR 51
ARREFECEDOR DE ÓLEO DO MOTOR E BASE DO FILTRO 51
ARREFECIMENTO 53 54
ARTICULAÇÃO DA CAÇAMBA DA RETROESCAVADEIRA 583
ARTICULAÇÃO DAS CAÇAMBAS DAS CARREGADEIRAS 585
ASSENTO 823 825 827
ASSENTO COM SUSPENSÃO 830 832 834 835

B

*BACKHOE AR-STANDARD STICK 5 6 7 8
BATENTE - CAÇAMBA 711
BATERIA 107 109 111 113
BATERIA (12 VOLTS, SERVIÇO PESADO) 111 113
BATERIA (12 VOLTS, 750 AMPERES) (750 A) . . . 107 109
BLOCO DO MOTOR 18 20
BOCAL DE ENCHIMENTO DE ÓLEO DO MOTOR 47
BOCAL DE ENCHIMENTO DE ÓLEO DO TREM DE FORÇA 216 218 220 222 223 224
BOMBA DA TRANSMISSÃO 248 255 259
BOMBA DE ÁGUA 63
BOMBA DE ESCORVA DO COMBUSTÍVEL 89 97
BOMBA DE INJEÇÃO DO COMBUSTÍVEL 94
BOMBA DE ÓLEO - MOTOR 49
BOMBA DE PISTÃO 509
BORDA CORTANTE 697 698
BOTÃO - DIREÇÃO 297
BRAÇO - CAÇAMBA RETRO-ESCAVADORA . . . 606
BRAÇO DE LEVANTAMENTO 575
BRAÇO DO ASSENTO 725 823 825
BRAÇO ESTENDÍVEL 604
BUJÃO - DRENAGEM DO RESERVATÓRIO 32
BUJÃO DO MOTOR 35 36
BUJÃO MAGNÉTICO 201 206 211
BUZINA ELÉTRICA 799

C

CABEÇOTE DO MOTOR 21 22

* TRADUÇÃO NÃO DISPONÍVEL NO MOMENTO DA IMPRESSÃO

ÍNDICE

Designação	Página
CABINE	726
	727
	728
	729
	730
	731
	732
	733
	735
	738
	740
CABOS/FIOS ELÉTRICOS - ABSORÇÃO DE IMPACTOS	187
	189
	191
CABOS/FIOS ELÉTRICOS - ALARME DO ESTABILIZADOR	196
CABOS/FIOS ELÉTRICOS - AQUECEDOR	175
CABOS/FIOS ELÉTRICOS - AR CONDICIONADO	138
	141
	142
CABOS/FIOS ELÉTRICOS - CABINE	150
	152
	153
	154
CABOS/FIOS ELÉTRICOS - CONTROLE ELET. DAS MARCHAS	145
	148
CABOS/FIOS ELÉTRICOS - DIREÇÃO	198
CABOS/FIOS ELÉTRICOS - ESTABILIZADOR	194
CABOS/FIOS ELÉTRICOS - MOTOR	171
CABOS/FIOS ELÉTRICOS - PLATAFORMA	177
	179
CABOS/FIOS ELÉTRICOS - SENSOR	193
CABOS/FIOS ELÉTRICOS - TOMADA DE FORÇA	183
CABOS/FIOS ELÉTRICOS - TRASEIROS	184
CABOS/FIOS ELÉTRICOS DO CONSOLE	157
	160
	165
	167
	169
CAÇAMBA - RETRO-ESCAVADORA	616
	617
	618
	619
	620
	621
	622
	623
	624
	625
CAÇAMBA DE MÚLTIPLAS APLICAÇÕES	608
	609
	610
	687
	688
	689
	690
CAÇAMBA DIANTEIRA	587
CAÇAMBA PARA APLICAÇÃO GERAL	611
	612
	614
	615
	626
	627
CAÇAMBA RETROESCAVADORA	628
	629
	630
	631
	632
	633
	634
	635
	636
	637
	638
	639
	640
	641
	642
	643
	644
	645
	646
	647
	648
	649
	650
	651
	652
	653
	654
	655
	656
	657
	658
	659
	660
	661
	662
	663
	664
	665
	666

* TRADUÇÃO NÃO DISPONÍVEL NO MOMENTO DA IMPRESSÃO

ÍNDICE

Designação	Página
	667
	668
	669
	670
	671
	672
	673
	674
	675
	676
	677
	678
	679
	680
	681
	682
	683
	684
	685
	686
CADEADO	863
CADEADO CONTRA VANDALISMO	863
CAIXA - BATERIA	305
	306
	307
	308
CAIXA DIANTEIRA	26
CAIXA DO VOLANTE DO MOTOR	25
CALCO	595
	600
	601
CALÇO DO ESTABILIZADOR	600
	601
CALÇO DO ESTABILIZADOR E MONTAGEM	597
	598
	599
CAPÔ DO MOTOR	327
CAPÔ E PROTETOR	325
CÁRTER DO ÓLEO DO MOTOR	32
CHAPA DO PISO	318
	319
CHASSI	10
CHASSI DIANTEIRO	321
CHAVE	863
CHAVE - ELETRÔNICO (AMARELO)	119
	121
CHAVE - ELETRÔNICO (CINZA)	119
	121
CHAVE INTERRUPTORA DE PARTIDA	819
CILINDRO	288
CILINDRO - CAÇAMBA DE MÚLTIPLAS APLICAÇÕES	380
CILINDRO - POLEGAR	385
CILINDRO DA CAÇAMBA RETROESCAVADEIRA	370
	372
CILINDRO DA LANÇA	374
CILINDRO DE GIRO	384
CILINDRO DE INCLINAÇÃO	386
CILINDRO DE LEVANTAMENTO	379
CILINDRO DO BRAÇO	383
CILINDRO DO BRAÇO ESTENDÍVEL	376
	377
CILINDRO DO ESTABILIZADOR	381
	382
CILINDRO E TUBULAÇÕES-POLEGAR	369
CINTO DE SEGURANÇA	821
	822
COBERTA TOLDO	746
	749
	750
COMANDO - ACOPLAMENTO FLEXÍVEL	215
COMANDO - RETROESCAVADEIRA	214
COMANDO DO VENTILADOR	23
COMANDO HIDRÁULICO	391
	392
	393
	394
COMPARTIMENTO PARA LITERATURA	755
COMPRESSOR DE REFRIGERANTE	756
	757
	759
CONDENSADOR DO REFRIGERANTE E MONTAGEM	760
CONDICIONADOR DE AR	722
	723
CONDICIONADOR DE AR E MONTAGEM	718
	720
CONEXÃO - TUBO D'ÁGUA	50
CONEXÃO-AQUECEDOR & AR CONDICIONADO	58
CONJUNTO DE 4 VÁLVULAS	519
CONSOLE DO OPERADOR	764
	765
CONSOLE LATERAL	766
	767
	768
	769
	770
	771
	772
	773
CONTRAPESO	310
	311
	312
	313

* TRADUÇÃO NÃO DISPONÍVEL NO MOMENTO DA IMPRESSÃO

ÍNDICE

Designação	Página
	314
CONTROLE - ALAVANCA	349
	351
CONTROLE - NÃO PROGRAMADO (SEGURANÇA)	119
	121
CONTROLE - PEDAL HIDRÁULICO	345
	347
CONTROLE DA TRANSMISSÃO	210
CONTROLE DA TRAVA DO DIFERENCIAL	209
CONTROLE DE DIREÇÃO	296
CONTROLE DO FREIO DE ESTACIONAMENTO	286
	287
CONTROLE DO FREIO DE SERVIÇO	288
CONTROLE DO GOVERNADOR E ACELERADOR	87
CONTROLE HIDRÁULICO	336
CONTROLE HIDRÁULICO MANUAL	338
	340
	342
	344
CONVERSÃO - TUBULAÇÕES AUXILIARES	355
	358
	362
CORREIA DE COMANDO	126
	127
CORREIA EM V (AR CONDICIONADO)	759
CORREIA EM V (COMPRESSOR DO GÁS REFRIGERANTE)	53
COXIM E PROTETOR DO ESTABILIZADOR	593
	594
	595

D

DECALQUE	861
DECALQUE - ADVERTÊNCIA (CILINDRO DE ALTA PRESSÃO)	355
DECALQUE - AMARRAÇÃO	864
DECALQUE - CAT	327
DECALQUE - CONTROLE (CONDICIONADOR DE AR)	718
	720
	795
DECALQUE - CONTROLE (CONDICIONADOR DE AR)	874
DECALQUE - DIREÇÃO EM TODAS AS RODAS	874
DECALQUE - IDENTIFICAÇÃO (PAINEL DE FUSÍVEIS)	214
DECALQUE - IDENTIFICAÇÃO (PAINEL DE FUSÍVEIS)	874
DECALQUE - INDICADOR	165
	874
DECALQUE - INDICADOR (CAÇAMBA)	608
	609
	610
DECALQUE - INSTRUÇÃO	358
	362
	875
DECALQUE - INSTRUÇÃO (AUXILIAR)	776
DECALQUE - INSTRUÇÃO (BRAÇO EXTENSÍVEL)	340
	875
DECALQUE - INSTRUÇÃO (CONTROLE DA CAÇAMBA)	391
	392
	394
	875
DECALQUE - INSTRUÇÃO (FLUXO DE RETORNO)	355
	401
	404
	408
	412
	417
	420
	874
DECALQUE - INSTRUÇÃO (LUBRIFICANTES)	327
DECALQUE - INSTRUÇÃO (SEM DEGRAUS)	874
DECALQUE - LEVANTAMENTO	864
DECALQUE - TIRA (399 CM)	726
	727
	728
	729
DECALQUE (CAÇAMBA)	776
DECALQUE (CAÇAMBA PARA MÚLTIPLAS APLICAÇÕES)	391
	392
DECALQUE (CAÇAMBA PARA MÚLTIPLAS APLICAÇÕES)	874
DECALQUE (CAÇAMBA PARA MÚLTIPLOS PROPÓSITOS)	776
DECALQUE (CARREGADOR DO PILOTO DE CONTROLE)	776
DECALQUE (CATERPILLAR)	727
	728
	729
	730
	731
	732
	745
DECALQUE (CATERPILLAR) (VISEIRA DE PÁRA-BRISA)	726

* TRADUÇÃO NÃO DISPONÍVEL NO MOMENTO DA IMPRESSÃO

ÍNDICE

Designação	Página
DECALQUE (CHAVE INTERRUPTORA DE PARTIDA)	874
DECALQUE (CONTROLE DA CAÇAMBA)	338, 340, 776, 874
DECALQUE (CONTROLE DO ESTABILIZADOR / TRAVA DA LANCA)	501
DECALQUE (CONTROLE DO PEDAL AUXILIAR)	345
DECALQUE (CONTROLE DO PEDAL E E-BRACO)	345
DECALQUE (IGNIÇÃO)	119, 122
DECALQUE (INDICADOR)	157
DECALQUE (INDICADOR DA CACAMBA)	396
DECALQUE-INDICADOR DE CAÇAMBA	874
DECALQUE (LOCAL DO OLHAL DE LEVANTAMENTO)	873
DECALQUE (PADRÃO CRUZADO PADRÃO)	874
DECALQUE (PARTIDA) (SISTEMA DE SEGURANÇA DA MÁQUINA)	122
DECALQUE (PIVÔ CENTRAL, TRAVA DA LANÇA)	874
DECALQUE (PLACA - NOME)	330
DECALQUE (RECIRCULAÇÃO DE AR)	723, 797
DECALQUE (SEGURANÇA)	122
DECALQUE (SEGURANÇA) (SISTEMA DE SEGURANÇA DA MÁQUINA)	119
DECALQUE (SISTEMA DE ABSORÇÃO DE IMPACTOS)	337, 398
DECALQUE (VELOCIDADE VARIÁVEL)	87, 874
DESENGATE E POSICIONADOR DA CAÇAMBA	396
DIFERENCIAL	211, 213
DIFERENCIAL E COROA	211
DUCTO DE AR	786, 788, 789

E

Designação	Página
EIXO-COMANDO DE VÁLVULA	13
EIXO DA TOMADA DE FORÇA	513
EIXO DE PROPULSÃO E DIREÇÃO	201, 203
EIXO DE TRANSMISSÃO	240, 241, 242
EIXO DIANTEIRO	293, 295
EIXO TRASEIRO E MONTAGEM	199, 200
ELEMENTO - FILTRANTE (COMBUSTÍVEL)	97
ELEMENTO - FILTRO DE COMBUSTÍVEL	89
ELEMENTO - FILTRO DE COMBUSTÍVEL (SEPARADOR DE ÁGUA)	91, 99
ELO - POLEGAR	582
EMISSOR - TEMPERATURA	171
ENGRENAGEM-COROA E PINHÃO	211
ESPELHO RETROVISOR	810
ESTABILIZADOR	514
ESTABILIZADOR - RETROESCAVADEIRA	602
EXTENSÃO DO TUBO DE ESCAPE	79

F

Designação	Página
FILTRO	533, 535, 537, 539, 543, 553
FILTRO - AR (AR CONDICIONADO)	718, 723
FILTRO - AR (CABINE)	797
FILTRO - COMBUSTÍVEL	89
FILTRO - HIDRÁULICO	387
FILTRO - ÓLEO	387
FILTRO - ÓLEO DO MOTOR	47
FILTRO - ÓLEO (HIDRÁULICO)	160
FILTRO - ÓLEO (HIDRÁULICO) (RESISTENTE A FOGO)	394
FILTRO - ÓLEO (LIMPEZA, ALTA EFICIÊNCIA)	394
FILTRO - ÓLEO (TRANSMISSÃO)	246
FILTRO (AQUECEDOR)	795
FILTRO (AR CONDICIONADO)	718, 720
FILTRO DE COMBUSTÍVEL E SEPARADOR DE ÁGUA	91
FILTRO (RESPIRO DO TANQUE HIDRAULICO)	515
FLANGE - RODA	225
*FOOTREST GP	794
FREIO DE ESTACIONAMENTO	285
FUSÍVEL (10 A)	126, 127, 142, 183, 191

* TRADUÇÃO NÃO DISPONÍVEL NO MOMENTO DA IMPRESSÃO

ÍNDICE

Designação	Página
	194
FUSÍVEL (10 AMPERES)	128
	138
	187
	189
FUSÍVEL (15 A)	153
FUSÍVEL (15 AMPERES)	128
	154
FUSÍVEL (20-AMPERES)	150
FUSÍVEL (5 AMP)	198
FUSÍVEL (5 AMPÈRES)	150

G

GARFO	699
	700
GR. DE CONVERSÃO - BRAÇO EXTENSÍVEL	366
GR. DE CONVERSÃO - VÁLVULA DE CONTROLE	365
	366
GR. DE INSTALAÇÃO - CALÇO DA RODA	862
GR. PLANETÁRIO - COMANDO FINAL	230
GRAXEIRA	385
	498
	577
	578
	689
	715
GRAXEIRA (ROSCA 1/8-27 POL)	321
	322
	575
	585
	592
	602
	606
	687
	688
	690
GRUPO DE CONVERSÃO - ESTOFAMENTO DE GIRO	353
GRUPO DE VÁLVULAS - SEIS	519
GRUPO DE VÁLVULAS - 5	519
GRUPO DE VÁLVULAS DE CONTROLE - CINCO	527
GRUPO DE VÁLVULAS DE CONTROLE - DUPLO	520
	522
	523
GRUPO DE VÁLVULAS DE CONTROLE - QUÁDRUPLO	526
GRUPO DE VÁLVULAS DE CONTROLE - SEIS	528
GRUPO DE VÁLVULAS DE CONTROLE - TRIPLO	524
	525
GRUPO ROTATIVO DA BOMBA	512

I

INDICADOR - MANUTENÇÃO (FILTRO DE AR)	80
INDICADOR - TROCA DO FILTRO DE AR	80
	81
	82
	83
INDICADOR (HIDRÁULICO)	169
INSTALAÇÃO DE GRUPO DE VÁLVULAS	395
INSTALAÇÃO-SEGURANÇA	119
	121
	122
INTERRUPTOR - BALANCIM (FAROL DIANTEIRO)	128
INTERRUPTOR - BALANCIM (FAROL TRASEIRO)	128
INTERRUPTOR - BALANCIM (PERIGO)	165
INTERRUPTOR - BALANCIM (SISTEMA DE ABSORÇÃO DE IMPACTOS)	187
	189
	337
INTERRUPTOR - BALANCIM (VELOCIDADE DO VENTILADOR DO AQUECEDOR)	138
	142
	175
INTERRUPTOR - BOTÃO	342
INTERRUPTOR - BOTÃO (NEUTRALIZADOR)	210
INTERRUPTOR - LIMITADOR (FREIO)	288
INTERRUPTOR - PRESSÃO	136
	138
	187
	189
INTERRUPTOR - PRESSÃO (ALTA - BAIXA)	142
INTERRUPTOR - PRESSÃO (DERIVAÇÃO ÓLEO HIDRÁULICO)	160
INTERRUPTOR - ROLETAS	193
INTERRUPTOR - TEMPERATURA	137
INTERRUPTOR - TEMPERATURA (ÓLEO HIDRÁULICO)	160
INTERRUPTOR - TERMOSTATO (AR CONDICIONADO)	723
INTERRUPTOR (AQUECEDOR)	175
INTERRUPTOR (BUZINA)	165
INTERRUPTOR (NEUTRO, TRAVA)	165
INTERRUPTOR (SETA DE DIREÇÃO)	152
INTERRUPTOR (TRAVA HIDRÁULICA)	391

* TRADUÇÃO NÃO DISPONÍVEL NO MOMENTO DA IMPRESSÃO

ÍNDICE

Designação	Página
INTERRUPTOR (TRAVAS HIDRÁULICAS)	391
INTERRUPTOR (40 GRAUS) (AVANÇO DE REGULAGEM)	94
J	
JANELA DA CABINE	848
	850
	852
JOGO - EXCÊNTRICO (SENTIDO ANTI-HORÁRIO)	285
JOGO - PORTA SISTEMA PLANETÁRIO	230
JOGO - PROTETOR DO PEDAL	800
JOGO - SERVIÇO DO ACUMULADOR	330
JOGO - SISTEMA DE ABSORÇÃO DE IMPACTOS	398
JOGO DE AJUSTADOR (ENCOSTO DO BRAÇO)	725
JOGO DE ALMOFADA (ENCOSTO DO BRAÇO)	725
JOGO DE BASE DO SEPARADOR DE ÁGUA	91
	99
JOGO DE BLOCO DESLIZADOR	830
	832
	834
JOGO DE CONTATO (MOTOR DE PARTIDA)	133
JOGO DE CORREIAS EM V (INCLUI 2 CORREIAS)	53
	54
	728
	729
	730
	731
	744
	745
JOGO DE CRUZETA	201
JOGO DE CRUZETA E MANCAL	240
	241
	242
JOGO DE ENGRENAGEM (MOTOR DE PARTIDA)	133
JOGO DE LONA DO FREIO	285
JOGO DE MANCAL	204
JOGO DE MANUTENÇÃO	820
JOGO DE MARCADOR DE HORAS DE SERVIÇO	165
JOGO DE PINCA DO FREIO	285
JOGO DE RECEPTÁCULO (12 PINOS)	160
JOGO DE RECEPTÁCULO (2 PINOS)	177
	191
	194
	196
	198
	210
	261
	270
	271
	272
	273
	342
	539
	553
	574
	756
JOGO DE RECEPTÁCULO (3 PINOS)	99
	157
	160
	191
	270
	272
	273
	844
JOGO DE RECEPTÁCULO (4 PINOS)	160
	191
	194
JOGO DE RECEPTÁCULO (4 PINOS)	125
JOGO DE RECEPTÁCULO (6 PINOS)	191
	813
	858
JOGO DE RECEPTÁCULO (8 PINOS)	812
JOGO DE REPARO	858
JOGO DE RETENTOR	118
	349
	351
	454
	555
JOGO DE RETENTOR (BOMBA DE MEDIÇÃO DA DIREÇÃO)	214
JOGO DE ROLAMENTO DOS ROLETES	230
JOGO DE TOMADA DE CONEXÃO (12 PINOS)	160
JOGO DE TOMADA DE CONEXÃO (12 PINOS)	157
JOGO DE TOMADA DE CONEXÃO (2 PINOS)	142
	148
	157
	160
	179
	191
	194
	196
	269
	287
	723
JOGO DE TOMADA DE CONEXÃO (3 PINOS)	160
	191

* TRADUÇÃO NÃO DISPONÍVEL NO MOMENTO DA IMPRESSÃO

ÍNDICE

Designação	Página
JOGO DE TOMADA DE CONEXÃO (4 PINOS)	157, 160, 191, 194, 196
JOGO DE TOMADA DE CONEXÃO (6 PINOS)	157, 160, 191

K

*KIT-ADAPTER TIP	703, 704

L

LAMINA	860
LÂMINA	858
LÂMPADA	812
LÂMPADA - FAROL	123
LÂMPADA - SINALIZAÇÃO	124
LÂMPADA - TETO	836
LÂMPADA (12 V)	126, 127, 157, 160, 841
LÂMPADA (12-VOLTS)	53, 119, 122, 141, 167, 169, 840
LÂMPADA (12-VOLTS, 10-WATTS)	836
LÂMPADA (12-VOLTS, 24-WATTS)	124
LÂMPADA (12 VOLTS, 55 WATTS)	123
LÂMPADA (12-VOLTS, 55-WATTS)	128
LÂMPADA (12 VOLTS/21 WATTS)	125
LÂMPADA (12 VOLTS/21/5 WATTS)	125
LANÇA	577, 578
LATA - RESPIRO	40, 42, 44
LAVADOR DO VIDRO	844, 846
LENTE	125
LENTE ÂMBAR	126, 127
LENTE (ÂMBER)	124
LENTE (FAROL)	123
LEVANTAMENTO DO MOTOR	28
LIMPADOR DO VIDRO	858, 860
LISTRA DA CABINE	842
LUVA DE JUNÇÃO DE CABO	755
LUZ GIRATÓRIA DE ALARME	126, 127
LUZ INTERMITENTE	179
LUZ TRASEIRA E DE FREIO	125

M

MANGUEIRA - RADIADOR	67
MANGUEIRA (RESPIRO)	14
MANGUEIRA (TAMPA DA VÁLVULA DO RESPIRO DO CÁRTER)	42
MANGUEIRA (109CM - ABERTURA DO RESPIRO DO CÁRTER)	42
MANGUEIRA (53CM)	298, 301
MANGUEIRA (90 CM - RESERVATÓRIO DO RESPIRO DO CÁRTER)	42
MECANISMO DAS VÁLVULAS	38
MÓDULO - INDICADOR DE ALARME	811, 812
MOLA (MANGUEIRA DO RESPIRO)	14
MONTAGEM - BANCO DE VÁLVULAS	496, 497
MONTAGEM - BOMBA HIDRÁULICA	502
MONTAGEM - BRAÇO	592
MONTAGEM - CAÇAMBA	705, 706
MONTAGEM - CILINDRO	498, 499
MONTAGEM - CONTROLE DA RETROESCAVADEIRA	494
MONTAGEM - CONTROLE HIDRÁULICO	500, 501
MONTAGEM - GARFO	707
MONTAGEM - MOTOR	29
MONTAGEM - MOTOR E TRANSMISSÃO	30, 31
MONTAGEM - PAINEL DE INSTRUMENTOS	814, 815, 816, 817
MONTAGEM - TUBOS	503, 504, 505, 506, 507, 508
MOTOR	11
MOTOR - LIMPADOR DO VIDRO	813

* TRADUÇÃO NÃO DISPONÍVEL NO MOMENTO DA IMPRESSÃO

ÍNDICE

Designação	Página
MOTOR ELÉTRICO DE PARTIDA	133
	135
MOTOR PRIMÁRIO	12
P	
PAINEL DE INSTRUMENTOS	819
PÁRA-CHOQUE DIANTEIRO	309
PÁRA-LAMA DIANTEIRO	316
PÁRA-LAMA TRASEIRO	317
PÁRA-SOL	843
PÁRA-SOL DA CABINE	843
PEDAL DO GOVERNADOR	820
PINO - EIXO	201
PINO-ACOPLADOR	708
	709
PISTÃO E BIELA	34
PLACA E DECALQUE	864
	865
	866
	867
	868
	869
	870
	871
	872
	873
POLEGAR	712
	713
	714
	715
POLIA DO VIRABREQUIM	37
PORTA - LADO DIREITO	784
PORTA - LADO ESQUERDO	782
POSTO DE CONTROLE/CONSOLE DIANTEIRO	761
	762
	763
PROTETOR - CAÇAMBA	701
	702
PROTETOR - CILINDRO DO ESTABILIZADOR	388
	389
PROTETOR - EIXO DE TRANSMISSÃO	324
PROTETOR DE BORRACHA CONTRA POEIRA	394
	561
	562
	565
	566
	567
	568
PURIFICADOR DE AR	75
	77

Designação	Página
R	
RADIADOR E ARREFECEDOR DO ÓLEO HIDRÁULICO	67
	68
	69
	70
	71
	72
	74
RADIADOR E VENTILADOR	65
	66
REDUÇÃO DE RUÍDO	836
REDUTOR	476
REFLETOR	701
REGULADOR DE TEMPERATURA DA ÁGUA	50
RELÉ (CONJ) (12 V)	128
	142
	148
	153
	198
RELÉ (CONJ) (12 V) (ALTA VELOCIDADE)	142
RELÉ (CONJ) (12-VOLTS)	119
	122
	138
	141
	145
	150
	154
	171
	175
	187
	189
RELÉ (CONJ) (12-VOLTS)	138
	175
RESPIRO	39
	40
	42
	44
	46
RESPIRO (EIXO)	201
RESPIRO (TRANSMISSÃO)	249
	254
RESPIRO (TRANSMISSÃO)	261
RETENTOR DE ANEL-O	432
RETENTOR DE ANEL-O (DRENO DO ÓLEO DO MOTOR)	32
RETENTOR DE ANEL-O (REGULADOR DA TEMPERATURA DA ÁGUA)	50
RETENTOR (RESPIRO)	40
	42
	44
RETROESCAVADEIRA - BRAÇO ESTENDÍVEL	1

* TRADUÇÃO NÃO DISPONÍVEL NO MOMENTO DA IMPRESSÃO

ÍNDICE

Designação	Página
	2
	3
	4
RETROESCAVADORA	5
	6
	8
	9
RODA E PNEU	275
	276
	277
	278
	279
	280
	281
	282
	283
	284
S	
SEMI-EIXO TRASEIRO	204
SEPARADOR DE ÁGUA	98
	99
	100
	101
SERVO-TRANSMISSÃO	246
SERVOTRANSMISSÃO	259
SILENCIADOR	84
SINCRONIZADOR	247
	253
SIST. DE ILUMINAÇÃO - PISCA-PISCA GIRATÓRIO DE ADVERTÊNCIA	131
	132
SISTEMA DE ABSORÇÃO DE IMPACTOS	336
	337
SISTEMA DE ILUMINAÇÃO - FARÓIS E SINAL	128
SUPORTE	107
	109
SUPORTE - ESCOVA	133
SUPORTE PARA TRANSPORTE	580
SUSPENSÃO - ASSENTO	838
T	
TACÔMETRO - ELÉTRICO	728
	729
	730
	731
	744
	745
	840
	841
TAMPA	274
	275
	399
TAMPA - ACESSO À BATERIA	315
TAMPA - ADMISSÃO DE AR	78
TAMPA - CONSOLO	775
	776
TAMPA - ENCHIMENTO (ÓLEO HIDRÁULICO)	515
TAMPA - MECANISMO DAS VÁLVULAS	14
TAMPA - RADIADOR	68
TAMPA - TANQUE DE COMBUSTÍVEL	104
TAMPA - VÁLVULA DE CONTROLE	368
TAMPA (BOCAL DE ENCHIMENTO DO OLEO DO MOTOR)	47
TAMPA-COLUNA	780
	781
TAMPA (CONDICIONADOR DE AR)	805
TAMPA CONTRA POEIRA	216
	218
	220
	333
	453
TAMPA-PAINEL TRASEIRO DO MOTOR	778
	779
TAMPA (RADIADOR)	71
	74
TAMPÃO	358
	519
TANQUE DE COMBUSTÍVEL	103
	104
TANQUE DE COMBUSTÍVEL E MONTAGEM	102
TANQUE DO FREIO	292
TANQUE HIDRÁULICO	515
TAPETE	790
	791
	792
	793
TELA FILTRANTE	249
	255
	261
TIRANTE DO CILINDRO DE LEVANTAMENTO	579
TOLDO	742
	743
	744
	745
TOLDO - ESTRUTURA ROPS ABERTA	753
	754
TRANSMISSÃO DIRETA	246
	247
	253
TRANSMISSÃO E MONTAGEM	243

* TRADUÇÃO NÃO DISPONÍVEL NO MOMENTO DA IMPRESSÃO

ÍNDICE

Designação	Página
	244
	245
TRAVA - CONTROLE MANUAL HIDRÁULICO	493
TRAVA - TRANSPORTE	588
	589
	590
	591
TREM DE FORÇA	231
	232
	233
	234
	235
	236
	237
	238
	239
TRINCO DE CONSOLE	801
TUBOS - ABSORÇÃO DE IMPACTOS	476
	478
TUBOS - AQUECEDOR	803
TUBOS - ARREFECEDOR DO TREM DE FORÇA	59
	61
TUBOS - BOMBA	463
	465
	466
	467
	470
	471
TUBOS - BRAÇO	482
	483
	484
TUBOS - BRAÇO COM EXTENSÃO	432
	433
	435
TUBOS - CAÇAMBA DE MÚLTIPLAS APLICAÇÕES	449
	451
TUBOS - CILINDRO DA CAÇAMBA	428
	430
TUBOS - CILINDRO DE INCLINAÇÃO	491
TUBOS - CILINDRO DE LEVANTAMENTO	437
	439
TUBOS - CIRCUITO PILOTO	453
	454
	456
	460
TUBOS - COMBUSTÍVEL	92
TUBOS - DIREÇÃO	298
	301
TUBOS - ESTABILIZADOR	480
TUBOS - GIRO	487
	489
TUBOS - LANÇA	424
	426
TUBOS - RETORNO	472
	473
	474
	475
TUBOS - VÁLVULA DE CONTROLE DE CARGA	440
	444
TUBOS AUXILIARES	447
TUBOS AUXILIARES - RETROESCAVADEIRA	399
	401
	404
	408
	412
	415
	417
	420
TUBOS DO AQUECEDOR	803
	805
	808
TUBULAÇÕES - AQUECEDOR E AR CONDICIONADO	805
	808
TURBOALIMENTADOR	85

U

UNI-DENTE	716

V

*VALVE GP-CHECK	531
*VALVE GP-PUMP CONTROL	570
	571
VÁLVULA - CONTROLE DE CARGA	555
	557
VÁLVULA (ÁGUA)	718
	720
	795
VÁLVULA DE ALÍVIO	247
	253
	259
	268
	304
	533
	545
	553
VÁLVULA DE ALÍVIO (AR CONDICIONADO)	756
VÁLVULA DE ALÍVIO (RESPIRO DE AR)	199
VÁLVULA DE CONTROLE	533
	535

* TRADUÇÃO NÃO DISPONÍVEL NO MOMENTO DA IMPRESSÃO

ÍNDICE

Designação	Página
	537
	539
	541
	543
	545
	547
	549
	551
	553
VÁLVULA DE CONTROLE E MONTAGEM	517
VÁLVULA DE CONTROLE PILOTO	558
	559
	560
	561
	562
	563
	564
	565
	566
	567
	568
	569
VÁLVULA DE GÁS	330
VÁLVULA DE PARADA	58
	467
VÁLVULA DE PNEU	274
	275
VÁLVULA DE PRIORIDADE	304
VÁLVULA DE RETENÇÃO	530
	532
VÁLVULA DE SEPARAÇÃO	573
VÁLVULA DO CONECTOR	333
VALVULA DO SOLENOIDE E MONTAGEM	518
VÁLVULA SOLENÓIDE	269
	270
	271
	272
	273
	574
VÁLVULA SOLENÓIDE (12 V)	94
VELA DE AQUECIMENTO; VELA INCANDESCENTE	115
VENTILADOR	723
	797
VENTILADOR DE SUCÇÃO	55
	56
	57
VIDRO DA PORTA	854
	856
VIRABREQUIM	16
VOLANTE	303
VOLANTE DO MOTOR	24

* TRADUÇÃO NÃO DISPONÍVEL NO MOMENTO DA IMPRESSÃO

STICHWORTVERZEICHNIS

Bezeichnung	Seite
A	
ABDECKGLAS	125
ABDECKGLAS (ARBEITSSCHEINWERFER)	123
ABDECKGLAS (GELB)	124
	126
	127
ABSPERRVENTIL	58
	467
ACHSBOLZEN	201
ACHSGEHÄUSEFLANSCH	226
	228
ANSCHLUSS	367
ANSCHLUSS - HEIZUNG U. KLIMAANLAGE	58
ANTRIEB - BAGGERLADER	214
ANTRIEBS- UND LENKACHSE	201
	203
ANTRIEBSWELLE	240
	241
	242
ANTRIEBSWELLENVERKLEIDUNG	324
ANZEIGE (HYDRAULIK)	169
ARBEITS- U. SIGNALLEUCHTE	128
ARBEITSLEUCHTEN	123
ARMLEHNE	725
	823
	825
AUFKLEBER	861
AUFKLEBER - ALLRADLENKUNG	874
AUFKLEBER - ANZEIGE	165
	874
AUFKLEBER - ANZEIGE (SCHAUFEL)	608
	609
	610
AUFKLEBER - CAT	327
AUFKLEBER - FESTZURREN	864
AUFKLEBER - HEBEN	864
AUFKLEBER - SCHAUFELANZEIGE	874
AUFKLEBER (ANZEIGE)	157
AUFKLEBER (CATERPILLAR)	729
	730
	731
	732
	745
AUFKLEBER (CATERPILLAR)	727
	728
AUFKLEBER (CATERPILLAR) (FRONTSCHEIBE - SONNENBLENDE)	726
AUFKLEBER (HUBÖSE)	873
AUFKLEBER (KOMBISCHAUFEL)	391
	392
	776
	874
AUFKLEBER (KONTROLLE) (KLIMAANLAGE)	718
	720
	795
AUFKLEBER (KONTROLLE) (KLIMAANLAGE)	874
AUFKLEBER (LADER-VORSTEUERUNG)	776
AUFKLEBER (LUFTUMLAUF)	723
	797
AUFKLEBER (NAMENSSCHILD)	330
AUFKLEBER (PEDALSTEUERUNG U. E-STIEL)	345
AUFKLEBER (SCHAUFEL)	776
AUFKLEBER (SCHAUFELANZEIGE)	396
AUFKLEBER (SCHAUFELSTEUERUNG)	338
	340
	776
	874
AUFKLEBER (SCHWINGUNGSDÄMPFUNG)	337
	398
AUFKLEBER (SICHERHEIT)	122
AUFKLEBER (SICHERHEIT) (MASCHINENSICHERHEITSSYSTEM)	119
AUFKLEBER (STABILISATORSTEUERUNG/ AUSLEGERSPERRE)	501
AUFKLEBER (STANDARD-KREUZMUSTER)	874
AUFKLEBER (START) (MASCHINENSICHERHEITSSYSTEM)	122
AUFKLEBER (STARTSCHALTER)	874
AUFKLEBER (STARTSCHLÜSSELSCHALTER)	119
	122
AUFKLEBER (VARIABLE GESCHWINDIGKEIT)	874
AUFKLEBER (VARIABLE GESCHWINDIGKEIT)	87
AUFKLEBER (ZENTRALE DREHVORRICHTUNG, AUSLEGERSPERRE)	874
AUFKLEBER (ZUSATZPEDALSTEUERUNG)	345
AUFKLEBER (399 CM)	726
	727
	728
	729
AUSLEGER	577
	578
AUSLEGERLEITUNGEN	424
	426
AUSLEGERZYLINDER	374
AUSPUFFROHRVERLÄNGERUNG	79
B	
*BACKHOE AR-STANDARD STICK	5

* ÜBERSETZUNG ZUM ZEITPUNKT DER DRUCKLEGUNG NICHT VORHANDEN

STICHWORTVERZEICHNIS

Bezeichnung	Seite
	6
	7
	8
BATTERIE	107
	109
	111
	113
BATTERIE (12 V, HD)	111
BATTERIE (12V, DH)	113
BATTERIE (12V, 750 A) (750 A)	107
	109
BATTERIEDECKEL	315
BATTERIEKASTEN	305
	306
	307
	308
BELEUCHTUNGSANLAGE (12 V)	119
	122
BLINKER	179
BLINKLEUCHTE	124
BODENBLECH	318
	319
BREMS- UND RÜCKLEUCHTE	125
BREMSBELAG-EINBAUSATZ	285
BREMSGESTÄNGE	288
BREMSSATTEL-EINBAUSATZ	285
BREMSTANK	292
BUCHSE - KABELSPLEISSUNG	755
BÜRSTENHALTER	133

D

DAUMEN	712
	713
	714
	715
DAUMEN - ZYLINDER U. LEITUNGEN	369
DAUMENGESTÄNGE	582
DAUMENZYLINDER	385
DICHTUNG (ENTLÜFTER)	40
	42
	44
DICHTUNGSSATZ	118
	349
	351
	454
	555
DICHTUNGSSATZ (LENKUNGSZUMESSPUMPE)	214
DIFFERENTIAL	211
	213
DIFFERENTIAL UND TELLERRAD	211
DIFFERENTIALSPERRENGESTÄNGE	209
DIFFERENZIALGEHÄUSE	211
DREHSTROMGENERATOR	106
DREHZAHLMESSER, ELEKTR.	729
	730
	731
	744
	745
	840
	841
DREHZAHLMESSER, ELEKTR.	728
DREHZAHLREGLER - STEUERHEBEL	802
DRUCKBEGRENZUNGSVENTIL (ENTLÜFTUNGSVORRICHTUNG)	199
DRUCKKNOPFSCHALTER	342
DRUCKKNOPFSCHALTER (AUSSCHALTER)	210
DRUCKSCHALTER	136
	138
	187
	189
DRUCKSCHALTER (HOCH - NIEDRIG)	142
DRUCKSCHALTER (HYDRAULIKÖLUMGEHUNG)	160
DRUCKSPEICHER - KLIMAANLAGE	805
DRUCKSPEICHER, HYDRAULISCHE SCHWINGUNGSDÄMPFUNG	330
	331
DRUCKSPEICHERWARTUNGSSATZ	330

E

EINFÜLLKAPPE (HYDRAULIKÖL)	515
EINSTELLER-EINBAUSATZ (ARMLEHNE)	725
ELEKTRONISCHER SCHLÜSSEL (GELB)	119
	121
ELEKTRONISCHER SCHLÜSSEL (GRAU)	119
	121
ENDSCHALTER (BREMSE)	288
ENTLÜFTER	39
	40
	42
	44
	46
ENTLÜFTER (ACHSE)	201
ENTLÜFTER (GETRIEBE)	249
	254
	261
ENTLÜFTERPATRONE	40
	42
	44

F

FAHRERHAUS	726

* ÜBERSETZUNG ZUM ZEITPUNKT DER DRUCKLEGUNG NICHT VORHANDEN

STICHWORTVERZEICHNIS

Bezeichnung	Seite
	727
	728
	729
	730
	731
	732
	733
	735
	738
	740
FAHRERHAUS - HALTETEILE	842
FAHRERHAUS M. OFFENEM ÜBERROLL-SCHUTZ	753
	754
FAHRERHAUS, SONNENBLENDE	843
FAHRERHAUSBELEUCHTUNG	836
FAHRERHAUSFENSTER	848
	850
	852
FAHRERHAUSHEIZUNG	797
FAHRERHAUSHEIZUNG U. BEFESTIGUNGS-TEILE	795
FAHRERHAUSTÜR (LINKS)	782
FAHRERHAUSTÜR (RECHTS)	784
FAHRERHAUSVERDRAHTUNG	150
	152
	153
	154
FAHRERPLATTFORMVERDRAHTUNG	177
	179
FAHRERSITZ	823
	825
	827
FAHRERSITZFEDERUNG	838
FAHRWERK	10
FEDER (ENTLÜFTERSCHLAUCH)	14
FESTSTELLBREMSE	285
FESTSTELLBREMSGESTÄNGE	286
	287
FEUERWANDABDECKUNG	778
	779
FILTER	533
	535
	537
	539
	543
	553
FILTER (HEIZUNG)	795
FILTER (HYDRAULIKTANKENTLÜFTER)	515
FILTER (KLIMAANLAGE)	718
	720
FILTER (KRAFTSTOFF)	97
FILTERSOCKEL U. MOTORÖLKÜHLER	51
*FOOTREST GP	794
FRONTSTEUERPULT	761
	762
	763
FRONTSTOSSSTANGE	309
FUSSMATTE	790
	791
	792
	793

G

Bezeichnung	Seite
GABEL	699
GABELBEFESTIGUNG	707
GASPEDAL	820
GASVENTIL	330
GEGENGEWICHT	310
	311
	312
	313
	314
GEHÄUSE - AUSFAHRBARER STIEL	581
GETRIEBE U. BEFESTIGUNG	243
	244
	245
GETRIEBEÖLFÜLLSTUTZEN	216
	218
	220
	222
	223
	224
GETRIEBEPUMPE	248
	255
	259
GETRIEBESTEUERUNG	210
GETRIEBESYNCHRONISIERSATZ	247
	253
GLEITSCHIENENBLOCK-EINBAUSATZ	830
	832
	834
GLÜHKERZE	115
GRUNDAUSFÜHRUNG	10

H

Bezeichnung	Seite
HALTERUNG	107
	109
HANDSTEUERHEBEL	291
HECKBAGGER	5
	6
	8
	9
HECKBAGGER-TELESKOPSTIEL	1

* ÜBERSETZUNG ZUM ZEITPUNKT DER DRUCKLEGUNG NICHT VORHANDEN

STICHWORTVERZEICHNIS

Bezeichnung	Seite
	2
	3
	4
HECKBAGGERLÖFFEL	616
	617
	618
	619
	620
	621
	622
	623
	624
	625
	628
	629
	630
	631
	632
	633
	634
	635
	636
	637
	638
	639
	640
	641
	642
	643
	644
	645
	646
	647
	648
	649
	650
	651
	652
	653
	654
	655
	656
	657
	658
	659
	660
	661
	662
	663
	664
	665
	666
	667
	668
	669
	670
	671
	672
	673
	674
	675
	676
	677
	678
	679
	680
	681
	682
	683
	684
	685
	686
HECKBAGGERLÖFFELGESTÄNGE	583
HECKBAGGERLÖFFELZYLINDER	370
	372
HECKBAGGERSTEURUNG - AUFHÄNGUNG	494
HEIZUNGS- U. KLIMAANLAGENLEITUNGEN	805
	808
HEIZUNGSLEITUNGEN	803
	805
	808
HEIZUNGSVERDRAHTUNG	175
HINTERACHSE	204
HINTERACHSE U. BEFESTIGUNG	199
	200
HUBARM	575
HUBZYLINDER	379
HUBZYLINDER-HALTERUNG	579
HUBZYLINDERLEITUNGEN	437
	439
HYDRAULIKFILTER	387
HYDRAULIKHANDSTEUERUNG	338
	340
	342
	344
HYDRAULIKPEDALSTEUERUNG	345
	347
HYDRAULIKPUMPE UND LEITUNGEN	463
	465
	466
	467
	470
	471
HYDRAULIKPUMPENBEFESTIGUNG	502
HYDRAULIKSPERRE (HANDBEDIENUNG)	493
HYDRAULIKSTEUERUNG	336

* ÜBERSETZUNG ZUM ZEITPUNKT DER DRUCKLEGUNG NICHT VORHANDEN

STICHWORTVERZEICHNIS

Bezeichnung	Seite
HYDRAULIKSTEUERUNGSAUFHÄNGUNG	500 501
HYDRAULIKSYSTEM	391 392 393 394
HYDRAULIKTANK	515
HYDRAULISCHE SCHWINGUNGSDÄMPFUNG	336 337
HYDRAULISCHE SCHWINGUNGSDÄMPFUNG - EINBAUSATZ	398

I

IDENTIFIZIERUNGS-AUFKLEBER (SICHERUNGSTAFEL)	214 874
INASTRUMENTENTAFEL-EINBAUSATZ	814 815 816 817
INSTRUKTIONS-AUFKLEBER	358 362 875
INSTRUKTIONS-AUFKLEBER (AUSFAHRBARER STIEL)	340 875
INSTRUKTIONS-AUFKLEBER (NICHT BETRETEN)	874
INSTRUKTIONS-AUFKLEBER (RÜCKFLUSS)	355 401 404 408 412 417 420 874
INSTRUKTIONS-AUFKLEBER (SCHAUFELSTEUERUNG)	391 392 875
INSTRUKTIONS-AUFKLEBER (SCHAUFELSTEUERUNG)	394
INSTRUKTIONS-AUFKLEBER (SCHMIERMITTEL)	327
INSTRUKTIONS-AUFKLEBER (ZUSATZ)	776
INSTRUMENTENTAFEL	819

J

JOYSTICK -STEUERUNG	349 351

K

KABELBINDER	148 460
KÄLTEMITTELKOMPRESSOR	756 757 759
KÄLTEMITTELKONDENSATOR U. BEFESTIGUNGSTEILE	760
KAPPE	274 275 399
KAPPE (KLIMAANLAGE)	805
KAPPE (KÜHLER)	71 74
KAPPE (MOTORÖLEINFÜLLUNG)	47
KEILRIEMEN (KÄLTEMITTELKOMPRESSOR)	53
KEILRIEMEN (KLIMAANLAGE)	759
KEILRIEMENSATZ (EINSCHL. 2 RIEMEN)	53 54
KEILRIEMENSATZ (EINSCHL. 2 RIEMEN)	53
KEILRIEMENSATZ (EINSCHL. 2 RIEMEN)	728 729 730 731 744 745
KIPPSCHALTER (HEIZGEBLÄSEGESCHWINGIGKEITSSTUFE)	138 142 175
KIPPSCHALTER (HINTERER ARBEITSSCHEINWERFER)	128
KIPPSCHALTER (SCHWINGUNGSDÄMPFUNG)	187 189 337
KIPPSCHALTER (VORDERE ARBEITSSCHEINWERFER)	128
KIPPSCHALTER (WARNSCHALTER)	165
KIPPZYLINDER	386
*KIT-ADAPTER TIP	703 704
KLIMAANLAGE	722 723
KLIMAANLAGE UND AUFHÄNGUNG	718 720
KLIMAANLAGENDRUCKSPEICHER	717
KLIMAANLAGENVERDRAHTUNG	138 141 142
KOLBENPUMPE	509
KOLBENPUMPENUMLAUFSATZ	512

* ÜBERSETZUNG ZUM ZEITPUNKT DER DRUCKLEGUNG NICHT VORHANDEN

STICHWORTVERZEICHNIS

Bezeichnung	Seite
KOMBISCHAUFEL	608
	609
	610
	687
	688
	689
	690
KOMBISCHAUFELLEITUNGEN	449
	451
KOMBISCHAUFELZYLINDER	380
KONSOLENVERDRAHTUNG	157
	160
	165
	167
	169
KONSOLENVERRIEGELUNG	801
KONTAKT-EINBAUSATZ (STARTERMOTOR)	133
KRAFTSTOFF-ENTLÜFTUNGSPUMPE	89
	97
KRAFTSTOFFEINSPRITZPUMPE	94
KRAFTSTOFFFILTEREINSATZ	89
KRAFTSTOFFFILTEREINSATZ (WASSERABSCHEIDER)	91
	99
KRAFTSTOFFILTER	89
KRAFTSTOFFLEITUNGEN	92
KRAFTSTOFFTANK	103
	104
KRAFTSTOFFTANK U. BEFESTIGUNG	102
KRAFTSTOFFTANKKAPPE	104
KRAFTÜBERTRAGUNG	231
	232
	233
	234
	235
	236
	237
	238
	239
KREUZGELENK-EINBAUSATZ	201
KREUZGELENKLAGER-EINBAUSATZ	240
	241
	242
KÜHLER UND HYDRAULIKÖLKÜHLER	67
	68
	69
	70
	71
	72
	74
KÜHLER UND LÜFTER	65
	66
KÜHLERKAPPE	68
KÜHLERSCHLAUCH	67
KÜHLSYSTEM	53
	54
KÜHLWASSERANSCHLUSS	50
KÜHLWASSERPUMPE	63
KUPPLUNGSANTRIEB, ELAST.	215
KUPPLUNGSBOLZEN	708
	709
KURBELWELLE	16
KURBELWELLEN-RIEMENSCHEIBE	37

L

Bezeichnung	Seite
LADERRAHMEN	321
LADERZUSATZLEITUNGEN	447
LADESCHAUFEL	587
LAGERSATZ	204
LASTSCHALTGETRIEBE	246
	259
LASTSTEUERVENTIL	555
	557
LASTSTEUERVENTILLEITUNGEN	440
	444
LAUFBAND UND ANTRIEB	126
	127
LAUFROLLENSCHALTER	193
LAUTSPRECHER	836
LEITUNGS-BEFESTIGUNGSTEILE	503
	504
	505
	506
	507
	508
LENKBETÄTIGUNG	296
LENKKNOPF	297
LENKÖLLEITUNGEN	298
	301
LENKRAD	303
LENKVERDRAHTUNG	198
LEUCHTE	812
LEUCHTE (12 V)	53
	126
	127
	157
	160
	167
	169
	840
	841
LEUCHTE (12 V)	141
LEUCHTE (12 V, 10 W)	836
LEUCHTE (12 V/ 21/5 W)	125
LEUCHTE (12 V, 24 W)	124

* ÜBERSETZUNG ZUM ZEITPUNKT DER DRUCKLEGUNG NICHT VORHANDEN

STICHWORTVERZEICHNIS

Bezeichnung	Seite
LEUCHTE (12 V, 55 W)	123, 128
LEUCHTE (12 V/21 W)	125
LITERATURABLAGE	755
LÖFFELSTIEL	606
LÖFFELZYLINDERLEITUNGEN	428, 430
LUFTEINLASSDECKEL	78
LÜFTER	723, 797
LÜFTERANTRIEB	23
LUFTFILTER (FAHRERHAUS)	797
LUFTFILTER (KLIMAANLAGE)	718, 723
LUFTFILTERWARTUNGSANZEIGE	80, 81, 82, 83
LUFTKANAL	786, 788, 789
LUFTREINIGER	75, 77

M

MAGNETSTOPFEN	201, 206, 211
MAGNETVENTIL	269, 270, 271, 272, 273, 574
MAGNETVENTIL (12 V)	94
MANSCHETTE	394, 561, 562, 565, 566, 567, 568
MECHANISCHES GETRIEBE	246
MOTOR- UND GETRIEBEAUFLAGER	30, 31
MOTORAUFLAGER	29
MOTORAUSFÜHRUNG	11, 12
MOTORBLOCK	18, 20
MOTORHAUBE	327
MOTORHAUBE UND VERKLEIDUNG	325
MOTORHUBÖSE	28
MOTORÖLEINFÜLLSTUTZEN	47
MOTORÖLKÜHLER	51
MOTORÖLKÜHLER UND FILTERSOCKEL	51
MOTORSTOPFEN	35, 36
MOTORVERDRAHTUNG	171

N

NEIGEZYLINDERLEITUNGEN	491
NOCKENSATZ (NACH LINKS)	285
NOCKENWELLE	13

O

O-RING-DICHTUNG	432
O-RING-DICHTUNG (KÜHLWASSERTHERMOSTAT)	50
O-RING-DICHTUNG (MOTORÖLABLASS)	32
ÖLFILTER	47, 387
ÖLFILTER (GETRIEBE)	246
ÖLFILTER (HOCHLEISTUNGSREINIGUNG)	394
ÖLFILTER (HYDRAULIK)	160
ÖLFILTER (HYDRAULISCH) (SCHWER ENTFLAMMBAR)	394
ÖLKÜHLERLEITUNGEN (KRAFTÜBERTRAGUNG)	59, 61
ÖLWANNE	32
ÖLWANNEN-ABLASSSCHRAUBE	32

P

PALETTENGABEL	700
PANETENTRÄGERSATZ	230
PEDALSCHUTZ	800
PENDELVENTIL	573
PFOSTENABDECKUNG	780, 781
PLEUELSTANGE UND KOLBEN	34
POLSTER	595, 600, 601
POLSTEREINBAUSATZ (ARMLEHNE)	725

R

RAD UND REIFEN	275, 276, 277, 278

* ÜBERSETZUNG ZUM ZEITPUNKT DER DRUCKLEGUNG NICHT VORHANDEN

STICHWORTVERZEICHNIS

Bezeichnung	Seite
	279
	280
	281
	282
	283
	284
RADFLANSCH	225
REDUZIERER	476
REFLEKTOR	701
REGLER- UND GASPEDALGESTÄNGE	87
REIFENVENTIL	274
	275
RELAIS (12 V)	119
	122
	128
	138
	141
	142
	145
	148
	150
	153
	154
	171
	175
	187
	189
	198
RELAIS (12 V) (HOHE GESCHWINDIGKEIT)	142
REPARATURSATZ	858
ROLLENLAGER-EINBAUSATZ	230
RÜCKLAUFLEITUNG	472
	473
	474
	475
RÜCKSPIEGEL	810
RUNDUM-KENNLEUCHTE	126
	127
	131
	132

S

SAUGLÜFTER	55
	56
	57
SCHALLDÄMPFER	84
SCHALLDÄMPFUNG	836
SCHALTAUTOMATIKVERDRAHTUNG	145
	148
SCHALTER (FAHRTRICHTUNGSANZEIGER)	152
SCHALTER (HEIZUNG)	175
SCHALTER (HUPE)	165
SCHALTER (HYDRAULIKSPERRE)	391
SCHALTER (HYDRAULIKSPERREN)	391
SCHALTER (NEUTRALSPERRE)	165
SCHALTER (40 GRAD) (SPRITZVERSTELLUNG)	94
SCHAUFELANSCHLAG	711
SCHAUFELAUFHÄNGUNG	705
	706
SCHAUFELAUSSCHALTER UND -EINSTELLER	396
SCHAUFELGESTÄNGE	585
SCHAUFELSCHUTZ	701
	702
SCHAUFELTRANSPORTAUSFÜHRUNG	710
SCHEIBENWASCHANLAGE	844
	846
SCHEIBENWISCHER	858
	860
SCHEIBENWISCHERBLATT	858
SCHEIBENWISCHERMOTOR	813
SCHILD	860
SCHILD UND AUFKLEBER	864
	865
	866
	867
	868
	869
	870
	871
	872
	873
SCHLAUCHLEITUNG (ENTLÜFTER)	14
SCHLAUCHLEITUNG (KUREBLGEHÄSUEENTLÜFTERVENTILDECKEL)	42
SCHLAUCHLEITUNG (109CM KURBELGEHÄUSEENTLÜFTER OFFEN)	42
SCHLAUCHLEITUNG (53CM)	298
	301
SCHLAUCHLEITUNG (90CM KURBELWELLENENTLÜFTERSUMPF)	42
SCHLÜSSEL	863
SCHMIERNIPPEL	385
	498
	577
	578
	689
	715
SCHMIERNIPPEL (1/8-27-GEWINDE)	321
	322
	575
	585
	592
	602

* ÜBERSETZUNG ZUM ZEITPUNKT DER DRUCKLEGUNG NICHT VORHANDEN

STICHWORTVERZEICHNIS

Bezeichnung	Seite
	606
SCHMIERNIPPEL (1/8-27-GEWINDE)	687
	688
	690
SCHMIERPUMPE	49
SCHNEIDMESSER	697
	698
SCHNELLWECHSELEINRICHTUNG	692
	693
	694
	695
	696
SCHNELLWECHSELVORRICHTUNG	691
SCHRAUBE	358
	519
SCHUTZBLECHE, HINTEN	317
SCHUTZBLECHE, VORNE	316
SCHUTZDACHSATZ	746
	749
	750
SCHWENKLEITUNGEN	487
	489
SCHWENKRAHMEN	322
SCHWENKZYLINDER	384
SCHWINGSITZ	830
	832
	834
	835
SCHWINGUNGSDÄMPFUNGSLEITUNGEN	476
	478
SCHWINGUNGSDÄMPFUNGSVERDRAHTUNG	187
	189
	191
SCHWUNGRAD	24
SCHWUNGRADGEHÄUSE	25
SEITENANTRIEB - PLANETENGETRIEBE	230
SEITENKONSOLE	766
	767
	768
	769
	770
	771
	772
	773
SEITENSTÜTZEN	514
	602
SEITENSTÜTZENALARMVERDRAHTUNG	196
SEITENSTÜTZENLEITUNGEN	480
SEITENSTÜTZENPLATTEN	600
	601
SEITENSTÜTZENPLATTEN UND SCHUTZABDECKUNG	593
	594
	595
SEITENSTÜTZENVERDRAHTUNG	194
SEITENSTÜTZENZYLINDER	381
	382
SEITENSTÜTZENZYLINDERSCHUTZ	388
	389
SENSORANSCHLUSSSATZ (12POLIG)	157
	160
SENSORANSCHLUSSSATZ (2POLIG)	142
	148
	157
	160
	179
	191
	194
	196
	269
	287
	723
SENSORANSCHLUSSSATZ (3POLIG)	160
	191
SENSORANSCHLUSSSATZ (4 POLIG)	191
	194
SENSORANSCHLUSSSATZ (4 POLIG)	157
	160
	196
SENSORANSCHLUSSSATZ (6POLIG)	157
	160
	191
SENSORVERDRAHTUNG	193
SICHERHEITSEINBAUSATZ	119
	121
	122
SICHERHEITSGURT	821
	822
SICHERUNG (10 A)	126
	127
	128
	138
	142
	183
	187
	189
	191
	194
SICHERUNG (15 A)	128
	153
	154
SICHERUNG (20 A)	150
SICHERUNG (5 A)	150
	198
SIEB	249

* ÜBERSETZUNG ZUM ZEITPUNKT DER DRUCKLEGUNG NICHT VORHANDEN

STICHWORTVERZEICHNIS

Bezeichnung	Seite
	255
	261
SOLENOIDVENTIL U. BEFESTIGUNGSTEILE	518
SONNENBLENDE	843
SPERRVENTIL	530
	532
STARTERMOTOR	133
	135
STARTSCHLÜSSELSCHALTER	819
STAUBKAPPE	216
	218
	220
	333
	453
STECKDOSEN - EINBAUSATZ (12POLIG)	160
STECKDOSEN - EINBAUSATZ (2POLIG)	177
	191
	194
	196
	198
	210
	261
	270
	271
	272
	273
	342
	539
	553
	574
	756
STECKDOSEN - EINBAUSATZ (3POLIG)	99
	157
	160
	191
	270
	272
	273
	844
STECKDOSEN - EINBAUSATZ (4 POLIG)	125
	160
	191
	194
STECKDOSEN - EINBAUSATZ (6POLIG)	191
	813
	858
STECKDOSEN - EINBAUSATZ (8POLIG)	812
STECKDOSENVERDRAHTUNG	183
STEUERKONSOLE	764
	765
STEUERKONSOLENABDECKUNG	775
	776
STEUERUNG - NICHT PROGRAMMIERT (SICHERHEIT)	121
STEUERUNG - NICHT PROGRAMMIERT (SICHERHEIT)	119
STEUERVENTIL	533
	535
	537
	539
	541
	543
	545
	547
	549
	551
	553
STEUERVENTILDECKEL	368
STIELAUFHÄNGUNG	592
STIELZYLINDER	383
STIELZYLINDERLEITUNGEN	482
	483
	484
STIRNRADGEHÄUSE	26
STÜTZEN-DRUCKSPEICHER	332
STÜTZPLATTEN U. BEFESTIGUNG	597
	598
	599

T

TELESKOPSTIEL	604
TELESKOPSTIELLEITUNGEN	432
	433
	435
TELESKOPSTIELZYLINDER	376
	377
TELLER- UND KEGELRAD	211
TEMPERATURGEBER	171
TEMPERATURSCHALTER	137
TEMPERATURSCHALTER (HYDRAULIKÖL)	160
THERMOSTATSCHALTER (KLIMAANLAGE)	723
TIEFLÖFFEL-HYDRAULIKNOTLEITUNGEN	399
	401
	404
	408
	412
	415
	417
	420
TRANSPORTHALTERUNG	580
TRANSPORTSPERRE	588
	589
	590
	591

* ÜBERSETZUNG ZUM ZEITPUNKT DER DRUCKLEGUNG NICHT VORHANDEN

STICHWORTVERZEICHNIS

Bezeichnung	Seite
TURBOLADER	85
TÜRFENSTER	854 856

U

Bezeichnung	Seite
ÜBERDRUCKVENTIL	247 253 259 268 304 533 545 553
ÜBERDRUCKVENTIL (KLIMAANLAGE)	756
UMBAUSATZ - STEUERVENTIL	365 366
UMBAUSATZ -TELESKOPSTIEL	366
UMLAUFKÜHLWASSERHEIZUNG	116 117 118
UMRÜSTSATZ - GEFEDERETE SCHWENKVORRICHTUNG	353
UMRÜSTSATZ - ZUSATZHYDRAULIKLEITUNGEN	355 358 362
UNIVERSAL-ZAHNSPITZE	716
UNIVERSALSCHAUFEL	611 612 614 615 626 627
UNTERLEGKEIL - EINBAUSATZ	862

V

Bezeichnung	Seite
*VALVE GP-CHECK	531
*VALVE GP-PUMP CONTROL	570 571
VENTIL (WASSER)	718 720 795
VENTILANORDNUNGS-BEFESTIGUNGSSATZ	496 497
VENTILBLOCK U. BEFESTIGUNG	517
VENTILDECKEL	14
VENTILEINBAUSATZ	395
VENTILSATZ (2-VENTIL)	520 522 523
VENTILSATZ (3-VENTIL)	524 525
VENTILSATZ (4-VENTIL)	526
VENTILSATZ (5-VENTIL)	527
VENTILSATZ (6-VENTIL)	528
VENTILSTEUERUNG	38
VERBINDUNGSVENTIL	333
VERDRAHTUNG, HINTEN	184
VORDERACHSE	293 295
VORHÄNGESCHLOSS	863
VORRANGVENTIL	304
VORSTEUERLEITUNGEN	453 454 456 460
VORSTEUERVENTIL	558 559 560 561 562 563 564 565 566 567 568 569

W

Bezeichnung	Seite
WARNANZEIGEMODUL	811 812
WARNAUFKLEBER (HOCHDRUCKZYLINDER)	355
WARNHORN, ELEKTR.	799
WARTUNGSANZEIGE (LUFTFILTER)	80
WARTUNGSMESSER	165
WARTUNGSSATZ	820
WASSERABSCHEIDER	98 99 100 101
WASSERABSCHEIDER - EINBAUSATZ	91 99
WASSERABSCHEIDER- U. KRAFTSTOFFILTER	91
WASSERTEMPERATURREGLER	50
WECHSELGETRIEBE	247 253
WETTERDACH	742 743 744

* ÜBERSETZUNG ZUM ZEITPUNKT DER DRUCKLEGUNG NICHT VORHANDEN

STICHWORTVERZEICHNIS

Bezeichnung	Seite
	745

Z

ZAHNRADSATZ (STARTERMOTOR)	133
ZAPFWELLE	513
ZYLINDER	288
ZYLINDERAUFHÄNGUNG	498
	499
ZYLINDERKOPF	21
	22

4

4-BLOCK-VENTILSATZ	519

5

5-VENTIL-BLOCK	519

6

6-FACH-VENTILBLOCK	519

* ÜBERSETZUNG ZUM ZEITPUNKT DER DRUCKLEGUNG NICHT VORHANDEN

MACHINE ARRANGEMENT

184-7925 BACKHOE AR-EXTENDABLE STICK

S/N: FDP18400-UP
BOOM AND STICK LOCKS
AN ATTACHMENT

SMCS-6504, 6533 **i01651318**

NOTE	PART NUMBER	QTY	PART NAME 1 2 3 4 5 6 (PRODUCT LEVEL)	SEE PAGE
Y	*185-1925*	1	BOOM GP	577
Y	**191-7839**	1	CYLINDER GP-BACKHOE BUCKET	372
Y	*185-6159*	1	LINES GP-LOAD CONTROL VALVE	444
Y	*197-6818*	1	LINES GP-RETURN	474
Y	*167-8276*	1	LINES GP-EXTENDABLE STICK	433
Y	*151-7928*	1	LINKAGE GP-BACKHOE BUCKET	583
Y	*171-2101*	1	MOUNTING GP-LINES	503
Y	*184-9950*	1	MOUNTING GP-STICK	592
Y	*184-6786*	1	STICK GP-EXTENDABLE	604
Y-SEPARATE ILLUSTRATION				

<END>

184-7927 BACKHOE AR-EXTENDABLE STICK

S/N: FDP18400-UP
AUXILIARY LINES , BOOM AND STICK LOCKS
AN ATTACHMENT

SMCS-6504, 6533 **i01651325**

NOTE	PART NUMBER	QTY	PART NAME 1 2 3 4 5 6 (PRODUCT LEVEL)	SEE PAGE
Y	*185-1926*	1	BOOM GP	578
Y	**191-7839**	1	CYLINDER GP-BACKHOE BUCKET	372
Y	*171-2429*	1	LINES GP-BACKHOE AUXILIARY	404
Y	*185-6159*	1	LINES GP-LOAD CONTROL VALVE	444
Y	*176-9208*	1	LINES GP-RETURN	472
Y	*151-7928*	1	LINKAGE GP-BACKHOE BUCKET	583
Y	*172-3190*	1	MOUNTING GP-LINES	504
Y	*184-9950*	1	MOUNTING GP-STICK	592
Y	*184-6786*	1	STICK GP-EXTENDABLE	604
Y-SEPARATE ILLUSTRATION				

<END>

MACHINE ARRANGEMENT

202-5971 BACKHOE AR-EXTENDABLE STICK

S/N: FDP18400-UP
LIGHT DUTY, LOW LEAK, E-STICK
AN ATTACHMENT

SMCS-6504, 6533 **i01945756**

NOTE	PART NUMBER	QTY	PART NAME 1 2 3 4 5 6 (PRODUCT LEVEL)	SEE PAGE
Y	*185-1925*	1	BOOM GP	577
Y	**191-7839**	1	CYLINDER GP-BACKHOE BUCKET	372
Y	*202-5931*	1	LINES GP-BOOM	426
Y	*197-6818*	1	LINES GP-RETURN	474
Y	*202-5935*	1	LINES GP-STICK	483
Y	*202-5939*	1	LINES GP-STICK	484
Y	*151-7928*	1	LINKAGE GP-BACKHOE BUCKET	583
Y	*202-5943*	1	MOUNTING GP-LINES	505
Y	*202-6014*	1	MOUNTING GP-LINES	507
Y	*184-9950*	1	MOUNTING GP-STICK	592
Y	*184-6786*	1	STICK GP-EXTENDABLE	604

Y-SEPARATE ILLUSTRATION

<END>

202-5973 BACKHOE AR-EXTENDABLE STICK

S/N: FDP18400-UP
ONE WAY AUXILIARY LINES
AN ATTACHMENT

SMCS-6504, 6533 **i01615583**

NOTE	PART NUMBER	QTY	PART NAME 1 2 3 4 5 6 (PRODUCT LEVEL)	SEE PAGE
Y	*185-1926*	1	BOOM GP	578
Y	**191-7839**	1	CYLINDER GP-BACKHOE BUCKET	372
Y	*202-5941*	1	LINES GP-BACKHOE AUXILIARY	408
Y	*202-5931*	1	LINES GP-BOOM	426
Y	*176-9208*	1	LINES GP-RETURN	472
Y	*202-5935*	1	LINES GP-STICK	483
Y	*151-7928*	1	LINKAGE GP-BACKHOE BUCKET	583
Y	*202-5944*	1	MOUNTING GP-LINES	506
Y	*202-6015*	1	MOUNTING GP-LINES	508
Y	*184-9950*	1	MOUNTING GP-STICK	592
Y	*184-6786*	1	STICK GP-EXTENDABLE	604

Y-SEPARATE ILLUSTRATION

<END>

MACHINE ARRANGEMENT

238-4786 BACKHOE AR-EXTENDABLE STICK

S/N: FDP18400-UP

AN ATTACHMENT

SMCS-6504, 6533 **i01970940**

NOTE	PART NUMBER	QTY	PART NAME 1 2 3 4 5 6 (PRODUCT LEVEL)	SEE PAGE
Y	*185-1926*	1	BOOM GP	578
Y	**191-7835**	1	CYLINDER GP-BACKHOE BUCKET	370
Y	*235-5845*	1	LINES GP-BACKHOE AUXILIARY	417
Y	*202-5931*	1	LINES GP-BOOM	426
Y	*202-5937*	1	LINES GP-BUCKET CYLINDER	430
Y	*202-5935*	1	LINES GP-STICK	483
Y	*151-7928*	1	LINKAGE GP-BACKHOE BUCKET	583
Y	*202-5944*	1	MOUNTING GP-LINES	506
Y	*202-6015*	1	MOUNTING GP-LINES	508
Y	*184-6178*	1	STICK GP-HOE	606

Y-SEPARATE ILLUSTRATION

<END>

238-4788 BACKHOE AR-EXTENDABLE STICK

S/N: FDP18400-UP

AN ATTACHMENT

SMCS-6504, 6533 **i01970394**

NOTE	PART NUMBER	QTY	PART NAME 1 2 3 4 5 6 (PRODUCT LEVEL)	SEE PAGE
Y	*185-1925*	1	BOOM GP	577
Y	**191-7839**	1	CYLINDER GP-BACKHOE BUCKET	372
Y	*202-5931*	1	LINES GP-BOOM	426
Y	*202-5935*	1	LINES GP-STICK	483
Y	*202-5939*	1	LINES GP-STICK	484
Y	*151-7928*	1	LINKAGE GP-BACKHOE BUCKET	583
Y	*202-5943*	1	MOUNTING GP-LINES	505
Y	*202-6014*	1	MOUNTING GP-LINES	507
Y	*184-9950*	1	MOUNTING GP-STICK	592
Y	*184-6786*	1	STICK GP-EXTENDABLE	604

Y-SEPARATE ILLUSTRATION

<END>

MACHINE ARRANGEMENT

238-4789 BACKHOE AR-EXTENDABLE STICK

S/N: FDP18400-UP

AN ATTACHMENT

SMCS-6504, 6533 **i01970962**

NOTE	PART NUMBER	QTY	PART NAME 1 2 3 4 5 6 (PRODUCT LEVEL)	SEE PAGE
Y	*185-1926*	1	BOOM GP	578
Y	**191-7839**	1	CYLINDER GP-BACKHOE BUCKET	372
Y	*235-5847*	1	LINES GP-BACKHOE AUXILIARY	420
Y	*202-5931*	1	LINES GP-BOOM	426
Y	*202-5935*	1	LINES GP-STICK	483
Y	*151-7928*	1	LINKAGE GP-BACKHOE BUCKET	583
Y	*202-5944*	1	MOUNTING GP-LINES	506
Y	*202-6015*	1	MOUNTING GP-LINES	508
Y	*184-9950*	1	MOUNTING GP-STICK	592
Y	*184-6786*	1	STICK GP-EXTENDABLE	604

Y-SEPARATE ILLUSTRATION

<END>

238-8218 BACKHOE AR-EXTENDABLE STICK–

MECHANICAL CONTROLS

S/N: FDP18400-UP

AN ATTACHMENT

SMCS-6504, 6533 **i01978273**

NOTE	PART NUMBER	QTY	PART NAME 1 2 3 4 5 6 (PRODUCT LEVEL)	SEE PAGE
Y	*185-1925*	1	BOOM GP	577
Y	**191-7839**	1	CYLINDER GP-BACKHOE BUCKET	372
Y	*167-8270*	1	LINES GP-BOOM	424
Y	*167-8276*	1	LINES GP-EXTENDABLE STICK	433
Y	*197-6818*	1	LINES GP-RETURN	474
Y	*167-8273*	1	LINES GP-STICK	482
Y	*151-7928*	1	LINKAGE GP-BACKHOE BUCKET	583
Y	*171-2101*	1	MOUNTING GP-LINES	503
Y	*184-9950*	1	MOUNTING GP-STICK	592
Y	*184-6786*	1	STICK GP-EXTENDABLE	604

Y-SEPARATE ILLUSTRATION

<END>

MACHINE ARRANGEMENT

184-7913 BACKHOE AR

S/N: FDP18400-UP
BOOM AND STICK LOCKS
AN ATTACHMENT

SMCS-6502, 6504 **i01622637**

NOTE	PART NUMBER	QTY	PART NAME 1 2 3 4 5 6 (PRODUCT LEVEL)	SEE PAGE
Y	*185-1925*	1	BOOM GP	577
Y	**191-7835**	1	CYLINDER GP-BACKHOE BUCKET	370
Y	*167-8275*	1	LINES GP-BUCKET CYLINDER	428
Y	*185-6159*	1	LINES GP-LOAD CONTROL VALVE	444
Y	*176-9209*	1	LINES GP-RETURN	473
Y	*151-7928*	1	LINKAGE GP-BACKHOE BUCKET	583
Y	*171-2101*	1	MOUNTING GP-LINES	503
Y	*184-6178*	1	STICK GP-HOE	606

Y-SEPARATE ILLUSTRATION

<END>

184-7915 BACKHOE AR-STANDARD STICK

S/N: FDP18400-UP
AUXILIARY LINES, BOOM AND STICK LOCKS
AN ATTACHMENT

SMCS-6502, 6504 **i01650752**

NOTE	PART NUMBER	QTY	PART NAME 1 2 3 4 5 6 (PRODUCT LEVEL)	SEE PAGE
Y	*185-1926*	1	BOOM GP	578
Y	**191-7835**	1	CYLINDER GP-BACKHOE BUCKET	370
Y	*171-2428*	1	LINES GP-BACKHOE AUXILIARY	401
Y	*167-8275*	1	LINES GP-BUCKET CYLINDER	428
Y	*185-6159*	1	LINES GP-LOAD CONTROL VALVE	444
Y	*176-9208*	1	LINES GP-RETURN	472
Y	*151-7928*	1	LINKAGE GP-BACKHOE BUCKET	583
Y	*172-3190*	1	MOUNTING GP-LINES	504
Y	*184-6178*	1	STICK GP-HOE	606

Y-SEPARATE ILLUSTRATION

<END>

MACHINE ARRANGEMENT

184-7916 BACKHOE AR-STANDARD STICK

S/N: FDP18400-UP
AUXILIARY LINES SHORT
AN ATTACHMENT

SMCS-6502, 6504 **i01768838**

NOTE	PART NUMBER	QTY	PART NAME 1 2 3 4 5 6 (PRODUCT LEVEL)	SEE PAGE
Y	*185-1925*	1	BOOM GP	577
Y	**191-7835**	1	CYLINDER GP-BACKHOE BUCKET	370
Y	*171-2427*	1	LINES GP-BACKHOE AUXILIARY	399
Y	*167-8270*	1	LINES GP-BOOM	424
Y	*167-8275*	1	LINES GP-BUCKET CYLINDER	428
Y	*176-9209*	1	LINES GP-RETURN	473
Y	*167-8273*	1	LINES GP-STICK	482
Y	*151-7928*	1	LINKAGE GP-BACKHOE BUCKET	583
Y	*171-2101*	1	MOUNTING GP-LINES	503
Y	*184-6178*	1	STICK GP-HOE	606

Y-SEPARATE ILLUSTRATION

<END>

184-7917 BACKHOE AR

S/N: FDP18400-UP
AUXILIARY LINES, BOOM AND STICK LOCKS
AN ATTACHMENT

SMCS-6502, 6504 **i01651301**

NOTE	PART NUMBER	QTY	PART NAME 1 2 3 4 5 6 (PRODUCT LEVEL)	SEE PAGE
Y	*185-1925*	1	BOOM GP	577
Y	**191-7835**	1	CYLINDER GP-BACKHOE BUCKET	370
Y	*171-2427*	1	LINES GP-BACKHOE AUXILIARY	399
Y	*167-8275*	1	LINES GP-BUCKET CYLINDER	428
Y	*185-6159*	1	LINES GP-LOAD CONTROL VALVE	444
Y	*176-9209*	1	LINES GP-RETURN	473
Y	*151-7928*	1	LINKAGE GP-BACKHOE BUCKET	583
Y	*171-2101*	1	MOUNTING GP-LINES	503
Y	*184-6178*	1	STICK GP-HOE	606

Y-SEPARATE ILLUSTRATION

<END>

MACHINE ARRANGEMENT

202-5958 BACKHOE AR-STANDARD STICK

S/N: FDP18400-UP
LOW LEAK, STANDARD STICK
AN ATTACHMENT

SMCS-6502, 6504 **i01617182**

NOTE	PART NUMBER	QTY	PART NAME 1 2 3 4 5 6 (PRODUCT LEVEL)	SEE PAGE
Y	*185-1925*	1	BOOM GP	577
Y	**191-7835**	1	CYLINDER GP-BACKHOE BUCKET	370
Y	*202-5931*	1	LINES GP-BOOM	426
Y	*202-5937*	1	LINES GP-BUCKET CYLINDER	430
Y	*176-9209*	1	LINES GP-RETURN	473
Y	*202-5935*	1	LINES GP-STICK	483
Y	*151-7928*	1	LINKAGE GP-BACKHOE BUCKET	583
Y	*202-5943*	1	MOUNTING GP-LINES	505
Y	*202-6014*	1	MOUNTING GP-LINES	507
Y	*184-6178*	1	STICK GP-HOE	606

Y-SEPARATE ILLUSTRATION

<END>

202-5961 BACKHOE AR-STANDARD STICK

S/N: FDP18400-UP
ONE WAY AUXILIARY LINES
AN ATTACHMENT

SMCS-6502, 6504 **i01615446**

NOTE	PART NUMBER	QTY	PART NAME 1 2 3 4 5 6 (PRODUCT LEVEL)	SEE PAGE
Y	*185-1926*	1	BOOM GP	578
Y	**191-7835**	1	CYLINDER GP-BACKHOE BUCKET	370
Y	*202-5945*	1	LINES GP-BACKHOE AUXILIARY	412
Y	*202-5931*	1	LINES GP-BOOM	426
Y	*202-5937*	1	LINES GP-BUCKET CYLINDER	430
Y	*176-9208*	1	LINES GP-RETURN	472
Y	*202-5935*	1	LINES GP-STICK	483
Y	*151-7928*	1	LINKAGE GP-BACKHOE BUCKET	583
Y	*202-5944*	1	MOUNTING GP-LINES	506
Y	*202-6015*	1	MOUNTING GP-LINES	508
Y	*184-6178*	1	STICK GP-HOE	606

Y-SEPARATE ILLUSTRATION

<END>

MACHINE ARRANGEMENT

202-5963 BACKHOE AR-STANDARD STICK

S/N: FDP18400-UP

TWO WAY AUXILIARY LINES, LOW LEAK, STANDARD STICK, SHORT

AN ATTACHMENT

SMCS-6502, 6504 **i01617327**

NOTE	PART NUMBER	QTY	PART NAME 1 2 3 4 5 6 (PRODUCT LEVEL)	SEE PAGE
Y	*185-1925*	1	BOOM GP	577
Y	**191-7835**	1	CYLINDER GP-BACKHOE BUCKET	370
Y	*202-5946*	1	LINES GP-BACKHOE AUXILIARY	415
Y	*202-5931*	1	LINES GP-BOOM	426
Y	*202-5937*	1	LINES GP-BUCKET CYLINDER	430
Y	*176-9209*	1	LINES GP-RETURN	473
Y	*202-5935*	1	LINES GP-STICK	483
Y	*151-7928*	1	LINKAGE GP-BACKHOE BUCKET	583
Y	*202-5943*	1	MOUNTING GP-LINES	505
Y	*202-6014*	1	MOUNTING GP-LINES	507
Y	*184-6178*	1	STICK GP-HOE	606

Y-SEPARATE ILLUSTRATION

<END>

238-4785 BACKHOE AR

S/N: FDP18400-UP

AN ATTACHMENT

SMCS-6502, 6504 **i01970390**

NOTE	PART NUMBER	QTY	PART NAME 1 2 3 4 5 6 (PRODUCT LEVEL)	SEE PAGE
Y	*185-1925*	1	BOOM GP	577
Y	**191-7835**	1	CYLINDER GP-BACKHOE BUCKET	370
Y	*202-5931*	1	LINES GP-BOOM	426
Y	*202-5937*	1	LINES GP-BUCKET CYLINDER	430
Y	*202-5935*	1	LINES GP-STICK	483
Y	*151-7928*	1	LINKAGE GP-BACKHOE BUCKET	583
Y	*202-5943*	1	MOUNTING GP-LINES	505
Y	*202-6014*	1	MOUNTING GP-LINES	507
Y	*184-6178*	1	STICK GP-HOE	606

Y-SEPARATE ILLUSTRATION

<END>

MACHINE ARRANGEMENT

238-4787 BACKHOE AR

S/N: FDP18400-UP
TWO WAY LINES
AN ATTACHMENT

SMCS-6502, 6504 **i01970391**

NOTE	PART NUMBER	QTY	PART NAME 1 2 3 4 5 6 (PRODUCT LEVEL)	SEE PAGE
Y	*185-1925*	1	BOOM GP	577
Y	**191-7835**	1	CYLINDER GP-BACKHOE BUCKET	370
Y	*202-5946*	1	LINES GP-BACKHOE AUXILIARY	415
Y	*202-5931*	1	LINES GP-BOOM	426
Y	*202-5937*	1	LINES GP-BUCKET CYLINDER	430
Y	*202-5935*	1	LINES GP-STICK	483
Y	*151-7928*	1	LINKAGE GP-BACKHOE BUCKET	583
Y	*202-5943*	1	MOUNTING GP-LINES	505
Y	*202-6014*	1	MOUNTING GP-LINES	507
Y	*184-6178*	1	STICK GP-HOE	606

Y-SEPARATE ILLUSTRATION

<END>

238-8219 BACKHOE AR–MECHANICAL CONTROLS

S/N: FDP18400-UP
AN ATTACHMENT

SMCS-6502, 6504 **i01978285**

NOTE	PART NUMBER	QTY	PART NAME 1 2 3 4 5 6 (PRODUCT LEVEL)	SEE PAGE
Y	*185-1925*	1	BOOM GP	577
Y	**191-7835**	1	CYLINDER GP-BACKHOE BUCKET	370
Y	*167-8270*	1	LINES GP-BOOM	424
Y	*167-8275*	1	LINES GP-BUCKET CYLINDER	428
Y	*176-9209*	1	LINES GP-RETURN	473
Y	*167-8273*	1	LINES GP-STICK	482
Y	*151-7928*	1	LINKAGE GP-BACKHOE BUCKET	583
Y	*171-2101*	1	MOUNTING GP-LINES	503
Y	*184-6178*	1	STICK GP-HOE	606

Y-SEPARATE ILLUSTRATION

<END>

MACHINE ARRANGEMENT

214-6951 CHASSIS AR

S/N: FDP18400-UP

PART OF 214-6886 COMMON AR

SMCS-7000 **i02014801**

NOTE	PART NUMBER	QTY	PART NAME 1 2 3 4 5 6 (PRODUCT LEVEL)	SEE PAGE
Y	*235-2853*	1	BATTERY GP	111
Y	*202-5916*	1	CONTROL AR-HYDRAULIC	336
Y	*234-8892*	1	CONTROL GP-GOV & ACCELERATOR	87
Y	*183-3120*	1	CONTROL GP-HYDRAULIC HAND	342
Y	*183-4897*	1	CONTROL GP-STEERING	296
Y	*214-6944*	1	FRAME GP-LOADER	321
Y	*183-6056*	1	FRAME GP-SWING	322
Y	*234-9065*	1	HOOD & GUARD GP	325
Y	*241-0098*	1	LIGHTING GP-FLOOD & SIGNAL	128
	188-9098	1	LINES GP-PILOT	
Y	*183-6076*	1	LOCK GP-TRANSPORT	591
Y	*185-7737*	1	PLATE & FILM GP	864
Y	*228-3600*	1	PLATE & FILM GP	873
Y	*9R-0041*	1	STABILIZER GP-BACKHOE	602
Y	*214-6908*	1	TANK & MTG GP-FUEL	102
Y	*186-0306*	1	WIRING GP-CAB (WARNING BEACON)	153
Y	*238-1165*	1	WIRING GP-CONSOLE	165
Y	*238-1821*	1	WIRING GP-PLATFORM	179

Y-SEPARATE ILLUSTRATION

<END>

214-6886 COMMON AR

S/N: FDP18400-UP

SMCS-7000 **i01967434**

NOTE	PART NUMBER	QTY	PART NAME 1 2 3 4 5 6 (PRODUCT LEVEL)	SEE PAGE
Y	*214-6951*	1	CHASSIS AR	10
Y	*214-6892*	1	ENGINE AR	11
Y	*214-6981*	1	HYDRAULIC AR	394
Y	*202-5747*	1	LOADER AR	587
Y	*184-7970*	1	POWER TRAIN AR	231

Y-SEPARATE ILLUSTRATION

<END>

ENGINE ARRANGEMENT

214-6892 ENGINE AR

S/N: FDP18400-UP

PART OF 214-6886 COMMON AR

SMCS-1000 **i02002886**

NOTE	PART NUMBER	QTY	PART NAME 1 2 3 4 5 6 (PRODUCT LEVEL)	SEE PAGE
Y	*234-1979*	1	AIR CLEANER GP	75
Y	**234-3060**	1	ENGINE AR-PRIMARY	12
Y	*236-2486*	1	EXTENSION GP-EXHAUST	79
Y	*234-7510*	1	FILLER GP-ENGINE OIL	47
Y	*235-2972*	1	LINES GP-FUEL	92
Y	*235-3420*	1	MUFFLER GP	84
Y	*235-3170*	1	SEPARATOR GP-WATER	101
Y	*234-1991*	1	WIRING GP-ENGINE	171

Y-SEPARATE ILLUSTRATION

ENGINE ARRANGEMENT

234-3060 ENGINE AR-PRIMARY

S/N: CRS1-UP
69 BRAKE KW (92 BHP) AT 2200 RPM
PART OF 214-6892 ENGINE AR

SMCS-1000 **i02002996**

NOTE	PART NUMBER	QTY	PART NAME 1 2 3 4 5 6 (PRODUCT LEVEL)	SEE PAGE
Y	*237-0027*	1	ALTERNATOR GP-CHARGING	106
Y	*232-7528*	1	CAMSHAFT GP	13
Y	*231-0033*	1	CONNECTION GP-WATER	50
Y	*232-6177*	1	COOLER GP-FLTR BASE & ENG OIL	51
Y	*231-0149*	1	COVER GP-AIR INLET	78
Y	*246-2582*	1	COVER GP-VALVE MECHANISM	14
Y	*232-7439*	1	CRANKSHAFT GP	16
Y	*232-7606*	1	CYLINDER BLOCK GP	20
Y	*232-7524*	1	CYLINDER HEAD GP	22
Y	*236-8241*	1	DRIVE GP-FAN	23
Y	*233-9417*	1	FILTER GP-FUEL	89
Y	*230-7300*	1	FLYWHEEL GP	24
Y	*232-6661*	1	GLOW PLUG GP	115
Y	*236-8238*	1	HOUSING GP-FLYWHEEL	25
Y	*232-3670*	1	HOUSING GP-FRONT	26
Y	*233-7432*	1	LIFTING GP-ENGINE	28
Y	*237-3658*	1	MOUNTING GP-ENGINE	29
Y	*237-0025*	1	PAN GP-OIL	32
Y	*232-7442*	1	PISTON & ROD GP	34
Y	*225-4317*	1	PLUG GP-ENGINE	35
Y	*230-7569*	1	PLUG GP-ENGINE	36
Y	*230-7353*	1	PULLEY GP-CRANKSHAFT	37
Y	*230-7578*	1	PUMP GP-ENGINE OIL	49
Y	*237-5214*	1	PUMP GP-FUEL INJECTION	94
Y	*230-7355*	1	PUMP GP-WATER	63
Y	*237-0024*	1	STARTING MOTOR GP-ELECTRIC	135
Y	*237-4896*	1	SWITCH GP-PRESSURE	136
Y	*235-8749*	1	SWITCH GP-TEMPERATURE	137
Y	*237-3924*	1	TURBOCHARGER GP	85
Y	*232-7526*	1	VALVE MECHANISM GP	38
			AVAILABLE GASKET KIT(S):	
	239-9897	1	KIT-GASKET (TOP)	
	235-3556		KIT-GASKET (BOTTOM)	

Y-SEPARATE ILLUSTRATION

BASIC ENGINE

232-7528 CAMSHAFT GP

S/N: CRS1-UP

PART OF 234-3060 ENGINE AR-PRIMARY

SMCS-1210, 1211, 1212 **i01863441**

NOTE	REF NO	GRAPHIC REF	PART NUMBER	QTY	PART NAME 1 2 3 4 5 6 (PRODUCT LEVEL)	SEE PAGE
	1	1	**1B-8736**	1	KEY-WOODRUFF	
	2	1	**225-5967**	1	CAMSHAFT	

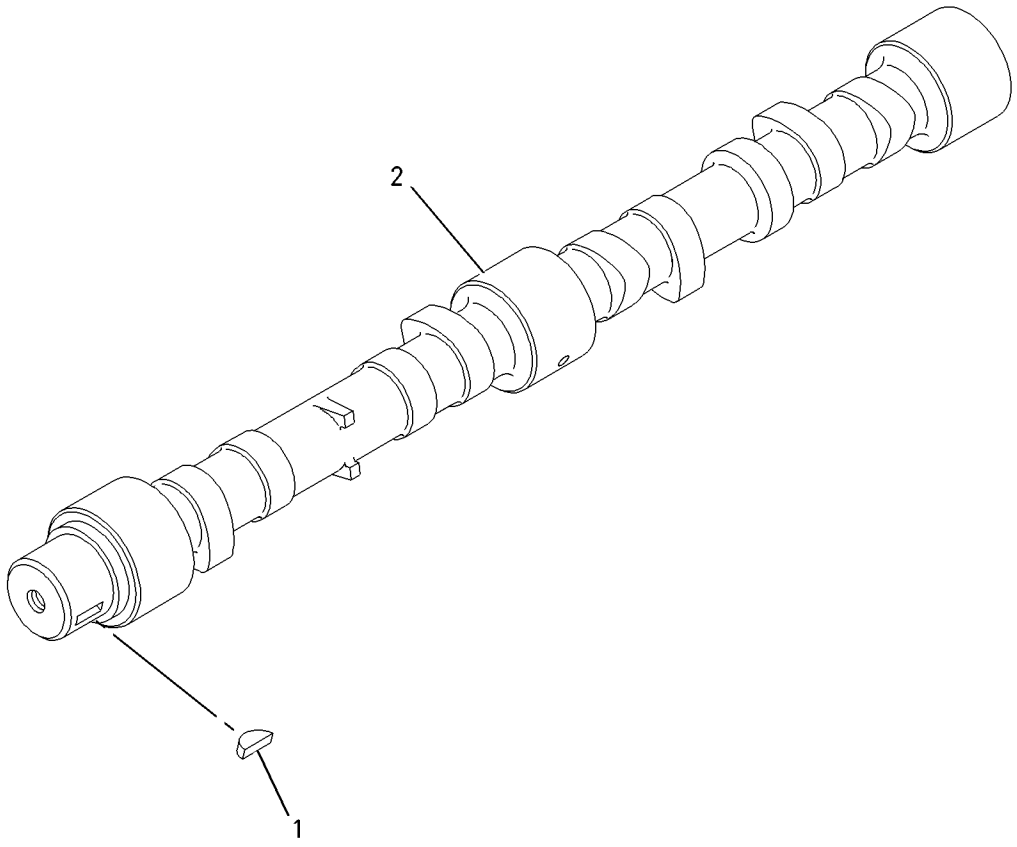

GRAPHIC #1 **<END>** g00911297

246-2582 COVER GP-VALVE MECHANISM

S/N: CRS1-UP

PART OF 234-3060 ENGINE AR-PRIMARY

SMCS-1107, 1120 **i02002548**

NOTE	REF NO	GRAPHIC REF	PART NUMBER	QTY	PART NAME 1 2 3 4 5 6 (PRODUCT LEVEL)	SEE PAGE
	1	1	**6I-0260**	2	BOLT (M8X1.25X25MM)	
	2	1	**6I-0846**	3	BOLT (M6X1.0X14MM)	
	3	1	**6I-0917**	1	BOLT (M6X1.0X25MM)	
	4	1	**7C-1281**	1	BRACKET	
	5	1	**100-4841**	2	BOLT (M6X1.0X10MM)	
	6	1	**5D-1026**	1	CLAMP-HOSE	
	7	1	**162-1565**	1	SPRING (BREATHER HOSE)	
	8	1	**198-8645**	1	HOSE (BREATHER)	
	9	1	**225-6522**	1	PLUG-CUP	
	10	1	**230-9127**	1	COVER	
	11	1	**230-9144**	1	CONNECTOR	
	11A	1	**150-7732**	1	SEAL-O-RING	
	11B	1	**225-6455**	2	BOLT	
	11C	1	**225-6517**	1	GASKET	
	12	1	**237-0769**	1	SHIELD-HEAT	
	13	1	**246-1163**	1	FILLER AS-OIL	
	13A	1	**229-4896**	1	SEAL-O-RING	

246-2582 **COVER GP-VALVE MECHANISM** *(contd.)* **i02002548**

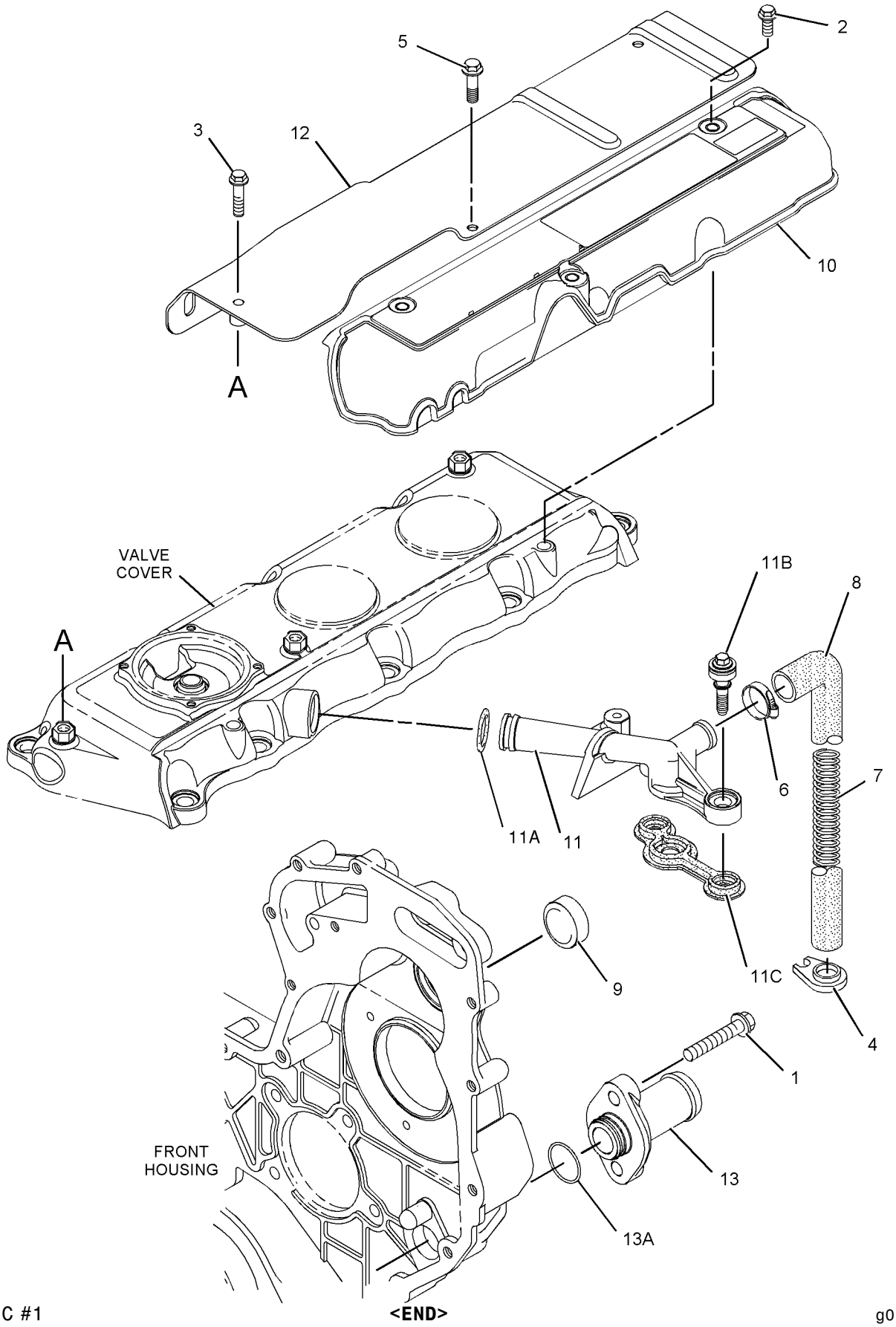

GRAPHIC #1 **<END>** g01039843

232-7439 CRANKSHAFT GP

S/N: CRS1-UP

PART OF 234-3060 ENGINE AR-PRIMARY

SMCS-1202, 1203, 1204, 1230, 1231, 1232 **i01863016**

NOTE	REF NO	GRAPHIC REF	PART NUMBER	QTY	PART NAME 1 2 3 4 5 6 (PRODUCT LEVEL)	SEE PAGE
	1	1	**1B-8736**	1	KEY-WOODRUFF	
	2	1	**216-8314**	1	GEAR-CRANKSHAFT (34 TEETH)	
	3	1	**232-7400**	1	CRANKSHAFT GP	
B	4	1	**225-7772**	1	BEARING SET-MAIN	
B		1	**233-3784**	1	KIT-CRANKSHAFT BEARING (.25MM US)	
B		1	**233-3785**	1	KIT-CRANKSHAFT BEARING (.50MM US)	
B		1	**233-3786**	1	KIT-CRANKSHAFT BEARING (.76MM US)	
B	5	1	**225-7781**	1	BEARING SET-ROD (STANDARD)	
B		1	**233-3788**	1	KIT-ROD BEARING (.25MM US)	
B		1	**233-3789**	1	KIT-ROD BEARING (.50MM US)	
B		1	**233-3790**	1	KIT-ROD BEARING (.76MM US)	
B	6	1	**032-9090**	2	WASHER-THRUST (STANDARD-UPPER)	
B		1	**067-6873**	2	WASHER-THRUST (.18MM OS)	
B	7	1	**032-9091**	2	WASHER-THRUST (STANDARD-LOWER)	
B		1	**067-6874**	2	WASHER-THRUST (.18MM OS)	

B-USE AS REQUIRED

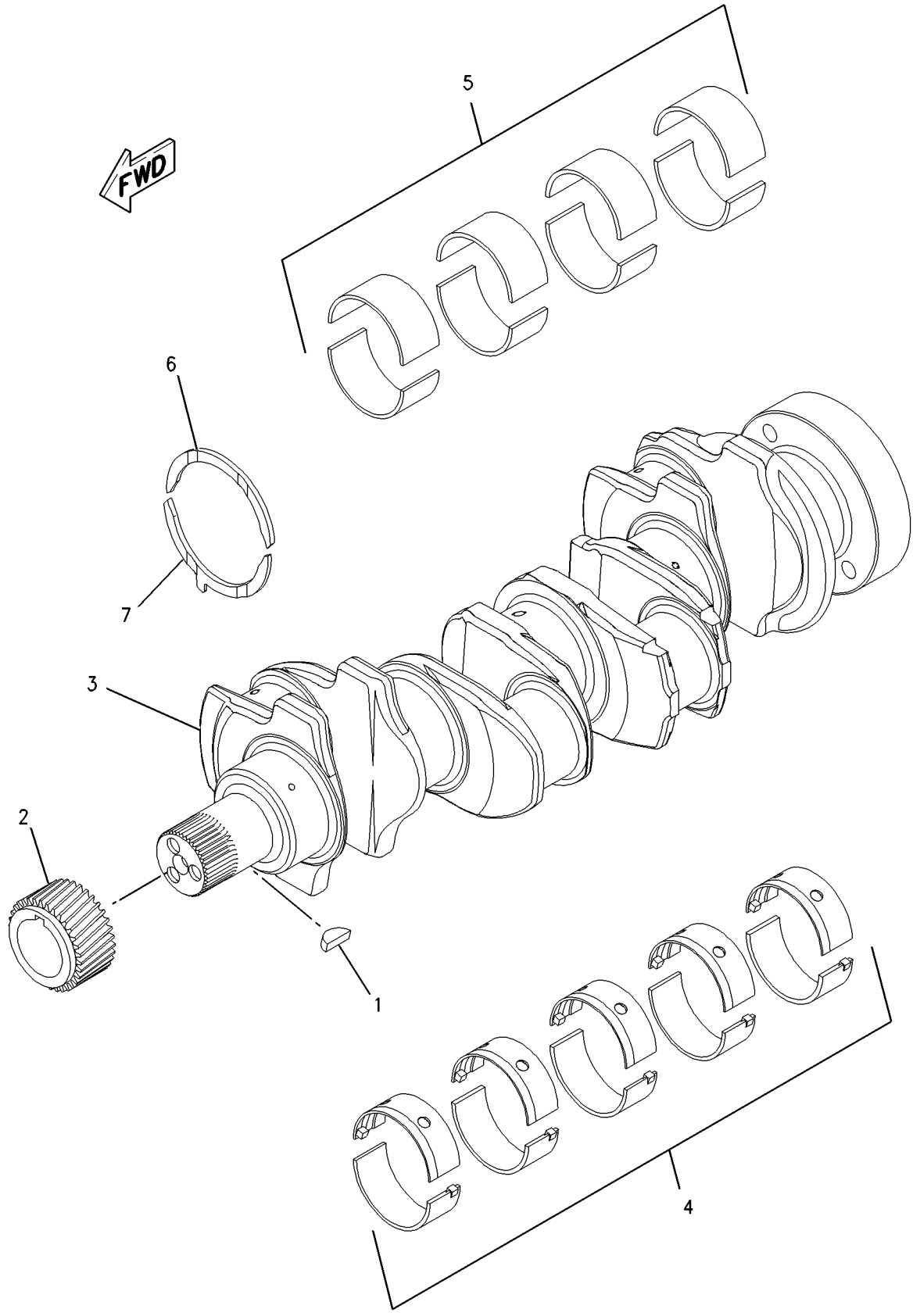

GRAPHIC #1 **<END>** g00950782

BASIC ENGINE

232-7604 CYLINDER BLOCK GP

S/N: CRS1-UP

PART OF 232-7606 CYLINDER BLOCK GP

SMCS-1201 **i02014648**

NOTE	REF NO	GRAPHIC REF	PART NUMBER	QTY	PART NAME 1 2 3 4 5 6 (PRODUCT LEVEL)	SEE PAGE
	1	1	**6I-0572**	4	BOLT (M8X1.25X20-MM)	
	2	1	**035-8068**	10	BOLT (5/8-18X3.75-IN)	
	3	1	**067-6002**	10	DOWEL	
	4	1	**067-6006**	1	PLUG	
	5	1	**067-6043**	1	PLUG-SIDE	
	6	1	**100-4841**	4	BOLT (M6X1.0X10-MM)	
	7	1	**185-0884**	2	DOWEL	
	8	1	**225-7944**	1	GASKET	
	9	1	**225-8858**	2	PLUG	
	10	1	**232-3751**	1	PLATE	
	11	1	**232-7440**	1	BEARING	
	12	1	**232-7454**	4	JET AS-PISTON COOLING	
	13	1	**232-7596**	1	PLUG	
	14	1	**232-7597**	2	PLUG	
	15	1	**232-7599**	1	PLUG	
	16	1	**232-7600**	1	PLUG-CUP	
	17	1	**232-7603**	1	PLUG	

232-7604 **CYLINDER BLOCK GP** *(contd.)* **i02014648**

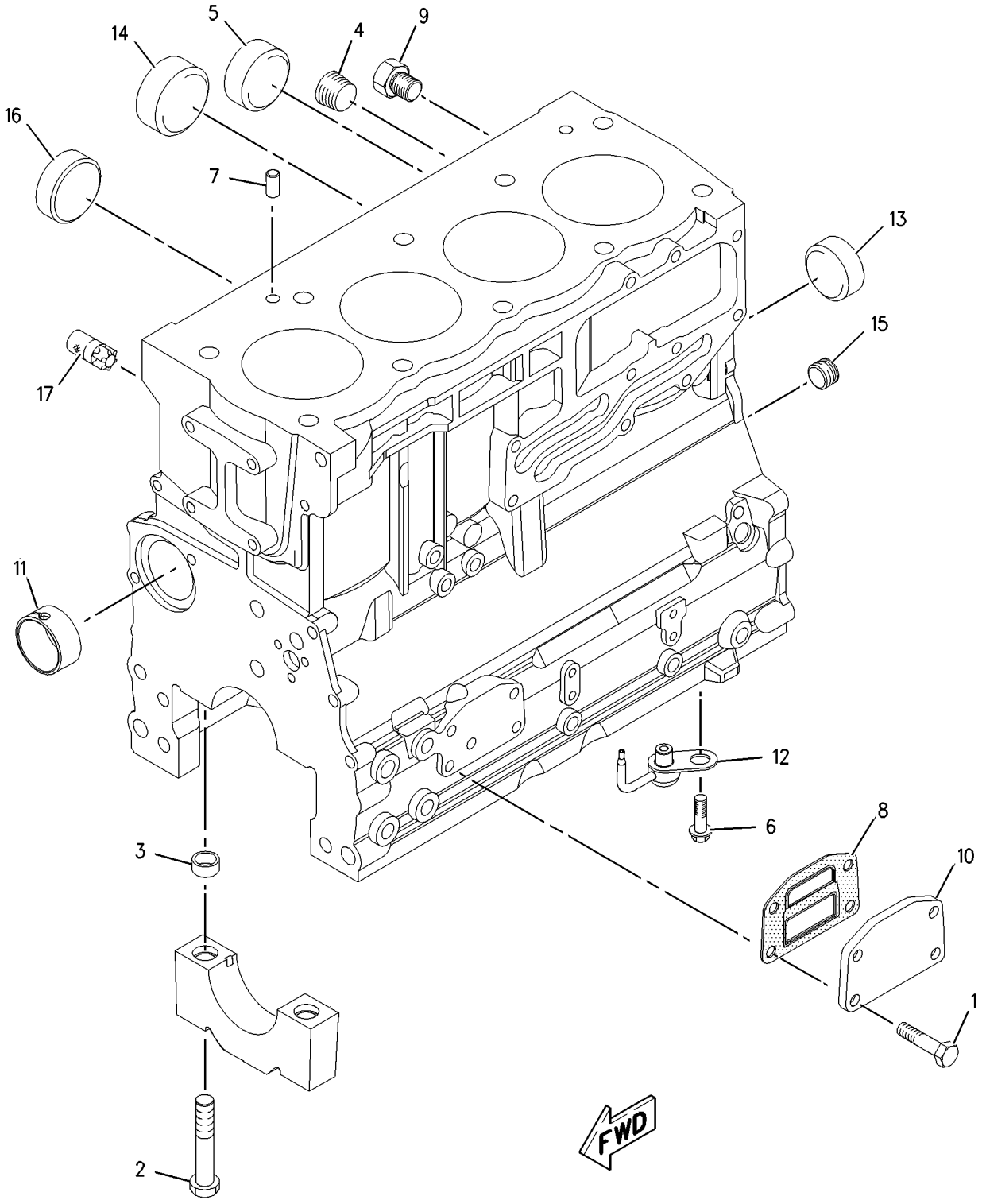

GRAPHIC #1 **<END>** g00951214

BASIC ENGINE

232-7606 CYLINDER BLOCK GP

S/N: CRS1-UP

PART OF 234-3060 ENGINE AR-PRIMARY

SMCS-1201 **i01863465**

NOTE	REF NO	GRAPHIC REF	PART NUMBER	QTY	PART NAME 1 2 3 4 5 6 (PRODUCT LEVEL)	SEE PAGE
	1	1	**209-9219**	10	BOLT (M8X1.25X16MM)	
	2	1	**232-7449**	1	HOUSING AS	
Y	3	1	**232-7604**	1	CYLINDER BLOCK GP	18

Y-SEPARATE ILLUSTRATION

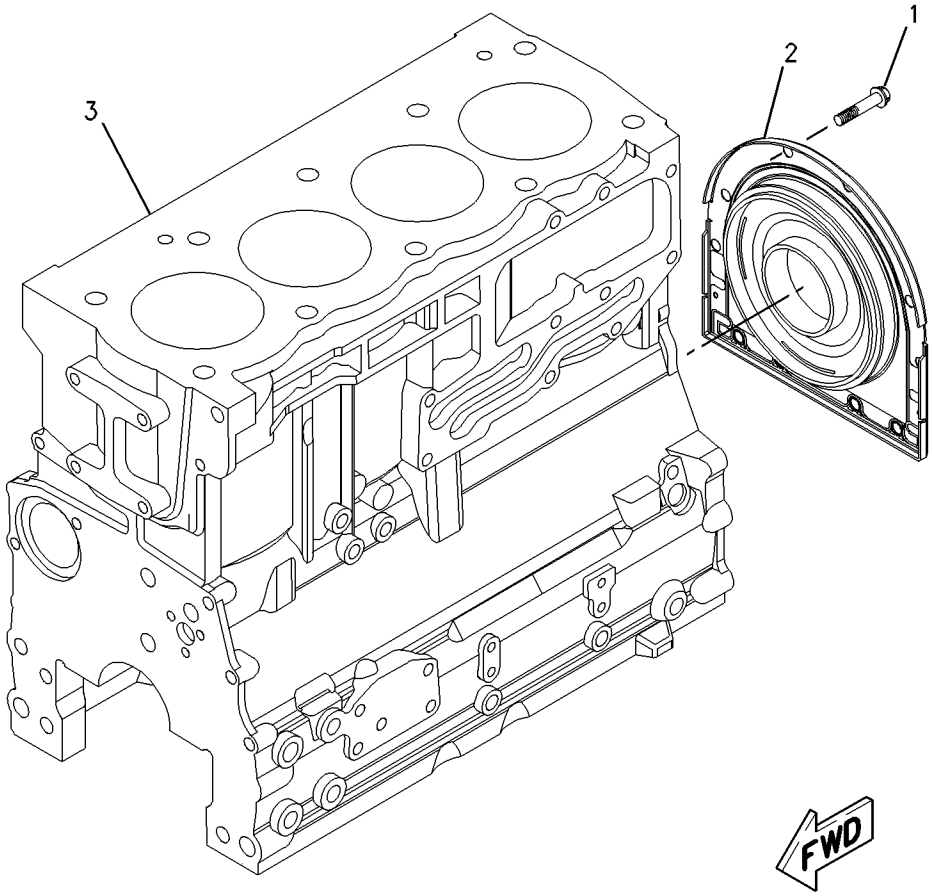

GRAPHIC #1 **<END>** g00952056

232-7519 CYLINDER HEAD GP

S/N: CRS1-UP

PART OF 232-7524 CYLINDER HEAD GP

SMCS-1100, 1101, 1103, 1104, 1105, 1106, 1108, 1109, 1115, 1117, 1121, 1124, 1125

i01863425

NOTE	REF NO	GRAPHIC REF	PART NUMBER	QTY	PART NAME 1 2 3 4 5 6 (PRODUCT LEVEL)	SEE PAGE
	1	1	**2B-0858**	1	PLUG-PIPE	
	2	1	**9Y-5015**	2	PLUG-FREEZE	
	3	1	**067-6006**	4	PLUG	
	4	1	**147-1979**	16	RETAINER	
	5	1	**185-0882**	8	GUIDE-VALVE (INTAKE)	
	6	1	**199-9751**	1	SEAL-O-RING	
	7	1	**225-5493**	4	INSERT-VALVE (INLET)	
	8	1	**225-5494**	4	INSERT-VALVE (EXHAUST)	
	9	1	**225-5495**	4	VALVE-INLET	
	10	1	**225-5496**	8	SPRING-VALVE	
	11	1	**225-5497**	8	SEAL-VALVE	
	12	1	**225-5498**	8	CAP	
	13	1	**225-5499**	4	VALVE-EXHAUST	
	14	1	**232-1322**	1	PLUG	

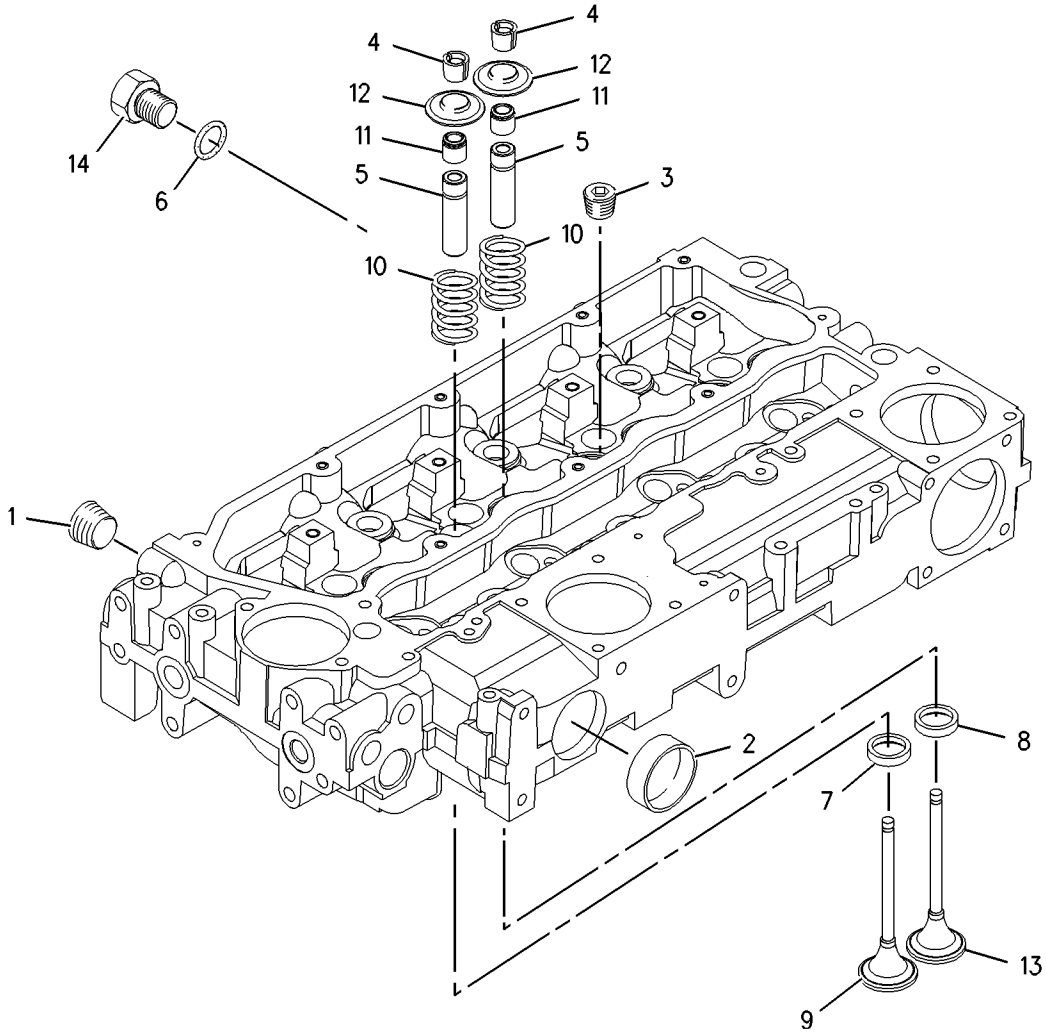

GRAPHIC #1

<END>

g00951196

232-7524 CYLINDER HEAD GP

S/N: CRS1-UP

PART OF 234-3060 ENGINE AR-PRIMARY

SMCS-1100, 1101, 1103, 1104, 1105, 1106, 1108, 1109, 1115, 1117, 1121, 1124, 1125 **i02000189**

NOTE	REF NO	GRAPHIC REF	PART NUMBER	QTY	PART NAME 1 2 3 4 5 6 (PRODUCT LEVEL)	SEE PAGE
	1	1	**225-5501**	7	BOLT (M15X1.5X137MM)	
	2	1	**225-5502**	3	BOLT (M15X1.5X162MM)	
	3	1	**240-7194**	1	GASKET-HEAD	
Y	4	1	**232-7519**	1	CYLINDER HEAD GP	21

Y-SEPARATE ILLUSTRATION

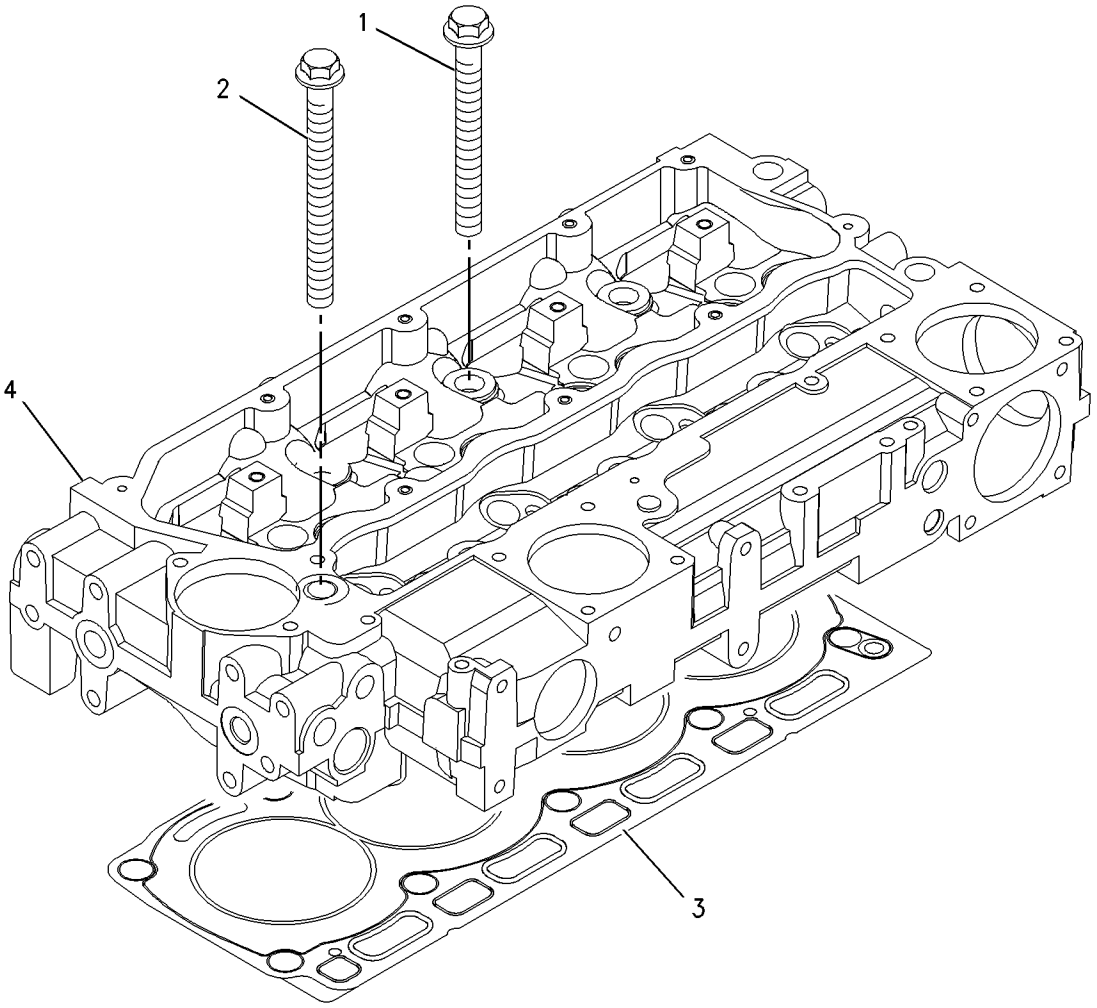

GRAPHIC #1 **<END>** g00909291

BASIC ENGINE

236-8241 DRIVE GP-FAN

S/N: CRS1-UP

PART OF 234-3060 ENGINE AR-PRIMARY

SMCS-1357, 1358, 1359, 1390 **i01964508**

NOTE	REF NO	GRAPHIC REF	PART NUMBER	QTY	PART NAME 1 2 3 4 5 6 (PRODUCT LEVEL)	SEE PAGE
	1	1	**111-0859**	4	BOLT (M10X1.5X35MM)	
	2	1	**230-8065**	1	HOUSING AS	

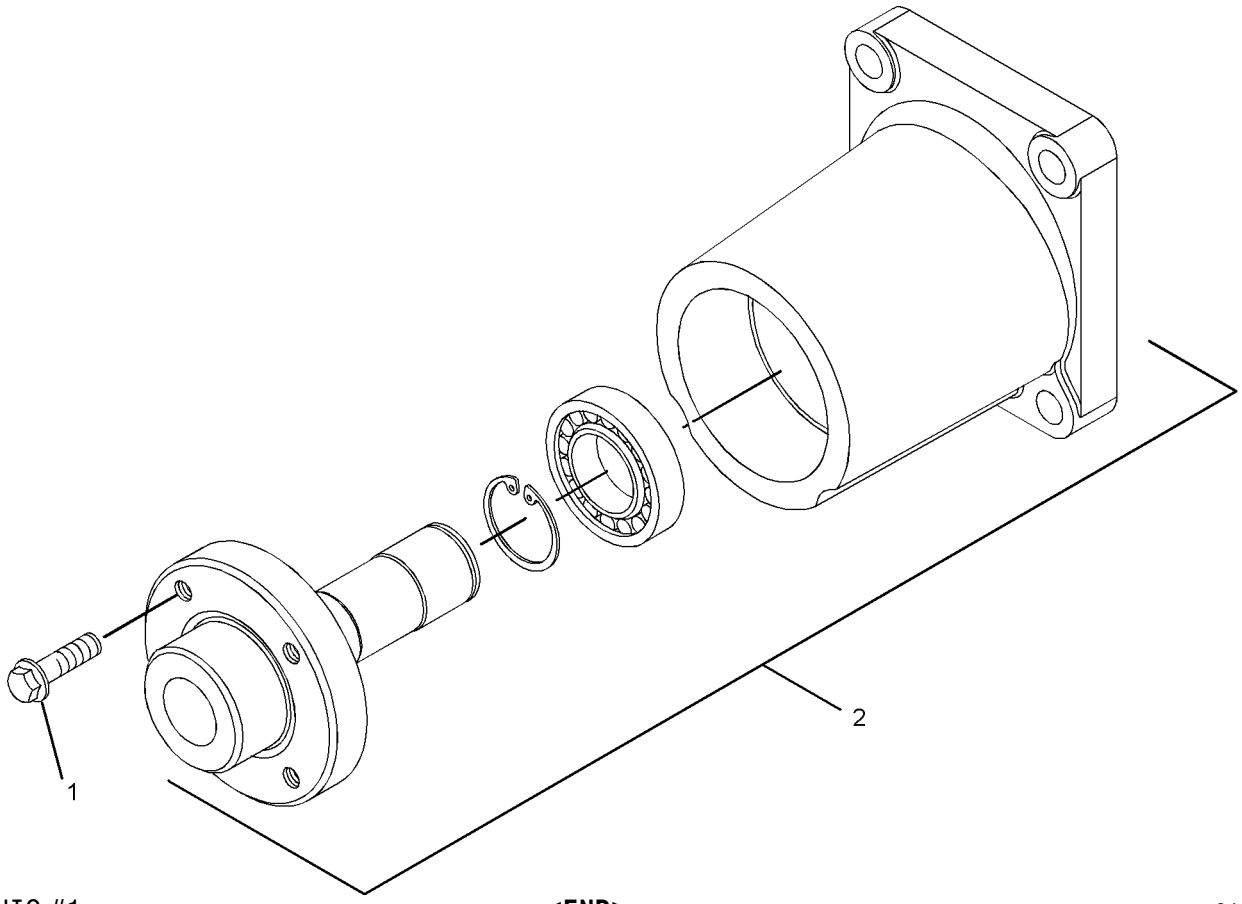

GRAPHIC #1 **<END>** g01022188

BASIC ENGINE

230-7300 FLYWHEEL GP

S/N: CRS1-UP

PART OF 234-3060 ENGINE AR-PRIMARY

SMCS-1156, 1158 **i02004993**

NOTE	REF NO	GRAPHIC REF	PART NUMBER	QTY	PART NAME 1 2 3 4 5 6 (PRODUCT LEVEL)	SEE PAGE
	1	1	**0S-1603**	6	BOLT (1/2-20X1.5 IN)	
	2	1	**5P-8245**	6	WASHER-HARD (13.5X25.5X3MM THK)	
	3	1	**245-9828**	1	FLYWHEEL AS	
	4	1	**033-7687**	1	RING (126 TEETH)	

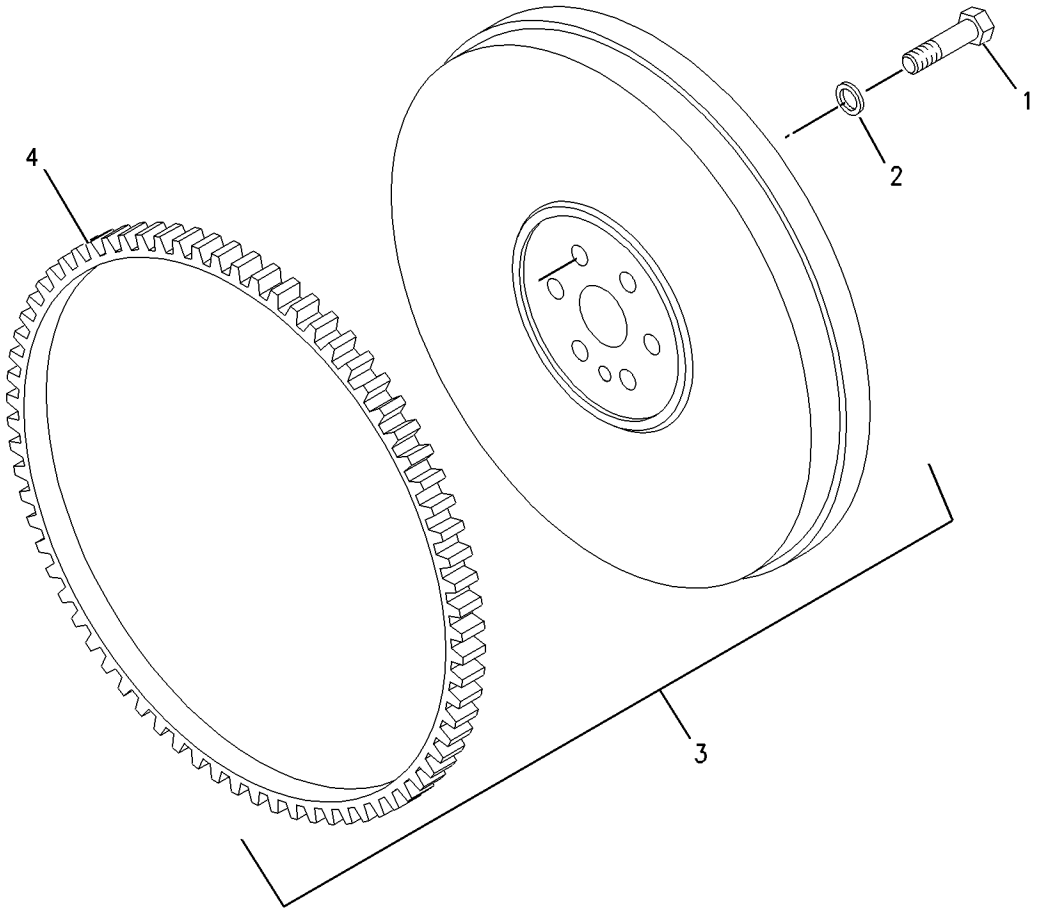

GRAPHIC #1 **<END>** g00955555

BASIC ENGINE

236-8238 HOUSING GP-FLYWHEEL

S/N: CRS1-UP

PART OF 234-3060 ENGINE AR-PRIMARY

SMCS-1157 **i01925943**

NOTE	REF NO	GRAPHIC REF	PART NUMBER	QTY	PART NAME 1 2 3 4 5 6 (PRODUCT LEVEL)	SEE PAGE
	1	1	**6I-0423**	2	BOLT (M12X1.75X30MM)	
	2	1	**6I-0847**	1	PLUG	
	3	1	**7W-1176**	1	PLATE-COVER	
	4	1	**7W-4642**	1	SHIELD-DUST	
	5	1	**067-6123**	2	DOWEL	
	6	1	**114-4363**	2	BOLT (M8X1.25X12MM)	
	7	1	**101-3617**	3	PLUG	
	8	1	**121-0883**	6	BOLT (M10X1.5X30MM)	
	9	1	**220-8631**	1	HOUSING-FLYWHEEL	

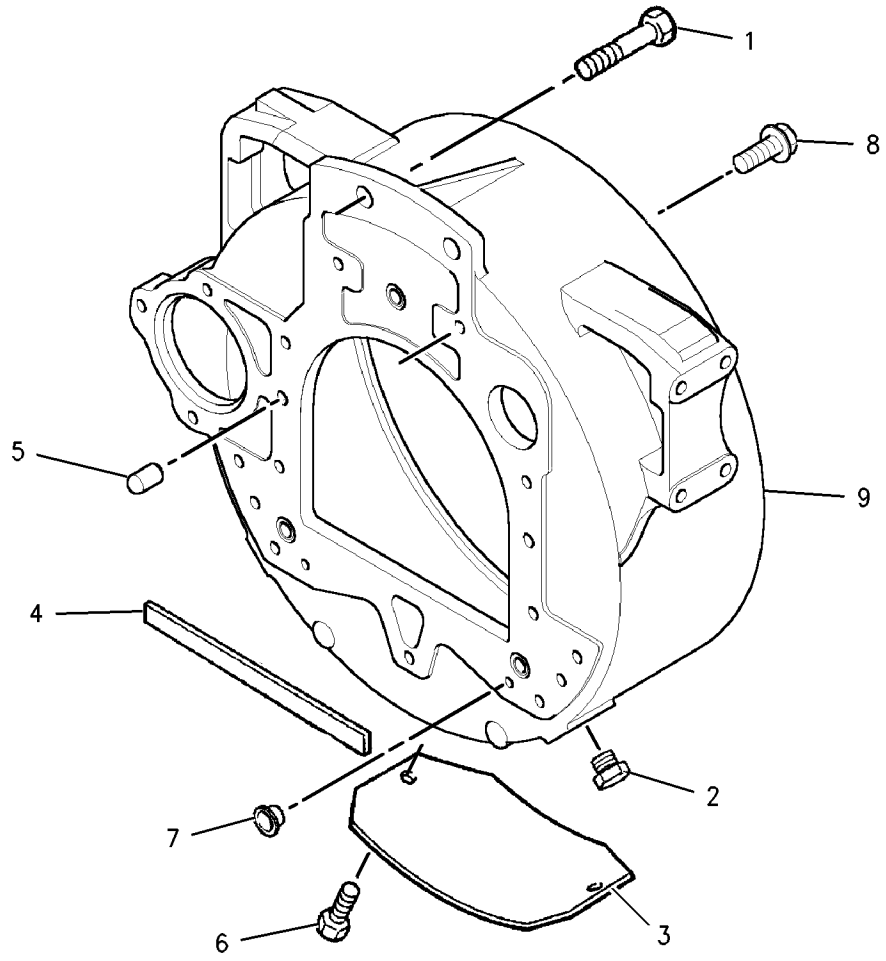

GRAPHIC #1 **<END>** g00902549

BASIC ENGINE

232-3670 HOUSING GP-FRONT

S/N: CRS1-UP

PART OF 234-3060 ENGINE AR-PRIMARY

SMCS-1151, 1162, 1166 **i01890768**

NOTE	REF NO	GRAPHIC REF	PART NUMBER	QTY	PART NAME 1 2 3 4 5 6 (PRODUCT LEVEL)	SEE PAGE
	1	1	**1B-8736**	1	KEY-WOODRUFF	
	2	1	**6I-0217**	8	BOLT (M8X1.25X20MM)	
	3	1	**6I-0645**	4	BOLT (M8X1.25X25MM)	
	4	1	**6I-0789**	3	BOLT (M10X1.5X60MM)	
	5	1	**7C-4616**	1	BOLT (M12X1.75X45MM)	
	6	1	**067-6179**	1	DOWEL	
	7	1	**067-6897**	1	HUB-IDLER GEAR	
	8	1	**067-6900**	1	PLATE-RETAINING	
	9	1	**100-3751**	5	BOLT (M8X1.25X65MM)	
	10	1	**124-3815**	10	BOLT (M8X16X1.25MM)	
	11	1	**133-1011**	1	WASHER	
	12	1	**216-8633**	1	GEAR AS-IDLER (73 TEETH)	
	12A	1	**067-6899**	2	BUSHING-IDLER GEAR	
	13	1	**216-8634**	1	GEAR-CAMSHAFT (68 TEETH)	
	14	1	**225-8278**	1	HOUSING-FRONT	
	15	1	**225-8280**	1	SEAL-CRANKSHAFT	
	16	1	**225-8281**	1	GASKET	
	17	1	**225-8282**	1	GASKET	
	18	1	**232-3657**	1	COVER AS-FRONT	
	19	1	**232-3666**	1	WASHER-THRUST	

232-3670 **HOUSING GP-FRONT** *(contd.)* **i01890768**

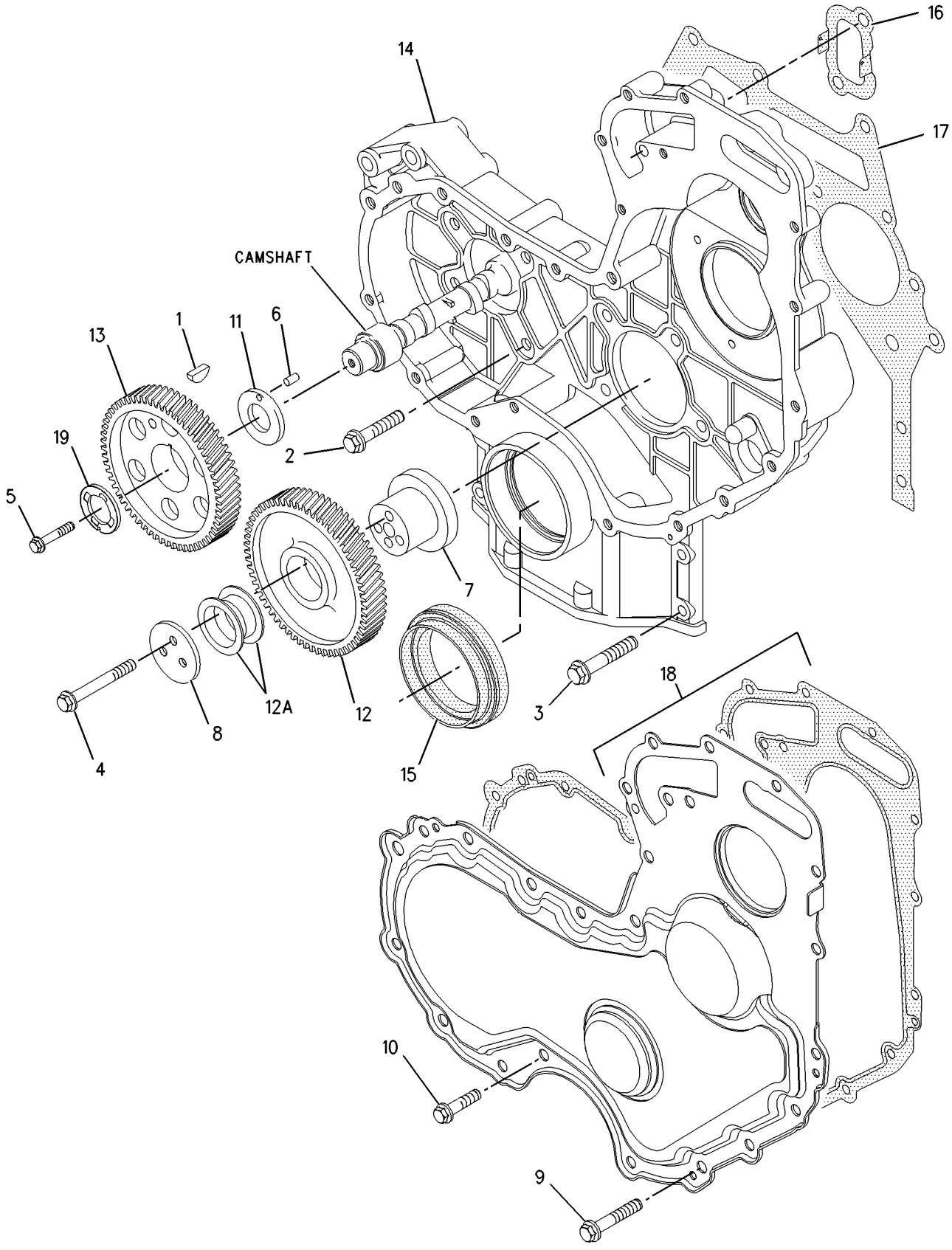

GRAPHIC #1 **<END>** g00985089

BASIC ENGINE

233-7432 LIFTING GP-ENGINE

S/N: CRS1-UP

PART OF 234-3060 ENGINE AR-PRIMARY

SMCS-1122 **i01876830**

NOTE	REF NO	GRAPHIC REF	PART NUMBER	QTY	PART NAME 1 2 3 4 5 6 (PRODUCT LEVEL)	SEE PAGE
	1	1	**100-4830**	4	BOLT (M10X1.5X20MM)	
	2	1	**225-8848**	2	PLATE	

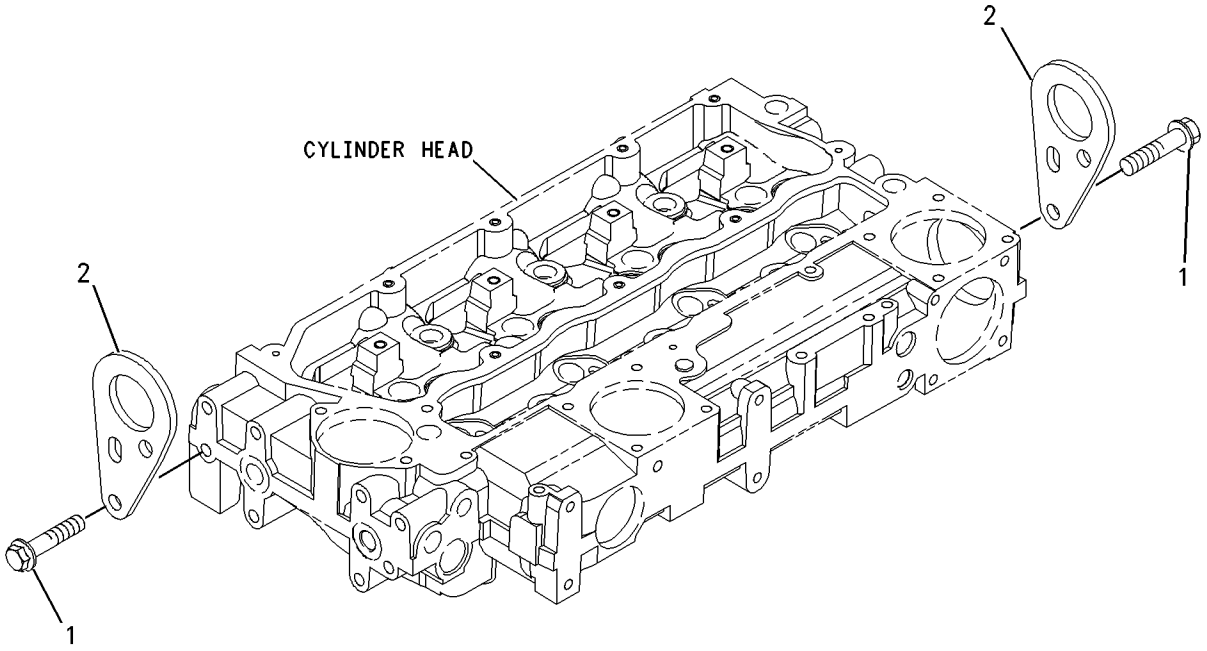

GRAPHIC #1 **<END>** g00955299

237-3658 MOUNTING GP-ENGINE

S/N: CRS1-UP

PART OF 234-3060 ENGINE AR-PRIMARY

SMCS-1152, 1153, 1154 **i01925958**

NOTE	REF NO	GRAPHIC REF	PART NUMBER	QTY	PART NAME 1 2 3 4 5 6 (PRODUCT LEVEL)	SEE PAGE
	1	1	**101-2987**	6	PLUG	
	2	1	**6H-3616**	3	PLUG-PROTECTION	
	3	1	**195-2132**	1	SUPPORT-FRONT	
	4	1	**195-2134**	1	SUPPORT-FRONT	
	5	1	**195-2136**	8	STUD	
	6	1	**195-2221**	8	NUT	

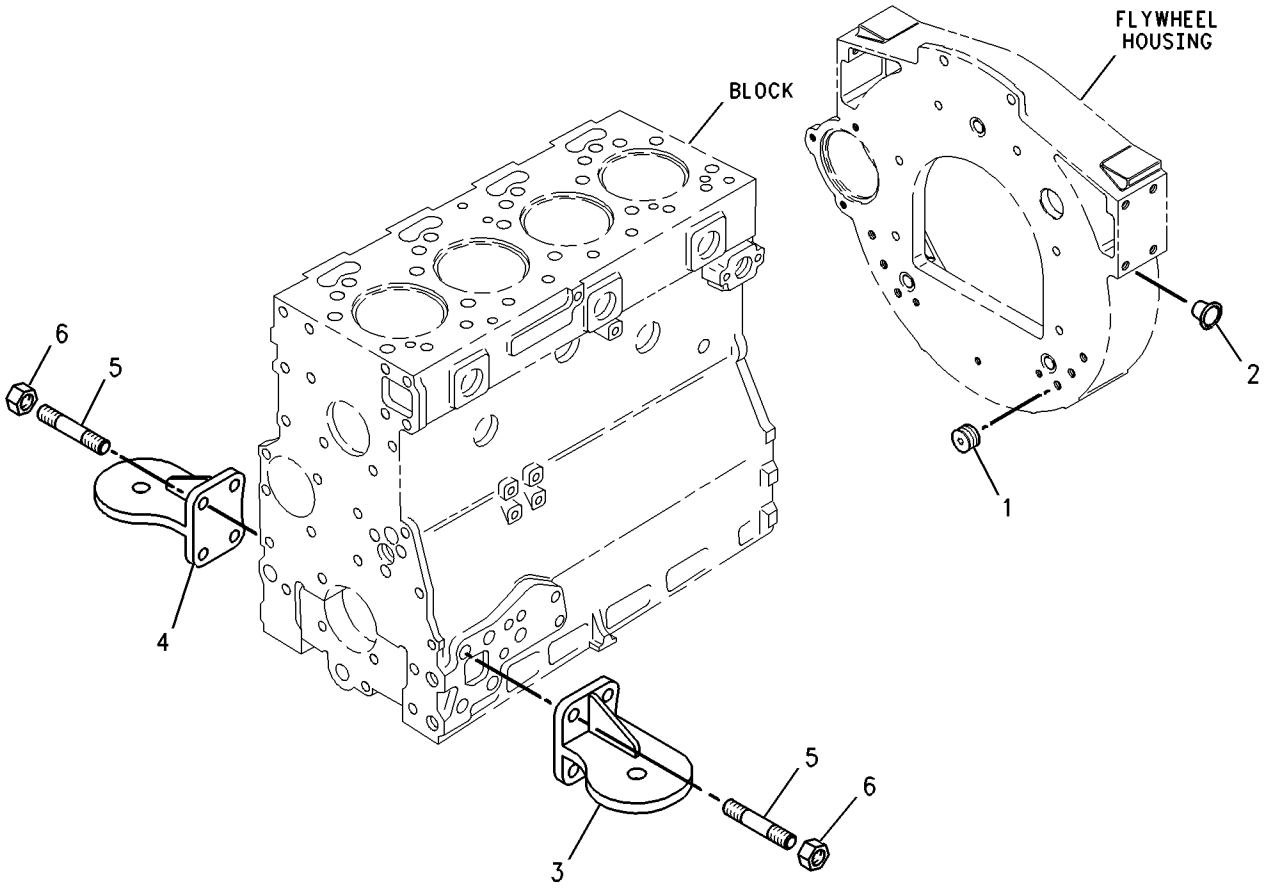

GRAPHIC #1 **<END>** g00738284

143-0782 MOUNTING GP-ENGINE & TMSN

S/N: FDP18400-UP

PART OF 192-4661, 192-4662, 192-4663, 192-4665, 192-4666, 198-4095, 214-6955, 214-6956, 214-6958, 214-6959, 214-6976, 214-6977 POWER TRAIN AR

AN ATTACHMENT

SMCS-1152, 1153, 1154 **i01646227**

NOTE	REF NO	GRAPHIC REF	PART NUMBER	QTY	PART NAME 1 2 3 4 5 6 (PRODUCT LEVEL)	SEE PAGE
	1	1	**3E-4892**	4	WASHER	
	2	1	**3E-4924**	2	MOUNTING AS	
	3	1	**6Y-9915**	2	MOUNT AS	
	4	1	**9W-9953**	2	SLEEVE	
	5	1	**8T-4121**	12	WASHER-HARD (11X21X2.5MM THK)	
M	6	1	**8T-4132**	4	NUT (M16X2 THD)	
M	7	1	**8T-4174**	4	BOLT (M16X2.0X120MM)	
M	8	1	**8T-4196**	12	BOLT (M10X1.5X35MM)	
	9	1	**9X-8257**	8	WASHER (17.5X30X3.5MM THK)	

M-METRIC PART

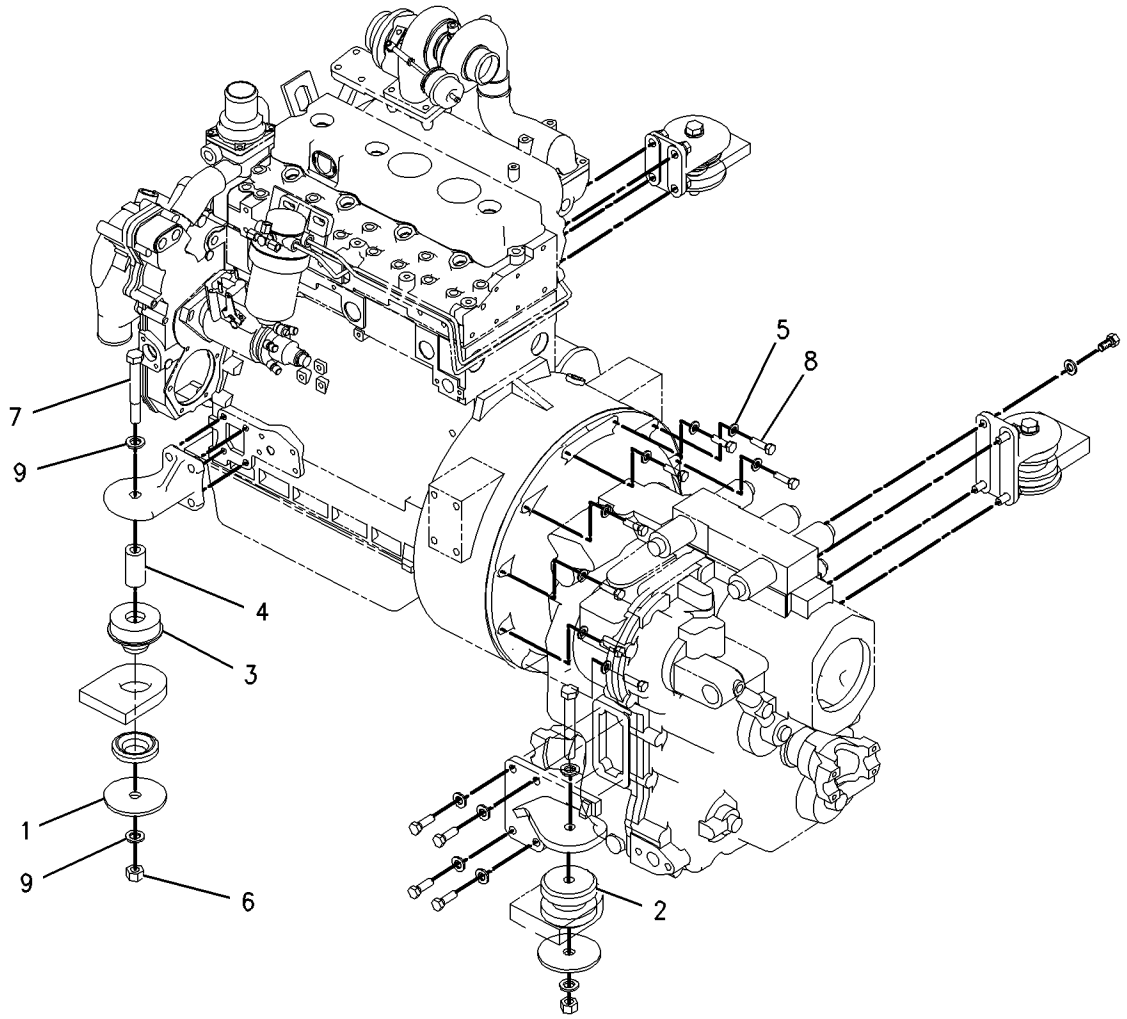

GRAPHIC #1 **<END>** g00850909

BASIC ENGINE

143-0788 MOUNTING GP-ENGINE & TMSN

S/N: FDP18400-UP
POWER SHIFT
PART OF 192-4659, 192-4664, 214-6957, 214-6978 POWER TRAIN AR
AN ATTACHMENT

SMCS-1152, 1153, 1154 **i01738984**

NOTE	REF NO	GRAPHIC REF	PART NUMBER	QTY	PART NAME 1 2 3 4 5 6 (PRODUCT LEVEL)	SEE PAGE
	1	1	**3E-4892**	4	WASHER	
	2	1	**3E-4924**	2	MOUNTING AS	
	3	1	**6Y-9915**	2	MOUNT AS	
	4	1	**9W-9953**	2	SLEEVE	
M	5	1	**8T-4174**	4	BOLT (M16X2.0X120MM)	
M	6	1	**8T-4196**	12	BOLT (M10X1.5X35MM)	
	7	1	**9X-8257**	8	WASHER (17.5X30X3.5MM THK)	
	8	1	**8T-4121**	12	WASHER-HARD (11X21X2.5MM THK)	
M	9	1	**8T-4132**	4	NUT (M16X2 THD)	

M-METRIC PART

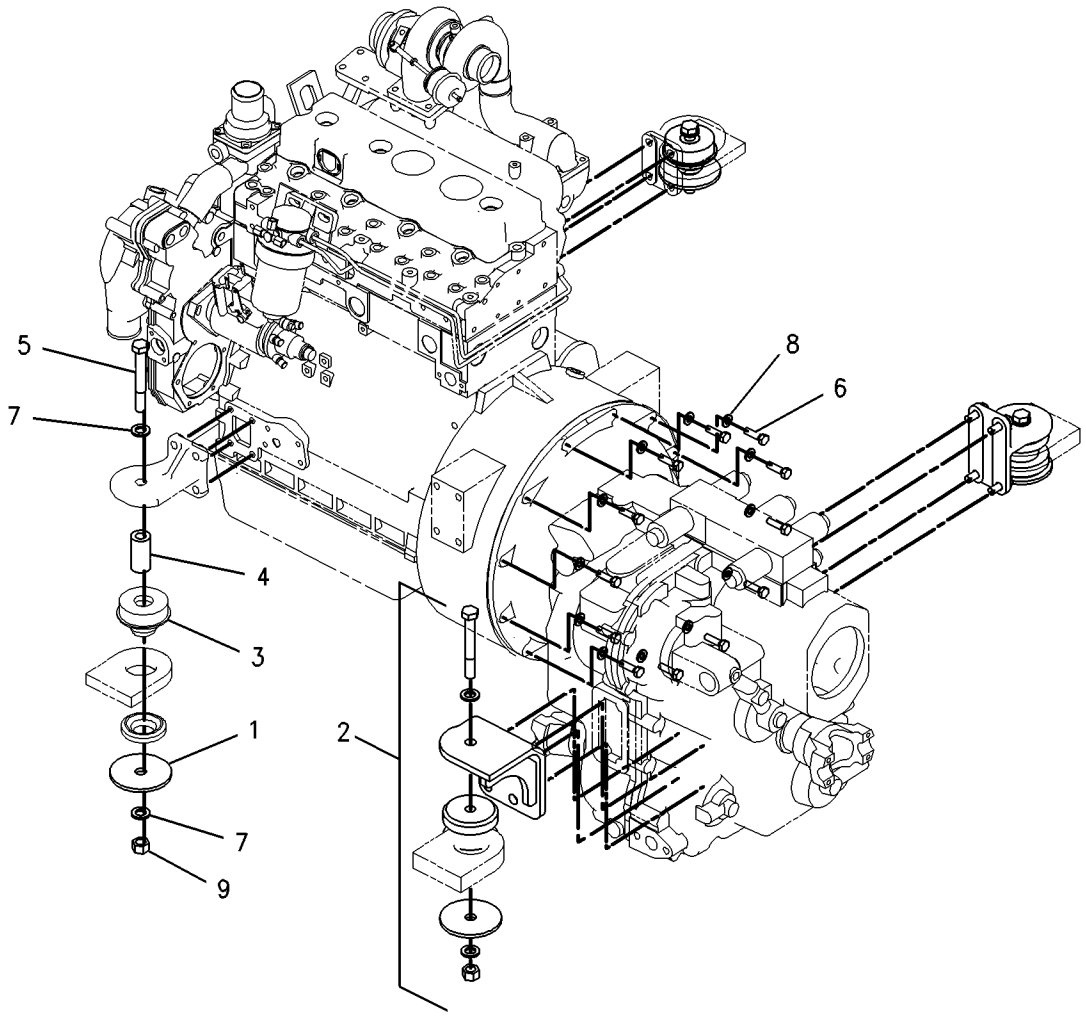

GRAPHIC #1 **<END>** g00890687

BASIC ENGINE

237-0025 PAN GP-OIL

S/N: CRS1-UP

PART OF 234-3060 ENGINE AR-PRIMARY

SMCS-1302 **i01966323**

NOTE	REF NO	GRAPHIC REF	PART NUMBER	QTY	PART NAME 1 2 3 4 5 6 (PRODUCT LEVEL)	SEE PAGE
	1	1	**5P-6718**	2	SEAL-O-RING (ENGINE OIL DRAIN)	
	2	1	**6I-0217**	12	BOLT (M8X1.25X20-MM)	
	3	1	**6I-0260**	2	BOLT (M8X1.25X25-MM)	
	4	1	**6I-0289**	1	PLUG	
	5	1	**6I-0363**	2	BOLT (M6X1.0X20-MM)	
	6	1	**6I-0572**	2	BOLT (M8X1.25X20-MM)	
	7	1	**7C-0351**	2	PLUG-SUMP DRAIN	
	8	1	**067-6213**	1	GASKET	
	9	1	**101-3771**	6	BOLT	
	10	1	**225-6004**	1	PAN AS-OIL	
	10A	1	**7C-1224**	2	INSERT	
	11	1	**225-6005**	1	GASKET	
	12	1	**225-6041**	1	TUBE	
	13	1	**230-8094**	1	BRIDGE	

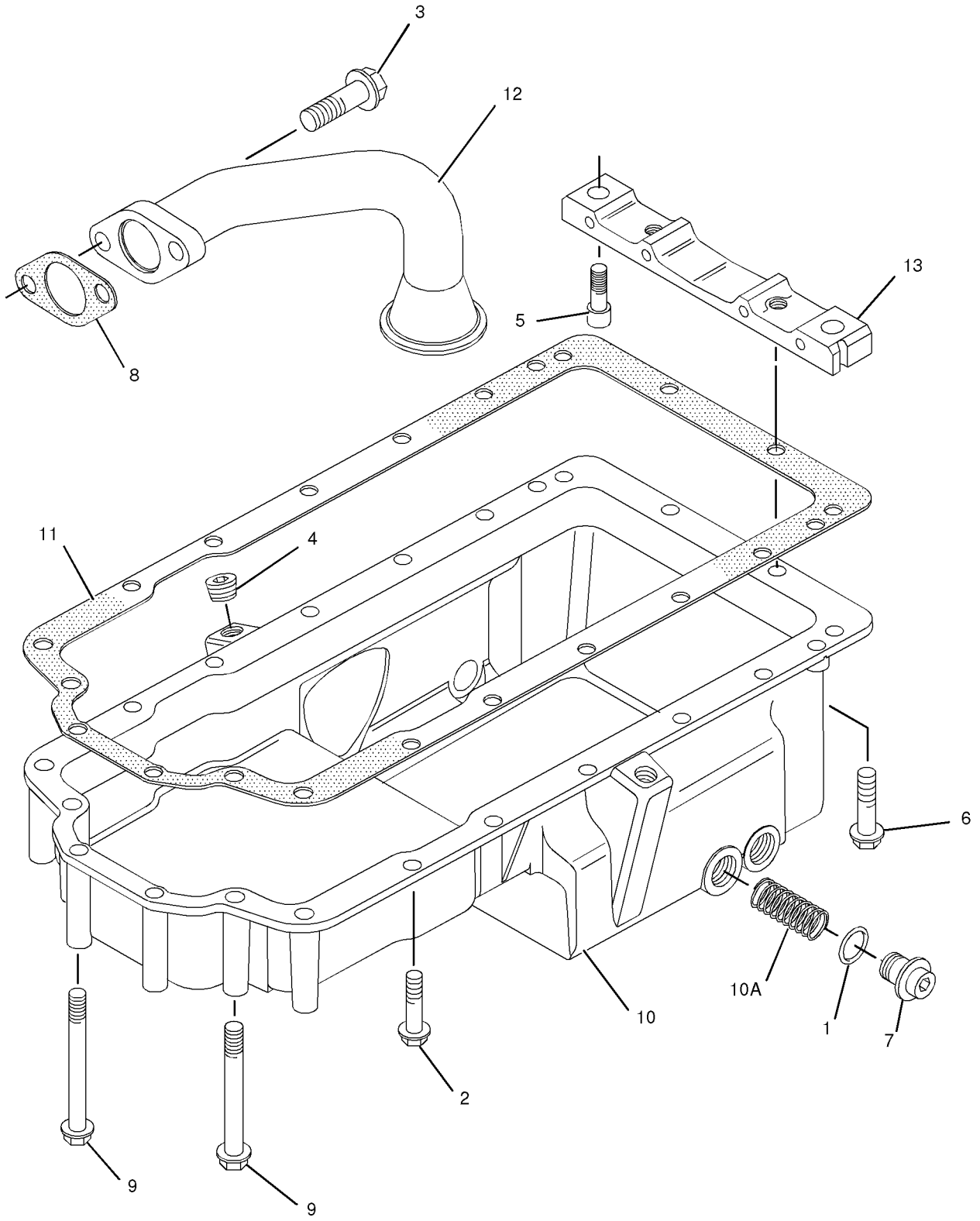

GRAPHIC #1 **<END>** g01036037

232-7442 PISTON & ROD GP

S/N: CRS1-UP

PART OF 234-3060 ENGINE AR-PRIMARY

SMCS-1213, 1214, 1215, 1218, 1219, 1225, 1239 **i01990217**

NOTE	REF NO	GRAPHIC REF	PART NUMBER	QTY	PART NAME 1 2 3 4 5 6 (PRODUCT LEVEL)	SEE PAGE
	1	1	**225-5437**	4	PISTON AS	
					(EACH PISTON AS INCLUDES)	
	2	1	**124-3536**	2	RING-RETAINING	
	3	1	**225-5436**	1	KIT-PISTON RING	
J	4	1	**225-5441**	4	ROD AS (L)	
					–OR–	
J		1	**225-5451**	4	ROD AS (K)	
					–OR–	
J		1	**225-5453**	4	ROD AS (J)	
					–OR–	
J		1	**225-5454**	4	ROD AS (H)	
					–OR–	
J		1	**225-5458**	4	ROD AS (G)	
					–OR–	
J		1	**225-5459**	4	ROD AS (F)	
					(EACH ROD AS INCLUDES)	
	5	1	**225-5438**	1	BUSHING	
	6	1	**225-5439**	2	BOLT	

J-ENSURE THAT CORRECT ROD LENGTH IS FITTED

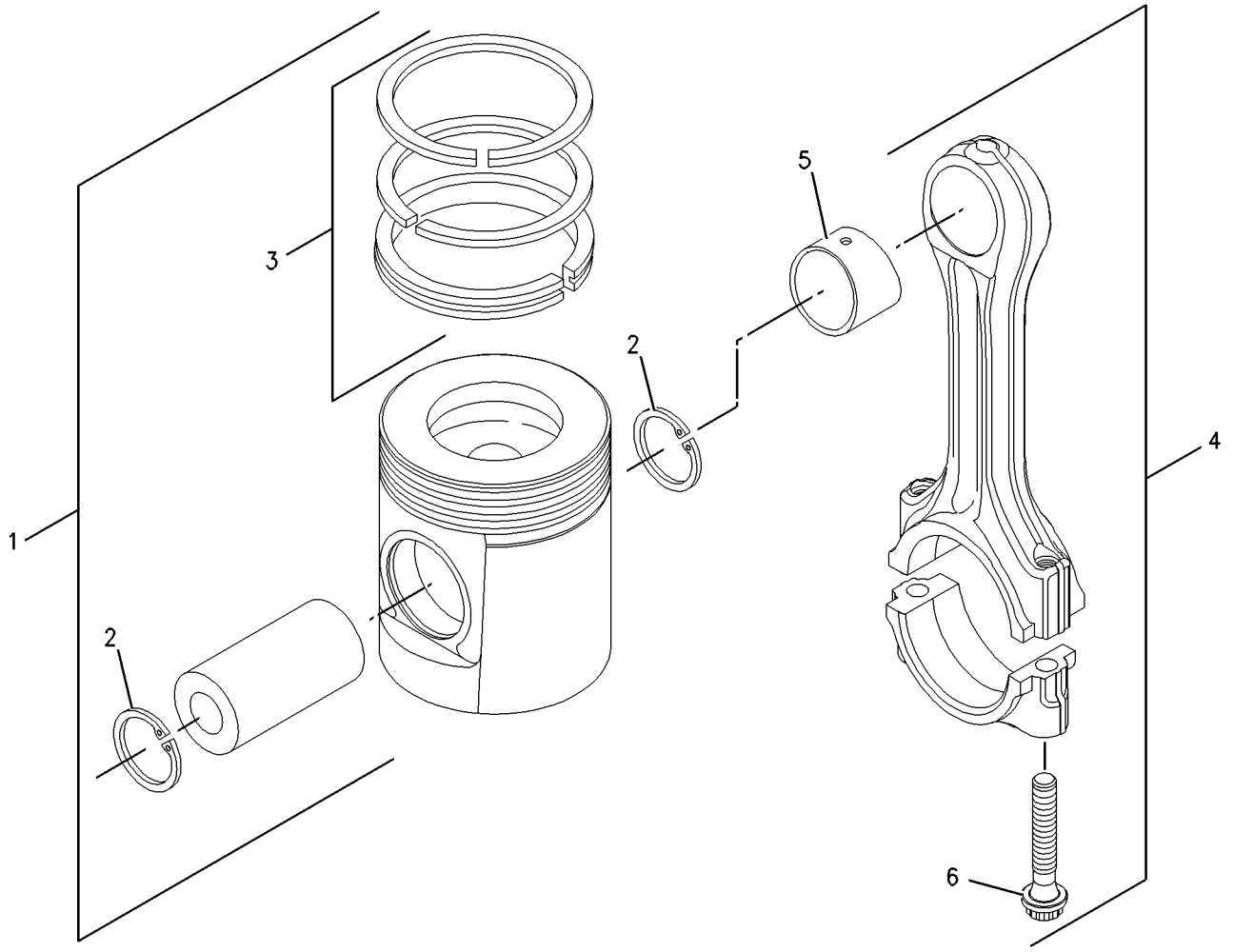

GRAPHIC #1 **<END>** g00909669

BASIC ENGINE

225-4317 PLUG GP-ENGINE

S/N: CRS1-UP

PART OF 234-3060 ENGINE AR-PRIMARY

SMCS-1000 **i01862406**

NOTE	REF NO	GRAPHIC REF	PART NUMBER	QTY	PART NAME 1 2 3 4 5 6 (PRODUCT LEVEL)	SEE PAGE
	1	1	**2B-0858**	3	PLUG-PIPE	

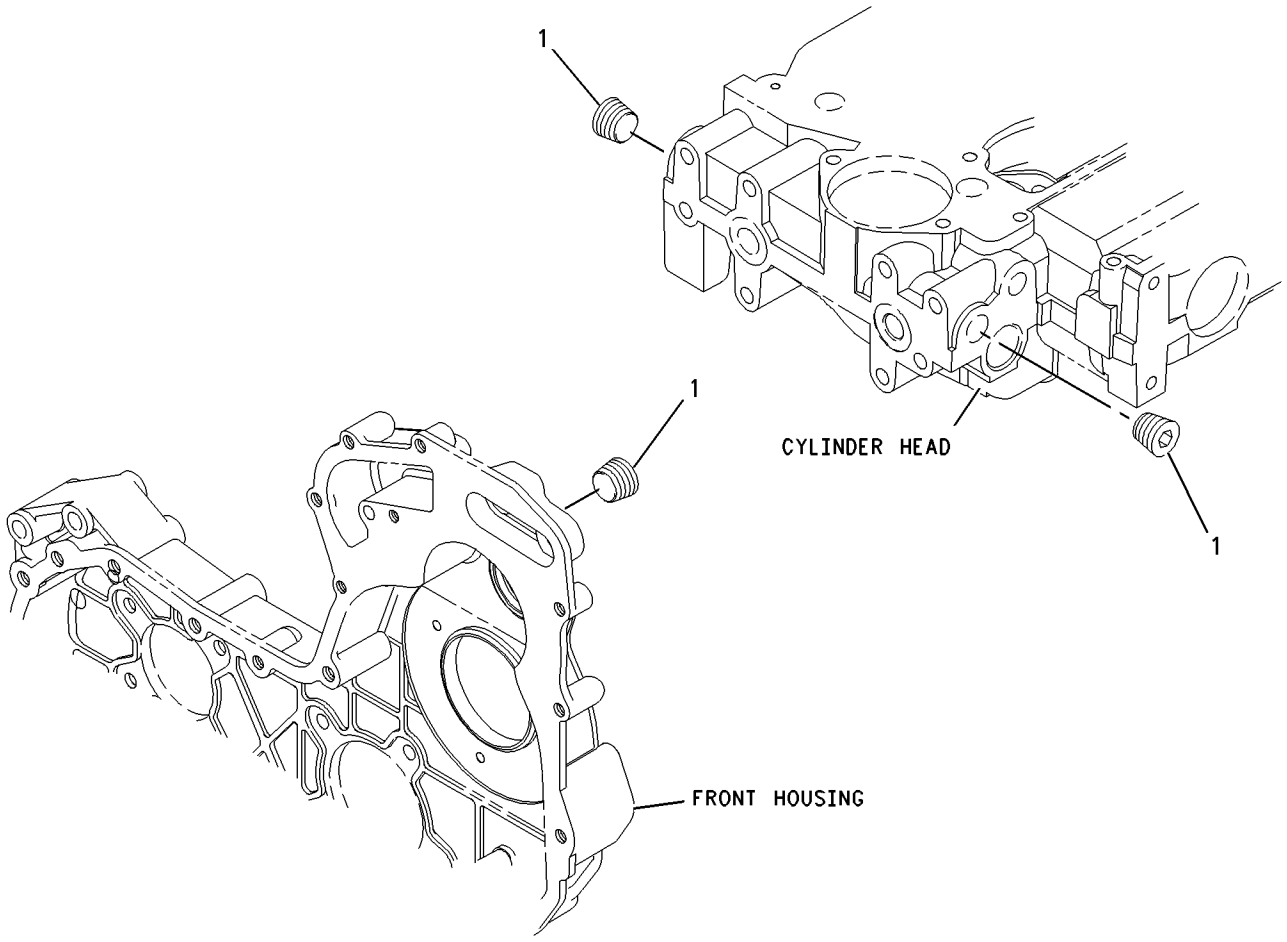

GRAPHIC #1 **<END>** g00911937

BASIC ENGINE

230-7569 PLUG GP-ENGINE

S/N: CRS1-UP

PART OF 234-3060 ENGINE AR-PRIMARY

SMCS-1000 **i01876806**

NOTE	REF NO	GRAPHIC REF	PART NUMBER	QTY	PART NAME 1 2 3 4 5 6 (PRODUCT LEVEL)	SEE PAGE
	1	1	**231-0046**	1	PLUG	

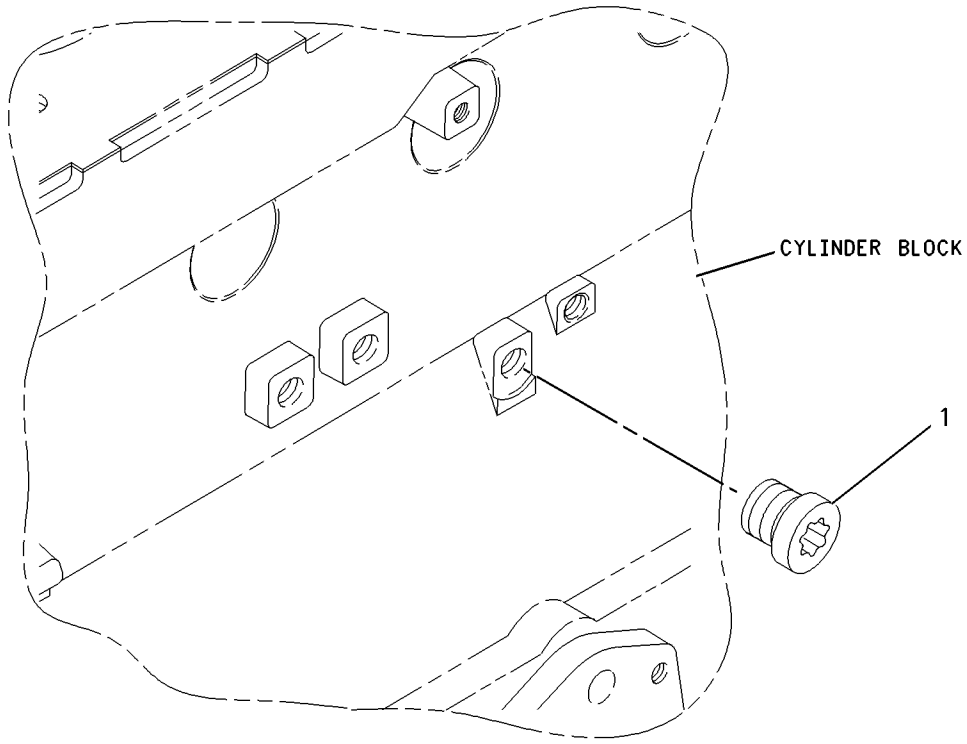

GRAPHIC #1 **<END>** g00911955

BASIC ENGINE

230-7353 PULLEY GP-CRANKSHAFT

S/N: CRS1-UP

PART OF 234-3060 ENGINE AR-PRIMARY

SMCS-1205 **i02009617**

NOTE	REF NO	GRAPHIC REF	PART NUMBER	QTY	PART NAME 1 2 3 4 5 6 (PRODUCT LEVEL)	SEE PAGE
	1	1	**6I-0501**	1	BLOCK	
	2	1	**6I-0502**	1	PULLEY	
	3	1	**7W-4634**	3	BOLT (7/16-20X1.5 IN)	

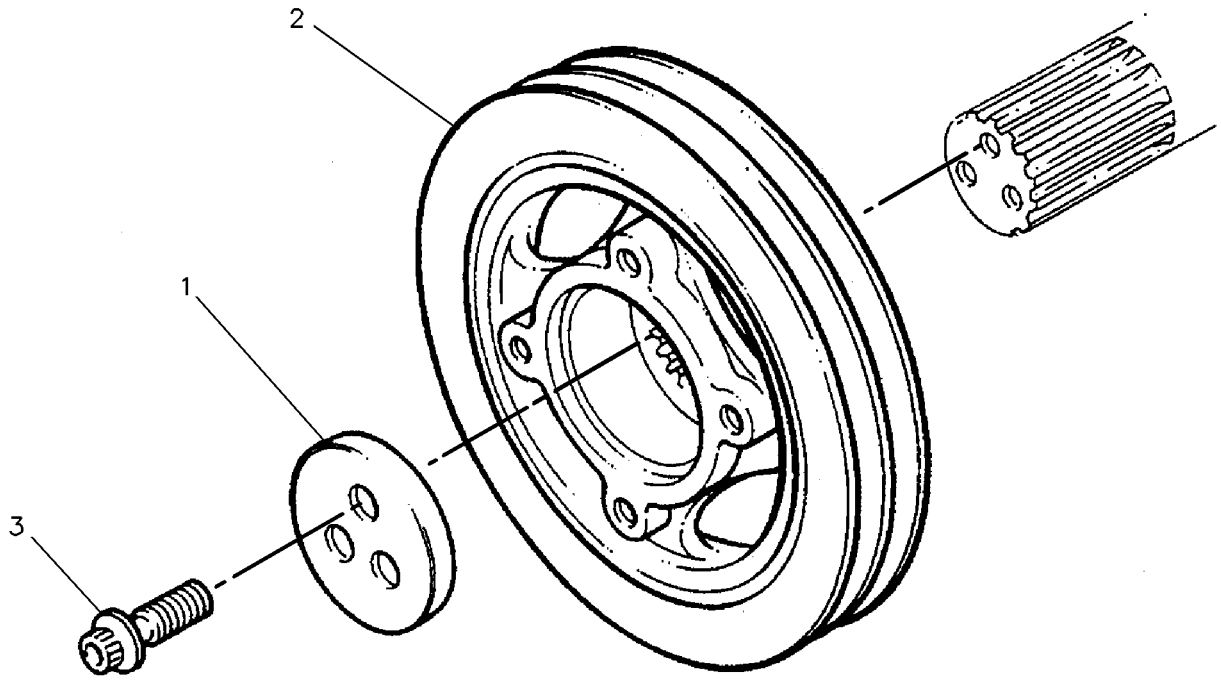

GRAPHIC #1 **<END>** g00130941

232-7526 VALVE MECHANISM GP

S/N: CRS1-UP

PART OF 234-3060 ENGINE AR-PRIMARY

SMCS-1102, 1112, 1121, 1123, 1208, 1209 **i01863433**

NOTE	REF NO	GRAPHIC REF	PART NUMBER	QTY	PART NAME 1 2 3 4 5 6 (PRODUCT LEVEL)	SEE PAGE
	1	1	**067-6095**	8	ROD	
	2	1	**138-2053**	8	TAPPET	
	3	1	**225-5963**	1	ROCKER ARM AS	
	4	1	**225-5625**	4	LEVER AS	
					(EACH INCLUDES)	
	5	1	**5B-9079**	1	NUT-JAM (3/8-24 THD)	
	6	1	**185-1546**	1	SCREW	
	7	1	**225-5634**	1	SHAFT AS	
	8	1	**225-5629**	2	PLUG	
	9	1	**225-5638**	3	SPRING	
	10	1	**225-5640**	4	LEVER AS	
					(EACH INCLUDES)	
	11	1	**5B-9079**	1	NUT-JAM (3/8-24 THD)	
	12	1	**185-1546**	1	SCREW	
	13	1	**225-5959**	2	CLIP	
	14	1	**225-5960**	1	BOLT	
	15	1	**225-5961**	2	WASHER	
	16	1	**225-5962**	3	BOLT	

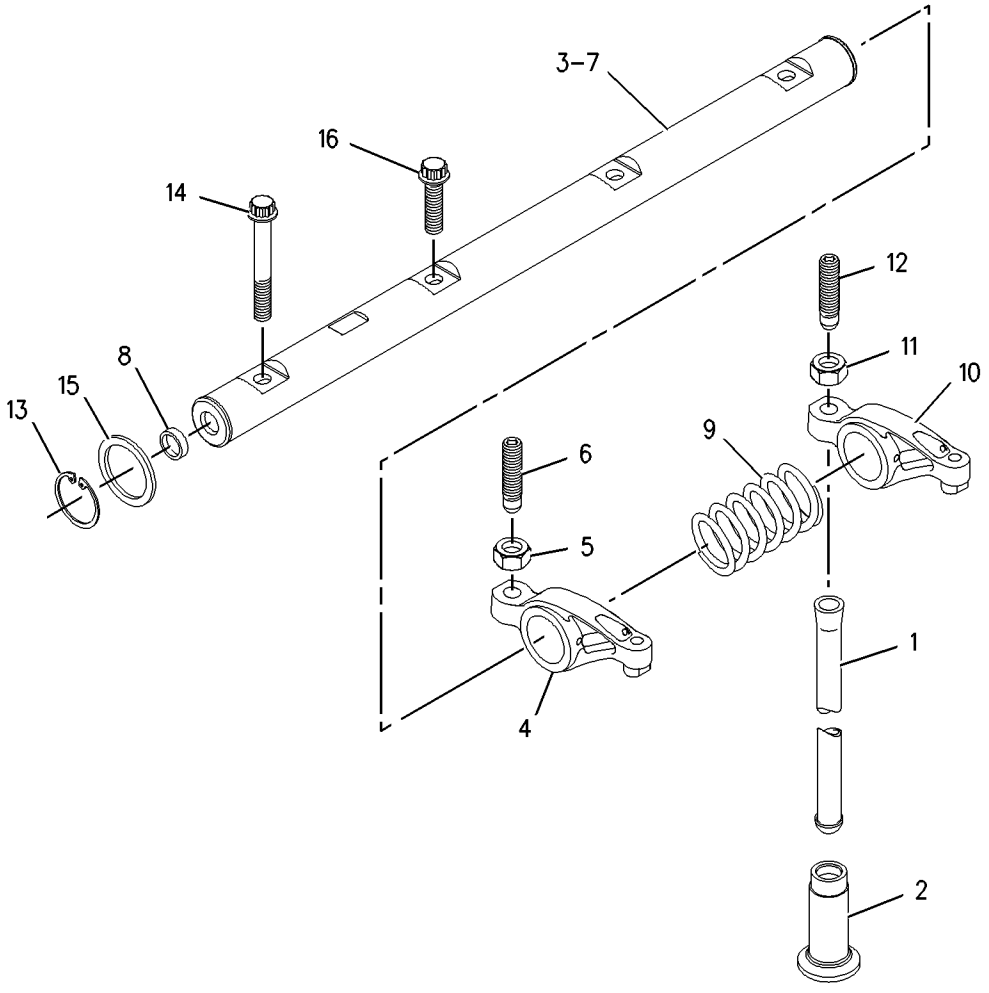

GRAPHIC #1 **<END>** g00910253

LUBRICATION SYSTEM

202-5912 BREATHER GP

S/N: FDP18400-UP

AN ATTACHMENT

SMCS-1317 **i01644390**

NOTE	PART NUMBER	QTY	PART NAME 1 2 3 4 5 6 (PRODUCT LEVEL)	SEE PAGE
Y	*202-5914*	1	BREATHER GP	42
Y-SEPARATE ILLUSTRATION				

<END>

LUBRICATION SYSTEM

202-5913 BREATHER GP

S/N: FDP18400-UP

AN ATTACHMENT

SMCS-1317 **i01709472**

NOTE	REF NO	GRAPHIC REF	PART NUMBER	QTY	PART NAME 1 2 3 4 5 6 (PRODUCT LEVEL)	SEE PAGE
E	1	1	**5P-1505**		HOSE (90CM)	
E	2	1	**136-1955**		HOSE (109CM)	
	3	1	**6I-1497**	1	SEAL	
	4	1	**6S-8620**	2	CLAMP-HOSE	
	5	1	**7K-1181**	2	STRAP-CABLE	
	6	1	**8T-9402**	3	CLAMP-HOSE	
	7	1	**032-9946**	1	GASKET	
	8	1	**165-4021**	1	CANISTER AS-BREATHER	
		1	**185-6643**	1	SEAL (BREATHER)	
	9	1	**202-5807**	1	BRACKET AS	
	10	1	**202-5909**	1	TUBE AS-OIL	
	11	1	**211-1871**	1	PAN-OIL	
	12	1	**211-1872**	1	TUBE AS (NO. 2 CYL.)	
	13	1	**218-2685**	1	HOSE	
	14	1	**132-5789**	2	CLIP	
	15	1	**6D-4246**	1	CLIP	
M	16	1	**6V-7743**	2	LOCKNUT (M6X1 THD)	
M	17	1	**8C-3798**	2	BOLT-LOCKING (M6X1X30)	
	18	1	**8T-4121**	1	WASHER-HARD (11X21X2.5MM THK)	
M	19	1	**8T-4137**	1	BOLT (M10X1.5X20MM)	
M	20	1	**8T-4181**	2	BOLT (M6X1X20MM)	
M	21	1	**8T-4189**	2	BOLT (M8X1.25X20MM)	
	22	1	**8T-4205**	6	WASHER-HARD (7.2X14.5X2MM THK)	

E-ORDER BY THE CENTIMETER
M-METRIC PART

202-5913 **BREATHER GP** *(contd.)* **i01709472**

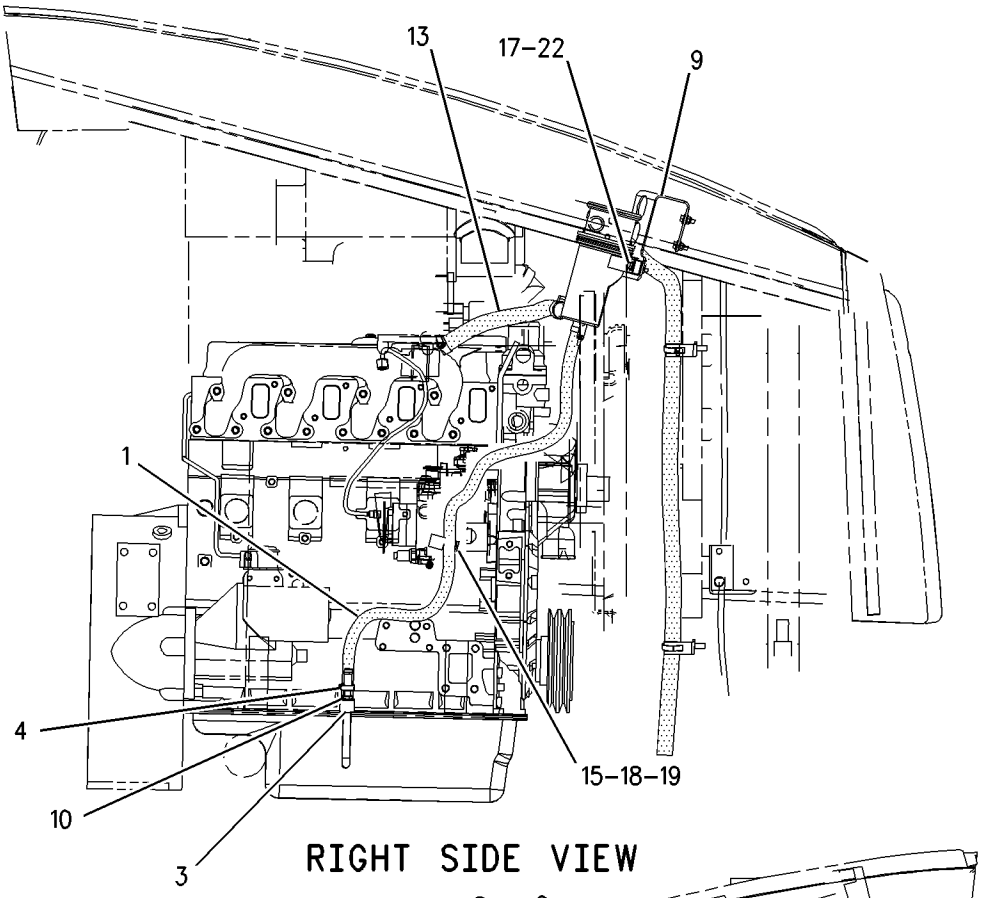

RIGHT SIDE VIEW

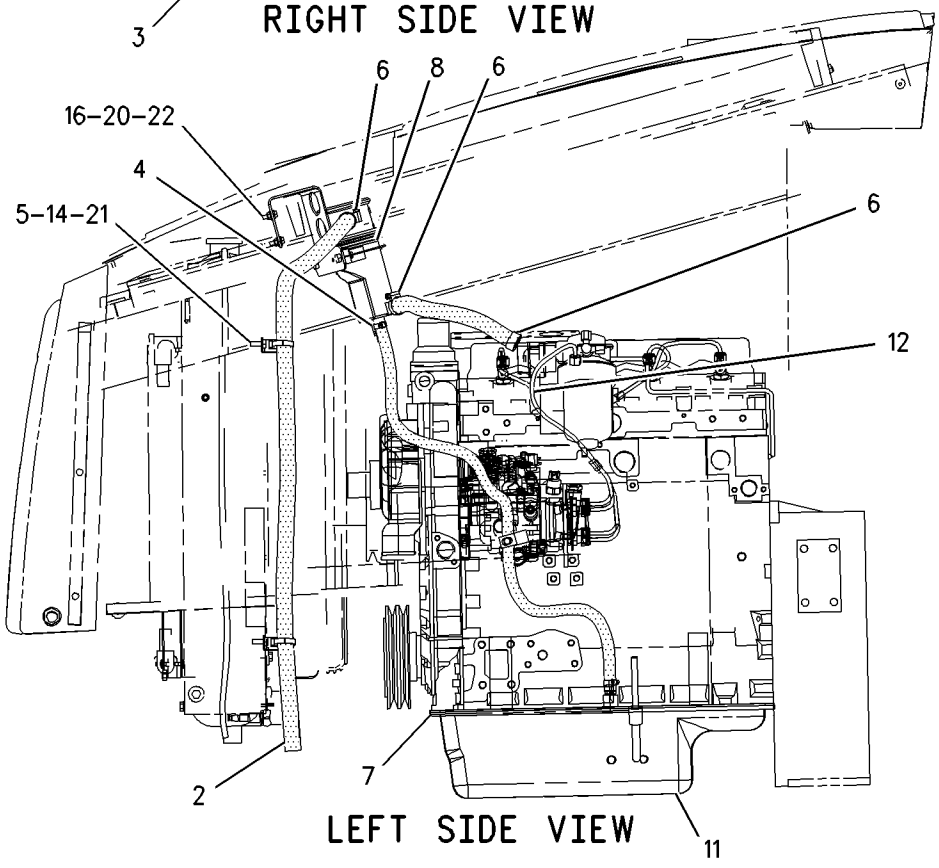

LEFT SIDE VIEW

GRAPHIC #1 **<END>** g00879881

LUBRICATION SYSTEM

202-5914 BREATHER GP

S/N: FDP18400-UP
PART OF 202-5912 BREATHER GP
AN ATTACHMENT

SMCS-1317 **i01897828**

NOTE	REF NO	GRAPHIC REF	PART NUMBER	QTY	PART NAME 1 2 3 4 5 6 (PRODUCT LEVEL)	SEE PAGE
E	1	1	**5P-1505**		HOSE (90CM CRANKCASE BREATHER SUMP)	
E	2	1	**136-1955**		HOSE (109CM CRANKCASE BREATHER OPEN)	
	3	1	**5D-1026**	2	CLAMP-HOSE	
	4	1	**6I-1497**	1	SEAL	
	5	1	**6S-8620**	2	CLAMP-HOSE	
	6	1	**7K-1181**	2	STRAP-CABLE	
	7	1	**8T-9402**	3	CLAMP-HOSE	
	8	1	**165-4021**	1	CANISTER AS-BREATHER	
		1	**185-6643**	1	SEAL (BREATHER)	
	9	1	**202-5909**	1	TUBE AS-OIL	
	9A	1	**6I-4079**	1	NUT	
	10	1	**218-2685**	1	HOSE (CRANKCASE BREATHER VALVE COVER)	
	11	1	**221-0750**	1	BRACKET AS	
M		1	**6V-9632**	2	NUT-WELD (M6X1 THD)	
	12	1	**132-5789**	2	CLIP	
	13	1	**6D-4246**	1	CLIP	
	14	1	**7X-0613**	2	WASHER-HARD (8.8X25.5X5MM THK)	
M	15	1	**8C-3798**	2	BOLT-LOCKING (M6X1X30)	
	16	1	**8T-4121**	1	WASHER-HARD (11X21X2.5MM THK)	
M	17	1	**8T-4137**	1	BOLT (M10X1.5X20MM)	
M	18	1	**8T-4189**	2	BOLT (M8X1.25X20MM)	
	19	1	**8T-4205**	2	WASHER-HARD (7.2X14.5X2MM THK)	
M	20	1	**8T-4908**	2	BOLT (M8X1.25X25MM)	

E-ORDER BY THE CENTIMETER
M-METRIC PART

202-5914 **BREATHER GP** *(contd.)* **i01897828**

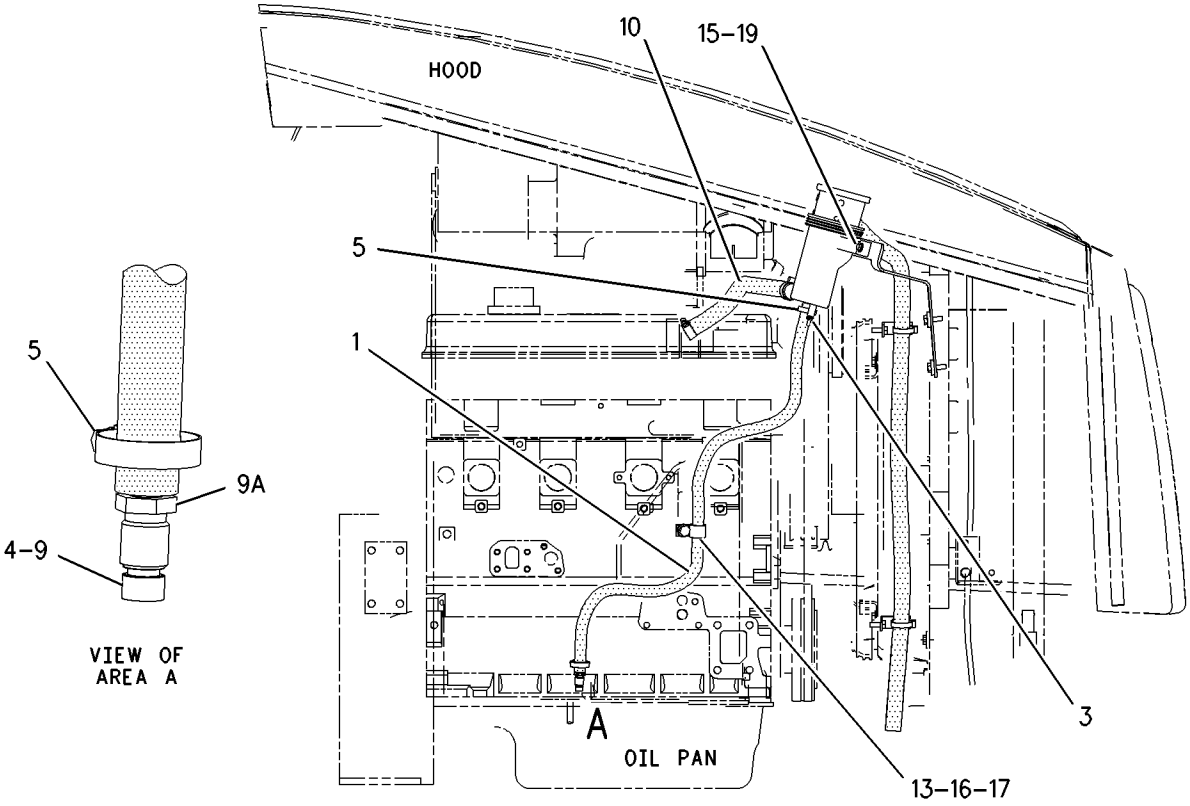

RIGHT SIDE VIEW

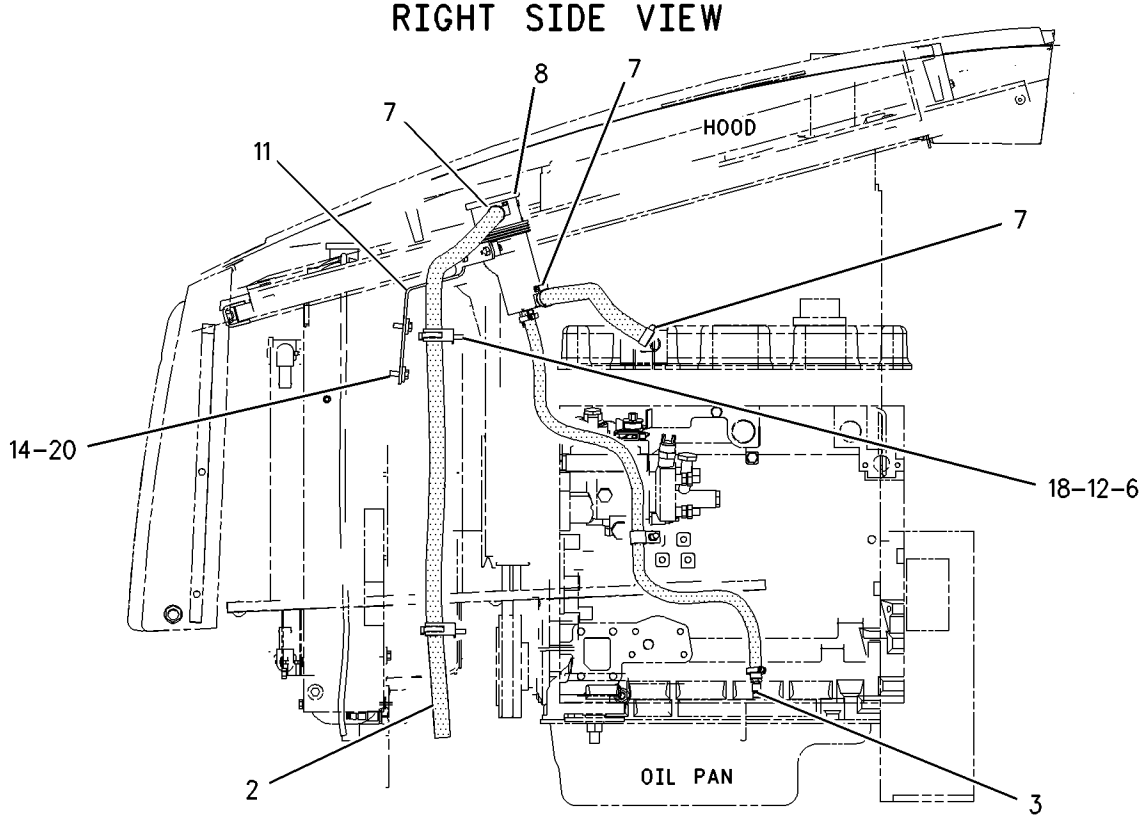

LEFT SIDE VIEW

GRAPHIC #1 **<END>** g00993980

LUBRICATION SYSTEM

239-5760 BREATHER GP

S/N: FDP18400-UP
PART OF 242-9946 BREATHER GP
AN ATTACHMENT

SMCS-1317 **i02001550**

NOTE	REF NO	GRAPHIC REF	PART NUMBER	QTY	PART NAME 1 2 3 4 5 6 (PRODUCT LEVEL)	SEE PAGE
	1	1	**6I-1497**	1	SEAL	
	2	1	**6S-8620**	2	CLAMP-HOSE	
	3	1	**7K-1181**	2	STRAP-CABLE	
	4	1	**8T-9402**	3	CLAMP-HOSE	
	5	1	**165-4021**	1	CANISTER AS-BREATHER	
		1	**185-6643**	1	SEAL (BREATHER)	
	6	1	**202-5909**	1	TUBE AS-OIL	
	7	1	**239-5765**	1	HOSE	
	8	1	**239-7421**	1	PLATE AS	
M		1	**6V-9632**	2	NUT-WELD (M6X1 THD)	
	9	1	**132-5789**	2	CLIP	
	10	1	**6D-4246**	1	CLIP	
	11	1	**7X-0613**	2	WASHER-HARD (8.8X25.5X5MM THK)	
M	12	1	**8C-3798**	2	BOLT-LOCKING (M6X1X30)	
	13	1	**8T-4121**	1	WASHER-HARD (11X21X2.5MM THK)	
M	14	1	**8T-4137**	1	BOLT (M10X1.5X20MM)	
	15	1	**8T-4205**	2	WASHER-HARD (7.2X14.5X2MM THK)	
M	16	1	**8T-4908**	2	BOLT (M8X1.25X25MM)	
E	17	1	**5P-1505**		HOSE (97CM)	
E	18	1	**136-1955**		HOSE (110CM)	

E-ORDER BY THE CENTIMETER
M-METRIC PART

239-5760 **BREATHER GP** ***(contd.)*** **i02001550**

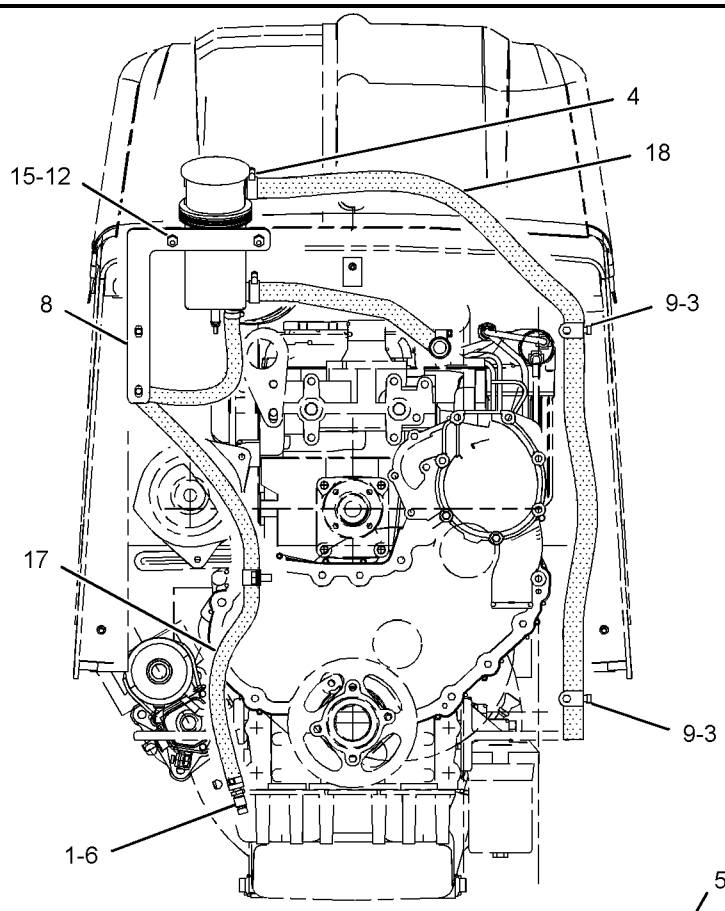

FRONT VIEW

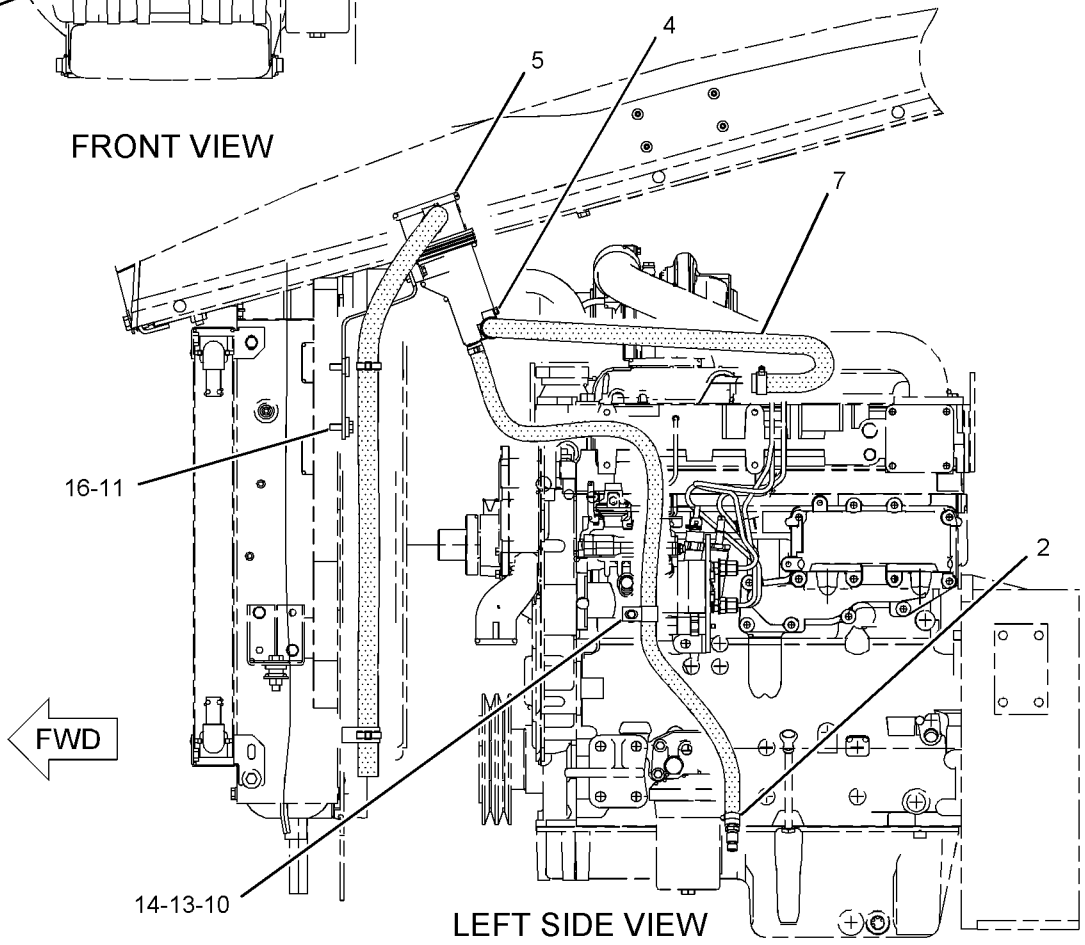

LEFT SIDE VIEW

GRAPHIC #1 **<END>** g01038235

LUBRICATION SYSTEM

242-9946 BREATHER GP–KIT

S/N: FDP18400-UP

FIELD INSTALLATION

SMCS-1317 **i02001562**

NOTE	PART NUMBER	QTY	PART NAME 1 2 3 4 5 6 (PRODUCT LEVEL)	SEE PAGE
Y	*239-5760*	1	BREATHER GP	44

Y-SEPARATE ILLUSTRATION

<END>

234-7510 FILLER GP-ENGINE OIL

S/N: FDP18400-UP

PART OF 214-6892 ENGINE AR

SMCS-1316 **i01991952**

NOTE	REF NO	GRAPHIC REF	PART NUMBER	QTY	PART NAME 1 2 3 4 5 6 (PRODUCT LEVEL)	SEE PAGE
	1	1	**6I-1497**	1	SEAL	
	2	1	**7W-2326**	1	FILTER AS-ENGINE OIL	
	3	1	**9M-7958**	1	CLAMP-HOSE	
	4	1	**127-4471**	1	CLAMP-HOSE	
	5	1	**234-7509**	1	TUBE AS	
		1	**6I-4079**	1	NUT	
	6	1	**234-7954**	1	HOSE (OIL FILLER)	
	7	1	**234-8815**	1	TUBE AS	
	8	1	**235-2491**	1	BRACKET AS	
M		1	**8T-3490**	1	NUT-WELD (M10X1.5-THD)	
	9	1	**236-6651**	1	CAP AS (ENGINE OIL FILLER)	
	10	1	**236-6652**	1	GAUGE-OIL LEVEL (DIPSTICK)	
	11	1	**239-3683**	1	SUPPORT	
	12	1	**147-0385**	2	CLIP	
	13	1	**7D-7233**	1	CLIP	
	14	1	**7X-7729**	7	WASHER (11X25X3-MM THK)	
M	15	1	**8T-4133**	1	NUT (M10X1.5-THD)	
M	16	1	**8T-4136**	4	BOLT (M10X1.5X25-MM)	
M	17	1	**8T-4195**	2	BOLT (M10X1.5X30-MM)	

M-METRIC PART

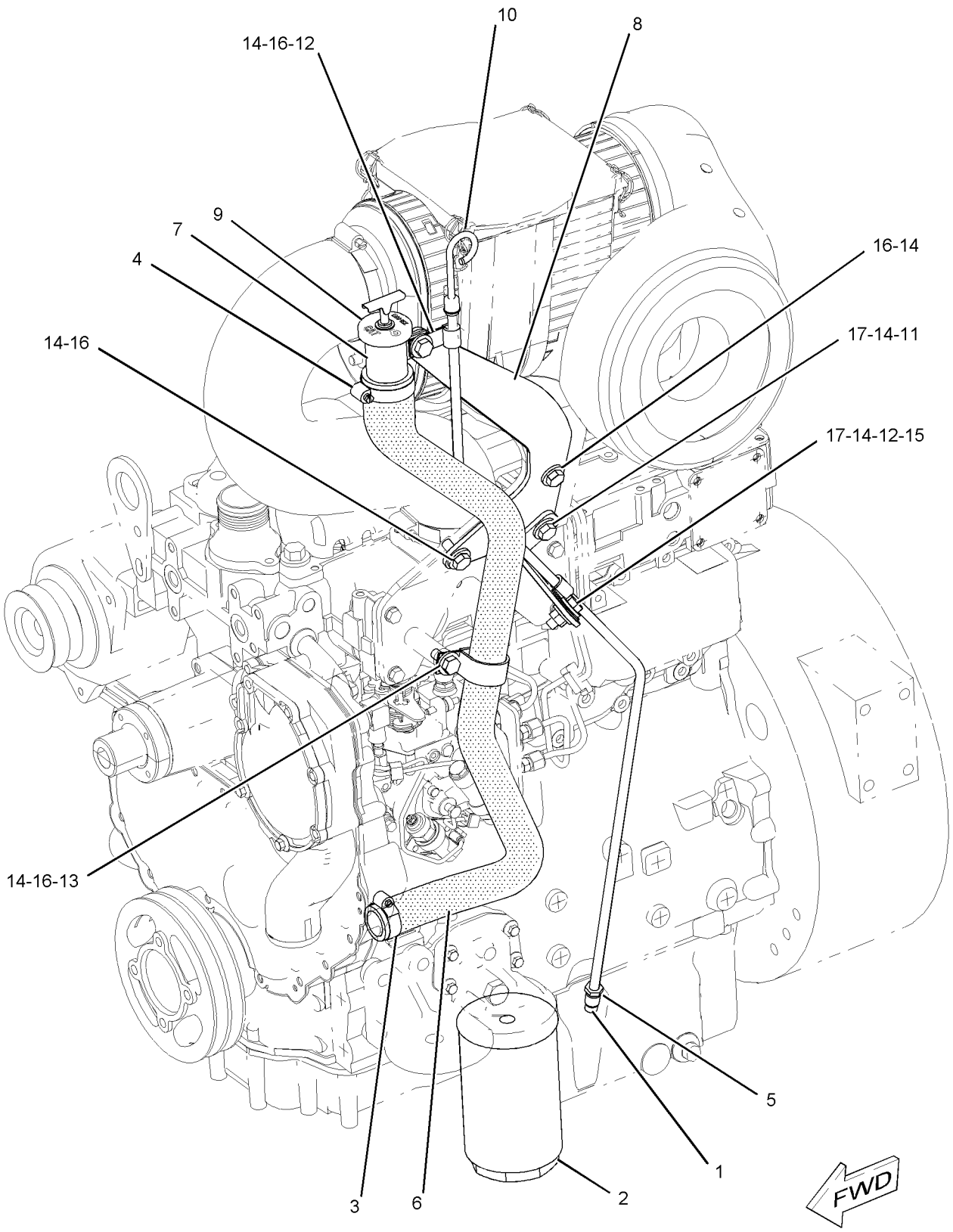

GRAPHIC #1

<END>

g01042658

LUBRICATION SYSTEM

230-7578 PUMP GP-ENGINE OIL

S/N: CRS1-UP

PART OF 234-3060 ENGINE AR-PRIMARY

SMCS-1304, 1315 **i01862499**

NOTE	REF NO	GRAPHIC REF	PART NUMBER	QTY	PART NAME 1 2 3 4 5 6 (PRODUCT LEVEL)	SEE PAGE
	1	1	**100-4461**	5	BOLT (M10X50MM)	
	2	1	**225-8329**	1	PUMP AS-ENGINE OIL	

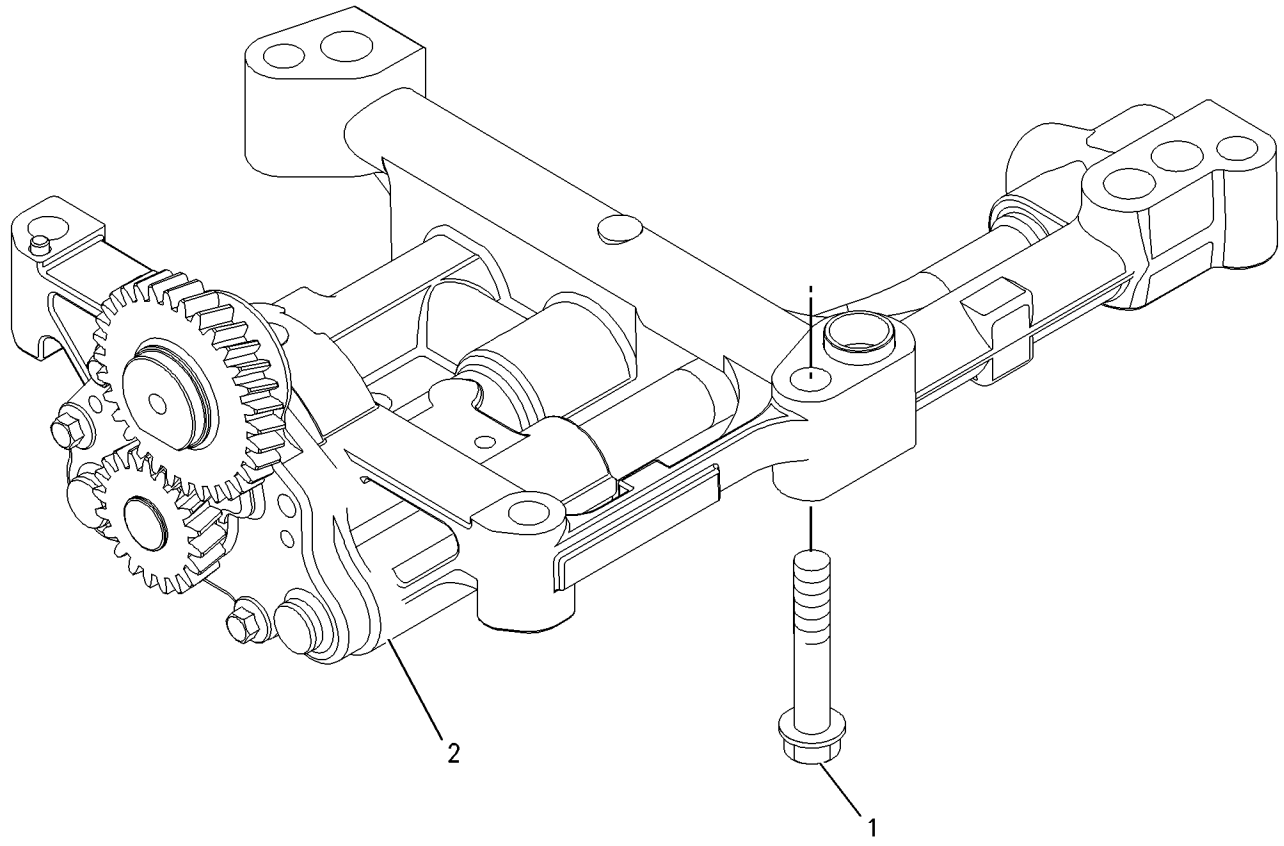

GRAPHIC #1 **<END>** g00911993

231-0033 CONNECTION GP-WATER

S/N: CRS1-UP

PART OF 234-3060 ENGINE AR-PRIMARY

SMCS-1380 **i01863003**

NOTE	REF NO	GRAPHIC REF	PART NUMBER	QTY	PART NAME 1 2 3 4 5 6 (PRODUCT LEVEL)	SEE PAGE
	1	1	**6I-0260**	2	BOLT (M8X1.25X25MM)	
	2	1	**231-0030**	1	CONNECTION AS	
	2A	1	**225-6908**	1	REGULATOR-WATER TEMPERATURE	
	2B	1	**225-6909**	1	SEAL-O-RING (WATER TEMPERATURE REGULATOR)	

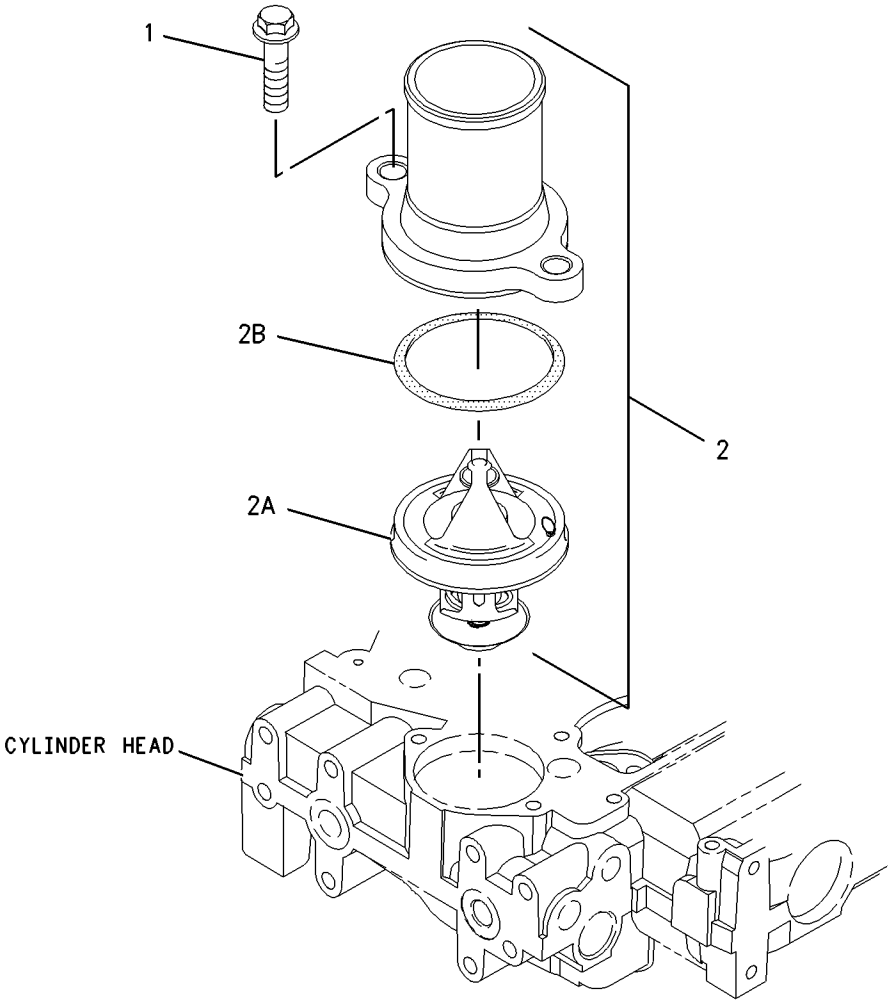

GRAPHIC #1 **<END>** g00950832

232-6177 COOLER GP-FLTR BASE & ENG OIL

S/N: CRS1-UP

PART OF 234-3060 ENGINE AR-PRIMARY

SMCS-1306, 1378 **i02016032**

NOTE	REF NO	GRAPHIC REF	PART NUMBER	QTY	PART NAME 1 2 3 4 5 6 (PRODUCT LEVEL)	SEE PAGE
	1	1	**6I-0572**	4	BOLT (M8X1.25X20-MM)	
	2	1	**6I-0645**	4	BOLT (M8X1.25X25-MM)	
	3	1	**199-9267**	1	SEAL-O-RING	
	4	1	**225-7941**	1	PLUG (ENGINE OIL FILTER LINES)	
	5	1	**225-7944**	2	GASKET	
	6	1	**230-8279**	1	HEAD AS-OIL FILTER	
	6A	1	**118-9145**	1	CONNECTOR	
	7	1	**232-3722**	1	COOLER GP-ENGINE OIL	
	7A	1	**6I-0260**	10	BOLT (M8X1.25X25-MM)	
	7B	1	**6I-4374**	3	BOLT	
M	7C	1	**101-3895**	4	BOLT (M8X1.25X35-MM)	
	7D	1	**225-6817**	1	COOLER-OIL	
	7E	1	**225-6818**	2	SEAL	
	7F	1	**225-6820**	1	GASKET	
	8	1	**232-3751**	1	PLATE	
	9	1	**232-3861**	1	PLUG	
	10	1	**8T-7876**	1	SEAL-O-RING	

M-METRIC PART

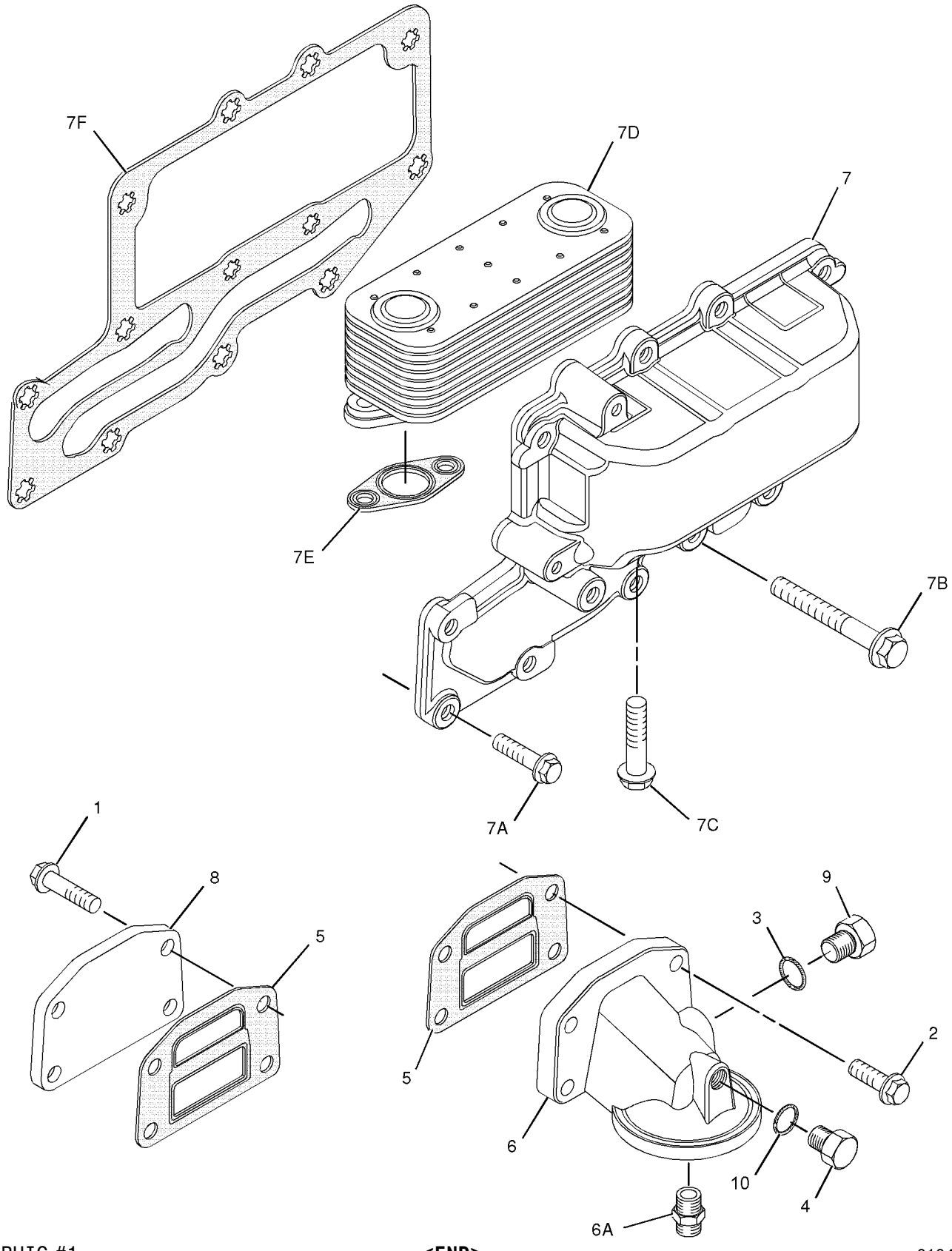

GRAPHIC #1 **<END>** g01042316

COOLING SYSTEM

202-5773 COOLING AR

S/N: FDP18400-UP
STANDARD SHIFT, WITHOUT AIR CONDITIONING
AN ATTACHMENT

SMCS-1350 **i02019170**

NOTE	PART NUMBER	QTY	PART NAME 1 2 3 4 5 6 (PRODUCT LEVEL)	SEE PAGE
Y	*145-6713*	1	FAN GP-SUCTION	55
Y	*147-1557*	1	RADIATOR & HYD OIL COOLER GP	67
	131-1424	1	SEAL	
	170-6308	1	TACHOMETER AS	
	4B-2043	6	NUT (8-32-THD)	
	9B-7233	6	LOCKWASHER	
	122-7137	1	LAMP (12-VOLT)	
	7W-3896	1	V-BELT SET (INCLUDES 2 BELTS)	

Y-SEPARATE ILLUSTRATION

<END>

202-5774 COOLING AR

S/N: FDP18400-UP
AUTOSHIFT, WITHOUT AIR CONDITIONING, HIGH AMBIENT
AN ATTACHMENT

SMCS-1350 **i02019176**

NOTE	PART NUMBER	QTY	PART NAME 1 2 3 4 5 6 (PRODUCT LEVEL)	SEE PAGE
Y	*147-1559*	1	FAN GP-SUCTION	56
Y	*147-1557*	1	RADIATOR & HYD OIL COOLER GP	67
	131-1424	1	SEAL	
	170-6308	1	TACHOMETER AS	
	4B-2043	6	NUT (8-32-THD)	
	9B-7233	6	LOCKWASHER	
	122-7137	1	LAMP (12-VOLT)	
	4N-8597	1	V-BELT SET (INCLUDES 2 BELTS)	

Y-SEPARATE ILLUSTRATION

<END>

202-5775 COOLING AR

S/N: FDP18400-UP
AUTOSHIFT, AIR CONDITIONING
AN ATTACHMENT

SMCS-1350 **i02019175**

NOTE	PART NUMBER	QTY	PART NAME 1 2 3 4 5 6 (PRODUCT LEVEL)	SEE PAGE
Y	*147-1560*	1	FAN GP-SUCTION	57
Y	*147-1557*	1	RADIATOR & HYD OIL COOLER GP	67
Y	*202-6107*	1	WIRING GP-AIR CONDITIONER	141
	1N-3743	1	V-BELT (REFRIGERANT COMPRESSOR)	
	4N-8597	1	V-BELT SET (INCLUDES 2 BELTS)	

Y-SEPARATE ILLUSTRATION

<END>

COOLING SYSTEM

214-6894 COOLING AR

S/N: FDP18400-UP

AN ATTACHMENT

SMCS-1350 **i02019244**

NOTE	PART NUMBER	QTY	PART NAME 1 2 3 4 5 6 (PRODUCT LEVEL)	SEE PAGE
Y	*145-6713*	1	FAN GP-SUCTION	55
Y	*234-7836*	1	RADIATOR & HYD OIL COOLER GP	70
	7W-3896	1	V-BELT SET (INCLUDES 2 BELTS)	

Y-SEPARATE ILLUSTRATION

<END>

214-6895 COOLING AR

S/N: FDP18400-UP

AN ATTACHMENT

SMCS-1350 **i02012814**

NOTE	PART NUMBER	QTY	PART NAME 1 2 3 4 5 6 (PRODUCT LEVEL)	SEE PAGE
Y	*147-1559*	1	FAN GP-SUCTION	56
Y	*236-5807*	1	RADIATOR & HYD OIL COOLER GP	72
	4N-8597	1	V-BELT SET (INCLUDES 2 BELTS)	

Y-SEPARATE ILLUSTRATION

<END>

COOLING SYSTEM

145-6713 FAN GP-SUCTION

S/N: FDP18400-UP
PART OF 239-5565, 239-5567 CAB AR, 239-5563, 239-5564 CANOPY AR, 202-5773, 214-6894 COOLING AR
AN ATTACHMENT

SMCS-1356, 1360 **i01644668**

NOTE	REF NO	GRAPHIC REF	PART NUMBER	QTY	PART NAME 1 2 3 4 5 6 (PRODUCT LEVEL)	SEE PAGE
	1	1	**5P-4116**	4	WASHER-HARD (8.8X20.5X2MM THK)	
M	2	1	**8T-4908**	6	BOLT (M8X1.25X25MM)	
	3	1	**127-6980**	2	GUARD AS-FAN	
	4	1	**130-3880**	1	PULLEY-FAN DRIVE	
	5	1	**142-3388**	1	SPACER-FAN	
	6	1	**142-3391**	1	SPIDER AS	
M	7	1	**153-3061**	4	BOLT-HEX HEAD (M8X1.25X130MM)	
	8	1	**8T-4224**	6	WASHER-HARD (8.8X16X2MM THK)	

M-METRIC PART

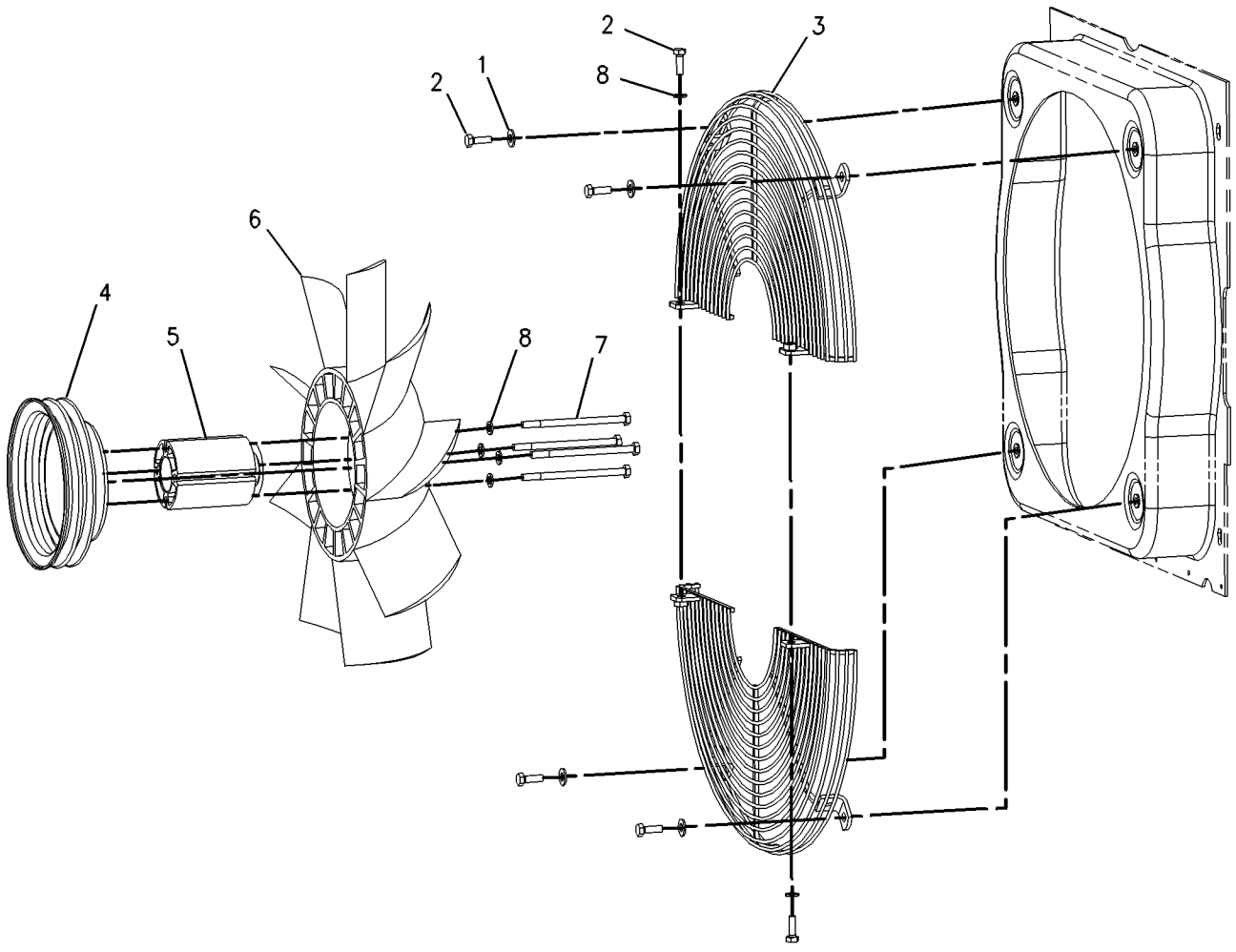

GRAPHIC #1 **<END>** g00367570

COOLING SYSTEM

147-1559 FAN GP-SUCTION

S/N: FDP18400-UP

PART OF 239-5566, 239-5568 CAB AR, 202-5774, 214-6895 COOLING AR

AN ATTACHMENT

SMCS-1356, 1360 **i01644669**

NOTE	REF NO	GRAPHIC REF	PART NUMBER	QTY	PART NAME 1 2 3 4 5 6 (PRODUCT LEVEL)	SEE PAGE
	1	1	**5P-4116**	4	WASHER-HARD (8.8X20.5X2MM THK)	
M	2	1	**8T-4908**	6	BOLT (M8X1.25X25MM)	
	3	1	**127-6980**	2	GUARD AS-FAN	
	4	1	**130-3879**	1	PULLEY-FAN DRIVE	
	5	1	**142-3388**	1	SPACER-FAN	
	6	1	**142-3391**	1	SPIDER AS	
M	7	1	**153-3061**	4	BOLT-HEX HEAD (M8X1.25X130MM)	
	8	1	**8T-4224**	6	WASHER-HARD (8.8X16X2MM THK)	

M-METRIC PART

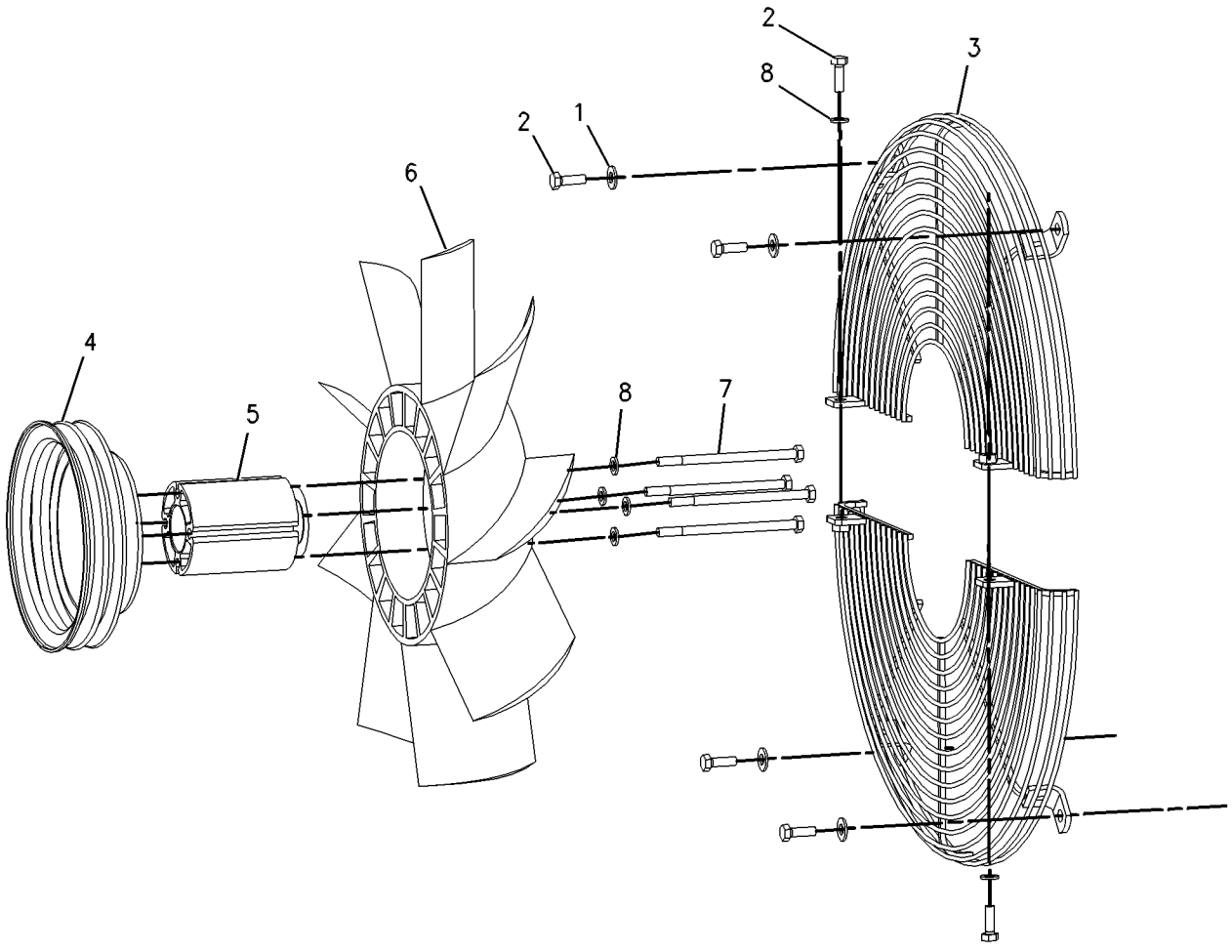

GRAPHIC #1 **<END>** g00448372

COOLING SYSTEM

147-1560 FAN GP-SUCTION

S/N: FDP18400-UP
PART OF 202-5775 COOLING AR
AN ATTACHMENT

SMCS-1356, 1360 **i01644673**

NOTE	REF NO	GRAPHIC REF	PART NUMBER	QTY	PART NAME 1 2 3 4 5 6 (PRODUCT LEVEL)	SEE PAGE
	1	1	**5P-4116**	4	WASHER-HARD (8.8X20.5X2MM THK)	
M	2	1	**8T-4908**	6	BOLT (M8X1.25X25MM)	
	3	1	**127-6980**	2	GUARD AS-FAN	
	4	1	**130-3879**	1	PULLEY-FAN DRIVE	
	5	1	**130-3881**	1	PULLEY-FAN	
	6	1	**142-3388**	1	SPACER-FAN	
	7	1	**142-3391**	1	SPIDER AS	
M	8	1	**153-3061**	4	BOLT-HEX HEAD (M8X1.25X130MM)	
	9	1	**8T-4224**	6	WASHER-HARD (8.8X16X2MM THK)	

M-METRIC PART

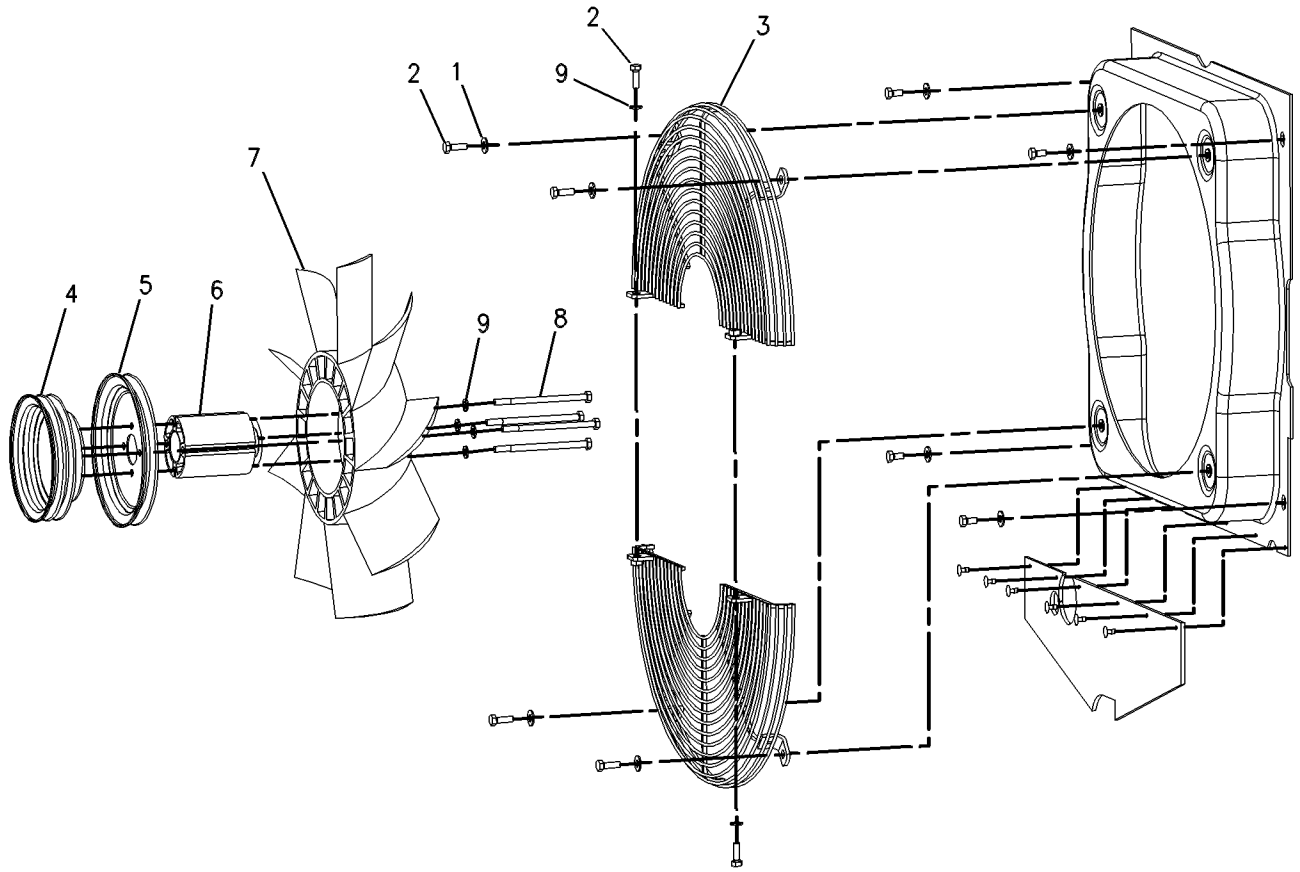

GRAPHIC #1 **<END>** g00367557

198-9723 FITTING GP-HEATER & AIR COND

S/N: FDP18400-UP

PART OF 202-5777, 244-5402 AIR CONDITIONER AR, 239-5565, 239-5566, 239-5567, 239-5568 CAB AR

AN ATTACHMENT

SMCS-7309 **i01519184**

NOTE	REF NO	GRAPHIC REF	PART NUMBER	QTY	PART NAME 1 2 3 4 5 6 (PRODUCT LEVEL)	SEE PAGE
	1	1	**6B-4661**	1	BUSHING-REDUCER	
	2	1	**8F-8151**	1	VALVE-SHUTOFF	
	3	1	**004-6557**	1	BUSHING-REDUCER	
	4	1	**004-6810**	1	ELBOW	

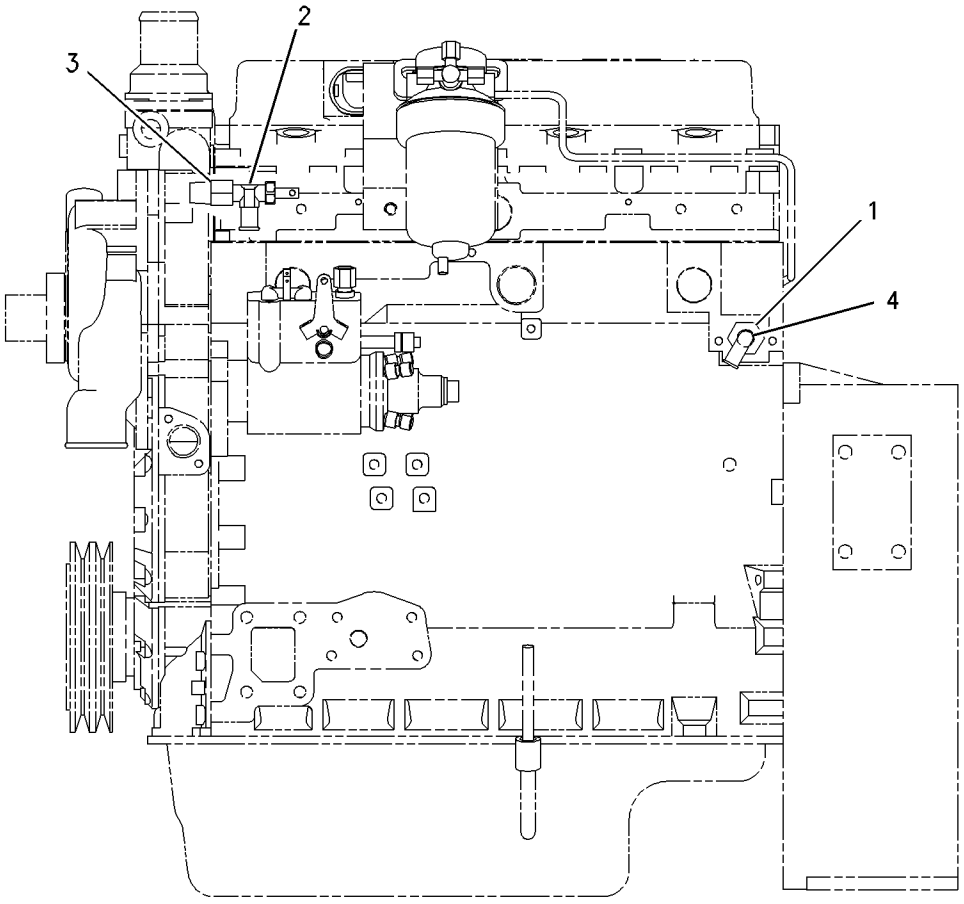

GRAPHIC #1 **<END>** g00772489

143-0786 LINES GP-POWER TRAIN COOLER

S/N: FDP18400-UP

PART OF 192-4661, 192-4662, 192-4663, 192-4665, 192-4666, 198-4095, 214-6955, 214-6956, 214-6958, 214-6959, 214-6976, 214-6977 POWER TRAIN AR AN ATTACHMENT

SMCS-1375, 3016 **i01433867**

NOTE	REF NO	GRAPHIC REF	PART NUMBER	QTY	PART NAME 1 2 3 4 5 6 (PRODUCT LEVEL)	SEE PAGE
B	1	1	**7K-1181**	2	STRAP-CABLE	
	2	1	**118-7286**	1	BRACKET AS	
	3	1	**130-9984**	2	CLIP (SLOT)	
	4	1	**138-6904**	1	HOSE AS	
	5	1	**138-6913**	1	HOSE AS	
	6	1	**159-0186**	2	CLAMP	
	7	1	*148-8339*	1	CONNECTOR GP	
		1	**6V-8716**	1	CONNECTOR	
		1	**6V-9746**	1	SEAL-O-RING (18.94MM ID)	
		1	**7M-8485**	1	SEAL-O-RING (29.74MM ID)	
	8	1	*148-8360*	1	ELBOW GP	
		1	**6V-9182**	1	ELBOW	
		1	**6V-9746**	1	SEAL-O-RING (18.94MM ID)	
		1	**7M-8485**	1	SEAL-O-RING (29.74MM ID)	
	9	1	**5P-4116**	2	WASHER-HARD (8.8X20.5X2MM THK)	
	10	1	**8T-4121**	2	WASHER-HARD (11X21X2.5MM THK)	
M	11	1	**8T-4136**	1	BOLT (M10X1.5X25MM)	
M	12	1	**8T-4137**	1	BOLT (M10X1.5X20MM)	
M	13	1	**8T-4189**	2	BOLT (M8X1.25X20MM)	
M	14	1	**8T-4192**	2	BOLT (M12X1.75X25MM)	
	15	1	**8T-4223**	2	WASHER-HARD (13.5X25.5X3MM THK)	
	16	1	**8T-7529**	3	CLIP (SLOT)	

B-USE AS REQUIRED
M-METRIC PART

143-0786 **LINES GP-POWER TRAIN COOLER** ***(contd.)*** **i01433867**

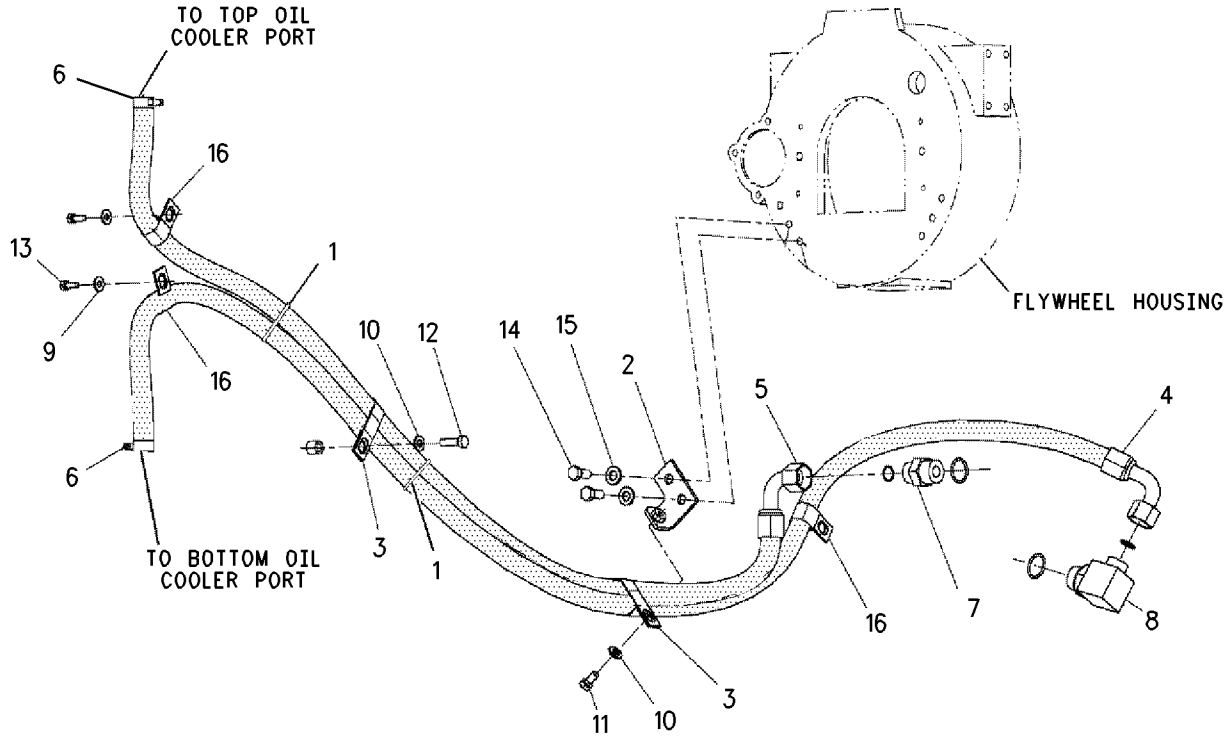

GRAPHIC #1 **<END>** g00751473

COOLING SYSTEM

143-0789 LINES GP-POWER TRAIN COOLER

S/N: FDP18400-UP
POWER SHIFT
PART OF 192-4659, 192-4664, 214-6957, 214-6978 POWER TRAIN AR
AN ATTACHMENT

SMCS-1375, 3016 **i01780806**

NOTE	REF NO	GRAPHIC REF	PART NUMBER	QTY	PART NAME 1 2 3 4 5 6 (PRODUCT LEVEL)	SEE PAGE
E	1	1	**136-1955**	2	HOSE (77CM)	
	2	1	**7K-1181**	1	STRAP-CABLE	
	3	1	**118-7286**	1	BRACKET AS	
	4	1	**130-9984**	2	CLIP	
	5	1	**138-6914**	1	HOSE AS	
	6	1	**150-3370**	1	REGULATOR AS-TMSN TEMPERATURE	
		1	**154-0875**	1	SEAL-O-RING	
	7	1	**150-3374**	1	MANIFOLD	
	8	1	**153-3761**	1	HOSE AS	
	9	1	**159-0186**	6	CLAMP	
	10	1	*148-8339*	1	CONNECTOR GP	
		1	**6V-8716**	1	CONNECTOR	
		1	**6V-9746**	1	SEAL-O-RING	
		1	**7M-8485**	1	SEAL-O-RING	
	11	1	*148-8360*	1	ELBOW GP	
		1	**6V-9182**	1	ELBOW	
		1	**6V-9746**	1	SEAL-O-RING	
		1	**7M-8485**	1	SEAL-O-RING	
	12	1	*153-9909*	1	FITTING AS	
		1	**3E-4075**	1	FITTING	
		1	**3D-2824**	1	SEAL-O-RING	
	13	1	*153-9910*	1	ELBOW AS	
		1	**032-8487**	1	ELBOW	
		1	**3D-2824**	1	SEAL-O-RING	
	14	1	*153-9911*	2	FITTING AS	
					(EACH INCLUDES)	
		1	**033-6783**	1	FITTING	
		1	**3D-2824**	1	SEAL-O-RING	
	15	1	**5P-4116**	2	WASHER-HARD (8.8X20.5X2MM THK)	
	16	1	**7X-7729**	4	WASHER (11X25X3MM THK)	
M	17	1	**8T-4136**	1	BOLT (M10X1.5X25MM)	
M	18	1	**8T-4137**	1	BOLT (M10X1.5X20MM)	
M	19	1	**8T-4189**	2	BOLT (M8X1.25X20MM)	
M	20	1	**8T-4192**	2	BOLT (M12X1.75X25MM)	
	21	1	**8T-4223**	2	WASHER-HARD (13.5X25.5X3MM THK)	
M	22	1	**8T-6466**	2	BOLT (M10X1.50X60MM)	
	23	1	**8T-7529**	3	CLIP (SLOT)	

E-ORDER BY THE CENTIMETER
M-METRIC PART

143-0789 **LINES GP-POWER TRAIN COOLER** *(contd.)* **i01780806**

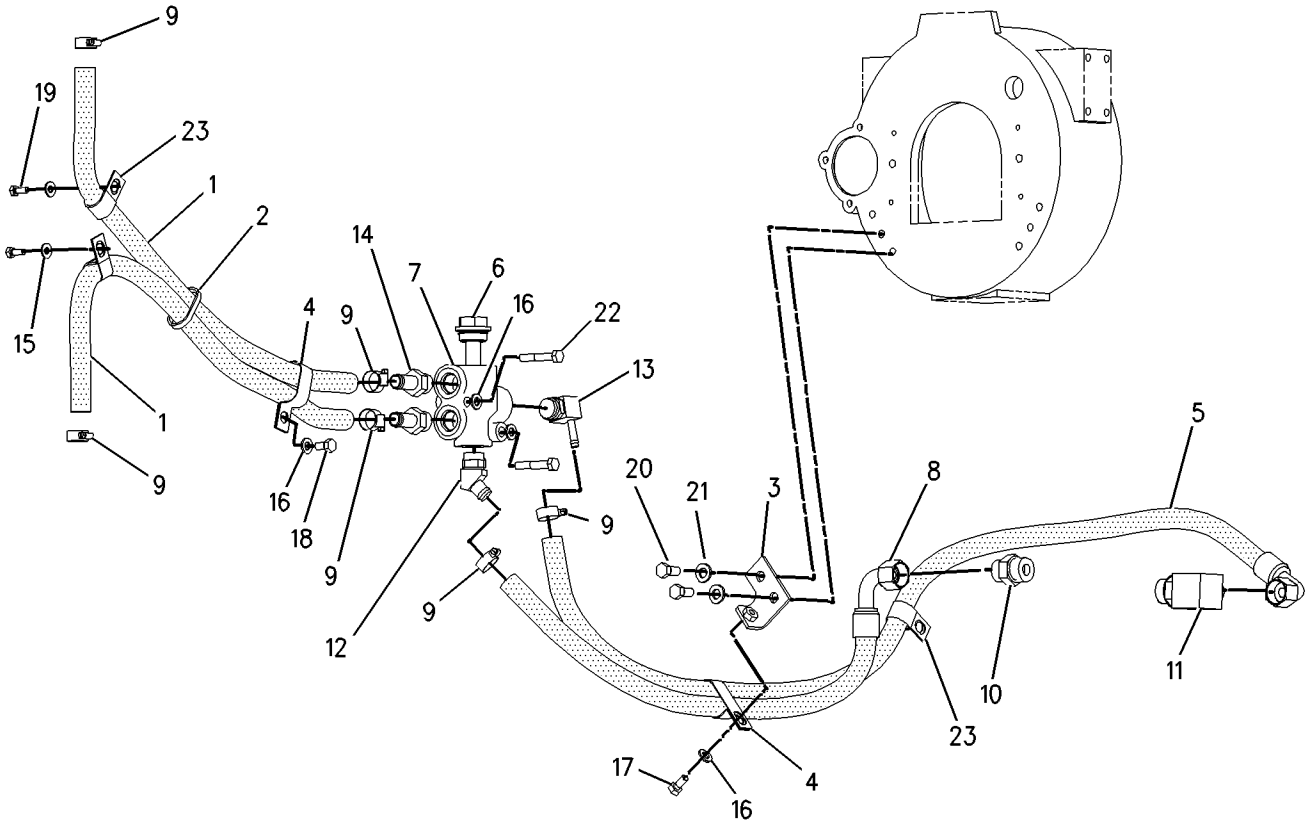

GRAPHIC #1 **<END>** g00667054

COOLING SYSTEM

230-7355 PUMP GP-WATER

S/N: CRS1-UP

PART OF 234-3060 ENGINE AR-PRIMARY

SMCS-1361 **i01862494**

NOTE	REF NO	GRAPHIC REF	PART NUMBER	QTY	PART NAME 1 2 3 4 5 6 (PRODUCT LEVEL)	SEE PAGE
	1	1	**6I-0217**	2	BOLT (M8X1.25X20MM)	
	2	1	**6I-0254**	2	BOLT (M8X1.25X30MM)	
	3	1	**100-3751**	5	BOLT (M8X1.25X65MM)	
	4	1	**113-8129**	2	BOLT (M8X75MM)	
	5	1	**225-7741**	1	CONNECTION AS	
	6	1	**225-7738**	1	SEAL-O-RING	
	7	1	**225-7739**	1	SEAL-O-RING	
	8	1	**225-8016**	1	PUMP GP-WATER	
	9	1	**225-8019**	1	GASKET	

230-7355 **PUMP GP-WATER** ***(contd.)*** **i01862494**

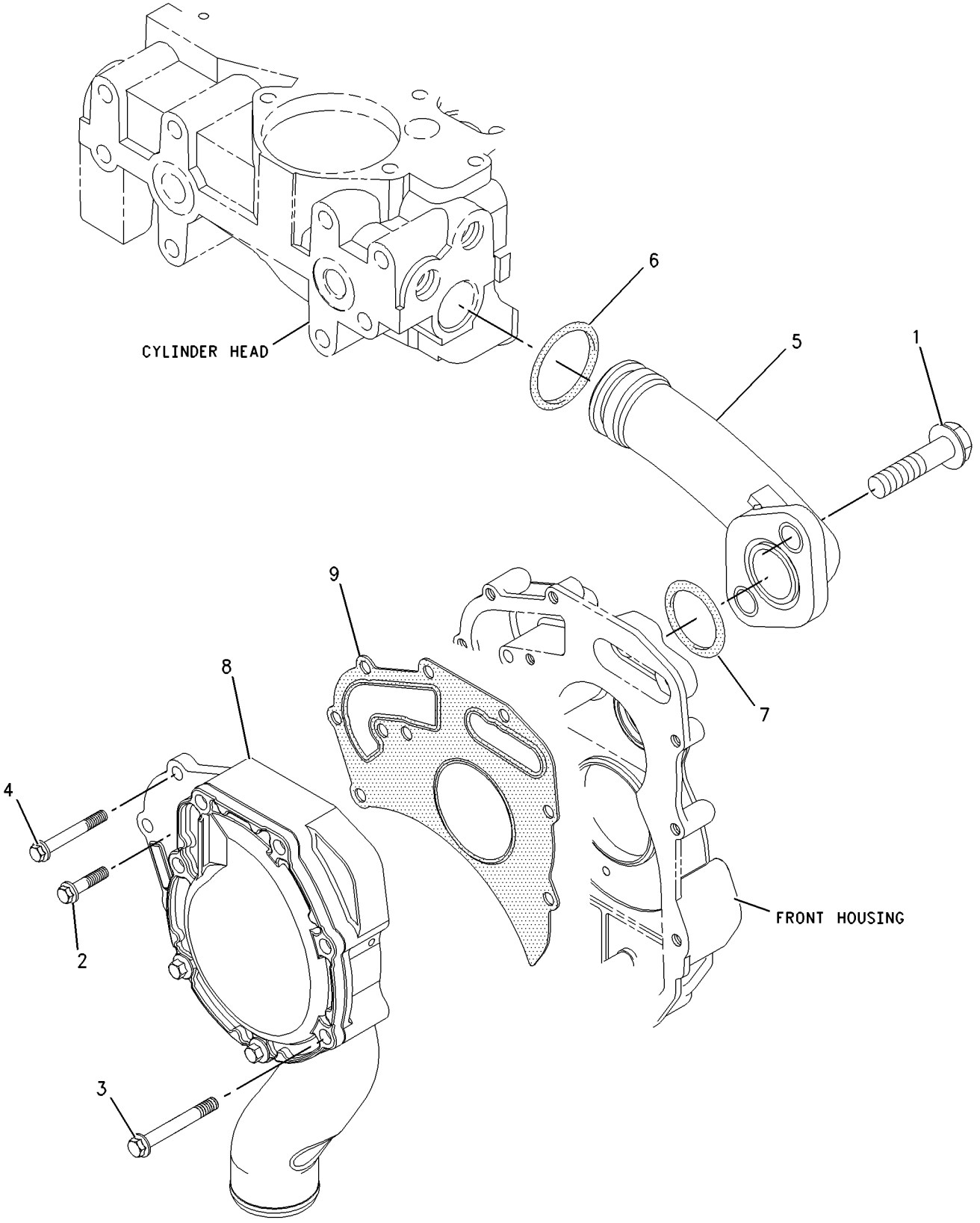

GRAPHIC #1 **<END>** g00912411

234-7834 RADIATOR & FAN GP

S/N: FDP18400-UP

PART OF 234-7836 RADIATOR & HYD OIL COOLER GP

AN ATTACHMENT

SMCS-1353, 1356 **i02015756**

NOTE	REF NO	GRAPHIC REF	PART NUMBER	QTY	PART NAME 1 2 3 4 5 6 (PRODUCT LEVEL)	SEE PAGE
C	1	1	**123-4065**	6	RIVET-POP	
C	2	1	**141-7512**	1	BAFFLE	
	3	1	**180-2441**	1	SHROUD AS	
Y	4	1	**235-1974**	1	RADIATOR & HYD OIL COOLER GP	71
	5	1	**7X-0579**	4	WASHER-HARD (8.8X25.5X2-MM THK)	
M	6	1	**8T-4200**	4	BOLT (M8X1.25X16-MM)	

C-CHANGE FROM PREVIOUS TYPE
M-METRIC PART
Y-SEPARATE ILLUSTRATION

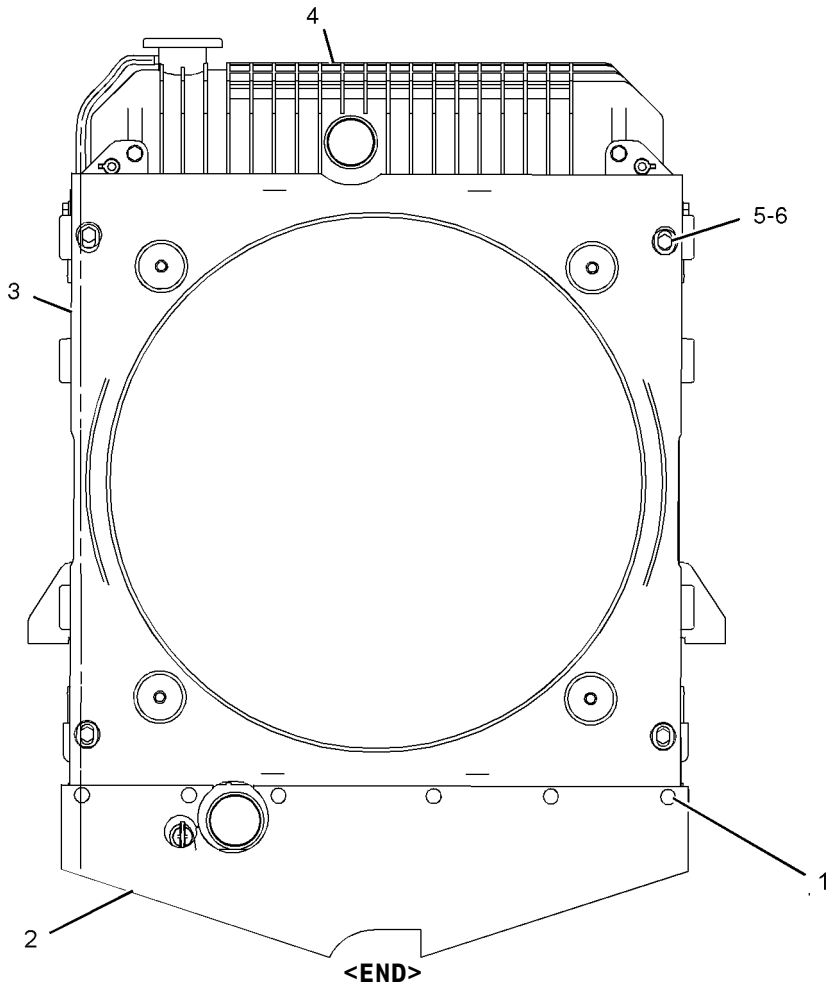

GRAPHIC #1 g01030668

<END>

236-5808 RADIATOR & FAN GP

S/N: FDP18400-UP
PART OF 236-5807 RADIATOR & HYD OIL COOLER GP
AN ATTACHMENT

SMCS-1353, 1356 **i02001591**

NOTE	REF NO	GRAPHIC REF	PART NUMBER	QTY	PART NAME 1 2 3 4 5 6 (PRODUCT LEVEL)	SEE PAGE
	1	1	**123-4065**	6	RIVET-POP	
	2	1	**141-7512**	1	BAFFLE	
	3	1	**180-2441**	1	SHROUD AS	
		1	**214-3520**	4	NUT-SHOULDER	
Y	4	1	**236-5809**	1	RADIATOR & HYD OIL COOLER GP	74
	5	1	**7X-0579**	4	WASHER-HARD (8.8X25.5X2MM THK)	
M	6	1	**8T-4200**	4	BOLT (M8X1.25X16MM)	

M-METRIC PART
Y-SEPARATE ILLUSTRATION

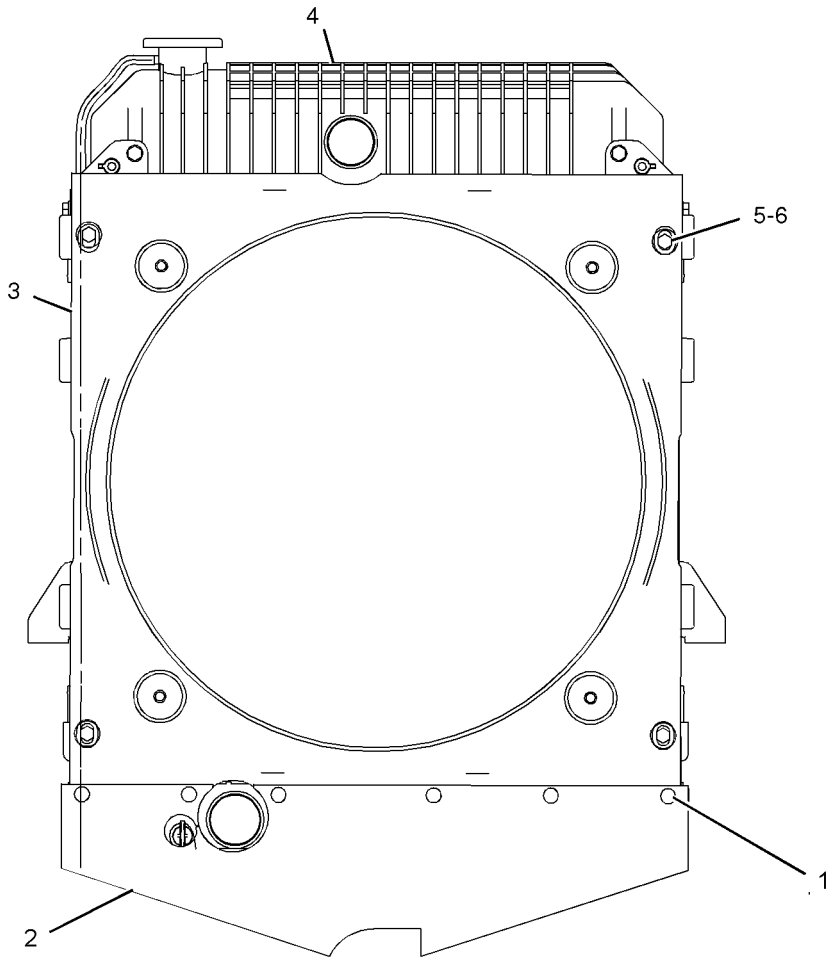

GRAPHIC #1 **<END>** g01030773

147-1557 RADIATOR & HYD OIL COOLER GP

S/N: FDP18400-UP
PART OF 202-5773, 202-5774, 202-5775 COOLING AR
AN ATTACHMENT

SMCS-1353, 1374 **i01675978**

NOTE	REF NO	GRAPHIC REF	PART NUMBER	QTY	PART NAME 1 2 3 4 5 6 (PRODUCT LEVEL)	SEE PAGE
D	1	1	**5P-6129**		TUBE (0.1M)	
	2	1	**2W-9710**	2	MOUNT AS	
	3	1	**6N-6984**	2	MOUNT	
	4	1	**140-3637**	1	HOSE-RADIATOR	
	5	1	**140-3638**	1	HOSE-RADIATOR	
	6	1	**140-3640**	2	PLATE	
Y	7	1	*154-3799*	1	RADIATOR & HYD OIL COOLER GP	69
	8	1	**214-7457**	2	CLAMP-T'BOLT	
	9	1	**214-7458**	2	CLAMP-T'BOLT	
	10	1	**7X-0603**	2	WASHER-HARD (9.9X35X2.5MM THK)	
M	11	1	**8T-4133**	2	NUT (M10X1.5 THD)	
M	12	1	**8T-4186**	2	BOLT (M10X1.5X40MM)	
	13	1	**8T-4222**	4	WASHER-PLATED (11X32X2.5MM THK)	
M	14	1	**8T-4908**	2	BOLT (M8X1.25X25MM)	

D-ORDER BY THE METER
M-METRIC PART
Y-SEPARATE ILLUSTRATION

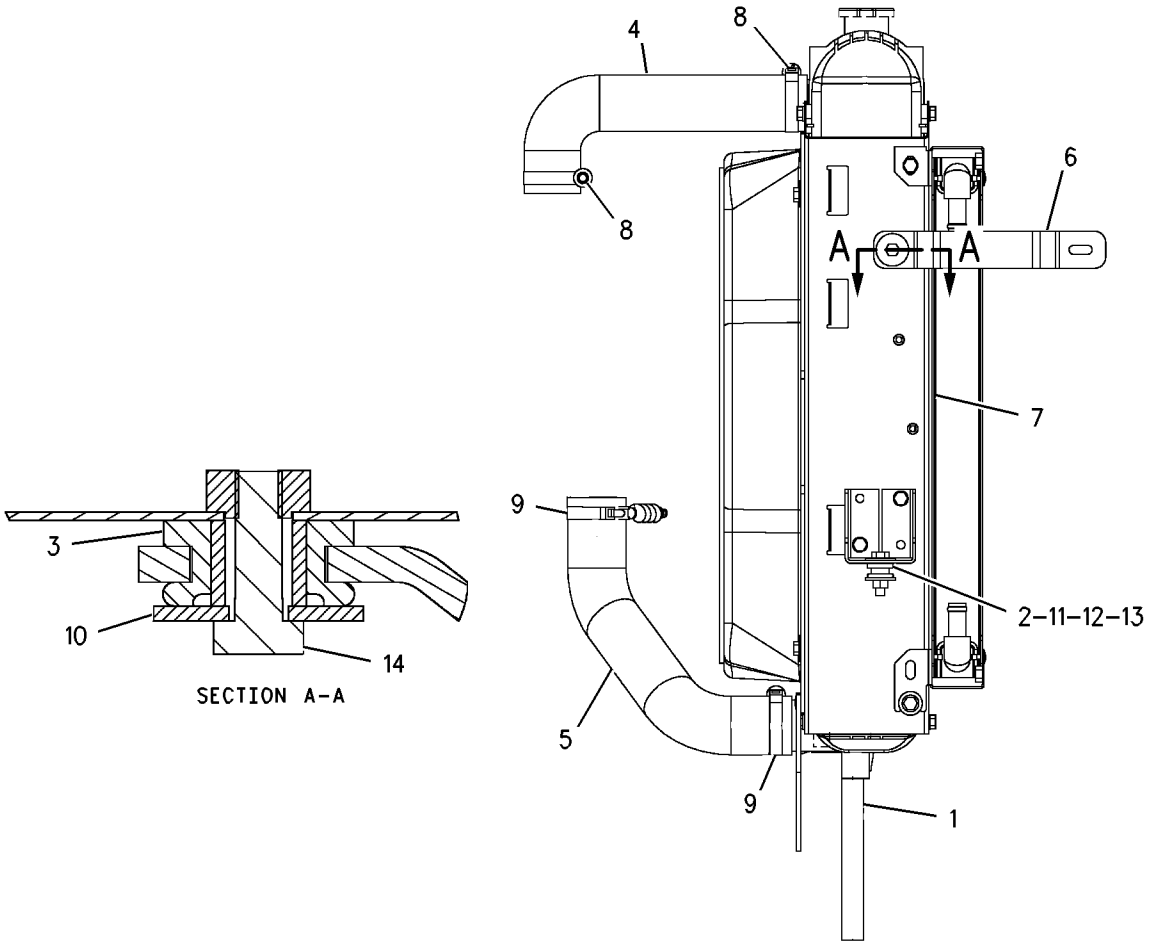

GRAPHIC #1 **<END>** g00856788

COOLING SYSTEM

147-1558 RADIATOR & HYD OIL COOLER GP

S/N: FDP18400-UP
PART OF 154-3799 RADIATOR & HYD OIL COOLER GP
AN ATTACHMENT

SMCS-1353, 1374 **i01092185**

NOTE	REF NO	GRAPHIC REF	PART NUMBER	QTY	PART NAME 1 2 3 4 5 6 (PRODUCT LEVEL)	SEE PAGE
	1	1	**151-8752**	2	BUSHING	
	2	1	**140-3634**	1	RADIATOR AS	
		1	**140-2358**	1	PLUG AS	
		1	**2D-6392**	1	SEAL-O-RING (6.07MM ID)	
		1	**5F-9144**	1	SEAL-O-RING (7.65MM ID)	
		1	**145-6005**	2	GASKET	
	3	1	**142-0724**	1	OIL COOLER AS	
		1	**123-4065**	16	RIVET-POP	
		1	**140-3635**	1	CORE AS	
		1	**140-3639**	1	CORE AS-15 PLATE	
	4	1	**006-8865**	1	CAP-RADIATOR	
M	5	1	**8T-4200**	4	BOLT (M8X1.25X16MM)	
	6	1	**8C-0572**	1	WASHER (8.8MM ID)	
	7	1	**8T-4224**	2	WASHER-HARD (2MM THK)	

M-METRIC PART

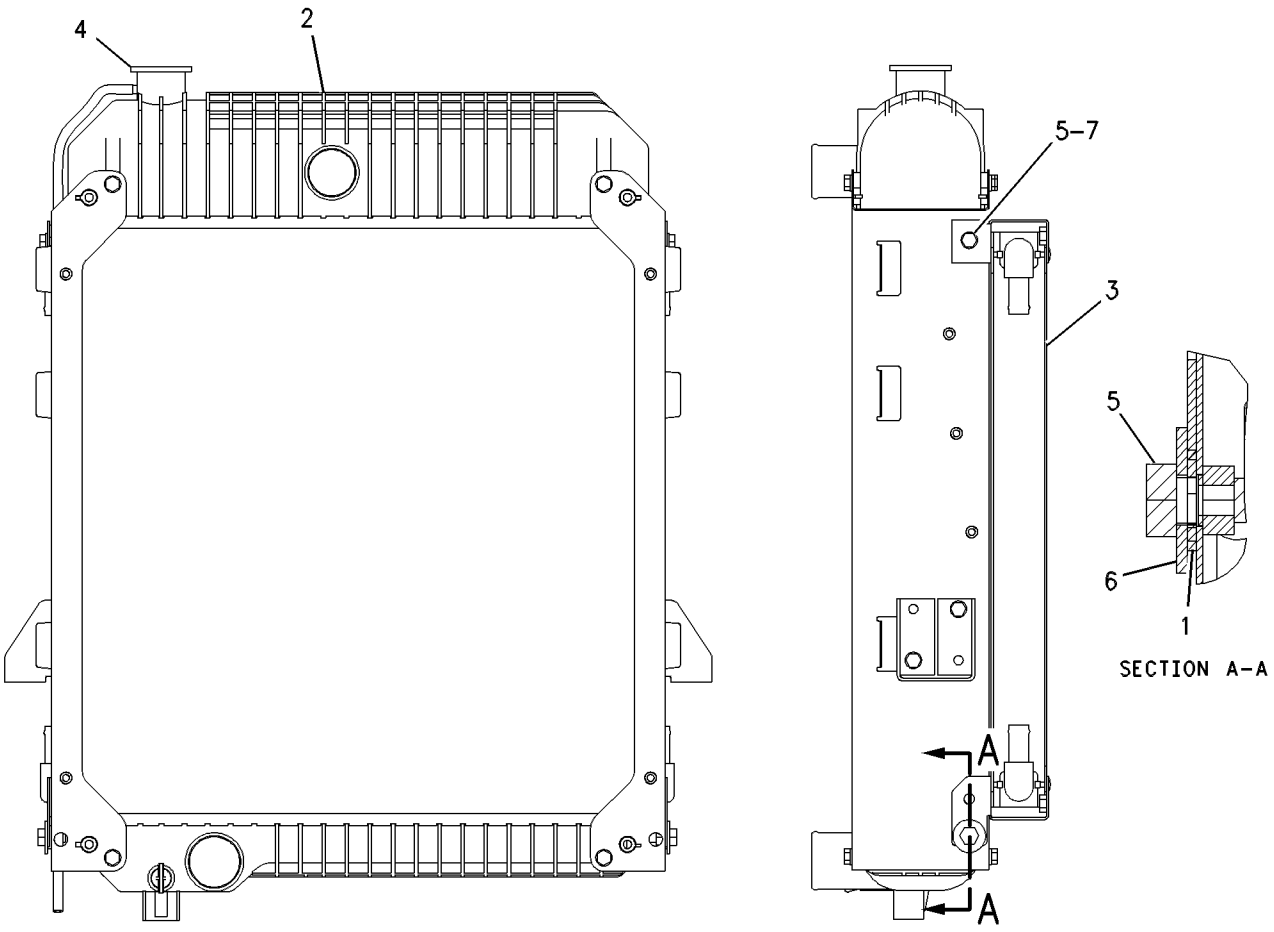

GRAPHIC #1 **<END>** g00365925

154-3799 RADIATOR & HYD OIL COOLER GP

S/N: FDP18400-UP
PART OF 147-1557 RADIATOR & HYD OIL COOLER GP
AN ATTACHMENT

SMCS-1353, 1374 **i01939887**

NOTE	REF NO	GRAPHIC REF	PART NUMBER	QTY	PART NAME 1 2 3 4 5 6 (PRODUCT LEVEL)	SEE PAGE
Y	1	1	*147-1558*	1	RADIATOR & HYD OIL COOLER GP	68
	2	1	**180-2441**	1	SHROUD AS	
	3	1	**7X-0579**	4	WASHER-HARD (8.8X25.5X2MM THK)	
M	4	1	**8T-4200**	4	BOLT (M8X1.25X16MM)	
	5	1	**123-4065**	6	RIVET-POP	
	6	1	**141-7512**	1	BAFFLE	

M-METRIC PART
Y-SEPARATE ILLUSTRATION

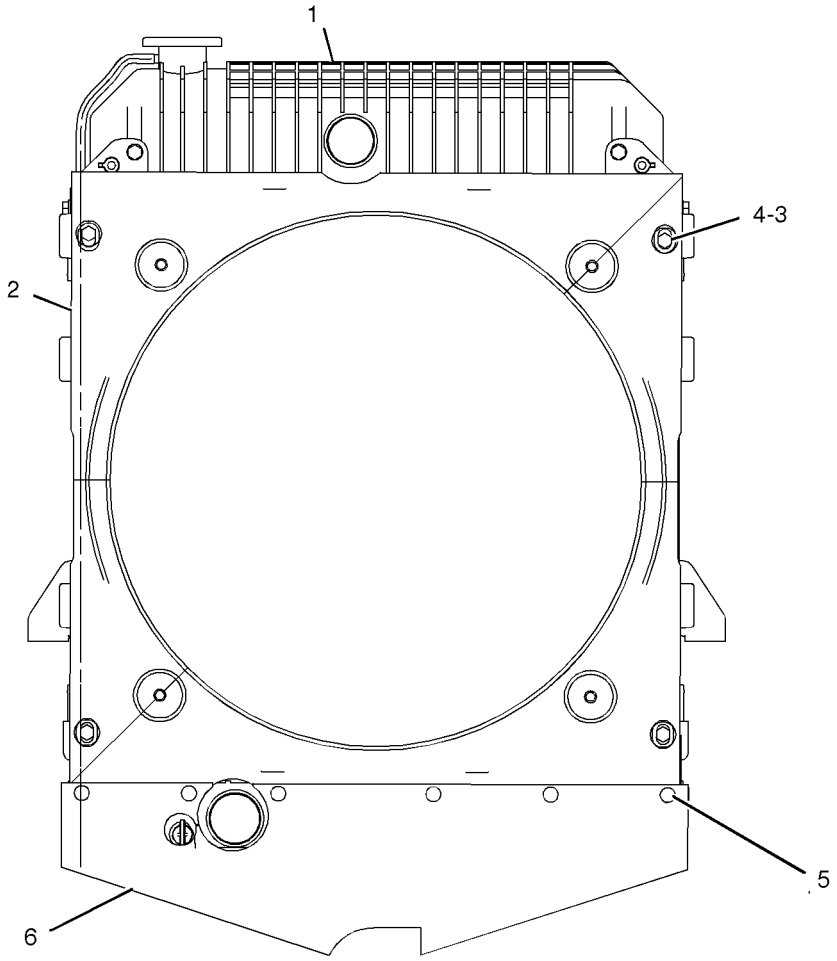

GRAPHIC #1 **<END>** g01009422

234-7836 RADIATOR & HYD OIL COOLER GP

S/N: FDP18400-UP
PART OF 214-6894 COOLING AR
AN ATTACHMENT

SMCS-1353, 1374 **i01968896**

NOTE	REF NO	GRAPHIC REF	PART NUMBER	QTY	PART NAME 1 2 3 4 5 6 (PRODUCT LEVEL)	SEE PAGE
D	1		**5P-6129**		TUBE (.1 METER)	
	2		**2W-9710**	2	MOUNT AS	
	3		**6N-6984**	2	MOUNT	
	4		**140-3640**	2	PLATE	
	5		**214-7457**	2	CLAMP-T'BOLT	
	6		**214-7458**	2	CLAMP-T'BOLT	
Y	7		*234-7834*	1	RADIATOR & FAN GP	65
	8		**235-1966**	1	HOSE	
	9		**235-1967**	1	HOSE	
	10		**7X-0603**	2	WASHER-HARD (9.9X35X2.5MM THK)	
M	11		**8T-4133**	2	NUT (M10X1.5 THD)	
M	12		**8T-4186**	2	BOLT (M10X1.5X40MM)	
	13		**8T-4222**	4	WASHER-PLATED (11X32X2.5MM THK)	
M	14		**8T-4908**	2	BOLT (M8X1.25X25MM)	

D-ORDER BY THE METER
M-METRIC PART
Y-SEPARATE ILLUSTRATION

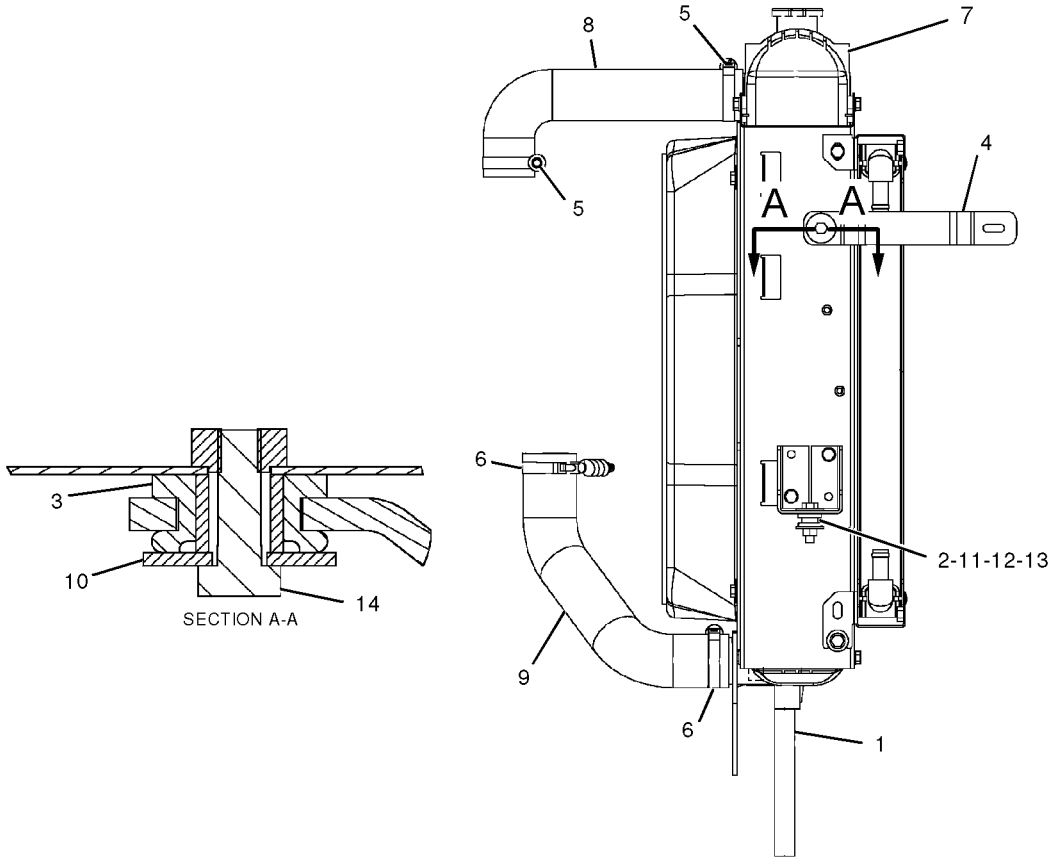

GRAPHIC #1 **<END>** g01022265

235-1974 RADIATOR & HYD OIL COOLER GP

S/N: FDP18400-UP
PART OF 234-7834 RADIATOR & FAN GP
AN ATTACHMENT

SMCS-1353, 1374 **i01969842**

NOTE	REF NO	GRAPHIC REF	PART NUMBER	QTY	PART NAME 1 2 3 4 5 6 (PRODUCT LEVEL)	SEE PAGE
	1		**8C-0572**	2	WASHER (8.8X25.5X2MM THK)	
	2		**140-3634**	1	RADIATOR AS	
			140-2358	1	PLUG AS	
			2D-6392	1	SEAL-O-RING	
			5F-9144	1	SEAL-O-RING	
			145-6005	2	GASKET	
	3		**142-0724**	1	COOLER AS-OIL	
			123-4065	16	RIVET-POP	
			140-3635	1	CORE AS (13 PLATE)	
			140-3639	1	CORE AS (15 PLATE)	
	4		**151-8752**	2	BUSHING	
	5		**227-4376**	1	CAP AS (RADIATOR)	
M	6		**8T-4200**	4	BOLT (M8X1.25X16MM)	
	7		**8T-4224**	2	WASHER-HARD (8.8X16X2MM THK)	

M-METRIC PART

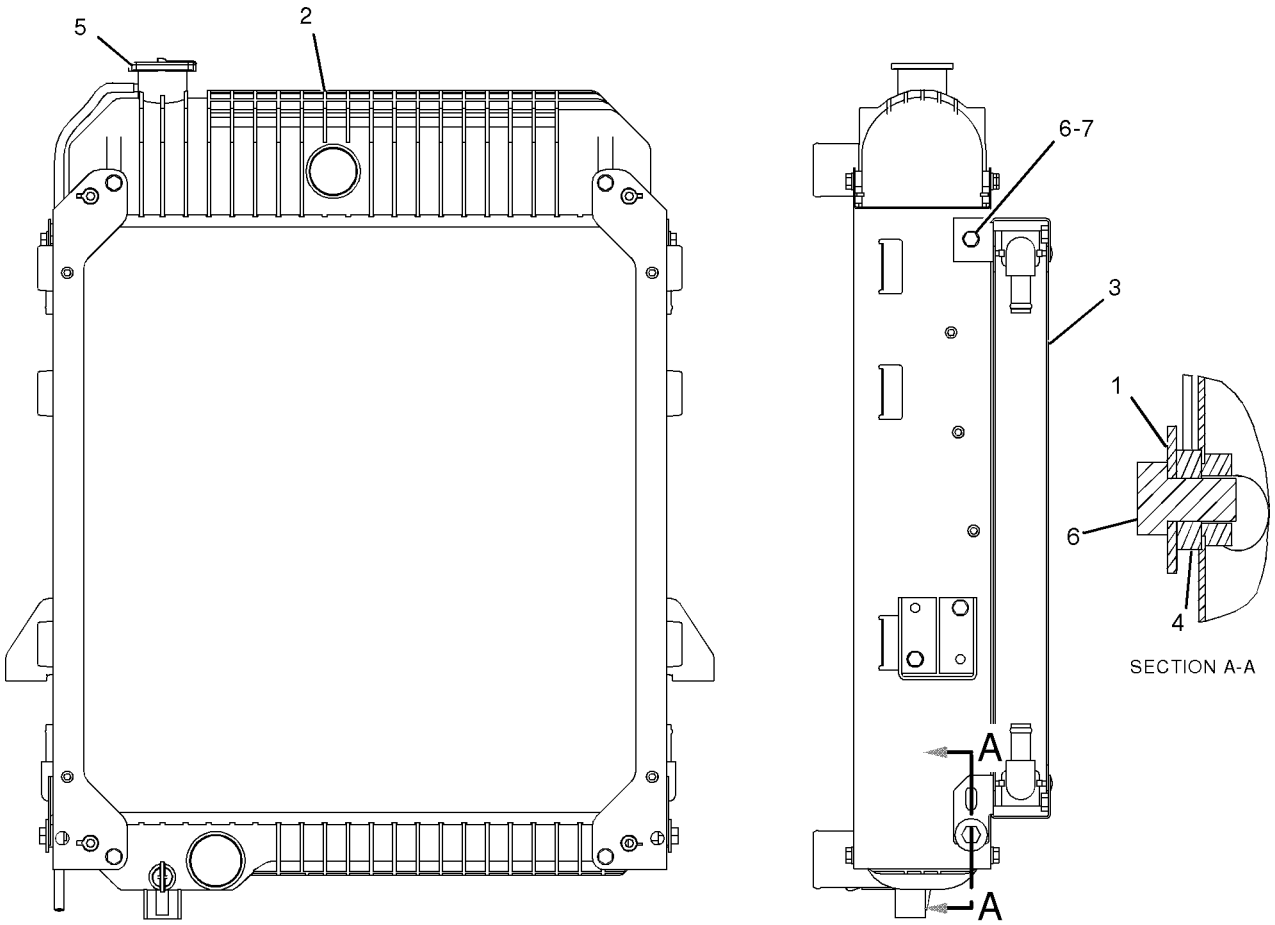

GRAPHIC #1 **<END>** g01028731

236-5807 RADIATOR & HYD OIL COOLER GP

S/N: FDP18400-UP
PART OF 214-6895 COOLING AR
AN ATTACHMENT

SMCS-1353, 1374 **i02001547**

NOTE	REF NO	GRAPHIC REF	PART NUMBER	QTY	PART NAME 1 2 3 4 5 6 (PRODUCT LEVEL)	SEE PAGE
D	1	1	**5P-6129**		TUBE (.1M)	
	2	1	**2W-9710**	2	MOUNT AS	
	3	1	**6N-6984**	2	MOUNT	
	4	1	**140-3640**	2	PLATE	
	5	1	**214-7457**	2	CLAMP-T'BOLT	
	6	1	**214-7458**	2	CLAMP-T'BOLT	
	7	1	**235-1966**	1	HOSE	
	8	1	**235-1967**	1	HOSE	
Y	9	1	*236-5808*	1	RADIATOR & FAN GP	66
	10	1	**7X-0603**	2	WASHER-HARD (9.9X35X2.5MM THK)	
M	11	1	**8T-4133**	2	NUT (M10X1.5 THD)	
M	12	1	**8T-4186**	2	BOLT (M10X1.5X40MM)	
	13	1	**8T-4222**	4	WASHER-PLATED (11X32X2.5MM THK)	
M	14	1	**8T-4908**	2	BOLT (M8X1.25X25MM)	

D-ORDER BY THE METER
M-METRIC PART
Y-SEPARATE ILLUSTRATION

236-5807 **RADIATOR & HYD OIL COOLER GP** *(contd.)* **i02001547**

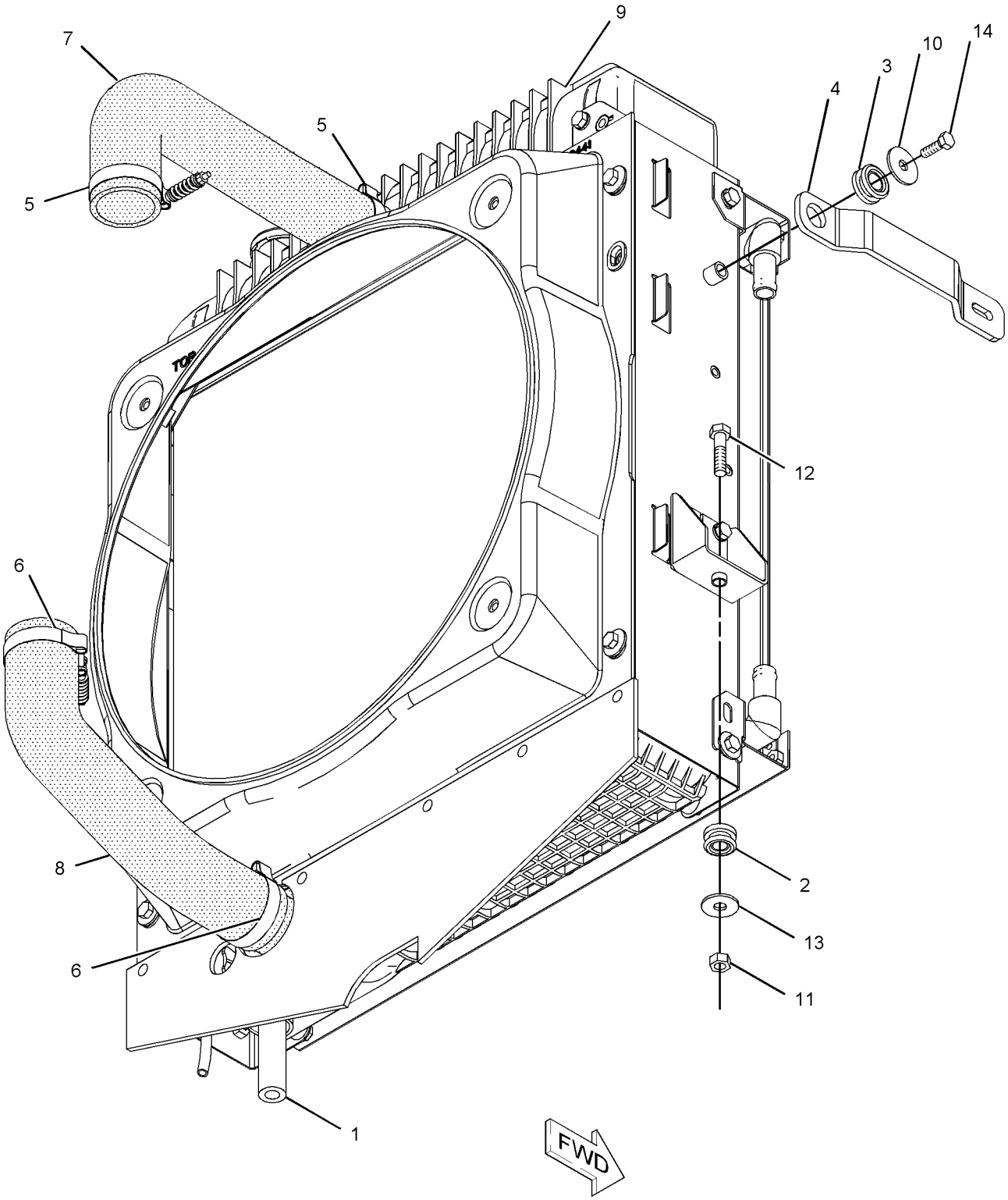

GRAPHIC #1 **<END>** g01023383

COOLING SYSTEM

236-5809 RADIATOR & HYD OIL COOLER GP

S/N: FDP18400-UP
PART OF 236-5808 RADIATOR & FAN GP
AN ATTACHMENT

SMCS-1353, 1374 **i02001595**

NOTE	REF NO	GRAPHIC REF	PART NUMBER	QTY	PART NAME 1 2 3 4 5 6 (PRODUCT LEVEL)	SEE PAGE
	1	1	**8C-0572**	2	WASHER (8.8X25.5X2MM THK)	
	2	1	**140-3634**	1	RADIATOR AS	
		1	**140-2358**	1	PLUG AS	
		1	**2D-6392**	1	SEAL-O-RING	
		1	**5F-9144**	1	SEAL-O-RING	
		1	**145-6005**	2	GASKET	
	3	1	**151-8752**	2	BUSHING	
	4	1	**227-4376**	1	CAP AS (RADIATOR)	
	5	1	**235-1975**	1	COOLER AS-OIL	
		1	**123-4065**	16	RIVET-POP	
M	6	1	**8T-4200**	4	BOLT (M8X1.25X16MM)	
	7	1	**8T-4224**	2	WASHER-HARD (8.8X16X2MM THK)	

M-METRIC PART

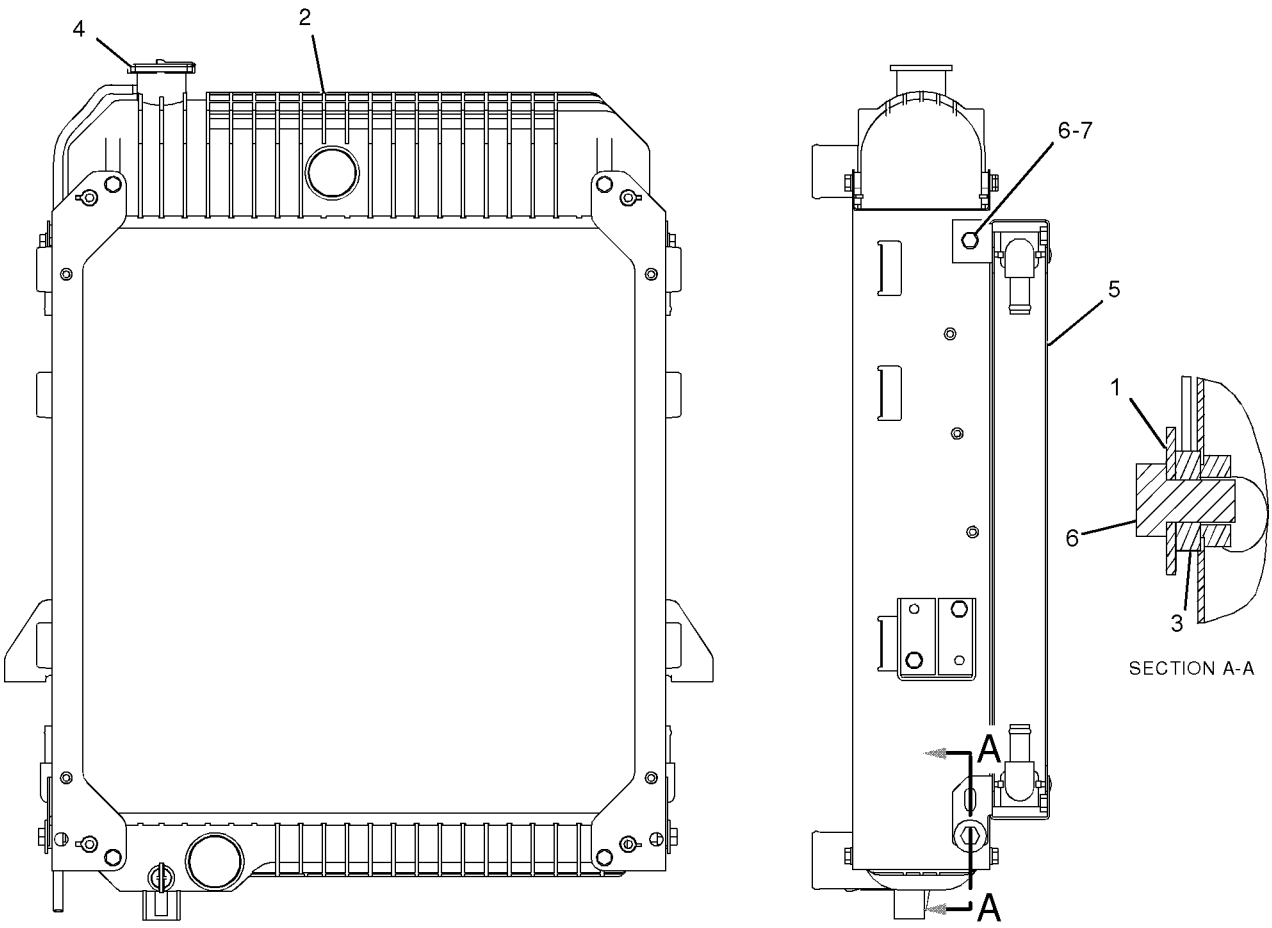

GRAPHIC #1 **<END>** g01032227

AIR INLET AND EXHAUST SYSTEM

234-1979 AIR CLEANER GP

S/N: FDP18400-UP

PART OF 214-6892 ENGINE AR

SMCS-1051, 1054 **i01998469**

NOTE	REF NO	GRAPHIC REF	PART NUMBER	QTY	PART NAME 1 2 3 4 5 6 (PRODUCT LEVEL)	SEE PAGE
D	1	1	**8T-2563**		SEAL (0.7M)	
	2	1	**5P-0600**	1	CLAMP-HOSE	
	3	1	**5P-4868**	1	CLAMP-HOSE	
	4	1	**6V-3582**	1	CLAMP-HOSE	
	5	1	**110-2445**	1	CLAMP-HOSE	
	6	1	**127-4471**	1	CLAMP-HOSE	
Y	7	1	**234-1981**	1	AIR CLEANER GP	77
	8	1	**234-2622**	1	HOSE-AIR	
	9	1	**234-5121**	1	HOSE-AIR	
	10	1	**238-9192**	1	PLATE AS	
	11	1	**242-1920**	1	DUCT AS (AIR INTAKE)	
M	12	1	**8T-4189**	2	BOLT (M8X1.25X20-MM)	
M	13	1	**8T-4224**	6	WASHER-HARD (8.8X16X2-MM THK)	
M	14	1	**8T-7547**	4	BOLT (M8X1.25X30-MM)	

D-ORDER BY THE METER
M-METRIC PART
Y-SEPARATE ILLUSTRATION

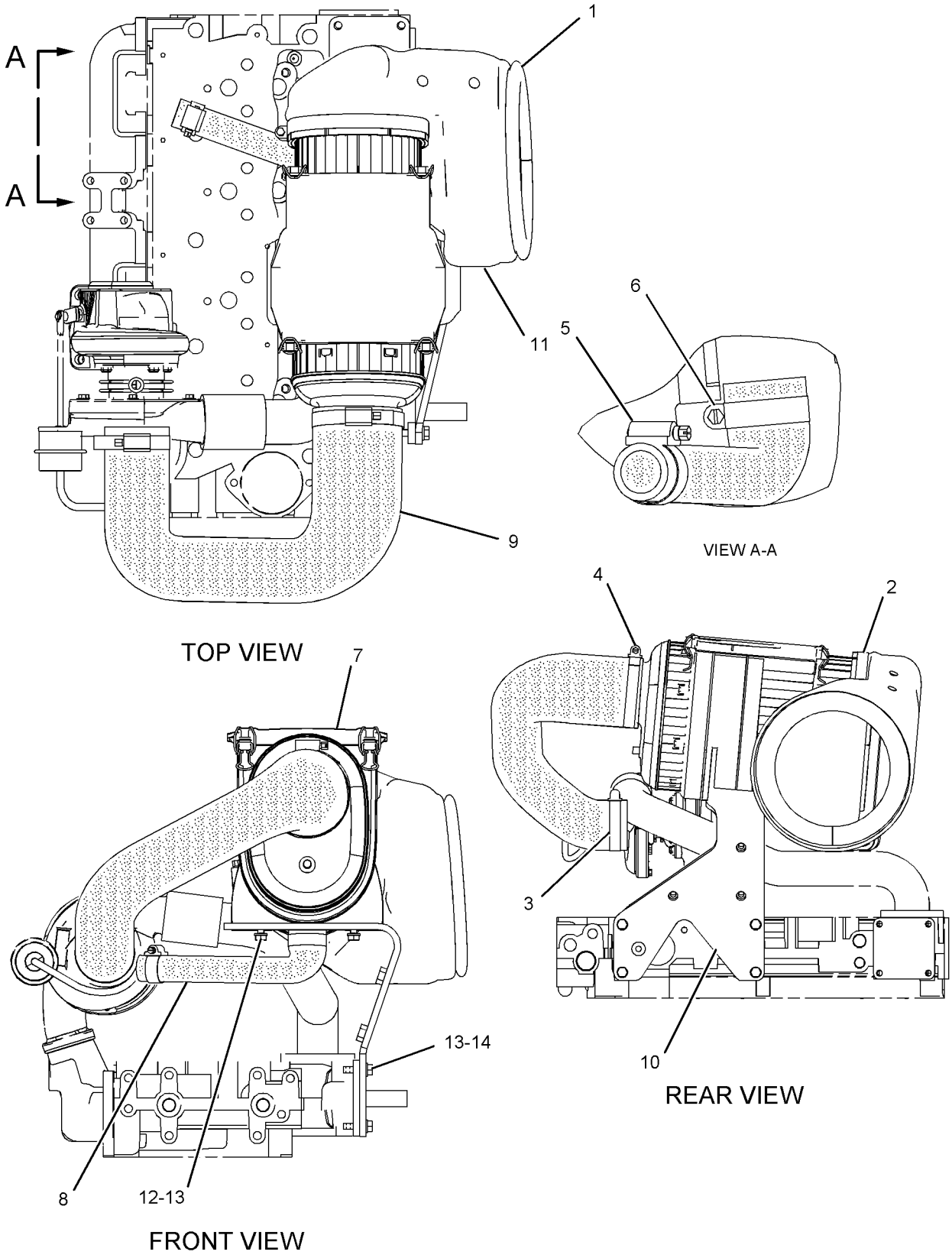

GRAPHIC #1 **<END>** g01035153

AIR INLET AND EXHAUST SYSTEM

234-1981 AIR CLEANER GP

S/N: FDP18400-UP

PART OF 234-1979 AIR CLEANER GP

SMCS-1051, 1054 **i01998482**

NOTE	REF NO	GRAPHIC REF	PART NUMBER	QTY	PART NAME 1 2 3 4 5 6 (PRODUCT LEVEL)	SEE PAGE
	1	1	**227-7447**	1	FRAME	
	2	1	**227-7448**	1	ELEMENT-PRIMARY	
	3	1	**227-7449**	1	FILTER ELEMENT AS-AIR (SECONDARY)	
	4	1	**237-4157**	1	COVER	

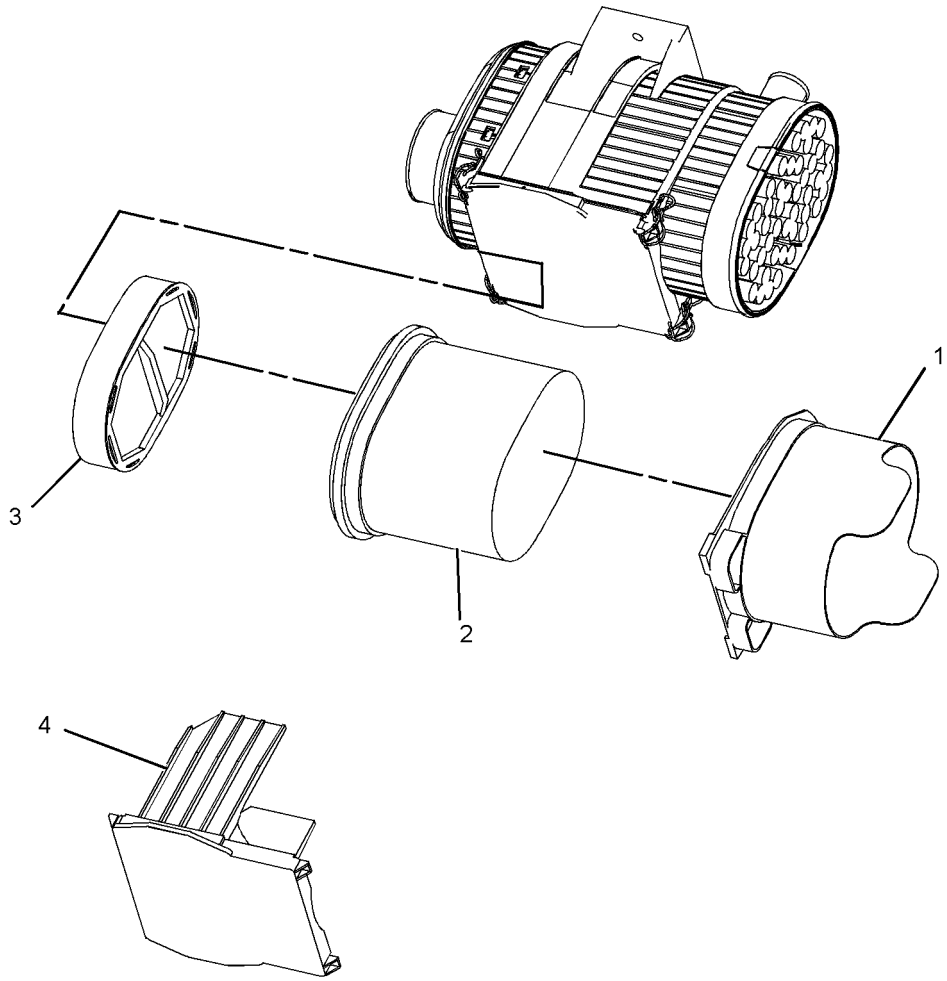

GRAPHIC #1 **<END>** g01035095

AIR INLET AND EXHAUST SYSTEM

231-0149 COVER GP-AIR INLET

S/N: CRS1-UP

PART OF 234-3060 ENGINE AR-PRIMARY

SMCS-1087 **i01892314**

NOTE	REF NO	GRAPHIC REF	PART NUMBER	QTY	PART NAME 1 2 3 4 5 6 (PRODUCT LEVEL)	SEE PAGE
	1	1	**6I-0572**	12	BOLT (M8X1.25.20MM)	
	2	1	**114-2579**	3	GASKET	
	3	1	**115-1162**	3	PLATE	

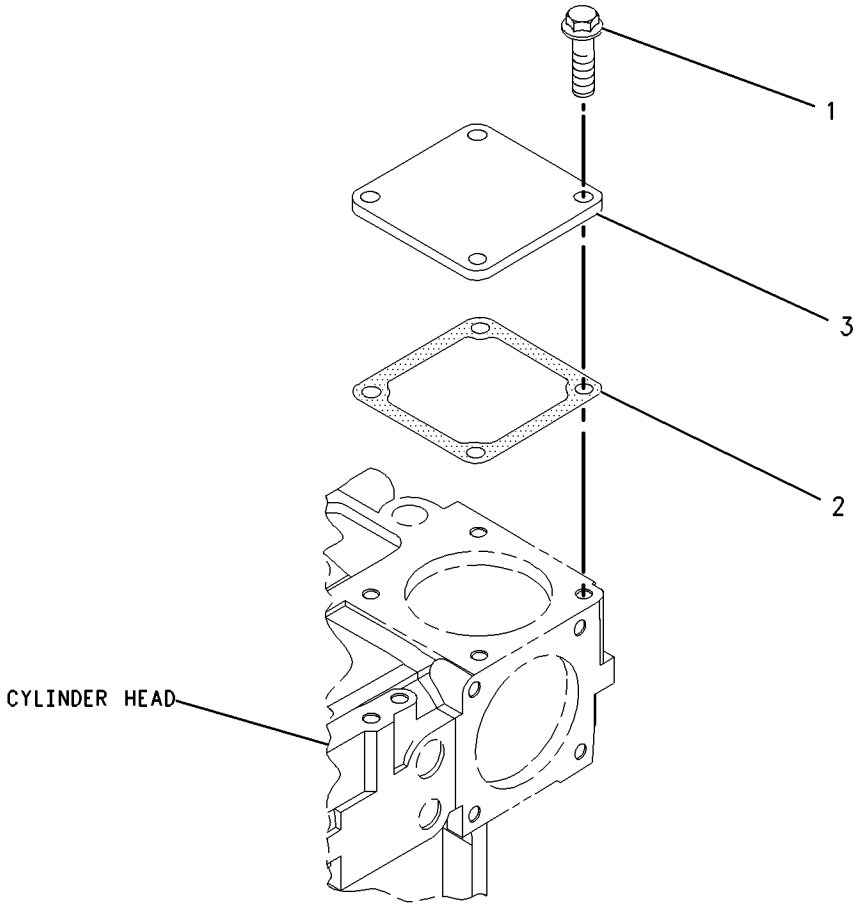

GRAPHIC #1 **<END>** g00986217

AIR INLET AND EXHAUST SYSTEM

236-2486 EXTENSION GP-EXHAUST

S/N: FDP18400-UP

PART OF 214-6892 ENGINE AR

SMCS-1061 **i01991958**

NOTE	REF NO	GRAPHIC REF	PART NUMBER	QTY	PART NAME 1 2 3 4 5 6 (PRODUCT LEVEL)	SEE PAGE
	1	1	**7E-3870**	1	CLAMP	
	2	1	**236-5860**	1	PLATE AS	
	3	1	**239-2270**	1	PIPE-EXTENSION	
	4	1	**8T-4121**	3	WASHER-HARD (11X21X2.5MM THK)	
M	5	1	**8T-4136**	3	BOLT (M10X1.5X25MM)	

M-METRIC PART

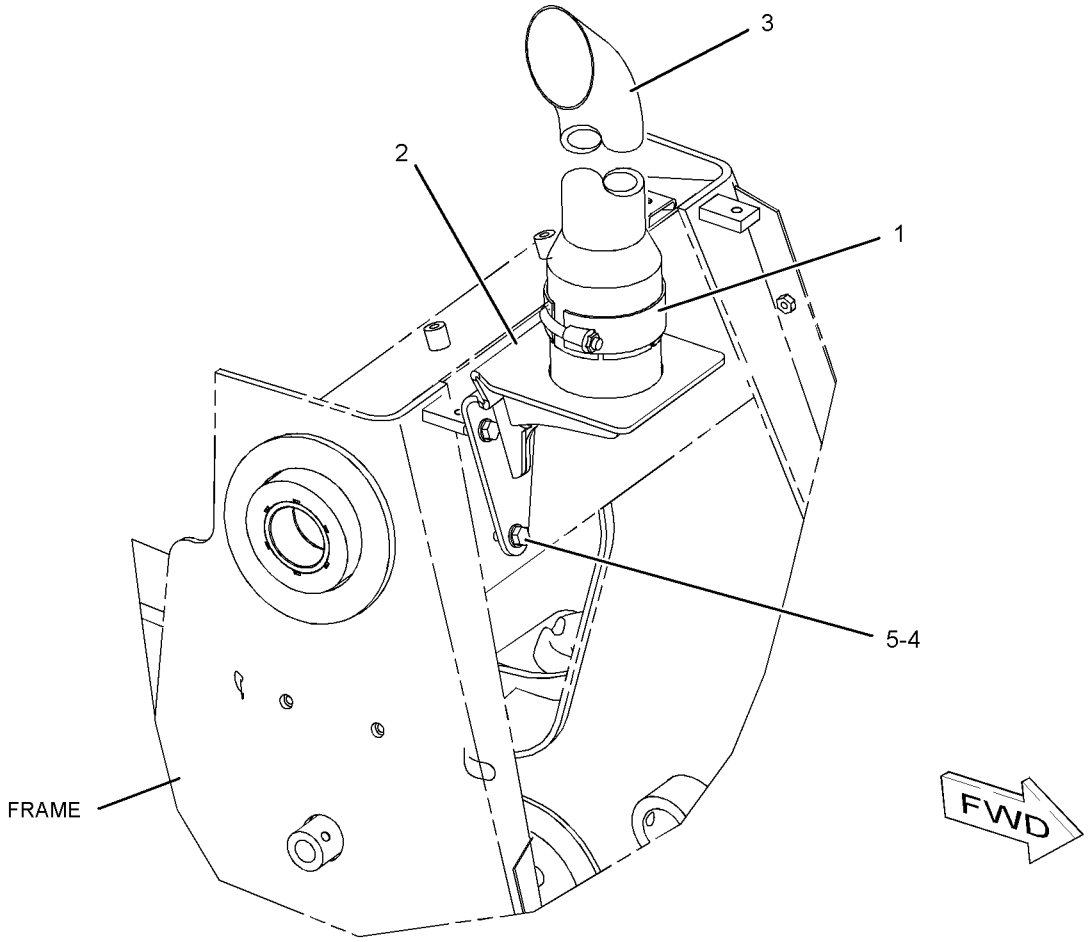

GRAPHIC #1 **<END>** g01040352

AIR INLET AND EXHAUST SYSTEM

184-7900 INDICATOR GP-AIR FILTER CHANGE

S/N: FDP18400-UP
STANDARD
PART OF 184-9737 CAB AR, 184-9736, 238-6697 CANOPY AR
AN ATTACHMENT

SMCS-7452 **i01944261**

NOTE	REF NO	GRAPHIC REF	PART NUMBER	QTY	PART NAME 1 2 3 4 5 6 (PRODUCT LEVEL)	SEE PAGE
D	1	1	**6V-1363**		HOSE (0.5M)	
	2	1	**123-0275**	1	FITTING (FILTER)	
	3	1	*228-4525*	1	INDICATOR GP-FILTER CHANGE	
		1	**5W-9411**	1	SEAL-O-RING	
		1	**7W-7417**	1	INDICATOR-SERVICE (AIR FILTER)	
		1	**119-6723**	1	FITTING	
		1	**123-0275**	1	FITTING (FILTER)	
M	4	1	**8T-4138**	2	BOLT (M6X1X20MM)	
	5	1	**8T-4205**	2	WASHER-HARD (7.2X14.5X2MM THK)	

D-ORDER BY THE METER
M-METRIC PART

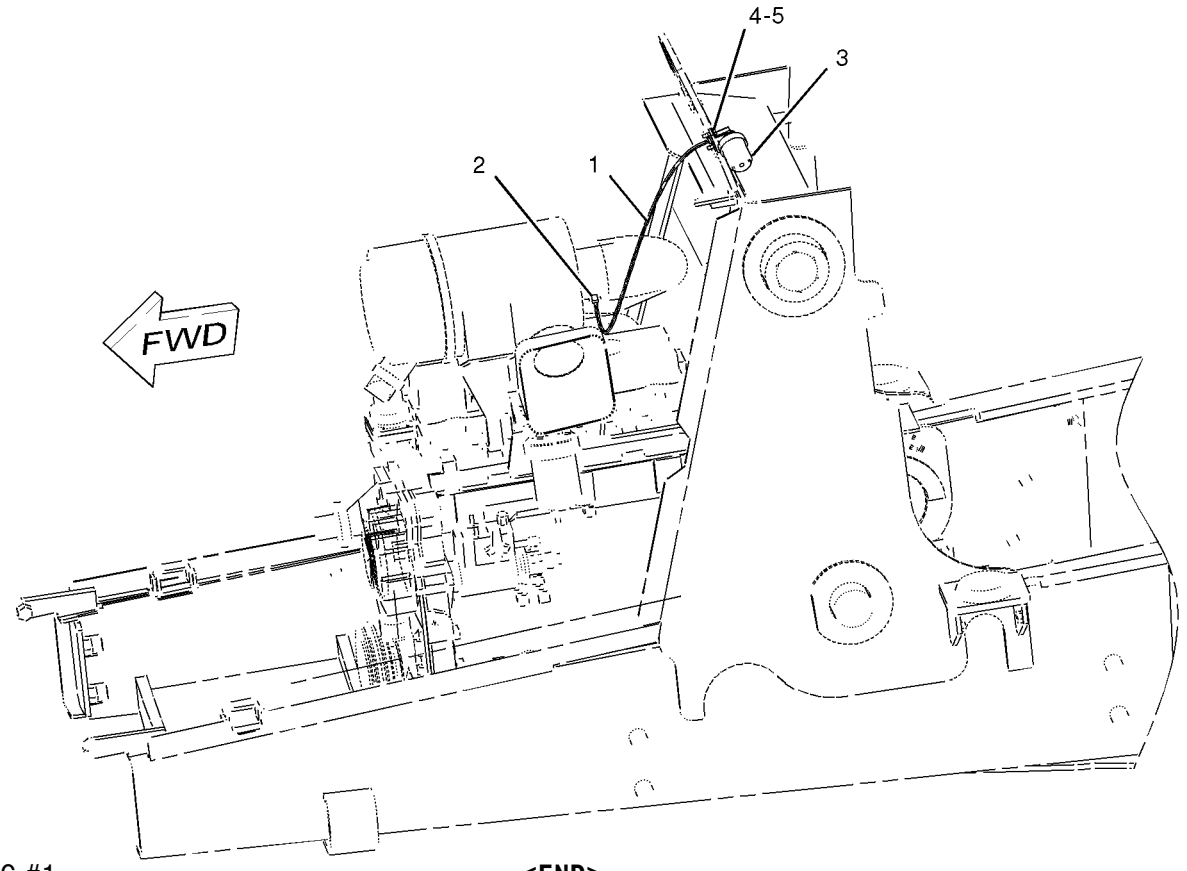

GRAPHIC #1 **<END>** g01012029

184-7901 INDICATOR GP-AIR FILTER CHANGE

S/N: FDP18400-UP
DELUXE
PART OF 184-9738, 244-1944 CAB AR
AN ATTACHMENT

SMCS-7452 **i01381041**

NOTE	PART NUMBER	QTY	PART NAME 1 2 3 4 5 6 (PRODUCT LEVEL)	SEE PAGE
M	**8T-4138**	2	BOLT (M6X1.0X20MM)	
	123-0275	1	FITTING	
D	**6V-1363**		HOSE (0.5M)	
	193-2183	1	INDICATOR	
	193-2181	1	INDICATOR GP-FILTER CHANGE	
	5W-6411	1	WASHER	
	119-6723	1	FITTING	
	123-0275	1	FITTING	
	193-2183	1	INDICATOR	
	8T-4205	2	WASHER-HARD (7.2X14.5X2MM THK)	

D-ORDER BY THE METER
M-METRIC PART

<END>

AIR INLET AND EXHAUST SYSTEM

238-9828 INDICATOR GP-AIR FILTER CHANGE

S/N: FDP18400-UP

PART OF 239-5565, 239-5566 CAB AR, 239-5563, 239-5564 CANOPY AR

AN ATTACHMENT

SMCS-7452 **i02010323**

NOTE	REF NO	GRAPHIC REF	PART NUMBER	QTY	PART NAME 1 2 3 4 5 6 (PRODUCT LEVEL)	SEE PAGE
	1	1	**5W-9411**	1	SEAL-O-RING	
	2	1	**8N-2694**	1	INDICATOR GP-AIR FILTER CHANGE	

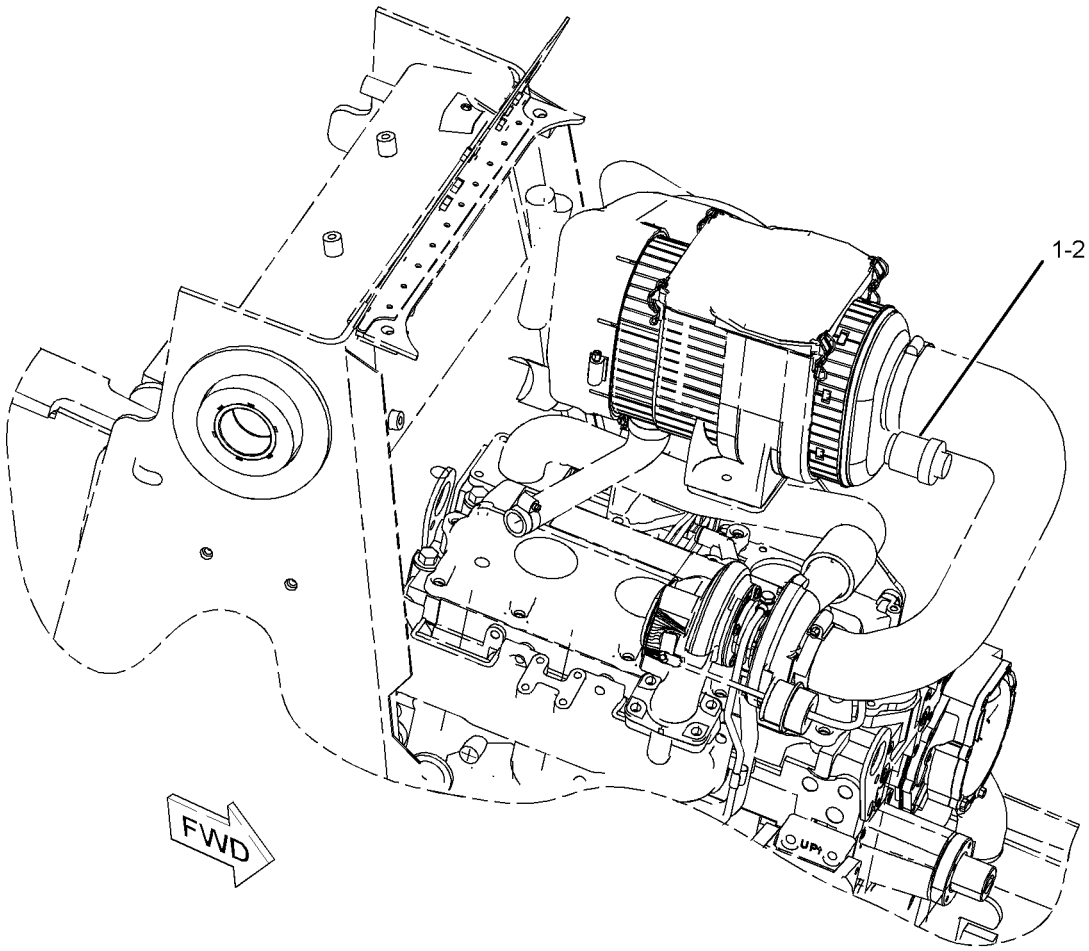

GRAPHIC #1 **<END>** g01040385

AIR INLET AND EXHAUST SYSTEM

241-5686 INDICATOR GP-AIR FILTER CHANGE

S/N: FDP18400-UP
PART OF 239-5567, 239-5568 CAB AR
AN ATTACHMENT

SMCS-7452 **i02007679**

NOTE	REF NO	GRAPHIC REF	PART NUMBER	QTY	PART NAME 1 2 3 4 5 6 (PRODUCT LEVEL)	SEE PAGE
	1	1	**3S-2093**	3	STRAP-CABLE	
	2	1	**5W-9411**	1	SEAL-O-RING	
	3	1	**241-5684**	1	INDICATOR AS	
	4	1	**246-6560**	1	WIRE AS	
		1	**102-8802**	1	KIT-RECEPTACLE (2-PIN)	
					(INCLUDES RECEPTACLE AS. & WEDGE)	
	5	1	**4P-8134**	2	CLIP	
M	6	1	**5C-9553**	2	BOLT (M6X1X16MM)	
	7	1	**8T-4205**	2	WASHER-HARD (7.2X14.5X2MM THK)	

M-METRIC PART

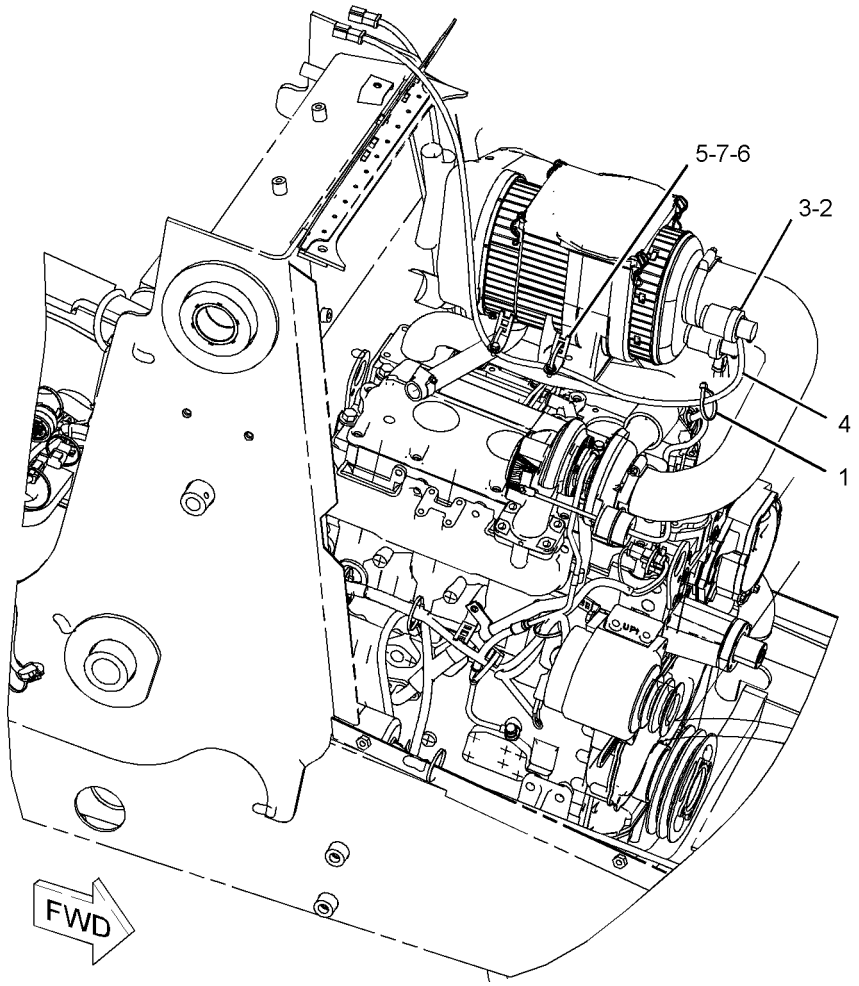

GRAPHIC #1 **<END>** g01038774

AIR INLET AND EXHAUST SYSTEM

235-3420 MUFFLER GP

S/N: FDP18400-UP

PART OF 214-6892 ENGINE AR

SMCS-1062 **i01998499**

NOTE	REF NO	GRAPHIC REF	PART NUMBER	QTY	PART NAME 1 2 3 4 5 6 (PRODUCT LEVEL)	SEE PAGE
	1	1	**6I-0563**	3	NUT (M10)	
	2	1	**147-5553**	3	STUD	
	3	1	**235-5363**	1	MUFFLER AS (TURBO)	
	4	1	**236-2507**	2	CLAMP AS (MUFFLER)	
	5	1	**237-0975**	1	PLATE AS	
M	5A	1	**8T-3490**	4	NUT-WELD (M10X1.5 THD)	
	6	1	**237-0976**	1	PLATE AS	
M	6A	1	**8T-3490**	1	NUT-WELD (M10X1.5 THD)	
	7	1	**8T-4121**	19	WASHER-HARD (11X21X2.5MM THK)	
M	8	1	**8T-4133**	4	NUT (M10X1.5 THD)	
M	9	1	**8T-4136**	4	BOLT (M10X1.5X25MM)	
M	10	1	**8T-4195**	8	BOLT (M10X1.5X30MM)	

M-METRIC PART

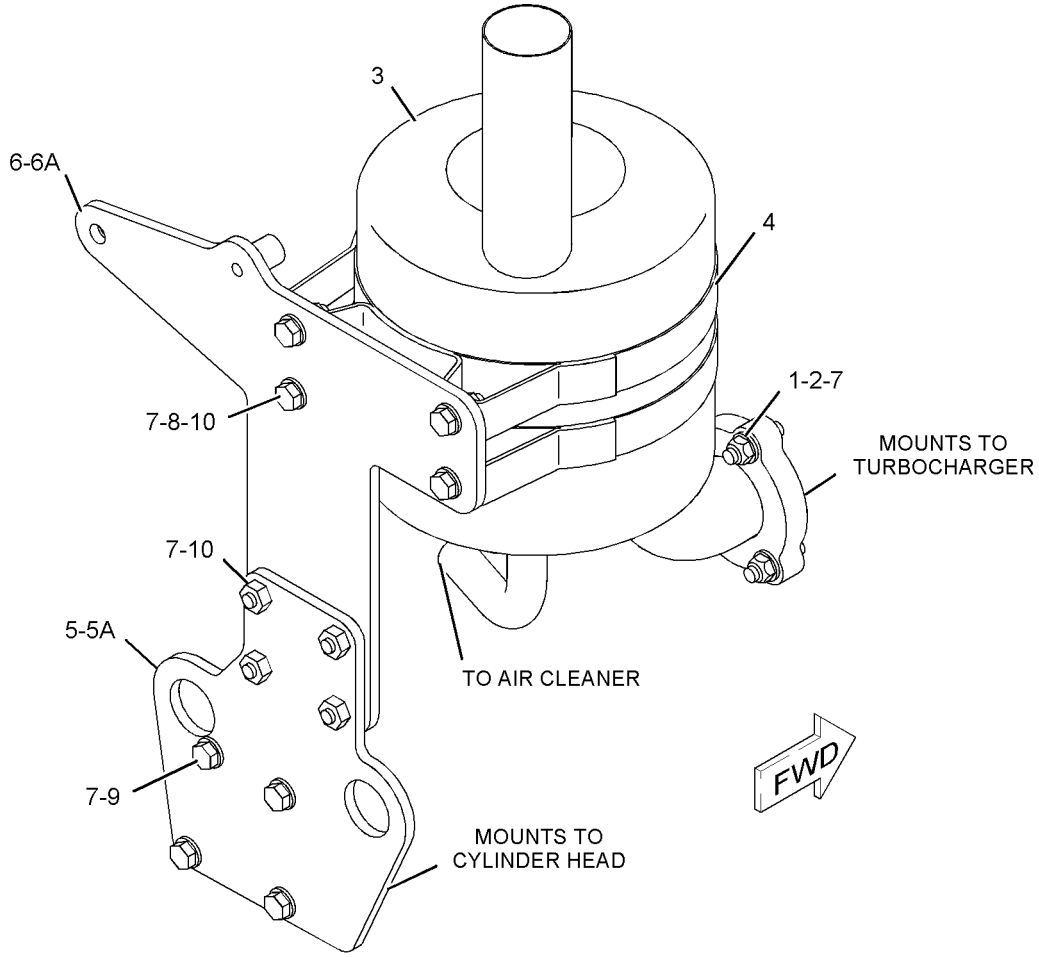

GRAPHIC #1 **<END>** g01036144

AIR INLET AND EXHAUST SYSTEM

237-3924 TURBOCHARGER GP

S/N: CRS1-UP

PART OF 234-3060 ENGINE AR-PRIMARY

SMCS-1052, 1053 **i01989916**

NOTE	REF NO	GRAPHIC REF	PART NUMBER	QTY	PART NAME 1 2 3 4 5 6 (PRODUCT LEVEL)	SEE PAGE
	1	1	**6I-0217**	2	BOLT (M8X1.25X20MM)	
	2	1	**6I-0563**	4	NUT (M10)	
	3	1	**6I-0572**	4	BOLT (M8X1.25.20MM)	
	4	1	**106-8916**	2	BOLT (M6X16MM)	
	5	1	**141-1667**	2	CLAMP-HOSE	
	6	1	**149-4236**	4	STUD	
	7	1	**174-9638**	8	BOLT	
	8	1	**194-5390**	1	GASKET-MANIFOLD	
	9	1	**225-8530**	1	GASKET	
	10	1	**225-8533**	1	GASKET	
	11	1	**225-8534**	1	GASKET	
	12	1	**225-8536**	1	GASKET	
	13	1	**234-3029**	1	HOSE	
	14	1	**234-3030**	1	GASKET	
	15	1	**237-2799**	1	TUBE AS	
	15A	1	**225-8524**	3	BOLT	
	15B	1	**225-8526**	7	WASHER	
	16	1	**237-3786**	1	TURBOCHARGER GP	
	17	1	**237-3791**	1	TUBE AS	
	18	1	**237-3794**	1	BOLT	
	19	1	**237-3921**	1	CLIP	
	20	1	**237-3922**	1	PIPE-EXHAUST	
	21	1	**237-3923**	1	MANIFOLD-EXHAUST	

237-3924 **TURBOCHARGER GP** ***(contd.)*** **i01989916**

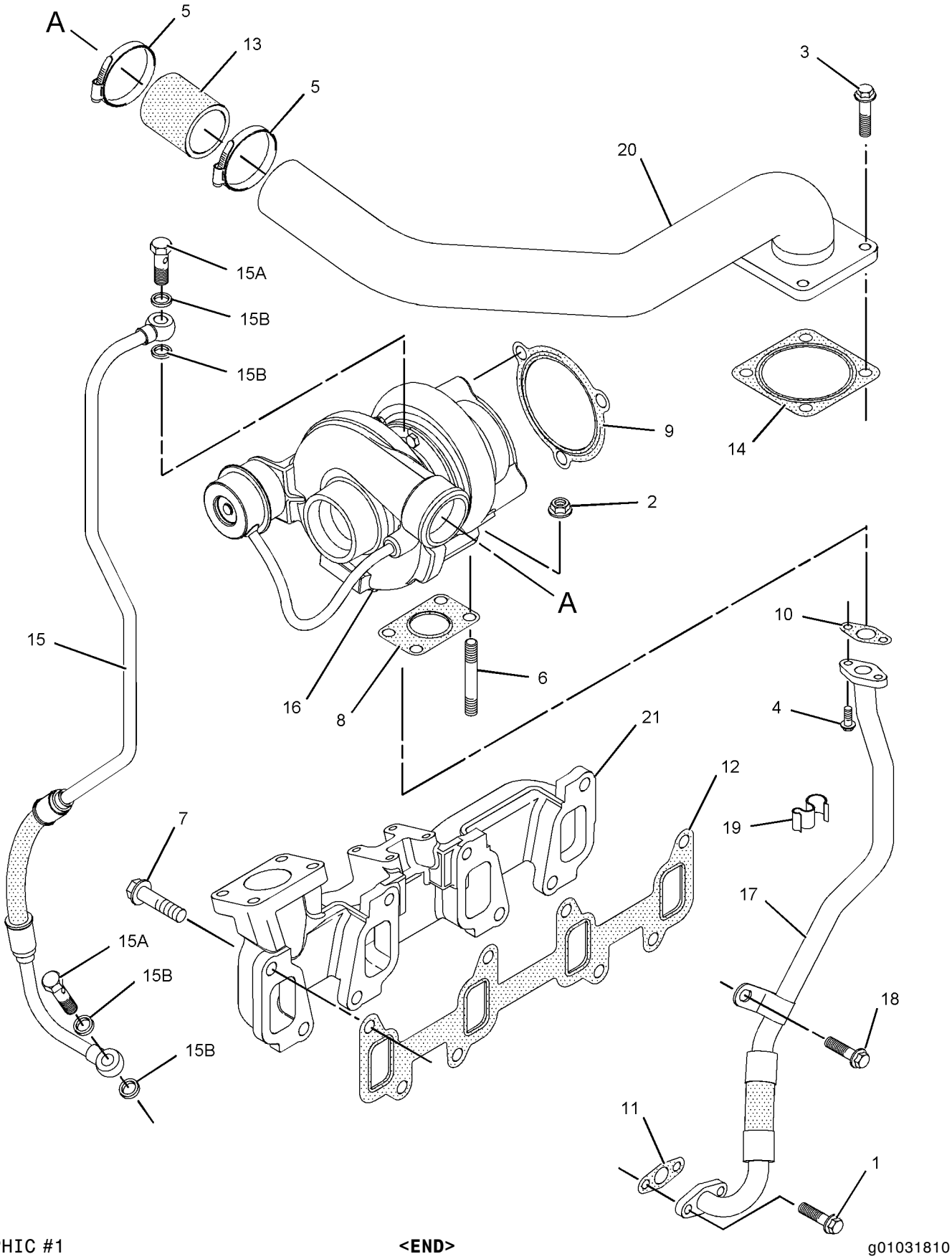

GRAPHIC #1 **<END>** g01031810

234-8892 CONTROL GP-GOV & ACCELERATOR

S/N: FDP18400-UP

PART OF 214-6951 CHASSIS AR

SMCS-1265, 1276 **i02012642**

NOTE	REF NO	GRAPHIC REF	PART NUMBER	QTY	PART NAME 1 2 3 4 5 6 (PRODUCT LEVEL)	SEE PAGE
	1	1	**7K-1181**	3	STRAP-CABLE	
	2	1	**8X-5489**	1	SLEEVE	
	3	1	**164-1077**	1	PANEL AS	
M		1	**6V-9632**	4	NUT-WELD (M6X1 THD)	
Y	4	1	**164-1078**	1	PEDAL GP-GOVERNOR	820
Y	5	1	**183-3887**	1	LEVER GP-GOVERNOR CONTROL	802
	6	1	**190-5139**	1	FILM (VARIABLE SPEED)	
	7	1	**202-6113**	1	BRACKET AS	
M		1	**6V-9632**	3	NUT-WELD (M6X1 THD)	
	8	1	**235-0128**	1	CABLE AS	
M		1	**5C-2890**	1	NUT (M6X1 THD)	
		1	**8T-4742**	2	END-YOKE ROD	
		1	**8T-4744**	2	PIN AS-SPRING	
		1	**222-2690**	1	CLIP	
	9	1	**239-1434**	1	PLATE	
	10	1	**239-1435**	1	BRACKET AS	
M		1	**8T-3612**	2	NUT-WELD (M8X1.25 THD)	
M	11	1	**119-5025**	4	SCREW-FLAT HEAD (M6X1X25MM)	
	12	1	**151-4841**	3	BLOCK	
	13	1	**164-1395**	1	KNOB	
	14	1	**3S-2093**	1	STRAP-CABLE	
M	15	1	**8T-4138**	3	BOLT (M6X1X20MM)	
	16	1	**8T-4205**	3	WASHER-HARD (7.2X14.5X2MM THK)	
	17	1	**8T-4224**	4	WASHER-HARD (8.8X16X2MM THK)	
M	18	1	**8T-4908**	4	BOLT (M8X1.25X25MM)	
M	19	1	**9X-2044**	7	SCREW-TRUSS HEAD (M6X1X16MM)	

M-METRIC PART
Y-SEPARATE ILLUSTRATION

234-8892 **CONTROL GP-GOV & ACCELERATOR** *(contd.)* **i02012642**

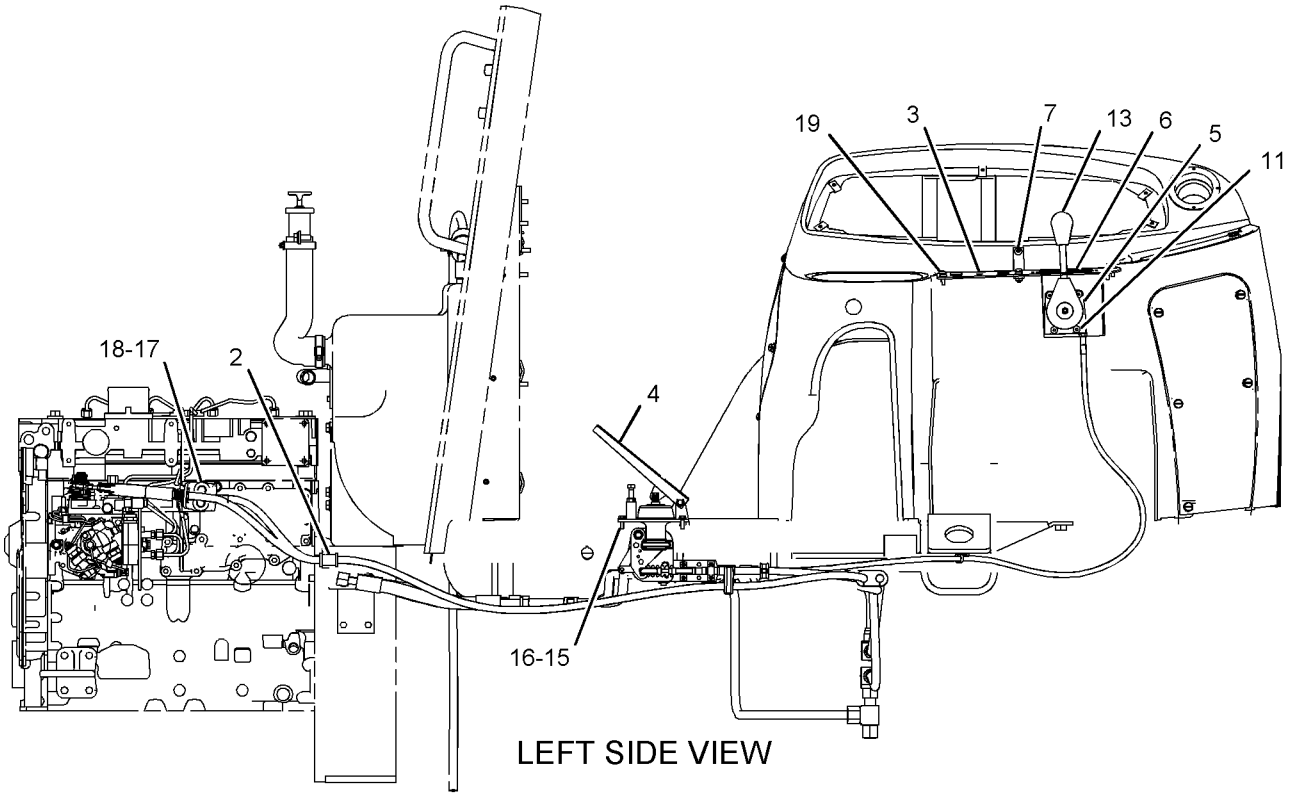

LEFT SIDE VIEW

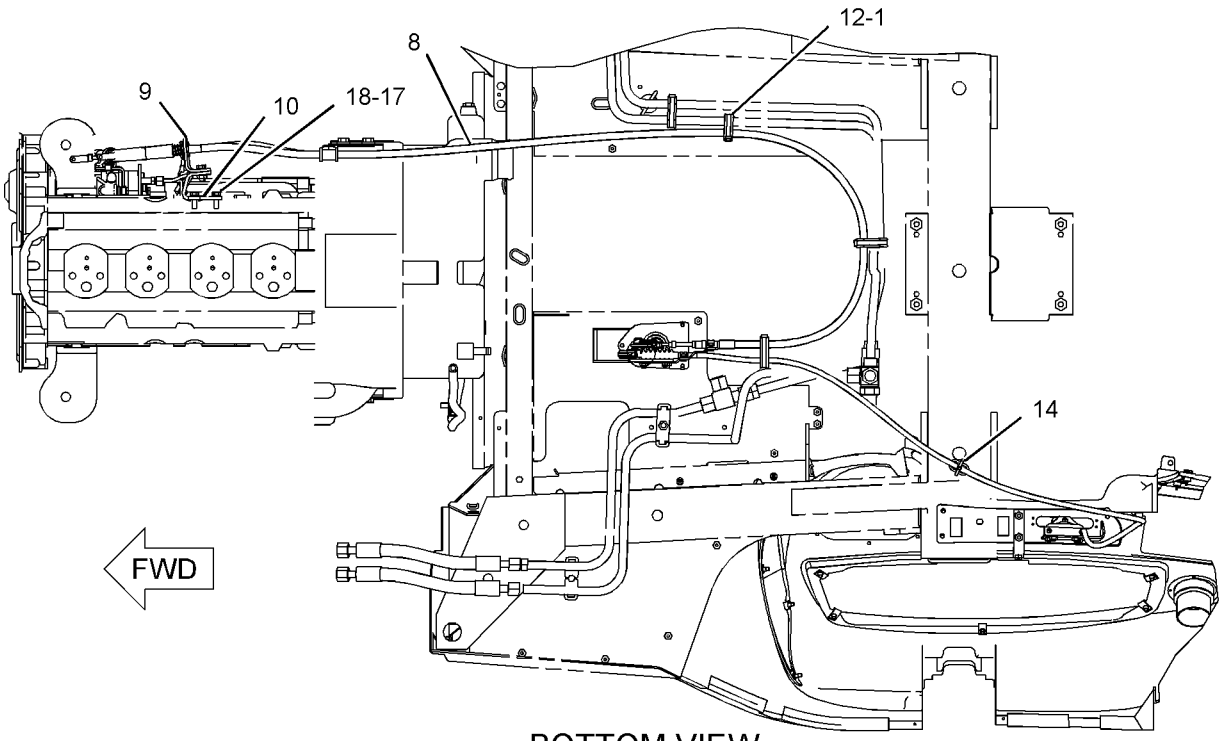

BOTTOM VIEW

GRAPHIC #1

<END>

g01031631

233-9417 FILTER GP-FUEL

S/N: CRS1-UP

PART OF 234-3060 ENGINE AR-PRIMARY

SMCS-1261 **i02016030**

NOTE	REF NO	GRAPHIC REF	PART NUMBER	QTY	PART NAME 1 2 3 4 5 6 (PRODUCT LEVEL)	SEE PAGE
	1	1	**237-0285**	1	BRACKET	
J	2	1	**120-6872**	3	BOLT	
	3	1	**160-7197**	1	CLIP	
	4	1	**237-0286**	1	PLUG	
	5	1	**215-9508**	1	CONNECTOR-SPECIAL	
	6	1	**215-9509**	1	CONNECTOR-SPECIAL	
	7	1	**232-3126**	1	CLIP	
	8	1	**238-8864**	1	PUMP GP-FUEL PRIMING	
	8A	1	**1R-1804**	1	FILTER ELEMENT AS-FUEL	
J	9	1	**232-9758**	3	WASHER	
	10	1	**232-9759**	1	LINE AS-FUEL	
	11	1	**237-0284**	1	LINE AS-FUEL	
	12	1	**232-1115**	1	CLIP-PIPE	
					AVAILABLE REPAIR KIT(S):	
J			**240-9756**	1	MOUNTING GP-PRIMING PUMP	

J-KIT MARKED J CONTAINS PARTS MARKED J

233-9417 **FILTER GP-FUEL** *(contd.)* **i02016030**

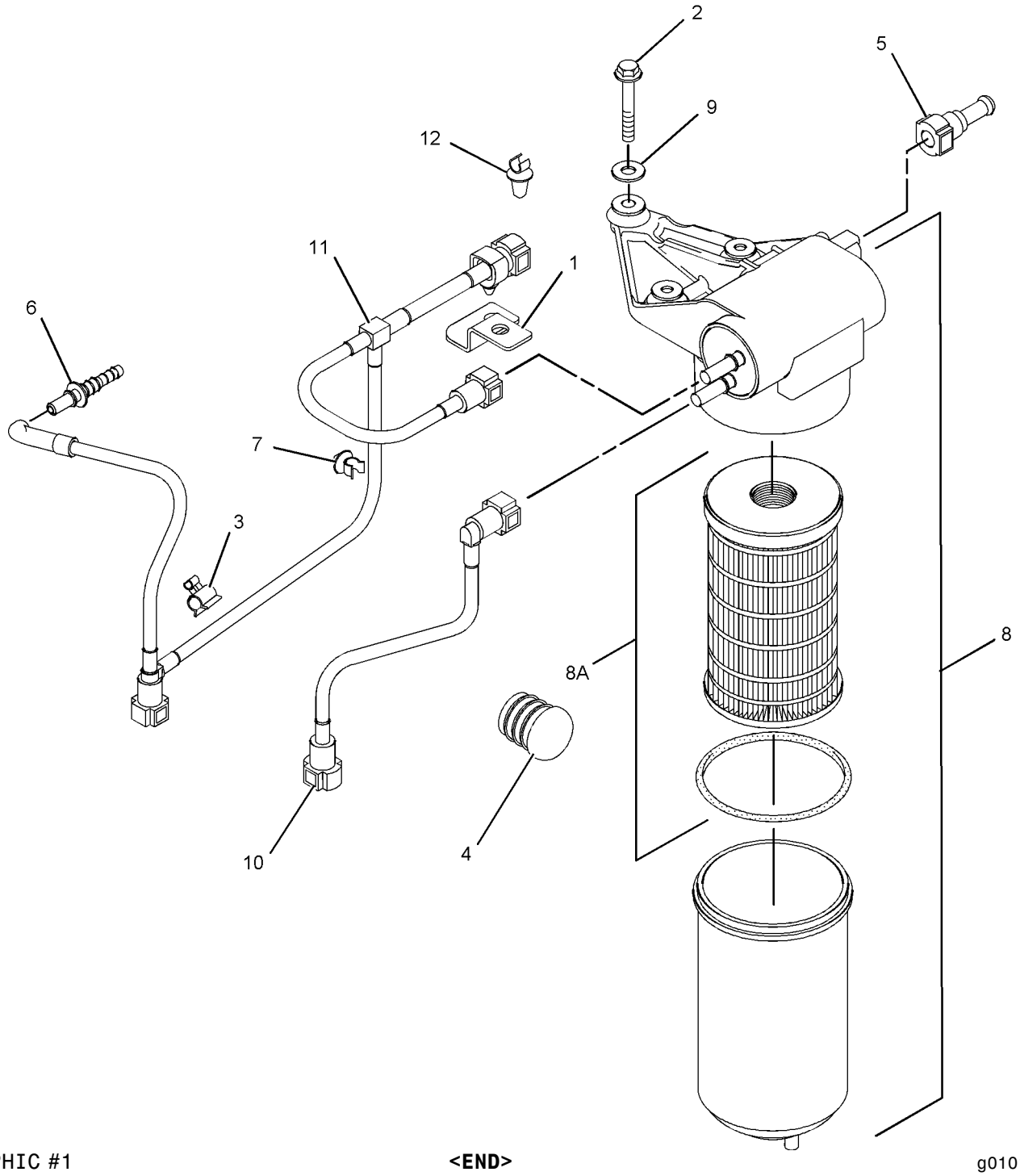

GRAPHIC #1 **<END>** g01011853

130-7092 FILTER GP-WATER SEP & FUEL

S/N: FDP18400-UP
PART OF 7E-4636 SEPARATOR GP-WATER
AN ATTACHMENT

SMCS-1261, 1263 **i01905092**

NOTE	REF NO	GRAPHIC REF	PART NUMBER	QTY	PART NAME 1 2 3 4 5 6 (PRODUCT LEVEL)	SEE PAGE
	1	1	**118-8118**	1	RING-RETAINING	
	2	1	**118-8119**	1	NUT	
	3	1	**131-1812**	1	FILTER ELEMENT AS-FUEL (WATER SEPARATOR)	
					AVAILABLE REPAIR KIT(S):	
			121-4480	1	KIT-WATER BASE	

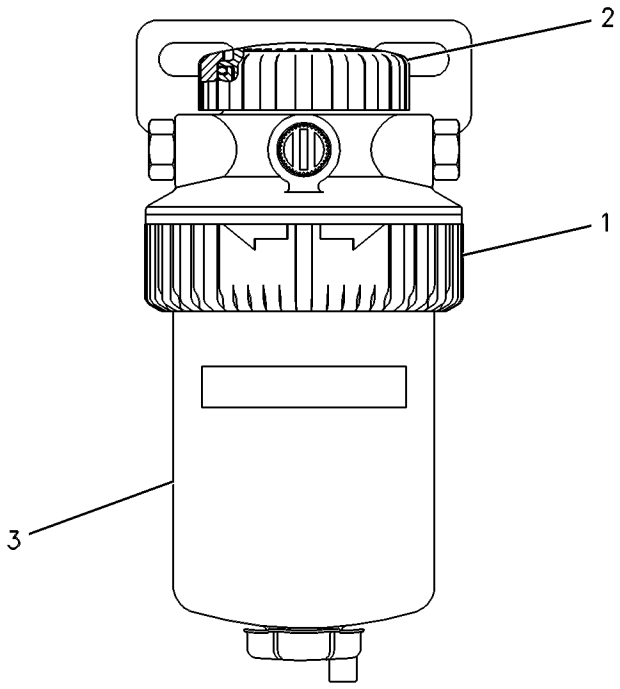

GRAPHIC #1 **<END>** g00259641

FUEL SYSTEM

235-2972 LINES GP-FUEL

S/N: FDP18400-UP

PART OF 214-6892 ENGINE AR

SMCS-1274 **i01998506**

NOTE	REF NO	GRAPHIC REF	PART NUMBER	QTY	PART NAME 1 2 3 4 5 6 (PRODUCT LEVEL)	SEE PAGE
	1	1	**1P-4278**	9	CLAMP-HOSE	
	2	1	**8B-6127**	1	CLIP	
	3	1	**190-9838**	1	TUBE AS	
E	3A	1	**5P-0078**		TUBE (34CM)	
	3B	1	**6V-8553**	1	NUT (11/16X16THD)	
	3C	1	**6V-8560**	1	SLEEVE	
	4	1	**215-9513**	1	CONNECTOR	
	5	1	**238-1830**	1	TUBE AS	
	5A	1	**6V-8553**	1	NUT (11/16X16THD)	
	6	1	**241-0022**	1	LINE AS-FUEL	
	6A	1	**1P-4278**	1	CLAMP-HOSE	
E	6B	1	**5P-1420**		HOSE (59CM)	
	7	1	**241-4275**	1	TEE-SPECIAL	
	8	1	**0S-0550**	1	CLIP	
	9	1	**1P-7009**	1	CLIP	
	10	1	**6D-7573**	1	CLIP	
	11	1	**6K-8178**	1	CLIP	
M	12	1	**8T-1159**	1	BOLT-SOCKET HEAD (M10X1.5X25MM)	
	13	1	**8T-4121**	3	WASHER-HARD (11X21X2.5MM THK)	
M	14	1	**8T-4179**	1	BOLT (M12X1.75X20MM)	
	15	1	**8T-4223**	1	WASHER-HARD (13.5X25.5X3MM THK)	
E	16	1	**5P-1442**		HOSE (81CM)	
E	17	1	**5P-1420**		HOSE (122CM)	

E-ORDER BY THE CENTIMETER
M-METRIC PART

235-2972 **LINES GP-FUEL** ***(contd.)*** **i01998506**

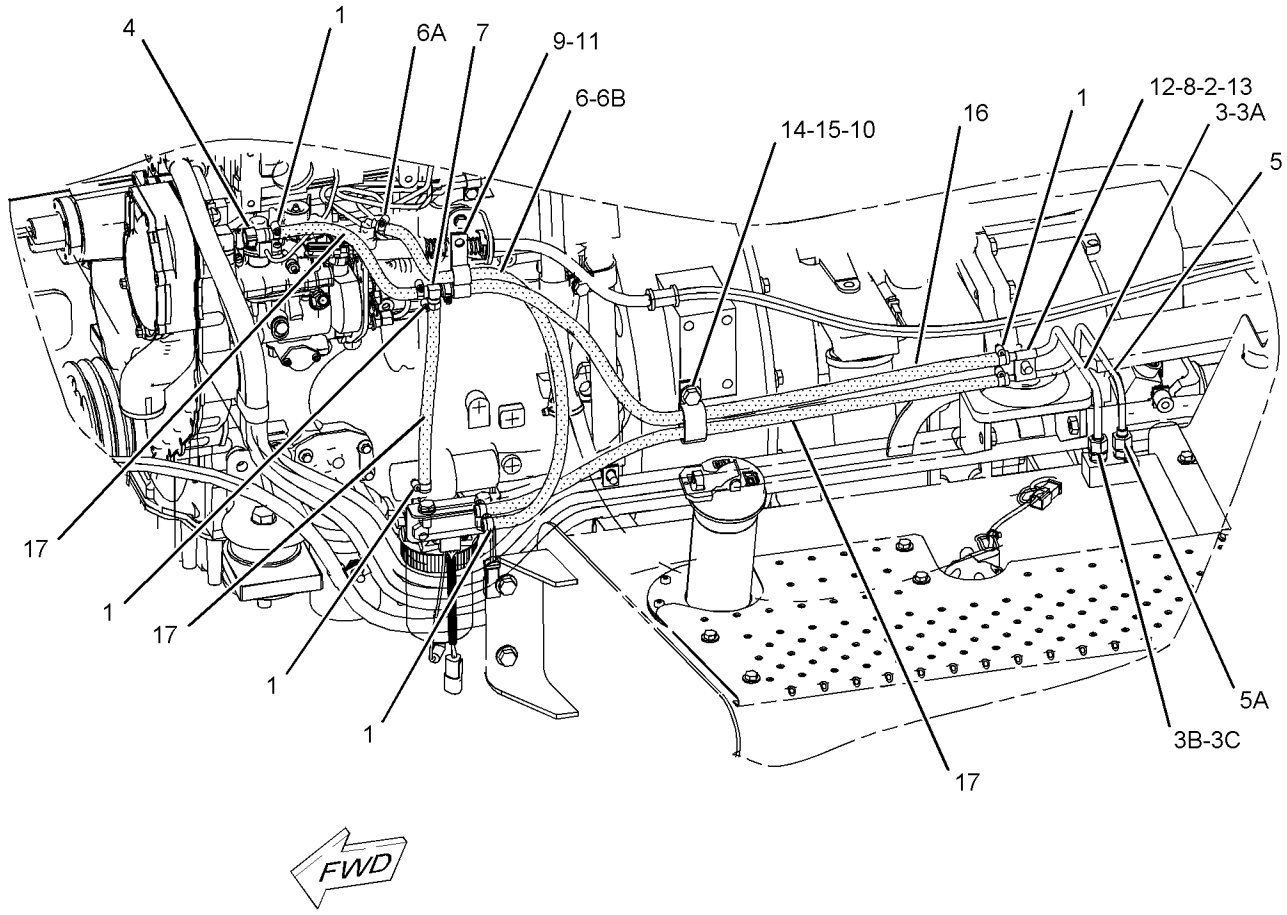

GRAPHIC #1 **<END>** g01035314

FUEL SYSTEM

237-5214 PUMP GP-FUEL INJECTION

S/N: CRS1-UP

PART OF 234-3060 ENGINE AR-PRIMARY

SMCS-1251, 1290 **i01990154**

NOTE	REF NO	GRAPHIC REF	PART NUMBER	QTY	PART NAME 1 2 3 4 5 6 (PRODUCT LEVEL)	SEE PAGE
	1	1	**6I-0217**	1	BOLT (M8X1.25X20MM)	
	2	1	**6I-0260**	3	BOLT (M8X1.25X25MM)	
	3	1	**6I-0291**	1	NUT (M8X1.25)	
	4	2	**9F-2247**	1	PLUG-PIPE	
	5	1	**100-4830**	1	BOLT (M10X1.5X20MM)	
	6	1	**110-8760**	1	STRAP	
	7	1	**111-3422**	1	NUT	
	8	1	**111-3423**	1	WASHER	
	9	1	**124-3815**	1	BOLT (M8X16X1.25MM)	
	10	1	**140-8714**	1	CLIP	
	11	1	**230-8989**	1	GEAR-FUEL PUMP	
	12	1	**230-8995**	1	TUBE AS (CYL NO.1)	
	13	1	**230-8996**	1	TUBE AS (CYL NO.2)	
	14	1	**230-8997**	1	TUBE AS (CYL NO.3)	
	15	1	**230-8998**	1	TUBE AS (CYL NO.4)	
	16	1	**230-9527**	1	BRACKET	
	17	1	**232-1117**	1	CLIP-PIPE	
	18	2	**232-1323**	1	PLUG-CUP	
	19	1	**232-1328**	1	CAP	
	20	2	**232-1793**	1	CABLE	
	21	1	**232-1794**	3	HOSE	
	22	1	**232-2725**	1	CLIP	
	23	1	**232-2726**	1	CLIP	
	24	1	**232-3149**	3	WASHER	
	25	1	**232-3157**	1	BRACKET	
	26	1	**232-3158**	4	CLAMP-INJECTOR	
	27	1	**232-3274**	4	BOLT	
	28	2	**235-1790**	1	SWITCH (40-DEG) (TIMING ADVANCE)	
	29	1	**236-1674**	4	INJECTOR AS-FUEL	
					(EACH INCLUDES)	
	29A	1	**140-8718**	1	WASHER	
	29B	1	**236-1673**	1	NOZZLE	
	30	1	**237-5213**	1	PUMP GP-FUEL INJECTION	
	30A	1	**152-3968**	1	SEAL-O-RING	
	30B	1	**176-6219**	1	VALVE GP-SOLENOID (12 V)	
	30C	1	**193-0161**	1	KIT-CONNECTOR	

237-5214 **PUMP GP-FUEL INJECTION** *(contd.)* **i01990154**

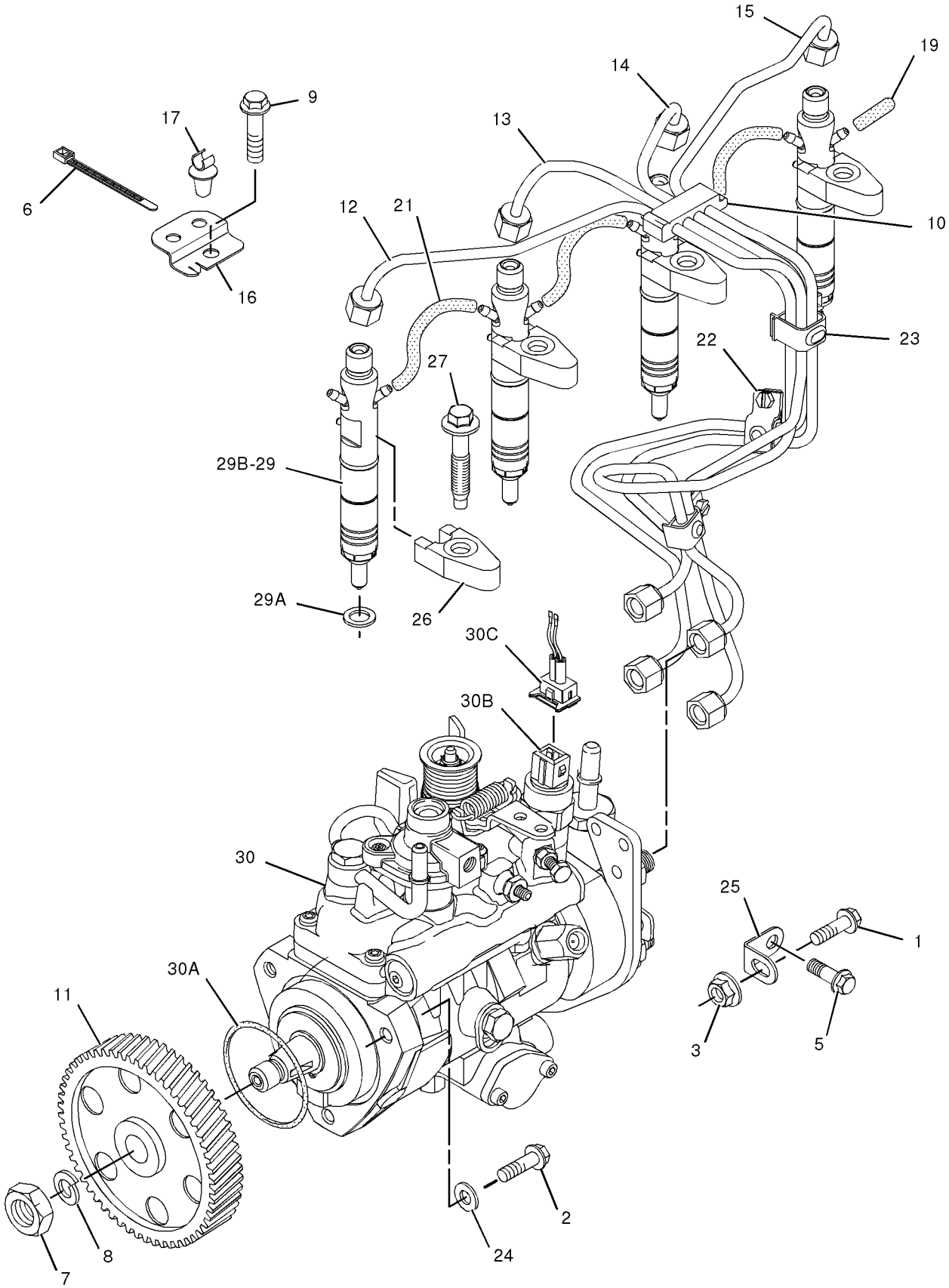

GRAPHIC #1

g01030127

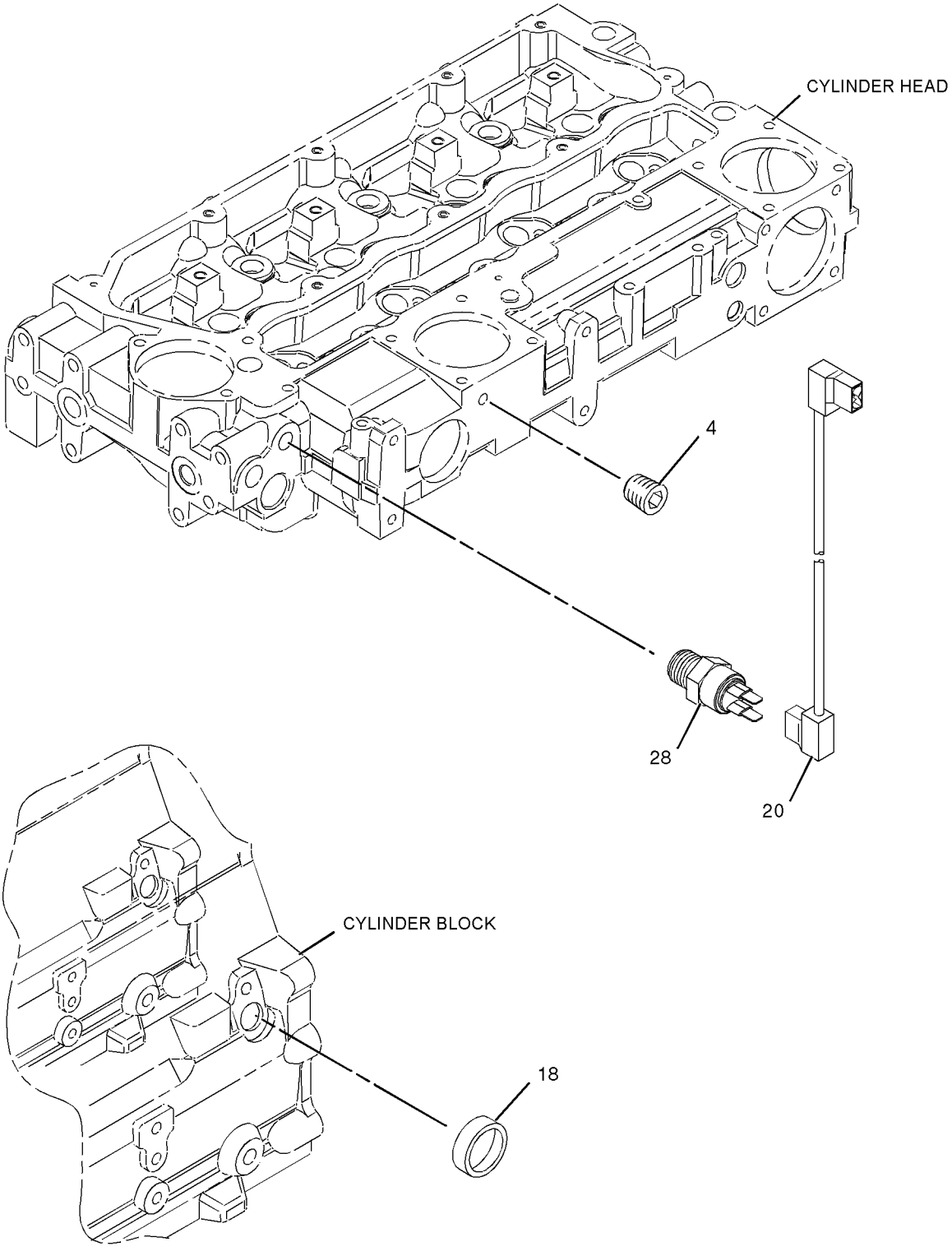

GRAPHIC #2 **<END>** g01030128

FUEL SYSTEM

228-9129 PUMP GP-FUEL PRIMING

S/N: FDP18400-UP
ELECTRIC
PART OF 235-3170 SEPARATOR GP-WATER

SMCS-1258 **i02010443**

NOTE	REF NO	GRAPHIC REF	PART NUMBER	QTY	PART NAME 1 2 3 4 5 6 (PRODUCT LEVEL)	SEE PAGE
	1	1	**118-8118**	1	RING-RETAINING	
	2	1	**228-9130**	1	ELEMENT-FILTER (FUEL)	
	3	1	**228-9132**	1	FITTING (FUEL PUMP)	
F			**149-9954**	1	DRAIN AS (SENSOR)	
	4	1	**193-0618**	1	SENSOR GP-MOISTURE (WATER SEPARATOR)	
		1	**192-7877**	1	RETAINER	

F-NOT SHOWN

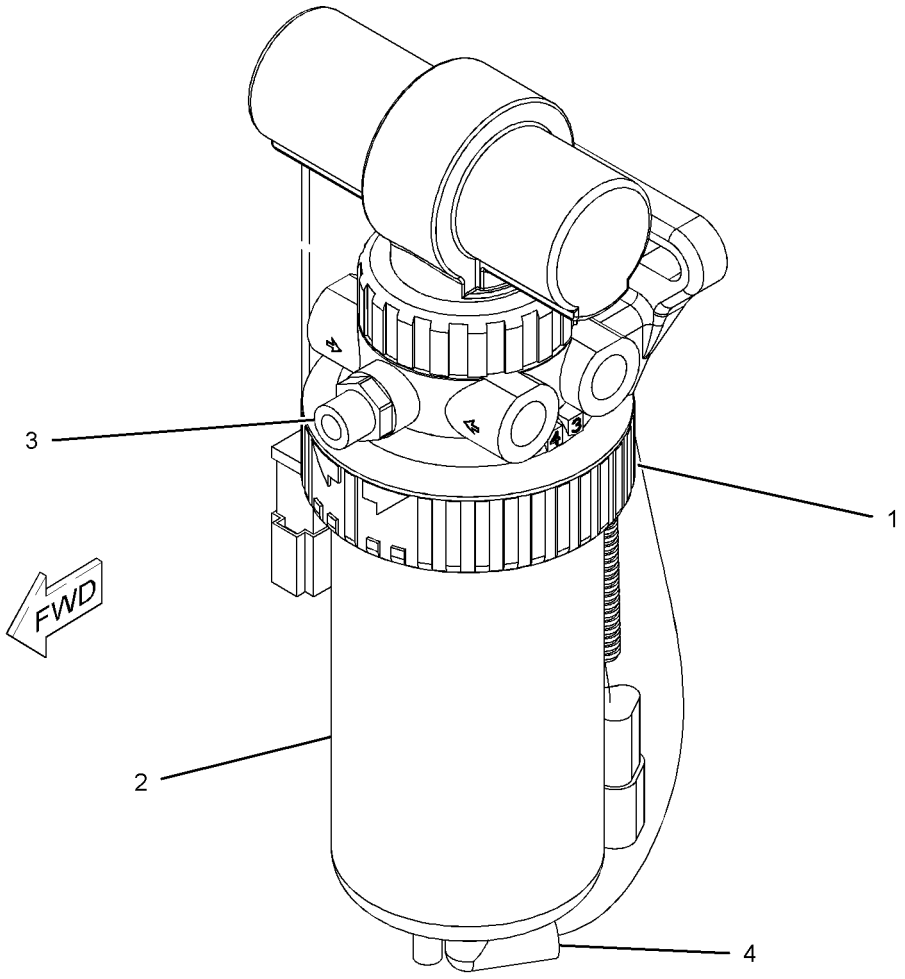

GRAPHIC #1 **<END>** g01039647

FUEL SYSTEM

7E-4636 SEPARATOR GP-WATER

S/N: FDP18400-UP
PART OF 184-9737 CAB AR, 184-9736, 238-6697 CANOPY AR
AN ATTACHMENT

SMCS-1263 **i00730256**

NOTE	REF NO	GRAPHIC REF	PART NUMBER	QTY	PART NAME 1 2 3 4 5 6 (PRODUCT LEVEL)	SEE PAGE
Y	1	1	**130-7092**	1	FILTER GP-WATER SEP & FUEL	91
M	2	1	**8T-4196**	2	BOLT (M10X1.50X35MM)	
	3	1	**8T-4121**	2	WASHER (2.5MM THK)	
	4	1	**130-7964**	1	TUBE AS	
	5	1	**127-8167**	2	CLIP	
	6	1	**9R-2603**	1	TUBE AS	
	7	1	**4H-2494**	3	SLEEVE-FITTING	
	8	1	**033-7849**	2	PLUG	
	9	1	**032-8100**	2	WASHER (.064MM THK)	

M-METRIC PART
Y-SEPARATE ILLUSTRATION

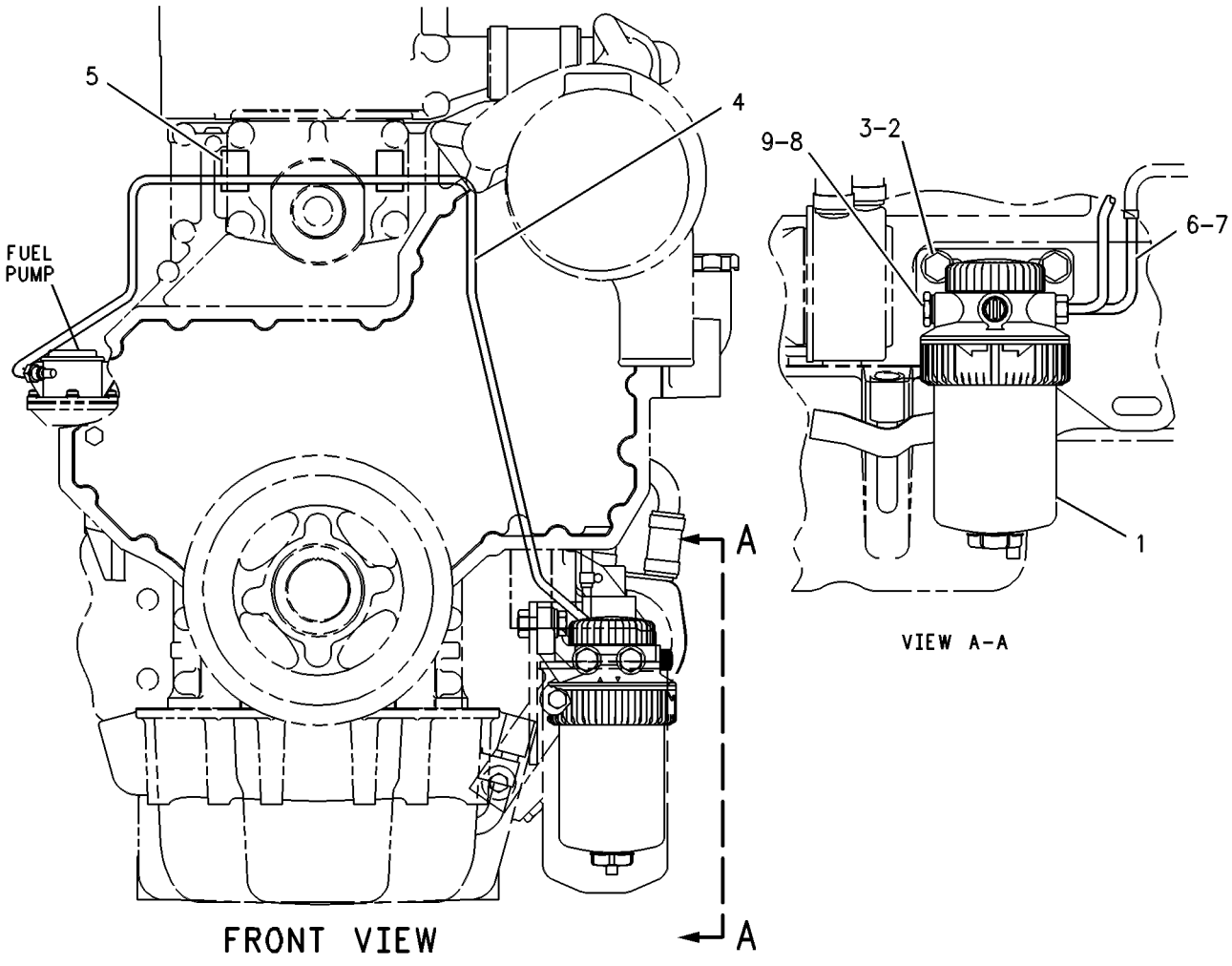

GRAPHIC #1 **<END>** g00259639

179-8291 SEPARATOR GP-WATER

S/N: FDP18400-UP
ELECTRONIC VERSION
PART OF 186-0204 SEPARATOR GP-WATER
AN ATTACHMENT

SMCS-1263 **i01955573**

NOTE	PART NUMBER	QTY	PART NAME 1 2 3 4 5 6 (PRODUCT LEVEL)	SEE PAGE
	131-1812	1	FILTER ELEMENT AS-FUEL (WATER SEPARATOR)	
	121-4480	1	KIT-WATER BASE	
	118-8119	1	NUT	
	118-8118	1	RING-RETAINING	
	193-0618	1	SENSOR GP-MOISTURE (WATER SEPARATOR)	
	192-7875	1	SENSOR AS	
	3E-3371	1	WEDGE-RECEPTACLE LOCK (3 PIN)	
	102-8803	1	KIT-RECEPTACLE (3 PIN)	
			(KIT INCLUDES RECEPTACLE AS AND WEDGE)	
	9X-3401	3	PIN-CONNECTOR	
	192-7876	1	SCREW-MOUNTING	
	192-7877	1	RETAINER	

<END>

186-0204 SEPARATOR GP-WATER

S/N: FDP18400-UP
PART OF 184-9738, 244-1944 CAB AR
AN ATTACHMENT

SMCS-1263 **i01589418**

NOTE	REF NO	GRAPHIC REF	PART NUMBER	QTY	PART NAME 1 2 3 4 5 6 (PRODUCT LEVEL)	SEE PAGE
Y	1	1	**179-8291**	1	SEPARATOR GP-WATER	99
M	2	1	**8T-4196**	2	BOLT (M10X1.5X35MM)	
	3	1	**8T-4121**	2	WASHER-HARD (11X21X2.5MM THK)	
	4	1	**130-7964**	1	TUBE AS	
	5	1	**127-8167**	2	CLIP	
	6	1	**9R-2603**	1	TUBE AS	
	7	1	**4H-2494**	3	SLEEVE-FITTING	
	8	1	**033-7849**	2	PLUG	
	9	1	**032-8100**	2	WASHER (.064MM THK)	
	10	1	**4P-7581**	1	CLIP	

M-METRIC PART
Y-SEPARATE ILLUSTRATION

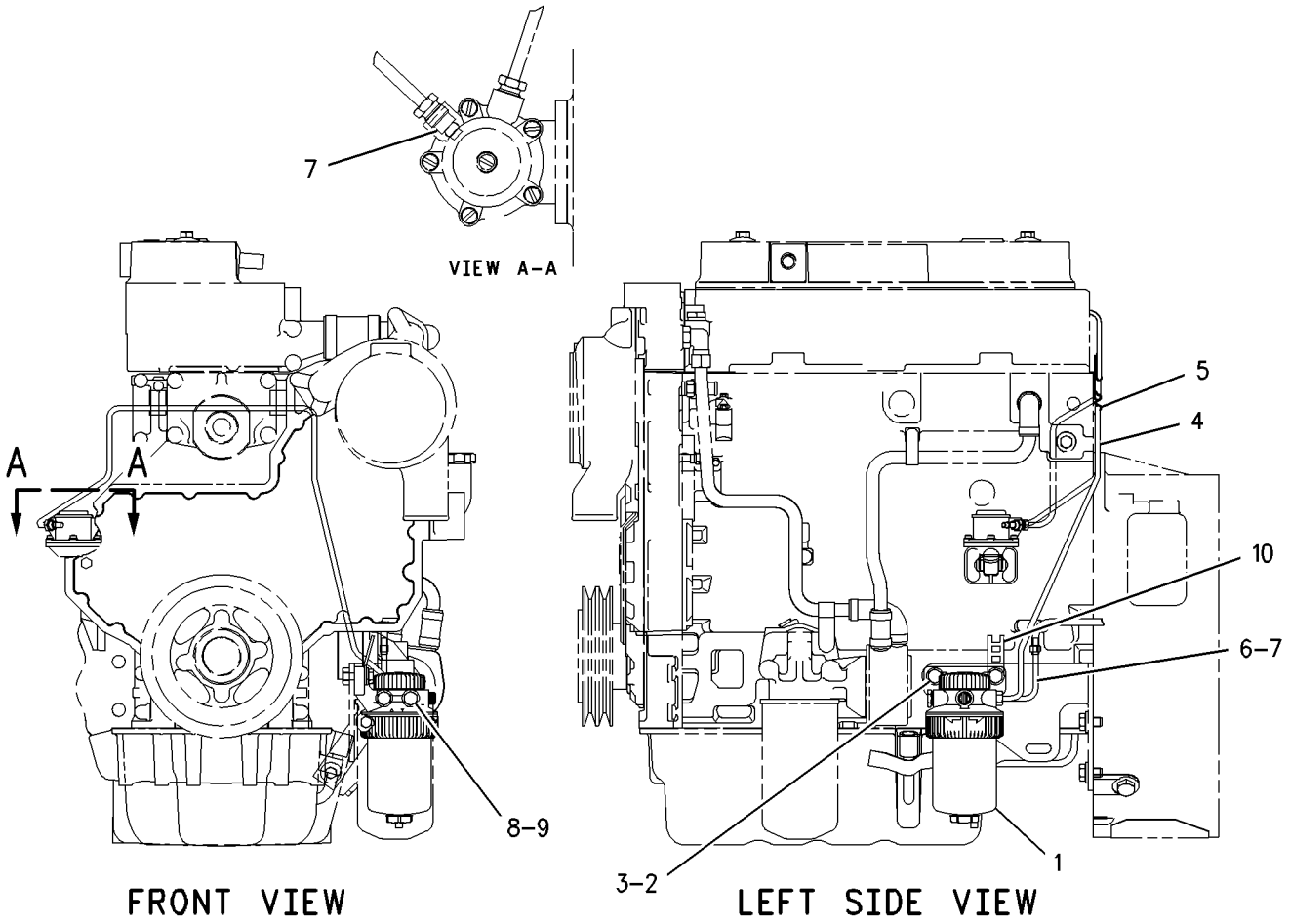

GRAPHIC #1 **<END>** g00834200

FUEL SYSTEM

235-3170 SEPARATOR GP-WATER

S/N: FDP18400-UP

PART OF 214-6892 ENGINE AR

SMCS-1263 **i01991956**

NOTE	REF NO	GRAPHIC REF	PART NUMBER	QTY	PART NAME 1 2 3 4 5 6 (PRODUCT LEVEL)	SEE PAGE
	1	1	**3S-2093**	1	STRAP-CABLE	
	2	1	**069-4080**	1	FITTING-COUPLING	
	3	1	*165-7951*	2	CONNECTOR AS	
		1	**3J-1907**	1	SEAL-O-RING	
		1	**157-1669**	1	CONNECTOR	
Y	4	1	**228-9129**	1	PUMP GP-FUEL PRIMING	97
	5	1	**237-2197**	1	BRACKET AS	
	6	1	**3J-1907**	2	SEAL-O-RING	
	7	1	**8T-4121**	4	WASHER-HARD (11X21X2.5MM THK)	
M	8	1	**8T-4136**	2	BOLT (M10X1.5X25MM)	
M	9	1	**8T-4196**	2	BOLT (M10X1.5X35MM)	
	10	1	**9S-4191**	2	PLUG	

M-METRIC PART
Y-SEPARATE ILLUSTRATION

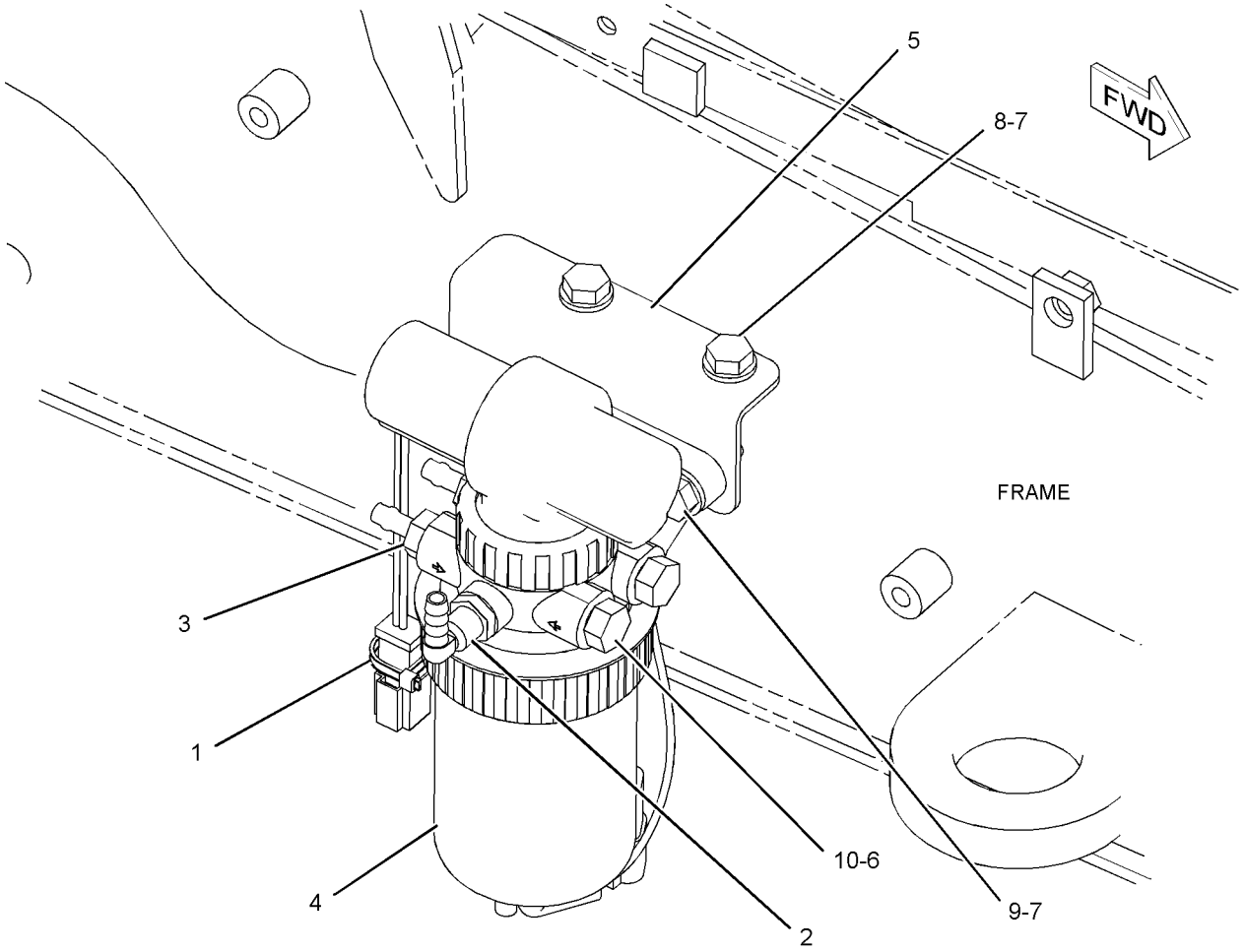

GRAPHIC #1 **<END>** g01040336

FUEL SYSTEM

214-6908 TANK & MTG GP-FUEL

S/N: FDP18400-UP

PART OF 214-6951 CHASSIS AR

SMCS-1273 **i01967038**

NOTE	REF NO	GRAPHIC REF	PART NUMBER	QTY	PART NAME 1 2 3 4 5 6 (PRODUCT LEVEL)	SEE PAGE
	1		**164-3876**	1	STEP AS	
	2		**190-5123**	1	PLATE AS	
	3		**201-1837**	1	TREAD	
Y	4		**214-6949**	1	TANK GP-FUEL	103
	5		**5P-4116**	7	WASHER-HARD (8.8X20.5X2MM THK)	
M	6		**8T-4183**	4	BOLT (M12X1.75X40MM)	
M	7		**8T-4189**	7	BOLT (M8X1.25X20MM)	
M	8		**8T-4200**	4	BOLT (M8X1.25X16MM)	
	9		**8T-4223**	4	WASHER-HARD (13.5X25.5X3MM THK)	
	10		**8T-4224**	4	WASHER-HARD (8.8X16X2MM THK)	

M-METRIC PART
Y-SEPARATE ILLUSTRATION

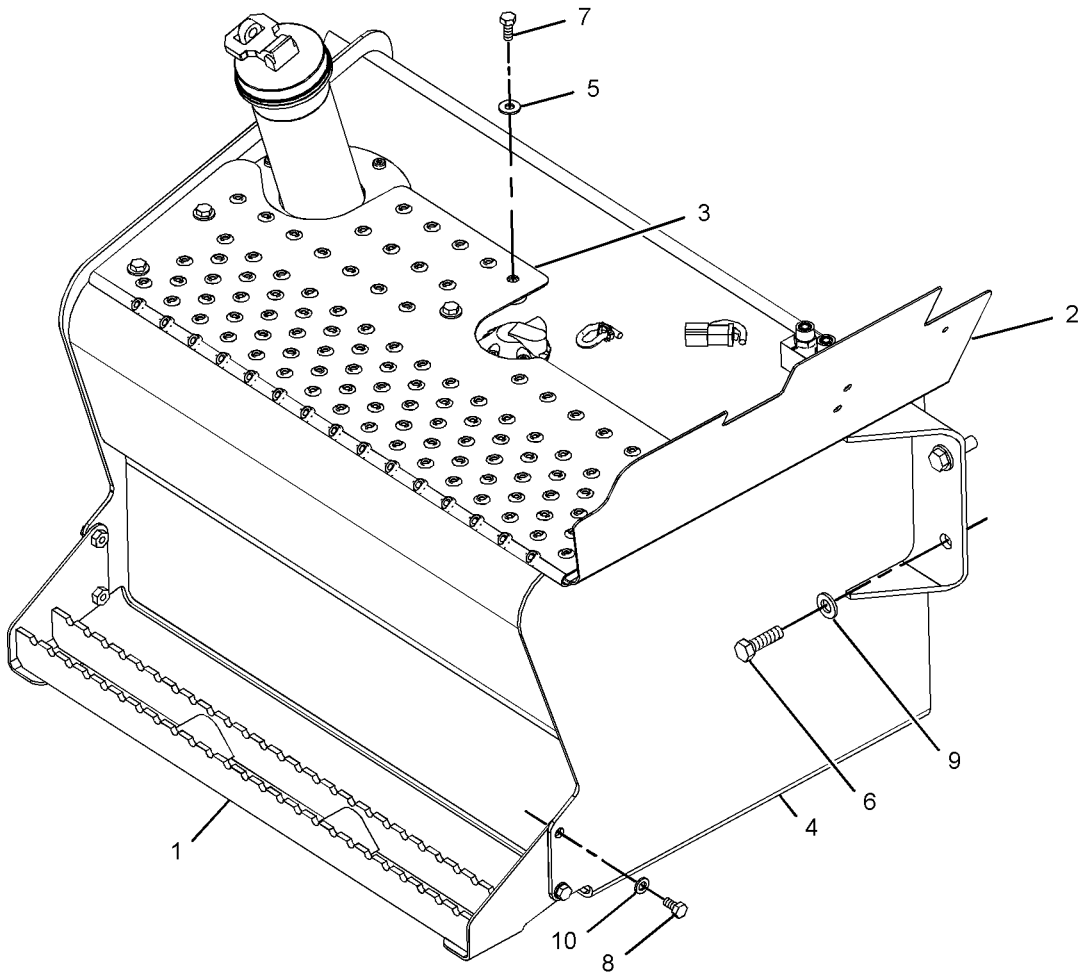

GRAPHIC #1 **<END>** g01022364

FUEL SYSTEM

214-6949 TANK GP-FUEL

S/N: FDP18400-UP

PART OF 214-6908 TANK & MTG GP-FUEL

SMCS-1273 **i02014882**

NOTE	REF NO	GRAPHIC REF	PART NUMBER	QTY	PART NAME 1 2 3 4 5 6 (PRODUCT LEVEL)	SEE PAGE
	1	1	**8L-8413**	1	STRAP-CABLE	
	2	1	**9R-7240**	1	GASKET	
	3	1	**131-0232**	1	COVER	
	4	1	**187-8936**	1	SENDER AS-FUEL LEVEL	
		1	**3E-3365**	1	WEDGE-RECEPTACLE LOCK (2-PIN)	
		1	**102-8802**	1	KIT-RECEPTACLE (2-PIN)	
		1	**186-3735**	2	PIN-CONNECTOR	
Y	5	1	*244-2603*	1	TANK GP-FUEL	104
M	6	1	**123-4950**	1	SCREW-PAN HEAD (M6X1X16-MM)	

M-METRIC PART
Y-SEPARATE ILLUSTRATION

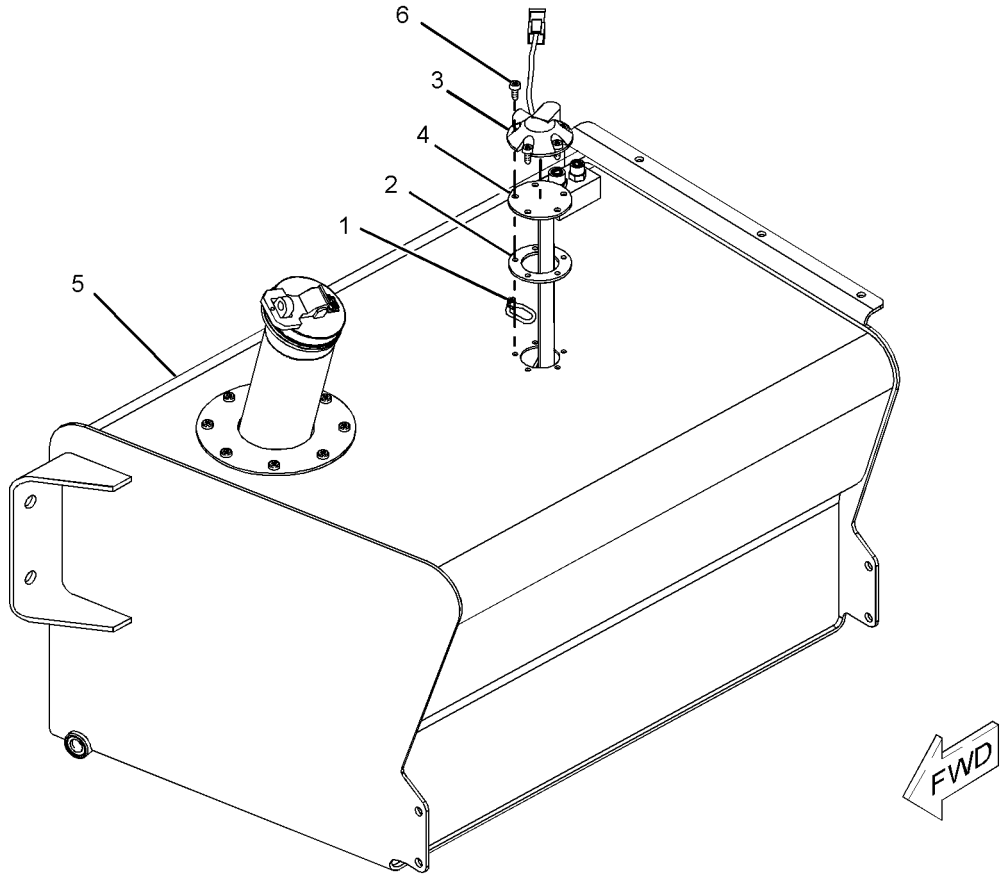

GRAPHIC #1 **<END>** g01042635

244-2603 TANK GP-FUEL

S/N: FDP18400-UP

PART OF 214-6949 TANK GP-FUEL

SMCS-1273 **i02014793**

NOTE	REF NO	GRAPHIC REF	PART NUMBER	QTY	PART NAME 1 2 3 4 5 6 (PRODUCT LEVEL)	SEE PAGE
	1	1	**201-0330**	1	CAP-FUEL	
J	2	1	**201-1835**	1	TUBE AS	
	3	1	**214-6948**	1	TANK AS-FUEL	
			7T-1099	2	LINK	
	4	1	**106-8020**	1	GASKET	
M	5	1	**123-4950**	8	SCREW-PAN HEAD (M6X1X16-MM)	
	6	1	*148-8326*	2	CONNECTOR GP	
			3J-7354	1	SEAL-O-RING	
			6V-8397	1	SEAL-O-RING	
			6V-9872	1	CONNECTOR	
	7	1	*148-8407*	1	PLUG GP	
			3J-1907	1	SEAL-O-RING	
			9S-4191	1	PLUG	

J-180-3730 (FILTER SCREEN) OPTIONAL SERVICE PART
M-METRIC PART

244-2603 **TANK GP-FUEL** ***(contd.)*** **i02014793**

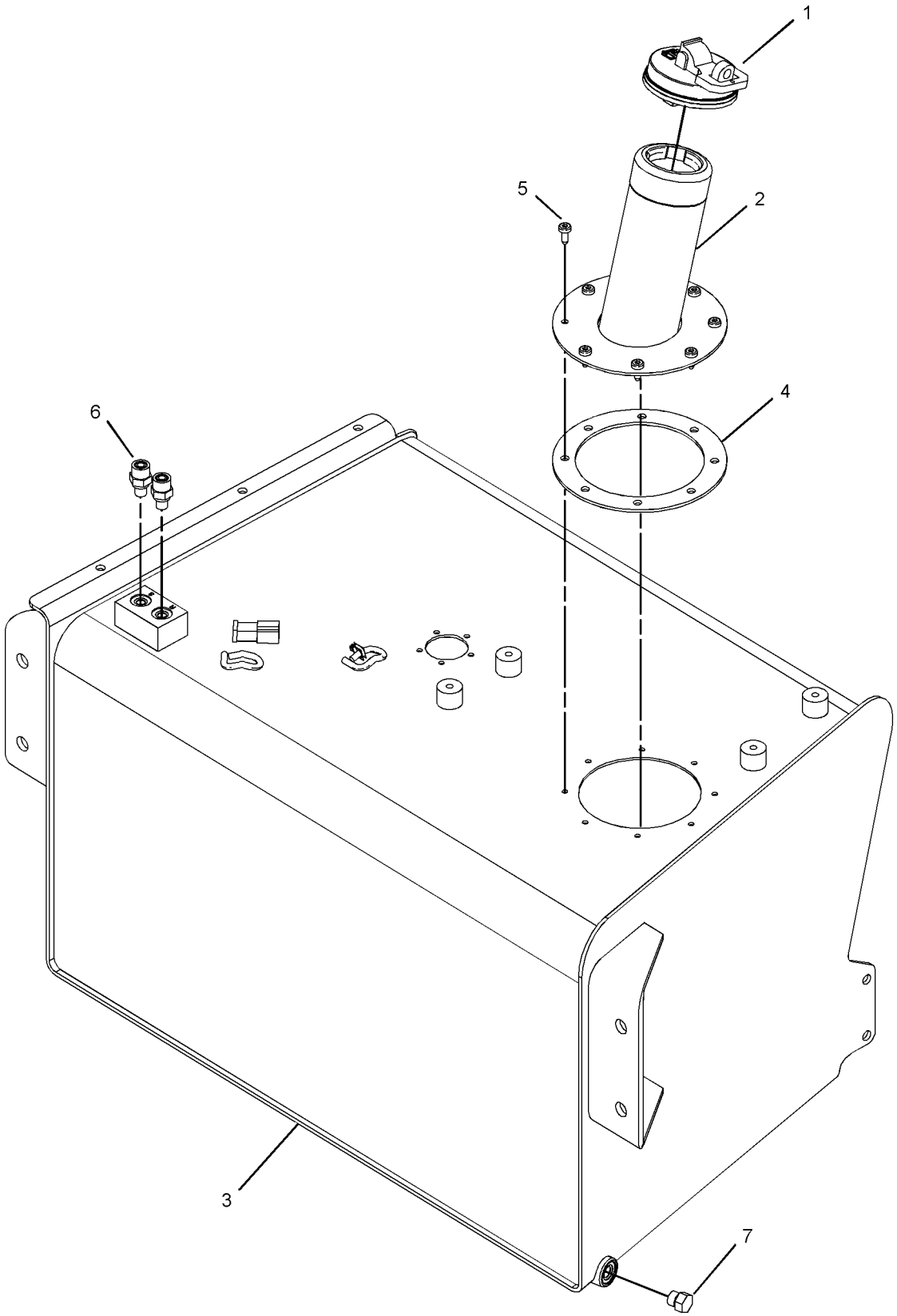

GRAPHIC #1 **<END>** g01042809

ELECTRICAL AND STARTING SYSTEM

237-0027 ALTERNATOR GP-CHARGING

S/N: CRS1-UP

PART OF 234-3060 ENGINE AR-PRIMARY

SMCS-1405 **i01991982**

NOTE	REF NO	GRAPHIC REF	PART NUMBER	QTY	PART NAME 1 2 3 4 5 6 (PRODUCT LEVEL)	SEE PAGE
	1	1	**6B-0933**	1	SPACER (10.31X19.05X6.35MM THK)	
	2	1	**6I-0260**	1	BOLT (M8X1.25X25MM)	
	3	1	**6I-0454**	1	BOLT (M10X1.5X70MM)	
	4	1	**6I-0594**	1	NUT (M10X1.5)	
	5	1	**7W-2632**	1	WASHER (8.5X16.8X1.6MM THK)	
	6	1	**067-6366**	1	WASHER (M8)	
	7	1	**100-8451**	1	BOLT	
	8	1	**113-6349**	1	NUT	
	9	1	**140-8783**	2	BOLT (M10X45MM)	
	10	1	**225-3145**	1	ALTERNATOR GP-CHARGING	
	11	1	**233-9530**	1	BRACKET	
	12	1	**233-9531**	1	LEVER-ADJUSTING	
	13	1	**233-9532**	1	PULLEY-ALTERNATOR	

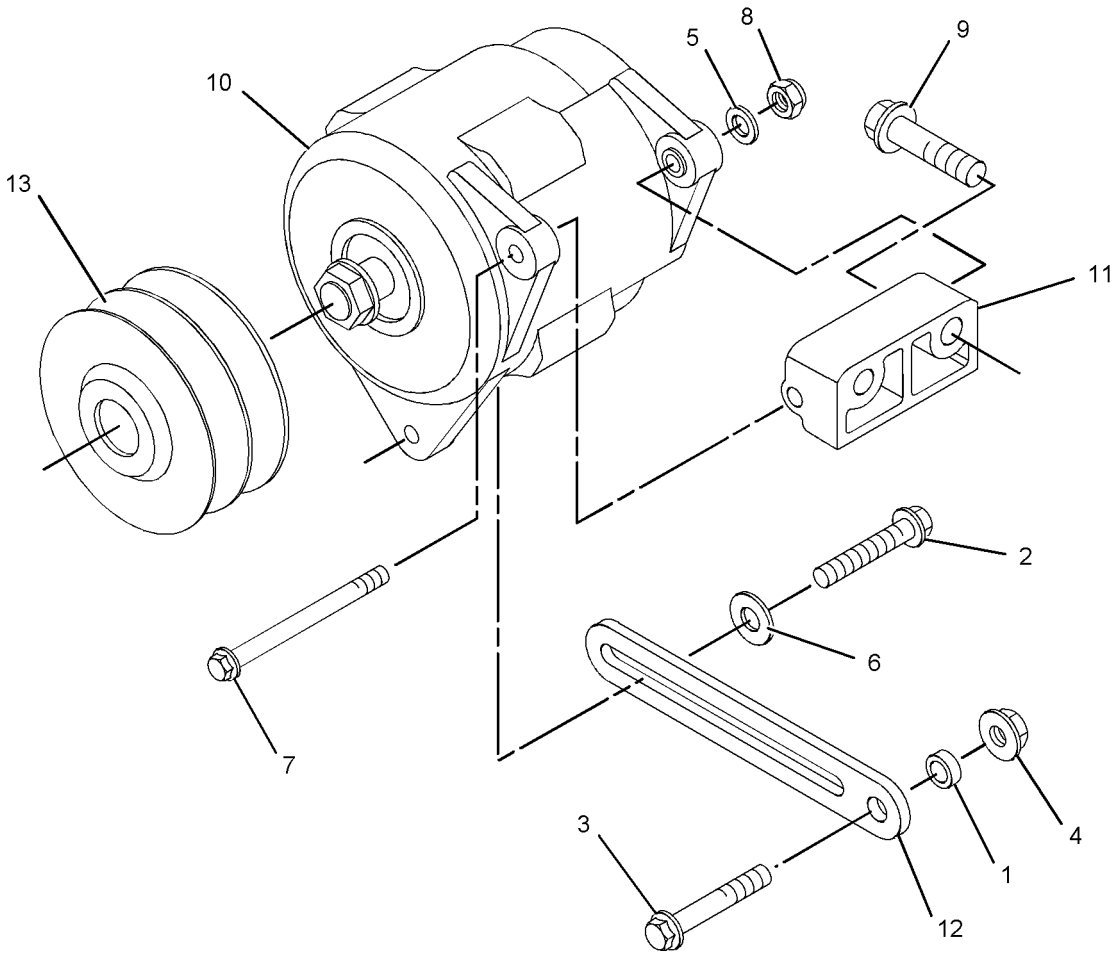

GRAPHIC #1 **<END>** g01039667

119-8016 BATTERY GP

S/N: FDP18400-UP
DUAL BATTERY
AN ATTACHMENT

SMCS-1401 **i02019243**

NOTE	REF NO	GRAPHIC REF	PART NUMBER	QTY	PART NAME 1 2 3 4 5 6 (PRODUCT LEVEL)	SEE PAGE
	1	1	**141-1658**	1	CABLE AS-BATTERY (POSITIVE)	
E		1	**5P-0761**		CABLE (00-GA)(RED) (94CM)	
D		1	**6V-2722**		TUBE-HEAT SHRINK (0.07M)	
		1	**1S-7252**	1	TERMINAL-RING (FOR 3/8-IN BOLT)	
		1	**8Y-8081**		TUBE	
		1	**7T-9987**	1	COVER-TERMINAL	
		1	**8N-0869**	1	COVER-TERMINAL (RED) (RING)	
		1	**3T-3349**	1	STUDBOLT (M18X57.5-MM)	
		1	**1M-6120**	2	NUT (5/16-18-THD)	
	1A	1	**3S-6049**	1	TERMINAL AS-BATTERY (POSITIVE)	
		1	**1M-6119**	1	BOLT (5/16-18X1.375-IN)	
		1	**1M-6120**	1	NUT (5/16-18-THD)	
C	2	1	**178-9242**	2	BRACKET AS	
	3	1	**130-8293**	1	CABLE AS-BATTERY (NEGATIVE)	
E		1	**5P-0747**		CABLE (00-GA)(BLACK) (46CM)	
	3A	1	**1S-7251**	1	TERMINAL-RING (FOR 1/2-IN BOLT)	
	3B	1	**7N-5274**	2	COVER-TERMINAL (BLACK) (BATTERY)	
	3C	1	**3S-6050**	2	TERMINAL AS-BATTERY (NEGATIVE)	
					(EACH INCLUDES)	
		1	**1M-6119**	1	BOLT (5/16-18X1.375-IN)	
		1	**1M-6120**	1	NUT (5/16-18-THD)	
	4	1	**7X-7729**	4	WASHER (11X25X3-MM THK)	
M	5	1	**8T-5005**	2	BOLT (M10X1.50X70-MM)	
	6	1	**3T-5760**	2	BATTERY (12-VOLT, 750-AMPERE) (750 AMP)	
	7	1	**4H-2558**	1	GROMMET	
	8	1	**8T-4223**	1	WASHER-HARD (13.5X25.5X3-MM THK)	
	9	1	**7K-1181**	2	STRAP-CABLE	
	10	1	**4P-8134**	1	CLIP	
	11	1	**3S-2093**	2	STRAP-CABLE	
M	12	1	**8T-4133**	2	NUT (M10X1.5-THD)	
	13	1	**038-9317**	2	TREAD	
M	14	1	**8T-4137**	2	BOLT (M10X1.5X20-MM)	

C-CHANGE FROM PREVIOUS TYPE
D-ORDER BY THE METER
E-ORDER BY THE CENTIMETER
M-METRIC PART

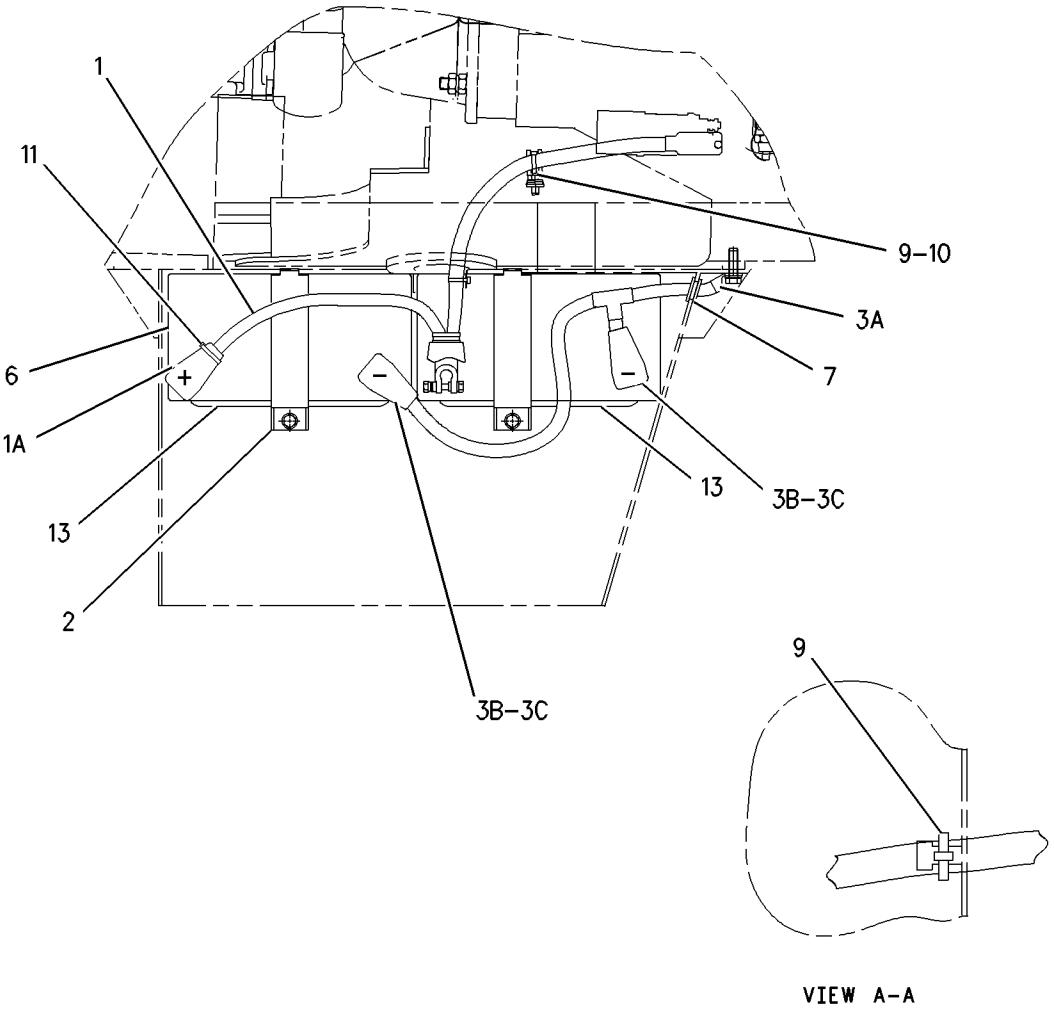

GRAPHIC #1 **<END>** g00802459

122-5865 BATTERY GP

S/N: FDP18400-UP
AN ATTACHMENT

SMCS-1401 **i02019248**

NOTE	REF NO	GRAPHIC REF	PART NUMBER	QTY	PART NAME 1 2 3 4 5 6 (PRODUCT LEVEL)	SEE PAGE
	1	1	**3T-5760**	1	BATTERY (12-VOLT, 750-AMPERE) (750 AMP)	
	2	1	**8T-4223**	1	WASHER-HARD (13.5X25.5X3-MM THK)	
	3	1	**7X-7729**	2	WASHER (11X25X3-MM THK)	
C	4	1	**178-9242**	1	BRACKET AS	
	5	1	**130-8292**	1	CABLE AS-BATTERY (NEGATIVE)	
E		1	**5P-0747**		CABLE (00-GA)(BLACK) (13CM)	
	5A	1	**1S-7251**	1	TERMINAL-RING (FOR 1/2-IN BOLT)	
	5B	1	**7N-5274**	1	COVER-TERMINAL (BLACK) (BATTERY)	
	5C	1	**3S-6050**	1	TERMINAL AS-BATTERY (NEGATIVE)	
		1	**1M-6119**	1	BOLT (5/16-18X1.375-IN)	
		1	**1M-6120**	1	NUT (5/16-18-THD)	
	6	1	**141-1656**	1	CABLE AS-BATTERY (POSITIVE)	
		1	**1S-7252**	1	TERMINAL-RING (FOR 3/8-IN BOLT)	
E		1	**5P-0761**		CABLE (00-GA)(RED) (56CM)	
D		1	**6V-2722**		TUBE-HEAT SHRINK (0.07M)	
		1	**8N-0869**	1	COVER-TERMINAL (RED)	
		1	**8Y-8081**		TUBE	
		1	**3S-6049**	1	TERMINAL AS-BATTERY (POSITIVE)	
		1	**1M-6120**	1	NUT (5/16-18-THD)	
		1	**1M-6119**	1	BOLT (5/16-18X1.375-IN)	
	7	1	**4H-2558**	1	GROMMET	
	8	1	**7K-1181**	2	STRAP-CABLE	
M	9	1	**8T-5005**	1	BOLT (M10X1.50X70-MM)	
	10	1	**4P-8134**	1	CLIP	
	11	1	**3S-2093**	1	STRAP-CABLE	
M	12	1	**8T-4133**	1	NUT (M10X1.5-THD)	
	13	1	**038-9317**	1	TREAD	
M	14	1	**8T-4137**	2	BOLT (M10X1.5X20-MM)	
	15	1	**8T-4121**	1	WASHER-HARD (11X21X2.5-MM THK)	

C-CHANGE FROM PREVIOUS TYPE
D-ORDER BY THE METER
E-ORDER BY THE CENTIMETER
M-METRIC PART

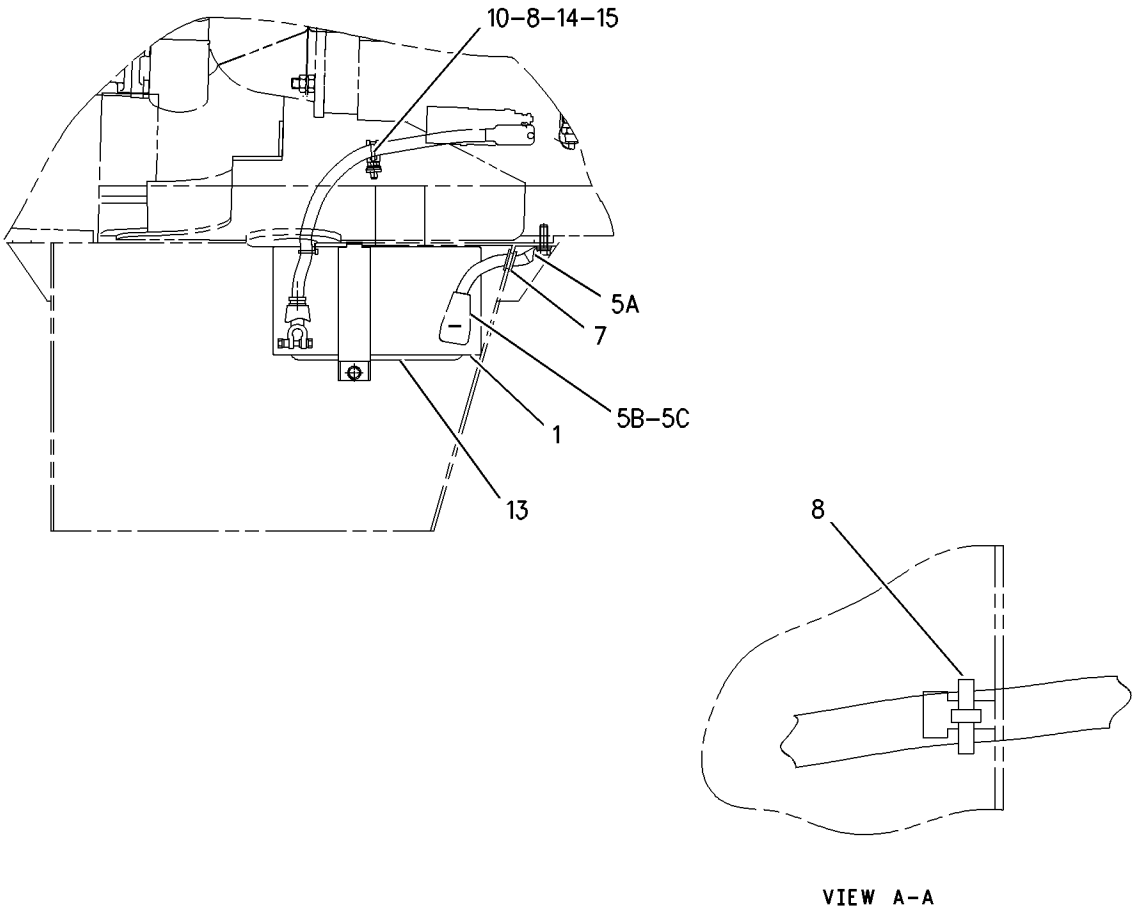

GRAPHIC #1 **<END>** g00852156

235-2853 BATTERY GP

S/N: FDP18400-UP

PART OF 214-6951 CHASSIS AR

SMCS-1401 **i02012891**

NOTE	REF NO	GRAPHIC REF	PART NUMBER	QTY	PART NAME 1 2 3 4 5 6 (PRODUCT LEVEL)	SEE PAGE
	1	1	**7K-1181**	2	STRAP-CABLE	
	2	1	**038-9317**	1	TREAD	
	3	1	**240-4639**	1	BRACKET AS	
	4	1	**213-6088**	1	CABLE AS-BATTERY (NEGATIVE)	
		1	**1S-7251**	1	TERMINAL-RING (FOR 1/2IN BOLT)	
E		1	**5P-0747**		CABLE (00GA)(BLACK) (61CM)	
		1	**1M-6119**	1	BOLT (5/16-18X1.375 IN)	
		1	**1M-6120**	2	NUT (5/16-18 THD)	
	5	1	**230-6368**	1	BATTERY (12 VOLT, HEAVY DUTY)	
	6	1	**235-5776**	1	CABLE AS (POSITIVE)	
		1	**1S-7251**	1	TERMINAL-RING (FOR 1/2IN BOLT)	
		1	**5P-0761**		CABLE (00GA)(RED) (95CM)	
		1	**8L-8413**	1	STRAP-CABLE	
		1	**1M-6119**	1	BOLT (5/16-18X1.375 IN)	
		1	**1M-6120**	1	NUT (5/16-18 THD)	
		1	**6V-8801**	2	NUT (3/8-16 THD)	
	7	1	**4H-2558**	1	GROMMET	
	8	1	**7X-7729**	2	WASHER (11X25X3MM THK)	
M	9	1	**8T-4133**	1	NUT (M10X1.5 THD)	
M	10	1	**8T-4137**	1	BOLT (M10X1.5X20MM)	
M	11	1	**8T-5005**	1	BOLT (M10X1.50X70MM)	

E-ORDER BY THE CENTIMETER
M-METRIC PART

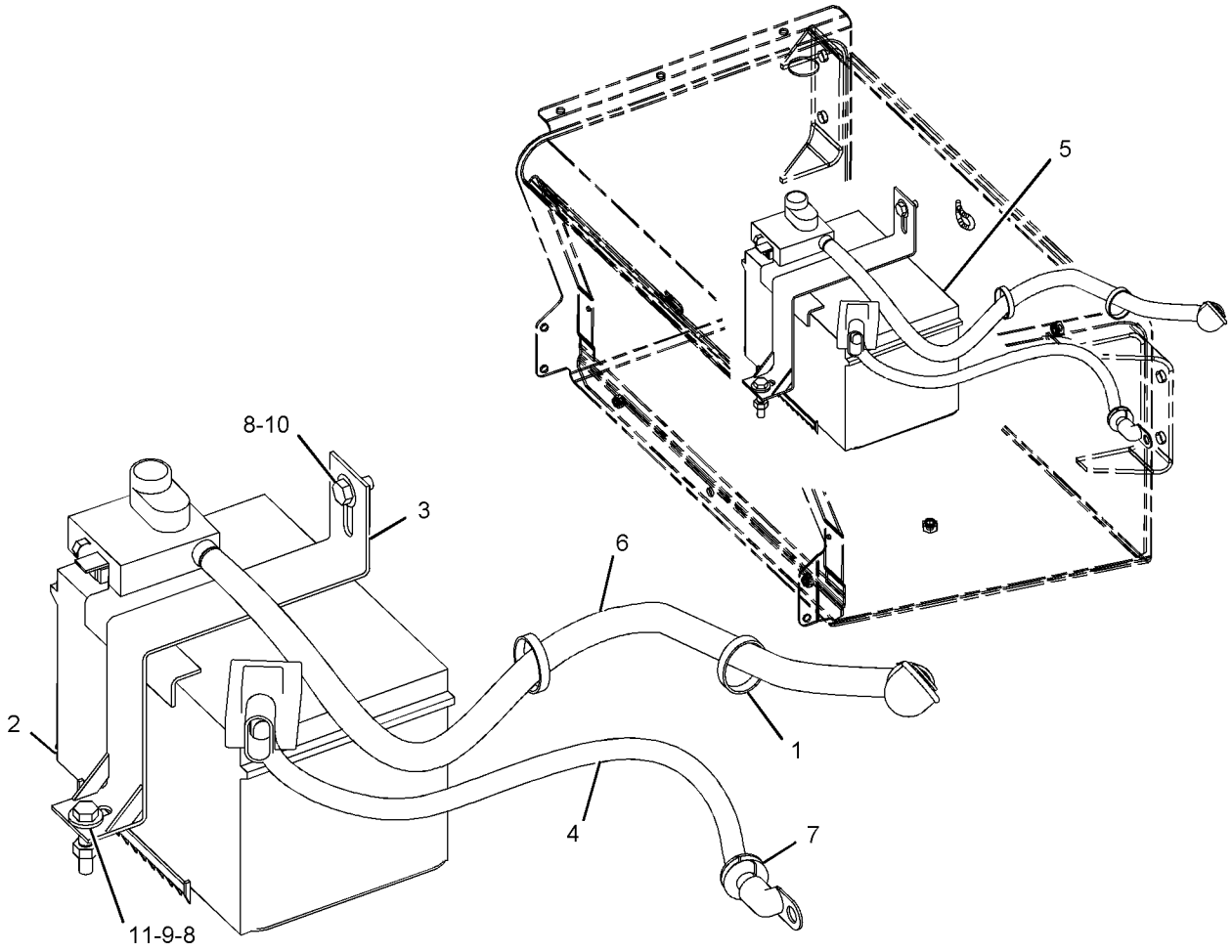

GRAPHIC #1 **<END>** g01034109

235-2854 BATTERY GP–HEAVY DUTY

S/N: FDP18400-UP
AN ATTACHMENT

SMCS-1401 **i02019251**

NOTE	REF NO	GRAPHIC REF	PART NUMBER	QTY	PART NAME 1 2 3 4 5 6 (PRODUCT LEVEL)	SEE PAGE
	1	1	**038-9317**	1	TREAD	
	2	1	**213-6091**	1	CABLE AS-BATTERY (POSITIVE)	
E	2A	1	**5P-0761**		CABLE (00-GA)(RED) (35CM)	
	2B	1	**7T-9987**	1	COVER-TERMINAL	
		1	**8L-8413**	1	STRAP-CABLE	
		1	**8L-8413**	2	STRAP-CABLE	
		1	**8N-0869**	1	COVER-TERMINAL (RED)	
		1	**8S-3020**	1	TERMINAL-CABLE	
E	2C	1	**8Y-8081**		TUBE (35CM)	
	2D	1	**3S-6049**	1	TERMINAL AS-BATTERY (POSITIVE)	
		1	**1M-6119**	1	BOLT (5/16-18X1.375-IN)	
		1	**1M-6120**	1	NUT (5/16-18-THD)	
	3	1	**213-6092**	1	CABLE AS-BATTERY (NEGATIVE)	
	3A	1	**1S-7252**	1	TERMINAL-RING (FOR 3/8-IN BOLT)	
E	3B	1	**5P-0747**		CABLE (00-GA)(BLACK) (47CM)	
	3C	1	**7N-5274**	1	COVER-TERMINAL (BLACK)	
		1	**8L-8413**	1	STRAP-CABLE	
		1	**8L-8413**	2	STRAP-CABLE	
		1	**9G-8909**	1	COVER-TERMINAL (BLACK)	
	3D	1	**3S-6050**	1	TERMINAL AS-BATTERY (NEGATIVE)	
		1	**1M-6119**	1	BOLT (5/16-18X1.375-IN)	
		1	**1M-6120**	1	NUT (5/16-18-THD)	
	4	1	**230-6368**	1	BATTERY (12-VOLT, HEAVY DUTY)	
	5	1	**240-4639**	1	BRACKET AS	
	6	1	**7X-7729**	2	WASHER (11X25X3-MM THK)	
M	7	1	**8T-4133**	1	NUT (M10X1.5-THD)	
M	8	1	**8T-4137**	1	BOLT (M10X1.5X20-MM)	
M	9	1	**8T-5005**	1	BOLT (M10X1.50X70-MM)	

E-ORDER BY THE CENTIMETER
M-METRIC PART

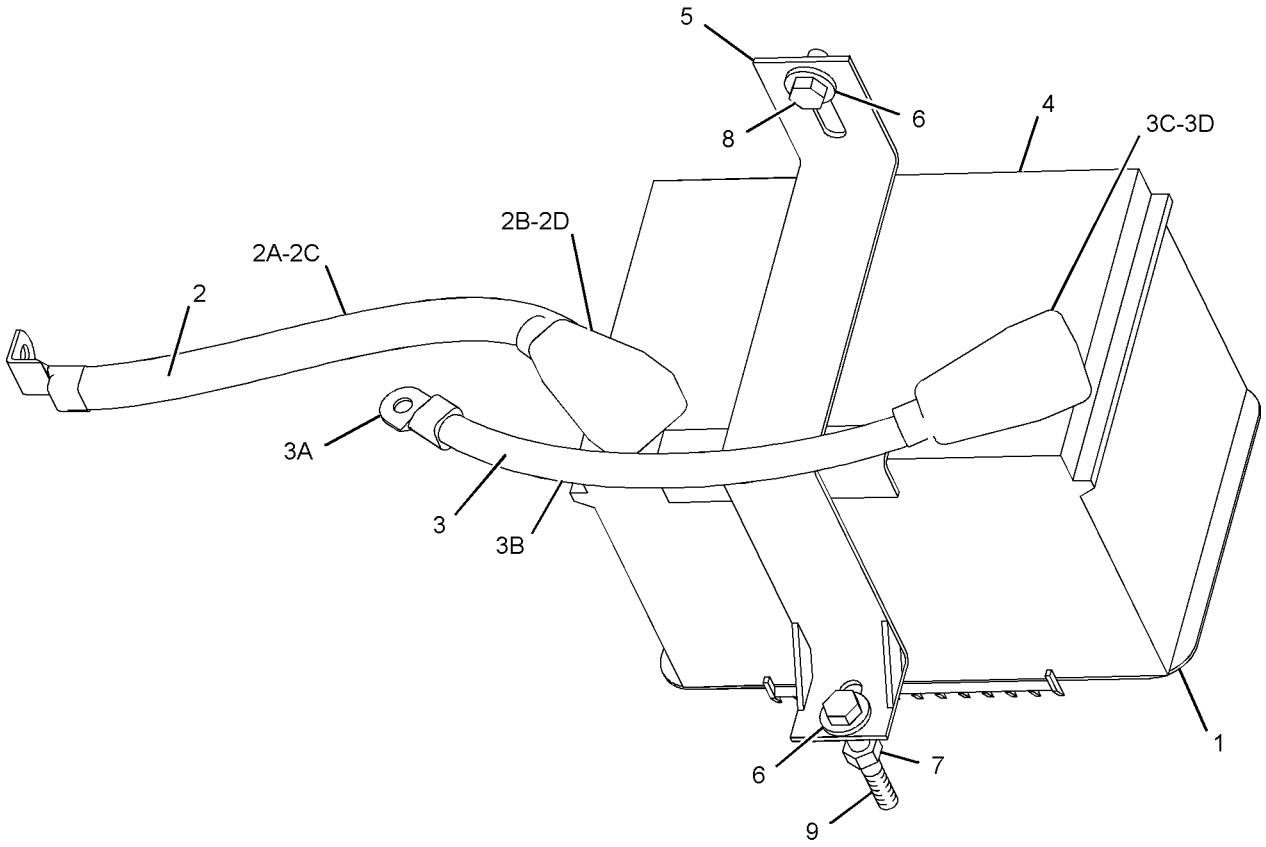

GRAPHIC #1 **<END>** g01023322

ELECTRICAL AND STARTING SYSTEM

232-6661 GLOW PLUG GP

S/N: CRS1-UP

PART OF 234-3060 ENGINE AR-PRIMARY

SMCS-1412 **i01988281**

NOTE	REF NO	GRAPHIC REF	PART NUMBER	QTY	PART NAME 1 2 3 4 5 6 (PRODUCT LEVEL)	SEE PAGE
	1	1	**244-3316**	1	SUPPORT	
	2	1	**232-6662**	4	GLOW PLUG	

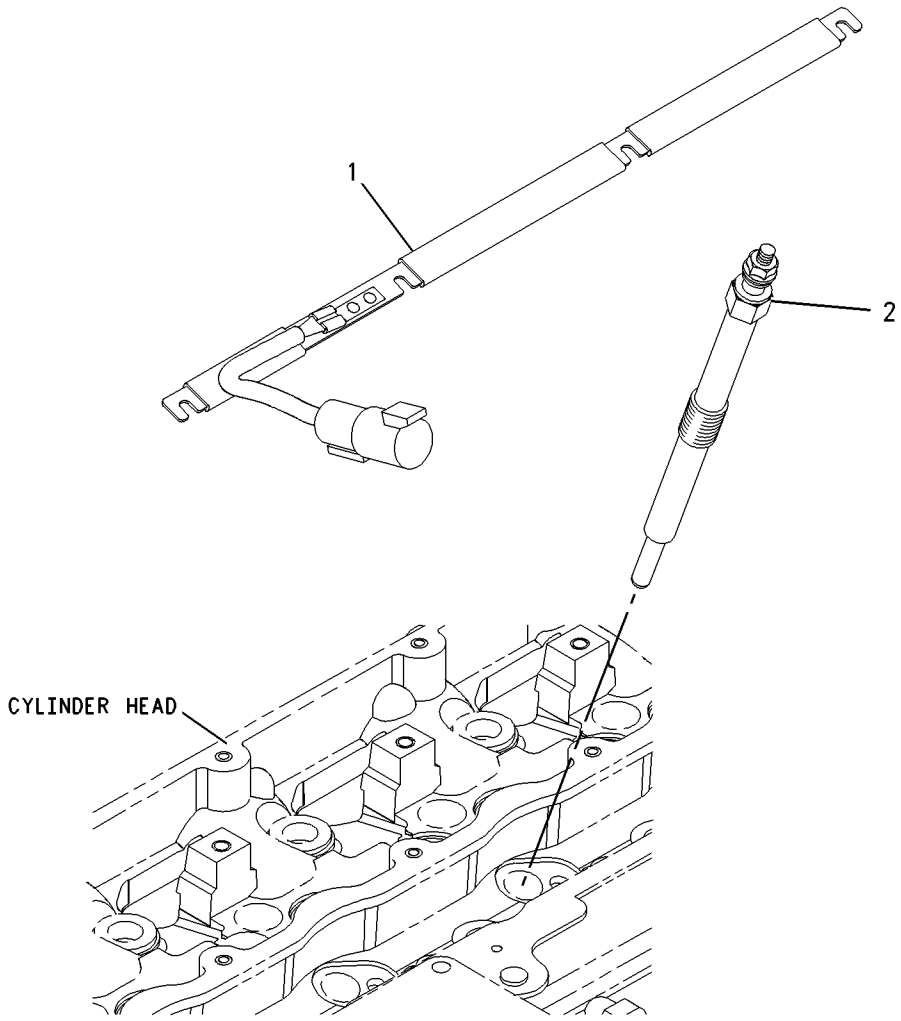

GRAPHIC #1 **<END>** g00950927

166-0658 HEATER GP-JACKET WATER

S/N: FDP18400-UP
120 VOLT
AN ATTACHMENT

SMCS-1383 **i01028780**

NOTE	REF NO	GRAPHIC REF	PART NUMBER	QTY	PART NAME 1 2 3 4 5 6 (PRODUCT LEVEL)	SEE PAGE
	1	1	**165-8357**	1	BRACKET AS	
M	2	1	**8T-4189**	2	BOLT (M8X1.25X20MM)	
	3	1	**8T-4224**	2	WASHER-HARD (2MM THK)	
	4	1	**130-0165**	1	RECEPTACLE-COVERED	
	5	1	**161-4150**	1	CORD AS	
	6	1	**161-8198**	1	ELEMENT AS-JACKET WATER HEATER	
		1	**161-8200**	1	KIT-SEAL	
	7	1	**3S-2093**	7	STRAP-CABLE (1.75IN DIA)	

M-METRIC PART

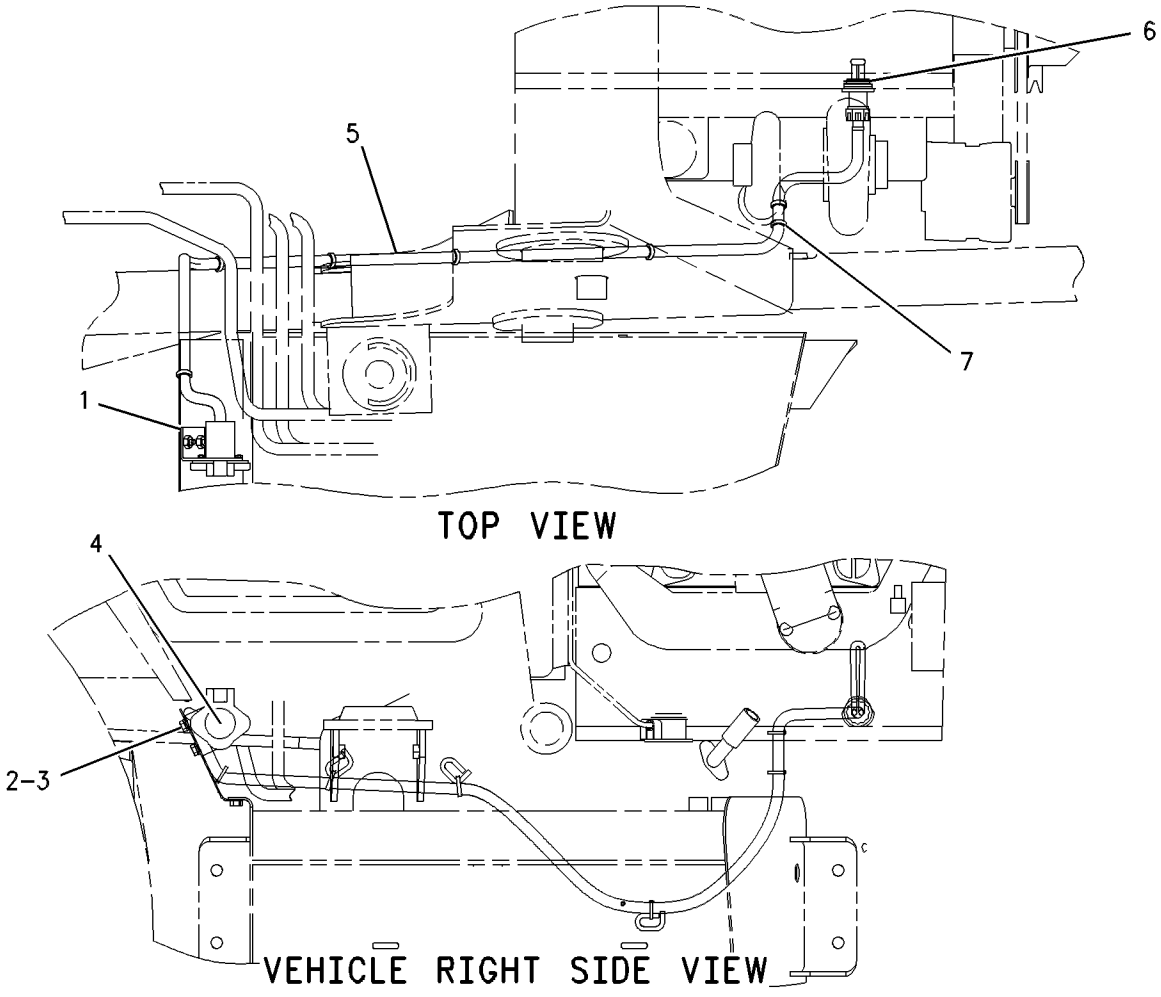

GRAPHIC #1 **<END>** g00533739

166-0659 HEATER GP-JACKET WATER

S/N: FDP18400-UP
240 VOLT
AN ATTACHMENT

SMCS-1383 **i01655307**

NOTE	REF NO	GRAPHIC REF	PART NUMBER	QTY	PART NAME 1 2 3 4 5 6 (PRODUCT LEVEL)	SEE PAGE
	1	1	**161-8199**	1	ELEMENT AS-JACKET WATER HEATER	
		1	**161-8200**	1	KIT-SEAL	
	2	1	**162-3874**	1	CORD AS (JACKET WATER HEATER)	
	3	1	**3S-2093**	7	STRAP-CABLE	

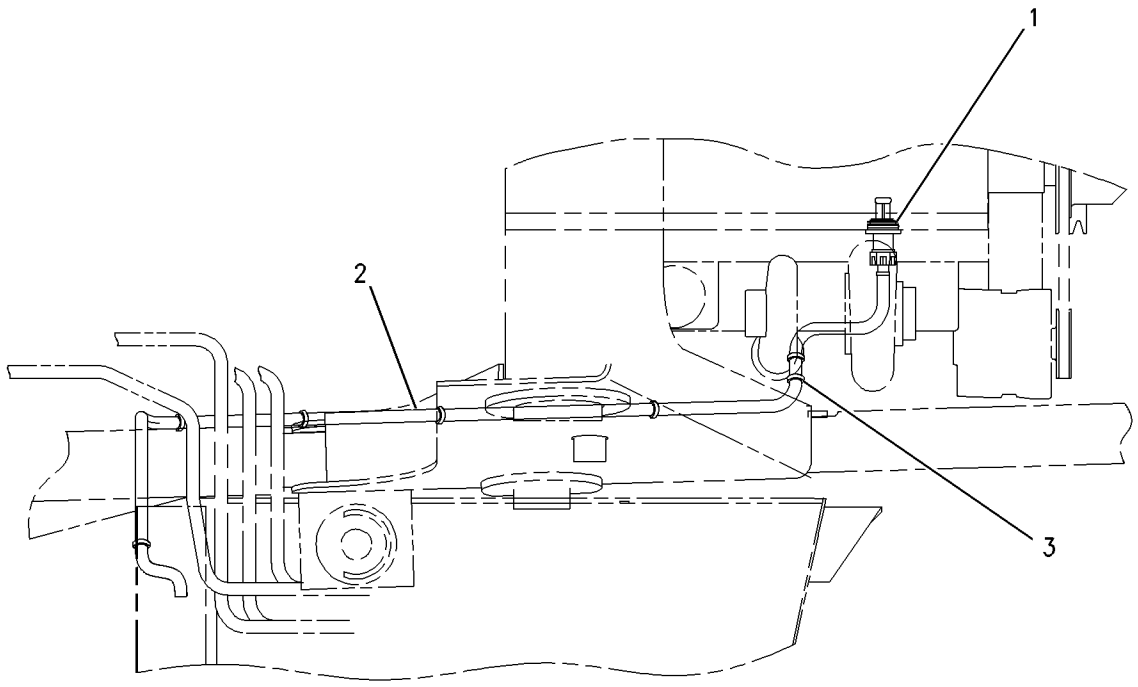

TOP VIEW

GRAPHIC #1 **<END>** g00712660

234-1711 HEATER GP-JACKET WATER

S/N: FDP18400-UP
AN ATTACHMENT

SMCS-1383 **i02012717**

NOTE	REF NO	GRAPHIC REF	PART NUMBER	QTY	PART NAME 1 2 3 4 5 6 (PRODUCT LEVEL)	SEE PAGE
	1	1	*231-3054*	1	HEATER GP-JACKET WATER	
		1	**219-3273**	1	ELEMENT AS-JACKET WATER HEATER (120-VOLT, 1000-WATT)	
		1	**133-6517**	1	CAP AS-DUST	
		1	**133-3413**	1	KIT-SEAL	
					(KIT INCLUDES SEAL, SPACER, & RINGS.)	
		1	**231-3052**	1	CORD AS	
	2	1	**130-0165**	1	RECEPTACLE AS	
		1	**1M-1230**	2	NUT & LOCK AS	
		1	**168-4511**	2	SCREW-PAN HEAD (NO 10X25.4-MM)	
	3	1	**165-8357**	1	BRACKET AS	
M		1	**8T-3612**	2	NUT-WELD (M8X1.25-THD)	
	4	1	**3S-2093**	3	STRAP-CABLE	
M	5	1	**8T-4189**	2	BOLT (M8X1.25X20-MM)	
M	6	1	**8T-4224**	2	WASHER-HARD (8.8X16X2-MM THK)	

M-METRIC PART

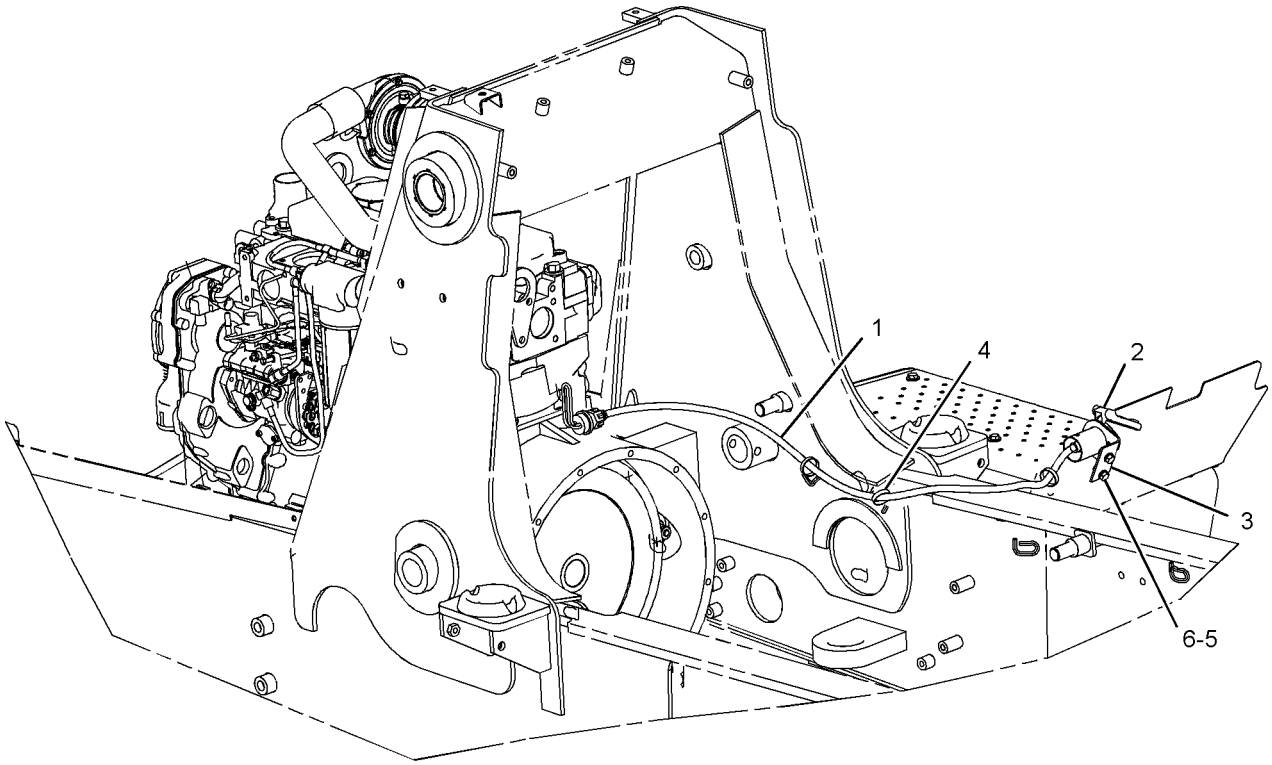

GRAPHIC #1 **<END>** g01042021

ELECTRICAL AND STARTING SYSTEM

186-0310 INSTALLATION GP-SECURITY

S/N: FDP18400-UP

AN ATTACHMENT

SMCS-7631 **i02019328**

NOTE	REF NO	GRAPHIC REF	PART NUMBER	QTY	PART NAME 1 2 3 4 5 6 (PRODUCT LEVEL)	SEE PAGE
	1	1	**6I-1418**	3	SPACER (8.2X12.7X28.7-MM THK)	
B	2	1	**6K-0806**	8	STRAP-CABLE	
	3	1	**8T-9655**	6	MOUNT (ISOLATION)	
	4	1	**9N-0869**	5	WASHER-HARD (8.8X25.5X2.0-MM THK)	
	5	1	**115-1615**	1	RELAY AS (12-VOLT)	
	6	1	**156-6155**	1	CONTROL GP-UNPROGRAMMED (SECURITY)	
		1	**7X-6315**	1	STRAP AS-GROUND	
		1	**134-4126**	1	WASHER (4.52X8.28X.76-MM THK)	
		1	**184-2472**	1	SCREW-PAN HEAD (NO.8-32X9.52-MM)	
	7	1	**205-0826**	1	FILM (SECURITY) (MACHINE SECURITY SYSTEM)	
	8	1	**206-5162**	1	KEY AS-ELECTRONIC (YELLOW)	
	9	1	**206-5165**	1	KEY AS-ELECTRONIC (GRAY)	
	10	1	**206-5203**	1	COIL AS (EXCITER)	
		1	**102-8802**	1	KIT-RECEPTACLE (2-PIN)	
					(KIT SERVICES RECEPTACLE AS AND WEDGE)	
		1	**198-5389**	1	FILM (IGNITION SWITCH)	
		1	**205-8257**	1	COIL AS (EXCITER)	
		1	**207-5271**	1	WASHER	
	11	1	**208-3702**	1	COIL AS	
		1	**102-8804**	1	KIT-RECEPTACLE (4-PIN)	
					(KIT SERVICES RECEPTACLE AS AND WEDGE)	
	12	1	**211-1813**	1	HARNESS AS-CONTROL (SECURITY)	
		1	**102-8802**	1	KIT-RECEPTACLE (2-PIN)	
					(KIT SERVICES RECEPTACLE AS AND WEDGE)	
		1	**102-8803**	1	KIT-RECEPTACLE (3-PIN)	
					(KIT SERVICES RECEPTACLE AS AND WEDGE)	
		1	**102-8804**	1	KIT-RECEPTACLE (4-PIN)	
					(KIT SERVICES RECEPTACLE AS AND WEDGE)	
		1	**8L-8413**	17	STRAP-CABLE	
		1	**8T-8737**	8	PLUG-SEAL	
		1	**9X-1054**	1	PLUG AS-CONNECTOR (4-PIN)	
		1	**150-6766**	1	PLUG AS-CONNECTOR (26-PIN)	
		1	**159-9322**	1	SEAL-O-RING	
		1	**155-2260**	2	KIT-CONNECTING PLUG (3-PIN)	
					(KIT SERVICES PLUG AS AND WEDGE)	
		1	**155-2270**	1	KIT-CONNECTING PLUG (2-PIN)	
					(KIT SERVICES PLUG AS AND WEDGE)	
		1	**155-2271**	1	KIT-CONNECTING PLUG (4-PIN)	
					(KIT SERVICES PLUG AS AND WEDGE)	
M	13	1	**129-3178**	1	LOCKNUT (M6X1-THD)	
M	14	1	**147-4502**	1	BOLT-SOCKET HEAD (M6X1X10.0-MM)	
	15	1	**165-5655**	1	LAMP AS (12-VOLT)	
	16	1	**4P-7581**	1	CLIP	
M	17	1	**5C-7261**	3	NUT (M8X1.25-THD)	
M	18	1	**7X-0818**	3	BOLT (M8X1.25X45-MM)	

B-USE AS REQUIRED
M-METRIC PART

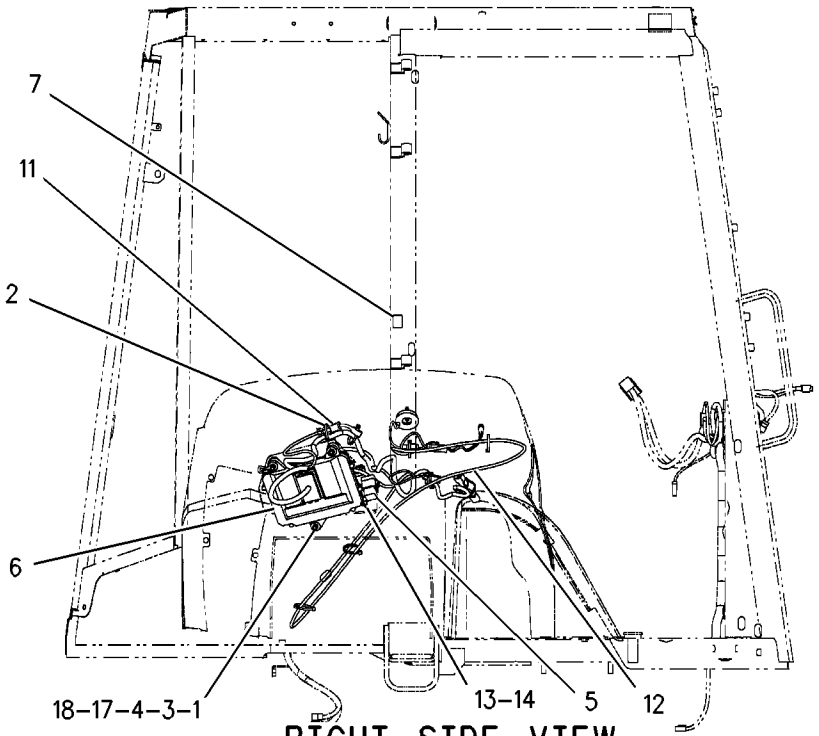

RIGHT SIDE VIEW

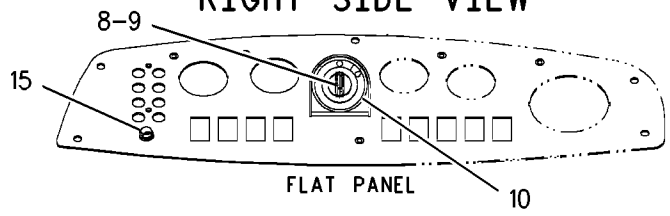

FLAT PANEL

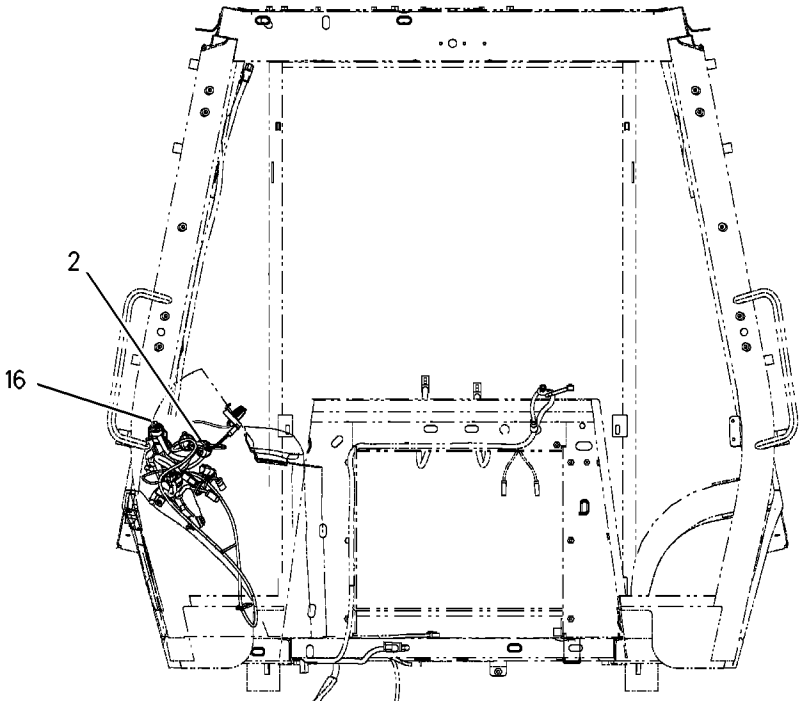

FRONT VIEW

GRAPHIC #1 **<END>** g00859939

207-5262 INSTALLATION GP-SECURITY

S/N: FDP18400-UP

PART OF 222-9924 INSTALLATION GP-SECURITY

SMCS-7631 **i02014197**

NOTE	REF NO	GRAPHIC REF	PART NUMBER	QTY	PART NAME 1 2 3 4 5 6 (PRODUCT LEVEL)	SEE PAGE
	1	1	*156-6155*	1	CONTROL GP-UNPROGRAMMED (SECURITY)	
	1A	1	**7X-6315**	1	STRAP AS-GROUND	
	1B	1	**184-2472**	1	SCREW-PAN HEAD (NO.8-32X9.52-MM)	
	1C	1	**134-4126**	1	WASHER (4.52X8.28X.76-MM THK)	
	2	1	**232-9737**	1	SOFTWARE GP-MACHINE (SECURITY)	
	3	1	**206-5162**	2	KEY AS-ELECTRONIC (YELLOW)	
					—OR—	
		1	**206-5165**	1	KEY AS-ELECTRONIC (GRAY)	
	4	1	**219-6314**	2	KEY RING (IDENTIFICATION)	

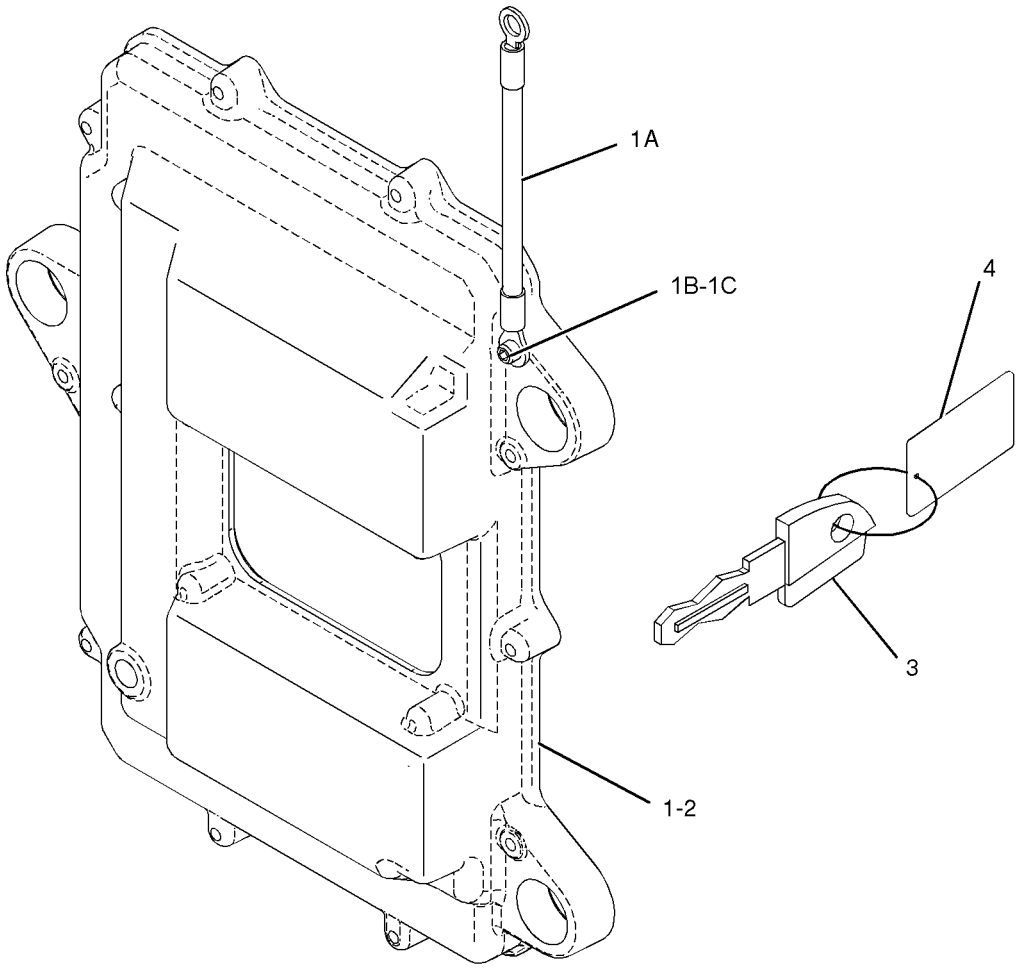

GRAPHIC #1 **<END>** g01026135

222-9924 INSTALLATION GP-SECURITY

S/N: FDP18400-UP
FIELD INSTALLATION

SMCS-7631 **i02019354**

NOTE	PART NUMBER	QTY	PART NAME 1 2 3 4 5 6 (PRODUCT LEVEL)	SEE PAGE
M	**7X-0818**	3	BOLT (M8X1.25X45-MM)	
M	**147-4502**	1	BOLT-SOCKET HEAD (M6X1X10.0-MM)	
	4P-7581	1	CLIP	
	205-8257	1	COIL AS (EXCITER)	
	186-3735	2	PIN-CONNECTOR	
	207-5271	1	WASHER	
	222-3870	1	COIL AS (FERRITE)	
	102-8802	1	KIT-RECEPTACLE (2-PIN)	
	186-3735	4	PIN-CONNECTOR	
	9X-1813		SLEEVE (15CM)	
Y	**207-5262**	1	INSTALLATION GP-SECURITY	121
	198-5389	1	FILM (IGNITION SWITCH)	
	205-0826	1	FILM (SECURITY)	
	224-3385	1	FILM (START) (MACHINE SECURITY SYSTEM)	
	211-1813	1	HARNESS AS-CONTROL (SECURITY)	
	102-8802	3	KIT-RECEPTACLE (2-PIN)	
	102-8803	1	KIT-RECEPTACLE (3-PIN)	
	102-8804	1	KIT-RECEPTACLE (4-PIN)	
	155-2260	2	KIT-CONNECTING PLUG (3-PIN)	
	155-2270	3	KIT-CONNECTING PLUG (2-PIN)	
	155-2271	1	KIT-CONNECTING PLUG (4-PIN)	
	102-8802	1	KIT-RECEPTACLE (2-PIN)	
	102-8803	1	KIT-RECEPTACLE (3-PIN)	
	165-5655	1	LAMP AS (12-VOLT)	
	186-3735	3	PIN-CONNECTOR	
M	**129-3178**	1	LOCKNUT (M6X1-THD)	
	8T-9655	6	MOUNT (ISOLATION)	
M	**5C-7261**	3	NUT (M8X1.25-THD)	
	115-1615	1	RELAY AS (12-VOLT)	
	6I-1418	3	SPACER (8.2X12.7X28.7-MM THK)	
	7K-1181	9	STRAP-CABLE	
	9N-0869	6	WASHER-HARD (8.8X25.5X2.0-MM THK)	

M-METRIC PART
Y-SEPARATE ILLUSTRATION

<END>

234-4328 LAMP GP-FLOOD

S/N: FDP18400-UP
12-VOLT. SUSPENDED
PART OF 241-0098 LIGHTING GP-FLOOD & SIGNAL

SMCS-1429, 1434 **i02001265**

NOTE	REF NO	GRAPHIC REF	PART NUMBER	QTY	PART NAME 1 2 3 4 5 6 (PRODUCT LEVEL)	SEE PAGE
	1	1	**9W-0607**	1	LAMP (12 VOLT, 55 WATT)	
M	2	1	**8T-4133**	1	NUT (M10X1.5 THD)	
	3	1	**9X-4244**	2	SCREW	
	4	1	**202-6614**	1	LENS AS (FLOOD)	
	5	1	**234-7730**	1	BODY AS	
	6	1	**164-7556**	1	CLIP	
	7	1	**234-7731**	1	BRACKET AS	

M-METRIC PART

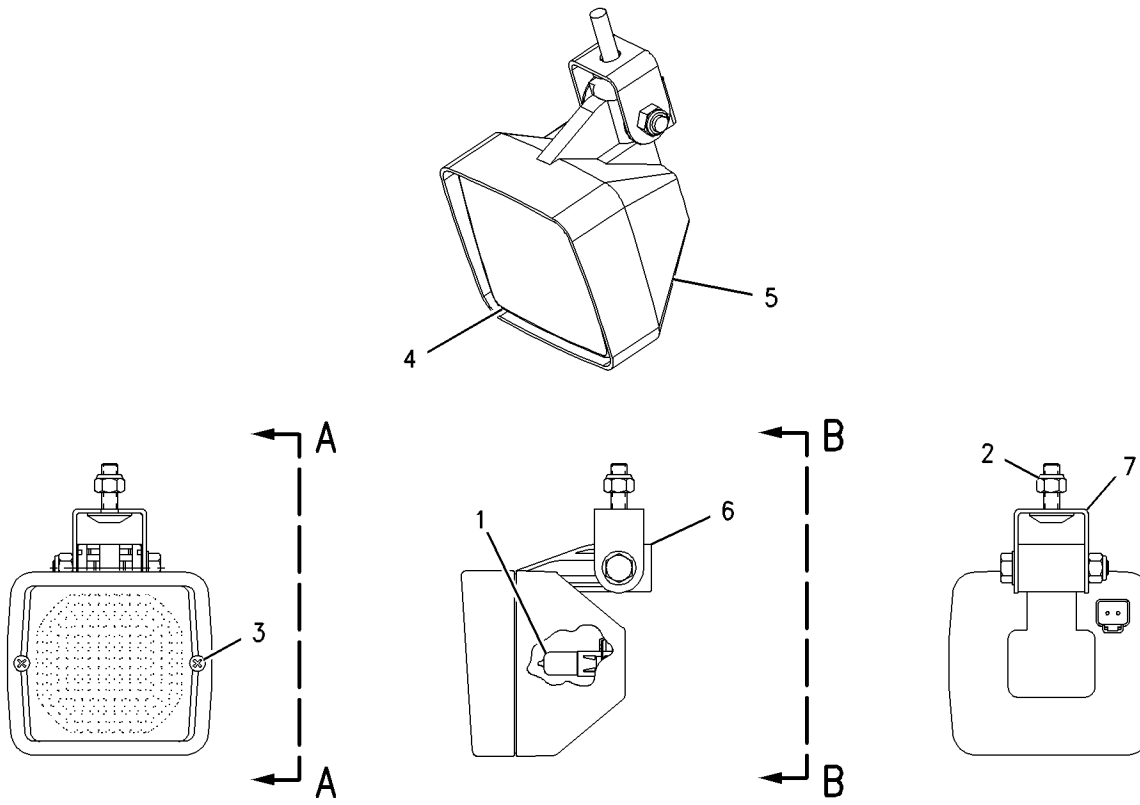

VIEW A-A VIEW B-B

GRAPHIC #1 **<END>** g01004557

115-1716 LAMP GP-SIGNAL

S/N: FDP18400-UP

PART OF 241-0098 LIGHTING GP-FLOOD & SIGNAL

SMCS-1429, 1430, 1432 **i02001588**

NOTE	REF NO	GRAPHIC REF	PART NUMBER	QTY	PART NAME 1 2 3 4 5 6 (PRODUCT LEVEL)	SEE PAGE
	1	1	**9W-3326**	1	LAMP (12-VOLT, 24-WATT)	
	2	1	**102-8802**	1	KIT-RECEPTACLE (2-PIN)	
					(KIT INCLUDES RECEPTACLE AS. & WEDGE)	
M	3	1	**173-2685**	2	SCREW-FLAT HEAD (M5X.8X50MM)	
	4	1	**173-8340**	2	SCREW-PAN HEAD	
	5	1	**174-8957**	1	LENS (AMBER)	

M-METRIC PART

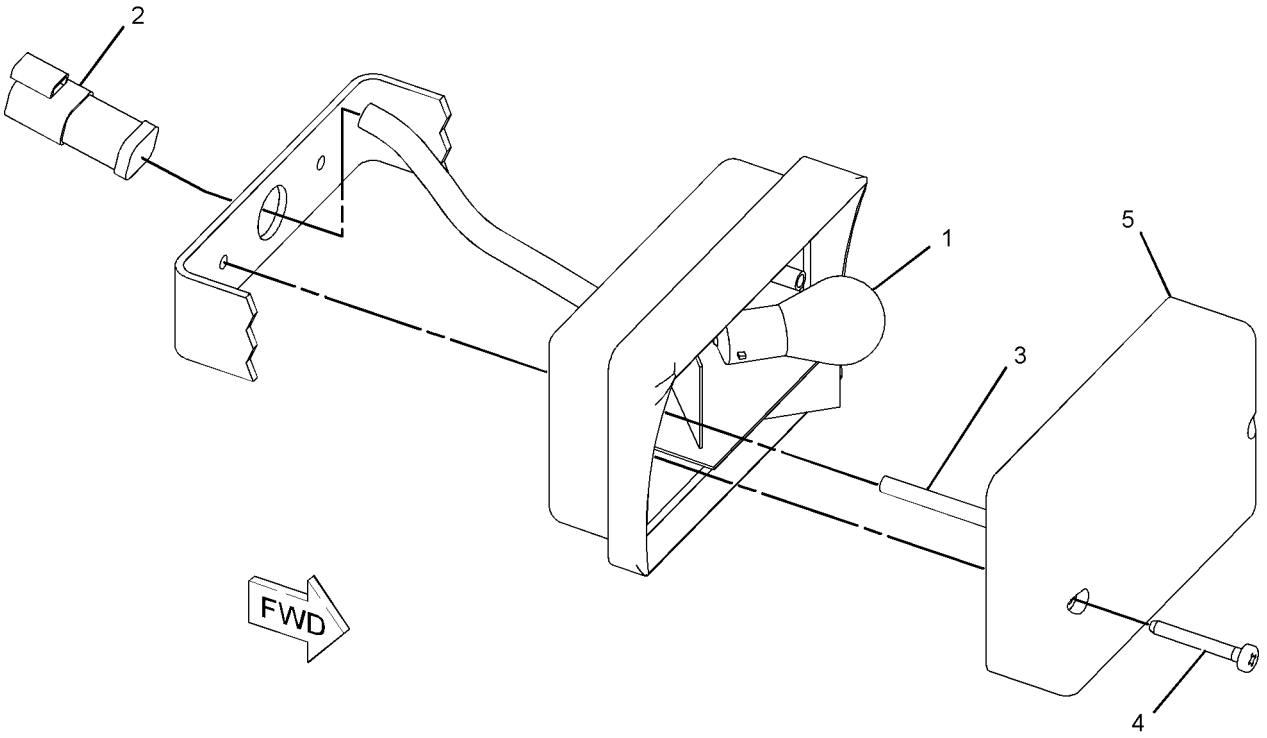

GRAPHIC #1 **<END>** g01038265

115-1715 LAMP GP-STOP & TAIL

S/N: FDP18400-UP

PART OF 241-0098 LIGHTING GP-FLOOD & SIGNAL

SMCS-1432 **i01953291**

NOTE	REF NO	GRAPHIC REF	PART NUMBER	QTY	PART NAME 1 2 3 4 5 6 (PRODUCT LEVEL)	SEE PAGE
	1	1	**3C-6516**	1	LAMP (12VOLT/21/5WATT)	
	2	1	**9W-3326**	1	LAMP (12 VOLT/21 WATT)	
	3	1	**102-8804**	1	KIT-RECEPTACLE (4 PIN)	
					(KIT SERVICES RECEPTACLE AS AND WEDGE)	
M	4	1	**173-2685**	2	SCREW-FLAT HEAD	
	5	1	**173-8340**	2	SCREW-PAN HEAD	
	6	1	**174-8958**	1	LENS	

M-METRIC PART

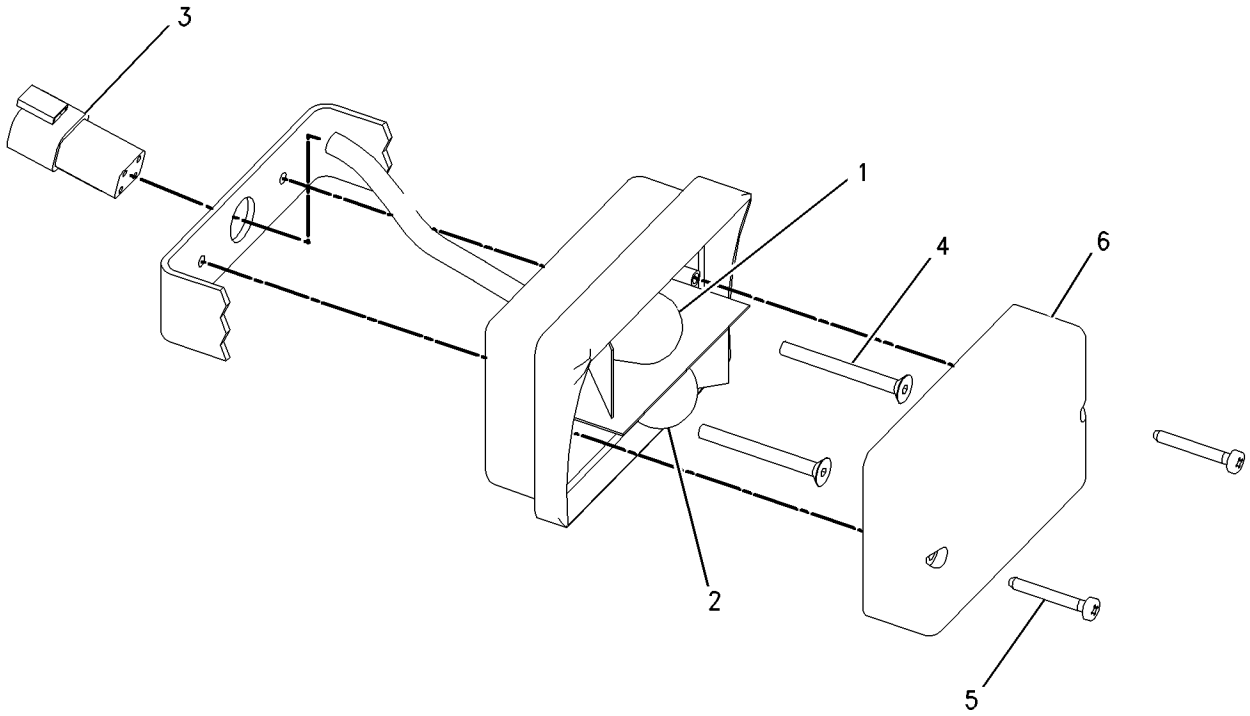

GRAPHIC #1 **<END>** g00848968

180-3663 LAMP GP-WARNING BEACON

S/N: FDP18400-UP
PART OF 141-8292 LIGHTING GP-WARNING BEACON
AN ATTACHMENT

SMCS-1431 **i01647428**

NOTE	REF NO	GRAPHIC REF	PART NUMBER	QTY	PART NAME 1 2 3 4 5 6 (PRODUCT LEVEL)	SEE PAGE
	1	1	**185-7015**	1	LAMP GP	
	2	1	**8T-4205**	3	WASHER-HARD (7.2X14.5X2MM THK)	
	3	1	**9X-8121**	1	LENS-AMBER	
	4	1	**9X-8118**	1	LAMP (12 VOLT)	
	5	1	**9X-8139**	1	BELT-DRIVE	
M	6	1	**5C-2890**	3	NUT (M6X1 THD)	
	7	1	**179-5434**	1	PLUG AS	
	8	1	**3K-8782**	1	FUSE (10 AMP)	

M-METRIC PART

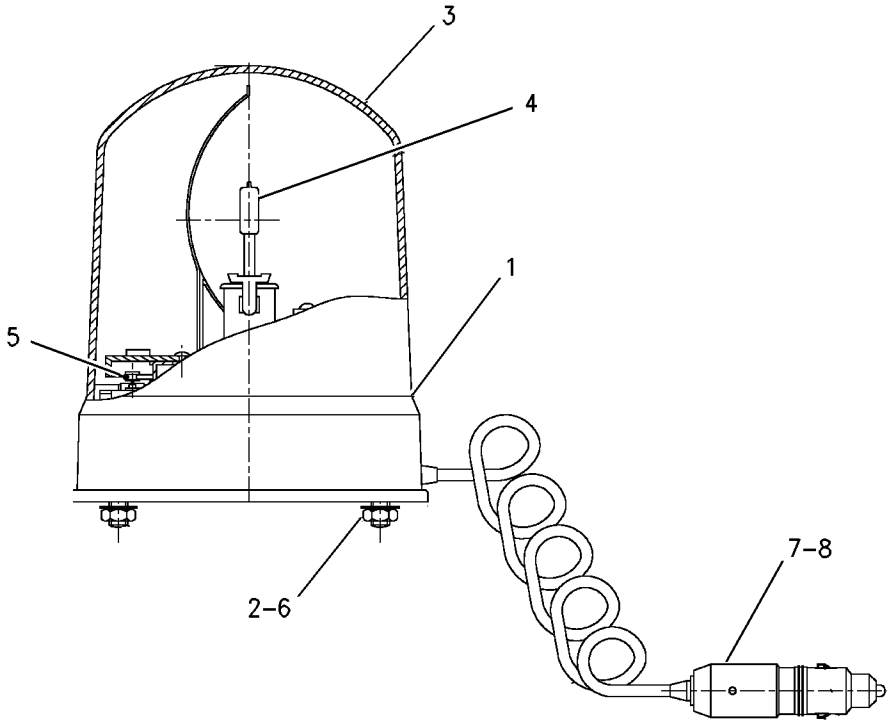

GRAPHIC #1 **<END>** g00851234

180-3664 LAMP GP-WARNING BEACON

S/N: FDP18400-UP
PART OF 104-9502 LIGHTING GP-WARNING BEACON
AN ATTACHMENT

SMCS-1431 **i01647422**

NOTE	REF NO	GRAPHIC REF	PART NUMBER	QTY	PART NAME 1 2 3 4 5 6 (PRODUCT LEVEL)	SEE PAGE
	1	1	**185-7016**	1	LAMP GP	
	2	1	**9X-8139**	1	BELT-DRIVE	
	3	1	**9X-8121**	1	LENS-AMBER	
	4	1	**9X-8118**	1	LAMP (12 VOLT)	
	5	1	**179-5434**	1	PLUG AS	
	6	1	**3K-8782**	1	FUSE (10 AMP)	

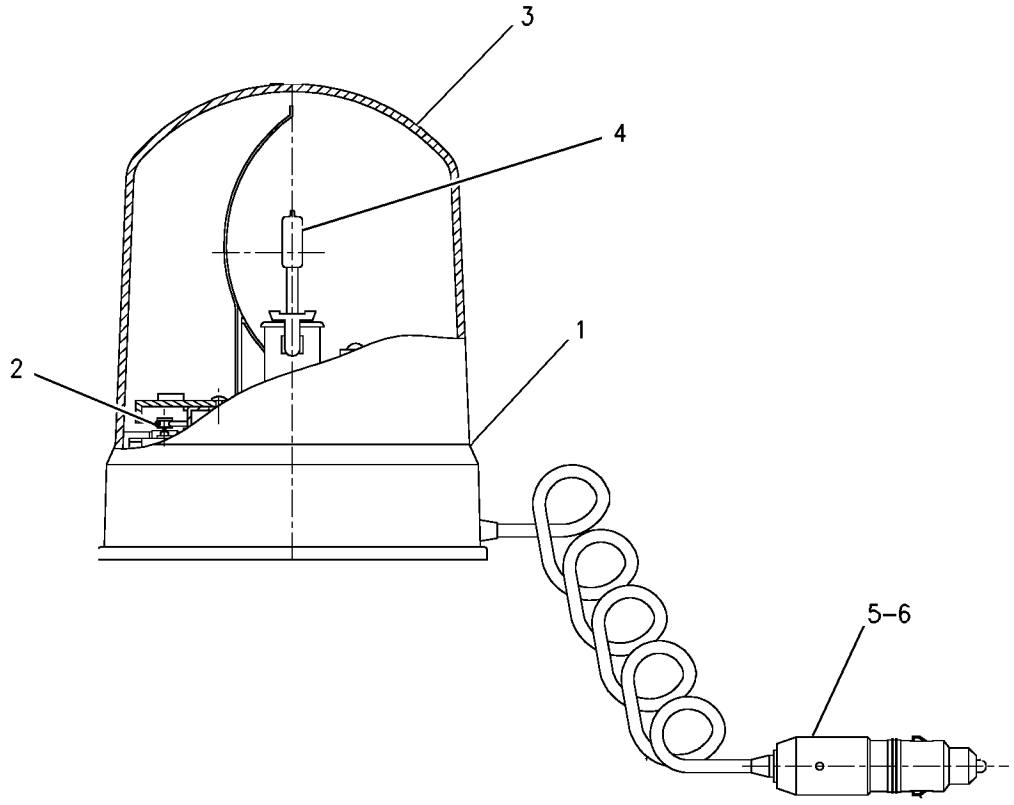

GRAPHIC #1 **<END>** g00851233

ELECTRICAL AND STARTING SYSTEM

241-0098 LIGHTING GP-FLOOD & SIGNAL

S/N: FDP18400-UP

PART OF 214-6951 CHASSIS AR

SMCS-1429, 1430, 1432, 1434 **i02007498**

NOTE	REF NO	GRAPHIC REF	PART NUMBER	QTY	PART NAME 1 2 3 4 5 6 (PRODUCT LEVEL)	SEE PAGE
	1	1	**9R-1499**	2	REFLECTOR	
	2	2	**105-8069**	4	LAMP GP-FLOOD	
					(EACH INCLUDES)	
		2	**9W-0607**	1	LAMP (12-VOLT, 55-WATT)	
		2	**142-5789**	4	SCREW	
	3	2	**113-8490**	2	FUSE (10-AMPERE)	
	4	2	**113-8491**	2	FUSE (15-AMPERE)	
Y	5	2	**115-1715**	2	LAMP GP-STOP & TAIL	125
Y	6	2	**115-1716**	2	LAMP GP-SIGNAL	124
	7	2	**146-9439**	3	RELAY AS (12 VOLT)	
	8	2	**155-6457**	2	MOUNT	
	9	2	**169-0591**	1	SWITCH AS-ROCKER (REAR FLOOD)	
		2	**111-7899**	1	GASKET	
	10	2	**169-0593**	1	SWITCH AS-ROCKER (FRONT FLOOD)	
		2	**111-7899**	1	GASKET	
Y	11	2	**234-4328**	2	LAMP GP-FLOOD	123
	12	2	**241-0094**	1	HARNESS AS-LIGHTING	
		2	**102-8805**	1	KIT-RECEPTACLE (6-PIN)	
					(KIT INCLUDES RECEPTACLE AS. & WEDGE.)	
		2	**155-2270**	6	KIT-CONNECTING PLUG (2-PIN)	
					(EACH KIT INCLUDES PLUG AS., INTERFACE SEAL, & WEDGE.)	
		2	**155-2271**	2	KIT-CONNECTING PLUG (4-PIN)	
					(EACH KIT INCLUDES PLUG AS., INTERFACE SEAL, & WEDGE.)	
		2	**155-2274**	1	KIT-CONNECTING PLUG (6-PIN)	
					(KIT INCLUDES PLUG AS., INTERFACE SEAL, & WEDGE.)	
	13	2	**122-9356**	1	ROOF	
		2	**104-3912**	1	ROOF	
	14	2	**156-0283**	7	WASHER-HARD (8.4X35X2.5MM THK)	
	15	2	**234-4329**	2	LAMP GP-FLOOD	
	16	1,2	**3S-2093**	20	STRAP-CABLE	
M	17	2	**8T-5093**	7	BOLT-LOCKING (M8X1.25X25MM)	
D	18	2	**141-0924**		SEAL (.6M)	

D-ORDER BY THE METER
M-METRIC PART
Y-SEPARATE ILLUSTRATION

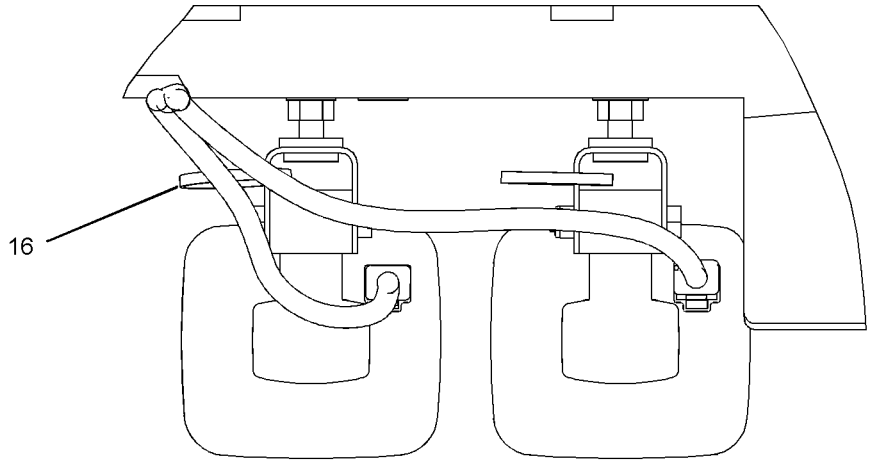

SECTION B-B

REFER TO ALL ILLUSTRATIONS OF
THIS GROUP FOR AUXILIARY VIEWS

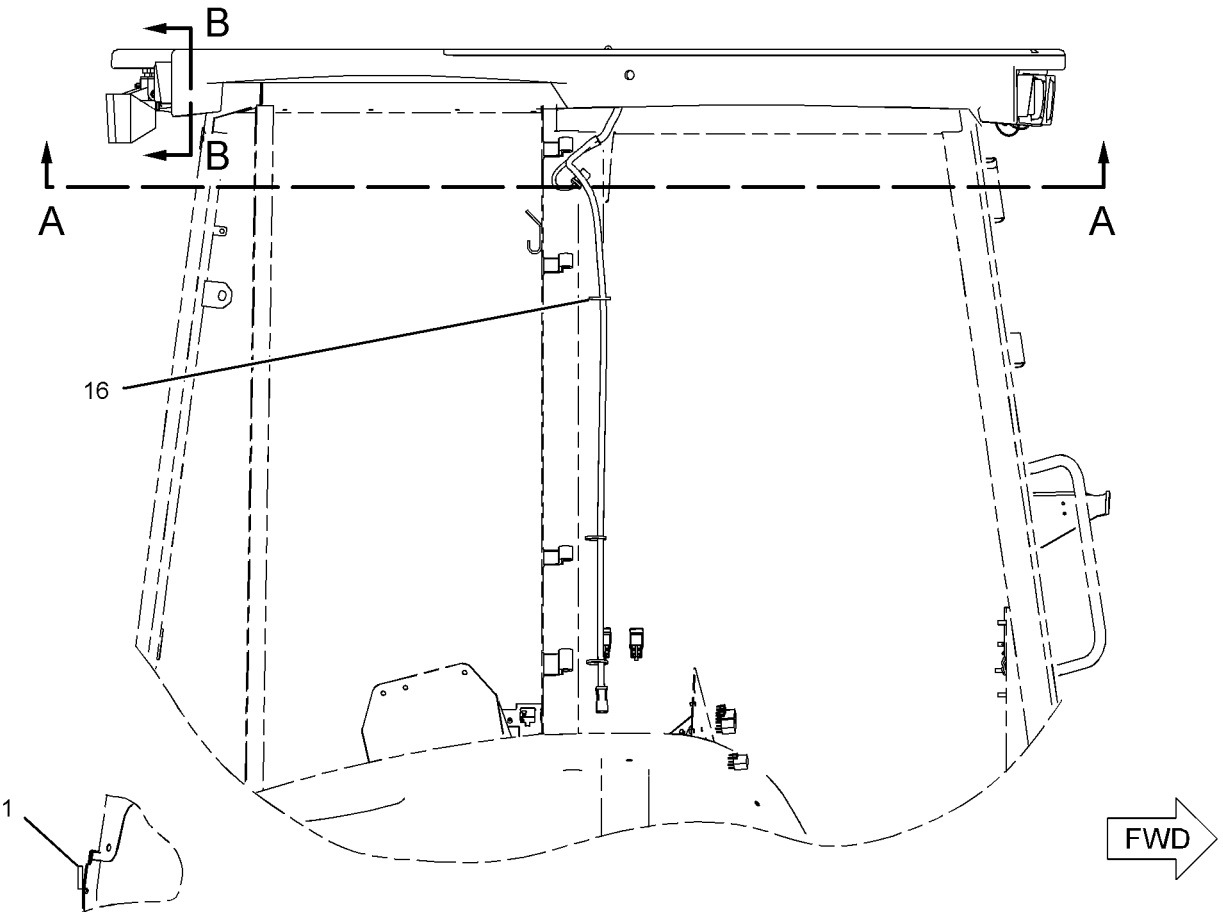

GRAPHIC #1

g01039561

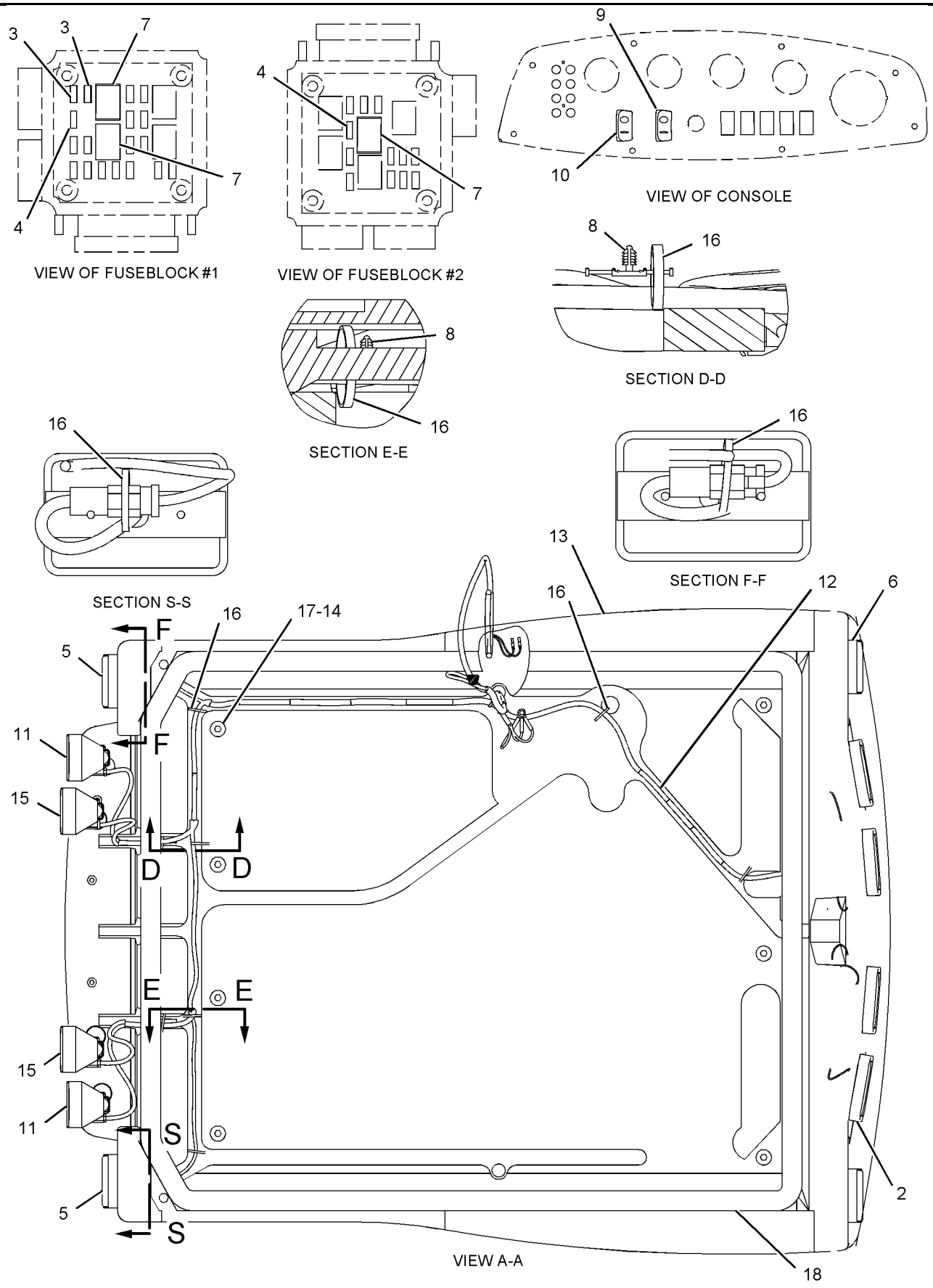

GRAPHIC #2 **<END>** g01039562

104-9502 LIGHTING GP-WARNING BEACON

S/N: FDP18400-UP
MAGNETIC
AN ATTACHMENT

SMCS-1431 **i01522500**

NOTE	REF NO	GRAPHIC REF	PART NUMBER	QTY	PART NAME 1 2 3 4 5 6 (PRODUCT LEVEL)	SEE PAGE
CY	1	1	**180-3664**	1	LAMP GP-WARNING BEACON	127
	2	1	**104-9504**	1	PLATE	
M	3	1	**135-7242**	3	SCREW-PAN HEAD	

C-CHANGE FROM PREVIOUS TYPE
M-METRIC PART
Y-SEPARATE ILLUSTRATION

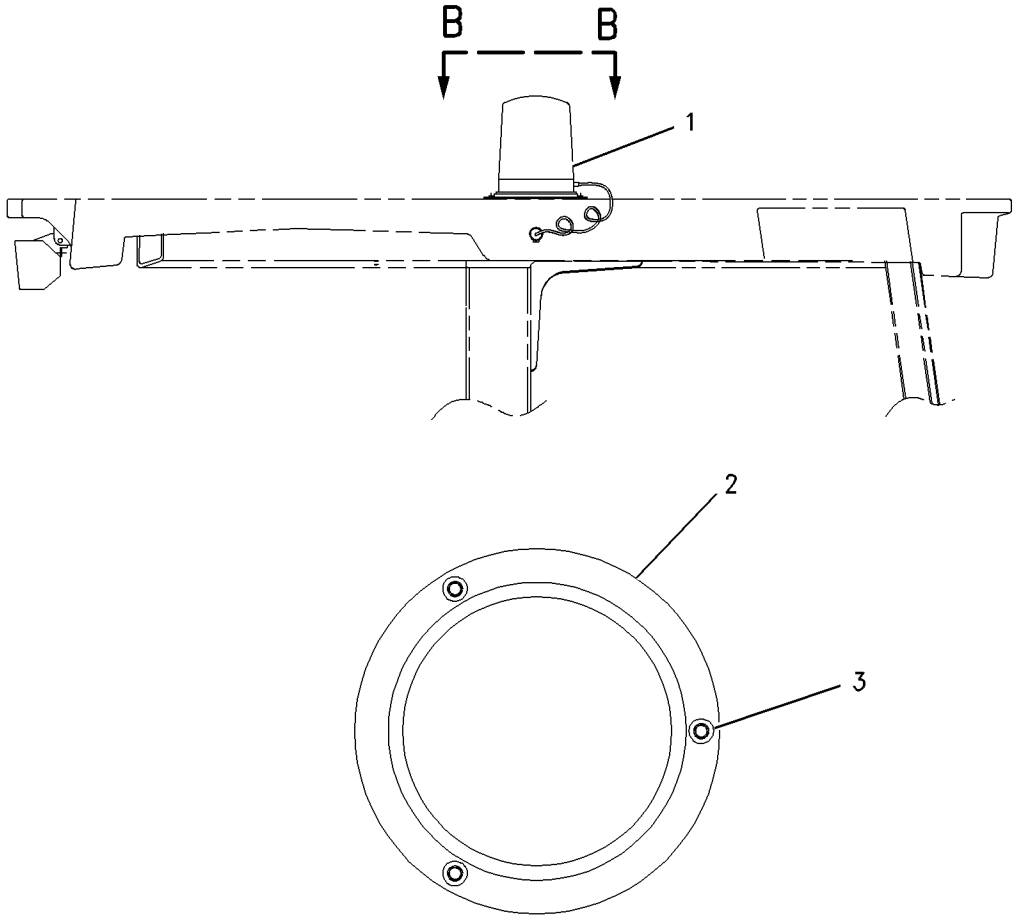

VIEW B-B

GRAPHIC #1 **<END>** g00673018

141-8292 LIGHTING GP-WARNING BEACON

S/N: FDP18400-UP
FIXED MOUNT
AN ATTACHMENT

SMCS-1431 **i01262760**

NOTE	REF NO	GRAPHIC REF	PART NUMBER	QTY	PART NAME 1 2 3 4 5 6 (PRODUCT LEVEL)	SEE PAGE
CY	1	1	**180-3663**	1	LAMP GP-WARNING BEACON	126
	2	1	**114-4916**	1	BRACKET AS-RH	
	3	1	**146-0218**	3	NUT	
M	4	1	**132-0111**	3	SCREW (M6X1.0X35MM) (M6X1.0X20MM)	
	5	1	**8T-4205**	3	WASHER-HARD (2MM THK)	

C-CHANGE FROM PREVIOUS TYPE
M-METRIC PART
Y-SEPARATE ILLUSTRATION

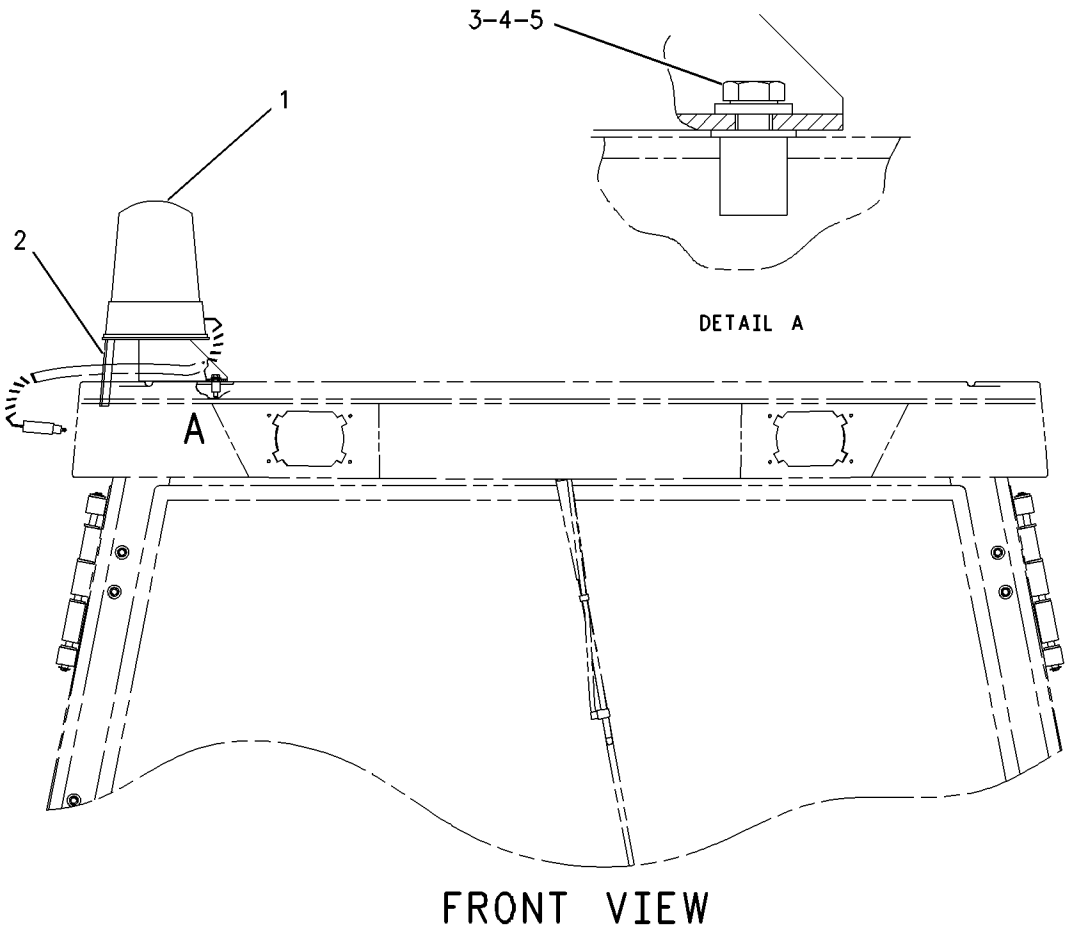

GRAPHIC #1 **<END>** g00672105

143-0539 STARTING MOTOR GP-ELECTRIC*R

S/N: CRS1-UP

12 VOLT

PART OF 237-0024 STARTING MOTOR GP-ELECTRIC

SMCS-1453 **i01955579**

NOTE	REF NO	GRAPHIC REF	PART NUMBER	QTY	PART NAME 1 2 3 4 5 6 (PRODUCT LEVEL)	SEE PAGE
	1	1	**8C-9778**	1	PLUNGER AS	
	2	1	**8C-9783**	1	GASKET	
	3	1	**2P-8104**	1	BEARING	
	4	1	**7T-6092**	1	HOLDER AS-BRUSH	
M	5	1	**8T-4133**	2	NUT (M10X1.5 THD)	
	6	1	**7T-6088**	1	BEARING AS	
	7	1	**7T-6087**	1	WASHER	
	8	1	**7T-6093**	1	CLUTCH AS	
	9	1	**8J-4455**	1	BALL	
	10	1	**7T-6090**	1	SPRING	
	11	1	**8T-4121**	2	WASHER-HARD (11X21X2.5MM THK)	
	12	1	**3E-5153**	1	COVER-STARTING MOTOR	
M	13	1	**9X-2036**	1	SCREW-PAN HEAD	
	14	1	**8F-1434**	1	LOCKWASHER	
	15	1	**100-4113**	1	SWITCH AS (STARTER - 12V)	
	16	1	**100-4119**	1	ARMATURE AS	
	17	1	**100-4118**	1	CASE AS-STARTING MOTOR	
	18	1	**100-4115**	1	HOUSING-STARTING MOTOR	
	19	1	**143-1344**	1	FRAME-STARTER	
	20	1	**100-3685**	1	CAP	
	21	1	**3E-5154**	1	BUSHING-STARTING MOTOR	
					AVAILABLE REPAIR KIT(S):	
			7T-6099	1	KIT-GEAR (STARTING MOTOR)	
					(INCLUDES RETAINER, PINION & ROLLERS)	
			146-6729	1	KIT-HARDWARE (STARTING MOTOR)	
					(INCLUDES BOLTS, SCREWS, SCREW ASSEMBLIES & PLATE)	
			100-4112	1	KIT-CONTACT (STARTING MOTOR)	
					(INCLUDES NUT, WASHERS, SEAL, BUSHINGS, PLATE & BOLT)	

M-METRIC PART

143-0539 STARTING MOTOR GP-ELECTRIC *(contd.)* **i01955579**

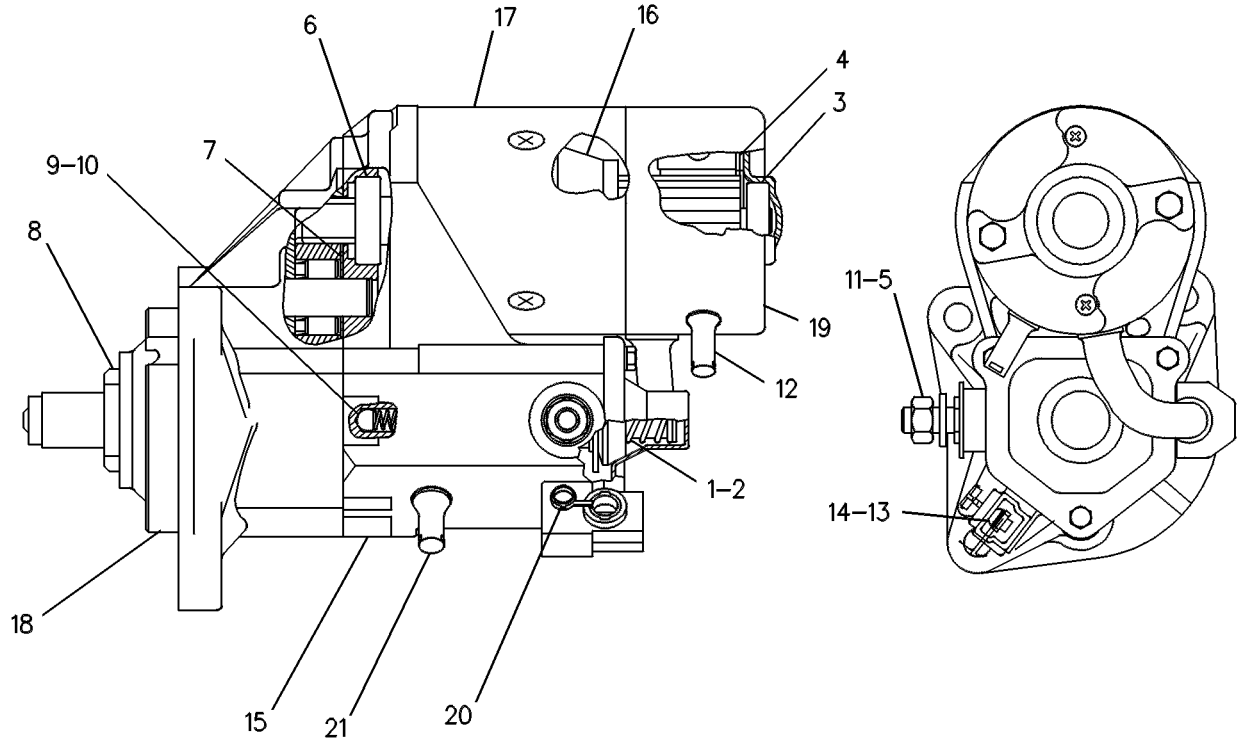

GRAPHIC #1 **<END>** g00131126

ELECTRICAL AND STARTING SYSTEM

237-0024 STARTING MOTOR GP-ELECTRIC

S/N: CRS1-UP

PART OF 234-3060 ENGINE AR-PRIMARY

SMCS-1453 **i01991979**

NOTE	REF NO	GRAPHIC REF	PART NUMBER	QTY	PART NAME 1 2 3 4 5 6 (PRODUCT LEVEL)	SEE PAGE
	1	1	**6I-0364**	3	STUD (M10X1.5X30MM)	
	2	1	**6I-0594**	3	NUT (M10X1.5)	
YR	3	1	**143-0539**	1	STARTING MOTOR GP-ELECTRIC	133

R-REMFG PART MAY BE AVAILABLE
Y-SEPARATE ILLUSTRATION

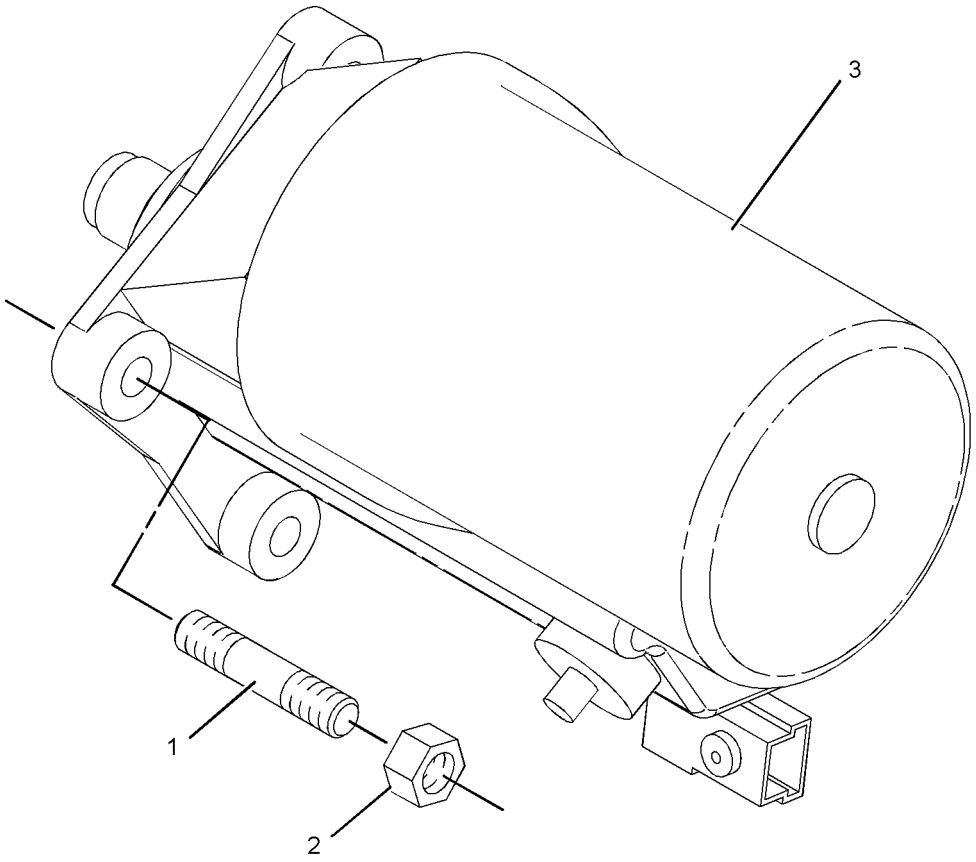

GRAPHIC #1 **<END>** g01039910

237-4896 SWITCH GP-PRESSURE

S/N: CRS1-UP

PART OF 234-3060 ENGINE AR-PRIMARY

SMCS-1435 **i02002679**

NOTE	REF NO	GRAPHIC REF	PART NUMBER	QTY	PART NAME 1 2 3 4 5 6 (PRODUCT LEVEL)	SEE PAGE
	1	1	**237-4894**	1	SWITCH-OIL PRESS (ENGINE)	

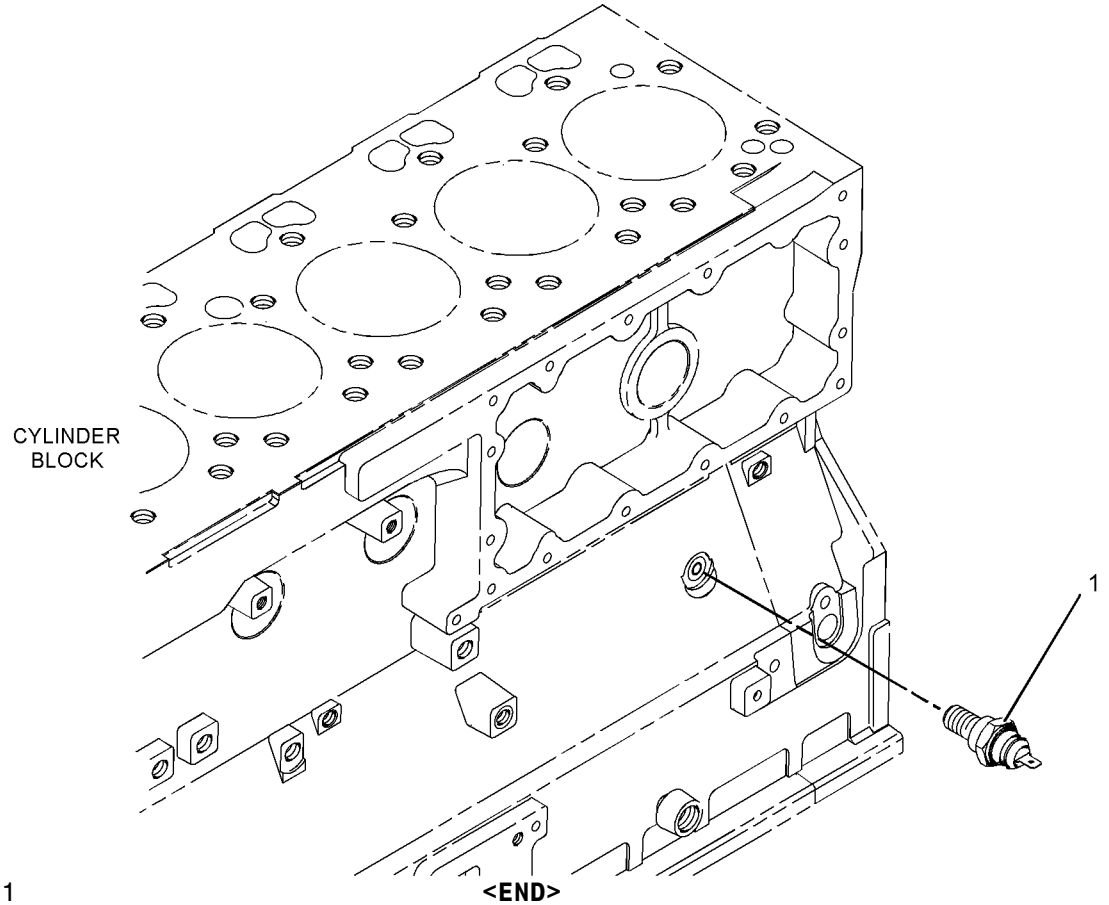

GRAPHIC #1

<END>

g01039594

235-8749 SWITCH GP-TEMPERATURE

S/N: CRS1-UP

PART OF 234-3060 ENGINE AR-PRIMARY

SMCS-7400, 7417 **i02001280**

NOTE	REF NO	GRAPHIC REF	PART NUMBER	QTY	PART NAME 1 2 3 4 5 6 (PRODUCT LEVEL)	SEE PAGE
	1	1	**199-9751**	1	SEAL-O-RING	
	2	1	**235-8747**	1	SWITCH-WATER TEMPERATURE	

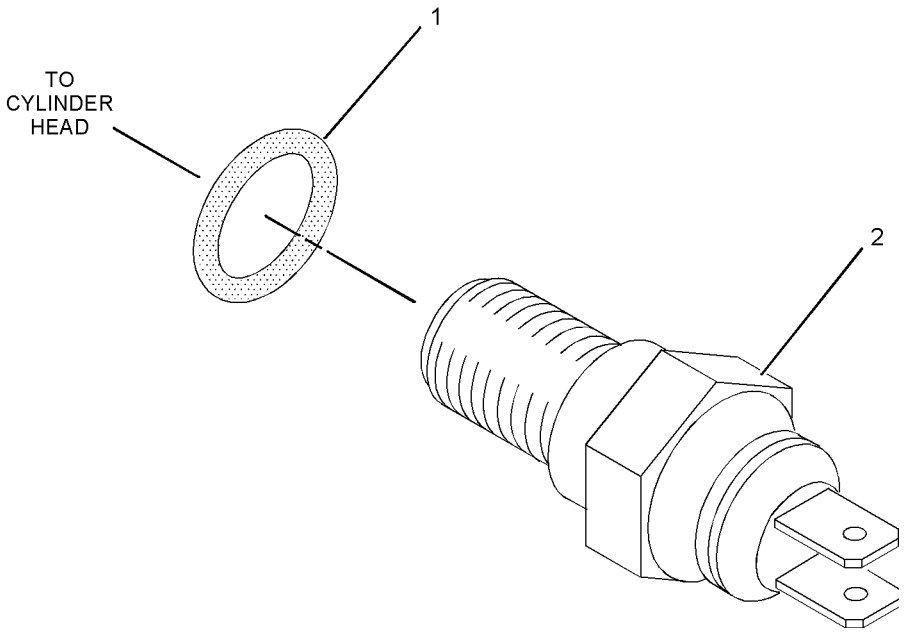

GRAPHIC #1 **<END>** g01036068

202-5797 WIRING GP-AIR CONDITIONER

S/N: FDP18400-UP

PART OF 202-5777, 244-5402 AIR CONDITIONER AR

AN ATTACHMENT

SMCS-1408, 7320 **i02019707**

NOTE	REF NO	GRAPHIC REF	PART NUMBER	QTY	PART NAME 1 2 3 4 5 6 (PRODUCT LEVEL)	SEE PAGE
	1	1	**3E-9362**	1	RELAY AS (12-VOLT)	
	2	1,2	**3S-2093**	4	STRAP-CABLE	
	3	2	**8Y-7833**	1	WIRE AS	
		2	**8T-8729**	2	PIN-CONNECTOR	
		2	**102-8802**	1	KIT-RECEPTACLE (2-PIN)	
	4	2	**9U-2277**	1	CLIP AS	
		2	**8C-3334**	1	RIVET-TUBULAR	
	5	2	**106-8704**	1	SUPPRESSOR AS-ARC	
		2	**8T-8729**	2	PIN-CONNECTOR	
		2	**102-8802**	1	KIT-RECEPTACLE (2-PIN)	
	6	1	**113-8490**	1	FUSE (10-AMPERE)	
	7	2	**114-5333**	1	SWITCH AS-PRESSURE	
		2	**8T-8729**	2	PIN-CONNECTOR	
		2	**102-8802**	1	KIT-RECEPTACLE (2-PIN)	
	8	1	**131-3201**	2	BOOT	
	9	1	**169-0605**	1	SWITCH AS-ROCKER (HEATER FAN SPEED)	
		1	**111-7899**	1	GASKET	
	10	1	**169-0606**	1	SWITCH AS-ROCKER (HEAT/AC)	
		1	**111-7899**	1	GASKET	
	11	1	**170-2237**	1	RELAY AS (12-VOLT)	
	12	2	**174-6417**	1	HARNESS AS-AIR CONDITIONER	
		2	**102-8802**	1	KIT-RECEPTACLE (2-PIN)	
		2	**155-2270**	1	KIT-CONNECTING PLUG (2-PIN)	
	13	1	**229-8377**	1	CIRCUIT BREAKER AS (35-AMPERE)	
		1	**6V-8378**	2	NUT (10-32-THD)	
		1	**8F-1434**	2	LOCKWASHER (INTERNAL TOOTH)	
		1	**8T-0328**	2	WASHER-HARD (5.5X10X1-MM THK)	
	14	1	**220-4141**	1	HARNESS AS-HEATER & AIR COND	
		1	**102-8802**	1	KIT-RECEPTACLE (2-PIN)	
		1	**102-8804**	1	KIT-RECEPTACLE (4-PIN)	
		1	**155-2270**	1	KIT-CONNECTING PLUG (2-PIN)	
		1	**177-9648**	1	KIT-CONNECTING PLUG (2-PIN)	
		1	**177-9645**		KIT-RECEPTACLE (2-PIN) (1)	
M	15	2	**138-8454**	1	SCREW-TRUSS HEAD (M4X0.7X10-MM)	
	16	1	**213-7315**	2	SCREW-TRUSS HEAD (M4X0.7X25-MM)	
	17	2	**4B-4863**	1	WASHER (4.7X11X1.2-MM THK)	
	18	2	**4P-8134**	1	CLIP	
	19	2	**8T-4121**	1	WASHER-HARD (11X21X2.5-MM THK)	
M	20	2	**8T-4133**	1	NUT (M10X1.5-THD)	
M	21	2	**8T-4195**	1	BOLT (M10X1.5X30-MM)	

M-METRIC PART

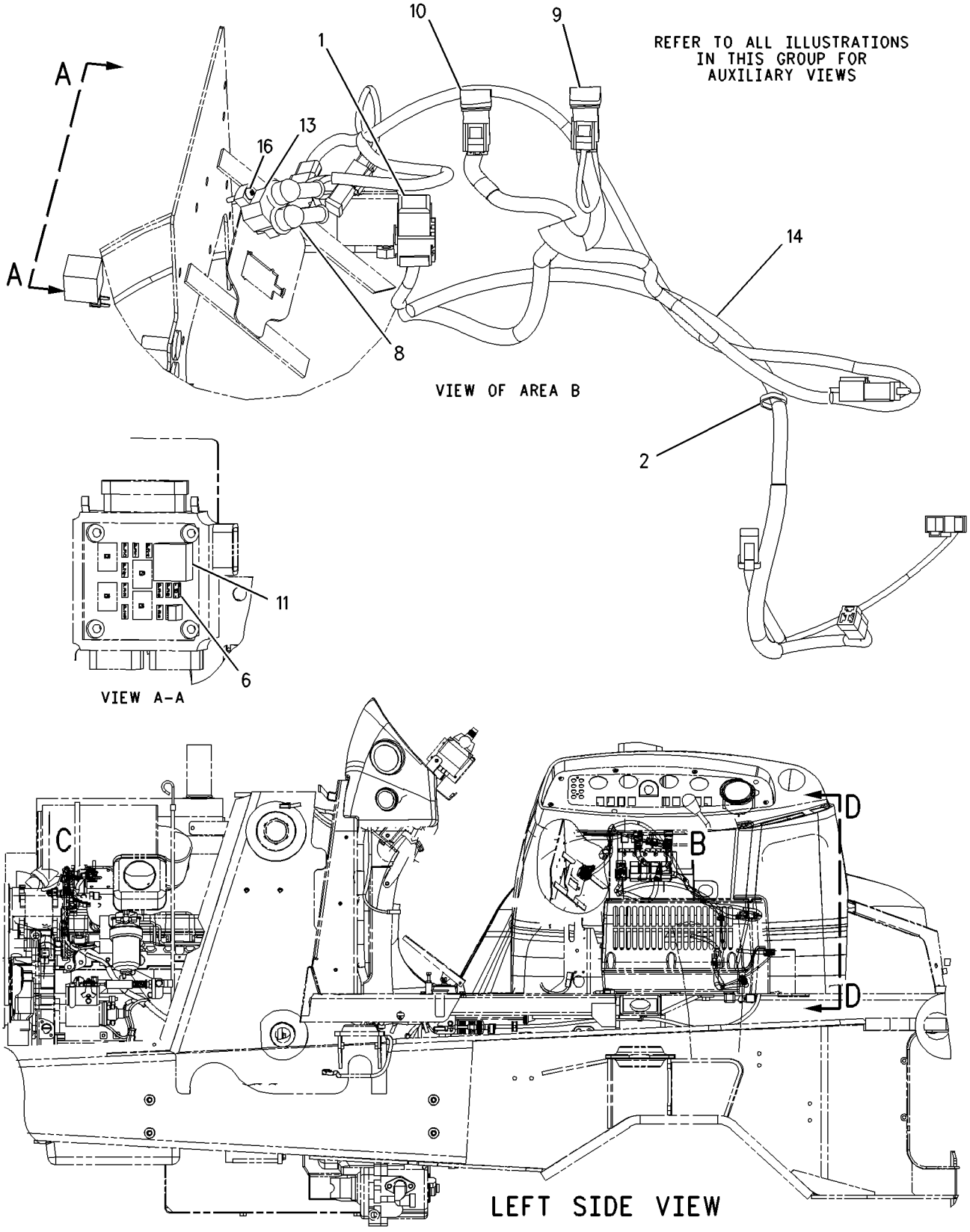

GRAPHIC #1 g00960366

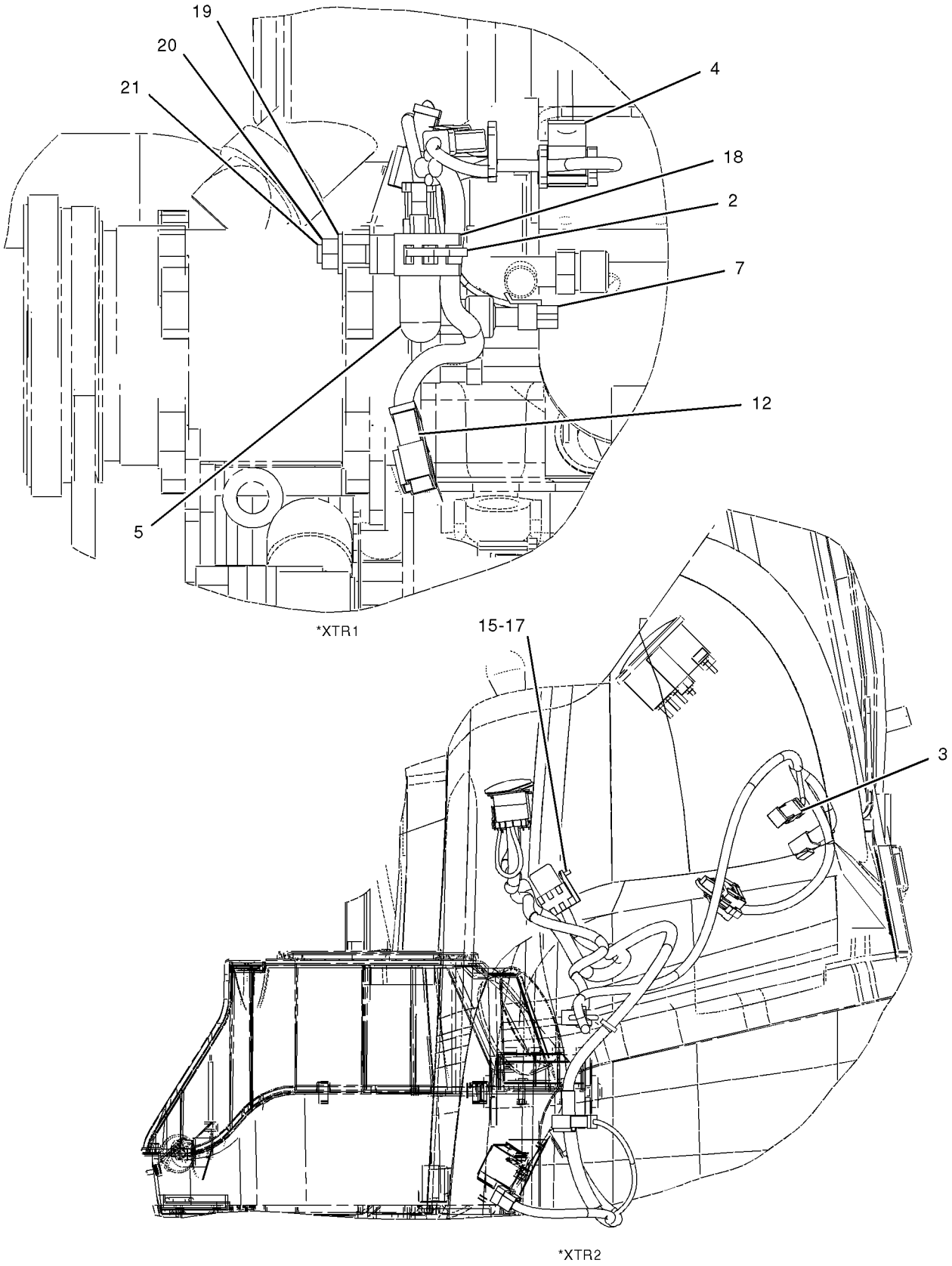

GRAPHIC #2 **<END>** g01043414

202-6107 WIRING GP-AIR CONDITIONER

S/N: FDP18400-UP
SHUT-OFF
PART OF 202-5775 COOLING AR
AN ATTACHMENT

SMCS-1408, 7320 **i02019576**

NOTE	REF NO	GRAPHIC REF	PART NUMBER	QTY	PART NAME 1 2 3 4 5 6 (PRODUCT LEVEL)	SEE PAGE
	1	1	**3E-9362**	1	RELAY AS (12-VOLT)	
B	2	1	**3S-2093**	6	STRAP-CABLE	
	3	1	**202-6108**	1	HARNESS AS-HEATER & AIR COND	
		1	**102-8802**	1	KIT-RECEPTACLE (2-PIN)	
		1	**8L-8413**	12	STRAP-CABLE	
		1	**111-6795**	1	HOUSING-RELAY	
		1	**111-6816**	1	LOCK	
	4	1	**131-1424**	1	SEAL	
	5	1	**188-2470**	1	TACHOMETER AS (12-VOLT)	
		1	**4B-2043**	6	NUT (8-32-THD)	
		1	**9B-7233**	6	LOCKWASHER	
		1	**122-7137**	1	LAMP (12-VOLT)	

B-USE AS REQUIRED

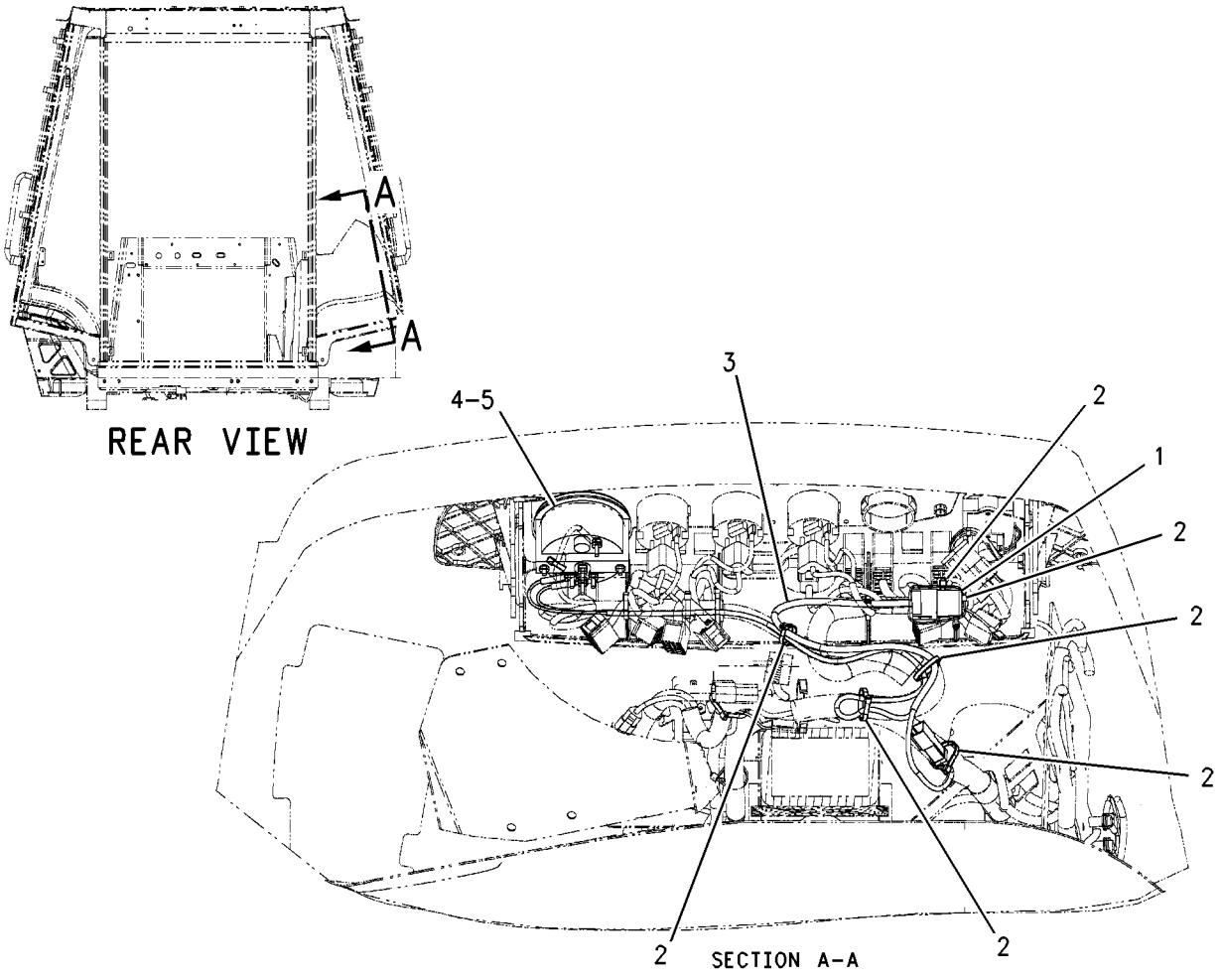

GRAPHIC #1 **<END>** g00810229

238-1811 WIRING GP-AIR CONDITIONER

S/N: FDP18400-UP
PART OF 239-5566, 239-5568 CAB AR
AN ATTACHMENT

SMCS-1408, 7320 **i01988997**

NOTE	REF NO	GRAPHIC REF	PART NUMBER	QTY	PART NAME 1 2 3 4 5 6 (PRODUCT LEVEL)	SEE PAGE
	1	1	**3E-9362**	1	RELAY AS (12 VOLT) (HIGH SPEED)	
	2	1	**8Y-7833**	1	WIRE AS	
	3	2	**106-8704**	1	SUPPRESSOR AS-ARC	
		2	**102-8802**	1	KIT-RECEPTACLE (2-PIN)	
					(INCLUDES RECEPTACLE AND WEDGE)	
		2	**186-3735**	2	PIN-CONNECTOR	
	4	2	**113-8490**	1	FUSE (10 AMP)	
	5	1	**131-3201**	2	BOOT	
	6	2	**169-0605**	1	SWITCH AS-ROCKER (HEATER FAN SPEED)	
		2	**111-7899**	1	GASKET	
	7	2	**169-0606**	1	SWITCH AS-ROCKER (HEATER/AC)	
		2	**111-7899**	1	GASKET	
	8	2	**170-2237**	1	RELAY AS (12 VOLT)	
	9	1	**229-8377**	1	CIRCUIT BREAKER AS (35AMP)	
		1	**6V-8378**	2	NUT (10-32 THD)	
		1	**8F-1434**	2	LOCKWASHER (INTERNAL TOOTH)	
		1	**8T-0328**	2	WASHER-HARD (5.5X10X1MM THK)	
	10	1	**229-8413**	1	HARNESS AS-HEATER & AIR COND	
		1	**102-8802**	1	KIT-RECEPTACLE (2-PIN)	
					(INCLUDES RECEPTACLE AND WEDGE)	
		1	**102-8804**	1	KIT-RECEPTACLE (4-PIN)	
					(INCLUDES RECEPTACLE AND WEDGE)	
		1	**155-2270**	1	KIT-CONNECTING PLUG (2-PIN)	
					(INCLUDES PLUG AND WEDGE)	
		1	**177-9645**	1	KIT-RECEPTACLE (2-PIN)	
					(INCLUDES RECEPTACLE AND WEDGE)	
		1	**177-9648**	1	KIT-CONNECTING PLUG (2-PIN)	
					(INCLUDES PLUG AND WEDGE)	
	11	2	**236-6923**	1	SWITCH AS-PRESSURE (HIGH - LOW)	
	12	2	**238-7492**	1	HARNESS AS-HEATER & AIR COND	
		2	**102-8802**	1	KIT-RECEPTACLE (2-PIN)	
					(INCLUDES RECEPTACLE AND WEDGE)	
		2	**155-2270**	2	KIT-CONNECTING PLUG (2-PIN)	
					(INCLUDES PLUG AND WEDGE)	
M	13	1	**138-8454**	1	SCREW-TRUSS HEAD (M4X0.7X10MM)	
	14	1	**213-7315**	2	SCREW-TRUSS HEAD (M4X0.7X25MM)	
	15	1,2	**3S-2093**	3	STRAP-CABLE	
	16	1	**4B-4863**	1	WASHER (4.7X11X1.2MM THK)	
	17	2	**4P-8134**	1	CLIP	
	18	2	**8T-4121**	2	WASHER-HARD (11X21X2.5MM THK)	
M	19	2	**8T-4133**	1	NUT (M10X1.5 THD)	
M	20	2	**8T-4195**	1	BOLT (M10X1.5X30MM)	

M-METRIC PART

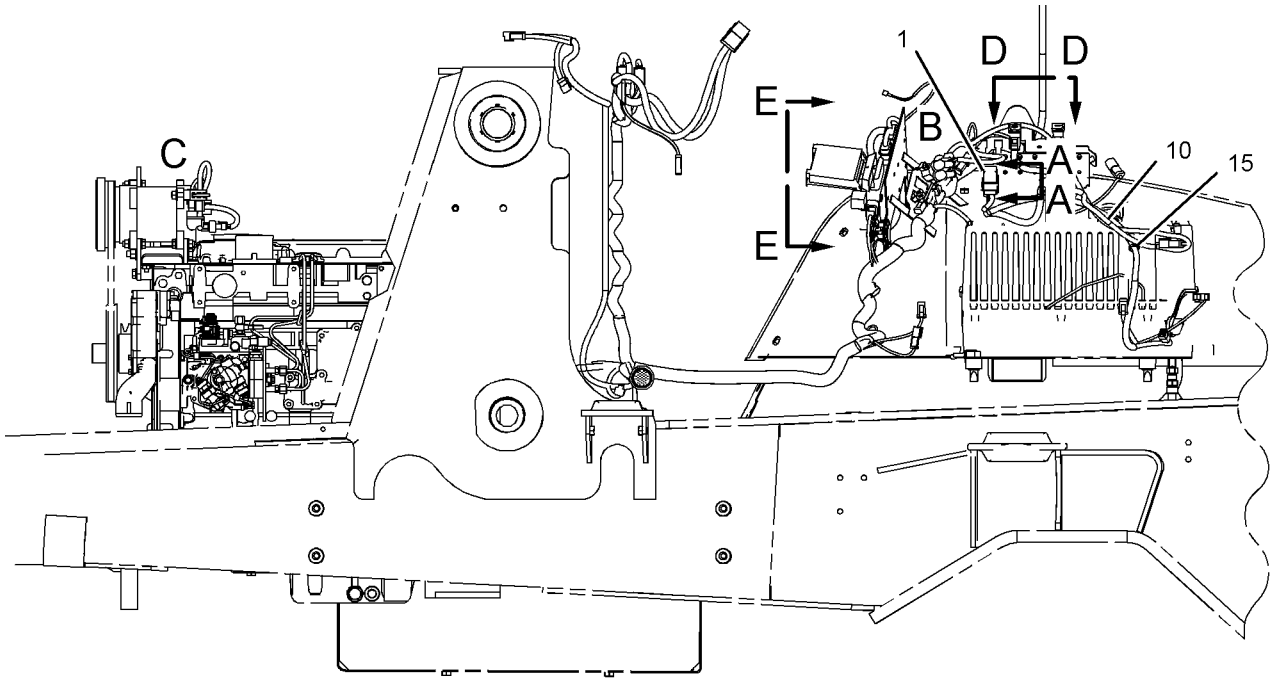

LEFT SIDE VIEW

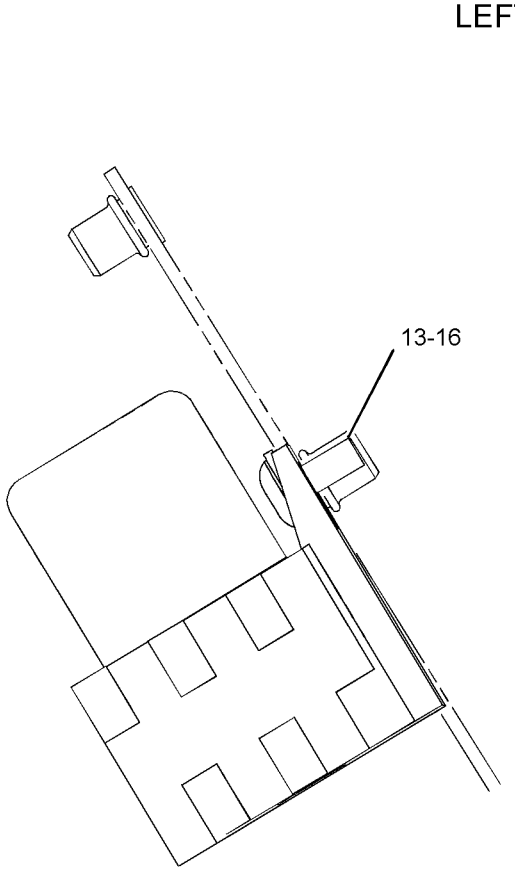

VIEW A-A

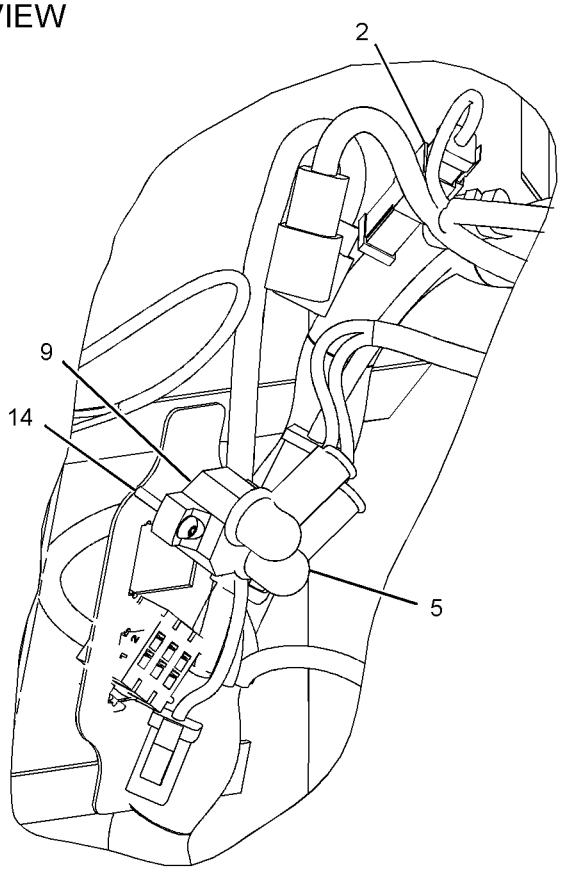

VIEW OF AREA B

GRAPHIC #1

g01032230

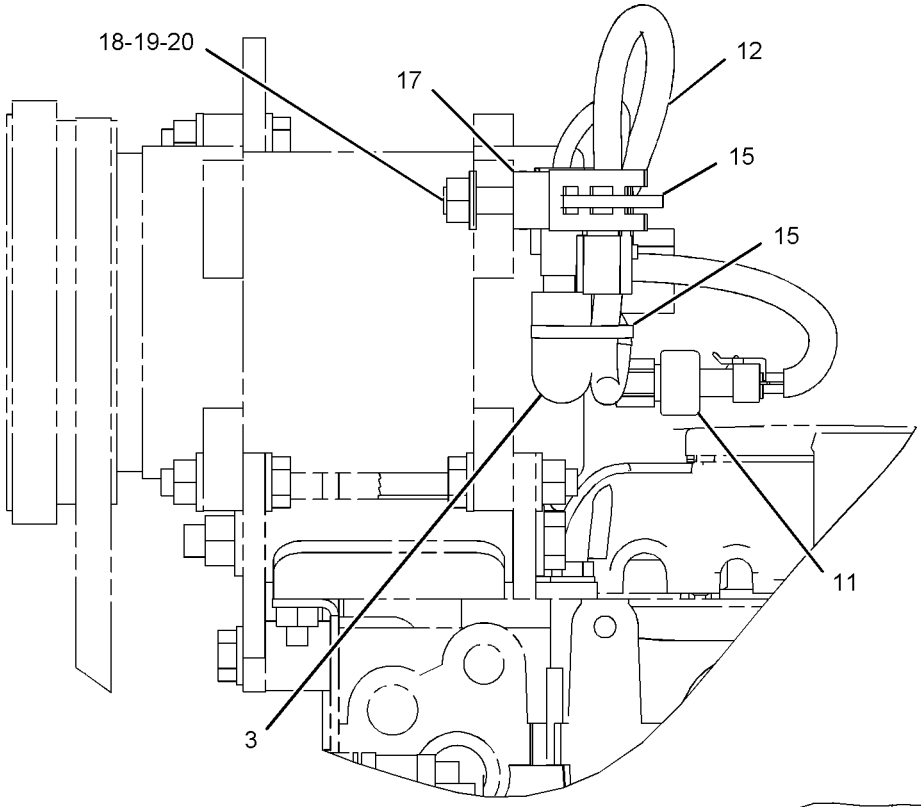

VIEW OF AREA C

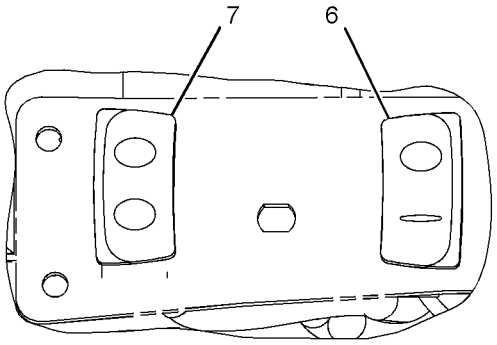

VIEW D-D

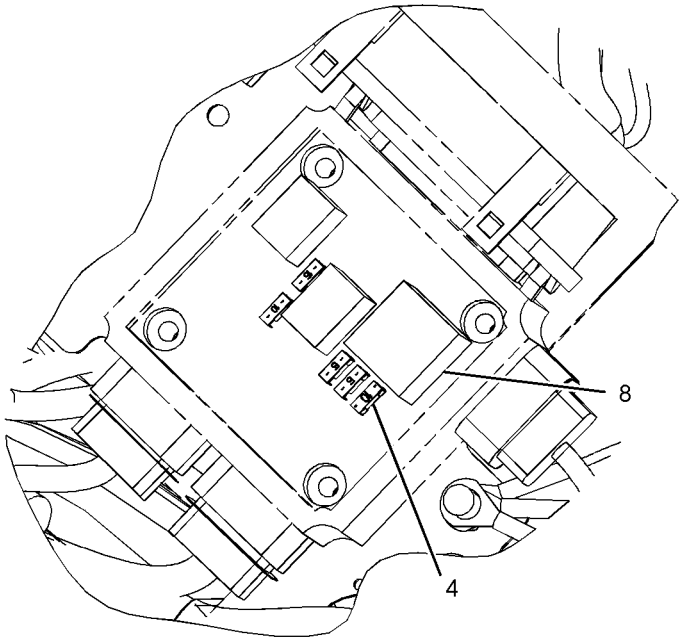

VIEW E-E

GRAPHIC #2 **<END>** g01032231

185-8809 WIRING GP-AUTOSHIFT

S/N: FDP18400-UP
PART OF 192-4659, 192-4664 POWER TRAIN AR
AN ATTACHMENT

SMCS-3104, 3168 **i02019732**

NOTE	REF NO	GRAPHIC REF	PART NUMBER	QTY	PART NAME 1 2 3 4 5 6 (PRODUCT LEVEL)	SEE PAGE
	1	1	**3E-8679**	1	DIODE AS-LIGHT	
	2	1	**3S-2093**	17	STRAP-CABLE	
	3	1	**6K-0806**	5	STRAP-CABLE	
	4	1	**7K-1181**	2	STRAP-CABLE	
	5	1	**8Y-7833**	1	WIRE AS	
		1	**8T-8729**	2	PIN-CONNECTOR	
		1	**102-8802**	1	KIT-RECEPTACLE (2-PIN)	
					(KIT SERVICES RECEPTACLE AS AND WEDGE)	
	6	1	**106-8704**	1	SUPPRESSOR AS-ARC	
		1	**8T-8729**	2	PIN-CONNECTOR	
		1	**102-8802**	1	KIT-RECEPTACLE (2-PIN)	
					(KIT SERVICES RECEPTACLE AS AND WEDGE)	
	7	1	**155-8522**	3	MOUNT	
	8	1	**169-0604**	1	SWITCH AS-ROCKER (AUTOSHIFT) (FIFTH GEAR LOCKOUT)	
		1	**111-7899**	1	GASKET	
	9	1	**174-6411**	1	HARNESS AS-TRANSMISSION (AUTOSHIFT SWITCH)	
		1	**155-2271**	1	KIT-CONNECTING PLUG (4-PIN)	
					(KIT SERVICES PLUG AS AND WEDGE)	
	10	1	**174-6415**	1	HARNESS AS-PLATFORM (AUTOSHIFT)	
		1	**102-8802**	1	KIT-RECEPTACLE (2-PIN)	
					(KIT SERVICES RECEPTACLE AS AND WEDGE)	
		1	**102-8804**	1	KIT-RECEPTACLE (4-PIN)	
					(KIT SERVICES RECEPTACLE AS AND WEDGE)	
		1	**102-8805**	1	KIT-RECEPTACLE (6-PIN)	
					(KIT SERVICES RECEPTACLE AS AND WEDGE)	
		1	**102-8801**	1	KIT-RECEPTACLE (12-PIN)	
					(KIT SERVICES RECEPTACLE AS AND WEDGE)	
		1	**155-2256**	1	KIT-CONNECTING PLUG (12-PIN)	
					(KIT SERVICES PLUG AS AND WEDGE)	
		1	**155-2271**	1	KIT-CONNECTING PLUG (4-PIN)	
					(KIT SERVICES PLUG AS AND WEDGE)	
	11	1	**174-6649**	1	CONTROL GP-TRANSMISSION	
	12	1	**187-1043**	1	CONTROL GP-AUTOSHIFT	
	13	1	**209-1925**	1	HARNESS AS-TRANSMISSION (AUTOSHIFT CONTROL) (BATTERY BOX)	
		1	**102-8804**	1	KIT-RECEPTACLE (4-PIN)	
					(KIT SERVICES RECEPTACLE AS AND WEDGE)	
		1	**155-2255**	2	KIT-CONNECTING PLUG (12-PIN)	
					(KIT SERVICES PLUG AS AND WEDGE)	
		1	**155-2270**	3	KIT-CONNECTING PLUG (2-PIN)	
					(KIT SERVICES PLUG AS AND WEDGE)	
	14	1	**209-1947**	1	HARNESS AS-TRANSMISSION (AUTOSHIFT)	
		1	**102-8802**	1	KIT-RECEPTACLE (2-PIN)	
					(KIT SERVICES RECEPTACLE AS AND WEDGE)	
		1	**102-8801**	1	KIT-RECEPTACLE (12-PIN)	
					(KIT SERVICES RECEPTACLE AS AND WEDGE)	
		1	**155-2260**	2	KIT-CONNECTING PLUG (3-PIN)	
					(KIT SERVICES PLUG AS AND WEDGE)	
		1	**155-2270**	4	KIT-CONNECTING PLUG (2-PIN)	
					(KIT SERVICES PLUG AS AND WEDGE)	
M	15	1	**095-0756**	4	SCREW-MACHINE	
M	16	1	**138-8454**	1	SCREW-TRUSS HEAD (M4X0.7X10-MM)	
	17	1	**3E-9362**	1	RELAY AS (12-VOLT)	
	18	1	**4B-4863**	1	WASHER (4.7X11X1.2-MM THK)	

185-8809 **WIRING GP-AUTOSHIFT** ***(contd.)*** **i02019732**

NOTE	REF NO	GRAPHIC REF	PART NUMBER	QTY	PART NAME 1 2 3 4 5 6 (PRODUCT LEVEL)	SEE PAGE
	19	1	**4P-7429**	1	CLIP	
M	20	1	**5C-9553**	4	BOLT (M6X1X16-MM)	
M	21	1	**8T-4179**	1	BOLT (M12X1.75X20-MM)	
	22	1	**8T-4223**	1	WASHER-HARD (13.5X25.5X3-MM THK)	
	23	1	**9X-8256**	4	WASHER (6.6X12X2-MM THK)	

M-METRIC PART

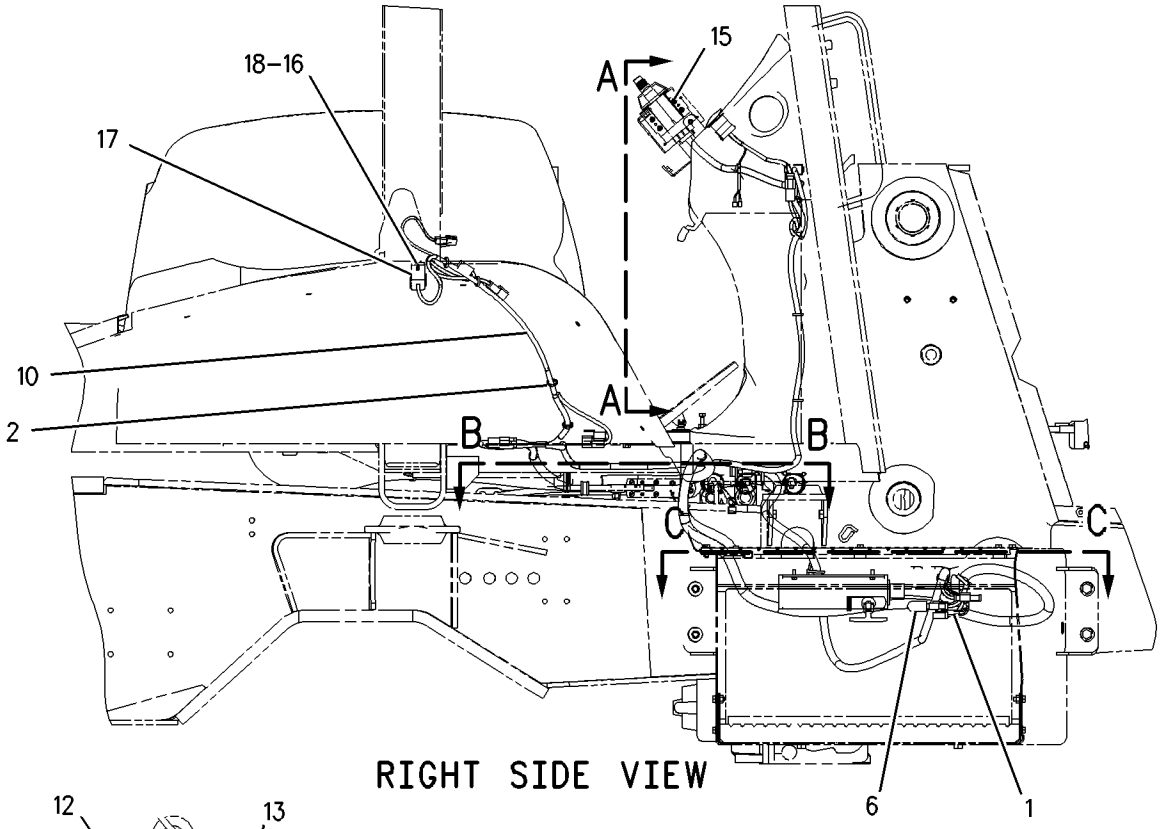

RIGHT SIDE VIEW

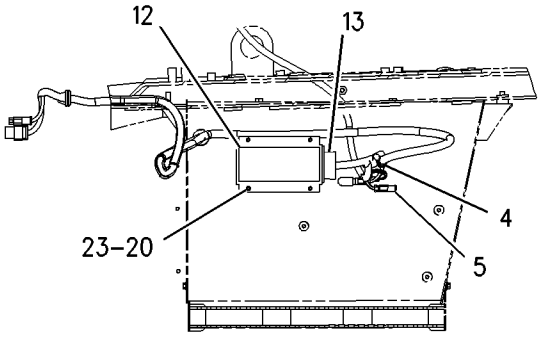

SECTION C-C

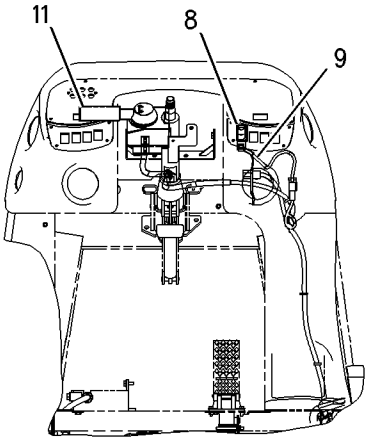

SECTION A-A

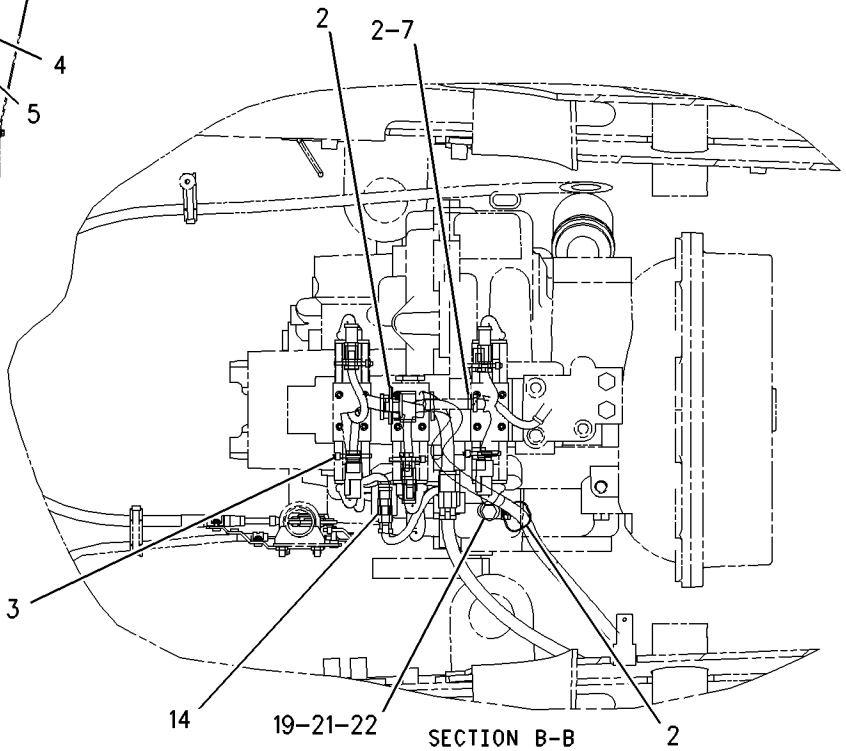

SECTION B-B

GRAPHIC #1 **<END>** g00871758

237-8037 WIRING GP-AUTOSHIFT

S/N: FDP18400-UP
PART OF 214-6957, 214-6978 POWER TRAIN AR
AN ATTACHMENT

SMCS-3104, 3168 **i02009591**

NOTE	REF NO	GRAPHIC REF	PART NUMBER	QTY	PART NAME 1 2 3 4 5 6 (PRODUCT LEVEL)	SEE PAGE
	1	1	**3E-8679**	1	DIODE AS-LIGHT	
	2	1	**3S-2093**	17	STRAP-CABLE	
	3	1	**6K-0806**	5	STRAP-CABLE	
	4	1	**7K-1181**	2	STRAP-CABLE	
	5	1	**8Y-7833**	1	WIRE AS	
	6	1	**106-8704**	1	SUPPRESSOR AS-ARC	
		1	**102-8802**	2	KIT-RECEPTACLE (2-PIN)	
		1	**186-3735**	1	PIN-CONNECTOR	
	7	1	**155-8522**	3	MOUNT	
	8	1	**169-0604**	1	SWITCH AS-ROCKER (AUTOSHIFT)	
		1	**111-7899**	1	GASKET	
	9	1	**174-6411**	1	HARNESS AS-TRANSMISSION (AUTOSHIFT SWITCH)	
		1	**155-2271**	1	KIT-CONNECTING PLUG (4-PIN)	
	10	1	**174-6415**	1	HARNESS AS-PLATFORM (AUTOSHIFT)	
		1	**102-8802**	1	KIT-RECEPTACLE (2-PIN)	
		1	**102-8804**	1	KIT-RECEPTACLE (4-PIN)	
		1	**102-8805**	1	KIT-RECEPTACLE (6-PIN)	
		1	**102-8801**	1	KIT-RECEPTACLE (12-PIN)	
		1	**155-2256**	1	KIT-CONNECTING PLUG (12-PIN)	
		1	**155-2271**	1	KIT-CONNECTING PLUG (4-PIN)	
	11	1	**174-6649**	1	CONTROL GP-TRANSMISSION	
	12	1	**209-1925**	1	HARNESS AS-TRANSMISSION (AUTOSHIFT CONTROL)	
			102-8804	1	KIT-RECEPTACLE (4-PIN)	
			155-2255	2	KIT-CONNECTING PLUG (12-PIN)	
			155-2270	3	KIT-CONNECTING PLUG (2-PIN)	
	13	1	**209-1947**	1	HARNESS AS-TRANSMISSION (AUTOSHIFT)	
		1	**102-8801**	1	KIT-RECEPTACLE (12-PIN)	
		1	**102-8802**	1	KIT-RECEPTACLE (2-PIN)	
		1	**155-2260**	2	KIT-CONNECTING PLUG (3-PIN)	
		1	**155-2270**	4	KIT-CONNECTING PLUG (2-PIN)	
	14	1	**237-3655**	1	CONTROL GP-POWER TRAIN	
M	15	1	**095-0756**	4	SCREW-MACHINE	
M	16	1	**138-8454**	1	SCREW-TRUSS HEAD (M4X0.7X10-MM)	
	17	1	**3E-9362**	1	RELAY AS (12 VOLT)	
	18	1	**4B-4863**	1	WASHER (4.7X11X1.2-MM THK)	
	19	1	**4P-7429**	1	CLIP	
M	20	1	**5C-9553**	4	BOLT (M6X1X16-MM)	
M	21	1	**8T-4179**	1	BOLT (M12X1.75X20-MM)	
	22	1	**8T-4223**	1	WASHER-HARD (13.5X25.5X3-MM THK)	
	23	1	**9X-8256**	4	WASHER (6.6X12X2-MM THK)	

M-METRIC PART

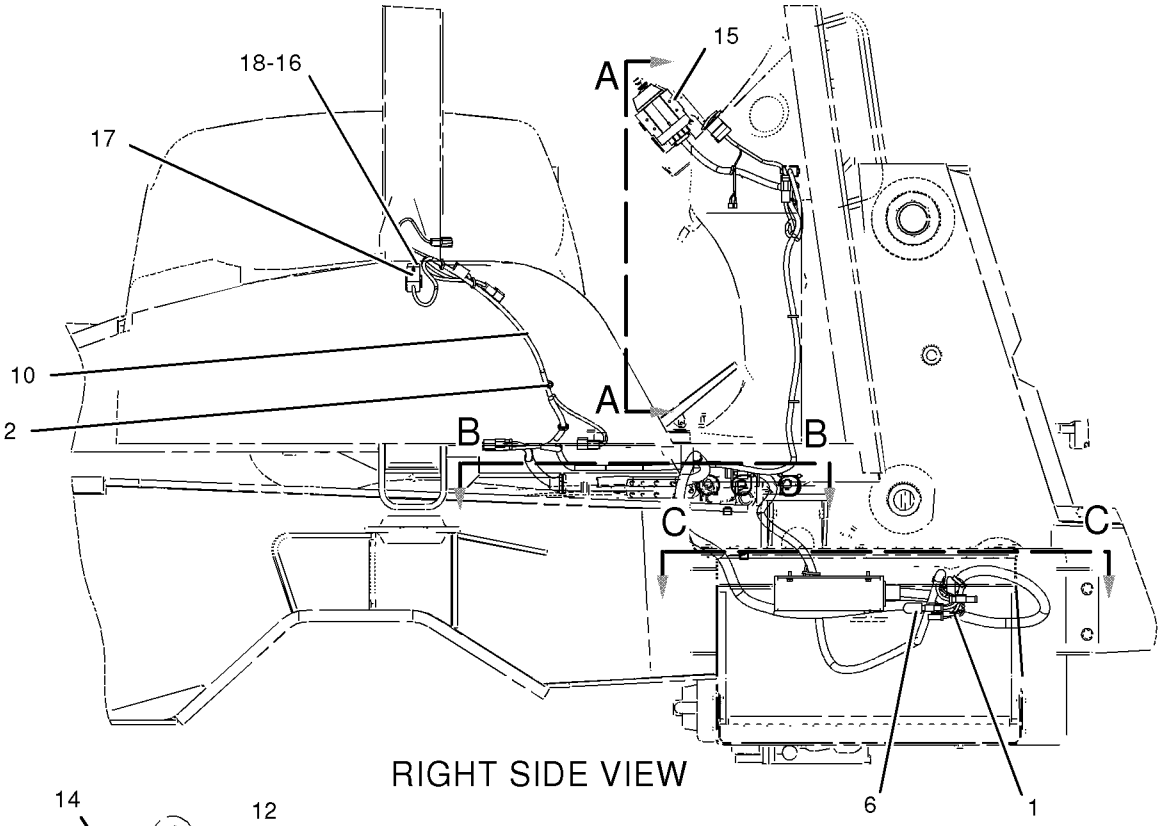

RIGHT SIDE VIEW

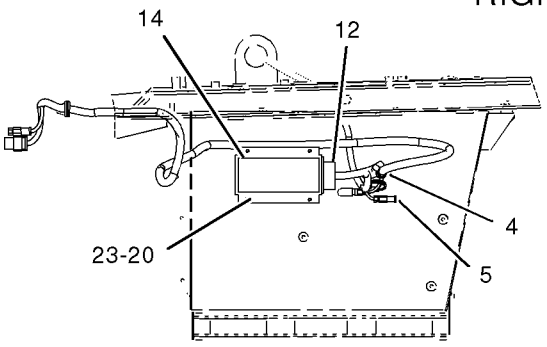

SECTION C-C

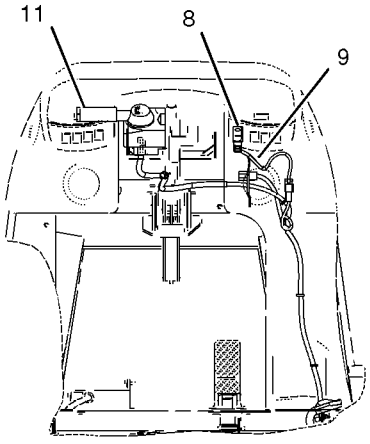

SECTION A-A

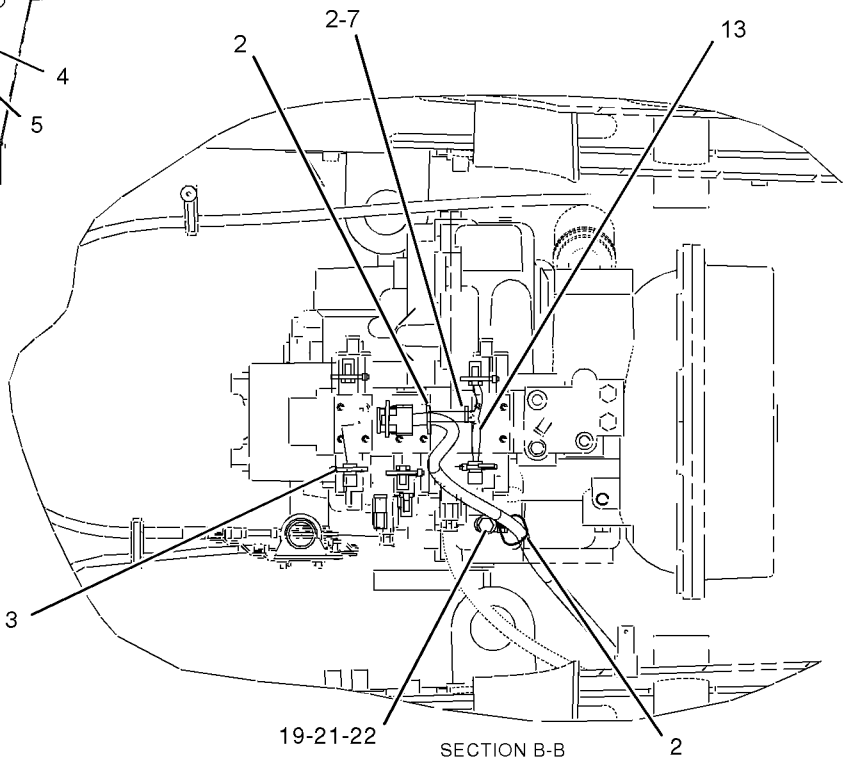

SECTION B-B

GRAPHIC #1 **<END>** g01032412

185-8801 WIRING GP-CAB

S/N: FDP18400-UP
STANDARD
PART OF 184-9737, 184-9738, 239-5565, 239-5566, 239-5567, 239-5568, 244-1944
CAB AR
AN ATTACHMENT

SMCS-1408, 7301 **i02014050**

NOTE	REF NO	GRAPHIC REF	PART NUMBER	QTY	PART NAME 1 2 3 4 5 6 (PRODUCT LEVEL)	SEE PAGE
	1	1	**3S-2093**	6	STRAP-CABLE	
	2	1	**8E-1118**	1	ANTENNA AS	
	3	1	**8R-6111**	1	CABLE AS-COAXIAL	
	4	1	**113-8492**	2	FUSE (20-AMPERE)	
	5	1	**141-2759**	1	FUSE (5-AMPERE)	
	6	1	**146-9439**	1	RELAY AS (12-VOLT)	
	7	1	**169-0596**	1	SWITCH AS (REAR WIPER, WASHER)	
		1	**111-7899**	1	GASKET	
	8	1	**179-1215**	1	HARNESS AS-CAB (UPPER CAB CONTROLS)	
		1	**102-8806**	1	KIT-RECEPTACLE (8-PIN)	
		1	**155-2260**	1	KIT-CONNECTING PLUG (3-PIN)	
		1	**155-2271**	1	KIT-CONNECTING PLUG (4-PIN)	
		1	**155-2274**	1	KIT-CONNECTING PLUG (6-PIN)	
		1	**155-2265**	1	KIT-CONNECTING PLUG (8-PIN)	
	9	1	**235-4752**	1	WIRE AS	
	10	1	**238-7448**	1	SWITCH AS (LIGHTS, TURN SIGNALS, WIPER)	
	11	1	**4P-8134**	1	CLIP	
M	12	1	**8T-0352**	2	BOLT (M5X0.8X45-MM)	
	13	1	**8T-4121**	2	WASHER-HARD (11X21X2.5-MM THK)	
M	14	1	**8T-4133**	2	NUT (M10X1.5-THD)	

M-METRIC PART

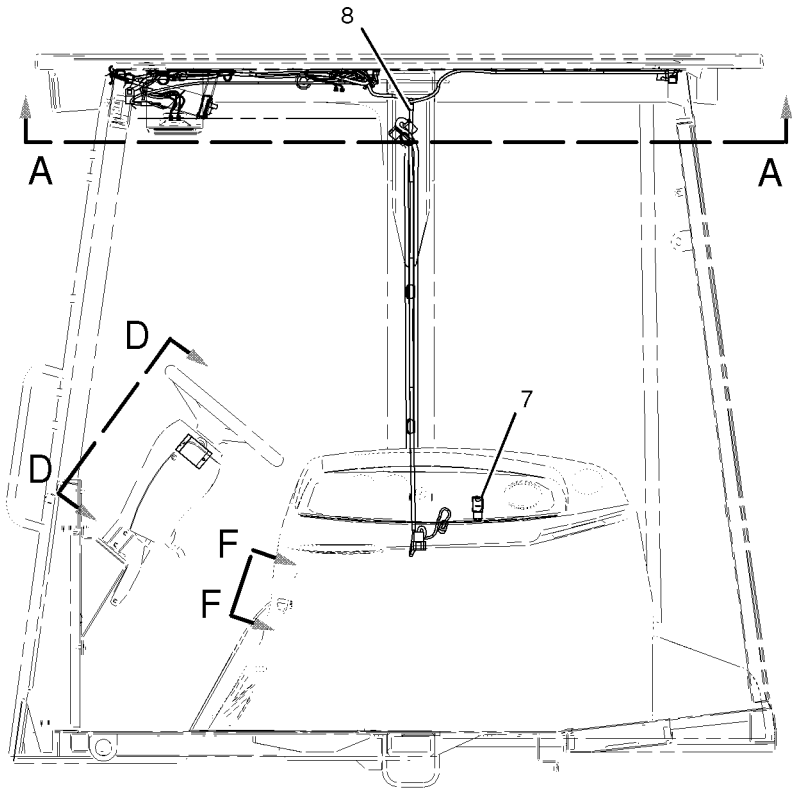

LEFT SIDE VIEW

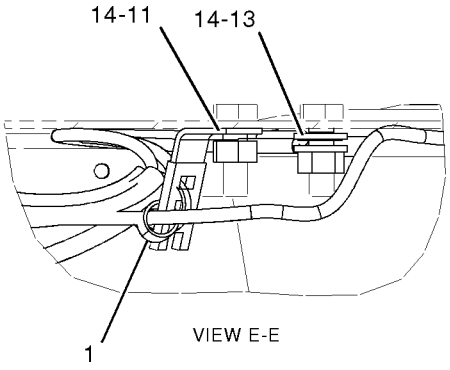

VIEW E-E

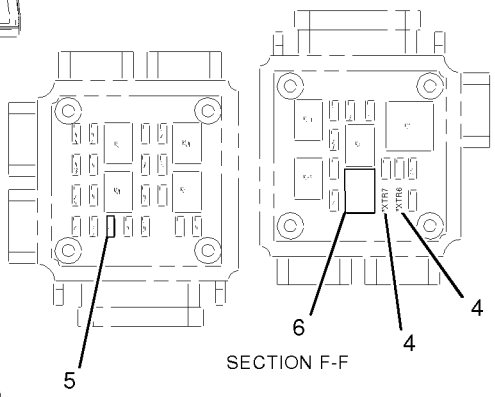

SECTION F-F

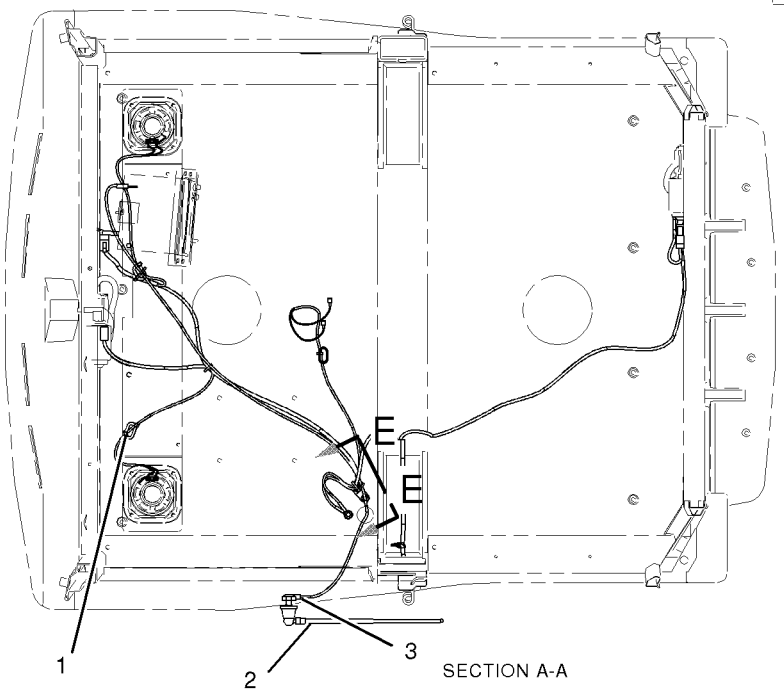

SECTION A-A

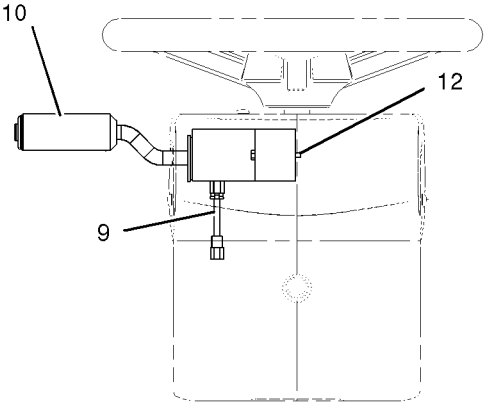

SECTION D-D

GRAPHIC #1 **<END>** g01043715

185-8802 WIRING GP-CAB

S/N: FDP18400-UP
CANOPY
PART OF 184-9736, 238-6697, 239-5563, 239-5564 CANOPY AR
AN ATTACHMENT

SMCS-1408, 7301 **i02019745**

NOTE	REF NO	GRAPHIC REF	PART NUMBER	QTY	PART NAME 1 2 3 4 5 6 (PRODUCT LEVEL)	SEE PAGE
	1	1	**138-4894**	1	SWITCH AS (TURN SIGNAL)	
		1	**111-7899**	1	GASKET	
	2	1	**164-1601**	1	BRACKET	
	3	1	**183-4492**	1	HARNESS AS-OPERATOR CONTROLS (TURN SIGNAL) (TURN SIGNAL)	
		1	**102-8801**	1	KIT-RECEPTACLE (12-PIN)	
M	4	1	**125-3298**	3	BOLT-SOCKET HEAD (M5X.8X12-MM)	

M-METRIC PART

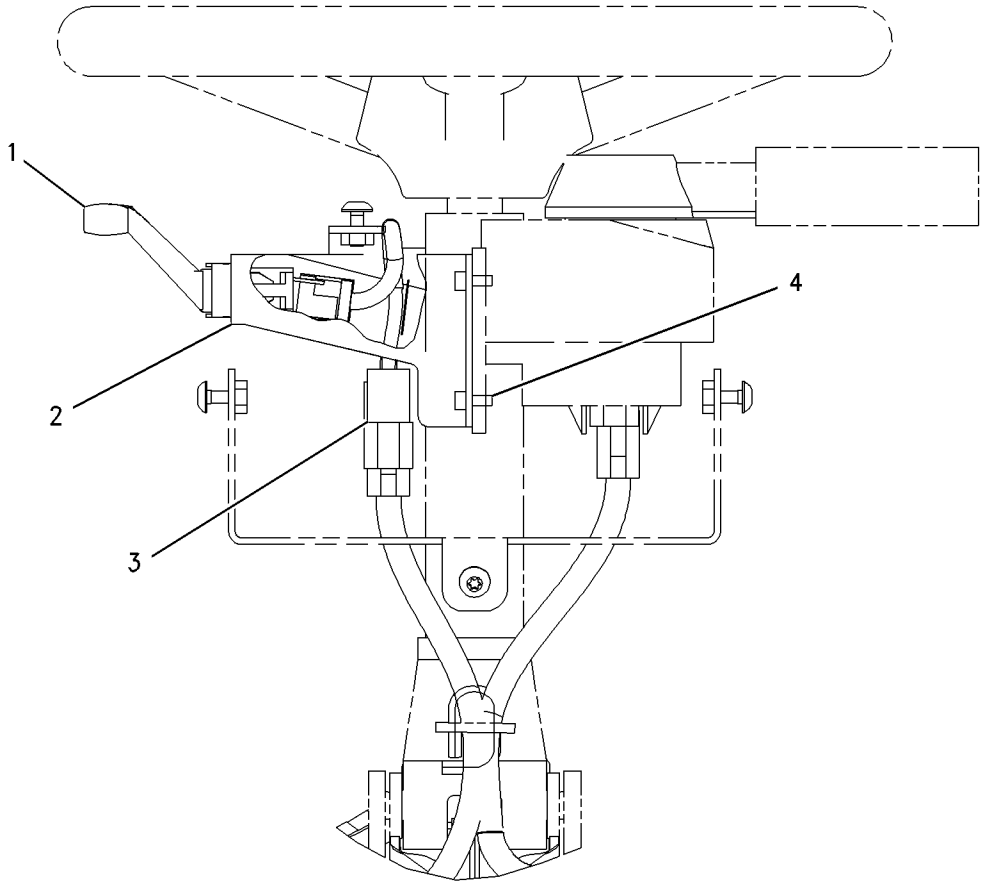

GRAPHIC #1 **<END>** g00746428

186-0306 WIRING GP-CAB

S/N: FDP18400-UP

PART OF 214-6951 CHASSIS AR

SMCS-1408, 7301 **i01690316**

NOTE	REF NO	GRAPHIC REF	PART NUMBER	QTY	PART NAME 1 2 3 4 5 6 (PRODUCT LEVEL)	SEE PAGE
	1	1	**113-8491**	1	FUSE (15 AMP)	
B	2	1	**146-9439**	1	RELAY AS (12 VOLT)	
	3	1	**169-0595**	1	SWITCH AS (BEACON)	
		1	**111-7899**	1	GASKET	
	4	1	**178-7539**	1	RECEPTACLE AS	
	5	1	**179-5435**	1	FLANGE	
	6	1	**3E-6922**	2	SCREW-RECESS FLAT HEAD (NO. 6-19X12.7MM)	

B-USE AS REQUIRED

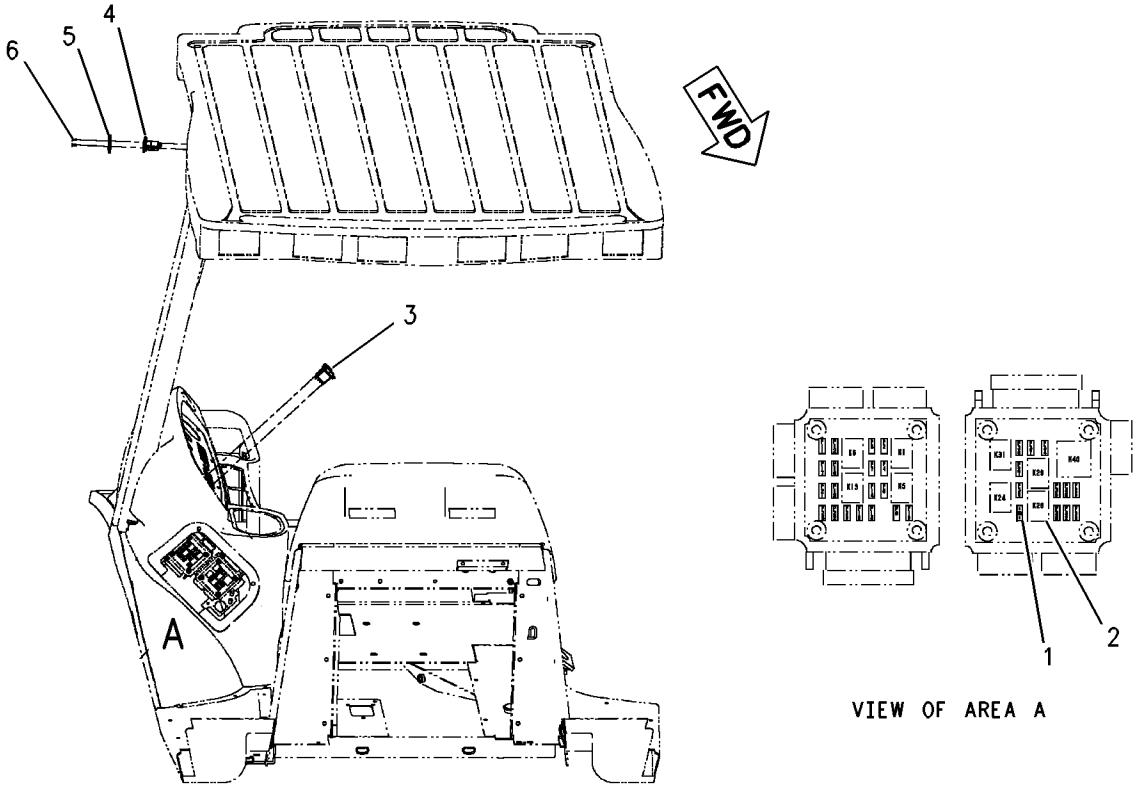

VIEW OF AREA A

GRAPHIC #1 **<END>** g00870937

207-6050 WIRING GP-CAB

S/N: FDP18400-UP
PART OF 239-5564 CANOPY AR
AN ATTACHMENT

SMCS-1408, 7301 **i02020901**

NOTE	REF NO	GRAPHIC REF	PART NUMBER	QTY	PART NAME 1 2 3 4 5 6 (PRODUCT LEVEL)	SEE PAGE
	1	2	**113-8491**	1	FUSE (15-AMPERE)	
	2	2	**146-9439**	1	RELAY AS (12-VOLT)	
	3	1	**167-3704**	1	HARNESS AS-CAB (UPPER CAB CONTROLS)	
		1	**102-8806**	1	KIT-RECEPTACLE (8-PIN)	
		1	**155-2260**	1	KIT-CONNECTING PLUG (3-PIN)	
		1	**155-2271**	1	KIT-CONNECTING PLUG (4-PIN)	
		1	**155-2274**	1	KIT-CONNECTING PLUG (6-PIN)	
	4	2	**213-8479**	1	SWITCH AS-MULTIFUNCTION (LIGHTS, TURN SIGNALS, WIPER)	
	5	2	**3S-2093**	4	STRAP-CABLE	
M	6	2	**8T-0352**	2	BOLT (M5X0.8X45-MM)	
	7	2	**8T-4121**	2	WASHER-HARD (11X21X2.5-MM THK)	
M	8	2	**8T-4133**	1	NUT (M10X1.5-THD)	
FM			**125-3298**	3	BOLT-SOCKET HEAD (M5X.8X12-MM)	
F			**6V-3265**	2	CLIP	

F-NOT SHOWN
M-METRIC PART

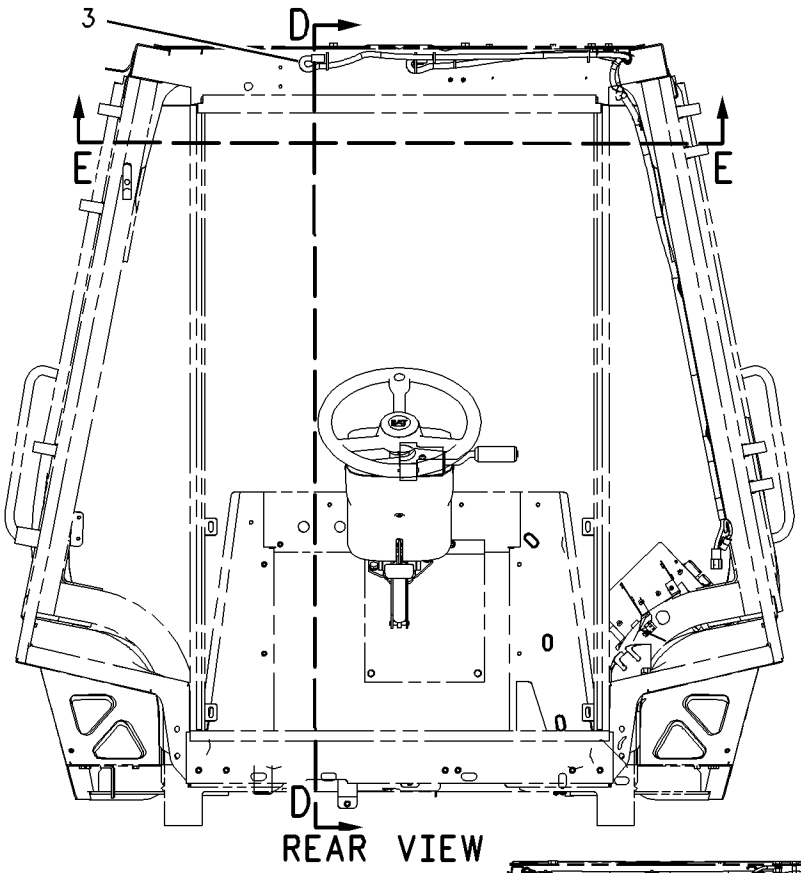

REAR VIEW

REFER TO ALL ILLUSTRATIONS
IN THIS GROUP FOR
AUXILIARY VIEWS

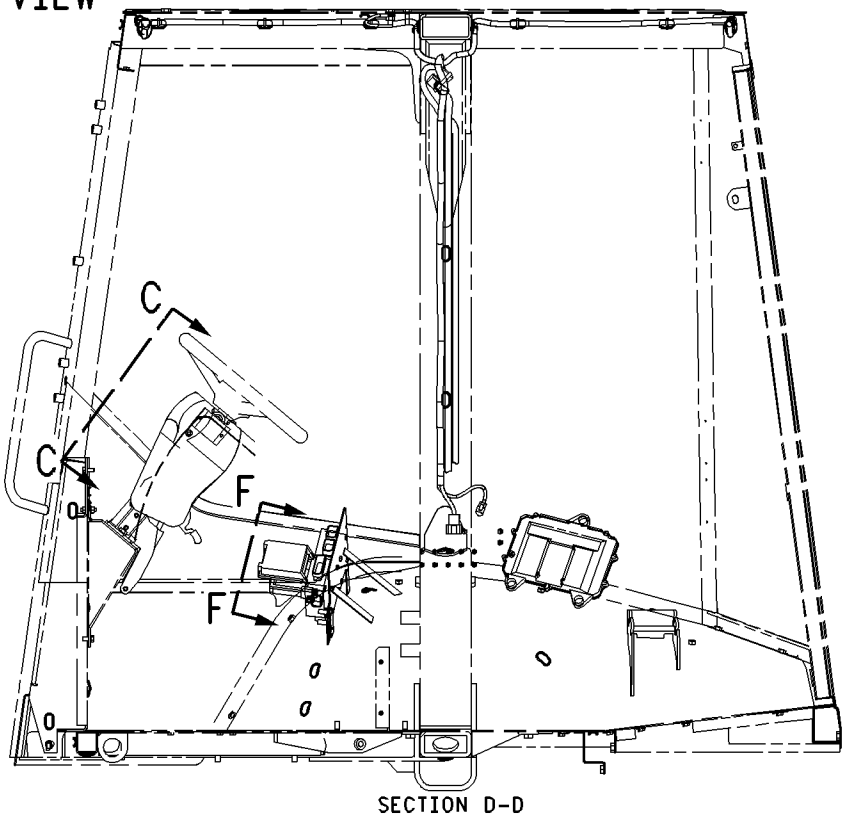

SECTION D-D

GRAPHIC #1

g00949703

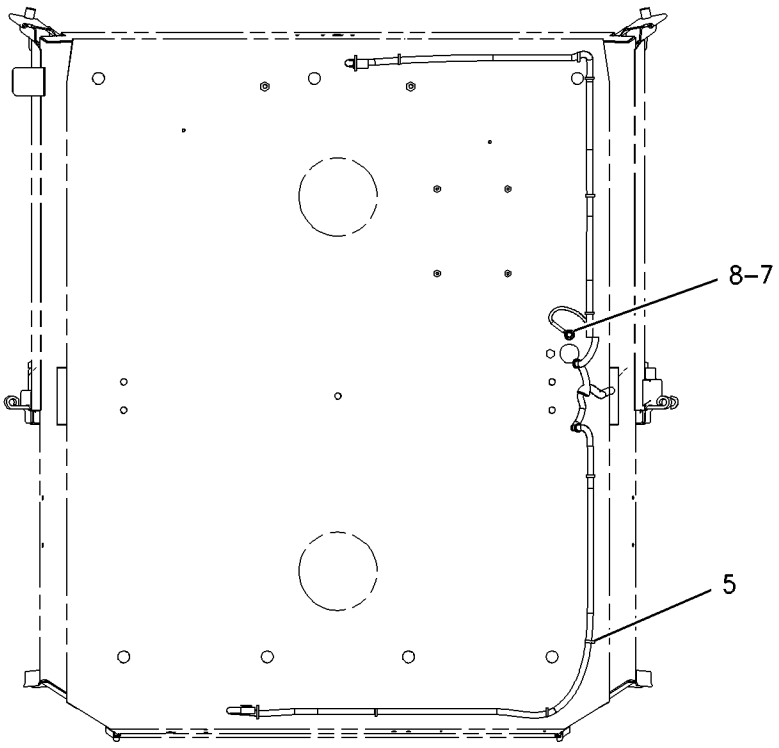

SECTION E-E

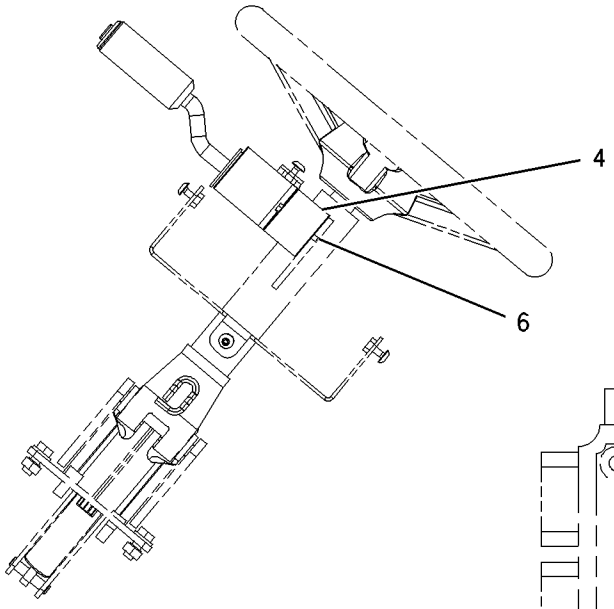

SECTION C-C

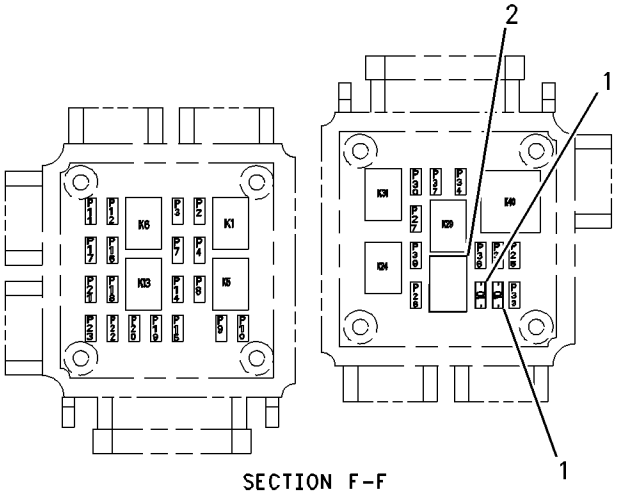

SECTION F-F

GRAPHIC #2 **<END>** g00949705

202-5810 WIRING GP-CONSOLE

S/N: FDP18400-UP
SIDE
PART OF 184-9737 CAB AR, 184-9736, 238-6697 CANOPY AR
AN ATTACHMENT

SMCS-1408 **i01943751**

NOTE	REF NO	GRAPHIC REF	PART NUMBER	QTY	PART NAME 1 2 3 4 5 6 (PRODUCT LEVEL)	SEE PAGE
B	1	1	**3S-2093**	12	STRAP-CABLE	
	2	1	**6K-0806**	4	STRAP-CABLE	
	3	1	**7K-1181**	3	STRAP-CABLE	
Y	4	2	**143-0421**	1	FILTER GP-OIL (HYDRAULIC)	387
Y	5	2	**144-9930**	1	MODULE GP-WARNING INDICATOR	811
	6	2	**157-1997**	2	SPACER (4.34X15.88X6.34MM THK)	
	7	1	**169-0586**	1	SWITCH AS (START AID)	
		1	**111-7899**	1	GASKET	
	8	1	**172-9200**	1	SUPPRESSOR-ARC	
B	9	1	**184-5293**	1	PLUG	
B	10	1	**187-1644**	6	PLUG	
	11	1	**205-4286**	1	HARNESS AS-CONSOLE (SIDE CONSOLE)	
		1	**102-8803**	1	KIT-RECEPTACLE (3 PIN)	
		1	**155-2255**	1	KIT-CONNECTING PLUG (12 PIN)	
		1	**155-2270**	1	KIT-CONNECTING PLUG (2 PIN)	
		1	**155-2271**	1	KIT-CONNECTING PLUG (4 PIN)	
		1	**155-2274**	1	KIT-CONNECTING PLUG (6 PIN)	
	12	1	**226-7164**	1	GAUGE GP-COOLANT TEMPERATURE (COOLANT TEMP)	
		1	**4B-2043**	3	NUT (8-32 THD)	
		1	**7X-9065**	1	LAMP (12 VOLT)	
		1	**9B-7233**	3	LOCKWASHER	
M	13	2	**095-0741**	1	SCREW-MACHINE (M6X1THD)	
	14	2	**116-7491**	1	ANCHOR	
	15	1	**134-2305**	3	SEAL	
	16	1	**170-6305**	1	INDICATOR AS (FUEL LEVEL)	
		1	**4B-2043**	3	NUT (8-32 THD)	
		1	**7X-9065**	1	LAMP (12 VOLT)	
		1	**9B-7233**	3	LOCKWASHER	
	17	1	**170-6542**	1	INDICATOR AS (CONVERTER OIL TEMP)	
		1	**4B-2043**	3	NUT (8-32 THD)	
		1	**7X-9065**	1	LAMP (12 VOLT)	
		1	**9B-7233**	3	LOCKWASHER	
	18	1	**196-2966**	1	PLUG	
	19	1	**198-0099**	1	FILM (INDICATOR)	
B	20	2	**4P-8134**	3	CLIP	
M	21	2	**8T-2659**	2	LOCKNUT (M4X6H THD)	
BM	22	2	**8T-4133**	3	NUT (M10X1.5 THD)	
BM	23	2	**8T-4191**	3	BOLT (M10X1.5X16MM)	

B-USE AS REQUIRED
M-METRIC PART
Y-SEPARATE ILLUSTRATION

REFER TO ALL ILLUSTRATIONS
IN THIS GROUP FOR
AUXILIARY VIEWS

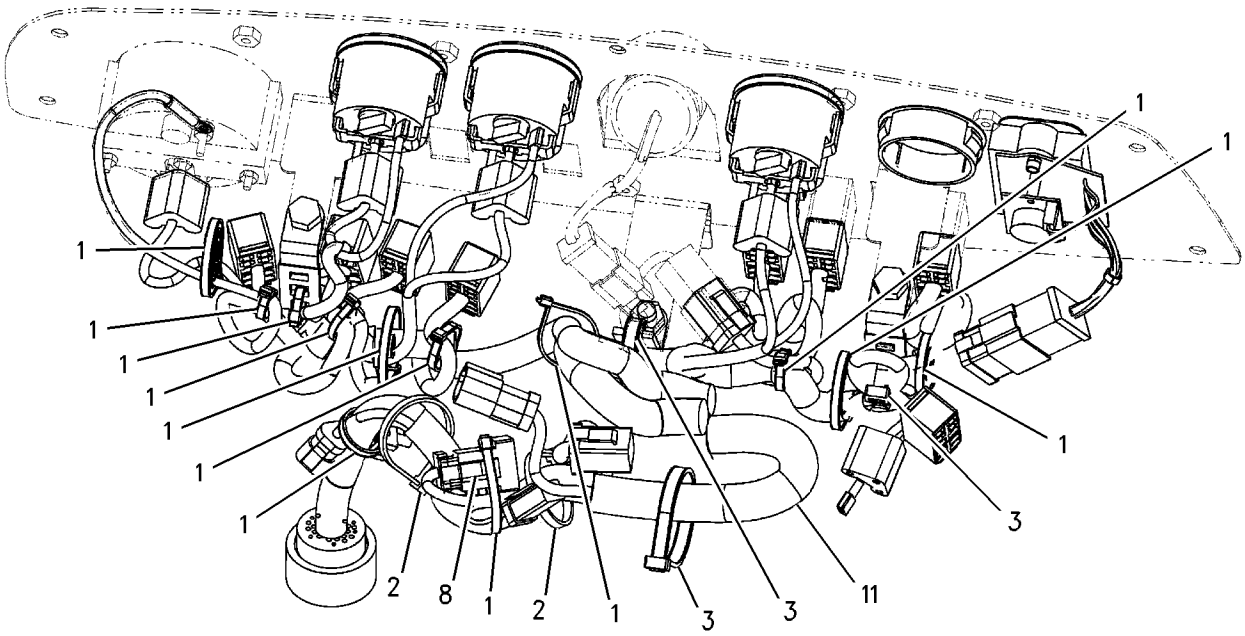

BACK OF SIDE CONSOLE

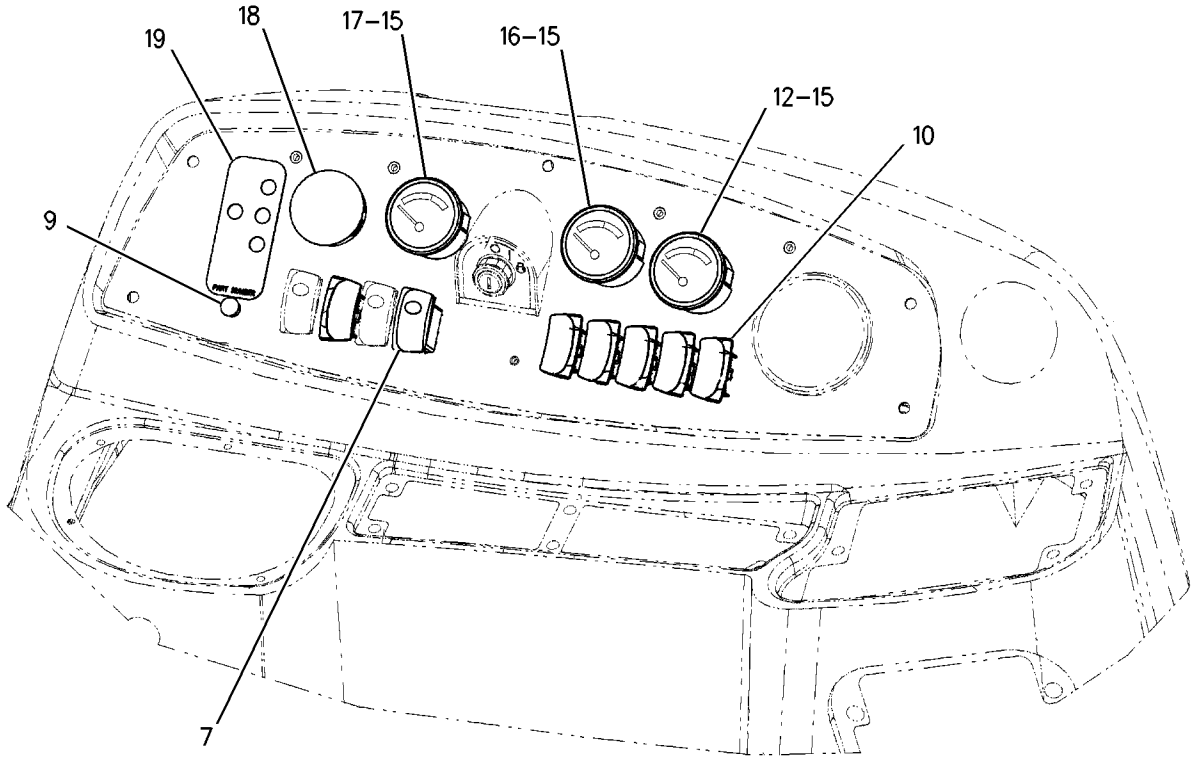

SIDE CONSOLE

GRAPHIC #1 g00953493

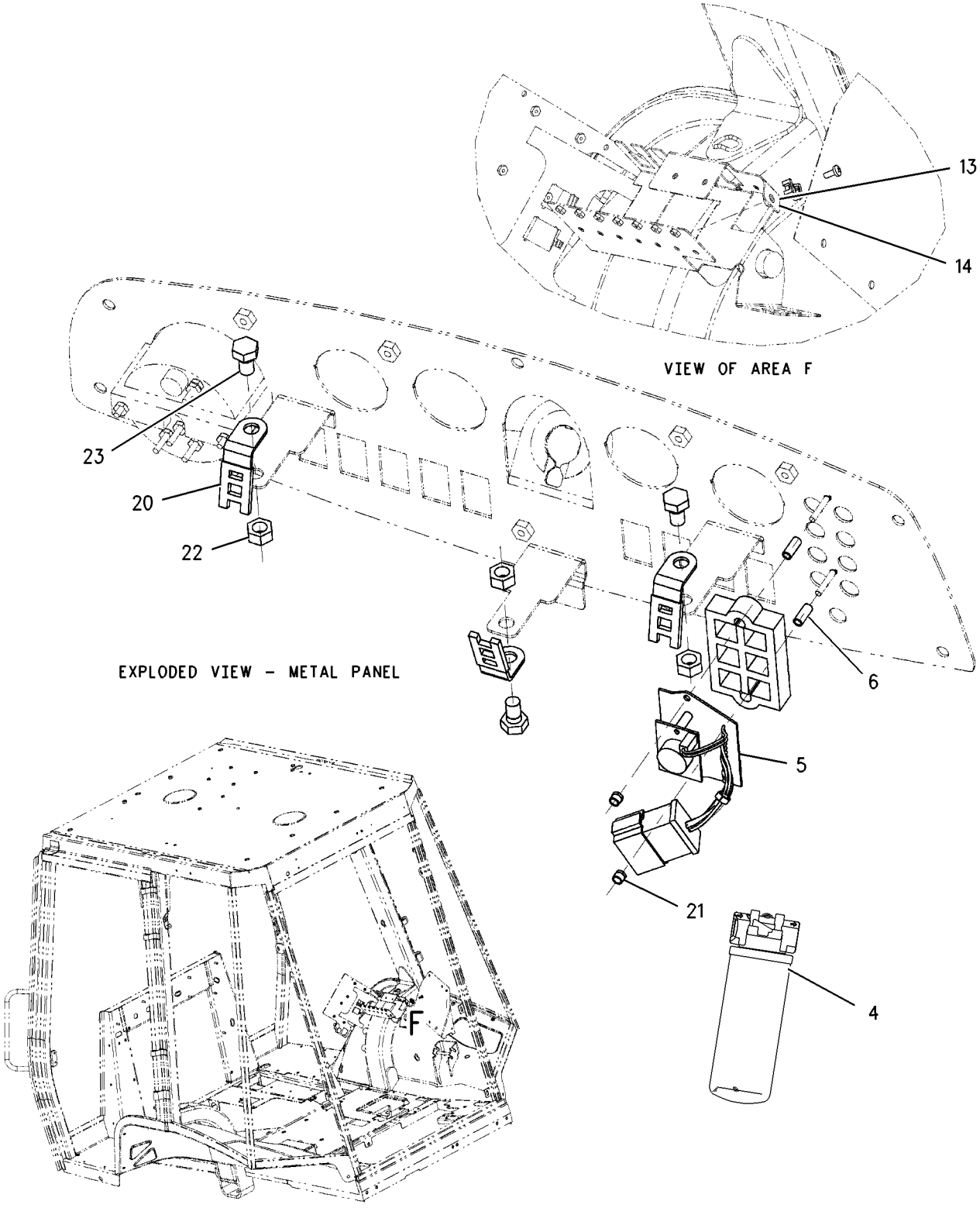

GRAPHIC #2 **<END>** g00953469

202-5811 WIRING GP-CONSOLE

S/N: FDP18400-UP
SIDE, DELUXE
PART OF 184-9738, 244-1944 CAB AR
AN ATTACHMENT

SMCS-1408 **i01910824**

NOTE	REF NO	GRAPHIC REF	PART NUMBER	QTY	PART NAME 1 2 3 4 5 6 (PRODUCT LEVEL)	SEE PAGE
BC	1	2,3	**3S-2093**	15	STRAP-CABLE	
	2	2	**6K-0806**	4	STRAP-CABLE	
	3	2	**7K-1181**	1	STRAP-CABLE	
C	4	3	**7N-0758**	1	SWITCH AS-TEMPERATURE (HYDRAULIC OIL)	
C		3	**6V-8376**	2	SCREW-MACHINE (8-32X0.25 IN)	
C		3	**9B-7233**	2	LOCKWASHER	
	5	3	**157-1997**	2	SPACER	
	6	1	**169-0586**	1	SWITCH AS (THERMOSTART)	
		1	**111-7899**	1	GASKET	
	7	2	**172-9200**	1	SUPPRESSOR-ARC	
B	8	1	**184-5293**	1	PLUG	
B	9	1	**187-1644**	6	PLUG	
	10	3	**189-0148**	1	MODULE GP-WARNING INDICATOR	
		3	**102-8801**	1	KIT-RECEPTACLE (12 PIN)	
		3	**193-0742**	1	GASKET	
	11	2	**194-4414**	1	HARNESS AS-CONSOLE (HYDRAULIC FILTER TIMER)	
		2	**102-8804**	1	KIT-RECEPTACLE (4 PIN)	
	12	3	**224-6812**	1	FILTER GP-OIL (HYDRAULIC)	
		3	**3J-1907**	1	SEAL-O-RING	
		3	**7X-8549**	1	SWITCH AS-PRESSURE (HYDRAULIC OIL BYPASS)	
		3	**126-1817**	1	FILTER AS-OIL (HYDRAULIC)	
C	13	1	**226-7164**	1	INDICATOR AS	
		1	**4B-2043**	3	NUT (8-32 THD)	
		1	**7X-9065**	1	LAMP (12 VOLT)	
		1	**9B-7233**	3	LOCKWASHER	
C	14	3	**226-7280**	1	WIRE AS	
M	15	3	**095-0741**	1	SCREW-MACHINE (M6X1THD)	
	16	3	**116-7491**	1	ANCHOR	
	17	1	**134-2305**	4	SEAL	
	18	1	**170-6305**	1	INDICATOR AS (FUEL LEVEL)	
		1	**4B-2043**	3	NUT (8-32 THD)	
		1	**7X-9065**	1	LAMP (12 VOLT)	
		1	**9B-7233**	3	LOCKWASHER	
	19	1	**170-6309**	1	INDICATOR AS (VOLT METER)	
		1	**4B-2043**	3	NUT (8-32 THD)	
		1	**7X-9065**	1	LAMP (12 VOLT)	
		1	**9B-7233**	3	LOCKWASHER	
	20	1	**170-6542**	1	INDICATOR AS (CONVERTER OIL TEMP)	
		1	**4B-2043**	3	NUT (8-32 THD)	
		1	**7X-9065**	1	LAMP (12 VOLT)	
		1	**9B-7233**	3	LOCKWASHER	
	21	1	**172-6224**	1	FILM-INDICATOR	
	22	2	**189-4920**	1	RELAY AS-TIMER	
	23	2	**205-4286**	1	HARNESS AS-CONSOLE (MAIN)	
		2	**102-8803**	1	KIT-RECEPTACLE (3 PIN)	
		2	**155-2255**	1	KIT-CONNECTING PLUG (12 PIN)	
		2	**155-2260**	1	KIT-CONNECTING PLUG (3 PIN)	
		2	**155-2270**	1	KIT-CONNECTING PLUG (2 PIN)	
		2	**155-2271**	1	KIT-CONNECTING PLUG (4 PIN)	
		2	**155-2274**	1	KIT-CONNECTING PLUG (6 PIN)	
C	24	3	**3K-0360**	1	SEAL-O-RING	
M	25	3	**8T-2659**	2	LOCKNUT	

B-USE AS REQUIRED
C-CHANGE FROM PREVIOUS TYPE
M-METRIC PART

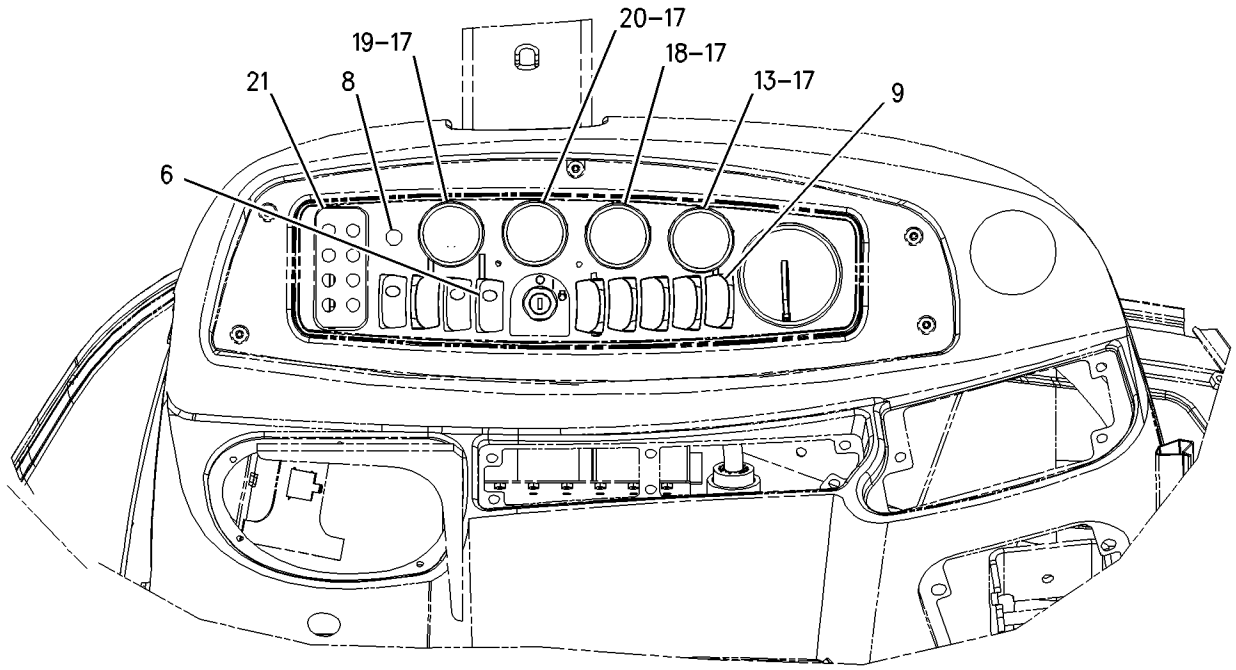

SECTION E-E

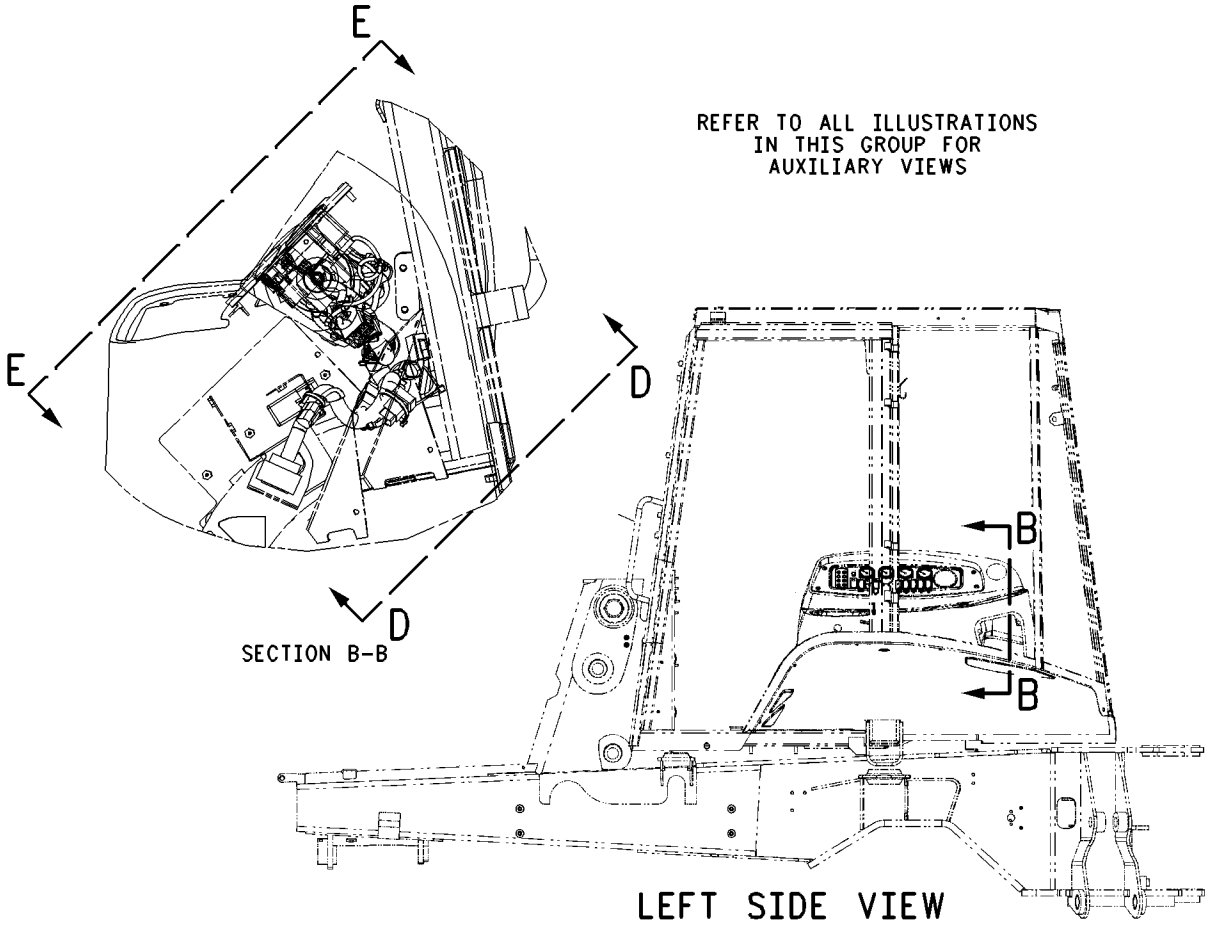

REFER TO ALL ILLUSTRATIONS
IN THIS GROUP FOR
AUXILIARY VIEWS

SECTION B-B

LEFT SIDE VIEW

GRAPHIC #1 g00995641

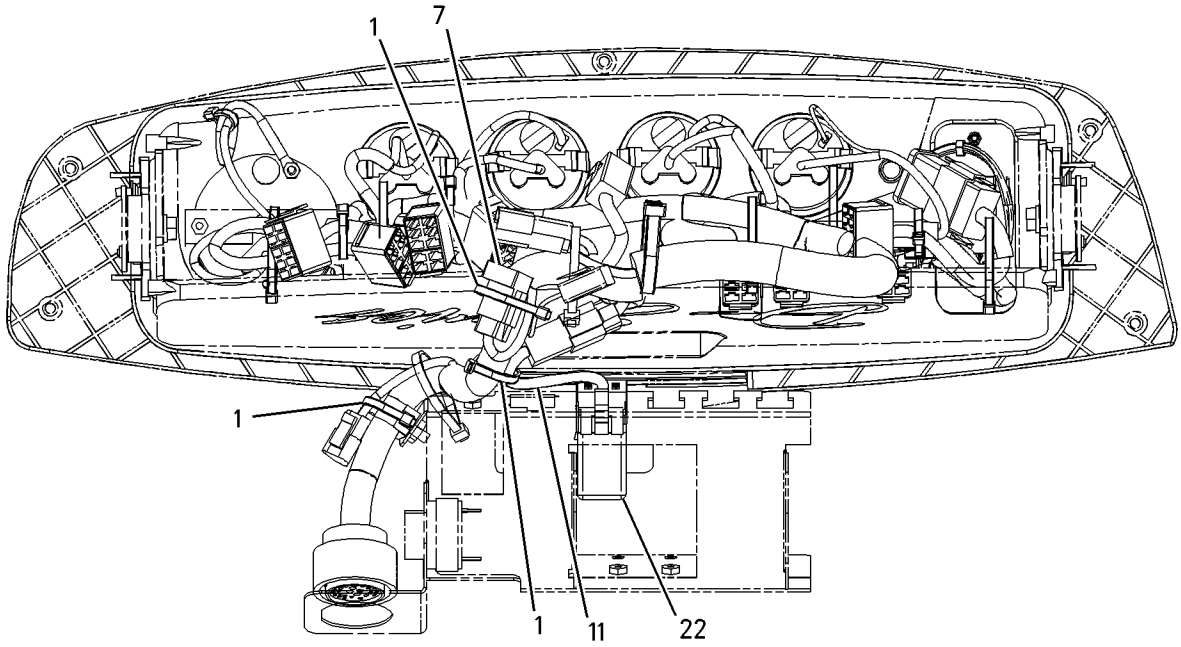

SECTION D-D

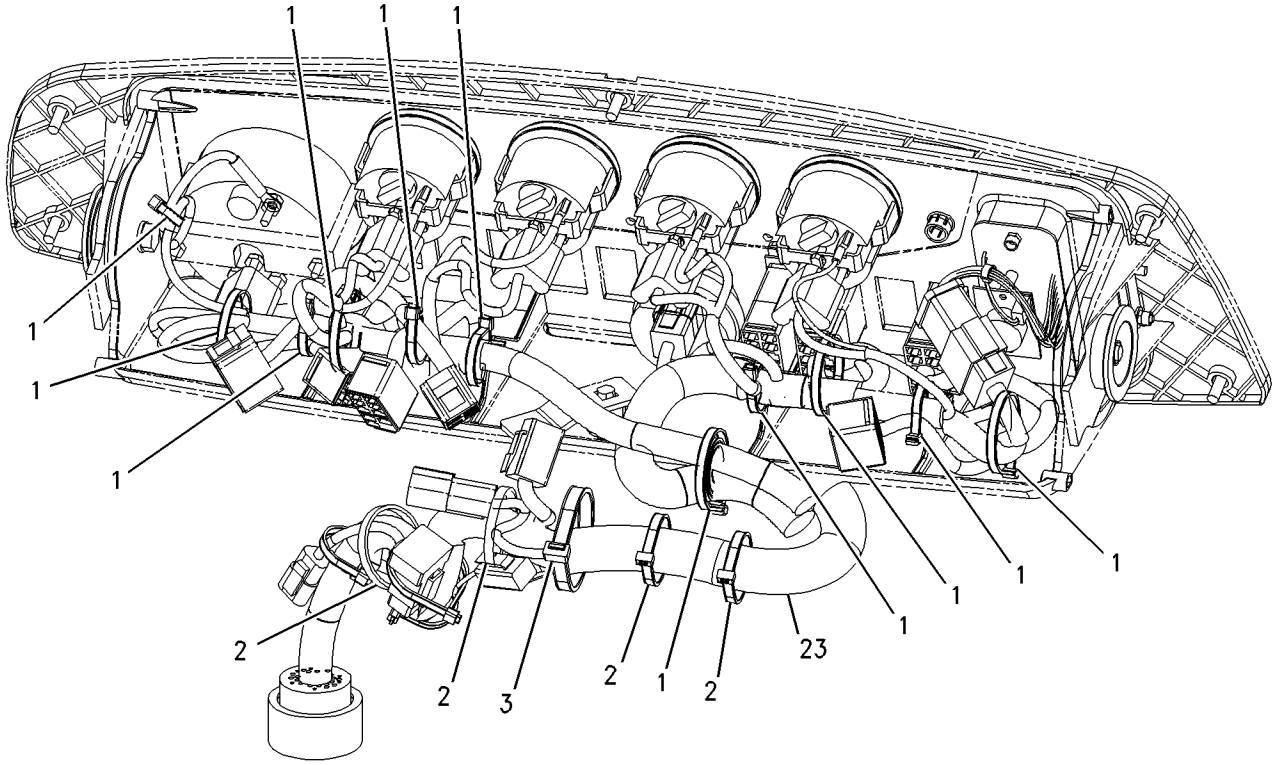

GRAPHIC #2 g00995642

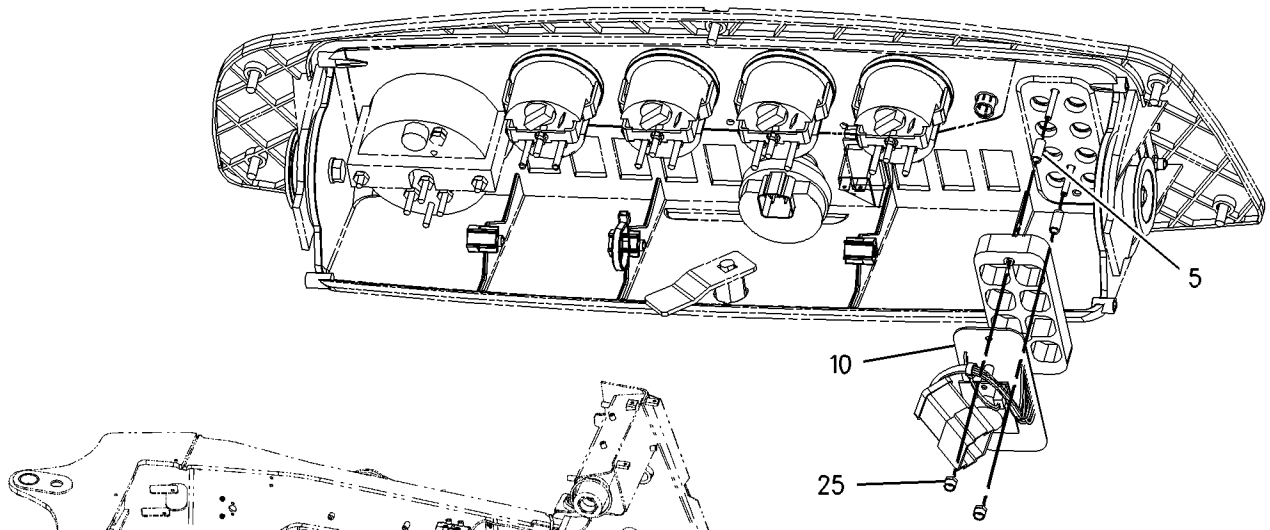

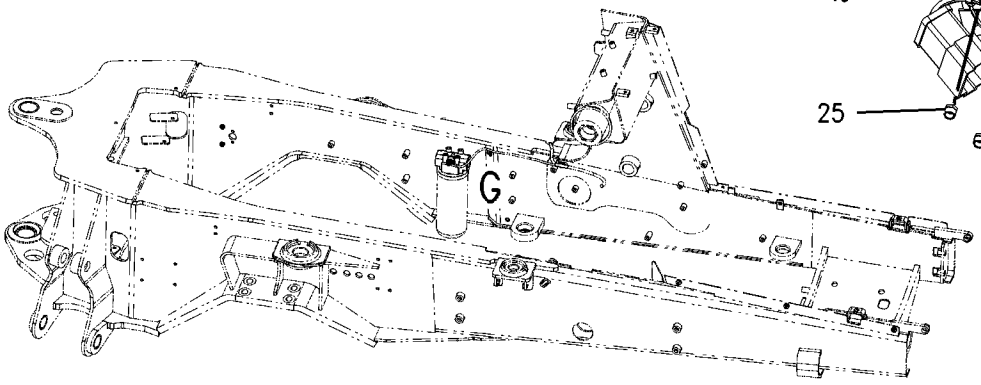

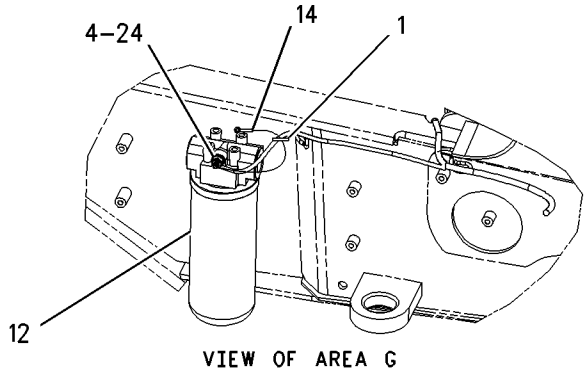

VIEW OF AREA G

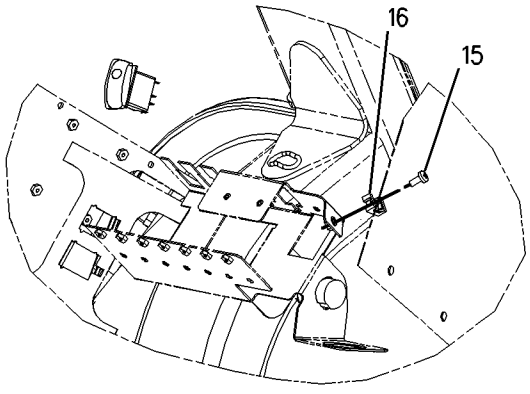

VIEW OF AREA F

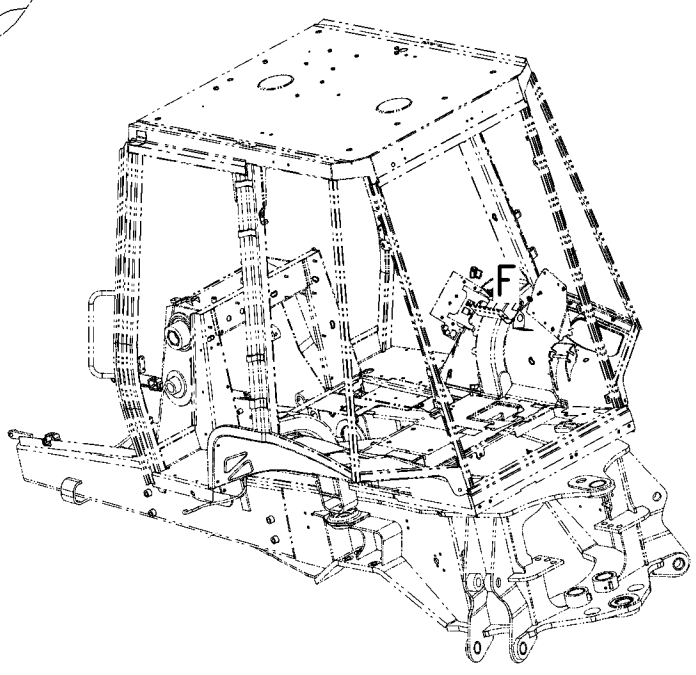

GRAPHIC #3 **<END>** g00995643

238-1165 WIRING GP-CONSOLE–FRONT

S/N: FDP18400-UP

PART OF 214-6951 CHASSIS AR

SMCS-1408 **i02019382**

NOTE	REF NO	GRAPHIC REF	PART NUMBER	QTY	PART NAME 1 2 3 4 5 6 (PRODUCT LEVEL)	SEE PAGE
Y	1	2	**144-9931**	1	MODULE GP-WARNING INDICATOR (WITHOUT ALARM)	812
	2	2	**157-1997**	2	SPACER (4.34X15.88X6.34-MM THK)	
	3	2	**167-3701**	1	HARNESS AS-CONSOLE	
		2	**102-8805**	1	KIT-RECEPTACLE (6-PIN)	
		2	**155-2255**	1	KIT-CONNECTING PLUG (12-PIN)	
		2	**155-2265**	1	KIT-CONNECTING PLUG (8-PIN)	
	4	2	**169-0587**	1	SWITCH AS (HORN)	
		2	**111-7899**	1	GASKET	
	5	2	**169-0588**	1	SWITCH AS (NEUTRA; LOCK)	
		2	**111-7899**	1	GASKET	
	6	2	**187-1644**	7	PLUG	
	7	2	**205-7700**	1	KIT-SERVICE METER	
					INCLUDES FILM	
	8	2	**229-8182**	1	SWITCH AS-ROCKER (HAZARD)	
		2	**111-7899**	1	GASKET	
M	9	2	**095-0741**	2	SCREW-MACHINE (M6X1-THD)	
M	10	2	**099-0492**	2	LOCKNUT (M6X1-THD)	
	11	2	**116-7491**	2	ANCHOR	
	12	2	**188-0863**	1	FILM-INDICATOR	
	13	2	**3S-2093**	6	STRAP-CABLE	
M	14	2	**8T-2659**	2	LOCKNUT (M4X6H THD)	

M-METRIC PART
Y-SEPARATE ILLUSTRATION

REFER TO ALL ILLUSTRATIONS OF THIS GROUP FOR AUXILIARY VIEWS

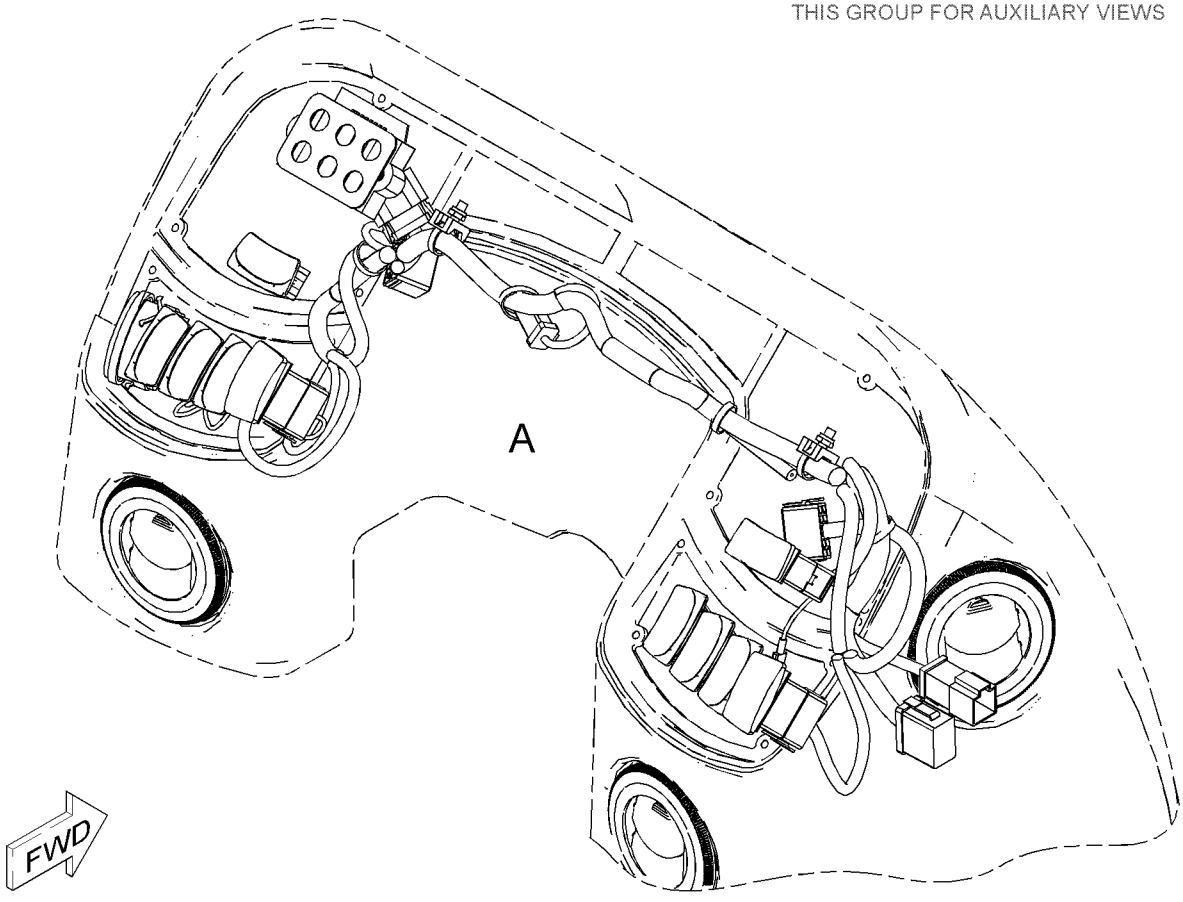

GRAPHIC #1 g01034859

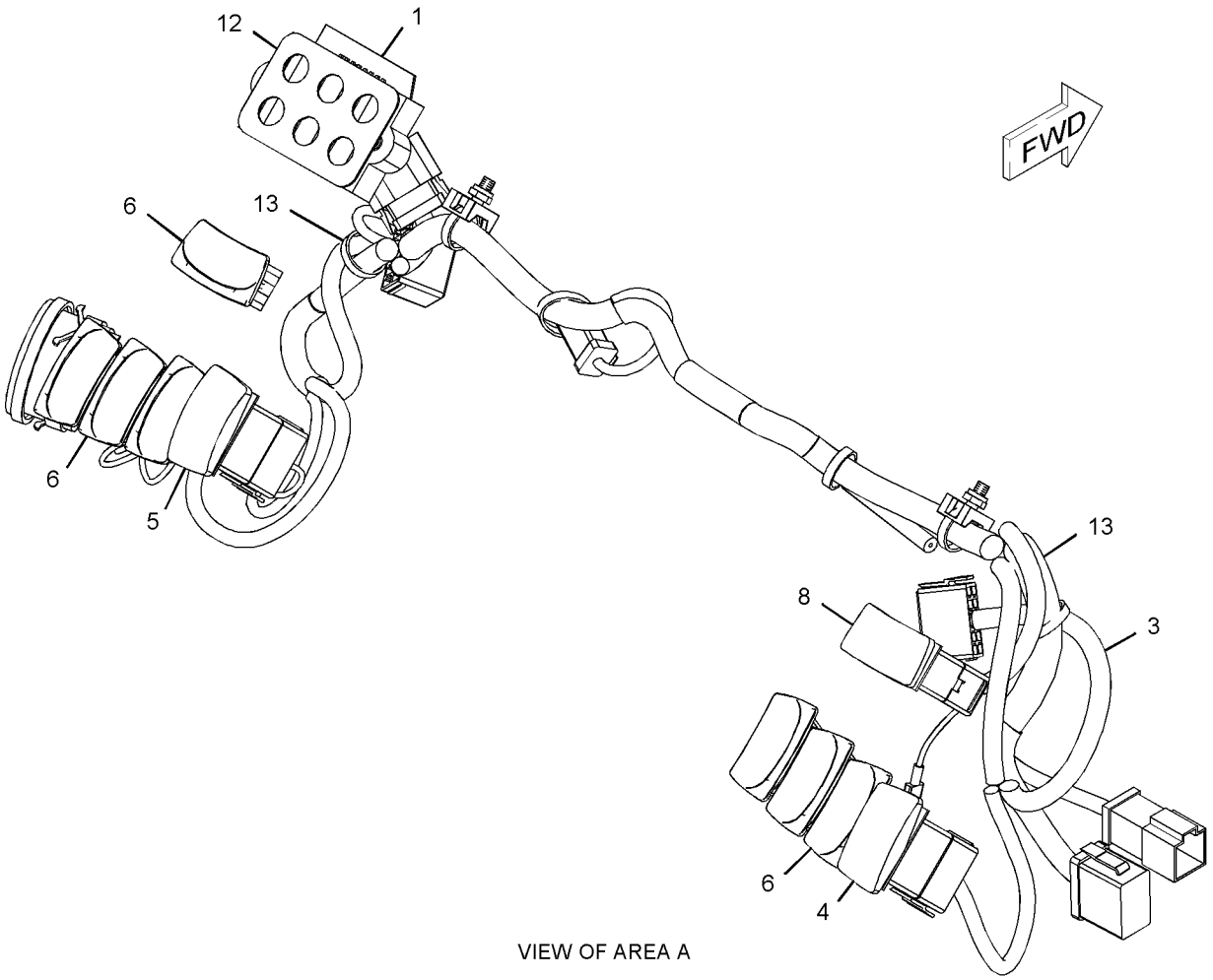

VIEW OF AREA A

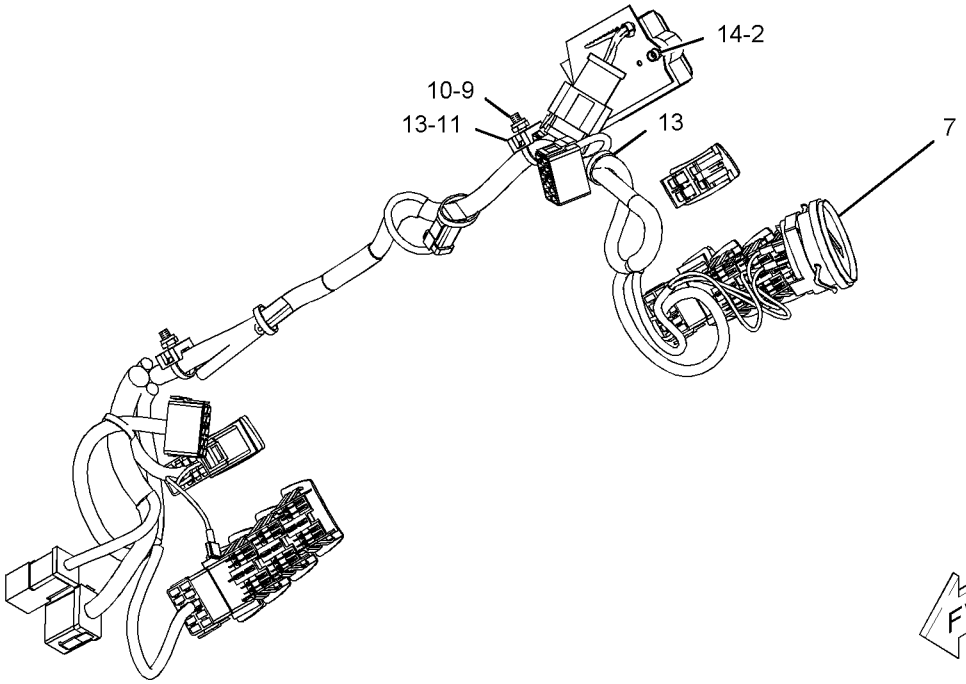

GRAPHIC #2 **<END>** g01034860

238-1166 WIRING GP-CONSOLE

S/N: FDP18400-UP

PART OF 239-5565, 239-5566 CAB AR, 239-5563, 239-5564 CANOPY AR AN ATTACHMENT

SMCS-1408 **i02015696**

NOTE	REF NO	GRAPHIC REF	PART NUMBER	QTY	PART NAME 1 2 3 4 5 6 (PRODUCT LEVEL)	SEE PAGE
	1	1	**6K-0806**	4	STRAP-CABLE	
	2	1	**7K-1181**	3	STRAP-CABLE	
	3	1	**157-1997**	2	SPACER (4.34X15.88X6.34-MM THK)	
	4	1	**169-0586**	1	SWITCH AS-ROCKER (STARTING AID)	
		1	**111-7899**	1	GASKET	
	5	1	**172-9200**	1	SUPPRESSOR-ARC	
	6	1	**184-5293**	1	PLUG	
	7	1	**187-1644**	6	PLUG	
	8	1	**205-4286**	1	HARNESS AS-INSTRUMENT PANEL	
		1	**102-8803**	1	KIT-RECEPTACLE (3-PIN)	
		1	**102-8804**	1	KIT-RECEPTACLE (4-PIN)	
		1	**155-2255**	1	KIT-CONNECTING PLUG (12-PIN)	
		1	**155-2260**	1	KIT-CONNECTING PLUG (3-PIN)	
		1	**155-2270**	1	KIT-CONNECTING PLUG (2-PIN)	
		1	**155-2271**	2	KIT-CONNECTING PLUG (4-PIN)	
		1	**155-2274**	2	KIT-CONNECTING PLUG (6-PIN)	
	9	1	**172-6224**	1	FILM-INDICATOR	
	10	1	*223-6539*	1	MODULE GP-WARNING INDICATOR	
		1	**3E-5180**	1	WEDGE-RECEPTACLE LOCK (12-PIN)	
		1	**8T-8737**	1	PLUG-SEAL	
		1	**102-8801**	1	KIT-RECEPTACLE (12-PIN)	
		1	**186-3735**	9	PIN-CONNECTOR	
		1	**232-4706**	1	GASKET	
	11	1	**226-7164**	1	GAUGE GP-COOLANT TEMPERATURE	
		1	**4B-2043**	3	NUT (8-32-THD)	
		1	**7X-9065**	1	LAMP (12-VOLT)	
		1	**9B-7233**	3	LOCKWASHER	
M	12	1	**095-0741**	1	SCREW-MACHINE (M6X1-THD)	
	13	1	**116-7491**	1	ANCHOR	
	14	1	**134-2305**	3	SEAL	
	15	1	**170-6305**	1	INDICATOR AS (FUEL LEVEL)	
		1	**4B-2043**	3	NUT (8-32-THD)	
		1	**7X-9065**	1	LAMP (12-VOLT)	
		1	**9B-7233**	3	LOCKWASHER	
	16	1	**170-6542**	1	INDICATOR AS (CONVERTER OIL TEMP)	
		1	**4B-2043**	3	NUT (8-32-THD)	
		1	**7X-9065**	1	LAMP (12-VOLT)	
		1	**9B-7233**	3	LOCKWASHER	
	17	1	**196-2966**	1	PLUG	
	18	1	**3S-2093**	11	STRAP-CABLE	
	19	1	**4P-8134**	3	CLIP	
M	20	1	**8T-2659**	2	LOCKNUT (M4X6H THD)	
M	21	1	**8T-4133**	3	NUT (M10X1.5-THD)	
M	22	1	**8T-4191**	3	BOLT (M10X1.5X16-MM)	

M-METRIC PART

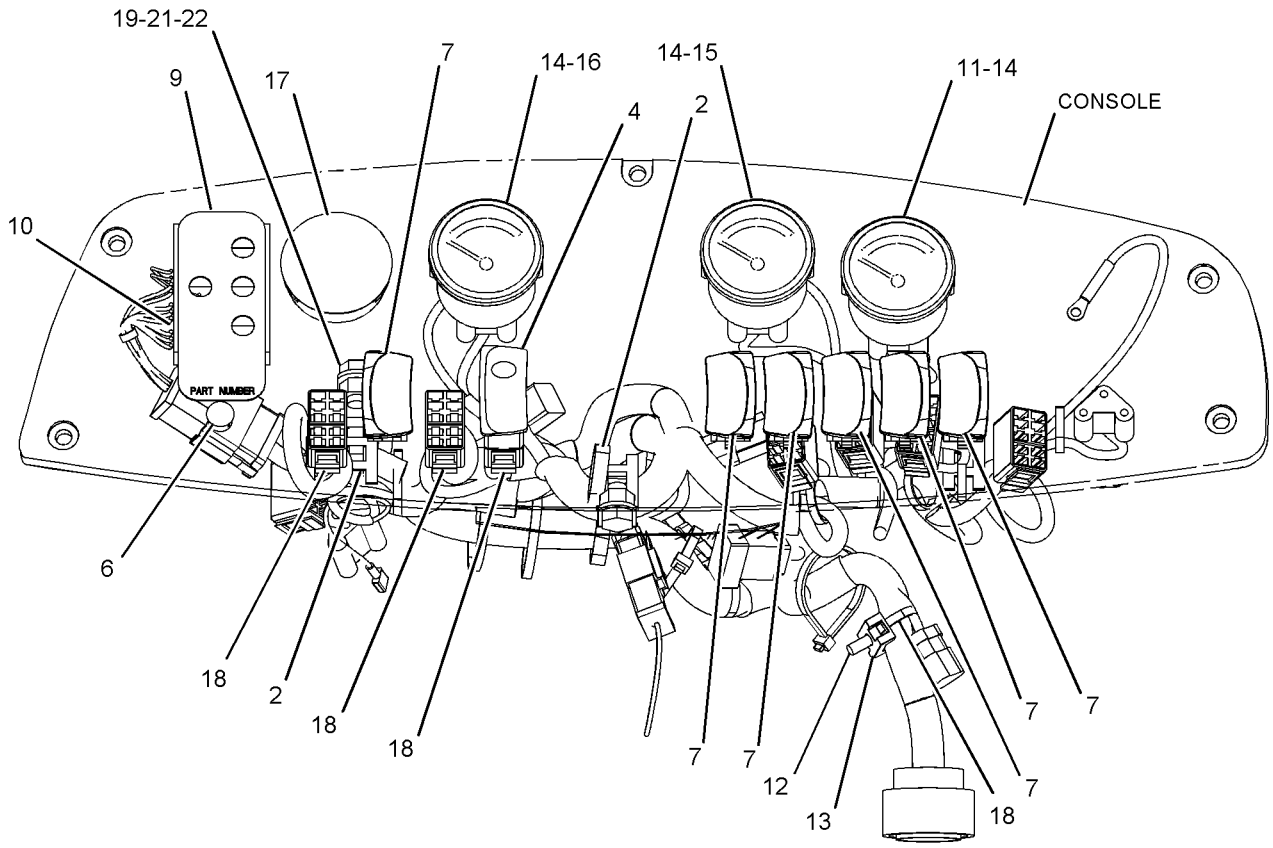

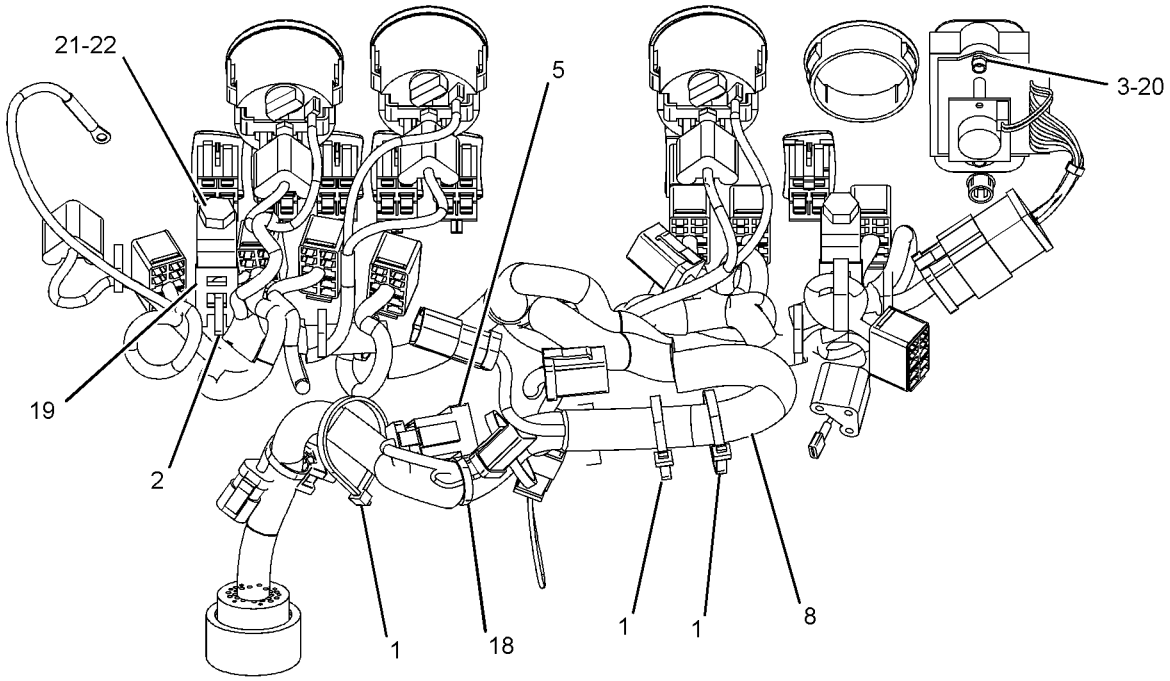

GRAPHIC #1 **<END>** g01026150

238-1167 WIRING GP-CONSOLE–SIDE, DELUXE

S/N: FDP18400-UP
PART OF 239-5567, 239-5568 CAB AR
AN ATTACHMENT

SMCS-1408 **i02016398**

NOTE	REF NO	GRAPHIC REF	PART NUMBER	QTY	PART NAME 1 2 3 4 5 6 (PRODUCT LEVEL)	SEE PAGE
	1	1	**6K-0806**	4	STRAP-CABLE	
	2	1	**7K-1181**	1	STRAP-CABLE	
	3	1	**134-0404**	1	INDICATOR AS (HYDRAULIC)	
	4	1	**157-1997**	2	SPACER (4.34X15.88X6.34-MM THK)	
	5	1	**169-0586**	1	SWITCH AS-ROCKER (STARTING AID)	
		1	**111-7899**	1	GASKET	
	6	1	**172-9200**	1	SUPPRESSOR-ARC	
	7	1	**184-5293**	1	PLUG	
	8	1	**187-1644**	6	PLUG	
	9	1	**189-0148**	1	MODULE GP-WARNING INDICATOR	
	10	1	**226-7164**	1	GAUGE GP-COOLANT TEMPERATURE	
		1	**4B-2043**	6	NUT (8-32-THD)	
		1	**7X-9065**	1	LAMP (12-VOLT)	
		1	**9B-7233**	3	LOCKWASHER	
M	11	1	**095-0741**	1	SCREW-MACHINE (M6X1-THD)	
	12	1	**116-7491**	1	ANCHOR	
	13	1	**134-2305**	4	SEAL	
	14	1	**170-6305**	1	INDICATOR AS (FUEL LEVEL)	
		1	**4B-2043**	3	NUT (8-32-THD)	
		1	**7X-9065**	1	LAMP (12-VOLT)	
		1	**9B-7233**	3	LOCKWASHER	
	15	1	**170-6309**	1	INDICATOR AS (VOLT METER)	
		1	**4B-2043**	3	NUT (8-32-THD)	
		1	**7X-9065**	1	LAMP (12-VOLT)	
		1	**9B-7233**	3	LOCKWASHER	
	16	1	**170-6542**	1	INDICATOR AS (CONVERTER OIL TEMP)	
		1	**4B-2043**	3	NUT (8-32-THD)	
		1	**7X-9065**	1	LAMP (12-VOLT)	
		1	**9B-7233**	3	LOCKWASHER	
	17	1	**172-6224**	1	FILM-INDICATOR	
	18	1	**205-4286**	1	HARNESS AS-INSTRUMENT PANEL	
		1	**102-8803**	1	KIT-RECEPTACLE (3-PIN)	
		1	**155-2260**	1	KIT-CONNECTING PLUG (3-PIN)	
		1	**102-8804**	1	KIT-RECEPTACLE (4-PIN)	
		1	**155-2255**	1	KIT-CONNECTING PLUG (12-PIN)	
		1	**155-2270**	1	KIT-CONNECTING PLUG (2-PIN)	
		1	**155-2271**	1	KIT-CONNECTING PLUG (4-PIN)	
		1	**155-2274**	1	KIT-CONNECTING PLUG (6-PIN)	
	19	1	**3S-2093**	14	STRAP-CABLE	
M	20	1	**8T-2659**	2	LOCKNUT (M4X6H THD)	

M-METRIC PART

238-1167 **WIRING GP-CONSOLE** *(contd.)* **i02016398**

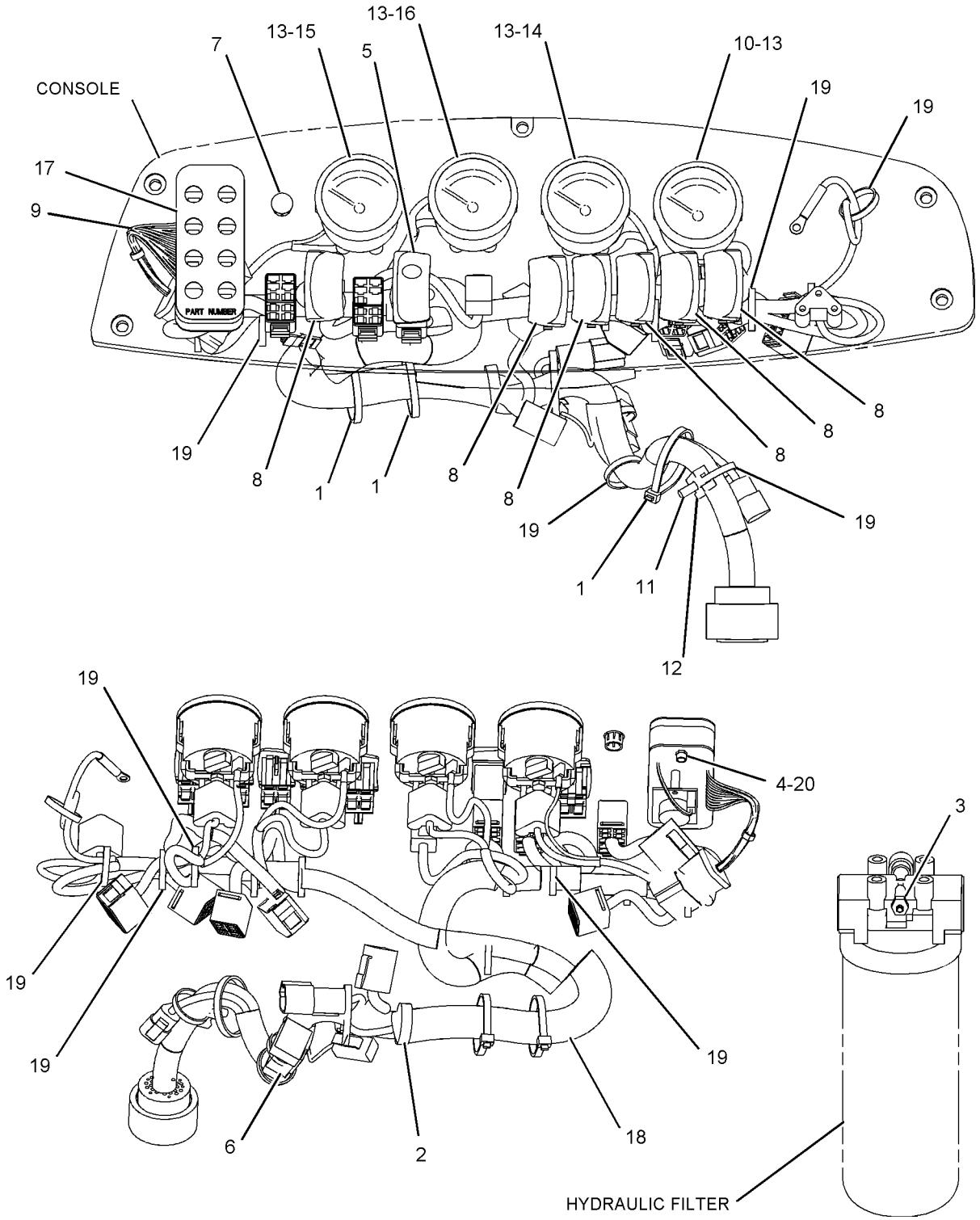

GRAPHIC #1 **<END>** g01026081

234-1991 WIRING GP-ENGINE

S/N: FDP18400-UP

PART OF 214-6892 ENGINE AR

SMCS-1408 **i01991948**

NOTE	REF NO	GRAPHIC REF	PART NUMBER	QTY	PART NAME 1 2 3 4 5 6 (PRODUCT LEVEL)	SEE PAGE
	1	1	**4W-9972**	1	SENDER-TEMPERATURE	
		1	**4B-2049**	1	NUT (10-32 THD)	
		1	**8F-1434**	1	LOCKWASHER (INTERNAL TOOTH)	
		1	**8T-0328**	1	WASHER-HARD (5.5X10X1MM THK)	
	2	1,2	**7K-1181**	2	STRAP-CABLE	
B	3	1	**8T-8737**	7	PLUG-SEAL	
	4	1,2	**115-1615**	2	RELAY AS (12-VOLT)	
	5	1	**155-8522**	1	MOUNT	
	6	2	**164-9425**	1	HORN AS (LOW TONE)	
	7	2	**178-8465**	1	HARNESS AS (WIRE)	
		2	**102-8802**	1	KIT-RECEPTACLE (2-PIN)	
					(INCLUDES RECEPTACLE AS AND WEDGE)	
		2	**100-3320**	1	PLUG AS-CONNECTOR (2 PIN)	
	8	2	**213-6094**	1	CABLE AS	
E		2	**8C-3056**		CABLE (2 GA) (85CM)	
		2	**8T-8799**	1	BOOT	
E		2	**119-3662**		TUBE-HEAT SHRINK (7CM)	
	9	2	**234-1992**	1	HARNESS AS-ENGINE	
		2	**102-8802**	1	KIT-RECEPTACLE (2-PIN)	
					(INCLUDES RECEPTACLE AS AND WEDGE)	
		2	**9X-1054**	2	PLUG AS-CONNECTOR (4 PIN)	
		2	**155-2260**	3	KIT-CONNECTING PLUG (3-PIN)	
					(INCLUDES PLUG AS AND WEDGE)	
		2	**155-2270**	12	KIT-CONNECTING PLUG (2-PIN)	
		2	**167-3693**	1	PLUG AS	
		2	**177-9645**	1	KIT-RECEPTACLE (2-PIN)	
					(INCLUDES RECEPTACLE AS AND WEDGE)	
	10	1	**238-9397**	1	RESISTOR AS	
	11	2	**243-5027**	1	NUT AS	
	12	2	**244-3106**	1	SENDER AS-TEMPERATURE	
		2	**102-8802**	1	KIT-RECEPTACLE (2-PIN)	
					(INCLUDES RECEPTACLE AS AND WEDGE)	
		2	**186-3735**	2	PIN-CONNECTOR	
	13	1	**155-2270**	1	KIT-CONNECTING PLUG (2-PIN)	
					(INCLUDES PLUG AS AND WEDGE)	
	14	1	**102-8802**	1	KIT-RECEPTACLE (2-PIN)	
	15	1	**102-8803**	1	KIT-RECEPTACLE (3-PIN)	
					(BOTH INCLUDE RECEPTACLE AS AND WEDGE)	
	16	1	**3J-1907**	1	SEAL-O-RING	
	17	1,2	**3S-2093**	32	STRAP-CABLE	
	18	2	**4P-7581**	8	CLIP	
	19	2	**4P-8134**	5	CLIP	
M	20	2	**5C-2874**	2	NUT (M5X.8 THD)	
M	21	1	**5C-2890**	1	NUT (M6X1 THD)	
	22	1	**6K-0806**	3	STRAP-CABLE	
M	23	1	**6V-7357**	1	BOLT (M6X1.0X25MM)	
	24	2	**8F-1434**	2	LOCKWASHER (INTERNAL TOOTH)	
	25	2	**8T-0328**	2	WASHER-HARD (5.5X10X1MM THK)	
	26	2	**8T-4121**	9	WASHER-HARD (11X21X2.5MM THK)	
M	27	2	**8T-4136**	1	BOLT (M10X1.5X25MM)	
M	28	2	**8T-4137**	8	BOLT (M10X1.5X20MM)	
M	29	2	**8T-4138**	1	BOLT (M6X1X20MM)	
M	30	2	**8T-4189**	1	BOLT (M8X1.25X20MM)	
	31	1,2	**8T-4205**	3	WASHER-HARD (7.2X14.5X2MM THK)	
	32	2	**8T-4224**	1	WASHER-HARD (8.8X16X2MM THK)	

B-USE AS REQUIRED
E-ORDER BY THE CENTIMETER
M-METRIC PART

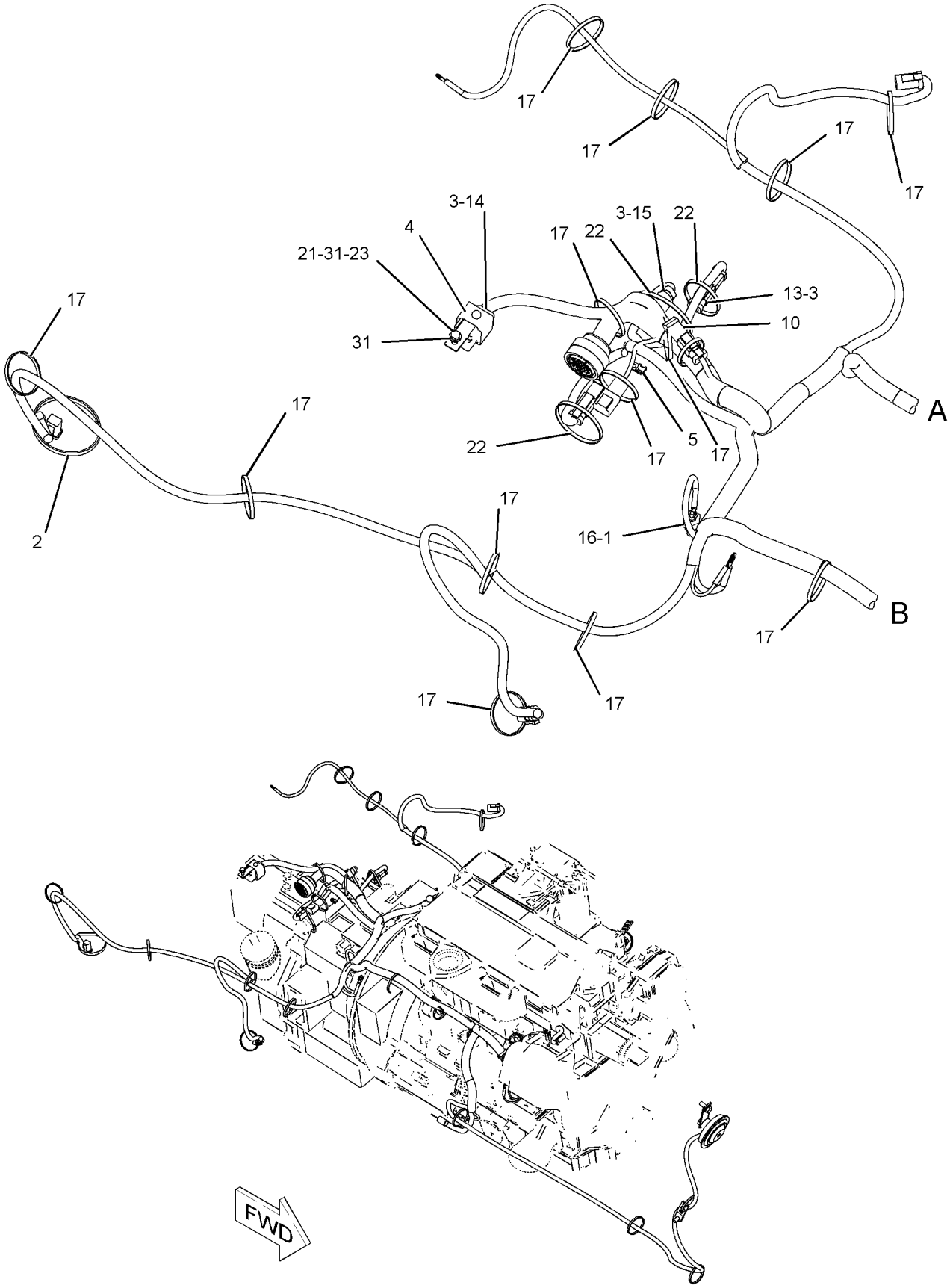

GRAPHIC #1 g01039490

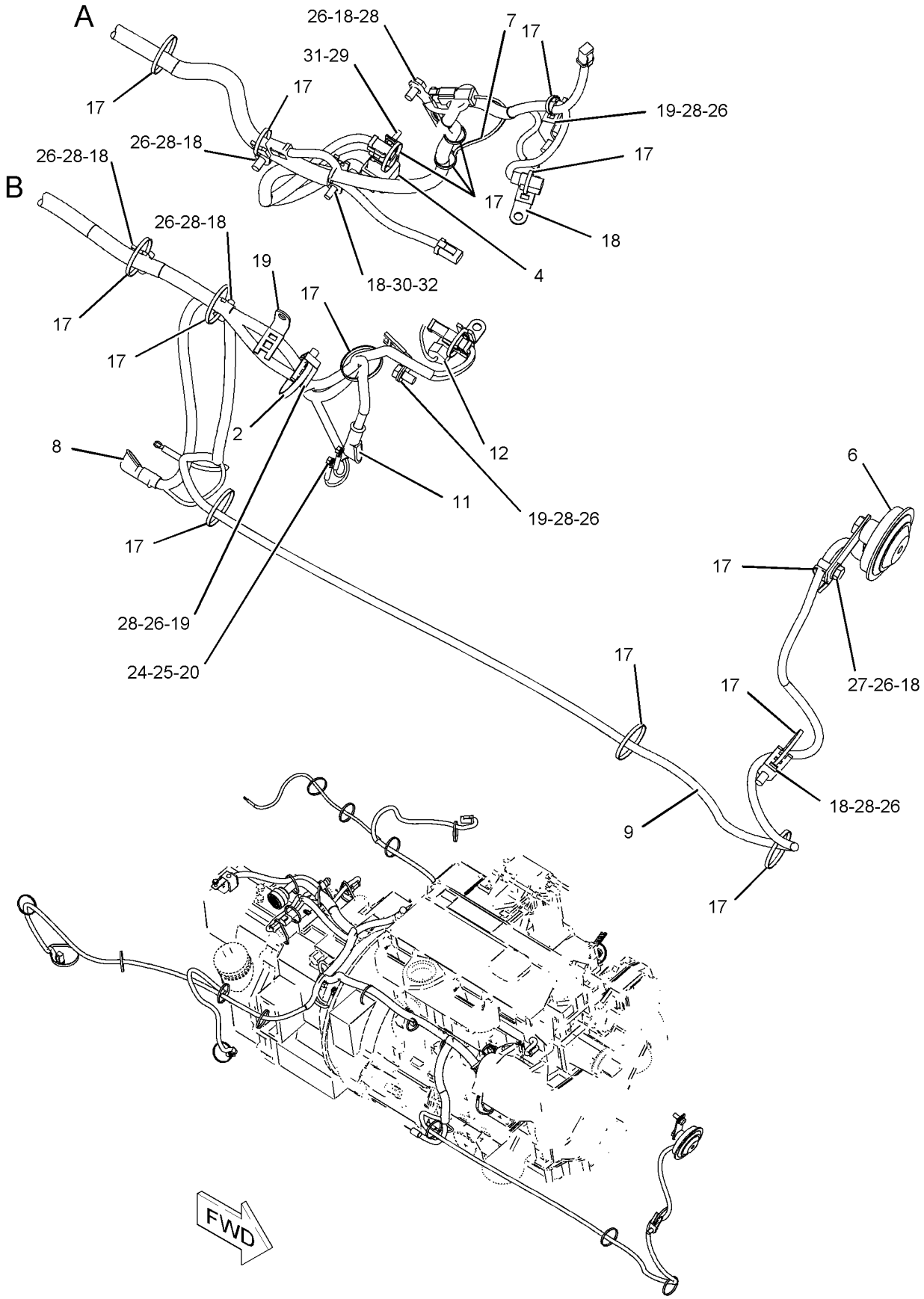

GRAPHIC #2 **<END>** g01039491

186-2731 WIRING GP-HEATER

S/N: FDP18400-UP
PART OF 239-5565, 239-5567 CAB AR
AN ATTACHMENT

SMCS-1408, 7304 **i02019629**

NOTE	REF NO	GRAPHIC REF	PART NUMBER	QTY	PART NAME 1 2 3 4 5 6 (PRODUCT LEVEL)	SEE PAGE
	1	1	**3E-9362**	1	RELAY AS (12-VOLT)	
	2	1	**3S-2093**	3	STRAP-CABLE	
	3	1	**131-3201**	2	BOOT	
	4	1	**169-0605**	1	SWITCH AS-ROCKER (HEATER FAN SPEED)	
		1	**111-7899**	1	GASKET	
	5	1	**170-2237**	1	RELAY AS (12-VOLT)	
	6	1	**184-2422**	1	SWITCH AS (HEATER)	
		1	**111-7899**	1	GASKET	
C	7	1	**229-8377**	1	CIRCUIT BREAKER AS (35-AMPERE)	
		1	**6V-8378**	2	NUT (10-32-THD)	
		1	**8F-1434**	2	LOCKWASHER (INTERNAL TOOTH)	
		1	**8T-0328**	2	WASHER-HARD (5.5X10X1-MM THK)	
C	8	1	**229-8413**	1	HARNESS AS-HEATER & AIR COND	
		1	**102-8802**	1	KIT-RECEPTACLE (2-PIN)	
		1	**102-8804**	1	KIT-RECEPTACLE (4-PIN)	
		1	**155-2270**	1	KIT-CONNECTING PLUG (2-PIN)	
		1	**177-9645**	1	KIT-RECEPTACLE (2-PIN)	
		1	**177-9648**	1	KIT-CONNECTING PLUG (2-PIN)	
M	9	1	**138-8454**	1	SCREW-TRUSS HEAD (M4X0.7X10-MM)	
	10	1	**213-7315**	2	SCREW-TRUSS HEAD (M4X0.7X25-MM)	
	11	1	**4B-4863**	1	WASHER (4.7X11X1.2-MM THK)	

C-CHANGE FROM PREVIOUS TYPE
M-METRIC PART

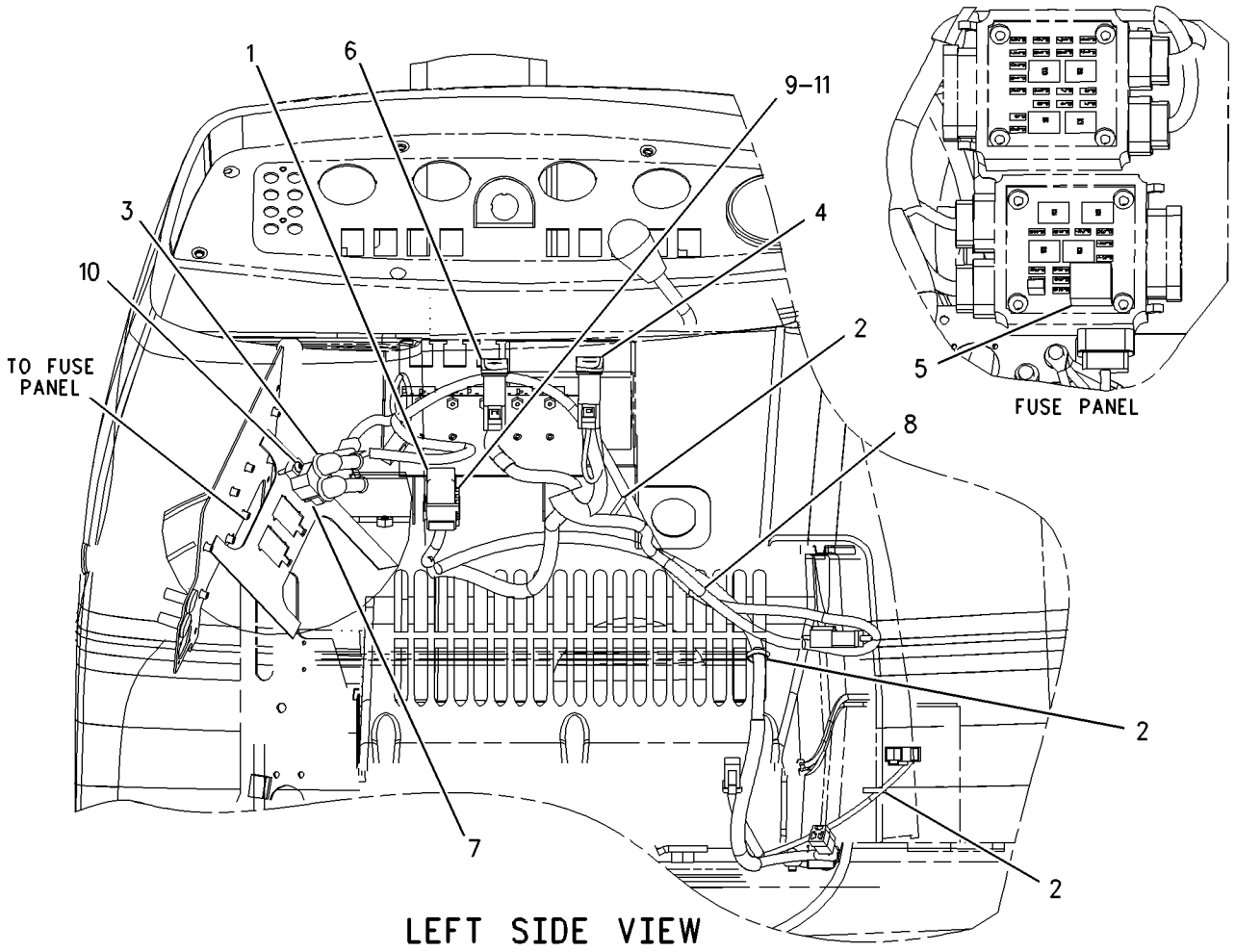

GRAPHIC #1 **<END>** g00996660

186-0304 WIRING GP-PLATFORM

S/N: FDP18400-UP
SERVICE
AN ATTACHMENT

SMCS-1408 **i01781113**

NOTE	REF NO	GRAPHIC REF	PART NUMBER	QTY	PART NAME 1 2 3 4 5 6 (PRODUCT LEVEL)	SEE PAGE
	1	1	**3S-2093**	4	STRAP-CABLE	
	2	1	**4I-3038**	4	WASHER (3.3X8X0.5MM THK)	
	3	1	**183-7581**	1	HARNESS AS-PLATFORM	
		1	**102-8802**	1	KIT-RECEPTACLE (2 PIN)	
	4	1	**224-6193**	4	BOLT-SOCKET HEAD	
M	5	1	**8T-2658**	4	LOCKNUT (M3X0.5 THD)	

M-METRIC PART

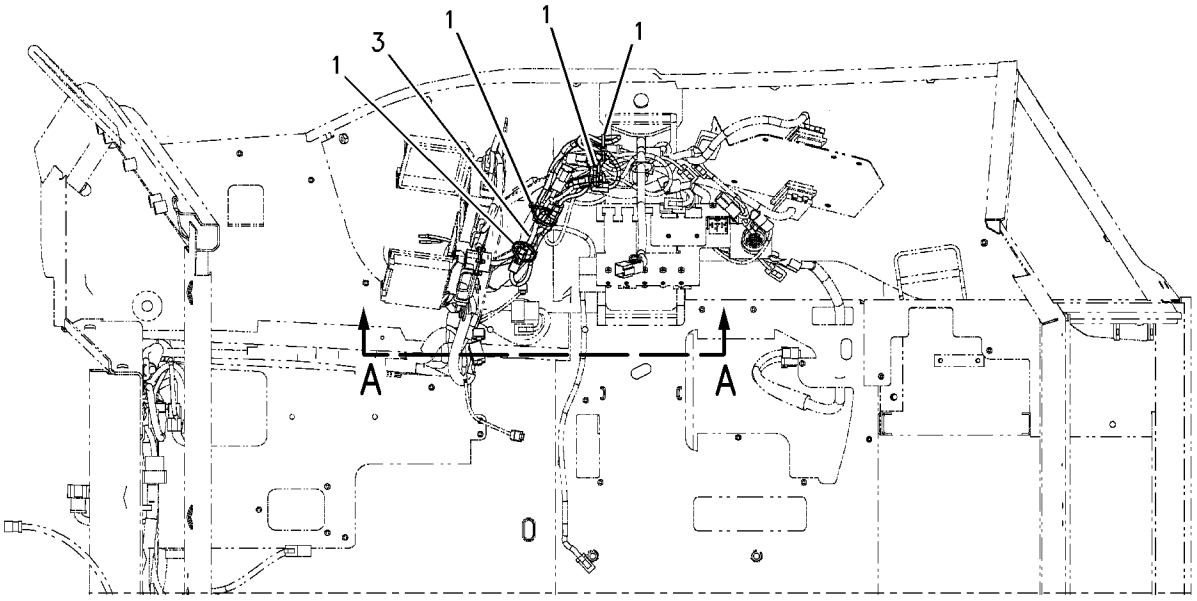

TOP VIEW

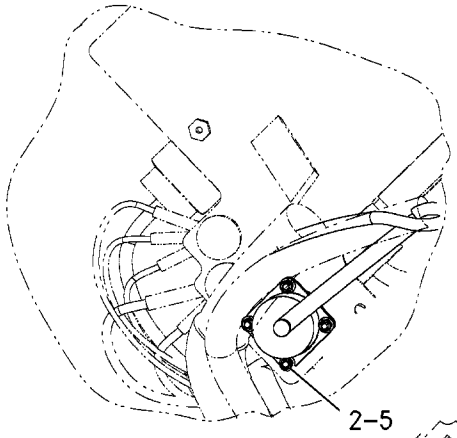

SECTION C-C

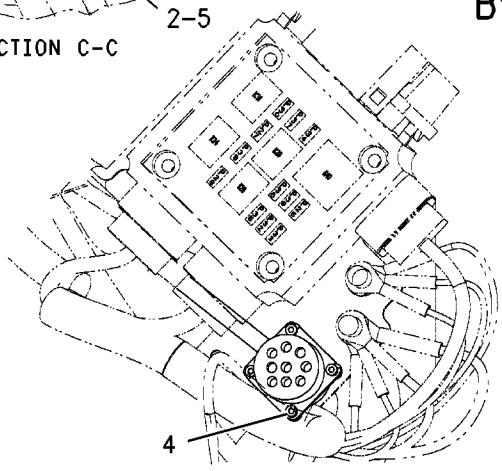

SECTION B-B

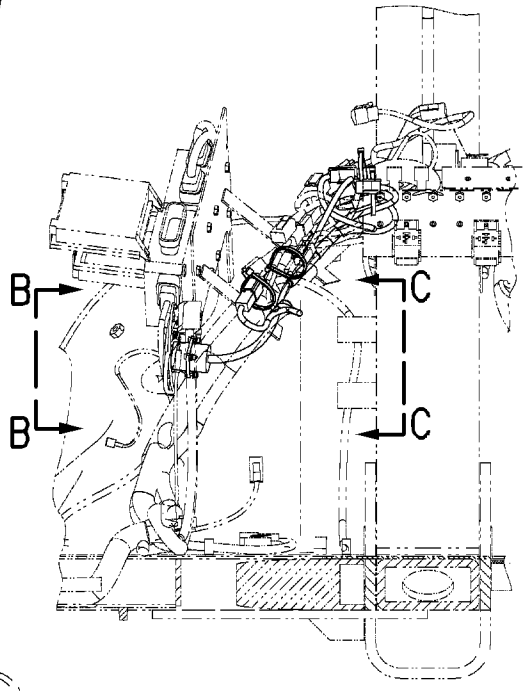

SECTION A-A

GRAPHIC #1 **<END>** g00743623

238-1821 WIRING GP-PLATFORM

S/N: FDP18400-UP

PART OF 214-6951 CHASSIS AR

SMCS-1408 **i01986608**

NOTE	REF NO	GRAPHIC REF	PART NUMBER	QTY	PART NAME 1 2 3 4 5 6 (PRODUCT LEVEL)	SEE PAGE
D	1	1	**5P-5923**		SEAL (.035M)	
D	2	1	**5P-7657**		SEAL (.032M)	
	3	2	**6K-0806**	8	STRAP-CABLE	
	4	1	**7G-1060**	1	STRAP AS-GROUND	
	5	2	**7T-4848**	1	FLASHER AS	
	6	1	**7Y-3883**	1	CABLE AS	
		1	**1S-7251**	2	TERMINAL-RING (FOR 1/2IN BOLT)	
		1	**5P-0747**	40	CABLE (00GA)(BLACK)	
B	7	1,2	**8T-8737**	15	PLUG-SEAL	
	8	1,2	**128-4249**	2	LOCKWASHER	
	9	2	**164-1056**	1	CHANNEL	
	10	2	**167-3700**	1	HARNESS AS-PLATFORM	
		2	**102-8802**	1	KIT-RECEPTACLE (2-PIN)	
					(INCLUDES RECEPTACLE AND WEDGE)	
		2	**102-8803**	1	KIT-RECEPTACLE (3-PIN)	
					(INCLUDES RECEPTACLE AND WEDGE)	
		2	**102-8804**	1	KIT-RECEPTACLE (4-PIN)	
					(INCLUDES RECEPTACLE AND WEDGE)	
		2	**102-8805**	1	KIT-RECEPTACLE (6-PIN)	
					(INCLUDES RECEPTACLE AND WEDGE)	
		2	**102-8806**	1	KIT-RECEPTACLE (8-PIN)	
					(INCLUDES RECEPTACLE AND WEDGE)	
		2	**102-8801**	1	KIT-RECEPTACLE (12-PIN)	
					(INCLUDES RECEPTACLE AND WEDGE)	
		2	**155-2255**	2	KIT-CONNECTING PLUG (12-PIN)	
					(EACH INCLUDES PLUG AND WEDGE)	
		2	**155-2265**	2	KIT-CONNECTING PLUG (8-PIN)	
					(EACH INCLUDES PLUG AND WEDGE)	
		2	**155-2260**	3	KIT-CONNECTING PLUG (3-PIN)	
					(EACH INCLUDES PLUG AND WEDGE)	
		2	**155-2270**	6	KIT-CONNECTING PLUG (2-PIN)	
					(EACH INCLUDES PLUG AND WEDGE)	
		2	**155-2271**	3	KIT-CONNECTING PLUG (4-PIN)	
					(EACH INCLUDES PLUG AND WEDGE)	
		2	**155-2274**	1	KIT-CONNECTING PLUG (6-PIN)	
					(INCLUDES PLUG AND WEDGE)	
		2	**196-2383**	2	KIT-PLUG (8 PIN)	
					(EACH INCLUDES PLUG AND WEDGE)	
		2	**196-2384**	2	KIT-PLUG (8 PIN)	
					(EACH INCLUDES PLUG AND WEDGE)	
		2	**177-9648**	2	KIT-CONNECTING PLUG (2-PIN)	
					(EACH INCLUDES PLUG AND WEDGE)	
		2	**196-2385**	2	KIT-PLUG (8 PIN)	
					(EACH INCLUDES PLUG AND WEDGE)	
		2	**196-2386**	1	KIT-PLUG	
					(INCLUDES PLUG AND WEDGE)	
	11	2	**184-6430**	1	COVER	
	12	1,2	**211-0052**	2	NUT (11/16-18 THD)	
	13	2	**8T-4224**	2	WASHER-HARD (8.8X16X2MM THK)	
D	14	1	**5P-7657**		SEAL (.032M)	
D	15	1	**5P-7657**		SEAL (.032M)	
M	16	2	**095-0733**	8	SCREW-MACHINE	
M	17	2	**138-8454**	3	SCREW-TRUSS HEAD (M4X0.7X10MM)	
B	18	1,2	**102-8802**	4	KIT-RECEPTACLE (2-PIN)	
					(EACH INCLUDES RECEPTACLE AND WEDGE)	

238-1821 **WIRING GP-PLATFORM** ***(contd.)*** **i01986608**

NOTE	REF NO	GRAPHIC REF	PART NUMBER	QTY	PART NAME 1 2 3 4 5 6 (PRODUCT LEVEL)	SEE PAGE
B	19	2	**102-8803**	1	KIT-RECEPTACLE (3-PIN)	
					(INCLUDES RECEPTACLE AND WEDGE)	
B	20	2	**102-8804**	1	KIT-RECEPTACLE (4-PIN)	
					(INCLUDES RECEPTACLE AND WEDGE)	
	21	1,2	**3S-2093**	32	STRAP-CABLE	
	22	2	**4B-4863**	11	WASHER (4.7X11X1.2MM THK)	
M	23	2	**5C-7261**	2	NUT (M8X1.25 THD)	
	24	1	**7X-7729**	2	WASHER (11X25X3MM THK)	
	25	1,2	**8T-4121**	6	WASHER-HARD (11X21X2.5MM THK)	
M	26	2	**8T-4133**	2	NUT (M10X1.5 THD)	
M	27	1	**8T-4136**	3	BOLT (M10X1.5X25MM)	
M	28	2	**8T-4171**	2	BOLT (M6X1X12MM)	
M	29	1	**8T-4179**	1	BOLT (M12X1.75X20MM)	
	30	2	**8T-4205**	2	WASHER-HARD (7.2X14.5X2MM THK)	
	31	1	**8T-4223**	1	WASHER-HARD (13.5X25.5X3MM THK)	

B-USE AS REQUIRED
D-ORDER BY THE METER
M-METRIC PART

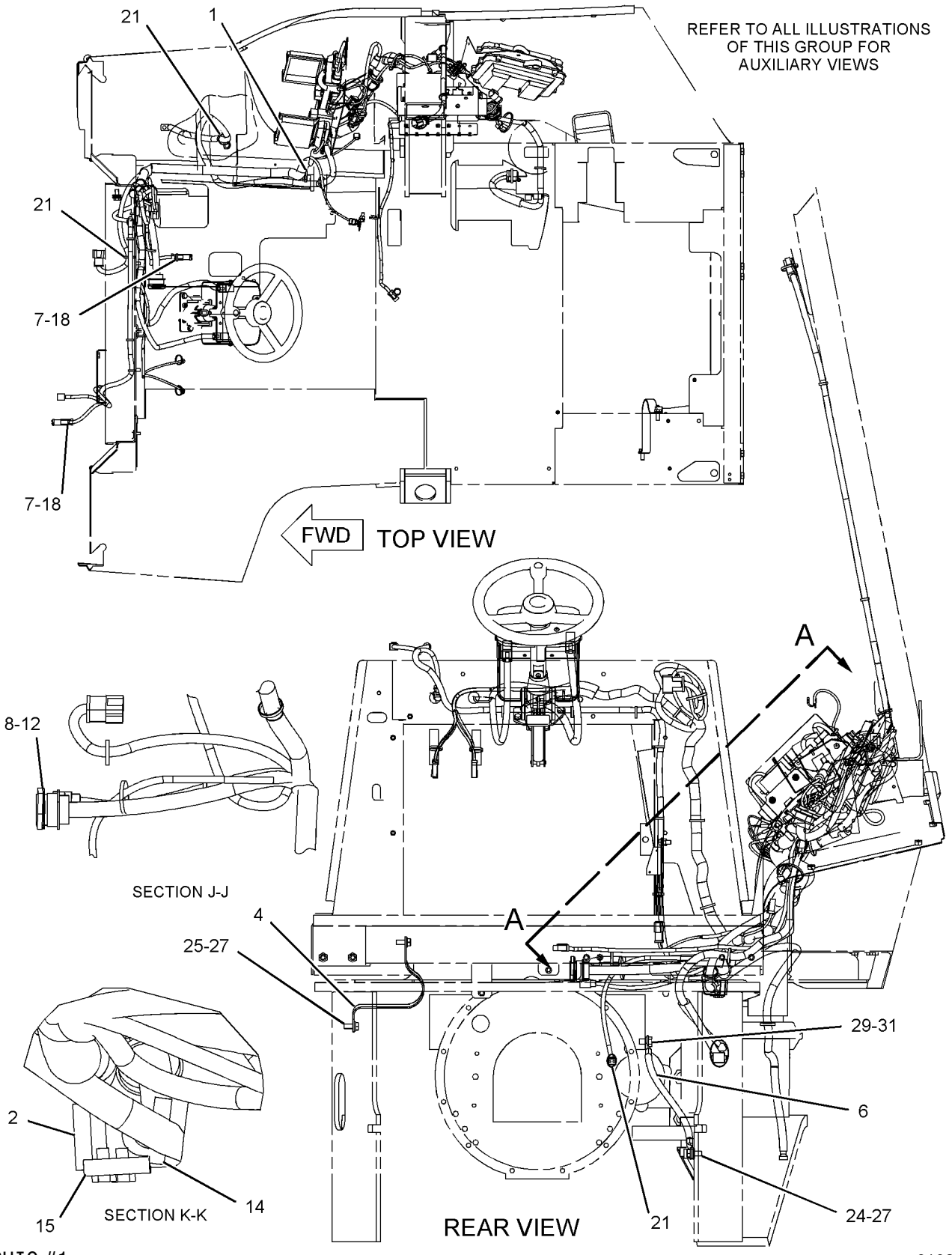

GRAPHIC #1

g01030217

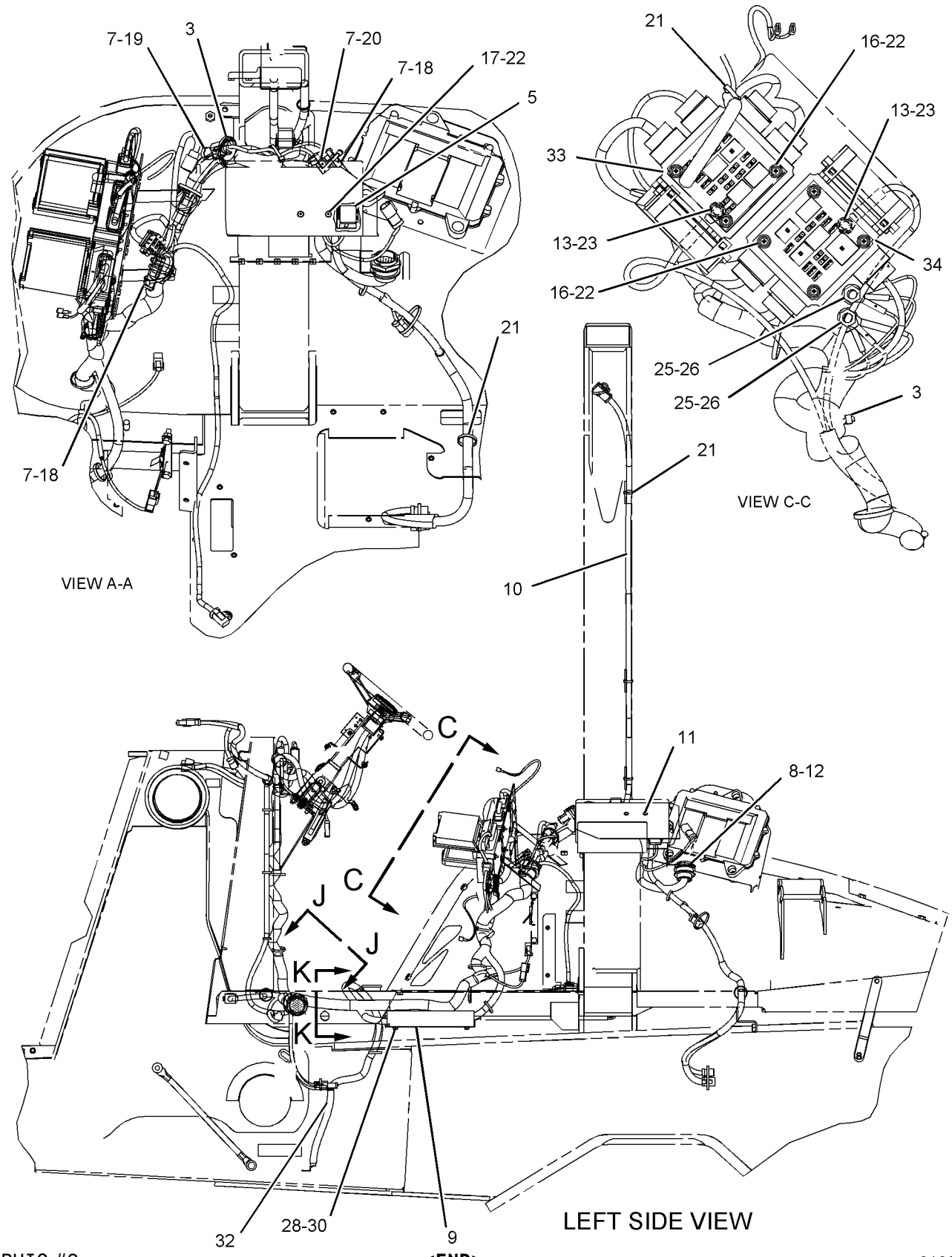

GRAPHIC #2

<END>

g01030218

190-7557 WIRING GP-POWER RECEPTACLE

S/N: FDP18400-UP

PART OF 184-9737, 184-9738, 239-5565, 239-5566, 239-5567, 239-5568, 244-1944 CAB AR, 184-9736, 238-6697, 239-5563 CANOPY AR AN ATTACHMENT

SMCS-1408, 7301 **i01961654**

NOTE	REF NO	GRAPHIC REF	PART NUMBER	QTY	PART NAME 1 2 3 4 5 6 (PRODUCT LEVEL)	SEE PAGE
	1	1	**113-8490**	1	FUSE (10 AMP)	
	2	1	**178-7539**	1	RECEPTACLE AS	
	3	1	**3S-2093**	1	STRAP-CABLE	

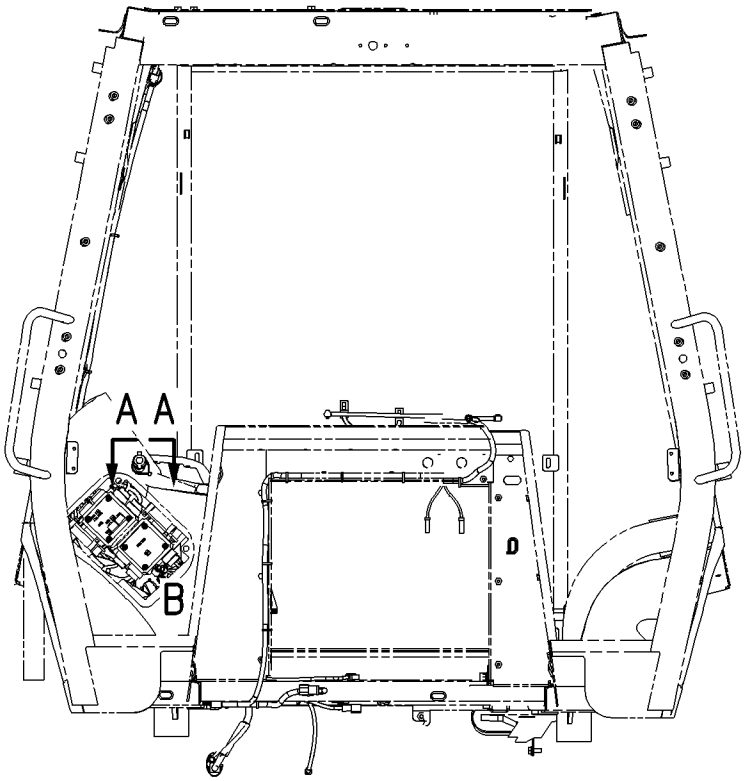

FRONT VIEW

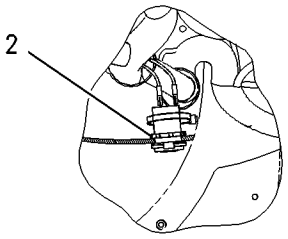

SECTION A-A

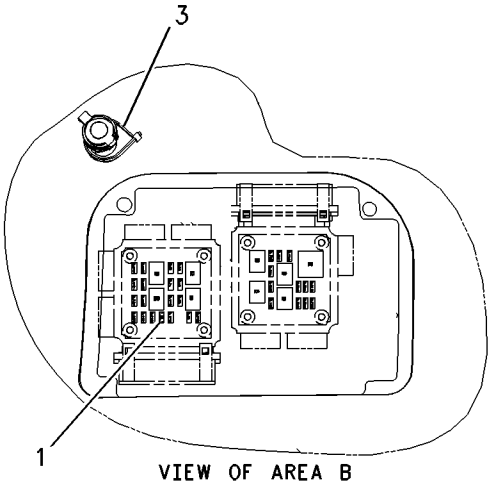

VIEW OF AREA B

GRAPHIC #1 **<END>** g00878859

185-8808 WIRING GP-REAR

S/N: FDP18400-UP
CENTER PIVOT
PART OF 237-6458, 237-6459 DRIVE AR-BACKHOE LOADER
AN ATTACHMENT

SMCS-1408 **i02019777**

NOTE	REF NO	GRAPHIC REF	PART NUMBER	QTY	PART NAME 1 2 3 4 5 6 (PRODUCT LEVEL)	SEE PAGE
	1	1	**7K-1181**	1	STRAP-CABLE	
B	2	1,2	**8T-8737**	4	PLUG-SEAL	
	3	2	**9U-2277**	1	CLIP AS	
		2	**8C-3334**	1	RIVET-TUBULAR	
	4	2	**154-5428**	1	WARNING GP-BACKUP	
		2	**102-8802**	1	KIT-RECEPTACLE (2-PIN)	
	5	1	**167-3708**	1	HARNESS AS-REAR	
		1	**102-8803**	1	KIT-RECEPTACLE (3-PIN)	
		1	**102-8806**	1	KIT-RECEPTACLE (8-PIN)	
		1	**155-2270**	1	KIT-CONNECTING PLUG (2-PIN)	
M	6	2	**111-4627**	2	SCREW-MACHINE (M6X1.0X30-MM)	
	7	2	**132-5789**	1	CLIP	
B	8	1,2	**102-8802**	2	KIT-RECEPTACLE (2-PIN)	
	9	1	**3S-2093**	5	STRAP-CABLE	
M	10	2	**8T-4134**	1	NUT (M6X1-THD)	
M	11	2	**8T-4136**	1	BOLT (M10X1.5X25-MM)	
	12	2	**9X-6165**	1	WASHER (6.5X22X2.5-MM THK)	

B-USE AS REQUIRED
M-METRIC PART

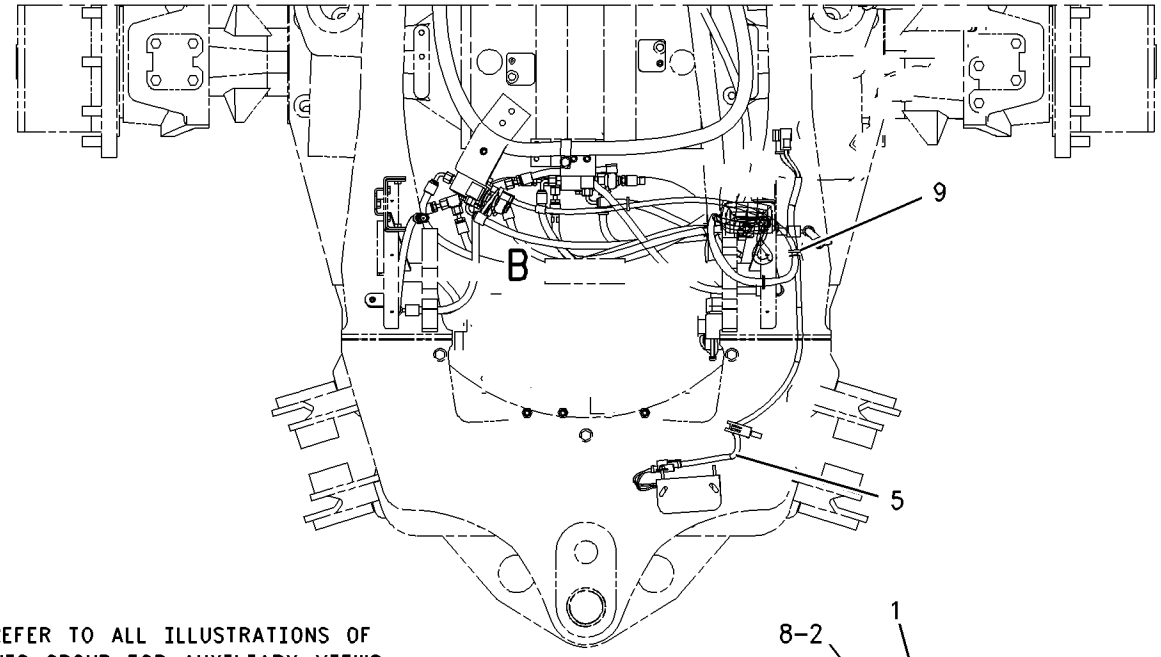

REFER TO ALL ILLUSTRATIONS OF THIS GROUP FOR AUXILIARY VIEWS

TOP VIEW

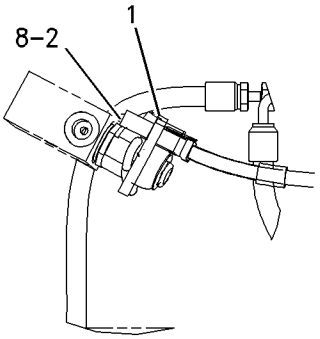

VIEW OF AREA B

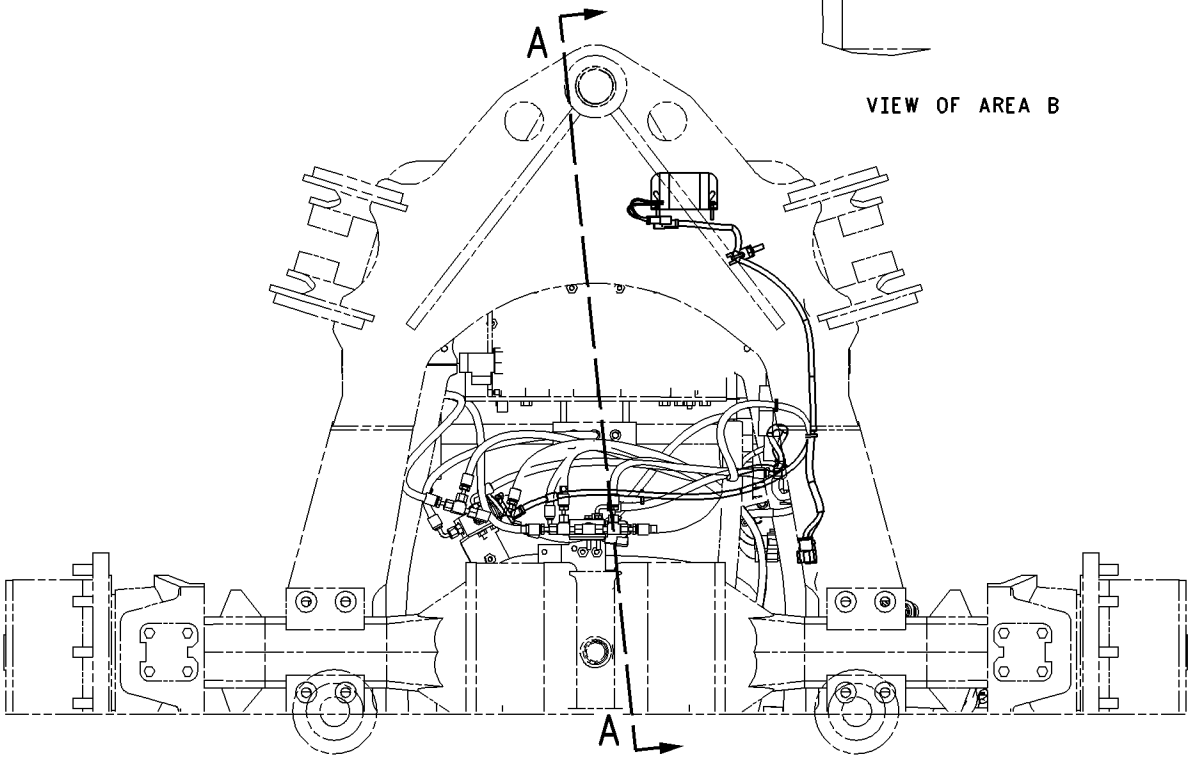

BOTTOM VIEW

GRAPHIC #1 g00904558

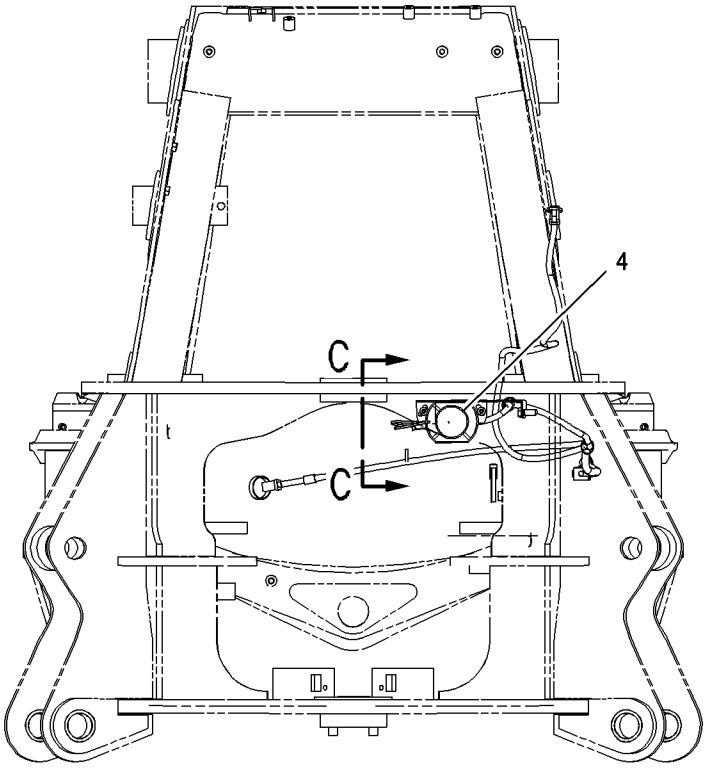

REAR VIEW

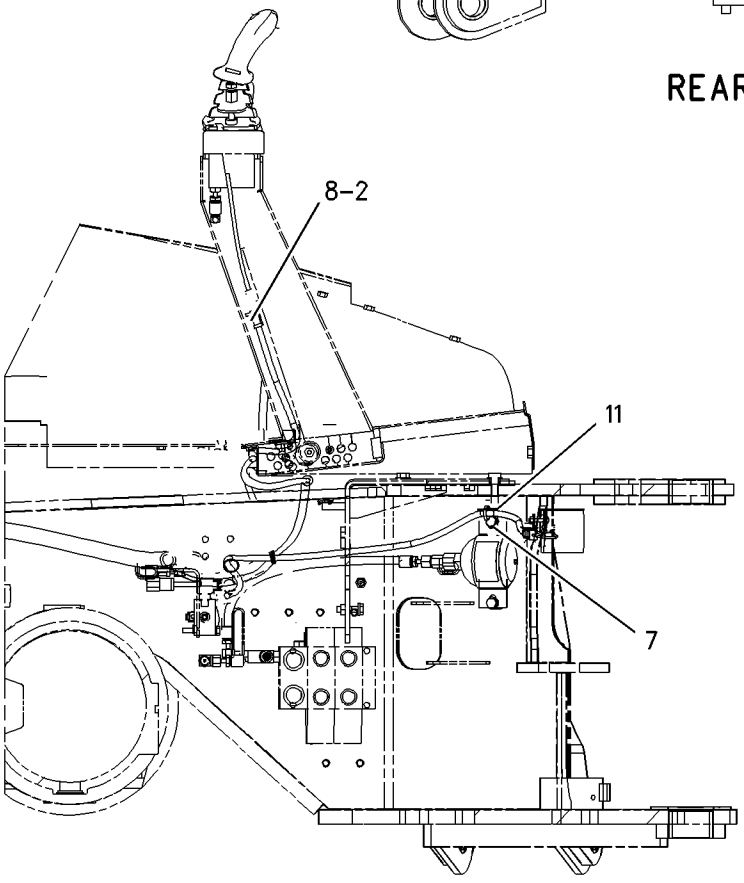

SECTION A-A

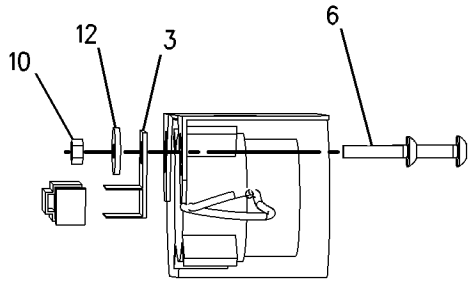

SECTION C-C

GRAPHIC #2 **<END>** g00905164

186-0311 WIRING GP-RIDE CONTROL

S/N: FDP18400-UP

PART OF 185-1482, 239-9245 CONTROL AR-RIDE, 200-6284, 236-5458 KIT-RIDE CONTROL AN ATTACHMENT

SMCS-1408 **i02019646**

NOTE	REF NO	GRAPHIC REF	PART NUMBER	QTY	PART NAME 1 2 3 4 5 6 (PRODUCT LEVEL)	SEE PAGE
	1	1	**3E-9362**	1	RELAY AS (12-VOLT)	
	2	1	**3S-2093**	18	STRAP-CABLE	
	3	1	**106-8704**	1	SUPPRESSOR AS-ARC	
		1	**3E-3365**	1	WEDGE-RECEPTACLE LOCK (2-PIN)	
		1	**186-3735**	2	PIN-CONNECTOR	
		1	**102-8802**	1	KIT-RECEPTACLE (2-PIN)	
	4	1	**113-8490**	1	FUSE (10-AMPERE)	
	5	1	**131-9203**	1	SWITCH AS-PRESSURE	
		1	**186-3735**	3	PIN-CONNECTOR	
		1	**3E-3371**	1	WEDGE-RECEPTACLE LOCK (3-PIN)	
		1	**102-8803**	1	KIT-RECEPTACLE (3-PIN)	
	6	1	**169-0607**	1	SWITCH AS-ROCKER (RIDE CONTROL)	
		1	**111-7899**	1	GASKET	
	7	1	**174-6395**	1	HARNESS AS-RIDE CONTROL (FRONT CONSOLE)	
		1	**155-2270**	1	KIT-CONNECTING PLUG (2-PIN)	
		1	**155-2274**	1	KIT-CONNECTING PLUG (6-PIN)	
	8	1	**174-6398**	1	HARNESS AS-RIDE CONTROL (PLATFORM)	
		1	**102-8804**	1	KIT-RECEPTACLE (4-PIN)	
		1	**102-8805**	1	KIT-RECEPTACLE (6-PIN)	
		1	**155-2270**	2	KIT-CONNECTING PLUG (2-PIN)	
		1	**155-2260**	1	KIT-CONNECTING PLUG (3-PIN)	
		1	**155-2274**	1	KIT-CONNECTING PLUG (6-PIN)	
	9	1	**200-2996**	1	HARNESS AS-RIDE CONTROL (FRAME, LEFT SIDE)	
		1	**102-8803**	1	KIT-RECEPTACLE (3-PIN)	
		1	**155-2260**	1	KIT-CONNECTING PLUG (3-PIN)	
		1	**155-2270**	1	KIT-CONNECTING PLUG (2-PIN)	
M	10	1	**138-8454**	1	SCREW-TRUSS HEAD (M4X0.7X10-MM)	
	11	1	**3J-1907**	1	SEAL-O-RING	
	12	1	**4B-4863**	1	WASHER (4.7X11X1.2-MM THK)	
	13	1	**4P-8134**	1	CLIP	

M-METRIC PART

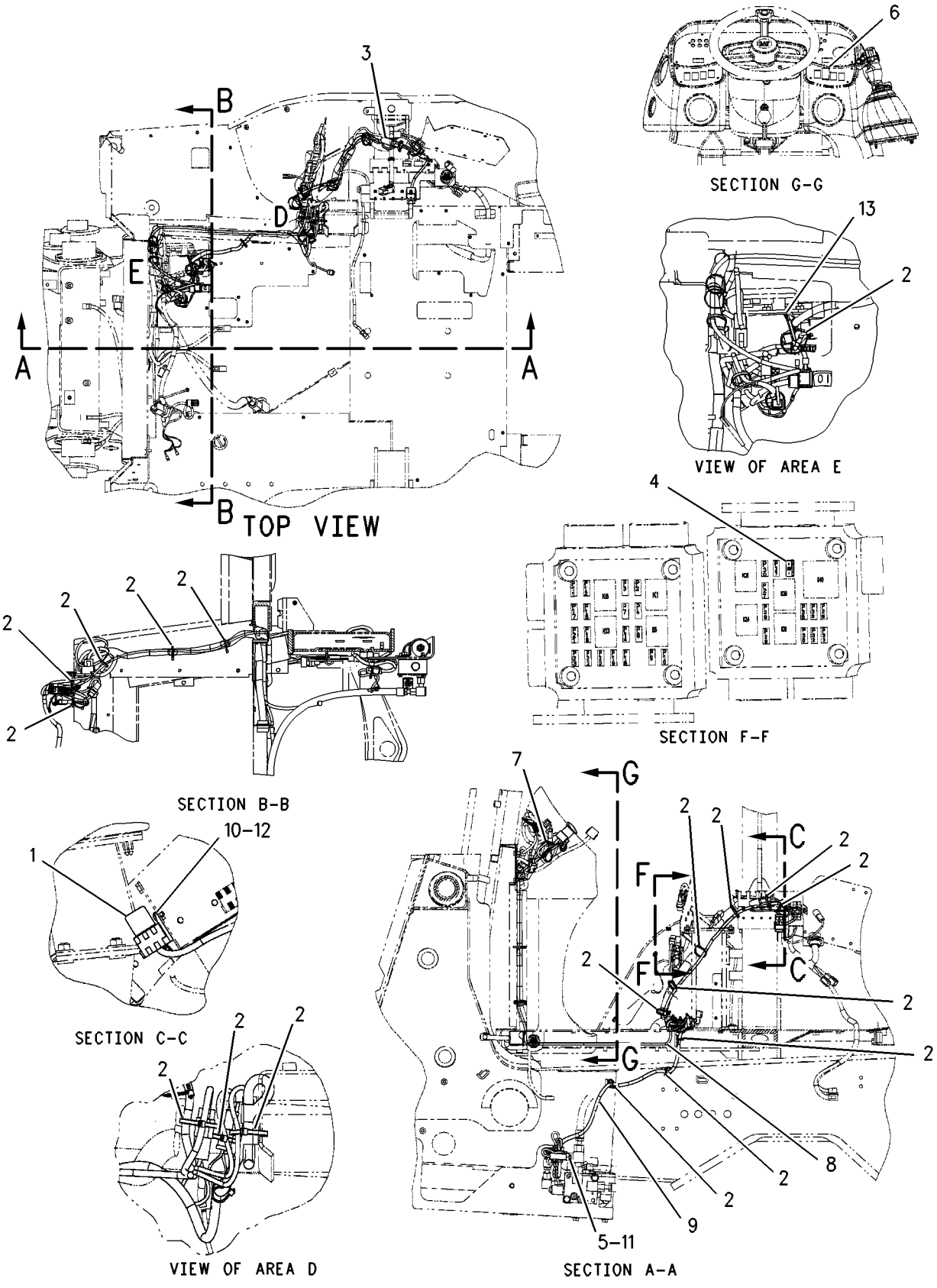

GRAPHIC #1 **<END>** g00775260

186-0312 WIRING GP-RIDE CONTROL

S/N: FDP18400-UP
AUTOSHIFT
PART OF 184-7949, 239-9246, 239-9248 CONTROL AR-RIDE, 236-5459 KIT-RIDE CONTROL
AN ATTACHMENT

SMCS-1408 **i02019658**

NOTE	REF NO	GRAPHIC REF	PART NUMBER	QTY	PART NAME 1 2 3 4 5 6 (PRODUCT LEVEL)	SEE PAGE
	1	1	**3E-9362**	1	RELAY AS (12-VOLT)	
	2	1	**3S-2093**	18	STRAP-CABLE	
	3	1	**106-8704**	2	SUPPRESSOR AS-ARC	
					(EACH INCLUDES)	
		1	**102-8802**	1	KIT-RECEPTACLE (2-PIN)	
					(KIT SERVICES RECEPTACLE AS AND WEDGE)	
		1	**186-3735**	2	PIN-CONNECTOR	
	4	1	**113-8490**	1	FUSE (10-AMPERE)	
	5	1	**131-9203**	1	SWITCH AS-PRESSURE	
		1	**102-8803**	1	KIT-RECEPTACLE (3-PIN)	
					(KIT SERVICES RECEPTACLE AS AND WEDGE)	
		1	**186-3735**	3	PIN-CONNECTOR	
	6	1	**169-0608**	1	SWITCH AS-ROCKER (RIDE CONTROL)	
		1	**111-7899**	1	GASKET	
	7	1	**174-6395**	1	HARNESS AS-RIDE CONTROL (FRONT CONSOLE)	
		1	**155-2270**	1	KIT-CONNECTING PLUG (2-PIN)	
					(KIT SERVICES PLUG AS AND WEDGE)	
		1	**155-2274**	1	KIT-CONNECTING PLUG (6-PIN)	
					(KIT SERVICES PLUG AS AND WEDGE)	
	8	1	**174-6398**	1	HARNESS AS-RIDE CONTROL (PLATFORM)	
		1	**102-8804**	1	KIT-RECEPTACLE (4-PIN)	
					(KIT SERVICES RECEPTACLE AS AND WEDGE)	
		1	**102-8805**	1	KIT-RECEPTACLE (6-PIN)	
					(KIT SERVICES RECEPTACLE AS AND WEDGE)	
		1	**155-2270**	1	KIT-CONNECTING PLUG (2-PIN)	
					(KIT SERVICES PLUG AS AND WEDGE)	
		1	**155-2260**	1	KIT-CONNECTING PLUG (3-PIN)	
					(KIT SERVICES PLUG AS AND WEDGE)	
		1	**155-2274**	1	KIT-CONNECTING PLUG (6-PIN)	
					(KIT SERVICES PLUG AS AND WEDGE)	
	9	1	**200-2996**	1	HARNESS AS-RIDE CONTROL (FRAME, LEFT SIDE)	
		1	**102-8803**	1	KIT-RECEPTACLE (3-PIN)	
					(KIT SERVICES RECEPTACLE AS AND WEDGE)	
		1	**155-2260**	1	KIT-CONNECTING PLUG (3-PIN)	
					(KIT SERVICES PLUG AS AND WEDGE)	
		1	**155-2270**	1	KIT-CONNECTING PLUG (2-PIN)	
					(KIT SERVICES PLUG AS AND WEDGE)	
M	10	1	**138-8454**	1	SCREW-TRUSS HEAD (M4X0.7X10-MM)	
	11	1	**3J-1907**	1	SEAL-O-RING	
	12	1	**4B-4863**	1	WASHER (4.7X11X1.2-MM THK)	
	13	1	**4P-8134**	1	CLIP	

M-METRIC PART

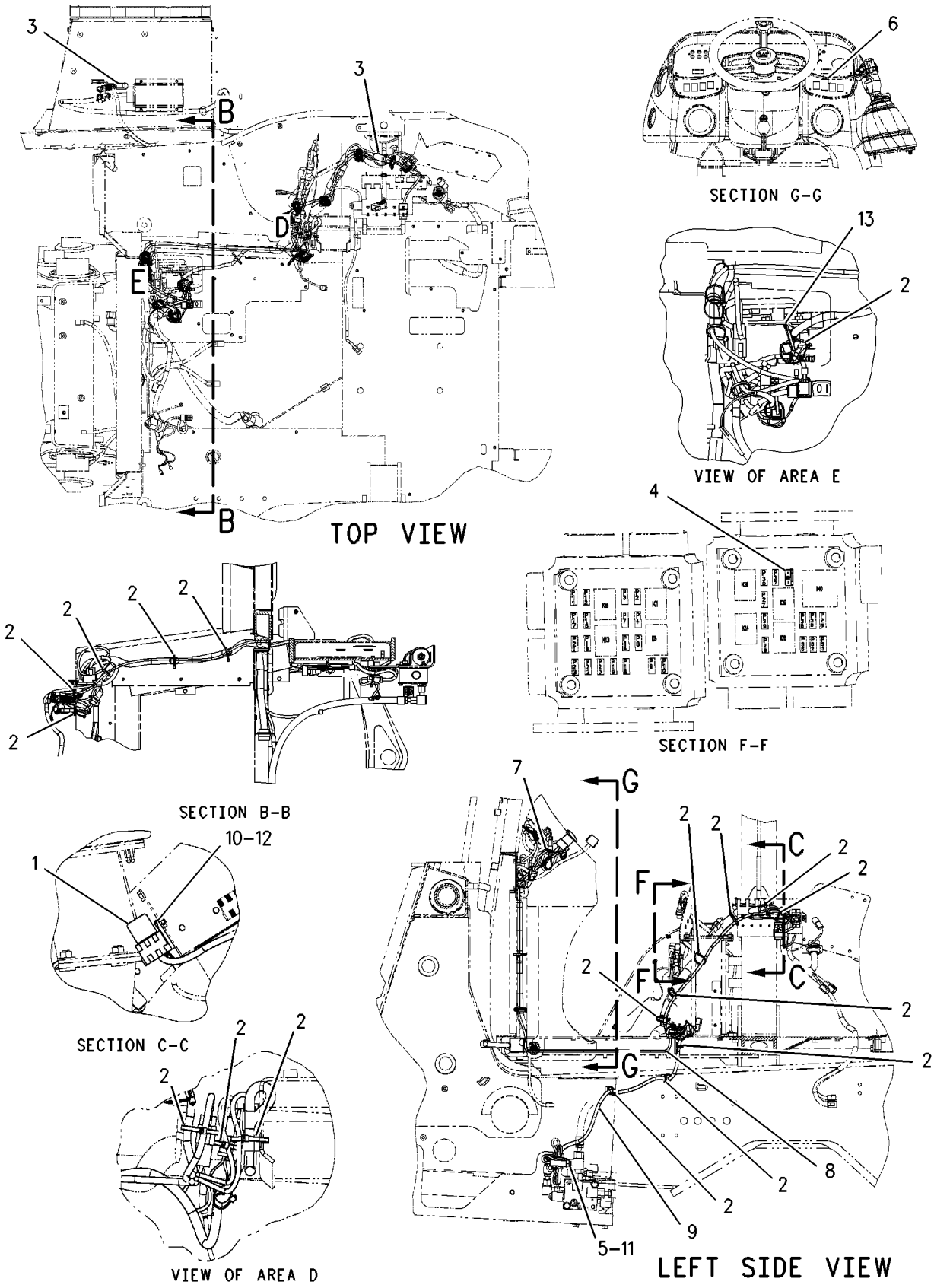

GRAPHIC #1 **<END>** g00863443

194-1948 WIRING GP-RIDE CONTROL

S/N: FDP18400-UP
AUTO, DEAD ENGINE LOWER
PART OF 184-7954 CONTROL AR-RIDE
AN ATTACHMENT

SMCS-1408 **i01772422**

NOTE	REF NO	GRAPHIC REF	PART NUMBER	QTY	PART NAME 1 2 3 4 5 6 (PRODUCT LEVEL)	SEE PAGE
	1	1	**3E-9362**	3	RELAY AS (12 VOLT DC)	
	2	1	**3S-2093**	39	STRAP-CABLE	
	3	1	**106-8704**	2	SUPPRESSOR AS-ARC	
					(EACH INCLUDES)	
		1	**102-8802**	1	KIT-RECEPTACLE (2 PIN)	
		1	**186-3735**	2	PIN-CONNECTOR	
	4	1	**113-8490**	1	FUSE (10 AMP)	
	5	1	**131-9203**	1	SWITCH AS-PRESSURE (HYDRAULIC CYL)	
		1	**102-8803**	1	KIT-RECEPTACLE (3 PIN)	
		1	**186-3735**	3	PIN-CONNECTOR	
	6	1	**169-0608**	1	SWITCH AS (RIDE CONTROL)	
		1	**111-7899**	1	GASKET	
	7	1	**174-6398**	1	HARNESS AS-RIDE CONTROL (PLATFORM)	
		1	**102-8804**	1	KIT-RECEPTACLE (4 PIN)	
		1	**102-8805**	1	KIT-RECEPTACLE (6 PIN)	
		1	**155-2270**	2	KIT-CONNECTING PLUG (2 PIN)	
		1	**155-2260**	1	KIT-CONNECTING PLUG (3 PIN)	
		1	**155-2274**	1	KIT-CONNECTING PLUG (6 PIN)	
	8	1	**194-1937**	1	HARNESS AS (FRAME)	
		1	**102-8804**	1	KIT-RECEPTACLE (4 PIN)	
		1	**155-2260**	2	KIT-CONNECTING PLUG (3 PIN)	
		1	**155-2270**	2	KIT-CONNECTING PLUG (2 PIN)	
	9	1	**194-1938**	1	HARNESS AS (SIDE CONSOLE)	
		1	**102-8804**	2	KIT-RECEPTACLE (4 PIN)	
		1	**155-2271**	2	KIT-CONNECTING PLUG (4 PIN)	
		1	**155-2270**	1	KIT-CONNECTING PLUG (2 PIN)	
	10	1	**194-1941**	1	HARNESS AS (FRONT CONSOLE)	
		1	**155-2270**	1	KIT-CONNECTING PLUG (2 PIN)	
		1	**155-2274**	1	KIT-CONNECTING PLUG (6 PIN)	
	11	1	**200-2996**	1	HARNESS AS-RIDE CONTROL (FRAME)	
		1	**102-8803**	1	KIT-RECEPTACLE (3 PIN)	
		1	**155-2260**	1	KIT-CONNECTING PLUG (3 PIN)	
		1	**155-2270**	1	KIT-CONNECTING PLUG (2 PIN)	
M	12	1	**138-8454**	3	SCREW-TRUSS HEAD	
	13	1	**3J-1907**	1	SEAL-O-RING	
	14	1	**4B-4863**	3	WASHER (4.7X11X1.2MM THK)	
	15	1	**4P-8134**	1	CLIP	

M-METRIC PART

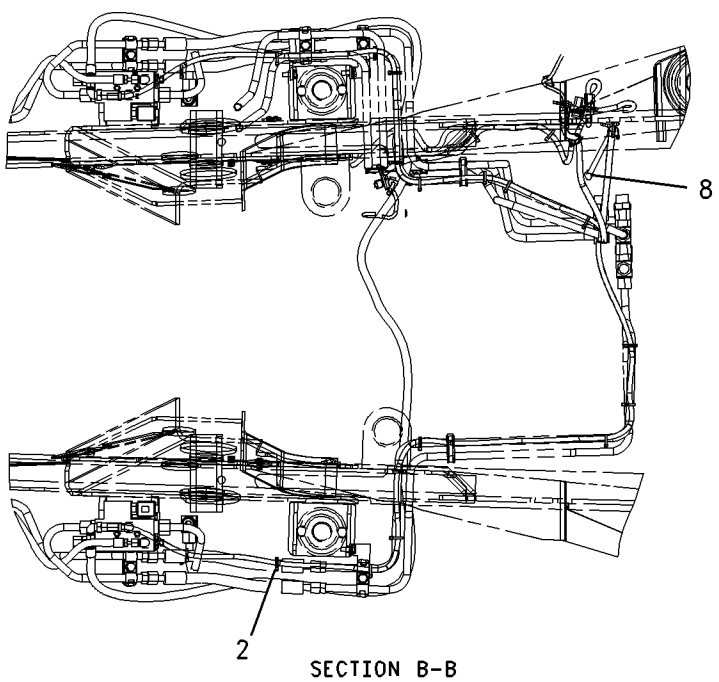

SECTION B-B

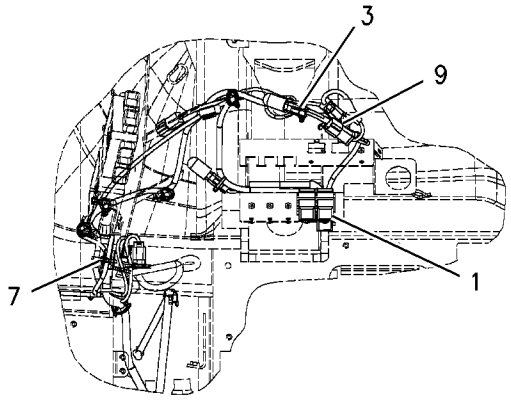

SECTION C-C

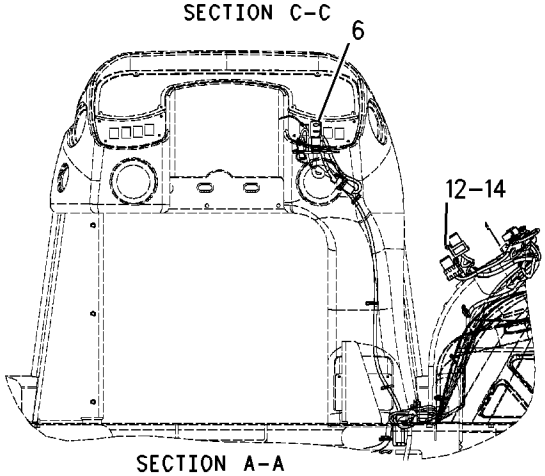

SECTION A-A

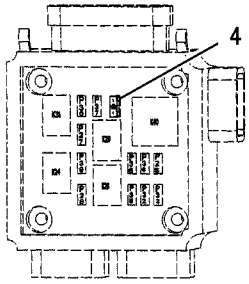

FUSE BOX

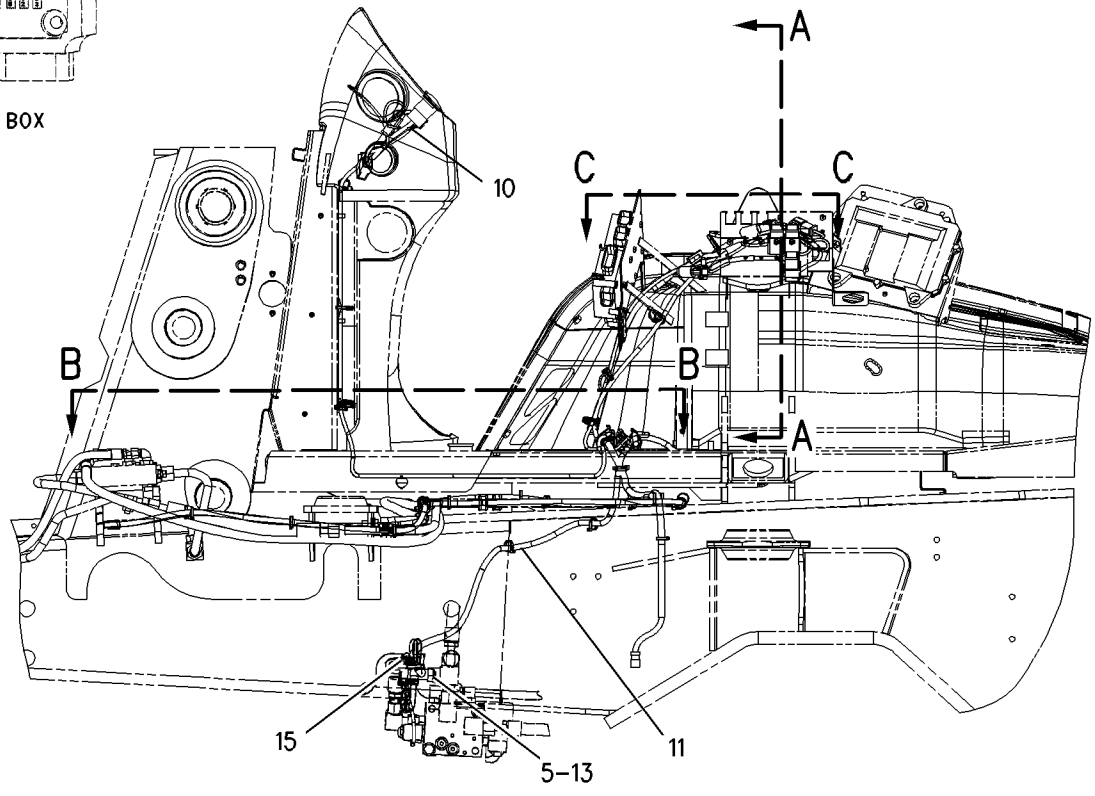

GRAPHIC #1 **<END>** g00774535

122-1645 WIRING GP-SENSOR

S/N: FDP18400-UP

PART OF 202-5747 LOADER AR

SMCS-1408 **i02019787**

NOTE	REF NO	GRAPHIC REF	PART NUMBER	QTY	PART NAME 1 2 3 4 5 6 (PRODUCT LEVEL)	SEE PAGE
	1	1	**3S-2093**	38	STRAP-CABLE	
	2	1	**118-7790**	1	BRACKET AS	
M	3	1	**8T-4138**	2	BOLT (M6X1X20-MM)	
	4	1	**8T-4205**	2	WASHER-HARD (7.2X14.5X2-MM THK)	
	5	1	**107-5605**	1	HARNESS AS-WORK TOOL (SENSOR)	
		1	**102-8803**	1	KIT-RECEPTACLE (3-PIN)	
	6	1	**206-1486**	1	SWITCH AS-ROLLER	
		1	**2H-3922**	1	LOCKWASHER	
		1	**6V-8363**	2	SCREW (10-32X0.312-IN)	
		1	**6V-8370**	1	NUT-HEX (3/4-32-THD)	
		1	**8F-1434**	2	LOCKWASHER (INTERNAL TOOTH)	
		1	**9X-0199**	1	BOOT-SWITCH	

M-METRIC PART

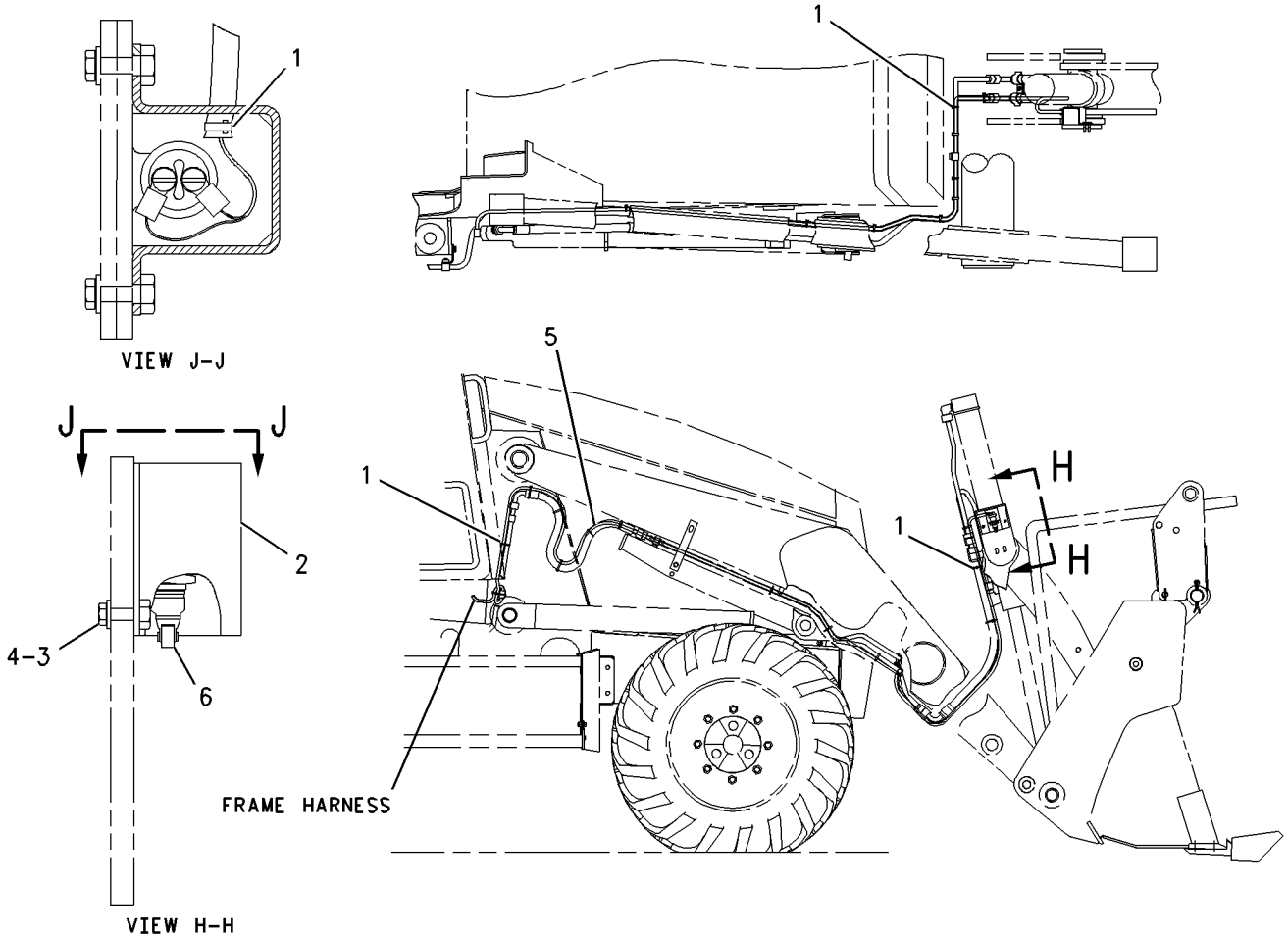

GRAPHIC #1 **<END>** g00889194

186-0308 WIRING GP-STABILIZER

S/N: FDP18400-UP
AUTO UP
PART OF 209-4165 STABILIZER AR
AN ATTACHMENT

SMCS-1408, 5734 **i01669435**

NOTE	REF NO	GRAPHIC REF	PART NUMBER	QTY	PART NAME 1 2 3 4 5 6 (PRODUCT LEVEL)	SEE PAGE
	1	1	**3S-2093**	7	STRAP-CABLE	
	2	1	**6K-0806**	2	STRAP-CABLE	
	3	1	**8Y-7833**	1	WIRE AS	
		1	**102-8802**	1	KIT-RECEPTACLE (2 PIN)	
					(KIT SERVICES RECEPTACLE AS AND WEDGE)	
		1	**3E-3365**	1	WEDGE-RECEPTACLE LOCK (2 PIN)	
		1	**186-3735**	2	PIN-CONNECTOR	
	4	1	**113-8490**	1	FUSE (10 AMP)	
	5	1	**173-7003**	1	RELAY AS (TIMER)	
	6	1	**186-0319**	1	HARNESS AS-REAR (STABILIZER - AUTO UP)	
		1	**155-2271**	1	KIT-CONNECTING PLUG (4 PIN)	
					(KIT SERVICES PLUG AS AND WEDGE)	
		1	**102-8802**	4	KIT-RECEPTACLE (2 PIN)	
					(KIT SERVICES RECEPTACLE AS AND WEDGE)	
		1	**102-8804**	1	KIT-RECEPTACLE (4 PIN)	
					(KIT SERVICES RECEPTACLE AS AND WEDGE)	
		1	**155-2270**	1	KIT-CONNECTING PLUG (2 PIN)	
					(KIT SERVICES PLUG AS AND WEDGE)	

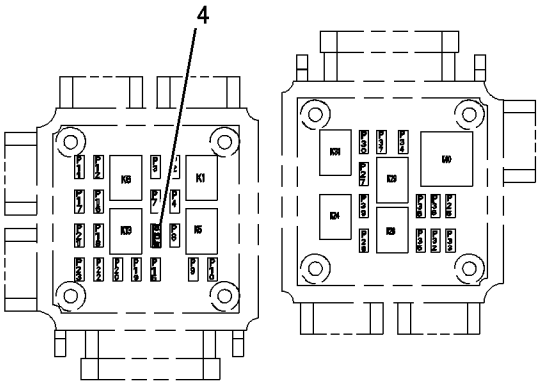

VIEW F-F

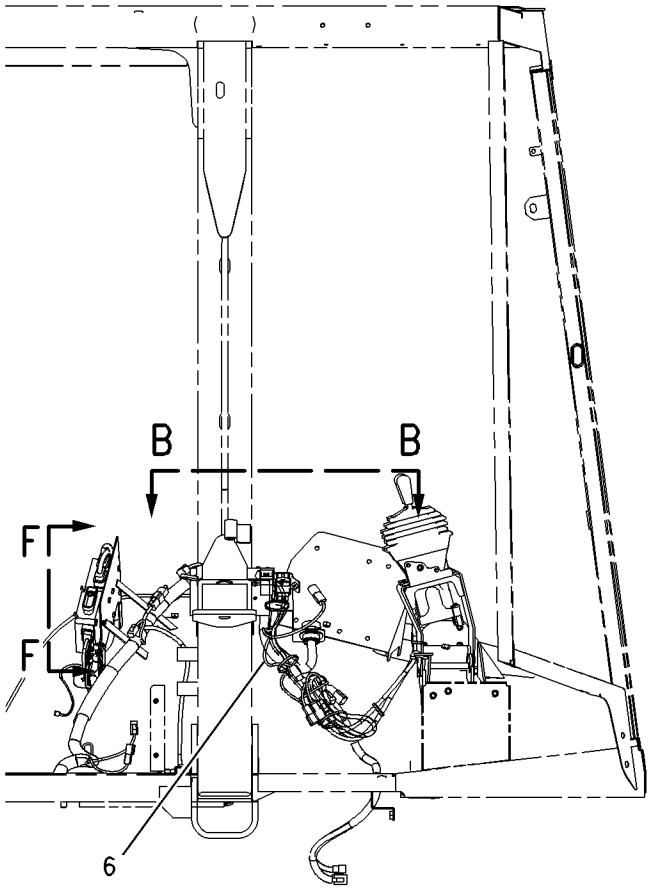

LEFT SIDE VIEW

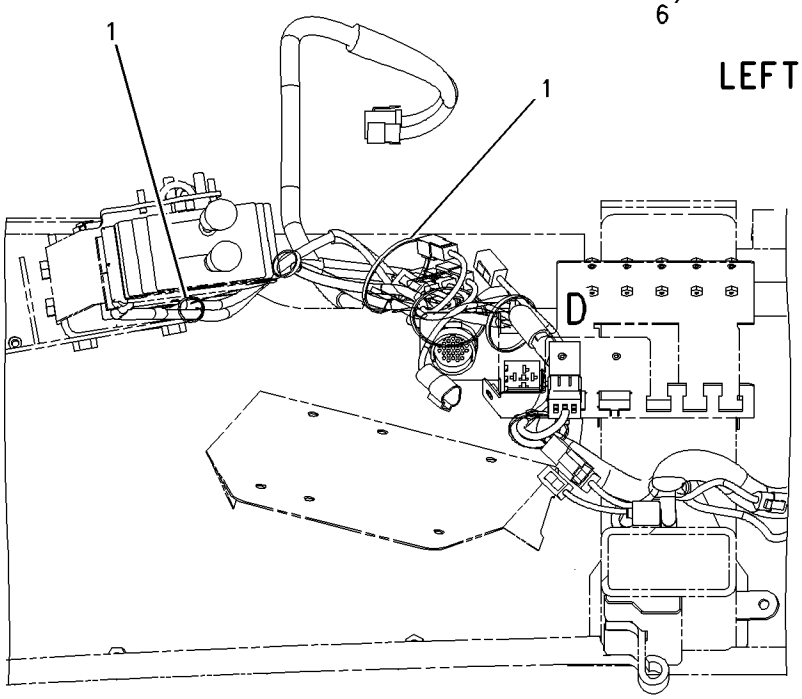

VIEW B-B

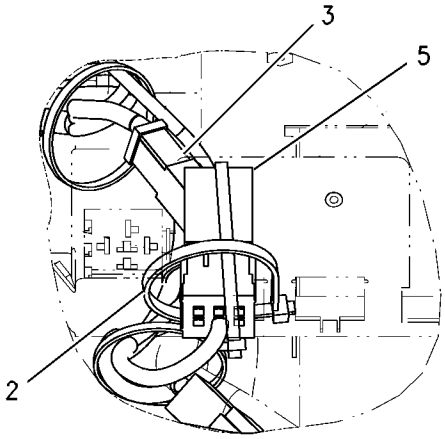

VIEW OF AREA D

GRAPHIC #1 **<END>** g00863535

186-0307 WIRING GP-STABILIZER ALARM

S/N: FDP18400-UP
WARNING
PART OF 209-4165, 209-4174 STABILIZER AR
AN ATTACHMENT

SMCS-1408, 7222, 7400 **i01739904**

NOTE	REF NO	GRAPHIC REF	PART NUMBER	QTY	PART NAME 1 2 3 4 5 6 (PRODUCT LEVEL)	SEE PAGE
	1	1	**3S-2093**	9	STRAP-CABLE	
	2	1	**136-5185**	1	HORN	
	3	1	**172-9200**	1	SUPPRESSOR-ARC	
	4	1	**186-0320**	1	HARNESS AS-ALARM (STABILIZER)	
		1	**102-8802**	3	KIT-RECEPTACLE (2 PIN)	
					(KIT SERVICES RECEPTACLE AS AND WEDGE)	
		1	**155-2270**	2	KIT-CONNECTING PLUG (2 PIN)	
					(KIT SERVICES PLUG AS AND WEDGE)	
		1	**155-2271**	1	KIT-CONNECTING PLUG (4 PIN)	
					(KIT SERVICES PLUG AS AND WEDGE)	

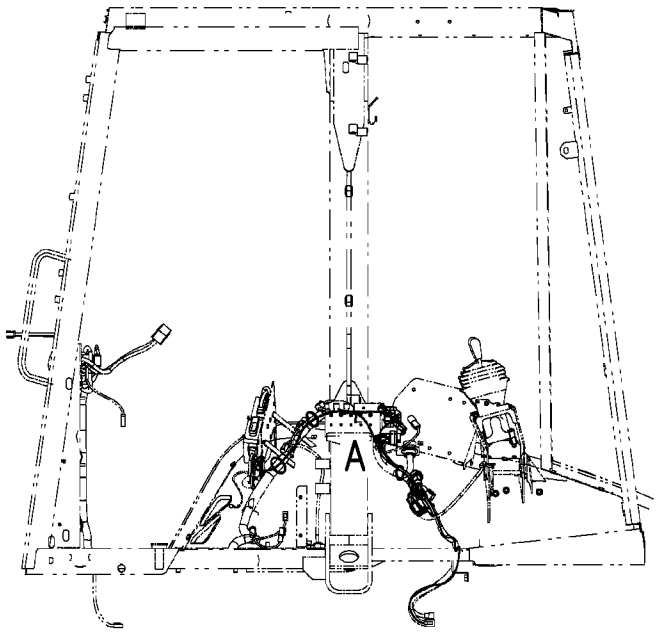

LEFT SIDE VIEW

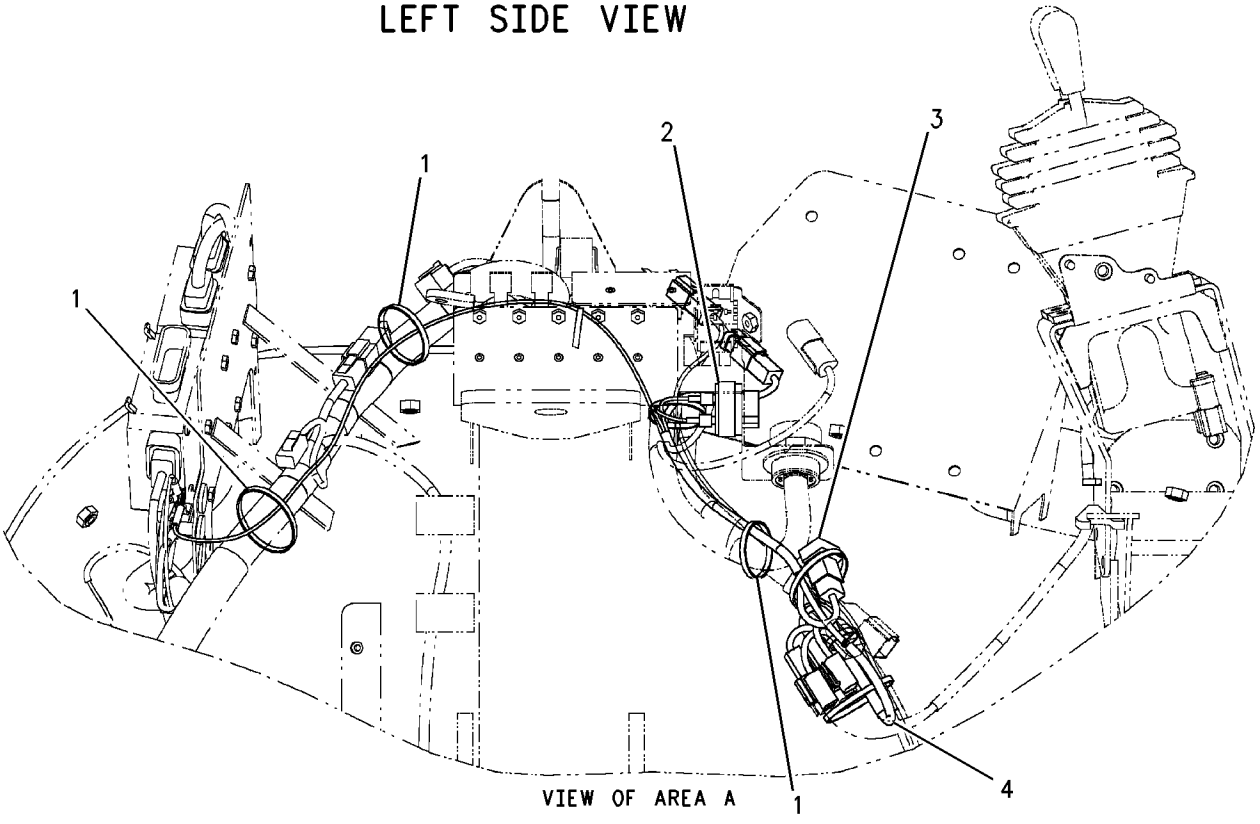

VIEW OF AREA A

GRAPHIC #1 **<END>** g00864642

186-0309 WIRING GP-STEERING

S/N: FDP18400-UP
ALL WHEEL DRIVE
PART OF 237-6459 DRIVE AR-BACKHOE LOADER
AN ATTACHMENT

SMCS-1408, 4334 **i01794709**

NOTE	REF NO	GRAPHIC REF	PART NUMBER	QTY	PART NAME 1 2 3 4 5 6 (PRODUCT LEVEL)	SEE PAGE
	1	1	**3S-2093**	1	STRAP-CABLE	
	2	1	**106-8704**	1	SUPPRESSOR AS-ARC	
		1	**102-8802**	1	KIT-RECEPTACLE (2 PIN)	
		1	**3E-3365**	1	WEDGE-RECEPTACLE LOCK (2 PIN)	
		1	**8T-8729**	2	PIN-CONNECTOR	
	3	1	**141-2759**	1	FUSE (5 AMP)	
	4	1	**146-9439**	1	RELAY AS (12 VOLT)	
	5	1	**169-0598**	1	SWITCH AS (ALL WHEEL DRIVE)	
		1	**111-7899**	1	GASKET	

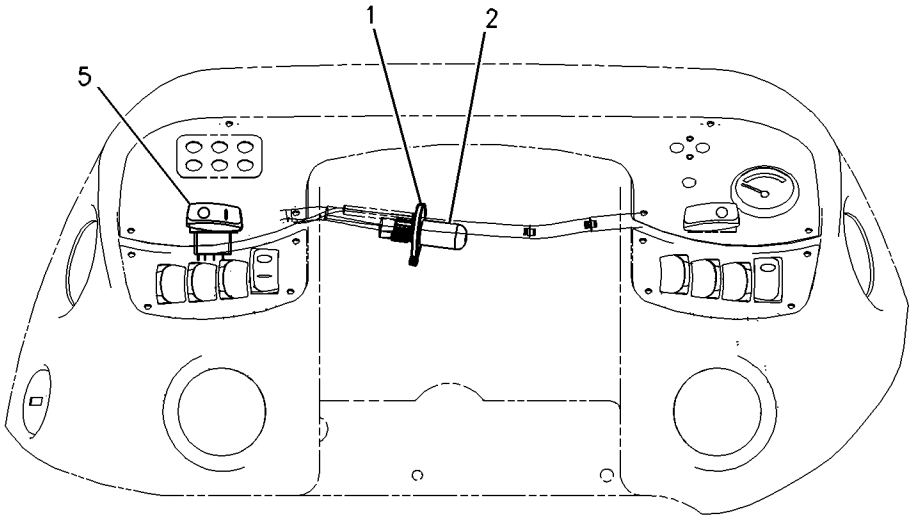

FRONT VIEW

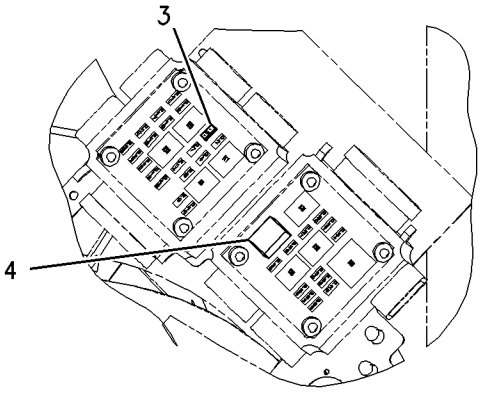

FUSE PANEL

GRAPHIC #1 **<END>** g00732887

107-3716 AXLE & MTG GP-REAR

S/N: FDP18400-UP
PART OF 237-6458 DRIVE AR-BACKHOE LOADER
AN ATTACHMENT

SMCS-3259, 3260, 3278 **i01945749**

NOTE	REF NO	GRAPHIC REF	PART NUMBER	QTY	PART NAME 1 2 3 4 5 6 (PRODUCT LEVEL)	SEE PAGE
	1	1	**5F-5434**	1	VALVE AS-RELIEF (AIR VENT)	
Y	2	1	**156-2853**	1	AXLE GP-REAR	204
M	3	1	**7X-2570**	8	BOLT (M20X2.5X220MM)	
M	4	1	**8T-4131**	8	NUT (M20X2.5 THD)	
	5	1	**8T-5439**	16	WASHER (21.5X45X6MM THK)	

M-METRIC PART
Y-SEPARATE ILLUSTRATION

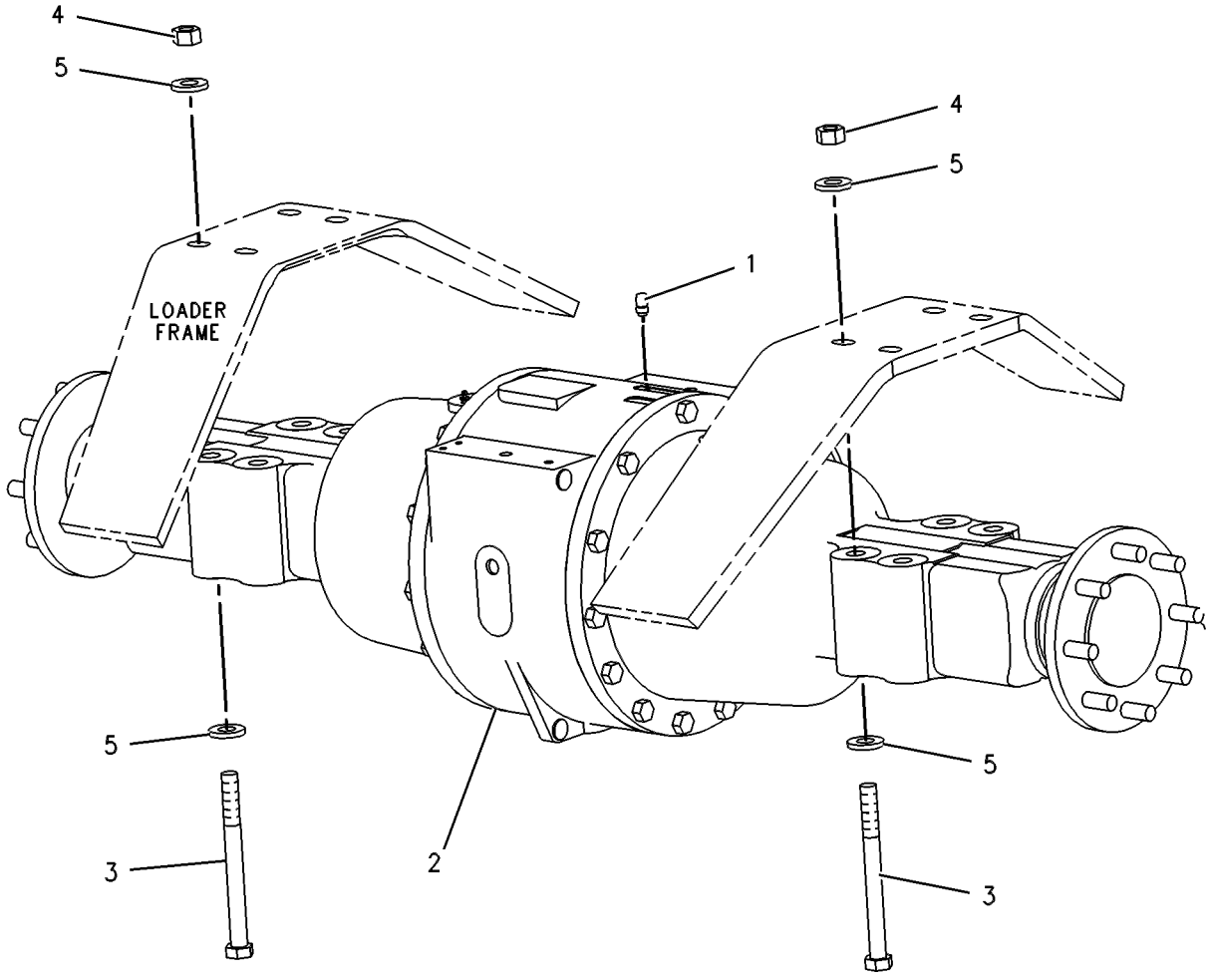

GRAPHIC #1 **<END>** g00363841

POWER TRAIN

202-6195 AXLE & MTG GP-REAR

S/N: FDP18400-UP
PART OF 237-6459 DRIVE AR-BACKHOE LOADER
AN ATTACHMENT

SMCS-3259, 3260, 3278 **i01914007**

NOTE	REF NO	GRAPHIC REF	PART NUMBER	QTY	PART NAME 1 2 3 4 5 6 (PRODUCT LEVEL)	SEE PAGE
	1	1	**5F-5434**	1	VALVE AS-RELIEF (AIR VENT)	
Y	2	1	**156-2853**	1	AXLE GP-REAR	204
	3	1	**194-2847**	2	PLATE	
M	4	1	**089-7990**	8	BOLT (M20X2.50X250)	
M	5	1	**8T-4131**	8	NUT (M20X2.5 THD)	
	6	1	**8T-5439**	16	WASHER (21.5X45X6MM THK)	

M-METRIC PART
Y-SEPARATE ILLUSTRATION

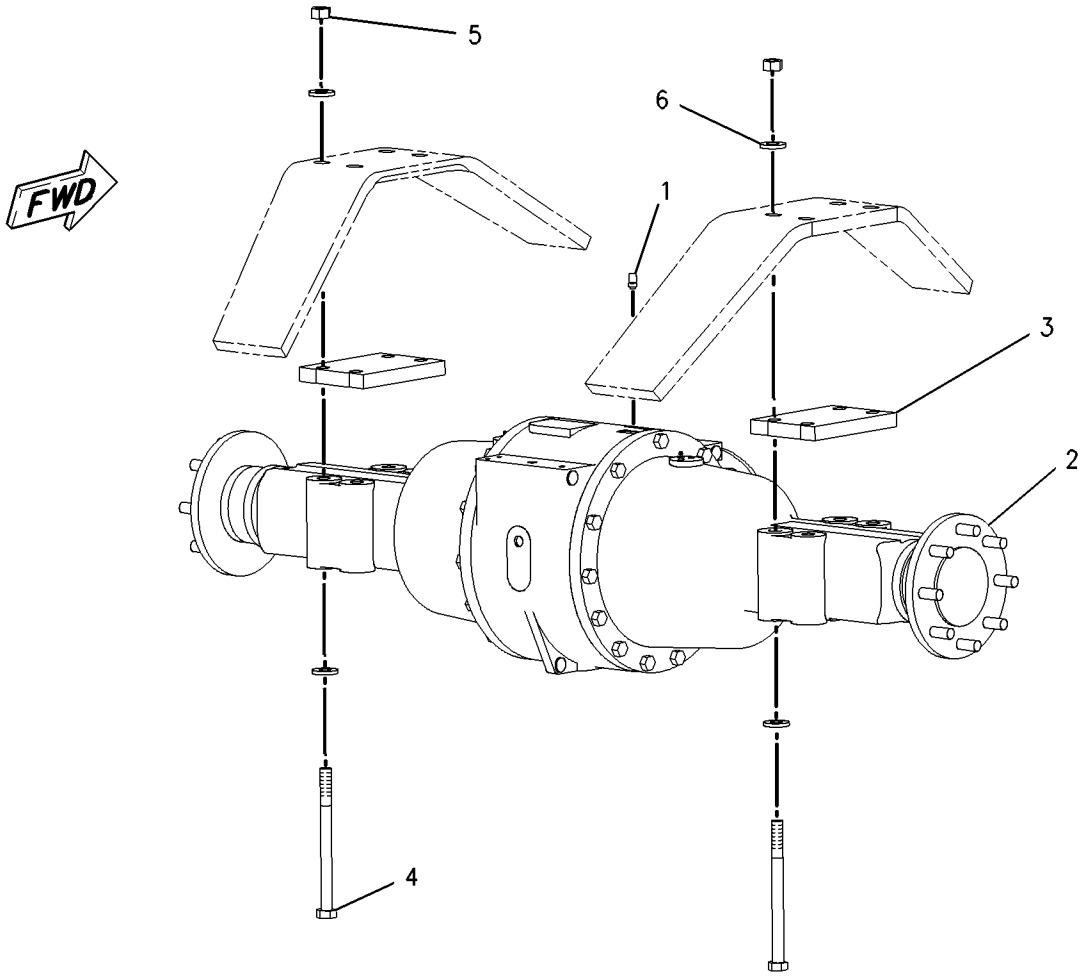

GRAPHIC #1 **<END>** g00997540

168-7446 AXLE GP-DRIVE & STEERING–FRONT

S/N: FDP18400-UP
(13.846/1 RATIO)
PART OF 202-6196 AXLE GP-DRIVE & STEERING
AN ATTACHMENT

SMCS-3020, 3250, 3258, 3259, 3260, 3264, 3278, 4050, 4313 **i01913982**

NOTE	REF NO	GRAPHIC REF	PART NUMBER	QTY	PART NAME 1 2 3 4 5 6 (PRODUCT LEVEL)	SEE PAGE
	1	1	**154-5404**	2	BEARING	
	2	1	**199-0639**	4	SCREW (WHEEL HUB)	
	3	1	**207-4254**	6	BOLT	
	4	1	**207-4258**	2	NUT	
	5	1	**219-8798**	2	SEAL-LIP TYPE	
	6	1	**209-9875**	2	DOWEL	
	7	1	**197-9155**	1	BREATHER (AXLE)	
	8	1	**209-7456**	2	BUSHING	
	9	1	**211-6735**	2	SEAL-O-RING	
	10	1	**214-5097**	1	CYLINDER GP-STEERING	
		1	**215-2023**	1	KIT-SEAL	
	11	1	**152-6144**	3	PLUG-MAGNETIC	
	12	1	**208-0321**	11	BOLT-FLANGE HEAD	
	13	1	**209-7464**	2	SEAL	
M	14	1	**199-0683**	16	BOLT (M16X2X38MM)	
	15	1	**210-5937**	2	WASHER	
B	16	1	**198-7841**	8	SHIM (.15MM THK)	
B	17	1	**198-7842**	4	SHIM (.2MM THK)	
B	18	1	**198-7843**	4	SHIM (.5MM THK)	
Y	19	1	**209-9882**	1	DIFFERENTIAL & BEVEL GEAR GP	211
	20	1	**210-5942**	2	RING	
	21	1	**209-9883**	1	HOUSING	
	22	1	**210-5946**	2	SHAFT GP-AXLE	
					(EACH INCLUDES)	
		1	**174-4643**	4	KIT-SPIDER	
		1	**174-4671**	1	YOKE	
	23	1	**209-9886**	2	TIE ROD GP	
					(EACH INCLUDES)	
	23A	1	**217-2883**	1	TIE ROD	
	23B	1	**217-2884**	1	BALL JOINT	
	23C	1	**217-2885**	1	NUT	
	24	1	**209-9887**	1	BUSHING	
	25	1	**210-5947**	2	WASHER-THRUST	
	26	1	**216-7473**	4	PIN GP-AXLE	
					(EACH INCLUDES)	
	26A	1	**198-7823**	1	BEARING AS	
	26B	1	**198-7825**	1	SEAL	
	26C	1	**198-7838**	1	PIN	
Y	27	1	**210-5924**	2	PLANETARY GP-FINAL DRIVE	230
Y	28	1	**209-9884**	1	HOUSING & FLANGE GP-AXLE (RH)	226
Y	29	1	**209-9885**	1	HOUSING & FLANGE GP-AXLE (LH)	228
	30	1	**069-4707**	1	SEALANT (GASKET)	

B-USE AS REQUIRED
M-METRIC PART
Y-SEPARATE ILLUSTRATION

168-7446 AXLE GP-DRIVE & STEERING *(contd.)* i01913982

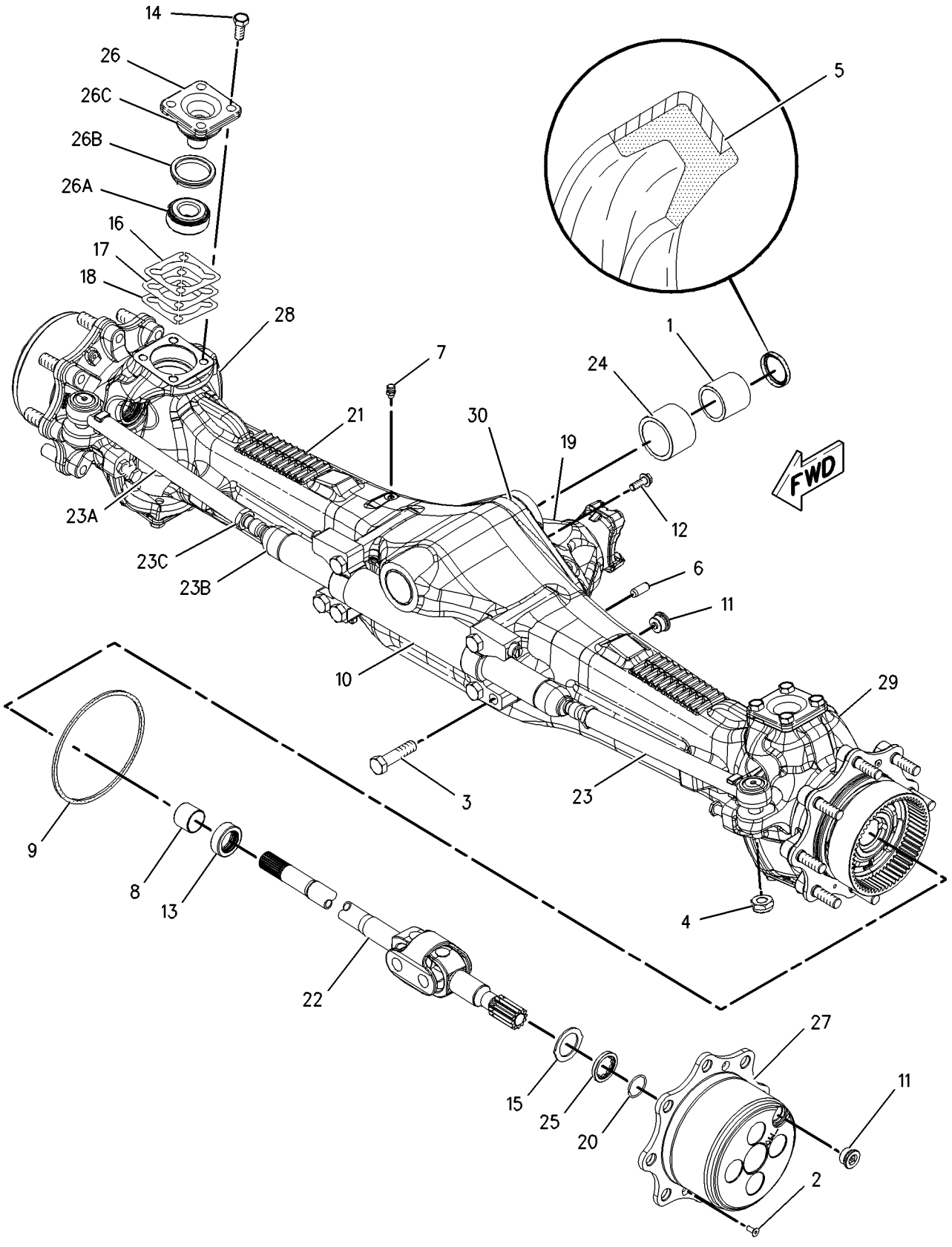

GRAPHIC #1 **<END>** g00997535

202-6196 AXLE GP-DRIVE & STEERING

S/N: FDP18400-UP
PART OF 237-6459 DRIVE AR-BACKHOE LOADER
AN ATTACHMENT

SMCS-3020, 3250, 3258, 3259, 3260, 3264, 3278, 4050, 4313 **i01913992**

NOTE	REF NO	GRAPHIC REF	PART NUMBER	QTY	PART NAME 1 2 3 4 5 6 (PRODUCT LEVEL)	SEE PAGE
B	1	1	**1K-7082**	1	WASHER (1/32IN THK)	
B	2	1	**9R-9702**	2	WASHER	
	3	1	**112-9629**	1	PIN	
	4	1	**165-8996**	2	WASHER-THRUST (55.5X100.5X5MM THK)	
Y	5	1	**168-7446**	1	AXLE GP-DRIVE & STEERING	201
M	6	1	**8T-5041**	1	BOLT (M12X1.75X120MM)	
M	7	1	**8T-8549**	1	LOCKNUT	

B-USE AS REQUIRED
M-METRIC PART
Y-SEPARATE ILLUSTRATION

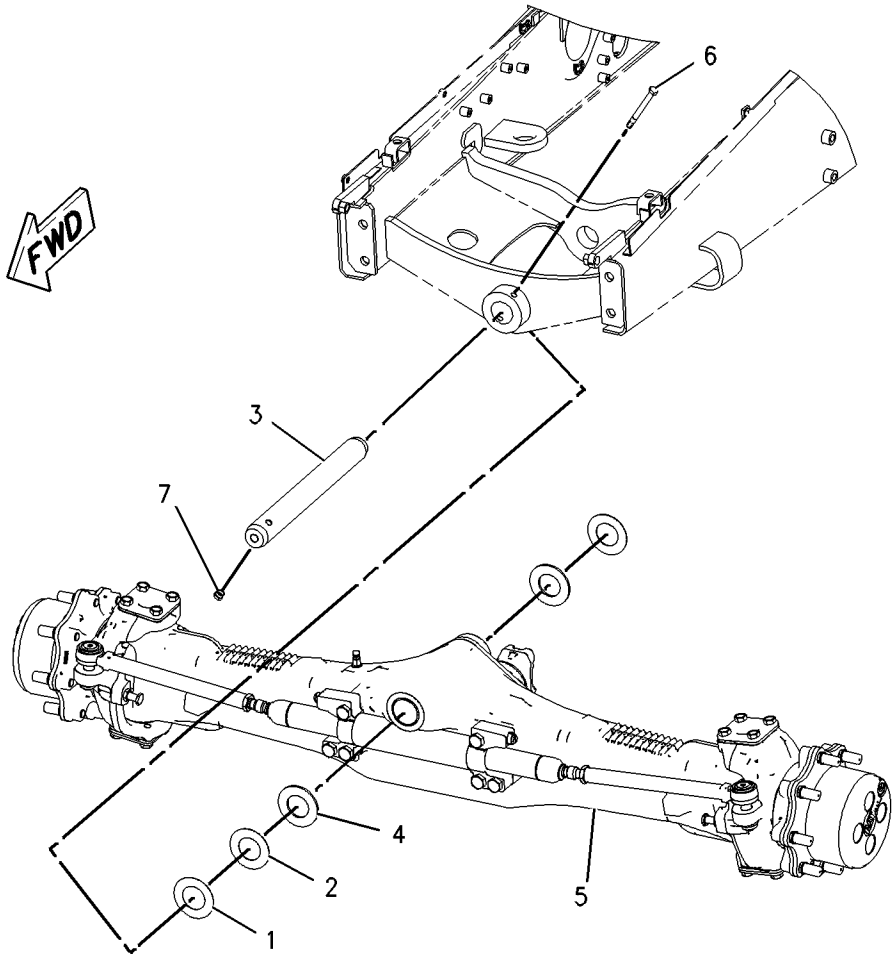

GRAPHIC #1 **<END>** g00997560

POWER TRAIN

156-2853 AXLE GP-REAR

S/N: FDP18400-UP
RATIO 18.5
PART OF 107-3716, 202-6195 AXLE & MTG GP-REAR
AN ATTACHMENT

SMCS-3278, 3282 **i01943902**

NOTE	REF NO	GRAPHIC REF	PART NUMBER	QTY	PART NAME 1 2 3 4 5 6 (PRODUCT LEVEL)	SEE PAGE
	1	1	**118-5837**	2	SHAFT AS	
					(EACH INCLUDES)	
	1A	1	**9R-5219**	8	BOLT-SPECIAL	
	2	2	**9R-2407**	1	RETAINER AS	
	2A	2	**3N-6408**	1	CUP-BEARING (TAPERED ROLLER BEARING)	
	2B	2	**4K-5843**	1	CUP-BEARING (TAPERED ROLLER BEARING)	
	3	1	**156-1928**	1	HOUSING AS-LH	
	3A	1	**6Y-7652**	1	CUP-BEARING (TAPERED ROLLER BEARING)	
	3B	1	**8S-9151**	1	CUP-BEARING (TAPERED ROLLER BEARING)	
	3C	1	**156-1929**	2	STUD	
	3D	1	**156-1930**	1	GEAR-PLANET RING	
	4	1	**156-2571**	1	HOUSING AS-RH	
	4A	1	**6Y-7652**	1	CUP-BEARING (TAPERED ROLLER BEARING)	
	4B	1	**8S-9151**	1	CUP-BEARING (TAPERED ROLLER BEARING)	
	4C	1	**156-1929**	2	STUD	
	4D	1	**156-1930**	1	GEAR-PLANET RING	
	5	1	**186-4117**	2	CARRIER AS	
					(EACH INCLUDES)	
	5A	1	**7T-6652**	1	CONE-BEARING (TAPERED ROLLER BEARING)	
	5B	1	**9R-2417**	3	WASHER (33.07X48.38X1.06MM THK)	
	5C	1	**9R-2418**	6	WASHER (32.94X57.21X.78MM THK)	
	5D	1	**9R-2419**	3	KIT-BEARING	
	5E	1	**9R-2420**	1	RETAINER	
	5F	1	**9R-2421**	3	SHAFT	
	5G	1	**186-4118**	3	GEAR-PLANET (20 TEETH)	
	6	1	**9F-2167**	2	SCREW-PURGE	
	7	1	**9R-0883**	1	PIN	
	8	1	**9R-0823**	1	LEVER AS	
B	9	1	**9R-2427**	1	SHIM (0.965MM THK)	
B		1	**9R-2428**	1	SHIM (1.118MM THK)	
B		1	**9R-2429**	1	SHIM (1.270MM THK)	
B		1	**9R-2430**	1	SHIM (1.422MM THK)	
B		1	**9R-2431**	1	SHIM (1.575MM THK)	
B		1	**9R-2432**	1	SHIM (1.727MM THK)	
B		1	**9R-2433**	1	SHIM (1.880MM THK)	
B		1	**9R-2434**	1	SHIM (2.032MM THK)	
	10	1	**9R-2425**	2	WASHER (23.088X69.6X9.52MM THK)	
	11	1	**156-2572**	1	HOUSING-REAR BRAKE (RH)	
	12	1	**9R-9410**	2	SEAL-REAR BRAKE	
	13	1	**9R-9409**	2	SEAL-REAR BRAKE	
	14	1	**9R-9408**	2	PISTON-REAR BRAKE	
B	15	2	**9R-2446**	1	SPACER (45.86X50.98X31.858MM THK)	
B		2	**9R-2447**	1	SPACER (45.86X50.98X31.908MM THK)	
B		2	**9R-2448**	1	SPACER (45.86X50.98X31.959MM THK)	
B		2	**9R-2449**	1	SPACER (45.86X50.98X32.010MM THK)	
B		2	**9R-2450**	1	SPACER (45.86X50.98X32.061MM THK)	
B		2	**9R-2451**	1	SPACER (45.86X50.98X32.112MM THK)	
B		2	**9R-2452**	1	SPACER (45.86X50.98X32.162MM THK)	
B		2	**9R-2453**	1	SPACER (45.86X50.98X32.213MM THK)	
B		2	**9R-2454**	1	SPACER (45.86X50.98X32.264MM THK)	
B		2	**9R-2455**	1	SPACER (45.86X50.98X32.315MM THK)	
B		2	**9R-2456**	1	SPACER (45.86X50.98X32.366MM THK)	
B		2	**9R-2457**	1	SPACER (45.86X50.98X32.416MM THK)	
B		2	**9R-2458**	1	SPACER (45.86X50.98X32.467MM THK)	

156-2853 AXLE GP-REAR *(contd.)* i01943902

NOTE	REF NO	GRAPHIC REF	PART NUMBER	QTY	PART NAME 1 2 3 4 5 6 (PRODUCT LEVEL)	SEE PAGE
B		2	**9R-2459**	1	SPACER (45.86X50.98X32.518MM THK)	
B		2	**9R-2460**	1	SPACER (45.86X50.98X32.569MM THK)	
	16	1	**230-4017**	8	DISC-BRAKE	
	17	1	**9R-2474**	2	PIN	
	18	1	**9R-9401**	8	PLATE	
	19	1	**8S-4740**	12	BOLT (9/16-12X5 IN)	
	20	1	**9R-9398**	2	MANIFOLD-BRAKE TUBE	
	21	1	**8H-1607**	2	SEAL-O-RING	
	22	1	**9R-2424**	2	GEAR (16 TEETH)	
	23	1	**8M-8157**	4	SEAL-O-RING	
	24	2	**2A-4576**	1	CUP-BEARING (TAPERED ROLLER BEARING)	
	25	2	**5L-9656**	1	CONE-BEARING (TAPERED ROLLER BEARING)	
	26	1	**9X-8880**	25	BOLT (5/8-11X2 IN)	
	27	2	**9R-2508**	1	HOUSING	
	28	2	**113-1147**	1	FLANGE	
	29	2	**9R-2497**	1	SEAL	
	30	2	**9R-2501**	1	WASHER (32.5X60.5X5.6MM THK) (5.6MM THK)	
	31	2	**9R-2502**	1	NUT (1 1/4-18 THD)	
	32	2	**3B-5302**	1	PIN-COTTER	
	33	2	**9R-2498**	1	RETAINER	
	34	2	**3B-4509**	6	LOCKWASHER	
	35	2	**3K-3379**	6	BOLT (9/16-12X1IN)	
	36	1	**9X-8883**	1	BOLT (5/8-11X2.75 IN)	
	37	1	**5L-9018**	4	BOLT-SOCKET HEAD (1/4X20X1.75 IN)	
	38	1	**8T-6760**	2	PLUG-PIPE	
	39	2	**9R-2499**	1	SEAL AS	
	40	2	**9R-2496**	1	SEAL	
	41	2	**7T-6653**	1	CONE-BEARING (TAPERED ROLLER BEARING)	
	42	1	**118-5839**	2	SEAL-REAR AXLE	
	43	2	**9R-2512**	1	SEAL	
	44	1	**030-1957**	2	CONE-BEARING (TAPERED ROLLER BEARING)	
	45	2	**7T-6654**	1	CONE-BEARING (TAPERED ROLLER BEARING)	
	46	1	**9R-2505**	1	SEAL	
	47	1	**9R-2504**	1	SHAFT	
M	48	1	**9R-2507**	1	SCREW-SPECIAL	
	49	2	**7T-7621**	1	BEARING AS	
	50	2	**9R-2494**	1	RING	
	51	2	**9R-2480**	1	CASE AS	
	52	2	**2S-0480**	1	CUP-BEARING (TAPERED ROLLER BEARING)	
	53	2	**2S-0479**	1	CONE-BEARING (TAPERED ROLLER BEARING)	
	54	1	**9R-2506**	1	FORK	
	55	2	**9R-2492**	1	WASHER (64.389X78.74X3.124MM THK) (3.1MM THK)	
	56	2	**9R-2493**	1	RING	
	57	2	**9R-2488**	1	GEAR (16 TEETH)	
	58	2	**9R-2482**	1	COUPLING	
	59	1	**156-1934**	1	HOUSING-BRAKE	
	60	2	**9R-2486**	1	SPRING	
	61	2	**9R-2483**	1	ADAPTER	
	62	2	**9R-2484**	2	BUSHING-TERMINAL	
	63	2	**9R-2490**	2	WASHER (76.2X101.6X1.5MM THK)	
	64	2	**9R-2491**	1	SPIDER	
	65	2	**9R-9403**	4	PINION	
	66	2	**9R-2489**	4	WASHER-SPRING	
	67	2	**9R-2485**	8	BOLT (1/2-13X1.85IN)	
	68	1	**9R-2495**	2	SEAL	
	69	2	**9R-5241**	1	GEAR SET	
M	70	2	**9R-6671**	12	BOLT (1/2-20X1.62IN)	
	71	2	**2M-2570**	12	LOCKNUT	
	72	2	**9R-2503**	1	BLOCK	

156-2853 AXLE GP-REAR *(contd.)* i01943902

NOTE	REF NO	GRAPHIC REF	PART NUMBER	QTY	PART NAME 1 2 3 4 5 6 (PRODUCT LEVEL)	SEE PAGE
	73	1	**2L-6267**	1	LOCKNUT	
	74	2	**0T-0318**	2	BOLT (7/16-14X1 IN)	
	75	2	**9R-2487**	1	GEAR (16 TEETH)	
B	76	1	**9R-2435**	2	SPACER (22.86X53.85X1.25MM THK)	
B		1	**9R-2436**	2	SPACER (22.86X53.85X1.35MM THK)	
B		1	**9R-2437**	2	SPACER (22.86X53.85X1.45MM THK)	
B		1	**9R-2438**	2	SPACER (22.86X53.85X1.55MM THK)	
B		1	**9R-2439**	2	SPACER (22.86X53.85X1.65MM THK)	
B		1	**9R-2440**	2	SPACER (22.86X53.85X1.75MM THK)	
B		1	**9R-2441**	2	SPACER (22.86X53.85X1.85MM THK)	
B		1	**9R-2442**	2	SPACER (22.86X53.85X1.96MM THK)	
B		1	**9R-2443**	2	SPACER (22.86X53.85X2.06MM THK)	
B		1	**9R-2444**	2	SPACER (22.86X53.85X2.16MM THK)	
B		1	**9R-2445**	2	SPACER (22.86X53.85X2.26MM THK)	
	77	2	**9R-6602**	2	PLUG-MAGNETIC	
	78	1	**5P-0540**	4	NUT-HEX FULL (9/16-18 THD)	
	79	1	**156-2573**	1	HOUSING-BRAKE	
	80	1	**156-1933**	1	HOUSING-REAR BRAKE (LH)	
	81	1	**9R-2426**	2	LOCK	
M	82	1	**9R-2466**	2	BOLT (7/8-14X1.625IN)	

B-USE AS REQUIRED
M-METRIC PART

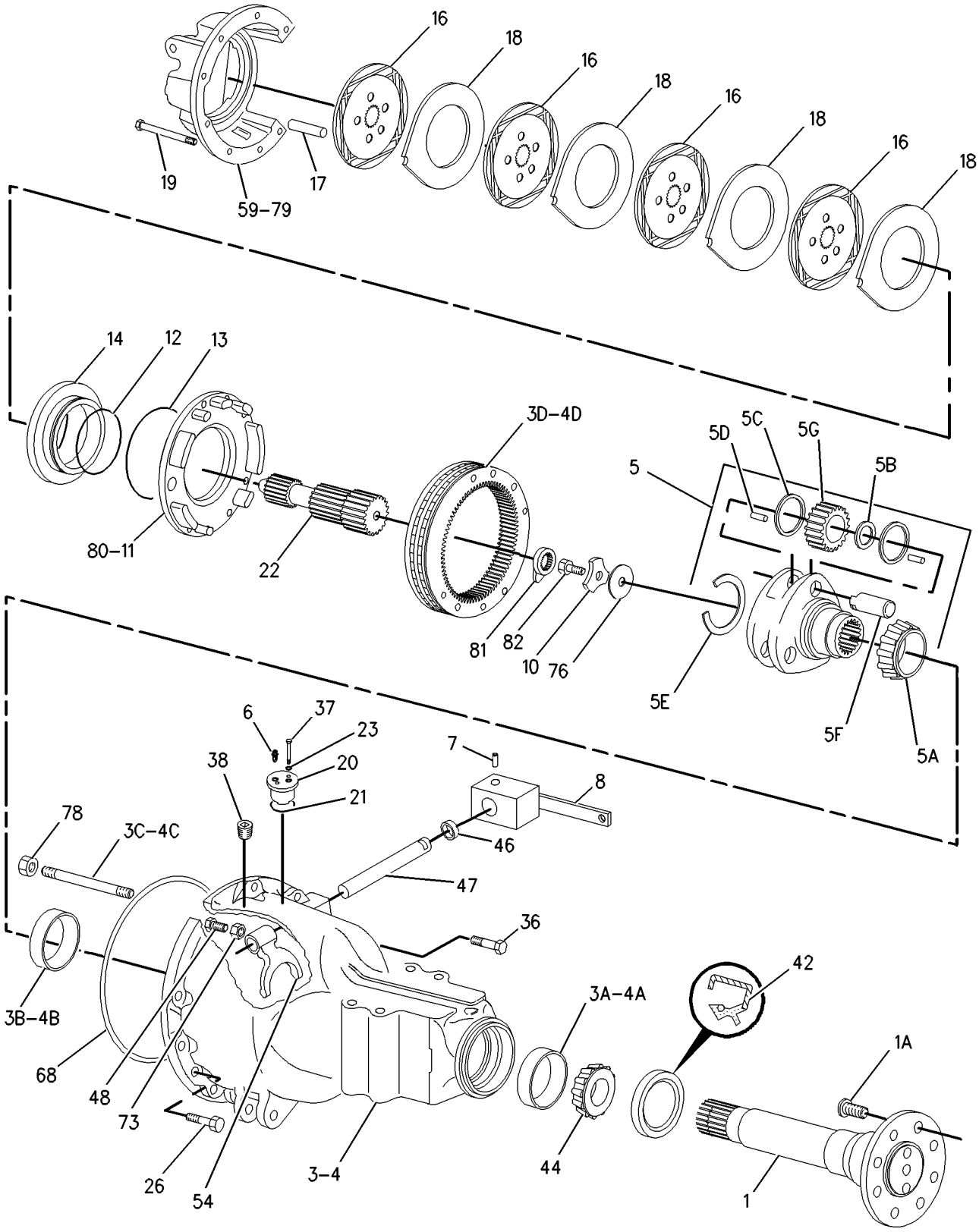

GRAPHIC #1 g00986345

156-2853 AXLE GP-REAR *(contd.)* **i01943902**

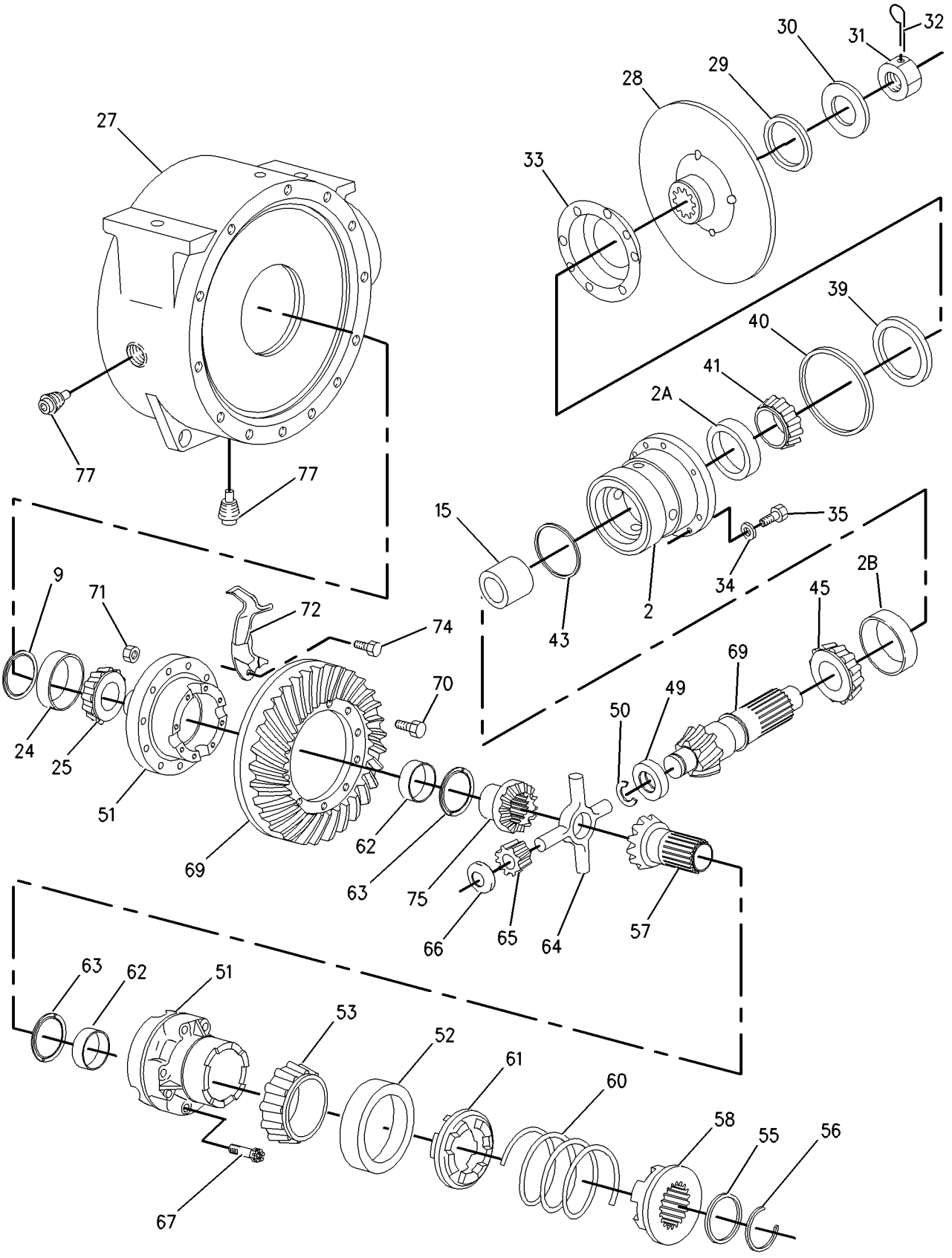

GRAPHIC #2 **<END>** g00986346

191-9114 CONTROL GP-DIFFERENTIAL LOCK

S/N: FDP18400-UP

PART OF 184-7970 POWER TRAIN AR

SMCS-3264, 3272, 3273 **i01945798**

NOTE	REF NO	GRAPHIC REF	PART NUMBER	QTY	PART NAME 1 2 3 4 5 6 (PRODUCT LEVEL)	SEE PAGE
	1	1	**9R-5567**	1	PLATE AS	
M	2	1	**8T-4244**	1	NUT (M12X1.75 THD)	
	3	1	**5P-0372**	2	LOCK PIN	
	4	1	**8B-1419**	1	PIN-CLEVIS	
	5	1	**191-9113**	1	ROD AS	
C	6	1	**8T-4815**	1	ROD END	
	7	1	**8C-4987**	1	PIN-CLEVIS	
M	8	1	**8T-4133**	1	NUT (M10X1.5 THD)	
	9	1	**9R-3051**	1	ROD	
	10	1	**9R-2806**	1	PIN	
	11	1	**9R-2807**	1	CLIP	
	12	1	**103-4867**	1	SPRING	
	13	1	**9R-1581**	1	BOOT	
C	14	1	**8T-5063**	1	ROD END	

C-CHANGE FROM PREVIOUS TYPE
M-METRIC PART

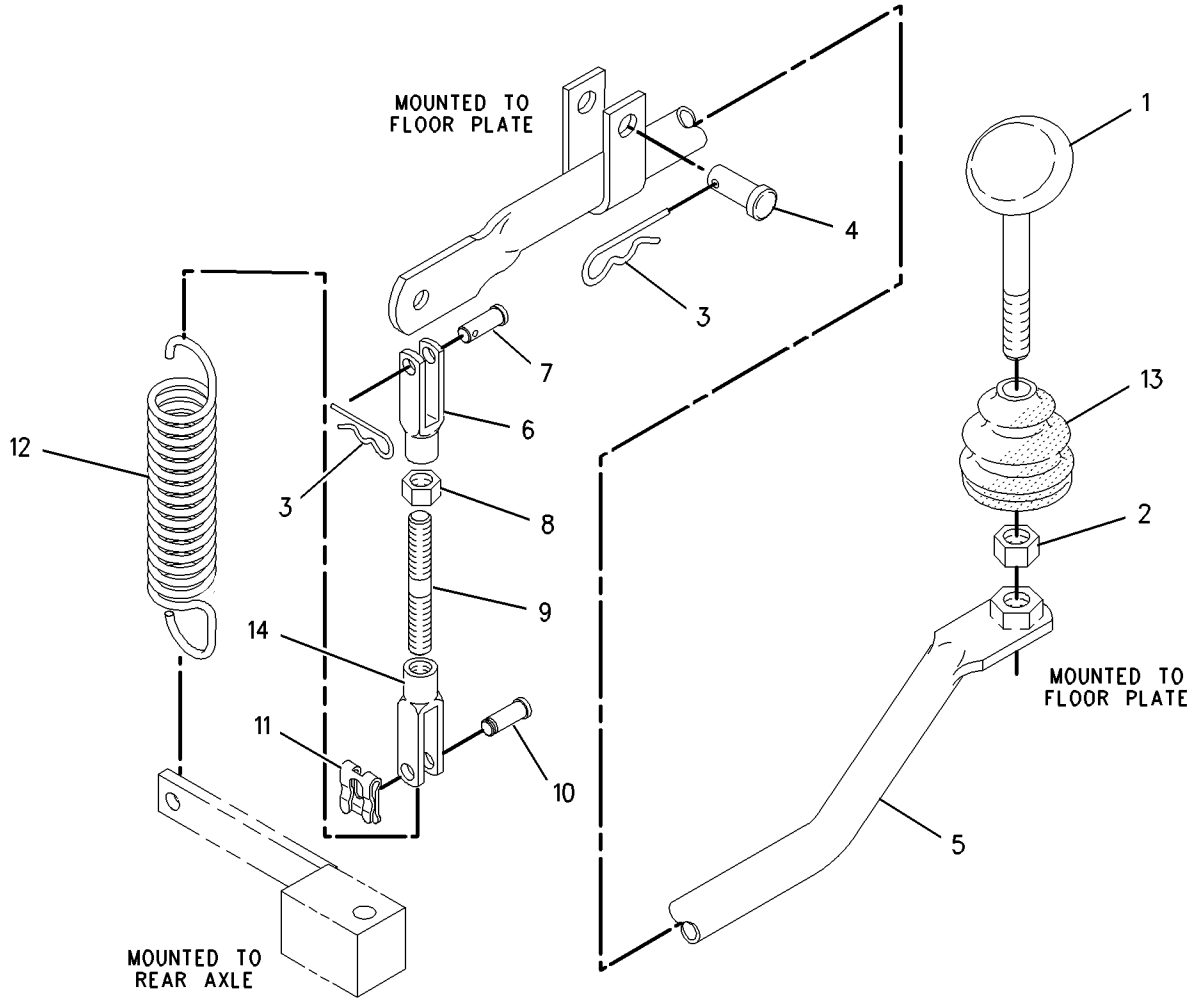

GRAPHIC #1 **<END>** g00995446

164-1130 CONTROL GP-TRANSMISSION

S/N: FDP18400-UP

PART OF 192-4661, 192-4662, 192-4663, 192-4665, 192-4666, 198-4095, 214-6955, 214-6956, 214-6958, 214-6959, 214-6976, 214-6977 POWER TRAIN AR AN ATTACHMENT

SMCS-3065 **i01979127**

NOTE	REF NO	GRAPHIC REF	PART NUMBER	QTY	PART NAME 1 2 3 4 5 6 (PRODUCT LEVEL)	SEE PAGE
	1	1	**102-8802**	1	KIT-RECEPTACLE (2-PIN)	
	2	1	**3E-3365**	1	WEDGE-RECEPTACLE LOCK (2 PIN)	
	3	1	**9R-1766**	1	KNOB	
	4	1	**9R-1767**	1	BOOT	
	5	1	**9R-9868**	1	SWITCH AS-PUSH BUTTON (NEUTRALIZER)	
		1	**186-3735**	2	PIN-CONNECTOR	
	6	1	**107-5591**	1	NUT-JAM (3/4-16 THD)	
	7	1	**164-1113**	1	PLATE	
	8	1	**164-1153**	1	KNOB	
	9	1	**164-1197**	1	ROD AS	
	10	1	**164-1365**	1	BOOT	
	11	1	**164-1368**	4	CLIP	
	12	1	**174-6640**	1	CONTROL GP-TRANSMISSION	
M	13	1	**192-4522**	4	SCREW-FLAT HEAD	
	14	1	**8T-4223**	1	WASHER-HARD (13.5X25.5X3MM THK)	
M	15	1	**8T-4956**	1	BOLT (M12X1.75X35MM)	
	16	1	**8T-9501**	2	SCREW (10-16X.75 IN)	

M-METRIC PART

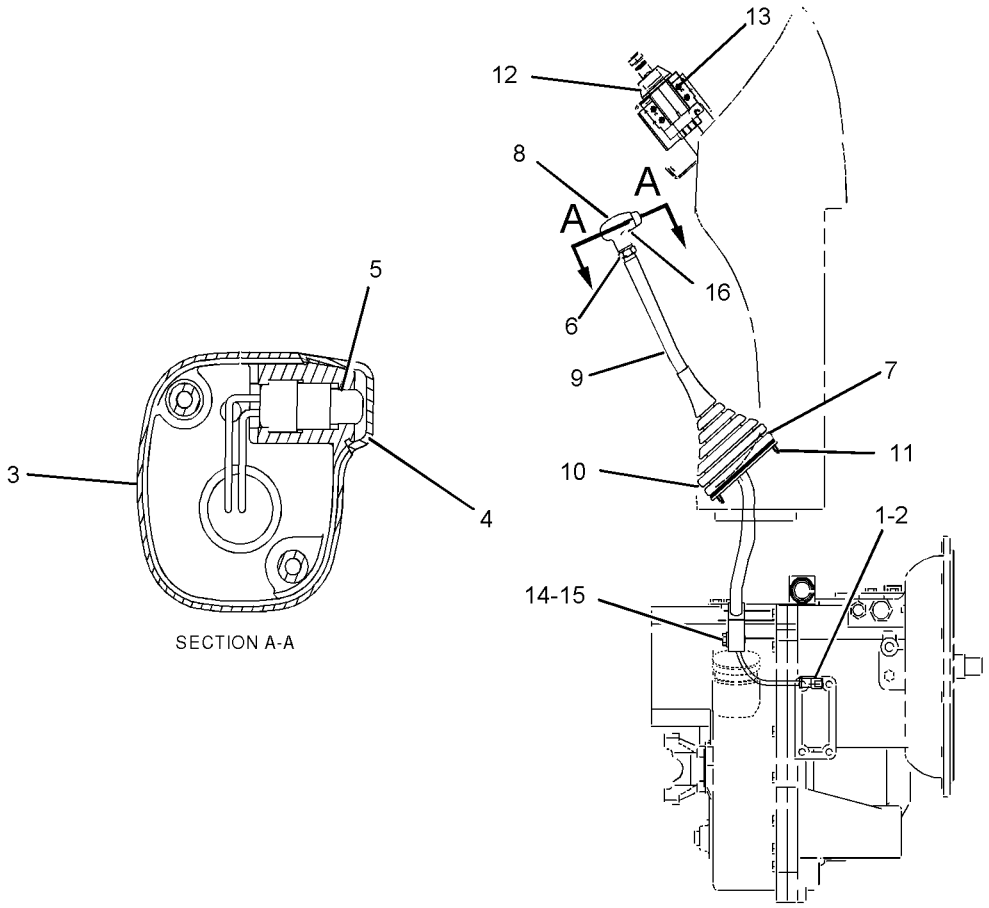

GRAPHIC #1 **<END>** g01026121

209-9882 DIFFERENTIAL & BEVEL GEAR GP

S/N: FDP18400-UP
PART OF 168-7446 AXLE GP-DRIVE & STEERING
AN ATTACHMENT

SMCS-3256, 3258, 3281, 3283, 3284 **i01918576**

NOTE	REF NO	GRAPHIC REF	PART NUMBER	QTY	PART NAME 1 2 3 4 5 6 (PRODUCT LEVEL)	SEE PAGE
	1	1	**4J-0520**	1	SEAL-O-RING	
	2	1	**216-4457**	1	SEAL	
	3	1	**216-4458**	2	BEARING	
	4	1	**136-7808**	1	BEARING AS-TAPERED ROLLER	
	5	1	**216-4461**	1	BEARING	
	6	1	**209-7454**	2	NUT (M94X2 THD)	
	7	1	**152-6144**	1	PLUG-MAGNETIC	
	8	1	**209-7462**	2	WASHER (40X50X.06MM THK)	
	9	1	**209-7463**	1	SLEEVE (COLLAPSIBLE)	
M	10	1	**199-0695**	2	BOLT (M6X1X14MM)	
	11	1	**209-7472**	1	NUT (M24X1.5 THD)	
	12	1	**216-4465**	1	WASHER (24.5X52X10MM THK)	
	13	1	**216-4464**	1	YOKE	
	14	1	**199-0858**	2	RETAINER	
Y	15	1	**216-9498**	1	DIFFERENTIAL GP	213
	16	1	**217-2868**	1	GEAR GP-BEVEL & PINION	
		1	**216-4466**	1	GEAR GP-BEVEL & PINION (KIT)	
					(INCLUDES GEARS,WASHERS,SPACERS,NUT AND O-RING)	
	17	1	**217-2880**	4	DOWEL	
	18	1	**216-5515**	1	HOUSING GP-DIFFERENTIAL	
	18A	1	**208-0322**	4	BOLT-FLANGE HEAD	
B	19	1	**209-7473**	1	SHIM (2.5MM THK)	
B			**219-8751**	1	SHIM (2.6MM THK)	
B			**219-8752**	1	SHIM (2.7MM THK)	
B			**219-8753**	1	SHIM (2.8MM THK)	
B			**219-8754**	1	SHIM (2.9MM THK)	
B			**219-8755**	1	SHIM (3.0MM THK)	
B			**219-8756**	1	SHIM (3.1MM THK)	
B			**219-8757**	1	SHIM (3.2MM THK)	
B			**219-8758**	1	SHIM (3.3MM THK)	
B			**219-8759**	1	SHIM (3.4MM THK)	

B-USE AS REQUIRED
M-METRIC PART
Y-SEPARATE ILLUSTRATION

209-9882 DIFFERENTIAL & BEVEL GEAR GP *(contd.)* i01918576

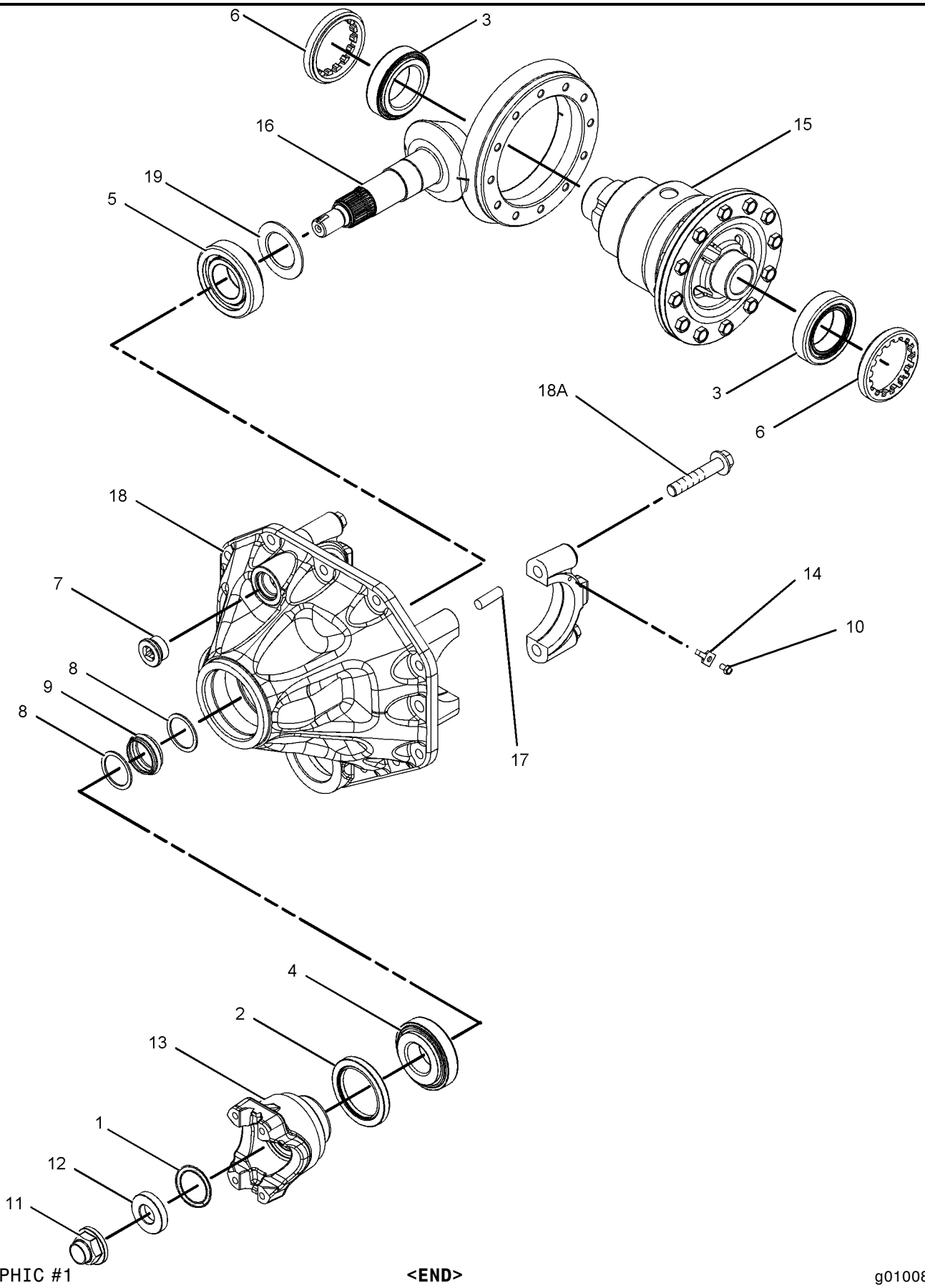

GRAPHIC #1 **<END>** g01008372

216-9498 DIFFERENTIAL GP

S/N: FDP18400-UP

PART OF 209-9882 DIFFERENTIAL & BEVEL GEAR GP

AN ATTACHMENT

SMCS-3258 **i02017281**

NOTE	REF NO	GRAPHIC REF	PART NUMBER	QTY	PART NAME 1 2 3 4 5 6 (PRODUCT LEVEL)	SEE PAGE
	1	1	**216-8687**	1	COVER	
	2	1	**216-8689**	1	HOUSING-DIFFERENTIAL	
	3	1	**229-5093**	2	WASHER-THRUST (49X72X1.5-MM THK)	
M	4	1	**144-6734**	12	BOLT (M10X1.5X30-MM)	
	5	1	**211-0092**	2	WASHER-THRUST (22X42X2-MM THK)	
	6	1	**209-7455**	1	PIN	
	7	1	**216-8691**	1	RETAINER	
	8	1	**216-9497**	1	GEAR GP-DIFFERENTIAL & BEVEL	
					AVAILABLE REPAIR KIT(S):	
			216-8700		GEAR GP-BEVEL (KIT)	
					(INCLUDES PIN,WASHERS,PIN,DISC AND GEARS)	

M-METRIC PART

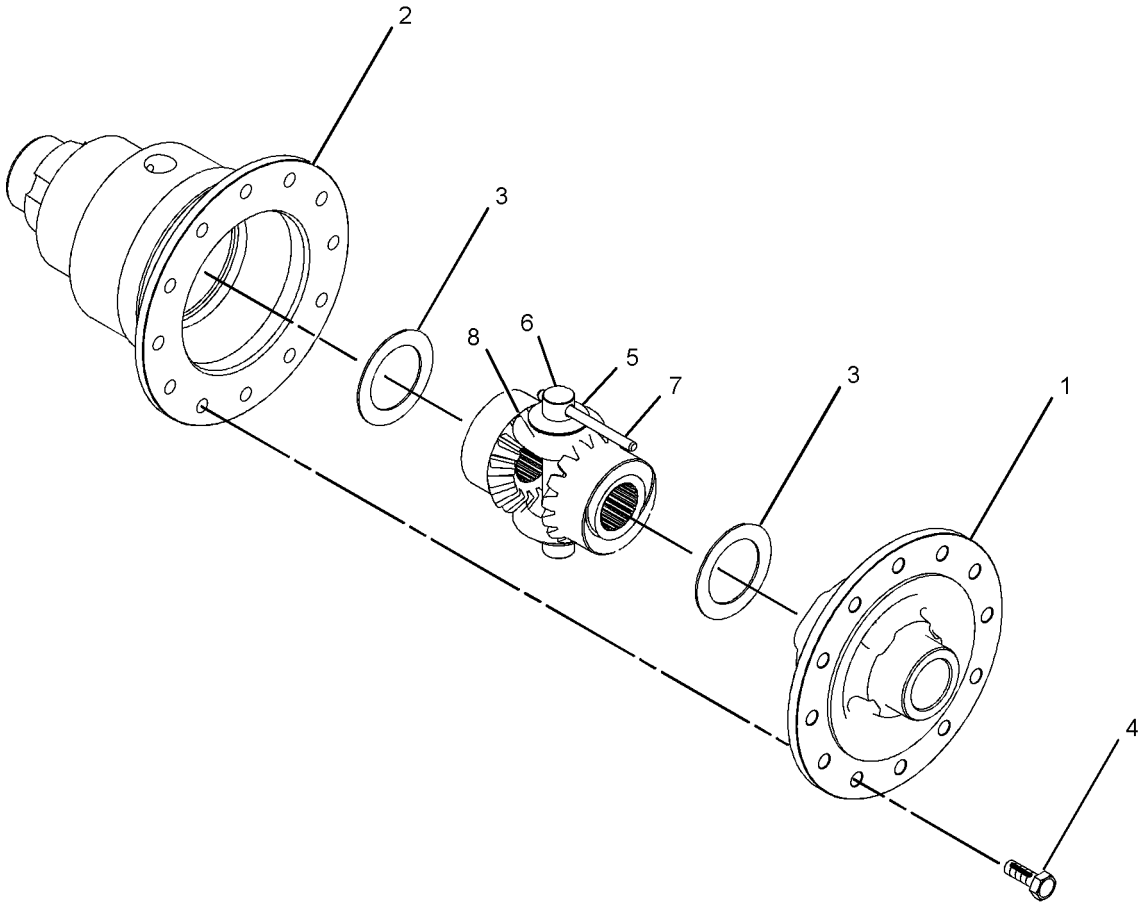

GRAPHIC #1 **<END>** g01043312

237-6458 DRIVE AR-BACKHOE LOADER–
2 WHEEL STEER, 2 WHEEL DRIVE
S/N: FDP18400-UP
PART OF 214-6955, 214-6958, 214-6976 POWER TRAIN AR
AN ATTACHMENT

SMCS-3278, 4313 **i02015771**

NOTE	PART NUMBER	QTY	PART NAME 1 2 3 4 5 6 (PRODUCT LEVEL)	SEE PAGE
Y	*107-3716*	1	AXLE & MTG GP-REAR	199
Y	*202-6198*	1	AXLE GP-FRONT	295
Y	*190-8954*	1	LINES GP-PUMP	463
Y	*185-3413*	1	LINES GP-STABILIZER	480
Y	*202-5712*	1	LINES GP-STEERING	301
Y	*185-9784*	1	VALVE & MTG GP-BANK (STABILIZER)	517
Y	*185-8808*	1	WIRING GP-REAR	184
	202-5710	1	FILM-IDENTIFICATION (FUSE PANEL)	
	231-9352	1	FILM-IDENTIFICATION (FUSE PANEL)	
	238-8550	1	PUMP GP-METERING	
	227-4709	1	KIT-SEAL (STEERING METERING PUMP)	

Y-SEPARATE ILLUSTRATION

<END>

237-6459 DRIVE AR-BACKHOE LOADER–
2 WHEEL STEER, ALL WHEEL DRIVE
S/N: FDP18400-UP
PART OF 214-6956, 214-6957, 214-6959, 214-6977, 214-6978 POWER TRAIN AR
AN ATTACHMENT

SMCS-3278, 4313 **i02015851**

NOTE	PART NUMBER	QTY	PART NAME 1 2 3 4 5 6 (PRODUCT LEVEL)	SEE PAGE
Y	*202-6195*	1	AXLE & MTG GP-REAR	200
Y	*202-6196*	1	AXLE GP-DRIVE & STEERING	203
Y	*9R-1233*	1	GUARD GP-DRIVE SHAFT	324
Y	*190-8954*	1	LINES GP-PUMP	463
Y	*185-3413*	1	LINES GP-STABILIZER	480
Y	*202-5711*	1	LINES GP-STEERING	298
Y	*185-9784*	1	VALVE & MTG GP-BANK (STABILIZER)	517
Y	*185-8808*	1	WIRING GP-REAR	184
Y	*186-0309*	1	WIRING GP-STEERING (AWD)	198
	202-5710	1	FILM-IDENTIFICATION (FUSE PANEL)	
	231-9352	1	FILM-IDENTIFICATION (FUSE PANEL)	
	238-8550	1	PUMP GP-METERING	
	227-4709	1	KIT-SEAL (STEERING METERING PUMP)	

Y-SEPARATE ILLUSTRATION

<END>

111-7907 DRIVE GP-FLEXIBLE COUPLING

S/N: FDP18400-UP

PART OF 185-7585, 185-7586 TRANSMISSION AR-DIRECT DRIVE, 185-7587 TRANSMISSION AR-POWER SHIFT

AN ATTACHMENT

SMCS-3252 **i00512643**

NOTE	REF NO	GRAPHIC REF	PART NUMBER	QTY	PART NAME 1 2 3 4 5 6 (PRODUCT LEVEL)	SEE PAGE
M	1	1	**8T-4200**	8	BOLT (M8X1.25X16MM)	
M	2	1	**6V-8455**	6	BOLT (M10X1.5X16MM)	
	3	1	**117-9713**	1	PLATE-CONVERTER REINFORCEMENT	
	4	1	**8T-4224**	8	WASHER-HARD (2MM THK)	
	5	1	**111-7906**	1	PLATE-CONVERTER DRIVE	

M-METRIC PART

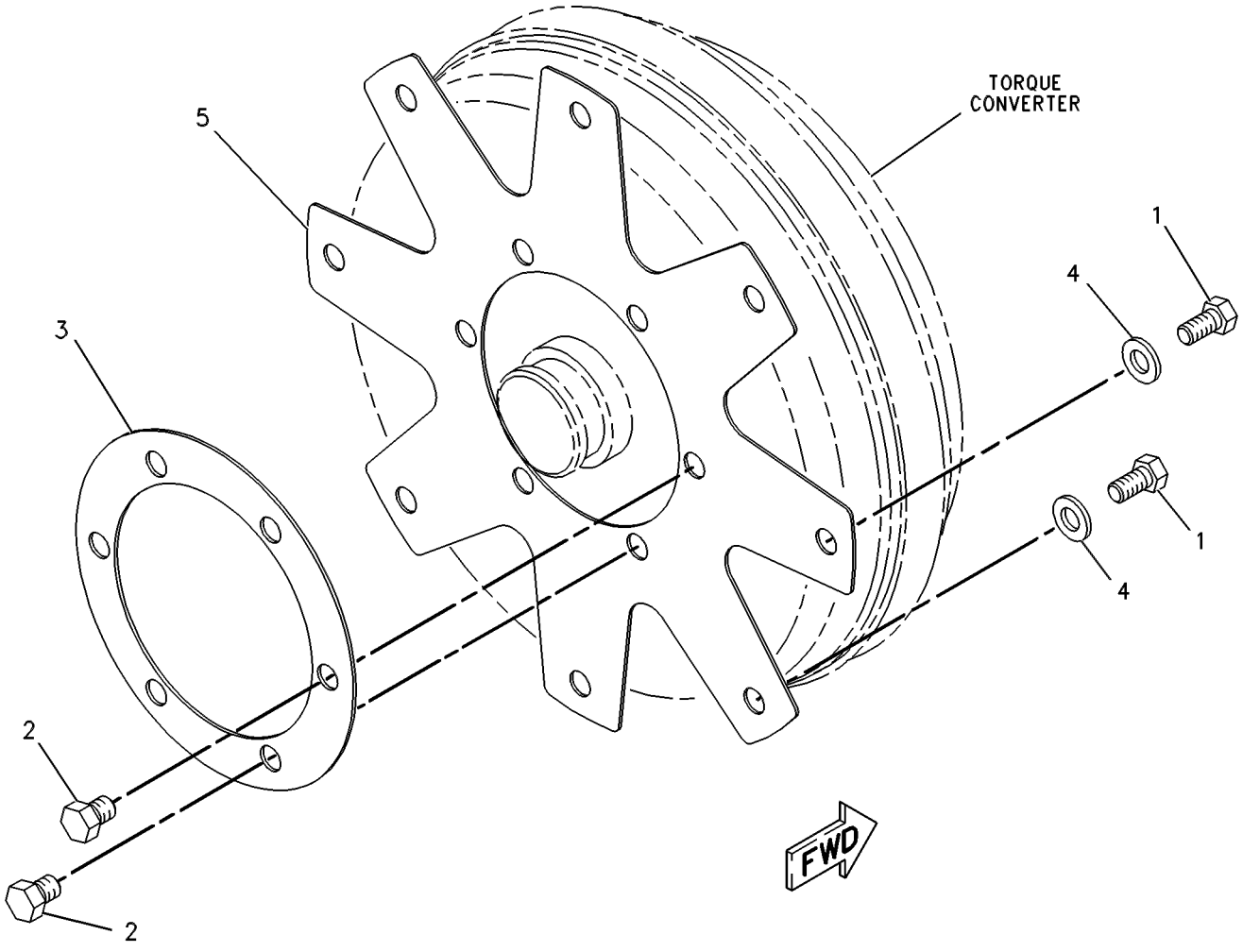

GRAPHIC #1 **<END>** g00131506

8Y-7483 FILLER GP-POWER TRAIN OIL

S/N: FDP18400-UP
ALL WHEEL DRIVE
PART OF 192-4661, 192-4662, 192-4665 POWER TRAIN AR
AN ATTACHMENT

SMCS-3005, 3081 **i01797055**

NOTE	REF NO	GRAPHIC REF	PART NUMBER	QTY	PART NAME 1 2 3 4 5 6 (PRODUCT LEVEL)	SEE PAGE
	1	1	**3J-1907**	2	SEAL-O-RING	
	2	1	**6V-0852**	2	CAP-DUST	
	3	1	**6V-3965**	2	FITTING AS	
	4	1	**7C-8246**	1	SPACER (10.5X20X24MM THK)	
	5	1	**104-8566**	1	GAUGE AS	
	6	1	**112-6219**	1	BRACKET AS	
	7	1	**125-0851**	1	TUBE AS	
	8	1	**146-1816**	1	BRACKET AS	
M	9	1	**148-1899**	1	BOLT	
	10	1	*150-3065*	1	ADAPTER GP	
		1	**3J-1907**	1	SEAL-O-RING	
		1	**6V-0484**	1	FITTING	
	11	1	**4J-0522**	1	SEAL-O-RING	
	12	1	**5P-7854**	2	CLIP	
	13	1	**8T-4121**	4	WASHER-HARD (11X21X2.5MM THK)	
M	14	1	**8T-4133**	1	NUT (M10X1.5 THD)	
M	15	1	**8T-4137**	3	BOLT (M10X1.5X20MM)	
M	16	1	**8T-4192**	2	BOLT (M12X1.75X25MM)	
	17	1	**8T-4223**	5	WASHER-HARD (13.5X25.5X3MM THK)	
M	18	1	**8T-4956**	2	BOLT (M12X1.75X35MM)	

M-METRIC PART

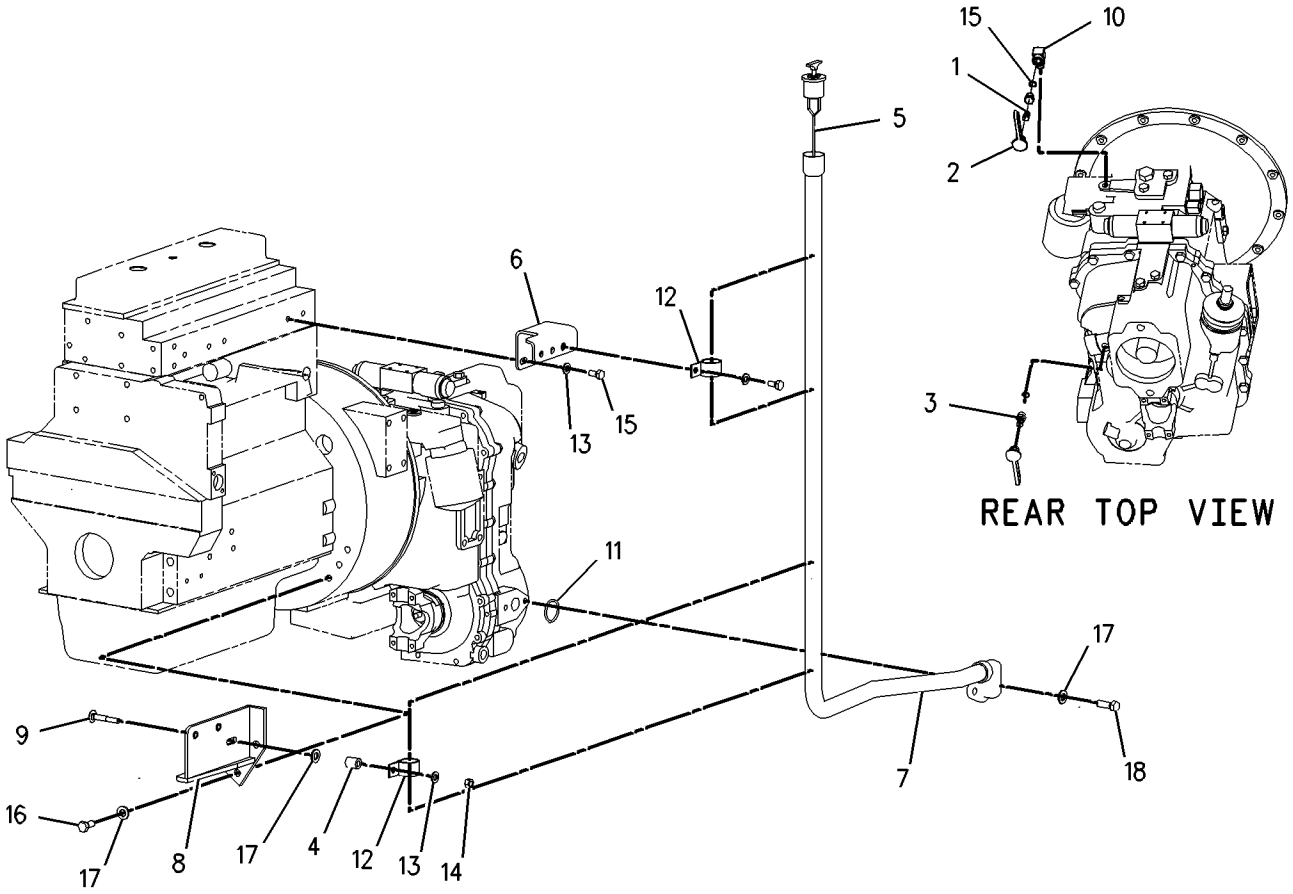

GRAPHIC #1 **<END>** g00920166

136-3110 FILLER GP-POWER TRAIN OIL

S/N: FDP18400-UP
TWO WHEEL DRIVE
PART OF 192-4663, 192-4666, 198-4095 POWER TRAIN AR
AN ATTACHMENT

SMCS-3005, 3081 **i01797068**

NOTE	REF NO	GRAPHIC REF	PART NUMBER	QTY	PART NAME 1 2 3 4 5 6 (PRODUCT LEVEL)	SEE PAGE
	1	1	**4J-0522**	2	SEAL-O-RING	
	2	1	**5P-7854**	2	CLIP	
	3	1	**7C-8246**	1	SPACER (10.5X20X24MM THK)	
	4	1	**104-8566**	1	GAUGE AS	
	5	1	**112-6219**	1	BRACKET AS	
	6	1	**146-1816**	1	BRACKET AS	
	7	1	**125-0851**	1	TUBE AS	
	8	1	**136-3112**	1	SPACER	
	9	1	**8T-4121**	4	WASHER-HARD (11X21X2.5MM THK)	
M	10	1	**8T-4133**	1	NUT (M10X1.5 THD)	
M	11	1	**8T-4137**	3	BOLT (M10X1.5X20MM)	
M	12	1	**8T-4192**	2	BOLT (M12X1.75X25MM)	
	13	1	**8T-4223**	5	WASHER-HARD (13.5X25.5X3MM THK)	
M	14	1	**8T-4194**	2	BOLT (M12X1.75X50MM)	
M	15	1	**148-1899**	1	BOLT (M10X1.50X60MM)	
	16	1	**3J-1907**	2	SEAL-O-RING	
	17	1	**6V-0852**	2	CAP-DUST	
	18	1	**6V-3965**	2	FITTING AS	
	19	1	*150-3065*	1	ADAPTER GP	
		1	**3J-1907**	1	SEAL-O-RING	
		1	**6V-0484**	1	FITTING	

M-METRIC PART

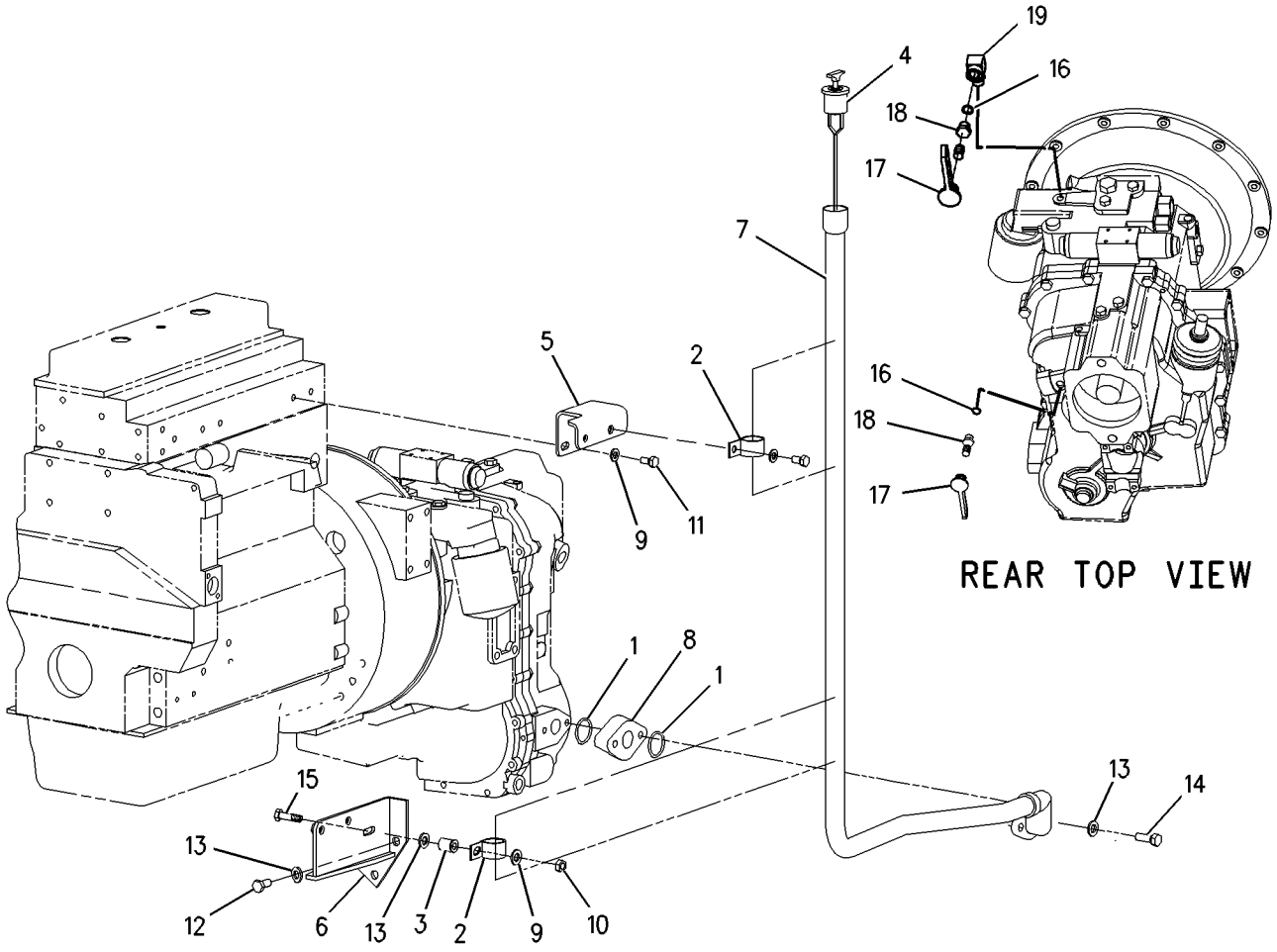

GRAPHIC #1 **<END>** g00920171

138-7381 FILLER GP-POWER TRAIN OIL

S/N: FDP18400-UP
POWER SHIFT
PART OF 192-4659, 192-4664 POWER TRAIN AR
AN ATTACHMENT

SMCS-3005, 3081 **i01645222**

NOTE	REF NO	GRAPHIC REF	PART NUMBER	QTY	PART NAME 1 2 3 4 5 6 (PRODUCT LEVEL)	SEE PAGE
	1	1	**6V-0852**	2	CAP-DUST	
	2	1	**6V-3965**	2	FITTING AS	
	3	1	**7C-8246**	1	SPACER (10.5X20X24MM THK)	
	4	1	**112-6219**	1	BRACKET AS	
	5	1	**138-7378**	1	GAUGE AS-OIL LEVEL	
	6	1	**138-7380**	1	TUBE AS	
	7	1	**146-1816**	1	BRACKET AS	
M	8	1	**148-1899**	1	BOLT	
	9	1	**3J-1907**	2	SEAL-O-RING	
	10	1	**4J-0522**	1	SEAL-O-RING	
	11	1	**5P-7854**	2	CLIP	
	12	1	**8T-4121**	4	WASHER-HARD (11X21X2.5MM THK)	
M	13	1	**8T-4133**	1	NUT (M10X1.5 THD)	
M	14	1	**8T-4137**	3	BOLT (M10X1.5X20MM)	
M	15	1	**8T-4192**	2	BOLT (M12X1.75X25MM)	
	16	1	**8T-4223**	5	WASHER-HARD (13.5X25.5X3MM THK)	
M	17	1	**8T-4956**	2	BOLT (M12X1.75X35MM)	

M-METRIC PART

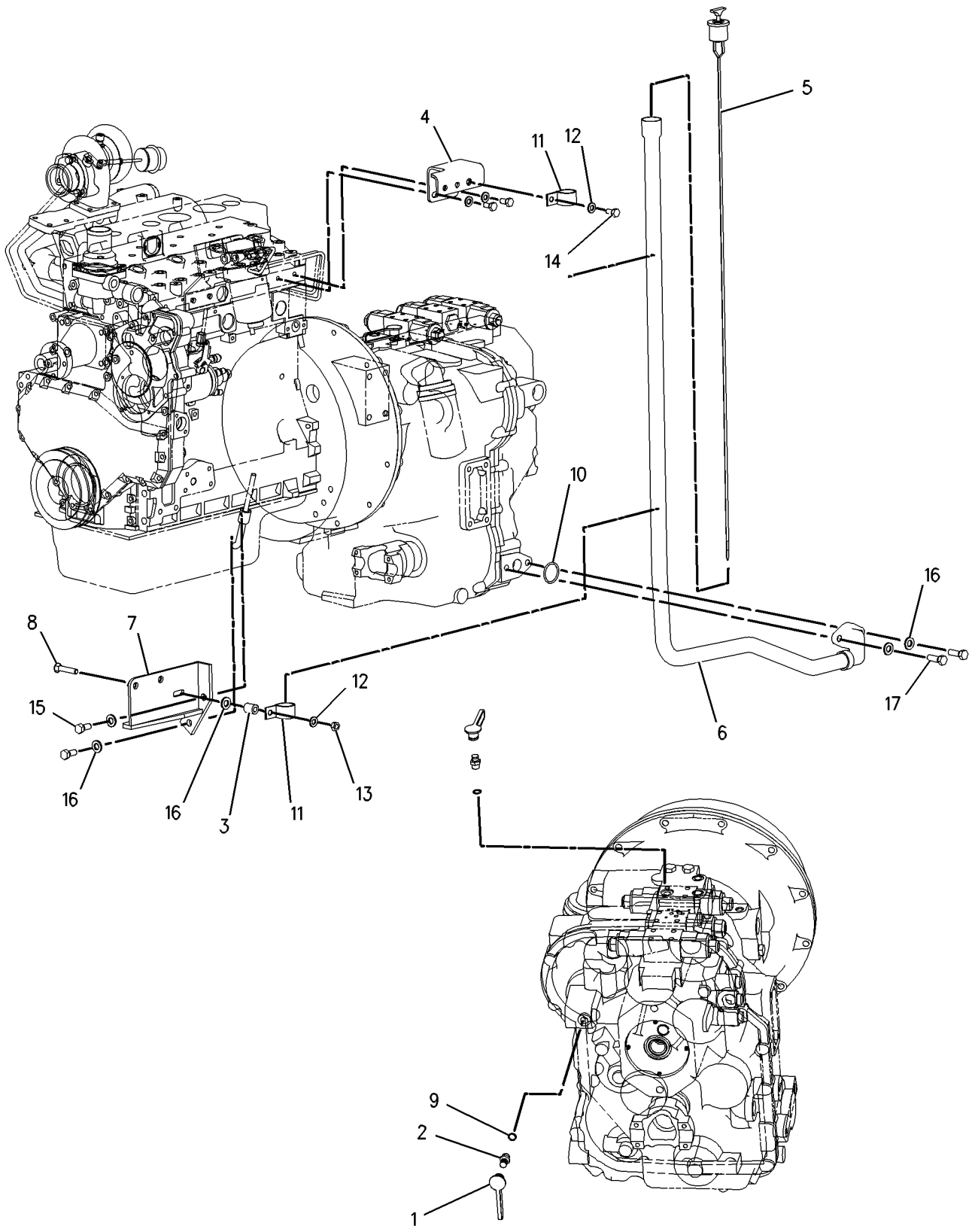

GRAPHIC #1 **<END>** g00759115

234-3387 FILLER GP-POWER TRAIN OIL

S/N: FDP18400-UP
PART OF 214-6955, 214-6958, 214-6976 POWER TRAIN AR
AN ATTACHMENT

SMCS-3005, 3081 **i02013145**

NOTE	REF NO	GRAPHIC REF	PART NUMBER	QTY	PART NAME 1 2 3 4 5 6 (PRODUCT LEVEL)	SEE PAGE
	1	1	**9P-1872**	1	SPACER	
	2	1	**136-3112**	1	SPACER	
	3	1	**234-9613**	1	TUBE AS	
	4	1	**236-7295**	1	GAUGE GP-OIL LEVEL (DIPSTICK)	
	5	1	**4J-0522**	2	SEAL-O-RING	
	6	1	**8D-9947**	1	CLIP	
	7	1	**8S-0023**	1	CLIP (SLOT)	
	8	1	**8S-0024**	1	CLIP (TAB)	
	9	1	**8T-4121**	1	WASHER-HARD (11X21X2.5-MM THK)	
M	10	1	**8T-4136**	1	BOLT (M10X1.5X25-MM)	
M	11	1	**8T-4194**	2	BOLT (M12X1.75X50-MM)	
	12	1	**8T-4223**	3	WASHER-HARD (13.5X25.5X3-MM THK)	
M	13	1	**8T-6868**	1	BOLT (M12X1.75X80-MM)	

M-METRIC PART

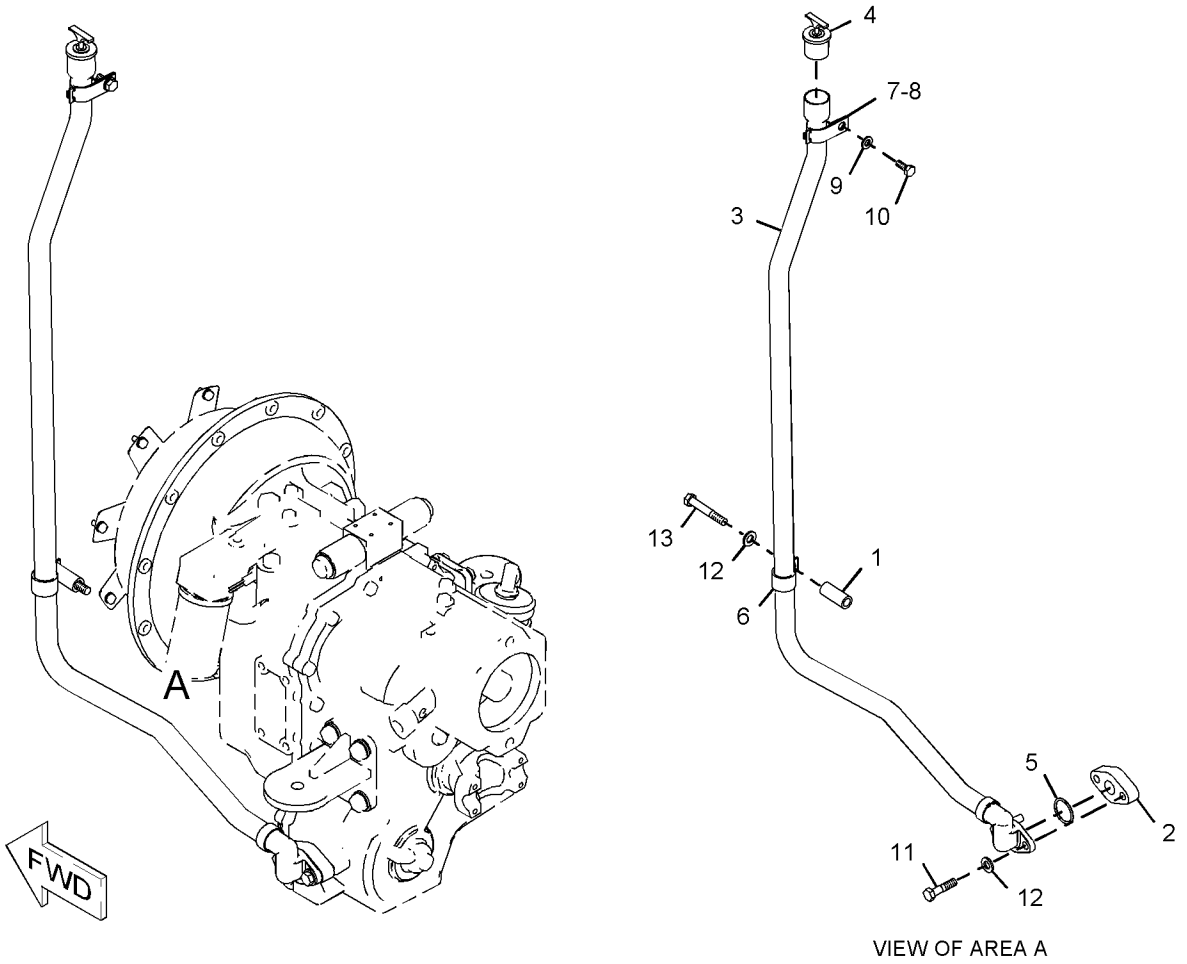

VIEW OF AREA A

GRAPHIC #1 **<END>** g01035251

234-7527 FILLER GP-POWER TRAIN OIL

S/N: FDP18400-UP

PART OF 214-6956, 214-6959, 214-6977 POWER TRAIN AR

AN ATTACHMENT

SMCS-3005, 3081 **i02013157**

NOTE	REF NO	GRAPHIC REF	PART NUMBER	QTY	PART NAME 1 2 3 4 5 6 (PRODUCT LEVEL)	SEE PAGE
	1	1	**9P-1872**	1	SPACER	
	2	1	**234-9613**	1	TUBE AS	
	3	1	**236-7295**	1	GAUGE GP-OIL LEVEL (DIPSTICK)	
	4	1	**4J-0522**	1	SEAL-O-RING	
	5	1	**8D-9947**	1	CLIP	
	6	1	**8S-0023**	1	CLIP (SLOT)	
	7	1	**8S-0024**	1	CLIP (TAB)	
	8	1	**8T-4121**	1	WASHER-HARD (11X21X2.5-MM THK)	
M	9	1	**8T-4136**	1	BOLT (M10X1.5X25-MM)	
	10	1	**8T-4223**	3	WASHER-HARD (13.5X25.5X3-MM THK)	
M	11	1	**8T-4956**	2	BOLT (M12X1.75X35-MM)	
M	12	1	**8T-6868**	1	BOLT (M12X1.75X80-MM)	

M-METRIC PART

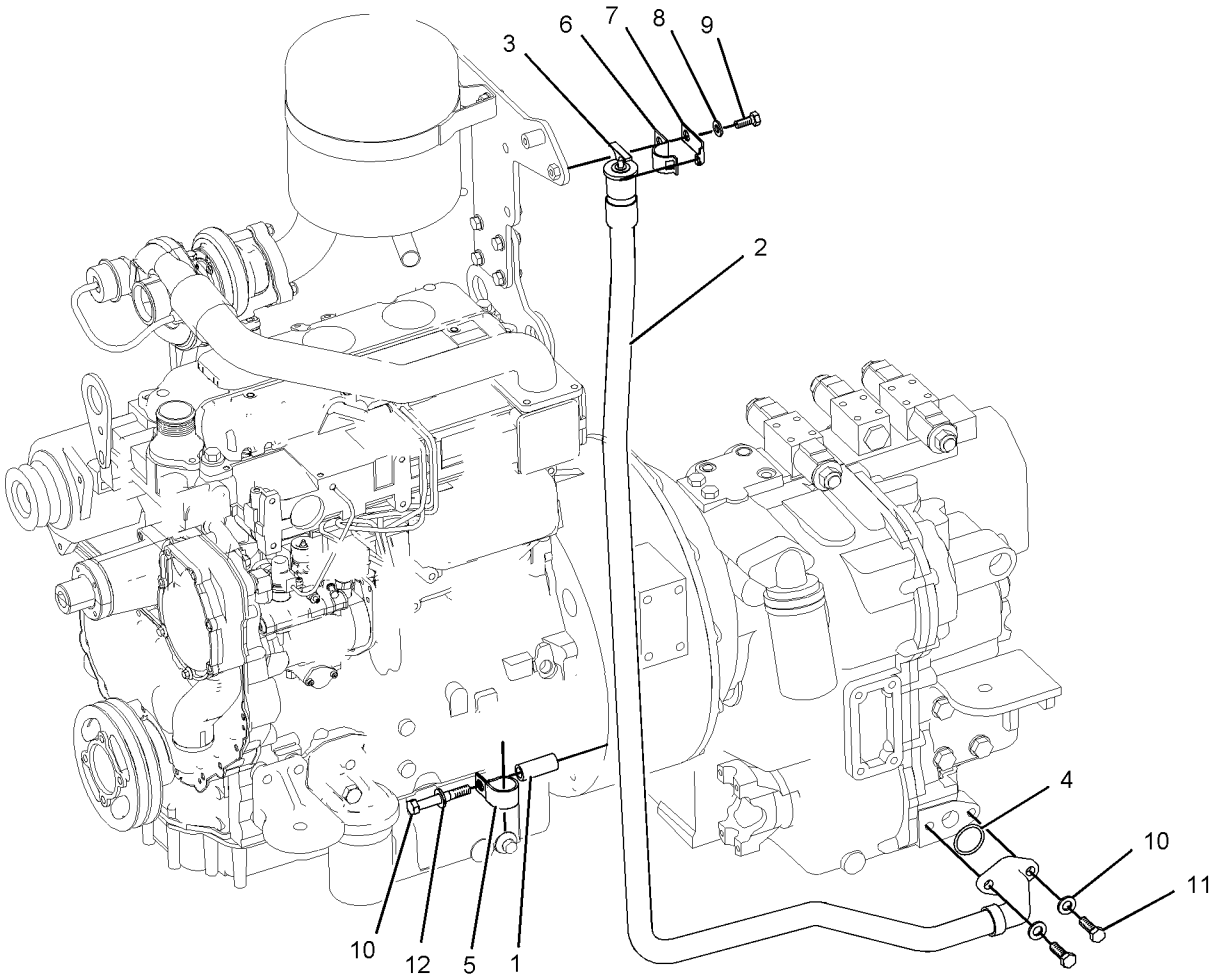

GRAPHIC #1 **<END>** g01042510

234-7528 FILLER GP-POWER TRAIN OIL

S/N: FDP18400-UP
PART OF 214-6957, 214-6978 POWER TRAIN AR
AN ATTACHMENT

SMCS-3005, 3081 **i02020485**

NOTE	REF NO	GRAPHIC REF	PART NUMBER	QTY	PART NAME 1 2 3 4 5 6 (PRODUCT LEVEL)	SEE PAGE
	1	1	**9P-1872**	1	SPACER (14.27X22.22X53-MM THK)	
	2	1	**236-7295**	1	GAUGE GP-OIL LEVEL (DIPSTICK)	
M	3	1	**8T-6868**	1	BOLT (M12X1.75X80-MM)	
	4	1	**4J-0522**	1	SEAL-O-RING	
	5	1	**8D-9947**	1	CLIP	
	6	1	**8S-0023**	1	CLIP (SLOT)	
	7	1	**8S-0024**	1	CLIP (TAB)	
	8	1	**8T-4121**	1	WASHER-HARD (11X21X2.5-MM THK)	
M	9	1	**8T-4136**	1	BOLT (M10X1.5X25-MM)	
	10	1	**8T-4223**	3	WASHER-HARD (13.5X25.5X3-MM THK)	
M	11	1	**8T-4956**	2	BOLT (M12X1.75X35-MM)	

M-METRIC PART

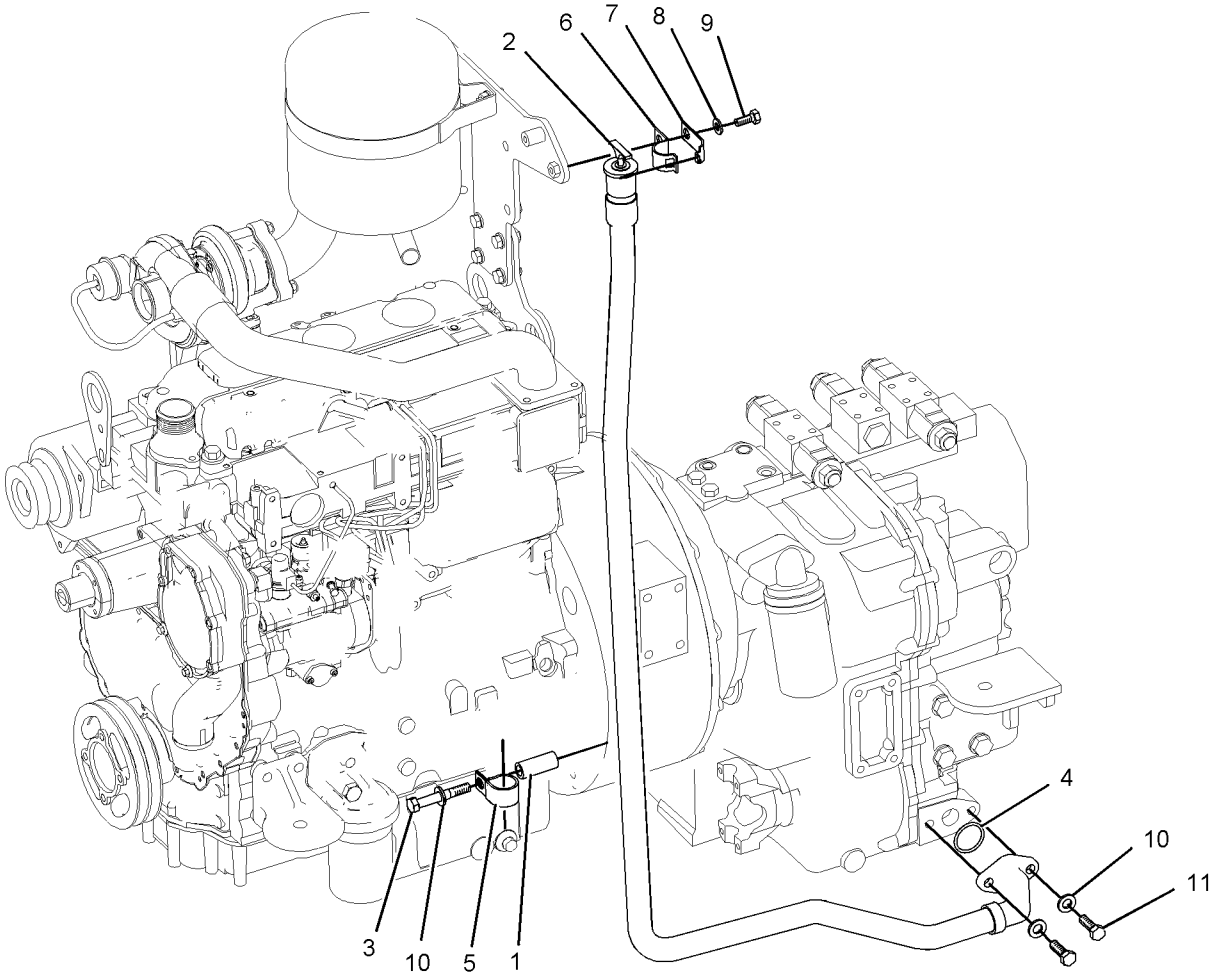

GRAPHIC #1 **<END>** g01030592

231-0683 FLANGE GP-WHEEL

S/N: FDP18400-UP
PART OF 189-1834 AXLE GP-FRONT
AN ATTACHMENT

SMCS-4057 **i02013085**

NOTE	REF NO	GRAPHIC REF	PART NUMBER	QTY	PART NAME 1 2 3 4 5 6 (PRODUCT LEVEL)	SEE PAGE
	1	1	**207-4263**	1	BEARING AS	
	2	1	**207-4267**	1	BEARING AS	
	3	1	**238-5228**	1	HUB GP-WHEEL	
	3A	1	**231-0687**	8	STUD	
	4	1	**231-0688**	1	SEAL	

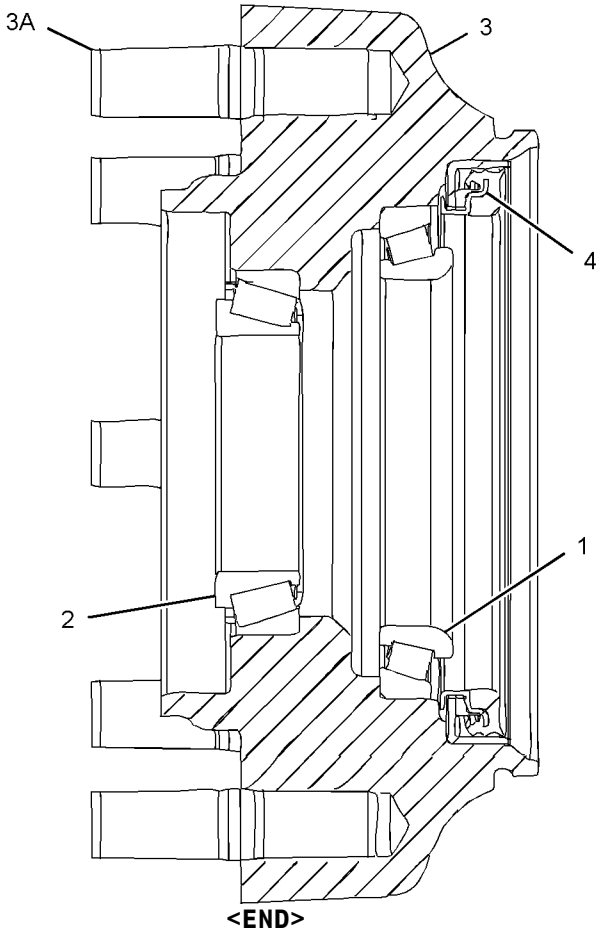

GRAPHIC #1 g01042234

<END>

209-9884 HOUSING & FLANGE GP-AXLE—RH

S/N: FDP18400-UP
PART OF 168-7446 AXLE GP-DRIVE & STEERING
AN ATTACHMENT

SMCS-4057, 4234 **i01918346**

NOTE	REF NO	GRAPHIC REF	PART NUMBER	QTY	PART NAME 1 2 3 4 5 6 (PRODUCT LEVEL)	SEE PAGE
	1	1	**217-2877**	1	HOUSING GP-AXLE (RH)	
	1A	1	**199-0648**	1	NUT-JAM	
	1B	1	**198-7814**	1	BOLT (M16X100MM)	
	1C	1	**209-7460**	1	BUSHING	
	1D	1	**209-7465**	1	SEAL	
	1E	1	**231-0700**	1	HOUSING	
	2	1	*231-0703*	1	FLANGE AS	
	2A	1	**2S-0480**	2	CUP-BEARING (TAPERED ROLLER BEARING)	
	2B	1	**178-8608**	2	CONE	
	2C	1	**226-4346**	8	STUD-WHEEL	
	2D	1	**229-5092**	1	SEAL	
	3	1	**229-5080**	1	NUT-SPANNER	
	4	1	**229-5083**	1	PIN	
	5	1	**229-5085**	1	SPACER	
	6	1	**229-5088**	1	GEAR GP-RING (60 TEETH)	
	7	1	**3E-4363**	1	RING-RETAINING	
					AVAILABLE REPAIR KIT(S):	
			231-0676	1	KIT-FLANGE	
					(INCLUDES STUDS)	

209-9884 HOUSING & FLANGE GP-AXLE *(contd.)* **i01918346**

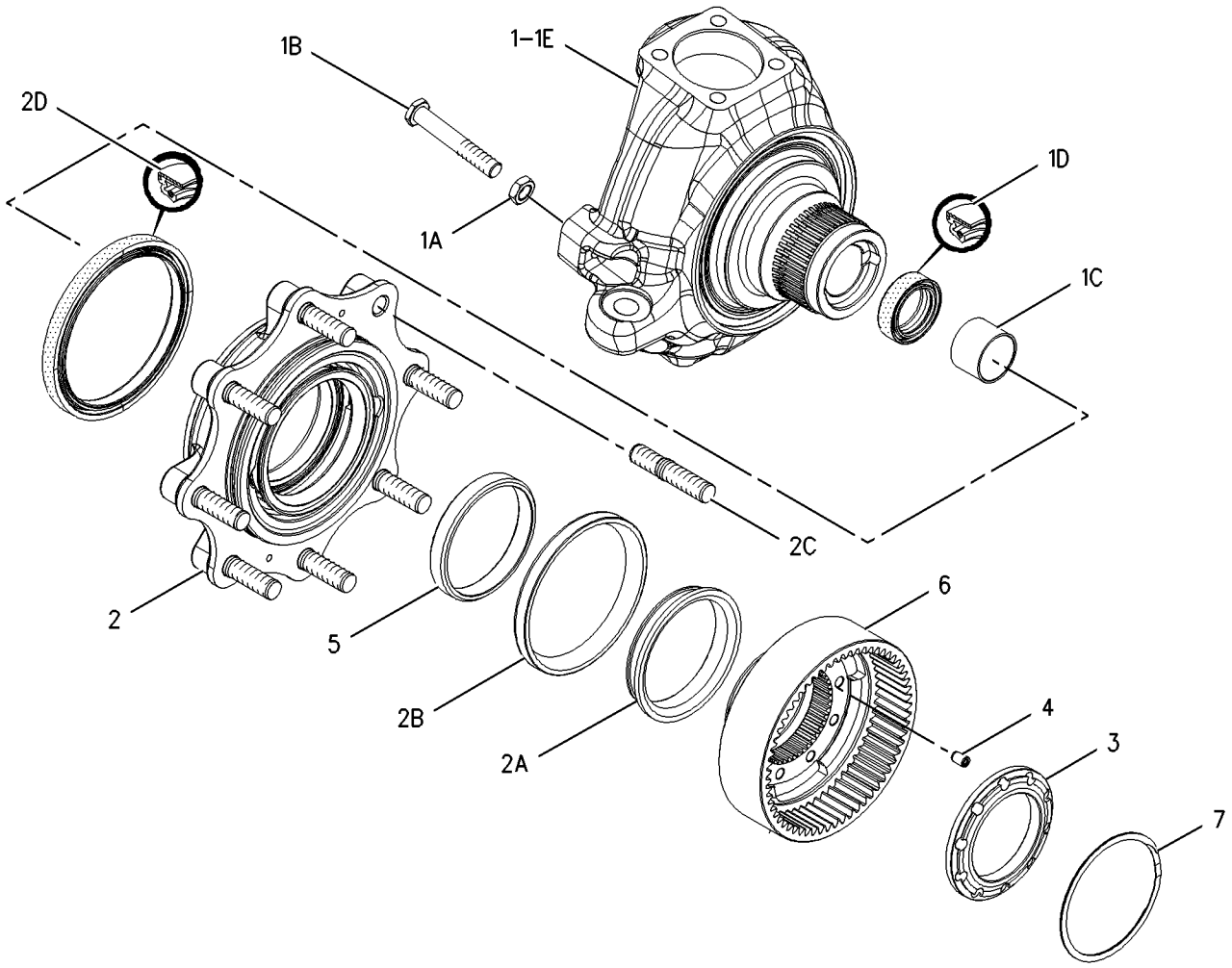

GRAPHIC #1 **<END>** g00998951

209-9885 HOUSING & FLANGE GP-AXLE—LH

S/N: FDP18400-UP
PART OF 168-7446 AXLE GP-DRIVE & STEERING
AN ATTACHMENT

SMCS-4057, 4234 **i01918352**

NOTE	REF NO	GRAPHIC REF	PART NUMBER	QTY	PART NAME 1 2 3 4 5 6 (PRODUCT LEVEL)	SEE PAGE
	1	1	**217-2878**	1	HOUSING GP-AXLE (LH)	
	1A	1	**198-7814**	1	BOLT (M16X100MM)	
	1B	1	**199-0648**	1	NUT-JAM	
	1C	1	**209-7460**	1	BUSHING	
	1D	1	**209-7465**	1	SEAL	
	1E	1	**231-0701**	1	HOUSING	
	2	1	*231-0703*	1	FLANGE AS	
	2A	1	**2S-0480**	2	CUP-BEARING (TAPERED ROLLER BEARING)	
	2B	1	**178-8608**	2	CONE	
	2C	1	**226-4346**	8	STUD-WHEEL	
	2D	1	**229-5092**	1	SEAL	
	3	1	**229-5080**	1	NUT-SPANNER	
	4	1	**229-5083**	1	PIN	
	5	1	**229-5085**	1	SPACER	
	6	1	**229-5088**	1	GEAR GP-RING (60 TEETH)	
	7	1	**3E-4363**	1	RING-RETAINING	
					AVAILABLE REPAIR KIT(S):	
			231-0676	1	KIT-FLANGE	
					(INCLUDES STUD)	

209-9885 HOUSING & FLANGE GP-AXLE *(contd.)* **i01918352**

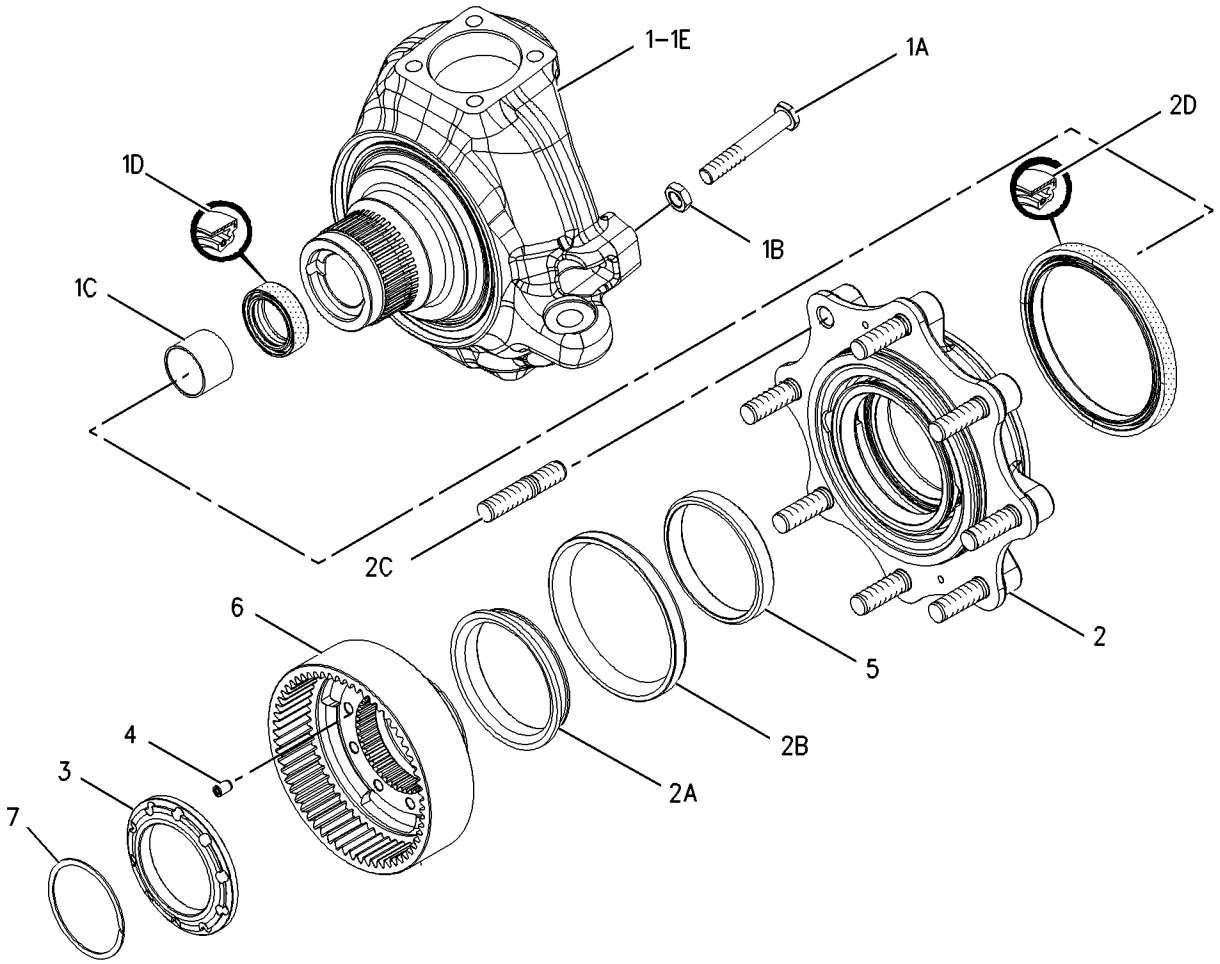

GRAPHIC #1 **<END>** g00998962

210-5924 PLANETARY GP-FINAL DRIVE

S/N: FDP18400-UP
PART OF 168-7446 AXLE GP-DRIVE & STEERING
AN ATTACHMENT

SMCS-4050 **i01946426**

NOTE	REF NO	GRAPHIC REF	PART NUMBER	QTY	PART NAME 1 2 3 4 5 6 (PRODUCT LEVEL)	SEE PAGE
	1	1	**210-5931**	4	RETAINER	
	2	1	**210-5934**	4	GEAR-PLANET	
	3	1	**095-0924**	4	RING-RETAINING	
	4	1	**209-7466**	1	KIT-PLANETARY CARRIER	
					(INCLUDES PLUG AND SHAFTS)	
	5	1	**219-8783**	23	KIT-ROLLER BEARING	
					(INCLUDES NEEDLES)	

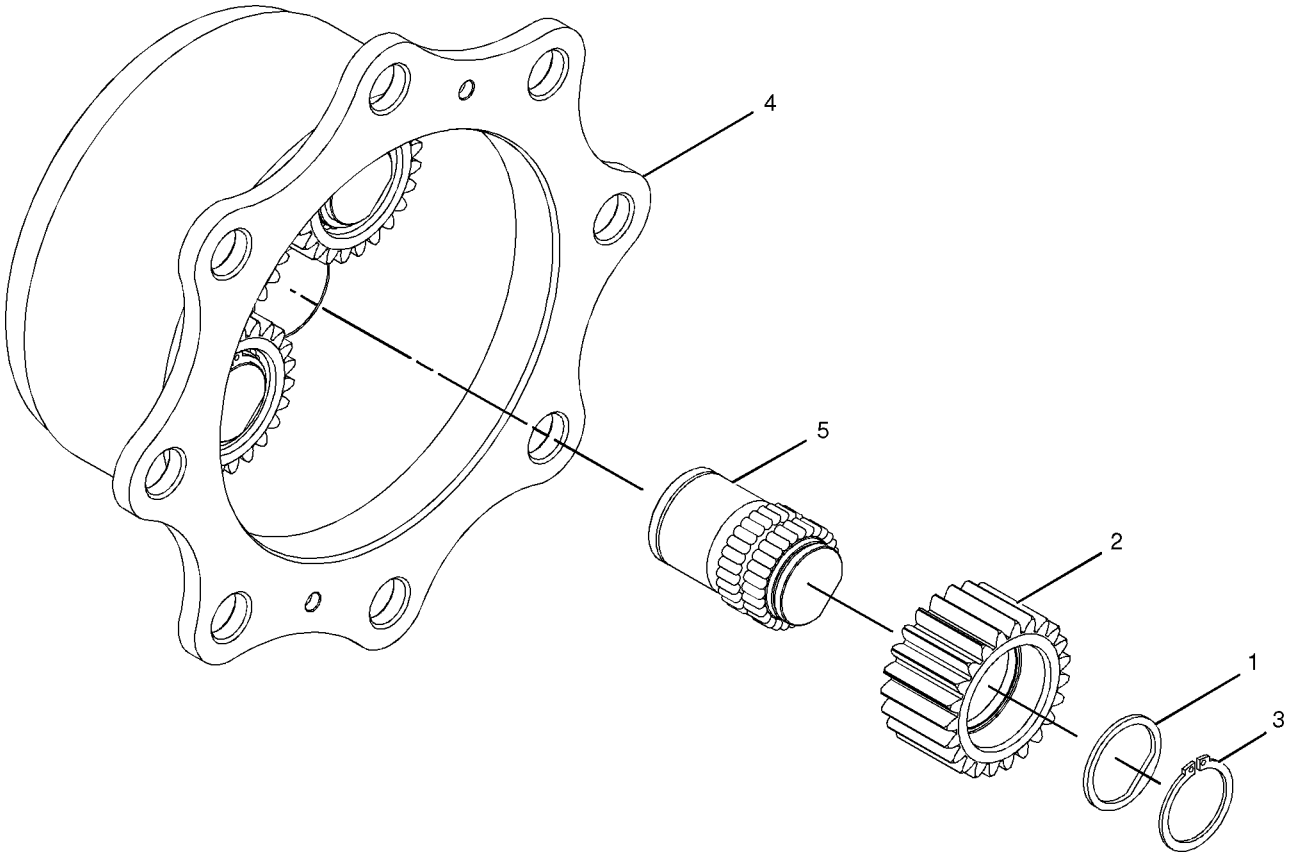

GRAPHIC #1 **<END>** g01013213

POWER TRAIN

184-7970 POWER TRAIN AR–2 WHEEL DRIVE

S/N: FDP18400-UP

PART OF 214-6886 COMMON AR

SMCS-3000, 4000 **i01439915**

NOTE	PART NUMBER	QTY	PART NAME 1 2 3 4 5 6 (PRODUCT LEVEL)	SEE PAGE
Y	*191-9114*	1	CONTROL GP-DIFFERENTIAL LOCK	209
Y	*184-6570*	1	CONTROL GP-PARKING BRAKE	287
Y	*165-6918*	1	CONTROL GP-SERVICE BRAKE	288
Y	*184-7898*	1	MOUNTING GP-INSTRUMENT PANEL	814
Y	*113-1151*	1	SHAFT GP-DRIVE	240

Y-SEPARATE ILLUSTRATION

<END>

192-4659 POWER TRAIN AR–ALL WHEEL DRIVE, AUTOSHIFT

S/N: FDP18400-UP

AN ATTACHMENT

SMCS-3000, 4000 **i01932094**

NOTE	PART NUMBER	QTY	PART NAME 1 2 3 4 5 6 (PRODUCT LEVEL)	SEE PAGE
Y	*188-0859*	1	BOX GP-BATTERY	305
Y	*183-4996*	1	CONSOLE GP-FRONT	762
Y	*164-1142*	1	DUCT GP-AIR	788
Y	*138-7381*	1	FILLER GP-POWER TRAIN OIL	220
Y	*143-0789*	1	LINES GP-POWER TRAIN COOLER	61
Y	*143-0788*	1	MOUNTING GP-ENGINE & TMSN	31
Y	*185-3525*	1	MOUNTING GP-INSTRUMENT PANEL	815
Y	*202-5732*	1	SHAFT GP-DRIVE	241
Y	*209-4174*	1	STABILIZER AR	514
Y	*185-7587*	1	TRANSMISSION AR-POWER SHIFT	246
Y	*185-8809*	1	WIRING GP-AUTOSHIFT	145

Y-SEPARATE ILLUSTRATION

<END>

192-4661 POWER TRAIN AR–ALL WHEEL DRIVE, STANDARD SHIFT

S/N: FDP18400-UP

AN ATTACHMENT

SMCS-3000, 4000 **i01909580**

NOTE	PART NUMBER	QTY	PART NAME 1 2 3 4 5 6 (PRODUCT LEVEL)	SEE PAGE
Y	*188-0860*	1	BOX GP-BATTERY	306
Y	*183-4995*	1	CONSOLE GP-FRONT	761
Y	*164-1130*	1	CONTROL GP-TRANSMISSION	210
Y	*164-1141*	1	DUCT GP-AIR	786
Y	*8Y-7483*	1	FILLER GP-POWER TRAIN OIL	216
Y	*143-0786*	1	LINES GP-POWER TRAIN COOLER	59
Y	*143-0782*	1	MOUNTING GP-ENGINE & TMSN	30
Y	*185-3525*	1	MOUNTING GP-INSTRUMENT PANEL	815
Y	*202-5733*	1	SHAFT GP-DRIVE	242
Y	*209-4172*	1	STABILIZER AR	514
Y	*185-7586*	1	TRANSMISSION AR-DIRECT DRIVE	246

Y-SEPARATE ILLUSTRATION

<END>

192-4662 POWER TRAIN AR–ALL WHEEL DRIVE, STANDARD SHIFT

S/N: FDP18400-UP

AN ATTACHMENT

SMCS-3000, 4000 **i01909613**

NOTE	PART NUMBER	QTY	PART NAME 1 2 3 4 5 6 (PRODUCT LEVEL)	SEE PAGE
Y	*188-0860*	1	BOX GP-BATTERY	306
Y	*183-4995*	1	CONSOLE GP-FRONT	761
Y	*164-1130*	1	CONTROL GP-TRANSMISSION	210
Y	*164-1141*	1	DUCT GP-AIR	786
Y	*8Y-7483*	1	FILLER GP-POWER TRAIN OIL	216
Y	*143-0786*	1	LINES GP-POWER TRAIN COOLER	59
Y	*143-0782*	1	MOUNTING GP-ENGINE & TMSN	30
Y	*185-3525*	1	MOUNTING GP-INSTRUMENT PANEL	815
Y	*202-5733*	1	SHAFT GP-DRIVE (FRONT)	242
Y	*209-4165*	1	STABILIZER AR	514
Y	*185-7586*	1	TRANSMISSION AR-DIRECT DRIVE	246

Y-SEPARATE ILLUSTRATION

<END>

192-4663 POWER TRAIN AR–2 WHEEL DRIVE, STANDARD SHIFT

S/N: FDP18400-UP

AN ATTACHMENT

SMCS-3000, 4000 **i01705546**

NOTE	PART NUMBER	QTY	PART NAME 1 2 3 4 5 6 (PRODUCT LEVEL)	SEE PAGE
Y	*188-0860*	1	BOX GP-BATTERY	306
Y	*183-4995*	1	CONSOLE GP-FRONT	761
Y	*164-1130*	1	CONTROL GP-TRANSMISSION	210
Y	*164-1141*	1	DUCT GP-AIR	786
Y	*136-3110*	1	FILLER GP-POWER TRAIN OIL	218
Y	*143-0786*	1	LINES GP-POWER TRAIN COOLER	59
Y	*143-0782*	1	MOUNTING GP-ENGINE & TMSN	30
Y	*185-3525*	1	MOUNTING GP-INSTRUMENT PANEL	815
Y	*209-4172*	1	STABILIZER AR	514
Y	*185-7585*	1	TRANSMISSION AR-DIRECT DRIVE	246

Y-SEPARATE ILLUSTRATION

<END>

192-4664 POWER TRAIN AR–ALL WHEEL DRIVE, AUTOSHIFT

S/N: FDP18400-UP

AN ATTACHMENT

SMCS-3000, 4000 **i01909623**

NOTE	PART NUMBER	QTY	PART NAME 1 2 3 4 5 6 (PRODUCT LEVEL)	SEE PAGE
Y	*188-0859*	1	BOX GP-BATTERY	305
	164-1146	1	CONSOLE-FRONT	
Y	*138-7381*	1	FILLER GP-POWER TRAIN OIL	220
Y	*143-0789*	1	LINES GP-POWER TRAIN COOLER	61
Y	*143-0788*	1	MOUNTING GP-ENGINE & TMSN	31
Y	*185-3525*	1	MOUNTING GP-INSTRUMENT PANEL	815
Y	*202-5732*	1	SHAFT GP-DRIVE	241
Y	*209-4174*	1	STABILIZER AR	514
Y	*185-7587*	1	TRANSMISSION AR-POWER SHIFT	246
Y	*185-8809*	1	WIRING GP-AUTOSHIFT	145

Y-SEPARATE ILLUSTRATION

<END>

POWER TRAIN

192-4665 POWER TRAIN AR–ALL WHEEL DRIVE, STANDARD SHIFT

S/N: FDP18400-UP

AN ATTACHMENT

SMCS-3000, 4000 **i01919966**

NOTE	PART NUMBER	QTY	PART NAME 1 2 3 4 5 6 (PRODUCT LEVEL)	SEE PAGE
Y	*188-0860*	1	BOX GP-BATTERY	306
	164-1105	1	CONSOLE-FRONT	
Y	*164-1130*	1	CONTROL GP-TRANSMISSION	210
Y	*8Y-7483*	1	FILLER GP-POWER TRAIN OIL	216
Y	*143-0786*	1	LINES GP-POWER TRAIN COOLER	59
Y	*143-0782*	1	MOUNTING GP-ENGINE & TMSN	30
Y	*185-3525*	1	MOUNTING GP-INSTRUMENT PANEL	815
Y	*202-5733*	1	SHAFT GP-DRIVE (FRONT)	242
Y	*209-4172*	1	STABILIZER AR	514
Y	*185-7586*	1	TRANSMISSION AR-DIRECT DRIVE	246

Y-SEPARATE ILLUSTRATION

<END>

192-4666 POWER TRAIN AR–2 WHEEL DRIVE, STANDARD SHIFT

S/N: FDP18400-UP

AN ATTACHMENT

SMCS-3000, 4000 **i01705576**

NOTE	PART NUMBER	QTY	PART NAME 1 2 3 4 5 6 (PRODUCT LEVEL)	SEE PAGE
Y	*188-0860*	1	BOX GP-BATTERY	306
Y	*164-1130*	1	CONTROL GP-TRANSMISSION	210
Y	*136-3110*	1	FILLER GP-POWER TRAIN OIL	218
Y	*143-0786*	1	LINES GP-POWER TRAIN COOLER	59
Y	*143-0782*	1	MOUNTING GP-ENGINE & TMSN	30
Y	*185-3525*	1	MOUNTING GP-INSTRUMENT PANEL	815
Y	*209-4172*	1	STABILIZER AR	514
Y	*185-7585*	1	TRANSMISSION AR-DIRECT DRIVE	246
	164-1105	1	CONSOLE-FRONT	

Y-SEPARATE ILLUSTRATION

<END>

POWER TRAIN

198-4095 POWER TRAIN AR–2 WHEEL DRIVE, STANDARD SHIFT

S/N: FDP18400-UP

AN ATTACHMENT

SMCS-3000, 4000 **i01705608**

NOTE	PART NUMBER	QTY	PART NAME 1 2 3 4 5 6 (PRODUCT LEVEL)	SEE PAGE
Y	*188-0860*	1	BOX GP-BATTERY	306
Y	*183-4995*	1	CONSOLE GP-FRONT	761
Y	*164-1130*	1	CONTROL GP-TRANSMISSION	210
Y	*164-1141*	1	DUCT GP-AIR	786
Y	*136-3110*	1	FILLER GP-POWER TRAIN OIL	218
Y	*143-0786*	1	LINES GP-POWER TRAIN COOLER	59
Y	*143-0782*	1	MOUNTING GP-ENGINE & TMSN	30
Y	*185-3525*	1	MOUNTING GP-INSTRUMENT PANEL	815
Y	*209-4165*	1	STABILIZER AR	514
Y	*185-7585*	1	TRANSMISSION AR-DIRECT DRIVE	246

Y-SEPARATE ILLUSTRATION

<END>

214-6955 POWER TRAIN AR–2 WHEEL DRIVE, STANDARD SHIFT

S/N: FDP18400-UP

AN ATTACHMENT

SMCS-3000, 4000 **i01990439**

NOTE	PART NUMBER	QTY	PART NAME 1 2 3 4 5 6 (PRODUCT LEVEL)	SEE PAGE
Y	*237-6415*	1	BOX GP-BATTERY	308
	164-1105	1	CONSOLE-FRONT	
Y	*164-1130*	1	CONTROL GP-TRANSMISSION	210
Y	*237-6458*	1	DRIVE AR-BACKHOE LOADER (2WS, 2WD)	214
Y	*234-3387*	1	FILLER GP-POWER TRAIN OIL	222
Y	*143-0786*	1	LINES GP-POWER TRAIN COOLER	59
Y	*143-0782*	1	MOUNTING GP-ENGINE & TMSN	30
Y	*185-3525*	1	MOUNTING GP-INSTRUMENT PANEL	815
Y	*209-4172*	1	STABILIZER AR	514
Y	*185-7585*	1	TRANSMISSION AR-DIRECT DRIVE	246

Y-SEPARATE ILLUSTRATION

<END>

214-6956 POWER TRAIN AR—ALL WHEEL DRIVE, STANDARD SHIFT

S/N: FDP18400-UP

AN ATTACHMENT

SMCS-3000, 4000 **i01990438**

NOTE	PART NUMBER	QTY	PART NAME 1 2 3 4 5 6 (PRODUCT LEVEL)	SEE PAGE
Y	*237-6415*	1	BOX GP-BATTERY	308
	164-1105	1	CONSOLE-FRONT	
Y	*164-1130*	1	CONTROL GP-TRANSMISSION	210
Y	*237-6459*	1	DRIVE AR-BACKHOE LOADER (AWD, 2WS)	214
Y	*234-7527*	1	FILLER GP-POWER TRAIN OIL	223
Y	*143-0786*	1	LINES GP-POWER TRAIN COOLER	59
Y	*143-0782*	1	MOUNTING GP-ENGINE & TMSN	30
Y	*185-3525*	1	MOUNTING GP-INSTRUMENT PANEL	815
Y	*202-5733*	1	SHAFT GP-DRIVE	242
Y	*209-4172*	1	STABILIZER AR	514
Y	*185-7586*	1	TRANSMISSION AR-DIRECT DRIVE	246

Y-SEPARATE ILLUSTRATION

<END>

214-6957 POWER TRAIN AR—ALL WHEEL DRIVE, AUTOSHIFT

S/N: FDP18400-UP

AN ATTACHMENT

SMCS-3000, 4000 **i02013088**

NOTE	PART NUMBER	QTY	PART NAME 1 2 3 4 5 6 (PRODUCT LEVEL)	SEE PAGE
Y	*237-6414*	1	BOX GP-BATTERY	307
	164-1146	1	CONSOLE-FRONT	
Y	*237-6459*	1	DRIVE AR-BACKHOE LOADER (AWD, 2WS)	214
Y	*234-7528*	1	FILLER GP-POWER TRAIN OIL	224
Y	*143-0789*	1	LINES GP-POWER TRAIN COOLER	61
Y	*143-0788*	1	MOUNTING GP-ENGINE & TMSN	31
Y	*185-3525*	1	MOUNTING GP-INSTRUMENT PANEL	815
Y	*202-5732*	1	SHAFT GP-DRIVE	241
Y	*209-4174*	1	STABILIZER AR	514
Y	*185-7587*	1	TRANSMISSION AR-POWER SHIFT	246
Y	*237-8037*	1	WIRING GP-AUTOSHIFT	148

Y-SEPARATE ILLUSTRATION

<END>

214-6958 POWER TRAIN AR–2 WHEEL DRIVE, STANDARD SHIFT

S/N: FDP18400-UP
AN ATTACHMENT

SMCS-3000, 4000 **i01990435**

NOTE	PART NUMBER	QTY	PART NAME 1 2 3 4 5 6 (PRODUCT LEVEL)	SEE PAGE
Y	*237-6415*	1	BOX GP-BATTERY	308
Y	*183-4995*	1	CONSOLE GP-FRONT	761
Y	*164-1130*	1	CONTROL GP-TRANSMISSION	210
Y	*237-6458*	1	DRIVE AR-BACKHOE LOADER (2WS, 2WD)	214
Y	*164-1141*	1	DUCT GP-AIR	786
Y	*234-3387*	1	FILLER GP-POWER TRAIN OIL	222
Y	*143-0786*	1	LINES GP-POWER TRAIN COOLER	59
Y	*143-0782*	1	MOUNTING GP-ENGINE & TMSN	30
Y	*185-3525*	1	MOUNTING GP-INSTRUMENT PANEL	815
Y	*209-4172*	1	STABILIZER AR	514
Y	*185-7585*	1	TRANSMISSION AR-DIRECT DRIVE	246

Y-SEPARATE ILLUSTRATION

<END>

214-6959 POWER TRAIN AR–ALL WHEEL DRIVE, STANDARD SHIFT

S/N: FDP18400-UP
AN ATTACHMENT

SMCS-3000, 4000 **i01990432**

NOTE	PART NUMBER	QTY	PART NAME 1 2 3 4 5 6 (PRODUCT LEVEL)	SEE PAGE
Y	*237-6415*	1	BOX GP-BATTERY	308
Y	*183-4995*	1	CONSOLE GP-FRONT	761
Y	*164-1130*	1	CONTROL GP-TRANSMISSION	210
Y	*237-6459*	1	DRIVE AR-BACKHOE LOADER (AWD, 2WS)	214
Y	*164-1141*	1	DUCT GP-AIR	786
Y	*234-7527*	1	FILLER GP-POWER TRAIN OIL	223
Y	*143-0786*	1	LINES GP-POWER TRAIN COOLER	59
Y	*143-0782*	1	MOUNTING GP-ENGINE & TMSN	30
Y	*185-3525*	1	MOUNTING GP-INSTRUMENT PANEL	815
Y	*202-5733*	1	SHAFT GP-DRIVE	242
Y	*209-4172*	1	STABILIZER AR	514
Y	*185-7586*	1	TRANSMISSION AR-DIRECT DRIVE	246

Y-SEPARATE ILLUSTRATION

<END>

214-6976 POWER TRAIN AR–2 WHEEL DRIVE, STANDARD SHIFT

S/N: FDP18400-UP
AN ATTACHMENT

SMCS-3000, 4000 **i01990430**

NOTE	PART NUMBER	QTY	PART NAME 1 2 3 4 5 6 (PRODUCT LEVEL)	SEE PAGE
Y	*237-6415*	1	BOX GP-BATTERY	308
Y	*183-4995*	1	CONSOLE GP-FRONT	761
Y	*164-1130*	1	CONTROL GP-TRANSMISSION	210
Y	*237-6458*	1	DRIVE AR-BACKHOE LOADER (2WS, 2WD)	214
Y	*164-1141*	1	DUCT GP-AIR	786
Y	*234-3387*	1	FILLER GP-POWER TRAIN OIL	222
Y	*143-0786*	1	LINES GP-POWER TRAIN COOLER	59
Y	*143-0782*	1	MOUNTING GP-ENGINE & TMSN	30
Y	*185-3525*	1	MOUNTING GP-INSTRUMENT PANEL	815
Y	*209-4165*	1	STABILIZER AR	514
Y	*185-7585*	1	TRANSMISSION AR-DIRECT DRIVE	246

Y-SEPARATE ILLUSTRATION

<END>

214-6977 POWER TRAIN AR–ALL WHEEL DRIVE, STANDARD SHIFT

S/N: FDP18400-UP
AN ATTACHMENT

SMCS-3000, 4000 **i01990428**

NOTE	PART NUMBER	QTY	PART NAME 1 2 3 4 5 6 (PRODUCT LEVEL)	SEE PAGE
Y	*237-6415*	1	BOX GP-BATTERY	308
Y	*183-4995*	1	CONSOLE GP-FRONT	761
Y	*164-1130*	1	CONTROL GP-TRANSMISSION	210
Y	*237-6459*	1	DRIVE AR-BACKHOE LOADER (AWD, 2WS)	214
Y	*164-1141*	1	DUCT GP-AIR	786
Y	*234-7527*	1	FILLER GP-POWER TRAIN OIL	223
Y	*143-0786*	1	LINES GP-POWER TRAIN COOLER	59
Y	*143-0782*	1	MOUNTING GP-ENGINE & TMSN	30
Y	*185-3525*	1	MOUNTING GP-INSTRUMENT PANEL	815
Y	*202-5733*	1	SHAFT GP-DRIVE	242
Y	*209-4165*	1	STABILIZER AR	514
Y	*185-7586*	1	TRANSMISSION AR-DIRECT DRIVE	246

Y-SEPARATE ILLUSTRATION

<END>

214-6978 POWER TRAIN AR–ALL WHEEL DRIVE, AUTOSHIFT

S/N: FDP18400-UP

AN ATTACHMENT

SMCS-3000, 4000 **i02007540**

NOTE	PART NUMBER	QTY	PART NAME 1 2 3 4 5 6 (PRODUCT LEVEL)	SEE PAGE
Y	*237-6414*	1	BOX GP-BATTERY	307
Y	*183-4996*	1	CONSOLE GP-FRONT	762
Y	*237-6459*	1	DRIVE AR-BACKHOE LOADER (AWD, 2WS)	214
Y	*164-1142*	1	DUCT GP-AIR	788
Y	*234-7528*	1	FILLER GP-POWER TRAIN OIL	224
Y	*143-0789*	1	LINES GP-POWER TRAIN COOLER	61
Y	*143-0788*	1	MOUNTING GP-ENGINE & TMSN	31
Y	*185-3525*	1	MOUNTING GP-INSTRUMENT PANEL	815
Y	*202-5732*	1	SHAFT GP-DRIVE	241
Y	*209-4165*	1	STABILIZER AR	514
Y	*185-7587*	1	TRANSMISSION AR-POWER SHIFT	246
Y	*237-8037*	1	WIRING GP-AUTOSHIFT	148

Y-SEPARATE ILLUSTRATION

<END>

113-1151 SHAFT GP-DRIVE–REAR

S/N: FDP18400-UP

PART OF 184-7970 POWER TRAIN AR

SMCS-3253 **i00512258**

NOTE	REF NO	GRAPHIC REF	PART NUMBER	QTY	PART NAME 1 2 3 4 5 6 (PRODUCT LEVEL)	SEE PAGE
	1	1	**8T-0799**	4	BOLT (1/2-20X1-1/2)	
	2	1	**5V-2545**	2	STRAP	
	3	1	**107-6826**	4	BOLT	
	4	1	**113-1150**	1	SHAFT AS-MAIN	
		1	**117-9887**	2	KIT-SPIDER & BEARING	
	5	1	**8T-4223**	4	WASHER-HARD (3MM THK)	

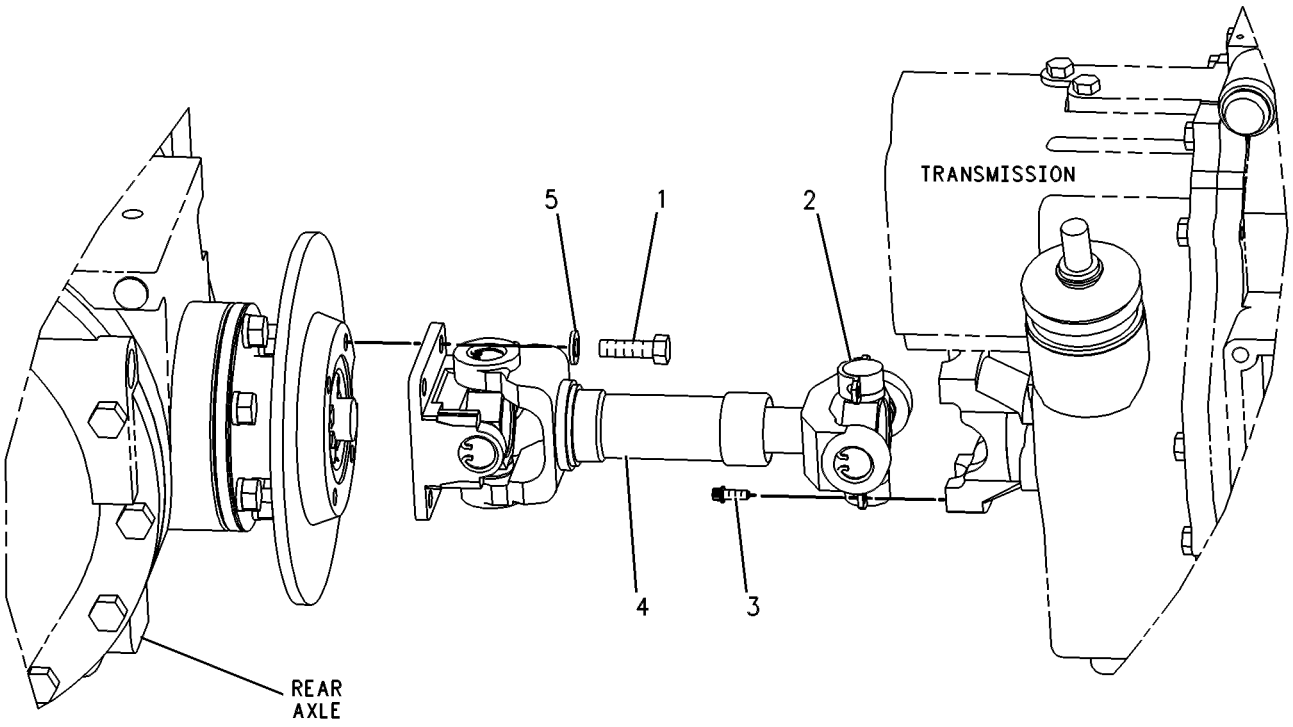

GRAPHIC #1 **<END>** g00131518

202-5732 SHAFT GP-DRIVE–FRONT

S/N: FDP18400-UP
POWERSHIFT
PART OF 192-4659, 192-4664, 214-6957, 214-6978 POWER TRAIN AR
AN ATTACHMENT

SMCS-3253 **i01908838**

NOTE	REF NO	GRAPHIC REF	PART NUMBER	QTY	PART NAME 1 2 3 4 5 6 (PRODUCT LEVEL)	SEE PAGE
	1	1	**5V-2545**	4	STRAP	
M	2	1	**107-6826**	8	BOLT (M24X19.1MM)	
	3	1	**202-7875**	1	SHAFT AS-FRONT	
		1	**117-9887**	2	KIT-SPIDER & BEARING	

M-METRIC PART

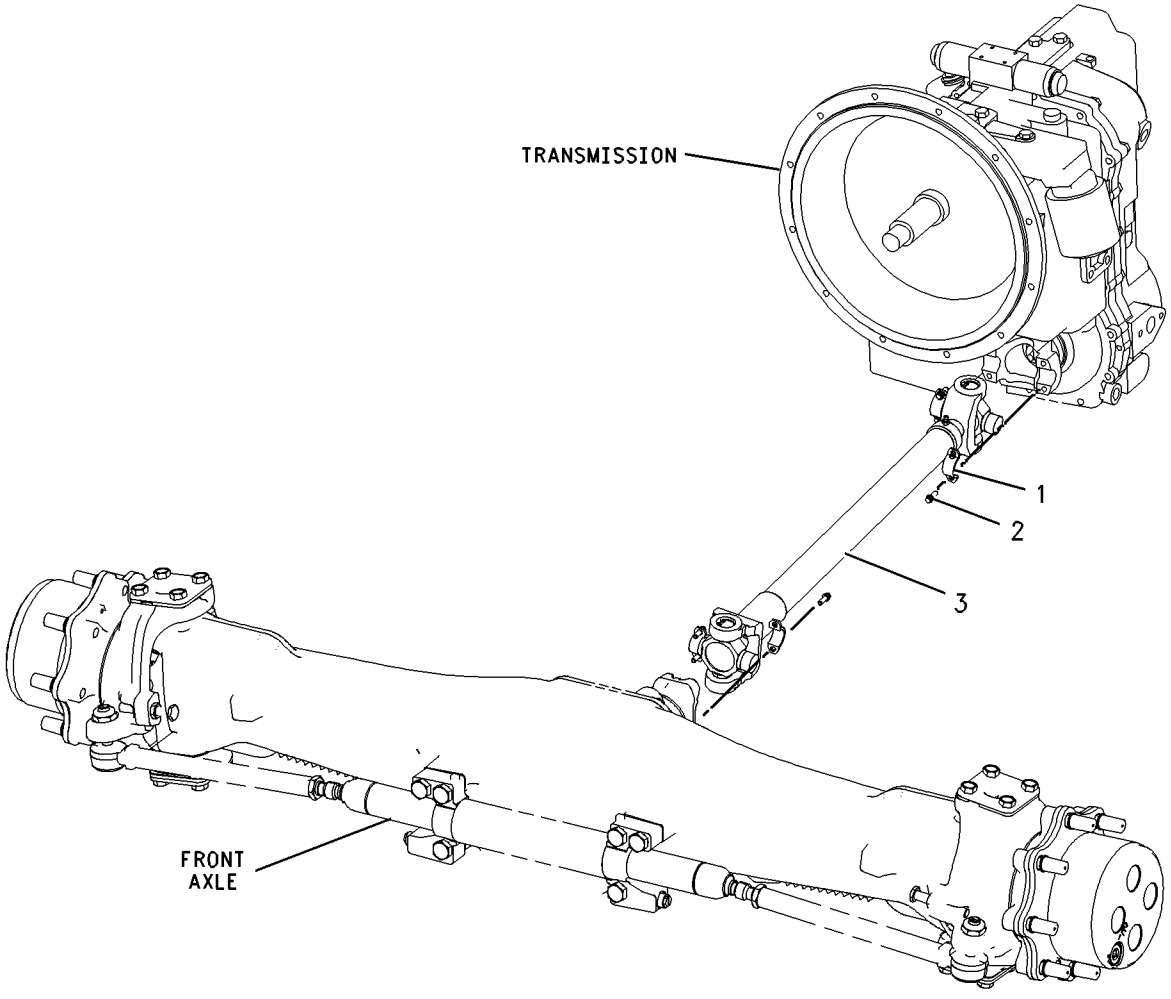

GRAPHIC #1 **<END>** g00996052

202-5733 SHAFT GP-DRIVE–FRONT

S/N: FDP18400-UP
STANDARD
PART OF 192-4661, 192-4662, 192-4665, 214-6956, 214-6959, 214-6977 POWER TRAIN AR AN ATTACHMENT

SMCS-3253 **i01909541**

NOTE	REF NO	GRAPHIC REF	PART NUMBER	QTY	PART NAME 1 2 3 4 5 6 (PRODUCT LEVEL)	SEE PAGE
	1	1	**5V-2545**	4	STRAP	
M	2	1	**107-6826**	8	BOLT (M24X19.1MM)	
	3	1	**202-7874**	1	SHAFT AS (FRONT)	
		1	**117-9887**	2	KIT-SPIDER & BEARING	

M-METRIC PART

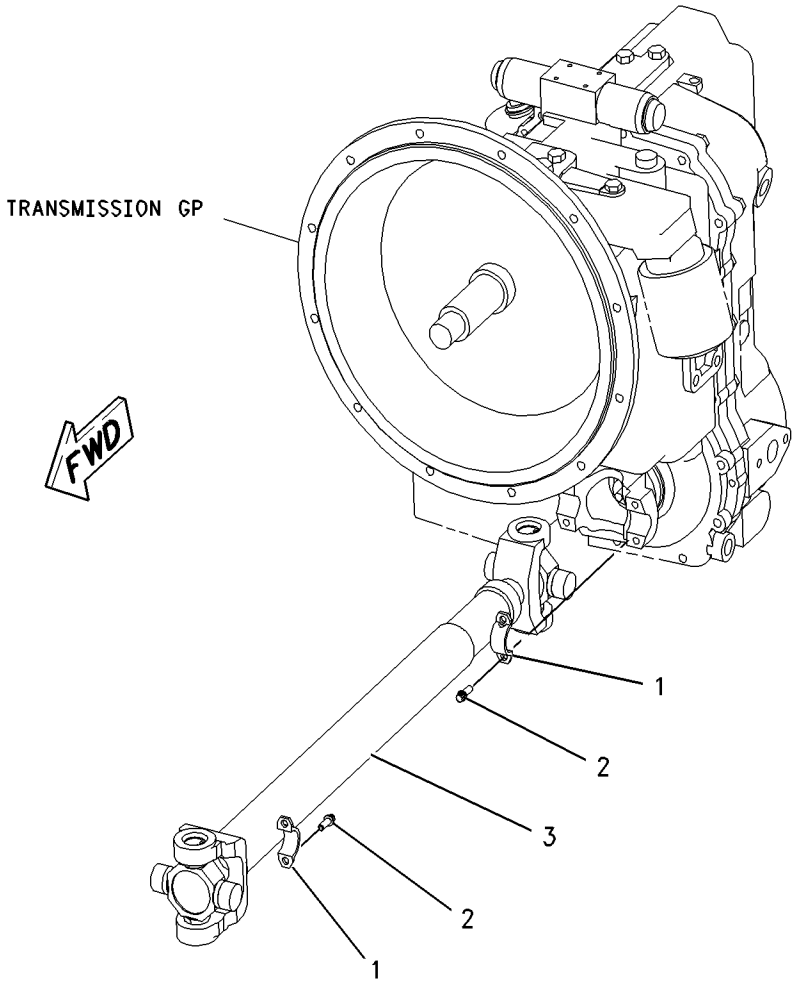

GRAPHIC #1 **<END>** g00995397

202-6007 TRANSMISSION & MOUNTING GP

S/N: FDP18400-UP
STANDARD SHIFT, TWO WHEEL DRIVE
PART OF 185-7585 TRANSMISSION AR-DIRECT DRIVE
AN ATTACHMENT

SMCS-3030 **i01943923**

NOTE	REF NO	GRAPHIC REF	PART NUMBER	QTY	PART NAME 1 2 3 4 5 6 (PRODUCT LEVEL)	SEE PAGE
	1	1	**113-9221**	1	SUPPORT-REAR	
	2	1	**138-7137**	1	SUPPORT AS	
Y	3	1	**201-8561**	1	TRANSMISSION GP-DIRECT DRIVE	247
M	4	1	**7X-2553**	4	BOLT (M16X2X40MM)	
	5	1	**8T-4223**	4	WASHER-HARD (13.5X25.5X3MM THK)	
M	6	1	**8T-4956**	4	BOLT (M12X1.75X35MM)	
	7	1	**9X-8257**	4	WASHER (17.5X30X3.5MM THK)	

M-METRIC PART
Y-SEPARATE ILLUSTRATION

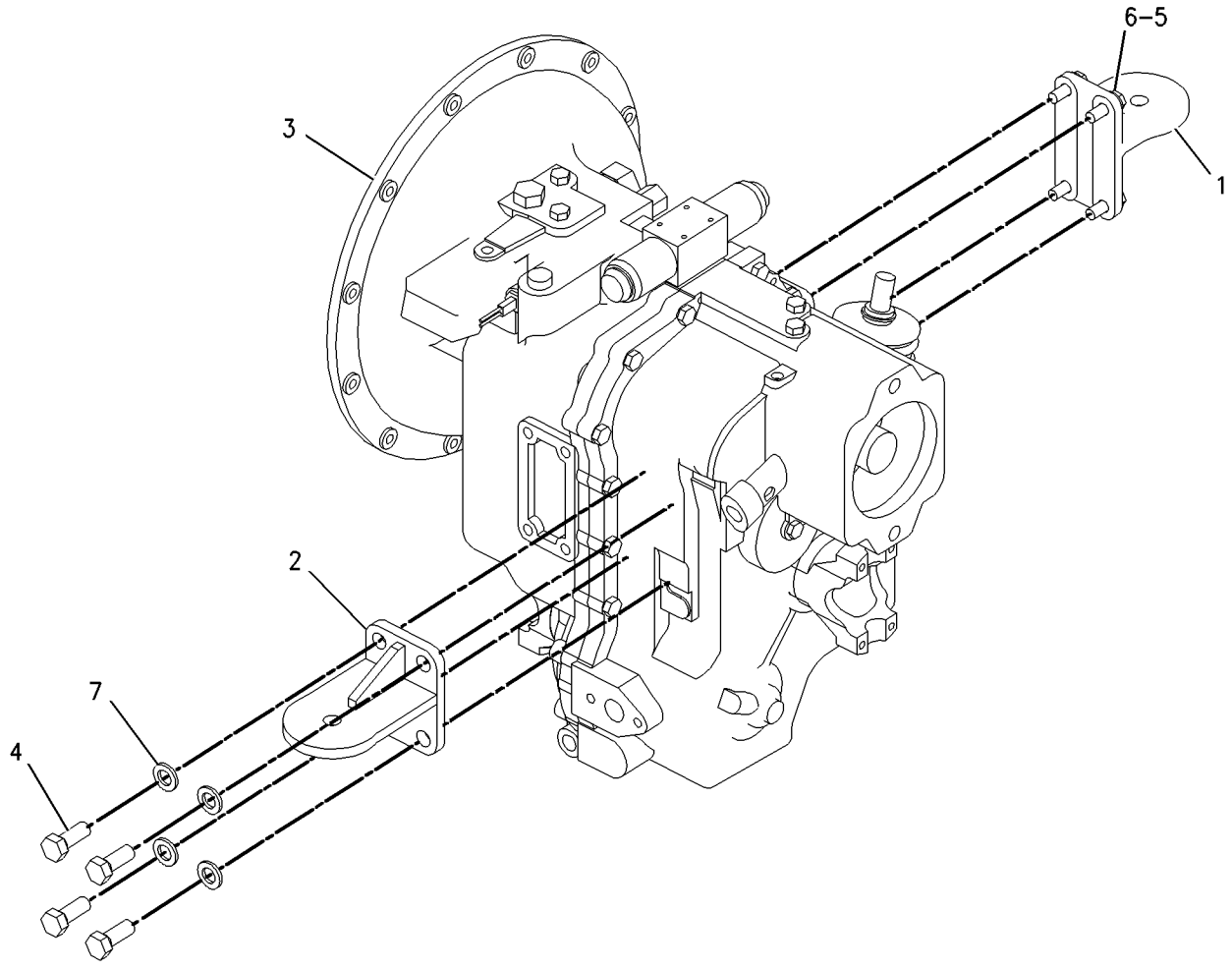

GRAPHIC #1 **<END>** g00869087

202-6008 TRANSMISSION & MOUNTING GP

S/N: FDP18400-UP
STANDARD SHIFT, ALL WHEEL DRIVE
PART OF 185-7586 TRANSMISSION AR-DIRECT DRIVE
AN ATTACHMENT

SMCS-3030 **i01944201**

NOTE	REF NO	GRAPHIC REF	PART NUMBER	QTY	PART NAME 1 2 3 4 5 6 (PRODUCT LEVEL)	SEE PAGE
	1	1	**113-9221**	1	SUPPORT-REAR	
	2	1	**138-7137**	1	SUPPORT AS	
Y	3	1	**201-8562**	1	TRANSMISSION GP-DIRECT DRIVE	253
M	4	1	**7X-2553**	4	BOLT (M16X2X40MM)	
	5	1	**8T-4223**	4	WASHER-HARD (13.5X25.5X3MM THK)	
M	6	1	**8T-4956**	4	BOLT (M12X1.75X35MM)	
	7	1	**9X-8257**	4	WASHER (17.5X30X3.5MM THK)	

M-METRIC PART
Y-SEPARATE ILLUSTRATION

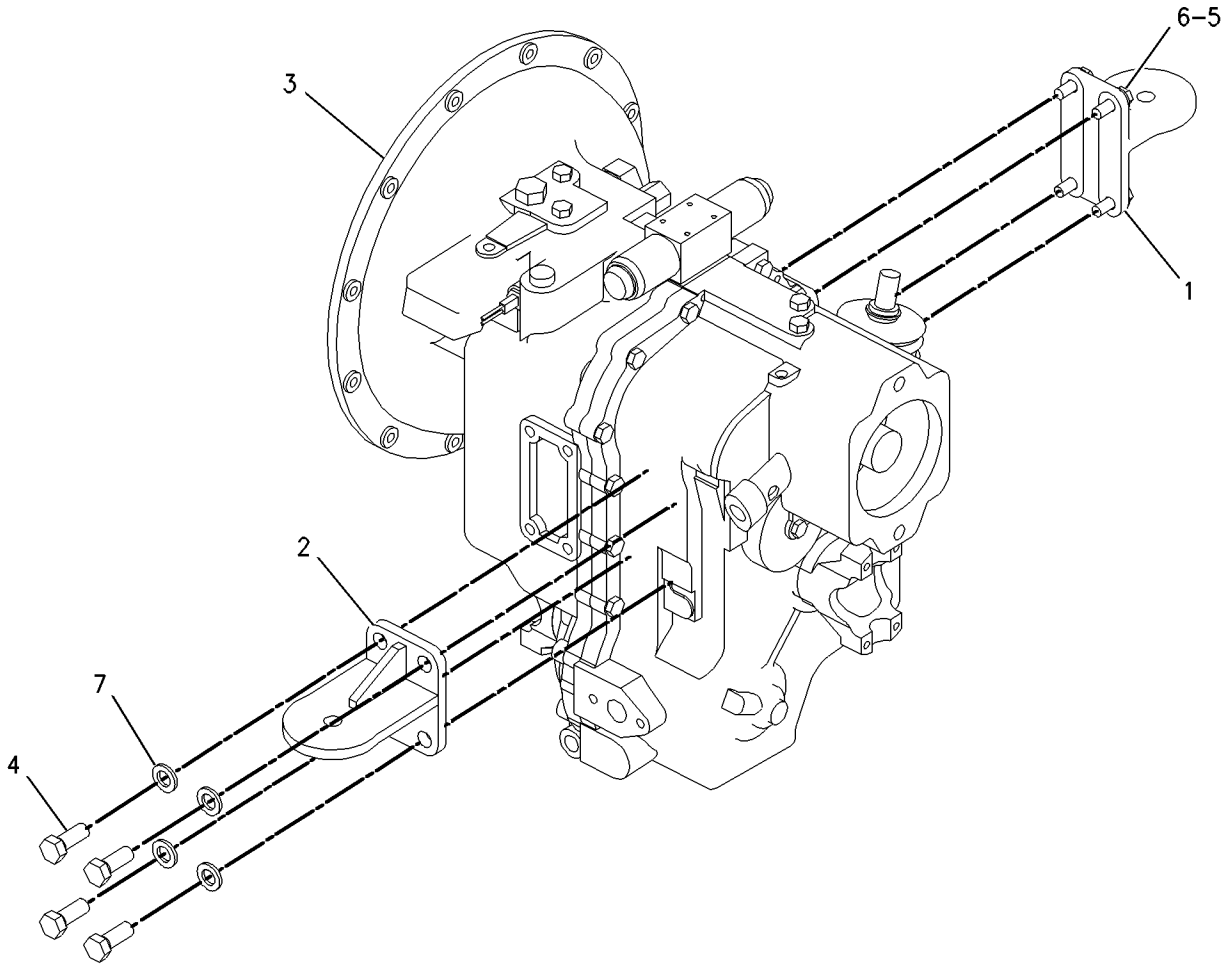

GRAPHIC #1 **<END>** g00869096

202-7432 TRANSMISSION & MOUNTING GP

S/N: FDP18400-UP
PART OF 185-7587 TRANSMISSION AR-POWER SHIFT
AN ATTACHMENT

SMCS-3030 **i01534409**

NOTE	REF NO	GRAPHIC REF	PART NUMBER	QTY	PART NAME 1 2 3 4 5 6 (PRODUCT LEVEL)	SEE PAGE
	1	1	**113-9221**	1	SUPPORT-REAR	
	2	1	**138-7138**	1	SUPPORT AS	
Y	3	1	**192-0849**	1	TRANSMISSION GP-POWER SHIFT	259
M	4	1	**7X-2553**	4	BOLT (M16X2X40MM)	
	5	1	**8T-4223**	4	WASHER-HARD (13.5X25.5X3MM THK)	
M	6	1	**8T-4956**	4	BOLT (M12X1.75X35MM)	
	7	1	**9X-8257**	4	WASHER (17.5X30X3.5MM THK)	

M-METRIC PART
Y-SEPARATE ILLUSTRATION

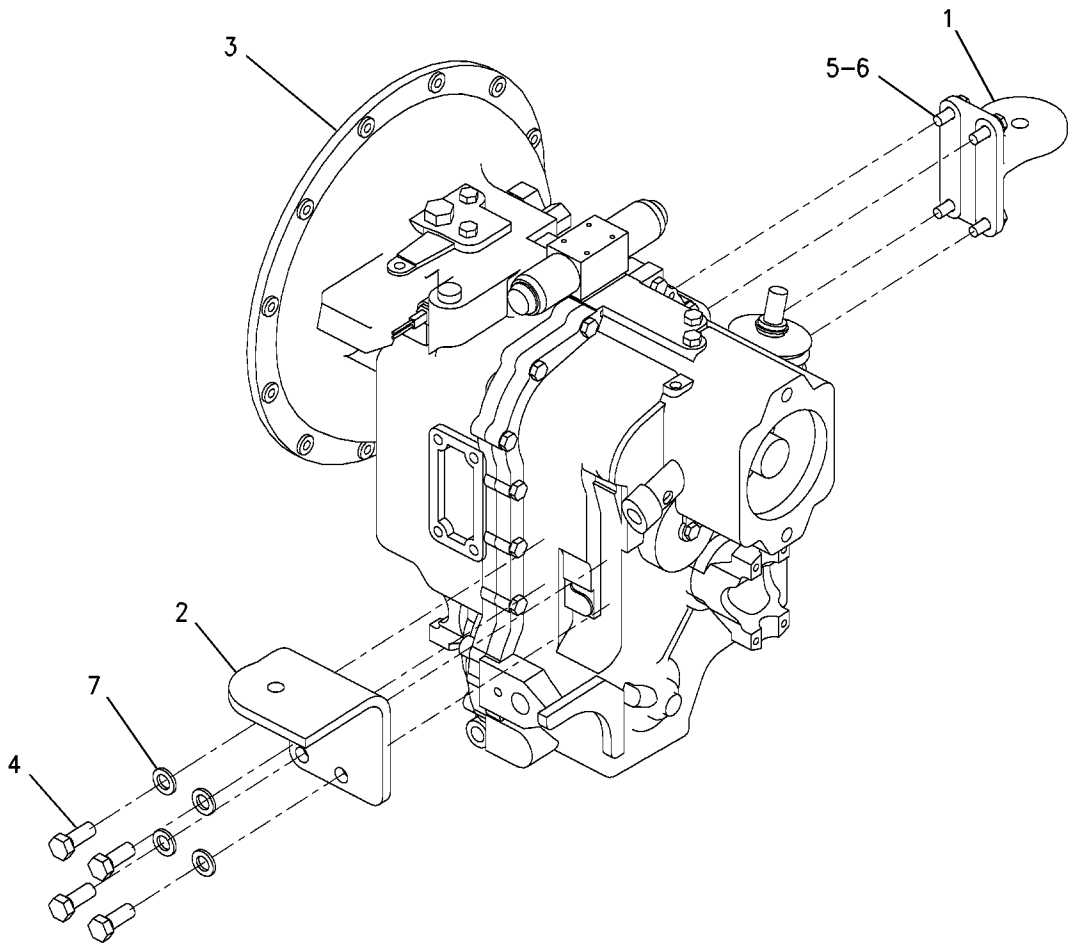

GRAPHIC #1 **<END>** g00797515

185-7585 TRANSMISSION AR-DIRECT DRIVE

S/N: FDP18400-UP
TWO WHEEL
PART OF 192-4663, 192-4666, 198-4095, 214-6955, 214-6958, 214-6976 POWER TRAIN AR
AN ATTACHMENT

SMCS-3030 **i01949802**

NOTE	PART NUMBER	QTY	PART NAME 1 2 3 4 5 6 (PRODUCT LEVEL)	SEE PAGE
Y	*111-7907*	1	DRIVE GP-FLEXIBLE COUPLING	215
Y	**202-6007**	1	TRANSMISSION & MOUNTING GP	243
	119-4740	1	FILTER AS-OIL (TRANSMISSION)	
	140-7393	1	TORQUE CONVERTER AS	

Y-SEPARATE ILLUSTRATION

<END>

185-7586 TRANSMISSION AR-DIRECT DRIVE

S/N: FDP18400-UP
ALL WHEEL DRIVE
PART OF 192-4661, 192-4662, 192-4665, 214-6956, 214-6959, 214-6977 POWER TRAIN AR
AN ATTACHMENT

SMCS-3030 **i01985454**

NOTE	PART NUMBER	QTY	PART NAME 1 2 3 4 5 6 (PRODUCT LEVEL)	SEE PAGE
Y	*111-7907*	1	DRIVE GP-FLEXIBLE COUPLING	215
Y	*202-6008*	1	TRANSMISSION & MOUNTING GP	244
	119-4740	1	FILTER AS-OIL (TRANSMISSION)	
	212-6215	1	TORQUE CONVERTER AS	

Y-SEPARATE ILLUSTRATION

<END>

185-7587 TRANSMISSION AR-POWER SHIFT

S/N: FDP18400-UP
PART OF 192-4659, 192-4664, 214-6957, 214-6978 POWER TRAIN AR
AN ATTACHMENT

SMCS-3030 **i02020259**

NOTE	PART NUMBER	QTY	PART NAME 1 2 3 4 5 6 (PRODUCT LEVEL)	SEE PAGE
Y	*111-7907*	1	DRIVE GP-FLEXIBLE COUPLING	215
	119-4740	1	FILTER AS-OIL (TRANSMISSION)	
	212-6215	1	TORQUE CONVERTER AS	
Y	*202-7432*	1	TRANSMISSION & MOUNTING GP	245

Y-SEPARATE ILLUSTRATION

<END>

201-8561 TRANSMISSION GP-DIRECT DRIVE

S/N: FDP18400-UP

PART OF 202-6007 TRANSMISSION & MOUNTING GP

AN ATTACHMENT

SMCS-3030 **i01938943**

NOTE	REF NO	GRAPHIC REF	PART NUMBER	QTY	PART NAME 1 2 3 4 5 6 (PRODUCT LEVEL)	SEE PAGE
	1	2	**178-8133**	2	GUIDE-SPRING	
	2	3	**174-9711**	1	GASKET	
	3	3	**175-0054**	1	SEAL-O-RING	
	4	3	**9M-1974**	3	WASHER-HARD (8.8X16X2MM THK)	
	5	2	**122-3649**	2	RING-RETAINING	
	6	3	**122-3652**	2	PLUG	
	7	3	**121-7405**	1	VALVE GP-RELIEF	
	7A	3	**6V-9178**	1	SEAL-O-RING	
	7B	3	**7X-4744**	1	SEAL-O-RING	
	7C	3	**106-9586**	1	SEAL-O-RING	
	8	3	**121-7396**	1	VALVE GP-RELIEF	
	8A	3	**6V-4589**	1	SEAL-O-RING	
	8B	3	**8L-2746**	1	SEAL-O-RING	
	9	2	**192-0843**	1	CASE AS	
	10	2	**156-9276**	1	CASE-TRANSMISSION	
	11	1,3	**9S-4191**	10	PLUG	
	12	1,3	**3J-1907**	11	SEAL-O-RING	
M	13	1	**6V-8335**	17	BOLT-SELF LOCKING (M10X1.5X40MM)	
	14	2	**7T-3022**	2	SLEEVE	
	15	2	**123-8906**	1	CUP-TAPERED ROLLER	
	16	2	**123-8905**	1	CONE	
	17	2	**9U-8886**	4	RING-SEAL (44.95MM ID)	
	18	2	**7T-3021**	2	SYNCHRONIZER GP	
	19	2	**211-6758**	1	GEAR (19 TEETH)	
	20	2	**121-1251**	1	GEAR (28 TEETH)	
	21	2	**117-4650**	1	GEAR (37 TEETH)	
	22	2	**6T-9160**	1	GEAR (43 TEETH)	
	23	2	**6V-8500**	2	BEARING	
	24	2	**7T-3017**	1	SPACER (9.6MM THK)	
	25	2	**7T-3018**	1	SLEEVE	
	26	2	**6Y-2326**	1	RING	
	27	2	**121-2062**	1	WASHER-THRUST	
	28	2	**7T-3034**	1	SHIM (2.02MM THK)	
B	29	2	**6T-9144**	1	SHIM (.051MM THK)	
B		2	**6T-9147**	1	SHIM (.076MM THK)	
B		2	**6T-9146**	1	SHIM (.127MM THK)	
B		2	**6T-9145**	1	SHIM (.178MM THK)	
B		2	**6T-9143**	1	SHIM (.381MM THK)	
B		2	**6T-9142**	1	SHIM (.508MM THK)	
M	30	1,3	**8C-5748**	7	BOLT (M8X1.25X55MM)	
	31	1	**9P-9150**	4	WASHER (8.25X18X.84MM THK)	
M	32	3	**6V-7731**	2	BOLT (M10X1.5X70MM)	
	33	3	**6Y-2035**	1	GASKET	
	34	3	**7T-3119**	1	HOUSING	
	35	2	**005-0469**	2	CUP-BEARING	
	36	2	**005-0471**	2	CONE-BEARING	
	37	2	**211-6759**	1	SHAFT (OUTPUT)	
	38	2	**123-8910**	1	CUP-TAPERED ROLLER	
	39	2	**123-8909**	1	CONE-BEARING	
	40	2	**7T-2646**	2	SPACER (66X79.5X2.02MM THK)	
B	41	2	**6T-9166**	2	SHIM (0.051MM THK)	
B		2	**6T-9165**	2	SHIM (0.076MM THK)	
B		2	**6T-9164**	2	SHIM (0.178MM THK)	
B		2	**6T-9163**	2	SHIM (0.599MM THK)	
	42	2	**6Y-2936**	1	SPACER	

201-8561 TRANSMISSION GP-DIRECT DRIVE *(contd.)* i01938943

NOTE	REF NO	GRAPHIC REF	PART NUMBER	QTY	PART NAME 1 2 3 4 5 6 (PRODUCT LEVEL)	SEE PAGE
	43	1	**122-6785**	1	PLUG AS	
	44	3	**1H-9721**	1	PLUG-EXPANSION	
	45	2	**7T-3051**	1	PLUG	
	46	2	**8T-1580**	1	CUP	
	47	2	**8T-1581**	1	CONE	
	48	2	**6Y-2737**	1	CUP-BEARING	
	49	2	**6Y-2736**	1	CONE-BEARING	
	50	2	**121-2500**	3	WASHER-THRUST	
	51	2	**121-2511**	1	SHAFT	
	52	2	**121-2537**	1	SHAFT-REVERSE	
	53	2	**121-2545**	1	SHAFT AS-INPUT	
		2	**123-0714**	1	BEARING	
		2	**123-2920**	3	PLUG	
	54	2	**121-2603**	1	GEAR (40 TEETH)	
	55	2	**121-2604**	1	GEAR (27 TEETH)	
	56	2	**121-0694**	1	WASHER-THRUST	
	57	2	**122-1882**	2	PLATE-END	
	58	2	**122-1881**	12	PLATE-CLUTCH	
	59	2	**122-1880**	12	DISC	
	60	2	**6V-8757**	3	RING	
	61	2	**178-8200**	2	RETAINER-SPRING	
	62	2	**178-8134**	2	SPRING	
	63	2	**178-8132**	2	SEAL	
	64	2	**122-6787**	1	YOKE AS	
		2	**123-1377**	1	GUARD	
	65	2	**122-1885**	2	SPACER (4MM THK)	
	66	2	**123-8913**	4	BEARING-ROLLER	
	67	2	**172-5317**	2	BEARING-SPECIAL	
	68	2	**7T-3195**	1	WASHER (12.3X47X6.35MM THK)	
M	69	2	**6V-8097**	1	BOLT (M12X1.75X30MM)	
	70	2	**5P-8066**	1	SEAL-O-RING	
	71	2	**121-7385**	1	PUMP GP-TRANSMISSION	
		1	**124-6612**	1	SEAL-LIP TYPE (57.15MM ID)	
	72	2	**7X-4741**	1	SEAL (140MM ID)	
	73	2	**122-1886**	1	RING-SEAL	
	74	1	**014-5645**	3	BALL	
	75	1	**6Y-1341**	2	SPRING	
	76	1	**121-7403**	1	FORK-SHIFT	
	77	1	**121-7389**	1	ROD AS-GEARSHIFT	
	78	1	**121-7390**	1	ROD AS-GEARSHIFT	
	79	1	**7T-3249**	2	SCREW	
	80	2	**123-8907**	2	CONE-BEARING	
	81	2	**123-8908**	2	CUP-TAPERED ROLLER	
	82	3	**127-3017**	1	SEAT AS	
	83	3	**7T-3109**	1	PIN	
	84	1	**121-7404**	1	FORK-SHIFT	
	85	3	**3S-2093**	1	STRAP-CABLE	
	86	2	**1U-8846**	1	SEALANT-GASKET	
	87	1	**6Y-1896**	1	PLUG AS	
		1	**5P-6718**	1	SEAL-O-RING	
	88	2	**121-7398**	1	SPACER (2MM THK)	
B	89	2	**121-7399**	1	SHIM (0.05MM THK)	
B		2	**121-7400**	1	SHIM (0.08MM THK)	
B		2	**121-7401**	1	SHIM (0.18MM THK)	
B		2	**121-7402**	1	SHIM (0.6MM THK)	
	90	3	**6K-0806**	1	STRAP-CABLE	
	91	3	**7T-3111**	1	COVER	
	92	1	**120-9762**	3	SEAL-O-RING	
M	93	1	**9X-6615**	4	BOLT (M5X.8X30MM)	

201-8561 TRANSMISSION GP-DIRECT DRIVE *(contd.)* i01938943

NOTE	REF NO	GRAPHIC REF	PART NUMBER	QTY	PART NAME 1 2 3 4 5 6 (PRODUCT LEVEL)	SEE PAGE
Y	94	3	**223-8181**	1	VALVE GP-SOLENOID	270
	95	1	**3G-6927**	1	ADAPTER	
	96	1	**7T-3253**	2	DOWEL	
	97	2	**216-2267**	1	SEAL-LIP TYPE	
	98	1	**7T-2651**	1	STRAINER	
	99	1	**4F-7952**	1	SEAL-O-RING	
	100	1	**9W-5460**	1	RING	
	101	1	**106-9861**	1	PLATE-COVER	
M	102	1	**6V-8210**	2	BOLT (M8X1.25X16 MM)	
	103	3	**7T-3251**	1	BREATHER (TRANSMISSION)	
	104	3	**121-7391**	1	LEVER	

B-USE AS REQUIRED
M-METRIC PART
Y-SEPARATE ILLUSTRATION

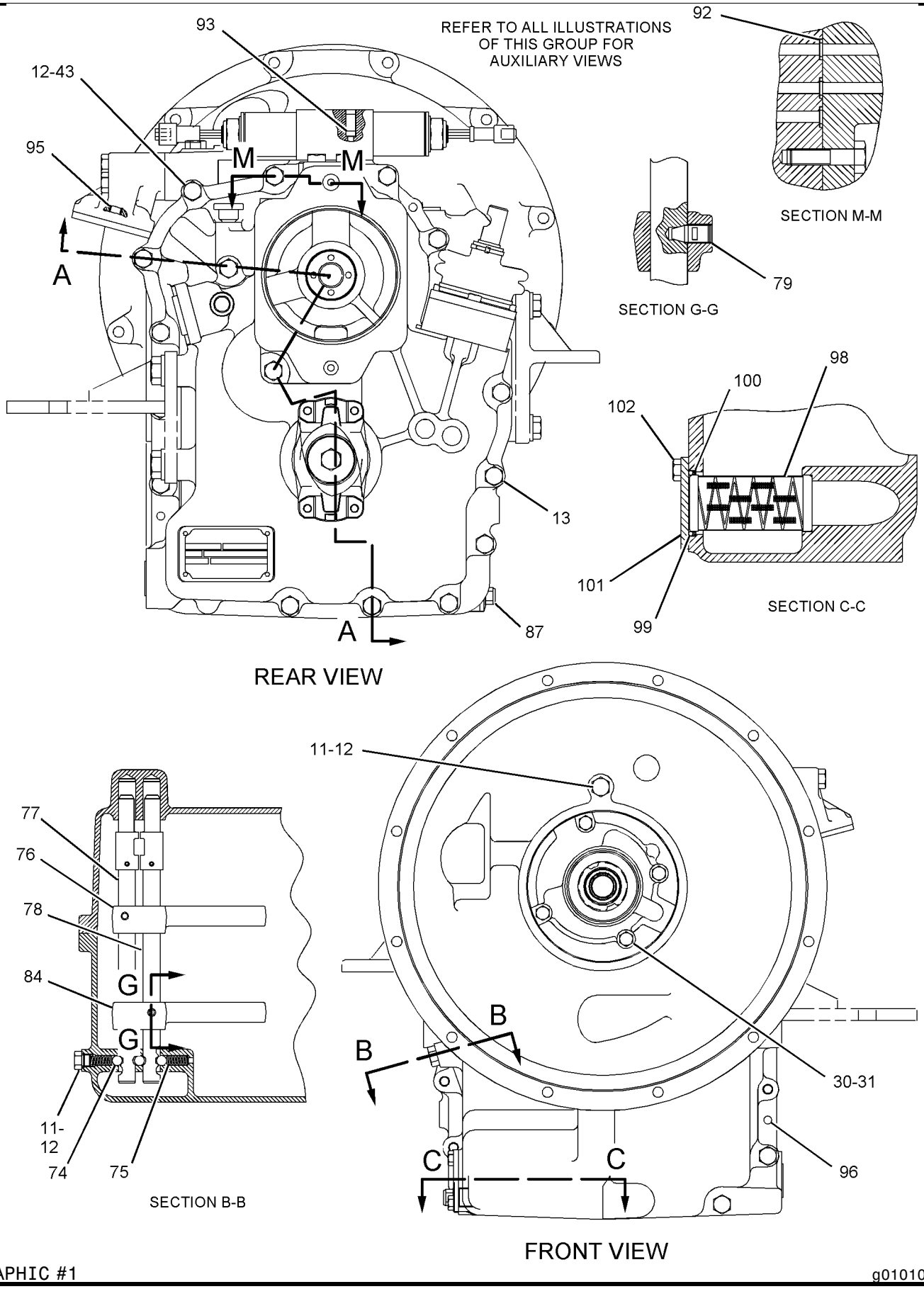

GRAPHIC #1 g01010544

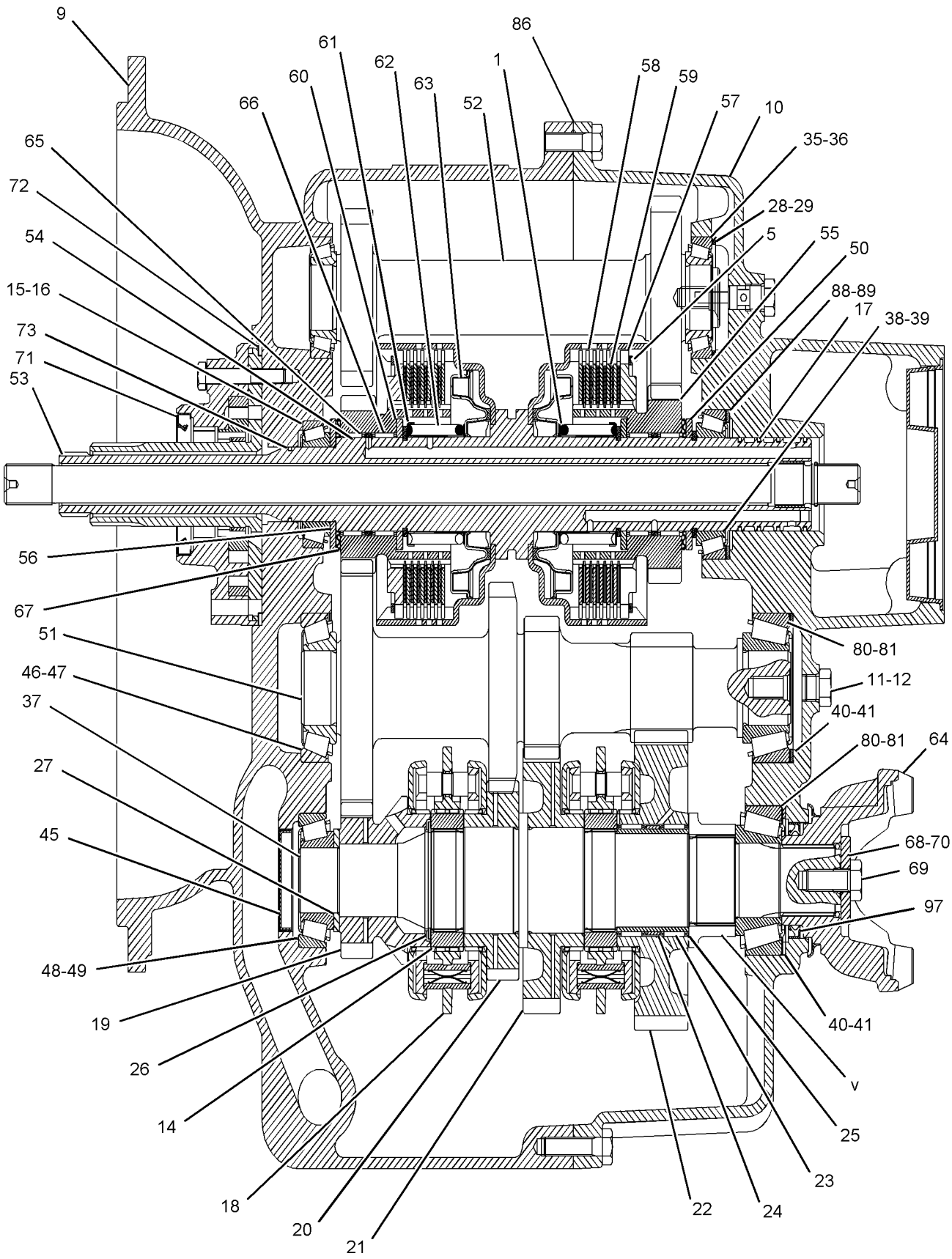

SECTION A-A

GRAPHIC #2

g01010546

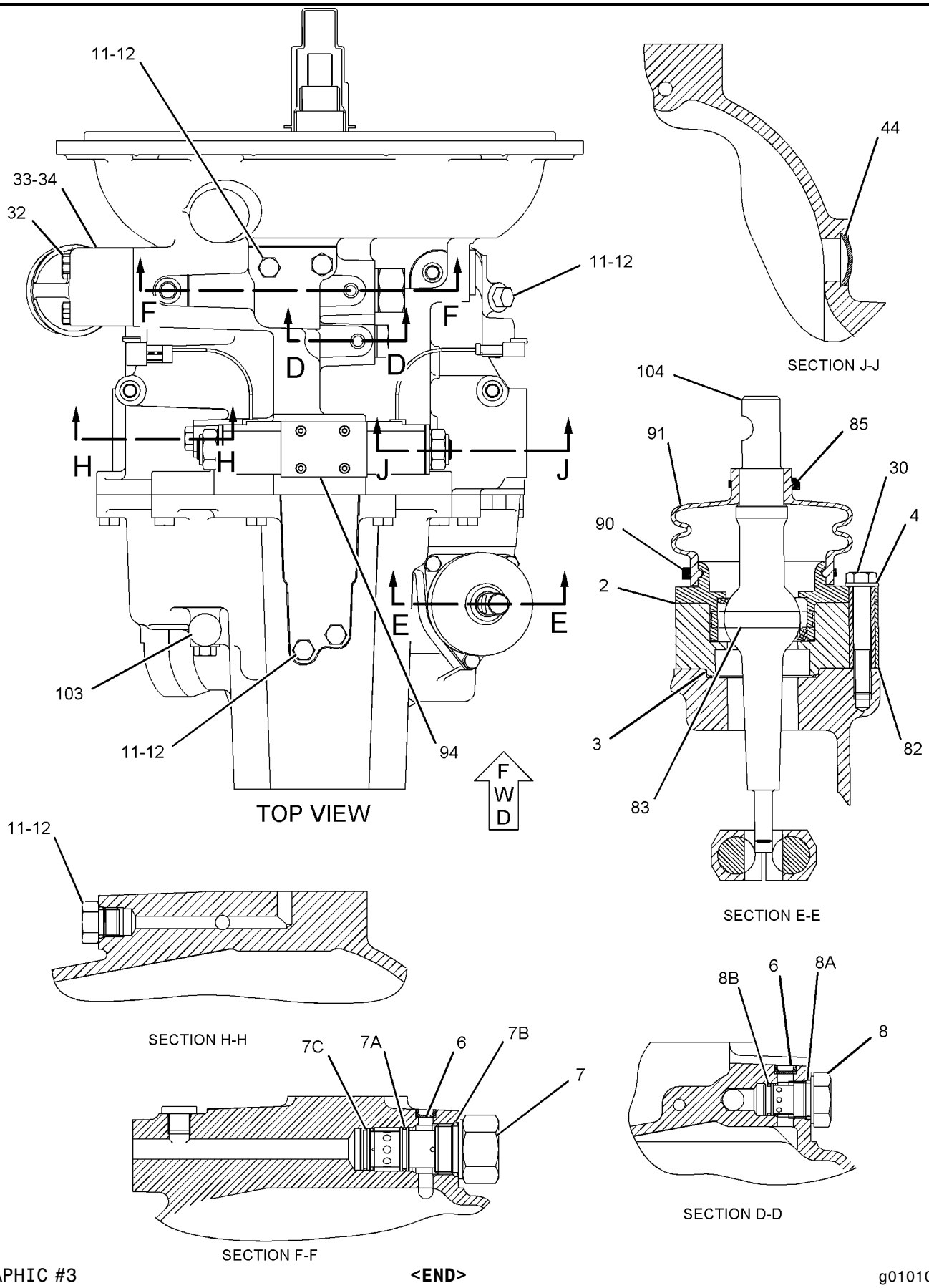

GRAPHIC #3 **<END>** g01010547

201-8562 TRANSMISSION GP-DIRECT DRIVE

S/N: FDP18400-UP

PART OF 202-6008 TRANSMISSION & MOUNTING GP

AN ATTACHMENT

SMCS-3030 **i02015814**

NOTE	REF NO	GRAPHIC REF	PART NUMBER	QTY	PART NAME 1 2 3 4 5 6 (PRODUCT LEVEL)	SEE PAGE
	1	3	**174-9711**	1	GASKET	
	2	3	**175-0054**	1	SEAL-O-RING	
	3	3	**9M-1974**	3	WASHER-HARD (8.8X16X2-MM THK)	
	4	3	**122-3652**	2	PLUG	
	5	3	**121-7405**	1	VALVE GP-RELIEF	
	5A	3	**6V-9178**	1	SEAL-O-RING	
	5B	3	**7X-4744**	1	SEAL-O-RING	
	5C	3	**106-9586**	1	SEAL-O-RING	
	6	3	**121-7396**	1	VALVE GP-RELIEF	
	6A	3	**6V-4589**	1	SEAL-O-RING	
	6B	3	**8L-2746**	1	SEAL-O-RING	
M	7	1,3	**8C-5748**	7	BOLT (M8X1.25X55-MM)	
	8	1	**9P-9150**	4	WASHER (8.25X18X.84-MM THK)	
	9	2	**192-0845**	1	CASE AS	
	10	2	**156-9275**	1	CASE-TRANSMISSION	
	11	1,2,3	**9S-4191**	10	PLUG	
	12	1,2,3	**3J-1907**	11	SEAL-O-RING	
M	13	1	**6V-8335**	14	BOLT-SELF LOCKING (M10X1.5X40-MM)	
	14	2	**7T-3022**	2	SLEEVE	
	15	2	**123-8906**	3	CUP-TAPERED ROLLER	
	16	2	**123-8905**	3	CONE	
	17	2	**9U-8886**	4	RING-SEAL (44.95-MM ID)	
	18	2	**7T-3021**	2	SYNCHRONIZER GP	
	19	2	**161-3249**	1	RING-RETAINING	
	20	2	**8E-5707**	1	PLATE-END	
	21	2	**121-0697**	1	WASHER-THRUST (45X65X5-MM THK)	
	22	2	**172-6050**	2	BEARING-SPECIAL	
	23	2	**095-0927**	1	RING-RETAINING	
	24	2	**121-0714**	1	PISTON	
	25	2	**178-9566**	1	SPRING-PISTON	
	26	2	**121-0885**	1	RETAINER	
	27	2	**6T-9196**	1	SEAL	
	28	2	**6T-9194**	8	PLATE	
	29	2	**6Y-7957**	8	DISC-FRICTION	
	30	2	**190-9767**	1	SHAFT AS	
	31	2	**121-0904**	1	GEAR AS	
	32	2	**123-8912**	2	BEARING-ROLLER	
	33	2	**122-1877**	1	WASHER-THRUST (40X65X4-MM THK)	
	34	2	**211-6758**	1	GEAR (19 TEETH)	
	35	2	**121-1251**	1	GEAR (28 TEETH)	
	36	2	**117-4650**	1	GEAR (37 TEETH)	
	37	2	**6T-9160**	1	GEAR (43 TEETH)	
	38	2	**121-1253**	1	GEAR (37 TEETH)	
	39	2	**6V-8500**	2	BEARING	
	40	2	**7T-3017**	1	SPACER (52.5X59X9.6-MM THK)	
	41	2	**7T-3018**	1	SLEEVE	
	42	2	**6Y-2326**	1	RING	
	43	2	**122-1878**	1	RING-SEAL	
	44	2	**122-1879**	1	SPACER (58X67.5X2-MM THK)	
B	45	2	**104-3288**	1	SHIM (0.05-MM THK)	
B		2	**121-2059**	1	SHIM (0.08-MM THK)	
B		2	**121-2060**	1	SHIM (0.18-MM THK)	
B		2	**121-2061**	1	SHIM (0.6-MM THK)	
M	46	3	**6V-7731**	2	BOLT (M10X1.5X70-MM)	
	47	3	**6Y-2035**	1	GASKET	

201-8562 TRANSMISSION GP-DIRECT DRIVE *(contd.)* i02015814

NOTE	REF NO	GRAPHIC REF	PART NUMBER	QTY	PART NAME 1 2 3 4 5 6 (PRODUCT LEVEL)	SEE PAGE
	48	3	**7T-3119**	1	HOUSING	
	49	2	**121-2062**	1	WASHER-THRUST (35X55X4-MM THK)	
	50	2	**7T-3034**		SHIM (2.02-MM THK)	
B	51	2	**6T-9144**	1	SHIM (.051-MM THK)	
B		2	**6T-9147**	1	SHIM (.076-MM THK)	
B		2	**6T-9146**	1	SHIM (.127-MM THK)	
B		2	**6T-9145**	1	SHIM (.178-MM THK)	
B		2	**6T-9143**	1	SHIM (.381-MM THK)	
B		2	**6T-9142**	1	SHIM (.508-MM THK)	
	52	3	**1H-9721**	1	PLUG-EXPANSION	
	53	3	**6K-0806**	1	STRAP-CABLE	
	54	3	**7T-3111**	1	COVER	
	55	1	**120-9762**	4	SEAL-O-RING	
	56	3	**121-7391**	1	LEVER	
	57	2	**005-0469**	2	CUP-BEARING	
	58	2	**005-0471**	2	CONE-BEARING	
	59	2	**211-6759**	1	SHAFT (OUTPUT)	
	60	2	**123-8910**	1	CUP-TAPERED ROLLER	
	61	2	**123-8909**	1	CONE-BEARING	
	62	2	**7T-2646**	2	SPACER (66X79.5X2.02-MM THK)	
B	63	2	**6T-9166**	2	SHIM (0.051-MM THK)	
B		2	**6T-9165**	2	SHIM (0.076-MM THK)	
B		2	**6T-9164**	2	SHIM (0.178-MM THK)	
B		2	**6T-9163**	2	SHIM (0.599-MM THK)	
	64	3	**7T-3251**	1	BREATHER (TRANSMISSION)	
M	65	1	**6V-8210**	2	BOLT (M8X1.25X16-MM)	
	66	1	**106-9861**	1	PLATE-COVER	
	67	2	**7T-3051**	1	PLUG	
	68	2	**8T-1580**	1	CUP	
	69	2	**8T-1581**	1	CONE	
	70	2	**6Y-2737**	1	CUP-BEARING	
	71	2	**6Y-2736**	1	CONE-BEARING	
	72	2	**121-2500**	3	WASHER-THRUST (50X70X4-MM THK)	
	73	2	**121-2511**	1	SHAFT	
	74	2	**121-2537**	1	SHAFT-REVERSE	
	75	2	**121-2545**	1	SHAFT AS-INPUT	
		2	**123-0714**	1	BEARING	
		2	**123-2920**	3	PLUG	
	76	2	**121-2603**	1	GEAR (40 TEETH)	
	77	2	**121-2604**	1	GEAR (27 TEETH)	
	78	2	**121-0694**	1	WASHER-THRUST (40X70X4-MM THK)	
	79	2	**122-1882**	2	PLATE-END	
	80	2	**122-1881**	12	PLATE-CLUTCH	
	81	2	**122-1880**	12	DISC	
	82	2	**6V-8757**	3	RING	
	83	2	**178-8200**	2	RETAINER-SPRING	
	84	2	**178-8134**	2	SPRING	
	85	2	**178-8132**	2	SEAL	
M	86	1	**121-9875**	4	BOLT (M10X1.5X55-MM)	
	87	2	**122-6787**	2	YOKE AS	
		2	**123-1377**	1	GUARD	
	88	2	**122-1883**	1	SPACER (38X45X5-MM THK)	
	89	2	**122-1885**	2	SPACER (51X55X4-MM THK)	
	90	2	**123-8913**	4	BEARING-ROLLER	
	91	2	**172-5317**	2	BEARING-SPECIAL	
	92	2	**122-3649**	2	RING-RETAINING	
	93	2	**7T-3195**	2	WASHER (12.3X47X6.35-MM THK)	
	94	3	**123-2920**	1	PLUG	
M	95	2	**6V-8097**	2	BOLT (M12X1.75X30-MM)	

201-8562 TRANSMISSION GP-DIRECT DRIVE *(contd.)* i02015814

NOTE	REF NO	GRAPHIC REF	PART NUMBER	QTY	PART NAME 1 2 3 4 5 6 (PRODUCT LEVEL)	SEE PAGE
	96	2	**5P-8066**	2	SEAL-O-RING	
	97	2	**122-1884**	1	SPACER (45X49X8-MM THK)	
	98	2	**121-7385**	1	PUMP GP-TRANSMISSION	
	99	2	**7X-4741**	1	SEAL (140-MM ID)	
	100	2	**122-1886**	1	RING-SEAL	
	101	1	**014-5645**	3	BALL	
	102	1	**6Y-1341**	2	SPRING	
	103	1	**121-7403**	1	FORK-SHIFT	
	104	1	**121-7389**	1	ROD AS-GEARSHIFT	
	105	1	**121-7390**	1	ROD AS-GEARSHIFT	
	106	1	**7T-3249**	2	SCREW (3/8-24X0.75-IN)	
	107	2	**123-8907**	2	CONE-BEARING	
	108	2	**123-8908**	2	CUP-TAPERED ROLLER	
	109	3	**7T-3109**	1	PIN	
	110	1	**121-7404**	1	FORK-SHIFT	
	111	3	**127-3017**	1	SEAT AS	
	112	2	**6V-5100**	1	SEAL-O-RING	
	113	3	**3S-2093**	1	STRAP-CABLE	
	114	2	**1U-8846**	1	SEALANT-GASKET	
	115	1	**123-2919**	2	NUT (M11X1-THD)	
	116	1	**122-1876**	1	TUBE	
	117	1	**6Y-1896**	1	PLUG AS	
		1	**5P-6718**	1	SEAL-O-RING	
	118	1	**123-2918**	1	SLEEVE	
	119	2	**121-7398**	1	SPACER (70X79.5X2-MM THK)	
B	120	2	**121-7399**	1	SHIM (0.05-MM THK)	
B		2	**121-7400**	1	SHIM (0.08-MM THK)	
B		2	**121-7401**	1	SHIM (0.18-MM THK)	
B		2	**121-7402**	1	SHIM (0.6-MM THK)	
	121	1	**9W-5460**	1	RING	
	122	1	**4F-7952**	1	SEAL-O-RING	
	123	1	**7T-2651**	1	STRAINER	
	124	2	**178-8133**	2	GUIDE-SPRING	
M	125	1	**9X-6615**	4	BOLT (M5X.8X30-MM)	
Y	126	3	**121-4036**	1	VALVE GP-SOLENOID	269
Y	127	3	**223-8181**	1	VALVE GP-SOLENOID	270
	128	1	**3G-6927**	1	ADAPTER	
	129	1	**7T-3253**	2	DOWEL	
	130	2	**216-2267**	2	SEAL-LIP TYPE	
	131	1	**122-6785**	1	PLUG AS	

B-USE AS REQUIRED
M-METRIC PART
Y-SEPARATE ILLUSTRATION

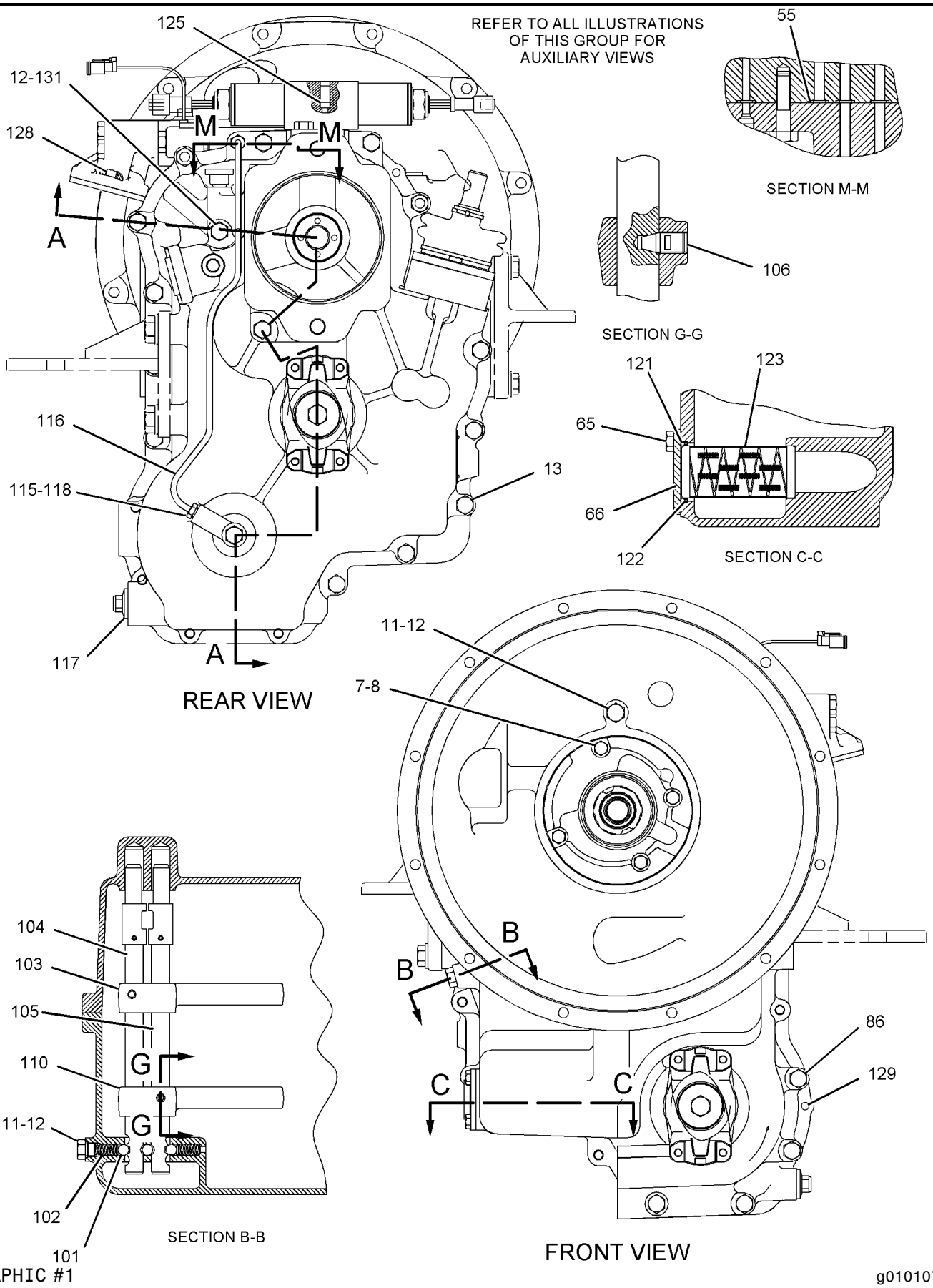

GRAPHIC #1

g01010746

201-8562 TRANSMISSION GP-DIRECT DRIVE *(contd.)* i02015814

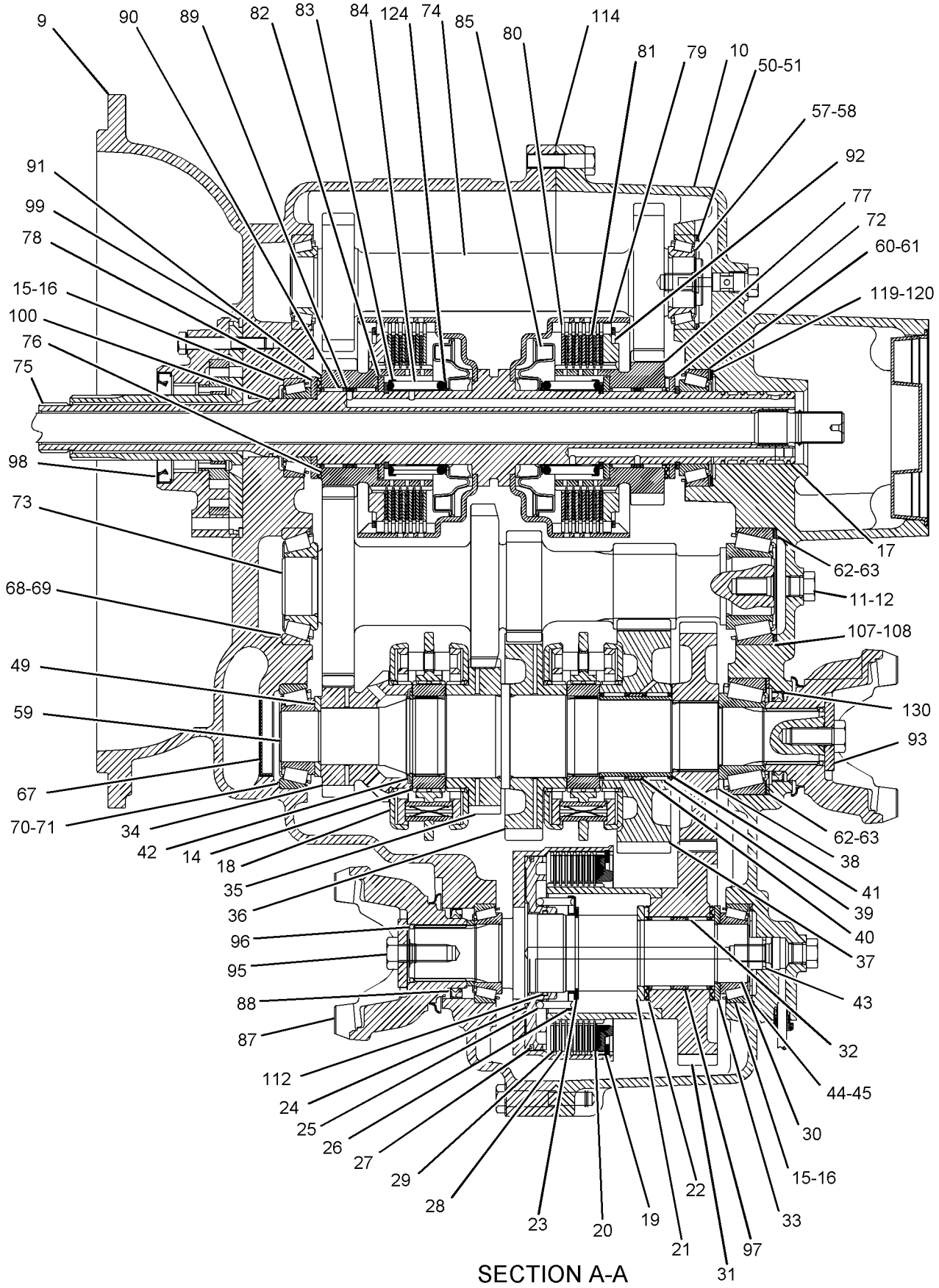

SECTION A-A

GRAPHIC #2

g01019426

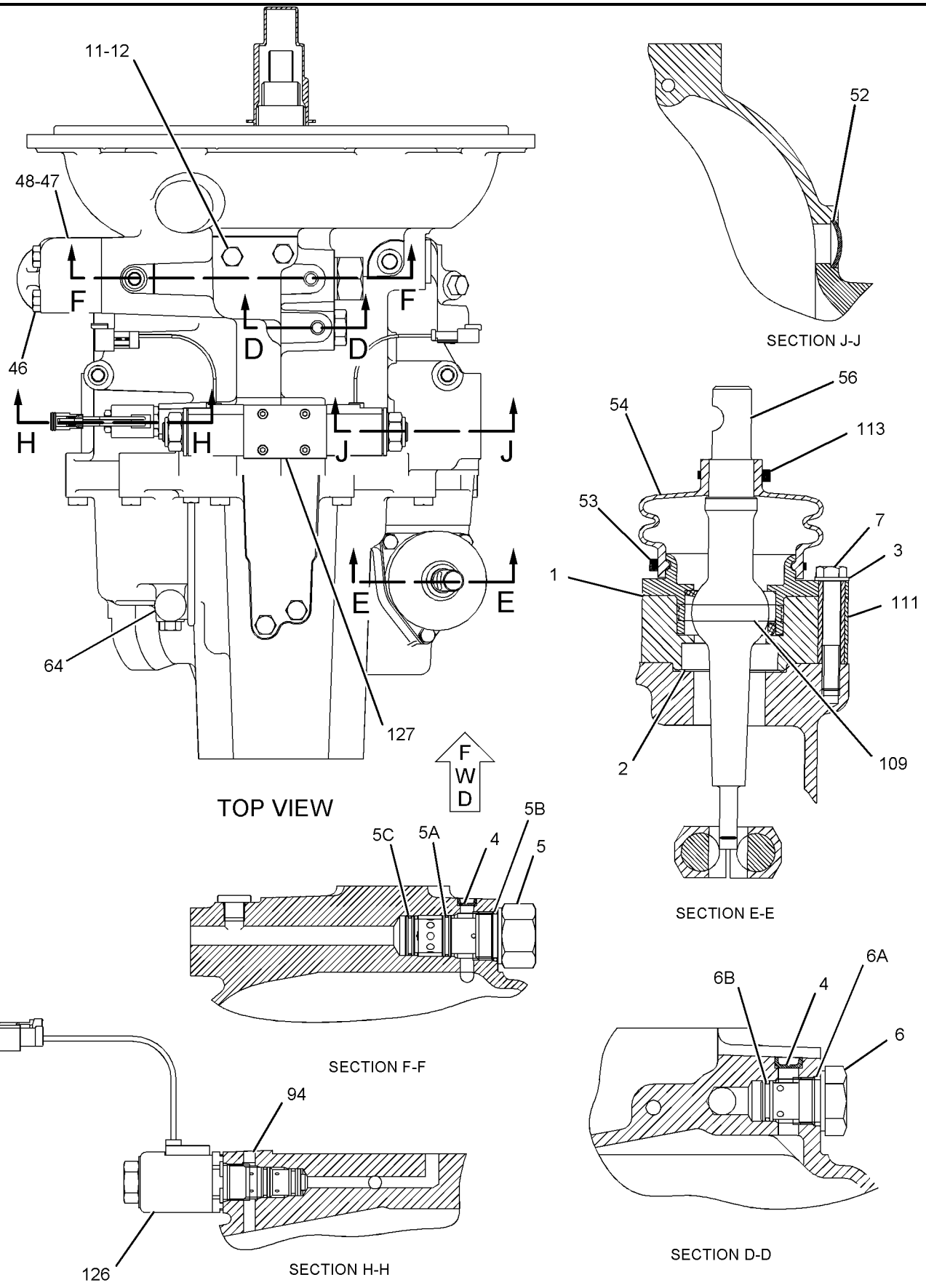

GRAPHIC #3 **<END>** g01010751

192-0849 TRANSMISSION GP-POWER SHIFT

S/N: FDP18400-UP
ALL WHEEL DRIVE
PART OF 202-7432 TRANSMISSION & MOUNTING GP
AN ATTACHMENT

SMCS-3030 **i01948335**

NOTE	REF NO	GRAPHIC REF	PART NUMBER	QTY	PART NAME 1 2 3 4 5 6 (PRODUCT LEVEL)	SEE PAGE
	1	5	**178-9566**	2	SPRING-PISTON	
M	2	2	**8C-5748**	4	BOLT (M8X1.25X55MM)	
	3	2,5	**161-3249**	1	RING-RETAINING	
	4	5	**8T-1581**	1	CONE	
	5	3	**150-7732**	2	SEAL-O-RING	
M	6	1,3	**8T-0271**	2	BOLT-SOCKET HEAD (M10X1.5X35MM)	
	7	1,3,5	**8T-1580**	1	CUP	
	8	1,6	**4F-7952**	1	SEAL-O-RING	
	9	2	**147-0218**	1	TUBE AS-TRANSFER	
Y	10	2	**238-1967**	1	VALVE GP-SOLENOID	272
M	11	2	**8C-8545**	2	BOLT-SOCKET HEAD (M5X0.8X20)	
	12	1,2	**120-9762**	5	SEAL-O-RING	
Y	13	2	**238-1966**	1	VALVE GP-SOLENOID	271
	14	2	**147-0253**	1	CASE AS-REAR	
		2	**9W-0717**	11	PLUG	
	15	2	**121-7398**	1	SPACER (2MM THK)	
B	16	2	**121-7402**	1	SHIM (0.6MM THK)	
B			**121-7401**	1	SHIM (0.18MM THK)	
B			**121-7400**	1	SHIM (0.08MM THK)	
B			**121-7399**	1	SHIM (0.05MM THK)	
	17	6	**9W-5460**	1	RING	
Y	18	6	**147-0209**	1	VALVE GP-RELIEF	268
	19	6	**121-7396**	1	VALVE GP-RELIEF	
		6	**6V-4589**	1	SEAL-O-RING	
		6	**8L-2746**	1	SEAL-O-RING	
	20	2	**7T-2646**	2	SPACER (66X79.5X2.02MM THK)	
B	21	2	**6T-9166**	2	SHIM (0.051MM THK)	
B			**6T-9165**	2	SHIM (0.076MM THK)	
B			**6T-9164**	2	SHIM (0.178MM THK)	
B			**6T-9163**	2	SHIM (0.599MM THK)	
Y	22	6	**121-4036**	2	VALVE GP-SOLENOID	269
	23	6	**106-9861**	1	PLATE-COVER	
	24	5	**122-1878**	1	RING-SEAL	
	25	2	**147-0201**	1	TUBE AS	
	26	2,3,6	**7W-3556**	12	WASHER (146.03X213X8MM THK)	
	27	2,3,6	**147-0234**	6	BOLT (9/16-18X21MM)	
B	28	2	**1U-8846**	1	SEALANT-GASKET	
	29	2	**5P-8066**	2	SEAL-O-RING	
M	30	2,4	**6V-8097**	3	BOLT (M12X1.75X30MM)	
	31	2,4	**7T-3195**	3	WASHER (12.3X47X6.35MM THK)	
	32	2	**122-6787**	2	YOKE AS	
		2	**123-1377**	1	GUARD	
	33	2	**216-2267**	2	SEAL-LIP TYPE	
	34	2	**121-7385**	1	PUMP GP-TRANSMISSION	
		2	**124-6612**	1	SEAL-LIP TYPE (57.15MM ID)	
	35	2	**9P-9150**	4	WASHER (8.25X18X.84MM THK)	
	36	4	**173-0332**	1	SHAFT AS	
		4	**163-9091**	1	PLUG	
	37	2	**7X-4741**	1	SEAL (140MM ID)	
	38	2,3	**9S-4185**	3	PLUG	
	39	2,3	**3K-0360**	3	SEAL-O-RING	
	40	3,4,5	**123-8906**	5	CUP-TAPERED ROLLER	
	41	3,4,5	**123-8905**	5	CONE	
	42	3,4	**121-0694**	2	WASHER-THRUST	

192-0849 **TRANSMISSION GP-POWER SHIFT** *(contd.)* **i01948335**

NOTE	REF NO	GRAPHIC REF	PART NUMBER	QTY	PART NAME 1 2 3 4 5 6 (PRODUCT LEVEL)	SEE PAGE
	43	3,4	**172-5317**	6	BEARING-SPECIAL	
	44	4	**123-8913**	2	BEARING-ROLLER	
	45	4	**147-0224**	1	GEAR (45 AND 32 TEETH)	
	46	3,4,5	**8E-5707**	7	PLATE-END	
	47	3,4,5	**6V-8757**	6	RING	
	48	3,4,5	**6T-9194**	45	PLATE	
	49	3,4,5	**6Y-7929**	37	DISC-FRICTION	
	50	3,4,5	**9U-8875**	6	RING-RETAINING	
	51	3,4	**121-2500**	4	WASHER-THRUST	
	52	3,4	**147-0202**	2	GEAR (45 AND 24 TEETH)	
	53	4	**147-0257**	1	SHAFT AS-INPUT	
		4	**123-2920**	3	PLUG	
	54	4	**9U-8886**	4	RING-SEAL (44.95MM ID)	
	55	4	**123-8910**	1	CUP-TAPERED ROLLER	
	56	4	**123-8909**	1	CONE-BEARING	
	57	3,4	**7T-6655**	4	BEARING	
	58	3,4	**147-0259**	2	SPACER (51.1X54.9X18.7MM THK)	
	59	3,4,5	**147-0238**	5	SPRING AS	
	60	3,4,5	**6V-5100**	5	SEAL-O-RING	
	61	3,4	**147-0228**	4	PISTON-CLUTCH	
	62	3,4,5	**6T-9196**	7	SEAL	
	63	4	**122-1886**	1	RING-SEAL	
	64	4,5	**123-8907**	3	CONE-BEARING	
	65	4,5	**123-8908**	3	CUP-TAPERED ROLLER	
	66	4	**147-0212**	1	GEAR (42 TEETH)	
	67	4	**147-0216**	1	GEAR (38 TEETH)	
	68	4,5	**147-0203**	3	WASHER-THRUST (5MM THK)	
	69	4	**147-0258**	1	SPACER (46X50X16MM THK)	
	70	4	**147-0215**	1	GEAR (45 AND 19 TEETH)	
	71	4,5	**172-6050**	6	BEARING-SPECIAL	
	72	4,5	**122-1877**	3	WASHER-THRUST (4MM THK)	
	73	3,4,5	**6Y-1192**	7	RING-SEAL (32MM ID)	
	74	4,5	**123-8912**	6	BEARING-ROLLER	
	75	1,3,6	**9S-4191**	14	PLUG	
	76	5	**147-0264**	1	GEAR (45 AND 28 TEETH)	
	77	5	**147-0260**	1	RETAINER-SPRING	
	78	5	**095-0928**	1	RING-RETAINING (EXTERNAL)	
	79	5	**147-0205**	2	WASHER (55X78X5MM THK)	
	80	5	**147-0248**	1	SPACER (56.2X60X15.8MM THK)	
	81	5	**157-2090**	1	GEAR (38 TEETH)	
	82	5	**172-6743**	2	BEARING-SPECIAL	
	83	5	**147-0242**	1	GEAR (32 TEETH)	
	84	5	**150-3757**	2	BEARING	
	85	5	**009-2062**	2	SEAL-O-RING	
	86	5	**157-2088**	2	PISTON AS	
	87	5	**147-0261**	1	SHAFT AS-OUTPUT (REAR)	
		5	**9W-0717**	2	PLUG	
	88	5	**095-0927**	1	RING-RETAINING	
	89	5	**122-1884**	1	SPACER (45X49X8MM THK)	
	90	5	**147-0210**	1	GEAR (45 AND 36 TEETH)	
	91	5	**147-0207**	1	SHAFT AS-OUTPUT (FRONT)	
	92	3,5	**122-1879**	2	SPACER (58X67.5X2MM THK)	
B	93	5	**104-3288**	2	SHIM (0.05MM THK)	
B			**121-2059**	2	SHIM (0.08MM THK)	
B			**121-2060**	2	SHIM (0.18MM THK)	
B			**121-2061**	2	SHIM (0.6MM THK)	
	94	6	**147-0236**	1	TUBE AS-TRANSFER	
	95	3	**147-0226**	1	TUBE AS	
	96	3	**147-0256**	1	SHAFT AS-REVERSE	

192-0849 **TRANSMISSION GP-POWER SHIFT** ***(contd.)*** **i01948335**

NOTE	REF NO	GRAPHIC REF	PART NUMBER	QTY	PART NAME 1 2 3 4 5 6 (PRODUCT LEVEL)	SEE PAGE
		3	**9W-0717**	1	PLUG	
		3	**147-0270**	1	ORIFICE	
	97	3	**147-0211**	1	ELBOW AS	
		3	**3G-6927**	1	ADAPTER	
	98	5	**6Y-7957**	8	DISC-FRICTION	
	99	5	**147-0227**	1	PISTON-CLUTCH	
M	100	1	**6V-8335**	16	BOLT-SELF LOCKING (M10X1.5X40MM)	
	101	1,6	**147-0262**	4	WASHER (58X67.5X1.5MM THK)	
	102	1,6	**147-0266**	2	BOLT (3/4-16X21MM)	
	103	1	**189-5746**	1	SENSOR GP-SPEED	
		1	**102-8802**	1	KIT-RECEPTACLE (2 PIN)	
		1	**3E-3365**	1	WEDGE-RECEPTACLE LOCK (2 PIN)	
		1	**8T-8729**	2	PIN-CONNECTOR	
E		1	**9X-1386**		SLEEVE (14CM)	
		1	**171-5349**	1	STRAP-MARKER	
	104	1	**1V-6341**	1	SEAL	
	105	1,3,6	**3J-1907**	14	SEAL-O-RING	
M	106	1	**8T-0643**	1	BOLT (M10X1.50X80MM)	
	107	1	**6Y-1896**	1	PLUG AS	
		1	**5P-6718**	1	SEAL-O-RING	
	108	1,3	**205-9244**	4	PLUG	
M	109	3	**9X-6615**	12	BOLT (M5X.8X30MM)	
	110	1	**7T-3253**	2	DOWEL	
	111	1	**7T-3251**	1	BREATHER (TRANSMISSION)	
	112	2	**192-0850**	1	CASE AS	
		2	**9W-0717**	4	PLUG	
		2	**147-0268**	4	PLUG	
	113	2	**122-1883**	1	SPACER (38X45X5MM THK)	
	114	5	**121-0885**	1	RETAINER	
Y	115	2	**238-1968**	1	VALVE GP-SOLENOID	273
	116	6	**7T-2651**	1	STRAINER	
	117	6	**6T-9202**	2	PLUG	
M	118	6	**6V-8210**	2	BOLT (M8X1.25X16 MM)	

B-USE AS REQUIRED
E-ORDER BY THE CENTIMETER
M-METRIC PART
Y-SEPARATE ILLUSTRATION

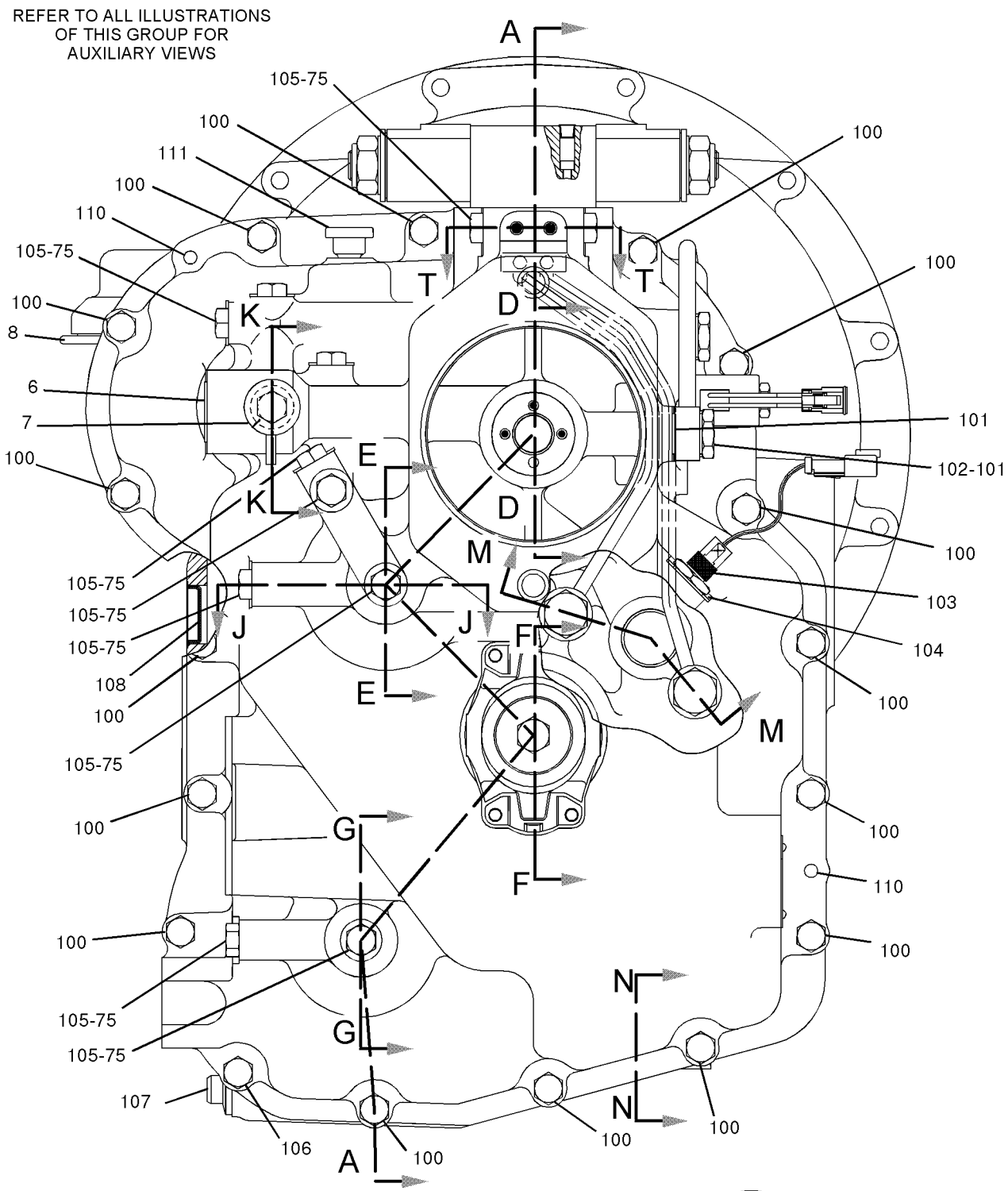

GRAPHIC #1 g01009865

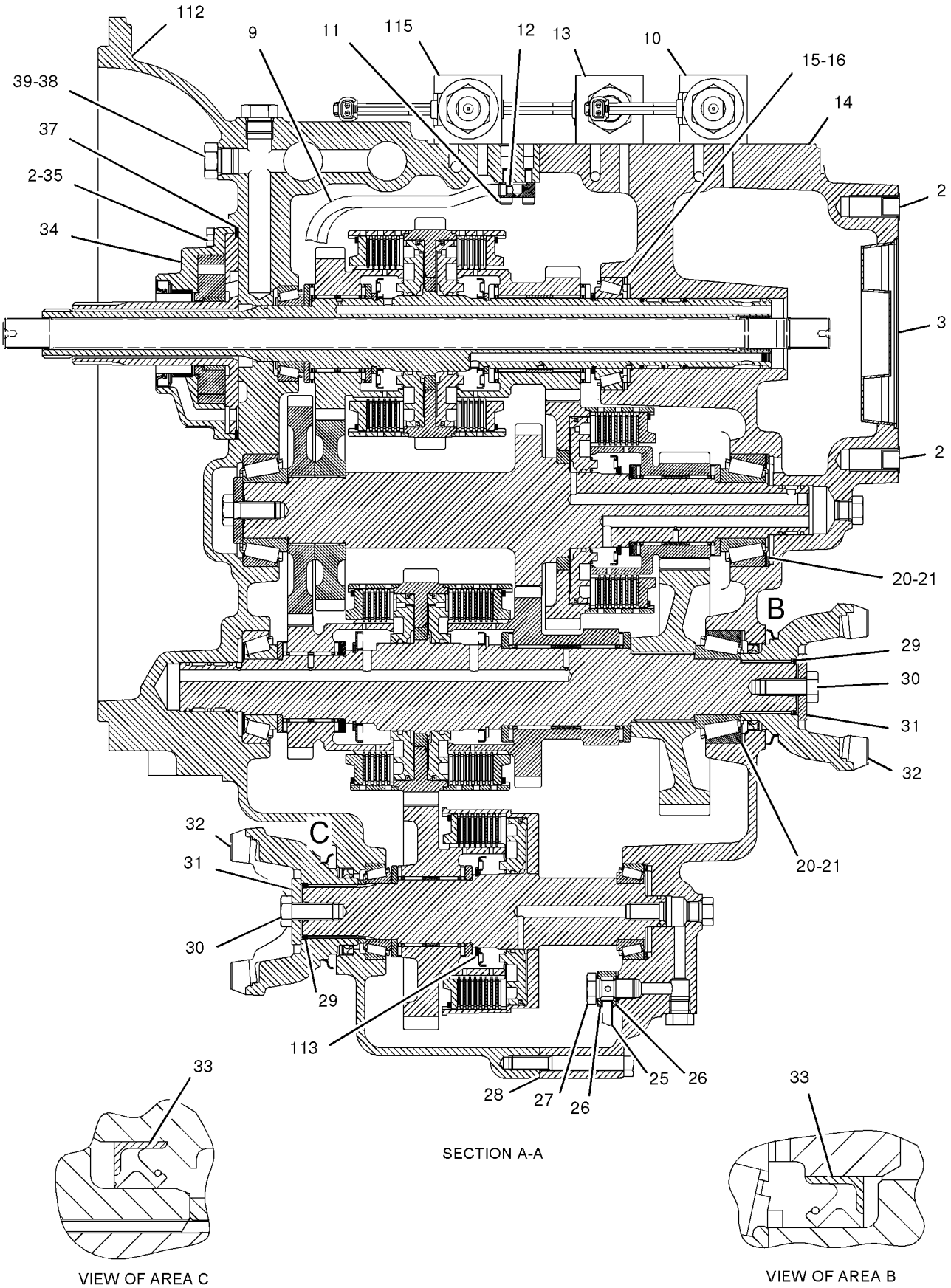

GRAPHIC #2

g01009871

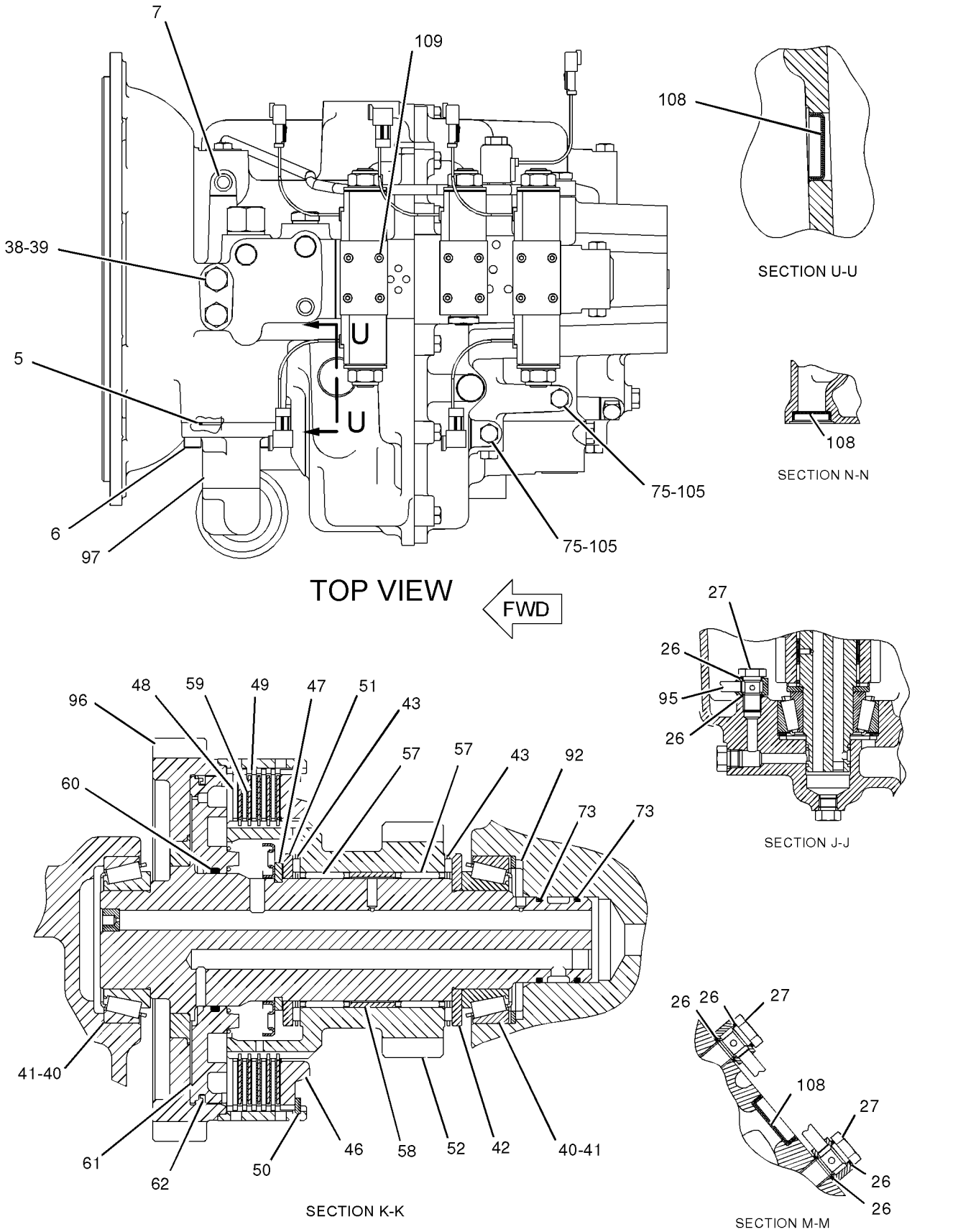

GRAPHIC #3

g01014170

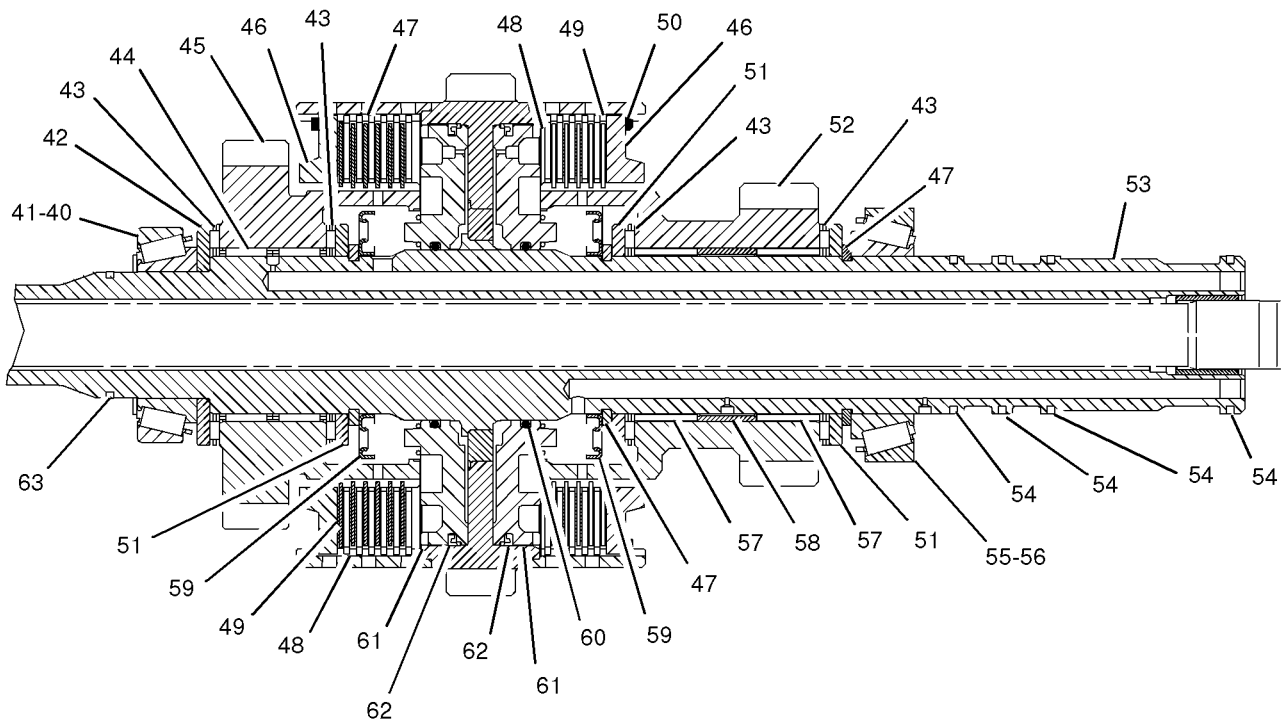

SECTION D-D

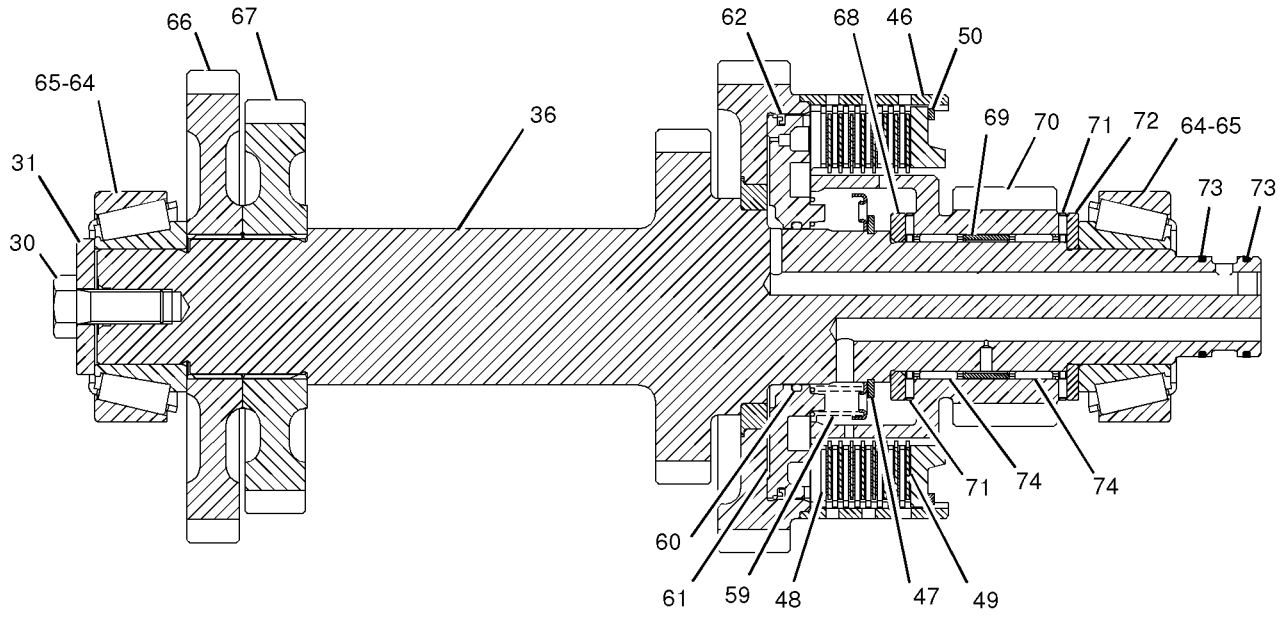

SECTION E-E

GRAPHIC #4

g01010113

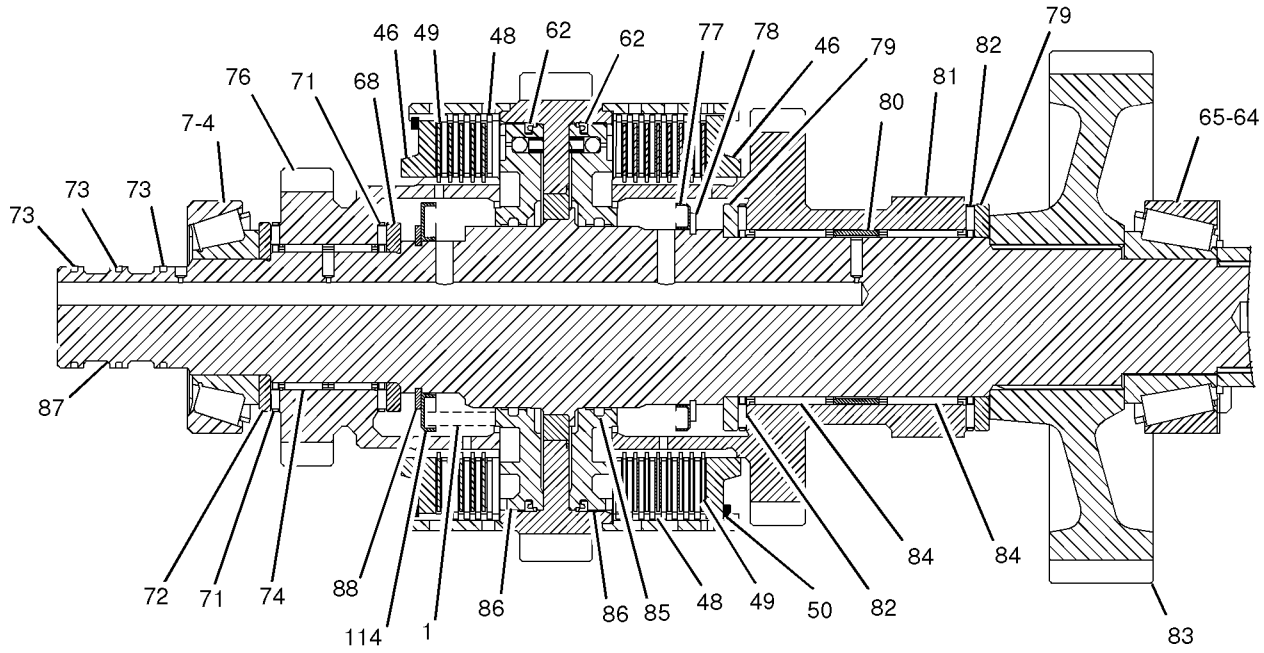

SECTION F-F

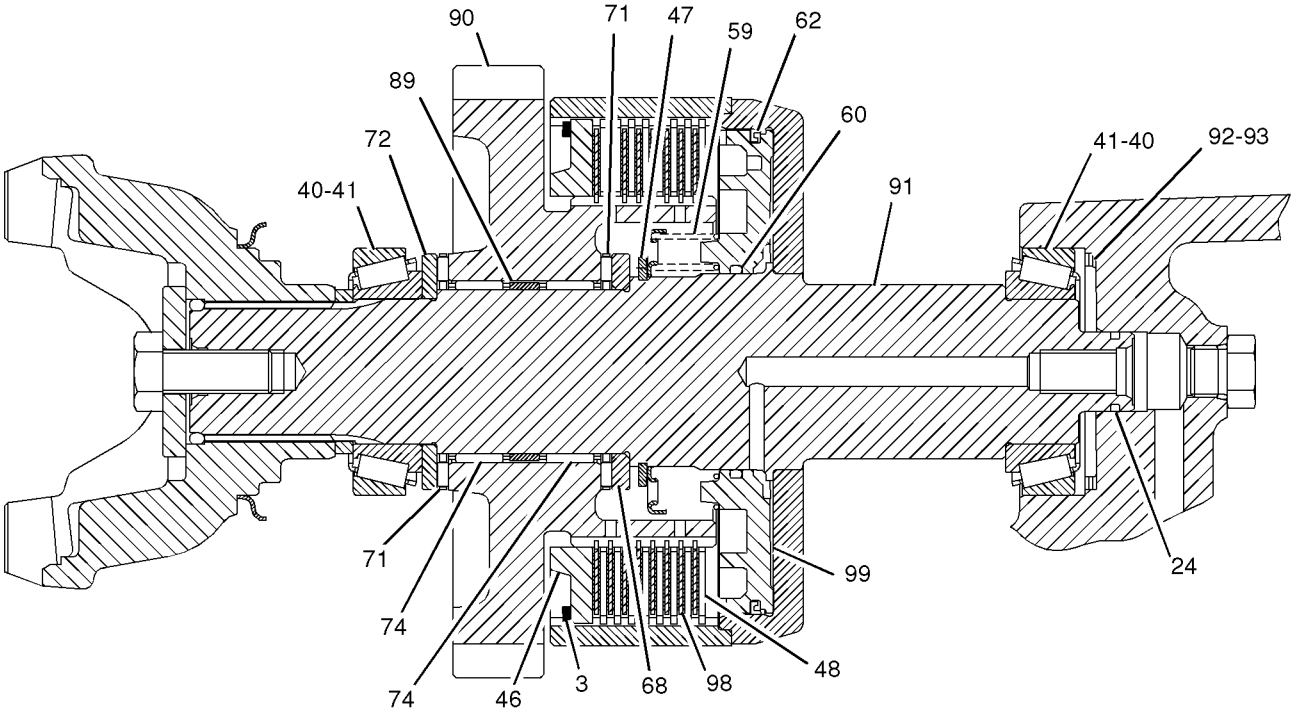

SECTION G-G

GRAPHIC #5

g01010114

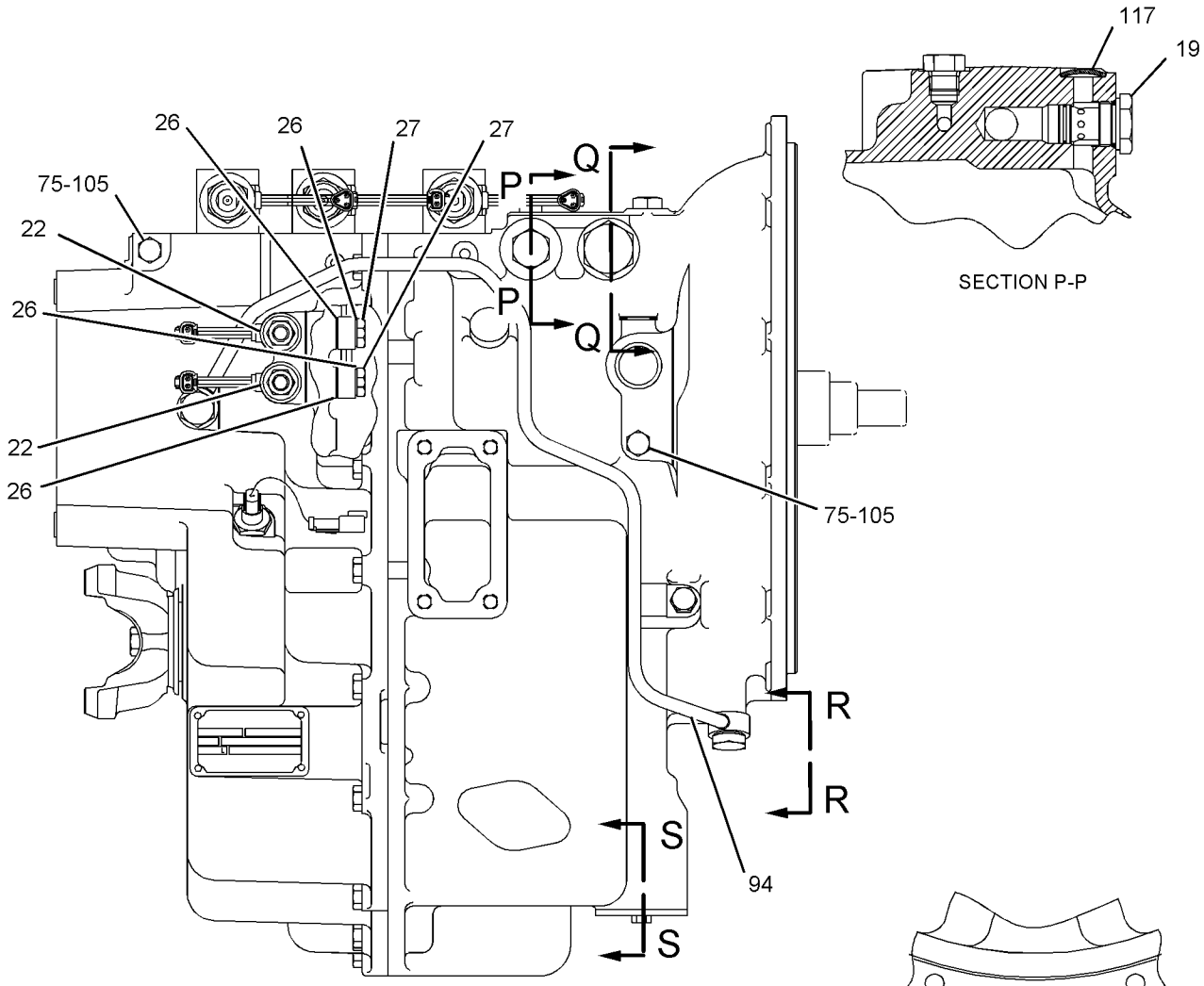

RIGHT SIDE VIEW

SECTION P-P

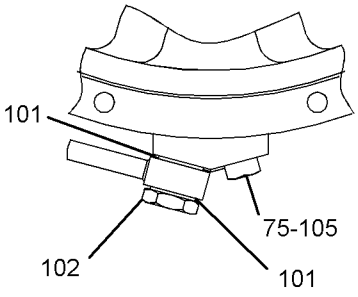

VIEW R-R

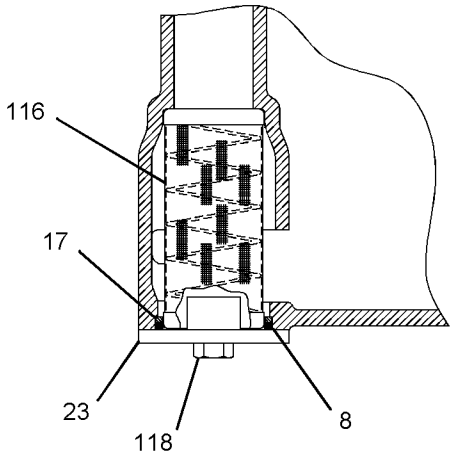

SECTION S-S

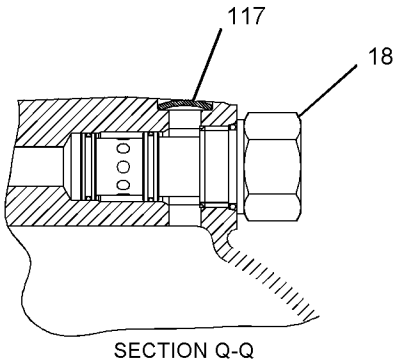

SECTION Q-Q

GRAPHIC #6 **<END>** g01010283

147-0209 VALVE GP-RELIEF

S/N: FDP18400-UP
PART OF 192-0849 TRANSMISSION GP-POWER SHIFT
AN ATTACHMENT

SMCS-3133, 3182, 3210, 3213 **i01980265**

NOTE	REF NO	GRAPHIC REF	PART NUMBER	QTY	PART NAME 1 2 3 4 5 6 (PRODUCT LEVEL)	SEE PAGE
	1	1	**7X-4744**	1	SEAL-O-RING	
	2	1	**6V-9178**	1	SEAL-O-RING	
	3	1	**106-9586**	1	SEAL-O-RING	

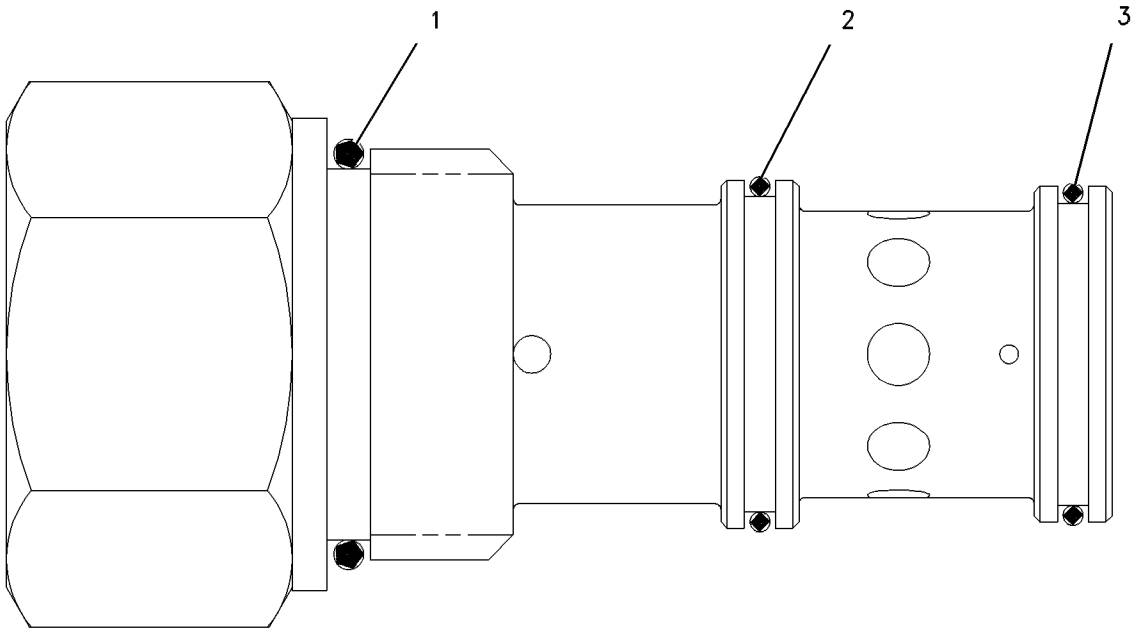

GRAPHIC #1 **<END>** g00304718

121-4036 VALVE GP-SOLENOID

S/N: FDP18400-UP

PART OF 201-8562 TRANSMISSION GP-DIRECT DRIVE, 192-0849 TRANSMISSION GP-POWER SHIFT

AN ATTACHMENT

SMCS-3174 **i01517232**

NOTE	REF NO	GRAPHIC REF	PART NUMBER	QTY	PART NAME 1 2 3 4 5 6 (PRODUCT LEVEL)	SEE PAGE
	1	1	**3J-9196**	1	NUT-JAM (1/2-20 THD)	
	2	1	**122-1672**	1	CARTRIDGE AS	
	3	1	**130-0013**	1	COIL AS	
	4	1	**1S-9593**	2	STRAP-CABLE	
	5	1	**3E-3362**	1	WEDGE-PLUG LOCK (2 PIN)	
	6	1	**186-3736**	2	SOCKET-CONNECTOR	
	7	1	**155-2270**	1	KIT-CONNECTING PLUG (2 PIN)	
					(KIT SERVICES PLUG AS. AND WEDGE)	
					AVAILABLE REPAIR KIT(S):	
			122-1135	1	KIT-SEAL	

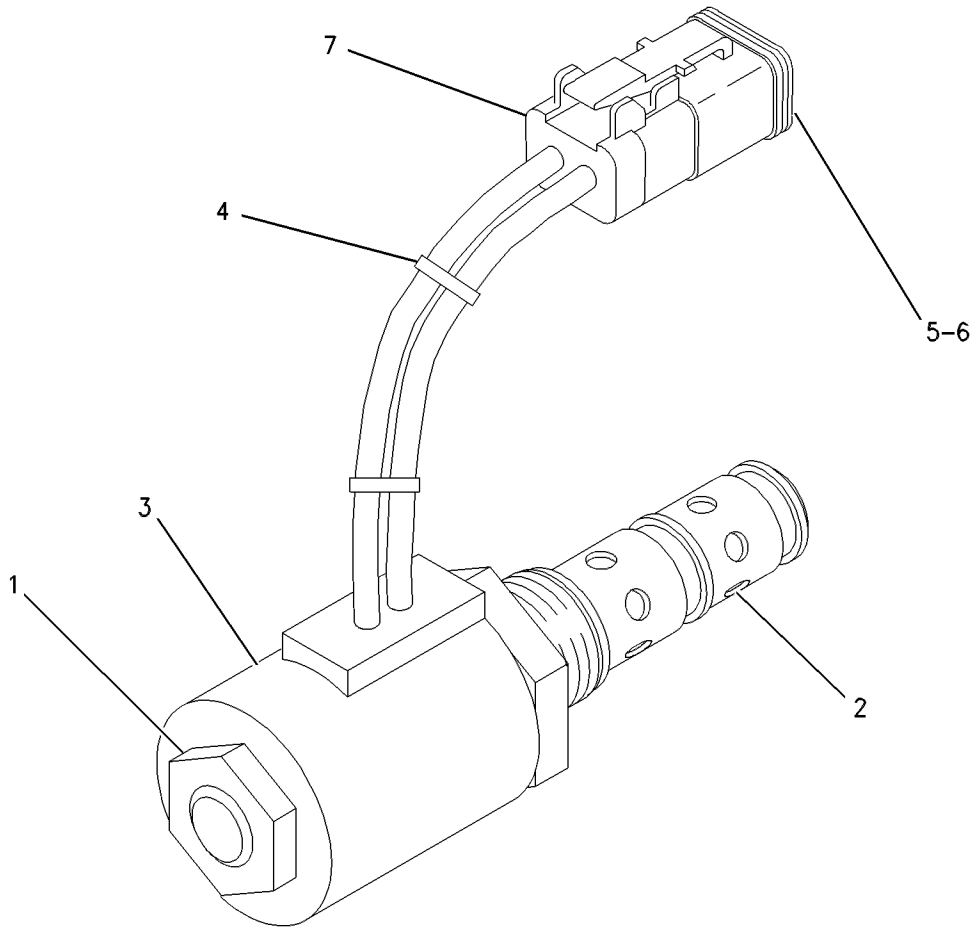

GRAPHIC #1 **<END>** g00582971

223-8181 VALVE GP-SOLENOID–TRANSMISSION–
FORWARD, NEUTRAL, REVERSE

S/N: FDP18400-UP

PART OF 201-8561, 201-8562 TRANSMISSION GP-DIRECT DRIVE

AN ATTACHMENT

SMCS-3174 **i01958696**

NOTE	REF NO	GRAPHIC REF	PART NUMBER	QTY	PART NAME 1 2 3 4 5 6 (PRODUCT LEVEL)	SEE PAGE
	1	1	**117-2911**	1	COIL AS	
		1	**1S-9593**	2	STRAP-CABLE	
		1	**102-8802**	1	KIT-RECEPTACLE (2 PIN)	
		1	**3E-3365**	1	WEDGE-RECEPTACLE LOCK (2 PIN)	
		1	**186-3735**	2	PIN-CONNECTOR	
	2	1	**130-0912**	1	COIL AS	
		1	**1S-9593**	2	STRAP-CABLE	
		1	**102-8803**	1	KIT-RECEPTACLE (3 PIN)	
		1	**3E-3371**	1	WEDGE-RECEPTACLE LOCK (3 PIN)	
		1	**186-3735**	2	PIN-CONNECTOR	
		1	**8T-8737**	1	PLUG-SEAL	
	3	1	**143-6227**	1	PLUG-ORIFICE	
	4	1	**202-0040**	2	NUT-LOCKING	
	5	1	**061-8639**	2	SEAL-O-RING	
	6	1	**143-4655**	2	WASHER (M18.4X24.8X0.8MM THK)	
	7	1	**8L-2779**	4	SEAL-O-RING	

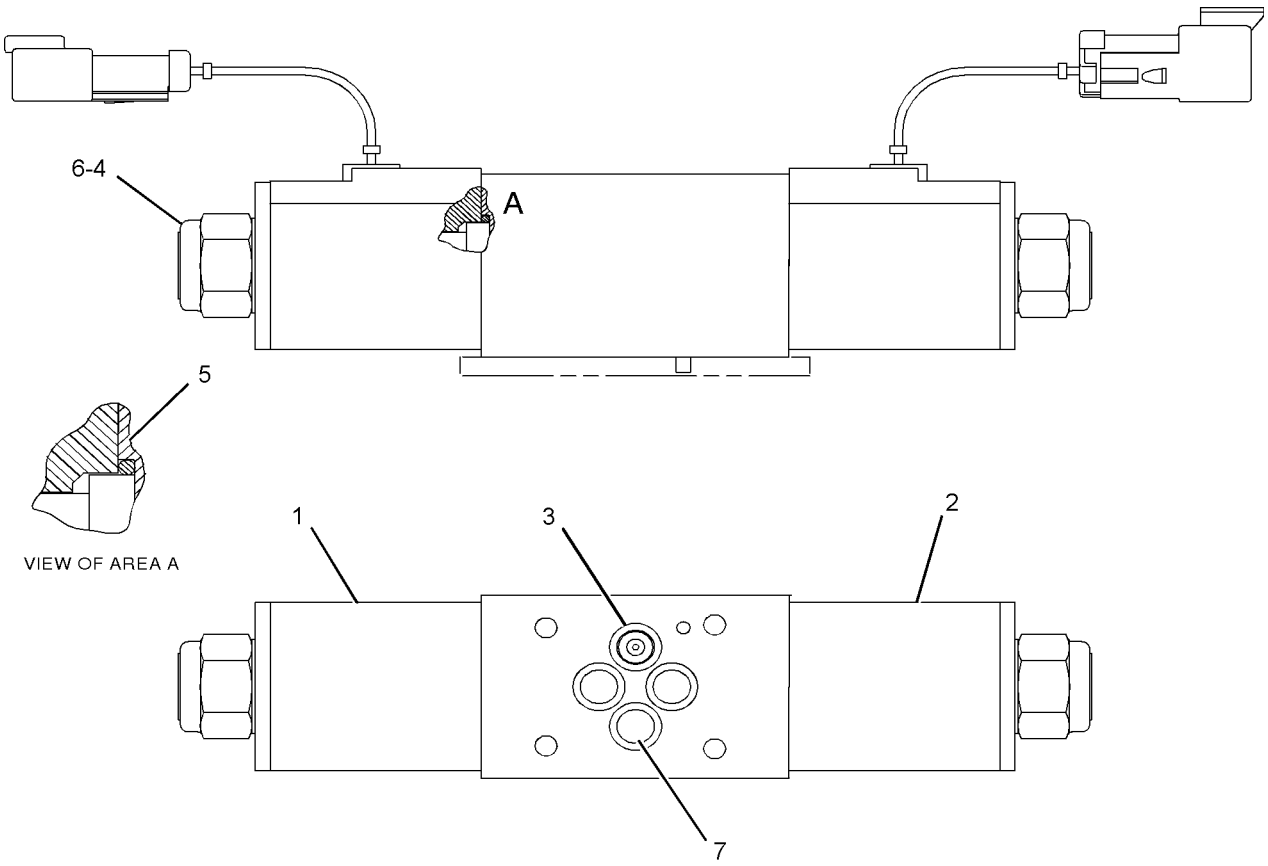

GRAPHIC #1 **<END>** g01017996

238-1966 VALVE GP-SOLENOID

S/N: FDP18400-UP
PART OF 192-0849 TRANSMISSION GP-POWER SHIFT
AN ATTACHMENT

SMCS-3174 **i01934883**

NOTE	REF NO	GRAPHIC REF	PART NUMBER	QTY	PART NAME 1 2 3 4 5 6 (PRODUCT LEVEL)	SEE PAGE
	1	1	**117-2911**	1	COIL AS	
		1	**1S-9593**	2	STRAP-CABLE	
		1	**102-8802**	1	KIT-RECEPTACLE (2 PIN)	
		1	**186-3735**	2	PIN-CONNECTOR	
	2	1	**061-8639**	2	SEAL-O-RING	
	3	1	**8L-2779**	4	SEAL-O-RING	
	4	1	**202-0040**	1	NUT-LOCKING	
	5	1	**150-4932**	1	PLUG-ORIFICE	
	6	1	**143-4655**	1	WASHER (M18.4X24.8X0.8MM THK)	

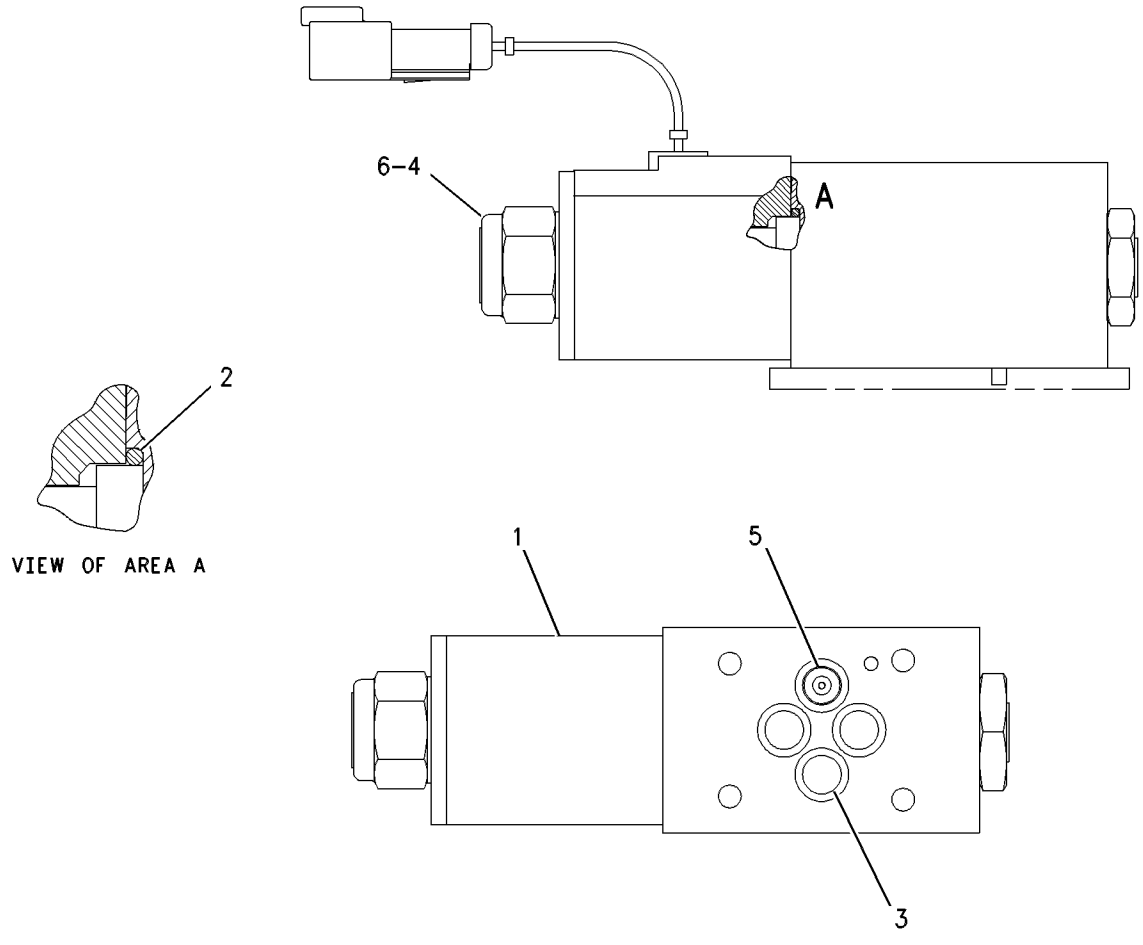

GRAPHIC #1 **<END>** g00304719

238-1967 VALVE GP-SOLENOID

S/N: FDP18400-UP
PART OF 192-0849 TRANSMISSION GP-POWER SHIFT
AN ATTACHMENT

SMCS-3174 **i01935400**

NOTE	REF NO	GRAPHIC REF	PART NUMBER	QTY	PART NAME 1 2 3 4 5 6 (PRODUCT LEVEL)	SEE PAGE
	1	1	**8L-2779**	4	SEAL-O-RING	
	2	1	**061-8639**	2	SEAL-O-RING	
	3	1	**117-2911**	1	COIL AS	
	3A	1	**1S-9593**	2	STRAP-CABLE	
	3B	1	**102-8802**	1	KIT-RECEPTACLE (2 PIN)	
	3C	1	**3E-3365**	1	WEDGE-RECEPTACLE LOCK (2 PIN)	
	3D	1	**8T-8729**	2	PIN-CONNECTOR	
	4	1	**130-0912**	1	COIL AS	
	4A	1	**1S-9593**	2	STRAP-CABLE	
	4B	1	**102-8803**	1	KIT-RECEPTACLE (3 PIN)	
	4C	1	**3E-3371**	1	WEDGE-RECEPTACLE LOCK (3 PIN)	
	4D	1	**8T-8729**	2	PIN-CONNECTOR	
	4E	1	**8T-8737**	1	PLUG-SEAL	
	5	1	**143-4655**	2	WASHER (M18.4X24.8X0.8MM THK)	
	6	1	**150-4932**	1	PLUG-ORIFICE	
	7	1	**202-0040**	2	NUT-LOCKING	

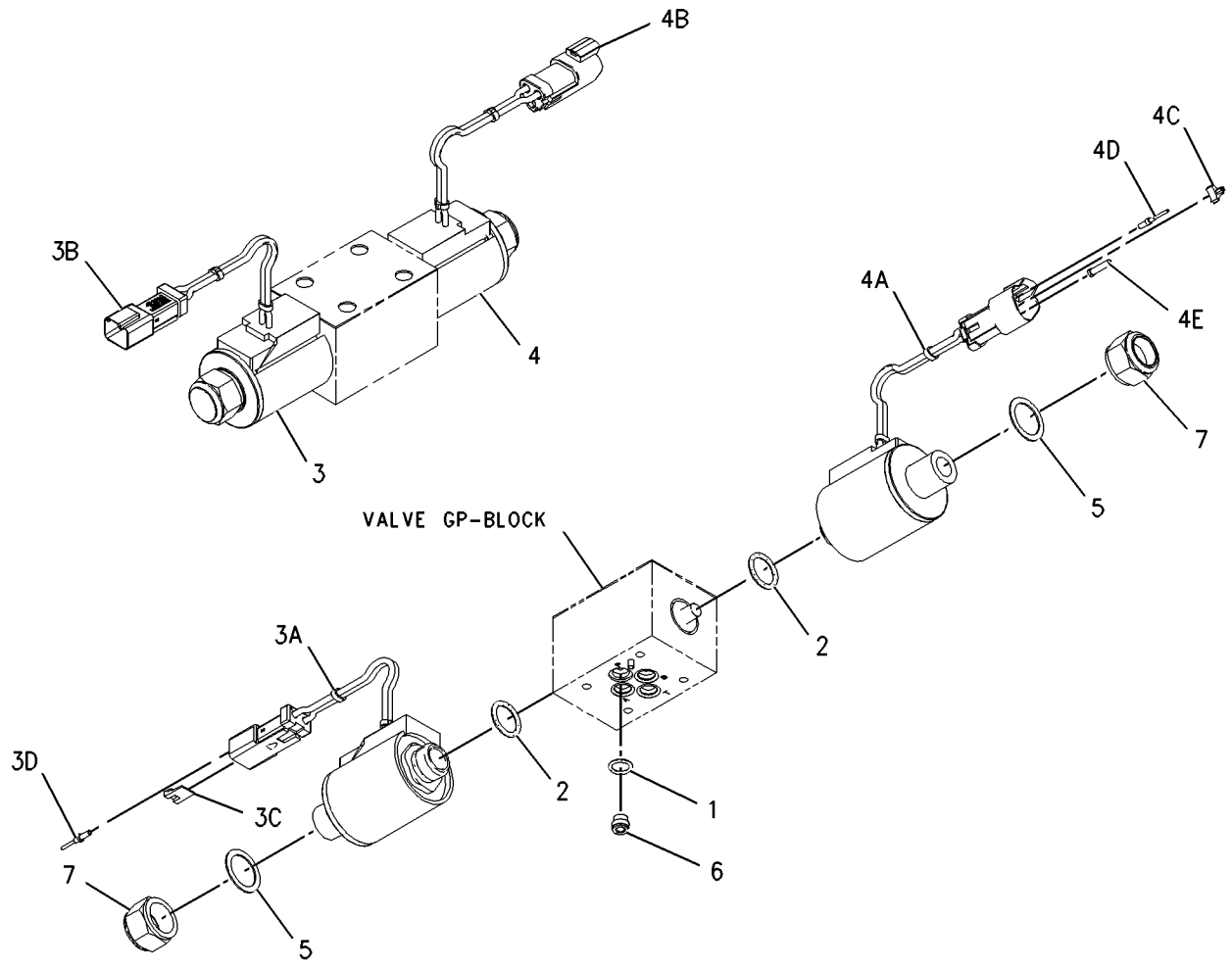

GRAPHIC #1 **<END>** g01007706

238-1968 VALVE GP-SOLENOID

S/N: FDP18400-UP
PART OF 192-0849 TRANSMISSION GP-POWER SHIFT
AN ATTACHMENT

SMCS-3174 **i01940514**

NOTE	REF NO	GRAPHIC REF	PART NUMBER	QTY	PART NAME 1 2 3 4 5 6 (PRODUCT LEVEL)	SEE PAGE
	1	1	**117-2911**	1	COIL AS	
		1	**1S-9593**	2	STRAP-CABLE	
		1	**102-8802**	1	KIT-RECEPTACLE (2 PIN)	
		1	**3E-3365**	1	WEDGE-RECEPTACLE LOCK (2 PIN)	
		1	**8T-8729**	2	PIN-CONNECTOR	
	2	1	**130-0912**	1	COIL AS	
		1	**1S-9593**	2	STRAP-CABLE	
		1	**102-8803**	1	KIT-RECEPTACLE (3 PIN)	
		1	**3E-3371**	1	WEDGE-RECEPTACLE LOCK (3 PIN)	
		1	**8T-8729**	2	PIN-CONNECTOR	
		1	**8T-8737**	1	PLUG-SEAL	
	3	1	**202-0040**	2	NUT-LOCKING	
	4	1	**218-3597**	1	PLUG-ORIFICE	
	5	1	**061-8639**	2	SEAL-O-RING	
	6	1	**143-4655**	2	WASHER (M18.4X24.8X0.8MM THK)	
	7	1	**8L-2779**	4	SEAL-O-RING	

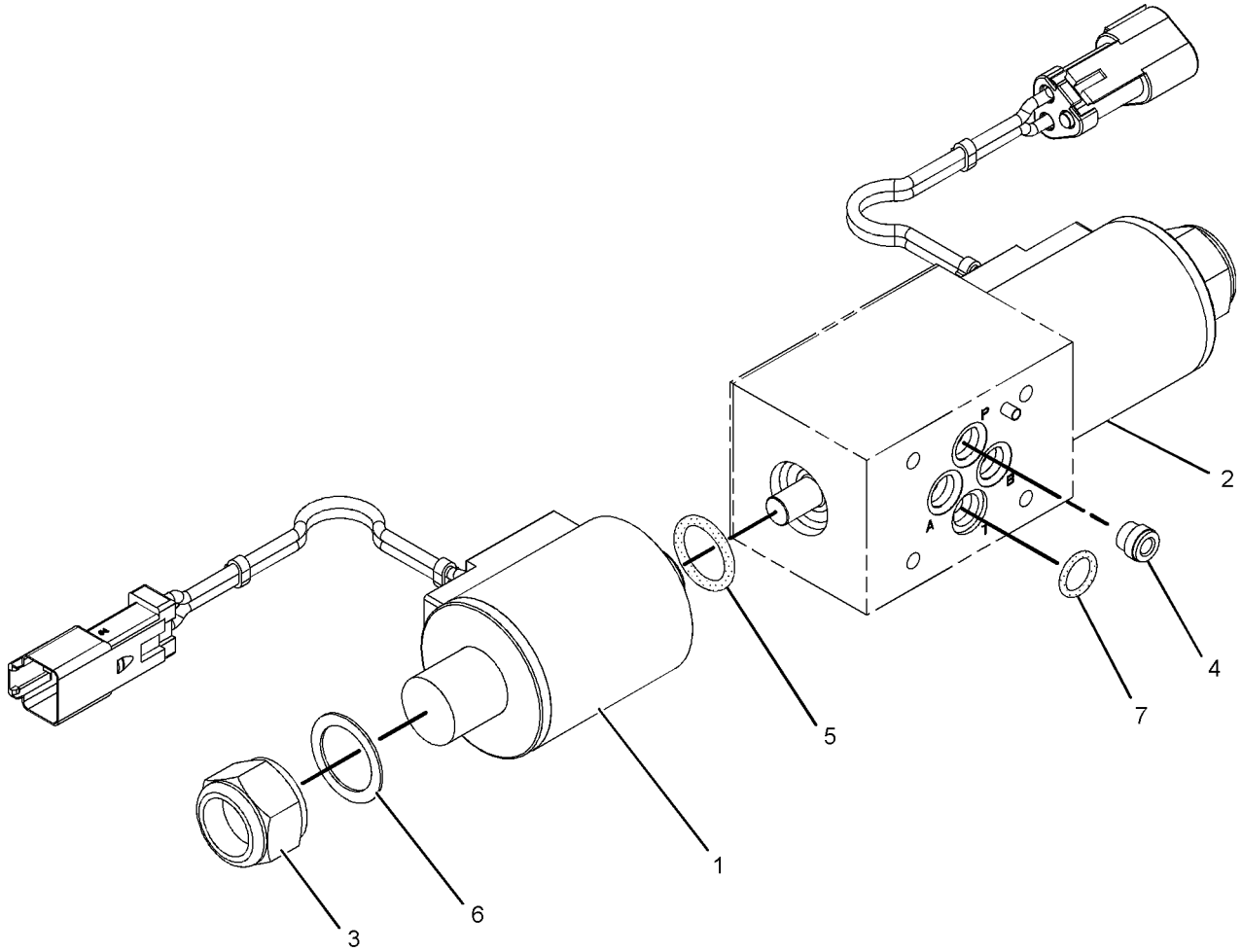

GRAPHIC #1 **<END>** g01009815

6D-0337 VALVE GP-TIRE

S/N: FDP18400-UP

PART OF 112-9332, 112-9334, 112-9337, 119-7787, 119-7788, 127-4289, 127-4290, 9R-2822 WHEEL & TIRE GP

AN ATTACHMENT

SMCS-4203 **i01720866**

NOTE	REF NO	GRAPHIC REF	PART NUMBER	QTY	PART NAME 1 2 3 4 5 6 (PRODUCT LEVEL)	SEE PAGE
	1	1	**6D-0443**	1	HOUSING AS-CORE	
	2	1	**2D-2628**	1	CORE-VALVE	
	3	1	**2D-2633**	1	CAP	
	4	1	**8D-2707**	1	SPUD AS	
	5	1	**2D-2629**	1	GROMMET	
	6	1	**2D-2630**	1	WASHER	
	7	1	**2D-2631**	1	NUT (.482-26 THD)	

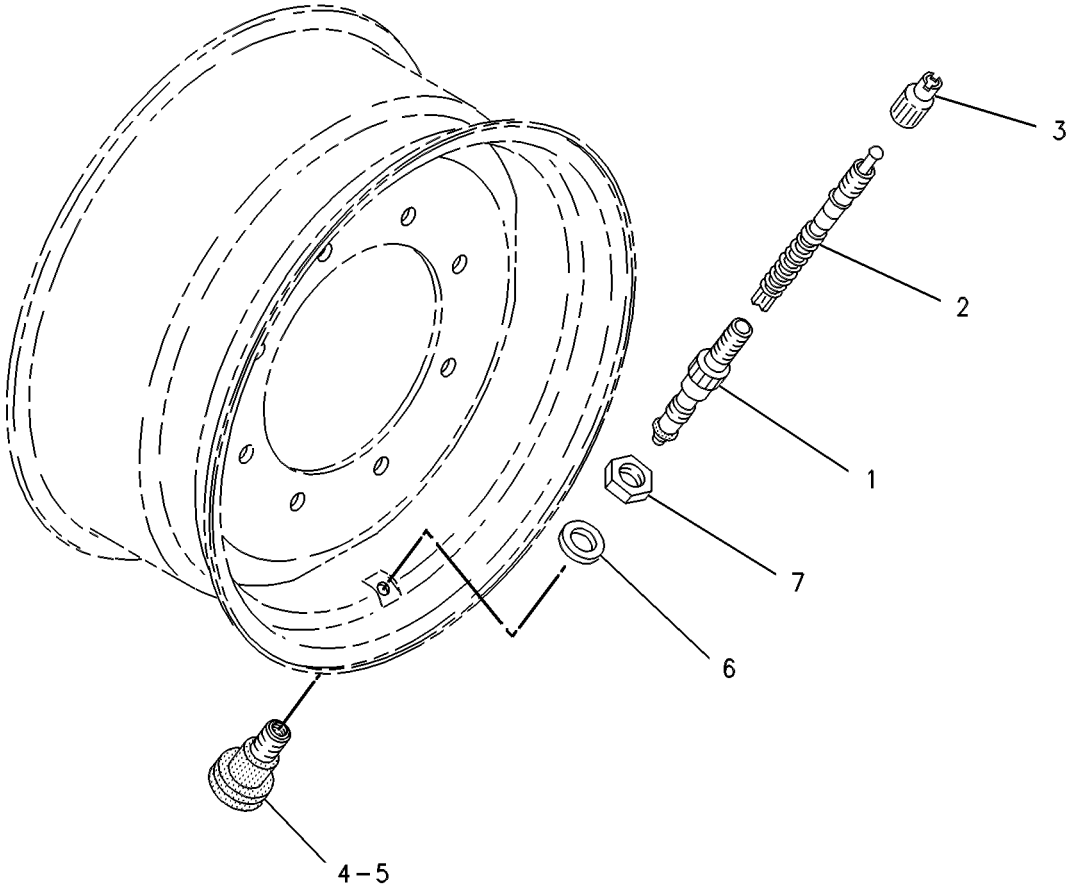

GRAPHIC #1 **<END>** g00121904

201-1920 VALVE GP-TIRE

S/N: FDP18400-UP

PART OF 201-1863, 201-1864, 201-1875, 201-1876, 201-1878 WHEEL & TIRE GP

AN ATTACHMENT

SMCS-4203 **i01550599**

NOTE	PART NUMBER	QTY	PART NAME 1 2 3 4 5 6 (PRODUCT LEVEL)	SEE PAGE
	6D-0337	1	VALVE GP-TIRE	
	6D-0443	1	HOUSING AS-CORE	
	2D-2628	1	CORE-VALVE	
	2D-2633	1	CAP	
	8D-2707	1	SPUD AS	
	2D-2629	1	GROMMET	
	2D-2630	1	WASHER-RING	
	2D-2631	1	NUT (.482-26 THD)	

<END>

229-2327 WHEEL & TIRE AR–2 WHEEL DRIVE

S/N: FDP18400-UP

AN ATTACHMENT

SMCS-4201, 4202, 4203, 4208, 4209 **i01935250**

NOTE	PART NUMBER	QTY	PART NAME 1 2 3 4 5 6 (PRODUCT LEVEL)	SEE PAGE
Y	*112-9334*	1	WHEEL & TIRE GP (REAR)	278
Y	*201-1878*	1	WHEEL & TIRE GP (FRONT)	284

Y-SEPARATE ILLUSTRATION

<END>

229-2328 WHEEL & TIRE AR–ALL WHEEL DRIVE

S/N: FDP18400-UP

AN ATTACHMENT

SMCS-4201, 4202, 4203, 4208, 4209 **i01935249**

NOTE	PART NUMBER	QTY	PART NAME 1 2 3 4 5 6 (PRODUCT LEVEL)	SEE PAGE
Y	*112-9334*	1	WHEEL & TIRE GP (REAR)	278
Y	*201-1876*	1	WHEEL & TIRE GP (FRONT)	283

Y-SEPARATE ILLUSTRATION

<END>

229-2329 WHEEL & TIRE AR–2 WHEEL DRIVE

S/N: FDP18400-UP

AN ATTACHMENT

SMCS-4201, 4202, 4203, 4208, 4209 **i01935248**

NOTE	PART NUMBER	QTY	PART NAME 1 2 3 4 5 6 (PRODUCT LEVEL)	SEE PAGE
Y	*127-4290*	1	WHEEL & TIRE GP (REAR)	281
Y	*201-1864*	1	WHEEL & TIRE GP (FRONT)	282

Y-SEPARATE ILLUSTRATION

<END>

229-2330 WHEEL & TIRE AR–2 WHEEL DRIVE, ALL WHEEL DRIVE

S/N: FDP18400-UP
AN ATTACHMENT

SMCS-4201, 4202, 4203, 4208, 4209 **i01935247**

NOTE	PART NUMBER	QTY	PART NAME 1 2 3 4 5 6 (PRODUCT LEVEL)	SEE PAGE
Y	*112-9334*	1	WHEEL & TIRE GP (REAR)	278
Y	*201-1864*	1	WHEEL & TIRE GP (FRONT)	282

Y-SEPARATE ILLUSTRATION

<END>

231-8118 WHEEL & TIRE AR–2 WHEEL DRIVE

S/N: FDP18400-UP
AN ATTACHMENT

SMCS-4201, 4202, 4203, 4208, 4209 **i01935246**

NOTE	PART NUMBER	QTY	PART NAME 1 2 3 4 5 6 (PRODUCT LEVEL)	SEE PAGE
Y	*127-4285*	1	WHEEL & TIRE GP (REAR)	280
Y	*201-1877*	1	WHEEL & TIRE GP (FRONT)	283

Y-SEPARATE ILLUSTRATION

<END>

238-0297 WHEEL & TIRE AR–2 WHEEL DRIVE

S/N: FDP18400-UP
AN ATTACHMENT

SMCS-4201, 4202, 4203, 4208, 4209 **i01935244**

NOTE	PART NUMBER	QTY	PART NAME 1 2 3 4 5 6 (PRODUCT LEVEL)	SEE PAGE
Y	*112-9331*	1	WHEEL & TIRE GP (REAR)	278
Y	*201-1877*	1	WHEEL & TIRE GP (FRONT)	283

Y-SEPARATE ILLUSTRATION

<END>

238-0298 WHEEL & TIRE AR–A WHEEL DRIVE

S/N: FDP18400-UP
AN ATTACHMENT

SMCS-4201, 4202, 4203, 4208, 4209 **i01935242**

NOTE	PART NUMBER	QTY	PART NAME 1 2 3 4 5 6 (PRODUCT LEVEL)	SEE PAGE
Y	*112-9331*	1	WHEEL & TIRE GP (REAR)	278
Y	*201-1874*	1	WHEEL & TIRE GP (FRONT)	282

Y-SEPARATE ILLUSTRATION

<END>

238-0299 WHEEL & TIRE AR—ALL WHEEL DRIVE

S/N: FDP18400-UP
AN ATTACHMENT

SMCS-4201, 4202, 4203, 4208, 4209 **i01935241**

NOTE	PART NUMBER	QTY	PART NAME 1 2 3 4 5 6 (PRODUCT LEVEL)	SEE PAGE
Y	*127-4285*	1	WHEEL & TIRE GP (REAR)	280
Y	*201-1862*	1	WHEEL & TIRE GP (FRONT)	281

Y-SEPARATE ILLUSTRATION

<END>

238-0300 WHEEL & TIRE AR—2 WHEEL DRIVE, ALL WHEEL DRIVE

S/N: FDP18400-UP
AN ATTACHMENT

SMCS-4201, 4202, 4203, 4208, 4209 **i01935240**

NOTE	PART NUMBER	QTY	PART NAME 1 2 3 4 5 6 (PRODUCT LEVEL)	SEE PAGE
Y	*112-9331*	1	WHEEL & TIRE GP (REAR)	278
Y	*201-1862*	1	WHEEL & TIRE GP (FRONT)	281

Y-SEPARATE ILLUSTRATION

<END>

238-0301 WHEEL & TIRE AR—ALL WHEEL DRIVE, 2 WHEEL STEER

S/N: FDP18400-UP
AN ATTACHMENT

SMCS-4201, 4202, 4203, 4208, 4209 **i01950024**

NOTE	PART NUMBER	QTY	PART NAME 1 2 3 4 5 6 (PRODUCT LEVEL)	SEE PAGE
Y	*119-7786*	1	WHEEL & TIRE GP (REAR)	279
Y	*201-1874*	1	WHEEL & TIRE GP (FRONT)	282

Y-SEPARATE ILLUSTRATION

<END>

9R-2822 WHEEL & TIRE GP—FRONT

S/N: FDP18400-UP
PART OF 133-3213 WHEEL & TIRE GP
AN ATTACHMENT

SMCS-4201, 4202, 4203, 4208, 4209 **i01935276**

NOTE	PART NUMBER	QTY	PART NAME 1 2 3 4 5 6 (PRODUCT LEVEL)	SEE PAGE
	9R-1956	1	TIRE (11L-16)	
Y	**6D-0337**	1	VALVE GP-TIRE	274
	9R-0315	1	WHEEL AS (FRONT)	

Y-SEPARATE ILLUSTRATION

<END>

112-9331 WHEEL & TIRE GP–REAR

S/N: FDP18400-UP
PART OF 238-0297, 238-0298, 238-0300 WHEEL & TIRE AR
AN ATTACHMENT

SMCS-4201, 4202, 4203, 4208, 4209 **i01935274**

NOTE	PART NUMBER	QTY	PART NAME 1 2 3 4 5 6 (PRODUCT LEVEL)	SEE PAGE
	141-7221	16	NUT-HEX FLANGE (3/4-16 THD)	
Y	*112-9334*	1	WHEEL & TIRE GP (RH)	278
Y	*112-9332*	1	WHEEL & TIRE GP (LH)	278

Y-SEPARATE ILLUSTRATION

<END>

112-9332 WHEEL & TIRE GP–LH

S/N: FDP18400-UP
PART OF 112-9331 WHEEL & TIRE GP
AN ATTACHMENT

SMCS-4201, 4202, 4203, 4208, 4209 **i01935273**

NOTE	PART NUMBER	QTY	PART NAME 1 2 3 4 5 6 (PRODUCT LEVEL)	SEE PAGE
	9R-1882	1	TIRE (19.5LX24-10PLY)	
Y	**6D-0337**	1	VALVE GP-TIRE	274
	112-4411	1	WHEEL AS (REAR)	

Y-SEPARATE ILLUSTRATION

<END>

112-9334 WHEEL & TIRE GP–RH

S/N: FDP18400-UP
PART OF 229-2327, 229-2328, 229-2330 WHEEL & TIRE AR, 112-9331 WHEEL & TIRE GP
AN ATTACHMENT

SMCS-4201, 4202, 4203, 4208, 4209 **i01935272**

NOTE	PART NUMBER	QTY	PART NAME 1 2 3 4 5 6 (PRODUCT LEVEL)	SEE PAGE
	9R-1882	1	TIRE (19.5LX24-10PLY)	
Y	**6D-0337**	1	VALVE GP-TIRE	274
	112-4411	1	WHEEL AS (REAR)	

Y-SEPARATE ILLUSTRATION

<END>

112-9337 WHEEL & TIRE GP–RH

S/N: FDP18400-UP
PART OF 229-2330 WHEEL & TIRE AR
AN ATTACHMENT

SMCS-4201, 4202, 4203, 4208, 4209 **i01935267**

NOTE	PART NUMBER	QTY	PART NAME 1 2 3 4 5 6 (PRODUCT LEVEL)	SEE PAGE
	112-9338	1	TIRE (340/80R18)	
Y	**6D-0337**	1	VALVE GP-TIRE	274
	135-0786	1	WHEEL AS (FRONT)	

Y-SEPARATE ILLUSTRATION

<END>

119-7786 WHEEL & TIRE GP–REAR

S/N: FDP18400-UP
PART OF 238-0301 WHEEL & TIRE AR
AN ATTACHMENT

SMCS-4201, 4202, 4203, 4208, 4209 **i01950224**

NOTE	PART NUMBER	QTY	PART NAME 1 2 3 4 5 6 (PRODUCT LEVEL)	SEE PAGE
	141-7221	16	NUT-HEX FLANGE (3/4-16 THD)	
Y	*119-7788*	1	WHEEL & TIRE GP (RH)	280
Y	*119-7787*	1	WHEEL & TIRE GP (RH)	279

Y-SEPARATE ILLUSTRATION

<END>

119-7787 WHEEL & TIRE GP–RH

S/N: FDP18400-UP
PART OF 119-7786 WHEEL & TIRE GP
AN ATTACHMENT

SMCS-4201, 4202, 4203, 4208, 4209 **i01792848**

NOTE	PART NUMBER	QTY	PART NAME 1 2 3 4 5 6 (PRODUCT LEVEL)	SEE PAGE
	9R-3659	1	TIRE (21LX24-12PR)	
Y	**6D-0337**	1	VALVE GP-TIRE	274
	119-7789	1	WHEEL AS-REAR	

Y-SEPARATE ILLUSTRATION

<END>

119-7788 WHEEL & TIRE GP–RH

S/N: FDP18400-UP
PART OF 119-7786 WHEEL & TIRE GP
AN ATTACHMENT

SMCS-4201, 4202, 4203, 4208, 4209 **i01950226**

NOTE	PART NUMBER	QTY	PART NAME 1 2 3 4 5 6 (PRODUCT LEVEL)	SEE PAGE
	9R-3659	1	TIRE (21LX24-12PR)	
Y	**6D-0337**	1	VALVE GP-TIRE	274
	119-7789	1	WHEEL AS	

Y-SEPARATE ILLUSTRATION

<END>

127-4285 WHEEL & TIRE GP–REAR

S/N: FDP18400-UP
PART OF 231-8118, 238-0299 WHEEL & TIRE AR
AN ATTACHMENT

SMCS-4201, 4202, 4203, 4208, 4209 **i01935266**

NOTE	PART NUMBER	QTY	PART NAME 1 2 3 4 5 6 (PRODUCT LEVEL)	SEE PAGE
	141-7221	16	NUT-HEX FLANGE (3/4-16 THD)	
Y	*127-4290*	1	WHEEL & TIRE GP (RH)	281
Y	*127-4289*	1	WHEEL & TIRE GP (LH)	280

Y-SEPARATE ILLUSTRATION

<END>

127-4289 WHEEL & TIRE GP–LH

S/N: FDP18400-UP
PART OF 127-4285 WHEEL & TIRE GP
AN ATTACHMENT

SMCS-4201, 4202, 4203, 4208, 4209 **i01935265**

NOTE	PART NUMBER	QTY	PART NAME 1 2 3 4 5 6 (PRODUCT LEVEL)	SEE PAGE
	127-4293	1	TIRE (19.5LR-24)	
Y	**6D-0337**	1	VALVE GP-TIRE	274
	112-4411	1	WHEEL AS (REAR)	

Y-SEPARATE ILLUSTRATION

<END>

127-4290 WHEEL & TIRE GP–RH

S/N: FDP18400-UP
PART OF 229-2329 WHEEL & TIRE AR, 127-4285 WHEEL & TIRE GP
AN ATTACHMENT

SMCS-4201, 4202, 4203, 4208, 4209 **i01935263**

NOTE	PART NUMBER	QTY	PART NAME 1 2 3 4 5 6 (PRODUCT LEVEL)	SEE PAGE
	127-4293	1	TIRE (19.5LR-24)	
Y	**6D-0337**	1	VALVE GP-TIRE	274
	112-4411	1	WHEEL AS (REAR)	

Y-SEPARATE ILLUSTRATION

<END>

133-3213 WHEEL & TIRE GP–FRONT

S/N: FDP18400-UP
PART OF 231-8118 WHEEL & TIRE AR
AN ATTACHMENT

SMCS-4201, 4202, 4203, 4208, 4209 **i01935262**

NOTE	PART NUMBER	QTY	PART NAME 1 2 3 4 5 6 (PRODUCT LEVEL)	SEE PAGE
	141-7221	16	NUT-HEX FLANGE (3/4-16 THD)	
Y	*9R-2822*	2	WHEEL & TIRE GP (FRONT)	277

Y-SEPARATE ILLUSTRATION

<END>

201-1862 WHEEL & TIRE GP–FRONT

S/N: FDP18400-UP
PART OF 238-0299, 238-0300 WHEEL & TIRE AR
AN ATTACHMENT

SMCS-4201, 4202, 4203, 4208, 4209 **i01935258**

NOTE	PART NUMBER	QTY	PART NAME 1 2 3 4 5 6 (PRODUCT LEVEL)	SEE PAGE
	201-1915	1	MOUNTING GP-WHEEL	
	8T-5439	16	WASHER (21.5X45X6MM THK)	
	201-1919	16	NUT (M20X1.5 THD)	
Y	*201-1863*	1	WHEEL & TIRE GP (LH)	282
Y	*201-1864*	1	WHEEL & TIRE GP (RH)	282

Y-SEPARATE ILLUSTRATION

<END>

201-1863 WHEEL & TIRE GP–LH

S/N: FDP18400-UP
PART OF 201-1862 WHEEL & TIRE GP
AN ATTACHMENT

SMCS-4201, 4202, 4203, 4208, 4209 **i01935257**

NOTE	PART NUMBER	QTY	PART NAME 1 2 3 4 5 6 (PRODUCT LEVEL)	SEE PAGE
	112-9338	1	TIRE (340/80R18)	
Y	*201-1920*	1	VALVE GP-TIRE	275
	202-6186	1	WHEEL AS (FRONT)	

Y-SEPARATE ILLUSTRATION

<END>

201-1864 WHEEL & TIRE GP–RH

S/N: FDP18400-UP
PART OF 229-2329, 229-2330 WHEEL & TIRE AR, 201-1862 WHEEL & TIRE GP
AN ATTACHMENT

SMCS-4201, 4202, 4203, 4208, 4209 **i01935256**

NOTE	PART NUMBER	QTY	PART NAME 1 2 3 4 5 6 (PRODUCT LEVEL)	SEE PAGE
	112-9338	1	TIRE (340/80R18)	
Y	*201-1920*	1	VALVE GP-TIRE	275
	202-6186	1	WHEEL AS (FRONT)	

Y-SEPARATE ILLUSTRATION

<END>

201-1874 WHEEL & TIRE GP–FRONT

S/N: FDP18400-UP
PART OF 238-0298, 238-0301 WHEEL & TIRE AR
AN ATTACHMENT

SMCS-4201, 4202, 4203, 4208, 4209 **i01935255**

NOTE	PART NUMBER	QTY	PART NAME 1 2 3 4 5 6 (PRODUCT LEVEL)	SEE PAGE
	201-1915	1	MOUNTING GP-WHEEL	
	8T-5439	16	WASHER (21.5X45X6MM THK)	
M	**178-1304**	16	NUT-HEX FLANGE (M20X1.5 THD)	
Y	*201-1875*	1	WHEEL & TIRE GP (LH)	283
Y	*201-1876*	1	WHEEL & TIRE GP (RH)	283

M-METRIC PART
Y-SEPARATE ILLUSTRATION

<END>

201-1875 WHEEL & TIRE GP–LH

S/N: FDP18400-UP
PART OF 201-1874 WHEEL & TIRE GP
AN ATTACHMENT

SMCS-4201, 4202, 4203, 4208, 4209 **i01935254**

NOTE	PART NUMBER	QTY	PART NAME 1 2 3 4 5 6 (PRODUCT LEVEL)	SEE PAGE
	9R-6481	1	TIRE (12.5X18-10PLY)	
Y	*201-1920*	1	VALVE GP-TIRE	275
	202-6186	1	WHEEL AS (FRONT)	

Y-SEPARATE ILLUSTRATION

<END>

201-1876 WHEEL & TIRE GP–RH

S/N: FDP18400-UP
PART OF 229-2328 WHEEL & TIRE AR, 201-1874 WHEEL & TIRE GP
AN ATTACHMENT

SMCS-4201, 4202, 4203, 4208, 4209 **i01935253**

NOTE	PART NUMBER	QTY	PART NAME 1 2 3 4 5 6 (PRODUCT LEVEL)	SEE PAGE
	9R-6481	1	TIRE (12.5X18-10PLY)	
Y	*201-1920*	1	VALVE GP-TIRE	275
	202-6186	1	WHEEL AS (FRONT)	

Y-SEPARATE ILLUSTRATION

<END>

201-1877 WHEEL & TIRE GP–FRONT

S/N: FDP18400-UP
PART OF 231-8118, 238-0297 WHEEL & TIRE AR
AN ATTACHMENT

SMCS-4201, 4202, 4203, 4208, 4209 **i01935252**

NOTE	PART NUMBER	QTY	PART NAME 1 2 3 4 5 6 (PRODUCT LEVEL)	SEE PAGE
	201-1915	1	MOUNTING GP-WHEEL	
	8T-5439	16	WASHER (21.5X45X6MM THK)	
	201-1919	16	NUT (M20X1.5 THD)	
Y	*201-1878*	2	WHEEL & TIRE GP (FRONT)	284

Y-SEPARATE ILLUSTRATION

<END>

201-1878 WHEEL & TIRE GP—FRONT

S/N: FDP18400-UP

PART OF 229-2327 WHEEL & TIRE AR, 201-1877 WHEEL & TIRE GP

AN ATTACHMENT

SMCS-4201, 4202, 4203, 4208, 4209 **i01935251**

NOTE	PART NUMBER	QTY	PART NAME 1 2 3 4 5 6 (PRODUCT LEVEL)	SEE PAGE
	9R-1956	1	TIRE (11L-16)	
Y	*201-1920*	1	VALVE GP-TIRE	275
	195-6341	1	WHEEL AS (FRONT)	

Y-SEPARATE ILLUSTRATION

<END>

129-0138 BRAKE GP-PARKING

S/N: FDP18400-UP

PART OF 184-6570 CONTROL GP-PARKING BRAKE

SMCS-3275, 3276, 3277, 4267 **i02021491**

NOTE	REF NO	GRAPHIC REF	PART NUMBER	QTY	PART NAME 1 2 3 4 5 6 (PRODUCT LEVEL)	SEE PAGE
	1	1	**230-3809**	1	BRAKE AS	
		1	**230-3810**	1	KIT-BRAKE LINING	
					(INCLUDES LINING AND SPRING)	
		1	**230-3811**	1	KIT-BRAKE CALIPER	
					(INCLUDES LINING,NUTS,WASHERS,BOOT,	
					THRUST BEARING,BOLT,SLEEVE/BOLT AS,SLEEVE PROTECTORS)	
		1	**166-9413**	1	KIT-CAM (COUNTERCLOCKWISE)	
					(INCLUDES CAM,BEARING,RETAINER)	
	2	1	**124-9464**	1	BRACKET	
	3	1	**130-7282**	1	BRACKET	

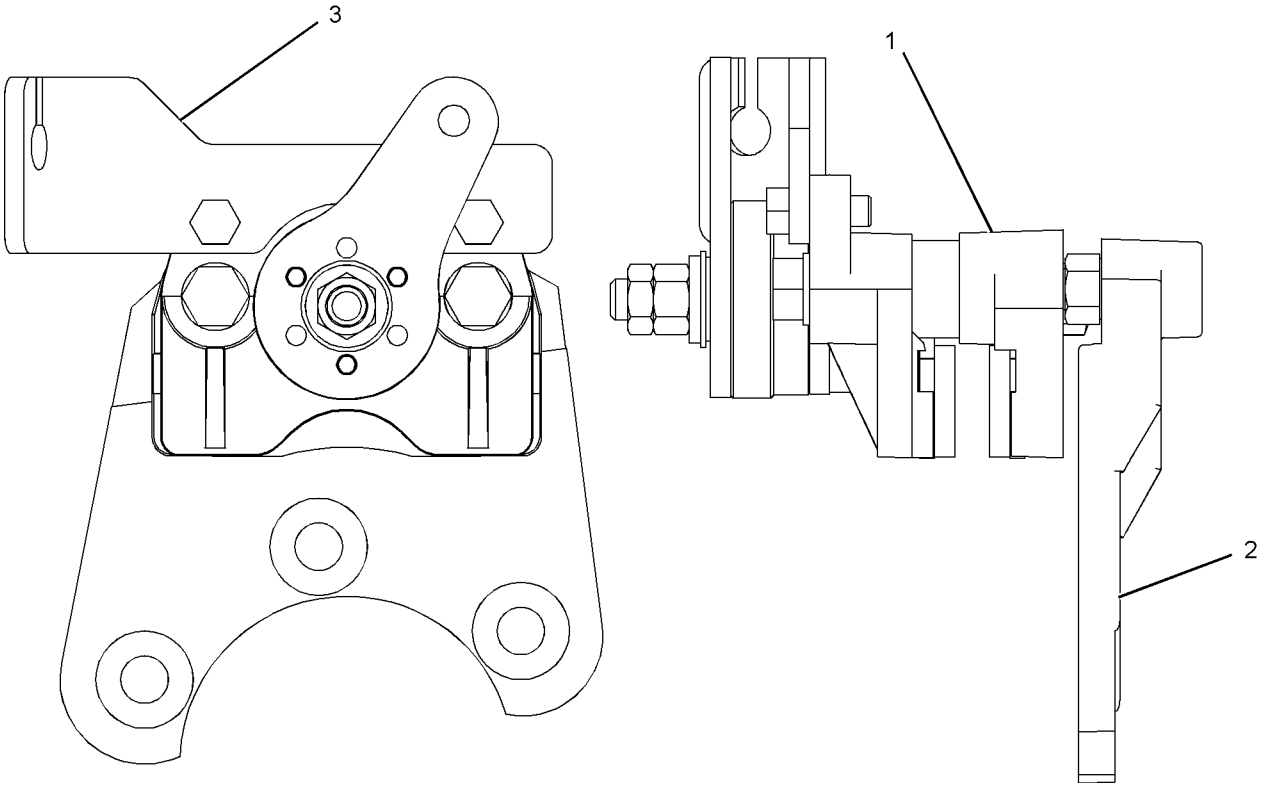

GRAPHIC #1 **<END>** g01043911

163-0754 CONTROL GP-PARKING BRAKE

S/N: FDP18400-UP

PART OF 184-6570 CONTROL GP-PARKING BRAKE

SMCS-4282, 4284 **i01380364**

NOTE	REF NO	GRAPHIC REF	PART NUMBER	QTY	PART NAME 1 2 3 4 5 6 (PRODUCT LEVEL)	SEE PAGE
Y	1	1	**163-0753**	1	LEVER GP-HAND CONTROL	291
	2	1	**163-0755**	1	CABLE GP	
		1	**6V-8759**	1	RING-RETAINING	

Y-SEPARATE ILLUSTRATION

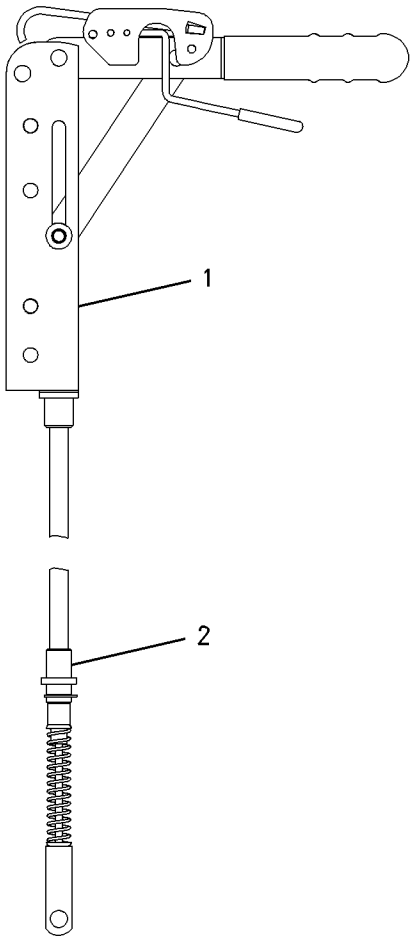

GRAPHIC #1 **<END>** g00729449

184-6570 CONTROL GP-PARKING BRAKE

S/N: FDP18400-UP

PART OF 184-7970 POWER TRAIN AR

SMCS-4282, 4284 **i01949822**

NOTE	REF NO	GRAPHIC REF	PART NUMBER	QTY	PART NAME 1 2 3 4 5 6 (PRODUCT LEVEL)	SEE PAGE
Y	1	1	**129-0138**	1	BRAKE GP-PARKING	285
	2	1	**154-5416**	1	SWITCH AS (PARKING BRAKE ALARM)	
		1	**155-2270**	1	KIT-CONNECTING PLUG (2 PIN)	
					(KIT SERVICES PLUG AS AND WEDGE)	
Y	3	1	**163-0754**	1	CONTROL GP-PARKING BRAKE	286
	4	1	**180-7245**	1	BRACKET AS	
M	5	1	**6V-9189**	2	LOCKNUT	
	6	1	**7M-0242**	3	WASHER (5MM THK)	
	7	1	**8S-4734**	3	BOLT (9/16-12X2 IN)	
M	8	1	**8T-0276**	2	BOLT (M8X1.25X45MM)	
	9	1	**8T-4224**	2	WASHER-HARD (8.8X16X2MM THK)	
	10	1	**9R-2806**	1	PIN	
	11	1	**9R-2807**	1	CLIP	
M	12	1	**9X-2043**	4	SCREW-TRUSS HEAD (M6X1X14MM)	

M-METRIC PART
Y-SEPARATE ILLUSTRATION

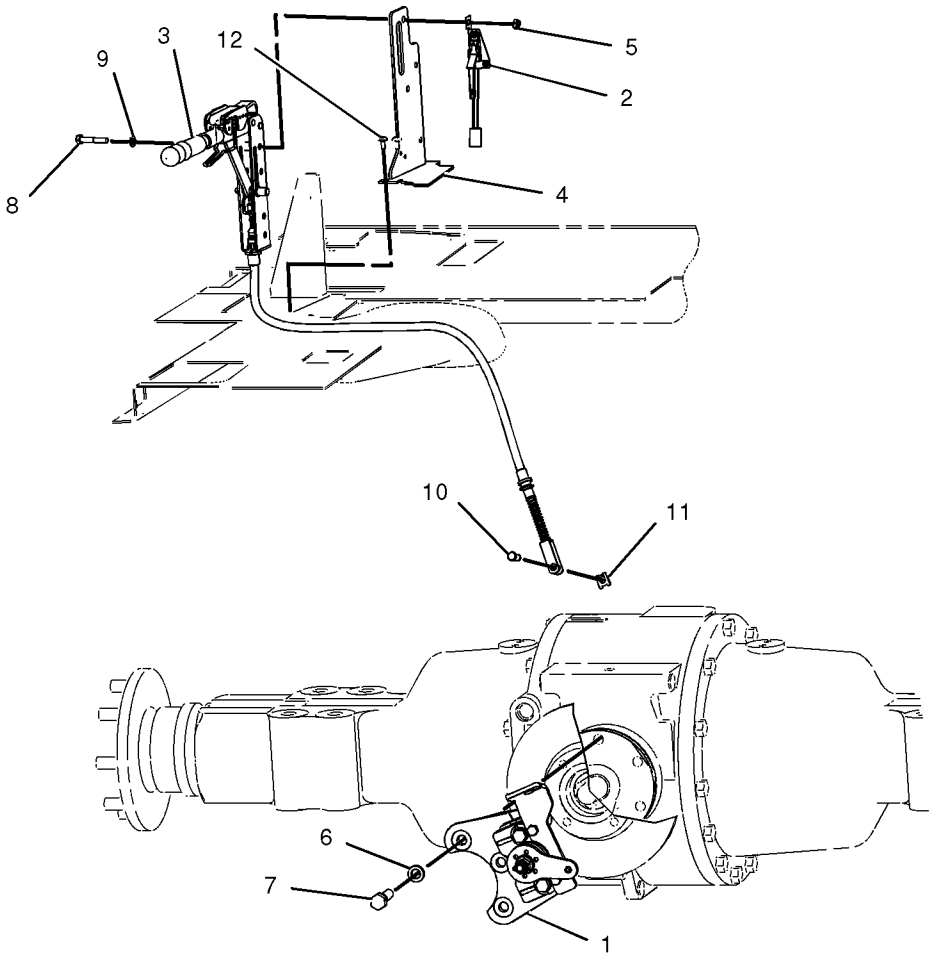

GRAPHIC #1 **<END>** g01014688

BRAKING SYSTEM

165-6918 CONTROL GP-SERVICE BRAKE

S/N: FDP18400-UP

PART OF 184-7970 POWER TRAIN AR

SMCS-4269 **i01943924**

NOTE	REF NO	GRAPHIC REF	PART NUMBER	QTY	PART NAME 1 2 3 4 5 6 (PRODUCT LEVEL)	SEE PAGE
Y	1	1	**4E-8619**	1	RESERVOIR GP-BRAKE	292
	2	1	**5G-8108**	1	CLAMP	
	3	1	**6S-8620**	4	CLAMP-HOSE	
	4	1	**9R-8189**	2	PUSHROD	
	5	1	**9R-9334**	1	BRACKET AS	
		1	**5G-8108**		CLAMP	
	6	1	**105-8034**	2	SWITCH AS-LIMIT (BRAKE)	
I	7	1	**155-8154**	2	HOSE AS	
	8	1	**165-6595**	1	PIN AS	
	9	1	**165-6599**	2	ROD END (YOKE)	
	10	1	**165-6601**	2	SPACER	
	11	1	**165-6602**	2	SPRING	
	12	1	**165-6603**	1	PLATE	
	13	1	**167-8160**	1	PLATE AS	
	14	1	*167-8161*	1	CYLINDER AS	
		1	**201-2157**	1	KIT-SERVICE	
		1	**113-5049**	1	TUBE AS	
I	15	1	**167-8164**	2	HOSE AS	
	16	1	**171-8623**	1	GROMMET	
	17	1	**174-7820**	2	TUBE AS	
	18	1	*184-6581*	2	CONNECTOR AS	
					(EACH INCLUDES)	
		1	**3J-1907**	1	SEAL-O-RING	
		1	**195-5830**	1	CONNECTOR	
C	19	1	**205-3759**	1	BRACKET AS	
M		1	**8T-7547**	4	BOLT (M8X1.25X30MM)	
C	20	1	**205-3760**	1	PEDAL AS-LH	
		1	**165-6585**	1	BEARING-SLEEVE	
C	21	1	**205-3761**	1	PEDAL AS-RH	
		1	**165-6585**	1	BEARING-SLEEVE	
	22	1	**212-3518**	1	PLATE AS	
	23	1	*148-8325*	2	CONNECTOR GP	
					(EACH INCLUDES)	
		1	**3J-1907**	1	SEAL-O-RING	
		1	**4J-5477**	1	SEAL-O-RING	
		1	**6V-8641**	1	CONNECTOR	
	24	1	*148-8368*	2	ELBOW GP	
					(EACH INCLUDES)	
		1	**3J-1907**	1	SEAL-O-RING	
		1	**4J-5477**	1	SEAL-O-RING	
		1	**6V-8627**	1	ELBOW	
	25	1	**1A-0621**	2	GROMMET	
	26	1	**1A-5350**	2	CLIP	
	27	1	**1H-1200**	1	PIN-SPRING	
	28	1	**2P-1279**	2	LOCKNUT	
	29	1	**3S-2093**	1	STRAP-CABLE	
	30	1	**4J-5477**	4	SEAL-O-RING	
M	31	1	**5C-7261**	9	NUT (M8X1.25 THD)	
M	32	1	**8T-4133**	2	NUT (M10X1.5 THD)	
M	33	1	**8T-4138**	6	BOLT (M6X1X20MM)	
M	34	1	**8T-4189**	4	BOLT (M8X1.25X20MM)	
M	35	1	**8T-4200**	1	BOLT (M8X1.25X16MM)	
	36	1	**8T-4205**	6	WASHER-HARD (7.2X14.5X2MM THK)	
	37	1	**8T-4224**	14	WASHER-HARD (8.8X16X2MM THK)	
	38	1	**9R-2807**	2	CLIP	
	39	1	**9R-7138**	2	PIN-CLEVIS	

165-6918 **CONTROL GP-SERVICE BRAKE** *(contd.)* **i01943924**

NOTE	REF NO	GRAPHIC REF	PART NUMBER	QTY	PART NAME 1 2 3 4 5 6 (PRODUCT LEVEL)	SEE PAGE
M	40	1	**9X-2042**	7	SCREW-TRUSS HEAD (M6X1X12MM)	
E	41	1	**5P-1442**	2	HOSE (23.6CM)	

C-CHANGE FROM PREVIOUS TYPE
E-ORDER BY THE CENTIMETER
I-SEE HOSE FABRICATION GUIDE
M-METRIC PART
Y-SEPARATE ILLUSTRATION

165-6918 **CONTROL GP-SERVICE BRAKE** ***(contd.)*** **i01943924**

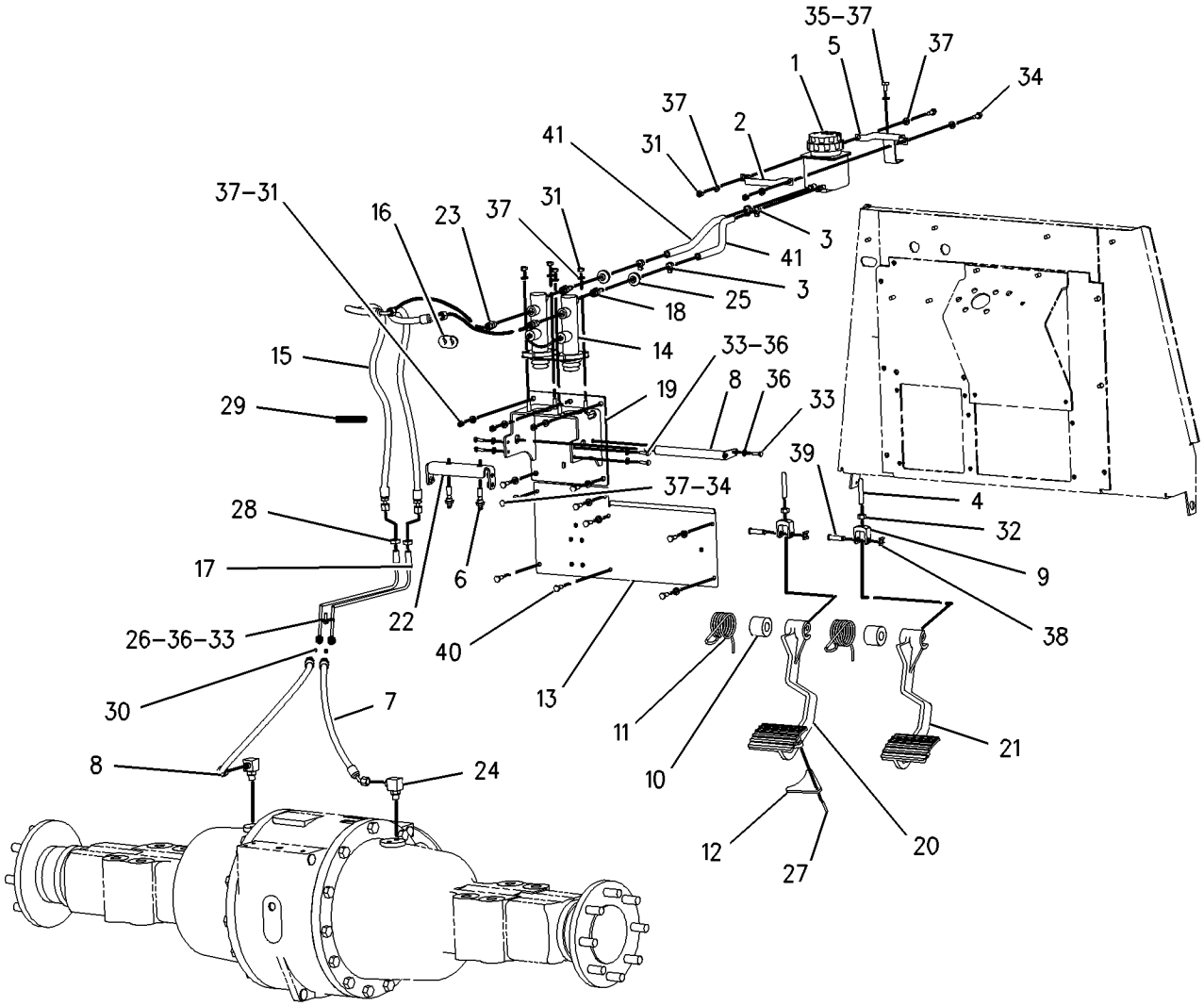

GRAPHIC #1 **<END>** g00906394

163-0753 LEVER GP-HAND CONTROL

S/N: FDP18400-UP

PART OF 163-0754 CONTROL GP-PARKING BRAKE

SMCS-4284 **i01548326**

NOTE	REF NO	GRAPHIC REF	PART NUMBER	QTY	PART NAME 1 2 3 4 5 6 (PRODUCT LEVEL)	SEE PAGE
	1	1	**7R-8239**	2	SPACER	
	2	1	**039-9133**	1	PIN	
	3	1	**164-9598**	1	GRIP	
	4	1	**164-9599**	1	COVER	
	5	1	**3B-4610**	1	PIN-COTTER	
	6	1	**8T-4224**	2	WASHER-HARD (8.8X16X2MM THK)	

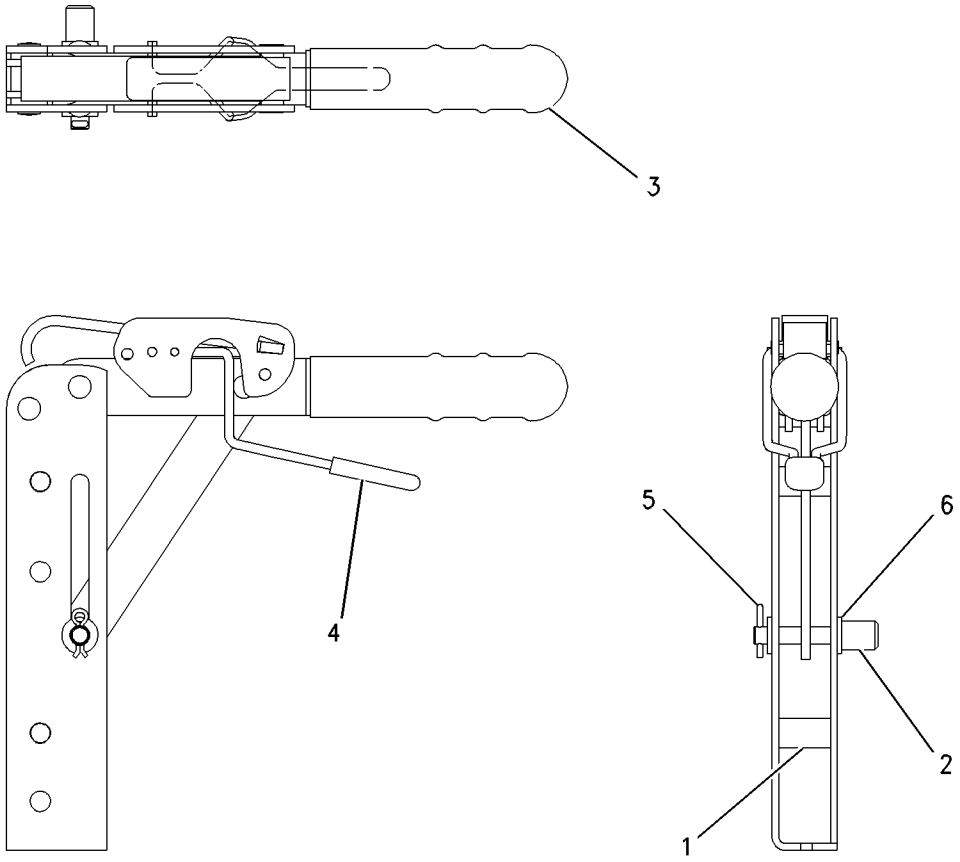

GRAPHIC #1 **<END>** g00729504

4E-8619 RESERVOIR GP-BRAKE

S/N: FDP18400-UP

PART OF 165-6918 CONTROL GP-SERVICE BRAKE

SMCS-4291 **i01772838**

NOTE	REF NO	GRAPHIC REF	PART NUMBER	QTY	PART NAME 1 2 3 4 5 6 (PRODUCT LEVEL)	SEE PAGE
	1	1	**7N-9737**	1	HOUSING-PLUG	
	2	1	**7N-7780**	1	PIN-CONNECTOR	
	3	1	**7N-7779**	1	SOCKET-CONNECTOR	
F			**8R-6263**	1	INDICATOR AS	
					AVAILABLE REPAIR KIT(S):	
			159-7907	1	KIT-BRAKE RESERVOIR	

F-NOT SHOWN

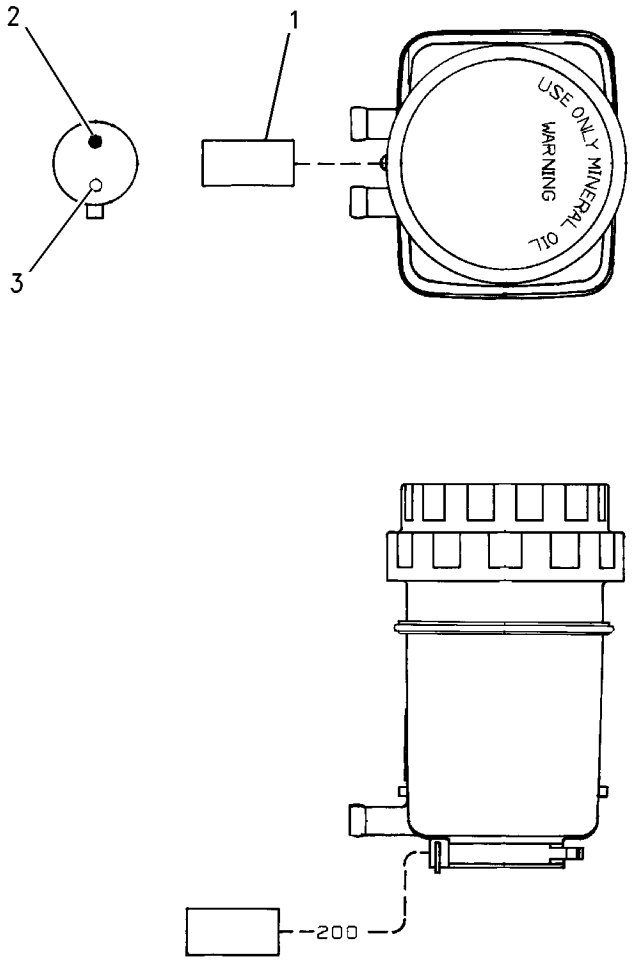

GRAPHIC #1 **<END>** g00906412

STEERING SYSTEM

189-1834 AXLE GP-FRONT

S/N: FDP18400-UP
PART OF 202-6198 AXLE GP-FRONT
AN ATTACHMENT

SMCS-3282 **i02016396**

NOTE	REF NO	GRAPHIC REF	PART NUMBER	QTY	PART NAME 1 2 3 4 5 6 (PRODUCT LEVEL)	SEE PAGE
	1	1	**154-5404**	2	BEARING	
	2	1	**198-7823**	4	BEARING AS	
	3	1	**198-7825**	4	SEAL	
	4	1	**198-7838**	4	PIN	
B	5	1	**198-7841**	4	SHIM (.15-MM THK)	
B	6	1	**198-7842**	4	SHIM (.2-MM THK)	
B	7	1	**198-7843**	4	SHIM (.5-MM THK)	
M	8	1	**199-0683**	16	BOLT (M16X2X38-MM)	
	9	1	**207-4254**	6	BOLT (STEER CYLINDER)	
	10	1	**207-4255**	2	PLUG	
	11	1	**207-4258**	2	NUT	
	12	1	**207-4260**	2	PLATE	
	13	1	**207-4262**	2	STOP	
	14	1	**207-4266**	2	RETAINER	
	15	1	**207-4268**	1	BEAM	
	16	1	**207-4271**	2	COVER	
	17	1	**207-4272**	2	TIE ROD GP	
					(EACH INCLUDES)	
		1	**204-3080**	1	BALL JOINT	
		1	**216-4459**	1	TIE ROD	
		1	**217-2885**	1	NUT	
	18	1	**214-5097**	1	CYLINDER GP-STEERING	
		1	**215-2023**	1	KIT-SEAL	
	19	1	**219-8798**	2	SEAL-LIP TYPE	
Y	20	1	**231-0683**	2	FLANGE GP-WHEEL	225
	21	1	**231-0684**	1	KNUCKLE (RH)	
	22	1	**231-0685**	1	KNUCKLE (LH)	
	23	1	**199-0648**	2	NUT-JAM	
M	24	1	**8T-4139**	6	BOLT (M12X1.75X30-MM)	
	25	1	**129-1938**	1	CARTRIDGE-GREASE	

B-USE AS REQUIRED
M-METRIC PART
Y-SEPARATE ILLUSTRATION

189-1834 AXLE GP-FRONT *(contd.)* i02016396

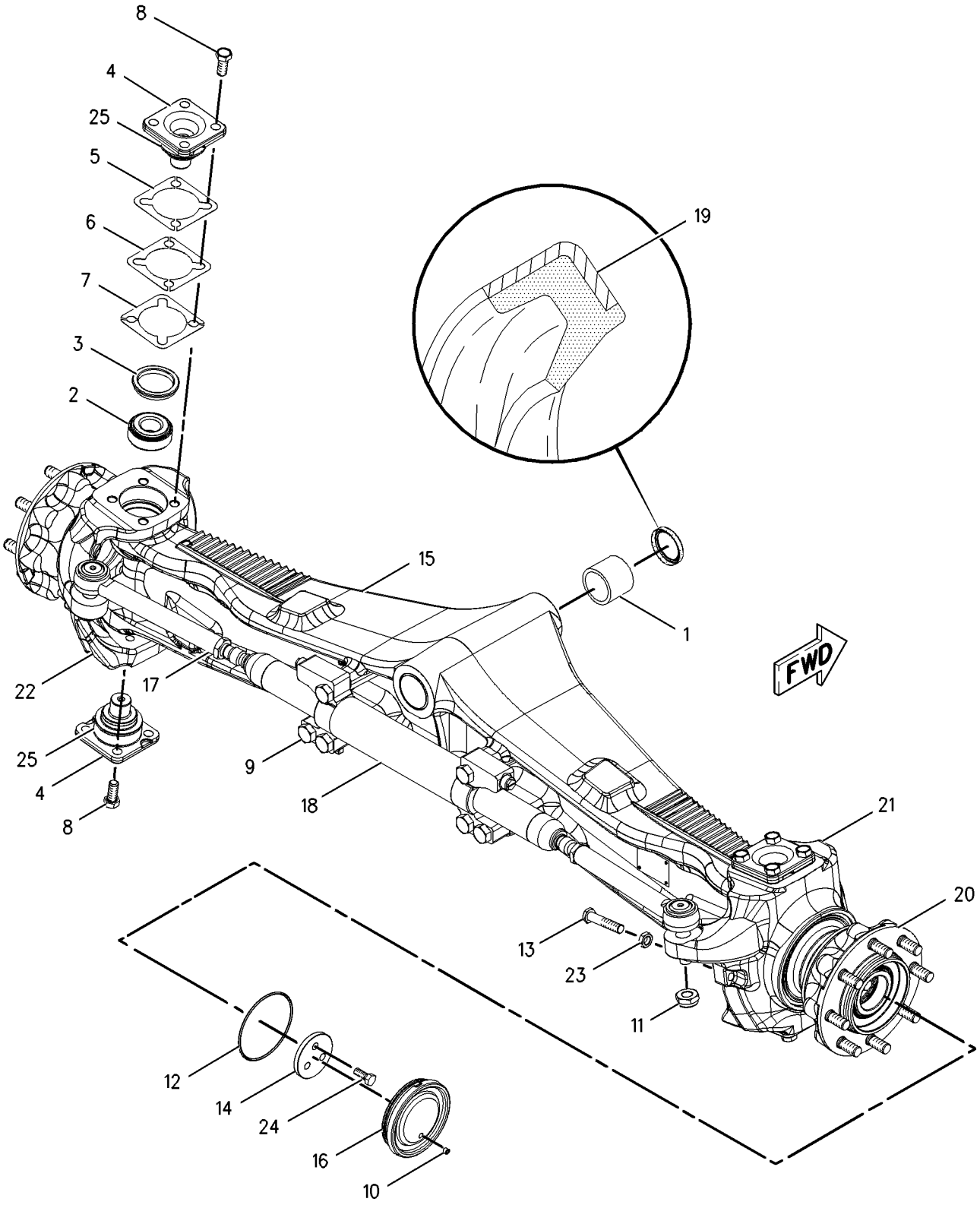

GRAPHIC #1 **<END>** g00997558

STEERING SYSTEM

202-6198 AXLE GP-FRONT

S/N: FDP18400-UP
PART OF 237-6458 DRIVE AR-BACKHOE LOADER
AN ATTACHMENT

SMCS-3282 **i01913957**

NOTE	REF NO	GRAPHIC REF	PART NUMBER	QTY	PART NAME 1 2 3 4 5 6 (PRODUCT LEVEL)	SEE PAGE
B	1	1	**1K-7082**	1	WASHER (1/32IN THK)	
B	2	1	**9R-9702**	2	WASHER	
	3	1	**112-9629**	1	PIN	
	4	1	**165-8996**	2	WASHER-THRUST (55.5X100.5X5MM THK)	
Y	5	1	**189-1834**	1	AXLE GP-FRONT	293
M	6	1	**8T-5041**	1	BOLT (M12X1.75X120MM)	
M	7	1	**8T-8549**	1	LOCKNUT	

B-USE AS REQUIRED
M-METRIC PART
Y-SEPARATE ILLUSTRATION

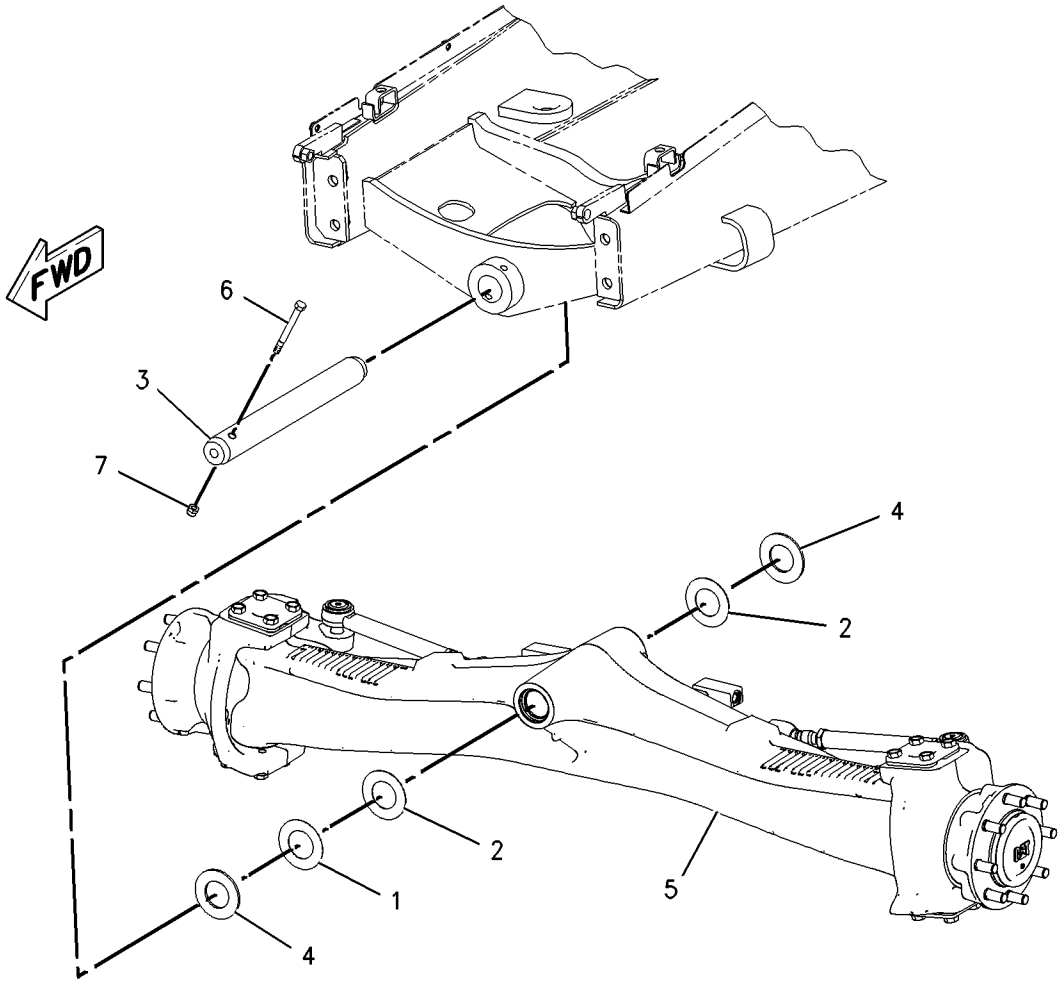

GRAPHIC #1 **<END>** g00997563

STEERING SYSTEM

183-4897 CONTROL GP-STEERING

S/N: FDP18400-UP

PART OF 214-6951 CHASSIS AR

SMCS-4309, 4310, 4322, 4338, 4343 **i01773550**

NOTE	REF NO	GRAPHIC REF	PART NUMBER	QTY	PART NAME 1 2 3 4 5 6 (PRODUCT LEVEL)	SEE PAGE
Y	1	1	*153-9580*	1	STEERING WHEEL GP	303
	2	1	**163-7940**	1	PANEL AS	
	3	1	**185-3529**	1	CONSOLE AS	
	4	1	**206-6974**	1	STEERING COLUMN AS	
M	5	1	**5C-7261**	2	NUT (M8X1.25 THD)	
	6	1	**8T-4121**	2	WASHER-HARD (11X21X2.5MM THK)	
M	7	1	**8T-4136**	2	BOLT (M10X1.5X25MM)	
M	8	1	**8T-4189**	2	BOLT (M8X1.25X20MM)	
	9	1	**8T-4224**	4	WASHER-HARD (8.8X16X2MM THK)	
M	10	1	**8T-8894**	4	BOLT-SOCKET HEAD (M10X1.5X20MM)	
M	11	1	**9X-2044**	6	SCREW-TRUSS HEAD (M6X1X16MM)	

M-METRIC PART
Y-SEPARATE ILLUSTRATION

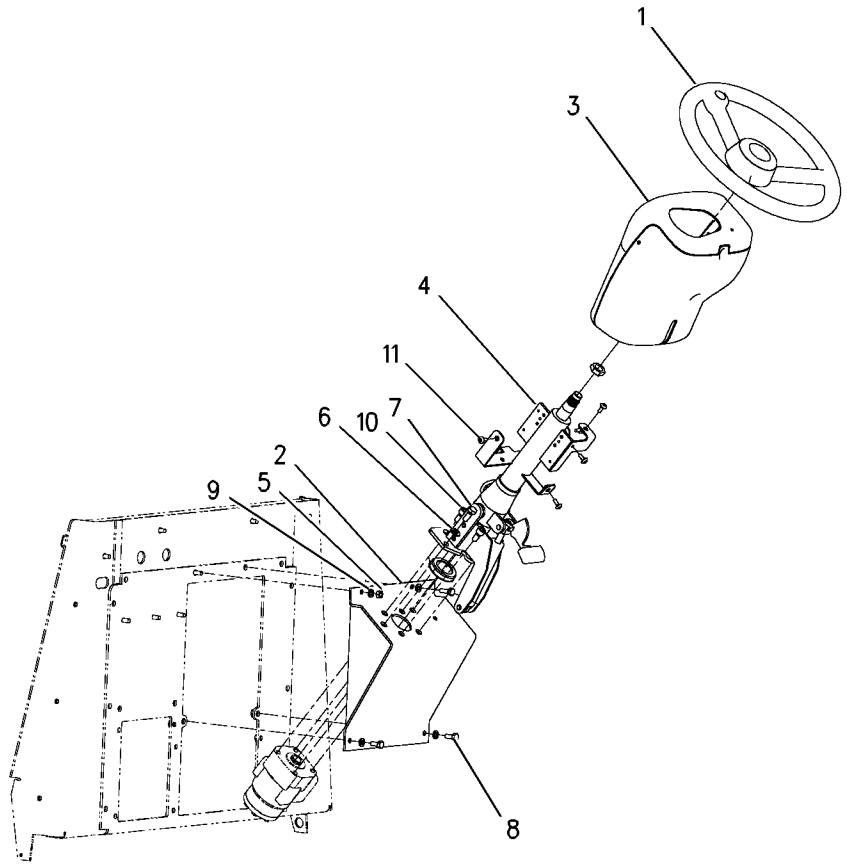

GRAPHIC #1 **<END>** g00875322

STEERING SYSTEM

153-7369 KNOB GP-STEERING

S/N: FDP18400-UP

AN ATTACHMENT

SMCS-4309 **i01877136**

NOTE	REF NO	GRAPHIC REF	PART NUMBER	QTY	PART NAME 1 2 3 4 5 6 (PRODUCT LEVEL)	SEE PAGE
M	1	1	**8T-6869**	1	BOLT (M8X1.25X60MM)	
	2	1	**8T-4224**	1	WASHER-HARD (8.8X16X2MM THK)	
M	3	1	**5C-7261**	1	NUT (M8X1.25 THD)	
Z	4	1		1	KNOB	

M-METRIC PART
Z-NOT SERVICED SEPARATELY

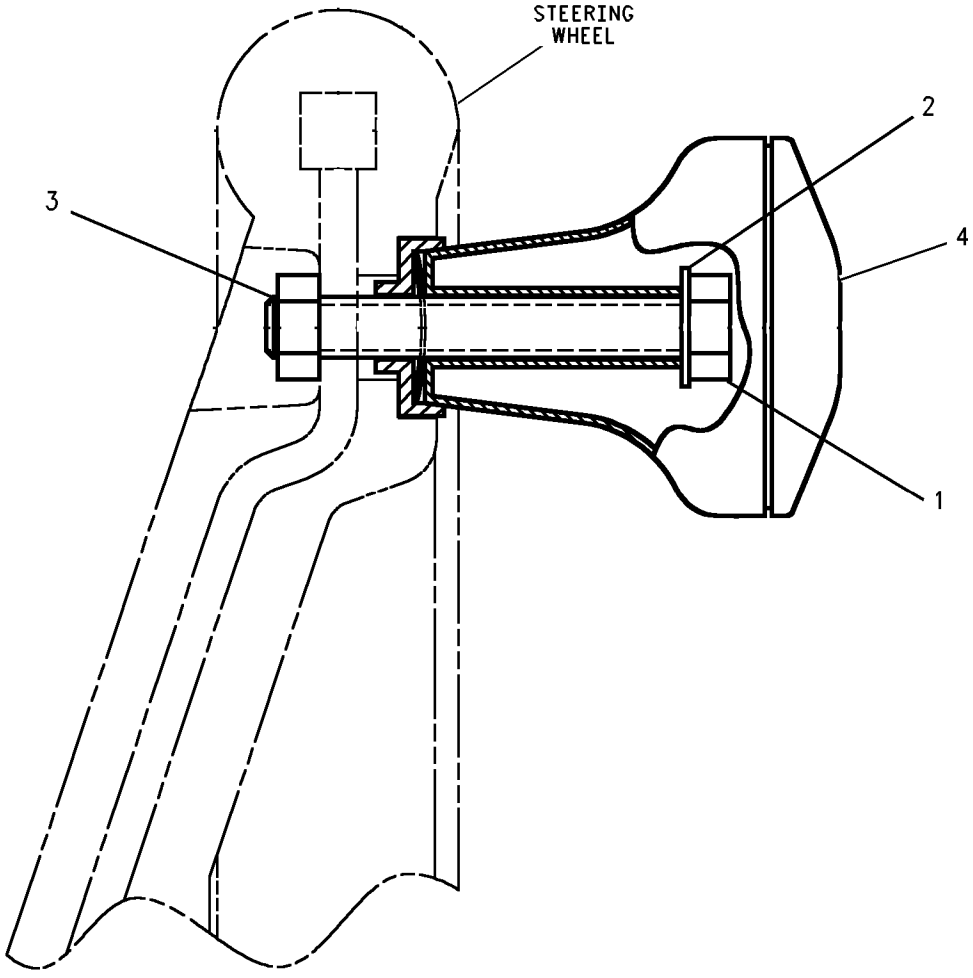

GRAPHIC #1 **<END>** g00955149

STEERING SYSTEM

202-5711 LINES GP-STEERING

S/N: FDP18400-UP
TWO WHEEL STEER, ALL WHEEL DRIVE
PART OF 237-6459 DRIVE AR-BACKHOE LOADER
AN ATTACHMENT

SMCS-4304 **i01909543**

NOTE	REF NO	GRAPHIC REF	PART NUMBER	QTY	PART NAME 1 2 3 4 5 6 (PRODUCT LEVEL)	SEE PAGE
G	1	1	**160-2248**		SLEEVE-ABRASION (8IN)	
	2	1	**5D-1026**	2	CLAMP-HOSE	
	3	1	**7K-1181**	5	STRAP-CABLE	
I	4	1	**117-3242**	1	HOSE AS	
	5	1	*195-2037*	1	FITTING AS	
		1	**3K-0360**	1	SEAL-O-RING	
		1	**034-3679**	1	FITTING	
	6	1	**204-0317**	1	CONNECTOR AS	
		1	**3K-0360**	1	SEAL-O-RING	
		1	**6V-8397**	1	SEAL-O-RING	
		1	**092-3635**	1	CONNECTOR	
	7	1	**210-7465**	1	HOSE AS	
	8	1	**210-7466**	1	HOSE AS	
I	9	1	**214-3159**	1	HOSE AS	
	10	1	*148-8316*	1	CONNECTOR AS	
		1	**3J-7354**	1	SEAL-O-RING	
		1	**4J-5477**	1	SEAL-O-RING	
		1	**6V-8647**	1	CONNECTOR	
	11	1	*148-8318*	2	CONNECTOR GP	
					(EACH INCLUDES)	
		1	**3K-0360**	1	SEAL-O-RING	
		1	**6V-8397**	1	SEAL-O-RING	
		1	**6V-8634**	1	CONNECTOR	
	12	1	*148-8346*	1	ELBOW GP	
		1	**3K-0360**	1	SEAL-O-RING	
		1	**6V-8398**	1	SEAL-O-RING	
		1	**8T-1686**	1	ELBOW	
	13	1	*148-8367*	1	ELBOW GP	
		1	**6V-8397**	1	SEAL-O-RING	
		1	**6V-9850**	1	ELBOW (SWIVEL)	
	14	1	*148-8369*	1	ELBOW GP	
		1	**3J-7354**	1	SEAL-O-RING	
		1	**4J-5477**	1	SEAL-O-RING	
		1	**6V-8628**	1	ELBOW	
	15	1	*148-8383*	2	ELBOW AS	
					(EACH INCLUDES)	
		1	**3K-0360**	1	SEAL-O-RING	
		1	**6V-8397**	1	SEAL-O-RING	
		1	**8T-1683**	1	ELBOW	
	16	1	*164-5544*	2	ELBOW GP	
					(EACH INCLUDES)	
		1	**3E-2333**	1	ELBOW	
		1	**6V-8398**	1	SEAL-O-RING	
	17	1	**5K-5338**	1	CLIP	
	18	1	**5P-4295**	2	CLIP	
	19	1	**5P-7462**	1	CLIP (SLOT)	
	20	1	**5P-7463**	1	CLIP (TAB)	
	21	1	**6D-4246**	1	CLIP	
	22	1	**6V-0683**	1	GROMMET	
	23	1	**8T-4121**	4	WASHER-HARD (11X21X2.5MM THK)	
M	24	1	**8T-4136**	4	BOLT (M10X1.5X25MM)	
	25	1	**9M-8406**	1	CLIP	
E	26	1	**5P-1505**		HOSE (53CM)	

E-ORDER BY THE CENTIMETER
G-ORDER BY THE INCH
I-SEE HOSE FABRICATION GUIDE
M-METRIC PART

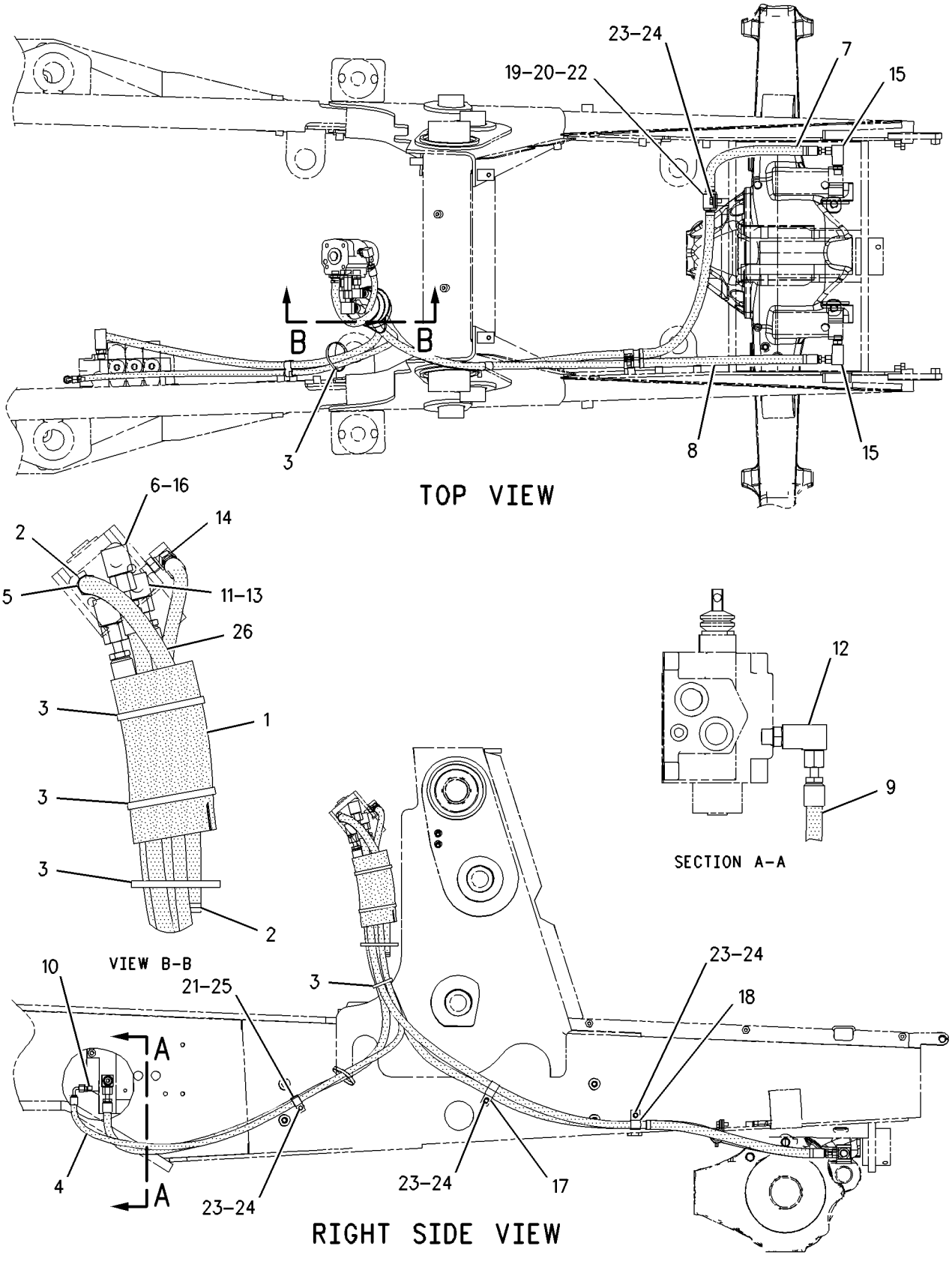

GRAPHIC #1 **<END>** g00995068

STEERING SYSTEM

202-5712 LINES GP-STEERING

S/N: FDP18400-UP
PART OF 237-6458 DRIVE AR-BACKHOE LOADER
AN ATTACHMENT

SMCS-4304 **i01911021**

NOTE	REF NO	GRAPHIC REF	PART NUMBER	QTY	PART NAME 1 2 3 4 5 6 (PRODUCT LEVEL)	SEE PAGE
G	1	1	**160-2248**		SLEEVE-ABRASION (8IN)	
	2	1	**5D-1026**	2	CLAMP-HOSE	
	3	1	**7K-1181**	5	STRAP-CABLE	
I	4	1	**117-3242**	1	HOSE AS	
	5	1	*195-2037*	1	FITTING AS	
		1	**3K-0360**	1	SEAL-O-RING	
		1	**034-3679**	1	FITTING	
I	6	1	**201-3398**	1	HOSE AS	
I	7	1	**202-1009**	1	HOSE AS	
	8	1	*204-0317*	1	CONNECTOR AS	
		1	**3K-0360**	1	SEAL-O-RING	
		1	**6V-8397**	1	SEAL-O-RING	
		1	**092-3635**	1	CONNECTOR	
I	9	1	**214-3159**	1	HOSE AS	
	10	1	*148-8316*	1	CONNECTOR AS	
		1	**3J-7354**	1	SEAL-O-RING	
		1	**4J-5477**	1	SEAL-O-RING	
		1	**6V-8647**	1	CONNECTOR	
	11	1	*148-8318*	2	CONNECTOR GP	
					(EACH INCLUDES)	
		1	**3K-0360**	1	SEAL-O-RING	
		1	**6V-8397**	1	SEAL-O-RING	
		1	**6V-8634**	1	CONNECTOR	
	12	1	*148-8346*	1	ELBOW GP	
		1	**3K-0360**	1	SEAL-O-RING	
		1	**6V-8398**	1	SEAL-O-RING	
		1	**8T-1686**	1	ELBOW	
	13	1	*148-8367*	1	ELBOW GP	
		1	**6V-8397**	1	SEAL-O-RING	
		1	**6V-9850**	1	ELBOW (SWIVEL)	
	14	1	*148-8369*	1	ELBOW GP	
		1	**3J-7354**	1	SEAL-O-RING	
		1	**4J-5477**	1	SEAL-O-RING	
		1	**6V-8628**	1	ELBOW	
	15	1	*148-8374*	2	ELBOW GP	
					(EACH INCLUDES)	
		1	**3K-0360**	1	SEAL-O-RING	
		1	**6V-8397**	1	SEAL-O-RING	
		1	**6V-8723**	1	ELBOW	
	16	1	*164-5544*	2	ELBOW GP	
					(EACH INCLUDES)	
		1	**3E-2333**	1	ELBOW	
		1	**6V-8398**	1	SEAL-O-RING	
	17	1	**5K-5338**	1	CLIP	
	18	1	**5P-4295**	2	CLIP	
	19	1	**6D-4246**	1	CLIP	
	20	1	**8T-4121**	3	WASHER-HARD (11X21X2.5MM THK)	
M	21	1	**8T-4136**	3	BOLT (M10X1.5X25MM)	
	22	1	**9M-8406**	1	CLIP	
E	23	1	**5P-1505**		HOSE (53CM)	

E-ORDER BY THE CENTIMETER
G-ORDER BY THE INCH
I-SEE HOSE FABRICATION GUIDE
M-METRIC PART

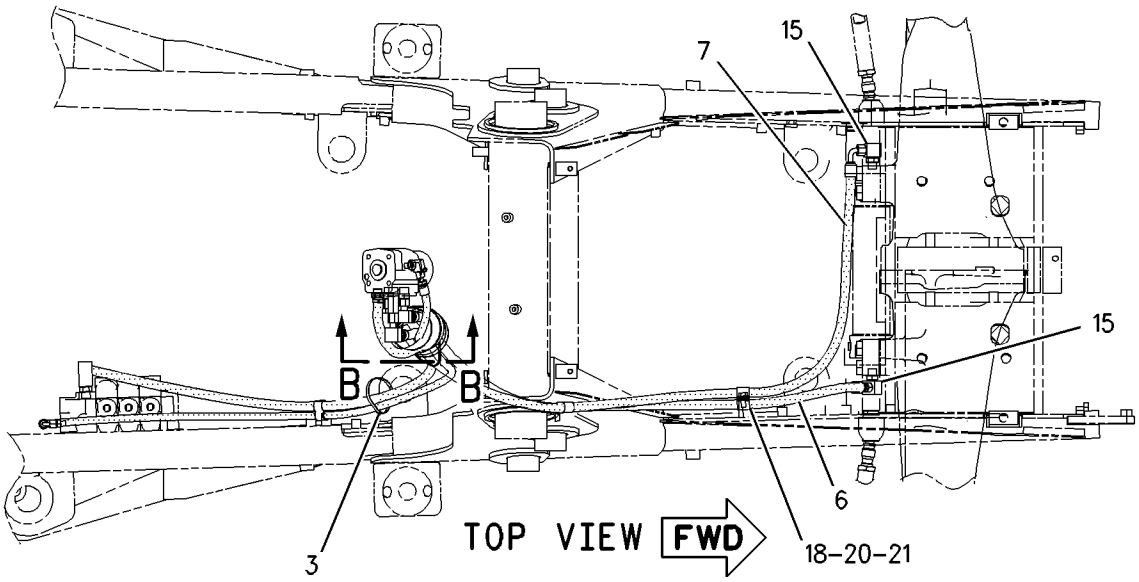

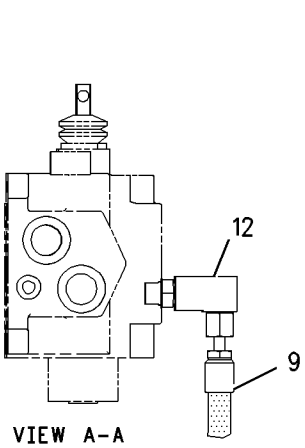

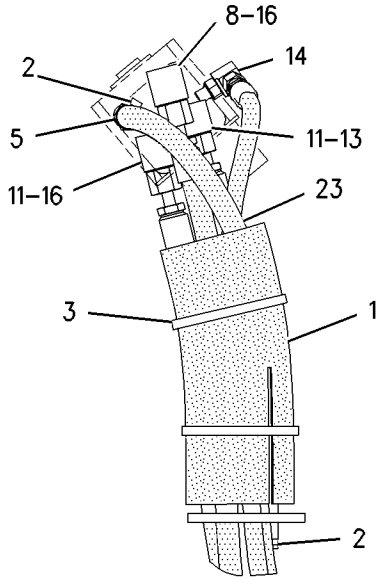

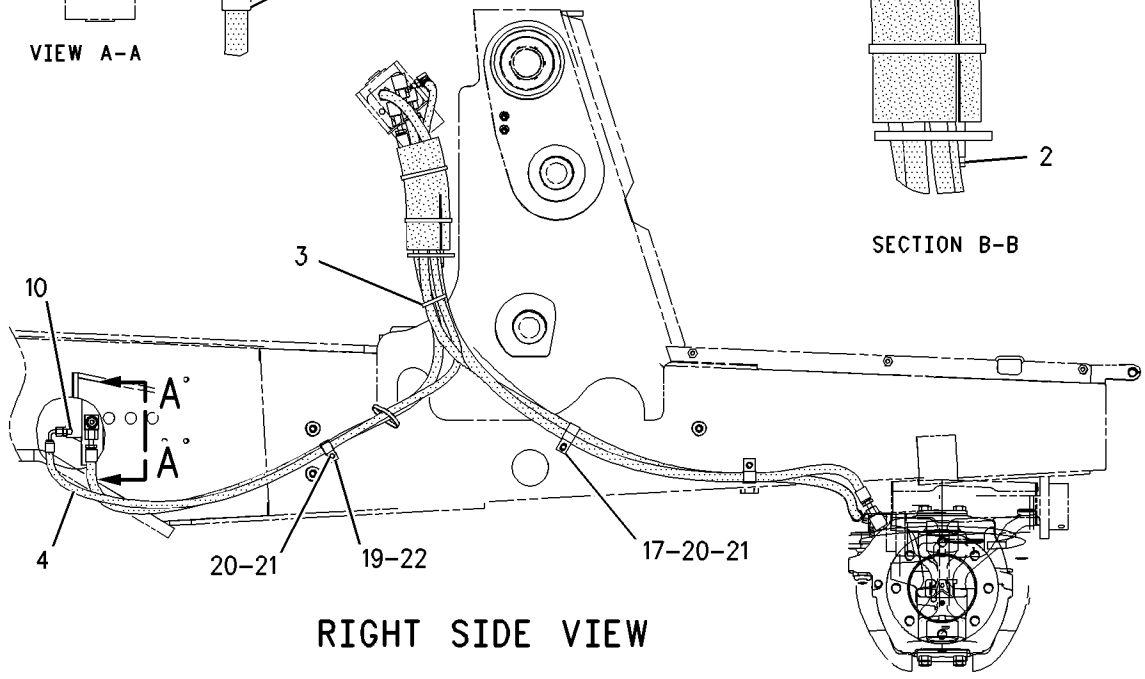

GRAPHIC #1 **<END>** g00995495

STEERING SYSTEM

153-9580 STEERING WHEEL GP

S/N: FDP18400-UP

PART OF 183-4897 CONTROL GP-STEERING

SMCS-4309 **i01108895**

NOTE	REF NO	GRAPHIC REF	PART NUMBER	QTY	PART NAME 1 2 3 4 5 6 (PRODUCT LEVEL)	SEE PAGE
	1	1	**8R-2916**	1	BUTTON AS	
	2	1	**145-9291**	1	WHEEL AS-STEERING	
	3	1	**153-7368**	1	PLUG	

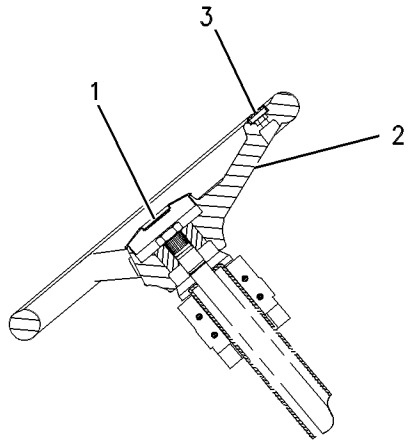

SECTION A-A

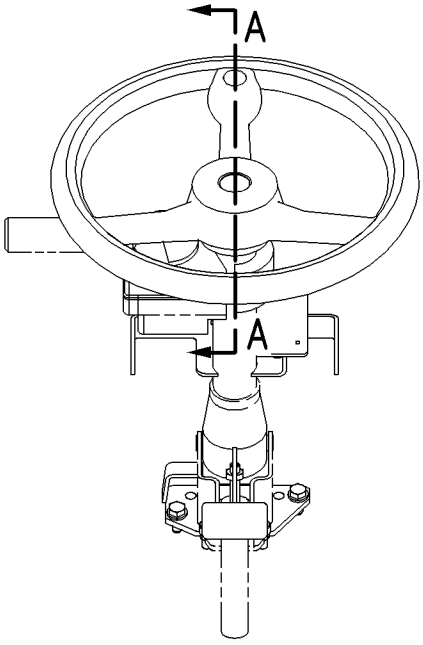

GRAPHIC #1 **<END>** g00586606

188-7471 VALVE GP-PRIORITY–STEERING

S/N: FDP18400-UP

PART OF 185-5911, 200-7827 VALVE GP-BANK 2, 185-5912, 200-7828 VALVE GP-BANK 3

AN ATTACHMENT

SMCS-4320, 5137 **i01695203**

NOTE	REF NO	GRAPHIC REF	PART NUMBER	QTY	PART NAME 1 2 3 4 5 6 (PRODUCT LEVEL)	SEE PAGE
	1	1	**9S-8006**	1	PLUG	
	2	1	**103-4754**	1	SPRING	
	3	1	**9T-0655**	1	VALVE GP-RELIEF	
	3A	1	**1S-8947**	1	SEAL-O-RING	
	3B	1	**3D-2824**	1	SEAL-O-RING	
	3C	1	**9T-0656**	1	RING	
	4	1	**5B-9318**	1	BALL	
	5	1	**180-9157**	1	SEAT AS	
	5A	1	**4T-7807**	1	RING-BACKUP	
	5B	1	**7J-0204**	1	SEAL-O-RING	
	5C	1	**8T-2360**	1	SEAL-O-RING	
	6	1	**9S-9334**	1	PLUG	
	7	1	**7M-8485**	1	SEAL-O-RING	

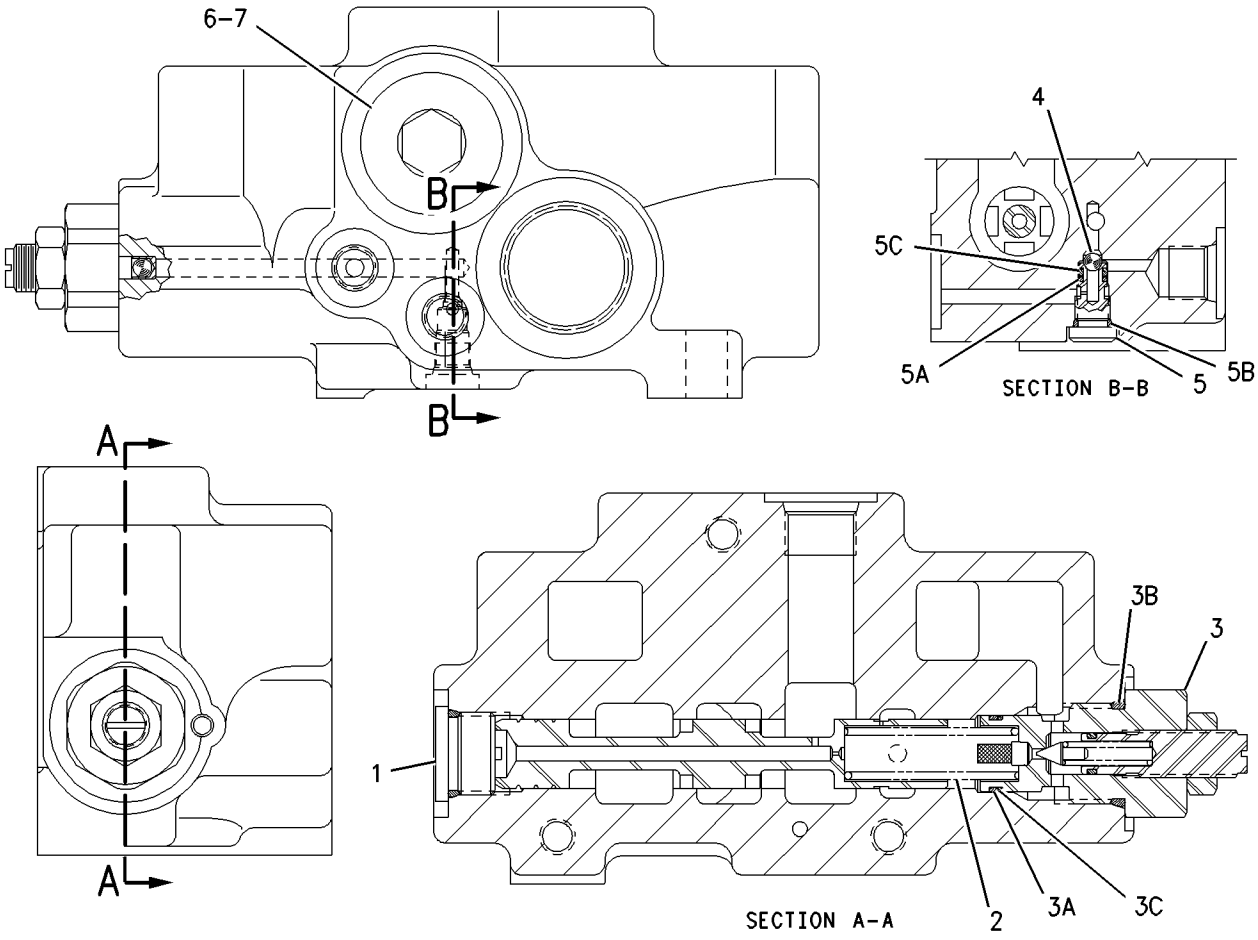

GRAPHIC #1 **<END>** g00872884

FRAME AND BODY

188-0859 BOX GP-BATTERY

S/N: FDP18400-UP
POWER SHIFT
PART OF 192-4659, 192-4664 POWER TRAIN AR
AN ATTACHMENT

SMCS-7257 **i01650174**

NOTE	REF NO	GRAPHIC REF	PART NUMBER	QTY	PART NAME 1 2 3 4 5 6 (PRODUCT LEVEL)	SEE PAGE
M	1	1	**8T-2910**	2	NUT-WING	
Y	2	1	**118-6842**	1	DOOR GP-BATTERY	315
	3	1	**118-6854**	1	TREAD	
	4	1	**139-3562**	1	COVER	
	5	1	**164-3876**	1	STEP AS	
	6	1	**188-0858**	1	BATTERY BOX AS	
	7	1	**190-5122**	1	PLATE AS	
	8	1	**5P-4116**	6	WASHER-HARD (8.8X20.5X2MM THK)	
M	9	1	**8T-4183**	4	BOLT (M12X1.75X40MM)	
M	10	1	**8T-4189**	6	BOLT (M8X1.25X20MM)	
M	11	1	**8T-4200**	7	BOLT (M8X1.25X16MM)	
	12	1	**8T-4223**	4	WASHER-HARD (13.5X25.5X3MM THK)	
	13	1	**8T-4224**	7	WASHER-HARD (8.8X16X2MM THK)	
M	14	1	**8T-7963**	1	LOCKNUT	

M-METRIC PART
Y-SEPARATE ILLUSTRATION

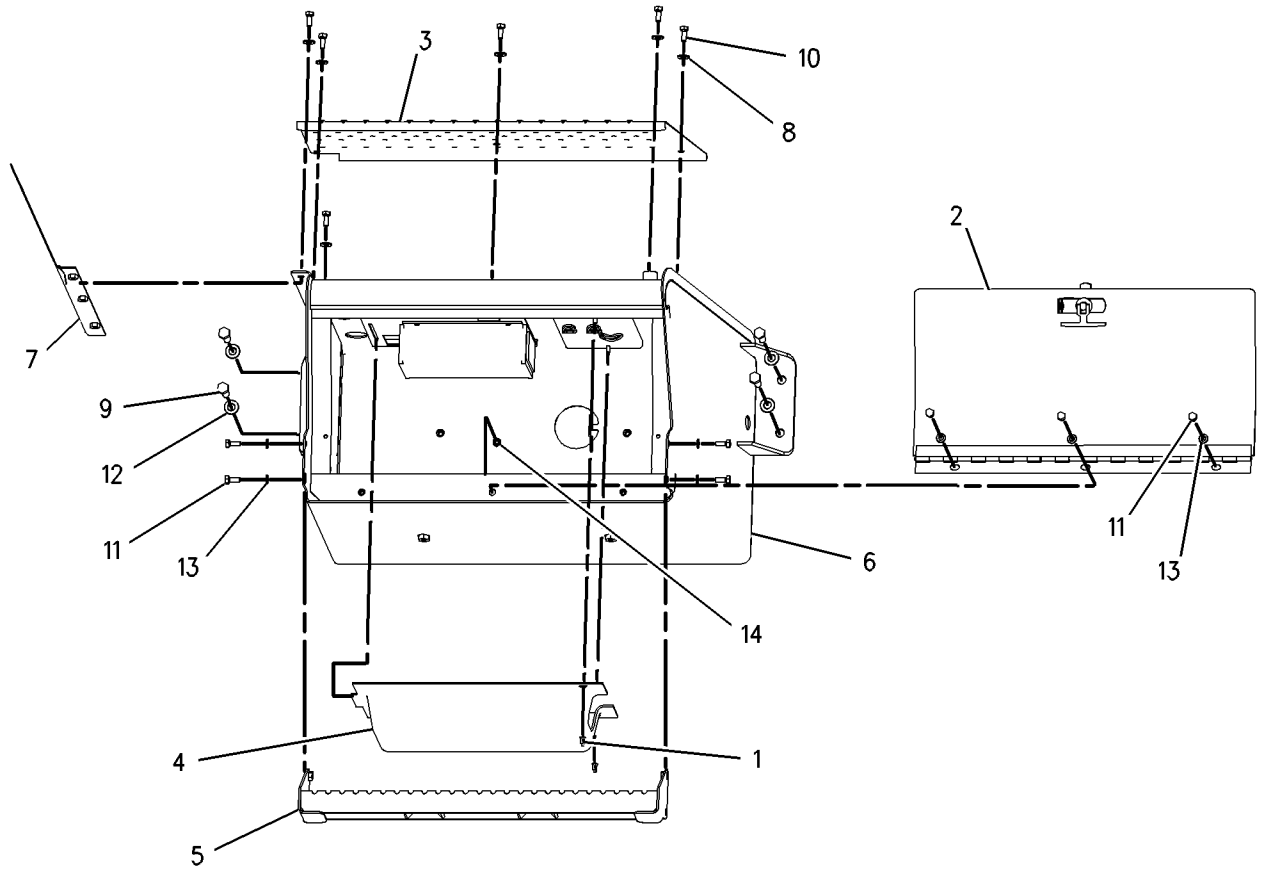

GRAPHIC #1 **<END>** g00795345

188-0860 BOX GP-BATTERY

S/N: FDP18400-UP

PART OF 192-4661, 192-4662, 192-4663, 192-4665, 192-4666, 198-4095 POWER TRAIN AR AN ATTACHMENT

SMCS-7257 **i01650181**

NOTE	REF NO	GRAPHIC REF	PART NUMBER	QTY	PART NAME 1 2 3 4 5 6 (PRODUCT LEVEL)	SEE PAGE
	1	1	**7T-8895**	1	GROMMET	
Y	2	1	**118-6842**	1	DOOR GP-BATTERY	315
	3	1	**118-6854**	1	TREAD	
	4	1	**164-3876**	1	STEP AS	
	5	1	**188-0857**	1	BATTERY BOX AS	
	6	1	**190-5122**	1	PLATE AS	
	7	1	**5P-4116**	6	WASHER-HARD (8.8X20.5X2MM THK)	
M	8	1	**8T-4183**	4	BOLT (M12X1.75X40MM)	
M	9	1	**8T-4189**	6	BOLT (M8X1.25X20MM)	
M	10	1	**8T-4200**	7	BOLT (M8X1.25X16MM)	
	11	1	**8T-4223**	4	WASHER-HARD (13.5X25.5X3MM THK)	
	12	1	**8T-4224**	7	WASHER-HARD (8.8X16X2MM THK)	
M	13	1	**8T-7963**	1	LOCKNUT	

M-METRIC PART
Y-SEPARATE ILLUSTRATION

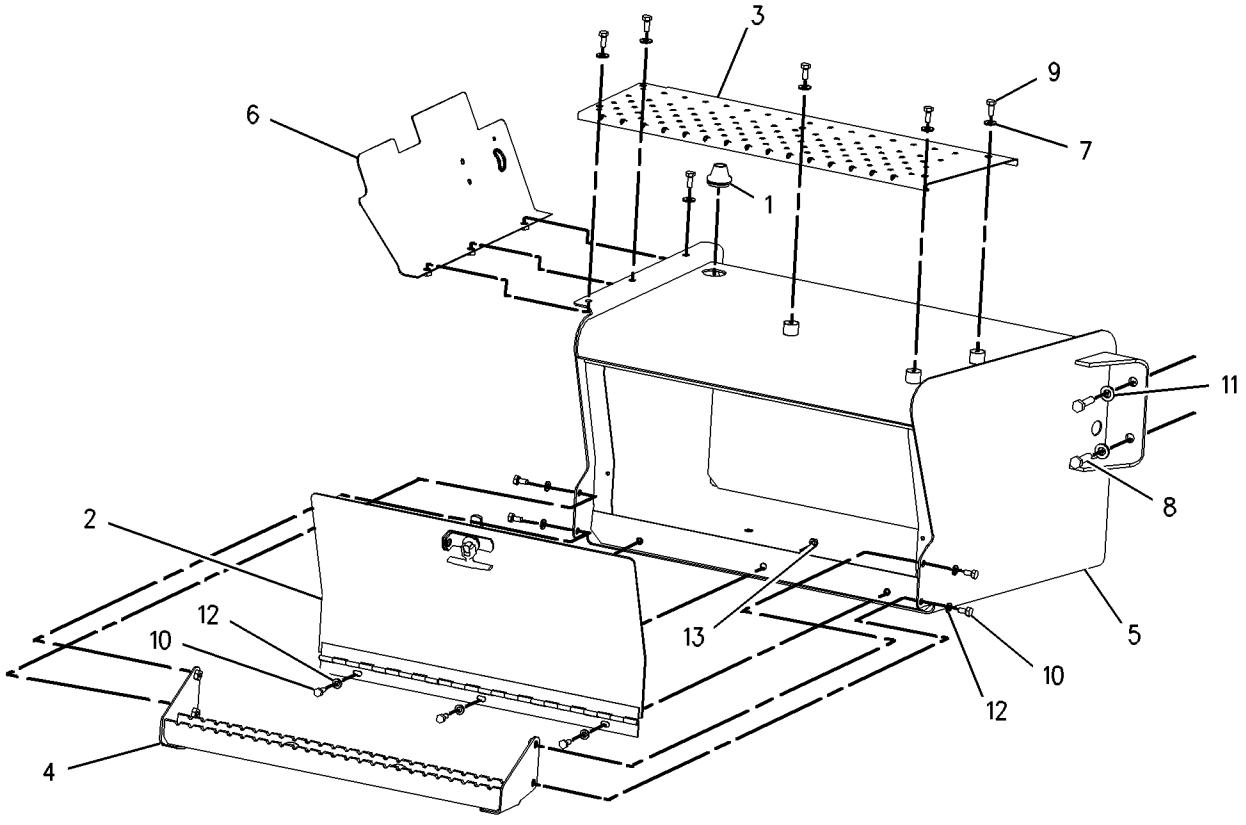

GRAPHIC #1 **<END>** g00852685

FRAME AND BODY

237-6414 BOX GP-BATTERY

S/N: FDP18400-UP
POWER SHIFT
PART OF 214-6957, 214-6978 POWER TRAIN AR
AN ATTACHMENT

SMCS-7257 **i01970318**

NOTE	REF NO	GRAPHIC REF	PART NUMBER	QTY	PART NAME 1 2 3 4 5 6 (PRODUCT LEVEL)	SEE PAGE
M	1	1	**8T-2910**	2	NUT-WING	
Y	2	1	**118-6842**	1	DOOR GP-BATTERY	315
	3	1	**118-6854**	1	TREAD	
	4	1	**139-3562**	1	COVER	
	5	1	**164-3876**	1	STEP AS	
M		1	**8T-3612**	4	NUT-WELD (M8X1.25 THD)	
	6	1	**190-5122**	1	PLATE AS	
		1	**7T-1099**	1	LINK	
	7	1	**237-6413**	1	BOX AS-BATTERY	
M		1	**6V-9632**	4	NUT-WELD (M6X1 THD)	
		1	**7T-1099**	3	LINK	
	8	1	**5P-4116**	6	WASHER-HARD (8.8X20.5X2MM THK)	
M	9	1	**8T-4183**	4	BOLT (M12X1.75X40MM)	
M	10	1	**8T-4189**	6	BOLT (M8X1.25X20MM)	
M	11	1	**8T-4200**	7	BOLT (M8X1.25X16MM)	
	12	1	**8T-4223**	4	WASHER-HARD (13.5X25.5X3MM THK)	
	13	1	**8T-4224**	7	WASHER-HARD (8.8X16X2MM THK)	
M	14	1	**8T-7963**	1	LOCKNUT (M8X1.25 THD)	

M-METRIC PART
Y-SEPARATE ILLUSTRATION

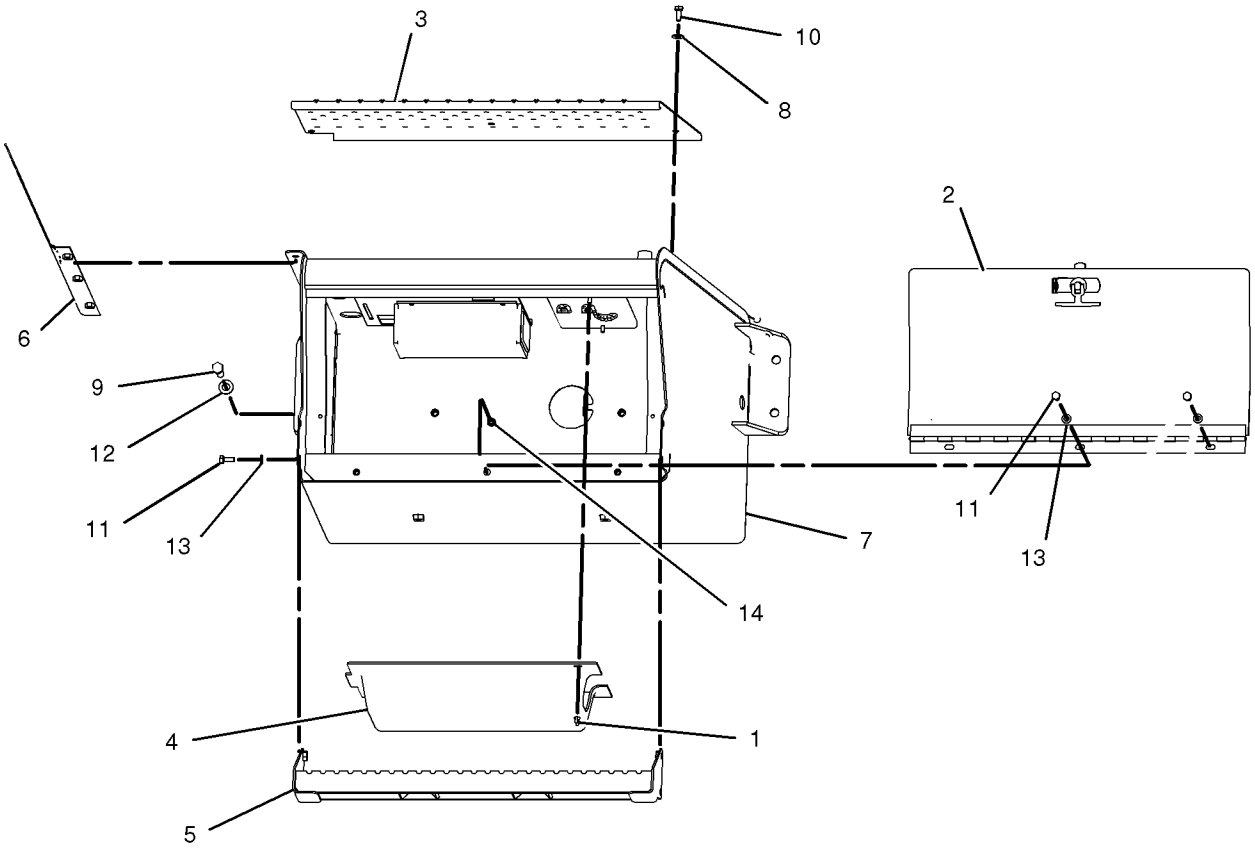

GRAPHIC #1 **<END>** g01023123

FRAME AND BODY

237-6415 BOX GP-BATTERY

S/N: FDP18400-UP

PART OF 214-6955, 214-6956, 214-6958, 214-6959, 214-6976, 214-6977 POWER TRAIN AR AN ATTACHMENT

SMCS-7257 **i01970325**

NOTE	REF NO	GRAPHIC REF	PART NUMBER	QTY	PART NAME 1 2 3 4 5 6 (PRODUCT LEVEL)	SEE PAGE
	1	1	**7T-8895**	1	GROMMET	
Y	2	1	**118-6842**	1	DOOR GP-BATTERY	315
	3	1	**118-6854**	1	TREAD	
	4	1	**164-3876**	1	STEP AS	
	5	1	**190-5122**	1	PLATE AS	
		1	**7T-1099**	1	LINK	
	6	1	**237-6412**	1	BOX AS-BATTERY	
		1	**7T-1099**	1	LINK	
	7	1	**5P-4116**	6	WASHER-HARD (8.8X20.5X2MM THK)	
M	8	1	**8T-4183**	4	BOLT (M12X1.75X40MM)	
M	9	1	**8T-4189**	6	BOLT (M8X1.25X20MM)	
M	10	1	**8T-4200**	7	BOLT (M8X1.25X16MM)	
	11	1	**8T-4223**	4	WASHER-HARD (13.5X25.5X3MM THK)	
	12	1	**8T-4224**	7	WASHER-HARD (8.8X16X2MM THK)	
M	13	1	**8T-7963**	1	LOCKNUT (M8X1.25 THD)	

M-METRIC PART
Y-SEPARATE ILLUSTRATION

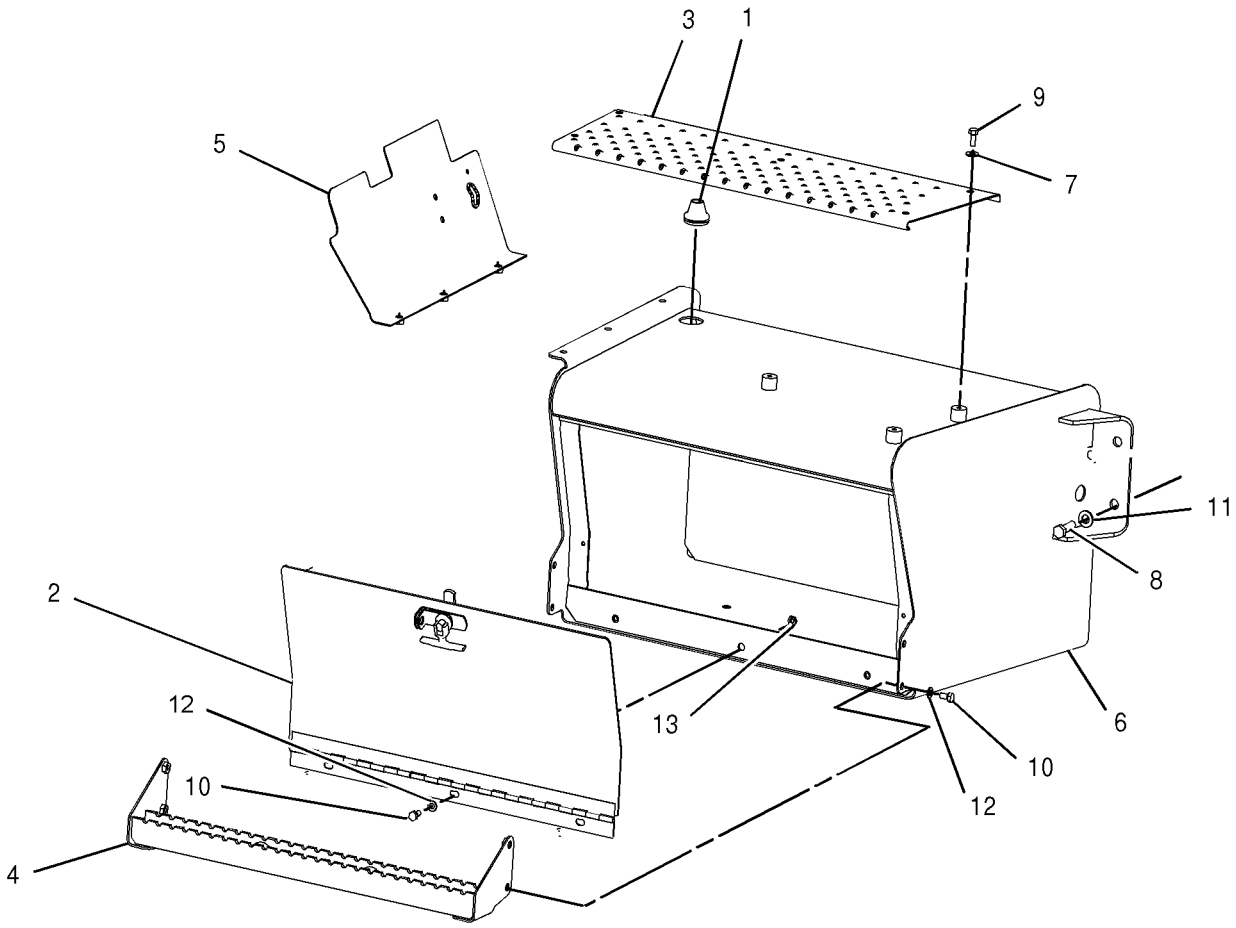

GRAPHIC #1 **<END>** g01023151

FRAME AND BODY

112-1809 BUMPER GP-FRONT

S/N: FDP18400-UP
AN ATTACHMENT

SMCS-7156 **i00814097**

NOTE	REF NO	GRAPHIC REF	PART NUMBER	QTY	PART NAME 1 2 3 4 5 6 (PRODUCT LEVEL)	SEE PAGE
	1	1	**7X-0572**	4	WASHER-HARD	
	2	1	**113-4495**	1	BUMPER AS	
M	3	1	**7X-2568**	4	BOLT (M20X2.5X180MM)	

M-METRIC PART

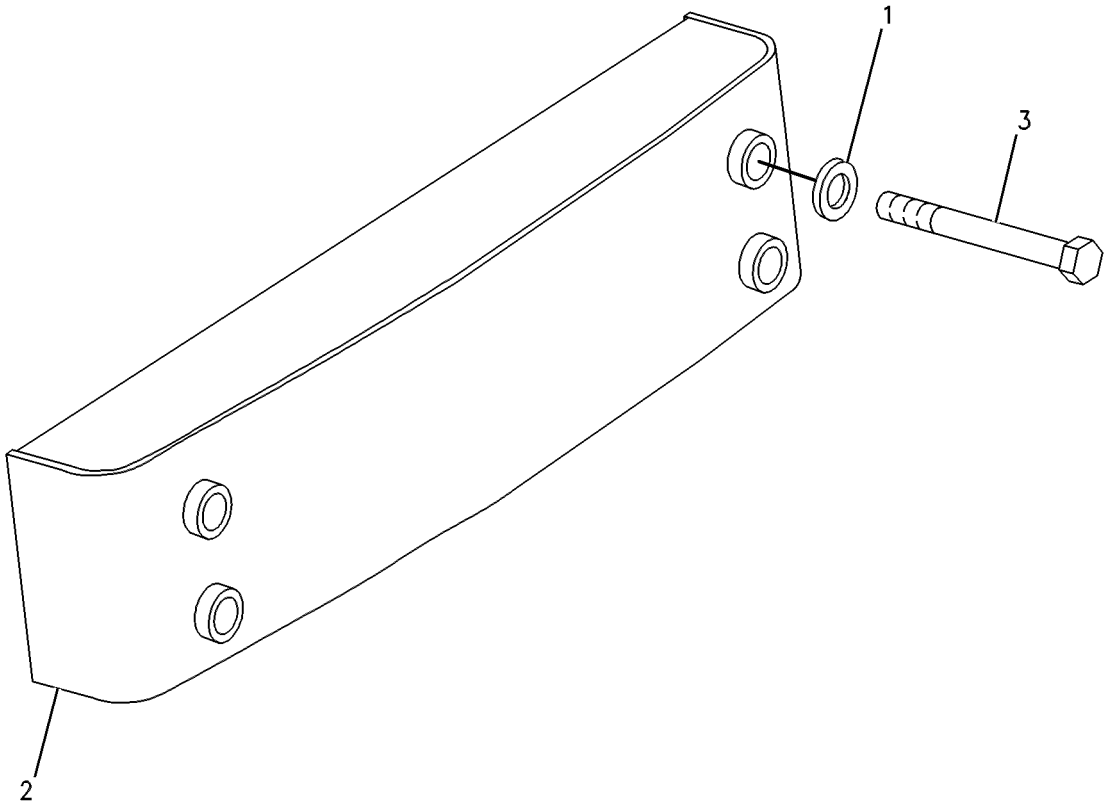

GRAPHIC #1 **<END>** g00257015

106-5878 COUNTERWEIGHT GP

S/N: FDP18400-UP
145KG (320LB)
AN ATTACHMENT

SMCS-7056 **i00523472**

NOTE	REF NO	GRAPHIC REF	PART NUMBER	QTY	PART NAME 1 2 3 4 5 6 (PRODUCT LEVEL)	SEE PAGE
	1	1	**112-4417**	1	COUNTERWEIGHT	
M	2	1	**8C-8478**	4	BOLT (M20X2.5X140MM)	
	3	1	**8T-4123**	4	WASHER-PLATED (3.5MM THK)	

M-METRIC PART

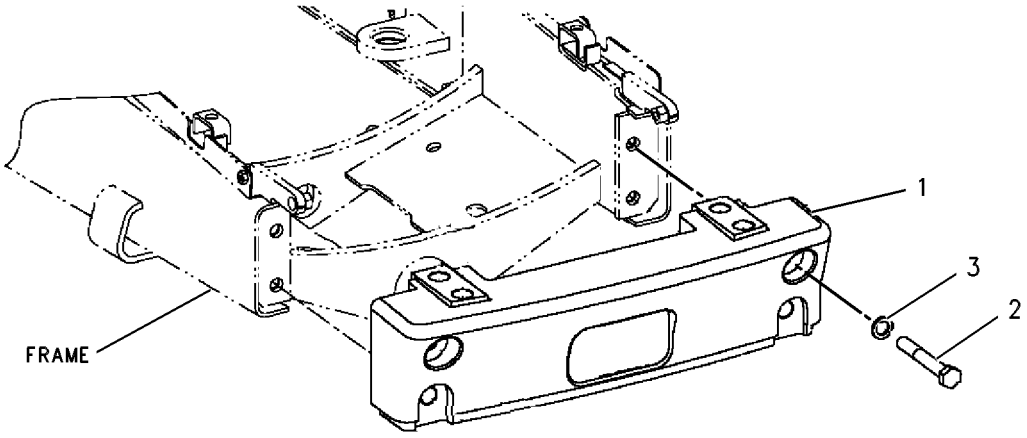

GRAPHIC #1 **<END>** g00131763

FRAME AND BODY

106-5879 COUNTERWEIGHT GP

S/N: FDP18400-UP
249KG (550LB)
AN ATTACHMENT

SMCS-7056 **i01934185**

NOTE	REF NO	GRAPHIC REF	PART NUMBER	QTY	PART NAME 1 2 3 4 5 6 (PRODUCT LEVEL)	SEE PAGE
	1	1	**112-4417**	1	COUNTERWEIGHT (144KG)	
	2	1	**112-4418**	1	COUNTERWEIGHT (102.7KG)	
	3	1	**113-7906**	2	U-BOLT	
M	4	1	**8T-4001**	4	NUT (M24X3 THD)	
	5	1	**8T-4167**	4	WASHER-HARD (26X44X4MM THK)	
M	6	1	**8C-8478**	4	BOLT (M20X2.5X140MM)	
	7	1	**8T-4123**	4	WASHER-PLATED (22X35X3.5MM THK)	

M-METRIC PART

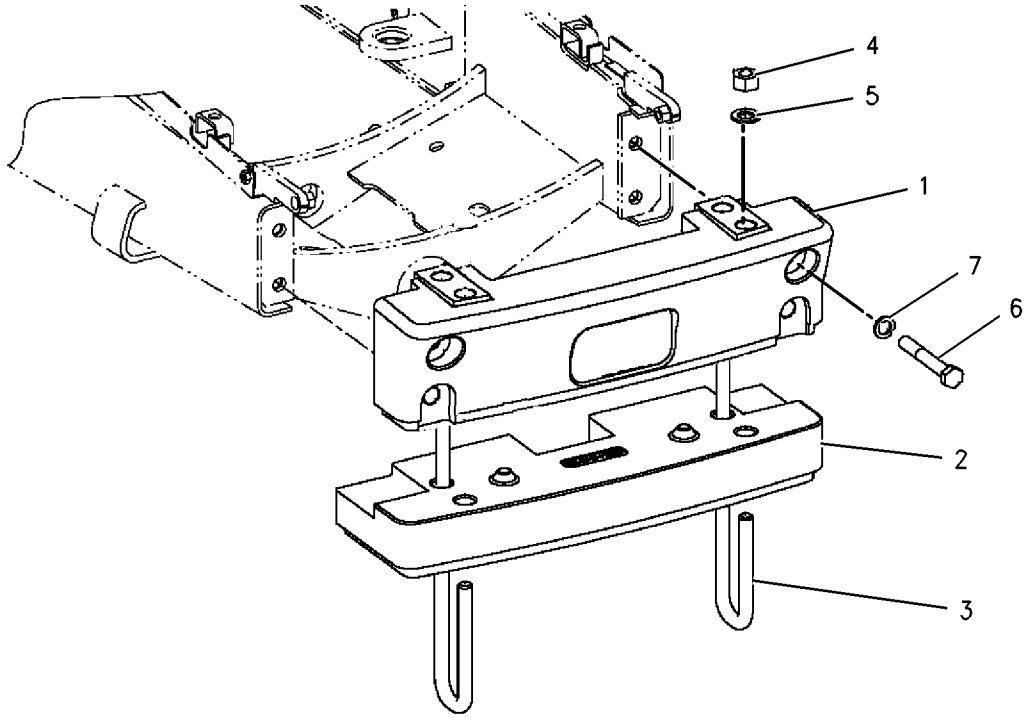

GRAPHIC #1 **<END>** g01006598

106-5880 COUNTERWEIGHT GP

S/N: FDP18400-UP
354KG (780LB)
AN ATTACHMENT

SMCS-7056 **i01934186**

NOTE	REF NO	GRAPHIC REF	PART NUMBER	QTY	PART NAME 1 2 3 4 5 6 (PRODUCT LEVEL)	SEE PAGE
	1	1	**112-4417**	1	COUNTERWEIGHT (144KG)	
	2	1	**112-4418**	2	COUNTERWEIGHT (102.7KG)	
	3	1	**113-7905**	2	U-BOLT	
M	4	1	**8T-4001**	4	NUT (M24X3 THD)	
	5	1	**8T-4167**	4	WASHER-HARD (26X44X4MM THK)	
M	6	1	**8C-8478**	4	BOLT (M20X2.5X140MM)	
	7	1	**8T-4123**	4	WASHER-PLATED (22X35X3.5MM THK)	

M-METRIC PART

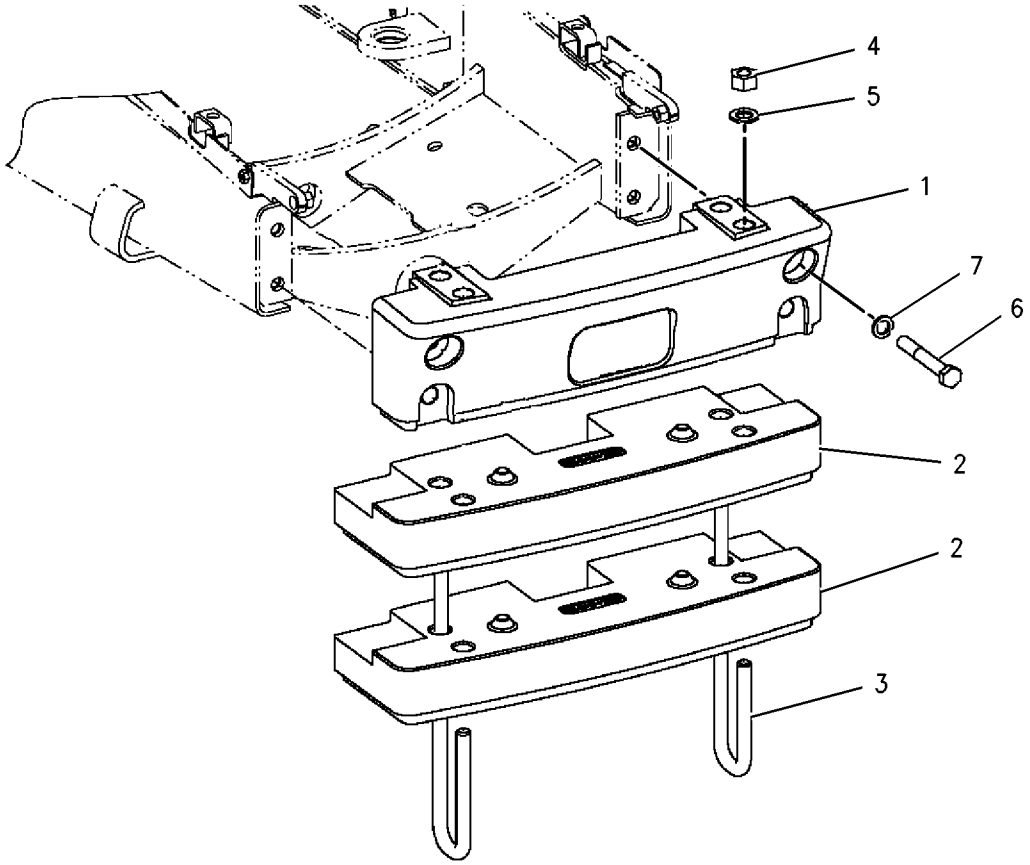

GRAPHIC #1 **<END>** g01006613

106-5881 COUNTERWEIGHT GP

S/N: FDP18400-UP
459KG (1010LB)
AN ATTACHMENT

SMCS-7056 **i01934187**

NOTE	REF NO	GRAPHIC REF	PART NUMBER	QTY	PART NAME 1 2 3 4 5 6 (PRODUCT LEVEL)	SEE PAGE
	1	1	**112-4417**	1	COUNTERWEIGHT (144KG)	
	2	1	**112-4418**	3	COUNTERWEIGHT (102.7KG)	
	3	1	**113-2662**	2	U-BOLT	
M	4	1	**8T-4001**	4	NUT (M24X3 THD)	
	5	1	**8T-4167**	4	WASHER-HARD (26X44X4MM THK)	
M	6	1	**8C-8478**	4	BOLT (M20X2.5X140MM)	
	7	1	**8T-4123**	4	WASHER-PLATED (22X35X3.5MM THK)	

M-METRIC PART

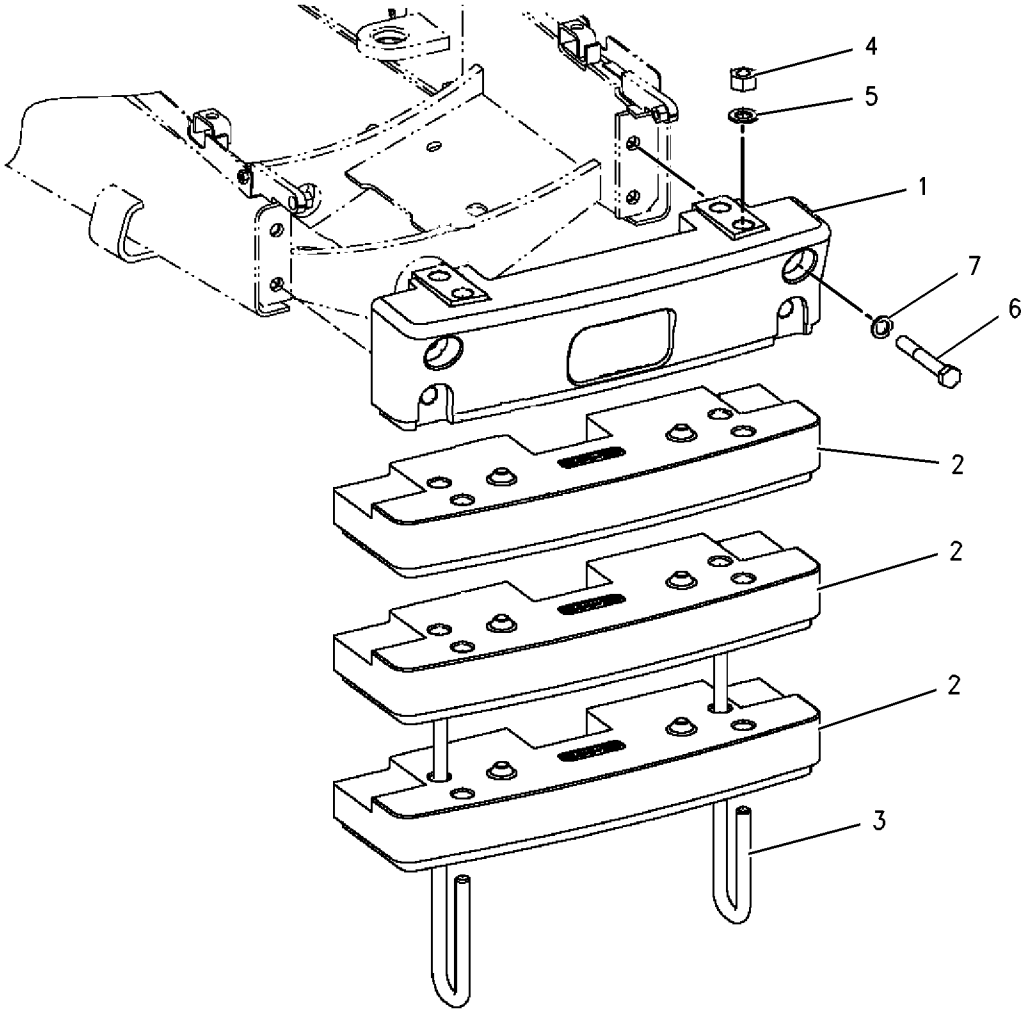

GRAPHIC #1 **<END>** g01006625

FRAME AND BODY

120-8482 COUNTERWEIGHT GP

S/N: FDP18400-UP
510KG (1260LB)
AN ATTACHMENT

SMCS-7056 **i01935716**

NOTE	REF NO	GRAPHIC REF	PART NUMBER	QTY	PART NAME 1 2 3 4 5 6 (PRODUCT LEVEL)	SEE PAGE
	1	1	**112-4417**	1	COUNTERWEIGHT	
	2	1	**112-4418**	1	COUNTERWEIGHT	
	3	1	**113-2662**	2	U-BOLT	
	4	1	**201-0190**	1	COUNTERWEIGHT AS	
M	5	1	**8T-4001**	4	NUT (M24X3 THD)	
	6	1	**8T-4167**	4	WASHER-HARD (26X44X4MM THK)	
M	7	1	**8C-8478**	4	BOLT (M20X2.5X140MM)	
	8	1	**8T-4123**	4	WASHER-PLATED (22X35X3.5MM THK)	

M-METRIC PART

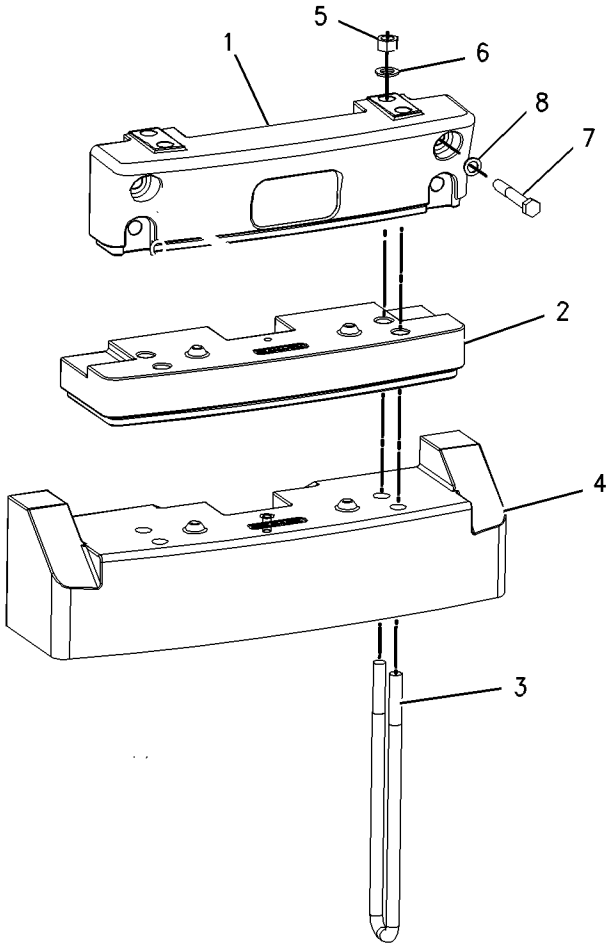

GRAPHIC #1 **<END>** g01007516

118-6842 DOOR GP-BATTERY

S/N: FDP18400-UP

PART OF 188-0859, 188-0860, 237-6414, 237-6415 BOX GP-BATTERY

AN ATTACHMENT

SMCS-7273 **i01399512**

NOTE	REF NO	GRAPHIC REF	PART NUMBER	QTY	PART NAME 1 2 3 4 5 6 (PRODUCT LEVEL)	SEE PAGE
	1	1	**8C-8522**	1	PAWL-LATCH	
	2	1	**129-4741**	1	LATCH AS-T-BAR	
	3	1	**151-2963**	1	DOOR AS	
M	4	1	**6V-7743**	2	LOCKNUT (M6X1 THD)	
M	5	1	**8T-4133**	2	NUT (M10X1.5 THD)	
	6	1	**8T-4205**	2	WASHER-HARD (7.2X14.5X2MM THK)	

M-METRIC PART

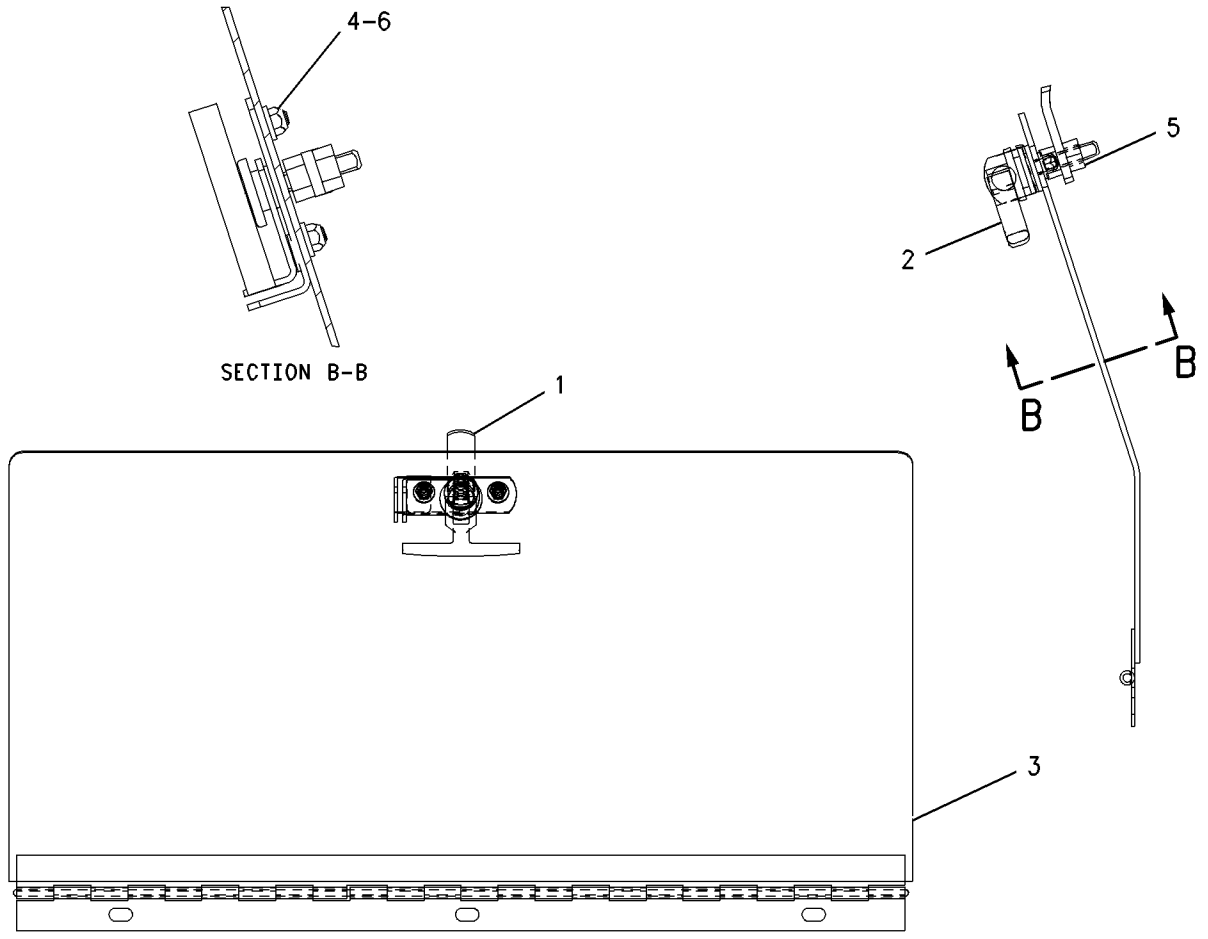

GRAPHIC #1 **<END>** g00739059

FRAME AND BODY

201-3954 FENDER GP-FRONT

S/N: FDP18400-UP

AN ATTACHMENT

SMCS-7252 **i01914688**

NOTE	REF NO	GRAPHIC REF	PART NUMBER	QTY	PART NAME 1 2 3 4 5 6 (PRODUCT LEVEL)	SEE PAGE
	1	1	**162-4004**	2	FENDER (FRONT)	
M	2	1	**199-0783**	8	BOLT (M16X2X38MM)	
	3	1	**222-1801**	1	BRACKET AS (LH)	
	4	1	**222-1802**	1	BRACKET AS (RH)	
M	5	1	**6V-7744**	4	LOCKNUT (M10X1.5 THD)	
	6	1	**8T-4121**	4	WASHER-HARD (11X21X2.5MM THK)	
M	7	1	**8T-4132**	8	NUT (M16X2 THD)	
M	8	1	**8T-4195**	4	BOLT (M10X1.5X30MM)	
	9	1	**8T-4222**	4	WASHER-PLATED (11X32X2.5MM THK)	
	10	1	**9X-8257**	8	WASHER (17.5X30X3.5MM THK)	

M-METRIC PART

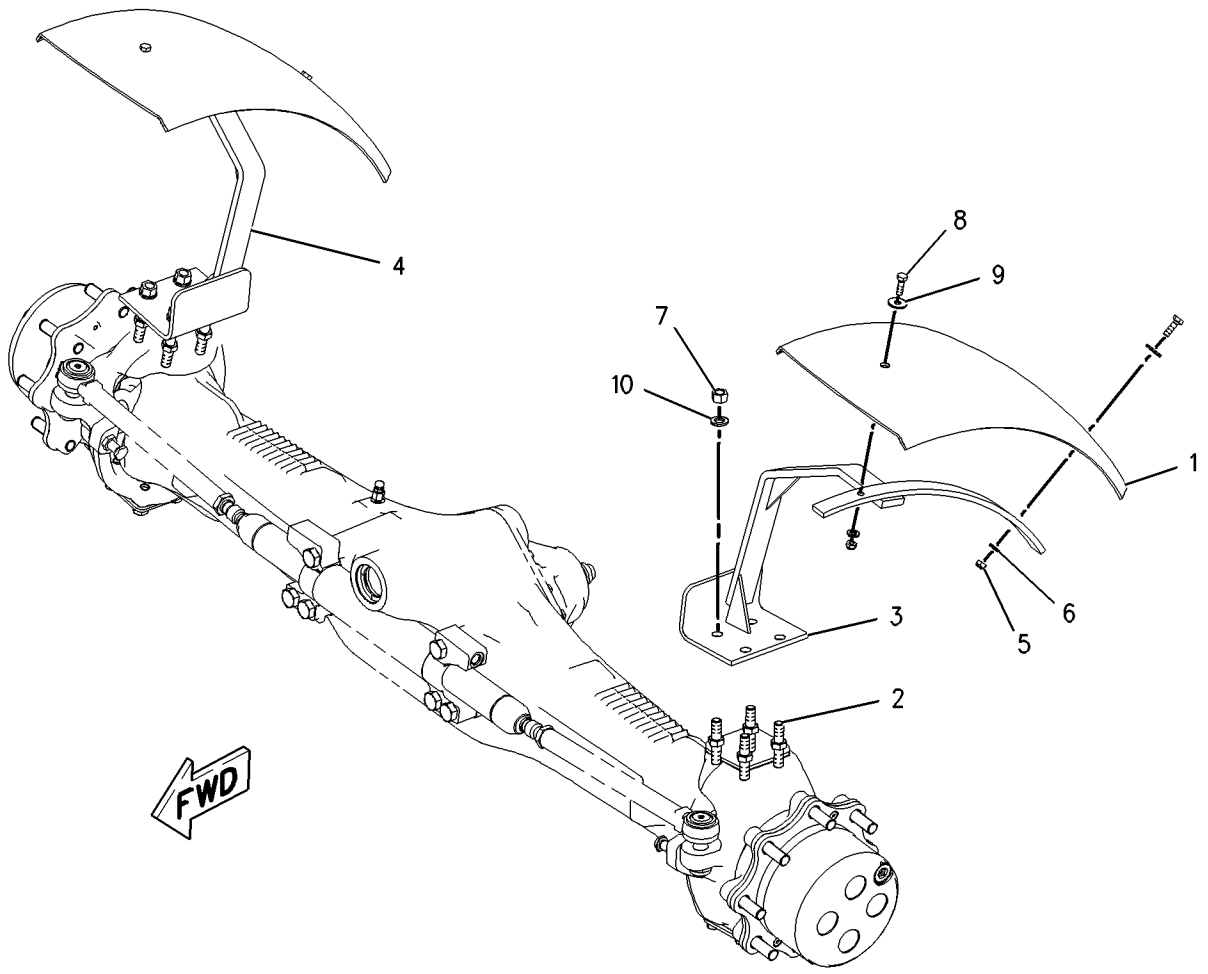

GRAPHIC #1 **<END>** g00997676

164-1148 FENDER GP-REAR

S/N: FDP18400-UP

PART OF 184-9737, 184-9738, 239-5565, 239-5566, 239-5567, 239-5568, 244-1944 CAB AR, 184-9736, 238-6697, 239-5563, 239-5564 CANOPY AR AN ATTACHMENT

SMCS-7252 **i01352830**

NOTE	REF NO	GRAPHIC REF	PART NUMBER	QTY	PART NAME 1 2 3 4 5 6 (PRODUCT LEVEL)	SEE PAGE
	1	1	**156-0283**	14	WASHER-HARD (2.5MM THK)	
	2	1	**167-8253**	1	FENDER-RH	
	3	1	**167-8254**	1	FENDER-LH	
M	4	1	**8T-4189**	14	BOLT (M8X1.25X20MM)	

M-METRIC PART

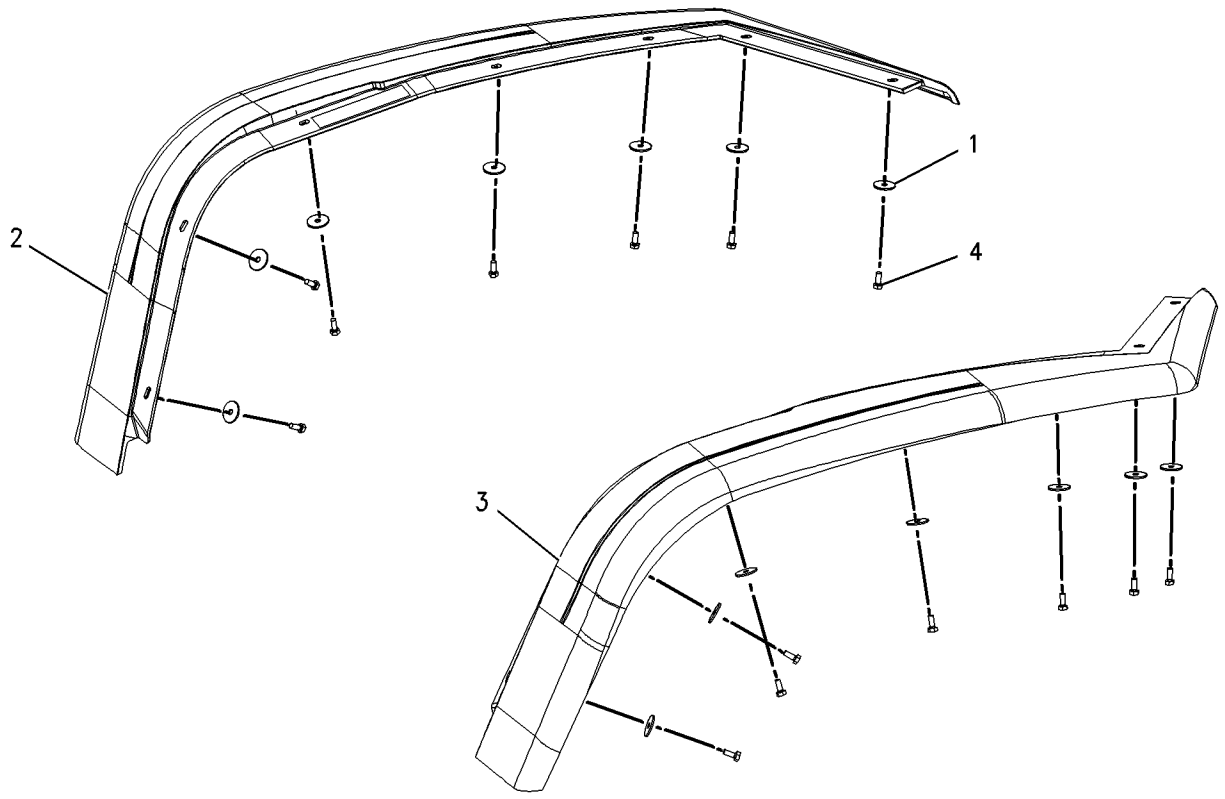

GRAPHIC #1 **<END>** g00713968

224-9748 FLOORPLATE GP

S/N: FDP18400-UP

PART OF 186-4958 INSTALLATION AR-BANK VALVE, 215-1510 VALVE AR-BANK 4 AN ATTACHMENT

SMCS-7265 **i01994868**

NOTE	REF NO	GRAPHIC REF	PART NUMBER	QTY	PART NAME 1 2 3 4 5 6 (PRODUCT LEVEL)	SEE PAGE
B	1	1	**9R-0393**	6	SHIM (1.6-MM THK)	
	2	1	**164-1103**	1	PLATE	
	3	1	**236-4991**	1	FLOORPLATE	
	4	1	**201-4822**	1	PLATE AS	
	5	1	**222-4880**	2	MOUNT AS	
	6	1	**222-4881**	2	MOUNT AS	
	7	1	**1L-6377**	2	BUTTON-PLUG	
	8	1	**8C-3291**	4	WASHER (M17X90X10-MM THK)	
M	9	1	**8T-4001**	2	NUT (M24X3-THD)	
	10	1	**8T-4122**	2	WASHER-HARD (17X32X3.5-MM THK)	
M	11	1	**8T-4132**	2	NUT (M16X2-THD)	
	12	1	**8T-4167**	2	WASHER-HARD (26X44X4-MM THK)	
M	13	1	**8T-4174**	2	BOLT (M16X2.0X120-MM)	
M	14	1	**8T-4649**	2	BOLT (M24X3X140-MM)	
	15	1	**9R-9869**	4	WASHER-HARD (M26X120X10-MM THK)	
M	16	1	**9X-2042**	13	SCREW-TRUSS HEAD (M6X1X12-MM)	
	17	1	**236-4990**	1	FLOORPLATE AS	
M		1	**6V-9632**	4	NUT-WELD (M6X1-THD)	

B-USE AS REQUIRED
M-METRIC PART

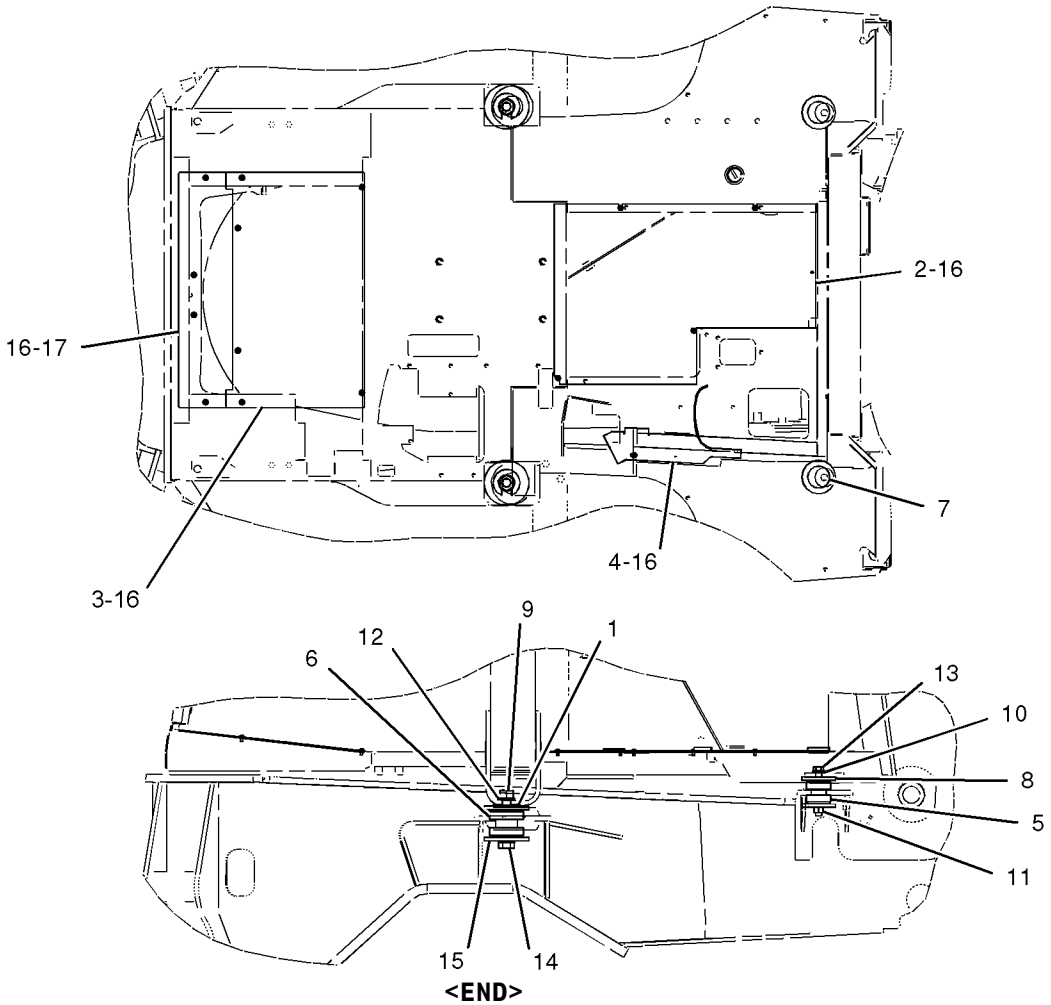

GRAPHIC #1

<END>

g01032503

224-9749 FLOORPLATE GP

S/N: FDP18400-UP

PART OF 186-4959, 186-4960 INSTALLATION AR-BANK VALVE, 215-1511 VALVE AR-BANK 5, 215-1512 VALVE AR-BANK 6

AN ATTACHMENT

SMCS-7265 **i01994869**

NOTE	REF NO	GRAPHIC REF	PART NUMBER	QTY	PART NAME 1 2 3 4 5 6 (PRODUCT LEVEL)	SEE PAGE
	1	1	**9R-0393**	6	SHIM (1.6 MM THK)	
	2	1	**164-1103**	1	PLATE	
	3	1	**236-4992**	1	PLATE AS	
M		1	**6V-9632**	6	NUT-WELD (M6X1 THD)	
M		1	**8T-4130**	1	STUD (M6X1X18 MM)	
M		1	**195-1095**	1	STUD-WELD (M6X1X20MM OAL)	
	4	1	**201-4822**	1	PLATE AS	
	5	1	**222-4880**	2	MOUNT AS	
	6	1	**222-4881**	2	MOUNT AS	
	7	1	**1L-6377**	2	BUTTON-PLUG	
	8	1	**8C-3291**	4	WASHER (M17X90X10MM THK)	
M	9	1	**8T-4001**	2	NUT (M24X3 THD)	
	10	1	**8T-4122**	2	WASHER-HARD (17X32X3.5MM THK)	
M	11	1	**8T-4132**	2	NUT (M16X2 THD)	
	12	1	**8T-4167**	2	WASHER-HARD (26X44X4MM THK)	
M	13	1	**8T-4174**	2	BOLT (M16X2.0X120MM)	
M	14	1	**8T-4649**	2	BOLT (M24X3X140MM)	
	15	1	**9R-9869**	4	WASHER-HARD (M26X120X10MM THK)	
M	16	1	**9X-2042**	13	SCREW-TRUSS HEAD (M6X1X12MM)	
	17	1	**236-4993**	1	PLATE AS	
M		1	**6V-9632**	2	NUT-WELD (M6X1 THD)	
M		1	**8T-4130**	1	STUD (M6X1X18 MM)	
M		1	**195-1095**	1	STUD-WELD (M6X1X20MM OAL)	

M-METRIC PART

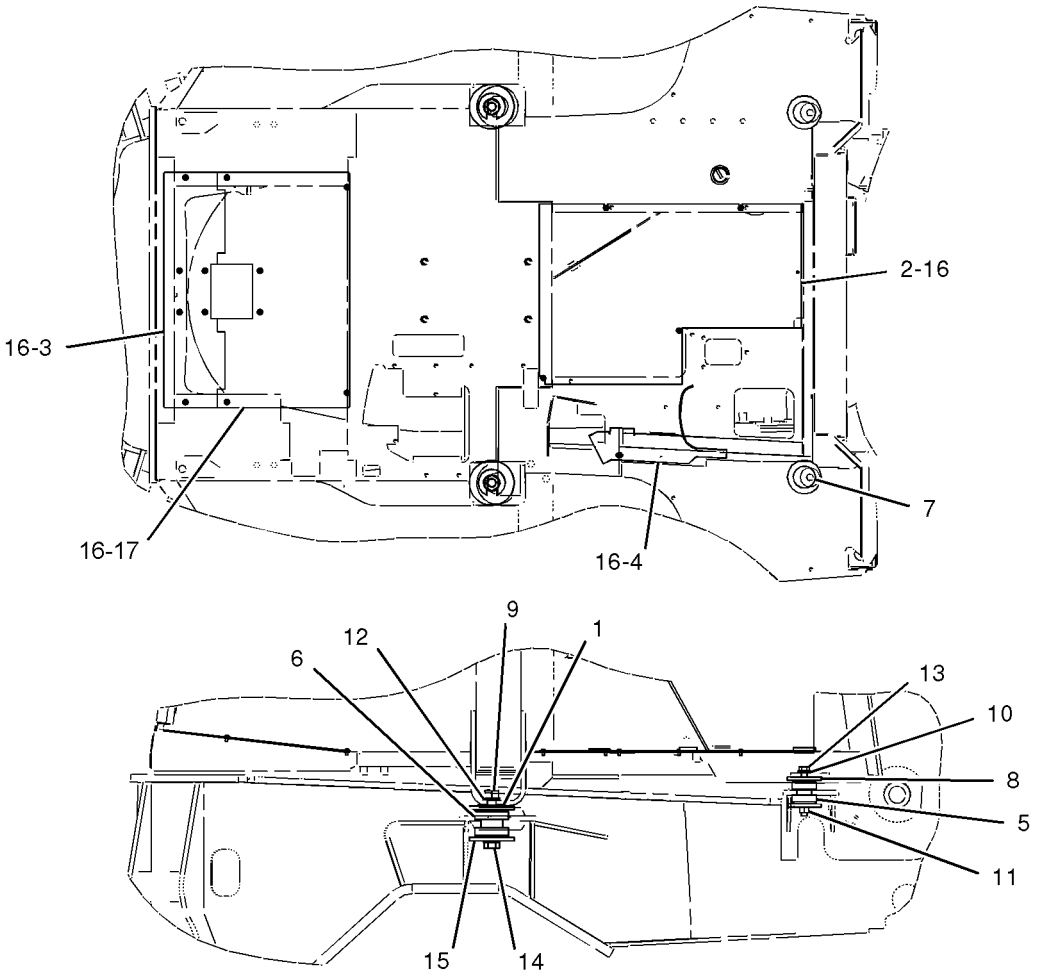

GRAPHIC #1

<END>

g01032509

FRAME AND BODY

214-6944 FRAME GP-LOADER–SINGLE TILT

S/N: FDP18400-UP

PART OF 214-6951 CHASSIS AR

SMCS-7054 **i01967013**

NOTE	REF NO	GRAPHIC REF	PART NUMBER	QTY	PART NAME 1 2 3 4 5 6 (PRODUCT LEVEL)	SEE PAGE
	1		**9R-0481**	2	WASHER (71X110X4MM THK)	
	2		**9R-7701**	1	CAP AS	
			9R-4110	2	BEARING-SLEEVE	
M	3		**114-6099**	6	BOLT (M24X3X80MM)	
	4		**214-6946**	1	FRAME AS	
	5		**3B-8488**	2	FITTING-GREASE (1/8-27 THD)	
	6		**3B-8489**	2	FITTING-GREASE (1/8-27 THD)	
M	7		**8T-4001**	6	NUT (M24X3 THD)	
	8		**8T-4167**	12	WASHER-HARD (26X44X4MM THK)	

M-METRIC PART

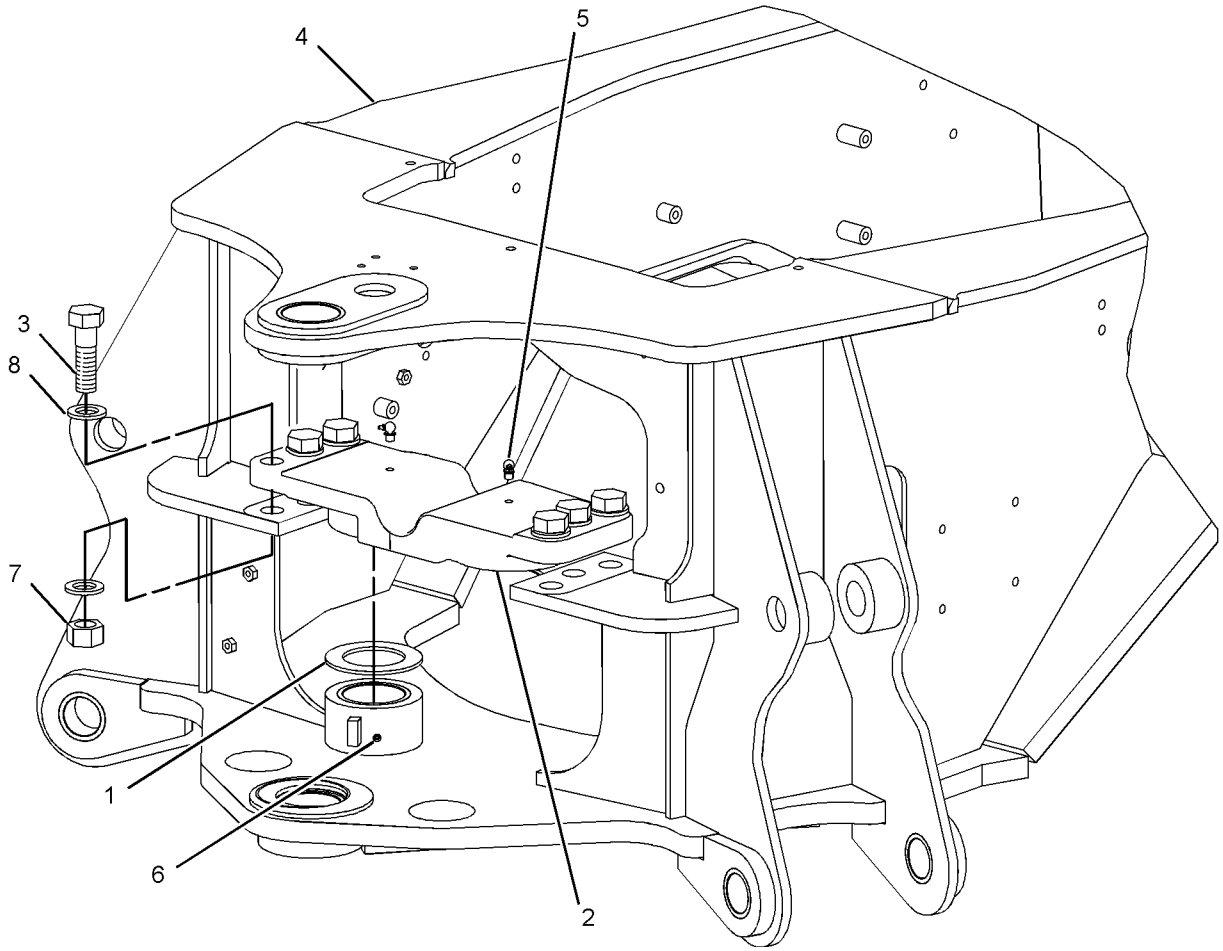

GRAPHIC #1 **<END>** g01025227

FRAME AND BODY

183-6056 FRAME GP-SWING

S/N: FDP18400-UP

PART OF 214-6951 CHASSIS AR

SMCS-6506 **i01969562**

NOTE	REF NO	GRAPHIC REF	PART NUMBER	QTY	PART NAME 1 2 3 4 5 6 (PRODUCT LEVEL)	SEE PAGE
	1	1	**5P-7958**	1	SLEEVE-CABLE SPLICE	
	2	1	**8T-4837**	1	WASHER (48X85X6MM THK)	
	3	1	**8Y-7203**	1	WEDGE	
	4	1	**8Y-7204**	1	WEDGE	
	5	1	**130-0484**	1	PIN	
B	6	1	**9R-5429**	2	SPACER (67.5X120X3MM THK)	
B	7	1	**9R-5437**	4	WASHER (56X90X.5MM THK)	
C	8	1	**236-6954**	1	FRAME AS	
		1	**9R-0366**	1	WASHER (80X140X5MM THK)	
	9	1	**9R-7882**	2	SPACER (14X25X7MM THK)	
B	10	1	**9R-8291**	2	SPACER (66X125X1MM THK)	
	11	1	**9R-8594**	1	PIN AS	
	12	1	**9R-8599**	1	PLATE	
	13	1	**9R-8760**	2	PLATE	
	14	1	**101-4015**	1	BRACKET	
	15	1	**101-4016**	1	PLATE AS	
	16	1	**101-4020**	1	PIN AS	
	17	1	**159-0960**	1	PIN AS	
	18	1	**102-1940**	1	STOP	
C	19	1	**237-5330**	2	PIN	
	20	1	**131-8775**	1	BRACKET AS	
	21	1	**134-0143**	1	CABLE	
	22	1	*142-6132*	1	ROD AS	
M		1	**6V-7687**	1	LOCKNUT (M12X1.75THD)	
		1	**123-7034**	1	ROD	
C	23	1	**237-0803**	1	SPRING	
B	24	1	**210-1706**	1	SHIM (0.5MM THK)	
B	25	1	**210-1707**	1	SHIM (1MM THK)	
	26	1	**222-0844**	1	CABLE AS	
	27	1	**3B-8489**	6	FITTING-GREASE (1/8-27 THD)	
	28	1	**4D-7794**	1	CLIP	
M	29	1	**6V-7687**	3	LOCKNUT (M12X1.75THD)	
	30	1	**7X-7729**	2	WASHER (11X25X3MM THK)	
M	31	1	**8T-3652**	1	NUT (M42X25THD)	
	32	1	**8T-4121**	6	WASHER-HARD (11X21X2.5MM THK)	
M	33	1	**8T-4136**	5	BOLT (M10X1.5X25MM)	
M	34	1	**8T-4139**	2	BOLT (M12X1.75X30MM)	
M	35	1	**8T-4195**	2	BOLT (M10X1.5X30MM)	
	36	1	**8T-4224**	4	WASHER-HARD (8.8X16X2MM THK)	
	37	1	**8T-4821**	2	WASHER (13.5X40X3MM THK)	
M	38	1	**8T-4908**	4	BOLT (M8X1.25X25MM)	
CM	39	1	**8T-5092**	2	BOLT (M12X1.75X150MM)	
M	40	1	**8T-8894**	1	BOLT-SOCKET HEAD (M10X1.5X20MM)	
C	41	1	**236-8182**	2	PIN	

B-USE AS REQUIRED
C-CHANGE FROM PREVIOUS TYPE
M-METRIC PART

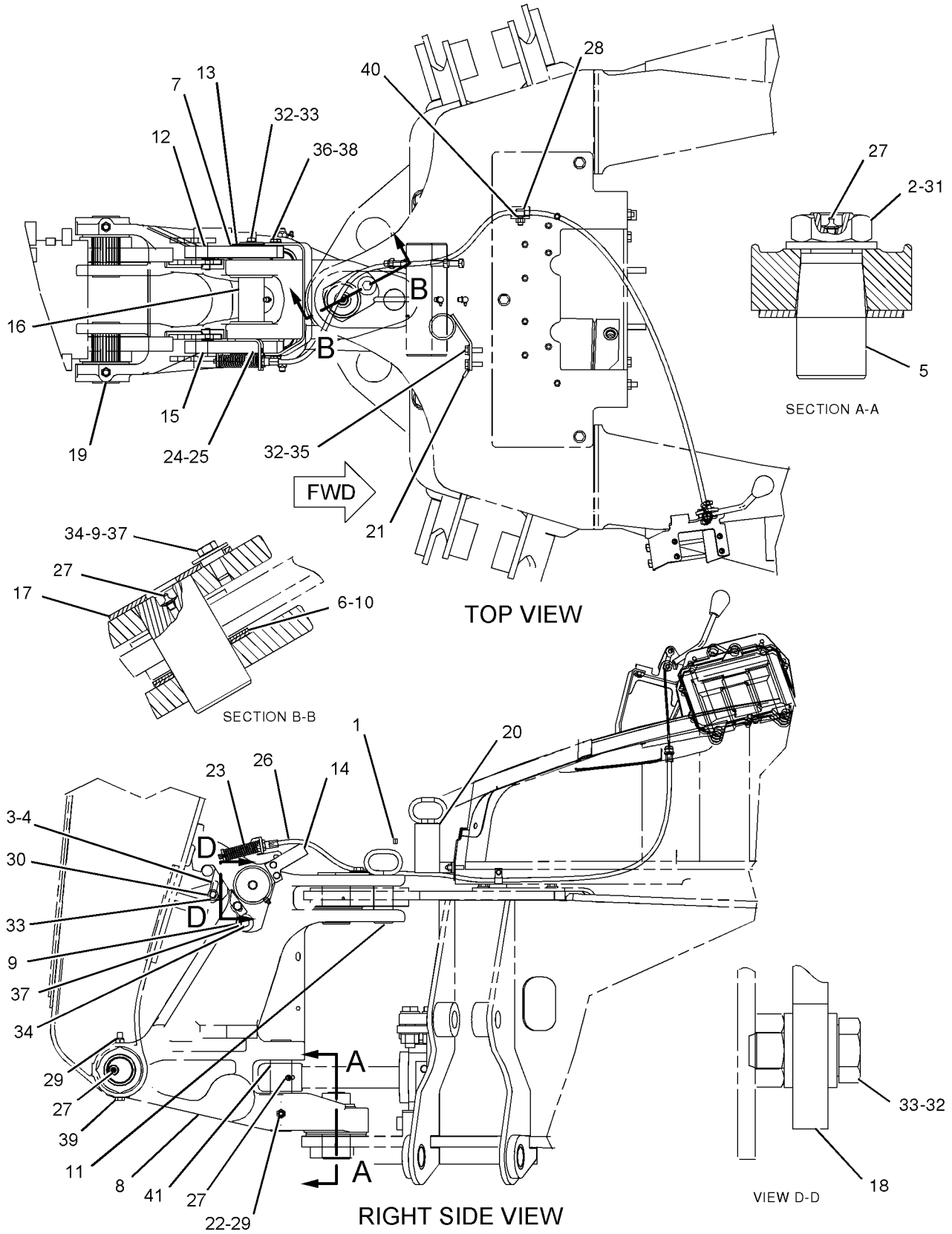

GRAPHIC #1

<END>

g01022586

9R-1233 GUARD GP-DRIVE SHAFT

S/N: FDP18400-UP
PART OF 237-6459 DRIVE AR-BACKHOE LOADER
AN ATTACHMENT

SMCS-7153 **i01811205**

NOTE	REF NO	GRAPHIC REF	PART NUMBER	QTY	PART NAME 1 2 3 4 5 6 (PRODUCT LEVEL)	SEE PAGE
	1	1	**213-8481**	1	GUARD AS	
M	2	1	**8T-4183**	4	BOLT (M12X1.75X40MM)	
	3	1	**8T-4223**	4	WASHER-HARD (13.5X25.5X3MM THK)	

M-METRIC PART

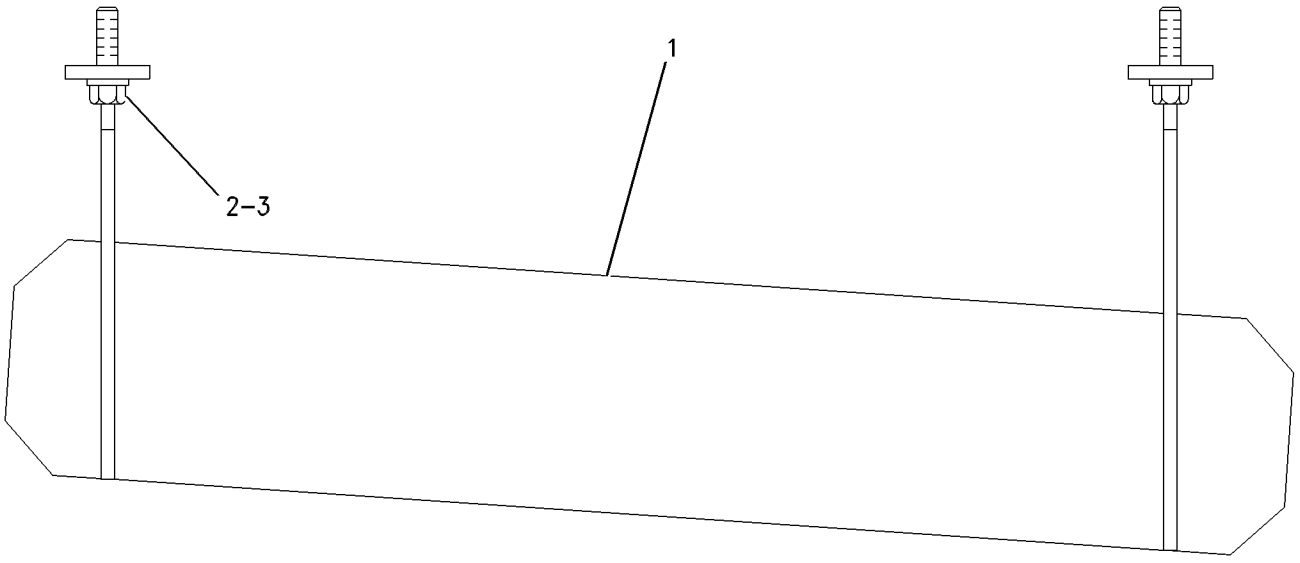

GRAPHIC #1 **<END>** g00287430

FRAME AND BODY

234-9065 HOOD & GUARD GP

S/N: FDP18400-UP

PART OF 214-6951 CHASSIS AR

SMCS-7150, 7251 **i01986736**

NOTE	REF NO	GRAPHIC REF	PART NUMBER	QTY	PART NAME 1 2 3 4 5 6 (PRODUCT LEVEL)	SEE PAGE
E	1	1	**3E-6600**		SEAL (83 CM)	
	2	1	**9R-2620**	1	PLUG	
	3	1	**112-4415**	2	BUMPER AS	
	4	1	**112-4416**	1	GUARD AS	
M		1	**6V-9632**	1	NUT-WELD (M6X1 THD)	
M		1	**8T-3490**	1	NUT-WELD (M10X1.5 THD)	
M		1	**8T-3612**	6	NUT-WELD (M8X1.25 THD)	
	5	1	**123-0428**	2	BAR	
	6	1	**123-4065**	6	RIVET-POP	
	7	1	**135-9886**	1	SPRING	
	8	1	**141-7514**	2	BAFFLE	
	9	1	**145-4476**	1	ENCLOSURE GP (RH)	
E	10	1	**179-5571**		SEAL (61 CM)	
	11	1	**188-0862**	1	GRILL AS	
	12	1	**188-0865**	1	BAFFLE	
	13	1	**198-8341**	1	CABLE AS	
	14	1	**234-9066**	1	ENCLOSURE GP-ENGINE	
Y	15	1	*234-9522*	1	HOOD GP-ENGINE	327
	16	1	**3S-2093**	4	STRAP-CABLE	
	17	1	**5P-4115**	1	WASHER-HARD (7.2X19X2MM THK)	
	18	1	**6P-6590**	1	GROMMET	
M	19	1	**7X-2554**	2	BOLT (M16X2X70MM)	
	20	1	**7X-7729**	3	WASHER (11X25X3MM THK)	
	21	1	**8T-4121**	8	WASHER-HARD (11X21X2.5MM THK)	
M	22	1	**8T-4133**	1	NUT (M10X1.5 THD)	
M	23	1	**8T-4136**	2	BOLT (M10X1.5X25MM)	
M	24	1	**8T-4137**	6	BOLT (M10X1.5X20MM)	
M	25	1	**8T-4138**	1	BOLT (M6X1X20MM)	
M	26	1	**8T-4182**	2	BOLT (M10X1.5X45MM)	
M	27	1	**8T-4191**	3	BOLT (M10X1.5X16MM)	
M	28	1	**8T-4196**	2	BOLT (M10X1.5X35MM)	
	29	1	**8T-4222**	5	WASHER-PLATED (11X32X2.5MM THK)	
	30	1	**8T-4224**	6	WASHER-HARD (8.8X16X2MM THK)	
M	31	1	**8T-7547**	6	BOLT (M8X1.25X30MM)	
	32	1	**9X-8257**	2	WASHER (17.5X30X3.5MM THK)	

E-ORDER BY THE CENTIMETER
M-METRIC PART
Y-SEPARATE ILLUSTRATION

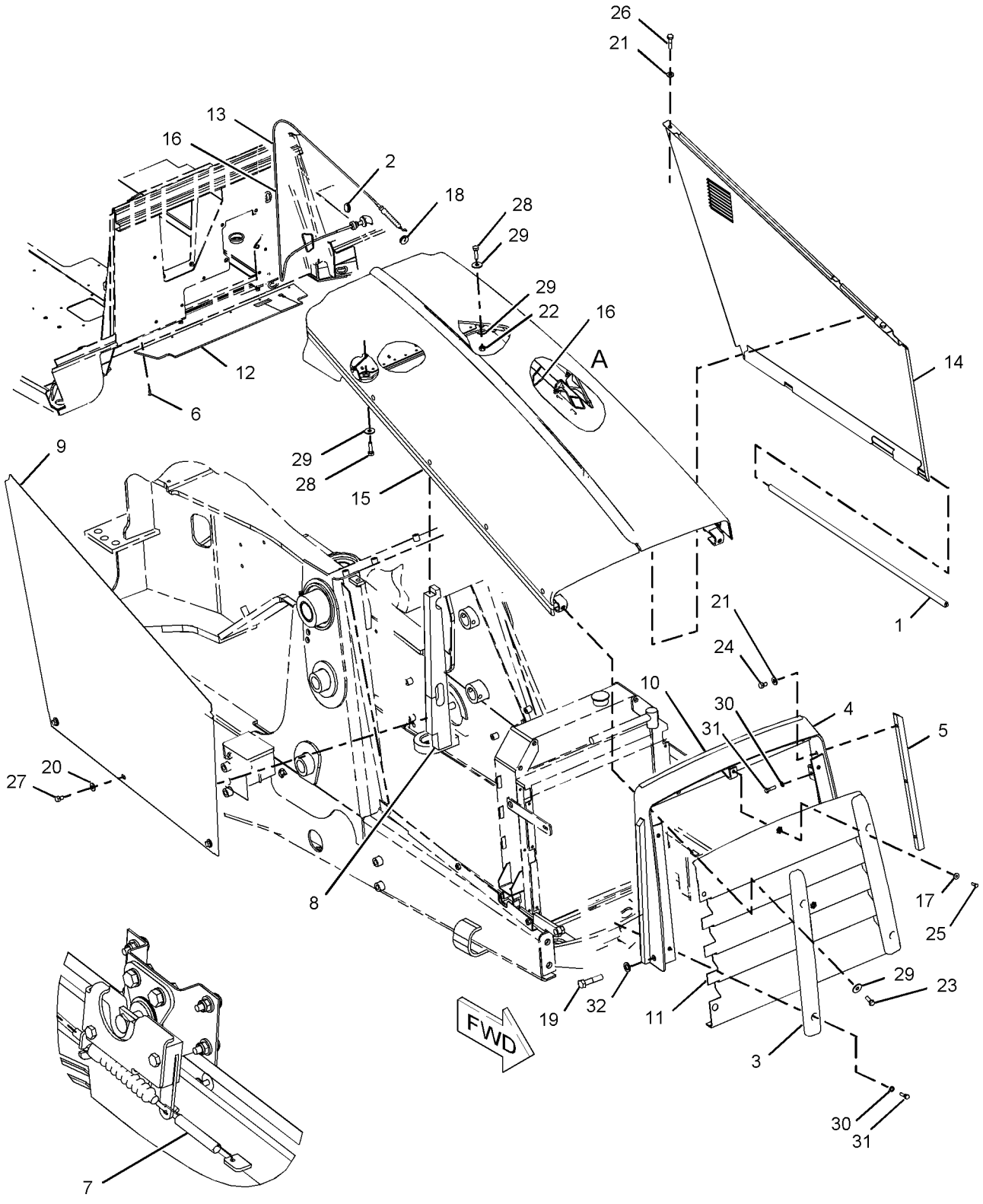

VIEW OF AREA A

GRAPHIC #1 **<END>** g01030238

FRAME AND BODY

234-9522 HOOD GP-ENGINE

S/N: FDP18400-UP

PART OF 234-9065 HOOD & GUARD GP

SMCS-7251 **i02019782**

NOTE	REF NO	GRAPHIC REF	PART NUMBER	QTY	PART NAME 1 2 3 4 5 6 (PRODUCT LEVEL)	SEE PAGE
	1	1	**3E-8211**	278	FILM-STRIPE	
	2	1	**126-8472**	144	SEAL	
	3	1	**4V-5091**	2	GROMMET	
	4	2	**5D-4822**	4	RING-RETAINING	
	5	1	**5V-8309**	1	STRIKER AS	
	6	2	**8T-0318**	3	SHIM (0.8-MM THK)	
	7	1	**8T-2444**	4	STUD-BALL	
	8	1	**8Y-6998**	1	LATCH AS-ROTARY	
	9	1	**9R-4784**	1	PLATE AS	
M		1	**8T-3612**	2	NUT-WELD (M8X1.25-THD)	
	10	2	**114-8861**	2	SPRING AS-GAS	
	11	2	**114-8972**	2	HINGE AS	
	12	1	**114-8973**	2	HINGE AS	
	13	1	**115-5219**	1	PLATE AS	
		1	**1F-0750**	1	NUT-WELD (3/8-16-THD)	
	14	1	**115-5220**	1	PLATE	
	15	1	**122-5923**	1	BAFFLE	
	16	1	**123-4065**	11	RIVET-POP	
	17	1	**131-0827**	1	PLATE-LH	
	18	1	**131-0828**	1	PLATE-RH	
	19	1	**141-7515**	1	BAFFLE	
	20	2	**191-9109**	1	HOOD AS	
		2	**8T-9501**	6	SCREW (10-16X.75-IN)	
	21	2	**191-9110**	1	HOOD AS	
	22	2	**224-8945**	1	FILM-WARNING (ETHER)	
	23	1	**234-9523**	1	SUPPORT AS	
		1	**7T-0525**	2	SHIM (3-MM THK)	
M		1	**8T-3490**	5	NUT-WELD (M10X1.5-THD)	
M		1	**6V-9632**	2	NUT-WELD (M6X1-THD)	
M		1	**8T-3612**	3	NUT-WELD (M8X1.25-THD)	
M		1	**6V-9632**	2	NUT-WELD (M6X1-THD)	
M		1	**8T-3612**	3	NUT-WELD (M8X1.25-THD)	
	24	2	**132-3895**	1	FILM-INSTRUCTION (LUBRICANTS)	
M	25	1	**129-3178**	4	LOCKNUT (M6X1-THD)	
	26	1	**139-3785**	9	RIVET-POP	
	27	2	**4B-4274**	9	WASHER (5.5X13X1.2-MM THK)	
M	28	1	**5C-7261**	6	NUT (M8X1.25-THD)	
	29	1	**7X-0579**	4	WASHER-HARD (8.8X25.5X2-MM THK)	
M	30	1	**8T-4181**	2	BOLT (M6X1X20-MM)	
M	31	2	**8T-4189**	12	BOLT (M8X1.25X20-MM)	
M	32	1	**8T-4197**	3	BOLT (M8X1.25X40-MM)	
	33	1	**8T-4205**	4	WASHER-HARD (7.2X14.5X2-MM THK)	
M	34	2	**8T-4224**	19	WASHER-HARD (8.8X16X2-MM THK)	
M	35	2	**8T-5091**	2	BOLT (M8X1.25X20-MM)	
M	36	1	**9X-2045**	4	SCREW-TRUSS HEAD (M6X1X20-MM)	
	37	2	**191-9111**	1	FILM-CAT	

M-METRIC PART

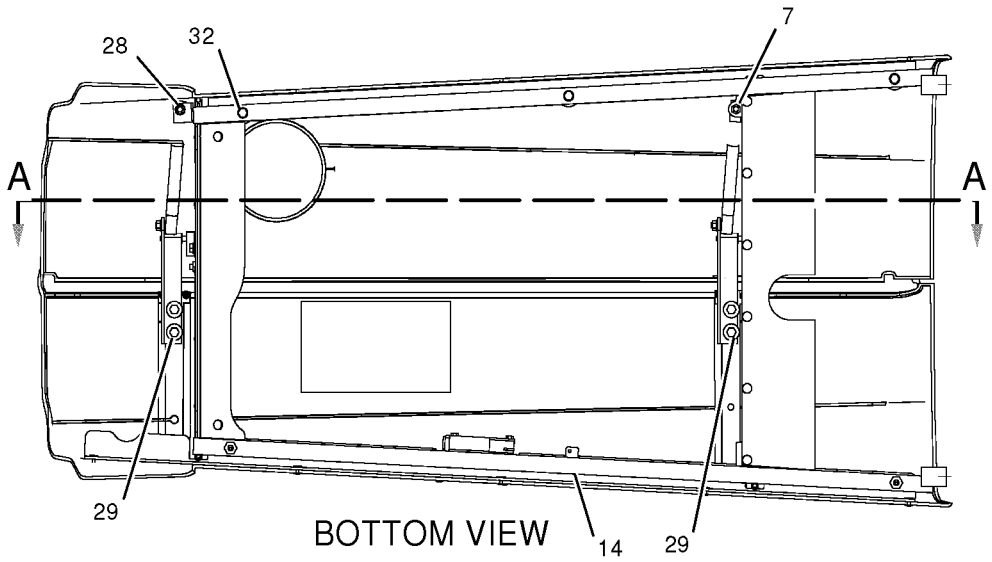

BOTTOM VIEW

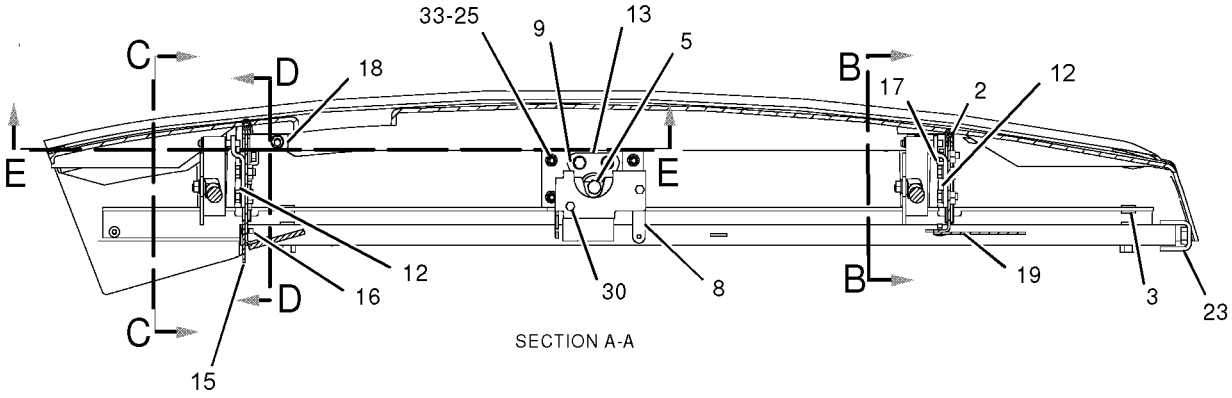

SECTION A-A

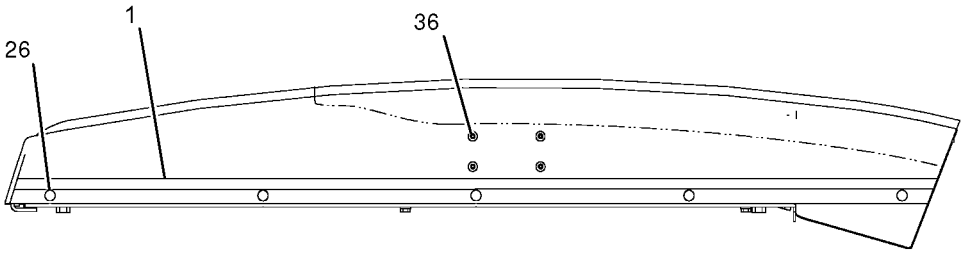

RIGHT SIDE VIEW

REFER TO ALL ILLUSTRATIONS IN THIS GROUP FOR AUXILIARY VIEWS

GRAPHIC #1 g01023309

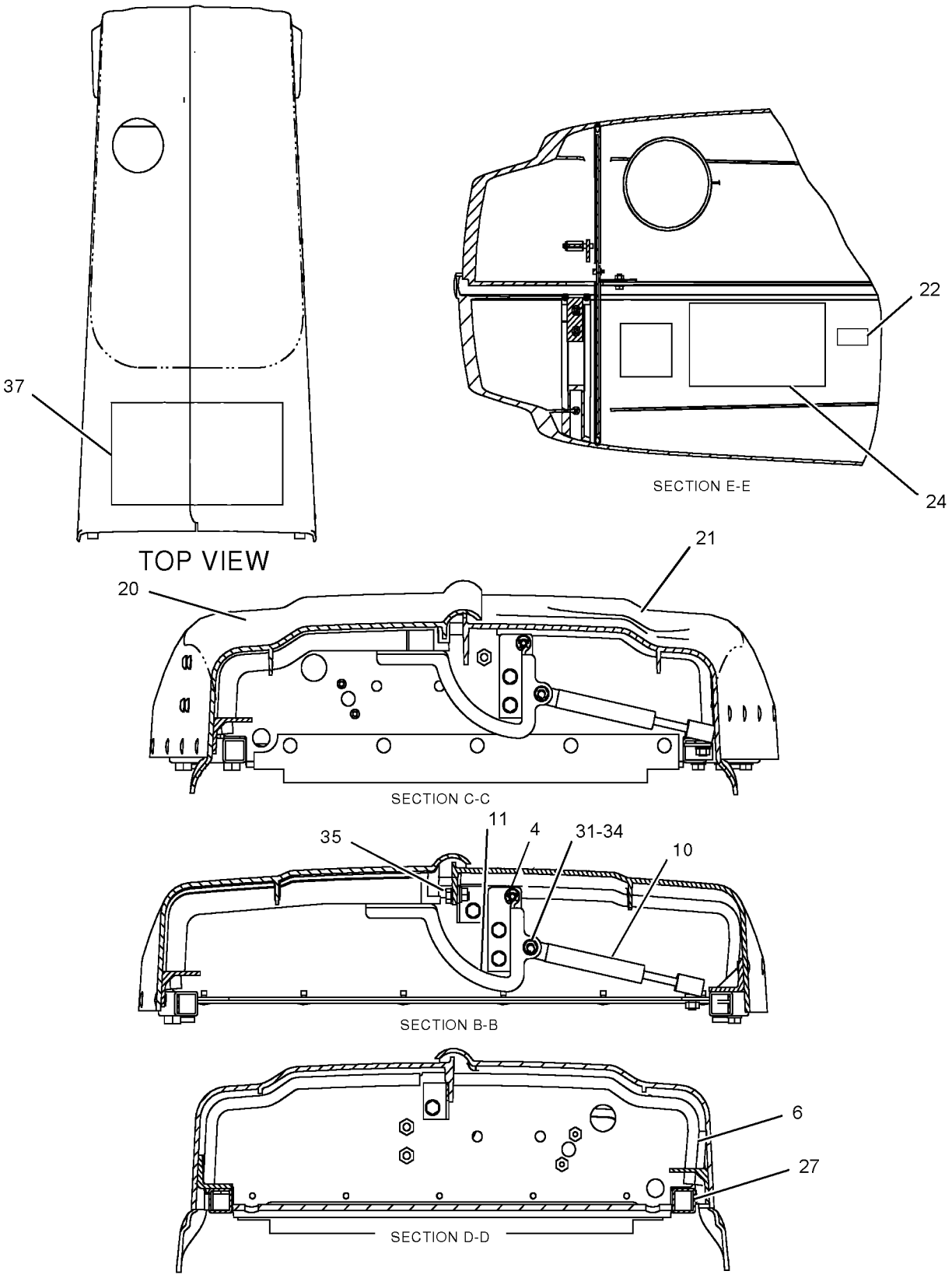

GRAPHIC #2 **<END>** g01023308

162-3960 ACCUMULATOR GP-RIDE CONTROL–CHARGED

S/N: FDP18400-UP

PART OF 162-3961 ACCUMULATOR GP-RIDE CONTROL, 195-1284, 235-5844 LINES GP-RIDE CONTROL

FIELD REPLACEMENT ORDER 162-3961–PAGE 331

AN ATTACHMENT

SMCS-5077 **i01980261**

NOTE	REF NO	GRAPHIC REF	PART NUMBER	QTY	PART NAME 1 2 3 4 5 6 (PRODUCT LEVEL)	SEE PAGE
	1	1	**158-2306**	1	VALVE-GAS	
	2	1	**170-0503**	1	FILM (PLATE-NAME)	
					AVAILABLE REPAIR KIT(S):	
			160-0496	1	KIT-ACCUMULATOR SERVICE	

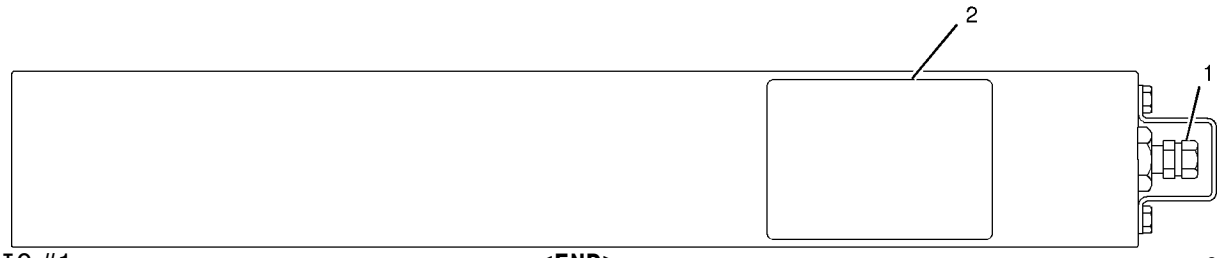

GRAPHIC #1 **<END>** g01027026

162-3961 ACCUMULATOR GP-RIDE CONTROL—UNCHARGED

S/N: FDP18400-UP

FIELD REPLACEMENT FOR 162-3960—PAGE 330

SMCS-5077 **i01980268**

NOTE	REF NO	GRAPHIC REF	PART NUMBER	QTY	PART NAME 1 2 3 4 5 6 (PRODUCT LEVEL)	SEE PAGE
Y	1	1	*162-3960*	1	ACCUMULATOR GP-RIDE CONTROL (CHARGED)	330

Y-SEPARATE ILLUSTRATION

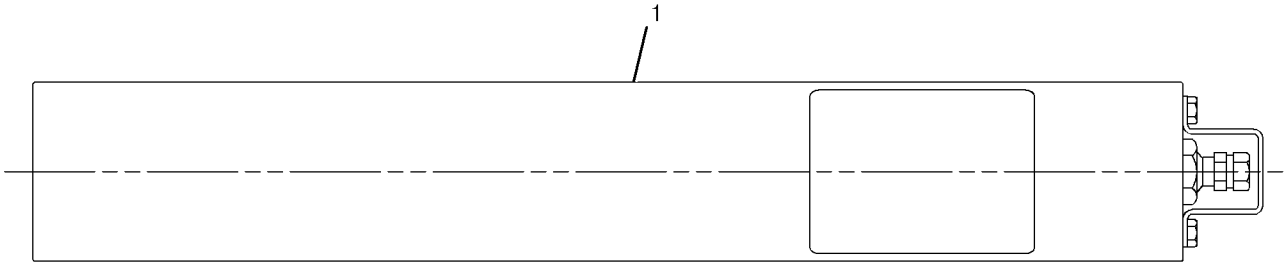

GRAPHIC #1 **<END>** g01027019

HYDRAULIC SYSTEM

195-0255 ACCUMULATOR GP-STABILIZER

S/N: FDP18400-UP
PART OF 202-5805, 202-5806, 214-6981 HYDRAULIC AR
ALSO AN ATTACHMENT

SMCS-5057, 5077 **i02014239**

NOTE	REF NO	GRAPHIC REF	PART NUMBER	QTY	PART NAME 1 2 3 4 5 6 (PRODUCT LEVEL)	SEE PAGE
	1	1	**101-8296**	2	CLIP	
	2	1	**149-0686**	1	ACCUMULATOR	
I	3	1	**198-9699**	1	HOSE AS	
	4	1	*148-8307*	1	ADAPTER GP	
		1	**3J-1907**	1	SEAL-O-RING	
		1	**5P-8874**	1	ADAPTER	
	5	1	*153-6248*	1	ADAPTER GP	
		1	**6V-8397**	1	SEAL-O-RING	
		1	**8T-6663**	1	ADAPTER-PORT	
	6	1	**3K-0360**	1	SEAL-O-RING	
	7	1	**8T-4121**	2	WASHER-HARD (11X21X2.5-MM THK)	
M	8	1	**8T-4136**	2	BOLT (M10X1.5X25-MM)	
	9	1	**224-7830**	1	FILM-WARNING (HIGH PRESSURE CYLINDER)	

I-REFER TO HYDRAULIC INFORMATION SYSTEM
M-METRIC PART

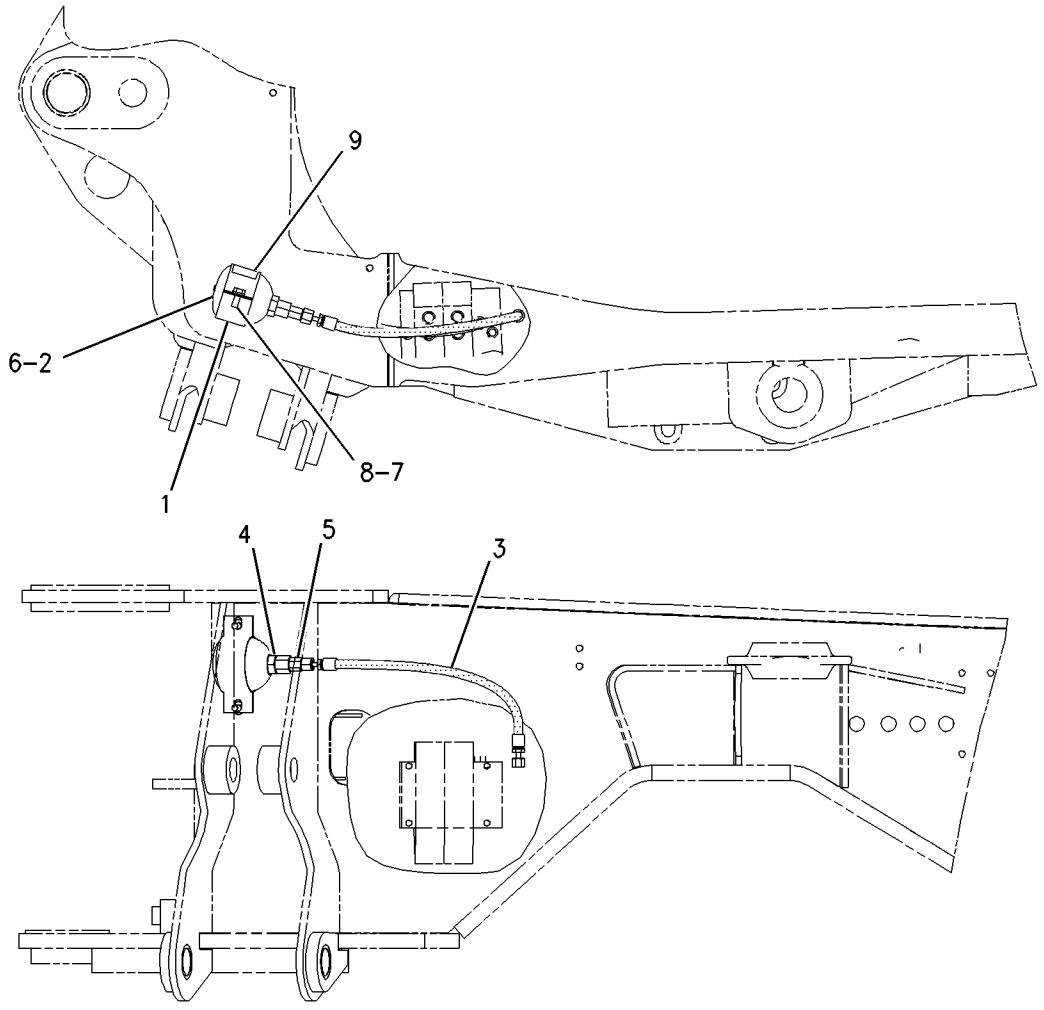

GRAPHIC #1 **<END>** g00755863

HYDRAULIC SYSTEM

202-5949 CONNECTOR GP-VALVE

S/N: FDP18400-UP

LOW LEAK

PART OF 214-6981 HYDRAULIC AR

SMCS-5079, 5137, 7553 **i01943299**

NOTE	REF NO	GRAPHIC REF	PART NUMBER	QTY	PART NAME 1 2 3 4 5 6 (PRODUCT LEVEL)	SEE PAGE
	1	1	**212-0732**	1	VALVE GP-FLOW CONTROL	
		1	**1H-1023**	1	SEAL-O-RING	
		1	**3K-0360**	1	SEAL-O-RING	
		1	**6E-0381**	2	RING-BACKUP	
C	2	1	**6V-0852**	1	CAP-DUST	
C	3	1	*164-5567*	1	FITTING AS	
		1	**6V-3965**	1	FITTING AS (QUICK DISCONNECT)	
		1	**3J-1907**	1	SEAL-O-RING	
CI	4	1	**190-8957**	1	HOSE AS	
	5	1	*207-0649*	1	CONNECTOR AS	
		1	**8C-8417**	1	CONNECTOR	
		1	**3D-2824**	1	SEAL-O-RING	
		1	**6V-9746**	1	SEAL-O-RING	
	6	1	*207-0651*	1	CONNECTOR AS	
		1	**207-0650**	1	CONNECTOR	
		1	**3D-2824**	1	SEAL-O-RING	
		1	**6V-8398**	1	SEAL-O-RING	
Y	7	1	**214-3523**	1	VALVE GP-SHUTTLE	573
	8	1	*214-4253*	1	TEE AS	
		1	**214-4252**	1	TEE	
		1	**4J-5477**	1	SEAL-O-RING	
		1	**6V-8398**	1	SEAL-O-RING	
	9	1	*214-4255*	1	TEE AS	
		1	**214-4254**	1	TEE	
		1	**4J-5477**	1	SEAL-O-RING	
		1	**6V-8398**	1	SEAL-O-RING	
C	10	1	*220-8219*	1	CONNECTOR AS	
		1	**220-8218**	1	CONNECTOR	
		1	**3J-7354**	1	SEAL-O-RING	
		1	**4J-5477**		SEAL-O-RING	
	11	1	*148-8316*	1	CONNECTOR AS	
		1	**6V-8647**	1	CONNECTOR	
		1	**3J-7354**	1	SEAL-O-RING	
		1	**4J-5477**	1	SEAL-O-RING	
	12	1	*148-8327*	1	CONNECTOR AS	
		1	**6V-8637**	1	CONNECTOR	
		1	**3D-2824**	1	SEAL-O-RING	
		1	**6V-9746**	1	SEAL-O-RING	
	13	1	*148-8328*	1	CONNECTOR GP	
		1	**6V-8633**	1	CONNECTOR	
		1	**3D-2824**	1	SEAL-O-RING	
		1	**6V-8398**	1	SEAL-O-RING	
	14	1	*148-8335*	1	CONNECTOR AS	
		1	**6V-8635**	1	CONNECTOR	
		1	**5K-9090**	1	SEAL-O-RING	
		1	**7M-8485**	1	SEAL-O-RING	
	15	1	*148-8340*	2	CONNECTOR GP	
					(EACH INCLUDES)	
		1	**6V-8639**	1	CONNECTOR	
		1	**3K-0360**	1	SEAL-O-RING	
		1	**6V-8398**	1	SEAL-O-RING	
	16	1	*148-8341*	2	CONNECTOR GP	
					(EACH INCLUDES)	
		1	**6V-8713**	1	CONNECTOR	
		1	**3D-2824**	1	SEAL-O-RING	

202-5949 **CONNECTOR GP-VALVE** ***(contd.)*** **i01943299**

NOTE	REF NO	GRAPHIC REF	PART NUMBER	QTY	PART NAME 1 2 3 4 5 6 (PRODUCT LEVEL)	SEE PAGE
		1	**7J-9108**	1	SEAL-O-RING	
	17	1	*148-8419*	1	REDUCER GP	
		1	**6V-8935**	1	REDUCER-O-RING	
		1	**4J-5477**	1	SEAL-O-RING	
	18	1	*148-8429*	1	TEE AS	
		1	**6V-9840**	1	TEE-SWIVEL	
		1	**5K-9090**	2	SEAL-O-RING	
C	19	1	*150-3062*	1	TEE AS	
		1	**101-1787**	1	TEE AS	
		1	**3J-7354**	1	SEAL-O-RING	
		1	**4J-5477**	1	SEAL-O-RING	
	20	1	**6V-8554**	1	NUT (13/16-16 THD)	

C-CHANGE FROM PREVIOUS TYPE
I-REFER TO HYDRAULIC INFORMATION SYSTEM
Y-SEPARATE ILLUSTRATION

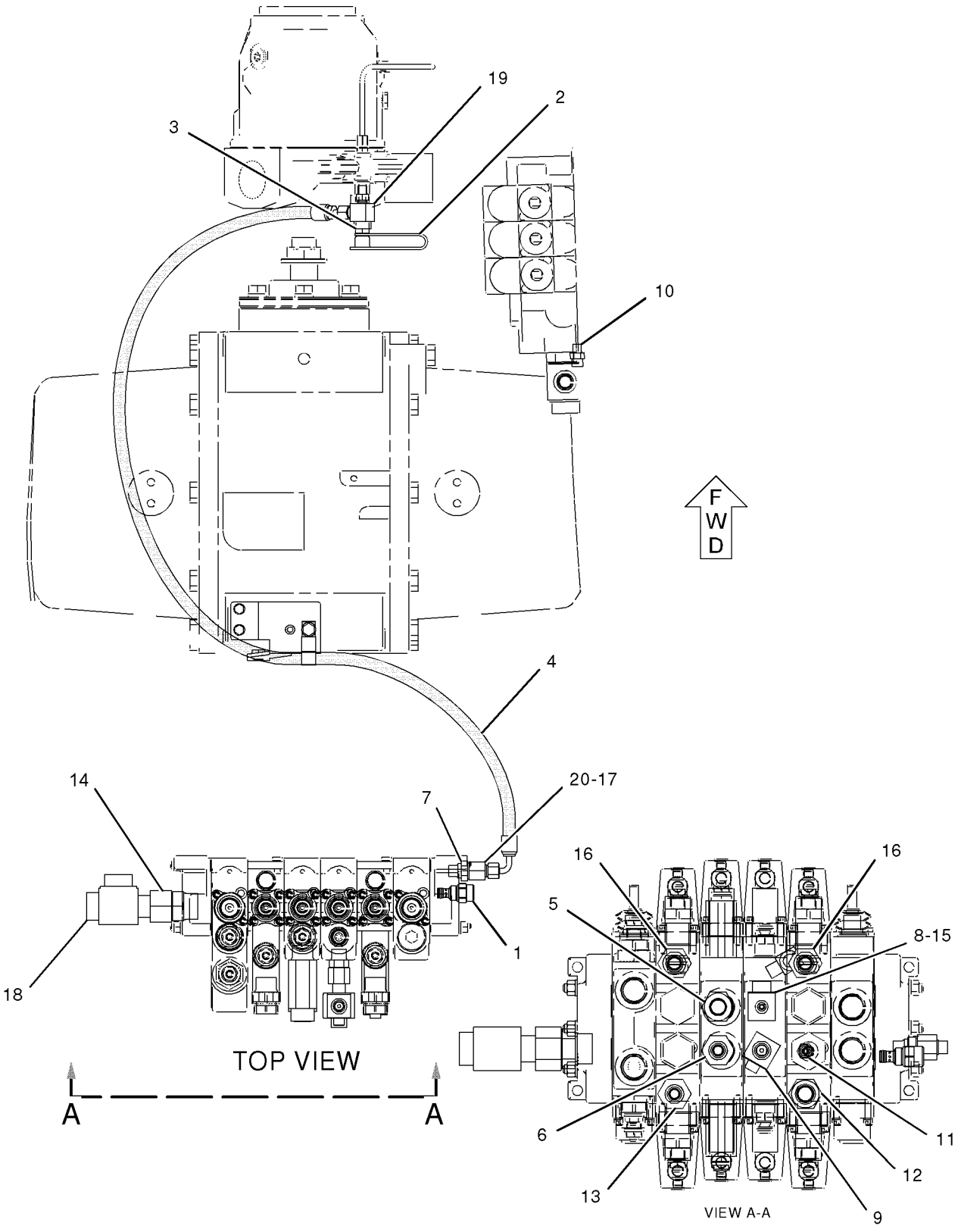

GRAPHIC #1 **<END>** g00997799

HYDRAULIC SYSTEM

202-5916 CONTROL AR-HYDRAULIC

S/N: FDP18400-UP
EXCAVATOR WITH SWITCHING VALVE, CENTER PIVOT
PART OF 214-6951 CHASSIS AR

SMCS-3264, 5063 **i02020434**

NOTE	PART NUMBER	QTY	PART NAME 1 2 3 4 5 6 (PRODUCT LEVEL)	SEE PAGE
Y	**185-5915**	1	CONTROL GP-JOYSTICK (RH)	349
Y	**185-5916**	1	CONTROL GP-JOYSTICK (LH)	351
Y	*202-5925*	1	LINES GP-PILOT	456
Y	*202-5919*	1	MOUNTING GP-BACKHOE CONTROL	494

Y-SEPARATE ILLUSTRATION

<END>

184-7949 CONTROL AR-RIDE

S/N: FDP18400-UP
AUTOSHIFT
AN ATTACHMENT

SMCS-5004 **i01447084**

NOTE	PART NUMBER	QTY	PART NAME 1 2 3 4 5 6 (PRODUCT LEVEL)	SEE PAGE
Y	*195-1284*	1	LINES GP-RIDE CONTROL	476
Y	*186-0312*	1	WIRING GP-RIDE CONTROL	189

Y-SEPARATE ILLUSTRATION

<END>

184-7954 CONTROL AR-RIDE

S/N: FDP18400-UP
DEAD ENGINE LOWER
AN ATTACHMENT

SMCS-5004 **i01443825**

NOTE	PART NUMBER	QTY	PART NAME 1 2 3 4 5 6 (PRODUCT LEVEL)	SEE PAGE
Y	*195-1284*	1	LINES GP-RIDE CONTROL	476
Y	*194-1948*	1	WIRING GP-RIDE CONTROL	191

Y-SEPARATE ILLUSTRATION

<END>

HYDRAULIC SYSTEM

185-1482 CONTROL AR-RIDE

S/N: FDP18400-UP
STANDARD SHIFT
AN ATTACHMENT

SMCS-5004 **i01443636**

NOTE	PART NUMBER	QTY	PART NAME 1 2 3 4 5 6 (PRODUCT LEVEL)	SEE PAGE
Y	*195-1284*	1	LINES GP-RIDE CONTROL	476
Y	*186-0311*	1	WIRING GP-RIDE CONTROL	187

Y-SEPARATE ILLUSTRATION

<END>

239-9245 CONTROL AR-RIDE

S/N: FDP18400-UP
AN ATTACHMENT

SMCS-5004 **i01971909**

NOTE	PART NUMBER	QTY	PART NAME 1 2 3 4 5 6 (PRODUCT LEVEL)	SEE PAGE
Y	*235-5844*	1	LINES GP-RIDE CONTROL	478
Y	*186-0311*	1	WIRING GP-RIDE CONTROL	187

Y-SEPARATE ILLUSTRATION

<END>

239-9246 CONTROL AR-RIDE–AUTOSHIFT

S/N: FDP18400-UP
AN ATTACHMENT

SMCS-5004 **i01971916**

NOTE	PART NUMBER	QTY	PART NAME 1 2 3 4 5 6 (PRODUCT LEVEL)	SEE PAGE
Y	*235-5844*	1	LINES GP-RIDE CONTROL	478
Y	*186-0312*	1	WIRING GP-RIDE CONTROL	189

Y-SEPARATE ILLUSTRATION

<END>

239-9248 CONTROL AR-RIDE–KIT

S/N: FDP18400-UP
FIELD INSTALLATION

SMCS-5004 **i02003579**

NOTE	PART NUMBER	QTY	PART NAME 1 2 3 4 5 6 (PRODUCT LEVEL)	SEE PAGE
	173-4514	2	FILM (RIDE CONTROL)	
Y	*235-5844*	1	LINES GP-RIDE CONTROL	478
	169-0607	1	SWITCH AS-ROCKER (RIDE CONTROL)	
	111-7899	1	GASKET	
Y	*186-0312*	1	WIRING GP-RIDE CONTROL	189

Y-SEPARATE ILLUSTRATION

<END>

HYDRAULIC SYSTEM

164-1500 CONTROL GP-HYDRAULIC HAND

S/N: FDP18400-UP
3 LEVER FOOT SWING
AN ATTACHMENT

SMCS-5063 **i02019799**

NOTE	REF NO	GRAPHIC REF	PART NUMBER	QTY	PART NAME 1 2 3 4 5 6 (PRODUCT LEVEL)	SEE PAGE
	1	1	**8F-7702**	4	SEAL-LIP TYPE	
	2	1	**8T-4773**	4	BALL JOINT	
	3	1	**8T-4815**	5	ROD END	
	4	1	**8T-6431**	2	ROD END	
	5	1	**9R-9901**	6	FASTENER (CLIP)	
	6	1	**117-5672**	3	BOOT	
B	7	1	**136-7439**	2	SPACER (3-MM THK)	
B	8	1	**136-7440**	2	SHIM (1-MM THK)	
	9	1	**142-7405**	2	COLLAR	
	10	1	**164-1373**	1	PLATE	
	11	1	**164-1397**	3	KNOB	
	12	1	**164-1427**	1	ROD	
	13	1	**164-1441**	1	ROD	
	14	1	**164-1501**	1	LEVER AS-BUCKET	
	15	1	**164-1502**	1	LEVER AS-STICK	
	16	1	**164-1503**	1	LEVER AS-BOOM	
	17	1	**164-1514**	2	ROD	
	18	1	**164-1515**	2	SUPPORT AS	
	19	1	**164-1517**	2	SHAFT AS-PEDAL	
	20	1	**164-1519**	1	SHAFT-LEVER	
	21	1	**164-1521**	1	SHAFT AS	
	22	1	**164-1523**	2	BEARING	
	23	1	**164-1525**	1	ROD	
	24	1	**164-1526**	1	GASKET	
	25	1	**164-1527**	2	SEAL	
	26	1	**164-1541**	1	PEDAL AS-RH	
	27	1	**164-1551**	1	PEDAL AS-LH	
	28	1	**164-1570**	1	TOWER AS	
	29	1	**179-8235**	4	LOCK PIN	
	30	1	**183-4994**	1	CONSOLE-REAR	
	31	1	**186-1583**	1	ROD END AS	
	32	1	**190-5129**	1	FILM (BUCKET CONTROL)	
M	33	1	**6V-7744**	6	LOCKNUT (M10X1.5-THD)	
M	34	1	**6V-8335**	2	BOLT-SELF LOCKING (M10X1.5X40-MM)	
M	35	1	**6V-8932**	2	SETSCREW-SOCKET (M6X1X10-MM)	
	36	1	**8C-4987**	4	PIN-CLEVIS	
	37	1	**8M-3175**	4	WASHER-HARD (10.2X16X3-MM THK)	
	38	1	**8T-4121**	13	WASHER-HARD (11X21X2.5-MM THK)	
M	39	1	**8T-4133**	11	NUT (M10X1.5-THD)	
M	40	1	**8T-4186**	2	BOLT (M10X1.5X40-MM)	
M	41	1	**8T-4195**	6	BOLT (M10X1.5X30-MM)	
M	42	1	**8T-4224**	6	WASHER-HARD (8.8X16X2-MM THK)	
M	43	1	**8T-4908**	4	BOLT (M8X1.25X25-MM)	
M	44	1	**8T-7547**	2	BOLT (M8X1.25X30-MM)	
	45	1	**9R-2806**	2	PIN	
	46	1	**9R-2807**	2	CLIP	
	47	1	**9X-2038**	4	WASHER (7X19X2-MM THK)	
M	48	1	**9X-2043**	4	SCREW-TRUSS HEAD (M6X1X14-MM)	

B-USE AS REQUIRED
M-METRIC PART

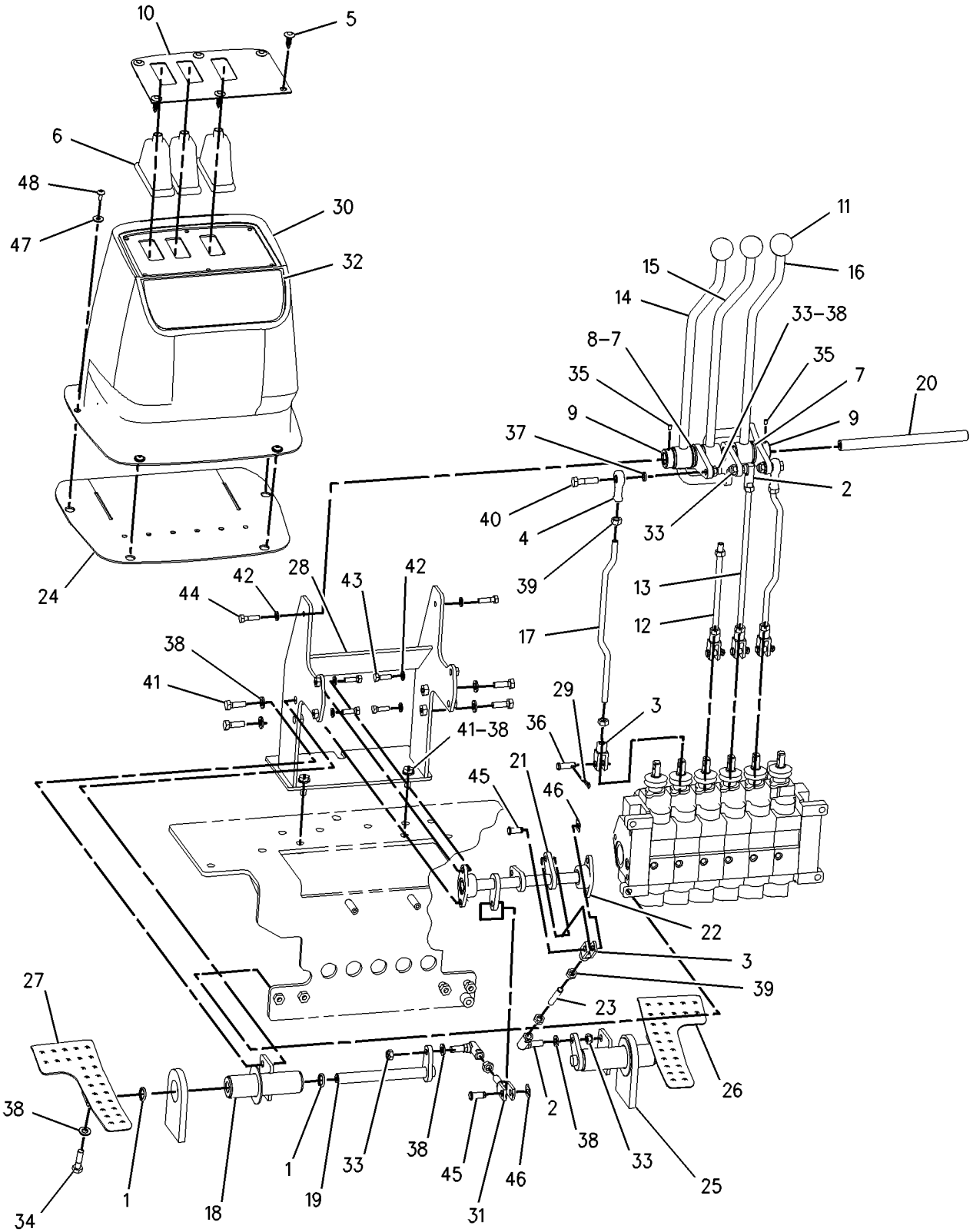

GRAPHIC #1 **<END>** g00768343

HYDRAULIC SYSTEM

164-1520 CONTROL GP-HYDRAULIC HAND

S/N: FDP18400-UP
4 LEVER FOOT SWING
AN ATTACHMENT

SMCS-5063 **i02019805**

NOTE	REF NO	GRAPHIC REF	PART NUMBER	QTY	PART NAME 1 2 3 4 5 6 (PRODUCT LEVEL)	SEE PAGE
	1	1	**8F-7702**	4	SEAL-LIP TYPE	
	2	1	**8T-4773**	4	BALL JOINT	
	3	1	**8T-4815**	6	ROD END	
	4	1	**8T-6431**	3	ROD END	
	5	1	**9R-9901**	6	FASTENER (CLIP)	
	6	1	**101-2788**	1	FILM-INSTRUCTION (EXTENDABLE STICK)	
	7	1	**117-5672**	4	BOOT	
B	8	1	**136-7439**	5	SPACER (3-MM THK)	
B	9	1	**136-7440**	1	SHIM (1-MM THK)	
	10	1	**142-7405**	1	COLLAR	
	11	1	**164-1372**	1	PLATE	
	12	1	**164-1397**	4	KNOB	
	13	1	**164-1427**	1	ROD	
	14	1	**164-1441**	1	ROD	
	15	1	**164-1501**	1	LEVER AS-BUCKET	
	16	1	**164-1502**	1	LEVER AS-STICK	
	17	1	**164-1503**	1	LEVER AS-BOOM	
	18	1	**164-1511**	1	LEVER AS	
	19	1	**164-1514**	3	ROD	
	20	1	**164-1515**	2	SUPPORT AS	
		1	**5V-4410**	2	BEARING-SLEEVE	
	21	1	**164-1517**	2	SHAFT AS-PEDAL	
	22	1	**164-1519**	1	SHAFT-LEVER	
	23	1	**164-1521**	1	SHAFT AS	
	24	1	**164-1523**	2	BEARING	
	25	1	**164-1525**	1	ROD	
	26	1	**164-1526**	1	GASKET	
	27	1	**164-1527**	2	SEAL	
	28	1	**164-1541**	1	PEDAL AS-RH	
	29	1	**164-1551**	1	PEDAL AS-LH	
	30	1	**164-1570**	1	TOWER AS	
	31	1	**179-8235**	5	LOCK PIN	
	32	1	**183-4999**	1	CONSOLE-REAR	
	33	1	**186-1583**	1	ROD END AS	
	34	1	**190-5129**	1	FILM (BUCKET CONTROL)	
M	35	1	**6V-7744**	7	LOCKNUT (M10X1.5-THD)	
M	36	1	**6V-8335**	2	BOLT-SELF LOCKING (M10X1.5X40-MM)	
M	37	1	**6V-8932**	1	SETSCREW-SOCKET (M6X1X10-MM)	
	38	1	**8C-4987**	5	PIN-CLEVIS	
	39	1	**8M-3175**	3	WASHER-HARD (10.2X16X3-MM THK)	
	40	1	**8T-4121**	14	WASHER-HARD (11X21X2.5-MM THK)	
M	41	1	**8T-4133**	13	NUT (M10X1.5-THD)	
M	42	1	**8T-4186**	3	BOLT (M10X1.5X40-MM)	
M	43	1	**8T-4195**	6	BOLT (M10X1.5X30-MM)	
M	44	1	**8T-4224**	6	WASHER-HARD (8.8X16X2-MM THK)	
M	45	1	**8T-4908**	4	BOLT (M8X1.25X25-MM)	
M	46	1	**8T-7547**	2	BOLT (M8X1.25X30-MM)	
	47	1	**9R-2806**	2	PIN	
	48	1	**9R-2807**	2	CLIP	
	49	1	**9X-2038**	4	WASHER (7X19X2-MM THK)	
M	50	1	**9X-2045**	4	SCREW-TRUSS HEAD (M6X1X20-MM)	

B-USE AS REQUIRED
M-METRIC PART

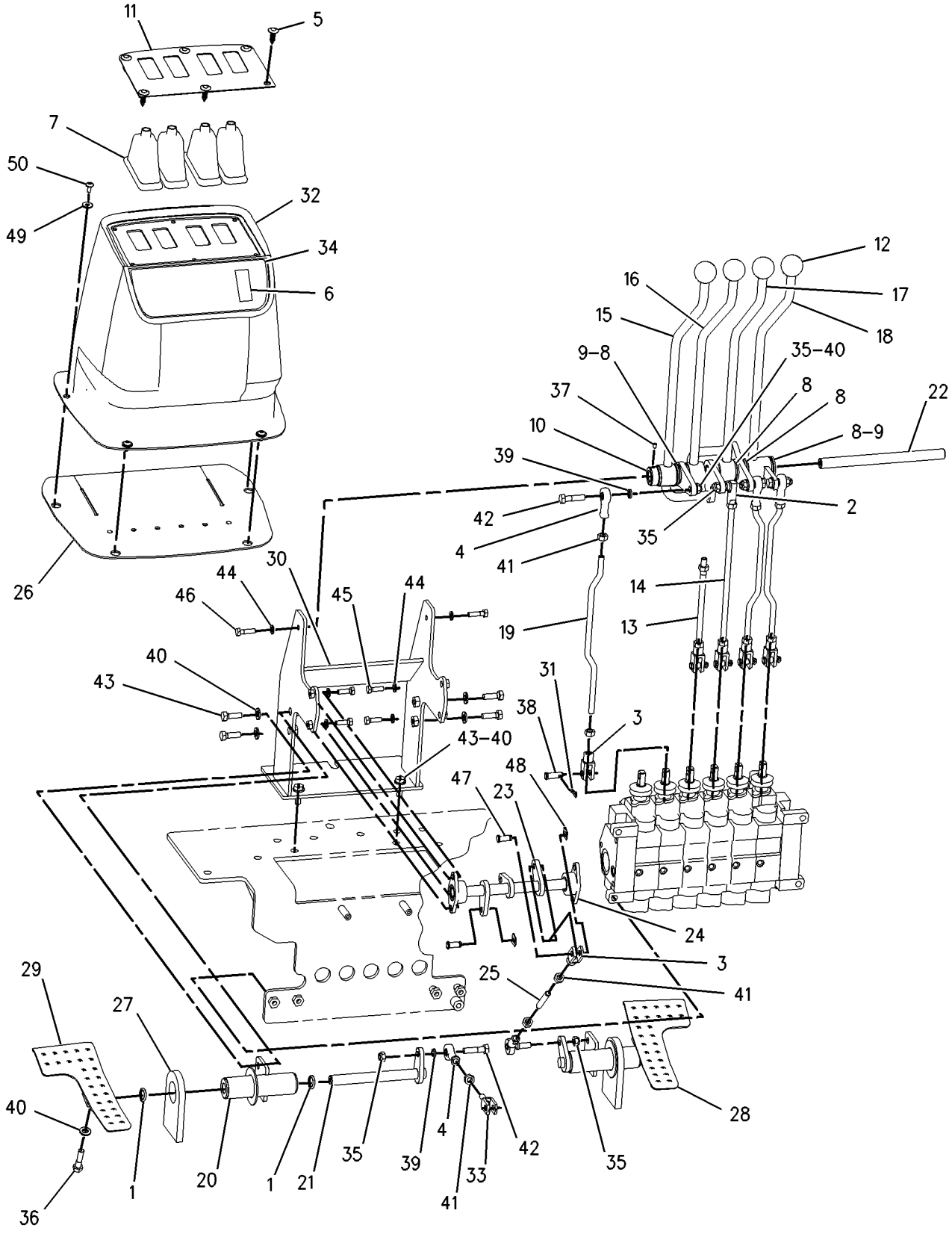

GRAPHIC #1 **<END>** g00768415

HYDRAULIC SYSTEM

183-3120 CONTROL GP-HYDRAULIC HAND–LOADER

S/N: FDP18400-UP
SINGLE TILT
PART OF 214-6951 CHASSIS AR

SMCS-5063 **i01739869**

NOTE	REF NO	GRAPHIC REF	PART NUMBER	QTY	PART NAME 1 2 3 4 5 6 (PRODUCT LEVEL)	SEE PAGE
B	1	1	**1K-0502**	7	WASHER (25.4X16.3X1.2MM THK)	
	2	1	**2R-0364**	3	RING-RETAINING	
	3	1	**3E-3365**	1	WEDGE-RECEPTACLE LOCK (2 PIN)	
	4	1	**5H-3193**	1	PIN-SPRING	
	5	1	**8T-4766**	1	ROD END	
	6	1	**8T-4773**	1	BALL JOINT	
	7	1	**8T-4815**	2	ROD END	
	8	1	**9R-1765**	1	KNOB	
	9	1	**9R-1766**	1	KNOB	
	10	1	**9R-1767**	1	BOOT	
	11	1	**9R-9868**	1	SWITCH AS-PUSH BUTTON	
		1	**186-3735**	2	PIN-CONNECTOR	
	12	1	**107-5591**	1	NUT-JAM (3/4-16 THD)	
M	13	1	**134-0453**	2	TURN BUCKLE	
	14	1	**140-6021**	1	PLATE	
	15	1	**164-1368**	8	CLIP	
	16	1	**164-1369**	1	PLATE	
	17	1	**179-8235**	1	LOCK PIN	
	18	1	**183-3121**	1	BRACKET AS	
	19	1	**183-3122**	1	LEVER AS	
	20	1	**183-3131**	1	DAMPER AS	
		1	**095-9230**	1	PIN-SPRING	
		1	**183-3132**	1	CYLINDER	
	21	1	**183-3135**	1	JOINT AS	
		1	**183-3136**	1	BEARING	
	22	1	**183-3137**	1	PIN	
	23	1	**183-3153**	1	ROD	
	24	1	**183-3155**	1	ROD	
	25	1	**183-3156**	1	ROD	
	26	1	**201-8069**	1	SEAL	
	27	1	**102-8802**	1	KIT-RECEPTACLE (2 PIN)	
					(KIT SERVICES RECEPTACLE AS AND WEDGE)	
	28	1	**3S-2093**	1	STRAP-CABLE	
M	29	1	**6V-7744**	2	LOCKNUT (M10X1.5 THD)	
	30	1	**8C-4987**	1	PIN-CLEVIS	
	31	1	**8T-4121**	4	WASHER-HARD (11X21X2.5MM THK)	
M	32	1	**8T-4133**	8	NUT (M10X1.5 THD)	
M	33	1	**8T-4136**	2	BOLT (M10X1.5X25MM)	
M	34	1	**8T-4195**	2	BOLT (M10X1.5X30MM)	
	35	1	**8T-4223**	4	WASHER-HARD (13.5X25.5X3MM THK)	
	36	1	**8T-9501**	2	SCREW (10-16X.75 IN)	
	37	1	**9R-2807**	1	CLIP	
	38	1	**9R-3067**	1	PIN	
M	39	1	**9X-2065**	2	NUT	

B-USE AS REQUIRED
M-METRIC PART

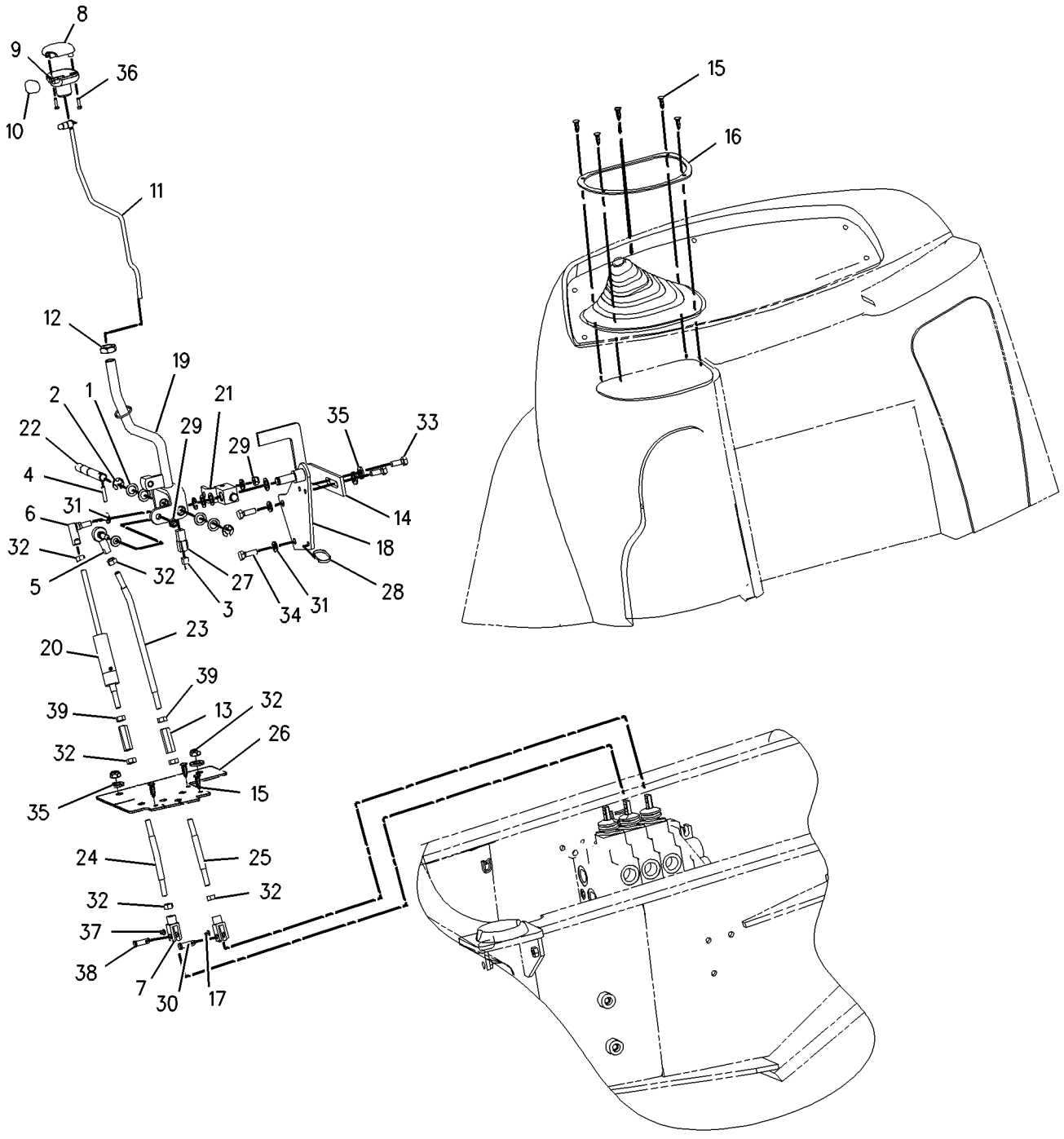

GRAPHIC #1 **<END>** g00861982

183-3150 CONTROL GP-HYDRAULIC HAND–LEVER

S/N: FDP18400-UP
MULTIPURPOSE
PART OF 186-5338, 202-5806 HYDRAULIC AR
AN ATTACHMENT

SMCS-5063 **i01657346**

NOTE	REF NO	GRAPHIC REF	PART NUMBER	QTY	PART NAME 1 2 3 4 5 6 (PRODUCT LEVEL)	SEE PAGE
	1	1	**1K-0502**	3	WASHER (25.4X16.3X1.2MM THK)	
	2	1	**2R-0364**	1	RING-RETAINING	
	3	1	**8T-4773**	1	BALL JOINT	
	4	1	**8T-4815**	1	ROD END	
M	5	1	**134-0453**	1	TURN BUCKLE	
	6	1	**164-1395**	1	KNOB	
	7	1	**179-8235**	1	LOCK PIN	
	8	1	**183-3151**	1	LEVER AS	
		1	**183-3136**	1	BEARING	
	9	1	**183-3153**	1	ROD	
	10	1	**183-3156**	1	ROD	
	11	1	**8C-4987**	1	PIN-CLEVIS	
	12	1	**8T-4121**	1	WASHER-HARD (11X21X2.5MM THK)	
M	13	1	**8T-4133**	3	NUT (M10X1.5 THD)	
M	14	1	**9X-2065**	1	NUT	

M-METRIC PART

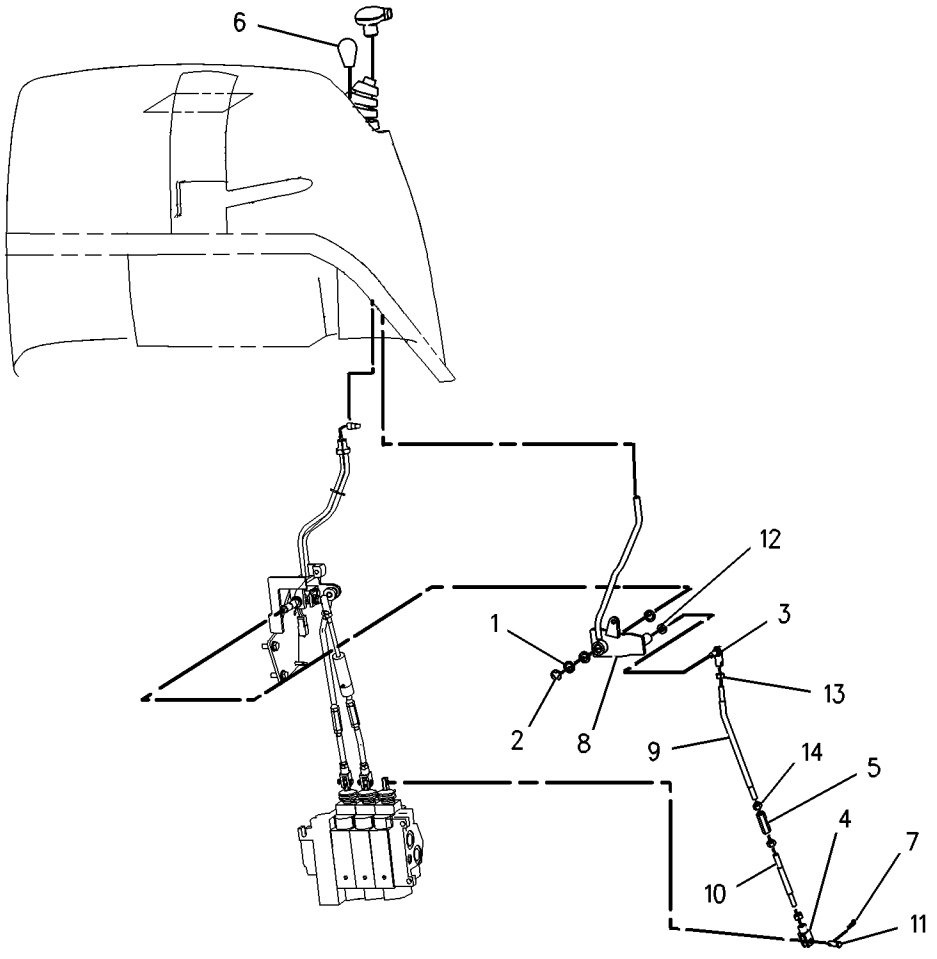

GRAPHIC #1 **<END>** g00738135

184-4483 CONTROL GP-HYDRAULIC PEDAL

S/N: FDP18400-UP
EXTENDABLE STICK
PART OF 210-8524 HYDRAULIC AR, 186-4959, 186-4960 INSTALLATION AR-BANK VALVE, 215-1511 VALVE AR-BANK 5, 215-1512 VALVE AR-BANK 6
AN ATTACHMENT

SMCS-5063 **i01944217**

NOTE	REF NO	GRAPHIC REF	PART NUMBER	QTY	PART NAME 1 2 3 4 5 6 (PRODUCT LEVEL)	SEE PAGE
	1	1	**184-4488**	1	SUPPORT AS	
	2	1	**184-4491**	1	PEDAL AS	
	3	1	**184-5417**	1	SHAFT AS	
	4	1	**186-1581**	1	COVER	
	5	1	**186-1582**	1	PLATE	
	6	1	**186-1592**	1	TUBE	
	7	1	**186-1597**	1	CONNECTOR	
B	8	1	**198-0097**	1	FILM (PEDAL CONTROL AND E-STICK)	
B	9	1	**198-0098**	1	FILM (AUX PEDAL CONTROL)	
	10	1	**218-4513**	1	CONNECTOR AS	
	11	1	**218-4516**	1	BALL JOINT	
M	12	1	**6V-7744**	3	LOCKNUT	
M	13	1	**6V-8335**	1	BOLT-SELF LOCKING (M10X1.5X40MM)	
M	14	1	**7X-2544**	1	BOLT (M10X1.5X104MM)	
	15	1	**8T-4121**	8	WASHER-HARD (11X21X2.5MM THK)	
M	16	1	**8T-4195**	3	BOLT (M10X1.5X30MM)	
	17	1	**9R-2806**	3	PIN	
	18	1	**9R-2807**	2	CLIP	
M	19	1	**9X-2045**	4	SCREW-TRUSS HEAD (M6X1X20MM)	

B-USE AS REQUIRED
M-METRIC PART

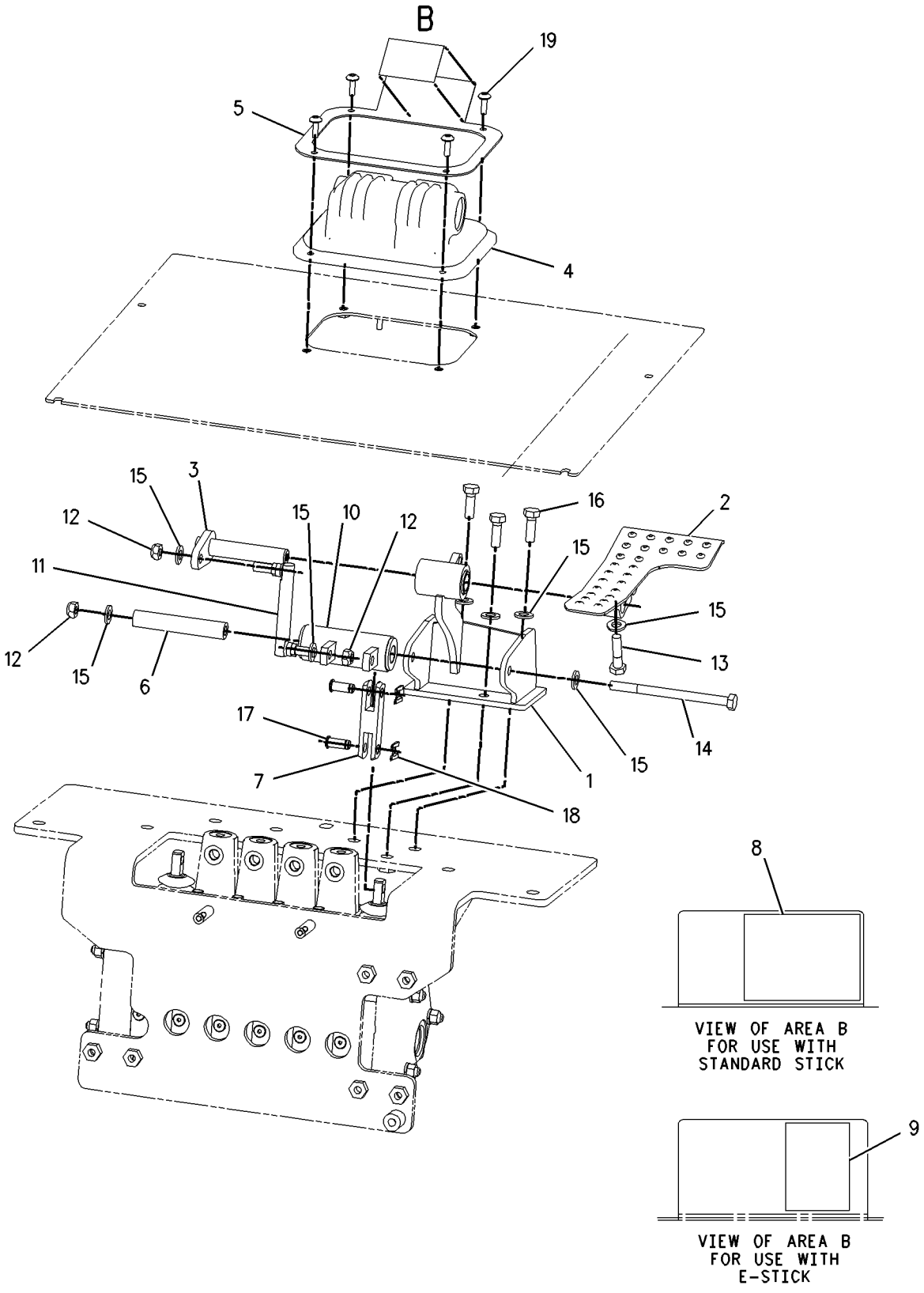

GRAPHIC #1 **<END>** g00879491

184-4484 CONTROL GP-HYDRAULIC PEDAL—BACKHOE

S/N: FDP18400-UP
AUXILIARY
PART OF 186-4960 INSTALLATION AR-BANK VALVE, 215-1512 VALVE AR-BANK 6
AN ATTACHMENT

SMCS-5063 **i01700187**

NOTE	REF NO	GRAPHIC REF	PART NUMBER	QTY	PART NAME 1 2 3 4 5 6 (PRODUCT LEVEL)	SEE PAGE
	1	1	**184-4486**	1	SHAFT AS	
	2	1	**184-5403**	1	PEDAL AS	
	3	1	**184-5408**	1	SUPPORT AS	
	4	1	**186-1592**	1	TUBE	
	5	1	**186-1597**	1	CONNECTOR	
	6	1	**198-0098**	1	FILM	
	7	1	**218-4513**	1	CONNECTOR AS	
	8	1	**218-4516**	1	BALL JOINT	
M	9	1	**6V-7744**	3	LOCKNUT (M10X1.5 THD)	
M	10	1	**6V-8335**	1	BOLT-SELF LOCKING (M10X1.5X40MM)	
M	11	1	**7X-2544**	1	BOLT (M10X1.5X104MM)	
	12	1	**8T-4121**	8	WASHER-HARD (11X21X2.5MM THK)	
M	13	1	**8T-4195**	3	BOLT (M10X1.5X30MM)	
	14	1	**9R-2806**	2	PIN	
	15	1	**9R-2807**	2	CLIP	

M-METRIC PART

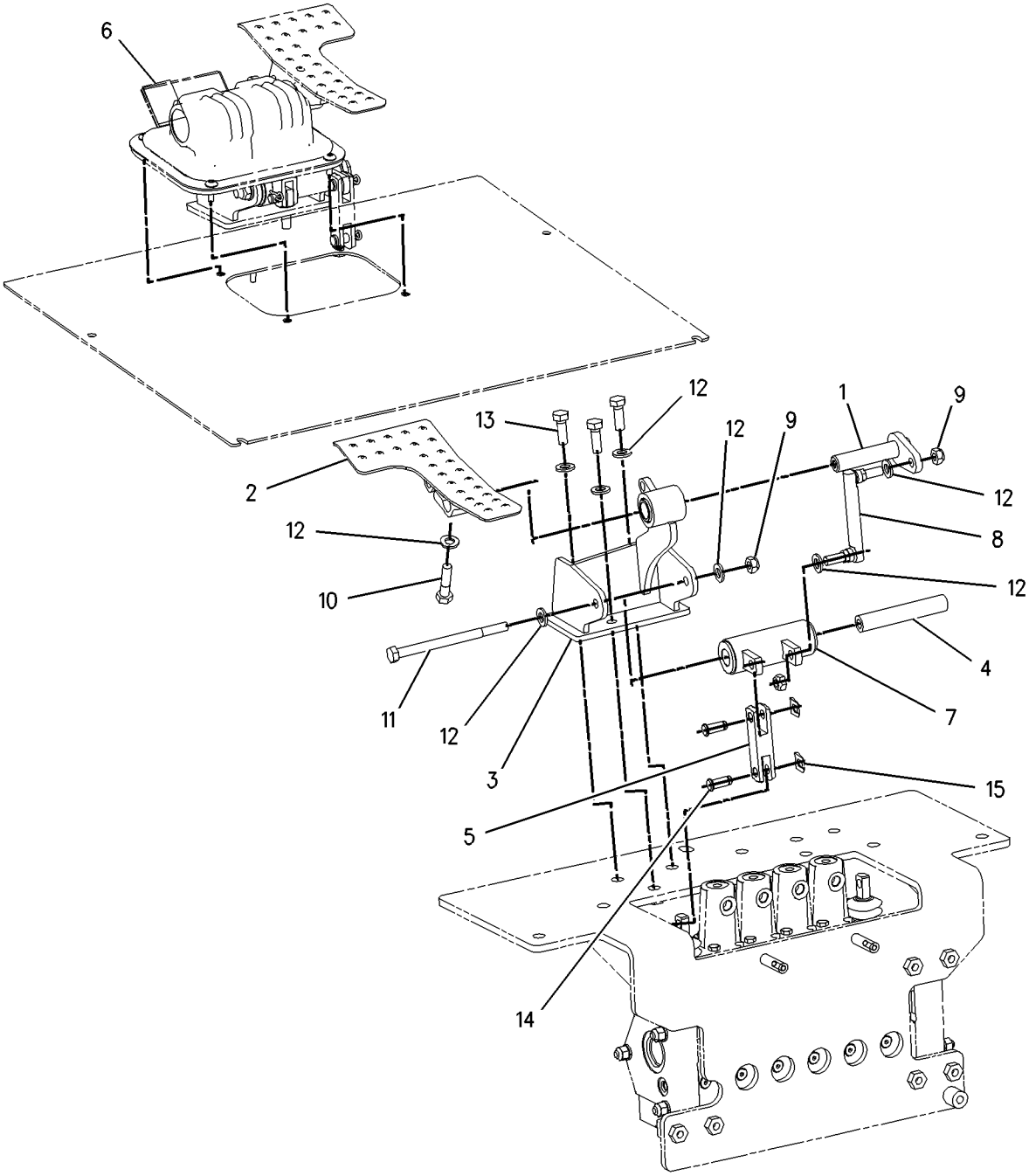

GRAPHIC #1 **<END>** g00879485

185-5915 CONTROL GP-JOYSTICK

S/N: FDP18400-UP
RIGHT HAND BACKHOE CONTROL
PART OF 202-5916 CONTROL AR-HYDRAULIC

SMCS-5063, 5705, 6107 **i01697432**

NOTE	REF NO	GRAPHIC REF	PART NUMBER	QTY	PART NAME 1 2 3 4 5 6 (PRODUCT LEVEL)	SEE PAGE
	1	1	**156-8143**	1	HANDLE-RH	
	2	1	**158-3769**	1	BOOT	
	3	1	**196-6870**	1	KIT-LEVER	
	4	1	**217-3850**	1	KIT-UNIVERSAL JOINT	
	5	1	**122-1904**	1	PLATE	
	6	1	**196-6904**	4	KIT-PLUNGER	
	7	1	**196-6873**	4	KIT-REGULATOR	
	8	1	**196-6874**	4	KIT-SPRING	
	9	1	**198-1873**	1	VALVE	
	10	1	**9T-2837**	1	KIT-SEAL	

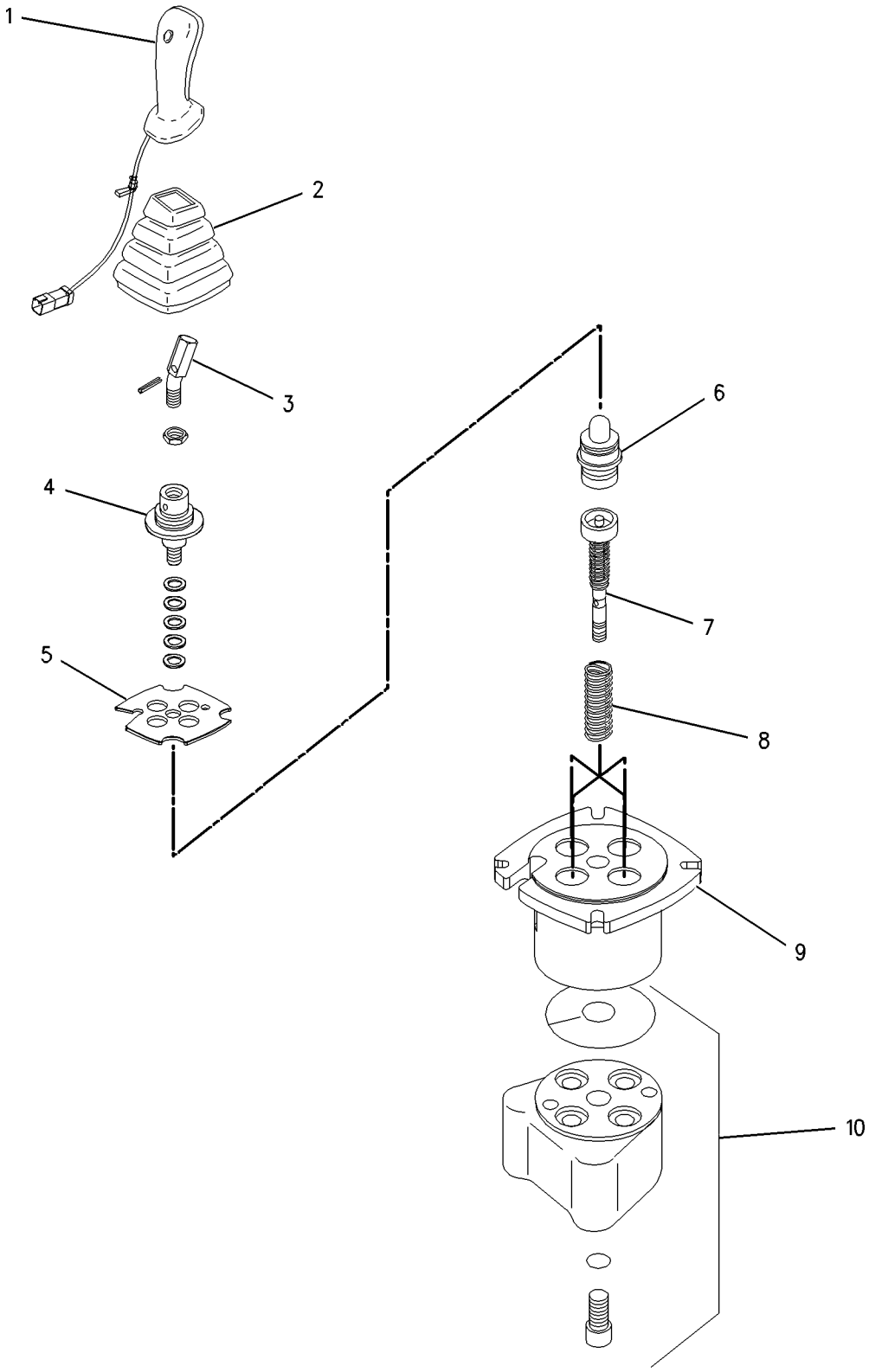

GRAPHIC #1 **<END>** g00748222

HYDRAULIC SYSTEM

185-5916 CONTROL GP-JOYSTICK

S/N: FDP18400-UP
LEFT HAND BACKHOE CONTROL
PART OF 202-5916 CONTROL AR-HYDRAULIC

SMCS-5063, 5705, 6107 **i01697490**

NOTE	REF NO	GRAPHIC REF	PART NUMBER	QTY	PART NAME 1 2 3 4 5 6 (PRODUCT LEVEL)	SEE PAGE
	1	1	**195-3510**	1	HANDLE	
	2	1	**158-3769**	1	BOOT	
	3	1	**208-9682**	1	KIT-LEVER	
	4	1	**217-3850**	1	KIT-UNIVERSAL JOINT	
	5	1	**122-1904**	1	PLATE	
	6	1	**196-6904**	4	KIT-PLUNGER	
	7	1	**196-6873**	4	KIT-REGULATOR	
	8	1	**196-6874**	4	KIT-SPRING	
	9	1	**198-1873**	1	VALVE	
	10	1	**9T-2837**	1	KIT-SEAL	

185-5916 CONTROL GP-JOYSTICK *(contd.)* **i01697490**

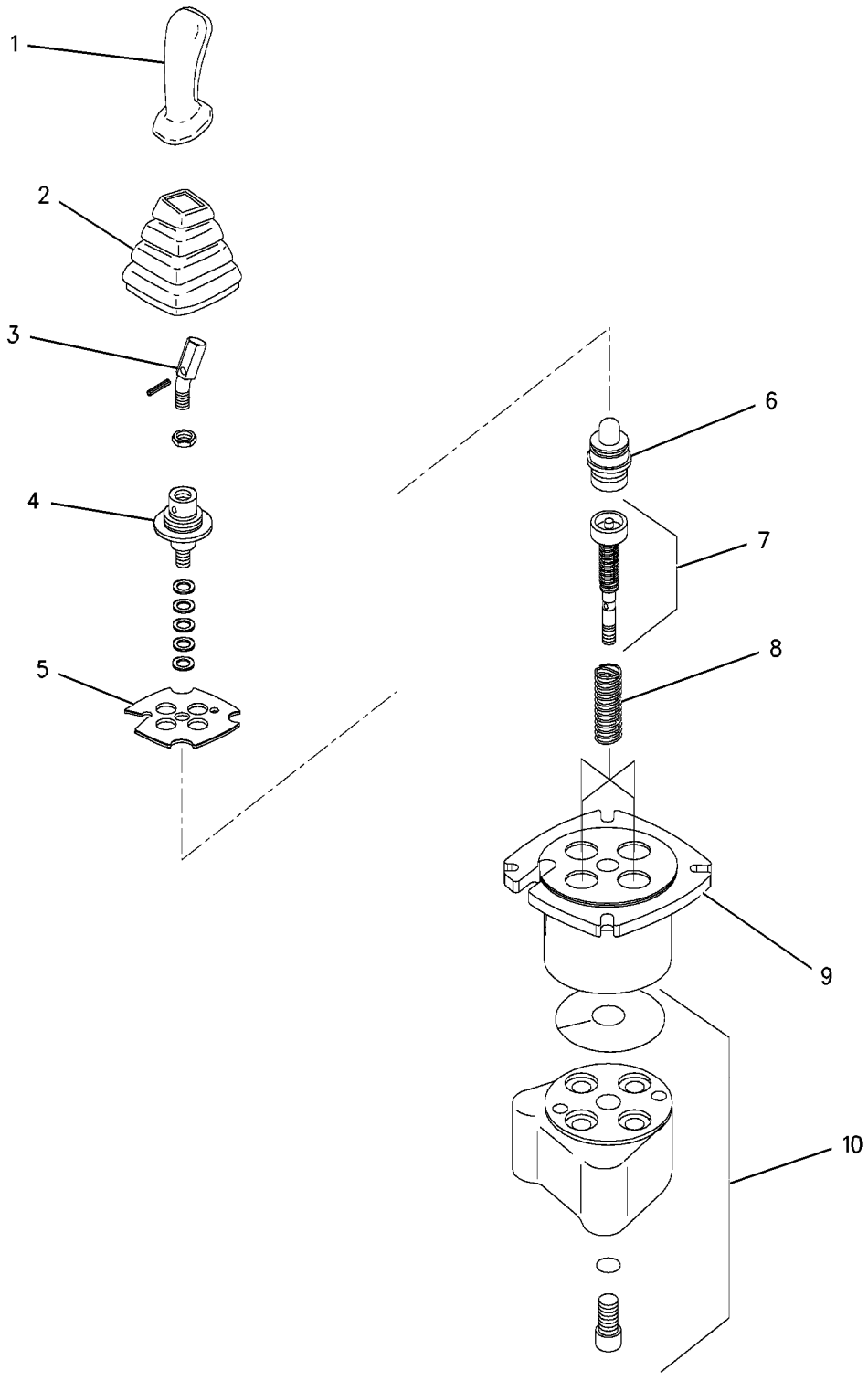

GRAPHIC #1 **<END>** g00754246

HYDRAULIC SYSTEM

202-6126 CONVERSION AR-CUSHION SWING–KIT

S/N: FDP18400-UP
CENTER PIVOT, NON LOW LEAK BACKHOE
AN ATTACHMENT

SMCS-5057, 5105, 5454 **i01809458**

NOTE	REF NO	GRAPHIC REF	PART NUMBER	QTY	PART NAME 1 2 3 4 5 6 (PRODUCT LEVEL)	SEE PAGE
	1	1	**206-3685**	1	VALVE GP-CROSSOVER RELIEF	
		1	**7I-8084**	2	PLUG	
I	2	1	**208-3600**	1	HOSE AS	
	3	1	*214-4253*	1	TEE AS	
		1	**4J-5477**	1	SEAL-O-RING	
		1	**6V-8398**	1	SEAL-O-RING	
		1	**214-4252**	1	TEE	
I	4	1	**217-1387**	1	HOSE AS	
	5	1	**226-5634**	2	CONNECTOR AS	
					(EACH INCLUDES)	
		1	**3J-1907**	1	SEAL-O-RING	
		1	**4J-5477**	1	SEAL-O-RING	
		1	**167-0566**	1	CARTRIDGE	
		1	**226-5633**	1	CONNECTOR	
	6	1	*148-8351*	2	ELBOW GP	
					(EACH INCLUDES)	
		1	**4J-5477**	1	SEAL-O-RING	
		1	**6V-9849**	1	ELBOW-SWIVEL	
	7	1	*148-8428*	1	TEE GP	
		1	**3K-0360**	1	SEAL-O-RING	
		1	**6V-8398**	2	SEAL-O-RING	
		1	**6V-8782**	1	TEE-FACE SEAL	
	8	1	*164-8908*	1	CONNECTOR GP	
		1	**3K-0360**	1	SEAL-O-RING	
		1	**6V-8398**	1	SEAL-O-RING	
		1	**8T-0077**	1	CONNECTOR	
M	9	1	**8T-3612**	2	NUT-WELD (M8X1.25 THD)	
	10	1	**8T-4224**	2	WASHER-HARD (8.8X16X2MM THK)	
M	11	1	**8T-6870**	2	BOLT (M8X1.25X70MM)	
I	12	1	**208-3601**	1	HOSE AS	

I-SEE HOSE FABRICATION GUIDE
M-METRIC PART

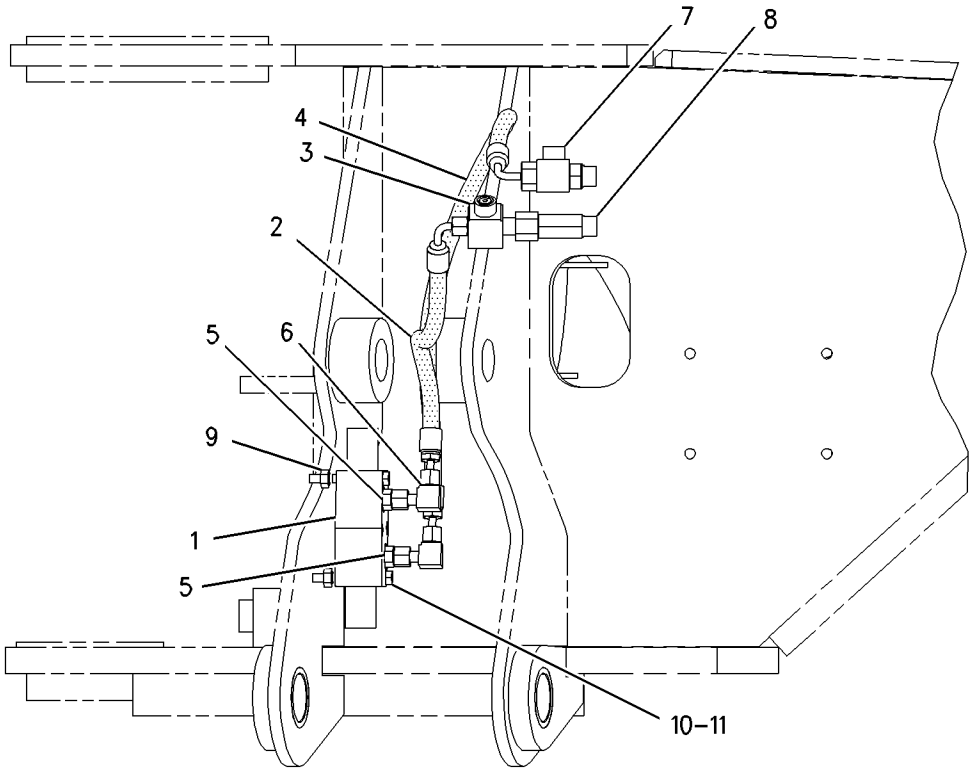

RIGHT SIDE VIEW
WITHOUT ANTI-DRIFT VALVE

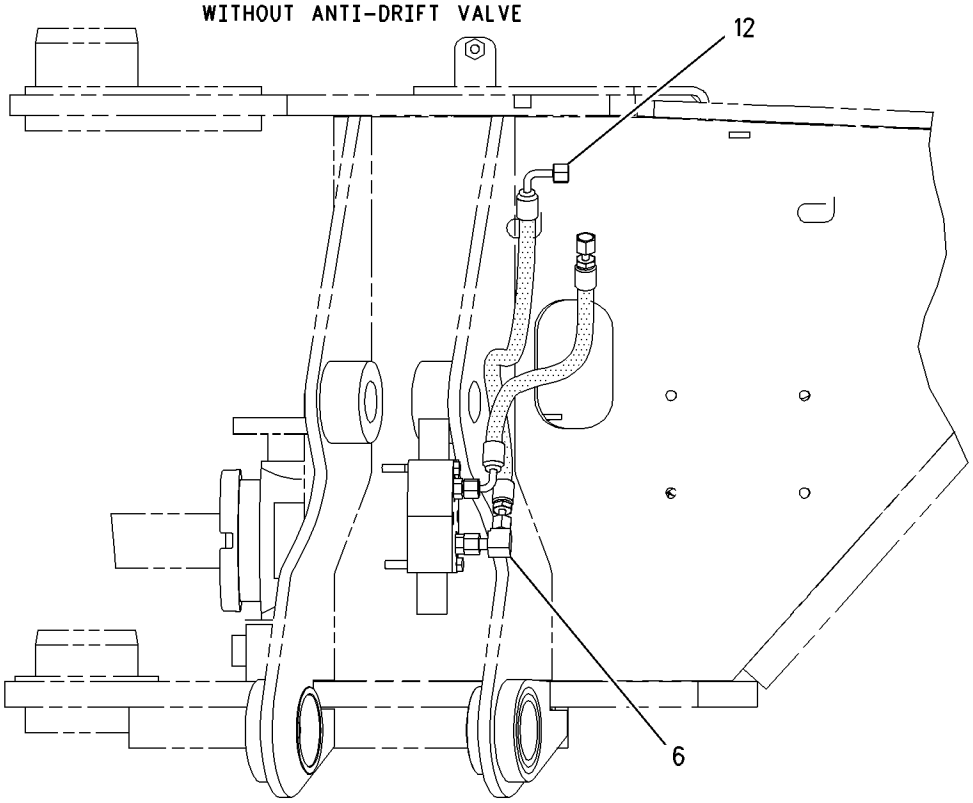

RIGHT SIDE VIEW
WITH ANTI-DRIFT VALVE

GRAPHIC #1 **<END>** g00930149

HYDRAULIC SYSTEM

210-8532 CONVERSION GP-AUXILIARY LINES—BACKHOE

S/N: FDP18400-UP
PART OF 210-8524 HYDRAULIC AR
AN ATTACHMENT

SMCS-5057 **i01932527**

NOTE	REF NO	GRAPHIC REF	PART NUMBER	QTY	PART NAME 1 2 3 4 5 6 (PRODUCT LEVEL)	SEE PAGE
	1	1	**101-0863**	2	FILM-INSTRUCTION (RETURN FLOW)	
I	2	1	**106-0409**	1	HOSE AS	
	3	1	**106-0425**	1	PLATE AS (TOOL)	
	4	1	**107-6708**	1	BRACKET	
	5	1	**109-1260**	1	BRACKET	
	6	1	**110-7709**	1	TUBE AS	
	7	1	**110-7710**	1	TUBE AS	
	8	1	**123-7637**	2	CAP	
	9	1	*148-8450*	1	TEE AS	
		1	**3E-7443**	1	TEE-UNION	
		1	**5K-9090**	1	SEAL-O-RING	
		1	**6V-9746**	2	SEAL-O-RING	
I	10	1	**168-8493**	1	HOSE AS	
I	11	1	**169-2944**	1	HOSE AS	
	12	1	**177-7148**	2	BLOCK	
	13	1	**177-7149**	2	BLOCK	
Y	14	1	**178-7481**	1	VALVE GP-CHECK	531
	15	1	**193-6355**	2	BLOCK	
	16	1	**202-6018**	4	FILM-WARNING (HIGH PRESSURE CYLINDER)	
I	17	1	**203-4694**	1	HOSE AS	
	18	1	**205-8845**	1	HOSE AS	
	19	1	**205-9014**	1	TUBE AS	
	20	1	**206-3099**	1	BLOCK	
	21	1	**206-3100**	1	BLOCK	
	22	1	*148-8327*	1	CONNECTOR AS	
		1	**3D-2824**	1	SEAL-O-RING	
		1	**6V-8637**	1	CONNECTOR-SEAL	
		1	**6V-9746**	1	SEAL-O-RING	
	23	1	*148-8352*	2	ELBOW GP	
					(EACH INCLUDES)	
		1	**5K-9090**	1	SEAL-O-RING	
		1	**6V-9854**	1	ELBOW (SWIVEL)	
	24	1	*148-8386*	1	ELBOW AS	
		1	**3E-7426**	1	ELBOW	
		1	**5K-9090**	1	SEAL-O-RING	
		1	**6V-8400**	1	SEAL-O-RING	
	25	1	*148-8387*	1	ELBOW GP	
		1	**6V-8400**	1	SEAL-O-RING	
		1	**6V-9855**	1	ELBOW	
	26	1	*148-8408*	1	PLUG AS	
		1	**3D-2824**	1	SEAL-O-RING	
		1	**9S-4183**	1	PLUG	
	27	1	*150-3052*	1	CONNECTOR AS	
		1	**5K-9090**	1	SEAL-O-RING	
		1	**7M-8485**	1	SEAL-O-RING	
		1	**107-6709**	1	CONNECTOR	
	28	1	*150-3053*	1	CONNECTOR AS	
		1	**6V-9746**	1	SEAL-O-RING	
		1	**7M-8485**	1	SEAL-O-RING	
		1	**108-3872**	1	CONNECTOR	
	29	1	**2P-1293**	2	LOCKNUT-BULKHEAD (1 3/16-12 THD)	
	30	1	**5K-9090**	2	SEAL-O-RING	
	31	1	**5P-7466**	1	CLIP (SLOT)	
	32	1	**5P-7467**	1	CLIP (TAB)	
	33	1	**5P-7468**	1	CLIP (SLOT)	

210-8532 CONVERSION GP-AUXILIARY LINES *(contd.)*

i01932527

NOTE	REF NO	GRAPHIC REF	PART NUMBER	QTY	PART NAME 1 2 3 4 5 6 (PRODUCT LEVEL)	SEE PAGE
	34	1	**5P-7469**	1	CLIP (TAB)	
	35	1	**5P-8112**	1	GROMMET	
	36	1	**5P-8444**	1	GROMMET	
	37	1	**6V-9172**	2	NUT (1 7/16-12 THD)	
M	38	1	**6V-9189**	2	LOCKNUT	
	39	1	**6V-9746**	1	SEAL-O-RING	
	40	1	**6V-9832**	1	CAP AS	
	41	1	**7S-3916**	1	CLIP (TAB)	
	42	1	**7S-3919**	1	CLIP (SLOT)	
	43	1	**8S-0023**	1	CLIP (SLOT)	
	44	1	**8S-0024**	1	CLIP (TAB)	
	45	1	**8T-1889**	1	CLIP (SLOT)	
	46	1	**8T-1890**	1	CLIP (TAB)	
	47	1	**8T-4121**	7	WASHER-HARD (11X21X2.5MM THK)	
M	48	1	**8T-4136**	4	BOLT (M10X1.5X25MM)	
M	49	1	**8T-4137**	1	BOLT (M10X1.5X20MM)	
M	50	1	**8T-4139**	2	BOLT (M12X1.75X30MM)	
M	51	1	**8T-4192**	2	BOLT (M12X1.75X25MM)	
	52	1	**8T-4223**	4	WASHER-HARD (13.5X25.5X3MM THK)	

I-SEE HOSE FABRICATION GUIDE
M-METRIC PART
Y-SEPARATE ILLUSTRATION

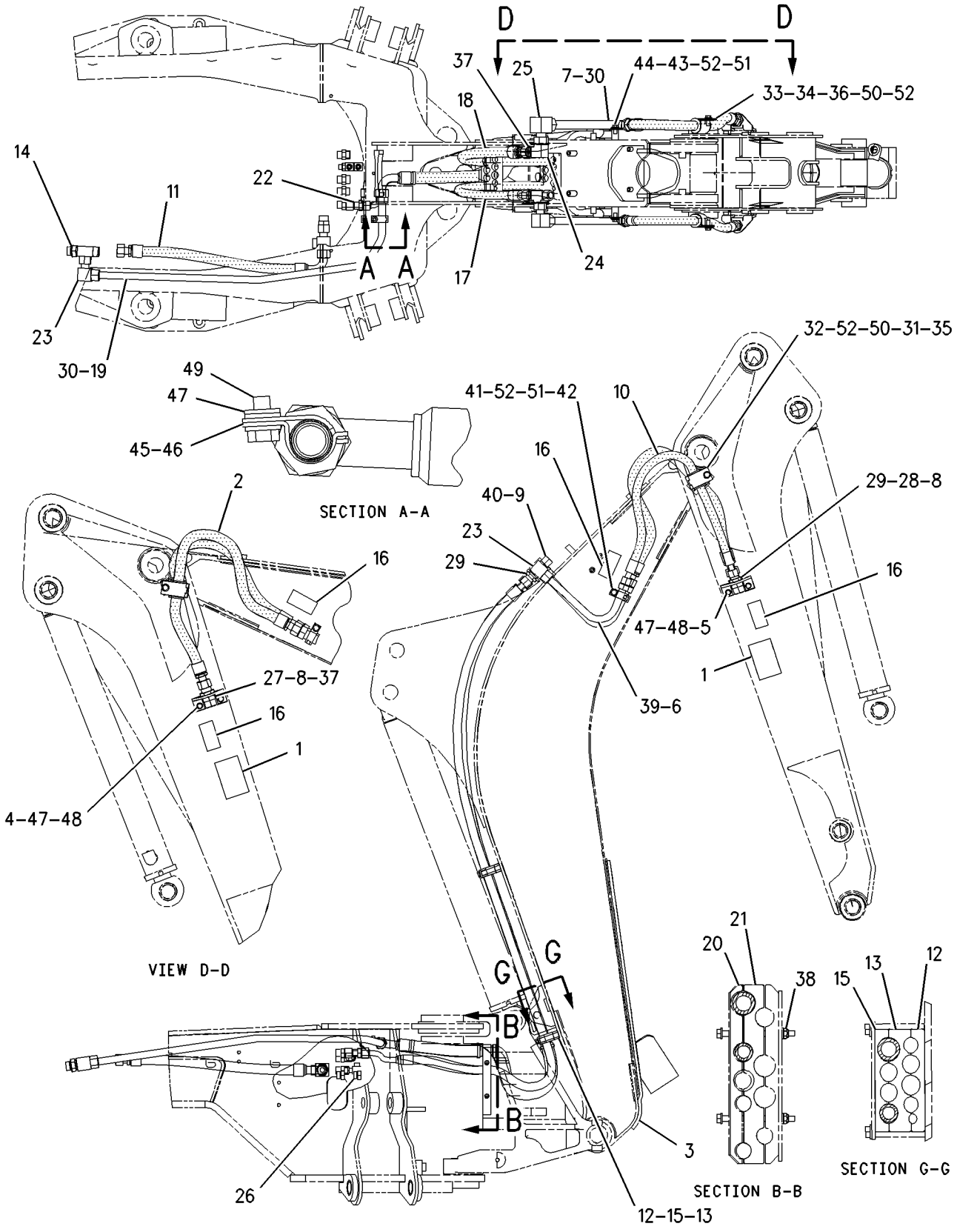

GRAPHIC #1 **<END>** g00867391

HYDRAULIC SYSTEM

210-8533 CONVERSION GP-AUXILIARY LINES—BACKHOE

S/N: FDP18400-UP

PART OF 210-8525 HYDRAULIC AR

SMCS-5057 **i01741842**

NOTE	REF NO	GRAPHIC REF	PART NUMBER	QTY	PART NAME 1 2 3 4 5 6 (PRODUCT LEVEL)	SEE PAGE
	1	1,2	**101-0863**	2	FILM-INSTRUCTION	
I	2	1	**106-0409**	1	HOSE AS	
	3	2	**106-0425**	1	PLATE AS	
	4	2	**107-6708**	1	BRACKET	
	5	1	**109-1260**	1	BRACKET	
	6	1	**110-7709**	1	TUBE AS	
	7	1	**110-7710**	1	TUBE AS	
	8	1,2	**123-7637**	2	CAP	
	9	1	*148-8450*	1	TEE AS-ORFS	
		1	**3E-7443**	1	TEE-UNION	
		1	**5K-9090**	1	SEAL-O-RING	
		1	**6V-9746**	2	SEAL-O-RING	
I	10	1	**168-8493**	1	HOSE AS	
I	11	1	**169-2944**	1	HOSE AS	
	12	1,2	**177-7148**	2	BLOCK	
	13	1,2	**177-7149**	2	BLOCK	
Y	14	1	**178-7481**	1	VALVE GP-CHECK	531
	15	1,2	**193-6355**	2	BLOCK	
	16	1,2	**202-6018**	4	FILM-WARNING	
	17	1	**203-4694**	1	HOSE AS	
	18	1	**205-8845**	1	HOSE AS	
	19	1	**205-9014**	1	TUBE AS	
	20	1	**206-3099**	1	BLOCK	
	21	1	**206-3100**	1	BLOCK	
	22	1	*148-8327*	1	CONNECTOR GP	
		1	**3D-2824**	1	SEAL-O-RING	
		1	**6V-8637**	1	CONNECTOR-SEAL	
		1	**6V-9746**	1	SEAL-O-RING	
	23	1	*148-8352*	2	ELBOW GP	
					(EACH INCLUDES)	
		1	**5K-9090**	1	SEAL-O-RING	
		1	**6V-9854**	1	ELBOW-SWIVEL	
	24	1	*148-8386*	1	ELBOW AS	
		1	**3E-7426**	1	ELBOW	
		1	**5K-9090**	1	SEAL-O-RING	
		1	**6V-8400**	1	SEAL-O-RING	
	25	1	*148-8387*	1	ELBOW GP	
		1	**6V-8400**	1	SEAL-O-RING	
		1	**6V-9855**	1	ELBOW	
	26	1	*148-8408*	1	PLUG AS	
		1	**3D-2824**	1	SEAL-O-RING	
		1	**9S-4183**	1	PLUG	
	27	2	*150-3052*	1	CONNECTOR AS	
		2	**5K-9090**	1	SEAL-O-RING	
		2	**7M-8485**	1	SEAL-O-RING	
		2	**107-6709**	1	CONNECTOR	
	28	1	*150-3053*	1	CONNECTOR AS	
		1	**6V-9746**	1	SEAL-O-RING	
		1	**7M-8485**	1	SEAL-O-RING	
		1	**108-3872**	1	CONNECTOR	
	29	1	**2P-1293**	2	LOCKNUT-BULKHEAD (1 3/16-12 THD)	
	30	1	**5K-9090**	2	SEAL-O-RING	
	31	1	**5P-7466**	1	CLIP (SLOT)	
	32	1	**5P-7467**	1	CLIP (TAB)	
	33	2	**5P-7468**	1	CLIP (SLOT)	
	34	2	**5P-7469**	1	CLIP (TAB)	

210-8533 CONVERSION GP-AUXILIARY LINES *(contd.)* i01741842

NOTE	REF NO	GRAPHIC REF	PART NUMBER	QTY	PART NAME 1 2 3 4 5 6 (PRODUCT LEVEL)	SEE PAGE
	35	1	**5P-8112**	1	GROMMET	
	36	2	**5P-8444**	1	GROMMET	
	37	1,2	**6V-9172**	2	NUT (1 7/16-12 THD)	
M	38	1	**6V-9189**	2	LOCKNUT	
	39	1	**6V-9746**	1	SEAL-O-RING	
	40	1	**6V-9832**	1	CAP AS	
	41	1	**7S-3916**	1	CLIP (TAB)	
	42	1	**7S-3919**	1	CLIP (SLOT)	
	43	1	**8S-0023**	1	CLIP (SLOT)	
	44	1	**8S-0024**	1	CLIP (TAB)	
	45	1	**8T-1889**	1	CLIP (SLOT)	
	46	1	**8T-1890**	1	CLIP (TAB)	
	47	1,2	**8T-4121**	7	WASHER-HARD (11X21X2.5MM THK)	
M	48	1,2	**8T-4136**	4	BOLT (M10X1.5X25MM)	
M	49	1	**8T-4137**	1	BOLT (M10X1.5X20MM)	
M	50	1,2	**8T-4139**	2	BOLT (M12X1.75X30MM)	
M	51	1	**8T-4192**	2	BOLT (M12X1.75X25MM)	
	52	1,2	**8T-4223**	4	WASHER-HARD (13.5X25.5X3MM THK)	

I-SEE HOSE FABRICATION GUIDE
M-METRIC PART
Y-SEPARATE ILLUSTRATION

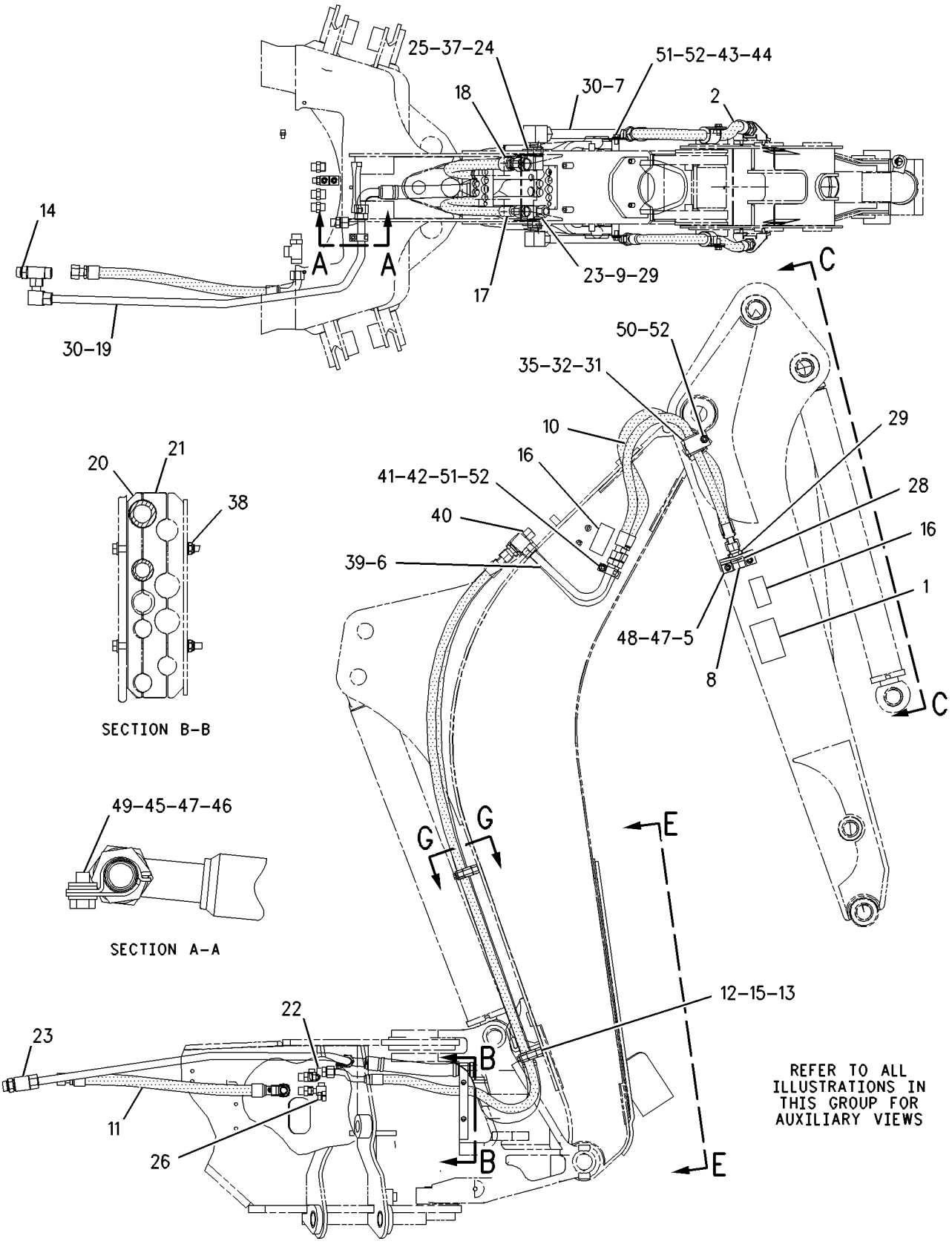

GRAPHIC #1 g00868783

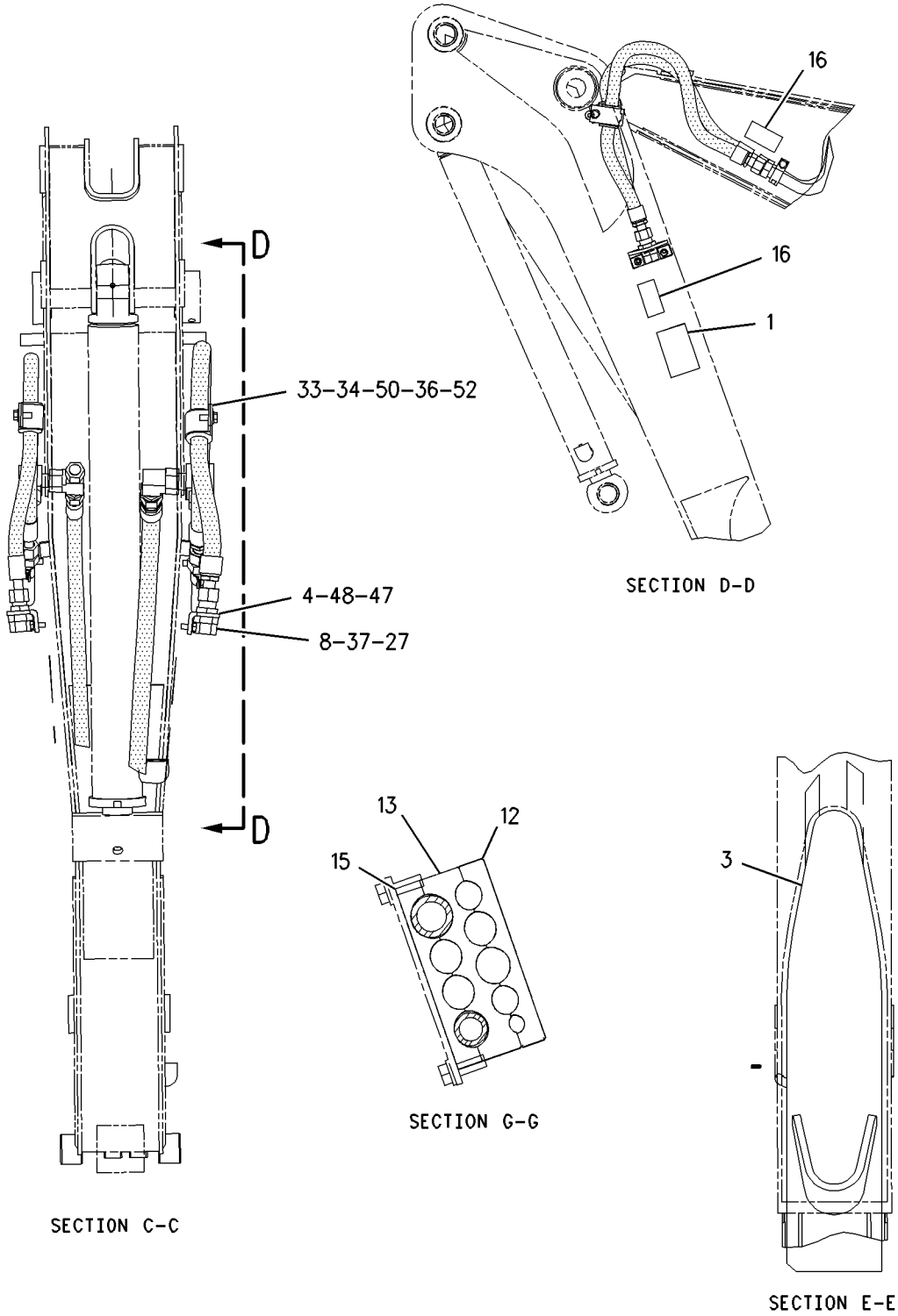

GRAPHIC #2 **<END>** g00868782

HYDRAULIC SYSTEM

210-8536 CONVERSION GP-AUXILIARY LINES—BACKHOE

S/N: FDP18400-UP

PART OF 210-8528 HYDRAULIC AR

SMCS-5057 **i01741843**

NOTE	REF NO	GRAPHIC REF	PART NUMBER	QTY	PART NAME 1 2 3 4 5 6 (PRODUCT LEVEL)	SEE PAGE
	1	1	**101-0863**	2	FILM-INSTRUCTION	
I	2	1	**106-0409**	1	HOSE AS	
	3	1	**106-0425**	1	PLATE AS	
	4	1	**107-6708**	1	BRACKET	
	5	1	**109-1260**	1	BRACKET	
	6	1	**110-7709**	1	TUBE AS	
	7	1	**110-7710**	1	TUBE AS	
	8	1	**110-7713**	1	TUBE AS	
	9	1	**123-7637**	2	CAP	
	10	1	*148-8450*	1	TEE AS-ORFS	
		1	**3E-7443**	1	TEE-UNION	
		1	**5K-9090**	1	SEAL-O-RING	
		1	**6V-9746**	2	SEAL-O-RING	
I	11	1	**168-8493**	1	HOSE AS	
	12	1	**177-7148**	2	BLOCK	
	13	1	**177-7149**	2	BLOCK	
	14	1	**193-6355**	2	BLOCK	
	15	1	**202-6018**	4	FILM-WARNING	
	16	1	**203-4694**	1	HOSE AS	
	17	1	**205-8845**	1	HOSE AS	
	18	1	**205-9014**	1	TUBE AS	
	19	1	**206-3099**	1	BLOCK	
	20	1	**206-3100**	1	BLOCK	
	21	1	*148-8327*	1	CONNECTOR GP	
		1	**3D-2824**	1	SEAL-O-RING	
		1	**6V-8637**	1	CONNECTOR-SEAL	
		1	**6V-9746**	1	SEAL-O-RING	
	22	1	*148-8352*	2	ELBOW GP	
					(EACH INCLUDES)	
		1	**5K-9090**	1	SEAL-O-RING	
		1	**6V-9854**	1	ELBOW-SWIVEL	
	23	1	*148-8386*	1	ELBOW AS	
		1	**3E-7426**	1	ELBOW	
		1	**5K-9090**	1	SEAL-O-RING	
		1	**6V-8400**	1	SEAL-O-RING	
	24	1	*148-8387*	1	ELBOW GP	
		1	**6V-8400**	1	SEAL-O-RING	
		1	**6V-9855**	1	ELBOW	
	25	1	*148-8392*	1	ELBOW GP	
		1	**6V-9746**	1	SEAL-O-RING	
		1	**6V-9853**	1	ELBOW-SWIVEL	
	26	1	*150-3052*	1	CONNECTOR AS	
		1	**5K-9090**	1	SEAL-O-RING	
		1	**7M-8485**	1	SEAL-O-RING	
		1	**107-6709**	1	CONNECTOR	
	27	1	*150-3053*	1	CONNECTOR AS	
		1	**6V-9746**	1	SEAL-O-RING	
		1	**7M-8485**	1	SEAL-O-RING	
		1	**108-3872**	1	CONNECTOR	
	28	1	**2P-1293**	2	LOCKNUT-BULKHEAD (1 3/16-12 THD)	
	29	1	**5K-9090**	2	SEAL-O-RING	
	30	1	**5P-7466**	1	CLIP (SLOT)	
	31	1	**5P-7467**	1	CLIP (TAB)	
	32	1	**5P-7468**	1	CLIP (SLOT)	
	33	1	**5P-7469**	1	CLIP (TAB)	
	34	1	**5P-8112**	1	GROMMET	

210-8536 **CONVERSION GP-AUXILIARY LINES** *(contd.)* **i01741843**

NOTE	REF NO	GRAPHIC REF	PART NUMBER	QTY	PART NAME 1 2 3 4 5 6 (PRODUCT LEVEL)	SEE PAGE
	35	1	**5P-8444**	1	GROMMET	
	36	1	**6V-8398**	1	SEAL-O-RING	
	37	1	**6V-9172**	2	NUT (1 7/16-12 THD)	
M	38	1	**6V-9189**	2	LOCKNUT	
	39	1	**6V-9746**	1	SEAL-O-RING	
	40	1	**7S-3916**	1	CLIP (TAB)	
	41	1	**7S-3919**	1	CLIP (SLOT)	
	42	1	**8S-0023**	1	CLIP (SLOT)	
	43	1	**8S-0024**	1	CLIP (TAB)	
	44	1	**8T-1889**	1	CLIP (SLOT)	
	45	1	**8T-1890**	1	CLIP (TAB)	
	46	1	**8T-4121**	7	WASHER-HARD (11X21X2.5MM THK)	
M	47	1	**8T-4136**	4	BOLT (M10X1.5X25MM)	
M	48	1	**8T-4137**	1	BOLT (M10X1.5X20MM)	
M	49	1	**8T-4184**	2	BOLT (M12X1.75X45MM)	
M	50	1	**8T-4192**	2	BOLT (M12X1.75X25MM)	
	51	1	**8T-4223**	4	WASHER-HARD (13.5X25.5X3MM THK)	

I-SEE HOSE FABRICATION GUIDE
M-METRIC PART

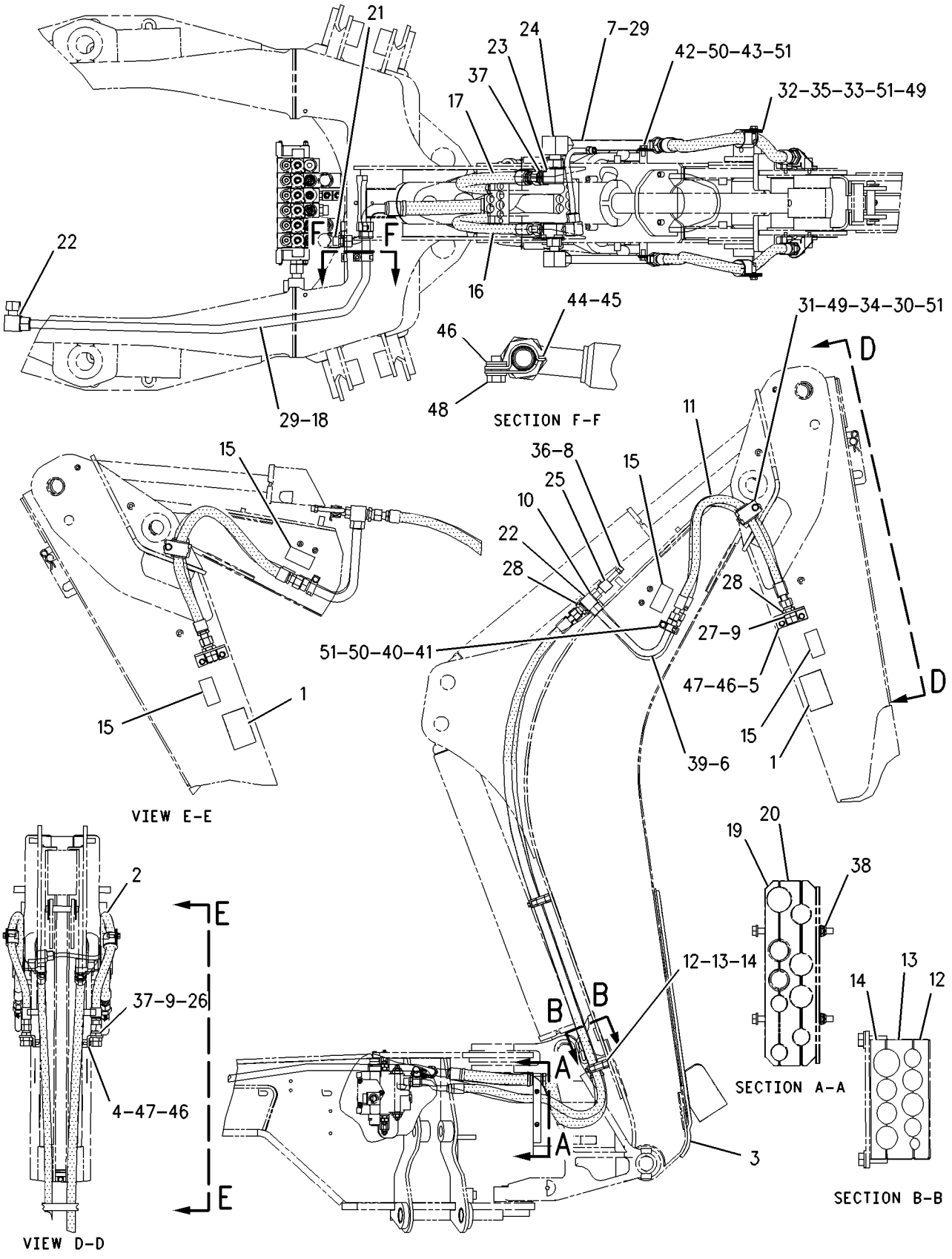

GRAPHIC #1 **<END>** g00871704

HYDRAULIC SYSTEM

198-7412 CONVERSION GP-CONTROL VALVE

S/N: FDP18400-UP
FOUR BANK TO FIVE BANK
AN ATTACHMENT

SMCS-5051 **i01645370**

NOTE	PART NUMBER	QTY	PART NAME 1 2 3 4 5 6 (PRODUCT LEVEL)	SEE PAGE
Y	**190-3450**	1	VALVE GP-CONTROL	537
	9S-8752	6	NUT-FULL (3/8-16 THD)	
	4D-9986	2	SEAL-O-RING	
	4J-5140	1	SEAL-O-RING	
	4J-5267	1	SEAL-O-RING	
B	**4T-2723**	3	SHIM (0.076MM THK)	
	107-8117	3	STUD	
	5M-2894	6	WASHER-HARD (10.2X18.5X2.5MM THK)	

B-USE AS REQUIRED
Y-SEPARATE ILLUSTRATION

<END>

201-6902 CONVERSION GP-CONTROL VALVE–KIT

S/N: FDP18400-UP
FIVE BANK TO SIX BANK
AN ATTACHMENT

SMCS-5051 **i01645716**

NOTE	PART NUMBER	QTY	PART NAME 1 2 3 4 5 6 (PRODUCT LEVEL)	SEE PAGE
Y	**190-3450**	1	VALVE GP-CONTROL	537
	9S-8752	6	NUT-FULL (3/8-16 THD)	
	4D-9986	2	SEAL-O-RING	
	4J-5140	1	SEAL-O-RING	
	4J-5267	1	SEAL-O-RING	
B	**4T-2723**	3	SHIM (0.076MM THK)	
	116-1316	3	STUD	
	5M-2894	6	WASHER-HARD (10.2X18.5X2.5MM THK)	

B-USE AS REQUIRED
Y-SEPARATE ILLUSTRATION

<END>

HYDRAULIC SYSTEM

230-9105 CONVERSION GP-CONTROL VALVE–KIT

S/N: FDP18400-UP
PART OF 210-8524 HYDRAULIC AR
AN ATTACHMENT

SMCS-5051 **i02016145**

NOTE	PART NUMBER	QTY	PART NAME 1 2 3 4 5 6 (PRODUCT LEVEL)	SEE PAGE
Y	**201-0664**	1	VALVE GP-CONTROL	543
	9S-8752	6	NUT-FULL (3/8-16-THD)	
	4D-9986	2	SEAL-O-RING	
	4J-5140	1	SEAL-O-RING	
	4J-5267	1	SEAL-O-RING	
	4T-2723	3	SHIM (0.076-MM THK)	
	107-8117	3	STUD	
	5M-2894	6	WASHER-HARD (10.2X18.5X2.5-MM THK)	

Y-SEPARATE ILLUSTRATION

<END>

214-5553 CONVERSION GP-EXTENDABLE STICK–KIT

S/N: FDP18400-UP
ANTI-DRIFT
AN ATTACHMENT

SMCS-5051 **i01773237**

NOTE	PART NUMBER	QTY	PART NAME 1 2 3 4 5 6 (PRODUCT LEVEL)	SEE PAGE
Y	**191-7839**	1	CYLINDER GP-BACKHOE BUCKET	372
Y	*214-6380*	1	LINES GP-EXTENDABLE STICK	435
Y	*184-6786*	1	STICK GP-EXTENDABLE	604
	214-6382	1	LINES GP-HYDRAULIC	
	6V-9833	1	CAP AS	
I	**169-2944**	1	HOSE AS	
	178-7481	1	VALVE GP-CONTROL	
	5K-9090	2	SEAL-O-RING	
	7M-8485	1	SEAL-O-RING	
	214-6381	1	MOUNTING GP-STICK	
	2K-3549	1	PIN-SPRING	
M	**6V-7687**	1	LOCKNUT (M12X1.75 THD)	
	9R-6163	1	PIN	
	184-9956	1	PIN	
	148-8408	2	PLUG AS	
			(EACH INCLUDES)	
	3D-2824	1	SEAL-O-RING	
	9S-4183	1	PLUG	

I-SEE HOSE FABRICATION GUIDE
M-METRIC PART
Y-SEPARATE ILLUSTRATION

<END>

HYDRAULIC SYSTEM

132-8769 COUPLING GP

S/N: FDP18400-UP
AN ATTACHMENT

SMCS-5057 **i01450413**

NOTE	REF NO	GRAPHIC REF	PART NUMBER	QTY	PART NAME 1 2 3 4 5 6 (PRODUCT LEVEL)	SEE PAGE
	1	1	**106-0406**	1	COUPLING	
	2	1	**106-0401**	1	COUPLING	

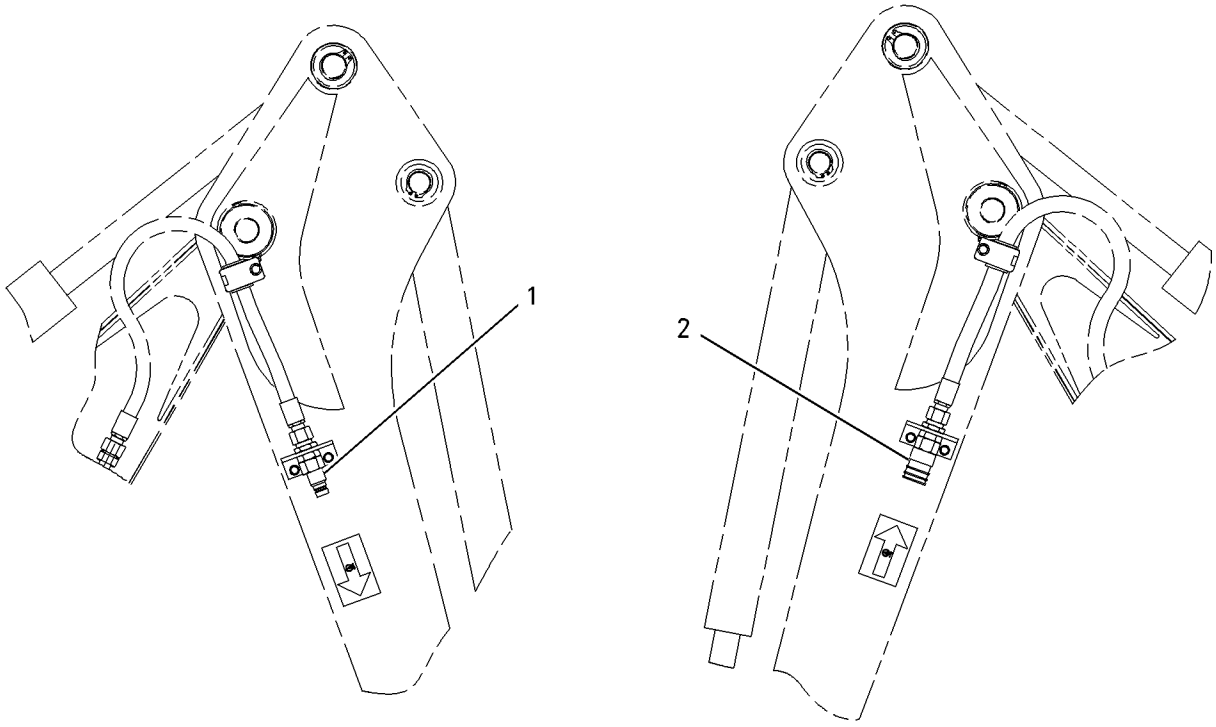

GRAPHIC #1 **<END>** g00759123

239-2226 COVER GP-CONTROL VALVE

S/N: FDP18400-UP
PART OF 185-5898 VALVE GP-BANK 2
AN ATTACHMENT

SMCS-5051 **i02013251**

NOTE	REF NO	GRAPHIC REF	PART NUMBER	QTY	PART NAME 1 2 3 4 5 6 (PRODUCT LEVEL)	SEE PAGE
	1	1	**192-2080**	1	SPRING	
	2	1	**7J-9108**	1	SEAL-O-RING	
	3	1	**192-7863**	1	PLUG	
	4	1	**192-2075**	1	VALVE GP-CHECK	
	5	1	**192-7512**	1	SEAL-O-RING	

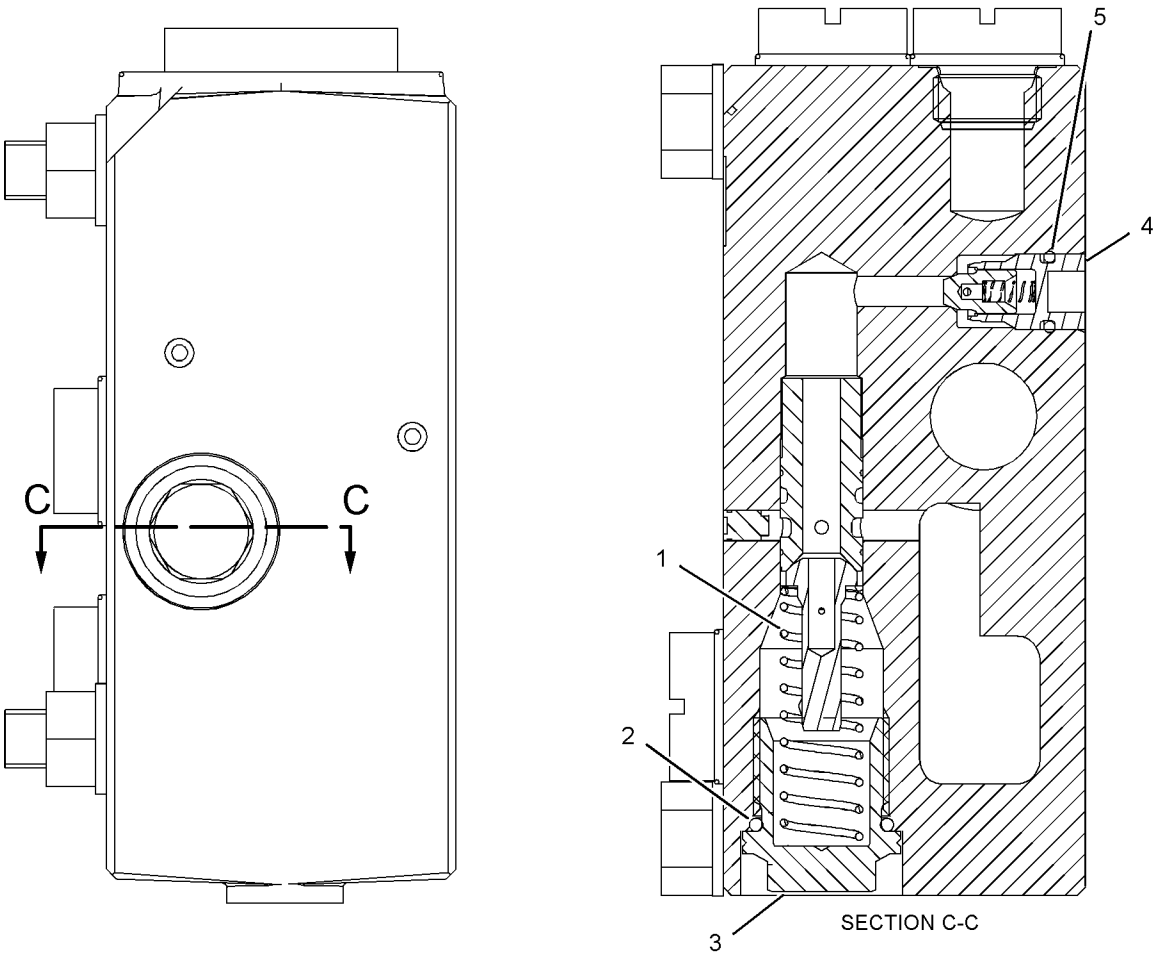

GRAPHIC #1 **<END>** g01025137

224-6236 CYLINDER & LINES GP-THUMB–STANDARD STICK

S/N: FDP18400-UP

PART OF 224-6224, 224-6225, 224-6226, 224-6227 THUMB AR

AN ATTACHMENT

SMCS-5057, 5362 **i01920960**

NOTE	REF NO	GRAPHIC REF	PART NUMBER	QTY	PART NAME 1 2 3 4 5 6 (PRODUCT LEVEL)	SEE PAGE
I	1	1	**221-4312**	2	HOSE AS	
Y	2	1	**221-4350**	1	CYLINDER GP-THUMB	385
	3	1	**5P-7464**	2	CLIP (SLOT)	
	4	1	**5P-7465**	2	CLIP (TAB)	
	5	1	**6V-1249**	2	GROMMET	
	6	1	**6V-8398**	2	SEAL-O-RING	
	7	1	**8T-4223**	4	WASHER-HARD (13.5X25.5X3MM THK)	
M	8	1	**8T-4956**	2	BOLT (M12X1.75X35MM)	

I-SEE HOSE FABRICATION GUIDE
M-METRIC PART
Y-SEPARATE ILLUSTRATION

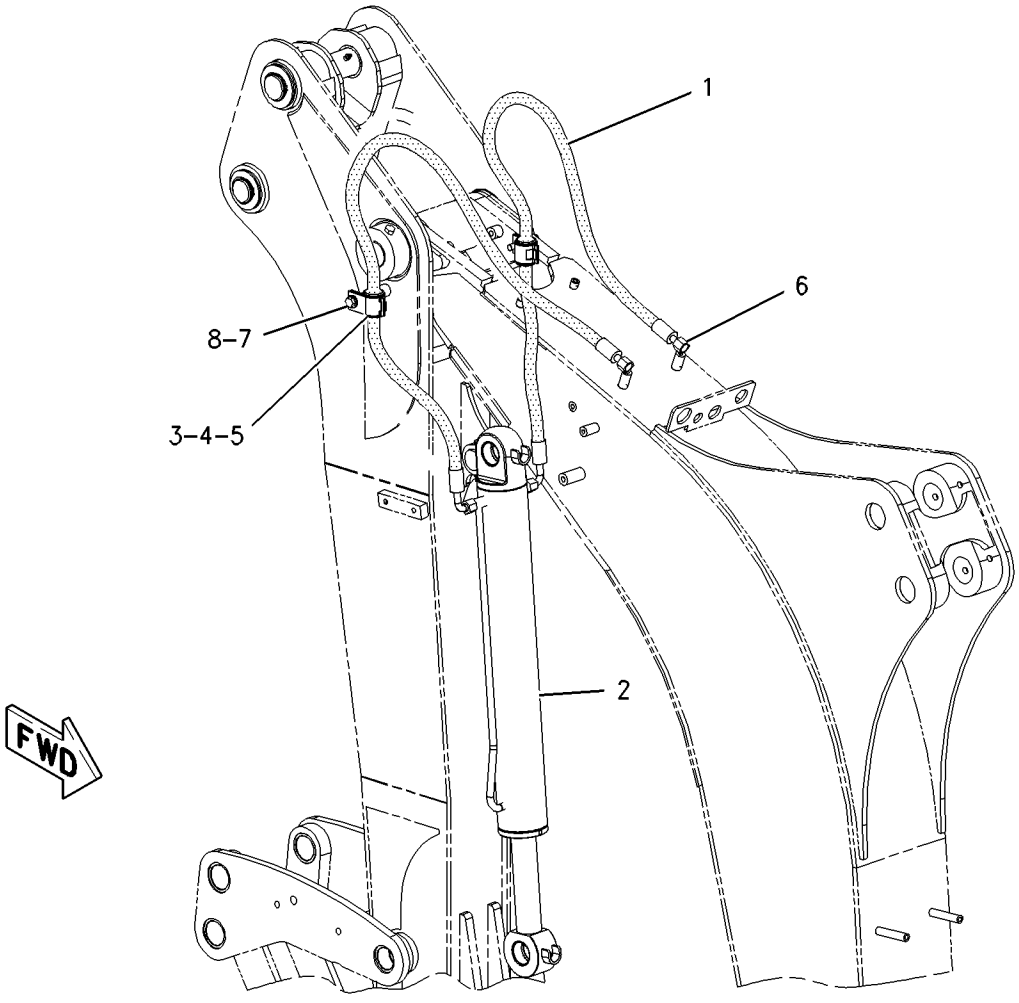

GRAPHIC #1 **<END>** g01003765

HYDRAULIC SYSTEM

191-7835 CYLINDER GP-BACKHOE BUCKET

S/N: FDP18400-UP
95.25MM BORE X 854MM STROKE
PART OF 238-4786 BACKHOE AR-EXTENDABLE STICK, 184-7913, 184-7915, 184-7916, 184-7917, 202-5958, 202-5961, 202-5963, 238-4785, 238-4787, 238-8219 BACKHOE AR-STANDARD STICK
AN ATTACHMENT

SMCS-5457 **i01949689**

NOTE	REF NO	GRAPHIC REF	PART NUMBER	QTY	PART NAME 1 2 3 4 5 6 (PRODUCT LEVEL)	SEE PAGE
	1	1	**191-7836**	1	CYLINDER AS	
	1A	1	**9R-7960**	2	BEARING-SLEEVE	
	1B	1	**6V-8398**	1	SEAL-O-RING	
M	2	1	**173-9682**	1	BOLT (M36X4X100MM)	
	3	1	**3S-6162**	1	WASHER-HARD (40.5X67X6MM THK)	
	4	1	**5J-8011**	1	SEAL AS	
	5	1	**8J-6245**	1	RING-WEAR	
	6	1	**166-8841**	1	PISTON	
	7	1	**1H-8128**	1	SEAL-O-RING	
	8	1	**1S-0669**	1	RING (BACK UP)	
	9	1	**191-6191**	1	HEAD	
	10	1	**166-8132**	1	ROD AS	
	10A	1	**9R-0162**	2	BEARING	
	11	1	**8C-9200**	1	RING-WEAR	
	12	1	**167-2207**	1	SEAL AS-BUFFER	
	13	1	**167-2317**	1	SEAL-U-CUP	
	14	1	**5J-7036**	1	WIPER-ROD	
	15	1	**2H-4145**	1	SEAL-O-RING	
					AVAILABLE REPAIR KIT(S):	
			231-5021	1	KIT-SEAL	
					(INCLUDES RINGS AND SEALS)	

M-METRIC PART

191-7835 CYLINDER GP-BACKHOE BUCKET *(contd.)* i01949689

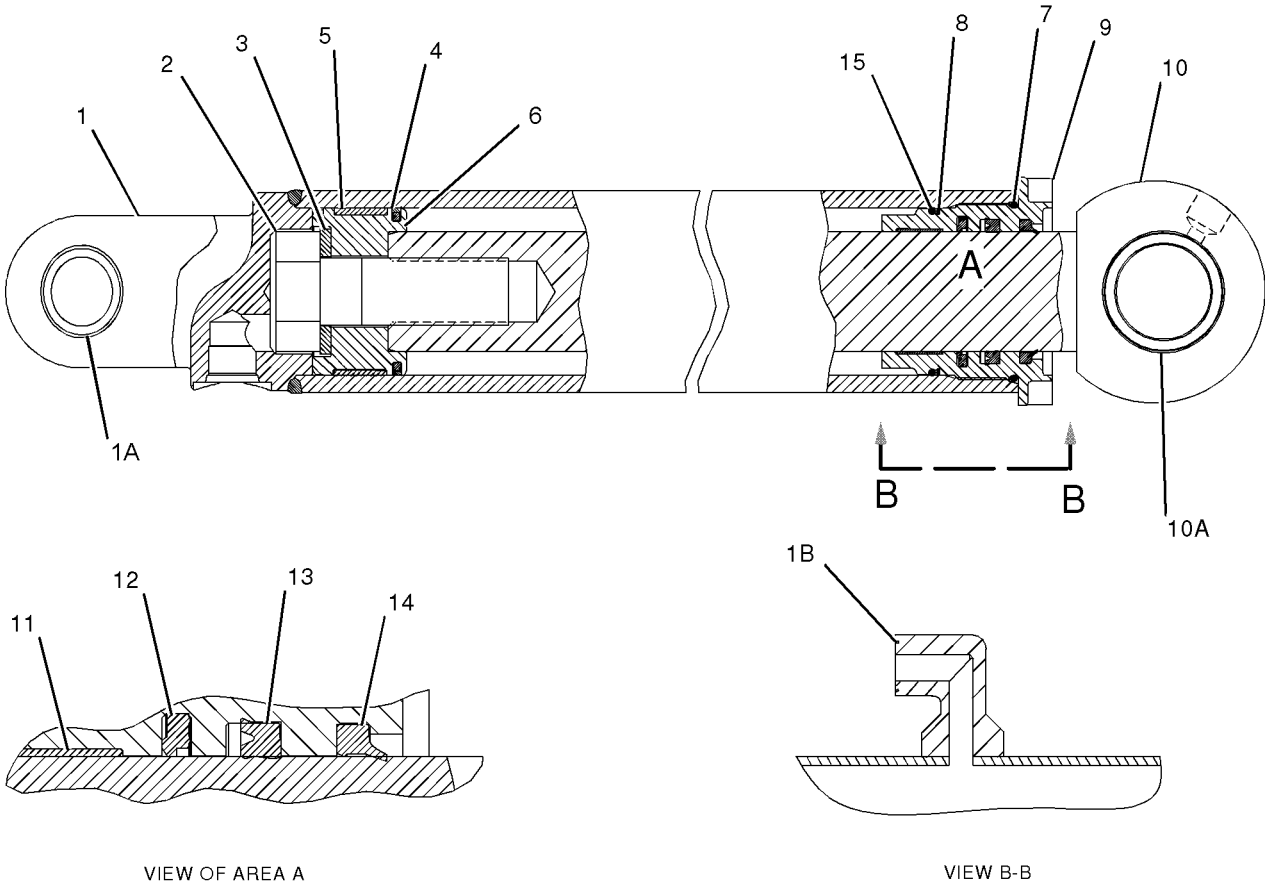

GRAPHIC #1 **<END>** g01014595

191-7839 CYLINDER GP-BACKHOE BUCKET—EXTENDABLE STICK

S/N: FDP18400-UP
95.25MM BORE X 854MM STROKE
PART OF 184-7925, 184-7927, 202-5971, 202-5973, 238-4788, 238-4789, 238-8218 BACKHOE AR-EXTENDABLE STICK, 214-5553 CONVERSION GP-EXTENDABLE STICK AN ATTACHMENT

SMCS-5457 **i01948285**

NOTE	REF NO	GRAPHIC REF	PART NUMBER	QTY	PART NAME 1 2 3 4 5 6 (PRODUCT LEVEL)	SEE PAGE
	1	1	**191-7838**	1	CYLINDER AS	
	1A	1	**6V-8398**	1	SEAL-O-RING	
M	2	1	**173-9682**	1	BOLT (M36X4X100MM)	
	3	1	**3S-6162**	1	WASHER-HARD (40.5X67X6MM THK)	
	4	1	**166-8151**	1	PISTON	
	5	1	**1H-8128**	1	SEAL-O-RING	
	6	1	**1S-0669**	1	RING (BACK UP)	
	7	1	**191-6191**	1	HEAD	
R	8	1	**166-8131**	1	ROD AS	
	8A	1	**9R-0162**	2	BEARING	
	9	1	**5J-8011**	1	SEAL AS	
	10	1	**8J-6245**	1	RING-WEAR	
	11	1	**5J-7036**	1	WIPER-ROD	
	12	1	**167-2317**	1	SEAL-U-CUP	
	13	1	**167-2207**	1	SEAL AS-BUFFER	
	14	1	**8C-9200**	1	RING-WEAR	
	15	1	**2H-4145**	1	SEAL-O-RING	
					AVAILABLE REPAIR KIT(S):	
			231-5021	1	KIT-SEAL	
					(INCLUDES RINGS AND SEALS)	

M-METRIC PART
R-REMFG PART MAY BE AVAILABLE

191-7839 CYLINDER GP-BACKHOE BUCKET *(contd.)* i01948285

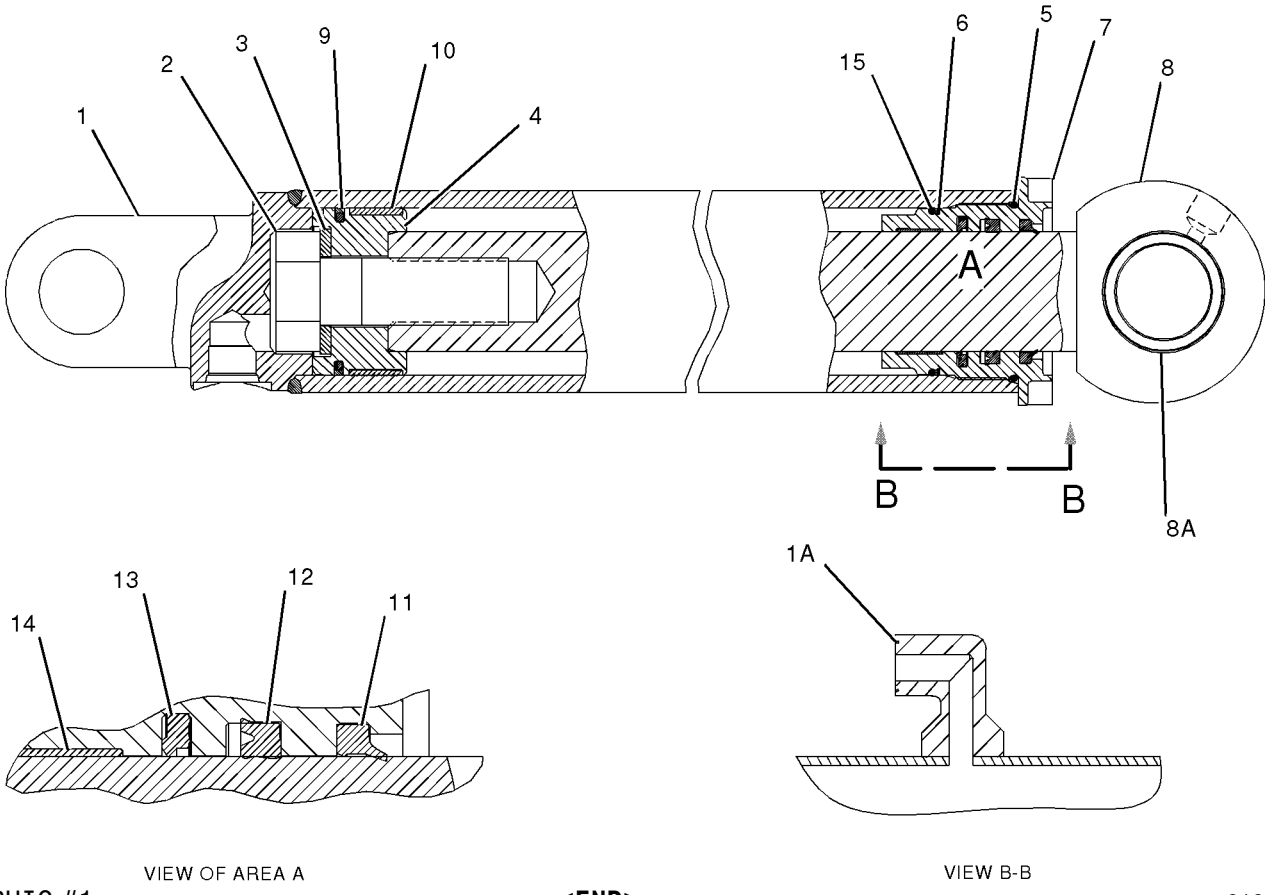

GRAPHIC #1 **<END>** g01014286

HYDRAULIC SYSTEM

206-3630 CYLINDER GP-BOOM

S/N: FDP18400-UP
120.7MM BORE X 1000MM STROKE
PART OF 214-6981 HYDRAULIC AR

SMCS-5456 **i01963832**

NOTE	REF NO	GRAPHIC REF	PART NUMBER	QTY	PART NAME 1 2 3 4 5 6 (PRODUCT LEVEL)	SEE PAGE
	1	1	**206-3629**	1	CYLINDER AS	
	1A	1	**6V-9746**	1	SEAL-O-RING	
	1B	1	**9R-0139**	2	BEARING-SLEEVE	
	2	1	**170-9066**	1	BOLT (1 1/2-12X101.6MM)	
	3	1	**3S-6162**	1	WASHER-HARD (40.5X67X6MM THK)	
	4	1	**8T-8390**	1	RING-WEAR	
	5	1	**4T-8588**	1	SEAL AS	
	6	1	**9X-7260**	1	RING-WEAR	
	7	1	**167-2202**	1	SEAL AS-BUFFER	
	8	1	**167-2310**	1	SEAL-U-CUP	
	9	1	**191-6558**	1	HEAD	
	10	1	**231-3540**	1	SEAL-WIPER	
	11	1	**175-7903**	1	SEAL-O-RING	
	12	1	**2J-3961**	1	RING-BACKUP	
R	13	1	**159-5848**	1	ROD AS	
	13A	1	**9R-0139**	2	BEARING-SLEEVE	
	14	1	**154-8051**	1	PISTON	
	15	1	**9T-5444**	1	PLUNGER	
	16	1	**6L-6208**	1	SPRING	
	17	1	**175-7902**	1	SEAL-O-RING	
					AVAILABLE REPAIR KIT(S):	
			235-0973	1	KIT-SEAL	
					(INCLUDES RINGS AND SEALS)	

R-REMFG PART MAY BE AVAILABLE

206-3630 CYLINDER GP-BOOM *(contd.)* **i01963832**

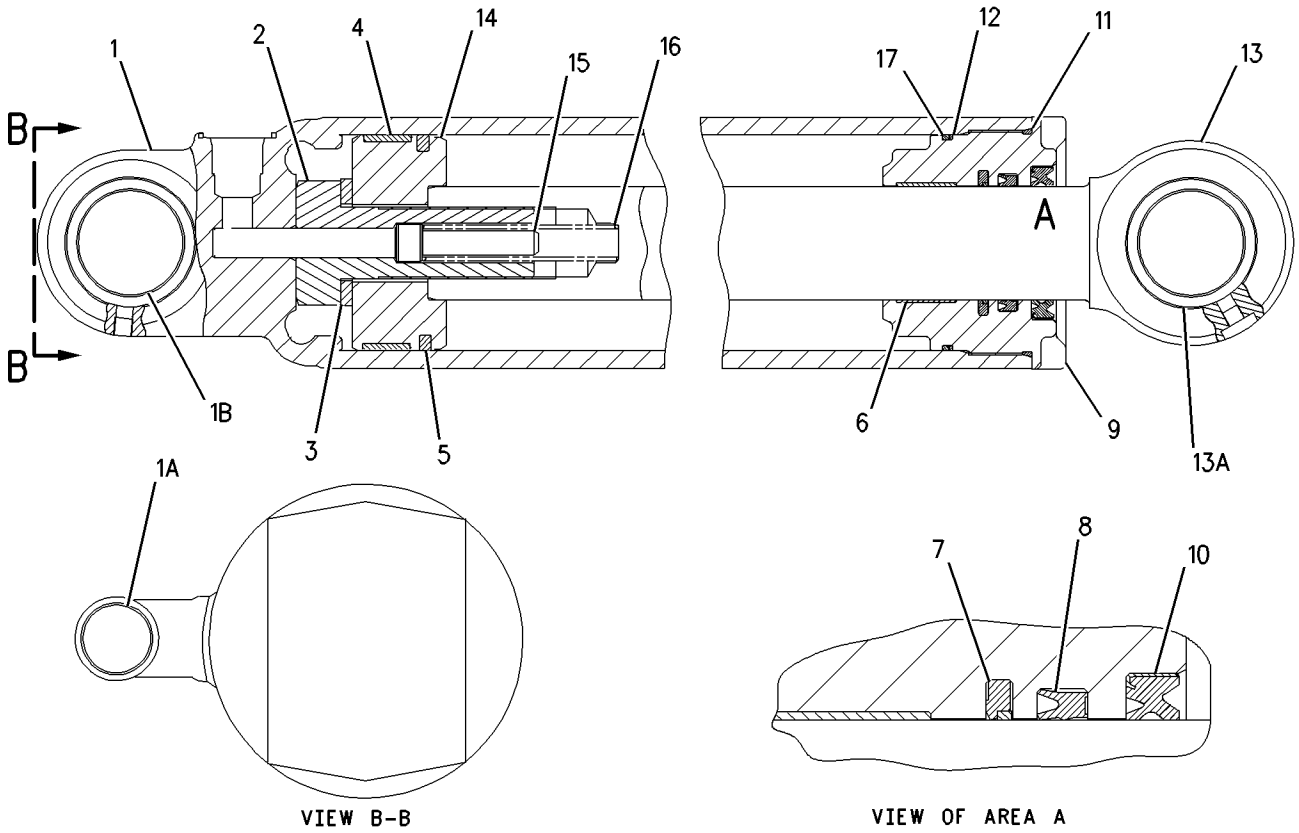

GRAPHIC #1 **<END>** g00995970

HYDRAULIC SYSTEM

155-6586 CYLINDER GP-EXTENDABLE STICK

S/N: FDP18400-UP

PART OF 184-6786 STICK GP-EXTENDABLE

AN ATTACHMENT

SMCS-5486 **i01913015**

NOTE	PART NUMBER	QTY	PART NAME 1 2 3 4 5 6 (PRODUCT LEVEL)	SEE PAGE
Y	**191-7725**	1	CYLINDER GP-EXTENDABLE STICK	377
Y	*162-2351*	1	LINES GP-EXTENDABLE STICK	432

Y-SEPARATE ILLUSTRATION

<END>

191-7725 CYLINDER GP-EXTENDABLE STICK

S/N: FDP18400-UP
76.2MM BORE X 1067MM STROKE
PART OF 155-6586 CYLINDER GP-EXTENDABLE STICK
AN ATTACHMENT

SMCS-5486 **i01864203**

NOTE	REF NO	GRAPHIC REF	PART NUMBER	QTY	PART NAME 1 2 3 4 5 6 (PRODUCT LEVEL)	SEE PAGE
	1	1	**9T-2212**	1	PISTON	
	2	1	**164-7176**	1	ROD AS	
	3	1	**191-7727**	1	CYLINDER AS	
		1	**6V-8398**	1	SEAL-O-RING	
	4	1	**167-2186**	1	SEAL AS-BUFFER	
	5	1	**167-2294**	1	SEAL-U-CUP	
	6	1	**226-8202**	1	SEAL-WIPER	
M	7	1	**173-9779**	1	BOLT-HEX HEAD (M24X3.0X80MM)	
	8	1	**175-7896**	1	SEAL-O-RING	
	9	1	**191-6159**	1	HEAD	
	10	1	**4T-6780**	1	RING-WEAR	
	11	1	**5H-8848**	1	SEAL-O-RING	
	12	1	**6J-1972**	1	SEAL AS	
	13	1	**6J-5731**	1	RING-BACKUP	
	14	1	**6J-5733**	1	RING-WEAR	
	15	1	**6V-8237**	1	WASHER (26X44X4MM THK)	

M-METRIC PART

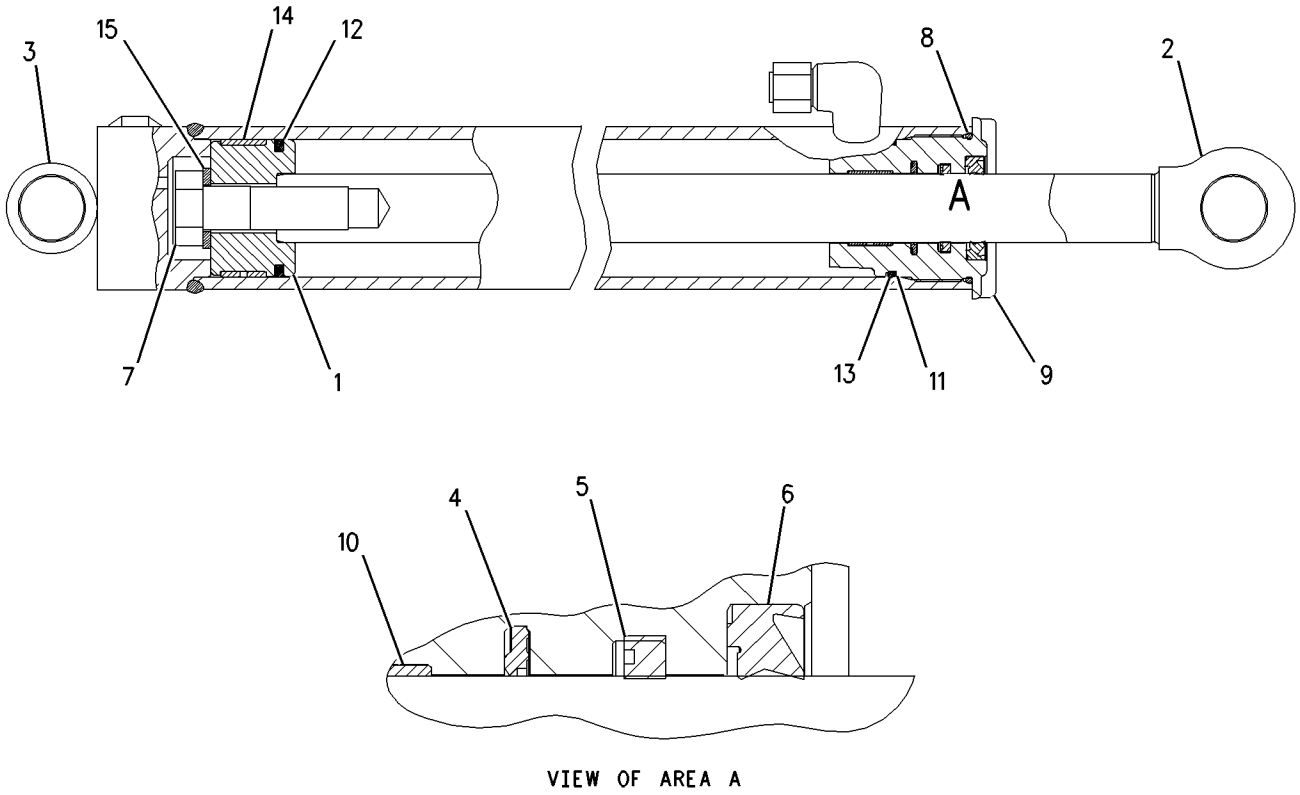

VIEW OF AREA A

GRAPHIC #1 **<END>** g00950327

230-0980 CYLINDER GP-LIFT

S/N: FDP18400-UP

PART OF 214-6981 HYDRAULIC AR

SMCS-5102 **i02019186**

NOTE	REF NO	GRAPHIC REF	PART NUMBER	QTY	PART NAME 1 2 3 4 5 6 (PRODUCT LEVEL)	SEE PAGE
	1	1	**151-2565**	1	RING-WEAR	
	2	1	**233-2571**	1	ROD AS	
	3	1	**233-2579**	1	PISTON	
	4	1	**233-2584**	1	SEAL AS	
	5	1	**233-2606**	1	SEAL-WIPER	
	6	1	**233-2610**	1	SEAL-U-CUP	
	7	1	**233-2619**	1	CYLINDER AS	
	8	1	**244-3837**	1	HEAD AS	
	9	1	**244-3838**	1	RING-BACKUP	
	10	1	**107-6279**	1	SEAL-O-RING	
	11	1	**3B-8489**	2	FITTING-GREASE	
	12	1	**3E-6732**	1	SEAL-O-RING	
	13	1	**9R-0153**	2	BEARING-SLEEVE	
	14	1	**9R-0321**	2	BEARING-SLEEVE	
M	15	1	**9X-6611**	1	SETSCREW-SOCKET	

M-METRIC PART

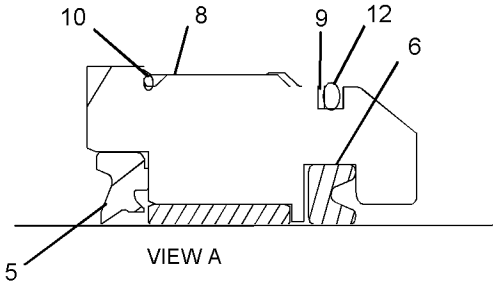

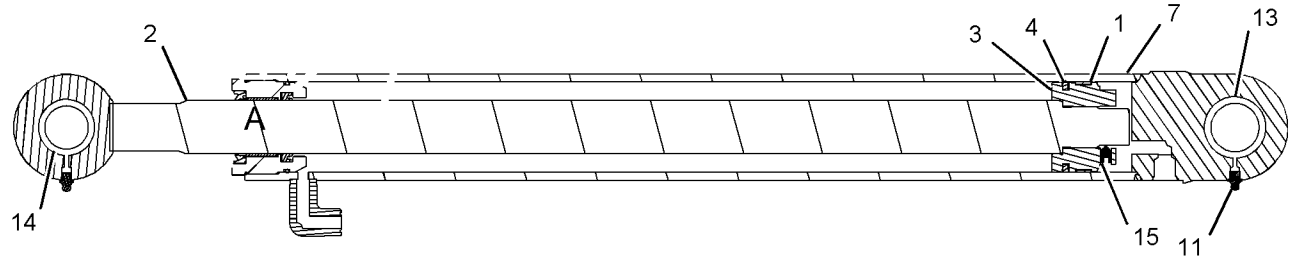

GRAPHIC #1 **<END>** g01043410

185-1839 CYLINDER GP-MULTIPURPOSE BUKT

S/N: FDP18400-UP
76.2MM BORE X 260MM STROKE
PART OF 111-8634, 111-8635, 112-0938, 112-0939 BUCKET AR-MULTIPURPOSE
AN ATTACHMENT

SMCS-5457 **i02020473**

NOTE	REF NO	GRAPHIC REF	PART NUMBER	QTY	PART NAME 1 2 3 4 5 6 (PRODUCT LEVEL)	SEE PAGE
	1	1	**6E-0122**	1	HEAD	
	2	1	**9T-2212**	1	PISTON	
R	3	1	**9T-4008**	1	ROD AS	
	3A	1	**9T-4007**	2	BEARING	
R	4	1	**9T-4009**	1	CYLINDER AS	
	5	1	**167-2186**	1	SEAL AS-BUFFER	
	6	1	**167-2294**	1	SEAL-U-CUP	
	7	1	**167-2450**	1	SEAL-WIPER	
	8	1	**1H-7339**	1	SEAL-O-RING	
	9	1	**4T-6780**	1	RING-WEAR	
	10	1	**5P-8250**	1	WASHER (28X49X5-MM THK)	
	11	1	**6F-7037**	1	BOLT (1-14X3.25-IN)	
	12	1	**6J-1972**	1	SEAL AS	
	13	1	**6J-5733**	1	RING-WEAR	
	14	1	**8J-2574**	1	RING-BACKUP	
					AVAILABLE REPAIR KIT(S):	
			235-0354	1	KIT-SEAL	
					(INCLUDES RINGS AND SEALS)	

R-REMFG PART MAY BE AVAILABLE

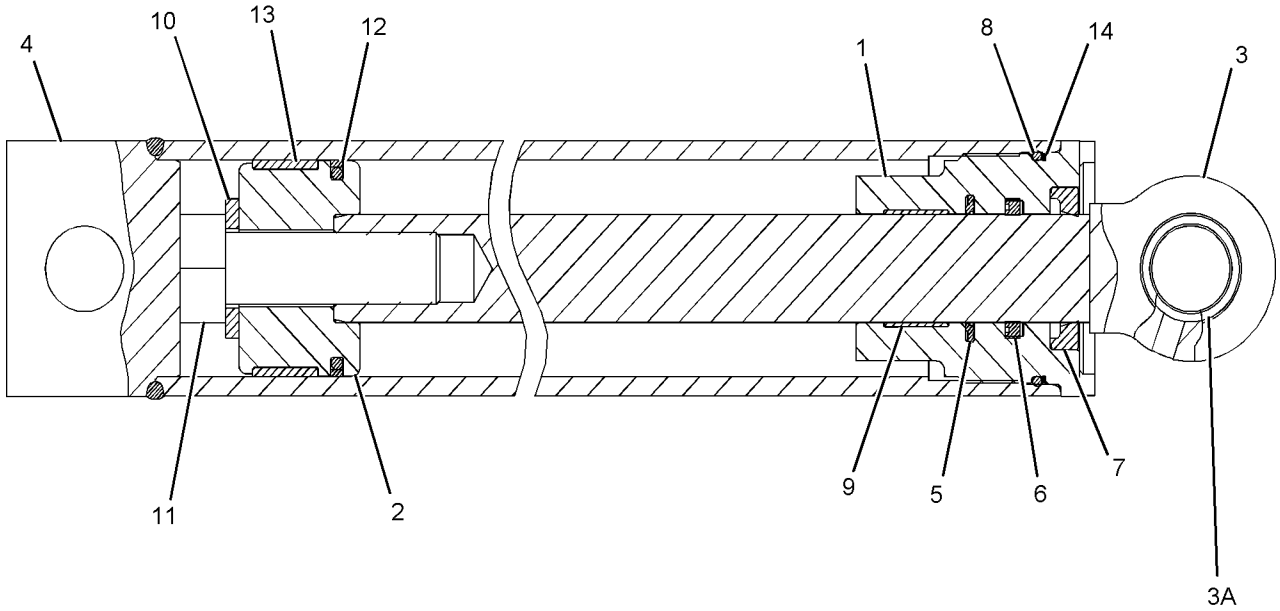

GRAPHIC #1 **<END>** g01043543

HYDRAULIC SYSTEM

206-0520 CYLINDER GP-STABILIZER

S/N: FDP18400-UP
101.6MM BORE X 541MM STROKE
PART OF 214-6981 HYDRAULIC AR

SMCS-5468 **i01889013**

NOTE	REF NO	GRAPHIC REF	PART NUMBER	QTY	PART NAME 1 2 3 4 5 6 (PRODUCT LEVEL)	SEE PAGE
	1	1	**189-5629**	1	HEAD	
	2	1	**206-0519**	1	CYLINDER AS	
	2A	1	**9R-0321**	2	BEARING-SLEEVE	
		1	**6V-8398**	1	SEAL-O-RING	
	3	1	**167-2197**	1	SEAL AS-BUFFER	
	4	1	**167-2305**	1	SEAL-U-CUP	
	5	1	**227-1145**	1	SEAL-WIPER	
	6	1	**172-2353**	1	PISTON	
	7	1	**172-2354**	1	ROD AS	
	7A	1	**9R-0321**	2	BEARING-SLEEVE	
	8	1	**2K-6830**	1	RING-BACKUP	
	9	1	**3S-7023**	1	WASHER (34X57X6MM THK)	
	10	1	**4T-6128**	1	RING	
	11	1	**5J-5402**	1	SEAL AS	
	12	1	**6J-2797**	1	RING-WEAR	
	13	1	**7F-6112**	1	BOLT (1 1/4-12X3 IN)	
	14	1	**8H-7521**	1	SEAL-O-RING	
	15	1	**9X-4611**	1	SEAL-O-RING	

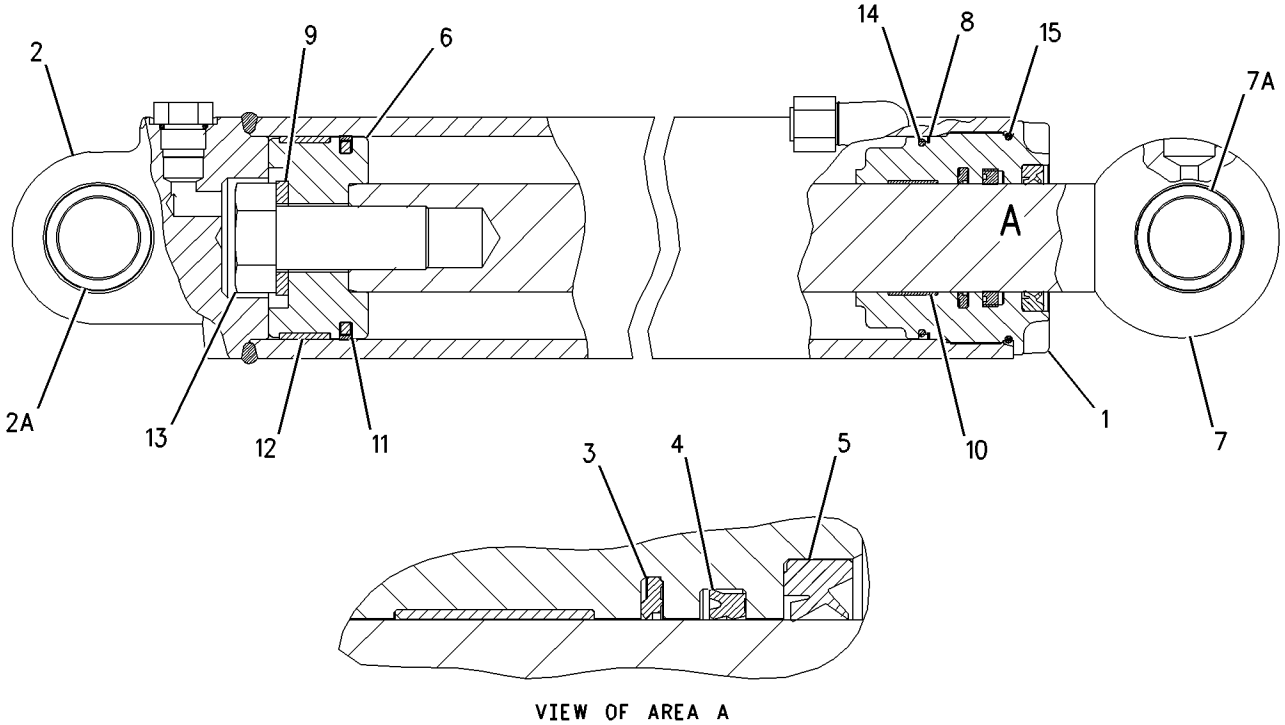

VIEW OF AREA A

GRAPHIC #1 **<END>** g00981022

HYDRAULIC SYSTEM

206-0522 CYLINDER GP-STABILIZER

S/N: FDP18400-UP
101.6MM BORE X 541MM STROKE
PART OF 214-6981 HYDRAULIC AR

SMCS-5468 **i01945835**

NOTE	REF NO	GRAPHIC REF	PART NUMBER	QTY	PART NAME 1 2 3 4 5 6 (PRODUCT LEVEL)	SEE PAGE
	1	1	**189-5629**	1	HEAD	
	2	1	**206-0521**	1	CYLINDER AS	
	2A	1	**9R-0321**	2	BEARING-SLEEVE	
	2B	1	**6V-8398**	1	SEAL-O-RING	
	3	1	**167-2197**	1	SEAL AS-BUFFER	
	4	1	**167-2305**	1	SEAL-U-CUP	
	5	1	**227-1145**	1	SEAL-WIPER	
	6	1	**172-2353**	1	PISTON	
	7	1	**172-2354**	1	ROD AS	
	7A	1	**9R-0321**	2	BEARING-SLEEVE	
	8	1	**2K-6830**	1	RING-BACKUP	
	9	1	**3S-7023**	1	WASHER (34X57X6MM THK)	
	10	1	**4T-6128**	1	RING	
	11	1	**5J-5402**	1	SEAL AS	
	12	1	**6J-2797**	1	RING-WEAR	
	13	1	**7F-6112**	1	BOLT (1 1/4-12X3 IN)	
	14	1	**8H-7521**	1	SEAL-O-RING	
	15	1	**9X-4611**	1	SEAL-O-RING	

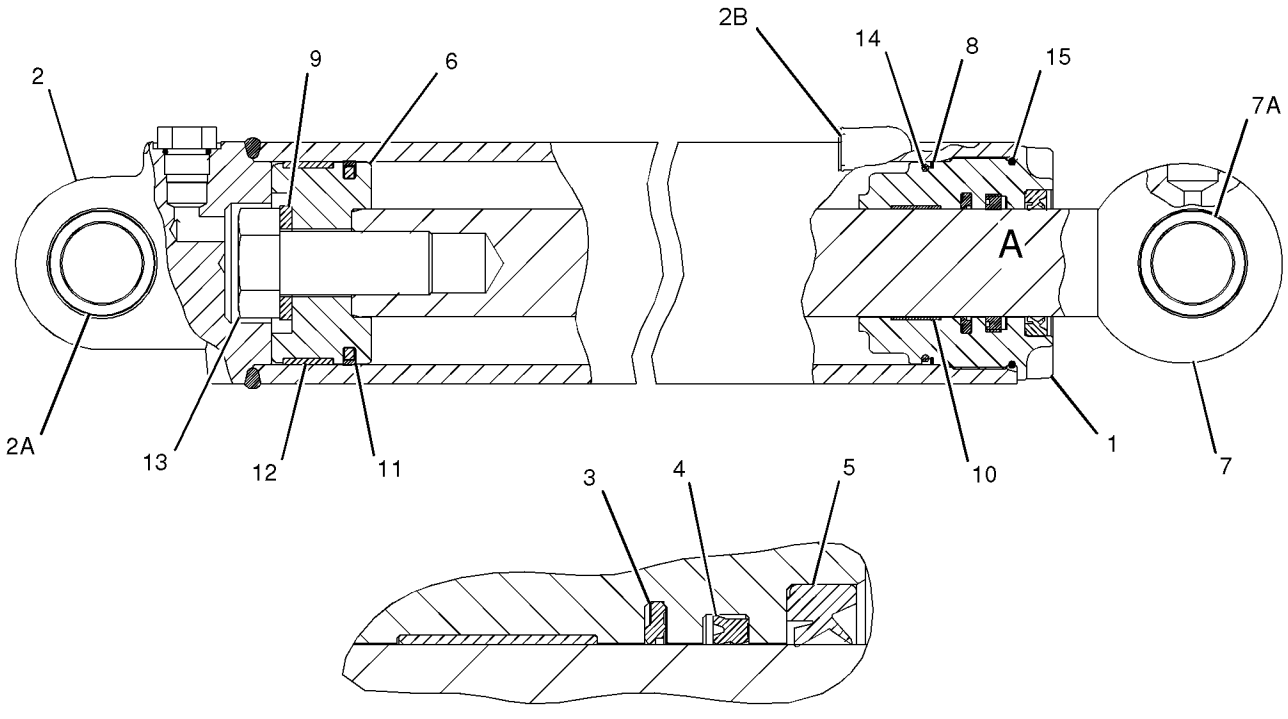

VIEW OF AREA A

GRAPHIC #1 **<END>** g01012767

235-9829 CYLINDER GP-STICK

S/N: FDP18400-UP
114.3MM BORE X 695MM STROKE
PART OF 214-6981 HYDRAULIC AR

SMCS-5458 **i01948833**

NOTE	REF NO	GRAPHIC REF	PART NUMBER	QTY	PART NAME 1 2 3 4 5 6 (PRODUCT LEVEL)	SEE PAGE
	1	1	**206-0502**	1	CYLINDER AS	
	1A	1	**6V-8398**	1	SEAL-O-RING	
	1B	1	**9R-0139**	2	BEARING-SLEEVE	
	2	1	**235-9832**	1	HEAD	
	3	1	**235-9833**	1	PISTON	
	4	1	**235-9835**	1	ROD AS	
	4A	1	**9R-0139**	2	BEARING-SLEEVE	
	5	1	**167-2201**	1	SEAL AS-BUFFER	
	6	1	**167-2312**	1	SEAL-U-CUP	
	7	1	**175-7902**	1	SEAL-O-RING	
	8	1	**225-3281**	1	SEAL-WIPER	
	9	1	**4J-3745**	1	RING-WEAR	
	10	1	**4J-9220**	1	RING-BACKUP	
	11	1	**4M-0189**	1	SEAL-O-RING	
	12	1	**5J-4986**	1	SEAL AS	
	13	1	**5J-7878**	1	NUT-SELF LOCKING	
	14	1	**8T-0785**	1	RING-WEAR	

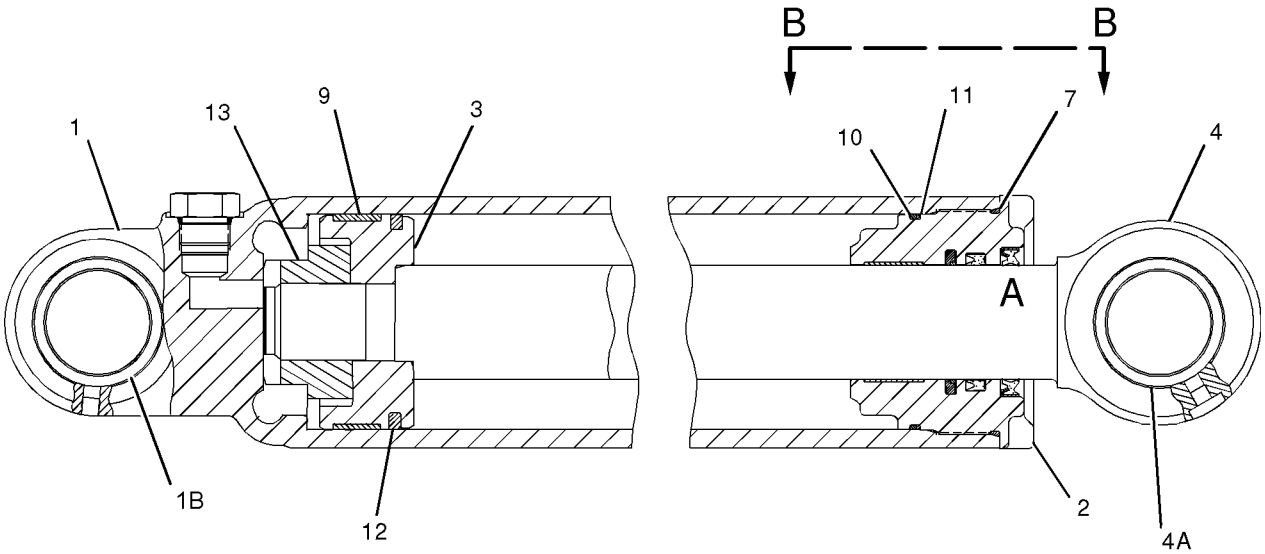

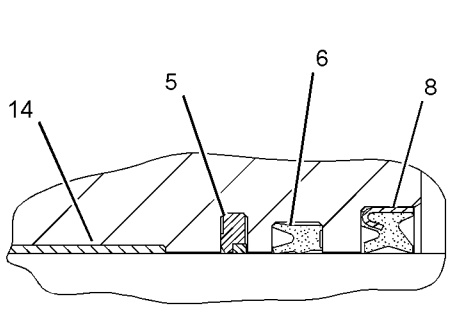

VIEW OF AREA A

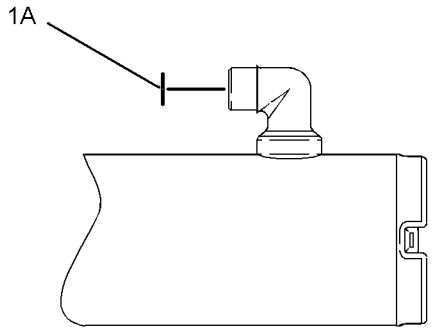

VIEW B-B

GRAPHIC #1 **<END>** g01014398

HYDRAULIC SYSTEM

191-8161 CYLINDER GP-SWING

S/N: FDP18400-UP
101.6MM BORE X 249MM STROKE
PART OF 214-6981 HYDRAULIC AR

SMCS-5105 **i02015260**

NOTE	REF NO	GRAPHIC REF	PART NUMBER	QTY	PART NAME 1 2 3 4 5 6 (PRODUCT LEVEL)	SEE PAGE
	1	1	**191-7738**	1	CYLINDER AS	
	1A	1	**9T-2883**	2	BEARING	
	2	1	**169-6947**	1	NUT (1 1/2X12-THD)	
	3	1	**6J-2797**	1	RING-WEAR	
	4	1	**5J-5402**	1	SEAL AS	
	5	1	**112-1773**	1	PISTON	
	6	1	**9X-4611**	1	SEAL-O-RING	
	7	1	**2K-6830**	1	RING-BACKUP	
	8	1	**201-4826**	1	HEAD	
R	9	1	**125-7894**	1	ROD AS	
	9A	1	**6E-1478**	1	PLUNGER	
	9B	1	**2Y-5821**	1	RING	
	9C	1	**102-3582**	1	WASHER (2.5-MM THK)	
	9D	1	**3N-5739**	1	SPRING	
	9E	1	**9R-9505**	2	BEARING-SLEEVE	
	10	1	**229-9382**	1	SEAL-WIPER	
	11	1	**167-2304**	1	SEAL-U-CUP	
	12	1	**167-2195**	1	SEAL AS-BUFFER	
	13	1	**4T-5613**	1	RING-WEAR	
	14	1	**8H-7521**	1	SEAL-O-RING	

R-REMFG PART MAY BE AVAILABLE

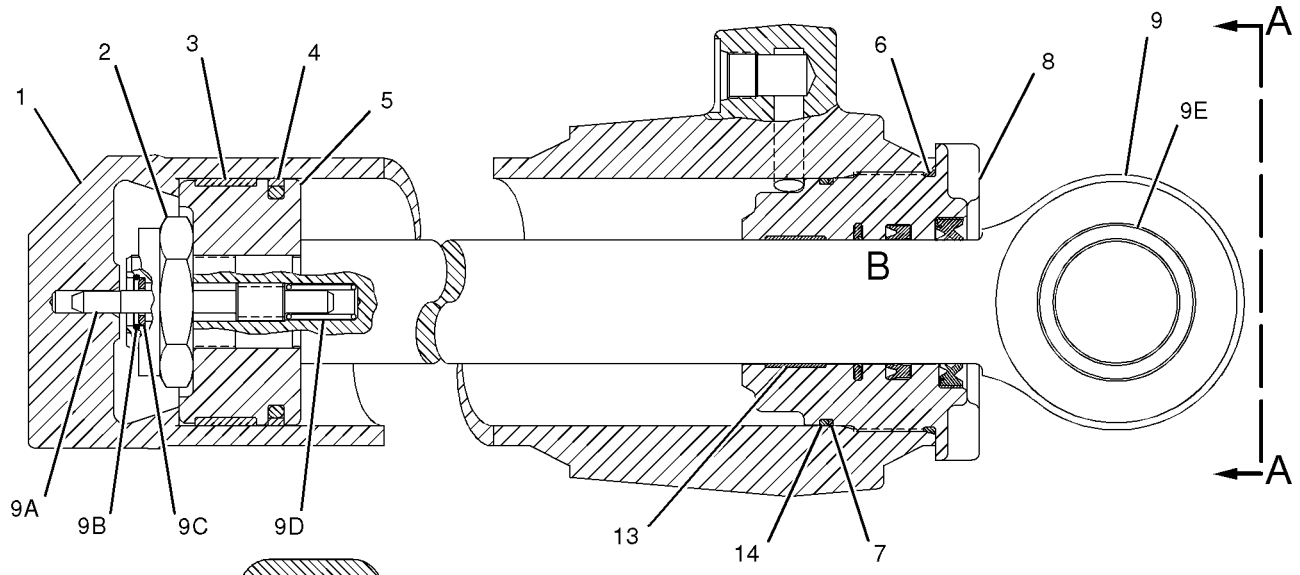

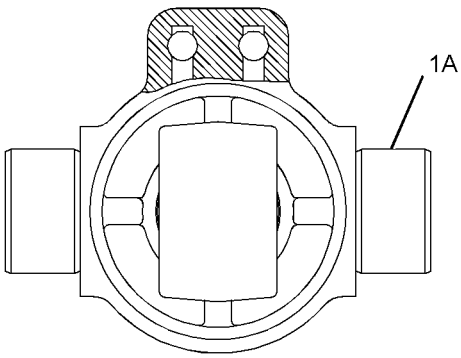

VIEW A-A

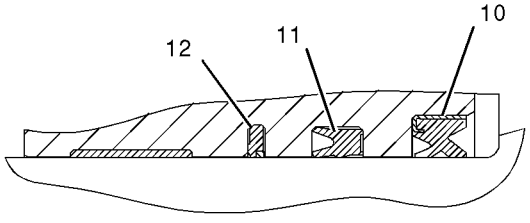

VIEW OF AREA B

GRAPHIC #1 **<END>** g01012218

221-4350 CYLINDER GP-THUMB

S/N: FDP18400-UP
85MM(3.35IN) BORE X 595MM(23.43IN) STROKE
PART OF 224-6236 CYLINDER & LINES GP-THUMB
AN ATTACHMENT

SMCS-5362 **i01923540**

NOTE	REF NO	GRAPHIC REF	PART NUMBER	QTY	PART NAME 1 2 3 4 5 6 (PRODUCT LEVEL)	SEE PAGE
	1	1	**3B-8489**	2	FITTING-GREASE	
	2	1	**9R-0320**	4	BEARING	

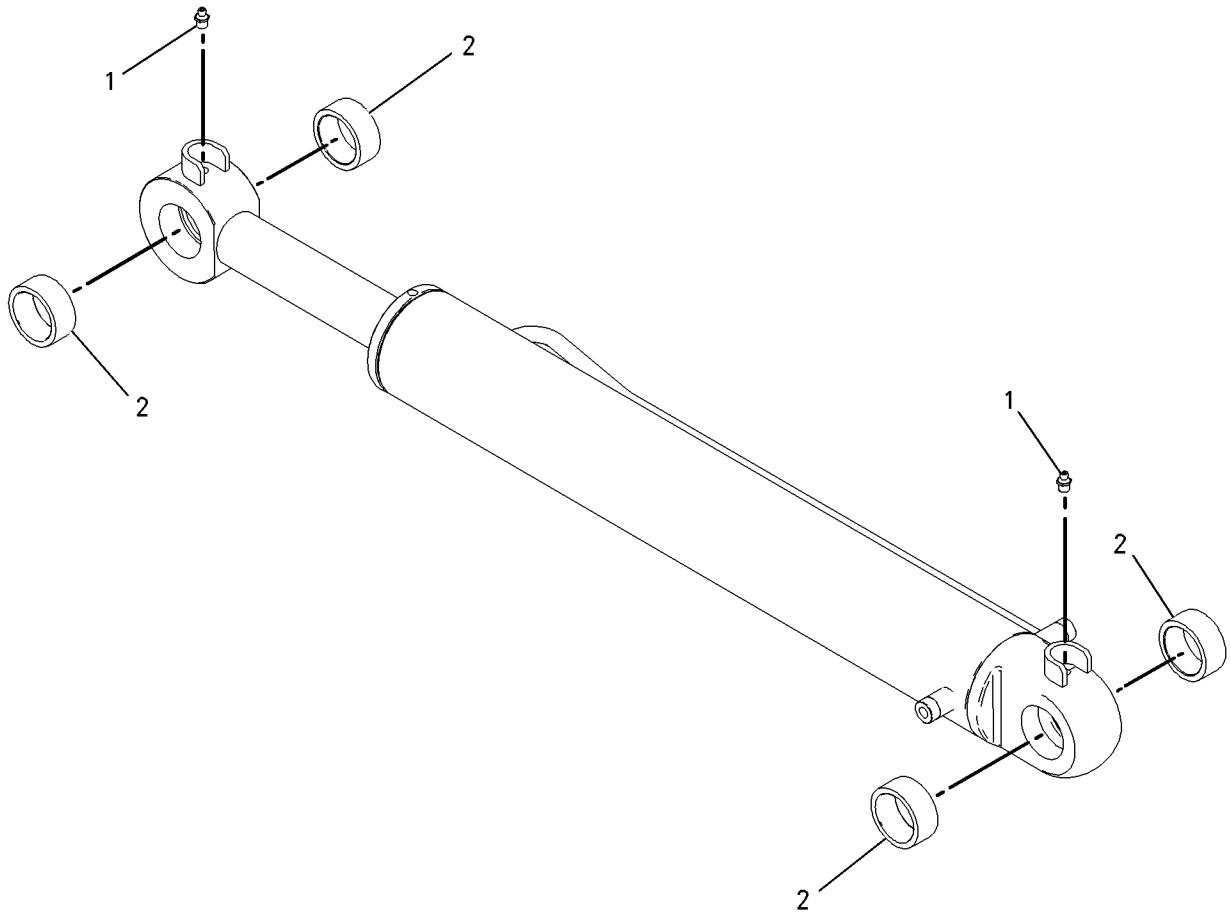

GRAPHIC #1 **<END>** g01003520

HYDRAULIC SYSTEM

200-7128 CYLINDER GP-TILT

S/N: FDP18400-UP
101.6MM BORE X 642.1MM STROKE
PART OF 214-6981 HYDRAULIC AR

SMCS-5104 **i01872295**

NOTE	REF NO	GRAPHIC REF	PART NUMBER	QTY	PART NAME 1 2 3 4 5 6 (PRODUCT LEVEL)	SEE PAGE
	1	1	**112-1773**	1	PISTON	
	2	1	**201-4826**	1	HEAD	
	3	1	**201-4899**	1	CYLINDER AS	
	3A	1	**6V-9746**	1	SEAL-O-RING	
	3B	1	**9T-3165**	2	BEARING	
	3C	1	**201-7659**	2	SPACER	
	4	1	**201-4902**	1	ROD AS	
	4A	1	**9R-0320**	2	BEARING	
	6	1	**167-2195**	1	SEAL AS-BUFFER	
	7	1	**167-2304**	1	SEAL-U-CUP	
	8	1	**2J-3950**	1	LOCKNUT	
	9	1	**2K-6830**	1	RING-BACKUP	
	10	1	**4T-5613**	1	RING-WEAR	
	13	1	**6J-2797**	1	RING-WEAR	
	14	1	**8H-7521**	1	SEAL-O-RING	
	15	1	**9X-4611**	1	SEAL-O-RING	

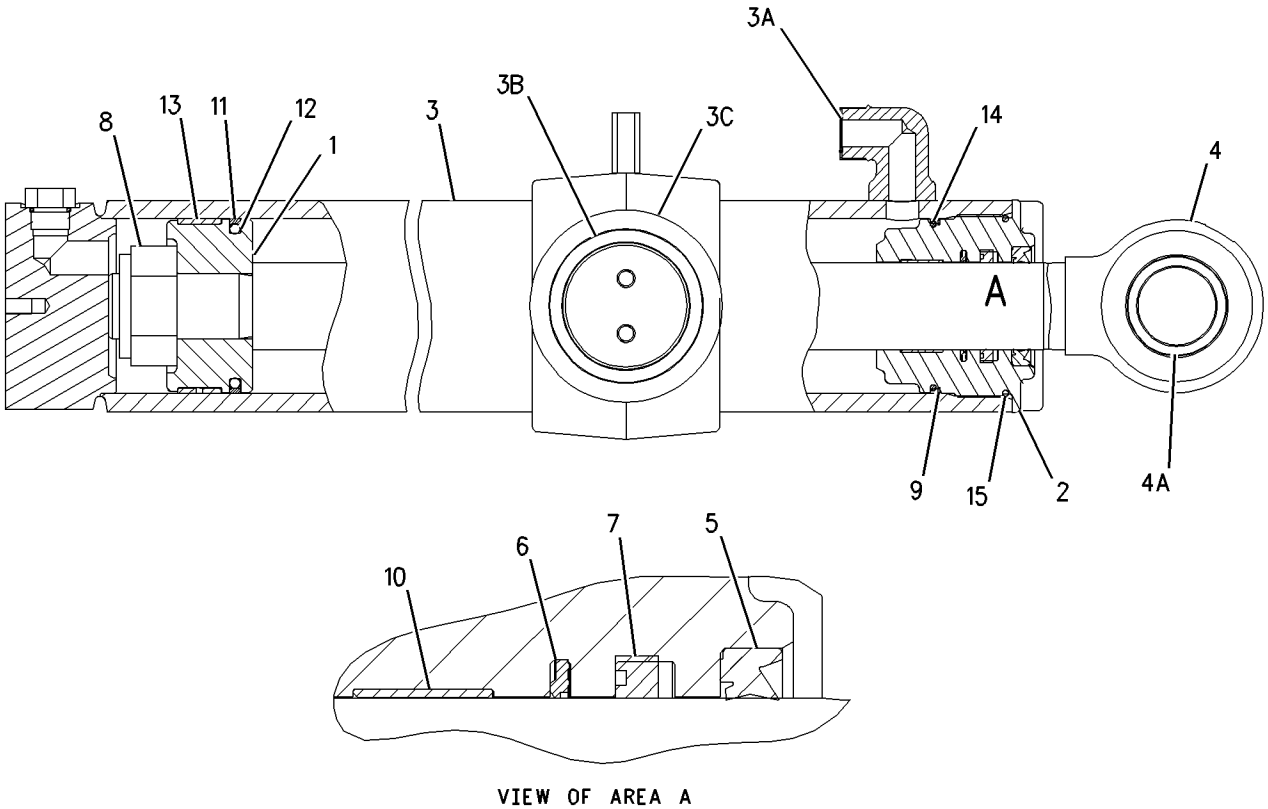

VIEW OF AREA A

GRAPHIC #1 **<END>** g00953676

143-0421 FILTER GP-OIL–HYDRAULIC

S/N: FDP18400-UP
PART OF 202-5810 WIRING GP-CONSOLE
AN ATTACHMENT

SMCS-5068 **i01496654**

NOTE	REF NO	GRAPHIC REF	PART NUMBER	QTY	PART NAME 1 2 3 4 5 6 (PRODUCT LEVEL)	SEE PAGE
	1	1	**134-3014**	1	FILTER AS-HYDRAULIC	

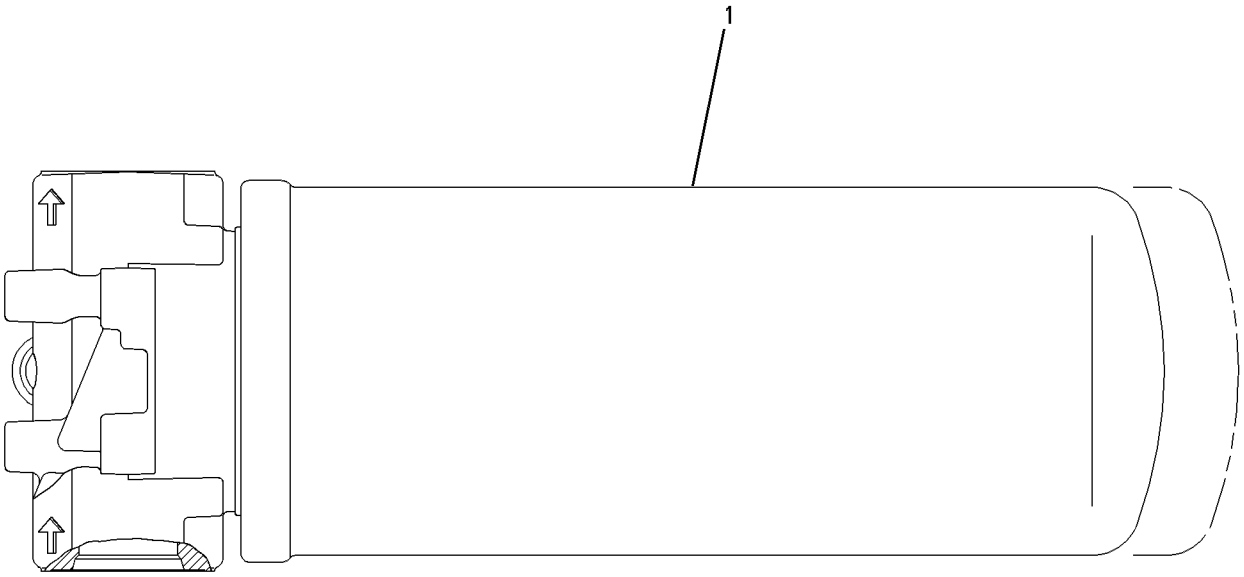

GRAPHIC #1 **<END>** g00639103

HYDRAULIC SYSTEM

133-3361 GUARD GP-STABILIZER CYLINDER

S/N: FDP18400-UP

FOR USE WITH 9R-6007 PAD GP-STABILIZER, 9R-1085 PAD GP-STREET, 116-4942 PAD GP AN ATTACHMENT

SMCS-5468, 7150 **i01556327**

NOTE	REF NO	GRAPHIC REF	PART NUMBER	QTY	PART NAME 1 2 3 4 5 6 (PRODUCT LEVEL)	SEE PAGE
	1	1	**8T-4986**	4	CLAMP-HOSE	
	2	1	**130-1638**	2	PIN	
	3	1	**130-1640**	2	GUARD AS	
	4	1	**188-3953**	2	PAD	
B	5	1	**9R-0109**	12	WASHER (3MM THK)	
	6	1	**201-5812**	2	PLATE AS	
	7	1	**5P-4116**	2	WASHER-HARD (8.8X20.5X2MM THK)	
	8	1	**6V-8144**	4	RING	
M	9	1	**7X-2537**	2	BOLT (M8X1.25X35MM)	

B-USE AS REQUIRED
M-METRIC PART

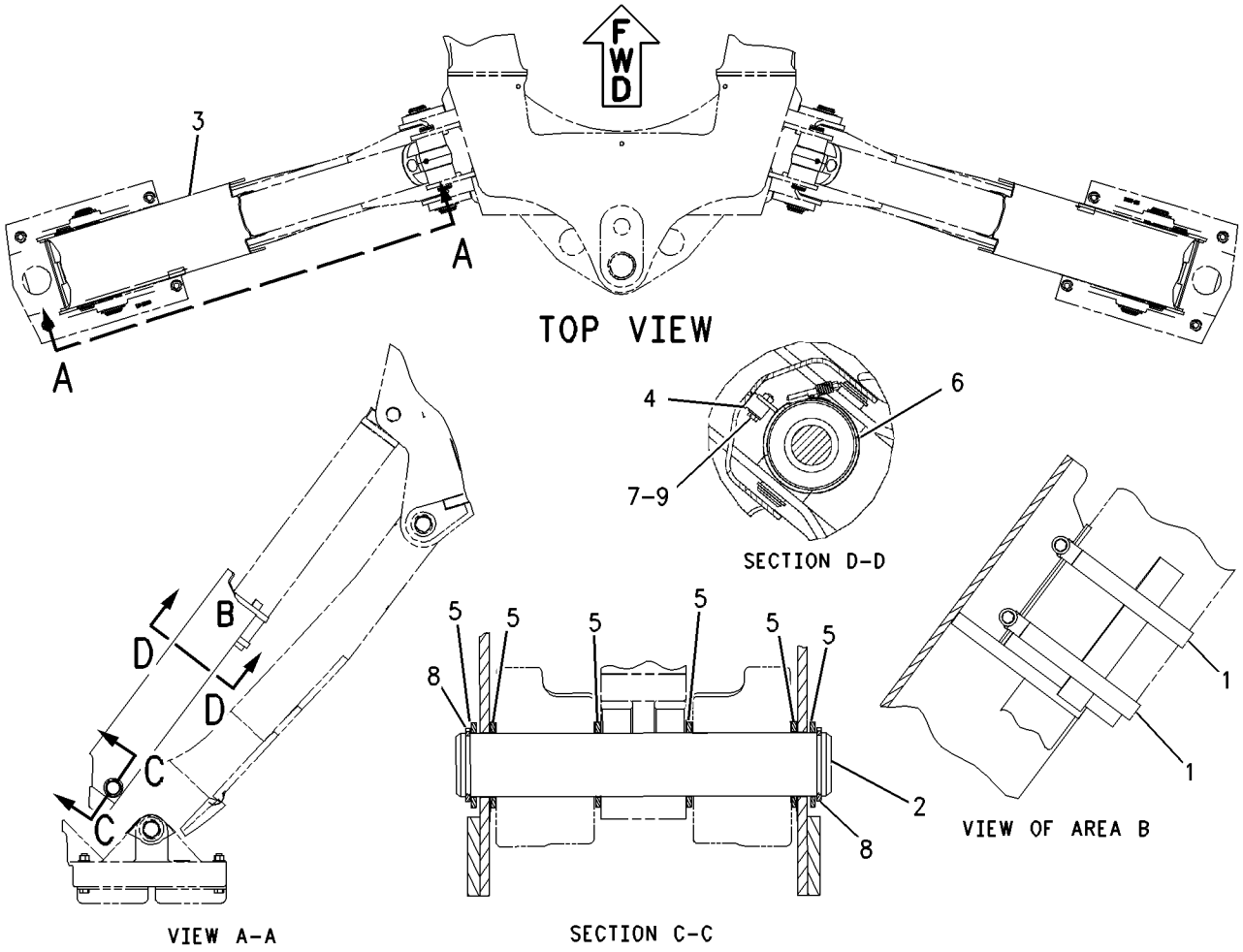

GRAPHIC #1 **<END>** g00808940

135-4744 GUARD GP-STABILIZER CYLINDER

S/N: FDP18400-UP
FOR USE WITH 9R-6007 PAD GP-STABILIZER
AN ATTACHMENT

SMCS-5468, 7150 **i01532898**

NOTE	REF NO	GRAPHIC REF	PART NUMBER	QTY	PART NAME 1 2 3 4 5 6 (PRODUCT LEVEL)	SEE PAGE
	1	1	**8T-4986**	4	CLAMP-HOSE	
	2	1	**130-1640**	2	GUARD AS	
	3	1	**146-1589**	4	LATCH	
	4	1	**146-1590**	4	LATCH	
	5	1	**188-3953**	2	PAD	
	6	1	**201-5810**	2	PLATE	
	7	1	**201-5812**	2	PLATE AS	
	8	1	**5P-4116**	2	WASHER-HARD (8.8X20.5X2MM THK)	
	9	1	**6V-5729**	4	LOCKNUT	
	10	1	**7X-0310**	4	BOLT (7/16-14X2 IN)	
M	11	1	**7X-2537**	2	BOLT (M8X1.25X35MM)	
	12	1	**8T-5360**	8	WASHER (12X22.5X2.5MM THK)	
B	13	1	**9R-0109**	12	WASHER (3MM THK)	

B-USE AS REQUIRED
M-METRIC PART

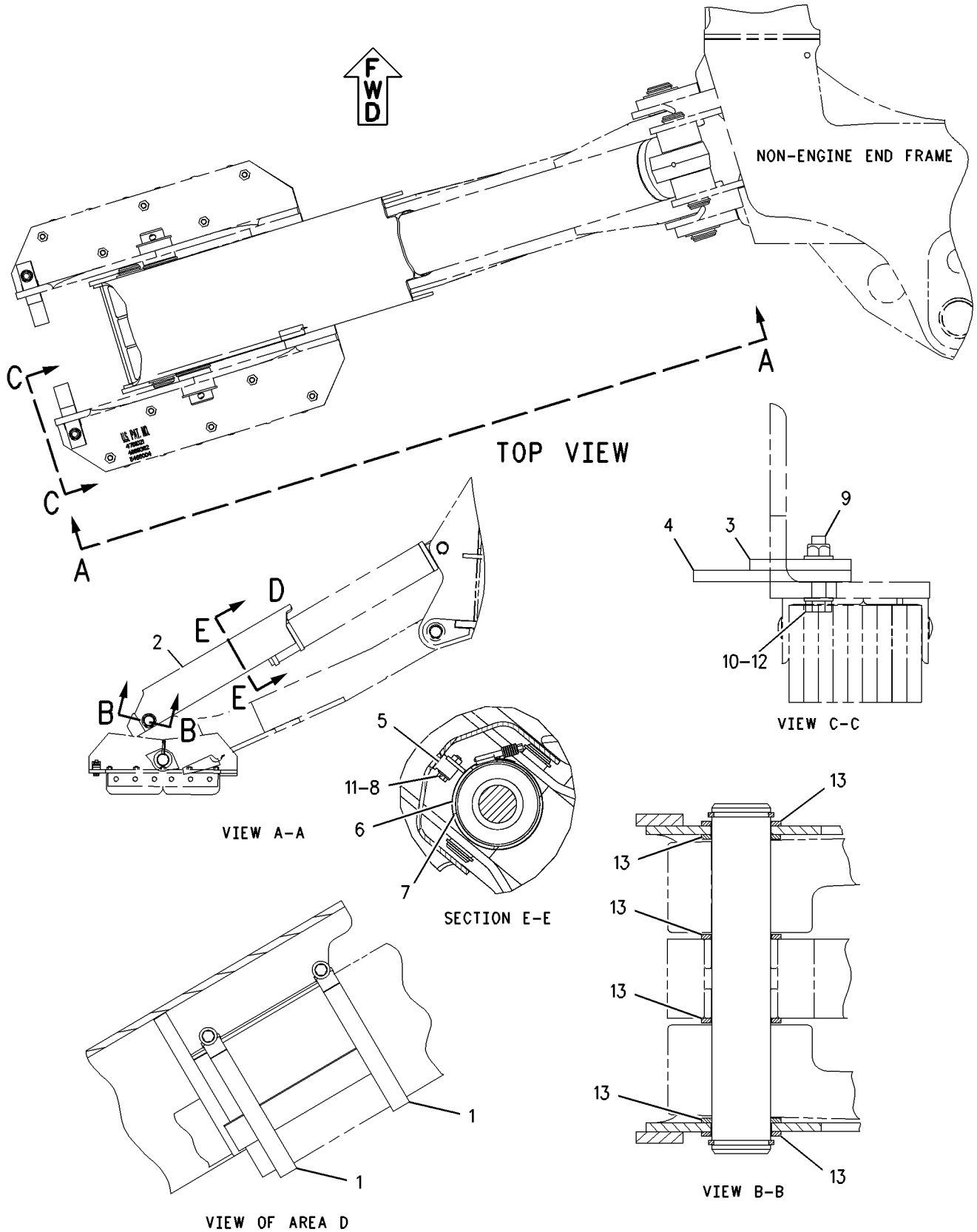

GRAPHIC #1 **<END>** g00795712

HYDRAULIC SYSTEM

186-5336 HYDRAULIC AR

S/N: FDP18400-UP
TWO BANK, SINGLE TILT, LOCKS
AN ATTACHMENT

SMCS-5050 **i01946344**

NOTE	PART NUMBER	QTY	PART NAME 1 2 3 4 5 6 (PRODUCT LEVEL)	SEE PAGE
	164-1363	1	BOOT	
	186-5298	1	FILM-INSTRUCTION (BUCKET CONTROL)	
Y	*183-8559*	1	LINES GP-LOAD CONTROL VALVE	440
Y	*185-1598*	1	MOUNTING GP-BANK VALVE	496
	211-3372	1	SWITCH GP (HYDRAULIC LOCK)	
	130-2758	1	HOUSING-SWITCH	
	130-2759	1	HOUSING-DETENT	
	131-0379	1	SWITCH AS (HYDRAULIC LOCK)	
	3E-3369	1	RECEPTACLE AS (3 PIN)	
Y	**185-5911**	1	VALVE GP-BANK 2	522

Y-SEPARATE ILLUSTRATION

<END>

186-5338 HYDRAULIC AR

S/N: FDP18400-UP
THREE BANK, SINGLE TILT, LOCKS
AN ATTACHMENT

SMCS-5050 **i02019467**

NOTE	PART NUMBER	QTY	PART NAME 1 2 3 4 5 6 (PRODUCT LEVEL)	SEE PAGE
	164-1364	1	BOOT	
Y	*183-3150*	1	CONTROL GP-HYDRAULIC HAND	344
	198-0102	1	FILM (MULTIPURPOSE BUCKET)	
	186-5298	1	FILM-INSTRUCTION (BUCKET CONTROL)	
Y	*183-8559*	1	LINES GP-LOAD CONTROL VALVE	440
Y	*106-5876*	1	LINES GP-LOADER AUXILIARY	447
Y	*185-1598*	1	MOUNTING GP-BANK VALVE	496
	211-3372	1	SWITCH GP (HYDRAULIC LOCKS)	
	130-2758	1	HOUSING-SWITCH	
	130-2759	1	HOUSING-DETENT	
	131-0379	1	SWITCH AS (HYDRAULIC LOCKS)	
	3E-3369	1	RECEPTACLE AS (3-PIN)	
Y	**185-5912**	1	VALVE GP-BANK 3	524

Y-SEPARATE ILLUSTRATION

<END>

HYDRAULIC SYSTEM

202-5805 HYDRAULIC AR

S/N: FDP18400-UP
SINGLE TILT, TWO BANK
AN ATTACHMENT

SMCS-5050 **i01925511**

NOTE	PART NUMBER	QTY	PART NAME 1 2 3 4 5 6 (PRODUCT LEVEL)	SEE PAGE
Y	*195-0255*	1	ACCUMULATOR GP-STABILIZER	332
	164-1363	1	BOOT	
	186-5298	1	FILM-INSTRUCTION (BUCKET CONTROL)	
Y	*163-9371*	1	LINES GP-LIFT CYLINDER	437
Y	*200-4153*	1	LINES GP-LIFT CYLINDER	439
Y	*188-9098*	1	LINES GP-PILOT	454
Y	*202-5723*	1	LINES GP-SWING	487
Y	*202-5725*	1	LINES GP-TILT CYLINDER	491
Y	*185-1598*	1	MOUNTING GP-BANK VALVE	496
Y	**200-7827**	1	VALVE GP-BANK 2	523

Y-SEPARATE ILLUSTRATION

<END>

202-5806 HYDRAULIC AR

S/N: FDP18400-UP
SINGLE TILT, THREE BANK
AN ATTACHMENT

SMCS-5050 **i02019469**

NOTE	PART NUMBER	QTY	PART NAME 1 2 3 4 5 6 (PRODUCT LEVEL)	SEE PAGE
Y	*195-0255*	1	ACCUMULATOR GP-STABILIZER	332
	164-1364	1	BOOT	
Y	*183-3150*	1	CONTROL GP-HYDRAULIC HAND	344
	198-0102	1	FILM (MULTIPURPOSE BUCKET)	
	186-5298	1	FILM-INSTRUCTION (BUCKET CONTROL)	
Y	*163-9371*	1	LINES GP-LIFT CYLINDER	437
Y	*200-4153*	1	LINES GP-LIFT CYLINDER	439
Y	*106-5876*	1	LINES GP-LOADER AUXILIARY	447
Y	*188-9098*	1	LINES GP-PILOT	454
Y	*202-5723*	1	LINES GP-SWING	487
Y	*202-5725*	1	LINES GP-TILT CYLINDER	491
Y	*185-1598*	1	MOUNTING GP-BANK VALVE	496
Y	**200-7828**	1	VALVE GP-BANK 3	525

Y-SEPARATE ILLUSTRATION

<END>

HYDRAULIC SYSTEM

210-8524 HYDRAULIC AR

S/N: FDP18400-UP
AN ATTACHMENT

SMCS-5050 **i02015872**

NOTE	PART NUMBER	QTY	PART NAME 1 2 3 4 5 6 (PRODUCT LEVEL)	SEE PAGE
Y	*184-4483*	1	CONTROL GP-HYDRAULIC PEDAL	345
Y	*210-8532*	1	CONVERSION GP-AUXILIARY LINES	355
Y	*230-9105*	1	CONVERSION GP-CONTROL VALVE	366
Y	*192-4018*	1	FOOTREST GP	794
M	**5C-2890**	2	NUT (M6X1-THD)	
	236-4992	1	PLATE AS	
	236-4993	1	PLATE AS	
M	**9X-2042**	4	SCREW-TRUSS HEAD (M6X1X12-MM)	
	8T-4205	2	WASHER-HARD (7.2X14.5X2-MM THK)	

M-METRIC PART
Y-SEPARATE ILLUSTRATION

<END>

210-8525 HYDRAULIC AR

S/N: FDP18400-UP
FIELD INSTALLATION

SMCS-5050 **i01933296**

NOTE	PART NUMBER	QTY	PART NAME 1 2 3 4 5 6 (PRODUCT LEVEL)	SEE PAGE
Y	*210-8533*	1	CONVERSION GP-AUXILIARY LINES	358

Y-SEPARATE ILLUSTRATION

<END>

210-8528 HYDRAULIC AR

S/N: FDP18400-UP
FIELD INSTALLATION

SMCS-5050 **i01933298**

NOTE	PART NUMBER	QTY	PART NAME 1 2 3 4 5 6 (PRODUCT LEVEL)	SEE PAGE
Y	*210-8536*	1	CONVERSION GP-AUXILIARY LINES	362

Y-SEPARATE ILLUSTRATION

<END>

HYDRAULIC SYSTEM

214-6981 HYDRAULIC AR

S/N: FDP18400-UP
PART OF 214-6886 COMMON AR

SMCS-5050 **i02010185**

NOTE	PART NUMBER	QTY	PART NAME 1 2 3 4 5 6 (PRODUCT LEVEL)	SEE PAGE
Y	*195-0255*	1	ACCUMULATOR GP-STABILIZER	332
Y	*202-5949*	1	CONNECTOR GP-VALVE	333
Y	**206-3630**	1	CYLINDER GP-BOOM	374
Y	**230-0980**	2	CYLINDER GP-LIFT	379
Y	**206-0520**	1	CYLINDER GP-STABILIZER (LH)	381
Y	**206-0522**	1	CYLINDER GP-STABILIZER (RH)	382
Y	**235-9829**	1	CYLINDER GP-STICK	383
Y	**191-8161**	2	CYLINDER GP-SWING	384
Y	**200-7128**	1	CYLINDER GP-TILT	386
	210-6243	1	FILTER GP-OIL (HYDRAULIC)	
	126-1817	1	FILTER AS-OIL (CLEANOUT, HIGH EFFICIENCY)	
			—OR—	
	134-3014	1	FILTER AS-OIL (HYDRAULIC) (FIRE RESISTANT)	
Y	*202-5928*	1	LINES GP-PILOT (STABILIZER)	460
Y	*235-4549*	1	LINES GP-PUMP	467
Y	*235-4788*	1	LINES GP-RETURN	475
Y	*202-5723*	1	LINES GP-SWING	487
Y	*185-3165*	1	MOUNTING GP-BANK VALVE	497
Y	*112-1826*	1	MOUNTING GP-HYDRAULIC PUMP	502
Y	**244-2228**	1	PUMP GP-PISTON	509
Y	*234-6926*	1	TANK GP-HYDRAULIC	515

Y-SEPARATE ILLUSTRATION

<END>

238-6698 HYDRAULIC AR

S/N: FDP18400-UP
SINGLE TILT, TWO BANK
AN ATTACHMENT

SMCS-5050 **i01978215**

NOTE	PART NUMBER	QTY	PART NAME 1 2 3 4 5 6 (PRODUCT LEVEL)	SEE PAGE
	164-1363	1	BOOT	
	186-5298	1	FILM-INSTRUCTION (BUCKET CONTROL)	
Y	*163-9371*	1	LINES GP-LIFT CYLINDER	437
Y	*188-9097*	1	LINES GP-PILOT	453
Y	*238-8217*	1	LINES GP-SWING	489
Y	*202-5725*	1	LINES GP-TILT CYLINDER	491
Y	*185-1598*	1	MOUNTING GP-BANK VALVE	496
Y	**200-7827**	1	VALVE GP-BANK 2	523

Y-SEPARATE ILLUSTRATION

<END>

186-4958 INSTALLATION AR-BANK VALVE–FOUR

S/N: FDP18400-UP
PILOT ACTUATED, CENTER PIVOT
AN ATTACHMENT

SMCS-5051, 5057, 5063, 7265 **i01945954**

NOTE	PART NUMBER	QTY	PART NAME 1 2 3 4 5 6 (PRODUCT LEVEL)	SEE PAGE
Y	*224-9748*	1	FLOORPLATE GP	318
Y	*191-5462*	1	LINES GP-PUMP	465
Y	**201-0665**	1	VALVE GP-BANK 4	526
Y-SEPARATE ILLUSTRATION				

<END>

186-4959 INSTALLATION AR-BANK VALVE–FIVE

S/N: FDP18400-UP
INCLUDES EXTENDABLE STICK, PILOT ACTUATED, CENTER PIVOT
AN ATTACHMENT

SMCS-5051, 5057, 5063, 7265 **i01777696**

NOTE	PART NUMBER	QTY	PART NAME 1 2 3 4 5 6 (PRODUCT LEVEL)	SEE PAGE
Y	*184-4483*	1	CONTROL GP-HYDRAULIC PEDAL	345
Y	*224-9749*	1	FLOORPLATE GP	319
Y	*191-5462*	1	LINES GP-PUMP	465
Y	*192-4018*	1	FOOTREST GP	794
Y	**201-0666**	1	VALVE GP-BANK 5	527
	148-8408	2	PLUG AS	
			(EACH INCLUDES)	
	3D-2824	1	SEAL-O-RING	
	9S-4183	1	PLUG	
Y-SEPARATE ILLUSTRATION				

<END>

186-4960 INSTALLATION AR-BANK VALVE–SIX

S/N: FDP18400-UP
INCLUDES AUXILIARY AND EXTENDABLE STICK, PILOT ACUATED, CENTER PIVOT
AN ATTACHMENT

SMCS-5051, 5057, 5063, 7265 **i01930776**

NOTE	PART NUMBER	QTY	PART NAME 1 2 3 4 5 6 (PRODUCT LEVEL)	SEE PAGE
	148-8408	2	PLUG AS	
			(EACH INCLUDES)	
	3D-2824	1	SEAL-O-RING	
	9S-4183	1	PLUG	
Y	*184-4483*	1	CONTROL GP-HYDRAULIC PEDAL	345
Y	*184-4484*	1	CONTROL GP-HYDRAULIC PEDAL	347
Y	**201-0667**	1	VALVE GP-BANK 6	528
Y	*216-4274*	1	LINES GP-PUMP	466
Y	*224-9749*	1	FLOORPLATE GP	319
Y-SEPARATE ILLUSTRATION				

<END>

HYDRAULIC SYSTEM

202-5721 KICKOUT & POSITIONER GP

S/N: FDP18400-UP
SINGLE TILT
PART OF 202-5747 LOADER AR

SMCS-5109, 5112 **i01946309**

NOTE	REF NO	GRAPHIC REF	PART NUMBER	QTY	PART NAME 1 2 3 4 5 6 (PRODUCT LEVEL)	SEE PAGE
	1	1	**1B-0676**	1	PIN	
	2	1	**5P-0372**	1	LOCK PIN	
	3	1	**9X-2334**	1	FILM (BUCKET INDICATOR)	
	4	1	**8C-6955**	1	END-YOKE ROD	
	5	1	**8T-0706**	1	RING-RETAINING	
M	6	1	**8T-4133**	2	NUT (M10X1.5 THD)	
	7	1	**8T-5063**	1	ROD END	
	8	1	**9R-2806**	2	PIN	
	9	1	**9R-2807**	4	CLIP	
	10	1	**9R-3255**	1	LEVER	
	11	1	**9R-5301**	2	PIN-COTTER	
	12	1	**9R-7797**	1	PLATE	
	13	1	**9R-9146**	1	PIPE AS	
	14	1	**106-7301**	1	ROD AS	
M		1	**2Y-5829**	1	NUT (M10X1.5 THD)	
	15	1	**112-5494**	1	LEVER AS	
		1	**7Y-0336**	1	SPACER (24.5X44X24MM THK)	
		1	**9R-2614**	1	BEARING	
	16	1	**128-7902**	1	SPACER (60.25X75X6MM THK)	
B	17	1	**128-7903**	3	SPACER (61X114.3X3MM THK)	
B	18	1	**128-7905**	3	SPACER (61X114.3X1MM THK)	
	19	1	**130-5774**	1	LINK AS	
	20	1	**130-5891**	1	LEVER AS	
		1	**7Y-0336**	1	SPACER (24.5X44X24MM THK)	
		1	**9R-2614**	1	BEARING	
		1	**9R-3135**	1	PIN	
	21	1	**130-7952**	1	PLATE	
	22	1	**134-5930**	1	SPACER (19X41X12.7MM THK)	
	23	1	**135-9420**	1	PIVOT	
	24	1	**140-6009**	1	LEVER AS	
	25	1	**141-6343**	1	SPRING	
	26	1	**1B-8736**	1	KEY-WOODRUFF	
	27	1	**3B-8489**	2	FITTING-GREASE	
	28	1	**8T-4123**	4	WASHER-PLATED (22X35X3.5MM THK)	
M	29	1	**8T-4182**	1	BOLT (M10X1.5X45MM)	

B-USE AS REQUIRED
M-METRIC PART

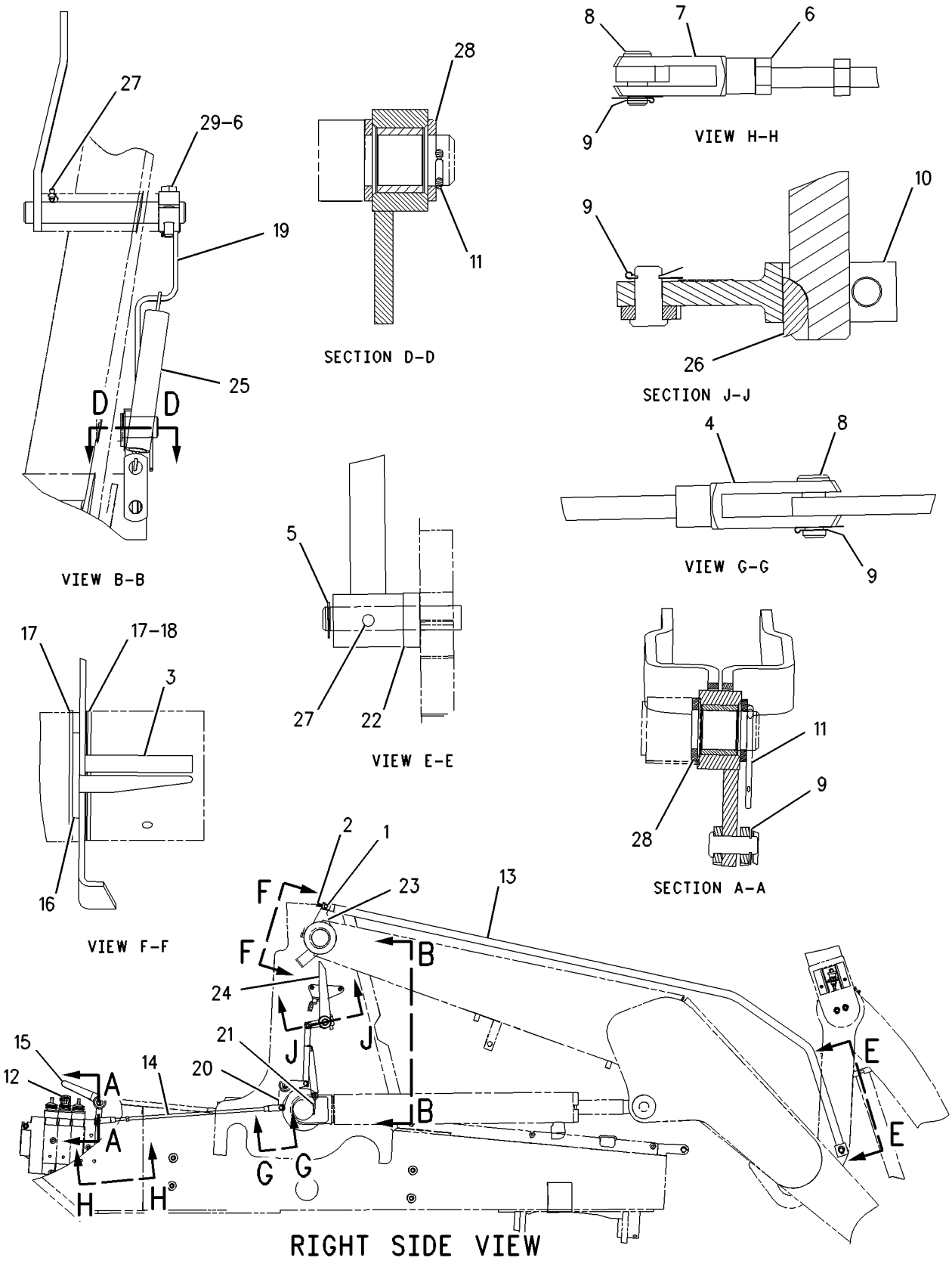

GRAPHIC #1 **<END>** g00848234

HYDRAULIC SYSTEM

200-6284 KIT-RIDE CONTROL

S/N: FDP18400-UP
FIELD INSTALLATION, STANDARD SHIFT ONLY
AN ATTACHMENT

SMCS-5004 **i02014245**

NOTE	PART NUMBER	QTY	PART NAME 1 2 3 4 5 6 (PRODUCT LEVEL)	SEE PAGE
	173-4514	2	FILM (RIDE CONTROL)	
			(ON HOOD IN PLACE OF TURBO DECAL)	
Y	*195-1284*	1	LINES GP-RIDE CONTROL	476
Y	*186-0311*	1	WIRING GP-RIDE CONTROL	187

Y-SEPARATE ILLUSTRATION

<END>

236-5458 KIT-RIDE CONTROL

S/N: FDP18400-UP
FOR USE WITH STANDARD SHIFT
FIELD INSTALLATION

SMCS-5004 **i01917538**

NOTE	PART NUMBER	QTY	PART NAME 1 2 3 4 5 6 (PRODUCT LEVEL)	SEE PAGE
	173-4514	2	FILM (RIDE CONTROL)	
			ON CAB DOOR OR ON HOOD IN PLACE OF TURBO DECAL	
Y	*195-1284*	1	LINES GP-RIDE CONTROL	476
Y	*186-0311*	1	WIRING GP-RIDE CONTROL	187

Y-SEPARATE ILLUSTRATION

<END>

236-5459 KIT-RIDE CONTROL

S/N: FDP18400-UP
FOR USE WITH AUTOSHIFT
AN ATTACHMENT

SMCS-5004 **i01917543**

NOTE	PART NUMBER	QTY	PART NAME 1 2 3 4 5 6 (PRODUCT LEVEL)	SEE PAGE
Y	*195-1284*	1	LINES GP-RIDE CONTROL	476
Y	*186-0312*	1	WIRING GP-RIDE CONTROL	189
	173-4514	2	FILM (RIDE CONTROL)	
			ON CAB DOOR OR ON HOOD IN PLACE OF TURBO DECAL	

Y-SEPARATE ILLUSTRATION

<END>

HYDRAULIC SYSTEM

171-2427 LINES GP-BACKHOE AUXILIARY

S/N: FDP18400-UP
PART OF 184-7916, 184-7917 BACKHOE AR-STANDARD STICK
AN ATTACHMENT

SMCS-5057 **i01602914**

NOTE	REF NO	GRAPHIC REF	PART NUMBER	QTY	PART NAME 1 2 3 4 5 6 (PRODUCT LEVEL)	SEE PAGE
	1	1	**2M-6102**	2	PIPE	
	2	1	**9R-9253**	1	PLATE	
I	3	1	**169-2935**	2	HOSE AS	
	4	1	**177-0856**	1	TUBE AS	
	5	1	**177-2171**	1	TUBE AS	
	6	1	*148-8328*	2	CONNECTOR GP	
					(EACH INCLUDES)	
		1	**3D-2824**	1	SEAL-O-RING	
		1	**6V-8398**	1	SEAL-O-RING	
		1	**6V-8633**	1	CONNECTOR	
	7	1	**6V-8398**	4	SEAL-O-RING	
	8	1	**6V-9830**	2	CAP AS	
	9	1	**8T-4121**	4	WASHER-HARD (11X21X2.5MM THK)	
M	10	1	**8T-4136**	2	BOLT (M10X1.5X25MM)	
M	11	1	**8T-4185**	2	BOLT (M10X1.5X50MM)	
	12	1	**9R-1004**	2	CLIP (TAB)	
	13	1	**9R-1005**	2	CLIP (SLOT)	

I-SEE HOSE FABRICATION GUIDE
M-METRIC PART

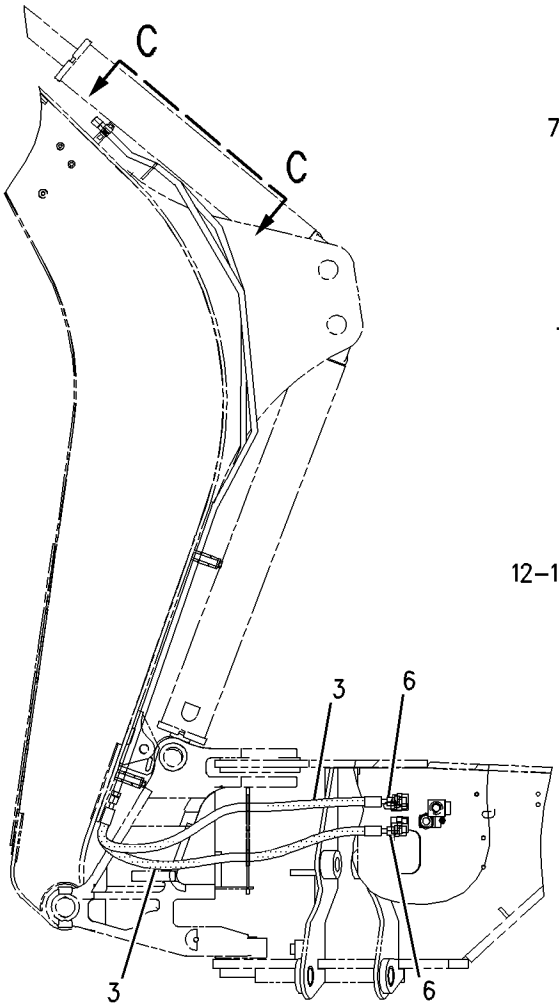

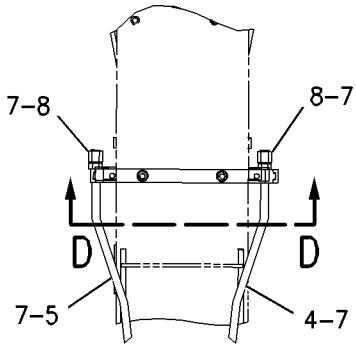

VIEW C-C

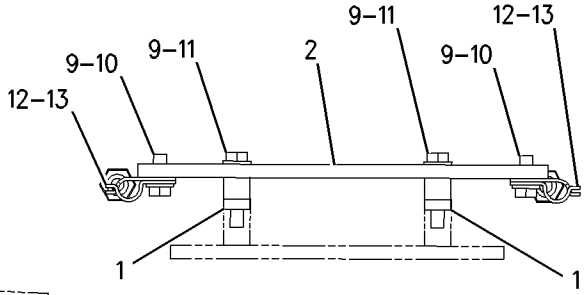

SECTION D-D

GRAPHIC #1 **<END>** g00702307

HYDRAULIC SYSTEM

171-2428 LINES GP-BACKHOE AUXILIARY

S/N: FDP18400-UP
PART OF 184-7915 BACKHOE AR-STANDARD STICK
AN ATTACHMENT

SMCS-5057 **i02015130**

NOTE	REF NO	GRAPHIC REF	PART NUMBER	QTY	PART NAME 1 2 3 4 5 6 (PRODUCT LEVEL)	SEE PAGE
	1	1	**101-0863**	2	FILM-INSTRUCTION (RETURN FLOW)	
I	2	1	**106-0409**	1	HOSE AS	
	3	1	**107-6708**	1	BRACKET	
	4	1	**109-1260**	1	BRACKET	
	5	1	**110-7709**	1	TUBE AS	
	6	1	**110-7710**	1	TUBE AS	
	7	1	**123-7637**	2	CAP	
	8	1	**124-2528**	1	SPACER (11X20X10-MM THK)	
	9	1	*148-8450*	1	TEE AS	
		1	**3E-7443**	1	TEE-UNION	
		1	**5K-9090**	1	SEAL-O-RING	
		1	**6V-9746**	2	SEAL-O-RING	
I	10	1	**168-8493**	1	HOSE AS	
I	11	1	**172-2252**	1	HOSE AS	
C	12	1	**205-9014**	1	TUBE AS	
C	13	1	**205-8845**	1	HOSE AS	
	14	1	*148-8327*	1	CONNECTOR AS	
		1	**3D-2824**	1	SEAL-O-RING	
		1	**6V-8637**	1	CONNECTOR	
		1	**6V-9746**	1	SEAL-O-RING	
	15	1	*148-8352*	2	ELBOW GP	
					(EACH INCLUDES)	
		1	**5K-9090**	1	SEAL-O-RING	
		1	**6V-9854**	1	ELBOW (SWIVEL)	
	16	1	*148-8386*	1	ELBOW AS	
		1	**3E-7426**	1	ELBOW	
		1	**5K-9090**	1	SEAL-O-RING	
		1	**6V-8400**	1	SEAL-O-RING	
	17	1	*148-8387*	1	ELBOW GP	
		1	**6V-8400**	1	SEAL-O-RING	
		1	**6V-9855**	1	ELBOW	
	18	1	*148-8408*	1	PLUG AS	
		1	**3D-2824**	1	SEAL-O-RING	
		1	**9S-4183**	1	PLUG	
	19	1	*150-3052*	1	CONNECTOR AS	
		1	**5K-9090**	1	SEAL-O-RING	
		1	**7M-8485**	1	SEAL-O-RING	
		1	**107-6709**	1	CONNECTOR	
	20	1	*150-3053*	1	CONNECTOR AS	
		1	**6V-9746**	1	SEAL-O-RING	
		1	**7M-8485**	1	SEAL-O-RING	
		1	**108-3872**	1	CONNECTOR	
	21	1	**2P-1293**	2	LOCKNUT (1 3/16-12-THD)	
	22	1	**5K-9090**	2	SEAL-O-RING	
	23	1	**5P-7466**	1	CLIP (SLOT)	
	24	1	**5P-7467**	1	CLIP (TAB)	
	25	1	**5P-7468**	1	CLIP (SLOT)	
	26	1	**5P-7469**	1	CLIP (TAB)	
	27	1	**5P-8112**	1	GROMMET	
	28	1	**5P-8444**	1	GROMMET	
	29	1	**6V-9172**	2	NUT (1 7/16-12-THD)	
	30	1	**6V-9746**	1	SEAL-O-RING	
	31	1	**6V-9832**	1	CAP AS	
	32	1	**7S-3916**	1	CLIP (TAB)	
	33	1	**7S-3919**	1	CLIP (SLOT)	

171-2428 LINES GP-BACKHOE AUXILIARY *(contd.)* i02015130

NOTE	REF NO	GRAPHIC REF	PART NUMBER	QTY	PART NAME 1 2 3 4 5 6 (PRODUCT LEVEL)	SEE PAGE
	34	1	**8S-0023**	1	CLIP (SLOT)	
	35	1	**8S-0024**	1	CLIP (TAB)	
	36	1	**8T-1889**	1	CLIP (SLOT)	
	37	1	**8T-1890**	1	CLIP (TAB)	
	38	1	**8T-4121**	5	WASHER-HARD (11X21X2.5-MM THK)	
CM	39	1	**8T-4136**	5	BOLT (M10X1.5X25-MM)	
M	40	1	**8T-4139**	2	BOLT (M12X1.75X30-MM)	
M	41	1	**8T-4192**	2	BOLT (M12X1.75X25-MM)	
	42	1	**8T-4223**	4	WASHER-HARD (13.5X25.5X3-MM THK)	
C	43	1	**241-8448**	4	FILM-WARNING (HYDRAULIC PRESSURE)	

C-CHANGE FROM PREVIOUS TYPE
I-REFER TO HYDRAULIC INFORMATION SYSTEM
M-METRIC PART

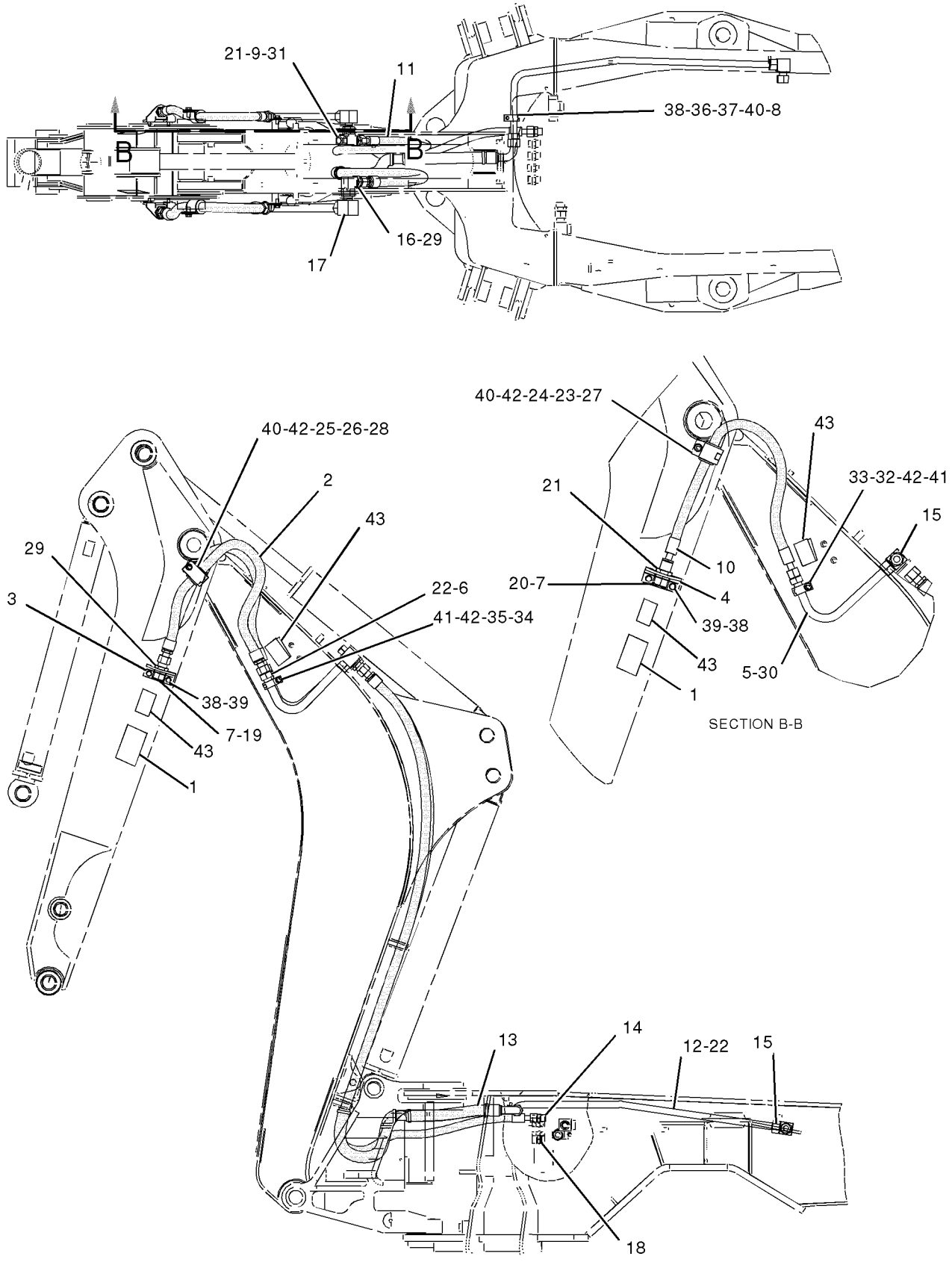

GRAPHIC #1

<END>

g01026421

HYDRAULIC SYSTEM

171-2429 LINES GP-BACKHOE AUXILIARY

S/N: FDP18400-UP
HYDRAULIC
PART OF 184-7927 BACKHOE AR-EXTENDABLE STICK
AN ATTACHMENT

SMCS-5057 **i02017599**

NOTE	REF NO	GRAPHIC REF	PART NUMBER	QTY	PART NAME 1 2 3 4 5 6 (PRODUCT LEVEL)	SEE PAGE
	1	1	**5P-0599**	1	CLAMP	
	2	1	**9R-5948**	1	BLOCK	
	3	2	**9R-9253**	1	PLATE	
	4	1,2	**101-0862**	2	PLATE-WARNING (E-STICK)	
	5	1,2	**101-0863**	2	FILM-INSTRUCTION (RETURN FLOW)	
I	6	1	**106-0409**	1	HOSE AS	
	7	1	**107-6708**	1	BRACKET	
	8	2	**109-1260**	1	BRACKET	
	9	2	**110-7709**	1	TUBE AS	
	10	2	**110-7710**	1	TUBE AS	
	11	2	**110-7713**	1	TUBE AS	
	12	1,2	**123-7637**	2	CAP	
	13	1	**124-2528**	1	SPACER (11X20X10-MM THK)	
	14	2	*148-8450*	1	TEE AS	
		2	**3E-7443**	1	TEE-UNION	
		2	**5K-9090**	1	SEAL-O-RING	
		2	**6V-9746**	2	SEAL-O-RING	
I	15	2	**160-6026**	1	HOSE AS	
	16	1,2	**162-2356**	2	TUBE AS	
I	17	1,2	**167-3896**	2	HOSE AS	
I	18	2	**168-8493**	1	HOSE AS	
I	19	1	**169-2935**	1	HOSE AS	
I	20	2	**169-2983**	1	HOSE AS	
I	21	2	**172-2252**	1	HOSE AS	
CI	22	2	**168-8497**	1	HOSE AS	
	23	2	**177-0856**	1	TUBE AS	
C	24	1	**205-9014**	1	TUBE AS	
	25	2	**187-4333**	1	TUBE AS	
	26	2	**187-4344**	1	TUBE AS	
C	27	1	**205-8845**	1	HOSE AS	
CI	28	1	**168-8644**	1	HOSE AS	
	29	1	*148-8327*	1	CONNECTOR AS	
		1	**3D-2824**	1	SEAL-O-RING	
		1	**6V-8637**	1	CONNECTOR	
		1	**6V-9746**	1	SEAL-O-RING	
	30	1	*148-8328*	1	CONNECTOR GP	
		1	**3D-2824**	1	SEAL-O-RING	
		1	**6V-8398**	1	SEAL-O-RING	
		1	**6V-8633**	1	CONNECTOR	
	31	2	*148-8347*	1	ELBOW GP	
		2	**3D-2824**	1	SEAL-O-RING	
		2	**6V-9007**	1	ELBOW	
		2	**6V-9746**	1	SEAL-O-RING	
	32	1,2	*148-8352*	2	ELBOW GP	
					(EACH INCLUDES)	
		1,2	**5K-9090**	1	SEAL-O-RING	
		1,2	**6V-9854**	1	ELBOW (SWIVEL)	
	33	2	*148-8386*	1	ELBOW AS	
		2	**3E-7426**	1	ELBOW	
		2	**5K-9090**	1	SEAL-O-RING	
		2	**6V-8400**	1	SEAL-O-RING	
	34	2	*148-8387*	1	ELBOW GP	
		2	**6V-8400**	1	SEAL-O-RING	
		2	**6V-9855**	1	ELBOW	

171-2429 LINES GP-BACKHOE AUXILIARY *(contd.)* i02017599

NOTE	REF NO	GRAPHIC REF	PART NUMBER	QTY	PART NAME 1 2 3 4 5 6 (PRODUCT LEVEL)	SEE PAGE
	35	2	*148-8392*	1	ELBOW GP	
		2	**6V-9746**	1	SEAL-O-RING	
		2	**6V-9853**	1	ELBOW	
	36	1	*150-3052*	1	CONNECTOR AS	
		1	**5K-9090**	1	SEAL-O-RING	
		1	**7M-8485**	1	SEAL-O-RING	
		1	**107-6709**	1	CONNECTOR	
	37	2	*150-3053*	1	CONNECTOR AS	
		2	**6V-9746**	1	SEAL-O-RING	
		2	**7M-8485**	1	SEAL-O-RING	
		2	**108-3872**	1	CONNECTOR	
	38	2	**2P-1293**	3	LOCKNUT (1 3/16-12-THD)	
	39	1,2	**5K-9090**	2	SEAL-O-RING	
	40	1,2	**5P-7464**	5	CLIP (SLOT)	
	41	1,2	**5P-7465**	5	CLIP (TAB)	
	42	2	**5P-7466**	3	CLIP (SLOT)	
	43	2	**5P-7467**	3	CLIP (TAB)	
	44	1,2	**5P-7468**	2	CLIP (SLOT)	
	45	1,2	**5P-7469**	2	CLIP (TAB)	
	46	2	**5P-8112**	3	GROMMET	
	47	1	**5P-8444**	1	GROMMET	
	48	1,2	**6V-1249**	5	GROMMET	
	49	1,2	**6V-8398**	7	SEAL-O-RING	
	50	2	**6V-9169**	1	NUT-BULKHEAD (13/16-16-THD)	
	51	1,2	**6V-9172**	2	NUT (1 7/16-12-THD)	
	52	2	**6V-9746**	3	SEAL-O-RING	
	53	1,2	**7J-9108**	2	SEAL-O-RING	
	54	2	**7S-3916**	1	CLIP (TAB)	
	55	2	**7S-3919**	1	CLIP (SLOT)	
	56	1	**8S-0023**	1	CLIP (SLOT)	
	57	1	**8S-0024**	1	CLIP (TAB)	
	58	1,2	**8T-1889**	2	CLIP (SLOT)	
	59	1,2	**8T-1890**	2	CLIP (TAB)	
	60	1,2	**8T-4121**	13	WASHER-HARD (11X21X2.5-MM THK)	
CM	61	1,2	**8T-4136**	9	BOLT (M10X1.5X25-MM)	
M	62	1,2	**8T-4139**	4	BOLT (M12X1.75X30-MM)	
M	63	1,2	**8T-4184**	4	BOLT (M12X1.75X45-MM)	
M	64	1,2	**8T-4192**	2	BOLT (M12X1.75X25-MM)	
M	65	1,2	**8T-4195**	4	BOLT (M10X1.5X30-MM)	
	66	1,2	**8T-4223**	10	WASHER-HARD (13.5X25.5X3-MM THK)	
	67	2	**8T-7087**	1	GROMMET	
	68	1,2	**9R-1004**	5	CLIP (TAB)	
	69	1,2	**9R-1005**	5	CLIP (SLOT)	
C	70	1,2	**241-8448**	4	FILM-WARNING (HYDRAULIC PRESSURE)	

C-CHANGE FROM PREVIOUS TYPE
I-REFER TO HYDRAULIC INFORMATION SYSTEM
M-METRIC PART

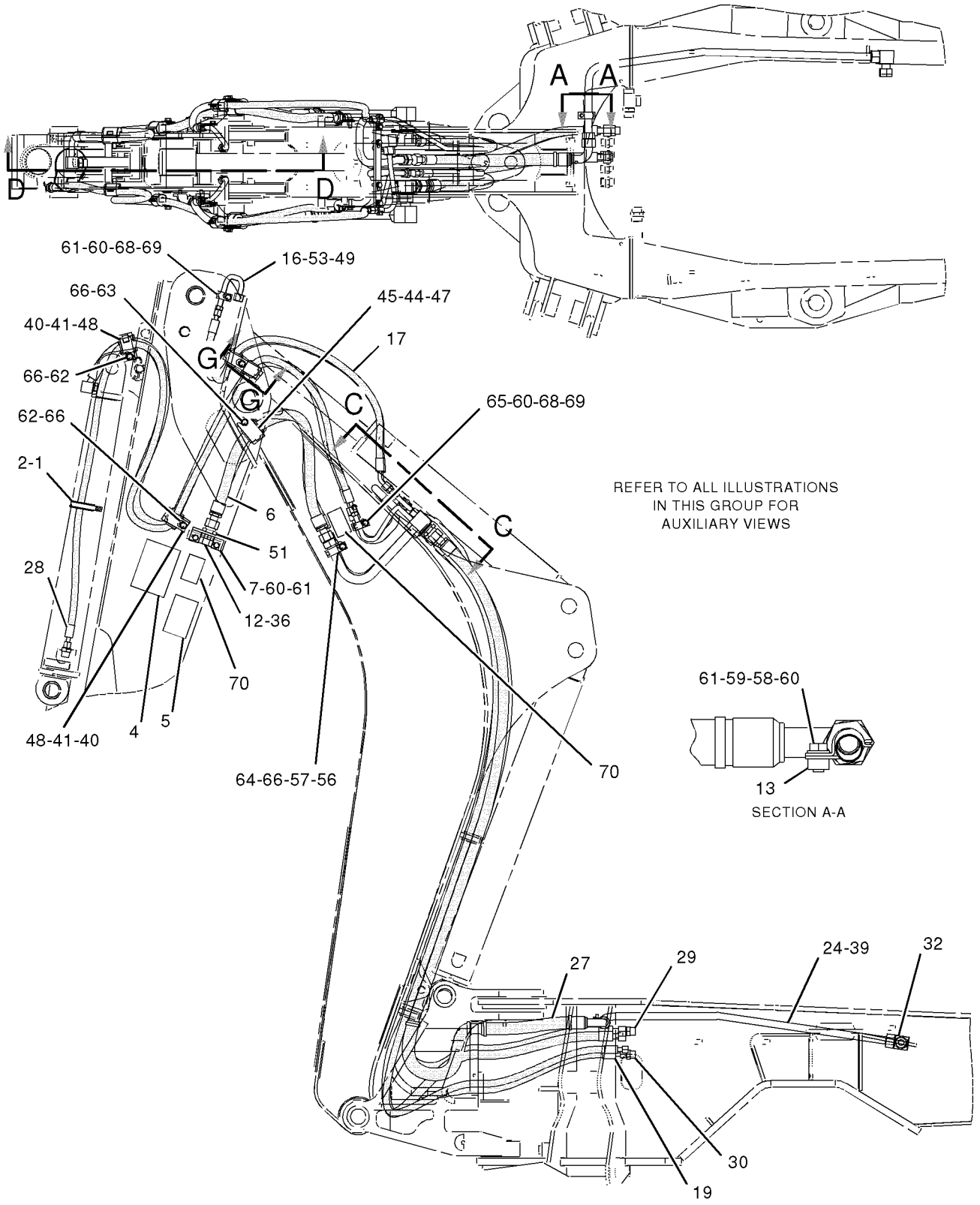

GRAPHIC #1

g01026502

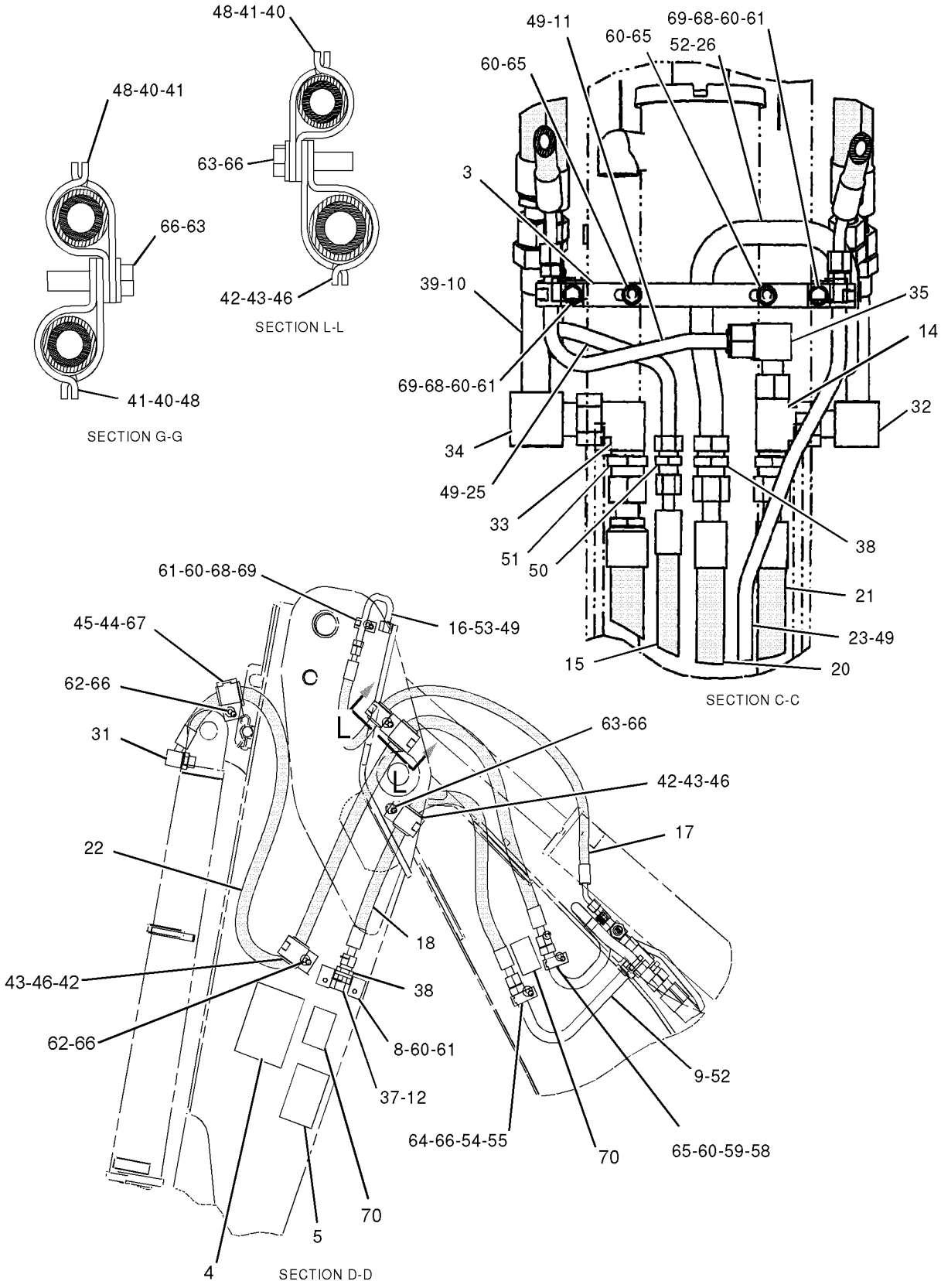

GRAPHIC #2 **<END>** g01026635

HYDRAULIC SYSTEM

202-5941 LINES GP-BACKHOE AUXILIARY

S/N: FDP18400-UP
LOW LEAK, ANTI-DRIFT
PART OF 202-5973 BACKHOE AR-EXTENDABLE STICK
AN ATTACHMENT

SMCS-5057 **i02020896**

NOTE	REF NO	GRAPHIC REF	PART NUMBER	QTY	PART NAME 1 2 3 4 5 6 (PRODUCT LEVEL)	SEE PAGE
	1	1	**5P-0599**	1	CLAMP	
	2	1	**9R-5948**	1	BLOCK	
	3	2	**9R-9253**	1	PLATE	
	4	1,2	**101-0862**	2	PLATE-WARNING (E-STICK)	
	5	1,2	**101-0863**	2	FILM-INSTRUCTION (RETURN FLOW)	
I	6	1	**106-0409**	1	HOSE AS	
	7	1	**107-6708**	1	BRACKET	
	8	2	**109-1260**	1	BRACKET	
	9	2	**110-7709**	1	TUBE AS	
	10	2	**110-7710**	1	TUBE AS	
	11	2	**110-7713**	1	TUBE AS	
	12	1,2	**123-7637**	2	CAP	
	13	2	*148-8450*	1	TEE AS	
		2	**3E-7443**	1	TEE-UNION	
		2	**5K-9090**	1	SEAL-O-RING	
		2	**6V-9746**	2	SEAL-O-RING	
	14	1,2	**162-2356**	2	TUBE AS	
I	15	1,2	**167-3896**	2	HOSE AS	
I	16	2	**168-8493**	1	HOSE AS	
I	17	2	**168-8497**	1	HOSE AS	
	18	2	**177-0856**	1	TUBE AS	
	19	2	**187-4333**	1	TUBE AS	
	20	2	**187-4344**	1	TUBE AS	
I	21	2	**201-3630**	1	HOSE AS	
	22	2	**201-3631**	1	HOSE AS	
	23	1	**201-3636**	1	HOSE AS	
	24	1,2	**241-8448**	4	FILM-WARNING (HYDRAULIC PRESSURE)	
I	25	2	**203-4694**	1	HOSE AS	
	26	1	**205-8845**	1	HOSE AS	
	27	1	**205-9014**	1	TUBE AS	
I	28	1	**168-8644**	1	HOSE AS	
	29	1	*148-8327*	1	CONNECTOR AS	
		1	**3D-2824**	1	SEAL-O-RING	
		1	**6V-8637**	1	CONNECTOR	
		1	**6V-9746**	1	SEAL-O-RING	
	30	1	*148-8328*	1	CONNECTOR GP	
		1	**3D-2824**	1	SEAL-O-RING	
		1	**6V-8398**	1	SEAL-O-RING	
		1	**6V-8633**	1	CONNECTOR	
	31	2	*148-8347*	1	ELBOW GP	
		2	**3D-2824**	1	SEAL-O-RING	
		2	**6V-9007**	1	ELBOW	
		2	**6V-9746**	1	SEAL-O-RING	
	32	1,2	*148-8352*	2	ELBOW GP	
					(EACH INCLUDES)	
		1,2	**5K-9090**	1	SEAL-O-RING	
		1,2	**6V-9854**	1	ELBOW (SWIVEL)	
	33	2	*148-8386*	1	ELBOW AS	
		2	**3E-7426**	1	ELBOW	
		2	**5K-9090**	1	SEAL-O-RING	
		2	**6V-8400**	1	SEAL-O-RING	
	34	2	*148-8387*	1	ELBOW GP	
		2	**6V-8400**	1	SEAL-O-RING	
		2	**6V-9855**	1	ELBOW	

202-5941 LINES GP-BACKHOE AUXILIARY *(contd.)* i02020896

NOTE	REF NO	GRAPHIC REF	PART NUMBER	QTY	PART NAME 1 2 3 4 5 6 (PRODUCT LEVEL)	SEE PAGE
	35	2	*148-8392*	1	ELBOW GP	
		2	**6V-9746**	1	SEAL-O-RING	
		2	**6V-9853**	1	ELBOW	
	36	1	*150-3052*	1	CONNECTOR AS	
		1	**5K-9090**	1	SEAL-O-RING	
		1	**7M-8485**	1	SEAL-O-RING	
		1	**107-6709**	1	CONNECTOR	
	37	2	*150-3053*	1	CONNECTOR AS	
		2	**6V-9746**	1	SEAL-O-RING	
		2	**7M-8485**	1	SEAL-O-RING	
		2	**108-3872**	1	CONNECTOR	
	38	2	**2P-1293**	3	LOCKNUT (1 3/16-12-THD)	
	39	1,2	**5K-9090**	2	SEAL-O-RING	
	40	1,2	**5P-7464**	5	CLIP (SLOT)	
	41	1,2	**5P-7465**	5	CLIP (TAB)	
	42	2	**5P-7466**	3	CLIP (SLOT)	
	43	2	**5P-7467**	3	CLIP (TAB)	
	44	1,2	**5P-7468**	2	CLIP (SLOT)	
	45	1,2	**5P-7469**	2	CLIP (TAB)	
	46	2	**5P-8112**	3	GROMMET	
	47	1	**5P-8444**	1	GROMMET	
	48	1,2	**6V-1249**	5	GROMMET	
	49	1,2	**6V-8398**	7	SEAL-O-RING	
	50	2	**6V-9169**	1	NUT-BULKHEAD (13/16-16-THD)	
	51	1,2	**6V-9172**	2	NUT (1 7/16-12-THD)	
	52	2	**6V-9746**	3	SEAL-O-RING	
	53	1,2	**7J-9108**	2	SEAL-O-RING	
	54	2	**7S-3916**	1	CLIP (TAB)	
	55	2	**7S-3919**	1	CLIP (SLOT)	
	56	1	**8S-0023**	1	CLIP (SLOT)	
	57	1	**8S-0024**	1	CLIP (TAB)	
	58	1,2	**8T-1889**	2	CLIP (SLOT)	
	59	1,2	**8T-1890**	2	CLIP (TAB)	
	60	1,2	**8T-4121**	13	WASHER-HARD (11X21X2.5-MM THK)	
M	61	1,2	**8T-4136**	9	BOLT (M10X1.5X25-MM)	
	62	1	**124-2528**	1	SPACER (11X20X10-MM THK)	
M	63	1,2	**8T-4139**	4	BOLT (M12X1.75X30-MM)	
M	64	1,2	**8T-4184**	4	BOLT (M12X1.75X45-MM)	
M	65	1,2	**8T-4192**	2	BOLT (M12X1.75X25-MM)	
M	66	1,2	**8T-4195**	4	BOLT (M10X1.5X30-MM)	
	67	1,2	**8T-4223**	10	WASHER-HARD (13.5X25.5X3-MM THK)	
	68	2	**8T-7087**	1	GROMMET	
	69	1,2	**9R-1004**	5	CLIP (TAB)	
	70	1,2	**9R-1005**	5	CLIP (SLOT)	

I-REFER TO HYDRAULIC INFORMATION SYSTEM
M-METRIC PART

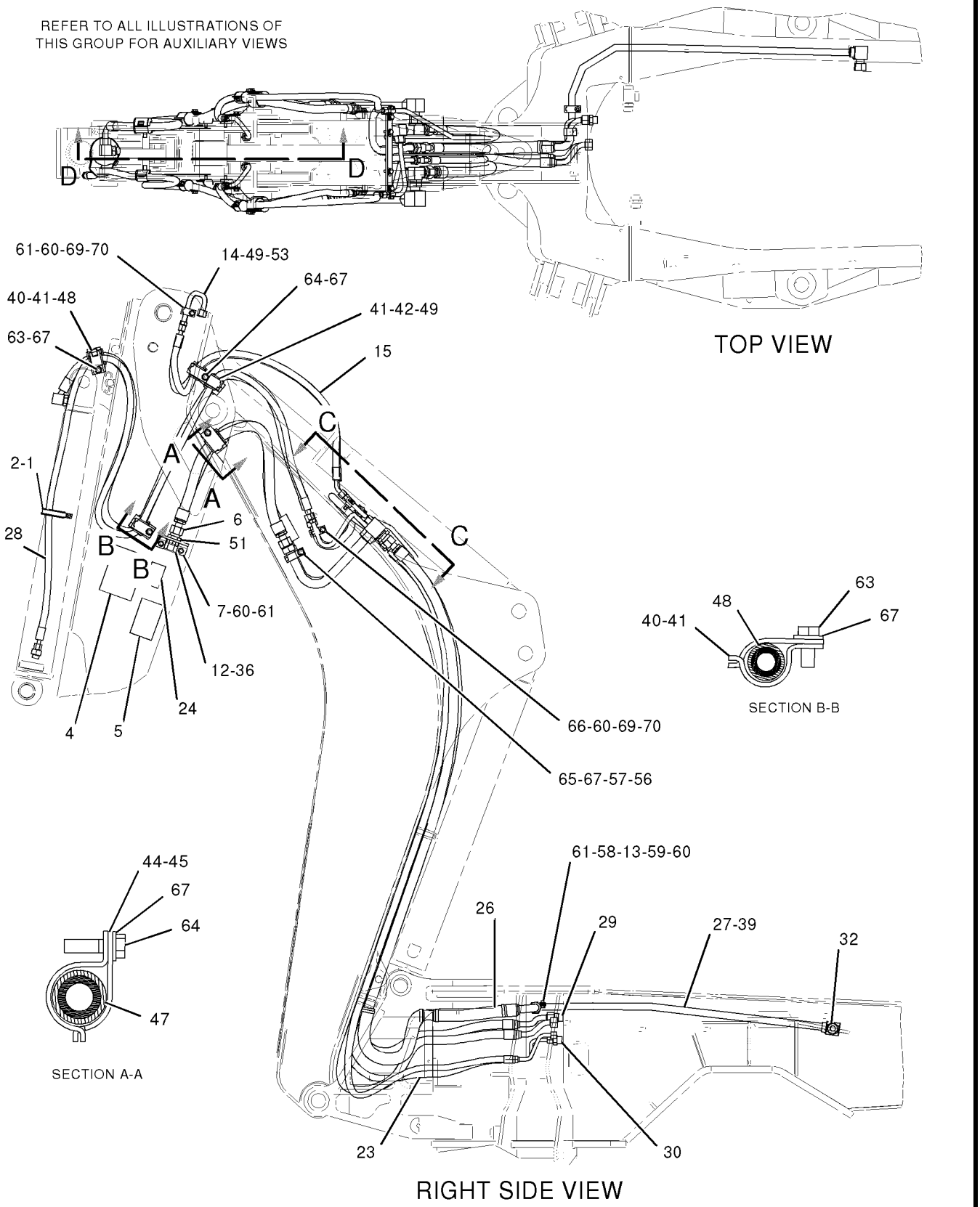

GRAPHIC #1

g01041744

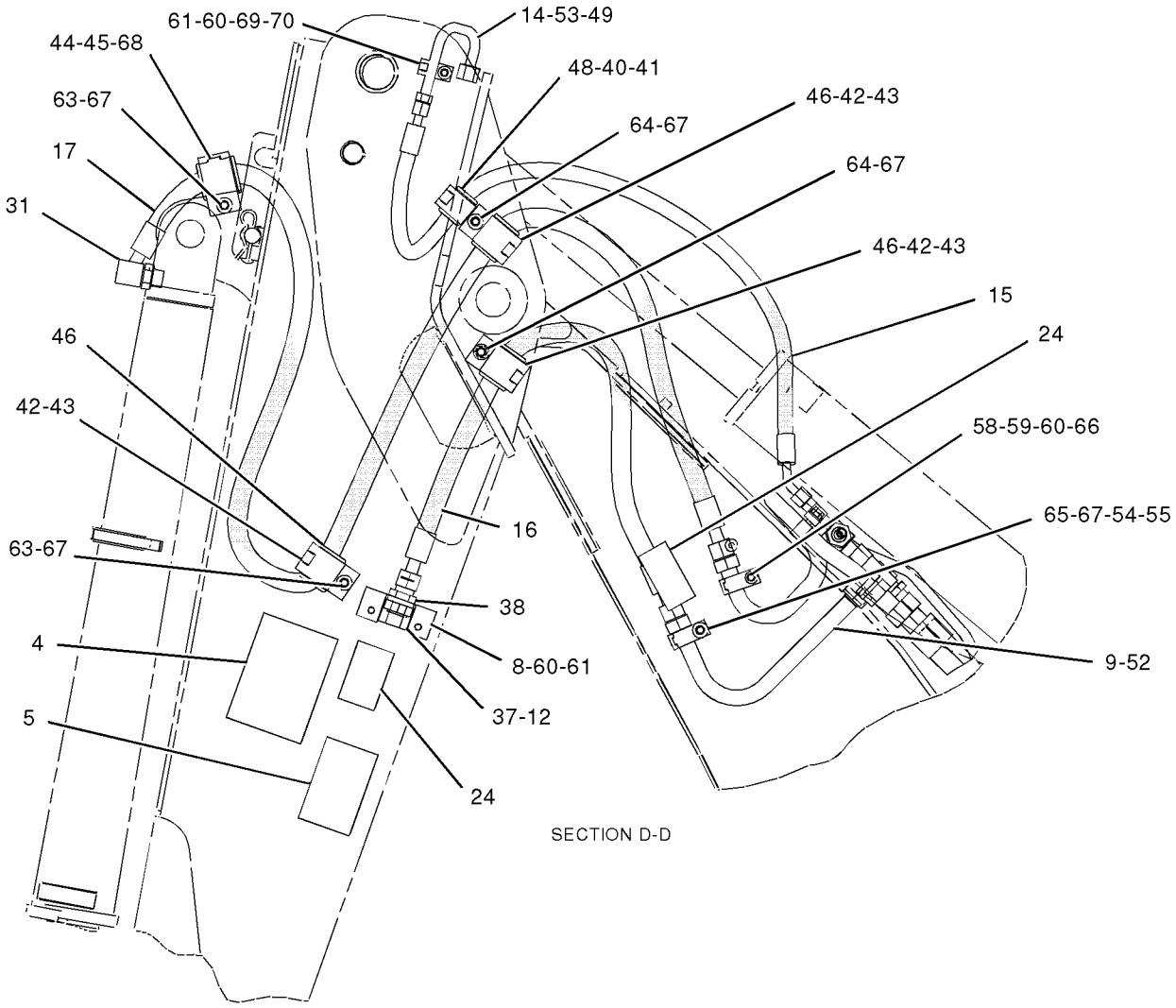

SECTION D-D

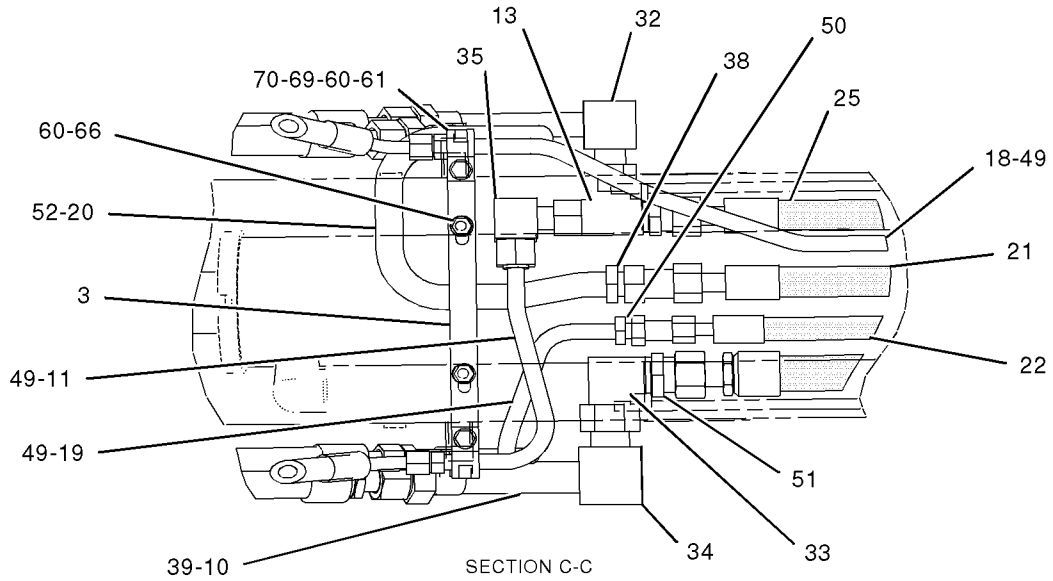

SECTION C-C

GRAPHIC #2 **<END>** g01041743

HYDRAULIC SYSTEM

202-5945 LINES GP-BACKHOE AUXILIARY

S/N: FDP18400-UP
ONE-WAY, LOW LEAK, ANTI-DRIFT
PART OF 202-5961 BACKHOE AR-STANDARD STICK
AN ATTACHMENT

SMCS-5057 **i02015859**

NOTE	REF NO	GRAPHIC REF	PART NUMBER	QTY	PART NAME 1 2 3 4 5 6 (PRODUCT LEVEL)	SEE PAGE
	1	1	**101-0863**	2	FILM-INSTRUCTION (RETURN FLOW)	
I	2	1	**106-0409**	1	HOSE AS	
	3	1	**107-6708**	1	BRACKET	
	4	1	**109-1260**	1	BRACKET	
	5	1	**110-7709**	1	TUBE AS	
	6	1	**110-7710**	1	TUBE AS	
	7	1	**123-7637**	2	CAP	
	8	1	*148-8450*	1	TEE AS	
		1	**3E-7443**	1	TEE-UNION	
		1	**5K-9090**	1	SEAL-O-RING	
		1	**6V-9746**	2	SEAL-O-RING	
I	9	1	**168-8493**	1	HOSE AS	
I	10	1	**203-4694**	1	HOSE AS	
	11	1	**205-8845**	1	HOSE AS	
	12	1	**205-9014**	1	TUBE AS	
	13	1	*148-8327*	1	CONNECTOR AS	
		1	**3D-2824**	1	SEAL-O-RING	
		1	**6V-8637**	1	CONNECTOR	
		1	**6V-9746**	1	SEAL-O-RING	
	14	1	*148-8352*	2	ELBOW GP	
					(EACH INCLUDES)	
		1	**5K-9090**	1	SEAL-O-RING	
		1	**6V-9854**	1	ELBOW (SWIVEL)	
	15	1	*148-8386*	1	ELBOW AS	
		1	**3E-7426**	1	ELBOW	
		1	**5K-9090**	1	SEAL-O-RING	
		1	**6V-8400**	1	SEAL-O-RING	
	16	1	*148-8387*	1	ELBOW GP	
		1	**6V-8400**	1	SEAL-O-RING	
		1	**6V-9855**	1	ELBOW	
	17	1	*148-8408*	1	PLUG AS	
		1	**3D-2824**	1	SEAL-O-RING	
		1	**9S-4183**	1	PLUG	
	18	1	*150-3052*	1	CONNECTOR AS	
		1	**5K-9090**	1	SEAL-O-RING	
		1	**7M-8485**	1	SEAL-O-RING	
		1	**107-6709**	1	CONNECTOR	
	19	1	*150-3053*	1	CONNECTOR AS	
		1	**6V-9746**	1	SEAL-O-RING	
		1	**7M-8485**	1	SEAL-O-RING	
		1	**108-3872**	1	CONNECTOR	
	20	1	**2P-1293**	2	LOCKNUT (1 3/16-12-THD)	
	21	1	**5K-9090**	2	SEAL-O-RING	
	22	1	**5P-7466**	1	CLIP (SLOT)	
	23	1	**5P-7467**	1	CLIP (TAB)	
	24	1	**5P-7468**	1	CLIP (SLOT)	
	25	1	**5P-7469**	1	CLIP (TAB)	
	26	1	**5P-8112**	1	GROMMET	
	27	1	**5P-8444**	1	GROMMET	
	28	1	**6V-9172**	2	NUT (1 7/16-12-THD)	
	29	1	**6V-9746**	1	SEAL-O-RING	
	30	1	**6V-9832**	1	CAP AS	
	31	1	**7S-3916**	1	CLIP (TAB)	
	32	1	**7S-3919**	1	CLIP (SLOT)	

202-5945 LINES GP-BACKHOE AUXILIARY *(contd.)* i02015859

NOTE	REF NO	GRAPHIC REF	PART NUMBER	QTY	PART NAME 1 2 3 4 5 6 (PRODUCT LEVEL)	SEE PAGE
	33	1	**8S-0023**	1	CLIP (SLOT)	
	34	1	**8S-0024**	1	CLIP (TAB)	
	35	1	**8T-1889**	1	CLIP (SLOT)	
	36	1	**8T-1890**	1	CLIP (TAB)	
	37	1	**8T-4121**	5	WASHER-HARD (11X21X2.5-MM THK)	
M	38	1	**8T-4136**	4	BOLT (M10X1.5X25-MM)	
M	39	1	**8T-4137**	1	BOLT (M10X1.5X20-MM)	
M	40	1	**8T-4139**	2	BOLT (M12X1.75X30-MM)	
M	41	1	**8T-4192**	2	BOLT (M12X1.75X25-MM)	
	42	1	**8T-4223**	4	WASHER-HARD (13.5X25.5X3-MM THK)	
	43	1	**241-8448**	4	FILM-WARNING (HYDRAULIC PRESSURE)	

I-REFER TO HYDRAULIC INFORMATION SYSTEM
M-METRIC PART

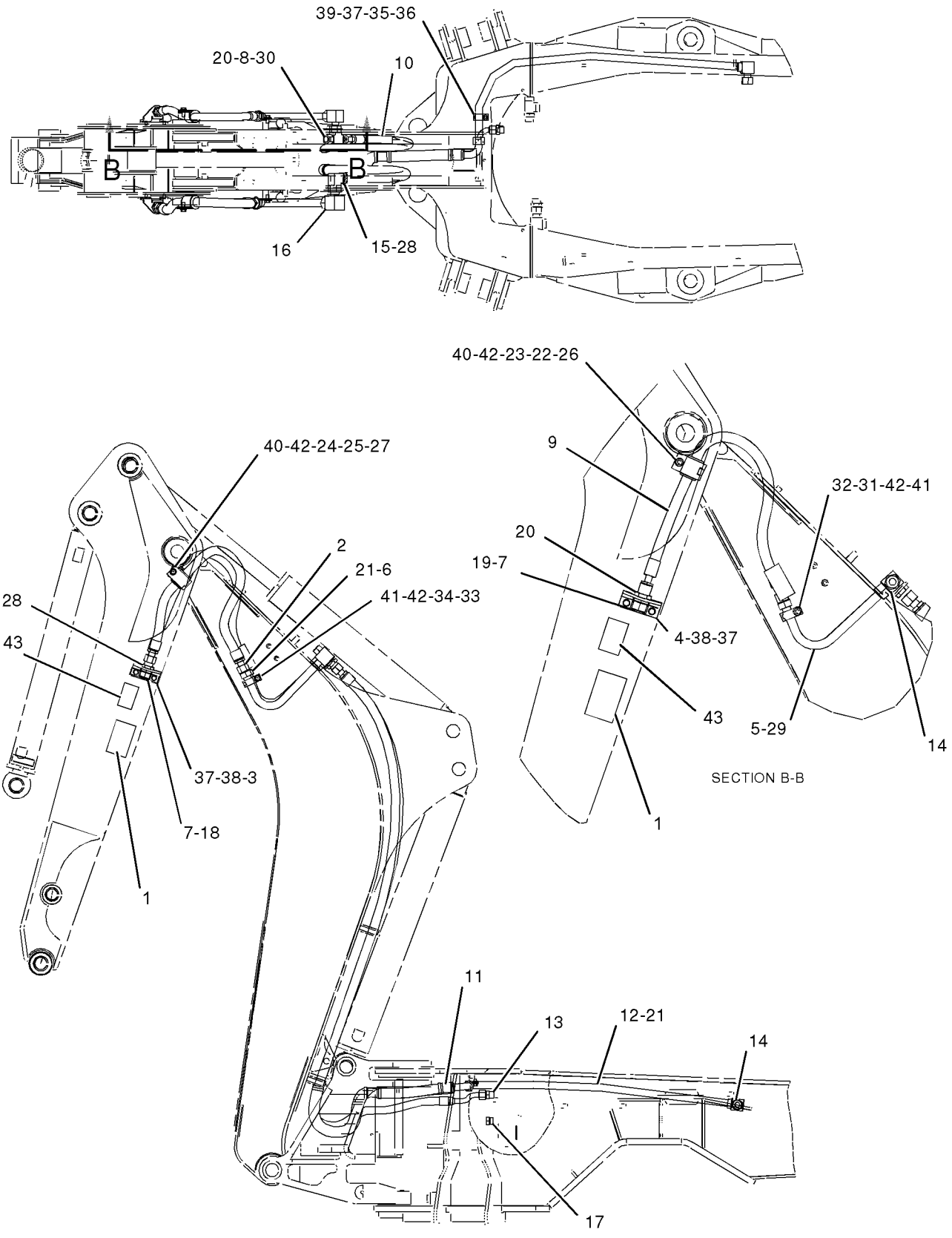

GRAPHIC #1

<END>

g01042173

202-5946 LINES GP-BACKHOE AUXILIARY

S/N: FDP18400-UP
TWO-WAY, LOW LEAK, ANTI-DRIFT
PART OF 202-5963, 238-4787 BACKHOE AR-STANDARD STICK
AN ATTACHMENT

SMCS-5057 **i02015672**

NOTE	REF NO	GRAPHIC REF	PART NUMBER	QTY	PART NAME 1 2 3 4 5 6 (PRODUCT LEVEL)	SEE PAGE
	1	1	**9R-9253**	1	PLATE	
	2	1	**177-0856**	1	TUBE AS	
	3	1	**177-2171**	1	TUBE AS	
	4	1	**201-3633**	1	HOSE AS	
	5	1	**201-3636**	1	HOSE AS	
	6	1	*148-8328*	2	CONNECTOR GP	
					(EACH INCLUDES)	
		1	**3D-2824**	1	SEAL-O-RING	
		1	**6V-8398**	1	SEAL-O-RING	
		1	**6V-8633**	1	CONNECTOR	
	7	1	**2M-6102**	2	PIPE	
	8	1	**6V-8398**	4	SEAL-O-RING	
	9	1	**6V-9830**	2	CAP AS	
	10	1	**8T-4121**	4	WASHER-HARD (11X21X2.5-MM THK)	
M	11	1	**8T-4136**	2	BOLT (M10X1.5X25-MM)	
M	12	1	**8T-4185**	2	BOLT (M10X1.5X50-MM)	
	13	1	**9R-1004**	2	CLIP (TAB)	
	14	1	**9R-1005**	2	CLIP (SLOT)	

M-METRIC PART

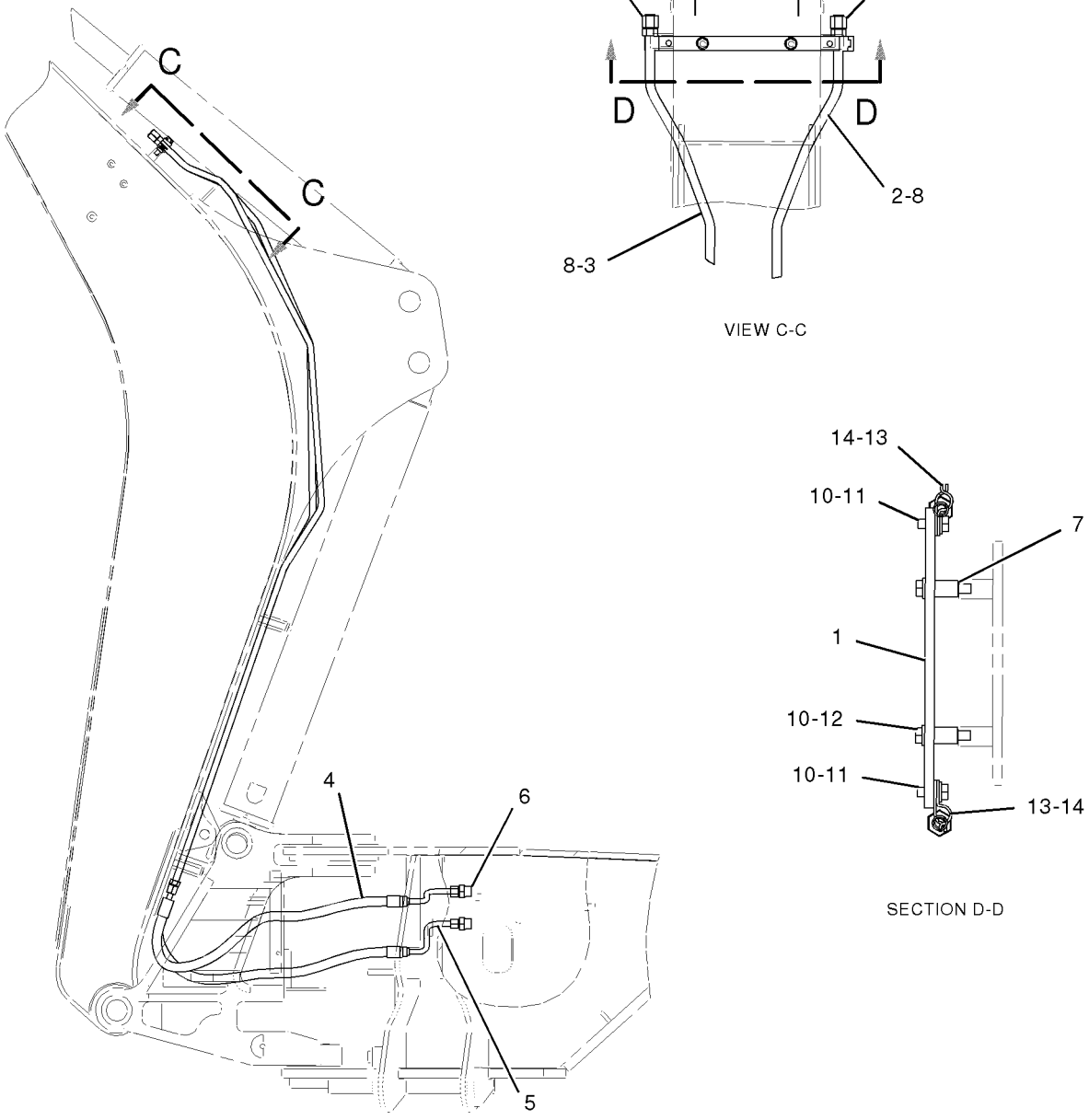

GRAPHIC #1

<END>

g01042030

HYDRAULIC SYSTEM

235-5845 LINES GP-BACKHOE AUXILIARY–1 WAY LINES

S/N: FDP18400-UP

PART OF 238-4786 BACKHOE AR-EXTENDABLE STICK

AN ATTACHMENT

SMCS-5057 **i02011524**

NOTE	REF NO	GRAPHIC REF	PART NUMBER	QTY	PART NAME 1 2 3 4 5 6 (PRODUCT LEVEL)	SEE PAGE
	1	1	**101-0863**	2	FILM-INSTRUCTION (RETURN FLOW)	
I	2	1	**106-0409**	1	HOSE AS	
	3	1	**107-6708**	1	BRACKET	
	4	1	**109-1260**	1	BRACKET	
	5	1	**110-7709**	1	TUBE AS	
	6	1	**110-7710**	1	TUBE AS	
	7	1	**123-7637**	2	CAP	
	8	1	**124-2528**	1	SPACER (11X20X10MM THK)	
	9	1	*148-8450*	1	TEE AS	
		1	**3E-7443**	1	TEE-UNION	
		1	**5K-9090**	1	SEAL-O-RING	
		1	**6V-9746**	2	SEAL-O-RING	
I	10	1	**168-8493**	1	HOSE AS	
	11	1	**241-8448**	4	FILM-WARNING (HYDRAULIC PRESSURE)	
I	12	1	**203-4694**	1	HOSE AS	
	13	1	**205-8845**	1	HOSE AS	
	14	1	**236-5901**	1	TUBE AS	
I	15	1	**236-9900**	1	HOSE AS	
	16	1	*148-8327*	1	CONNECTOR AS	
		1	**3D-2824**	1	SEAL-O-RING	
		1	**6V-8637**	1	CONNECTOR	
		1	**6V-9746**	1	SEAL-O-RING	
	17	1	*148-8335*	1	CONNECTOR AS	
		1	**5K-9090**	1	SEAL-O-RING	
		1	**6V-8635**	1	CONNECTOR	
		1	**7M-8485**	1	SEAL-O-RING	
	18	1	*148-8352*	1	ELBOW GP	
		1	**5K-9090**	1	SEAL-O-RING	
		1	**6V-9854**	1	ELBOW (SWIVEL)	
	19	1	*148-8386*	1	ELBOW AS	
		1	**3E-7426**	1	ELBOW	
		1	**5K-9090**	1	SEAL-O-RING	
		1	**6V-8400**	1	SEAL-O-RING	
	20	1	*148-8387*	1	ELBOW GP	
		1	**6V-8400**	1	SEAL-O-RING	
		1	**6V-9855**	1	ELBOW	
	21	1	*148-8408*	1	PLUG AS	
		1	**3D-2824**	1	SEAL-O-RING	
		1	**9S-4183**	1	PLUG	
	22	1	*150-3052*	1	CONNECTOR AS	
		1	**5K-9090**	1	SEAL-O-RING	
		1	**7M-8485**	1	SEAL-O-RING	
		1	**107-6709**	1	CONNECTOR	
	23	1	*150-3053*	1	CONNECTOR AS	
		1	**6V-9746**	1	SEAL-O-RING	
		1	**7M-8485**	1	SEAL-O-RING	
		1	**108-3872**	1	CONNECTOR	
	24	1	**2P-1293**	2	LOCKNUT (1 3/16-12 THD)	
	25	1	**5K-9090**	3	SEAL-O-RING	
	26	1	**5P-7466**	1	CLIP (SLOT)	
	27	1	**5P-7467**	1	CLIP (TAB)	
	28	1	**5P-7468**	1	CLIP (SLOT)	
	29	1	**5P-7469**	1	CLIP (TAB)	
	30	1	**5P-8112**	1	GROMMET	
	31	1	**5P-8444**	1	GROMMET	

235-5845 LINES GP-BACKHOE AUXILIARY *(contd.)* i02011524

NOTE	REF NO	GRAPHIC REF	PART NUMBER	QTY	PART NAME 1 2 3 4 5 6 (PRODUCT LEVEL)	SEE PAGE
	32	1	**6V-9172**	2	NUT (1 7/16-12 THD)	
	33	1	**6V-9746**	1	SEAL-O-RING	
	34	1	**6V-9832**	1	CAP AS	
	35	1	**7S-3916**	1	CLIP (TAB)	
	36	1	**7S-3919**	1	CLIP (SLOT)	
	37	1	**8S-0023**	1	CLIP (SLOT)	
	38	1	**8S-0024**	1	CLIP (TAB)	
	39	1	**8T-1889**	2	CLIP (SLOT)	
	40	1	**8T-1890**	2	CLIP (TAB)	
	41	1	**8T-4121**	6	WASHER-HARD (11X21X2.5MM THK)	
M	42	1	**8T-4136**	5	BOLT (M10X1.5X25MM)	
M	43	1	**8T-4139**	2	BOLT (M12X1.75X30MM)	
M	44	1	**8T-4192**	2	BOLT (M12X1.75X25MM)	
M	45	1	**8T-4195**	1	BOLT (M10X1.5X30MM)	
	46	1	**8T-4223**	4	WASHER-HARD (13.5X25.5X3MM THK)	

I-REFER TO HYDRAULIC INFORMATION SYSTEM
M-METRIC PART

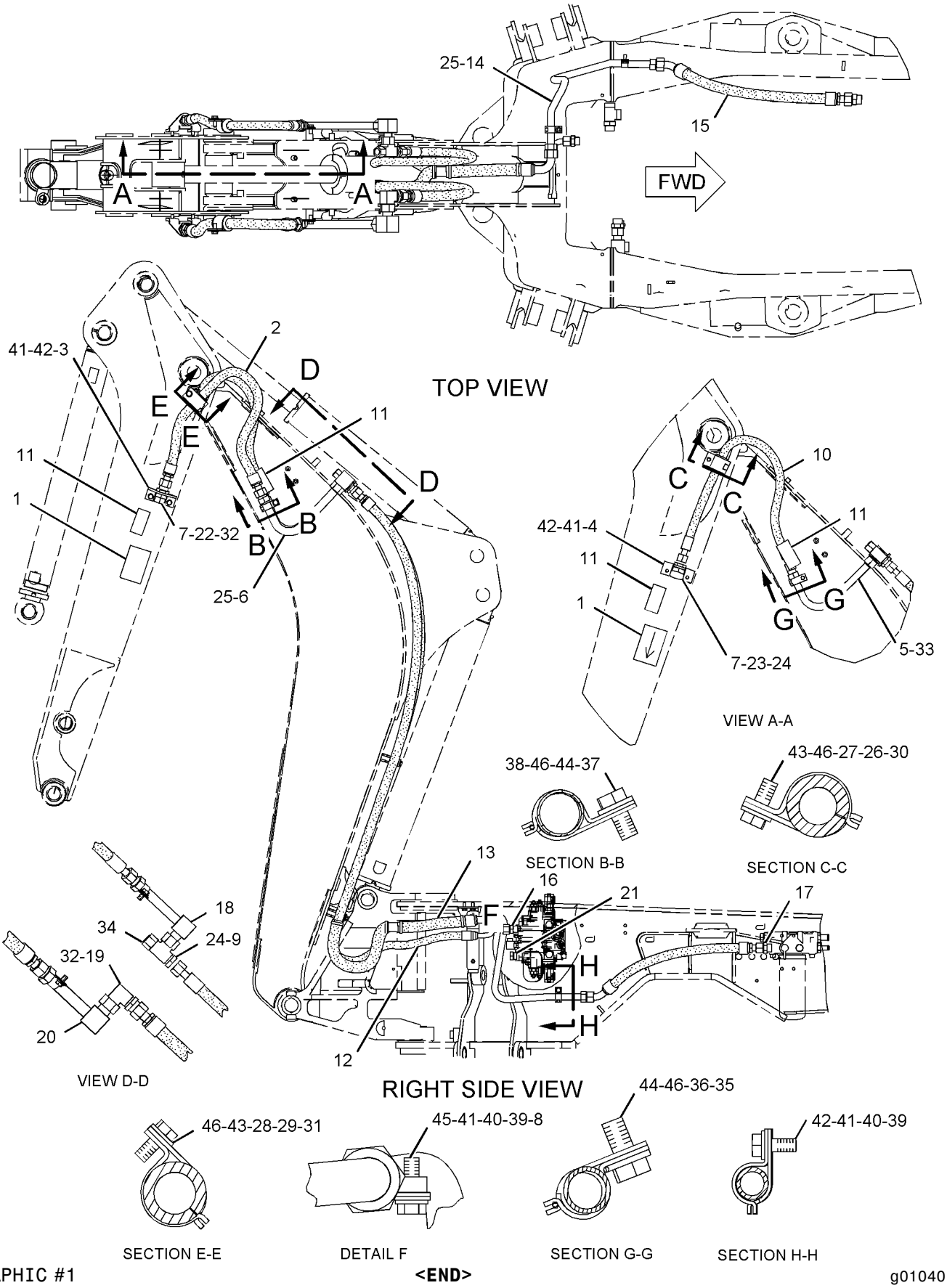

GRAPHIC #1 **<END>** g01040141

HYDRAULIC SYSTEM

235-5847 LINES GP-BACKHOE AUXILIARY–1-WAY

S/N: FDP18400-UP

PART OF 238-4789 BACKHOE AR-EXTENDABLE STICK

AN ATTACHMENT

SMCS-5057 **i02014878**

NOTE	REF NO	GRAPHIC REF	PART NUMBER	QTY	PART NAME 1 2 3 4 5 6 (PRODUCT LEVEL)	SEE PAGE
	1	1	**5P-0599**	1	CLAMP	
	2	1	**9R-5948**	1	BLOCK	
	3	2	**9R-9253**	1	PLATE	
	4	1,2	**101-0862**	2	PLATE-WARNING (E-STICK)	
	5	1,2	**101-0863**	2	FILM-INSTRUCTION (RETURN FLOW)	
I	6	1	**106-0409**	1	HOSE AS	
	7	1	**107-6708**	1	BRACKET	
	8	2	**109-1260**	1	BRACKET	
	9	2	**110-7709**	1	TUBE AS	
	10	1	**110-7710**	1	TUBE AS	
	11	2	**110-7713**	1	TUBE AS	
	12	1,2	**123-7637**	2	CAP	
	13	1	**124-2528**	1	SPACER (11X20X10-MM THK)	
	14	2	*148-8450*	1	TEE AS	
		2	**3E-7443**	1	TEE-UNION	
		2	**5K-9090**	1	SEAL-O-RING	
		2	**6V-9746**	2	SEAL-O-RING	
	15	1,2	**162-2356**	2	TUBE AS	
I	16	1,2	**167-3896**	2	HOSE AS	
I	17	2	**168-8493**	1	HOSE AS	
I	18	2	**168-8497**	1	HOSE AS	
I	19	1	**168-8644**	1	HOSE AS	
	20	2	**177-0856**	1	TUBE AS	
	21	2	**187-4333**	1	TUBE AS	
	22	2	**187-4344**	1	TUBE AS	
I	23	1	**201-3630**	1	HOSE AS	
	24	1	**201-3631**	1	HOSE AS	
	25	1	**201-3636**	1	HOSE AS	
	26	1,2	**241-8448**	4	FILM-WARNING (HYDRAULIC PRESSURE)	
I	27	1	**203-4694**	1	HOSE AS	
	28	1	**205-8845**	1	HOSE AS	
	29	1	**236-5901**	1	TUBE AS	
I	30	1	**236-9900**	1	HOSE AS	
	31	1	*148-8327*	1	CONNECTOR AS	
		1	**3D-2824**	1	SEAL-O-RING	
		1	**6V-8637**	1	CONNECTOR	
		1	**6V-9746**	1	SEAL-O-RING	
	32	1	*148-8328*	1	CONNECTOR GP	
		1	**3D-2824**	1	SEAL-O-RING	
		1	**6V-8398**	1	SEAL-O-RING	
		1	**6V-8633**	1	CONNECTOR	
	33	1	*148-8335*	1	CONNECTOR AS	
		1	**5K-9090**	1	SEAL-O-RING	
		1	**6V-8635**	1	CONNECTOR	
		1	**7M-8485**	1	SEAL-O-RING	
	34	1	*148-8347*	1	ELBOW GP	
		1	**3D-2824**	1	SEAL-O-RING	
		1	**6V-9007**	1	ELBOW	
		1	**6V-9746**	1	SEAL-O-RING	
	35	2	*148-8352*	1	ELBOW GP	
		2	**5K-9090**	1	SEAL-O-RING	
		2	**6V-9854**	1	ELBOW (SWIVEL)	
	36	2	*148-8386*	1	ELBOW AS	
		2	**3E-7426**	1	ELBOW	
		2	**5K-9090**	1	SEAL-O-RING	

235-5847 LINES GP-BACKHOE AUXILIARY *(contd.)* i02014878

NOTE	REF NO	GRAPHIC REF	PART NUMBER	QTY	PART NAME 1 2 3 4 5 6 (PRODUCT LEVEL)	SEE PAGE
		2	**6V-8400**	1	SEAL-O-RING	
	37	2	*148-8387*	1	ELBOW GP	
		2	**6V-8400**	1	SEAL-O-RING	
		2	**6V-9855**	1	ELBOW	
	38	2	*148-8392*	1	ELBOW GP	
		2	**6V-9746**	1	SEAL-O-RING	
		2	**6V-9853**	1	ELBOW	
	39	1	*150-3052*	1	CONNECTOR AS	
		1	**5K-9090**	1	SEAL-O-RING	
		1	**7M-8485**	1	SEAL-O-RING	
		1	**107-6709**	1	CONNECTOR	
	40	2	*150-3053*	1	CONNECTOR AS	
		2	**6V-9746**	1	SEAL-O-RING	
		2	**7M-8485**	1	SEAL-O-RING	
		2	**108-3872**	1	CONNECTOR	
	41	2	**2P-1293**	3	LOCKNUT (1 3/16-12-THD)	
	42	1	**5K-9090**	3	SEAL-O-RING	
	43	1,2	**5P-7464**	5	CLIP (SLOT)	
	44	1,2	**5P-7465**	5	CLIP (TAB)	
	45	2	**5P-7466**	3	CLIP (SLOT)	
	46	2	**5P-7467**	3	CLIP (TAB)	
	47	1,2	**5P-7468**	2	CLIP (SLOT)	
	48	1,2	**5P-7469**	2	CLIP (TAB)	
	49	2	**5P-8112**	3	GROMMET	
	50	1	**5P-8444**	1	GROMMET	
	51	1,2	**6V-1249**	5	GROMMET	
	52	1,2	**6V-8398**	7	SEAL-O-RING	
	53	2	**6V-9169**	1	NUT-BULKHEAD (13/16-16-THD)	
	54	1,2	**6V-9172**	2	NUT (1 7/16-12-THD)	
	55	2	**6V-9746**	3	SEAL-O-RING	
	56	1,2	**7J-9108**	2	SEAL-O-RING	
	57	2	**7S-3916**	1	CLIP (TAB)	
	58	2	**7S-3919**	1	CLIP (SLOT)	
	59	1	**8S-0023**	1	CLIP (SLOT)	
	60	1	**8S-0024**	1	CLIP (TAB)	
	61	1,2	**8T-1889**	3	CLIP (SLOT)	
	62	1,2	**8T-1890**	3	CLIP (TAB)	
	63	1,2	**8T-4121**	14	WASHER-HARD (11X21X2.5-MM THK)	
M	64	1,2	**8T-4136**	9	BOLT (M10X1.5X25-MM)	
M	65	1,2	**8T-4139**	4	BOLT (M12X1.75X30-MM)	
M	66	1,2	**8T-4184**	4	BOLT (M12X1.75X45-MM)	
M	67	1,2	**8T-4192**	2	BOLT (M12X1.75X25-MM)	
M	68	1,2	**8T-4195**	5	BOLT (M10X1.5X30-MM)	
	69	1,2	**8T-4223**	10	WASHER-HARD (13.5X25.5X3-MM THK)	
	70	2	**8T-7087**	1	GROMMET	
	71	1,2	**9R-1004**	5	CLIP (TAB)	
	72	1,2	**9R-1005**	5	CLIP (SLOT)	

I-REFER TO HYDRAULIC INFORMATION SYSTEM
M-METRIC PART

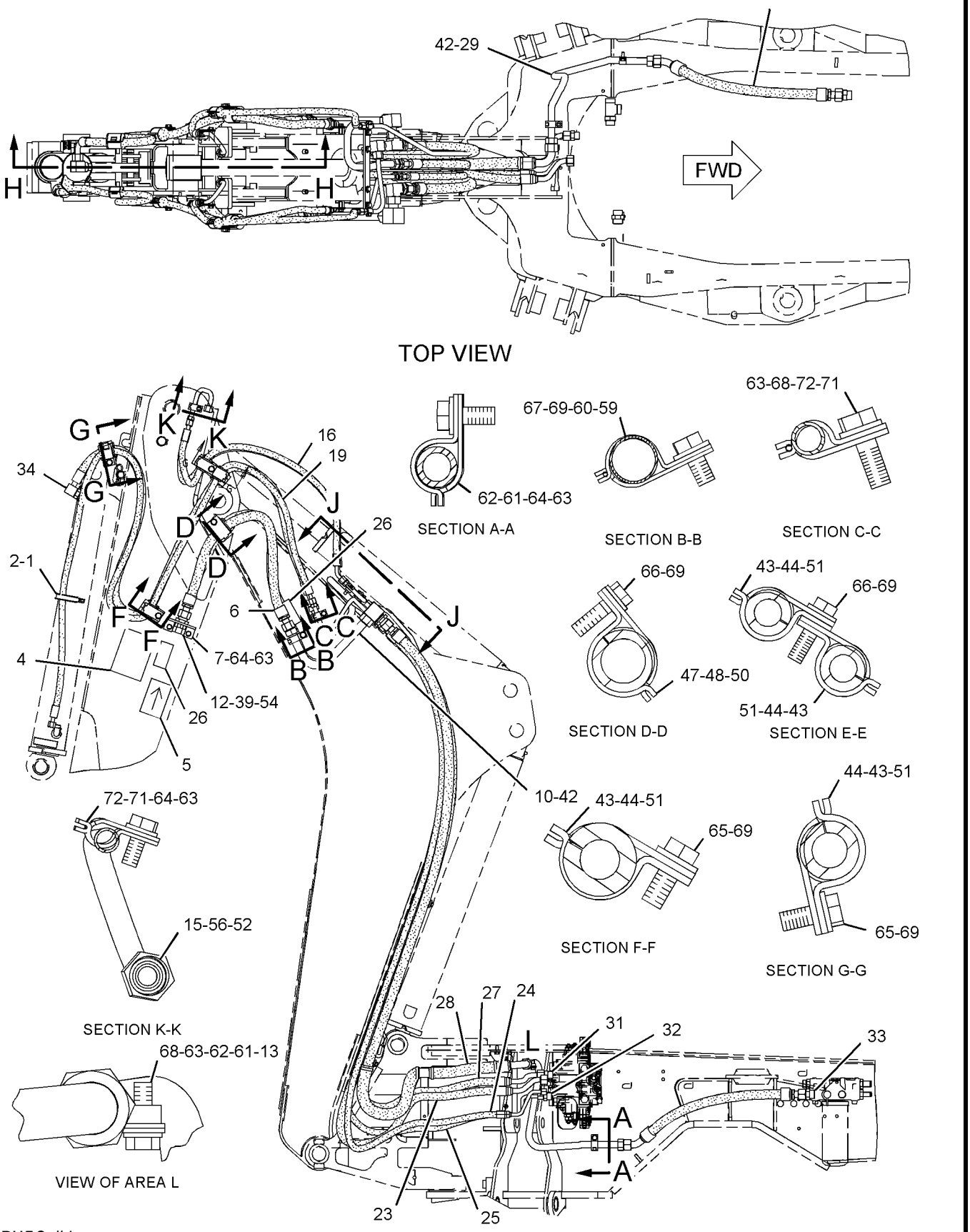

GRAPHIC #1

g01041725

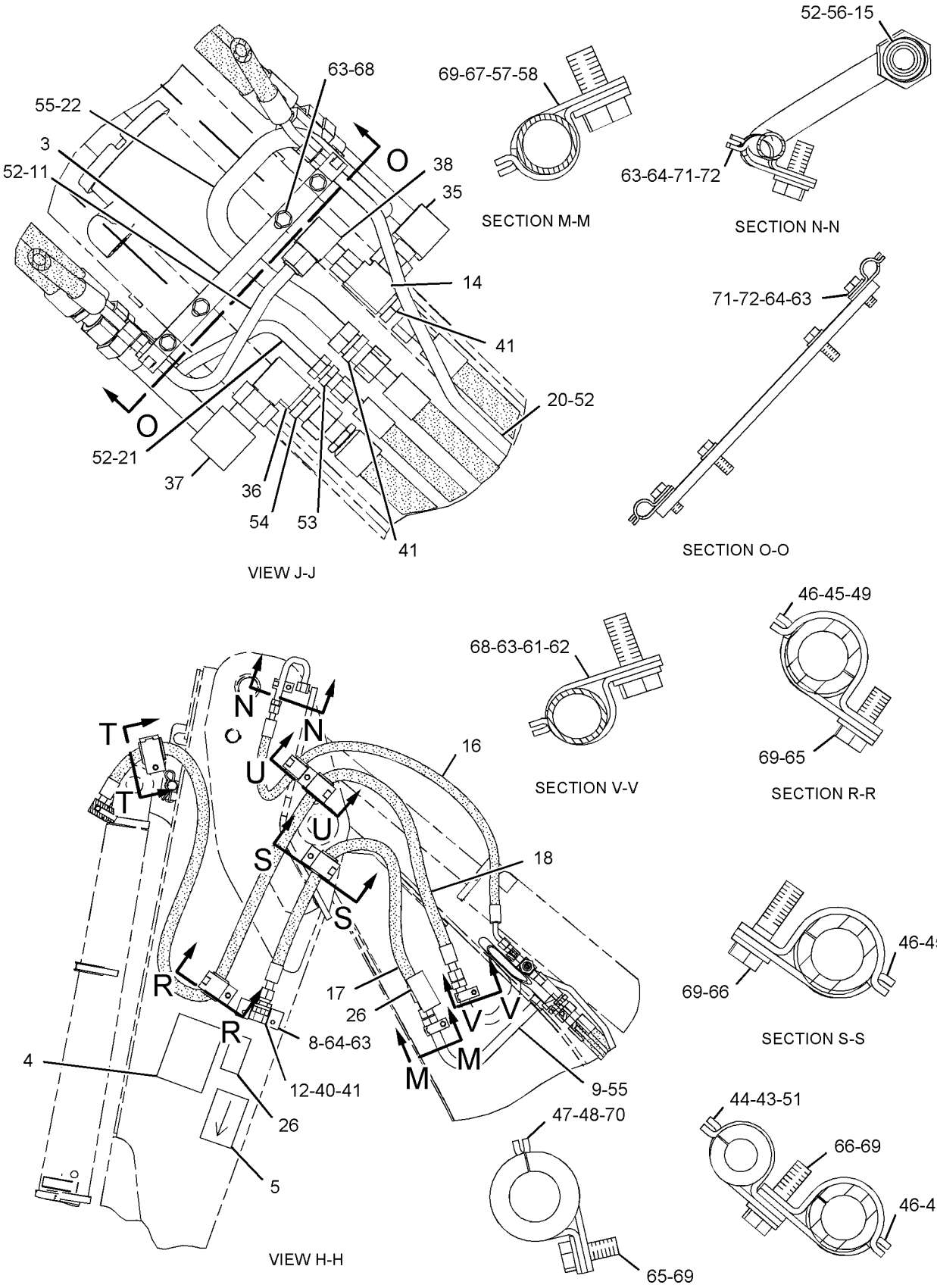

GRAPHIC #2 **<END>** g01041728

HYDRAULIC SYSTEM

167-8270 LINES GP-BOOM

S/N: FDP18400-UP

PART OF 238-8218 BACKHOE AR-EXTENDABLE STICK, 184-7916, 238-8219 BACKHOE AR-STANDARD STICK AN ATTACHMENT

SMCS-5057, 5456 **i01773577**

NOTE	REF NO	GRAPHIC REF	PART NUMBER	QTY	PART NAME 1 2 3 4 5 6 (PRODUCT LEVEL)	SEE PAGE
	1	1	**5P-0599**	1	CLAMP	
	2	1	**9R-4619**	1	SUPPORT AS	
I	3	1	**169-2978**	1	HOSE AS	
I	4	1	**172-3820**	1	HOSE AS	
	5	1	**207-5477**	1	TUBE AS	
		1	**6V-8556**	1	NUT (1 3/16-12 THD)	
		1	**6V-8563**	1	SLEEVE-O-RING	
	6	1	*148-8327*	1	CONNECTOR GP	
		1	**3D-2824**	1	SEAL-O-RING	
		1	**6V-8637**	1	CONNECTOR-SEAL	
		1	**6V-9746**	1	SEAL-O-RING	
	7	1	**7J-9108**	1	SEAL-O-RING	
	8	1	**8T-1887**	1	CLIP (SLOT)	
	9	1	**8T-1888**	1	CLIP (TAB)	
	10	1	**8T-4121**	1	WASHER-HARD (11X21X2.5MM THK)	
M	11	1	**8T-4137**	1	BOLT (M10X1.5X20MM)	

I-SEE HOSE FABRICATION GUIDE
M-METRIC PART

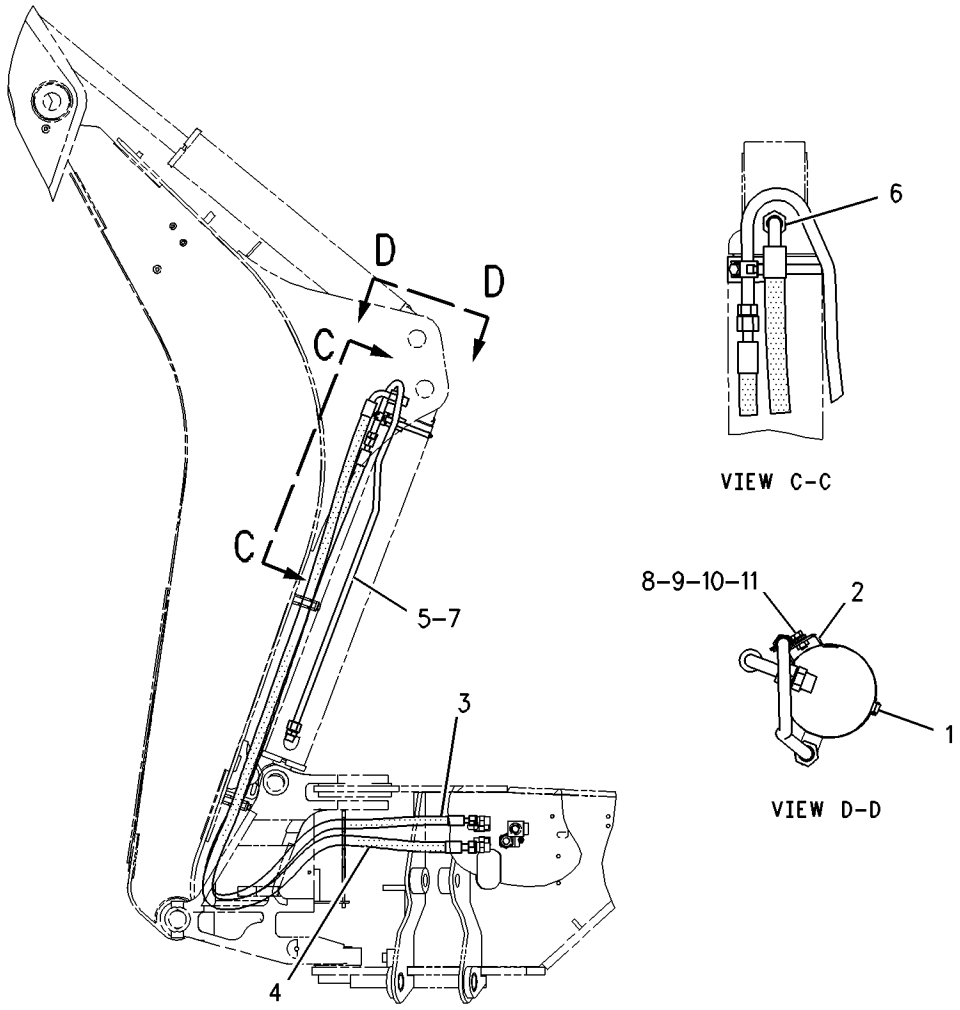

GRAPHIC #1 **<END>** g00860767

HYDRAULIC SYSTEM

202-5931 LINES GP-BOOM

S/N: FDP18400-UP
LOW LEAK
PART OF 202-5971, 202-5973, 238-4786, 238-4788, 238-4789 BACKHOE AR-EXTENDABLE STICK, 202-5958, 202-5961, 202-5963, 238-4785, 238-4787 BACKHOE AR-STANDARD STICK
AN ATTACHMENT

SMCS-5057, 5456 **i01773580**

NOTE	REF NO	GRAPHIC REF	PART NUMBER	QTY	PART NAME 1 2 3 4 5 6 (PRODUCT LEVEL)	SEE PAGE
	1	1	**5P-0599**	1	CLAMP	
	2	1	**9R-4619**	1	SUPPORT AS	
I	3	1	**201-3629**	1	HOSE AS	
I	4	1	**202-0994**	1	HOSE AS	
I	5	1	**202-1037**	1	HOSE AS	
	6	1	**207-5477**	1	TUBE AS	
		1	**6V-8556**	1	NUT (1 3/16-12 THD)	
		1	**6V-8563**	1	SLEEVE-O-RING	
	7	1	*148-8316*	1	CONNECTOR GP	
		1	**3J-7354**	1	SEAL-O-RING	
		1	**4J-5477**	1	SEAL-O-RING	
		1	**6V-8647**	1	CONNECTOR	
	8	1	*148-8327*	1	CONNECTOR GP	
		1	**3D-2824**	1	SEAL-O-RING	
		1	**6V-8637**	1	CONNECTOR-SEAL	
		1	**6V-9746**	1	SEAL-O-RING	
	9	1	**7J-9108**	1	SEAL-O-RING	
	10	1	**8T-1887**	1	CLIP (SLOT)	
	11	1	**8T-1888**	1	CLIP (TAB)	
	12	1	**8T-4121**	1	WASHER-HARD (11X21X2.5MM THK)	
M	13	1	**8T-4137**	1	BOLT (M10X1.5X20MM)	

I-SEE HOSE FABRICATION GUIDE
M-METRIC PART

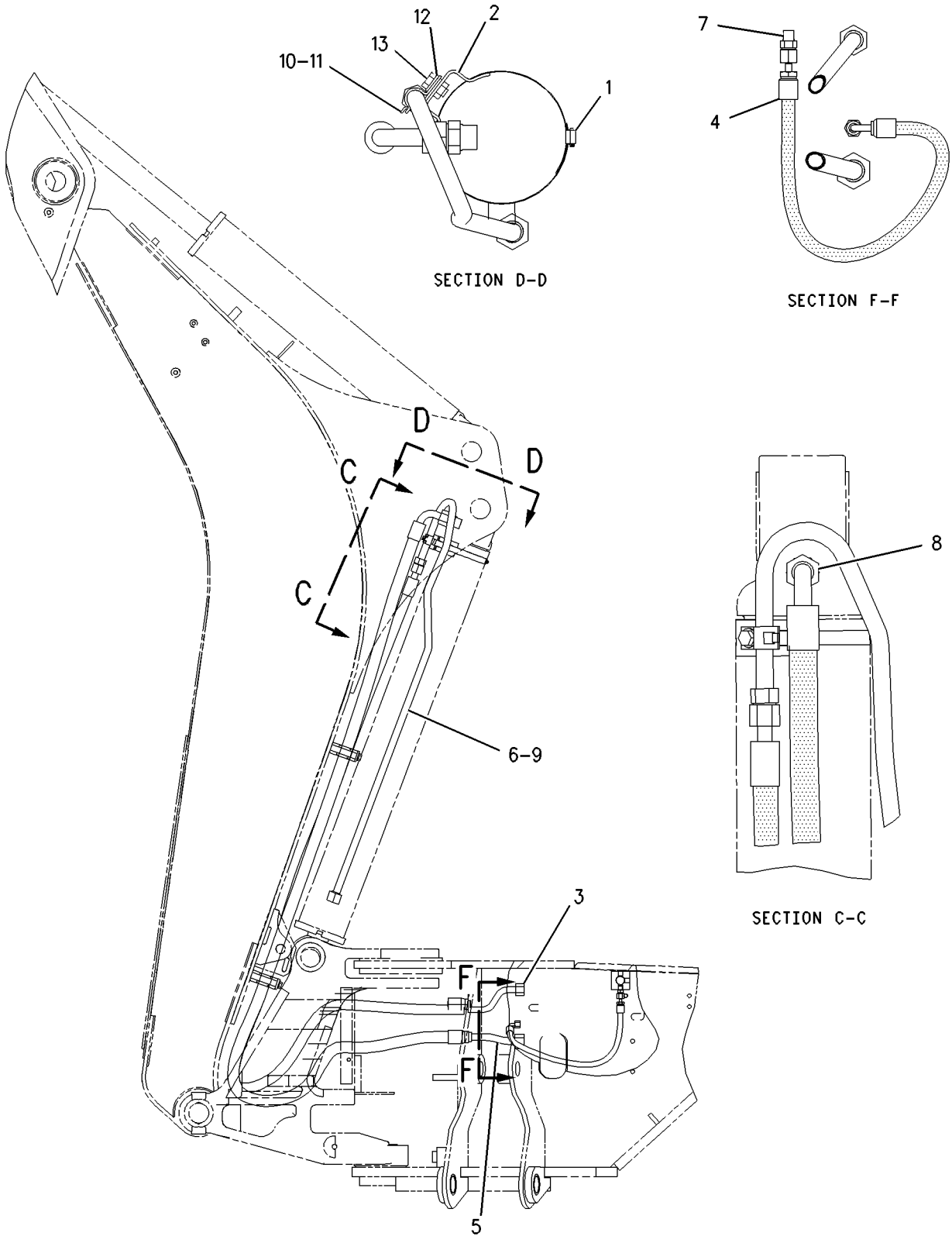

GRAPHIC #1 **<END>** g00867090

HYDRAULIC SYSTEM

167-8275 LINES GP-BUCKET CYLINDER

S/N: FDP18400-UP

PART OF 184-7913, 184-7915, 184-7916, 184-7917, 238-8219 BACKHOE AR-STANDARD STICK AN ATTACHMENT

SMCS-5057, 5457 **i01663585**

NOTE	REF NO	GRAPHIC REF	PART NUMBER	QTY	PART NAME 1 2 3 4 5 6 (PRODUCT LEVEL)	SEE PAGE
	1	1	**5P-0599**	2	CLAMP	
	2	1	**9R-5948**	1	BLOCK	
I	3	1	**160-6026**	1	HOSE AS	
I	4	1	**169-2983**	1	HOSE AS	
	5	1	**187-4343**	1	TUBE AS	
	6	1	**195-0268**	1	BRACKET AS	
I	7	1	**197-0573**	1	HOSE AS	
	8	1	**212-9338**	1	HOSE AS	
	9	1	*148-8362*	1	ELBOW GP	
		1	**3D-2824**	1	SEAL-O-RING	
		1	**5K-9090**	1	SEAL-O-RING	
		1	**8T-6684**	1	ELBOW	
	10	1	*148-8455*	1	UNION GP	
		1	**6V-8997**	1	UNION	
		1	**6V-9746**	2	SEAL-O-RING	
	11	1	*148-8457*	1	UNION GP	
		1	**6V-8398**	2	SEAL-O-RING	
		1	**6V-8995**	1	UNION-BULKHEAD	
	12	1	**2P-1293**	1	LOCKNUT-BULKHEAD (1 3/16-12 THD)	
	13	1	**5P-7464**	1	CLIP (SLOT)	
	14	1	**5P-7465**	1	CLIP (TAB)	
	15	1	**5P-7466**	1	CLIP (SLOT)	
	16	1	**5P-7467**	1	CLIP (TAB)	
	17	1	**5P-8112**	1	GROMMET	
	18	1	**6V-1249**	1	GROMMET	
	19	1	**6V-9169**	1	NUT-BULKHEAD (13/16-16 THD)	
	20	1	**6V-9746**	1	SEAL-O-RING	
	21	1	**8T-1889**	1	CLIP (SLOT)	
	22	1	**8T-1890**	1	CLIP (TAB)	
	23	1	**8T-4121**	1	WASHER-HARD (11X21X2.5MM THK)	
M	24	1	**8T-4137**	1	BOLT (M10X1.5X20MM)	
M	25	1	**8T-4139**	2	BOLT (M12X1.75X30MM)	
	26	1	**8T-4223**	2	WASHER-HARD (13.5X25.5X3MM THK)	

I-SEE HOSE FABRICATION GUIDE
M-METRIC PART

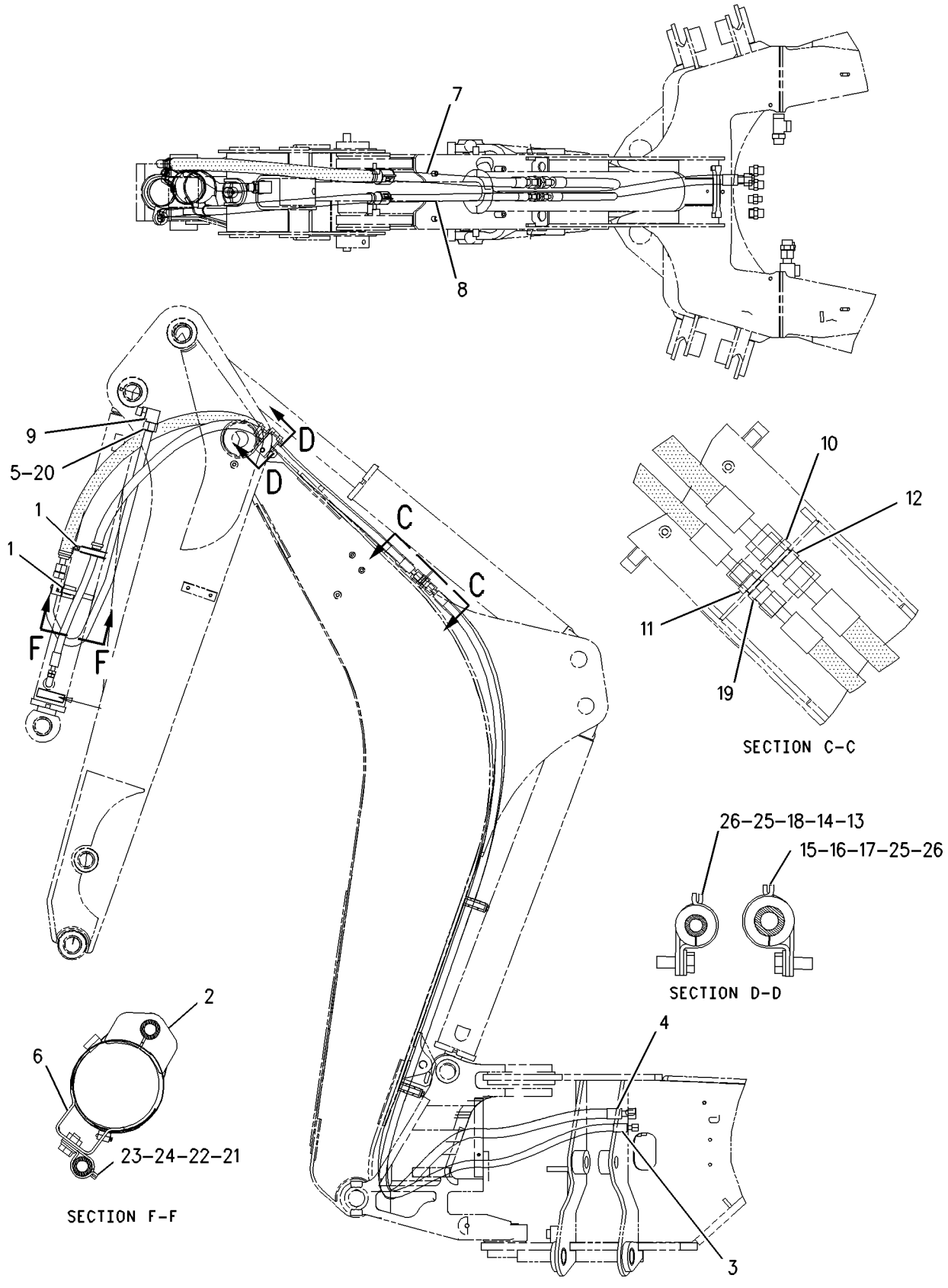

GRAPHIC #1 **<END>** g00858873

HYDRAULIC SYSTEM

202-5937 LINES GP-BUCKET CYLINDER

S/N: FDP18400-UP

LOW LEAK

PART OF 238-4786 BACKHOE AR-EXTENDABLE STICK, 202-5958, 202-5961, 202-5963, 238-4785, 238-4787 BACKHOE AR-STANDARD STICK AN ATTACHMENT

SMCS-5057, 5457 **i01618782**

NOTE	REF NO	GRAPHIC REF	PART NUMBER	QTY	PART NAME 1 2 3 4 5 6 (PRODUCT LEVEL)	SEE PAGE
	1	1	**5P-0599**	2	CLAMP	
	2	1	**9R-5948**	1	BLOCK	
	3	1	**187-4343**	1	TUBE AS	
	4	1	**195-0268**	1	BRACKET AS	
I	5	1	**197-0573**	1	HOSE AS	
	6	1	**201-3630**	1	HOSE AS	
	7	1	**201-3631**	1	HOSE AS	
	8	1	**212-9338**	1	HOSE AS	
	9	1	*148-8362*	1	ELBOW GP	
		1	**3D-2824**	1	SEAL-O-RING	
		1	**5K-9090**	1	SEAL-O-RING	
		1	**8T-6684**	1	ELBOW	
	10	1	*148-8455*	1	UNION GP	
		1	**6V-8997**	1	UNION	
		1	**6V-9746**	2	SEAL-O-RING	
	11	1	*148-8457*	1	UNION GP	
		1	**6V-8398**	2	SEAL-O-RING	
		1	**6V-8995**	1	UNION-BULKHEAD	
	12	1	**2P-1293**	1	LOCKNUT-BULKHEAD (1 3/16-12 THD)	
	13	1	**5P-7464**	1	CLIP (SLOT)	
	14	1	**5P-7465**	1	CLIP (TAB)	
	15	1	**5P-7466**	1	CLIP (SLOT)	
	16	1	**5P-7467**	1	CLIP (TAB)	
	17	1	**5P-8112**	1	GROMMET	
	18	1	**6V-1249**	1	GROMMET	
	19	1	**6V-9169**	1	NUT-BULKHEAD (13/16-16 THD)	
	20	1	**6V-9746**	1	SEAL-O-RING	
	21	1	**8T-1889**	1	CLIP (SLOT)	
	22	1	**8T-1890**	1	CLIP (TAB)	
	23	1	**8T-4121**	1	WASHER-HARD (11X21X2.5MM THK)	
M	24	1	**8T-4137**	1	BOLT (M10X1.5X20MM)	
M	25	1	**8T-4139**	2	BOLT (M12X1.75X30MM)	
	26	1	**8T-4223**	2	WASHER-HARD (13.5X25.5X3MM THK)	

I-SEE HOSE FABRICATION GUIDE
M-METRIC PART

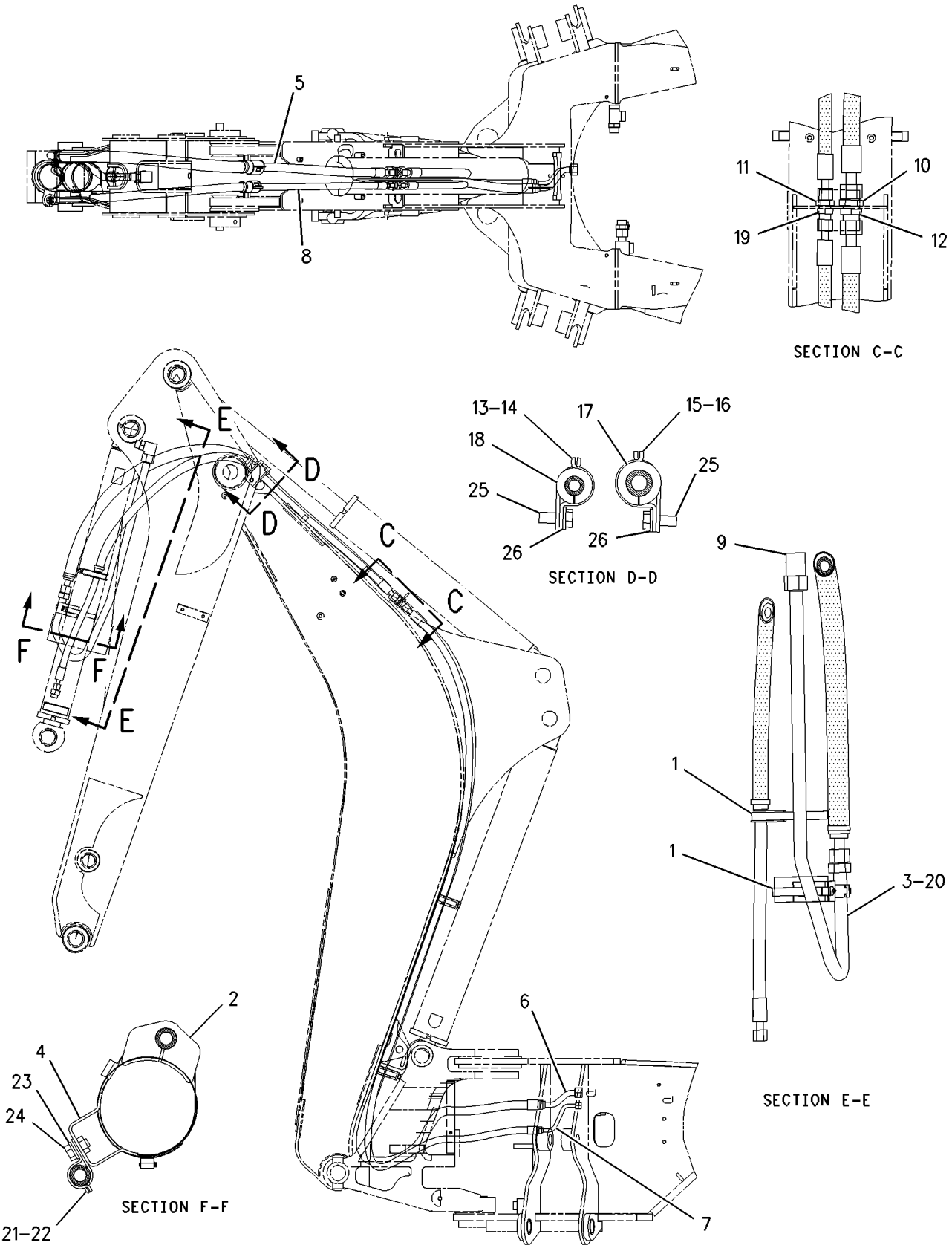

GRAPHIC #1 **<END>** g00838054

162-2351 LINES GP-EXTENDABLE STICK

S/N: FDP18400-UP
PART OF 155-6586 CYLINDER GP-EXTENDABLE STICK
AN ATTACHMENT

SMCS-5057 **i01888626**

NOTE	REF NO	GRAPHIC REF	PART NUMBER	QTY	PART NAME 1 2 3 4 5 6 (PRODUCT LEVEL)	SEE PAGE
	1	1	**5P-0598**	1	CLAMP	
	2	1	**9R-2004**	1	BLOCK	
	3	1	**162-2353**	1	TUBE AS	
	4	1	**203-9048**	1	TUBE AS	
	5	1	*148-8390*	1	ELBOW GP	
		1	**2M-9780**	1	SEAL-O-RING	
		1	**6V-8626**	1	ELBOW	
		1	**7J-9108**	1	SEAL-O-RING	

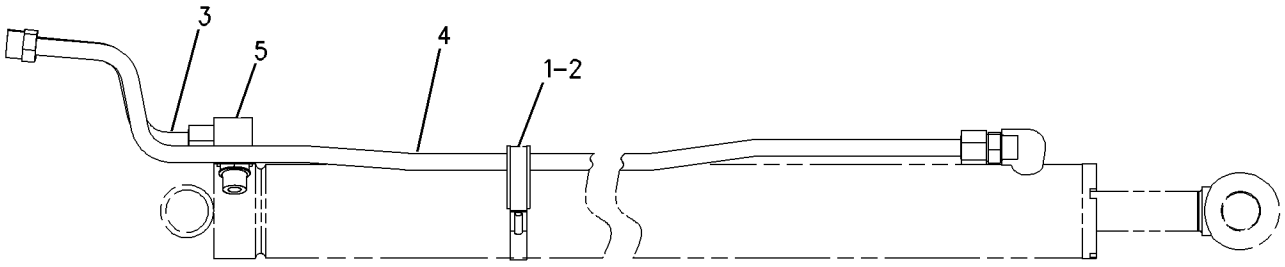

GRAPHIC #1 **<END>** g00865371

HYDRAULIC SYSTEM

167-8276 LINES GP-EXTENDABLE STICK

S/N: FDP18400-UP
EXTENDED
PART OF 184-7925, 238-8218 BACKHOE AR-EXTENDABLE STICK
AN ATTACHMENT

SMCS-5057 **i01979935**

NOTE	REF NO	GRAPHIC REF	PART NUMBER	QTY	PART NAME 1 2 3 4 5 6 (PRODUCT LEVEL)	SEE PAGE
	1	1	**5P-0599**	1	CLAMP	
	2	1	**9R-5948**	1	BLOCK	
	3	1	**9R-9253**	1	PLATE	
	4	1	**101-0862**	2	PLATE-WARNING (E-STICK)	
I	5	1	**160-6026**	1	HOSE AS	
	6	1	**162-2356**	2	TUBE AS	
I	7	1	**167-3896**	2	HOSE AS	
I	8	1	**169-2935**	2	HOSE AS	
I	9	1	**169-2983**	1	HOSE AS	
I	10	1	**168-8497**	1	HOSE AS	
	11	1	**177-0856**	1	TUBE AS	
	12	1	**177-2171**	1	TUBE AS	
	13	1	**187-4333**	1	TUBE AS	
	14	1	**187-4344**	1	TUBE AS	
I	15	1	**168-8644**	1	HOSE AS	
	16	1	*148-8328*	2	CONNECTOR GP	
					(EACH INCLUDES)	
		1	**3D-2824**	1	SEAL-O-RING	
		1	**6V-8398**	1	SEAL-O-RING	
		1	**6V-8633**	1	CONNECTOR	
	17	1	*148-8347*	1	ELBOW GP	
		1	**3D-2824**	1	SEAL-O-RING	
		1	**6V-9007**	1	ELBOW	
		1	**6V-9746**	1	SEAL-O-RING	
	18	1	**2P-1293**	1	LOCKNUT (1 3/16-12 THD)	
	19	1	**5P-7464**	5	CLIP (SLOT)	
	20	1	**5P-7465**	5	CLIP (TAB)	
	21	1	**5P-7466**	2	CLIP (SLOT)	
	22	1	**5P-7467**	2	CLIP (TAB)	
	23	1	**5P-7468**	1	CLIP (SLOT)	
	24	1	**5P-7469**	1	CLIP (TAB)	
	25	1	**5P-8112**	2	GROMMET	
	26	1	**6V-1249**	5	GROMMET	
	27	1	**6V-8398**	8	SEAL-O-RING	
	28	1	**6V-9169**	1	NUT-BULKHEAD (13/16-16 THD)	
	29	1	**6V-9746**	2	SEAL-O-RING	
	30	1	**7J-9108**	2	SEAL-O-RING	
	31	1	**8T-1889**	1	CLIP (SLOT)	
	32	1	**8T-1890**	1	CLIP (TAB)	
	33	1	**8T-4121**	8	WASHER-HARD (11X21X2.5MM THK)	
M	34	1	**8T-4136**	4	BOLT (M10X1.5X25MM)	
M	35	1	**8T-4139**	4	BOLT (M12X1.75X30MM)	
M	36	1	**8T-4184**	2	BOLT (M12X1.75X45MM)	
M	37	1	**8T-4195**	4	BOLT (M10X1.5X30MM)	
	38	1	**8T-4223**	6	WASHER-HARD (13.5X25.5X3MM THK)	
	39	1	**8T-7087**	1	GROMMET	
	40	1	**9R-1004**	5	CLIP (TAB)	
	41	1	**9R-1005**	5	CLIP (SLOT)	

I-REFER TO HYDRAULIC INFORMATION SYSTEM
M-METRIC PART

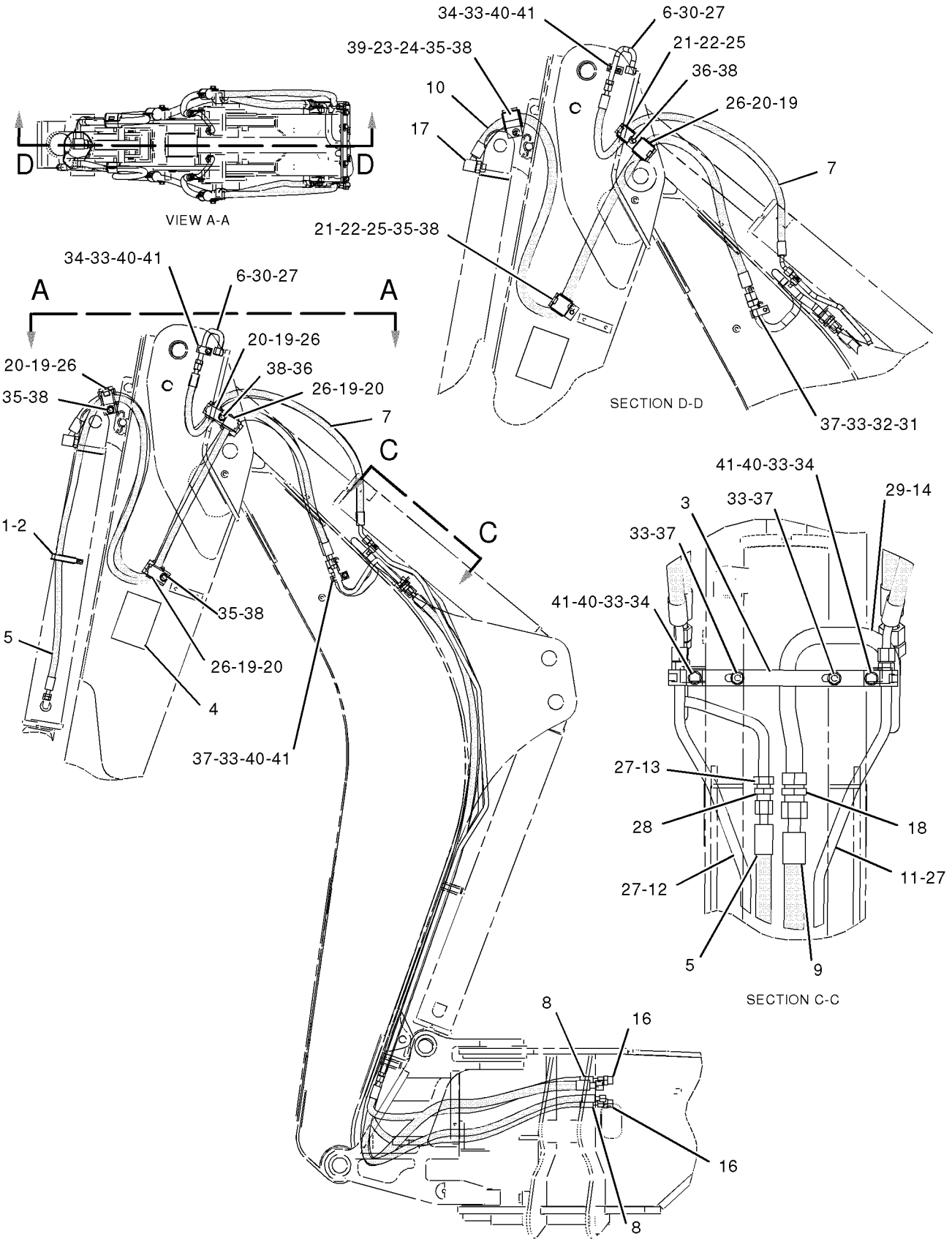

GRAPHIC #1 **<END>** g01026357

HYDRAULIC SYSTEM

214-6380 LINES GP-EXTENDABLE STICK

S/N: FDP18400-UP
PART OF 214-5553 CONVERSION GP-EXTENDABLE STICK
AN ATTACHMENT

SMCS-5057 **i02013390**

NOTE	REF NO	GRAPHIC REF	PART NUMBER	QTY	PART NAME 1 2 3 4 5 6 (PRODUCT LEVEL)	SEE PAGE
	1	1	**5P-0599**	1	CLAMP	
	2	1	**9R-5948**	1	BLOCK	
	3	1	**9R-9253**	1	PLATE	
	4	1	**101-0862**	2	PLATE-WARNING (E-STICK)	
I	5	1	**160-6026**	1	HOSE AS	
	6	1	**162-2356**	2	TUBE AS	
I	7	1	**167-3896**	2	HOSE AS	
CI	8	1	**168-8497**	1	HOSE AS	
CI	9	1	**168-8644**	2	HOSE AS	
I	10	1	**169-2935**	2	HOSE AS	
I	11	1	**169-2983**	1	HOSE AS	
	12	1	**177-0856**	1	TUBE AS	
	13	1	**177-2171**	1	TUBE AS	
	14	1	**187-4333**	1	TUBE AS	
	15	1	**187-4344**	1	TUBE AS	
	16	1	*148-8328*	2	CONNECTOR GP	
					(EACH INCLUDES)	
		1	**3D-2824**	1	SEAL-O-RING	
		1	**6V-8398**	1	SEAL-O-RING	
		1	**6V-8633**	1	CONNECTOR	
	17	1	*148-8347*	1	ELBOW GP	
		1	**3D-2824**	1	SEAL-O-RING	
		1	**6V-9007**	1	ELBOW	
		1	**6V-9746**	1	SEAL-O-RING	
	18	1	**2P-1293**		LOCKNUT (1 3/16-12-THD)	
	19	1	**5P-7464**	5	CLIP (SLOT)	
	20	1	**5P-7465**	5	CLIP (TAB)	
	21	1	**5P-7466**	2	CLIP (SLOT)	
	22	1	**5P-7467**	2	CLIP (TAB)	
	23	1	**5P-7468**	1	CLIP (SLOT)	
	24	1	**5P-7469**	1	CLIP (TAB)	
	25	1	**5P-8112**	2	GROMMET	
	26	1	**6V-1249**	5	GROMMET	
	27	1	**6V-8398**	8	SEAL-O-RING	
	28	1	**6V-9169**	1	NUT-BULKHEAD (13/16-16-THD)	
	29	1	**6V-9746**	2	SEAL-O-RING	
	30	1	**7J-9108**	2	SEAL-O-RING	
	31	1	**8T-1889**	1	CLIP (SLOT)	
	32	1	**8T-1890**	1	CLIP (TAB)	
	33	1	**8T-4121**	8	WASHER-HARD (11X21X2.5-MM THK)	
M	34	1	**8T-4136**	4	BOLT (M10X1.5X25-MM)	
M	35	1	**8T-4139**	4	BOLT (M12X1.75X30-MM)	
M	36	1	**8T-4184**	2	BOLT (M12X1.75X45-MM)	
M	37	1	**8T-4195**	4	BOLT (M10X1.5X30-MM)	
	38	1	**8T-4223**	6	WASHER-HARD (13.5X25.5X3-MM THK)	
	39	1	**8T-7087**	1	GROMMET	
	40	1	**9R-1004**	5	CLIP (TAB)	
	41	1	**9R-1005**	5	CLIP (SLOT)	

C-CHANGE FROM PREVIOUS TYPE
I-REFER TO HYDRAULIC INFORMATION SYSTEM
M-METRIC PART

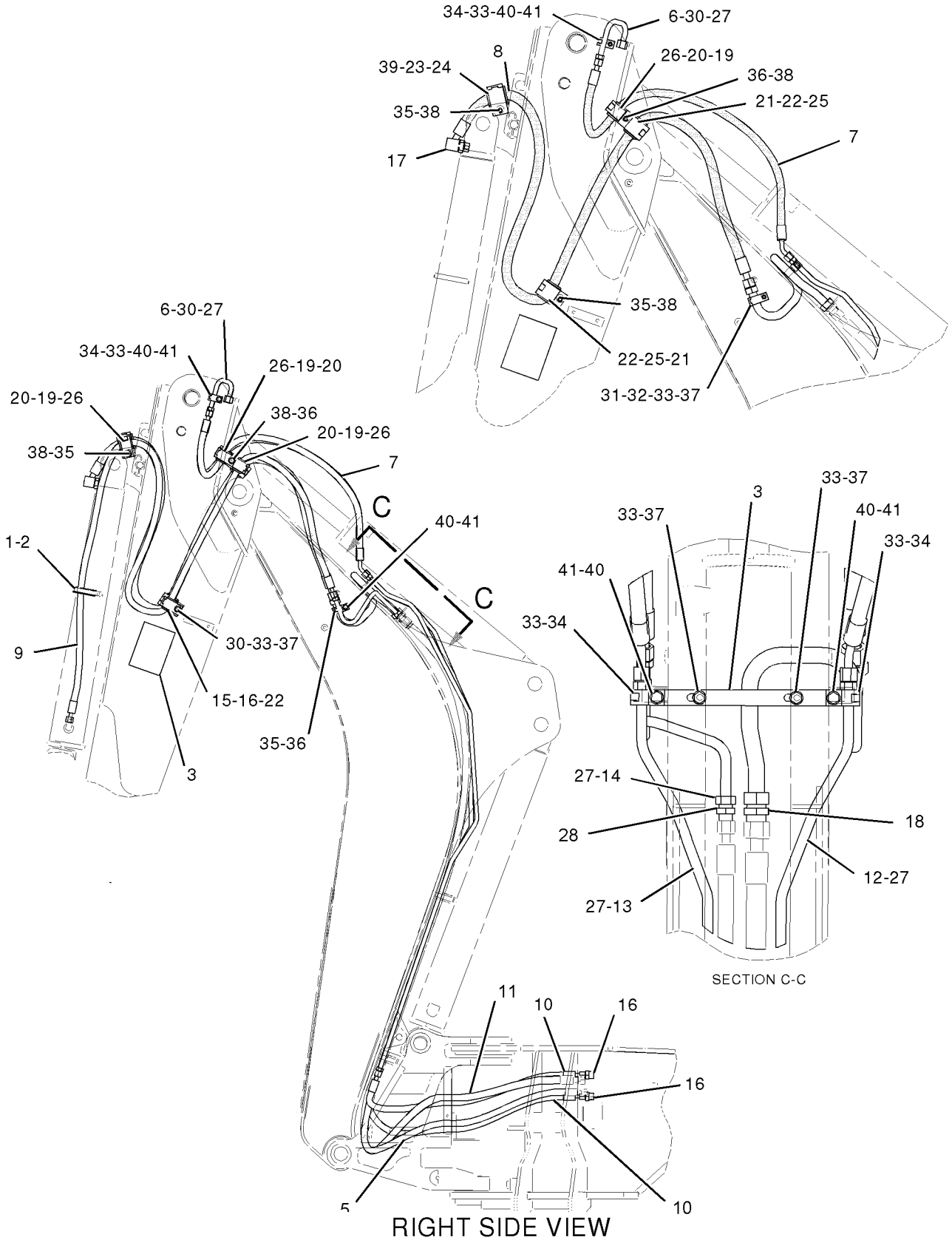

GRAPHIC #1

<END>

g01042379

HYDRAULIC SYSTEM

163-9371 LINES GP-LIFT CYLINDER

S/N: FDP18400-UP
PART OF 202-5805, 202-5806, 238-6698 HYDRAULIC AR
AN ATTACHMENT

SMCS-5057, 5102 **i01910947**

NOTE	REF NO	GRAPHIC REF	PART NUMBER	QTY	PART NAME 1 2 3 4 5 6 (PRODUCT LEVEL)	SEE PAGE
	1	1	**7K-1181**	1	STRAP-CABLE	
C	2	1	**112-5823**	1	TUBE AS	
C	3	1	**112-5827**	1	TUBE AS	
I	4	1	**120-1324**	4	HOSE AS	
	5	1	**122-4872**	1	BRACKET AS	
	6	1	**122-4873**	1	BRACKET AS	
	7	1	**158-3412**	6	CLIP (SLOT)	
C	8	1	**230-7649**	1	TUBE AS	
C	9	1	**230-7651**	1	TUBE AS	
	10	1	*148-8341*	1	CONNECTOR GP	
		1	**3D-2824**	1	SEAL-O-RING	
		1	**6V-8713**	1	CONNECTOR	
		1	**7J-9108**	1	SEAL-O-RING	
	11	1	*148-8446*	3	TEE GP-SWIVEL	
					(EACH INCLUDES)	
		1	**6V-9838**	1	TEE-SWIVEL	
		1	**7J-9108**	2	SEAL-O-RING	
	12	1	*150-3063*	1	TEE AS	
		1	**3D-2824**	1	SEAL-O-RING	
		1	**7J-9108**	2	SEAL-O-RING	
		1	**120-9809**	1	TEE	
	13	1	**151-4841**	1	BLOCK	
C	14	1	**230-7650**	1	TUBE AS	
	15	1	**6V-8398**	4	SEAL-O-RING	
	16	1	**6V-9831**	2	CAP AS	
	17	1	**7J-9108**	1	SEAL-O-RING	
	18	1	**8T-4121**	5	WASHER-HARD (11X21X2.5MM THK)	
CM	19	1	**8T-4133**	1	NUT (M10X1.5 THD)	
M	20	1	**8T-4136**	4	BOLT (M10X1.5X25MM)	
CM	21	1	**8T-4137**	1	BOLT (M10X1.5X20MM)	
	22	1	**9R-7803**	3	CLIP (TAB)	

C-CHANGE FROM PREVIOUS TYPE
I-SEE HOSE FABRICATION GUIDE
M-METRIC PART

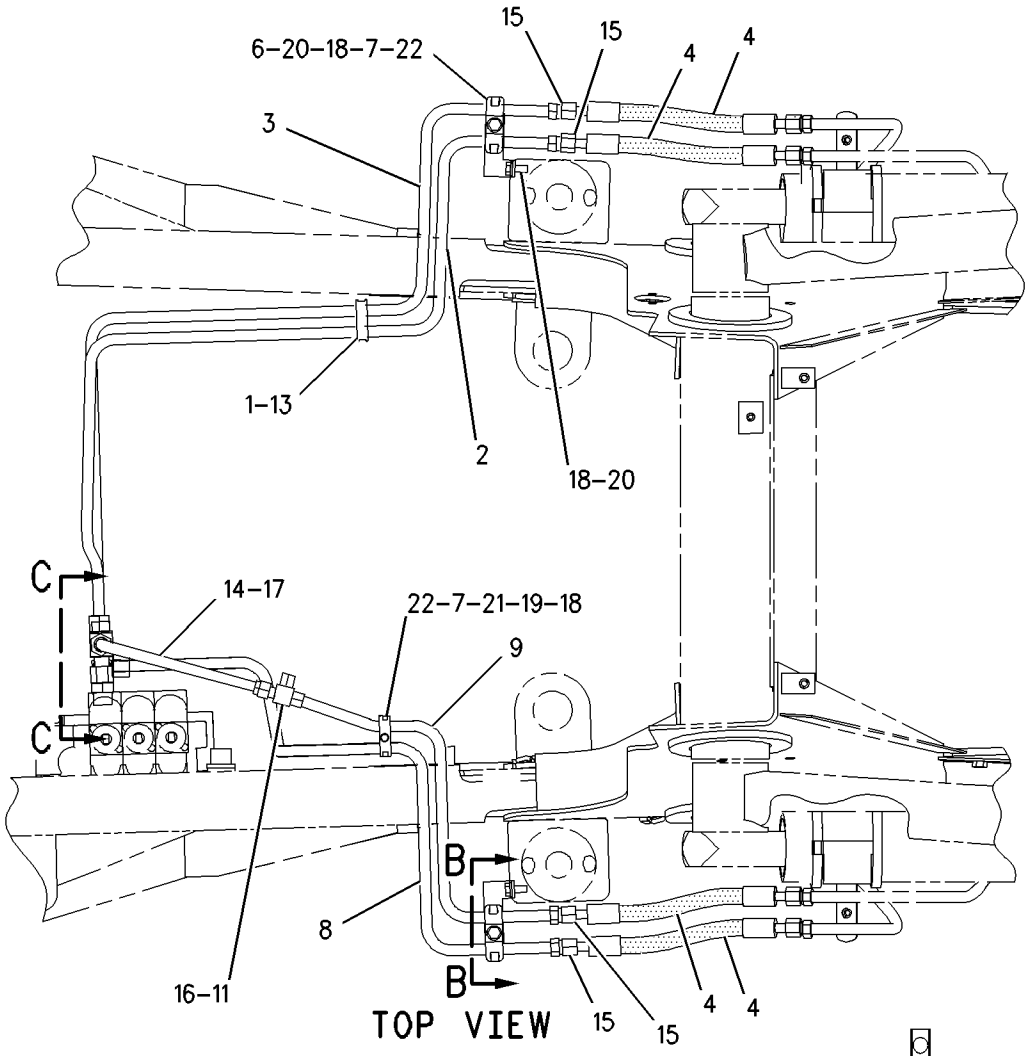

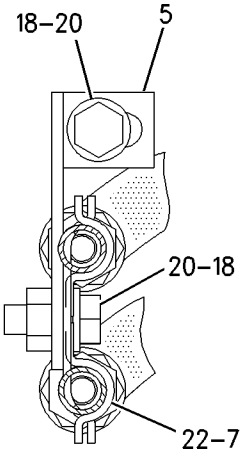

VIEW B-B

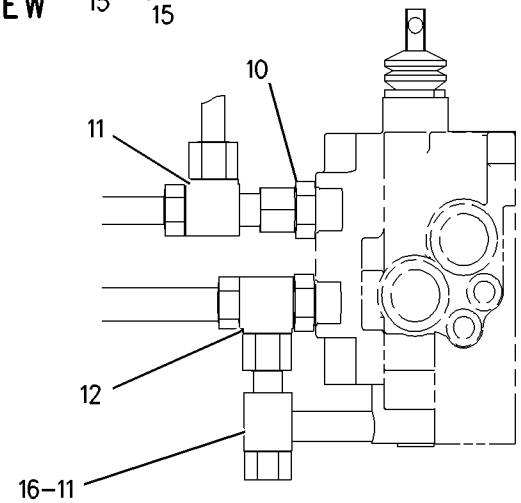

VIEW C-C

GRAPHIC #1 **<END>** g00995757

HYDRAULIC SYSTEM

200-4153 LINES GP-LIFT CYLINDER

S/N: FDP18400-UP
PART OF 202-5805, 202-5806 HYDRAULIC AR
AN ATTACHMENT

SMCS-5057, 5102 **i01696396**

NOTE	REF NO	GRAPHIC REF	PART NUMBER	QTY	PART NAME 1 2 3 4 5 6 (PRODUCT LEVEL)	SEE PAGE
	1	1	**8T-6726**	4	CLAMP-HOSE	
	2	1	**9R-7070**	1	PLATE AS	
	3	1	**9R-7071**	1	PLATE AS	
	4	1	**120-8413**	1	TUBE AS	
	5	1	**120-8414**	1	TUBE AS	
	6	1	**158-3412**	4	CLIP (SLOT)	
	7	1	**198-8352**	1	TUBE AS	
	8	1	**198-8353**	1	TUBE AS	
	9	1	*148-8390*	2	ELBOW GP	
					(EACH INCLUDES)	
		1	**2M-9780**	1	SEAL-O-RING	
		1	**6V-8626**	1	ELBOW	
		1	**7J-9108**	1	SEAL-O-RING	
	10	1	**6V-8398**	4	SEAL-O-RING	
	11	1	**8T-4121**	2	WASHER-HARD (11X21X2.5MM THK)	
M	12	1	**8T-4136**	2	BOLT (M10X1.5X25MM)	
	13	1	**9R-7803**	2	CLIP	

M-METRIC PART

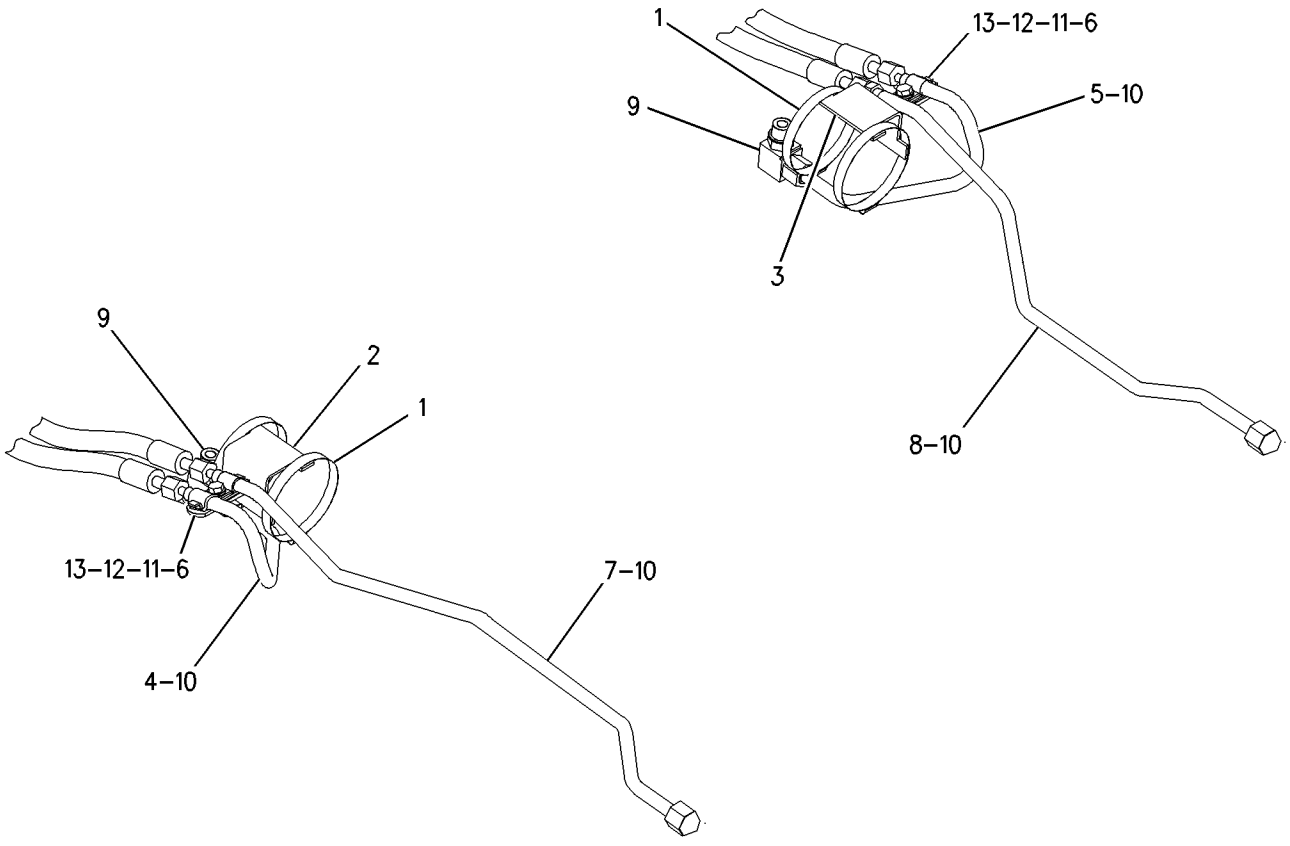

GRAPHIC #1 **<END>** g00873546

HYDRAULIC SYSTEM

183-8559 LINES GP-LOAD CONTROL VALVE

S/N: FDP18400-UP
LIFT AND TILT
PART OF 186-5336, 186-5338 HYDRAULIC AR
AN ATTACHMENT

SMCS-5057, 5811 **i01946295**

NOTE	REF NO	GRAPHIC REF	PART NUMBER	QTY	PART NAME 1 2 3 4 5 6 (PRODUCT LEVEL)	SEE PAGE
	1	2	**5P-0599**	1	CLAMP	
C	2	1	**7K-1181**	2	STRAP-CABLE	
	3	2	**8T-6726**	4	CLAMP-HOSE	
I	4	1	**8W-4002**	2	HOSE AS	
I	5	1	**9R-7069**	4	HOSE AS	
I	6	1	**9R-9198**	2	HOSE AS	
	7	1	**9R-9316**	1	BRACKET AS	
	8	2	**9R-9375**	1	PLATE	
Y	9	1	**9T-5455**	1	VALVE GP-LOAD CONTROL	555
C	10	2	**112-5823**	1	TUBE AS	
C	11	2	**112-5827**	1	TUBE AS	
	12	1	**122-4872**	1	BRACKET AS	
	13	1	**122-4873**	1	BRACKET AS	
	14	1	**122-5822**	1	BRACKET AS	
	15	2	**156-3837**	2	CLIP (SLOT)	
	16	2	**156-3838**	1	CLIP (TAB)	
	17	1,2	**158-3412**	16	CLIP (SLOT)	
	18	1,2	**159-0738**	1	BRACKET AS	
	19	2	**159-0739**	1	BRACKET AS	
	20	2	**159-0783**	1	TUBE AS	
	21	2	**159-0784**	1	TUBE AS	
	22	2	**159-0974**	1	TUBE AS	
	23	2	**159-0975**	1	TUBE AS	
I	24	2	**161-3981**	2	HOSE AS	
	25	2	**175-6916**	2	VALVE GP-LOAD CONTROL	
I	26	1	**180-4194**	1	HOSE AS	
	27	1	**187-3162**	1	TUBE AS	
	28	1	**187-3163**	1	TUBE AS	
	29	1	**187-3164**	1	TUBE AS	
	30	1	**187-3166**	1	TUBE AS	
	31	1	**192-8775**	1	TUBE AS	
	32	1	**207-8593**	1	TUBE AS	
	33	1	**207-8594**	1	TUBE AS	
	34	1	**207-8595**	1	TUBE AS	
C	35	1	**230-7649**	1	TUBE AS	
C	36	1	**230-7651**	1	TUBE AS	
	37	2	*148-8315*	4	CONNECTOR GP	
					(EACH INCLUDES)	
		2	**2M-9780**	1	SEAL-O-RING	
		2	**6V-8642**	1	CONNECTOR	
		2	**7J-9108**	1	SEAL-O-RING	
	38	1	*148-8340*	2	CONNECTOR GP	
					(EACH INCLUDES)	
		1	**3K-0360**	1	SEAL-O-RING	
		1	**6V-8398**	1	SEAL-O-RING	
		1	**6V-8639**	1	CONNECTOR	
	39	1,2	*148-8341*	3	CONNECTOR GP	
					(EACH INCLUDES)	
		1,2	**3D-2824**	1	SEAL-O-RING	
		1,2	**6V-8713**	1	CONNECTOR	
		1,2	**7J-9108**	1	SEAL-O-RING	
	40	1	*148-8342*	1	CONNECTOR GP	
		1	**3K-0360**	1	SEAL-O-RING	
		1	**6V-8632**	1	CONNECTOR	

183-8559 LINES GP-LOAD CONTROL VALVE *(contd.)* i01946295

NOTE	REF NO	GRAPHIC REF	PART NUMBER	QTY	PART NAME 1 2 3 4 5 6 (PRODUCT LEVEL)	SEE PAGE
		1	**7J-9108**	1	SEAL-O-RING	
	41	2	*148-8368*	2	ELBOW GP	
					(EACH INCLUDES)	
		2	**3J-1907**	1	SEAL-O-RING	
		2	**4J-5477**	1	SEAL-O-RING	
		2	**6V-8627**	1	ELBOW	
	42	1,2	*148-8390*	3	ELBOW GP	
					(EACH INCLUDES)	
		1,2	**2M-9780**	1	SEAL-O-RING	
		1,2	**6V-8626**	1	ELBOW	
		1,2	**7J-9108**	1	SEAL-O-RING	
	43	1	*148-8393*	2	ELBOW GP	
					(EACH INCLUDES)	
		1	**6V-9852**	1	ELBOW (SWIVEL)	
		1	**7J-9108**	1	SEAL-O-RING	
	44	1,2	*148-8446*	5	TEE GP-SWIVEL	
					(EACH INCLUDES)	
		1,2	**6V-9838**	1	TEE-SWIVEL	
		1,2	**7J-9108**	2	SEAL-O-RING	
	45	1	*150-3037*	1	ELBOW GP	
		1	**3K-0360**	1	SEAL-O-RING	
		1	**7J-9108**	1	SEAL-O-RING	
		1	**8T-2530**	1	ELBOW	
	46	2	*150-3063*	1	TEE AS	
		2	**3D-2824**	1	SEAL-O-RING	
		2	**7J-9108**	2	SEAL-O-RING	
		2	**120-9809**	1	TEE	
	47	1	**151-4841**	2	BLOCK	
	48	2	*156-3691*	2	ADAPTER AS	
					(EACH INCLUDES)	
		2	**3J-1907**	1	SEAL-O-RING	
		2	**4J-5477**	1	SEAL-O-RING	
		2	**081-6352**	1	ADAPTER	
C	49	1	**230-7650**	1	TUBE AS	
M	50	2	**3T-0850**	2	SCREW	
	51	1	**6V-8397**	2	SEAL-O-RING	
	52	1,2	**6V-8398**	14	SEAL-O-RING	
	53	1	**6V-8555**	2	NUT-FACE SEAL (1-14THD)	
	54	1	**6V-8938**	2	REDUCER-O-RING	
	55	1,2	**6V-9831**	2	CAP AS	
C	56	1	**7J-9108**	1	SEAL-O-RING	
	57	1	**8T-1891**	2	CLIP (SLOT)	
	58	1	**8T-1892**	2	CLIP (TAB)	
	59	1,2	**8T-4121**	16	WASHER-HARD (11X21X2.5MM THK)	
CM	60	1	**8T-4133**	1	NUT (M10X1.5 THD)	
M	61	1,2	**8T-4136**	10	BOLT (M10X1.5X25MM)	
CM	62	1	**8T-4137**	2	BOLT (M10X1.5X20MM)	
M	63	1,2	**8T-4195**	4	BOLT (M10X1.5X30MM)	
M	64	2	**8T-6912**	4	BOLT (M8X1.25X50MM)	
M	65	2	**8T-7963**	4	LOCKNUT	
	66	1,2	**9R-7803**	9	CLIP (TAB)	
BF			**3S-2093**	45	STRAP-CABLE	

B-USE AS REQUIRED
C-CHANGE FROM PREVIOUS TYPE
F-NOT SHOWN
I-SEE HOSE FABRICATION GUIDE
M-METRIC PART
Y-SEPARATE ILLUSTRATION

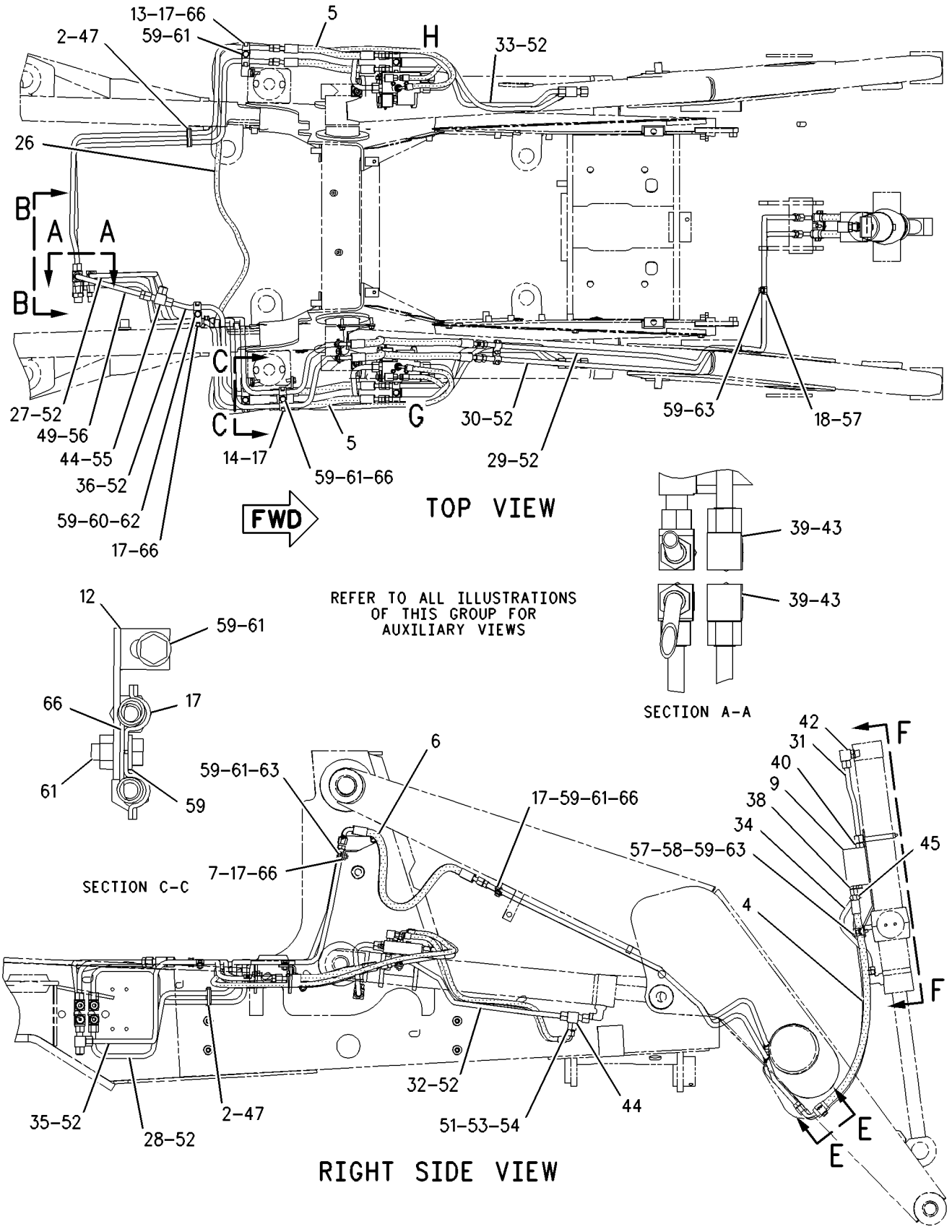

GRAPHIC #1 g00996259

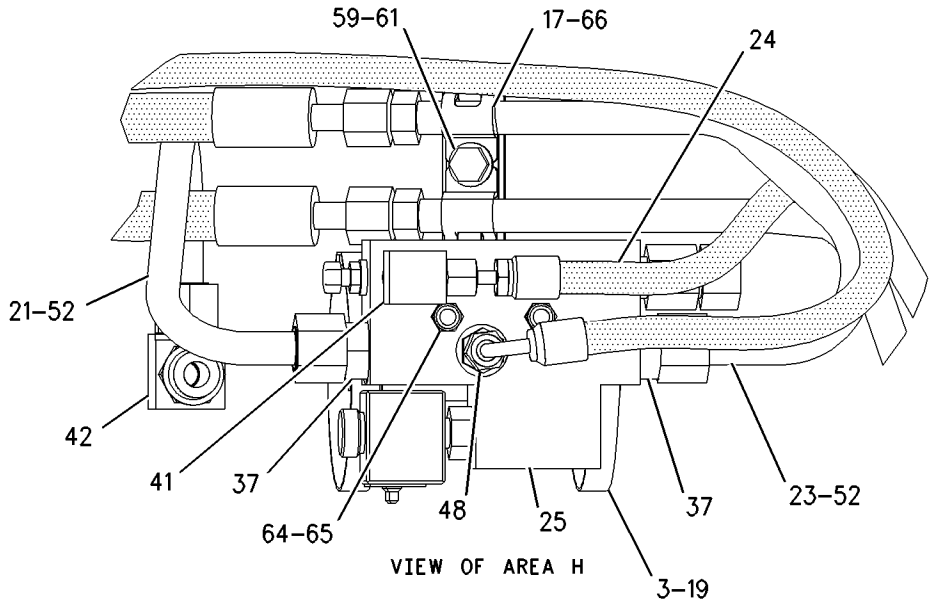

VIEW OF AREA H

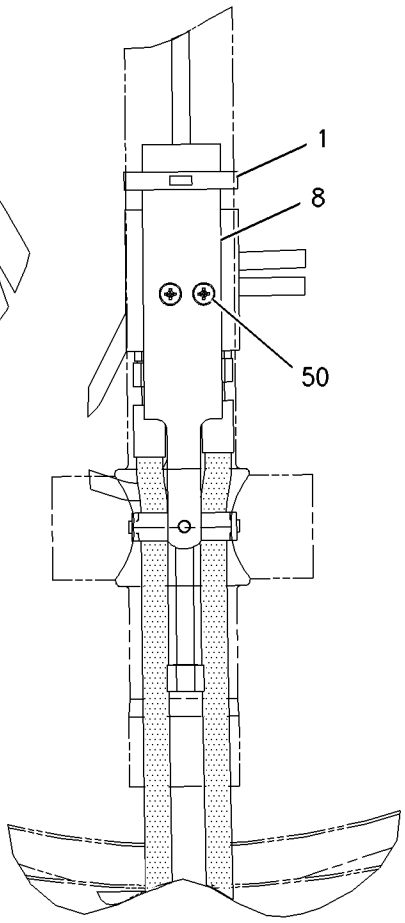

VIEW F-F

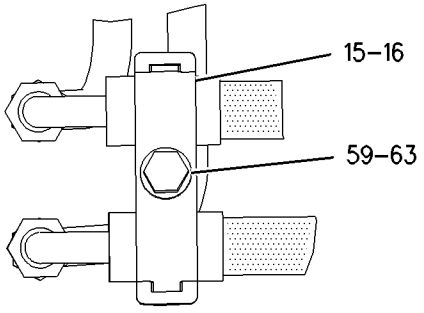

VIEW E-E

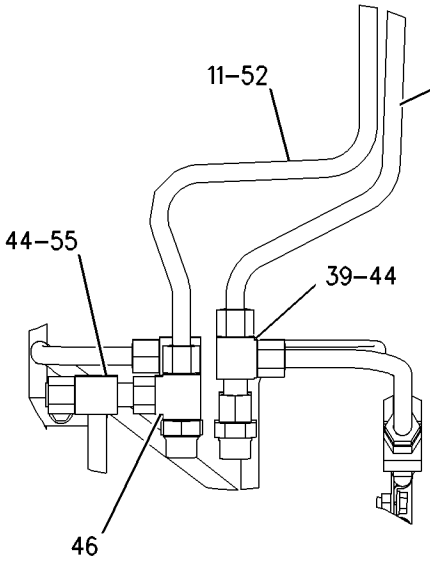

SECTION B-B

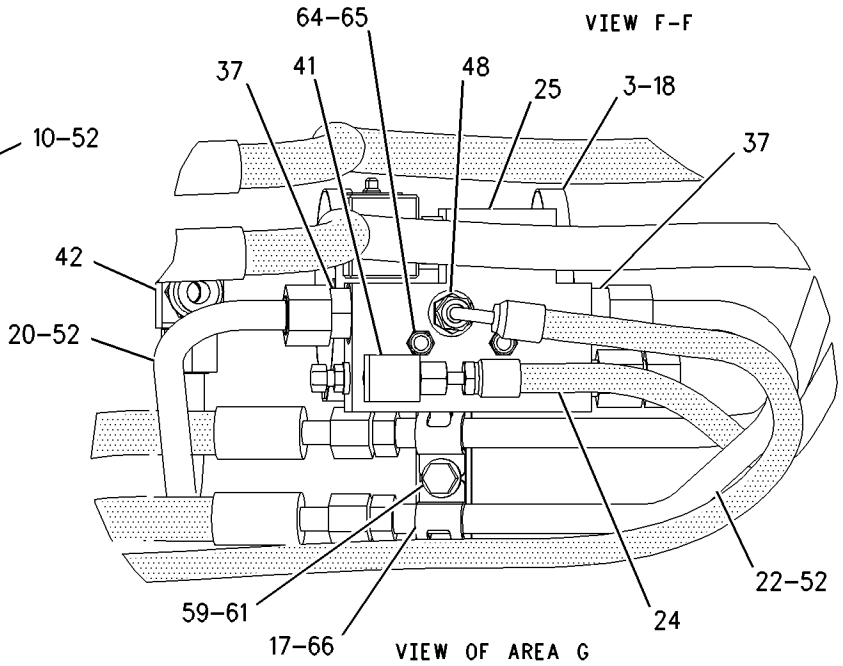

VIEW OF AREA G

GRAPHIC #2 **<END>** g00996261

HYDRAULIC SYSTEM

185-6159 LINES GP-LOAD CONTROL VALVE—BACKHOE

S/N: FDP18400-UP
BOOM AND STICK
PART OF 184-7925, 184-7927 BACKHOE AR-EXTENDABLE STICK, 184-7913, 184-7915, 184-7917 BACKHOE AR-STANDARD STICK
AN ATTACHMENT

SMCS-5057, 5811 **i01929355**

NOTE	REF NO	GRAPHIC REF	PART NUMBER	QTY	PART NAME 1 2 3 4 5 6 (PRODUCT LEVEL)	SEE PAGE
	1	1	**5P-0599**	6	CLAMP	
	2	1	**7X-3164**	1	ADAPTER-SWIVEL	
	3	1	**9R-4619**	1	SUPPORT AS	
	4	1	**9R-5948**	1	BLOCK	
	5	1	**160-8282**	1	BRACKET	
	6	1	**160-9777**	1	BRACKET	
I	7	1	**161-1024**	1	HOSE AS	
	8	1	*161-9916*	1	ADAPTER GP	
		1	**2M-9780**	1	SEAL-O-RING	
		1	**6V-7420**	1	ADAPTER-STRAIGHT THREAD	
I	9	1	**169-2978**	1	HOSE AS	
	10	1	**175-6918**	1	VALVE GP-LOAD CONTROL	
	11	1	**175-6919**	1	VALVE GP-LOAD CONTROL	
I	12	1	**191-1730**	1	HOSE AS	
I	13	1	**191-1839**	1	HOSE AS	
I	14	1	**191-2204**	1	HOSE AS	
	15	1	**207-8598**	1	TUBE AS	
	16	1	*215-3191*	1	REDUCER AS	
		1	**4J-5477**	1	SEAL-O-RING	
		1	**6V-8937**	1	REDUCER-O-RING	
I	17	1	**235-9625**	1	HOSE AS	
I	18	1	**235-9637**	1	HOSE AS	
I	19	1	**237-0505**	1	HOSE AS	
	20	1	*148-8322*	1	CONNECTOR GP	
					(EACH INCLUDES)	
		1	**2M-9780**	1	SEAL-O-RING	
		1	**6V-8640**	1	CONNECTOR-SEAL	
		1	**6V-9746**	1	SEAL-O-RING	
	21	1	*148-8325*	1	CONNECTOR GP	
		1	**3J-1907**	1	SEAL-O-RING	
		1	**4J-5477**	1	SEAL-O-RING	
		1	**6V-8641**	1	CONNECTOR	
	22	1	*148-8326*	1	CONNECTOR GP	
		1	**3J-7354**	1	SEAL-O-RING	
		1	**6V-8397**	1	SEAL-O-RING	
		1	**6V-9872**	1	CONNECTOR	
	23	1	*148-8336*	1	CONNECTOR AS	
		1	**3J-1907**	1	SEAL-O-RING	
		1	**6V-8397**	1	SEAL-O-RING	
		1	**6V-8636**	1	CONNECTOR	
	24	1	*148-8341*	1	CONNECTOR GP	
		1	**3D-2824**	1	SEAL-O-RING	
		1	**6V-8713**	1	CONNECTOR	
		1	**7J-9108**	1	SEAL-O-RING	
	25	1	*148-8345*	1	CONNECTOR GP	
		1	**2M-9780**	1	SEAL-O-RING	
		1	**6V-8398**	1	SEAL-O-RING	
		1	**6V-8638**	1	CONNECTOR-SEAL	
	26	1	*148-8347*	1	ELBOW GP	
		1	**3D-2824**	1	SEAL-O-RING	
		1	**6V-9007**	1	ELBOW	
		1	**6V-9746**	1	SEAL-O-RING	
	27	1	*148-8368*	1	ELBOW GP	

185-6159 LINES GP-LOAD CONTROL VALVE *(contd.)* i01929355

NOTE	REF NO	GRAPHIC REF	PART NUMBER	QTY	PART NAME 1 2 3 4 5 6 (PRODUCT LEVEL)	SEE PAGE
		1	**3J-1907**	1	SEAL-O-RING	
		1	**4J-5477**	1	SEAL-O-RING	
		1	**6V-8627**	1	ELBOW	
	28	1	*148-8417*	1	REDUCER AS	
		1	**6V-8397**	1	SEAL-O-RING	
		1	**6V-8941**	1	REDUCER	
	29	1	*148-8435*	1	TEE AS	
		1	**3J-1907**	1	SEAL-O-RING	
		1	**6V-8397**	2	SEAL-O-RING	
		1	**6V-8781**	1	TEE-FACE SEAL	
	30	1	*148-8446*	1	TEE GP-SWIVEL	
		1	**6V-9838**	1	TEE-SWIVEL	
		1	**7J-9108**	2	SEAL-O-RING	
	31	1	*148-8449*	1	TEE GP-SWIVEL	
		1	**6V-9746**	2	SEAL-O-RING	
		1	**6V-9839**	1	TEE-SWIVEL	
	32	1	**164-5561**	1	ADAPTER AS	
		1	**2M-9780**	1	SEAL-O-RING	
		1	**5P-1042**	1	ADAPTER-O-RING	
	33	1	**3D-2824**	1	SEAL-O-RING	
	34	1	**3K-0360**	1	SEAL-O-RING	
M	35	1	**6V-7744**	1	LOCKNUT	
	36	1	**6V-8555**	1	NUT-FACE SEAL (1-14THD)	
	37	1	**6V-8556**	1	NUT (1 3/16-12 THD)	
	38	1	**7J-9108**	1	SEAL-O-RING	
	39	1	**7X-3166**	1	ADAPTER-SWIVEL	
	40	1	**8M-2773**	2	CLIP	
	41	1	**8T-1887**	1	CLIP (SLOT)	
	42	1	**8T-1888**	1	CLIP (TAB)	
	43	1	**8T-4121**	3	WASHER-HARD (11X21X2.5MM THK)	
M	44	1	**8T-4137**	1	BOLT (M10X1.5X20MM)	
	45	1	**8T-4224**	4	WASHER-HARD (8.8X16X2MM THK)	
M	46	1	**8T-6466**	1	BOLT (M10X1.50X60MM)	
M	47	1	**8T-7329**	1	BOLT (M8X1.25X55MM)	
M	48	1	**8T-7963**	1	LOCKNUT	
BF			**3S-2093**	45	STRAP-CABLE	

B-USE AS REQUIRED
F-NOT SHOWN
I-SEE HOSE FABRICATION GUIDE
M-METRIC PART

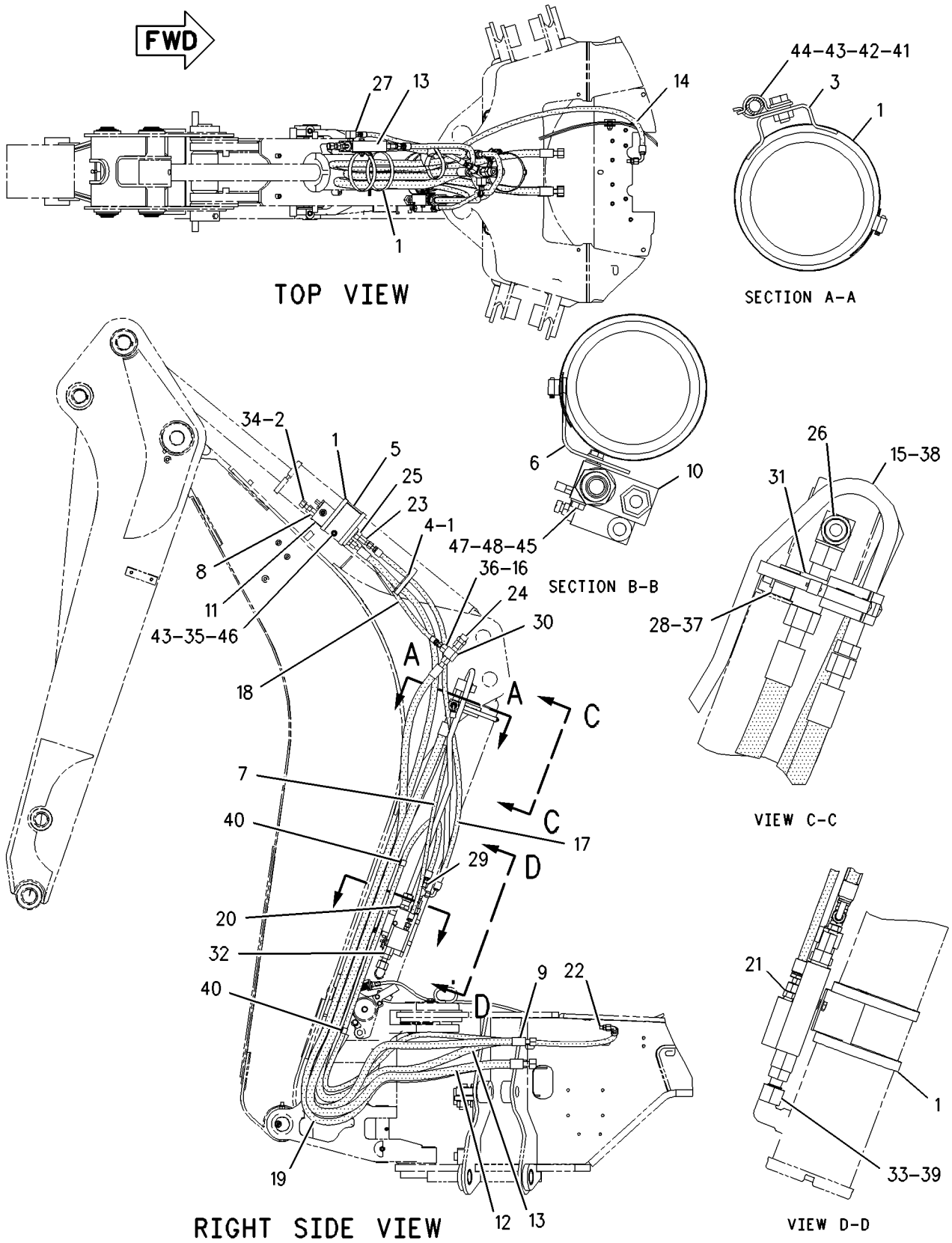

GRAPHIC #1 **<END>** g01004021

HYDRAULIC SYSTEM

106-5876 LINES GP-LOADER AUXILIARY

S/N: FDP18400-UP
ONE CIRCUIT, SCISSORS
PART OF 186-5338, 202-5806 HYDRAULIC AR
AN ATTACHMENT

SMCS-5057 **i01986465**

NOTE	REF NO	GRAPHIC REF	PART NUMBER	QTY	PART NAME 1 2 3 4 5 6 (PRODUCT LEVEL)	SEE PAGE
	1	1	**6V-9830**	2	CAP AS	
I	2	1	**9R-9198**	2	HOSE AS	
	3	1	**9R-9319**	1	BRACKET AS	
M		1	**8T-3490**	1	NUT-WELD (M10X1.5 THD)	
	4	1	**116-4616**	1	TUBE AS	
	5	1	**116-4617**	1	TUBE AS	
	6	1	**122-5823**	1	BRACKET AS	
M		1	**8T-3490**	1	NUT-WELD (M10X1.5 THD)	
	7	1	**151-4841**	1	BLOCK	
	8	1	**133-7332**	1	TUBE AS	
	9	1	**133-7333**	1	TUBE AS	
	10	1	**9R-7803**	4	CLIP (TAB)	
	11	1	**6V-8398**	6	SEAL-O-RING	
	12	1	*148-8341*	2	CONNECTOR GP	
					(EACH INCLUDES)	
		1	**3D-2824**	1	SEAL-O-RING	
		1	**6V-8713**	1	CONNECTOR	
		1	**7J-9108**	1	SEAL-O-RING	
M	13	1	**8T-4137**	1	BOLT (M10X1.5X20MM)	
	14	1	**8T-4121**	8	WASHER-HARD (11X21X2.5MM THK)	
	15	1	**7K-1181**	1	STRAP-CABLE	
M	16	1	**8T-4136**	3	BOLT (M10X1.5X25MM)	
M	17	1	**8T-4195**	3	BOLT (M10X1.5X30MM)	
	18	1	**158-3412**	8	CLIP (SLOT)	

I-REFER TO HYDRAULIC INFORMATION SYSTEM
M-METRIC PART

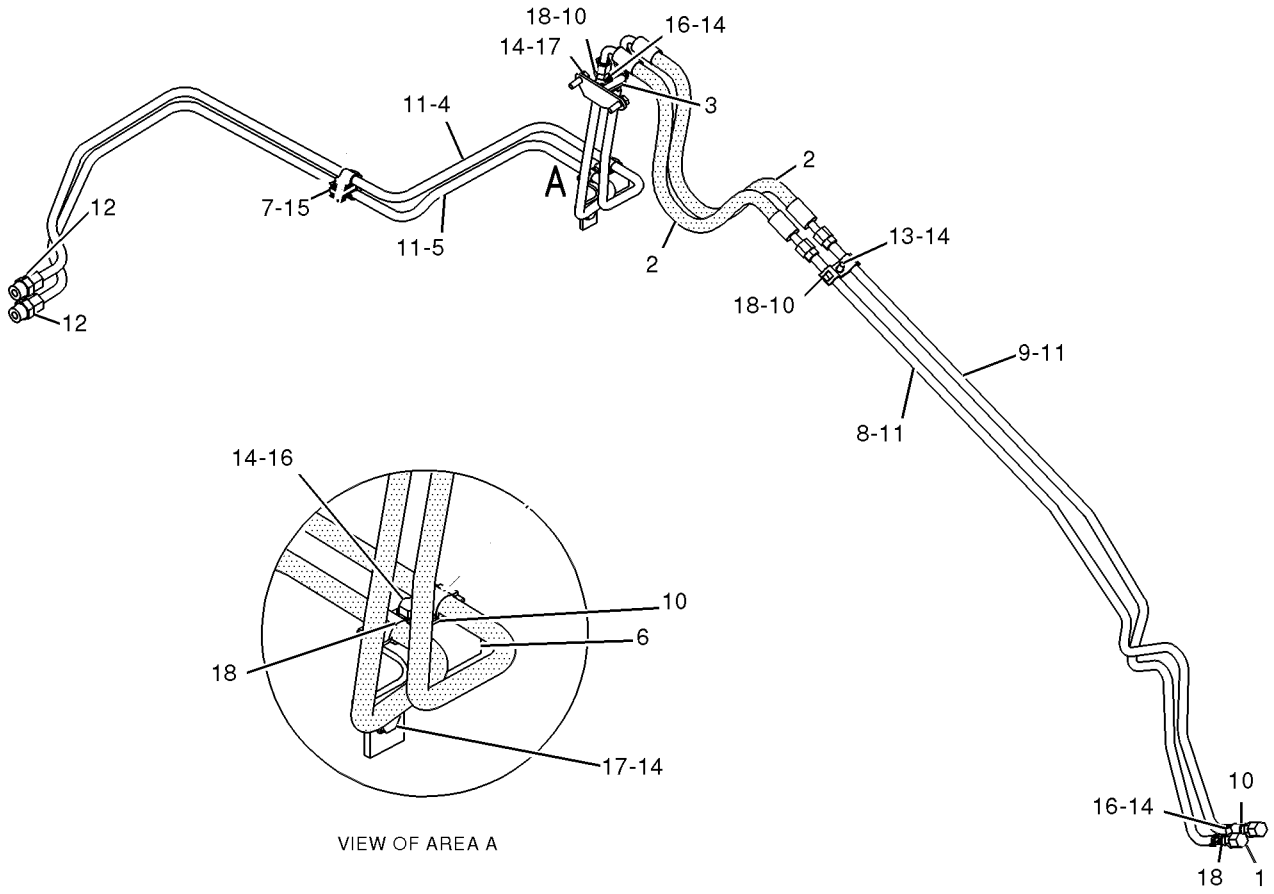

VIEW OF AREA A

GRAPHIC #1 **<END>** g01029236

HYDRAULIC SYSTEM

9R-3712 LINES GP-MULTIPURPOSE BUCKET

S/N: FDP18400-UP
BOTTOM DUMP
PART OF 112-0938, 112-0939 BUCKET AR-MULTIPURPOSE
AN ATTACHMENT

SMCS-5057 **i01710063**

NOTE	REF NO	GRAPHIC REF	PART NUMBER	QTY	PART NAME 1 2 3 4 5 6 (PRODUCT LEVEL)	SEE PAGE
	1	1	**6V-1249**	2	GROMMET	
I	2	1	**8E-3081**	1	HOSE AS	
I	3	1	**9R-0418**	2	HOSE AS	
I	4	1	**9R-5971**	1	HOSE AS	
I	5	1	**100-7442**	1	HOSE AS	
I	6	1	**117-7520**	1	HOSE AS	
	7	1	**148-8336**	4	CONNECTOR GP	
					(EACH INCLUDES)	
		1	**3J-1907**	1	SEAL-O-RING	
		1	**6V-8397**	1	SEAL-O-RING	
		1	**6V-8636**	1	CONNECTOR	
	8	1	**150-3060**	2	TEE AS	
					(EACH INCLUDES)	
		1	**6V-8397**	2	SEAL-O-RING	
		1	**6V-8398**	1	SEAL-O-RING	
		1	**8T-3444**	1	TEE-UNION ORIFICE	
	9	1	**5P-7464**	2	CLIP (SLOT)	
	10	1	**5P-7465**	2	CLIP (TAB)	
	11	1	**8T-1891**	4	CLIP (SLOT)	
	12	1	**8T-1892**	4	CLIP (TAB)	
	13	1	**8T-4121**	2	WASHER-HARD (11X21X2.5MM THK)	
M	14	1	**8T-4136**	2	BOLT (M10X1.5X25MM)	
M	15	1	**8T-4192**	2	BOLT (M12X1.75X25MM)	
	16	1	**8T-4223**	2	WASHER-HARD (13.5X25.5X3MM THK)	

I-SEE HOSE FABRICATION GUIDE
M-METRIC PART

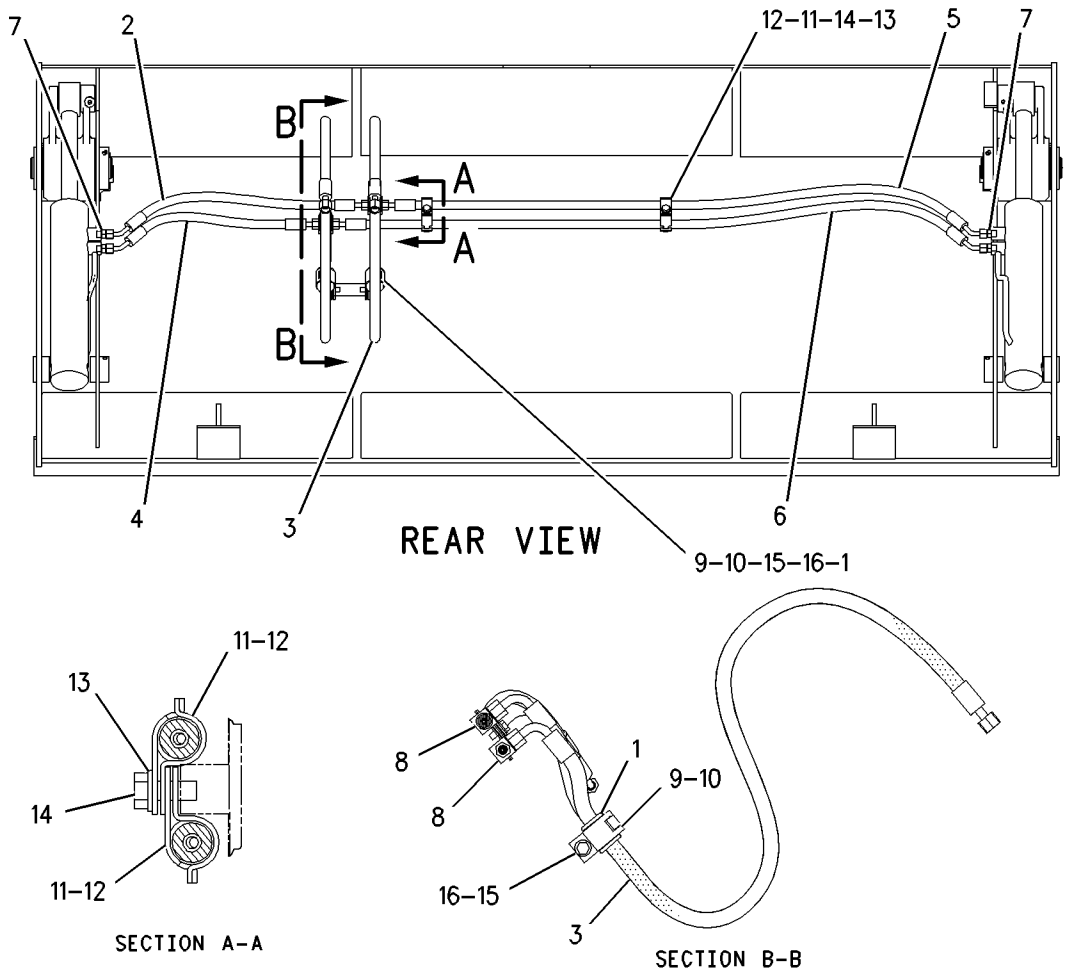

GRAPHIC #1 **<END>** g00882884

HYDRAULIC SYSTEM

9R-5788 LINES GP-MULTIPURPOSE BUCKET

S/N: FDP18400-UP
BOTTOM DUMP
PART OF 111-8634, 111-8635 BUCKET AR-MULTIPURPOSE
AN ATTACHMENT

SMCS-5057 **i01711627**

NOTE	REF NO	GRAPHIC REF	PART NUMBER	QTY	PART NAME 1 2 3 4 5 6 (PRODUCT LEVEL)	SEE PAGE
	1	1	**6V-1249**	2	GROMMET	
I	2	1	**7I-5486**	1	HOSE AS	
I	3	1	**9R-0418**	2	HOSE AS	
I	4	1	**100-7443**	1	HOSE AS	
I	5	1	**100-7444**	1	HOSE AS	
I	6	1	**131-2127**	1	HOSE AS	
	7	1	*148-8336*	4	CONNECTOR GP	
					(EACH INCLUDES)	
		1	**3J-1907**	1	SEAL-O-RING	
		1	**6V-8397**	1	SEAL-O-RING	
		1	**6V-8636**	1	CONNECTOR	
	8	1	*150-3060*	2	TEE AS	
					(EACH INCLUDES)	
		1	**6V-8397**	2	SEAL-O-RING	
		1	**6V-8398**	1	SEAL-O-RING	
		1	**8T-3444**	1	TEE-UNION ORIFICE	
	9	1	**5P-7464**	2	CLIP (SLOT)	
	10	1	**5P-7465**	2	CLIP (TAB)	
C	11	1	**8T-1891**	4	CLIP (SLOT)	
C	12	1	**8T-1892**	4	CLIP (TAB)	
C	13	1	**8T-4121**	2	WASHER-HARD (11X21X2.5MM THK)	
CM	14	1	**8T-4136**	2	BOLT (M10X1.5X25MM)	
M	15	1	**8T-4192**	2	BOLT (M12X1.75X25MM)	
	16	1	**8T-4223**	2	WASHER-HARD (13.5X25.5X3MM THK)	

C-CHANGE FROM PREVIOUS TYPE
I-SEE HOSE FABRICATION GUIDE
M-METRIC PART

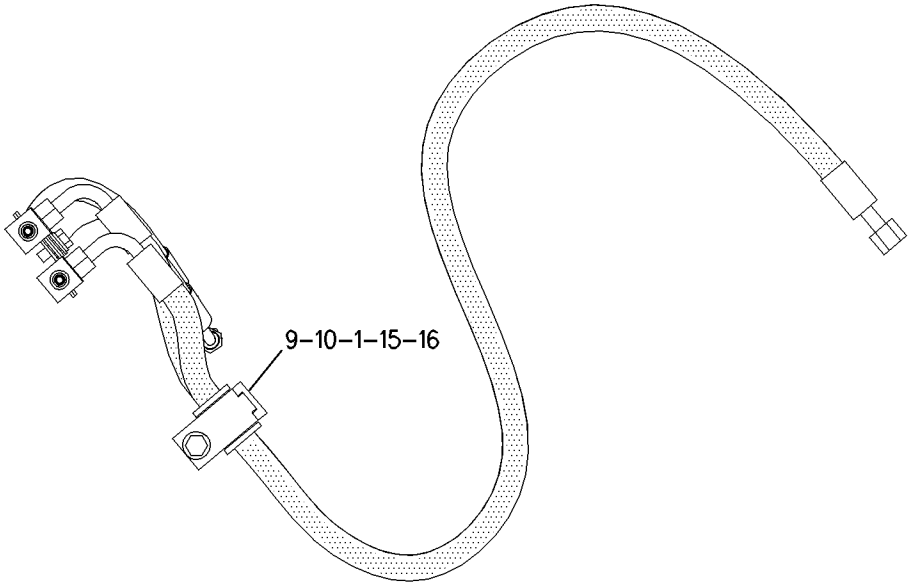

SECTION B–B

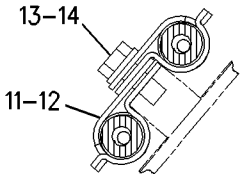

SECTION A–A

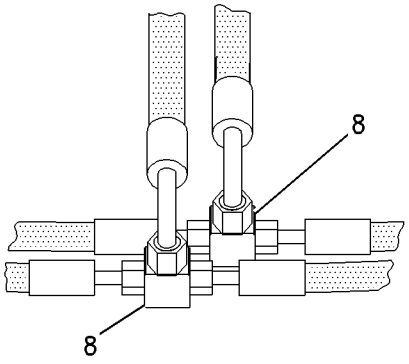

SECTION C–C

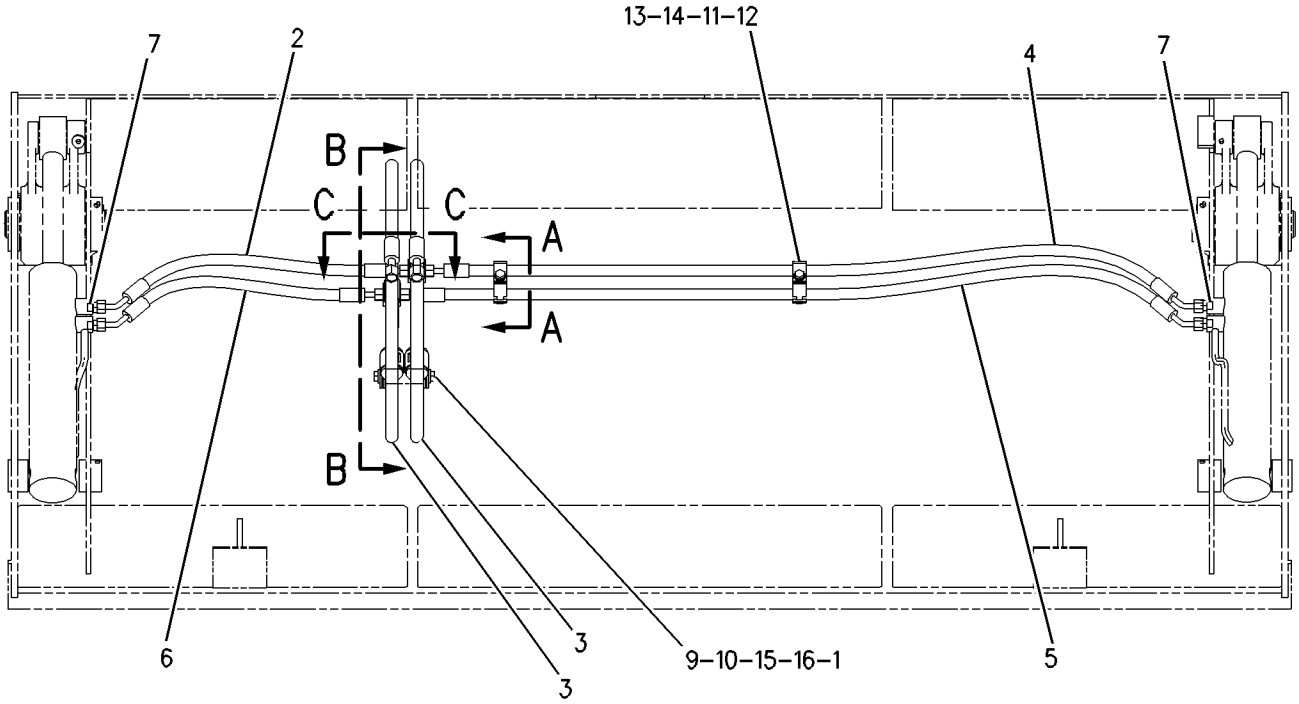

GRAPHIC #1 **<END>** g00879948

HYDRAULIC SYSTEM

188-9097 LINES GP-PILOT

S/N: FDP18400-UP
PRESSURE, STABILIZER ONLY
PART OF 238-6698 HYDRAULIC AR
AN ATTACHMENT

SMCS-5057, 5059 **i01617629**

NOTE	REF NO	GRAPHIC REF	PART NUMBER	QTY	PART NAME 1 2 3 4 5 6 (PRODUCT LEVEL)	SEE PAGE
	1	1	**6V-0852**	1	CAP-DUST	
	2	1	**133-5813**	2	BAND-HOSE (P-GRAY)	
	3	1	*164-5567*	1	FITTING GP	
		1	**3J-1907**	1	SEAL-O-RING	
		1	**6V-3965**	1	FITTING AS	
	4	1	*166-2033*	1	FITTING GP	
		1	**4J-5477**	1	SEAL-O-RING	
		1	**7X-2444**	1	TEE-SWIVEL	
	5	1	**202-5923**	1	BLOCK	
	6	1	**205-3126**	1	HOSE AS	
	7	1	*148-8325*	2	CONNECTOR GP	
					(EACH INCLUDES)	
		1	**3J-1907**	1	SEAL-O-RING	
		1	**4J-5477**	1	SEAL-O-RING	
		1	**6V-8641**	1	CONNECTOR	
	8	1	**6V-9828**	1	CAP AS	

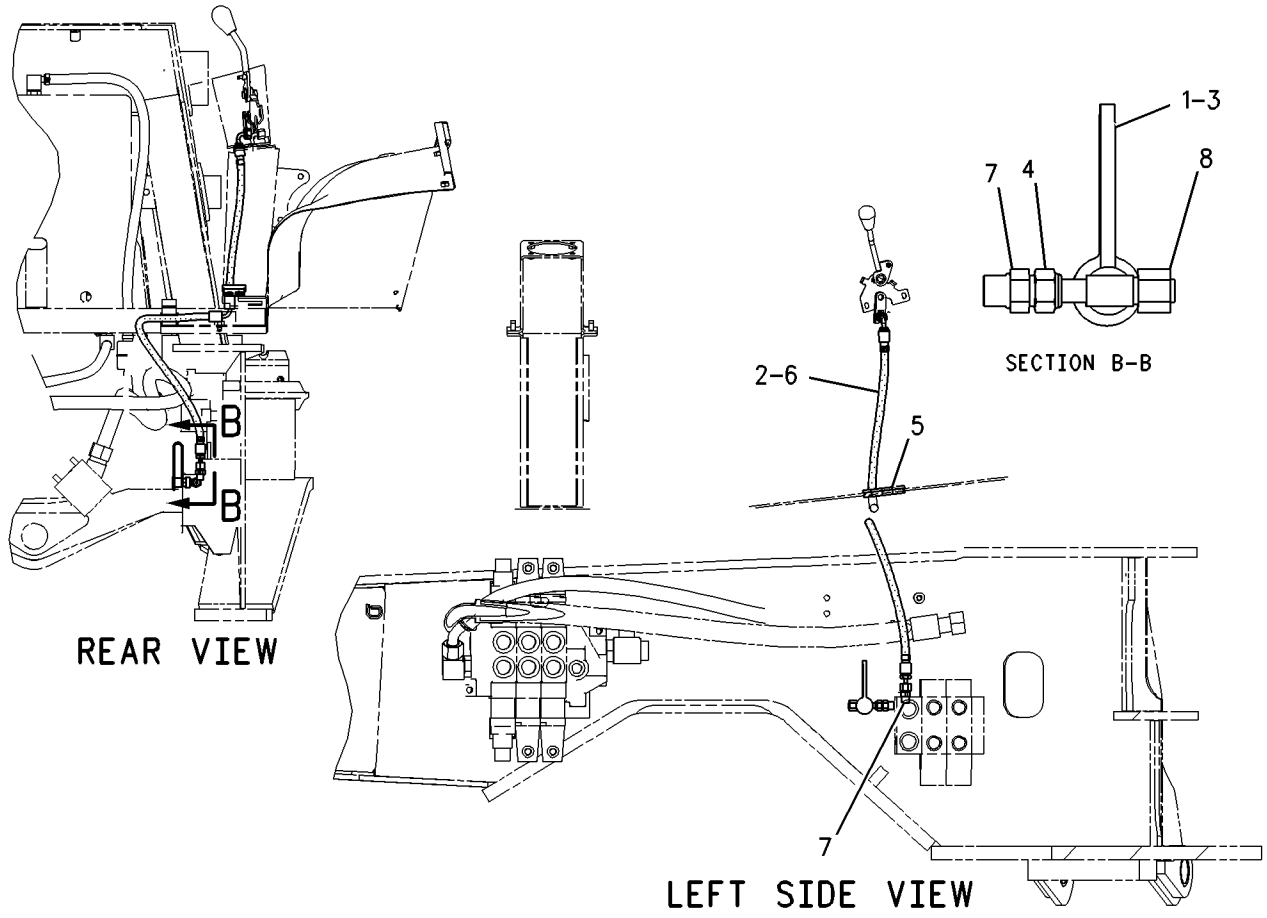

GRAPHIC #1 **<END>** g00837301

HYDRAULIC SYSTEM

188-9098 LINES GP-PILOT—BACKHOE

S/N: FDP18400-UP

PART OF 202-5805, 202-5806 HYDRAULIC AR

AN ATTACHMENT

SMCS-5057, 5059 **i02022614**

NOTE	REF NO	GRAPHIC REF	PART NUMBER	QTY	PART NAME 1 2 3 4 5 6 (PRODUCT LEVEL)	SEE PAGE
	1	1	**6V-0852**	1	CAP-DUST	
	2	1	**133-5813**	6	BAND-HOSE (P-GRAY)	
	3	1	*164-5567*	1	FITTING AS	
		1	**3J-1907**	1	SEAL-O-RING	
		1	**6V-3965**	1	FITTING (QUICK DISCONNECT)	
	4	1	**165-7948**	1	VALVE GP-CHECK	
		1	**3J-1907**	1	SEAL-O-RING	
		1	**4J-5477**	1	SEAL-O-RING	
	5	1	*166-2033*	1	TEE GP	
		1	**4J-5477**	1	SEAL-O-RING	
		1	**7X-2444**	1	TEE-SWIVEL	
I	6	1	**174-4021**	1	HOSE AS	
I	7	1	**185-7596**	1	HOSE AS	
C	8	1	**220-3392**	1	VALVE & MTG GP-SOLENOID	
M		1	**8T-1158**	1	BOLT-SOCKET HEAD (M8X1.25X20-MM)	
		1	**198-1515**	1	VALVE GP-SOLENOID	
		1	**200-2371**	1	KIT-SEAL	
		1	**208-2978**	1	MANIFOLD	
		1	**212-0061**	1	FLANGE	
	9	1	**205-3126**	1	HOSE AS	
I	10	1	**205-9124**	2	HOSE AS	
	11	1	*148-8325*	3	CONNECTOR GP	
					(EACH INCLUDES)	
		1	**3J-1907**	1	SEAL-O-RING	
		1	**4J-5477**	1	SEAL-O-RING	
		1	**6V-8641**	1	CONNECTOR	
	12	1	*148-8368*	1	ELBOW GP	
		1	**3J-1907**	1	SEAL-O-RING	
		1	**4J-5477**	1	SEAL-O-RING	
		1	**6V-8627**	1	ELBOW	
	13	1	*148-8369*	1	ELBOW GP	
		1	**3J-7354**	1	SEAL-O-RING	
		1	**4J-5477**	1	SEAL-O-RING	
		1	**6V-8628**	1	ELBOW	
	14	1	*148-8448*	2	FITTING GP	
					(EACH INCLUDES)	
		1	**4J-5477**	2	SEAL-O-RING	
		1	**6V-9842**	1	TEE-SWIVEL	
CM	15	1	**8T-6869**	2	BOLT (M8X1.25X60-MM)	
M	16	1	**8T-4224**	2	WASHER-HARD (8.8X16X2-MM THK)	
FJ		1	**169-0599**	1	SWITCH AS (HYDRAULIC SHUTOFF)	
		1	**111-7899**	1	GASKET	

C-CHANGE FROM PREVIOUS TYPE
F-NOT SHOWN
I-REFER TO HYDRAULIC INFORMATION SYSTEM
J-INSTALL IN SIDE CONSOLE
M-METRIC PART

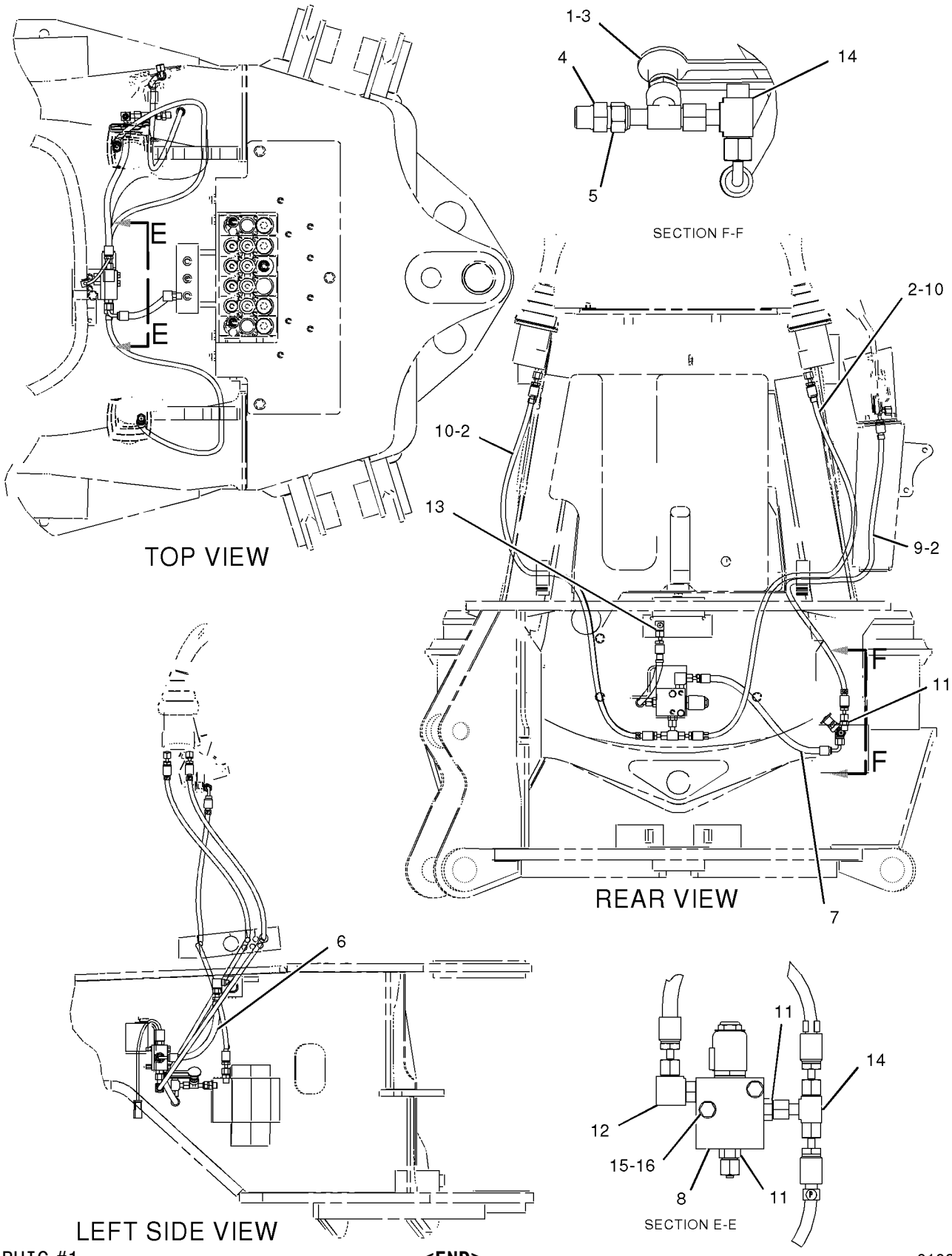

GRAPHIC #1 **<END>** g01026056

HYDRAULIC SYSTEM

202-5925 LINES GP-PILOT

S/N: FDP18400-UP
CENTER PIVOT SWITCH VALVE
PART OF 202-5916 CONTROL AR-HYDRAULIC

SMCS-5057, 5059 **i01810966**

NOTE	REF NO	GRAPHIC REF	PART NUMBER	QTY	PART NAME 1 2 3 4 5 6 (PRODUCT LEVEL)	SEE PAGE
	1	1	**4I-9521**	2	BAND-HOSE (L1-RED)	
	2	1,2	**4I-9522**	4	BAND-HOSE (L2-YELLOW)	
	3	2	**4I-9523**	2	BAND-HOSE (L3-BLUE)	
	4	2	**4I-9524**	4	BAND-HOSE (L4-BROWN)	
	5	1	**4I-9525**	2	BAND-HOSE (R1-ORANGE)	
	6	2	**4I-9526**	4	BAND-HOSE (R2-WHITE)	
	7	2	**4I-9527**	2	BAND-HOSE (R3-GREEN)	
	8	1,2	**4I-9528**	4	BAND-HOSE (R4-PURPLE)	
C	9	2	**7K-1181**	9	STRAP-CABLE	
	10	2	**164-2274**	1	VALVE GP-SELECTOR	
		2	**117-8683**	1	PIN-SPRING	
		2	**196-4072**	1	VALVE AS	
		2	**169-7176**	1	KIT-SEAL	
		2	**196-4073**	1	CAP	
C	11	2	**164-9639**	2	CONNECTOR GP	
	12	2	**191-9102**	1	LEVER AS	
	13	1	**205-2152**	2	HOSE AS	
	14	2	**205-2153**	1	HOSE AS	
C	15	1	**205-2155**	2	HOSE AS	
	16	2	**205-2156**	1	HOSE AS	
	17	2	**205-2160**	1	HOSE AS	
	18	2	**205-2161**	1	HOSE AS	
	19	2	**205-2162**	1	HOSE AS	
	20	2	**205-2163**	1	HOSE AS	
	21	1	**205-2164**	1	HOSE AS	
I	22	1	**217-6892**	1	HOSE AS	
C	23	2	**222-9950**	1	HOSE AS	
C	24	2	**222-9951**	1	HOSE AS	
C	25	2	*148-8316*	11	CONNECTOR AS	
					(EACH INCLUDES)	
		2	**3J-7354**	1	SEAL-O-RING	
		2	**4J-5477**	1	SEAL-O-RING	
		2	**6V-8647**	1	CONNECTOR	
C	26	2	*148-8325*	10	CONNECTOR GP	
					(EACH INCLUDES)	
		2	**3J-1907**	1	SEAL-O-RING	
		2	**4J-5477**	1	SEAL-O-RING	
		2	**6V-8641**	1	CONNECTOR	
C	27	2	*148-8351*	1	ELBOW GP	
		2	**4J-5477**	1	SEAL-O-RING	
		2	**6V-9849**	1	ELBOW-SWIVEL	
F			**205-6388**	1	BOLT	
F			**191-9105**	1	FILM-WARNING	
C	28	1	*148-8369*	3	ELBOW GP	
					(EACH INCLUDES)	
		1	**3J-7354**	1	SEAL-O-RING	
		1	**4J-5477**	1	SEAL-O-RING	
		1	**6V-8628**	1	ELBOW	
	29	2	*148-8385*	4	ELBOW GP	
		2	**3J-7354**	1	SEAL-O-RING	
		2	**4J-5477**	1	SEAL-O-RING	
		2	**6V-9000**	1	ELBOW	
	30	2	**195-1141**	2	SPACER	
M	31	2	**8T-4908**	2	BOLT (M8X1.25X25MM)	

202-5925 **LINES GP-PILOT** ***(contd.)*** **i01810966**

NOTE	REF NO	GRAPHIC REF	PART NUMBER	QTY	PART NAME 1 2 3 4 5 6 (PRODUCT LEVEL)	SEE PAGE
M	32	2	**5C-2890**	2	NUT (M6X1 THD)	
	33	2	**5P-4115**	2	WASHER-HARD (7.2X19X2MM THK)	
	34	2	**5P-4116**	2	WASHER-HARD (8.8X20.5X2MM THK)	
M	35	2	**7X-0465**	2	BOLT (M6X1X100MM)	
	36	2	**8T-4205**	2	WASHER-HARD (7.2X14.5X2MM THK)	

C-CHANGE FROM PREVIOUS TYPE
F-NOT SHOWN
I-SEE HOSE FABRICATION GUIDE
M-METRIC PART

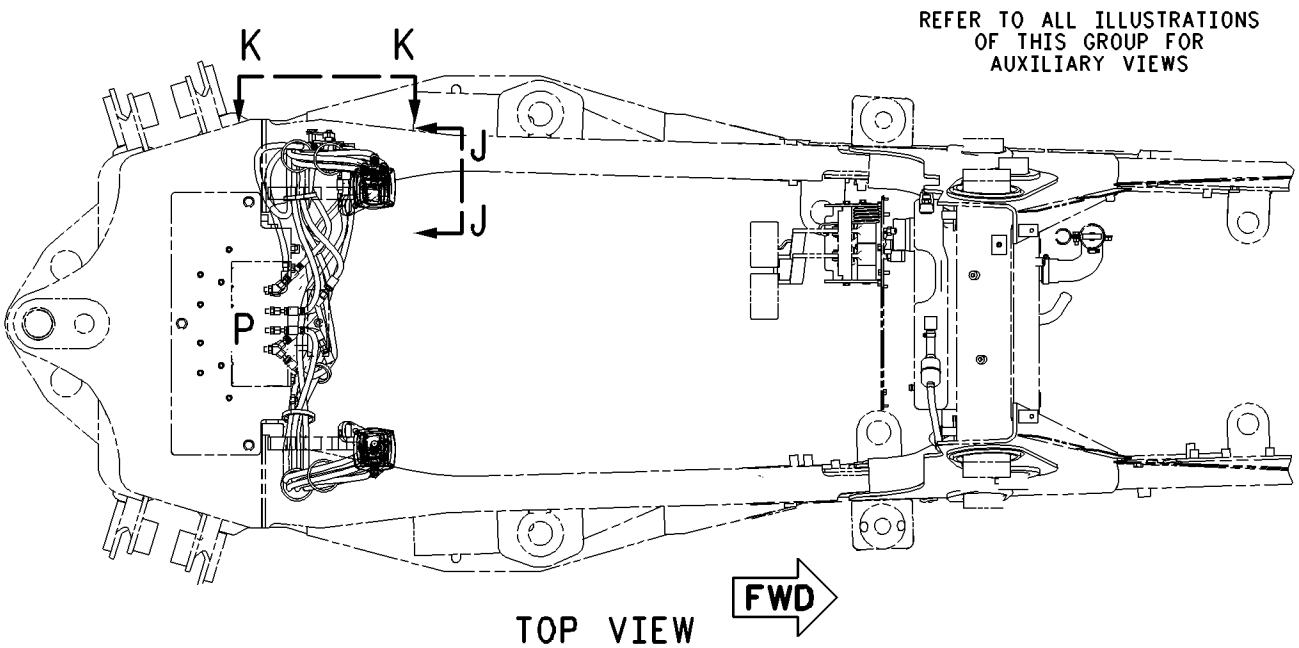

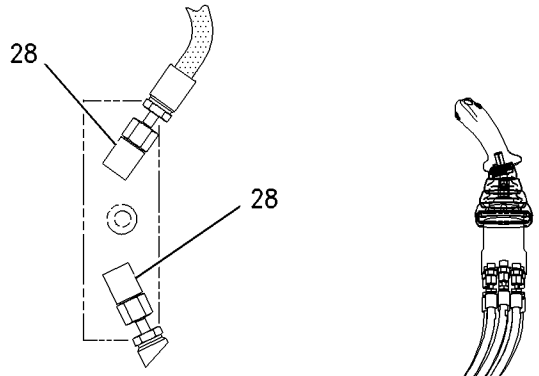

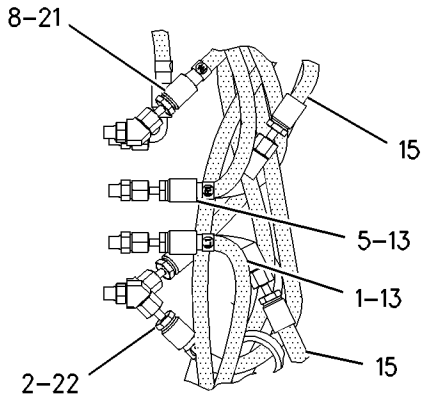

GRAPHIC #1 g00939879

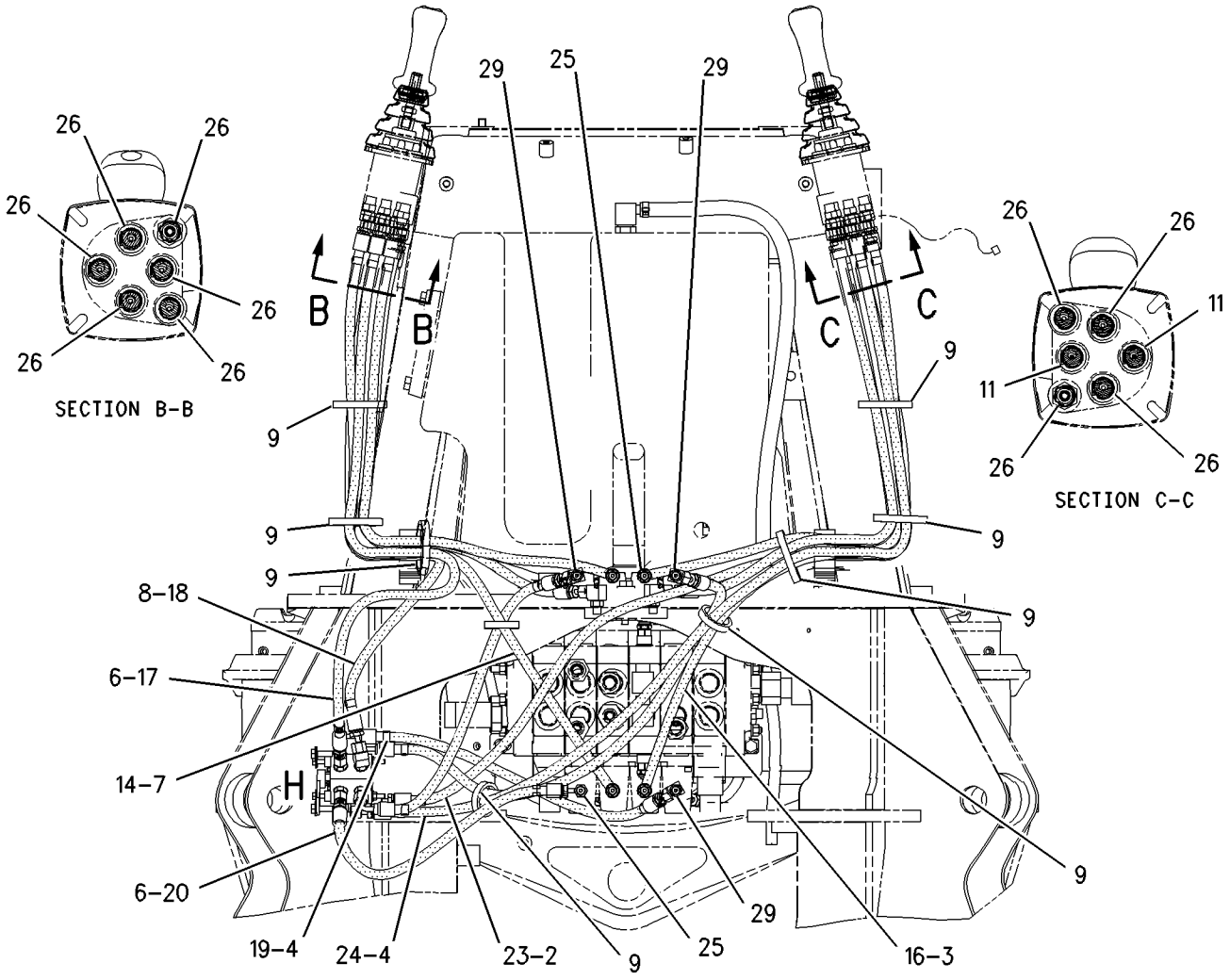

REAR VIEW

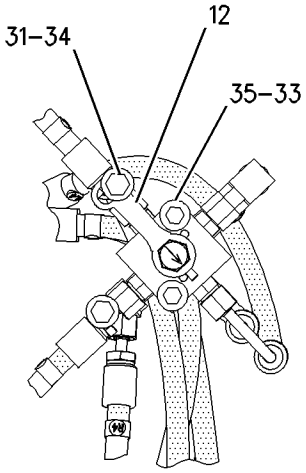

SECTION K-K

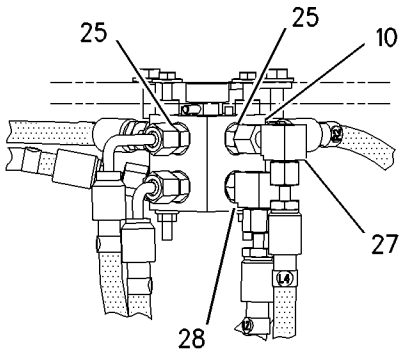

SECTION J-J

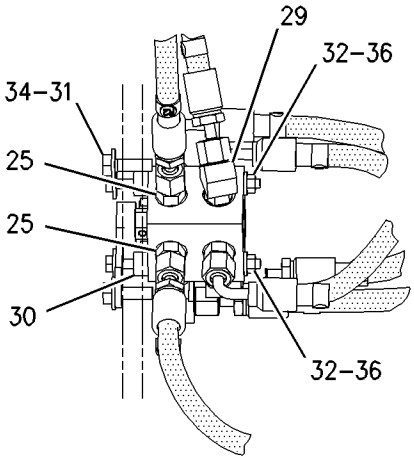

VIEW OF AREA H

GRAPHIC #2 **<END>** g00939880

HYDRAULIC SYSTEM

202-5928 LINES GP-PILOT

S/N: FDP18400-UP
STABILIZER
PART OF 214-6981 HYDRAULIC AR

SMCS-5057, 5059 **i02014879**

NOTE	REF NO	GRAPHIC REF	PART NUMBER	QTY	PART NAME 1 2 3 4 5 6 (PRODUCT LEVEL)	SEE PAGE
	1	2	**5D-1026**	2	CLAMP-HOSE	
	2	2	**7K-1181**	1	STRAP-CABLE	
	3	1	**143-3158**	1	CONNECTOR	
B	4	1,2	*155-3624*	7	PLUG GP	
					(EACH INCLUDES)	
		1,2	**3J-7354**	1	SEAL-O-RING	
		1,2	**9S-4182**	1	PLUG	
	5	1	*174-6740*	1	TEE AS	
		1	**2M-9780**	1	SEAL-O-RING	
		1	**122-1113**	1	TEE-O-RING (12.7-MM ID)	
	6	2	**186-3629**	1	MANIFOLD	
I	7	1	**188-8715**	1	HOSE AS	
	8	2	**195-0260**	2	BAND-HOSE	
	9	2	**195-0261**	2	BAND-HOSE	
	10	1	**195-0262**	2	BAND-HOSE	
	11	2	**195-0263**	2	BAND-HOSE	
	12	2	**205-6373**	1	HOSE AS	
	13	2	**205-6374**	1	HOSE AS	
	14	1	**205-6375**	1	HOSE AS	
	15	2	**205-6376**	1	HOSE AS	
	16	1	**205-6377**	1	HOSE AS	
	17	1,2	*148-8325*	7	CONNECTOR GP	
					(EACH INCLUDES)	
		1,2	**3J-1907**	1	SEAL-O-RING	
		1,2	**4J-5477**	1	SEAL-O-RING	
		1,2	**6V-8641**	1	CONNECTOR	
	18	1	*148-8369*	2	ELBOW GP	
					(EACH INCLUDES)	
		1	**3J-7354**	1	SEAL-O-RING	
		1	**4J-5477**	1	SEAL-O-RING	
		1	**6V-8628**	1	ELBOW	
	19	1	*150-3033*	4	CONNECTOR GP	
					(EACH INCLUDES)	
		1	**3J-1907**	1	SEAL-O-RING	
		1	**4J-5477**	1	SEAL-O-RING	
		1	**8T-0164**	1	ELBOW	
	20	1	**2M-9780**	1	SEAL-O-RING	
	21	1	**6D-4246**	4	CLIP	
	22	1	**7D-7233**	1	CLIP	
M	23	1	**8T-3844**	2	BOLT (M6X1X70-MM)	
	24	1	**8T-4121**	4	WASHER-HARD (11X21X2.5-MM THK)	
M	25	1	**8T-4133**	2	NUT (M10X1.5-THD)	
M	26	1	**8T-4195**	2	BOLT (M10X1.5X30-MM)	
	27	1	**8T-4205**	2	WASHER-HARD (7.2X14.5X2-MM THK)	
	28	1	**9M-8406**	1	CLIP	
E	29	1	**5P-1505**		HOSE (220CM)	

B-USE AS REQUIRED
E-ORDER BY THE CENTIMETER
I-REFER TO HYDRAULIC INFORMATION SYSTEM
M-METRIC PART

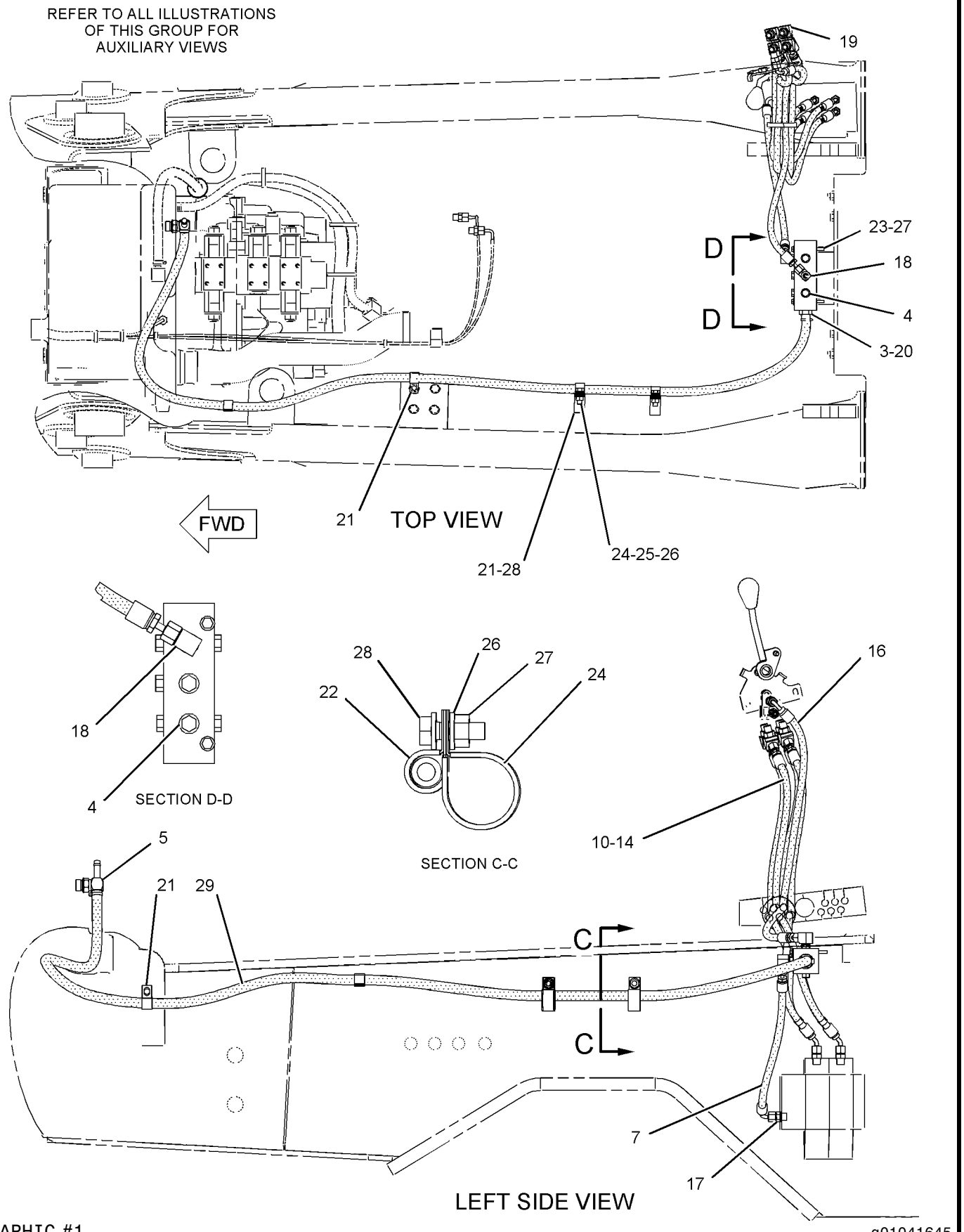

GRAPHIC #1

g01041645

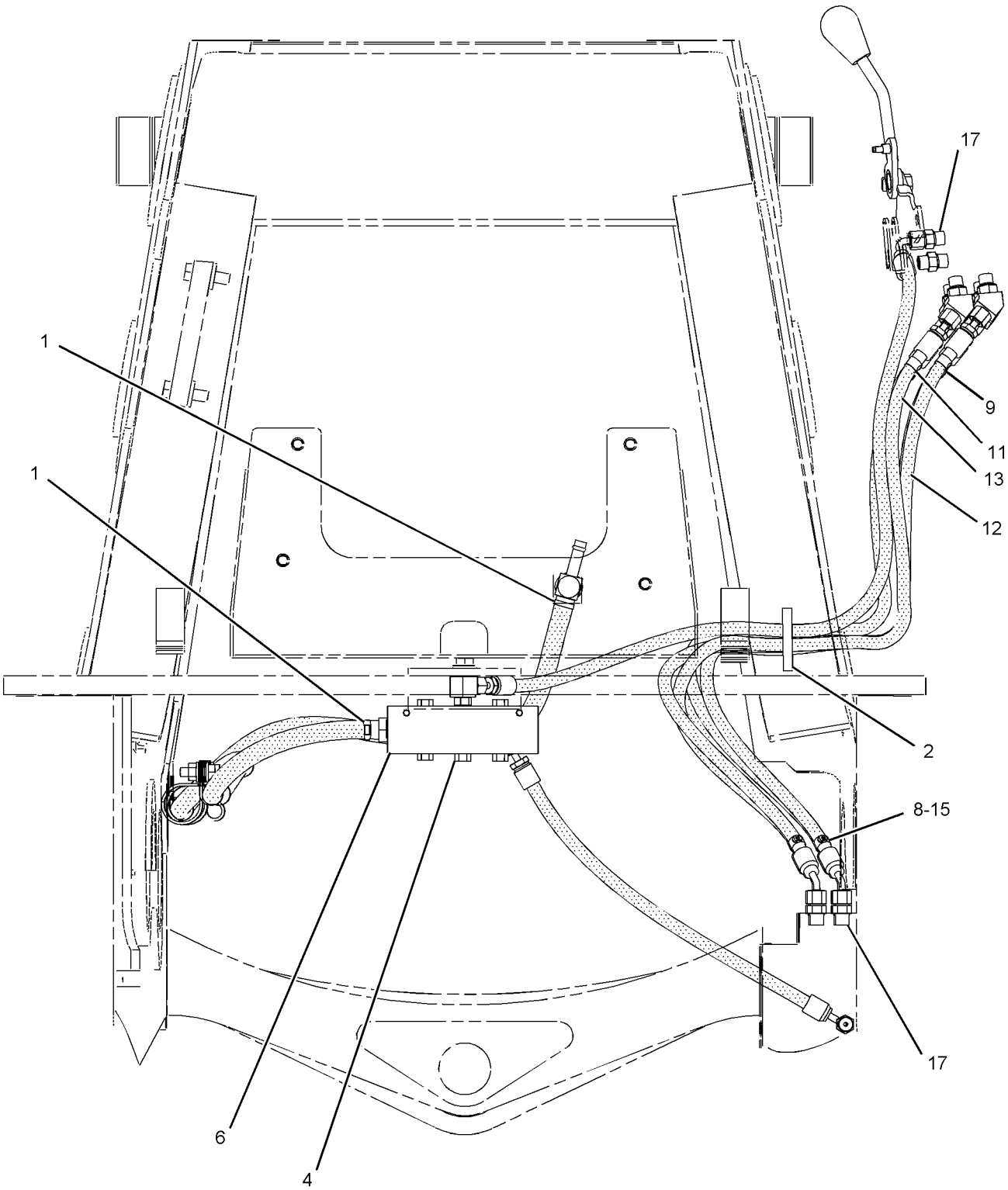

REAR VIEW

GRAPHIC #2

<END>

g01041654

HYDRAULIC SYSTEM

190-8954 LINES GP-PUMP

S/N: FDP18400-UP

PART OF 237-6458, 237-6459 DRIVE AR-BACKHOE LOADER

AN ATTACHMENT

SMCS-5057 **i01821528**

NOTE	REF NO	GRAPHIC REF	PART NUMBER	QTY	PART NAME 1 2 3 4 5 6 (PRODUCT LEVEL)	SEE PAGE
I	1	1	**120-4604**	1	HOSE AS	
I	2	1	**190-8956**	1	HOSE AS	
	3	1	**220-0248**	1	PLATE AS	
	4	1	*148-8316*	2	CONNECTOR AS	
					(EACH INCLUDES)	
		1	**3J-7354**	1	SEAL-O-RING	
		1	**4J-5477**	1	SEAL-O-RING	
		1	**6V-8647**	1	CONNECTOR	
	5	1	*148-8351*	1	ELBOW GP	
		1	**4J-5477**	1	SEAL-O-RING	
		1	**6V-9849**	1	ELBOW (SWIVEL)	
	6	1	*148-8369*	1	ELBOW GP	
		1	**3J-7354**	1	SEAL-O-RING	
		1	**4J-5477**	1	SEAL-O-RING	
		1	**6V-8628**	1	ELBOW	
	7	1	**5K-0906**	2	BOLT (5/16-18X0.63 IN)	
	8	1	**6K-8178**	1	CLIP	
	9	1	**8T-4121**	1	WASHER-HARD (11X21X2.5MM THK)	
M	10	1	**8T-4137**	1	BOLT (M10X1.5X20MM)	
	11	1	**8T-4224**	2	WASHER-HARD (8.8X16X2MM THK)	
	12	1	**9M-8406**	1	CLIP	

I-SEE HOSE FABRICATION GUIDE
M-METRIC PART

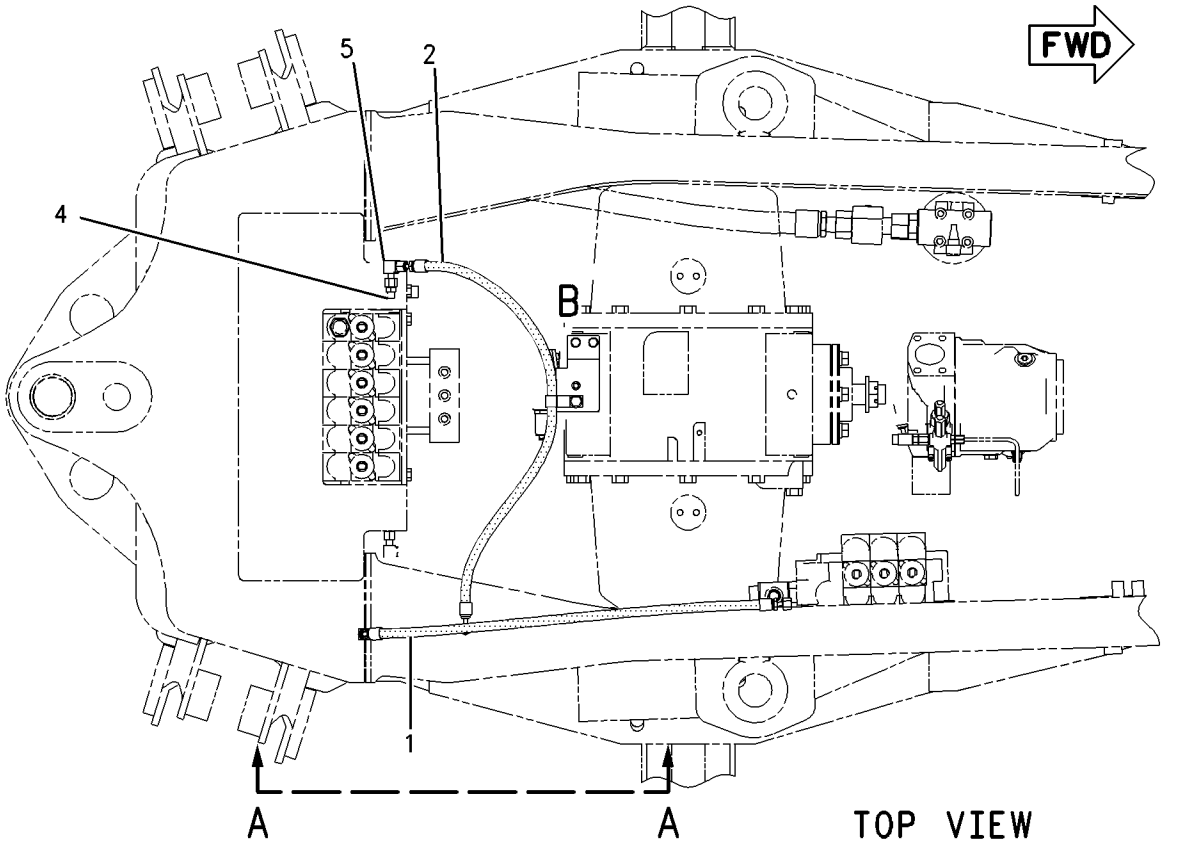

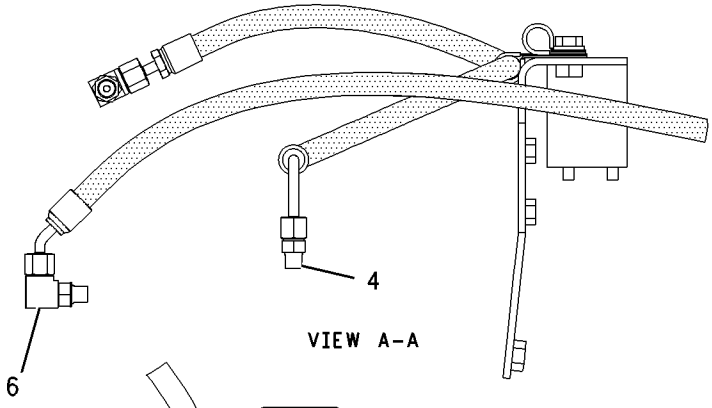

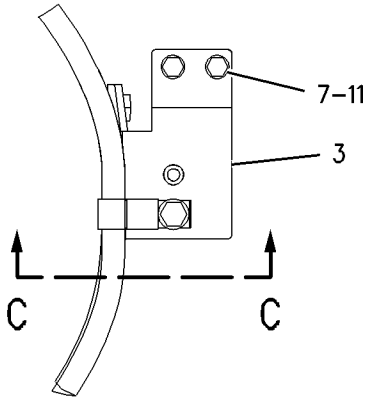

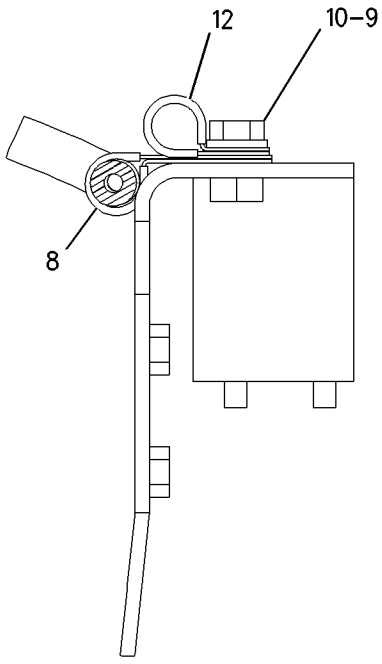

GRAPHIC #1 **<END>** g00995705

HYDRAULIC SYSTEM

191-5462 LINES GP-PUMP

S/N: FDP18400-UP
FOUR OR FIVE BANK
PART OF 186-4958, 186-4959 INSTALLATION AR-BANK VALVE
AN ATTACHMENT

SMCS-5057 **i01913444**

NOTE	REF NO	GRAPHIC REF	PART NUMBER	QTY	PART NAME 1 2 3 4 5 6 (PRODUCT LEVEL)	SEE PAGE
I	1	1	**214-0701**	1	HOSE AS	
I	2	1	**214-0706**	1	HOSE AS	
C	3	1	*148-8335*	1	CONNECTOR AS	
		1	**5K-9090**	1	SEAL-O-RING	
		1	**6V-8635**	1	CONNECTOR	
		1	**7M-8485**	1	SEAL-O-RING	
C	4	1	*148-8352*	1	ELBOW GP	
		1	**5K-9090**	1	SEAL-O-RING	
		1	**6V-9854**	1	ELBOW (SWIVEL)	
	5	1	**148-8429**	1	TEE AS	
		1	**5K-9090**	1	SEAL-O-RING	
		1	**6V-9854**	1	ELBOW (SWIVEL)	

C-CHANGE FROM PREVIOUS TYPE
I-SEE HOSE FABRICATION GUIDE

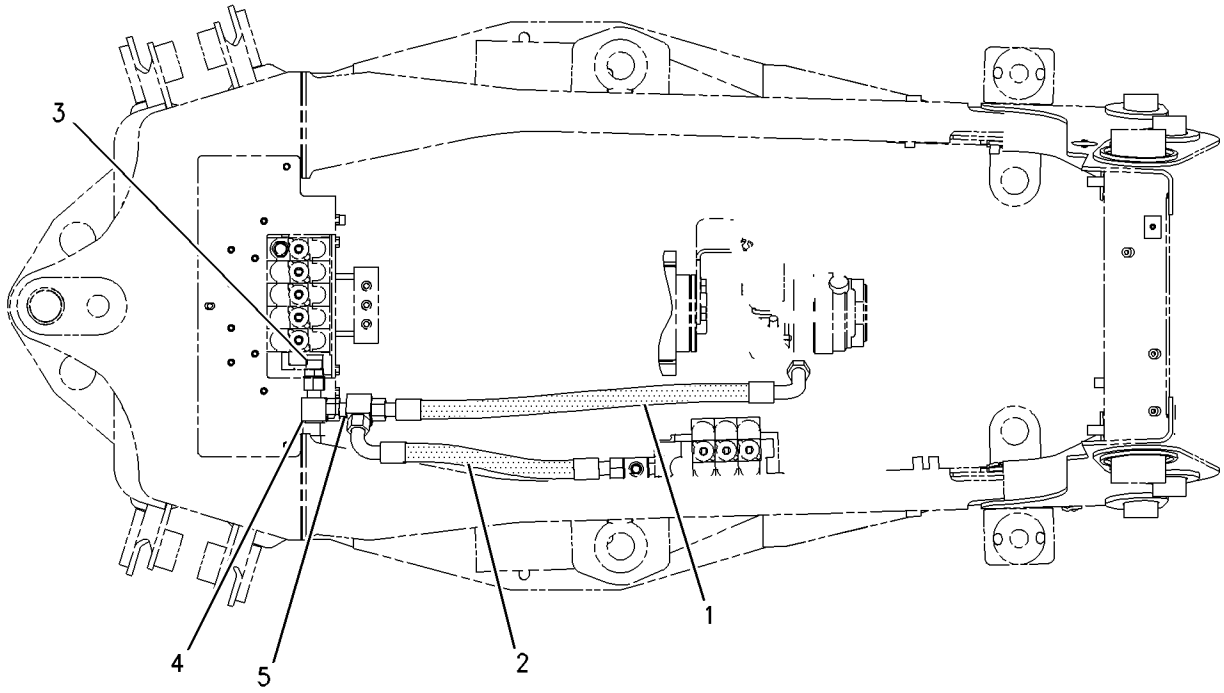

GRAPHIC #1 **<END>** g00997460

HYDRAULIC SYSTEM

216-4274 LINES GP-PUMP

S/N: FDP18400-UP
PART OF 186-4960 INSTALLATION AR-BANK VALVE
AN ATTACHMENT

SMCS-5057 **i01930404**

NOTE	REF NO	GRAPHIC REF	PART NUMBER	QTY	PART NAME 1 2 3 4 5 6 (PRODUCT LEVEL)	SEE PAGE
I	1	1	**214-0701**	1	HOSE AS	
I	2	1	**214-0706**	1	HOSE AS	
	3	1	*148-8357*	1	ELBOW GP	
		1	**5K-9090**	1	SEAL-O-RING	
		1	**6V-9008**	1	ELBOW	
		1	**7M-8485**	1	SEAL-O-RING	
	4	1	*148-8429*	1	TEE AS	
		1	**5K-9090**	2	SEAL-O-RING	
		1	**6V-9840**	1	TEE-SWIVEL	

I-SEE HOSE FABRICATION GUIDE

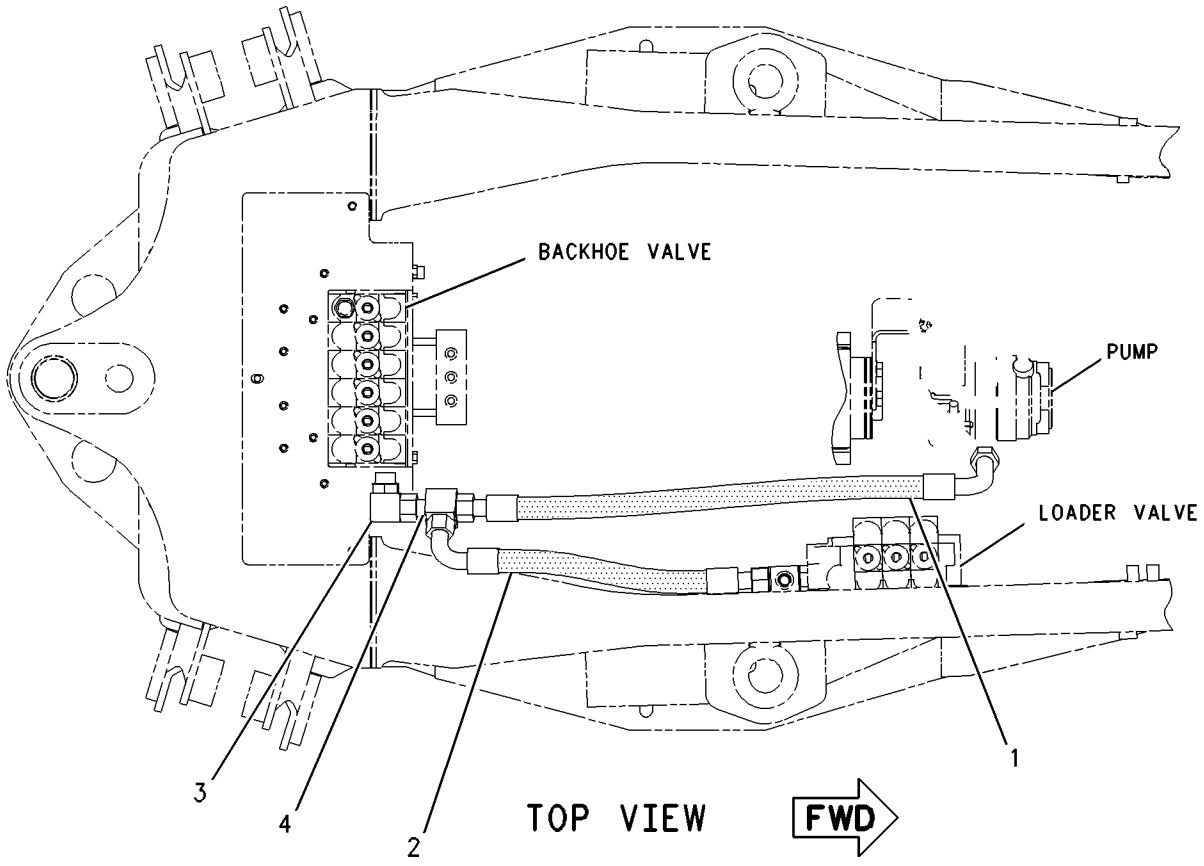

GRAPHIC #1 **<END>** g01004502

HYDRAULIC SYSTEM

235-4549 LINES GP-PUMP

S/N: FDP18400-UP

PART OF 214-6981 HYDRAULIC AR

SMCS-5057 **i02018267**

NOTE	REF NO	GRAPHIC REF	PART NUMBER	QTY	PART NAME 1 2 3 4 5 6 (PRODUCT LEVEL)	SEE PAGE
	1	1	**5D-1026**	2	CLAMP-HOSE	
	2	1	**5P-4868**	2	CLAMP-HOSE	
	3	1	**6V-0852**	1	CAP-DUST	
	4	1	**7K-1181**	5	STRAP-CABLE	
	5	1	**8T-0154**	1	CLAMP-HOSE	
	6	1	**110-2445**	4	CLAMP-HOSE	
	7	1	**130-9984**	1	CLIP	
	8	1	**144-0367**	1	CLAMP-HOSE	
	9	1	**159-0186**	4	CLAMP	
	10	1	*165-2273*	1	VALVE GP-SHUTOFF	
		1	**3K-0360**	1	SEAL-O-RING	
		1	**6V-7238**	1	VALVE-SHUTOFF	
	11	1	*166-2033*	1	TEE GP	
		1	**4J-5477**	1	SEAL-O-RING	
		1	**7X-2444**	1	TEE-SWIVEL	
	12	1	**211-4348**	1	ELBOW	
	13	1	**215-9632**	1	SPACER (12X20X20-MM THK)	
	14	1	**232-0252**	1	TEE	
	15	1	**235-4553**	1	BRACKET AS	
M		1	**8T-3490**	3	NUT-WELD (M10X1.5-THD)	
I	16	1	**235-5306**	1	HOSE AS	
	17	1	**235-7091**	1	HOSE	
	18	1	**235-8528**	1	HOSE	
	19	1	**148-8325**	1	CONNECTOR GP	
	20	1	*148-8352*	1	ELBOW GP	
		1	**5K-9090**	1	SEAL-O-RING	
		1	**6V-9854**	1	ELBOW (SWIVEL)	
	21	1	*148-8357*	1	ELBOW GP	
		1	**5K-9090**	1	SEAL-O-RING	
		1	**6V-9008**	1	ELBOW	
		1	**7M-8485**	1	SEAL-O-RING	
	22	1	*148-8362*	1	ELBOW GP	
		1	**3D-2824**	1	SEAL-O-RING	
		1	**5K-9090**	1	SEAL-O-RING	
		1	**8T-6684**	1	ELBOW	
	23	1	*148-8422*	1	TEE AS	
		1	**5K-9090**	1	SEAL-O-RING	
		1	**6V-9746**	1	SEAL-O-RING	
		1	**7M-8485**	1	SEAL-O-RING	
		1	**8T-6356**	1	TEE-O-RING PORT	
	24	1	*150-3027*	1	ELBOW AS	
		1	**2M-9780**	1	SEAL-O-RING	
		1	**6V-5653**	1	ELBOW (7/8-14-THD)	
	25	1	*164-5567*	1	FITTING AS	
		1	**3J-1907**	1	SEAL-O-RING	
		1	**6V-3965**	1	FITTING (QUICK DISCONNECT)	
	26	1	**1P-4584**	2	FLANGE-HALF	
	27	1	**5P-4116**	2	WASHER-HARD (8.8X20.5X2-MM THK)	
	28	1	**6J-2680**	1	SEAL-O-RING	
	29	1	**6V-9828**	1	CAP AS	
	30	1	**7D-7233**	3	CLIP	
	31	1	**8T-4121**	11	WASHER-HARD (11X21X2.5-MM THK)	
M	32	1	**8T-4136**	5	BOLT (M10X1.5X25-MM)	
M	33	1	**8T-4137**	2	BOLT (M10X1.5X20-MM)	
M	34	1	**8T-4182**	1	BOLT (M10X1.5X45-MM)	
M	35	1	**8T-4183**	4	BOLT (M12X1.75X40-MM)	

235-4549 **LINES GP-PUMP** ***(contd.)*** **i02018267**

NOTE	REF NO	GRAPHIC REF	PART NUMBER	QTY	PART NAME 1 2 3 4 5 6 (PRODUCT LEVEL)	SEE PAGE
M	36	1	**8T-4189**	2	BOLT (M8X1.25X20-MM)	
M	37	1	**8T-4195**	3	BOLT (M10X1.5X30-MM)	
	38	1	**8T-4223**	4	WASHER-HARD (13.5X25.5X3-MM THK)	
	39	1	**8T-7529**	3	CLIP	
E	40	1	**5P-0743**		HOSE (35CM)	
E	41	1	**5P-1505**		HOSE (72CM)	
E	42	1	**5P-1506**		HOSE (88CM)	
E	43	1	**136-1955**		HOSE (107CM)	
E	44	1	**136-1955**		HOSE (201CM)	

E-ORDER BY THE CENTIMETER
I-REFER TO HYDRAULIC INFORMATION SYSTEM
M-METRIC PART

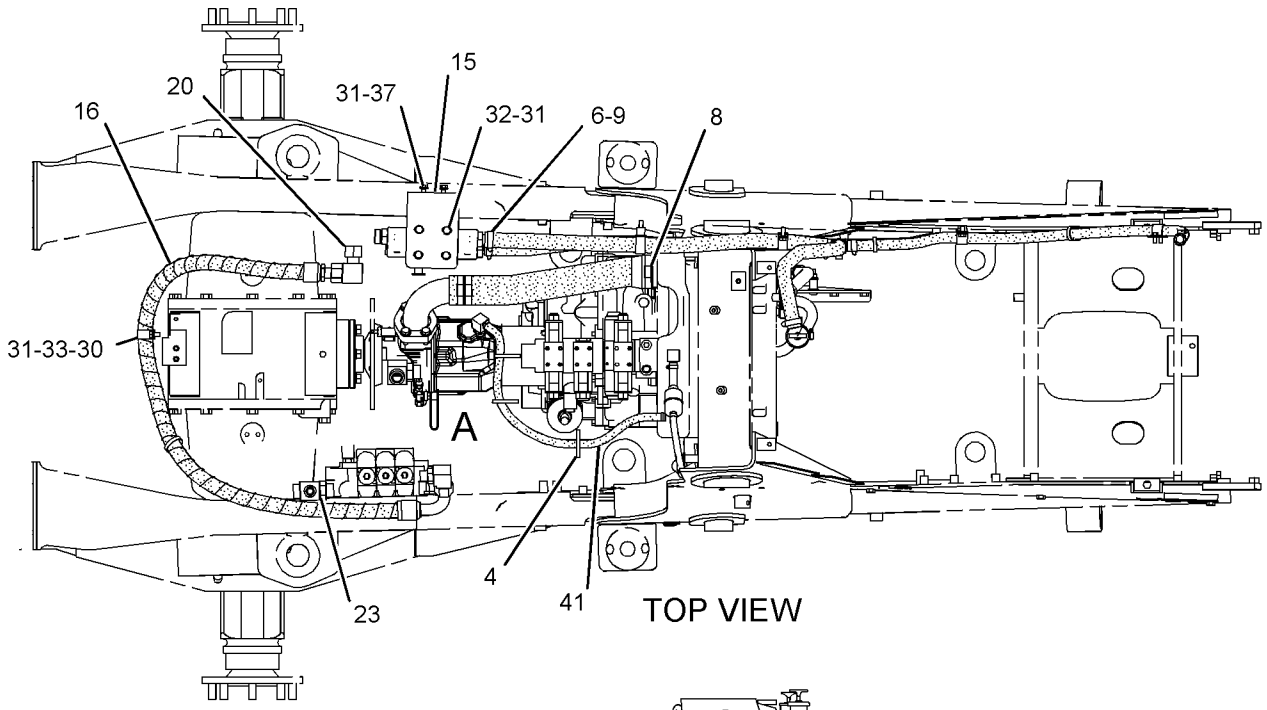

TOP VIEW

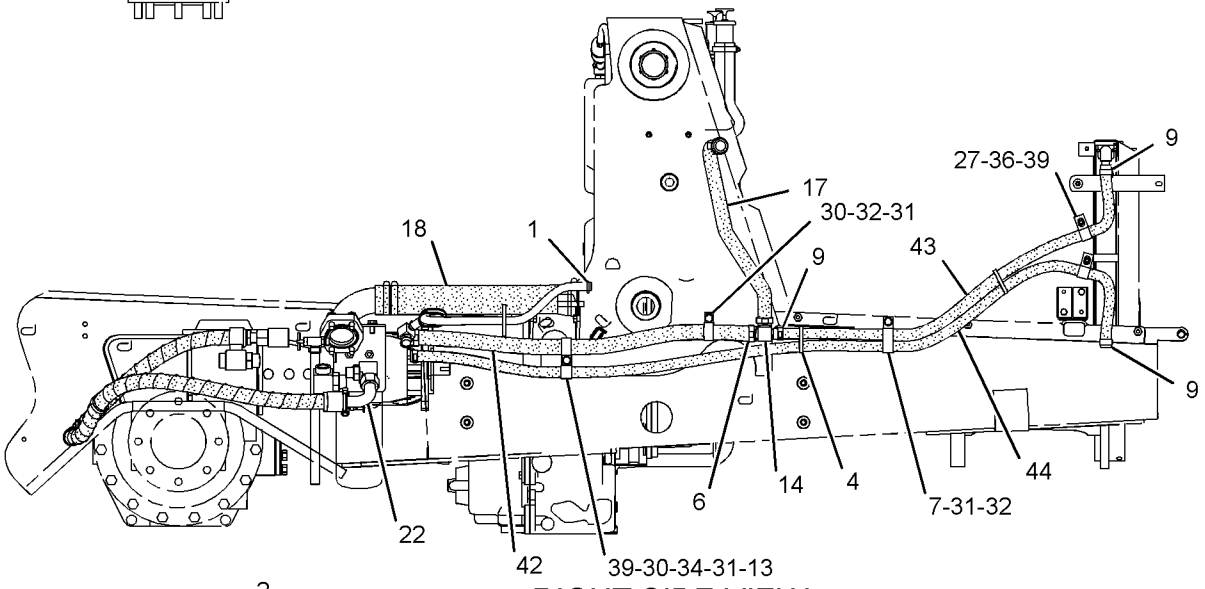

RIGHT SIDE VIEW

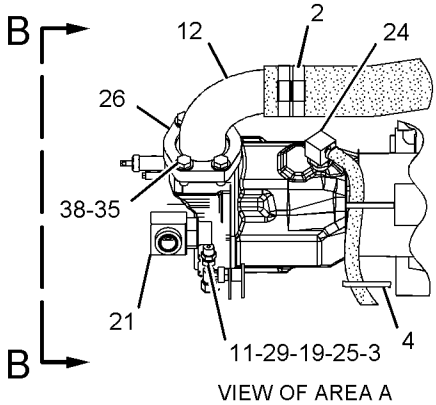

VIEW OF AREA A

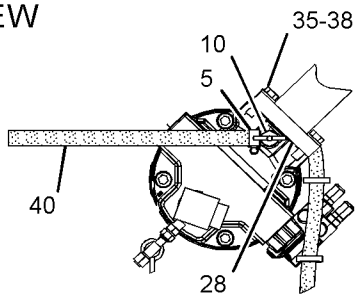

VIEW B-B

GRAPHIC #1 **<END>** g01043415

HYDRAULIC SYSTEM

235-5854 LINES GP-PUMP

S/N: FDP18400-UP

PART OF 215-1510 VALVE AR-BANK 4, 215-1511 VALVE AR-BANK 5

AN ATTACHMENT

SMCS-5057 **i01990841**

NOTE	REF NO	GRAPHIC REF	PART NUMBER	QTY	PART NAME 1 2 3 4 5 6 (PRODUCT LEVEL)	SEE PAGE
I	1	1	**214-0706**	1	HOSE AS	
I	2	1	**239-1162**	1	HOSE AS	
	3	1	*148-8335*	1	CONNECTOR AS	
		1	**5K-9090**	1	SEAL-O-RING	
		1	**6V-8635**	1	CONNECTOR	
		1	**7M-8485**	1	SEAL-O-RING	
	4	1	*148-8352*	1	ELBOW GP	
		1	**5K-9090**	1	SEAL-O-RING	
		1	**6V-9840**	1	TEE-SWIVEL	
	5	1	*148-8429*	1	TEE AS	
		1	**5K-9090**	1	SEAL-O-RING	
		1	**6V-9840**	1	TEE-SWIVEL	

I-REFER TO HYDRAULIC INFORMATION SYSTEM

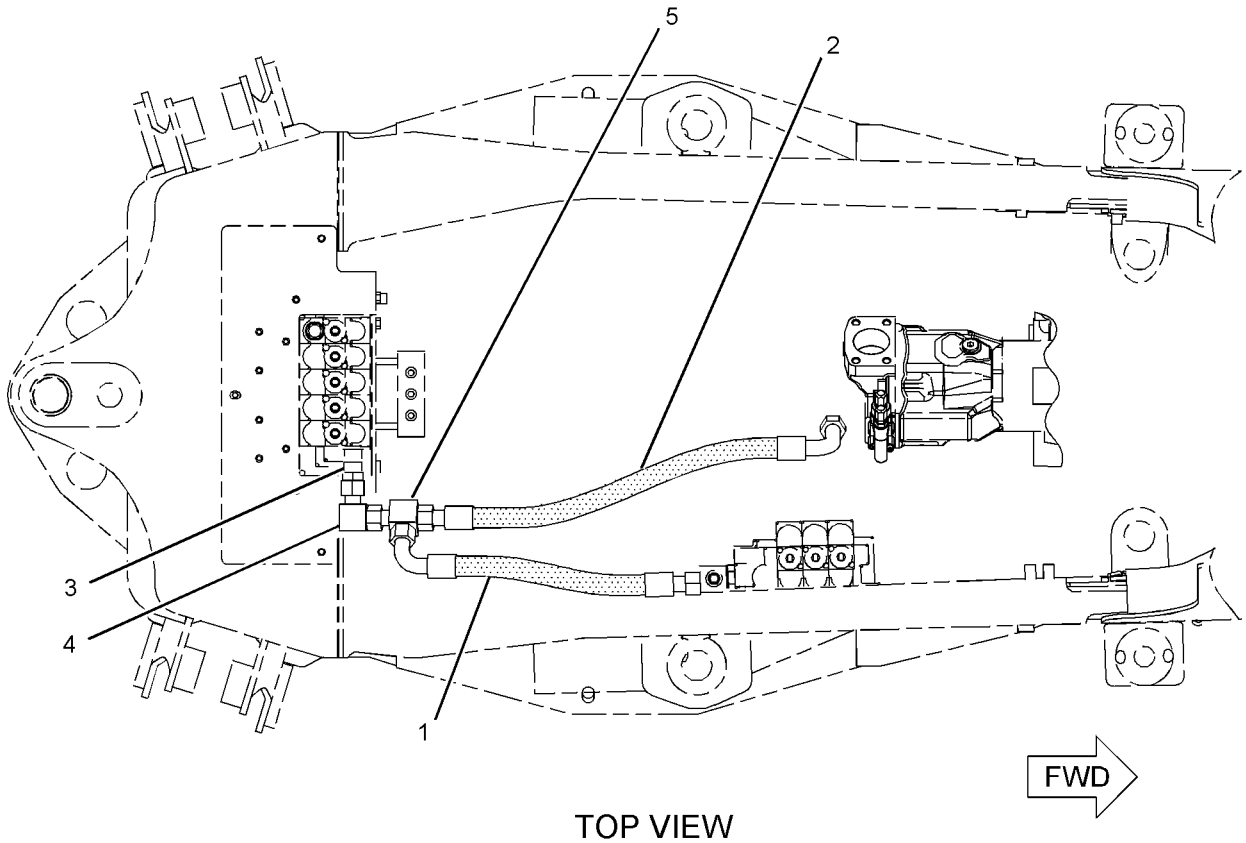

TOP VIEW

GRAPHIC #1 **<END>** g01037856

HYDRAULIC SYSTEM

235-5856 LINES GP-PUMP

S/N: FDP18400-UP
PART OF 215-1512 VALVE AR-BANK 6
AN ATTACHMENT

SMCS-5057 **i01990834**

NOTE	REF NO	GRAPHIC REF	PART NUMBER	QTY	PART NAME 1 2 3 4 5 6 (PRODUCT LEVEL)	SEE PAGE
I	1	1	**214-0706**	1	HOSE AS	
I	2	1	**239-1162**	1	HOSE AS	
	3	1	**148-8357**	1	ELBOW GP	
		1	**5K-9090**	1	SEAL-O-RING	
		1	**6V-9008**	1	ELBOW	
		1	**7M-8485**	1	SEAL-O-RING	
	4	1	*148-8429*	1	TEE AS	
		1	**5K-9090**	2	SEAL-O-RING	
		1	**6V-9840**	1	TEE-SWIVEL	

I-REFER TO HYDRAULIC INFORMATION SYSTEM

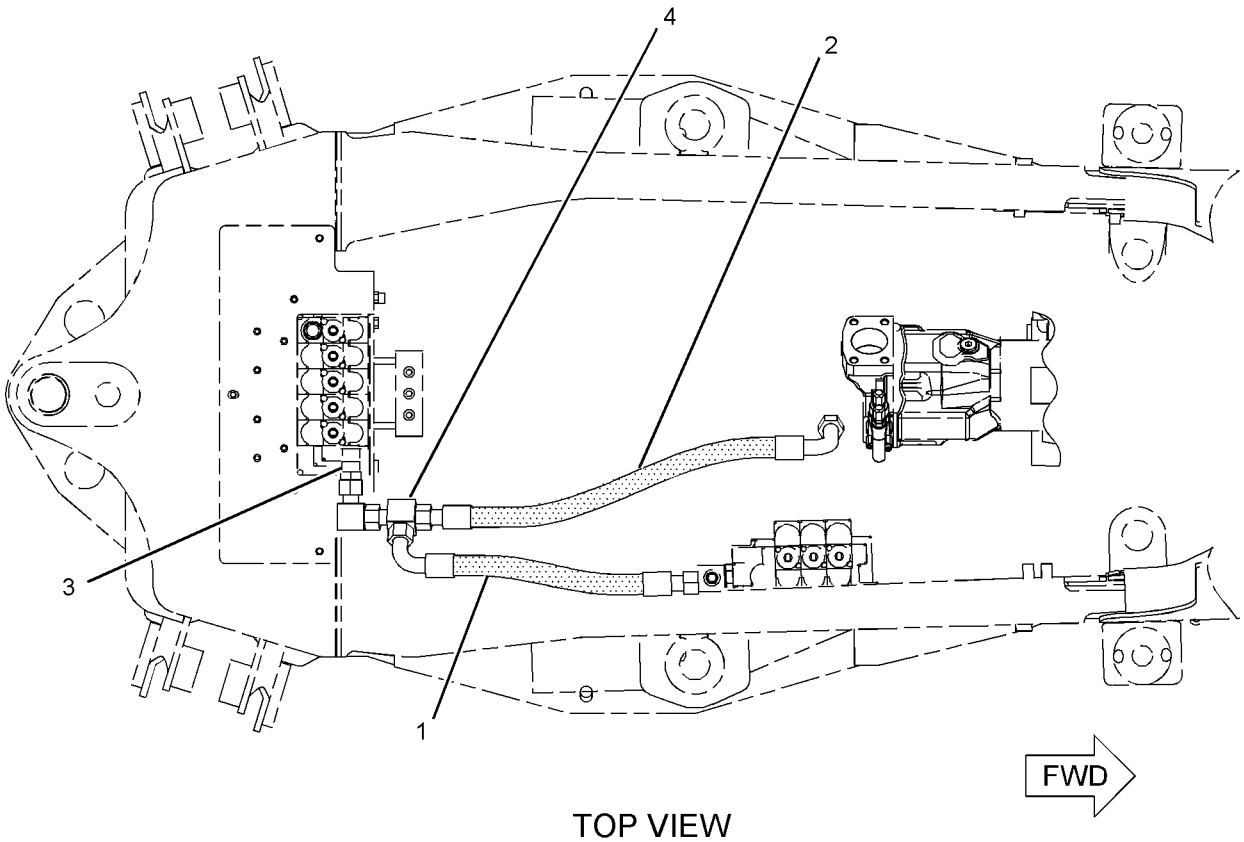

TOP VIEW

GRAPHIC #1 **<END>** g01037861

176-9208 LINES GP-RETURN

S/N: FDP18400-UP
PART OF 184-7927, 202-5973 BACKHOE AR-EXTENDABLE STICK, 184-7915, 202-5961 BACKHOE AR-STANDARD STICK AN ATTACHMENT

SMCS-5057 **i01325785**

NOTE	REF NO	GRAPHIC REF	PART NUMBER	QTY	PART NAME 1 2 3 4 5 6 (PRODUCT LEVEL)	SEE PAGE
I	1	1	**169-2944**	1	HOSE AS	
Y	2	1	*178-7481*	1	VALVE GP-CHECK	531
	3	1	*148-8429*	1	TEE AS-ORFS	
		1	**5K-9090**	2	SEAL-O-RING (23.52MM ID)	
		1	**6V-9840**	1	TEE-SWIVEL	

I-SEE HOSE FABRICATION GUIDE
Y-SEPARATE ILLUSTRATION

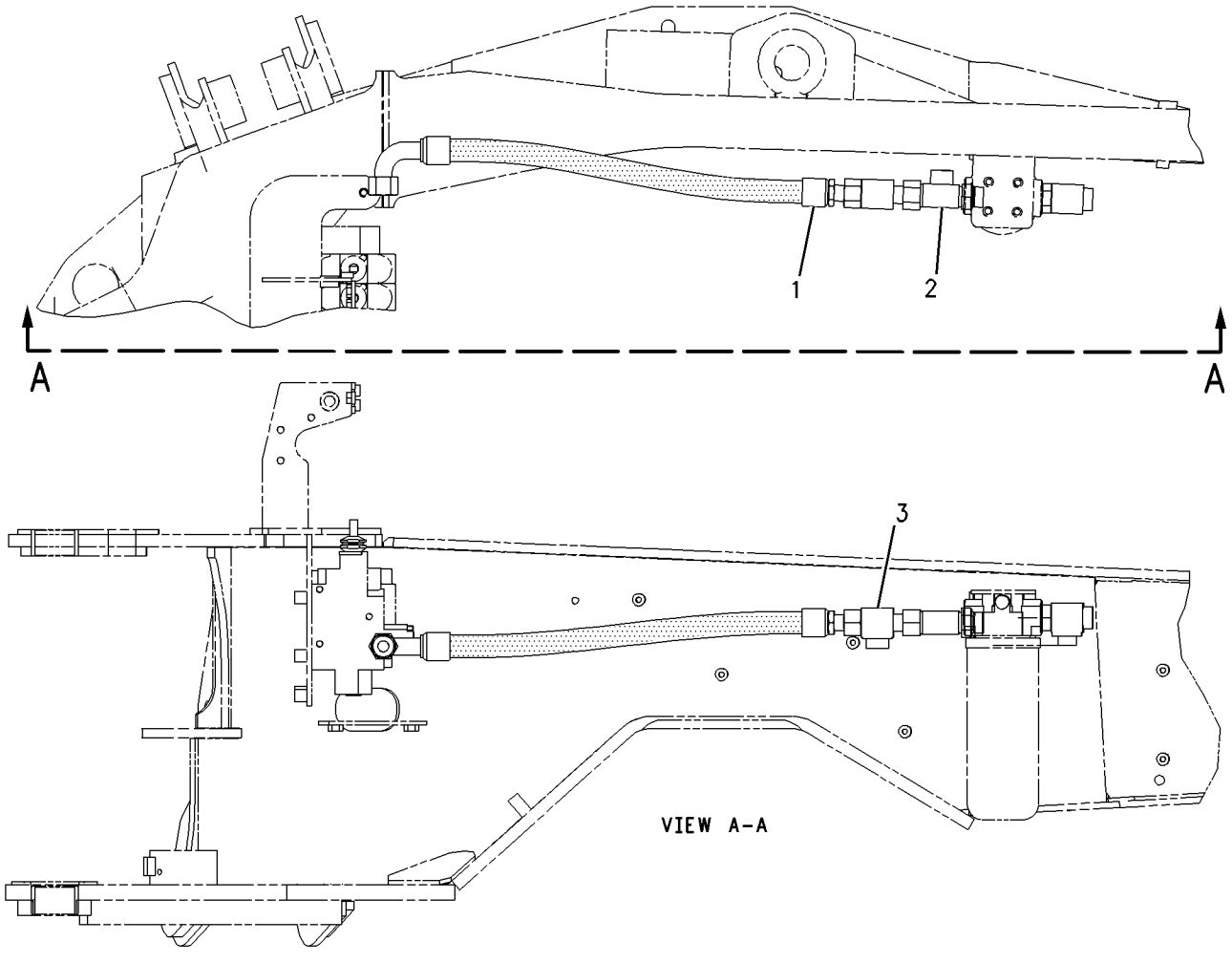

GRAPHIC #1 **<END>** g00702268

176-9209 LINES GP-RETURN

S/N: FDP18400-UP
PART OF 184-7913, 184-7916, 184-7917, 202-5958, 202-5963, 238-8219 BACKHOE
AR-STANDARD STICK
AN ATTACHMENT

SMCS-5057 **i01324533**

NOTE	REF NO	GRAPHIC REF	PART NUMBER	QTY	PART NAME 1 2 3 4 5 6 (PRODUCT LEVEL)	SEE PAGE
Y	1	1	*178-7480*	1	VALVE GP-CHECK	530
I	2	1	**185-6572**	1	HOSE AS	
	3	1	*148-8429*	1	TEE AS-ORFS	
		1	**5K-9090**	2	SEAL-O-RING (23.52MM ID)	
		1	**6V-9840**	1	TEE-SWIVEL	

I-SEE HOSE FABRICATION GUIDE
Y-SEPARATE ILLUSTRATION

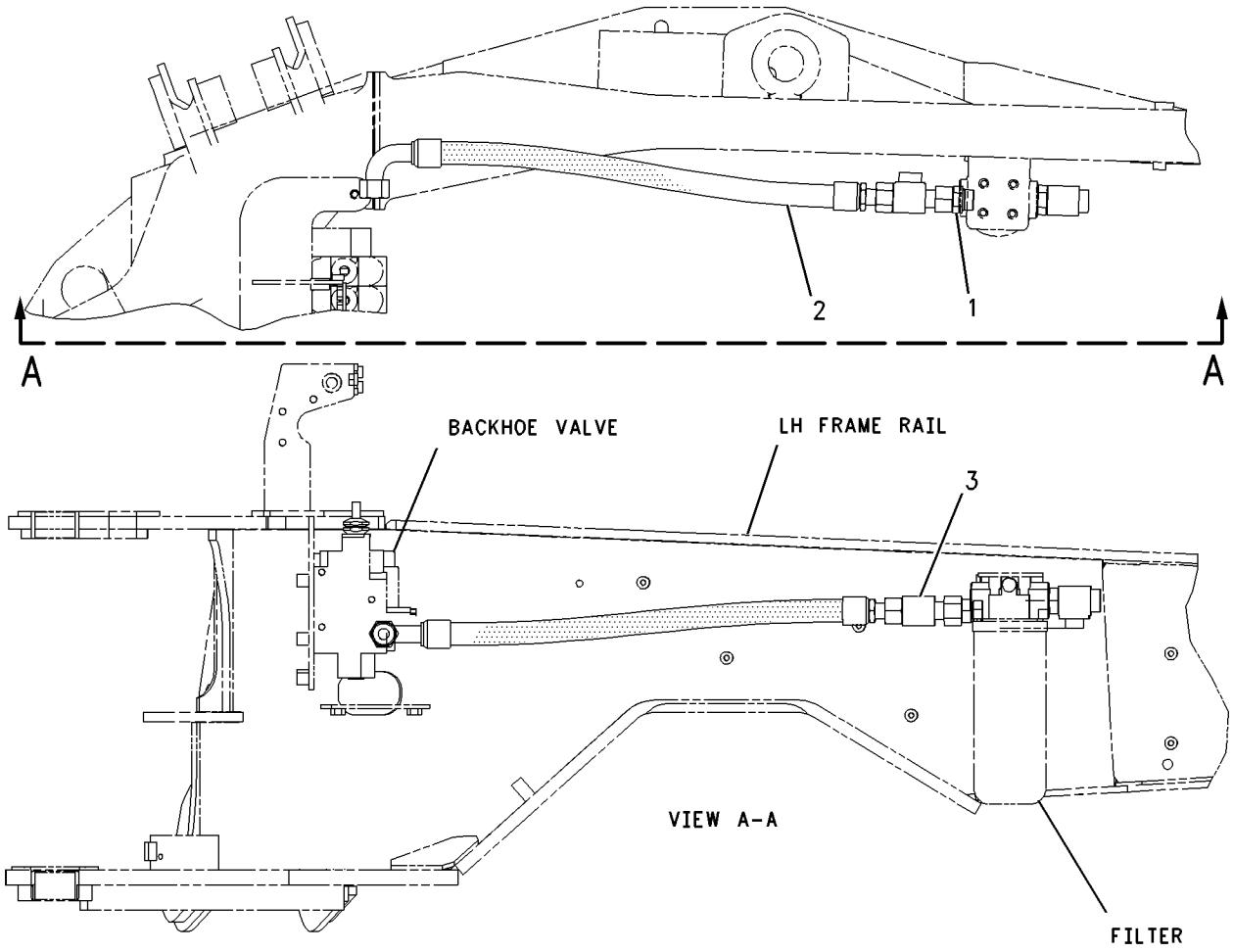

GRAPHIC #1 **<END>** g00701041

HYDRAULIC SYSTEM

197-6818 LINES GP-RETURN

S/N: FDP18400-UP

PART OF 184-7925, 202-5971, 238-8218 BACKHOE AR-EXTENDABLE STICK AN ATTACHMENT

SMCS-5057 **i01409250**

NOTE	REF NO	GRAPHIC REF	PART NUMBER	QTY	PART NAME 1 2 3 4 5 6 (PRODUCT LEVEL)	SEE PAGE
I	1	1	**169-2944**	1	HOSE AS	
Y	2	1	*178-7481*	1	VALVE GP-CHECK	531
	3	1	*148-8429*	1	FITTING GP	
		1	**5K-9090**	2	SEAL-O-RING (23.52MM ID)	
		1	**6V-9840**	1	TEE-SWIVEL	
	4	1	**6V-9833**	1	CAP AS	

I-SEE HOSE FABRICATION GUIDE
Y-SEPARATE ILLUSTRATION

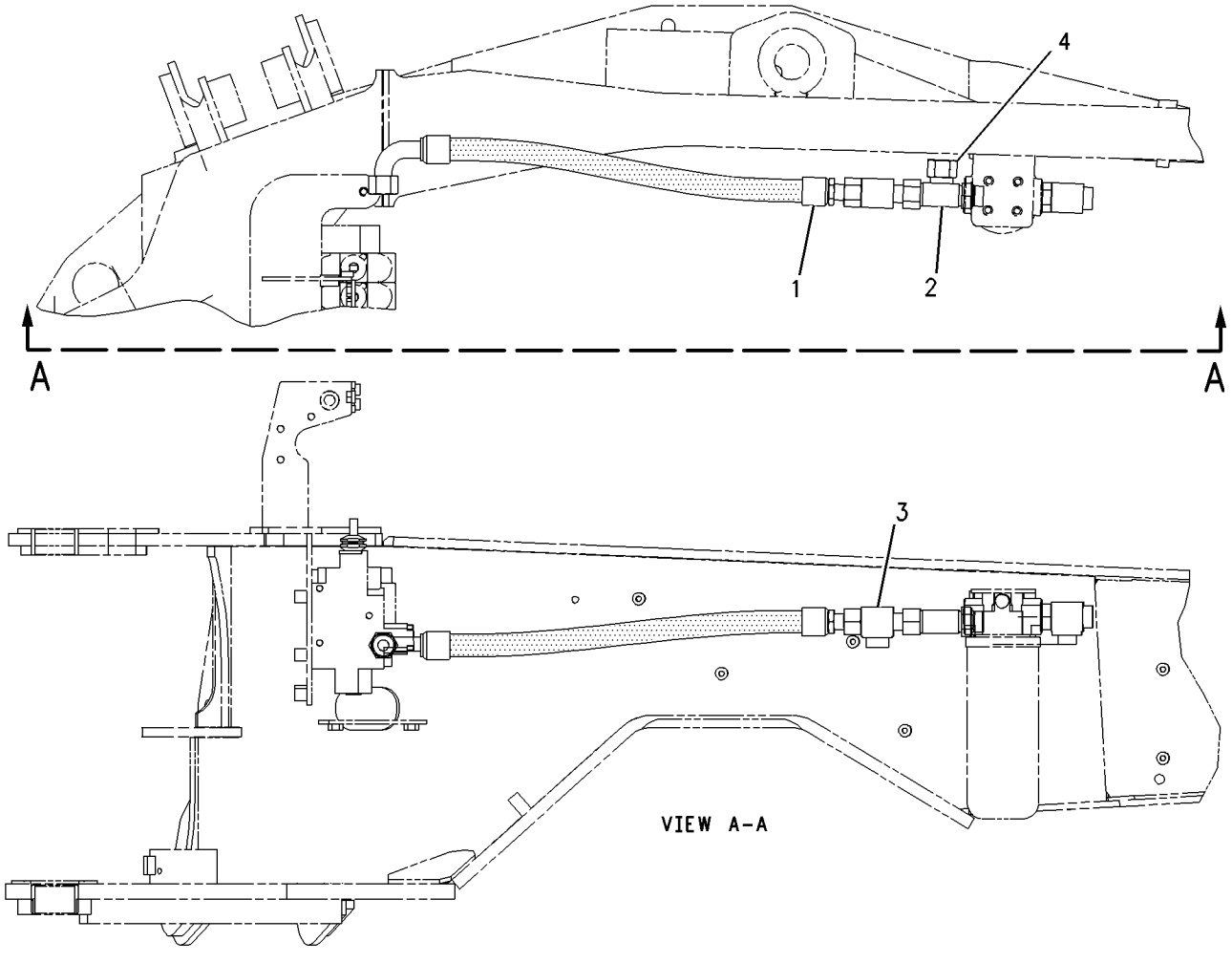

GRAPHIC #1 **<END>** g00741832

HYDRAULIC SYSTEM

235-4788 LINES GP-RETURN

S/N: FDP18400-UP

PART OF 214-6981 HYDRAULIC AR

SMCS-5057 **i02009711**

NOTE	REF NO	GRAPHIC REF	PART NUMBER	QTY	PART NAME 1 2 3 4 5 6 (PRODUCT LEVEL)	SEE PAGE
I	1	1	**6R-3299**	1	HOSE AS	
	2	1	**148-8429**	1	TEE AS	
		1	**5K-9090**	2	SEAL-O-RING	

I-REFER TO HYDRAULIC INFORMATION SYSTEM

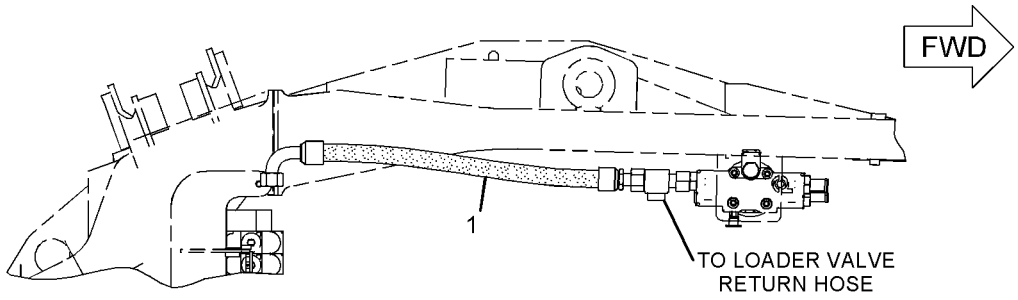

TOP VIEW

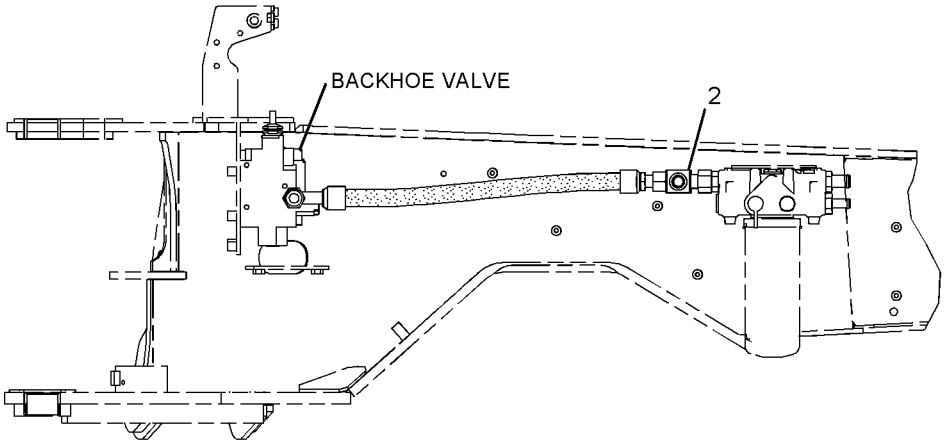

RIGHT SIDE VIEW

GRAPHIC #1

<END>

g01034089

HYDRAULIC SYSTEM

195-1284 LINES GP-RIDE CONTROL

S/N: FDP18400-UP

PART OF 184-7949, 184-7954, 185-1482 CONTROL AR-RIDE, 200-6284, 236-5458, 236-5459 KIT-RIDE CONTROL

AN ATTACHMENT

SMCS-5057, 5077 **i02015798**

NOTE	REF NO	GRAPHIC REF	PART NUMBER	QTY	PART NAME 1 2 3 4 5 6 (PRODUCT LEVEL)	SEE PAGE
	1	1	**224-7830**	1	FILM-WARNING (HIGH PRESSURE CYLINDER)	
Y	2	1	**162-3960**	1	ACCUMULATOR GP-RIDE CONTROL (CHARGED)	330
I	3	1	**162-5380**	1	HOSE AS	
Y	4	1	**190-8315**	1	VALVE & MTG GP-SOLENOID (RIDE CONTROL)	518
I	5	1	**232-7497**	1	HOSE AS	
I	6	1	**232-7498**	1	HOSE AS	
I	7	1	**195-1288**	1	HOSE AS	
	8	1	**195-1289**	1	BRACKET AS	
	9	1	**195-1736**	1	TUBE AS	
	10	1	**109-1633**	2	CLIP (SLOT)	
	11	1	**109-1634**	2	CLIP (TAB)	
	12	1	*148-8316*	1	CONNECTOR AS	
		1	**3J-7354**	1	SEAL-O-RING	
		1	**4J-5477**	1	SEAL-O-RING	
		1	**6V-8647**	1	CONNECTOR	
	13	1	*148-8345*	1	CONNECTOR GP	
		1	**2M-9780**	1	SEAL-O-RING	
		1	**6V-8398**	1	SEAL-O-RING	
		1	**6V-8638**	1	CONNECTOR	
	14	1	*148-8370*	1	ELBOW GP	
		1	**6V-8398**	1	SEAL-O-RING	
		1	**6V-9851**	1	ELBOW	
	15	1	*148-8372*	1	ELBOW GP	
		1	**2M-9780**	1	SEAL-O-RING	
		1	**6V-8398**	1	SEAL-O-RING	
		1	**6V-8721**	1	ELBOW	
	16	1	*148-8378*	1	ELBOW AS	
		1	**3J-1907**	1	SEAL-O-RING	
		1	**6V-8397**	1	SEAL-O-RING	
		1	**6V-8724**	1	ELBOW	
	17	1	*148-8390*	2	ELBOW GP	
					(EACH INCLUDES)	
		1	**2M-9780**	1	SEAL-O-RING	
		1	**6V-8626**	1	ELBOW	
		1	**7J-9108**	1	SEAL-O-RING	
	18	1	*148-8418*	1	REDUCER GP	
		1	**6V-8398**	1	SEAL-O-RING	
		1	**6V-8942**	1	REDUCER-O-RING (FACE)	
	19	1	*148-8447*	1	TEE AS-SWIVEL	
		1	**7J-9108**	1	SEAL-O-RING	
		1	**7X-0872**	1	TEE-SWIVEL	
	20	1	*150-4043*	1	CONNECTOR GP	
		1	**3J-1907**	1	SEAL-O-RING	
		1	**6V-8398**	1	SEAL-O-RING	
		1	**6V-9873**	1	CONNECTOR	
M	21	1	**7X-2549**	2	BOLT (M12X1.75X100-MM)	
	22	1	**8T-4121**	3	WASHER-HARD (11X21X2.5-MM THK)	
M	23	1	**8T-4137**	3	BOLT (M10X1.5X20-MM)	
M	24	1	**8T-4139**	2	BOLT (M12X1.75X30-MM)	
	25	1	**8T-4223**	4	WASHER-HARD (13.5X25.5X3-MM THK)	
	26	1	**9X-6580**	1	NUT-O-RING SEAL	

I-REFER TO HYDRAULIC INFORMATION SYSTEM
M-METRIC PART
Y-SEPARATE ILLUSTRATION

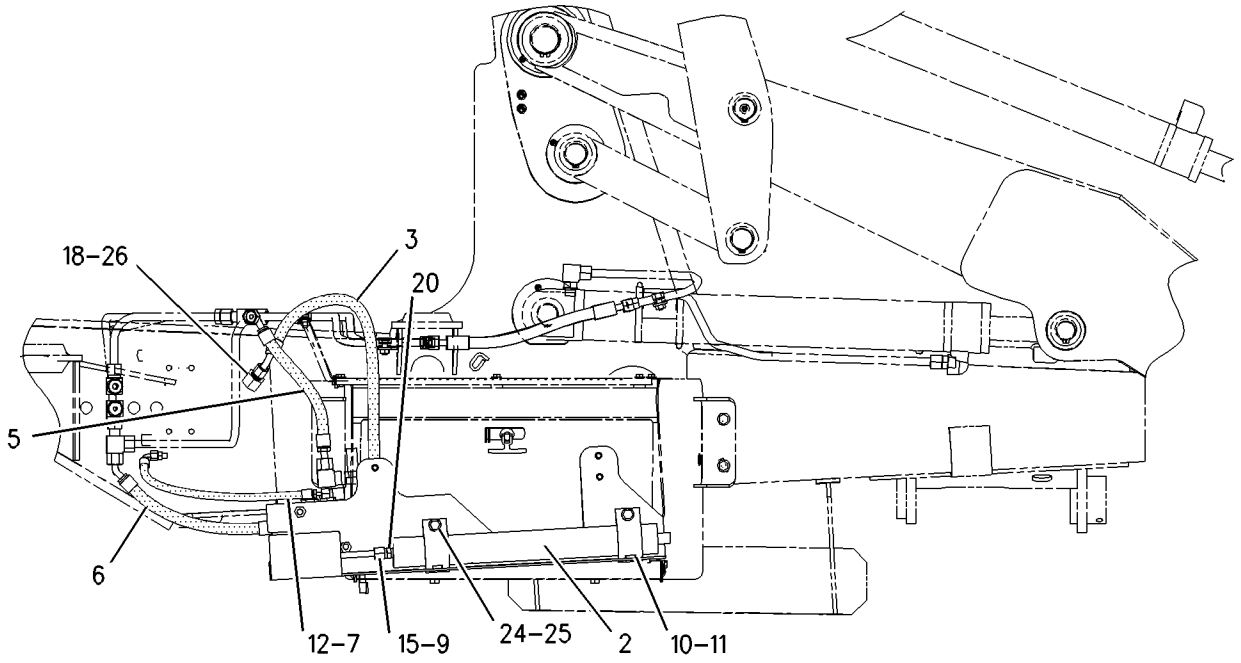

LEFT SIDE VIEW

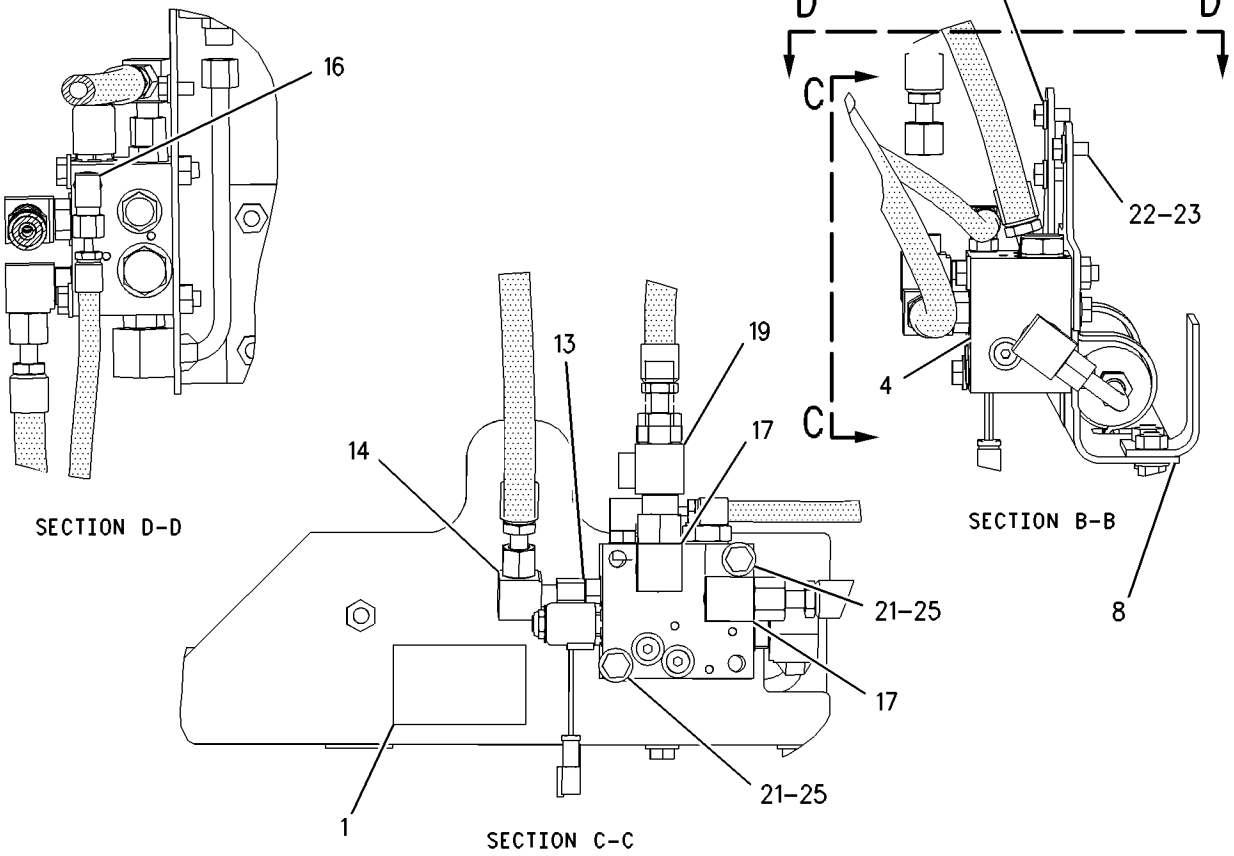

GRAPHIC #1 **<END>** g00996506

HYDRAULIC SYSTEM

235-5844 LINES GP-RIDE CONTROL

S/N: FDP18400-UP

PART OF 239-9245, 239-9246, 239-9248 CONTROL AR-RIDE

AN ATTACHMENT

SMCS-5057, 5077 **i01994202**

NOTE	REF NO	GRAPHIC REF	PART NUMBER	QTY	PART NAME 1 2 3 4 5 6 (PRODUCT LEVEL)	SEE PAGE
	1	1	**7K-1181**	1	STRAP-CABLE	
Y	2	1	*162-3960*	1	ACCUMULATOR GP-RIDE CONTROL (CHARGED)	330
I	3	1	**169-9049**	1	HOSE AS	
Y	4	1	**190-8315**	1	VALVE & MTG GP-SOLENOID (RIDE CONTROL)	518
	5	1	**195-1289**	1	BRACKET AS	
M		1	**8T-3597**	4	NUT-WELD (M12X1.75 THD)	
	6	1	**195-1736**	1	TUBE AS	
		1	**6V-8554**	2	NUT (13/16-16 THD)	
		1	**6V-8561**	2	SLEEVE	
	7	1	**224-7830**	1	FILM-WARNING (HIGH PRESSURE CYLINDER)	
I	8	1	**232-7497**	1	HOSE AS	
I	9	1	**232-7498**	1	HOSE AS	
I	10	1	**239-0625**	1	HOSE AS	
	11	1	**109-1633**	2	CLIP (SLOT)	
	12	1	**109-1634**	2	CLIP (TAB)	
	13	1	*148-8345*	1	CONNECTOR GP	
		1	**2M-9780**	1	SEAL-O-RING	
		1	**6V-8398**	1	SEAL-O-RING	
		1	**6V-8638**	1	CONNECTOR	
	14	1	*148-8368*	1	ELBOW GP	
		1	**3J-1907**	1	SEAL-O-RING	
		1	**4J-5477**	1	SEAL-O-RING	
		1	**6V-8627**	1	ELBOW	
	15	1	*148-8370*	1	ELBOW GP	
		1	**6V-8398**	1	SEAL-O-RING	
		1	**6V-9851**	1	ELBOW	
	16	1	*148-8372*	1	ELBOW GP	
		1	**2M-9780**	1	SEAL-O-RING	
		1	**6V-8398**	1	SEAL-O-RING	
		1	**6V-8721**	1	ELBOW	
	17	1	*148-8390*	2	ELBOW GP	
					(EACH INCLUDES)	
		1	**2M-9780**	1	SEAL-O-RING	
		1	**6V-8626**	1	ELBOW	
		1	**7J-9108**	1	SEAL-O-RING	
	18	1	*148-8447*	1	TEE AS-SWIVEL	
		1	**7J-9108**	1	SEAL-O-RING	
		1	**7X-0872**	1	TEE-SWIVEL	
	19	1	*150-4043*	1	CONNECTOR GP	
		1	**3J-1907**	1	SEAL-O-RING	
		1	**6V-8398**	1	SEAL-O-RING	
		1	**6V-9873**	1	CONNECTOR	
M	20	1	**7X-2549**	2	BOLT (M12X1.75X100MM)	
	21	1	**8T-4121**	3	WASHER-HARD (11X21X2.5MM THK)	
M	22	1	**8T-4137**	3	BOLT (M10X1.5X20MM)	
M	23	1	**8T-4139**	2	BOLT (M12X1.75X30MM)	
	24	1	**8T-4223**	4	WASHER-HARD (13.5X25.5X3MM THK)	

I-REFER TO HYDRAULIC INFORMATION SYSTEM
M-METRIC PART
Y-SEPARATE ILLUSTRATION

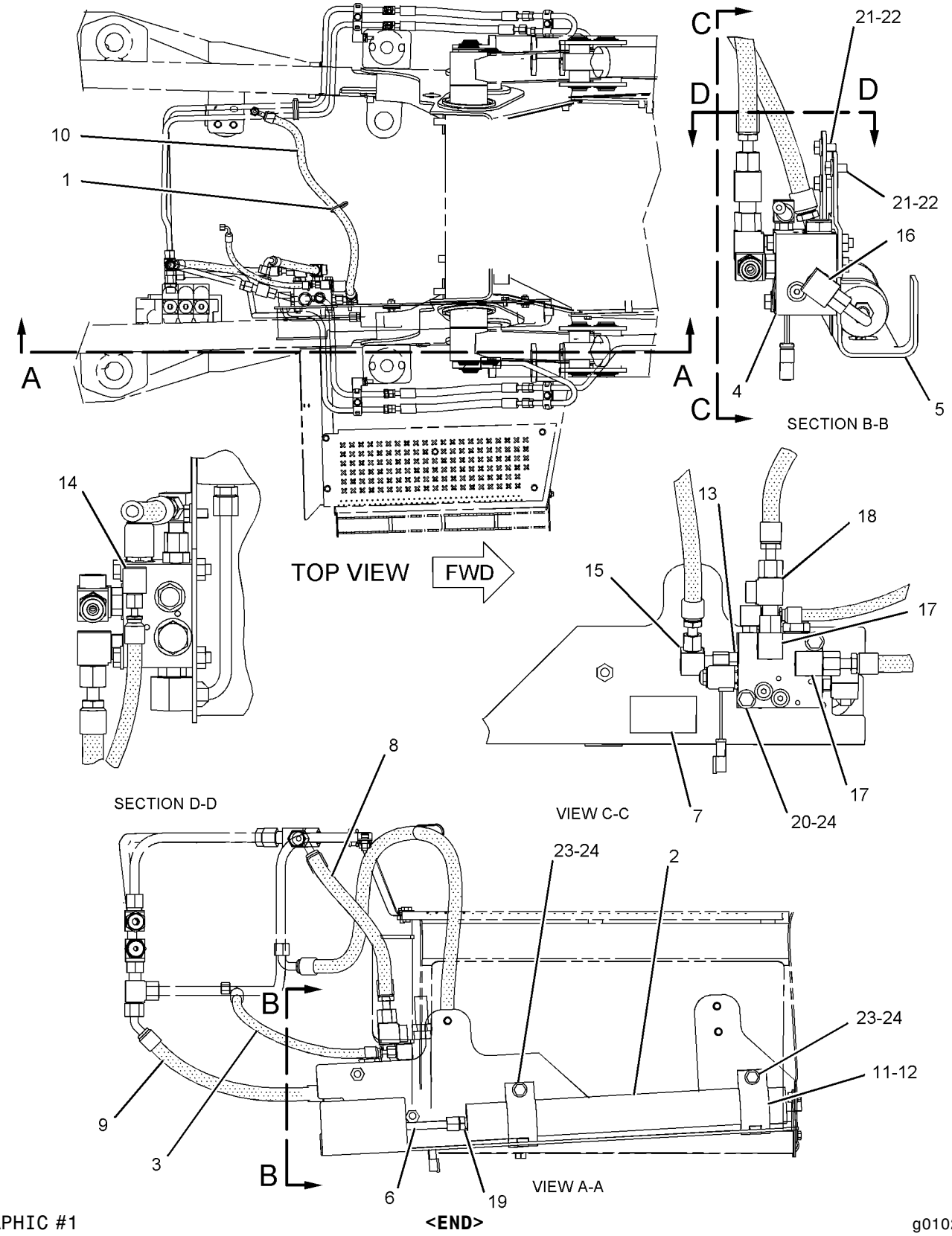

GRAPHIC #1

<END>

g01024033

HYDRAULIC SYSTEM

185-3413 LINES GP-STABILIZER

S/N: FDP18400-UP

PART OF 237-6458, 237-6459 DRIVE AR-BACKHOE LOADER

AN ATTACHMENT

SMCS-5057, 5468 **i01739890**

NOTE	REF NO	GRAPHIC REF	PART NUMBER	QTY	PART NAME 1 2 3 4 5 6 (PRODUCT LEVEL)	SEE PAGE
	1	1	**5P-0599**	4	CLAMP	
	2	1	**9R-2052**	2	BLOCK	
	3	1	**9R-2053**	2	BLOCK	
	4	1	**134-7323**	1	TUBE AS	
	5	1	**134-7324**	1	TUBE AS	
I	6	1	**174-4306**	1	HOSE AS	
I	7	1	**174-5699**	1	HOSE AS	
I	8	1	**174-5700**	1	HOSE AS	
I	9	1	**174-5701**	1	HOSE AS	
I	10	1	**174-5702**	1	HOSE AS	
I	11	1	**177-7094**	1	HOSE AS	
	12	1	*148-8327*	1	CONNECTOR GP	
		1	**3D-2824**	1	SEAL-O-RING	
		1	**6V-8637**	1	CONNECTOR-SEAL	
		1	**6V-9746**	1	SEAL-O-RING	
	13	1	*148-8345*	4	CONNECTOR GP	
					(EACH INCLUDES)	
		1	**2M-9780**	1	SEAL-O-RING (19.8MM ID)	
		1	**6V-8398**	1	SEAL-O-RING	
		1	**6V-8638**	1	CONNECTOR-SEAL	
	14	1	*148-8347*	1	ELBOW GP	
		1	**3D-2824**	1	SEAL-O-RING	
		1	**6V-9007**	1	ELBOW	
		1	**6V-9746**	1	SEAL-O-RING	
	15	1	*148-8372*	2	ELBOW GP	
					(EACH INCLUDES)	
		1	**2M-9780**	1	SEAL-O-RING (19.8MM ID)	
		1	**6V-8398**	1	SEAL-O-RING	
		1	**6V-8721**	1	ELBOW	
	16	1	**5P-7462**	6	CLIP (SLOT)	
	17	1	**5P-7463**	6	CLIP (TAB)	
	18	1	**6V-0683**	6	GROMMET	
	19	1	**8T-4121**	9	WASHER-HARD (11X21X2.5MM THK)	
M	20	1	**8T-4133**	4	NUT (M10X1.5 THD)	
M	21	1	**8T-4186**	4	BOLT (M10X1.5X40MM)	
M	22	1	**8T-4196**	1	BOLT (M10X1.5X35MM)	

I-SEE HOSE FABRICATION GUIDE
M-METRIC PART

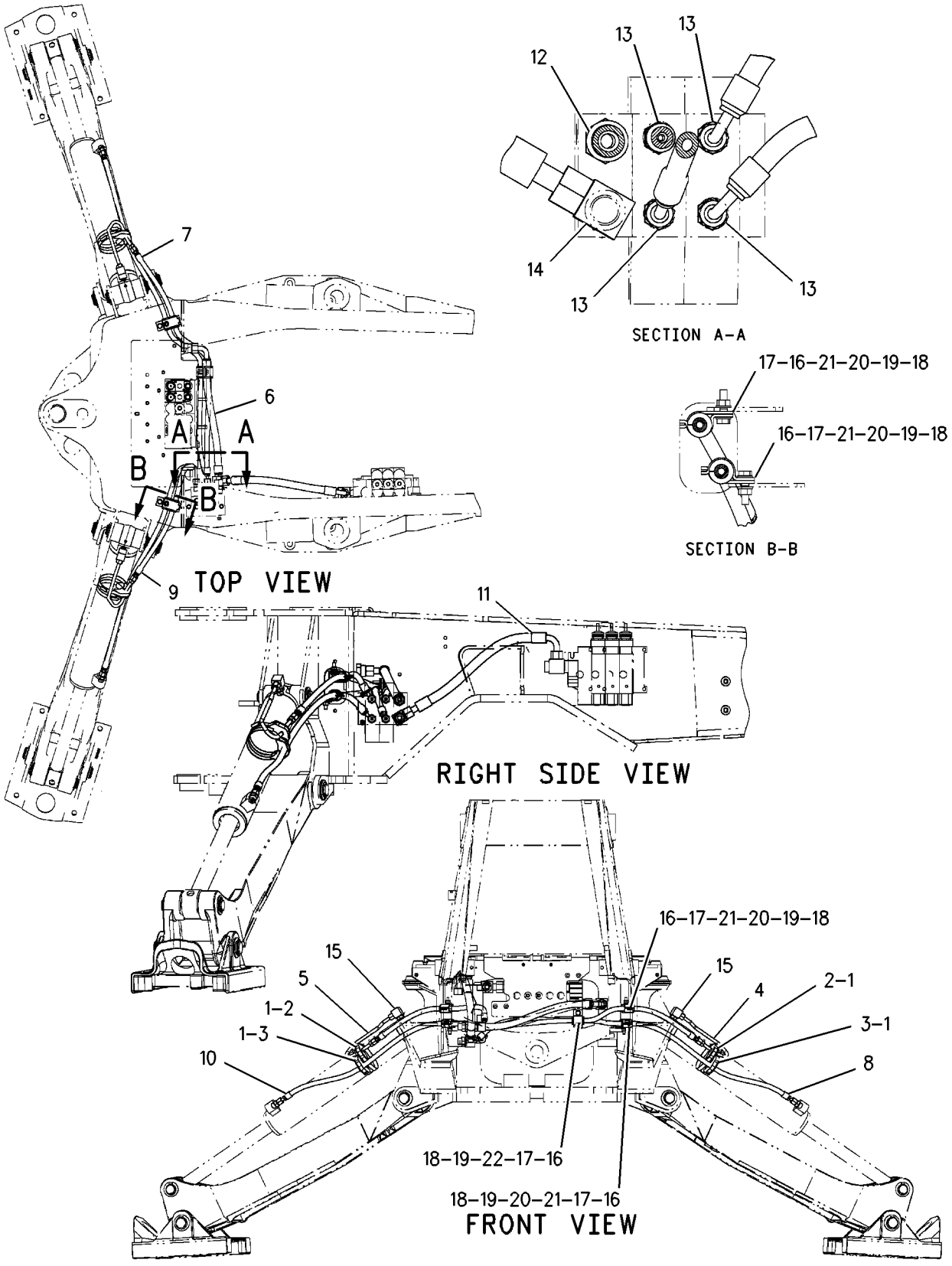

GRAPHIC #1 **<END>** g00889567

HYDRAULIC SYSTEM

167-8273 LINES GP-STICK

S/N: FDP18400-UP
PART OF 238-8218 BACKHOE AR-EXTENDABLE STICK, 184-7916, 238-8219 BACKHOE AR-STANDARD STICK
AN ATTACHMENT

SMCS-5057, 5458 **i01928736**

NOTE	REF NO	GRAPHIC REF	PART NUMBER	QTY	PART NAME 1 2 3 4 5 6 (PRODUCT LEVEL)	SEE PAGE
	1	1	**5P-3860**	1	CLAMP-HOSE	
I	2	1	**169-2980**	1	HOSE AS	
I	3	1	**172-3821**	1	HOSE AS	
	4	1	**9R-5948**	1	BLOCK	
	5	1	*148-8341*	1	CONNECTOR GP	
		1	**3D-2824**	1	SEAL-O-RING	
		1	**6V-8713**	1	CONNECTOR	
		1	**7J-9108**	1	SEAL-O-RING	

I-SEE HOSE FABRICATION GUIDE

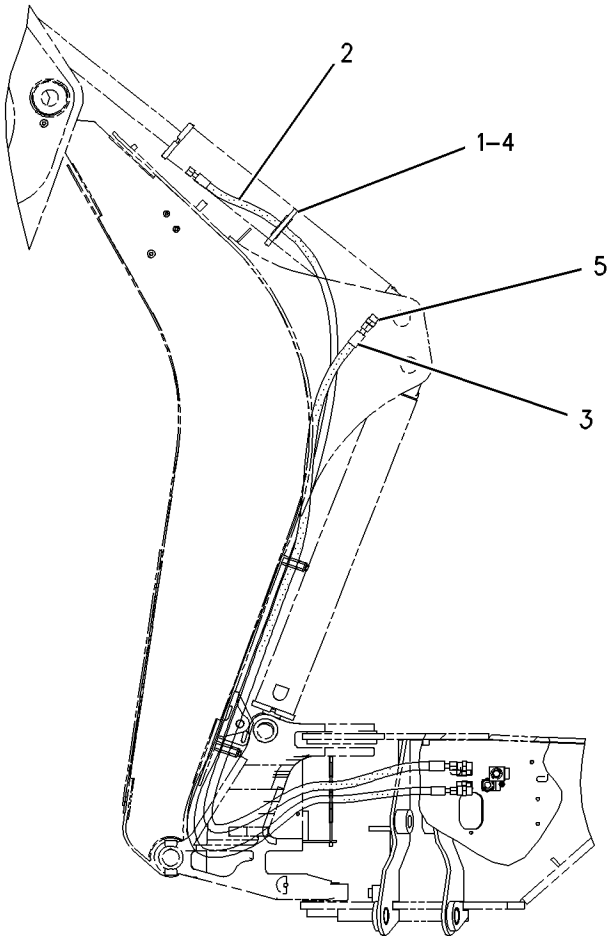

RIGHT SIDE VIEW

GRAPHIC #1 **<END>** g01003298

202-5935 LINES GP-STICK

S/N: FDP18400-UP
LOW LEAK
PART OF 202-5971, 202-5973, 238-4786, 238-4788, 238-4789 BACKHOE AR-EXTENDABLE STICK, 202-5958, 202-5961, 202-5963, 238-4785, 238-4787 BACKHOE AR-STANDARD STICK
AN ATTACHMENT

SMCS-5057, 5458 **i01919075**

NOTE	REF NO	GRAPHIC REF	PART NUMBER	QTY	PART NAME 1 2 3 4 5 6 (PRODUCT LEVEL)	SEE PAGE
	1	1	**5P-3860**	1	CLAMP-HOSE	
	2	1	**9R-5948**	1	BLOCK	
	3	1	**201-3627**	1	HOSE AS	
I	4	1	**201-3628**	1	HOSE AS	
	5	1	*148-8341*	1	CONNECTOR GP	
		1	**3D-2824**	1	SEAL-O-RING	
		1	**6V-8713**	1	CONNECTOR	
		1	**7J-9108**	1	SEAL-O-RING	

I-SEE HOSE FABRICATION GUIDE

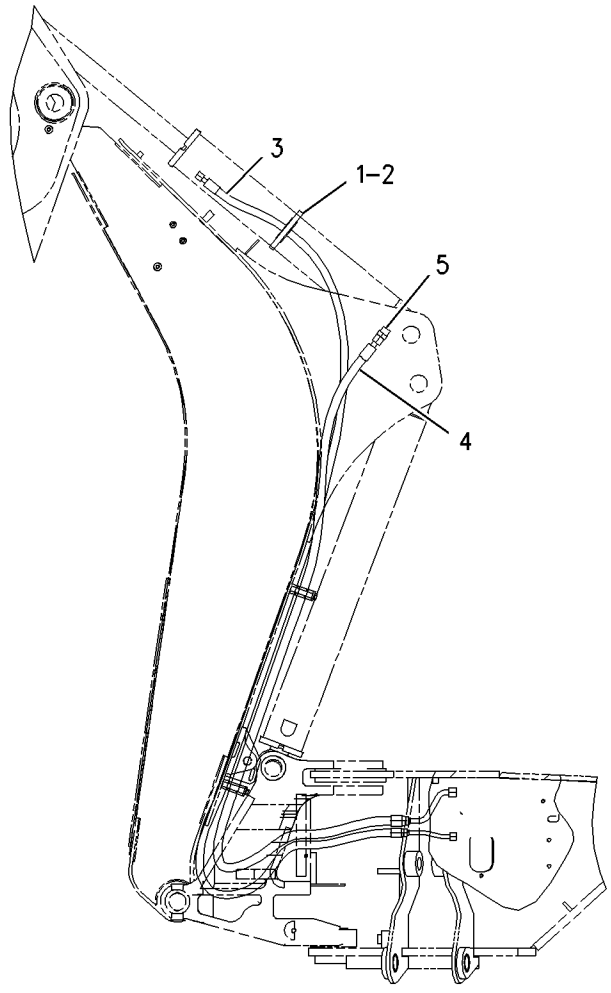

GRAPHIC #1 **<END>** g00836601

HYDRAULIC SYSTEM

202-5939 LINES GP-STICK

S/N: FDP18400-UP
EXTENDABLE, LOW LEAK
PART OF 202-5971, 238-4788 BACKHOE AR-EXTENDABLE STICK
AN ATTACHMENT

SMCS-5057, 5458 **i02013403**

NOTE	REF NO	GRAPHIC REF	PART NUMBER	QTY	PART NAME 1 2 3 4 5 6 (PRODUCT LEVEL)	SEE PAGE
	1	1	**5P-0599**	1	CLAMP	
	2	1	**9R-5948**	1	BLOCK	
	3	1	**9R-9253**	1	PLATE	
	4	1,2	**101-0862**	2	PLATE-WARNING (E-STICK)	
	5	1,2	**162-2356**	2	TUBE AS	
I	6	1,2	**167-3896**	2	HOSE AS	
I	7	2	**168-8497**	1	HOSE AS	
	8	1	**177-0856**	1	TUBE AS	
	9	1	**177-2171**	1	TUBE AS	
	10	1	**187-4333**	1	TUBE AS	
	11	1	**187-4344**	1	TUBE AS	
I	12	1	**201-3630**	1	HOSE AS	
	13	1	**201-3631**	1	HOSE AS	
	14	1	**201-3633**	1	HOSE AS	
	15	1	**201-3636**	1	HOSE AS	
	16	1,2	**9R-1004**	5	CLIP (TAB)	
I	17	1	**168-8644**	1	HOSE AS	
	18	1,2	**9R-1005**	5	CLIP (SLOT)	
	19	1	*148-8328*	2	CONNECTOR GP	
					(EACH INCLUDES)	
		1	**3D-2824**	1	SEAL-O-RING	
		1	**6V-8398**	1	SEAL-O-RING	
		1	**6V-8633**	1	CONNECTOR	
	20	2	*148-8347*	1	ELBOW GP	
		2	**3D-2824**	1	SEAL-O-RING	
		2	**6V-9007**	1	ELBOW	
		2	**6V-9746**	1	SEAL-O-RING	
	21	1	**2P-1293**	1	LOCKNUT (1 3/16-12-THD)	
	22	1,2	**5P-7464**	5	CLIP (SLOT)	
	23	1,2	**5P-7465**	5	CLIP (TAB)	
	24	2	**5P-7466**	2	CLIP (SLOT)	
	25	2	**5P-7467**	2	CLIP (TAB)	
	26	2	**5P-7468**	1	CLIP (SLOT)	
	27	2	**5P-7469**	1	CLIP (TAB)	
	28	2	**5P-8112**	2	GROMMET	
	29	1,2	**6V-1249**	5	GROMMET	
	30	1,2	**6V-8398**	8	SEAL-O-RING	
	31	1	**6V-9169**	1	NUT-BULKHEAD (13/16-16-THD)	
	32	1	**6V-9746**	2	SEAL-O-RING	
	33	1,2	**7J-9108**	2	SEAL-O-RING	
	34	2	**8T-1889**	1	CLIP (SLOT)	
	35	2	**8T-1890**	1	CLIP (TAB)	
	36	1,2	**8T-4121**	8	WASHER-HARD (11X21X2.5-MM THK)	
M	37	1,2	**8T-4136**	4	BOLT (M10X1.5X25-MM)	
M	38	1,2	**8T-4139**	4	BOLT (M12X1.75X30-MM)	
M	39	1	**8T-4184**	2	BOLT (M12X1.75X45-MM)	
M	40	1,2	**8T-4195**	4	BOLT (M10X1.5X30-MM)	
	41	1,2	**8T-4223**	6	WASHER-HARD (13.5X25.5X3-MM THK)	
	42	2	**8T-7087**	1	GROMMET	

I-REFER TO HYDRAULIC INFORMATION SYSTEM
M-METRIC PART

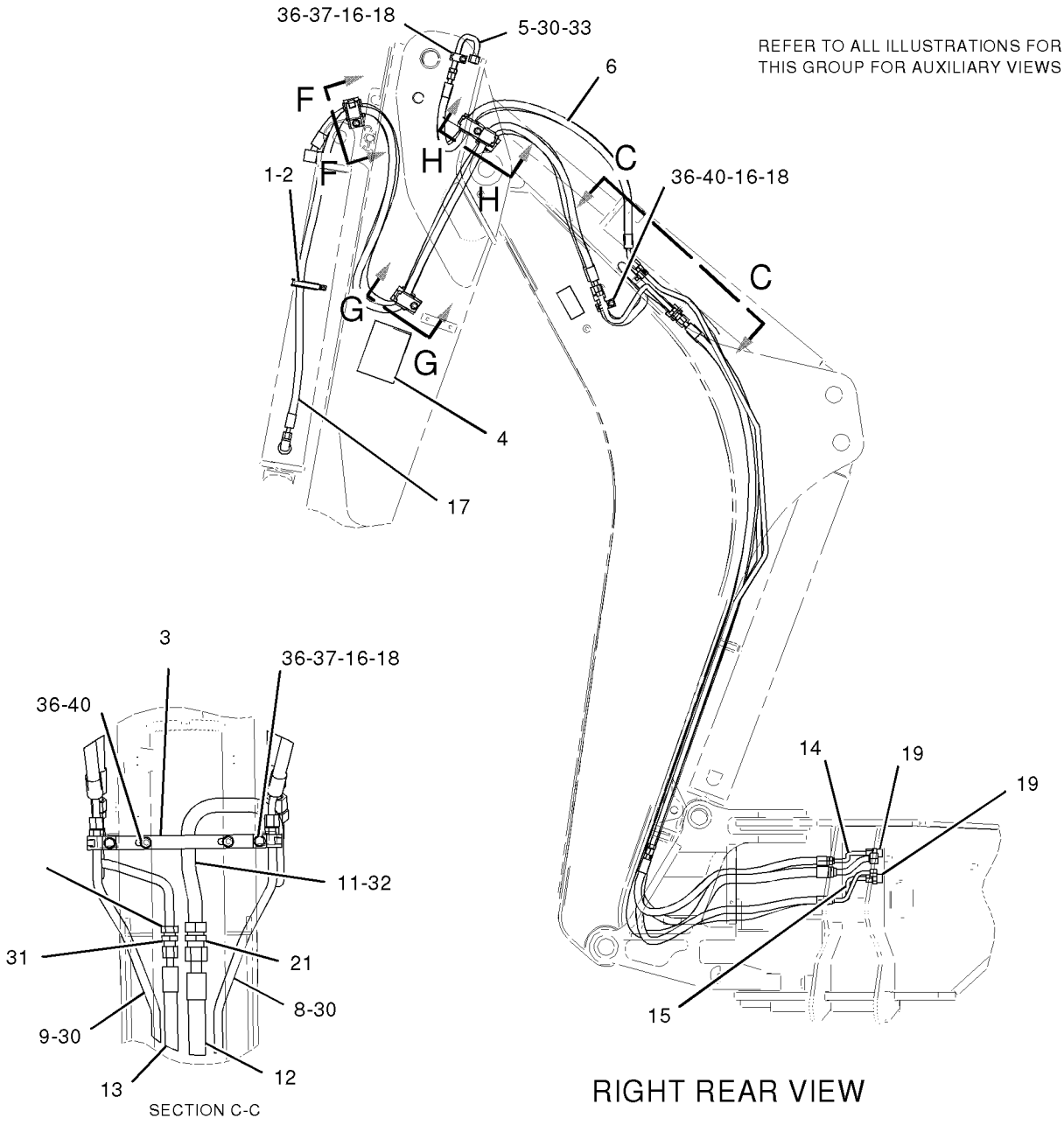

GRAPHIC #1

g01041097

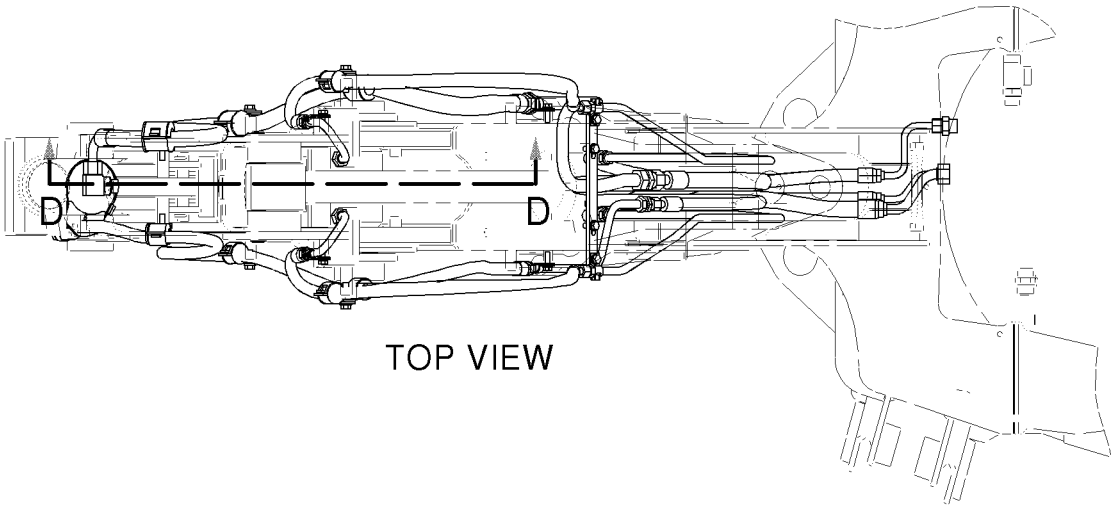

TOP VIEW

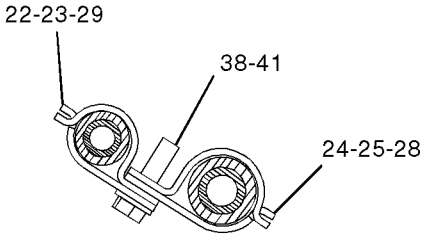

SECTION L-L

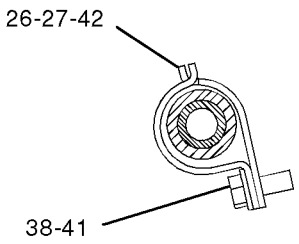

SECTION J-J

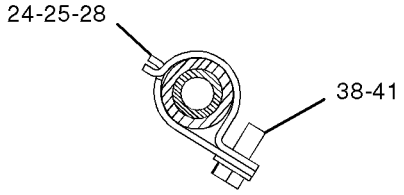

SECTION K-K

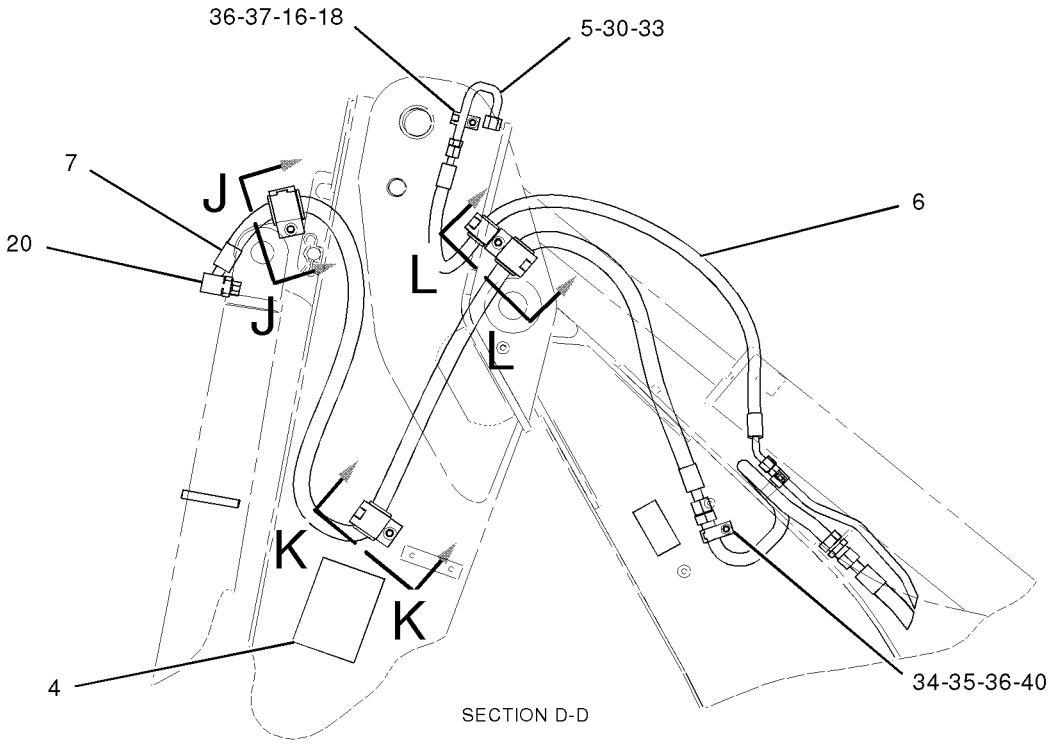

SECTION D-D

GRAPHIC #2

<END>

g01041098

HYDRAULIC SYSTEM

202-5723 LINES GP-SWING

S/N: FDP18400-UP
LOW LEAK
PART OF 202-5805, 202-5806, 214-6981 HYDRAULIC AR
ALSO AN ATTACHMENT

SMCS-5057, 5105 **i01801340**

NOTE	REF NO	GRAPHIC REF	PART NUMBER	QTY	PART NAME 1 2 3 4 5 6 (PRODUCT LEVEL)	SEE PAGE
	1	1	**5P-0599**	2	CLAMP	
	2	1	**9R-2053**	2	BLOCK	
I	3	1	**9R-9005**	2	HOSE AS	
I	4	1	**201-3625**	1	HOSE AS	
I	5	1	**201-3626**	1	HOSE AS	
	6	1	**206-3685**	1	VALVE GP-CROSSOVER RELIEF	
		1	**7I-8084**	2	PLUG	
I	7	1	**208-3600**	1	HOSE AS	
I	8	1	**208-3601**	1	HOSE AS	
	9	1	**226-5634**	2	CONNECTOR AS	
					(EACH INCLUDES)	
		1	**3J-1907**	1	SEAL-O-RING	
		1	**4J-5477**	1	SEAL-O-RING	
		1	**167-0566**	1	CARTRIDGE	
		1	**226-5633**	1	CONNECTOR	
	10	1	*148-8340*	4	CONNECTOR GP	
					(EACH INCLUDES)	
		1	**3K-0360**	1	SEAL-O-RING	
		1	**6V-8398**	1	SEAL-O-RING	
		1	**6V-8639**	1	CONNECTOR	
	11	1	*148-8351*	1	ELBOW GP	
		1	**4J-5477**	1	SEAL-O-RING	
		1	**6V-9849**	2	ELBOW-SWIVEL	
	12	1	*148-8364*	2	ELBOW GP	
					(EACH INCLUDES)	
		1	**3K-0360**	1	SEAL-O-RING	
		1	**6V-8398**	1	SEAL-O-RING	
		1	**6V-8625**	1	ELBOW	
	13	1	**5P-7464**	1	CLIP (SLOT)	
	14	1	**5P-7465**	1	CLIP (TAB)	
	15	1	**6V-7359**	1	GROMMET	
	16	1	**8T-4121**	1	WASHER-HARD (11X21X2.5MM THK)	
M	17	1	**8T-4195**	1	BOLT (M10X1.5X30MM)	
	18	1	**8T-4224**	2	WASHER-HARD (8.8X16X2MM THK)	
M	19	1	**8T-6870**	2	BOLT (M8X1.25X70MM)	

I-SEE HOSE FABRICATION GUIDE
M-METRIC PART

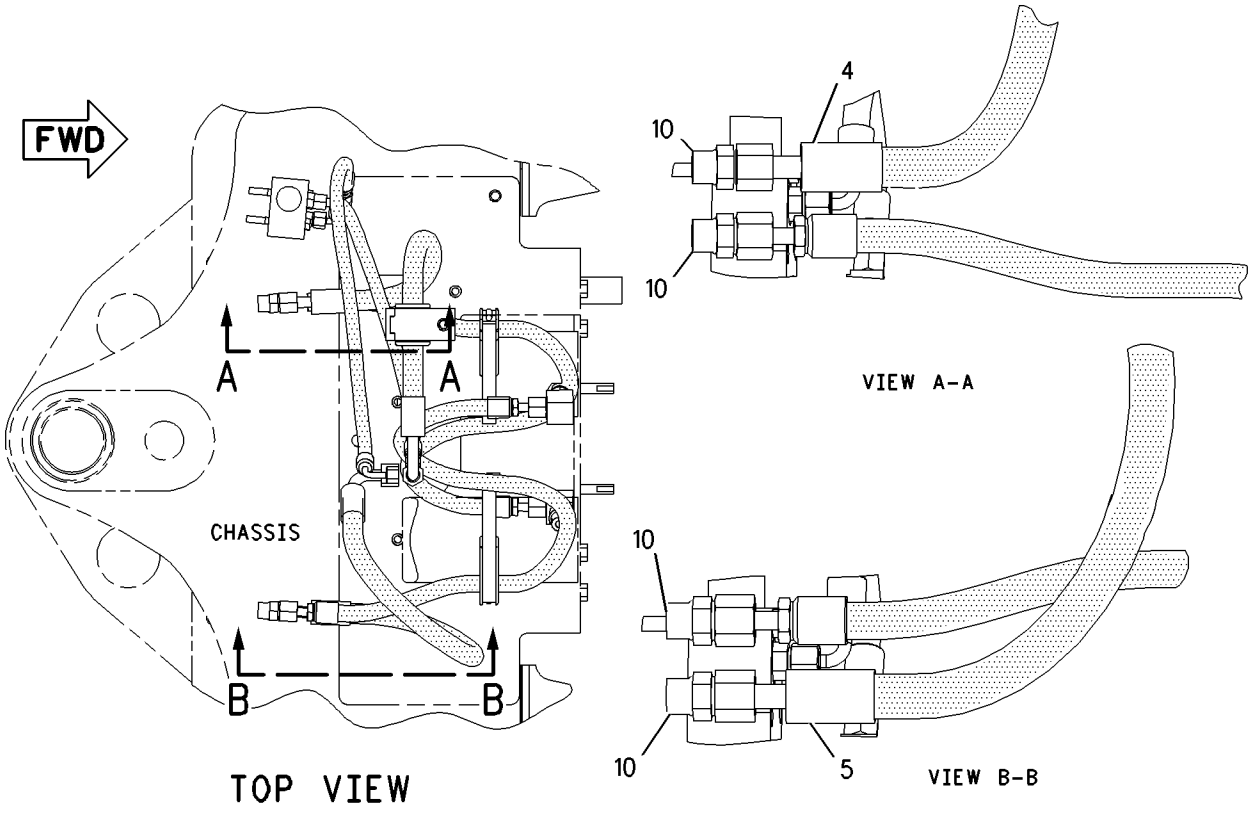

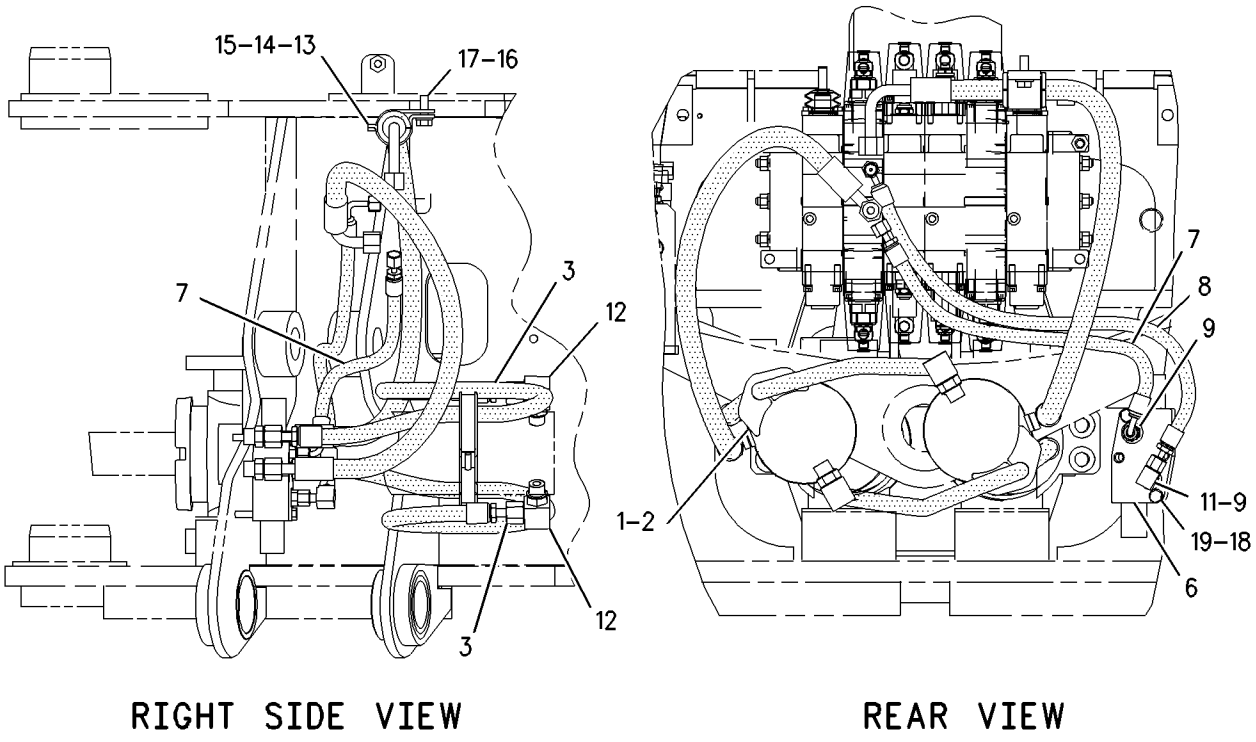

GRAPHIC #1 **<END>** g00921878

HYDRAULIC SYSTEM

238-8217 LINES GP-SWING

S/N: FDP18400-UP
PART OF 238-6698 HYDRAULIC AR
AN ATTACHMENT

SMCS-5057, 5105 **i01978259**

NOTE	REF NO	GRAPHIC REF	PART NUMBER	QTY	PART NAME 1 2 3 4 5 6 (PRODUCT LEVEL)	SEE PAGE
	1	1	**5P-0599**	2	CLAMP	
	2	1	**9R-2053**	2	BLOCK	
I	3	1	**9R-9005**	2	HOSE AS	
I	4	1	**176-7228**	1	HOSE AS	
I	5	1	**178-1123**	1	HOSE AS	
	6	1	**206-3685**	1	VALVE GP-CROSSOVER RELIEF	
		1	**7I-8084**	2	PLUG	
I	7	1	**208-3600**	1	HOSE AS	
I	8	1	**208-3601**	1	HOSE AS	
	9	1	**226-5634**	2	CONNECTOR AS	
					(EACH INCLUDES)	
		1	**3J-1907**	1	SEAL-O-RING	
		1	**4J-5477**	1	SEAL-O-RING	
		1	**226-5633**	1	CONNECTOR	
	10	1	*148-8325*	1	CONNECTOR GP	
		1	**3J-1907**	1	SEAL-O-RING	
		1	**4J-5477**	1	SEAL-O-RING	
		1	**6V-8641**	1	CONNECTOR	
	11	1	*148-8340*	4	CONNECTOR GP	
					(EACH INCLUDES)	
		1	**3K-0360**	1	SEAL-O-RING	
		1	**6V-8398**	1	SEAL-O-RING	
		1	**6V-8639**	1	CONNECTOR	
	12	1	*148-8351*	1	ELBOW GP	
		1	**4J-5477**	1	SEAL-O-RING	
		1	**6V-9849**	1	ELBOW (SWIVEL)	
	13	1	*148-8364*	2	ELBOW AS	
					(EACH INCLUDES)	
		1	**3K-0360**	1	SEAL-O-RING	
		1	**6V-8398**	1	SEAL-O-RING	
		1	**6V-8625**	1	ELBOW	
	14	1	*148-8370*	1	ELBOW GP	
		1	**6V-8398**	12	SEAL-O-RING	
		1	**6V-9851**		ELBOW	
	15	1	*214-4253*	2	TEE AS	
					(EACH INCLUDES)	
		1	**4J-5477**	1	SEAL-O-RING	
		1	**6V-8398**	1	SEAL-O-RING	
		1	**214-4252**	1	TEE	
	16	1	*214-4255*	1	TEE AS	
		1	**4J-5477**	1	SEAL-O-RING	
		1	**6V-8398**	1	SEAL-O-RING	
		1	**214-4254**	1	TEE	
M	17	1	**8T-4224**	2	WASHER-HARD (8.8X16X2-MM THK)	
M	18	1	**8T-6870**	2	BOLT (M8X1.25X70-MM)	

I-REFER TO HYDRAULIC INFORMATION SYSTEM
M-METRIC PART

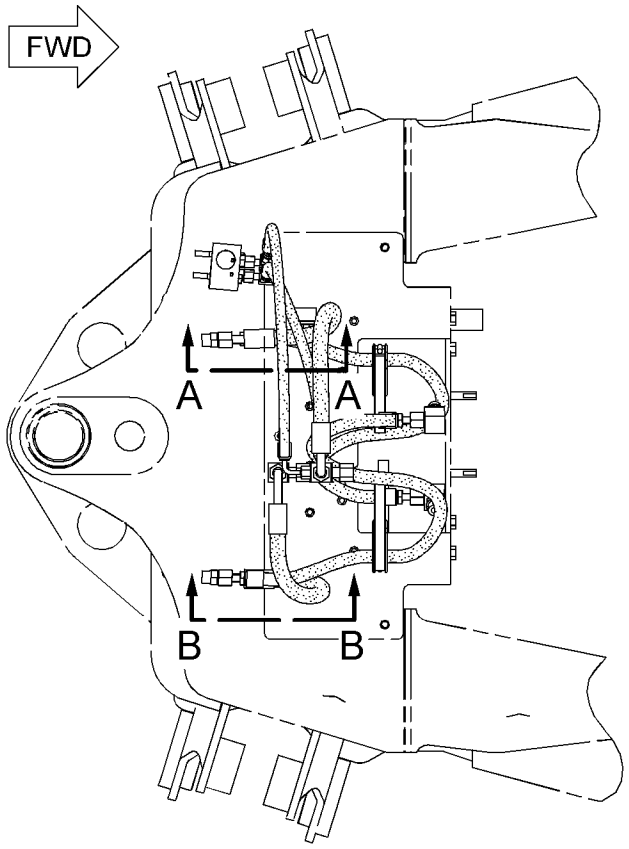

TOP VIEW

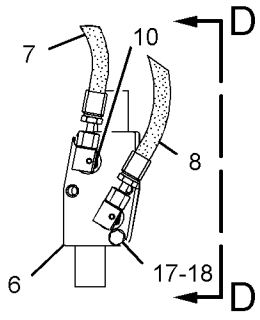

VIEW OF AREA C

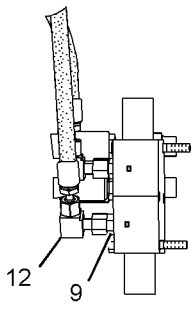

VIEW D-D

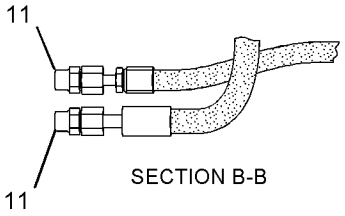

SECTION B-B

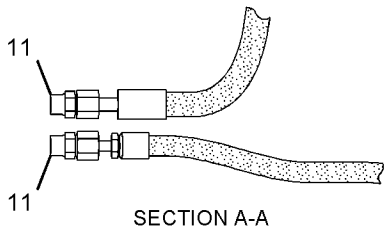

SECTION A-A

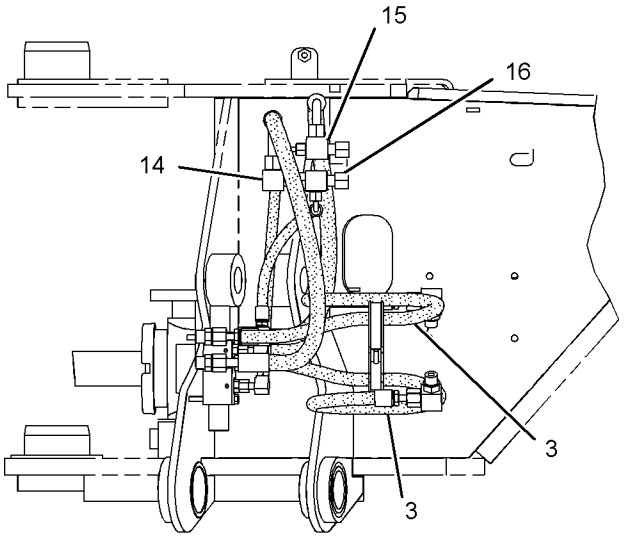

RIGHT SIDE VIEW

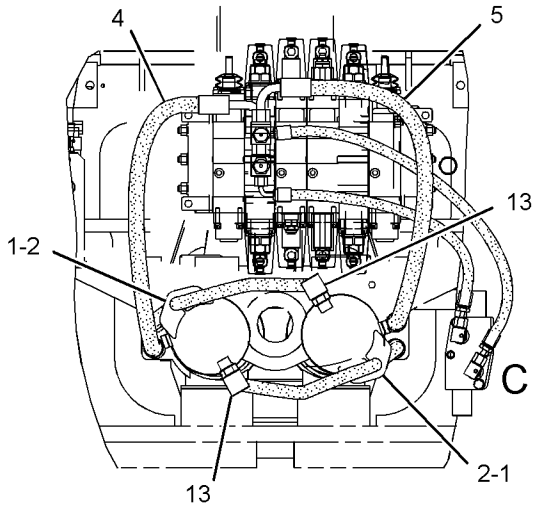

FRONT VIEW

GRAPHIC #1 **<END>** g01043991

HYDRAULIC SYSTEM

202-5725 LINES GP-TILT CYLINDER

S/N: FDP18400-UP
PART OF 202-5805, 202-5806, 238-6698 HYDRAULIC AR
AN ATTACHMENT

SMCS-5057, 5104 **i01722257**

NOTE	REF NO	GRAPHIC REF	PART NUMBER	QTY	PART NAME 1 2 3 4 5 6 (PRODUCT LEVEL)	SEE PAGE
	1	1	**7K-1181**	1	STRAP-CABLE	
	2	1	**9R-9316**	1	BRACKET AS	
	3	1	**122-5822**	1	BRACKET AS	
I	4	1	**201-3340**	2	HOSE AS	
I	5	1	**201-3341**	2	HOSE AS	
	6	1	**201-3342**	1	TUBE AS	
	7	1	**201-3343**	1	TUBE AS	
	8	1	**201-3344**	1	TUBE AS	
	9	1	**201-3345**	1	TUBE AS	
	10	1	**201-3346**	1	TUBE AS	
	11	1	**201-3347**	1	TUBE AS	
	12	1	**201-4756**	1	GROMMET	
	13	1	*148-8341*	2	CONNECTOR GP	
					(EACH INCLUDES)	
		1	**3D-2824**	1	SEAL-O-RING	
		1	**6V-8713**	1	CONNECTOR	
		1	**7J-9108**	1	SEAL-O-RING	
	14	1	*148-8388*	1	ELBOW GP	
		1	**2M-9780**	1	SEAL-O-RING	
		1	**6V-8629**	1	ELBOW	
		1	**6V-9746**	1	SEAL-O-RING	
	15	1	*150-3035*	2	ELBOW AS	
					(EACH INCLUDES)	
		1	**6V-9746**	1	SEAL-O-RING	
		1	**8T-1718**	1	ELBOW	
	16	1	**7J-9108**	8	SEAL-O-RING	
	17	1	**8T-1887**	8	CLIP (SLOT)	
	18	1	**8T-1888**	8	CLIP (TAB)	
	19	1	**8T-1895**	4	CLIP (SLOT)	
	20	1	**8T-1896**	4	CLIP (TAB)	
	21	1	**8T-4121**	10	WASHER-HARD (11X21X2.5MM THK)	
M	22	1	**8T-4136**	2	BOLT (M10X1.5X25MM)	
M	23	1	**8T-4186**	1	BOLT (M10X1.5X40MM)	
M	24	1	**8T-4195**	3	BOLT (M10X1.5X30MM)	
M	25	1	**8T-4196**	3	BOLT (M10X1.5X35MM)	

I-SEE HOSE FABRICATION GUIDE
M-METRIC PART

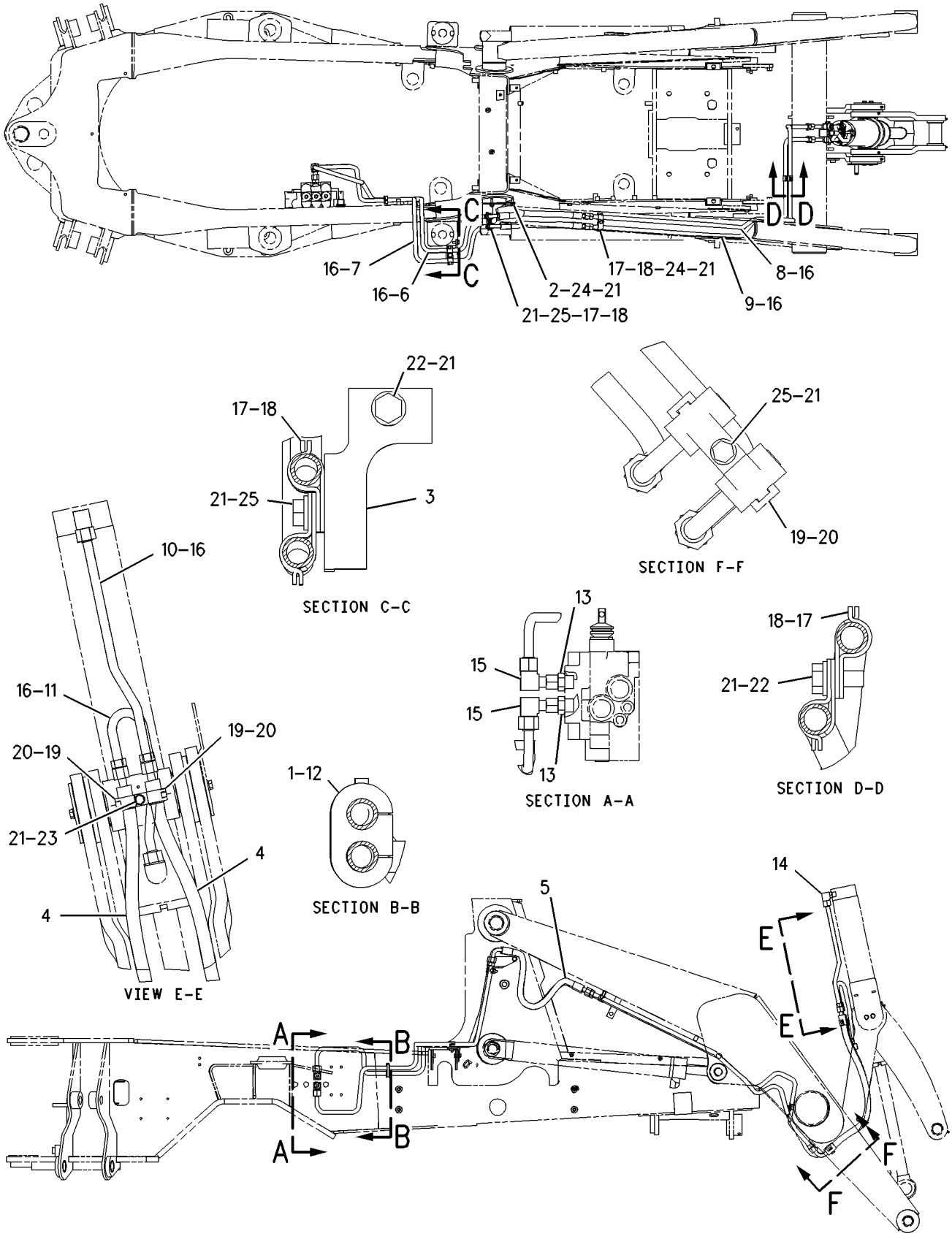

GRAPHIC #1 **<END>** g00885527

HYDRAULIC SYSTEM

106-2404 LOCK GP-HYDRAULIC HAND CONTROL

S/N: FDP18400-UP
AN ATTACHMENT

SMCS-5001 **i00523396**

NOTE	REF NO	GRAPHIC REF	PART NUMBER	QTY	PART NAME 1 2 3 4 5 6 (PRODUCT LEVEL)	SEE PAGE
	1	1	**106-2405**	1	PLATE AS	
	2	1	**106-2409**	1	PIN	
M	3	1	**8T-4136**	2	BOLT (M10X1.50X25MM)	
	4	1	**8T-4223**	2	WASHER-HARD (3MM THK)	

M-METRIC PART

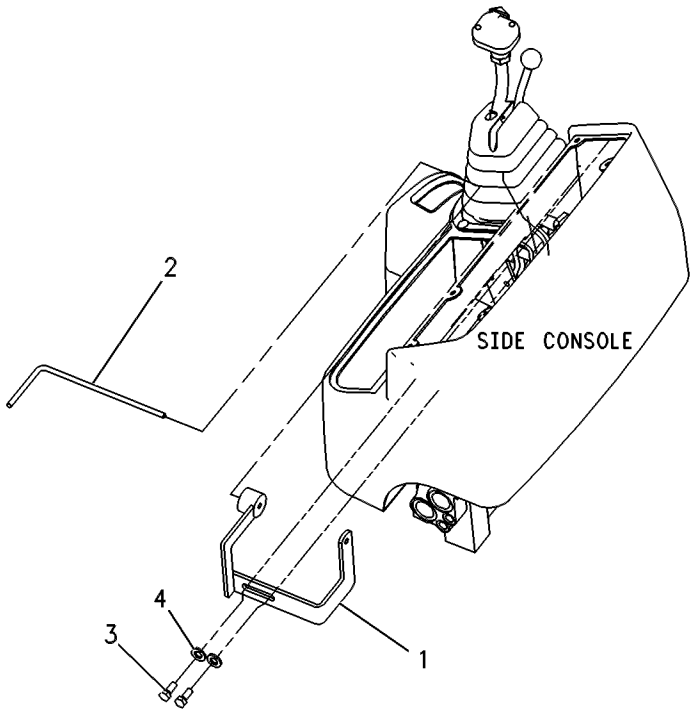

GRAPHIC #1 **<END>** g00131793

HYDRAULIC SYSTEM

202-5919 MOUNTING GP-BACKHOE CONTROL

S/N: FDP18400-UP

PILOT BACKHOE

PART OF 202-5916 CONTROL AR-HYDRAULIC

SMCS-5705 **i02014802**

NOTE	REF NO	GRAPHIC REF	PART NUMBER	QTY	PART NAME 1 2 3 4 5 6 (PRODUCT LEVEL)	SEE PAGE
M	1	1	**8T-4908**	4	BOLT (M8X1.25X25-MM)	
	2	1	**9R-9901**	7	FASTENER (CLIP)	
	3	1	**110-8760**	2	STRAP	
	4	1	**180-7234**	1	PLATE AS	
	5	1	**183-4907**	2	CAP AS	
					(EACH INCLUDES)	
M		1	**6V-9632**	4	NUT-WELD (M6X1-THD)	
	6	1	**183-4908**	1	COVER AS (RH)	
		1	**154-8079**	6	NUT (U-TYPE RETAINER)	
	7	1	**183-4909**	1	COVER AS (LH)	
		1	**154-8079**	5	NUT (U-TYPE RETAINER)	
Y	8	1	*183-4910*	1	LATCH GP-CONSOLE	801
	9	1	**183-4923**	1	COVER AS (LATCH)	
		1	**128-0899**	8	RIVET	
		1	**183-4914**	1	COVER-LATCH	
		1	**183-4922**	2	BRUSH AS	
	10	1	**183-4933**	2	TUBE	
	11	1	**183-4934**	2	BEARING-SELF-ALIGNING	
	12	1	**183-4935**	1	BLOCK	
	13	1	**183-4936**	1	BOOT	
	14	1	**183-4937**	2	PLATE	
	15	1	**183-4938**	1	BOOT	
	16	1	**183-4939**	1	PLATE	
	17	1	**185-3526**	1	COVER (LATCH)	
	18	1	**185-5505**	2	STRIKER AS	
B	19	1	**195-7602**	4	SHIM (1.6-MM THK)	
	20	1	**202-5920**	2	BLOCK	
	21	1	**202-5921**	1	BLOCK	
B	22	1	**204-0751**	1	SHIM (2-MM THK)	
B	23	1	**219-7627**	1	SHIM (1-MM THK)	
C	24	1	**220-3685**	1	SUPPORT AS	
C	25	1	**220-3688**	1	PLATE AS	
C	26	1	**221-7677**	2	BUMPER AS	
	27	1	**223-5924**	1	COVER AS	
	28	1	**223-5925**	1	COVER AS	
	29	1	**225-5179**	4	SPACER (7.9X14.3X15.7-MM THK)	
M	30	1	**111-4627**	4	SCREW-MACHINE (M6X1.0X30-MM)	
C	31	1	**200-1131**	4	SCREW-TRUSS HEAD (M4X0.7X20-MM)	
	32	1	**213-7315**	8	SCREW-TRUSS HEAD (M4X0.7X25-MM)	
M	33	1	**5C-7261**	2	NUT (M8X1.25-THD)	
C	34	1	**5P-4116**	4	WASHER-HARD (8.8X20.5X2-MM THK)	
M	35	1	**6V-8837**	2	BOLT (M6X1X16-MM)	
M	36	1	**7X-2533**	6	BOLT (M6X1X35-MM)	
M	37	1	**8T-0269**	8	BOLT-SOCKET HEAD (M6X1X20-MM)	
B	38	1	**8T-4121**	2	WASHER-HARD (11X21X2.5-MM THK)	
M	39	1	**8T-4185**	2	BOLT (M10X1.5X50-MM)	
M	40	1	**9X-2039**	8	SCREW-TRUSS HEAD (M10X1.5X35-MM)	
M	41	1	**9X-2044**	8	SCREW-TRUSS HEAD (M6X1X16-MM)	
M	42	1	**9X-2045**	3	SCREW-TRUSS HEAD (M6X1X20-MM)	
	43	1	**9X-8256**	24	WASHER (6.6X12X2-MM THK)	

B-USE AS REQUIRED
C-CHANGE FROM PREVIOUS TYPE
M-METRIC PART
Y-SEPARATE ILLUSTRATION

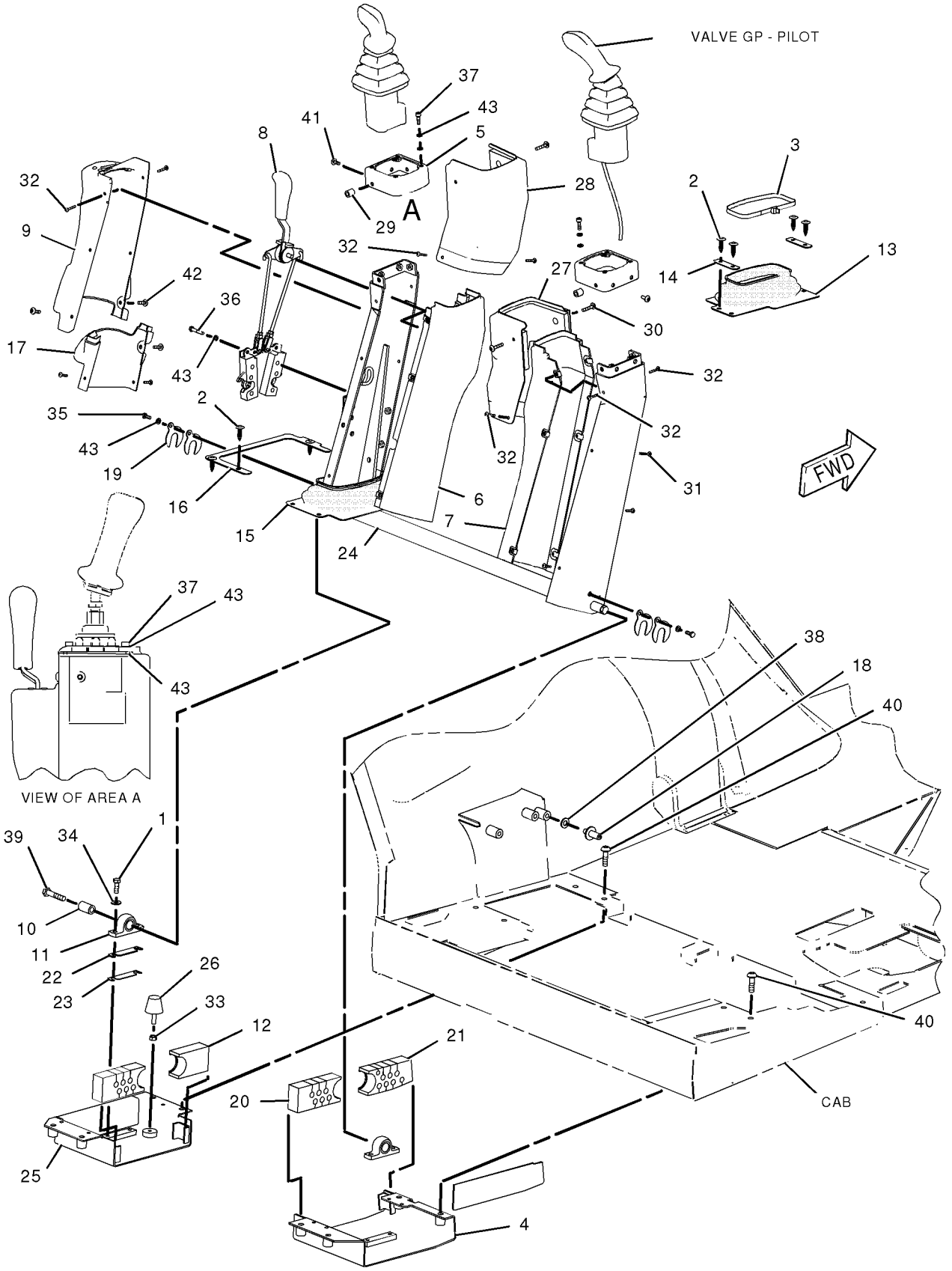

GRAPHIC #1 **<END>** g01041592

185-1598 MOUNTING GP-BANK VALVE–LOADER

S/N: FDP18400-UP

PART OF 186-5336, 186-5338, 202-5805, 202-5806, 238-6698 HYDRAULIC AR AN ATTACHMENT

SMCS-5051 **i01655822**

NOTE	REF NO	GRAPHIC REF	PART NUMBER	QTY	PART NAME 1 2 3 4 5 6 (PRODUCT LEVEL)	SEE PAGE
	1	1	**199-7854**	2	SPACER (11.8X20X45MM THK)	
M	2	1	**8T-0389**	2	LOCKNUT (M10X1.5 THD)	
	3	1	**8T-4121**	5	WASHER-HARD (11X21X2.5MM THK)	
M	4	1	**8T-4186**	1	BOLT (M10X1.5X40MM)	
M	5	1	**8T-4198**	2	BOLT (M10X1.5X100MM)	

M-METRIC PART

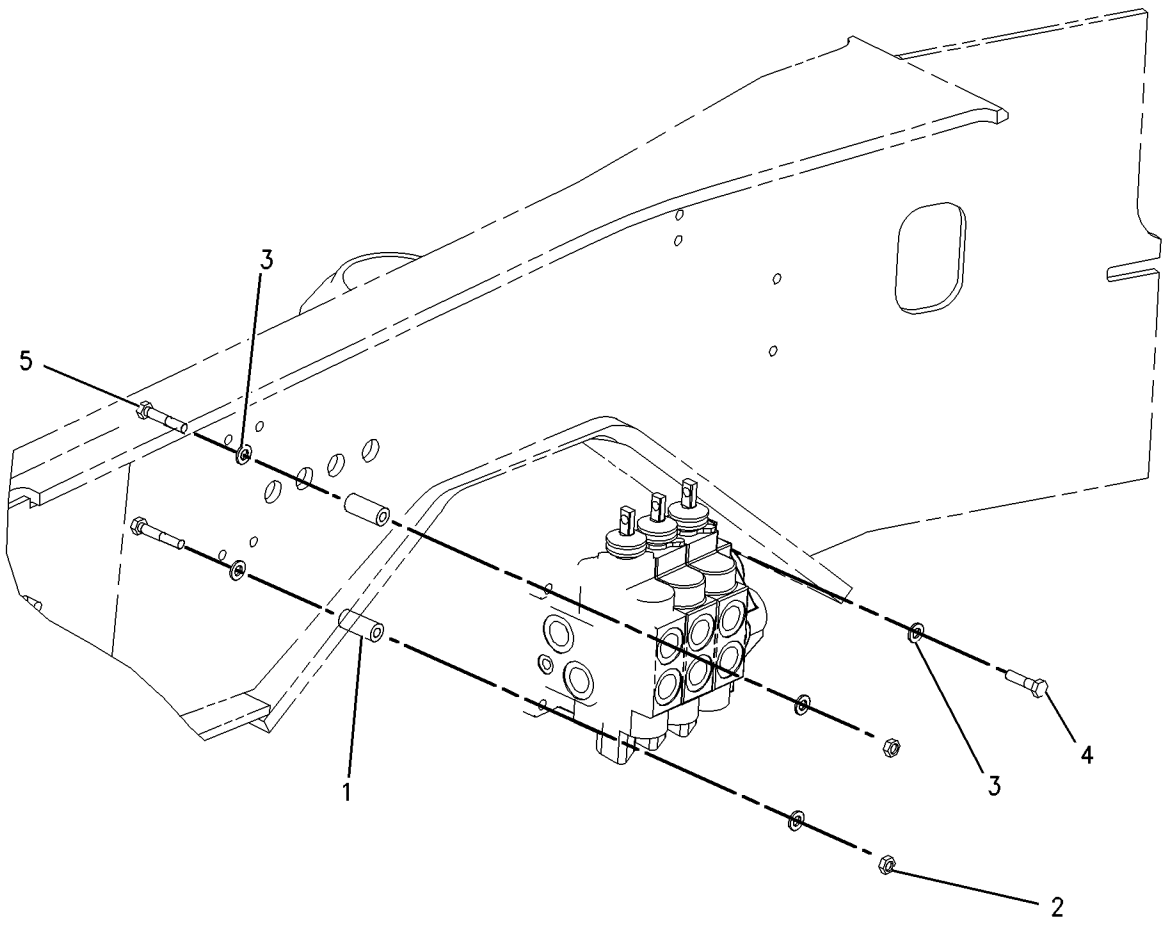

GRAPHIC #1 **<END>** g00791744

185-3165 MOUNTING GP-BANK VALVE–BACKHOE

S/N: FDP18400-UP
CENTER PIVOT
PART OF 214-6981 HYDRAULIC AR

SMCS-5051 **i01519108**

NOTE	REF NO	GRAPHIC REF	PART NUMBER	QTY	PART NAME 1 2 3 4 5 6 (PRODUCT LEVEL)	SEE PAGE
	1	1	**164-1481**	1	BRACKET AS	
M	2	1	**165-7019**	1	BOLT-HEX HEAD	
	3	1	**8T-4121**	5	WASHER-HARD (11X21X2.5MM THK)	
M	4	1	**8T-4183**	2	BOLT (M12X1.75X40 MM)	
M	5	1	**8T-4185**	1	BOLT (M10X1.5X50MM)	
M	6	1	**8T-4186**	2	BOLT (M10X1.5X40MM)	
	7	1	**8T-4223**	3	WASHER-HARD (13.5X25.5X3MM THK)	

M-METRIC PART

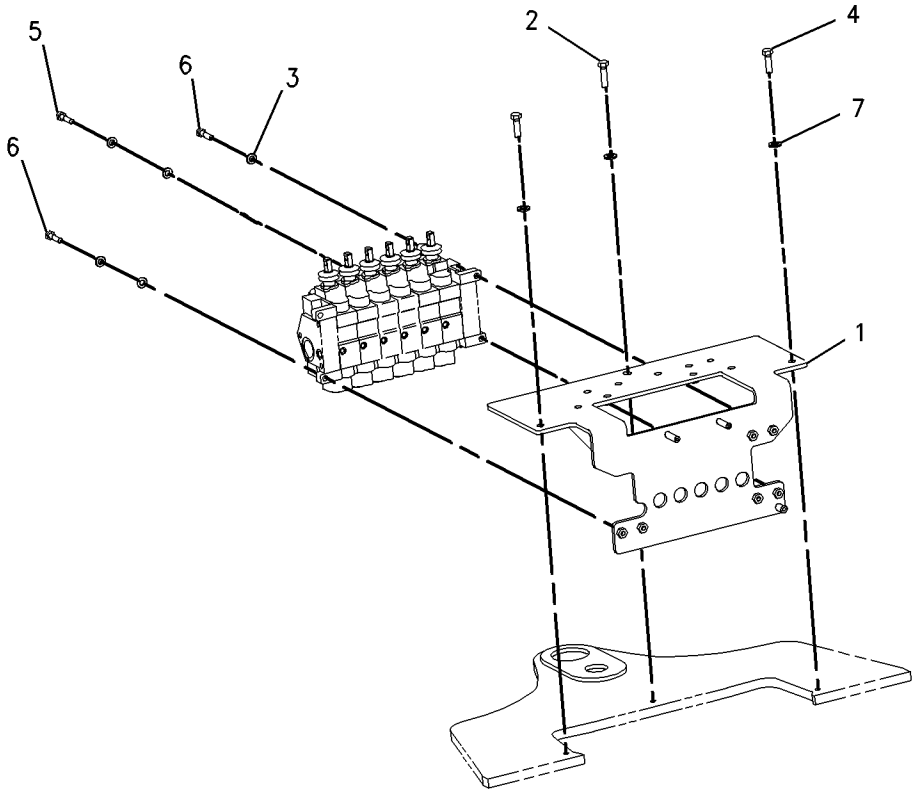

GRAPHIC #1 **<END>** g00771410

9R-4668 MOUNTING GP-CYLINDER

S/N: FDP18400-UP

PART OF 111-8634, 111-8635, 112-0938, 112-0939 BUCKET AR-MULTIPURPOSE

AN ATTACHMENT

SMCS-5102, 6068, 7562 **i01450458**

NOTE	REF NO	GRAPHIC REF	PART NUMBER	QTY	PART NAME 1 2 3 4 5 6 (PRODUCT LEVEL)	SEE PAGE
	1	1	**9R-4677**	2	PIN	
	2	1	**3B-5317**	4	COTTER	
	3	1	**9R-4678**	2	PIN	
	4	1	**3B-8489**	4	FITTING-GREASE	

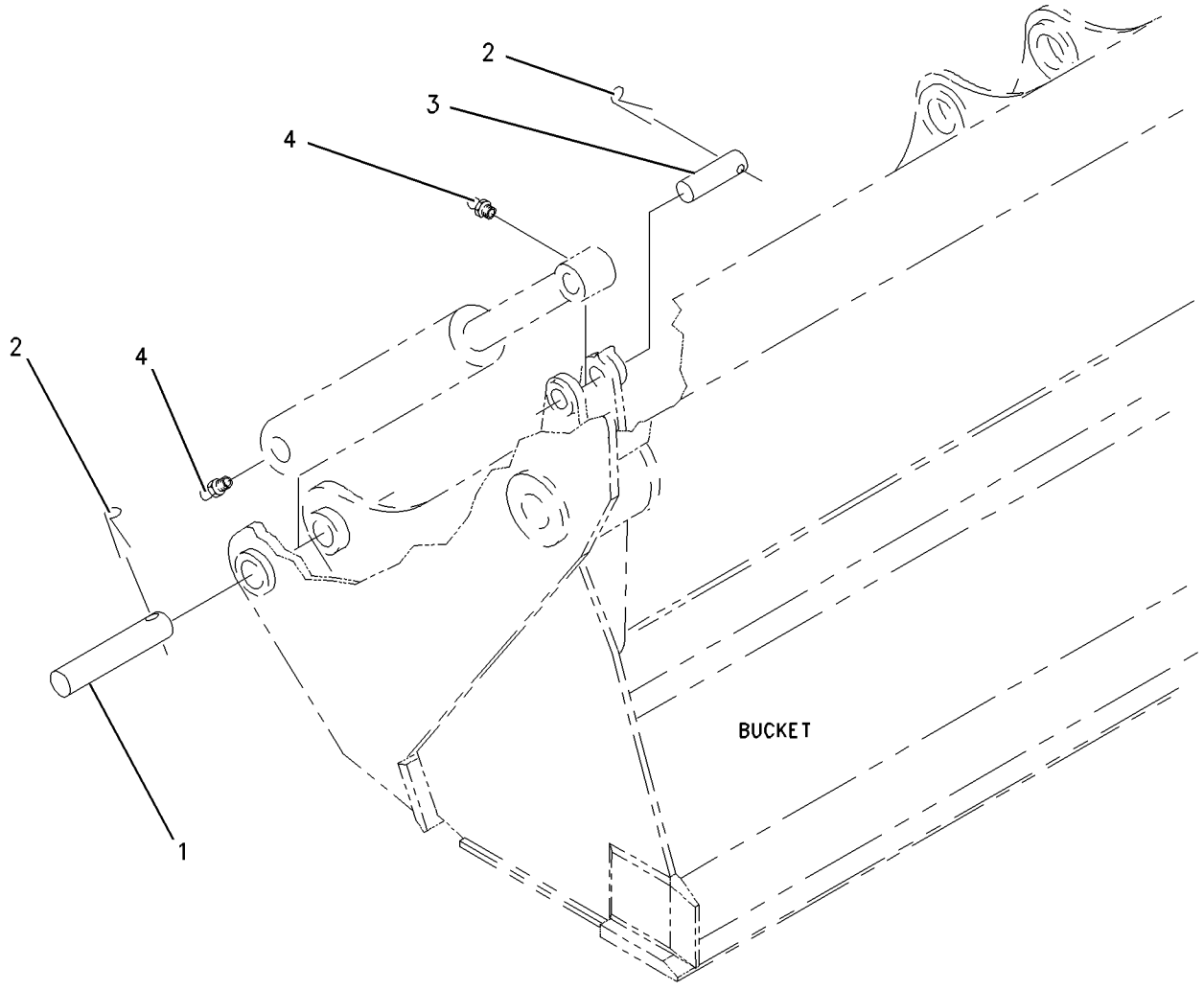

GRAPHIC #1 **<END>** g00759178

221-4265 MOUNTING GP-CYLINDER

S/N: FDP18400-UP
PART OF 221-4260 THUMB AR
AN ATTACHMENT

SMCS-5102, 6068, 7562 **i01920956**

NOTE	REF NO	GRAPHIC REF	PART NUMBER	QTY	PART NAME 1 2 3 4 5 6 (PRODUCT LEVEL)	SEE PAGE
	1	1	**9R-1510**	8	WASHER (4MM THK)	
	2	1	**221-4295**	1	PIN	
	3	1	**221-4296**	1	PIN	
	4	1	**221-4297**	1	PIN	
	5	1	**221-4315**	1	STOP AS	
	6	1	**221-4316**	1	BRACKET AS	
	7	1	**3B-5319**	2	PIN-COTTER	
	8	1	**6V-3213**	2	RING-RETAINING	
M	9	1	**6V-9189**	1	LOCKNUT	
M	10	1	**8T-3647**	1	BOLT (M8X1.25X80MM)	
	11	1	**9R-0158**	2	WASHER (46X69X3MM THK)	

M-METRIC PART

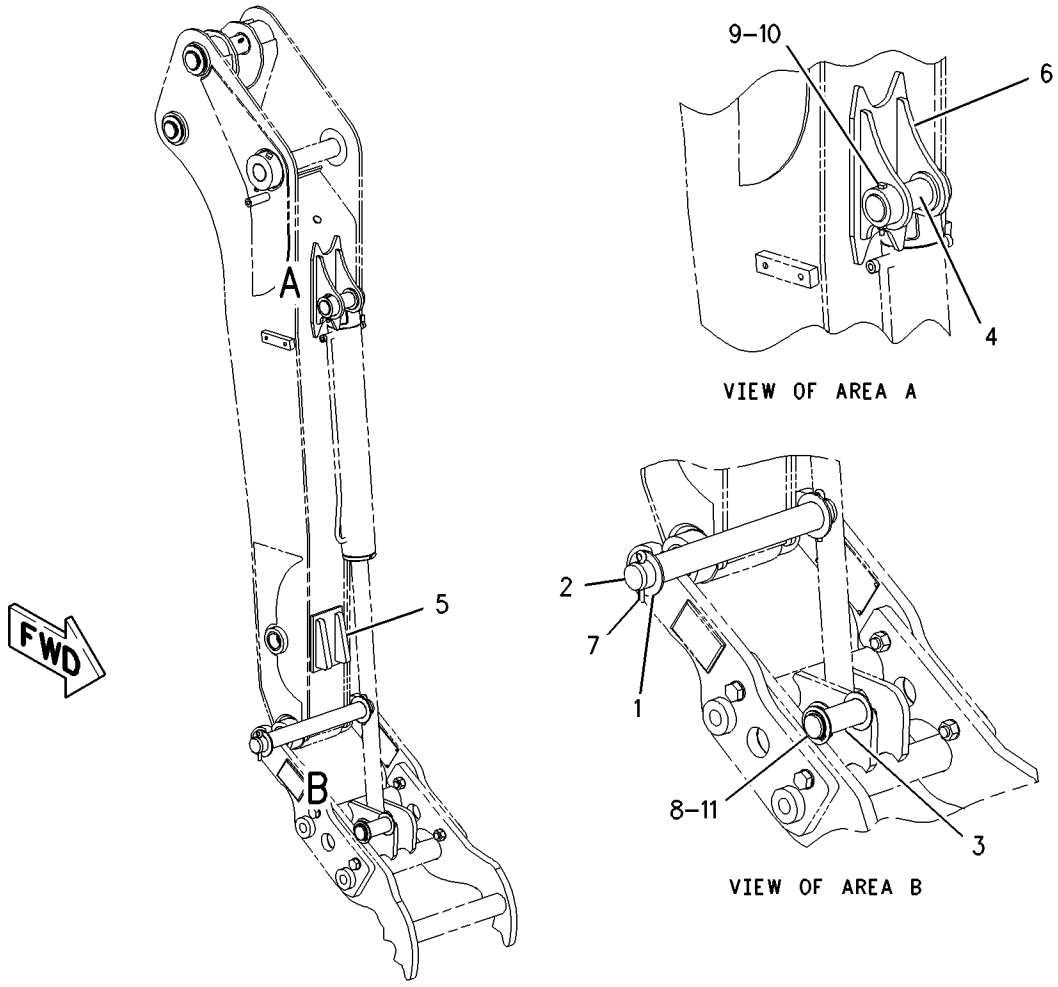

GRAPHIC #1 **<END>** g01003739

183-6078 MOUNTING GP-HYDRAULIC CONTROL–STABILIZER

S/N: FDP18400-UP
PART OF 209-4172, 209-4174 STABILIZER AR
AN ATTACHMENT

SMCS-5063 **i01801011**

NOTE	REF NO	GRAPHIC REF	PART NUMBER	QTY	PART NAME 1 2 3 4 5 6 (PRODUCT LEVEL)	SEE PAGE
	1	1	**164-1398**	2	KNOB	
	2	1	**190-5136**	1	FILM (STABILIZER CONTROL)	
	3	1	**205-5798**	1	PLATE	
M	4	1	**8T-4189**	4	BOLT (M8X1.25X20MM)	
	5	1	**8T-4224**	4	WASHER-HARD (8.8X16X2MM THK)	
M	6	1	**9X-2043**	3	SCREW-TRUSS HEAD (M6X1X14MM)	

M-METRIC PART

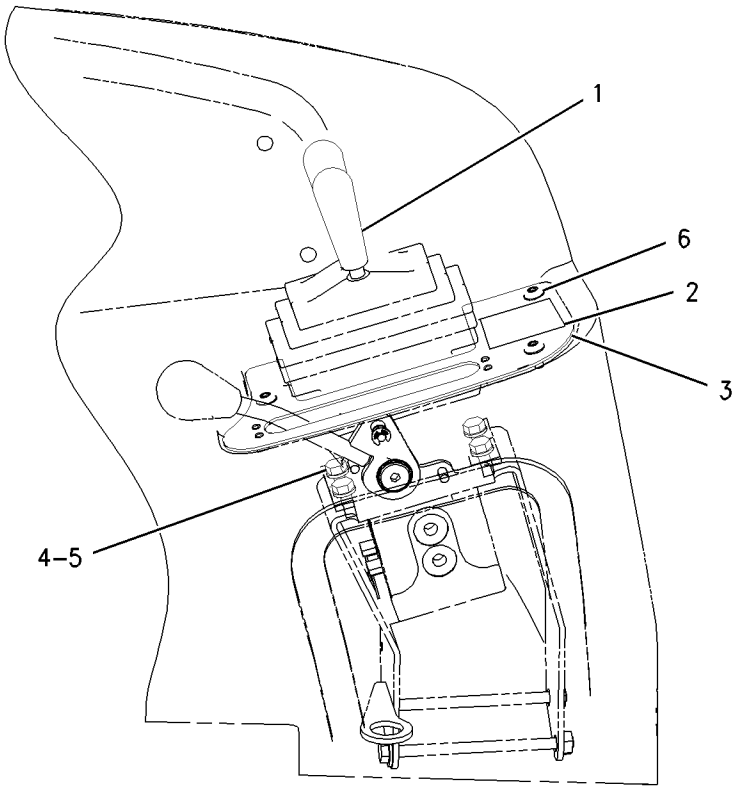

GRAPHIC #1 **<END>** g00882860

209-4163 MOUNTING GP-HYDRAULIC CONTROL

S/N: FDP18400-UP
STABILIZER
PART OF 209-4165 STABILIZER AR
AN ATTACHMENT

SMCS-5063 **i01944170**

NOTE	REF NO	GRAPHIC REF	PART NUMBER	QTY	PART NAME 1 2 3 4 5 6 (PRODUCT LEVEL)	SEE PAGE
	1	1	**164-1398**	2	KNOB	
	2	1	**202-1227**	1	FILM (STABILIZER CONTROL/BOOM LOCK)	
	3	1	**205-5798**	1	PLATE	
M	4	1	**8T-4189**	4	BOLT (M8X1.25X20MM)	
	5	1	**8T-4224**	4	WASHER-HARD (8.8X16X2MM THK)	
M	6	1	**9X-2043**	3	SCREW-TRUSS HEAD (M6X1X14MM)	

M-METRIC PART

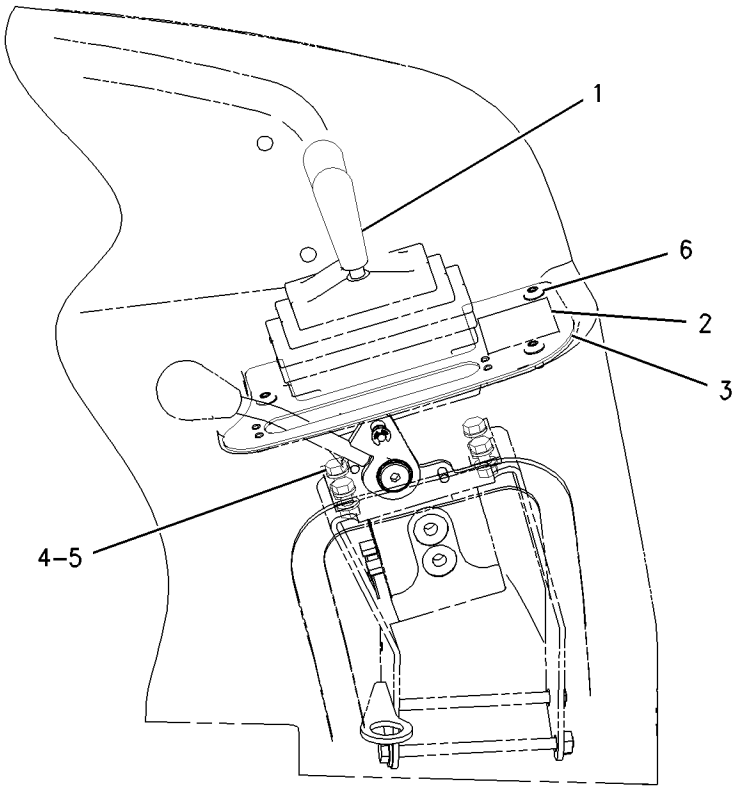

GRAPHIC #1 **<END>** g00875965

HYDRAULIC SYSTEM

112-1826 MOUNTING GP-HYDRAULIC PUMP

S/N: FDP18400-UP

PART OF 214-6981 HYDRAULIC AR

SMCS-5070 **i00512831**

NOTE	REF NO	GRAPHIC REF	PART NUMBER	QTY	PART NAME 1 2 3 4 5 6 (PRODUCT LEVEL)	SEE PAGE
M	1	1	**8T-9405**	4	BOLT-SOCKET HEAD (M4X0.7X16MM)	
	2	1	**9U-8886**	1	RING-SEAL (44.95MM ID)	
	3	1	**115-1918**	1	PLATE	
	4	1	**117-3534**	1	ADAPTER	
	5	1	**117-3535**	1	HUB	
Y	6	1	**128-5596**	1	SHAFT GP-POWER TAKE-OFF	513
	7	1	**5F-3106**	1	SEAL-O-RING (126.59MM ID)	
	8	1	**8T-4122**	2	WASHER (3.5MM THK)	
M	9	1	**8T-7338**	2	BOLT (M16X2.0X45MM)	

M-METRIC PART
Y-SEPARATE ILLUSTRATION

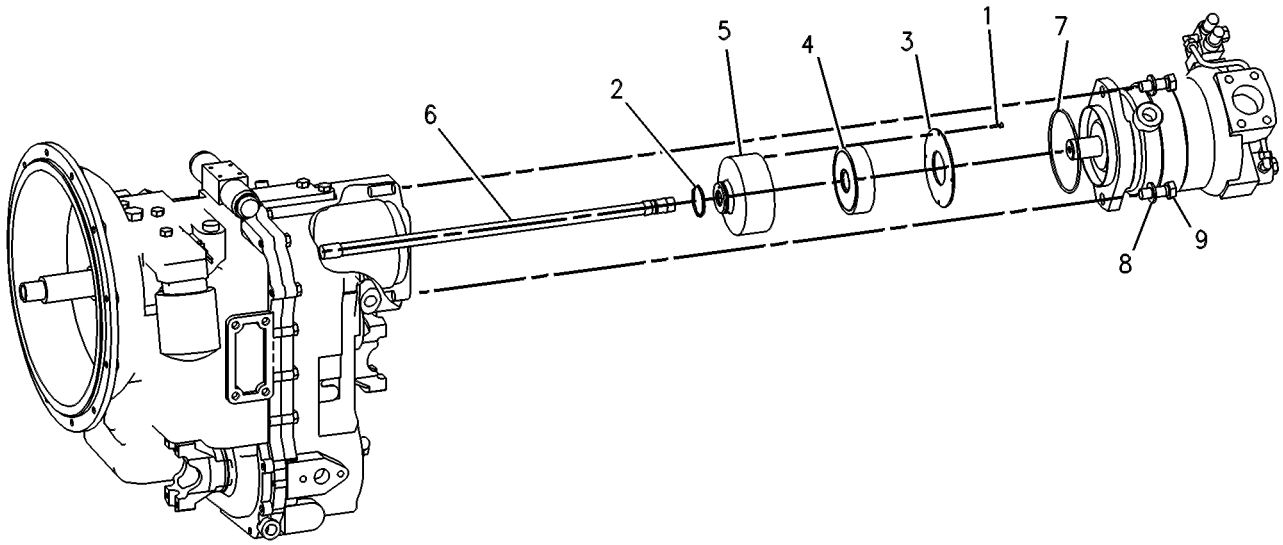

GRAPHIC #1 **<END>** g00131524

171-2101 MOUNTING GP-LINES

S/N: FDP18400-UP

PART OF 184-7925, 238-8218 BACKHOE AR-EXTENDABLE STICK, 184-7913, 184-7916, 184-7917, 238-8219 BACKHOE AR-STANDARD STICK AN ATTACHMENT

SMCS-5057, 5456 **i01519506**

NOTE	REF NO	GRAPHIC REF	PART NUMBER	QTY	PART NAME 1 2 3 4 5 6 (PRODUCT LEVEL)	SEE PAGE
	1	1	**9R-8874**	2	PLATE	
	2	1	**120-4397**	1	PLATE	
	3	1	**201-1034**	2	BLOCK	
	4	1	**172-2363**	2	BLOCK	
	5	1	**201-1035**	2	BLOCK	
	6	1	**191-4852**	1	BLOCK	
	7	1	**193-6352**	1	BLOCK	
	8	1	**193-6353**	1	BLOCK	
M	9	1	**6V-9189**	2	LOCKNUT (M8X1.25 THD)	
M	10	1	**7X-2539**	2	BOLT (M8X1.25X110MM)	
	11	1	**8T-4121**	4	WASHER-HARD (11X21X2.5MM THK)	
M	12	1	**8T-4136**	4	BOLT (M10X1.5X25MM)	
	13	1	**8T-4224**	4	WASHER-HARD (8.8X16X2MM THK)	

M-METRIC PART

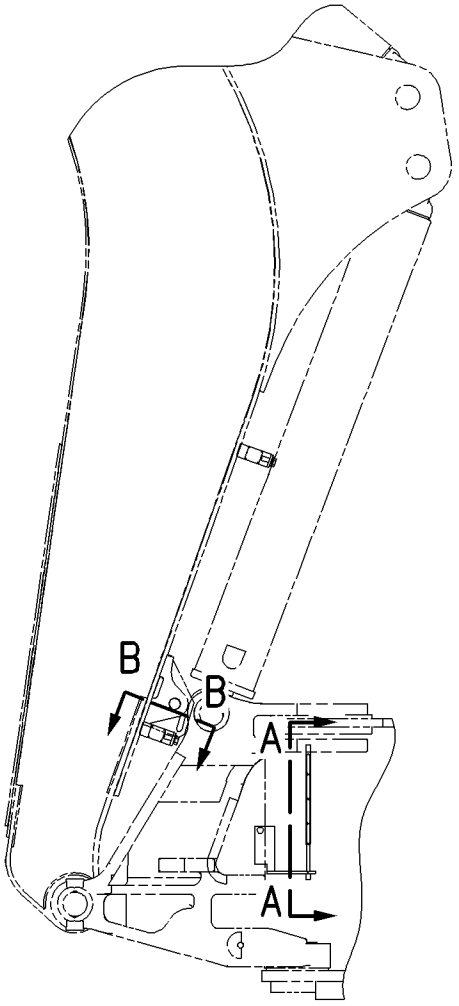

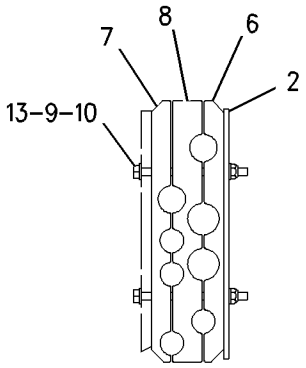

SECTION A-A

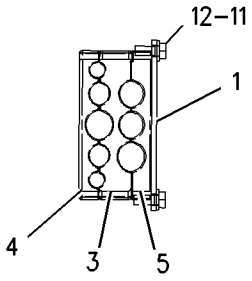

SECTION B-B

GRAPHIC #1 **<END>** g00788993

HYDRAULIC SYSTEM

172-3190 MOUNTING GP-LINES

S/N: FDP18400-UP

PART OF 184-7927 BACKHOE AR-EXTENDABLE STICK, 184-7915 BACKHOE AR-STANDARD STICK AN ATTACHMENT

SMCS-5057, 5456 **i01520729**

NOTE	REF NO	GRAPHIC REF	PART NUMBER	QTY	PART NAME 1 2 3 4 5 6 (PRODUCT LEVEL)	SEE PAGE
	1	1	**120-4397**	1	PLATE	
	2	1	**177-7148**	2	BLOCK	
	3	1	**177-7149**	2	BLOCK	
	4	1	**191-4850**	1	BLOCK	
	5	1	**191-4851**	1	BLOCK	
	6	1	**191-4852**	1	BLOCK	
	7	1	**193-6355**	2	BLOCK	
M	8	1	**6V-9189**	2	LOCKNUT (M8X1.25 THD)	
M	9	1	**7X-2539**	2	BOLT (M8X1.25X110MM)	
	10	1	**8T-4121**	4	WASHER-HARD (11X21X2.5MM THK)	
M	11	1	**8T-4136**	4	BOLT (M10X1.5X25MM)	
	12	1	**8T-4224**	4	WASHER-HARD (8.8X16X2MM THK)	
	13	1	**9R-8874**	2	PLATE	

M-METRIC PART

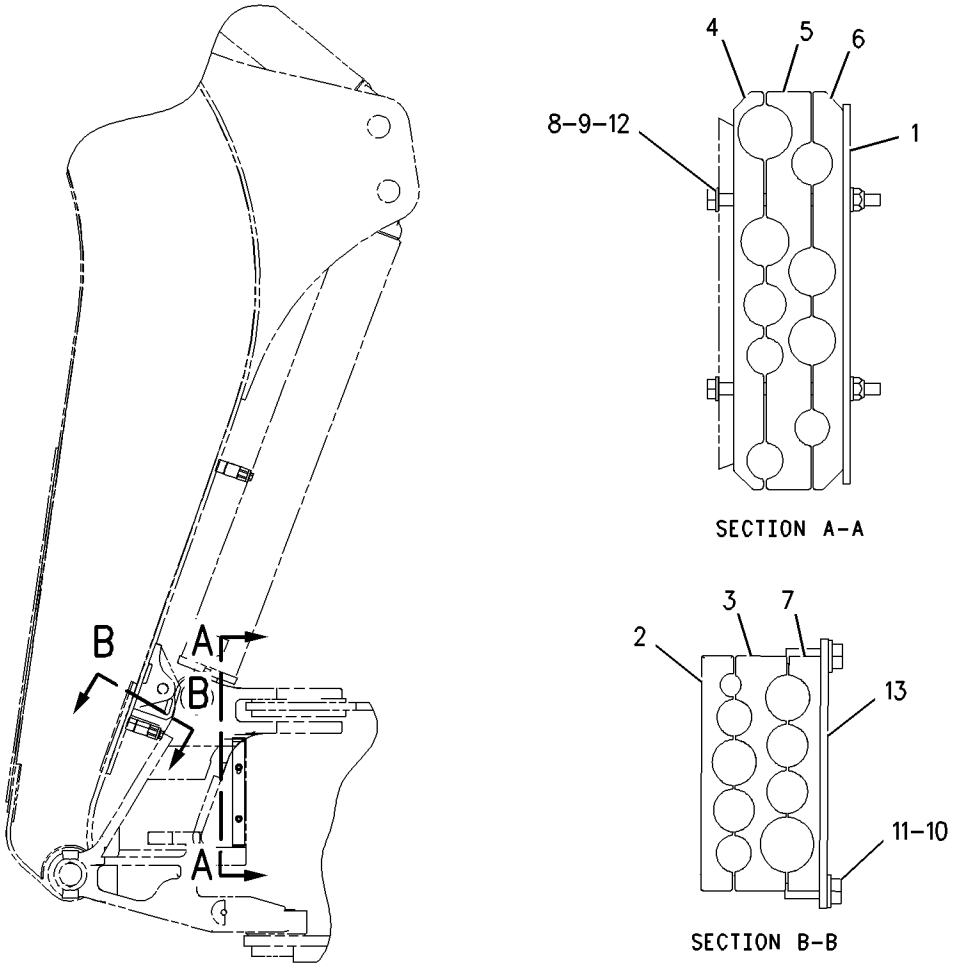

GRAPHIC #1 **<END>** g00789796

202-5943 MOUNTING GP-LINES

S/N: FDP18400-UP

PART OF 202-5971, 238-4788 BACKHOE AR-EXTENDABLE STICK, 202-5958, 202-5963, 238-4785, 238-4787 BACKHOE AR-STANDARD STICK AN ATTACHMENT

SMCS-5057, 5456 **i01614627**

NOTE	REF NO	GRAPHIC REF	PART NUMBER	QTY	PART NAME 1 2 3 4 5 6 (PRODUCT LEVEL)	SEE PAGE
	1	1	**120-4397**	1	PLATE	
	2	1	**172-2363**	2	BLOCK	
	3	1	**191-4852**	1	BLOCK	
	4	1	**201-1034**	2	BLOCK	
	5	1	**201-1035**	2	BLOCK	
	6	1	**206-3101**	1	BLOCK	
	7	1	**206-3102**	1	BLOCK	
M	8	1	**6V-9189**	2	LOCKNUT (M8X1.25 THD)	
M	9	1	**7X-2539**	2	BOLT (M8X1.25X110MM)	
	10	1	**8T-4121**	4	WASHER-HARD (11X21X2.5MM THK)	
M	11	1	**8T-4136**	4	BOLT (M10X1.5X25MM)	
	12	1	**8T-4224**	4	WASHER-HARD (8.8X16X2MM THK)	
	13	1	**9R-8874**	2	PLATE	

M-METRIC PART

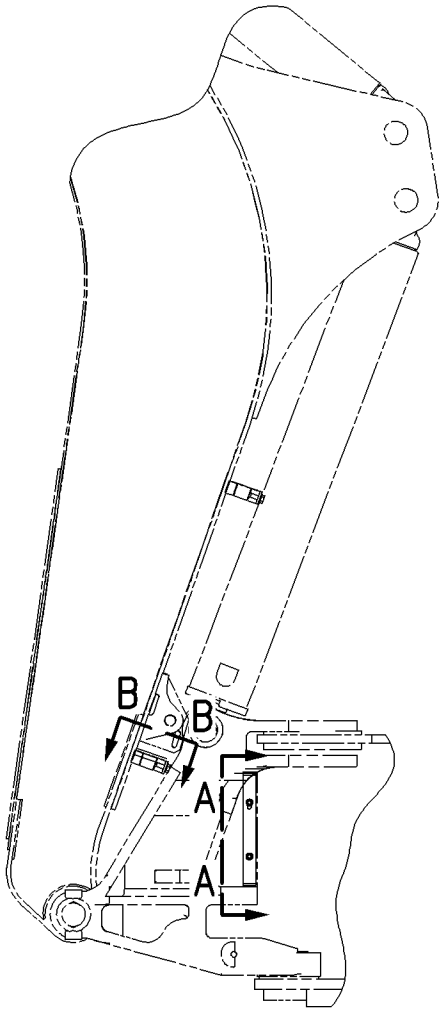

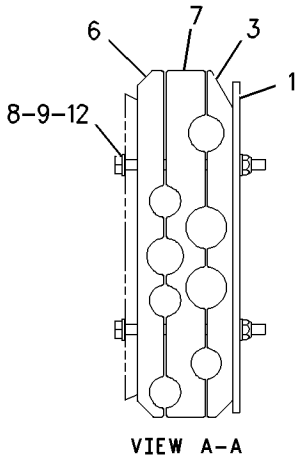

VIEW A-A

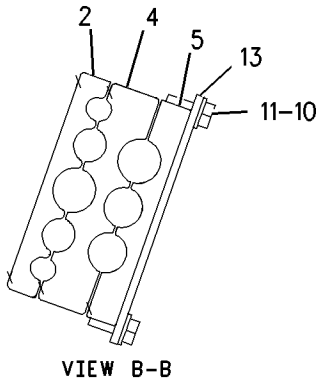

VIEW B-B

GRAPHIC #1 **<END>** g00838145

202-5944 MOUNTING GP-LINES

S/N: FDP18400-UP

PART OF 202-5973, 238-4786, 238-4789 BACKHOE AR-EXTENDABLE STICK, 202-5961 BACKHOE AR-STANDARD STICK AN ATTACHMENT

SMCS-5057, 5456 **i01614662**

NOTE	REF NO	GRAPHIC REF	PART NUMBER	QTY	PART NAME 1 2 3 4 5 6 (PRODUCT LEVEL)	SEE PAGE
	1	1	**120-4397**	1	PLATE	
	2	1	**177-7148**	2	BLOCK	
	3	1	**177-7149**	2	BLOCK	
	4	1	**191-4852**	1	BLOCK	
	5	1	**193-6355**	2	BLOCK	
	6	1	**206-3099**	1	BLOCK	
	7	1	**206-3100**	1	BLOCK	
M	8	1	**6V-9189**	2	LOCKNUT (M8X1.25 THD)	
M	9	1	**7X-2539**	2	BOLT (M8X1.25X110MM)	
	10	1	**8T-4121**	4	WASHER-HARD (11X21X2.5MM THK)	
M	11	1	**8T-4136**	4	BOLT (M10X1.5X25MM)	
	12	1	**8T-4224**	4	WASHER-HARD (8.8X16X2MM THK)	
	13	1	**9R-8874**	2	PLATE	

M-METRIC PART

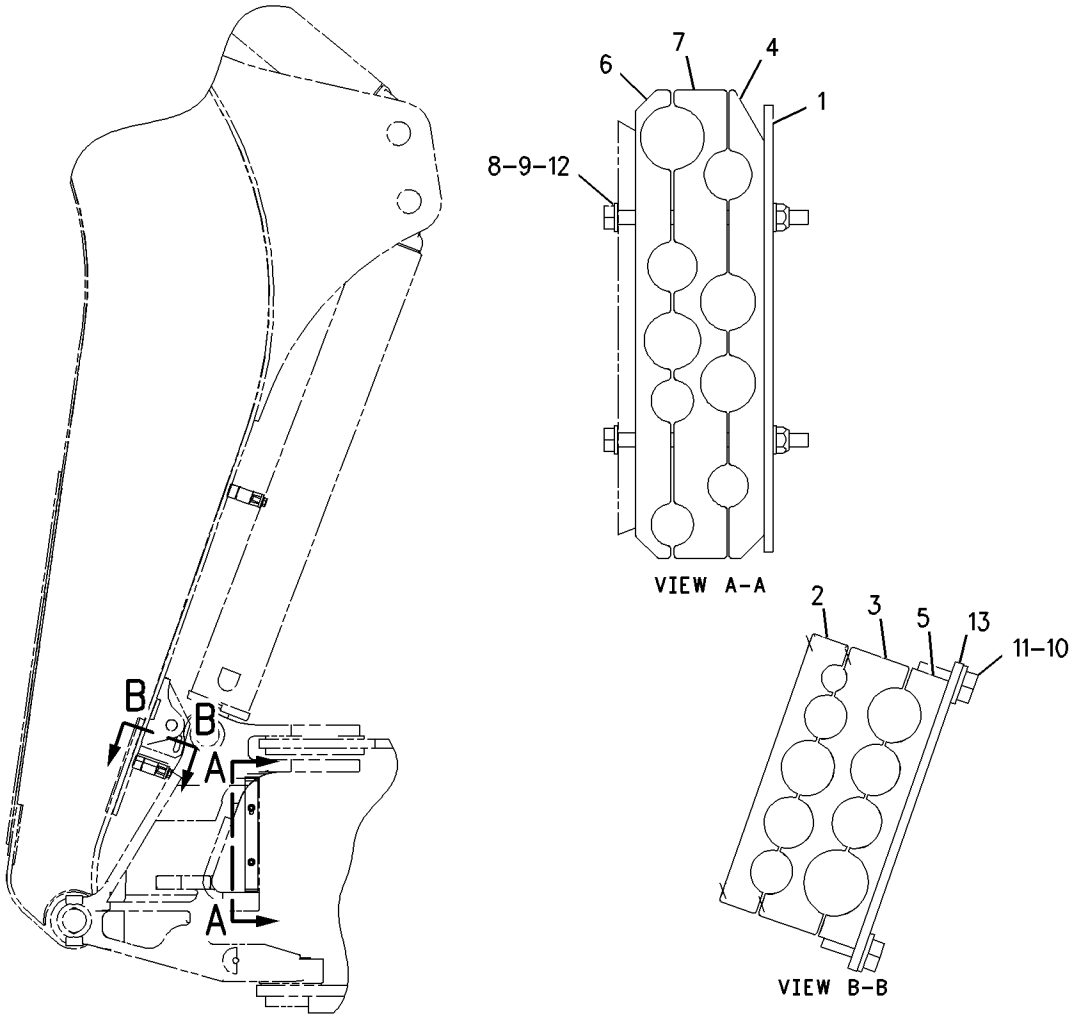

GRAPHIC #1 **<END>** g00838147

202-6014 MOUNTING GP-LINES

S/N: FDP18400-UP

PART OF 202-5971, 238-4788 BACKHOE AR-EXTENDABLE STICK, 202-5958, 202-5963, 238-4785, 238-4787 BACKHOE AR-STANDARD STICK AN ATTACHMENT

SMCS-5057, 5456 **i01690035**

NOTE	REF NO	GRAPHIC REF	PART NUMBER	QTY	PART NAME 1 2 3 4 5 6 (PRODUCT LEVEL)	SEE PAGE
	1	1	**202-1474**	1	BLOCK	
	2	1	**202-1475**	1	BLOCK	
	3	1	**202-1476**	1	BLOCK	
	4	1	**202-2565**	1	PLATE AS	
	5	1	**202-2566**	1	BRACKET	
	6	1	**213-4974**	1	BLOCK	
M	7	1	**6V-5219**	1	BOLT (M8X1.25X40MM)	
M	8	1	**6V-9189**	1	LOCKNUT (M8X1.25 THD)	
M	9	1	**7X-0457**	1	BOLT (M8X1.25X130MM)	
	10	1	**8T-4121**	3	WASHER-HARD (11X21X2.5MM THK)	
M	11	1	**8T-4136**	3	BOLT (M10X1.5X25MM)	
	12	1	**8T-4224**	3	WASHER-HARD (8.8X16X2MM THK)	

M-METRIC PART

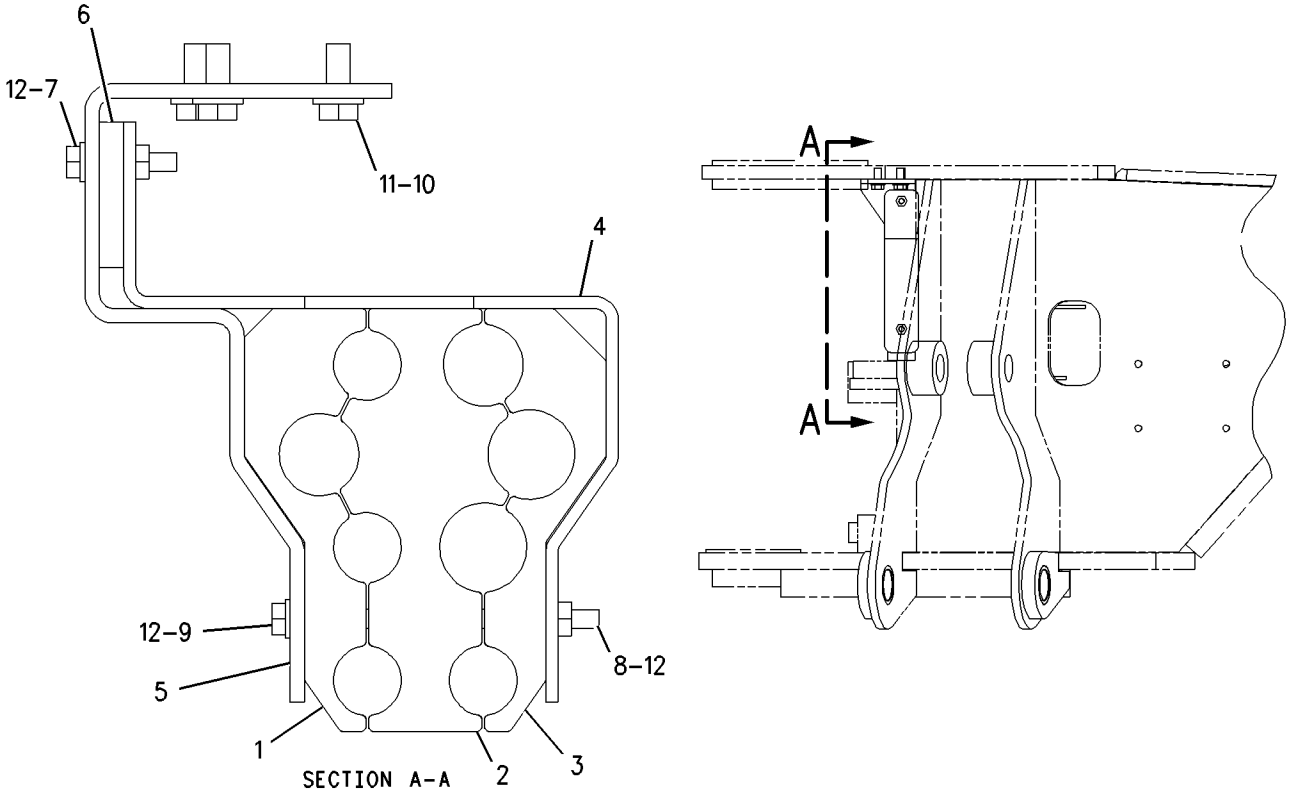

GRAPHIC #1 **<END>** g00870489

202-6015 MOUNTING GP-LINES

S/N: FDP18400-UP

PART OF 202-5973, 238-4786, 238-4789 BACKHOE AR-EXTENDABLE STICK, 202-5961 BACKHOE AR-STANDARD STICK AN ATTACHMENT

SMCS-5057, 5456 **i02011523**

NOTE	REF NO	GRAPHIC REF	PART NUMBER	QTY	PART NAME 1 2 3 4 5 6 (PRODUCT LEVEL)	SEE PAGE
	1	1	**202-1476**	1	BLOCK	
	2	1	**202-2565**	1	PLATE AS	
	3	1	**202-2566**	1	BRACKET	
	4	1	**203-4784**	1	BLOCK	
	5	1	**203-4785**	1	BLOCK	
	6	1	**213-4974**	1	BLOCK	
M	7	1	**099-3649**	1	BOLT (M8X1.25X40MM)	
M	8	1	**6V-9189**	1	LOCKNUT (M8X1.25 THD)	
M	9	1	**108-2989**	1	BOLT (M8X1.25X130MM)	
	10	1	**8T-4121**	3	WASHER-HARD (11X21X2.5MM THK)	
M	11	1	**8T-4136**	3	BOLT (M10X1.5X25MM)	
	12	1	**8T-4224**	3	WASHER-HARD (8.8X16X2MM THK)	

M-METRIC PART

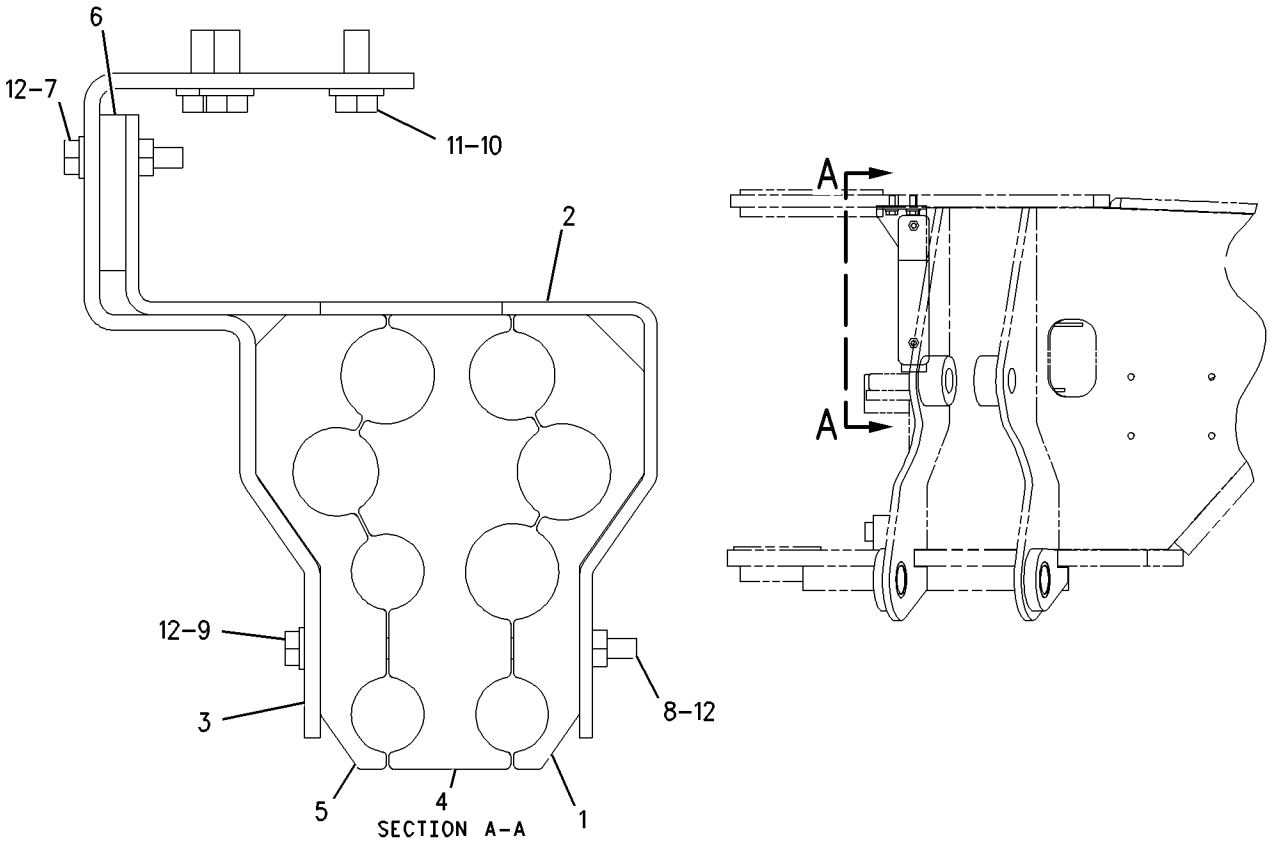

GRAPHIC #1 **<END>** g00870495

HYDRAULIC SYSTEM

244-2228 PUMP GP-PISTON

S/N: FDP18400-UP

PART OF 214-6981 HYDRAULIC AR

SMCS-5070 **i02007676**

NOTE	REF NO	GRAPHIC REF	PART NUMBER	QTY	PART NAME 1 2 3 4 5 6 (PRODUCT LEVEL)	SEE PAGE
	1	2	**180-6213**	1	RING-RETAINING	
	2	2	**6E-4003**	2	BEARING	
	3	2	**173-0637**	1	HOUSING-PUMP	
Y	4	2	**120-5726**	1	ROTATING GP-PUMP	512
	5	2	**3E-6769**	4	SEAL-O-RING	
M	6	2	**095-9805**	4	BOLT-SOCKET HEAD (M14X2X40MM)	
	7	2	**1P-6872**	1	CUP-BEARING	
	8	2	**8C-7110**	1	CONE-BEARING	
		2	**109-1779**	1	CONE-BEARING	
	9	2	**103-5520**	1	CARRIER-PIN	
	10	1	**6E-4000**	1	SPACER (25.5X35X3MM THK)	
	11	2	**3E-6770**	1	SEAL-O-RING	
	12	1	**6E-6175**	1	CYLINDER	
	13	1	**6E-6176**	1	SPRING	
	14	1	**6E-6174**	1	PLUNGER	
	15	2	**9S-8006**	1	PLUG	
	16	2	**2M-9780**	1	SEAL-O-RING	
	17	2	**162-1604**	1	SHAFT-PUMP	
	18	1	**6V-2323**	1	CONE-BEARING	
	19	1	**3B-5790**	1	CUP-BEARING	
	20	1	**6E-4004**	2	SEAL-SHAFT	
	21	1	**173-0639**	1	SWASHPLATE AS	
	22	1	**120-5727**	1	PISTON-CONTROL	
	23	1	**120-5729**	1	GUIDE-PISTON	
	24	1	**136-8423**	1	PLUG-BREAK OFF	
	25	1	**083-4419**	1	PIN	
	26	2	**173-0641**	1	PLUG-FILTER	
	27	1	**173-0638**	1	HEAD-PUMP	
	28	1	**215-9219**	1	ADAPTER AS	
		1	**3J-7354**	1	SEAL-O-RING	
	29	1	**3J-7352**	2	CONNECTOR	
	30	1	**3J-7354**	3	SEAL-O-RING	
	31	1	**193-8648**	1	TUBE AS	
Y	32	1	**103-5519**	1	VALVE GP-PUMP CONTROL (POWER COMPENSATOR)	570
M	33	2	**6V-5683**	1	BOLT (M6X1X16MM)	
	34	2	**3C-8388**	1	PIN-ROLL	
Y	35	1	**173-0640**	1	VALVE GP-PUMP CONTROL (PRESSURE, FLOW COMPENSATOR)	571
	36	2	**6V-0852**	1	CAP-DUST	
	37	2	*164-5567*	1	FITTING AS	
		2	**3J-1907**	1	SEAL-O-RING	
		2	**6V-3965**	1	FITTING (QUICK DISCONNECT)	

M-METRIC PART
Y-SEPARATE ILLUSTRATION

244-2228 PUMP GP-PISTON *(contd.)* **i02007676**

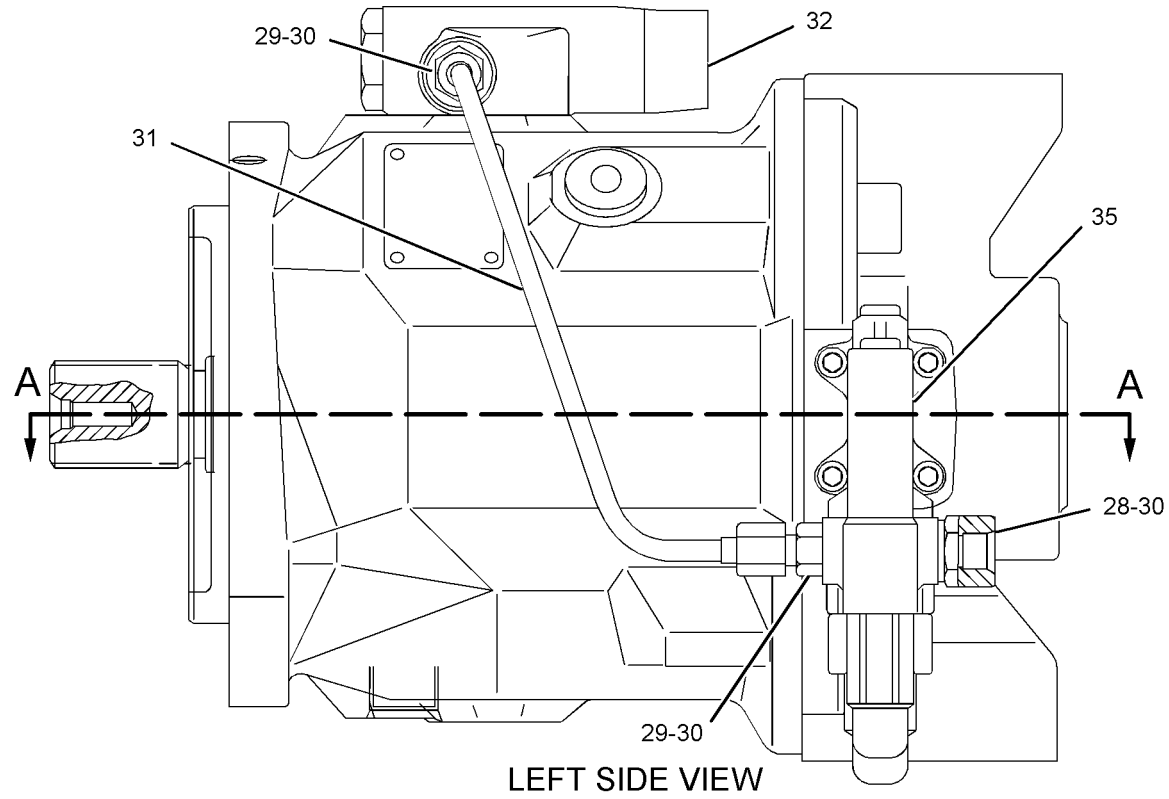

LEFT SIDE VIEW

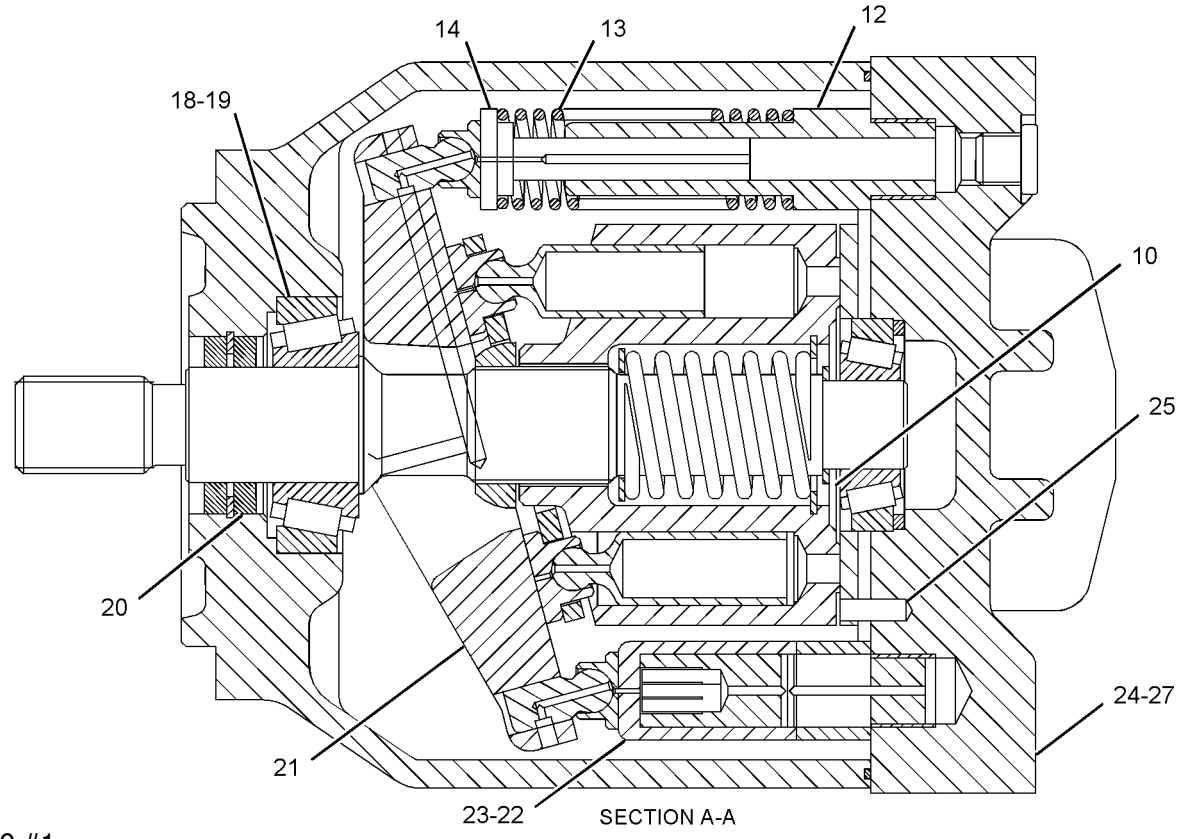

SECTION A-A

GRAPHIC #1

g01039464

244-2228 PUMP GP-PISTON ***(contd.)*** **i02007676**

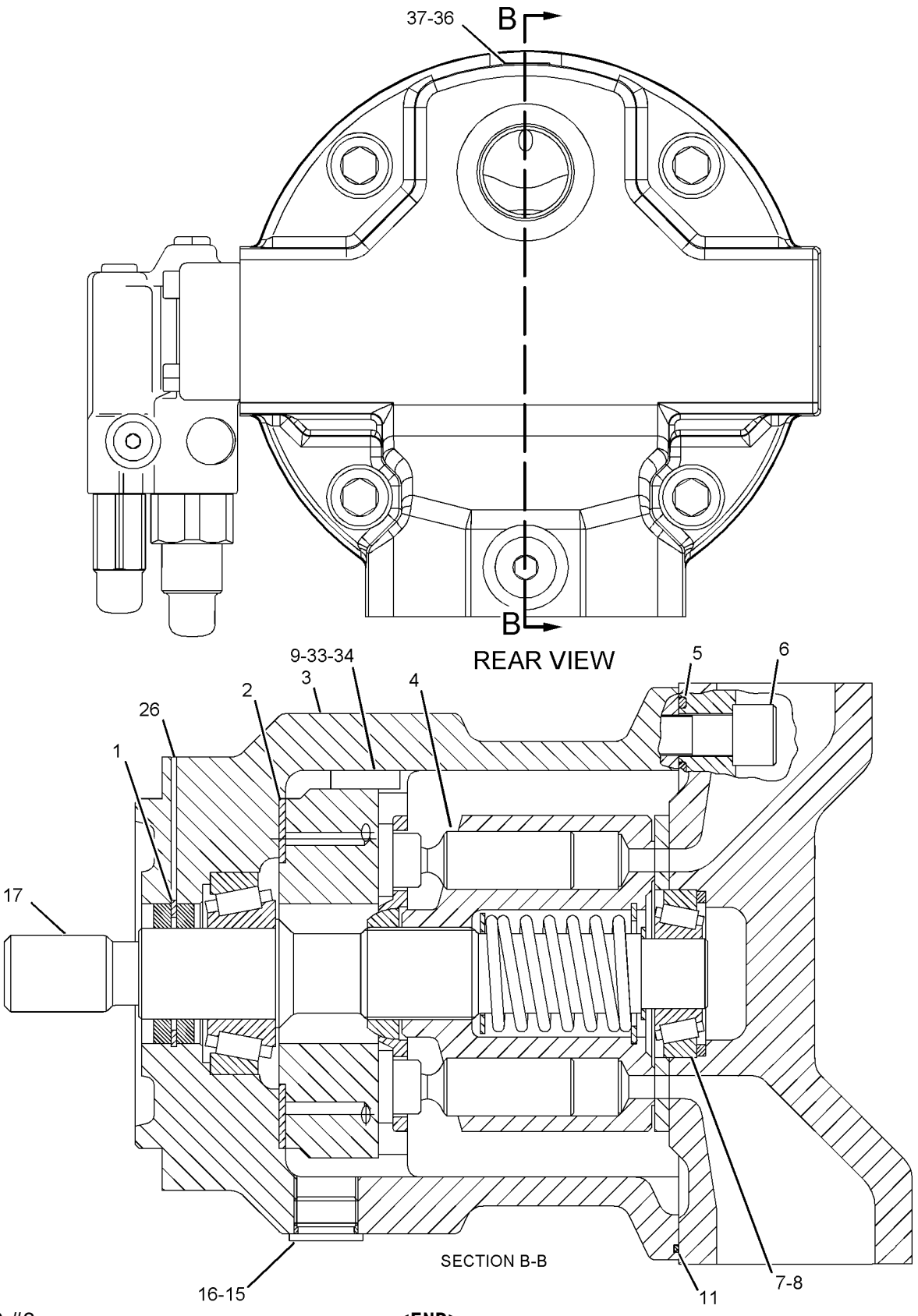

GRAPHIC #2 **<END>** g01039465

HYDRAULIC SYSTEM

120-5726 ROTATING GP-PUMP

S/N: FDP18400-UP

PART OF 244-2228 PUMP GP-PISTON

SMCS-5070 **i00733625**

NOTE	REF NO	GRAPHIC REF	PART NUMBER	QTY	PART NAME 1 2 3 4 5 6 (PRODUCT LEVEL)	SEE PAGE
	1	1	**6E-6151**	9	PISTON AS	
	2	1	**6E-6154**	1	PLATE-RETRACTION	
	3	1	**6E-6155**	1	BEARING	
	4	1	**6E-4007**	1	BARREL	
	5	1	**6E-3341**	1	SEAT-SPRING	
	6	1	**6E-4009**	1	SPRING	
	7	1	**6E-6158**	1	RING	
	8	1	**120-5724**	1	PLATE-VALVE	
	9	1	**6E-6157**	3	PIN	

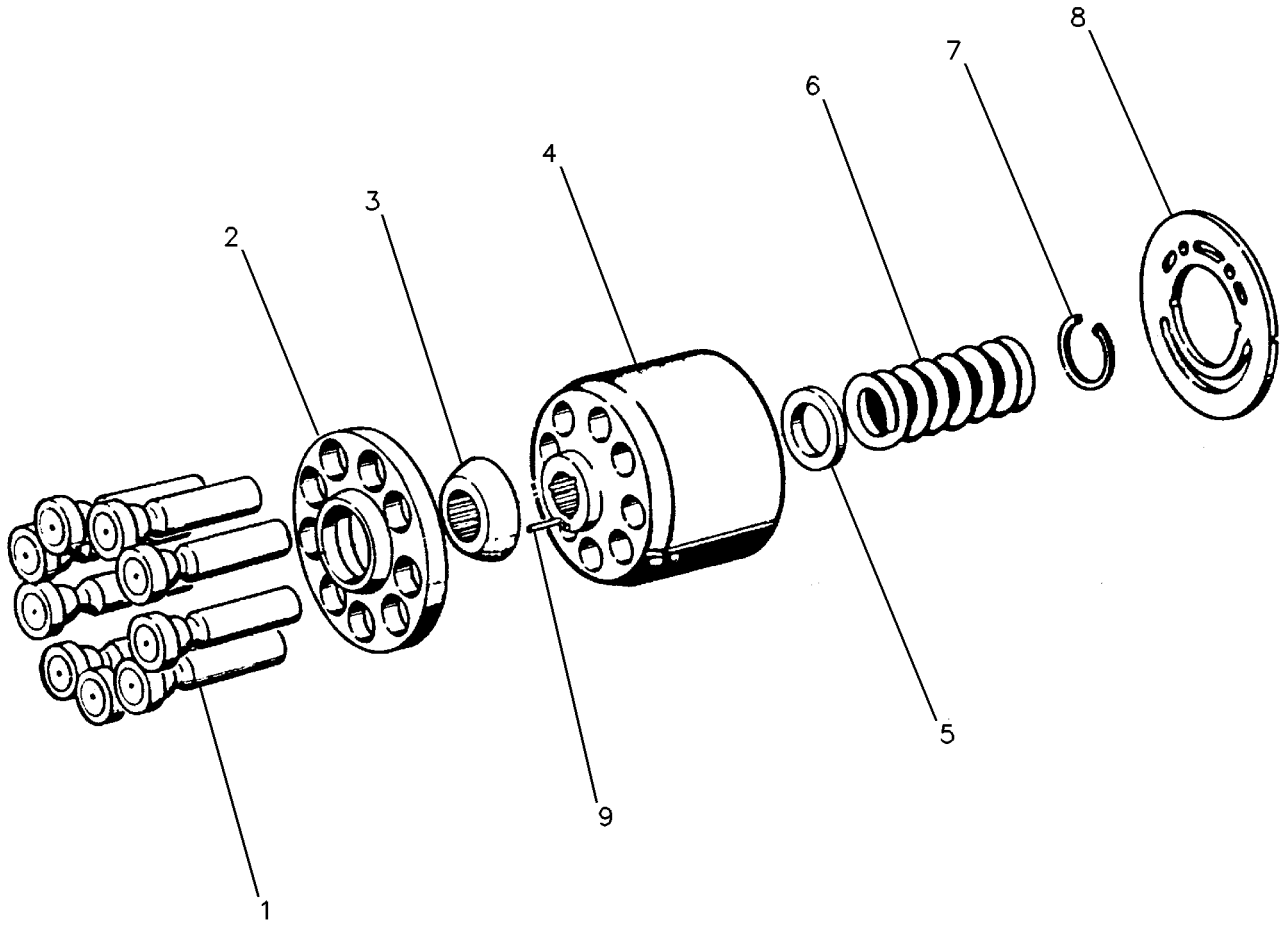

GRAPHIC #1 **<END>** g00119332

128-5596 SHAFT GP-POWER TAKE-OFF

S/N: FDP18400-UP

PART OF 112-1826 MOUNTING GP-HYDRAULIC PUMP

SMCS-3107 **i00512642**

NOTE	REF NO	GRAPHIC REF	PART NUMBER	QTY	PART NAME 1 2 3 4 5 6 (PRODUCT LEVEL)	SEE PAGE
	1	1	**130-8150**	1	RING-RETAINING	

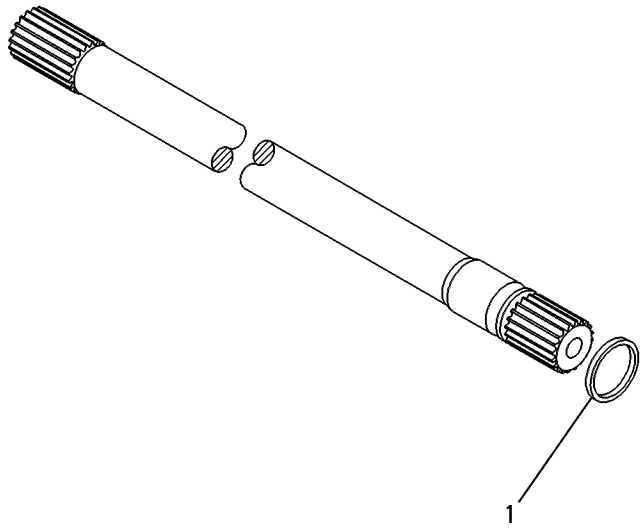

GRAPHIC #1 **<END>** g00131851

209-4165 STABILIZER AR

S/N: FDP18400-UP
AUTO UP
PART OF 192-4662, 198-4095, 214-6976, 214-6977, 214-6978 POWER TRAIN AR
AN ATTACHMENT

SMCS-1408, 5059, 7222 **i01700993**

NOTE	PART NUMBER	QTY	PART NAME 1 2 3 4 5 6 (PRODUCT LEVEL)	SEE PAGE
Y	*209-4163*	1	MOUNTING GP-HYDRAULIC CONTROL	501
Y	**185-5900**	1	VALVE GP-PILOT	558
Y	*186-0308*	1	WIRING GP-STABILIZER	194
Y	*186-0307*	1	WIRING GP-STABILIZER ALARM	196

Y-SEPARATE ILLUSTRATION

<END>

209-4172 STABILIZER AR

S/N: FDP18400-UP
STANDARD
PART OF 192-4661, 192-4663, 192-4665, 192-4666, 214-6955, 214-6956, 214-6958, 214-6959 POWER TRAIN AR
AN ATTACHMENT

SMCS-1408, 5059, 7222 **i01701082**

NOTE	PART NUMBER	QTY	PART NAME 1 2 3 4 5 6 (PRODUCT LEVEL)	SEE PAGE
Y	*183-6078*	1	MOUNTING GP-HYDRAULIC CONTROL	500
Y	**185-5902**	1	VALVE GP-PILOT	560

Y-SEPARATE ILLUSTRATION

<END>

209-4174 STABILIZER AR

S/N: FDP18400-UP
ALARM
PART OF 192-4659, 192-4664, 214-6957 POWER TRAIN AR
AN ATTACHMENT

SMCS-1408, 5059, 7222 **i01701771**

NOTE	PART NUMBER	QTY	PART NAME 1 2 3 4 5 6 (PRODUCT LEVEL)	SEE PAGE
Y	*183-6078*	1	MOUNTING GP-HYDRAULIC CONTROL	500
Y	**185-5901**	1	VALVE GP-PILOT	559
Y	*186-0307*	1	WIRING GP-STABILIZER ALARM	196

Y-SEPARATE ILLUSTRATION

<END>

HYDRAULIC SYSTEM

234-6926 TANK GP-HYDRAULIC

S/N: FDP18400-UP

PART OF 214-6981 HYDRAULIC AR

SMCS-5056 **i02015713**

NOTE	REF NO	GRAPHIC REF	PART NUMBER	QTY	PART NAME 1 2 3 4 5 6 (PRODUCT LEVEL)	SEE PAGE
	1	1	**1P-4278**	1	CLAMP-HOSE	
	2	1	**5D-1026**	2	CLAMP-HOSE	
	3	1	**9M-0164**	1	CLAMP-HOSE	
	4	1	**9R-9925**	1	FILTER (HYDRAULIC TANK BREATHER)	
	5	1	**132-3056**	1	SEAL-O-RING	
	6	1	**222-4067**	6	BOLT-SOCKET HEAD (M5X.8X14-MM)	
	7	1	**234-6927**	1	HOSE	
	8	1	**234-8815**	1	TUBE AS	
	9	1	**235-5843**	1	DIFFUSER AS	
	10	1	**237-3797**	1	CAP-FILL (HYDRAULIC OIL)	
	11	1	**240-9671**	1	BRACKET AS	
		1	**7T-1099**	3	LINK	
			9G-9155	1	CLIP	
	12	1	**240-9721**	1	TANK GP-HYDRAULIC	
		1	**240-9716**	1	TANK AS-HYDRAULIC	
		1	**170-1644**	1	GAUGE-SIGHT (HYDRAULIC OIL LEVEL)	
	13	1	*150-3027*	2	ELBOW AS	
		1	**2M-9780**	1	SEAL-O-RING	
		1	**6V-5653**	1	ELBOW (7/8-14-THD)	
	14	1	**6D-3479**	1	CLIP	
	15	1	**8T-4121**	6	WASHER-HARD (11X21X2.5-MM THK)	
M	16	1	**8T-4136**	1	BOLT (M10X1.5X25-MM)	
M	17	1	**8T-4137**	1	BOLT (M10X1.5X20-MM)	
M	18	1	**8T-4139**	1	BOLT (M12X1.75X30-MM)	
M	19	1	**8T-4179**	3	BOLT (M12X1.75X20-MM)	
M	20	1	**8T-4191**	4	BOLT (M10X1.5X16-MM)	
	21	1	**8T-4223**	4	WASHER-HARD (13.5X25.5X3-MM THK)	
E	22	1	**5P-1505**		HOSE (8CM)	
E	23	1	**5P-1442**		HOSE (124CM)	
	24	1	**127-4471**	1	CLAMP-HOSE	

E-ORDER BY THE CENTIMETER
M-METRIC PART

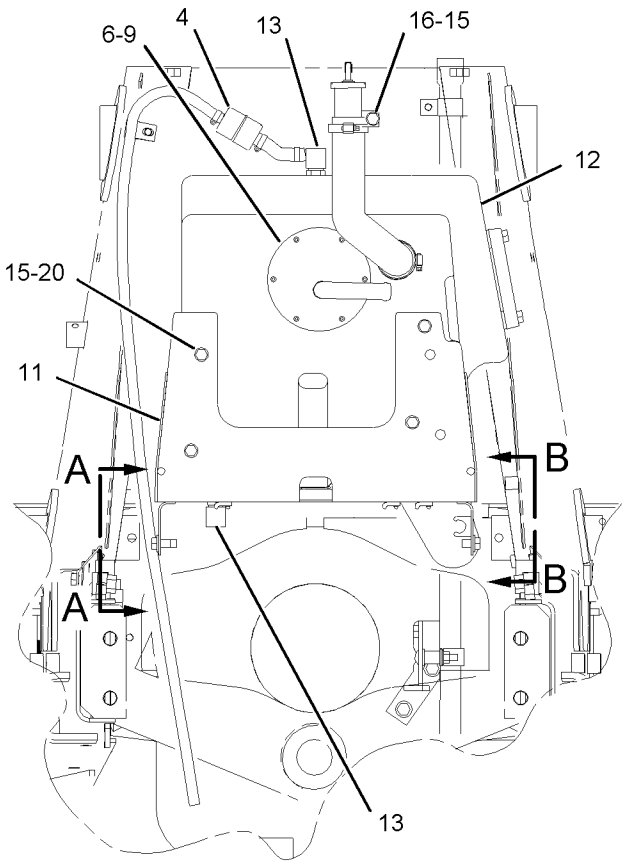

FRONT VIEW

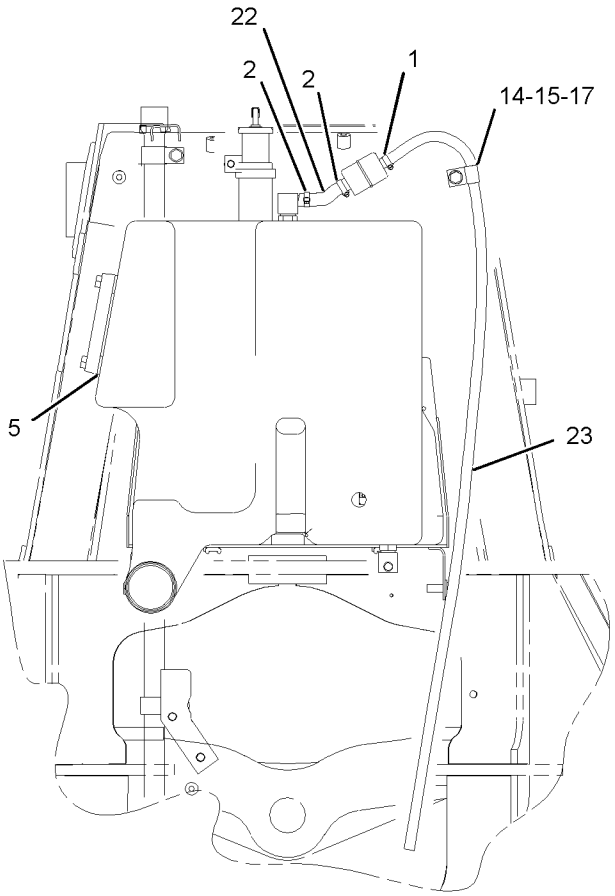

REAR VIEW

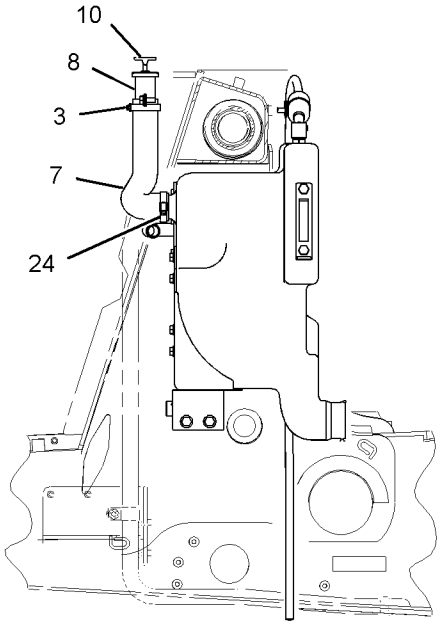

LEFT SIDE VIEW

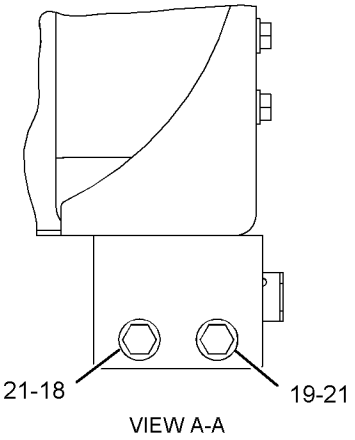

VIEW A-A

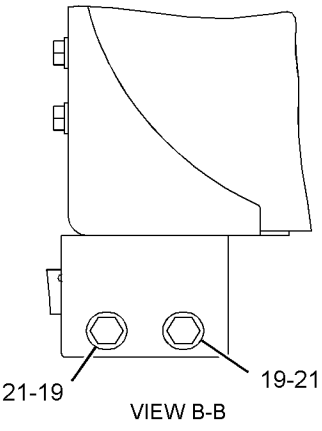

VIEW B-B

GRAPHIC #1 **<END>** g01042066

185-9784 VALVE & MTG GP-BANK–STABILIZER

S/N: FDP18400-UP
PART OF 237-6458, 237-6459 DRIVE AR-BACKHOE LOADER
AN ATTACHMENT

SMCS-5051, 5057, 7265 **i01988385**

NOTE	REF NO	GRAPHIC REF	PART NUMBER	QTY	PART NAME 1 2 3 4 5 6 (PRODUCT LEVEL)	SEE PAGE
Y	1	1	**185-5898**	1	VALVE GP-BANK 2	520
	2	1	**232-5849**	4	STUD-TAPERLOCK	
M	3	1	**5C-7261**	4	NUT (M8X1.25 THD)	
	4	1	**8T-4224**	4	WASHER-HARD (8.8X16X2MM THK)	

M-METRIC PART
Y-SEPARATE ILLUSTRATION

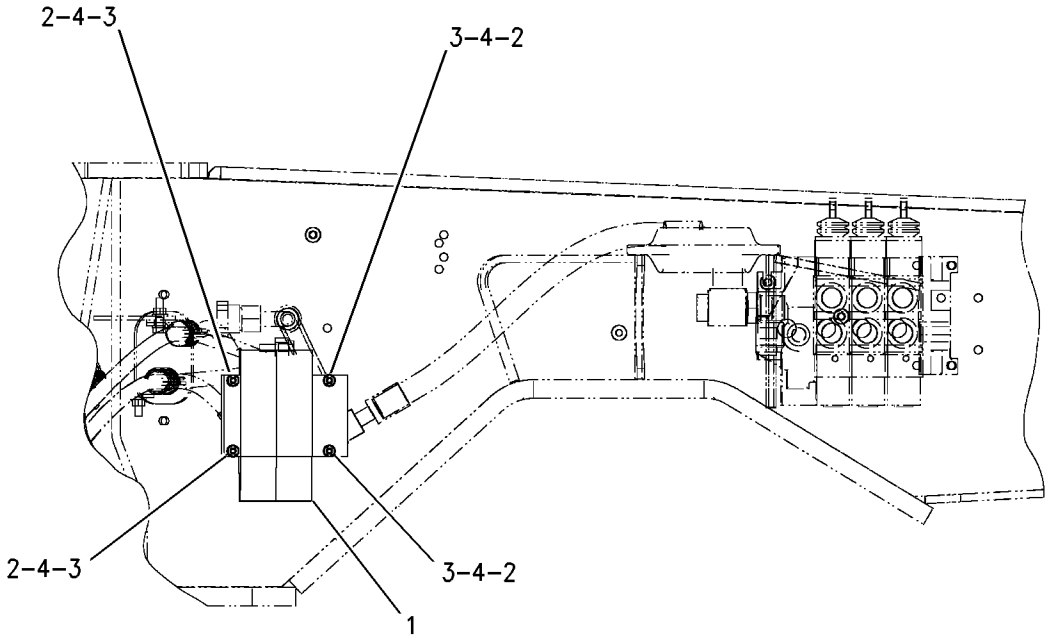

GRAPHIC #1 **<END>** g00723571

190-8315 VALVE & MTG GP-SOLENOID

S/N: FDP18400-UP
PART OF 195-1284, 235-5844 LINES GP-RIDE CONTROL
AN ATTACHMENT

SMCS-4805, 5479 **i01711730**

NOTE	REF NO	GRAPHIC REF	PART NUMBER	QTY	PART NAME 1 2 3 4 5 6 (PRODUCT LEVEL)	SEE PAGE
	1	1	**160-0269**	2	ORIFICE GP	
		1	**4J-7533**	1	SEAL-O-RING	
Y	2	1	*171-8775*	1	VALVE GP-SOLENOID	574
J	3	1	**190-8308**	1	CARTRIDGE AS	
	4	1	**190-8310**	1	MANIFOLD AS	
L	5	1	**190-8312**	1	VALVE AS-CHECK	
	6	1	**190-8314**	1	SPOOL-VALVE	
	7	1	**9S-8004**	4	PLUG	
					AVAILABLE REPAIR KIT(S):	
J			**193-5958**	1	KIT-SEAL	
L			**143-5446**	1	KIT-SEAL	

J-KIT MARKED J AVAILABLE FOR PART MARKED J
L-KIT MARKED L AVAILABLE FOR PART MARKED L
Y-SEPARATE ILLUSTRATION

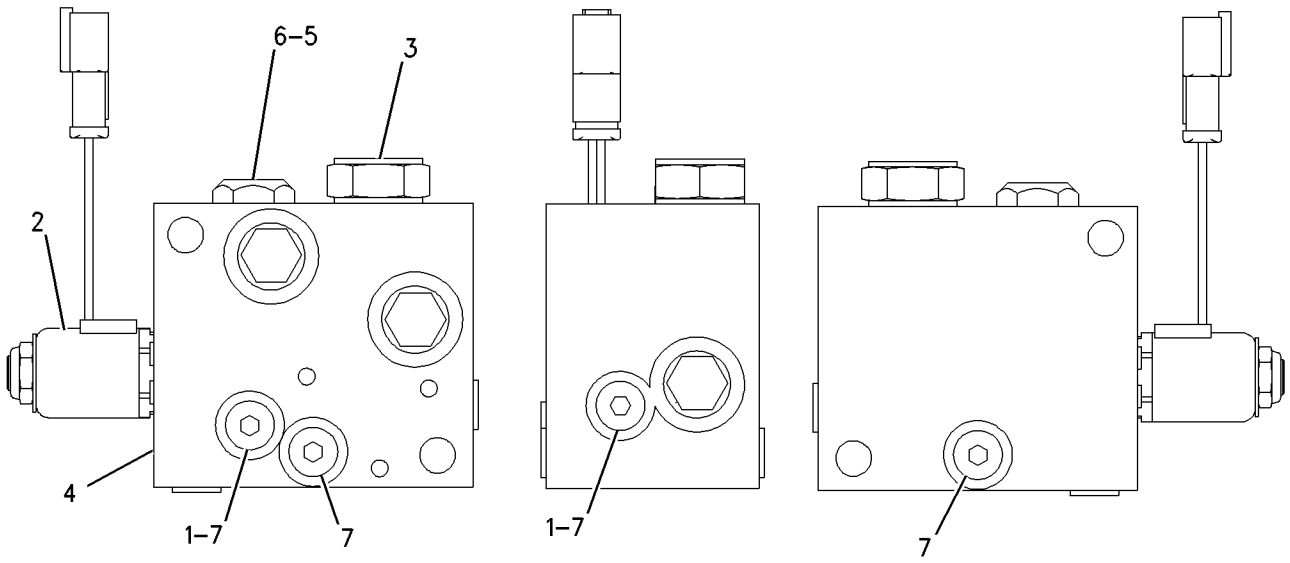

GRAPHIC #1 **<END>** g00778200

HYDRAULIC SYSTEM

215-1510 VALVE AR-BANK 4

S/N: FDP18400-UP
AN ATTACHMENT

SMCS-5051 **i01980895**

NOTE	PART NUMBER	QTY	PART NAME 1 2 3 4 5 6 (PRODUCT LEVEL)	SEE PAGE
Y	*224-9748*	1	FLOORPLATE GP	318
Y	*235-5854*	1	LINES GP-PUMP	470
Y	**201-0665**	1	VALVE GP-BANK 4	526
Y-SEPARATE ILLUSTRATION				

<END>

215-1511 VALVE AR-BANK 5

S/N: FDP18400-UP
AN ATTACHMENT

SMCS-5051 **i01980931**

NOTE	PART NUMBER	QTY	PART NAME 1 2 3 4 5 6 (PRODUCT LEVEL)	SEE PAGE
Y	*184-4483*	1	CONTROL GP-HYDRAULIC PEDAL	345
Y	*224-9749*	1	FLOORPLATE GP	319
Y	*235-5854*	1	LINES GP-PUMP	470
	148-8408	2	PLUG AS	
			(EACH INCLUDES)	
	3D-2824	1	SEAL-O-RING	
	9S-4183	1	PLUG	
Y	*192-4018*	1	FOOTREST GP	794
Y	**201-0666**	1	VALVE GP-BANK 5	527
Y-SEPARATE ILLUSTRATION				

<END>

215-1512 VALVE AR-BANK 6

S/N: FDP18400-UP
AN ATTACHMENT

SMCS-5051 **i01990157**

NOTE	PART NUMBER	QTY	PART NAME 1 2 3 4 5 6 (PRODUCT LEVEL)	SEE PAGE
Y	*184-4483*	1	CONTROL GP-HYDRAULIC PEDAL	345
Y	*184-4484*	1	CONTROL GP-HYDRAULIC PEDAL	347
Y	*224-9749*	1	FLOORPLATE GP	319
Y	*235-5856*	1	LINES GP-PUMP	471
	148-8408	2	PLUG AS	
	3D-2824	1	SEAL-O-RING	
	9S-4183	1	PLUG	
Y	**201-0667**	1	VALVE GP-BANK 6	528
Y-SEPARATE ILLUSTRATION				

<END>

HYDRAULIC SYSTEM

185-5898 VALVE GP-BANK 2—STABILIZER

S/N: FDP18400-UP
PART OF 185-9784 VALVE & MTG GP-BANK
AN ATTACHMENT

SMCS-5051 **i02015158**

NOTE	REF NO	GRAPHIC REF	PART NUMBER	QTY	PART NAME 1 2 3 4 5 6 (PRODUCT LEVEL)	SEE PAGE
	1	1	**192-4489**	3	STUD	
M	2	1	**5C-7261**	6	NUT (M8X1.25-THD)	
	3	1	**8T-4205**	6	WASHER-HARD (7.2X14.5X2-MM THK)	
	4	1	**192-7506**	20	SEAL-O-RING	
	5	1	**192-7511**	1	SEAL	
	6	1	**192-7508**	10	SEAL-O-RING	
	7	1	**192-7509**	2	SEAL-O-RING	
Y	8	1	**239-2226**	1	COVER GP-CONTROL VALVE	368
	9	1	**192-0826**	1	COVER-END	
Y	10	1	**192-0827**	2	VALVE GP-CONTROL	541
	11	1	**192-2060**	2	COVER AS	
					(EACH INCLUDES)	
		1	**192-7506**	2	SEAL-O-RING	
		1	**192-7516**	1	SEAL	
	12	1	**192-7516**	2	SEAL	
	13	1	**192-7505**	2	SEAL-O-RING	
M	14	1	**149-4311**	16	BOLT-SOCKET HEAD (M6X1X16-MM)	
	15	1	**192-7507**	2	SEAL-O-RING	
	16	1	**192-7864**	2	PLUG	
	17	1	**192-4491**	2	DISC	
	18	1	**192-4492**	2	BALL	
	19	1	**192-0828**	2	VALVE GP-COMPENSATING	
					(EACH INCLUDES)	
	19A	1	**192-4488**	1	RING	
	19B	1	**192-7512**	1	SEAL-O-RING	
	19C	1	**192-7515**	1	SEAL-O-RING	
	20	1	**192-2061**	2	COVER AS	
					(EACH INCLUDES)	
		1	**192-7505**	1	SEAL-O-RING	
		1	**192-7506**	4	SEAL-O-RING	
	21	1	**220-0407**	2	VALVE GP-CONTROL	
					(EACH INCLUDES)	
	21A	1	**192-7506**	2	SEAL-O-RING	
	21B	1	**192-7507**	1	SEAL-O-RING	

M-METRIC PART
Y-SEPARATE ILLUSTRATION

185-5898 VALVE GP-BANK 2 ***(contd.)*** **i02015158**

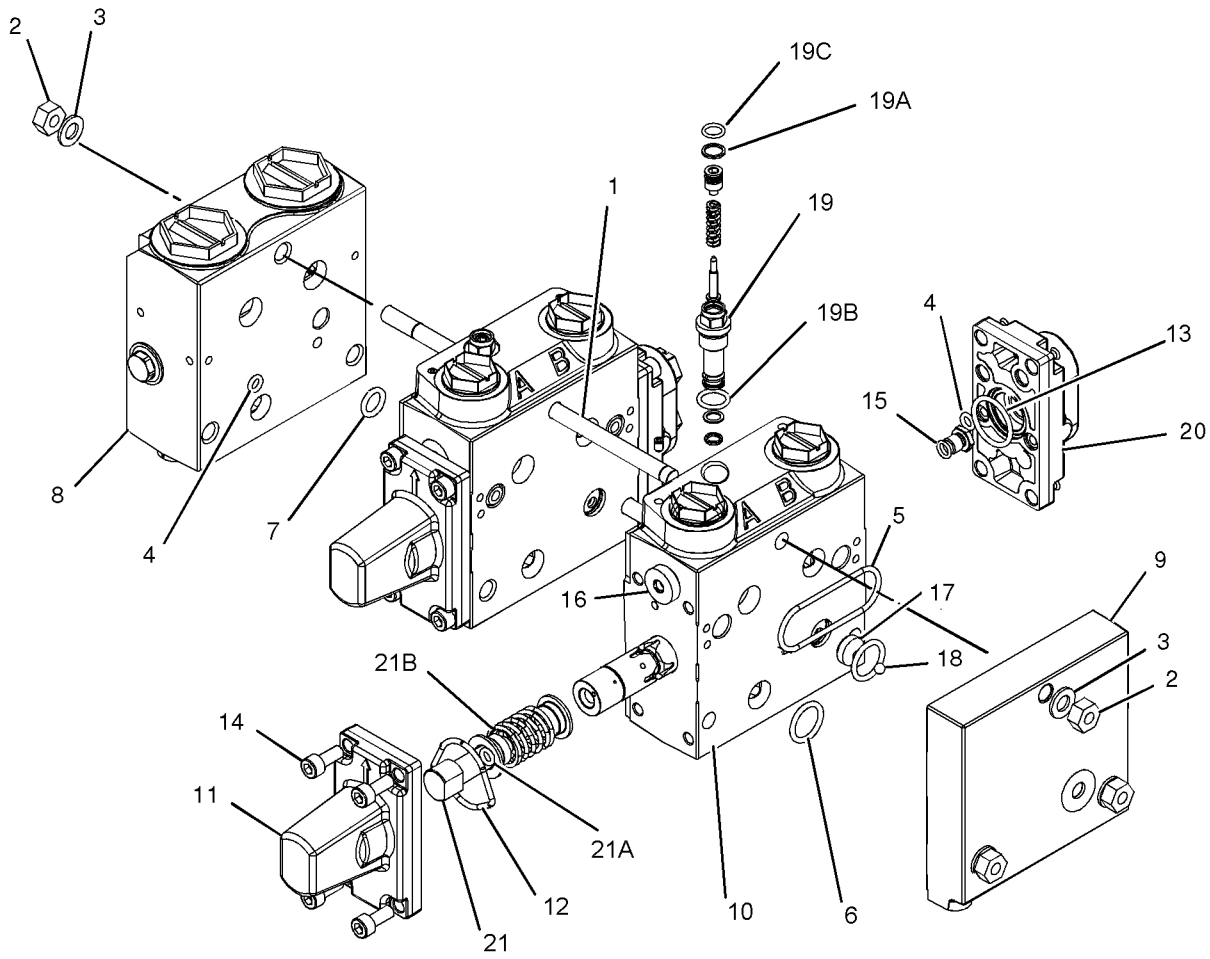

GRAPHIC #1 **<END>** g01017938

185-5911 VALVE GP-BANK 2

S/N: FDP18400-UP
PART OF 186-5336 HYDRAULIC AR
AN ATTACHMENT

SMCS-5051 **i01442747**

NOTE	REF NO	GRAPHIC REF	PART NUMBER	QTY	PART NAME 1 2 3 4 5 6 (PRODUCT LEVEL)	SEE PAGE
Y	1	1	**188-7471**	1	VALVE GP-PRIORITY	304
	2	1	**191-4010**	1	COVER GP	
Y	3	1	**130-6520**	1	VALVE GP-CONTROL (LIFT)	535
Y	4	1	**191-4012**	1	VALVE GP-CONTROL (TILT)	539
	5	1	**5M-2894**	3	WASHER-HARD (10.2X18.5X2.5MM THK)	
	6	1	**9S-8752**	3	NUT-FULL (3/8-16 THD)	
	7	1	**4T-4538**	3	STUD	
	8	1	**4D-9986**	6	SEAL-O-RING (23.47MM ID)	
	9	1	**4J-5140**	3	SEAL-O-RING (18.64MM ID)	
	10	1	**4J-5267**	3	SEAL-O-RING (24.99MM ID)	
	11	1	**4T-2723**	9	SHIM (.076MM THK)	

Y-SEPARATE ILLUSTRATION

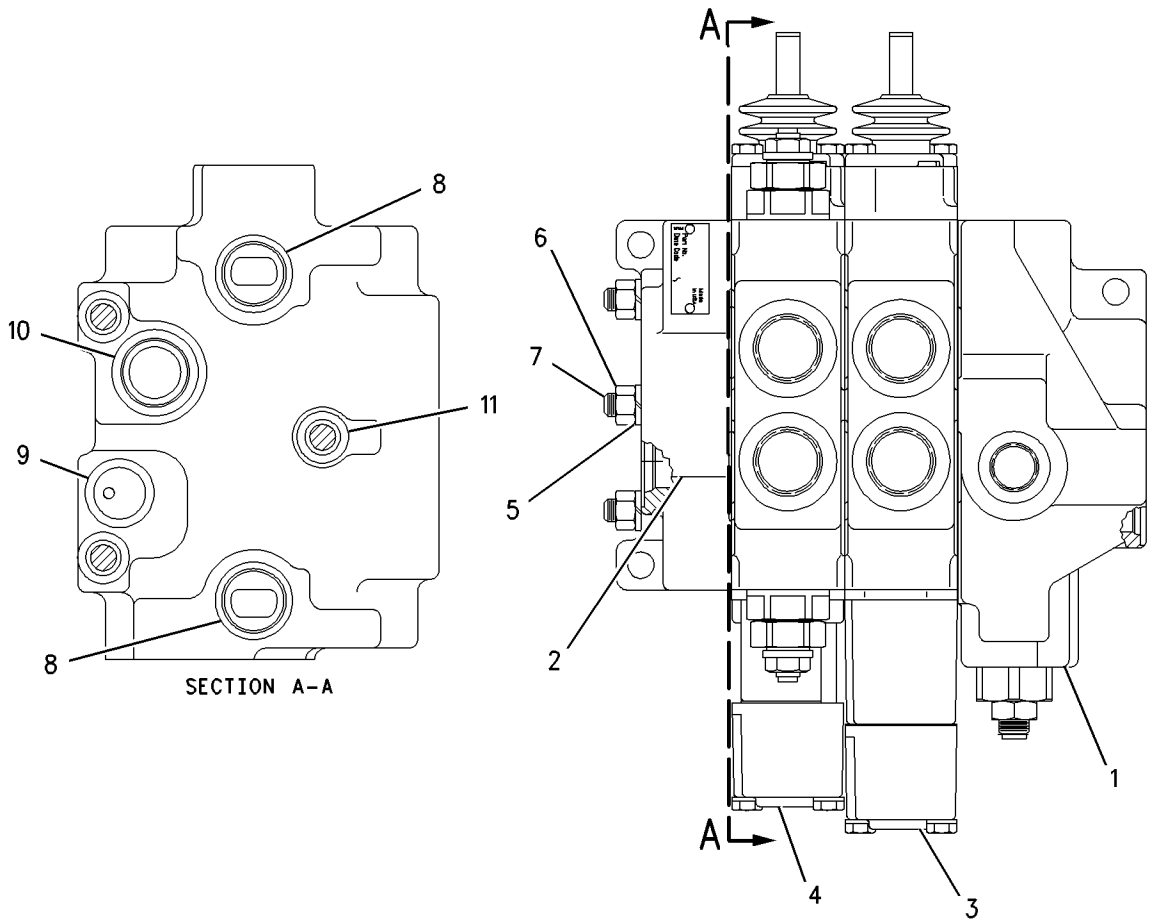

GRAPHIC #1 **<END>** g00738121

200-7827 VALVE GP-BANK 2

S/N: FDP18400-UP
PART OF 202-5805, 238-6698 HYDRAULIC AR
AN ATTACHMENT

SMCS-5051 **i01946261**

NOTE	REF NO	GRAPHIC REF	PART NUMBER	QTY	PART NAME 1 2 3 4 5 6 (PRODUCT LEVEL)	SEE PAGE
Y	1	1	**188-7471**	1	VALVE GP-PRIORITY (STEERING)	304
	2	1	**191-4010**	1	COVER GP	
Y	3	1	**130-6520**	1	VALVE GP-CONTROL (LIFT)	535
Y	4	1	**201-5377**	1	VALVE GP-CONTROL (TILT)	553
	5	1	**8T-4896**	3	WASHER-HARD (10.2X18.5X2.5MM THK)	
	6	1	**6V-8801**	3	NUT (3/8-16 THD)	
	7	1	**4T-4538**	3	STUD	
	8	1	**4D-9986**	6	SEAL-O-RING	
	9	1	**4J-5140**	3	SEAL-O-RING	
	10	1	**4J-5267**	3	SEAL-O-RING	
B	11	1	**4T-2723**	9	SHIM (0.076MM THK)	

B-USE AS REQUIRED
Y-SEPARATE ILLUSTRATION

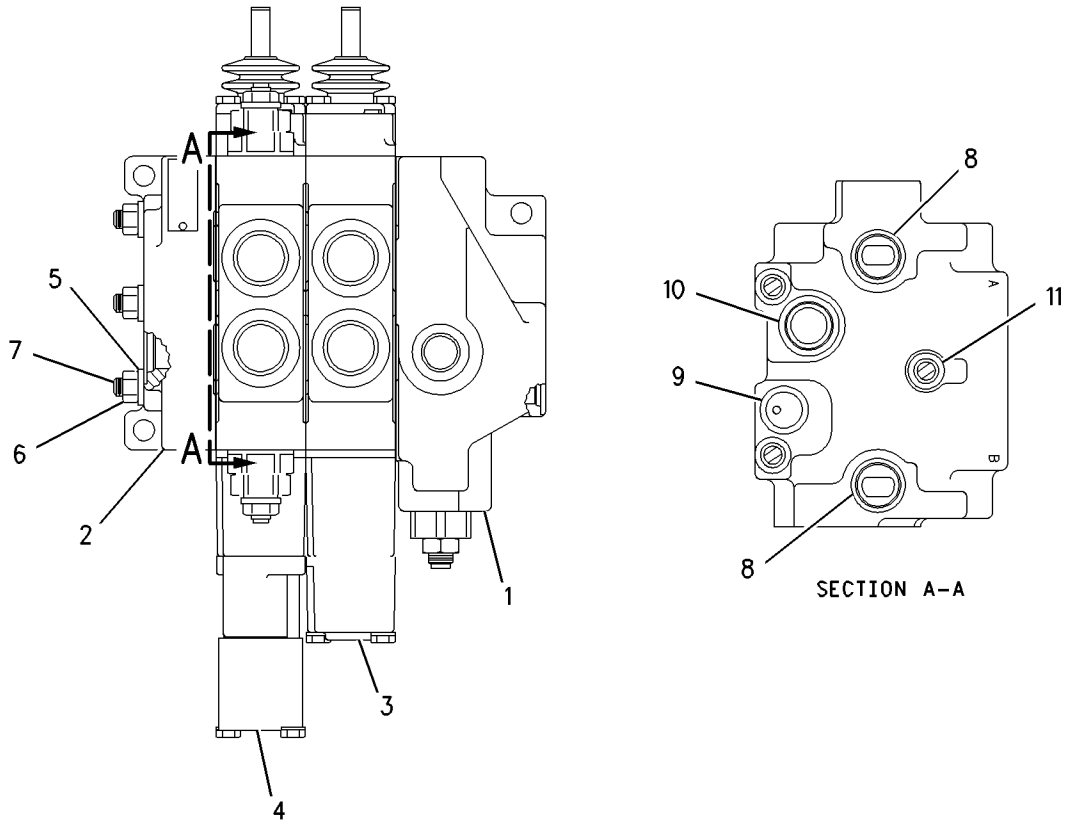

GRAPHIC #1 **<END>** g00847157

HYDRAULIC SYSTEM

185-5912 VALVE GP-BANK 3

S/N: FDP18400-UP
PART OF 186-5338 HYDRAULIC AR
AN ATTACHMENT

SMCS-5051 **i01946266**

NOTE	REF NO	GRAPHIC REF	PART NUMBER	QTY	PART NAME 1 2 3 4 5 6 (PRODUCT LEVEL)	SEE PAGE
Y	1	1	**188-7471**	1	VALVE GP-PRIORITY (STEERING)	304
	2	1	**191-4010**	1	COVER GP	
Y	3	1	**130-6520**	1	VALVE GP-CONTROL (LIFT)	535
Y	4	1	**191-4012**	1	VALVE GP-CONTROL (TILT)	539
Y	5	1	**124-8818**	1	VALVE GP-CONTROL (AUXILIARY)	533
	6	1	**5M-2894**	3	WASHER-HARD (10.2X18.5X2.5MM THK)	
	7	1	**9S-8752**	3	NUT-FULL (3/8-16 THD)	
	8	1	**4T-4518**	3	STUD	
	9	1	**4D-9986**	8	SEAL-O-RING	
	10	1	**4J-5140**	4	SEAL-O-RING	
	11	1	**4J-5267**	4	SEAL-O-RING	
B	12	1	**4T-2723**	12	SHIM (0.076MM THK)	

B-USE AS REQUIRED
Y-SEPARATE ILLUSTRATION

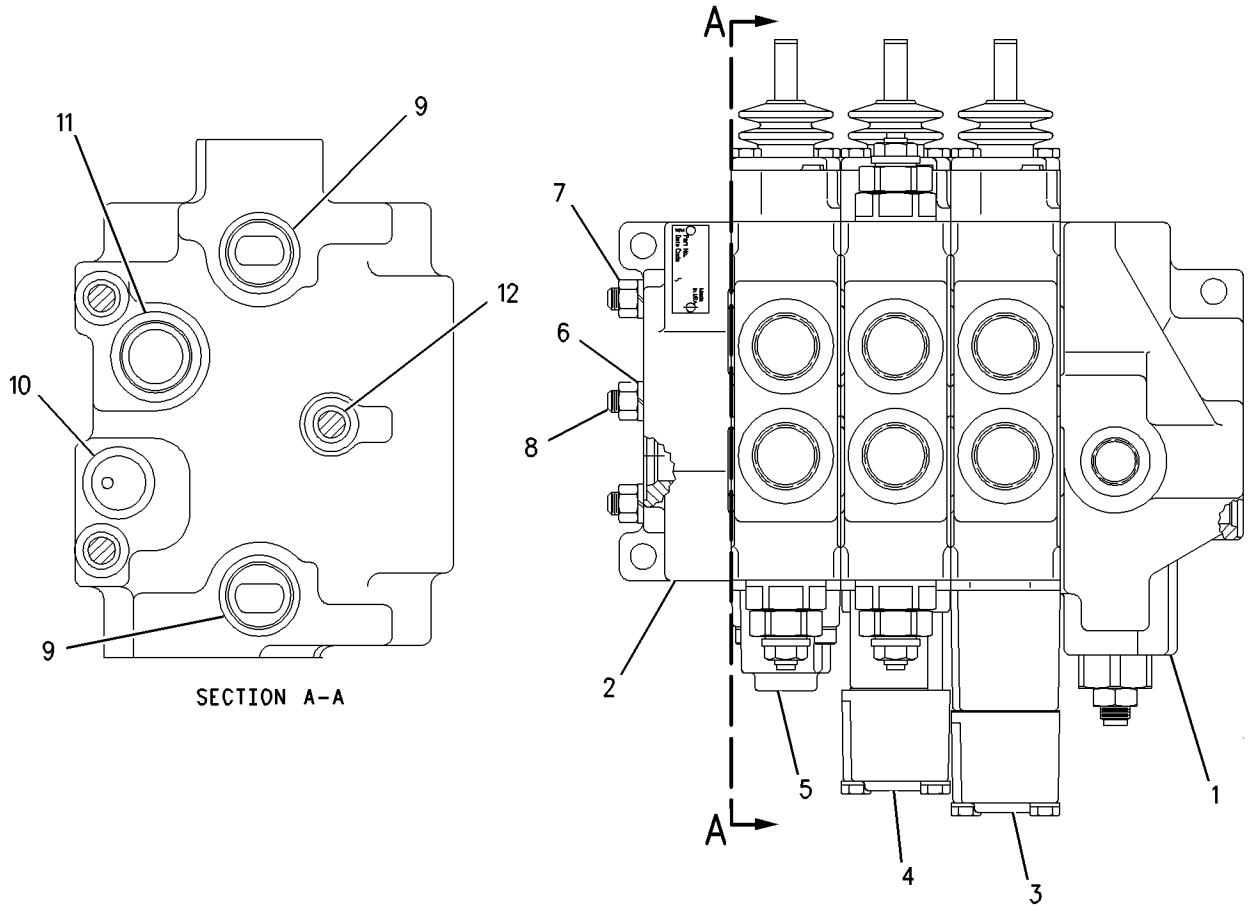

SECTION A-A

GRAPHIC #1 **<END>** g00738125

200-7828 VALVE GP-BANK 3

S/N: FDP18400-UP
PART OF 202-5806 HYDRAULIC AR
AN ATTACHMENT

SMCS-5051 **i01946262**

NOTE	REF NO	GRAPHIC REF	PART NUMBER	QTY	PART NAME 1 2 3 4 5 6 (PRODUCT LEVEL)	SEE PAGE
Y	1	1	**188-7471**	1	VALVE GP-PRIORITY (STEERING)	304
	2	1	**191-4010**	1	COVER GP	
Y	3	1	**130-6520**	1	VALVE GP-CONTROL (LIFT)	535
Y	4	1	**201-5377**	1	VALVE GP-CONTROL (TILT)	553
Y	5	1	**124-8818**	1	VALVE GP-CONTROL (AUXILIARY)	533
	6	1	**8T-4896**	3	WASHER-HARD (10.2X18.5X2.5MM THK)	
	7	1	**6V-8801**	3	NUT (3/8-16 THD)	
	8	1	**4T-4518**	3	STUD	
	9	1	**4D-9986**	8	SEAL-O-RING	
	10	1	**4J-5140**	4	SEAL-O-RING	
	11	1	**4J-5267**	4	SEAL-O-RING	
B	12	1	**4T-2723**	12	SHIM (0.076MM THK)	

B-USE AS REQUIRED
Y-SEPARATE ILLUSTRATION

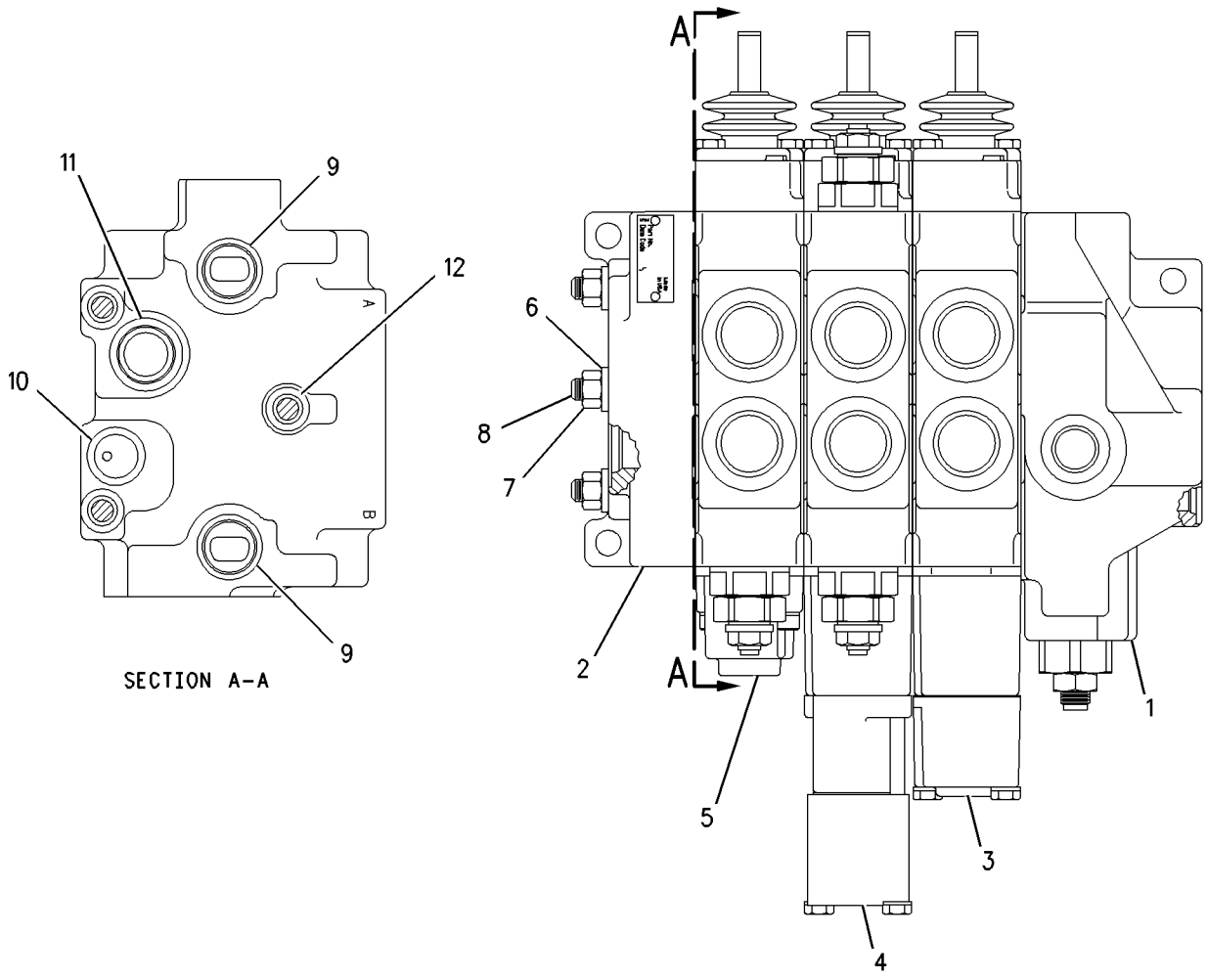

GRAPHIC #1 **<END>** g00849956

201-0665 VALVE GP-BANK 4

S/N: FDP18400-UP
PART OF 186-4958 INSTALLATION AR-BANK VALVE, 215-1510 VALVE AR-BANK 4
AN ATTACHMENT

SMCS-5051 **i01944278**

NOTE	REF NO	GRAPHIC REF	PART NUMBER	QTY	PART NAME 1 2 3 4 5 6 (PRODUCT LEVEL)	SEE PAGE
	1	1	**211-0180**	1	COVER	
	2	1	**6E-4158**	1	COVER	
Y	3	1	**201-0668**	1	VALVE GP-CONTROL (BOOM)	545
Y	4	1	**201-5357**	1	VALVE GP-CONTROL (SWING)	549
Y	5	1	**201-5358**	1	VALVE GP-CONTROL (BUCKET)	551
Y	6	1	**201-0669**	1	VALVE GP-CONTROL (STICK)	547
	7	1	**5M-2894**	6	WASHER-HARD (10.2X18.5X2.5MM THK)	
	8	1	**6V-8801**	6	NUT (3/8-16 THD)	
	9	1	**4T-4218**	3	STUD	
	10	1	**4D-9986**	10	SEAL-O-RING	
	11	1	**4J-5140**	5	SEAL-O-RING	
	12	1	**4J-5267**	5	SEAL-O-RING	
	13	1	**2D-6392**	3	SEAL-O-RING	
B	14	1	**4T-2723**	15	SHIM (0.076MM THK)	

B-USE AS REQUIRED
Y-SEPARATE ILLUSTRATION

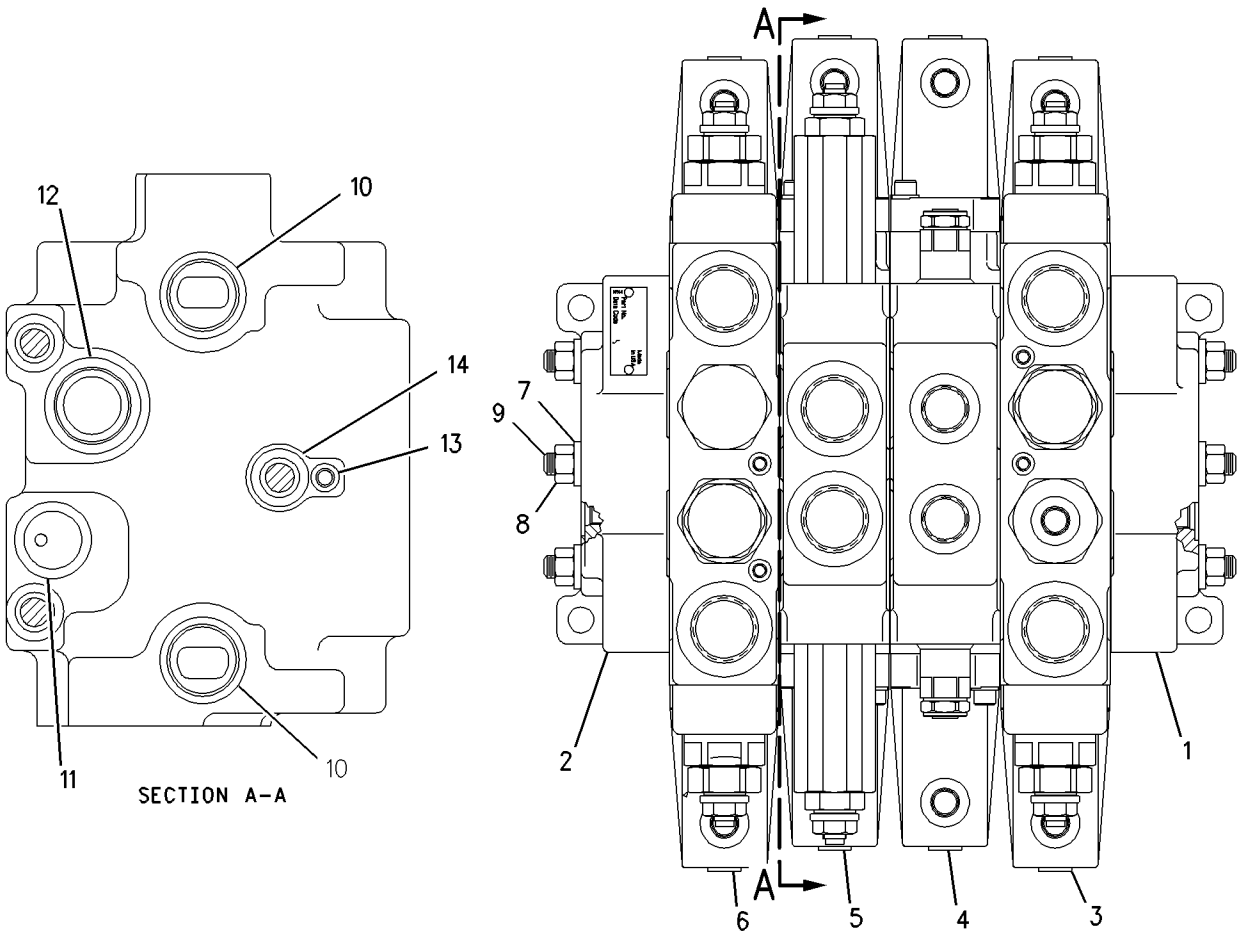

GRAPHIC #1 **<END>** g00848907

201-0666 VALVE GP-BANK 5

S/N: FDP18400-UP
BACKHOE, LOW LEAK, PILOT LOADER
PART OF 186-4959 INSTALLATION AR-BANK VALVE, 215-1511 VALVE AR-BANK 5
AN ATTACHMENT

SMCS-5051 **i01944280**

NOTE	REF NO	GRAPHIC REF	PART NUMBER	QTY	PART NAME 1 2 3 4 5 6 (PRODUCT LEVEL)	SEE PAGE
	1	1	**211-0180**	1	COVER	
	2	1	**6E-4158**	1	COVER	
Y	3	1	**201-0668**	1	VALVE GP-CONTROL (BOOM)	545
Y	4	1	**201-5357**	1	VALVE GP-CONTROL (SWING)	549
Y	5	1	**201-5358**	1	VALVE GP-CONTROL (BUCKET)	551
Y	6	1	**201-0669**	1	VALVE GP-CONTROL (STICK)	547
Y	7	1	**201-0664**	1	VALVE GP-CONTROL (E-STICK)	543
	8	1	**5M-2894**	6	WASHER-HARD (10.2X18.5X2.5MM THK)	
	9	1	**6V-8801**	6	NUT (3/8-16 THD)	
	10	1	**107-8117**	3	STUD	
	11	1	**4D-9986**	12	SEAL-O-RING	
	12	1	**4J-5140**	6	SEAL-O-RING	
	13	1	**4J-5267**	6	SEAL-O-RING	
	14	1	**2D-6392**	3	SEAL-O-RING	
B	15	1	**4T-2723**	18	SHIM (0.076MM THK)	

B-USE AS REQUIRED
Y-SEPARATE ILLUSTRATION

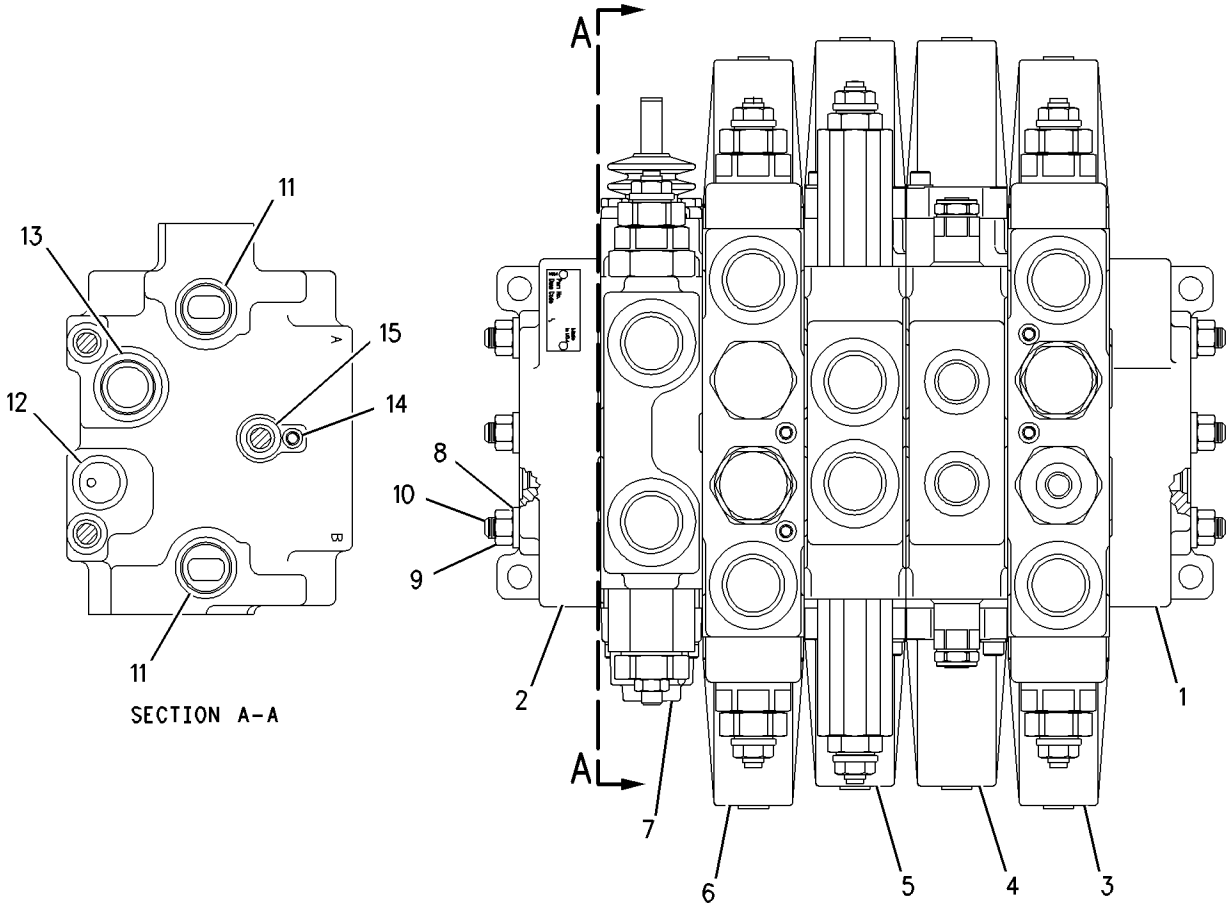

SECTION A-A

GRAPHIC #1 **<END>** g00850010

201-0667 VALVE GP-BANK 6

S/N: FDP18400-UP
LOW LEAK, PILOT LOADER, BACKHOE
PART OF 186-4960 INSTALLATION AR-BANK VALVE, 215-1512 VALVE AR-BANK 6
AN ATTACHMENT

SMCS-5051 **i01944282**

NOTE	REF NO	GRAPHIC REF	PART NUMBER	QTY	PART NAME 1 2 3 4 5 6 (PRODUCT LEVEL)	SEE PAGE
	1	1	**211-0180**	1	COVER	
	2	1	**6E-4158**	1	COVER	
Y	3	1	**190-3450**	1	VALVE GP-CONTROL (AUXILIARY)	537
Y	4	1	**201-0668**	1	VALVE GP-CONTROL (BOOM)	545
Y	5	1	**201-5357**	1	VALVE GP-CONTROL (SWING)	549
Y	6	1	**201-5358**	1	VALVE GP-CONTROL (BUCKET)	551
Y	7	1	**201-0669**	1	VALVE GP-CONTROL (STICK)	547
Y	8	1	**201-0664**	1	VALVE GP-CONTROL (E-STICK)	543
	9	1	**5M-2894**	6	WASHER-HARD (10.2X18.5X2.5MM THK)	
	10	1	**6V-8801**	6	NUT (3/8-16 THD)	
	11	1	**116-1316**	3	STUD	
	12	1	**4D-9986**	14	SEAL-O-RING	
	13	1	**4J-5140**	7	SEAL-O-RING	
	14	1	**4J-5267**	7	SEAL-O-RING	
	15	1	**2D-6392**	3	SEAL-O-RING	
B	16	1	**4T-2723**	21	SHIM (0.076MM THK)	

B-USE AS REQUIRED
Y-SEPARATE ILLUSTRATION

201-0667 VALVE GP-BANK 6 ***(contd.)*** **i01944282**

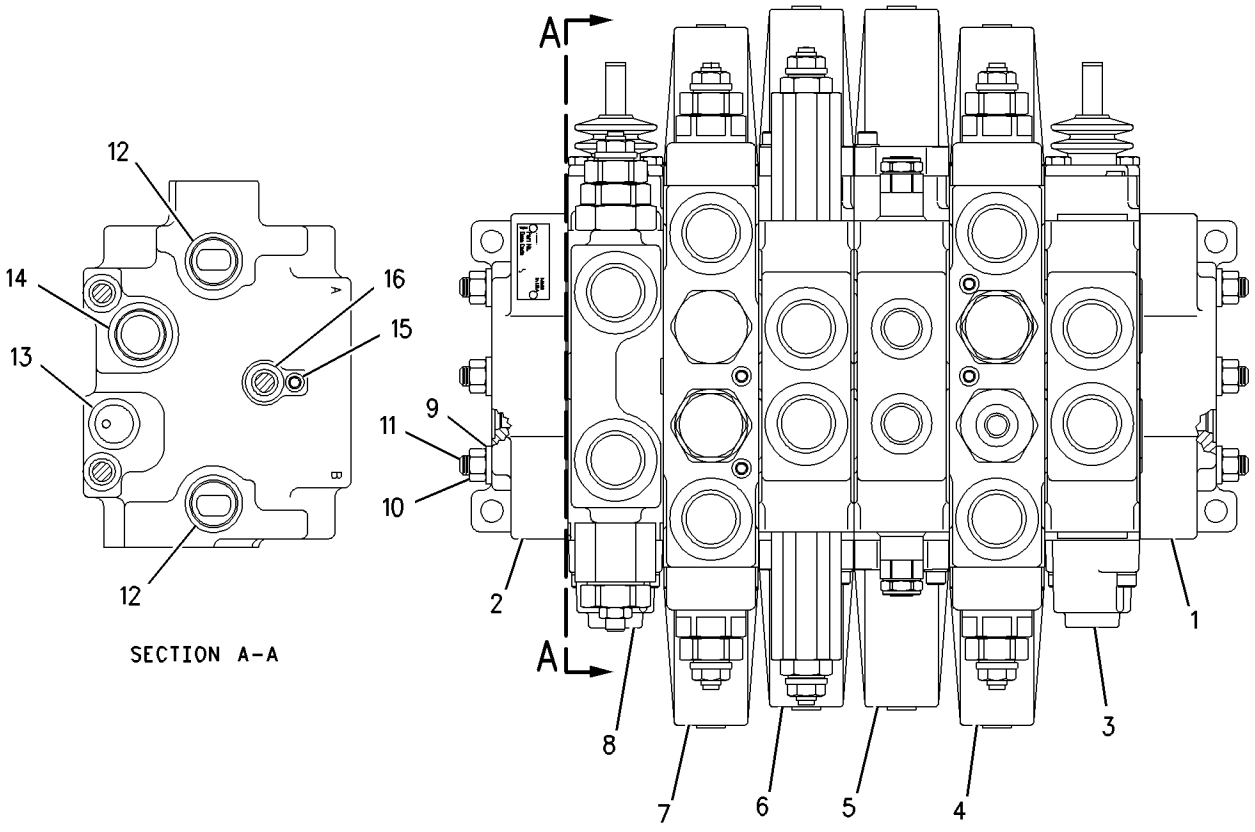

GRAPHIC #1 **<END>** g00850131

178-7480 VALVE GP-CHECK–RETURN OIL

S/N: FDP18400-UP
PRE-INSTALLED O-RINGS
PART OF 176-9209 LINES GP-RETURN
AN ATTACHMENT

SMCS-5067 **i01946260**

NOTE	REF NO	GRAPHIC REF	PART NUMBER	QTY	PART NAME 1 2 3 4 5 6 (PRODUCT LEVEL)	SEE PAGE
	1	1	**5K-9090**	1	SEAL-O-RING	
	2	1	**7M-8485**	1	SEAL-O-RING	

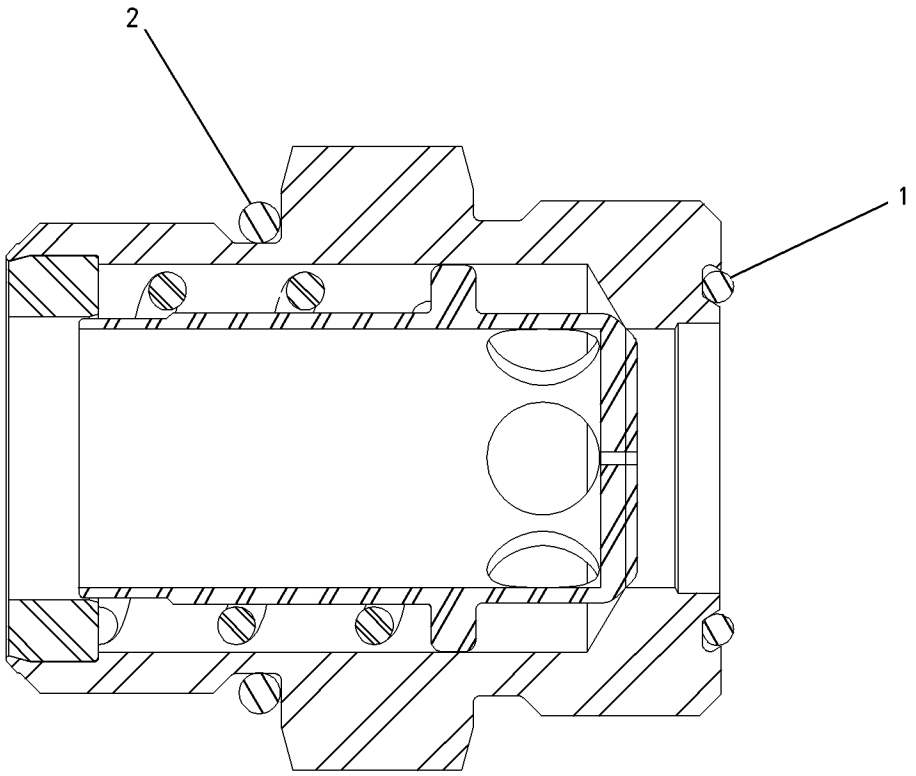

GRAPHIC #1 **<END>** g00756300

178-7481 VALVE GP-CHECK–BACK PRESSURE

S/N: FDP18400-UP
PRE-INSTALLED O-RINGS
PART OF 210-8532, 210-8533 CONVERSION GP-AUXILIARY LINES, 176-9208, 197-6818
LINES GP-RETURN
AN ATTACHMENT

SMCS-5067 **i01496587**

NOTE	REF NO	GRAPHIC REF	PART NUMBER	QTY	PART NAME 1 2 3 4 5 6 (PRODUCT LEVEL)	SEE PAGE
	1	1	**5K-9090**	2	SEAL-O-RING	
	2	1	**7M-8485**	1	SEAL-O-RING	

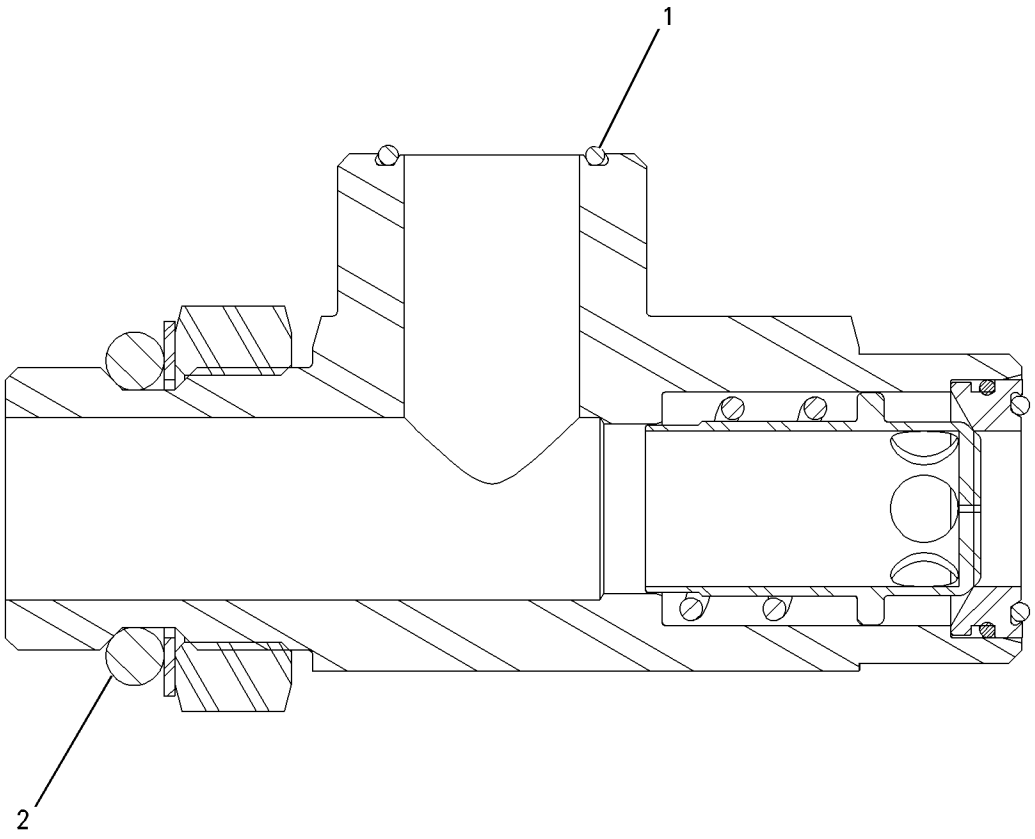

GRAPHIC #1 **<END>** g00774246

HYDRAULIC SYSTEM

213-4072 VALVE GP-CHECK

S/N: FDP18400-UP

PART OF 201-0668, 201-0669 VALVE GP-CONTROL

AN ATTACHMENT

SMCS-5067 **i02010595**

NOTE	PART NUMBER	QTY	PART NAME 1 2 3 4 5 6 (PRODUCT LEVEL)	SEE PAGE
			(NO SERVICED PARTS)	

<END>

HYDRAULIC SYSTEM

124-8818 VALVE GP-CONTROL–CLAM

S/N: FDP18400-UP
LOADER
PART OF 185-5912, 200-7828 VALVE GP-BANK 3
AN ATTACHMENT

SMCS-5051 **i01450466**

NOTE	REF NO	GRAPHIC REF	PART NUMBER	QTY	PART NAME 1 2 3 4 5 6 (PRODUCT LEVEL)	SEE PAGE
	1	1	**4T-4524**	1	GUARD-DUST	
	2	1	**031-0214**	2	BOLT-LOCKING (1/4-20X0.5 IN)	
	3	1	**8H-0707**	2	BOLT (1/4-20X1 IN)	
	4	1	**4T-4516**	1	SPRING	
	5	1	**031-5085**	1	BOLT-LOCKING (1/4-20X1.00 IN)	
	6	1	**167-6768**	1	HOUSING	
	7	1	**4T-4521**	2	RETAINER	
	8	1	**4T-4533**	1	SPACER	
	9	1	**195-2139**	2	SEAL-O-RING	
	10	1	**6E-4317**	1	SPRING	
	11	1	**2M-9780**	1	SEAL-O-RING	
	12	1	**9S-8006**	1	PLUG	
	13	1	**4T-4520**	1	FILTER	
	14	1	**4T-4528**	1	RETAINER	
	15	1	**5B-9318**	1	BALL	
	16	1	**9T-0704**	1	VALVE GP-RELIEF	
	17	1	**4K-1388**	1	SEAL-O-RING (26.59MM ID)	
	18	1	**6E-0358**	1	RING-BACKUP	
	19	1	**5K-9090**	1	SEAL-O-RING	
	20	1	**126-5476**	1	SEAT AS-SHUTTLE	
	21	1	**4T-7807**	1	RING-BACKUP (5.13MM ID)	
	22	1	**7J-0204**	1	SEAL-O-RING (7.65MM ID)	
	23	1	**8T-2360**	1	SEAL-O-RING (4.5MM ID)	
	24	1	**155-9836**	1	HOUSING AS	
	25	1	**1P-7363**	1	SEAL-O-RING (6.07MM ID)	
	26	1	**3J-7354**	1	SEAL-O-RING	
	27	1	**8T-2361**	1	SEAL-O-RING (5.28MM ID)	
	28	1	**126-5984**	1	RING-BACKUP (5.94MM ID)	
	29	1	**126-5985**	1	RING-BACKUP (6.73MM ID)	

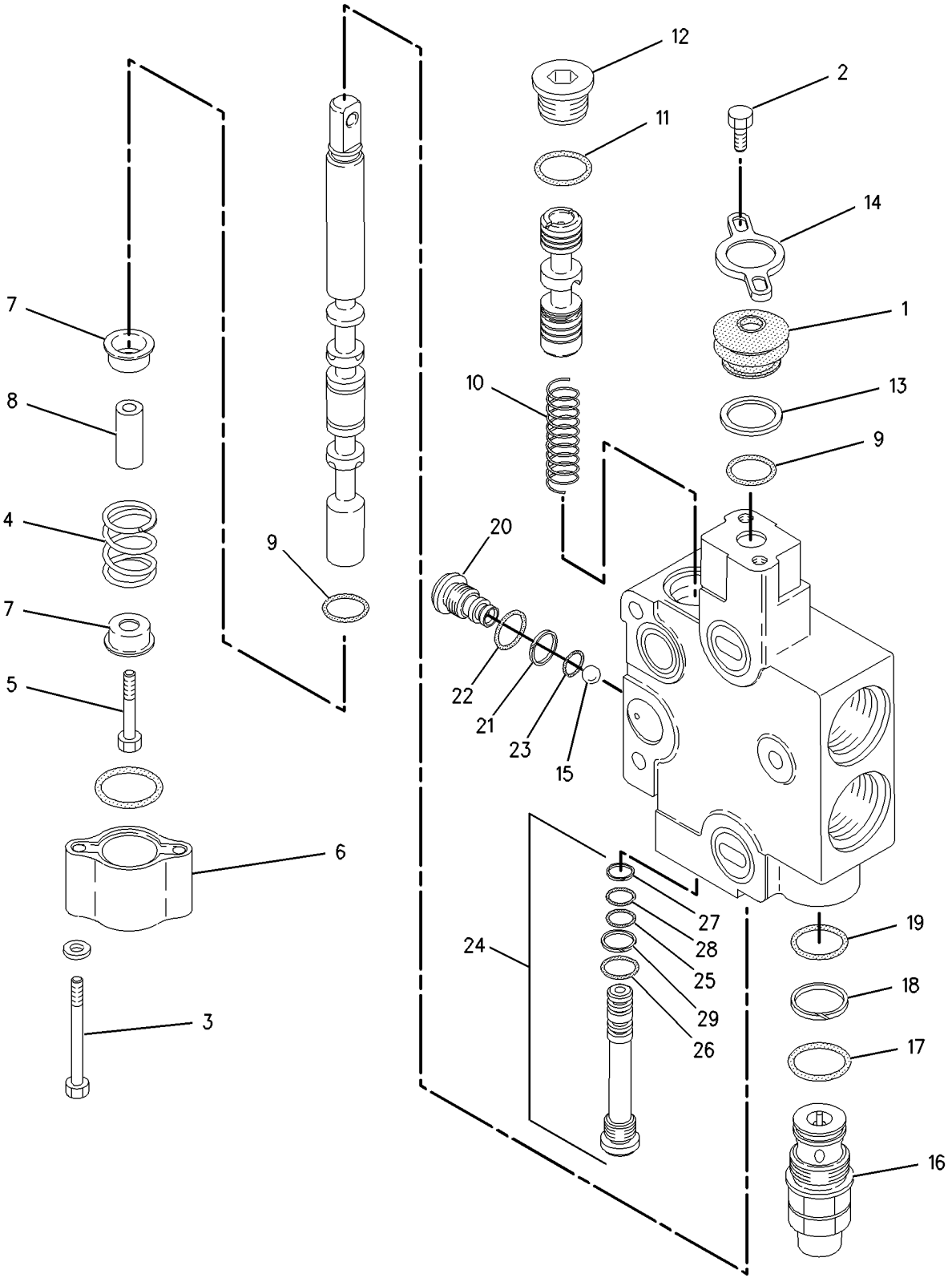

GRAPHIC #1 **<END>** g00745853

HYDRAULIC SYSTEM

130-6520 VALVE GP-CONTROL–LIFT

S/N: FDP18400-UP

PART OF 185-5911, 200-7827 VALVE GP-BANK 2, 185-5912, 200-7828 VALVE GP-BANK 3

AN ATTACHMENT

SMCS-5051 **i01655841**

NOTE	REF NO	GRAPHIC REF	PART NUMBER	QTY	PART NAME 1 2 3 4 5 6 (PRODUCT LEVEL)	SEE PAGE
	1	1	**4T-4524**	1	GUARD-DUST	
	2	1	**031-0214**	2	BOLT-LOCKING (1/4-20X0.5 IN)	
	3	1	**4T-4531**	1	PLUG	
	4	1	**4T-4513**	1	SPRING	
	5	1	**100-3567**	1	HOUSING-DETENT	
	6	1	**100-3566**	1	PISTON-DETENT	
	7	1	**4B-9782**	1	BALL	
	8	1	**4T-4532**	1	HOUSING	
	9	1	**144-4277**	1	SHAFT AS-DETENT	
	10	1	**8S-4710**	2	BOLT (1/4-20X4 IN)	
	11	1	**5P-0537**	2	WASHER-HARD (7.2X14.5X2MM THK)	
	12	1	**100-3564**	1	SPRING	
	13	1	**4T-4521**	2	RETAINER	
	14	1	**100-3563**	1	SPACER-DETENT	
	15	1	**8F-0212**	1	SEAL-O-RING	
	16	1	**6E-4317**	1	SPRING	
	17	1	**2M-9780**	1	SEAL-O-RING	
	18	1	**9S-8006**	1	PLUG	
	19	1	**4T-4520**	1	FILTER	
	20	1	**4T-4528**	1	RETAINER	
	21	1	**126-5476**	1	SEAT AS-SHUTTLE	
	21A	1	**4T-7807**	1	RING-BACKUP	
	21B	1	**7J-0204**	1	SEAL-O-RING	
	21C	1	**8T-2360**	1	SEAL-O-RING	
	22	1	**5B-9318**	7	BALL	
	23	1	**155-9836**	1	VALVE GP-RELIEF	
	23A	1	**1P-7363**	1	SEAL-O-RING	
	23B	1	**3J-7354**	1	SEAL-O-RING	
	23C	1	**8T-2361**	1	SEAL-O-RING	
	23D	1	**126-5984**	1	RING-BACKUP	
	23E	1	**126-5985**	1	RING-BACKUP	
	24	1	**4K-1388**	1	SEAL-O-RING	
	25	1	**6E-0358**	1	RING-BACKUP	
	26	1	**5K-9090**	1	SEAL-O-RING	
	27	1	**128-2776**	1	GASKET	
	28	1	**195-2139**	1	SEAL-O-RING	

130-6520 VALVE GP-CONTROL *(contd.)* i01655841

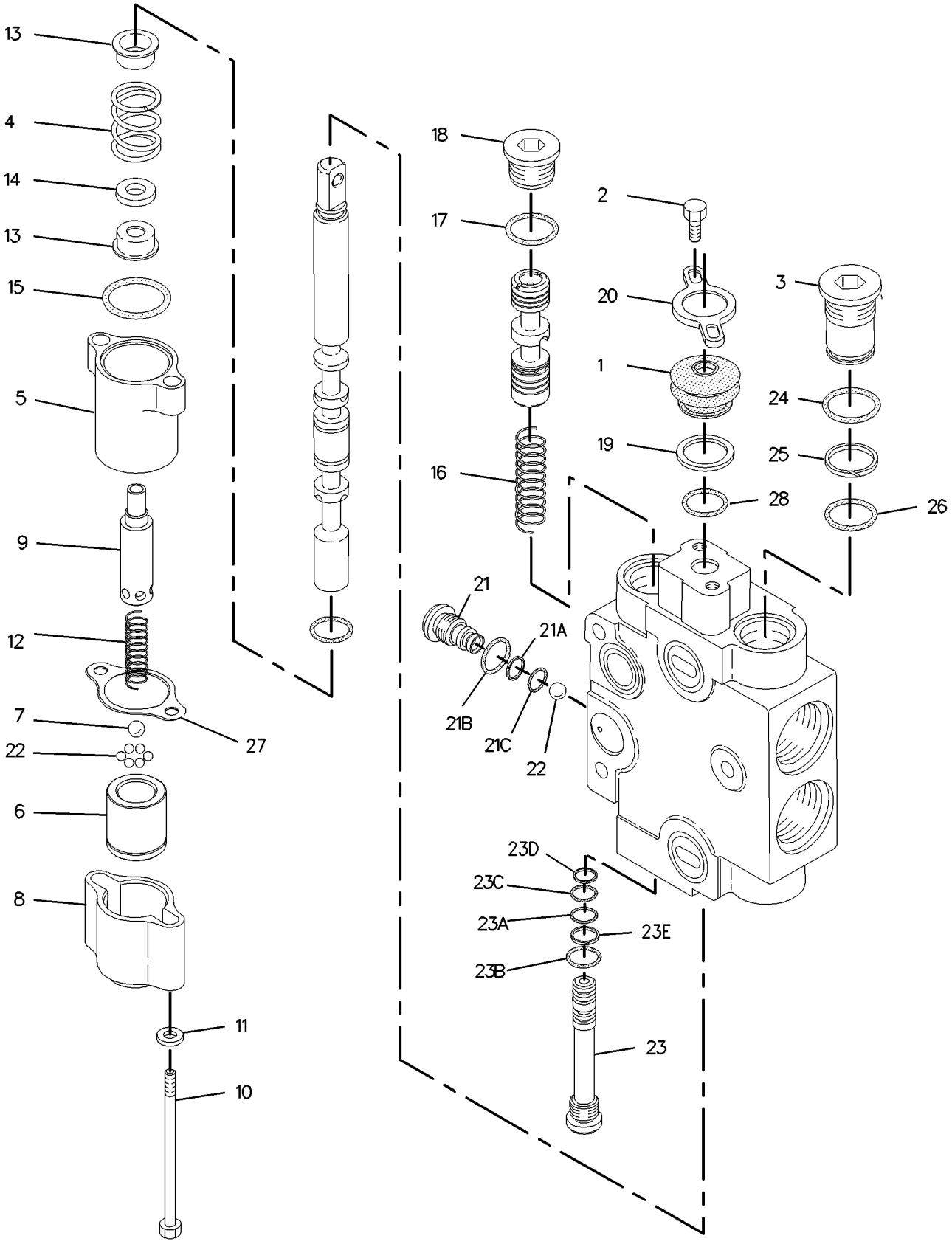

GRAPHIC #1 **<END>** g00855145

HYDRAULIC SYSTEM

190-3450 VALVE GP-CONTROL—EXTENDABLE STICK;AUXILIARY

S/N: FDP18400-UP

PART OF 198-7412, 201-6902 CONVERSION GP-CONTROL VALVE, 201-0667 VALVE GP-BANK 6 AN ATTACHMENT

SMCS-5051 **i01781168**

NOTE	REF NO	GRAPHIC REF	PART NUMBER	QTY	PART NAME 1 2 3 4 5 6 (PRODUCT LEVEL)	SEE PAGE
	1	1	**195-2139**	2	SEAL-O-RING	
	2	1	**9S-8009**	1	PLUG	
	3	1	**197-2709**	1	SPRING	
	4	1	**155-9836**	1	VALVE GP-RELIEF	
	4A	1	**1P-7363**	1	SEAL-O-RING	
	4B	1	**3J-7354**	1	SEAL-O-RING	
	4C	1	**8T-2361**	1	SEAL-O-RING	
	4D	1	**126-5984**	1	RING-BACKUP	
	4E	1	**126-5985**	1	RING-BACKUP	
	5	1	**5B-9318**	1	BALL	
	6	1	**126-5476**	1	SEAT AS-SHUTTLE	
	6A	1	**4T-7807**	1	RING-BACKUP	
	6B	1	**7J-0204**	1	SEAL-O-RING	
	6C	1	**8T-2360**	1	SEAL-O-RING	
	7	1	**4T-4516**	1	SPRING	
	8	1	**8H-0707**	2	BOLT (1/4-20X1 IN)	
	9	1	**4T-4533**	1	SPACER (7.1X10.2X17.3MM DIA)	
	10	1	**167-6768**	1	HOUSING	
	11	1	**031-5085**	1	BOLT-LOCKING (1/4-20X1.00 IN)	
	12	1	**4T-4521**	2	RETAINER	
	13	1	**6E-0131**	2	WASHER	
	14	1	**4T-4531**	2	PLUG	
	15	1	**031-0214**	2	BOLT-LOCKING (1/4-20X0.5 IN)	
	16	1	**4T-4524**	1	GUARD-DUST	
	17	1	**4T-4528**	1	RETAINER	
	18	1	**4T-4520**	1	FILTER	
	19	1	**2M-9780**	1	SEAL-O-RING	
	20	1	**4K-1388**	2	SEAL-O-RING	
	21	1	**5K-9090**	2	SEAL-O-RING	
	22	1	**6E-0358**	2	RING-BACKUP	

190-3450 VALVE GP-CONTROL *(contd.)* i01781168

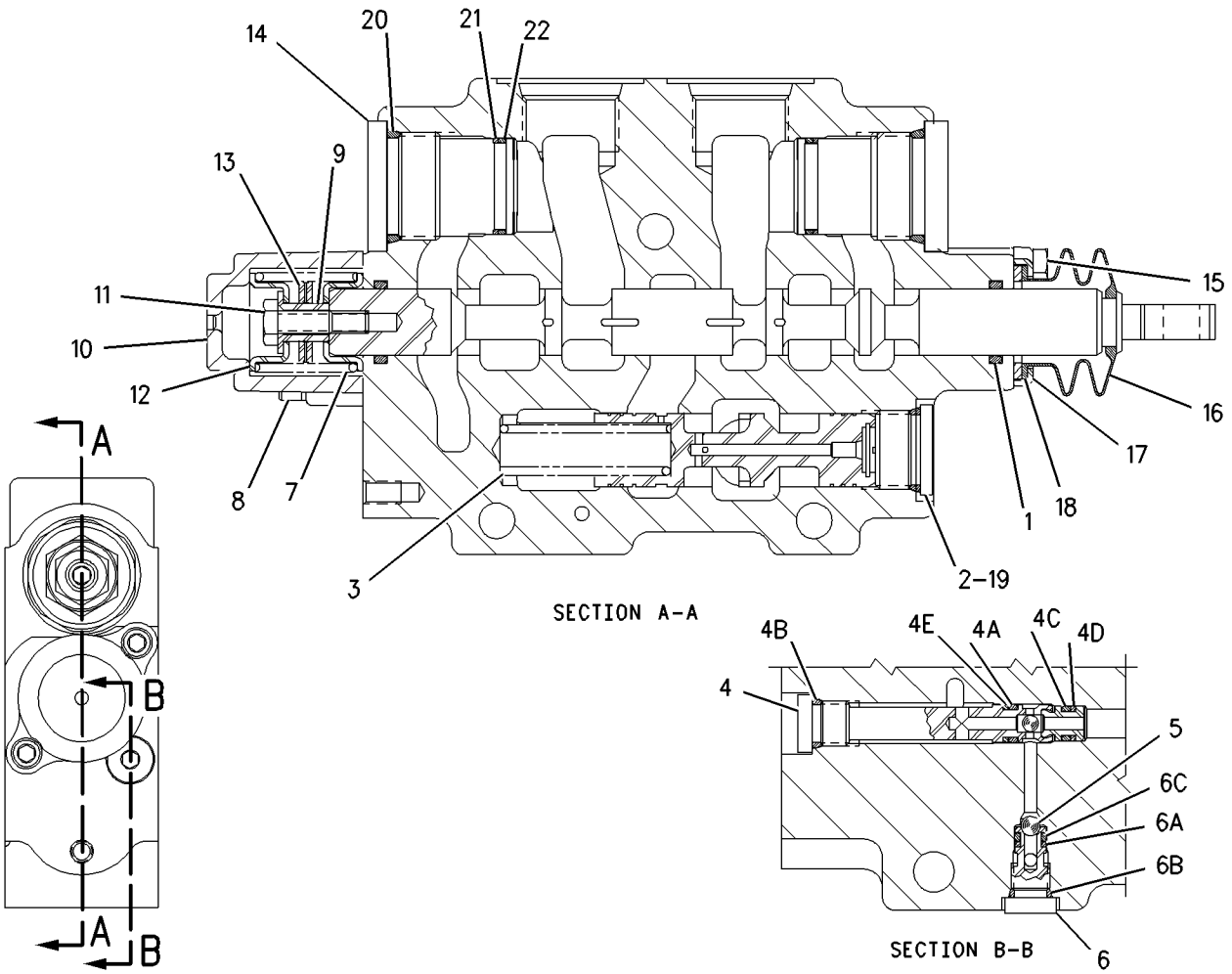

GRAPHIC #1 **<END>** g00910842

HYDRAULIC SYSTEM

191-4012 VALVE GP-CONTROL–TILT

S/N: FDP18400-UP

PART OF 185-5911 VALVE GP-BANK 2, 185-5912 VALVE GP-BANK 3

AN ATTACHMENT

SMCS-5051 **i01668200**

NOTE	REF NO	GRAPHIC REF	PART NUMBER	QTY	PART NAME 1 2 3 4 5 6 (PRODUCT LEVEL)	SEE PAGE
	1	1	**195-2139**	2	SEAL-O-RING	
	2	1	**9S-8009**	1	PLUG	
	3	1	**6E-4317**	1	SPRING	
	4	1	**155-9836**	1	VALVE GP-RELIEF	
		1	**1P-7363**	1	SEAL-O-RING	
		1	**3J-7354**	1	SEAL-O-RING	
		1	**8T-2361**	1	SEAL-O-RING	
		1	**126-5984**	1	RING-BACKUP	
		1	**126-5985**	1	RING-BACKUP	
	5	1	**5B-9318**	1	BALL	
	6	1	**126-5476**	1	SEAT AS-SHUTTLE	
		1	**4T-7807**	1	RING-BACKUP	
		1	**7J-0204**	1	SEAL-O-RING	
		1	**8T-2360**	1	SEAL-O-RING	
	7	1	**197-3698**	1	SEAL-O-RING	
	8	1	**8F-0212**	1	SEAL-O-RING	
	9	1	**4T-4516**	1	SPRING	
	10	1	**3E-8620**	1	COIL AS-SOLENOID	
		1	**1S-9593**	2	STRAP-CABLE	
		1	**102-8802**	1	KIT-RECEPTACLE (2 PIN)	
					(KIT SERVICES RECEPTACLE AS. AND WEDGE)	
		1	**3E-3365**	1	WEDGE-RECEPTACLE LOCK (2 PIN)	
		1	**8T-8729**	2	PIN-CONNECTOR	
	11	1	**9T-7309**	1	PLATE	
	12	1	**5P-0537**	2	WASHER-HARD (7.2X14.5X2MM THK)	
	13	1	**8F-6302**	2	BOLT (1/4-20X3.75IN)	
	14	1	**9T-0642**	1	COUPLING	
	15	1	**5L-9023**	1	RING-RETAINING	
	16	1	**4T-4532**	1	HOUSING	
	17	1	**9T-0644**	1	SPRING	
	18	1	**128-2776**	1	GASKET	
	19	1	**4T-4521**	2	RETAINER	
	20	1	**187-0530**	2	VALVE GP-RELIEF	
	21	1	**031-0214**	2	BOLT-LOCKING (1/4-20X0.5 IN)	
	22	1	**4T-4524**	1	GUARD-DUST	
	23	1	**4T-4528**	1	RETAINER	
	24	1	**4T-4520**	1	FILTER	
	25	1	**197-3121**	1	RING-GUIDE	
	26	1	**2M-9780**	1	SEAL-O-RING	

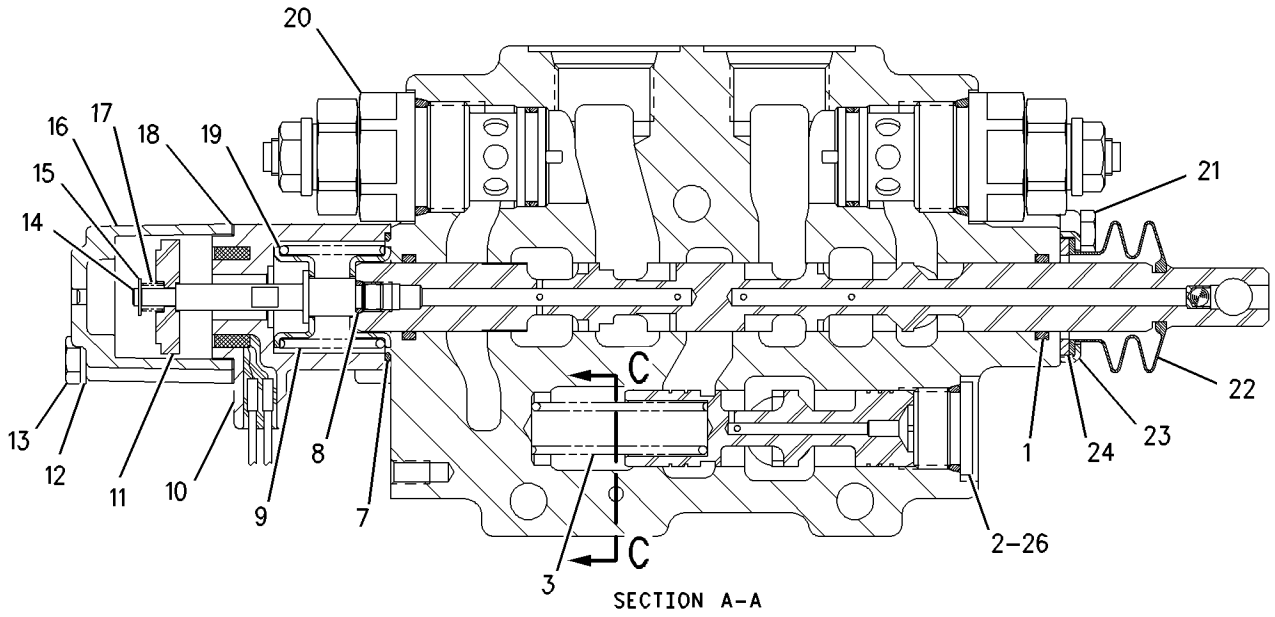

SECTION A-A

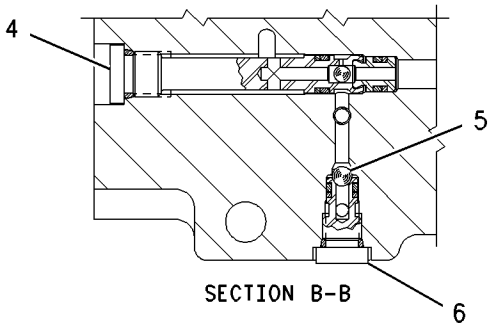

SECTION B-B

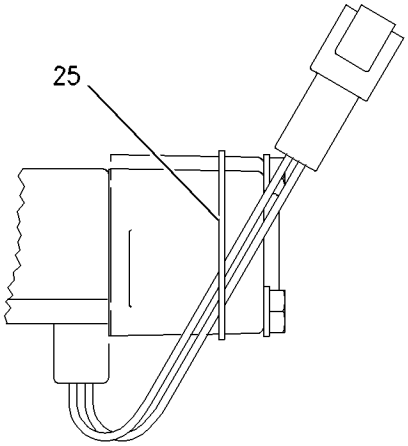

VIEW D-D

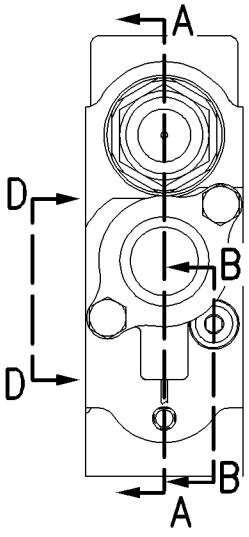

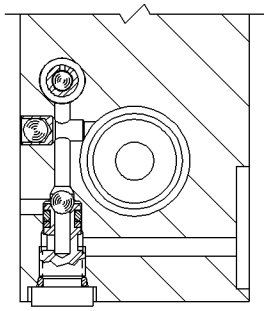

SECTION C-C

GRAPHIC #1 **<END>** g00861612

192-0827 VALVE GP-CONTROL–STABILIZER

S/N: FDP18400-UP
PART OF 185-5898 VALVE GP-BANK 2
AN ATTACHMENT

SMCS-5051 **i01699289**

NOTE	REF NO	GRAPHIC REF	PART NUMBER	QTY	PART NAME 1 2 3 4 5 6 (PRODUCT LEVEL)	SEE PAGE
	1	1	**192-7512**	4	SEAL-O-RING	
	2	1	**192-2060**	1	COVER AS	
		1	**192-7506**	2	SEAL-O-RING	
		1	**192-7516**	1	SEAL	
	3	1	**192-7864**	2	PLUG	
	4	1	**192-7510**	2	SEAL-O-RING	
	5	1	**192-2081**	2	SPRING	
	6	1	**192-4490**	2	VALVE GP-CHECK	
	7	1	**192-2082**	2	SPRING	
	8	1	**192-7513**	2	SEAL-O-RING	
	9	1	**192-4488**	2	RING	
	10	1	**192-4487**	2	RING	
	11	1	**192-7514**	2	SEAL-O-RING	
	12	1	**192-4491**	1	DISC	
	13	1	**192-4492**	1	BALL	
	14	1	**192-0828**	1	VALVE GP-COMPENSATING	
		1	**192-4488**	1	RING	
		1	**192-7512**	1	SEAL-O-RING	
		1	**192-7515**	1	SEAL-O-RING	
	15	1	**214-6350**	2	PISTON	

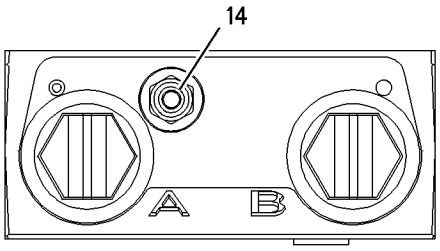

TOP VIEW

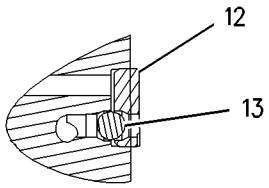

SECTION E-E

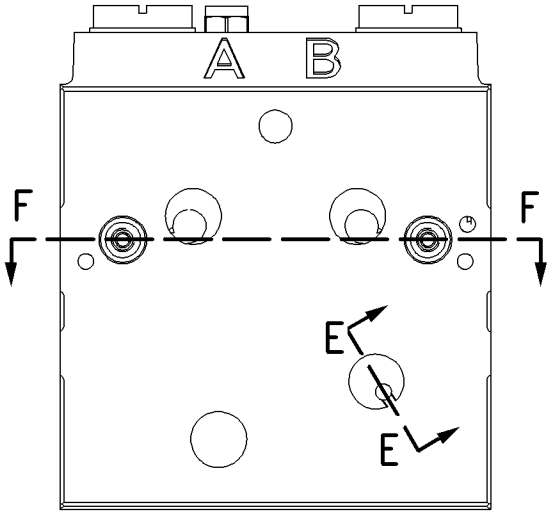

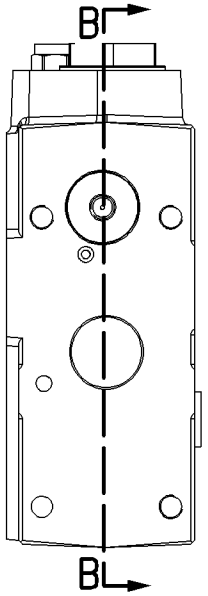

RIGHT SIDE VIEW

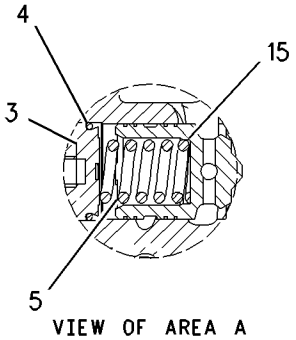

VIEW OF AREA A

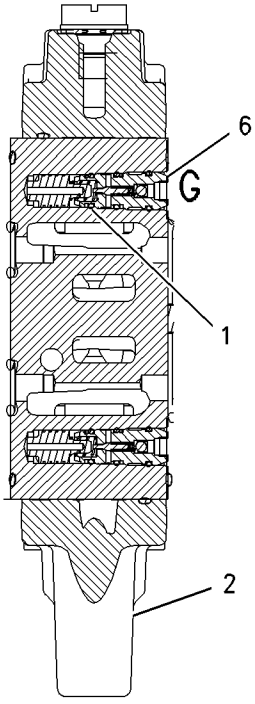

SECTION F-F

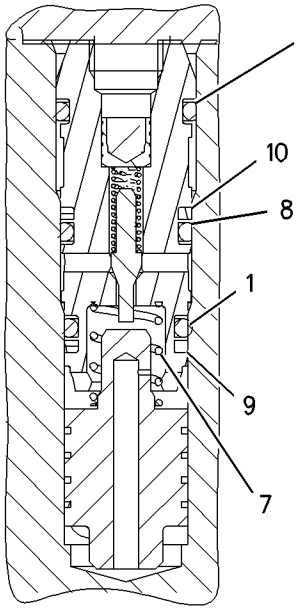

VIEW OF AREA G

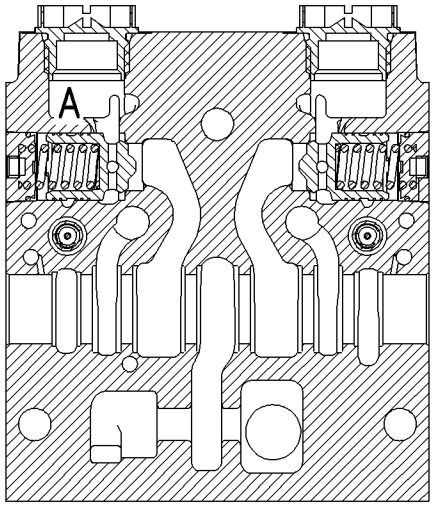

SECTION B-B

GRAPHIC #1 **<END>** g00874817

201-0664 VALVE GP-CONTROL–EXTENDABLE STICK

S/N: FDP18400-UP

PART OF 230-9105 CONVERSION GP-CONTROL VALVE, 201-0666 VALVE GP-BANK 5, 201-0667 VALVE GP-BANK 6

AN ATTACHMENT

SMCS-5051 **i01644333**

NOTE	REF NO	GRAPHIC REF	PART NUMBER	QTY	PART NAME 1 2 3 4 5 6 (PRODUCT LEVEL)	SEE PAGE
	1	1	**195-2139**	2	SEAL-O-RING	
	2	1	**9S-8006**	1	PLUG	
	3	1	**6E-4317**	1	SPRING	
	4	1	**155-9836**	1	VALVE GP-RELIEF	
		1	**1P-7363**	1	SEAL-O-RING	
		1	**3J-7354**	1	SEAL-O-RING	
		1	**8T-2361**	1	SEAL-O-RING	
		1	**126-5984**	1	RING-BACKUP	
		1	**126-5985**	1	RING-BACKUP	
	5	1	**5B-9318**	1	BALL	
	6	1	**126-5476**	1	SEAT AS-SHUTTLE	
		1	**4T-7807**	1	RING-BACKUP	
		1	**7J-0204**	1	SEAL-O-RING	
		1	**8T-2360**	1	SEAL-O-RING	
	7	1	**4T-4516**	1	SPRING	
	8	1	**8H-0707**	2	BOLT (1/4-20X1 IN)	
	9	1	**6E-0131**	2	WASHER	
	10	1	**4T-4533**	1	SPACER	
	11	1	**167-6768**	1	HOUSING	
	12	1	**031-5085**	1	BOLT-LOCKING (1/4-20X1.00 IN)	
	13	1	**4T-4521**	2	RETAINER	
	14	1	**206-5107**	1	PLUG AS	
		1	**4K-1388**	1	SEAL-O-RING	
		1	**5K-9090**	1	SEAL-O-RING	
		1	**6E-0358**	1	RING-BACKUP	
		1	**197-1742**	1	PLUG	
	15	1	**211-3539**	1	VALVE GP-RELIEF	
		1	**6V-5326**	1	SEAL-O-RING	
		1	**208-1463**	1	SEAL-O-RING	
		1	**208-9791**	1	RING-BACKUP	
		1	**208-9801**	1	RING-BACKUP	
	16	1	**206-9978**	1	VALVE-POPPET	
	17	1	**175-5453**	1	SEAT	
	18	1	**175-5454**	1	POPPET	
	19	1	**8T-2275**	1	BALL	
	20	1	**175-5457**	1	RETAINER-SPRING	
	21	1	**175-5458**	1	SPRING	
	22	1	**175-5452**	1	PLUG	
	23	1	**031-0214**	2	BOLT-LOCKING (1/4-20X0.5 IN)	
	24	1	**4T-4524**	1	GUARD-DUST	
	25	1	**4T-4528**	1	RETAINER	
	26	1	**4T-4520**	1	FILTER	
	27	1	**132-5303**	1	VALVE GP-RELIEF	
		1	**4K-1388**	1	SEAL-O-RING	
		1	**5K-9090**	1	SEAL-O-RING	
		1	**6E-0358**	1	RING-BACKUP	
	28	1	**2M-9780**	1	SEAL-O-RING	

201-0664 VALVE GP-CONTROL ***(contd.)*** **i01644333**

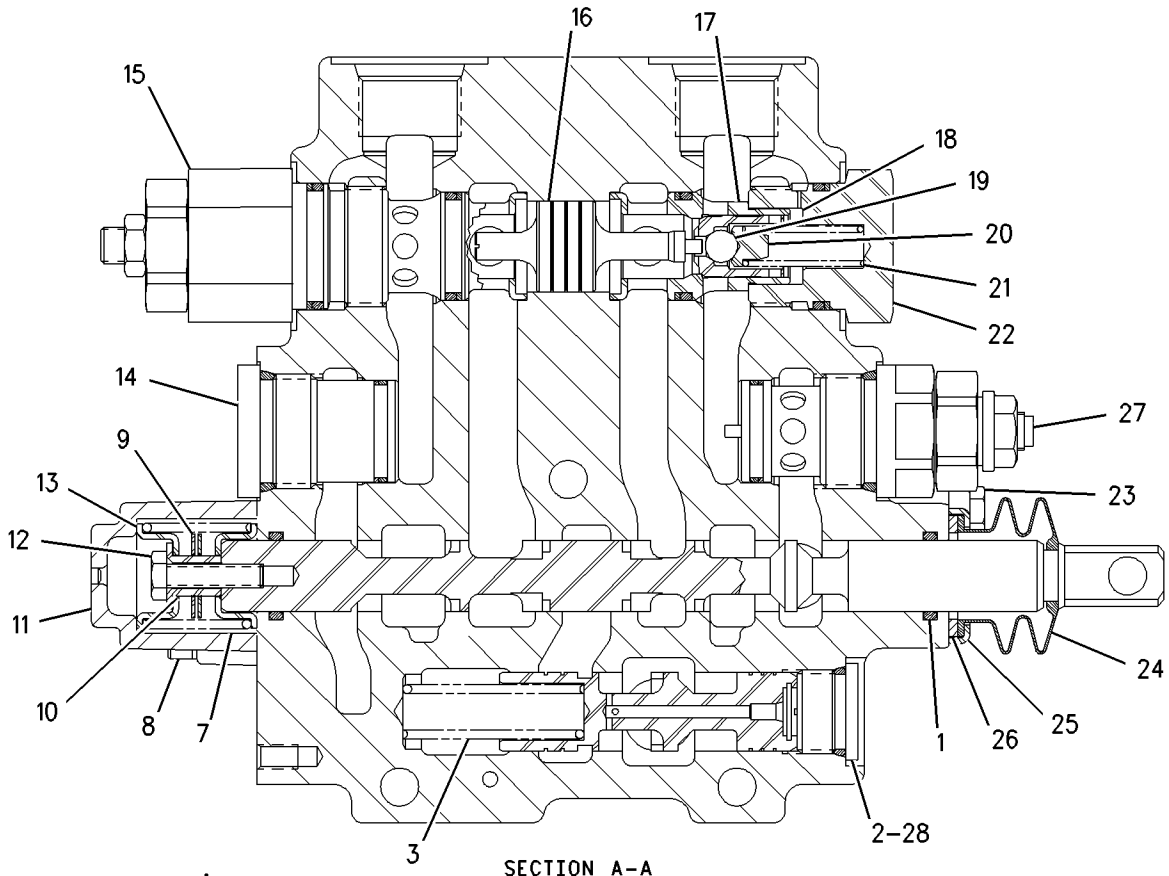

SECTION A-A

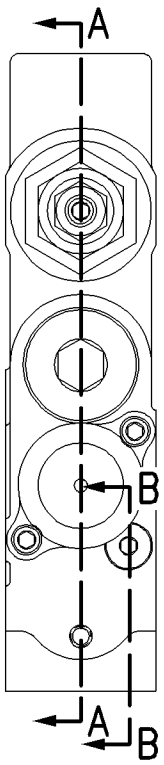

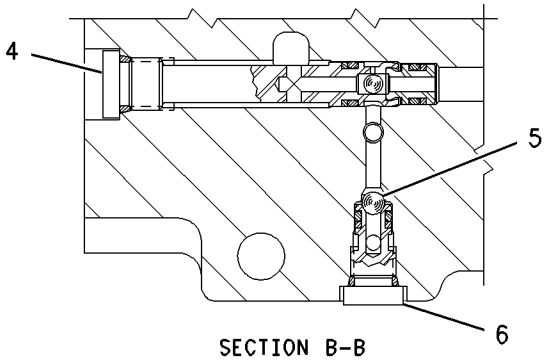

SECTION B-B

GRAPHIC #1 **<END>** g00849960

201-0668 VALVE GP-CONTROL

S/N: FDP18400-UP

BOOM

PART OF 201-0665 VALVE GP-BANK 4, 201-0666 VALVE GP-BANK 5, 201-0667 VALVE GP-BANK 6

AN ATTACHMENT

SMCS-5051 **i01781165**

NOTE	REF NO	GRAPHIC REF	PART NUMBER	QTY	PART NAME 1 2 3 4 5 6 (PRODUCT LEVEL)	SEE PAGE
	1	1	**003-8137**	2	SEAL-O-RING	
	2	1	**9S-8006**	1	PLUG	
	3	1	**197-2709**	1	SPRING	
	4	1	**126-5796**	1	HOUSING GP	
		1	**1P-7363**	1	SEAL-O-RING	
		1	**3J-7354**	1	SEAL-O-RING	
		1	**8T-2361**	1	SEAL-O-RING	
		1	**126-5984**	1	RING-BACKUP	
		1	**126-5985**	1	RING-BACKUP	
	5	1	**5B-9318**	1	BALL	
	6	1	**126-5476**	1	SEAT AS-SHUTTLE	
		1	**4T-7807**	1	RING-BACKUP	
		1	**7J-0204**	1	SEAL-O-RING	
		1	**8T-2360**	1	SEAL-O-RING	
	7	1	**114-1973**	1	COUPLING	
	8	1	**197-3222**	2	HOUSING	
	9	1	**156-1267**	2	RETAINER	
	10	1	**207-2255**	2	RETAINER	
	11	1	**114-1972**	1	COUPLING	
	12	1	**5S-0003**	2	NUT (5/16-18 THD)	
	13	1	**200-6382**	2	SPRING	
	14	1	**9X-8267**	4	WASHER (6.6X12X2MM THK)	
	15	1	**187-0523**	1	VALVE GP-RELIEF	
		1	**4K-1388**	1	SEAL-O-RING	
		1	**5K-9090**	1	SEAL-O-RING	
		1	**6E-0358**	1	RING-BACKUP	
	16	1	**207-2253**	1	PLUG AS	
		1	**4K-1388**	1	SEAL-O-RING	
		1	**5K-9090**	1	SEAL-O-RING	
		1	**6E-0358**	1	RING-BACKUP	
Y	17	1	**213-4072**	1	VALVE GP-CHECK	532
	18	1	**6E-6285**	1	VALVE GP-RELIEF	
		1	**4K-1388**	1	SEAL-O-RING	
		1	**5K-9090**	1	SEAL-O-RING	
		1	**6E-0358**	1	RING-BACKUP	
	19	1	**8H-0707**	4	BOLT (1/4-20X1 IN)	
	20	1	**2M-9780**	1	SEAL-O-RING	

Y-SEPARATE ILLUSTRATION

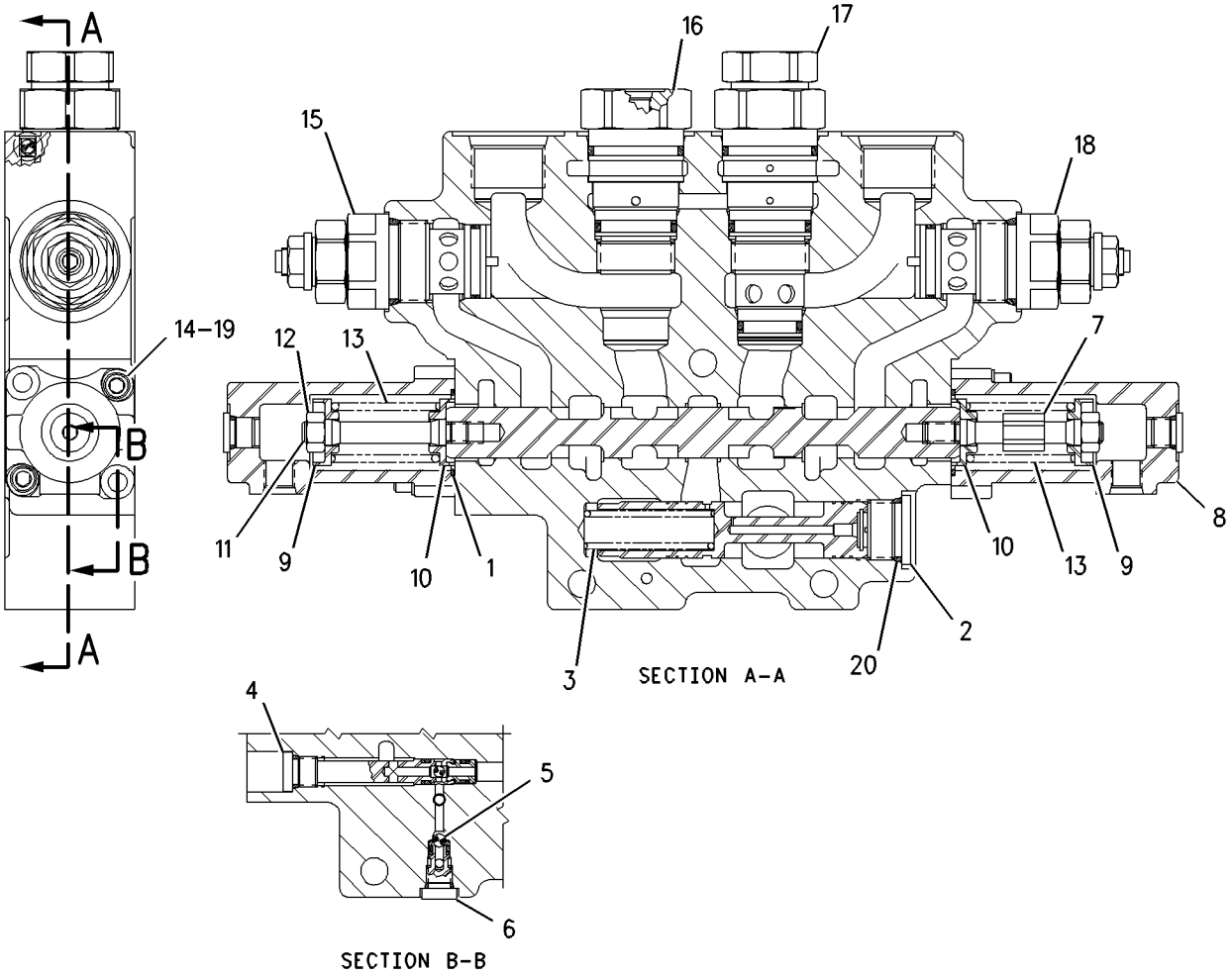

GRAPHIC #1 **<END>** g00833445

201-0669 VALVE GP-CONTROL

S/N: FDP18400-UP

PART OF 201-0665 VALVE GP-BANK 4, 201-0666 VALVE GP-BANK 5, 201-0667 VALVE GP-BANK 6

AN ATTACHMENT

SMCS-5051 **i01644676**

NOTE	REF NO	GRAPHIC REF	PART NUMBER	QTY	PART NAME 1 2 3 4 5 6 (PRODUCT LEVEL)	SEE PAGE
	1	1	**003-8137**	2	SEAL-O-RING	
	2	1	**9S-8006**	1	PLUG	
	3	1	**197-2709**	1	SPRING	
	4	1	**126-5796**	1	HOUSING GP	
		1	**1P-7363**	1	SEAL-O-RING	
		1	**3J-7354**	1	SEAL-O-RING	
		1	**8T-2361**	1	SEAL-O-RING	
		1	**126-5984**	1	RING-BACKUP	
		1	**126-5985**	1	RING-BACKUP	
	5	1	**5B-9318**	1	BALL	
	6	1	**126-5476**	1	SEAT AS-SHUTTLE	
		1	**4T-7807**	1	RING-BACKUP	
		1	**7J-0204**	1	SEAL-O-RING	
		1	**8T-2360**	1	SEAL-O-RING	
	7	1	**114-1973**	1	COUPLING	
	8	1	**197-3222**	2	HOUSING	
	9	1	**156-1267**	2	RETAINER	
	10	1	**207-2255**	2	RETAINER	
	11	1	**114-1972**	1	COUPLING	
	12	1	**5S-0003**	2	NUT (5/16-18 THD)	
	13	1	**200-6382**	2	SPRING	
	14	1	**9X-8267**	4	WASHER (6.6X12X2MM THK)	
	15	1	**187-0529**	1	VALVE GP-RELIEF	
		1	**4K-1388**	1	SEAL-O-RING	
		1	**5K-9090**	1	SEAL-O-RING	
		1	**6E-0358**	1	RING-BACKUP	
Y	16	1	**213-4072**	1	VALVE GP-CHECK	532
	17	1	**206-5107**	1	PLUG AS	
		1	**197-1742**	1	PLUG	
		1	**4K-1388**	1	SEAL-O-RING	
		1	**6E-0358**	1	RING-BACKUP	
		1	**5K-9090**	1	SEAL-O-RING	
	18	1	**187-0528**	1	VALVE GP-RELIEF	
	19	1	**8H-0707**	4	BOLT (1/4-20X1 IN)	
	20	1	**2M-9780**	1	SEAL-O-RING	

Y-SEPARATE ILLUSTRATION

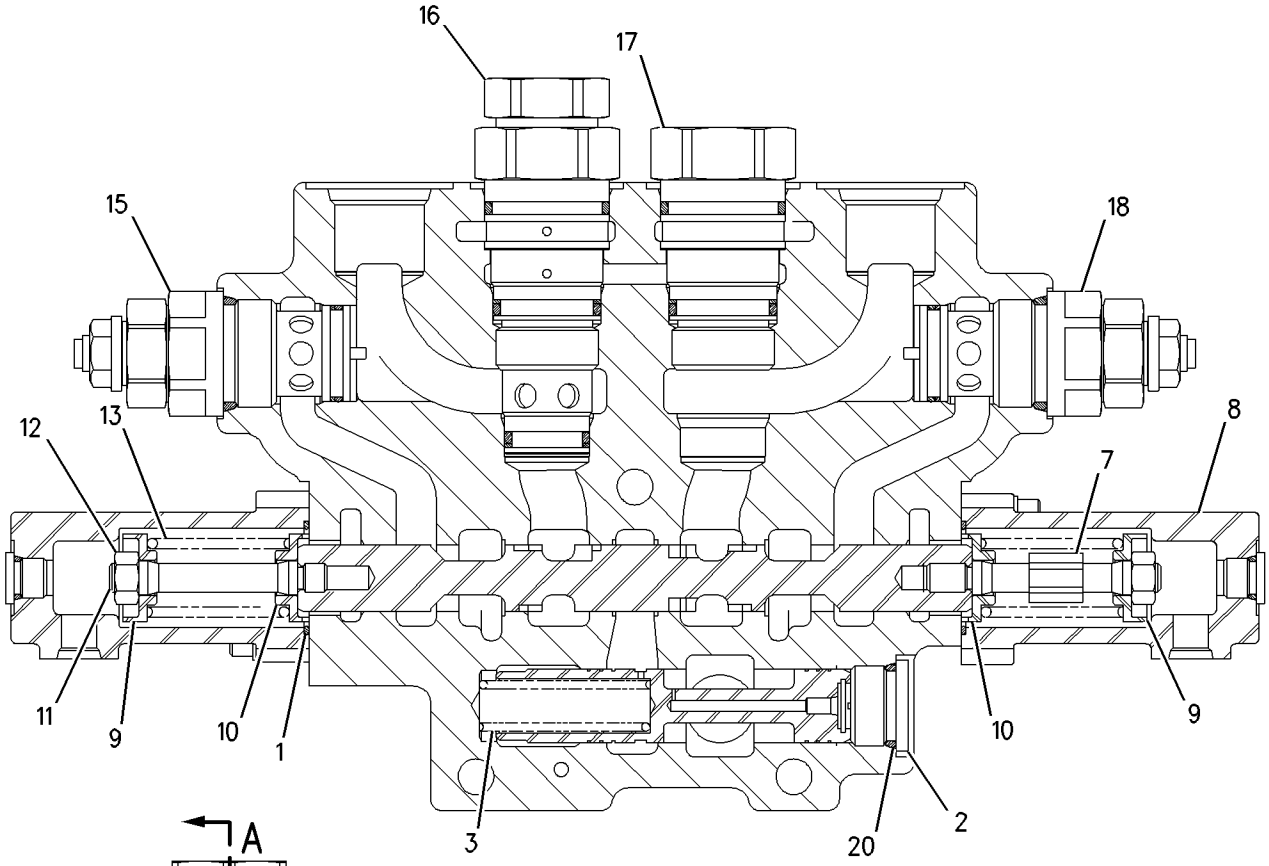

SECTION A-A

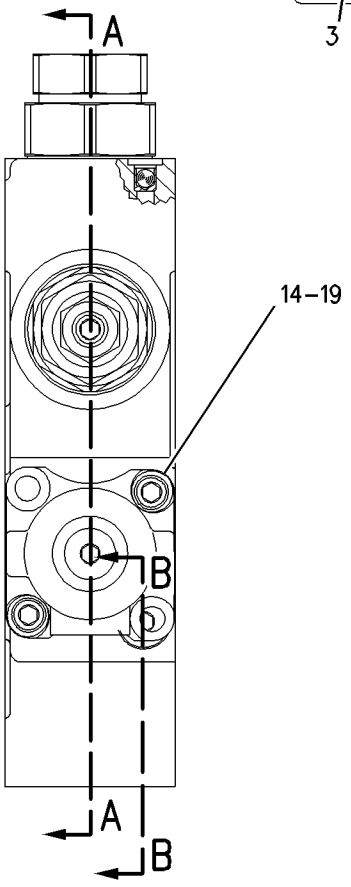

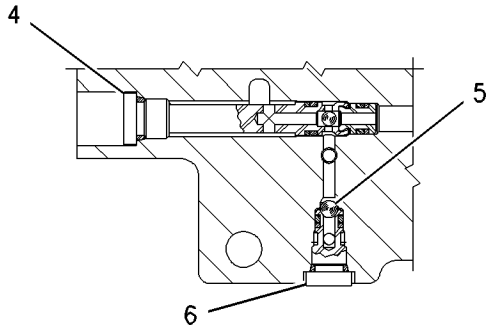

SECTION B-B

GRAPHIC #1 **<END>** g00850414

201-5357 VALVE GP-CONTROL

S/N: FDP18400-UP
SWING
PART OF 201-0665 VALVE GP-BANK 4, 201-0666 VALVE GP-BANK 5, 201-0667 VALVE GP-BANK 6
AN ATTACHMENT

SMCS-5051 **i01702228**

NOTE	REF NO	GRAPHIC REF	PART NUMBER	QTY	PART NAME 1 2 3 4 5 6 (PRODUCT LEVEL)	SEE PAGE
	1	1	**003-8137**	2	SEAL-O-RING	
	2	1	**9S-8006**	1	PLUG	
	3	1	**133-0116**	1	STEM	
	4	1	**6E-4317**	1	SPRING	
	5	1	**126-5796**	1	HOUSING GP	
		1	**1P-7363**	1	SEAL-O-RING	
		1	**3J-7354**	1	SEAL-O-RING	
		1	**8T-2361**	1	SEAL-O-RING	
		1	**126-5984**	1	RING-BACKUP	
		1	**126-5985**	1	RING-BACKUP	
	6	1	**5B-9318**	1	BALL	
	7	1	**126-5476**	1	SEAT AS-SHUTTLE	
		1	**4T-7807**	1	RING-BACKUP	
		1	**7J-0204**	1	SEAL-O-RING	
		1	**8T-2360**	1	SEAL-O-RING	
	8	1	**197-1743**	1	PLUG-ORIFICE	
	9	1	**197-3225**	2	SPACER	
	10	1	**197-3222**	2	HOUSING	
	11	1	**6E-0131**	2	WASHER	
	12	1	**114-3906**	2	RETAINER	
	13	1	**5S-0003**	2	NUT (5/16-18 THD)	
	14	1	**197-3637**	2	SPRING	
	15	1	**9X-8267**	4	WASHER (6.6X12X2MM THK)	
	16	1	**137-9466**	2	VALVE GP-RELIEF	
					(EACH INCLUDES)	
		1	**147-1689**	1	CARRIER-SEAL	
	17	1	**2M-9780**	1	SEAL-O-RING	
	18	1	**8H-0707**	4	BOLT (1/4-20X1 IN)	

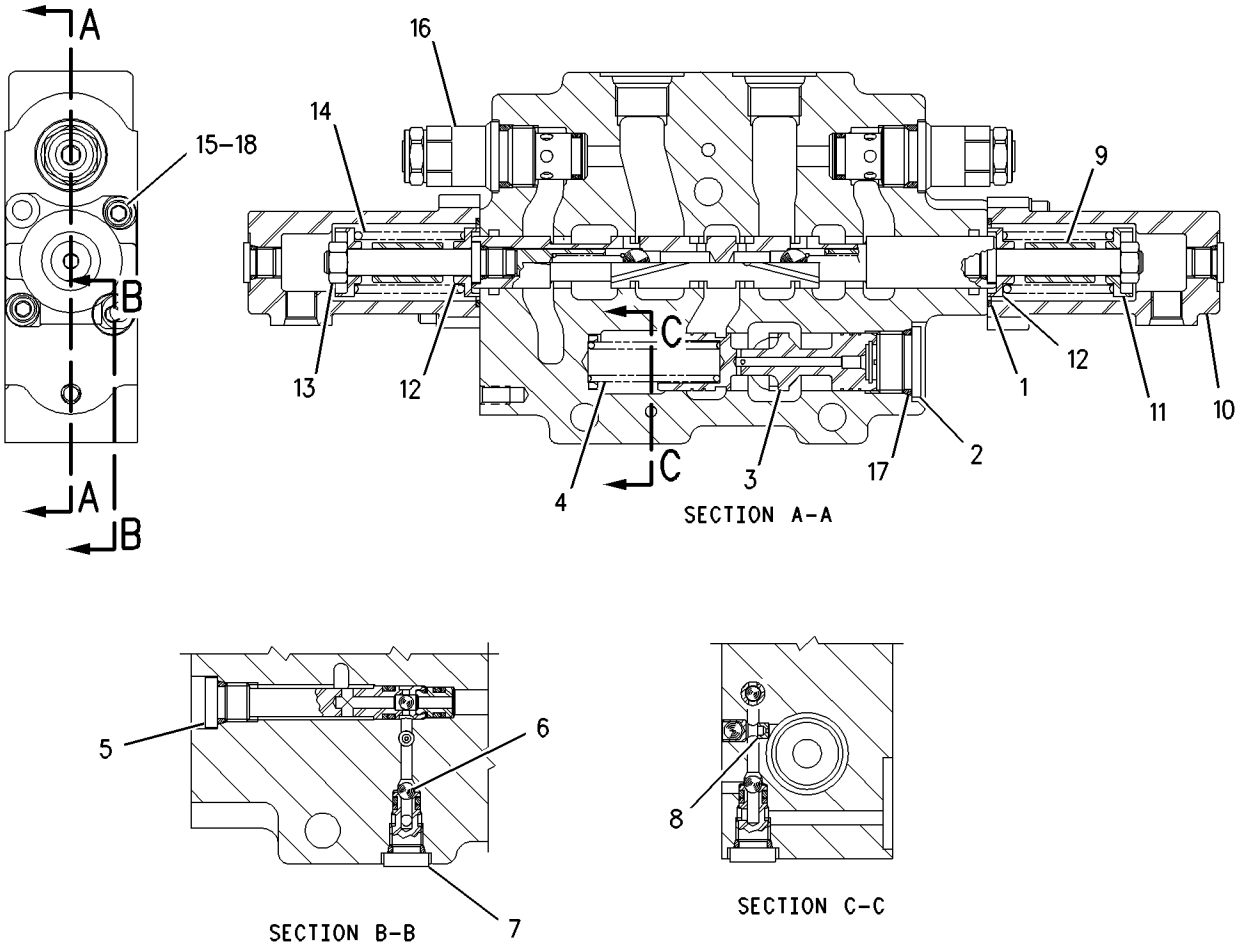

GRAPHIC #1 **<END>** g00882458

201-5358 VALVE GP-CONTROL

S/N: FDP18400-UP

BUCKET

PART OF 201-0665 VALVE GP-BANK 4, 201-0666 VALVE GP-BANK 5, 201-0667 VALVE GP-BANK 6

AN ATTACHMENT

SMCS-5051 **i01635844**

NOTE	REF NO	GRAPHIC REF	PART NUMBER	QTY	PART NAME 1 2 3 4 5 6 (PRODUCT LEVEL)	SEE PAGE
	1	1	**003-8137**	2	SEAL-O-RING	
	2	1	**9S-8006**	1	PLUG	
	3	1	**197-2709**	1	SPRING	
	4	1	**126-5796**	1	HOUSING GP	
		1	**1P-7363**	1	SEAL-O-RING	
		1	**3J-7354**	1	SEAL-O-RING	
		1	**8T-2361**	1	SEAL-O-RING	
		1	**126-5984**	1	RING-BACKUP	
		1	**126-5985**	1	RING-BACKUP	
	5	1	**5B-9318**	1	BALL	
	6	1	**126-5476**	1	SEAT AS-SHUTTLE	
		1	**4T-7807**	1	RING-BACKUP	
		1	**7J-0204**	1	SEAL-O-RING	
		1	**8T-2360**	1	SEAL-O-RING	
	7	1	**114-1973**	1	COUPLING	
	8	1	**197-3222**	2	HOUSING	
	9	1	**6E-0131**	2	WASHER	
	10	1	**114-3906**	2	RETAINER	
	11	1	**200-6382**	2	SPRING	
	12	1	**114-1972**	1	COUPLING	
	13	1	**5S-0003**	2	NUT (5/16-18 THD)	
	14	1	**9X-8267**	4	WASHER (6.6X12X2MM THK)	
	15	1	**187-0527**	1	VALVE GP-RELIEF	
		1	**3K-0360**	1	SEAL-O-RING	
		1	**4K-1388**	1	SEAL-O-RING	
		1	**5K-9090**	1	SEAL-O-RING	
		1	**6E-0358**	1	RING-BACKUP	
	16	1	**187-0524**	1	VALVE GP-RELIEF	
		1	**3K-0360**	1	SEAL-O-RING	
		1	**4K-1388**	1	SEAL-O-RING	
		1	**5K-9090**	1	SEAL-O-RING	
		1	**6E-0358**	1	RING-BACKUP	
	17	1	**2M-9780**	1	SEAL-O-RING	
	18	1	**8H-0707**	4	BOLT (1/4-20X1 IN)	

201-5358 VALVE GP-CONTROL ***(contd.)*** **i01635844**

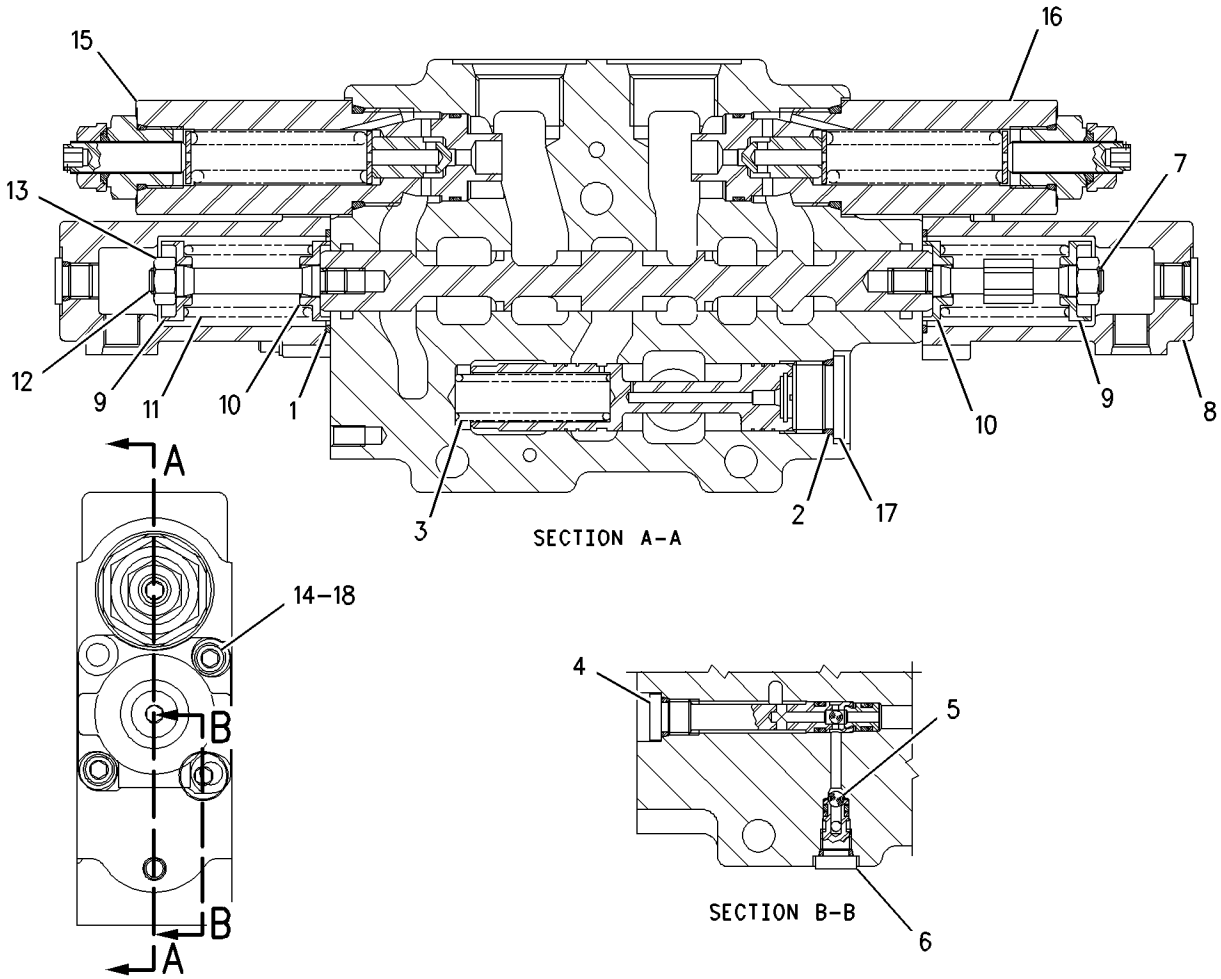

GRAPHIC #1 **<END>** g00848652

HYDRAULIC SYSTEM

201-5377 VALVE GP-CONTROL–TILT

S/N: FDP18400-UP

PART OF 200-7827 VALVE GP-BANK 2, 200-7828 VALVE GP-BANK 3

AN ATTACHMENT

SMCS-5051 **i01644359**

NOTE	REF NO	GRAPHIC REF	PART NUMBER	QTY	PART NAME 1 2 3 4 5 6 (PRODUCT LEVEL)	SEE PAGE
	1	1	**195-2139**	2	SEAL-O-RING	
	2	1	**9S-8006**	1	PLUG	
	3	1	**133-0116**	1	STEM	
	4	1	**6E-4317**	1	SPRING	
	5	1	**114-5030**	1	SPRING	
	6	1	**155-9836**	1	VALVE GP-RELIEF	
		1	**1P-7363**	1	SEAL-O-RING	
		1	**3J-7354**	1	SEAL-O-RING	
		1	**8T-2361**	1	SEAL-O-RING	
		1	**126-5984**	1	RING-BACKUP	
		1	**126-5985**	1	RING-BACKUP	
	7	1	**5B-9318**	1	BALL	
	8	1	**126-5476**	1	SEAT AS-SHUTTLE	
		1	**4T-7807**	1	RING-BACKUP	
		1	**7J-0204**	1	SEAL-O-RING	
		1	**8T-2360**	1	SEAL-O-RING	
	9	1	**210-6171**	1	VALVE GP-RELIEF	
		1	**4D-2297**	1	SEAL-O-RING	
		1	**033-6027**	1	SEAL-O-RING	
	10	1	**109-9685**	1	SEAL-O-RING	
	11	1	**4T-4521**	2	RETAINER	
	12	1	**208-5673**	1	SHAFT	
	13	1	**3E-8620**	1	COIL AS-SOLENOID	
		1	**1S-9593**	2	STRAP-CABLE	
		1	**102-8802**	1	KIT-RECEPTACLE (2 PIN)	
					(KIT SERVICES PLUG AS AND WEDGE)	
	14	1	**9T-7309**	1	PLATE	
	15	1	**5P-0537**	2	WASHER-HARD (7.2X14.5X2MM THK)	
	16	1	**1B-2718**	2	BOLT (1/4-20X6IN)	
	17	1	**5L-9023**	1	RING-RETAINING	
	18	1	**133-8689**	1	HOUSING	
	19	1	**9T-0644**	1	SPRING	
	20	1	**128-2776**	1	GASKET	
	21	1	**100-3567**	1	HOUSING-DETENT	
	22	1	**4T-4513**	1	SPRING	
	23	1	**208-5674**	1	SPACER	
	24	1	**197-3698**	2	SEAL-O-RING	
	25	1	**6E-6285**	1	VALVE GP-RELIEF	
		1	**4K-1388**		SEAL-O-RING	
		1	**5K-9090**		SEAL-O-RING	
		1	**6E-0358**		RING-BACKUP	
	26	1	**204-4313**	1	VALVE GP-RELIEF	
	27	1	**031-0214**	2	BOLT-LOCKING (1/4-20X0.5 IN)	
	28	1	**4T-4524**	1	GUARD-DUST	
	29	1	**4T-4528**	1	RETAINER	
	30	1	**4T-4520**	1	FILTER	
	31	1	**197-3121**	1	RING-GUIDE	
	32	1	**2M-9780**	1	SEAL-O-RING	

201-5377 VALVE GP-CONTROL *(contd.)* i01644359

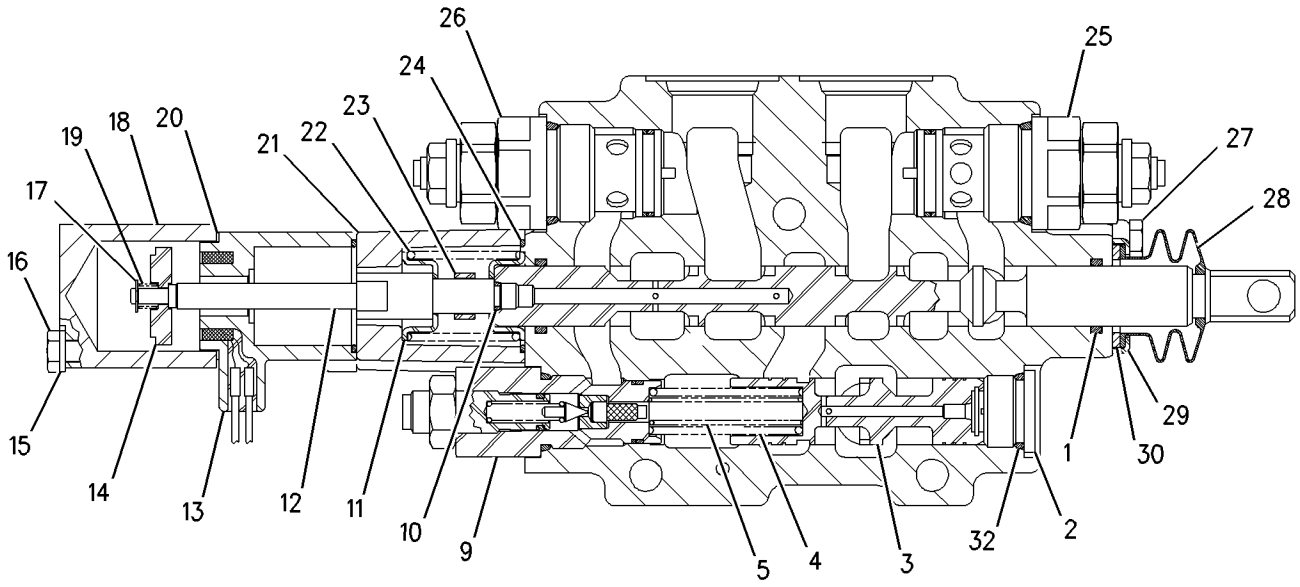

SECTION A-A

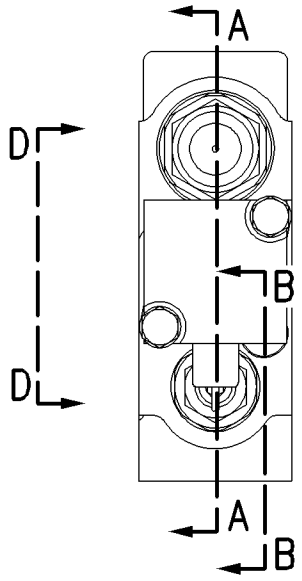

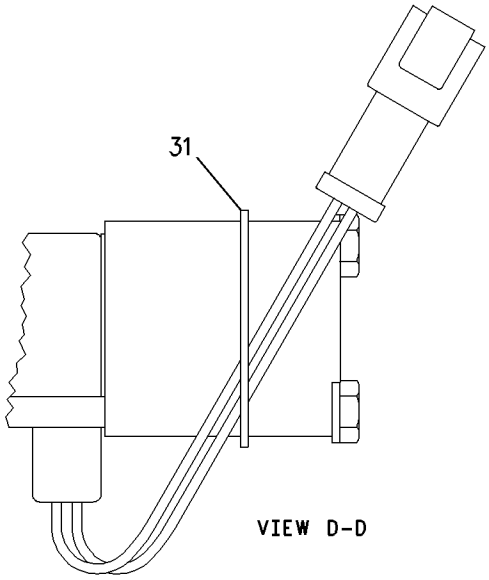

VIEW D-D

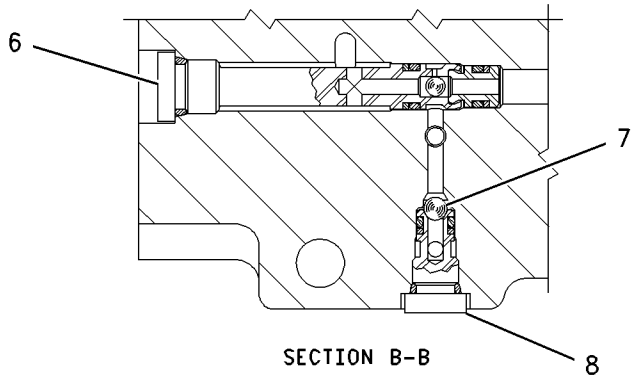

SECTION B-B

GRAPHIC #1 **<END>** g00847227

9T-5455 VALVE GP-LOAD CONTROL

S/N: FDP18400-UP
PART OF 183-8559 LINES GP-LOAD CONTROL VALVE
AN ATTACHMENT

SMCS-5811 **i00730502**

NOTE	REF NO	GRAPHIC REF	PART NUMBER	QTY	PART NAME 1 2 3 4 5 6 (PRODUCT LEVEL)	SEE PAGE
	1	1	**106-9427**	1	VALVE GP-SEQUENCE	
		1	**6E-4753**	1	KIT-SEAL	
	2	1	**9S-8002**	4	PLUG-O-RING (7/16-20 THD)	
	3	1	**3J-7354**	4	SEAL-O-RING (8.92MM ID)	
	4	1	**106-9430**	1	VALVE GP-CHECK	
J		1	**2M-9780**	1	SEAL-O-RING (19.18MM ID)	
J		1	**4M-6582**	1	SEAL-O-RING (15.88MM ID)	
J		1	**5P-2199**	1	RING-BACKUP	
J		1	**6E-3583**	1	KIT-SEAL	
CY	5	1	**150-5150**	1	VALVE GP-LOAD CONTROL	557
	6	1	**9S-8007**	2	PLUG-O-RING (3/8-24 THD)	
	7	1	**7J-0204**	2	SEAL-O-RING (7.65MM ID)	
	8	1	**4J-9780**	1	PLUG-ORIFICE	
	9	1	**7Y-4224**	1	ORIFICE	
	10	1	**9S-8004**	2	PLUG-O-RING (9/16-18 THD)	
	11	1	**3J-1907**	2	SEAL-O-RING (11.89MM ID)	

C-CHANGE FROM PREVIOUS TYPE
J-PARTS MARKED J INCLUDED IN KIT MARKED J
Y-SEPARATE ILLUSTRATION

9T-5455 VALVE GP-LOAD CONTROL *(contd.)* i00730502

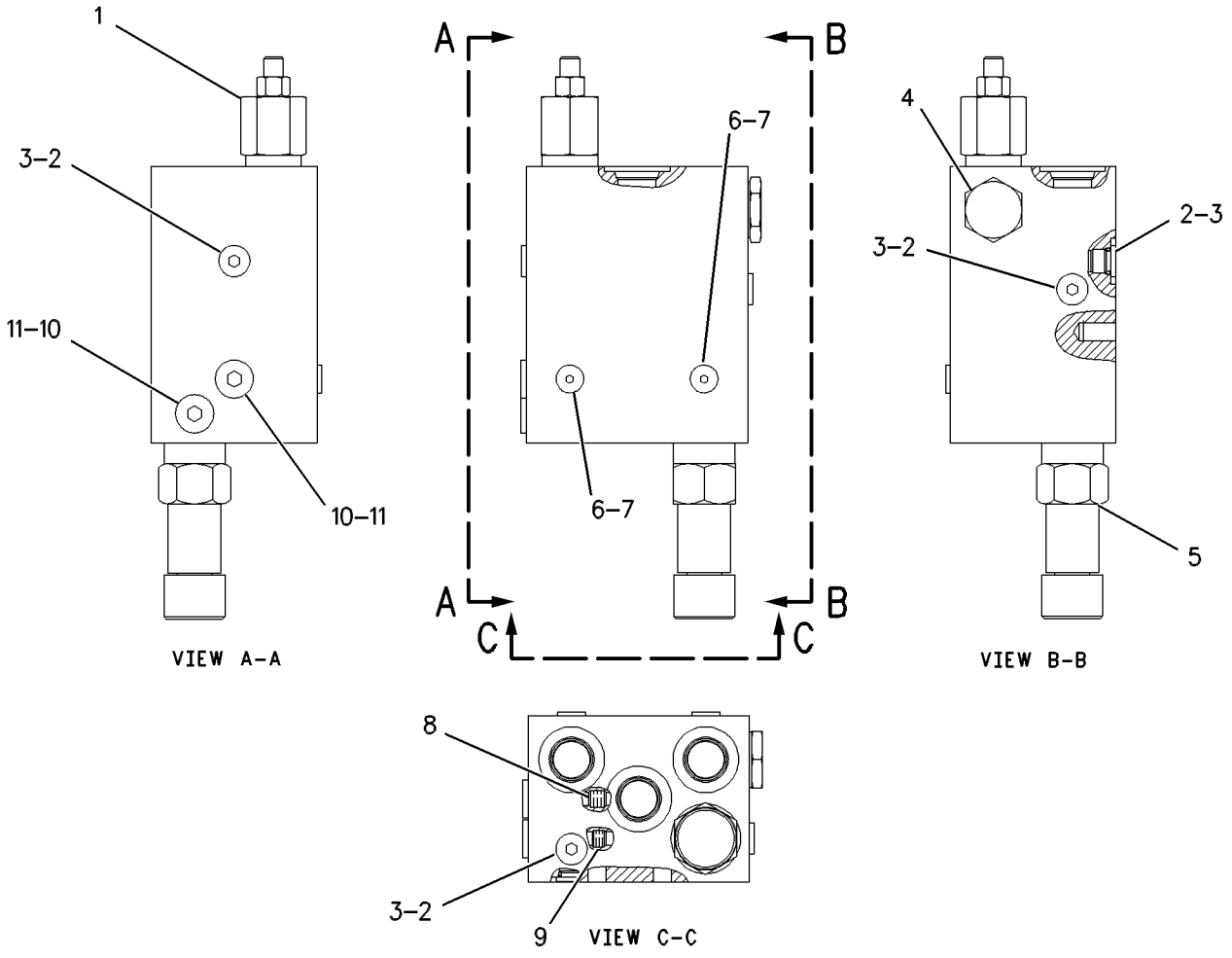

GRAPHIC #1

<END>

g00324416

150-5150 VALVE GP-LOAD CONTROL

S/N: FDP18400-UP
PART OF 9T-5455 VALVE GP-LOAD CONTROL
AN ATTACHMENT

SMCS-5811 **i01782692**

NOTE	REF NO	GRAPHIC REF	PART NUMBER	QTY	PART NAME 1 2 3 4 5 6 (PRODUCT LEVEL)	SEE PAGE
	1	1	**2M-9780**	1	SEAL-O-RING	
	2	1	**6V-8399**	2	SEAL-O-RING	
	3	1	**149-4091**	3	RING-BACKUP	

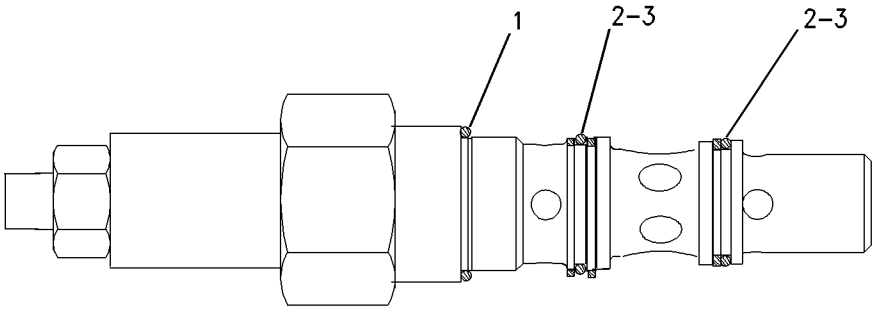

GRAPHIC #1 **<END>** g00911856

185-5900 VALVE GP-PILOT

S/N: FDP18400-UP
BODY
PART OF 209-4165 STABILIZER AR
AN ATTACHMENT

SMCS-5059 **i01472362**

NOTE	REF NO	GRAPHIC REF	PART NUMBER	QTY	PART NAME 1 2 3 4 5 6 (PRODUCT LEVEL)	SEE PAGE
Y	1	1	**198-6555**	1	VALVE GP-PILOT	561
Y	2	1	**198-6556**	1	VALVE GP-PILOT	562
	3	1	**198-6515**	1	KIT-SEAL	
M	4	1	**7I-8935**	2	BOLT-SOCKET HEAD (M8X1.25X75MM)	
M	5	1	**176-8541**	2	NUT	

M-METRIC PART
Y-SEPARATE ILLUSTRATION

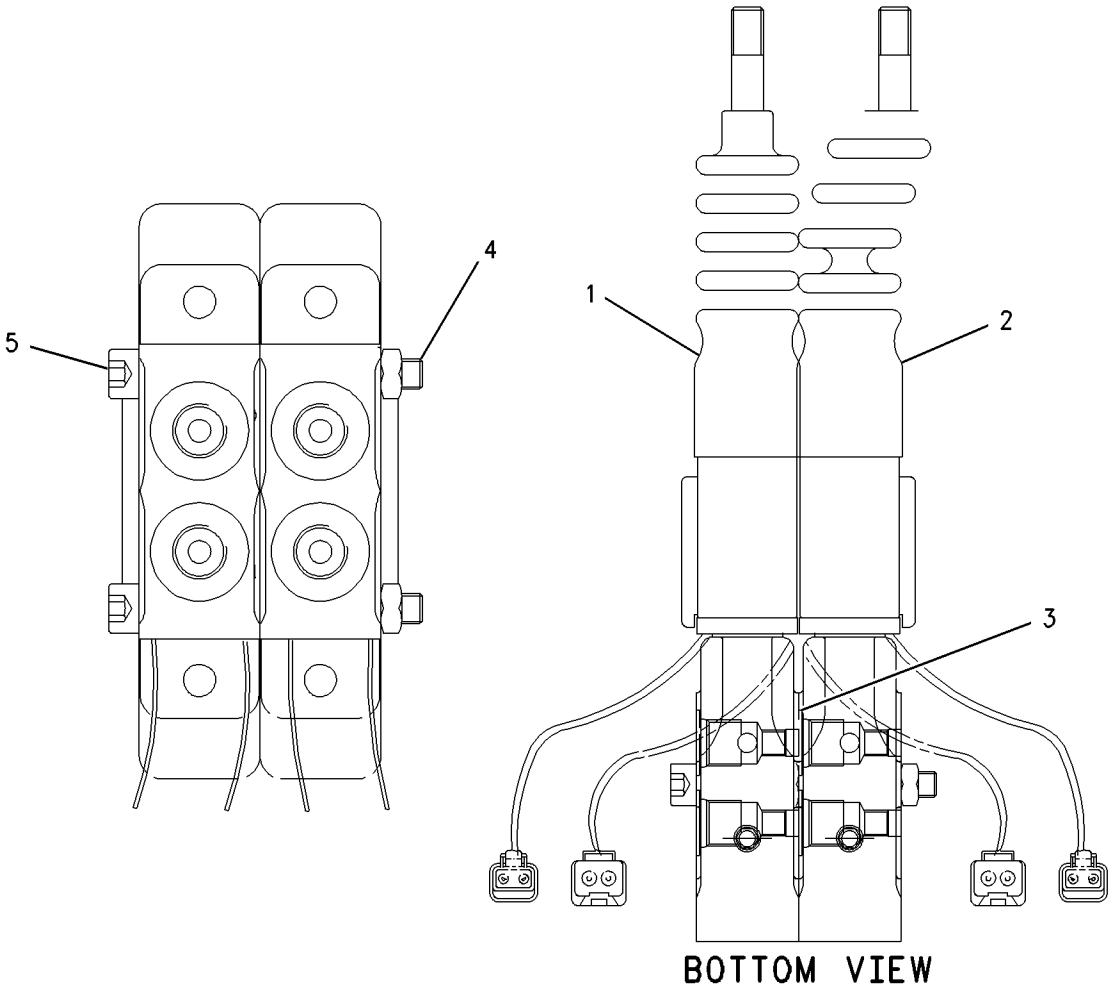

GRAPHIC #1 **<END>** g00755928

185-5901 VALVE GP-PILOT–STABILIZER

S/N: FDP18400-UP
PART OF 209-4174 STABILIZER AR
AN ATTACHMENT

SMCS-5059 **i01472367**

NOTE	REF NO	GRAPHIC REF	PART NUMBER	QTY	PART NAME 1 2 3 4 5 6 (PRODUCT LEVEL)	SEE PAGE
Y	1	1	*200-1722*	1	VALVE GP-PILOT	565
Y	2	1	*200-1723*	1	VALVE GP-PILOT	566
	3	1	**198-6515**	1	KIT-SEAL	
M	4	1	**7I-8935**	2	BOLT-SOCKET HEAD (M8X1.25X75MM)	
M	5	1	**176-8541**	2	NUT	

M-METRIC PART
Y-SEPARATE ILLUSTRATION

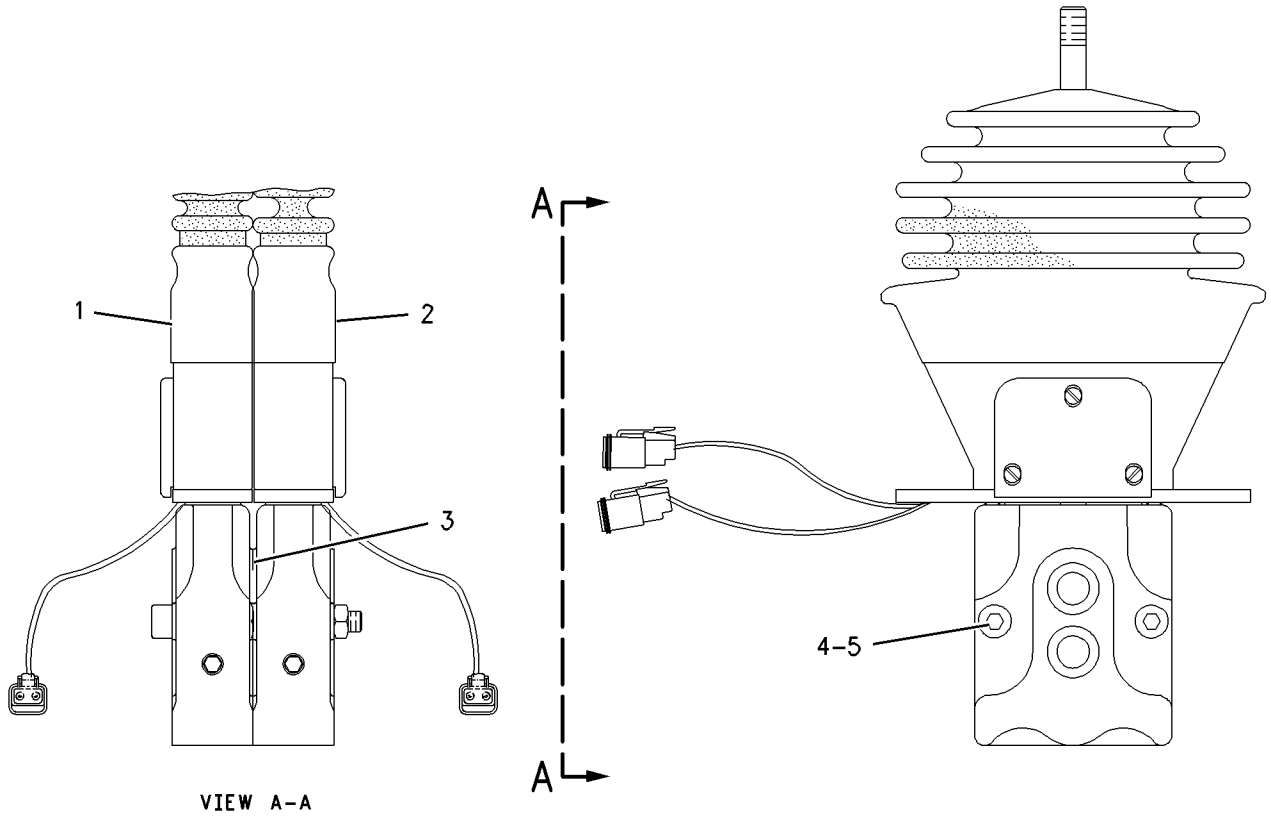

VIEW A-A

GRAPHIC #1 **<END>** g00754472

HYDRAULIC SYSTEM

185-5902 VALVE GP-PILOT–STABILIZER

S/N: FDP18400-UP
PART OF 209-4172 STABILIZER AR
AN ATTACHMENT

SMCS-5059 **i01533770**

NOTE	REF NO	GRAPHIC REF	PART NUMBER	QTY	PART NAME 1 2 3 4 5 6 (PRODUCT LEVEL)	SEE PAGE
Y	1	1	**200-1726**	1	VALVE GP-PILOT	567
Y	2	1	**200-1728**	1	VALVE GP-PILOT	568
	3	1	**198-6515**	1	KIT-SEAL	
M	4	1	**7I-8935**	2	BOLT-SOCKET HEAD (M8X1.25X75MM)	
M	5	1	**176-8541**	2	NUT	

M-METRIC PART
Y-SEPARATE ILLUSTRATION

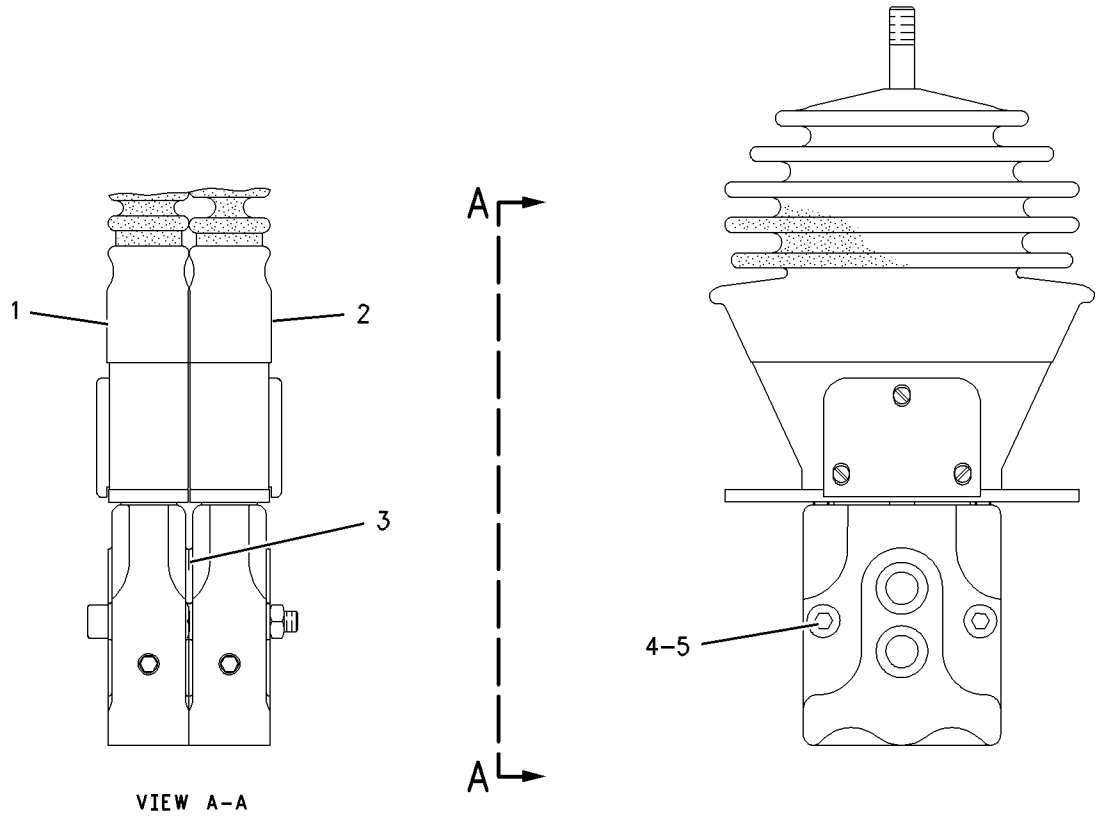

GRAPHIC #1 **<END>** g00754474

198-6555 VALVE GP-PILOT–STABILIZER

S/N: FDP18400-UP
PART OF 185-5900 VALVE GP-PILOT
AN ATTACHMENT

SMCS-5059 **i01696221**

NOTE	REF NO	GRAPHIC REF	PART NUMBER	QTY	PART NAME 1 2 3 4 5 6 (PRODUCT LEVEL)	SEE PAGE
	1	1	**198-6498**	1	BOOT	
	2	1	**198-6522**	1	KIT-LEVER	
	3	1	**198-6516**	1	KIT-SWITCH	
	4	1	**198-6505**	1	KIT-COIL	
Y	5	1	**198-7377**	1	VALVE GP-PILOT	563
	6	1	**116-4481**	1	PLATE	
	7	1	**202-3263**	1	SEAL	

Y-SEPARATE ILLUSTRATION

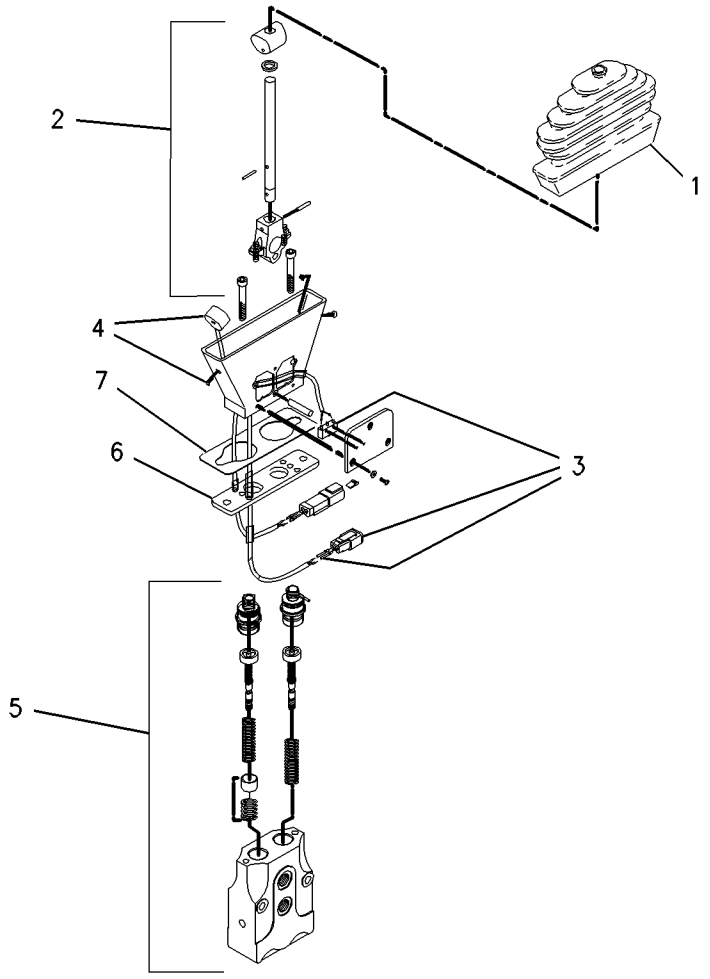

GRAPHIC #1 **<END>** g00775268

198-6556 VALVE GP-PILOT–STABILIZER

S/N: FDP18400-UP
PART OF 185-5900 VALVE GP-PILOT
AN ATTACHMENT

SMCS-5059 **i01696244**

NOTE	REF NO	GRAPHIC REF	PART NUMBER	QTY	PART NAME 1 2 3 4 5 6 (PRODUCT LEVEL)	SEE PAGE
	1	1	**198-6498**	1	BOOT	
	2	1	**198-6499**	1	KIT-LEVER	
	3	1	**198-6505**	1	KIT-COIL	
	4	1	**198-6516**	1	KIT-SWITCH	
Y	5	1	**200-0937**	1	VALVE GP-PILOT	564
	6	1	**116-4481**	1	PLATE	
	7	1	**202-3263**	1	SEAL	

Y-SEPARATE ILLUSTRATION

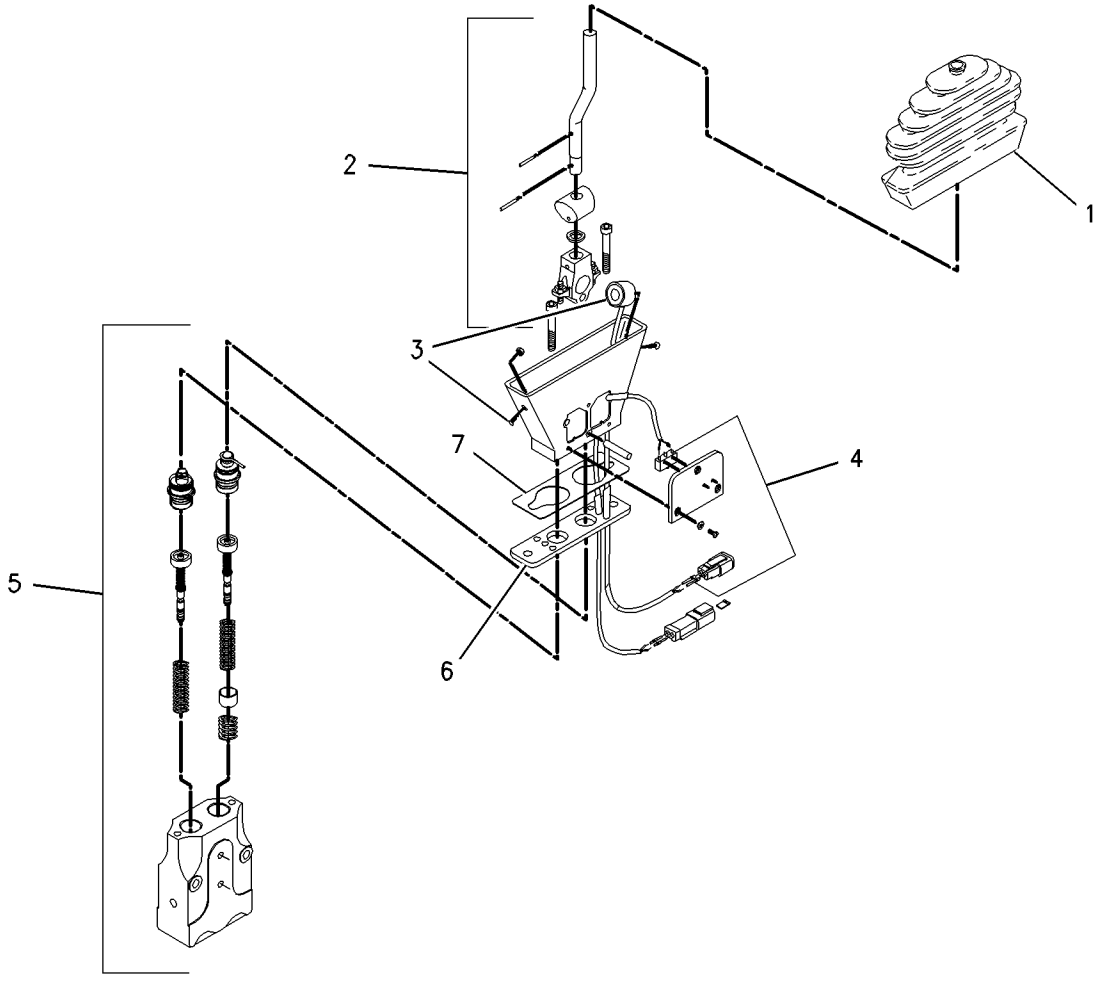

GRAPHIC #1 **<END>** g00775274

198-7377 VALVE GP-PILOT–STABILIZER

S/N: FDP18400-UP
PART OF 198-6555 VALVE GP-PILOT
AN ATTACHMENT

SMCS-5059 **i01637649**

NOTE	REF NO	GRAPHIC REF	PART NUMBER	QTY	PART NAME 1 2 3 4 5 6 (PRODUCT LEVEL)	SEE PAGE
	1	1	**198-6506**	1	KIT-PLUNGER	
	2	1	**198-6511**	1	KIT-REGULATOR	
	3	1	**198-6512**	1	KIT-REGULATOR	
	4	1	**158-4466**	1	KIT-SPRING	
	5	1	**8U-9427**	1	KIT-REPAIR	
	6	1	**198-6514**	1	KIT-SENSOR	

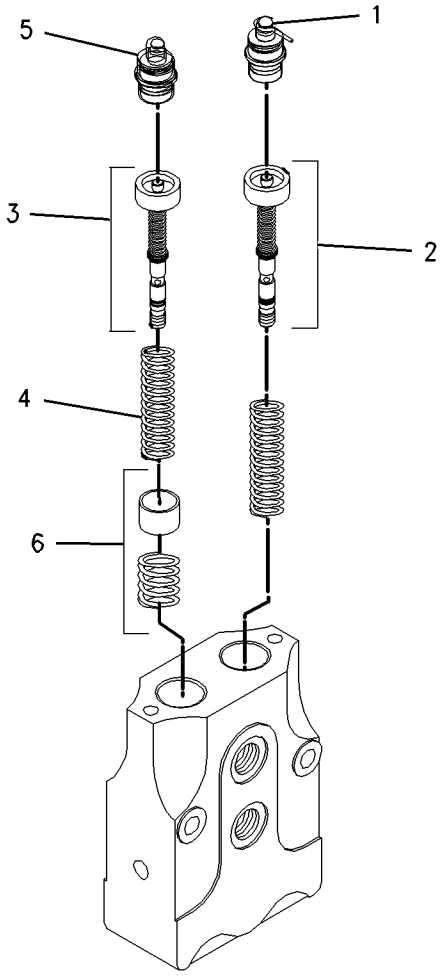

GRAPHIC #1 **<END>** g00842693

200-0937 VALVE GP-PILOT–STABILIZER

S/N: FDP18400-UP
PART OF 198-6556 VALVE GP-PILOT
AN ATTACHMENT

SMCS-5059 **i01595994**

NOTE	REF NO	GRAPHIC REF	PART NUMBER	QTY	PART NAME 1 2 3 4 5 6 (PRODUCT LEVEL)	SEE PAGE
	1	1	**8U-9427**	2	KIT-REPAIR	
	2	1	**198-6514**	1	KIT-SENSOR	
	3	1	**198-6511**	1	KIT-REGULATOR	
	4	1	**198-6512**	1	KIT-REGULATOR	
	5	1	**158-4466**	1	KIT-SPRING	

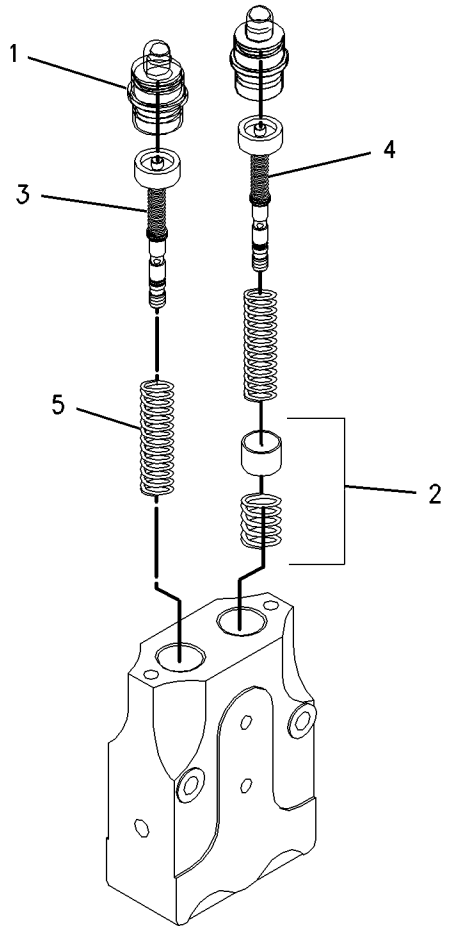

GRAPHIC #1 **<END>** g00827172

200-1722 VALVE GP-PILOT–STABILIZER

S/N: FDP18400-UP
PART OF 185-5901 VALVE GP-PILOT
AN ATTACHMENT

SMCS-5059 **i01669085**

NOTE	REF NO	GRAPHIC REF	PART NUMBER	QTY	PART NAME 1 2 3 4 5 6 (PRODUCT LEVEL)	SEE PAGE
	1	1	**198-6498**	1	BOOT	
	2	1	**200-4020**	1	KIT-LEVER	
	3	1	**198-6516**	1	KIT-SWITCH	
	4	1	**200-1724**	1	VALVE GP-PILOT	
	4A	1	**200-4019**	2	KIT-PLUNGER	
	4B	1	**198-6511**	2	KIT-REGULATOR	
	4C	1	**198-6513**	2	KIT-SPRING	
	5	1	**116-4481**	1	PLATE	
	6	1	**202-3263**	1	SEAL	

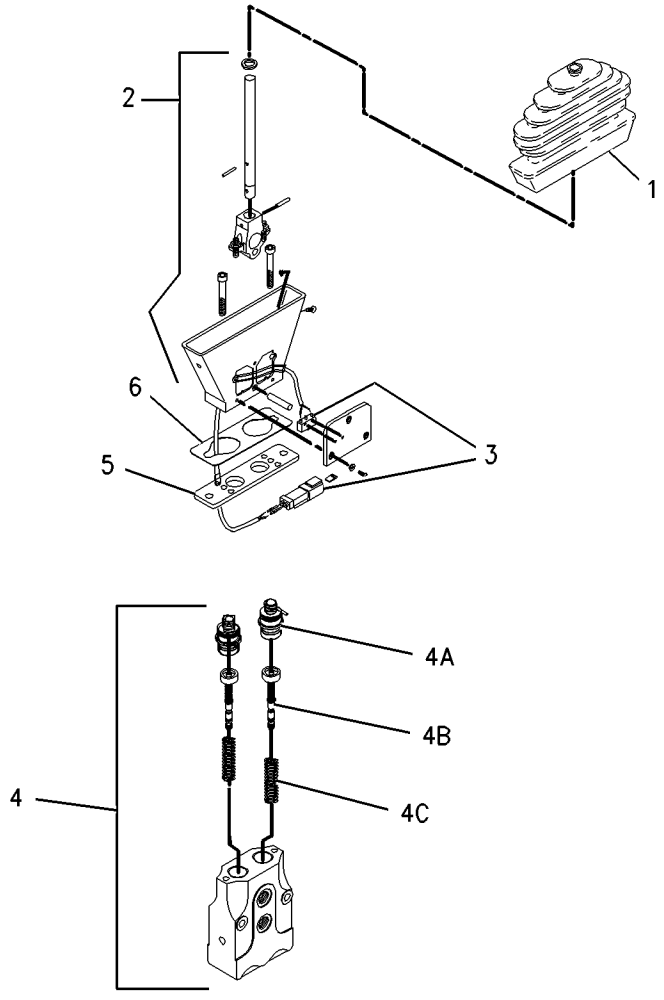

GRAPHIC #1 **<END>** g00778194

200-1723 VALVE GP-PILOT–STABILIZER

S/N: FDP18400-UP
PART OF 185-5901 VALVE GP-PILOT
AN ATTACHMENT

SMCS-5059 **i01669088**

NOTE	REF NO	GRAPHIC REF	PART NUMBER	QTY	PART NAME 1 2 3 4 5 6 (PRODUCT LEVEL)	SEE PAGE
	1	1	**198-6498**	1	BOOT	
	2	1	**200-4021**	1	KIT-LEVER	
	3	1	**198-6516**	1	KIT-SWITCH	
	4	1	**200-1725**	1	VALVE GP-PILOT	
	4A	1	**198-6506**	1	KIT-PLUNGER	
	4B	1	**198-6511**	2	KIT-REGULATOR	
	4C	1	**198-6513**	2	KIT-SPRING	
	4D	1	**200-4019**	1	KIT-PLUNGER	
	5	1	**116-4481**	1	PLATE	
	6	1	**202-3263**	1	SEAL	

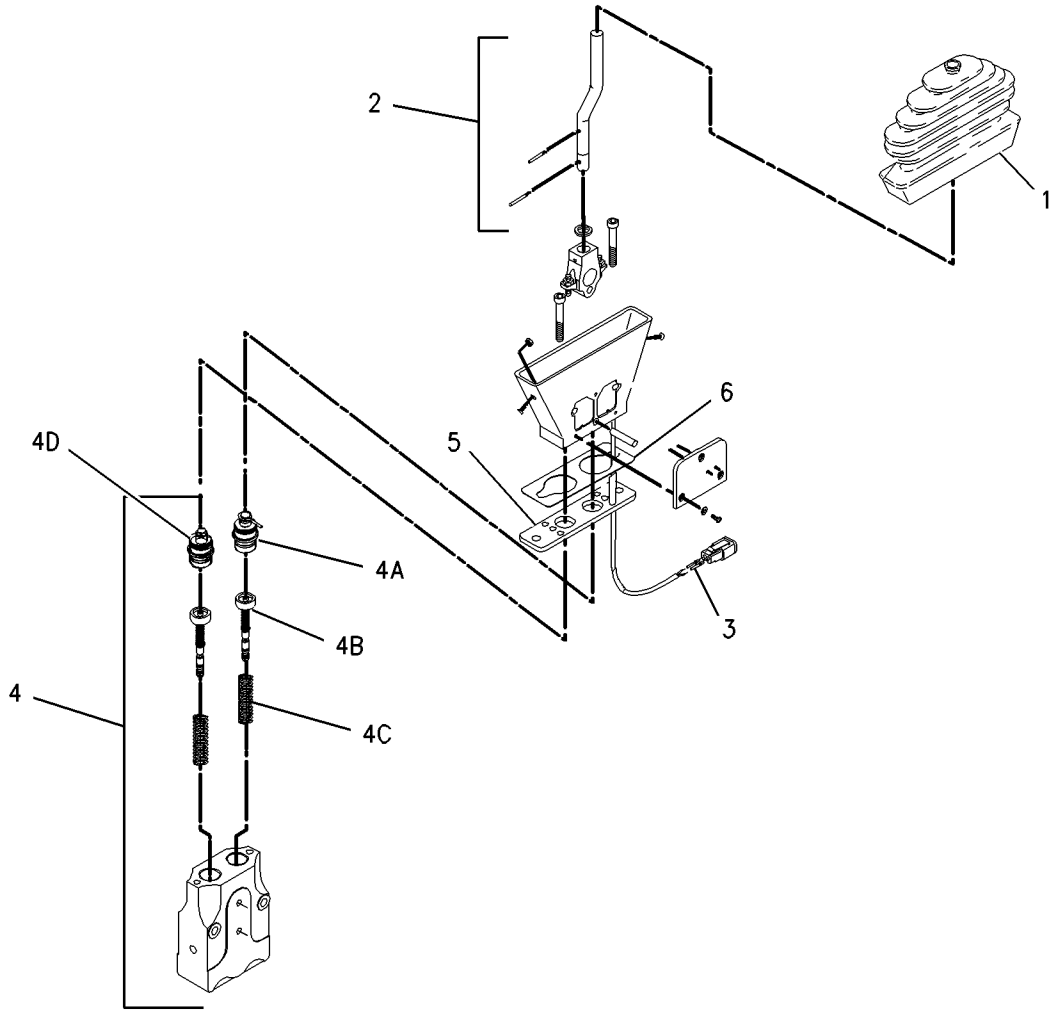

GRAPHIC #1 **<END>** g00778201

200-1726 VALVE GP-PILOT–STABILIZER

S/N: FDP18400-UP
PART OF 185-5902 VALVE GP-PILOT
AN ATTACHMENT

SMCS-5059 **i01696254**

NOTE	REF NO	GRAPHIC REF	PART NUMBER	QTY	PART NAME 1 2 3 4 5 6 (PRODUCT LEVEL)	SEE PAGE
	1	1	**198-6498**	1	BOOT	
	2	1	**200-4023**	1	KIT-LEVER	
	3	1	**200-4025**	1	VALVE GP-PILOT	
	3A	1	**200-4019**	2	KIT-PLUNGER	
	3B	1	**198-6511**	2	KIT-REGULATOR	
	3C	1	**198-6513**	2	KIT-SPRING	
	4	1	**116-4481**	1	PLATE	
	5	1	**202-3263**	1	SEAL	

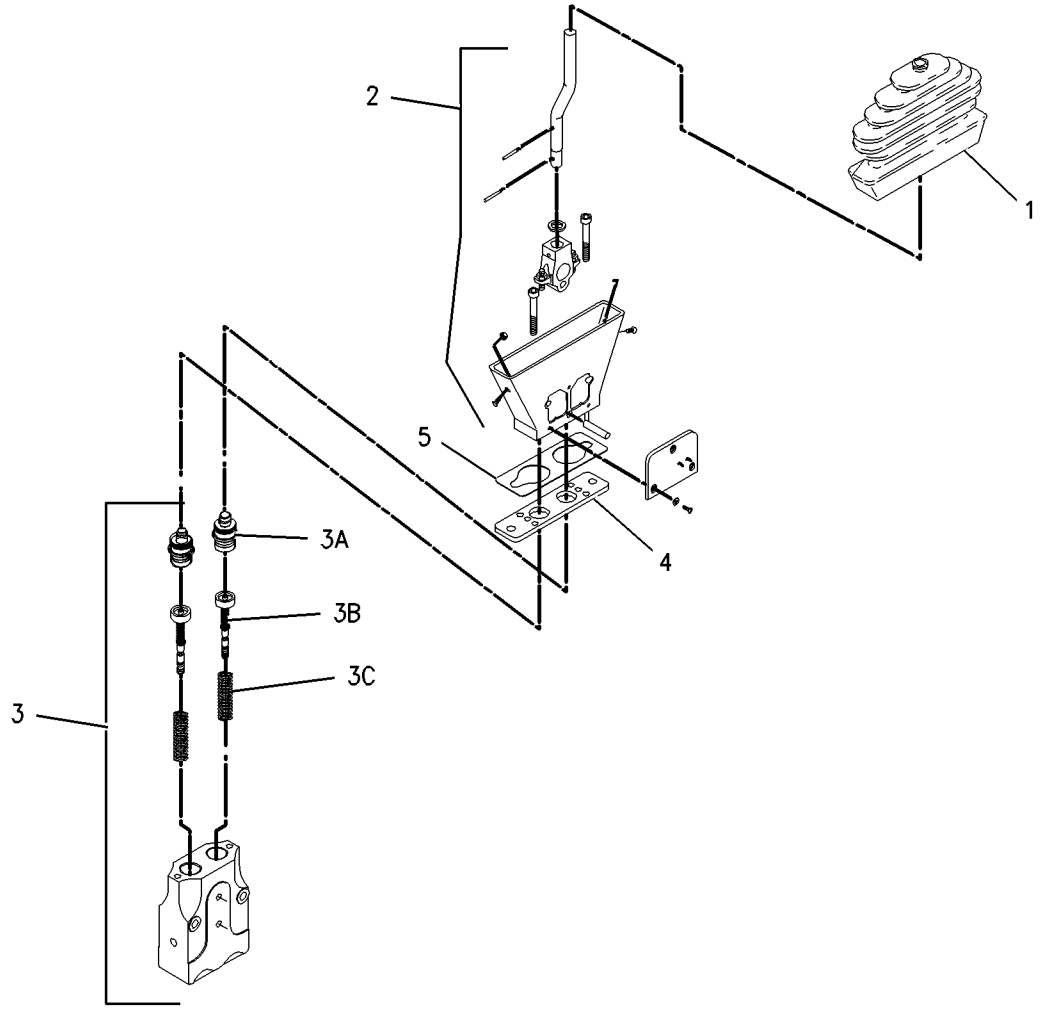

GRAPHIC #1 **<END>** g00778213

200-1728 VALVE GP-PILOT–STABILIZER

S/N: FDP18400-UP
PART OF 185-5902 VALVE GP-PILOT
AN ATTACHMENT

SMCS-5059 **i01696302**

NOTE	REF NO	GRAPHIC REF	PART NUMBER	QTY	PART NAME 1 2 3 4 5 6 (PRODUCT LEVEL)	SEE PAGE
	1	1	**198-6498**	1	BOOT	
	2	1	**200-4022**	1	KIT-LEVER	
Y	3	1	**200-4024**	1	VALVE GP-PILOT	569
	4	1	**116-4481**	1	PLATE	
	5	1	**202-3263**	1	SEAL	

Y-SEPARATE ILLUSTRATION

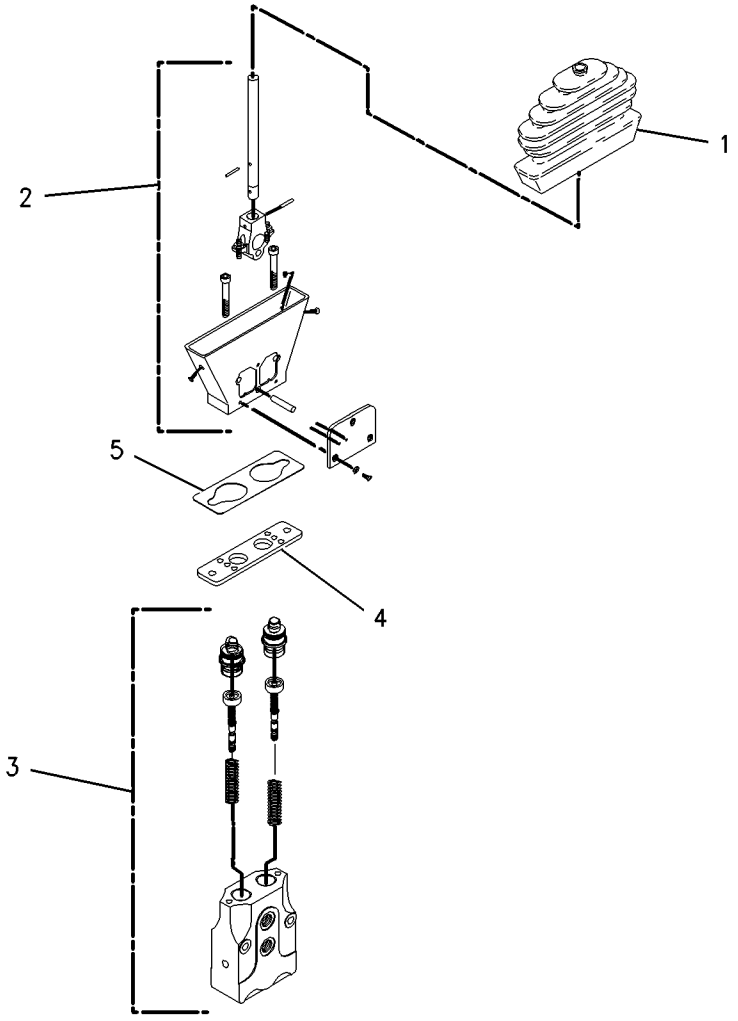

GRAPHIC #1 **<END>** g00776221

HYDRAULIC SYSTEM

200-4024 VALVE GP-PILOT

S/N: FDP18400-UP
PART OF 200-1728 VALVE GP-PILOT
AN ATTACHMENT

SMCS-5059 **i01637655**

NOTE	REF NO	GRAPHIC REF	PART NUMBER	QTY	PART NAME 1 2 3 4 5 6 (PRODUCT LEVEL)	SEE PAGE
	1	1	**8U-9427**	2	KIT-REPAIR	
	2	1	**198-6511**	2	KIT-REGULATOR	
	3	1	**158-4466**	1	KIT-SPRING	

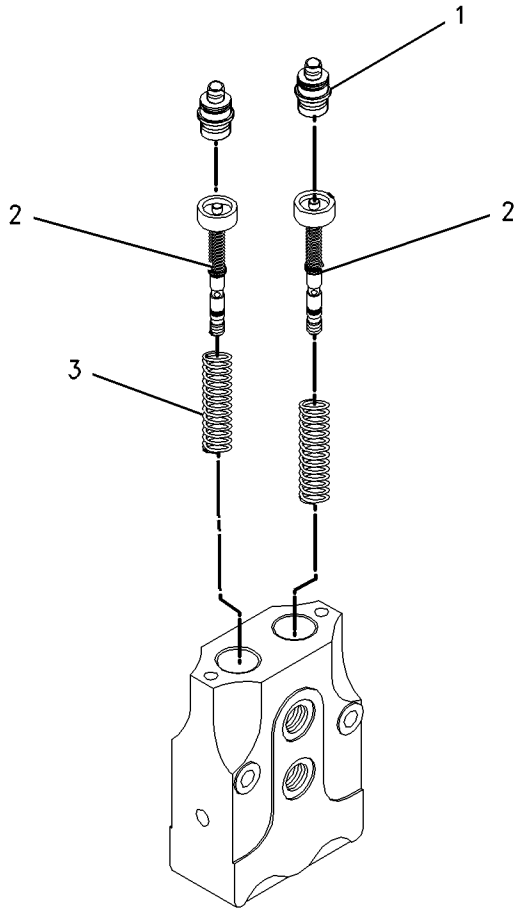

GRAPHIC #1 **<END>** g00843722

HYDRAULIC SYSTEM

103-5519 VALVE GP-PUMP CONTROL–POWER COMPENSATOR

S/N: FDP18400-UP

PART OF 244-2228 PUMP GP-PISTON

SMCS-5455 **i01739597**

NOTE	REF NO	GRAPHIC REF	PART NUMBER	QTY	PART NAME 1 2 3 4 5 6 (PRODUCT LEVEL)	SEE PAGE
	1	1	**105-1434**	1	PLUG	
	2	1	**5P-5599**	1	SEAL-O-RING	
	3	1	**105-1435**	1	SPRING	
	4	1	**105-1436**	1	RETAINER-SPRING	
	5	1	**214-0592**	1	GASKET	
	6	1	**6V-8236**	1	PIN-SPRING	
	7	1	**6E-6528**	1	SEAL	
M	8	1	**3T-0849**	2	BOLT-SOCKET HEAD (M6X1X25MM)	
	9	1	**105-1437**	1	RETAINER-SPRING	
	10	1	**105-1438**	1	SPRING	
	11	1	**033-6044**	1	SEAL-O-RING	
	12	1	**105-1439**	1	ADJUSTER	
	13	1	**105-1440**	1	CAP	
	14	1	**105-1441**	1	PLUG	

M-METRIC PART

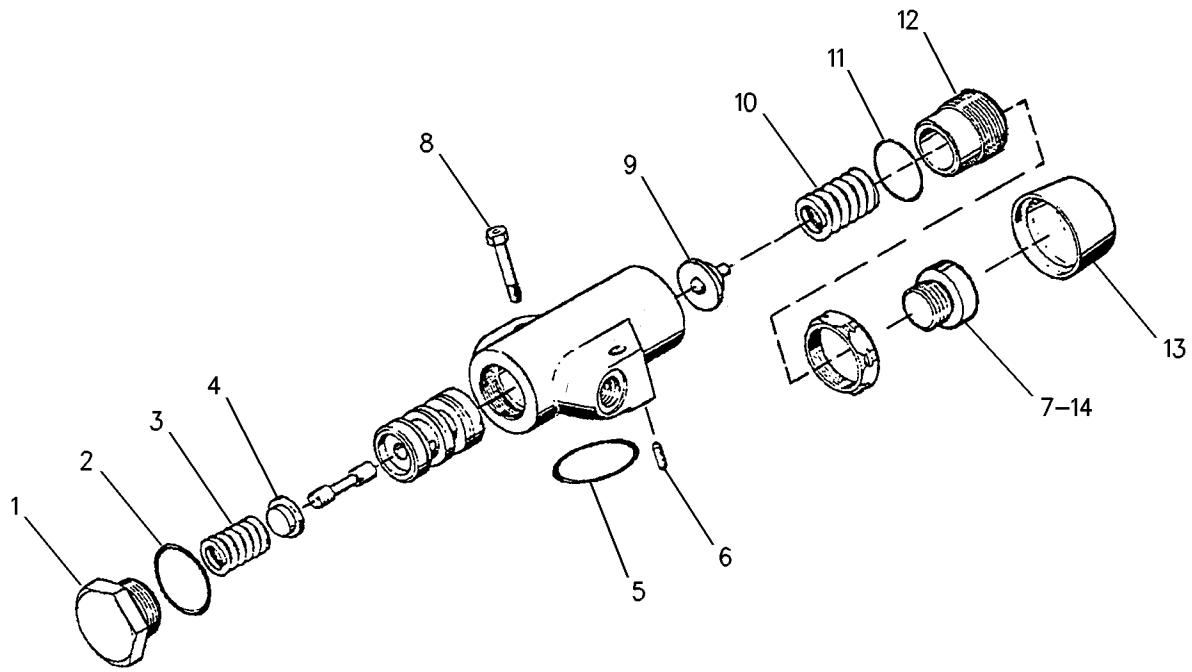

GRAPHIC #1 **<END>** g00890883

173-0640 VALVE GP-PUMP CONTROL–PRESSURE,FLOW COMPENSATOR

S/N: FDP18400-UP

PART OF 244-2228 PUMP GP-PISTON

SMCS-5455 **i01523868**

NOTE	REF NO	GRAPHIC REF	PART NUMBER	QTY	PART NAME 1 2 3 4 5 6 (PRODUCT LEVEL)	SEE PAGE
	1	1	**6E-3268**	1	RETAINER-SPRING	
	2	1	**6E-3269**	1	RETAINER-SPRING	
	3	1	**200-5359**	1	HOUSING	
	4	1	**200-5360**	1	HOUSING	
	5	1	**6E-3272**	1	SEAT	
	6	1	**6E-3273**	1	SEAT	
	7	1	**6E-3274**	1	SPRING	
	8	1	**6E-3275**	1	SPRING	
	9	1	**6E-3276**	1	SPRING	
	10	1	**105-2145**	1	VALVE-ORIFICE	
	11	1	**202-7503**	2	RETAINER	
	12	1	**6E-6527**	2	PLUG	
	13	1	**193-1036**	1	SPRING	
	14	1	**033-6043**	1	SEAL-O-RING	
	15	1	**6V-8352**	1	SEAL-O-RING	
	16	1	**6E-6528**	2	SEAL (9.3MM ID)	
	17	1	**5P-9262**	1	SEAL-O-RING	
	18	1	**200-5361**	2	NUT	
	19	1	**200-5362**	2	SEAL-O-RING	
	20	1	**200-5363**	2	RING-THRUST	
	21	1	**200-5364**	2	CAP	

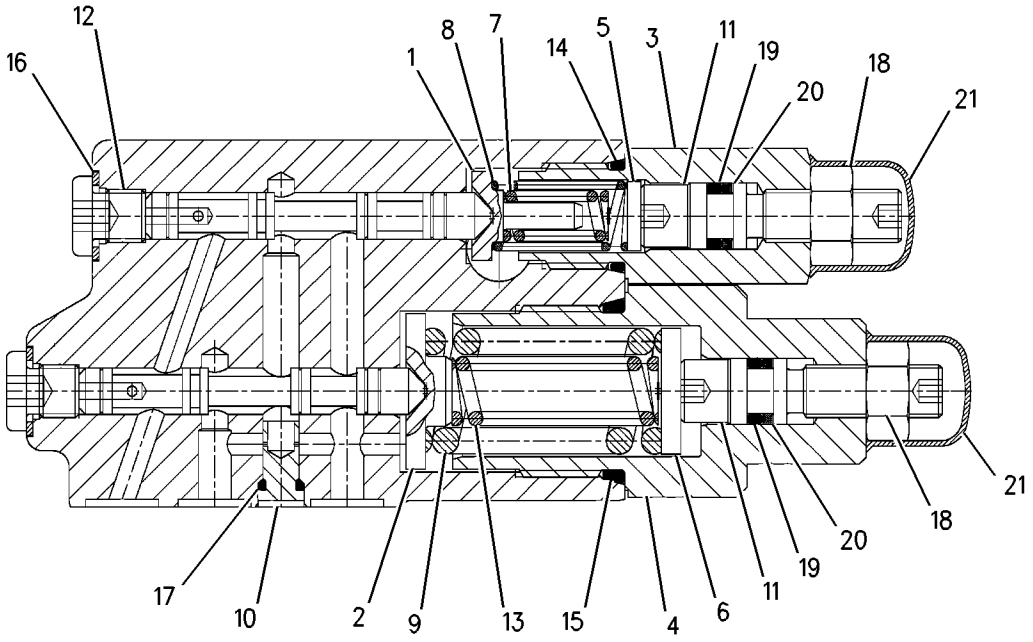

GRAPHIC #1 **<END>** g00791680

HYDRAULIC SYSTEM

214-3523 VALVE GP-SHUTTLE

S/N: FDP18400-UP

PART OF 202-5949 CONNECTOR GP-VALVE

SMCS-5079 **i01634831**

NOTE	REF NO	GRAPHIC REF	PART NUMBER	QTY	PART NAME 1 2 3 4 5 6 (PRODUCT LEVEL)	SEE PAGE
	1	1	**6V-8398**	1	SEAL-O-RING	
	2	1	**123-5799**	1	SEAT	
	3	1	**214-3524**	1	VALVE-SHUTTLE	
	4	1	**123-5798**	1	SEAT	
	5	1	**131-0749**	1	CONNECTOR	
	6	1	**3J-1907**	1	SEAL-O-RING	

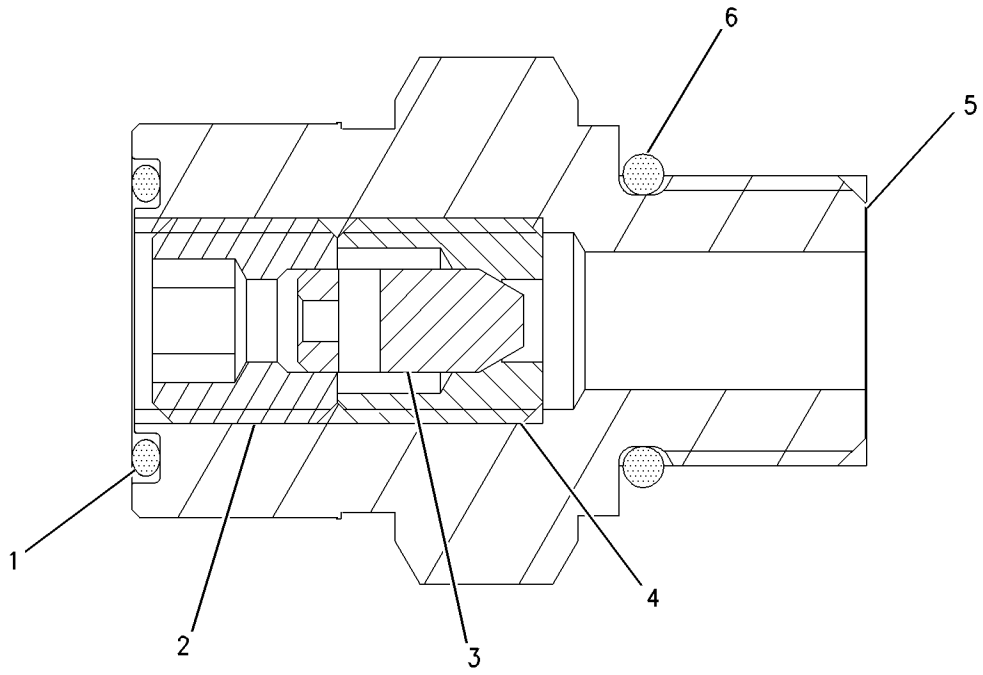

GRAPHIC #1 **<END>** g00848119

HYDRAULIC SYSTEM

171-8775 VALVE GP-SOLENOID

S/N: FDP18400-UP
PART OF 190-8315 VALVE & MTG GP-SOLENOID
AN ATTACHMENT

SMCS-5132, 5479 **i01794684**

NOTE	REF NO	GRAPHIC REF	PART NUMBER	QTY	PART NAME 1 2 3 4 5 6 (PRODUCT LEVEL)	SEE PAGE
	1	1	**3E-8621**	1	COIL AS	
		1	**1S-9593**	1	STRAP-CABLE	
		1	**102-8802**	1	KIT-RECEPTACLE (2 PIN)	
		1	**3E-3365**	1	WEDGE-RECEPTACLE LOCK (2 PIN)	
		1	**186-3735**	2	PIN-CONNECTOR	
	2	1	**156-5970**	1	NUT (1/2-20-2B THD)	
J	3	1	**171-8772**	1	VALVE AS-SOLENOID	
		1	**156-5970**	1	NUT (1/2-20-2B THD)	
					AVAILABLE REPAIR KIT(S):	
J			**195-7430**	1	KIT-SEAL	

J-KIT MARKED J IS AVAILABLE FOR PART MARKED J

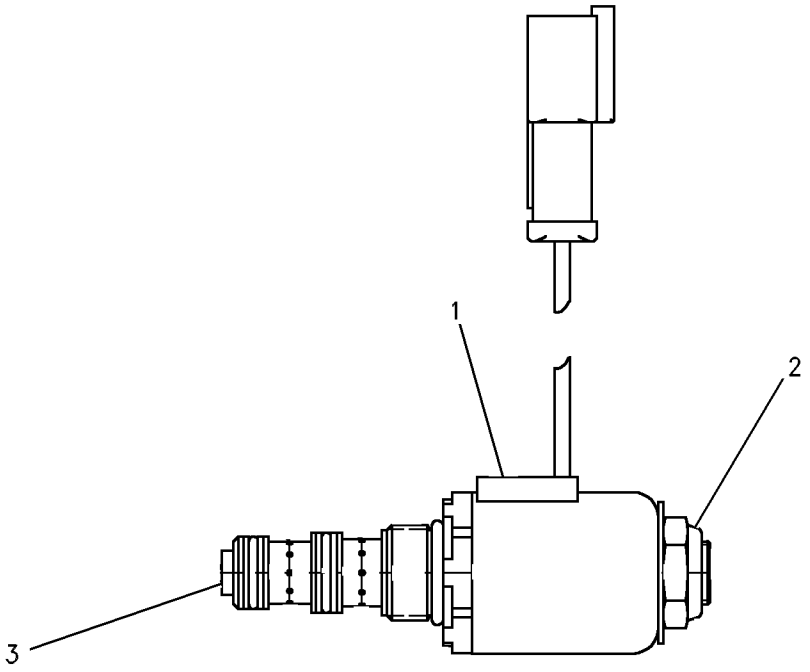

GRAPHIC #1 **<END>** g00628325

129-9121 ARM GP-LIFT

S/N: FDP18400-UP

PART OF 202-5747 LOADER AR

SMCS-6118, 6119 **i01739733**

NOTE	REF NO	GRAPHIC REF	PART NUMBER	QTY	PART NAME 1 2 3 4 5 6 (PRODUCT LEVEL)	SEE PAGE
M	1	1	**8T-4176**	2	BOLT (M12X1.75X90MM)	
M	2	1	**6V-7687**	2	LOCKNUT (M12X1.75 THD)	
	3	1	**9R-0158**	2	WASHER (46X69X3MM THK)	
	4	1	**6V-3213**	2	RING-RETAINING	
	5	1	**130-5451**	2	PIN	
	6	1	**6V-8144**	6	RING	
B	7	1	**9R-0109**	8	WASHER (3MM THK)	
	8	1	**9R-3182**	2	PIN	
	9	1	**129-9120**	1	ARM AS-LIFT	
	9A	1	**9R-0111**	4	BEARING-SLEEVE	
	9B	1	**9R-0119**	2	BOSS	
	9C	1	**9R-6690**	4	BEARING-SLEEVE	
	9D	1	**112-4498**	1	BOSS	
	10	1	**3B-8488**	4	FITTING-GREASE (1/8-27 THD)	
	11	1	**9R-9373**	1	PIN AS	
	12	1	**127-8987**	2	RING-RETAINING	
B	13	1	**9R-8390**	2	SPACER (1.0MM THK)	
	14	1	**128-5010**	1	PIN	
	15	1	**3B-8489**	5	FITTING-GREASE (1/8-27 THD)	
	16	1	**132-6496**	1	PIN AS	
B	17	1	**9R-4066**	2	WASHER (4MM THK)	

B-USE AS REQUIRED
M-METRIC PART

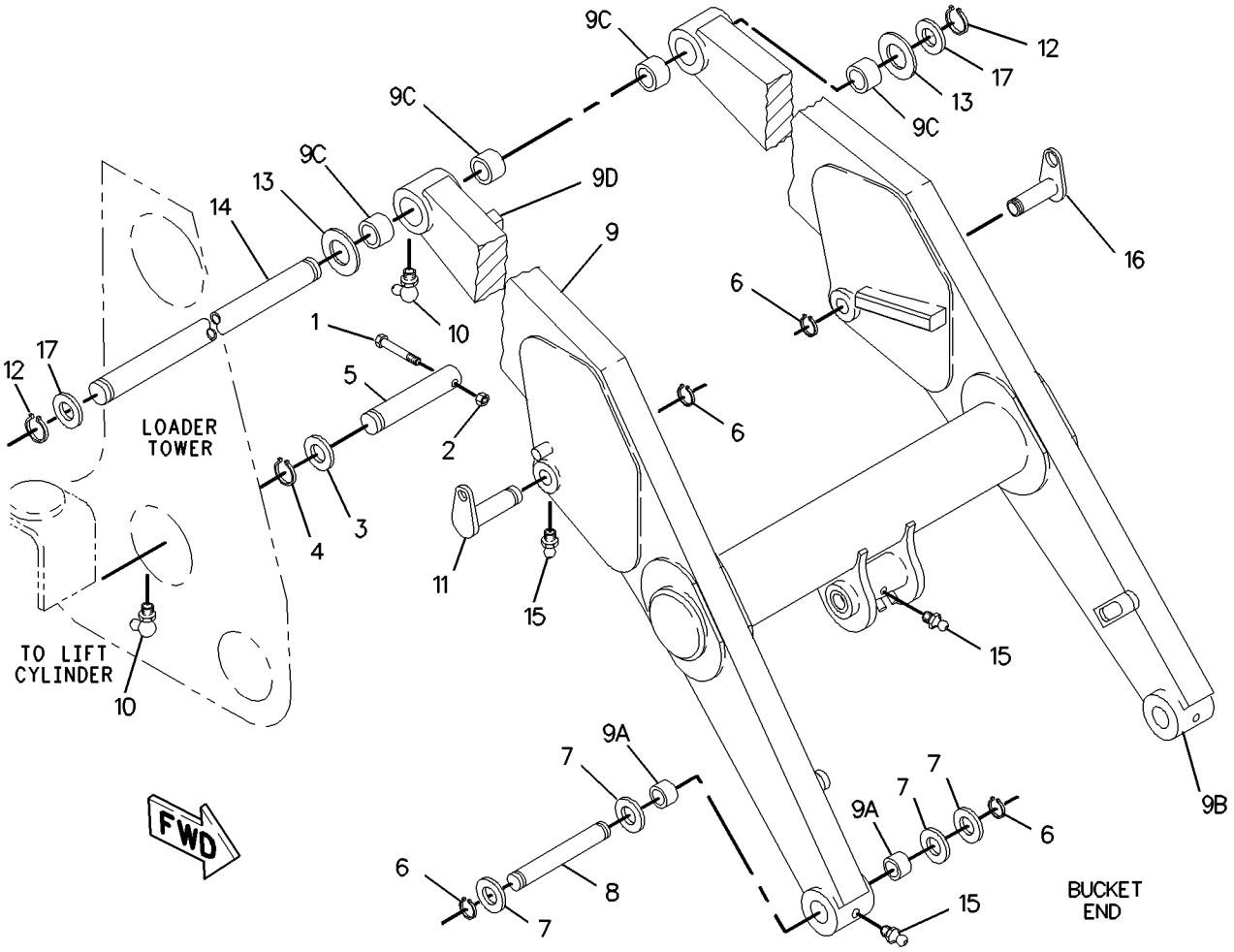

GRAPHIC #1 **<END>** g00890885

185-1925 BOOM GP

S/N: FDP18400-UP

PART OF 184-7925, 202-5971, 238-4788, 238-8218 BACKHOE AR-EXTENDABLE STICK, 184-7913, 184-7916, 184-7917, 202-5958, 202-5963, 238-4785, 238-4787, 238-8219 BACKHOE AR-STANDARD STICK

AN ATTACHMENT

SMCS-6501 **i01990965**

NOTE	REF NO	GRAPHIC REF	PART NUMBER	QTY	PART NAME 1 2 3 4 5 6 (PRODUCT LEVEL)	SEE PAGE
C	1	1	*237-2231*	1	BOOM AS	
	1A	1	**8Y-4489**	4	BOSS (M10X35MM)	
	1B	1	**9R-8523**	2	PIN	
	1C	1	**106-0421**	2	BOSS	
	1D	1	**106-0424**	1	PLATE	
	1E	1	**111-0483**	2	BOSS (M10X1.5MM)	
	1F	1	**174-6812**	2	BOSS	
	2	1	**3B-8488**	3	FITTING-GREASE	
	3	1	**9R-9812**	2	PIN	
M	4	1	**8T-5001**	2	BOLT (M12X1.75X130MM)	
M	5	1	**6V-7687**	2	LOCKNUT (M12X1.75THD)	
	6	1	**3B-8489**	1	FITTING-GREASE	
	7	1	**179-9961**	1	PLUG-PROTECTIVE	

C-CHANGE FROM PREVIOUS TYPE
M-METRIC PART

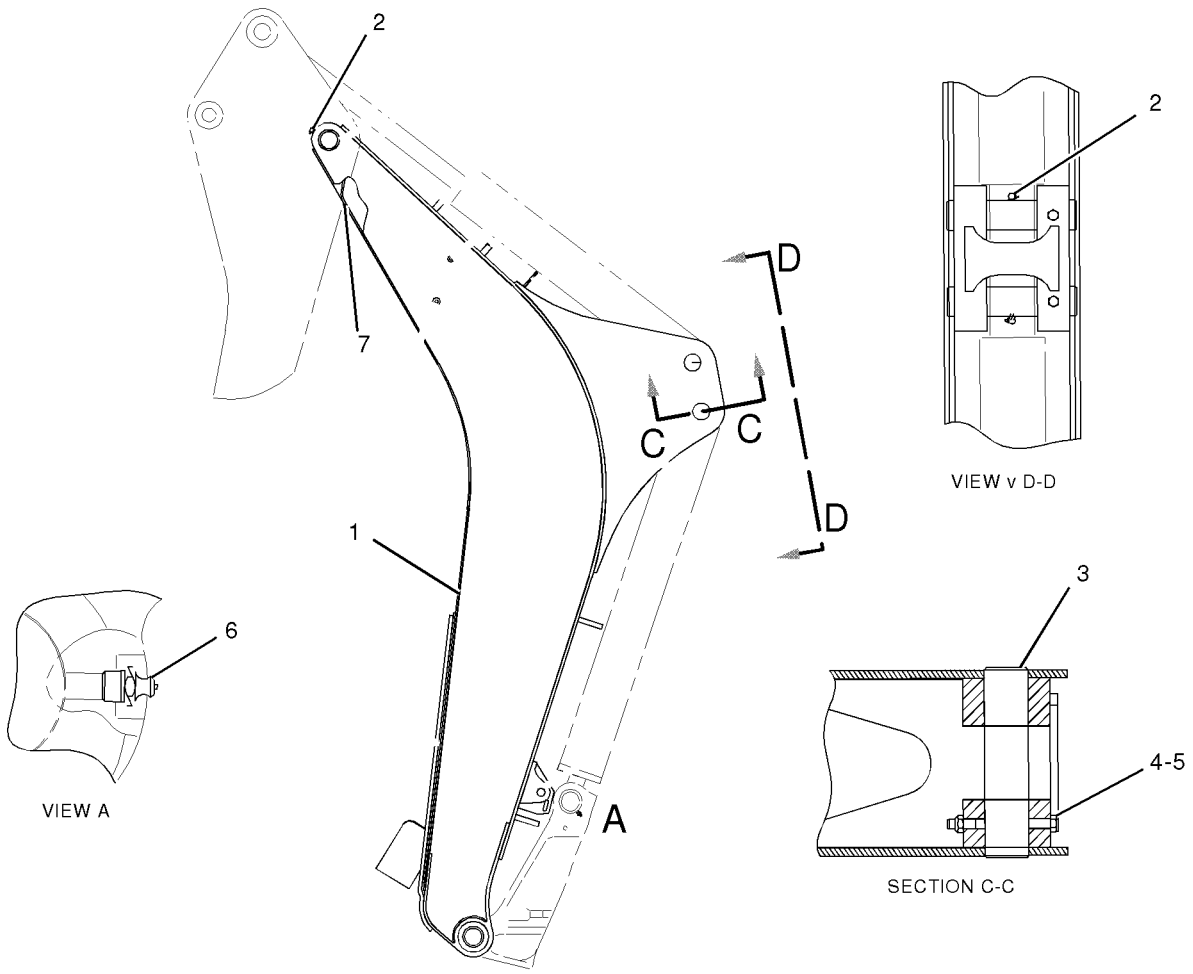

GRAPHIC #1 **<END>** g01032190

185-1926 BOOM GP

S/N: FDP18400-UP

PART OF 184-7927, 202-5973, 238-4786, 238-4789 BACKHOE AR-EXTENDABLE STICK, 184-7915, 202-5961 BACKHOE AR-STANDARD STICK AN ATTACHMENT

SMCS-6501 **i01991025**

NOTE	REF NO	GRAPHIC REF	PART NUMBER	QTY	PART NAME 1 2 3 4 5 6 (PRODUCT LEVEL)	SEE PAGE
C	1	1	**237-3663**	1	BOOM AS	
C	1A	1	**8Y-4489**	4	BOSS (M10X35MM)	
C	1B	1	**9R-8523**	2	PIN	
C	1C	1	**106-0421**	2	BOSS	
C	1D	1	**106-0424**	1	PLATE	
C	1E	1	**106-0425**	1	PLATE AS (TOOL)	
C	1F	1	**111-0483**	2	BOSS (M10X1.5MM)	
C	1G	1	**174-6812**	2	BOSS	
	2	1	**3B-8488**	3	FITTING-GREASE	
	3	1	**9R-9812**	2	PIN	
M	4	1	**8T-5001**	2	BOLT (M12X1.75X130MM)	
M	5	1	**6V-7687**	2	LOCKNUT (M12X1.75THD)	
	6	1	**3B-8489**	1	FITTING-GREASE	
	7	1	**179-9961**	1	PLUG-PROTECTIVE	

C-CHANGE FROM PREVIOUS TYPE
M-METRIC PART

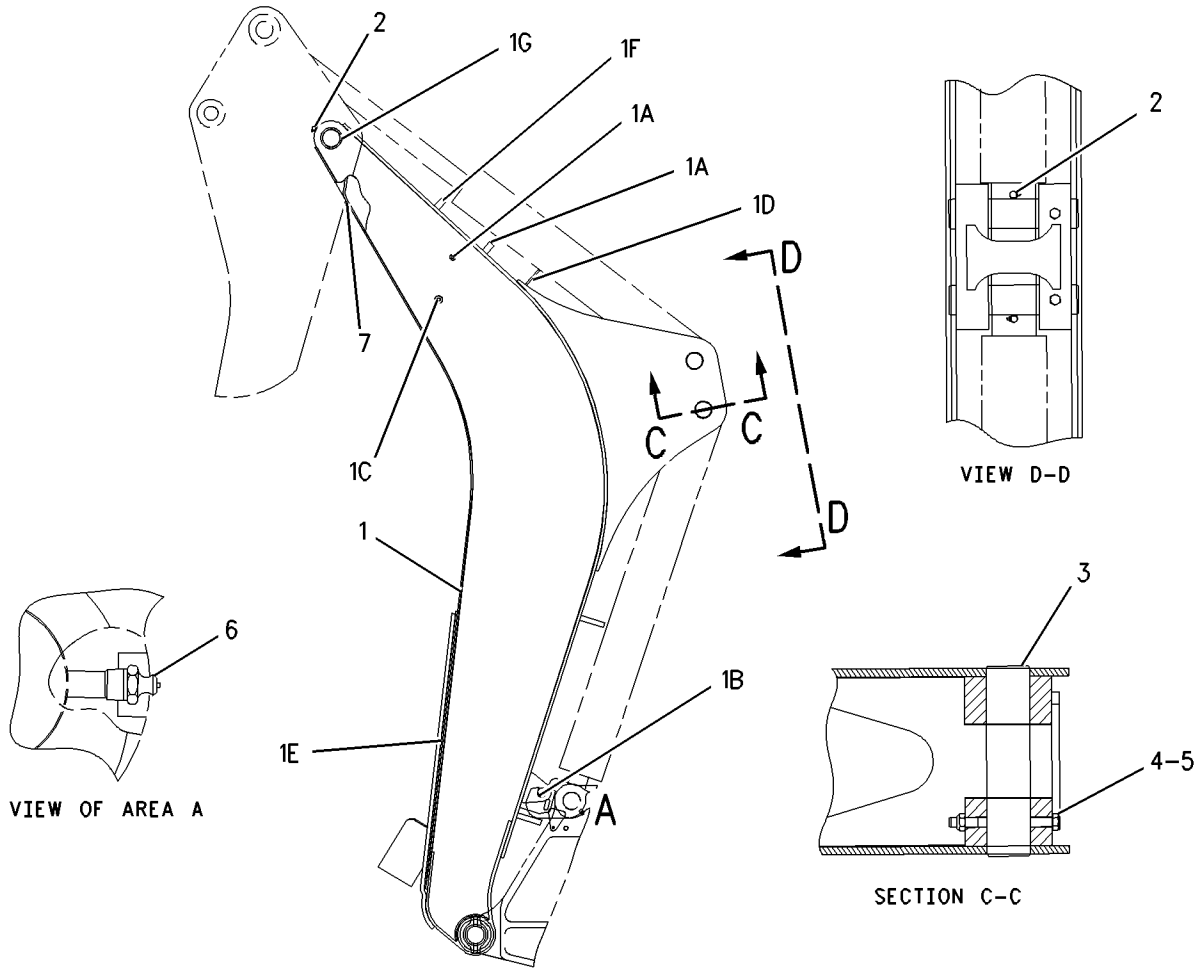

GRAPHIC #1 **<END>** g00837999

9R-0036 BRACE GP-LIFT CYLINDER

S/N: FDP18400-UP

PART OF 202-5747 LOADER AR

SMCS-7507 **i00457750**

NOTE	REF NO	GRAPHIC REF	PART NUMBER	QTY	PART NAME 1 2 3 4 5 6 (PRODUCT LEVEL)	SEE PAGE
	1	1	**9R-0189**	1	PIN	
	2	1	**132-6497**	1	BRACE AS	
C	3	1	**9R-5301**	1	PIN-COTTER	
C	4	1	**8C-4447**	1	FILM-INDICATOR	

C-CHANGE FROM PREVIOUS TYPE

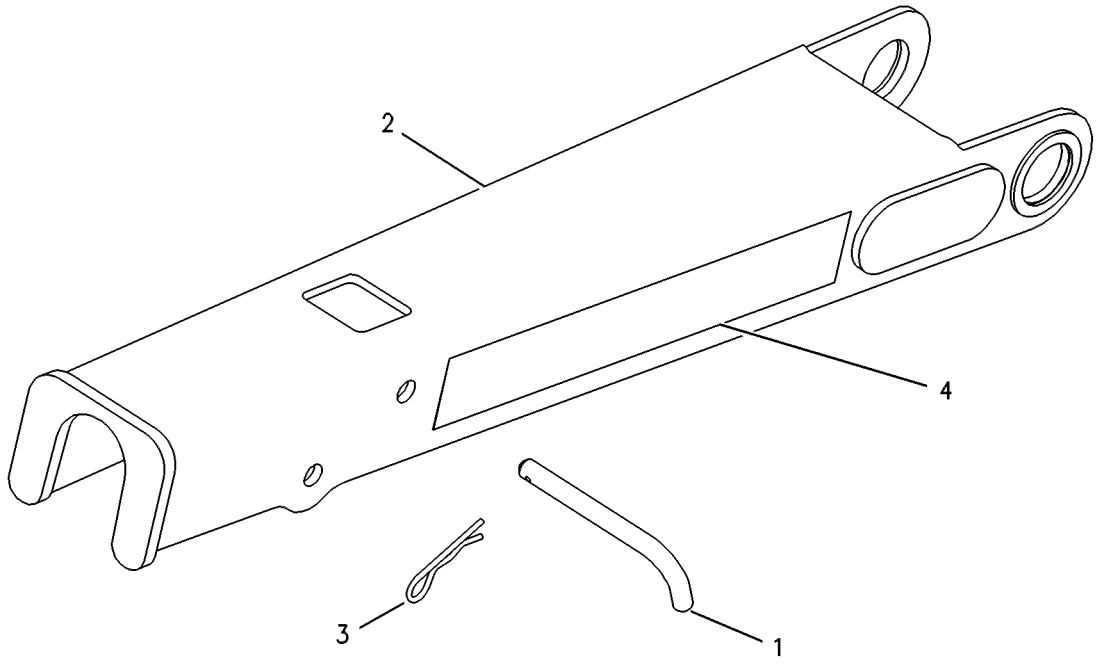

GRAPHIC #1 **<END>** g00131910

120-9289 BRACKET GP-TRANSPORT

S/N: FDP18400-UP
PART OF 119-1530 SHIPPING AR-BUCKET
AN ATTACHMENT

SMCS-7505 **i01500845**

NOTE	REF NO	GRAPHIC REF	PART NUMBER	QTY	PART NAME 1 2 3 4 5 6 (PRODUCT LEVEL)	SEE PAGE
	1	1	**3B-5322**	2	PIN-COTTER	
	2	1	**9R-0109**	2	WASHER (3MM THK)	
B	3	1	**9R-4066**	6	WASHER (4MM THK)	
	4	1	**9R-6014**	4	TUBE	
	5	1	**034-1432**	2	STRAP-CABLE	
	6	1	**120-9332**	2	BLOCK	
	7	1	**120-9333**	1	TUBE	

B-USE AS REQUIRED

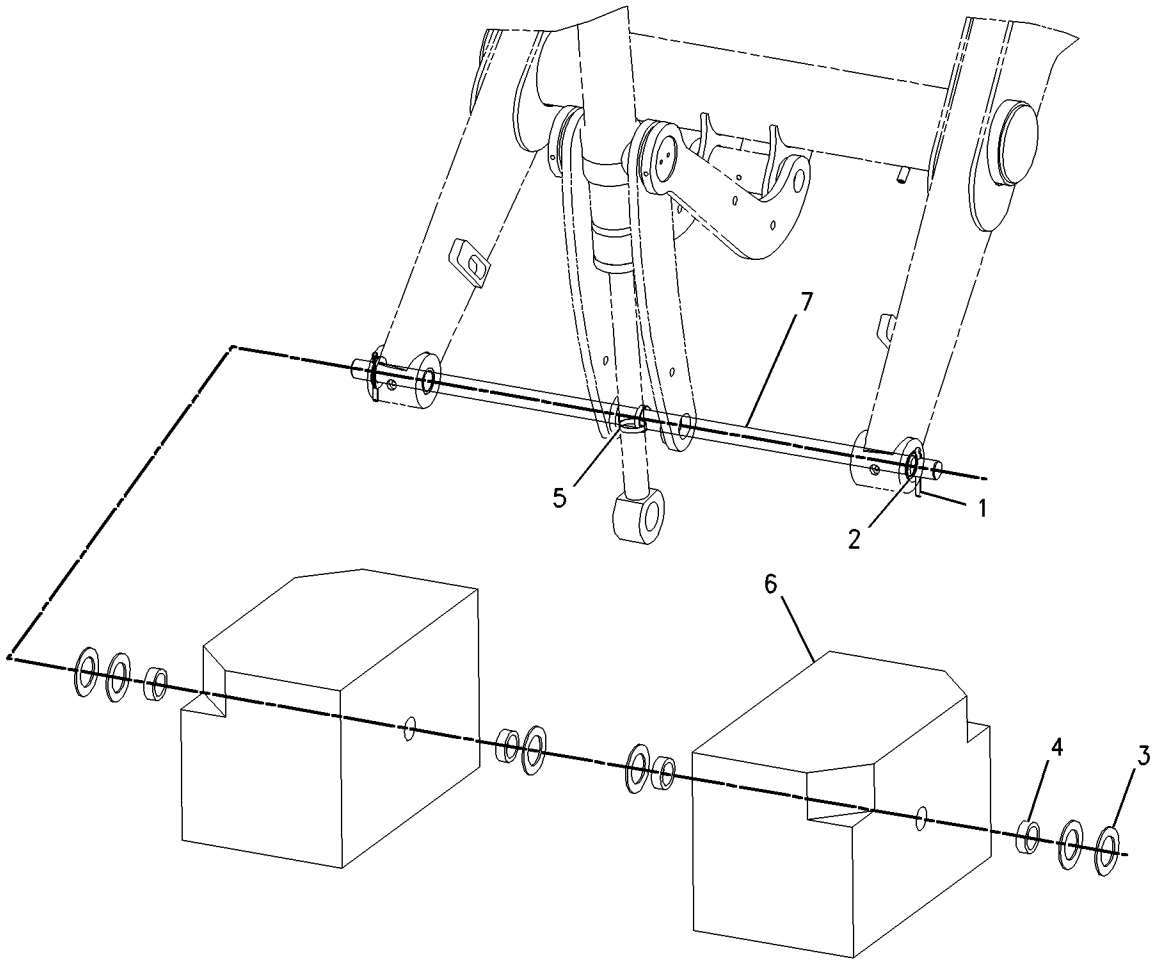

GRAPHIC #1 **<END>** g00778843

184-6784 HOUSING AS-EXTENDABLE STICK

S/N: FDP18400-UP
PART OF 184-6786 STICK GP-EXTENDABLE
AN ATTACHMENT

SMCS-6502 **i01334643**

NOTE	REF NO	GRAPHIC REF	PART NUMBER	QTY	PART NAME 1 2 3 4 5 6 (PRODUCT LEVEL)	SEE PAGE
	1	1	**9R-9254**	2	BOSS	
	2	1	**9R-0139**	2	BEARING-SLEEVE	
	3	1	**8Y-4489**	2	BOSS	
	4	1	**107-6711**	2	BLOCK	
	5	1	**188-9954**	2	STOP	
	6	1	**187-0576**	2	BLOCK	
	7	1	**9R-9187**	2	GUSSET	
	8	1	**158-8778**	2	BOSS	

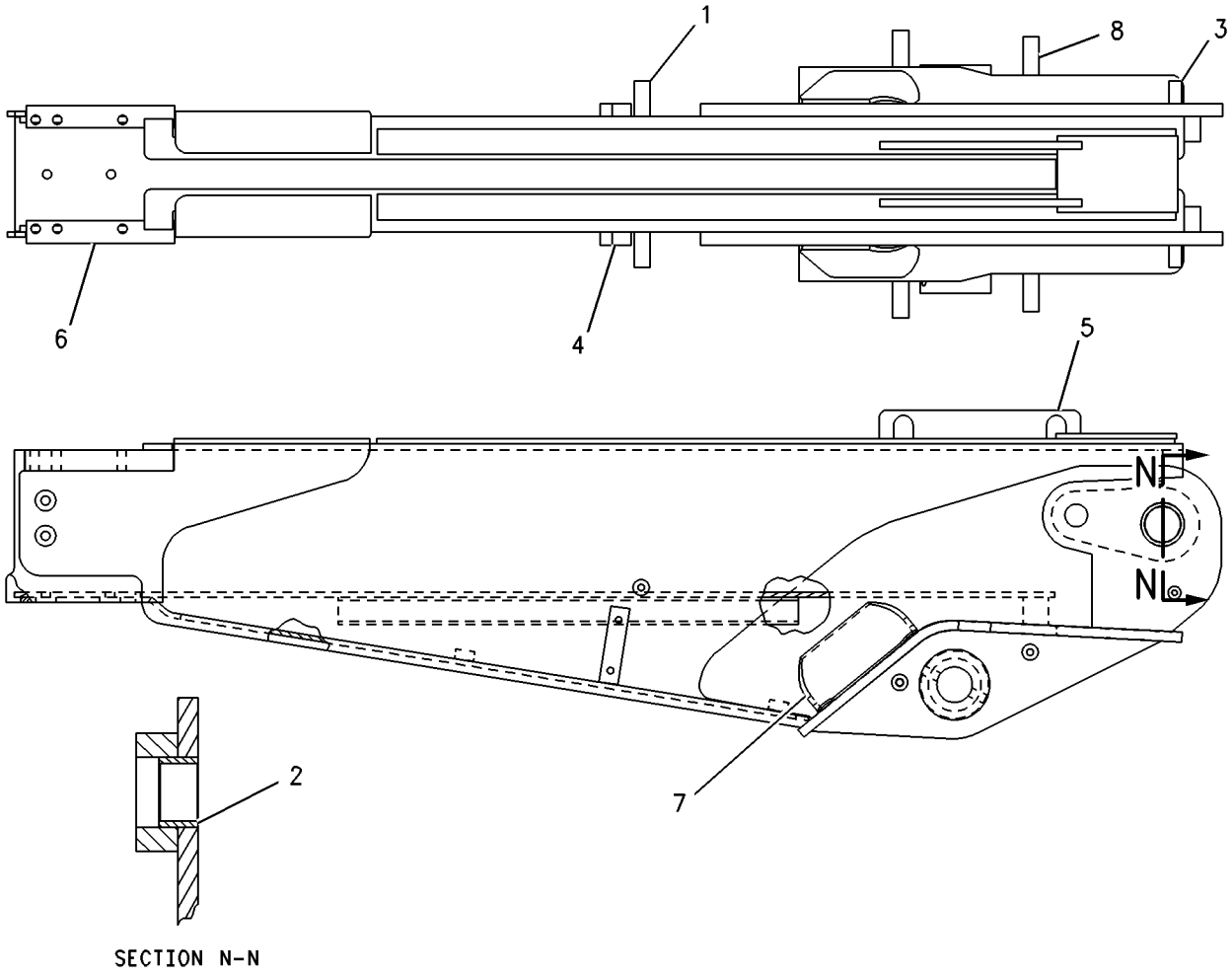

GRAPHIC #1 **<END>** g00706322

221-4276 LINK GP-THUMB

S/N: FDP18400-UP

PART OF 224-6232, 224-6233, 224-6234, 224-6235 THUMB AR

AN ATTACHMENT

SMCS-6547 **i01923588**

NOTE	REF NO	GRAPHIC REF	PART NUMBER	QTY	PART NAME 1 2 3 4 5 6 (PRODUCT LEVEL)	SEE PAGE
	1	1	**221-4271**	1	LINK AS	
	2	1	**221-4272**	1	LINK AS	
	3	1	**224-4527**	1	PIN AS	

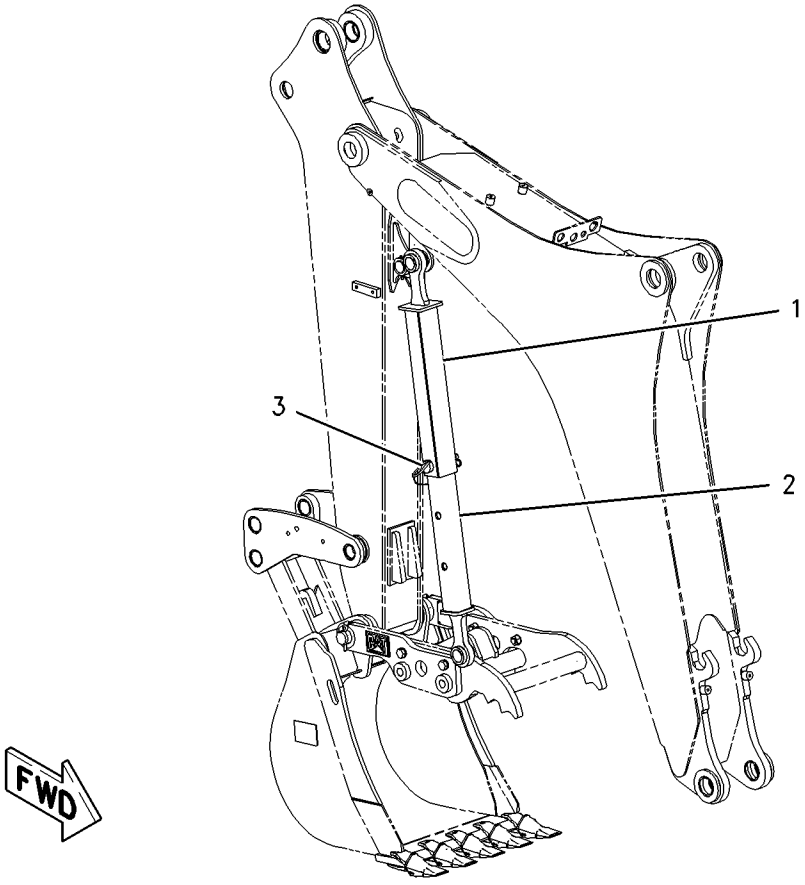

GRAPHIC #1 **<END>** g01003484

151-7928 LINKAGE GP-BACKHOE BUCKET

S/N: FDP18400-UP

PART OF 184-7925, 184-7927, 202-5971, 202-5973, 238-4786, 238-4788, 238-4789, 238-8218 BACKHOE AR-EXTENDABLE STICK, 184-7913, 184-7915, 184-7916, 184-7917, 202-5958, 202-5961, 202-5963, 238-4785, 238-4787, 238-8219 BACKHOE AR-STANDARD STICK

AN ATTACHMENT

SMCS-6513 **i01994647**

NOTE	REF NO	GRAPHIC REF	PART NUMBER	QTY	PART NAME 1 2 3 4 5 6 (PRODUCT LEVEL)	SEE PAGE
	1	1	**9R-0158**	10	WASHER (46X69X3MM THK)	
	2	1	**9R-1510**	13	WASHER (51X82X4MM THK)	
	3	1	**6V-4364**	4	RING-RETAINING	
	4	1	**145-8337**	1	GUIDE AS-RH	
		1	**9R-0162**	1	BEARING	
		1	**9R-0411**	1	BEARING-SLEEVE	
	5	1	**145-8344**	1	GUIDE AS-LH	
		1	**9R-0162**	2	BEARING	
		1	**9R-0411**	1	BEARING-SLEEVE	
	6	1	**154-5265**	1	LINK AS	
		1	**9R-3092**	2	BEARING-SLEEVE	
		1	**9R-0147**	2	BEARING	
	7	1	**154-5277**	1	PIN	
	8	1	**154-5278**	2	PIN	
	9	1	**154-5279**	1	PIN	
	10	1	**154-5280**	1	PIN	
	11	1	**239-9435**	1	FILM-INSTRUCTION	
	12	1	**3B-5319**	4	PIN-COTTER	
	13	1	**3B-8489**	5	FITTING-GREASE	
	14	1	**6V-3213**	2	RING-RETAINING	

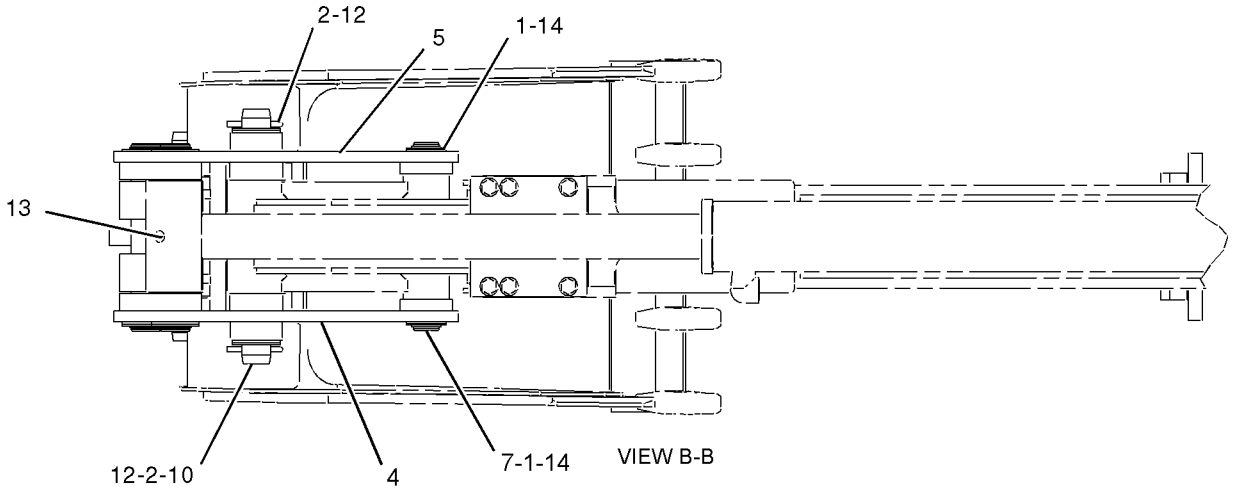

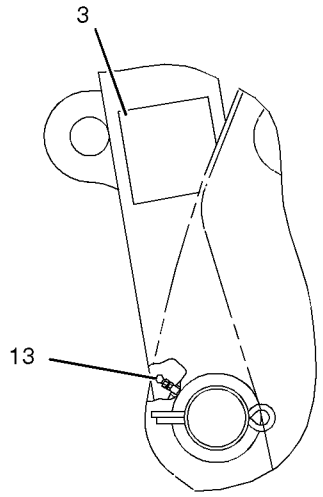

VIEW OF AREA A

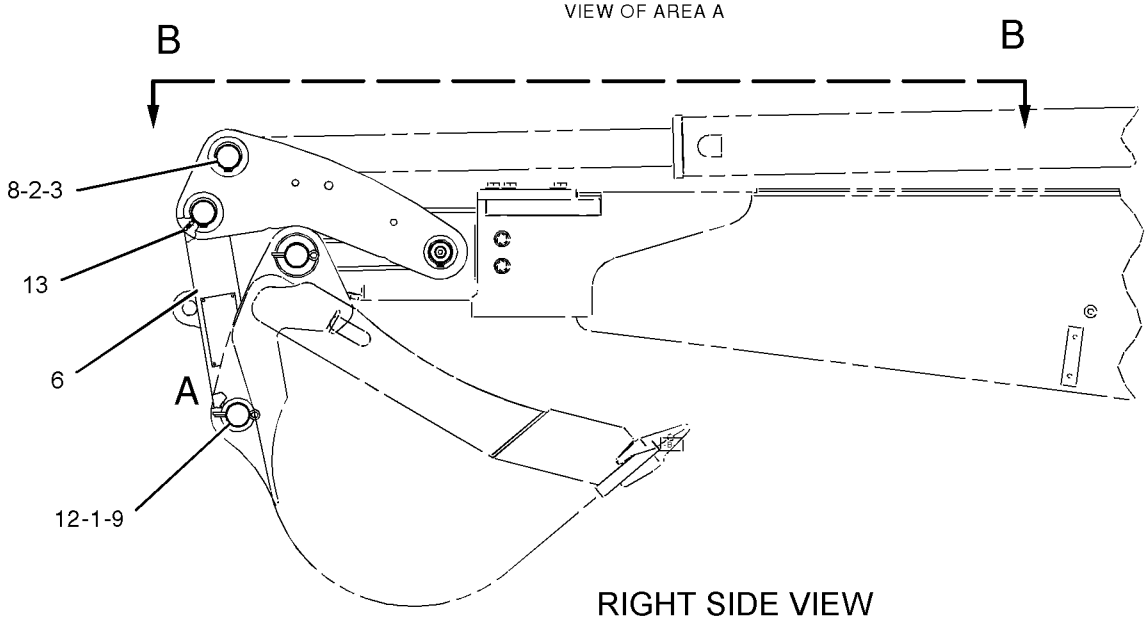

RIGHT SIDE VIEW

GRAPHIC #1

<END>

g01032311

202-5720 LINKAGE GP-LOADER BUCKET

S/N: FDP18400-UP

PART OF 202-5747 LOADER AR

SMCS-6513 **i01643669**

NOTE	REF NO	GRAPHIC REF	PART NUMBER	QTY	PART NAME 1 2 3 4 5 6 (PRODUCT LEVEL)	SEE PAGE
B	1	1	**9R-0158**	8	WASHER (46X69X3MM THK)	
	2	1	**9R-4482**	1	SPACER	
	3	1	**9R-4494**	2	PIN AS	
B	4	1	**111-4337**	10	WASHER (1MM THK)	
	5	1	**200-8303**	1	LINK AS	
		1	**9R-3756**	1	BEARING-SLEEVE	
		1	**9R-5828**	1	BEARING-SLEEVE	
	6	1	**200-8306**	1	LINK AS	
		1	**9R-3756**	1	BEARING-SLEEVE	
		1	**9R-5828**	1	BEARING-SLEEVE	
	7	1	**200-8309**	1	GUIDE AS	
		1	**9R-3747**	1	BEARING-SLEEVE	
		1	**200-8308**	1	GUIDE	
		1	**200-8313**	1	PIN	
	8	1	**200-8310**	1	GUIDE AS	
		1	**9R-3747**	1	BEARING-SLEEVE	
	9	1	**200-8311**	1	PIN AS	
	10	1	**201-1838**	1	PLATE	
	11	1	**201-1840**	1	PLATE	
	12	1	**3B-8489**	7	FITTING-GREASE (1/8-27 THD)	
	13	1	**6V-3213**	3	RING-RETAINING	
	14	1	**8T-4121**	4	WASHER-HARD (11X21X2.5MM THK)	
M	15	1	**8T-4137**	4	BOLT (M10X1.5X20MM)	

B-USE AS REQUIRED
M-METRIC PART

202-5720 **LINKAGE GP-LOADER BUCKET** ***(contd.)*** **i01643669**

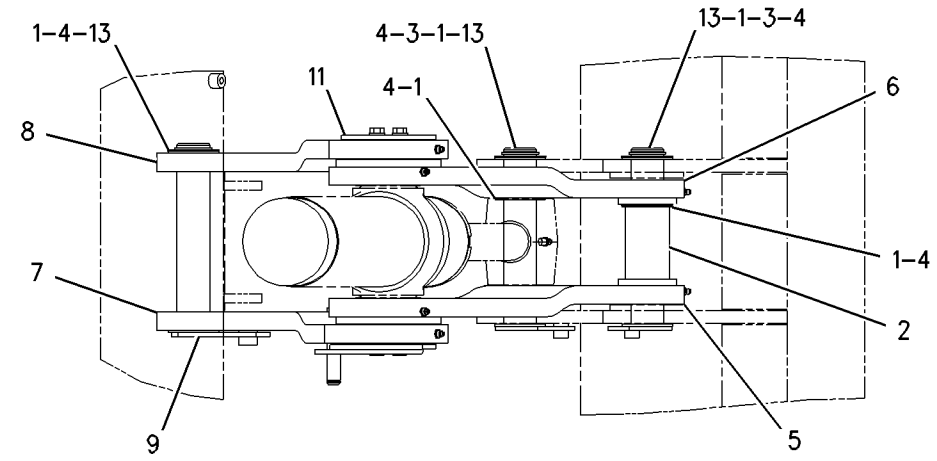

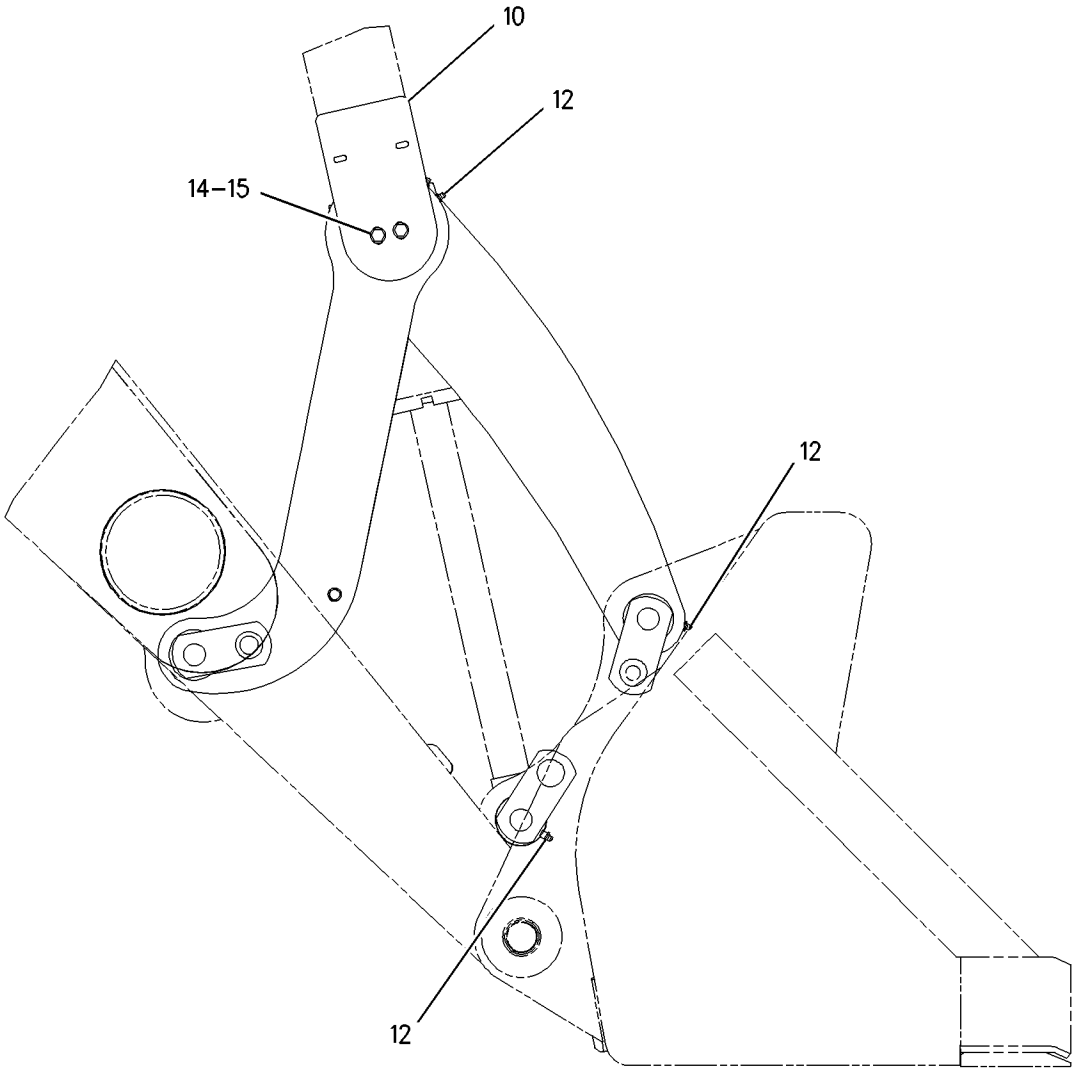

GRAPHIC #1 **<END>** g00849583

IMPLEMENTS

202-5747 LOADER AR

S/N: FDP18400-UP

PART OF 214-6886 COMMON AR

SMCS-6100 **i01642651**

NOTE	PART NUMBER	QTY	PART NAME 1 2 3 4 5 6 (PRODUCT LEVEL)	SEE PAGE
Y	*129-9121*	1	ARM GP-LIFT	575
Y	*9R-0036*	1	BRACE GP-LIFT CYLINDER	579
Y	*202-5721*	1	KICKOUT & POSITIONER GP	396
Y	*202-5720*	1	LINKAGE GP-LOADER BUCKET	585
Y	*122-1645*	1	WIRING GP-SENSOR	193

Y-SEPARATE ILLUSTRATION

<END>

122-8037 LOCK GP-TRANSPORT

S/N: FDP18400-UP
AN ATTACHMENT

SMCS-7505 **i01010687**

NOTE	REF NO	GRAPHIC REF	PART NUMBER	QTY	PART NAME 1 2 3 4 5 6 (PRODUCT LEVEL)	SEE PAGE
	1	1	**122-8032**	1	BRACE AS	
	2	1	**113-9090**	1	PIN AS	
	3	1	**9R-5301**	1	PIN-COTTER	
	4	1	**9R-6140**	1	LINK	
	5	1	**9S-1315**	1	PIN-CLEVIS	
	6	1	**6S-6646**	1	PIN	

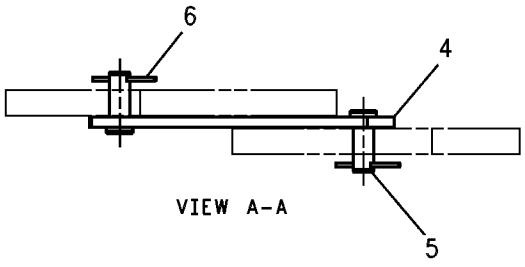

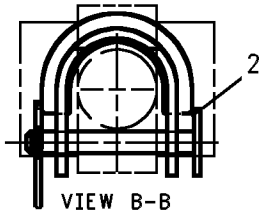

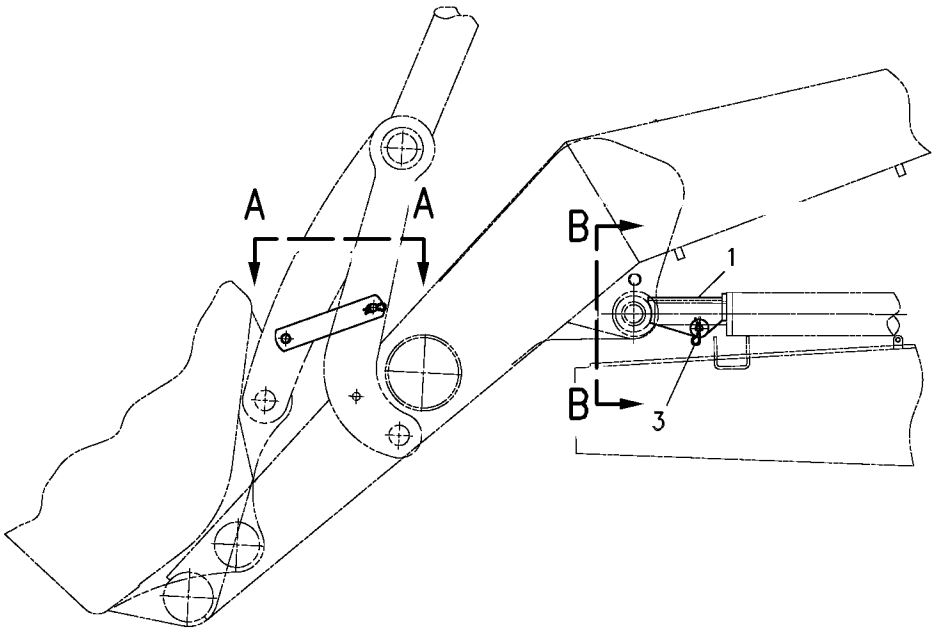

GRAPHIC #1 **<END>** g00511968

IMPLEMENTS

177-4726 LOCK GP-TRANSPORT

S/N: FDP18400-UP
EXTENDABLE STICK
AN ATTACHMENT

SMCS-7505 **i01655875**

NOTE	REF NO	GRAPHIC REF	PART NUMBER	QTY	PART NAME 1 2 3 4 5 6 (PRODUCT LEVEL)	SEE PAGE
	1	1	**177-4729**	1	CABLE AS	
	2	1	**9R-5301**	2	PIN-COTTER	
	3	1	**9R-9028**	1	PIN	

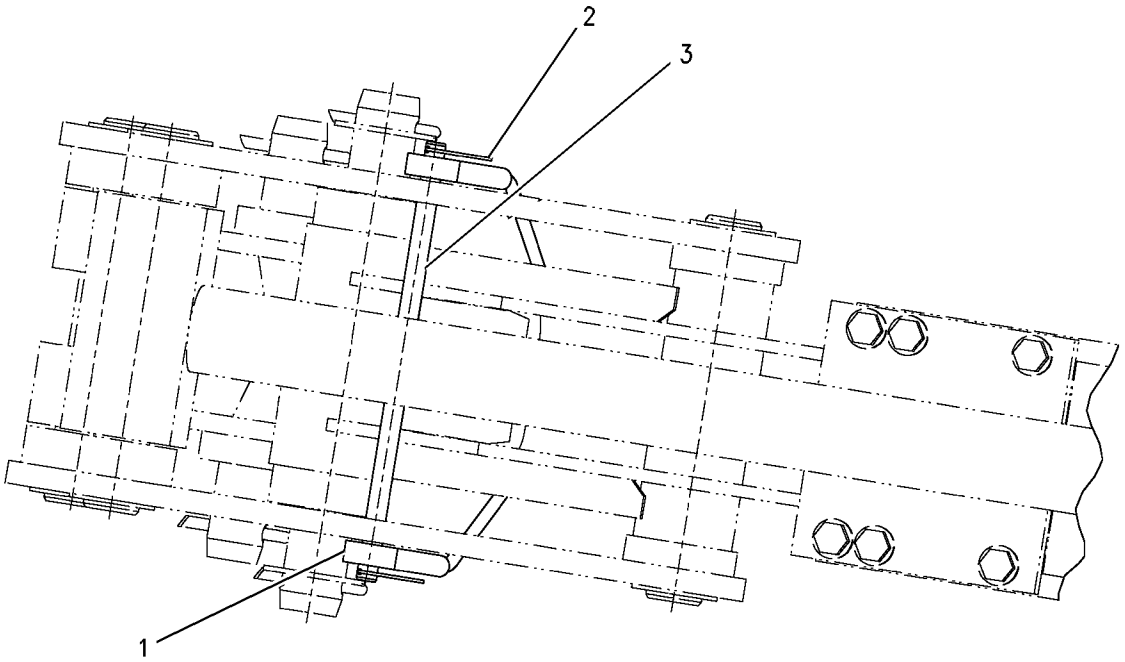

GRAPHIC #1 **<END>** g00855152

IMPLEMENTS

177-4727 LOCK GP-TRANSPORT

S/N: FDP18400-UP
STANDARD STICK
AN ATTACHMENT

SMCS-7505 **i01655894**

NOTE	REF NO	GRAPHIC REF	PART NUMBER	QTY	PART NAME 1 2 3 4 5 6 (PRODUCT LEVEL)	SEE PAGE
	1	1	**177-4733**	1	CABLE AS	
	2	1	**9R-5301**	2	PIN-COTTER	
	3	1	**9R-9028**	1	PIN	

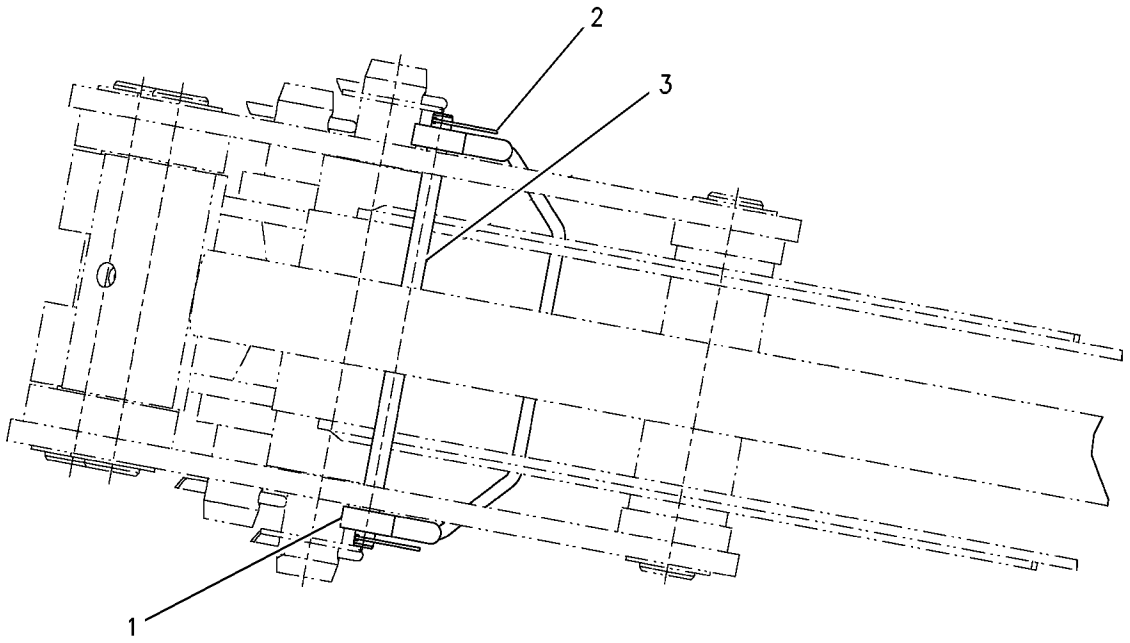

GRAPHIC #1 **<END>** g00855154

183-6076 LOCK GP-TRANSPORT

S/N: FDP18400-UP

PART OF 214-6951 CHASSIS AR

SMCS-7505 **i01984600**

NOTE	REF NO	GRAPHIC REF	PART NUMBER	QTY	PART NAME 1 2 3 4 5 6 (PRODUCT LEVEL)	SEE PAGE
	1	1	**8T-6902**	1	CLIP	
M	2	1	**108-2989**	2	BOLT (M8X1.25X130MM)	
	3	1	**164-1395**	1	KNOB	
	4	1	**183-6051**	1	BRACKET AS	
	5	1	**183-6075**	1	LEVER AS	
	6	1	**183-6081**	1	BOLT	
	7	1	**183-6084**	1	BEARING	
	8	1	**183-6085**	2	BEARING	
	9	1	**5P-4116**	2	WASHER-HARD (8.8X20.5X2MM THK)	

M-METRIC PART

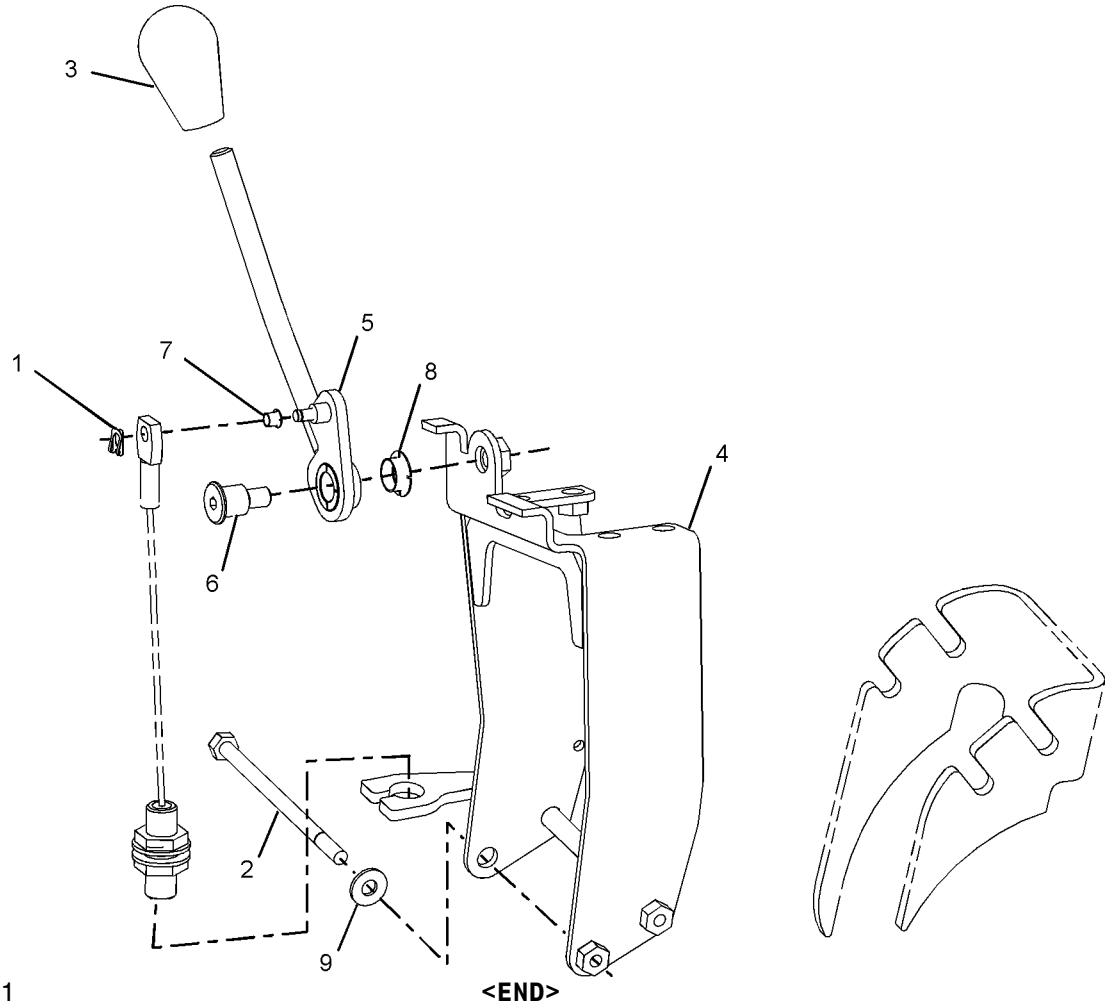

GRAPHIC #1 **<END>** g01028464

184-9950 MOUNTING GP-STICK

S/N: FDP18400-UP

PART OF 184-7925, 184-7927, 202-5971, 202-5973, 238-4788, 238-4789, 238-8218

BACKHOE AR-EXTENDABLE STICK

AN ATTACHMENT

SMCS-6502 **i01621866**

NOTE	REF NO	GRAPHIC REF	PART NUMBER	QTY	PART NAME 1 2 3 4 5 6 (PRODUCT LEVEL)	SEE PAGE
B	1	1	**9R-1502**	4	WASHER (4MM THK)	
	2	1	**9R-6163**	1	PIN	
	3	1	**159-0961**	1	PIN	
B	4	1	**124-0360**	3	WASHER-THRUST	
	5	1	**184-9956**	1	PIN	
	6	1	**2K-3549**	1	PIN-SPRING	
	7	1	**3B-8489**	2	FITTING-GREASE (1/8-27 THD)	
M	8	1	**6V-7687**	1	LOCKNUT (M12X1.75 THD)	
	9	1	**6V-8344**	2	RING	
M	10	1	**8T-5001**	1	BOLT (M12X1.75X130MM)	

B-USE AS REQUIRED
M-METRIC PART

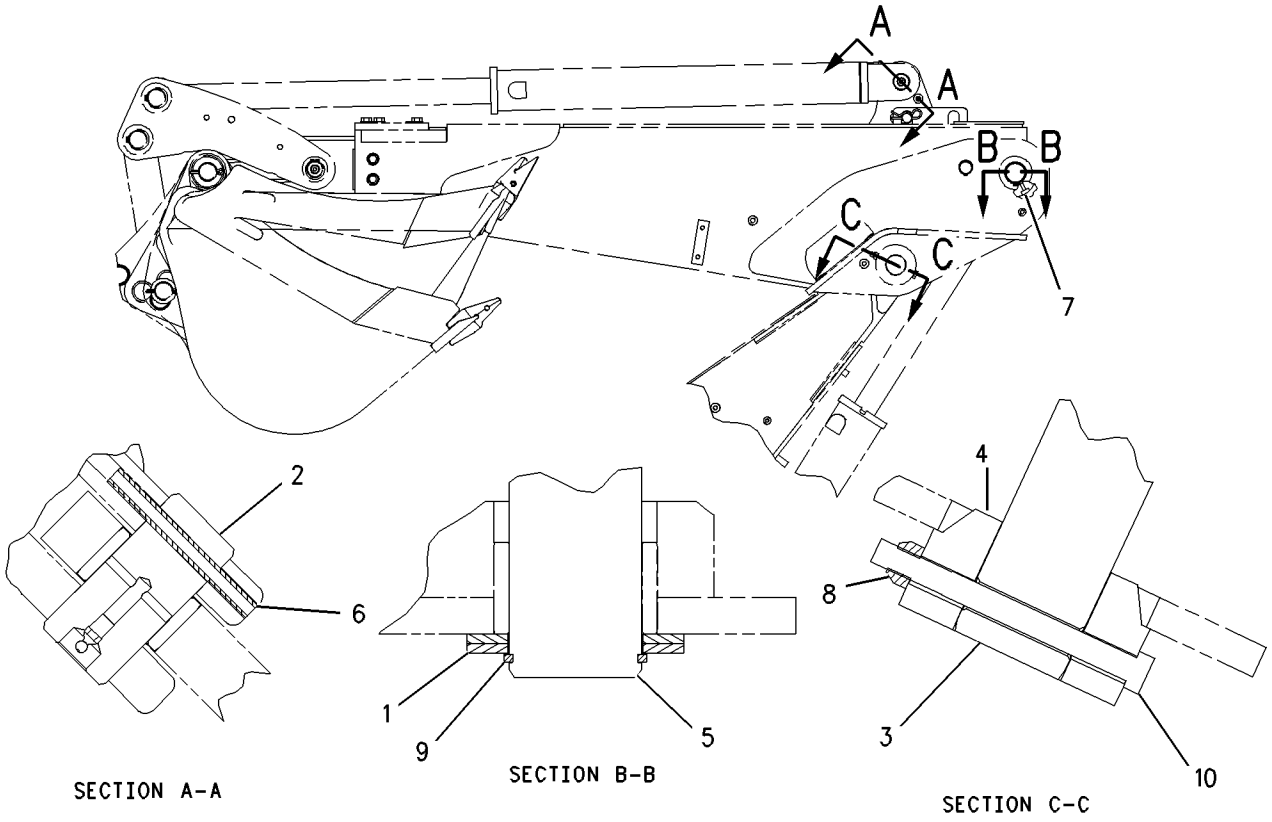

GRAPHIC #1 **<END>** g00839180

133-3362 PAD & GUARD GP-STABILIZER

S/N: FDP18400-UP
FLIPOVER
AN ATTACHMENT

SMCS-7222 **i01601282**

NOTE	REF NO	GRAPHIC REF	PART NUMBER	QTY	PART NAME 1 2 3 4 5 6 (PRODUCT LEVEL)	SEE PAGE
	1	1	**3B-5322**	4	PIN-COTTER	
	2	1	**8T-4986**	4	CLAMP-HOSE	
	3	1	**130-1637**	2	SHAFT	
	4	1	**130-1638**	2	PIN	
	5	1	**130-1640**	2	GUARD AS	
Y	6	1	*135-2876*	2	PAD GP-STABILIZER	601
	7	1	**188-3953**	2	PAD	
	8	1	**201-5810**	2	PLATE	
	9	1	**201-5812**	2	PLATE AS	
	10	1	**5P-4116**	2	WASHER-HARD (8.8X20.5X2MM THK)	
	11	1	**6V-8144**	4	RING	
M	12	1	**7X-2537**	2	BOLT (M8X1.25X35MM)	
B	13	1	**9R-0109**	12	WASHER (3MM THK)	
B	14	1	**9R-0158**	8	WASHER (46X69X3MM THK)	

B-USE AS REQUIRED
M-METRIC PART
Y-SEPARATE ILLUSTRATION

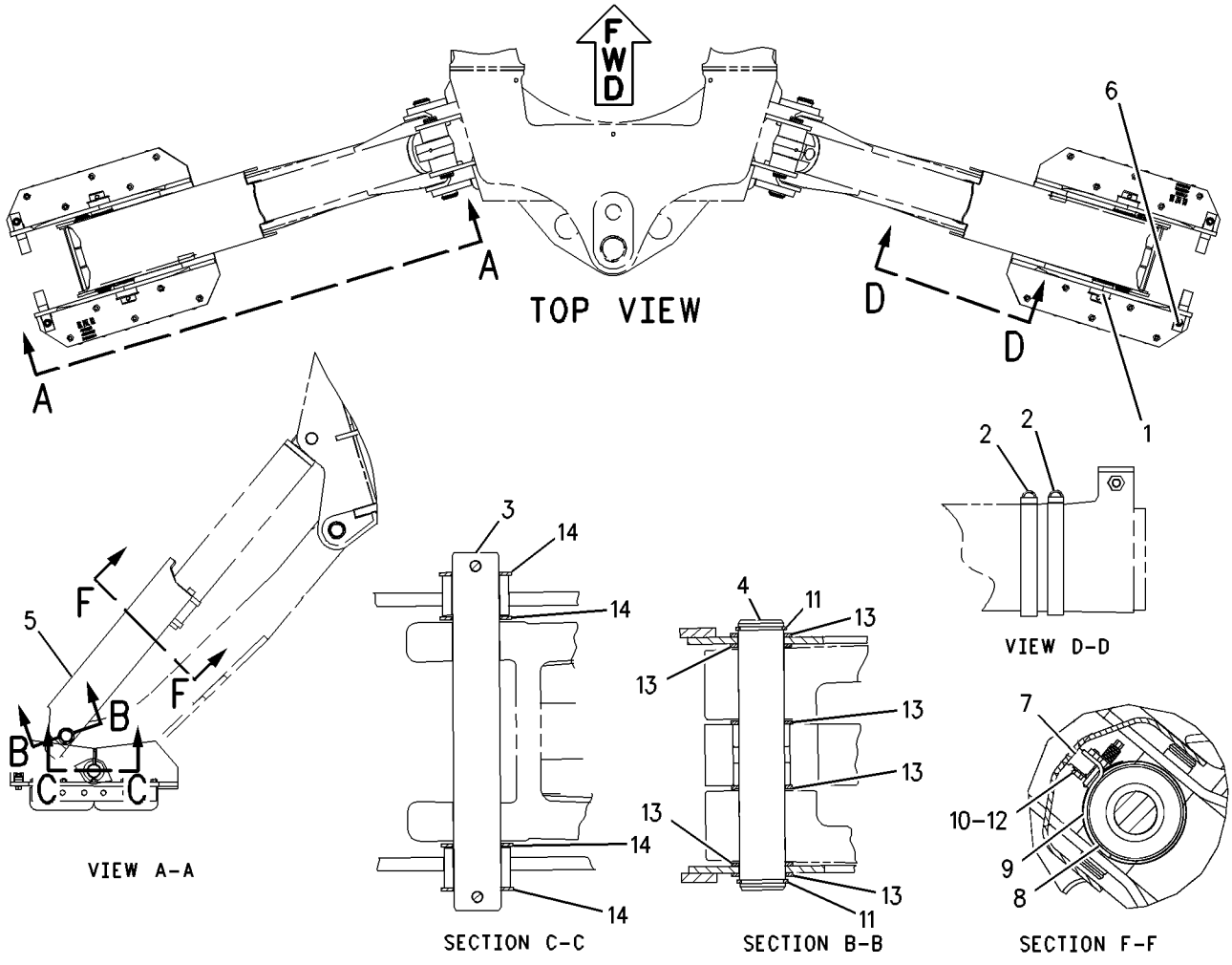

GRAPHIC #1 **<END>** g00829705

IMPLEMENTS

133-3363 PAD & GUARD GP-STABILIZER

S/N: FDP18400-UP
GROUSER
AN ATTACHMENT

SMCS-7222 **i01600877**

NOTE	REF NO	GRAPHIC REF	PART NUMBER	QTY	PART NAME 1 2 3 4 5 6 (PRODUCT LEVEL)	SEE PAGE
	1	1	**8T-4986**	4	CLAMP-HOSE	
	2	1	**9R-0424**	2	PIN	
	3	1	**130-1638**	2	PIN	
	4	1	**130-1640**	2	GUARD AS	
	5	1	**141-6208**	2	PAD-STABILIZER	
	6	1	**188-3953**	2	PAD	
	7	1	**201-5810**	2	PLATE	
	8	1	**201-5812**	2	PLATE AS	
	9	1	**5P-4116**	2	WASHER-HARD (8.8X20.5X2MM THK)	
	10	1	**6V-3213**	4	RING-RETAINING	
	11	1	**6V-8144**	4	RING	
M	12	1	**7X-2537**	2	BOLT (M8X1.25X35MM)	
	13	1	**9R-0109**	12	WASHER (3MM THK)	
	14	1	**9R-0158**	8	WASHER (46X69X3MM THK)	

M-METRIC PART

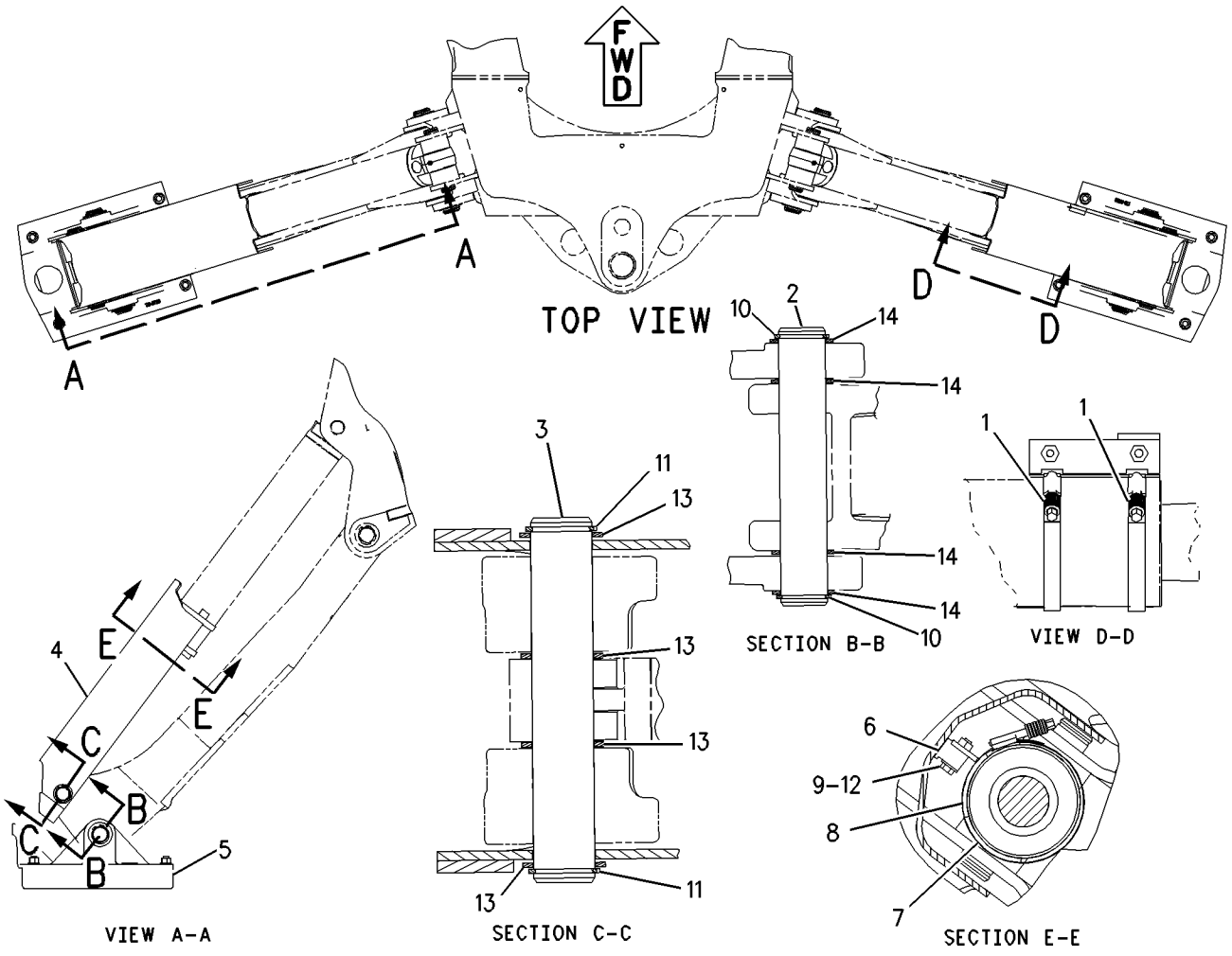

GRAPHIC #1 **<END>** g00832076

IMPLEMENTS

133-3366 PAD & GUARD GP-STABILIZER

S/N: FDP18400-UP
STREET
AN ATTACHMENT

SMCS-7222 **i01786332**

NOTE	REF NO	GRAPHIC REF	PART NUMBER	QTY	PART NAME 1 2 3 4 5 6 (PRODUCT LEVEL)	SEE PAGE
	1	1	**8T-4986**	4	CLAMP-HOSE	
	2	1	**9R-0424**	2	PIN	
	3	1	**130-1638**	2	PIN	
	4	1	**130-1640**	2	GUARD AS	
	5	1	**141-5150**	4	PAD AS	
	6	1	**141-6208**	2	PAD-STABILIZER	
	7	1	**188-3953**	2	PAD	
	8	1	**201-5810**	2	PLATE	
	9	1	**201-5812**	2	PLATE AS	
	10	1	**5P-4116**	2	WASHER-HARD (8.8X20.5X2MM THK)	
	11	1	**6V-3213**	4	RING-RETAINING	
	12	1	**6V-8144**	4	RING	
M	13	1	**7X-2537**	2	BOLT (M8X1.25X35MM)	
	14	1	**8T-4122**	12	WASHER-HARD (17X32X3.5MM THK)	
M	15	1	**8T-4132**	12	NUT (M16X2 THD)	
B	16	1	**9R-0109**	12	WASHER (3MM THK)	
B	17	1	**9R-0158**	8	WASHER (46X69X3MM THK)	

B-USE AS REQUIRED
M-METRIC PART

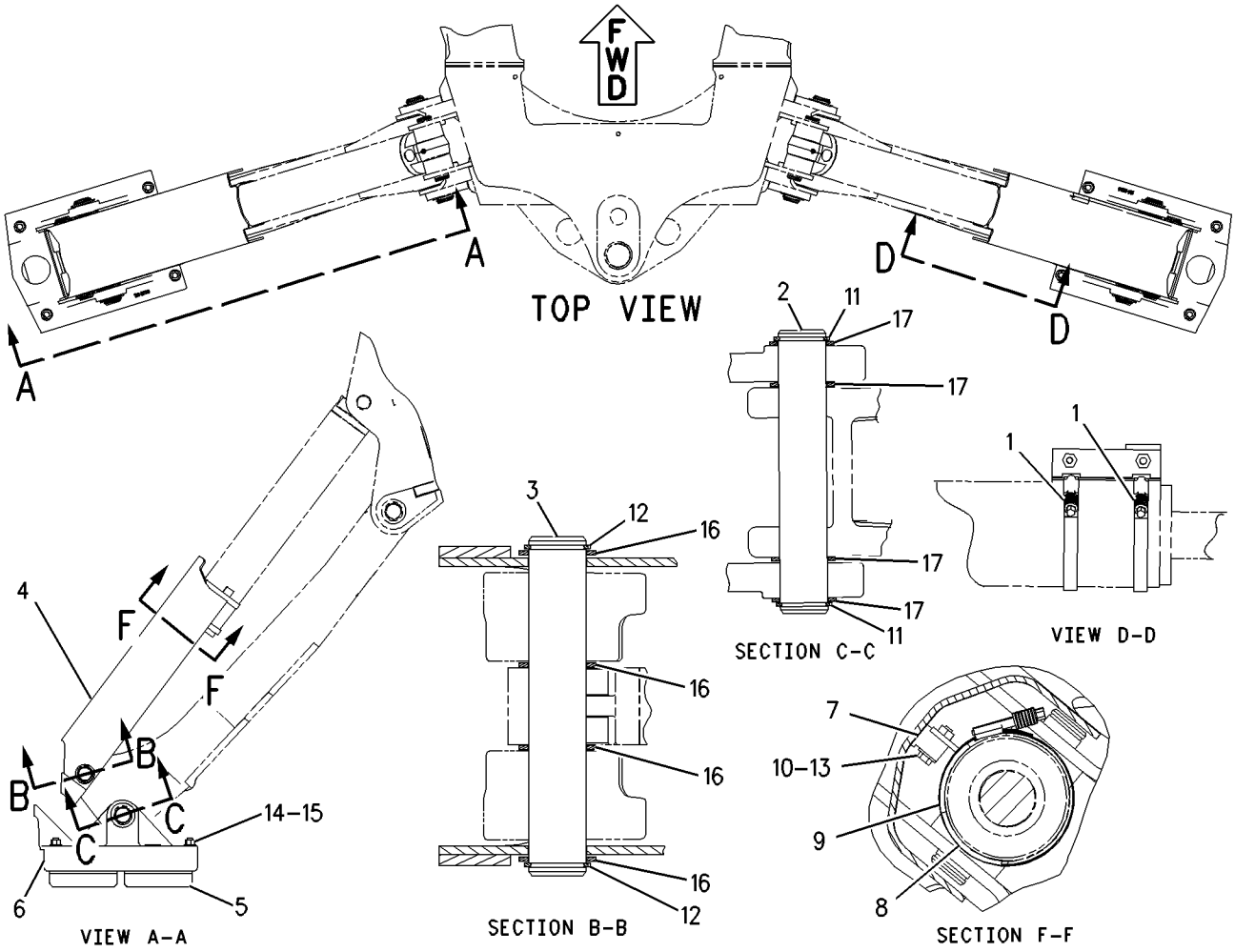

GRAPHIC #1 **<END>** g00832114

IMPLEMENTS

9R-1085 PAD & MTG GP-STABILIZER–STREET

S/N: FDP18400-UP
AN ATTACHMENT

SMCS-7222 **i01514650**

NOTE	REF NO	GRAPHIC REF	PART NUMBER	QTY	PART NAME 1 2 3 4 5 6 (PRODUCT LEVEL)	SEE PAGE
	1	1	**141-5150**	4	PAD AS	
M	2	1	**8T-4132**	12	NUT (M16X2 THD)	
	3	1	**9R-0424**	2	PIN	
	4	1	**8T-4122**	12	WASHER-HARD (17X32X3.5MM THK)	
	5	1	**6V-3213**	4	RING-RETAINING	
	6	1	**6V-8144**	4	RING	
C	7	1	**141-6208**	2	PAD-STABILIZER	
BC	8	1	**9R-0109**	8	WASHER (3MM THK)	
BC	9	1	**9R-0158**	8	WASHER	
	10	1	**9R-0422**	2	PIN	

B-USE AS REQUIRED
C-CHANGE FROM PREVIOUS TYPE
M-METRIC PART

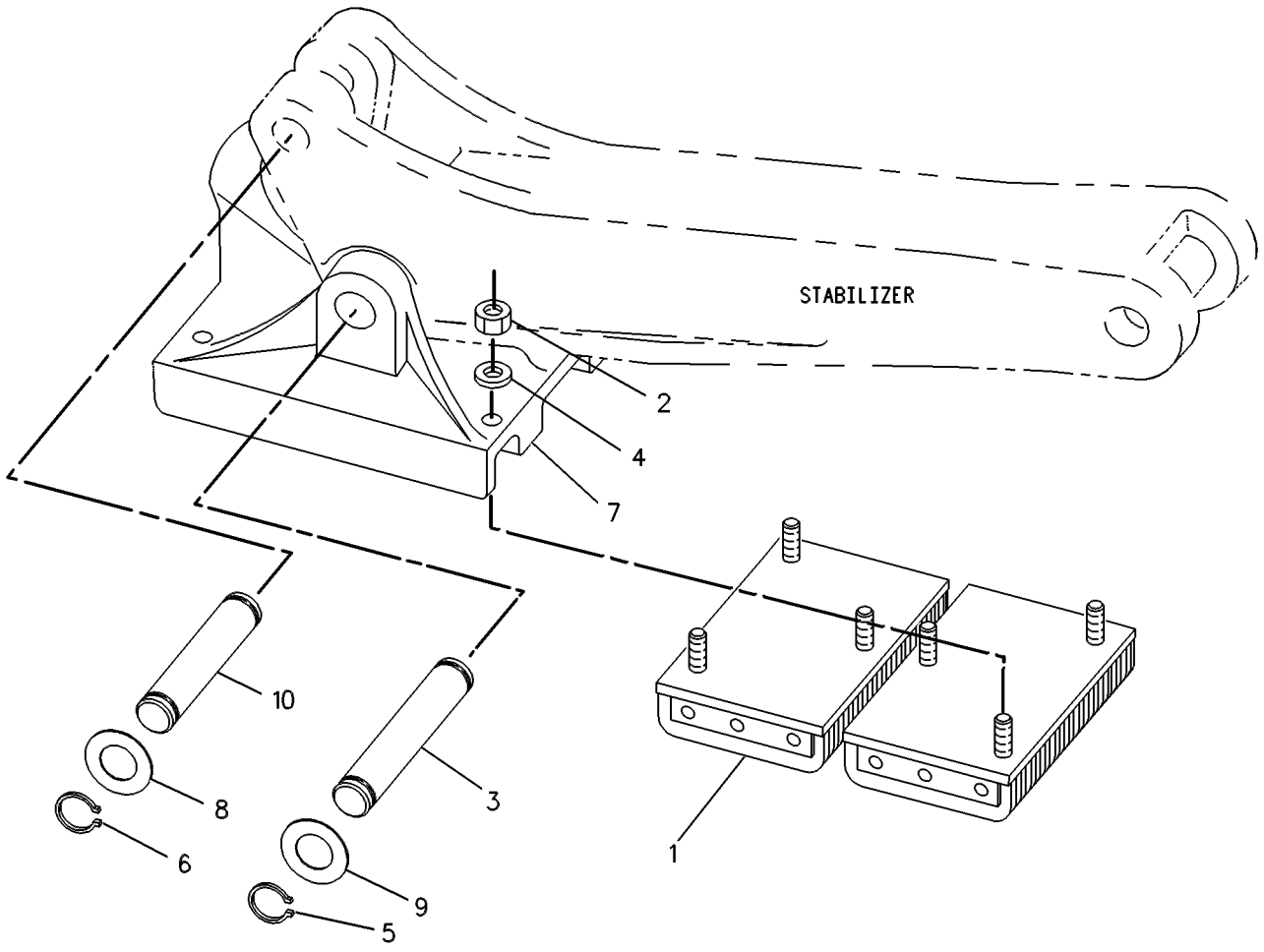

GRAPHIC #1 **<END>** g00282112

9R-6007 PAD & MTG GP-STABILIZER—FLIPOVER

S/N: FDP18400-UP
AN ATTACHMENT

SMCS-7222 **i01780277**

NOTE	REF NO	GRAPHIC REF	PART NUMBER	QTY	PART NAME 1 2 3 4 5 6 (PRODUCT LEVEL)	SEE PAGE
B	1	1	**9R-0109**	14	WASHER (3MM THK)	
B	2	1	**9R-0158**	8	WASHER (46X69X3MM THK)	
Y	3	1	*9R-6062*	2	PAD GP-STABILIZER	600
	4	1	**6V-8144**	4	RING	
	5	1	**130-1638**	2	PIN	
	6	1	**188-5004**	2	CABLE AS	
	7	1	**130-1637**	2	SHAFT	
	8	1	**3B-5322**	4	PIN-COTTER	

B-USE AS REQUIRED
Y-SEPARATE ILLUSTRATION

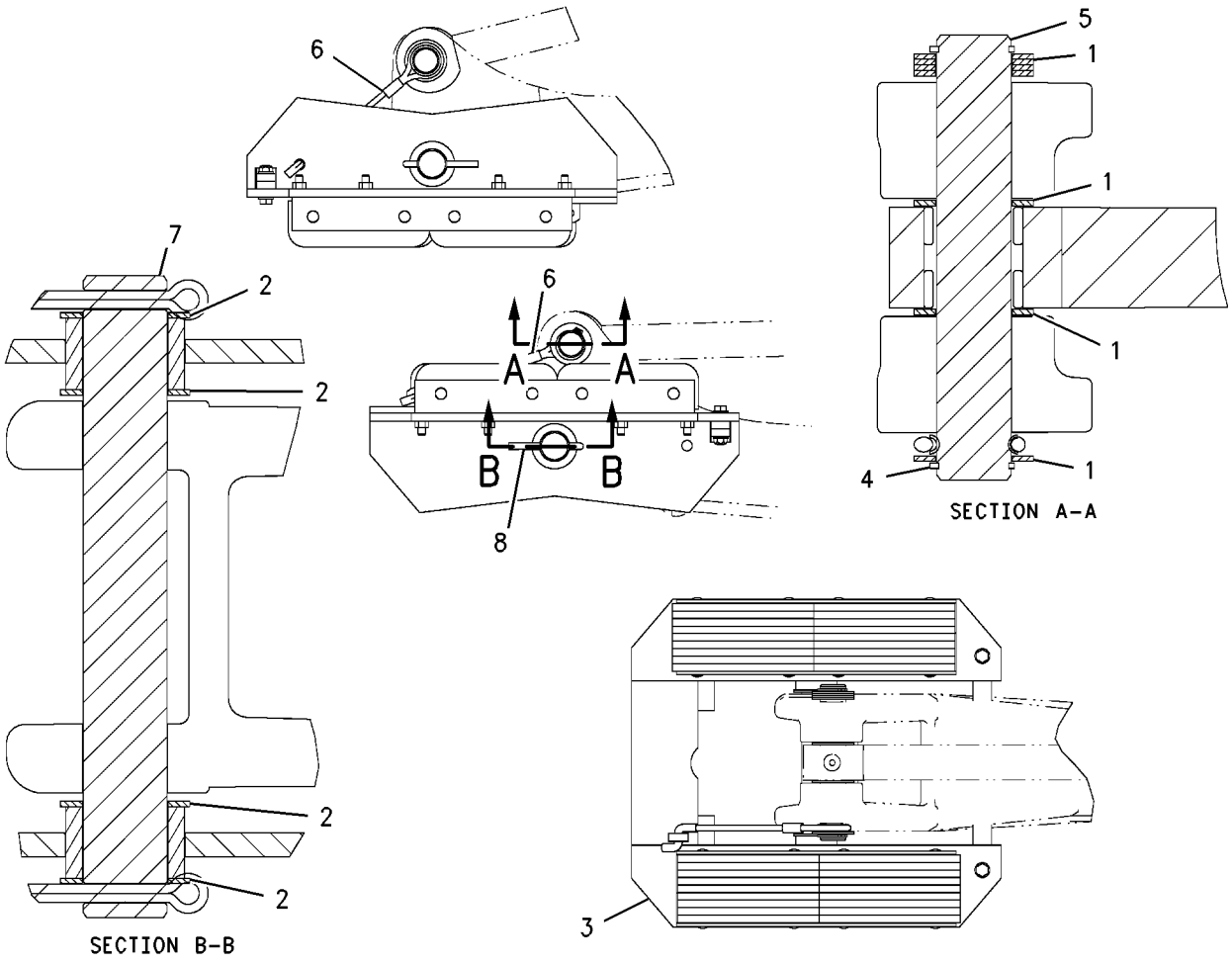

GRAPHIC #1 **<END>** g00877632

116-4942 PAD & MTG GP-STABILIZER–GROUSER

S/N: FDP18400-UP
AN ATTACHMENT

SMCS-7222 **i01542172**

NOTE	REF NO	GRAPHIC REF	PART NUMBER	QTY	PART NAME 1 2 3 4 5 6 (PRODUCT LEVEL)	SEE PAGE
BC	1	1	**9R-0109**	12	WASHER (3MM THK)	
BC	2	1	**9R-0158**	14	WASHER (46X69X3MM THK)	
	3	1	**9R-0422**	2	PIN	
	4	1	**9R-0424**	2	PIN	
C	5	1	**141-6208**	2	PAD-STABILIZER	
	6	1	**6V-3213**	4	RING-RETAINING	
	7	1	**6V-8144**	4	RING	

B-USE AS REQUIRED
C-CHANGE FROM PREVIOUS TYPE

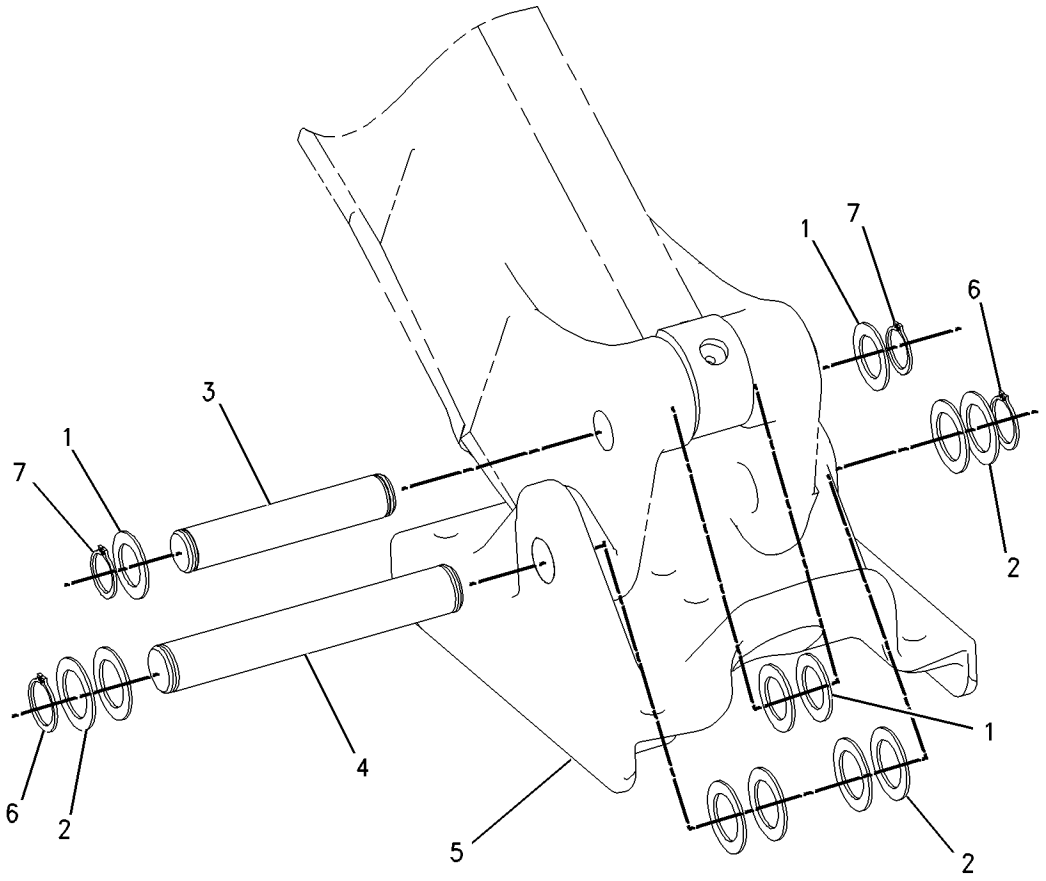

GRAPHIC #1 **<END>** g00801165

9R-6062 PAD GP-STABILIZER

S/N: FDP18400-UP
PART OF 9R-6007 PAD & MTG GP-STABILIZER
AN ATTACHMENT

SMCS-7222 **i01786475**

NOTE	REF NO	GRAPHIC REF	PART NUMBER	QTY	PART NAME 1 2 3 4 5 6 (PRODUCT LEVEL)	SEE PAGE
	1	1	**9R-5555**	2	PAD AS	
	2	1	**130-1642**	1	PAD AS	
C	3	1	**146-1591**	2	LATCH	
	4	1	**6V-5729**	2	LOCKNUT	
	5	1	**7X-0310**	2	BOLT (7/16-14X2 IN)	
	6	1	**7X-0447**	8	NUT (7/16-14 THD)	
	7	1	**8T-5360**	4	WASHER (12X22.5X2.5MM THK)	

C-CHANGE FROM PREVIOUS TYPE

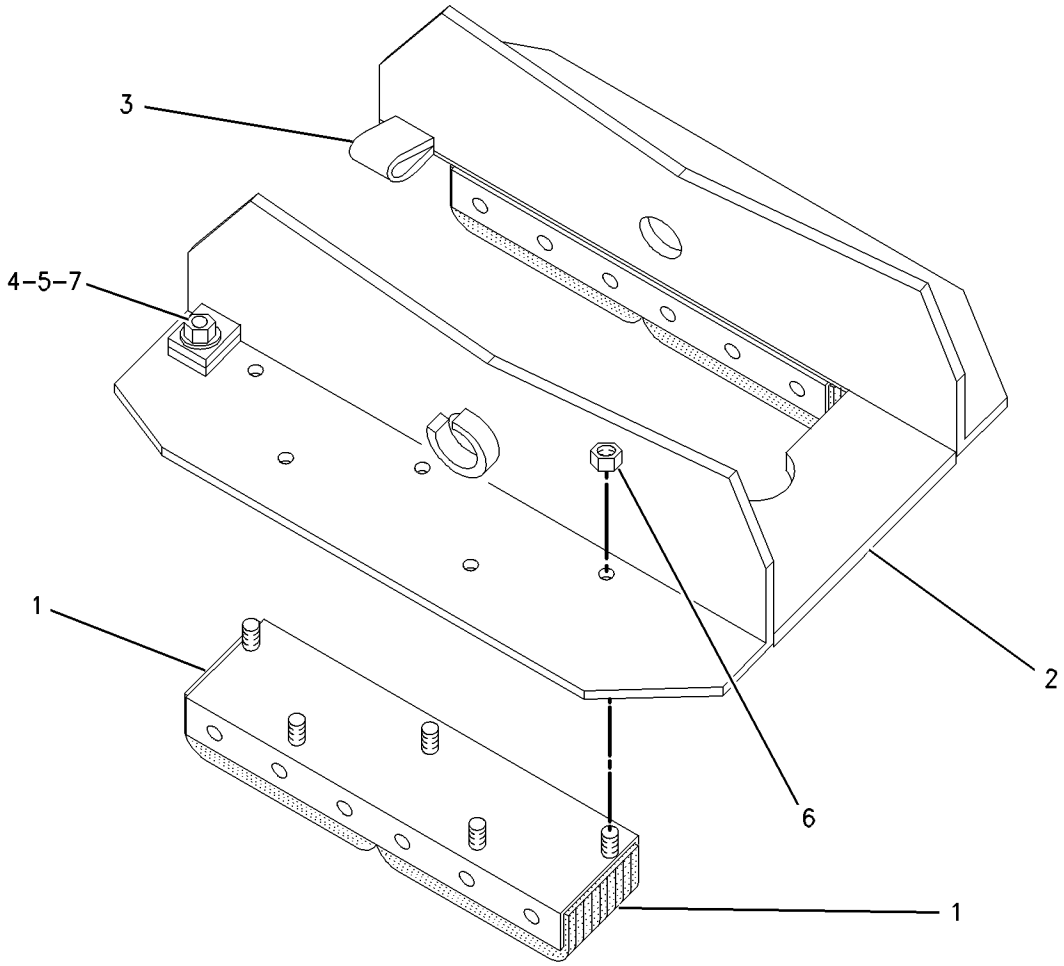

GRAPHIC #1 **<END>** g00844245

135-2876 PAD GP-STABILIZER

S/N: FDP18400-UP
PART OF 133-3362 PAD & GUARD GP-STABILIZER
AN ATTACHMENT

SMCS-7222 **i01786479**

NOTE	REF NO	GRAPHIC REF	PART NUMBER	QTY	PART NAME 1 2 3 4 5 6 (PRODUCT LEVEL)	SEE PAGE
	1	1	**9R-5555**	2	PAD AS	
	2	1	**130-1642**	1	PAD AS	
	3	1	**146-1589**	2	LATCH	
	4	1	**146-1590**	2	LATCH	
	5	1	**6V-5729**	2	LOCKNUT	
	6	1	**7X-0310**	2	BOLT (7/16-14X2 IN)	
	7	1	**7X-0447**	8	NUT (7/16-14 THD)	
	8	1	**8T-5360**	4	WASHER (12X22.5X2.5MM THK)	

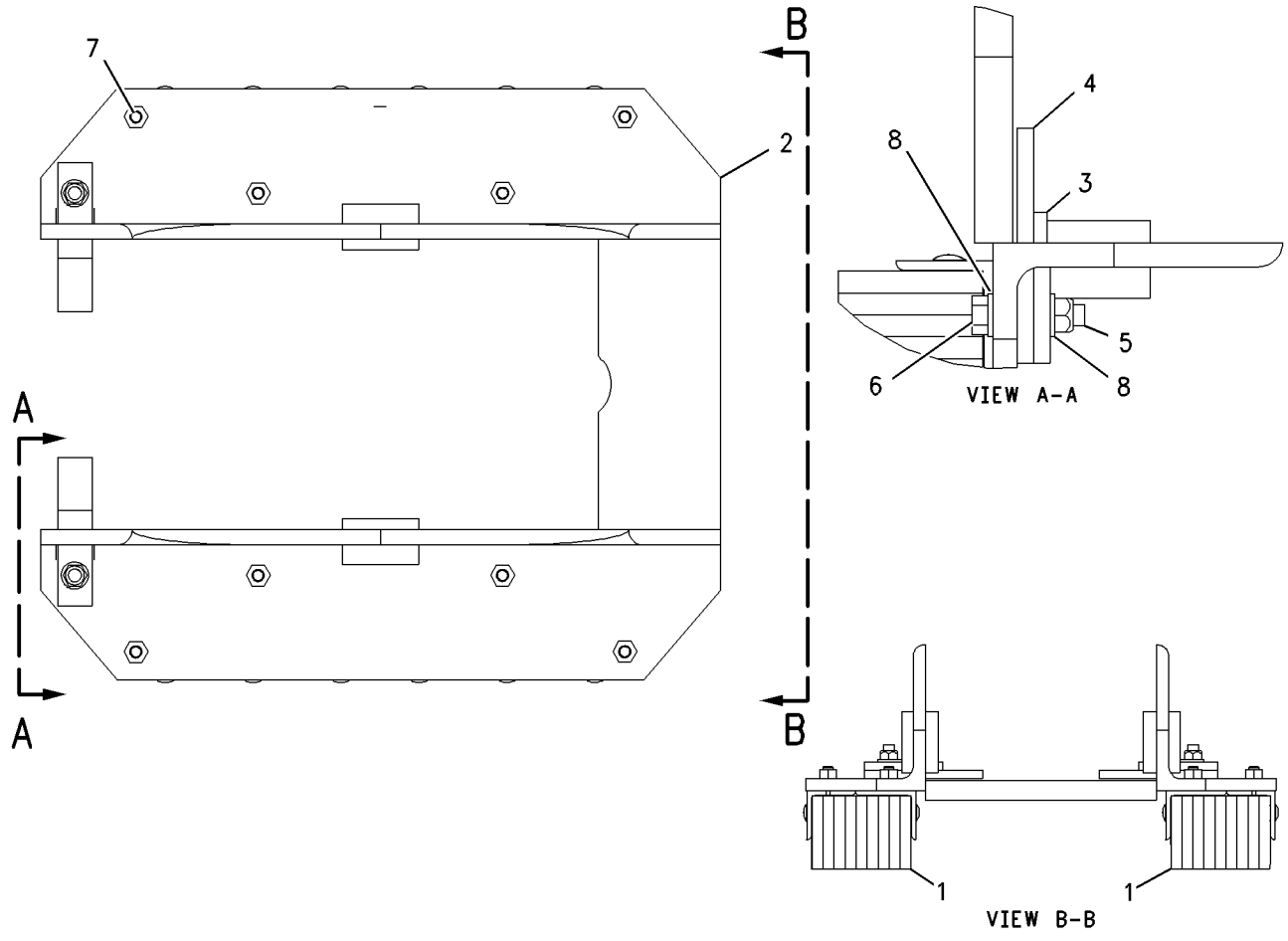

GRAPHIC #1 **<END>** g00845450

9R-0041 STABILIZER GP-BACKHOE

S/N: FDP18400-UP

PART OF 214-6951 CHASSIS AR

SMCS-7222 **i01711668**

NOTE	REF NO	GRAPHIC REF	PART NUMBER	QTY	PART NAME 1 2 3 4 5 6 (PRODUCT LEVEL)	SEE PAGE
B	1	1	**9R-0109**	8	WASHER (3MM THK)	
B	2	1	**9R-0158**	14	WASHER (46X69X3MM THK)	
	3	1	**9R-0423**	2	PIN	
	4	1	**9R-0424**	2	PIN	
B	5	1	**111-4337**	2	WASHER (1MM THK)	
B	6	1	**119-4594**	2	WASHER (1MM THK)	
	7	1	**130-0777**	2	STABILIZER AS	
					(EACH INCLUDES)	
		1	**9R-0411**	2	BEARING-SLEEVE	
	8	1	**3B-8489**	4	FITTING-GREASE (1/8-27 THD)	
	9	1	**6V-3213**	4	RING-RETAINING	
	10	1	**6V-8144**	4	RING	

B-USE AS REQUIRED

9R-0041 **STABILIZER GP-BACKHOE** ***(contd.)*** **i01711668**

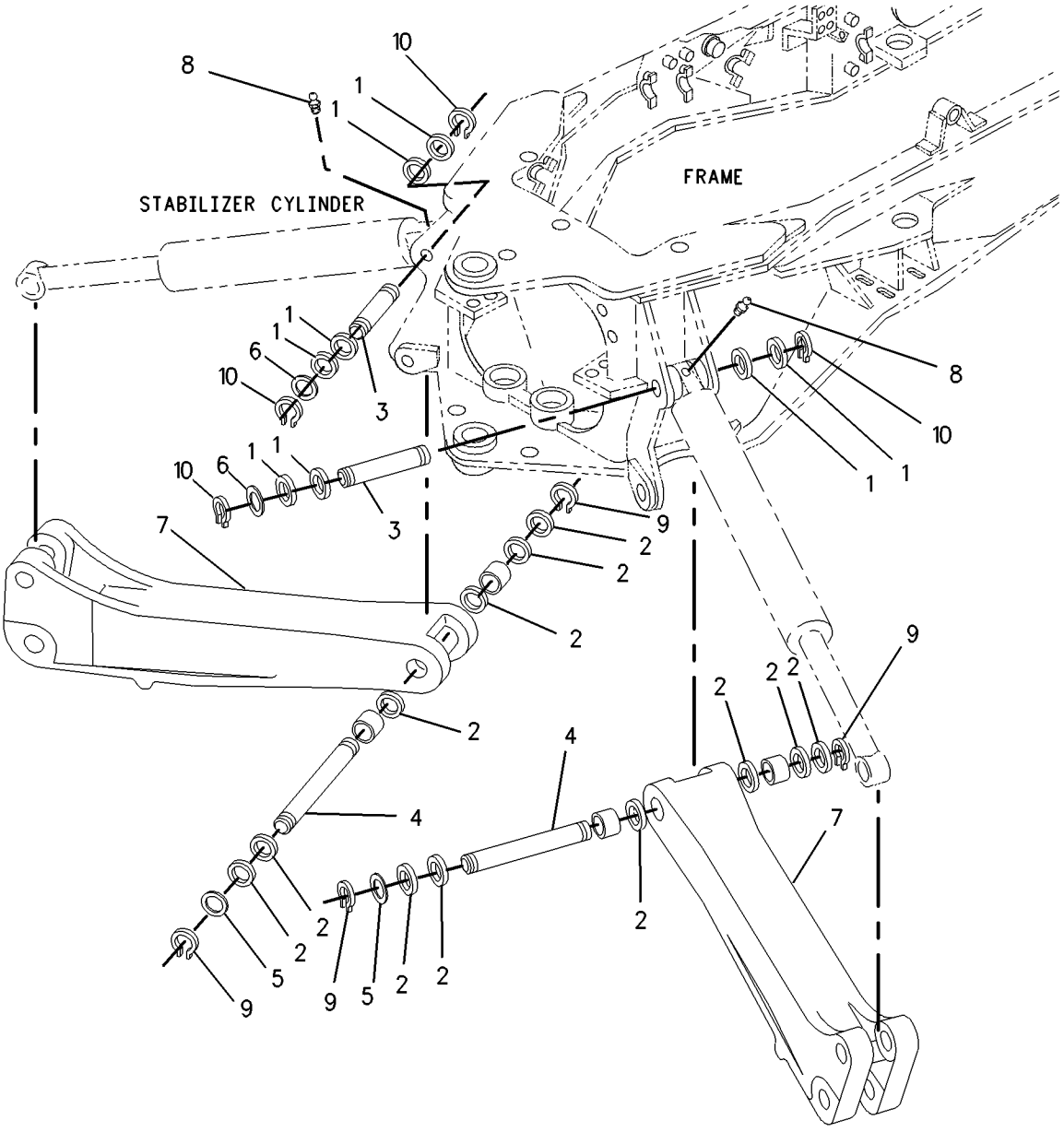

GRAPHIC #1 **<END>** g00880840

IMPLEMENTS

184-6786 STICK GP-EXTENDABLE

S/N: FDP18400-UP

PART OF 184-7925, 184-7927, 202-5971, 202-5973, 238-4788, 238-4789, 238-8218 BACKHOE AR-EXTENDABLE STICK, 214-5553 CONVERSION GP-EXTENDABLE STICK AN ATTACHMENT

SMCS-6533 **i01944010**

NOTE	REF NO	GRAPHIC REF	PART NUMBER	QTY	PART NAME 1 2 3 4 5 6 (PRODUCT LEVEL)	SEE PAGE
	1	1	**9R-2958**	1	PIN	
	2	1	**9R-2959**	2	CLIP	
B	3	1	**117-0754**	4	SHIM (1MM THK)	
Y	4	1	*155-6586*	1	CYLINDER GP-EXTENDABLE STICK	376
B	5	1	**187-3834**	6	SHIM (1MM THK)	
B	6	1	**187-3832**	12	SHIM (1MM THK)	
B	7	1	**187-3835**	4	SHIM (0.5MM THK)	
B	8	1	**187-3833**	4	SHIM (0.5MM THK)	
	9	1	**173-2769**	1	PIN	
	10	1	**173-7758**	1	PIN	
B	11	1	**187-3836**	3	SHIM (1MM THK)	
B	12	1	**187-3837**	2	SHIM (0.5MM THK)	
Y	13	1	**184-6784**	1	HOUSING AS-EXTENDABLE STICK	581
	14	1	**184-6785**	1	EXTENSION AS	
	14A	1	**9R-0162**	2	BEARING	
	14B	1	**9R-0411**	3	BEARING-SLEEVE	
F		1	**9R-9254**	2	BOSS	
	15	1	**187-3825**	1	PAD AS	
	16	1	**187-3826**	4	PAD AS	
	17	1	**187-3827**	2	PAD AS	
	18	1	**187-3828**	1	PAD AS	
B	19	1	**198-0014**	3	SHIM (1MM THK)	
B	20	1	**198-0015**	2	SHIM (0.5MM THK)	
	21	1	**187-4052**	1	PLATE	
	22	1	**1J-6474**	2	RING-RETAINING	
	23	1	**1L-3768**	2	RING-RETAINING	
	24	1	**3B-8489**	1	FITTING-GREASE	
	25	1	**8T-4122**	6	WASHER-HARD (17X32X3.5MM THK)	
M	26	1	**8T-4179**	4	BOLT (M12X1.75X20MM)	
M	27	1	**8T-4184**	2	BOLT (M12X1.75X45MM)	
M	28	1	**8T-4192**	10	BOLT (M12X1.75X25MM)	
	29	1	**8T-4223**	6	WASHER-HARD (13.5X25.5X3MM THK)	
M	30	1	**8T-7338**	6	BOLT (M16X2.0X45MM)	
	31	1	**8T-7971**	8	WASHER-HARD (13.5X25.5X5MM THK)	

B-USE AS REQUIRED
F-NOT SHOWN
M-METRIC PART
Y-SEPARATE ILLUSTRATION

184-6786 **STICK GP-EXTENDABLE** *(contd.)* **i01944010**

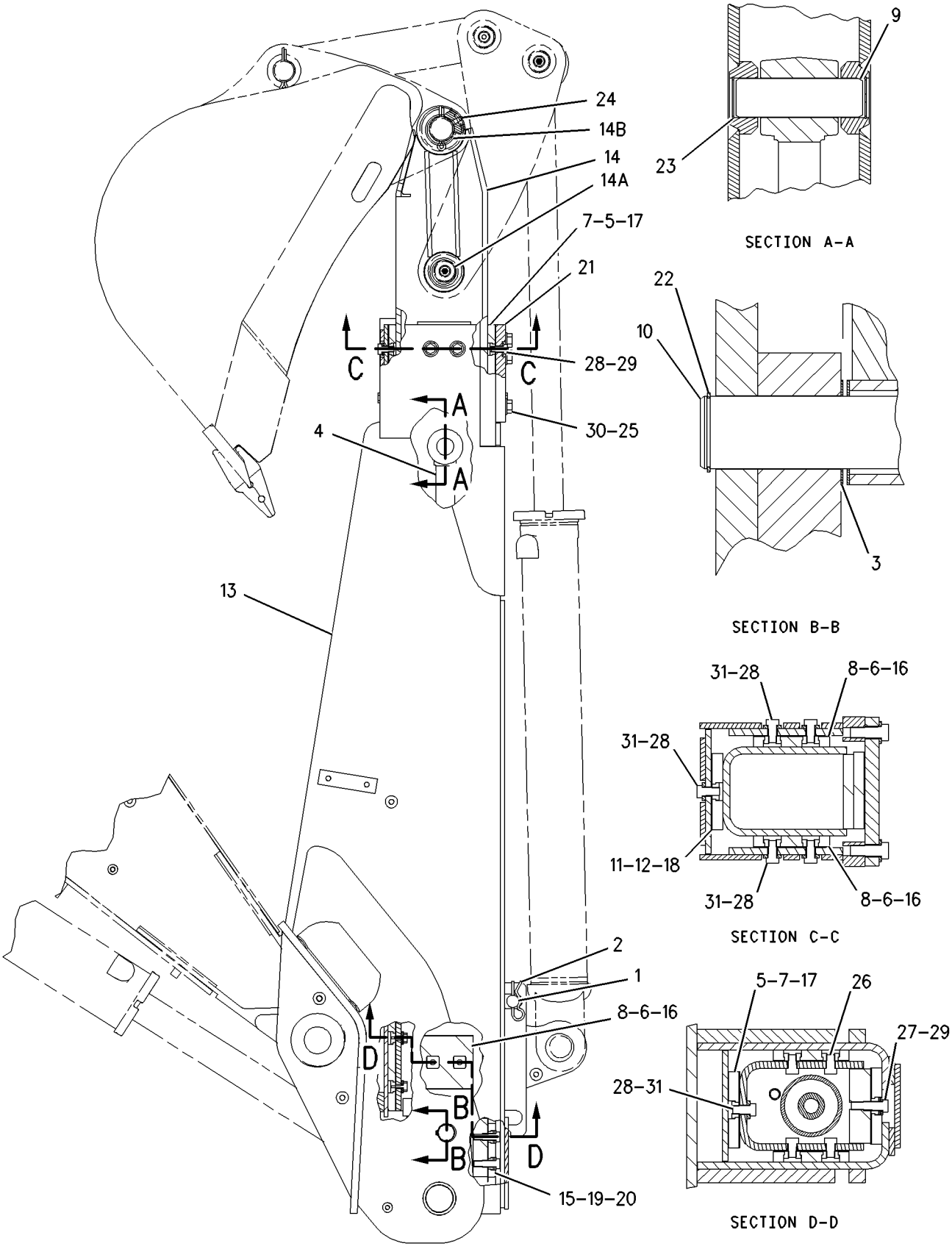

GRAPHIC #1 **<END>** g00773441

184-6178 STICK GP-HOE

S/N: FDP18400-UP

PART OF 238-4786 BACKHOE AR-EXTENDABLE STICK, 184-7913, 184-7915, 184-7916, 184-7917, 202-5958, 202-5961, 202-5963, 238-4785, 238-4787, 238-8219 BACKHOE AR-STANDARD STICK AN ATTACHMENT

SMCS-6502 **i01659583**

NOTE	REF NO	GRAPHIC REF	PART NUMBER	QTY	PART NAME 1 2 3 4 5 6 (PRODUCT LEVEL)	SEE PAGE
	1	1	**3B-8488**	1	FITTING-GREASE (1/8-27 THD)	
B	2	1	**9R-1502**	4	WASHER (4MM THK)	
B	3	1	**9R-1510**	4	WASHER (4MM THK)	
	4	1	**9R-8663**	1	PIN	
B	5	1	**124-0360**	3	WASHER-THRUST	
	6	1	**179-9961**	1	PLUG-PROTECTIVE	
	7	1	**184-1307**	1	STICK AS	
	7A	1	**9R-0139**	2	BEARING-SLEEVE	
	7B	1	**9R-0162**	4	BEARING	
	7C	1	**9R-0411**	2	BEARING-SLEEVE	
	7D	1	**107-6711**	2	BLOCK	
	7E	1	**172-9992**	2	BOSS	
	8	1	**174-5696**	1	PIN	
	9	1	**3B-8489**	2	FITTING-GREASE (1/8-27 THD)	
	10	1	**6V-4364**	2	RING-RETAINING	
M	11	1	**6V-7687**	1	LOCKNUT (M12X1.75 THD)	
	12	1	**6V-8344**	2	RING	
M	13	1	**8T-5001**	1	BOLT (M12X1.75X130MM)	
	14	1	**159-0961**	1	PIN	

B-USE AS REQUIRED
M-METRIC PART

184-6178 **STICK GP-HOE** *(contd.)* **i01659583**

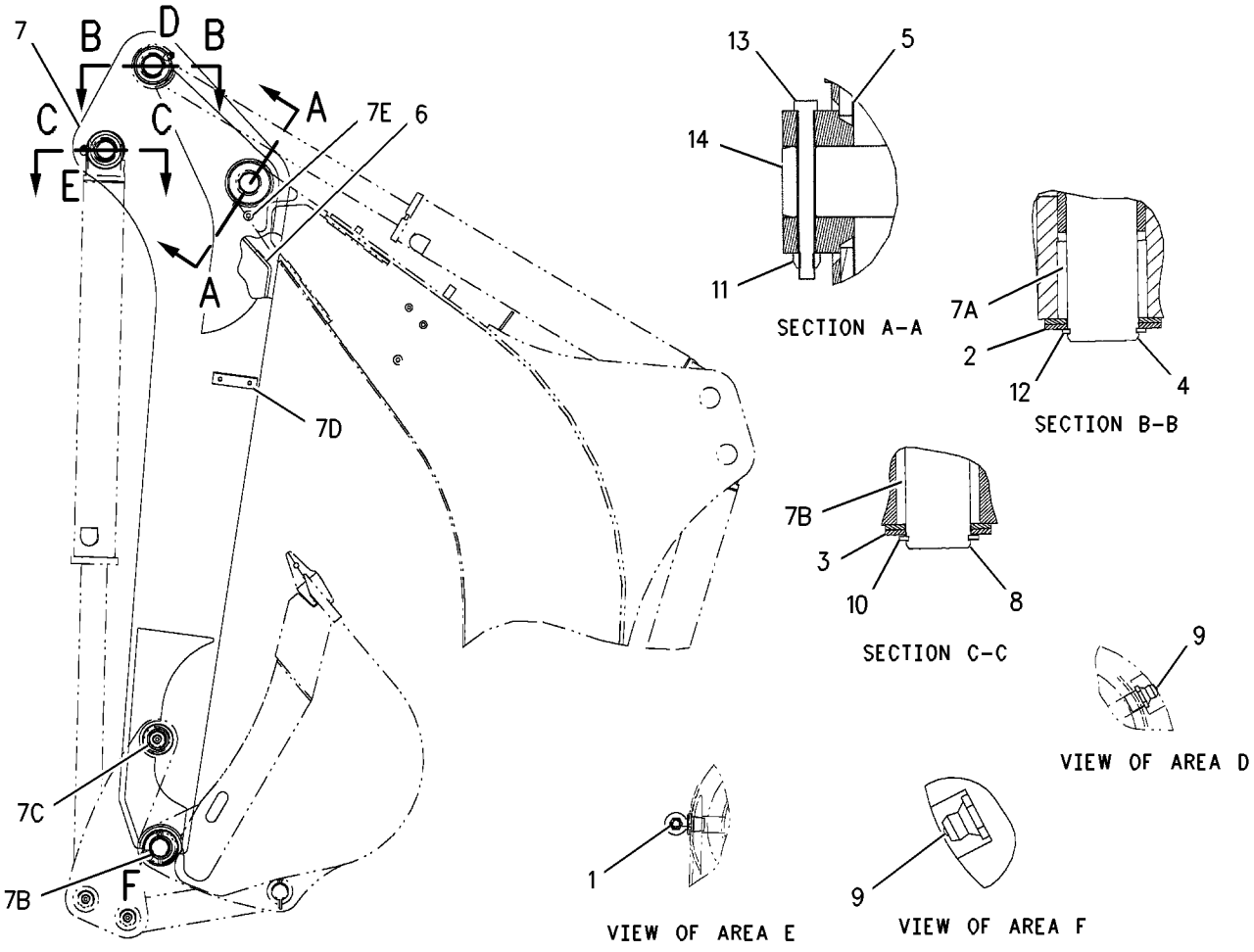

GRAPHIC #1 **<END>** g00856348

WORK TOOLS

111-8634 BUCKET AR-MULTIPURPOSE

S/N: FDP18400-UP
PART OF 111-8636 BUCKET AR-MULTIPURPOSE
AN ATTACHMENT

SMCS-6104 **i01422436**

NOTE	PART NUMBER	QTY	PART NAME 1 2 3 4 5 6 (PRODUCT LEVEL)	SEE PAGE
Y	**104-3965**	1	BUCKET GP-MULTIPURPOSE	688
Y	**185-1839**	2	CYLINDER GP-MULTIPURPOSE BUKT	380
Y	*9R-5788*	1	LINES GP-MULTIPURPOSE BUCKET	451
Y	*9R-4668*	1	MOUNTING GP-CYLINDER	498

Y-SEPARATE ILLUSTRATION

<END>

111-8635 BUCKET AR-MULTIPURPOSE

S/N: FDP18400-UP
WITH FORKS
PART OF 111-8637 BUCKET AR-MULTIPURPOSE
AN ATTACHMENT

SMCS-6104 **i01422956**

NOTE	PART NUMBER	QTY	PART NAME 1 2 3 4 5 6 (PRODUCT LEVEL)	SEE PAGE
Y	**104-3964**	1	BUCKET GP-MULTIPURPOSE	687
Y	**185-1839**	2	CYLINDER GP-MULTIPURPOSE BUKT	380
Y	*104-6310*	1	FORK GP	700
Y	*9R-5788*	1	LINES GP-MULTIPURPOSE BUCKET	451
Y	*9R-4668*	1	MOUNTING GP-CYLINDER	498

Y-SEPARATE ILLUSTRATION

<END>

111-8636 BUCKET AR-MULTIPURPOSE

S/N: FDP18400-UP
AN ATTACHMENT

SMCS-6104 **i01658044**

NOTE	PART NUMBER	QTY	PART NAME 1 2 3 4 5 6 (PRODUCT LEVEL)	SEE PAGE
Y	**111-8634**	1	BUCKET AR-MULTIPURPOSE	608
	106-9387	1	FILM-INDICATOR (BUCKET)	

Y-SEPARATE ILLUSTRATION

<END>

111-8637 BUCKET AR-MULTIPURPOSE

S/N: FDP18400-UP
WITH FORKS
AN ATTACHMENT

SMCS-6104 **i01658045**

NOTE	PART NUMBER	QTY	PART NAME 1 2 3 4 5 6 (PRODUCT LEVEL)	SEE PAGE
Y	**111-8635**	1	BUCKET AR-MULTIPURPOSE	608
	106-9387	1	FILM-INDICATOR (BUCKET)	

Y-SEPARATE ILLUSTRATION

<END>

112-0938 BUCKET AR-MULTIPURPOSE

S/N: FDP18400-UP
PART OF 112-0940 BUCKET AR-MULTIPURPOSE
AN ATTACHMENT

SMCS-6104 **i01422430**

NOTE	PART NUMBER	QTY	PART NAME 1 2 3 4 5 6 (PRODUCT LEVEL)	SEE PAGE
Y	**108-3036**	1	BUCKET GP-MULTIPURPOSE	689
Y	**185-1839**	2	CYLINDER GP-MULTIPURPOSE BUKT	380
Y	*9R-3712*	1	LINES GP-MULTIPURPOSE BUCKET	449
Y	*9R-4668*	1	MOUNTING GP-CYLINDER	498

Y-SEPARATE ILLUSTRATION

<END>

112-0939 BUCKET AR-MULTIPURPOSE

S/N: FDP18400-UP
WITH FORKS
PART OF 112-0941 BUCKET AR-MULTIPURPOSE
AN ATTACHMENT

SMCS-6104 **i01441761**

NOTE	PART NUMBER	QTY	PART NAME 1 2 3 4 5 6 (PRODUCT LEVEL)	SEE PAGE
Y	**112-1778**	1	BUCKET GP-MULTIPURPOSE	690
Y	**185-1839**	2	CYLINDER GP-MULTIPURPOSE BUKT	380
Y	*104-6310*	1	FORK GP	700
Y	*9R-3712*	1	LINES GP-MULTIPURPOSE BUCKET	449
Y	*9R-4668*	1	MOUNTING GP-CYLINDER	498

Y-SEPARATE ILLUSTRATION

<END>

WORK TOOLS

112-0940 BUCKET AR-MULTIPURPOSE

S/N: FDP18400-UP
AN ATTACHMENT

SMCS-6104 **i01658064**

NOTE	PART NUMBER	QTY	PART NAME 1 2 3 4 5 6 (PRODUCT LEVEL)	SEE PAGE
Y	**112-0938**	1	BUCKET AR-MULTIPURPOSE	609
	106-9387	1	FILM-INDICATOR (BUCKET)	

Y-SEPARATE ILLUSTRATION

<END>

112-0941 BUCKET AR-MULTIPURPOSE

S/N: FDP18400-UP
WITH FORKS
CANNOT BE USED WITH ALL WHEEL STEER
AN ATTACHMENT

SMCS-6104 **i01658065**

NOTE	PART NUMBER	QTY	PART NAME 1 2 3 4 5 6 (PRODUCT LEVEL)	SEE PAGE
Y	**112-0939**	1	BUCKET AR-MULTIPURPOSE	609
	106-9387	1	FILM-INDICATOR (BUCKET)	

Y-SEPARATE ILLUSTRATION

<END>

WORK TOOLS

9R-5201 BUCKET AS-GENERAL PURPOSE

S/N: FDP18400-UP
0.76 CU M (1.00 CU YD)
AN ATTACHMENT

SMCS-6101 **i01933593**

NOTE	REF NO	GRAPHIC REF	PART NUMBER	QTY	PART NAME 1 2 3 4 5 6 (PRODUCT LEVEL)	SEE PAGE
	1	1	**9R-5205**	1	EDGE-LH	
	2	1	**9R-5206**	1	EDGE-RH	
	3	1	**9R-0347**	2	EDGE	
	4	1	**9R-4672**	1	EDGE	
	5	1	*9R-0336*	2	BRACKET AS-LIFT (RH)	
					(EACH INCLUDES)	
	5A	1	**9R-0111**	1	BEARING-SLEEVE	
	6	1	*9R-0343*	2	BRACKET AS-LIFT (LH)	
					(EACH INCLUDES)	
	6A	1	**9R-0111**	1	BEARING-SLEEVE	
	7	1	*9R-4483*	1	BRACKET AS-TILT (RH)	
	7A	1	**9R-4485**	1	BOSS	
	7B	1	**9R-4486**	1	BOSS	
	8	1	**9R-4487**	1	BRACKET AS-TILT (LH)	
	8A	1	**9R-4485**	1	BOSS	
	8B	1	**9R-4486**	1	BOSS	

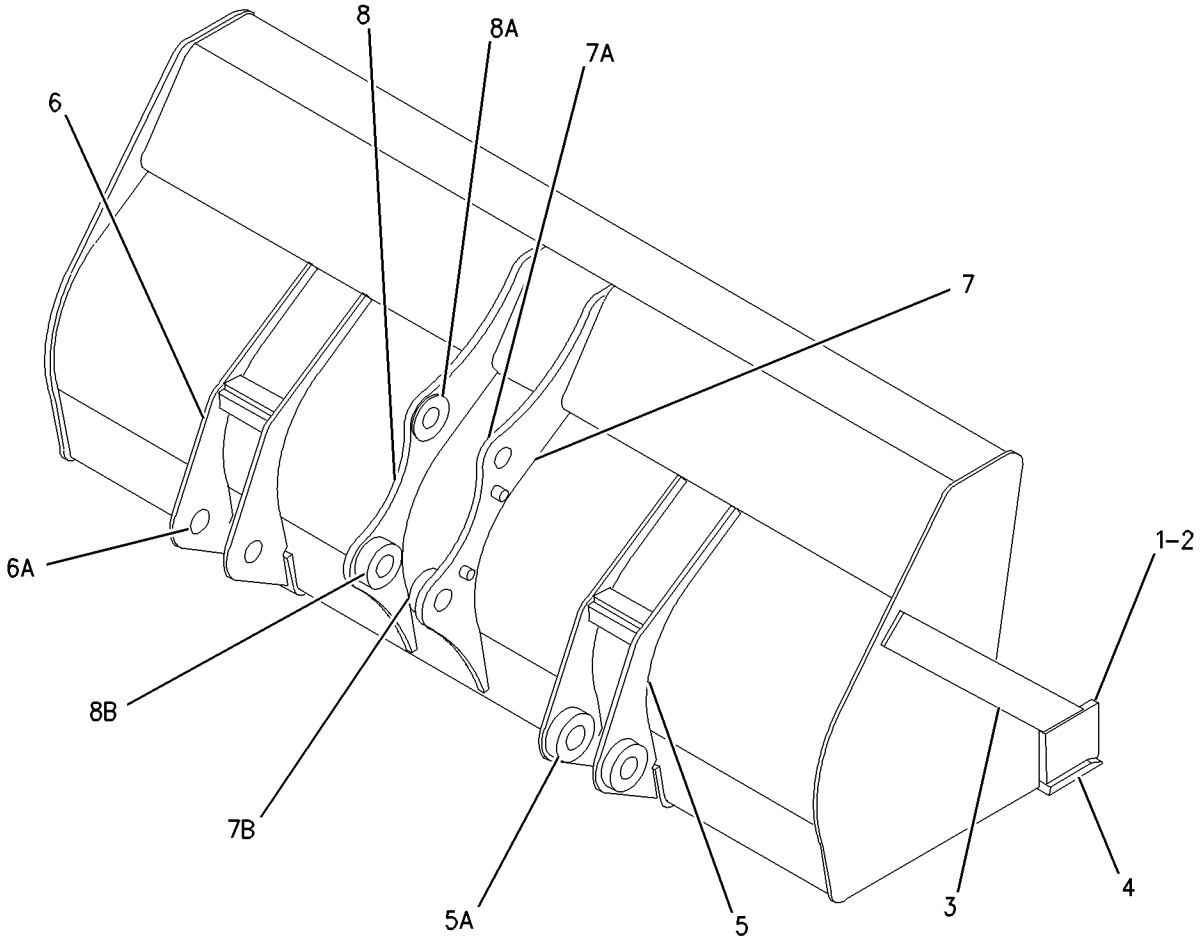

GRAPHIC #1 **<END>** g01006050

9R-5202 BUCKET AS-GENERAL PURPOSE

S/N: FDP18400-UP
1.0 CU M (1.31 CU YD)
PART OF 190-1056, 190-1079 BUCKET GP-GENERAL PURPOSE
FOR USE WITH ALL WHEEL STEER
AN ATTACHMENT

SMCS-6101 **i01933594**

NOTE	REF NO	GRAPHIC REF	PART NUMBER	QTY	PART NAME 1 2 3 4 5 6 (PRODUCT LEVEL)	SEE PAGE
	1	1	**9R-5206**	1	EDGE-RH	
	2	1	**9R-5205**	1	EDGE-LH	
	3	1	**9R-5832**	2	EDGE	
	4	1	**9R-5313**	1	EDGE	
	5	1	**9R-0336**	2	BRACKET AS-LIFT (RH)	
					(EACH INCLUDES)	
	5A	1	**9R-0111**	1	BEARING-SLEEVE	
	6	1	**9R-0343**	2	BRACKET AS-LIFT (LH)	
					(EACH INCLUDES)	
	6A	1	**9R-0111**	1	BEARING-SLEEVE	
	7	1	**9R-0371**	1	BRACKET AS-TILT (RH)	
	7A	1	**9R-4485**	1	BOSS	
	7B	1	**9R-4486**	1	BOSS	
	8	1	**9R-0372**	1	BRACKET AS-TILT (LH)	
	8A	1	**9R-4485**	1	BOSS	
	8B	1	**9R-4486**	1	BOSS	

9R-5202 BUCKET AS-GENERAL PURPOSE *(contd.)* i01933594

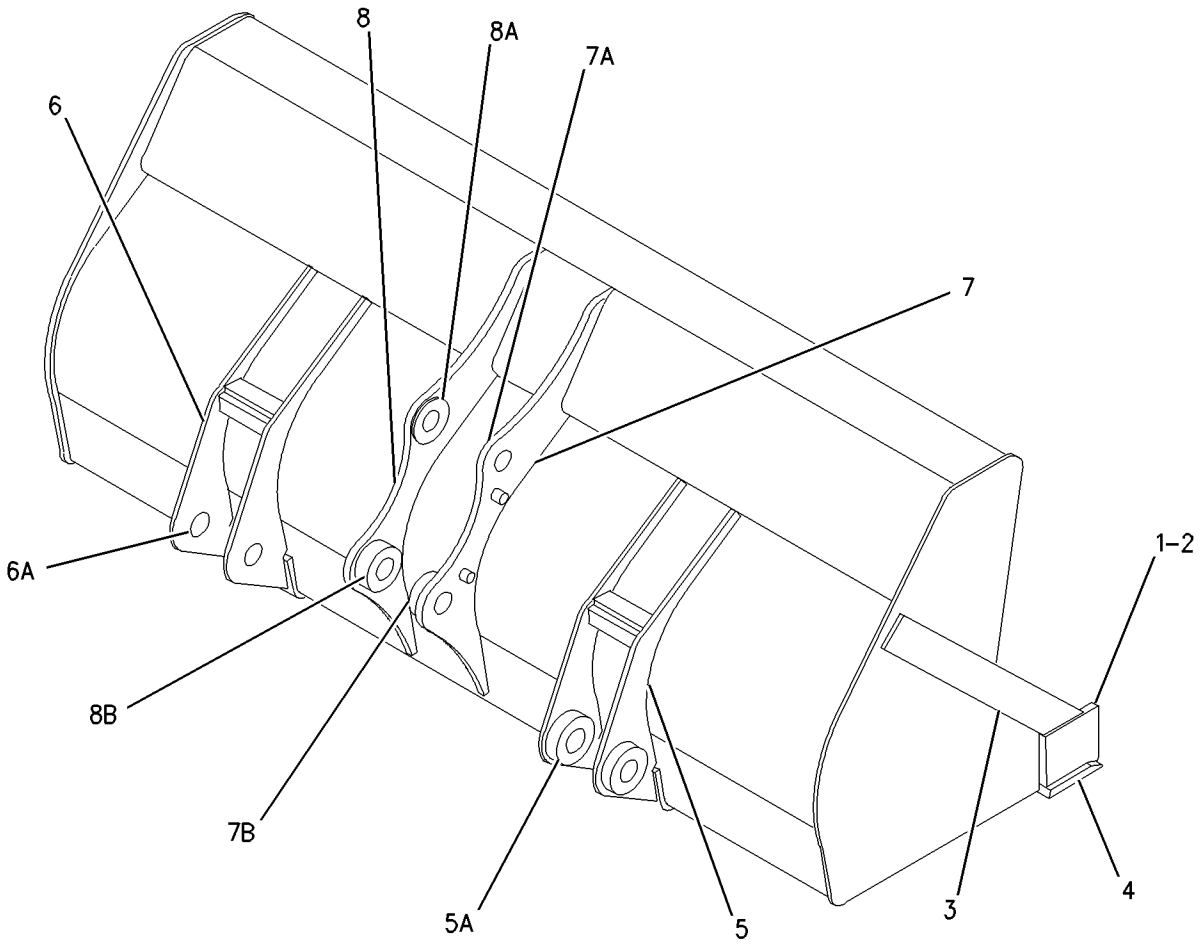

GRAPHIC #1 **<END>** g01006050

WORK TOOLS

9R-5988 BUCKET AS-GENERAL PURPOSE

S/N: FDP18400-UP
1.07 CU M (1.40 CU YD)
PART OF 190-1057, 190-1080 BUCKET GP-GENERAL PURPOSE
AN ATTACHMENT

SMCS-6101 **i01933595**

NOTE	REF NO	GRAPHIC REF	PART NUMBER	QTY	PART NAME 1 2 3 4 5 6 (PRODUCT LEVEL)	SEE PAGE
	1	1	**9R-5205**	1	EDGE-LH	
	2	1	**9R-5206**	1	EDGE-RH	
	3	1	**9R-0376**	2	EDGE	
	4	1	**9R-4672**	1	EDGE	
	5	1	*9R-5898*	2	BRACKET AS-LIFT (RH)	
					(EACH INCLUDES)	
	5A	1	**9R-0111**	1	BEARING-SLEEVE	
	6	1	*9R-5899*	2	BRACKET AS-LIFT (LH)	
					(EACH INCLUDES)	
	6A	1	**9R-0111**	1	BEARING-SLEEVE	
	7	1	*9R-5901*	1	BRACKET AS-TILT (RH)	
	7A	1	**9R-4485**	1	BOSS	
	7B	1	**9R-4486**	1	BOSS	
	8	1	*9R-5902*	1	BRACKET AS-TILT (LH)	
	8A	1	**9R-4485**	1	BOSS	
	8B	1	**9R-4486**	1	BOSS	

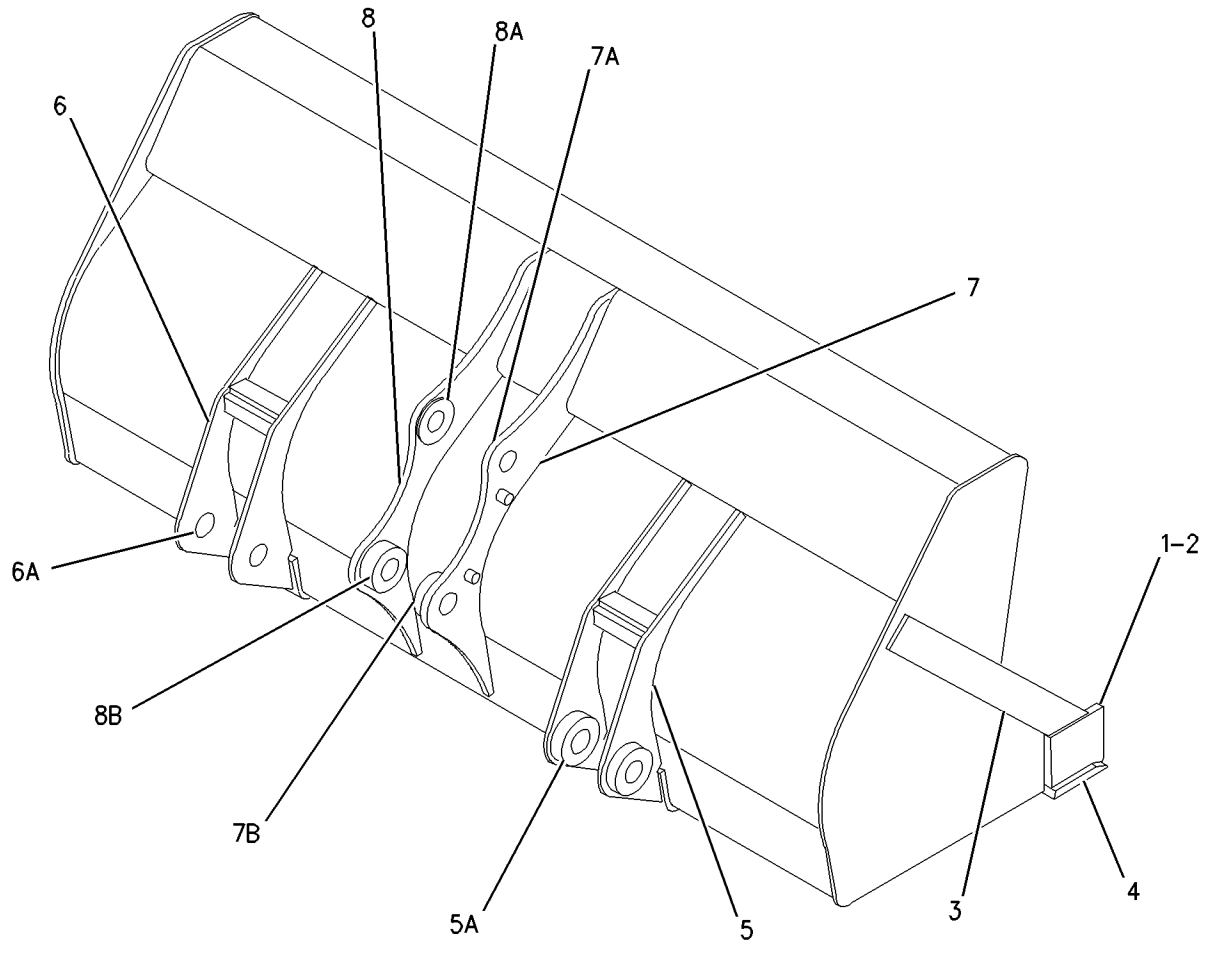

GRAPHIC #1 **<END>** g01006050

WORK TOOLS

9R-5989 BUCKET AS-GENERAL PURPOSE

S/N: FDP18400-UP
0.96 CU M (1.25 CU YD)
PART OF 190-1058, 190-1081 BUCKET GP-GENERAL PURPOSE
AN ATTACHMENT

SMCS-6101 **i01933597**

NOTE	REF NO	GRAPHIC REF	PART NUMBER	QTY	PART NAME 1 2 3 4 5 6 (PRODUCT LEVEL)	SEE PAGE
	1	1	**9R-5205**	1	EDGE-LH	
	2	1	**9R-5206**	1	EDGE-RH	
	3	1	**9R-0376**	2	EDGE	
	4	1	**9R-4672**	1	EDGE	
	5	1	*9R-0336*	2	BRACKET AS-LIFT (RH)	
	5A	1	**9R-0111**	2	BEARING-SLEEVE	
	6	1	*9R-0343*	2	BRACKET AS-LIFT (LH)	
	6A	1	**9R-0111**	2	BEARING-SLEEVE	
	7	1	*9R-0371*	1	BRACKET AS-TILT (RH)	
	7A	1	**9R-4485**	1	BOSS	
	7B	1	**9R-4486**	1	BOSS	
	8	1	*9R-0372*	1	BRACKET AS-TILT (LH)	
	8A	1	**9R-4485**	1	BOSS	
	8B	1	**9R-4486**	1	BOSS	

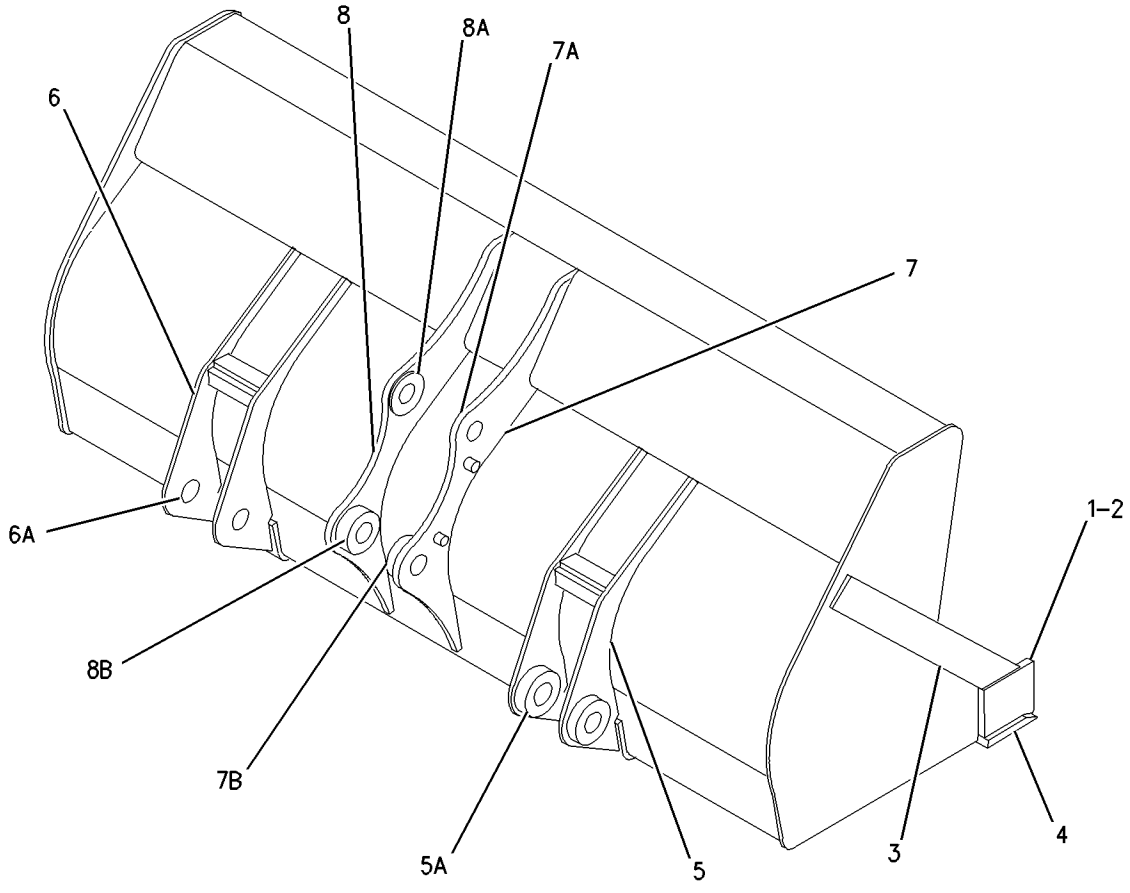

GRAPHIC #1 **<END>** g01006074

WORK TOOLS

191-6261 BUCKET AS-HOE—DITCH CLEANING

S/N: FDP18400-UP
1200MM (47IN)
AN ATTACHMENT

SMCS-6503 **i01643673**

NOTE	REF NO	GRAPHIC REF	PART NUMBER	QTY	PART NAME 1 2 3 4 5 6 (PRODUCT LEVEL)	SEE PAGE
	1	1	**136-3766**	1	EDGE	
	2	1	**191-6253**	1	PLATE (TORQUE)	
	3	1	**191-6259**	2	BRACKET AS	

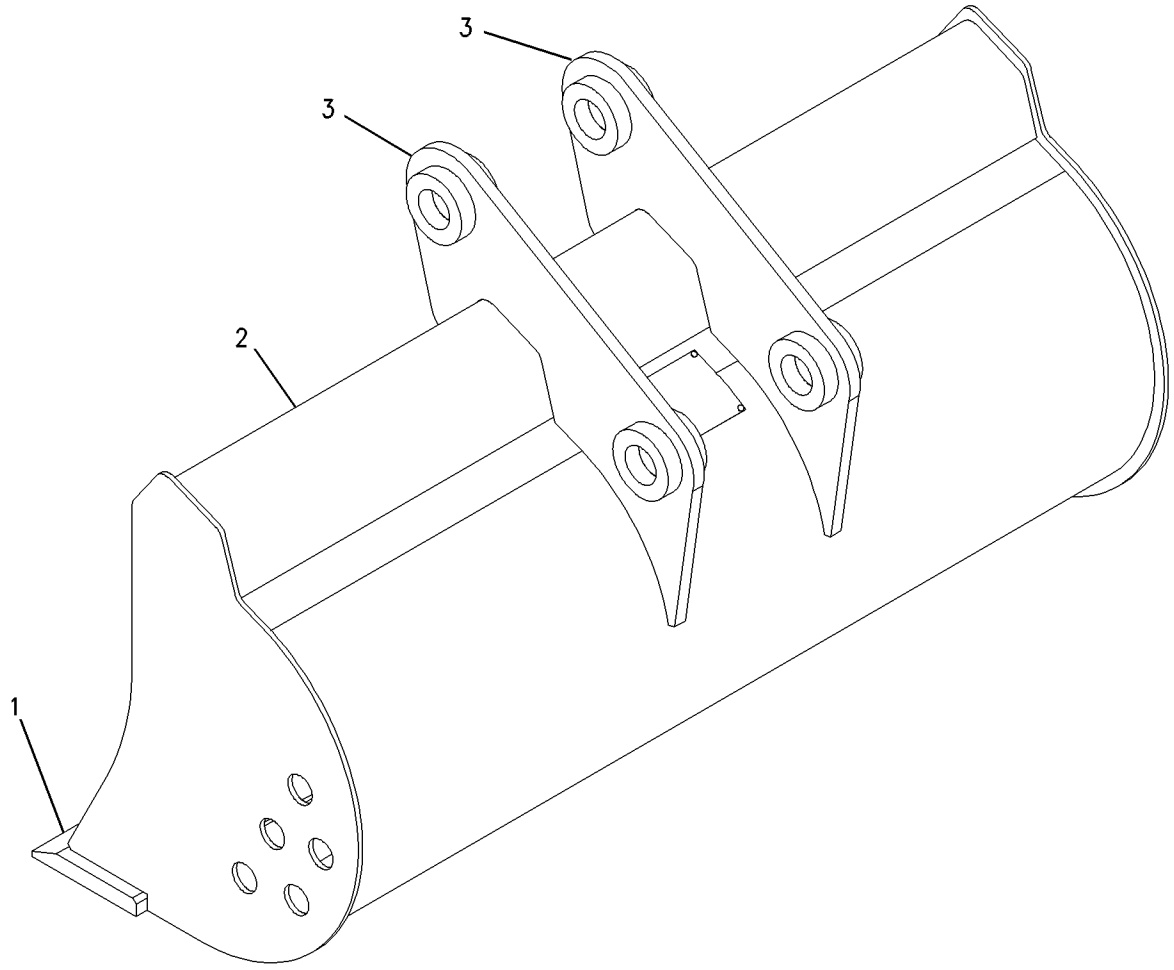

GRAPHIC #1 **<END>** g00757686

WORK TOOLS

191-6262 BUCKET AS-HOE—DITCH CLEANING

S/N: FDP18400-UP
1500MM (59IN)
AN ATTACHMENT

SMCS-6503 **i01643676**

NOTE	REF NO	GRAPHIC REF	PART NUMBER	QTY	PART NAME 1 2 3 4 5 6 (PRODUCT LEVEL)	SEE PAGE
	1	1	**121-7238**	1	EDGE (CUTTING)	
	2	1	**191-6254**	1	PLATE (TORQUE)	
	3	1	**191-6259**	2	BRACKET AS	

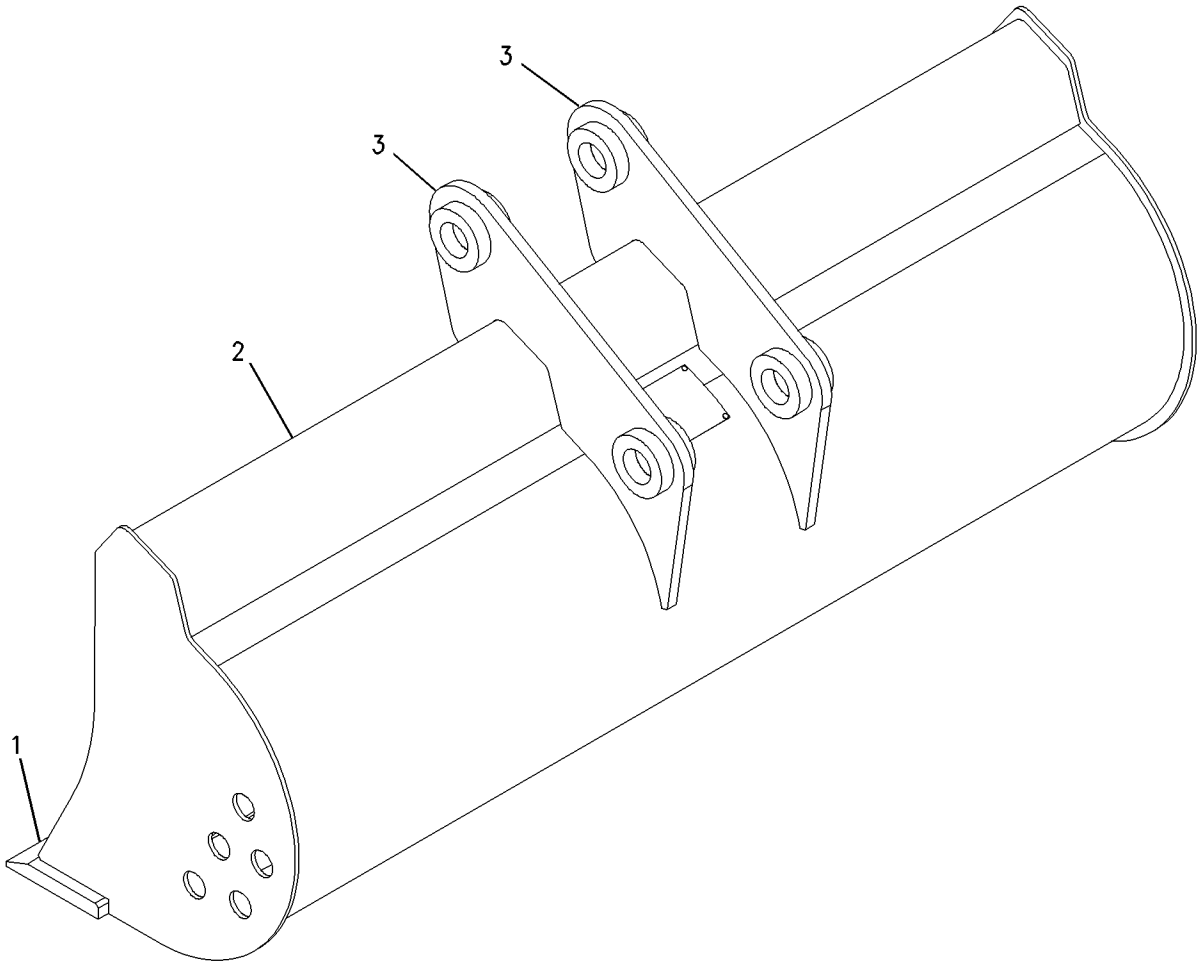

GRAPHIC #1 **<END>** g00757684

WORK TOOLS

191-6263 BUCKET AS-HOE—DITCH CLEANING

S/N: FDP18400-UP
1800MM (71IN)
AN ATTACHMENT

SMCS-6503 **i01643678**

NOTE	REF NO	GRAPHIC REF	PART NUMBER	QTY	PART NAME 1 2 3 4 5 6 (PRODUCT LEVEL)	SEE PAGE
	1	1	**130-6591**	1	EDGE (CUTTING)	
	2	1	**191-6255**	1	PLATE (TORQUE)	
	3	1	**191-6259**	2	BRACKET AS	

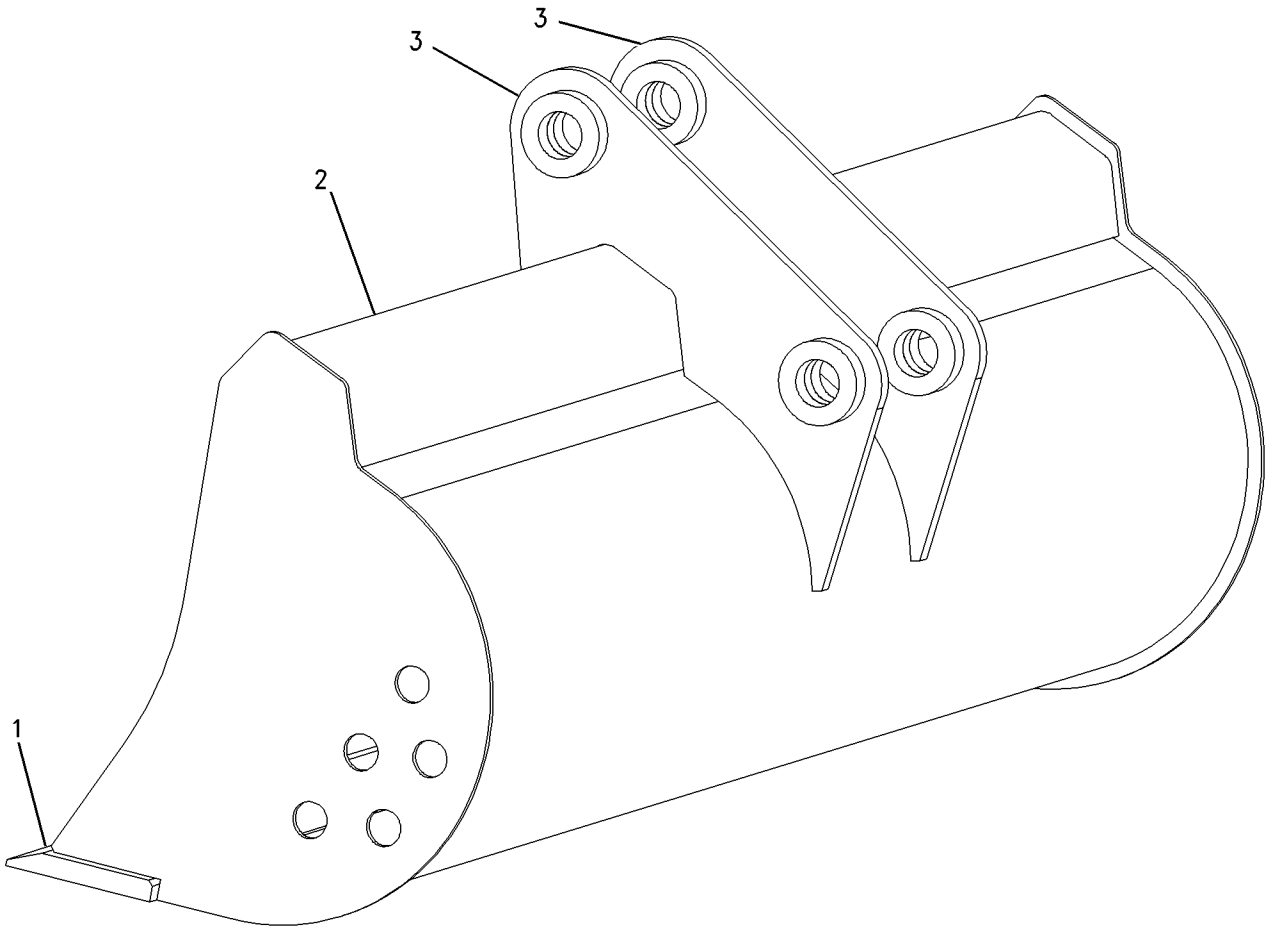

GRAPHIC #1 **<END>** g00757682

WORK TOOLS

191-9555 BUCKET AS-HOE—DITCH CLEANING

S/N: FDP18400-UP
1500MM (59IN)
AN ATTACHMENT

SMCS-6503 **i01643740**

NOTE	REF NO	GRAPHIC REF	PART NUMBER	QTY	PART NAME 1 2 3 4 5 6 (PRODUCT LEVEL)	SEE PAGE
	1	1	**121-7238**	1	EDGE	
	2	1	**191-6254**	1	PLATE (TORQUE)	
	3	1	**192-1194**	1	BRACKET AS (LH)	
	4	1	**192-1196**	1	BRACKET AS (RH)	

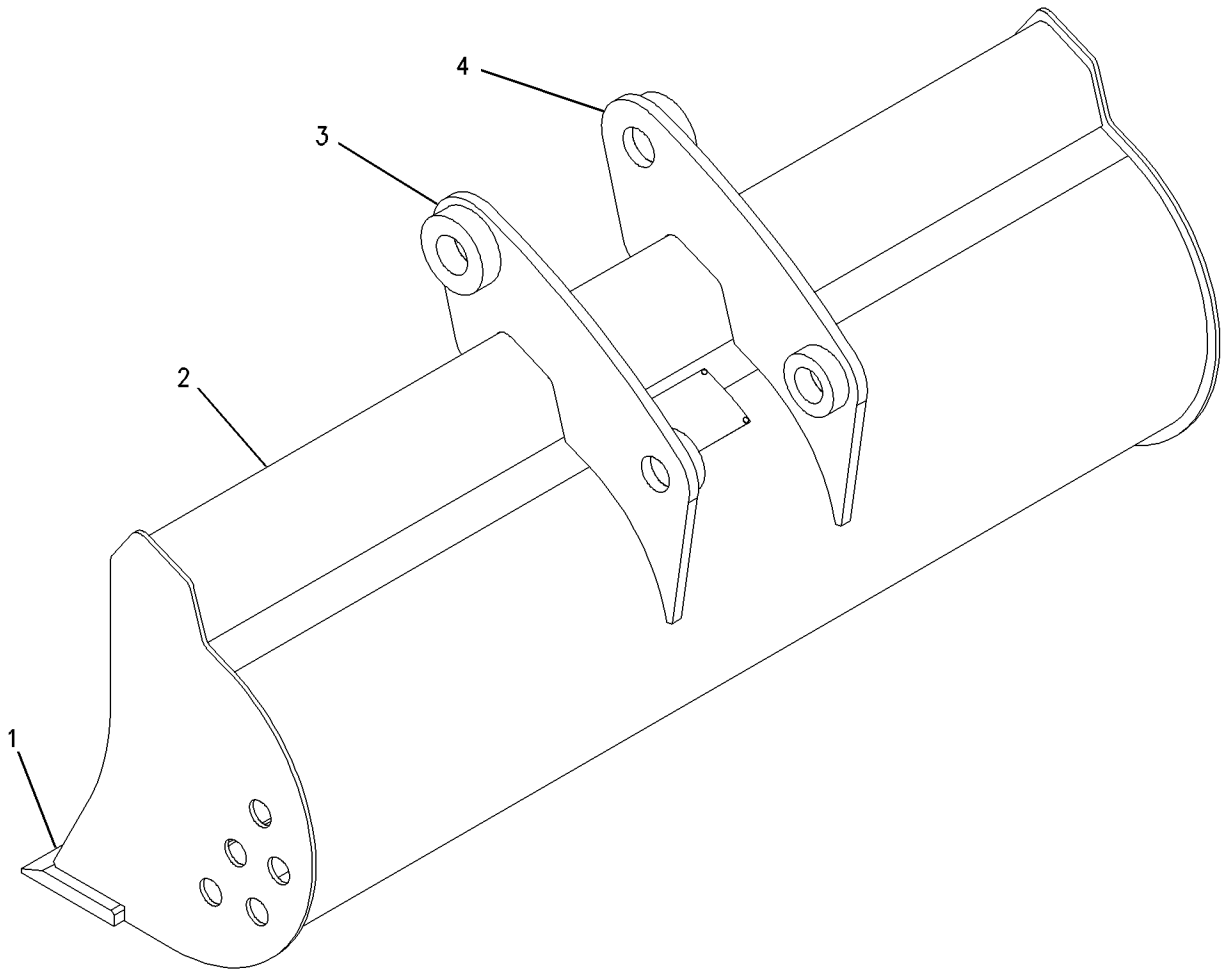

GRAPHIC #1 **<END>** g00757689

WORK TOOLS

192-0657 BUCKET AS-HOE—DITCH CLEANING

S/N: FDP18400-UP
1200MM (47IN)
AN ATTACHMENT

SMCS-6503 **i01643910**

NOTE	REF NO	GRAPHIC REF	PART NUMBER	QTY	PART NAME 1 2 3 4 5 6 (PRODUCT LEVEL)	SEE PAGE
	1	1	**136-3766**	1	EDGE (CUTTING)	
	2	1	**191-6253**	1	PLATE (TORQUE)	
	3	1	**192-1194**	1	BRACKET AS (LH)	
	4	1	**192-1196**	1	BRACKET AS (RH)	

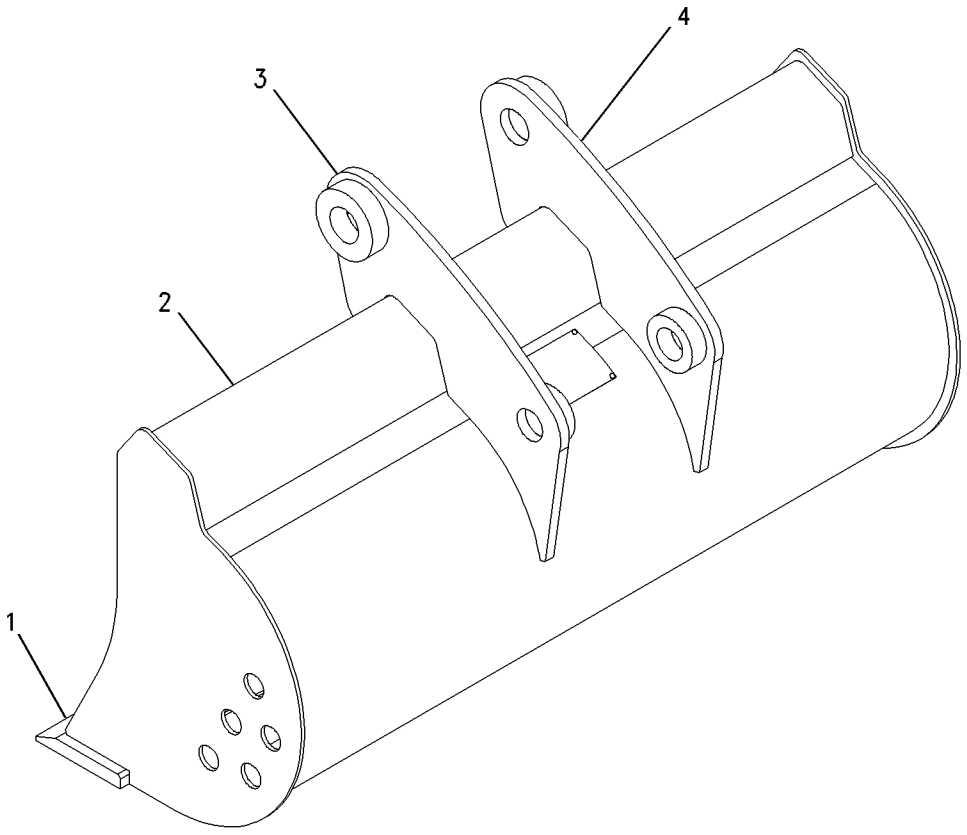

GRAPHIC #1 **<END>** g00757679

WORK TOOLS

192-0658 BUCKET AS-HOE—DITCH CLEANING

S/N: FDP18400-UP
1400MM (55IN)
AN ATTACHMENT

SMCS-6503 **i01643914**

NOTE	REF NO	GRAPHIC REF	PART NUMBER	QTY	PART NAME 1 2 3 4 5 6 (PRODUCT LEVEL)	SEE PAGE
	1	1	**192-0662**	1	PLATE (TORQUE)	
	2	1	**192-0666**	1	EDGE-CUTTING	
	3	1	**192-1194**	1	BRACKET AS (LH)	
	4	1	**192-1196**	1	BRACKET AS (RH)	

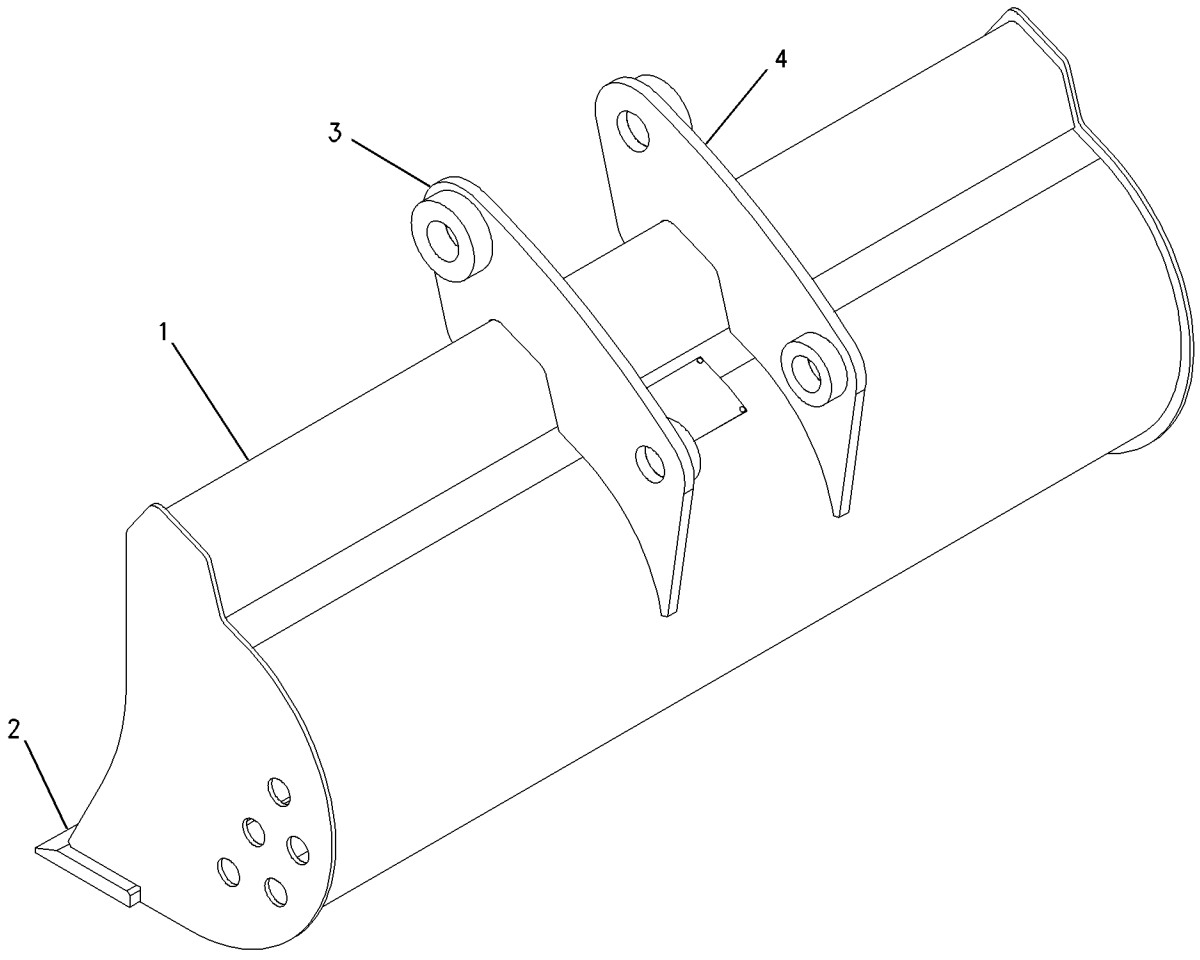

GRAPHIC #1 **<END>** g00757680

192-0660 BUCKET AS-HOE—DITCH CLEANING

S/N: FDP18400-UP
1600MM (63IN)
AN ATTACHMENT

SMCS-6503 **i01643863**

NOTE	REF NO	GRAPHIC REF	PART NUMBER	QTY	PART NAME 1 2 3 4 5 6 (PRODUCT LEVEL)	SEE PAGE
	1	1	**192-0667**	1	EDGE-CUTTING	
	2	1	**192-0663**	1	PLATE (TORQUE)	
	3	1	**192-1194**	1	BRACKET AS (LH)	
	4	1	**192-1196**	1	BRACKET AS (RH)	

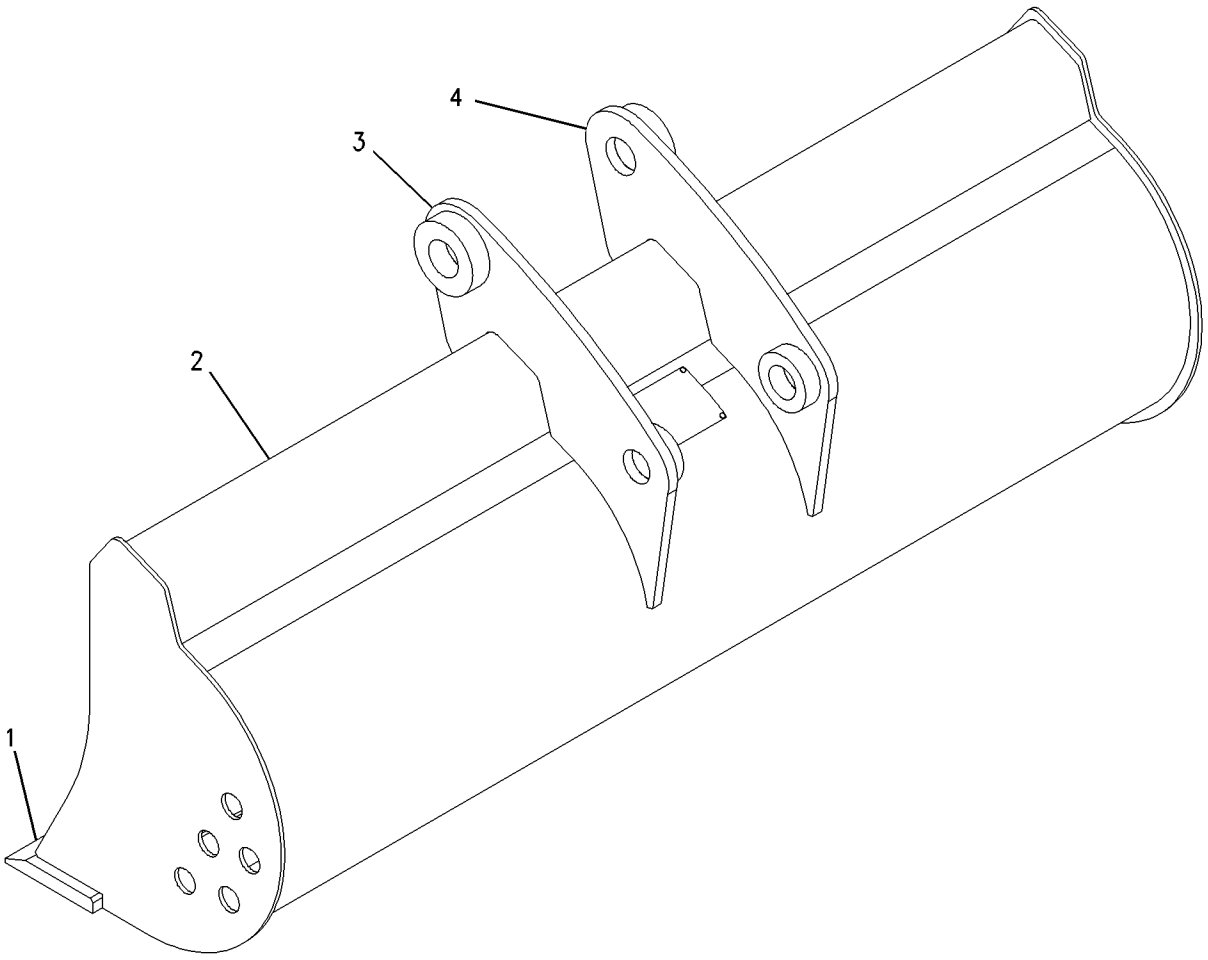

GRAPHIC #1 **<END>** g00757691

WORK TOOLS

192-0661 BUCKET AS-HOE—DITCH CLEANING

S/N: FDP18400-UP
1800MM (71IN)
AN ATTACHMENT

SMCS-6503 **i01643866**

NOTE	REF NO	GRAPHIC REF	PART NUMBER	QTY	PART NAME 1 2 3 4 5 6 (PRODUCT LEVEL)	SEE PAGE
	1	1	**130-6591**	1	EDGE	
	2	1	**191-6255**	1	PLATE (TORQUE)	
	3	1	**192-1194**	1	BRACKET AS (LH)	
	4	1	**192-1196**	1	BRACKET AS (RH)	

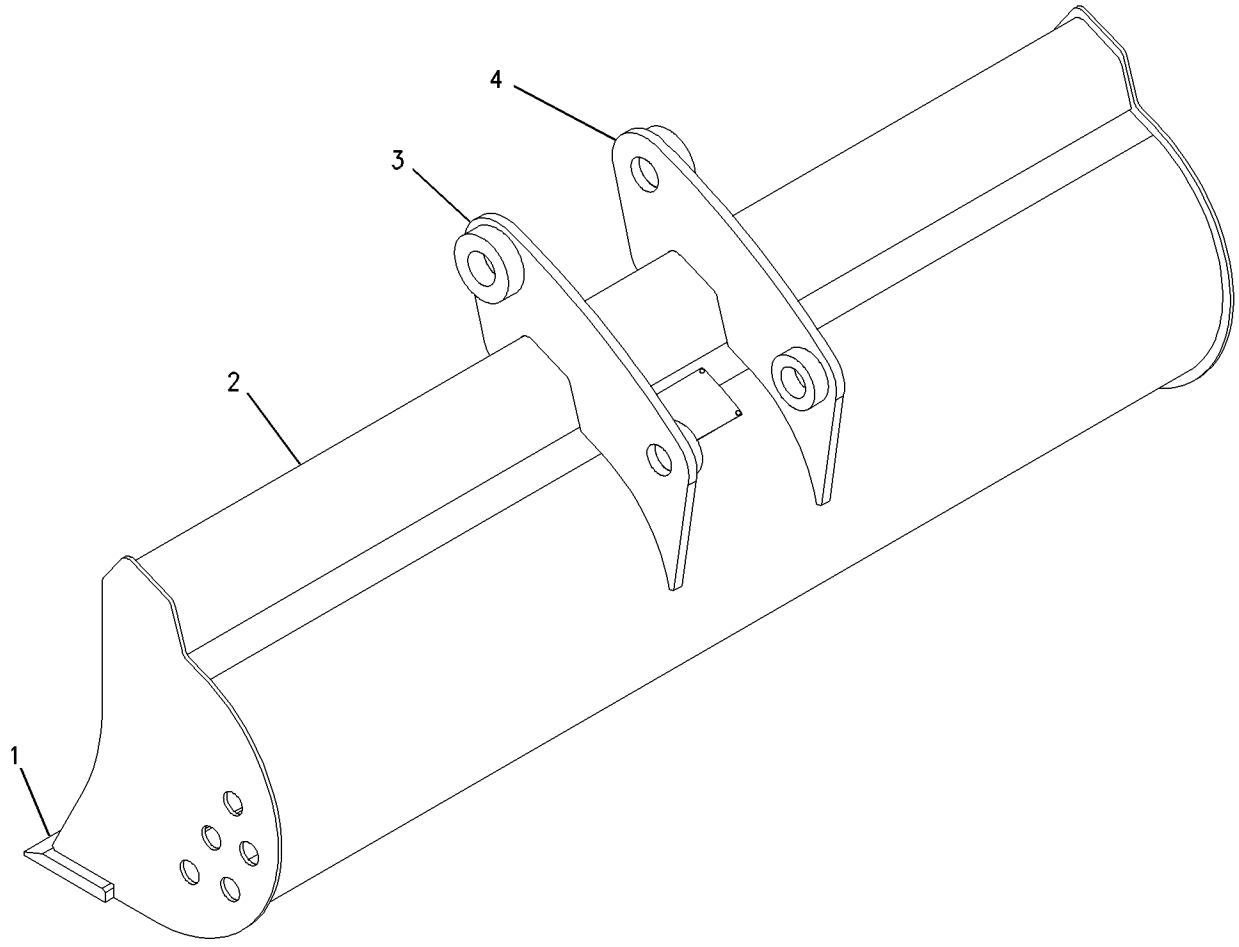

GRAPHIC #1 **<END>** g00757694

WORK TOOLS

192-2825 BUCKET AS-HOE—DITCH CLEANING

S/N: FDP18400-UP
1400MM (55IN)
AN ATTACHMENT

SMCS-6503 **i01643869**

NOTE	REF NO	GRAPHIC REF	PART NUMBER	QTY	PART NAME 1 2 3 4 5 6 (PRODUCT LEVEL)	SEE PAGE
	1	1	**191-6259**	2	BRACKET AS	
	2	1	**192-0662**	1	PLATE (TORQUE)	
	3	1	**192-0666**	1	EDGE-CUTTING	

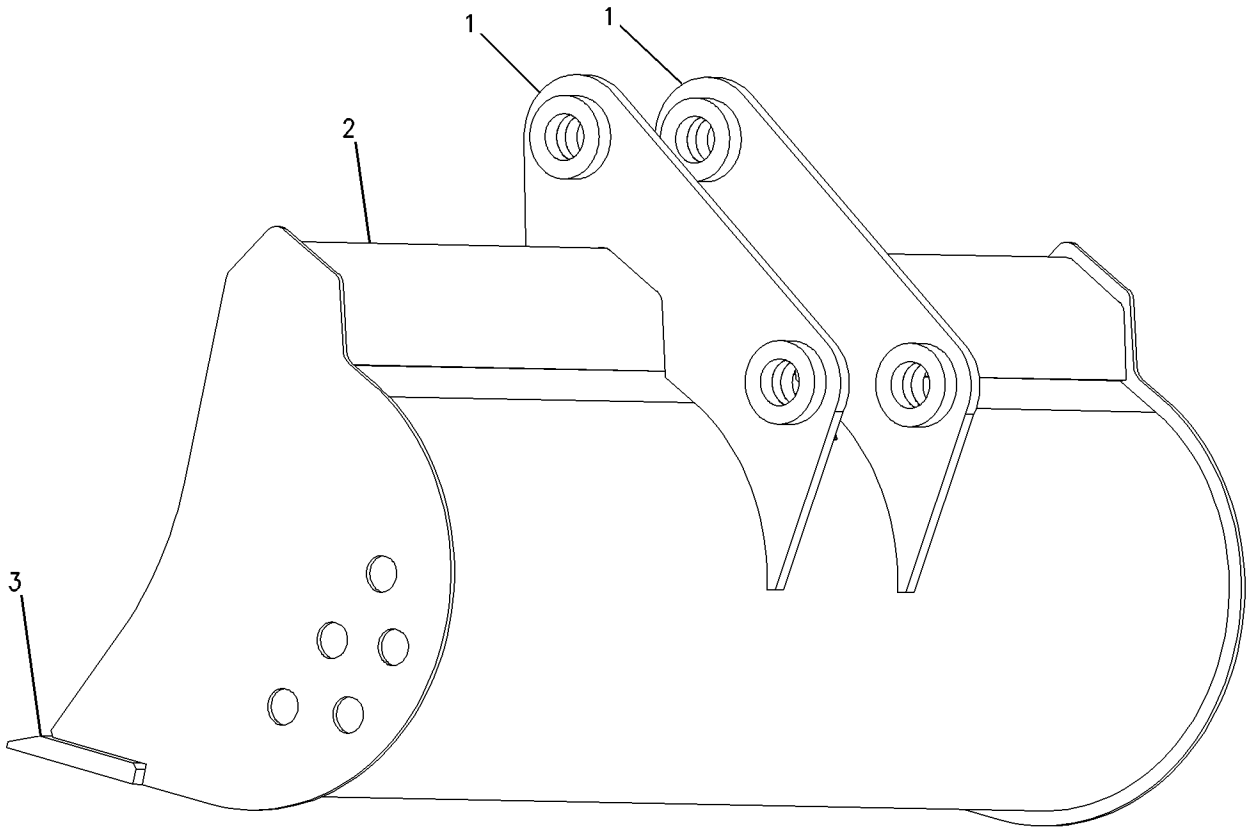

GRAPHIC #1 **<END>** g00757681

WORK TOOLS

192-2826 BUCKET AS-HOE—DITCH CLEANING

S/N: FDP18400-UP
1600MM (63IN)
AN ATTACHMENT

SMCS-6503 **i01643870**

NOTE	REF NO	GRAPHIC REF	PART NUMBER	QTY	PART NAME 1 2 3 4 5 6 (PRODUCT LEVEL)	SEE PAGE
	1	1	**191-6259**	2	BRACKET AS	
	2	1	**192-0663**	1	PLATE (TORQUE)	
	3	1	**192-0667**	1	EDGE-CUTTING	

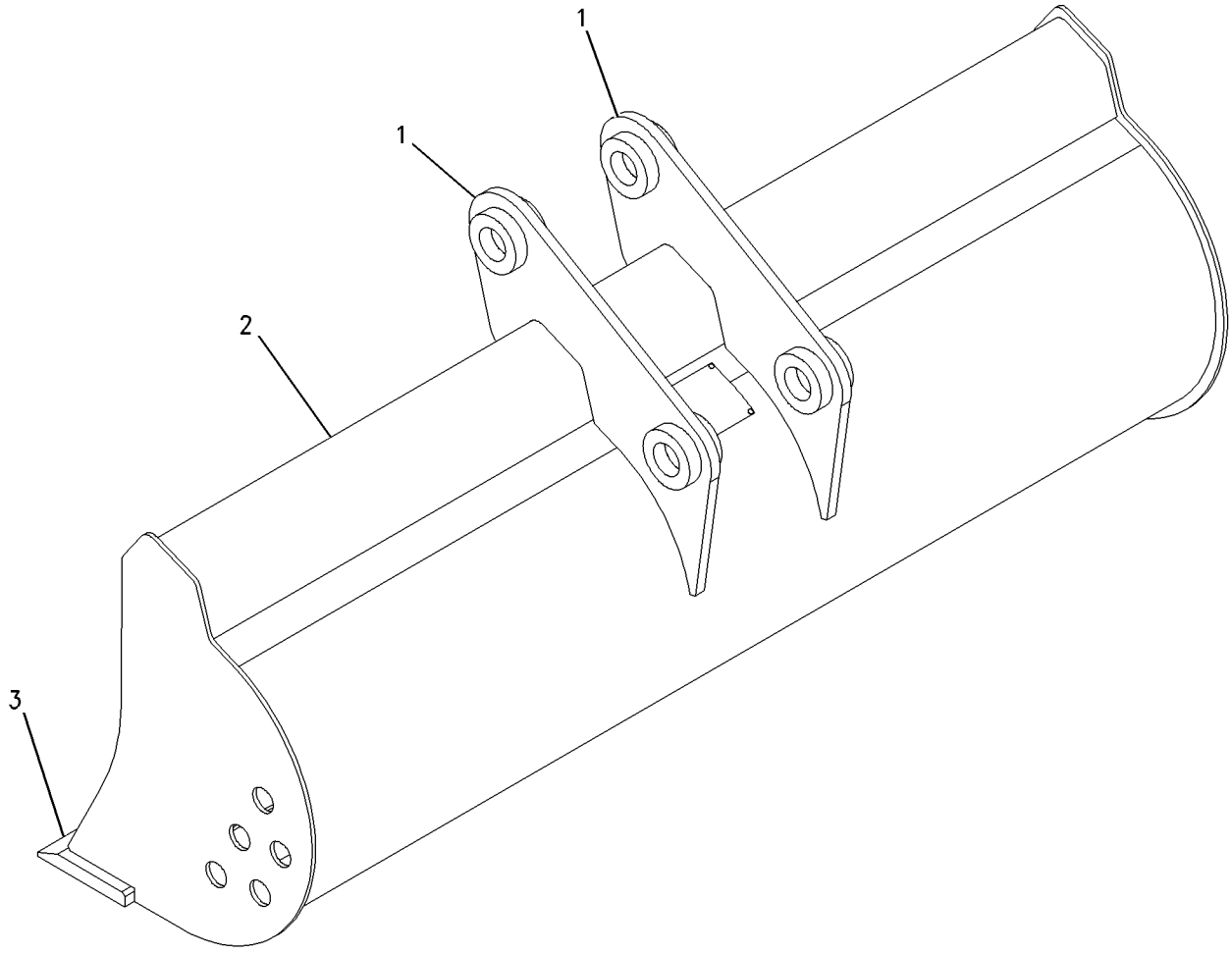

GRAPHIC #1 **<END>** g00757687

190-1056 BUCKET GP-GENERAL PURPOSE

S/N: FDP18400-UP
AN ATTACHMENT

SMCS-6101 **i01306920**

NOTE	PART NUMBER	QTY	PART NAME 1 2 3 4 5 6 (PRODUCT LEVEL)	SEE PAGE
Y	**9R-5202**	1	BUCKET AS-GENERAL PURPOSE	612
Y	*9R-5866*	1	TOOTH GP-UNI	716

Y-SEPARATE ILLUSTRATION

<END>

190-1057 BUCKET GP-GENERAL PURPOSE

S/N: FDP18400-UP
AN ATTACHMENT

SMCS-6101 **i01412384**

NOTE	PART NUMBER	QTY	PART NAME 1 2 3 4 5 6 (PRODUCT LEVEL)	SEE PAGE
Y	**9R-5988**	1	BUCKET AS-GENERAL PURPOSE	614
Y	*9R-5866*	1	TOOTH GP-UNI	716

Y-SEPARATE ILLUSTRATION

<END>

190-1058 BUCKET GP-GENERAL PURPOSE

S/N: FDP18400-UP
AN ATTACHMENT

SMCS-6101 **i01412388**

NOTE	PART NUMBER	QTY	PART NAME 1 2 3 4 5 6 (PRODUCT LEVEL)	SEE PAGE
Y	**9R-5989**	1	BUCKET AS-GENERAL PURPOSE	615
Y	*9R-5866*	1	TOOTH GP-UNI	716

Y-SEPARATE ILLUSTRATION

<END>

190-1079 BUCKET GP-GENERAL PURPOSE

S/N: FDP18400-UP
AN ATTACHMENT

SMCS-6101 **i01306828**

NOTE	PART NUMBER	QTY	PART NAME 1 2 3 4 5 6 (PRODUCT LEVEL)	SEE PAGE
Y	**9R-5202**	1	BUCKET AS-GENERAL PURPOSE	612
Y	*9R-5320*	1	EDGE GP-CUTTING	697

Y-SEPARATE ILLUSTRATION

<END>

190-1080 BUCKET GP-GENERAL PURPOSE

S/N: FDP18400-UP
AN ATTACHMENT

SMCS-6101 **i01427908**

NOTE	PART NUMBER	QTY	PART NAME 1 2 3 4 5 6 (PRODUCT LEVEL)	SEE PAGE
Y	**9R-5988**	1	BUCKET AS-GENERAL PURPOSE	614
Y	*9R-5321*	1	EDGE GP-CUTTING	698

Y-SEPARATE ILLUSTRATION

<END>

190-1081 BUCKET GP-GENERAL PURPOSE

S/N: FDP18400-UP
AN ATTACHMENT

SMCS-6101 **i01448391**

NOTE	PART NUMBER	QTY	PART NAME 1 2 3 4 5 6 (PRODUCT LEVEL)	SEE PAGE
Y	**9R-5989**	1	BUCKET AS-GENERAL PURPOSE	615
Y	*9R-5321*	1	EDGE GP-CUTTING	698

Y-SEPARATE ILLUSTRATION

<END>

WORK TOOLS

151-7866 BUCKET GP-HOE–STANDARD DUTY

S/N: FDP18400-UP
(305MM) 12 INCH
PART OF 174-6362 BUCKET GP-HOE
AN ATTACHMENT

SMCS-6503 **i01922720**

NOTE	REF NO	GRAPHIC REF	PART NUMBER	QTY	PART NAME 1 2 3 4 5 6 (PRODUCT LEVEL)	SEE PAGE
C	1	1	*135-8206*	3	TOOTH GP-UNI	
					(EACH INCLUDES)	
	1A	1	**4F-3657**	2	BOLT-PLOW (5/8-11X2.75 IN)	
	1B	1	**4K-0367**	2	NUT-FULL (5/8-11 THD)	
	1C	1	**135-8203**	1	TOOTH-UNI	
	2	1	**154-5255**	1	EDGE	
	3	1	*151-7929*	1	BRACKET AS-LH	
	3A	1	**9R-0320**	1	BEARING	
	3B	1	**154-5257**	1	BEARING	
	4	1	*151-7930*	1	BRACKET AS-RH	
	4A	1	**9R-0320**	1	BEARING	
	4B	1	**154-5257**	1	BEARING	

C-CHANGE FROM PREVIOUS TYPE

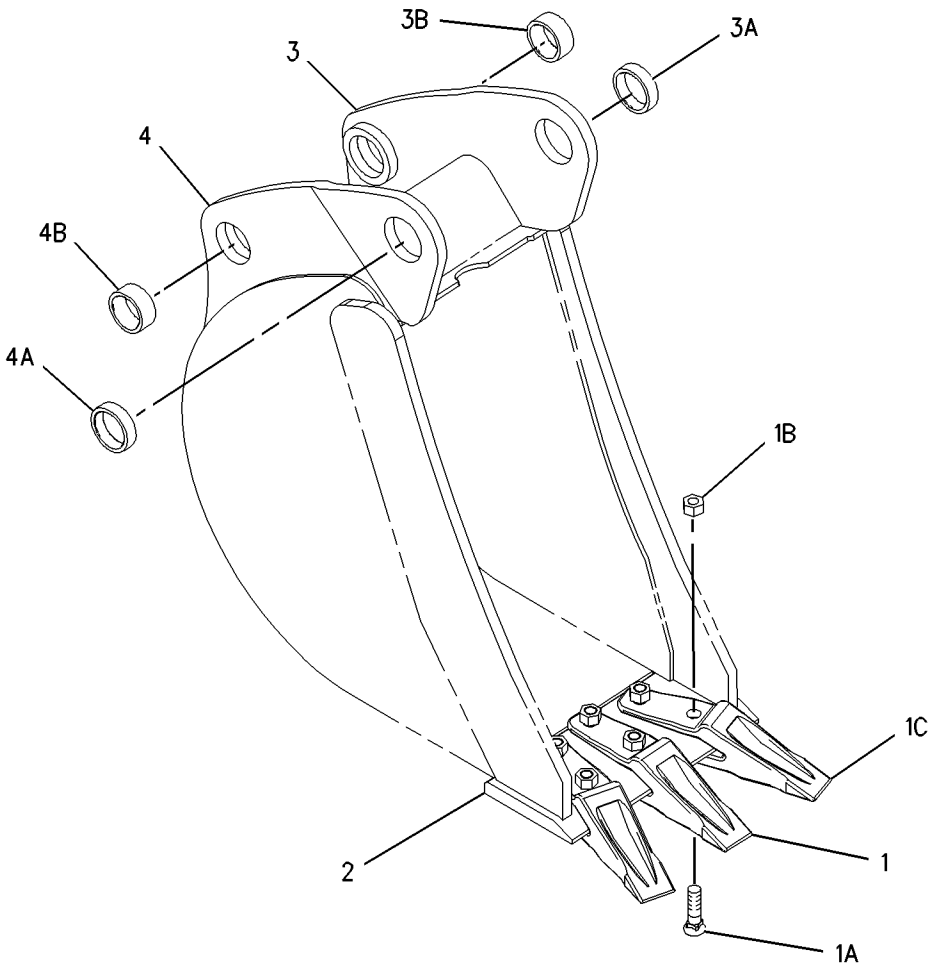

GRAPHIC #1 **<END>** g01001382

151-7867 BUCKET GP-HOE–STANDARD DUTY

S/N: FDP18400-UP
(458MM) 18 INCH
AN ATTACHMENT

SMCS-6503 **i01922704**

NOTE	REF NO	GRAPHIC REF	PART NUMBER	QTY	PART NAME 1 2 3 4 5 6 (PRODUCT LEVEL)	SEE PAGE
C	1	1	*135-8206*	3	TOOTH GP-UNI	
					(EACH INCLUDES)	
	1A	1	**4F-3657**	2	BOLT-PLOW (5/8-11X2.75 IN)	
	1B	1	**4K-0367**	2	NUT-FULL (5/8-11 THD)	
	1C	1	**135-8203**	1	TOOTH-UNI	
	2	1	**128-3778**	1	EDGE	
	3	1	*151-7902*	1	BRACKET AS-LH	
	3A	1	**9R-0162**	1	BEARING	
	3B	1	**168-0480**	1	BEARING-SLEEVE	
	4	1	*151-7903*	1	BRACKET AS-RH	
	4A	1	**9R-0162**	1	BEARING	
	4B	1	**168-0480**	1	BEARING-SLEEVE	

C-CHANGE FROM PREVIOUS TYPE

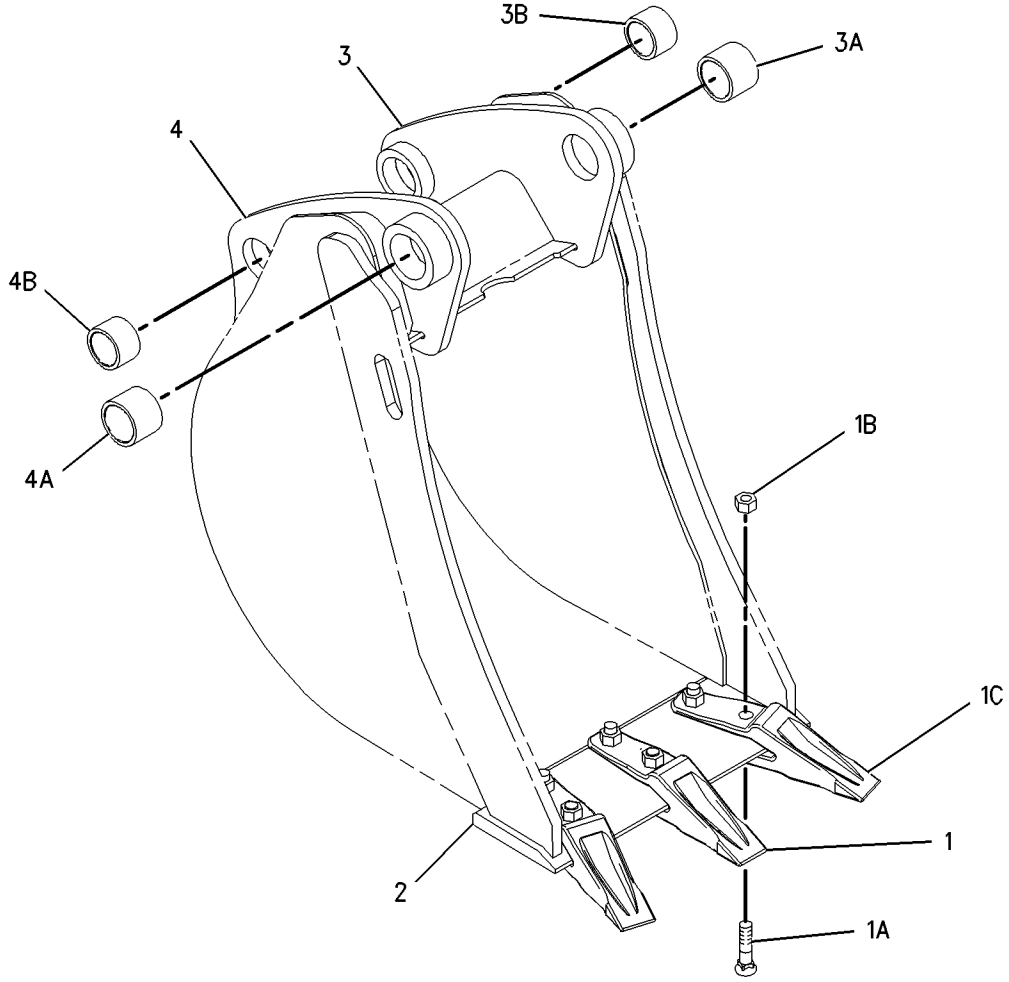

GRAPHIC #1 **<END>** g01001213

151-7868 BUCKET GP-HOE–STANDARD DUTY

S/N: FDP18400-UP
(610MM) 24INCH
AN ATTACHMENT

SMCS-6503 **i01922711**

NOTE	REF NO	GRAPHIC REF	PART NUMBER	QTY	PART NAME 1 2 3 4 5 6 (PRODUCT LEVEL)	SEE PAGE
	1	1	*135-8206*	4	TOOTH GP-UNI	
					(EACH INCLUDES)	
	1A	1	**4F-3657**	2	BOLT-PLOW (5/8-11X2.75 IN)	
	1B	1	**4K-0367**	2	NUT-FULL (5/8-11 THD)	
	1C	1	**135-8203**	1	TOOTH-UNI	
	2	1	**128-3094**	1	EDGE	
	3	1	*151-7902*	1	BRACKET AS-LH	
	3A	1	**9R-0162**	1	BEARING	
	3B	1	**168-0480**	1	BEARING-SLEEVE	
	4	1	*151-7903*	1	BRACKET AS-RH	
	4A	1	**9R-0162**	1	BEARING	
	4B	1	**168-0480**	1	BEARING-SLEEVE	

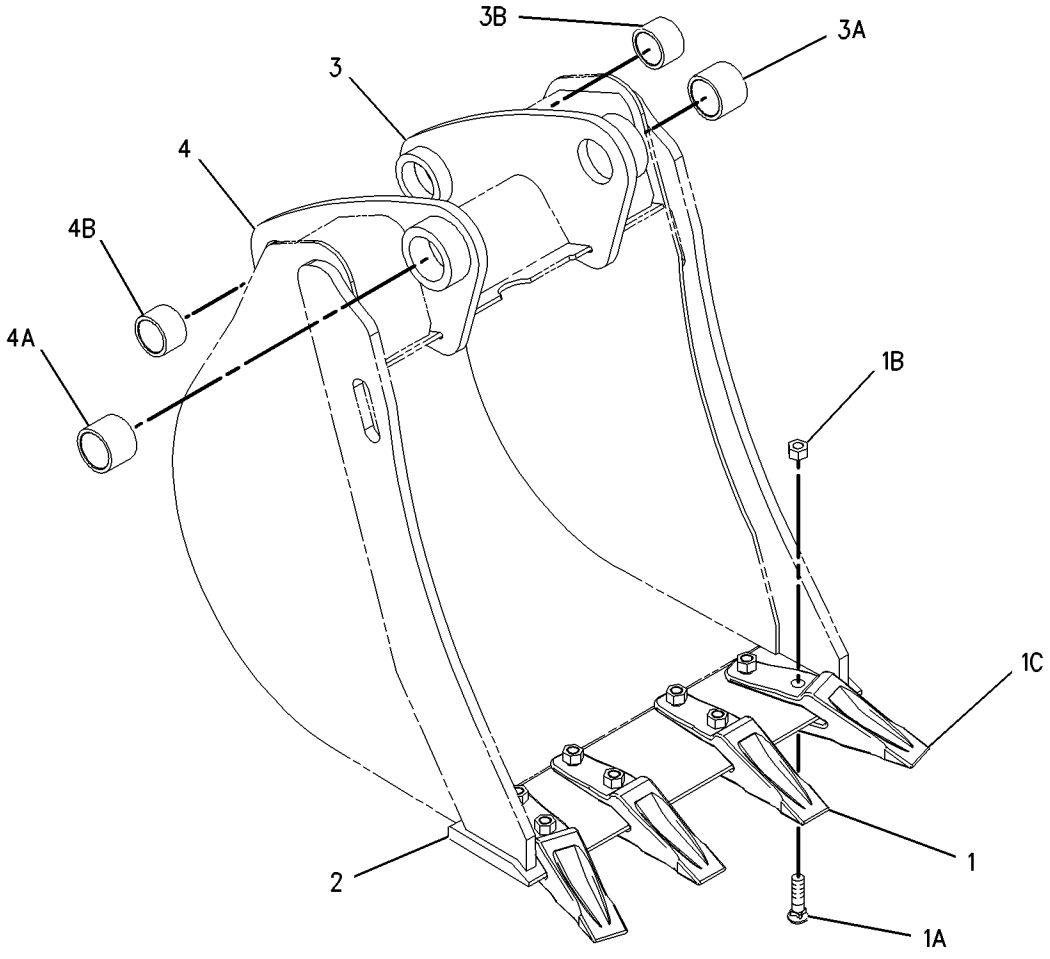

GRAPHIC #1 **<END>** g01001341

151-7869 BUCKET GP-HOE–STANDARD DUTY

S/N: FDP18400-UP
(762MM) 30INCH
AN ATTACHMENT

SMCS-6503 **i01922717**

NOTE	REF NO	GRAPHIC REF	PART NUMBER	QTY	PART NAME 1 2 3 4 5 6 (PRODUCT LEVEL)	SEE PAGE
C	1	1	*135-8206*	5	TOOTH GP-UNI	
					(EACH INCLUDES)	
	1A	1	**4F-3657**	2	BOLT-PLOW (5/8-11X2.75 IN)	
	1B	1	**4K-0367**	2	NUT-FULL (5/8-11 THD)	
	1C	1	**135-8203**	1	TOOTH-UNI	
	2	1	**131-2117**	1	EDGE	
	3	1	*151-7902*	1	BRACKET AS-LH	
	3A	1	**9R-0162**	1	BEARING	
	3B	1	**168-0480**	1	BEARING-SLEEVE	
	4	1	*151-7903*	1	BRACKET AS-RH	
	4A	1	**9R-0162**	1	BEARING	
	4B	1	**168-0480**	1	BEARING-SLEEVE	

C-CHANGE FROM PREVIOUS TYPE

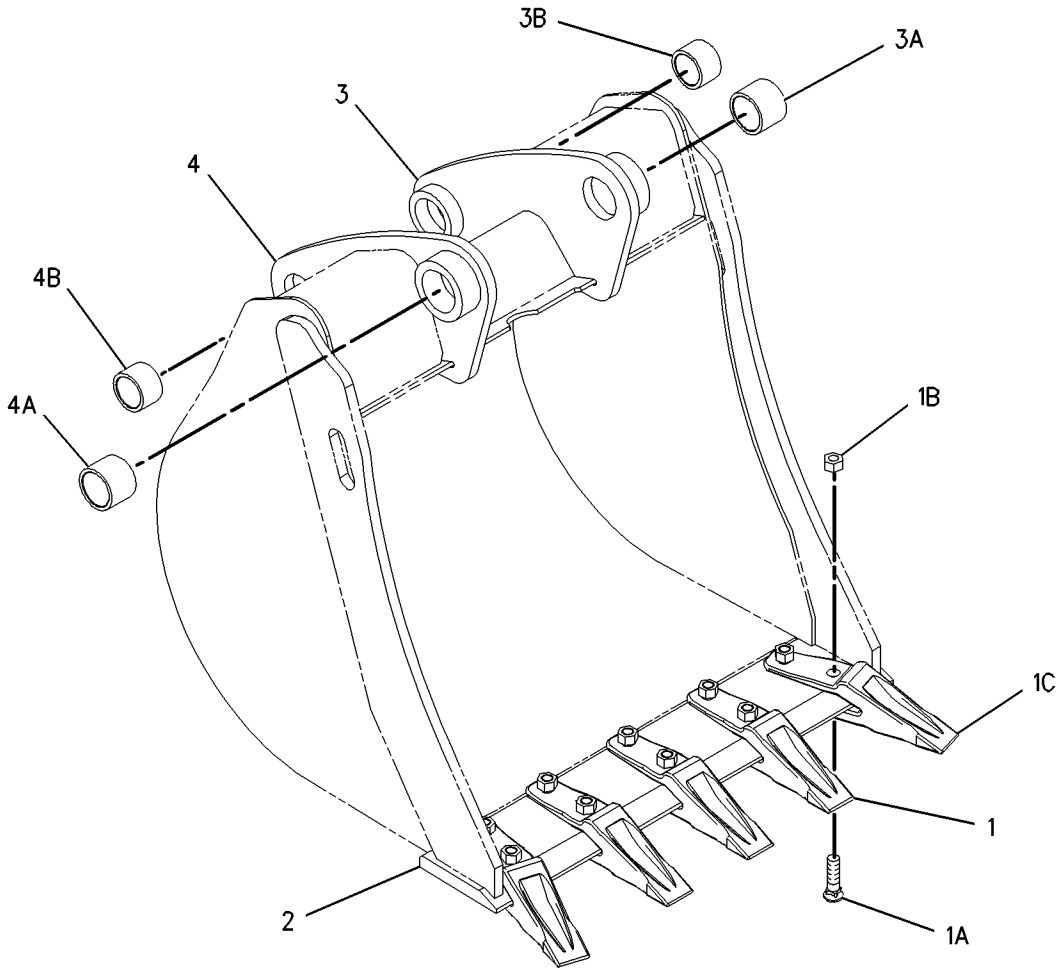

GRAPHIC #1 **<END>** g01001315

WORK TOOLS

151-7870 BUCKET GP-HOE–STANDARD DUTY

S/N: FDP18400-UP
(914MM) 36 INCH
AN ATTACHMENT

SMCS-6503 **i01922719**

NOTE	REF NO	GRAPHIC REF	PART NUMBER	QTY	PART NAME 1 2 3 4 5 6 (PRODUCT LEVEL)	SEE PAGE
	1	1	*135-8206*	6	TOOTH GP-UNI	
					(EACH INCLUDES)	
	1A	1	**4F-3657**	2	BOLT-PLOW (5/8-11X2.75 IN)	
	1B	1	**4K-0367**	2	NUT-FULL (5/8-11 THD)	
	1C	1	**135-8203**	1	TOOTH-UNI	
	2	1	**130-2057**	1	EDGE	
	3	1	*151-7902*	1	BRACKET AS-LH	
	3A	1	**9R-0162**	1	BEARING	
	3B	1	**168-0480**	1	BEARING-SLEEVE	
	4	1	*151-7903*	1	BRACKET AS-RH	
	4A	1	**9R-0162**	1	BEARING	
	4B	1	**168-0480**	1	BEARING-SLEEVE	

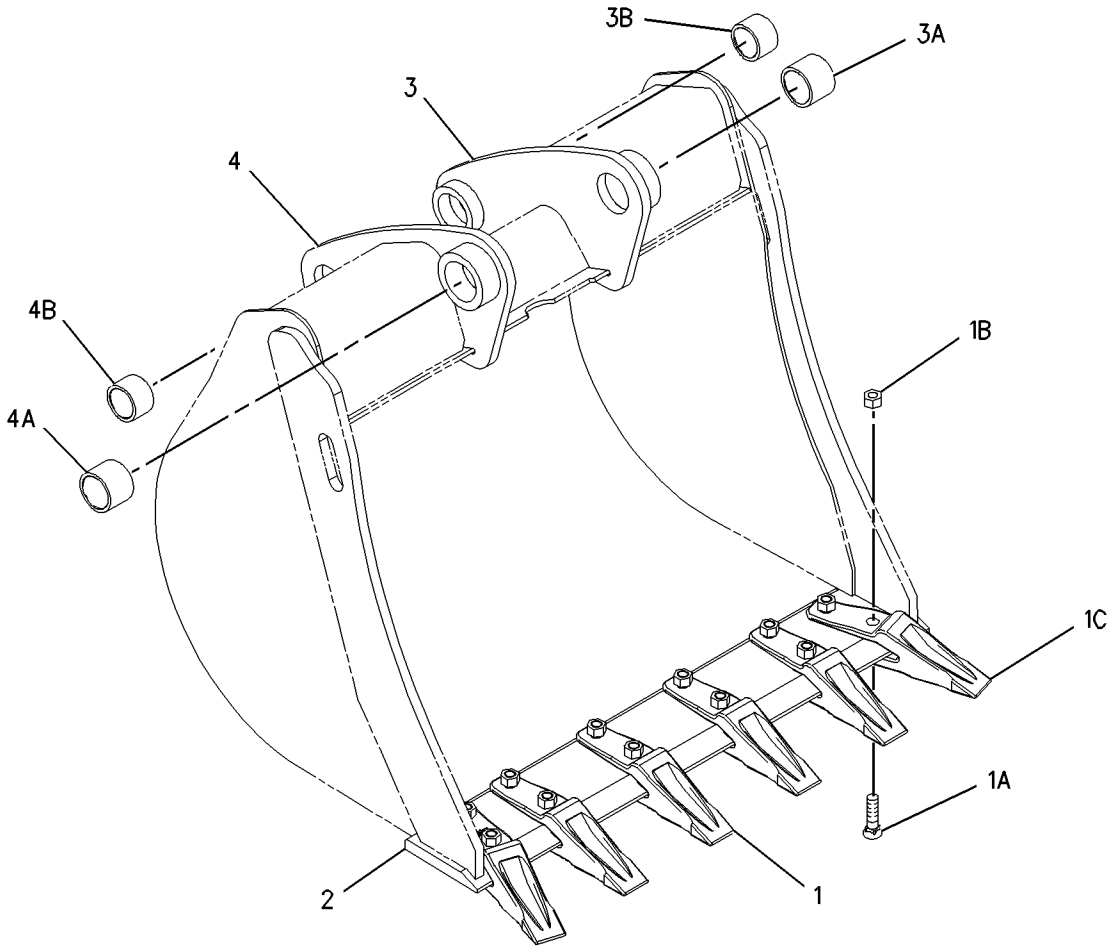

GRAPHIC #1 **<END>** g01001288

151-7877 BUCKET GP-HOE–HEAVY DUTY

S/N: FDP18400-UP
(305MM) 12 INCH
PART OF 174-6365 BUCKET GP-HOE
AN ATTACHMENT

SMCS-6503 **i01951361**

NOTE	REF NO	GRAPHIC REF	PART NUMBER	QTY	PART NAME 1 2 3 4 5 6 (PRODUCT LEVEL)	SEE PAGE
C	1	1	*135-8206*	3	TOOTH GP-UNI	
					(EACH INCLUDES)	
	1A	1	**4F-3657**	1	BOLT-PLOW (5/8-11X2.75 IN)	
	1B	1	**4K-0367**	1	NUT-FULL (5/8-11 THD)	
	1C	1	**135-8203**	1	TOOTH-UNI	
	2	1	**9R-8987**	1	EDGE-LH	
	3	1	**9R-8988**	1	EDGE-RH	
	4	1	*151-7929*	1	BRACKET AS-LH	
	4A	1	**9R-0320**	1	BEARING	
	4B	1	**154-5257**	1	BEARING	
	5	1	*151-7930*	1	BRACKET AS-RH	
	5A	1	**9R-0320**	1	BEARING	
	5B	1	**154-5257**	1	BEARING	
	6	1	**154-5255**	1	EDGE	
	7	1	**151-7927**	2	PLATE	

C-CHANGE FROM PREVIOUS TYPE

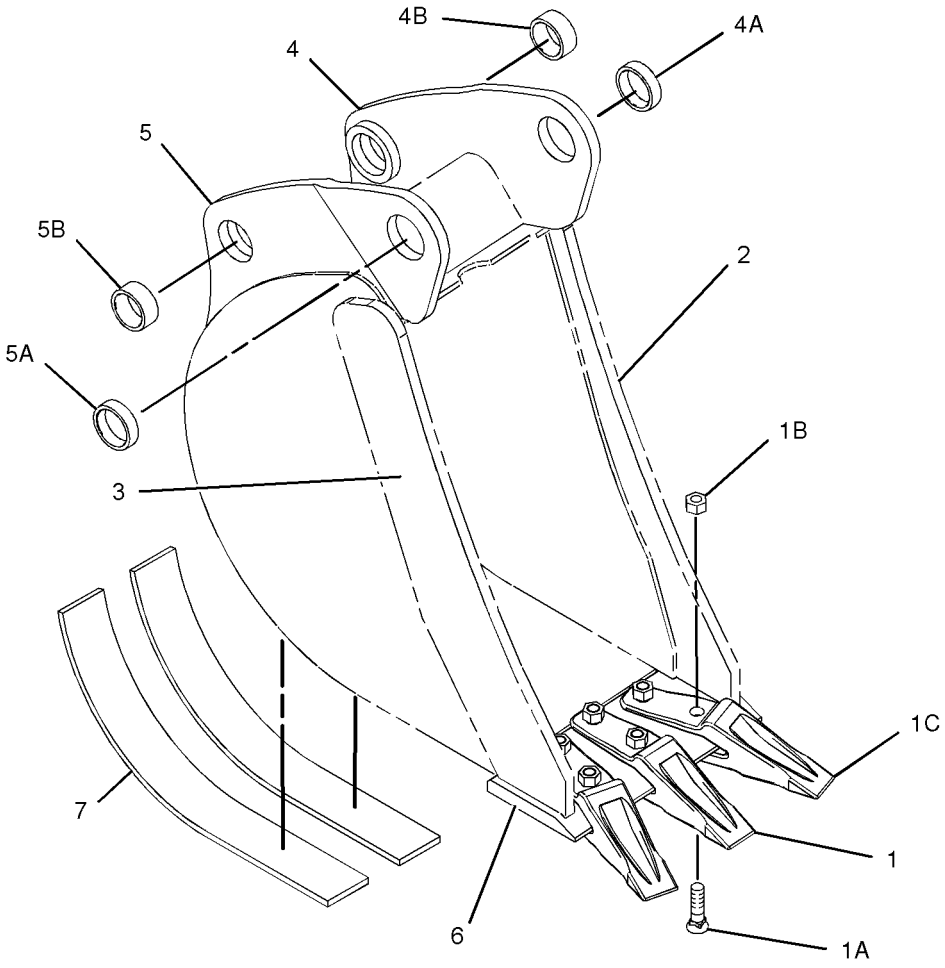

GRAPHIC #1 **<END>** g01015081

WORK TOOLS

151-7879 BUCKET GP-HOE–HEAVY DUTY

S/N: FDP18400-UP
(458MM) 18 INCH
AN ATTACHMENT

SMCS-6503 **i01925862**

NOTE	REF NO	GRAPHIC REF	PART NUMBER	QTY	PART NAME 1 2 3 4 5 6 (PRODUCT LEVEL)	SEE PAGE
C	1	1	*135-8206*	3	TOOTH GP-UNI	
					(EACH INCLUDES)	
C	1A	1	**4F-3657**	2	BOLT-PLOW (5/8-11X2.75 IN)	
	1B	1	**4K-0367**	2	NUT-FULL (5/8-11 THD)	
	1C	1	**135-8203**	1	TOOTH-UNI	
	2	1	**9R-8987**	1	EDGE-LH	
	3	1	**9R-8988**	1	EDGE-RH	
	4	1	**128-3778**	1	EDGE	
	5	1	**151-7927**	3	PLATE	
	6	1	*151-7902*	1	BRACKET AS-LH	
	6A	1	**9R-0162**	1	BEARING	
	6B	1	**168-0480**	1	BEARING-SLEEVE	
	7	1	*151-7903*	1	BRACKET AS-RH	
	7A	1	**9R-0162**	1	BEARING	
	7B	1	**168-0480**	1	BEARING-SLEEVE	

C-CHANGE FROM PREVIOUS TYPE

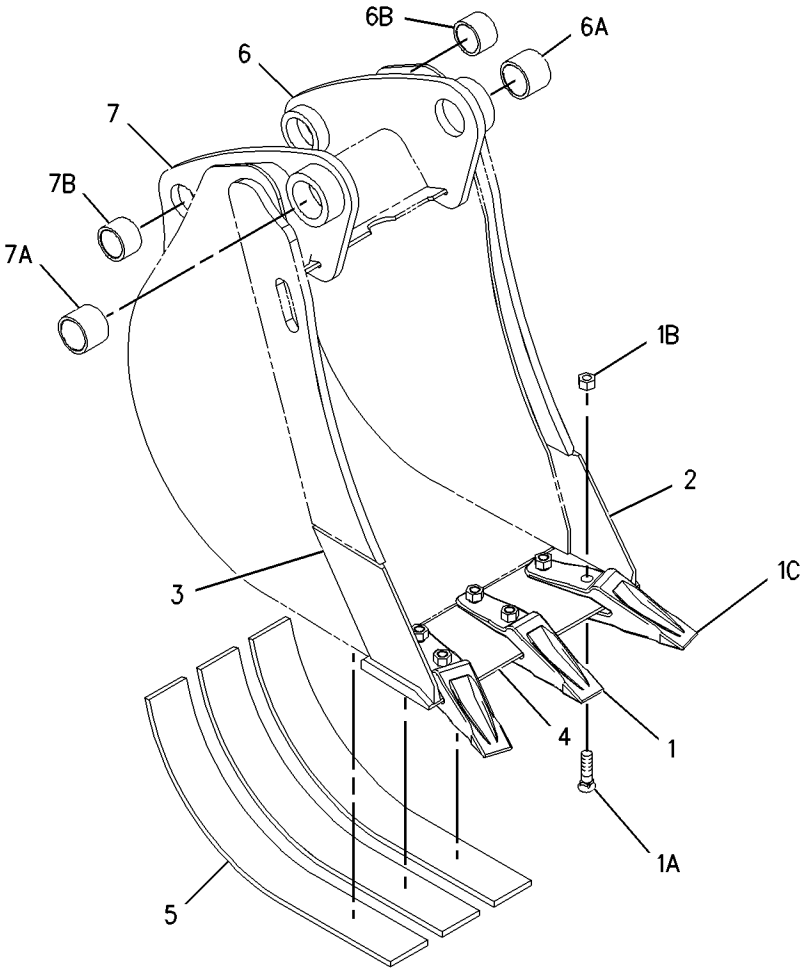

GRAPHIC #1 **<END>** g01002992

WORK TOOLS

151-7880 BUCKET GP-HOE–HEAVY DUTY

S/N: FDP18400-UP
(610MM) 24 INCH
AN ATTACHMENT

SMCS-6503 **i01925864**

NOTE	REF NO	GRAPHIC REF	PART NUMBER	QTY	PART NAME 1 2 3 4 5 6 (PRODUCT LEVEL)	SEE PAGE
C	1	1	*135-8206*	4	TOOTH GP-UNI	
					(EACH INCLUDES)	
C	1A	1	**4F-3657**	2	BOLT-PLOW (5/8-11X2.75 IN)	
	1B	1	**4K-0367**	2	NUT-FULL (5/8-11 THD)	
	1C	1	**135-8203**	1	TOOTH-UNI	
	2	1	**9R-8987**	1	EDGE-LH	
	3	1	**9R-8988**	1	EDGE-RH	
	4	1	**128-3094**	1	EDGE	
	5	1	**151-7927**	4	PLATE	
	6	1	*151-7902*	1	BRACKET AS-LH	
	6A	1	**9R-0162**	1	BEARING	
	6B	1	**168-0480**	1	BEARING-SLEEVE	
	7	1	*151-7903*	1	BRACKET AS-RH	
	7A	1	**9R-0162**	1	BEARING	
	7B	1	**168-0480**	1	BEARING-SLEEVE	

C-CHANGE FROM PREVIOUS TYPE

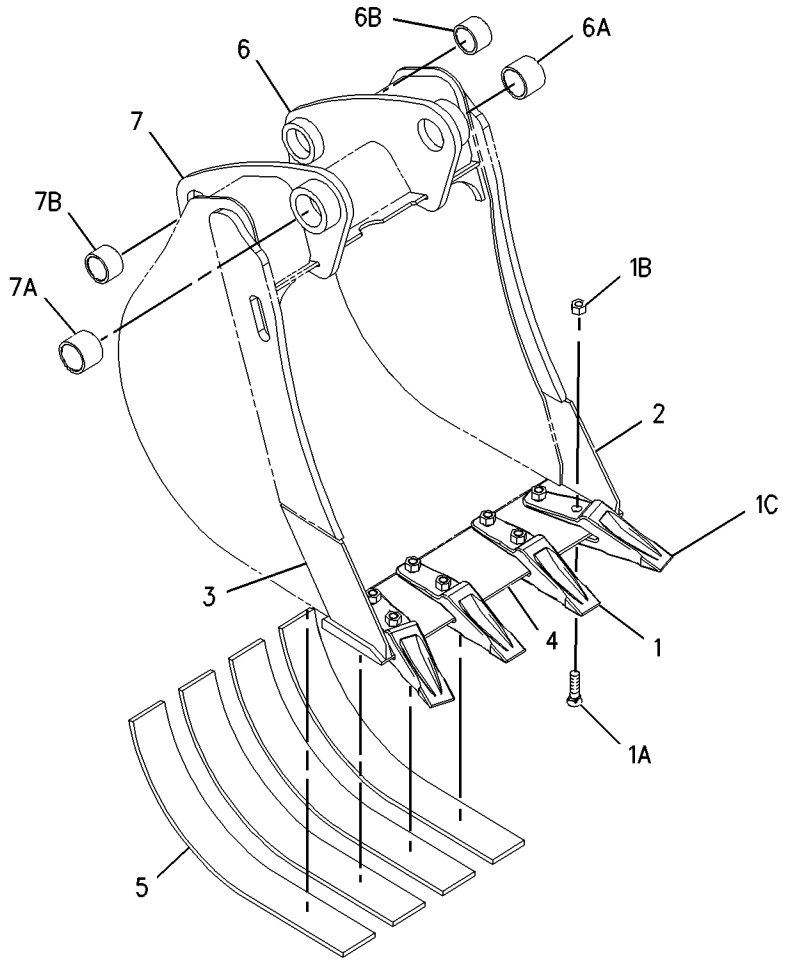

GRAPHIC #1 **<END>** g01003054

WORK TOOLS

151-7881 BUCKET GP-HOE–HEAVY DUTY

S/N: FDP18400-UP
(762MM) 30 INCH
AN ATTACHMENT

SMCS-6503 **i01925871**

NOTE	REF NO	GRAPHIC REF	PART NUMBER	QTY	PART NAME 1 2 3 4 5 6 (PRODUCT LEVEL)	SEE PAGE
C	1	1	*135-8206*	5	TOOTH GP-UNI	
					(EACH INCLUDES)	
C	1A	1	**4F-3657**	2	BOLT-PLOW (5/8-11X2.75 IN)	
	1B	1	**4K-0367**	2	NUT-FULL (5/8-11 THD)	
	1C	1	**135-8203**	1	TOOTH-UNI	
	2	1	**9R-8987**	1	EDGE-LH	
	3	1	**9R-8988**	1	EDGE-RH	
	4	1	**131-2117**	1	EDGE	
	5	1	**151-7927**	4	PLATE	
	6	1	*151-7902*	1	BRACKET AS-LH	
	6A	1	**9R-0162**	1	BEARING	
	6B	1	**168-0480**	1	BEARING-SLEEVE	
	7	1	*151-7903*	1	BRACKET AS-RH	
	7A	1	**9R-0162**	1	BEARING	
	7B	1	**168-0480**	1	BEARING-SLEEVE	

C-CHANGE FROM PREVIOUS TYPE

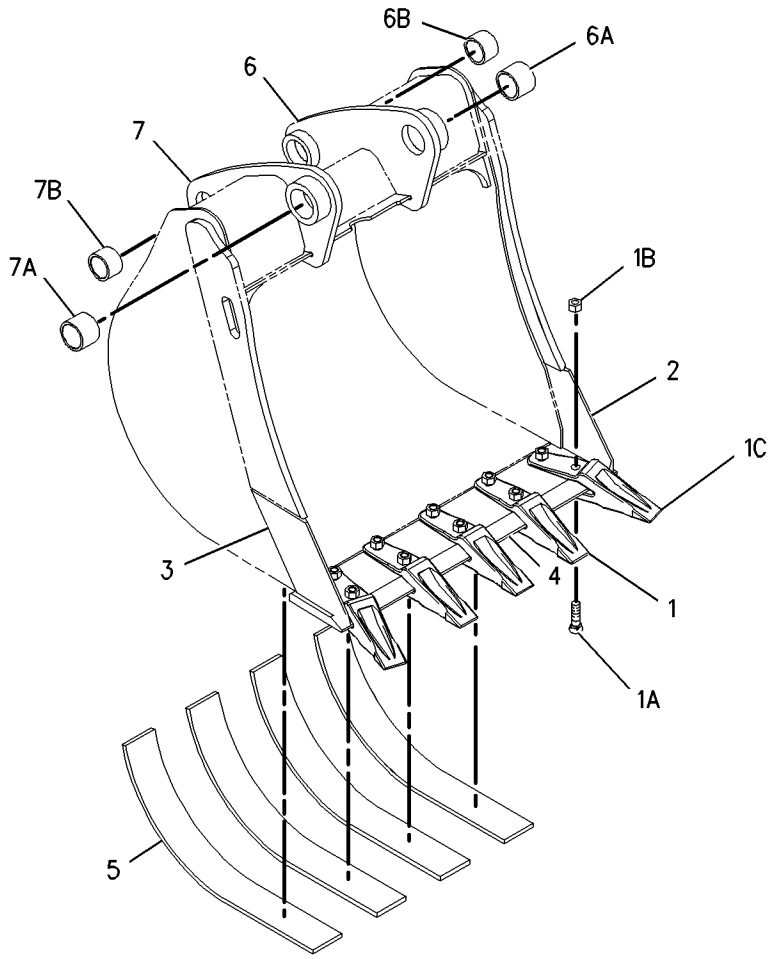

GRAPHIC #1 **<END>** g01003078

WORK TOOLS

151-7882 BUCKET GP-HOE–HEAVY DUTY

S/N: FDP18400-UP
(914MM) 36 INCH
AN ATTACHMENT

SMCS-6503 **i01925877**

NOTE	REF NO	GRAPHIC REF	PART NUMBER	QTY	PART NAME 1 2 3 4 5 6 (PRODUCT LEVEL)	SEE PAGE
C	1	1	*135-8206*	6	TOOTH GP-UNI	
					(EACH INCLUDES)	
C	1A	1	**4F-3657**	2	BOLT-PLOW (5/8-11X2.75 IN)	
	1B	1	**4K-0367**	2	NUT-FULL (5/8-11 THD)	
	1C	1	**135-8203**	1	TOOTH-UNI	
	2	1	**9R-8987**	1	EDGE-LH	
	3	1	**9R-8988**	1	EDGE-RH	
	4	1	**130-2057**	1	EDGE	
	5	1	**151-7927**	5	PLATE	
	6	1	*151-7902*	1	BRACKET AS-LH	
	6A	1	**9R-0162**	1	BEARING	
	6B	1	**168-0480**	1	BEARING-SLEEVE	
	7	1	*151-7903*	1	BRACKET AS-RH	
	7A	1	**9R-0162**	1	BEARING	
	7B	1	**168-0480**	1	BEARING-SLEEVE	

C-CHANGE FROM PREVIOUS TYPE

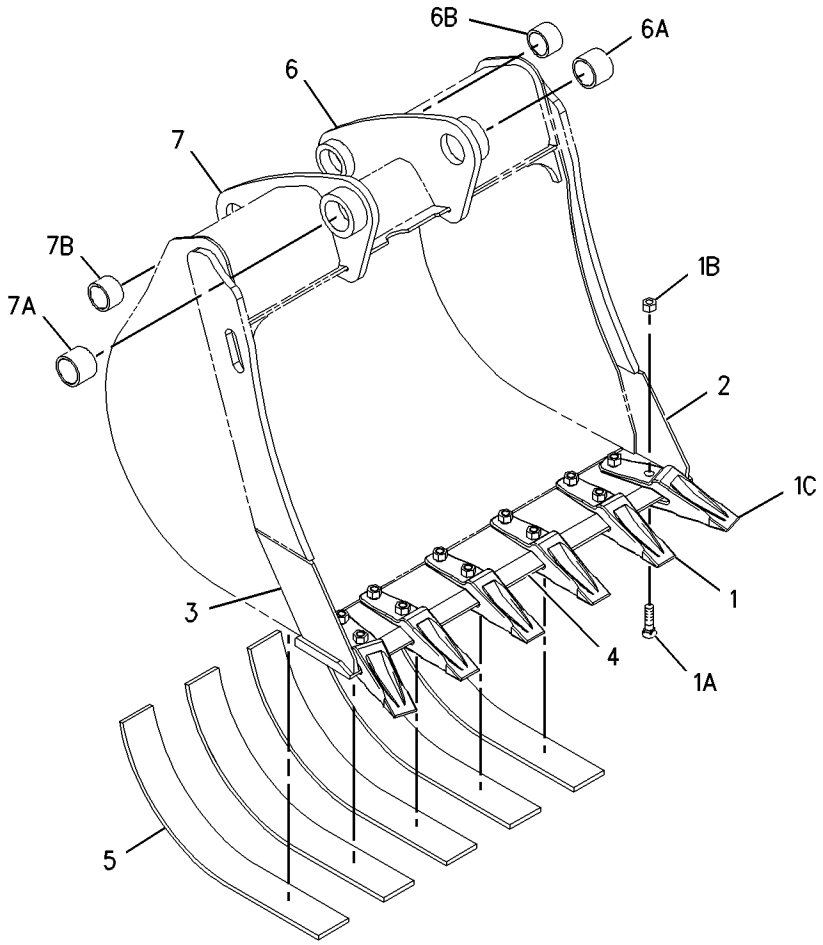

GRAPHIC #1 **<END>** g01003214

WORK TOOLS

151-7887 BUCKET GP-HOE—HIGH CAPACITY

S/N: FDP18400-UP
(458MM) 18 INCH
AN ATTACHMENT

SMCS-6503 **i01923081**

NOTE	REF NO	GRAPHIC REF	PART NUMBER	QTY	PART NAME 1 2 3 4 5 6 (PRODUCT LEVEL)	SEE PAGE
C	1	1	*135-8206*	3	TOOTH GP-UNI	
					(EACH INCLUDES)	
	1A	1	**4F-3657**	2	BOLT-PLOW (5/8-11X2.75 IN)	
	1B	1	**4K-0367**	2	NUT-FULL (5/8-11 THD)	
	1C	1	**135-8203**	1	TOOTH-UNI	
	2	1	**9R-8987**	1	EDGE-LH	
	3	1	**9R-8988**	1	EDGE-RH	
	4	1	**128-3778**	1	EDGE	
	5	1	*151-7902*	1	BRACKET AS-LH	
	5A	1	**9R-0162**	1	BEARING	
	5B	1	**168-0480**	1	BEARING-SLEEVE	
	6	1	*151-7903*	1	BRACKET AS-RH	
	6A	1	**9R-0162**	1	BEARING	
	6B	1	**168-0480**	1	BEARING-SLEEVE	

C-CHANGE FROM PREVIOUS TYPE

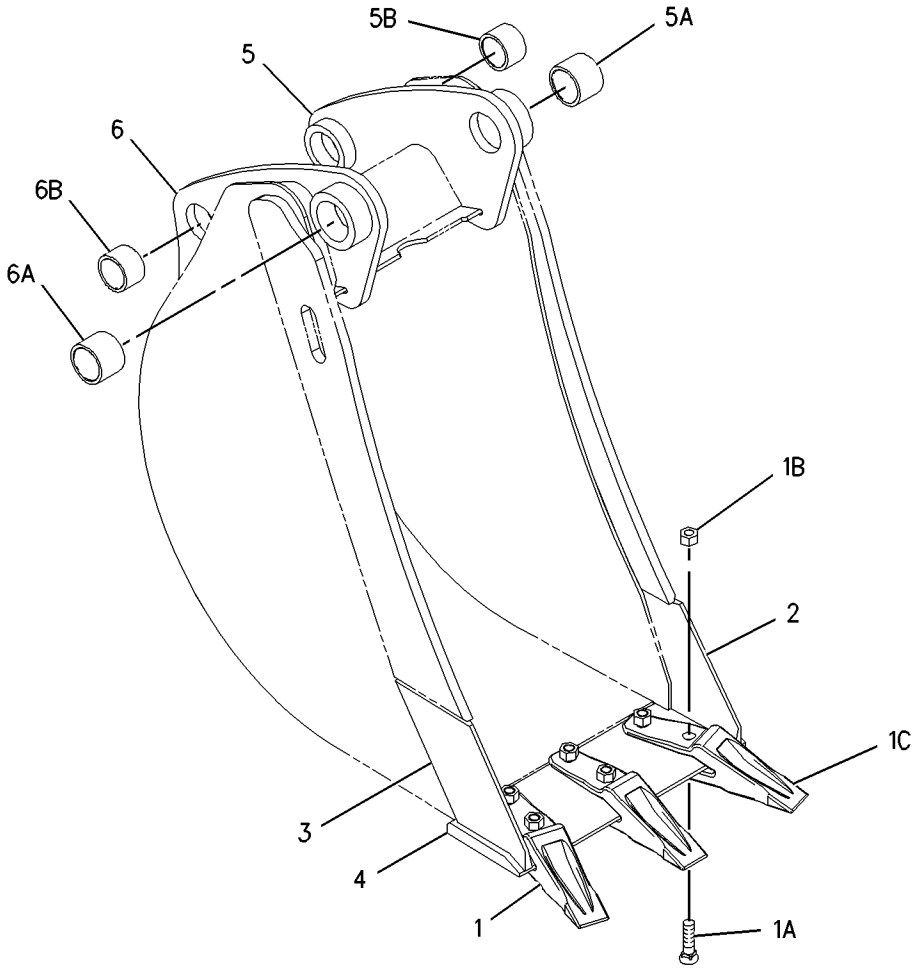

GRAPHIC #1 **<END>** g01002171

151-7888 BUCKET GP-HOE—HIGH CAPACITY

S/N: FDP18400-UP
(610MM) 24 INCH
AN ATTACHMENT

SMCS-6503 **i01923345**

NOTE	REF NO	GRAPHIC REF	PART NUMBER	QTY	PART NAME 1 2 3 4 5 6 (PRODUCT LEVEL)	SEE PAGE
C	1	1	*135-8206*	4	TOOTH GP-UNI	
					(EACH INCLUDES)	
	1A	1	**4F-3657**	2	BOLT-PLOW (5/8-11X2.75 IN)	
	1B	1	**4K-0367**	2	NUT-FULL (5/8-11 THD)	
	1C	1	**135-8203**	1	TOOTH-UNI	
	2	1	**9R-8987**	1	EDGE-LH	
	3	1	**9R-8988**	1	EDGE-RH	
	4	1	**128-3094**	1	EDGE	
	5	1	*151-7902*	1	BRACKET AS-LH	
	5A	1	**9R-0162**	1	BEARING	
	5B	1	**168-0480**	1	BEARING-SLEEVE	
	6	1	*151-7903*	1	BRACKET AS-RH	
	6A	1	**9R-0162**	1	BEARING	
	6B	1	**168-0480**	1	BEARING-SLEEVE	

C-CHANGE FROM PREVIOUS TYPE

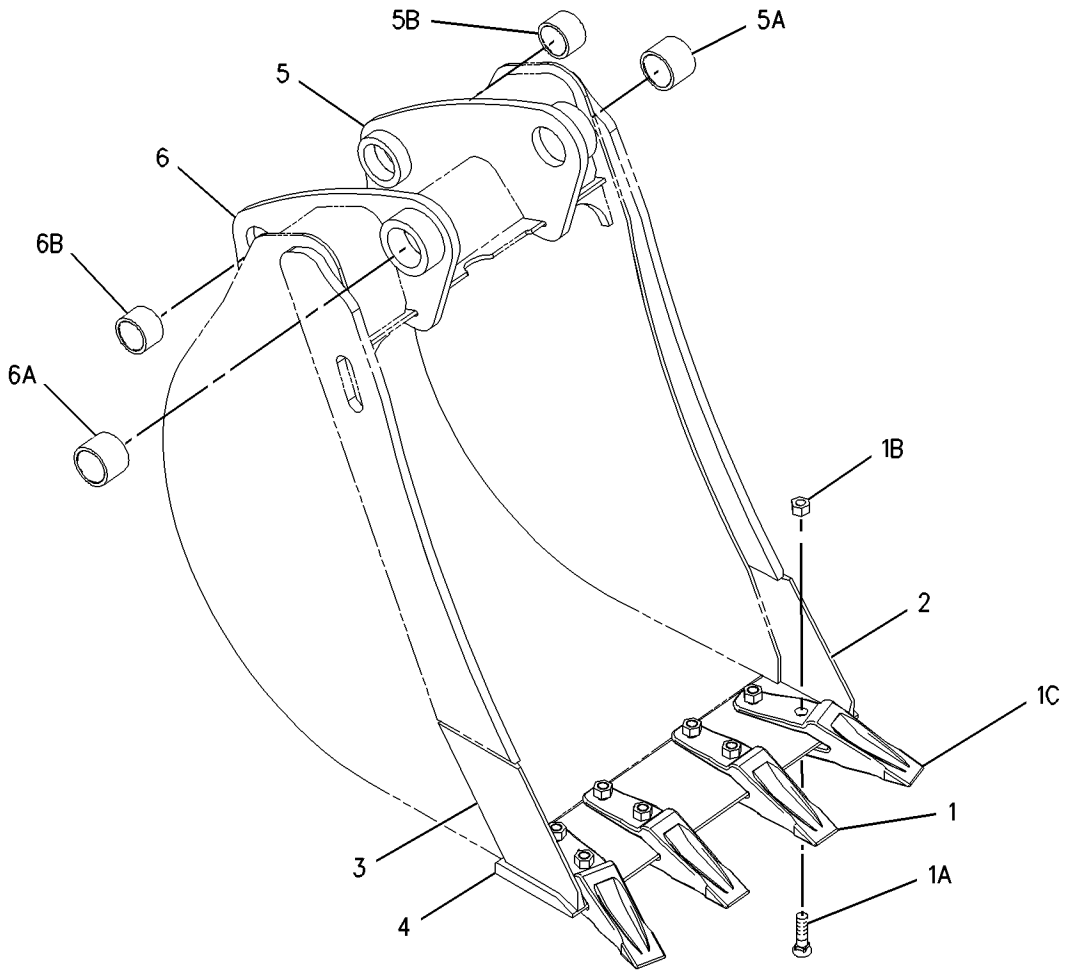

GRAPHIC #1 **<END>** g01002186

WORK TOOLS

151-7889 BUCKET GP-HOE—HIGH CAPACITY

S/N: FDP18400-UP
(762MM) 30 INCH
AN ATTACHMENT

SMCS-6503 **i01923346**

NOTE	REF NO	GRAPHIC REF	PART NUMBER	QTY	PART NAME 1 2 3 4 5 6 (PRODUCT LEVEL)	SEE PAGE
C	1	1	*135-8206*	5	TOOTH GP-UNI	
					(EACH INCLUDES)	
	1A	1	**4F-3657**	2	BOLT-PLOW (5/8-11X2.75 IN)	
	1B	1	**4K-0367**	2	NUT-FULL (5/8-11 THD)	
	1C	1	**135-8203**	2	TOOTH-UNI	
	2	1	**9R-8987**	1	EDGE-LH	
	3	1	**9R-8988**	1	EDGE-RH	
	4	1	**131-2117**	1	EDGE	
	5	1	*151-7902*	1	BRACKET AS-LH	
	5A	1	**9R-0162**	1	BEARING	
	5B	1	**168-0480**	1	BEARING-SLEEVE	
	6	1	*151-7903*	1	BRACKET AS-RH	
	6A	1	**9R-0162**	1	BEARING	
	6B	1	**168-0480**	1	BEARING-SLEEVE	

C-CHANGE FROM PREVIOUS TYPE

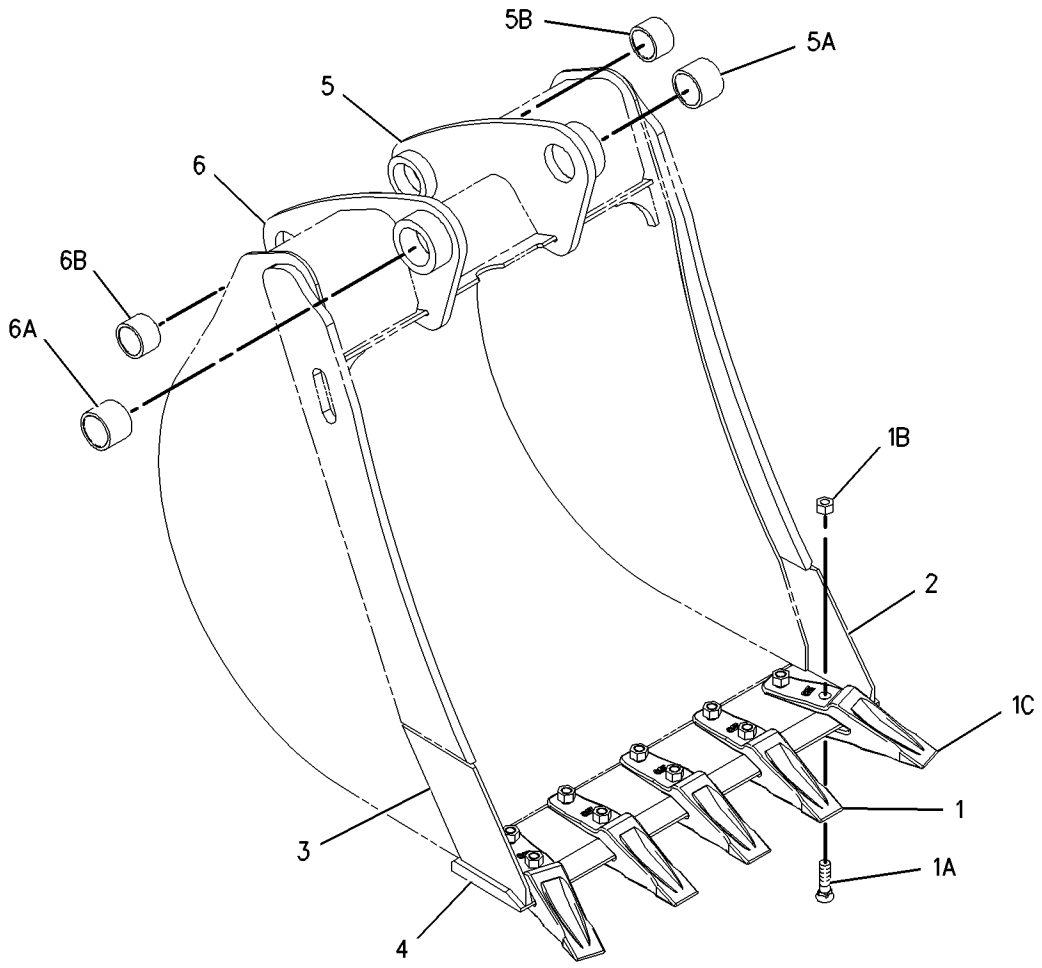

GRAPHIC #1 **<END>** g01002193

WORK TOOLS

151-7890 BUCKET GP-HOE—HIGH CAPACITY

S/N: FDP18400-UP
914MM (36IN)
AN ATTACHMENT

SMCS-6503 **i01923347**

NOTE	REF NO	GRAPHIC REF	PART NUMBER	QTY	PART NAME 1 2 3 4 5 6 (PRODUCT LEVEL)	SEE PAGE
	1	1	*135-8206*	6	TOOTH GP-UNI	
					(EACH INCLUDES)	
	1A	1	**4F-3657**	2	BOLT-PLOW (5/8-11X2.75 IN)	
	1B	1	**4K-0367**	2	NUT-FULL (5/8-11 THD)	
	1C	1	**135-8203**	1	TOOTH-UNI	
	2	1	**9R-8987**	1	EDGE-LH	
	3	1	**9R-8988**	1	EDGE-RH	
	4	1	**130-2057**	1	EDGE	
	5	1	*151-7902*	1	BRACKET AS-LH	
	5A	1	**9R-0162**	1	BEARING	
	5B	1	**168-0480**	1	BEARING-SLEEVE	
	6	1	*151-7903*	1	BRACKET AS-RH	
	6A	1	**9R-0162**	1	BEARING	
	6B	1	**168-0480**	1	BEARING-SLEEVE	

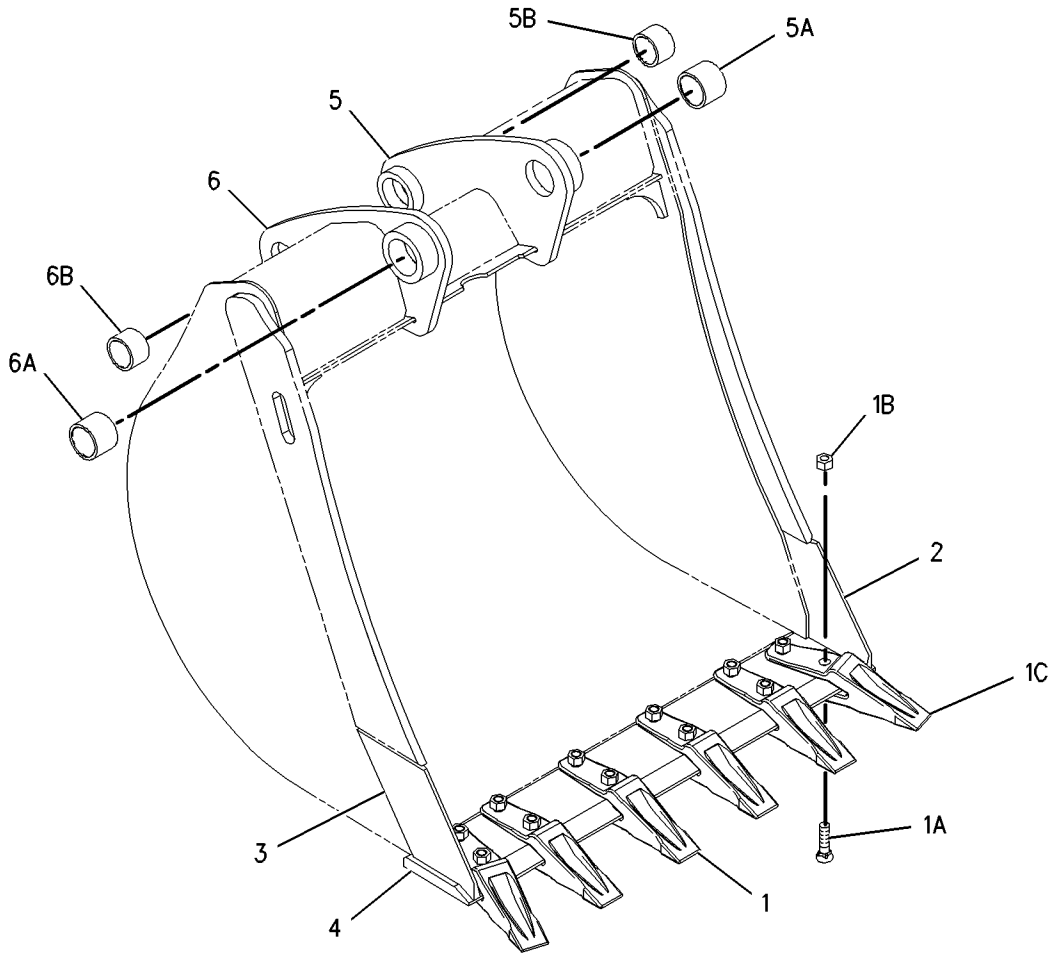

GRAPHIC #1 **<END>** g01002306

WORK TOOLS

174-6362 BUCKET GP-HOE–STANDARD DUTY

S/N: FDP18400-UP
305MM (12IN)
AN ATTACHMENT

SMCS-6503 **i01949840**

NOTE	REF NO	GRAPHIC REF	PART NUMBER	QTY	PART NAME 1 2 3 4 5 6 (PRODUCT LEVEL)	SEE PAGE
	1	1	**9R-0158**	5	WASHER (46X69X3MM THK)	
	2	1	**9R-1510**	3	WASHER (51X82X4MM THK)	
Y	3	1	**151-7866**	1	BUCKET GP-HOE	628
	4	1	**168-0443**	1	PIN	
	5	1	**168-0444**	1	PIN	
	6	1	**6V-3213**	2	RING-RETAINING	
	7	1	**6V-4364**	2	RING-RETAINING	

Y-SEPARATE ILLUSTRATION

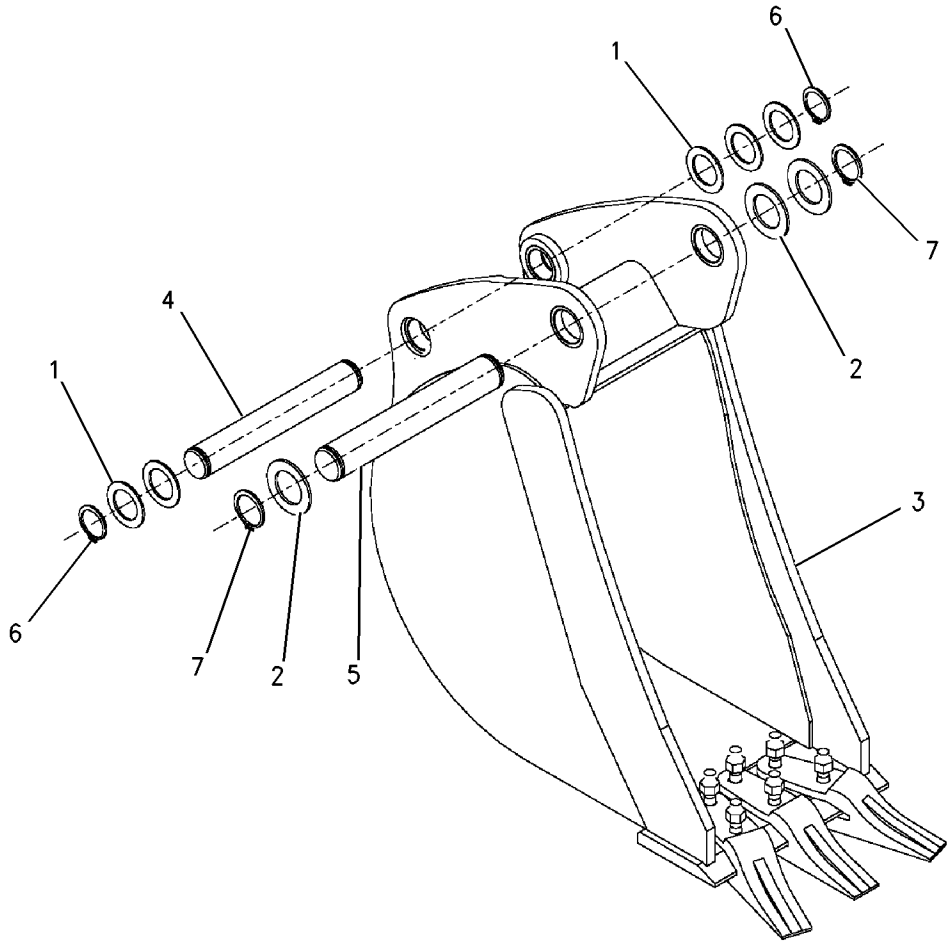

GRAPHIC #1 **<END>** g00713100

WORK TOOLS

174-6365 BUCKET GP-HOE—HEAVY DUTY

S/N: FDP18400-UP
305MM (12IN)
AN ATTACHMENT

SMCS-6503 **i01949839**

NOTE	REF NO	GRAPHIC REF	PART NUMBER	QTY	PART NAME 1 2 3 4 5 6 (PRODUCT LEVEL)	SEE PAGE
	1	1	**9R-0158**	5	WASHER (46X69X3MM THK)	
	2	1	**9R-1510**	3	WASHER (51X82X4MM THK)	
Y	3	1	**151-7877**	1	BUCKET GP-HOE	633
	4	1	**168-0443**	1	PIN	
	5	1	**168-0444**	1	PIN	
	6	1	**6V-3213**	2	RING-RETAINING	
	7	1	**6V-4364**	2	RING-RETAINING	

Y-SEPARATE ILLUSTRATION

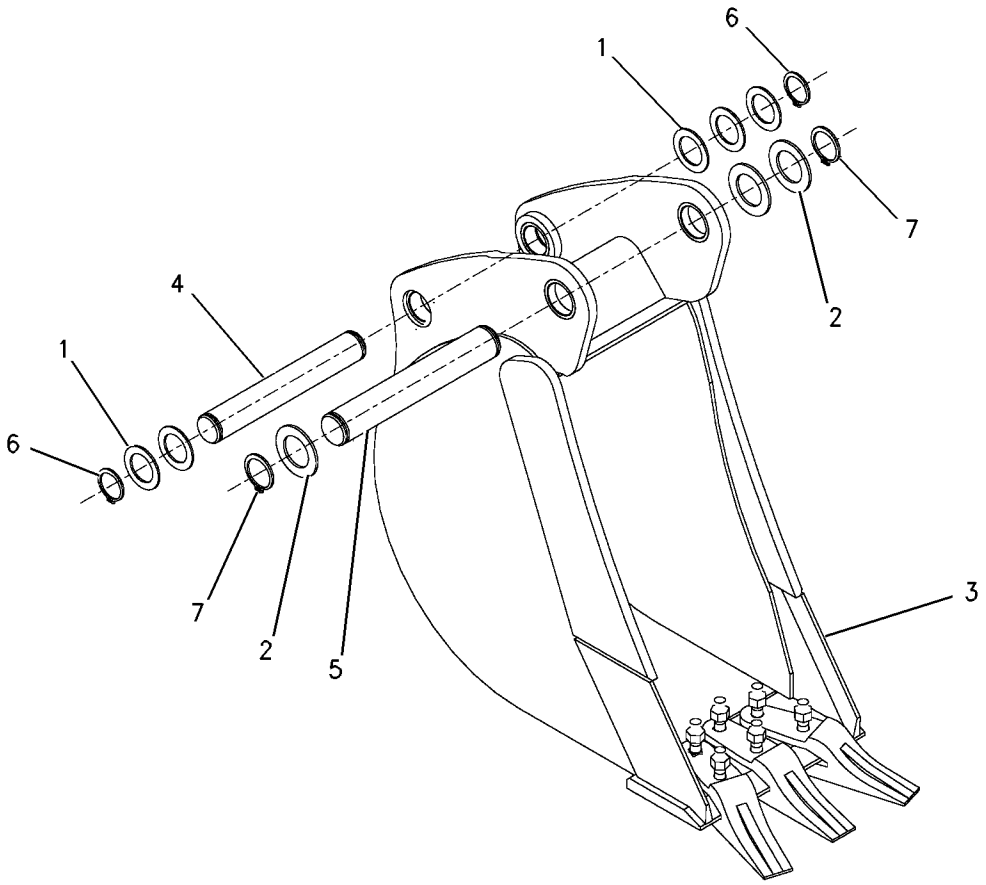

GRAPHIC #1 **<END>** g00713078

WORK TOOLS

191-6939 BUCKET GP-HOE–UTILITY

S/N: FDP18400-UP
1200MM (47IN)
AN ATTACHMENT

SMCS-6503 **i01949885**

NOTE	REF NO	GRAPHIC REF	PART NUMBER	QTY	PART NAME 1 2 3 4 5 6 (PRODUCT LEVEL)	SEE PAGE
	1	1	**167-0495**	1	BUCKET AS-HOE	
	2	1	*151-7902*	1	BRACKET AS-LH	
	2A	1	**9R-0162**	1	BEARING	
	2B	1	**168-0480**	1	BEARING-SLEEVE	
	3	1	*151-7903*	1	BRACKET AS-RH	
	3A	1	**9R-0162**	1	BEARING	
	3B	1	**168-0480**	1	BEARING-SLEEVE	
	4	1	**167-0499**	1	EDGE	

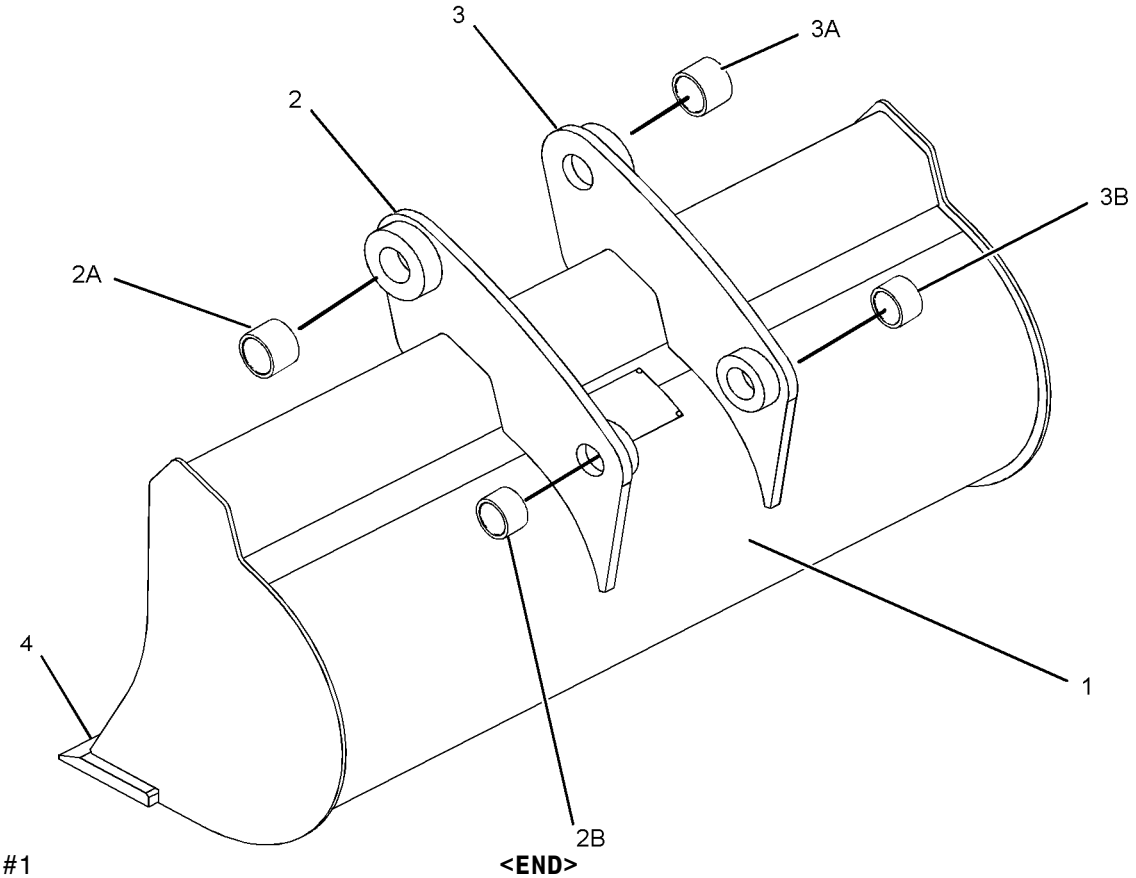

GRAPHIC #1 **<END>** g01014849

WORK TOOLS

191-6940 BUCKET GP-HOE—UTILITY

S/N: FDP18400-UP
1200MM (47IN)
AN ATTACHMENT

SMCS-6503 **i01949890**

NOTE	REF NO	GRAPHIC REF	PART NUMBER	QTY	PART NAME 1 2 3 4 5 6 (PRODUCT LEVEL)	SEE PAGE
	1	1	**167-0500**	1	BUCKET AS-HOE	
	2	1	*151-7902*	1	BRACKET AS-LH	
	2A	1	**9R-0162**	1	BEARING	
	2B	1	**168-0480**	1	BEARING-SLEEVE	
	3	1	*151-7903*	1	BRACKET AS-RH	
	3A	1	**9R-0162**	1	BEARING	
	3B	1	**168-0480**	1	BEARING-SLEEVE	
	4	1	**136-3766**	1	EDGE	

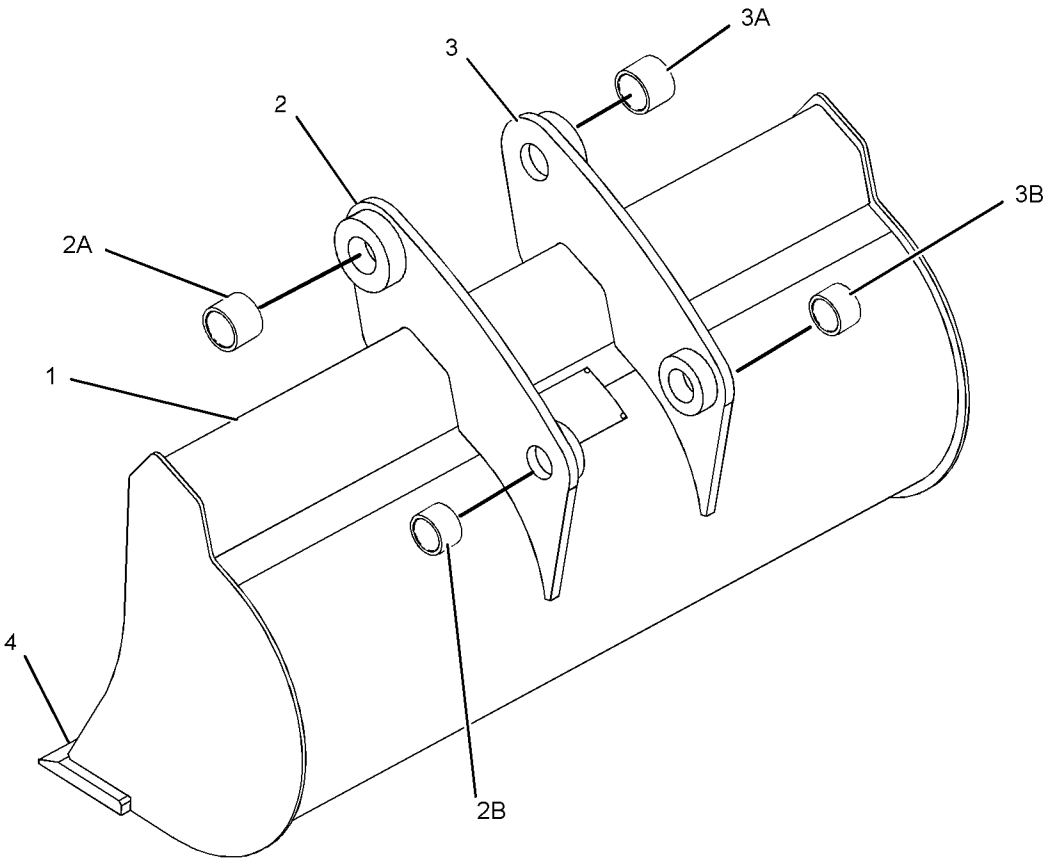

GRAPHIC #1 **<END>** g01014815

212-8738 BUCKET GP-HOE—DITCH CLEANING

S/N: FDP18400-UP
1200MM (47IN)
AN ATTACHMENT

SMCS-6503 **i02021904**

NOTE	REF NO	GRAPHIC REF	PART NUMBER	QTY	PART NAME 1 2 3 4 5 6 (PRODUCT LEVEL)	SEE PAGE
	1	1	*200-0235*	1	BUCKET AS-HOE	
	1A	1	**200-0219**	1	EDGE	
F		1	*200-0222*	1	BRACKET AS (RH)	
	1B	1	**9R-0162**	1	BEARING	
	1C	1	**168-0480**	1	BEARING-SLEEVE	
F		1	*200-0223*	1	BRACKET AS (LH)	
	1D	1	**9R-0162**	1	BEARING	
	1E	1	**168-0480**	1	BEARING-SLEEVE	

F-NOT SHOWN

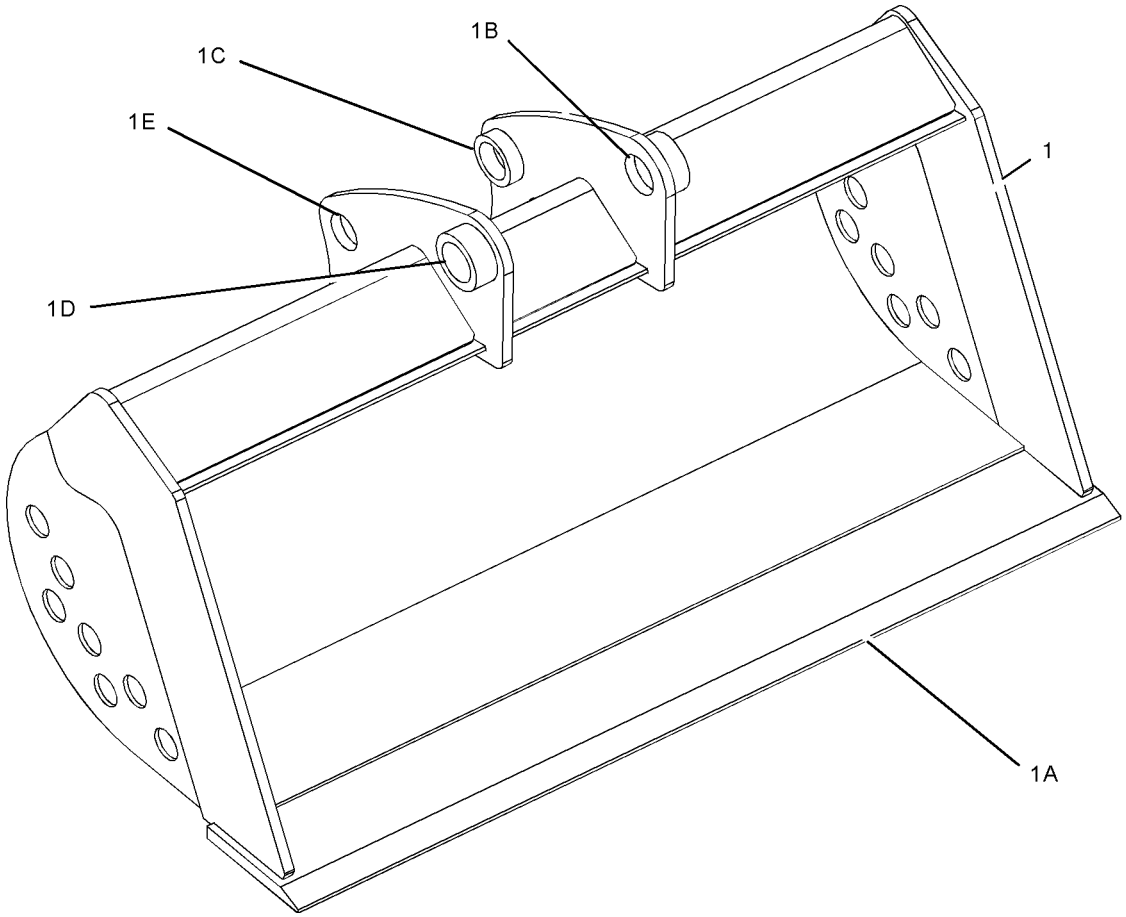

GRAPHIC #1 **<END>** g01044155

WORK TOOLS

212-8740 BUCKET GP-HOE—DITCH CLEANING

S/N: FDP18400-UP
1400MM (55IN)
AN ATTACHMENT

SMCS-6503 **i02021902**

NOTE	REF NO	GRAPHIC REF	PART NUMBER	QTY	PART NAME 1 2 3 4 5 6 (PRODUCT LEVEL)	SEE PAGE
	1	1	*200-0236*	1	BUCKET AS-HOE	
	1A	1	**200-0220**	1	EDGE	
F		1	*200-0222*	1	BRACKET AS (RH)	
	1B	1	**9R-0162**	1	BEARING	
	1C	1	**168-0480**	1	BEARING-SLEEVE	
F		1	*200-0223*	1	BRACKET AS (LH)	
	1D	1	**9R-0162**	1	BEARING	
	1E	1	**168-0480**	1	BEARING-SLEEVE	

F-NOT SHOWN

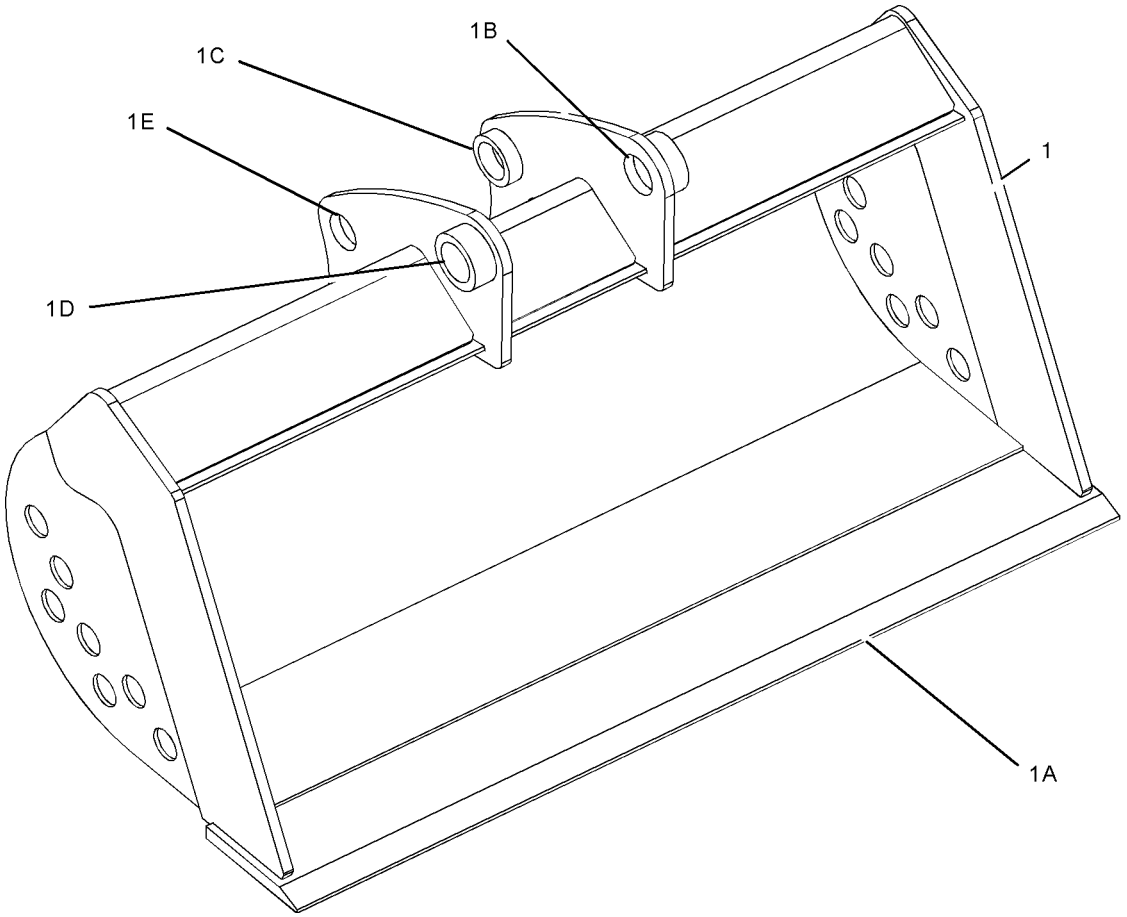

GRAPHIC #1 **<END>** g01044155

WORK TOOLS

219-3379 BUCKET GP-HOE–STANDARD DUTY

S/N: FDP18400-UP
305MM (12IN)
PART OF 219-3410 BUCKET GP-HOE
AN ATTACHMENT

SMCS-6503 **i01916339**

NOTE	REF NO	GRAPHIC REF	PART NUMBER	QTY	PART NAME 1 2 3 4 5 6 (PRODUCT LEVEL)	SEE PAGE
	1	1	*208-5245*	3	TIP GP-PENETRATION	
					(EACH INCLUDES)	
	1A	1	**201-1238**	1	PIN	
	1B	1	**201-1239**	1	RETAINER AS	
	1C	1	**208-5235**	1	TIP-PENETRATION	
	2	1	*151-7929*	1	BRACKET AS-LH	
	2A	1	**9R-0320**	1	BEARING	
	2B	1	**154-5257**	1	BEARING	
	3	1	*151-7930*	1	BRACKET AS-RH	
	3A	1	**9R-0320**	1	BEARING	
	3B	1	**154-5257**	1	BEARING	

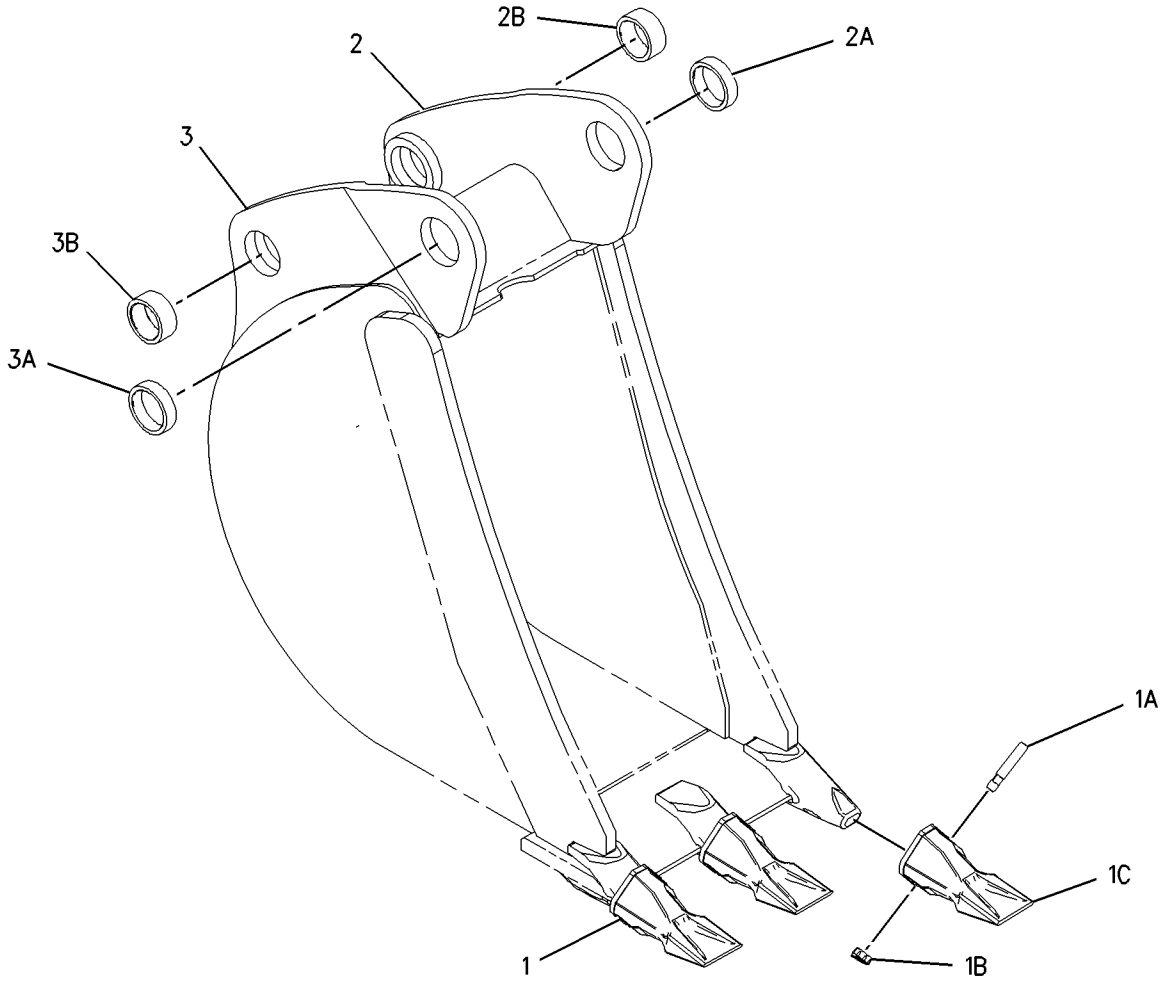

GRAPHIC #1 **<END>** g01001647

219-3380 BUCKET GP-HOE–STANDARD DUTY

S/N: FDP18400-UP
458MM (18IN)
AN ATTACHMENT

SMCS-6503 **i01916416**

NOTE	REF NO	GRAPHIC REF	PART NUMBER	QTY	PART NAME 1 2 3 4 5 6 (PRODUCT LEVEL)	SEE PAGE
	1	1	*208-5245*	4	TIP GP-PENETRATION	
					(EACH INCLUDES)	
	1A	1	**201-1238**	1	PIN	
	1B	1	**201-1239**	1	RETAINER AS	
	1C	1	**208-5235**	1	TIP-PENETRATION	
	2	1	*151-7902*	1	BRACKET AS-LH	
	2A	1	**9R-0162**	1	BEARING	
	2B	1	**168-0480**	1	BEARING-SLEEVE	
	3	1	*151-7903*	1	BRACKET AS-RH	
	3A	1	**9R-0162**	1	BEARING	
	3B	1	**168-0480**	1	BEARING-SLEEVE	

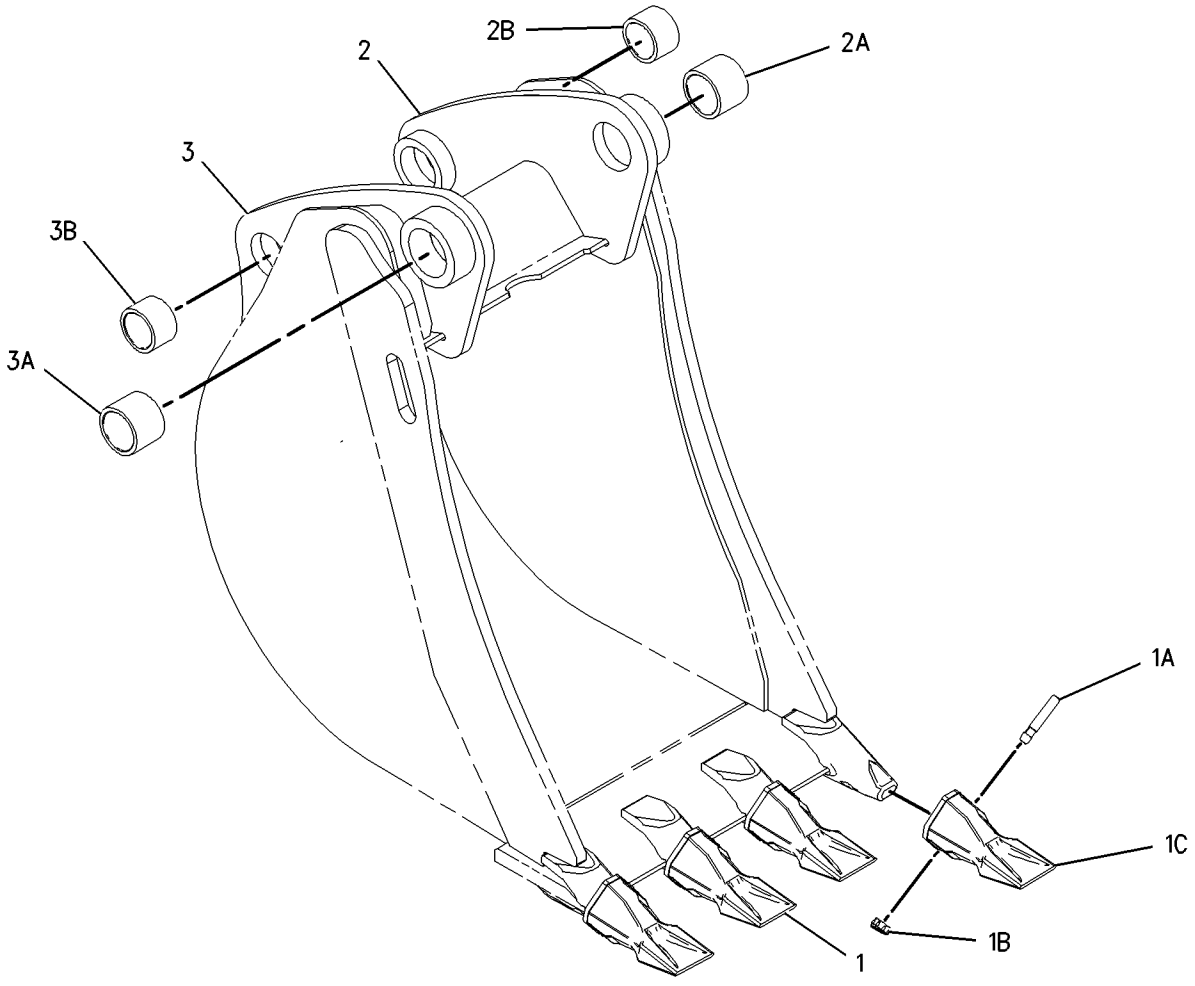

GRAPHIC #1 **<END>** g01001636

WORK TOOLS

219-3381 BUCKET GP-H0E–STANDARD DUTY

S/N: FDP18400-UP
610MM (24IN)
AN ATTACHMENT

SMCS-6503 **i01946855**

NOTE	REF NO	GRAPHIC REF	PART NUMBER	QTY	PART NAME 1 2 3 4 5 6 (PRODUCT LEVEL)	SEE PAGE
	1	1	*208-5245*	5	TIP GP-PENETRATION	
					(EACH INCLUDES)	
	1A	1	**201-1238**	1	PIN	
	1B	1	**201-1239**	1	RETAINER AS	
	1C	1	**208-5235**	1	TIP-PENETRATION	
	2	1	*151-7902*	1	BRACKET AS-LH	
	2A	1	**9R-0162**	1	BEARING	
	2B	1	**168-0480**	1	BEARING-SLEEVE	
	3	1	*151-7903*	1	BRACKET AS-RH	
	3A	1	**9R-0162**	1	BEARING	
	3B	1	**168-0480**	1	BEARING-SLEEVE	
	4	1	**219-9488**	1	EDGE	
	5	1	**201-1235**	5	ADAPTER	

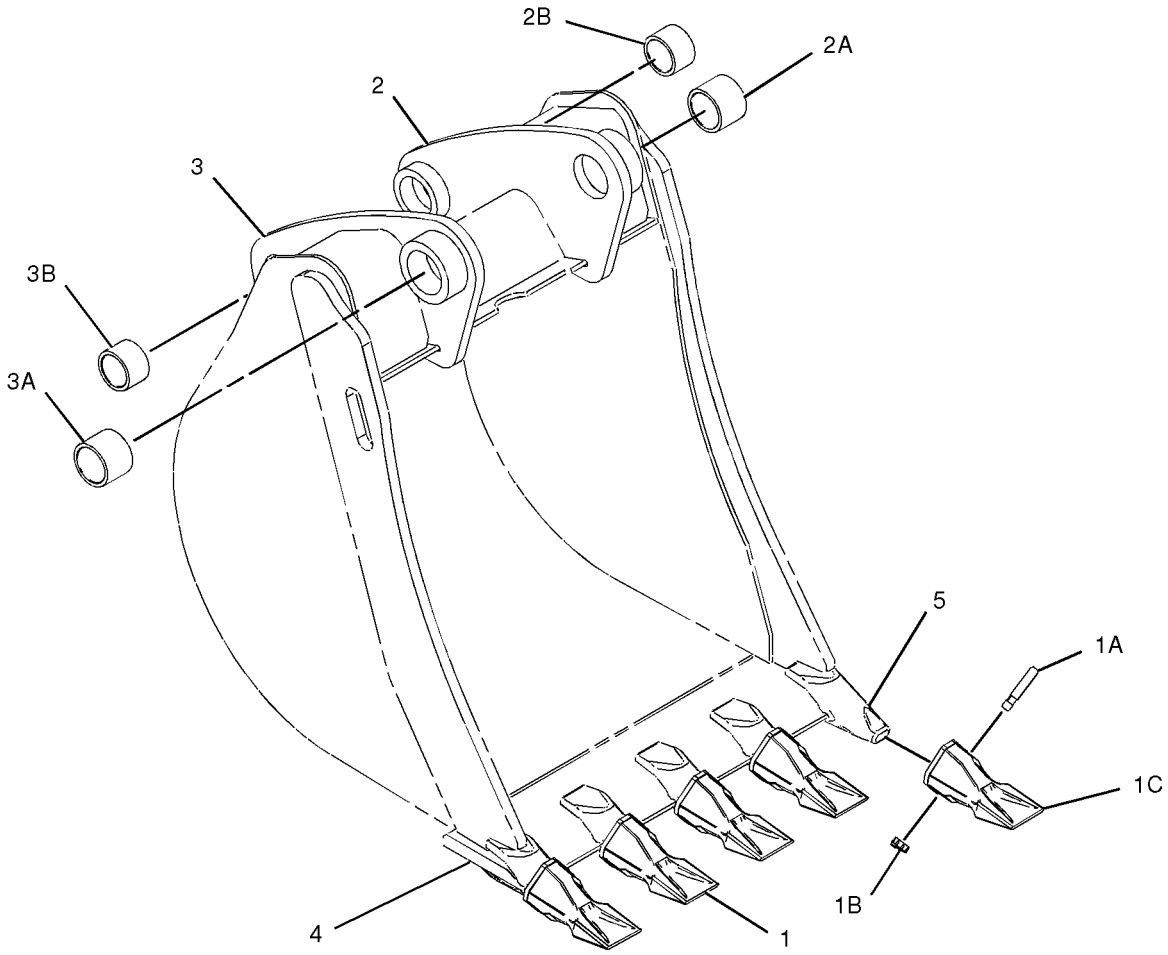

GRAPHIC #1 **<END>** g01013630

219-3382 BUCKET GP-HOE–STANDARD DUTY

S/N: FDP18400-UP
762MM (30IN)
AN ATTACHMENT

SMCS-6503 **i01916518**

NOTE	REF NO	GRAPHIC REF	PART NUMBER	QTY	PART NAME 1 2 3 4 5 6 (PRODUCT LEVEL)	SEE PAGE
	1	1	*208-5245*	5	TIP GP-PENETRATION	
					(EACH INCLUDES)	
	1A	1	**201-1238**	1	PIN	
	1B	1	**201-1239**	1	RETAINER AS	
	1C	1	**208-5235**	1	TIP-PENETRATION	
	2	1	*151-7902*	1	BRACKET AS-LH	
	2A	1	**9R-0162**	1	BEARING	
	2B	1	**168-0480**	1	BEARING-SLEEVE	
	3	1	*151-7903*	1	BRACKET AS-RH	
	3A	1	**9R-0162**	1	BEARING	
	3B	1	**168-0480**	1	BEARING-SLEEVE	

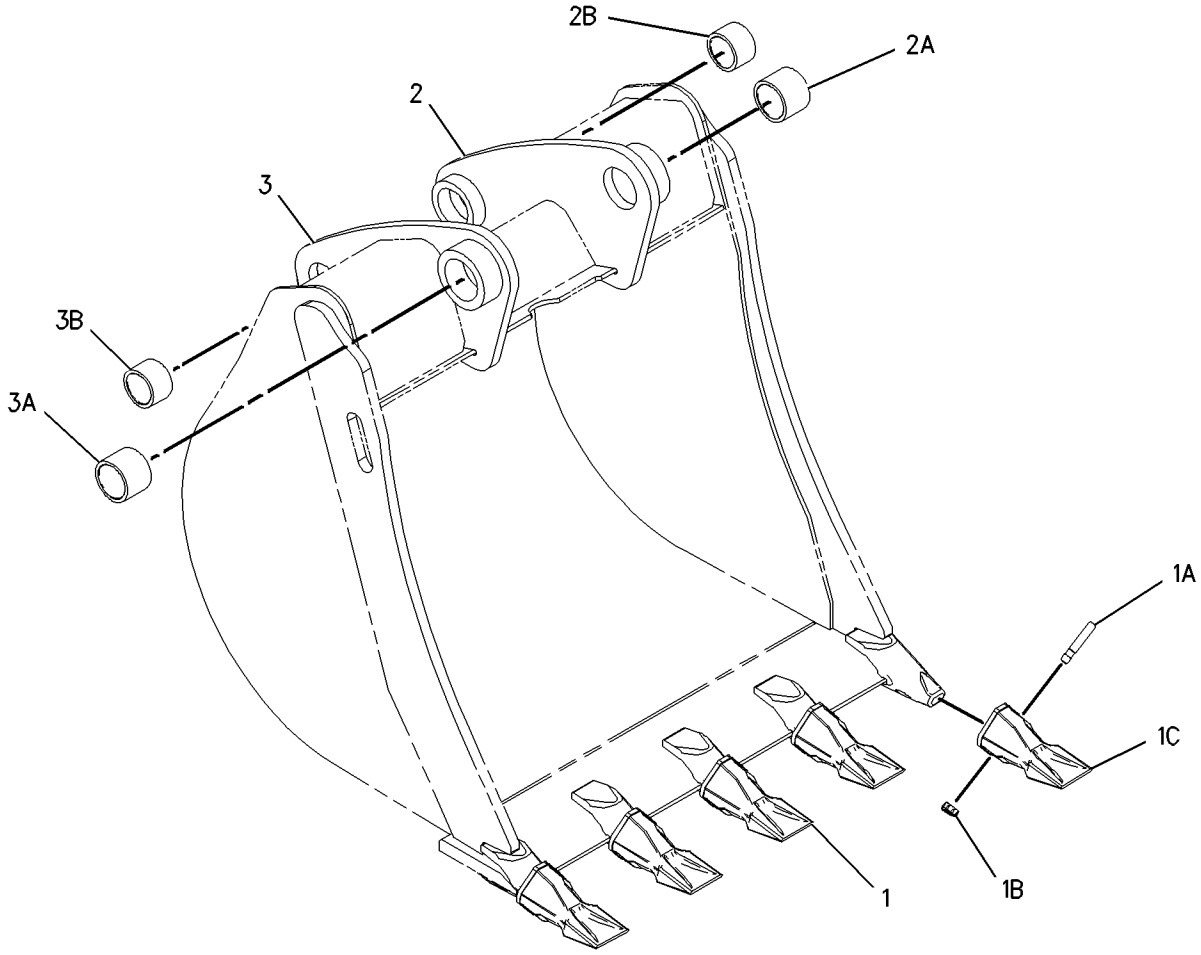

GRAPHIC #1 **<END>** g01001590

WORK TOOLS

219-3383 BUCKET GP-H0E–STANDARD DUTY

S/N: FDP18400-UP
914MM (36IN)
AN ATTACHMENT

SMCS-6503 **i01916522**

NOTE	REF NO	GRAPHIC REF	PART NUMBER	QTY	PART NAME 1 2 3 4 5 6 (PRODUCT LEVEL)	SEE PAGE
	1	1	*208-5245*	6	TIP GP-PENETRATION	
					(EACH INCLUDES)	
	1A	1	**201-1238**	1	PIN	
	1B	1	**201-1239**	1	RETAINER AS	
	1C	1	**208-5235**	1	TIP-PENETRATION	
	2	1	*151-7902*	1	BRACKET AS-LH	
	2A	1	**9R-0162**	1	BEARING	
	2B	1	**168-0480**	1	BEARING-SLEEVE	
	3	1	*151-7903*	1	BRACKET AS-RH	
	3A	1	**9R-0162**	1	BEARING	
	3B	1	**168-0480**	1	BEARING-SLEEVE	

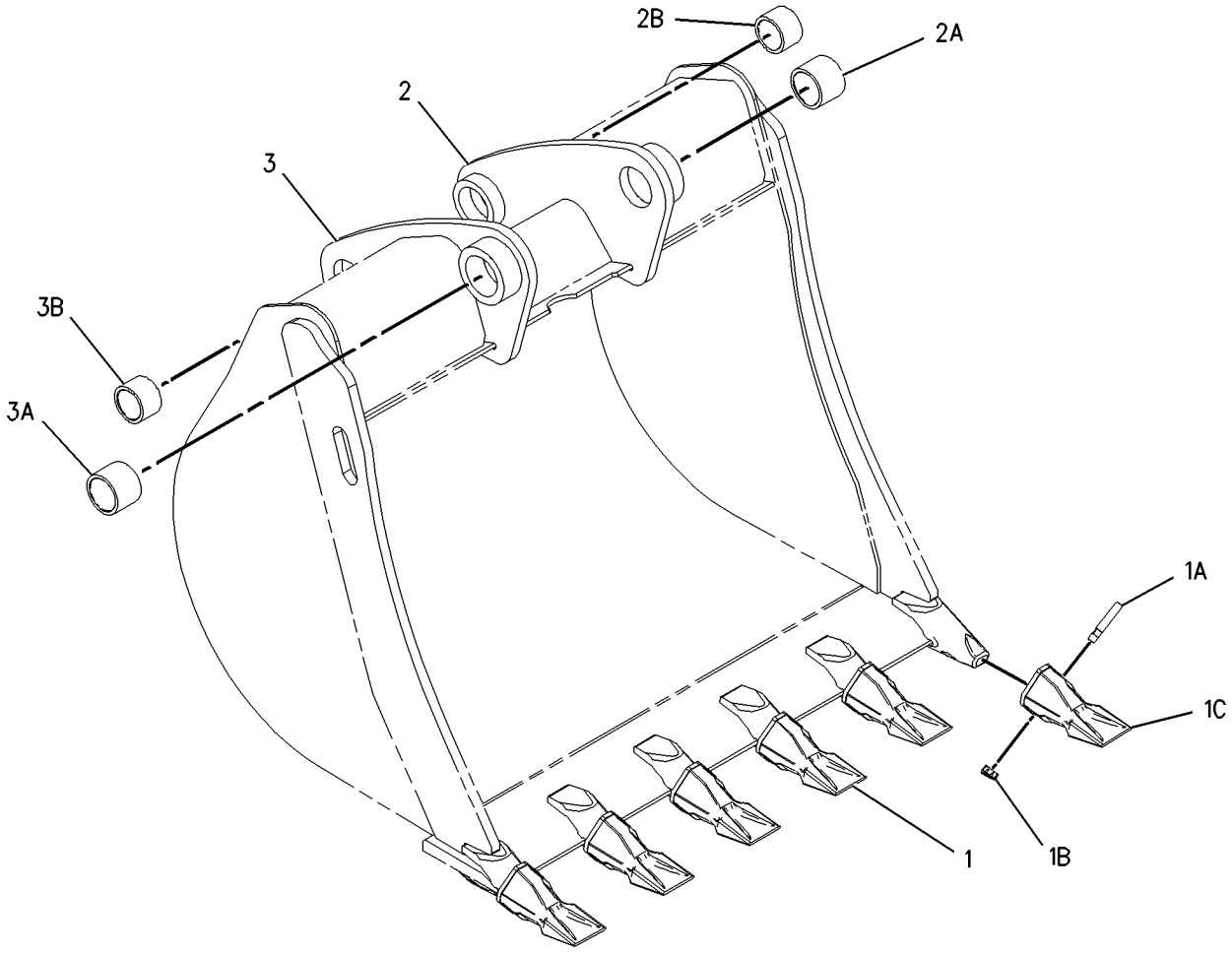

GRAPHIC #1 **<END>** g01001601

219-3384 BUCKET GP-HOE—HEAVY DUTY

S/N: FDP18400-UP
305MM (18IN)
PART OF 219-3411 BUCKET GP-HOE
AN ATTACHMENT

SMCS-6503 **i01917203**

NOTE	REF NO	GRAPHIC REF	PART NUMBER	QTY	PART NAME 1 2 3 4 5 6 (PRODUCT LEVEL)	SEE PAGE
	1	1	*208-5245*	3	TIP GP-PENETRATION	
					(EACH INCLUDES)	
	1A	1	**201-1238**	1	PIN	
	1B	1	**201-1239**	1	RETAINER AS	
	1C	1	**208-5235**	1	TIP-PENETRATION	
	2	1	*151-7929*	1	BRACKET AS-LH	
	2A	1	**9R-0320**	1	BEARING	
	2B	1	**154-5257**	1	BEARING	
	3	1	*151-7930*	1	BRACKET AS-RH	
	3A	1	**9R-0320**	1	BEARING	
	3B	1	**154-5257**	1	BEARING	
	4	1	**219-9482**	1	EDGE	

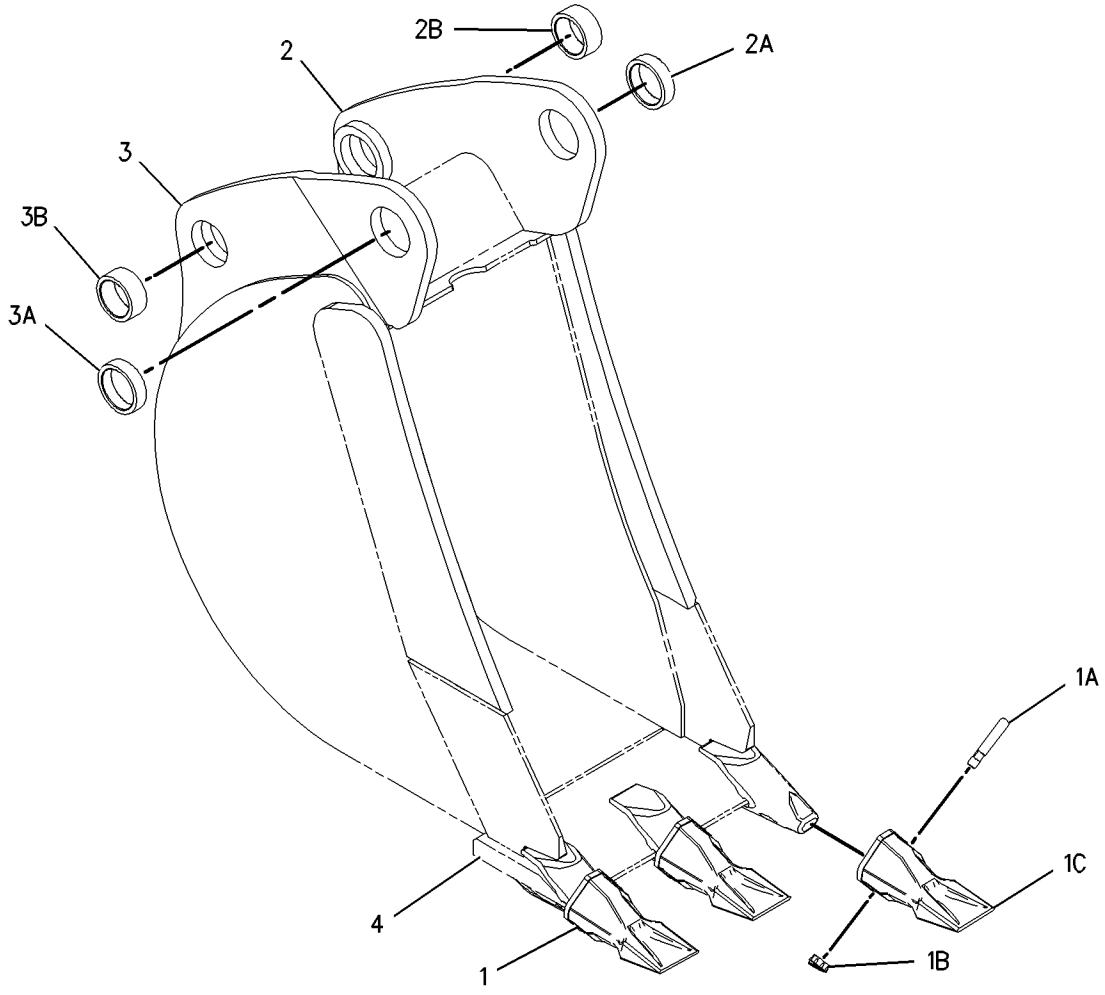

GRAPHIC #1 **<END>** g01001916

WORK TOOLS

219-3385 BUCKET GP-H0E–HEAVY DUTY

S/N: FDP18400-UP
407MM (16IN)
AN ATTACHMENT

SMCS-6503 **i01917327**

NOTE	REF NO	GRAPHIC REF	PART NUMBER	QTY	PART NAME 1 2 3 4 5 6 (PRODUCT LEVEL)	SEE PAGE
	1	1	*208-5245*	3	TIP GP-PENETRATION	
					(EACH INCLUDES)	
	1A	1	**201-1238**	1	PIN	
	1B	1	**201-1239**	1	RETAINER AS	
	1C	1	**208-5235**	1	TIP-PENETRATION	
	2	1	*151-7902*	1	BRACKET AS-LH	
	2A	1	**9R-0162**	1	BEARING	
	2B	1	**168-0480**	1	BEARING-SLEEVE	
	3	1	*151-7903*	1	BRACKET AS-RH	
	3A	1	**9R-0162**	1	BEARING	
	3B	1	**168-0480**	1	BEARING-SLEEVE	
	4	1	**219-9482**	1	EDGE	

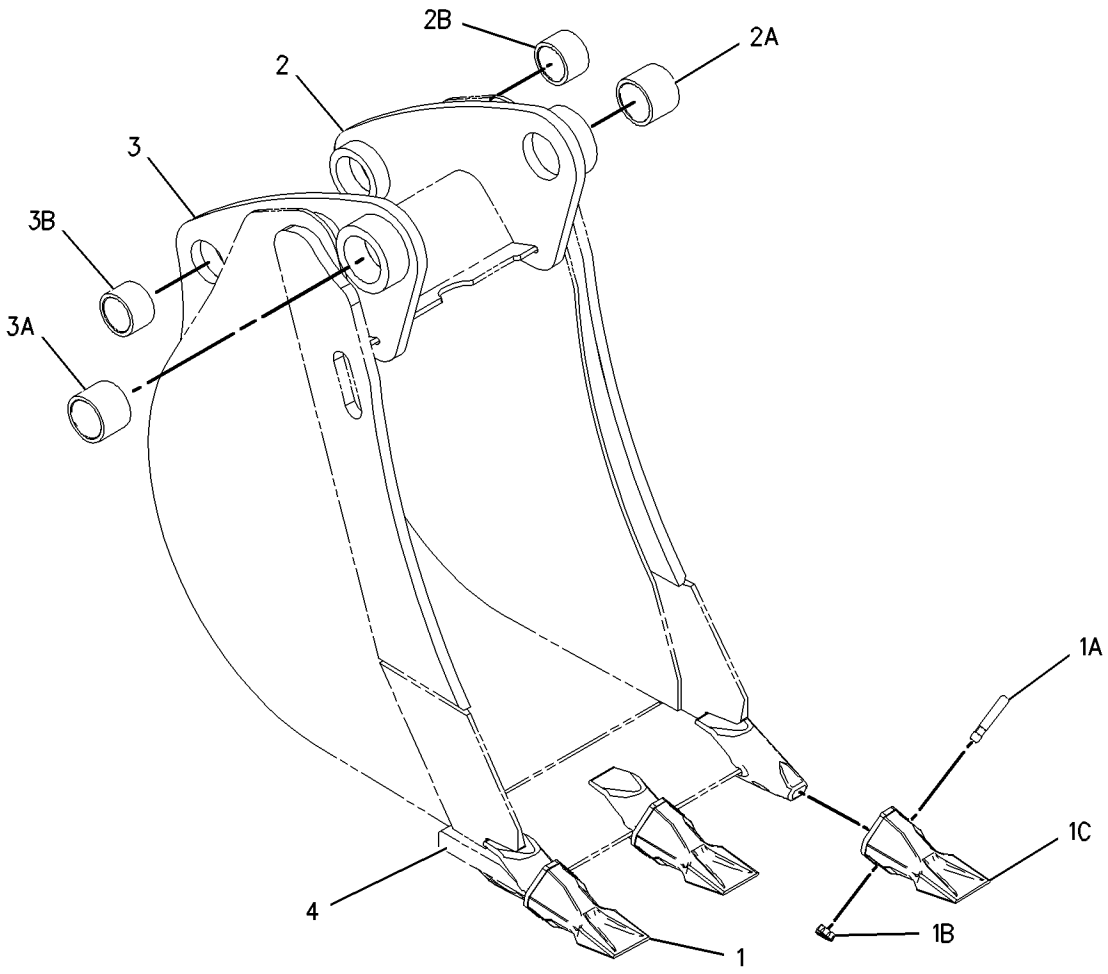

GRAPHIC #1 **<END>** g01001972

219-3386 BUCKET GP-HOE–HEAVY DUTY

S/N: FDP18400-UP
458MM (18IN)
AN ATTACHMENT

SMCS-6503 **i01917356**

NOTE	REF NO	GRAPHIC REF	PART NUMBER	QTY	PART NAME 1 2 3 4 5 6 (PRODUCT LEVEL)	SEE PAGE
	1	1	*208-5245*	4	TIP GP-PENETRATION	
					(EACH INCLUDES)	
	1A	1	**201-1238**	1	PIN	
	1B	1	**201-1239**	1	RETAINER AS	
	1C	1	**208-5235**	1	TIP-PENETRATION	
	2	1	*151-7902*	1	BRACKET AS-LH	
	2A	1	**9R-0162**	1	BEARING	
	2B	1	**168-0480**	1	BEARING-SLEEVE	
	3	1	*151-7903*	1	BRACKET AS-RH	
	3A	1	**9R-0162**	1	BEARING	
	3B	1	**168-0480**	1	BEARING-SLEEVE	
	4	1	**219-9483**	1	EDGE	

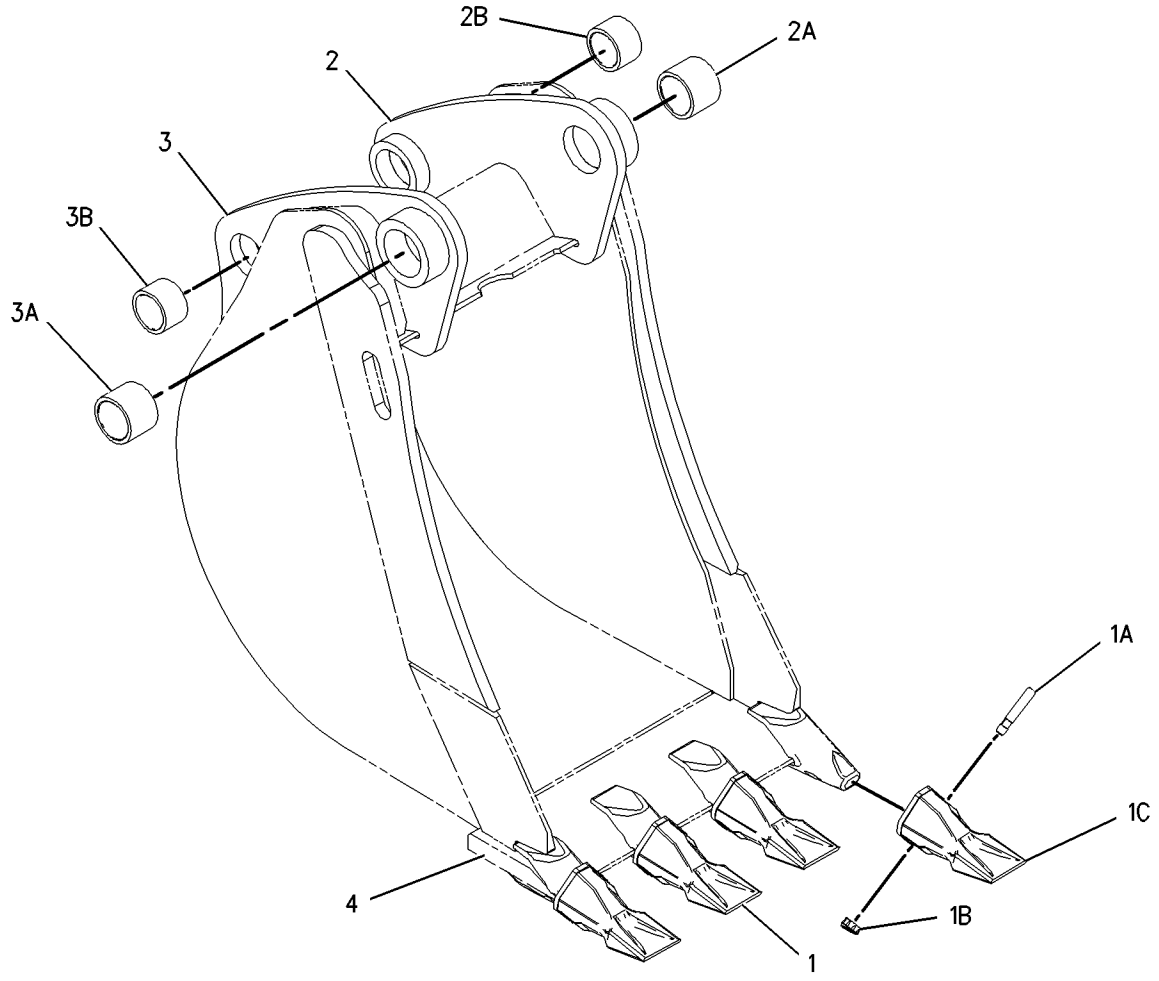

GRAPHIC #1 **<END>** g01001988

WORK TOOLS

219-3387 BUCKET GP-H0E–HEAVY DUTY

S/N: FDP18400-UP
610MM (24IN)
AN ATTACHMENT

SMCS-6503 **i01917364**

NOTE	REF NO	GRAPHIC REF	PART NUMBER	QTY	PART NAME 1 2 3 4 5 6 (PRODUCT LEVEL)	SEE PAGE
	1	1	*208-5245*	5	TIP GP-PENETRATION	
					(EACH INCLUDES)	
	1A	1	**201-1238**	1	PIN	
	1B	1	**201-1239**	1	RETAINER AS	
	1C	1	**208-5235**	1	TIP-PENETRATION	
	2	1	*151-7902*	1	BRACKET AS-LH	
	2A	1	**9R-0162**	1	BEARING	
	2B	1	**168-0480**	1	BEARING-SLEEVE	
	3	1	*151-7903*	1	BRACKET AS-RH	
	3A	1	**9R-0162**	1	BEARING	
	3B	1	**168-0480**	1	BEARING-SLEEVE	
	4	1	**219-9484**	1	EDGE	

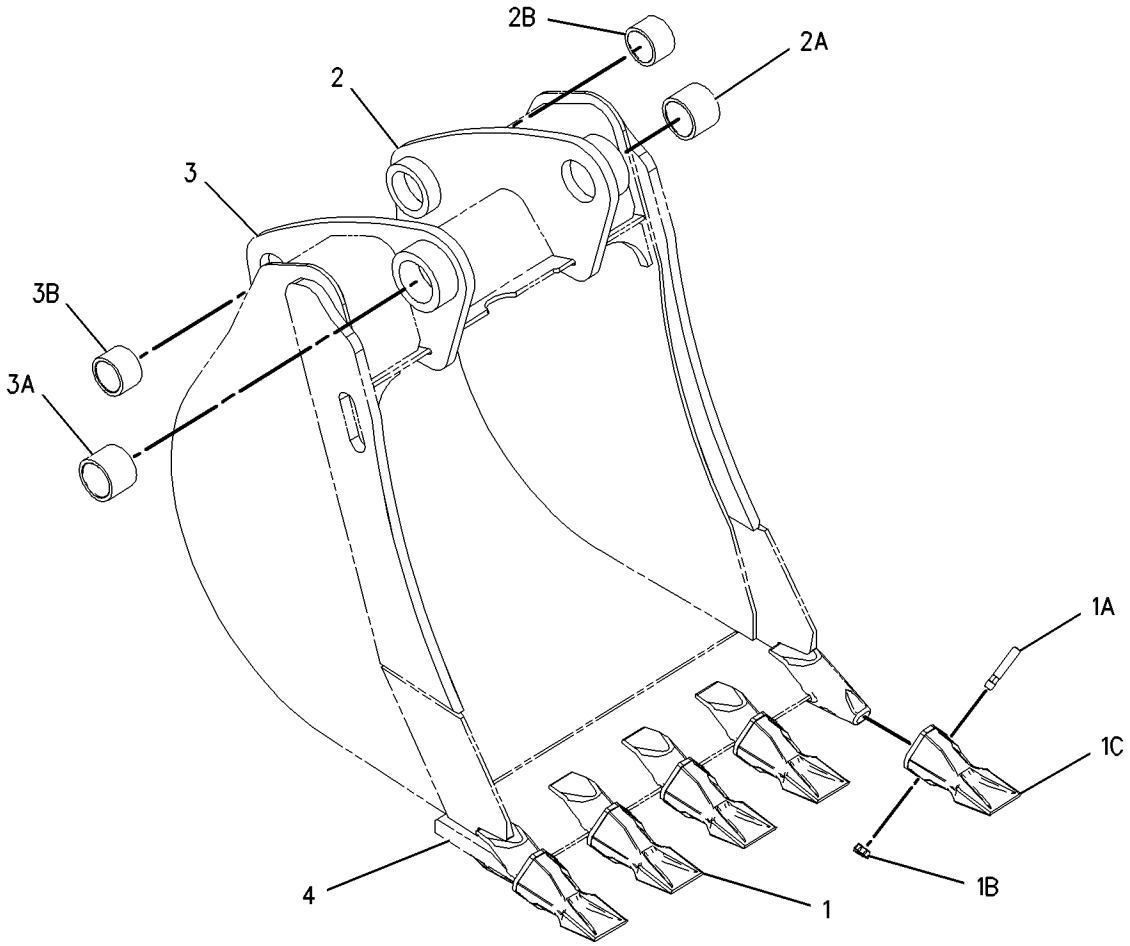

GRAPHIC #1 **<END>** g01002004

WORK TOOLS

219-3388 BUCKET GP-HOE–HEAVY DUTY

S/N: FDP18400-UP
762MM (30IN)
AN ATTACHMENT

SMCS-6503 **i01917366**

NOTE	REF NO	GRAPHIC REF	PART NUMBER	QTY	PART NAME 1 2 3 4 5 6 (PRODUCT LEVEL)	SEE PAGE
	1	1	*208-5245*	5	TIP GP-PENETRATION	
					(EACH INCLUDES)	
	1A	1	**201-1238**	1	PIN	
	1B	1	**201-1239**	1	RETAINER AS	
	1C	1	**208-5235**	1	TIP-PENETRATION	
	2	1	*151-7902*	1	BRACKET AS-LH	
	2A	1	**9R-0162**	1	BEARING	
	2B	1	**168-0480**	1	BEARING-SLEEVE	
	3	1	*151-7903*	1	BRACKET AS-RH	
	3A	1	**9R-0162**	1	BEARING	
	3B	1	**168-0480**	1	BEARING-SLEEVE	
	4	1	**219-9485**	1	EDGE	

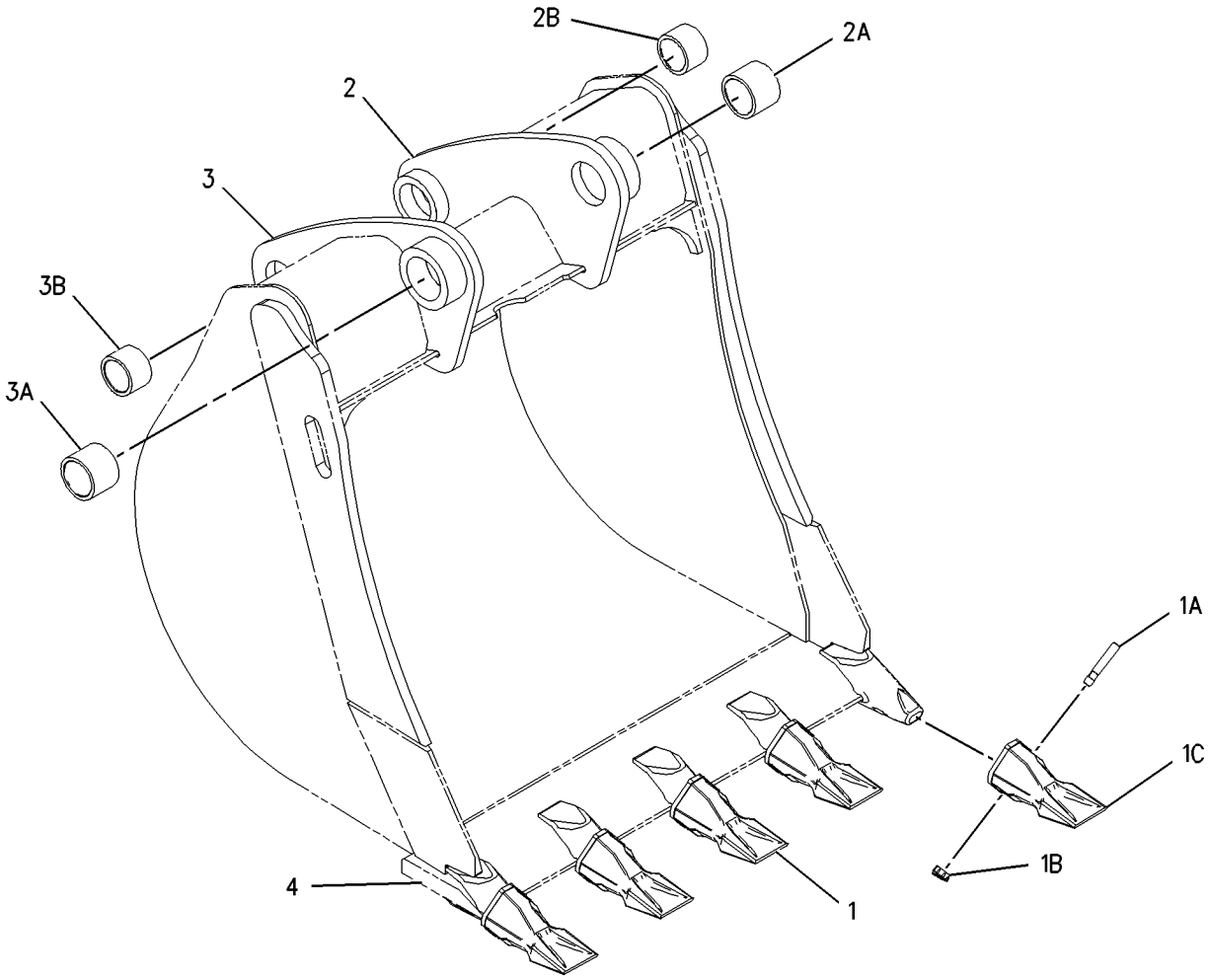

GRAPHIC #1 **<END>** g01002018

WORK TOOLS

219-3389 BUCKET GP-H0E–HEAVY DUTY

S/N: FDP18400-UP
914MM (36IN)
AN ATTACHMENT

SMCS-6503 **i01917647**

NOTE	REF NO	GRAPHIC REF	PART NUMBER	QTY	PART NAME 1 2 3 4 5 6 (PRODUCT LEVEL)	SEE PAGE
	1	1	*208-5245*	6	TIP GP-PENETRATION	
					(EACH INCLUDES)	
	1A	1	**201-1238**	1	PIN	
	1B	1	**201-1239**	1	RETAINER AS	
	1C	1	**208-5235**	1	TIP-PENETRATION	
	2	1	*151-7902*	1	BRACKET AS-LH	
	2A	1	**9R-0162**	1	BEARING	
	2B	1	**168-0480**	1	BEARING-SLEEVE	
	3	1	*151-7903*	1	BRACKET AS-RH	
	3A	1	**9R-0162**	1	BEARING	
	3B	1	**168-0480**	1	BEARING-SLEEVE	
	4	1	**219-9486**	1	EDGE	

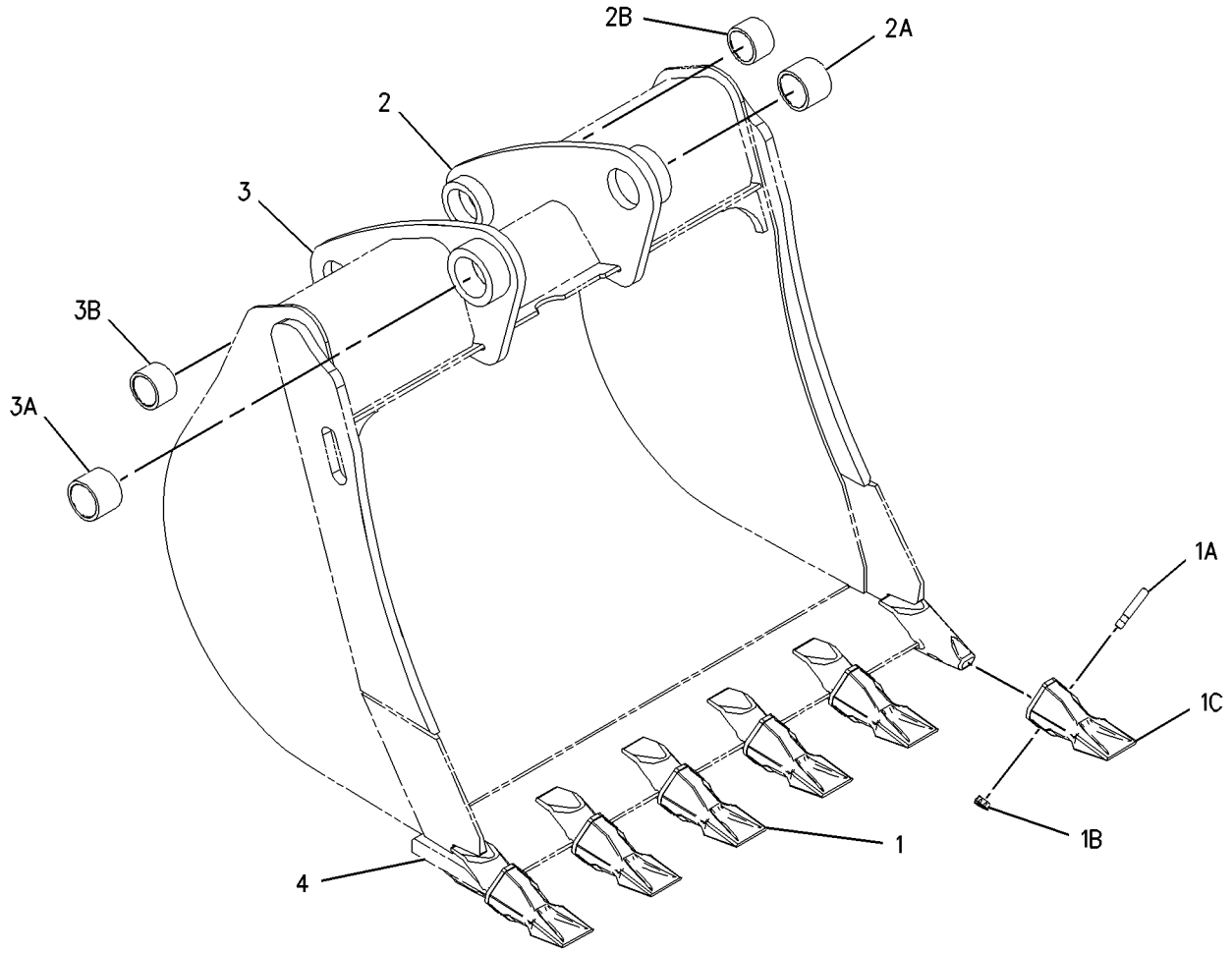

GRAPHIC #1 **<END>** g01002037

WORK TOOLS

219-3390 BUCKET GP-HOE—HIGH CAPACITY

S/N: FDP18400-UP
458MM (18IN)
AN ATTACHMENT

SMCS-6503 **i01917633**

NOTE	REF NO	GRAPHIC REF	PART NUMBER	QTY	PART NAME 1 2 3 4 5 6 (PRODUCT LEVEL)	SEE PAGE
	1	1	*208-5245*	4	TIP GP-PENETRATION	
					(EACH INCLUDES)	
	1A	1	**201-1238**	1	PIN	
	1B	1	**201-1239**	1	RETAINER AS	
	1C	1	**208-5235**	1	TIP-PENETRATION	
	2	1	*151-7902*	1	BRACKET AS-LH	
	2A	1	**9R-0162**	1	BEARING	
	2B	1	**168-0480**	1	BEARING-SLEEVE	
	3	1	*151-7903*	1	BRACKET AS-RH	
	3A	1	**9R-0162**	1	BEARING	
	3B	1	**168-0480**	1	BEARING-SLEEVE	
	4	1	**219-9483**	1	EDGE	

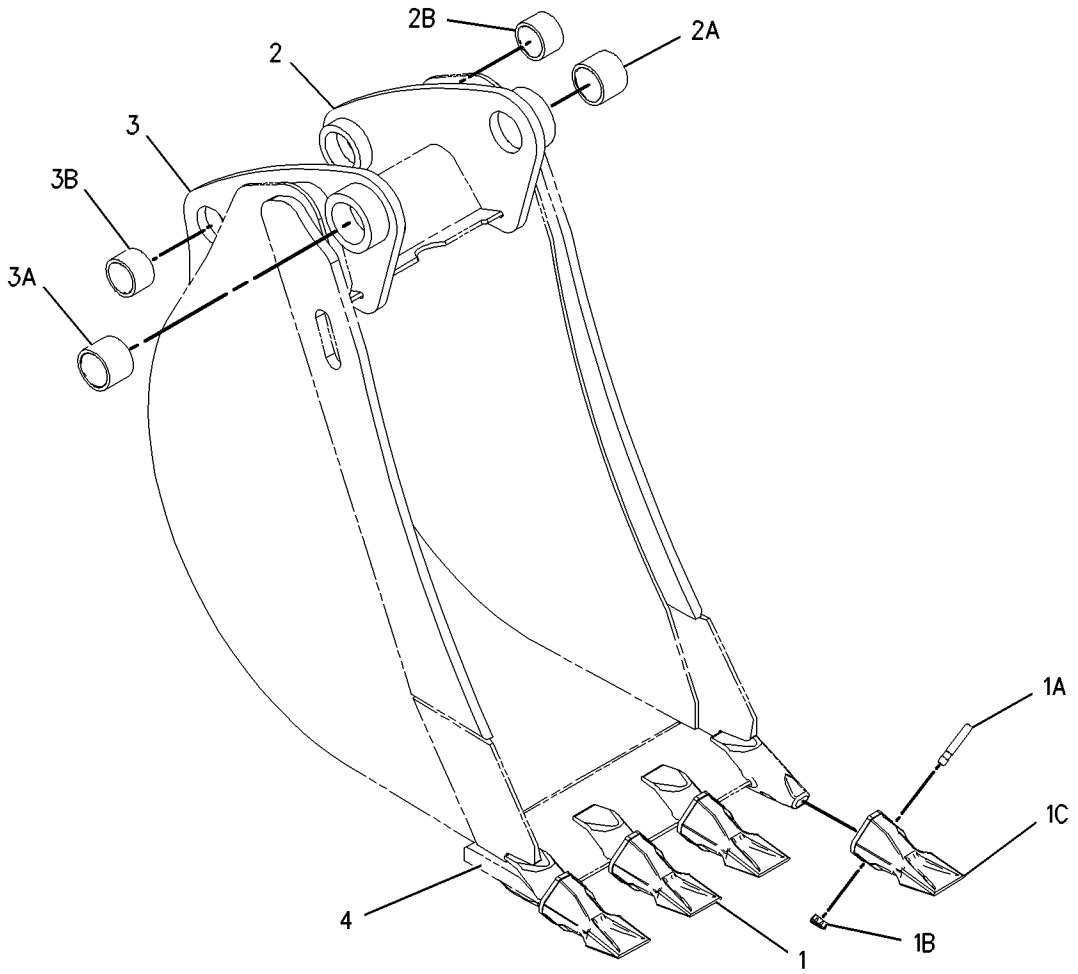

GRAPHIC #1 **<END>** g01002001

WORK TOOLS

219-3391 BUCKET GP-HOE—HIGH CAPACITY

S/N: FDP18400-UP
610MM (24IN)
AN ATTACHMENT

SMCS-6503 **i01917651**

NOTE	REF NO	GRAPHIC REF	PART NUMBER	QTY	PART NAME 1 2 3 4 5 6 (PRODUCT LEVEL)	SEE PAGE
	1	1	*208-5245*	5	TIP GP-PENETRATION	
					(EACH INCLUDES)	
	1A	1	**201-1238**	1	PIN	
	1B	1	**201-1239**	1	RETAINER AS	
	1C	1	**208-5235**	1	TIP-PENETRATION	
	2	1	*151-7902*	1	BRACKET AS-LH	
	2A	1	**9R-0162**	1	BEARING	
	2B	1	**168-0480**	1	BEARING-SLEEVE	
	3	1	**151-7903**	1	BRACKET AS-RH	
	3A	1	**9R-0162**	1	BEARING	
	3B	1	**168-0480**	1	BEARING-SLEEVE	
	4	1	**219-9484**	1	EDGE	

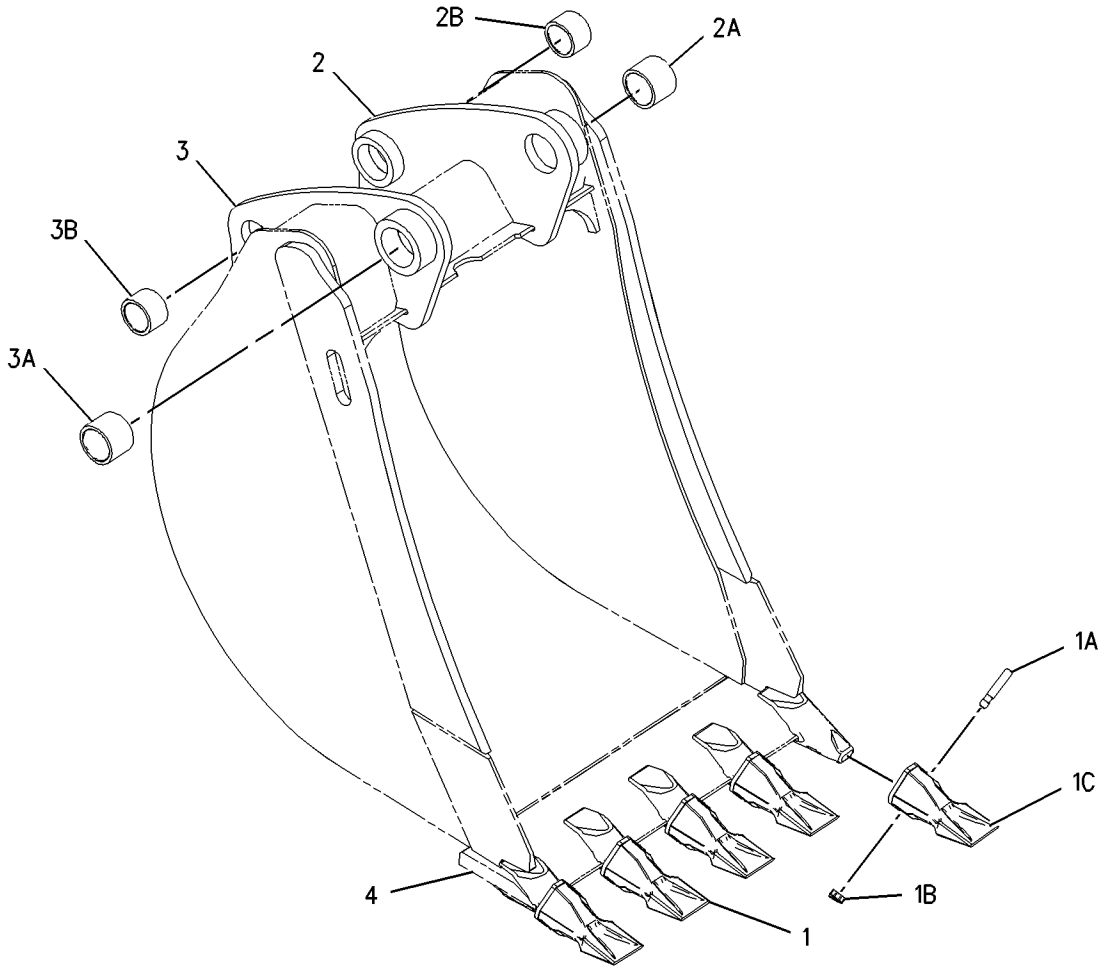

GRAPHIC #1 **<END>** g01002058

WORK TOOLS

219-3392 BUCKET GP-HOE—HIGH CAPACITY

S/N: FDP18400-UP
762MM (30IN)
AN ATTACHMENT

SMCS-6503 **i01917655**

NOTE	REF NO	GRAPHIC REF	PART NUMBER	QTY	PART NAME 1 2 3 4 5 6 (PRODUCT LEVEL)	SEE PAGE
	1	1	*208-5245*	5	TIP GP-PENETRATION	
					(EACH INCLUDES)	
	1A	1	**201-1238**	1	PIN	
	1B	1	**201-1239**	1	RETAINER AS	
	1C	1	**208-5235**	1	TIP-PENETRATION	
	2	1	*151-7902*	1	BRACKET AS-LH	
	2A	1	**9R-0162**	1	BEARING	
	2B	1	**168-0480**	1	BEARING-SLEEVE	
	3	1	*151-7903*	1	BRACKET AS-RH	
	3A	1	**9R-0162**	1	BEARING	
	3B	1	**168-0480**	1	BEARING-SLEEVE	
	4	1	**219-9485**	1	EDGE	

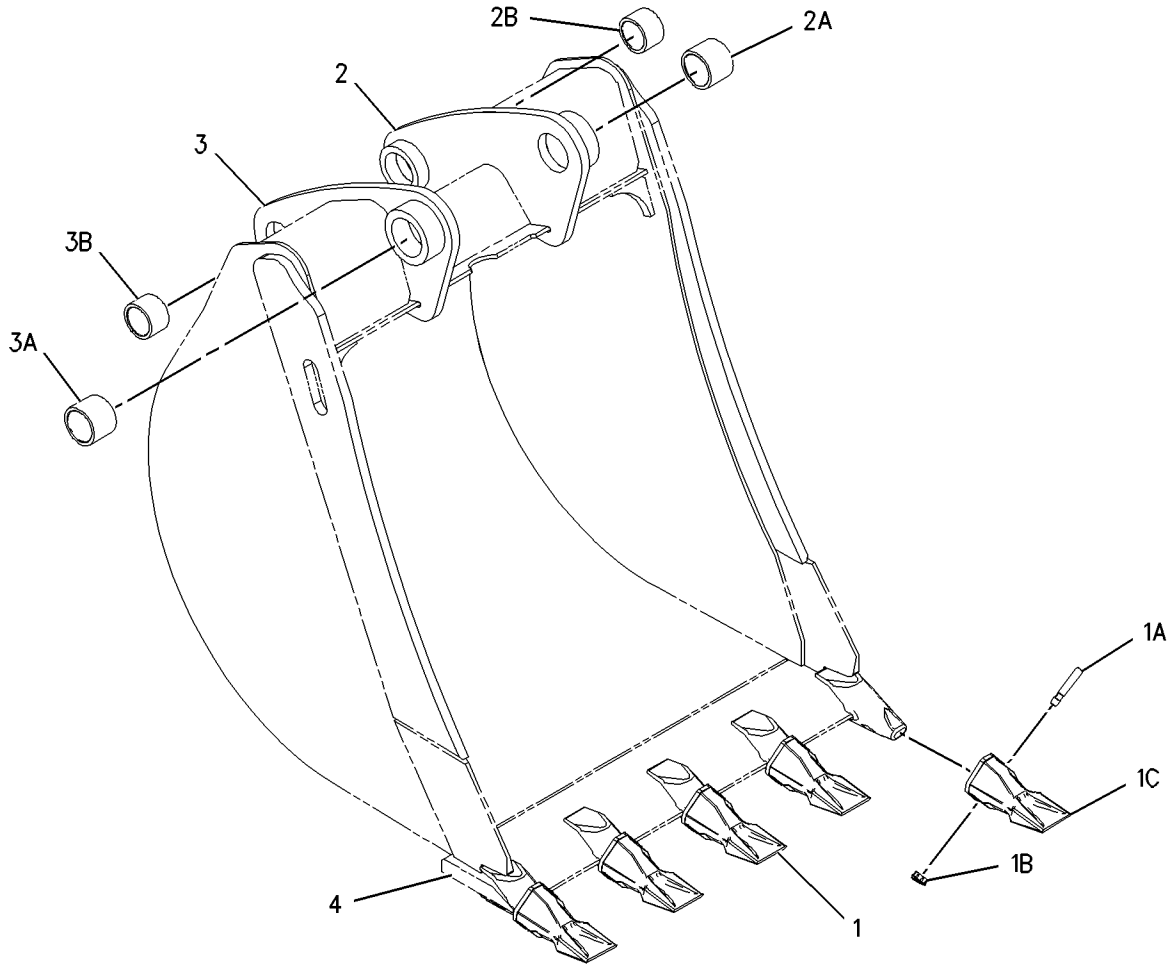

GRAPHIC #1 **<END>** g01002066

WORK TOOLS

219-3393 BUCKET GP-HOE—HIGH CAPACITY

S/N: FDP18400-UP
914MM (36IN)
AN ATTACHMENT

SMCS-6503 **i01916154**

NOTE	REF NO	GRAPHIC REF	PART NUMBER	QTY	PART NAME 1 2 3 4 5 6 (PRODUCT LEVEL)	SEE PAGE
	1	1	*208-5245*	6	TIP GP-PENETRATION	
					(EACH INCLUDES)	
	1A	1	**201-1238**	1	PIN	
	1B	1	**201-1239**	1	RETAINER AS	
	1C	1	**208-5235**	1	TIP-PENETRATION	
	2	1	*151-7902*	1	BRACKET AS-LH	
	2A	1	**9R-0162**	1	BEARING	
	2B	1	**168-0480**	1	BEARING-SLEEVE	
	3	1	*151-7903*	1	BRACKET AS-RH	
	3A	1	**9R-0162**	1	BEARING	
	3B	1	**168-0480**	1	BEARING-SLEEVE	
	4	1	**219-9486**	1	EDGE	

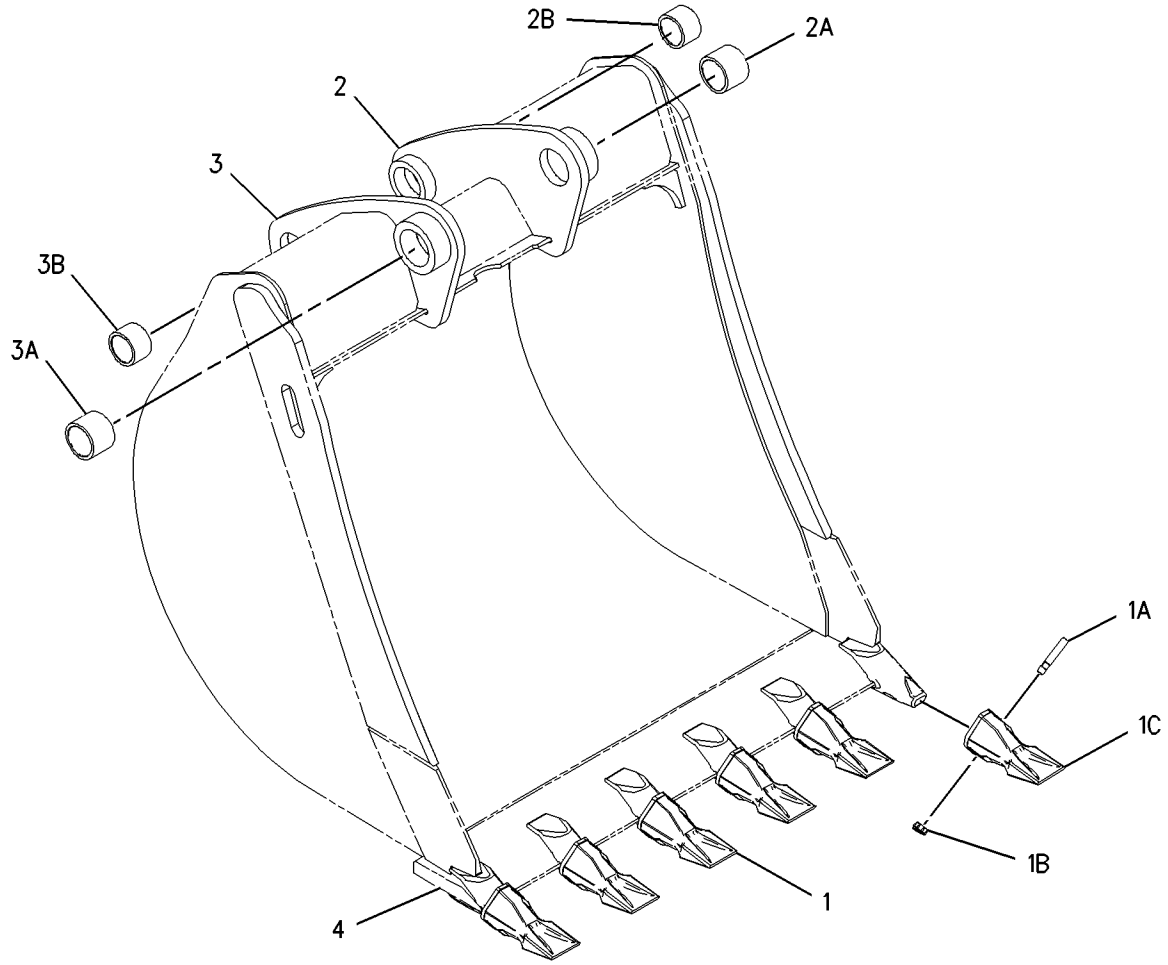

GRAPHIC #1 **<END>** g01002085

WORK TOOLS

219-3394 BUCKET GP-HOE–ROCK

S/N: FDP18400-UP
305MM (12IN)
PART OF 219-3412 BUCKET GP-HOE
AN ATTACHMENT

SMCS-6503 **i01916167**

NOTE	REF NO	GRAPHIC REF	PART NUMBER	QTY	PART NAME 1 2 3 4 5 6 (PRODUCT LEVEL)	SEE PAGE
	1	1	*208-5245*	3	TIP GP-PENETRATION	
					(EACH INCLUDES)	
	1A	1	**201-1238**	1	PIN	
	1B	1	**201-1239**	1	RETAINER AS	
	1C	1	**208-5235**	1	TIP-PENETRATION	
	2	1	*151-7929*	1	BRACKET AS-LH	
	2A	1	**9R-0320**	1	BEARING	
	2B	1	**154-5257**	1	BEARING	
	3	1	*151-7930*	1	BRACKET AS-RH	
	3A	1	**9R-0320**	1	BEARING	
	3B	1	**154-5257**	1	BEARING	
	4	1	**219-9493**	1	EDGE	

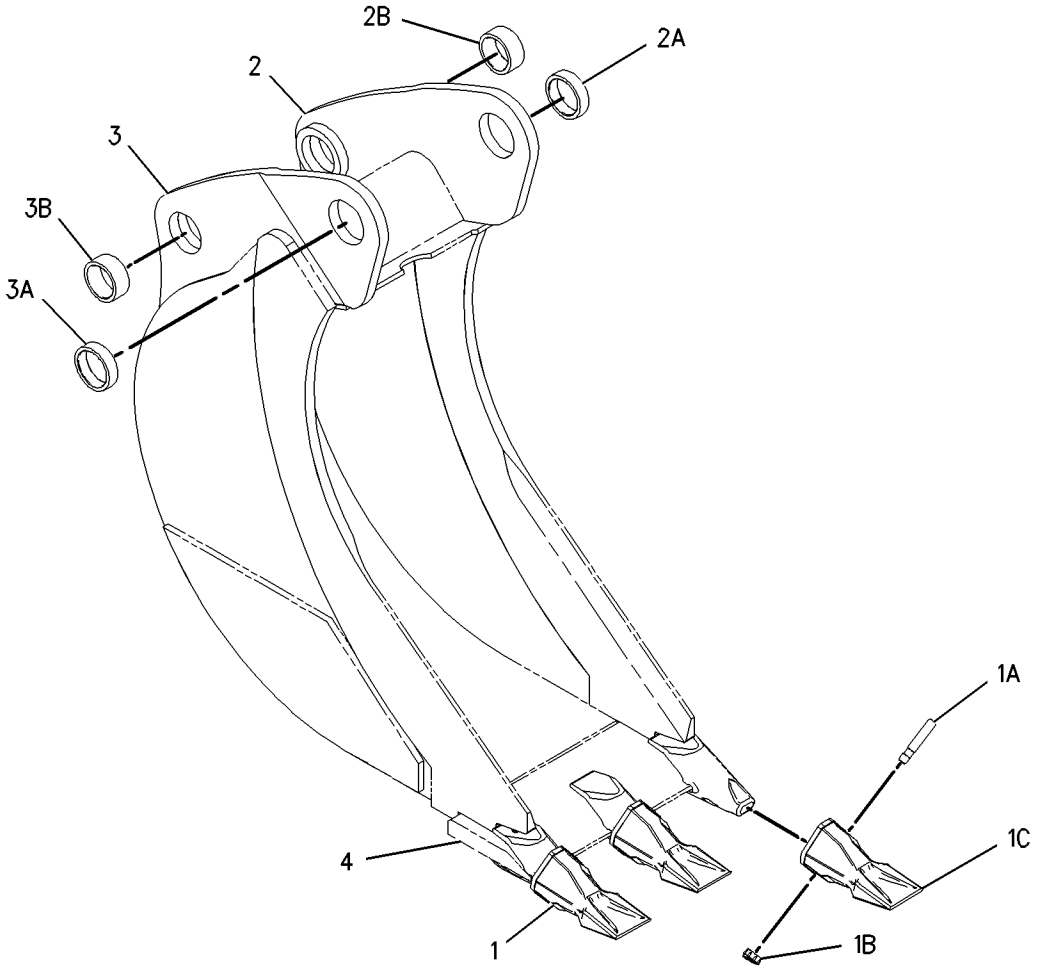

GRAPHIC #1 **<END>** g01001954

WORK TOOLS

219-3395 BUCKET GP-H0E–ROCK

S/N: FDP18400-UP
458MM (18IN)
AN ATTACHMENT

SMCS-6503 **i01916165**

NOTE	REF NO	GRAPHIC REF	PART NUMBER	QTY	PART NAME 1 2 3 4 5 6 (PRODUCT LEVEL)	SEE PAGE
	1	1	*208-5245*	4	TIP GP-PENETRATION	
					(EACH INCLUDES)	
	1A	1	**201-1238**	1	PIN	
	1B	1	**201-1239**	1	RETAINER AS	
	1C	1	**208-5235**	1	TIP-PENETRATION	
	2	1	*151-7902*	1	BRACKET AS-LH	
	2A	1	**9R-0162**	1	BEARING	
	2B	1	**168-0480**	1	BEARING-SLEEVE	
	3	1	*151-7903*	1	BRACKET AS-RH	
	3A	1	**9R-0162**	1	BEARING	
	3B	1	**168-0480**	1	BEARING-SLEEVE	
	4	1	**219-9483**	1	EDGE	

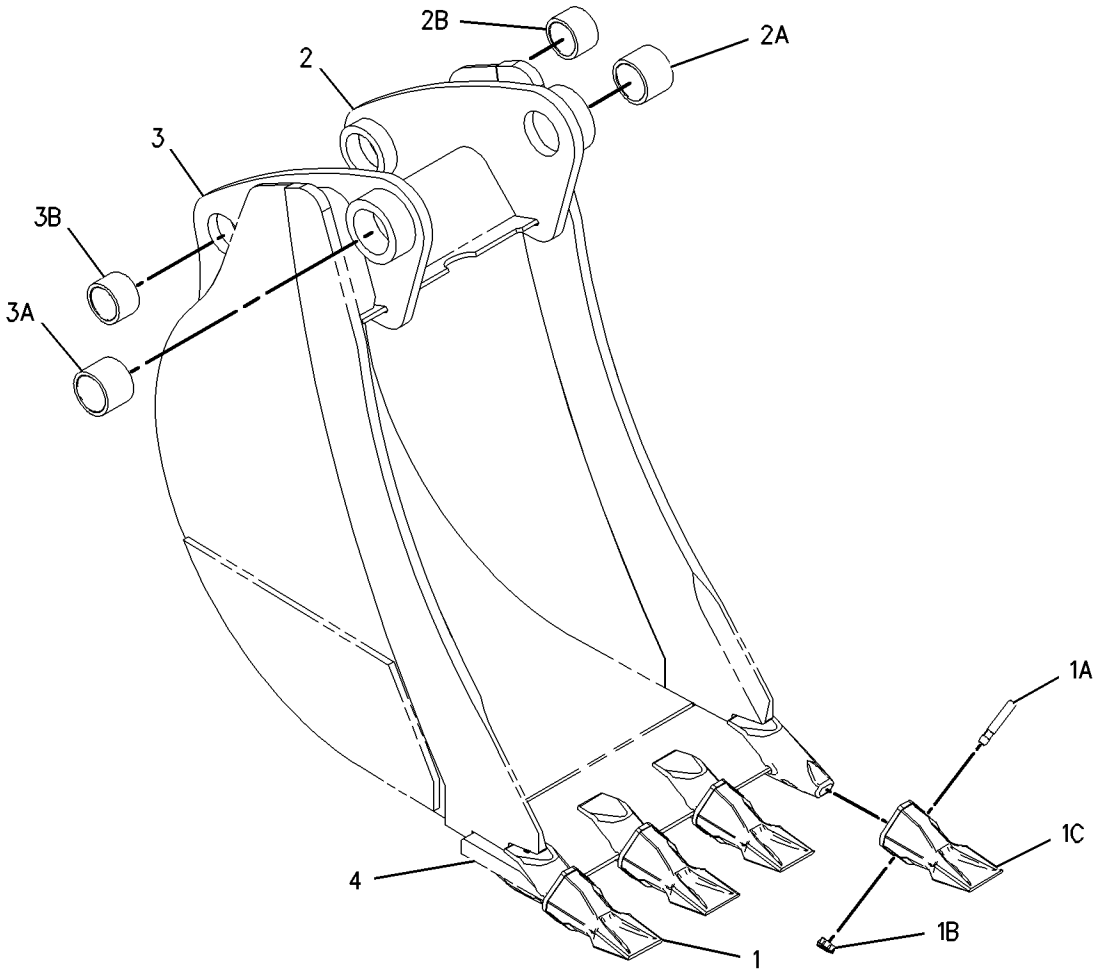

GRAPHIC #1 **<END>** g01001940

WORK TOOLS

219-3396 BUCKET GP-HOE–ROCK

S/N: FDP18400-UP
610MM (24IN)
AN ATTACHMENT

SMCS-6503 **i01916161**

NOTE	REF NO	GRAPHIC REF	PART NUMBER	QTY	PART NAME 1 2 3 4 5 6 (PRODUCT LEVEL)	SEE PAGE
	1	1	*208-5245*	5	TIP GP-PENETRATION	
					(EACH INCLUDES)	
	1A	1	**201-1238**	1	PIN	
	1B	1	**201-1239**	1	RETAINER AS	
	1C	1	**208-5235**	1	TIP-PENETRATION	
	2	1	*151-7902*	1	BRACKET AS-LH	
	2A	1	**9R-0162**	1	BEARING	
	2B	1	**168-0480**	1	BEARING-SLEEVE	
	3	1	*151-7903*	1	BRACKET AS-RH	
	3A	1	**9R-0162**	1	BEARING	
	3B	1	**168-0480**	1	BEARING-SLEEVE	
	4	1	**219-9484**	1	EDGE	

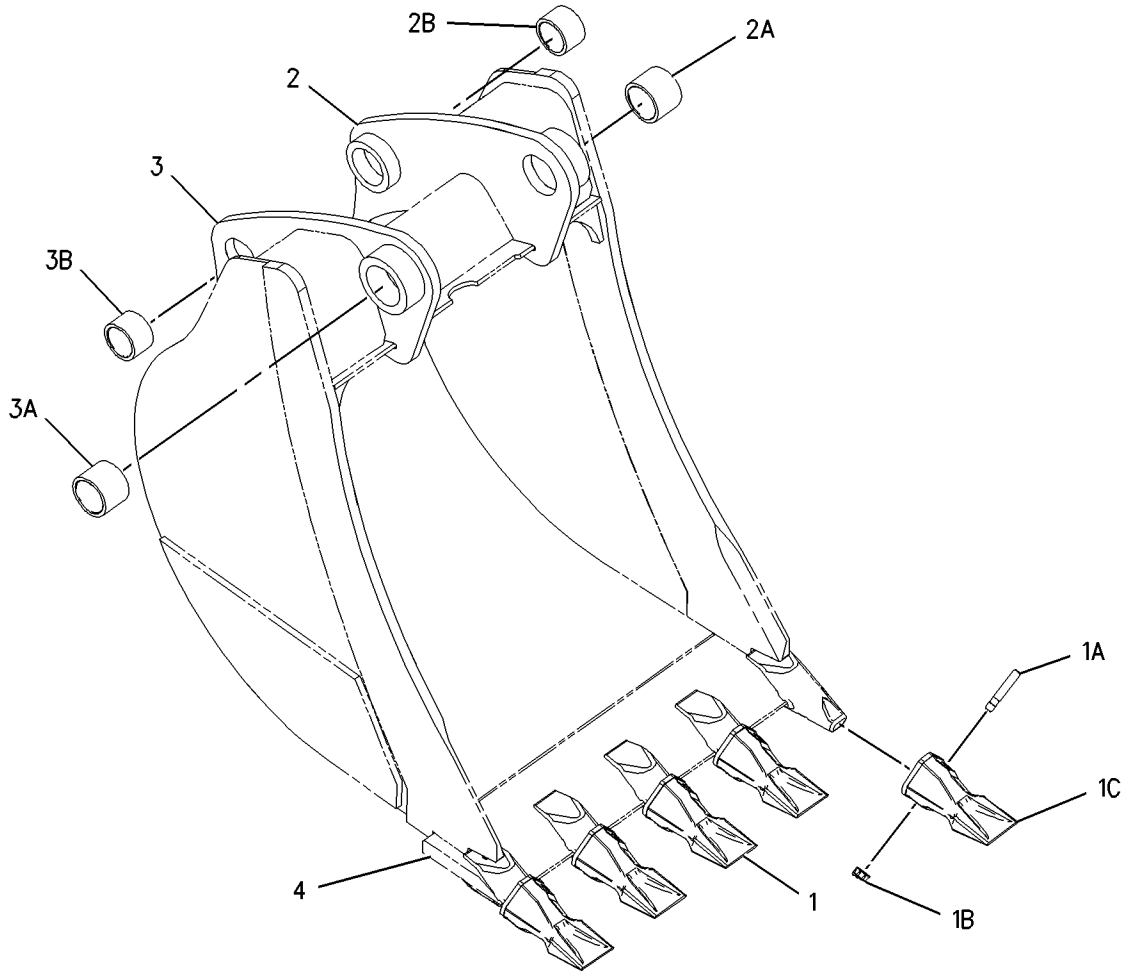

GRAPHIC #1 **<END>** g01002082

WORK TOOLS

219-3397 BUCKET GP-H0E–ROCK

S/N: FDP18400-UP
762MM (30IN)
AN ATTACHMENT

SMCS-6503 **i01916156**

NOTE	REF NO	GRAPHIC REF	PART NUMBER	QTY	PART NAME 1 2 3 4 5 6 (PRODUCT LEVEL)	SEE PAGE
	1	1	*208-5245*	5	TIP GP-PENETRATION	
					(EACH INCLUDES)	
	1A	1	**201-1238**	1	PIN	
	1B	1	**201-1239**	1	RETAINER AS	
	1C	1	**208-5235**	1	TIP-PENETRATION	
	2	1	*151-7902*	1	BRACKET AS-LH	
	2A	1	**9R-0162**	1	BEARING	
	2B	1	**168-0480**	1	BEARING-SLEEVE	
	3	1	*151-7903*	1	BRACKET AS-RH	
	3A	1	**9R-0162**	1	BEARING	
	3B	1	**168-0480**	1	BEARING-SLEEVE	
	4	1	**219-9485**	1	EDGE	

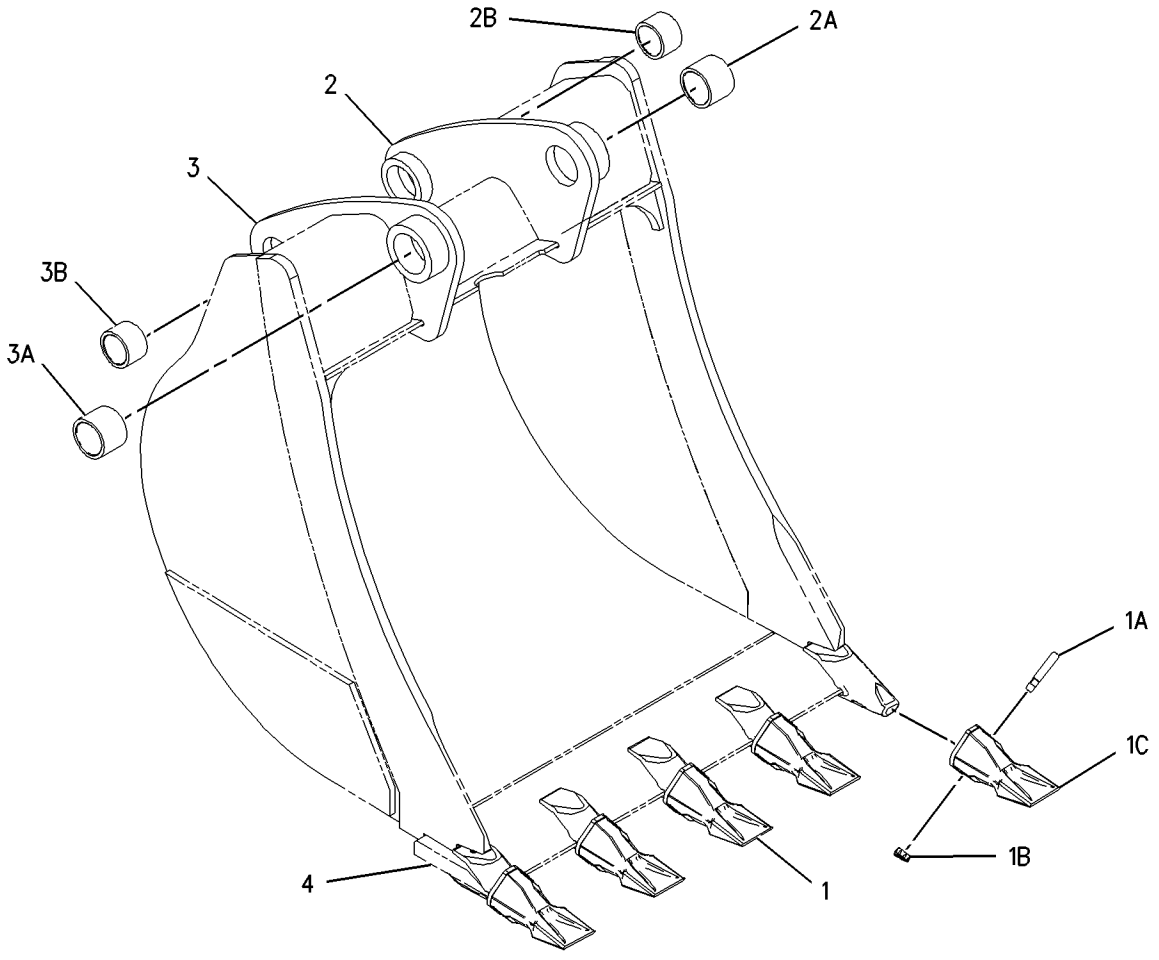

GRAPHIC #1 **<END>** g01002078

219-3398 BUCKET GP-HOE–ROCK

S/N: FDP18400-UP
914MM (36IN)
AN ATTACHMENT

SMCS-6503 **i01916065**

NOTE	REF NO	GRAPHIC REF	PART NUMBER	QTY	PART NAME 1 2 3 4 5 6 (PRODUCT LEVEL)	SEE PAGE
	1	1	*208-5245*	6	TIP GP-PENETRATION	
					(EACH INCLUDES)	
	1A	1	**201-1238**	1	PIN	
	1B	1	**201-1239**	1	RETAINER AS	
	1C	1	**208-5235**	1	TIP-PENETRATION	
	2	1	*151-7902*	1	BRACKET AS-LH	
	2A	1	**9R-7902**	1	COVER AS	
	2B	1	**168-0480**	1	BEARING-SLEEVE	
	3	1	*151-7903*	1	BRACKET AS-RH	
	3A	1	**9R-0162**	1	BEARING	
	3B	1	**168-0480**	1	BEARING-SLEEVE	
	4	1	**219-9486**	1	EDGE	

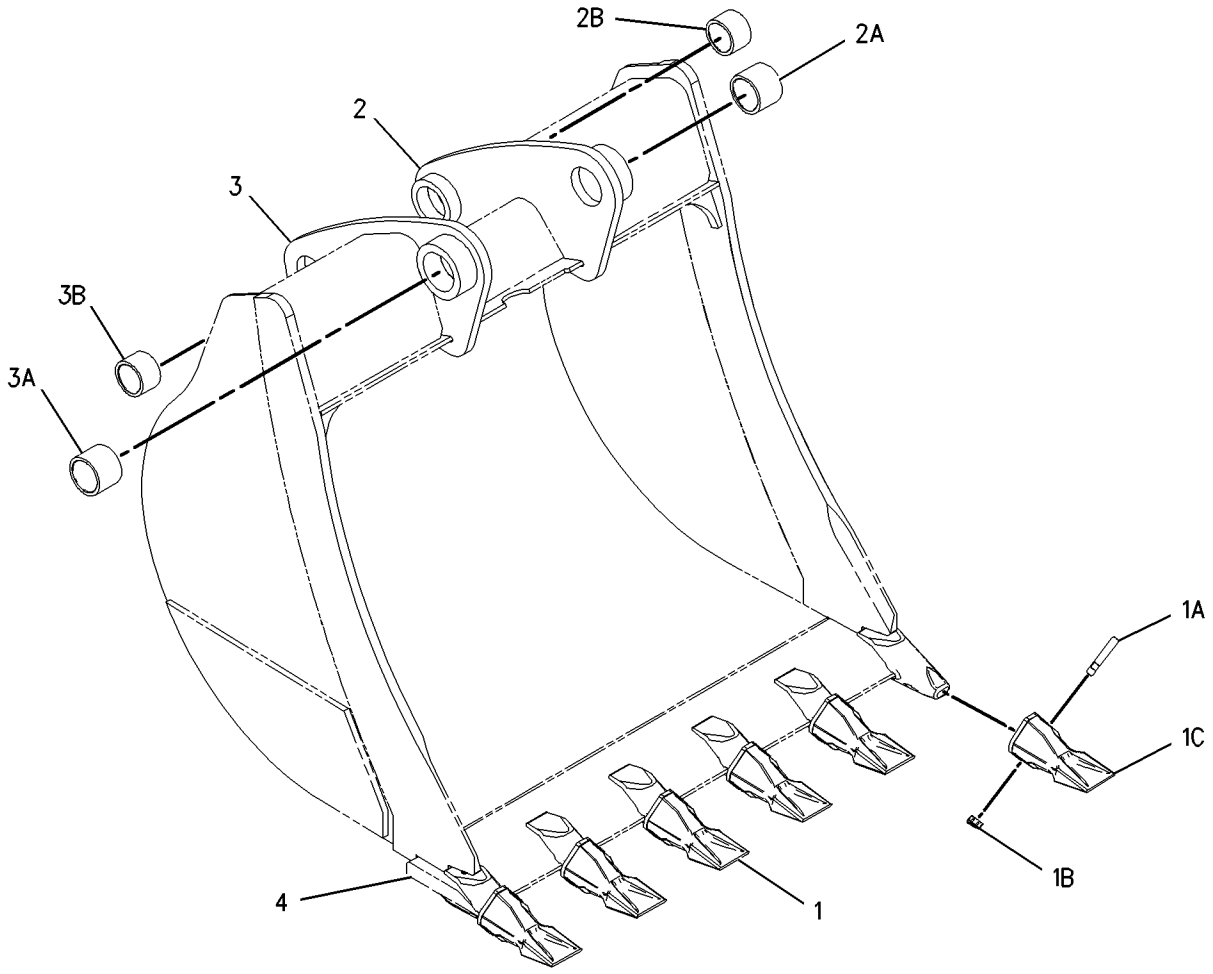

GRAPHIC #1 **<END>** g01002088

WORK TOOLS

219-3399 BUCKET GP-HOE—CORAL

S/N: FDP18400-UP
305MM (12IN)
PART OF 219-3413 BUCKET GP-HOE
AN ATTACHMENT

SMCS-6503 **i01916120**

NOTE	REF NO	GRAPHIC REF	PART NUMBER	QTY	PART NAME 1 2 3 4 5 6 (PRODUCT LEVEL)	SEE PAGE
	1	1	*208-5242*	4	TIP GP-CHISEL	
					(EACH INCLUDES)	
	1A	1	**201-1238**	1	PIN	
	1B	1	**201-1239**	1	RETAINER AS	
	1C	1	**208-5232**	1	TIP-CHISEL	
	2	1	*202-4162*	1	BRACKET AS-LH	
	2A	1	**9R-0320**	1	BEARING	
	2B	1	**154-5257**	1	BEARING	
	3	1	*202-4163*	1	BRACKET AS-RH	
	3A	1	**9R-0320**	1	BEARING	
	3B	1	**154-5257**	1	BEARING	
	4	1	**219-9496**	1	EDGE	

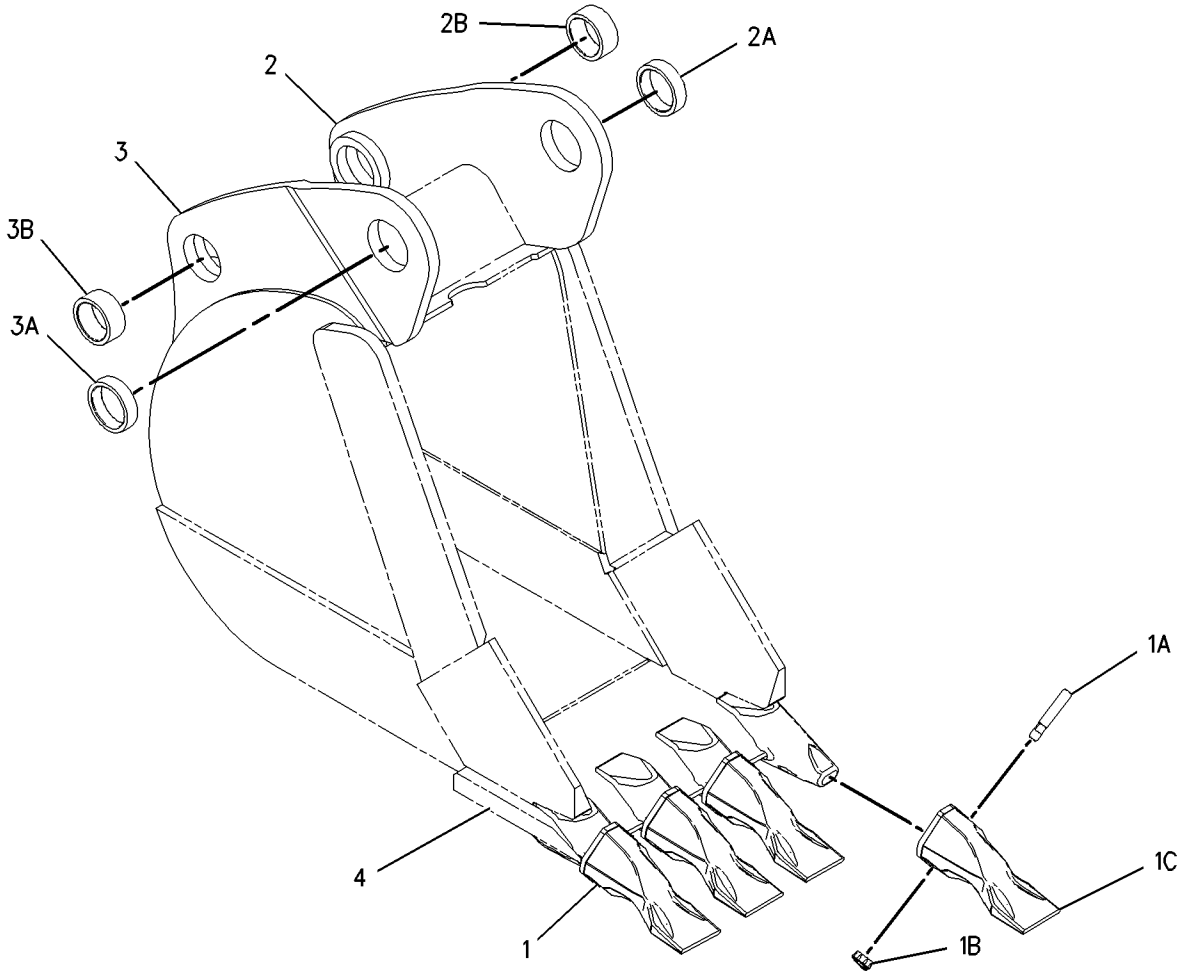

GRAPHIC #1 **<END>** g01002114

WORK TOOLS

219-3400 BUCKET GP-HOE–CORAL

S/N: FDP18400-UP
458MM (18IN)
AN ATTACHMENT

SMCS-6503 **i01916125**

NOTE	REF NO	GRAPHIC REF	PART NUMBER	QTY	PART NAME 1 2 3 4 5 6 (PRODUCT LEVEL)	SEE PAGE
	1	1	*208-5242*	6	TIP GP-CHISEL	
					(EACH INCLUDES)	
	1A	1	**201-1238**	1	PIN	
	1B	1	**201-1239**	1	RETAINER AS	
	1C	1	**208-5232**	1	TIP-CHISEL	
	2	1	*202-0596*	1	BRACKET AS-LH	
	2A	1	**9R-0162**	1	BEARING	
	2B	1	**168-0480**	1	BEARING-SLEEVE	
	3	1	*202-0597*	1	BRACKET AS-RH	
	3A	1	**9R-0162**	1	BEARING	
	3B	1	**168-0480**	1	BEARING-SLEEVE	
	4	1	**219-9491**	1	EDGE	

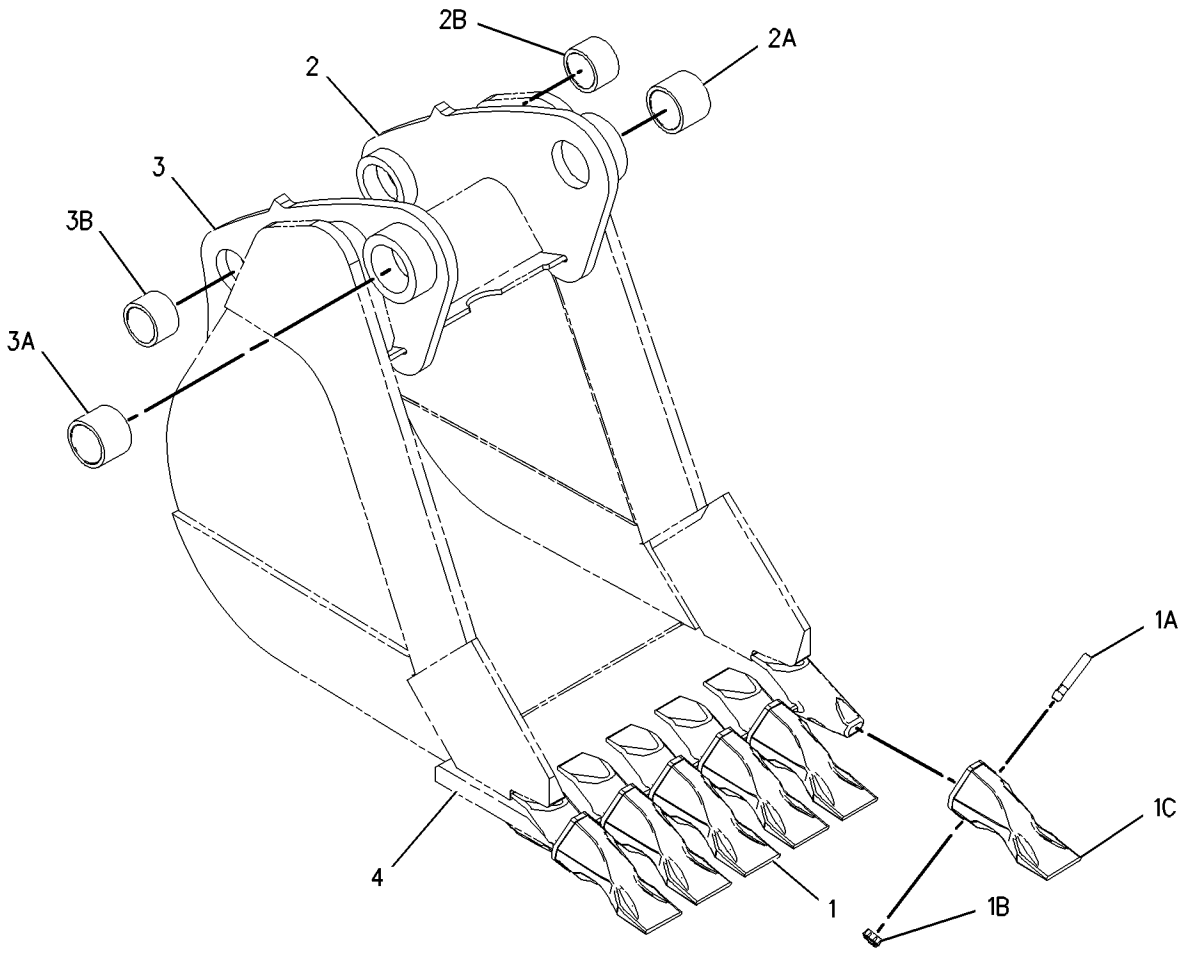

GRAPHIC #1 **<END>** g01002128

WORK TOOLS

219-3401 BUCKET GP-HOE–CORAL

S/N: FDP18400-UP
610MM (24IN)
AN ATTACHMENT

SMCS-6503 **i01916127**

NOTE	REF NO	GRAPHIC REF	PART NUMBER	QTY	PART NAME 1 2 3 4 5 6 (PRODUCT LEVEL)	SEE PAGE
	1	1	*208-5242*	8	TIP GP-CHISEL	
					(EACH INCLUDES)	
	1A	1	**201-1238**	1	PIN	
	1B	1	**201-1239**	1	RETAINER AS	
	1C	1	**208-5232**	1	TIP-CHISEL	
	2	1	*202-0596*	1	BRACKET AS-LH	
	2A	1	**9R-0162**	1	BEARING	
	2B	1	**168-0480**	1	BEARING-SLEEVE	
	3	1	*202-0597*	1	BRACKET AS-RH	
	3A	1	**9R-0162**	1	BEARING	
	3B	1	**168-0480**	1	BEARING-SLEEVE	
	4	1	**219-9492**	1	EDGE	

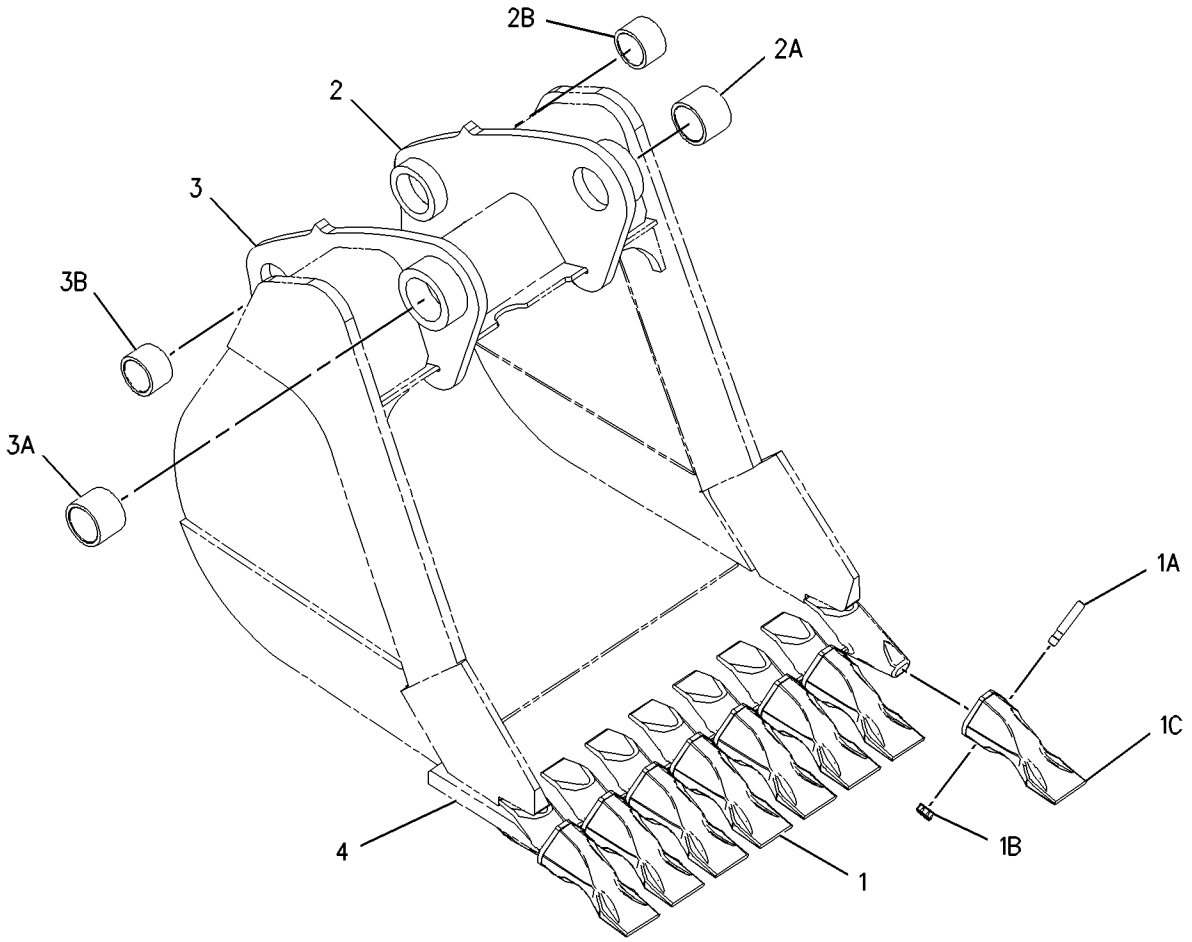

GRAPHIC #1 **<END>** g01002141

WORK TOOLS

219-3402 BUCKET GP-HOE–CORAL

S/N: FDP18400-UP
762MM (30IN)
AN ATTACHMENT

SMCS-6503 **i01916134**

NOTE	REF NO	GRAPHIC REF	PART NUMBER	QTY	PART NAME 1 2 3 4 5 6 (PRODUCT LEVEL)	SEE PAGE
	1	1	*208-5242*	10	TIP GP-CHISEL	
					(EACH INCLUDES)	
	1A	1	**201-1238**	1	PIN	
	1B	1	**201-1239**	1	RETAINER AS	
	1C	1	**208-5235**	1	TIP-PENETRATION	
	2	1	*202-0596*	1	BRACKET AS-LH	
	2A	1	**9R-0162**	1	BEARING	
	2B	1	**168-0480**	1	BEARING-SLEEVE	
	3	1	*202-0597*	1	BRACKET AS-RH	
	3A	1	**9R-0162**	1	BEARING	
	3B	1	**168-0480**	1	BEARING-SLEEVE	
	4	1	**219-9495**	1	EDGE	

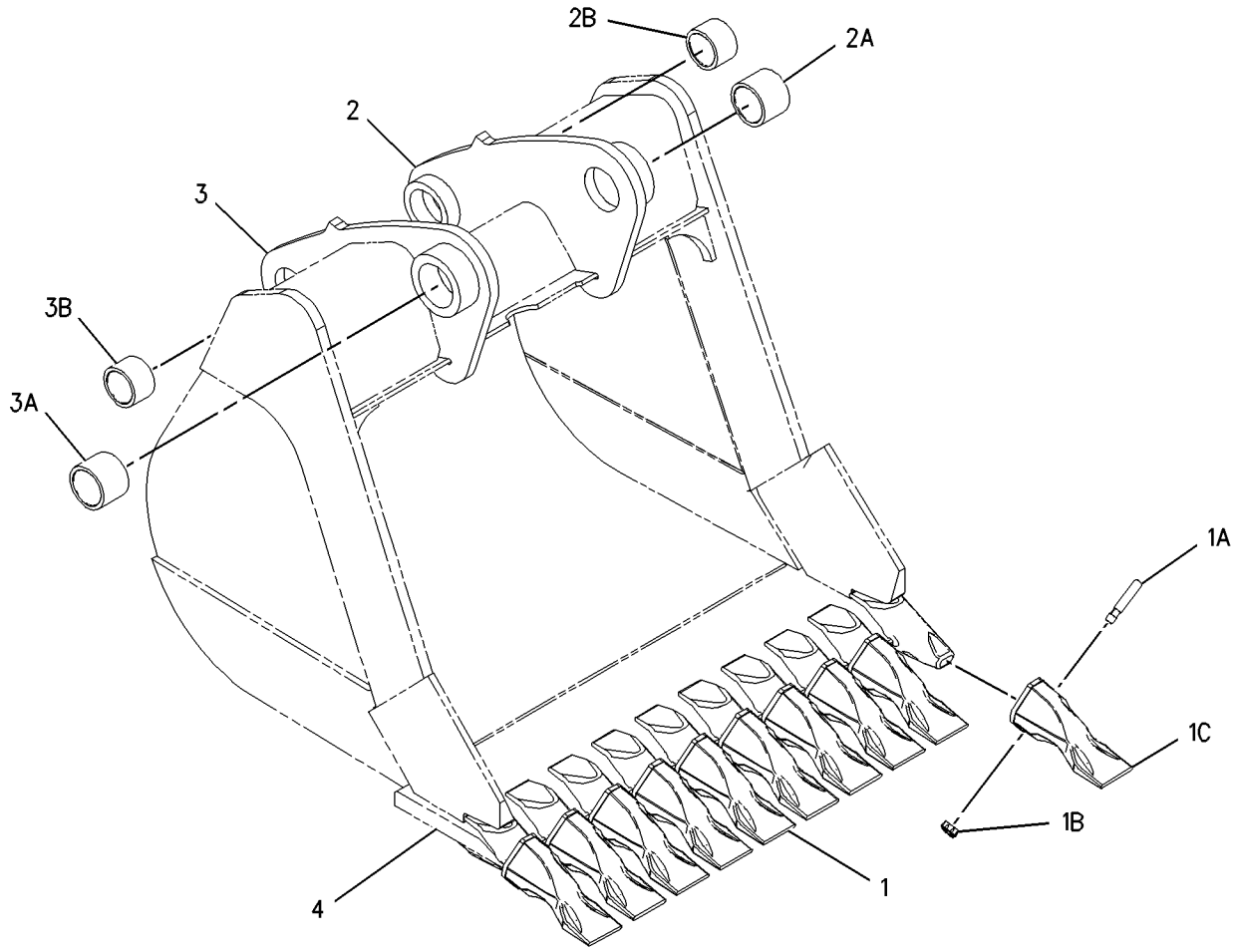

GRAPHIC #1 **<END>** g01002149

WORK TOOLS

219-3410 BUCKET GP-HOE—STANDARD DUTY

S/N: FDP18400-UP
305MM(12IN)
AN ATTACHMENT

SMCS-6503 **i01916048**

NOTE	REF NO	GRAPHIC REF	PART NUMBER	QTY	PART NAME 1 2 3 4 5 6 (PRODUCT LEVEL)	SEE PAGE
	1	1	**6V-3213**	2	RING-RETAINING	
	2	1	**6V-4364**	2	RING-RETAINING	
	3	1	**9R-0158**	5	WASHER (46X69X3MM THK)	
	4	1	**9R-1510**	3	WASHER (4MM THK)	
	5	1	**168-0443**	1	PIN	
	6	1	**168-0444**	1	PIN	
Y	7	1	**219-3379**	1	BUCKET GP-HOE	648

Y-SEPARATE ILLUSTRATION

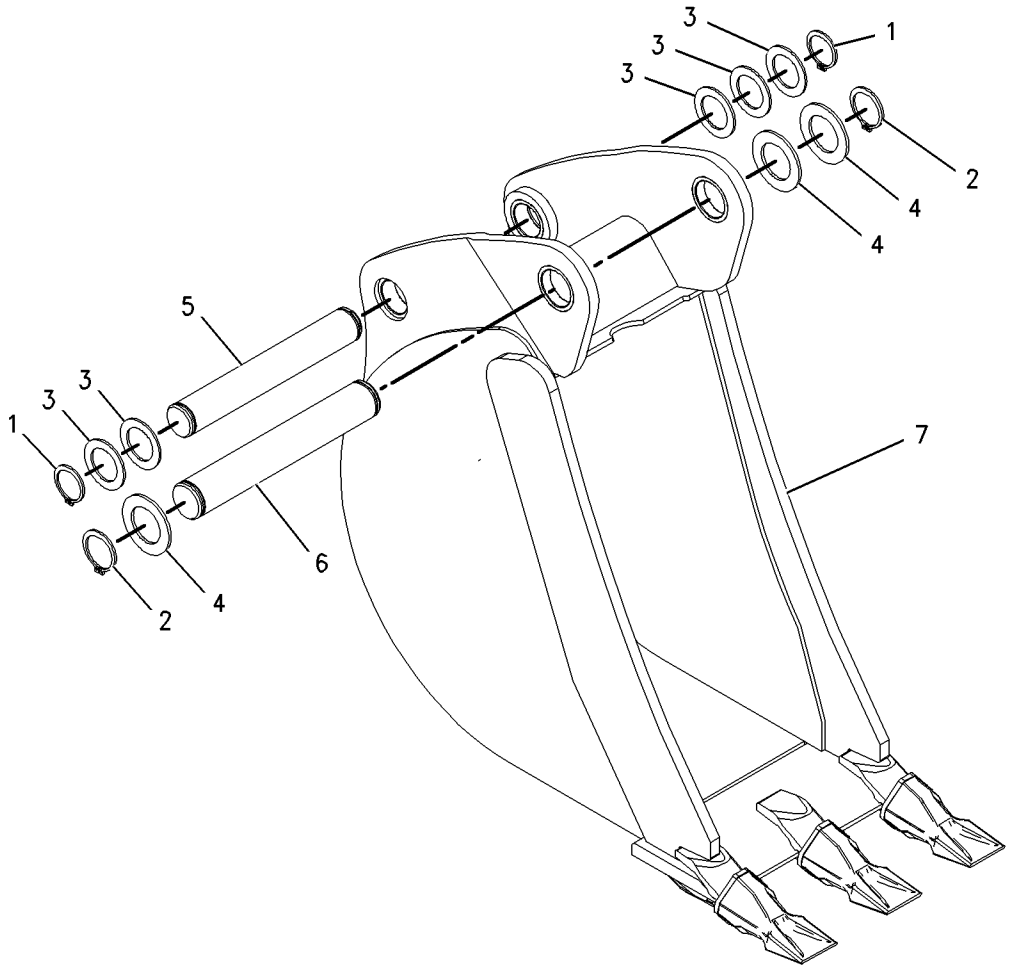

GRAPHIC #1 **<END>** g01001892

WORK TOOLS

219-3411 BUCKET GP-HOE—HEAVY DUTY

S/N: FDP18400-UP
305MM(12IN)
AN ATTACHMENT

SMCS-6503 **i01916050**

NOTE	REF NO	GRAPHIC REF	PART NUMBER	QTY	PART NAME 1 2 3 4 5 6 (PRODUCT LEVEL)	SEE PAGE
	1	1	**6V-3213**	2	RING-RETAINING	
	2	1	**6V-4364**	2	RING-RETAINING	
	3	1	**9R-0158**	5	WASHER (46X69X3MM THK)	
	4	1	**9R-1510**	3	WASHER (4MM THK)	
	5	1	**168-0443**	1	PIN	
	6	1	**168-0444**	1	PIN	
Y	7	1	**219-3384**	1	BUCKET GP-HOE	653

Y-SEPARATE ILLUSTRATION

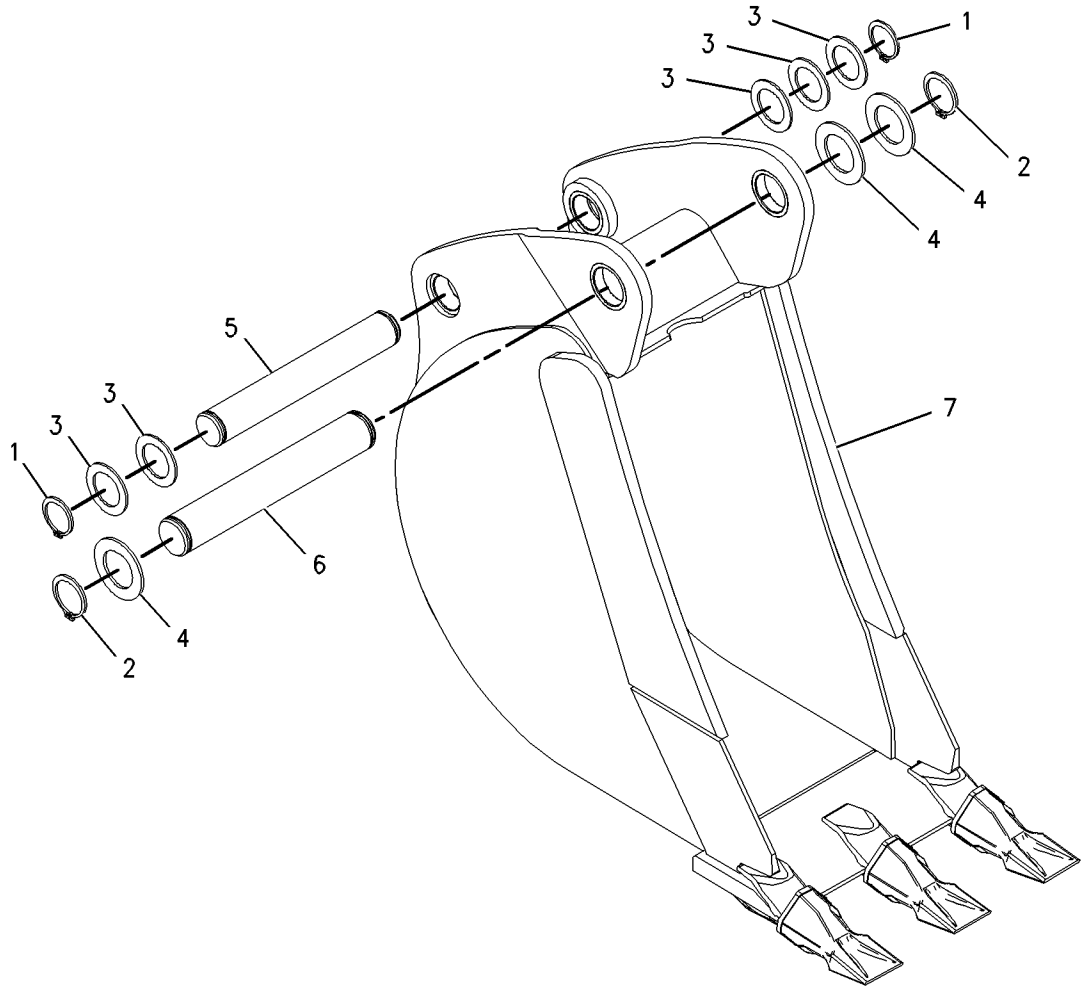

GRAPHIC #1 **<END>** g01001906

WORK TOOLS

219-3412 BUCKET GP-HOE—CORAL

S/N: FDP18400-UP
305MM(12IN)
AN ATTACHMENT

SMCS-6503 **i01916052**

NOTE	REF NO	GRAPHIC REF	PART NUMBER	QTY	PART NAME 1 2 3 4 5 6 (PRODUCT LEVEL)	SEE PAGE
	1	1	**6V-3213**	2	RING-RETAINING	
	2	1	**6V-4364**	2	RING-RETAINING	
	3	1	**9R-0158**	4	WASHER (46X69X3MM THK)	
	4	1	**9R-1510**	3	WASHER (4MM THK)	
	5	1	**168-0443**	1	PIN	
	6	1	**168-0444**	1	PIN	
Y	7	1	**219-3394**	1	BUCKET GP-HOE	663

Y-SEPARATE ILLUSTRATION

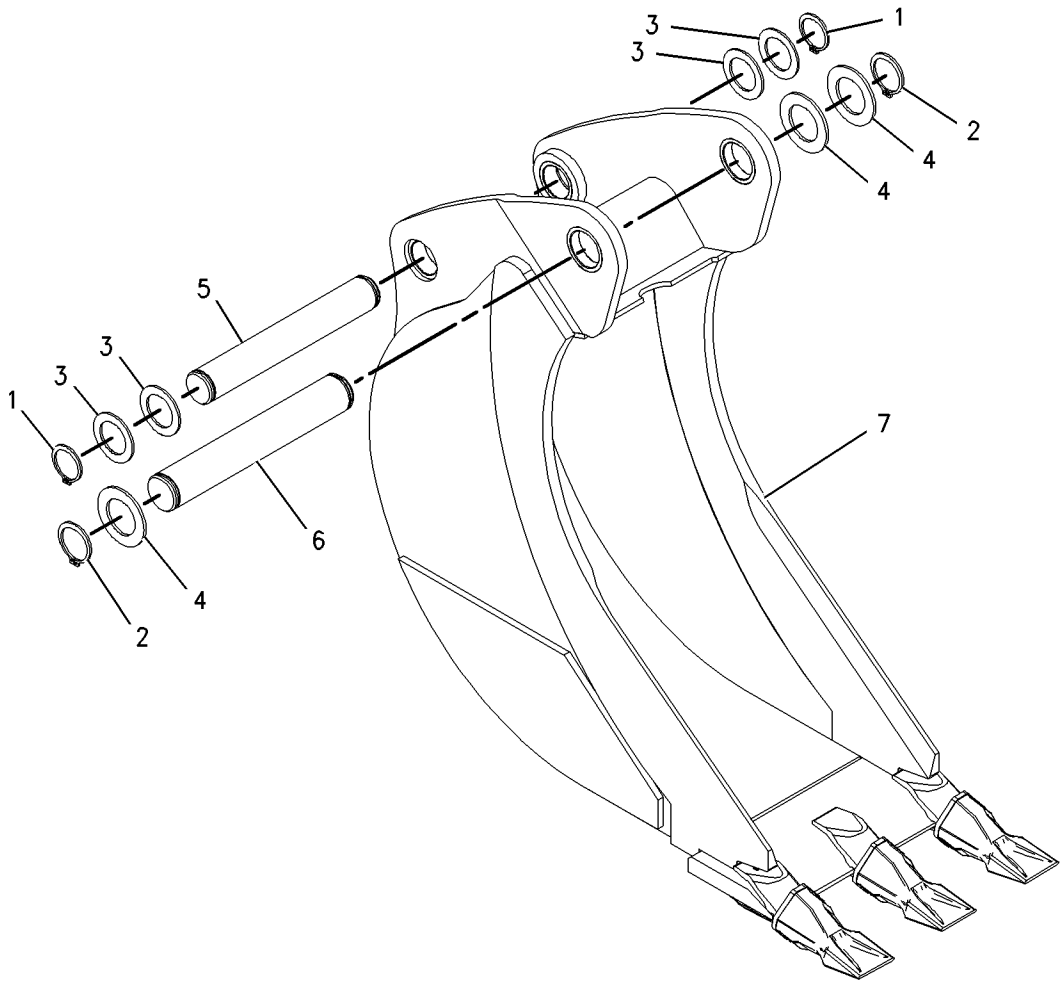

GRAPHIC #1 **<END>** g01001913

WORK TOOLS

219-3413 BUCKET GP-HOE–ROCK

S/N: FDP18400-UP
305MM(12IN)
AN ATTACHMENT

SMCS-6503 **i01916055**

NOTE	REF NO	GRAPHIC REF	PART NUMBER	QTY	PART NAME 1 2 3 4 5 6 (PRODUCT LEVEL)	SEE PAGE
	1	1	**6V-3213**	2	RING-RETAINING	
	2	1	**6V-4364**	2	RING-RETAINING	
	3	1	**9R-0158**	4	WASHER (46X69X3MM THK)	
	4	1	**9R-1510**	3	WASHER (4MM THK)	
	5	1	**168-0443**	1	PIN	
	6	1	**168-0444**	1	PIN	
Y	7	1	**219-3399**	1	BUCKET GP-HOE	668

Y-SEPARATE ILLUSTRATION

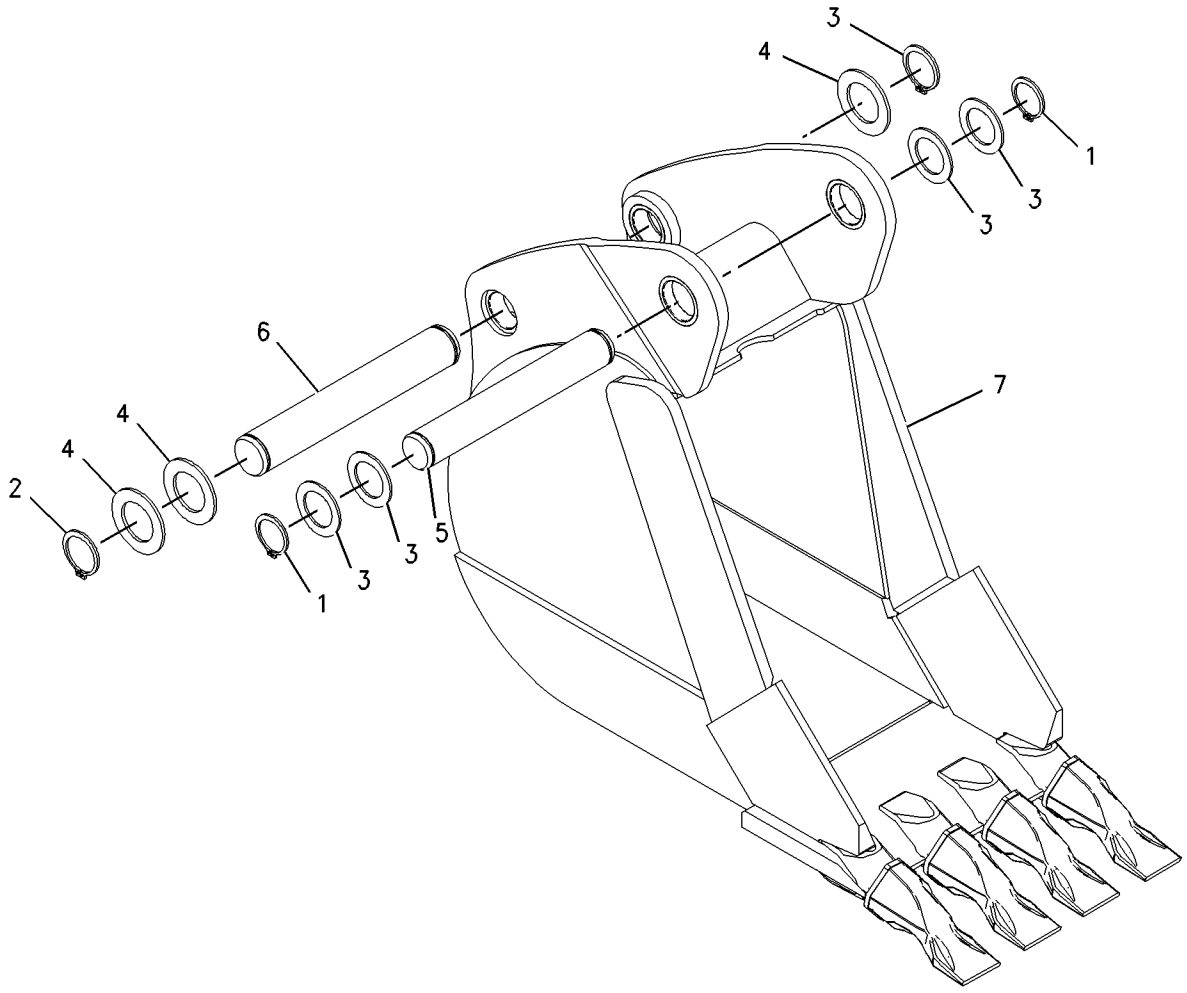

GRAPHIC #1 **<END>** g01001674

222-7380 BUCKET GP-HOE–HEAVY DUTY

S/N: FDP18400-UP
305MM (12 IN). PIN-LOCK
AN ATTACHMENT

SMCS-6503 **i01776375**

NOTE	REF NO	GRAPHIC REF	PART NUMBER	QTY	PART NAME 1 2 3 4 5 6 (PRODUCT LEVEL)	SEE PAGE
	1	1	*6Y-6767*	3	TIP GP-LONG	
					(EACH INCLUDES)	
		1	**6Y-3222**	1	TIP-LONG	
		1	**6Y-3228**	1	PIN-G.E.T.	
		1	**8E-6259**	1	RETAINER AS-G.E.T.	
	2	1	*222-7392*	1	BUCKET AS	
		1	**6Y-3224**	3	ADAPTER	
		1	**216-4560**	1	EDGE	

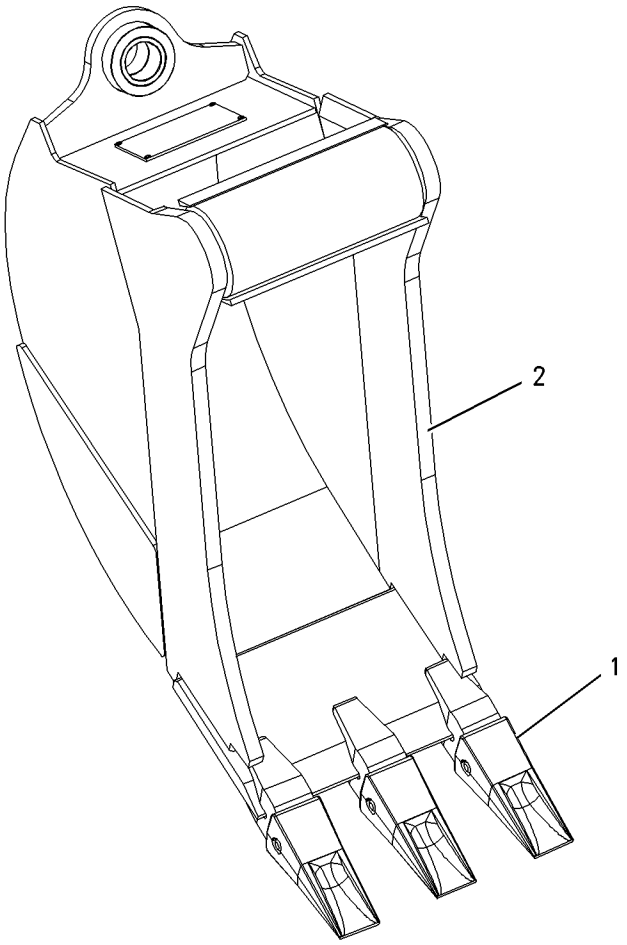

GRAPHIC #1 **<END>** g00850096

222-7381 BUCKET GP-H0E–HEAVY DUTY

S/N: FDP18400-UP
406MM (16 IN) . PIN-LOCK
AN ATTACHMENT

SMCS-6503 **i01776380**

NOTE	REF NO	GRAPHIC REF	PART NUMBER	QTY	PART NAME 1 2 3 4 5 6 (PRODUCT LEVEL)	SEE PAGE
	1	1	*6Y-6767*	3	TIP GP-LONG	
					(EACH INCLUDES)	
		1	**6Y-3222**	1	TIP-LONG	
		1	**6Y-3228**	1	PIN-G.E.T.	
		1	**8E-6259**	1	RETAINER AS-G.E.T.	
	2	1	*222-7393*	1	BUCKET AS	
		1	**6Y-3224**	3	ADAPTER	
		1	**210-1116**	1	EDGE	

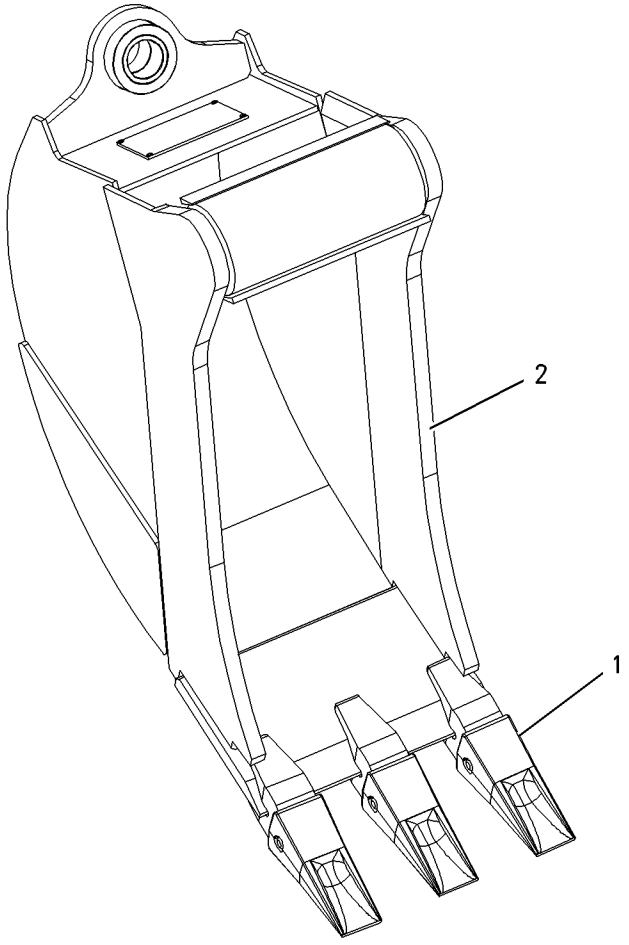

GRAPHIC #1 **<END>** g00850096

WORK TOOLS

222-7383 BUCKET GP-HOE–HEAVY DUTY

S/N: FDP18400-UP
609MM (24 IN). PIN-LOCK
AN ATTACHMENT

SMCS-6503 **i01801848**

NOTE	REF NO	GRAPHIC REF	PART NUMBER	QTY	PART NAME 1 2 3 4 5 6 (PRODUCT LEVEL)	SEE PAGE
	1	1	*6Y-6767*	5	TIP GP-LONG	
					(EACH INCLUDES)	
		1	**6Y-3222**	1	TIP-LONG	
		1	**6Y-3228**	1	PIN-G.E.T.	
		1	**8E-6259**	1	RETAINER AS-G.E.T.	
	2	1	*222-7395*	1	BUCKET AS	
		1	**6Y-3224**	5	ADAPTER	
		1	**214-3019**	1	EDGE	
		1	**6Y-3224**	5	ADAPTER	
		1	**214-3019**	1	EDGE	

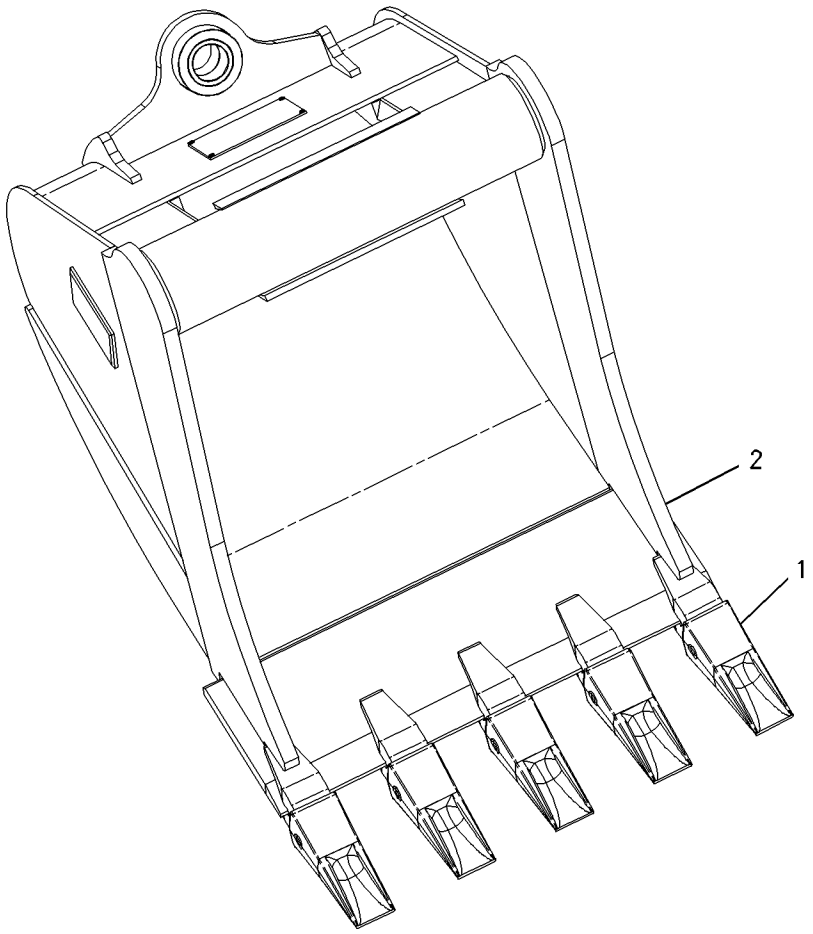

GRAPHIC #1 **<END>** g00852925

WORK TOOLS

222-7384 BUCKET GP-H0E–HEAVY DUTY

S/N: FDP18400-UP
762MM (30 IN). PIN-LOCK
AN ATTACHMENT

SMCS-6503 **i01776414**

NOTE	REF NO	GRAPHIC REF	PART NUMBER	QTY	PART NAME 1 2 3 4 5 6 (PRODUCT LEVEL)	SEE PAGE
	1	1	*6Y-6767*	5	TIP GP-LONG	
					(EACH INCLUDES)	
		1	**6Y-3222**	1	TIP-LONG	
		1	**6Y-3228**	1	PIN-G.E.T.	
		1	**8E-6259**	1	RETAINER AS-G.E.T.	
	2	1	*222-7396*	1	BUCKET AS	
		1	**6Y-3224**	5	ADAPTER	
		1	**214-3027**	1	EDGE	

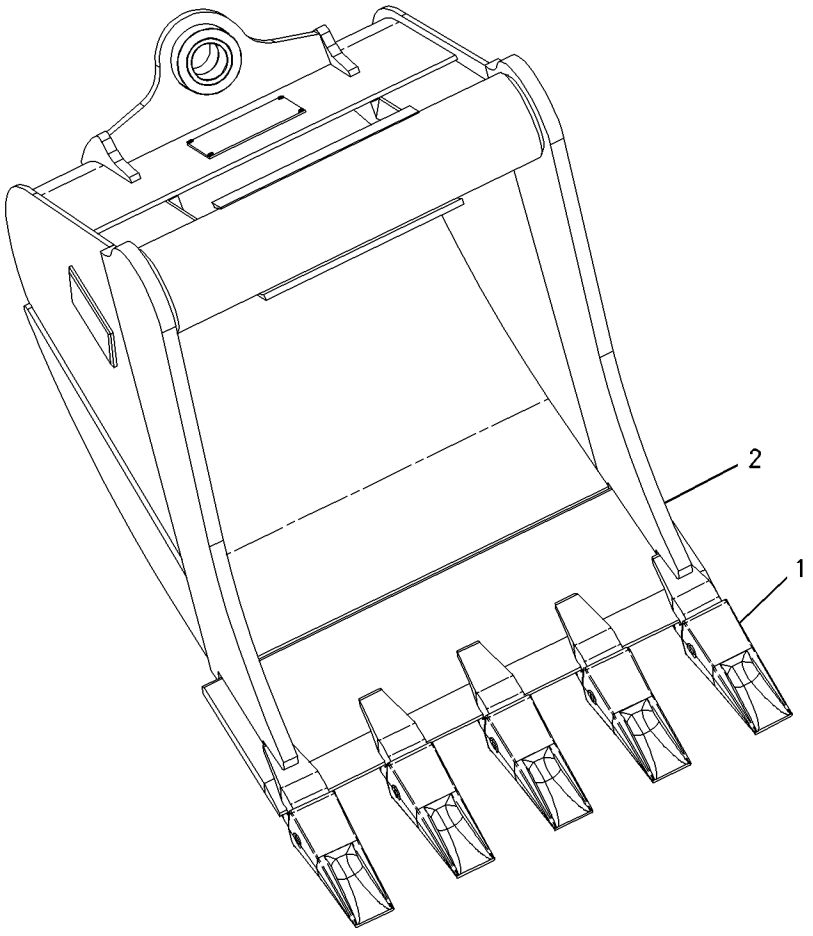

GRAPHIC #1 **<END>** g00852925

222-7385 BUCKET GP-HOE–HEAVY DUTY

S/N: FDP18400-UP
914MM (36 IN). PIN-LOCK
AN ATTACHMENT

SMCS-6503 **i01949880**

NOTE	REF NO	GRAPHIC REF	PART NUMBER	QTY	PART NAME 1 2 3 4 5 6 (PRODUCT LEVEL)	SEE PAGE
	1	1	*6Y-6767*	6	TIP GP-LONG	
					(EACH INCLUDES)	
		1	**6Y-3222**	1	TIP-LONG	
		1	**6Y-3228**	1	PIN	
		1	**8E-6259**	1	RETAINER AS	
	2	1	*222-7397*	1	BUCKET AS	
		1	**6Y-3224**	6	ADAPTER	
		1	**214-3035**	1	EDGE	

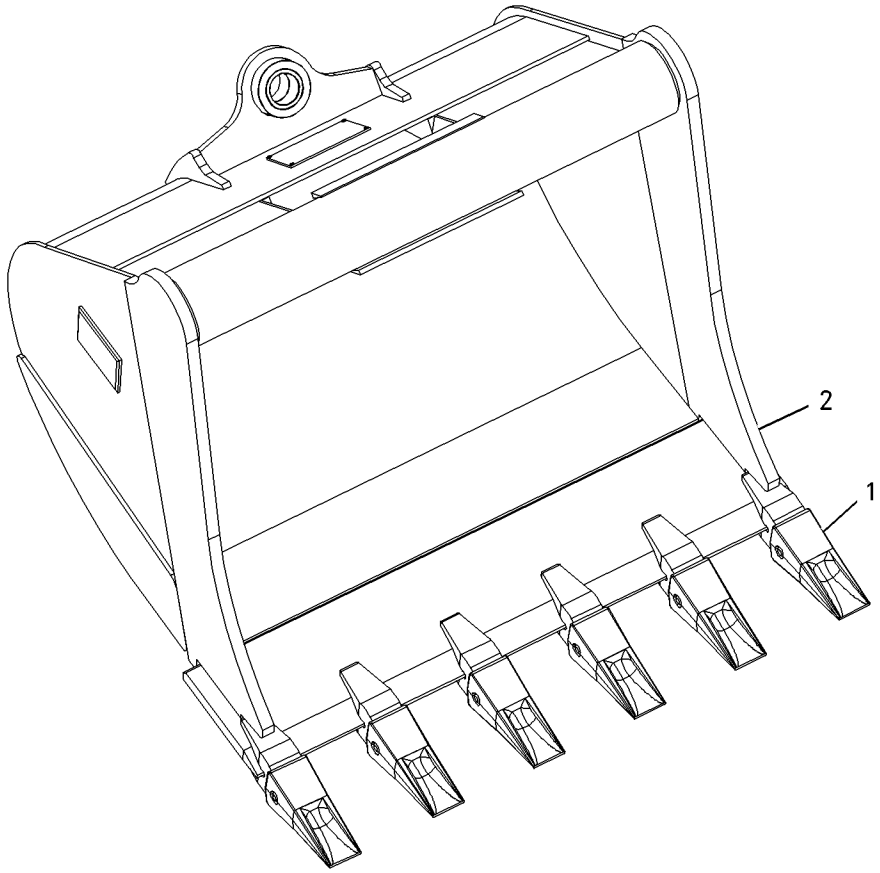

GRAPHIC #1 **<END>** g00852937

WORK TOOLS

222-7386 BUCKET GP-HOE—HIGH CAPACITY

S/N: FDP18400-UP
305MM (12 IN). PIN-LOCK
AN ATTACHMENT

SMCS-6503 **i01776385**

NOTE	REF NO	GRAPHIC REF	PART NUMBER	QTY	PART NAME 1 2 3 4 5 6 (PRODUCT LEVEL)	SEE PAGE
	1	1	*6Y-6767*	3	TIP GP-LONG	
					(EACH INCLUDES)	
		1	**6Y-3222**	1	TIP-LONG	
		1	**6Y-3228**	1	PIN-G.E.T.	
		1	**8E-6259**	1	RETAINER AS-G.E.T.	
	2	1	*222-7398*	1	BUCKET AS	
		1	**6Y-3224**	3	ADAPTER	
		1	**216-4560**	1	EDGE	

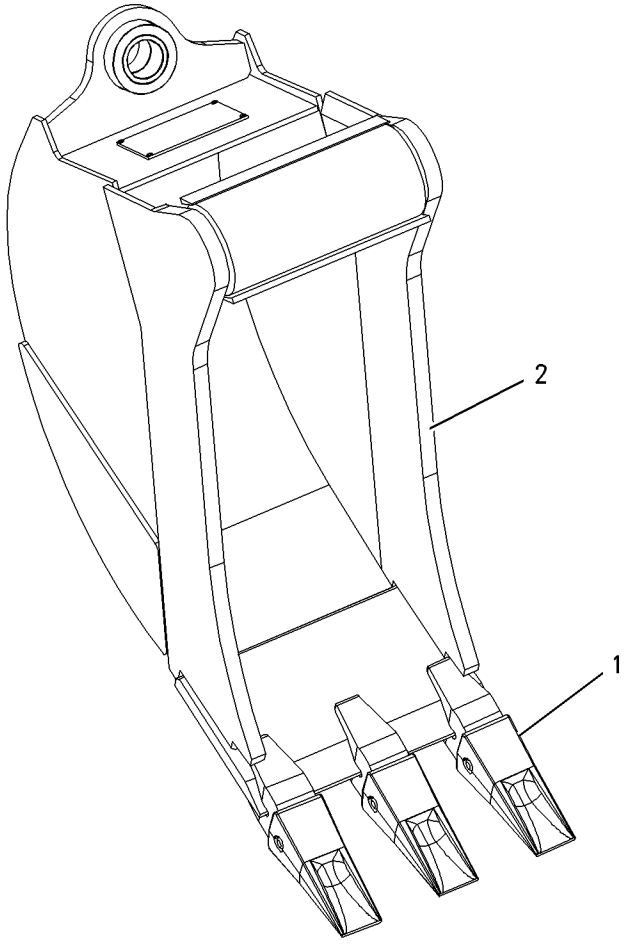

GRAPHIC #1 **<END>** g00850096

WORK TOOLS

222-7387 BUCKET GP-HOE—HIGH CAPACITY

S/N: FDP18400-UP
406MM (16 IN). PIN-LOCK
AN ATTACHMENT

SMCS-6503 **i01776358**

NOTE	REF NO	GRAPHIC REF	PART NUMBER	QTY	PART NAME 1 2 3 4 5 6 (PRODUCT LEVEL)	SEE PAGE
	1	1	*6Y-6767*	3	TIP GP-LONG	
					(EACH INCLUDES)	
		1	**6Y-3222**	1	TIP-LONG	
		1	**6Y-3228**	1	PIN-G.E.T.	
		1	**8E-6259**	1	RETAINER AS-G.E.T.	
	2	1	*222-7399*	1	BUCKET AS	
		1	**6Y-3224**	1	ADAPTER	
		1	**210-1116**	1	EDGE	

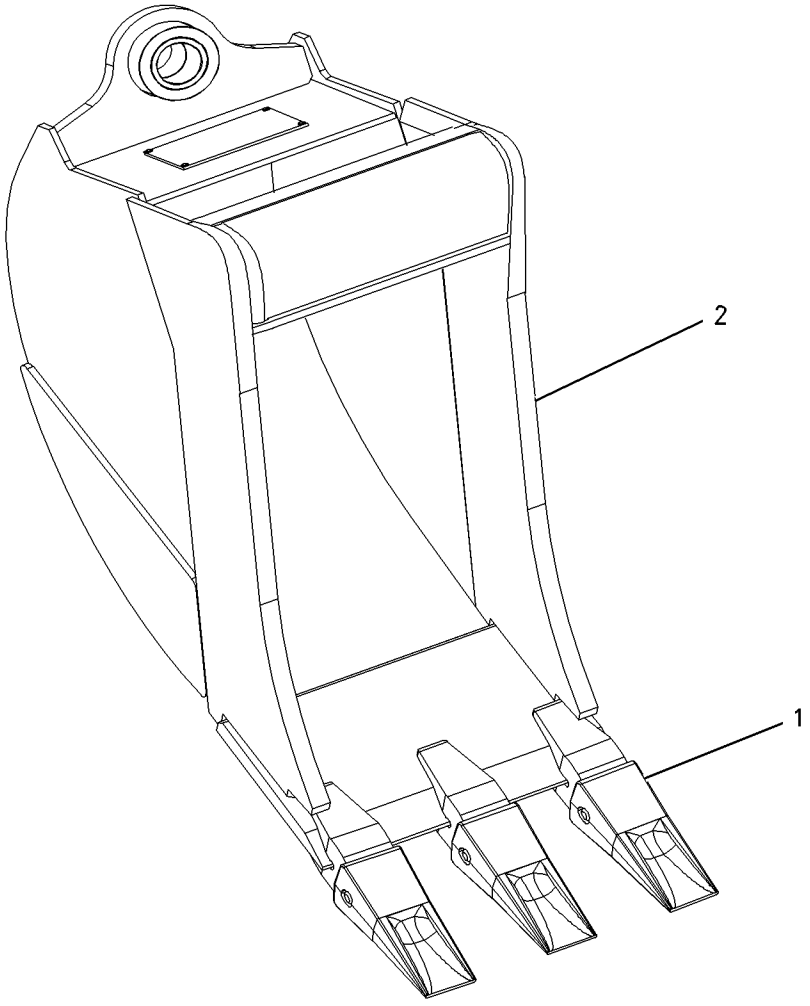

GRAPHIC #1 **<END>** g00908618

WORK TOOLS

222-7388 BUCKET GP-HOE—HIGH CAPACITY

S/N: FDP18400-UP
457MM (18 IN). PIN-LOCK
AN ATTACHMENT

SMCS-6503 **i01776311**

NOTE	REF NO	GRAPHIC REF	PART NUMBER	QTY	PART NAME 1 2 3 4 5 6 (PRODUCT LEVEL)	SEE PAGE
	1	1	*6Y-6767*	4	TIP GP-LONG	
					(EACH INCLUDES)	
		1	**6Y-3222**	1	TIP-LONG	
		1	**6Y-3228**	1	PIN-G.E.T.	
		1	**8E-6259**	1	RETAINER AS-G.E.T.	
	2	1	*222-7400*	1	BUCKET AS	
		1	**6Y-3224**	4	ADAPTER	
		1	**214-3011**	1	EDGE	

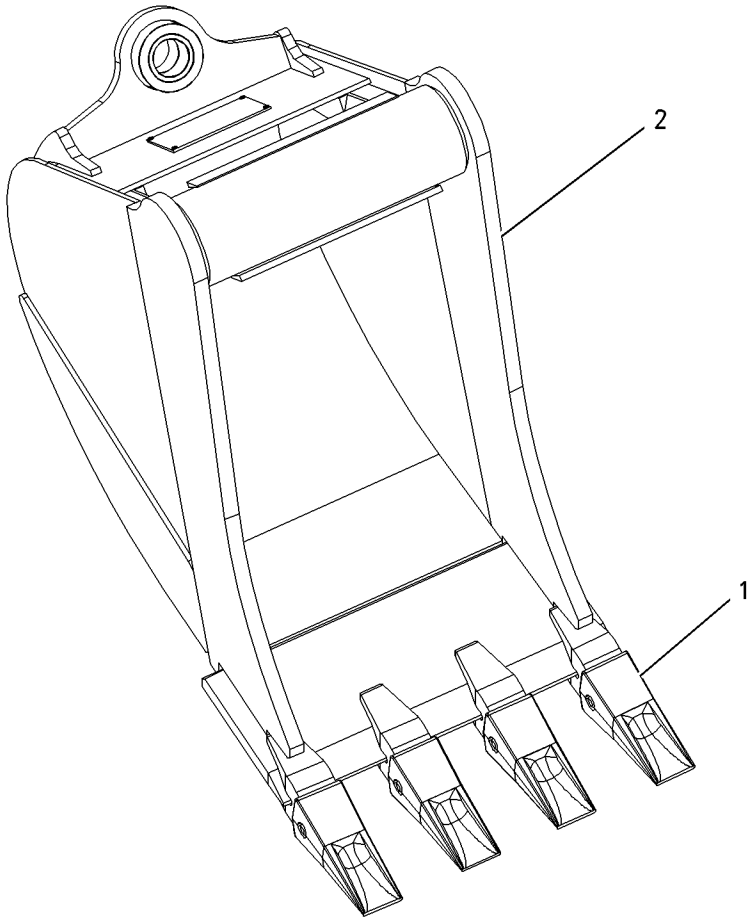

GRAPHIC #1 **<END>** g00850085

222-7389 BUCKET GP-HOE–HIGH CAPACITY

S/N: FDP18400-UP
609MM (24 IN). PIN-LOCK
AN ATTACHMENT

SMCS-6503 **i01777335**

NOTE	REF NO	GRAPHIC REF	PART NUMBER	QTY	PART NAME 1 2 3 4 5 6 (PRODUCT LEVEL)	SEE PAGE
	1	1	*6Y-6767*	5	TIP GP-LONG	
					(EACH INCLUDES)	
		1	**6Y-3222**	1	TIP-LONG	
		1	**6Y-3228**	1	PIN-G.E.T.	
		1	**8E-6259**	1	RETAINER AS-G.E.T.	
	2	1	*222-7401*	1	BUCKET AS	
		1	**6Y-3224**	5	ADAPTER	
		1	**214-3019**	1	EDGE	

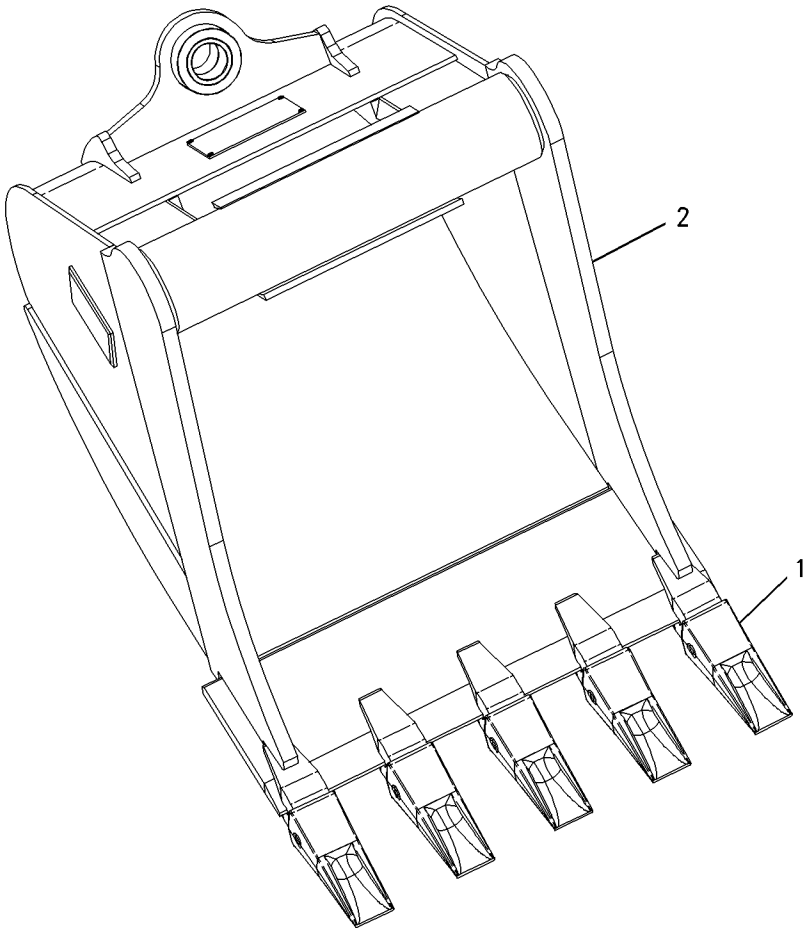

GRAPHIC #1 **<END>** g00908682

WORK TOOLS

222-7390 BUCKET GP-HOE—HIGH CAPACITY

S/N: FDP18400-UP
762MM (30 IN). PIN-LOCK
AN ATTACHMENT

SMCS-6503 **i01776366**

NOTE	REF NO	GRAPHIC REF	PART NUMBER	QTY	PART NAME 1 2 3 4 5 6 (PRODUCT LEVEL)	SEE PAGE
	1	1	*6Y-6767*	5	TIP GP-LONG	
					(EACH INCLUDES)	
		1	**6Y-3222**	1	TIP-LONG	
		1	**6Y-3228**	1	PIN-G.E.T.	
		1	**8E-6259**	1	RETAINER AS-G.E.T.	
	2	1	*222-7402*	1	BUCKET AS	
		1	**6Y-3224**	5	ADAPTER	
		1	**214-3027**	1	EDGE	

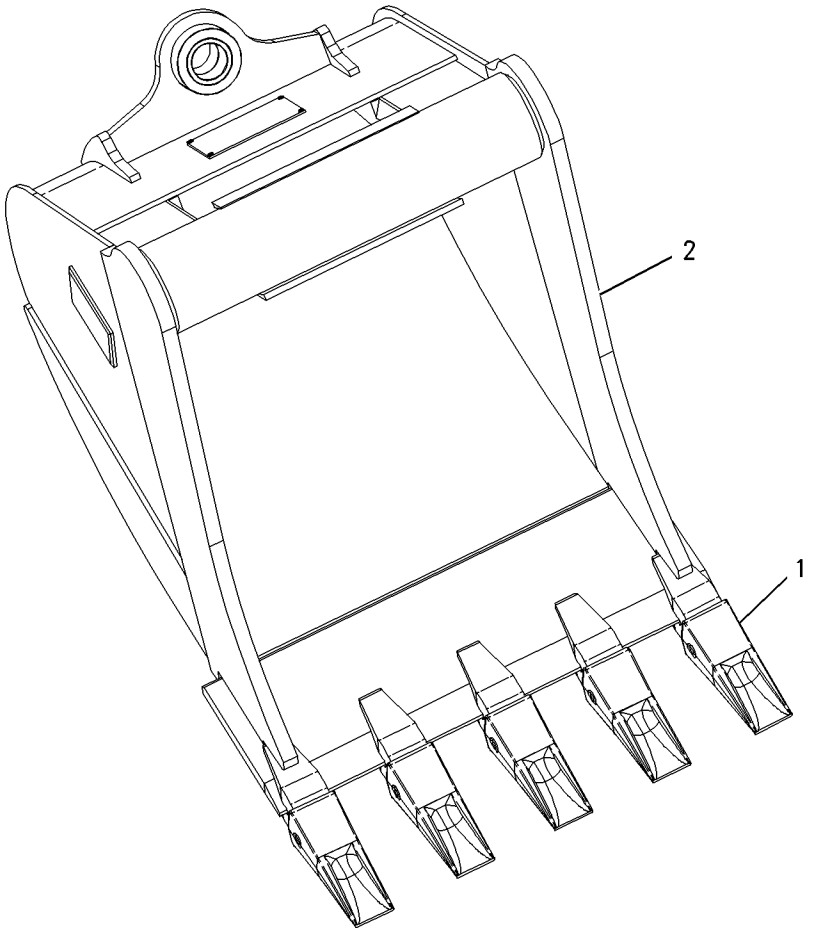

GRAPHIC #1 **<END>** g00908683

222-7391 BUCKET GP-HOE—HIGH CAPACITY

S/N: FDP18400-UP
914MM (36 IN). PIN-LOCK
AN ATTACHMENT

SMCS-6503 **i01776371**

NOTE	REF NO	GRAPHIC REF	PART NUMBER	QTY	PART NAME 1 2 3 4 5 6 (PRODUCT LEVEL)	SEE PAGE
	1	1	*6Y-6767*	6	TIP GP-LONG	
					(EACH INCLUDES)	
		1	**6Y-3222**	1	TIP-LONG	
		1	**6Y-3228**	1	PIN-G.E.T.	
		1	**8E-6259**	1	RETAINER AS-G.E.T.	
	2	1	*222-7403*	1	BUCKET AS	
		1	**6Y-3224**	6	ADAPTER	
		1	**214-3035**	1	EDGE	

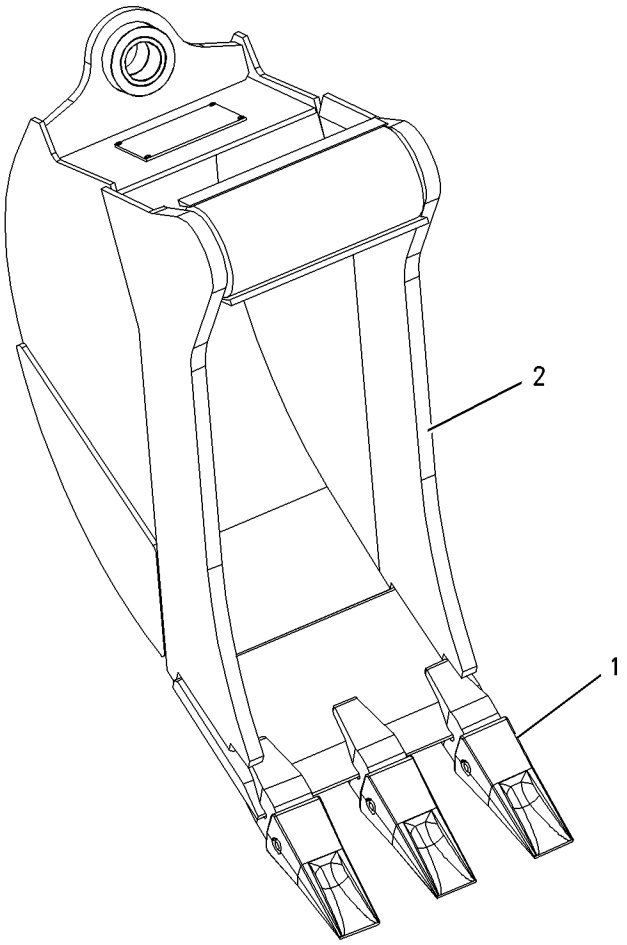

GRAPHIC #1 **<END>** g00850096

WORK TOOLS

104-3964 BUCKET GP-MULTIPURPOSE

S/N: FDP18400-UP
1.03 CU M (1.35 CU YD)
PART OF 111-8635 BUCKET AR-MULTIPURPOSE
AN ATTACHMENT

SMCS-6104 **i01115824**

NOTE	REF NO	GRAPHIC REF	PART NUMBER	QTY	PART NAME 1 2 3 4 5 6 (PRODUCT LEVEL)	SEE PAGE
	1	1	**104-3966**	1	BULLDOZER AS	
	2	1	**104-6314**	2	BRACKET	
	3	1	**104-6313**	1	BRACKET AS	
	4	1	**106-9388**	1	BRACKET	
	5	1	**104-3967**	1	BULLDOZER AS	
	6	1	**9R-5786**	1	EDGE	
	7	1	**9R-0111**	2	BEARING-SLEEVE	
	8	1	**110-2861**	4	BRACKET	
	9	1	**126-4225**	1	CLAM AS	
	10	1	**9R-4675**	2	BUSHING-TERMINAL	
	11	1	**9R-5313**	1	EDGE	
	12	1	**9R-5294**	2	HINGE	
	13	1	**4J-1888**	2	COTTER	
	14	1	**3B-8489**	2	FITTING-GREASE (1/8-27 THD)	
	15	1	**9R-4676**	2	PIN	

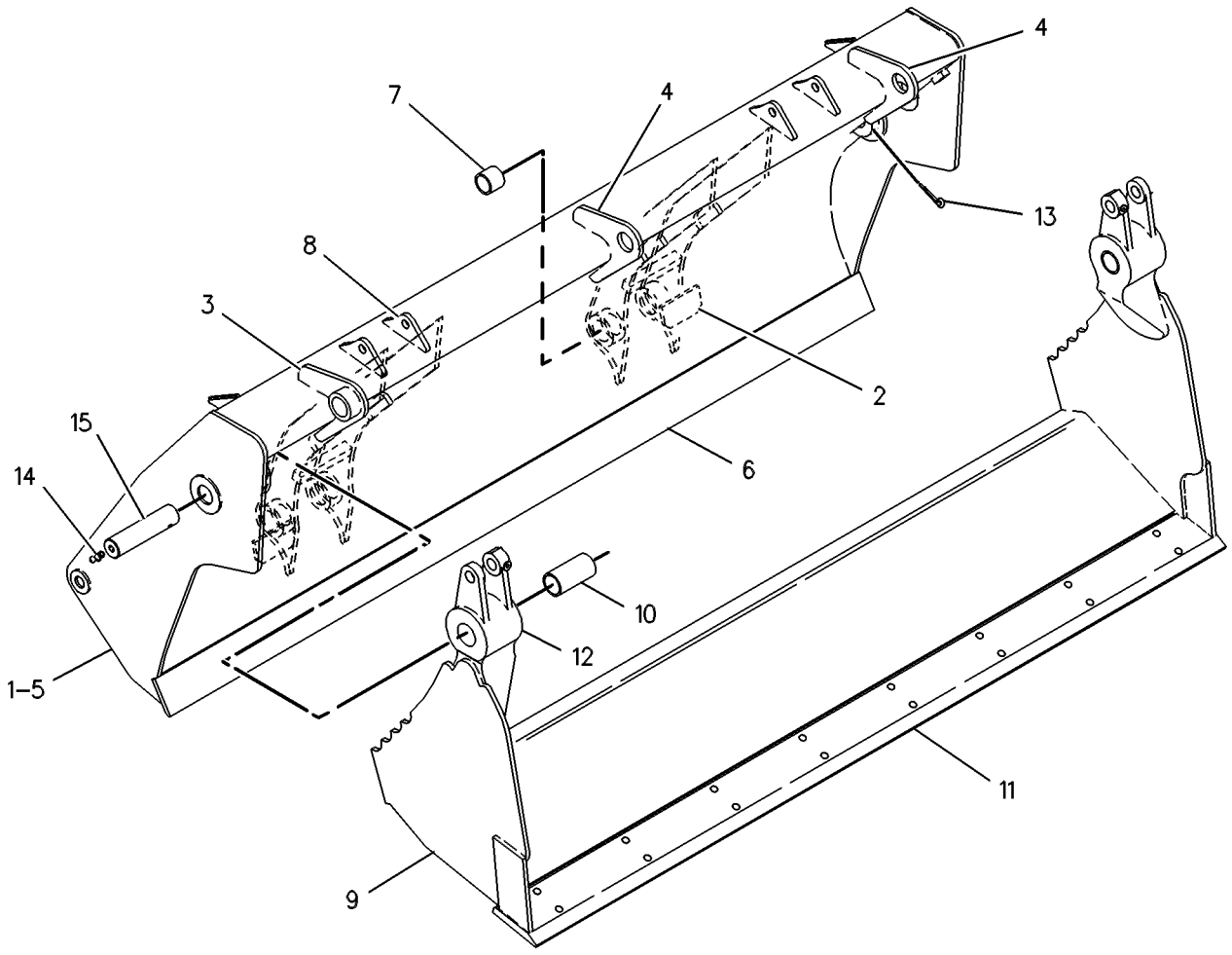

GRAPHIC #1 **<END>** g00131436

WORK TOOLS

104-3965 BUCKET GP-MULTIPURPOSE

S/N: FDP18400-UP
1.03 CU M (1.35 CU YD)
PART OF 111-8634 BUCKET AR-MULTIPURPOSE
AN ATTACHMENT

SMCS-6104 **i01115832**

NOTE	REF NO	GRAPHIC REF	PART NUMBER	QTY	PART NAME 1 2 3 4 5 6 (PRODUCT LEVEL)	SEE PAGE
	1	1	**104-3967**	1	BULLDOZER AS	
	2	1	**9R-5786**	1	EDGE	
	3	1	**9R-0111**	2	BEARING-SLEEVE	
	4	1	**126-4225**	1	CLAM AS	
	5	1	**9R-4675**	2	BUSHING-TERMINAL	
	6	1	**9R-5313**	1	EDGE	
	7	1	**9R-5294**	2	HINGE	
	8	1	**4J-1888**	2	COTTER	
	9	1	**3B-8489**	2	FITTING-GREASE (1/8-27 THD)	
	10	1	**9R-4676**	2	PIN	

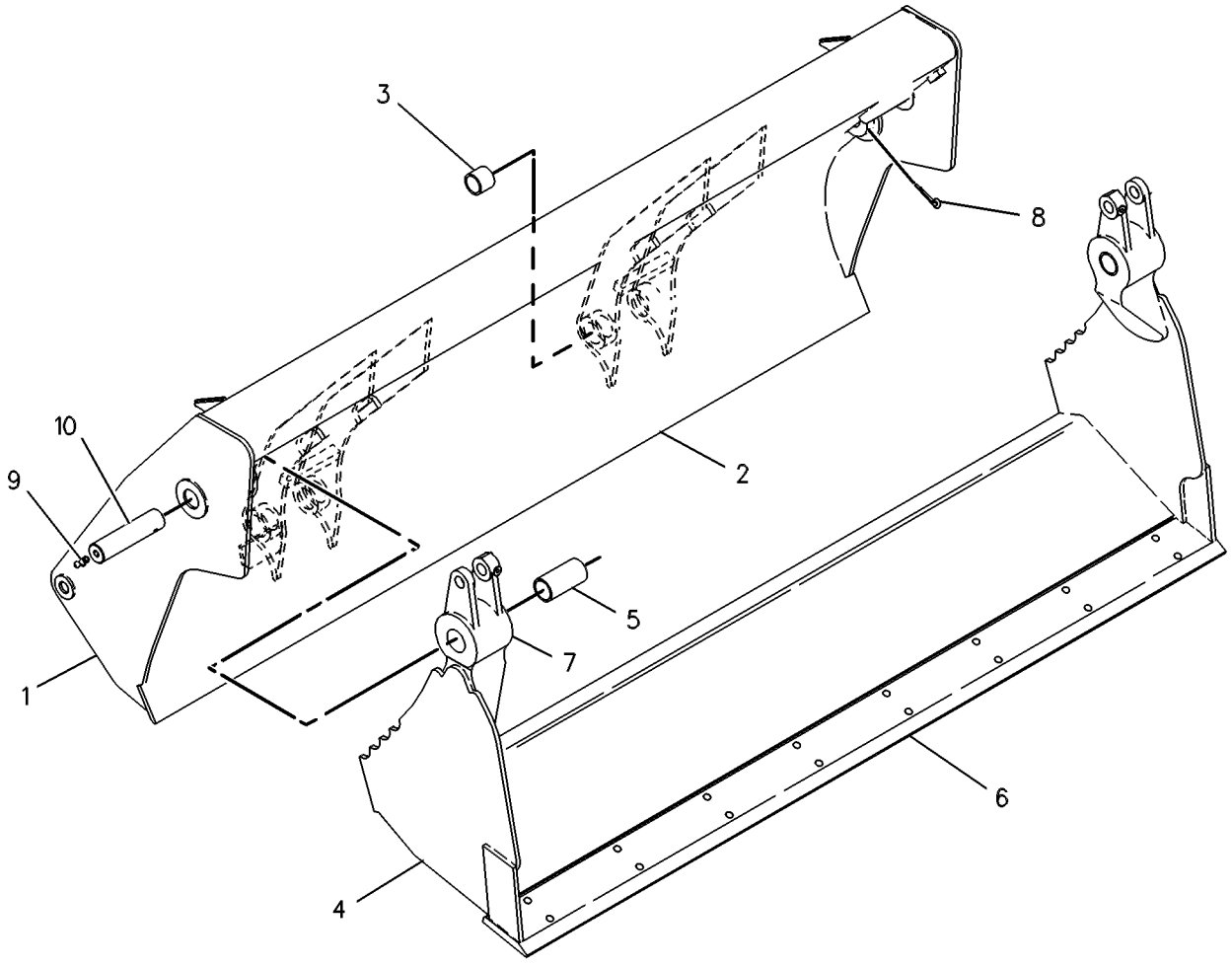

GRAPHIC #1 **<END>** g00131434

108-3036 BUCKET GP-MULTIPURPOSE

S/N: FDP18400-UP
0.96 CU M (1.25 CU YD)
PART OF 112-0938 BUCKET AR-MULTIPURPOSE
AN ATTACHMENT

SMCS-6104 **i01531717**

NOTE	REF NO	GRAPHIC REF	PART NUMBER	QTY	PART NAME 1 2 3 4 5 6 (PRODUCT LEVEL)	SEE PAGE
	1	1	**108-3037**	1	BULLDOZER AS	
	2	1	**9R-4670**	1	EDGE	
	3	1	**9R-0111**	2	BEARING-SLEEVE	
	4	1	**126-4224**	1	CLAM AS	
	5	1	**9R-4675**	2	BUSHING-TERMINAL	
	6	1	**9R-4672**	1	EDGE	
	7	1	**9R-5294**	2	HINGE	
	8	1	**125-7116**	1	EDGE	
	9	1	**4J-1888**	2	COTTER	
	10	1	**3B-8489**	2	FITTING-GREASE	
	11	1	**9R-4676**	2	PIN	

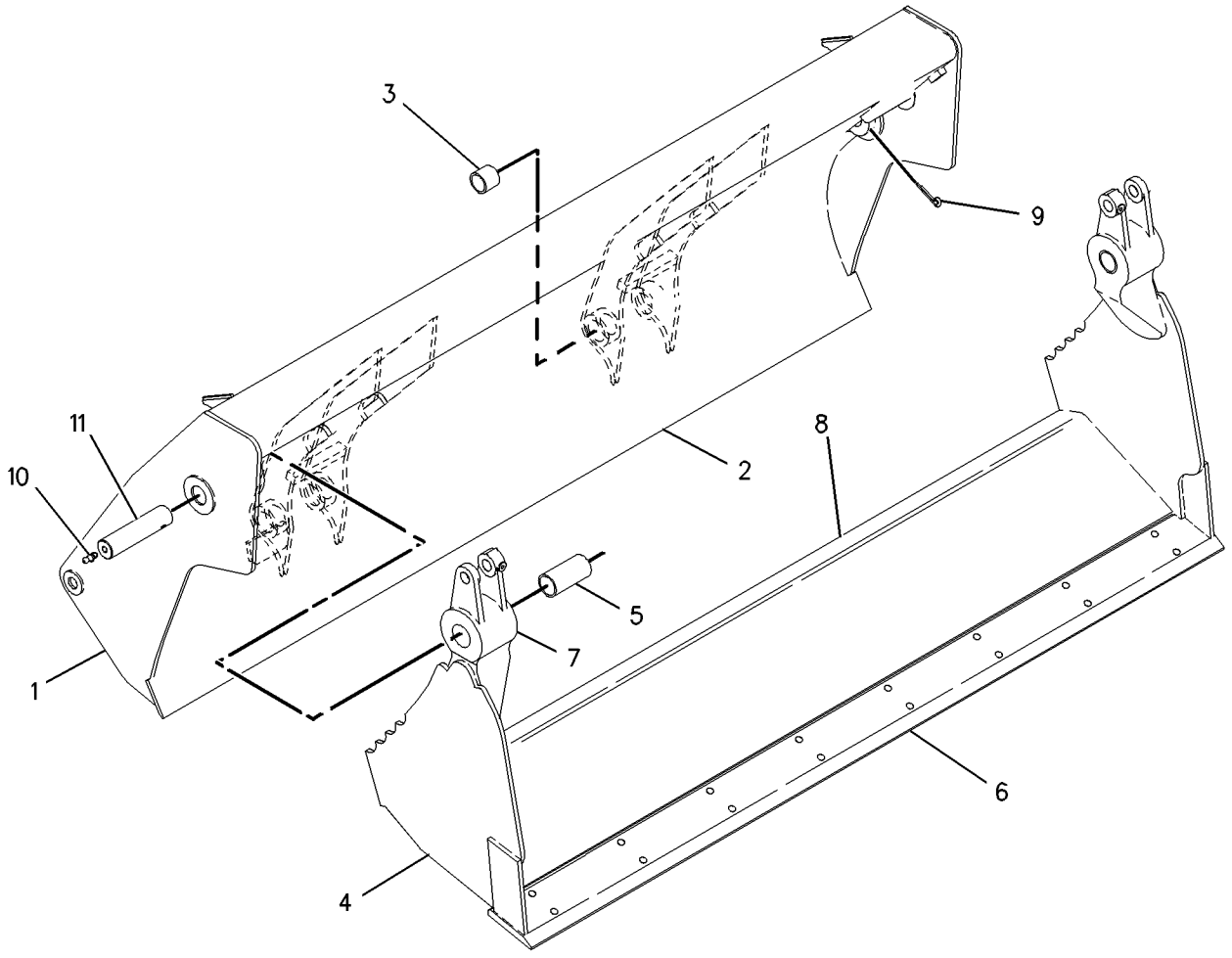

GRAPHIC #1 **<END>** g00795236

WORK TOOLS

112-1778 BUCKET GP-MULTIPURPOSE

S/N: FDP18400-UP
0.95 CU M (1.25 CU YD)
PART OF 112-0939 BUCKET AR-MULTIPURPOSE
AN ATTACHMENT

SMCS-6104 **i01115857**

NOTE	REF NO	GRAPHIC REF	PART NUMBER	QTY	PART NAME 1 2 3 4 5 6 (PRODUCT LEVEL)	SEE PAGE
	1	1	**112-1777**	1	BULLDOZER AS	
	2	1	**104-6314**	2	BRACKET	
	3	1	**104-6313**	1	BRACKET AS	
	4	1	**106-9388**	1	BRACKET	
	5	1	**108-3037**	1	BULLDOZER AS	
	6	1	**9R-4670**	1	EDGE	
	7	1	**9R-0111**	2	BEARING-SLEEVE	
	8	1	**110-2861**	4	BRACKET	
	9	1	**126-4224**	1	CLAM AS	
	10	1	**9R-4675**	2	BUSHING-TERMINAL	
	11	1	**9R-4672**	1	EDGE	
	12	1	**9R-5294**	2	HINGE	
	13	1	**4J-1888**	2	COTTER	
	14	1	**3B-8489**	2	FITTING-GREASE (1/8-27 THD)	
	15	1	**9R-4676**	2	PIN	

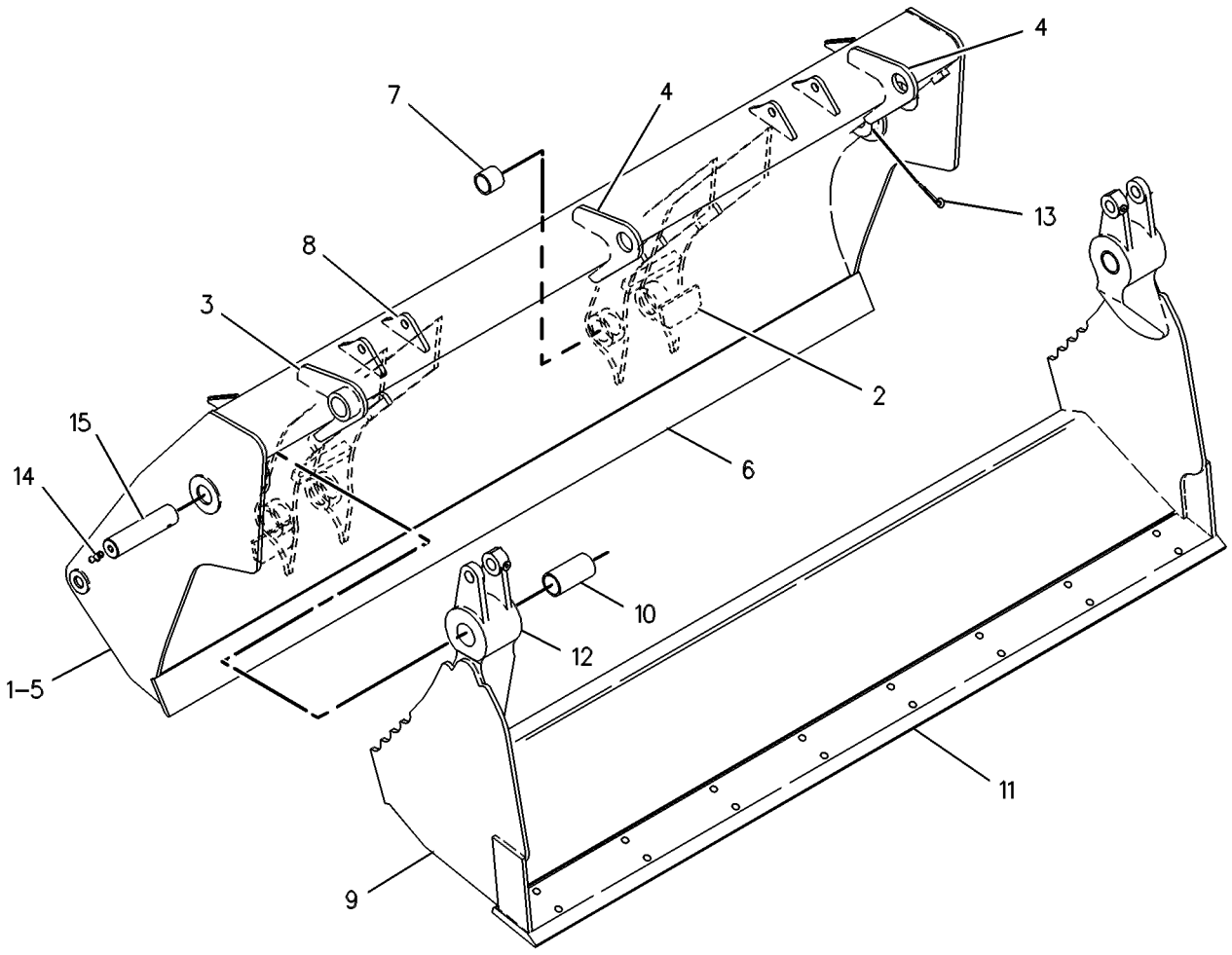

GRAPHIC #1 **<END>** g00131436

WORK TOOLS

222-7379 COUPLER AR-QUICK

S/N: FDP18400-UP
PIN-LOCK SERIES II
AN ATTACHMENT

SMCS-6129 **i01797725**

NOTE	PART NUMBER	QTY	PART NAME 1 2 3 4 5 6 (PRODUCT LEVEL)	SEE PAGE
Y	*222-7464*	1	COUPLER GP-QUICK	696
Y	*216-0928*	1	PIN GP-COUPLER	709
Y	*215-9478*	1	PIN GP-COUPLER	708

Y-SEPARATE ILLUSTRATION

<END>

WORK TOOLS

176-6247 COUPLER GP-QUICK

S/N: FDP18400-UP
HOE
PART OF 178-8849 COUPLER GP-QUICK
AN ATTACHMENT

SMCS-6129 **i01853638**

NOTE	REF NO	GRAPHIC REF	PART NUMBER	QTY	PART NAME 1 2 3 4 5 6 (PRODUCT LEVEL)	SEE PAGE
	1	1	**176-6248**	1	COUPLER	
	2	1	**200-5921**	1	HOOK	
	3	1	**132-3725**	1	SPRING	
	4	1	**132-3721**	1	PIN AS	
	5	1	**132-3723**	1	LOCK PIN	
	6	1	**091-5928**	1	FITTING	
F		1	**132-3821**	1	LEVER-ACTUATING	

F-NOT SHOWN

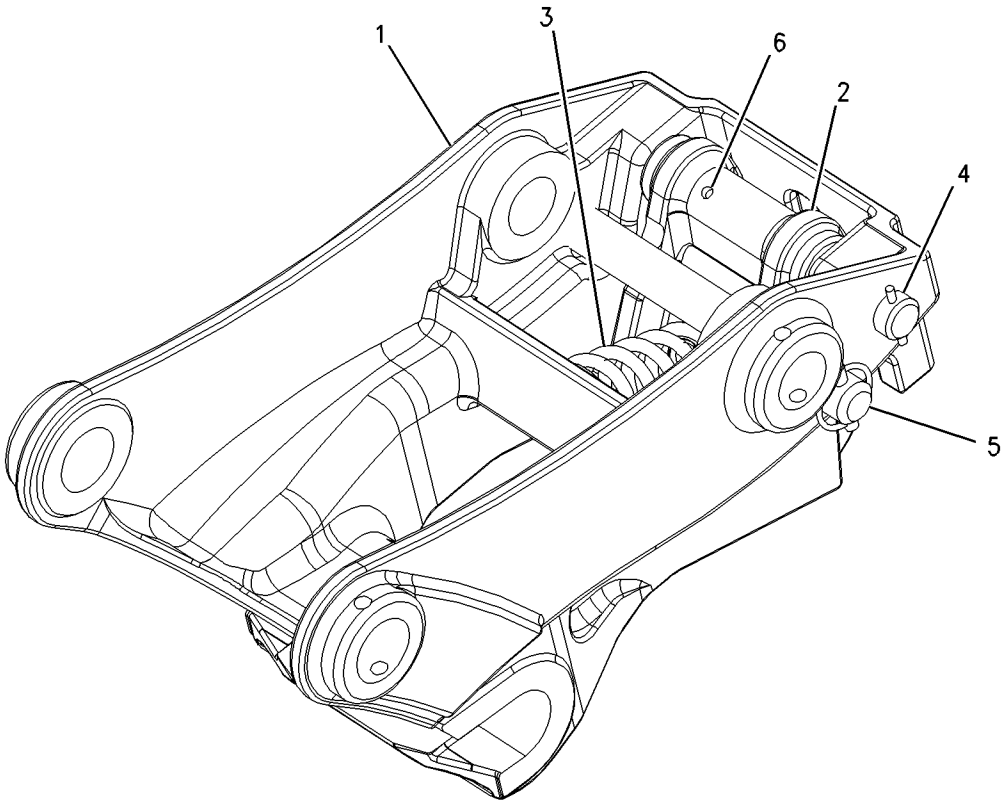

GRAPHIC #1 **<END>** g00888629

176-6251 COUPLER GP-QUICK

S/N: FDP18400-UP
HOE
PART OF 178-8850 COUPLER GP-QUICK
AN ATTACHMENT

SMCS-6129 **i01860101**

NOTE	REF NO	GRAPHIC REF	PART NUMBER	QTY	PART NAME 1 2 3 4 5 6 (PRODUCT LEVEL)	SEE PAGE
	1	1	**176-6252**	1	COUPLER	
	2	1	**200-5921**	1	HOOK	
	3	1	**132-3725**	1	SPRING	
	4	1	**132-3721**	1	PIN AS (HOOK)	
	5	1	**132-3723**	1	LOCK PIN	
	6	1	**091-5928**	1	FITTING	
F			**132-3821**	1	LEVER-ACTUATING	

F-NOT SHOWN

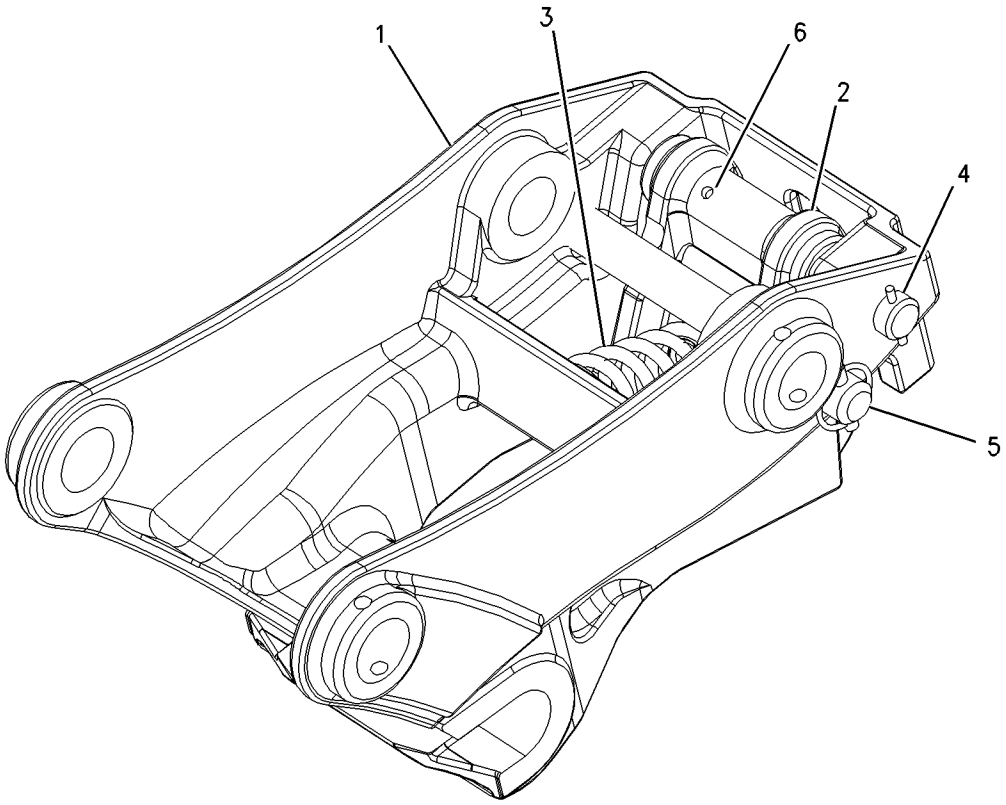

GRAPHIC #1 **<END>** g00888576

WORK TOOLS

178-8849 COUPLER GP-QUICK

S/N: FDP18400-UP

AN ATTACHMENT

SMCS-6129 **i01797235**

NOTE	PART NUMBER	QTY	PART NAME 1 2 3 4 5 6 (PRODUCT LEVEL)	SEE PAGE
Y	**176-6247**	1	COUPLER GP-QUICK	692
	132-3777	1	PIN (345MM)	
	132-3778	1	PIN (330MM)	
	4J-1888	2	PIN-COTTER	

Y-SEPARATE ILLUSTRATION

<END>

WORK TOOLS

178-8850 COUPLER GP-QUICK

S/N: FDP18400-UP
AN ATTACHMENT

SMCS-6129 **i01768722**

NOTE	REF NO	GRAPHIC REF	PART NUMBER	QTY	PART NAME 1 2 3 4 5 6 (PRODUCT LEVEL)	SEE PAGE
	1	1	**4J-1888**	2	PIN-COTTER	
	2	1	**132-3777**	1	PIN	
	3	1	**132-3778**	1	PIN	
Y	4	1	**176-6251**	1	COUPLER GP-QUICK	693

Y-SEPARATE ILLUSTRATION

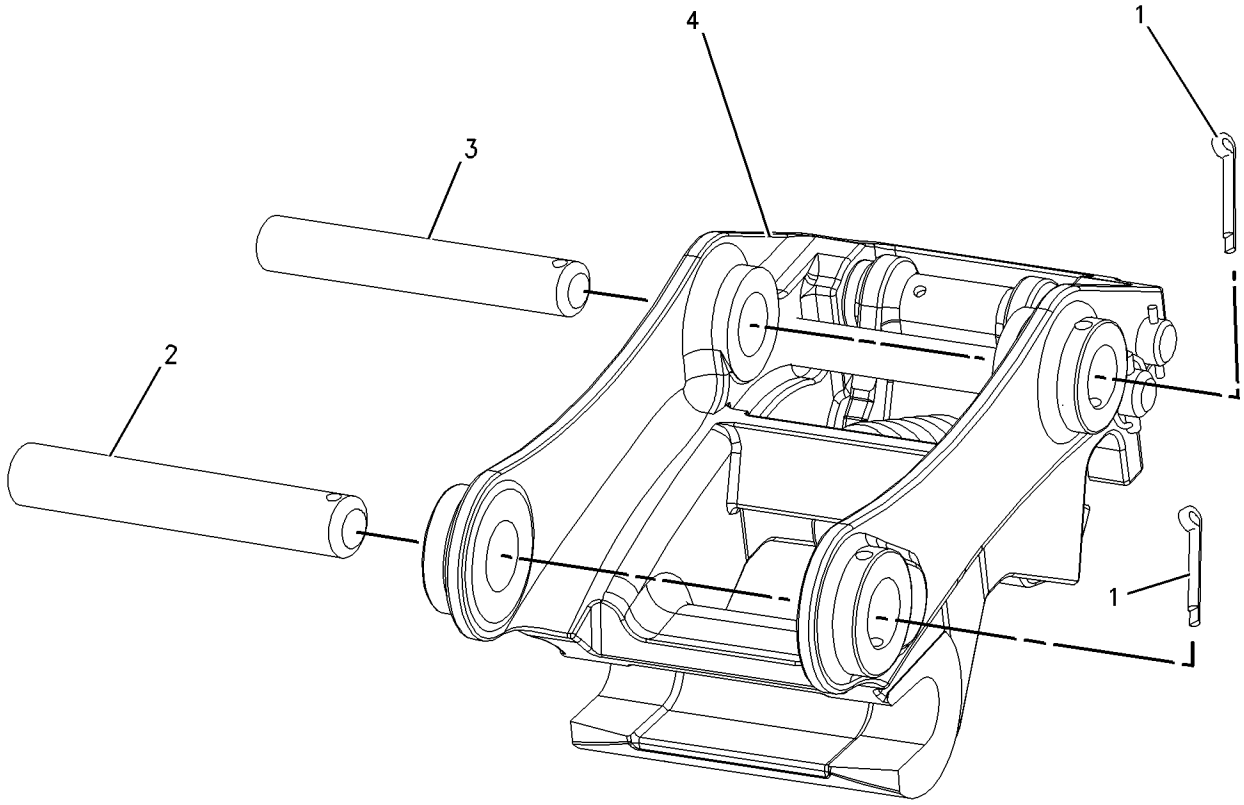

GRAPHIC #1 **<END>** g00904540

222-7464 COUPLER GP-QUICK

S/N: FDP18400-UP
PIN-LOCK SERIES II
PART OF 222-7379 COUPLER AR-QUICK
AN ATTACHMENT

SMCS-6129 **i01753972**

NOTE	REF NO	GRAPHIC REF	PART NUMBER	QTY	PART NAME 1 2 3 4 5 6 (PRODUCT LEVEL)	SEE PAGE
	1	1	**9H-3771**	1	FITTING	
	2	1	**210-1145**	2	BEARING-SLEEVE	
	3	1	**9R-0320**	2	BEARING	
	4	1	**9R-3700**	2	BEARING-SLEEVE	

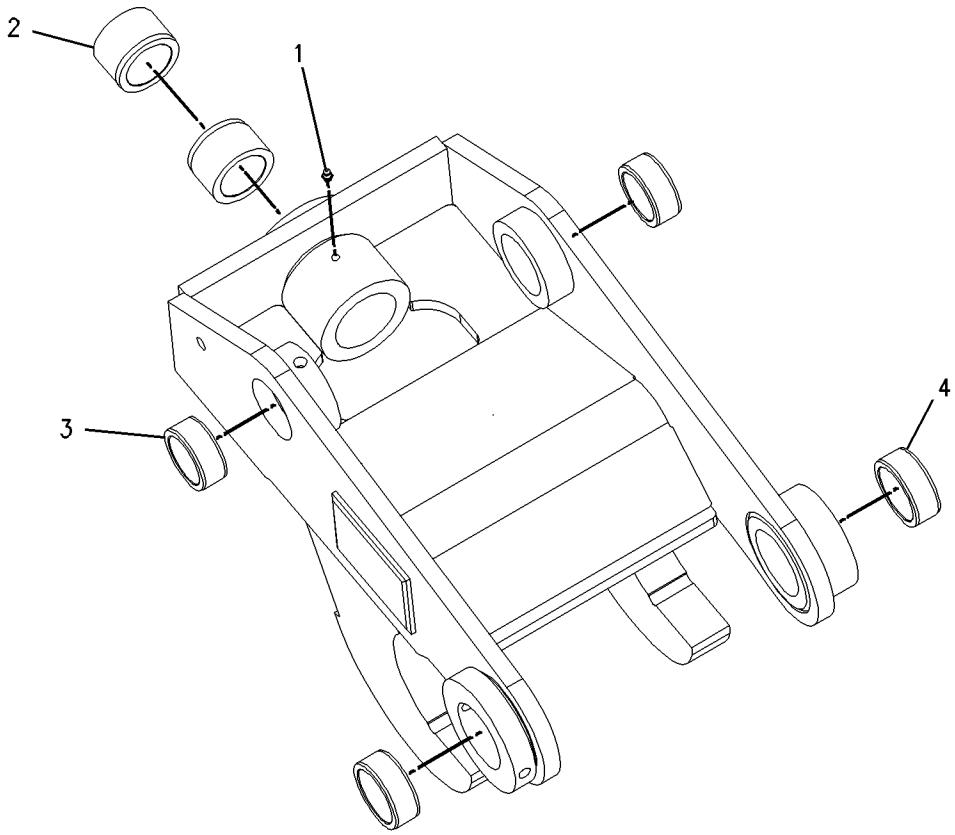

GRAPHIC #1 **<END>** g00897210

WORK TOOLS

9R-5320 EDGE GP-CUTTING

S/N: FDP18400-UP
PART OF 190-1079 BUCKET GP-GENERAL PURPOSE
AN ATTACHMENT

SMCS-6801 **i00457549**

NOTE	REF NO	GRAPHIC REF	PART NUMBER	QTY	PART NAME 1 2 3 4 5 6 (PRODUCT LEVEL)	SEE PAGE
	1	1	**118-7110**	2	EDGE-CUTTING	
	2	1	**4F-3657**	8	BOLT-PLOW	
	3	1	**4K-0367**	8	NUT (5/8-11 THD)	
	4	1	**8T-4122**	8	WASHER (3.5MM THK)	

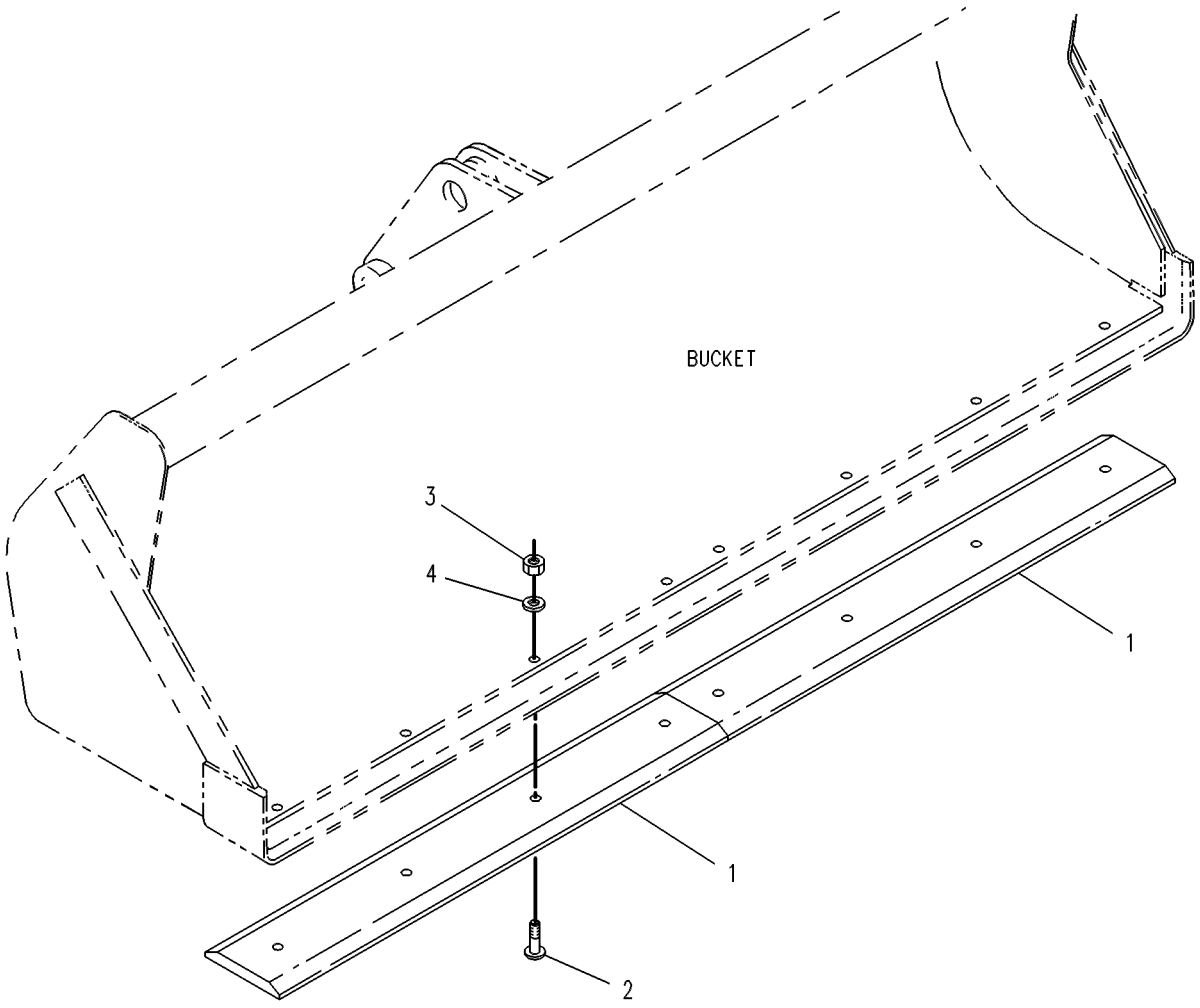

GRAPHIC #1 **<END>** g00131376

WORK TOOLS

9R-5321 EDGE GP-CUTTING

S/N: FDP18400-UP
PART OF 190-1080, 190-1081 BUCKET GP-GENERAL PURPOSE
AN ATTACHMENT

SMCS-6801 **i00921780**

NOTE	REF NO	GRAPHIC REF	PART NUMBER	QTY	PART NAME 1 2 3 4 5 6 (PRODUCT LEVEL)	SEE PAGE
	1	1	**9W-8215**	2	EDGE-CUTTING	
	2	1	**3F-5108**	8	BOLT-PLOW	
	3	1	**4K-0367**	8	NUT (5/8-11 THD)	
	4	1	**8T-4122**	8	WASHER (3.5MM THK)	

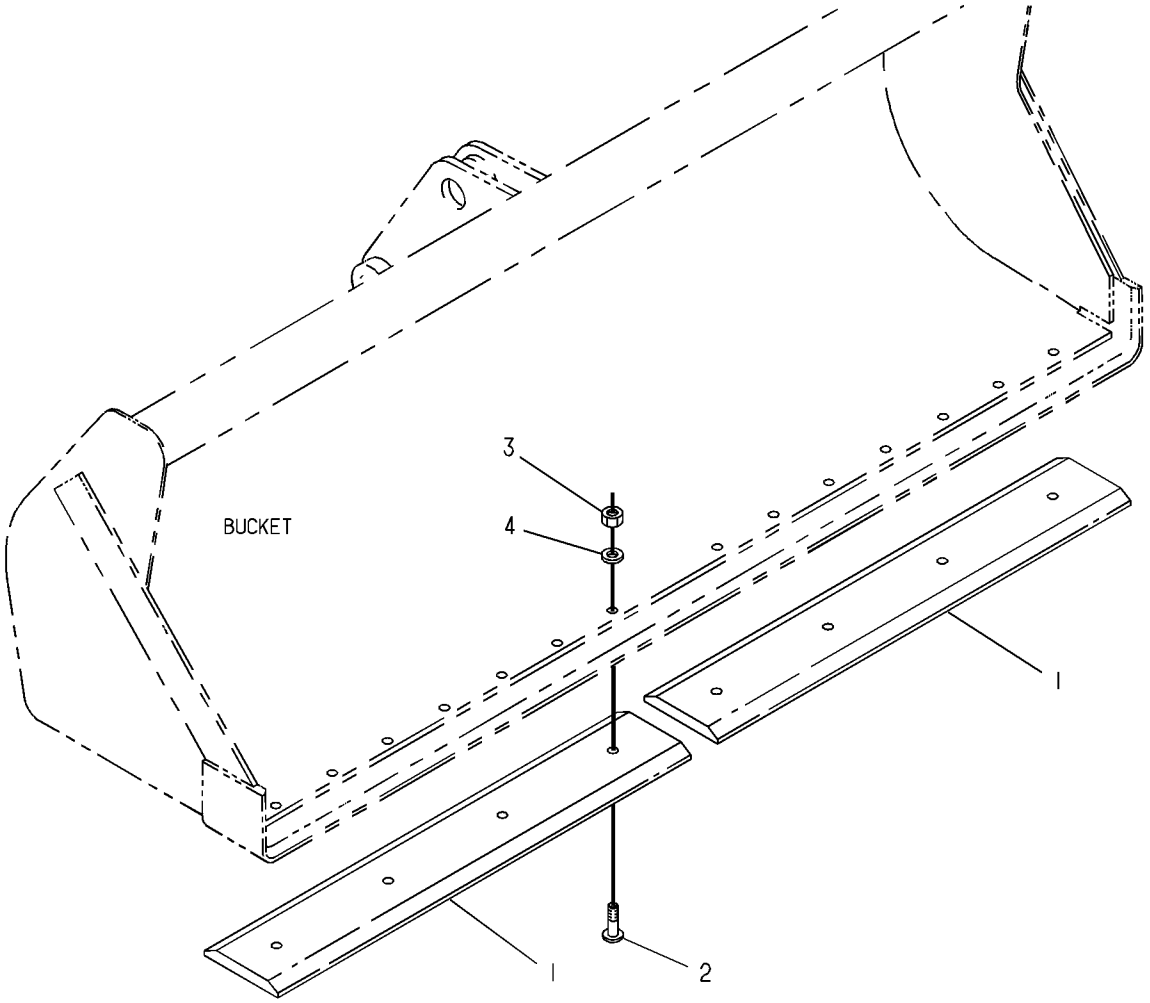

GRAPHIC #1 **<END>** g00130834

WORK TOOLS

112-0942 FORK AR

S/N: FDP18400-UP

FOR USE WITH 112-0938 BUCKET AR-MULTIPURPOSE, 111-8636 BUCKET AR-MULTIPURPOSE, 9R-8002 HYDRAULIC AR

AN ATTACHMENT

SMCS-6405 **i00755991**

NOTE	PART NUMBER	QTY	PART NAME 1 2 3 4 5 6 (PRODUCT LEVEL)	SEE PAGE
Y	*104-6310*	1	FORK GP	700
Y	*108-1587*	1	MOUNTING GP-FORK	707

Y-SEPARATE ILLUSTRATION

<END>

WORK TOOLS

104-6310 FORK GP

S/N: FDP18400-UP

PART OF 111-8635, 112-0939 BUCKET AR-MULTIPURPOSE, 112-0942 FORK AR

AN ATTACHMENT

SMCS-6405 **i00714346**

NOTE	REF NO	GRAPHIC REF	PART NUMBER	QTY	PART NAME 1 2 3 4 5 6 (PRODUCT LEVEL)	SEE PAGE
	1	1	**104-6311**	2	BRACKET AS	
	2	1	**104-6312**	2	FORK AS	
	3	1	**104-6316**	1	PIN	
	4	1	**104-6317**	2	PIN	
	5	1	**4J-1888**	1	COTTER	
	6	1	**9R-0109**	4	WASHER (3MM THK)	
	7	1	**112-1776**	2	PIN AS	
	8	1	**6V-8144**	4	RING	
	9	1	**5D-8159**	2	PIN AS	

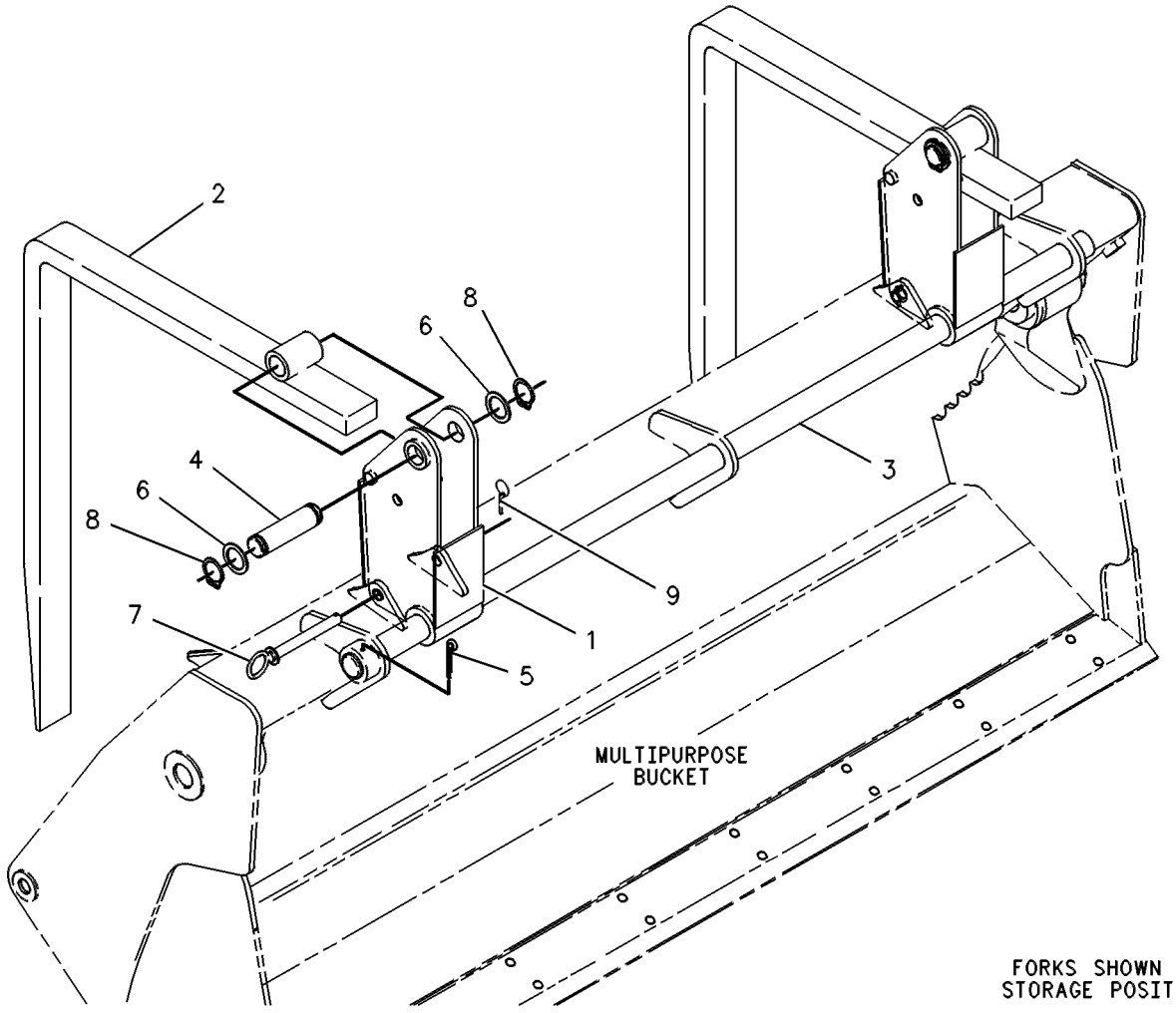

GRAPHIC #1 **<END>** g00131084

101-4408 GUARD GP-BUCKET—FRONT BUCKET

S/N: FDP18400-UP

AN ATTACHMENT

SMCS-6001, 6800, 6805 **i01768667**

NOTE	PART NUMBER	QTY	PART NAME 1 2 3 4 5 6 (PRODUCT LEVEL)	SEE PAGE
Y	*101-4409*	1	GUARD GP-BUCKET	702
	101-4415	1	REFLECTOR	

Y-SEPARATE ILLUSTRATION

<END>

101-4409 GUARD GP-BUCKET

S/N: FDP18400-UP
PART OF 101-4408 GUARD GP-BUCKET
AN ATTACHMENT

SMCS-6001, 6800, 6805 **i00824356**

NOTE	REF NO	GRAPHIC REF	PART NUMBER	QTY	PART NAME 1 2 3 4 5 6 (PRODUCT LEVEL)	SEE PAGE
	1	1	**101-4410**	1	GUARD AS	
	2	1	**101-4411**	2	RETAINER AS	
	3	1	**101-4412**	2	CHAIN	
	4	1	**101-4413**	2	SPRING	
	5	1	**101-4414**	2	HOOK AS	

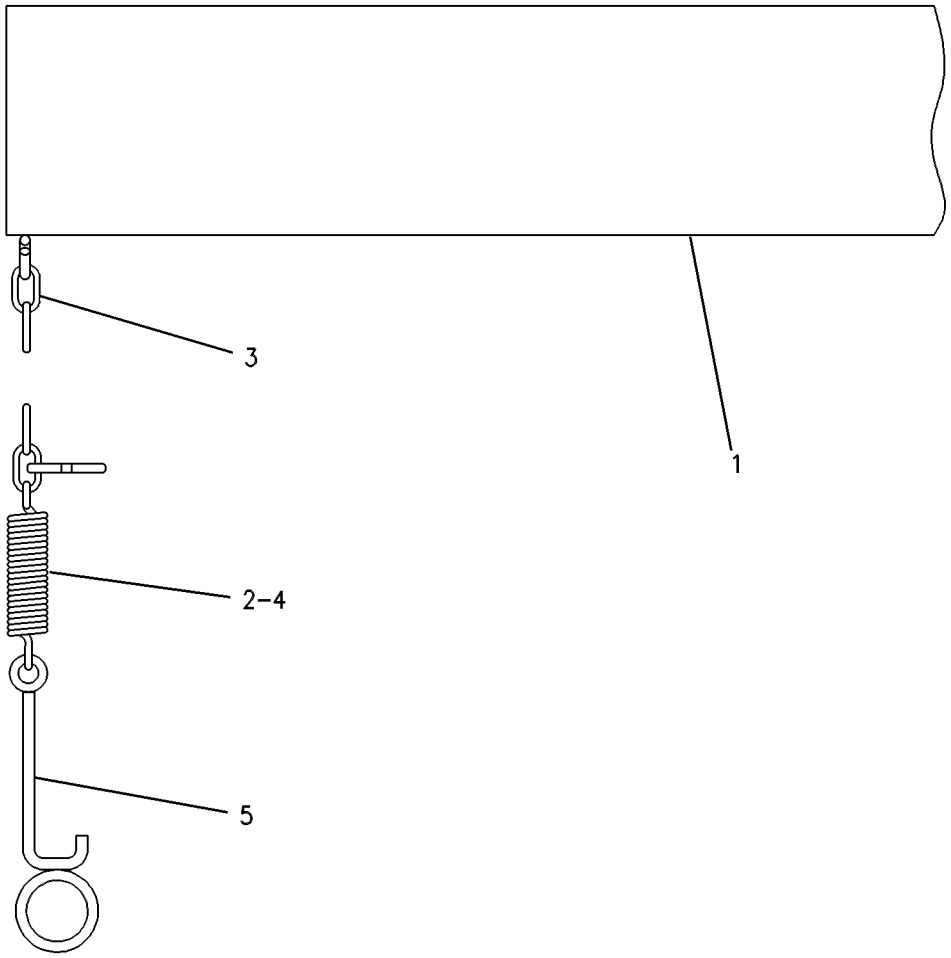

GRAPHIC #1 **<END>** g00265135

WORK TOOLS

223-8120 KIT-ADAPTER TIP

S/N: FDP18400-UP

AN ATTACHMENT

SMCS-6800, 6803 **i02003589**

NOTE	REF NO	GRAPHIC REF	PART NUMBER	QTY	PART NAME 1 2 3 4 5 6 (PRODUCT LEVEL)	SEE PAGE
	1	1	**201-1235**	5	ADAPTER	
	2	1	**201-1238**	5	PIN	
	3	1	**201-1239**	5	RETAINER AS	

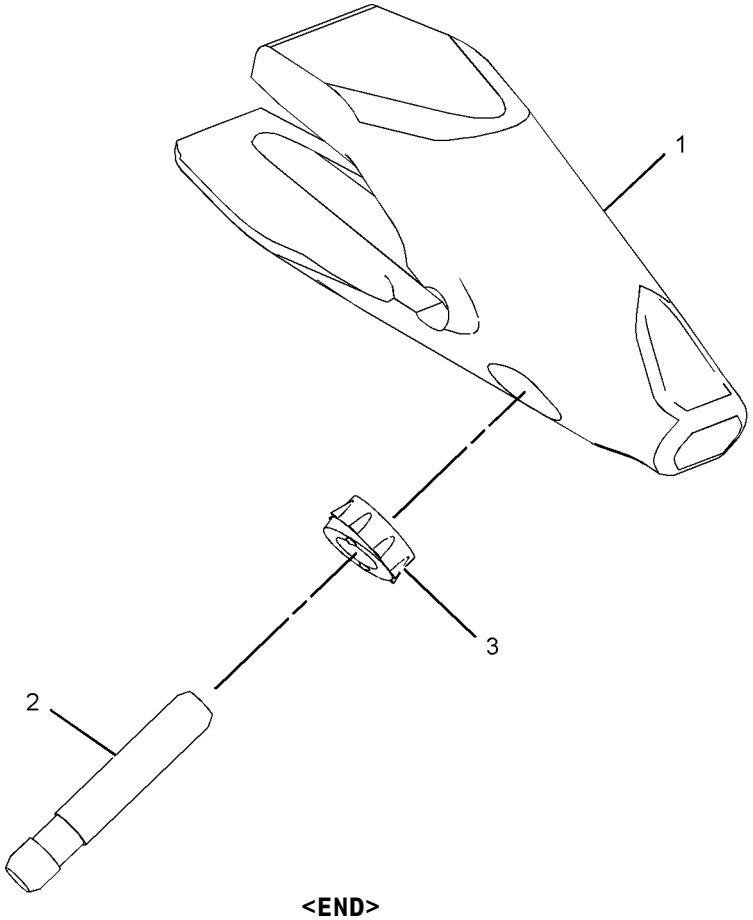

GRAPHIC #1 **<END>** g01038549

WORK TOOLS

223-8125 KIT-ADAPTER TIP

S/N: FDP18400-UP

AN ATTACHMENT

SMCS-6800, 6803 **i02003586**

NOTE	REF NO	GRAPHIC REF	PART NUMBER	QTY	PART NAME 1 2 3 4 5 6 (PRODUCT LEVEL)	SEE PAGE
	1	1	**201-1234**	5	ADAPTER	
	2	1	**201-1238**	5	PIN	
	3	1	**201-1239**	5	RETAINER AS	

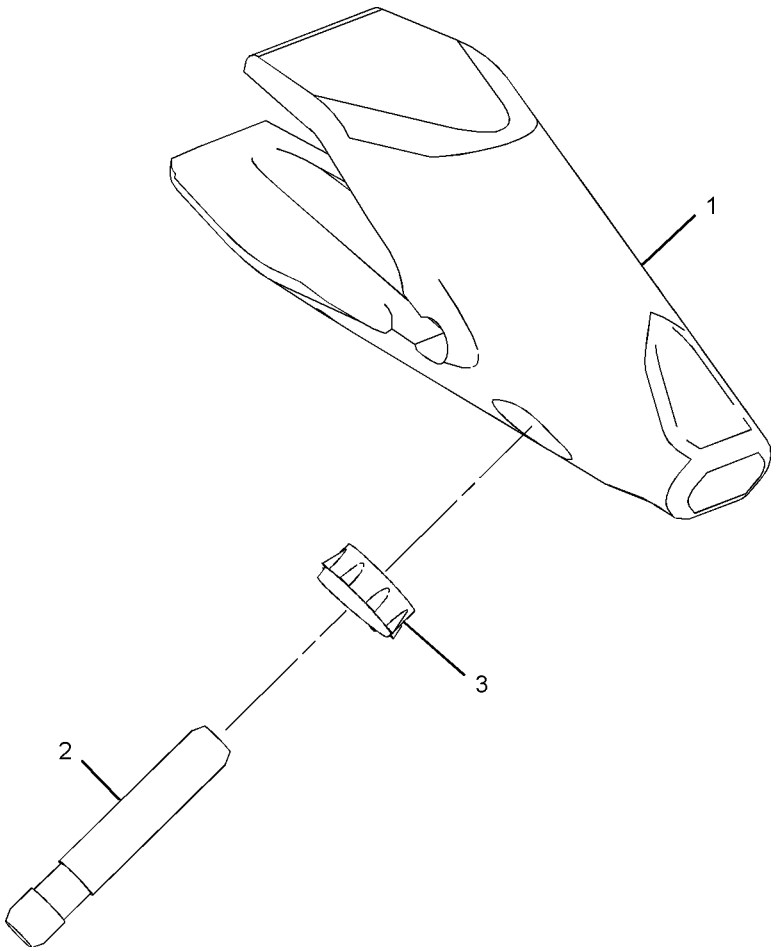

GRAPHIC #1 **<END>** g01038546

WORK TOOLS

137-3848 MOUNTING GP-BUCKET

S/N: FDP18400-UP
QUICK COUPLER-BACKHOE
AN ATTACHMENT

SMCS-6101 **i01271145**

NOTE	REF NO	GRAPHIC REF	PART NUMBER	QTY	PART NAME 1 2 3 4 5 6 (PRODUCT LEVEL)	SEE PAGE
	1	1	**9R-0158**	5	WASHER (3MM THK)	
	2	1	**3B-5319**	4	COTTER	
	3	1	**9R-6162**	1	PIN	
	4	1	**9R-1510**	2	WASHER (4MM THK)	
	5	1	**154-5279**	1	PIN	

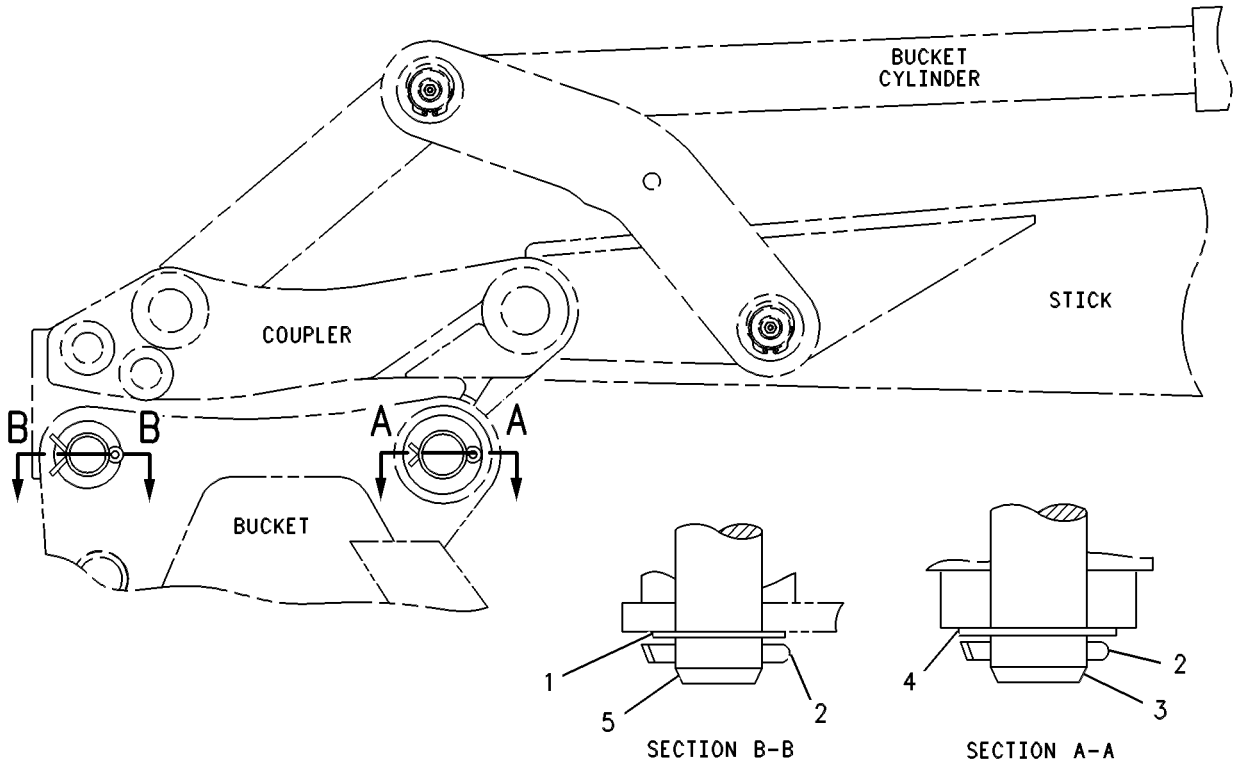

GRAPHIC #1 **<END>** g00131819

WORK TOOLS

178-3593 MOUNTING GP-BUCKET

S/N: FDP18400-UP
QUICK COUPLER-BACKHOE
AN ATTACHMENT

SMCS-6101 **i01351210**

NOTE	PART NUMBER	QTY	PART NAME 1 2 3 4 5 6 (PRODUCT LEVEL)	SEE PAGE
	3B-5319	4	COTTER	
	154-5279	1	PIN	
	154-5280	1	PIN	
B	**9R-0158**	5	WASHER (3MM THK)	
B	**9R-1510**	5	WASHER (4MM THK)	

B-USE AS REQUIRED

<END>

WORK TOOLS

108-1587 MOUNTING GP-FORK

S/N: FDP18400-UP
PART OF 112-0942 FORK AR
AN ATTACHMENT

SMCS-6405 **i00457503**

NOTE	REF NO	GRAPHIC REF	PART NUMBER	QTY	PART NAME 1 2 3 4 5 6 (PRODUCT LEVEL)	SEE PAGE
	1	1	**110-2861**	4	BRACKET	
	2	1	**104-6313**	1	BRACKET AS	
	3	1	**104-6314**	2	BRACKET	
	4	1	**106-9388**	2	BRACKET	

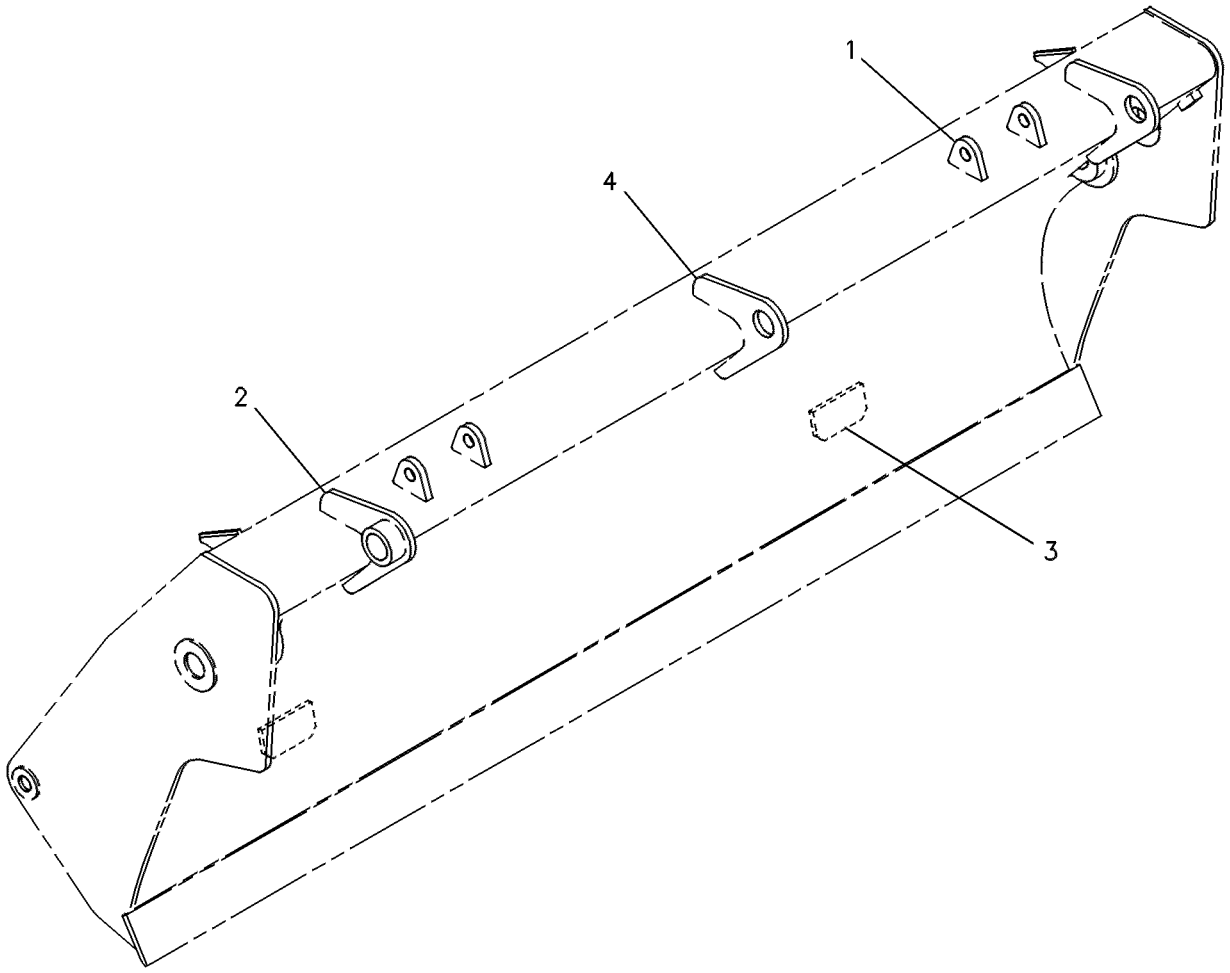

GRAPHIC #1 **<END>** g00131197

WORK TOOLS

215-9478 PIN GP-COUPLER

S/N: FDP18400-UP
MACHINE
PART OF 222-7379 COUPLER AR-QUICK
AN ATTACHMENT

SMCS-6129 **i01797195**

NOTE	REF NO	GRAPHIC REF	PART NUMBER	QTY	PART NAME 1 2 3 4 5 6 (PRODUCT LEVEL)	SEE PAGE
	1	1	**215-3373**	1	PIN	
	2	1	**168-0425**	1	PIN	
M	3	1	**6V-7744**	2	LOCKNUT (M10X1.5 THD)	
M	4	1	**7X-2543**	1	BOLT (M10X1.5X120MM)	
M	5	1	**8T-4198**	1	BOLT (M10X1.5X100MM)	

M-METRIC PART

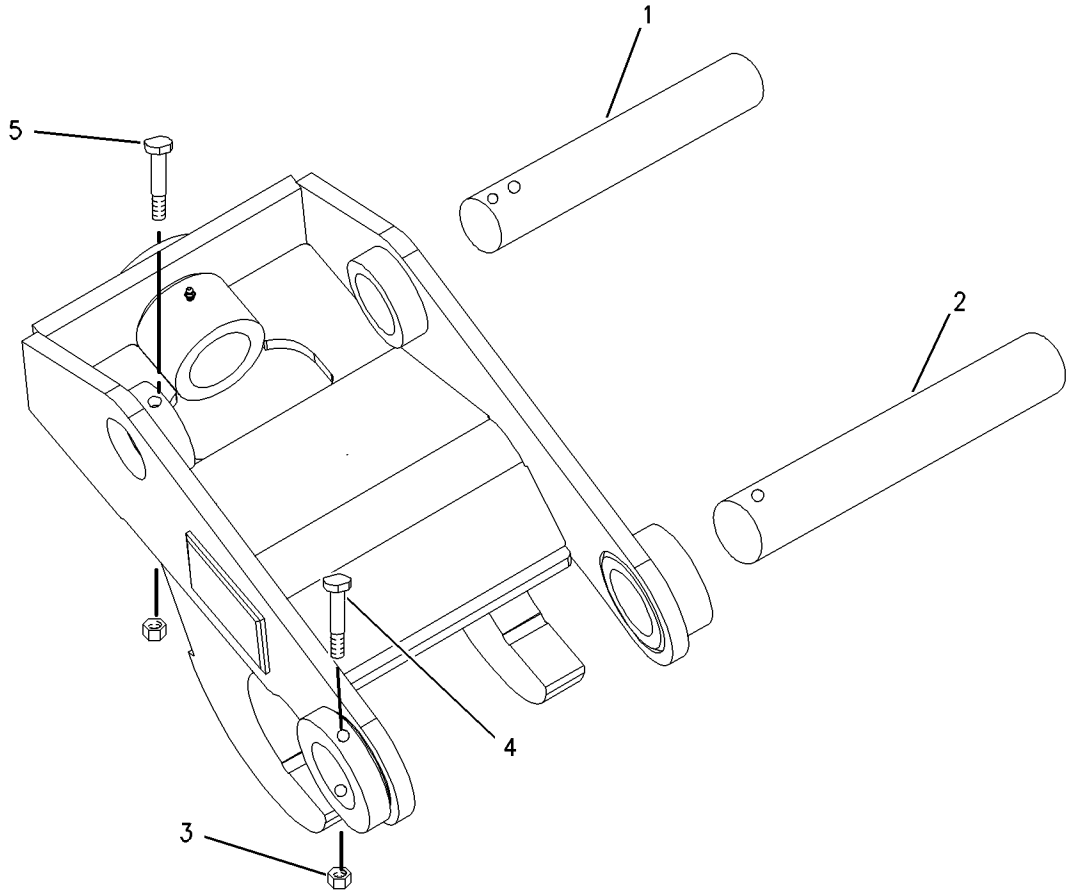

GRAPHIC #1 **<END>** g00920584

WORK TOOLS

216-0928 PIN GP-COUPLER

S/N: FDP18400-UP
PART OF 222-7379 COUPLER AR-QUICK
AN ATTACHMENT

SMCS-6129 **i01797167**

NOTE	REF NO	GRAPHIC REF	PART NUMBER	QTY	PART NAME 1 2 3 4 5 6 (PRODUCT LEVEL)	SEE PAGE
	1	1	**210-1115**	1	PIN AS	
	2	1	**216-3712**	1	PIN	

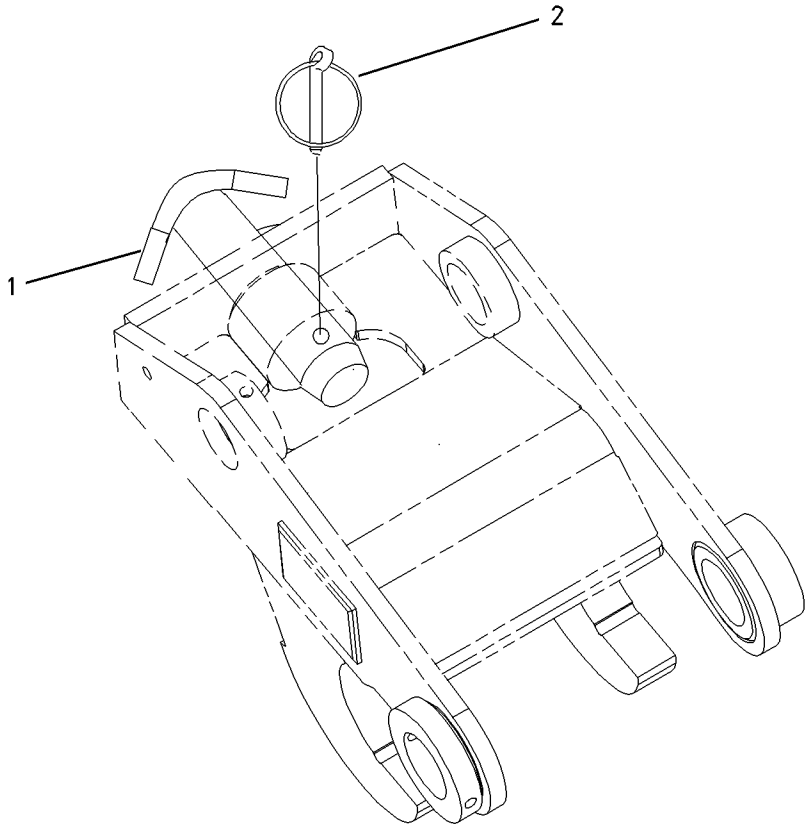

GRAPHIC #1 **<END>** g00920705

WORK TOOLS

119-1530 SHIPPING AR-BUCKET

S/N: FDP18400-UP
TRANSPORT (NO BUCKET OPTION)
AN ATTACHMENT

SMCS-7505 **i00756012**

NOTE	PART NUMBER	QTY	PART NAME 1 2 3 4 5 6 (PRODUCT LEVEL)	SEE PAGE
Y	*120-9289*	1	BRACKET GP-TRANSPORT	580

Y-SEPARATE ILLUSTRATION

<END>

WORK TOOLS

177-4903 STOP GP-BUCKET

S/N: FDP18400-UP

AN ATTACHMENT

SMCS-6001 **i01876858**

NOTE	REF NO	GRAPHIC REF	PART NUMBER	QTY	PART NAME 1 2 3 4 5 6 (PRODUCT LEVEL)	SEE PAGE
	1	1	**178-4200**	1	STOP AS	
	2	1	**180-3773**	1	STOP AS	
	3	1	**7X-7729**	4	WASHER (11X25X3MM THK)	
M	4	1	**8T-0389**	4	LOCKNUT (M10X1.5 THD)	
M	5	1	**8T-4182**	4	BOLT (M10X1.5X45MM)	

M-METRIC PART

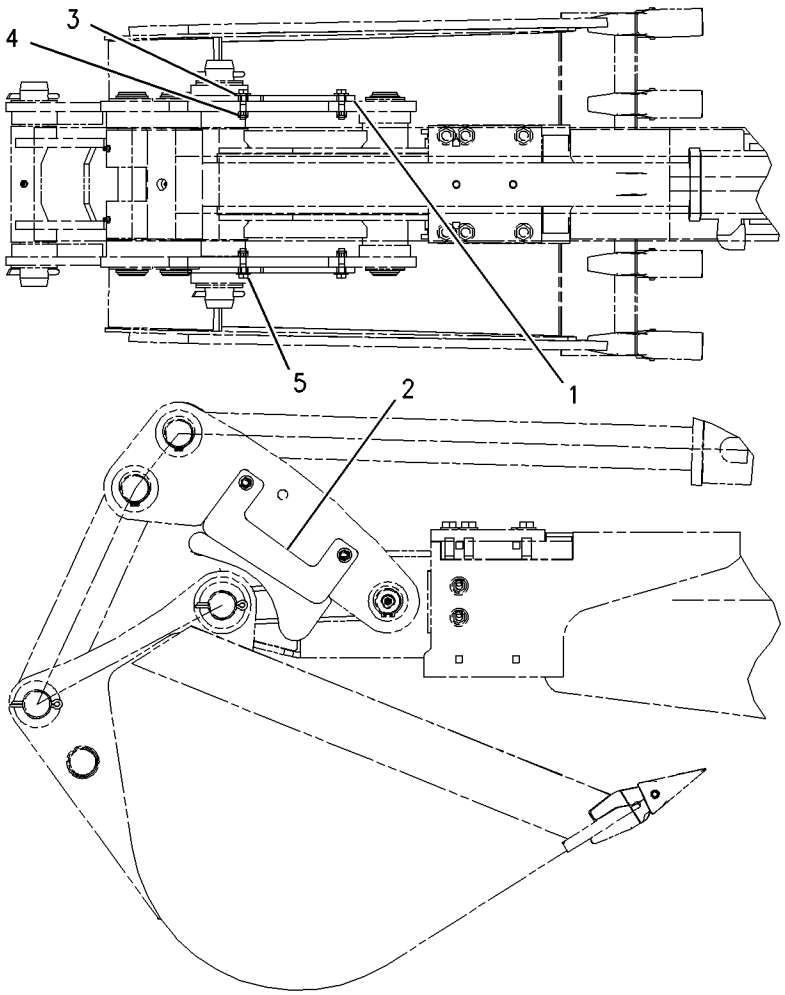

GRAPHIC #1 **<END>** g00954944

221-4260 THUMB AR

S/N: FDP18400-UP
PART OF 224-6224, 224-6225, 224-6226, 224-6227, 224-6232, 224-6233, 224-6234, 224-6235 THUMB AR
AN ATTACHMENT

SMCS-6547 **i01920959**

NOTE	PART NUMBER	QTY	PART NAME 1 2 3 4 5 6 (PRODUCT LEVEL)	SEE PAGE
Y	*221-4265*	1	MOUNTING GP-CYLINDER (THUMB)	499
Y	*221-4267*	1	THUMB GP (BAKCHOE LOADER)	715

Y-SEPARATE ILLUSTRATION

<END>

224-6224 THUMB AR—HEAVY DUTY

S/N: FDP18400-UP
24IN
FOR USE WITH STANDARD STICK
AN ATTACHMENT

SMCS-6547 **i01920554**

NOTE	PART NUMBER	QTY	PART NAME 1 2 3 4 5 6 (PRODUCT LEVEL)	SEE PAGE
Y	**224-6236**	1	CYLINDER & LINES GP-THUMB	369
Y	**221-4260**	1	THUMB AR	712
	221-4282	1	TINE AS	

Y-SEPARATE ILLUSTRATION

<END>

224-6225 THUMB AR—HEAVY DUTY

S/N: FDP18400-UP
24 IN
FOR USE WITH COUPLER
AN ATTACHMENT

SMCS-6547 **i01920636**

NOTE	PART NUMBER	QTY	PART NAME 1 2 3 4 5 6 (PRODUCT LEVEL)	SEE PAGE
Y	**224-6236**	1	CYLINDER & LINES GP-THUMB	369
Y	**221-4260**	1	THUMB AR	712
	221-4283	1	TINE AS	

Y-SEPARATE ILLUSTRATION

<END>

WORK TOOLS

224-6226 THUMB AR–ROCK

S/N: FDP18400-UP
24 IN
FOR USE WITH STANDARD STICK
AN ATTACHMENT

SMCS-6547 **i01920641**

NOTE	PART NUMBER	QTY	PART NAME 1 2 3 4 5 6 (PRODUCT LEVEL)	SEE PAGE
Y	**224-6236**	1	CYLINDER & LINES GP-THUMB	369
Y	**221-4260**	1	THUMB AR	712
	221-4284	1	TINE AS	

Y-SEPARATE ILLUSTRATION

<END>

224-6227 THUMB AR–ROCK

S/N: FDP18400-UP
24IN
FOR USE WITH COUPLER
AN ATTACHMENT

SMCS-6547 **i01920648**

NOTE	PART NUMBER	QTY	PART NAME 1 2 3 4 5 6 (PRODUCT LEVEL)	SEE PAGE
Y	**224-6236**	1	CYLINDER & LINES GP-THUMB	369
Y	**221-4260**	1	THUMB AR	712
	221-4285	1	TINE AS	

Y-SEPARATE ILLUSTRATION

<END>

224-6232 THUMB AR–HEAVY DUTY

S/N: FDP18400-UP
24IN
FOR USE WITH STIFF-LINK
AN ATTACHMENT

SMCS-6547 **i01920653**

NOTE	PART NUMBER	QTY	PART NAME 1 2 3 4 5 6 (PRODUCT LEVEL)	SEE PAGE
Y	**221-4276**	1	LINK GP-THUMB	582
Y	**221-4260**	1	THUMB AR	712
	221-4282	1	TINE AS	

Y-SEPARATE ILLUSTRATION

<END>

WORK TOOLS

224-6233 THUMB AR–HEAVY DUTY

S/N: FDP18400-UP
24IN
FOR USE WITH COUPLER/STIFF-LINK
AN ATTACHMENT

SMCS-6547 **i01920656**

NOTE	PART NUMBER	QTY	PART NAME 1 2 3 4 5 6 (PRODUCT LEVEL)	SEE PAGE
Y	**221-4276**	1	LINK GP-THUMB	582
Y	**221-4260**	1	THUMB AR	712
	221-4283	1	TINE AS	

Y-SEPARATE ILLUSTRATION

<END>

224-6234 THUMB AR–ROCK

S/N: FDP18400-UP
24IN
FOR USE WITH STIFF-LINK
AN ATTACHMENT

SMCS-6547 **i01920659**

NOTE	PART NUMBER	QTY	PART NAME 1 2 3 4 5 6 (PRODUCT LEVEL)	SEE PAGE
Y	**221-4276**	1	LINK GP-THUMB	582
Y	**221-4260**	1	THUMB AR	712
	221-4284	1	TINE AS	

Y-SEPARATE ILLUSTRATION

<END>

224-6235 THUMB AR–ROCK

S/N: FDP18400-UP
24IN
FOR USE WITH COUPLER/STIFF-LINK
AN ATTACHMENT

SMCS-6547 **i01920662**

NOTE	PART NUMBER	QTY	PART NAME 1 2 3 4 5 6 (PRODUCT LEVEL)	SEE PAGE
Y	**221-4276**	1	LINK GP-THUMB	582
Y	**221-4260**	1	THUMB AR	712
	221-4285	1	TINE AS	

Y-SEPARATE ILLUSTRATION

<END>

WORK TOOLS

221-4267 THUMB GP

S/N: FDP18400-UP
PART OF 221-4260 THUMB AR
AN ATTACHMENT

SMCS-6547 **i01923131**

NOTE	REF NO	GRAPHIC REF	PART NUMBER	QTY	PART NAME 1 2 3 4 5 6 (PRODUCT LEVEL)	SEE PAGE
	1	1	**221-4263**	1	THUMB AS	
	2	1	**3B-8489**	2	FITTING-GREASE	
	3	1	**8T-4123**	8	WASHER-PLATED (22X35X3.5MM THK)	
M	4	1	**8T-4131**	4	NUT (M20X2.5 THD)	
M	5	1	**8T-4187**	4	BOLT (M20X2.5X80MM)	

M-METRIC PART

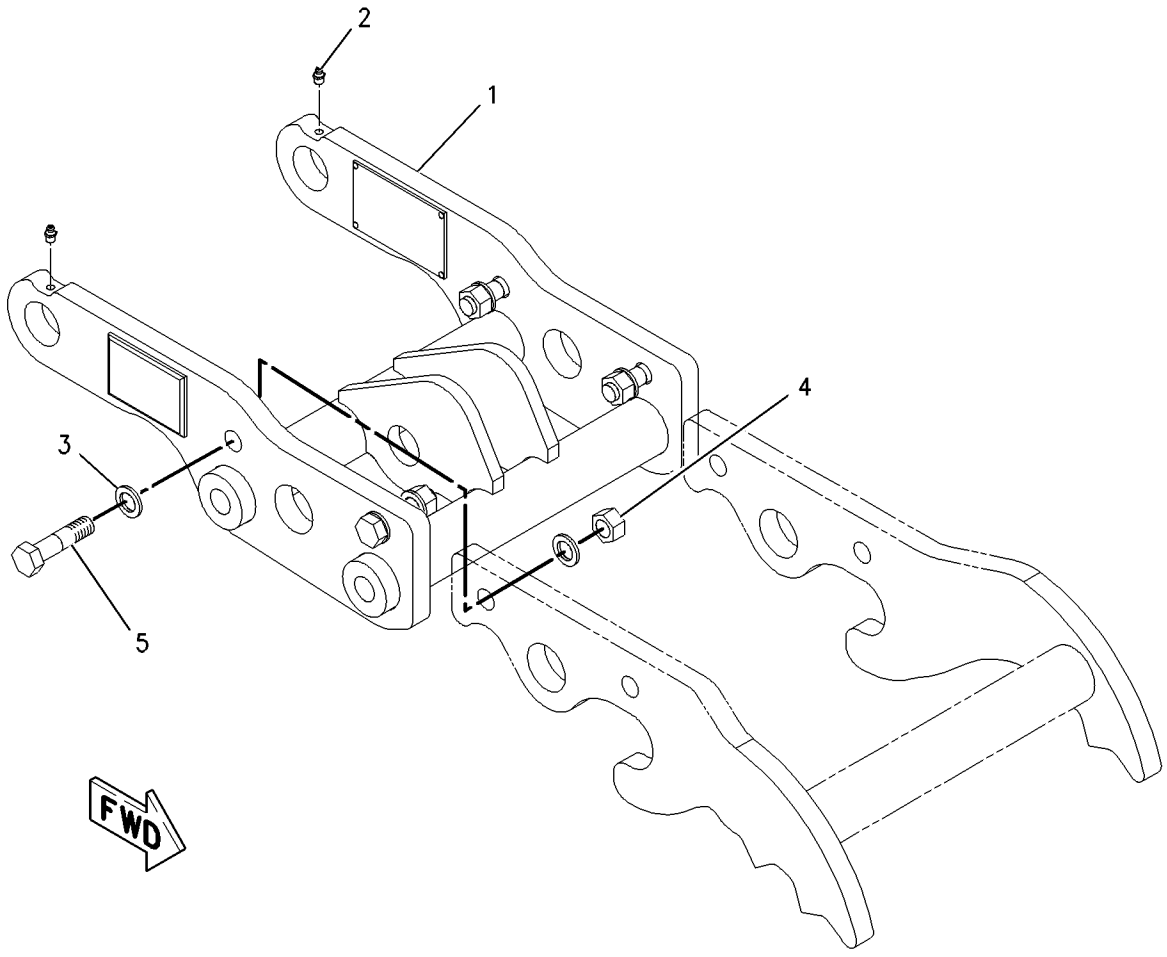

GRAPHIC #1 **<END>** g01003468

9R-5866 TOOTH GP-UNI

S/N: FDP18400-UP
PART OF 190-1056, 190-1057, 190-1058 BUCKET GP-GENERAL PURPOSE
FOR USE WITH LOADER BUCKETS
AN ATTACHMENT

SMCS-6822 **i01789917**

NOTE	REF NO	GRAPHIC REF	PART NUMBER	QTY	PART NAME 1 2 3 4 5 6 (PRODUCT LEVEL)	SEE PAGE
	1	1	**135-8203**	8	TOOTH-UNI	
	2	1	**4F-3657**	16	BOLT-PLOW (5/8-11X2.75 IN)	
	3	1	**4K-0367**	16	NUT-FULL (5/8-11 THD)	

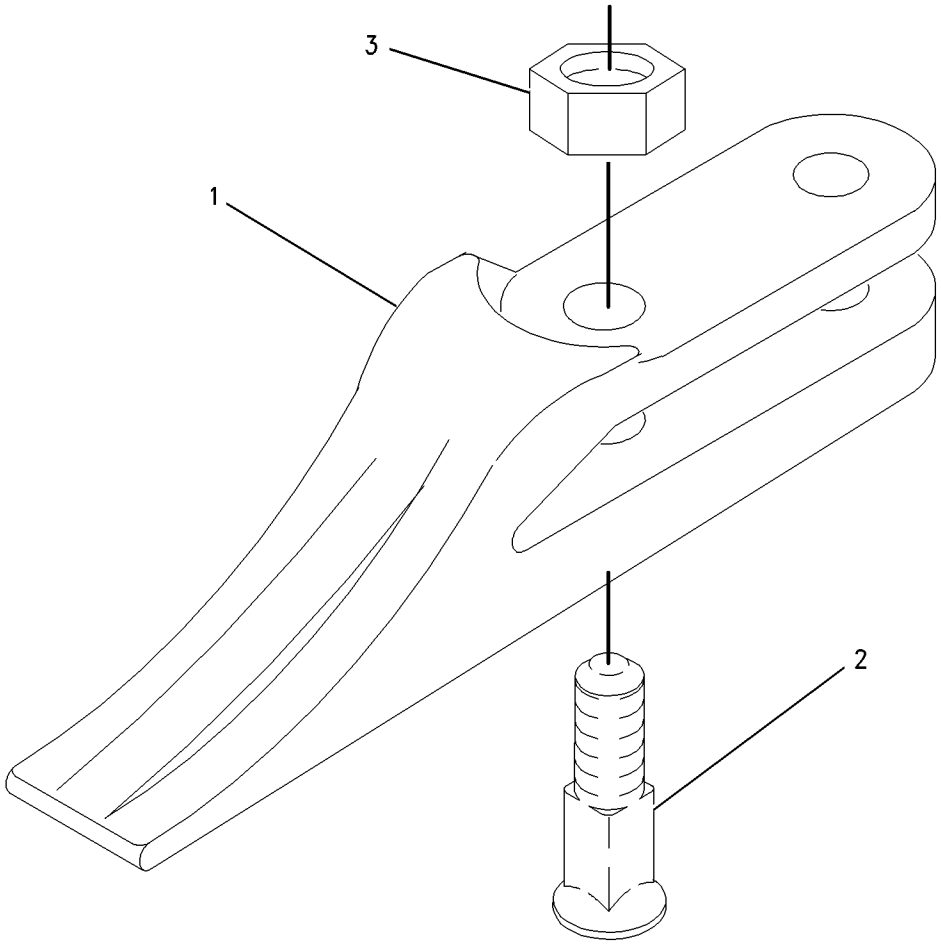

GRAPHIC #1 **<END>** g00915958

OPERATOR STATION

186-6190 ACCUMULATOR GP-REFRIGERANT–CHARGED

S/N: FDP18400-UP

PART OF 234-2617 LINES GP-HEATER & AIR COND

AN ATTACHMENT

SMCS-7320 **i02018341**

NOTE	PART NUMBER	QTY	PART NAME 1 2 3 4 5 6 (PRODUCT LEVEL)	SEE PAGE
			(NO SERVICED PARTS)	

<END>

OPERATOR STATION

164-1032 AIR CONDITIONER & MOUNTING GP

S/N: FDP18400-UP

PART OF 202-5777, 244-5402 AIR CONDITIONER AR

AN ATTACHMENT

SMCS-7320 **i01946259**

NOTE	REF NO	GRAPHIC REF	PART NUMBER	QTY	PART NAME 1 2 3 4 5 6 (PRODUCT LEVEL)	SEE PAGE
E	1	1	**6V-6813**		HOSE (40CM)	
	2	1	**6L-4725**	2	CLAMP-HOSE	
	3	1	**8Y-5737**	1	CLAMP	
C	4	1	**8Y-6967**	1	LOUVER AS	
	5	1	**9M-7959**	1	CLAMP (HOSE)	
	6	1	**9R-9901**	5	FASTENER (CLIP)	
	7	1	**110-6109**	1	KNOB-CONTROL	
	8	1	**130-4832**	2	SCREW (8-18X.39 IN)	
	9	1	**164-1042**	1	DUCT-OUTLET	
	10	1	**164-1196**	1	CABLE AS	
		1	**143-8874**	1	BOOT	
Y	11	1	**170-0075**	1	AIR CONDITIONER GP	723
	12	1	**184-6560**	1	BRACKET	
	13	1	**184-6561**	1	HOSE-AIR	
	14	1	**184-6564**	1	GASKET	
	15	1	**184-6567**	1	GASKET	
	16	1	**184-6572**	1	INSULATION	
	17	1	**184-6573**	1	INSULATION	
	18	1	**184-6574**	1	INSULATION	
	19	1	**190-5132**	1	FILM-CONTROL (AIR CONDITIONER)	
	20	1	**194-5622**	1	VALVE AS (WATER)	
	20A	1	**6V-6717**	1	SCREW-WASHER HEAD (8-32X.375 IN)	
		1	**124-0312**	2	SCREW-PAN HEAD (8-16X.32 IN)	
	21	1	**206-7512**	1	COVER	
	22	1	**206-7513**	2	BRACKET	
	23	1	**206-7514**	1	FILTER (AIR CONDITIONER)	
C	24	1	**228-0297**	1	PLATE AS	
C	25	1	**228-0298**	1	DUCT-AIR	
C	26	1	**228-0560**	1	SEAL	
C	27	1	**228-4284**	1	AIR DUCT GP	
		1	**104-2091**	8	SCREW-FLAT HEAD (6-20X0.5 IN)	
		1	**164-8473**	2	LOUVER AS	
		1	**228-3178**	1	DUCT-AIR	
	28	1	**2H-3920**	1	LOCKWASHER	
C	29	1	**5P-4115**		WASHER-HARD (7.2X19X2MM THK)	
CM	30	1	**9X-2042**	3	SCREW-TRUSS HEAD (M6X1X12MM)	
M	31	1	**9X-2044**	2	SCREW-TRUSS HEAD (M6X1X16MM)	
M	32	1	**9X-2045**	2	SCREW-TRUSS HEAD (M6X1X20MM)	
E	33	1	**5P-3915**		HOSE (30CM)	
	34	1	**170-7272**	1	FILTER-AIR (AIR CONDITIONER)	

C-CHANGE FROM PREVIOUS TYPE
E-ORDER BY THE CENTIMETER
M-METRIC PART
Y-SEPARATE ILLUSTRATION

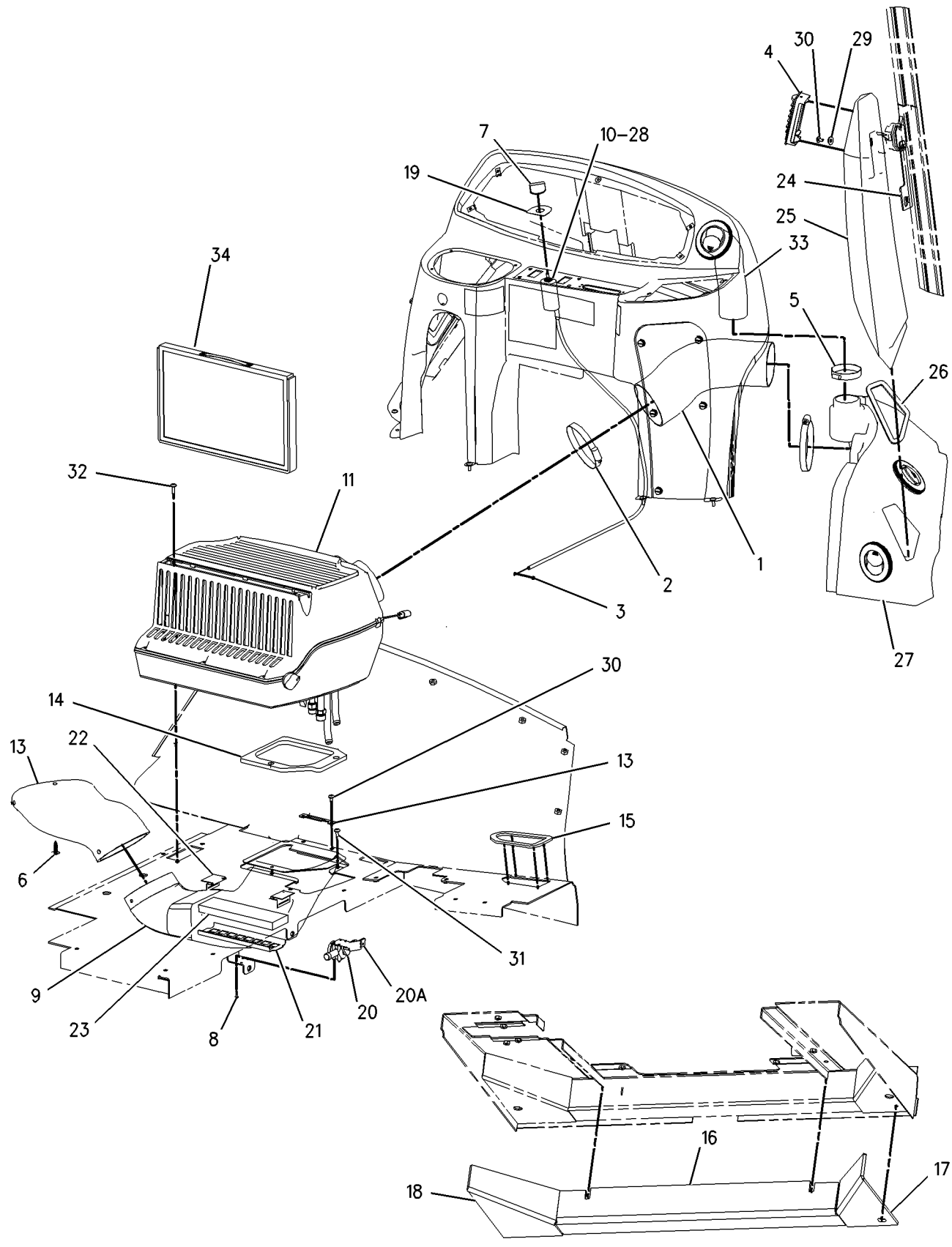

GRAPHIC #1 **<END>** g00952378

OPERATOR STATION

236-6966 AIR CONDITIONER & MOUNTING GP

S/N: FDP18400-UP

PART OF 202-5777 AIR CONDITIONER AR, 239-5566, 239-5568 CAB AR

AN ATTACHMENT

SMCS-7320 **i01980967**

NOTE	REF NO	GRAPHIC REF	PART NUMBER	QTY	PART NAME 1 2 3 4 5 6 (PRODUCT LEVEL)	SEE PAGE
E	1	1	**6V-6813**		HOSE (40CM)	
	2	1	**6L-4725**	2	CLAMP-HOSE	
	3	1	**8Y-5737**	1	CLAMP	
	4	1	**8Y-6967**	1	LOUVER AS	
	5	1	**9M-7959**	1	CLAMP (HOSE)	
	6	1	**9P-6571**	2	PLUG	
	7	1	**110-6109**	1	KNOB-CONTROL	
	8	1	**130-4832**	2	SCREW (8-18X.39 IN)	
	9	1	**164-1042**	1	DUCT-OUTLET	
	10	1	**164-1196**	1	CABLE AS	
		1	**143-8874**	1	BOOT	
Y	11	1	**170-0075**	1	AIR CONDITIONER GP	723
	12	1	**184-6560**	1	BRACKET	
	13	1	**184-6561**	1	HOSE-AIR	
	14	1	**184-6564**	1	GASKET	
	15	1	**190-5132**	1	FILM-CONTROL (AIR CONDITIONER)	
	16	1	**194-5622**	1	VALVE AS (WATER)	
		1	**6V-6717**	1	SCREW-WASHER HEAD (8-32X.375 IN)	
		1	**124-0312**	2	SCREW-PAN HEAD (8-16X.32 IN)	
	17	1	**206-7512**	1	COVER	
	18	1	**206-7513**	2	BRACKET	
	19	1	**206-7514**	1	FILTER (AIR CONDITIONER)	
	20	1	**228-0297**	1	PLATE AS	
M		1	**6V-9632**	1	NUT-WELD (M6X1 THD)	
	21	1	**228-0298**	1	DUCT-AIR	
	22	1	**228-0560**	1	SEAL	
	23	1	**232-4666**	1	DUCT-AIR	
	24	1	**232-4874**	1	DUCT GP-AIR	
		1	**164-8473**	2	LOUVER AS	
		1	**104-2091**	8	SCREW-FLAT HEAD (6-20X0.5 IN)	
	25	1	**236-6985**	1	GASKET	
	26	1	**2H-3920**	1	LOCKWASHER	
	27	1	**5P-4115**	1	WASHER-HARD (7.2X19X2MM THK)	
	28	1	**9R-9901**	5	FASTENER (CLIP)	
	29	1	**9X-2038**	2	WASHER (7X19X2MM THK)	
M	30	1	**9X-2042**	3	SCREW-TRUSS HEAD (M6X1X12MM)	
M	31	1	**9X-2044**	2	SCREW-TRUSS HEAD (M6X1X16MM)	
M	32	1	**9X-2045**	4	SCREW-TRUSS HEAD (M6X1X20MM)	
E	33	1	**5P-3915**		HOSE (30CM)	

E-ORDER BY THE CENTIMETER
M-METRIC PART
Y-SEPARATE ILLUSTRATION

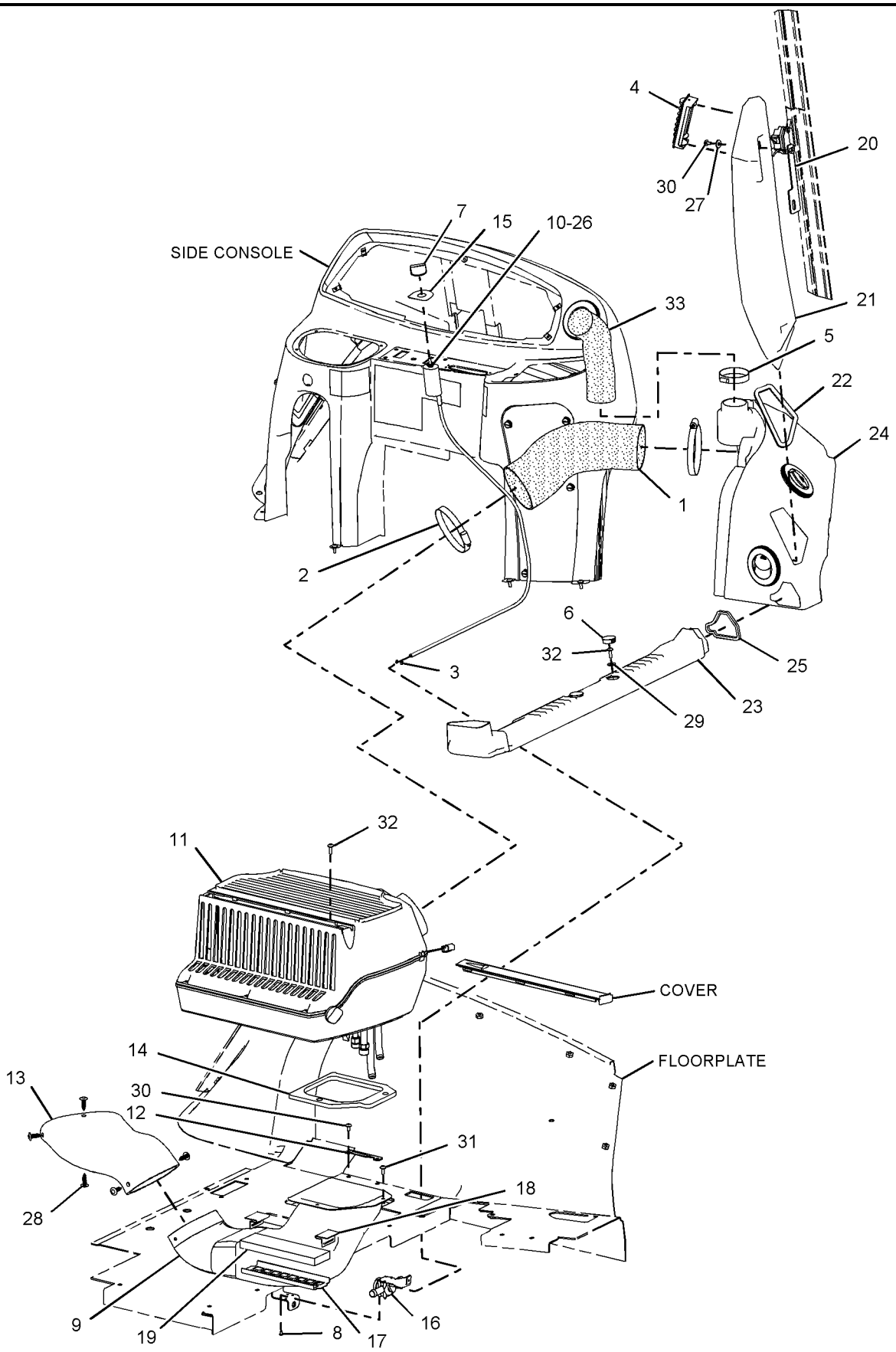

GRAPHIC #1 **<END>** g01027732

OPERATOR STATION

202-5777 AIR CONDITIONER AR

S/N: FDP18400-UP
HEATER
CANNOT BE USED WITH 424D
AN ATTACHMENT

SMCS-7320 **i02014785**

NOTE	PART NUMBER	QTY	PART NAME 1 2 3 4 5 6 (PRODUCT LEVEL)	SEE PAGE
Y	*236-6966*	1	AIR CONDITIONER & MOUNTING GP	720
Y	*202-5746*	1	COMPRESSOR GP-REFRIGERANT	757
Y	*144-2222*	1	CONDENSER & MTG GP-REFRIGERANT	760
Y	*236-6938*	1	CONSOLE GP-SIDE (LH)	773
Y	*198-9723*	1	FITTING GP-HEATER & AIR COND	58
Y	*236-6967*	1	FLOOR MAT GP	793
Y	*164-1033*	1	LINES GP-HEATER & AIR COND	805
Y	*202-5797*	1	WIRING GP-AIR CONDITIONER	138

Y-SEPARATE ILLUSTRATION

<END>

244-5402 AIR CONDITIONER AR

S/N: FDP18400-UP
AN ATTACHMENT

SMCS-7320 **i02009210**

NOTE	PART NUMBER	QTY	PART NAME 1 2 3 4 5 6 (PRODUCT LEVEL)	SEE PAGE
Y	*164-1032*	1	AIR CONDITIONER & MOUNTING GP	718
Y	*202-5746*	1	COMPRESSOR GP-REFRIGERANT	757
Y	*144-2222*	1	CONDENSER & MTG GP-REFRIGERANT	760
Y	*236-6938*	1	CONSOLE GP-SIDE (LH)	773
Y	*198-9723*	1	FITTING GP-HEATER & AIR COND	58
Y	*180-5760*	1	FLOOR MAT GP	790
Y	*164-1033*	1	LINES GP-HEATER & AIR COND	805
Y	*202-5797*	1	WIRING GP-AIR CONDITIONER	138

Y-SEPARATE ILLUSTRATION

<END>

OPERATOR STATION

170-0075 AIR CONDITIONER GP

S/N: FDP18400-UP
BASIC
PART OF 164-1032, 236-6966 AIR CONDITIONER & MOUNTING GP
AN ATTACHMENT

SMCS-7320 **i01944030**

NOTE	REF NO	GRAPHIC REF	PART NUMBER	QTY	PART NAME 1 2 3 4 5 6 (PRODUCT LEVEL)	SEE PAGE
	1	1	**119-9631**	1	SWITCH-THERMOSTAT (AIR CONDITIONER)	
	2	1	**164-4139**	1	COIL AS	
		1	**7X-2049**	1	TUBE AS-REFRIGERANT ORIFICE	
		1	**201-1635**	1	GASKET	
		1	**201-1636**	1	GASKET	
	3	1	**168-2313**	1	FAN AS	
		1	**7T-0093**	2	PIN-CONNECTOR	
	4	1	**170-7269**	1	COVER	
	5	1	**170-7270**	1	CASE AS	
		1	**6C-3680**	4	RIVET-POP	
M		1	**129-3178**	4	LOCKNUT (M6X1 THD)	
		1	**188-2711**	1	GUARD AS	
	6	1	**170-7271**	1	COVER	
	7	1	**170-7272**	1	FILTER-AIR (AIR CONDITIONER)	
	8	1	**170-7274**	1	HARNESS AS-HEATER & AIR COND	
		1	**155-2270**	1	KIT-CONNECTING PLUG (2 PIN)	
	9	1	**170-7281**	1	GASKET	
	10	1	**170-7282**	1	GASKET	
	11	1	**185-4015**	4	CLIP	
	12	1	**188-2706**	2	GASKET	
	13	1	**188-2708**	1	GASKET	
	14	1	**188-2709**	1	GASKET	
	15	1	**188-2710**	1	GASKET	
	16	1	**188-2712**	2	FITTING	
	17	1	**191-6034**	1	GROMMET	
	18	1	**199-3729**	1	DOOR AS	
		1	**191-6033**	1	CONTROL AS	
		1	**191-6035**	1	RETAINER	
		1	**201-1634**	1	LINK	
	19	1	**204-9921**	1	RESISTOR AS	
	20	1	**206-7398**	1	KNOB-CONTROL	
	21	1	**213-9270**	1	FILM (AIR RECIRCULATION)	
	22	1	**2S-3745**	6	SCREW-TAPPING (10-16X.5 IN)	
	23	1	**5P-7921**	3	SCREW-WASHER HEAD (1/4-20X3/4 IN)	
	24	1	**6V-6717**	2	SCREW-WASHER HEAD (8-32X.375 IN)	
M	25	1	**6V-7357**	4	BOLT (M6X1.0X25MM)	
	26	1	**8T-4205**	4	WASHER-HARD (7.2X14.5X2MM THK)	
D	27	1	**5P-6011**		TUBE (0.0381M)	

D-ORDER BY THE METER
M-METRIC PART

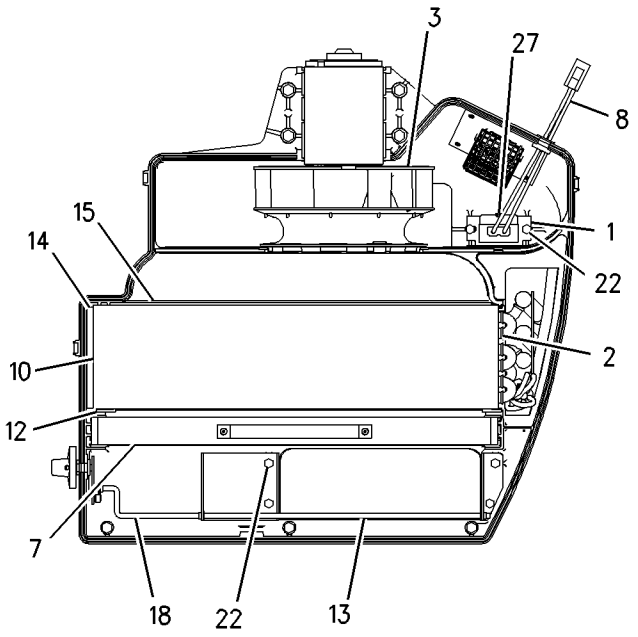

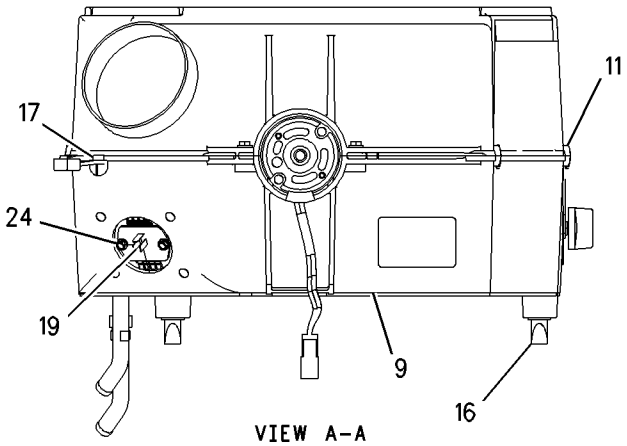

VIEW A-A

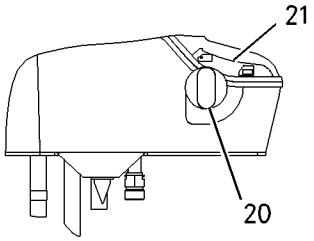

VIEW D-D

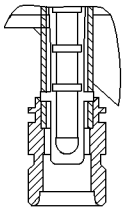

VIEW OF AREA C

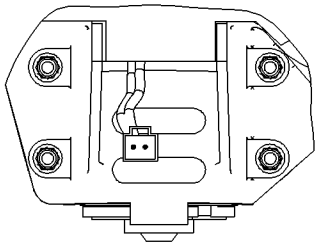

VIEW B-B

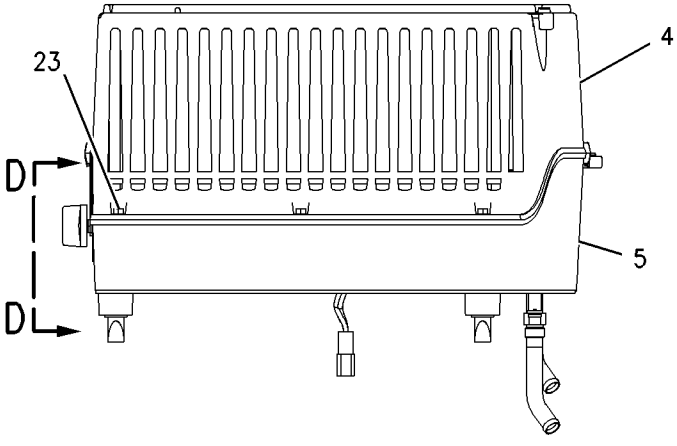

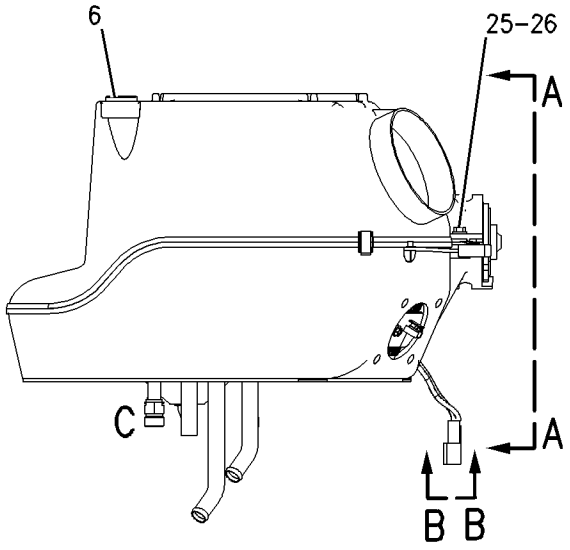

GRAPHIC #1 **<END>** g00952723

OPERATOR STATION

8Y-5904 ARMREST GP

S/N: FDP18400-UP
PART OF 164-1209, 164-1210, 164-1213 SEAT GP
AN ATTACHMENT

SMCS-7307, 7312 **i01683504**

NOTE	REF NO	GRAPHIC REF	PART NUMBER	QTY	PART NAME 1 2 3 4 5 6 (PRODUCT LEVEL)	SEE PAGE
	1	1	**8Y-5906**	1	BASE-ARMREST	
L	2	1	**8S-7803**	1	RING-RETAINING	
J	3	1	**6V-2687**	4	SCREW-PAN HEAD	
L	4	1	**8T-8641**	1	WASHER (M9.8X16.0X0.8MM THK)	
L	5	1	**3E-4312**	1	NUT-SQUARE (3/8-16 THD)	
					AVAILABLE REPAIR KIT(S):	
J			**8Y-5988**	1	KIT-CUSHION (ARMREST)	
					(INCLUDES CUSHION AS & SCREWS)	
L			**8Y-6028**	1	KIT-ADJUSTER (ARMREST)	
					(INCLUDES KNOB AS, NUT, WASHER, RING & SPRING)	

J-KIT MARKED J INCLUDES PART MARKED J
L-KIT MARKED L INCLUDES PART(S) MARKED L

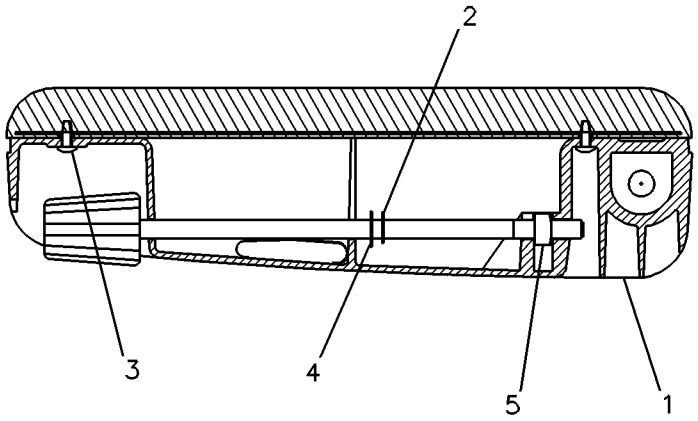

GRAPHIC #1 **<END>** g00083048

OPERATOR STATION

184-9737 CAB AR

S/N: FDP18400-UP
STANDARD, PILOT CONTROLS
AN ATTACHMENT

SMCS-7301, 7325, 7335 **i01979503**

NOTE	PART NUMBER	QTY	PART NAME 1 2 3 4 5 6 (PRODUCT LEVEL)	SEE PAGE
Y	**180-7250**	1	CAB GP	740
Y	*185-3524*	1	CONSOLE GP-OPERATOR	765
Y	*186-0252*	1	COVER GP-FIREWALL (LOWER)	778
Y	*164-1148*	1	FENDER GP-REAR	317
Y	*184-7900*	1	INDICATOR GP-AIR FILTER CHANGE	80
Y	*164-1155*	1	MIRROR GP-REAR VIEW	810
Y	*180-5770*	1	SEAT GP-SUSPENSION	835
Y	*7E-4636*	1	SEPARATOR GP-WATER	98
Y	*164-1165*	1	SUPPRESSION GP-SOUND	836
Y	*164-1370*	1	TRIM GP-CAB	842
Y	*167-8187*	1	WASHER GP-WINDOW	844
Y	*174-2024*	1	WIPER GP-WINDOW	858
Y	*185-8801*	1	WIRING GP-CAB	150
Y	*202-5810*	1	WIRING GP-CONSOLE	157
Y	*190-7557*	1	WIRING GP-POWER RECEPTACLE	183
	110-0037	1	FILM (CATERPILLAR) (WINDSHIELD SUN VISOR)	
E	**3E-8211**		FILM-STRIPE (399CM)	

E-ORDER BY THE CENTIMETER
Y-SEPARATE ILLUSTRATION

<END>

OPERATOR STATION

184-9738 CAB AR

S/N: FDP18400-UP
DELUXE
AN ATTACHMENT

SMCS-7301, 7325, 7335 **i01979775**

NOTE	PART NUMBER	QTY	PART NAME 1 2 3 4 5 6 (PRODUCT LEVEL)	SEE PAGE
Y	**180-7250**	1	CAB GP	740
Y	*185-3524*	1	CONSOLE GP-OPERATOR	765
Y	*186-0252*	1	COVER GP-FIREWALL (LOWER)	778
Y	*164-1148*	1	FENDER GP-REAR	317
Y	*184-7901*	1	INDICATOR GP-AIR FILTER CHANGE	81
Y	*164-1155*	1	MIRROR GP-REAR VIEW	810
Y	*202-5724*	1	MOUNTING GP-INSTRUMENT PANEL	817
Y	*180-5772*	1	SEAT GP-SUSPENSION	835
Y	*186-0204*	1	SEPARATOR GP-WATER	100
Y	*164-1165*	1	SUPPRESSION GP-SOUND	836
Y	*164-1370*	1	TRIM GP-CAB	842
Y	*108-8251*	1	VISOR GP-CAB	843
Y	*167-8187*	1	WASHER GP-WINDOW	844
Y	*174-2024*	1	WIPER GP-WINDOW	858
Y	*185-8801*	1	WIRING GP-CAB	150
Y	*202-5811*	1	WIRING GP-CONSOLE	160
Y	*190-7557*	1	WIRING GP-POWER RECEPTACLE	183
	3E-8211		FILM-STRIPE (399CM)	
	110-0037	1	FILM (CATERPILLAR)	

Y-SEPARATE ILLUSTRATION

<END>

OPERATOR STATION

239-5565 CAB AR

S/N: FDP18400-UP

AN ATTACHMENT

SMCS-7301, 7325, 7335 **i01989978**

NOTE	PART NUMBER	QTY	PART NAME 1 2 3 4 5 6 (PRODUCT LEVEL)	SEE PAGE
Y	**180-7250**	1	CAB GP	740
Y	*200-2676*	1	COMPARTMENT GP-LITERATURE	755
Y	*185-3524*	1	CONSOLE GP-OPERATOR	765
Y	*164-1388*	1	CONSOLE GP-SIDE (LH)	768
Y	*186-0252*	1	COVER GP-FIREWALL (LOWER)	778
Y	*145-6713*	1	FAN GP-SUCTION	55
Y	*164-1148*	1	FENDER GP-REAR	317
	110-0037	1	FILM (CATERPILLAR)	
E	**3E-8211**		FILM-STRIPE (399CM)	
Y	*198-9723*	1	FITTING GP-HEATER & AIR COND	58
Y	*180-5761*	1	FLOOR MAT GP	791
Y	*164-1030*	1	HEATER & MTG GP-CAB	795
Y	*238-9828*	1	INDICATOR GP-AIR FILTER CHANGE	82
Y	*236-6657*	1	LINES GP-HEATER	803
Y	*164-1155*	1	MIRROR GP-REAR VIEW	810
Y	*180-5770*	1	SEAT GP-SUSPENSION	835
Y	*164-1165*	1	SUPPRESSION GP-SOUND	836
Y	**239-1081**	1	TACHOMETER GP-ELECTRIC	841
Y	*164-1370*	1	TRIM GP-CAB	842
	5L-3308	1	V-BELT SET (INCLUDES 2 BELTS)	
Y	*167-8187*	1	WASHER GP-WINDOW	844
Y	*174-2024*	1	WIPER GP-WINDOW	858
Y	*185-8801*	1	WIRING GP-CAB	150
Y	*238-1166*	1	WIRING GP-CONSOLE	167
Y	*186-2731*	1	WIRING GP-HEATER	175
Y	*190-7557*	1	WIRING GP-POWER RECEPTACLE	183

E-ORDER BY THE CENTIMETER
Y-SEPARATE ILLUSTRATION

<END>

OPERATOR STATION

239-5566 CAB AR

S/N: FDP18400-UP

AN ATTACHMENT

SMCS-7301, 7325, 7335 **i01989974**

NOTE	PART NUMBER	QTY	PART NAME 1 2 3 4 5 6 (PRODUCT LEVEL)	SEE PAGE
Y	*236-6966*	1	AIR CONDITIONER & MOUNTING GP	720
Y	**180-7250**	1	CAB GP	740
Y	*200-2676*	1	COMPARTMENT GP-LITERATURE	755
Y	*234-8601*	1	COMPRESSOR GP-REFRIGERANT	759
Y	*144-2222*	1	CONDENSER & MTG GP-REFRIGERANT	760
Y	*185-3524*	1	CONSOLE GP-OPERATOR	765
Y	*236-6938*	1	CONSOLE GP-SIDE	773
Y	*186-0252*	1	COVER GP-FIREWALL (LOWER)	778
Y	*147-1559*	1	FAN GP-SUCTION	56
Y	*164-1148*	1	FENDER GP-REAR	317
	110-0037	1	FILM (CATERPILLAR)	
E	**3E-8211**		FILM-STRIPE (399CM)	
Y	*198-9723*	1	FITTING GP-HEATER & AIR COND	58
Y	*236-6967*	1	FLOOR MAT GP	793
Y	*238-9828*	1	INDICATOR GP-AIR FILTER CHANGE	82
Y	*234-2617*	1	LINES GP-HEATER & AIR COND	808
Y	*164-1155*	1	MIRROR GP-REAR VIEW	810
Y	*180-5770*	1	SEAT GP-SUSPENSION	835
Y	*164-1165*	1	SUPPRESSION GP-SOUND	836
Y	**239-1080**	1	TACHOMETER GP-ELECTRIC	840
Y	*164-1370*	1	TRIM GP-CAB	842
	3N-1491	1	V-BELT SET (INCLUDES 2 BELTS)	
Y	*167-8187*	1	WASHER GP-WINDOW	844
Y	*174-2024*	1	WIPER GP-WINDOW	858
Y	*238-1811*	1	WIRING GP-AIR CONDITIONER	142
Y	*185-8801*	1	WIRING GP-CAB	150
Y	*238-1166*	1	WIRING GP-CONSOLE	167
Y	*190-7557*	1	WIRING GP-POWER RECEPTACLE	183

E-ORDER BY THE CENTIMETER
Y-SEPARATE ILLUSTRATION

<END>

OPERATOR STATION

239-5567 CAB AR

S/N: FDP18400-UP

AN ATTACHMENT

SMCS-7301, 7325, 7335 **i02007684**

NOTE	PART NUMBER	QTY	PART NAME 1 2 3 4 5 6 (PRODUCT LEVEL)	SEE PAGE
Y	**180-7250**	1	CAB GP	740
Y	*200-2676*	1	COMPARTMENT GP-LITERATURE	755
Y	*185-3524*	1	CONSOLE GP-OPERATOR	765
Y	*164-1388*	1	CONSOLE GP-SIDE (LH)	768
Y	*186-0252*	1	COVER GP-FIREWALL (LOWER)	778
Y	*145-6713*	1	FAN GP-SUCTION	55
Y	*164-1148*	1	FENDER GP-REAR	317
	110-0037	1	FILM (CATERPILLAR)	
E	**3E-8211**		FILM-STRIPE (399CM)	
Y	*198-9723*	1	FITTING GP-HEATER & AIR COND	58
Y	*180-5761*	1	FLOOR MAT GP	791
Y	*164-1030*	1	HEATER & MTG GP-CAB	795
Y	*236-6657*	1	LINES GP-HEATER	803
Y	*164-1155*	1	MIRROR GP-REAR VIEW	810
Y	*241-5686*	1	INDICATOR GP-AIR FILTER CHANGE	83
Y	*202-5724*	1	MOUNTING GP-INSTRUMENT PANEL	817
Y	*180-5772*	1	SEAT GP-SUSPENSION	835
Y	*164-1165*	1	SUPPRESSION GP-SOUND	836
Y	**239-1081**	1	TACHOMETER GP-ELECTRIC	841
Y	*164-1370*	1	TRIM GP-CAB	842
	5L-3308	1	V-BELT SET (INCLUDES 2 BELTS)	
Y	*108-8251*	1	VISOR GP-CAB	843
Y	*167-8187*	1	WASHER GP-WINDOW	844
Y	*174-2024*	1	WIPER GP-WINDOW	858
Y	*185-8801*	1	WIRING GP-CAB	150
Y	*238-1167*	1	WIRING GP-CONSOLE	169
Y	*186-2731*	1	WIRING GP-HEATER	175
Y	*190-7557*	1	WIRING GP-POWER RECEPTACLE	183

E-ORDER BY THE CENTIMETER
Y-SEPARATE ILLUSTRATION

<END>

OPERATOR STATION

239-5568 CAB AR

S/N: FDP18400-UP

AN ATTACHMENT

SMCS-7301, 7325, 7335 **i02007545**

NOTE	PART NUMBER	QTY	PART NAME 1 2 3 4 5 6 (PRODUCT LEVEL)	SEE PAGE
Y	*236-6966*	1	AIR CONDITIONER & MOUNTING GP	720
Y	**180-7250**	1	CAB GP	740
Y	*200-2676*	1	COMPARTMENT GP-LITERATURE	755
Y	*234-8601*	1	COMPRESSOR GP-REFRIGERANT	759
Y	*144-2222*	1	CONDENSER & MTG GP-REFRIGERANT	760
Y	*185-3524*	1	CONSOLE GP-OPERATOR	765
Y	*236-6938*	1	CONSOLE GP-SIDE (LH)	773
Y	*186-0252*	1	COVER GP-FIREWALL (LOWER)	778
Y	*147-1559*	1	FAN GP-SUCTION	56
Y	*164-1148*	1	FENDER GP-REAR	317
	110-0037	1	FILM (CATERPILLAR)	
E	**3E-8211**		FILM-STRIPE (399CM)	
Y	*198-9723*	1	FITTING GP-HEATER & AIR COND	58
Y	*236-6967*	1	FLOOR MAT GP	793
Y	*241-5686*	1	INDICATOR GP-AIR FILTER CHANGE	83
Y	*234-2617*	1	LINES GP-HEATER & AIR COND	808
Y	*164-1155*	1	MIRROR GP-REAR VIEW	810
Y	*202-5724*	1	MOUNTING GP-INSTRUMENT PANEL	817
Y	*180-5772*	1	SEAT GP-SUSPENSION	835
Y	*164-1165*	1	SUPPRESSION GP-SOUND	836
Y	**239-1080**	1	TACHOMETER GP-ELECTRIC	840
Y	*164-1370*	1	TRIM GP-CAB	842
	3N-1491	1	V-BELT SET (INCLUDES 2 BELTS)	
Y	*108-8251*	1	VISOR GP-CAB	843
Y	*167-8187*	1	WASHER GP-WINDOW	844
Y	*174-2024*	1	WIPER GP-WINDOW	858
Y	*238-1811*	1	WIRING GP-AIR CONDITIONER	142
Y	*185-8801*	1	WIRING GP-CAB	150
Y	*238-1167*	1	WIRING GP-CONSOLE	169
Y	*190-7557*	1	WIRING GP-POWER RECEPTACLE	183

E-ORDER BY THE CENTIMETER
Y-SEPARATE ILLUSTRATION

<END>

OPERATOR STATION

244-1944 CAB AR

S/N: FDP18400-UP

AN ATTACHMENT

SMCS-7301, 7325, 7335 **i02009227**

NOTE	PART NUMBER	QTY	PART NAME 1 2 3 4 5 6 (PRODUCT LEVEL)	SEE PAGE
Y	*164-1140*	1	CAB GP	738
Y	*200-2676*	1	COMPARTMENT GP-LITERATURE	755
Y	*185-3524*	1	CONSOLE GP-OPERATOR	765
Y	*186-0252*	1	COVER GP-FIREWALL (LOWER)	778
Y	*164-1148*	1	FENDER GP-REAR	317
	110-0037	1	FILM (CATERPILLAR)	
	3E-8211	1	FILM-STRIPE	
Y	*184-7901*	1	INDICATOR GP-AIR FILTER CHANGE	81
Y	*164-1155*	1	MIRROR GP-REAR VIEW	810
Y	*202-5724*	1	MOUNTING GP-INSTRUMENT PANEL	817
Y	*180-5772*	1	SEAT GP-SUSPENSION	835
Y	*186-0204*	1	SEPARATOR GP-WATER	100
Y	*164-1165*	1	SUPPRESSION GP-SOUND	836
Y	*164-1370*	1	TRIM GP-CAB	842
Y	*108-8251*	1	VISOR GP-CAB	843
Y	*167-8187*	1	WASHER GP-WINDOW	844
Y	*174-2024*	1	WIPER GP-WINDOW	858
Y	*185-8801*	1	WIRING GP-CAB	150
Y	*202-5811*	1	WIRING GP-CONSOLE	160
Y	*190-7557*	1	WIRING GP-POWER RECEPTACLE	183

Y-SEPARATE ILLUSTRATION

<END>

OPERATOR STATION

164-1150 CAB AS

S/N: FDP18400-UP
PART OF 164-1140 CAB GP
AN ATTACHMENT

SMCS-7301, 7325, 7335 **i01514622**

NOTE	REF NO	GRAPHIC REF	PART NUMBER	QTY	PART NAME 1 2 3 4 5 6 (PRODUCT LEVEL)	SEE PAGE
	1	1	**7T-1099**	1	LINK	
	2	1	**8Y-7311**	2	HINGE	
	3	1	**9R-2589**	1	BOSS	
	4	1	**113-5973**	6	HINGE	
Y	5	1	*164-1050*	1	CANOPY AS	749
M	6	1	**8T-4967**	2	STUD (M10X1.5X23MM)	

M-METRIC PART
Y-SEPARATE ILLUSTRATION

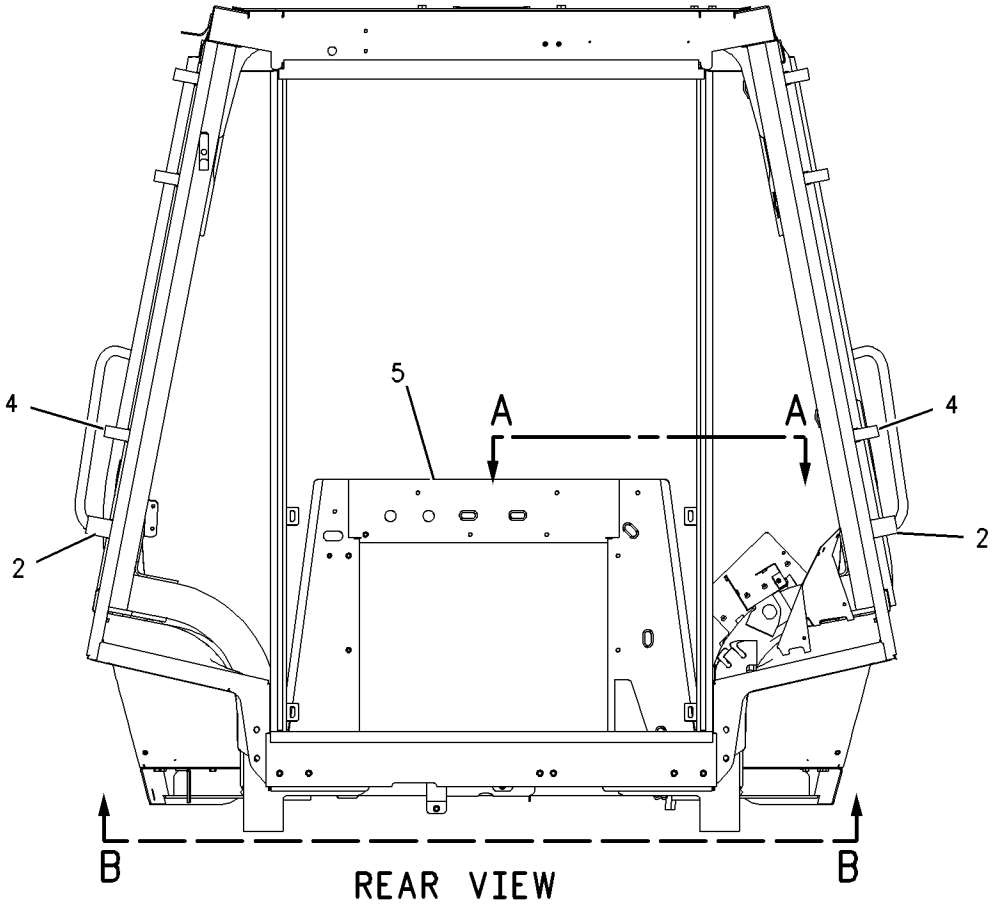

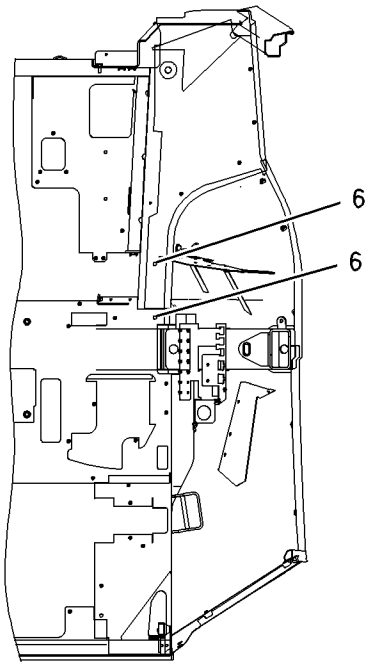

VIEW A-A

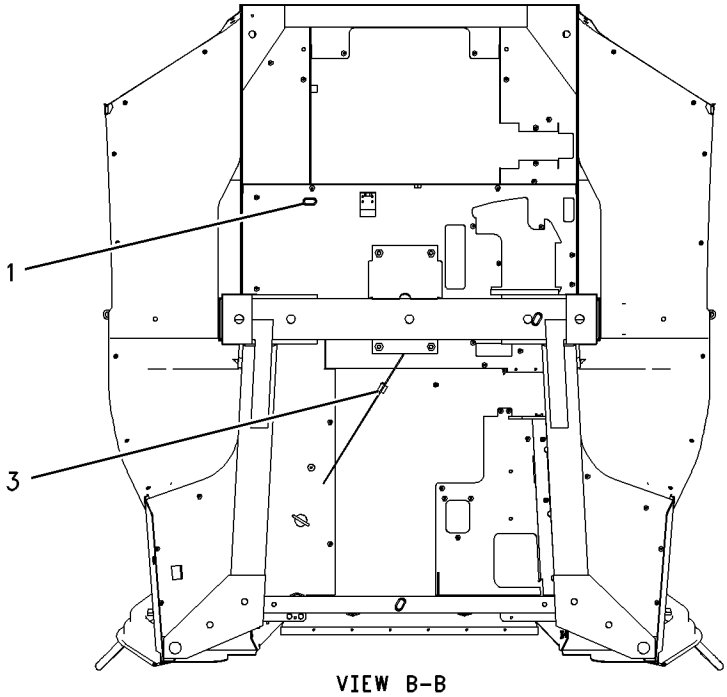

VIEW B-B

GRAPHIC #1 **<END>** g00785826

OPERATOR STATION

180-7230 CAB AS

S/N: FDP18400-UP
PILOT CONTROLS
PART OF 180-7250 CAB GP
AN ATTACHMENT

SMCS-7301, 7325, 7335 **i01514092**

NOTE	REF NO	GRAPHIC REF	PART NUMBER	QTY	PART NAME 1 2 3 4 5 6 (PRODUCT LEVEL)	SEE PAGE
	1	2	**7T-1099**	1	LINK	
	2	1	**8Y-7311**	2	HINGE	
	3	2	**9R-2589**	1	BOSS	
	4	1	**113-5973**	6	HINGE	
M	5	1	**8T-4967**	2	STUD (M10X1.5X23MM)	
Y	6	1	*164-1050*	1	CANOPY AS	749

M-METRIC PART
Y-SEPARATE ILLUSTRATION

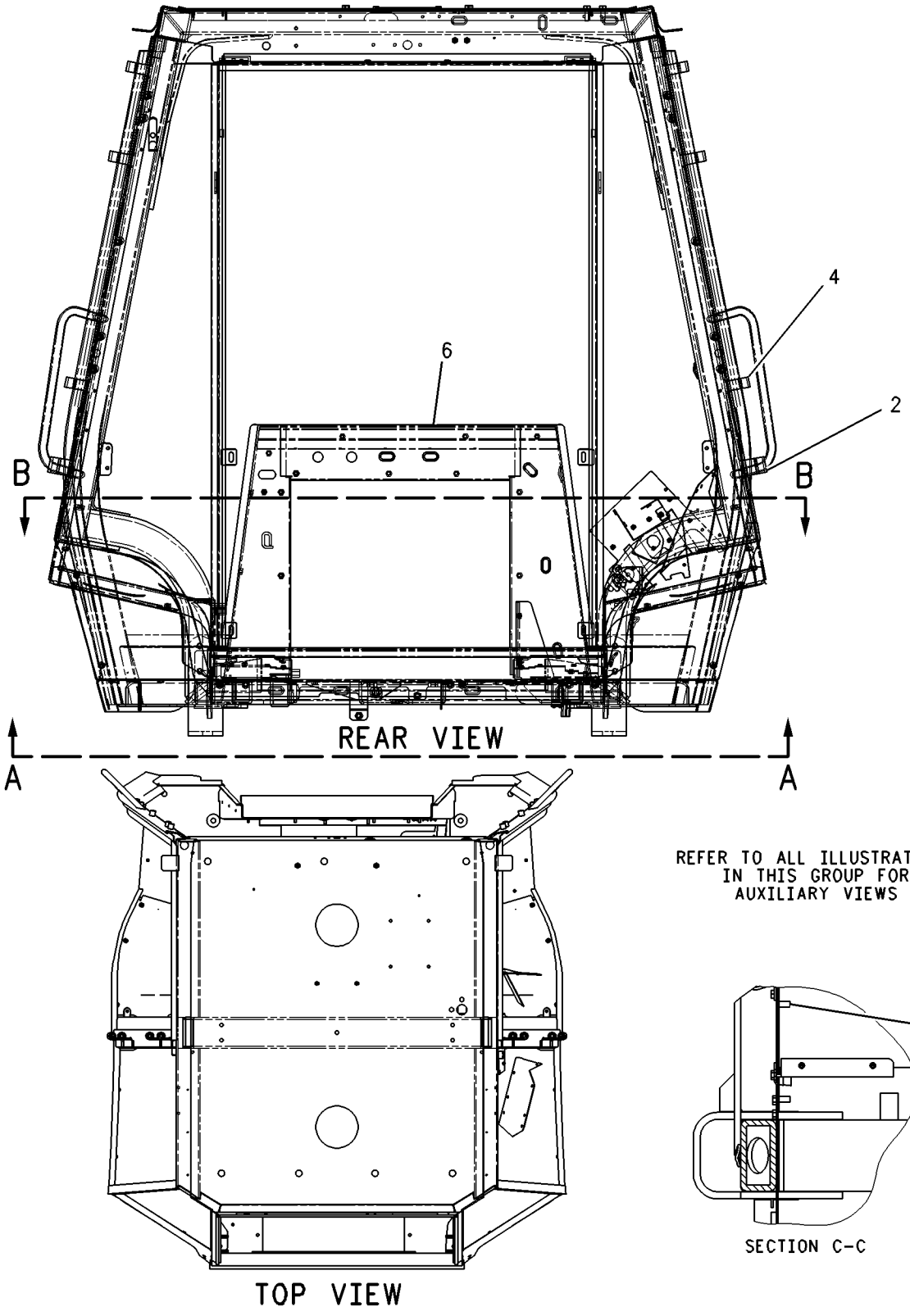

GRAPHIC #1 g00785681

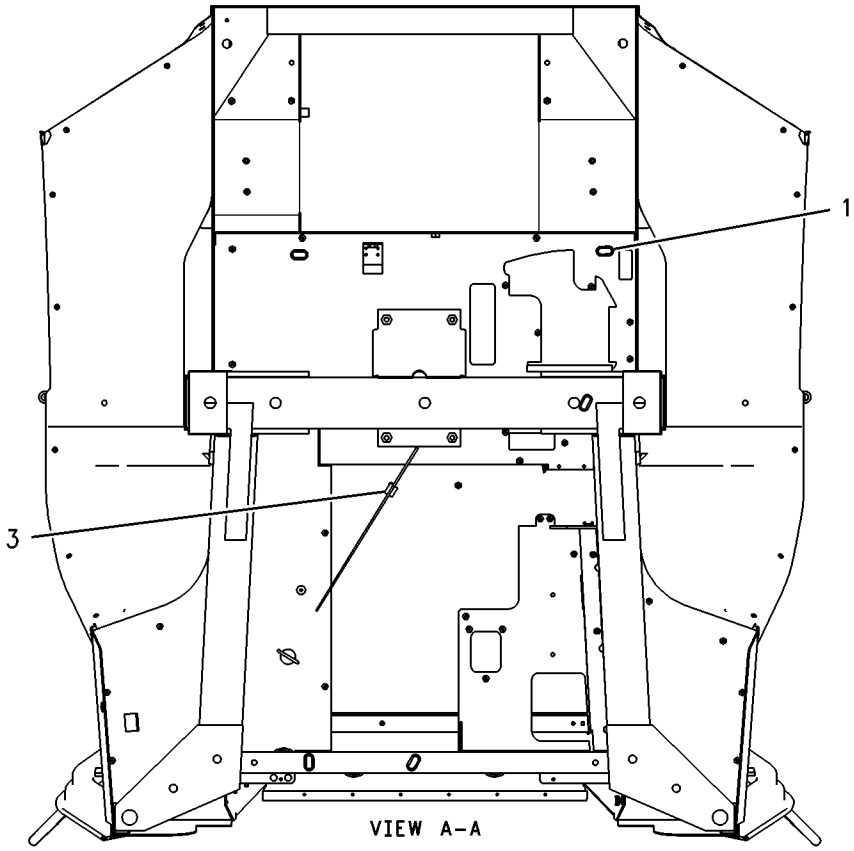

VIEW A-A

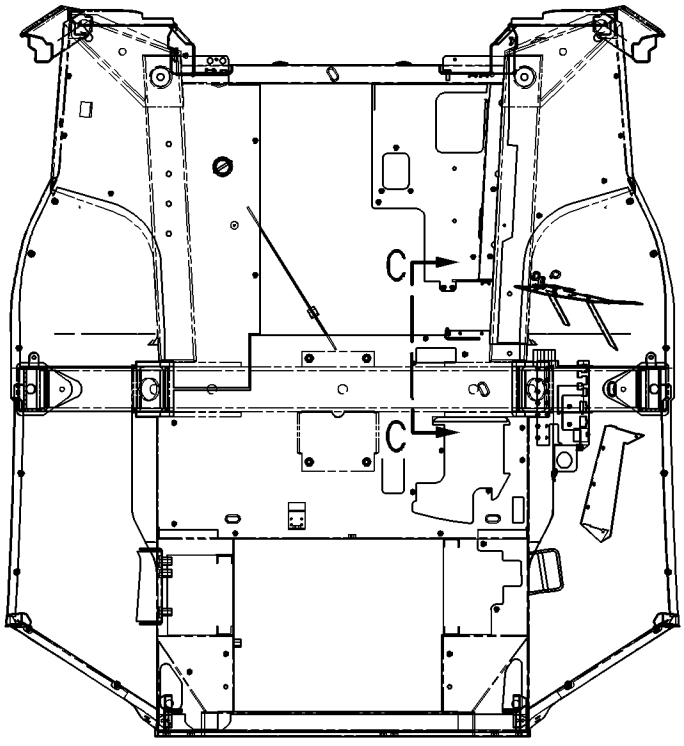

SECTION B-B

GRAPHIC #2 **<END>** g00766092

OPERATOR STATION

164-1140 CAB GP

S/N: FDP18400-UP
CENTER PIVOT
PART OF 244-1944 CAB AR
AN ATTACHMENT

SMCS-7301, 7325, 7335 **i01596472**

NOTE	REF NO	GRAPHIC REF	PART NUMBER	QTY	PART NAME 1 2 3 4 5 6 (PRODUCT LEVEL)	SEE PAGE
	1	1	**8S-7803**	8	RING-RETAINING	
	2	1	**8Y-7444**	2	PIN	
	3	1	**117-7414**	2	PIN	
	4	1	**129-5256**	12	BUSHING	
	5	1	**129-5257**	8	BUSHING	
	6	1	**134-3059**	1	GUARD-STRIKER	
	7	1	**134-3060**	1	PLATE	
	8	1	**134-3061**	1	PLATE	
	9	1	**134-3062**	2	STRIKER	
	10	1	**134-3503**	1	GUARD-STRIKER	
	11	1	**159-4945**	2	KEEPER-REAR (LH)	
	12	1	**159-4946**	2	KEEPER-REAR (RH)	
	13	1	**163-7939**	1	PLATE AS	
Y	14	1	*164-1059*	1	WINDOW GP-CAB (RH)	848
Y	15	1	*164-1060*	1	WINDOW GP-CAB (LH)	850
Y	16	1	**164-1061**	1	DOOR GP-RH	784
Y	17	1	*164-1062*	1	DOOR GP-LH	782
J	18	1	**164-1068**	1	GLASS-RH	
J	19	1	**164-1069**	1	GLASS-LH	
J	20	1	**164-1070**	1	GLASS (FRONT)	
J	21	1	**164-1071**	1	GLASS-RH	
J	22	1	**164-1072**	1	GLASS-LH	
Y	23	1	**164-1150**	1	CAB AS	733
Y	24	1	*164-1325*	1	WINDOW GP-CAB (REAR)	852
B	25	1	**177-4877**	2	SHIM	
	26	1	**108-4311**	2	SCREW-MACHINE	
M	27	1	**131-3987**	8	SCREW (M4X0.7X12MM)	
	28	1	**3S-2093**	5	STRAP-CABLE	
M	29	1	**5C-7261**	2	NUT (M8X1.25 THD)	
	30	1	**5P-4116**	11	WASHER-HARD (8.8X20.5X2MM THK)	
	31	1	**8T-4121**	4	WASHER-HARD (11X21X2.5MM THK)	
M	32	1	**8T-4137**	4	BOLT (M10X1.5X20MM)	
M	33	1	**8T-4189**	5	BOLT (M8X1.25X20MM)	
M	34	1	**8T-4200**	4	BOLT (M8X1.25X16MM)	
	35	1	**9R-5616**	4	PLUG	
E	36	1	**144-0195**	2	HOSE (410CM)	

B-USE AS REQUIRED
E-ORDER BY THE CENTIMETER
J-USE ADHESIVE AS REQUIRED
M-METRIC PART
Y-SEPARATE ILLUSTRATION

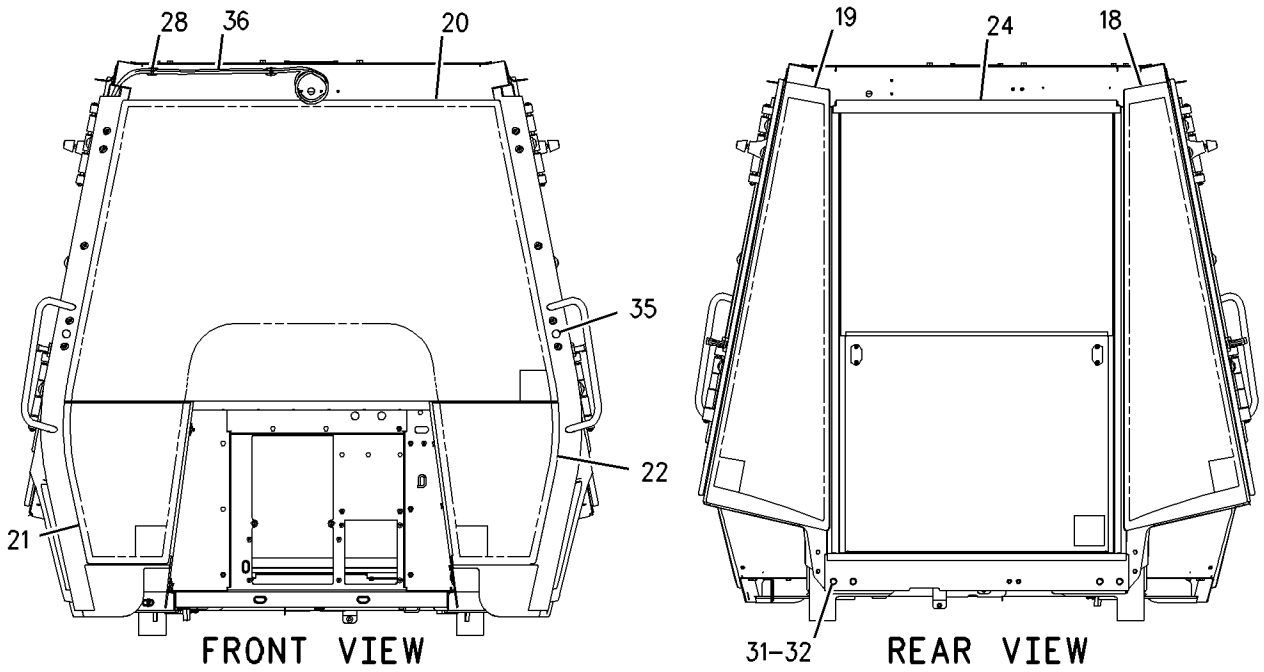

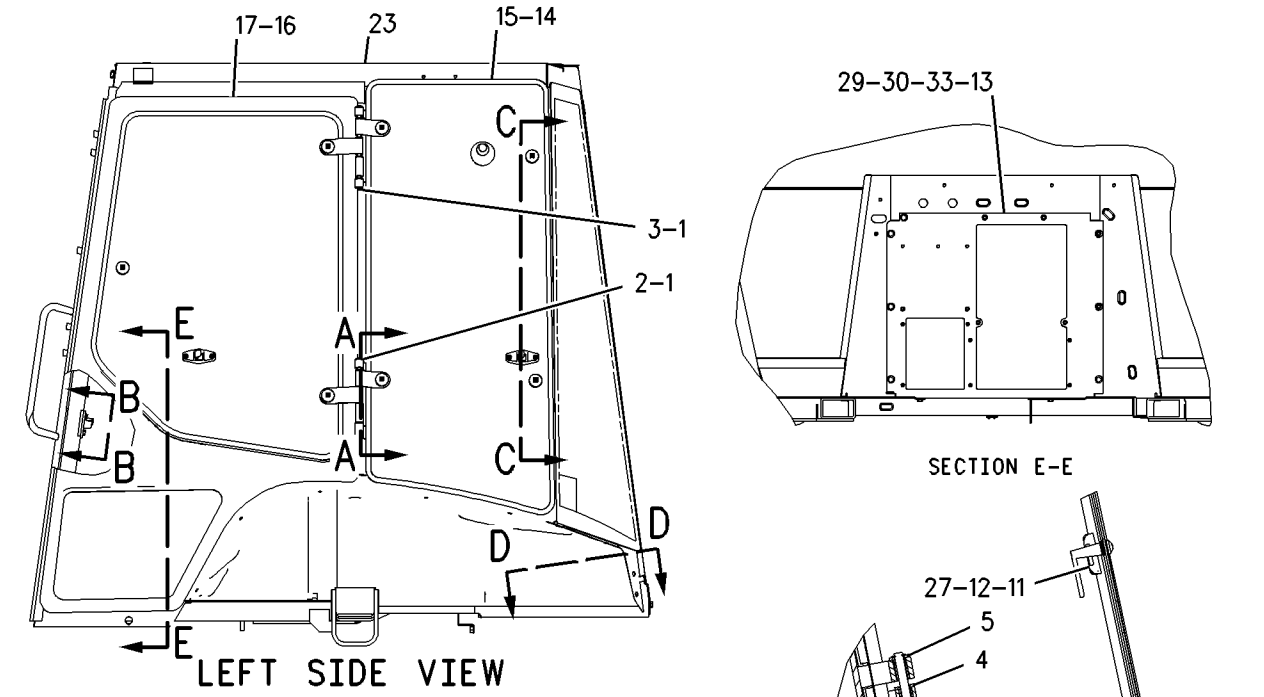

GRAPHIC #1 **<END>** g00827455

OPERATOR STATION

180-7250 CAB GP

S/N: FDP18400-UP
CENTER PIVOT
PART OF 184-9737, 184-9738, 239-5565, 239-5566, 239-5567, 239-5568 CAB AR
AN ATTACHMENT

SMCS-7301, 7325, 7335 **i01596203**

NOTE	REF NO	GRAPHIC REF	PART NUMBER	QTY	PART NAME 1 2 3 4 5 6 (PRODUCT LEVEL)	SEE PAGE
	1	1	**8S-7803**	8	RING-RETAINING	
	2	1	**8Y-7444**	2	PIN	
	3	1	**117-7414**	2	PIN	
	4	1	**129-5256**	12	BUSHING	
	5	1	**129-5257**	8	BUSHING	
	6	1	**134-3059**	1	GUARD-STRIKER	
	7	1	**134-3060**	1	PLATE	
	8	1	**134-3061**	1	PLATE	
	9	1	**134-3062**	2	STRIKER	
	10	1	**134-3503**	1	GUARD-STRIKER	
	11	1	**159-4945**	2	KEEPER-REAR (LH)	
	12	1	**159-4946**	2	KEEPER-REAR (RH)	
	13	1	**163-7939**	1	PLATE AS	
Y	14	1	*164-1059*	1	WINDOW GP-CAB (RH)	848
Y	15	1	*164-1060*	1	WINDOW GP-CAB (LH)	850
Y	16	1	**164-1061**	1	DOOR GP-RH	784
Y	17	1	*164-1062*	1	DOOR GP-LH	782
	18	1	**164-1068**	1	GLASS-RH	
	19	1	**164-1069**	1	GLASS-LH	
	20	1	**164-1070**	1	GLASS (FRONT)	
	21	1	**164-1071**	1	GLASS-RH	
	22	1	**164-1072**	1	GLASS-LH	
Y	23	1	*164-1325*	1	WINDOW GP-CAB (REAR)	852
B	24	1	**177-4877**	2	SHIM	
Y	25	1	**180-7230**	1	CAB AS	735
	26	1	**108-4311**	2	SCREW-MACHINE	
M	27	1	**131-3987**	8	SCREW (M4X0.7X12MM)	
	28	1	**3S-2093**	5	STRAP-CABLE	
M	29	1	**5C-7261**	2	NUT (M8X1.25 THD)	
	30	1	**5P-4116**	11	WASHER-HARD (8.8X20.5X2MM THK)	
	31	1	**8T-4121**	4	WASHER-HARD (11X21X2.5MM THK)	
M	32	1	**8T-4137**	4	BOLT (M10X1.5X20MM)	
M	33	1	**8T-4189**	5	BOLT (M8X1.25X20MM)	
M	34	1	**8T-4200**	4	BOLT (M8X1.25X16MM)	
	35	1	**9R-5616**	4	PLUG	
E	36	1	**144-0195**	2	HOSE (410CM)	

B-USE AS REQUIRED
E-ORDER BY THE CENTIMETER
M-METRIC PART
Y-SEPARATE ILLUSTRATION

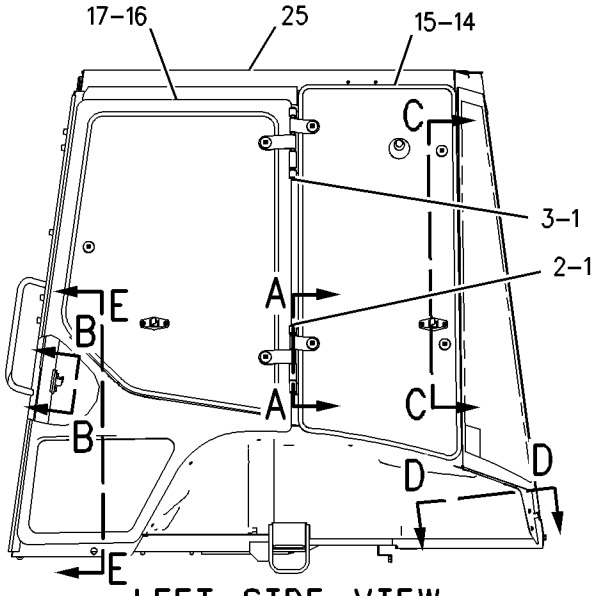

LEFT SIDE VIEW

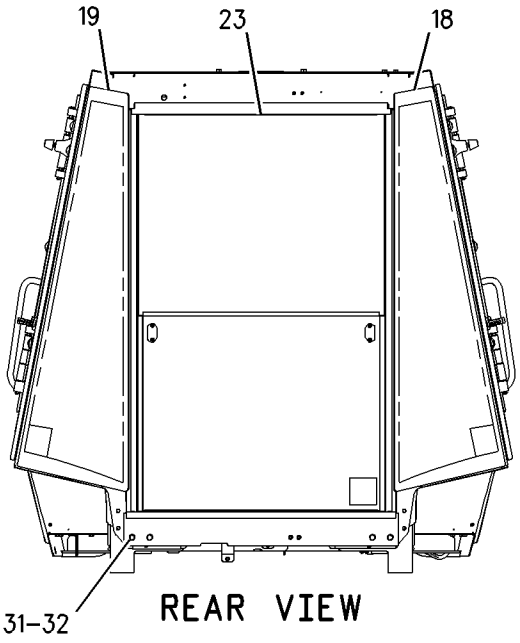

REAR VIEW

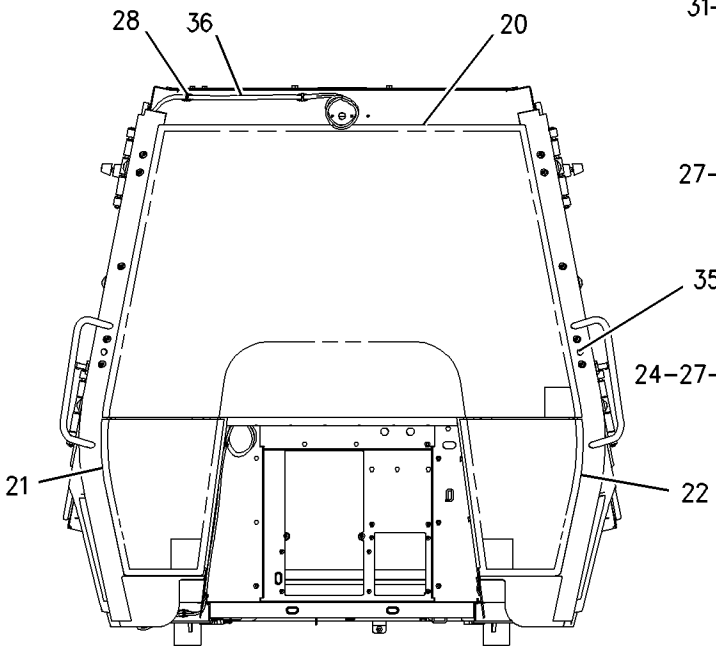

FRONT VIEW

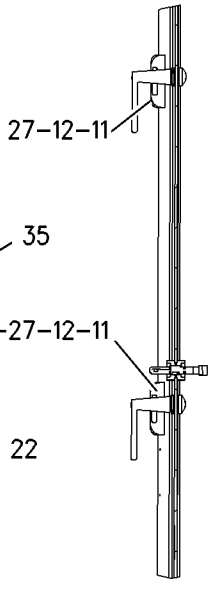

SECTION C-C

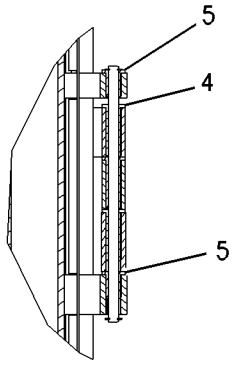

SECTION A-A

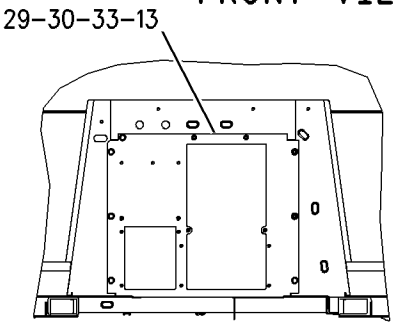

SECTION E-E

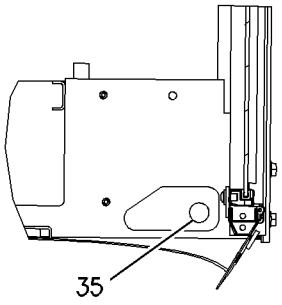

SECTION D-D

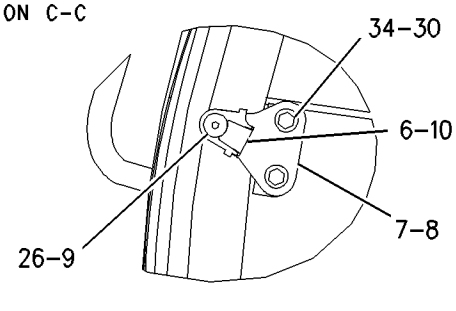

SECTION B-B

GRAPHIC #1 **<END>** g00827318

OPERATOR STATION

184-9736 CANOPY AR

S/N: FDP18400-UP

AN ATTACHMENT

SMCS-7302 **i01708213**

NOTE	PART NUMBER	QTY	PART NAME 1 2 3 4 5 6 (PRODUCT LEVEL)	SEE PAGE
Y	*180-7215*	1	CANOPY GP-OPEN ROPS	754
Y	*164-1389*	1	CONSOLE GP-OPERATOR	764
Y	*185-3530*	1	CONSOLE GP-SIDE	771
Y	*186-0252*	1	COVER GP-FIREWALL (LOWER)	778
Y	*198-0104*	1	COVER GP-FIREWALL (UPPER)	779
Y	**197-7564**	1	COVER GP-POST (RH)	780
Y	*164-1148*	1	FENDER GP-REAR	317
Y	*180-5766*	1	FLOOR MAT GP	792
Y	*184-7900*	1	INDICATOR GP-AIR FILTER CHANGE	80
Y	*164-1155*	1	MIRROR GP-REAR VIEW	810
Y	*180-5771*	1	SEAT GP-SUSPENSION	835
Y	*7E-4636*	1	SEPARATOR GP-WATER	98
Y	*164-1370*	1	TRIM GP-CAB	842
Y	*185-8802*	1	WIRING GP-CAB	152
Y	*202-5810*	1	WIRING GP-CONSOLE	157
Y	*190-7557*	1	WIRING GP-POWER RECEPTACLE	183
	203-4158	1	PLUG GP	
	9J-1874	1	PLUG	
	187-1644	2	PLUG	

Y-SEPARATE ILLUSTRATION

<END>

OPERATOR STATION

238-6697 CANOPY AR—MECHANICAL CONTROL

S/N: FDP18400-UP

AN ATTACHMENT

SMCS-7302 **i02021207**

NOTE	PART NUMBER	QTY	PART NAME 1 2 3 4 5 6 (PRODUCT LEVEL)	SEE PAGE
Y	*164-1350*	1	CANOPY GP-OPEN ROPS	753
Y	*200-2676*	1	COMPARTMENT GP-LITERATURE	755
Y	*247-0470*	1	CONSOLE GP-FRONT	763
Y	*185-3530*	1	CONSOLE GP-SIDE	771
Y	*186-0252*	1	COVER GP-FIREWALL (LOWER)	778
Y	*198-0104*	1	COVER GP-FIREWALL (UPPER)	779
Y	**197-7564**	1	COVER GP-POST (RH)	780
Y	*164-1148*	1	FENDER GP-REAR	317
Y	*180-5760*	1	FLOOR MAT GP	790
Y	*184-7900*	1	INDICATOR GP-AIR FILTER CHANGE	80
Y	*164-1155*	1	MIRROR GP-REAR VIEW	810
Y	*180-5771*	1	SEAT GP-SUSPENSION	835
Y	*7E-4636*	1	SEPARATOR GP-WATER	98
Y	*164-1370*	1	TRIM GP-CAB	842
Y	*185-8802*	1	WIRING GP-CAB	152
Y	*202-5810*	1	WIRING GP-CONSOLE	157
Y	*190-7557*	1	WIRING GP-POWER RECEPTACLE	183
	203-4158	1	PLUG GP	
	9J-1874	1	PLUG	
	187-1644	2	PLUG	

Y-SEPARATE ILLUSTRATION

<END>

OPERATOR STATION

239-5563 CANOPY AR

S/N: FDP18400-UP

AN ATTACHMENT

SMCS-7302 **i01990005**

NOTE	PART NUMBER	QTY	PART NAME 1 2 3 4 5 6 (PRODUCT LEVEL)	SEE PAGE
Y	*180-7215*	1	CANOPY GP-OPEN ROPS	754
Y	*200-2676*	1	COMPARTMENT GP-LITERATURE	755
Y	*164-1389*	1	CONSOLE GP-OPERATOR	764
Y	*185-3530*	1	CONSOLE GP-SIDE	771
Y	*186-0252*	1	COVER GP-FIREWALL (LOWER)	778
Y	*198-0104*	1	COVER GP-FIREWALL (UPPER)	779
Y	**197-7564**	1	COVER GP-POST (RH)	780
Y	*145-6713*	1	FAN GP-SUCTION	55
Y	*164-1148*	1	FENDER GP-REAR	317
Y	*180-5766*	1	FLOOR MAT GP	792
Y	*238-9828*	1	INDICATOR GP-AIR FILTER CHANGE	82
Y	*164-1155*	1	MIRROR GP-REAR VIEW	810
	203-4158	1	PLUG GP	
	9J-1874	1	PLUG	
	187-1644	2	PLUG	
Y	*180-5771*	1	SEAT GP-SUSPENSION	835
Y	**239-1081**	1	TACHOMETER GP-ELECTRIC	841
Y	*164-1370*	1	TRIM GP-CAB	842
	5L-3308	1	V-BELT SET (INCLUDES 2 BELTS)	
Y	*185-8802*	1	WIRING GP-CAB	152
Y	*238-1166*	1	WIRING GP-CONSOLE	167
Y	*190-7557*	1	WIRING GP-POWER RECEPTACLE	183

Y-SEPARATE ILLUSTRATION

<END>

OPERATOR STATION

239-5564 CANOPY AR

S/N: FDP18400-UP

AN ATTACHMENT

SMCS-7302 **i01989981**

NOTE	PART NUMBER	QTY	PART NAME 1 2 3 4 5 6 (PRODUCT LEVEL)	SEE PAGE
	110-7524	11	BUTTON	
Y	*180-7215*	1	CANOPY GP-OPEN ROPS	754
Y	*200-2676*	1	COMPARTMENT GP-LITERATURE	755
Y	*164-1389*	1	CONSOLE GP-OPERATOR	764
Y	*185-3530*	1	CONSOLE GP-SIDE	771
Y	*186-0252*	1	COVER GP-FIREWALL (LOWER)	778
Y	*198-0104*	1	COVER GP-FIREWALL (UPPER)	779
Y	**198-1289**	1	COVER GP-POST (RH)	781
Y	*145-6713*	1	FAN GP-SUCTION	55
Y	*164-1148*	1	FENDER GP-REAR	317
	110-0037	1	FILM (CATERPILLAR)	
Y	*180-5766*	1	FLOOR MAT GP	792
	164-1070	1	GLASS (FRONT)	
Y	*238-9828*	1	INDICATOR GP-AIR FILTER CHANGE	82
Y	*164-1155*	1	MIRROR GP-REAR VIEW	810
	203-4158	1	PLUG GP	
	9J-1874	1	PLUG	
	187-1644	2	PLUG	
Y	*180-5771*	1	SEAT GP-SUSPENSION	835
Y	**239-1081**	1	TACHOMETER GP-ELECTRIC	841
Y	*164-1370*	1	TRIM GP-CAB	842
	5L-3308	1	V-BELT SET (INCLUDES 2 BELTS)	
Y	*207-6052*	1	WASHER GP-WINDOW	846
Y	*207-6051*	1	WIPER GP-WINDOW	860
Y	*185-8802*	1	WIRING GP-CAB	152
Y	*207-6050*	1	WIRING GP-CAB	154
Y	*238-1166*	1	WIRING GP-CONSOLE	167

Y-SEPARATE ILLUSTRATION

<END>

OPERATOR STATION

164-1025 CANOPY AS

S/N: FDP18400-UP
PART OF 164-1350 CANOPY GP-OPEN ROPS
AN ATTACHMENT

SMCS-7302 **i01988388**

NOTE	REF NO	GRAPHIC REF	PART NUMBER	QTY	PART NAME 1 2 3 4 5 6 (PRODUCT LEVEL)	SEE PAGE
	1	1	**7T-1099**	26	LINK	
	2	1	**8Y-7292**	2	HANDHOLD (RH)	
	3	2	**9R-2589**	1	BOSS	
	4	1	**140-2959**	2	HANDHOLD (LH)	
	5	1	**5D-9629**	6	ROD	
M	6	2	**8T-4967**	2	STUD-WELD (M10X1.5X23MM OAL)	
	7	1	**164-1051**	2	FENDER AS-RH	
M		1	**8T-3612**	7	NUT-WELD (M8X1.25 THD)	
		1	*173-7661*	1	BRACKET AS	
M		1	**8T-5413**	2	STUD-WELD (M10X1.5X25MM OAL)	
		1	**205-7047**	10	INSERT-THREADED	
	8	1	**164-1052**	2	FENDER AS-LH	

M-METRIC PART

164-1025 CANOPY AS ***(contd.)*** **i01988388**

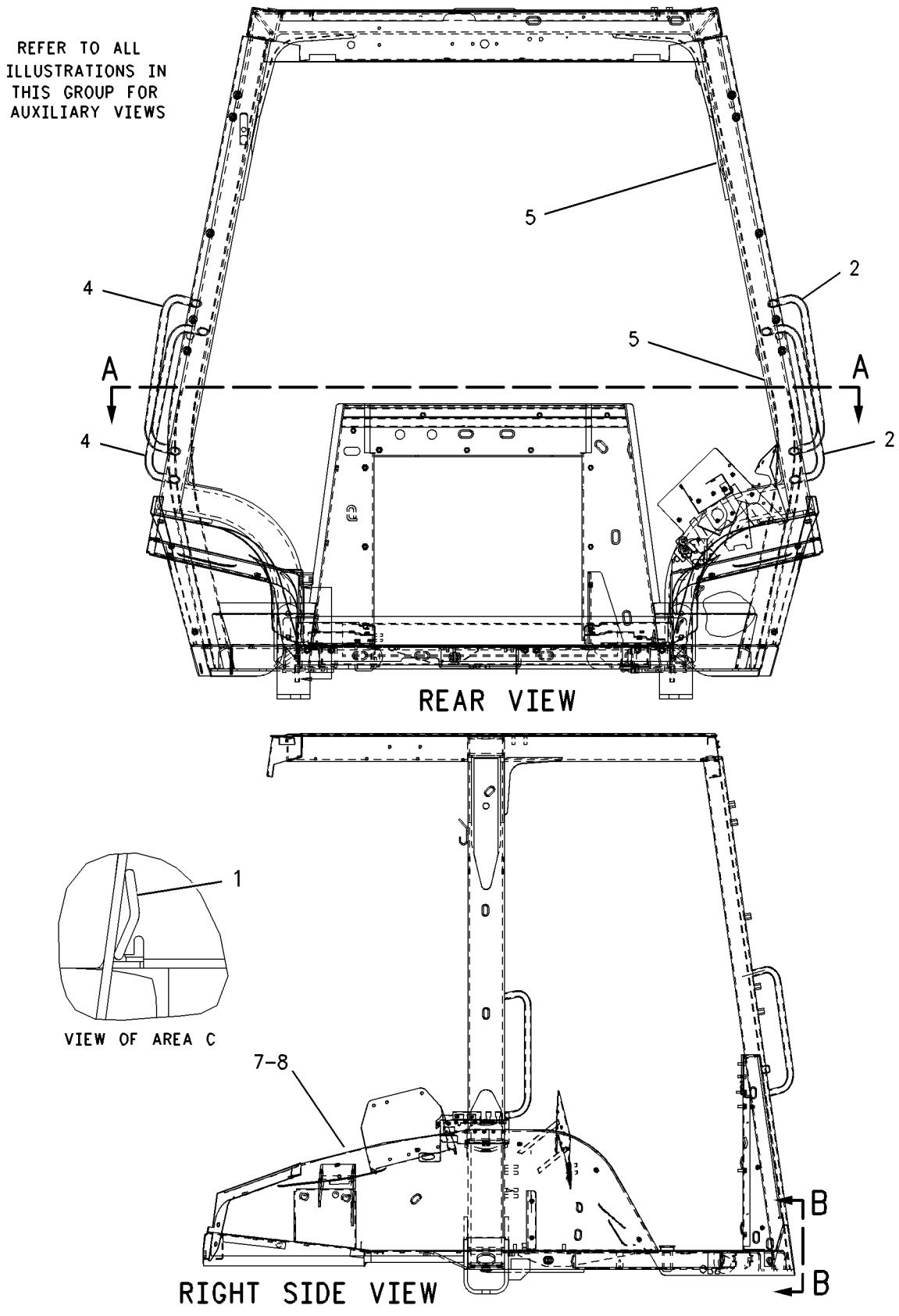

GRAPHIC #1 g00986746

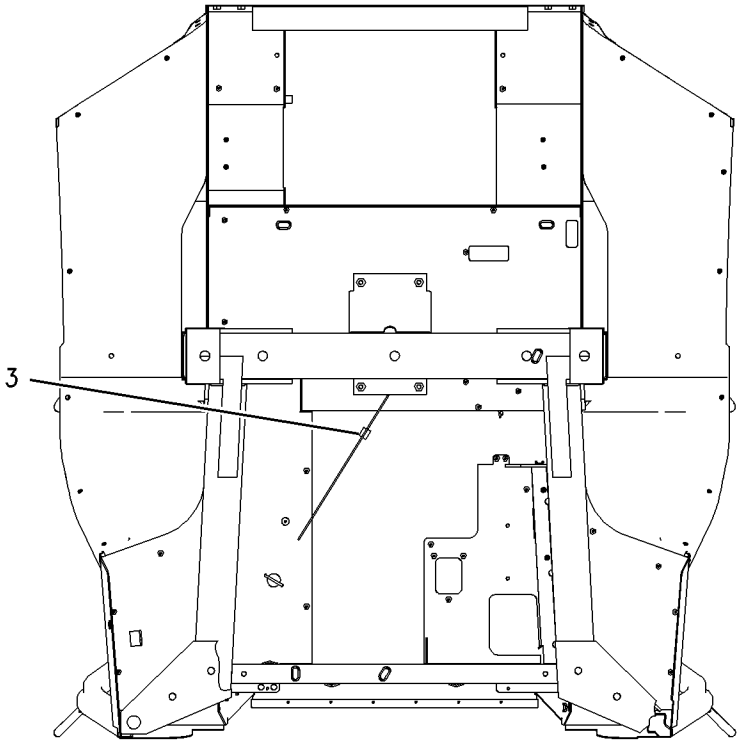

BOTTOM VIEW

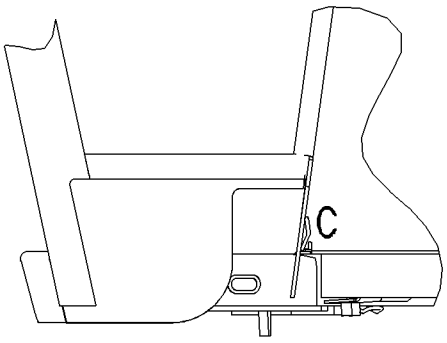

VIEW B-B

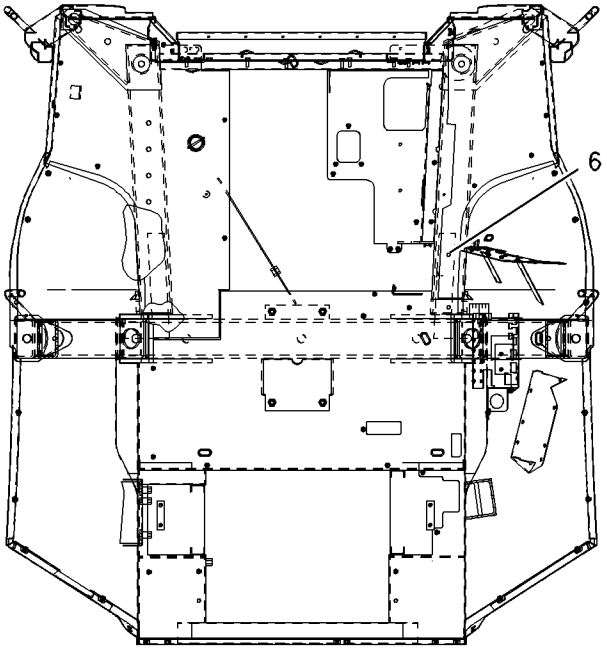

SECTION A-A

GRAPHIC #2 **<END>** g00786953

OPERATOR STATION

164-1050 CANOPY AS

S/N: FDP18400-UP
PART OF 164-1150, 180-7230 CAB AS
AN ATTACHMENT

SMCS-7302 **i01896412**

NOTE	REF NO	GRAPHIC REF	PART NUMBER	QTY	PART NAME 1 2 3 4 5 6 (PRODUCT LEVEL)	SEE PAGE
	1	1	**7T-1099**	27	LINK	
	2	1	*163-7938*	1	PLATE AS	
		1	**7T-1099**	1	LINK	
M		1	**8T-4189**	6	BOLT (M8X1.25X20MM)	
M		1	**8T-4908**	2	BOLT (M8X1.25X25MM)	
M	3	1	**6V-9632**	2	NUT-WELD (M6X1 THD)	
	4	1	**5D-9629**	6	ROD	
	5	1	**164-1051**	1	FENDER AS-RH	
M		1	**8T-3612**	7	NUT-WELD (M8X1.25 THD)	
		1	*173-7661*	1	BRACKET AS	
M		1	**8T-5413**	2	STUD-WELD (M10X1.5X25MM OAL)	
		1	**205-7047**	10	INSERT-THREADED	
	6	1	**164-1052**	1	FENDER AS-LH	
M		1	**8T-3612**	7	NUT-WELD (M8X1.25 THD)	
	7	1	**164-1654**	1	GRAB-HANDLE	
	8	1	**164-1671**	1	GRAB-HANDLE	

M-METRIC PART

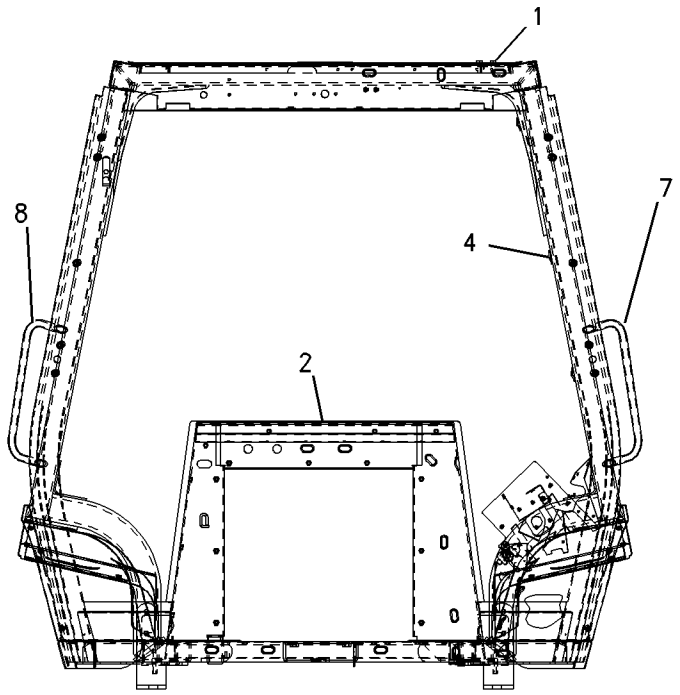

REAR VIEW

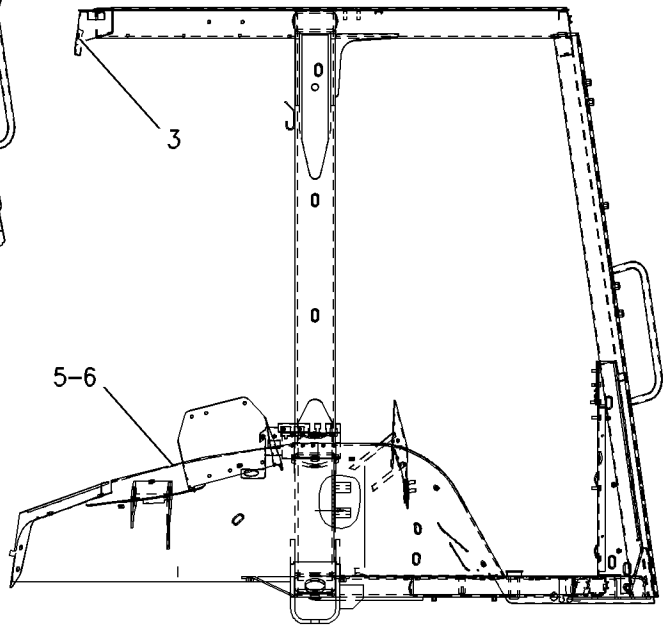

RIGHT SIDE VIEW

GRAPHIC #1 **<END>** g00986632

OPERATOR STATION

180-7235 CANOPY AS

S/N: FDP18400-UP
PART OF 180-7215 CANOPY GP-OPEN ROPS
AN ATTACHMENT

SMCS-7302 **i01988389**

NOTE	REF NO	GRAPHIC REF	PART NUMBER	QTY	PART NAME 1 2 3 4 5 6 (PRODUCT LEVEL)	SEE PAGE
	1	1	**7T-1099**	26	LINK	
	2	1	**8Y-7292**	2	HANDHOLD (RH)	
	3	2	**9R-2589**	1	BOSS	
	4	1	**140-2959**	2	HANDHOLD (LH)	
	5	1	**5D-9629**	6	ROD	
M	6	2	**8T-4967**	2	STUD-WELD (M10X1.5X23MM OAL)	
	7	1	**164-1051**	2	FENDER AS-RH	
M		1	**8T-3612**	7	NUT-WELD (M8X1.25 THD)	
		1	*173-7661*	1	BRACKET AS	
M		1	**8T-5413**	2	STUD-WELD (M10X1.5X25MM OAL)	
		1	**205-7047**	10	INSERT-THREADED	
	8	1	**164-1052**	2	FENDER AS-LH	

M-METRIC PART

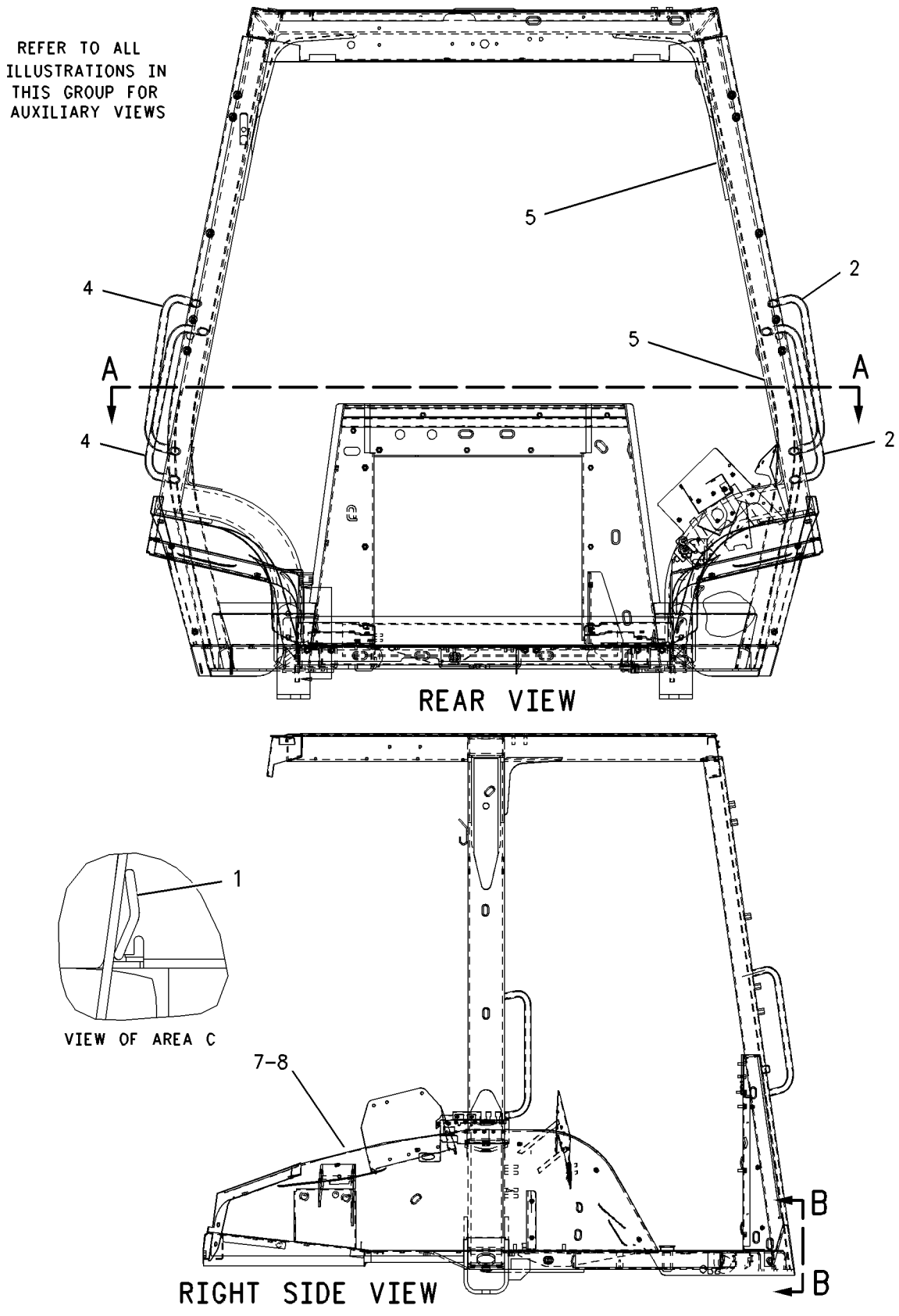

GRAPHIC #1 g00986746

180-7235 CANOPY AS *(contd.)* **i01988389**

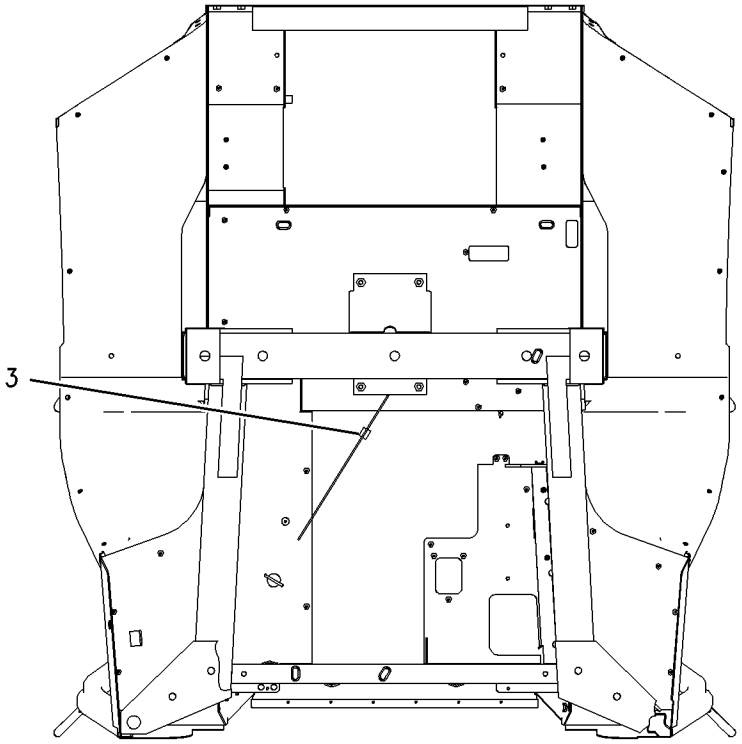

BOTTOM VIEW

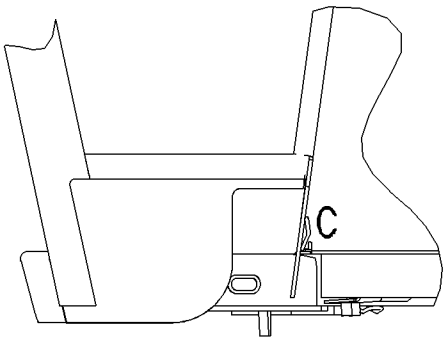

VIEW B-B

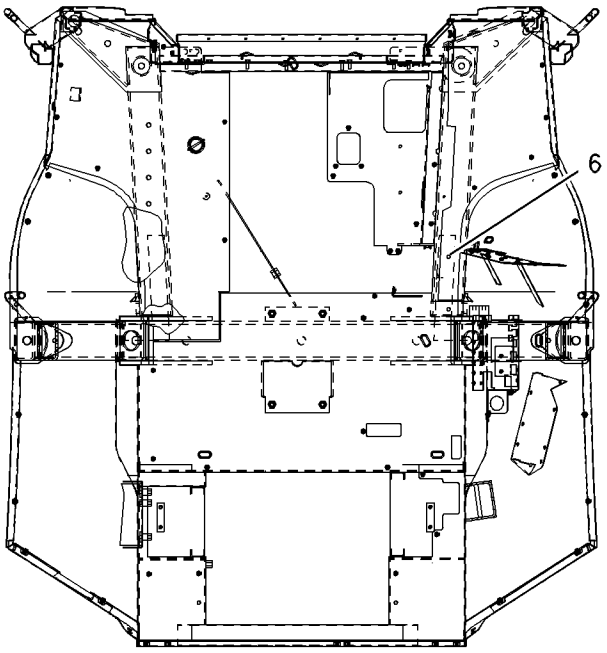

SECTION A-A

GRAPHIC #2 **<END>** g00786953

OPERATOR STATION

164-1350 CANOPY GP-OPEN ROPS

S/N: FDP18400-UP
MECHANICAL BACK HOE CONTROLS
PART OF 238-6697 CANOPY AR
AN ATTACHMENT

SMCS-7302, 7323 **i01655815**

NOTE	REF NO	GRAPHIC REF	PART NUMBER	QTY	PART NAME 1 2 3 4 5 6 (PRODUCT LEVEL)	SEE PAGE
	1	1	**9R-5616**	2	PLUG	
	2	1	**163-7939**	1	PLATE AS	
		1	**7T-1099**	1	LINK	
M		1	**8T-4189**	3	BOLT (M8X1.25X20MM)	
Y	3	1	**164-1025**	1	CANOPY AS	746
	4	1	**164-1071**	1	GLASS-RH	
	5	1	**164-1072**	1	GLASS-LH	
M	6	1	**5C-7261**	2	NUT (M8X1.25 THD)	
	7	1	**5P-4116**	7	WASHER-HARD (8.8X20.5X2MM THK)	
M	8	1	**8T-4189**	5	BOLT (M8X1.25X20MM)	
E	9	1	**9X-2092**	2	STRIP-EDGE (40CM)	

E-ORDER BY THE CENTIMETER
M-METRIC PART
Y-SEPARATE ILLUSTRATION

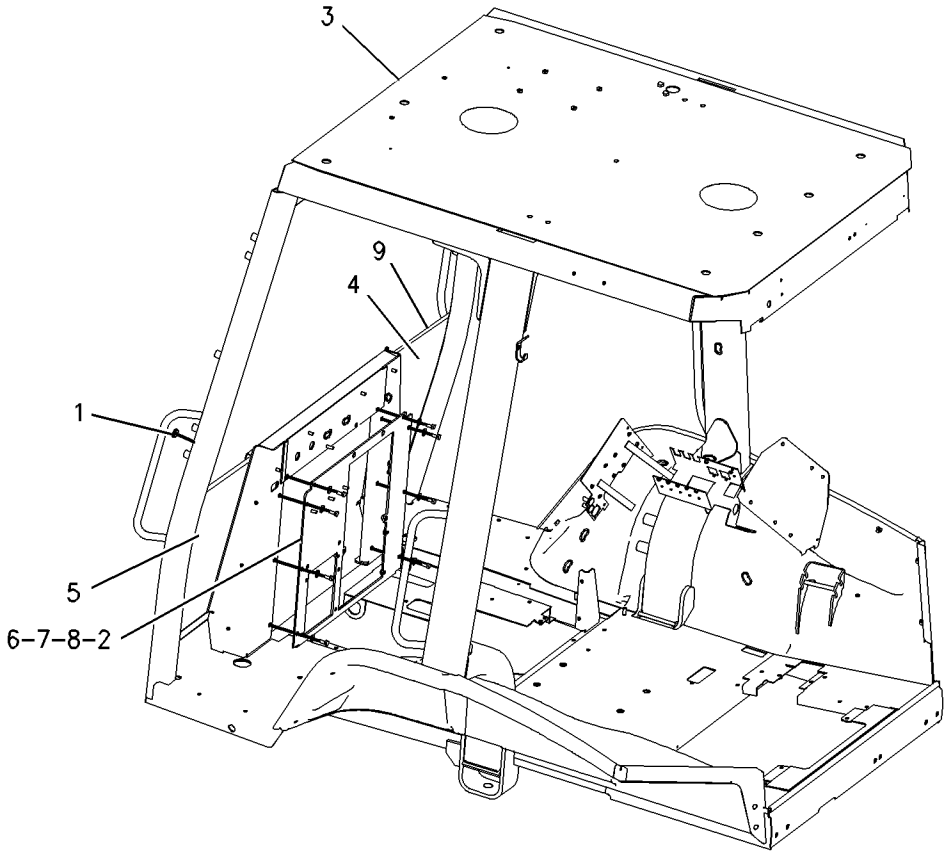

GRAPHIC #1 **<END>** g00827125

OPERATOR STATION

180-7215 CANOPY GP-OPEN ROPS

S/N: FDP18400-UP
WITH PILOT BACKHOE CONTROLS
PART OF 184-9736, 239-5563, 239-5564 CANOPY AR
AN ATTACHMENT

SMCS-7302, 7323 **i01582115**

NOTE	REF NO	GRAPHIC REF	PART NUMBER	QTY	PART NAME 1 2 3 4 5 6 (PRODUCT LEVEL)	SEE PAGE
	1	1	**9R-5616**	2	PLUG	
	2	1	**163-7939**	1	PLATE AS	
	3	1	**164-1071**	1	GLASS-RH	
	4	1	**164-1072**	1	GLASS-LH	
Y	5	1	**180-7235**	1	CANOPY AS	750
M	6	1	**5C-7261**	2	NUT (M8X1.25 THD)	
	7	1	**5P-4116**	7	WASHER-HARD (8.8X20.5X2MM THK)	
M	8	1	**8T-4189**	5	BOLT (M8X1.25X20MM)	
E	9	1	**9X-2092**	2	STRIP-EDGE (40CM)	

E-ORDER BY THE CENTIMETER
M-METRIC PART
Y-SEPARATE ILLUSTRATION

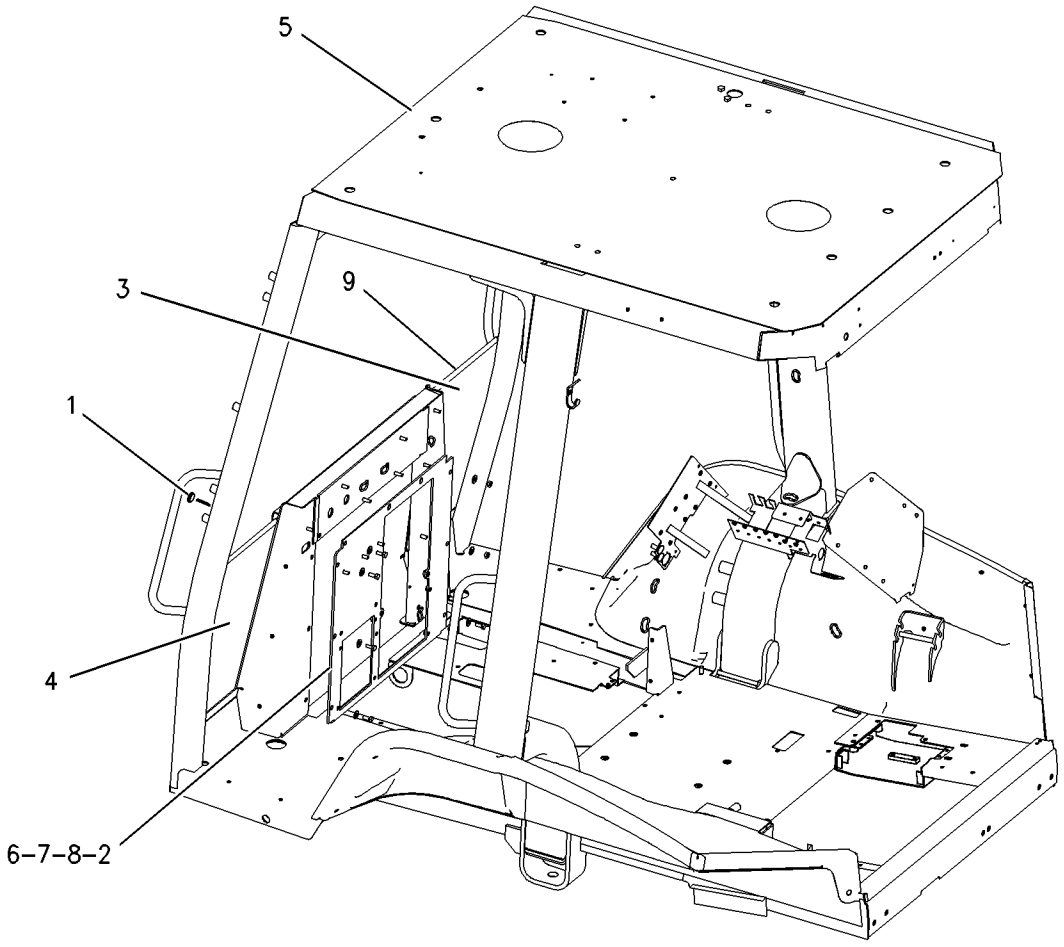

GRAPHIC #1 **<END>** g00821003

OPERATOR STATION

200-2676 COMPARTMENT GP-LITERATURE

S/N: FDP18400-UP

PART OF 239-5565, 239-5566, 239-5567, 239-5568, 244-1944 CAB AR, 238-6697, 239-5563, 239-5564 CANOPY AR

AN ATTACHMENT

SMCS-7268 **i01988666**

NOTE	REF NO	GRAPHIC REF	PART NUMBER	QTY	PART NAME 1 2 3 4 5 6 (PRODUCT LEVEL)	SEE PAGE
	1	1	**5P-7957**	1	LANYARD	
	2	1	**5P-7958**	1	SLEEVE-CABLE SPLICE	
	3	1	**5P-8500**	2	KEY	
B	4	1	**7F-3400**	2	BAG-POLYETHYLENE	

B-USE AS REQUIRED

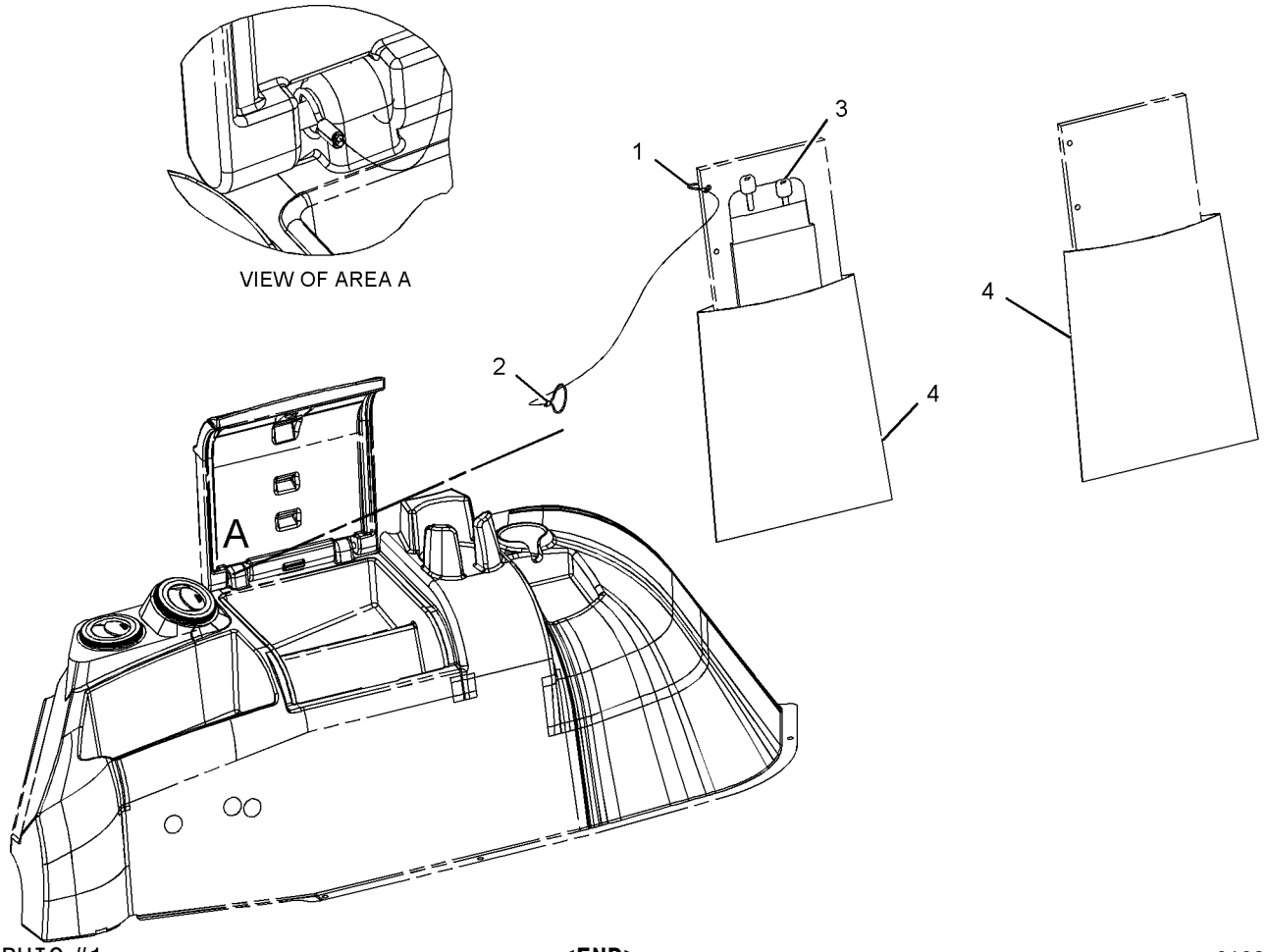

GRAPHIC #1 **<END>** g01035823

OPERATOR STATION

3E-1908 COMPRESSOR GP-REFRIGERANT

S/N: FDP18400-UP

PART OF 234-8601 COMPRESSOR GP-REFRIGERANT

AN ATTACHMENT

SMCS-1802 **i01947698**

NOTE	REF NO	GRAPHIC REF	PART NUMBER	QTY	PART NAME 1 2 3 4 5 6 (PRODUCT LEVEL)	SEE PAGE
	1	1	**102-8802**	1	KIT-RECEPTACLE (2 PIN)	
					(INCLUDES RECEPTACLE AS & WEDGE)	
	2	1	**114-3469**	1	VALVE GP-RELIEF (AIR CONDITIONER)	
		1	**9X-7378**	1	SEAL-O-RING	
	3	1	**7T-4532**	1	PLUG AS	
	4	1	**9X-7385**	2	SEAL-O-RING	

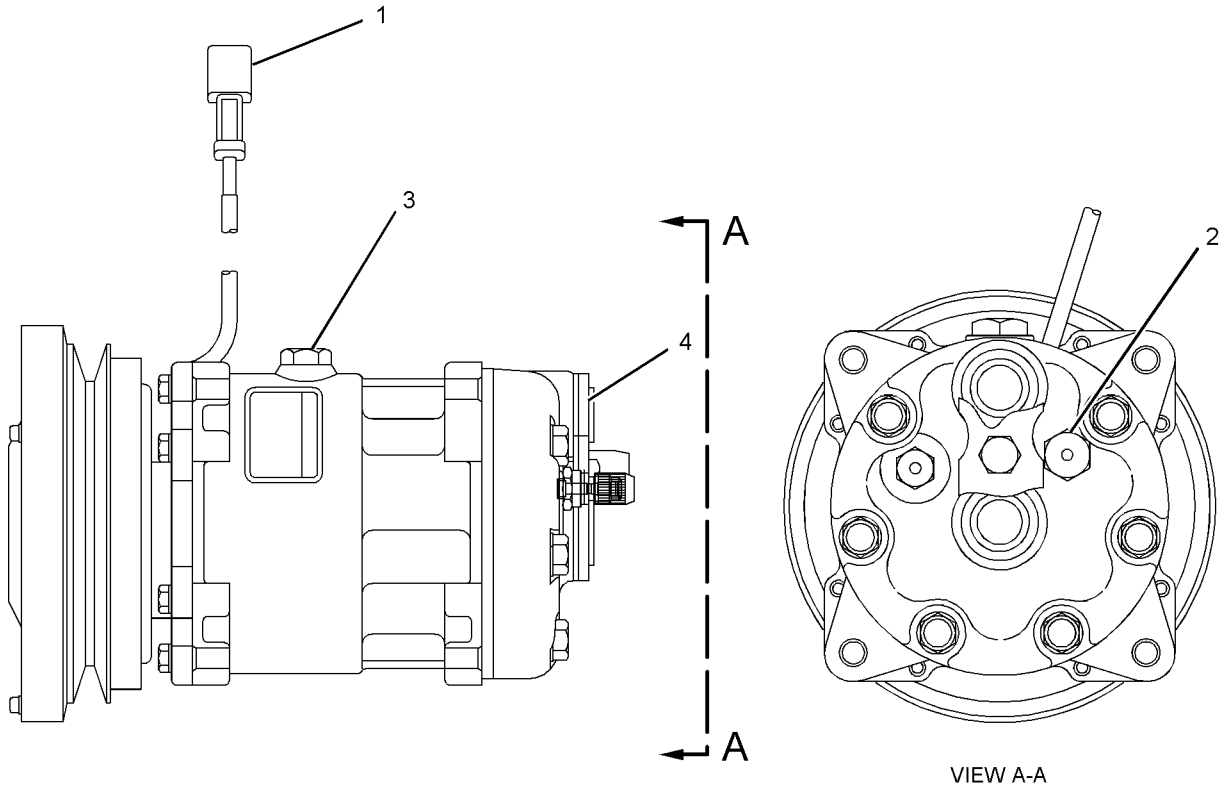

VIEW A-A

GRAPHIC #1 **<END>** g01014389

OPERATOR STATION

202-5746 COMPRESSOR GP-REFRIGERANT

S/N: FDP18400-UP
PART OF 202-5777, 244-5402 AIR CONDITIONER AR
AN ATTACHMENT

SMCS-1802 **i01740283**

NOTE	REF NO	GRAPHIC REF	PART NUMBER	QTY	PART NAME 1 2 3 4 5 6 (PRODUCT LEVEL)	SEE PAGE
	1	1	**2Y-9255**	1	SPACER	
	2	1	**3E-1908**	1	COMPRESSOR GP-REFRIGERANT	
		1	**7T-4532**	1	PLUG AS	
		1	**9X-7385**	2	SEAL-O-RING	
	3	1	**105-9411**	1	SUPPORT	
	4	1	**137-7141**	1	PLATE	
	5	1	**137-7142**	1	BRACKET AS	
	6	1	**139-0219**	1	PLATE AS	
	7	1	**146-0797**	1	FITTING AS-AIR CONDITIONER	
		1	**3E-4051**	1	CAP-SEAL (AIR CONDITIONER)(LOW SIDE)	
		1	**3E-4057**	1	VALVE AS-AIR CONDITIONER (LOW SIDE)	
	8	1	**7X-7729**	1	WASHER (11X25X3MM THK)	
	9	1	**8T-2561**	1	WASHER-HARD (10.5X28.5X5MM THK)	
	10	1	**8T-4121**	7	WASHER-HARD (11X21X2.5MM THK)	
M	11	1	**8T-4133**	2	NUT (M10X1.5 THD)	
M	12	1	**8T-4186**	3	BOLT (M10X1.5X40MM)	
M	13	1	**8T-4195**	3	BOLT (M10X1.5X30MM)	
	14	1	**8T-4224**	2	WASHER-HARD (8.8X16X2MM THK)	
M	15	1	**8T-4908**	1	BOLT (M8X1.25X25MM)	
M	16	1	**8T-6466**	1	BOLT (M10X1.50X60MM)	
M	17	1	**8T-6869**	1	BOLT (M8X1.25X60MM)	

M-METRIC PART

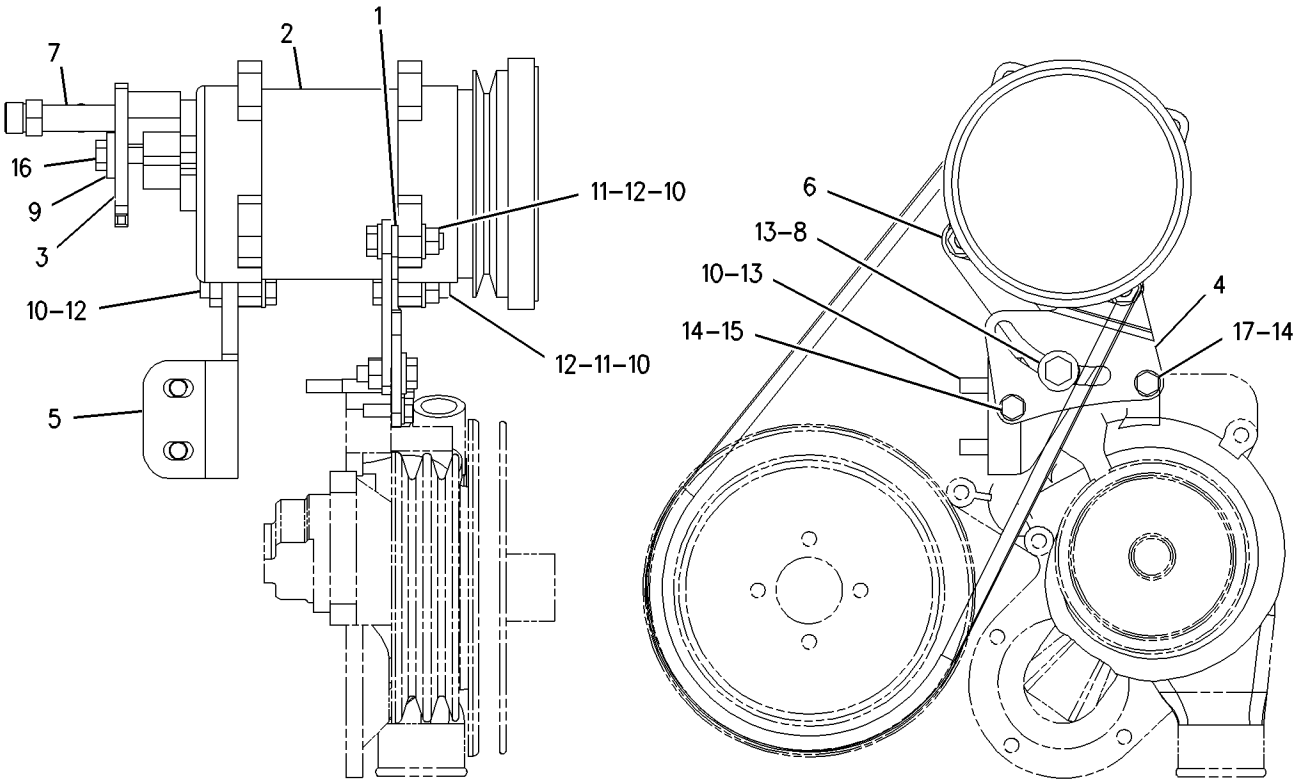

GRAPHIC #1 **<END>** g00844025

OPERATOR STATION

234-8601 COMPRESSOR GP-REFRIGERANT

S/N: FDP18400-UP
PART OF 239-5566, 239-5568 CAB AR
AN ATTACHMENT

SMCS-1802 **i02013164**

NOTE	REF NO	GRAPHIC REF	PART NUMBER	QTY	PART NAME 1 2 3 4 5 6 (PRODUCT LEVEL)	SEE PAGE
	1	1	**1W-2934**	1	V-BELT (AIR CONDITIONER)	
Y	2	1	**3E-1908**	1	COMPRESSOR GP-REFRIGERANT	756
	3	1	**124-6524**	1	SPACER (11X25X10.5-MM THK)	
	4	1	**140-3881**	1	COVER AS-TANK	
	5	1	**234-9430**	1	PLATE AS	
	6	1	**234-9554**	1	PLATE	
	7	1	**235-1056**	1	PLATE	
	8	1	**239-0602**	1	PLATE	
	9	1	**244-2104**	1	PLATE	
	10	1	**8T-4121**	12	WASHER-HARD (11X21X2.5-MM THK)	
M	11	1	**8T-4133**	5	NUT (M10X1.5-THD)	
M	12	1	**8T-4185**	1	BOLT (M10X1.5X50-MM)	
M	13	1	**8T-4186**	5	BOLT (M10X1.5X40-MM)	
M	14	1	**8T-4195**	1	BOLT (M10X1.5X30-MM)	
	15	1	**8T-4223**	2	WASHER-HARD (13.5X25.5X3-MM THK)	
M	16	1	**8T-4224**	4	WASHER-HARD (8.8X16X2-MM THK)	
M	17	1	**8T-4244**	1	NUT (M12X1.75-THD)	
M	18	1	**8T-4908**	4	BOLT (M8X1.25X25-MM)	
M	19	1	**8T-5001**	1	BOLT (M12X1.75X130-MM)	

M-METRIC PART
Y-SEPARATE ILLUSTRATION

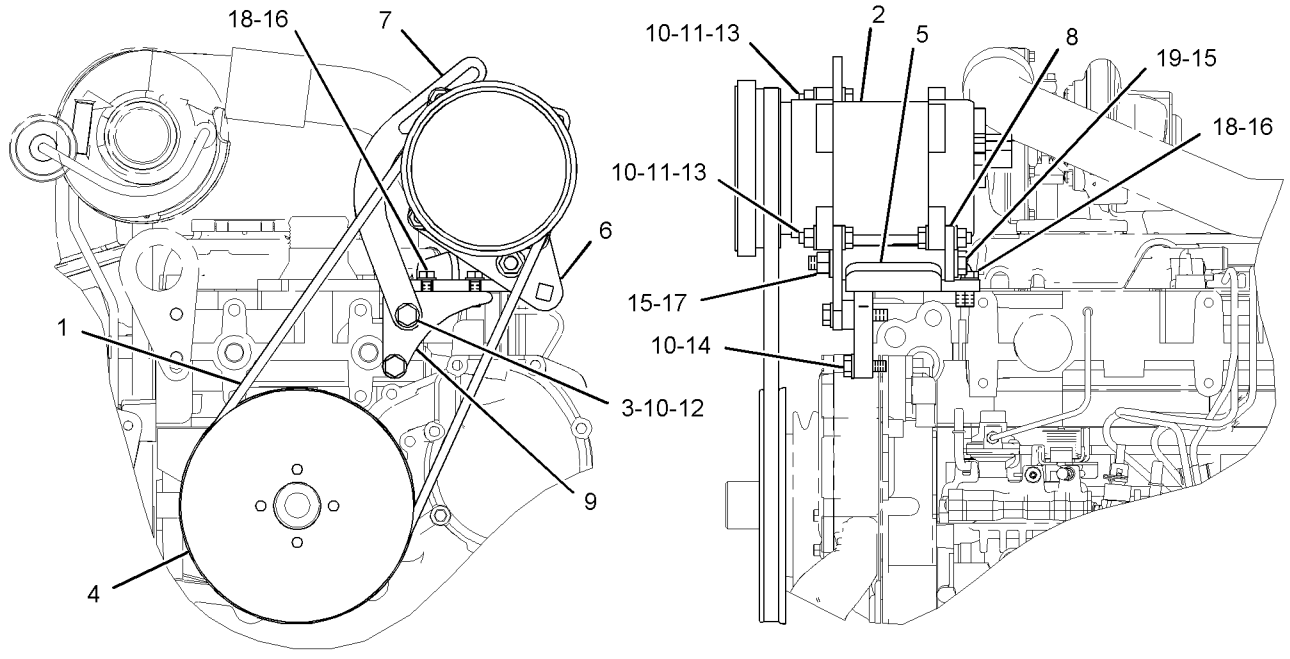

FRONT VIEW LEFT SIDE VIEW

GRAPHIC #1 **<END>** g01043205

OPERATOR STATION

144-2222 CONDENSER & MTG GP-REFRIGERANT

S/N: FDP18400-UP

PART OF 202-5777, 244-5402 AIR CONDITIONER AR, 239-5566, 239-5568 CAB AR

AN ATTACHMENT

SMCS-1805 **i02011525**

NOTE	REF NO	GRAPHIC REF	PART NUMBER	QTY	PART NAME 1 2 3 4 5 6 (PRODUCT LEVEL)	SEE PAGE
	1	1	**7X-0579**	7	WASHER-HARD (8.8X25.5X2MM THK)	
	2	1	**166-2861**	1	CORE AS	
	3	1	**240-2614**	2	SPACER (10X19.5X60MM THK)	
M	4	1	**153-3061**	1	BOLT (M8X1.25X130MM)	
M	5	1	**8T-3647**	1	BOLT (M8X1.25X80MM)	
M	6	1	**8T-4200**	4	BOLT (M8X1.25X16MM)	

M-METRIC PART

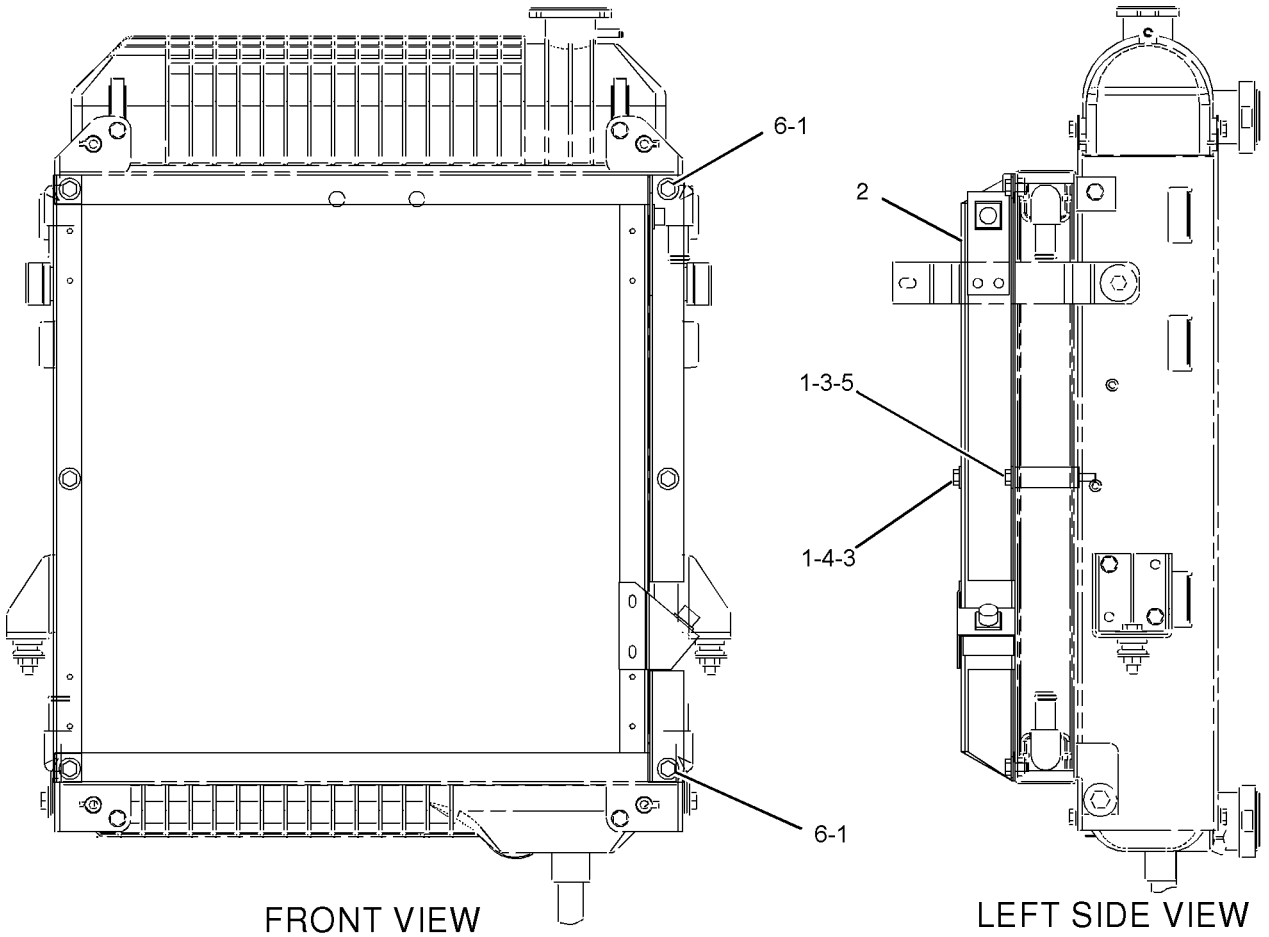

GRAPHIC #1 **<END>** g01026368

OPERATOR STATION

183-4995 CONSOLE GP-FRONT

S/N: FDP18400-UP

PART OF 192-4661, 192-4662, 192-4663, 198-4095, 214-6958, 214-6959, 214-6976, 214-6977 POWER TRAIN AR

AN ATTACHMENT

SMCS-5258 **i01410573**

NOTE	REF NO	GRAPHIC REF	PART NUMBER	QTY	PART NAME 1 2 3 4 5 6 (PRODUCT LEVEL)	SEE PAGE
	1	1	**8Y-6388**	1	LOUVER AS	
	2	1	**151-5715**	2	LOUVER AS	
	3	1	**164-8473**	5	LOUVER AS	
	4	1	**167-8246**	1	CONSOLE AS-FRONT	
	5	1	**104-2091**	22	SCREW-FLAT HEAD (NO.6-20X0.5 IN)	
	6	1	**148-3626**	4	SCREW-FLAT HEAD	

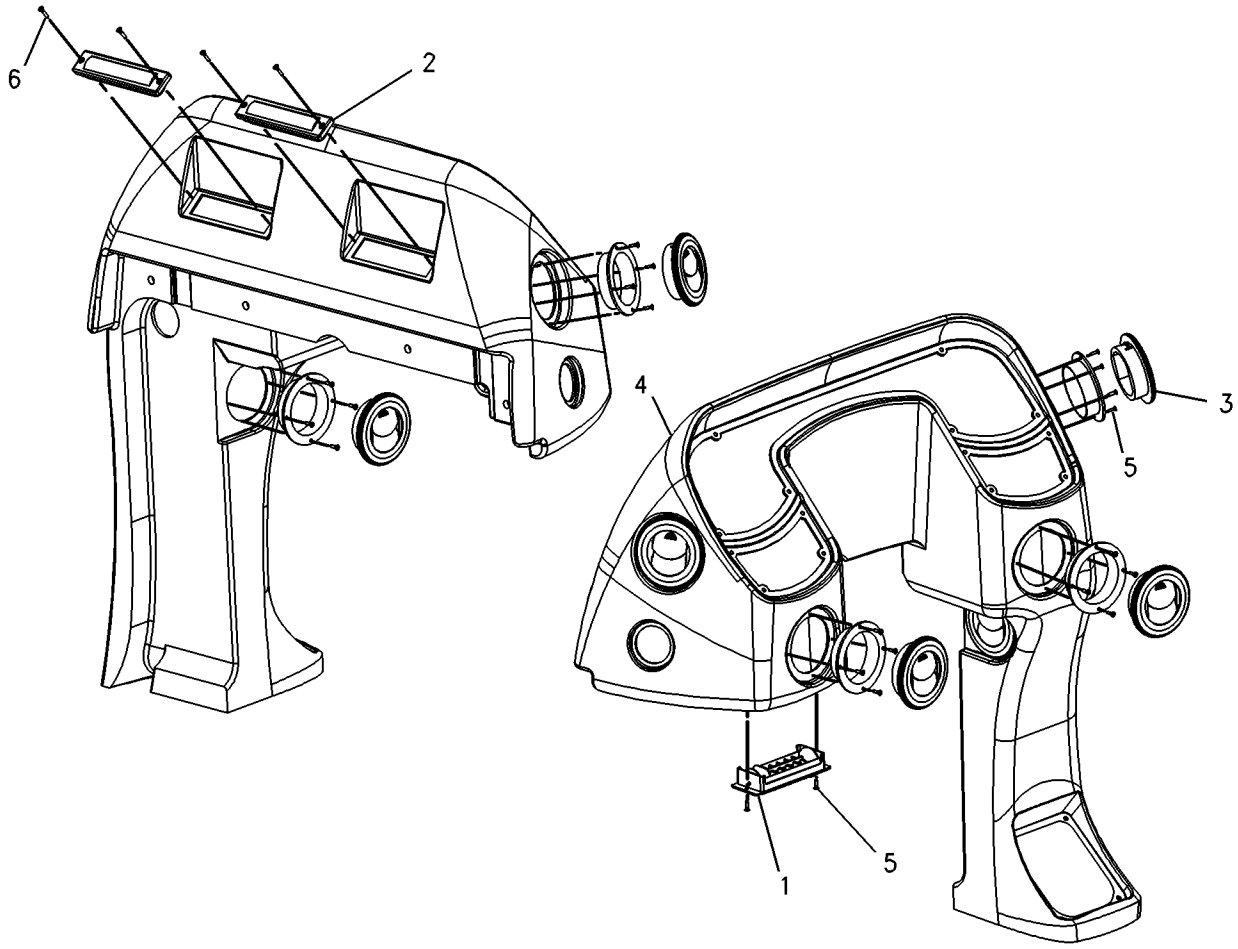

GRAPHIC #1 **<END>** g00743525

OPERATOR STATION

183-4996 CONSOLE GP-FRONT

S/N: FDP18400-UP
PART OF 192-4659, 214-6978 POWER TRAIN AR
AN ATTACHMENT

SMCS-5258 **i01395740**

NOTE	REF NO	GRAPHIC REF	PART NUMBER	QTY	PART NAME 1 2 3 4 5 6 (PRODUCT LEVEL)	SEE PAGE
	1	1	**8Y-6388**	1	LOUVER AS	
	2	1	**151-5715**	2	LOUVER AS	
	3	1	**164-1147**	1	CONSOLE-FRONT	
	4	1	**164-8473**	5	LOUVER AS	
	5	1	**104-2091**	22	SCREW-FLAT HEAD (NO.6-20X0.5IN)	
	6	1	**148-3626**	4	SCREW-FLAT HEAD	

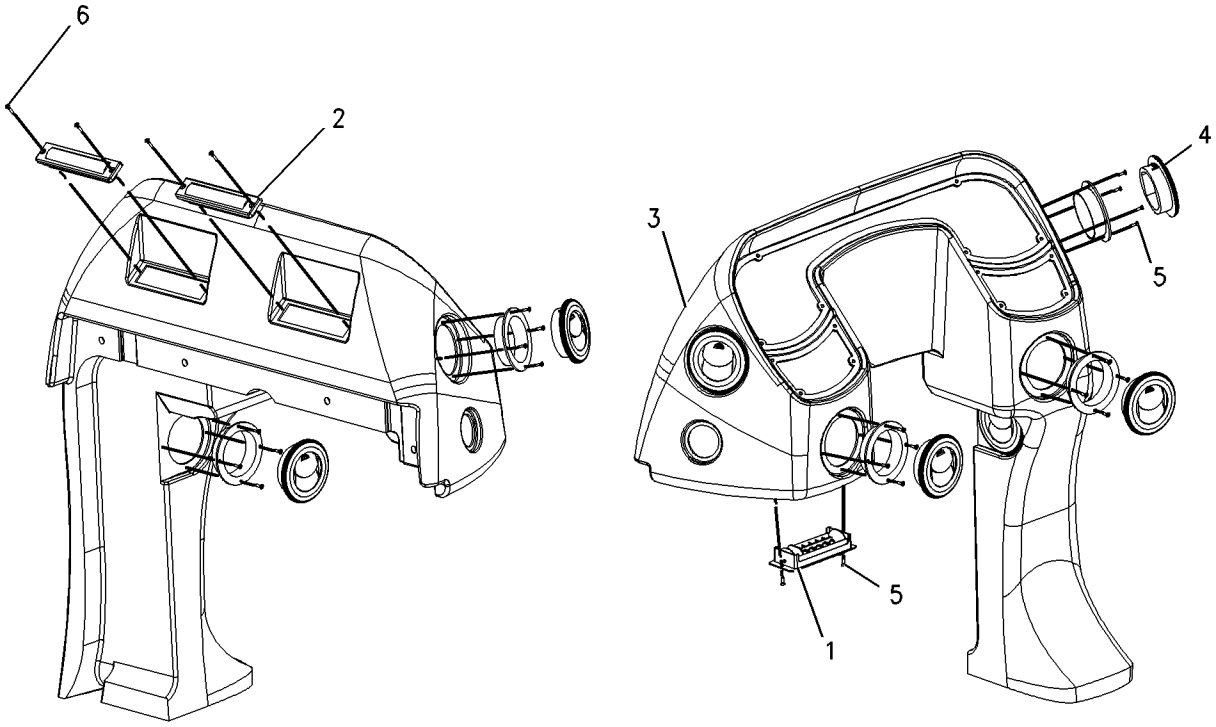

GRAPHIC #1 **<END>** g00735963

OPERATOR STATION

247-0470 CONSOLE GP-FRONT

S/N: FDP18400-UP
PART OF 238-6697 CANOPY AR
AN ATTACHMENT

SMCS-5258 **i02015456**

NOTE	REF NO	GRAPHIC REF	PART NUMBER	QTY	PART NAME 1 2 3 4 5 6 (PRODUCT LEVEL)	SEE PAGE
B	1	1	**9P-6571**	3	PLUG	
Y	2	1	*164-1131*	1	CONSOLE GP-SIDE	766
M	3	1	**178-9983**	3	LOCKNUT (M4X0.7-THD)	
	4	1	**198-6886**	1	PLATE	
M	5	1	**8T-3998**	3	BOLT (M4X0.7X12-MM)	
	6	1	**9X-2038**	3	WASHER (7X19X2-MM THK)	
M	7	1	**9X-2044**	4	SCREW-TRUSS HEAD (M6X1X16-MM)	

B-USE AS REQUIRED
M-METRIC PART
Y-SEPARATE ILLUSTRATION

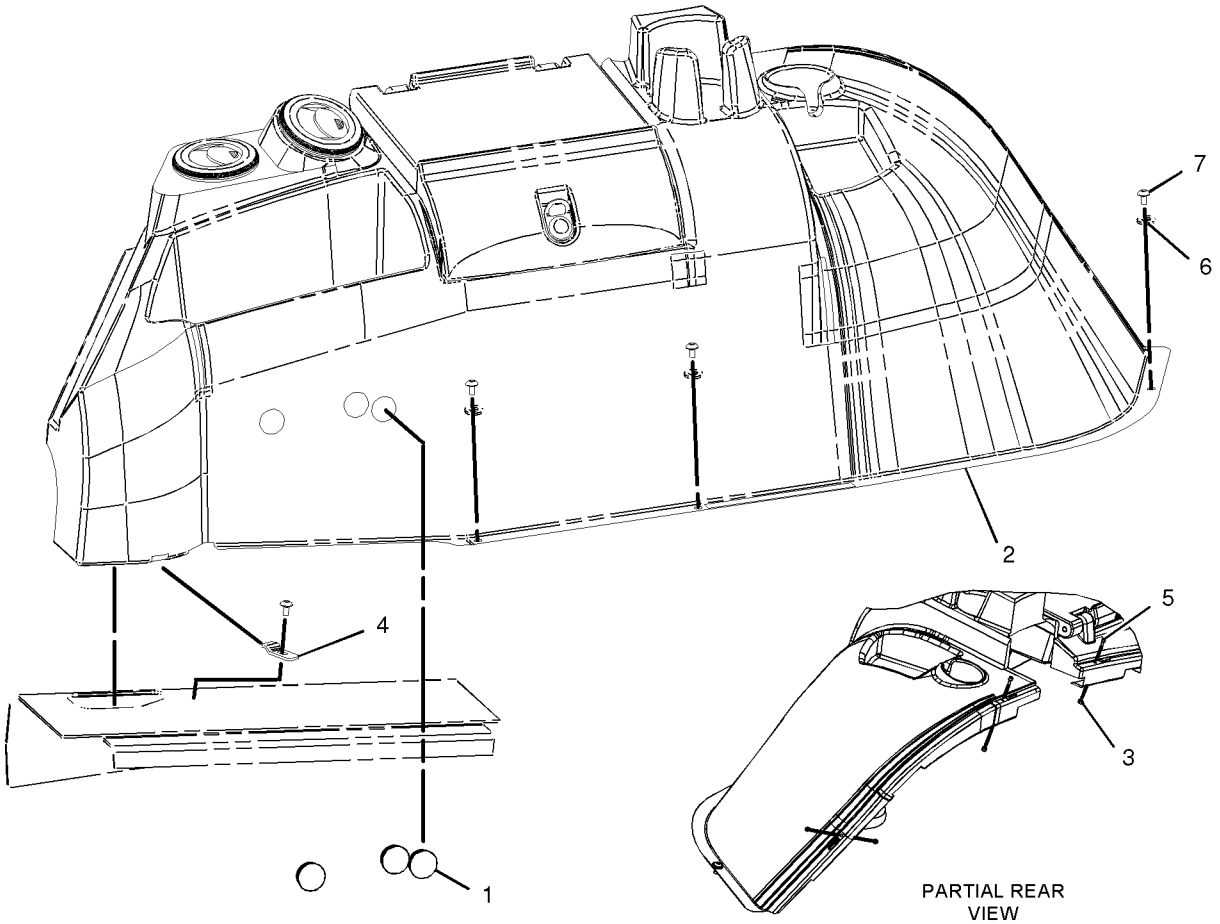

GRAPHIC #1 **<END>** g01041919

OPERATOR STATION

164-1389 CONSOLE GP-OPERATOR

S/N: FDP18400-UP
NO AIR CONDITIONING, LEFT HAND
PART OF 184-9736, 239-5563, 239-5564 CANOPY AR
AN ATTACHMENT

SMCS-5258, 7451 **i01665870**

NOTE	REF NO	GRAPHIC REF	PART NUMBER	QTY	PART NAME 1 2 3 4 5 6 (PRODUCT LEVEL)	SEE PAGE
B	1	1	**9P-6571**	3	PLUG	
Y	2	1	*164-1132*	1	CONSOLE GP-SIDE (LH)	767
M	3	1	**178-9983**	3	LOCKNUT	
M	4	1	**8T-3998**	3	BOLT (M4X0.7X12MM)	
	5	1	**9X-2038**	4	WASHER (7X19X2MM THK)	
M	6	1	**9X-2044**	4	SCREW-TRUSS HEAD (M6X1X16MM)	

B-USE AS REQUIRED
M-METRIC PART
Y-SEPARATE ILLUSTRATION

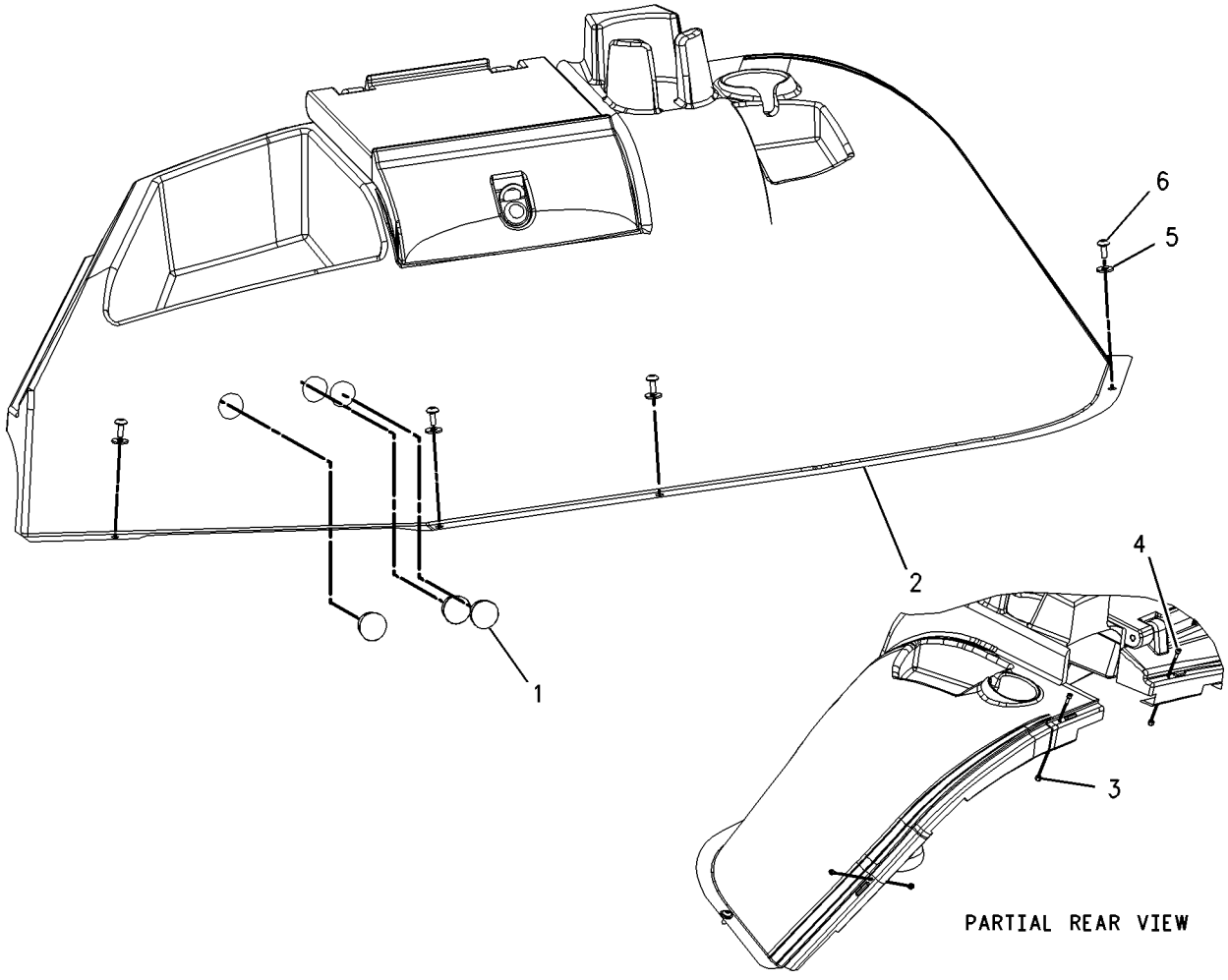

GRAPHIC #1 **<END>** g00861135

OPERATOR STATION

185-3524 CONSOLE GP-OPERATOR–RH

S/N: FDP18400-UP

PART OF 184-9737, 184-9738, 239-5565, 239-5566, 239-5567, 239-5568, 244-1944

CAB AR

AN ATTACHMENT

SMCS-5258, 7451 **i01555564**

NOTE	REF NO	GRAPHIC REF	PART NUMBER	QTY	PART NAME 1 2 3 4 5 6 (PRODUCT LEVEL)	SEE PAGE
BC	1	1	**9P-6571**	1	PLUG	
M	2	1	**178-9983**	4	LOCKNUT	
Y	3	1	*183-4998*	1	CONSOLE GP-SIDE (RH)	770
	4	1	**205-9980**	4	SCREW-TRUSS HEAD	
CM	5	1	**8T-3998**	4	BOLT (M4X0.7X12MM)	
M	6	1	**9X-2044**	5	SCREW-TRUSS HEAD (M6X1X16MM)	

B-USE AS REQUIRED
C-CHANGE FROM PREVIOUS TYPE
M-METRIC PART
Y-SEPARATE ILLUSTRATION

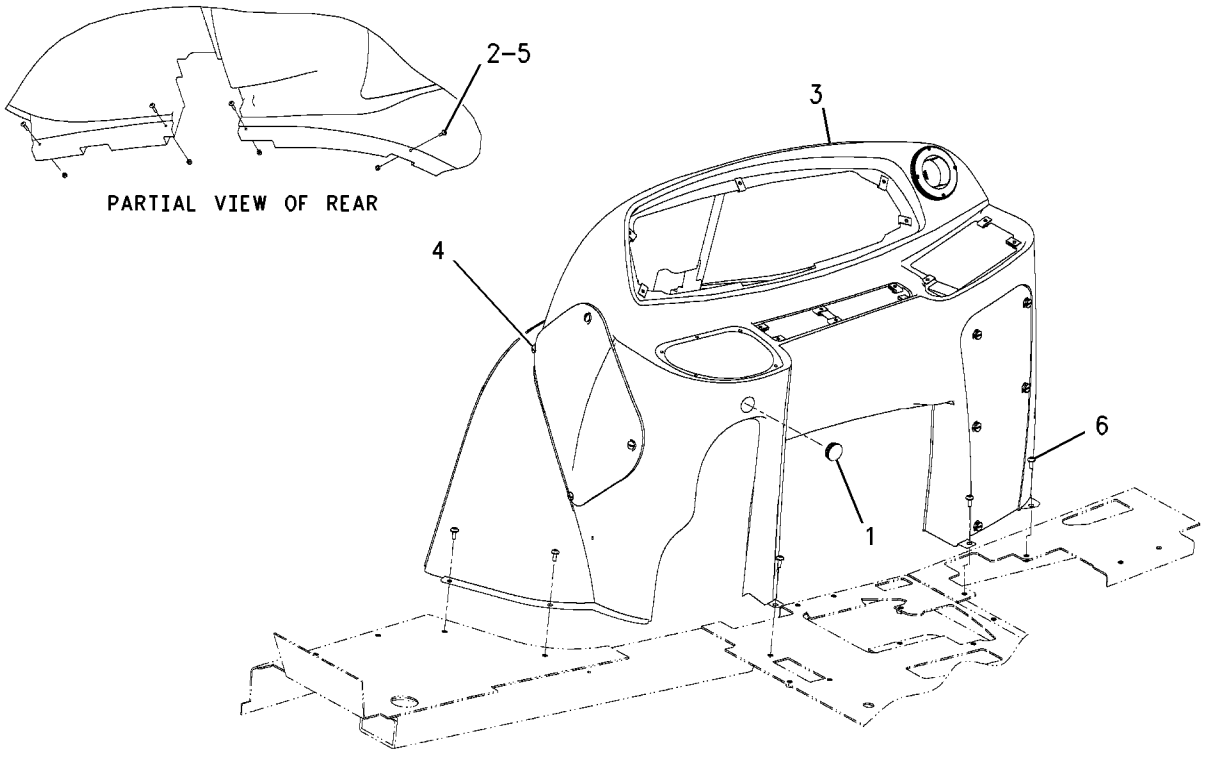

GRAPHIC #1 **<END>** g00808569

OPERATOR STATION

164-1131 CONSOLE GP-SIDE

S/N: FDP18400-UP
AIR CONDITIONING
PART OF 247-0470 CONSOLE GP-FRONT, 164-1388 CONSOLE GP-SIDE
AN ATTACHMENT

SMCS-7451 **i01941457**

NOTE	REF NO	GRAPHIC REF	PART NUMBER	QTY	PART NAME 1 2 3 4 5 6 (PRODUCT LEVEL)	SEE PAGE
J	1	1	**5P-9000**	1	LOCK AS-CYLINDER	
	2	1	**118-5503**	2	LOUVER AS	
	3	1	**164-1133**	1	COVER	
	4	1	**164-1134**	1	PIN	
	5	1	**167-8252**	1	CONSOLE-LH	
	6	1	**188-7760**	1	PLATE	
	7	1	**104-2091**	8	SCREW-FLAT HEAD (6-20X0.5 IN)	
	8	1	**200-2673**	1	PLATE	
J-REQUIRES 5P8500 KEY						

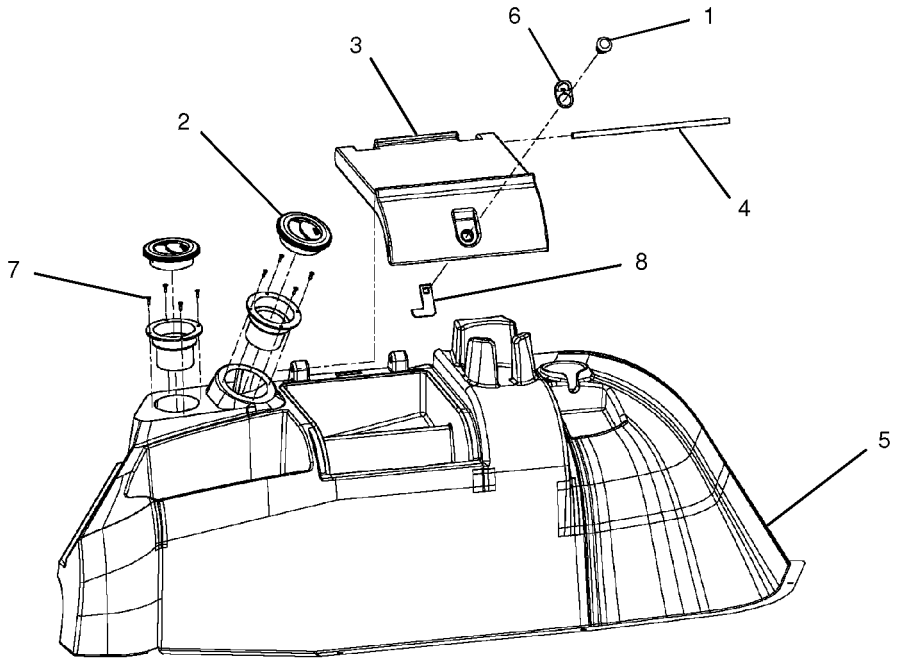

EXPLODED VIEW

GRAPHIC #1 **<END>** g01010396

OPERATOR STATION

164-1132 CONSOLE GP-SIDE

S/N: FDP18400-UP
NO AIR CONDITIONING
PART OF 164-1389 CONSOLE GP-OPERATOR
AN ATTACHMENT

SMCS-7451 **i01958750**

NOTE	REF NO	GRAPHIC REF	PART NUMBER	QTY	PART NAME 1 2 3 4 5 6 (PRODUCT LEVEL)	SEE PAGE
J	1	1	**5P-9000**	1	LOCK AS-CYLINDER	
	2	1	**200-2673**	1	PLATE	
	3	1	**164-1133**	1	COVER	
	4	1	**164-1134**	1	PIN	
	5	1	**183-4899**	1	CONSOLE-LH	
	6	1	**188-7760**	1	PLATE	
J-REQUIRES A 5P-8500 KEY						

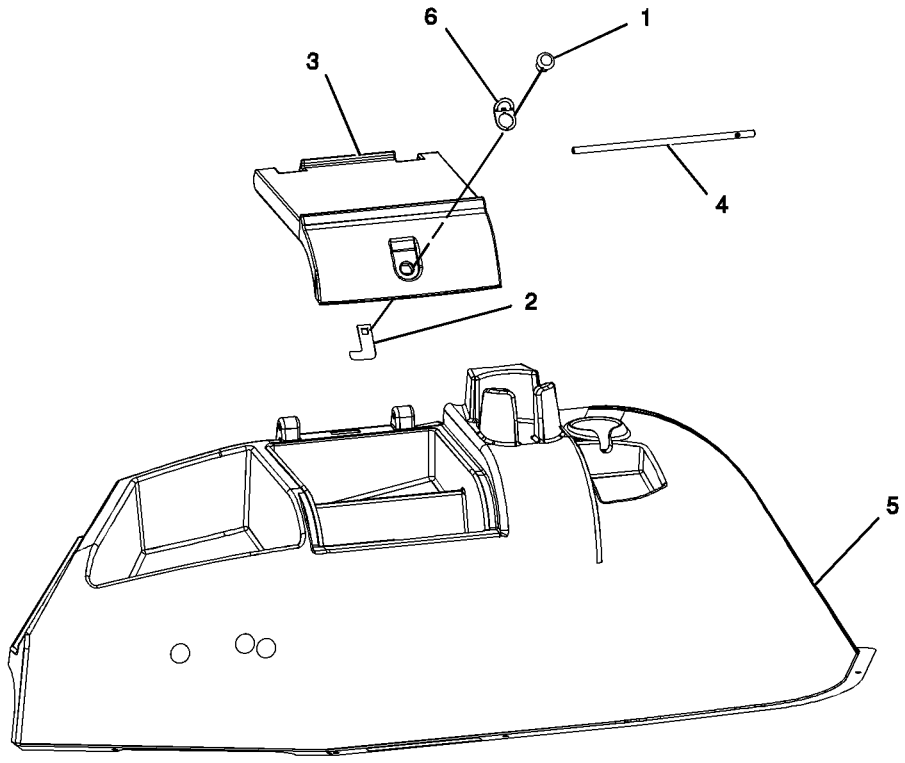

GRAPHIC #1 **<END>** g01018022

OPERATOR STATION

164-1388 CONSOLE GP-SIDE

S/N: FDP18400-UP
AIR CONDITIONING
PART OF 239-5565, 239-5567 CAB AR
AN ATTACHMENT

SMCS-7451 **i01665840**

NOTE	REF NO	GRAPHIC REF	PART NUMBER	QTY	PART NAME 1 2 3 4 5 6 (PRODUCT LEVEL)	SEE PAGE
B	1	1	**9P-6571**	3	PLUG	
Y	2	1	*164-1131*	1	CONSOLE GP-SIDE	766
M	3	1	**178-9983**	3	LOCKNUT	
	4	1	**184-6558**	1	HOSE	
	5	1	**184-6566**	1	GASKET	
	6	1	**198-6886**	1	PLATE	
M	7	1	**8T-3998**	3	BOLT (M4X0.7X12MM)	
	8	1	**9X-2038**	3	WASHER (7X19X2MM THK)	
M	9	1	**9X-2044**	4	SCREW-TRUSS HEAD (M6X1X16MM)	

B-USE AS REQUIRED
M-METRIC PART
Y-SEPARATE ILLUSTRATION

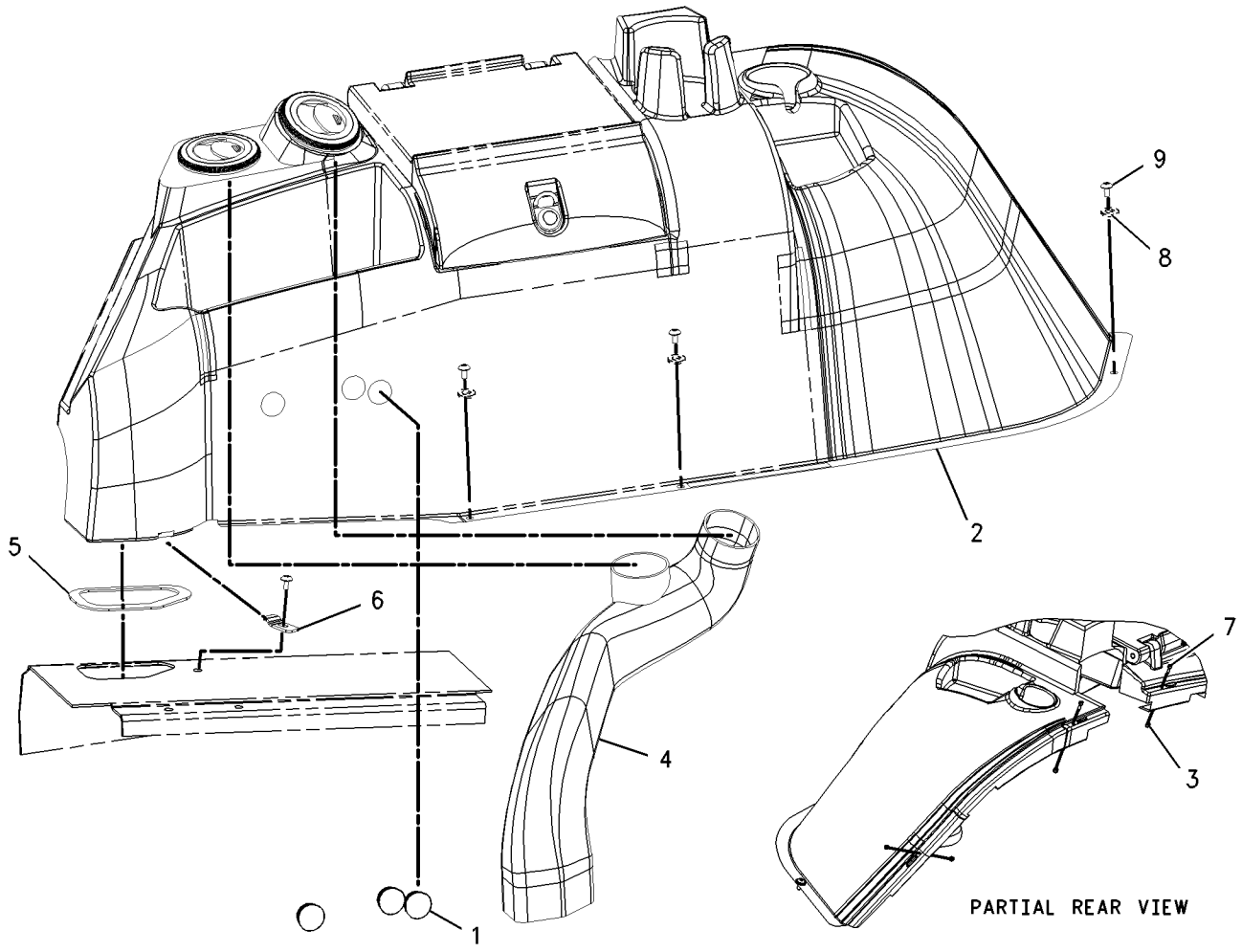

GRAPHIC #1 **<END>** g00860220

OPERATOR STATION

183-4997 CONSOLE GP-SIDE

S/N: FDP18400-UP
PART OF 185-3530 CONSOLE GP-SIDE
AN ATTACHMENT

SMCS-7451 **i01636578**

NOTE	REF NO	GRAPHIC REF	PART NUMBER	QTY	PART NAME 1 2 3 4 5 6 (PRODUCT LEVEL)	SEE PAGE
	1	1	**164-1178**	5	CLIP	
	2	1	**172-8591**	16	NUT-SPRING	
Y	3	1	*183-4991*	1	COVER GP-CONSOLE	775
	4	1	**202-6141**	1	CONSOLE	
	5	1	**204-7341**	1	COVER-FUSE	

Y-SEPARATE ILLUSTRATION

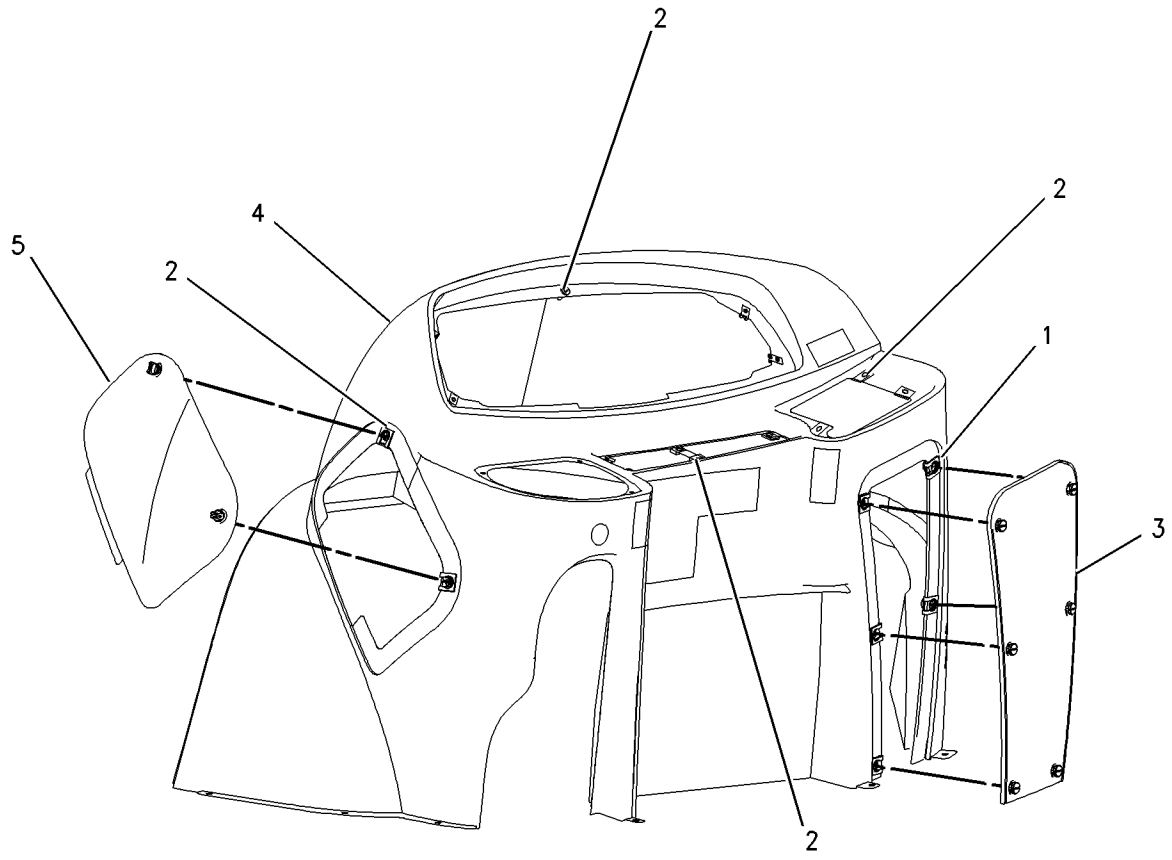

GRAPHIC #1 **<END>** g00847304

OPERATOR STATION

183-4998 CONSOLE GP-SIDE

S/N: FDP18400-UP
PART OF 185-3524 CONSOLE GP-OPERATOR
AN ATTACHMENT

SMCS-7451 **i01663927**

NOTE	REF NO	GRAPHIC REF	PART NUMBER	QTY	PART NAME 1 2 3 4 5 6 (PRODUCT LEVEL)	SEE PAGE
	1	1	**118-5503**	1	LOUVER AS	
C	2	1	**164-1178**	5	CLIP	
C	3	1	**172-8591**	16	NUT-SPRING	
Y	4	1	*183-4991*	1	COVER GP-CONSOLE	775
C	5	1	**202-6142**	1	CONSOLE-SIDE	
	6	1	**204-7341**	1	COVER-FUSE	
	7	1	**104-2091**	4	SCREW-FLAT HEAD (6-20X0.5 IN)	

C-CHANGE FROM PREVIOUS TYPE
Y-SEPARATE ILLUSTRATION

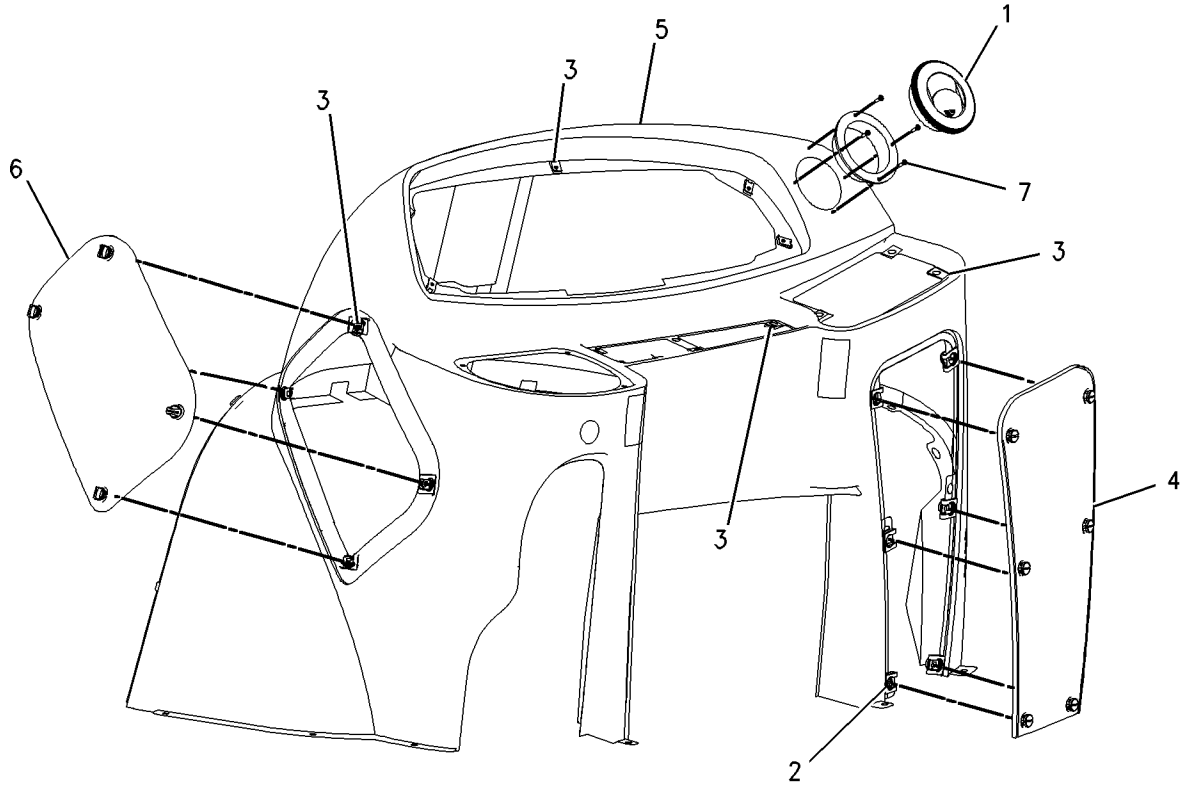

GRAPHIC #1 **<END>** g00859080

OPERATOR STATION

185-3530 CONSOLE GP-SIDE

S/N: FDP18400-UP

PART OF 184-9736, 238-6697, 239-5563, 239-5564 CANOPY AR

AN ATTACHMENT

SMCS-7451 **i01980650**

NOTE	REF NO	GRAPHIC REF	PART NUMBER	QTY	PART NAME 1 2 3 4 5 6 (PRODUCT LEVEL)	SEE PAGE
B	1	1	**9P-6571**	1	PLUG	
	2	1	**164-1107**	1	CONSOLE-STORAGE	
M	3	1	**178-9983**	4	LOCKNUT (M4X0.7 THD)	
Y	4	1	*183-4997*	1	CONSOLE GP-SIDE	769
	5	1	**184-6557**	1	CONSOLE	
	6	1	**205-9980**	4	SCREW-TRUSS HEAD	
M	7	1	**8T-3998**	4	BOLT (M4X0.7X12MM)	
	8	1	**9X-2038**	2	WASHER (7X19X2MM THK)	
M	9	1	**9X-2044**	5	SCREW-TRUSS HEAD (M6X1X16MM)	
M	10	1	**121-9870**	2	SCREW-MACHINE (M6X1X40MM)	

B-USE AS REQUIRED
M-METRIC PART
Y-SEPARATE ILLUSTRATION

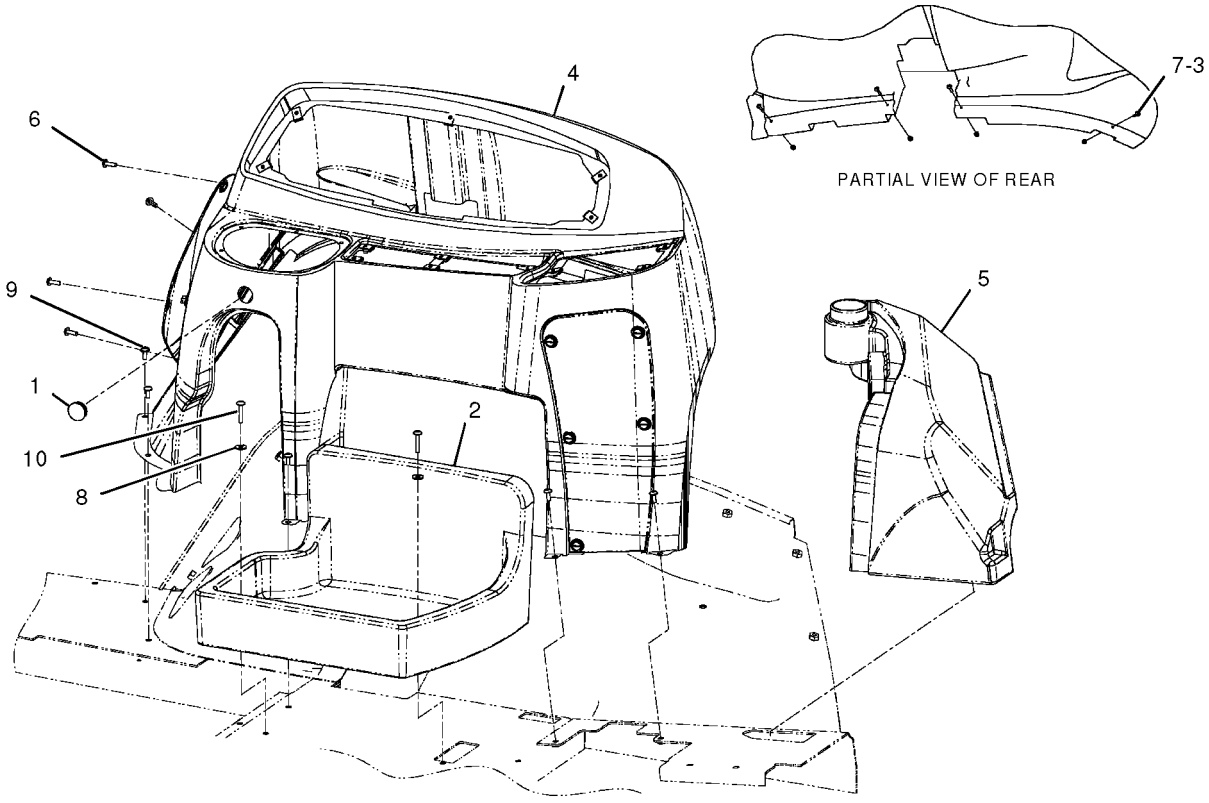

GRAPHIC #1 **<END>** g01026663

OPERATOR STATION

236-6937 CONSOLE GP-SIDE—LH, AIR CONDITIONING

S/N: FDP18400-UP

PART OF 236-6938 CONSOLE GP-SIDE

AN ATTACHMENT

SMCS-7451 **i01980961**

NOTE	REF NO	GRAPHIC REF	PART NUMBER	QTY	PART NAME 1 2 3 4 5 6 (PRODUCT LEVEL)	SEE PAGE
	1	1	**5P-9000**	1	LOCK AS-CYLINDER	
	2	1	**118-5503**	2	LOUVER AS	
	3	1	**164-1133**	1	COVER	
	4	1	**164-1134**	1	PIN	
	5	1	**188-7760**	1	PLATE	
	6	1	**200-2673**	1	PLATE	
	7	1	**232-4873**	1	CONSOLE-LH	
	8	1	**104-2091**	8	SCREW-FLAT HEAD (6-20X0.5 IN)	

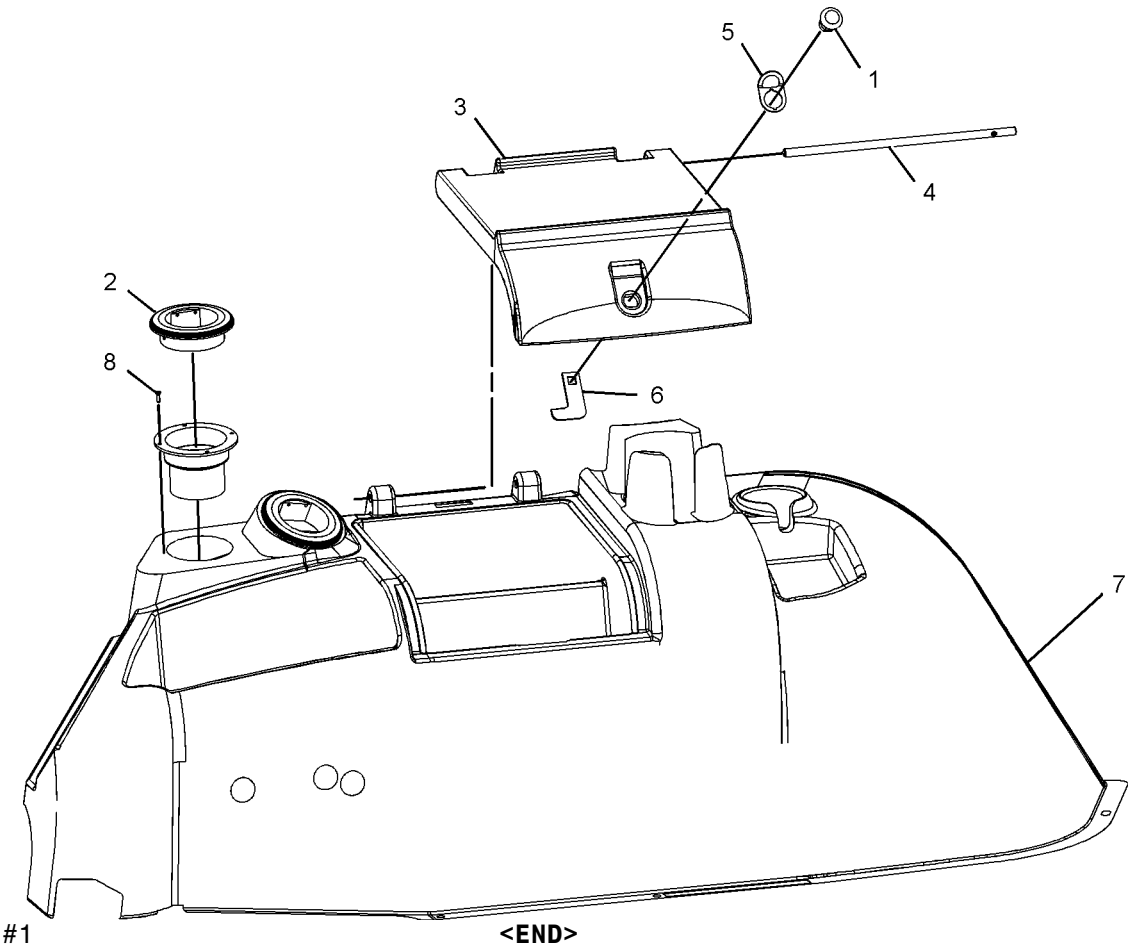

GRAPHIC #1 **<END>** g01022814

OPERATOR STATION

236-6938 CONSOLE GP-SIDE—LH, AIR CONDITIONING

S/N: FDP18400-UP

PART OF 202-5777, 244-5402 AIR CONDITIONER AR, 239-5566, 239-5568 CAB AR AN ATTACHMENT

SMCS-7451 **i01980955**

NOTE	REF NO	GRAPHIC REF	PART NUMBER	QTY	PART NAME 1 2 3 4 5 6 (PRODUCT LEVEL)	SEE PAGE
B	1	1	**9P-6571**	3	PLUG	
M	2	1	**178-9983**	3	LOCKNUT (M4X0.7 THD)	
	3	1	**232-4877**	1	DUCT-AIR	
Y	4	1	*236-6937*	1	CONSOLE GP-SIDE (LH)	772
M	5	1	**8T-3998**	3	BOLT (M4X0.7X12MM)	
	6	1	**9X-2038**	3	WASHER (7X19X2MM THK)	
M	7	1	**9X-2044**	3	SCREW-TRUSS HEAD (M6X1X16MM)	

B-USE AS REQUIRED
M-METRIC PART
Y-SEPARATE ILLUSTRATION

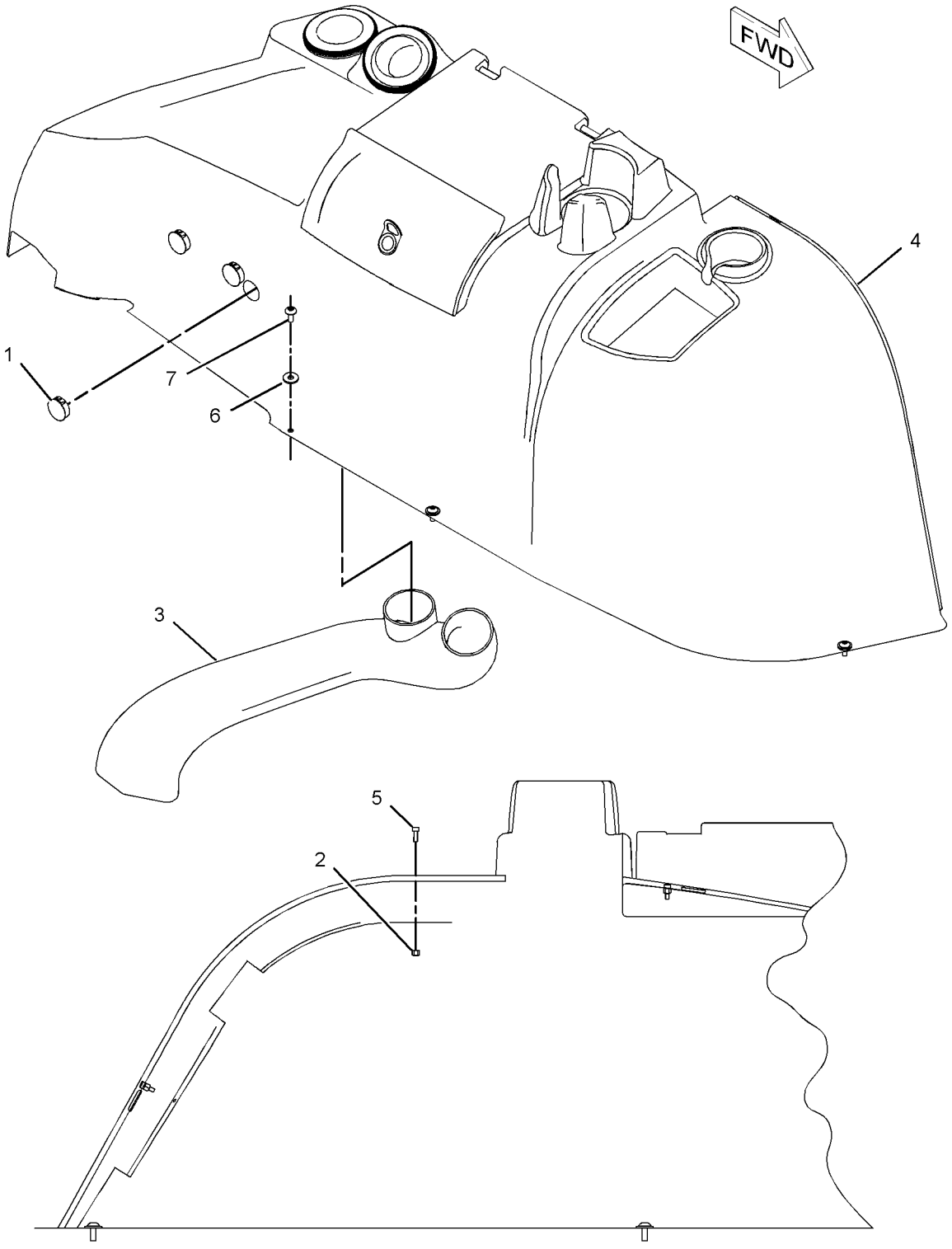

LEFT SIDE VIEW

GRAPHIC #1

<END>

g01023371

OPERATOR STATION

183-4991 COVER GP-CONSOLE

S/N: FDP18400-UP
BOOM LOCK
PART OF 183-4997, 183-4998 CONSOLE GP-SIDE
AN ATTACHMENT

SMCS-5258 **i01419851**

NOTE	REF NO	GRAPHIC REF	PART NUMBER	QTY	PART NAME 1 2 3 4 5 6 (PRODUCT LEVEL)	SEE PAGE
	1	1	**117-3789**	5	RETAINER-STUD	
	2	1	**164-1108**	1	COVER	
	3	1	**167-8251**	5	STUD	

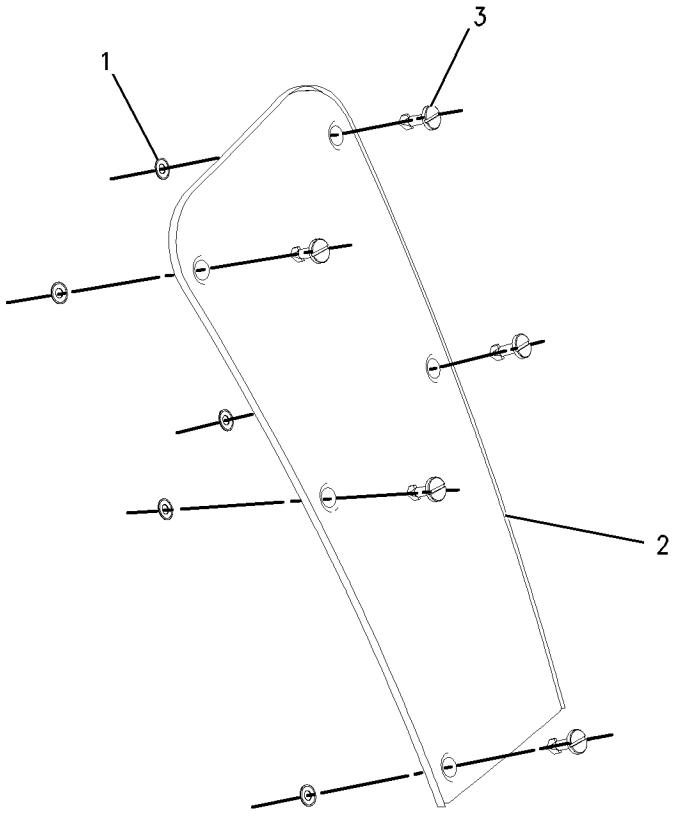

GRAPHIC #1 **<END>** g00744971

OPERATOR STATION

191-1784 COVER GP-CONSOLE

S/N: FDP18400-UP
VANDAL
AN ATTACHMENT

SMCS-5258 **i01697107**

NOTE	REF NO	GRAPHIC REF	PART NUMBER	QTY	PART NAME 1 2 3 4 5 6 (PRODUCT LEVEL)	SEE PAGE
	1	1	**9C-9785**	1	BUMPER	
	2	1	**124-8105**	1	PLATE	
	3	1	**130-7912**	1	SPRING	
	4	1	**130-7913**	2	WASHER	
	5	1	**130-7914**	1	BUSHING (40MM THK)	
	6	1	**186-5298**	1	FILM (BUCKET CONTROL)	
	7	1	**186-5300**	1	FILM (CONTROL PILOT LOADER)	
	8	1	**188-0861**	1	FILM (BUCKET MULTIPURPOSE)	
	9	1	**188-0864**	1	FILM-INSTRUCTION (AUXILIARY)	
	10	1	**194-9497**	1	SUPPORT AS	
	11	1	**194-9645**	1	COVER AS	
	12	1	**195-6523**	1	PLATE	
	13	1	**198-0102**	1	FILM (BUCKET)	
	14	1	**113-8277**	1	SCREW-PAN HEAD (8-32X12.7MM)	
J	15	1	**125-2086**	1	LOCK AS-CYLINDER	
M	16	1	**5C-2890**	1	NUT (M6X1 THD)	
M	17	1	**6V-7743**	1	LOCKNUT (M6X1 THD)	
M	18	1	**8T-3844**	1	BOLT (M6X1X70MM)	

J-REQUIRES A 5P8500 KEY
M-METRIC PART

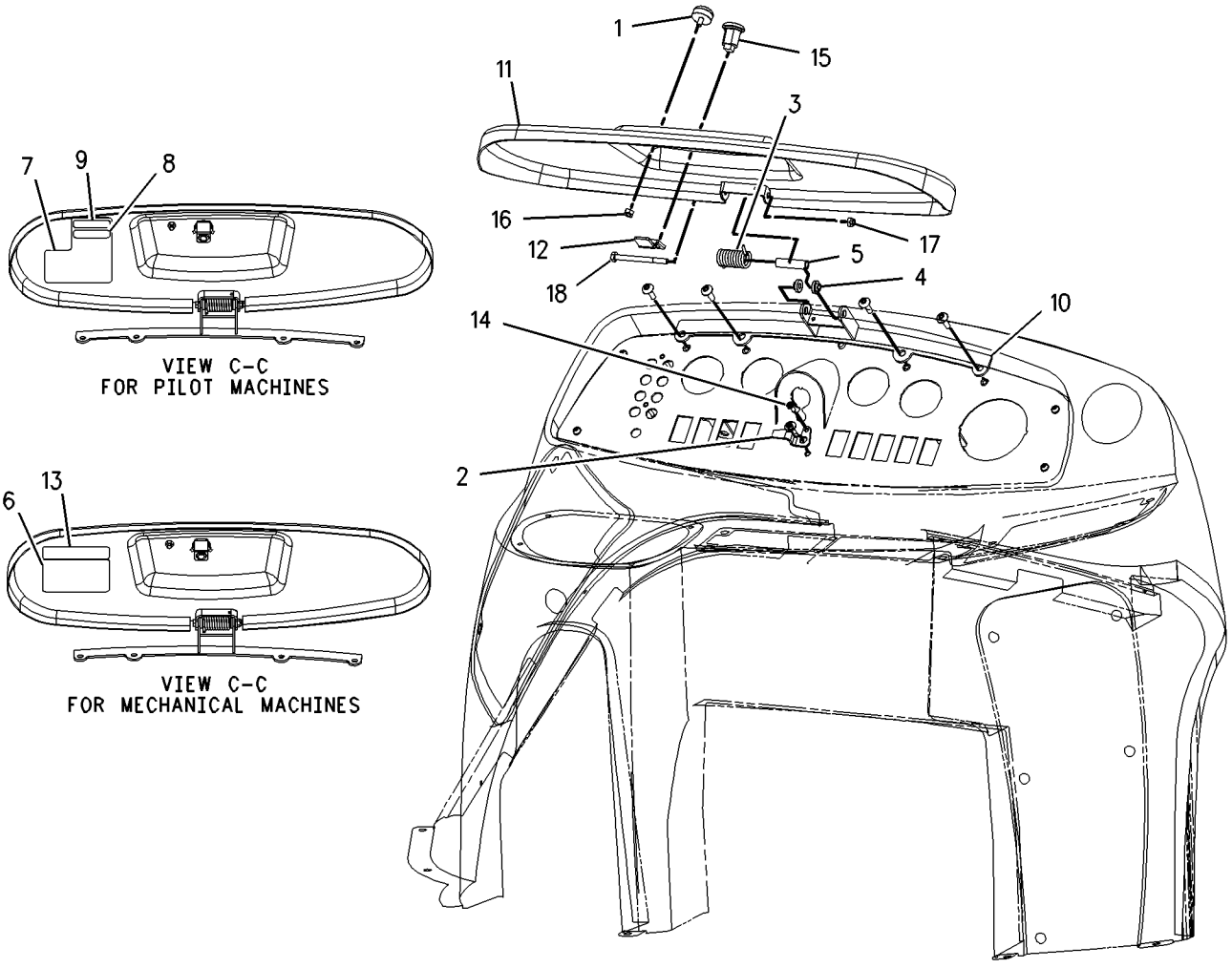

GRAPHIC #1 **<END>** g00867910

OPERATOR STATION

186-0252 COVER GP-FIREWALL

S/N: FDP18400-UP
LOWER
PART OF 184-9737, 184-9738, 239-5565, 239-5566, 239-5567, 239-5568, 244-1944 CAB AR, 184-9736, 238-6697, 239-5563, 239-5564 CANOPY AR AN ATTACHMENT

SMCS-7262 **i01668267**

NOTE	REF NO	GRAPHIC REF	PART NUMBER	QTY	PART NAME 1 2 3 4 5 6 (PRODUCT LEVEL)	SEE PAGE
	1	1	**164-1137**	1	COVER-FIREWALL	
	2	1	**9X-2038**	12	WASHER (7X19X2MM THK)	
M	3	1	**9X-2045**	12	SCREW-TRUSS HEAD (M6X1X20MM)	

M-METRIC PART

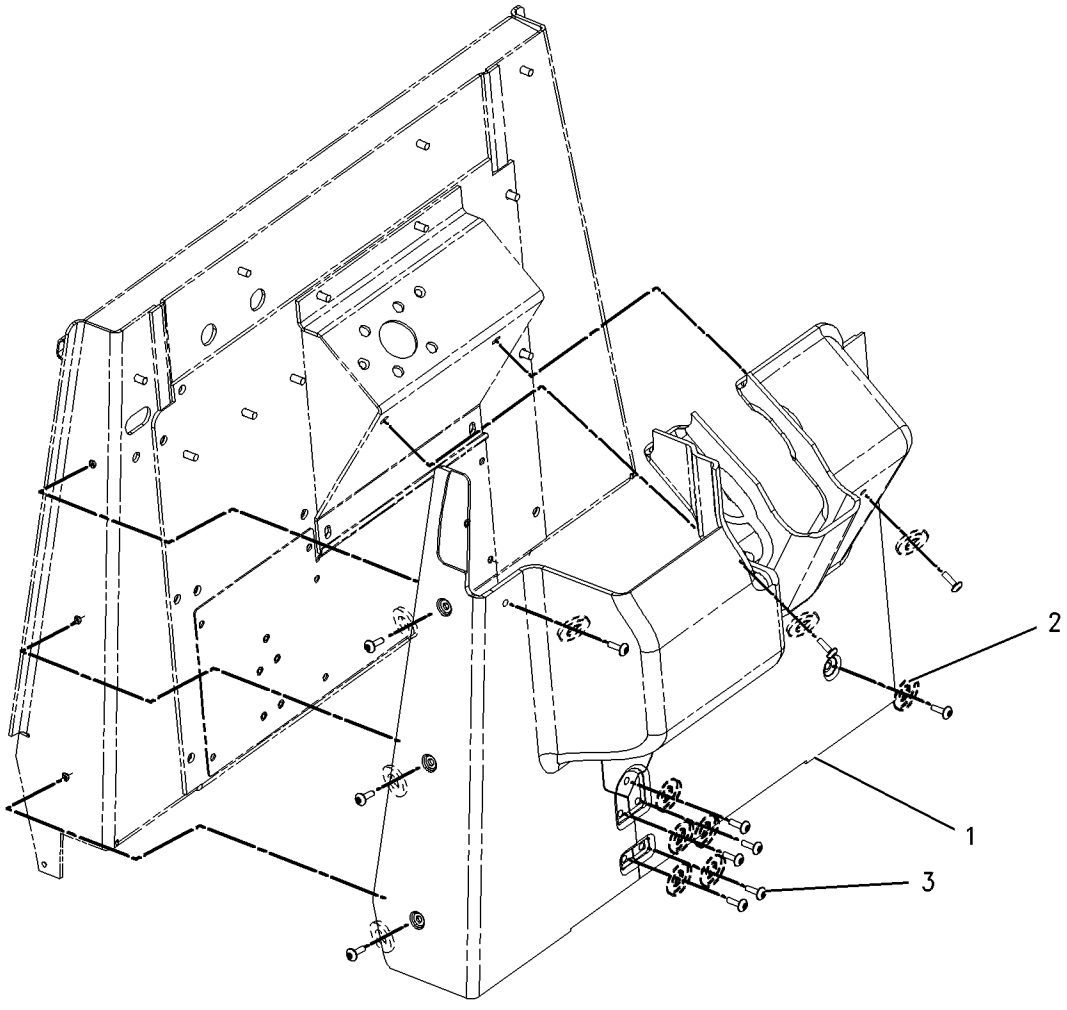

GRAPHIC #1 **<END>** g00861665

OPERATOR STATION

198-0104 COVER GP-FIREWALL

S/N: FDP18400-UP
UPPER
PART OF 184-9736, 238-6697, 239-5563, 239-5564 CANOPY AR
AN ATTACHMENT

SMCS-7262 **i01535914**

NOTE	REF NO	GRAPHIC REF	PART NUMBER	QTY	PART NAME 1 2 3 4 5 6 (PRODUCT LEVEL)	SEE PAGE
E	1	1	**126-8472**		SEAL (84CM)	
	2	1	**198-0103**	1	PLATE	
	3	1	**8T-4121**	1	WASHER-HARD (11X21X2.5MM THK)	
M	4	1	**8T-4137**	1	BOLT (M10X1.5X20MM)	

E-ORDER BY THE CENTIMETER
M-METRIC PART

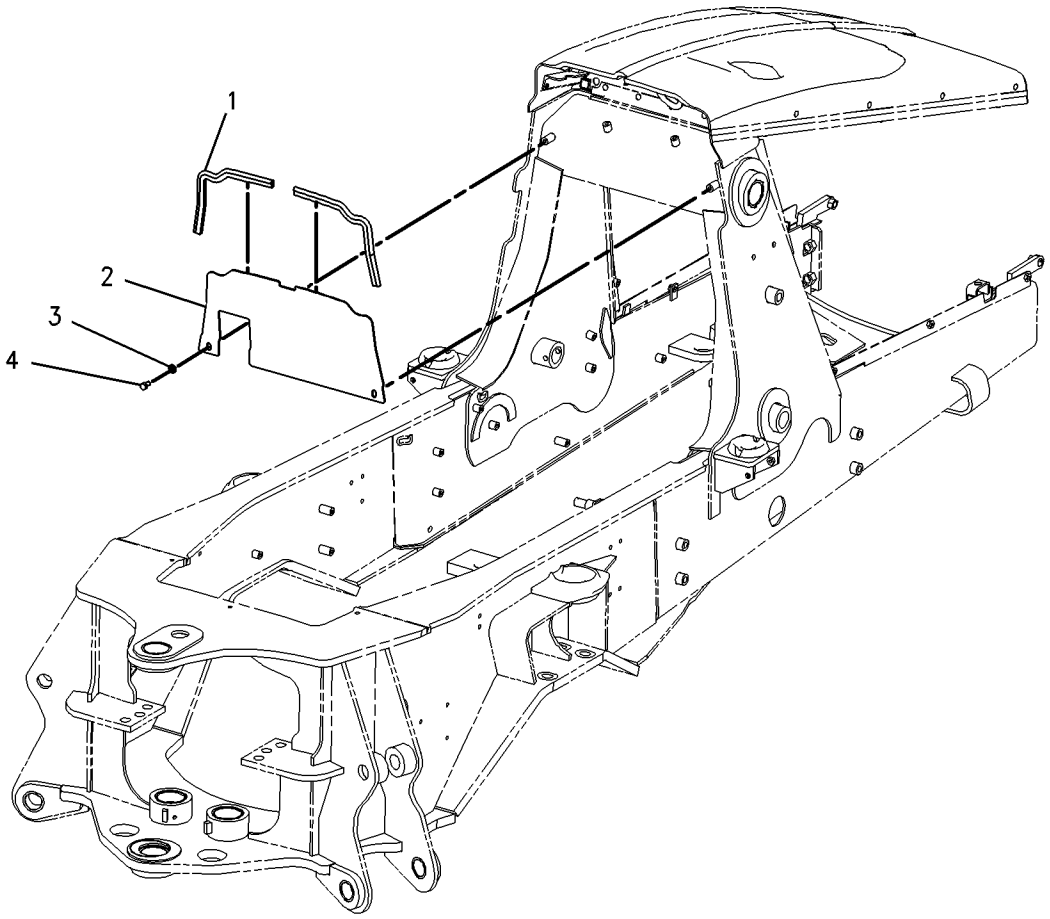

GRAPHIC #1 **<END>** g00797673

OPERATOR STATION

197-7564 COVER GP-POST–RH

S/N: FDP18400-UP
PART OF 184-9736, 238-6697, 239-5563 CANOPY AR
AN ATTACHMENT

SMCS-7329 **i02011806**

NOTE	REF NO	GRAPHIC REF	PART NUMBER	QTY	PART NAME 1 2 3 4 5 6 (PRODUCT LEVEL)	SEE PAGE
E	1	1	**129-1854**	5	FASTENER-LOOP (18CM EA)	
E	2	1	**129-1855**	5	FASTENER-HOOK (18CM EA)	
	3	1	**197-7230**	1	COVER-POST	
	4	1	**9X-2038**	2	WASHER (7X19X2MM THK)	
M	5	1	**9X-2042**	2	SCREW-TRUSS HEAD (M6X1X12MM)	
E	6	1	**129-1854**		FASTENER-LOOP (10CM)	
E	7	1	**129-1855**		FASTENER-HOOK (10CM)	
E	8	1	**129-1854**		FASTENER-LOOP (8CM)	
E	9	1	**129-1855**		FASTENER-HOOK (8CM)	

E-ORDER BY THE CENTIMETER
M-METRIC PART

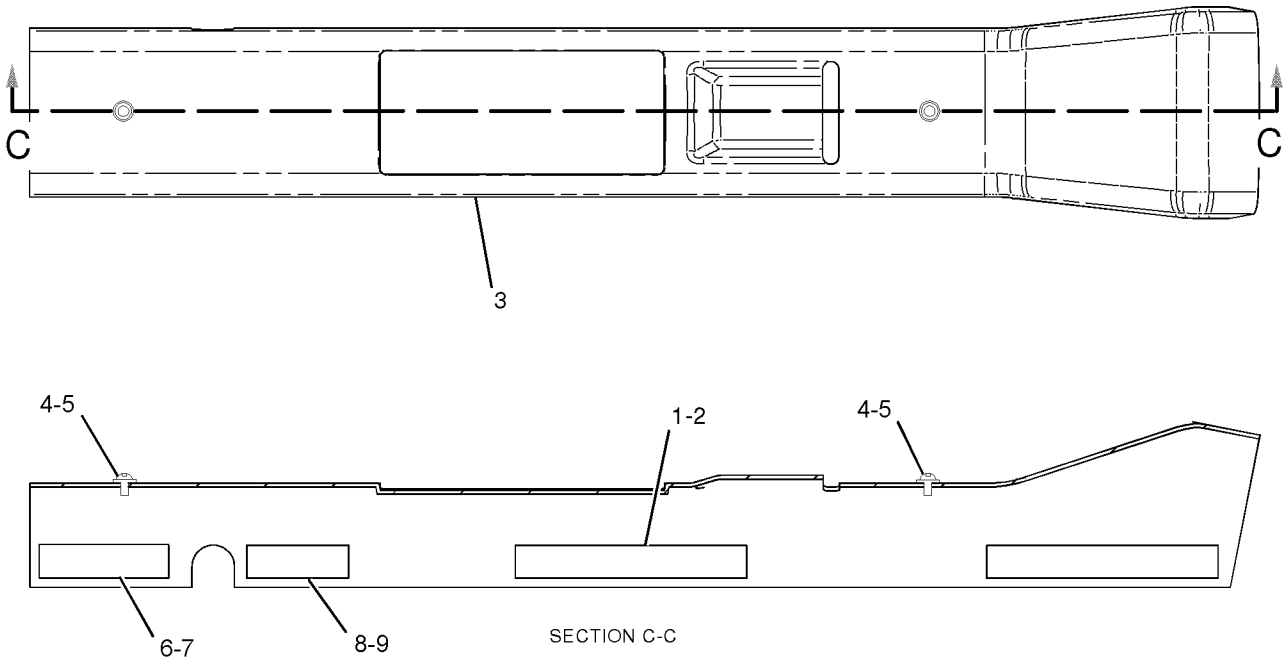

GRAPHIC #1 **<END>** g01028944

OPERATOR STATION

198-1289 COVER GP-POST–RH

S/N: FDP18400-UP
PART OF 239-5564 CANOPY AR
AN ATTACHMENT

SMCS-7329 **i01622428**

NOTE	REF NO	GRAPHIC REF	PART NUMBER	QTY	PART NAME 1 2 3 4 5 6 (PRODUCT LEVEL)	SEE PAGE
	1	1	**164-1156**	1	COVER	
	2	1	**206-4703**	1	COVER	
M	3	1	**9X-2041**	2	SCREW-TRUSS HEAD (M10X1.5X20MM)	
E	4	1	**129-1854**	6	FASTENER-LOOP (18CM)	
E	5	1	**129-1855**	6	FASTENER-HOOK (18CM)	

E-ORDER BY THE CENTIMETER
M-METRIC PART

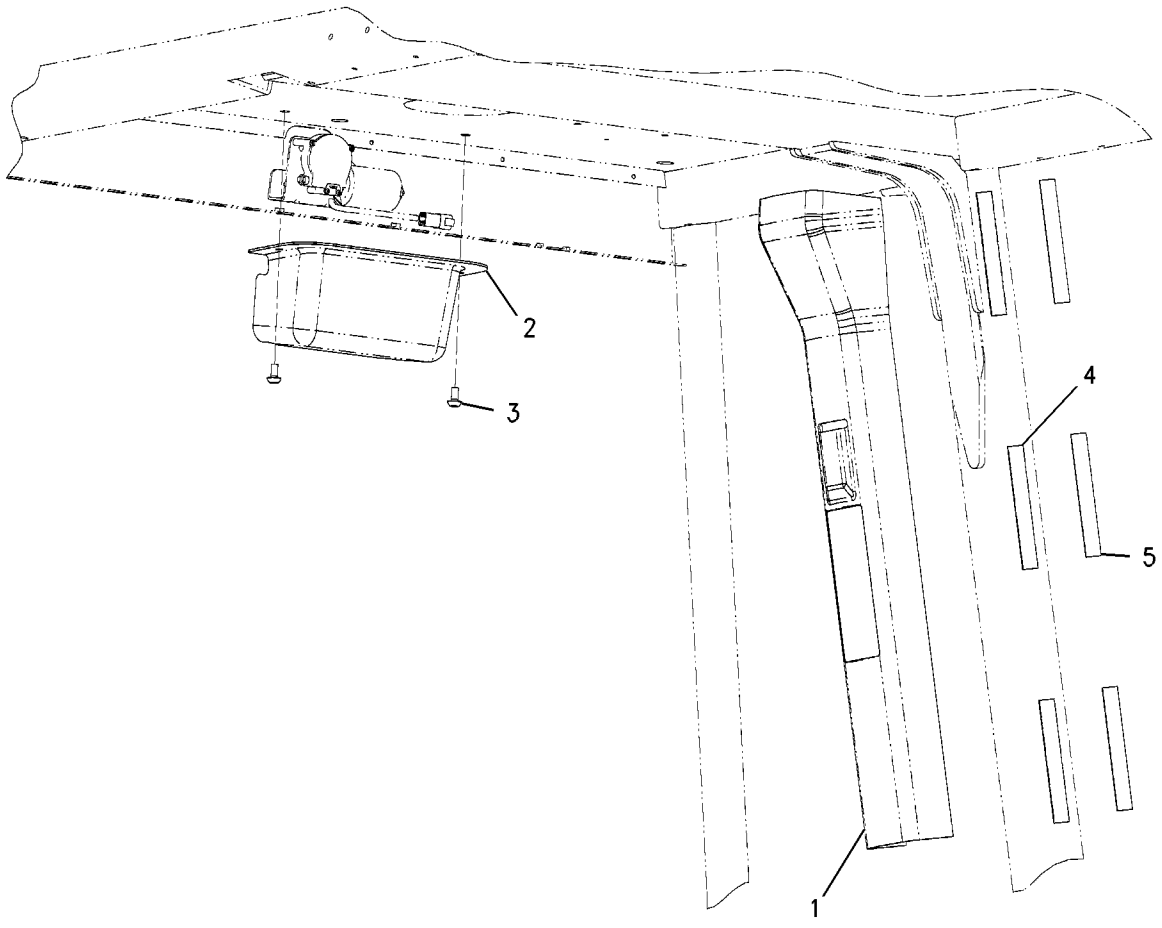

GRAPHIC #1 **<END>** g00840758

OPERATOR STATION

164-1062 DOOR GP-LH

S/N: FDP18400-UP
PART OF 164-1140, 180-7250 CAB GP
AN ATTACHMENT

SMCS-7308 **i01513678**

NOTE	REF NO	GRAPHIC REF	PART NUMBER	QTY	PART NAME 1 2 3 4 5 6 (PRODUCT LEVEL)	SEE PAGE
J	1	1	**159-4269**	1	SPRING AS-GAS	
E	2	1	**148-5355**		SEAL (478CM)	
	3	1	**5P-4116**	2	WASHER-HARD (8.8X20.5X2MM THK)	
M	4	1	**8T-4171**	1	BOLT (M6X1X12MM)	
	5	1	**7X-2497**	1	HANDLE-DOOR	
	6	1	**159-4953**	1	DOOR AS-LH	
		1	**154-5406**	1	PLATE	
M		1	**8T-3612**	1	NUT-WELD (M8X1.25 THD)	
		1	**8Y-7310**	2	HINGE AS-LH	
Y	7	1	*164-1074*	1	WINDOW GP-DOOR (LH)	856
L	8	1	**8Y-7264**	1	GLASS	
M	9	1	**8T-4180**	4	SCREW-MACHINE (M5X0.8X20MM)	
	10	1	**8Y-6386**	1	SEAL-HANDLE	
	11	1	**148-7319**	1	HANDLE AS-PADDLE	
	12	1	**147-3019**	2	BRACKET	
	13	1	**8Y-7306**	1	COVER	
M	14	1	**131-3987**	6	SCREW (M4X0.7X12MM)	
	15	1	**148-7311**	1	LATCH AS-ROTARY	
M	16	1	**8T-4181**	4	BOLT (M6X1X20MM)	
	17	1	**159-4946**	1	KEEPER-REAR (RH)	
					AVAILABLE REPAIR KIT(S):	
J			**161-9044**	1	KIT-FITTING (INCLUDES FITTING AND NUT)	

E-ORDER BY THE CENTIMETER
J-KIT MARKED J SERVICES PART MARKED J
L-MAY REQUIRE ADHESIVE
M-METRIC PART
Y-SEPARATE ILLUSTRATION

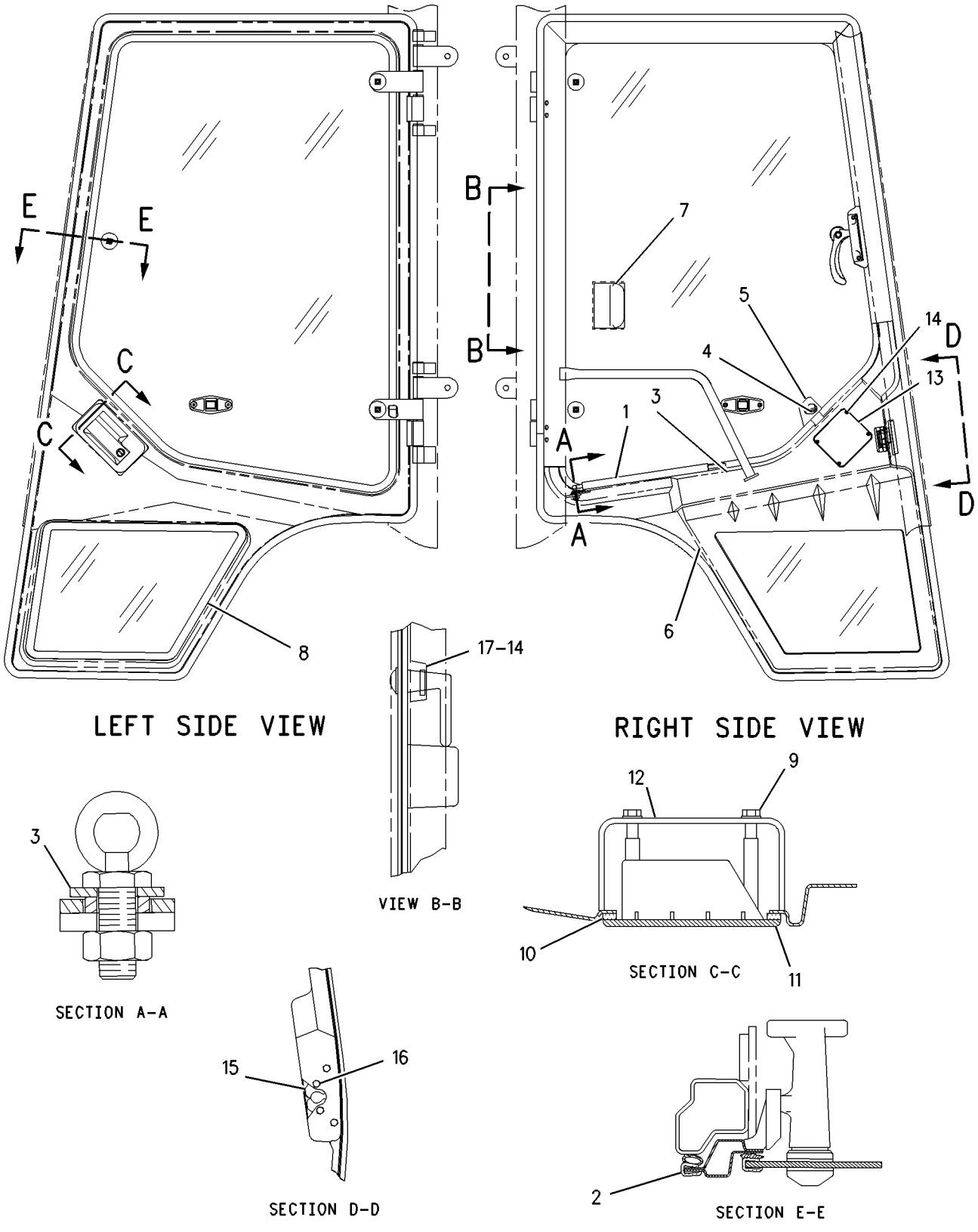

GRAPHIC #1 **<END>** g00755606

OPERATOR STATION

164-1061 DOOR GP-RH

S/N: FDP18400-UP
PART OF 164-1140, 180-7250 CAB GP
AN ATTACHMENT

SMCS-7308 **i01380266**

NOTE	REF NO	GRAPHIC REF	PART NUMBER	QTY	PART NAME 1 2 3 4 5 6 (PRODUCT LEVEL)	SEE PAGE
J	1	1	**159-4269**	1	SPRING AS-GAS	
E	2	1	**148-5355**		SEAL (478CM)	
	3	1	**5P-4116**	2	WASHER (8.8X20.5X2MM THK)	
M	4	1	**8T-4171**	1	BOLT (M6X1.0X12MM)	
	5	1	**7X-2497**	1	HANDLE-DOOR	
	6	1	**159-4954**	1	DOOR AS-RH	
M		1	**8T-3612**	1	NUT-WELD (M8X1.25 THD)	
		1	**8Y-7310**	2	HINGE AS-LH	
Y	7	1	**164-1073**	1	WINDOW GP-DOOR	854
	8	1	**8Y-7263**	1	GLASS	
M	9	1	**8T-4180**	4	SCREW-MACHINE (M5X0.8X20MM)	
	10	1	**8Y-6386**	1	SEAL-HANDLE	
L	11	1	**148-7318**	1	HANDLE AS-PADDLE	
	12	1	**147-3019**	2	BRACKET	
	13	1	**8Y-7306**	1	COVER	
M	14	1	**131-3987**	6	SCREW (M4X0.7X12MM)	
	15	1	**148-7310**	1	LATCH AS-ROTARY	
M	16	1	**8T-4181**	4	BOLT (M6X1X20MM)	
	17	1	**159-4945**	1	KEEPER-REAR	
					AVAILABLE REPAIR KIT(S):	
J			**161-9044**	1	KIT-FITTING	

E-ORDER BY THE CENTIMETER
J-REPAIR KIT MARKED J AVAILABLE FOR PART MARKED J
L-REQUIRES A 5P-8500 KEY
M-METRIC PART
Y-SEPARATE ILLUSTRATION

164-1061 DOOR GP-RH *(contd.)*

i01380266

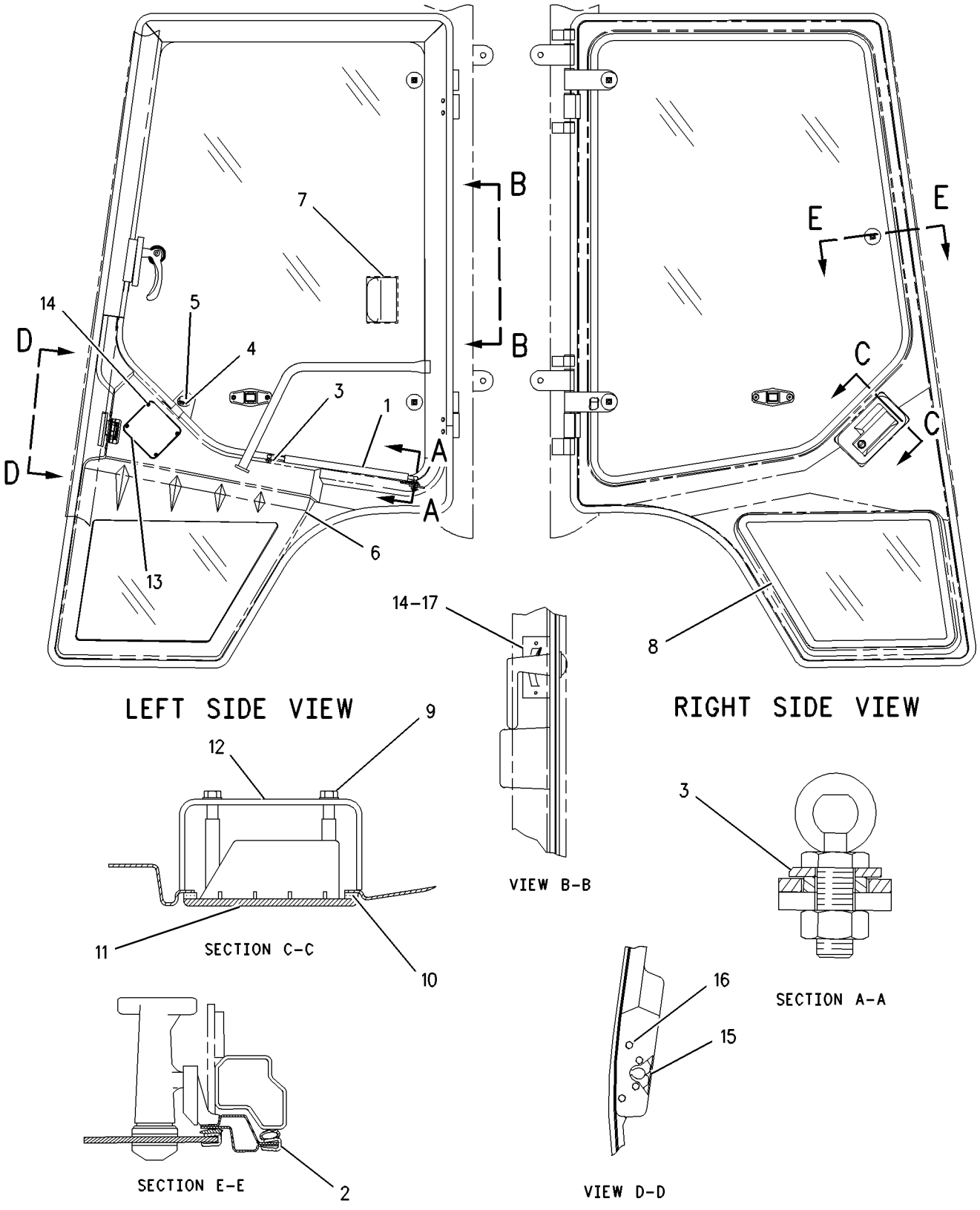

GRAPHIC #1

<END>

g00728856

OPERATOR STATION

164-1141 DUCT GP-AIR

S/N: FDP18400-UP
BASIC, STANDARD SHIFT
PART OF 192-4661, 192-4662, 192-4663, 198-4095, 214-6958, 214-6959, 214-6976, 214-6977 POWER TRAIN AR
AN ATTACHMENT

SMCS-734D **i01399213**

NOTE	REF NO	GRAPHIC REF	PART NUMBER	QTY	PART NAME 1 2 3 4 5 6 (PRODUCT LEVEL)	SEE PAGE
	1	1	**164-1043**	1	DUCT AS-FRONT	
	2	1	**164-1198**	1	BOOT	
	3	1	**164-1368**	4	CLIP	
	4	1	**184-6562**	1	PLATE	
	5	1	**184-6563**	1	GASKET	
	6	1	**185-3528**	1	SEAL	
M	7	1	**9X-2042**	2	SCREW-TRUSS HEAD (M6X1.0X12MM)	

M-METRIC PART

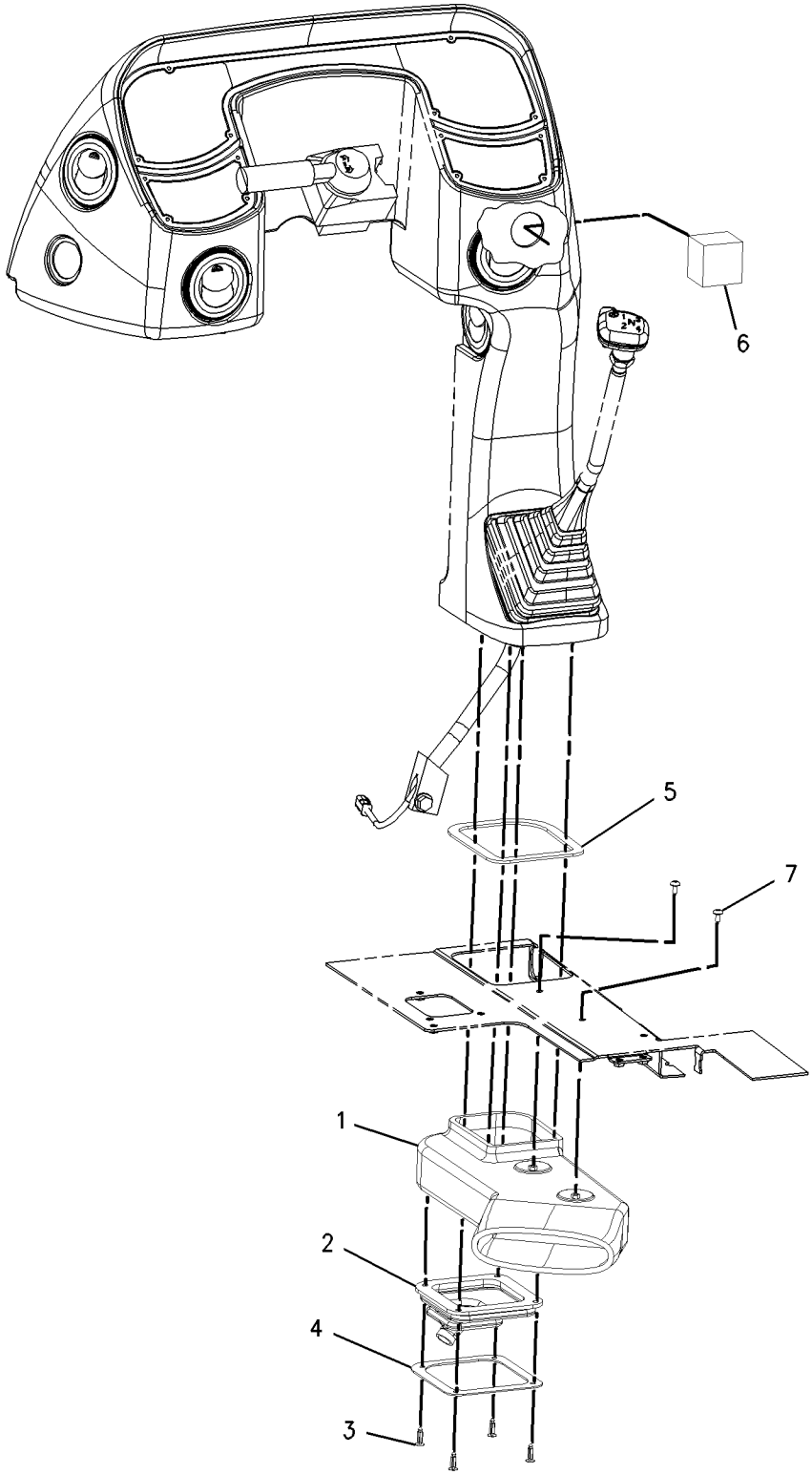

GRAPHIC #1 **<END>** g00739067

OPERATOR STATION

164-1142 DUCT GP-AIR

S/N: FDP18400-UP
POWERSHIFT
PART OF 192-4659, 214-6978 POWER TRAIN AR
AN ATTACHMENT

SMCS-734D **i01430388**

NOTE	REF NO	GRAPHIC REF	PART NUMBER	QTY	PART NAME 1 2 3 4 5 6 (PRODUCT LEVEL)	SEE PAGE
	1	1	**164-1044**	1	DUCT AS	
	2	1	**184-6563**	1	GASKET	
	3	1	**185-3528**	1	SEAL	
M	4	1	**9X-2042**	2	SCREW-TRUSS HEAD (M6X1X12MM)	

M-METRIC PART

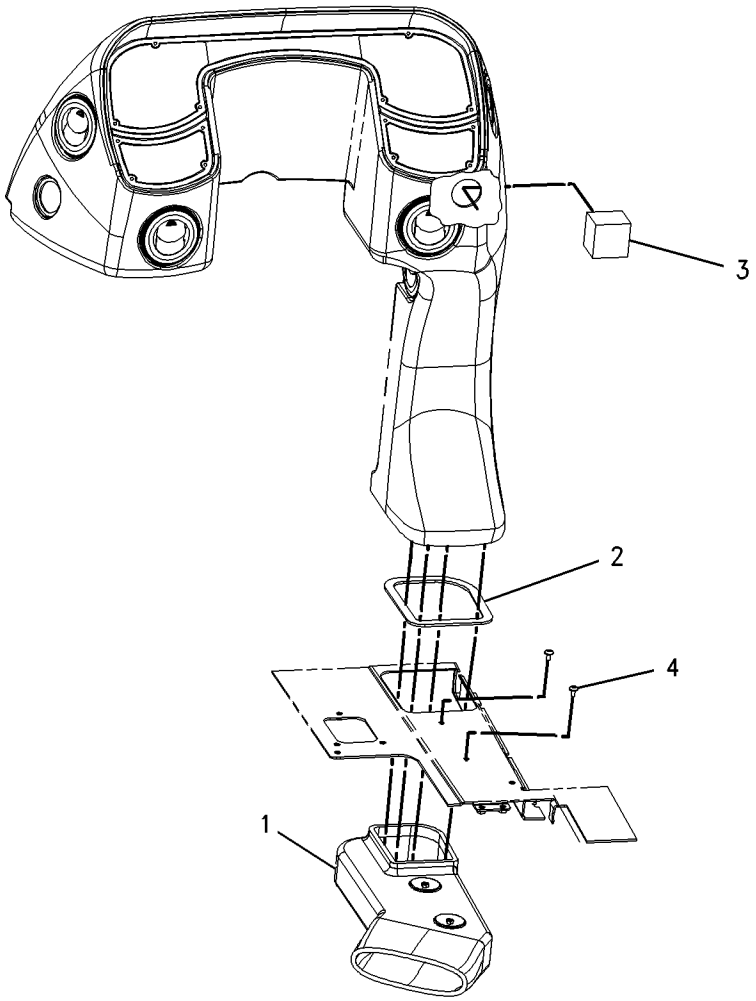

GRAPHIC #1 **<END>** g00750274

OPERATOR STATION

184-6575 DUCT GP-AIR

S/N: FDP18400-UP
HEATER
PART OF 164-1030 HEATER & MTG GP-CAB
AN ATTACHMENT

SMCS-734D **i01385576**

NOTE	REF NO	GRAPHIC REF	PART NUMBER	QTY	PART NAME 1 2 3 4 5 6 (PRODUCT LEVEL)	SEE PAGE
	1	1	**151-5715**	1	LOUVER AS	
	2	1	**164-8473**	2	LOUVER AS	
	3	1	**184-6555**	1	DUCT-AIR	
	4	1	**104-2091**	8	SCREW-FLAT HEAD (NO.6-20X0.5IN)	
	5	1	**148-3626**	2	SCREW-FLAT HEAD	

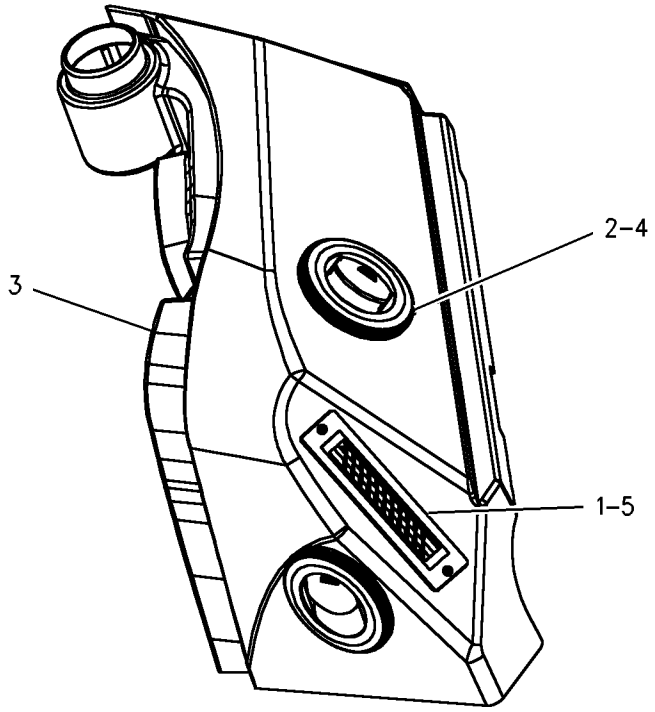

GRAPHIC #1 **<END>** g00732842

OPERATOR STATION

180-5760 FLOOR MAT GP

S/N: FDP18400-UP

PART OF 244-5402 AIR CONDITIONER AR, 238-6697 CANOPY AR

AN ATTACHMENT

SMCS-7265 **i01374872**

NOTE	REF NO	GRAPHIC REF	PART NUMBER	QTY	PART NAME 1 2 3 4 5 6 (PRODUCT LEVEL)	SEE PAGE
	1	1	**180-5750**	1	FLOOR MAT	
	2	1	**180-5754**	2	PLATE	
	3	1	**1H-3244**	4	LOCKWASHER	
M	4	1	**9X-2045**	4	SCREW-TRUSS HEAD (M6X1X20MM)	

M-METRIC PART

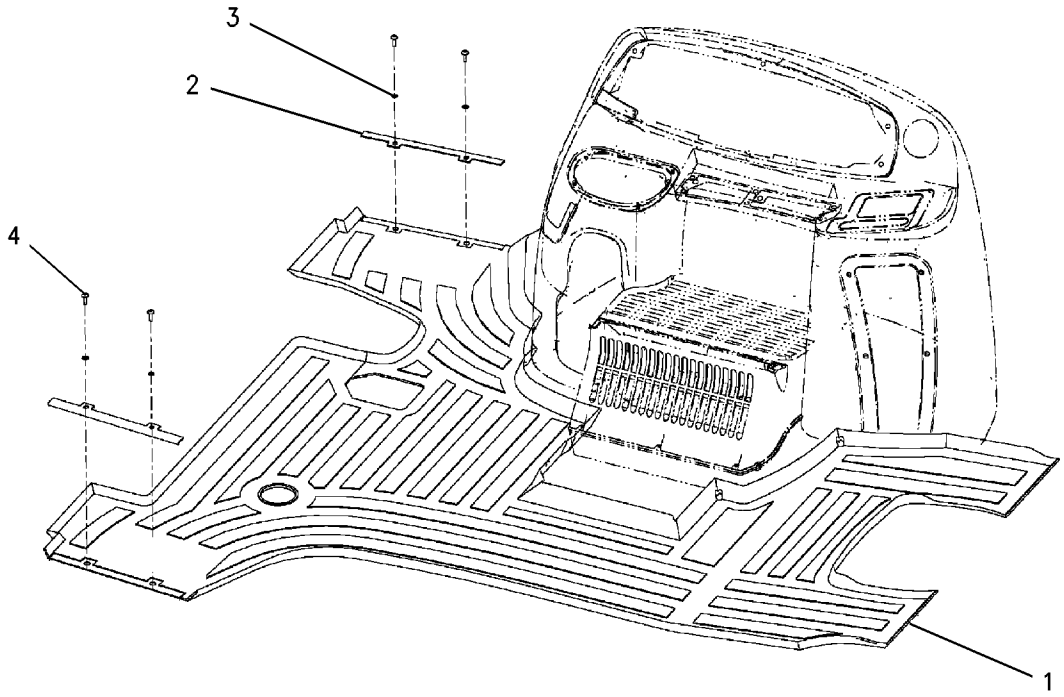

GRAPHIC #1 **<END>** g00727772

OPERATOR STATION

180-5761 FLOOR MAT GP

S/N: FDP18400-UP
PILOT CONTROLS, CAB
PART OF 239-5565, 239-5567 CAB AR
AN ATTACHMENT

SMCS-7265 **i01379579**

NOTE	REF NO	GRAPHIC REF	PART NUMBER	QTY	PART NAME 1 2 3 4 5 6 (PRODUCT LEVEL)	SEE PAGE
	1	1	**180-5751**	1	FLOOR MAT	
	2	1	**180-5754**	2	PLATE	
	3	1	**1H-3244**	4	LOCKWASHER	
M	4	1	**9X-2045**	4	SCREW-TRUSS HEAD (M6X1X20MM)	

M-METRIC PART

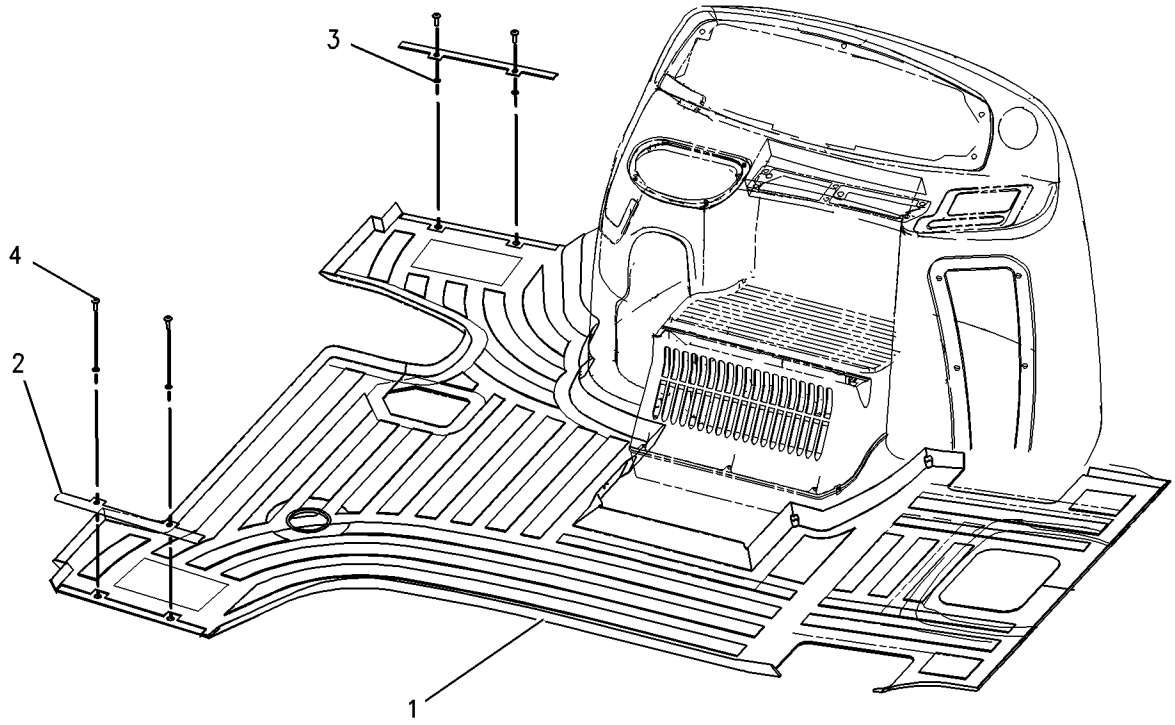

GRAPHIC #1 **<END>** g00728979

OPERATOR STATION

180-5766 FLOOR MAT GP

S/N: FDP18400-UP
PILOT CONTROLS, CANOPY
PART OF 184-9736, 239-5563, 239-5564 CANOPY AR
AN ATTACHMENT

SMCS-7265 **i01376511**

NOTE	REF NO	GRAPHIC REF	PART NUMBER	QTY	PART NAME 1 2 3 4 5 6 (PRODUCT LEVEL)	SEE PAGE
	1	1	**180-5754**	2	PLATE	
	2	1	**180-5756**	1	FLOOR MAT	
	3	1	**1H-3244**	4	LOCKWASHER	
M	4	1	**9X-2045**	4	SCREW-TRUSS HEAD (M6X1X20MM)	

M-METRIC PART

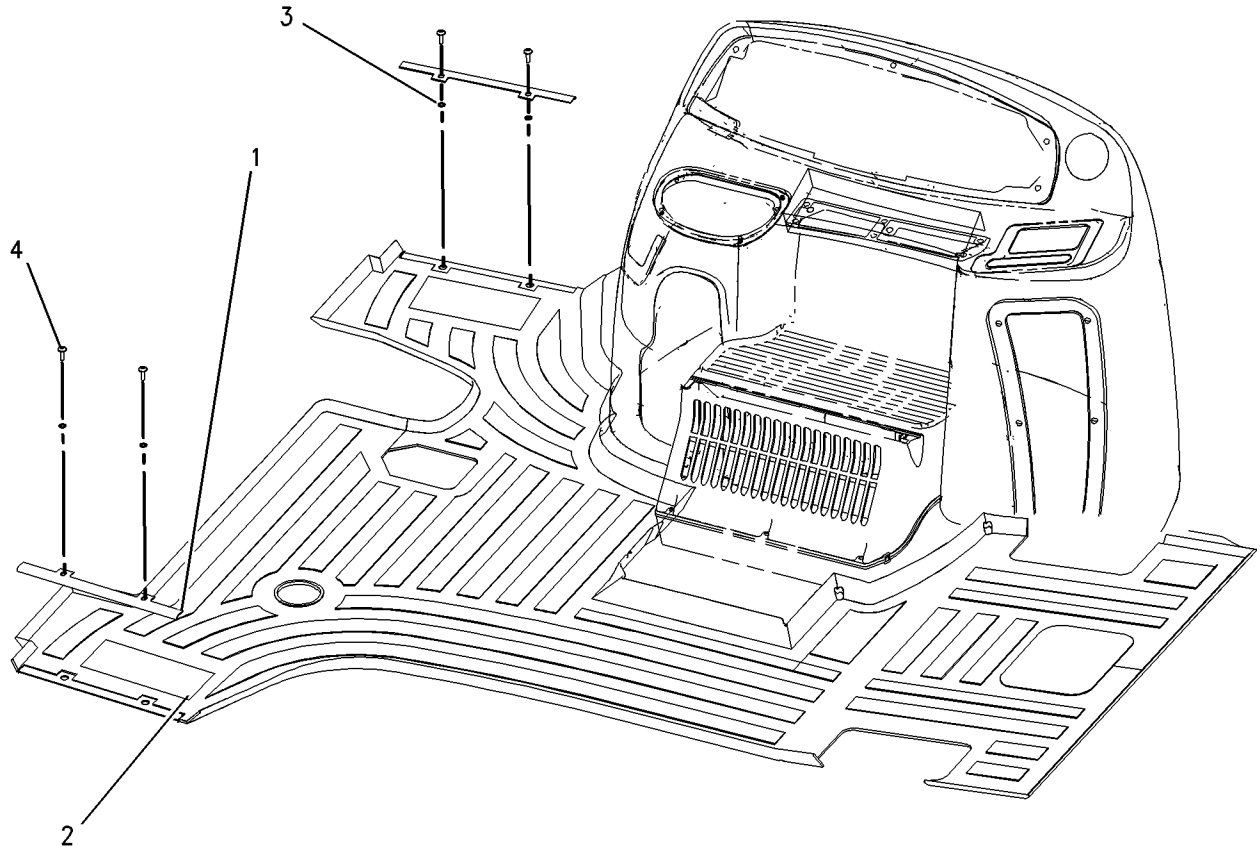

GRAPHIC #1 **<END>** g00727845

OPERATOR STATION

236-6967 FLOOR MAT GP

S/N: FDP18400-UP
PILOT CONTROLS,AIR CONDITIONER
PART OF 202-5777 AIR CONDITIONER AR, 239-5566, 239-5568 CAB AR
AN ATTACHMENT

SMCS-7265 **i01980947**

NOTE	REF NO	GRAPHIC REF	PART NUMBER	QTY	PART NAME 1 2 3 4 5 6 (PRODUCT LEVEL)	SEE PAGE
	1	1	**180-5754**	2	PLATE (FLOOR MAT)	
	2	1	**236-4836**	1	FLOOR MAT	
	3	1	**1H-3244**	4	LOCKWASHER	
M	4	1	**9X-2045**	4	SCREW-TRUSS HEAD (M6X1X20MM)	

M-METRIC PART

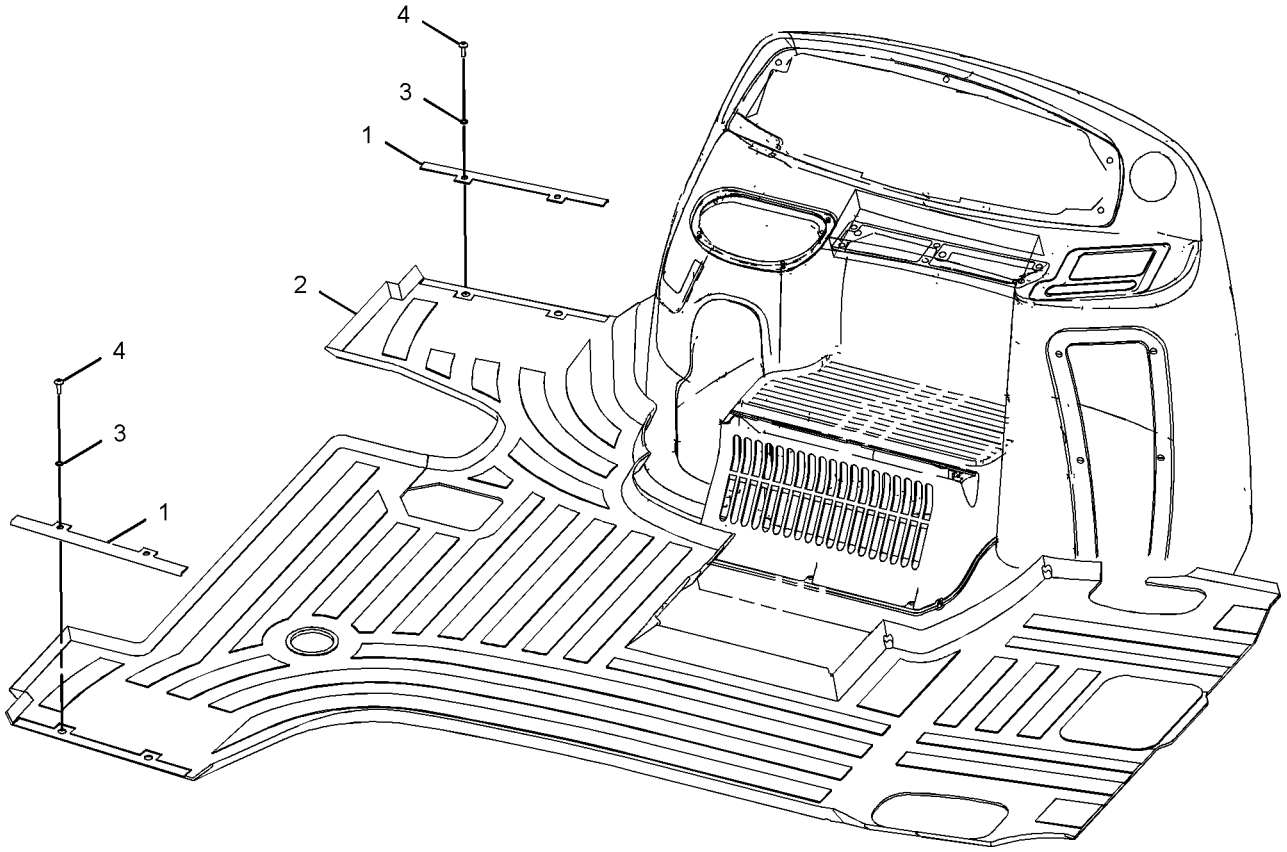

GRAPHIC #1 **<END>** g01023462

OPERATOR STATION

192-4018 FOOTREST GP

S/N: FDP18400-UP
PART OF 210-8524 HYDRAULIC AR, 186-4959 INSTALLATION AR-BANK VALVE, 215-1511
VALVE AR-BANK 5
AN ATTACHMENT

SMCS-0635 **i01440216**

NOTE	REF NO	GRAPHIC REF	PART NUMBER	QTY	PART NAME 1 2 3 4 5 6 (PRODUCT LEVEL)	SEE PAGE
	1	1	**192-4019**	1	BRACKET AS	
M	2	1	**6V-7743**	2	LOCKNUT (M6X1 THD)	
	3	1	**9X-8256**	2	WASHER (6.6X12X2MM THK)	

M-METRIC PART

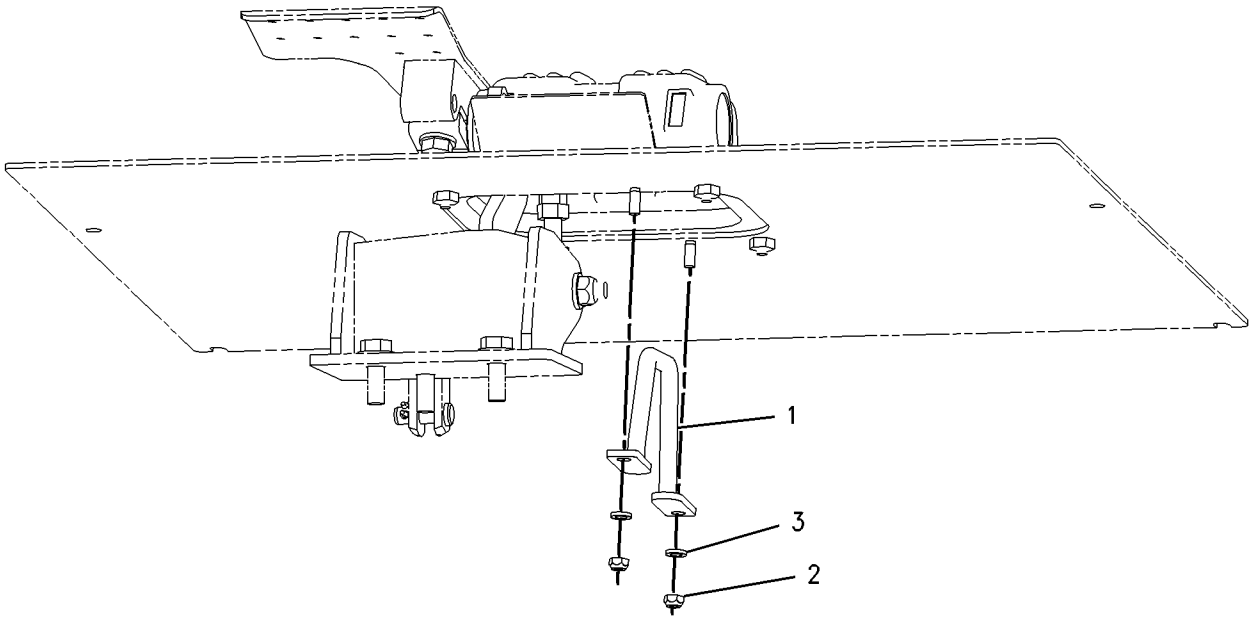

GRAPHIC #1 **<END>** g00754480

OPERATOR STATION

164-1030 HEATER & MTG GP-CAB

S/N: FDP18400-UP
PART OF 239-5565, 239-5567 CAB AR
AN ATTACHMENT

SMCS-7304 **i01945027**

NOTE	REF NO	GRAPHIC REF	PART NUMBER	QTY	PART NAME 1 2 3 4 5 6 (PRODUCT LEVEL)	SEE PAGE
	1	1	**6L-4725**	2	CLAMP-HOSE	
	2	1	**8Y-5737**	1	CLAMP	
	3	1	**9M-7959**	1	CLAMP (HOSE)	
	4	1	**9R-9901**	5	FASTENER (CLIP)	
	5	1	**110-6109**	1	KNOB-CONTROL	
	6	1	**130-4832**	2	SCREW (8-18X.39 IN)	
	7	1	**164-1037**	1	DUCT	
	8	1	**164-1196**	1	CABLE AS	
		1	**143-8874**	1	BOOT	
Y	9	1	**170-0076**	1	HEATER GP-CAB	797
	10	1	**184-6560**	1	BRACKET	
	11	1	**184-6561**	1	HOSE-AIR	
	12	1	**184-6564**	1	GASKET	
	13	1	**184-6567**	1	GASKET	
	14	1	**184-6572**	1	INSULATION	
	15	1	**184-6573**	1	INSULATION	
	16	1	**184-6574**	1	INSULATION	
Y	17	1	*184-6575*	1	DUCT GP-AIR	789
	18	1	**190-5132**	1	FILM-CONTROL (AIR CONDITIONER)	
	19	1	**194-5622**	1	VALVE AS (WATER)	
	19A	1	**6V-6717**	1	SCREW-WASHER HEAD (8-32X.375 IN)	
		1	**124-0312**	2	SCREW-PAN HEAD (8-16X.32 IN)	
	20	1	**206-7512**	1	COVER	
	21	1	**206-7513**	2	BRACKET	
	22	1	**206-7514**	1	FILTER (HEATER)	
	23	1	**2H-3920**	1	LOCKWASHER	
M	24	1	**9X-2042**	2	SCREW-TRUSS HEAD (M6X1X12MM)	
M	25	1	**9X-2044**	2	SCREW-TRUSS HEAD (M6X1X16MM)	
M	26	1	**9X-2045**	2	SCREW-TRUSS HEAD (M6X1X20MM)	
E	27	1	**5P-3915**		HOSE (30CM)	
E	28	1	**6V-6813**		HOSE (40CM)	

E-ORDER BY THE CENTIMETER
M-METRIC PART
Y-SEPARATE ILLUSTRATION

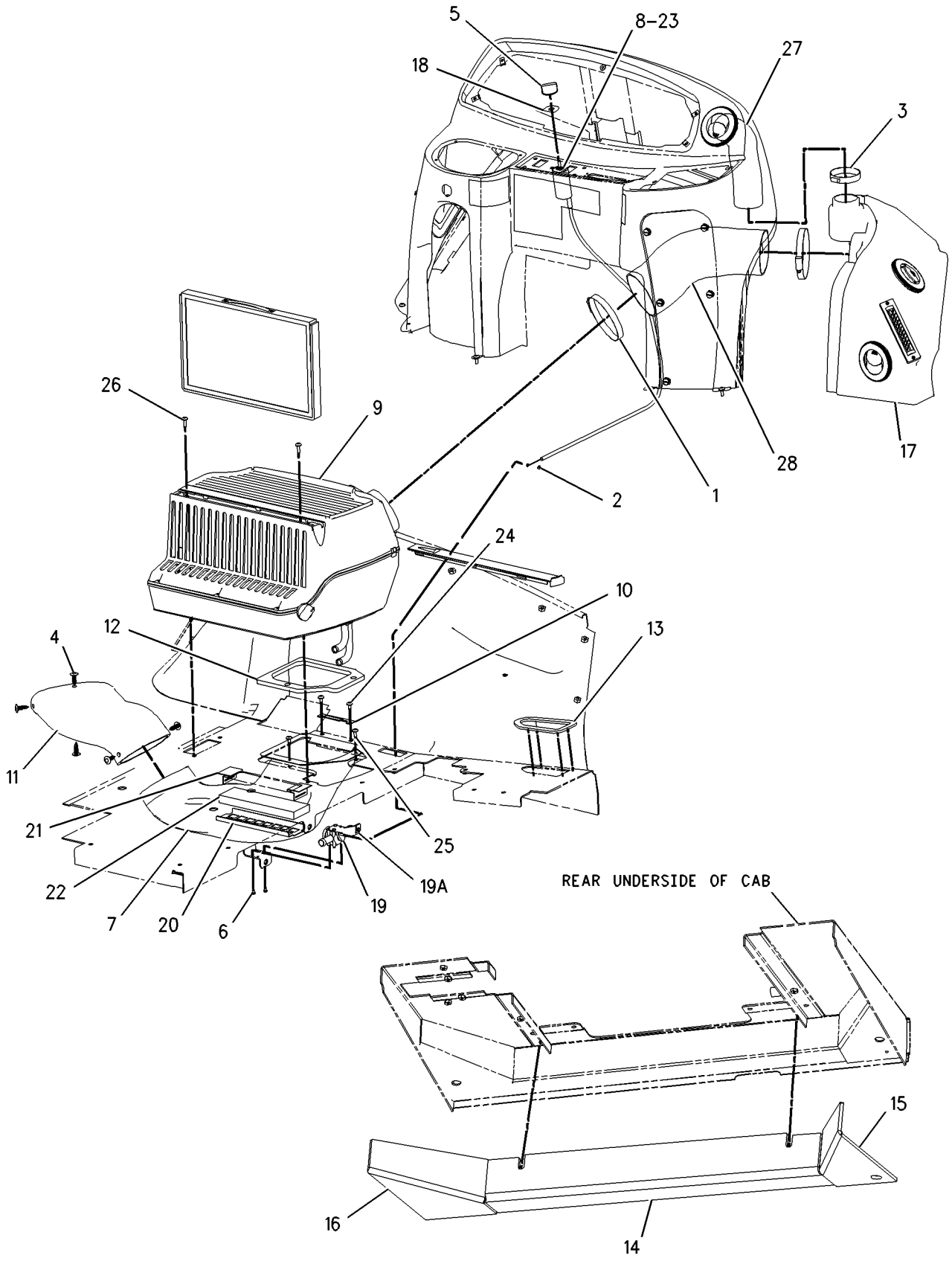

GRAPHIC #1 **<END>** g00960148

OPERATOR STATION

170-0076 HEATER GP-CAB

S/N: FDP18400-UP
BASIC
PART OF 164-1030 HEATER & MTG GP-CAB
AN ATTACHMENT

SMCS-7304 **i01944369**

NOTE	REF NO	GRAPHIC REF	PART NUMBER	QTY	PART NAME 1 2 3 4 5 6 (PRODUCT LEVEL)	SEE PAGE
	1	1	**164-6613**	1	COIL AS-HEATER	
		1	**201-1637**	1	GASKET	
		1	**201-1638**	1	GASKET	
	2	1	**168-2313**	1	FAN AS	
		1	**7T-0093**	2	PIN-CONNECTOR	
	3	1	**170-7269**	1	COVER	
	4	1	**170-7270**	1	CASE AS	
		1	**6C-3680**	4	RIVET-POP	
M		1	**129-3178**	4	LOCKNUT (M6X1 THD)	
		1	**188-2711**	1	GUARD AS	
	5	1	**170-7271**	1	COVER	
	6	1	**170-7272**	1	FILTER-AIR (CAB)	
	7	1	**170-7281**	1	GASKET	
	8	1	**170-7282**	1	GASKET	
	9	1	**185-4015**	4	CLIP	
	10	1	**188-2704**	1	GASKET	
	11	1	**188-2706**	4	GASKET	
	12	1	**188-2708**	1	GASKET	
	13	1	**188-2715**	1	BRACKET	
	14	1	**199-3729**	1	DOOR AS	
		1	**191-6033**	1	CONTROL AS	
		1	**191-6035**	1	RETAINER	
		1	**201-1634**	1	LINK	
	15	1	**204-9921**	1	RESISTOR AS	
	16	1	**206-7398**	1	KNOB-CONTROL	
	17	1	**213-9270**	1	FILM (AIR RECIRCULATION)	
	18	1	**2S-3745**	4	SCREW-TAPPING (10-16X.5 IN)	
	19	1	**5P-7921**	3	SCREW-WASHER HEAD (1/4-20X3/4 IN)	
	20	1	**6V-6717**	2	SCREW-WASHER HEAD (8-32X.375 IN)	
M	21	1	**6V-7357**	4	BOLT (M6X1.0X25MM)	
	22	1	**8T-4205**	4	WASHER-HARD (7.2X14.5X2MM THK)	

M-METRIC PART

170-0076 HEATER GP-CAB *(contd.)* i01944369

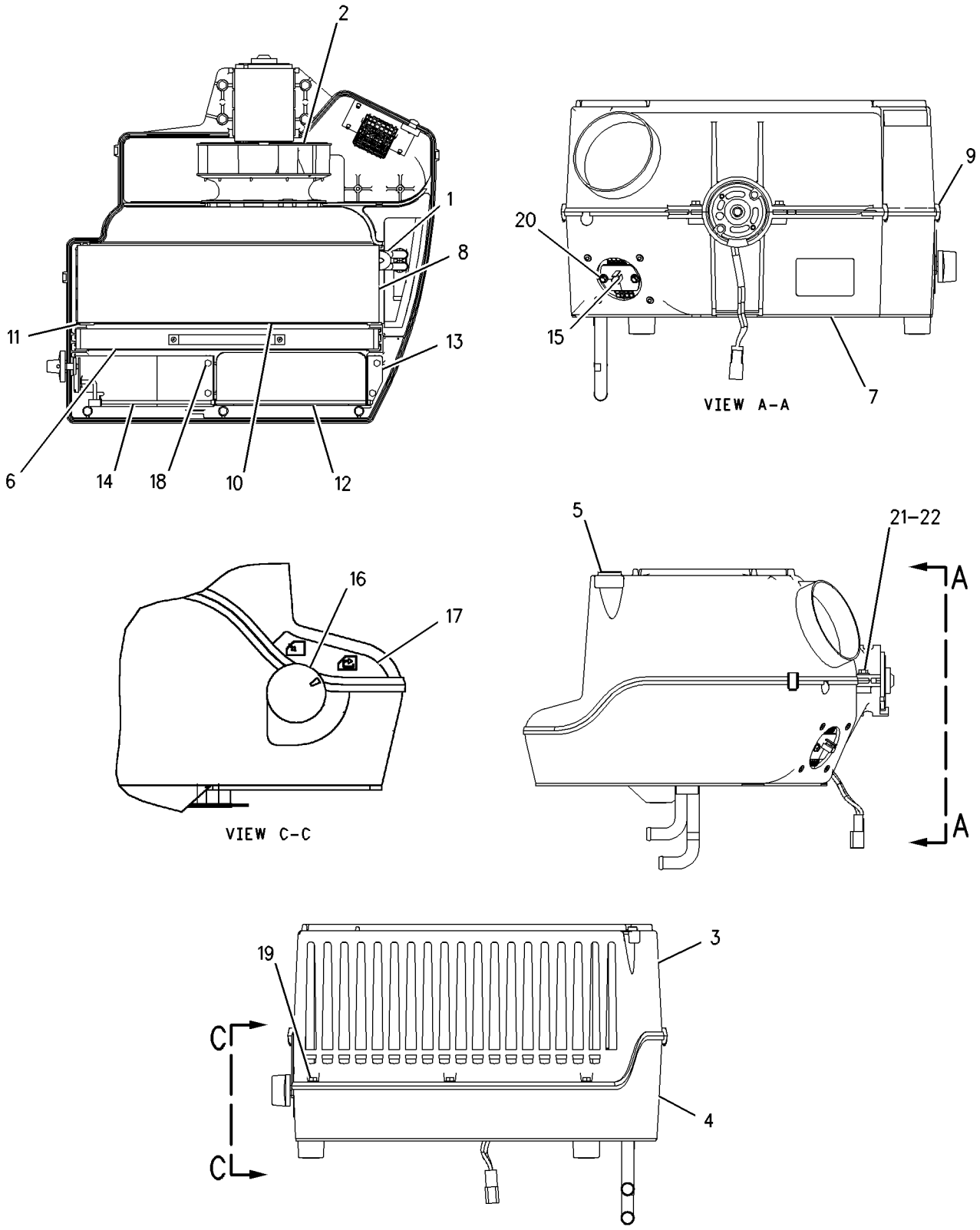

GRAPHIC #1 **<END>** g00952802

OPERATOR STATION

193-2342 HORN GP-ELECTRIC

S/N: FDP18400-UP
REAR
AN ATTACHMENT

SMCS-7402 **i01656633**

NOTE	REF NO	GRAPHIC REF	PART NUMBER	QTY	PART NAME 1 2 3 4 5 6 (PRODUCT LEVEL)	SEE PAGE
B	1	1	**3S-2093**	1	STRAP-CABLE	
	2	1	**164-9425**	1	HORN AS	
	3	1	**169-0587**	1	SWITCH AS (HORN)	
		1	**111-7899**	1	GASKET	
	4	1	**096-4415**	1	LOCKWASHER	
B	5	1	**4P-8134**	1	CLIP	
M	6	1	**8T-4133**	1	NUT (M10X1.5 THD)	
M	7	1	**8T-4195**	1	BOLT (M10X1.5X30MM)	

B-USE AS REQUIRED
M-METRIC PART

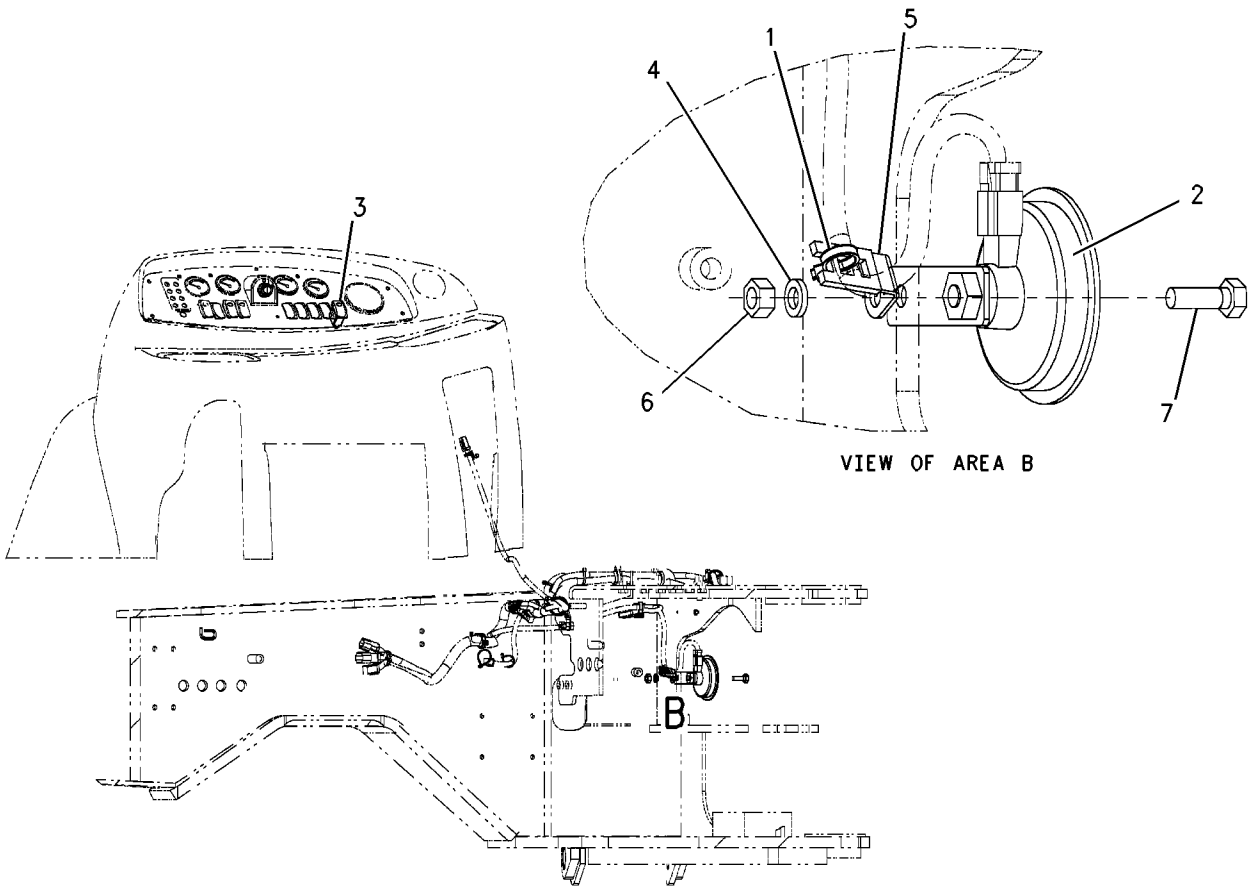

GRAPHIC #1 **<END>** g00823261

OPERATOR STATION

243-5245 KIT-PEDAL GUARD

S/N: FDP18400-UP

AN ATTACHMENT

SMCS-6544, 7150 **i02015155**

NOTE	REF NO	GRAPHIC REF	PART NUMBER	QTY	PART NAME 1 2 3 4 5 6 (PRODUCT LEVEL)	SEE PAGE
	1	1	**241-4954**	1	GUARD (RH)	
	2	1	**241-4955**	1	GUARD (LH)	
	3	1	**205-7048**	6	INSERT-THREADED	
M	4	1	**5C-9553**	6	BOLT (M6X1X16-MM)	
	5	1	**8T-4205**	6	WASHER-HARD (7.2X14.5X2-MM THK)	

M-METRIC PART

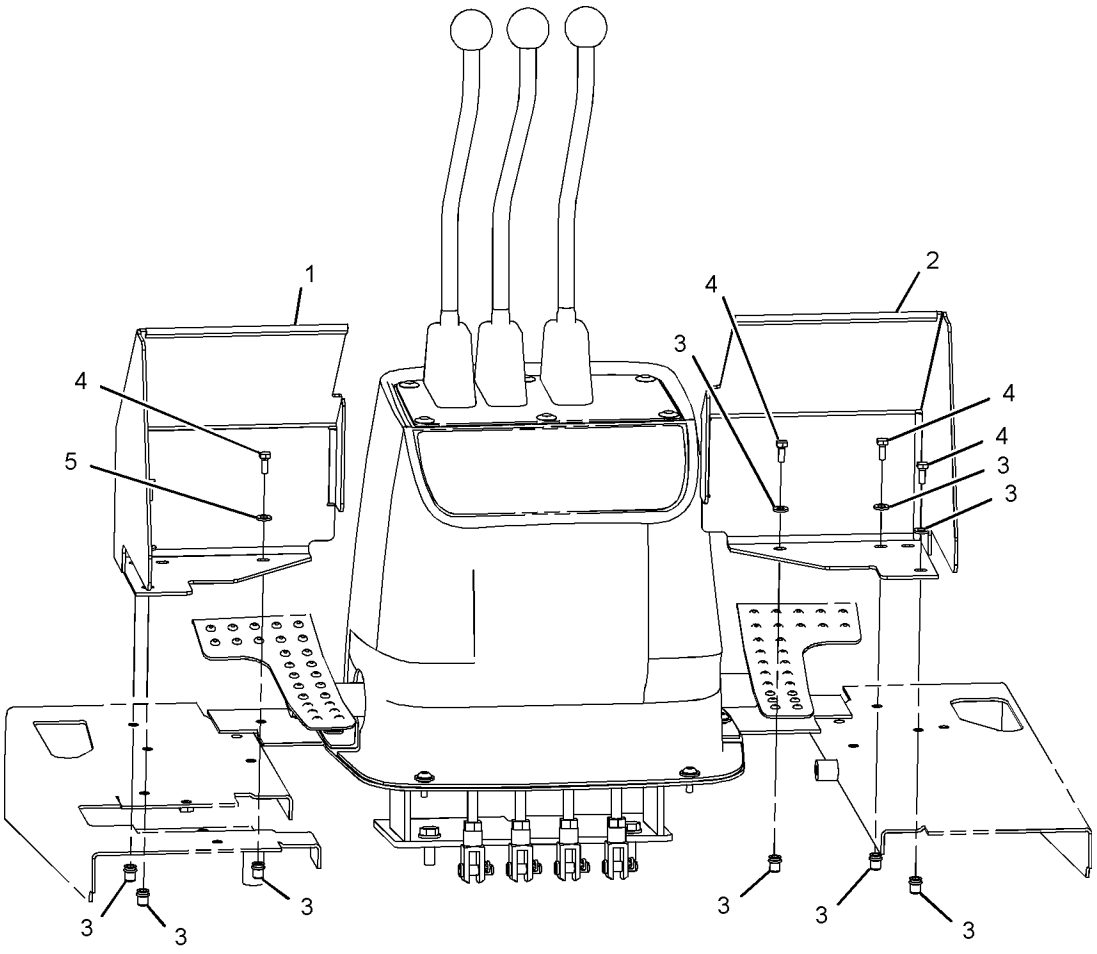

GRAPHIC #1 **<END>** g01042084

OPERATOR STATION

183-4910 LATCH GP-CONSOLE–BACKHOE

S/N: FDP18400-UP

PART OF 202-5919 MOUNTING GP-BACKHOE CONTROL

SMCS-5258 **i01405661**

NOTE	REF NO	GRAPHIC REF	PART NUMBER	QTY	PART NAME 1 2 3 4 5 6 (PRODUCT LEVEL)	SEE PAGE
	1	1	**8T-4742**	2	END-YOKE ROD	
	2	1	**8T-4744**	2	PIN AS-SPRING	
	3	1	**110-5602**	1	KNOB	
	4	1	**156-0283**	2	WASHER-HARD (2.5MM THK)	
	5	1	**180-9160**	1	LATCH AS	
	6	1	**183-4911**	2	PLATE	
	7	1	**183-4912**	1	SLEEVE	
	8	1	**183-4913**	2	ROD	
	9	1	**183-4915**	1	LEVER AS	
	10	1	**183-5443**	1	LATCH AS	
	11	1	**183-6085**	2	BEARING	
M	12	1	**099-3649**	1	BOLT (M8X1.25X40MM)	
M	13	1	**5C-2890**	2	NUT (M6X1 THD)	

M-METRIC PART

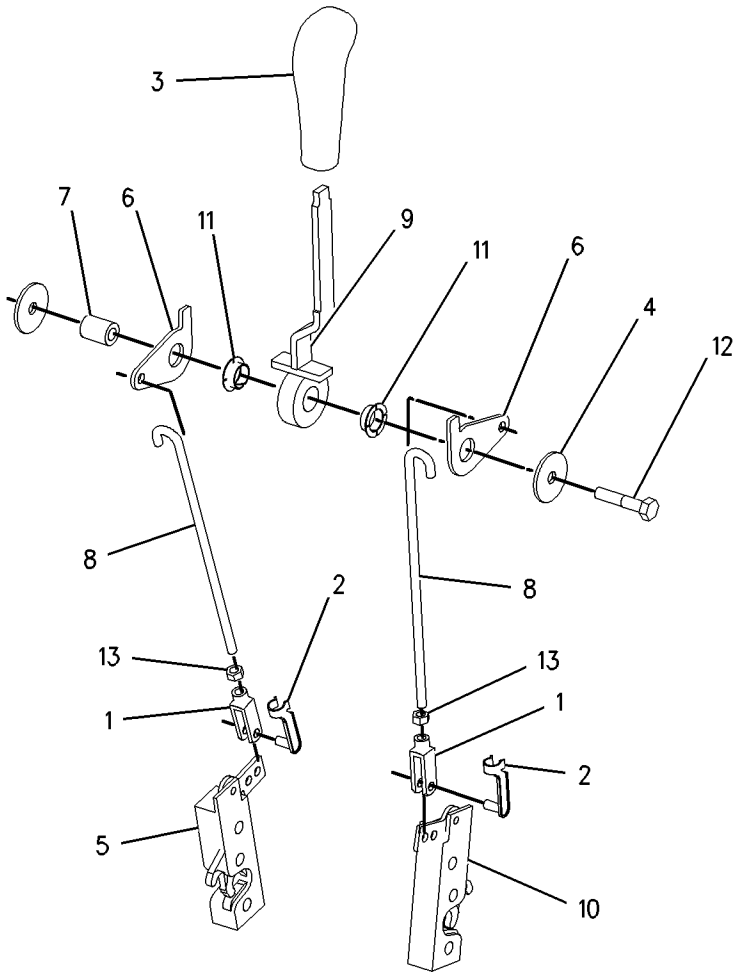

GRAPHIC #1 **<END>** g00740213

OPERATOR STATION

183-3887 LEVER GP-GOVERNOR CONTROL

S/N: FDP18400-UP

BASIC

PART OF 234-8892 CONTROL GP-GOV & ACCELERATOR

SMCS-1265 **i01412217**

NOTE	REF NO	GRAPHIC REF	PART NUMBER	QTY	PART NAME 1 2 3 4 5 6 (PRODUCT LEVEL)	SEE PAGE
	1	1	**8T-4742**	1	END-YOKE ROD	
	2	1	**8T-4744**	1	PIN AS-SPRING	
	3	1	**164-1079**	1	CABLE AS	
	4	1	**164-1083**	1	LEVER AS	
M	5	1	**8T-4971**	1	BOLT (M6X1.0X30MM)	
M	6	1	**129-3178**	1	LOCKNUT	

M-METRIC PART

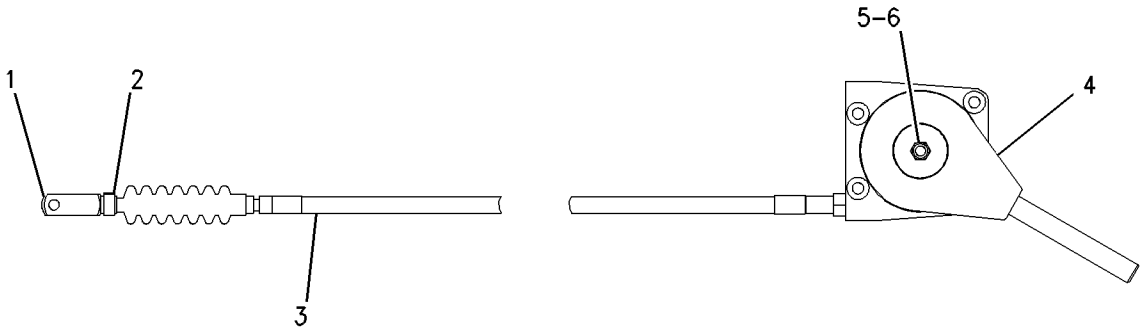

GRAPHIC #1 **<END>** g00743371

OPERATOR STATION

236-6657 LINES GP-HEATER

S/N: FDP18400-UP
PART OF 239-5565, 239-5567 CAB AR
AN ATTACHMENT

SMCS-7304 **i02016250**

NOTE	REF NO	GRAPHIC REF	PART NUMBER	QTY	PART NAME 1 2 3 4 5 6 (PRODUCT LEVEL)	SEE PAGE
	1	1	**5D-1026**	8	CLAMP-HOSE	
	2	1	**9M-8406**	1	CLIP	
	3	1	**6P-8855**	1	SPACER (.56X.625X3-MM THK)	
	4	1	**9M-4814**	1	CONNECTOR-HOSE	
	5	1	**3E-4321**	5	CLIP	
	6	1	**8T-4121**	6	WASHER-HARD (11X21X2.5-MM THK)	
M	7	1	**8T-4137**	5	BOLT (M10X1.5X20-MM)	
M	8	1	**8T-4189**	1	BOLT (M8X1.25X20-MM)	
	9	1	**5P-0767**		HOSE (275CM)	
	10	1	**5P-0767**		HOSE (295CM)	
	11	1	**5P-0767**		HOSE (42.5CM EACH)	
	12	1	**134-3856**	1	ELBOW	

M-METRIC PART

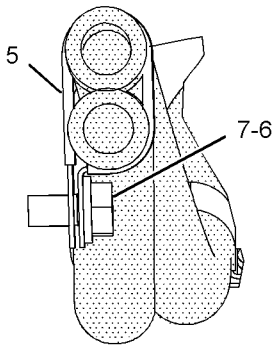

SECTION E-E

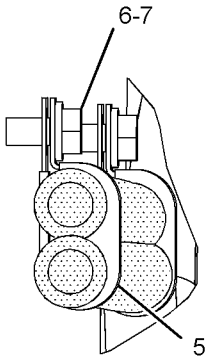

SECTION C-C

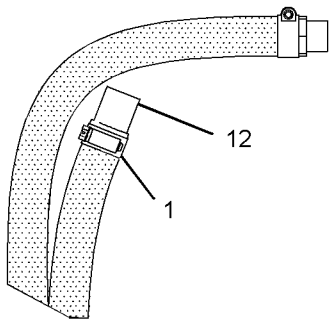

VIEW G-G

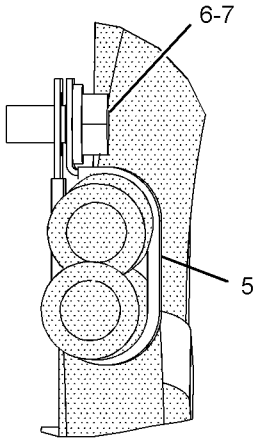

SECTION D-D

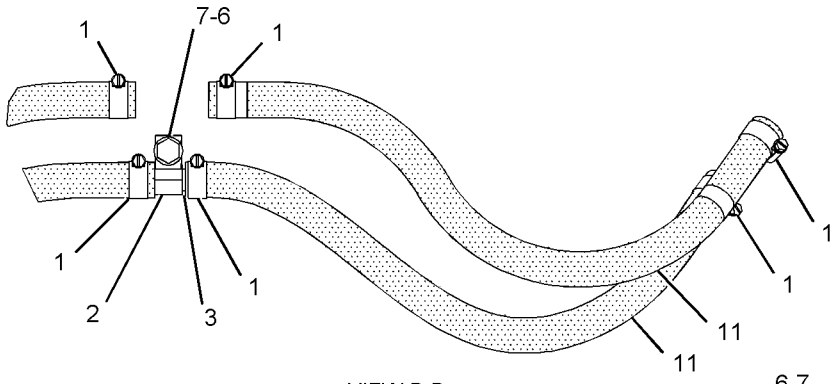

VIEW B-B

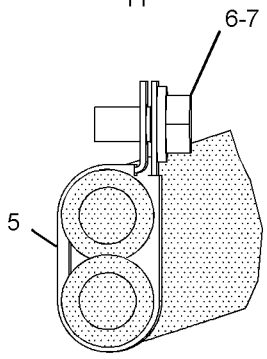

SECTION A-A

LEFT SIDE VIEW

GRAPHIC #1

<END>

g01036311

OPERATOR STATION

164-1033 LINES GP-HEATER & AIR COND

S/N: FDP18400-UP

PART OF 202-5777, 244-5402 AIR CONDITIONER AR

AN ATTACHMENT

SMCS-1380, 1808, 7304 **i01979174**

NOTE	REF NO	GRAPHIC REF	PART NUMBER	QTY	PART NAME 1 2 3 4 5 6 (PRODUCT LEVEL)	SEE PAGE
E	1	1	**5P-0767**		HOSE (265CM)	
	2	1	**3S-2093**	3	STRAP-CABLE	
	3	1,2	**5D-1026**	8	CLAMP-HOSE	
	4	2	**6P-8855**	1	SPACER (.56X.625X3MM THK)	
I	5	1	**104-9494**	1	HOSE AS	
	6	1	**118-9517**	1	FITTING AS	
		1	**3E-4052**	1	CAP AS (AIR CONDITIONER)	
		1	**3E-4058**	1	VALVE AS (AIR CONDITIONER)	
I	7	1	**125-3416**	1	HOSE AS	
	8	1	**152-8417**	1	STRAP	
I	9	2	**164-1040**	1	HOSE AS	
I	10	2	**164-1041**	1	HOSE AS	
	11	1	**184-6565**	1	BRACKET AS	
	12	2	**176-3900**	1	ACCUMULATOR GP-AIR CONDITIONER	
	13	1	**199-6243**	1	PLATE	
C	14	1	**201-1842**	1	HOSE AS	
	15	2	**223-1598**	1	BRACKET AS	
	16	1	**3E-4321**	4	CLIP	
	17	1	**6D-4246**	1	CLIP (SLOT)	
	18	1	**6K-8178**	1	CLIP (SLOT)	
	19	1,2	**7C-4354**	6	CLIP (SLOT)	
	20	1,2	**8T-4121**	16	WASHER-HARD (11X21X2.5MM THK)	
M	21	1	**8T-4136**	3	BOLT (M10X1.5X25MM)	
M	22	1,2	**8T-4137**	7	BOLT (M10X1.5X20MM)	
M	23	1,2	**8T-4195**	5	BOLT (M10X1.5X30MM)	
	24	2	**8T-4224**	1	WASHER-HARD (8.8X16X2MM THK)	
M	25	2	**8T-4908**	1	BOLT (M8X1.25X25MM)	
	26	1,2	**9M-8406**	6	CLIP	
	27	1,2	**9X-7380**	2	SEAL-O-RING	
	28	1,2	**9X-7381**	3	SEAL-O-RING	
	29	1,2	**9X-7382**	2	SEAL-O-RING	
	30	2	**9X-7383**	2	SEAL-O-RING	
M	31	1	**7X-2621**	1	BOLT (M10X1.50X12MM)	
D	32	1	**5P-5924**		SEAL (0.3M)	
E	33	1	**160-2245**		SLEEVE-ABRASION (30CM)	
E	34	1	**5P-0767**		HOSE (230CM)	
E	35	2	**5P-0767**		HOSE (42.5CM EACH)	

C-CHANGE FROM PREVIOUS TYPE
D-ORDER BY THE METER
E-ORDER BY THE CENTIMETER
I-REFER TO HYDRAULIC INFORMATION SYSTEM
M-METRIC PART

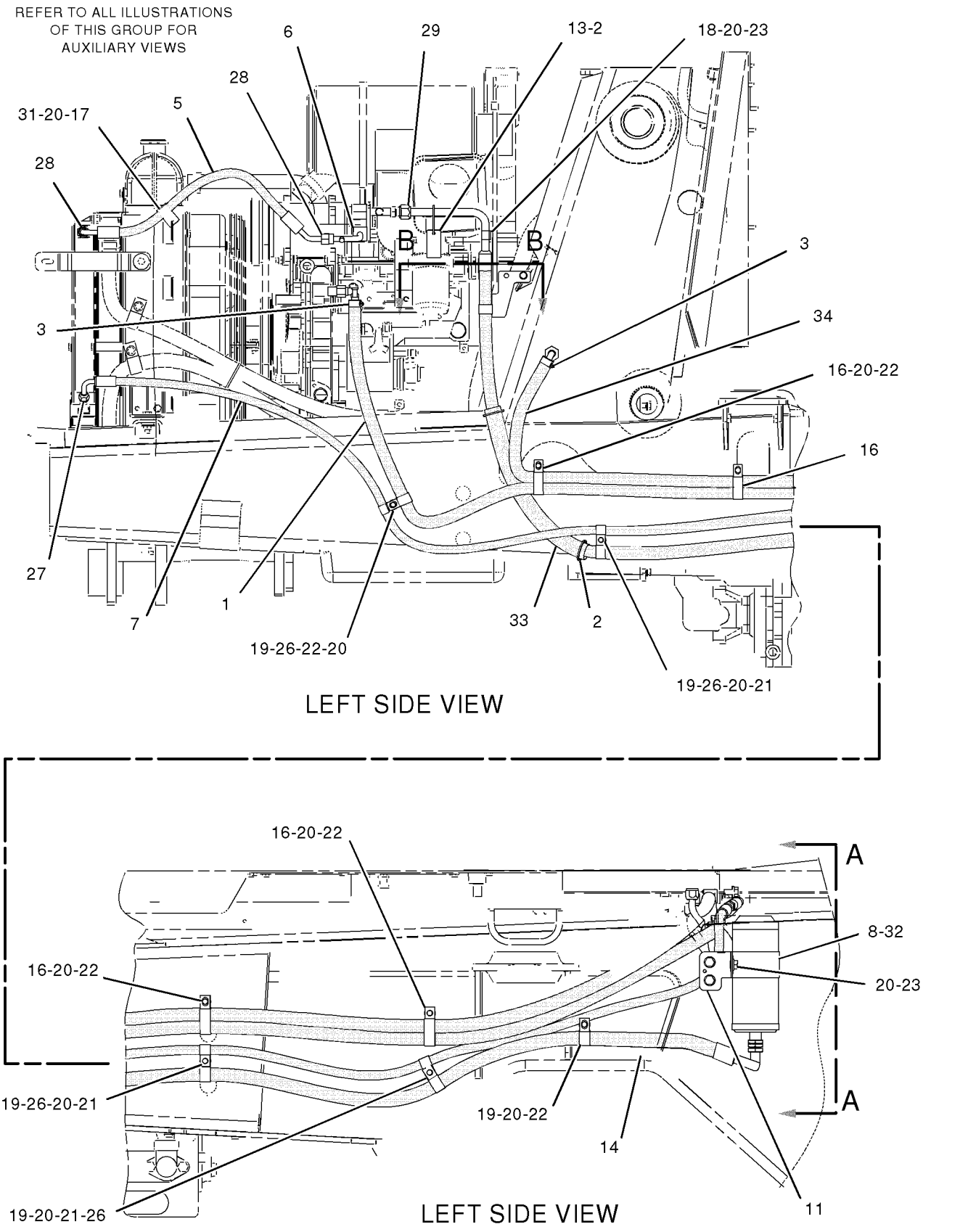

GRAPHIC #1

g01026272

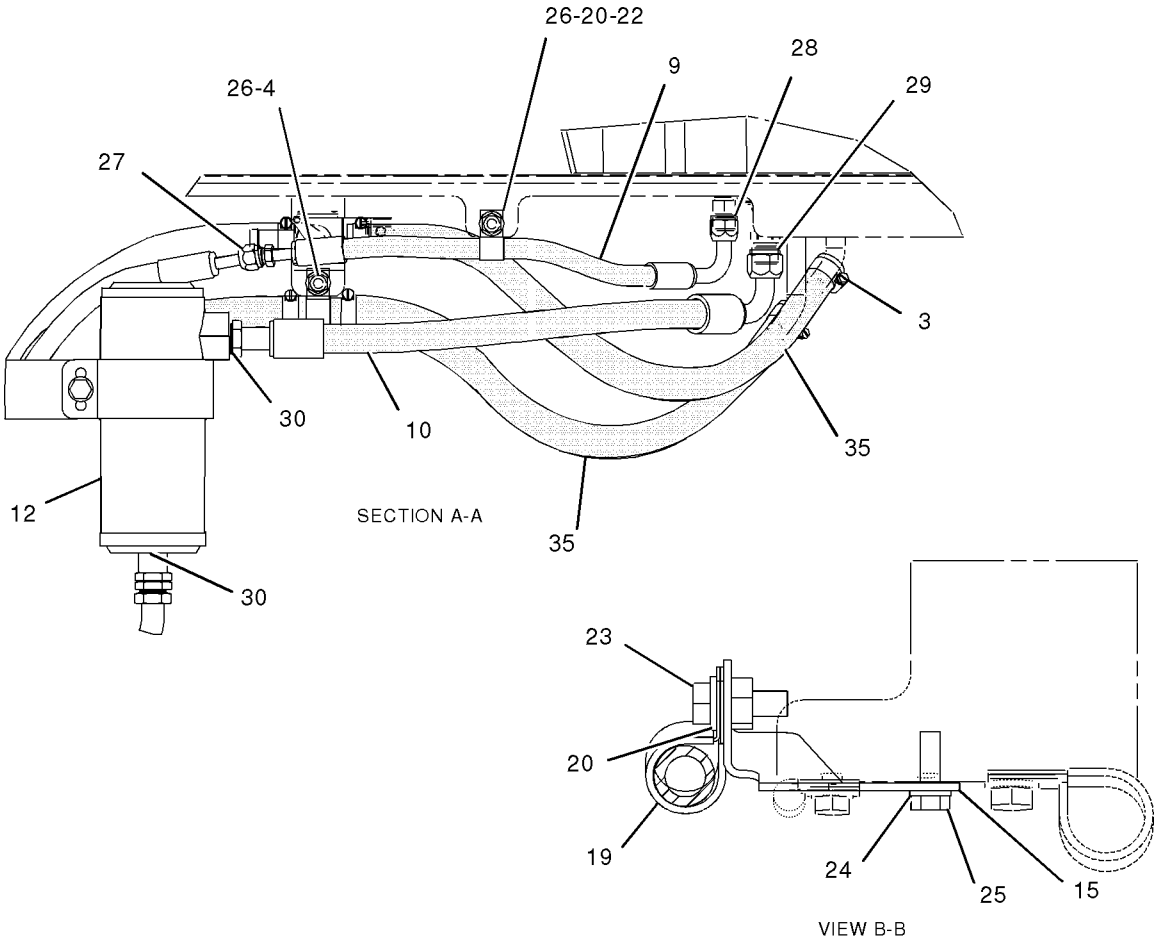

GRAPHIC #2 **<END>** g01026273

OPERATOR STATION

234-2617 LINES GP-HEATER & AIR COND

S/N: FDP18400-UP
PART OF 239-5566, 239-5568 CAB AR
AN ATTACHMENT

SMCS-1380, 1808, 7304 **i02017601**

NOTE	REF NO	GRAPHIC REF	PART NUMBER	QTY	PART NAME 1 2 3 4 5 6 (PRODUCT LEVEL)	SEE PAGE
	1	1	**3S-2093**	3	STRAP-CABLE	
	2	1	**5D-1026**	8	CLAMP-HOSE	
E	3	1	**5P-0767**		HOSE (295CM)	
	4	1	**6P-8855**	1	SPACER (.56X.625X3-MM THK)	
E	5	1	**160-2245**		SLEEVE-ABRASION (28CM)	
	6	1	**9M-4814**	1	CONNECTOR-HOSE	
	7	1	**105-9411**	1	SUPPORT	
I	8	1	**125-3416**	1	HOSE AS	
	9	1	**152-8417**	1	STRAP	
I	10	1	**164-1040**	1	HOSE AS	
I	11	1	**164-1041**	1	HOSE AS	
	12	1	**184-6565**	1	BRACKET AS	
M		1	**8T-3490**	3	NUT-WELD (M10X1.5-THD)	
Y	13	1	*186-6190*	1	ACCUMULATOR GP-REFRIGERANT (CHARGED)	717
	14	1	**199-6243**	1	PLATE (INSTRUCTION)	
	15	1	**234-2484**	1	HOSE AS	
	16	1	**234-2485**	1	HOSE AS	
	17	1	**3E-4321**	5	CLIP	
	18	1	**5P-7854**	1	CLIP	
	19	1	**6D-4246**	1	CLIP	
	20	1	**7F-6998**	1	LOCKWASHER	
	21	1	**8T-4121**	18	WASHER-HARD (11X21X2.5-MM THK)	
M	22	1	**8T-4133**	1	NUT (M10X1.5-THD)	
M	23	1	**8T-4136**	5	BOLT (M10X1.5X25-MM)	
M	24	1	**8T-4137**	8	BOLT (M10X1.5X20-MM)	
M	25	1	**8T-4189**	1	BOLT (M8X1.25X20-MM)	
M	26	1	**8T-4195**	3	BOLT (M10X1.5X30-MM)	
	27	1	**9M-4972**	5	CLIP	
	28	1	**9M-8406**	6	CLIP	
	29	1	**9X-7380**	2	SEAL-O-RING	
	30	1	**9X-7381**	2	SEAL-O-RING	
	31	1	**9X-7382**	1	SEAL-O-RING	
	32	1	**9X-7383**	2	SEAL-O-RING	
D	33	1	**5P-5924**		SEAL (.3M)	
E	34	1	**5P-0767**		HOSE (275CM)	
E	35	1	**5P-0767**	2	HOSE (42.5CM)	
	36	1	**134-3856**	1	ELBOW	

D-ORDER BY THE METER
E-ORDER BY THE CENTIMETER
I-REFER TO HYDRAULIC INFORMATION SYSTEM
M-METRIC PART
Y-SEPARATE ILLUSTRATION

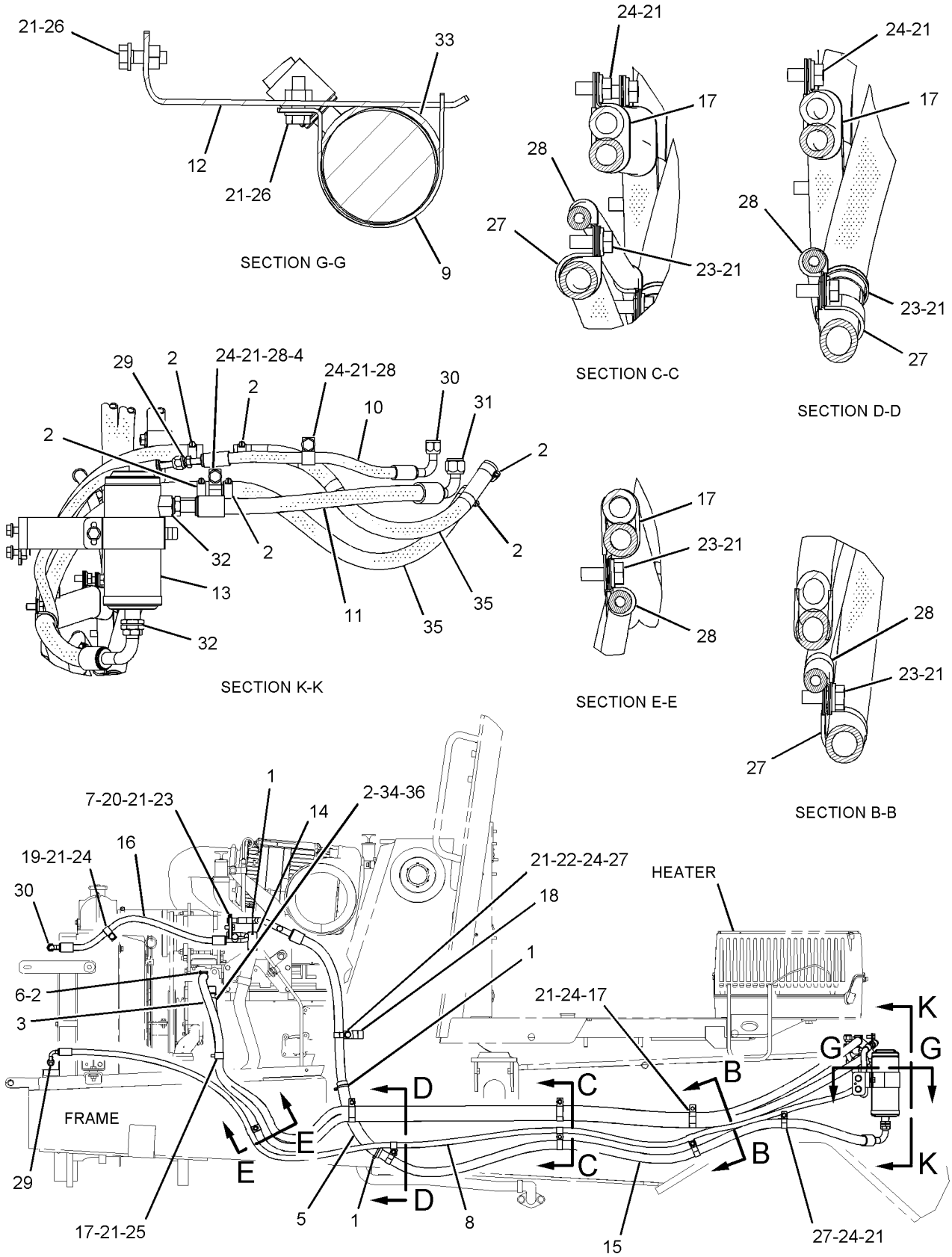

RIGHT SIDE VIEW

GRAPHIC #1 **<END>** g01042921

OPERATOR STATION

164-1155 MIRROR GP-REAR VIEW

S/N: FDP18400-UP

PART OF 184-9737, 184-9738, 239-5565, 239-5566, 239-5567, 239-5568, 244-1944 CAB AR, 184-9736, 238-6697, 239-5563, 239-5564 CANOPY AR AN ATTACHMENT

SMCS-7319 **i01718696**

NOTE	REF NO	GRAPHIC REF	PART NUMBER	QTY	PART NAME 1 2 3 4 5 6 (PRODUCT LEVEL)	SEE PAGE
M	1	1	**8C-4982**	2	BOLT-SOCKET HEAD (M4X0.7X20 MM)	
	2	1	**199-0929**	1	MIRROR AS	
	3	1	**205-7047**	2	INSERT-THREADED	
	4	1	**096-6166**	2	WASHER-HARD (4.5X9X1MM THK)	

M-METRIC PART

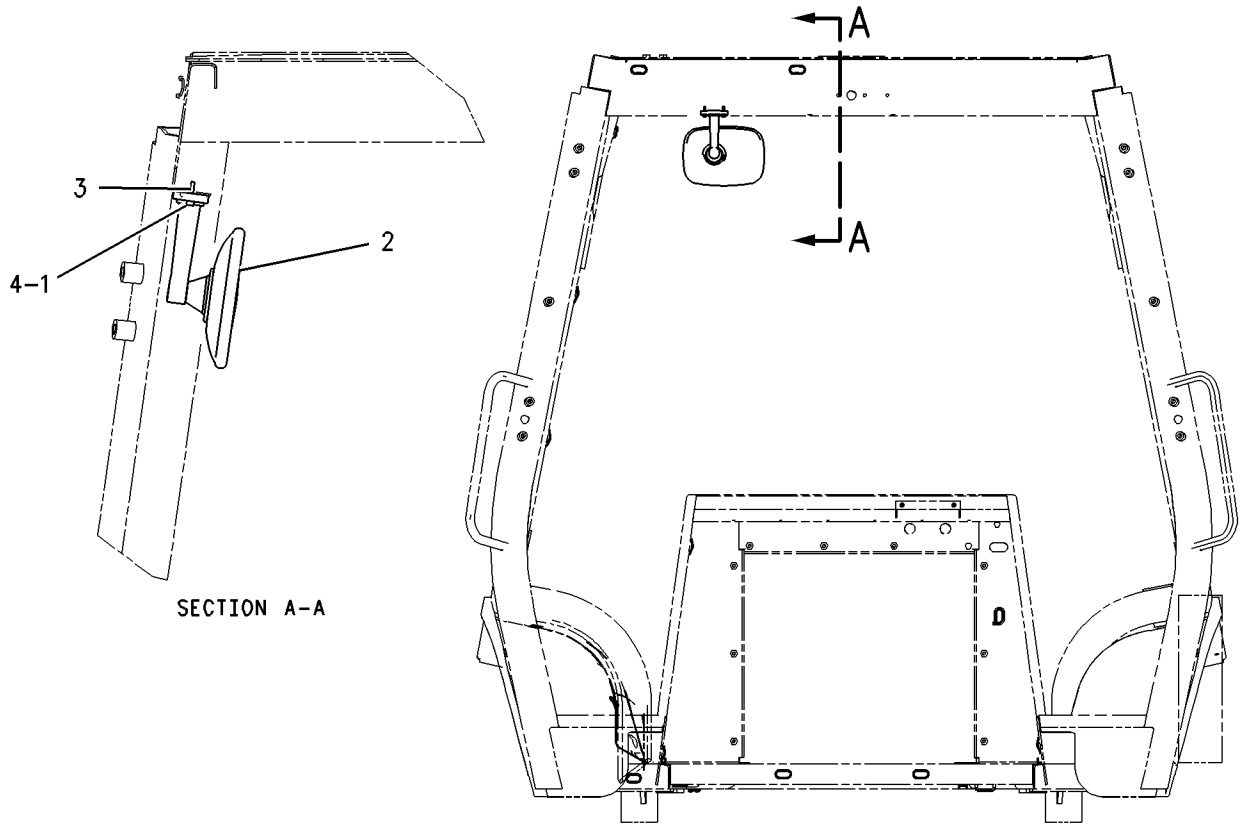

GRAPHIC #1 **<END>** g00883594

OPERATOR STATION

144-9930 MODULE GP-WARNING INDICATOR

S/N: FDP18400-UP
12 VOLT. WITH ALARM
PART OF 202-5810 WIRING GP-CONSOLE
AN ATTACHMENT

SMCS-7407, 7431 **i02009766**

NOTE	REF NO	GRAPHIC REF	PART NUMBER	QTY	PART NAME 1 2 3 4 5 6 (PRODUCT LEVEL)	SEE PAGE
	1	1	**144-9934**	1	GASKET	
	2	1	**102-8801**	1	KIT-RECEPTACLE (12-PIN)	

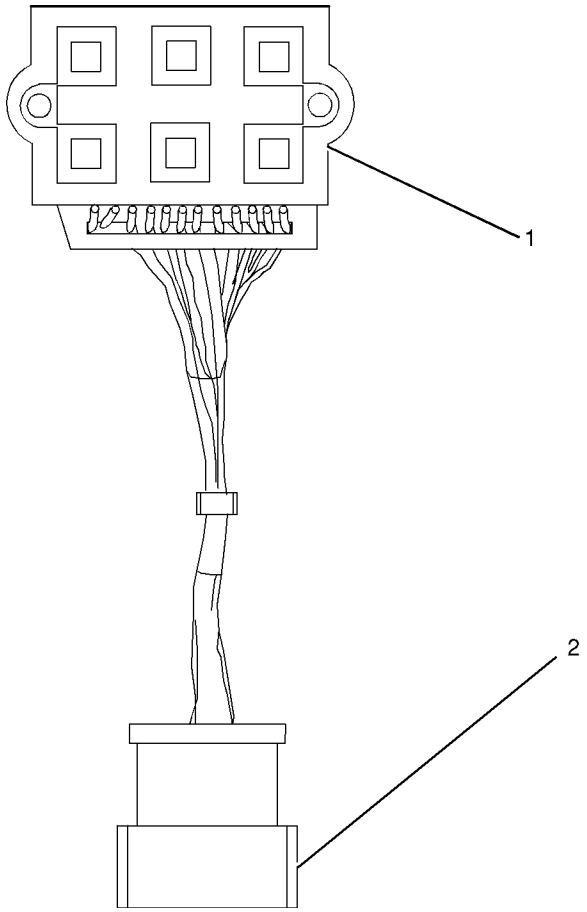

GRAPHIC #1 **<END>** g01039137

OPERATOR STATION

144-9931 MODULE GP-WARNING INDICATOR

S/N: FDP18400-UP
12 VOLT. WITHOUT ALARM
PART OF 238-1165 WIRING GP-CONSOLE

SMCS-7407, 7431 **i01739777**

NOTE	REF NO	GRAPHIC REF	PART NUMBER	QTY	PART NAME 1 2 3 4 5 6 (PRODUCT LEVEL)	SEE PAGE
	1	1	**144-9934**	1	GASKET	
	2	1	**102-8806**	1	KIT-RECEPTACLE (8 PIN)	
					(KIT SERVICES RECEPTACLE AS AND WEDGE)	
F			**189-3610**	1	LAMP	

F-NOT SHOWN

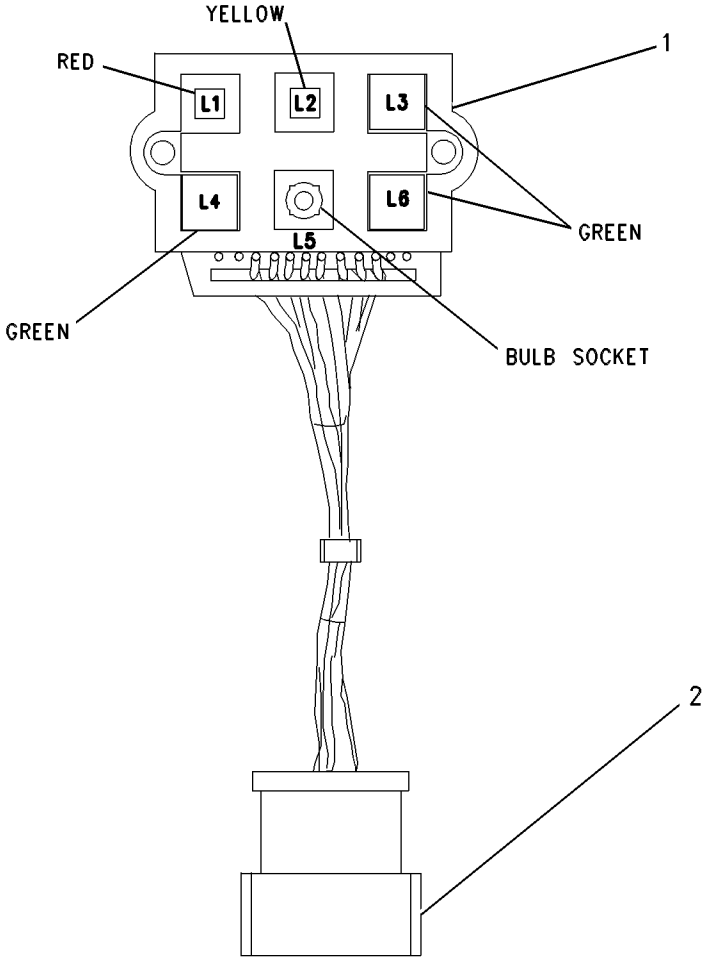

GRAPHIC #1 **<END>** g00464170

186-2589 MOTOR GP-WINDOW WIPER

S/N: FDP18400-UP
12 VOLT
PART OF 174-2024, 207-6051 WIPER GP-WINDOW
AN ATTACHMENT

SMCS-7305 **i01373590**

NOTE	REF NO	GRAPHIC REF	PART NUMBER	QTY	PART NAME 1 2 3 4 5 6 (PRODUCT LEVEL)	SEE PAGE
M	1	1	**5C-7261**	1	NUT (M8X1.25 THD)	
	2	1	**3F-9556**	1	LOCKWASHER (8.4MM ID)	
	3	1	**102-8805**	1	KIT-RECEPTACLE (6 PIN)	
	4	1	**9G-3695**	1	PLUG-SEALING (GROMMET)	
	5	1	**186-3735**	5	PIN-CONNECTOR	

M-METRIC PART

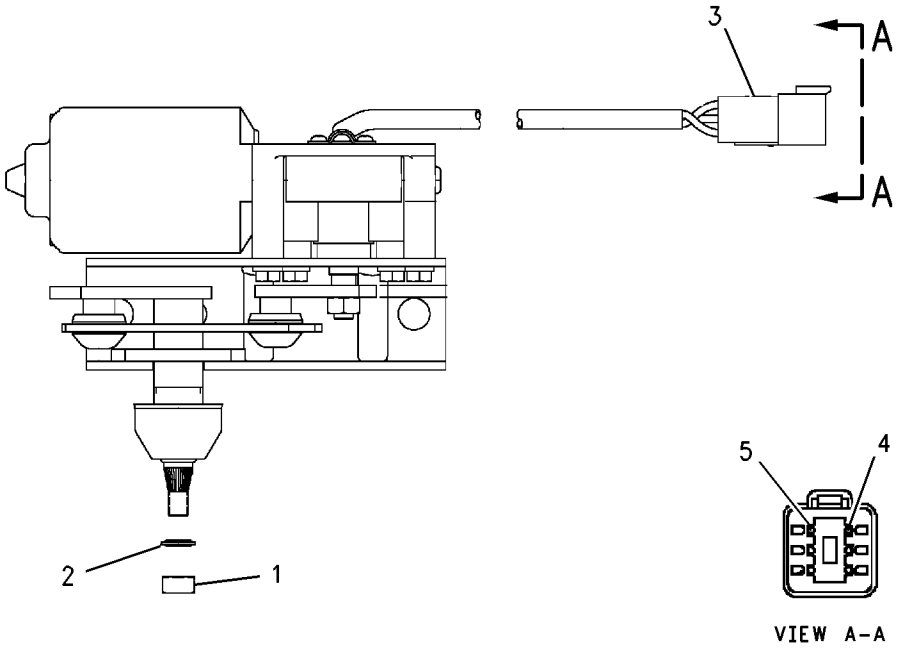

GRAPHIC #1 **<END>** g00726430

OPERATOR STATION

184-7898 MOUNTING GP-INSTRUMENT PANEL

S/N: FDP18400-UP
TWO WHEEL STEER, FRONT CONSOLE
PART OF 184-7970 POWER TRAIN AR

SMCS-7451 **i01439921**

NOTE	REF NO	GRAPHIC REF	PART NUMBER	QTY	PART NAME 1 2 3 4 5 6 (PRODUCT LEVEL)	SEE PAGE
	1	1	**167-8278**	2	PLATE	
	2	1	**167-8279**	1	PANEL AS	
M	3	1	**9X-1046**	14	SCREW (M4X0.7X18MM)	

M-METRIC PART

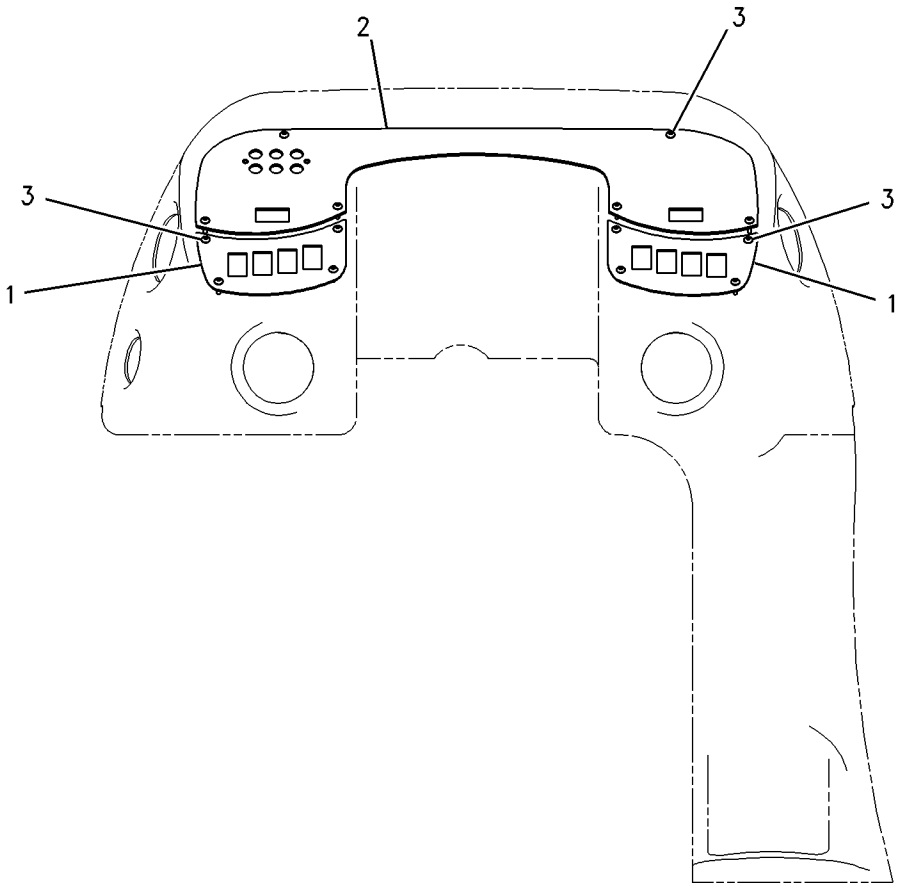

GRAPHIC #1 **<END>** g00754349

OPERATOR STATION

185-3525 MOUNTING GP-INSTRUMENT PANEL

S/N: FDP18400-UP

PART OF 192-4659, 192-4661, 192-4662, 192-4663, 192-4664, 192-4665, 192-4666, 198-4095, 214-6955, 214-6956, 214-6957, 214-6958, 214-6959, 214-6976, 214-6977, 214-6978 POWER TRAIN AR

AN ATTACHMENT

SMCS-7451 **i01443017**

NOTE	REF NO	GRAPHIC REF	PART NUMBER	QTY	PART NAME 1 2 3 4 5 6 (PRODUCT LEVEL)	SEE PAGE
	1	1	**5P-4116**	4	WASHER-HARD (8.8X20.5X2MM THK)	
M	2	1	**6V-9189**	4	LOCKNUT	

M-METRIC PART

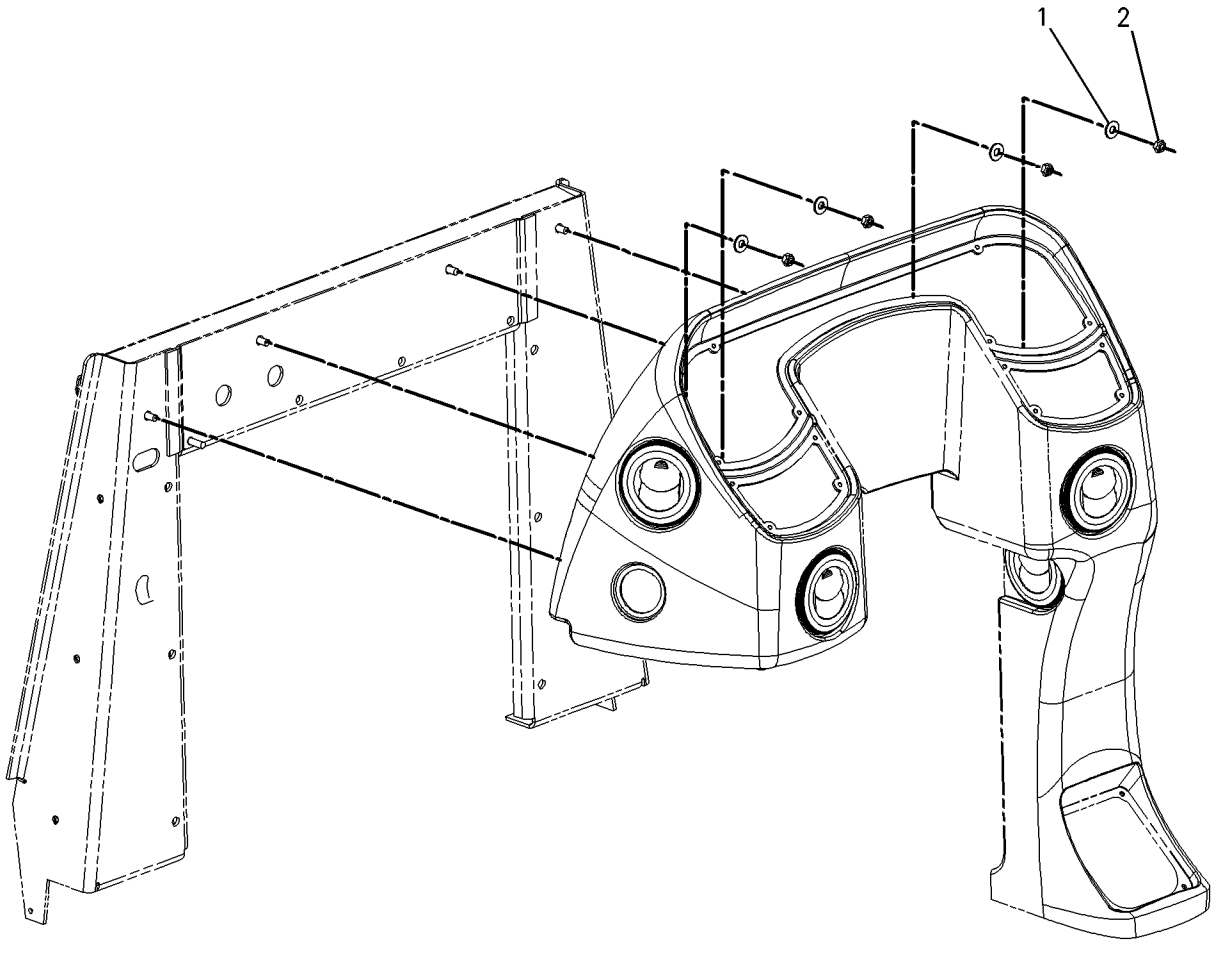

GRAPHIC #1 **<END>** g00756122

OPERATOR STATION

190-7374 MOUNTING GP-INSTRUMENT PANEL—SIDE CONSOLE

S/N: FDP18400-UP

AN ATTACHMENT

SMCS-7451 **i01506886**

NOTE	REF NO	GRAPHIC REF	PART NUMBER	QTY	PART NAME 1 2 3 4 5 6 (PRODUCT LEVEL)	SEE PAGE
	1	1	**167-8283**	1	PANEL AS-INSTRUMENT	
M	2	1	**9X-2045**	10	SCREW-TRUSS HEAD (M6X1X20MM)	

M-METRIC PART

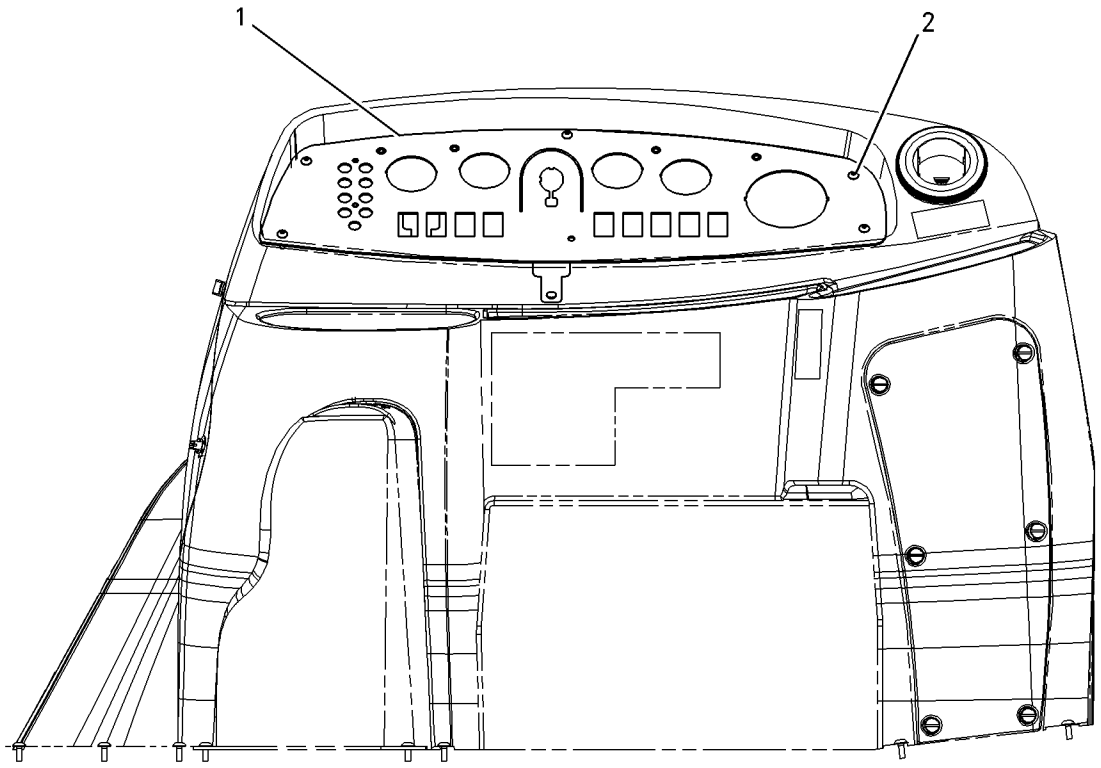

GRAPHIC #1 **<END>** g00735774

OPERATOR STATION

202-5724 MOUNTING GP-INSTRUMENT PANEL

S/N: FDP18400-UP
ROTATING VANDALISM GUARD
PART OF 184-9738, 239-5567, 239-5568, 244-1944 CAB AR
AN ATTACHMENT

SMCS-7451 **i01673590**

NOTE	REF NO	GRAPHIC REF	PART NUMBER	QTY	PART NAME 1 2 3 4 5 6 (PRODUCT LEVEL)	SEE PAGE
J	1	1	**5P-9000**	1	LOCK AS-CYLINDER	
	2	1	**164-1122**	1	BODY	
	3	1	**164-1123**	1	BEZEL	
	4	1	**164-1177**	2	CAP-END	
	5	1	**168-4609**	1	SWITCH AS-START	
		1	**7T-6799**	1	NUT-MOUNTING (1-32 THD)	
	6	1	**185-9777**	1	PLATE	
	7	1	**191-5104**	4	MOUNT	
	8	1	**192-7355**	2	PLATE	
	9	1	**194-4250**	2	PIN	
	10	1	**197-7499**	2	BOLT (M4X.7X25MM)	
	11	1	**202-5979**	1	HANDLE	
	12	1	**202-6063**	1	FILM	
M	13	1	**131-3540**	2	LOCKNUT (M8X1.25 THD)	
	15	1	**214-9035**	8	BOLT	
	16	1	**4B-4863**	2	WASHER (4.7X11X1.2MM THK)	
M	17	1	**8T-2659**	8	LOCKNUT (M4X0.7 THD)	
	18	1	**8T-4224**	4	WASHER-HARD (8.8X16X2MM THK)	
M	19	1	**8T-4908**	2	BOLT (M8X1.25X25MM)	
M	20	1	**9X-2045**	5	SCREW-TRUSS HEAD (M6X1X20MM)	

J-REQUIRES 5P8500 KEY
M-METRIC PART

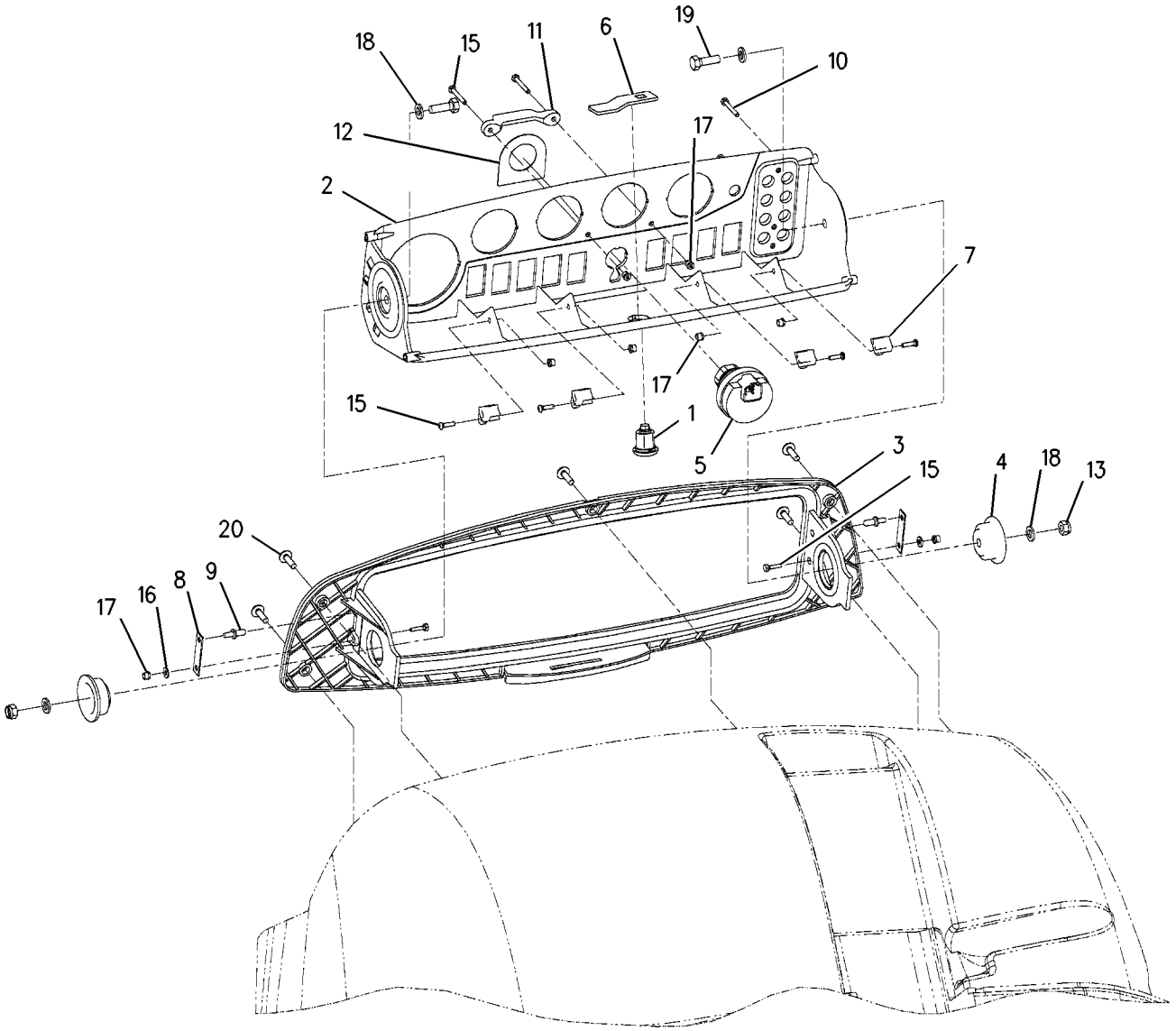

GRAPHIC #1 **<END>** g00864598

OPERATOR STATION

202-5812 PANEL GP-INSTRUMENT–SIDE

S/N: FDP18400-UP
FLAT GAUGE PANEL
AN ATTACHMENT

SMCS-1435, 7450, 7451, 7453, 7462, 7463, 7477, 7481 **i01626400**

NOTE	REF NO	GRAPHIC REF	PART NUMBER	QTY	PART NAME 1 2 3 4 5 6 (PRODUCT LEVEL)	SEE PAGE
J	1	1	**142-8858**	1	SWITCH AS-KEY START	
	2	1	**167-8283**	1	PANEL AS-INSTRUMENT	
	3	1	**193-1509**	1	WIRE AS	
	4	1	**191-9104**	1	FILM	
M	5	1	**9X-2045**	10	SCREW-TRUSS HEAD (M6X1X20MM)	

J-REQUIRES 5P8500 KEY
M-METRIC PART

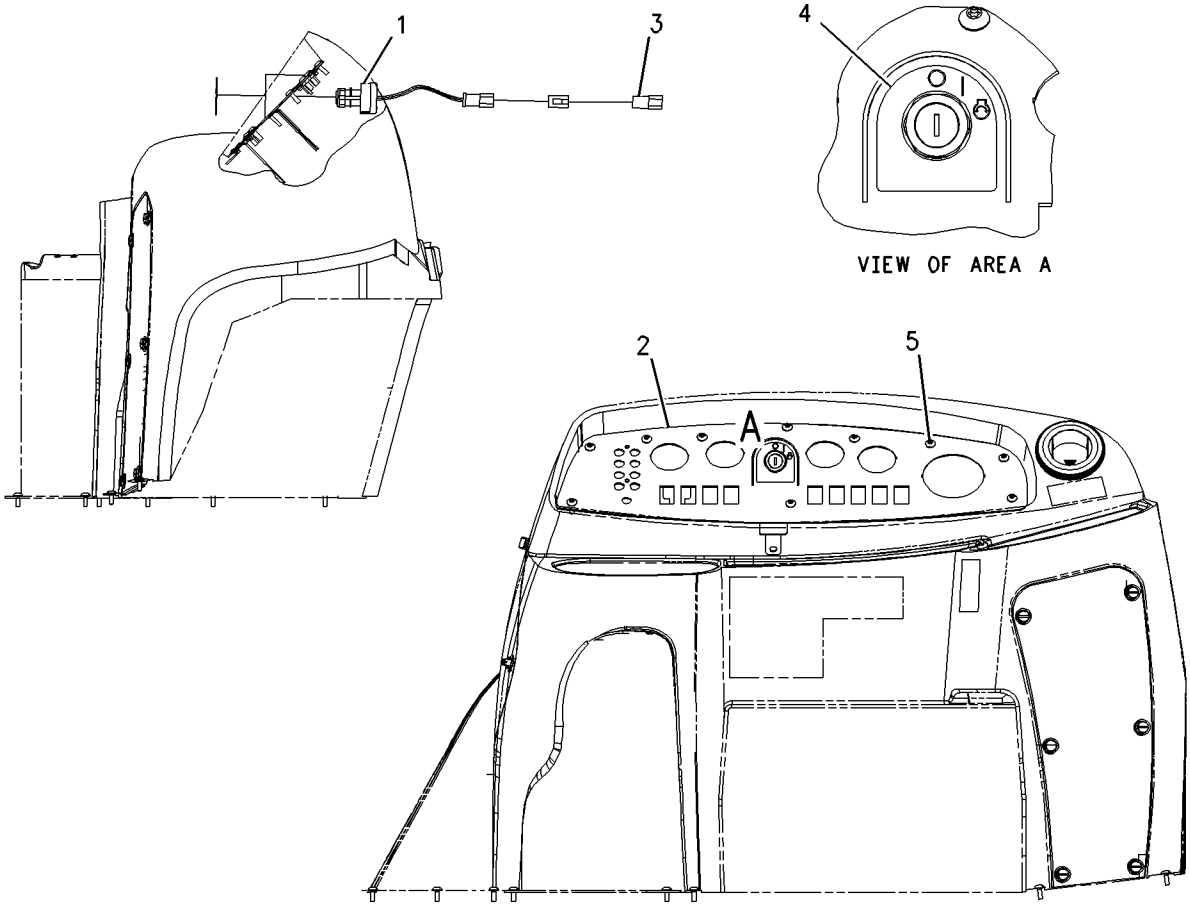

GRAPHIC #1 **<END>** g00844991

OPERATOR STATION

164-1078 PEDAL GP-GOVERNOR

S/N: FDP18400-UP

PART OF 234-8892 CONTROL GP-GOV & ACCELERATOR

SMCS-1265 **i01928735**

NOTE	REF NO	GRAPHIC REF	PART NUMBER	QTY	PART NAME 1 2 3 4 5 6 (PRODUCT LEVEL)	SEE PAGE
M	1	1	**129-3178**	1	LOCKNUT	
M	2	1	**5C-7261**	1	NUT (M8X1.25 THD)	
M	3	1	**5C-9553**	1	BOLT (M6X1X16MM)	
	4	1	**8T-4205**	1	WASHER-HARD (7.2X14.5X2MM THK)	
	5	1	**8T-6902**	3	CLIP	
	6	1	**3F-9556**	2	LOCKWASHER	
M	7	1	**095-0641**	4	BOLT-SOCKET HEAD (M4X0.7X10MM)	
	8	1	**6V-8186**	2	NUT-FULL (5/16-24 THD)	
M	9	1	**9X-2842**	1	BOLT (M8X1.25 THD)	
					AVAILABLE REPAIR KIT(S):	
			164-1154	1	KIT-SERVICE	
					(INCLUDES CLAMPS AND SCREW)	

M-METRIC PART

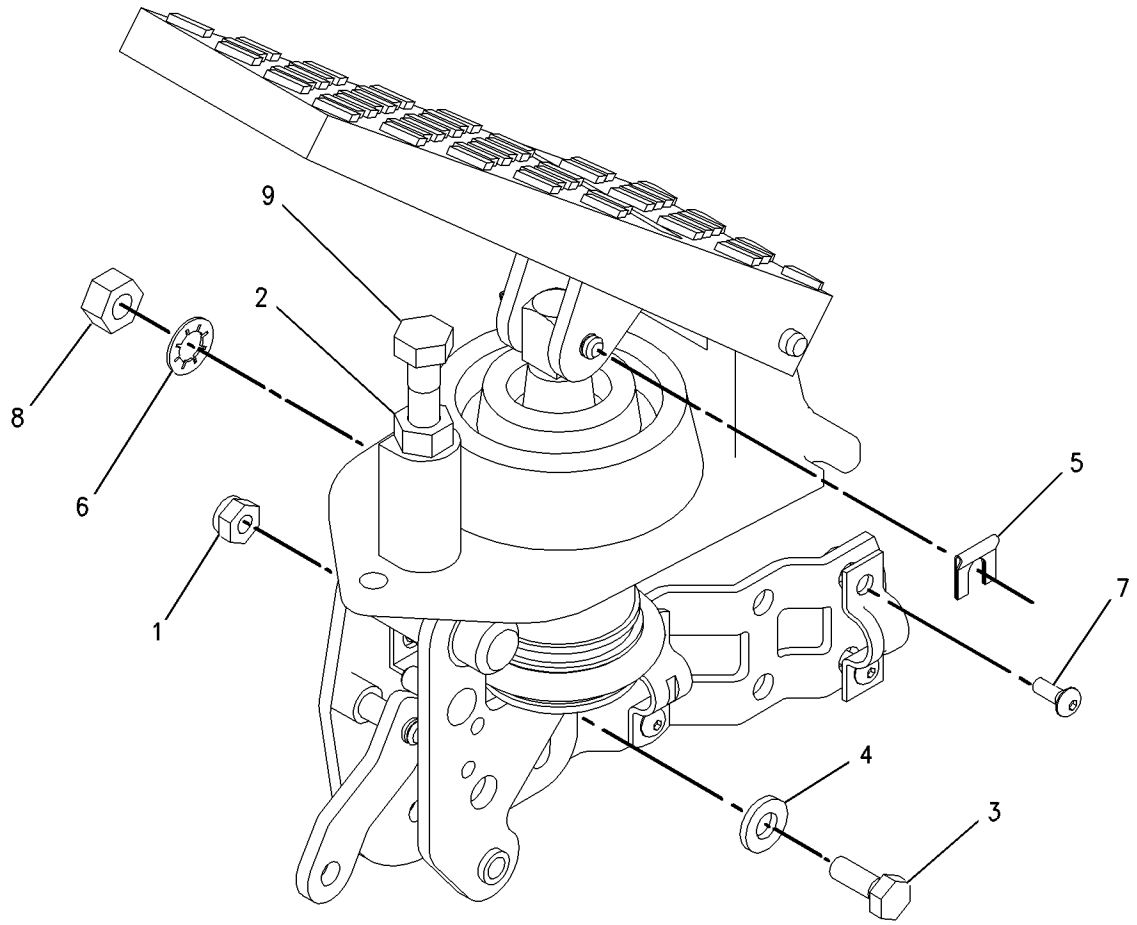

GRAPHIC #1 **<END>** g00832396

OPERATOR STATION

190-8918 SEAT BELT GP

S/N: FDP18400-UP
2 IN. RETRACTABLE
AN ATTACHMENT

SMCS-7327 **i01506882**

NOTE	REF NO	GRAPHIC REF	PART NUMBER	QTY	PART NAME 1 2 3 4 5 6 (PRODUCT LEVEL)	SEE PAGE
	1	1	**7X-0546**	3	WASHER-HARD (2MM THK)	
M	2	1	**8C-8992**	1	BOLT-LOCKING (M12X1.75X30MM) (4MM THK)	
	3	1	**194-9625**	1	WASHER-HARD (4MM THK)	
M	4	1	**3E-8004**	1	BOLT (M12X1.75X45MM) (M12X1.75)	

M-METRIC PART

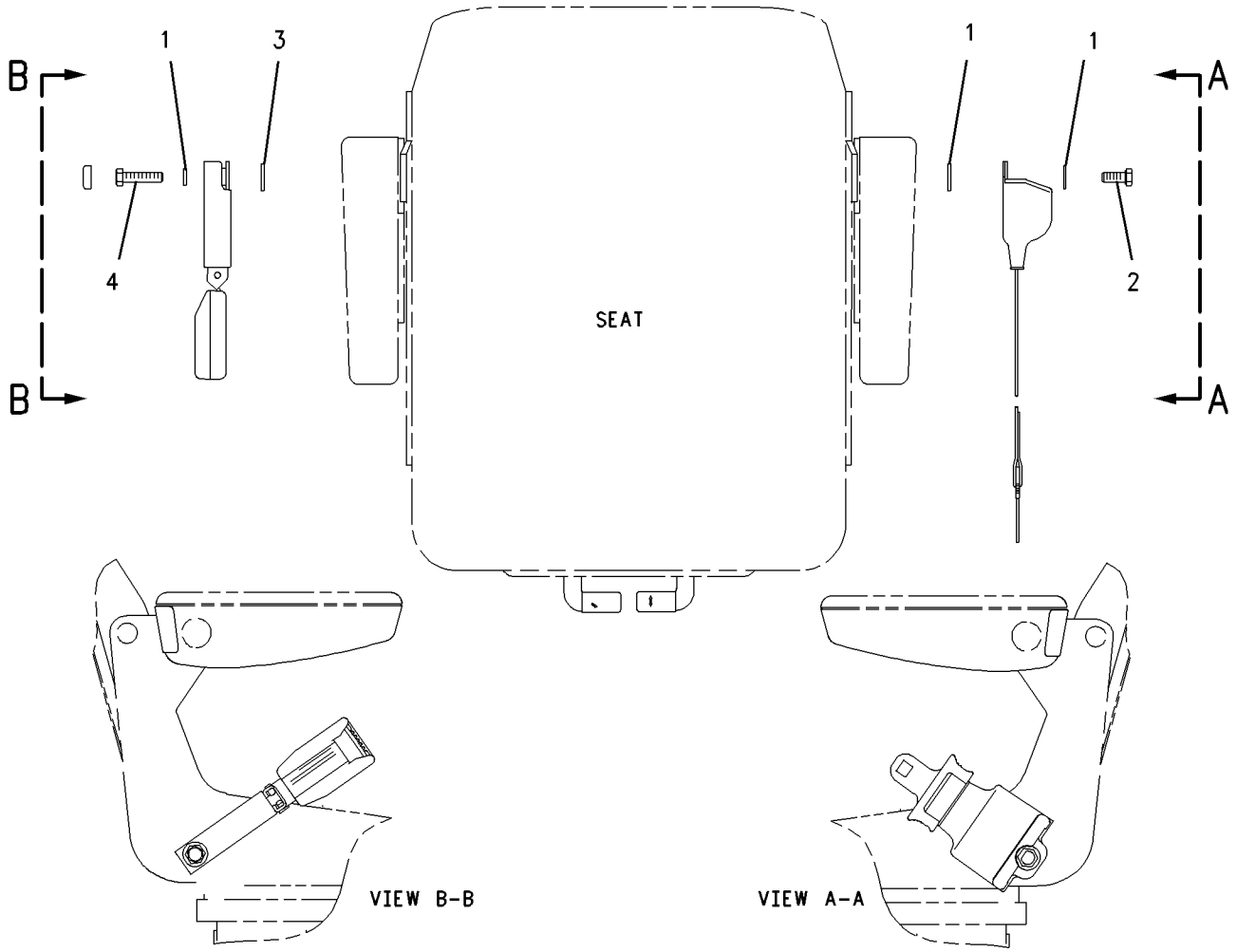

GRAPHIC #1 **<END>** g00778928

OPERATOR STATION

190-8919 SEAT BELT GP

S/N: FDP18400-UP
3 IN. RETRACTABLE
AN ATTACHMENT

SMCS-7327 **i01450481**

NOTE	REF NO	GRAPHIC REF	PART NUMBER	QTY	PART NAME 1 2 3 4 5 6 (PRODUCT LEVEL)	SEE PAGE
M	1	1	**8C-8992**	1	BOLT-LOCKING (M12X1.75X30MM)	
M	2	1	**3E-8004**	1	BOLT (M12X1.75X45MM)	
	3	1	**7X-0546**	3	WASHER-HARD (2MM THK)	
	4	1	**194-9625**	1	WASHER-HARD	

M-METRIC PART

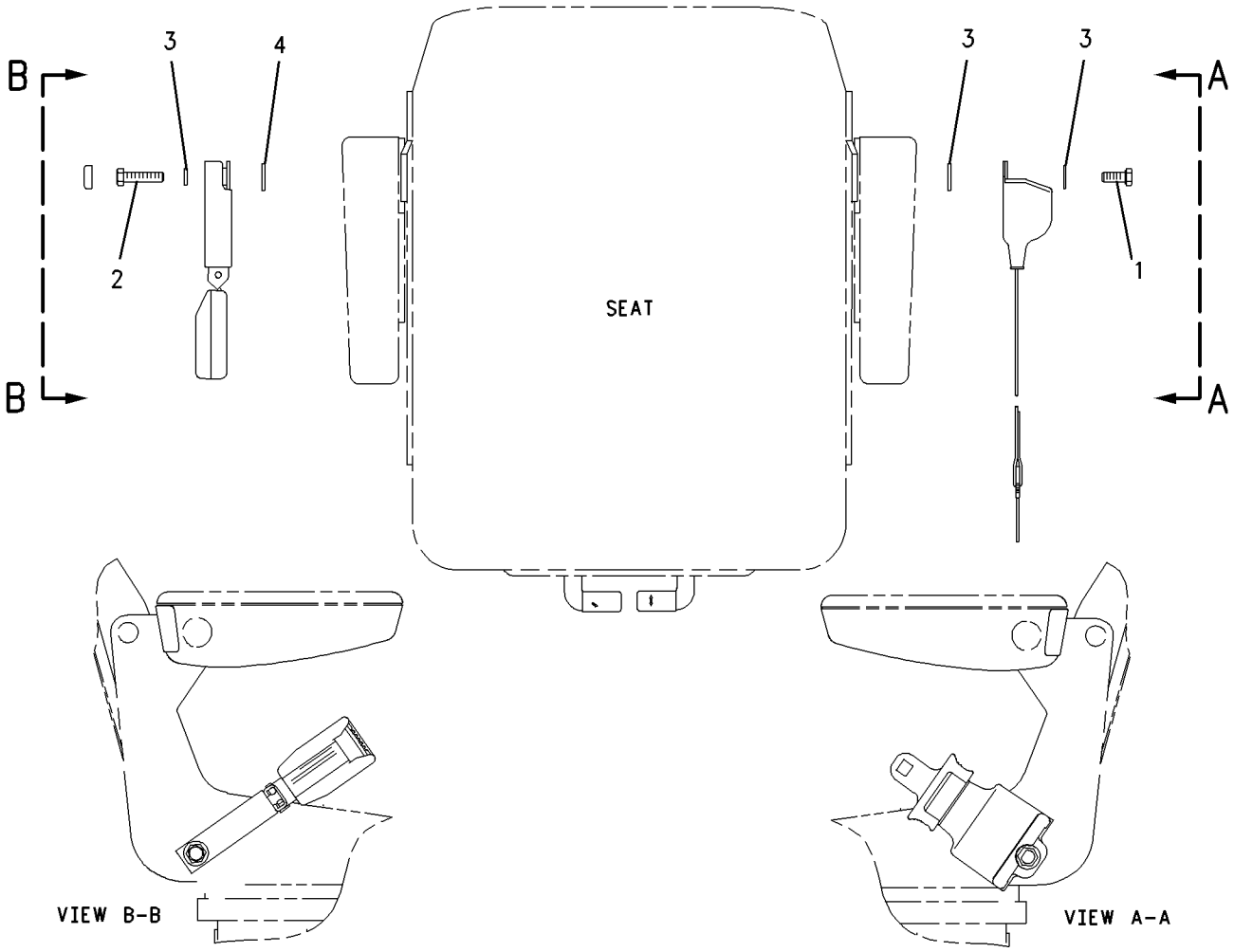

GRAPHIC #1 **<END>** g00759204

OPERATOR STATION

164-1209 SEAT GP

S/N: FDP18400-UP
STANDARD FABRIC
PART OF 164-1201 SEAT GP-SUSPENSION
AN ATTACHMENT

SMCS-7312, 7321, 7324, 7336 **i01514493**

NOTE	REF NO	GRAPHIC REF	PART NUMBER	QTY	PART NAME 1 2 3 4 5 6 (PRODUCT LEVEL)	SEE PAGE
Y	1	1	**8Y-5904**	2	ARMREST GP	725
M	2	1	**105-3481**	2	BOLT-HEX SOCKET (M8X1.25X20MM)	
	3	1	**164-1214**	4	KNOB	
	4	1	**164-1244**	1	CUSHION AS	
	5	1	**164-1247**	1	BRACKET AS	
	6	1	**164-1248**	1	PAN	
	7	1	**164-1249**	1	LEVER AS	
	8	1	**164-1250**	1	HANDLE	
	9	1	**164-1251**	1	SPRING	
	10	1	**164-1252**	1	SPRING	
	14	1	**164-1256**	2	SPACER	
	15	1	**164-1258**	1	BRACKET AS	
	16	1	**164-1259**	1	BRACKET AS	
	17	1	**164-1261**	1	BRACKET AS	
	18	1	**164-1265**	4	BOLT	
	21	1	**180-5796**	1	CUSHION AS-SEAT	
	22	1	**180-5797**	1	PAN AS	
	23	1	**195-9223**	2	SCREW-PAN HEAD	
M	24	1	**129-3180**	2	LOCKNUT (M12X1.75 THD)	
M	25	1	**131-3540**	8	LOCKNUT (M8X1.25 THD)	
	26	1	**1K-6872**	2	LOCKNUT (1/2-13 THD)	
	27	1	**4B-5271**	4	WASHER (25.5X11.2X2MM THK)	
	28	1	**5P-8245**	4	WASHER-HARD (13.5X25.5X3MM THK)	
M	29	1	**8T-4200**	2	BOLT (M8X1.25X16MM)	
	30	1	**8T-9501**	2	SCREW (10-16X.75 IN)	
	31	1	**9X-8873**	2	BOLT (1/2-13X2.25 IN)	

M-METRIC PART
Y-SEPARATE ILLUSTRATION

164-1209 SEAT GP *(contd.)*

i01514493

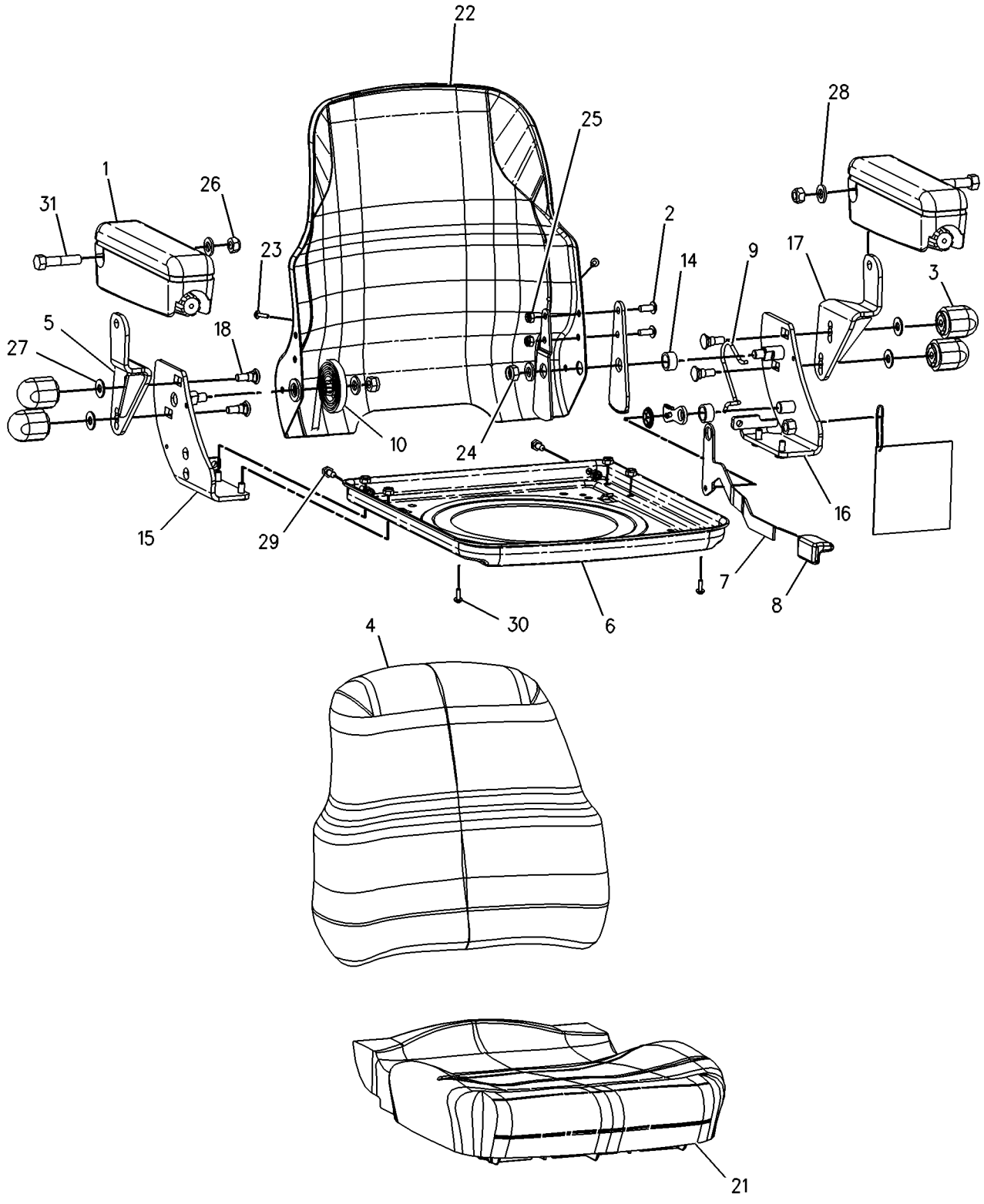

GRAPHIC #1

<END>

g00785719

OPERATOR STATION

164-1210 SEAT GP

S/N: FDP18400-UP
STANDARD VINYL
PART OF 164-1202 SEAT GP-SUSPENSION
AN ATTACHMENT

SMCS-7312, 7321, 7324, 7336 **i01515948**

NOTE	REF NO	GRAPHIC REF	PART NUMBER	QTY	PART NAME 1 2 3 4 5 6 (PRODUCT LEVEL)	SEE PAGE
Y	1	1	**8Y-5904**	2	ARMREST GP	725
M	2	1	**105-3481**	2	BOLT-HEX SOCKET (M8X1.25X20MM)	
	3	1	**164-1214**	4	KNOB	
	4	1	**164-1247**	1	BRACKET AS	
	5	1	**164-1248**	1	PAN	
	6	1	**164-1249**	1	LEVER AS	
	7	1	**164-1250**	1	HANDLE	
	8	1	**164-1251**	1	SPRING	
	9	1	**164-1252**	1	SPRING	
	13	1	**164-1256**	2	SPACER (12.5MM THK)	
	14	1	**8T-9501**	2	SCREW (10-16X.75 IN) (15.9MM THK)	
	15	1	**164-1258**	1	BRACKET AS	
	16	1	**164-1259**	1	BRACKET AS	
	17	1	**180-5797**	1	PAN AS	
	18	1	**164-1261**	1	BRACKET AS	
	19	1	**164-1265**	4	BOLT	
	20	1	**164-1266**	1	CUSHION AS-BACK	
	21	1	**180-5795**	1	CUSHION AS-SEAT	
	24	1	**195-9223**	2	SCREW-PAN HEAD	
M	25	1	**129-3180**	2	LOCKNUT (M12X1.75 THD)	
M	26	1	**131-3540**	8	LOCKNUT (M8X1.25 THD)	
	27	1	**1K-6872**	2	LOCKNUT (1/2-13 THD)	
	28	1	**4B-5271**	4	WASHER (25.5X11.2X2MM THK)	
	29	1	**5P-8245**	4	WASHER-HARD (13.5X25.5X3MM THK)	
M	30	1	**8T-4200**	2	BOLT (M8X1.25X16MM)	
	31	1	**9X-8873**	2	BOLT (1/2-13X2.25 IN)	

M-METRIC PART
Y-SEPARATE ILLUSTRATION

164-1210 SEAT GP *(contd.)* **i01515948**

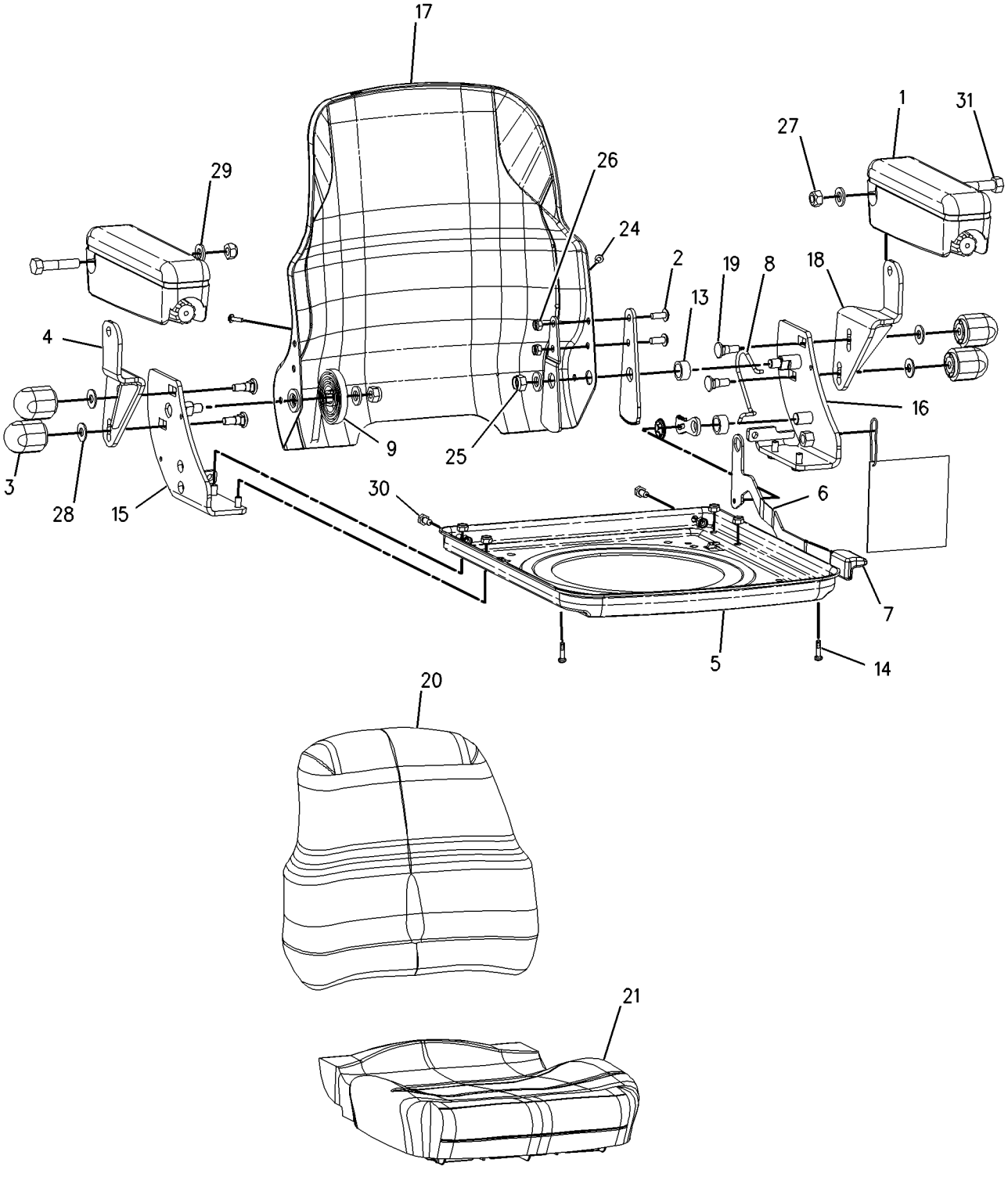

GRAPHIC #1 **<END>** g00786601

OPERATOR STATION

164-1213 SEAT GP

S/N: FDP18400-UP
DELUXE
PART OF 164-1203 SEAT GP-SUSPENSION
AN ATTACHMENT

SMCS-7312, 7321, 7324, 7336 **i01926985**

NOTE	REF NO	GRAPHIC REF	PART NUMBER	QTY	PART NAME 1 2 3 4 5 6 (PRODUCT LEVEL)	SEE PAGE
	1	1	**2M-7819**	1	RING-RETAINING	
	2	1	**4B-4278**	4	WASHER (10.2X20.5X1.6MM THK)	
	3	1	**6C-3677**	2	RIVET-POP	
	4	1	**8S-7803**	2	RING-RETAINING	
Y	5	1	**8Y-5904**	2	ARMREST GP	725
	6	1	**031-4155**	4	LOCKNUT (5/16-18 THD)	
	7	1	**095-0878**	2	PIN-SPRING	
M	8	1	**105-3481**	2	BOLT-HEX SOCKET (M8X1.25X20MM)	
	9	1	**123-6077**	1	SHAFT-PIVOT	
	10	1	**132-9240**	1	LATCH AS	
	11	1	**135-1706**	1	SPRING	
	12	1	**154-8278**	1	SPRING-RETURN	
	13	1	**154-8280**	1	SPRING-RETURN	
	14	1	**154-8284**	1	TUBE	
	15	1	**161-9290**	1	WASHER (11.9X20.7X2.3MM THK)	
	16	1	**164-1211**	1	LEVER	
	17	1	**164-1212**	1	LEVER	
	18	1	**164-1214**	4	KNOB	
	19	1	**164-1245**	1	CUSHION GP-SEAT	
		1	**164-1269**	1	BOOT	
		1	**164-1270**	3	FASTENER	
		1	**164-1272**	1	ROD AS	
		1	**164-1273**	2	SPRING-EXTENSION	
	20	1	**164-1246**	1	CUSHION AS	
	21	1	**164-1247**	1	BRACKET AS	
	22	1	**164-1249**	1	LEVER AS	
	23	1	**164-1250**	1	HANDLE	
	24	1	**164-1251**	1	SPRING	
	25	1	**164-1252**	1	SPRING	
	29	1	**164-1256**	2	SPACER (19.0X25.4X12.5MM THK)	
	30	1	**164-1257**	1	SPACER (19.4X25.4X15.9MM THK)	
	31	1	**164-1258**	1	BRACKET AS	
	32	1	**164-1259**	1	BRACKET AS	
	33	1	**164-1261**	1	BRACKET AS	
	34	1	**164-1262**	1	PAN AS	
	35	1	**164-1263**	1	PAN AS	
	36	1	**164-1264**	1	PAN AS	
	37	1	**164-1265**	4	BOLT (3/8-16X1.10IN)	
	38	1	**164-1271**	2	SPRING	
	39	1	**164-1274**	2	BLOCK	
	40	1	**164-1275**	1	BACKREST AS	
M		1	**2W-9499**	2	BOLT (M6X1.0X40MM)	
		1	**8C-0572**	2	WASHER (8.8X25.5X2MM THK)	
	41	1	**164-1276**	2	TUBE	
	42	1	**164-1277**	2	CLIP-SPRING	
	43	1	**164-1295**	1	PLATE AS-SLIDE	
	44	1	**180-5780**	1	LEVER	
	45	1	**180-5781**	1	ROD	
	46	1	**180-5782**	1	SPRING	
	47	1	**180-5783**	1	FOLLOWER	
	48	1	**180-5784**	1	LATCH AS	
	49	1	**180-5785**	1	SPRING	
	51	1	**180-5787**	1	KNOB	
	52	1	**180-5788**	1	BLOCK	

164-1213 SEAT GP *(contd.)*

i01926985

NOTE	REF NO	GRAPHIC REF	PART NUMBER	QTY	PART NAME 1 2 3 4 5 6 (PRODUCT LEVEL)	SEE PAGE
	55	1	**180-5791**	1	SUPPORT AS-SEAT (LUMBAR)	
	56	1	**195-7055**	8	WASHER-HARD (9.9X28.5X3.2MM THK)	
	57	1	**195-9223**	4	SCREW-PAN HEAD	
M	58	1	**129-3180**	2	LOCKNUT (M12X1.75 THD)	
M	59	1	**131-3540**	12	LOCKNUT	
	60	1	**1K-6872**	2	LOCKNUT (1/2-13 THD)	
	61	1	**2K-4973**	4	LOCKNUT (3/8-16 THD)	
	62	1	**2P-7864**	2	SCREW-TAPPING	
	63	1	**3B-4505**	4	LOCKWASHER	
	64	1	**4B-5271**	4	WASHER (25.5X11.2X2MM THK)	
	65	1	**4H-1641**	2	PIN-SPRING	
	66	1	**4M-0061**	4	BOLT (5/16-18X.750 IN)	
	67	1	**5P-8245**	4	WASHER-HARD (13.5X25.5X3MM THK)	
	68	1	**5S-7379**	4	BOLT (3/8-16X0.875 IN)	
M	69	1	**8T-4200**	2	BOLT (M8X1.25X16MM)	
	70	1	**8T-7566**	1	PIN-SPRING	
	71	1	**9X-8873**	2	BOLT (1/2-13X2.25 IN)	

M-METRIC PART
Y-SEPARATE ILLUSTRATION

164-1213 SEAT GP *(contd.)*

i01926985

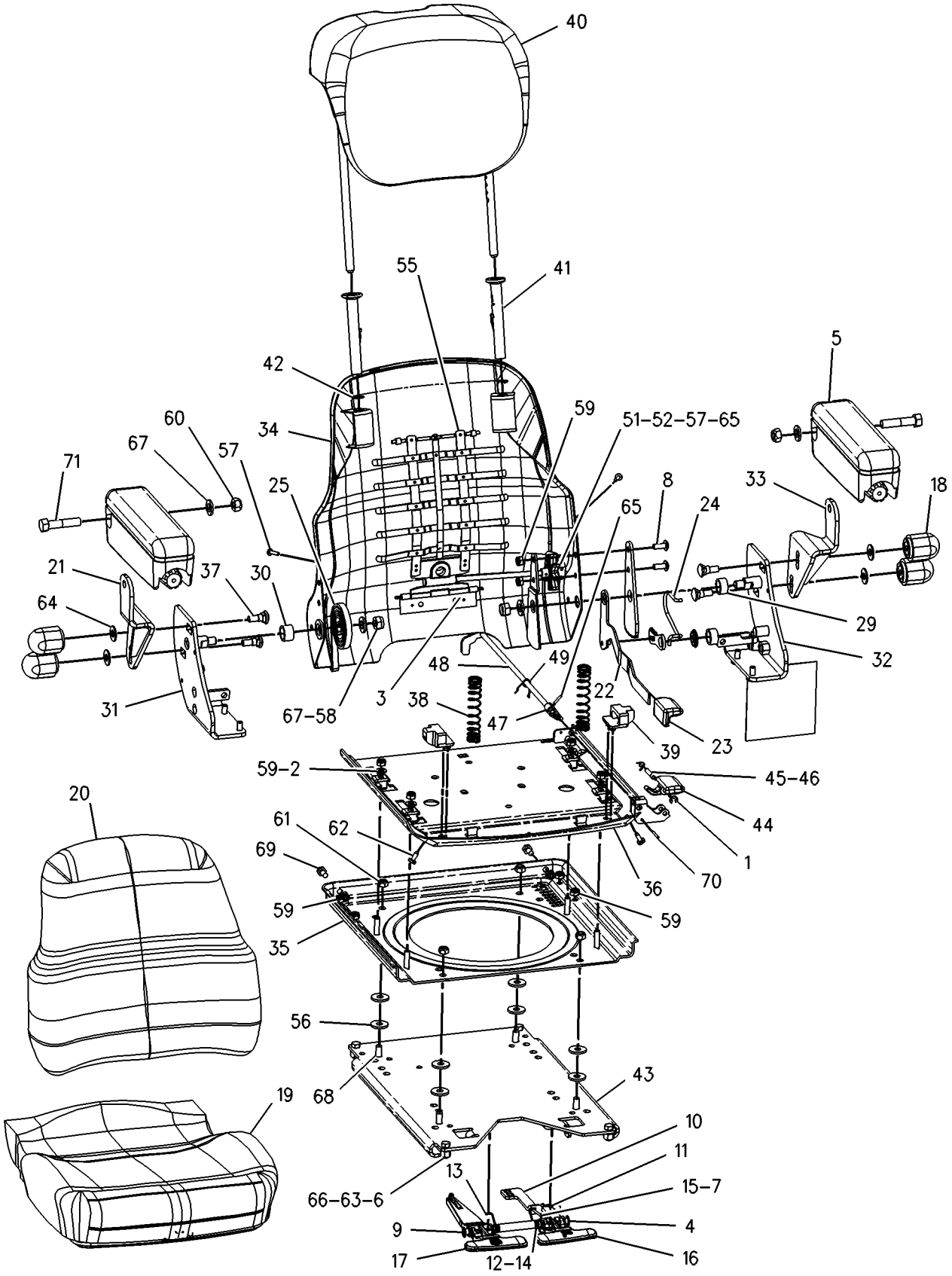

GRAPHIC #1

<END>

g01002664

OPERATOR STATION

164-1201 SEAT GP-SUSPENSION

S/N: FDP18400-UP
FABRIC
PART OF 180-5770 SEAT GP-SUSPENSION
AN ATTACHMENT

SMCS-7324, 7336 **i01516250**

NOTE	REF NO	GRAPHIC REF	PART NUMBER	QTY	PART NAME 1 2 3 4 5 6 (PRODUCT LEVEL)	SEE PAGE
	1	1	**8S-7803**	2	RING-RETAINING	
	2	1	**095-0878**	2	PIN-SPRING	
	3	1	**123-6077**	1	SHAFT-PIVOT	
	4	1	**132-9240**	1	LATCH AS	
	5	1	**135-1706**	1	SPRING	
	6	1	**149-4745**	2	KIT-SLIDER BLOCK	
					(EACH INCLUDES SLIDER BLOCKS AND BOLT)	
	7	1	**154-8278**	1	SPRING-RETURN	
	8	1	**154-8280**	1	SPRING-RETURN	
	9	1	**154-8284**	1	TUBE	
J	10	1	**161-9289**	2	BLOCK-SLIDER	
	11	1	**161-9290**	1	WASHER (11.9X20.7X2.3MM THK)	
Y	12	1	**164-1207**	1	SUSPENSION GP-SEAT	838
Y	13	1	**164-1209**	1	SEAT GP	823
	14	1	**164-1211**	1	LEVER	
	15	1	**164-1212**	1	LEVER	
	16	1	**164-1295**	1	PLATE AS-SLIDE	
J	17	1	**173-5787**	2	SETSCREW	
	18	1	**195-7055**	4	WASHER-HARD (3.2MM THK)	
	19	1	**031-4155**	4	LOCKNUT	
	20	1	**2K-4973**	4	LOCKNUT (3/8-16 THD)	
	21	1	**3B-4505**	4	LOCKWASHER	
	22	1	**4L-6454**	4	BOLT (3/8-16X1 IN)	
	23	1	**4M-0061**	4	BOLT (5/16-18X0.750 IN)	
					AVAILABLE REPAIR KIT(S):	
J			**161-9744**	1	KIT-SLIDER BLOCK	

J-KIT MARKED J INCLUDES PART MARKED J
Y-SEPARATE ILLUSTRATION

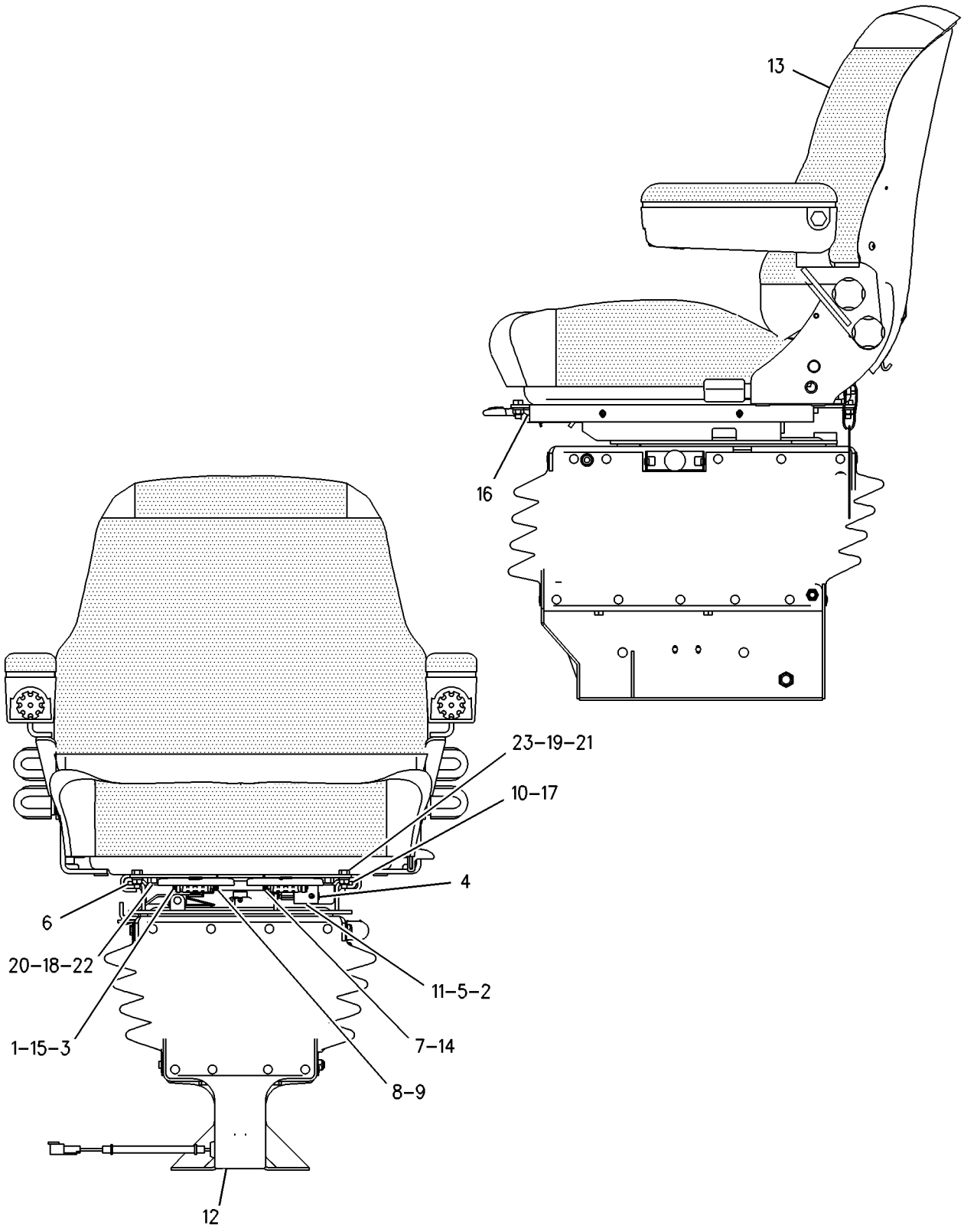

GRAPHIC #1 **<END>** g00759727

OPERATOR STATION

164-1202 SEAT GP-SUSPENSION

S/N: FDP18400-UP
VINYL
PART OF 180-5771 SEAT GP-SUSPENSION
AN ATTACHMENT

SMCS-7324, 7336 **i01516264**

NOTE	REF NO	GRAPHIC REF	PART NUMBER	QTY	PART NAME 1 2 3 4 5 6 (PRODUCT LEVEL)	SEE PAGE
	1	1	**8S-7803**	2	RING-RETAINING	
	2	1	**123-6077**	1	SHAFT-PIVOT	
	3	1	**132-9240**	1	LATCH AS	
	4	1	**135-1706**	1	SPRING	
	5	1	**149-4745**	2	KIT-SLIDER BLOCK	
					(EACH INCLUDES SLIDER BLOCKS AND BOLT)	
	6	1	**154-8278**	1	SPRING-RETURN	
	7	1	**154-8280**	1	SPRING-RETURN	
	8	1	**154-8284**	1	TUBE	
J	9	1	**161-9289**	2	BLOCK-SLIDER	
	10	1	**161-9290**	1	WASHER (11.9X20.7X2.3MM THK)	
Y	11	1	**164-1207**	1	SUSPENSION GP-SEAT	838
Y	12	1	**164-1210**	1	SEAT GP	825
	13	1	**164-1211**	1	LEVER	
	14	1	**164-1212**	1	LEVER	
	15	1	**164-1295**	1	PLATE AS-SLIDE	
J	16	1	**173-5787**	2	SETSCREW	
	17	1	**195-7055**	4	WASHER-HARD (3.2MM THK)	
	18	1	**031-4155**	4	LOCKNUT	
	19	1	**095-0878**	2	PIN-SPRING	
	20	1	**2K-4973**	4	LOCKNUT (3/8-16 THD)	
	21	1	**3B-4505**	4	LOCKWASHER	
	22	1	**4L-6454**	4	BOLT (3/8-16X1 IN)	
	23	1	**4M-0061**	4	BOLT (5/16-18X0.750 IN)	
					AVAILABLE REPAIR KIT(S):	
J			**161-9744**	1	KIT-SLIDER BLOCK	

J-KIT MARKED J INCLUDES PART MARKED J
Y-SEPARATE ILLUSTRATION

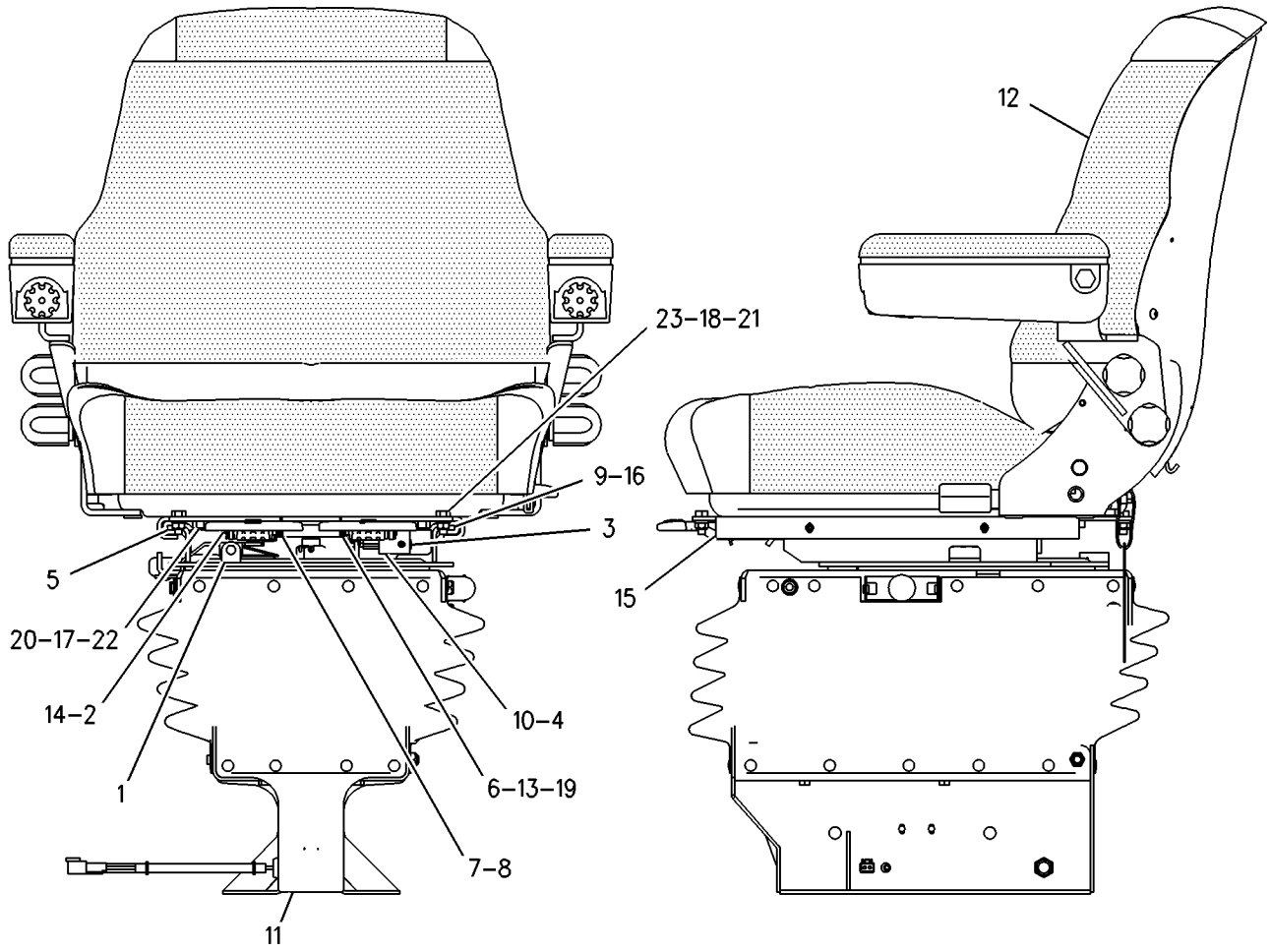

GRAPHIC #1 **<END>** g00759725

OPERATOR STATION

164-1203 SEAT GP-SUSPENSION

S/N: FDP18400-UP
FABRIC
PART OF 180-5772 SEAT GP-SUSPENSION
AN ATTACHMENT

SMCS-7324, 7336 **i01516275**

NOTE	REF NO	GRAPHIC REF	PART NUMBER	QTY	PART NAME 1 2 3 4 5 6 (PRODUCT LEVEL)	SEE PAGE
	1	1	**149-4745**	2	KIT-SLIDER BLOCK	
					(EACH INCLUDES SLIDER BLOCKS AND BOLT)	
J	2	1	**161-9289**	2	BLOCK-SLIDER	
Y	3	1	**164-1207**	1	SUSPENSION GP-SEAT	838
Y	4	1	**164-1213**	1	SEAT GP	827
J	5	1	**173-5787**	2	SETSCREW	
					AVAILABLE REPAIR KIT(S):	
J			**161-9744**	1	KIT-SLIDER BLOCK	

J-KIT MARKED J INCLUDES PART MARKED J
Y-SEPARATE ILLUSTRATION

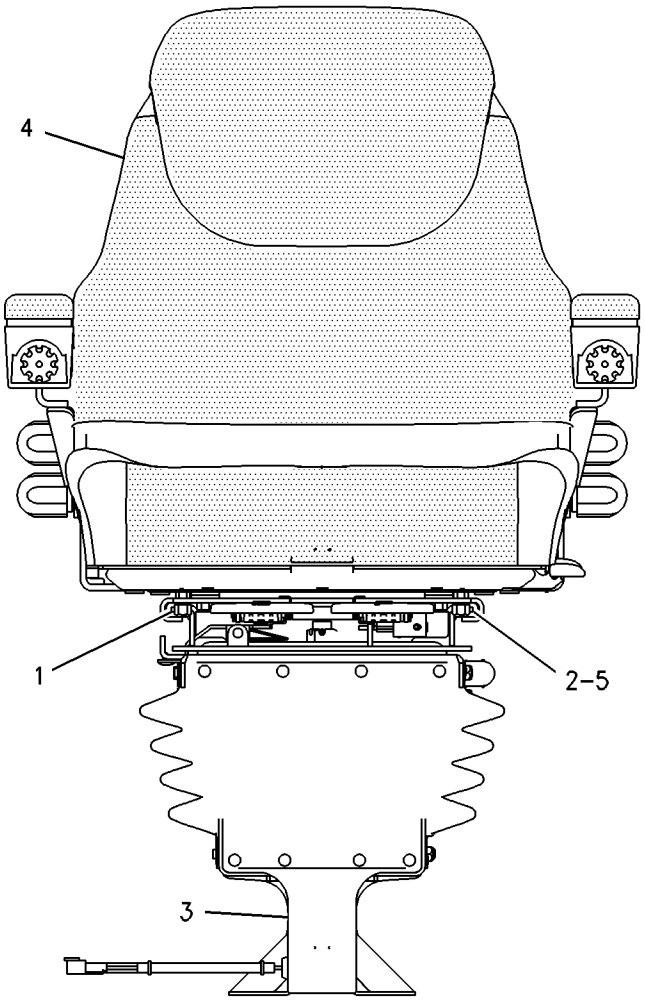

GRAPHIC #1

<END>

g00759724

OPERATOR STATION

180-5770 SEAT GP-SUSPENSION

S/N: FDP18400-UP
FABRIC, STANDARD
PART OF 184-9737, 239-5565, 239-5566 CAB AR
AN ATTACHMENT

SMCS-7324, 7336 **i01453039**

NOTE	PART NUMBER	QTY	PART NAME 1 2 3 4 5 6 (PRODUCT LEVEL)	SEE PAGE
M	**8T-4139**	4	BOLT (M12X1.75X30MM)	
Y	**164-1201**	1	SEAT GP-SUSPENSION	830
	3S-2093	1	STRAP-CABLE	
	8T-4223	4	WASHER-HARD (13.5X25.5X3MM THK)	

M-METRIC PART
Y-SEPARATE ILLUSTRATION

<END>

180-5771 SEAT GP-SUSPENSION

S/N: FDP18400-UP
VINYL, STANDARD
PART OF 184-9736, 238-6697, 239-5563, 239-5564 CANOPY AR
AN ATTACHMENT

SMCS-7324, 7336 **i01453041**

NOTE	PART NUMBER	QTY	PART NAME 1 2 3 4 5 6 (PRODUCT LEVEL)	SEE PAGE
M	**8T-4139**	4	BOLT (M12X1.75X30MM)	
Y	**164-1202**	1	SEAT GP-SUSPENSION	832
	3S-2093	1	STRAP-CABLE	
	8T-4223	4	WASHER-HARD (13.5X25.5X3MM THK)	

M-METRIC PART
Y-SEPARATE ILLUSTRATION

<END>

180-5772 SEAT GP-SUSPENSION

S/N: FDP18400-UP
FABRIC, DELUXE
PART OF 184-9738, 239-5567, 239-5568, 244-1944 CAB AR
AN ATTACHMENT

SMCS-7324, 7336 **i01453042**

NOTE	PART NUMBER	QTY	PART NAME 1 2 3 4 5 6 (PRODUCT LEVEL)	SEE PAGE
M	**8T-4139**	4	BOLT (M12X1.75X30MM)	
Y	**164-1203**	1	SEAT GP-SUSPENSION	834
	3S-2093	1	STRAP-CABLE	
	8T-4223	4	WASHER-HARD (13.5X25.5X3MM THK)	

M-METRIC PART
Y-SEPARATE ILLUSTRATION

<END>

OPERATOR STATION

164-1165 SUPPRESSION GP-SOUND

S/N: FDP18400-UP

PART OF 184-9737, 184-9738, 239-5565, 239-5566, 239-5567, 239-5568, 244-1944

CAB AR

AN ATTACHMENT

SMCS-7329, 7330 **i01969762**

NOTE	REF NO	GRAPHIC REF	PART NUMBER	QTY	PART NAME 1 2 3 4 5 6 (PRODUCT LEVEL)	SEE PAGE
	1	1	**229-6051**	8	SPACER (4.5X8X10MM THK)	
	2	1	**4V-2264**	8	NUT-PUSH	
	3	1	**9U-8263**	1	COVER	
	4	1	**084-4277**	1	LAMP GP-DOME	
		1	**6R-7490**	1	LAMP (12-VOLT, 10-WATT)	
M	5	1	**113-0920**	8	BOLT-HEX SOCKET (M4X0.7X35MM)	
	6	1	**130-8432**	1	PLATE-FACE	
	7	1	**164-1152**	1	BRACKET AS	
	8	1	**164-1156**	1	COVER	
	9	1	**164-1157**	1	COVER	
	10	1	**164-1166**	1	LINER-CAB	
	11	1	**169-7290**	2	SPEAKER	
	12	1	**169-7291**	2	COVER-SPEAKER	
	13	1	**197-8973**	6	FASTENER-PANEL	
	14	1	**200-5356**	1	PLATE AS	
	15	1	**229-6052**	6	SPACER (9.7X12.7X7.5MM THK)	
M	16	1	**131-3985**	2	SCREW (M6X1 THD)	
	17	1	**200-3004**	2	SCREW-TRUSS HEAD (M6X1X45MM)	
	18	1	**6V-2410**	8	SCREW-WASHER HEAD	
	19	1	**8T-4121**	2	WASHER-HARD (11X21X2.5MM THK)	
M	20	1	**8T-4137**	2	BOLT (M10X1.5X20MM)	
	21	1	**8T-4205**	2	WASHER-HARD (7.2X14.5X2MM THK)	
M	22	1	**9X-2041**	4	SCREW-TRUSS HEAD (M10X1.5X20MM)	
M	23	1	**9X-2045**	4	SCREW-TRUSS HEAD (M6X1X20MM)	
E	24	1	**129-1855**		FASTENER-HOOK (18CM EACH)	
E	25	1	**129-1854**		FASTENER-LOOP (18CM EACH)	
E	26	1	**129-1855**		FASTENER-HOOK (16CM)	
E	27	1	**129-1854**		FASTENER-LOOP (16CM)	

E-ORDER BY THE CENTIMETER
M-METRIC PART

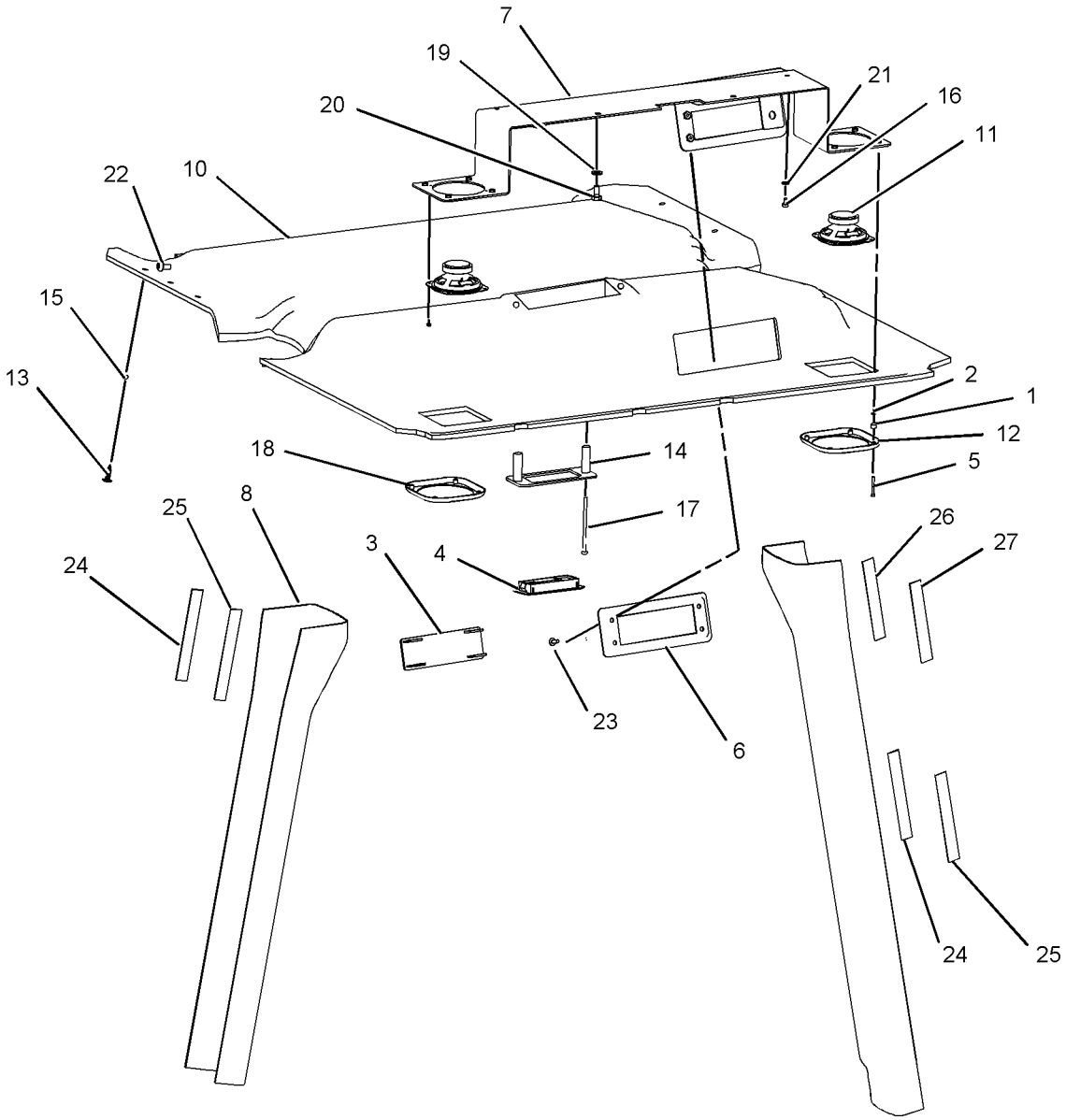

GRAPHIC #1 **<END>** g01022625

OPERATOR STATION

164-1207 SUSPENSION GP-SEAT

S/N: FDP18400-UP

PART OF 164-1201, 164-1202, 164-1203 SEAT GP-SUSPENSION

AN ATTACHMENT

SMCS-7312, 7324 **i01945135**

NOTE	REF NO	GRAPHIC REF	PART NUMBER	QTY	PART NAME 1 2 3 4 5 6 (PRODUCT LEVEL)	SEE PAGE
	1	1	**111-5042**	34	FASTENER	
M	2	1	**129-3180**	1	LOCKNUT	
	3	1	**130-8343**	1	SCREW-BUTTON HEAD	
	4	1	**161-9282**	1	BOLT (3/4-10 X1.5)	
	5	1	**161-9283**	1	WASHER (1.6MM THK)	
	6	1	**161-9285**	1	NUT (3/4-10 THD)	
	7	1	**163-1135**	1	SPRING	
	8	1	**163-1139**	1	BRACKET	
	9	1	**164-1208**	1	PLATE AS	
	9A	1	**161-9286**	1	SPRING-LATCH	
	9B	1	**161-9288**	1	SHAFT-PIVOT	
	9C	1	**164-1294**	1	LATCH GP-SEAT SWIVEL	
	9D	1	**8S-7803**	1	RING-RETAINING	
	10	1	**164-1215**	1	ABSORBER AS-SHOCK	
	11	1	**164-1216**	1	BASE AS	
	12	1	**164-1217**	1	ARM AS-SUSPENSION	
	13	1	**164-1218**	2	ARM AS-SUSPENSION	
	14	1	**164-1219**	1	BRACKET AS	
	15	1	**164-1220**	1	BRACKET AS	
	16	1	**164-1221**	1	AIR COMPRESSOR GP	
	17	1	**164-1224**	2	SHAFT AS	
	18	1	**164-1225**	2	SHAFT AS	
	19	1	**164-1226**	2	SHAFT	
	20	1	**164-1228**	1	HARNESS AS-RIDE CONTROL	
	21	1	**164-1229**	4	BUMPER	
	22	1	**164-1230**	12	BEARING	
	23	1	**5V-4845**	2	BEARING	
	24	1	**164-1232**	1	PLATE	
	25	1	**164-1233**	2	SPACER (13X25.4X20.5MM THK)	
	26	1	**164-1234**	1	PLATE	
	27	1	**164-1237**	1	BUSHING	
	28	1	**164-1238**	1	SPACER (12.8X22.2X3.1MM THK)	
	29	1	**164-1239**	2	SPACER (13.5X19X61.9MM THK)	
	30	1	**164-1240**	1	BOOT	
	31	1	**185-3890**	2	SCREW-PAN HEAD	
	32	1	**215-8196**	1	VALVE AS	
	33	1	**215-1242**	1	RING	
	34	1	**197-6657**	1	BOLT-ROUND HEAD	
	35	1	**1K-6872**	1	LOCKNUT	
	36	1	**2K-4973**	8	LOCKNUT (3/8-16 THD)	
	37	1	**3S-2093**	2	STRAP-CABLE	
	38	1	**4B-9784**	8	BALL	
	39	1	**4K-0499**	2	LOCKWASHER	
	40	1	**5M-3062**	1	BOLT (3/8-16X0.75 IN)	
	41	1	**6V-8185**	8	NUT (1/4-20 THD)	
	42	1	**7X-0481**	1	BOLT (203.2MM)	
	43	1	**7X-0622**	2	WASHER (13X24X2.5MM THK)	
	44	1	**8T-9364**	4	BOLT (1/4-20X0.625 IN)	
	45	1	**1H-3337**	2	BOLT (1/4-20X0.875 IN)	
	46	1	**164-1236**	2	PLATE AS	
	47	1	**180-5794**	2	PLATE	
	48	1	**197-6658**	1	WASHER	
	49	1	**3B-4631**	1	PIN-COTTER	
	50	1	**164-1235**	1	KNOB	

M-METRIC PART

164-1207 SUSPENSION GP-SEAT *(contd.)*

i01945135

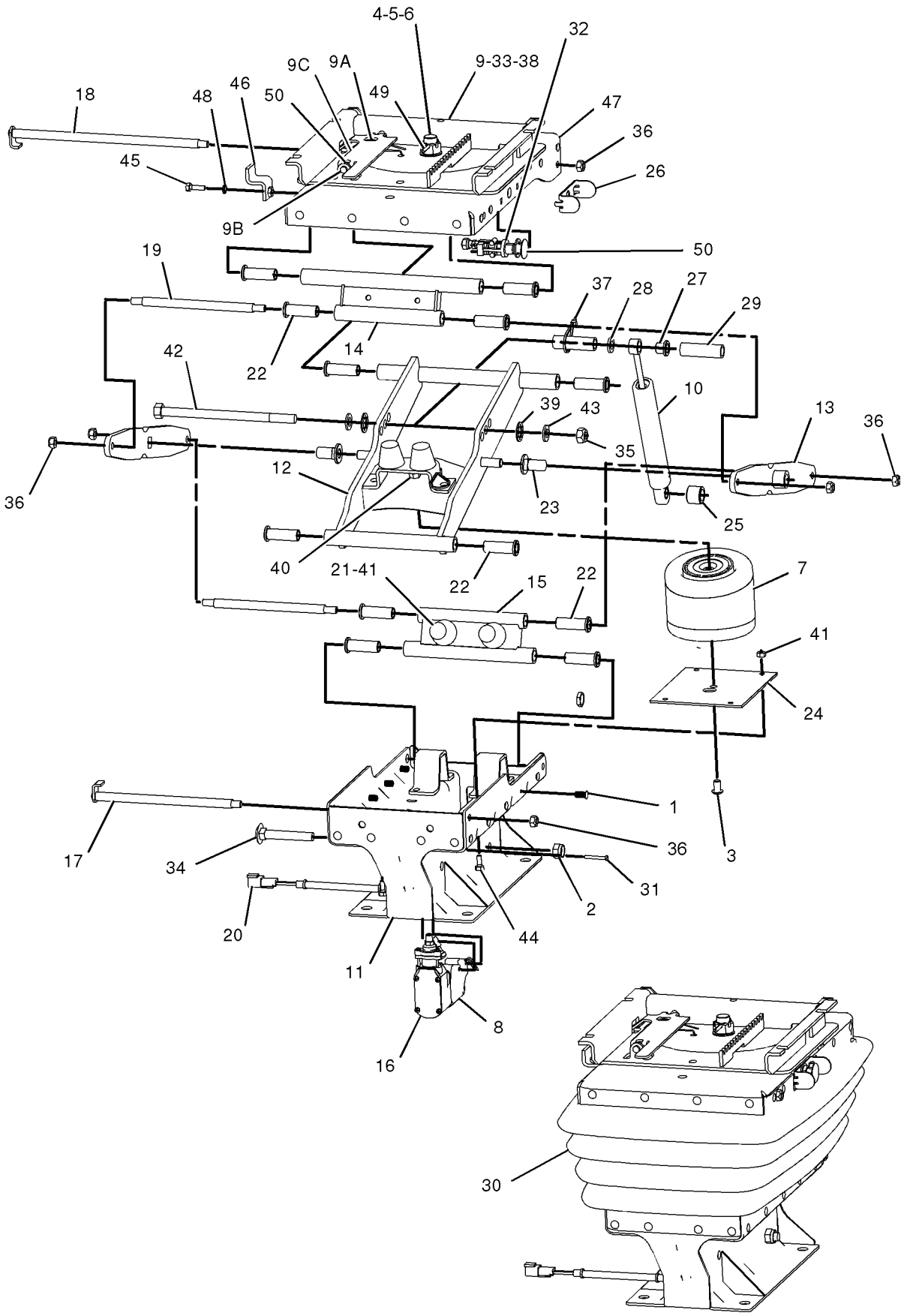

GRAPHIC #1 **<END>** g01012383

OPERATOR STATION

239-1080 TACHOMETER GP-ELECTRIC

S/N: FDP18400-UP
PART OF 239-5566, 239-5568 CAB AR
AN ATTACHMENT

SMCS-7462 **i01986564**

NOTE	REF NO	GRAPHIC REF	PART NUMBER	QTY	PART NAME 1 2 3 4 5 6 (PRODUCT LEVEL)	SEE PAGE
	1	1	**4B-2043**	7	NUT (8-32 THD)	
	2	1	**9B-7233**	7	LOCKWASHER	
	3	1	**122-7137**	1	LAMP (12-VOLT)	
	4	1	**131-1424**	1	SEAL	

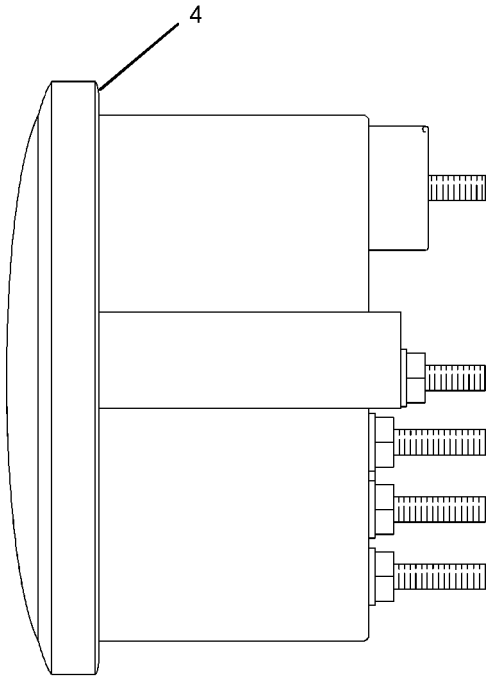

LEFT SIDE VIEW

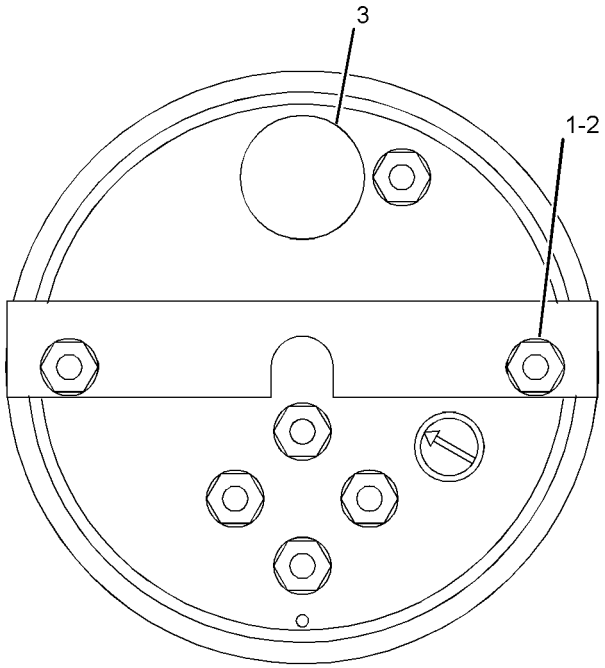

REAR VIEW

GRAPHIC #1 **<END>** g01030658

OPERATOR STATION

239-1081 TACHOMETER GP-ELECTRIC

S/N: FDP18400-UP

PART OF 239-5565, 239-5567 CAB AR, 239-5563, 239-5564 CANOPY AR

AN ATTACHMENT

SMCS-7462 **i01986539**

NOTE	REF NO	GRAPHIC REF	PART NUMBER	QTY	PART NAME 1 2 3 4 5 6 (PRODUCT LEVEL)	SEE PAGE
	1	1	**4B-2043**	6	NUT (8-32 THD)	
	2	1	**9B-7233**	6	LOCKWASHER	
	3	1	**122-7137**	1	LAMP (12 VOLT)	
	4	1	**131-1424**	1	SEAL	

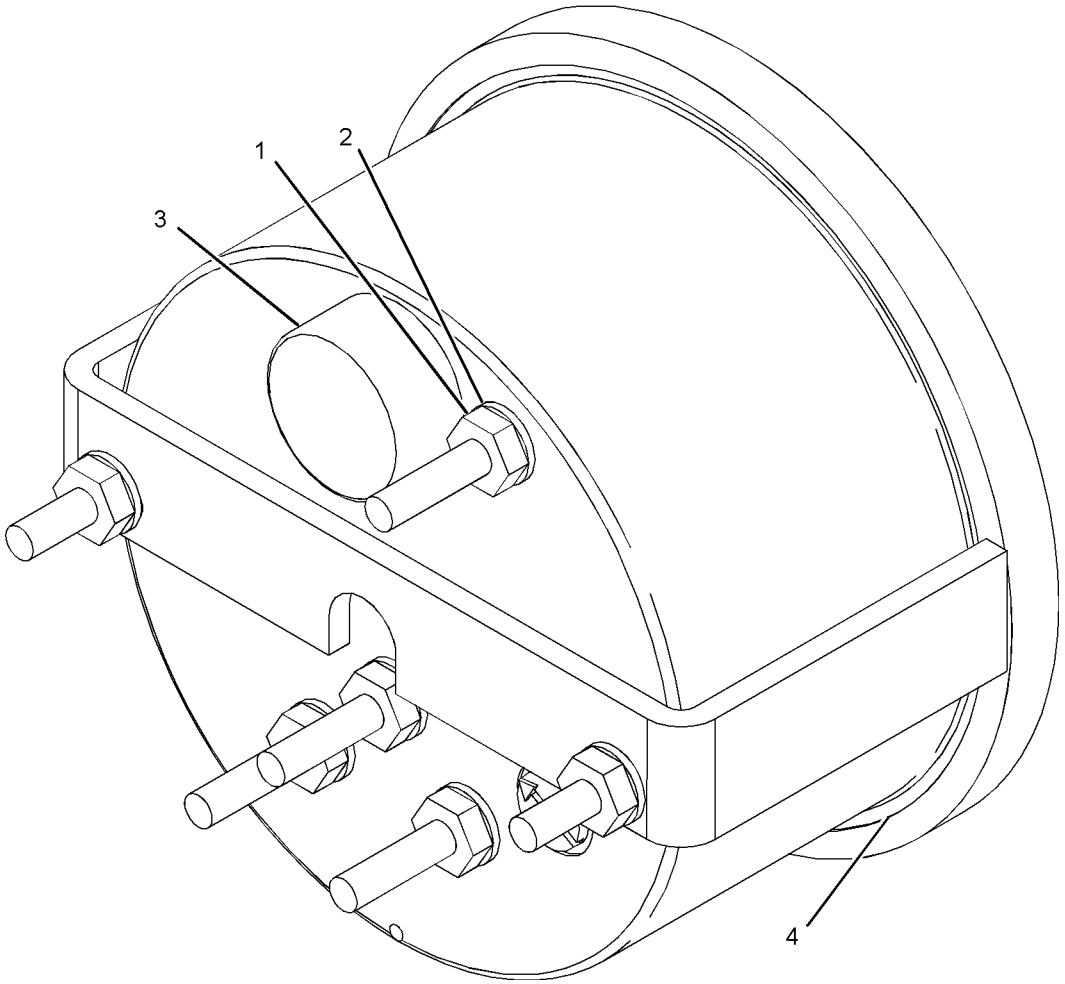

GRAPHIC #1

<END>

g01029988

OPERATOR STATION

164-1370 TRIM GP-CAB

S/N: FDP18400-UP

PART OF 184-9737, 184-9738, 239-5565, 239-5566, 239-5567, 239-5568, 244-1944 CAB AR, 184-9736, 238-6697, 239-5563, 239-5564 CANOPY AR AN ATTACHMENT

SMCS-7329, 7451 **i01617347**

NOTE	REF NO	GRAPHIC REF	PART NUMBER	QTY	PART NAME 1 2 3 4 5 6 (PRODUCT LEVEL)	SEE PAGE
	1	1	**9R-1948**	8	RIVET	
	2	1	**164-1366**	1	BRUSH AS	
	3	1	**164-1374**	1	BRUSH AS	
C	4	1	**164-1110**	1	COVER	
M	5	1	**9X-2044**	2	SCREW-TRUSS HEAD (M6X1X16MM)	

C-CHANGE FROM PREVIOUS TYPE
M-METRIC PART

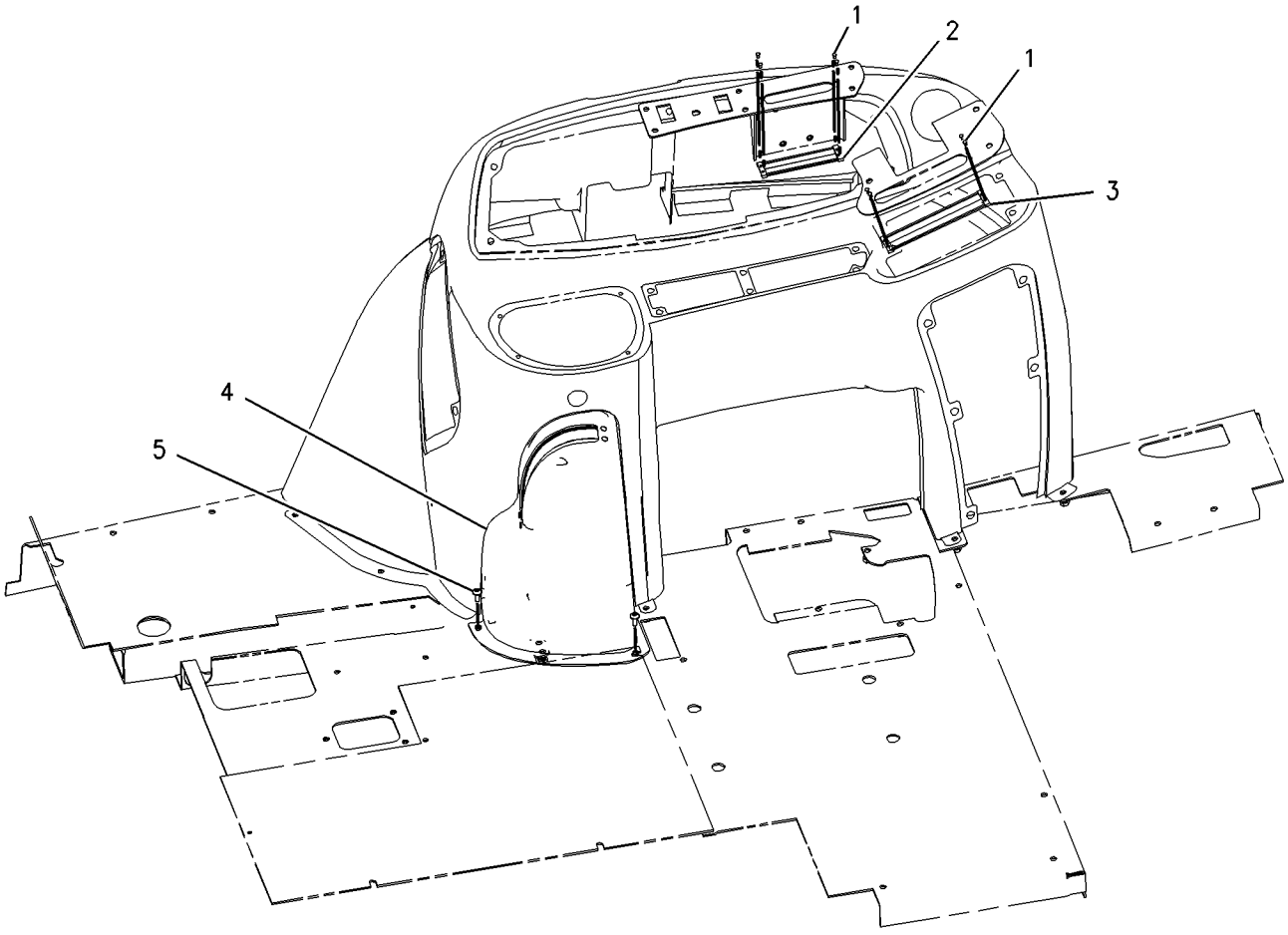

GRAPHIC #1 **<END>** g00796683

OPERATOR STATION

108-8251 VISOR GP-CAB

S/N: FDP18400-UP
PART OF 184-9738, 239-5567, 239-5568, 244-1944 CAB AR
FOR USE WITH AIR CONDITIONER
AN ATTACHMENT

SMCS-7301, 7325, 7335 **i01447419**

NOTE	REF NO	GRAPHIC REF	PART NUMBER	QTY	PART NAME 1 2 3 4 5 6 (PRODUCT LEVEL)	SEE PAGE
	1	1	**9R-3205**	1	VISOR AS	
	2	1	**9R-3204**	1	PLATE AS	
M	3	1	**8T-4171**	4	BOLT (M6X1X12MM)	
	4	1	**9R-3203**	2	PLATE	

M-METRIC PART

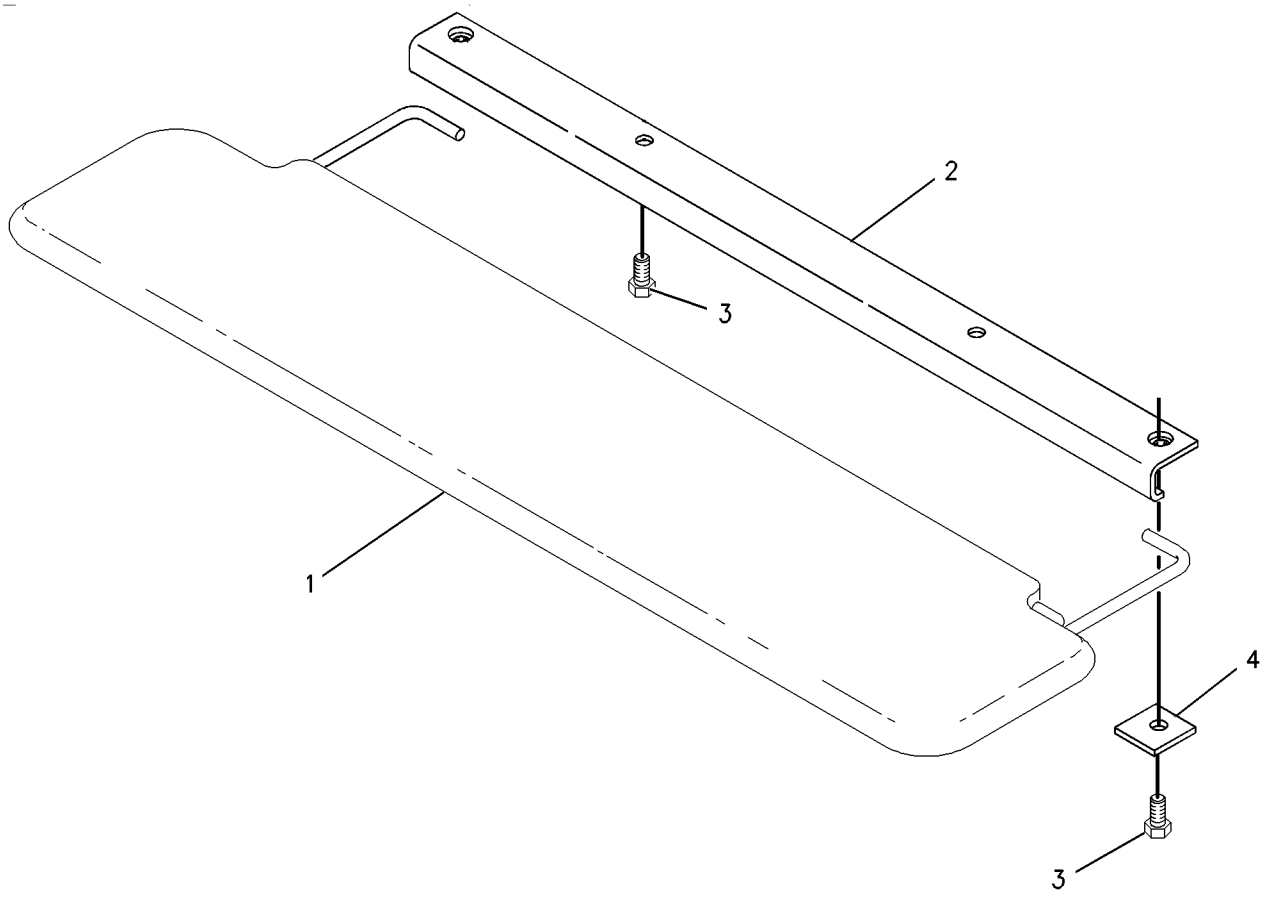

GRAPHIC #1 **<END>** g00757829

OPERATOR STATION

167-8187 WASHER GP-WINDOW

S/N: FDP18400-UP
WINDSHIELD
PART OF 184-9737, 184-9738, 239-5565, 239-5566, 239-5567, 239-5568, 244-1944
CAB AR
AN ATTACHMENT

SMCS-7306 **i01794723**

NOTE	REF NO	GRAPHIC REF	PART NUMBER	QTY	PART NAME 1 2 3 4 5 6 (PRODUCT LEVEL)	SEE PAGE
	1	1	**3S-2093**	2	STRAP-CABLE	
	2	1	**8T-0789**	1	CLIP-HOSE	
	3	1	**8T-1118**	1	NOZZLE AS	
	4	1	**9R-3469**	2	DIAPHRAGM	
	5	1	**112-9450**	1	PLATE	
	6	1	**121-6936**	2	CONNECTOR	
	7	1	**123-8670**	1	TANK AS	
		1	**123-8669**	1	TANK	
		1	**117-2823**	1	CAP	
		1	**117-2824**	2	GROMMET	
		1	**117-2826**	2	PUMP AS	
	8	1	**131-1368**	1	HARNESS AS (WIPER SWITCH)	
		1	**102-8803**	1	KIT-RECEPTACLE (3 PIN)	
	9	1	**168-9906**	1	BRACKET	
	10	1	**186-0817**	1	WASHER-HARD (7X19X2MM THK)	
M	11	1	**129-3178**	1	LOCKNUT (M6X1 THD)	
	12	1	**7X-7729**	1	WASHER (11X25X3MM THK)	
	13	1	**8T-4121**	2	WASHER-HARD (11X21X2.5MM THK)	
M	14	1	**8T-4201**	2	BOLT-LOCKING (M10X1.5X20MM)	
	15	1	**8T-4205**	1	WASHER-HARD (7.2X14.5X2MM THK)	
M	16	1	**8T-4971**	1	BOLT (M6X1X30MM)	
E	17	1	**144-0195**	2	HOSE (15CM)	
E	18	1	**144-0195**		HOSE (226CM)	

E-ORDER BY THE CENTIMETER
M-METRIC PART

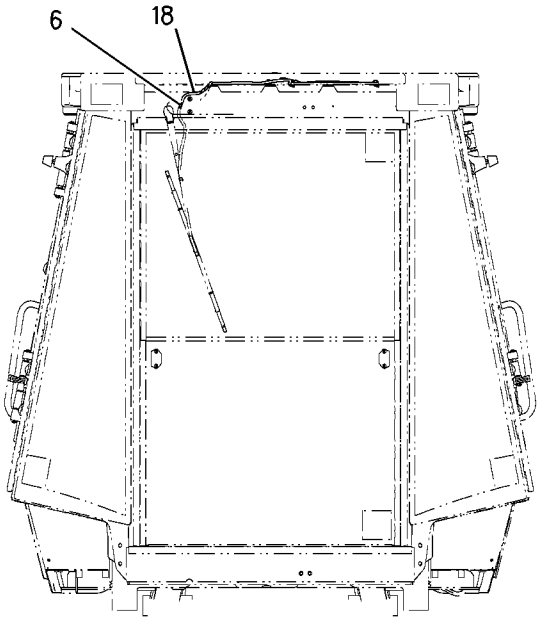

REAR VIEW

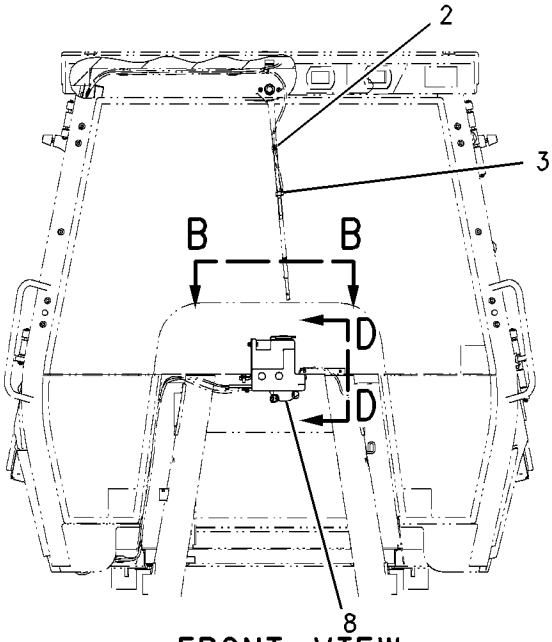

FRONT VIEW

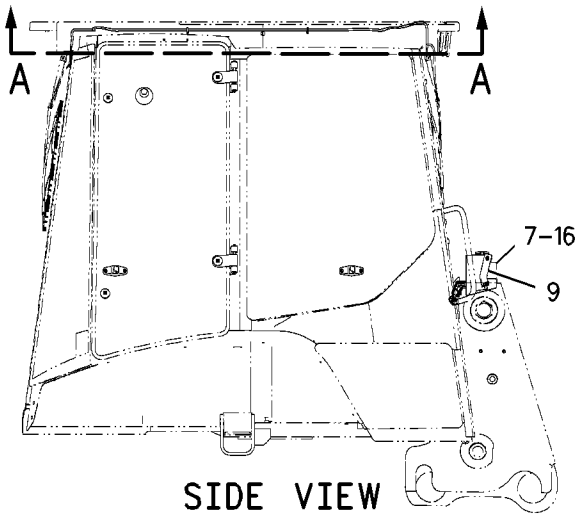

SIDE VIEW

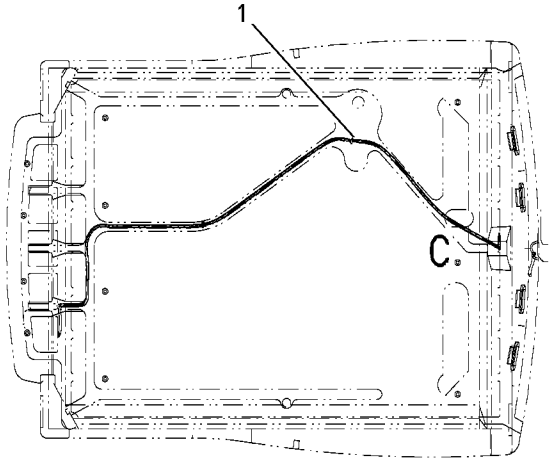

SECTION A-A

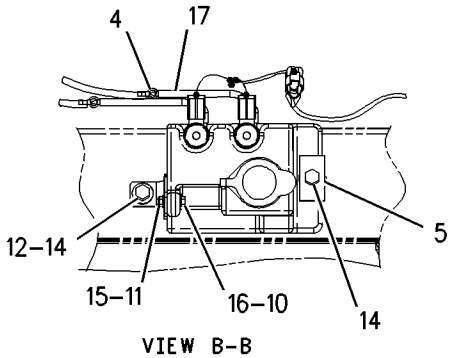

VIEW B-B

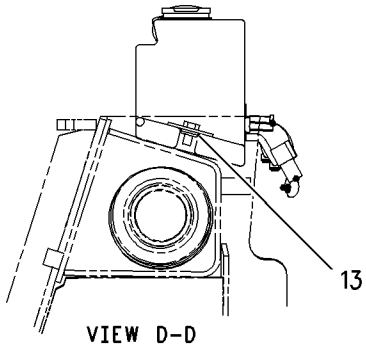

VIEW D-D

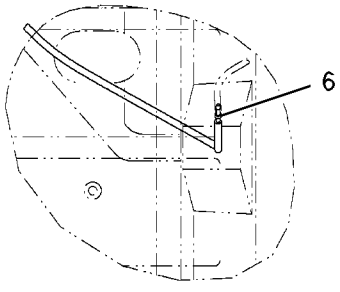

DETAIL C

GRAPHIC #1 **<END>** g00745155

OPERATOR STATION

207-6052 WASHER GP-WINDOW

S/N: FDP18400-UP
PART OF 239-5564 CANOPY AR
AN ATTACHMENT

SMCS-7306 **i02020876**

NOTE	REF NO	GRAPHIC REF	PART NUMBER	QTY	PART NAME 1 2 3 4 5 6 (PRODUCT LEVEL)	SEE PAGE
	1	1	**3S-2093**	2	STRAP-CABLE	
	2	1	**8T-0789**	1	CLIP-HOSE	
	3	1	**8T-1118**	1	NOZZLE AS	
	4	1	**9R-3469**	2	DIAPHRAGM	
	5	1	**112-9450**	1	PLATE	
	6	1	**6K-9632**	1	TEE	
	7	1	**123-8670**	1	TANK AS	
		1	**117-2823**	1	CAP	
		1	**117-2824**	2	GROMMET	
		1	**117-2826**	2	PUMP AS-WASHER	
		1	**123-8669**	1	TANK	
	8	1	**131-1368**	1	HARNESS AS-WINDOW WIPER	
		1	**102-8803**	1	KIT-RECEPTACLE (3-PIN)	
					(KIT SERVICES RECEPTACLE AND WEDGE)	
	9	1	**168-9906**	1	BRACKET	
	10	1	**186-0817**	1	WASHER-HARD (7X19X2-MM THK)	
M	11	1	**129-3178**	1	LOCKNUT (M6X1-THD)	
	12	1	**7X-7729**	1	WASHER (11X25X3-MM THK)	
B	13	1	**8T-4121**	2	WASHER-HARD (11X21X2.5-MM THK)	
M	14	1	**8T-4201**	2	BOLT-LOCKING (M10X1.5X20-MM)	
	15	1	**8T-4205**	1	WASHER-HARD (7.2X14.5X2-MM THK)	
M	16	1	**8T-4971**	1	BOLT (M6X1X30-MM)	
E	17	1	**144-0195**		HOSE (450CM)	
E	18	1	**144-0195**		HOSE (450CM)	

B-USE AS REQUIRED
E-ORDER BY THE CENTIMETER
M-METRIC PART

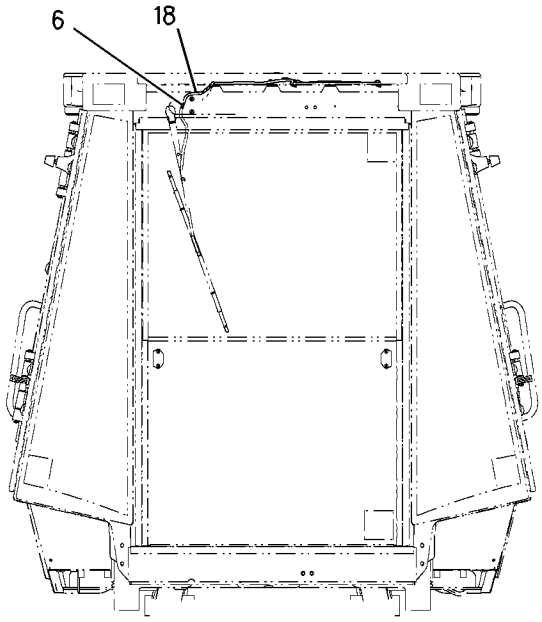

REAR VIEW

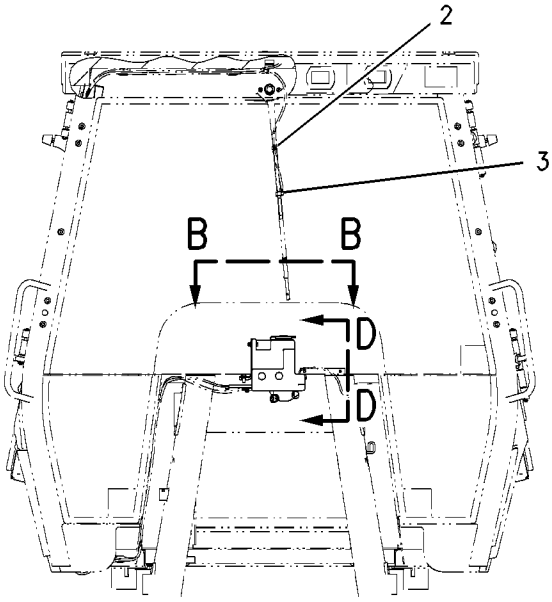

FRONT VIEW

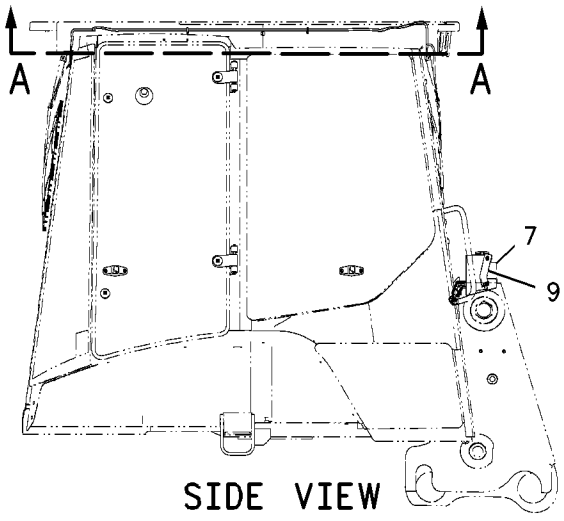

SIDE VIEW

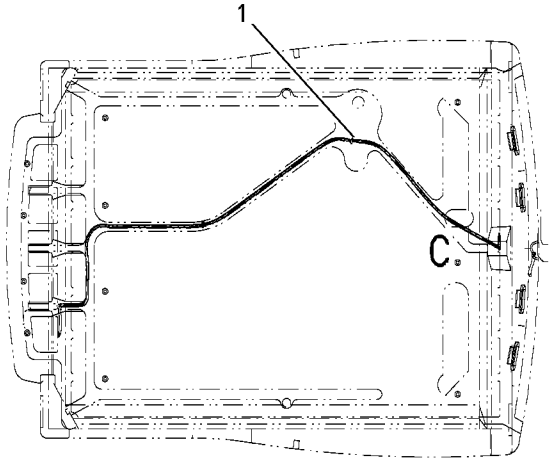

SECTION A-A

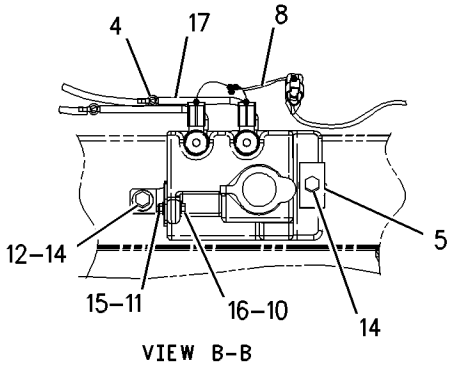

VIEW B-B

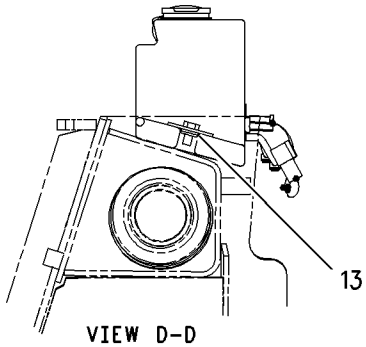

VIEW D-D

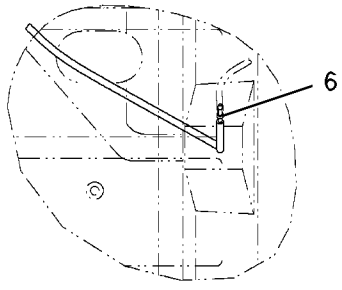

DETAIL C

GRAPHIC #1 **<END>** g00909894

OPERATOR STATION

164-1059 WINDOW GP-CAB—RH

S/N: FDP18400-UP
PART OF 164-1140, 180-7250 CAB GP
AN ATTACHMENT

SMCS-7310 **i01374492**

NOTE	REF NO	GRAPHIC REF	PART NUMBER	QTY	PART NAME 1 2 3 4 5 6 (PRODUCT LEVEL)	SEE PAGE
	1	1	**7X-2393**	1	BUMPER-CONICAL	
	2	1	**8Y-7309**	1	RETAINER	
	3	1	**100-7608**	1	HANDLE	
	4	1	**129-8542**	6	RETAINER	
	5	1	**129-8545**	8	WASHER (3MM THK)	
M	6	1	**136-4192**	4	BOLT (M6X1.0X35MM)	
	7	1	**143-2830**	1	LATCH AS	
M		1	**6V-7743**	2	LOCKNUT (M6X1 THD)	
M		1	**9X-2045**	2	SCREW-TRUSS HEAD (M6X1X20MM)	
		1	**143-2827**	1	SPRING	
	8	1	**154-5423**	2	SPACER	
	9	1	**154-5424**	2	HINGE	
	10	1	**159-4951**	2	LATCH AS	
M		1	**5C-2874**	2	NUT (M5X.8 THD)	
M		1	**161-6984**	2	SCREW-TRUSS HEAD (M5X0.8X20MM)	
		1	**161-6987**	2	WASHER-HARD (1.5MM THK)	
		1	**161-9294**	2	SPRING-FLAT WIRE	
M		1	**162-6556**	2	LOCKNUT (M6X1.0 THD)	
	11	1	**164-1064**	1	GLASS-RH	
M	12	1	**5C-7261**	1	NUT (M8X1.25 THD)	
M	13	1	**6V-7743**	2	LOCKNUT (M6X1 THD)	
E	14	1	**148-5353**		SEAL (342CM) (378CM)	

E-ORDER BY THE CENTIMETER
M-METRIC PART

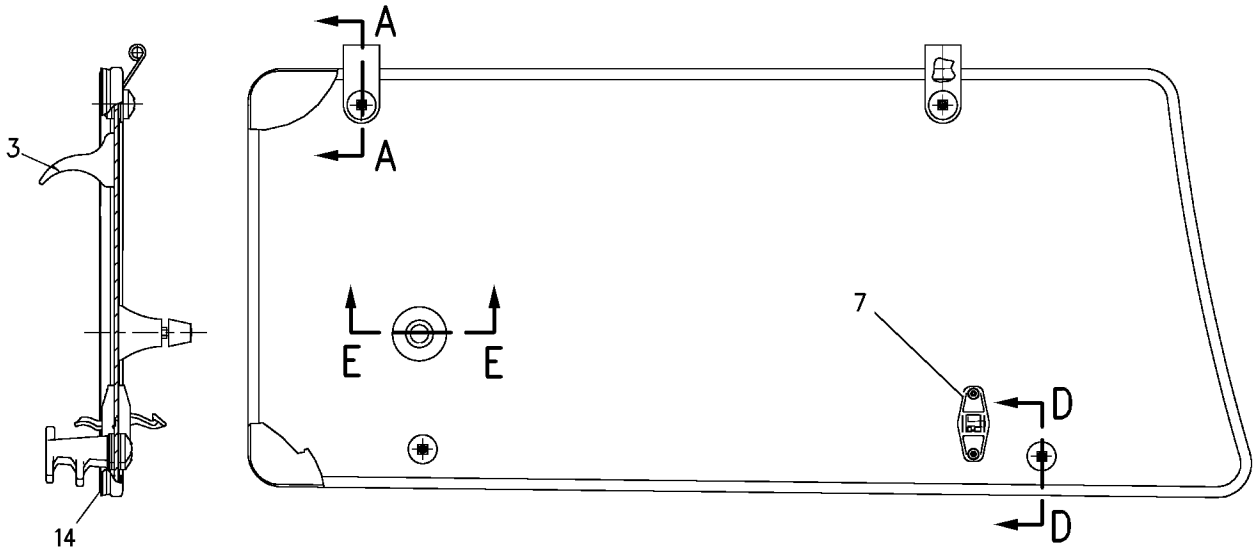

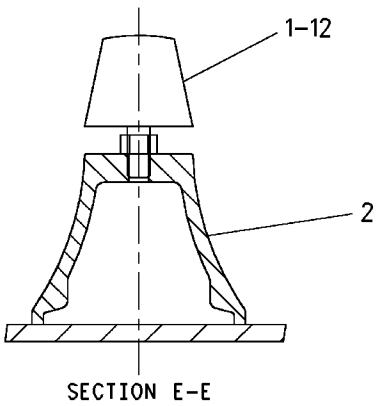

SECTION E-E

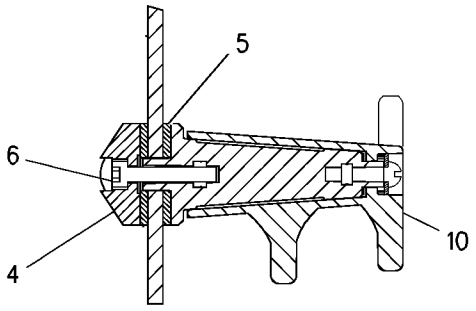

SECTION D-D

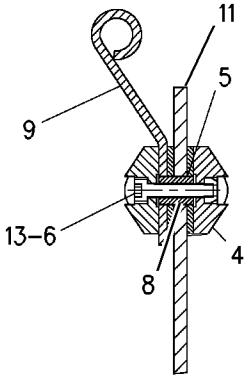

SECTION A-A

GRAPHIC #1 **<END>** g00725900

OPERATOR STATION

164-1060 WINDOW GP-CAB—LH

S/N: FDP18400-UP
PART OF 164-1140, 180-7250 CAB GP
AN ATTACHMENT

SMCS-7310 **i01374530**

NOTE	REF NO	GRAPHIC REF	PART NUMBER	QTY	PART NAME 1 2 3 4 5 6 (PRODUCT LEVEL)	SEE PAGE
	1	1	**7X-2393**	1	BUMPER-CONICAL	
	2	1	**8Y-7309**	1	RETAINER	
	3	1	**100-7608**	1	HANDLE	
	4	1	**129-8542**	6	RETAINER	
	5	1	**129-8545**	8	WASHER (3MM THK)	
M	6	1	**136-4192**	4	BOLT (M6X1.0X35MM)	
	7	1	**143-2830**	1	LATCH AS	
M		1	**6V-7743**	2	LOCKNUT (M6X1 THD)	
M		1	**9X-2045**	2	SCREW-TRUSS HEAD (M6X1X20MM)	
		1	**143-2827**	1	SPRING	
	8	1	**154-5423**	2	SPACER	
	9	1	**154-5424**	2	HINGE	
	10	1	**159-4950**	2	LATCH AS	
M		1	**5C-2874**	2	NUT (M5X.8 THD)	
M		1	**161-6984**	2	SCREW-TRUSS HEAD (M5X0.8X20MM)	
		1	**161-6987**	2	WASHER-HARD (1.5MM THK)	
		1	**161-9294**	2	SPRING-FLAT WIRE	
M		1	**162-6556**	2	LOCKNUT (M6X1.0 THD)	
	11	1	**164-1065**	1	GLASS-LH	
M	12	1	**5C-7261**	1	NUT (M8X1.25 THD)	
M	13	1	**6V-7743**	2	LOCKNUT (M6X1 THD)	
E	14	1	**148-5353**		SEAL (378CM)	

E-ORDER BY THE CENTIMETER
M-METRIC PART

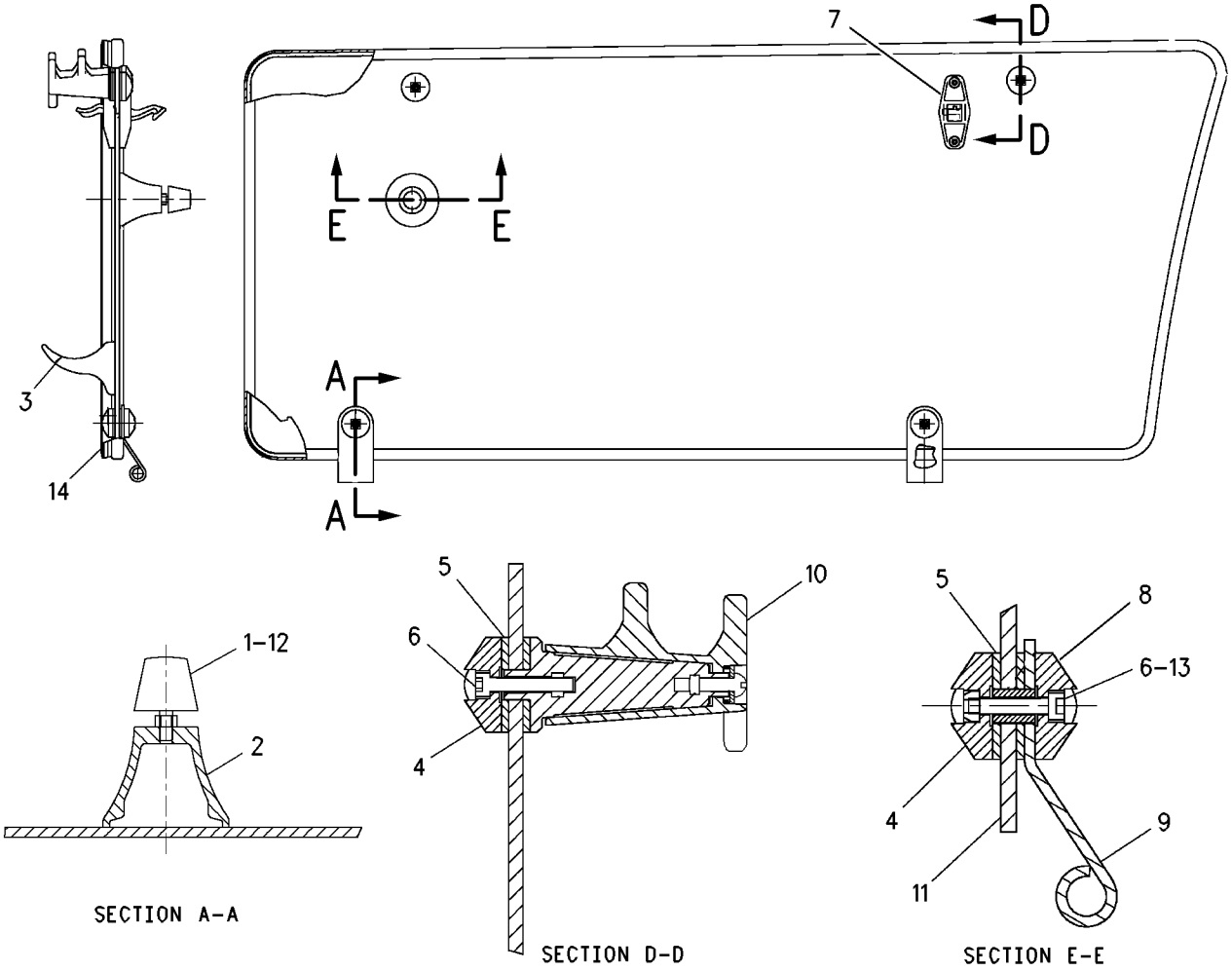

GRAPHIC #1 **<END>** g00725887

OPERATOR STATION

164-1325 WINDOW GP-CAB—REAR

S/N: FDP18400-UP
PART OF 164-1140, 180-7250 CAB GP
AN ATTACHMENT

SMCS-7310 **i01961857**

NOTE	REF NO	GRAPHIC REF	PART NUMBER	QTY	PART NAME 1 2 3 4 5 6 (PRODUCT LEVEL)	SEE PAGE
	1	1	**110-5602**	2	KNOB	
M	2	1	**131-8203**	4	SCREW-FLAT HEAD	
	3	1	**140-9921**	2	INSERT-THREADED	
	4	1	**146-7744**	1	KIT-LATCH (LH)	
	5	1	**146-7745**	1	KIT-LATCH (RH)	
	6	1	**150-8015**	2	GASKET	
	7	1	**164-1308**	2	ROLLER	
	8	1	**164-1311**	1	LINKAGE AS	
	9	1	**164-1327**	1	GLASS	
	10	1	**164-1328**	2	SPRING AS-GAS	
	11	1	**164-1331**	1	FRAME AS	
		1	**140-9921**	4	INSERT-THREADED	
	12	1	**164-1342**	4	BOLT-SPECIAL	
	13	1	**164-1343**	4	WASHER-THRUST	
	14	1	**164-1344**	4	WASHER-THRUST	
	15	1	**164-1345**	4	BEARING	
	16	1	**164-1346**	4	STRIKER	
	17	1	**164-1347**	1	WINDOW AS	
		1	**164-1326**	1	GLASS	
	18	1	**164-1351**	2	PIN	
	19	1	**164-1352**	1	LATCH AS	
	20	1	**164-1353**	1	LATCH AS	
	21	1	**167-8182**	2	BUMPER	
	22	1	**171-2870**	2	SPACER (7X10X5.4MM THK)	
BC	23	1	**201-9465**	4	SHIM (1MM THK)	
C	24	1	**205-7536**	1	BRACKET AS	
C	25	1	**205-7538**	1	BRACKET AS	
	26	1	**119-8349**	2	CAP	
	27	1	**121-9743**	1	SEAL	
CM	28	1	**129-3180**	4	LOCKNUT (M12X1.75 THD)	
	29	1	**5P-4115**	6	WASHER-HARD (7.2X19X2MM THK)	
	30	1	**5P-4116**	4	WASHER-HARD (8.8X20.5X2MM THK)	
M	31	1	**8T-4138**	2	BOLT (M6X1X20MM)	
M	32	1	**8T-4200**	4	BOLT (M8X1.25X16MM)	
	33	1	**8T-4223**	4	WASHER-HARD (13.5X25.5X3MM THK)	
M	34	1	**9X-2044**	4	SCREW-TRUSS HEAD (M6X1X16MM)	
	35	1	**9X-2132**	4	RETAINER	
E	36	1	**164-1354**		CHANNEL-WINDOW (86.6CM)	
D	37	1	**5P-5637**		SEAL (0.85M)	
E	38	1	**9X-6383**		SEAL (85CM)	
E	39	1	**164-1314**		SEAL-LAMP (148.5CM EACH)	
E	40	1	**164-1354**		CHANNEL-WINDOW (72.5CM EACH)	
E	41	1	**164-1354**		CHANNEL-WINDOW (73.8CM EACH)	

B-USE AS REQUIRED
C-CHANGE FROM PREVIOUS TYPE
D-ORDER BY THE METER
E-ORDER BY THE CENTIMETER
M-METRIC PART

164-1325 **WINDOW GP-CAB** *(contd.)* **i01961857**

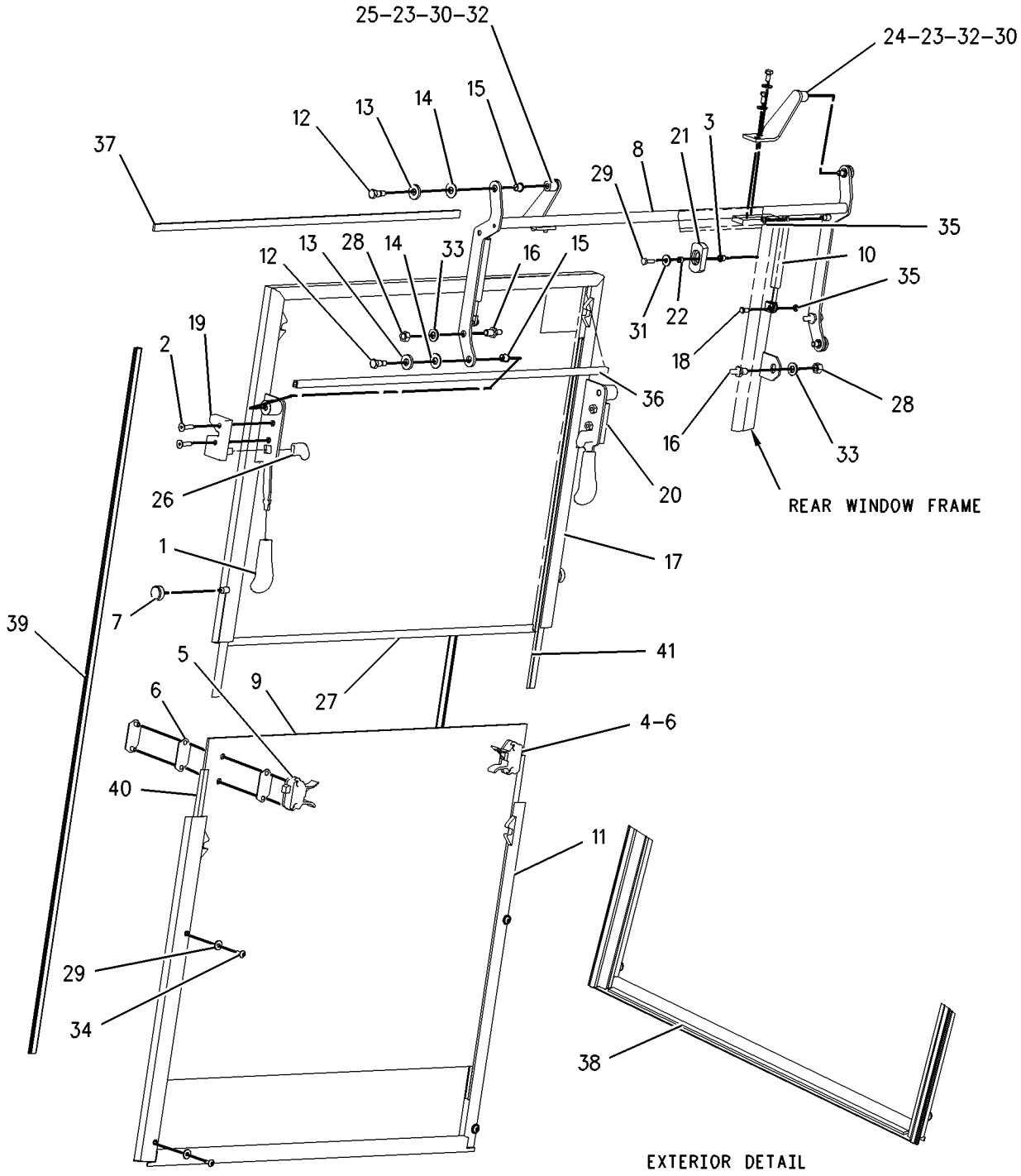

GRAPHIC #1 **<END>** g00814848

OPERATOR STATION

164-1073 WINDOW GP-DOOR—RH

S/N: FDP18400-UP
PART OF 164-1061 DOOR GP-RH
AN ATTACHMENT

SMCS-7308, 7310 **i01706415**

NOTE	REF NO	GRAPHIC REF	PART NUMBER	QTY	PART NAME 1 2 3 4 5 6 (PRODUCT LEVEL)	SEE PAGE
	1	1	**8Y-7287**	2	HINGE	
	2	1	**100-7608**	1	HANDLE	
	3	1	**129-8542**	5	RETAINER	
	4	1	**129-8543**	2	SPACER (16MM THK)	
	5	1	**129-8545**	6	WASHER (3MM THK)	
M	6	1	**136-4192**	3	BOLT (M6X1.0X35MM)	
	7	1	**143-2830**	1	LATCH AS	
M		1	**6V-7743**	2	LOCKNUT (M6X1 THD)	
M		1	**9X-2045**	2	SCREW-TRUSS HEAD (M6X1X20MM)	
		1	**143-2827**	1	SPRING	
	8	1	**159-4950**	1	LATCH AS	
M		1	**5C-2874**	1	NUT (M5X.8 THD)	
M		1	**161-6984**	1	SCREW-TRUSS HEAD (M5X0.8X20MM)	
		1	**161-6987**	1	WASHER-HARD	
		1	**161-9294**	1	SPRING-FLAT WIRE	
M		1	**162-6556**	1	LOCKNUT	
	9	1	**164-1066**	1	GLASS	
M	10	1	**6V-7743**	2	LOCKNUT (M6X1 THD)	
E	11	1	**148-5353**		SEAL (342CM)	

E-ORDER BY THE CENTIMETER
M-METRIC PART

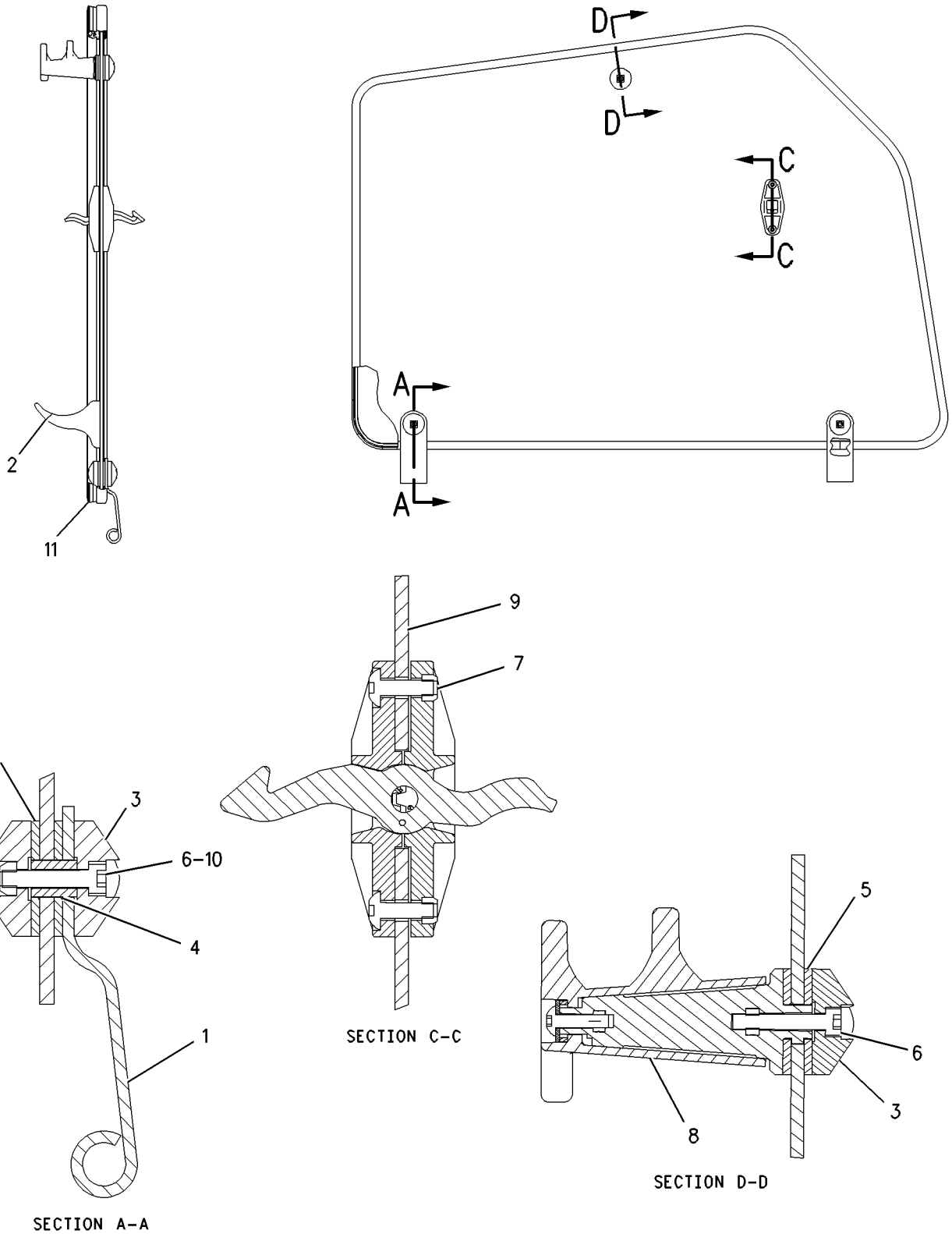

GRAPHIC #1 **<END>** g00878022

OPERATOR STATION

164-1074 WINDOW GP-DOOR—LH

S/N: FDP18400-UP
PART OF 164-1062 DOOR GP-LH
AN ATTACHMENT

SMCS-7308, 7310 **i01706432**

NOTE	REF NO	GRAPHIC REF	PART NUMBER	QTY	PART NAME 1 2 3 4 5 6 (PRODUCT LEVEL)	SEE PAGE
	1	1	**8Y-7287**	2	HINGE	
	2	1	**100-7608**	1	HANDLE	
	3	1	**129-8542**	5	RETAINER	
	4	1	**129-8543**	2	SPACER (16MM THK)	
	5	1	**129-8545**	6	WASHER (3MM THK)	
M	6	1	**136-4192**	3	BOLT (M6X1.0X35MM)	
	7	1	**143-2830**	1	LATCH AS	
M		1	**6V-7743**	2	LOCKNUT (M6X1 THD)	
M		1	**9X-2045**	2	SCREW-TRUSS HEAD (M6X1X20MM)	
		1	**143-2827**	1	SPRING	
	8	1	**159-4951**	1	LATCH AS	
M		1	**5C-2874**	1	NUT (M5X.8 THD)	
M		1	**161-6984**	1	SCREW-TRUSS HEAD (M5X0.8X20MM)	
		1	**161-6987**	1	WASHER-HARD	
		1	**161-9294**	1	SPRING-FLAT WIRE	
M		1	**162-6556**	1	LOCKNUT	
	9	1	**164-1067**	1	GLASS	
M	10	1	**6V-7743**	2	LOCKNUT (M6X1 THD)	
E	11	1	**148-5353**		SEAL (342CM)	

E-ORDER BY THE CENTIMETER
M-METRIC PART

164-1074 WINDOW GP-DOOR *(contd.)* i01706432

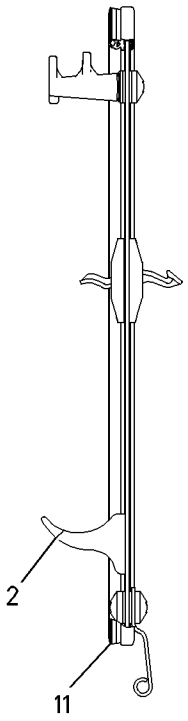

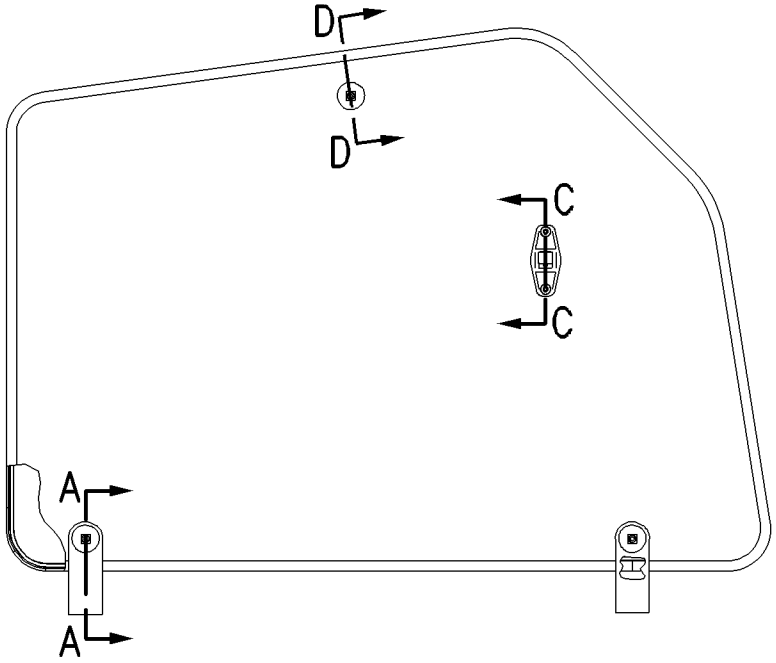

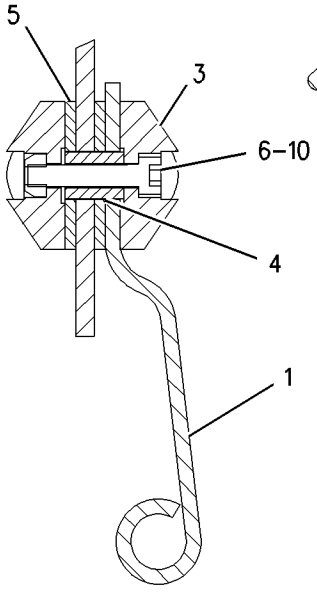

SECTION A-A

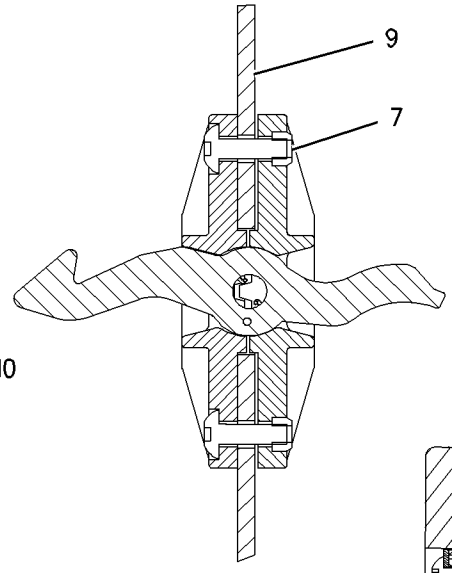

SECTION C-C

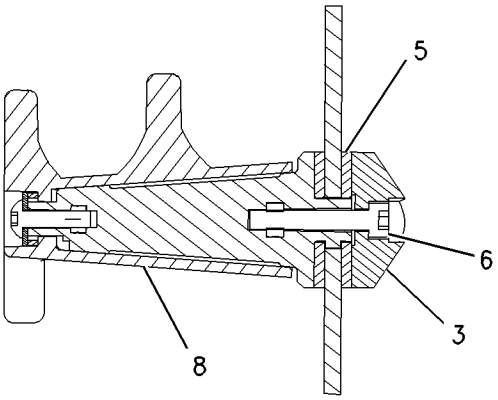

SECTION D-D

GRAPHIC #1 **<END>** g00878022

OPERATOR STATION

174-2024 WIPER GP-WINDOW

S/N: FDP18400-UP

PART OF 184-9737, 184-9738, 239-5565, 239-5566, 239-5567, 239-5568, 244-1944

CAB AR

AN ATTACHMENT

SMCS-7305 **i01517867**

NOTE	REF NO	GRAPHIC REF	PART NUMBER	QTY	PART NAME 1 2 3 4 5 6 (PRODUCT LEVEL)	SEE PAGE
	1	1	**6K-0806**	1	STRAP-CABLE	
M	2	1	**8T-4970**	5	BOLT (M6X1X14MM)	
	3	1	**102-2940**	2	BLADE AS	
	4	1	**132-2249**	2	SPACER	
	5	1	**132-2250**	1	SPACER	
	6	1	**154-5410**	1	ARM AS-WIPER	
	7	1	**174-2025**	1	MOTOR GP-WINDOW WIPER	
		1	**102-8805**	1	KIT-RECEPTACLE (6 PIN)	
					(KIT SERVICES RECEPTACLE AS. AND WEDGE)	
		1	**186-3735**	4	PIN-CONNECTOR	
J	8	1	**174-2026**	1	ARM AS	
E		1	**194-5171**		HOSE (33CM)	
	9	1	**174-5456**	1	PLATE	
Y	10	1	**186-2589**	1	MOTOR GP-WINDOW WIPER	813
M	11	1	**8C-8451**	2	BOLT (M6X1X40MM)	
	12	1	**8T-4205**	7	WASHER-HARD (7.2X14.5X2MM THK)	
					AVAILABLE REPAIR KIT(S):	
J			**163-4759**	1	KIT-REPAIR	

E-ORDER BY THE CENTIMETER
J-REPAIR KIT MARKED J AVAILABLE FOR PART MARKED J
M-METRIC PART
Y-SEPARATE ILLUSTRATION

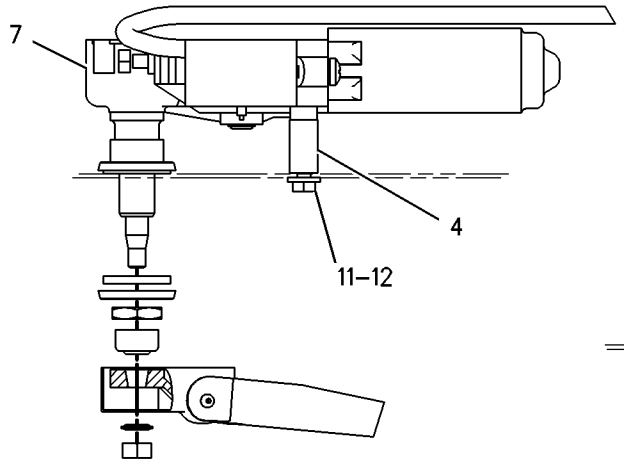

VIEW A–A

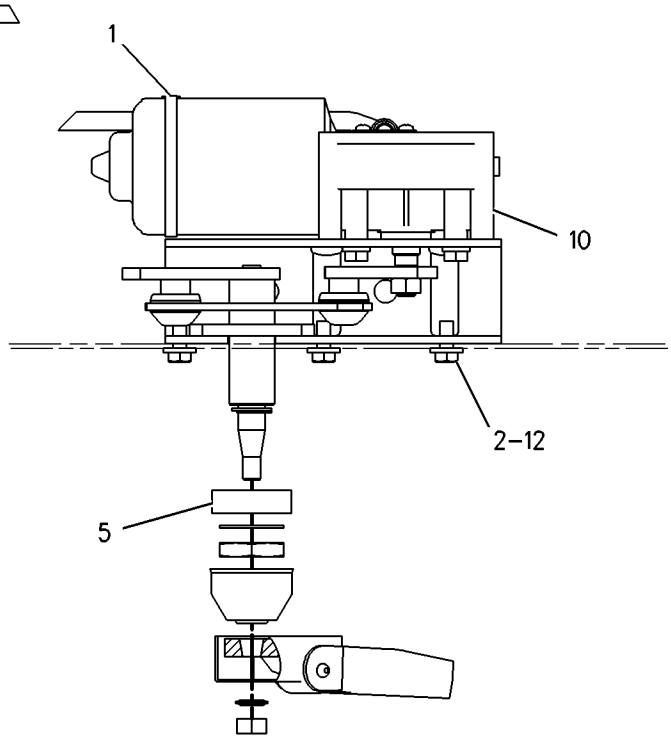

VIEW B–B

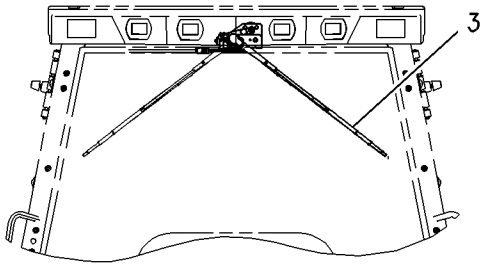

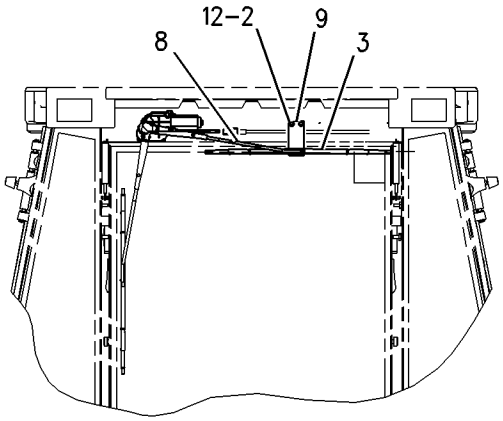

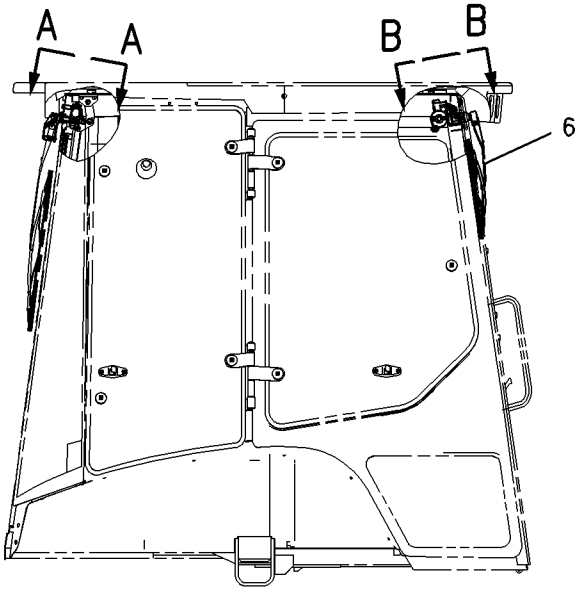

GRAPHIC #1 **<END>** g00726930

OPERATOR STATION

207-6051 WIPER GP-WINDOW

S/N: FDP18400-UP
PART OF 239-5564 CANOPY AR
AN ATTACHMENT

SMCS-7305 **i02020903**

NOTE	PART NUMBER	QTY	PART NAME 1 2 3 4 5 6 (PRODUCT LEVEL)	SEE PAGE
Y	**186-2589**	1	MOTOR GP-WINDOW WIPER	813
	154-5410	1	ARM AS-WIPER	
	101-0745	1	BLADE	
M	**8T-4970**	3	BOLT (M6X1X14-MM)	
	132-2250	1	SPACER (21X35X10-MM THK)	
	6K-0806	1	STRAP-CABLE	
	8T-4205	3	WASHER-HARD (7.2X14.5X2-MM THK)	

M-METRIC PART
Y-SEPARATE ILLUSTRATION

<END>

186-5297 FILM GP

S/N: FDP18400-UP

PART OF 185-7737 PLATE & FILM GP

SMCS-7405, 7557 **i01543481**

NOTE	REF NO	GRAPHIC REF	PART NUMBER	QTY	PART NAME 1 2 3 4 5 6 (PRODUCT LEVEL)	SEE PAGE
	1	1	**186-5267**	1	FILM (RH)	
	2	1	**101-0003**	8	FASTENER	
	3	1	**3E-8124**	1	FILM-STRIPE (LH)	
	4	1	**3E-8123**	1	FILM-STRIPE (RH)	
	5	1	**186-5268**	1	FILM (LH)	

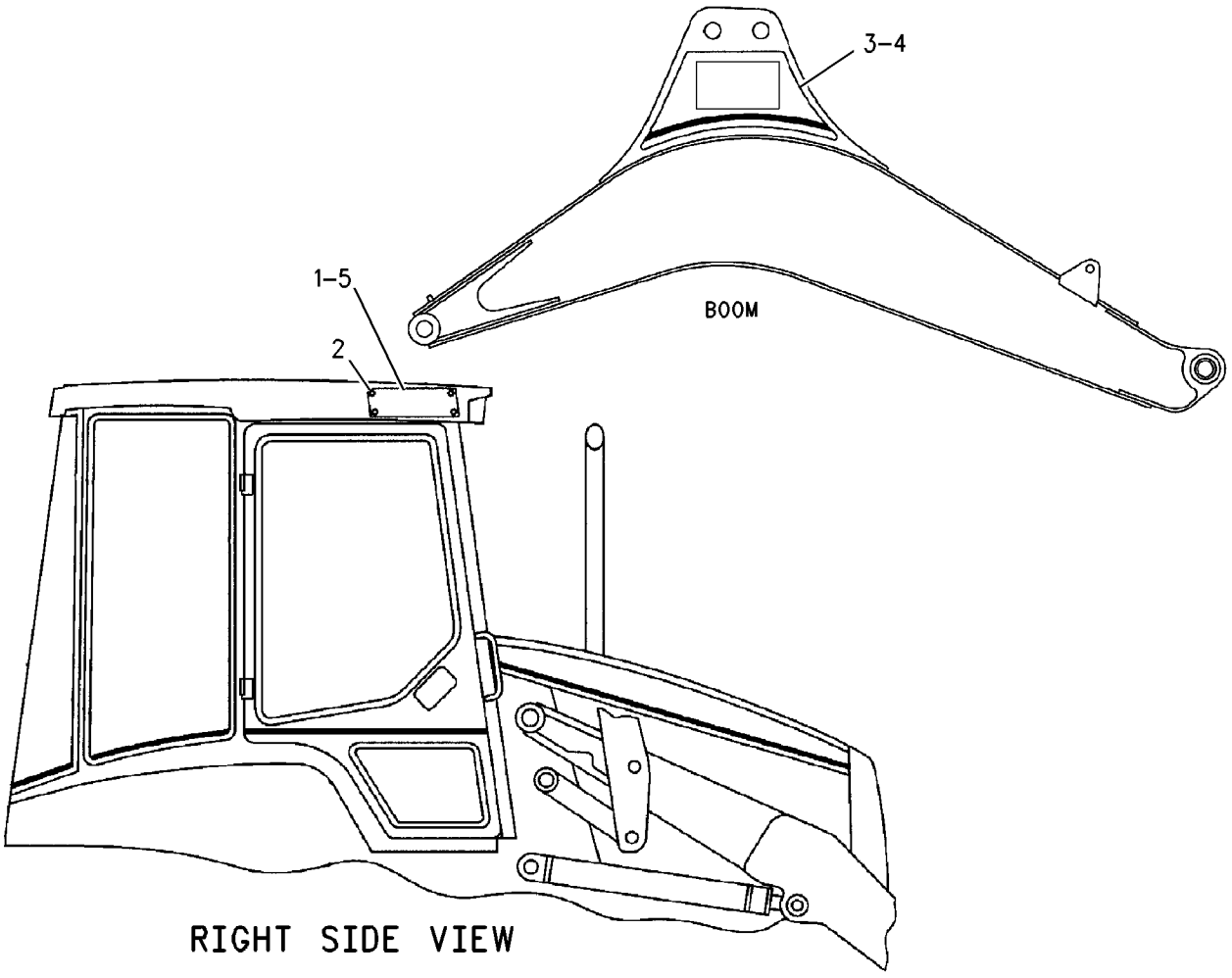

GRAPHIC #1 **<END>** g00752212

SERVICE EQUIPMENT AND SUPPLIES

113-0018 INSTALLATION AR-WHEEL CHOCK

S/N: FDP18400-UP
FIELD INSTALLATION ONLY
AN ATTACHMENT

SMCS-7000 **i00730797**

NOTE	REF NO	GRAPHIC REF	PART NUMBER	QTY	PART NAME 1 2 3 4 5 6 (PRODUCT LEVEL)	SEE PAGE
	1	1	**114-9342**	2	WHEEL CHOCK	
	2	1	**130-7452**	2	PLATE	

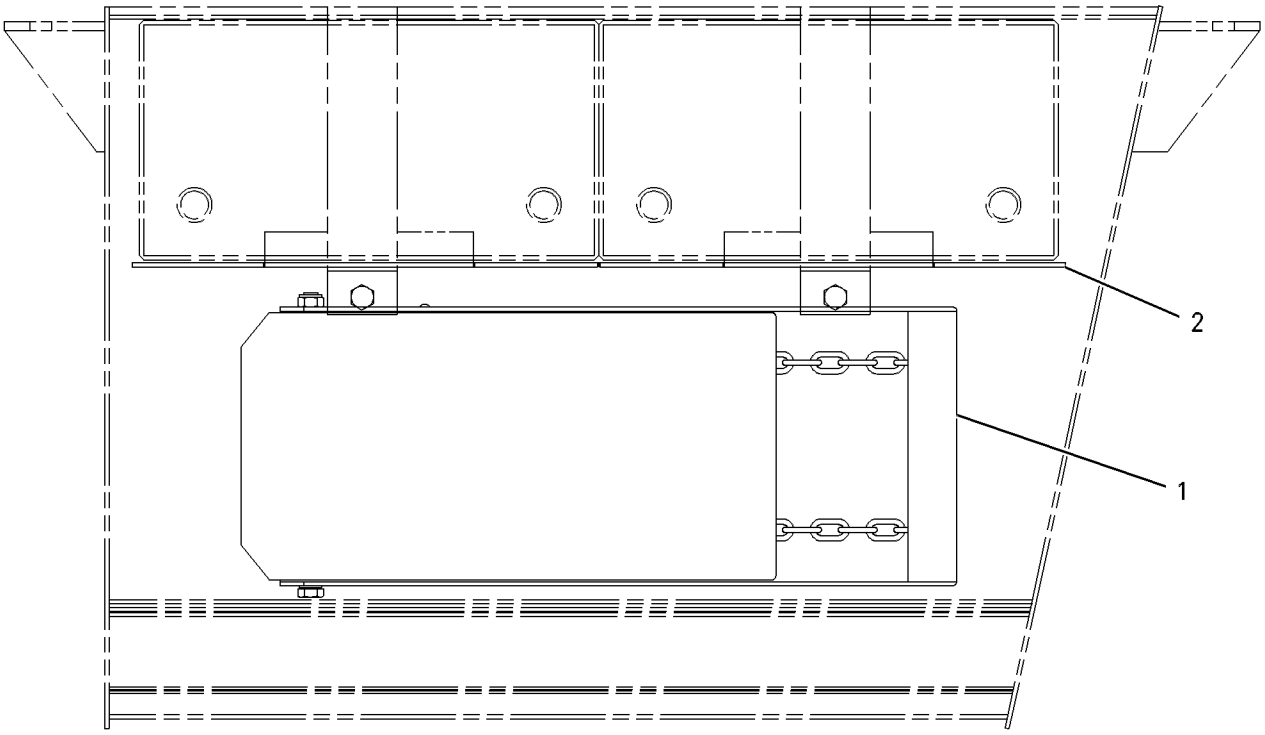

GRAPHIC #1 **<END>** g00307295

SERVICE EQUIPMENT AND SUPPLIES

134-8204 LOCK GP-VANDALISM

S/N: FDP18400-UP
SINGLE TILT
AN ATTACHMENT

SMCS-7315 **i00797701**

NOTE	REF NO	GRAPHIC REF	PART NUMBER	QTY	PART NAME 1 2 3 4 5 6 (PRODUCT LEVEL)	SEE PAGE
	1	1	**5P-8502**	2	PADLOCK GP	
					(EACH INCLUDES)	
		1	**5P-8500**	1	KEY	
		1	**8Y-6364**	1	SLEEVE	
	2	1	**125-2086**	1	LOCK AS-CYLINDER	
		1	**7F-9223**	1	LOCKWASHER (0.91MM THK)	
		1	**8T-5004**	1	SCREW-MACHINE (1/4-28X0.375IN)	

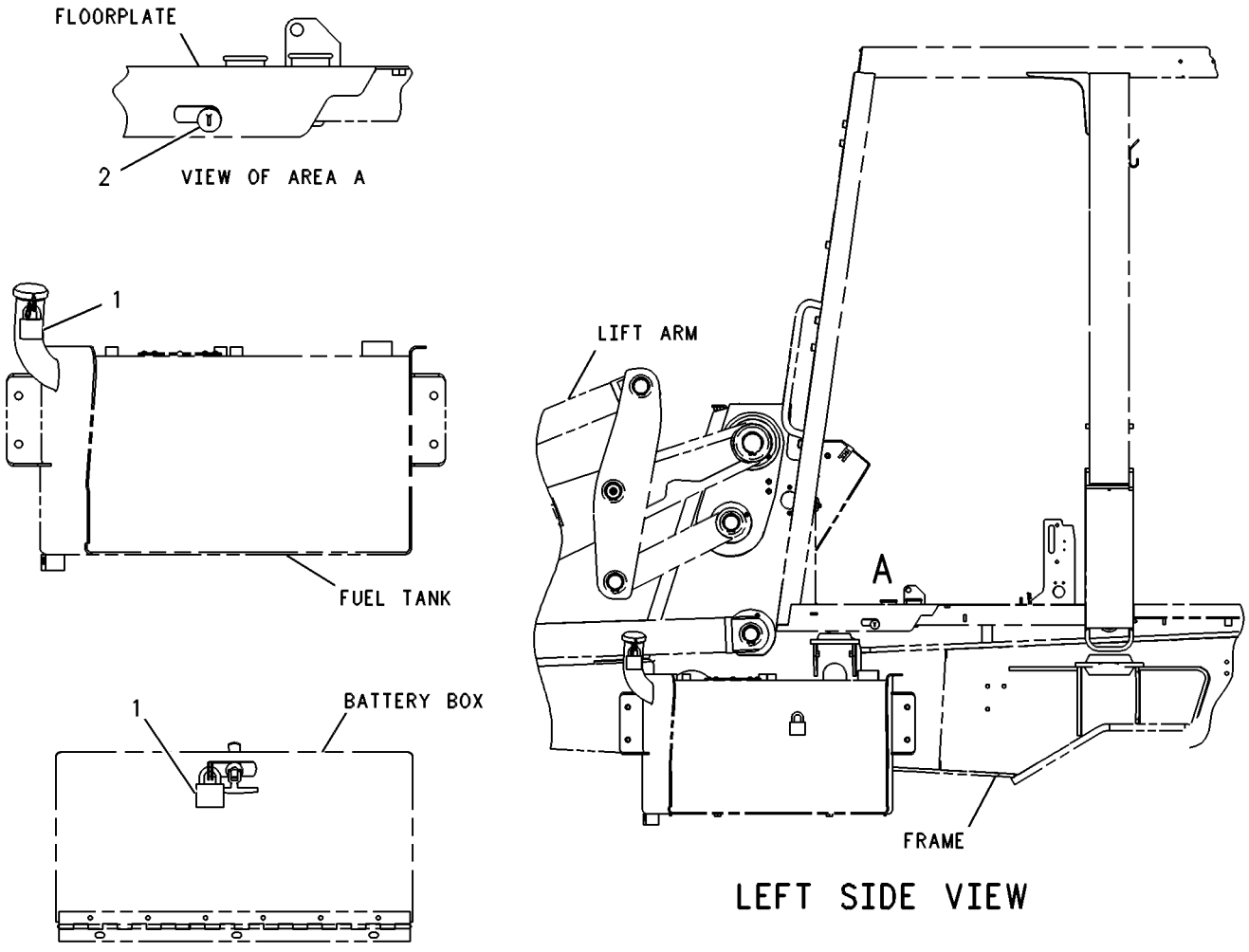

GRAPHIC #1 **<END>** g00131833

185-7737 PLATE & FILM GP

S/N: FDP18400-UP
TWO WHEEL STEER, SINGLE TILT, PILOT BACKHOE CONTROLS
PART OF 214-6951 CHASSIS AR

SMCS-7405 **i01410543**

NOTE	PART NUMBER	QTY	PART NAME 1 2 3 4 5 6 (PRODUCT LEVEL)	SEE PAGE
Y	*186-5297*	1	FILM GP	861
	1P-2807	4	FILM-LIFT	
			(LOCATE 2 ON FRONT SIDE OF FRONT AXLE AND 1 ON BOTH LH AND RH STABILIZER PADS)	
	186-5296	1	FILM-NOTICE	
			(LOCATE ON BACK SURFACE OF RH CONSOLE)	
	7X-7644	4	FILM-TIE DOWN	
			(LOCATE 2 ON FRONT AXLE AND 2 AT REAR OF FRAME)	
	130-5582	1	FILM-WARNING	
			(LOCATE ON LH LOADER ARM)	

Y-SEPARATE ILLUSTRATION

<END>

185-7756 PLATE & FILM GP—FRENCH

S/N: FDP18400-UP
AN ATTACHMENT

SMCS-7405 **i01951425**

NOTE	PART NUMBER	QTY	PART NAME 1 2 3 4 5 6 (PRODUCT LEVEL)	SEE PAGE
	3E-8186	1	FILM-NOTICE (ENGINE START)	
			(CENTER ABOVE WARNING FILM)	
B	**196-4852**	1	FILM-WARNING (CONTROL PATTERN SELECTION)	
			(LOCATE ON LH B POST)	
B	**196-4866**	1	FILM-WARNING (CONTROL PATTERN SELECTION)	
			(PART OF CONTROL GP-VALVE)	
B	**196-4985**	1	FILM-WARNING (CONTROL PATTERN SELECTION)	
			(LOCATE ON LH B POST)	
	133-8490	1	FILM-WARNING (PARALLEL LIFT LINKAGE)	
			(LOCATE ON LH LOADER ARM)	
	133-8502	1	FILM-WARNING (SINGLE TILT LINKAGE)	
			(LOCATE ON LH LOADER ARM)	
	174-3335	1	FILM-WARNING	
			(LOCATE ON RH B POST)	
	101-0568	1	FILM-WARNING (CABLE CONNECTION)	
			(LOCATE INSIDE BATTERY BOX DOOR)	
B	**128-5964**	2	PLATE-WARNING (E-STICK)	
	4S-8264	2	RIVET-POP	

B-USE AS REQUIRED

<END>

185-7757 PLATE & FILM GP—SPANISH

S/N: FDP18400-UP
AN ATTACHMENT

SMCS-7405 **i01951426**

NOTE	PART NUMBER	QTY	PART NAME 1 2 3 4 5 6 (PRODUCT LEVEL)	SEE PAGE
	3E-8187	1	FILM-NOTICE (STARTING PROCEDURE)	
			(CENTER ABOVE WARNING FILM)	
B	**196-4859**	1	FILM-WARNING (CONTROL PATTERN SELECTION)	
			(LOCATE ON LH B POST)	
B	**196-4978**	1	FILM-WARNING (CONTROL PATTERN SELECTION)	
			(PART OF CONTROL GP-VALVE)	
B	**196-5759**	1	FILM-WARNING (CONTROL PATTERN SELECTION)	
			(LOCATE ON LH B POST)	
	133-8491	1	FILM-WARNING (LIFT ARM BRACE)	
			(LOCATE ON LH LOADER ARM)	
	133-8503	1	FILM-WARNING (LIFT ARM BRACE)	
			(LOCATE ON LH LOADER ARM)	
	174-3336	1	FILM-WARNING	
			(LOCATE ON RH B POST)	
	101-0569	1	FILM-WARNING (CABLE CONNECTION)	
			(LOCATE INSIDE BATTERY BOX DOOR)	
B	**128-5965**	2	PLATE-WARNING (E-STICK)	
	4S-8264	2	RIVET-POP	

B-USE AS REQUIRED

<END>

185-7758 PLATE & FILM GP—PORTUGUESE

S/N: FDP18400-UP
AN ATTACHMENT

SMCS-7405 **i01951428**

NOTE	PART NUMBER	QTY	PART NAME 1 2 3 4 5 6 (PRODUCT LEVEL)	SEE PAGE
	3E-8188	1	FILM-NOTICE (STARTING PROCEDURE)	
			(CENTER ABOVE WARNING FILM)	
B	**196-4858**	1	FILM-WARNING	
			(LOCATE ON LH B POST)	
B	**196-5758**	1	FILM-WARNING (CONTROL PATTERN SELECTION)	
			(LOCATE ON LH B-POST)	
B	**200-7143**	1	FILM-WARNING (CONTROL PATTERN SELECTION)	
			(LOCATED ON LH B POST)	
	133-8492	1	FILM-WARNING (LIFT ARM BRACE)	
			(LOCATE ON LH LOADER ARM)	
	133-8504	1	FILM-WARNING (LIFT ARM BRACE)	
			(LOCATE ON LH LOADER ARM)	
	174-3337	1	FILM-WARNING	
			(LOCATE ON RH B POST)	
	101-0570	1	FILM-WARNING (CABLE CONNECTION)	
			(LOCATE INSIDE BATTERY BOX DOOR)	
B	**128-5966**	2	PLATE-WARNING (E-STICK)	
			(PART OF LINES GP-EXT STICK)	
	4S-8264	2	RIVET-POP	

B-USE AS REQUIRED

<END>

185-7759 PLATE & FILM GP—GERMAN

S/N: FDP18400-UP

AN ATTACHMENT

SMCS-7405 **i01951429**

NOTE	PART NUMBER	QTY	PART NAME 1 2 3 4 5 6 (PRODUCT LEVEL)	SEE PAGE
	3E-8189	1	FILM-NOTICE (ENGINE START)	
			(CENTER ABOVE WARNING FILM)	
B	**196-4867**	1	FILM-WARNING (CONTROL PATTERN SELECTION)	
			(PART OF CONTROL GP-VALVE)	
B	**196-4853**	1	FILM-WARNING (CONTROL PATTERN SELECTION)	
			(LOCATE ON LH B POST)	
B	**196-5753**	1	FILM-WARNING (CONTROL PATTERN SELECTION)	
			(LOCATE ON LH B POST)	
	133-8493	1	FILM-WARNING (LIFT ARM BRACE)	
			(LOCATE ON LH LOADER ARM)	
	133-8505	1	FILM-WARNING (LIFT ARM BRACE)	
			(LOCATE ON LH LOADER ARM)	
	174-3338	1	FILM-WARNING	
			(LOCATE ON RH B POST)	
	101-0571	1	FILM-WARNING (CABLE CONNECTION)	
			(LOCATE INSIDE BATTERY BOX DOOR OR LEFT INSIDE FACE OF BOX)	
B	**128-5967**	2	PLATE-WARNING (E-STICK)	
	4S-8264	2	RIVET-POP	

B-USE AS REQUIRED

<END>

SERVICE EQUIPMENT AND SUPPLIES

185-7760 PLATE & FILM GP—ITALIAN

S/N: FDP18400-UP

AN ATTACHMENT

SMCS-7405 **i01951430**

NOTE	PART NUMBER	QTY	PART NAME 1 2 3 4 5 6 (PRODUCT LEVEL)	SEE PAGE
	3E-8190	1	FILM-NOTICE (ENGINE START)	
			(CENTER ABOVE WARNING FILM ON BATTERY BOX DOOR)	
B	**196-4870**	1	FILM-WARNING (CONTROL PATTERN SELECTION)	
			(LOCATE ON REAR CONSOLE)	
B	**196-4856**	1	FILM-WARNING (CONTROL PATTERN SELECTION)	
			(LOCATE ON LH B POST COVER)	
B	**196-5756**	1	FILM-WARNING (CONTROL PATTERN SELECTION)	
			(LOCATE ON LH B POST COVER)	
	131-2011	1	FILM-WARNING (LIFT ARM BRACE)	
			(LOCATE ON LH LOADER ARM)	
	131-2012	1	FILM-WARNING (LIFT ARM BRACE)	
			(LOCATE ON LH LOADER ARM)	
	174-3339	1	FILM-WARNING	
			(LOCATE ON RH B POST)	
	101-0572	1	FILM-WARNING (CABLE CONNECTION)	
			(LOCATE LEFT INSIDE FACE OF BATTERY BOX DOOR)	
B	**128-5968**	2	PLATE-WARNING (E-STICK)	
			(LOCATE ON EACH SIDE OF E-STICK)	
	4S-8264	2	RIVET-POP	

B-USE AS REQUIRED

<END>

SERVICE EQUIPMENT AND SUPPLIES

185-7761 PLATE & FILM GP—DANISH

S/N: FDP18400-UP

AN ATTACHMENT

SMCS-7405 **i01951432**

NOTE	PART NUMBER	QTY	PART NAME 1 2 3 4 5 6 (PRODUCT LEVEL)	SEE PAGE
	3E-8191	1	FILM-NOTICE (ENGINE START)	
			(CENTER ABOVE WARNING FILM ON BATTERY BOX DOOR)	
B	**196-4863**	1	FILM-WARNING (CONTROL PATTERN SELECTION)	
			(LOCATE ON REAR CONSOLE)	
B	**196-4849**	1	FILM-WARNING (CONTROL PATTERN SELECTION)	
			(LOCATE ON LH B POST COVER)	
B	**196-4982**	1	FILM-WARNING (CONTROL PATTERN SELECTION)	
			(LOCATE ON LH B POST COVER)	
	133-8494	1	FILM-WARNING (LIFT ARM BRACE)	
			(LOCATE ON LH LOADER ARM)	
	133-8506	1	FILM-WARNING (LIFT ARM BRACE)	
			(LOCATE ON LH LOADER ARM)	
	174-3340	1	FILM-WARNING	
			(LOCATE ON RH B POST)	
	101-0573	1	FILM-WARNING (CABLE CONNECTION)	
			(LOCATE ON LEFT INSIDE FACE OF BATTERY BOX DOOR)	
B	**128-5969**	2	PLATE-WARNING (E-STICK)	
			(LOCATE ON EACH SIDE OF E-STICK)	
	4S-8264	2	RIVET-POP	

B-USE AS REQUIRED

<END>

185-7762 PLATE & FILM GP—ARABIC

S/N: FDP18400-UP
AN ATTACHMENT

SMCS-7405 **i01951433**

NOTE	PART NUMBER	QTY	PART NAME 1 2 3 4 5 6 (PRODUCT LEVEL)	SEE PAGE
	3E-8194	1	FILM-NOTICE (ENGINE START)	
			(CENTER ABOVE WARNING FILM)	
B	**196-4847**	1	FILM-WARNING (CONTROL PATTERN SELECTION)	
			(LOCATE ON LH B POST)	
B	**196-4861**	1	FILM-WARNING	
			(PART OF CONTROL GP-VALVE)	
B	**196-4980**	1	FILM-WARNING (CONTROL PATTERN SELECTION)	
			(LOCATE ON LH B POST)	
	133-8498	1	FILM-WARNING (LIFT ARM BRACE)	
			(LOCATE ON LH LOADER ARM)	
	133-8509	1	FILM-WARNING (LIFT ARM BRACE)	
			(LOCATE ON LH LOADER ARM)	
	174-3343	1	FILM-WARNING	
			(LOCATE ON RH B POST)	
	101-0576	1	FILM-WARNING (CABLE CONNECTION)	
			(LOCATE INSIDE BATTERY BOX DOOR)	
B	**128-5972**	2	PLATE-WARNING (E-STICK)	
	4S-8264	2	RIVET-POP	

B-USE AS REQUIRED

<END>

185-7763 PLATE & FILM GP—SWEDISH

S/N: FDP18400-UP
AN ATTACHMENT

SMCS-7405 **i01951434**

NOTE	PART NUMBER	QTY	PART NAME 1 2 3 4 5 6 (PRODUCT LEVEL)	SEE PAGE
	101-3819	1	FILM-NOTICE (ENGINE START)	
			(CENTER ABOVE WARNING FILM ON BATTERY BOX DOOR)	
B	**196-4860**	1	FILM-WARNING (CONTROL PATTERN SELECTION)	
			(LOCATE ON LH B POST COVER)	
B	**196-5760**	1	FILM-WARNING (CONTROL PATTERN SELECTION)	
			(LOCATE ON LH B POST COVER)	
	133-8499	1	FILM-WARNING (LIFT ARM BRACE)	
			(LOCATE ON LH LOADER ARM)	
	133-8511	1	FILM-WARNING (LIFT ARM BRACE)	
			(LOCATE ON LH LOADER ARM)	
	174-3344	1	FILM-WARNING	
			(LOCATE ON RH B POST)	
	101-0577	1	FILM-WARNING (CABLE CONNECTION)	
			(LOCATE LEFT INSIDE FACE OF BATTERY BOX DOOR)	
B	**200-7145**	1	FILM-WARNING (CONTROL PATTERN SELECTION)	
			(LOCATE ON REAR CONSOLE)	
B	**128-5973**	2	PLATE-WARNING (E-STICK)	
			(LOCATE ON EACH SIDE OF E-STICK)	
	4S-8264	2	RIVET-POP	

B-USE AS REQUIRED

<END>

185-7764 PLATE & FILM GP

S/N: FDP18400-UP
AN ATTACHMENT

SMCS-7405 **i01945445**

NOTE	PART NUMBER	QTY	PART NAME 1 2 3 4 5 6 (PRODUCT LEVEL)	SEE PAGE
	3E-8185	1	FILM-NOTICE (ENGINE START)	
			(LOCATE INSIDE BATTERY BOX DOOR)	
	8C-7588	1	FILM-WARNING (BATTERY)	
			(LOCATE INSIDE BATTERY BOX DOOR)	
	173-9813	1	FILM-WARNING	
			(LOCATE ON RIGHT HAND B POST)	

<END>

185-7765 PLATE & FILM GP—FINNISH

S/N: FDP18400-UP
AN ATTACHMENT

SMCS-7405 **i01951436**

NOTE	PART NUMBER	QTY	PART NAME 1 2 3 4 5 6 (PRODUCT LEVEL)	SEE PAGE
	127-1942	1	FILM-NOTICE (ENGINE START)	
			(CENTER ABOVE WARNING FILM)	
B	**196-4851**	1	FILM-WARNING (CONTROL PATTERN SELECTION)	
			(LOCATE ON LH B POST)	
B	**196-4865**	1	FILM-WARNING (CONTROL PATTERN SELECTION)	
			(PART OF CONTROL GP-VALVE)	
B	**196-4984**	1	FILM-WARNING (CONTROL PATTERN SELECTION)	
			(LOCATE ON LH B POST)	
	133-8500	1	FILM-WARNING (LIFT ARM BRACE)	
			(LOCATE ON LH LOADER ARM)	
	133-8512	1	FILM-WARNING (LIFT ARM BRACE)	
			(LOCATE ON LH LOADER ARM)	
	174-3347	1	FILM-WARNING	
			(LOCATE ON RH B POST)	
	128-8583	1	FILM-WARNING (CABLE CONNECTION)	
			(LOCATE INSIDE BATTERY BOX DOOR)	
B	**128-5974**	2	PLATE-WARNING (E-STICK)	
	4S-8264	2	RIVET-POP	

B-USE AS REQUIRED

<END>

SERVICE EQUIPMENT AND SUPPLIES

185-7766 PLATE & FILM GP—CZECH

S/N: FDP18400-UP

AN ATTACHMENT

SMCS-7405 **i01951439**

NOTE	PART NUMBER	QTY	PART NAME 1 2 3 4 5 6 (PRODUCT LEVEL)	SEE PAGE
	140-8773	1	FILM-NOTICE (ENGINE START)	
			(CENTER ABOVE WARNING FILM)	
B	**196-4848**	1	FILM-WARNING (CONTROL PATTERN SELECTION)	
			(LOCATE ON LH B POST)	
B	**196-4862**	1	FILM-WARNING (CONTROL PATTERN SELECTION)	
			(PART OF CONTROL GP-VALVE)	
B	**196-4981**	1	FILM-WARNING (CONTROL PATTERN SELECTION)	
			(LOCATE ON LH B POST)	
	140-8761	1	FILM-WARNING (LIFT ARM BRACE)	
			(LOCATE ON LH LOADER ARM)	
	140-8767	1	FILM-WARNING (LIFT ARM BRACE)	
			(LOCATE ON LH LOADER ARM)	
	174-3346	1	FILM-WARNING	
			(LOCATE ON RH B POST)	
	140-8760	1	FILM-WARNING (CABLE CONNECTION)	
			(LOCATE INSIDE BATTERY BOX DOOR)	
B	**140-8764**	2	PLATE-WARNING (E-STICK)	
	4S-8264	2	RIVET-POP	

B-USE AS REQUIRED

<END>

185-7767 PLATE & FILM GP—HEBREW

S/N: FDP18400-UP

AN ATTACHMENT

SMCS-7405 **i01951441**

NOTE	PART NUMBER	QTY	PART NAME 1 2 3 4 5 6 (PRODUCT LEVEL)	SEE PAGE
	141-4801	1	FILM-NOTICE (ENGINE START)	
			(CENTER ABOVE WARNING FILM)	
B	**196-4855**	1	FILM-WARNING (CONTROL PATTERN SELECTION)	
			(LOCATE ON LH B POST)	
B	**196-4869**	1	FILM-WARNING (CONTROL PATTERN SELECTION)	
			(PART OF CONTROL GP-VALVE)	
B	**196-5755**	1	FILM-WARNING (CONTROL PATTERN SELECTION)	
			(LOCATE ON LH B POST)	
	141-4799	1	FILM-WARNING (LIFT ARM BRACE)	
			(LOCATE ON LH LOADER ARM)	
	141-4800	1	FILM-WARNING (LIFT ARM BRACE)	
			(LOCATE ON LH LOADER ARM)	
	174-3345	1	FILM-WARNING	
			(LOCATE ON RH B POST)	
	141-4797	1	FILM-WARNING (CABLE CONNECTION)	
			(LOCATE INSIDE BATTERY BOX DOOR)	
B	**141-4796**	2	PLATE-WARNING (E-STICK)	
	4S-8264	2	RIVET-POP	

B-USE AS REQUIRED

<END>

SERVICE EQUIPMENT AND SUPPLIES

185-7768 PLATE & FILM GP—POLISH

S/N: FDP18400-UP
AN ATTACHMENT

SMCS-7405 **i01951444**

NOTE	PART NUMBER	QTY	PART NAME 1 2 3 4 5 6 (PRODUCT LEVEL)	SEE PAGE
	152-9787	1	FILM-NOTICE (ENGINE START)	
			(CENTER ABOVE WARNING FILM)	
	196-4857	1	FILM-WARNING (CONTROL PATTERN SELECTION)	
			(LOCATE ON LH B POST)	
	196-5757	1	FILM-WARNING (CONTROL PATTERN SELECTION)	
			(LOCATE ON LH B POST)	
	200-7144	1	FILM-WARNING (CONTROL PATTERN SELECTION)	
			(PART OF CONTROL GP-VALVE)	
	152-9785	1	FILM-WARNING (LIFT ARM BRACE)	
			(LOCATE ON LH LOADER ARM)	
	152-9786	1	FILM-WARNING (LIFT ARM BRACE)	
			(LOCATE ON LH LOADER ARM)	
	174-3348	1	FILM-WARNING	
			(LOCATE ON RH B POST)	
	152-9784	1	FILM-WARNING (CABLE CONNECTION)	
			(LOCATE INSIDE BATTERY BOX DOOR)	
	152-9788	2	PLATE-WARNING (E-STICK)	
	4S-8264	2	RIVET-POP	

<END>

185-7769 PLATE & FILM GP—DUTCH

S/N: FDP18400-UP
AN ATTACHMENT

SMCS-7405 **i01951445**

NOTE	PART NUMBER	QTY	PART NAME 1 2 3 4 5 6 (PRODUCT LEVEL)	SEE PAGE
	3E-8193	1	FILM-NOTICE (ENGINE START)	
			(CENTER ABOVE WARNING FILM)	
B	**196-4850**	1	FILM-WARNING (CONTROL PATTERN SELECTION)	
			(LOCATE ON LH B POST)	
B	**196-4864**	1	FILM-WARNING (CONTROL PATTERN SELECTION)	
			(PART OF CONTROL GP-VALVE)	
B	**196-4983**	1	FILM-WARNING (CONTROL PATTERN SELECTION)	
			(LOCATE ON RH CONSOLE)	
	133-8497	1	FILM-WARNING (LIFT ARM BRACE)	
			(LOCATE ON LH LOADER ARM)	
	133-8508	1	FILM-WARNING (LIFT ARM BRACE)	
			(LOCATE ON LH LOADER ARM)	
	174-3342	1	FILM-WARNING	
			(LOCATE ON RH B POST)	
	101-0575	1	FILM-WARNING (CABLE CONNECTION)	
			(LOCATE INSIDE BATTERY BOX DOOR)	
B	**128-5971**	2	PLATE-WARNING (E-STICK)	
	4S-8264	2	RIVET-POP	

B-USE AS REQUIRED

<END>

185-7770 PLATE & FILM GP–GREEK

S/N: FDP18400-UP

AN ATTACHMENT

SMCS-7405 **i01951446**

NOTE	PART NUMBER	QTY	PART NAME 1 2 3 4 5 6 (PRODUCT LEVEL)	SEE PAGE
	3E-8192	1	FILM-NOTICE (ENGINE START)	
			(CENTER ABOVE WARNING FILM)	
B	**196-4854**	1	FILM-WARNING (CONTROL PATTERN SELECTION)	
			(LOCATE ON LH B POST)	
B	**196-4868**	1	FILM-WARNING (CONTROL PATTERN SELECTION)	
			(PART OF CONTROL GP-VALVE)	
B	**196-5754**	1	FILM-WARNING (CONTROL PATTERN SELECTION)	
			(LOCATE ON LH B POST)	
	133-8495	1	FILM-WARNING (LIFT ARM BRACE)	
			(LOCATE ON LH LOADER ARM)	
	133-8507	1	FILM-WARNING (LIFT ARM BRACE)	
			(LOCATE ON LH LOADER ARM)	
	174-3341	1	FILM-WARNING	
			(LOCATE ON RH B POST)	
	101-0574	1	FILM-WARNING (CABLE CONNECTION)	
			(LOCATE INSIDE BATTERY BOX DOOR)	
B	**128-5970**	2	PLATE-WARNING (E-STICK)	
	4S-8264	2	RIVET-POP	

B-USE AS REQUIRED

<END>

228-3600 PLATE & FILM GP

S/N: FDP18400-UP

PART OF 214-6951 CHASSIS AR

SMCS-7405 **i02012768**

NOTE	PART NUMBER	QTY	PART NAME 1 2 3 4 5 6 (PRODUCT LEVEL)	SEE PAGE
	224-9855	1	FILM (STARTING AID)	
			ON RH B-POST.	
	7X-7644	4	FILM (TIE-DOWN)	
			ONE ON EACH SIDE OF THE MACHINE ON THE MAIN FRAME NEAR FRONT AXLE SUPPORT NEXT TO THE TIEDOWN HOLES.	
			TO THE REAR OF THE MAIN FRAME ON LOWER HORIZONTAL SURFACE NEAR LH & RH SIDE NEXT TO THE TIEDOWN HOLES.	
	1P-2807	4	FILM (LIFT EYE LOCATION)	
			TO THE FRONT SIDE OF THE FRONT AXLE BETWEEN CHASSIS AND WHEEL ASSEMBLY ON THE LH & RH SIDE OF THE MACHINE.	
			ONE ON EACH LH & RH STABILIZER PAD BESIDE TOP LIFTING HOLE SO ARROW POINTS UP WHEN STABILIZERS ARE IN THE UP POSITION.	
	199-6245	1	FILM (SEPARATOR)	
			ON SIDE OF FUEL TANK.	
	101-0333	1	FILM-IDENTIFICATION (HYDRAULIC OIL)	
			ON BRAKE FLUID RESERVOIR CAP.	
	226-1242	1	FILM-WARNING (STAY BACK)	
			ON BOOM.	
	240-7094	2	FILM-WARNING (NO ENTRANCE, EXIT)	
			ON THE CAB STRUCTURE IN THE REAR.	
	224-9021	1	FILM-WARNING (SEATBELT)	
			ON RH B-POST.	
	240-7956	1	FILM-WARNING (UNIVERSAL)	
			ON RH B-POST.	

228-3600 **PLATE & FILM GP** *(contd.)* **i02012768**

NOTE	PART NUMBER	QTY	PART NAME 1 2 3 4 5 6 (PRODUCT LEVEL)	SEE PAGE
	219-0305	1	FILM-WARNING (NO WELD, NO DRILL)	
			ON UPPER REAR SHEET METAL PANEL OF CAB STRUCTURE,	
	239-9429	1	FILM-WARNING (ARM BRACE)	
			FOR SINGLE TILT MACHINES:	
			ON LH SIDE LIFT ARM.	
			FOR PARALLEL LIFT MACHINES:	
			ON LH SIDE LIFT ARM.	
	225-4256	2	FILM-WARNING (HOT FLUID)	
			ON BOTH SIDES OF FRONT BAFFLE PLATE ON LH SIDE OF THE MACHINE.	
	239-6989	1	PLATE (PIN)	
			CENTERED ON UPPER RH SIDE FRAME RAIL.	
A	**190-5128**	1	FILM (BUCKET CONTROL)	
			ON REAR CONSOLE FOR MECHANICAL EXCAVATOR BACKHOE CONTROLES.	
A	**239-9437**	1	FILM (CONTROL PATTERN)	
			ON THE LH B-POST.	
A	**190-5129**	1	FILM (BUCKET CONTROL)	
			ON REAR CONSOLE FOR MECHANICAL CASE STYLE BACKHOE CONTROLS.	
A	**190-5134**	1	FILM (STD CROSS PATTERN)	
			ON REAR CONSOLE FOR MECHANICAL STANDARD/CROSS BACKHOE CONTROLS.	
A	**238-4441**	1	FILM (LUBRICANTS)	
			IN HOOD GP - ENG.	
A	**190-5139**	1	FILM (VARIABLE SPEED)	
			IN CONTROL GP - GOV.	
A	**190-5136**	1	FILM (CENTER PIVOT, BOOM LOCK)	
			IN MOUNTING GP - VALVE FOR CENTER PIVOT MACHINES.	
A	**198-0102**	1	FILM (MULTIPURPOSE BUCKET)	
			ON HYD AR. WHICH ARE MECHANICAL LOADER CONTROL.	
A	**191-9104**	1	FILM (START SWITCH)	
			AROUND KEY SWITCH.	
A	**130-6662**	1	FILM-AWS	
			IN WIRING GP - STER.	
A	**8C-3274**	1	FILM-BUCKET INDICATOR	
			ON UPPER RH LOADER ARM BOSS.	
A	**190-5132**	1	FILM-CONTROL (AIR CONDITIONER)	
			ON THE RH CONSOLE AROUND THE TEMPERATURE CONTROL KNOB.	
A	**159-8033**	1	FILM-IDENTIFICATION (12-VOLT)	
			INSIDE BATTERY BOX DOOR.	
A	**231-9352**	1	FILM-IDENTIFICATION (FUSE PANEL)	
			INSIDE RH CONSOLE ACESS PANEL.	
A	**172-6224**	1	FILM-INDICATOR	
			IN WIRING GP - CSL.	
A	**188-0863**	1	FILM-INDICATOR	
			IN WIRING GP - CSL.	
A	**8C-4447**	1	FILM-INDICATOR	
			IN BRACE GP - LFT CYL.	
A	**246-3457**	1	FILM-INSTRUCTION (MACHINE CONTROL)	
			ON B-POST CENTERED ABOVE RH CONSOLE.	
A	**124-2456**	1	FILM-INSTRUCTION (NO STEP)	
			INSIDE BATTERY BOX DOOR.	
A	**101-0863**	1	FILM-INSTRUCTION (RETURN FLOW)	
			IN LINES GP - AUX HYD.	
A	**239-9435**	1	FILM-INSTRUCTION (LINK)	
			ON THE LINKAGE PLATE.	

228-3600 **PLATE & FILM GP** *(contd.)* **i02012768**

NOTE	PART NUMBER	QTY	PART NAME 1 2 3 4 5 6 (PRODUCT LEVEL)	SEE PAGE
A	**190-5130**	1	FILM-INSTRUCTION	
			ON REAR CONSOLE FOR MECHANICAL BACKHOE STANDARD CONTROLS.	
A	**133-8916**	1	FILM-INSTRUCTION (EXTENDABLE STICK)	
			ON HORIZONTAL SMOOTH SPOT ON RH SIDE OF REAR CONSOLE.	
A	**101-2788**	1	FILM-INSTRUCTION (EXTENDABLE STICK)	
			IN CONTROL GP - VALVE.	
A	**186-5298**	1	FILM-INSTRUCTION (BUCKET CONTROL)	
			ON B-POST CENTERED ABOVE RH CONSOLE.	
A	**239-9427**	2	FILM-NOTICE (STICK)	
			IN LINES GP. ON THE STICK. &	
			IN STICK GP - EXT.	
A	**225-0313**	1	FILM-WARNING (JUMP START)	
			INSIDE OF BATTERY BOX DOOR.	
A	**224-8945**	1	FILM-WARNING (ETHER)	
			IN HOOD GP - ENG.	
A	**224-7830**	1	FILM-WARNING (HIGH PRESSURE CYLINDER)	
			IN LINES GP - RIDE CONTROL.	
A	**239-9433**	2	FILM-WARNING (QUICK COUPLER)	
			ON RH B-POST.	
A	**199-6243**	1	PLATE (INSTRUCTION)	
			IN A/C LINES GP.	
A	**239-9436**	1	PLATE-WARNING (ALTERNATE CONTROL PATTERN)	
			ON REAR CONSOLE FOR MECHANICAL STANDARD/CROSS BACKHOE CONTROLS.	
A	**4P-6236**	1	PLATE-SERIAL NUMBER (ENGINE)	
			ON MOUNTING PAD ON LH SIDE OF ENGINE BLOCK.	
A	**4P-6396**	1	PLATE-CAT	
			ON TOP OF VALVE COVER READABLE FROM LH SIDE OF ENGINE.	
AB	**8T-6656**	1	FILM-IDENTIFICATION (OIL FILTER)	
			ON SPIN-ON OIL FILTER	
A	**4P-6422**	1	FILM-WARNING (NO ETHER, AIR INTAKE)	
			ON SIDE OF VALVE COVER IN VISABLE LOCATION.	
A	**4P-6423**	1	PLATE-IDENTIFICATION	
			ON LOWER LH SIDE OF BLOCK TOWARDS REAR OF ENGINE MOUNTING PAD.	
			PLATE MAY BE INSTALLED ON RH SIDE IF OBSCURED BY STARTER.	

A-NOT PART OF THIS GROUP
B-USE AS REQUIRED

<END>

MEMORANDA

PART NUMBER INDEX

Part	Page
0	
0S-0550	92
0S-1603	24
0T-0318	206
1	
1A-0621	288
1A-5350	288
1B-0676	396
1B-2718	553
1B-8736	13
	16
	26
	396
1F-0750	327
1H-1023	333
1H-1200	288
1H-3244	790
	791
	792
	793
1H-3337	838
1H-7339	380
1H-8128	370
	372
1H-9721	248
	254
1J-6474	604
1K-0502	342
	344
1K-6872	823
	825
	828
	838
1K-7082	203
	295
1L-3768	604
1L-6377	318
	319
1M-1230	118
1M-6119	107
	109
	111
	113
1M-6120	107
	109
	111
	113
1N-3743	53
1P-2807	864
	873
1P-4278	92
	515
1P-4584	467
1P-6872	509
1P-7009	92
1P-7363	533
	535
	537
	539
	543
	545
	547
	549
	551
	553
1R-1804	89
1S-0669	370
	372
1S-7251	107
	109
	111
	179
1S-7252	107
	109
	113
1S-8947	304
1S-9593	269
	270
	271
	272
	273
	539
	553
	574
1U-8846	248
	255
	259
1V-6341	261
1W-2934	759
2	
2A-4576	205
2B-0858	21
	35
2D-2628	274
	275
2D-2629	274
	275
2D-2630	274
	275
2D-2631	274
	275
2D-2633	274
	275
2D-6392	68
	71
	74
	526
	527
	528
2H-3920	718
	720
	795
2H-3922	193
2H-4145	370
	372
2J-3950	386
2J-3961	374
2K-3549	366
	592
2K-4973	828
	830
	832
	838
2K-6830	381
	382
	384
	386
2L-6267	206
2M-2570	205
2M-6102	399
	415
2M-7819	827
2M-9780	432
	439
	440
	441
	444
	445
	460
	467
	476
	478
	480
	491
	509
	515
	533
	535
	537
	539
	543
	545
	547
	549
	551
	553
	555
	557
2P-1279	288
2P-1293	355
	358
	362
	401
	405
	409
	412
	417
	421
	428
	430
	433
	435
	484
2P-7864	828
2P-8104	133
2R-0364	342
	344
2S-0479	205
2S-0480	205
	226
	228
2S-3745	723
	797
2W-9499	827
2W-9710	67
	70
	72
2Y-5821	384
2Y-5829	396
2Y-9255	757
3	
3B-4505	828
	830
	832
3B-4509	205
3B-4610	291
3B-4631	838
3B-5302	205
3B-5317	498
3B-5319	499
	583
	705
	706
3B-5322	580
	593
	598
3B-5790	509
3B-8488	321
	575
	577
	578
	606
3B-8489	321
	322
	379
	385
	396
	498
	575
	577
	578
	583
	585
	592
	602
	604
	606
	687
	688
	689
	690
	715
3C-6516	125
3C-8388	509
3D-2824	61
	304
	333
	355
	358
	362
	366
	395
	399
	401
	404
	408
	412
	415
	417
	420

► **PRIMARY REFERENCE**

PART NUMBER INDEX

Part	Page
	424
	426
	428
	430
	433
	435
	437
	440
	441
	444
	445
	447
	467
	480
	482
	483
	484
	491
	519
3E-1908	▶756
	757
	759
3E-2333	298
	301
3E-3362	269
3E-3365	103
	187
	194
	198
	210
	261
	270
	272
	273
	342
	539
	574
3E-3369	391
3E-3371	99
	187
	270
	272
	273
3E-4051	757
3E-4052	805
3E-4057	757
3E-4058	805
3E-4075	61
3E-4312	725
3E-4321	803
	805
	808
3E-4363	226
	228
3E-4892	30
	31
3E-4924	30
	31
3E-5153	133
3E-5154	133
3E-5180	167
3E-6600	325
3E-6732	379
3E-6769	509
3E-6770	509
3E-6922	153
3E-7426	355
	358
	362
	401
	404
	408
	412
	417
	420
3E-7443	355
	358
	362
	401
	404
	408
	412
	417
	420
3E-8004	821
	822
3E-8123	861
3E-8124	861
3E-8185	870
3E-8186	864
3E-8187	865
3E-8188	865
3E-8189	866
3E-8190	867
3E-8191	868
3E-8192	873
3E-8193	872
3E-8194	869
3E-8211	327
	726
	727
	728
	729
	730
	731
	732
3E-8620	539
	553
3E-8621	574
3E-8679	145
	148
3E-9362	138
	141
	142
	145
	148
	175
	187
	189
	191
3F-5108	698
3F-9556	813
	820
3G-6927	249
	255
	261
3J-1907	101
	104
	160
	171
	187
	189
	191
	216
	218
	220
	247
	253
	261
	288
	332
	333
	353
	441
	444
	445
	449
	451
	453
	454
	456
	460
	467
	476
	478
	487
	489
	509
	555
	573
3J-7352	509
3J-7354	104
	298
	301
	333
	334
	426
	444
	454
	456
	460
	463
	476
	509
	533
	535
	537
	539
	543
	545
	547
	549
	551
	553
	555
3J-9196	269
3K-0360	160
	259
	298
	301
	332
	333
	353
	440
	441
3K-3379	205
3K-8782	126
	127
3N-1491	729
	731
3N-5739	384
3N-6408	204
3S-2093	83
	87
	101
	107
	109
	116
	117
	118
	128
	138
	141
	142
	145
	148
	150
	154
	157
	160
	165
	167
	169
	171
	175
	177
	180
	183
	184
	187
	189
	191
	193
	194
	196
	198
	248
	255
	288
	325
	342
	441
	445
	738
	740
	799
	805
	808
	835
	838
	844
	846
3S-6049	107
	109
	113

▶ **PRIMARY REFERENCE**

PART NUMBER INDEX

Part	Page
3S-6050	107
	109
	113
3S-6162	370
	372
	374
3S-7023	381
	382
3T-0849	570
3T-0850	441
3T-3349	107
3T-5760	107
	109
4	
4B-2043	53
	141
	157
	160
	167
	169
	840
	841
4B-2049	171
4B-4274	327
4B-4278	827
4B-4863	138
	142
	145
	148
	175
	180
	187
	189
	191
	817
4B-5271	823
	825
	828
4B-9782	535
4B-9784	838
4D-2297	553
4D-7794	322
4D-9986	365
	366
	522
	523
	524
	525
	526
	527
	528
4E-8619	288
	▶292
4F-3657	628
	629
	630
	631
	632
	633
	634
	635
	636
	637
	638
	639
	640
	641
	697
	716
4F-7952	249
	255
	259
4H-1641	828
4H-2494	98
	100
4H-2558	107
	109
	111
4I-3038	177
4I-9521	456
4I-9522	456
4I-9523	456
4I-9524	456
4I-9525	456
4I-9526	456
4I-9527	456
4I-9528	456
4J-0520	211
4J-0522	216
	218
	220
	222
	223
	224
4J-1888	687
	688
	689
	690
	694
	695
	700
4J-3745	383
4J-5140	365
	366
	522
	523
	524
4J-5267	365
	366
	522
	523
	524
	525
	526
	527
	528
4J-5477	288
	298
	301
	333
	334
	353
	426
	441
	444
	445
	453
	454
	456
	460
	463
	467
	476
	478
	487
	489
4J-7533	518
4J-9220	383
4J-9780	555
4K-0367	628
	629
	630
	631
	632
	633
	634
	635
	636
	637
	638
	639
	640
	641
	697
	716
4K-0499	838
4K-1388	533
	535
	537
	543
	545
	547
	551
	553
4K-5843	204
4L-6454	830
	832
4M-0061	828
	830
	832
4M-0189	383
4M-6582	555
4N-8597	53
	54
4P-6236	875
4P-6396	875
4P-6422	875
4P-6423	875
4P-7429	146
	148
4P-7581	100
	119
	122
	171
4P-8134	83
	107
	109
	138
	142
	150
	157
	167
	171
	187
	189
	191
	799
4S-8264	864
	865
	866
	867
	868
	869
	870
	871
	872
	873
4T-2723	365
	366
	522
	523
	524
	525
	526
	527
	528
4T-4218	526
4T-4513	535
	553
4T-4516	533
	537
	539
	543
4T-4518	524
	525
4T-4520	533
	535
	537
	539
	543
	553
4T-4521	533
	535
	537
	539
	543
	553
4T-4524	533
	535
	537
	539
	543
	553
4T-4528	533
	535
	537
	539
	543
	553
4T-4531	535
	537
4T-4532	535

▶ **PRIMARY REFERENCE**

PART NUMBER INDEX

Part	Page
	539
4T-4533	533
	537
	543
4T-4538	522
	523
4T-5613	384
	386
4T-6128	381
	382
4T-6780	377
	380
4T-7807	304
	533
	535
	537
	539
	543
	545
	547
	549
	551
	553
4T-8588	374
4V-2264	836
4V-5091	327
4W-9972	171
5	
5B-9079	38
5B-9318	304
	533
	535
	537
	539
	543
	545
	547
	549
	551
	553
5C-2874	171
	848
	850
	854
	856
5C-2890	87
	126
	171
	393
	457
	776
	801
5C-7261	119
	122
	180
	288
	296
	297
	327
	494
	517
	520
	738
	740
	753
	754
	813
	820
	848
	850
5C-9553	83
	146
	148
	800
	820
5D-1026	14
	42
	298
	301
	460
	467
	515
	803
	805
	808
5D-4822	327
5D-8159	700
5D-9629	746
	749
	750
5F-3106	502
5F-5434	199
	200
5F-9144	68
	71
	74
5G-8108	288
5H-3193	342
5H-8848	377
5J-4986	383
5J-5402	381
	382
	384
5J-7036	370
	372
5J-7878	383
5J-8011	370
	372
5K-0906	463
5K-5338	298
	301
5K-9090	333
	334
	355
	358
	362
	366
	401
	404
	405
	408
	409
	412
	417
	420
	421
	428
	430
	465
	466
	467
	470
	471
	472
	473
	474
	475
	530
	531
	533
	535
	537
	543
	545
	547
	551
	553
5L-3308	728
	730
	744
	745
5L-9018	205
5L-9023	539
	553
5L-9656	205
5M-2894	365
	366
	522
	524
	526
	527
	528
5M-3062	838
5P-0078	92
5P-0372	209
	396
5P-0537	535
	539
	553
5P-0540	206
5P-0598	432
5P-0599	404
	408
	420
	424
	426
	428
	430
	433
	435
	440
	444
	480
	484
	487
	489
5P-0600	75
5P-0743	468
5P-0747	107
	109
	111
	113
	179
5P-0761	107
	109
	111
	113
5P-0767	803
	805
	808
5P-1042	445
5P-1420	92
5P-1442	92
	289
	515
5P-1505	40
	42
	44
	298
	301
	460
	468
	515
5P-1506	468
5P-2199	555
5P-3860	482
	483
5P-3915	718
	720
	795
5P-4115	325
	457
	718
	720
	852
5P-4116	55
	56
	57
	59
	61
	102
	305
	306
	307
	308
	388
	389
	457
	467
	494
	591
	593
	594
	595
	738
	740
	753
	754
	782
	784
	815
	852
5P-4295	298
	301
5P-4868	75
	467
5P-5599	570

► **PRIMARY REFERENCE**

PART NUMBER INDEX

Part	Page
5P-5637	852
5P-5923	179
5P-5924	805
	808
5P-6011	723
5P-6129	67
	70
	72
5P-6718	32
	248
	255
	261
5P-7462	298
	480
5P-7463	298
	480
5P-7464	369
	405
	409
	421
	428
	430
	433
	435
	449
	451
	484
	487
5P-7465	369
	405
	409
	421
	428
	430
	433
	435
	449
	451
	484
	487
5P-7466	355
	358
	362
	401
	405
	409
	412
	417
	421
	428
	430
	433
	435
	484
5P-7467	355
	358
	362
	401
	405
	409
	412
	417
	421
	428
	430
5P-7468	355
	358
	362
	401
	405
	409
	412
	417
	421
	428
	430
	433
	435
	484
5P-7469	356
	358
	362
	401
	405
	409
	412
	417
	421
	428
	430
	433
	435
	484
5P-7657	179
5P-7854	216
	218
	220
	808
5P-7921	723
	797
5P-7957	755
5P-7958	322
	755
5P-8066	248
	255
	259
5P-8112	356
	359
	362
	401
	405
	409
	412
	417
	421
	428
	430
	433
	435
	484
5P-8245	24
	823
	825
	828
5P-8250	380
5P-8444	356
	359
	363
	401
	405
	409
5P-8500	755
	863
5P-8502	863
5P-8874	332
5P-9000	766
	767
	772
	817
5P-9262	571
5S-0003	545
	547
	549
	551
5S-7379	828
5V-2545	240
	241
	242
5V-4410	340
5V-4845	838
5V-8309	327
5W-6411	81
5W-9411	80
	82
	83
6B-0933	106
6B-4661	58
6C-3677	827
6C-3680	723
	797
6D-0337	▶274
	275
	277
	278
	279
	280
	281
6D-0443	274
	275
6D-3479	515
6D-4246	40
	42
	44
	298
	301
	460
	805
	808
6D-7573	92
6E-0122	380
6E-0131	537
	543
	549
	551
6E-0358	533
	535
	537
	543
	545
6E-0381	333
6E-1478	384
6E-3268	571
6E-3269	571
6E-3272	571
6E-3273	571
6E-3274	571
6E-3275	571
6E-3276	571
6E-3341	512
6E-3583	555
6E-4000	509
6E-4003	509
6E-4004	509
6E-4007	512
6E-4009	512
6E-4158	526
	527
	528
6E-4317	533
	535
	539
	543
	549
	553
6E-4753	555
6E-6151	512
6E-6154	512
6E-6155	512
6E-6157	512
6E-6158	512
6E-6174	509
6E-6175	509
6E-6176	509
6E-6285	545
	553
6E-6527	571
6E-6528	570
	571
6F-7037	380
6H-3616	29
6I-0217	26
	32
	63
	85
	94
6I-0254	63
6I-0260	14
	32
	50
	51
	94
	106
6I-0289	32
6I-0291	94
6I-0363	32
6I-0364	135
6I-0423	25
6I-0454	106
6I-0501	37
6I-0502	37
6I-0563	84

6

▶ **PRIMARY REFERENCE**

PART NUMBER INDEX

Part	Page	Part	Page	Part	Page	Part	Page
	85	6S-8620	40	6V-3213	499		592
6I-0572	18		42		575		606
	32		44		583	6V-7731	247
	51		288		585		253
	78	6T-9142	247		594	6V-7743	40
	85		254		595		315
6I-0594	106	6T-9143	247		597		776
	135		254		599		794
6I-0645	26	6T-9144	247		602		848
	51		254		642		850
6I-0789	26	6T-9145	247		643		854
6I-0846	14		254		672		856
6I-0847	25	6T-9146	247		673	6V-7744	316
6I-0917	14		254		674		338
6I-1418	119	6T-9147	247		675		340
	122		254	6V-3265	154		342
6I-1497	40	6T-9160	247	6V-3582	75		345
	42		253	6V-3965	216		347
	44	6T-9163	247		218		445
	47		254		220		708
6I-4079	42		259		333	6V-8097	248
	47	6T-9164	247		453		254
6I-4374	51		254		454		259
6J-1972	377		259		467	6V-8144	388
	380	6T-9165	247		509		575
6J-2680	467		254	6V-4364	583		593
6J-2797	381		259		606		594
	382	6T-9166	247		642		595
	384		254		643		597
	386		259		672		598
6J-5731	377	6T-9194	253		673		599
6J-5733	377		260		674		602
	380	6T-9196	253		675		700
6K-0806	119		260	6V-4589	247	6V-8185	838
	145	6T-9202	261		253	6V-8186	820
	148	6V-0484	216		259	6V-8210	249
	157		218	6V-5100	255		254
	160	6V-0683	298		260		261
	167		480	6V-5219	507	6V-8236	570
	169	6V-0852	216	6V-5326	543	6V-8237	377
	171		218	6V-5653	467	6V-8335	247
	179		220		515		253
	194		333	6V-5683	509		261
	248		453	6V-5729	389		338
	254		454		600		340
	858		467		601		345
	860		509	6V-6717	718		347
6K-8178	92	6V-1249	369		720	6V-8344	592
	463		405		723		606
	805		409		795	6V-8352	571
6K-9632	846		421		797	6V-8363	193
6L-4725	718		428	6V-6813	718	6V-8370	193
	720		430		720	6V-8376	160
	795		433		795	6V-8378	138
6L-6208	374		435	6V-7238	467		142
6N-6984	67		449	6V-7357	171		175
	70		451		723	6V-8397	104
	72		484		797		298
6P-6590	325	6V-1363	80	6V-7359	487		301
6P-8855	803		81	6V-7420	444		332
	805	6V-2323	509	6V-7687	322		441
	808	6V-2410	836		366		444
6R-3299	475	6V-2687	725		575		445
6R-7490	836	6V-2722	107		577		449
6S-6646	588		109		578		451

PART NUMBER INDEX

Part	Page	Part	Page	Part	Page	Part	Page
	476	6V-8625	487		456		428
6V-8398	298		489		460		430
	301	6V-8626	432		489		433
	333		439	6V-8642	440		435
	353		441	6V-8647	298		484
	363		476		301	6V-9172	356
	369		478		333		359
	370	6V-8627	288		426		363
	372		441		456		401
	377		445		463		405
	381		454		476		409
	382		478	6V-8713	333		412
	383	6V-8628	298		437		418
	399		301		440		421
	404		454		444	6V-9178	247
	405		456		447		253
	408		460		482		268
	409		463		483	6V-9182	59
	415	6V-8629	491		491		61
	420	6V-8632	440	6V-8716	59	6V-9189	287
	421	6V-8633	333		61		356
	428		399	6V-8721	476		359
	430		404		478		363
	433		408		480		499
	435		415	6V-8723	301		503
	437		420	6V-8724	476		504
	439		433	6V-8757	248		505
	440		435		254		506
	441		484		260		507
	444	6V-8634	298	6V-8759	286		508
	447		301	6V-8781	445		815
	449	6V-8635	333	6V-8782	353	6V-9632	42
	451		417	6V-8801	111		44
	476		420		523		87
	478		465		525		307
	480		470		526		318
	484	6V-8636	444		527		319
	487		449		528		325
	489		451	6V-8837	494		327
	573	6V-8637	333	6V-8932	338		494
6V-8399	557		355		340		720
6V-8400	355		358	6V-8935	334		749
	358		362	6V-8937	444	6V-9746	59
	362		401	6V-8938	441		61
	401		404	6V-8941	445		333
	404		408	6V-8942	476		355
	408		412	6V-8995	428		356
	412		417		430		358
	417		420	6V-8997	428		359
	421		424		430		362
6V-8455	215		426	6V-9000	456		363
6V-8500	247		480	6V-9007	404		374
	253	6V-8638	444		408		386
6V-8553	92		476		420		401
6V-8554	334		478		433		404
	478		480		435		405
6V-8555	441	6V-8639	333		444		408
	445		440		480		409
6V-8556	424		487		484		412
	426		489	6V-9008	466		417
	445	6V-8640	444		467		418
6V-8560	92	6V-8641	288		471		420
6V-8561	478		444	6V-9169	405		421
6V-8563	424		453		409		424
	426		454		421		426

► **PRIMARY REFERENCE**

PART NUMBER INDEX

Part	Page
	428
	430
	433
	435
	444
	445
	467
	480
	484
	491
6V-9828	453
	467
6V-9830	399
	415
	447
6V-9831	437
	441
6V-9832	356
	359
	401
	412
	418
6V-9833	366
	474
6V-9838	437
	441
	445
6V-9839	445
6V-9840	334
	466
	470
	471
	472
	473
	474
6V-9842	454
6V-9849	353
	456
	463
	487
	489
6V-9850	298
	301
6V-9851	476
	478
	489
6V-9852	441
6V-9853	362
	405
	409
	421
6V-9854	355
	358
	362
	401
	404
	408
	412
	417
	420
	465
	467
6V-9855	355
	358
	362
	401
	404
	408
	412
	417
	421
6V-9872	104
	444
6V-9873	476
	478
6Y-1192	260
6Y-1341	248
	255
6Y-1896	248
	255
	261
6Y-2035	247
	253
6Y-2326	247
	253
6Y-2736	248
	254
6Y-2737	248
	254
6Y-2936	247
6Y-3222	676
	677
	678
	679
	680
	681
	682
	683
	684
	685
	686
6Y-3224	676
	677
	678
	679
	680
	681
	682
	683
	684
	685
	686
6Y-3228	676
	677
	678
	679
	680
	681
	682
	683
	684
	685
	686
6Y-6767	676
	677
	678
	679
	680
	681
	682
	683
	684
	685
	686
6Y-7652	204
6Y-7929	260
6Y-7957	253
	261
6Y-9915	30
	31

7

Part	Page
7C-0351	32
7C-1224	32
7C-1281	14
7C-4354	805
7C-4616	26
7C-8246	216
	218
	220
7D-7233	47
	460
	467
7E-3870	79
7E-4636	►98
	726
	742
	743
7F-3400	755
7F-6112	381
	382
7F-6998	808
7F-9223	863
7G-1060	179
7I-5486	451
7I-8084	353
	487
	489
7I-8935	558
	559
	560
7J-0204	304
	533
	535
	537
	539
	543
	545
	547
	549
	551
	553
	555
7J-9108	334
	368
	405
	409
	421
	424
	426
	432
	433
	435
	437
	439
	440
	441
	444
	445
	447
	476
	478
	482
	483
	484
	491
7K-1181	40
	42
	44
	59
	61
	87
	107
	109
	111
	122
	145
	148
	157
	160
	167
	169
	171
	184
	298
	301
	437
	440
	447
	456
	460
	467
	478
	491
7M-0242	287
7M-8485	59
	61
	304
	333
	355
	358
	362
	366
	401
	405
	409
	412
	417
	420
	421
	465
	466
	467
	470
	471
	530
	531
7N-0758	160

► **PRIMARY REFERENCE**

PART NUMBER INDEX

Part	Page	Part	Page	Part	Page	Part	Page
7N-5274	107	7T-3249	248	7X-2444	453	8B-6127	92
	109		255		454	8C-0572	68
	113	7T-3251	249		467		71
7N-7779	292		254	7X-2497	782		74
7N-7780	292		261		784		827
7N-9737	292	7T-3253	249	7X-2533	494	8C-3056	171
7R-8239	291		255	7X-2537	388	8C-3274	874
7S-3916	356		261		389	8C-3291	318
	359	7T-4532	756		593		319
	363		757		594	8C-3334	138
	401	7T-4848	179		595		184
	405	7T-6087	133	7X-2539	503	8C-3798	40
	409	7T-6088	133		504		42
	412	7T-6090	133		505		44
	418	7T-6092	133		506	8C-4447	579
	421	7T-6093	133	7X-2543	708		874
7S-3919	356	7T-6099	133	7X-2544	345	8C-4982	810
	359	7T-6652	204		347	8C-4987	209
	363	7T-6653	205	7X-2549	476		338
	401	7T-6654	205		478		340
	405	7T-6655	260	7X-2553	243		342
	409	7T-6799	817		244		344
	412	7T-7621	205		245	8C-5748	247
	418	7T-8895	306	7X-2554	325		253
	421		308	7X-2568	309		259
7T-0093	723	7T-9987	107	7X-2570	199	8C-6955	396
	797		113	7X-2621	805	8C-7110	509
7T-0525	327	7W-1176	25	7X-3164	444	8C-7588	870
7T-1099	104	7W-2326	47	7X-3166	445	8C-8417	333
	307	7W-2632	106	7X-4741	248	8C-8451	858
	308	7W-3556	259		255	8C-8478	310
	515	7W-3896	53		259		311
	733		54	7X-4744	247		312
	735	7W-4634	37		253		313
	746	7W-4642	25		268		314
	749	7W-7417	80	7X-6315	119	8C-8522	315
	750	7X-0310	389		121	8C-8545	259
	753		600	7X-7644	864	8C-8992	821
7T-2646	247		601		873		822
	254	7X-0447	600	7X-7729	47	8C-9200	370
	259		601		61		372
7T-2651	249	7X-0457	507		107	8C-9778	133
	255	7X-0465	457		109	8C-9783	133
	261	7X-0481	838		111	8D-2707	274
7T-3017	247	7X-0546	821		113		275
	253		822		180	8D-9947	222
7T-3018	247	7X-0572	309		322		223
	253	7X-0579	65		325		224
7T-3021	247		66		711	8E-1118	150
	253		69		757	8E-3081	449
7T-3022	247		327		844	8E-5707	253
	253		760		846		260
7T-3034	247	7X-0603	67	7X-8549	160	8E-6259	676
	254		70	7X-9065	157		677
7T-3051	248		72		160		678
	254	7X-0613	42		167		679
7T-3109	248		44		169		680
	255	7X-0622	838	7Y-0336	396		681
7T-3111	248	7X-0818	119	7Y-3883	179		682
	254		122	7Y-4224	555		683
7T-3119	247	7X-0872	476				684
	254		478				685
7T-3195	248	7X-2049	723				686
	254	7X-2393	848			8F-0212	535
	259		850	8B-1419	209		539

8

► **PRIMARY REFERENCE**

PART NUMBER INDEX

Part	Page
8F-1434	133
	138
	142
	171
	175
	193
8F-6302	539
8F-7702	338
	340
8F-8151	58
8H-0707	533
	537
	543
	545
	547
	549
	551
8H-1607	205
8H-7521	381
	382
	384
	386
8J-2574	380
8J-4455	133
8J-6245	370
	372
8L-2746	247
	253
	259
8L-2779	270
	271
	272
	273
8L-8413	103
	111
	113
	119
	141
8M-2773	445
8M-3175	338
	340
8M-8157	205
8N-0869	107
	109
	113
8N-2694	82
8R-2916	303
8R-6111	150
8R-6263	292
8S-0023	222
	223
	224
	356
	359
	363
	402
	405
	409
	413
	418
	421
8S-0024	222
	223
	224
	356
	359
	363
	402
	405
	409
	413
	418
	421
	428
	430
	433
	435
	484
8S-3020	113
8S-4710	535
8S-4734	287
8S-4740	205
8S-7803	725
	738
	740
	827
	830
	832
	838
8S-9151	204
8T-0077	353
8T-0154	467
8T-0164	460
8T-0269	494
8T-0271	259
8T-0276	287
8T-0318	327
8T-0328	138
	142
	171
	175
8T-0352	150
	154
8T-0389	496
	711
8T-0643	261
8T-0706	396
8T-0785	383
8T-0789	844
	846
8T-0799	240
8T-1118	844
	846
8T-1158	454
8T-1159	92
8T-1580	248
	254
	259
8T-1581	248
	254
	259
8T-1683	298
8T-1686	298
	301
8T-1718	491
8T-1887	424
	426
	445
	491
8T-1888	424
	426
	445
	491
8T-1889	356
	359
	363
	402
	405
	409
	413
	418
	421
	428
	430
	433
	435
	484
8T-1890	356
	359
	363
	402
	405
	409
	413
	418
	421
	428
	430
	433
	435
	484
8T-1891	441
	449
	451
8T-1892	441
	449
	451
8T-1895	491
8T-1896	491
8T-2275	543
8T-2360	304
	533
	535
	537
	539
	543
	545
	547
	549
	551
	553
8T-2361	533
	535
	537
	539
	543
	545
	547
	549
	551
	553
8T-2444	327
8T-2530	441
8T-2561	757
8T-2563	75
8T-2658	177
8T-2659	157
	160
	165
	167
	169
	817
8T-2910	305
	307
8T-3444	449
	451
8T-3490	47
	84
	325
	327
	447
	467
	808
8T-3597	478
8T-3612	87
	118
	307
	325
	327
	353
	746
	749
	750
	782
	784
8T-3647	499
	760
8T-3652	322
8T-3844	460
	776
8T-3998	763
	764
	765
	768
	771
	773
8T-4001	311
	312
	313
	314
	318
	319
	321
8T-4121	30
	31
	40
	42
	44
	59
	79
	84
	92
	98
	100
	101
	109
	133
	138
	142
	150
	154
	171
	180
	216
	218

► **PRIMARY REFERENCE**

PART NUMBER INDEX

Part	Page	Part	Page	Part	Page	Part	Page
	220		779		460		111
	222		803		480		113
	223		805		757		171
	224		808		759		216
	296		836		799		218
	298		844		808		220
	301		846	8T-4134	184		325
	316	8T-4122	318	8T-4136	47		356
	322		319		59		359
	325		502		61		363
	332		595		79		413
	338		597		84		424
	340		604		101		426
	342		697		171		428
	344		698		180		430
	345	8T-4123	310		184		437
	347		311		222		441
	356		312		223		445
	359		313		224		447
	363		314		296		463
	399		396		298		467
	402		715		301		476
	405	8T-4130	319		322		478
	409	8T-4131	199		325		515
	413		200		332		585
	415		715		342		738
	418	8T-4132	30		356		740
	421		31		359		779
	424		316		363		803
	426		318		399		805
	428		319		402		808
	430		595		405		836
	433		597		409	8T-4138	80
	435	8T-4133	47		413		81
	437		67		415		87
	439		70		418		171
	441		72		421		193
	445		84		433		288
	447		107		435		325
	449		109		437		852
	451		111		439	8T-4139	293
	460		113		441		322
	463		123		447		356
	467		133		449		359
	476		138		451		402
	478		142		467		405
	480		150		484		409
	484		154		491		413
	487		157		493		418
	491		167		503		421
	494		180		504		428
	496		209		505		430
	497		216		506		433
	503		218		507		435
	504		220		508		476
	505		288		515		478
	506		315		805		484
	507		325		808		515
	508		338	8T-4137	40		835
	515		340		42	8T-4167	311
	585		342		44		312
	738		344		59		313
	740		396		61		314
	757		437		107		318
	759		441		109		319

► **PRIMARY REFERENCE**

PART NUMBER INDEX

Part	Page	Part	Page	Part	Page	Part	Page
	321		116		484		844
8T-4171	180		118		487		846
	782		171		491		858
	784		288		757		860
	843		296		759	8T-4222	67
8T-4174	30		305		799		70
	31		306		805		72
	318		307		808		316
	319		308	8T-4196	30		325
8T-4176	575		317		31	8T-4223	59
8T-4179	92		327		98		61
	146		468		100		92
	148		500		101		102
	180		501		325		107
	515		738		480		109
	604		740		491		146
8T-4180	782		749	8T-4197	327		148
	784		753	8T-4198	496		180
8T-4181	40		754		708		210
	327		803	8T-4200	65		216
	782		808		66		218
	784	8T-4191	157		68		220
8T-4182	325		167		69		222
	396		325		71		223
	467		515		74		224
	711	8T-4192	59		102		240
8T-4183	102		61		215		243
	305		216		288		244
	306		218		305		245
	307		220		306		305
	308		356		307		306
	324		359		308		307
	467		363		738		308
	497		402		740		324
8T-4184	363		405		760		342
	405		409		823		356
	409		413		825		359
	421		418		828		363
	433		421		852		369
	435		449	8T-4201	844		402
	484		451		846		405
	604		604	8T-4205	40		409
8T-4185	399	8T-4194	218		42		413
	415		222		44		418
	494	8T-4195	47		80		421
	497		84		81		428
	759		138		83		430
8T-4186	67		142		87		433
	70		316		126		435
	72		322		132		449
	338		338		171		451
	340		340		180		468
	480		342		193		476
	491		345		288		478
	496		347		315		484
	497		405		327		493
	757		409		393		497
	759		418		457		515
8T-4187	715		421		460		604
8T-4189	40		433		520		759
	42		435		723		835
	59		441		797		852
	61		447		800	8T-4224	55
	75		460		820		56
	102		468		836		57

PART NUMBER INDEX

Part	Page	Part	Page	Part	Page	Part	Page
	68	8T-4837	322	8T-5413	746		145
	71	8T-4896	523		749		198
	74		525		750		261
	75	8T-4908	42	8T-5439	199		272
	87		44		200		273
	102		55		281		539
	116		56		282	8T-8737	119
	118		57		283		167
	171		67	8T-6356	467		171
	179		70	8T-6431	338		179
	215		72		340		184
	287		87	8T-6466	61		270
	288		322		445		272
	291		338		757		273
	296		340	8T-6656	875	8T-8799	171
	297		456	8T-6663	332	8T-8894	296
	305		494	8T-6684	428		322
	306		749		430	8T-9364	838
	307		757		467	8T-9402	40
	308		759	8T-6726	439		42
	322		805		440		44
	325		817	8T-6760	205	8T-9405	502
	327	8T-4956	210	8T-6868	222	8T-9501	210
	338		216		223		327
	340		220		224		342
	353		223	8T-6869	297		823
	445		224		454		825
	454		243		757	8T-9655	119
	463		244	8T-6870	353		122
	487		245		487	8U-9427	563
	489		369		489		564
	500	8T-4967	733	8T-6902	591		569
	501		735		820	8W-4002	440
	503		746	8T-6912	441	8X-5489	87
	504		750	8T-7087	405	8Y-4489	577
	505	8T-4970	858		409		578
	506		860		421		581
	507	8T-4971	802		433	8Y-5737	718
	508		844		435		720
	517		846		484		795
	757	8T-4986	388	8T-7329	445	8Y-5904	►725
	759		389	8T-7338	502		823
	805		593		604		825
	817		594	8T-7529	59		827
8T-4244	209		595		61	8Y-5906	725
	759	8T-5001	577		468	8Y-5988	725
8T-4649	318		578	8T-7547	75	8Y-6028	725
	319		592		288	8Y-6364	863
8T-4742	87		606		325	8Y-6386	782
	801		759		338		784
	802	8T-5004	863		340	8Y-6388	761
8T-4744	87	8T-5005	107	8T-7566	828		762
	801		109	8T-7876	51	8Y-6967	718
	802		111	8T-7963	305		720
8T-4766	342		113		306	8Y-6998	327
8T-4773	338	8T-5041	203		307	8Y-7203	322
	340		295		308	8Y-7204	322
	342	8T-5063	209		441	8Y-7263	784
	344		396		445	8Y-7264	782
8T-4815	209	8T-5091	327	8T-7971	604	8Y-7287	854
	338	8T-5092	322	8T-8390	374		856
	340	8T-5093	128	8T-8549	203	8Y-7292	746
	342	8T-5360	389		295		750
	344		600	8T-8641	725	8Y-7306	782
8T-4821	322		601	8T-8729	138		784

► **PRIMARY REFERENCE**

PART NUMBER INDEX

Part	Page
8Y-7309	848
	850
8Y-7310	782
	784
8Y-7311	733
	735
8Y-7444	738
	740
8Y-7483	▶216
	232
	234
8Y-7833	138
	142
	145
	148
	194
8Y-8081	107
	109
	113
9	
9B-7233	53
	141
	157
	160
	167
	169
	840
	841
9C-9785	776
9F-2167	204
9F-2247	94
9G-3695	813
9G-8909	113
9G-9155	515
9H-3771	696
9J-1874	742
	743
	744
	745
9M-0164	515
9M-1974	247
	253
9M-4814	803
	808
9M-4972	808
9M-7958	47
9M-7959	718
	720
	795
9M-8406	298
	301
	460
	463
	803
	805
	808
9N-0869	119
	122
9P-1872	222
	223
	224
9P-6571	720
	763
	764
	765
	768
	771
	773
9P-9150	247
	253
	259
9R-0036	▶579
	587
9R-0041	10
	▶602
9R-0109	388
	389
	575
	580
	593
	594
	595
	597
	598
	599
	602
	700
9R-0111	575
	611
	612
	614
	615
	687
	688
	689
	690
9R-0119	575
9R-0139	374
	383
	581
	606
9R-0147	583
9R-0153	379
9R-0158	499
	575
	583
	585
	593
	594
	595
	597
	598
	599
	602
	604
	606
	629
	630
	631
	632
	634
	635
	636
	637
	638
	639
	640
	641
	644
	645
	646
	647
	649
	650
	651
	652
	654
	655
	656
	657
	658
	659
	660
	661
	662
	664
	665
	666
	667
	669
	670
	671
9R-0189	579
9R-0315	277
9R-0320	385
	386
	628
	633
	648
	653
	663
	668
	696
9R-0321	379
	381
	382
9R-0336	611
	612
	615
9R-0343	611
	612
	615
9R-0347	611
9R-0366	322
9R-0371	612
	615
9R-0372	612
	615
9R-0376	614
	615
9R-0393	318
	319
9R-0411	583
	602
	604
	606
9R-0418	449
	451
9R-0422	597
	599
9R-0423	602
9R-0424	594
	595
	597
	599
	602
9R-0481	321
9R-0823	204
9R-0883	204
9R-1004	399
	405
	409
	415
	421
	433
	435
	484
9R-1005	399
	405
	409
	415
	421
	433
	435
	484
9R-1085	▶597
9R-1233	214
	▶324
9R-1499	128
9R-1502	592
	606
9R-1510	499
	583
	606
	642
	643
	672
	673
	674
	675
	705
	706
9R-1581	209
9R-1765	342
9R-1766	210
	342
9R-1767	210
	342
9R-1882	278
9R-1948	842
9R-1956	277
	284
9R-2004	432
9R-2052	480
9R-2053	480
	487

▶ **PRIMARY REFERENCE**

PART NUMBER INDEX

Part	Page	Part	Page	Part	Page	Part	Page
	489	9R-2501	205		612		753
9R-2407	204	9R-2502	205		614		754
9R-2417	204	9R-2503	205		615	9R-5786	687
9R-2418	204	9R-2504	205	9R-4487	611		688
9R-2419	204	9R-2505	205	9R-4494	585	9R-5788	▶451
9R-2420	204	9R-2506	205	9R-4619	424		608
9R-2421	204	9R-2507	205		426	9R-5828	585
9R-2424	205	9R-2508	205		444	9R-5832	612
9R-2425	204	9R-2512	205	9R-4668	▶498	9R-5866	626
9R-2426	206	9R-2589	733		608		▶716
9R-2427	204		735		609	9R-5898	614
9R-2428	204		746	9R-4670	689	9R-5899	614
9R-2429	204		750		690	9R-5901	614
9R-2430	204	9R-2603	98	9R-4672	611	9R-5902	614
9R-2431	204		100		614	9R-5948	404
9R-2432	204	9R-2614	396		615		408
9R-2433	204	9R-2620	325		689		420
9R-2434	204	9R-2806	209		690		428
9R-2435	206		287	9R-4675	687		430
9R-2436	206		338		688		433
9R-2437	206		340		689		435
9R-2438	206		345		690		444
9R-2439	206		347	9R-4676	687		482
9R-2440	206		396		688		483
9R-2441	206	9R-2807	209		689		484
9R-2442	206		287		690	9R-5971	449
9R-2443	206		288	9R-4677	498	9R-5988	▶614
9R-2444	206		338	9R-4678	498		626
9R-2445	206		340	9R-4784	327		627
9R-2446	204		342	9R-5201	▶611	9R-5989	▶615
9R-2447	204		345	9R-5202	▶612		626
9R-2448	204		347		626		627
9R-2449	204		396	9R-5205	611	9R-6007	▶598
9R-2450	204	9R-2822	▶277		612	9R-6014	580
9R-2451	204		281		614	9R-6062	598
9R-2452	204	9R-2958	604		615		▶600
9R-2453	204	9R-2959	604	9R-5206	611	9R-6140	588
9R-2454	204	9R-3051	209		612	9R-6162	705
9R-2455	204	9R-3067	342		614	9R-6163	366
9R-2456	204	9R-3092	583		615		592
9R-2457	204	9R-3135	396	9R-5219	204	9R-6481	283
9R-2458	204	9R-3182	575	9R-5241	205	9R-6602	206
9R-2459	205	9R-3203	843	9R-5294	687	9R-6671	205
9R-2460	205	9R-3204	843		688	9R-6690	575
9R-2466	206	9R-3205	843		689	9R-7069	440
9R-2474	205	9R-3255	396		690	9R-7070	439
9R-2480	205	9R-3469	844	9R-5301	396	9R-7071	439
9R-2482	205		846		579	9R-7138	288
9R-2483	205	9R-3659	279		588	9R-7240	103
9R-2484	205		280		589	9R-7701	321
9R-2485	205	9R-3700	696		590	9R-7797	396
9R-2486	205	9R-3712	▶449	9R-5313	612	9R-7803	437
9R-2487	206		609		687		439
9R-2488	205	9R-3747	585		688		441
9R-2489	205	9R-3756	585	9R-5320	626		447
9R-2490	205	9R-4066	575		▶697	9R-7882	322
9R-2491	205		580	9R-5321	627	9R-7902	667
9R-2492	205	9R-4110	321		▶698	9R-7960	370
9R-2493	205	9R-4482	585	9R-5429	322	9R-8189	288
9R-2494	205	9R-4483	611	9R-5437	322	9R-8291	322
9R-2495	205	9R-4485	611	9R-5555	600	9R-8390	575
9R-2496	205		612		601	9R-8523	577
9R-2497	205		614	9R-5567	209		578
9R-2498	205		615	9R-5616	738	9R-8594	322
9R-2499	205	9R-4486	611		740	9R-8599	322

▶ **PRIMARY REFERENCE**

PART NUMBER INDEX

Part	Page	Part	Page	Part	Page	Part	Page
9R-8663	606		494	9U-8875	260		852
9R-8760	322		718	9U-8886	247	9X-2045	327
9R-8874	503		720		253		340
	504		795		260		345
	505	9R-9925	515		502		494
	506	9S-1315	588	9W-0607	123		718
9R-8987	633	9S-4182	460		128		720
	634	9S-4183	355	9W-0717	259		778
	635		358		260		790
	636		366		261		791
	637		395	9W-3326	124		792
	638		401		125		793
	639		412	9W-5460	249		795
	640		417		255		816
	641		519		259		817
9R-8988	633	9S-4185	259	9W-8215	698		819
	634	9S-4191	101	9W-9953	30		836
	635		104		31		848
	636		247	9X-0199	193		850
	637		253	9X-1046	814		854
	638		260	9X-1054	119		856
	639	9S-8002	555		171	9X-2065	342
	640	9S-8004	518	9X-1386	261		344
	641		555	9X-1813	122	9X-2092	753
9R-9005	487	9S-8006	304	9X-2036	133		754
	489		509	9X-2038	338	9X-2132	852
9R-9028	589		533		340	9X-2334	396
	590		535		720	9X-2842	820
9R-9146	396		543		763	9X-3401	99
9R-9187	581		545		764	9X-4244	123
9R-9198	440		547		768	9X-4611	381
	447		549		771		382
9R-9253	399		551		773		384
	404		553		778		386
	408	9S-8007	555		780	9X-6165	184
	415	9S-8009	537	9X-2039	494	9X-6383	852
	420		539	9X-2041	781	9X-6580	476
	433	9S-8752	365		836	9X-6611	379
	435		366	9X-2042	289	9X-6615	248
	484		522		318		255
9R-9254	581		524		319		261
	604	9S-9334	304		393	9X-7260	374
9R-9316	440	9T-0642	539		718	9X-7378	756
	491	9T-0644	539		720	9X-7380	805
9R-9319	447		553		780		808
9R-9334	288	9T-0655	304		786	9X-7381	805
9R-9373	575	9T-0656	304		788		808
9R-9375	440	9T-0704	533		795	9X-7382	805
9R-9398	205	9T-2212	377	9X-2043	287		808
9R-9401	205		380		338	9X-7383	805
9R-9403	205	9T-2837	349		500		808
9R-9408	204		351		501	9X-7385	756
9R-9409	204	9T-2883	384	9X-2044	87		757
9R-9410	204	9T-3165	386		296	9X-8118	126
9R-9505	384	9T-4007	380		494		127
9R-9702	203	9T-4008	380		718	9X-8121	126
	295	9T-4009	380		720		127
9R-9812	577	9T-5444	374		763	9X-8139	126
	578	9T-5455	440		764		127
9R-9868	210		▶555		765	9X-8256	146
	342	9T-7309	539		768		148
9R-9869	318		553		771		494
	319	9U-2277	138		773		794
9R-9901	338		184		795	9X-8257	30
	340	9U-8263	836		842		31

▶ **PRIMARY REFERENCE**

PART NUMBER INDEX

Part	Page
9X-8267	545
	547
	549
	551
9X-8873	823
	825
	828
9X-8880	205
9X-8883	205
9Y-5015	21
0	
003-8137	545
	547
	549
	551
004-6557	58
004-6810	58
005-0469	247
	254
005-0471	247
	254
006-8865	68
009-2062	260
014-5645	248
	255
030-1957	205
031-0214	533
	535
	537
	539
	543
	553
031-4155	827
	830
	832
031-5085	533
	537
	543
032-8100	98
	100
032-8487	61
032-9090	16
032-9091	16
032-9946	40
033-6027	553
033-6043	571
033-6044	570
033-6783	61
033-7687	24
033-7849	98
	100
034-1432	580
034-3679	298
	301
035-8068	18
038-9317	107
	109
	111
	113
039-9133	291
061-8639	270
	271
	272
	273
067-6002	18
067-6006	18
	21
067-6043	18
067-6095	38
067-6123	25
067-6179	26
067-6213	32
067-6366	106
067-6873	16
067-6874	16
067-6897	26
067-6899	26
067-6900	26
069-4080	101
069-4707	201
081-6352	441
083-4419	509
084-4277	836
089-7990	200
091-5928	692
	693
092-3635	298
	301
095-0641	820
095-0733	179
095-0741	157
	160
	165
	167
	169
095-0756	145
	148
095-0878	827
	830
	832
095-0924	230
095-0927	253
	260
095-0928	260
095-9230	342
095-9805	509
096-4415	799
096-6166	810
099-0492	165
099-3649	508
	801
1	
100-3320	171
100-3563	535
100-3564	535
100-3566	535
100-3567	535
	553
100-3685	133
100-3751	26
	63
100-4112	133
100-4113	133
100-4115	133
100-4118	133
100-4119	133
100-4461	49
100-4830	28
	94
100-4841	14
	18
100-7442	449
100-7443	451
100-7444	451
100-7608	848
	850
	854
	856
100-8451	106
101-0003	861
101-0333	873
101-0568	864
101-0569	865
101-0570	865
101-0571	866
101-0572	867
101-0573	868
101-0574	873
101-0575	872
101-0576	869
101-0577	869
101-0745	860
101-0862	404
	408
	420
	433
	435
	484
101-0863	355
	358
	362
	401
	404
	408
	412
	417
	420
	874
101-1787	334
101-2788	340
	875
101-2987	29
101-3617	25
101-3771	32
101-3819	869
101-3895	51
101-4015	322
101-4016	322
101-4020	322
101-4408	▶701
101-4409	701
	▶702
101-4410	702
101-4411	702
101-4412	702
101-4413	702
101-4414	702
101-4415	701
101-8296	332
102-1940	322
102-2940	858
102-3582	384
102-8801	145
	148
	152
	160
	167
	179
	811
102-8802	83
	103
	119
	122
	124
	138
	141
	142
	145
	148
	171
	175
	177
	179
	184
	187
	189
	191
	194
	196
	198
	210
	261
	270
	271
	272
	273
	342
	539
	553
	574
	756
102-8803	99
	119
	122
	157
	160
	167
	169
	171
	179
	180
	184
	187
	189
	191
	193
	270
	272
	273

▶ **PRIMARY REFERENCE**

PART NUMBER INDEX

Part	Page
	844
	846
102-8804	119
	122
	125
	138
	142
	145
	148
	160
	167
	169
	175
	179
	180
	187
	189
	191
	194
102-8805	128
	145
	148
	165
	179
	187
	189
	191
	813
	858
102-8806	150
	154
	179
	184
	812
103-4754	304
103-4867	209
103-5519	509
	▶570
103-5520	509
104-2091	718
	720
	761
	762
	766
	770
	772
	789
104-3288	253
	260
104-3912	128
104-3964	608
	▶687
104-3965	608
	▶688
104-3966	687
104-3967	687
	688
104-6310	608
	609
	699
	▶700
104-6311	700
104-6312	700
104-6313	687
	690
	707
104-6314	687
	690
	707
104-6316	700
104-6317	700
104-8566	216
	218
104-9494	805
104-9502	▶131
104-9504	131
105-1434	570
105-1435	570
105-1436	570
105-1437	570
105-1438	570
105-1439	570
105-1440	570
105-1441	570
105-2145	571
105-3481	823
	825
	827
105-8034	288
105-8069	128
105-9411	757
	808
106-0401	367
106-0406	367
106-0409	355
	358
	362
	401
	404
	408
	412
	417
	420
106-0421	577
	578
106-0424	577
	578
106-0425	355
	358
	362
	578
106-2404	▶493
106-2405	493
106-2409	493
106-5876	391
	392
	▶447
106-5878	▶310
106-5879	▶311
106-5880	▶312
106-5881	▶313
106-7301	396
106-8020	104
106-8704	138
	142
	145
	148
	187
	189
	191
	198
106-8916	85
106-9387	608
	609
	610
106-9388	687
	690
	707
106-9427	555
106-9430	555
106-9586	247
	253
	268
106-9861	249
	254
	259
107-3716	▶199
	214
107-5591	210
	342
107-5605	193
107-6279	379
107-6708	355
	358
	362
	401
	404
	408
	412
	417
	420
107-6709	355
	358
	362
	401
	405
	409
	412
	417
	421
107-6711	581
	606
107-6826	240
	241
	242
107-8117	365
	366
	527
108-1587	699
	▶707
108-2989	508
	591
108-3036	609
	▶689
108-3037	689
	690
108-3872	355
	358
	362
	401
	405
	409
	412
	417
	421
108-4311	738
	740
108-8251	727
	730
	731
	732
	▶843
109-1260	355
	358
	362
	401
	404
	408
	412
	417
	420
109-1633	476
	478
109-1634	476
	478
109-1779	509
109-9685	553
110-0037	726
	727
	728
	729
	730
	731
	732
	745
110-2445	75
	467
110-2861	687
	690
	707
110-5602	801
	852
110-6109	718
	720
	795
110-7524	745
110-7709	355
	358
	362
	401
	404
	408
	412
	417
	420
110-7710	355
	358
	362
	401
	404
	408
	412
	417
	420
110-7713	362
	404
	408
	420
110-8760	94
	494

▶ **PRIMARY REFERENCE**

PART NUMBER INDEX

Part	Page
111-0483	577
	578
111-0859	23
111-3422	94
111-3423	94
111-4337	585
	602
111-4627	184
	494
111-5042	838
111-6795	141
111-6816	141
111-7899	128
	138
	142
	145
	148
	150
	152
	153
	157
	160
	165
	167
	169
	175
	187
	189
	191
	198
	337
	454
	799
111-7906	215
111-7907	▶215
	246
111-8634	▶608
111-8635	▶608
	609
111-8636	▶608
111-8637	▶609
112-0938	▶609
	610
112-0939	▶609
	610
112-0940	▶610
112-0941	▶610
112-0942	▶699
112-1773	384
	386
112-1776	700
112-1777	690
112-1778	609
	▶690
112-1809	▶309
112-1826	394
	▶502
112-4411	278
	280
	281
112-4415	325
112-4416	325
112-4417	310
	311
	312
	313
	314
112-4418	311
	312
	313
	314
112-4498	575
112-5494	396
112-5823	437
	440
112-5827	437
	440
112-6219	216
	218
	220
112-9331	276
	277
	▶278
112-9332	▶278
112-9334	275
	276
	▶278
112-9337	▶279
112-9338	279
	282
112-9450	844
	846
112-9629	203
	295
113-0018	▶862
113-0920	836
113-1147	205
113-1150	240
113-1151	231
	▶240
113-2662	313
	314
113-4495	309
113-5049	288
113-5973	733
	735
113-6349	106
113-7905	312
113-7906	311
113-8129	63
113-8277	776
113-8490	128
	138
	142
	183
	187
	189
	191
	194
113-8491	128
	153
	154
113-8492	150
113-9090	588
113-9221	243
	244
	245
114-1972	545
	547
	551
114-1973	545
	547
	551
114-2579	78
114-3469	756
114-3906	549
	551
114-4363	25
114-4916	132
114-5030	553
114-5333	138
114-6099	321
114-8861	327
114-8972	327
114-8973	327
114-9342	862
115-1162	78
115-1615	119
	122
	171
115-1715	▶125
	128
115-1716	▶124
	128
115-1918	502
115-5219	327
115-5220	327
116-1316	365
	528
116-4481	561
	562
	565
	566
	567
	568
116-4616	447
116-4617	447
116-4942	▶599
116-7491	157
	160
	165
	167
	169
117-0754	604
117-2823	844
	846
117-2824	844
	846
117-2826	844
	846
117-2911	270
	271
	272
	273
117-3242	298
	301
117-3534	502
117-3535	502
117-3789	775
117-4650	247
	253
117-5672	338
	340
117-7414	738
	740
117-7520	449
117-8683	456
117-9713	215
117-9887	240
	241
	242
118-5503	766
	770
	772
118-5837	204
118-5839	205
118-6842	305
	306
	307
	308
	▶315
118-6854	305
	306
	307
	308
118-7110	697
118-7286	59
	61
118-7790	193
118-8118	91
	97
	99
118-8119	91
	99
118-9145	51
118-9517	805
119-1530	▶710
119-3662	171
119-4594	602
119-4740	246
119-5025	87
119-6723	80
	81
119-7786	277
	▶279
119-7787	▶279
119-7788	279
	▶280
119-7789	279
	280
119-8016	▶107
119-8349	852
119-9631	723
120-1324	437
120-4397	503
	504
	505
	506
120-4604	463
120-5724	512
120-5726	509
	▶512
120-5727	509
120-5729	509
120-6872	89
120-8413	439
120-8414	439
120-8482	▶314
120-9289	▶580
	710

▶ **PRIMARY REFERENCE**

PART NUMBER INDEX

Part	Page
120-9332	580
120-9333	580
120-9762	248
	254
	259
120-9809	437
	441
121-0694	248
	254
	259
121-0697	253
121-0714	253
121-0883	25
121-0885	253
	261
121-0904	253
121-1251	247
	253
121-1253	253
121-2059	253
	260
121-2060	253
	260
121-2061	253
	260
121-2062	247
	254
121-2500	248
	254
	260
121-2511	248
	254
121-2537	248
	254
121-2545	248
	254
121-2603	248
	254
121-2604	248
	254
121-4036	255
	259
	▶269
121-4480	91
	99
121-6936	844
121-7238	617
	619
121-7385	248
	255
	259
121-7389	248
	255
121-7390	248
	255
121-7391	249
	254
121-7396	247
	253
	259
121-7398	248
	255
	259
121-7399	248
	255
	259
121-7400	248
	255
	259
121-7401	248
	255
	259
121-7402	248
	255
	259
121-7403	248
	255
121-7404	248
	255
121-7405	247
	253
121-9743	852
121-9870	771
121-9875	254
122-1113	460
122-1135	269
122-1645	▶193
	587
122-1672	269
122-1876	255
122-1877	253
	260
122-1878	253
	259
122-1879	253
	260
122-1880	248
	254
122-1881	248
	254
122-1882	248
	254
122-1883	254
	261
122-1884	255
	260
122-1885	248
	254
122-1886	248
	255
	260
122-1904	349
	351
122-3649	247
	254
122-3652	247
	253
122-4872	437
	440
122-4873	437
	440
122-5822	440
	491
122-5823	447
122-5865	▶109
122-5923	327
122-6785	248
	255
122-6787	248
	254
122-7137	53
	141
	840
	841
122-8032	588
122-8037	▶588
122-9356	128
123-0275	80
	81
123-0428	325
123-0714	248
	254
123-1377	248
	254
	259
123-2918	255
123-2919	255
123-2920	248
	254
	260
123-4065	65
	66
	68
	69
	71
	74
	325
	327
123-4950	103
	104
123-5798	573
123-5799	573
123-6077	827
	830
	832
123-7034	322
123-7637	355
	358
	362
	401
	404
	408
	412
	417
	420
123-8669	844
	846
123-8670	844
	846
123-8905	247
	253
	259
123-8906	247
	253
	259
123-8907	248
	255
	260
123-8908	248
	255
	260
123-8909	247
	254
	260
123-8910	247
	254
	260
123-8912	253
	260
123-8913	248
	254
	260
124-0312	718
	720
	795
124-0360	592
	606
124-2456	874
124-2528	401
	404
	409
	417
	420
124-3536	34
124-3815	26
	94
124-6524	759
124-6612	248
	259
124-8105	776
124-8818	524
	525
	▶533
124-9464	285
125-0851	216
	218
125-2086	776
	863
125-3298	152
	154
125-3416	805
	808
125-7116	689
125-7894	384
126-1817	160
	394
126-4224	689
	690
126-4225	687
	688
126-5476	533
	535
	537
	539
	543
	545
	547
	549
	551
	553
126-5796	545
	547
	549
	551
126-5984	533
	535
	537
	539
	543

▶ **PRIMARY REFERENCE**

PART NUMBER INDEX

Part	Page
	545
	547
	549
	551
	553
126-5985	533
	535
	537
	539
	543
	545
	547
	549
	551
	553
126-8472	327
	779
127-1942	870
127-3017	248
	255
127-4285	276
	277
	▶280
127-4289	▶280
127-4290	275
	280
	▶281
127-4293	280
	281
127-4471	47
	75
	515
127-6980	55
	56
	57
127-8167	98
	100
127-8987	575
128-0899	494
128-2776	535
	539
	553
128-3094	630
	635
	639
128-3778	629
	634
	638
128-4249	179
128-5010	575
128-5596	502
	▶513
128-5964	864
128-5965	865
128-5966	865
128-5967	866
128-5968	867
128-5969	868
128-5970	873
128-5971	872
128-5972	869
128-5973	869
128-5974	870
128-7902	396
128-7903	396
128-7905	396
128-8583	870
129-0138	▶285
	287
129-1854	780
	781
	836
129-1855	780
	781
	836
129-1938	293
129-3178	119
	122
	327
	723
	797
	802
	820
	844
	846
129-3180	823
	825
	828
	838
	852
129-4741	315
129-5256	738
	740
129-5257	738
	740
129-8542	848
	850
	854
	856
129-8543	854
	856
129-8545	848
	850
	854
	856
129-9120	575
129-9121	▶575
	587
130-0013	269
130-0165	116
	118
130-0484	322
130-0777	602
130-0912	270
	272
	273
130-1637	593
	598
130-1638	388
	593
	594
	595
	598
130-1640	388
	389
	593
	594
	595
130-1642	600
	601
130-2057	632
	637
	641
130-2758	391
130-2759	391
130-3879	56
	57
130-3880	55
130-3881	57
130-4832	718
	720
	795
130-5451	575
130-5582	864
130-5774	396
130-5891	396
130-6520	522
	523
	524
	525
	▶535
130-6591	618
	623
130-6662	874
130-7092	▶91
	98
130-7282	285
130-7452	862
130-7912	776
130-7913	776
130-7914	776
130-7952	396
130-7964	98
	100
130-8150	513
130-8292	109
130-8293	107
130-8343	838
130-8432	836
130-9984	59
	61
	467
131-0232	103
131-0379	391
131-0749	573
131-0827	327
131-0828	327
131-1368	844
	846
131-1424	53
	141
	840
	841
131-1812	91
	99
131-2011	867
131-2012	867
131-2117	631
	636
	640
131-2127	451
131-3201	138
	142
	175
131-3540	817
131-3985	836
131-3987	738
	740
	782
	784
131-8203	852
131-8775	322
131-9203	187
	189
	191
132-0111	132
132-2249	858
132-2250	858
	860
132-3056	515
132-3721	692
	693
132-3723	692
	693
132-3725	692
	693
132-3777	694
	695
132-3778	694
	695
132-3821	692
	693
132-3895	327
132-5303	543
132-5789	40
	42
	44
	184
132-6496	575
132-6497	579
132-8769	▶367
132-9240	827
	830
	832
133-0116	549
	553
133-1011	26
133-3213	▶281
133-3361	▶388
133-3362	▶593
133-3363	▶594
133-3366	▶595
133-3413	118
133-5813	453
	454
133-6517	118
133-7332	447
133-7333	447
133-8490	864
133-8491	865
133-8492	865
133-8493	866
133-8494	868
133-8495	873
133-8497	872
133-8498	869
133-8499	869

▶ **PRIMARY REFERENCE**

PART NUMBER INDEX

Part	Page
133-8500	870
133-8502	864
133-8503	865
133-8504	865
133-8505	866
133-8506	868
133-8507	873
133-8508	872
133-8509	869
133-8511	869
133-8512	870
133-8689	553
133-8916	875
134-0143	322
134-0404	169
134-0453	342
	344
134-2305	157
	160
	167
	169
134-3014	387
	394
134-3059	738
	740
134-3060	738
	740
134-3061	738
	740
134-3062	738
	740
134-3503	738
	740
134-3856	803
	808
134-4126	119
	121
134-5930	396
134-7323	480
134-7324	480
134-8204	▶863
135-0786	279
135-1706	827
	830
	832
135-2876	593
	▶601
135-4744	▶389
135-7242	131
135-8203	628
	629
	630
	631
	632
	633
	634
	635
	636
	637
	638
	639
	640
	641
	716
135-8206	628
	629
	630
	631
	632
	633
	634
	635
	636
	637
	638
	639
	640
	641
135-9420	396
135-9886	325
136-1955	40
	42
	44
	61
	468
136-3110	▶218
	233
	234
136-3112	218
	222
136-3766	616
	620
	645
136-4192	848
	850
	854
	856
136-5185	196
136-7439	338
	340
136-7440	338
	340
136-7808	211
136-8423	509
137-3848	▶705
137-7141	757
137-7142	757
137-9466	549
138-2053	38
138-4894	152
138-6904	59
138-6913	59
138-6914	61
138-7137	243
	244
138-7138	245
138-7378	220
138-7380	220
138-7381	▶220
	231
	233
138-8454	138
	142
	145
	148
	175
	179
	187
	189
	191
139-0219	757
139-3562	305
	307
139-3785	327
140-2358	68
	71
	74
140-2959	746
	750
140-3634	68
	71
	74
140-3635	68
	71
140-3637	67
140-3638	67
140-3639	68
	71
140-3640	67
	70
	72
140-3881	759
140-6009	396
140-6021	342
140-7393	246
140-8714	94
140-8718	94
140-8760	871
140-8761	871
140-8764	871
140-8767	871
140-8773	871
140-8783	106
140-9921	852
141-0924	128
141-1656	109
141-1658	107
141-1667	85
141-2759	150
	198
141-4796	871
141-4797	871
141-4799	871
141-4800	871
141-4801	871
141-5150	595
	597
141-6208	594
	595
	597
	599
141-6343	396
141-7221	278
	279
	280
	281
141-7512	65
	66
	69
141-7514	325
141-7515	327
141-8292	▶132
142-0724	68
	71
142-3388	55
	56
	57
142-3391	55
	56
	57
142-5789	128
142-6132	322
142-7405	338
	340
142-8858	819
143-0421	157
	▶387
143-0539	▶133
	135
143-0782	▶30
	232
	233
	234
	235
	236
	237
	238
143-0786	▶59
	232
	233
	234
	235
	236
	237
	238
143-0788	▶31
	231
	233
	236
143-0789	▶61
	231
	233
	236
	239
143-1344	133
143-2827	848
	850
	854
	856
143-2830	848
	850
	854
	856
143-3158	460
143-4655	270
	271
	272
	273
143-5446	518
143-6227	270
143-8874	718
	720
	795
144-0195	738
	740
	844
	846
144-0367	467

▶ **PRIMARY REFERENCE**

PART NUMBER INDEX

Part	Page
144-2222	722
	729
	731
	▶760
144-4277	535
144-6734	213
144-9930	157
	▶811
144-9931	165
	▶812
144-9934	811
	812
145-4476	325
145-6005	68
	71
	74
145-6713	53
	54
	▶55
	728
	730
	744
	745
145-8337	583
145-8344	583
145-9291	303
146-0218	132
146-0797	757
146-1589	389
	601
146-1590	389
	601
146-1591	600
146-1816	216
	218
	220
146-6729	133
146-7744	852
146-7745	852
146-9439	128
	150
	153
	154
	198
147-0201	259
147-0202	260
147-0203	260
147-0205	260
147-0207	260
147-0209	259
	▶268
147-0210	260
147-0211	261
147-0212	260
147-0215	260
147-0216	260
147-0218	259
147-0224	260
147-0226	260
147-0227	261
147-0228	260
147-0234	259
147-0236	260
147-0238	260
147-0242	260
147-0248	260
147-0253	259
147-0256	260
147-0257	260
147-0258	260
147-0259	260
147-0260	260
147-0261	260
147-0262	261
147-0264	260
147-0266	261
147-0268	261
147-0270	261
147-0385	47
147-1557	53
	▶67
147-1558	▶68
	69
147-1559	53
	54
	▶56
	729
	731
147-1560	53
	▶57
147-1689	549
147-1979	21
147-3019	782
	784
147-4502	119
	122
147-5553	84
148-1899	216
	218
	220
148-3626	761
	762
	789
148-5353	848
	850
	854
	856
148-5355	782
	784
148-7310	784
148-7311	782
148-7318	784
148-7319	782
148-8307	332
148-8315	440
148-8316	298
	301
	333
	426
	456
	463
	476
148-8318	298
	301
148-8322	444
148-8325	288
	444
	453
	454
	456
	460
	467
	489
148-8326	104
	444
148-8327	333
	355
	358
	362
	401
	404
	408
	412
	417
	420
	424
	426
	480
148-8328	333
	399
	404
	408
	415
	420
	433
	435
	484
148-8335	333
	417
	420
	465
	470
148-8336	444
	449
	451
148-8339	59
	61
148-8340	333
	440
	487
	489
148-8341	333
	437
	440
	444
	447
	482
	483
	491
148-8342	440
148-8345	444
	476
	478
	480
148-8346	298
	301
148-8347	404
	408
	420
	433
	435
	444
	480
	484
148-8351	353
148-8352	355
	358
	362
	401
	404
	408
	412
	417
	420
	465
	467
	470
148-8357	466
	467
	471
148-8360	59
	61
148-8362	428
	430
	467
148-8364	487
	489
148-8367	298
	301
148-8368	288
	441
	444
	454
	478
148-8369	298
	301
	454
	456
	460
	463
148-8370	476
	478
	489
148-8372	476
	478
	480
148-8374	301
148-8378	476
148-8383	298
148-8385	456
148-8386	355
	358
	362
	401
	404
	408
	412
	417
	420
148-8387	355
	358
	362
	401
	404
	408
	412

▶ **PRIMARY REFERENCE**

PART NUMBER INDEX

Part	Page
	417
	421
148-8388	491
148-8390	432
	439
	441
	476
	478
148-8392	362
	405
	409
	421
148-8393	441
148-8407	104
148-8408	355
	358
	366
	395
	401
	412
	417
	519
148-8417	445
148-8418	476
148-8419	334
148-8422	467
148-8428	353
148-8429	334
	465
	466
	470
	471
	472
	473
	474
	475
148-8435	445
148-8446	437
	441
	445
148-8447	476
	478
148-8448	454
148-8449	445
148-8450	355
	358
	362
	401
	404
	408
	412
	417
	420
148-8455	428
	430
148-8457	428
	430
149-0686	332
149-4091	557
149-4236	85
149-4311	520
149-4745	830
	832
	834
149-9954	97
150-3027	467
	515
150-3033	460
150-3035	491
150-3037	441
150-3052	355
	358
	362
	401
	405
	409
	412
	417
	421
150-3053	355
	358
	362
	401
	405
	409
	412
	417
	421
	445
150-3060	449
	451
150-3062	334
150-3063	437
	441
150-3065	216
	218
150-3370	61
150-3374	61
150-3757	260
150-4043	476
	478
150-4932	271
	272
150-5150	555
	▶557
150-6766	119
150-7732	14
	259
150-8015	852
151-2565	379
151-2963	315
151-4841	87
	437
	441
	447
151-5715	761
	762
	789
151-7866	▶628
	642
151-7867	▶629
151-7868	▶630
151-7869	▶631
151-7870	▶632
151-7877	▶633
	643
151-7879	▶634
151-7880	▶635
151-7881	▶636
151-7882	▶637
151-7887	▶638
151-7888	▶639
151-7889	▶640
151-7890	▶641
151-7902	629
	630
	631
	632
	634
	635
	636
	637
	638
	639
	640
	641
	644
	645
	649
	650
	651
	652
	654
	655
	656
	657
	658
	659
	660
	661
	662
	664
	665
	666
	667
151-7903	629
	630
	631
	632
	634
	635
	636
	637
	638
	639
	640
	641
	644
	645
	649
	650
	651
	652
	654
	655
	656
	657
	658
	659
	660
	661
	662
	664
	665
	666
	667
151-7927	633
	634
	635
	636
	637
151-7928	1
	2
	3
	4
	5
	6
	7
	8
	9
	▶583
151-7929	628
	633
	648
	653
	663
151-7930	628
	633
	648
	653
	663
151-8752	68
	71
	74
152-3968	94
152-6144	201
	211
152-8417	805
	808
152-9784	872
152-9785	872
152-9786	872
152-9787	872
152-9788	872
153-3061	55
	56
	57
	760
153-3761	61
153-6248	332
153-7368	303
153-7369	▶297
153-9580	296
	▶303
153-9909	61
153-9910	61
153-9911	61
154-0875	61
154-3799	67
	▶69
154-5255	628
	633
154-5257	628
	633
	648
	653
	663
	668
154-5265	583
154-5277	583
154-5278	583

▶ **PRIMARY REFERENCE**

PART NUMBER INDEX

Part	Page
154-5279	583
	705
	706
154-5280	583
	706
154-5404	201
	293
154-5406	782
154-5410	858
	860
154-5416	287
154-5423	848
	850
154-5424	848
	850
154-5428	184
154-8051	374
154-8079	494
154-8278	827
	830
	832
154-8280	827
	830
	832
154-8284	827
	830
	832
155-2255	145
	148
	157
	160
	165
	167
	169
	179
155-2256	145
	148
155-2260	119
	122
	145
	148
	150
	154
	160
	167
	169
	171
	179
	187
	189
	191
155-2265	150
	165
	179
155-2270	119
	122
	128
	138
	142
	145
	148
	157
	160
	167
	169
155-2271	119
155-2274	128
	150
	154
	157
	160
	167
	169
	179
	191
	194
	196
155-3624	460
155-6457	128
155-6586	▶376
	604
155-8154	288
155-8522	145
	148
155-9836	533
	535
	537
	539
	543
	553
156-0283	128
	317
	801
156-1267	545
	547
156-1928	204
156-1929	204
156-1930	204
156-1933	206
156-1934	205
156-2571	204
156-2572	204
156-2573	206
156-2853	199
	200
	▶204
156-3691	441
156-3837	440
156-3838	440
156-5970	574
156-6155	119
	121
156-8143	349
156-9275	253
156-9276	247
157-1669	101
157-1997	157
	160
	165
	167
	169
157-2088	260
157-2090	260
158-2306	330
158-3412	437
	439
	440
	447
158-3769	349
	351
158-4466	563
	564
	569
158-8778	581
159-0186	59
	61
	467
159-0738	440
159-0739	440
159-0783	440
159-0784	440
159-0960	322
159-0961	592
	606
159-0974	440
159-0975	440
159-4269	782
	784
159-4945	738
	740
	784
159-4946	738
	740
	782
159-4950	850
	854
159-4951	848
	856
159-4953	782
159-4954	784
159-5848	374
159-7907	292
159-8033	874
159-9322	119
160-0269	518
160-0496	330
160-2245	805
	808
160-2248	298
	301
160-6026	404
	428
	433
	435
160-7197	89
160-8282	444
160-9777	444
161-1024	444
161-3249	253
	259
161-3981	440
161-4150	116
161-6984	848
	850
	854
	856
161-6987	848
	850
	854
	856
161-8198	116
161-8199	117
161-8200	116
	117
161-9044	782
	784
161-9282	838
161-9283	838
161-9285	838
161-9286	838
161-9288	838
161-9289	830
	832
	834
161-9290	827
	830
	832
161-9294	848
	850
	854
	856
161-9744	830
	832
	834
161-9916	444
162-1565	14
162-1604	509
162-2351	376
	▶432
162-2353	432
162-2356	404
	408
	420
	433
	435
	484
162-3874	117
162-3960	▶330
	331
	476
	478
162-3961	▶331
162-4004	316

▶ **PRIMARY REFERENCE**

PART NUMBER INDEX

Part	Page
162-5380	476
162-6556	848
	850
	854
	856
163-0753	286
	▶291
163-0754	▶286
	287
163-0755	286
163-1135	838
163-1139	838
163-4759	858
163-7938	749
163-7939	738
	740
	753
	754
163-7940	296
163-9091	259
163-9371	392
	394
	▶437
164-1025	▶746
	753
164-1030	728
	730
	▶795
164-1032	▶718
	722
164-1033	722
	▶805
164-1037	795
164-1040	805
	808
164-1041	805
	808
164-1042	718
	720
164-1043	786
164-1044	788
164-1050	733
	735
	▶749
164-1051	746
	749
	750
164-1052	746
	749
	750
164-1056	179
164-1059	738
	740
	▶848
164-1060	738
	740
	▶850
164-1061	738
	740
	▶784
164-1062	738
	740
	▶782
164-1064	848
164-1065	850
164-1066	854
164-1067	856
164-1068	738
	740
164-1069	738
	740
164-1070	738
	740
	745
164-1071	738
	740
	753
	754
164-1072	738
	740
	753
	754
164-1073	784
	▶854
164-1074	782
	▶856
164-1077	87
164-1078	87
	▶820
164-1079	802
164-1083	802
164-1103	318
	319
164-1105	234
	235
	236
164-1107	771
164-1108	775
164-1110	842
164-1113	210
164-1122	817
164-1123	817
164-1130	▶210
	232
	233
	234
	235
	236
	237
	238
164-1131	763
	▶766
	768
164-1132	764
	▶767
164-1133	766
	767
	772
164-1134	766
	767
	772
164-1137	778
164-1140	732
	▶738
164-1141	232
	233
	235
	237
	238
	▶786
164-1142	231
	239
	▶788
164-1146	233
	236
164-1147	762
164-1148	▶317
	726
	727
	728
	729
	730
	731
	732
	742
	743
	744
	745
164-1150	▶733
	738
164-1152	836
164-1153	210
164-1154	820
164-1155	726
	727
	728
	729
	730
	731
	732
	742
	743
	744
	745
	▶810
164-1156	781
	836
164-1157	836
164-1165	726
	727
	728
	729
	730
	731
	732
	▶836
164-1166	836
164-1177	817
164-1178	769
	770
164-1196	718
	720
	795
164-1197	210
164-1198	786
164-1201	▶830
	835
164-1202	▶832
	835
164-1203	▶834
	835
164-1207	830
	832
	834
	▶838
164-1208	838
164-1209	▶823
	830
164-1210	▶825
	832
164-1211	827
	830
	832
164-1212	827
	830
	832
164-1213	▶827
	834
164-1214	823
	825
	827
164-1215	838
164-1216	838
164-1217	838
164-1218	838
164-1219	838
164-1220	838
164-1221	838
164-1224	838
164-1225	838
164-1226	838
164-1228	838
164-1229	838
164-1230	838
164-1232	838
164-1233	838
164-1234	838
164-1235	838
164-1236	838
164-1237	838
164-1238	838
164-1239	838
164-1240	838
164-1244	823
164-1245	827
164-1246	827
164-1247	823
	825
	827
164-1248	823
	825
164-1249	823
	825
	827
164-1250	823
	825
	827
164-1251	823
	825
	827
164-1252	823
	825
	827
164-1256	823
	825
	827
164-1257	827
164-1258	823
	825
	827

▶ **PRIMARY REFERENCE**

PART NUMBER INDEX

Part	Page
164-1259	823
	825
	827
164-1261	823
	825
	827
164-1262	827
164-1263	827
164-1264	827
164-1265	823
	825
	827
164-1266	825
164-1269	827
164-1270	827
164-1271	827
164-1272	827
164-1273	827
164-1274	827
164-1275	827
164-1276	827
164-1277	827
164-1294	838
164-1295	827
	830
	832
164-1308	852
164-1311	852
164-1314	852
164-1325	738
	740
	▶852
164-1326	852
164-1327	852
164-1328	852
164-1331	852
164-1342	852
164-1343	852
164-1344	852
164-1345	852
164-1346	852
164-1347	852
164-1350	743
	▶753
164-1351	852
164-1352	852
164-1353	852
164-1354	852
164-1363	391
	392
	394
164-1364	391
	392
164-1365	210
164-1366	842
164-1368	210
	342
	786
164-1369	342
164-1370	726
	727
	728
	729
	730
	731
	732
	742
	743
	744
	745
	▶842
164-1372	340
164-1373	338
164-1374	842
164-1388	728
	730
	▶768
164-1389	742
	744
	745
	▶764
164-1395	87
	344
	591
164-1397	338
	340
164-1398	500
	501
164-1427	338
	340
164-1441	338
	340
164-1481	497
164-1500	▶338
164-1501	338
	340
164-1502	338
	340
164-1503	338
	340
164-1511	340
164-1514	338
	340
164-1515	338
	340
164-1517	338
	340
164-1519	338
	340
164-1520	▶340
164-1521	338
	340
164-1523	338
	340
164-1525	338
	340
164-1526	338
	340
164-1527	338
	340
164-1541	338
	340
164-1551	338
	340
164-1570	338
	340
164-1601	152
164-1654	749
164-1671	749
164-2274	456
164-3876	102
	305
	306
	307
	308
164-4139	723
164-5544	298
	301
164-5561	445
164-5567	333
	453
	454
	467
	509
164-6613	797
164-7176	377
164-7556	123
164-8473	718
	720
	761
	762
	789
164-8908	353
164-9425	171
	799
164-9598	291
164-9599	291
164-9639	456
165-2273	467
165-4021	40
	42
	44
165-5655	119
	122
165-6585	288
165-6595	288
165-6599	288
165-6601	288
165-6602	288
165-6603	288
165-6918	231
	▶288
165-7019	497
165-7948	454
165-7951	101
165-8357	116
	118
165-8996	203
	295
166-0658	▶116
166-0659	▶117
166-2033	453
	454
	467
166-2861	760
166-8131	372
166-8132	370
166-8151	372
166-8841	370
166-9413	285
167-0495	644
167-0499	644
167-0500	645
167-0566	353
	487
167-2186	377
	380
167-2195	384
	386
167-2197	381
	382
167-2201	383
167-2202	374
167-2207	370
	372
167-2294	377
	380
167-2304	384
	386
167-2305	381
	382
167-2310	374
167-2312	383
167-2317	370
	372
167-2450	380
167-3693	171
167-3700	179
167-3701	165
167-3704	154
167-3708	184
167-3896	404
	408
	420
	433
	435
	484
167-6768	533
	537
	543
167-8160	288
167-8161	288
167-8164	288
167-8182	852
167-8187	726
	727
	728
	729
	730
	731
	732
	▶844
167-8246	761
167-8251	775
167-8252	766
167-8253	317
167-8254	317
167-8270	4
	6
	9
	▶424
167-8273	4
	6
	9
	▶482
167-8275	5
	6
	9
	▶428
167-8276	1

▶ **PRIMARY REFERENCE**

PART NUMBER INDEX

Part	Page	Part	Page	Part	Page	Part	Page
	4		404		720	172-3821	482
	▶433		408		▶723	172-5317	248
167-8278	814		412	170-0076	795		254
167-8279	814		417		▶797		260
167-8283	816		420	170-0503	330	172-6050	253
	819	168-8497	404	170-1644	515		260
168-0425	708		408	170-2237	138	172-6224	160
168-0443	642		420		142		167
	643		433		175		169
	672		435	170-6305	157		874
	673		484		160	172-6743	260
	674	168-8644	404		167	172-8591	769
	675		408		169		770
168-0444	642		420	170-6308	53	172-9200	157
	643		433	170-6309	160		160
	672		435		169		167
	673		484	170-6542	157		169
	674	168-9906	844		160		196
	675		846		167	172-9992	606
168-0480	629	169-0586	157		169	173-0332	259
	630		160	170-7269	723	173-0637	509
	631		167		797	173-0638	509
	632		169	170-7270	723	173-0639	509
	634	169-0587	165		797	173-0640	509
	635		799	170-7271	723		▶571
	636	169-0588	165		797	173-0641	509
	637	169-0591	128	170-7272	718	173-2685	124
	638	169-0593	128		723		125
	639	169-0595	153		797	173-2769	604
	640	169-0596	150	170-7274	723	173-4514	337
	641	169-0598	198	170-7281	723		398
	644	169-0599	454		797	173-5787	830
	645	169-0604	145	170-7282	723		832
	646		148		797		834
	647	169-0605	138	170-9066	374	173-7003	194
	649		142	171-2101	1	173-7661	746
	650		175		4		749
	651	169-0606	138		5		750
	652		142		6	173-7758	604
	654	169-0607	187		9	173-8340	124
	655		337		▶503		125
	656	169-0608	189	171-2427	6	173-9682	370
	657		191		▶399		372
	658	169-2935	399	171-2428	5	173-9779	377
	659		404		▶401	173-9813	870
	660		433	171-2429	1	174-2024	726
	661		435		▶404		727
	662	169-2944	355	171-2870	852		728
	664		358	171-5349	261		729
	665		366	171-8623	288		730
	666		472	171-8772	574		731
	667		474	171-8775	518		732
	669	169-2978	424		▶574		▶858
	670		444	172-2252	401	174-2025	858
	671	169-2980	482		404	174-2026	858
168-2313	723	169-2983	404	172-2353	381	174-3335	864
	797		428		382	174-3336	865
168-4511	118		433	172-2354	381	174-3337	865
168-4609	817		435		382	174-3338	866
168-7446	▶201	169-6947	384	172-2363	503	174-3339	867
	203	169-7176	456		505	174-3340	868
168-8493	355	169-7290	836	172-3190	1	174-3341	873
	358	169-7291	836		5	174-3342	872
	362	169-9049	478		▶504	174-3343	869
	401	170-0075	718	172-3820	424	174-3344	869

▶ **PRIMARY REFERENCE**

PART NUMBER INDEX

Part	Page
174-3345	871
174-3346	871
174-3347	870
174-3348	872
174-4021	454
174-4306	480
174-4643	201
174-4671	201
174-5456	858
174-5696	606
174-5699	480
174-5700	480
174-5701	480
174-5702	480
174-6362	▶642
174-6365	▶643
174-6395	187
	189
174-6398	187
	189
	191
174-6411	145
	148
174-6415	145
	148
174-6417	138
174-6640	210
174-6649	145
	148
174-6740	460
174-6812	577
	578
174-7820	288
174-8957	124
174-8958	125
174-9638	85
174-9711	247
	253
175-0054	247
	253
175-5452	543
175-5453	543
175-5454	543
175-5457	543
175-5458	543
175-6916	440
175-6918	444
175-6919	444
175-7896	377
175-7902	374
	383
175-7903	374
176-3900	805
176-6219	94
176-6247	▶692
	694
176-6248	692
176-6251	▶693
	695
176-6252	693
176-7228	489
176-8541	558
	559
	560
176-9208	1
	2
	5
	7
	▶472
176-9209	5
	6
	7
	8
	9
	▶473
177-0856	399
	404
	408
	415
	420
	433
	435
	484
177-2171	399
	415
	433
	435
	484
177-4726	▶589
177-4727	▶590
177-4729	589
177-4733	590
177-4877	738
	740
177-4903	▶711
177-7094	480
177-7148	355
	358
	362
	504
	506
177-7149	355
	358
	362
	504
	506
177-9645	138
	142
	171
	175
177-9648	138
	142
	175
	179
178-1123	489
178-1304	282
178-3593	▶706
178-4200	711
178-7480	473
	▶530
178-7481	355
	358
	366
	472
	474
	▶531
178-7539	153
	183
178-8132	248
	254
178-8133	247
	255
178-8134	248
	254
178-8200	248
	254
178-8465	171
178-8608	226
	228
178-8849	▶694
178-8850	▶695
178-9242	107
	109
178-9566	253
	259
178-9983	763
	764
	765
	768
	771
	773
179-1215	150
179-5434	126
	127
179-5435	153
179-5571	325
179-8235	338
	340
	342
	344
179-8291	▶99
	100
179-9961	577
	578
	606
180-2441	65
	66
	69
180-3663	▶126
	132
180-3664	▶127
	131
180-3773	711
180-4194	440
180-5750	790
180-5751	791
180-5754	790
	791
	792
	793
180-5756	792
180-5760	722
	743
	▶790
180-5761	728
	730
	▶791
180-5766	742
	744
	745
	▶792
180-5770	726
	728
	729
	▶835
180-5771	742
	743
	744
	745
	▶835
180-5772	727
	730
	731
	732
	▶835
180-5780	827
180-5781	827
180-5782	827
180-5783	827
180-5784	827
180-5785	827
180-5787	827
180-5788	827
180-5791	828
180-5794	838
180-5795	825
180-5796	823
180-5797	823
	825
180-6213	509
180-7215	742
	744
	745
	▶754
180-7230	▶735
	740
180-7234	494
180-7235	▶750
	754
180-7245	287
180-7250	726
	727
	728
	729
	730
	731
	▶740
180-9157	304
180-9160	801
183-3120	10
	▶342
183-3121	342
183-3122	342
183-3131	342
183-3132	342
183-3135	342
183-3136	342
	344
183-3137	342
183-3150	▶344
	391
	392
183-3151	344
183-3153	342
	344
183-3155	342
183-3156	342
	344
183-3887	87
	▶802

▶ **PRIMARY REFERENCE**

PART NUMBER INDEX

Part	Page
183-4492	152
183-4897	10
	▶296
183-4899	767
183-4907	494
183-4908	494
183-4909	494
183-4910	494
	▶801
183-4911	801
183-4912	801
183-4913	801
183-4914	494
183-4915	801
183-4922	494
183-4923	494
183-4933	494
183-4934	494
183-4935	494
183-4936	494
183-4937	494
183-4938	494
183-4939	494
183-4991	769
	770
	▶775
183-4994	338
183-4995	232
	233
	235
	237
	238
	▶761
183-4996	231
	239
	▶762
183-4997	▶769
	771
183-4998	765
	▶770
183-4999	340
183-5443	801
183-6051	591
183-6056	10
	▶322
183-6075	591
183-6076	10
	▶591
183-6078	▶500
	514
183-6081	591
183-6084	591
183-6085	591
	801
183-7581	177
183-8559	391
	▶440
184-1307	606
184-2422	175
184-2472	119
	121
184-4483	▶345
	393
	395
	519
184-4484	▶347
	395
	519
184-4486	347
184-4488	345
184-4491	345
184-5293	157
	160
	167
	169
184-5403	347
184-5408	347
184-5417	345
184-6178	3
	5
	6
	7
	8
	9
	▶606
184-6430	179
184-6555	789
184-6557	771
184-6558	768
184-6560	718
	720
	795
184-6561	718
	720
	795
184-6562	786
184-6563	786
	788
184-6564	718
	720
	795
184-6565	805
	808
184-6566	768
184-6567	718
	795
184-6570	231
	▶287
184-6572	718
	795
184-6573	718
	795
184-6574	718
	795
184-6575	▶789
	795
184-6581	288
184-6784	▶581
	604
184-6785	604
184-6786	1
	2
	3
	4
	366
	▶604
184-7898	231
	▶814
184-7900	▶80
	726
	742
	743
184-7901	▶81
	727
	732
184-7913	▶5
184-7915	▶5
184-7916	▶6
184-7917	▶6
184-7925	▶1
184-7927	▶1
184-7949	▶336
184-7954	▶336
184-7970	10
	▶231
184-9736	▶742
184-9737	▶726
184-9738	▶727
184-9950	1
	2
	3
	4
	▶592
184-9956	366
	592
185-0882	21
185-0884	18
185-1482	▶337
185-1546	38
185-1598	391
	392
	394
	▶496
185-1839	▶380
	608
	609
185-1925	1
	2
	3
	4
	5
	6
	7
	8
	9
	▶577
185-1926	1
	2
	3
	4
	5
	7
	▶578
185-3165	394
	▶497
185-3413	214
	▶480
185-3524	726
	727
	728
	729
	730
	731
	732
	▶765
185-3525	231
	232
	233
	234
	235
	236
	237
	238
	239
	▶815
185-3526	494
185-3528	786
	788
185-3529	296
185-3530	742
	743
	744
	745
	▶771
185-3890	838
185-4015	723
	797
185-5505	494
185-5898	517
	▶520
185-5900	514
	▶558
185-5901	514
	▶559
185-5902	514
	▶560
185-5911	391
	▶522
185-5912	391
	▶524
185-5915	336
	▶349
185-5916	336
	▶351
185-6159	1
	5
	6
	▶444
185-6572	473
185-6643	40
	42
	44
185-7015	126
185-7016	127
185-7585	233
	234
	235
	237
	238
	▶246
185-7586	232
	234
	236
	237
	238
	▶246
185-7587	231
	233
	236
	239

▶ **PRIMARY REFERENCE**

PART NUMBER INDEX

Part	Page
	▶246
185-7596	454
185-7737	10
	▶864
185-7756	▶864
185-7757	▶865
185-7758	▶865
185-7759	▶866
185-7760	▶867
185-7761	▶868
185-7762	▶869
185-7763	▶869
185-7764	▶870
185-7765	▶870
185-7766	▶871
185-7767	▶871
185-7768	▶872
185-7769	▶872
185-7770	▶873
185-8801	▶150
	726
	727
	728
	729
	730
	731
	732
185-8802	▶152
	742
	743
	744
	745
185-8808	▶184
	214
185-8809	▶145
	231
	233
185-9777	817
185-9784	214
	▶517
186-0204	▶100
	727
	732
186-0252	726
	727
	728
	729
	730
	731
	732
	742
	743
	744
	745
	▶778
186-0304	▶177
186-0306	10
	▶153
186-0307	▶196
	514
186-0308	▶194
	514
186-0309	▶198
	214
186-0310	▶119
186-0311	▶187
	337
	398
186-0312	▶189
	336
	337
	398
186-0319	194
186-0320	196
186-0817	844
	846
186-1581	345
186-1582	345
186-1583	338
	340
186-1592	345
	347
186-1597	345
	347
186-2589	▶813
	858
	860
186-2731	▶175
	728
	730
186-3629	460
186-3735	103
	122
	142
	148
	167
	171
	187
	189
	191
	194
	210
	270
	271
	342
	574
	813
	858
186-3736	269
186-4117	204
186-4118	204
186-4958	▶395
186-4959	▶395
186-4960	▶395
186-5267	861
186-5268	861
186-5296	864
186-5297	▶861
	864
186-5298	391
	392
	394
	776
	875
186-5300	776
186-5336	▶391
186-5338	▶391
186-6190	▶717
	808
187-0523	545
187-0524	551
187-0527	551
187-0528	547
187-0529	547
187-0530	539
187-0576	581
187-1043	145
187-1644	157
	160
	165
	167
	169
	742
	743
	744
	745
187-3162	440
187-3163	440
187-3164	440
187-3166	440
187-3825	604
187-3826	604
187-3827	604
187-3828	604
187-3832	604
187-3833	604
187-3834	604
187-3835	604
187-3836	604
187-3837	604
187-4052	604
187-4333	404
	408
	420
	433
	435
	484
187-4343	428
	430
187-4344	404
	408
	420
	433
	435
	484
187-8936	103
188-0857	306
188-0858	305
188-0859	231
	233
	▶305
188-0860	232
	233
	234
	235
	▶306
188-0861	776
188-0862	325
188-0863	165
	874
188-0864	776
188-0865	325
188-2470	141
188-2704	797
188-2706	723
	797
188-2708	723
	797
188-2709	723
188-2710	723
188-2711	723
	797
188-2712	723
188-2715	797
188-3953	388
	389
	593
	594
	595
188-5004	598
188-7471	▶304
	522
	523
	524
	525
188-7760	766
	767
	772
188-8715	460
188-9097	394
	▶453
188-9098	10
	392
	▶454
188-9954	581
189-0148	160
	169
189-1834	▶293
	295
189-3610	812
189-4920	160
189-5629	381
	382
189-5746	261
190-1056	▶626
190-1057	▶626
190-1058	▶626
190-1079	▶626
190-1080	▶627
190-1081	▶627
190-3450	365
	528
	▶537
190-5122	305
	306
	307
	308
190-5123	102
190-5128	874
190-5129	338
	340
	874
190-5130	875
190-5132	718
	720
	795
	874
190-5134	874
190-5136	500
	874

▶ **PRIMARY REFERENCE**

PART NUMBER INDEX

Part	Page
190-5139	87
	874
190-7374	▶816
190-7557	▶183
	726
	727
	728
	729
	730
	731
	732
	742
	743
	744
190-8308	518
190-8310	518
190-8312	518
190-8314	518
190-8315	476
	478
	▶518
190-8918	▶821
190-8919	▶822
190-8954	214
	▶463
190-8956	463
190-8957	333
190-9767	253
190-9838	92
191-1730	444
191-1784	▶776
191-1839	444
191-2204	444
191-4010	522
	523
	524
	525
191-4012	522
	524
	▶539
191-4850	504
191-4851	504
191-4852	503
	504
	505
	506
191-5104	817
191-5462	395
	▶465
191-6033	723
	797
191-6034	723
191-6035	723
	797
191-6159	377
191-6191	370
	372
191-6253	616
	620
191-6254	617
	619
191-6255	618
	623
191-6259	616
	617
	618
	624
	625
191-6261	▶616
191-6262	▶617
191-6263	▶618
191-6558	374
191-6939	▶644
191-6940	▶645
191-7725	376
	▶377
191-7727	377
191-7738	384
191-7835	3
	5
	6
	7
	8
	9
	▶370
191-7836	370
191-7838	372
191-7839	1
	2
	3
	4
	366
	▶372
191-8161	▶384
	394
191-9102	456
191-9104	819
	874
191-9105	456
191-9109	327
191-9110	327
191-9111	327
191-9113	209
191-9114	▶209
	231
191-9555	▶619
192-0657	▶620
192-0658	▶621
192-0660	▶622
192-0661	▶623
192-0662	621
	624
192-0663	622
	625
192-0666	621
	624
192-0667	622
	625
192-0826	520
192-0827	520
	▶541
192-0828	520
	541
192-0843	247
192-0845	253
192-0849	245
	▶259
192-0850	261
192-1194	619
	620
	621
	622
	623
192-1196	619
	620
	621
	622
	623
192-2060	520
	541
192-2061	520
192-2075	368
192-2080	368
192-2081	541
192-2082	541
192-2825	▶624
192-2826	▶625
192-4018	393
	395
	519
	▶794
192-4019	794
192-4487	541
192-4488	520
	541
192-4489	520
192-4490	541
192-4491	520
	541
192-4492	520
	541
192-4522	210
192-4659	▶231
192-4661	▶232
192-4662	▶232
192-4663	▶233
192-4664	▶233
192-4665	▶234
192-4666	▶234
192-7355	817
192-7505	520
192-7506	520
	541
192-7507	520
192-7508	520
192-7509	520
192-7510	541
192-7511	520
192-7512	368
	520
	541
192-7513	541
192-7514	541
192-7515	520
	541
192-7516	520
	541
192-7863	368
192-7864	520
	541
192-7875	99
192-7876	99
192-7877	97
	99
192-8775	440
193-0161	94
193-0618	97
	99
193-0742	160
193-1036	571
193-1509	819
193-2181	81
193-2183	81
193-2342	▶799
193-5958	518
193-6352	503
193-6353	503
193-6355	355
	358
	362
	504
	506
193-8648	509
194-1937	191
194-1938	191
194-1941	191
194-1948	▶191
	336
194-2847	200
194-4250	817
194-4414	160
194-5171	858
194-5390	85
194-5622	718
	720
	795
194-9497	776
194-9625	821
	822
194-9645	776
195-0255	▶332
	392
	394
195-0260	460
195-0261	460
195-0262	460
195-0263	460
195-0268	428
	430
195-1095	319
195-1141	456
195-1284	336
	337
	398
	▶476
195-1288	476
195-1289	476
	478
195-1736	476
	478
195-2037	298
	301
195-2132	29
195-2134	29
195-2136	29
195-2139	533
	535
	537
	539
	543

▶ **PRIMARY REFERENCE**

PART NUMBER INDEX

Part	Page
	553
195-2221	29
195-3510	351
195-5830	288
195-6341	284
195-6523	776
195-7055	828
	830
	832
195-7430	574
195-7602	494
195-9223	823
	825
	828
196-2383	179
196-2384	179
196-2385	179
196-2386	179
196-2966	157
	167
196-4072	456
196-4073	456
196-4847	869
196-4848	871
196-4849	868
196-4850	872
196-4851	870
196-4852	864
196-4853	866
196-4854	873
196-4855	871
196-4856	867
196-4857	872
196-4858	865
196-4859	865
196-4860	869
196-4861	869
196-4862	871
196-4863	868
196-4864	872
196-4865	870
196-4866	864
196-4867	866
196-4868	873
196-4869	871
196-4870	867
196-4978	865
196-4980	869
196-4981	871
196-4982	868
196-4983	872
196-4984	870
196-4985	864
196-5753	866
196-5754	873
196-5755	871
196-5756	867
196-5757	872
196-5758	865
196-5759	865
196-5760	869
196-6870	349
196-6873	349
	351
196-6874	349
196-6904	349
	351
197-0573	428
	430
197-1742	543
	547
197-1743	549
197-2709	537
	545
	547
	551
197-3121	539
	553
197-3222	545
	547
	549
	551
197-3225	549
197-3637	549
197-3698	539
	553
197-6657	838
197-6658	838
197-6818	1
	2
	4
	▶474
197-7230	780
197-7499	817
197-7564	742
	743
	744
	▶780
197-8973	836
197-9155	201
198-0014	604
198-0015	604
198-0097	345
198-0098	345
	347
198-0099	157
198-0102	391
	392
	776
	874
198-0103	779
198-0104	742
	743
	744
	745
	▶779
198-1289	745
	▶781
198-1515	454
198-1873	349
	351
198-4095	▶235
198-5389	119
	122
198-6498	561
	562
	565
	566
	567
198-6499	562
198-6505	561
	562
198-6506	563
	566
198-6511	563
	564
	565
	566
	567
	569
198-6512	563
	564
198-6513	565
	566
	567
198-6514	563
	564
198-6515	558
	559
	560
198-6516	561
	562
	565
	566
198-6522	561
198-6555	558
	▶561
198-6556	558
	▶562
198-6886	763
	768
198-7377	561
	▶563
198-7412	▶365
198-7814	226
	228
198-7823	201
	293
198-7825	201
	293
198-7838	201
	293
198-7841	201
	293
198-7842	201
	293
198-7843	201
	293
198-8341	325
198-8352	439
198-8353	439
198-8645	14
198-9699	332
198-9723	▶58
	722
	728
	729
	730
	731
199-0639	201
199-0648	226
	228
	293
199-0683	201
	293
199-0695	211
199-0783	316
199-0858	211
199-0929	810
199-3729	723
	797
199-6243	805
	808
	875
199-6245	873
199-7854	496
199-9267	51
199-9751	21
	137
	2
200-0219	646
200-0220	647
200-0222	646
	647
200-0223	646
	647
200-0235	646
200-0236	647
200-0937	562
	▶564
200-1131	494
200-1722	559
	▶565
200-1723	559
	▶566
200-1724	565
200-1725	566
200-1726	560
	▶567
200-1728	560
	▶568
200-2371	454
200-2673	766
	767
	772
200-2676	728
	729
	730
	731
	732
	743
	744
	745
	▶755
200-2996	187
	189
	191
200-3004	836
200-4019	565
	566
	567
200-4020	565
200-4021	566
200-4022	568
200-4023	567

▶ **PRIMARY REFERENCE**

PART NUMBER INDEX

Part	Page
200-4024	568
	▶569
200-4025	567
200-4153	392
	▶439
200-5356	836
200-5359	571
200-5360	571
200-5361	571
200-5362	571
200-5363	571
200-5364	571
200-5921	692
	693
200-6284	▶398
200-6382	545
	547
	551
200-7128	▶386
	394
200-7143	865
200-7144	872
200-7145	869
200-7827	392
	394
	▶523
200-7828	392
	▶525
200-8303	585
200-8306	585
200-8308	585
200-8309	585
200-8310	585
200-8311	585
200-8313	585
201-0190	314
201-0330	104
201-0664	366
	527
	528
	▶543
201-0665	395
	519
	▶526
201-0666	395
	519
	▶527
201-0667	395
	519
	▶528
201-0668	526
	527
	528
	▶545
201-0669	526
	527
	528
	▶547
201-1034	503
	505
201-1035	503
	505
201-1234	704
201-1235	650
	703
201-1238	648
	649
	650
	651
	652
	653
	654
	655
	656
	657
	658
	659
	660
	661
	662
	663
	664
	665
	666
	667
	668
	669
	670
	671
	703
	704
201-1239	648
	649
	650
	651
	652
	653
	654
	655
	656
	657
	658
	659
	660
	661
	662
	663
	664
	665
	666
	667
	668
	669
	670
	671
	703
	704
201-1634	723
	797
201-1635	723
201-1636	723
201-1637	797
201-1638	797
201-1835	104
201-1837	102
201-1838	585
201-1840	585
201-1842	805
201-1862	277
	▶281
201-1863	281
	▶282
201-1864	275
	276
	281
	▶282
201-1874	276
	277
	▶282
201-1875	282
	▶283
201-1876	275
	282
	▶283
201-1877	276
	▶283
201-1878	275
	283
	▶284
201-1915	281
	282
	283
201-1919	281
	283
201-1920	▶275
	282
	283
	284
201-2157	288
201-3340	491
201-3341	491
201-3342	491
201-3343	491
201-3344	491
201-3345	491
201-3346	491
201-3347	491
201-3398	301
201-3625	487
201-3626	487
201-3627	483
201-3628	483
201-3629	426
201-3630	408
	420
	430
	484
201-3631	408
	420
	430
	484
201-3633	415
	484
201-3636	408
	415
	420
	484
201-3954	▶316
201-4756	491
201-4822	318
	319
201-4826	384
	386
201-4899	386
201-4902	386
201-5357	526
	527
	528
	▶549
201-5358	526
	527
	528
	▶551
201-5377	523
	525
	▶553
201-5810	389
	593
	594
	595
201-5812	388
	389
	593
	594
	595
201-6902	▶365
201-7659	386
201-8069	342
201-8561	243
	▶247
201-8562	244
	▶253
201-9465	852
202-0040	270
	271
	272
	273
202-0596	669
	670
	671
202-0597	669
	670
	671
202-0994	426
202-1009	301
202-1037	426
202-1227	501
202-1474	507
202-1475	507
202-1476	507
	508
202-2565	507
	508
202-2566	507
	508
202-3263	561
	562
	565
	566
	567
	568
202-4162	668
202-4163	668
202-5710	214
202-5711	214
	▶298
202-5712	214
	▶301
202-5720	▶585
	587

▶ **PRIMARY REFERENCE**

PART NUMBER INDEX

Part	Page
202-5721	▶396
	587
202-5723	392
	394
	▶487
202-5724	727
	730
	731
	732
	▶817
202-5725	392
	394
	▶491
202-5732	231
	233
	236
	239
	▶241
202-5733	232
	234
	236
	237
	238
	▶242
202-5746	722
	▶757
202-5747	10
	▶587
202-5773	▶53
202-5774	▶53
202-5775	▶53
202-5777	▶722
202-5797	▶138
	722
202-5805	▶392
202-5806	▶392
202-5807	40
202-5810	▶157
	726
	742
	743
202-5811	▶160
	727
	732
202-5812	▶819
202-5909	40
	42
	44
202-5912	▶39
202-5913	▶40
202-5914	39
	▶42
202-5916	10
	▶336
202-5919	336
	▶494
202-5920	494
202-5921	494
202-5923	453
202-5925	336
	▶456
202-5928	394
	▶460
202-5931	2
	3
	4
	7
	8
	9
	▶483
202-5937	3
	7
	8
	9
	▶430
202-5939	2
	3
	▶484
202-5941	2
	▶408
202-5943	2
	3
	7
	8
	9
	▶505
202-5944	2
	3
	4
	7
	▶506
202-5945	7
	▶412
202-5946	8
	9
	▶415
202-5949	▶333
	394
202-5958	▶7
202-5961	▶7
202-5963	▶8
202-5971	▶2
202-5973	▶2
202-5979	817
202-6007	▶243
	246
202-6008	▶244
	246
202-6014	2
	3
	7
	8
	9
	▶507
202-6015	2
	3
	4
	7
	▶508
202-6018	355
	358
	362
202-6063	817
202-6107	53
	▶141
202-6108	141
202-6113	87
202-6126	▶353
202-6141	769
202-6142	770
202-6186	282
	283
202-6195	▶200
	214
202-6196	▶203
	214
202-6198	214
	▶295
202-6614	123
202-7432	▶245
	246
202-7503	571
202-7874	242
202-7875	241
203-4158	742
	743
	744
	745
203-4694	355
	358
	362
	408
	412
	417
	420
203-4784	508
203-4785	508
203-9048	432
204-0317	298
	301
204-0751	494
204-3080	293
204-4313	553
204-7341	769
	770
204-9921	723
	797
205-0826	119
	122
205-2152	456
205-2153	456
205-2155	456
205-2156	456
205-2160	456
205-2161	456
205-2162	456
205-2163	456
205-2164	456
205-3126	453
	454
205-3759	288
205-3760	288
205-3761	288
205-4286	157
	160
	167
	169
205-5798	500
	501
205-6373	460
205-6374	460
205-6375	460
205-6376	460
205-6377	460
205-6388	456
205-7047	746
	749
	750
	810
205-7048	800
205-7536	852
205-7538	852
205-7700	165
205-8257	119
	122
205-8845	355
	358
	362
	401
	404
	408
	412
	417
	420
205-9014	355
	358
	362
	401
	404
	408
	412
205-9124	454
205-9244	261
205-9980	765
	771
206-0502	383
206-0519	381
206-0520	▶381
	394
206-0521	382
206-0522	▶382
	394
206-1486	193
206-3099	355
	358
	362
	506
206-3100	355
	358
	362
	506
206-3101	505
206-3102	505
206-3629	374
206-3630	▶374
	394
206-3685	353
	487
	489
206-4703	781
206-5107	543
	547
206-5162	119

▶ **PRIMARY REFERENCE**

PART NUMBER INDEX

Part	Page
	121
206-5165	119
	121
206-5203	119
206-6974	296
206-7398	723
	797
206-7512	718
	720
	795
206-7513	718
	720
	795
206-7514	718
	720
	795
206-9978	543
207-0649	333
207-0650	333
207-0651	333
207-2253	545
207-2255	545
	547
207-4254	201
	293
207-4255	293
207-4258	201
	293
207-4260	293
207-4262	293
207-4263	225
207-4266	293
207-4267	225
207-4268	293
207-4271	293
207-4272	293
207-5262	▶121
	122
207-5271	119
	122
207-5477	424
	426
207-6050	▶154
	745
207-6051	745
	▶860
207-6052	745
	▶846
207-8593	440
207-8594	440
207-8595	440
207-8598	444
208-0321	201
208-0322	211
208-1463	543
208-2978	454
208-3600	353
	487
	489
208-3601	353
	487
	489
208-3702	119
208-5232	668
	669
	670
208-5235	648
	649
	650
	651
	652
	653
	654
	655
	656
	657
	658
	659
	660
	661
	662
	663
	664
	665
	666
	667
	671
208-5242	668
	669
	670
	671
208-5245	648
	649
	650
	651
	652
	653
	654
	655
	656
	657
	658
	659
	660
	661
	662
	663
	664
	665
	666
	667
208-5673	553
208-5674	553
208-9682	351
208-9791	543
208-9801	543
209-1925	145
	148
209-1947	145
	148
209-4163	▶501
	514
209-4165	232
	235
	238
	239
	▶514
209-4172	232
	233
	234
	235
	236
	237
	▶514
209-4174	231
	233
	236
	▶514
209-7454	211
209-7455	213
209-7456	201
209-7460	226
	228
209-7462	211
209-7463	211
209-7464	201
209-7465	226
	228
209-7466	230
209-7472	211
209-7473	211
209-9219	20
209-9875	201
209-9882	201
	▶211
209-9883	201
209-9884	201
	▶226
209-9885	201
	▶228
209-9886	201
209-9887	201
210-1115	709
210-1116	677
	682
210-1145	696
210-1706	322
210-1707	322
210-5924	201
	▶230
210-5931	230
210-5934	230
210-5937	201
210-5942	201
210-5946	201
210-5947	201
210-6171	553
210-6243	394
210-7465	298
210-7466	298
210-8524	▶393
210-8525	▶393
210-8528	▶393
210-8532	▶355
	393
210-8533	▶358
	393
210-8536	▶362
	393
211-0052	179
211-0092	213
211-0180	526
	527
	528
211-1813	119
	122
211-1871	40
211-1872	40
211-3372	391
211-3539	543
211-4348	467
211-6735	201
211-6758	247
	253
211-6759	247
	254
212-0061	454
212-0732	333
212-3518	288
212-6215	246
212-8738	▶646
212-8740	▶647
212-9338	428
	430
213-4072	▶532
	545
	547
213-4974	507
	508
213-6088	111
213-6091	113
213-6092	113
213-6094	171
213-7315	138
	142
	175
	494
213-8479	154
213-8481	324
213-9270	723
	797
214-0592	570
214-0701	465
	466
214-0706	465
	466
	470
	471
214-3011	683
214-3019	678
	684
214-3027	679
	685
214-3035	680
	686
214-3159	298
	301
214-3520	66
214-3523	333
	▶573
214-3524	573
214-4252	333
	353
	489
214-4253	333
	353
	489
214-4254	333
	489
214-4255	333

▶ **PRIMARY REFERENCE**

PART NUMBER INDEX

Part	Page
	489
214-5097	201
	293
214-5553	▶366
214-6350	541
214-6380	366
	▶435
214-6381	366
214-6382	366
214-6886	▶10
214-6892	10
	▶11
214-6894	▶54
214-6895	▶54
214-6908	10
	▶102
214-6944	10
	▶321
214-6946	321
214-6948	104
214-6949	102
	▶103
214-6951	10
214-6955	▶235
214-6956	▶236
214-6957	▶236
214-6958	▶237
214-6959	▶237
214-6976	▶238
214-6977	▶238
214-6978	▶239
214-6981	10
	▶394
214-7457	67
	70
	72
214-7458	67
	70
	72
214-9035	817
215-1242	838
215-1510	▶519
215-1511	▶519
215-1512	▶519
215-2023	201
	293
215-3191	444
215-3373	708
215-8196	838
215-9219	509
215-9478	691
	▶708
215-9508	89
215-9509	89
215-9513	92
215-9632	467
216-0928	691
	▶709
216-2267	249
	255
	259
216-3712	709
216-4274	395
	▶466
216-4457	211
216-4458	211
216-4459	293
216-4461	211
216-4464	211
216-4465	211
216-4466	211
216-4560	676
	681
216-5515	211
216-7473	201
216-8314	16
216-8633	26
216-8634	26
216-8687	213
216-8689	213
216-8691	213
216-8700	213
216-9497	213
216-9498	211
	▶213
217-1387	353
217-2868	211
217-2877	226
217-2878	228
217-2880	211
217-2883	201
217-2884	201
217-2885	201
	293
217-3850	349
	351
217-6892	456
218-2685	40
	42
218-3597	273
218-4513	345
	347
218-4516	345
	347
219-0305	874
219-3273	118
219-3379	▶648
	672
219-3380	▶649
219-3381	▶650
219-3382	▶651
219-3383	▶652
219-3384	▶653
	673
219-3385	▶654
219-3386	▶655
219-3387	▶656
219-3388	▶657
219-3389	▶658
219-3390	▶659
219-3391	▶660
219-3392	▶661
219-3393	▶662
219-3394	▶663
	674
219-3395	▶664
219-3396	▶665
219-3397	▶666
219-3398	▶667
219-3399	▶668
	675
219-3400	▶669
219-3401	▶670
219-3402	▶671
219-3410	▶672
219-3411	▶673
219-3412	▶674
219-3413	▶675
219-6314	121
219-7627	494
219-8751	211
219-8752	211
219-8753	211
219-8754	211
219-8755	211
219-8756	211
219-8757	211
219-8758	211
219-8759	211
219-8783	230
219-8798	201
	293
219-9482	653
	654
219-9483	655
	659
	664
219-9484	656
	660
	665
219-9485	657
	661
	666
219-9486	658
	662
	667
219-9488	650
219-9491	669
219-9492	670
219-9493	663
219-9495	671
219-9496	668
220-0248	463
220-0407	520
220-3392	454
220-3685	494
220-3688	494
220-4141	138
220-8218	333
220-8219	333
220-8631	25
221-0750	42
221-4260	712
	713
	714
221-4263	715
221-4265	▶499
	712
221-4267	712
	▶715
221-4271	582
221-4272	582
221-4276	▶582
	713
	714
221-4282	712
	713
221-4283	712
	714
221-4284	713
	714
221-4285	713
	714
221-4295	499
221-4296	499
221-4297	499
221-4312	369
221-4315	499
221-4316	499
221-4350	369
	▶385
221-7677	494
222-0844	322
222-1801	316
222-1802	316
222-2690	87
222-3870	122
222-4067	515
222-4880	318
	319
222-4881	318
	319
222-7379	▶691
222-7380	▶676
222-7381	▶677
222-7383	▶678
222-7384	▶679
222-7385	▶680
222-7386	▶681
222-7387	▶682
222-7388	▶683
222-7389	▶684
222-7390	▶685
222-7391	▶686
222-7392	676
222-7393	677
222-7395	678
222-7396	679
222-7397	680
222-7398	681
222-7399	682
222-7400	683
222-7401	684
222-7402	685
222-7403	686
222-7464	691
	▶696
222-9924	▶122
222-9950	456
222-9951	456
223-1598	805
223-5924	494
223-5925	494
223-6539	167
223-8120	▶703
223-8125	▶704
223-8181	249
	255
	▶270
224-3385	122

▶ **PRIMARY REFERENCE**

PART NUMBER INDEX

Part	Page	Part	Page	Part	Page	Part	Page
224-4527	582	225-6004	32		▶873		393
224-6193	177	225-6005	32	228-4284	718	230-9127	14
224-6224	▶712	225-6041	32	228-4525	80	230-9144	14
224-6225	▶712	225-6455	14	228-9129	▶97	230-9527	94
224-6226	▶713	225-6517	14		101	231-0030	50
224-6227	▶713	225-6522	14	228-9130	97	231-0033	12
224-6232	▶713	225-6817	51	228-9132	97		▶50
224-6233	▶714	225-6818	51	229-2327	▶275	231-0046	36
224-6234	▶714	225-6820	51	229-2328	▶275	231-0149	12
224-6235	▶714	225-6908	50	229-2329	▶275		▶78
224-6236	▶369	225-6909	50	229-2330	▶276	231-0676	226
	712	225-7738	63	229-4896	14		228
	713	225-7739	63	229-5080	226	231-0683	▶225
224-6812	160	225-7741	63		228		293
224-7830	332	225-7772	16	229-5083	226	231-0684	293
	476	225-7781	16		228	231-0685	293
	478	225-7941	51	229-5085	226	231-0687	225
	875	225-7944	18		228	231-0688	225
224-8945	327		51	229-5088	226	231-0700	226
	875	225-8016	63		228	231-0701	228
224-9021	873	225-8019	63	229-5092	226	231-0703	226
224-9748	▶318	225-8278	26		228		228
	395	225-8280	26	229-5093	213	231-3052	118
	519	225-8281	26	229-6051	836	231-3054	118
224-9749	▶319	225-8282	26	229-6052	836	231-3540	374
	395	225-8329	49	229-8182	165	231-5021	370
	519	225-8524	85	229-8377	138		372
224-9855	873	225-8526	85		142	231-8118	▶276
225-0313	875	225-8530	85		175	231-9352	214
225-3145	106	225-8533	85	229-8413	142		874
225-3281	383	225-8534	85		175	232-0252	467
225-4256	874	225-8536	85	229-9382	384	232-1115	89
225-4317	12	225-8848	28	230-0980	▶379	232-1117	94
	▶35	225-8858	18		394	232-1322	21
225-5179	494	226-1242	873	230-3809	285	232-1323	94
225-5436	34	226-4346	226	230-3810	285	232-1328	94
225-5437	34		228	230-3811	285	232-1793	94
225-5438	34	226-5633	353	230-4017	205	232-1794	94
225-5439	34		487	230-6368	111	232-2725	94
225-5441	34		489		113	232-2726	94
225-5451	34	226-5634	353	230-7300	12	232-3126	89
225-5453	34		487		▶24	232-3149	94
225-5454	34		489	230-7353	12	232-3157	94
225-5458	34	226-7164	157		▶37	232-3158	94
225-5459	34		160	230-7355	12	232-3274	94
225-5493	21		167		▶63	232-3657	26
225-5494	21		169	230-7569	12	232-3666	26
225-5495	21	226-7280	160		▶36	232-3670	12
225-5496	21	226-8202	377	230-7578	12		▶26
225-5497	21	227-1145	381		▶49	232-3722	51
225-5498	21		382	230-7649	437	232-3751	18
225-5499	21	227-4376	71		440		51
225-5501	22		74	230-7650	437	232-3861	51
225-5502	22	227-4709	214		441	232-4666	720
225-5625	38	227-7447	77	230-7651	437	232-4706	167
225-5629	38	227-7448	77		440	232-4873	772
225-5634	38	227-7449	77	230-8065	23	232-4874	720
225-5638	38	228-0297	718	230-8094	32	232-4877	773
225-5640	38		720	230-8279	51	232-5849	517
225-5959	38	228-0298	718	230-8989	94	232-6177	12
225-5960	38		720	230-8995	94		▶51
225-5961	38	228-0560	718	230-8996	94	232-6661	12
225-5962	38		720	230-8997	94		▶115
225-5963	38	228-3178	718	230-8998	94	232-6662	115
225-5967	13	228-3600	10	230-9105	▶366	232-7400	16

▶ **PRIMARY REFERENCE**

PART NUMBER INDEX

Part	Page
232-7439	12
	▶16
232-7440	18
232-7442	12
	▶34
232-7449	20
232-7454	18
232-7497	476
	478
232-7498	476
	478
232-7519	▶21
	22
232-7524	12
	▶22
232-7526	12
	▶38
232-7528	12
	▶13
232-7596	18
232-7597	18
232-7599	18
232-7600	18
232-7603	18
232-7604	▶18
	20
232-7606	12
	▶20
232-9737	121
232-9758	89
232-9759	89
233-2571	379
233-2579	379
233-2584	379
233-2606	379
233-2610	379
233-2619	379
233-3784	16
233-3785	16
233-3786	16
233-3788	16
233-3789	16
233-3790	16
233-7432	12
	▶28
233-9417	12
	▶89
233-9530	106
233-9531	106
233-9532	106
234-1711	▶118
234-1979	11
	▶75
234-1981	75
	▶77
234-1991	11
	▶171
234-1992	171
234-2484	808
234-2485	808
234-2617	729
	731
	▶808
234-2622	75
234-3029	85
234-3030	85
234-3060	11
	▶12
234-3387	▶222
	235
	237
	238
234-4328	▶123
	128
234-4329	128
234-5121	75
234-6926	394
	▶515
234-6927	515
234-7509	47
234-7510	11
	▶47
234-7527	▶223
	236
	237
	238
234-7528	▶224
	236
	239
234-7730	123
234-7731	123
234-7834	▶65
	70
234-7836	54
	▶70
234-7954	47
234-8601	729
	731
	▶759
234-8815	47
	515
234-8892	10
	▶87
234-9065	10
	▶325
234-9066	325
234-9430	759
234-9522	325
	▶327
234-9523	327
234-9554	759
234-9613	222
	223
235-0128	87
235-0354	380
235-0973	374
235-1056	759
235-1790	94
235-1966	70
	72
235-1967	70
	72
235-1974	65
	▶71
235-1975	74
235-2491	47
235-2853	10
	▶111
235-2854	▶113
235-2972	11
	▶92
235-3170	11
	▶101
235-3420	11
	▶84
235-3556	12
235-4549	394
	▶467
235-4553	467
235-4752	150
235-4788	394
	▶475
235-5306	467
235-5363	84
235-5776	111
235-5843	515
235-5844	337
	▶478
235-5845	3
	▶417
235-5847	4
	▶420
235-5854	▶470
	519
235-5856	▶471
	519
235-7091	467
235-8528	467
235-8747	137
235-8749	12
	▶137
235-9625	444
235-9637	444
235-9829	▶383
	394
235-9832	383
235-9833	383
235-9835	383
236-1673	94
236-1674	94
236-2486	11
	▶79
236-2507	84
236-4836	793
236-4990	318
236-4991	318
236-4992	319
	393
236-4993	319
	393
236-5458	▶398
236-5459	▶398
236-5807	54
	▶72
236-5808	▶66
	72
236-5809	66
	▶74
236-5860	79
236-5901	417
	420
236-6651	47
236-6652	47
236-6657	728
	730
236-6923	142
236-6937	▶772
	773
236-6938	722
	729
	731
	▶773
236-6954	322
236-6966	▶720
	722
	729
	731
236-6967	722
	729
	731
	▶793
236-6985	720
236-7295	222
	223
	224
236-8182	322
236-8238	12
	▶25
236-8241	12
	▶23
236-9900	417
	420
237-0024	12
	▶135
237-0025	12
	▶32
237-0027	12
	▶106
237-0284	89
237-0285	89
237-0286	89
237-0505	444
237-0769	14
237-0803	322
237-0975	84
237-0976	84
237-2197	101
237-2231	577
237-2799	85
237-3655	148
237-3658	12
	▶29
237-3663	578
237-3786	85
237-3791	85
237-3794	85
237-3797	515
237-3921	85
237-3922	85
237-3923	85
237-3924	12
	▶85
237-4157	77
237-4894	136
237-4896	12
	▶136
237-5213	94
237-5214	12
	▶94
	▶803
236-6923	142
236-6937	▶772
	773
236-6938	722
	729
	731
	▶773
236-6954	322
236-6966	▶720
	722
	729
	731
236-6967	722
	729
	731
	▶793
236-6985	720
236-7295	222
	223
	224
236-8182	322
236-8238	12
	▶25
236-8241	12
	▶23
236-9900	417
	420
237-0024	12
	▶135
237-0025	12
	▶32
237-0027	12
	▶106
237-0284	89
237-0285	89
237-0286	89
237-0505	444
237-0769	14
237-0803	322
237-0975	84
237-0976	84
237-2197	101
237-2231	577
237-2799	85
237-3655	148
237-3658	12
	▶29
237-3663	578
237-3786	85
237-3791	85
237-3794	85
237-3797	515
237-3921	85
237-3922	85
237-3923	85
237-3924	12
	▶85
237-4157	77
237-4894	136
237-4896	12
	▶136
237-5213	94
237-5214	12
	▶94

▶ **PRIMARY REFERENCE**

PART NUMBER INDEX

Part	Page
237-5330	322
237-6412	308
237-6413	307
237-6414	236
	239
	▶307
237-6415	235
	236
	237
	238
	▶308
237-6458	▶214
	235
	237
	238
237-6459	▶214
	236
	237
	238
	239
237-8037	▶148
	236
	239
238-0297	▶276
238-0298	▶276
238-0299	▶277
238-0300	▶277
238-0301	▶277
238-1165	10
	▶165
238-1166	▶167
	728
	729
	744
	745
238-1167	▶169
	730
	731
238-1811	▶142
	729
	731
238-1821	10
	▶179
238-1830	92
238-1966	259
	▶271
238-1967	259
	▶272
238-1968	261
	▶273
238-4441	874
238-4785	▶8
238-4786	▶3
238-4787	▶9
238-4788	▶3
238-4789	▶4
238-5228	225
238-6697	▶743
238-6698	▶394
238-7448	150
238-7492	142
238-8217	394
	▶489
238-8218	▶4
238-8219	▶9
238-8550	214
238-8864	89
238-9192	75
238-9397	171
238-9828	▶82
	728
	729
	744
	745
239-0602	759
239-0625	478
239-1080	729
	731
	▶840
239-1081	728
	730
	744
	745
	▶841
239-1162	470
	471
239-1434	87
239-1435	87
239-2226	▶368
	520
239-2270	79
239-3683	47
239-5563	▶744
239-5564	▶745
239-5565	▶728
239-5566	▶729
239-5567	▶730
239-5568	▶731
239-5760	▶44
	46
239-5765	44
239-6989	874
239-7421	44
239-9245	▶337
239-9246	▶337
239-9248	▶337
239-9427	875
239-9429	874
239-9433	875
239-9435	583
	874
239-9436	875
239-9437	874
239-9897	12
240-2614	760
240-4639	111
	113
240-7094	873
240-7194	22
240-7956	873
240-9671	515
240-9716	515
240-9721	515
240-9756	89
241-0022	92
241-0094	128
241-0098	10
	▶128
241-4275	92
241-4954	800
241-4955	800
241-5684	83
241-5686	▶83
	730
	731
241-8448	402
	405
	408
	413
	417
	420
242-1920	75
242-9946	▶46
243-5027	171
243-5245	▶800
244-1944	▶732
244-2104	759
244-2228	394
	▶509
244-2603	103
	▶104
244-3106	171
244-3316	115
244-3837	379
244-3838	379
244-5402	▶722
245-9828	24
246-1163	14
246-2582	12
	▶14
246-3457	874
246-6560	83
247-0470	743
	▶763

▶ **PRIMARY REFERENCE**



© 2003 Caterpillar
All Rights Reserved

Printed in U.S.A.