CATERPILLAR®

SEBP3703-01
January 2006

RUTHZIL TRATOR COMERCIAL DE PEÇAS LTDA 11 97083-6812 ROLANDO

Parts Manual

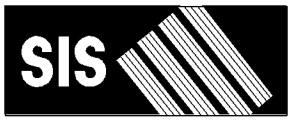

See "General Information" for New Parts Manual Features.

420E Backhoe Loader
Single Tilt, Center Pivot

HLS1-Up (Machine)
THP1-Up (Machine)
CRS1-Up (Engine)
CRX1-Up (Engine)

Powered By 3054C Engine
This Parts Manual is also available in .PDF Format on Compact Disc *(CD-ROM) - Caterpillar Form No. SERP3703-00.

Product and Dealer Information

Note: For product identification plate locations, see the section “Product Identification Information” in the Operation and Maintenance Manual.

Delivery Date: _____

Product Information

Model: _____

Product Identification Number: _____

Engine Serial Number: _____

Transmission Serial Number: _____

Generator Serial Number: _____

Attachment Serial Numbers: _____

Attachment Information: _____

Customer Equipment Number: _____

Dealer Equipment Number: _____

Dealer Information

Name: _____ Branch: _____

Address: _____

_____

_____

	Dealer Contact	Phone Number	Hours
Sales:	_____	_____	_____
Parts:	_____	_____	_____
Service:	_____	_____	_____

Informations produit et concessionnaire

Nota: Voir l'emplacement de la plaque signalétique du produit au chapitre "Informations produit" du guide d'utilisation et d'entretien.

Date de livraison: _____

Informations produit

Modèle: _____

Numéro d'identification produit: _____

Numéro de série du moteur: _____

Numéro de série de la boîte de vitesses: _____

Numéro de série de l'alternateur: _____

Numéros de série d'équipement: _____

Informations sur l'équipement: _____

Numéro matériel client: _____

Numéro matériel concessionnaire: _____

Informations concessionnaire

Nom: _____ Agence: _____

Adresse: _____

_____

_____

	Contact concessionnaire	Numéro de téléphone	Heures
Ventes:			
Pièces:			
Service:			

Información del Producto/Distribuidor

Nota: Para saber la ubicación de las placas de identificación del producto, ver la sección “Información sobre identificación del producto” en el Manual de Operación y Mantenimiento.

Fecha de entrega: _____

Información del producto

Modelo: _____

Número de identificación del producto: _____

Número de serie del motor: _____

Número de serie de la transmisión: _____

Número de serie del generador: _____

Números de serie de los accesorios: _____

Información sobre los accesorios: _____

Número del equipo del cliente: _____

Número del equipo del distribuidor: _____

Información del distribuidor

Nombre: _____ Sucursal: _____

Dirección: _____

_____

_____

Comunicación con el distribuidor	Número de teléfono	Horas
Ventas: _____	_____	_____
Piezas: _____	_____	_____
Servicio: _____	_____	_____

Informações Sobre Produto e Revendedor

Nota: Para localizações da placa de identificação do produto, consulte a seção, “Informações Sobre Identificação do Produto” no Manual de Operação e Manutenção.

Data de Entrega: _____

Informações Sobre o Produto

Modelo: _____

Número de Identificação do Produto: _____

Número de Série do Motor: _____

Número de Série da Transmissão: _____

Número de Série do Gerador: _____

Números de Série de Acessórios: _____

Informações Sobre Acessórios: _____

Número do Equipamento do Cliente: _____

Número do Equipamento do Revendedor: _____

Informações Sobre o Revendedor

Nome: _____ Filial: _____

Endereço: _____

_____

_____

	Contato do Revendedor	Telefone	Horas
Vendas:	_____	_____	_____
Peças:	_____	_____	_____
Serviço:	_____	_____	_____

Produkt- und Händlerinformation

Anmerkung: Für die Lage der Produkt-Identnummer und Seriennummern siehe Abschnitt “Produkt-Identinformation” im Betriebs- und Wartungshandbuch.

Lieferdatum: _____

Produkt-Identinformation

Modell: _____

Produkt-Identnummer: _____

Seriennummer des Motors: _____

Seriennummer des Getriebes: _____

Seriennummer des Generators: _____

Seriennummern der Arbeitsgeräte: _____

Arbeitsgeräteinformation: _____

Kundennummer: _____

Händlernummer: _____

Händlerinformation

Name: _____ Niederlassung: _____

Adresse: _____

_____

_____

	Kontaktperson beim Händler	Telefon	Dienststunden
Verkauf:	_____	_____	_____
Ersatzteile:	_____	_____	_____
Service:	_____	_____	_____

MEMORANDA

TABLE OF CONTENTS

Name	Page
GENERAL INFORMATION	A23
REPAIR ALTERNATIVES	A42
SUPPLEMENTAL COOLANT ADDITIVES	A47
MAINTENANCE PARTS	A52
INDEX	A65
MACHINE ARRANGEMENT	1
BACKHOE AR-EXTENDABLE STICK	1
BACKHOE AR-STANDARD STICK	3
CHASSIS AR	4
COMMON AR	4
ENGINE ARRANGEMENT	5
ENGINE AR	5
BASIC ENGINE	7
CAMSHAFT GP	7
COVER GP-CYLINDER HEAD	8
COVER GP-VALVE MECHANISM	9
CRANKSHAFT GP	11
CYLINDER BLOCK GP	13
CYLINDER HEAD GP	16
DRIVE GP-FAN	18
FLYWHEEL GP	19
HOUSING GP-FLYWHEEL	20
HOUSING GP-FRONT	21
LIFTING GP-ENGINE	23
MOUNTING GP-ENGINE	24
MOUNTING GP-ENGINE & TMSN	25
PAN GP-OIL	26
PISTON & ROD GP	28
PLUG GP-ENGINE	30
PULLEY GP-CRANKSHAFT	33
VALVE MECHANISM GP	34
LUBRICATION SYSTEM	35
BREATHER GP	35
GAUGE GP-OIL LEVEL & FILLER	37
PUMP GP-ENGINE OIL	38
COOLING SYSTEM	39
CONNECTION GP-WATER	39
COOLER GP-ENGINE OIL	40
COOLER GP-FLTR BASE & ENG OIL	41
COOLING AR	43
FAN GP-SUCTION	44
LINES GP-TRANSMISSION COOLER	46
MOUNTING GP-RAD & OIL COOLER	48
PUMP GP-WATER	50
RADIATOR & OIL COOLER GP	52
TANK GP-EXPANSION	54
AIR INLET AND EXHAUST SYSTEM	55
AIR CLEANER GP	55
INDICATOR GP-AIR FILTER CHANGE	57
MUFFLER GP	58
TURBOCHARGER GP	59
FUEL SYSTEM	61
CONTROL GP-GOVERNOR	61
LINES GP-FUEL	62
LINES GP-FUEL FILTER	64
PUMP GP-FUEL INJECTION	65
PUMP GP-FUEL PRM & PRIM FILTER	68
TANK & MTG GP-FUEL	70
TANK GP-FUEL	71
ELECTRICAL AND STARTING SYSTEM	73
ALTERNATOR GP-CHARGING	73
BATTERY & WIRING GP	74
CONTROL GP-COMMUNICATION	78
ELECTRONICS GP-MACHINE	79
ELECTRONICS GP-MONITOR	80
GLOW PLUG GP	81
HEATER GP-JACKET WATER	82
INSTALLATION GP-COMMUNICATION	83
INSTALLATION GP-GRADE CONTROL	87
LAMP GP-FLOOD	91
LAMP GP-WARNING BEACON	93
LIGHTING GP-FLOOD & SIGNAL	94
LIGHTING GP-WARNING BEACON	96
MOUNTING GP-MAST	97
MOUNTING GP-SENSOR	98
RELAY GP	99
SENSOR GP-SPEED	102
STARTING MOTOR GP-ELECTRIC	103
SWITCH GP-ALL WHEEL DRIVE	106
SWITCH GP-DIFFERENTIAL LOCK	107
SWITCH GP-PRESSURE	108
WIRING GP-AIR CONDITIONER	109
WIRING GP-CONSOLE	112
WIRING GP-CONTROL	116
WIRING GP-ENGINE	119
WIRING GP-EXTENDABLE STICK	122
WIRING GP-HEATER	123
WIRING GP-KICKOUT & POSITIONER	125
WIRING GP-PLATFORM	127
WIRING GP-REAR	132
WIRING GP-RIDE CONTROL	134
WIRING GP-TRANSMISSION CONTROL	136

TABLE OF CONTENTS

Name	Page
POWER TRAIN	138
AXLE GP-DRIVE & STEERING	138
AXLE GP-REAR	140
CASE AS-TRANSMISSION	143
CONTROL GP-TRANSMISSION	146
DIFFERENTIAL & BEVEL GEAR GP	148
DIFFERENTIAL GP	150
DRIVE AR-BACKHOE LOADER	152
DRIVE GP-FLEXIBLE COUPLING	153
FILLER GP-POWER TRAIN OIL	154
FLANGE GP-WHEEL	158
HOUSING & FLANGE GP-AXLE	159
HOUSING GP-AXLE	161
LINES GP-POWER TRAIN OIL	165
MOUNTING GP-AXLE	166
MOUNTING GP-TRANSMISSION	167
PLANETARY GP-FINAL DRIVE	169
POWER TRAIN AR	171
SHAFT GP-COUNTER	172
SHAFT GP-DRIVE	174
SHAFT GP-IDLER	175
SHAFT GP-INPUT	177
SHAFT GP-OUTPUT	181
TRANSMISSION & MOUNTING GP	187
TRANSMISSION AR-DIRECT DRIVE	188
TRANSMISSION AR-POWER SHIFT	188
TRANSMISSION GP-DIRECT DRIVE	189
TRANSMISSION GP-POWER SHIFT	194
VALVE & LINES GP-SOLENOID	200
VALVE & MTG GP-SOLENOID	202
VALVE GP-RELIEF	203
VALVE GP-TIRE	204
WHEEL & TIRE AR	205
WHEEL & TIRE GP	206
BRAKING SYSTEM	213
CONTROL GP-PARKING BRAKE	213
CONTROL GP-SERVICE BRAKE	215
CYLINDER GP-BRAKE	218
LEVER GP-HAND CONTROL	220
STEERING SYSTEM	221
CONTROL GP-STEERING	221
KNOB GP-STEERING	223
LINES GP-STEERING	224
PUMP GP-METERING	226
FRAME AND BODY	227
BOX GP-BATTERY	227
COUNTERWEIGHT GP	228
DOOR GP-BATTERY	231
EXTENSION GP-FENDER	232
FENDER GP-FRONT	233
FENDER GP-REAR	234
FLOORPLATE GP	236
FRAME GP-LOADER	238
FRAME GP-SWING	239
GUARD GP-DRIVE SHAFT	241
GUARD GP-RADIATOR	242
HOOD & GUARD GP	243
HOOD GP-ENGINE	245
HYDRAULIC SYSTEM	247
ACCUMULATOR GP-PILOT OIL	247
ACCUMULATOR GP-RIDE CONTROL	248
CONTROL AR-RIDE	249
CONTROL GP-HYDRAULIC HAND	250
CONTROL GP-JOYSTICK	255
CYLINDER & LINES GP-THUMB	259
CYLINDER GP-BACKHOE BUCKET	260
CYLINDER GP-BOOM	264
CYLINDER GP-EXTENDABLE STICK	267
CYLINDER GP-LIFT	269
CYLINDER GP-MULTIPURPOSE BUKT	270
CYLINDER GP-STABILIZER	271
CYLINDER GP-STICK	275
CYLINDER GP-SWING	279
CYLINDER GP-THUMB	281
CYLINDER GP-TILT	282
DRIVE & MTG GP-PUMP	284
FASTENER GP-VALVE	285
FILTER GP-OIL	286
FITTING GP-HYDRAULIC	287
HYDRAULIC AR	288
KICKOUT & POSITIONER GP	289
KIT-RIDE CONTROL	291
LINES GP-BACKHOE AUXILIARY	294
LINES GP-BOOM	301
LINES GP-BUCKET	303
LINES GP-DRAIN	308
LINES GP-EXTENDABLE STICK	309
LINES GP-HYDRAULIC OIL COOLER	311
LINES GP-LIFT CYLINDER	313
LINES GP-LOADER AUXILIARY	315
LINES GP-MULTIPURPOSE BUCKET	317
LINES GP-PILOT	321
LINES GP-PUMP	327
LINES GP-RIDE CONTROL	329
LINES GP-STABILIZER	331
LINES GP-STICK	337
LINES GP-SWING	338
LINES GP-TILT CYLINDER	340
MANIFOLD GP-CONTROL	342
MANIFOLD GP-CONTROL & SOLENOID	346
MOUNTING GP-BACKHOE CONTROL	348
MOUNTING GP-BANK VALVE	350
MOUNTING GP-CYLINDER	351
MOUNTING GP-LINES	354

TABLE OF CONTENTS

Name	Page
PUMP GP-PISTON	356
ROTATING GP-PUMP	358
SHAFT GP-PUMP DRIVE	359
TANK & MTG GP-HYDRAULIC	360
VALVE & LINES GP-PILOT	362
VALVE AR-BANK 2	364
VALVE AR-BANK 3	364
VALVE AR-BANK 6	364
VALVE AR-BANK 7	365
VALVE AR-BANK 8	365
VALVE GP-BANK 2	366
VALVE GP-BANK 3	367
VALVE GP-BANK 6	368
VALVE GP-BANK 7	369
VALVE GP-BANK 8	370
VALVE GP-CONTROL	372
VALVE GP-PILOT	386
VALVE GP-PUMP CONTROL	388
VALVE GP-SOLENOID	389
IMPLEMENTS	391
ARM GP-LIFT	391
BOOM GP	393
BRACE GP-LIFT CYLINDER	394
GUARD GP-BOOM	395
LINK GP-THUMB	396
LINKAGE GP-BACKHOE BUCKET	397
LINKAGE GP-LOADER BUCKET	399
LOADER AR	401
LOCK GP-TRANSPORT	402
MOUNTING GP-STICK	406
PAD & GUARD GP-STABILIZER	407
PAD & MTG GP-STABILIZER	413
PAD GP-STABILIZER	416
STABILIZER GP-BACKHOE	418
STICK GP-EXTENDABLE	419
STICK GP-HOE	423
WORK TOOLS	425
BOWL AS-BUCKET	425
BUCKET AR-MULTIPURPOSE	427
BUCKET AS-GENERAL PURPOSE	430
BUCKET AS-HOE	440
BUCKET GP-GENERAL PURPOSE	444
BUCKET GP-HOE	451
BUCKET GP-MULTIPURPOSE	495
BULLDOZER AS	502
COUPLER AR-QUICK	506
COUPLER GP-QUICK	507
EDGE GP-CUTTING	512
FORK GP	514
GUARD GP-WORK TOOL	515
MOUNTING GP-BUCKET	516
PIN GP-COUPLER	517
THUMB AR	519
THUMB GP	552
TOOTH GP-UNI	554
OPERATOR STATION	555
AIR CONDITIONER & MOUNTING GP	555
AIR CONDITIONER GP	557
BRACKET GP-MOUNTING	559
CAB AR	560
CAB GP	563
CANOPY AR	566
CANOPY GP-OPEN ROPS	568
COMPARTMENT GP-LITERATURE	571
COMPRESSOR & MTG GP-REFRIG	572
COMPRESSOR GP-REFRIGERANT	573
CONDENSER & MTG GP-REFRIGERANT	574
CONSOLE GP-OPERATOR	575
COVER GP-WIPER MOTOR	581
DOOR GP-CAB	582
FLOOR MAT GP	586
HEATER GP-CAB	587
INSTALLATION GP-MONITOR	591
LATCH GP-CONSOLE	593
LEVER GP-GOVERNOR	594
LINER GP-CAB	595
LINES GP-HEATER	597
LINES GP-HEATER & AIR COND	598
MIRROR GP-REAR VIEW	600
MOTOR GP-WINDOW WIPER	602
MOUNTING GP-CAB	603
MOUNTING GP-MONITOR	604
PEDAL GP-GOVERNOR	605
ROOF GP-CAB	606
SEAT BELT GP	607
SEAT GP	609
SEAT GP-SUSPENSION	614
SUSPENSION GP-SEAT	619
TACHOMETER GP-ELECTRIC	624
TRIM GP-CAB	625
VISOR GP-CAB	627
WASHER GP-WINDOW	628
WINDOW GP-CAB	630
WINDOW GP-DOOR	636
WIPER & WASHER GP-WINDOW	640
WIPER GP-WINDOW	642
SERVICE EQUIPMENT AND SUPPLIES	643
BRACKET GP-TRANSPORT	643
FILM GP	644
LINK GP-SHIPPING	645
LOCK GP-VANDALISM	645
PLATE & FILM GP	645
PROTECTION GP-VANDALISM	649
SHIPPING AR-BUCKET	650

TABLE OF CONTENTS

Name	Page	Name	Page
PART NUMBER INDEX	B1		

TABLE DES MATIÈRES

Désignation	Page
GÉNÉRALITÉS	A26
OPTIONS DE RÉPARATION	A43
ADDITIFS POUR LIQUIDE DE REFROIDISSEMENT	A48
PIÈCES DE RECHANGE	A54
INDEX	A75
VERSION DE MACHINE	1
PELLE RÉTRO - BRAS TÉLESCOPIQUE (VERSION)	1
PELLE RÉTRO - BRAS NORMAL (VERSION)	3
VERSION DE CHASSIS	4
VERSION NORMALE	4
VERSION DE MOTEUR	5
MOTEUR (VERSION)	5
MOTEUR STANDARD	7
ARBRE A CAMES (ASS)	7
COUVERCLE DE CULASSE (ASS)	8
CACHE-SOUPAPES (ASS)	9
VILEBREQUIN (ASS)	11
BLOC-CYLINDRES (ASS)	13
CULASSE (ASS)	16
ENTRAÎNEMENT DE VENTILATEUR (ASS)	18
VOLANT MOTEUR (ASS)	19
CARTER DE VOLANT (ASS)	20
CARTER AV (ASS)	21
OEILLETONS DE LEVAGE MOTEUR (ASS)	23
MONTAGE DE MOTEUR (ASS)	24
MONTAGE DE MOTEUR ET BOÎTE (ASS)	25
HUILE MOTEUR - CARTER (ASS)	26
PISTON ET BIELLE (ASS)	28
BOUCHON DE MOTEUR (ASS)	30
VILEBREQUIN - POULIE (ASS)	33
CULBUTERIE (ASS)	34
CIRCUIT DE GRAISSAGE	35
RENIFLARD (ASS)	35
INSTRUMENT - NIVEAU D'HUILE ET GOUL. DE REMPLIS.	37
POMPE A HUILE MOTEUR (ASS)	38
CIRCUIT DE REFROIDISSEMENT	39
RACCORD D'EAU (ASS)	39
REFROIDISSEUR D'HUILE MOTEUR (ASS)	40
SUPPORT DE FILTRE ET REFROIDISSEUR D'HUILE MOTEUR	41
REFROIDISSEMENT (VERSION)	43
VENTILATEUR ASPIRANT (ASS)	44
CANALISATIONS DE REFROIDISSEUR DE TRANSMISSION (ASS)	46
MONTAGE DE RADIATEUR ET REFROIDISSEUR D'HUILE (ASS)	48
POMPE A EAU (ASS)	50
RADIATEUR ET REFROIDISSEUR D'HUILE (ASS)	52
RESERVOIR D'EXPANSION (ASS)	54
CIRCUIT D'ADMISSION D'AIR ET D'ÉCHAPPEMENT	55
FILTRE A AIR (ASS)	55
INDICATEUR DE COLMATAGE DE FILTRE À AIR (ASS)	57
SILENCIEUX (ASS)	58
TURBOCOMPRESSEUR (ASS)	59
CIRCUIT DE CARBURANT	61
COMMANDE DE RÉGULATEUR (ASS)	61
CANALISATIONS DE CARBURANT (ASS)	62
CANALISATIONS DU FILTRE A CARBURANT (ASS)	64
POMPE D'INJECTION DE CARBURANT (ASS)	65
POMPE D'AMORÇAGE DE CARBURANT ET FILTRE PRINCIPAL	68
RÉSERVOIR DE CARBURANT ET MONTAGE (ASS)	70
RÉSERVOIR DE CARBURANT (ASS)	71
CIRCUIT ÉLECTRIQUE ET DE DÉMARRAGE	73
ALTERNATEUR DE CHARGE (ASS)	73
BATTERIE ET CÂBLAGE	74
COMMANDE DE COMMUNICATION (ASS)	78
ÉLECTRONIQUE - MACHINE (ENS)	79
ÉLECTRONIQUE-MONITEUR (ASS)	80
BOUGIE DE PRÉCHAUFFAGE (ASS)	81
EAU DES CHEMISES - RECHAUFFEUR (ASS)	82
MONTAGE-COMMUNICATION (ASS)	83
MONTAGE DE COMMANDE DE PROFIL LONGITUDINAL (ASS)	87
LAMPE - PHARE (ASS)	91
LAMPE - GYROPHARE (ASS)	93

* TRADUCTION NON DISPONIBLE AU MOMENT DE LA PUBLICATION

TABLE DES MATIÈRES

Désignation	Page
ÉCLAIRAGE - PROJECTEURS ET CLIGNOTANTS (ASS)	94
ÉCLAIRAGE - GYROPHARE (ASS)	96
MONTAGE DU MAT (ASS)	97
MONTAGE - CAPTEUR (ASS)	98
RELAIS (ASS)	99
CAPTEUR DE VITESSE (ASS)	102
DÉMARREUR ÉLECTRIQUE (ASS)	103
CONTACTEUR DE TRACTION INTÉGRALE (ASS)	106
CONTACTEUR DE VERROUILLAGE DE DIFFÉRENTIEL (ASS)	107
MANOCONTACT	108
CABLAGE - CLIMATISEUR (ASS)	109
CABLAGE DE CONSOLE (ASS)	112
CABLAGE - COMMANDE (ASS)	116
CABLAGE DE MOTEUR (ASS)	119
CÂBLAGE DE BRAS TÉLESCOPIQUE (ASS)	122
CABLAGE DU CHAUFFAGE DE CABINE (ASS)	123
CÂBLAGE DE PRISE DE FORCE ET LIMITEUR (ASS)	125
CABLAGE - PLATE-FORME (ASS)	127
CABLAGE AR (ASS)	132
CÂBLAGE DE COMMANDE DE TRANSLATION (ASS)	134
CABLAGE DE COMMANDE DE BOITE (ASS)	136
TRANSMISSION	138
ESSIEU MOTEUR ET DIRECTION (ASS)	138
ESSIEU AR (ASS)	140
CARTER DE BOÎTE DE VITESSES (ENS)	143
COMMANDE DE BOITE DE VITESSES (ASS)	146
COURONNE ET DIFFERENTIEL (ASS)	148
DIFFERENTIEL (ASS)	150
VERSION D'ENTRAÎNEMENT DE CHARGEUSE-PELLETEUSE	152
ENTRAÎNEMENT D'ACCOUPLEMENT FLEXIBLE (ASS)	153
GOULOTTE DE REMPLISSAGE D'HUILE DE TRANSMISSION	154
BOUDIN DE ROUE (ASS)	158
CARTER ET BRIDE D'ESSIEU (ASS)	159
BOÎTIER D'ESSIEU (ASS)	161
CANALISATIONS D'HUILE DE TRANSMISSION (ASS)	165
MONTAGE D'ESSIEU (ASS)	166
REDUCTEUR MARIN - MONTAGE (ASS)	167
TRAINS PLANÉTAIRES-RÉDUCTEURS (ASS)	169
TRANSMISSION (VERSION)	171
ARBRE INTERMÉDIAIRE (ASS)	172
ARBRE D'ENTRAÎNEMENT (ASS)	174
ARBRE DE RENVOI (ASS)	175
ARBRE D'ENTRÉE (ASS)	177
ARBRE DE SORTIE (ASS)	181
BOITE DE VITESSES ET MONTAGE (ASS)	187
BOITE MECANIQUE (VERSION)	188
BOÎTE POWER SHIFT (VERSION)	188
BOÎTE MÉCANIQUE (ASS)	189
BOÎTE POWER SHIFT (ASS)	194
SOLÉNOÏDE DE SOUPAPE ET DE CANALISATIONS (ASS)	200
SOUPAPE ET MONTAGE - SOLÉNOÏDE	202
CLAPET DE DECHARGE (ASS)	203
PNEU - GROUPE DE VALVE	204
ROUE ET PNEU (VERSION)	205
ROUE ET PNEU (ASS)	206
CIRCUIT DE FREINAGE	213
COMMANDE DE FREIN DE STATIONNEMENT (ASS)	213
FREIN DE MANOEUVRE - COMMANDE (ASS)	215
FREIN - MAITRE-CYLINDRE (ASS)	218
LEVIER DE COMMANDE MANUELLE	220
CIRCUIT DE DIRECTION	221
COMMANDE DE DIRECTION (ASS)	221
BOUTON DE DIRECTION (ASS)	223
CANALISATIONS DE DIRECTION (ASS)	224
POMPE DE REGULARISATION DE DEBIT (ASS)	226
CHÂSSIS ET BENNE	227
COMPARTIMENT DE BATTERIE (ASS)	227
CONTREPOIDS (ASS)	228
PORTE DE BATTERIE (ASS)	231
RALLONGE DE GARDE-BOUE	232
GARDE-BOUE AV (ASS)	233
GARDE-BOUE AR (ASS)	234
TÔLE DE PLANCHER (ASS)	236
BATI - CHARGEUSE (ASS)	238
BÂTI D'ORIENTATION (ASS)	239

* TRADUCTION NON DISPONIBLE AU MOMENT DE LA PUBLICATION

TABLE DES MATIÈRES

Désignation	Page
BLINDAGE D'ARBRE DE TRANSMISSION (ASS)	241
PROTÈGE-RADIATEUR (ASS)	242
CAPOT ET PROTECTION (ASS)	243
CAPOT DU MOTEUR (ASS)	245
CIRCUIT HYDRAULIQUE	247
ACCUMULATEUR - HUILE PILOTE (ASS)	247
ACCUMULATEUR - COMMANDE DE TRANSLATION (ASS)	248
COMMANDE DE TRANSLATION (VERSION)	249
COMMANDE HYDRAULIQUE MANUELLE (ASS)	250
PALONNIER - GROUPE DE COMMANDE (ASS)	255
VÉRIN ET CANALISATIONS DE SERRE-JOINT (ASS)	259
VÉRIN DE GODET RÉTRO (ASS)	260
VERIN DE FLECHE (ASS)	264
VÉRIN DU BRAS TELESCOPIQUE (ASS)	267
VÉRIN DE LEVAGE (ASS)	269
VÉRIN - GODET TOUS-TRAVAUX (ASS)	270
VERIN DE STABILISATEUR (ASS)	271
VERIN DE BRAS (ASS)	275
VÉRIN D'ORIENTATION (ASS)	279
VÉRIN DE SERRE-JOINT (ASS)	281
VÉRIN D'INCLINAISON (ASS)	282
ENTRAÎNEMENT ET MONTAGE DE POMPE (ASS)	284
BOULONNERIE DE SOUPAPE (ASS)	285
FILTRE A HUILE (ASS)	286
GRAISSEUR HYDRAULIQUE (ASS)	287
VERSION HYDRAULIQUE	288
LIMITEUR DE LEVAGE ET RETOUR À L'ANGLE DE CAVAGE	289
KIT - COMMANDE DE TRANSLATION	291
CANALISATIONS SECONDAIRES DE PELLE RÉTRO (ASS)	294
FLECHE - CANALISATIONS	301
ECLAIRAGE DE GODET (ASS)	303
CANALISATIONS DE VIDANGE (ASS)	308
CANALISATIONS DU BRAS TELESCOPIQUE (ASS)	309
CANALISATIONS DE REFROIDISSEUR D'HUILE HYDR. (ASS)	311
CANALISATIONS DE VÉRIN DE LEVAGE (ASS)	313
CANALISATIONS-CHARGEUSE AUXILIAIRE (ASS)	315
CANALISATIONS - GODET TOUS-TRAVAUX (ASS)	317
CANALISATIONS A COMMANDE PILOTE (ASS)	321
CANALISATIONS DE POMPE (ASS)	327
CANALISATIONS DE COMMANDE DE MARCHE	329
CANALISATIONS DE STABILISATEUR (ASS)	331
CANALISATIONS DE BRAS (ASS)	337
CANALISATIONS D'ORIENTATION (ASS)	338
CANALISATIONS DU VÉRIN D'INCLINAISON (ASS)	340
COLLECTEUR - COMMANDE (ASS)	342
*MANIFOLD GP-CONTROL & SOLENOID	346
MONTAGE DE COMMANDE DE PELLE RÉTRO	348
MONTAGE-DISTRIBUTEUR (ASS)	350
MONTAGE DE VÉRIN (ASS)	351
MONTAGE DE CANALISATIONS (ASS)	354
POMPE A PISTONS (ASS)	356
GROUPE DE ROTATION DE POMPE	358
*SHAFT GP-PUMP DRIVE	359
RÉSERVOIR HYDRAULIQUE ET MONTAGE (ASS)	360
SOUPAPE PILOTE ET CANALISATIONS (ASS)	362
VERSION DE RANGÉE DE DISTRIBUTEURS 2	364
VERSION DE RANGÉE DE DISTRIBUTEURS 3	364
DISTRIBUTEUR 6 ÉLÉMENTS (VERSION)	364
VERSION DE RANGÉE DE DISTRIBUTEURS 7	365
DISTRIBUTEUR 8 ÉLÉMENTS (VERSION)	365
DISTRIBUTEUR DOUBLE ÉLÉMENT (ASS)	366
DISTRIBUTEUR TRIPLE ÉLÉMENT (ASS)	367
DISTRIBUTEUR 6 ÉLÉMENTS (ASS)	368
DISTRIBUTEUR 7 ÉLÉMENTS (ASS)	369
DISTRIBUTEUR 8 ÉLÉMENTS (ASS)	370
DISTRIBUTEUR (ASS)	372
SOUPAPE PILOTE (ASS)	386
DISTRIBUTEUR DE POMPE (ASS)	388
SOUPAPE - SOLÉNOÏDE (ASS)	389

* TRADUCTION NON DISPONIBLE AU MOMENT DE LA PUBLICATION

TABLE DES MATIÈRES

Désignation	Page
ÉQUIPEMENTS	391
BRAS DE LEVAGE (ASS)	391
FLECHE (ASS)	393
TIRANT DE VÉRIN DE LEVAGE (ASS)	394
PROTECTION DE FLÈCHE (ASS)	395
BIELLETTE DE SERRE-JOINT (ASS)	396
TIMONERIE DE GODET RÉTRO (ASS)	397
TIMONERIE DE GODET DE CHARGEUSE (ASS)	399
CHARGEUSE (VERSION)	401
VERROUILLAGE POUR L'EXPÉDITION (ASS)	402
MONTAGE DE BRAS (ASS)	406
SEMELLE ET PROTECTION DE STABILISATEUR (ASS)	407
SEMELLE ET MONTAGE DE STABILISATEUR	413
SEMELLE DE STABILISATEUR	416
PELLE RÉTRO - STABILISATEUR (ASS)	418
BRAS TÉLESCOPIQUE (ASS)	419
BRAS DE PELLE RETRO (ASS)	423
OUTILS DE TRAVAIL	425
CUVE - GODET (ENS)	425
GODET TOUS-TRAVAUX (VERSION)	427
GODET NORMAL (ENS)	430
GODET RETRO (ENS)	440
GODET NORMAL (ASS)	444
GODET RETRO (ASS)	451
GODET TOUS-TRAVAUX (ASS)	495
LAME POUR LE REFOULEMENT (ENS)	502
COUPLEUR EXPRESS (VERSION)	506
COUPLEUR EXPRESS (ASS)	507
LAME DE COUPE (ASS)	512
FOURCHE (ASS)	514
*GUARD GP-WORK TOOL	515
GODET - MONTAGE (ASS)	516
AXE DU COUPLER (ASS)	517
VERSION DE SERRE-JOINT	519
SERRE-JOINT (ASS)	552
DENT MONOBLOC (ASS)	554
POSTE DE CONDUITE	555
CLIMATISEUR ET MONTAGE (ASS)	555
CLIMATISEUR (ASS)	557
SUPPORT - MONTAGE (ASS)	559
CABINE (VERSION)	560
CABINE (ASS)	563
TOIT (VERSION)	566
TOIT-ROPS OUVERT (ASS)	568
POCHE A DOCUMENTS (ASS)	571
COMPRESSEUR ET MONTAGE - RÉFRIGÉRANT (ASS)	572
COMPRESSEUR DE REFRIGERANT (ASS)	573
CONDENSATEUR ET MONTAGE (RÉFRIGÉRANT)	574
CONSOLE DE CONDUITE (ASS)	575
COUVERCLE DE MOTEUR D'ESSUIE-GLACE (ASS)	581
PORTIÈRE DE CABINE (ASS)	582
TAPIS DU PLANCHER (ASS)	586
CHAUFFAGE DE CABINE (ASS)	587
MONTAGE DE MONITEUR (ASS)	591
LOQUET (GR)-CONSOLE	593
LEVIER DE RÉGULATEUR (ASS)	594
CABINE - REVÊTEMENT (ASS)	595
CANALISATIONS DE CHAUFFAGE (ASS)	597
CANALISATIONS-RÉCHAUFFEUR ET CLIMATISEUR (ASS)	598
RÉTROVISEUR (ASS)	600
MOTEUR D'ESSUIE-GLACE (ASS)	602
MONTAGE DE CABINE (ASS)	603
MONTAGE DE MONITEUR (ASS)	604
RÉGULATEUR - PÉDALE (ASS)	605
TOIT - CABINE (ASS)	606
CEINTURE DE SECURITE (ASS)	607
SIÈGE (ASS)	609
SIÈGE AVEC SUSPENSION (ASS)	614
COMPTE-TOURS ÉLECTRIQUE (ASS)	624
GARNITURE POUR CABINE (ASS)	625
RETROVISEUR - CABINE (ASS)	627
LAVE-GLACE - VITRE (ASS)	628
VITRE DE CABINE (ASS)	630
GLACE DE PORTIÈRE (ASS)	636
ESSUIE-GLACE ET LAVE-GLACE	640
ESSUIE-GLACE (ASS)	642
MATÉRIEL ET FOURNITURES D'ENTRETIEN	643
SUPPORT D'EXPÉDITION (ASS)	643
PLAQUE SIGNALÉTIQUE (ASS)	644
LIAISON-EXPÉDITION (ASS)	645
VERROUILLAGE ANTI-VANDALISME (ASS)	645
PLAQUES SIGNALETIQUES ET AUTOCOLLANTS (ASS)	645
PROTECTION ANTIVANDALISME (ASS)	649
GODET - VERSION D'EXPÉDITION	650

* TRADUCTION NON DISPONIBLE AU MOMENT DE LA PUBLICATION

TABLE DES MATIÈRES

Désignation	Page	Désignation	Page
INDEX DE NUMÉROS DE PIÈCES	B1		

* TRADUCTION NON DISPONIBLE AU MOMENT DE LA PUBLICATION

CONTENIDO

Nombre	Página
INFORMACIÓN GENERAL	A30
ALTERNATIVAS DE REPARACIÓN	A44
ADITIVOS DE REFRIGERANTE SUPLEMENTARIOS	A49
PIEZAS DE MANTENIMIENTO	A57
INDICE	A86
CONFIGURACIÓN DE MÁQUINA	1
BRAZO EXTENDIBLE DE RETROEXCAVADOR (CONFIG)	1
BRAZO ESTÁNDAR DE RETROEXCAVADOR (CONFIG)	3
CHASIS (CONFIG)	4
CONFIGURACIÓN COMÚN	4
CONFIGURACIÓN DE MOTOR	5
CONFIGURACIÓN DE MOTORES	5
MOTOR BÁSICO	7
ÁRBOL DE LEVAS (GR)	7
TAPA DE LA CULATA DE CILINDROS (GR)	8
TAPA DEL MECANISMO DE VÁLVULAS (GR)	9
CIGÜEÑAL (GR)	11
BLOQUE MOTOR (GR)	13
CULATA DE CILINDROS (GR)	16
IMPULSOR DE VENTILADOR (GR)	18
VOLANTE (GR)	19
VOLANTE - CAJA DE (GR)	20
CAJA DELANTERA (GR)	21
CÁNCAMOS DE LEVANTAMIENTO DEL MOTOR (GR)	23
MONTAJE DEL MOTOR (GR)	24
MONTAJE DEL MOTOR Y LA TRANSMISIÓN (GR)	25
CÁRTER - COLECTOR DEL (GR)	26
PISTÓN Y BIELA (GR)	28
TAPÓN DEL MOTOR (GR)	30
CIGÜEÑAL - POLEA DE (GR)	33
MECANISMO DE VÁLVULAS (GR)	34
SISTEMA DE LUBRICACIÓN	35
RESPIRADERO (GR)	35
INDICADOR DE NIVEL DE ACEITE Y TUBO DE LLENADO	37
BOMBA DE ACEITE DEL MOTOR (GR)	38
SISTEMA DE ENFRIAMIENTO	39
AGUA - CONEXIÓN DE (GR)	39
ENFRIADOR DE ACEITE DEL MOTOR (GR)	40
ENFRIADOR DE ACEITE DEL MOTOR Y BASE DEL FILTRO	41
CONFIGURACIÓN DE ENFRIAMIENTO	43
SUCCIÓN - VENTILADOR DE (GR)	44
GRUPO DE TUBERIAS-ENFRIADOR DE TRANSMISION	46
GRUPO DEMONTAJE DE RADIADOR Y ENFRIAMIENTO DE ACEITE	48
BOMBA DE AGUA (GR)	50
RADIADOR Y ENFRIADOR DE ACEITE (GR)	52
TANQUE DE EXPANSIÓN (GR)	54
SISTEMA DE ADMISIÓN Y ESCAPE	55
FILTRO DE AIRE (GR)	55
INDICADOR DE CAMBIO DE FILTRO DE ACEITE (GR)	57
SILENCIADOR (GR)	58
TURBOCOMPRESOR (GR)	59
SISTEMA DE COMBUSTIBLE	61
CONTROL DE REGULADOR (GR)	61
TUBERÍAS DE COMBUSTIBLE (GR)	62
TUBERÍAS DEL FILTRO DE COMBUSTIBLE	64
BOMBA DE INYECCIÓN DE COMBUSTIBLE (GR)	65
BOMBA DE CEBADO Y FILTRO PRIMARIO DE COMBUSTIBLE (GR)	68
TANQUE DE COMBUSTIBLE Y GRUPO DE MONTAJE	70
COMBUSTIBLE - TANQUE DE (GR)	71
SISTEMA ELÉCTRICO Y DE ARRANQUE	73
CARGA - ALTERNADOR DE (GR)	73
BATERÍA Y CABLES (GR)	74
CONTROL DE COMUNICACION (GR)	78
ELECTRÓNICA DE LA MÁQUINA (GR)	79
ELECTRONICA DE MONITOR (GR)	80
BUJÍA INCANDESCENTE (GR)	81
AGUA DE LAS CAMISAS - CALENTADOR DEL (GR)	82
INSTALACION DE COMUNICACION (GR)	83
GRUPO DE INSTALACION, CONTROL DE GRADO	87
REFLECTOR (GR)	91

* NO HAY TRADUCCION DISPONIBLE EN EL MOMENTO DE LA IMPRESION

CONTENIDO

Nombre	Página
LÁMPARA DE BALIZA DE ADVERTENCIA (GR)	93
LUCES DE REFLECTOR Y CAMBIO DE DIRECCION (GR)	94
LUZ DE BALIZA (GR)	96
MASTIL - MONTAJE DEL (GR)	97
MONTAJE DEL SENSOR (GR)	98
RELÉ (GR)	99
SENSOR DE VELOCIDAD (GR)	102
MOTOR DE ARRANQUE ELÉCTRICO (GR)	103
GRUPO DE INTERRUPTOR-TRACCIÓN EN TODAS LAS RUEDAS	106
GRUPO DE INTERRUPTOR, TRABA DEL DIFERENCIAL	107
INTERRUPTOR DE PRESIÓN (GR)	108
CABLES DEL ACONDICIONADOR DE AIRE (GR)	109
CABLES DE LA CONSOLA (GR)	112
CABLES DEL CONTROL (GR)	116
CABLES DEL MOTOR (GR)	119
*WIRING GP-EXTENDABLE STICK	122
CABLES DE CALEFACCIÓN (GR)	123
CABLES DEL POSICIONADOR Y DE DESCONEXIÓN (GR)	125
CABLES DE LA PLATAFORMA (GR)	127
CABLES POSTERIORES (GR)	132
CABLES DE CONTROL DE AMORTIGUACIÓN (GR)	134
*WIRING GP-TRANSMISSION CONTROL	136
TREN DE FUERZA	138
EJE DE IMPULSIÓN Y DE DIRECCIÓN (GR)	138
EJE TRASERO (GR)	140
CAJA DE LA TRANSMISIÓN (CONJ)	143
CONTROL DE LA TRANSMISIÓN (GR)	146
DIFERENCIAL Y CORONA (GR)	148
DIFERENCIAL (GR)	150
CONFIG. DEL MANDO, CARGADOR RETROEXCAVADORA	152
ACOPLAMIENTO FLEXIBLE - MANDO DE (GR)	153
TUBO DE LLENADO DE ACEITE DE LA TRANSMISIÓN (GR)	154
GRUPO DE PESTAÑA, RUEDA	158
GRUPO DE PESTAÑA Y RESINTO, EJE	159
CAJA DEL EJE (GRUPO)	161
TUBERÍAS DE ACEITE DEL TREN DE FUERZA (GR)	165
EJE - GRUPO DE MONTAJE	166
MONTAJE DE LA TRANSMISIÓN (GR)	167
PLANETARIO DEL MANDO FINAL (GR)	169
TREN DE FUERZA (CONFIG)	171
EJE GR-CONTRARIO	172
EJE DE MANDO (GR)	174
EJE GR-RUEDA GUIA	175
EJE DE ENTRADA (GR)	177
EJE DE SALIDA (GR)	181
MONTAJE Y TRANSMISIÓN(GR)	187
TRANSMISION DIRECTA (CONFIG)	188
SERVOTRANSMISIÓN (CONFIG)	188
TRANSMISION DIRECTA (GR)	189
SERVOTRANSMISIÓN (GR)	194
*VALVE & LINES GP-SOLENOID	200
VALVULA DE SOLENOIDE Y MONTAJE (GR	202
VÁLVULA DE ALIVIO (GR)	203
VÁLVULA DEL NEUMÁTICO (GR)	204
RUEDA Y LLANTA (CONFIG)	205
RUEDA Y NEUMÁTICO (GR)	206
SISTEMA DE FRENOS	213
CONTROL DEL FRENO DE ESTACIONAMIENTO	213
FRENO DE SERVICIO - CONTROL (GR)	215
FRENO DEL CILINDRO (GR)	218
CONTROL MANUAL DE PALANCA (GR)	220
SISTEMA DE DIRECCIÓN	221
CONTROL DE DIRECCIÓN (GR)	221
GRUPO PERILLA, DIRECCIÓN	223
TUBERÍAS DE DIRECCIÓN (GR)	224
DOSIFICACIÓN - BOMBA DE (GR)	226
BASTIDOR Y CAJA	227
CAJA DE BATERÍA	227
CONTRAPESO (GR)	228
TAPA DE LA BATERÍA (GR)	231
EXTENSIÓN DEL GUARDABARROS (GR)	232
GUARDABARROS DELANTERO (GR)	233
GUARDABARROS TRASERO (GR)	234
PLANCHA DEL PISO (GR)	236
BASTIDOR DEL CARGADOR (GR)	238
BASTIDOR DE ROTACIÓN (GR)	239
PROTECTOR DEL EJE IMPULSOR (GR)	241
PROTECTOR DEL RADIADOR (GR)	242
CAPO Y PROTECTOR (GR)	243
CAPÓ DEL MOTOR (GR)	245

* NO HAY TRADUCCION DISPONIBLE EN EL MOMENTO DE LA IMPRESION

CONTENIDO

Nombre	Página
SISTEMA HIDRÁULICO	247
ACUMULADOR DE ACEITE PILOTO (GR)	247
ACUMULADOR DE CONTROL DE AMORTIGUACION (GR)	248
CONTROL DE AMORTIGUACIÓN (CONFIG)	249
CONTROL HIDRÁULICO MANUAL (GR)	250
PALANCA UNIVERSAL DE CONTROL (GR)	255
CILINDRO Y TUBERIAS GR - PULGAR	259
CILINDRO DE CUCHARÓN RETROEXCAVADOR (GR)	260
CILINDRO DE LA PLUMA (GR)	264
CILINDRO DEL BRAZO EXTENSIBLE (GR)	267
CILINDRO DE LEVANTAMIENTO (GR)	269
CILINDRO DE CUCHARÓN DE USO MÚLTIPLE (GR)	270
CILINDRO ESTABILIZADOR (GR)	271
CILINDRO DEL BRAZO (GR)	275
CILINDRO DE ROTACIÓN (GR)	279
CILINDRO GR - PULGAR	281
INCLINACIÓN HORIZONTAL - CILINDRO DE (GR)	282
MANDO DE LA BOMBA Y MONTAJE (GR)	284
GRUPO DE AJUSTADOR, VÁLVULA	285
FILTRO DE ACEITE (GR)	286
CONEXION HIDRAULICA (GR)	287
HIDRÁULICA (CONFIG)	288
POSICIONADOR DEL CUCHARÓN Y DESCONEXIÓN (GR)	289
JUEGO DE CONTROL DE OPERACION	291
TUBERIAS AUXILIARES-RETROEXCAVADORA (GR)	294
TUBERÍAS DE LA PLUMA (GR)	301
TUBERÍAS DEL CUCHARÓN (GR)	303
TUBERÍAS DE DRENAJE (GR)	308
TUBERÍAS DE LA PALANCA EXTENDIBLE (GR)	309
TUBERÍAS DEL ENFRIADOR DE ACEITE HIDRÁULICO (GR)	311
CILINDRO DE LEVANTAMIENTO - TUBERÍAS DEL (GR)	313
TUBERIAS DE AUXILIAR DE CARGADOR (GR)	315
TUBERÍAS DEL CUCHARÓN DE USO MÚLTIPLE	317
TUBERÍAS CON SERVOMANDO (GR)	321
BOMBA - TUBERÍAS DE (GR)	327
TUBERIAS DE CONTROL DE LA SUSPENSIÓN (GR)	329
TUBERÍAS DEL ESTABILIZADOR (GR)	331
TUBERÍAS DEL BRAZO (GR)	337
TUBERÍAS DE GIRO (GR)	338
TUBERÍAS DEL CILINDRO DE INCLINACIÓN (GR)	340
CONTROL DEL MULTIPLE (GR)	342
*MANIFOLD GP-CONTROL & SOLENOID	346
GRUPO DE MONTAJE-CONTROL DE RETROEXCAVADORA	348
MONTAJE DE BANCADA DE VALVULA (GR)	350
MONTAJE DE CILINDRO (GR)	351
MONTAJE DE TUBERIAS (GR)	354
BOMBA DE PISTONES (GR)	356
GRUPO GIRATORIO DE BOMBA	358
*SHAFT GP-PUMP DRIVE	359
TANQUE HIDRÁULICO Y MONTAJE (GR)	360
VÁLVULA Y TUBERÍAS PILOTO (GR)	362
VÁVULA CONFIG.-BANCO 2	364
VÁVULA CONFIG.-BANCO 3	364
GRUPO DE 6 VALVULAS (CONFIG)	364
VÁLVULA CONFIG.-BANCO 7	365
BANCADA DE VALVULAS DE 8 (CONFIG)	365
VÁLVULAS HIDRÁULICAS - GRUPO DE 2	366
GRUPO DE 3 VÁLVULAS HIDRÁULICAS	367
VÁLVULAS HIDRÁULICAS - GRUPO DE 6	368
VÁLVULAS HIDRÁULICAS - GRUPO DE 7	369
VÁLVULAS HIDRÁULICAS - GRUPO DE 8	370
VÁLVULA DE CONTROL (GR)	372
VÁLVULA PILOTO (GR)	386
VALVULA DE CONTROL DE LA BOMBA (GR)	388
VÁLVULA DE SOLENOIDE (GR)	389
IMPLEMENTOS	391
GRUPO DE BRAZO DE LEVANTAMIENTO	391
PLUMA (GR)	393
SOPORTE DEL CILINDRO DE LEVANTAMIENTO (GR)	394
PROTECTOR DE LA PLUMA (GR)	395
VARILLAJE GR-PULGAR	396

* NO HAY TRADUCCION DISPONIBLE EN EL MOMENTO DE LA IMPRESION

CONTENIDO

Nombre	Página
VARILLAJE DEL CUCHARÓN RETROEXCAVADOR (GR)	397
VARILLAJE DE CUCHARÓN CARGADOR (GR)	399
CARGADOR (CONFIG)	401
TRABA DE TRANSPORTE DE LA MÁQUINA (GR)	402
MONTAJE DEL BRAZO (GR)	406
ZAPATA Y PROTECTOR DEL ESTABILIZADOR	407
ALMOHADILLA Y MONTAJE DEL ESTABILIZADOR (GR)	413
ZAPATA DE ESTABILIZADOR (GR)	416
RETROEXCAVADOR - ESTABILIZADOR DEL (GR)	418
BRAZO EXTENSIBLE (GR)	419
BRAZO DE RETROEXCAVADOR (GR)	423
HERRAMIENTAS	425
TAZA DE CUCHARÓN (CONJ)	425
CUCHARÓN DE USO MÚLTIPLE (CONFIG)	427
CUCHARÓN DE USO GENERAL (CONJ)	430
CUCHARÓN EXCAVADOR (CONJ)	440
CUCHARÓN DE USO GENERAL (GR)	444
CUCHARÓN RETROEXCAVADOR (GR)	451
CUCHARÓN DE USO MÚLTIPLE (GR)	495
HOJA TOPADORA (CONJ)	502
ACOPLADOR RÁPIDO (CONFIG)	506
ACOPLADOR RÁPIDO (GR)	507
CUCHILLA (GR)	512
HORQUILLA (GR)	514
*GUARD GP-WORK TOOL	515
MONTAJE DEL CUCHARÓN (GR)	516
PASADOR DE ACOPLADOR (GR)	517
PULGAR CONFIG.	519
PULGAR GR	552
DIENTE DE UNA PIEZA (UNI-TOOTH) (GR)	554
PUESTO DEL OPERADOR	555
ACONDICIONADOR DE AIRE Y MONTAJE (GR)	555
ACONDICIONADOR DE AIRE (GR)	557
SOPORTE DE MONTAJE (GR)	559
CABINA (CONFIG)	560
CABINA (GR)	563
TECHO (CONFIG)	566
TECHO ROPS ABIERTO (GR)	568
COMPARTIMIENTO DE LITERATURA DE SERVICIO (GR)	571
COMPRESOR DE REFRIGERANTE Y GRUPO DE MONTAJE	572
COMPRESOR DE REFRIGERANTE (GR)	573
CONDENSADOR DEL REFRIGERANTE Y MONTAJE (GR)	574
CONSOLA DEL OPERADOR (GR)	575
CUBIERTA DEL MOTOR DE LIMPIAPARABRISAS (GR)	581
PUERTA DE CABINA	582
ALFOMBRILLA DEL PISO (GR)	586
CALEFACCIÓN DE LA CABINA (GR)	587
*INSTALLATION GP-MONITOR	591
PESTILLO DE CONSOLA (GR)	593
GRUPO DE PALANCA-REGULADOR	594
REVESTIMIENTO DE LA CABINA (GR)	595
TUBERÍAS DE LA CALEFACCIÓN (GR)	597
TUBERIAS DE CALENTEDOR Y ACONDICIONADOR DE AIRE (GR)	598
RETROVISOR (GR)	600
MOTOR-LIMPIAPARABRISAS (GR)	602
GRUPO DE MONTAJE DE LA CABINA	603
MONTAJE GR-MONITOR	604
REGULADOR - PEDAL DEL (GR)	605
TECHO DE LA CABINA (GR)	606
CINTURÓN DE SEGURIDAD (GR)	607
ASIENTO (GR)	609
SUSPENSIÓN - ASIENTO CON (GR)	614
ASIENTO CON SUSPENSIÓN (GR)	619
TACÓMETRO ELÉCTRICO (GR)	624
GUARNICIONES DE LA CABINA (GR)	625
VISERA (GR)	627
LAVAPARABRISAS DE LA VENTANA (GR)	628
VENTANA DE LA CABINA (GR)	630
VENTANA DE LA PUERTA (GR)	636
LIMPIA Y LAVAPARABRISAS (GR)	640
LIMPIAPARABRISAS DE LA VENTANA (GR)	642
EQUIPOS Y SUMINISTRO DE SERVICIOS	643
SOPORTE PARA EL TRANSPORTE	643
ETIQUETA DE ADVERTENCIA (GR)	644
TIRANTE DE EMBARQUE (GR)	645
TRABA CONTRA EL VANDALISMO (GR)	645
CALCOMANÍAS Y PLACAS DE IDENTIFICACIÓN (GR)	645
GRUPO DE PROTECCIÓN CONTRA EL VANDALISMO	649

* NO HAY TRADUCCION DISPONIBLE EN EL MOMENTO DE LA IMPRESION

CONTENIDO

Nombre	Página	Nombre	Página
CUCHARÓN DE EMBARQUE (CONFIG)	650		
INDICE DE NUMEROS DE PIEZA	B1		

* NO HAY TRADUCCION DISPONIBLE EN EL MOMENTO DE LA IMPRESION

ÍNDICE

Designação	Página
INFORMAÇÃO GERAL	A34
ALTERNATIVAS DE REPARO	A45
ADITIVOS SUPLEMENTARES DO LÍQUIDO ARREFECEDOR	A50
PEÇAS DE MANUTENÇÃO	A60
ÍNDICE	A97
ARRANJO DA MÁQUINA	1
RETROESCAVADEIRA - BRAÇO ESTENDÍVEL	1
RETROESCAVADEIRA - BRAÇO PADRÃO	3
CHASSI	4
ARRANJO BÁSICO	4
ARRANJO DO MOTOR	5
MOTOR	5
MOTOR BÁSICO	7
EIXO-COMANDO DE VÁLVULA	7
TAMPA - CABEÇA DO CILINDRO	8
TAMPA - MECANISMO DAS VÁLVULAS	9
VIRABREQUIM	11
BLOCO DO MOTOR	13
CABEÇOTE DO MOTOR	16
COMANDO DO VENTILADOR	18
VOLANTE DO MOTOR	19
CAIXA DO VOLANTE DO MOTOR	20
CAIXA DIANTEIRA	21
LEVANTAMENTO DO MOTOR	23
MONTAGEM - MOTOR	24
MONTAGEM - MOTOR E TRANSMISSÃO	25
CÁRTER DO ÓLEO DO MOTOR	26
PISTÃO E BIELA	28
BUJÃO DO MOTOR	30
POLIA DO VIRABREQUIM	33
MECANISMO DAS VÁLVULAS	34
SISTEMA DE LUBRIFICAÇÃO	35
RESPIRO	35
VARETA DE NÍVEL E BOCAL DE ENCHIMENTO DO ÓLEO	37
BOMBA DE ÓLEO - MOTOR	38
SISTEMA DE ARREFECIMENTO	39
CONEXÃO - TUBO D'ÁGUA	39
ARREFECEDOR - ÓLEO DO MOTOR	40
ARREFECEDOR DE ÓLEO DO MOTOR E BASE DO FILTRO	41
ARREFECIMENTO	43
VENTILADOR DE SUCÇÃO	44
TUBULAÇÕES-ARREFECEDOR DA TRANSMISSÃO	46
SUPORTE - ARREFECEDR DE ÓLEO E RADIADOR	48
BOMBA DE ÁGUA	50
RADIADOR E ARREFECEDOR DE ÓLEO	52
TANQUE DE EXPANSÃO	54
SISTEMA DE ADMISSÃO E ESCAPE DE AR	55
PURIFICADOR DE AR	55
INDICADOR - TROCA DO FILTRO DE AR	57
SILENCIADOR	58
TURBOALIMENTADOR	59
SISTEMA DO COMBUSTÍVEL	61
CONTROLE DO GOVERNADOR	61
TUBOS - COMBUSTÍVEL	62
TUBOS - FILTRO DO COMBUSTÍVEL	64
BOMBA DE INJEÇÃO DO COMBUSTÍVEL	65
BOMBA DE ESCORVA DO COMBUSTÍVEL E DO FILTRO PRIMÁRIO	68
TANQUE DE COMBUSTÍVEL E MONTAGEM	70
TANQUE DE COMBUSTÍVEL	71
SISTEMA ELÉTRICO DE PARTIDA	73
ALTERNADOR DE CORRENTE	73
BATERIA E CABOS / FIOS ELÉTRICOS	74
CONTROLE-COMUNICAÇÃO	78
SISTEMA ELETRÔNICO - MÁQUINA	79
SISTEMA ELETRÔNICO - MONITOR	80
VELA DE AQUECIMENTO; VELA INCANDESCENTE	81
AQUECEDOR DA ÁGUA DO MOTOR	82
INSTALAÇÃO-COMUNICAÇÃO	83
INSTALAÇÃO-CONTROLE DA INCLINAÇÃO	87
LÂMPADA - FAROL	91
LUZ GIRATÓRIA DE ALARME	93
SISTEMA DE ILUMINAÇÃO - FARÓIS E SINAL	94
SIST. DE ILUMINAÇÃO - PISCA-PISCA GIRATÓRIO DE ADVERTÊNCIA	96
MONTAGEM - MASTRO	97

* TRADUÇÃO NÃO DISPONÍVEL NO MOMENTO DA IMPRESSÃO

ÍNDICE

Designação	Página
MONTAGEM - SENSOR	98
RELÉ	99
SENSOR DE VELOCIDADE	102
MOTOR ELÉTRICO DE PARTIDA	103
INTERRUPTOR-TRAÇÃO EM TODAS AS RODAS	106
INTERRUPTOR - TRAVA DO DIFERENCIAL	107
INTERRUPTOR - PRESSÃO	108
CABOS/FIOS ELÉTRICOS - AR CONDICIONADO	109
CABOS/FIOS ELÉTRICOS DO CONSOLE	112
CABOS/FIOS ELÉTRICOS - CONTROLE	116
CABOS/FIOS ELÉTRICOS - MOTOR	119
FIAÇÃO-BRAÇO ALONGÁVEL	122
CABOS/FIOS ELÉTRICOS - AQUECEDOR	123
CABOS/FIOS ELÉTRICOS - POSICIONADOR E DESENGATE AUTOMÁTICO	125
CABOS/FIOS ELÉTRICOS - PLATAFORMA	127
CABOS/FIOS ELÉTRICOS - TRASEIROS	132
CABOS/FIOS ELÉTRICOS - ABSORÇÃO DE IMPACTOS	134
CABOS/FIOS ELÉTRICOS - CONTROLE DA TRANSMISSÃO	136
TREM DE FORÇA	138
EIXO DE PROPULSÃO E DIREÇÃO	138
SEMI-EIXO TRASEIRO	140
CAIXA DA TRANSMISSÃO	143
CONTROLE DA TRANSMISSÃO	146
DIFERENCIAL E COROA	148
DIFERENCIAL	150
COMANDO - RETROESCAVADEIRA	152
COMANDO - ACOPLAMENTO FLEXÍVEL	153
BOCAL DE ENCHIMENTO DE ÓLEO DO TREM DE FORÇA	154
FLANGE - RODA	158
ALOJAMENTO E FLANGE - EIXO	159
CAIXA DO SEMI-EIXO	161
TUBOS - ÓLEO DA TRANSMISSÃO	165
MONTAGEM DO EIXO	166
MONTAGEM - TRANSMISSÃO	167
GR. PLANETÁRIO - COMANDO FINAL	169
TREM DE FORÇA	171
EIXO-CONTADOR	172
EIXO DE TRANSMISSÃO	174
EIXO-RODA-GUIA	175
EIXO DE ENTRADA	177
EIXO - SAÍDA	181
TRANSMISSÃO E MONTAGEM	187
TRANSMISSÃO DIRETA	188
SERVO-TRANSMISSÃO	188
TRANSMISSÃO DIRETA	189
SERVOTRANSMISSÃO	194
VÁLVULA E TUBULAÇÕES-SOLENÓIDE	200
VALVULA DO SOLENOIDE E MONTAGEM	202
VÁLVULA DE ALÍVIO	203
VÁLVULA DE PNEU	204
RODA E PNEU	205
SISTEMA DE FREIOS	213
CONTROLE DO FREIO DE ESTACIONAMENTO	213
CONTROLE DO FREIO DE SERVIÇO	215
CILINDRO DO FREIO	218
ALAVANCA DE CONTROLE MANUAL	220
SISTEMA DE DIREÇÃO	221
CONTROLE DE DIREÇÃO	221
BOTÃO - DIREÇÃO	223
TUBOS - DIREÇÃO	224
BOMBA REGULADORA	226
CHASSI E CARCAÇA	227
CAIXA - BATERIA	227
CONTRAPESO	228
TAMPA - ACESSO À BATERIA	231
PÁRA-LAMA-EXTENSÃO	232
PÁRA-LAMA DIANTEIRO	233
PÁRA-LAMA TRASEIRO	234
CHAPA DO PISO	236
CHASSI DIANTEIRO	238
ARMAÇÃO OSCILANTE	239
PROTETOR - EIXO DE TRANSMISSÃO	241
PROTETOR - RADIADOR	242
CAPÔ E PROTETOR	243
CAPÔ DO MOTOR	245
SISTEMA HIDRÁULICO	247
ACUMULADOR D ÓLEO - PILOTO	247
ACUMULADOR DO SISTEMA DE ABSORÇÃO DE IMPACTOS	248
SISTEMA DE ABSORÇÃO DE IMPACTOS	249
CONTROLE HIDRÁULICO MANUAL	250
CONTROLE - ALAVANCA	255

* TRADUÇÃO NÃO DISPONÍVEL NO MOMENTO DA IMPRESSÃO

ÍNDICE

Designação	Página
CILINDRO E TUBULAÇÕES-POLEGAR	259
CILINDRO DA CAÇAMBA RETROESCAVADEIRA	260
CILINDRO DA LANÇA	264
CILINDRO DO BRAÇO ESTENDÍVEL	267
CILINDRO DE LEVANTAMENTO	269
CILINDRO - CAÇAMBA DE MÚLTIPLAS APLICAÇÕES	270
CILINDRO DO ESTABILIZADOR	271
CILINDRO DO BRAÇO	275
CILINDRO DE GIRO	279
CILINDRO - POLEGAR	281
CILINDRO DE INCLINAÇÃO	282
COMANDO DA BOMBA E MONTAGEM	284
FIXADOR - VÁLVULA	285
FILTRO - ÓLEO	286
CONEXÃO - HIDRÁULICA	287
COMANDO HIDRÁULICO	288
DESENGATE E POSICIONADOR DA CAÇAMBA	289
JOGO - SISTEMA DE ABSORÇÃO DE IMPACTOS	291
TUBOS AUXILIARES - RETROESCAVADEIRA	294
TUBOS - LANÇA	301
TUBOS - CAÇAMBA	303
TUBOS - DRENAGEM	308
TUBOS - BRAÇO COM EXTENSÃO	309
TUBOS - ARREFECEDOR DE ÓLEO HIDRÁULICO	311
TUBOS - CILINDRO DE LEVANTAMENTO	313
TUBOS AUXILIARES	315
TUBOS - CAÇAMBA DE MÚLTIPLAS APLICAÇÕES	317
TUBOS - CIRCUITO PILOTO	321
TUBOS - BOMBA	327
TUBOS - ABSORÇÃO DE IMPACTOS	329
TUBOS - ESTABILIZADOR	331
TUBOS - BRAÇO	337
TUBOS - GIRO	338
TUBOS - CILINDRO DE INCLINAÇÃO	340
COLETOR - CONTROLE	342
COLETOR-CONTROLE E SOLENÓIDE	346
MONTAGEM - CONTROLE DA RETROESCAVADEIRA	348
MONTAGEM - BANCO DE VÁLVULAS	350
MONTAGEM - CILINDRO	351
MONTAGEM - TUBOS	354
BOMBA DE PISTÃO	356
GRUPO ROTATIVO DA BOMBA	358
*SHAFT GP-PUMP DRIVE	359
TANQUE DE ÓLEO HIDRÁULICO E MONTAGEM	360
VÁLVULA PILOTO E TUBOS	362
GRUPO DE VÁLVULA DE CONTROLE - 2	364
VÁLVULA-CONTROLE 3	364
GRUPO DE VÁLVULAS - SEIS	364
VÁLVULA-CONTROLE 7	365
VÁLVULAS DE CONTROLE - OITO	365
GRUPO DE VÁLVULAS DE CONTROLE - DUPLO	366
GRUPO DE VÁLVULAS DE CONTROLE - TRIPLO	367
GRUPO DE VÁLVULAS DE CONTROLE - SEIS	368
GRUPO DE VÁLVULAS DE CONTROLE - SETE	369
GRUPO DE VÁLVULAS DE CONTROLE - OITO	370
VÁLVULA DE CONTROLE	372
VÁLVULA DE CONTROLE PILOTO	386
VÁLVULA DE CONTROLE DA BOMBA	388
VÁLVULA SOLENÓIDE	389
ACESSÓRIOS	391
BRAÇO DE LEVANTAMENTO	391
LANÇA	393
TIRANTE DO CILINDRO DE LEVANTAMENTO	394
PROTETOR DA LANÇA	395
ELO - POLEGAR	396
ARTICULAÇÃO DA CAÇAMBA DA RETROESCAVADEIRA	397
ARTICULAÇÃO DAS CAÇAMBAS DAS CARREGADEIRAS	399
CAÇAMBA DIANTEIRA	401
TRAVA - TRANSPORTE	402
MONTAGEM - BRAÇO	406
COXIM E PROTETOR DO ESTABILIZADOR	407
CALÇO DO ESTABILIZADOR E MONTAGEM	413
CALÇO DO ESTABILIZADOR	416
ESTABILIZADOR - RETROESCAVADEIRA	418
BRAÇO ESTENDÍVEL	419
BRAÇO - CAÇAMBA RETRO-ESCAVADORA	423
FERRAMENTAS DE TRABALHO	425
CAÇAMBA	425

* TRADUÇÃO NÃO DISPONÍVEL NO MOMENTO DA IMPRESSÃO

ÍNDICE

Designação	Página
CAÇAMBA DE MÚLTIPLAS APLICAÇÕES	427
CAÇAMBA PARA APLICAÇÃO GERAL	430
CAÇAMBA - RETRO-ESCAVADORA	440
CAÇAMBA PARA APLICAÇÃO GERAL	444
CAÇAMBA RETROESCAVADORA	451
CAÇAMBA DE MÚLTIPLAS APLICAÇÕES	495
LÂMINA	502
ACOPLADOR RÁPIDO	506
BORDA CORTANTE	512
GARFO	514
PROTETOR-FERRAMENTA DE TRABALHO	515
MONTAGEM - CAÇAMBA	516
PINO-ACOPLADOR	517
POLEGAR	519
UNI-DENTE	554
POSTO DO OPERADOR	555
CONDICIONADOR DE AR E MONTAGEM	555
CONDICIONADOR DE AR	557
SUPORTE - MONTAGEM	559
CABINE	560
TOLDO	566
TOLDO - ESTRUTURA ROPS ABERTA	568
COMPARTIMENTO PARA LITERATURA	571
COMPRESSOR DE REFRIGERANTE E MONTAGEM	572
COMPRESSOR DE REFRIGERANTE	573
CONDENSADOR DO REFRIGERANTE E MONTAGEM	574
CONSOLE DO OPERADOR	575
TAMPA - MOTOR DO LIMPADOR DE PÁRA-BRISA	581
PORTA DA CABINE	582
TAPETE	586
AQUECEDOR DA CABINE	587
INSTALAÇÃO-MONITOR	591
TRINCO DE CONSOLE	593
ALAVANCA - GOVERNADOR	594
REVESTIMENTO DA CABINE	595
TUBOS - AQUECEDOR	597
TUBULAÇÕES - AQUECEDOR E AR CONDICIONADO	598
ESPELHO RETROVISOR	600
MOTOR - LIMPADOR DO VIDRO	602
MONTAGEM - CABINE	603
MONTAGEM - MONITOR	604
PEDAL DO GOVERNADOR	605
TETO - CABINE	606
CINTO DE SEGURANÇA	607
ASSENTO	609
ASSENTO COM SUSPENSÃO	614
SUSPENSÃO - ASSENTO	619
TACÔMETRO - ELÉTRICO	624
LISTRA DA CABINE	625
PÁRA-SOL DA CABINE	627
LAVADOR DO VIDRO	628
JANELA DA CABINE	630
VIDRO DA PORTA	636
LIMPADOR E LAVADOR - JANELA	640
LIMPADOR DO VIDRO	642
EQUIPAMENTOS DE SERVIÇO E SUPRIMENTOS	643
SUPORTE PARA TRANSPORTE	643
DECALQUE	644
ELO - EMBARQUE	645
CADEADO CONTRA VANDALISMO	645
PLACA E DECALQUE	645
PROTEÇÃO CONTRA VANDALISMO	649
AR. DE EMBARQUE DA CAÇAMBA	650
ÍNDICE DE NÚMERO DE PEÇA	B1

* TRADUÇÃO NÃO DISPONÍVEL NO MOMENTO DA IMPRESSÃO

INHALTSVERZEICHNIS

Bezeichnung	Seite
ALLGEMEINE HINWEISE	A38
REPARATURALTERNATIVEN	A46
KÜHLMITTELZUSATZ	A51
WARTUNGSTEILE	A63
STICHWORTVERZEICHNIS	A108
MASCHINE	1
HECKBAGGER-TELESKOPSTIEL	1
STANDARDHECKBAGGERSTIEL	3
FAHRWERK	4
GRUNDAUSFÜHRUNG	4
MOTOR	5
MOTORAUSFÜHRUNG	5
MOTOR (GRUNDAUSFÜHRUNG)	7
NOCKENWELLE	7
ZYLINDERKOPFDECKEL	8
VENTILDECKEL	9
KURBELWELLE	11
MOTORBLOCK	13
ZYLINDERKOPF	16
LÜFTERANTRIEB	18
SCHWUNGRAD	19
SCHWUNGRADGEHÄUSE	20
STIRNRADGEHÄUSE	21
MOTORHUBÖSE	23
MOTORAUFLAGER	24
MOTOR- UND GETRIEBEAUFLAGER	25
ÖLWANNE	26
PLEUELSTANGE UND KOLBEN	28
MOTORSTOPFEN	30
KURBELWELLEN-RIEMENSCHEIBE	33
VENTILSTEUERUNG	34
SCHMIERSYSTEM	35
ENTLÜFTER	35
ÖLMESSSTAB U. EINFÜLLSTUTZEN	37
SCHMIERPUMPE	38
KÜHLSYSTEM	39
KÜHLWASSERANSCHLUSS	39
MOTORÖLKÜHLER	40
MOTORÖLKÜHLER UND FILTER-SOCKEL	41
KÜHLSYSTEM	43
SAUGLÜFTER	44
GETRIEBEKÜHLERLEITUNGEN	46
KÜHLER U. ÖLKÜHLER - BEFESTIGUNG	48
KÜHLWASSERPUMPE	50
KÜHLERNETZ UND ÖLKÜHLER	52
AUSGLEICHSBEHÄLTER	54
LUFTANSAUG- UND ABGASSYSTEM	55
LUFTREINIGER	55
LUFTFILTERWARTUNGSANZEIGE	57
SCHALLDÄMPFER	58
TURBOLADER	59
KRAFTSTOFFSYSTEM	61
REGLERSTEUERUNG	61
KRAFTSTOFFLEITUNGEN	62
KRAFTSTOFFILTERLEITUNGEN	64
KRAFTSTOFFEINSPRITZPUMPE	65
KRAFTSTOFFENTLÜFTUNGSPUMPE UND -HAUPTFILTER	68
KRAFTSTOFFTANK U. BEFESTIGUNG	70
KRAFTSTOFFTANK	71
ELEKTRISCHE ANLAGE UND STARTSYSTEM	73
DREHSTROMGENERATOR	73
BATTERIE UND VERDRAHTUNG	74
ÜBERTRAGUNGSSTEURUNG	78
ELEKTRONIK - MASCHINE	79
ELEKTRONIK - MONITOR	80
GLÜHKERZE	81
UMLAUFKÜHLWASSERHEIZUNG	82
KOMMUNIKATIONSEINBAUSATZ	83
EINBAUSATZ - PLANIERSTEUERUNG	87
ARBEITSLEUCHTEN	91
RUNDUM-KENNLEUCHTE	93
ARBEITS- U. SIGNALLEUCHTE	94
RUNDUM-KENNLEUCHTE	96
HUBMASTBEFESTIGUNG	97
SENSORBEFESTIGUNG	98
RELAIS	99
DREHZAHLSENSOR	102
STARTERMOTOR	103
SCHALTER - ALLRADANTRIEB	106
DIFFERENZIALSPERRENSCHALTER	107
DRUCKSCHALTER	108
KLIMAANLAGENVERDRAHTUNG	109
KONSOLENVERDRAHTUNG	112
STEUERUNGSVERDRAHTUNG	116
MOTORVERDRAHTUNG	119
*WIRING GP-EXTENDABLE STICK	122
HEIZUNGSVERDRAHTUNG	123

* ÜBERSETZUNG ZUM ZEITPUNKT DER DRUCKLEGUNG NICHT VORHANDEN

INHALTSVERZEICHNIS

Bezeichnung	Seite
VERDRAHTUNG - SCHAUFELAUSSCHALTER U. EINSTELLER	125
FAHRERPLATTFORMVERDRAHTUNG	127
VERDRAHTUNG, HINTEN	132
SCHWINGUNGSDÄMPFUNGSVERDRAHTUNG	134
GETRIEBESTEUERUNGS-VERDRAHTUNG	136
KRAFTÜBERTRAGUNG	138
ANTRIEBS- UND LENKACHSE	138
HINTERACHSE	140
GETRIEBEGEHÄUSE	143
GETRIEBESTEUERUNG	146
DIFFERENTIAL UND TELLERRAD	148
DIFFERENTIAL	150
ANTRIEB - BAGGERLADER	152
KUPPLUNGSANTRIEB, ELAST.	153
GETRIEBEÖLFÜLLSTUTZEN	154
RADFLANSCH	158
ACHSGEHÄUSEFLANSCH	159
ACHSGEHÄUSE	161
ÖLLEITUNGEN - KRAFTÜBERTRAGUNG	165
ACHSENANBAUSATZ	166
GETRIEBEAUFLAGER	167
SEITENANTRIEB - PLANETENGETRIEBE	169
KRAFTÜBERTRAGUNG	171
GEGENWELLE	172
ANTRIEBSWELLE	174
ZWISCHENRADWELLE	175
ANTRIEBSWELLE	177
ABTRIEBSWELLE	181
GETRIEBE U. BEFESTIGUNG	187
MECHANISCHES GETRIEBE	188
LASTSCHALTGETRIEBE	188
WECHSELGETRIEBE	189
LASTSCHALTGETRIEBE	194
*VALVE & LINES GP-SOLENOID	200
SOLENOIDVENTIL U. BEFESTIGUNGSTEILE	202
ÜBERDRUCKVENTIL	203
REIFENVENTIL	204
RAD UND REIFEN	205
BREMSSYSTEM	213
FESTSTELLBREMSGESTÄNGE	213
BREMSGESTÄNGE	215
BREMSZYLINDER	218
HANDSTEUERHEBEL	220
LENKSYSTEM	221
LENKBETÄTIGUNG	221
LENKKNOPF	223
LENKÖLLEITUNGEN	224
ZUMESSPUMPE	226
RAHMEN UND FAHRGESTELL	227
BATTERIEKASTEN	227
GEGENGEWICHT	228
BATTERIEDECKEL	231
SCHUTZBLECHVERLÄNGERUNG	232
SCHUTZBLECHE, VORNE	233
SCHUTZBLECHE, HINTEN	234
BODENBLECH	236
LADERRAHMEN	238
SCHWENKRAHMEN	239
ANTRIEBSWELLENVERKLEIDUNG	241
KÜHLERSCHUTZ	242
MOTORHAUBE UND VERKLEIDUNG	243
MOTORHAUBE	245
HYDRAULIKSYSTEM	247
VORSTEUERÖLDRUCKSAMMLER	247
DRUCKSPEICHER, HYDRAULISCHE SCHWINGUNGSDÄMPFUNG	248
HYDRAULISCHE SCHWINGUNGSDÄMPFUNG	249
HYDRAULIKHANDSTEUERUNG	250
JOYSTICK -STEUERUNG	255
DAUMEN - ZYLINDER U. LEITUNGEN	259
HECKBAGGERLÖFFELZYLINDER	260
AUSLEGERZYLINDER	264
TELESKOPSTIELZYLINDER	267
HUBZYLINDER	269
KOMBISCHAUFELZYLINDER	270
SEITENSTÜTZENZYLINDER	271
STIELZYLINDER	275
SCHWENKZYLINDER	279
DAUMENZYLINDER	281
KIPPZYLINDER	282
PUMPENANTRIEB U. BEFESTIGUNGSTEILE	284
VENTILBEFESTIGUNG	285
ÖLFILTER	286
HYDRAULIKFITTING	287
HYDRAULIKSYSTEM	288
SCHAUFELAUSSCHALTER UND -EINSTELLER	289
HYDRAULISCHE SCHWINGUNGSDÄMPFUNG - EINBAUSATZ	291
TIEFLÖFFEL-HYDRAULIKNOTLEITUNGEN	294
AUSLEGERLEITUNGEN	301

* ÜBERSETZUNG ZUM ZEITPUNKT DER DRUCKLEGUNG NICHT VORHANDEN

INHALTSVERZEICHNIS

Bezeichnung	Seite
SCHAUFELLEITUNGEN	303
ABLASSLEITUNGEN	308
TELESKOPSTIELLEITUNGEN	309
HYDRAULIKÖLKÜHLERLEITUNGEN	311
HUBZYLINDERLEITUNGEN	313
LADERZUSATZLEITUNGEN	315
KOMBISCHAUFELLEITUNGEN	317
VORSTEUERLEITUNGEN	321
HYDRAULIKPUMPE UND LEITUNGEN	327
SCHWINGUNGSDÄMPFUNGSLEITUNGEN	329
SEITENSTÜTZENLEITUNGEN	331
STIELZYLINDERLEITUNGEN	337
SCHWENKLEITUNGEN	338
NEIGEZYLINDERLEITUNGEN	340
STEUERKRÜMMER	342
*MANIFOLD GP-CONTROL & SOLENOID	346
HECKBAGGERSTEURUNG - AUFHÄNGUNG	348
VENTILANORDNUNGS-BEFESTIGUNGSSATZ	350
ZYLINDERAUFHÄNGUNG	351
LEITUNGS-BEFESTIGUNGSTEILE	354
KOLBENPUMPE	356
KOLBENPUMPENUMLAUFSATZ	358
*SHAFT GP-PUMP DRIVE	359
HYDRAULIKTANK UND BEFESTIGUNGSTEILE	360
HYDRAULIKVORSTEUERVENTIL U. LEITUNGEN	362
VENTILBLOCK 2	364
VENTILBLOCK 3	364
6-FACH-VENTILBLOCK	364
VENTILBLOCK 7	365
8-BLOCK-VENTILSATZ	365
VENTILSATZ (2-VENTIL)	366
VENTILSATZ (3-VENTIL)	367
VENTILSATZ (6-VENTIL)	368
VENTILSATZ (7-VENTIL)	369
VENTILSATZ (8-VENTIL)	370
STEUERVENTIL	372
VORSTEUERVENTIL	386
PUMPENSTEUERVENTIL	388
MAGNETVENTIL	389
ARBEITSGERÄTE	391
HUBARM	391
AUSLEGER	393
HUBZYLINDER-HALTERUNG	394
*GUARD GP-BOOM	395
DAUMENGESTÄNGE	396
HECKBAGGERLÖFFELGESTÄNGE	397
SCHAUFELGESTÄNGE	399
LADESCHAUFEL	401
TRANSPORTSPERRE	402
STIELAUFHÄNGUNG	406
SEITENSTÜTZENPLATTEN UND SCHUTZABDECKUNG	407
STÜTZPLATTEN U. BEFESTIGUNG	413
SEITENSTÜTZENPLATTEN	416
SEITENSTÜTZEN	418
TELESKOPSTIEL	419
LÖFFELSTIEL	423
ARBEITSGERÄTE	425
*BOWL AS-BUCKET	425
KOMBISCHAUFEL	427
UNIVERSALSCHAUFEL	430
HECKBAGGERLÖFFEL	440
*BUCKET GP-GENERAL PURPOSE	444
HECKBAGGERLÖFFEL	451
KOMBISCHAUFEL	495
PLANIERSCHILD	502
SCHNELLWECHSELVORRICHTUNG	506
SCHNELLWECHSELEINRICHTUNG	507
SCHNEIDMESSER	512
PALETTENGABEL	514
*GUARD GP-WORK TOOL	515
SCHAUFELAUFHÄNGUNG	516
KUPPLUNGSBOLZEN	517
DAUMEN	519
UNIVERSAL-ZAHNSPITZE	554
FAHRERHAUS	555
KLIMAANLAGE UND AUFHÄNGUNG	555
KLIMAANLAGE	557
BEFESTIGUNGSHALTERUNG	559
FAHRERHAUS	560
WETTERDACH	566
FAHRERHAUS M. OFFENEM ÜBERROLLSCHUTZ	568
LITERATURABLAGE	571
KÄLTEMITTELKOMPRESSOR U. BEFESTIGUNG	572
KÄLTEMITTELKOMPRESSOR	573
KÄLTEMITTELKONDENSATOR U. BEFESTIGUNGSTEILE	574
STEUERKONSOLE	575
WISCHERMOTORABDECKUNG	581
FAHRERHAUSTÜR	582
FUSSMATTE	586
FAHRERHAUSHEIZUNG	587
*INSTALLATION GP-MONITOR	591
KONSOLENVERRIEGELUNG	593

* ÜBERSETZUNG ZUM ZEITPUNKT DER DRUCKLEGUNG NICHT VORHANDEN

INHALTSVERZEICHNIS

Bezeichnung	Seite
REGELERHEBEL	594
FAHRERHAUSAUSKLEIDUNG	595
HEIZUNGSLEITUNGEN	597
HEIZUNGS- U. KLIMAANLAGENLEITUNGEN	598
RÜCKSPIEGEL	600
SCHEIBENWISCHERMOTOR	602
FAHRERHAUSANBAUSATZ	603
MONITORBEFESTIGUNG	604
GASPEDAL	605
FAHRERHAUSDACH	606
SICHERHEITSGURT	607
FAHRERSITZ	609
SCHWINGSITZ	614
FAHRERSITZFEDERUNG	619
DREHZAHLMESSER, ELEKTR.	624
FAHRERHAUS - HALTETEILE	625
FAHRERHAUS, SONNENBLENDE	627
SCHEIBENWASCHANLAGE	628
FAHRERHAUSFENSTER	630
TÜRFENSTER	636
SCHEIBENWISCHER UND -WASCHANLAGE	640
SCHEIBENWISCHER	642
WARTUNGSAUSRÜSTUNG UND -ZUBEHÖR	643
TRANSPORTHALTERUNG	643
AUFKLEBER	644
TRANSPORTSPERRE	645
VORHÄNGESCHLOSS	645
SCHILD UND AUFKLEBER	645
SCHUTZABDECKUNG	649
SCHAUFELTRANSPORTAUSFÜHRUNG	650
ERSATZTEILNUMMERNINDEX	B1

* ÜBERSETZUNG ZUM ZEITPUNKT DER DRUCKLEGUNG NICHT VORHANDEN

GENERAL INFORMATION

1. MACHINE IDENTIFICATION

Caterpillar machines are identified by Product Identification Numbers (PIN). Some components included in a machine may be identified by Serial Numbers (S/N). Typical components that will be serialized include engines, transmissions, bulldozers, and rippers. The machine and engine are further identified by arrangement numbers and in some cases modification numbers. These numbers are shown on the product identification plate(s) and on the master plate in the operator's compartment.

Caterpillar dealers need all of these numbers to determine accurate parts identification.

SIS *New Feature*

Effective First Quarter 2001 the Caterpillar Product Identification Number (PIN) changed from 8 to 17 characters. In an effort to provide uniform equipment identification, Caterpillar and other construction equipment manufacturers are moving to comply with the latest version of the product identification numbering standard. Non-road machine PINs are defined by ISO 10261. The new PIN format will apply to all Caterpillar machines and generator sets. The PIN plates and frame marking will display the 17 character PIN. The new format will look like the following:

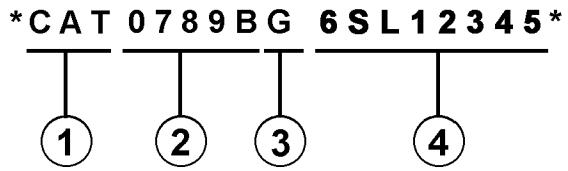

Where:

1. Caterpillar's World Manufacturing Code (characters 1-3)

2. Machine Descriptor (characters 4-8)

3. Check Character (character 9)

4. Machine Indicator Section (MIS) or Product Sequence Number (characters 10-17). These were previously referred to as the Serial Number.

Machines and generator sets produced before First Quarter 2001 will maintain their 8 character PIN format.

Components such as engines, transmissions, axles, etc. and work tools will continue to use an 8 character Serial Number (S/N).

2. ORDERING PARTS

WARNING

When replacement parts are required for this product Caterpillar recommends using Caterpillar replacement parts or parts with equivalent specifications including, but not limited to, physical dimensions, type, strength and material.

Failure to heed this warning can lead to premature failures, product damage, personal injury or death.

Quality Caterpillar replacement parts are available from Caterpillar dealers throughout the world. Their parts inventories are up to date and include all parts normally required to protect your investment in Caterpillar machines. Dealers may offer repair kits or remanufactured parts to allow selection of the most effective repair alternative for a particular situation. When ordering parts, your order should specify the quantity, part number, part name, and the serial number/product identification number of the machine for which the parts are needed.

3. PARTS MANUAL ORGANIZATION

Product information in this manual is presented as "information elements" that represent all of the components for the specific model. Engine Arrangement and Seat Group are examples of information elements. The information elements are organized alphabetically by part name and secondarily by part number within each major section of the manual.

4. TABLE OF CONTENTS

A table of contents (TOC) is found at the beginning of the manual. The TOC lists each section of the manual with a complete list of all information elements organized as they appear in the manual. Page numbers are provided for quick reference to detailed parts identification illustrations and serviceable consist lists.

5. MAINTENANCE PARTS INDEX

The Maintenance Parts Index, located near the beginning of the manual, references most frequently used maintenance part numbers, providing description, quantity, usage and page number. This information is organized alphabetically by part description.

6. INDEX

The index located near the front of the manual is an alphabetical listing of all information elements included in the manual. Page numbers are provided for quick reference to detailed parts identification illustrations and serviceable consist lists.

7. PART NUMBER INDEX

A numerical index listing all part numbers and the corresponding page number(s) appears at the back of the manual.

8. CAPTIONS

Captions located at the beginning of each information element identify the part number and part name along with additional descriptive information. PIN and S/N information found in each caption should be used to select correct information for a specific machine. Field replacement options, identification of optional attachment components, and where used ("part of") information is also provided.

The first line of a caption is shown in larger type font to indicate the beginning of an information element. Captions for additional pages that may be required to illustrate an information element will be shown in standard type font and will include the term *(contd.)* .

9. NON-SERVICED PARTS

In some instances it is necessary to display non-serviced parts that are a link to a lower level serviceable consist lists. These non-serviced part numbers are shown in *italic* type indicating that they are not available.

10. PARTS LIST REFERENCE NUMBERS

Numbers shown in the Ref No column correspond to numbers used in the associated graphic(s). An alphabetic suffix may be added to a reference number to identify lower level consist items. Numbers shown in the Graphic Ref column refer to the graphic number identifier displayed in the lower left corner of each illustration. The Graphic Ref number may be used in combination with the item Ref No to determine the correct part number. There may be intentional omission of a Ref No in a consist list as information is updated to reflect the latest serviceable part numbers.

11. INDENTED PART NAMES

When a part name is indented in a parts list, it is part of (included in) the group or assembly under which it is indented.

12. ILLUSTRATION REFERENCE LETTERS

When necessary, illustrations contain reference letters (A, B, C etc.) that are intended to track lines and harnesses from one point to another. They are also used to show where to reconnect illustrations that have been separated.

13. ABBREVIATIONS AND SYMBOLS

O.D. – Outside Diameter
I.D. – Inside Diameter
A – Not Part Of This Group
B – Use As Required
C – Change From Previous Type
D – Order By The Meter
E – Order By The Centimeter
F – Not Shown
G – Order By The Inch
I – Refer To Hydraulic Information System
M – Metric Part
R – Remfg Part May Be Available
Y – Separate Illustration
Z – Not Serviced Separately

SIS *New Feature*

14.<END>

This symbol indicates the end of an information element.

NOTE:

Continuing improvement and advancement of product design may cause changes to your machine which may not be included in this publication. Whenever a question arises regarding your caterpillar product or this publication, please consult your caterpillar dealer for the latest available information.

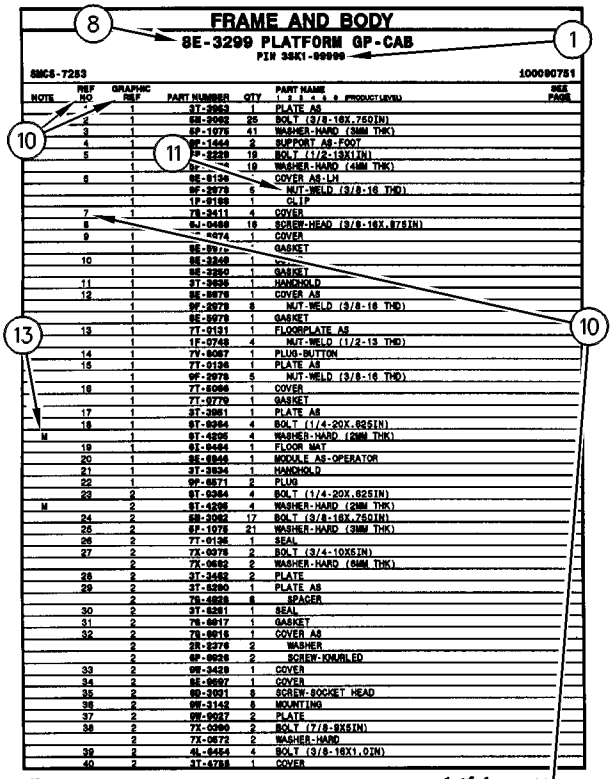
FRAME AND BODY
8E-3299 PLATFORM GP-CAB
PIN 3SK1-99999
SMCS-7253
100090751
NOTE | REF NO | GRAPHIC REF | PART NUMBER | QTY | PART NAME | SEE PAGE
1 | 1 | 3T-2953 | PLATE AS
2 | 1 | 5S-2062 | 25 | BOLT (3/8-16X.750IN)
3 | 1 | 9P-1075 | 41 | WASHER-HARD (38MM THK)
4 | 1 | 9W-1444 | 2 | SUPPORT AS-FOOT
5 | 1 | 7P-2229 | 19 | BOLT (1/2-13X1IN)
1 | 19 | WASHER-HARD (41MM THK)
6 | 1 | 8E-6136 | COVER AS-LH
1 | 9F-2978 | 5 | NUT-WELD (3/8-16 THD)
1 | 1P-0189 | 1 | CLIP
7 | 1 | 7S-2411 | 4 | COVER
8 | 9J-0498 | 18 | SCREW-HEAD (3/8-16X.875IN)
9 | 1 | 4474 | 1 | COVER
1 | 8E-8976 | GASKET
10 | 1 | 8E-3248 | 1
1 | 8E-3250 | 1 | GASKET
11 | 1 | 3T-2936 | 1 | HANDHOLD
12 | 1 | 8E-8978 | 1 | COVER AS
1 | 9F-2978 | 8 | NUT-WELD (3/8-16 THD)
1 | 8E-8979 | 1 | GASKET
13 | 1 | 7T-0131 | 1 | FLOORPLATE AS
1 | 1F-0748 | 4 | NUT-WELD (1/2-13 THD)
14 | 1 | 7V-8087 | 1 | PLUG-BUTTON
15 | 1 | 7T-0136 | 1 | PLATE AS
1 | 9F-2978 | 5 | NUT-WELD (3/8-16 THD)
16 | 1 | 7T-8066 | 1 | COVER
1 | 7T-8779 | 1 | GASKET
17 | 1 | 3T-3951 | 1 | PLATE AS
18 | 1 | 6T-0364 | 4 | BOLT (1/4-20X.625IN)
M | 1 | 9T-4205 | 4 | WASHER-HARD (20MM THK)
19 | 1 | 6L-8494 | 1 | FLOOR MAT
20 | 1 | 8E-8846 | 1 | MODULE AS-OPERATOR
21 | 1 | 3T-3934 | 1 | HANDHOLD
22 | 1 | 9P-8571 | 2 | PLUG
23 | 2 | 6T-0364 | 4 | BOLT (1/4-20X.625IN)
M | 2 | 9T-4205 | 4 | WASHER-HARD (20MM THK)
24 | 2 | 5S-2062 | 17 | BOLT (3/8-16X.750IN)
25 | 2 | 9P-1075 | 21 | WASHER-HARD (38MM THK)
26 | 2 | 7T-0135 | 1 | SEAL
27 | 2 | 7X-0075 | 2 | BOLT (3/4-10X5IN)
2 | 7X-0652 | 2 | WASHER-HARD (64MM THK)
28 | 2 | 3T-3452 | 2 | PLATE
29 | 2 | 3T-8290 | 1 | PLATE AS
2 | 7S-4828 | 8 | SPACER
30 | 2 | 3T-8281 | 1 | SEAL
31 | 2 | 7S-8817 | 1 | GASKET
32 | 2 | 7S-8815 | 1 | COVER AS
2 | 2R-3276 | 2 | WASHER
2 | 9P-8926 | 2 | SCREW-KNURLED
33 | 2 | 9W-3429 | 1 | COVER
34 | 2 | 8E-8897 | 1 | COVER
35 | 2 | 9D-3931 | 8 | SCREW-SOCKET HEAD
36 | 2 | 9W-3142 | 8 | MOUNTING
37 | 2 | 9W-8927 | 2 | PLATE
38 | 2 | 7X-0390 | 2 | BOLT (7/8-9X5IN)
2 | 7X-0672 | 2 | WASHER-HARD
39 | 2 | 4L-8454 | 4 | BOLT (3/8-16X1.0IN)
40 | 2 | 3T-4788 | 1 | COVER
12 FRAME AND BODY
1 of 4
SELP4570-01

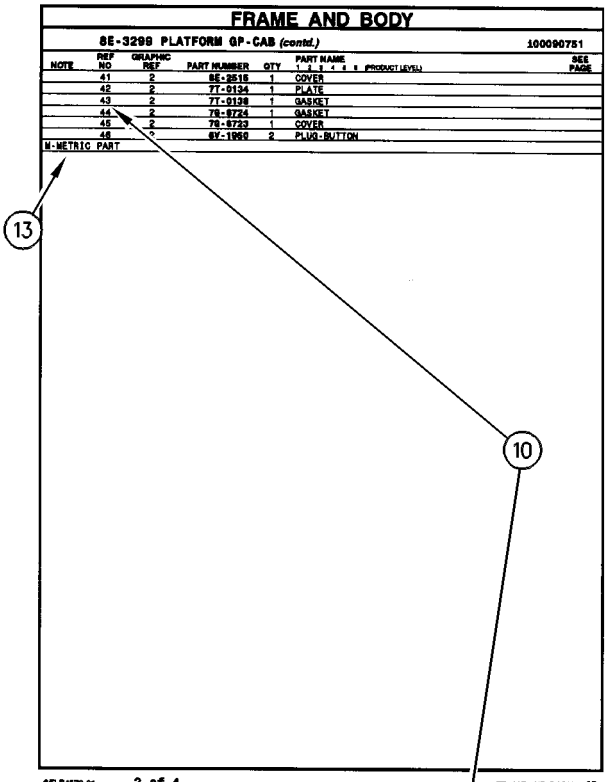
FRAME AND BODY
8E-3299 PLATFORM GP-CAB (contd.)
100090751
NOTE | REF NO | GRAPHIC REF | PART NUMBER | QTY | PART NAME | SEE PAGE
41 | 2 | 8E-2516 | 1 | COVER
42 | 2 | 7T-0134 | 1 | PLATE
43 | 2 | 7T-0138 | 1 | GASKET
44 | 2 | 7S-8724 | 1 | GASKET
45 | 2 | 7S-8723 | 1 | COVER
46 | 2 | 6V-1950 | 2 | PLUG-BUTTON
M-METRIC PART
SELP4570-01
2 of 4
FRAME AND BODY 13

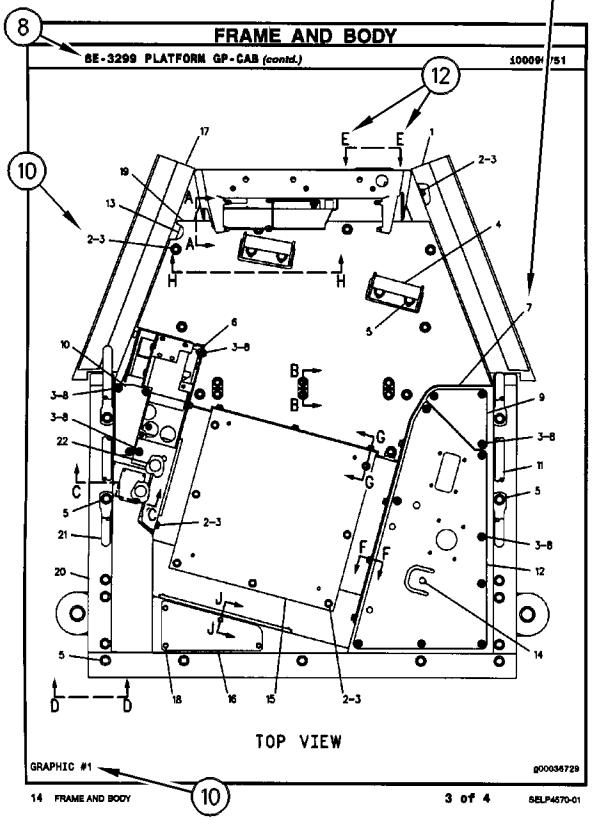
FRAME AND BODY
8E-3299 PLATFORM GP-CAB (contd.)
100090751
TOP VIEW
GRAPHIC #1
g00036729
14 FRAME AND BODY
3 of 4
SELP4570-01

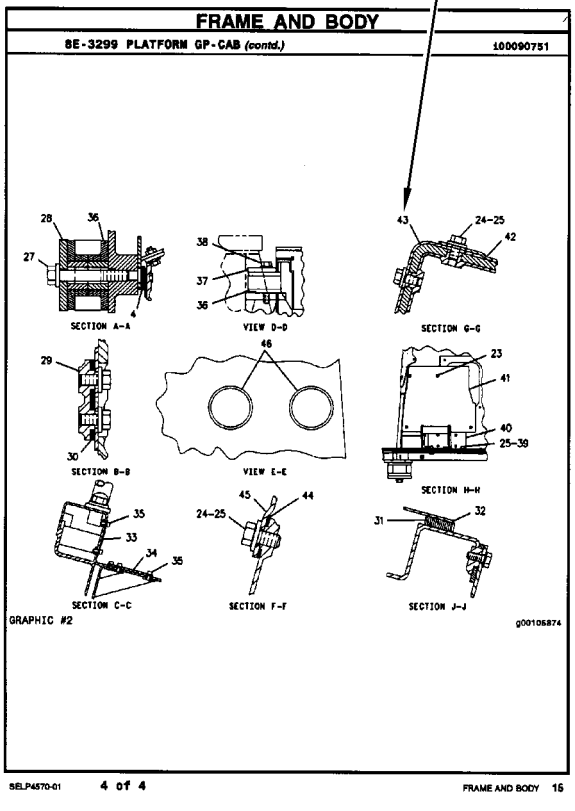
FRAME AND BODY
8E-3299 PLATFORM GP-CAB (contd.)
100090751
SECTION A-A
VIEW D-D
SECTION G-G
SECTION B-B
VIEW E-E
SECTION H-H
SECTION C-C
SECTION F-F
SECTION J-J
GRAPHIC #2
g00105874
SELP4570-01
4 of 4
FRAME AND BODY 15

GÉNÉRALITÉS

1. IDENTIFICATION DE LA MACHINE

Toutes les machines Caterpillar portent un numéro d'identification (PIN). Certains composants des machines peuvent porter des numéros de série (S/N). En général, parmi les composants qui portent des numéros de série il y a les moteurs, les transmissions, les bulldozers et les rippers. En plus, la machine et le moteur peuvent recevoir des numéros de version, et dans certains cas, de modification. Ces numéros figurent sur les plaques de numéro de série et sur la plaque signalétique principale qui se trouve dans le poste de conduite.

Les concessionnaires Caterpillar doivent connaître tous ces numéros pour identifier correctement les pièces.

SIS *Nouvelle Caractéristique*

À partir du premier trimestre 2001, le numéro d'identification produit (PIN) Caterpillar passe de 8 à 17 caractères. Afin de permettre une identification uniforme des matériels, Caterpillar et d'autres constructeurs de machines de travaux publics s'efforcent de se conformer à la norme la plus récente portant sur les numéros d'identification des produits. Les numéros d'identification (PIN) de machines de chantier sont définis par la norme ISO 10261. Le nouveau format du numéro d'identification est valable pour toutes les machines et tous les groupes électrogènes Caterpillar. Le numéro d'identification produit (PIN) figurant sur la plaque et sur le châssis se composera de 17 caractères. Le nouveau format ressemblera à ceci:

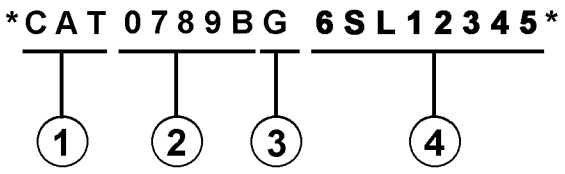

Il se décomposera de la façon suivante:

1. Code international de fabrication de Caterpillar (caractères 1 à 3)

2. Descriptif de la machine (caractères 4 à 8)

3. Contrôle (caractère 9)

4. Indicateur machine (MIS) ou numéro de séquence produit (caractères 10 à 17). Ceux-ci étaient auparavant désignés sous le terme de numéro de série.

Les machines et les groupes électrogènes construits avant le premier trimestre 2001 garderont le format à 8 caractères du numéro d'identification produit (PIN).

Les organes tels que les moteurs, les boîtes de vitesses, les essieux, etc., continueront d'être désignés par un numéro de série (S/N) à 8 caractères.

2. COMMANDE DE PIÈCES

⚠ DANGER

Lorsqu'il faut remplacer des pièces de rechange pour ce produit Caterpillar recommande d'utiliser les pièces de rechange Caterpillar ou les pièces qui ont des spécifications équivalentes dont les dimensions physiques, le type, la force et le matériau. Ces équivalences ne se limitent pas à l'énoncé précédent.

L'inobservation de cette mise en garde peut entraîner des défaillances prématurées, des dommages au produit, des blessures ou même la mort.

Les concessionnaires Caterpillar fournissent dans le monde entier des pièces de rechange de qualité Caterpillar. Leurs stocks de pièces sont constamment réapprovisionnés et comptent toutes les pièces nécessaires pour assurer la bonne marche de vos machines Caterpillar. Certains concessionnaires proposent également des kits de réparation ou des pièces rénovées, ce qui permet de choisir la solution la plus économique dans une situation donnée. Lors des commandes de pièces, mentionner la quantité, le numéro et la désignation des pièces ainsi que le numéro de série ou le numéro d'identification (PIN) de la machine pour laquelle ces pièces sont requises.

3. ORGANISATION DU CATALOGUE DE PIÈCES

Les renseignements sur les produits sont présentés sous forme de "Information element" (élément d'information) représentant tous les composants d'un modèle donné. "Engine Arrangement" (version de moteur) et "Seat Group" (assemblage de siège)" sont des exemples d'éléments d'information. Les éléments d'information sont classés par ordre alphabétique par la désignation standard des pièces et par numéros de pièces dans chaque partie importante du manuel.

4. TABLE DES MATIÈRES

SIS *Nouvelle Caractéristique*

La table des matières se trouve au début du manuel. La table des matières fournit la liste de tous les chapitres du manuel avec une liste complète de tous les éléments d'information classés par ordre d'apparition dans le manuel. Les numéros de page sont fournis afin que l'utilisateur puisse trouver rapidement les illustrations détaillées concernant l'identification des pièces et les listes des pièces d'entretien.

5. INDEX DES PIÈCES D'ENTRETIEN

La rubrique "Index des pièces d'entretien" qui se trouve au début du manuel renvoie aux pièces d'entretien les plus fréquemment utilisées en précisant la désignation, la quantité, là où la pièce est utilisée et le numéro de page. Ces pièces sont classés par ordre alphabétique.

6. INDEX

L'index qui se trouve vers le début du manuel est une liste alphabétique de tous les éléments d'information du manuel. Les numéros de page sont fournis afin que l'utilisateur puisse trouver rapidement les illustrations détaillées concernant l'identification des pièces et les listes des pièces d'entretien.

7. INDEX DES NUMÉROS DE PIÈCES

Une liste numérique de tous les numéros de pièces et des pages correspondantes se trouve à la fin du manuel.

8. LÉGENDES

Les légendes qui se trouvent en haut de chaque page de chaque élément d'information fournissent le numéro de pièce, la désignation ainsi que des renseignements supplémentaires sur les pièces. Les renseignements concernant les numéros de série (S/N) qui se trouvent dans chaque légende doivent être utilisés pour sélectionner les informations correctes pour un moteur donné. Les informations concernant les options de remplacement sur le chantier, l'identification des composants des équipements offerts en option et les lieux d'application sont aussi fournies.

SIS *Nouvelle Caractéristique*

Les lettres de la première ligne d'une légende sont présentées en police plus grande afin d'indiquer le début d'une unité d'information. Les légendes qui pourraient être requises pour des pages supplémentaires afin d'illustrer une unité d'information seront présentées en police standard et comprendront le terme (à suivre).

9. PIÈCES NON FOURNIES

SIS *Nouvelle Caractéristique*

Dans certains cas, il est nécessaire d'indiquer les pièces non fournies qui sont en aval de la liste des pièces d'entretien. Les numéros des pièces non fournies dans la liste des pièces et les légendes seront en italique pour signaler qu'ils ne sont pas disponibles.

10. NUMÉROS DE RÉFÉRENCE DE LA LISTE DES PIÈCES

SIS *Nouvelle Caractéristique*

Les numéros indiqués dans la colonne des numéros de références correspondent aux numéros utilisés dans les illustrations auxquelles ils sont associés. Un suffixe alphabétique peut être ajouté à un numéro de référence pour identifier la liste des articles en aval. Les numéros indiqués dans la colonne de référence de l'illustration renvoient à l'identification du numéro affiché dans le coin inférieur gauche de chaque illustration. Le numéro de référence de l'illustration pourrait être utilisé avec le numéro de référence de l'article pour déterminer le numéro de pièce correct. Il peut y avoir une omission intentionnelle d'un numéro de référence dans une liste de pièces suite à la mise à jour des informations en vue de refléter les numéros de pièces les plus récentes.

11. DÉSIGNATIONS DE PIÈCES EN RETRAIT

Lorsqu'une désignation de pièce est en retrait, cela veut dire que l'article en regard fait partie de l'ensemble sous lequel il figure.

12. LETTRES DE RÉFÉRENCE DES ILLUSTRATIONS

Quand cela est nécessaire, les illustrations comportent des lettres de référence (A, B, C, etc.) pour montrer le trajet des canalisations et faisceaux de câbles d'un point à l'autre. Elles sont utilisées également pour indiquer où relier les illustrations séparées auparavant.

13. ABRÉVIATIONS ET SYMBOLES

O.D. – Diamètre extérieur
I.D. – Diamètre intérieur
A – Ne fait pas partie de ce groupe
B – Utiliser selon besoin
C – Modification
D – Commander par mètre
E – Commander par centimètre
F – Non représenté
G – Commander par pouce
I – Voir "Hydraulic Information System"
M – Pièce métrique
R – Pièce rénovée éventuellement disponible
Y – Illustration séparée
Z – Non fourni séparément

NOTA:

En raison du progrès technique et des améliorations continuelles apportées au matériel, votre machine comporte peut-être des modifications qui n'apparaissent pas dans la présente publication. En cas de doute sur un détail de votre machine Caterpillar ou sur le texte de la présente publication, adressez-vous à votre concessionnaire Caterpillar.

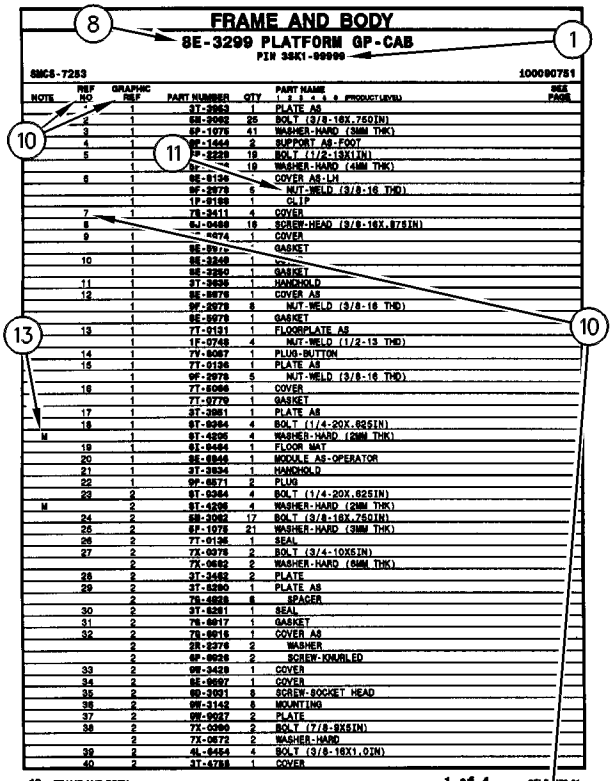

FRAME AND BODY

8E-3299 PLATFORM GP-CAB

PIN 3SK1-99999

SMCS-7253 100090751

NOTE	REF NO	GRAPHIC REF	PART NUMBER	QTY	PART NAME 1 2 3 4 5 6 (PRODUCT LEVEL)	SEE PAGE
		1	3T-2953	1	PLATE AS	
	2	1	6E-2062	25	BOLT (3/8-16X.750IN)	
	3	1	6P-1076	41	WASHER-HARD (38MM THK)	
	4	1	9W-1444	2	SUPPORT AS-FOOT	
	5	1	7P-2229	19	BOLT (1/2-13X1IN)	
		1	9F-	19	WASHER-HARD (41MM THK)	
	6	1	8E-6136	1	COVER AS-LH	
		1	9F-2978	5	NUT-WELD (3/8-16 THD)	
		1	1P-0169	1	CLIP	
	7	1	7S-2411	4	COVER	
	8	1	9J-0498	18	SCREW-HEAD (3/8-16X.875IN)	
	9	1	-4474	1	COVER	
		1	8E-897		GASKET	
	10	1	8E-3248	1		
		1	8E-3250	1	GASKET	
	11	1	3T-2636	1	HANDHOLD	
	12	1	8E-8678	1	COVER AS	
		1	9F-2978	8	NUT-WELD (3/8-16 THD)	
		1	8E-8679	1	GASKET	
	13	1	7T-0131	1	FLOORPLATE AS	
		1	1F-0748	4	NUT-WELD (1/2-13 THD)	
	14	1	7V-8087	1	PLUG-BUTTON	
	15	1	7T-0136	1	PLATE AS	
		1	9F-2978	5	NUT-WELD (3/8-16 THD)	
	16	1	7T-8066	1	COVER	
		1	7T-8779	1	GASKET	
	17	1	3T-3951	1	PLATE AS	
	18	1	6T-8364	4	BOLT (1/4-20X.625IN)	
M		1	9T-4205	4	WASHER-HARD (20MM THK)	
	19	1	6L-8494	1	FLOOR MAT	
	20	1	8E-8846	1	MODULE AS-OPERATOR	
	21	1	3T-3834	1	HANDHOLD	
	22	1	9P-8671	2	PLUG	
	23	2	6T-8364	4	BOLT (1/4-20X.625IN)	
M		2	9T-4205	4	WASHER-HARD (20MM THK)	
	24	2	6E-2062	17	BOLT (3/8-16X.750IN)	
	25	2	6P-1076	21	WASHER-HARD (38MM THK)	
	26	2	7T-0135	1	SEAL	
	27	2	7X-0078	2	BOLT (3/4-10X5IN)	
		2	7X-0662	2	WASHER-HARD (64MM THK)	
	28	2	3T-3452	2	PLATE	
	29	2	3T-8290	1	PLATE AS	
		2	7S-4828	8	SPACER	
	30	2	3T-8281	1	SEAL	
	31	2	7S-8817	1	GASKET	
	32	2	7S-8815	1	COVER AS	
		2	2R-2276	2	WASHER	
		2	6P-8926	2	SCREW-KNURLED	
	33	2	9W-3429	1	COVER	
	34	2	8E-8697	1	COVER	
	35	2	6D-3031	8	SCREW-SOCKET HEAD	
	36	2	9W-3142	8	MOUNTING	
	37	2	9W-8027	2	PLATE	
	38	2	7X-0390	2	BOLT (7/8-9X8IN)	
		2	7X-0672	2	WASHER-HARD	
	39	2	4L-8454	4	BOLT (3/8-16X1.0IN)	
	40	2	3T-4788	1	COVER	

12 FRAME AND BODY 1 of 4 SELP4570-01

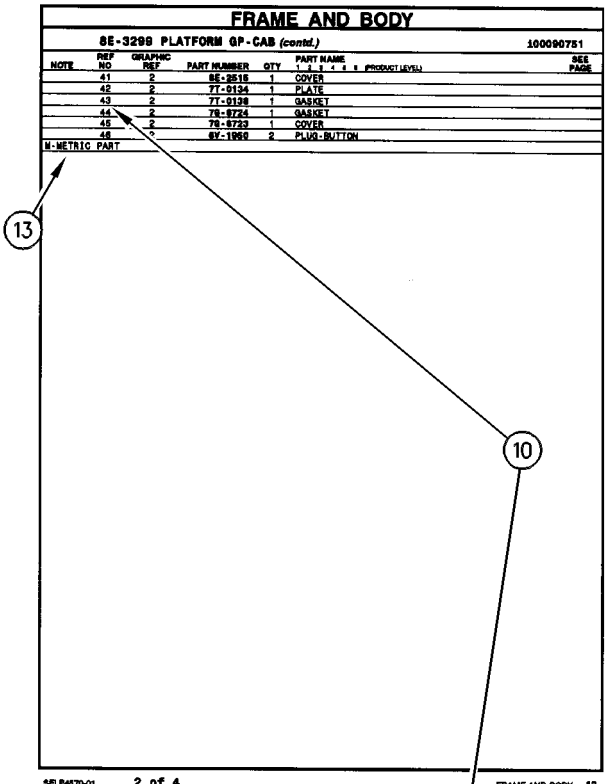

FRAME AND BODY

8E-3299 PLATFORM GP-CAB (contd.) 100090751

NOTE	REF NO	GRAPHIC REF	PART NUMBER	QTY	PART NAME 1 2 3 4 5 6 (PRODUCT LEVEL)	SEE PAGE
	41	2	8E-2516	1	COVER	
	42	2	7T-0134	1	PLATE	
	43	2	7T-0138	1	GASKET	
	44	2	7S-8724	1	GASKET	
	45	2	7S-8723	1	COVER	
	46	2	6V-1950	2	PLUG-BUTTON	

M-METRIC PART

SELP4570-01 2 of 4 FRAME AND BODY 13

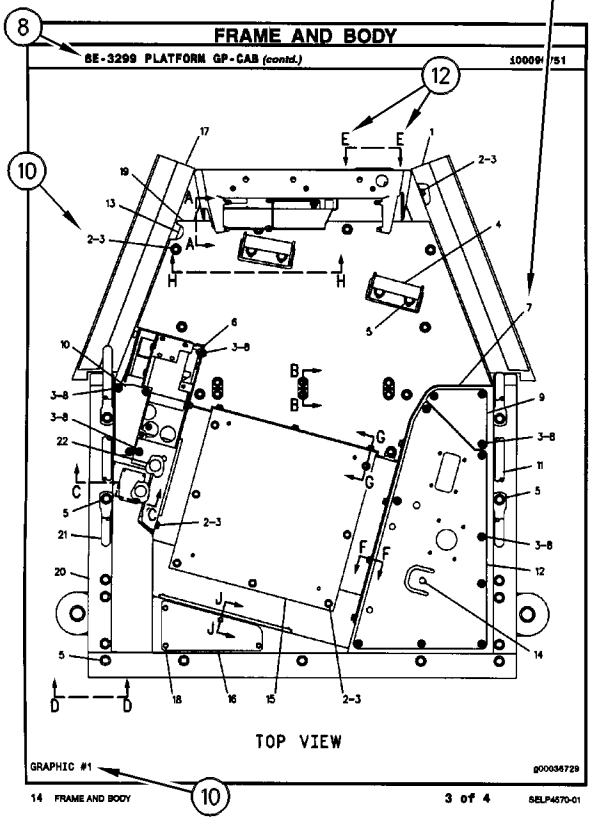

FRAME AND BODY

8E-3299 PLATFORM GP-CAB (contd.) 100090751

GRAPHIC #1 g00036729

TOP VIEW

14 FRAME AND BODY 3 of 4 SELP4570-01

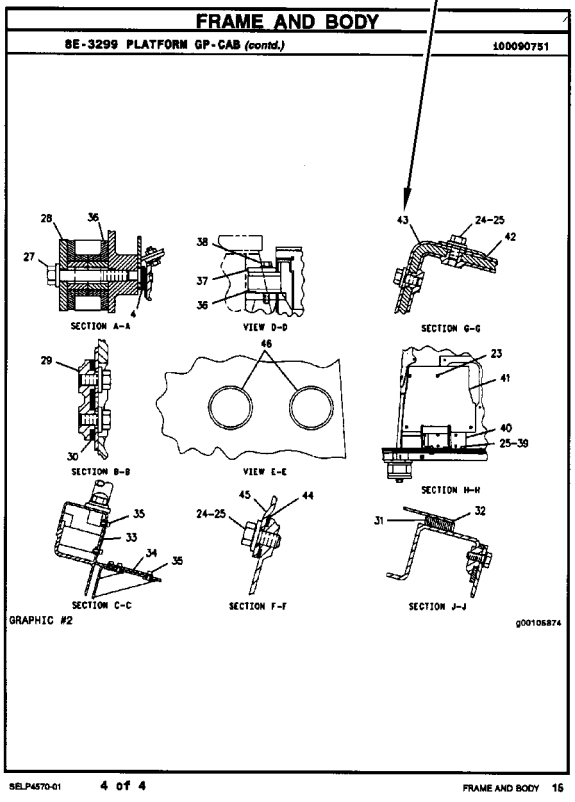

FRAME AND BODY

8E-3299 PLATFORM GP-CAB (contd.) 100090751

SECTION A-A

VIEW D-D

SECTION G-G

SECTION B-B

VIEW E-E

SECTION H-H

SECTION C-C

SECTION F-F

SECTION J-J

GRAPHIC #2 g00105874

SELP4570-01 4 of 4 FRAME AND BODY 16

INFORMACIÓN GENERAL

1. MÁQUINAS

Las máquinas Caterpillar se identifican con Números de Identificación del Producto (PIN). Algunos componentes incluídos en la máquina pueden estar identificados con Números de Serie (N/S). Los componentes que tienen típicamente esta identificación incluyen motores, transmisiones, hojas topadoras y desgarradores. La máquina y el motor se identifican además con Números de Configuración y en algunos casos, Números de Modificación. Estos números están en las placas de identificación del producto o en la placa principal en la cabina del operador.

Los distribuidores Caterpillar necesitan estos números para identificar con exactitud los números de piezas de repuesto.

SIS *Nueva Característica*

A partir del primer trimestre del 2001, el Número de Identificación de Producto (PIN) de Caterpillar cambió de 8 a 17 caracteres. Para hacer más uniforme el método de identificación de equipos, Caterpillar y otros fabricantes de equipo de construcción han tomado medidas para cumplir con la versión más reciente de la norma de numeración de identificación de productos. Los Números de Identificación de Producto para máquinas que no se operan en carreteras son definidos por la norma ISO 10261. El nuevo formato PIN corresponderá a todas las máquinas y grupos electrógenos Caterpillar. Las placas y los caracteres PIN estampados en el bastidor mostrarán el PIN de 17 caracteres. El nuevo formato tendrá la apariencia siguiente:

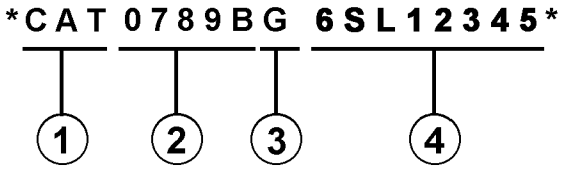

Significado de los caracteres:

1. Código de Fabricación Mundial de Caterpillar (caracteres 1-3)

2. Sección Descriptor de la Máquina (caracteres 4-8)

3. Carácter de Verificación (carácter 9)

4. Sección Indicador de la Máquina (MIS) o Número de Secuencia de Producto (caracteres 10-17). Anteriormente, estos caracteres constituían el Número de Serie.

Las máquinas y grupos electrógenos producidos antes del primer semestre del 2001 mantendrán su formato PIN de 8 caracteres.

Los componentes como motores, transmisiones, ejes, herramientas de trabajo, etc., continuarán usando un Número de Serie (S/N) de 8 caracteres.

2. COMO PEDIR REPUESTOS

⚠ ADVERTENCIA

Cuando se necesiten piezas de repuesto para este producto, Caterpillar recomienda usar piezas de repuesto Caterpillar o piezas que tengan especificaciones equivalentes incluyendo, pero sin estar limitadas a, dimensiones físicas, tipo, fortaleza y material.

El no hacer caso de esta advertencia puede llevar a fallas prematuras, daños al producto y lesiones graves o mortales.

Las piezas de repuesto Caterpillar de calidad están a la disposición de los distribuidores Caterpillar en todo el mundo. Sus existencias actualizadas incluyen todas las piezas normalmente requeridas para proteger su inversión en máquinas Caterpillar. Los distribuidores pueden tener juegos de reparación o piezas remanufacturadas para permitir la selección de la mejor alternativa de reparación en un caso en particular. Al pedir piezas de repuesto, especifique en su pedido la cantidad, el número de pieza, el nombre de la pieza y el número de serie/número de identificación del producto, de la máquina para la cual se necesitan estas piezas.

3. ORGANIZACION DEL MANUAL DE PIEZAS

La información sobre el producto, se presenta en este manual, como "elementos de información" que representan todos los componentes de un modelo específico. Las configuraciones de motores y los grupos de asientos son ejemplos de elementos de información. Los elementos de información están organizados primeramente por nombres de piezas en orden alfabético y en segundo lugar, por el número de pieza dentro de cada sección principal del manual.

4. CONTENIDO

La página de Contenido se encuentra al principio del manual. El Contenido indica cada sección del manual con una lista completa de todos los elementos de información organizados en el orden que aparecen en el manual. Los números de página proporcionan una referencia rápida a las ilustraciones detalladas de identificación de piezas y a las listas de componentes de repuesto de dichas piezas.

5. ÍNDICE DE PIEZAS DE MANTENIMIENTO

Al principio de este catálogo se encuentra un índice de los números de piezas utilizadas más frecuentemente para el mantenimiento, que incluye descripción, cantidad necesaria, lugar de utilización y número de página. Esta información está organizada alfabéticamente, por descripción de la pieza.

6. ÍNDICE

El Índice, ubicado cerca del principio del manual, es una lista en orden alfabético de todos los elementos de información incluídos en el manual. Los números de página proporcionan una referencia rápida a las ilustraciones detalladas de identificación de piezas y a las listas de componentes de repuesto de dichas piezas.

7. INDICE NUMÉRICO DE PIEZAS

Un índice numérico de piezas con el correspondiente número de página aparece al final de este catálogo.

8. TÍTULOS

Los títulos ubicados al principio de cada elemento de información identifican el número y el nombre de la pieza junto con información descriptiva. Se debe usar información sobre los Números de Identificación de Pieza (PIN) y los números de serie (S/N) para seleccionar la información que corresponda a una máquina en particular. También se suministra información sobre las opciones de reparación en el campo, la identificación de componentes de accesorios optativos y el lugar de ubicación de la pieza ("es parte de").

La primera línea del título se muestra con un tipo de letra más grande para indicar el comienzo de un elemento de información. Si se requieren páginas adicionales para ilustrar un elemento de información, los títulos se muestran con un tipo de letra normal y la continuación se indica entre paréntesis.

9. PIEZAS QUE NO SE SUMINISTRAN COMO REPUESTO

En algunos casos es necesario indicar piezas que no se suministran como repuesto pero que pueden estar conectadas a listas de componentes de otras piezas de repuesto. En tal caso, dichas piezas se muestran en cursiva para indicar que no son piezas disponibles.

10. NÚMEROS DE REFERENCIA

Los números en la columna de No. de Referencia corresponden a los números indicados en la ilustración que pertenece a ese número de pieza. Los números que tienen un sufijo alfabético identifican artículos de las listas de componentes de piezas. Los números en la columna de Referencia de la ilustración se identifican en la esquina inferior izquierda de cada ilustración. Para determinar el número de pieza correcto se puede utilizar tanto el No. de Referencia de la ilustración como el No. de Referencia del artículo. A medida que se actualiza la información para indicar los más recientes números de piezas de repuesto, puede omitirse intencionalmente un No. de Referencia en una lista de componentes de piezas.

11. NOMBRES DE PIEZA SANGRADOS

Cuando el nombre de una pieza está sangrado en una lista, significa que esta pieza forma parte del grupo o conjunto del renglón inmediatamente superior.

12. LETRAS DE REFERENCIA DE ILUSTRACIONES

Las ilustraciones contienen algunas veces letras de referencia (A, B, C etc.) cuyo propósito es seguir el trayecto de líneas y mazos de cables de un punto a otro. También se utilizan para mostrar dónde volver a unir ilustraciones que se habían separado.

13. ABREVIATURAS Y SIMBOLOS

O.D. – Diámetro exterior
I.D. – Diámetro interior
A – No es pieza de este grupo
B – Utilizado según la demanda
C – Indica cambio
D – Se pide por metro
E – Se pide por centímetro
F – No se muestra
G – Se pide por pulgada
I – Consulte el sistema de información hidráulica
M – Pieza métrica
R – Puede estar disponible como pieza remanufacturada
Y – Ilustración separada
Z – No se suministra por separado

SIS *Nueva Característica*

14.<END>

Este símbolo indica el final de un elemento de información.

NOTA:

Las contínuas mejoras y adelantos en diseño podrían originar cambios a su máquina que no se incluyen en esta publicación. Cuando tenga alguna pregunta acerca de su producto Caterpillar o de esta publicación, consulte al distribuidor Caterpillar para obtener la información más reciente.

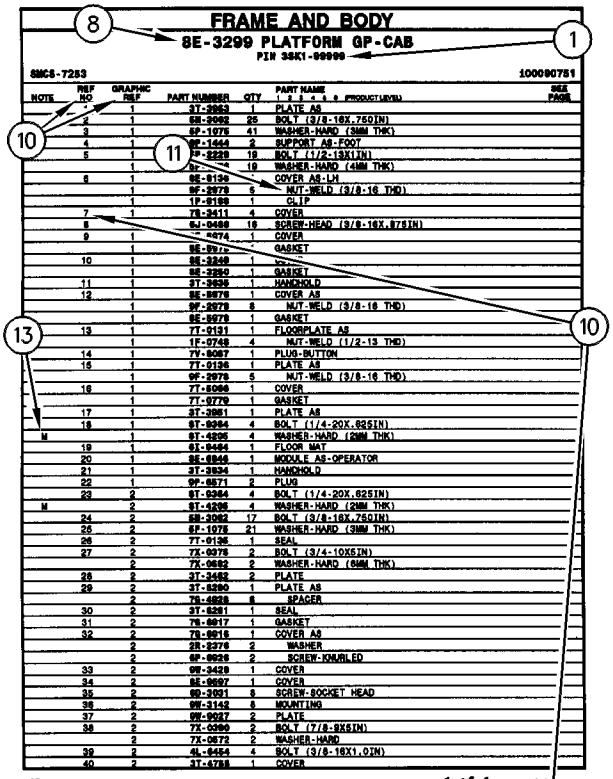

FRAME AND BODY

8E-3299 PLATFORM GP-CAB

PIN 35K1-99999

SMCS-7253 100090751

NOTE	REF NO	GRAPHIC REF	PART NUMBER	QTY	PART NAME 1 2 3 4 5 6 (PRODUCT LEVEL)	SEE PAGE
	*	1	3T-2953	1	PLATE AS	
	2	1	6E-2062	25	BOLT (3/8-16X.750IN)	
	3	1	6P-1076	41	WASHER-HARD (38MM THK)	
	4	1	9F-1444	2	SUPPORT AS-FOOT	
	5	1	7P-2229	19	BOLT (1/2-13X1IN)	
		1	9F-	19	WASHER-HARD (41MM THK)	
	6	1	6E-6136	1	COVER AS-LH	
		1	9F-2978	5	NUT-WELD (3/8-16 THD)	
		1	1P-0169	1	CLIP	
	7	1	7S-2411	4	COVER	
	8	1	9J-0498	18	SCREW-HEAD (3/8-16X.875IN)	
	9	1	-4474	1	COVER	
		1	6E-9	1	GASKET	
	10	1	6E-3249	1		
		1	6E-3250	1	GASKET	
	11	1	3T-2636	1	HANDHOLD	
	12	1	9E-9979	1	COVER AS	
		1	9F-2978	8	NUT-WELD (3/8-16 THD)	
		1	6E-9978	1	GASKET	
	13	1	7T-0131	1	FLOORPLATE AS	
		1	1F-0748	4	NUT-WELD (1/2-13 THD)	
	14	1	7V-8087	1	PLUG-BUTTON	
	15	1	7T-0136	1	PLATE AS	
		1	9F-2978	5	NUT-WELD (3/8-16 THD)	
	16	1	7T-8066	1	COVER	
		1	7T-9779	1	GASKET	
	17	1	3T-3951	1	PLATE AS	
	18	1	6T-8364	4	BOLT (1/4-20X.625IN)	
M		1	9T-4205	4	WASHER-HARD (20MM THK)	
	19	1	6L-8494	1	FLOOR MAT	
	20	1	8E-8846	1	MODULE AS-OPERATOR	
	21	1	3T-3834	1	HANDHOLD	
	22	1	9P-8571	2	PLUG	
	23	2	6T-8364	4	BOLT (1/4-20X.625IN)	
M		2	9T-4205	4	WASHER-HARD (20MM THK)	
	24	2	6E-2062	17	BOLT (3/8-16X.750IN)	
	25	2	6P-1076	21	WASHER-HARD (38MM THK)	
	26	2	7T-0135	1	SEAL	
	27	2	7X-0078	2	BOLT (3/4-10X5IN)	
		2	7X-0662	2	WASHER-HARD (64MM THK)	
	28	2	3T-3452	2	PLATE	
	29	2	3T-8290	1	PLATE AS	
		2	7S-4828	8	SPACER	
	30	2	3T-8281	1	SEAL	
	31	2	7S-8817	1	GASKET	
	32	2	7S-9615	1	COVER AS	
		2	2R-3276	2	WASHER	
		2	6P-9926	2	SCREW-KNURLED	
	33	2	9W-3429	1	COVER	
	34	2	8E-9697	1	COVER	
	35	2	6D-3931	8	SCREW-SOCKET HEAD	
	36	2	9W-3142	8	MOUNTING	
	37	2	9W-9027	2	PLATE	
	38	2	7X-0990	2	BOLT (7/8-9X8IN)	
		2	7X-0672	2	WASHER-HARD	
	39	2	4L-8454	4	BOLT (3/8-16X1.0IN)	
	40	2	3T-4788	1	COVER	

12 FRAME AND BODY 1 of 4 SELP4570-01

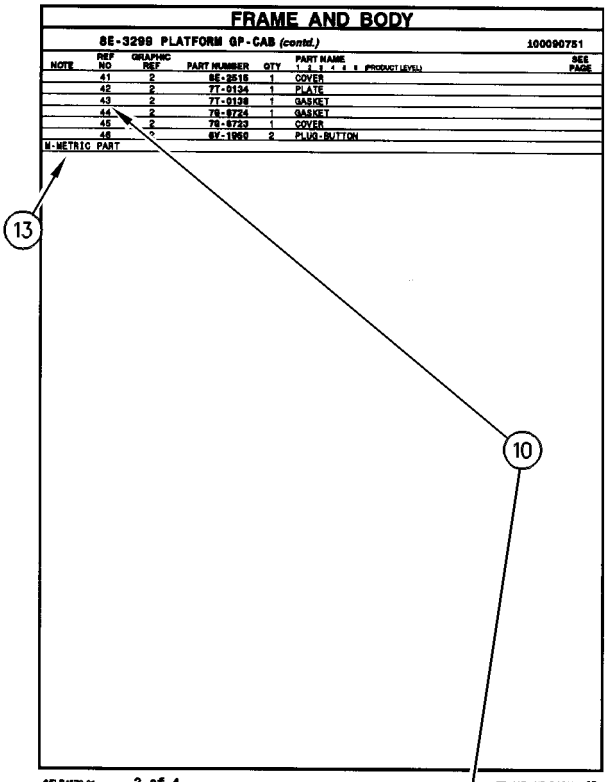

FRAME AND BODY

8E-3299 PLATFORM GP-CAB (contd.) 100090751

NOTE	REF NO	GRAPHIC REF	PART NUMBER	QTY	PART NAME 1 2 3 4 5 6 (PRODUCT LEVEL)	SEE PAGE
	41	2	6E-2516	1	COVER	
	42	2	7T-0134	1	PLATE	
	43	2	7T-0138	1	GASKET	
	44	2	7S-9724	1	GASKET	
	45	2	7S-8723	1	COVER	
	46	2	6V-1950	2	PLUG-BUTTON	

M-METRIC PART

SELP4570-01 2 of 4 FRAME AND BODY 13

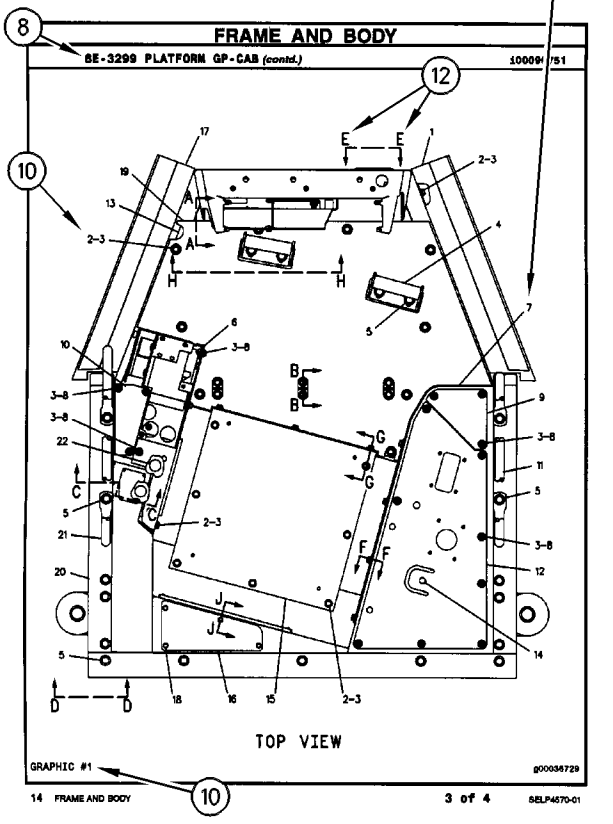

FRAME AND BODY

8E-3299 PLATFORM GP-CAB (contd.) 100090751

14 FRAME AND BODY 3 of 4 SELP4570-01

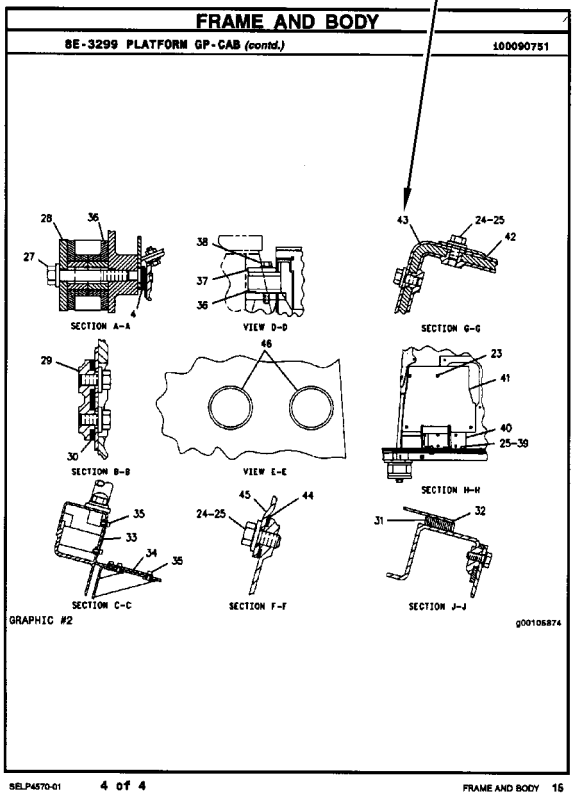

FRAME AND BODY

8E-3299 PLATFORM GP-CAB (contd.) 100090751

SELP4570-01 4 of 4 FRAME AND BODY 16

INFORMAÇÃO GERAL

1. IDENTIFICAÇÃO DA MÁQUINA

As máquinas Caterpillar são identificadas pelos Números de Informação do Produto (PIN). Alguns componentes incluídos numa máquina podem ser identificados por Números de Série (S/N). Componentes típicos que serão enumerados com números de série incluem motores, transmissões, lâminas e ríperes. Além do número de série, a máquina e o motor são ainda identificados por números de arranjo e, em alguns casos, números de modificações. Tais números encontram-se na(s) placa(s) de identificação do produto e na placa mestre no compartimento do operador.

SIS *Novidades*

A partir do primeiro trimestre de 2001 o Número de Identificação de Produto da Caterpillar (PIN) precisa ser mudado de 8 para 17 caracteres. Esforçando-se para fornecer uma identificação uniforme de equipamentos, a Caterpillar e outros fabricantes de equipamento de construção estão mudando para atender a versão mais atualizada do padrão de identificação de produtos. Os números de PIN para produtos de aplicações não rodoviárias são definidos pela ISO 10261. O novo formato de número PIN será adotado em todas as máquinas e grupos geradores Caterpillar. As placas e as marcações do chassi mostrarão os 17 dígitos de PIN. O novo formato terá a seguinte disposição:

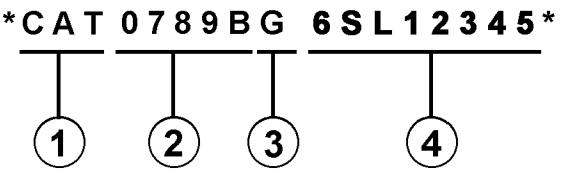

Onde:

1. Código de Fabricação Mundial da Caterpillar (dígitos 1-3)

2. Descrição da Máquina (dígitos 4-8)

3. Dígito de Verificação (dígito 9)

4. Seção de Indicador da Máquina (MIS) ou Número de Seqüência de Produto (dígitos 10-17). Estes eram anteriormente chamados de Número de Série.

Máquinas e grupos geradores produzidos antes do primeiro trimestre de 2001 manterão o formato de 8 caracteres de PIN.

Componentes como motores, transmissões, eixos, ferramentas de trabalho, etc. continuarão a usar Número de Série (S/N) com oito caracteres.

2. COMO OBTER PEÇAS

⚠ CUIDADO

Quando peças de substituição são exigidas para este produto, a Caterpillar recomenda a utilização de peças de substituição Caterpillar ou peças com as especificações equivalentes incluindo, mas não limitadas, à dimensões físicas, tipos, resistência e materiais.

A inobservância desta advertência poderá resultar em falhas prematuras, danos ao produto, ferimentos ou morte.

As Peças de Reposição de Qualidade Caterpillar encontram-se disponíveis nos revendedores Caterpillar no mundo inteiro. Seus estoques de peças são atualizados e incluem todas as peças normalmente necessárias para proteger seu investimento em máquinas Caterpillar. Alguns revendedores podem oferecer jogos de reparo ou peças de troca/remanufaturadas disponíveis como uma opção da alternativa de reparo mais eficaz para uma situação específica. Ao encomendar peças, seu pedido deve especificar a quantidade, o número e o nome da peça e o número de série/número de identificação do produto referentes à máquina para a qual as peças se destinam.

3. ORGANIZAÇÃO DO MANUAL DE PEÇAS

A informação do produto neste manual é apresentada em forma de "elementos de informação" que representam todos os componentes para o modelo específico. Arranjo de Motor e Grupo de Assento são exemplos de elementos de informação. Os elementos de informação são organizados em ordem alfabética por nome de peça ou secundariamente, por número de peça incluído em cada seção principal do manual.

4. LISTA DE CONTEÚDOS

A Lista de Conteúdos (TOC) se encontra no princípio do manual. A Lista de Conteúdos (TOC) relaciona em cada seção do manual uma lista completa com todos os elementos de informação organizados conforme aparecem no manual. Números de página são fornecidos para que se tenha referência rápida de ilustrações de peças detalhadas e listas de conteúdos que podem receber serviço de manutenção.

5. ÍNDICE DE PEÇAS DE MANUTENÇÃO

O Índice de Peças de Manutenção, localizado perto do princípio do manual, faz referência aos números de peça de manutenção usados com maior frequência, fornecendo uma descrição, a quantidade, o uso e o número de página. Esta informação é organizada com a descrição da peça em ordem alfabética.

6. ÍNDICE

O Índice localizado perto do princípio do manual, consiste de uma lista em ordem alfabética de todos os elementos de informação incluídos no manual. Números de página são fornecidos para que se tenha referência rápida de ilustrações de peças detalhadas e listas de conteúdos que podem receber serviço de manutenção.

7. ÍNDICE DE NÚMERO DE PEÇA

Um índice numérico relacionando todos os números de peça e a(s) página(s) correspondentes, aparece no final do manual.

8. LEGENDAS

As legendas localizadas no início de cada elemento de informação identificam o número e o nome de peça, juntamente com informação descritiva adicional. Informações sobre o Número de Informação do Produto (PIN) e o Número de Série (S/N) encontradas em cada legenda devem ser usadas para selecionar a informação correta sobre uma máquina específica. Opções de substituição no campo, identificação de componentes de acessórios opcionais e informações sobre onde são utilizados ("parte de") são também fornecidas.

A primeira linha de uma legenda é indicada em tipo maior para indicar o princípio de um elemento de informação. Legendas para páginas adicionais que podem ser necessárias para ilustrar um elemento de informação serão apresentadas em tipo padrão e incluirão o termo *(continua)* .

9. NÃO DISPONÍVEL SEPARADAMENTE

Em alguns casos, é necessário mostrar peças não disponíveis separadamente que têm uma ligação com listas de conteúdos de nível inferior que podem receber serviço de manutenção. Os números de peça destes componentes não disponíveis aparecerão em *itálico* , a fim de indicar que não estão disponíveis.

10. NÙMEROS DE REFERÊNCIA À LISTA DE PEÇAS

Os números indicados na coluna Ref No (No. de Referência) correspondem-se aos números usados no(s) gráfico(s) correspondente(s). Um sufixo com letras pode ser acrescentado a um número de referência para identificar itens de conteúdo de nível inferior. Os números indicados na coluna Graphic Ref (Referência de Gráfico) referem-se ao identificador de número de gráfico presente no canto esquerdo inferior de cada ilustração. O número de Referência de Gráfico pode ser usado em combinação com o item Ref No para determinar-se o número de peça correto. Poderá haver omissão intencional de um número de referência (Ref No) de uma lista de conteúdos uma vez que as informações são atualizadas para refletir os números de peça mais recentes que podem receber serviço de manutenção.

11. NOMES DE PEÇAS DESALINHADOS

Quando um nome de peça encontra-se desalinhado numa lista de peças, significa que tal item faz parte do (está incluído no) grupo ou conjunto sob o qual está relacionado.

12. LETRAS DE REFERÊNCIA NAS ILUSTRAÇÕES

Quando necessário, as ilustrações contêm letras de referência (A, B, C, etc.) que são utilizadas para seguir tubulações e cabos elétricos de um ponto a outro. Também foram utilizadas para indicar onde se pode reconectar as ilustrações que foram separadas.

13. ABREVIAÇÕES E SÍMBOLOS

O.D. – "Outside Diameter" (Diâmetro Externo)
I.D. – "Inside Diameter" (Diâmetro Interno)
A – Não faz parte deste grupo
B – Use conforme necessário
C – Indica modificação
D – Vendido por metro
E – Vendido por centímetro
F – Não ilustrado
G – Vendido por polegada
I – Consultar o Sistema de Informações Hidráulicas
M – Peça métrica
R – Peça remanufaturada pode estar disponível; consulte o seu revendedor Cat
Y – Ilustração separada
Z – Não disponível separadamente

SIS *Novidades*

14. <END>

Este símbolo indica o final de um elemento de informação.

INFORMAÇÃO GERAL

NOTA:

Os contínuos aperfeiçoamentos e avanços no projeto do produto podem ocasionar modificações em sua máquina que talvez ainda não estejam incluídas nesta publicação. Sempre que surgirem dúvidas quanto a um produto Caterpillar ou quanto à presente publicação, consulte o seu revendedor Caterpillar para obter as informações mais recentes disponíveis.

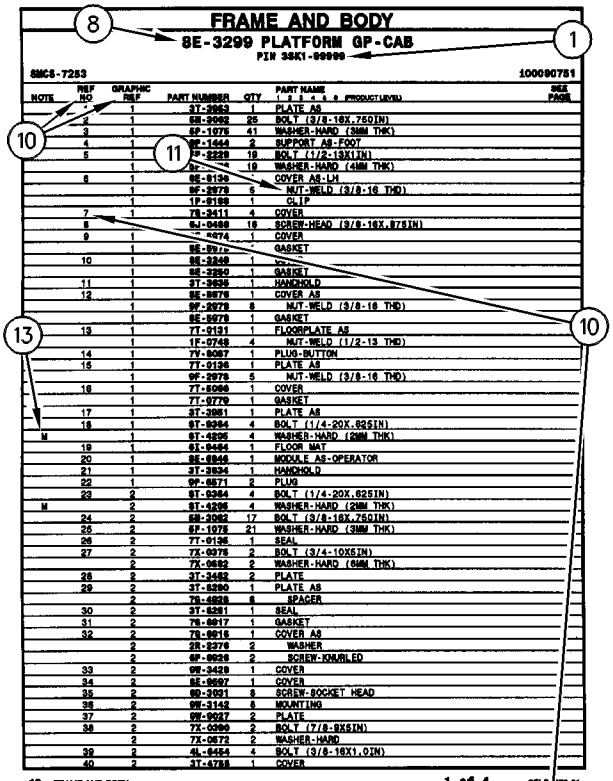

FRAME AND BODY

8E-3299 PLATFORM GP-CAB

PIN 3SK1-99999

SMCS-7253 100090751

NOTE	REF NO	GRAPHIC REF	PART NUMBER	QTY	PART NAME 1 2 3 4 5 6 (PRODUCT LEVEL)	SEE PAGE
		1	3T-2953	1	PLATE AS	
	2	1	6B-2062	25	BOLT (3/8-16X.750IN)	
	3	1	6P-1076	41	WASHER-HARD (38MM THK)	
	4	1	9W-1444	2	SUPPORT AS-FOOT	
	5	1	7P-2229	18	BOLT (1/2-13X1IN)	
		1	9P-	18	WASHER-HARD (41MM THK)	
	6	1	8E-6136	1	COVER AS-LH	
		1	9F-2978	6	NUT-WELD (3/8-16 THD)	
		1	1P-0169	1	CLIP	
	7	1	7B-2411	4	COVER	
	8	1	9J-0498	18	SCREW-HEAD (3/8-16X.875IN)	
	9	1	-4474	1	COVER	
		1	8E-897	1	GASKET	
	10	1	8E-3249	1		
		1	8E-3250	1	GASKET	
	11	1	3T-2636	1	HANDHOLD	
	12	1	8E-8678	1	COVER AS	
		1	9F-2978	8	NUT-WELD (3/8-16 THD)	
		1	8E-8679	1	GASKET	
	13	1	7T-0131	1	FLOORPLATE AS	
		1	1F-0748	4	NUT-WELD (1/2-13 THD)	
	14	1	7V-8087	1	PLUG-BUTTON	
	15	1	7T-0136	1	PLATE AS	
		1	9F-2978	5	NUT-WELD (3/8-16 THD)	
	16	1	7T-8066	1	COVER	
		1	7T-8779	1	GASKET	
	17	1	3T-3981	1	PLATE AS	
	18	1	6T-8364	4	BOLT (1/4-20X.625IN)	
M		1	9T-4205	4	WASHER-HARD (20MM THK)	
	19	1	6L-8494	1	FLOOR MAT	
	20	1	8E-8846	1	MODULE AS-OPERATOR	
	21	1	3T-3834	1	HANDHOLD	
	22	1	9P-8671	2	PLUG	
	23	2	6T-8364	4	BOLT (1/4-20X.625IN)	
M		2	9T-4205	4	WASHER-HARD (20MM THK)	
	24	2	6B-2062	17	BOLT (3/8-16X.750IN)	
	25	2	6P-1076	21	WASHER-HARD (38MM THK)	
	26	2	7T-0135	1	SEAL	
	27	2	7X-0078	2	BOLT (3/4-10X5IN)	
		2	7X-0682	2	WASHER-HARD (64MM THK)	
	28	2	3T-3452	2	PLATE	
	29	2	3T-8290	1	PLATE AS	
		2	7B-4828	8	SPACER	
	30	2	3T-8281	1	SEAL	
	31	2	7B-8817	1	GASKET	
	32	2	7B-8815	1	COVER AS	
		2	2R-2276	2	WASHER	
		2	9P-8926	2	SCREW-KNURLED	
	33	2	9W-3429	1	COVER	
	34	2	8E-8697	1	COVER	
	35	2	6D-3031	8	SCREW-SOCKET HEAD	
	36	2	9W-3142	8	MOUNTING	
	37	2	9W-8027	2	PLATE	
	38	2	7X-0090	2	BOLT (7/8-9X8IN)	
		2	7X-0672	2	WASHER-HARD	
	39	2	4L-8454	4	BOLT (3/8-16X1.0IN)	
	40	2	3T-4788	1	COVER	

12 FRAME AND BODY 1 of 4 SELP4570-01

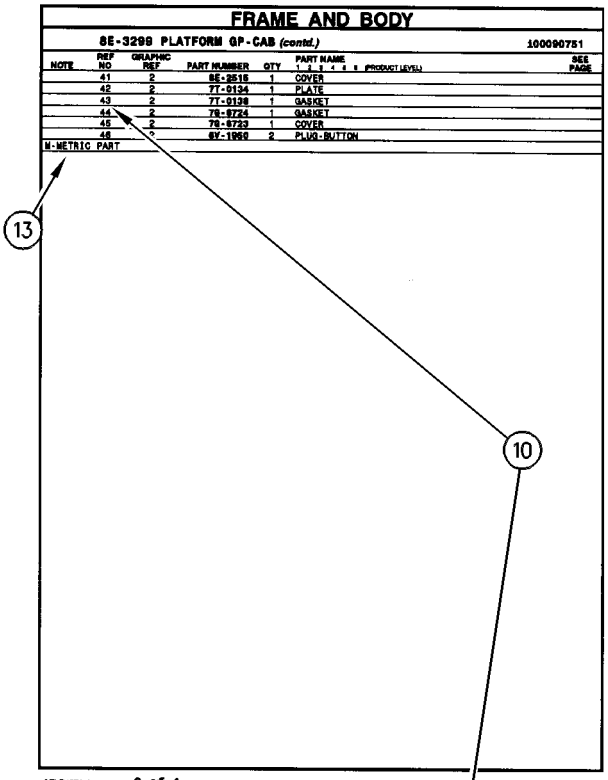

FRAME AND BODY

8E-3299 PLATFORM GP-CAB (contd.) 100090751

NOTE	REF NO	GRAPHIC REF	PART NUMBER	QTY	PART NAME 1 2 3 4 5 6 (PRODUCT LEVEL)	SEE PAGE
	41	2	8E-2516	1	COVER	
	42	2	7T-0134	1	PLATE	
	43	2	7T-0138	1	GASKET	
	44	2	7B-8724	1	GASKET	
	45	2	7B-8723	1	COVER	
	46	2	6V-1950	2	PLUG-BUTTON	

M-METRIC PART

SELP4570-01 2 of 4 FRAME AND BODY 13

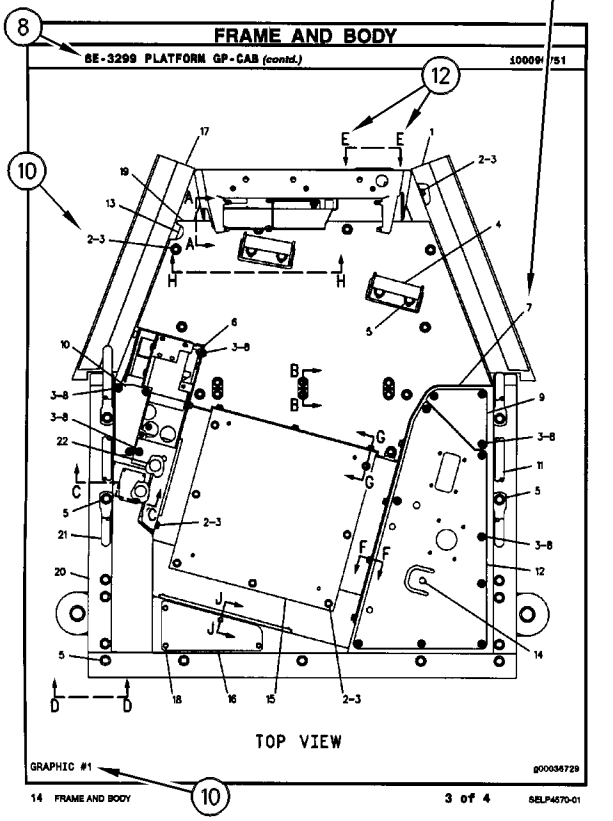

FRAME AND BODY

8E-3299 PLATFORM GP-CAB (contd.) 100090751

TOP VIEW

GRAPHIC #1 g00036729

14 FRAME AND BODY 3 of 4 SELP4570-01

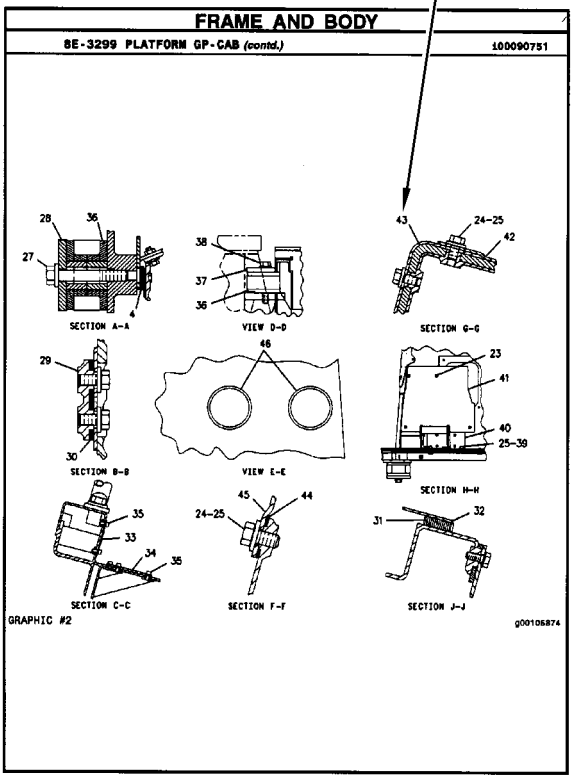

FRAME AND BODY

8E-3299 PLATFORM GP-CAB (contd.) 100090751

SECTION A-A VIEW D-D SECTION G-G

SECTION B-B VIEW E-E SECTION H-H

SECTION C-C SECTION F-F SECTION J-J

GRAPHIC #2 g00105874

SELP4570-01 4 of 4 FRAME AND BODY 16

ALLGEMEINE HINWEISE

1. MASCHINENKENNZEICHNUNG

Caterpillar-Maschinen sind mit PRODUCT IDENTIFICATION NUMBERS (PIN) (Produkt-Identnummern) gekennzeichnet. Einige Baugruppen, z.B. Motoren, Getriebe, Planierschilde und Aufreißer, sind mit SERIAL NUMBERS (S/N) (Seriennummern) gekennzeichnet. An der Maschine und am Motor befinden sich außerdem ARRANGEMENT NUMBERS (Ausrüstungsnummern) sowie in einigen Fällen MODIFICATION NUMBERS (Änderungsnummern). Sie befinden sich auf den PIN-Schildern und auf dem Typenschild im Fahrerhaus.

Bei Ersatzteilbestellungen müssen dem Händler alle diese Nummern zur Verfügung gestellt werden.

SIS *Neu im Parts Manual*

Vom ersten Quartal 2001 ab wurde die Caterpillar Produkt-Identnummer (PIN) von 8 auf 17 Zeichen geändert. Um zur Standardisierung der Produkt-Identnummer beizutragen, sind Caterpillar und andere Baumaschinenhersteller bestrebt, die aktuellste Norm zur Produkt-Identnummerierung einzuführen. Produkt-Identnummern für Baumaschinen sind durch ISO 10261 definiert. Das neue Format der Produkt-Identnummern gilt für alle Caterpillar-Maschinen und -Stromaggregate. Die Produkt-Identschilder und -Identrahmenmarkierung enthalten die aus 17 Zeichen bestehende Identnummer. Das neue Format hat folgende Abschnitte:

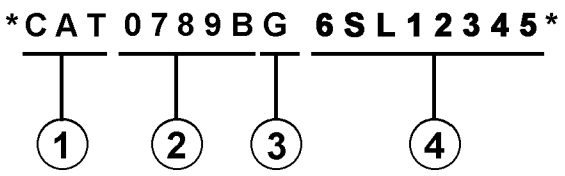

Abschnitte:

1. Caterpillars weltweiter Herstellungscode (Zeichen 1-3)

2. Modell (Zeichen 4-8)

3. Kontrollzeichen (Zeichen 9)

4. Maschinenspezifische Kennung (MIS) oder Produktsequenznummer (Zeichen 10-17). Diese wurde früher als Seriennummer bezeichnet.

Für vor dem ersten Quartal 2001 hergestellte Maschinen und Stromaggregate wird das aus 8 Zeichen bestehende PIN-Format beibehalten.

Bauteile wie z.B. Motoren, Getriebe, Achsen sowie Arbeitsgeräte werden weiterhin eine aus 8 Zeichen bestehende Seriennummer (S/N) aufweisen.

2. BESTELLEN VON ERSATZTEILEN

⚠ WARNUNG

Wenn für diese Maschine Ersatzteile benötigt werden, empfiehlt Caterpillar, ausschließlich Caterpillar-Ersatzteile oder solche zu verwenden, die die gleichen technischen Merkmale hinsichtlich Typ, Festigkeit, Werkzeugeigenschaften und die gleichen Maße aufweisen.

Bei Nichtbeachtung dieser Warnung besteht Verletzungs- oder sogar Lebensgefahr! Ferner kann Nichtbeachtung vorzeitige Ausfälle der Teile und Beschädigung der Maschine zur Folge haben.

Original Caterpillar-Ersatzteile können weltweit bei jedem Caterpillar-Händlern bestellt werden. Die umfangreichen Händlerlager enthalten normalerweise alle Teile, die Sie für Ihre Caterpillar-Maschine benötigen. Einige Händler bieten Reparatursätze, Austausch- oder werküberholte Teile an, so daß Sie eine Auswahl unter verschiedenen Reparaturmöglichkeiten treffen können. Ihre Bestellung muß folgende Angaben enthalten: Anzahl der benötigten Teile, Bestellnummer, Bezeichnung des Teils, Serien-Nr./Produkt-Ident-Nr., Ausrüstungs-Nr. und Änderungs-Nr. der Maschine, für die diese Teile benötigt werden.

3. AUFBAU DES PARTS MANUAL

Die Produktinformationen für alle Komponenten eines bestimmten Modells sind in INFORMATION ELEMENTS (Informationseinheiten) gegliedert. ENGINE ARRANGEMENT (Motorausführung) und SEAT GROUP (Fahrersitz) sind Beispiele für solche Informationseinheiten. Sie sind innerhalb jeder Gruppe alphabetisch, entsprechend der Ersatzteilbezeichnung, und zusätzlich numerisch, entsprechend der Ersatzteilnummer, geordnet.

4. INHALTSVERZEICHNIS

Das Inhaltsverzeichnis befindet sich am Anfang des Buches. Im Inhaltsverzeichnis werden die einzelnen Abschnitte des Buches aufgeführt. Die Abschnitte enthalten eine vollständige Aufstellung aller Informationseinheiten. Diese sind entsprechend ihrem Erscheinen im Buch geordnet. Das Inhaltsverzeichnis enthält Seitenangaben für Schnellverweise auf detaillierte Abbildungen und Teillisten.

ALLGEMEINE HINWEISE

5. INDEX FÜR WARTUNGSTEILE

Der Index für Wartungsteile vorn im Buch enthält die Bestellnummern, Seitenangaben, Mengenangaben und Informationen über den Einsatzbereich für die am häufigsten benötigten Ersatzteile. Die Angaben sind alphabetisch entsprechend der Teilebezeichnung geordnet.

6. INDEX

Der Index vorn im Buch enthält eine alphabetische Liste aller Informationseinheiten. Er enthält Seitenangaben für Schnellverweise auf detaillierte Abbildungen und Teillisten.

7. INDEX FÜR BESTELLNUMMERN

Hinten im Buch befindet sich ein numerischer Index, mit allen Bestellnummern und dem Hinweis auf die Seite, auf der sich die betreffende Abbildung befindet.

8. ÜBERSCHRIFTEN

Die Überschriften, die sich am Anfang jeder der Informationseinheiten befinden, enthalten Bestellnummern, Ersatzteilbezeichnungen und zusätzliche beschreibende Informationen. Produkt-Ident- und Seriennummern in den Überschriften sollten zur Auswahl der richtigen Informationen für die betreffende Maschine verwendet werden. Die Überschriften enthalten außerdem Informationen über möglichen Außendienstersatz, mögliche Baugerätekomponenten und die Baugruppe, zu der das Teil gehört.

Die erste Zeile einer Überschrift erscheint in einer größeren Schriftart, um den Anfang einer Informationseinheit zu kennzeichnen. Überschriften für zusätzliche Seiten, die zur Erläuterung einer Informationseinheit notwendig sind, erscheinen in normaler Schriftart und enthalten den Begriff "(contd.)".

9. NICHT EINZELN LIEFERBARE TEILE

In einigen Fällen ist es notwendig nicht lieferbare Teile, die selbst mit einer eigenen Teilliste im Buch vertreten sind, aufzuführen. Die Bestellnummern dieser nicht einzeln lieferbaren Teile erscheinen kursiv, wodurch angezeigt wird, daß sie nur in Verbindung mit anderen Teilen lieferbar sind.

10. REFERENZNUMMER FÜR ERSATZTEILE

Die Zahlen, die in der Spalte "Ref No" aufgeführt sind, stimmen mit den Zahlen in den beigefügten Abbildungen überein. Ein Buchstaben-Suffix kann zu einer Referenznummer hinzugefügt werden, um zu kennzeichnen, daß das Teil mit einer eigenen Teilliste im Buch aufgeführt ist. Die in der Spalte "Graphic Ref" angeführten Zahlen verweisen auf die Identifikationsnummer der Abbildung, die sich in der linken unteren Ecke der Abbildung befindet. Diese Nummer kann zusammen mit der Referenznummer des Teils angegeben werden, um die richtige Ersatzteilnummer zu ermitteln. Referenznummern können absichtlich weggelassen werden, da die Nummern der lieferbaren Ersatzteile ständig aktualisiert werden.

11. EINGERÜCKTE BEZEICHNUNGEN

Wenn eine Bezeichnung eingerückt ist, wird dadurch angezeigt, daß das Teil zu einer Baugruppe gehört, unter deren Bezeichnung es eingerückt ist.

12. REFERENZBUCHSTABEN

Falls erforderlich sind in den Abbildungen Referenzbuchstaben enthalten (z.B. A, B, C, usw.), die Leitungen und Kabelbäume von einem Punkt zum anderen verfolgen. Außerdem geben sie die Stelle an, an der getrennte Abbildungen fortgesetzt werden.

13. ABKÜRZUNGEN UND SYMBOLE

O.D. – Außendurchmesser
I.D. – Innendurchmesser
A – kein Teil dieser Gruppe
B – nach Bedarf verwenden
C – Hinweis auf eine Änderung
D – in Meter-Länge bestellen
E – in Zentimeter-Länge bestellen
F – nicht gezeigt
G – in Zoll-Länge bestellen
I – siehe Hydraulikinformationssystem
M – metrisches Teil
R – werküberholtes Teil unter Umständen lieferbar
Y – separate Abbildung
Z – nicht einzeln lieferbar

SIS *Neu im Parts Manual*

14. <END>

Dieses Symbol zeigt das Ende eines Informationselements an.

ALLGEMEINE HINWEISE

ANMERKUNG:

Ständig vorgenommene Verbesserungen und Weiterentwicklungen an Ihrer Maschine können Änderungen verursachen, die in der vorliegenden Ausgabe noch nicht berücksichtigt sind. Fragen zu Ihrer Caterpillar-Maschine oder diesem Ersatzteilbuch beantwortet Ihr Caterpillar-Händler.

ALLGEMEINE HINWEISE

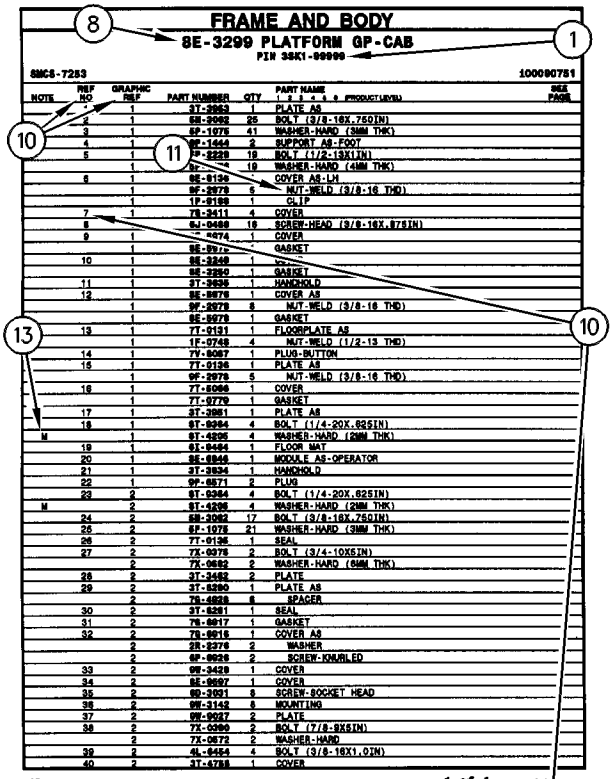

FRAME AND BODY

8E-3299 PLATFORM GP-CAB

PIN 3SK1-99999

SMCS-7253 100090751

NOTE	REF NO	GRAPHIC REF	PART NUMBER	QTY	PART NAME 1 2 3 4 5 6 (PRODUCT LEVEL)	SEE PAGE
	*	1	3T-2953	1	PLATE AS	
	2	1	5B-2062	25	BOLT (3/8-16X.750IN)	
	3	1	9F-1075	41	WASHER-HARD (3MM THK)	
	4	1	9W-1444	2	SUPPORT AS-FOOT	
	5	1	7P-2229	19	BOLT (1/2-13X1IN)	
		1	9F-	19	WASHER-HARD (4MM THK)	
	6	1	8E-6136	*	COVER AS-LH	
		1	9F-2978	5	NUT-WELD (3/8-16 THD)	
		1	1P-0169	1	CLIP	
	7	1	7B-3411	4	COVER	
	8	1	9J-0498	18	SCREW-HEAD (3/8-16X.875IN)	
	9	1	-4474	1	COVER	
		1	8E-897	*	GASKET	
	10	1	8E-3248	1	*	
		1	8E-3250	1	GASKET	
	11	1	3T-2636	1	HANDHOLD	
	12	1	8E-8878	1	COVER AS	
		1	9F-2978	8	NUT-WELD (3/8-16 THD)	
		1	8E-8878	1	GASKET	
	13	1	7T-0131	1	FLOORPLATE AS	
		1	1F-0748	4	NUT-WELD (1/2-13 THD)	
	14	1	7V-8087	1	PLUG-BUTTON	
	15	1	7T-0136	1	PLATE AS	
		1	9F-2978	5	NUT-WELD (3/8-16 THD)	
	16	1	7T-8066	1	COVER	
		1	7T-8779	1	GASKET	
	17	1	3T-3951	1	PLATE AS	
	18	1	6T-8364	4	BOLT (1/4-20X.625IN)	
M		1	9T-4205	4	WASHER-HARD (2MM THK)	
	19	1	6L-8494	1	FLOOR MAT	
	20	1	8E-8846	1	MODULE AS-OPERATOR	
	21	1	3T-3834	1	HANDHOLD	
	22	1	9P-8671	2	PLUG	
	23	2	6T-8364	4	BOLT (1/4-20X.625IN)	
M		2	9T-4205	4	WASHER-HARD (2MM THK)	
	24	2	5B-2062	17	BOLT (3/8-16X.750IN)	
	25	2	9F-1075	21	WASHER-HARD (3MM THK)	
	26	2	7T-0135	1	SEAL	
	27	2	7X-0075	2	BOLT (3/4-10X5IN)	
		2	7X-0662	2	WASHER-HARD (6MM THK)	
	28	2	3T-3452	2	PLATE	
	29	2	3T-8290	1	PLATE AS	
		2	7B-4828	8	SPACER	
	30	2	3T-8281	1	SEAL	
	31	2	7B-8817	1	GASKET	
	32	2	7B-8815	1	COVER AS	
		2	2R-2276	2	WASHER	
		2	9F-8926	2	SCREW-KNURLED	
	33	2	9W-3429	1	COVER	
	34	2	8E-8897	1	COVER	
	35	2	9D-3031	8	SCREW-SOCKET HEAD	
	36	2	9W-3142	8	MOUNTING	
	37	2	9W-8027	2	PLATE	
	38	2	7X-0090	2	BOLT (7/8-9X5IN)	
		2	7X-0672	2	WASHER-HARD	
	39	2	4L-8454	4	BOLT (3/8-16X1.0IN)	
	40	2	3T-4788	1	COVER	

12 FRAME AND BODY 1 of 4 SELP4570-01

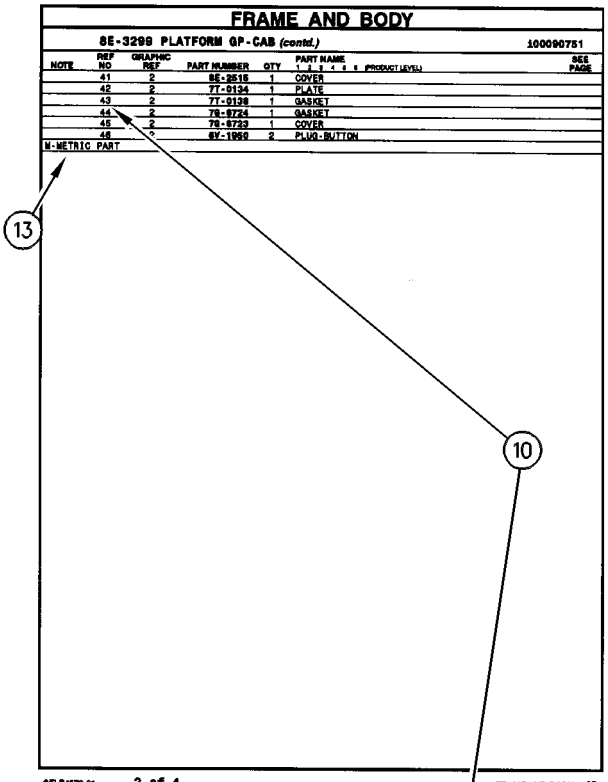

FRAME AND BODY

8E-3299 PLATFORM GP-CAB (contd.) 100090751

NOTE	REF NO	GRAPHIC REF	PART NUMBER	QTY	PART NAME 1 2 3 4 5 6 (PRODUCT LEVEL)	SEE PAGE
	41	2	8E-2516	1	COVER	
	42	2	7T-0134	1	PLATE	
	43	2	7T-0138	1	GASKET	
	44	2	7B-8724	1	GASKET	
	45	2	7B-8723	1	COVER	
	46	2	6V-1950	2	PLUG-BUTTON	

M-METRIC PART

SELP4570-01 2 of 4 FRAME AND BODY 13

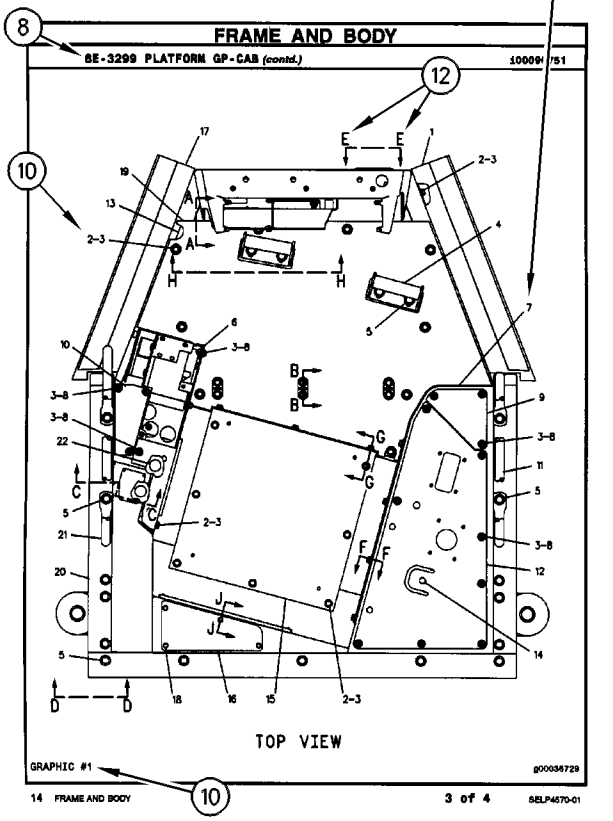

FRAME AND BODY

8E-3299 PLATFORM GP-CAB (contd.) 100090751

GRAPHIC #1 g00036729

TOP VIEW

14 FRAME AND BODY 3 of 4 SELP4570-01

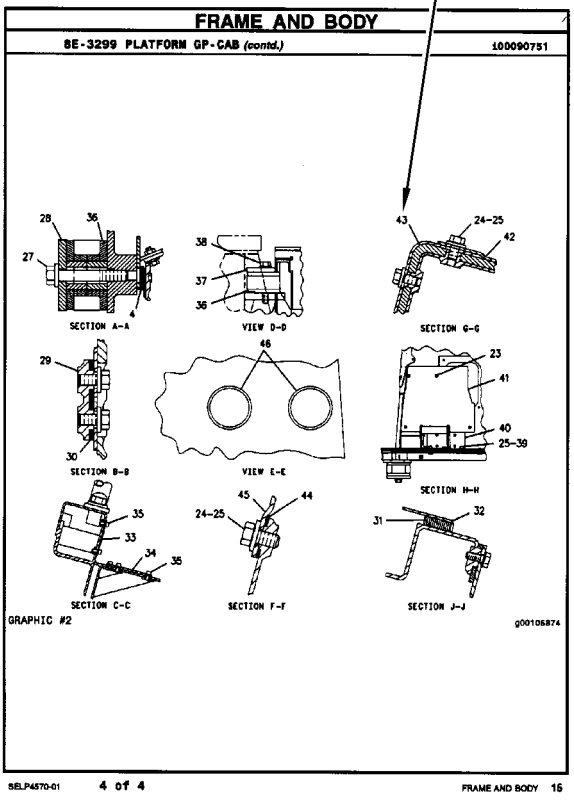

FRAME AND BODY

8E-3299 PLATFORM GP-CAB (contd.) 100090751

SECTION A-A

VIEW D-D

SECTION G-G

SECTION B-B

VIEW E-E

SECTION H-H

SECTION C-C

SECTION F-F

SECTION J-J

GRAPHIC #2 g00105874

SELP4570-01 4 of 4 FRAME AND BODY 16

REPAIR ALTERNATIVES

REMANUFACTURED COMPONENTS

As an option when making repairs consider Caterpillar Remanufactured Components. Components that are available through the Caterpillar Remanufactured Program are identified three ways in the parts book:

- with the letter R in the note field of the parts list
- with an R* at the beginning of the first line of the caption
- with an *R at the end of the first line of the caption

Typical components included in the Remanufacturing Program include:

ALTERNATORS
CONNECTING RODS
CRANKSHAFTS - UNDERSIZE
CRANKSHAFTS - UPGRADE TO NEW
CYLINDER HEADS
ELECTRONIC CONTROL MODULES (ECM)
ELECTRONIC SENSORS
FUEL INJECTORS
FUEL NOZZLES
FUEL PUMPS
GOVERNORS
OIL PUMPS
PISTONS
SHORT BLOCKS
STARTERS
TURBOCHARGERS - COMPLETE
TURBOCHARGER CARTRIDGES
WATER PUMPS

Caterpillar Remanufactured engines for many engine arrangements are also available.

OPTIONS DE RÉPARATION

COMPOSANTS RÉNOVÉS

Comme option de réparation, considérer les composants rénovés Caterpillar. Les composants disponibles dans le cadre du programme Caterpillar de composants rénovés sont identifiés de trois façons dans le catalogue de pièces:

- avec la lettre "R" dans l'espace note de la liste des pièces
- avec R* au début de la première ligne des légendes
- avec *R à la fin de la première ligne des légendes

Les composants suivants figurent parmi les composants typiques du programme de rénovation:

ALTERNATEURS
BIELLES
VILEBREQUINS - SOUS-DIMENSIONNÉS
VILEBREQUINS - REMIS À NEUF
CULASSES
MODULES DE COMMANDE ÉLECTRONIQUE (ECM)
CAPTEURS ÉLECTRONIQUES
INJECTEURS
TÊTES D'INJECTEURS
POMPES À CARBURANT
RÉGULATEURS
POMPES À HUILE
PISTONS
BLOCS EMBIELLÉS
DÉMARREURS
TURBOCOMPRESSEURS - COMPLETS
CARTOUCHES DE TURBOCOMPRESSEUR
POMPES À EAU

Des moteurs rénovés sont aussi disponibles pour plusieurs versions de moteur.

ALTERNATIVAS DE REPARACIÓN

COMPONENTES REMANUFACTURADOS

Al hacer reparaciones, tenga en cuenta la opción de Componentes Remanufacturados Caterpillar. Los componentes que están disponibles por medio del programa de Productos Remanufacturados Caterpillar se identifican de tres maneras en el manual de piezas:

- con la letra R en el espacio de Nota de la lista de piezas
- con una R* al comienzo de la primera línea de la leyenda
- con una *R al final de la primera línea de la leyenda

Los componentes que se incluyen típicamente en el Programa de Productos Remanufacturados son:

ALTERNADORES
BIELAS
CIGÜEÑALES - BAJOMEDIDA
CIGÜEÑALES - REMANUFACTURADOS A NUEVO
CULATAS
MÓDULOS DE CONTROL ELECTRÓNICO (ECM)
SENSORES ELECTRONICOS
INYECTORES
BOQUILLAS
BOMBAS DE COMBUSTIBLE
REGULADORES
BOMBAS DE ACEITE
PISTONES
MONOBLOQUES
MOTORES DE ARRANQUE
TURBOCOMPRESORES - COMPLETOS
NÚCLEOS DE TURBOCOMPRESOR
BOMBAS DE AGUA

También hay disponibles motores Remanufacturados Caterpillar para muchas de las configuraciones de motores.

ALTERNATIVAS DE REPARO

COMPONENTES REMANUFATURADOS

Considere o uso de Componentes Remanufaturados Caterpillar ao efetuar reparos. Os componentes disponíveis através do Programa de Remanufatura Caterpillar são identificados de três formas no manual de peças:

- com um R na área da nota da lista de peças
- com um R* no princípio da primeira linha da legenda
- com um *R no final da primeira linha da legenda

Os componentes típicos que constam no Programa de Remanufatura incluem:

ALTERNADORES
BIELAS
VIRABREQUINS - SUBMEDIDAS
VIRABREQUINS - ATUALIZAÇÃO
CABEÇOTES
MÓDULOS DE CONTROLE ELETRÔNICO (ECM)
SENSORES ELETRÔNICOS
INJETORES DE COMBUSTÍVEL
BICOS DE ABASTECIMENTO DE COMBUSTÍVEL
BOMBAS DE COMBUSTÍVEL
GOVERNADORES
BOMBAS DE ÓLEO
PISTÕES
BLOCOS BÁSICOS DO MOTOR
MOTORES DE PARTIDA
TURBOALIMENTADORES - COMPLETOS
CARTUCHOS DE TURBOALIMENTADORES
BOMBAS D'ÁGUA

Motores Remanufaturados Caterpillar também encontram-se disponíveis para diversos arranjos de motor.

REPARATURALTERNATIVEN

WERKÜBERHOLTE AT-PRODUKTE

Bei Reparaturen sollten werküberholte AT-Produkte von Caterpillar in Betracht gezogen werden. Die durch das AT-Programm von Caterpillar erhältlichen Teile sind im Parts Book auf drei verschiedene Arten gekennzeichnet:

- mit dem Buchstaben R in der Spalte NOTE der Ersatzteilliste
- mit einem R* am Anfang der ersten Zeile der Überschrift
- mit einem *R am Ende der ersten Zeile der Überschrift

Das AT-Programm umfaßt u.a. folgende Produkte:

DREHSTROMGENERATOREN
PLEUELSTANGEN
KURBELWELLEN - MIT UNTERMASS
KURBELWELLEN - MIT ORIGINALMASS
ZYLINDERKÖPFE
ELEKTRONISCHE STEUEREINHEITEN (EMC)
ELEKTRONISCHE SENSOREN
PUMPENDÜSEN
EINSPRITZDÜSEN
KRAFTSTOFFPUMPEN
DREHZAHLREGLER
ÖLPUMPEN
KOLBEN
TEILMOTOREN
ANLASSER
TURBOLADER - KOMPLETT
TURBOLADERLAUFZEUGE
KÜHLWASSERPUMPEN

Viele Motoren können durch werküberholte AT-Motoren von Caterpillar ersetzt werden.

SUPPLEMENTAL COOLANT ADDITIVES

CUSTOMER BENEFITS:

Protects against cavitation, foam, erosion, corrosion, and scale buildup in cooling systems.

- Provides measured coolant conditioner.

DESCRIPTION:

Additives deplete from the coolant with normal operation. For this reason, Supplemental Coolant Additives (SCA) must be added to all heavy duty coolants at regular intervals. In addition, when not using a fully formulated, pre-charged antifreeze, like Caterpillar's DEAC, an initial charge of SCA must be added to the cooling system. The amount of SCA added to the system is dependent on the capacity of the system.

The SCA for initial fill is provided as a liquid. SCA's for maintenance intervals are available in liquid form and as a spin-on element. (No Spin-on available for 3600 Family of Engines)

NOTE:

The amount of SCA added at initial fill is not the same as the amount added at maintenance intervals.

The coolant additive elements can be used with any ethylene or propylene glycol type antifreeze which meets ASTM D4985 or ASTM D5345 Specifications.

NOTE:

For use with standard heavy duty coolant only, not for use with Extended Life Coolant.

PARTS NEEDED:

Cooling System Capacity		Liquid SCA at Initial Fill	Liquid SCA at Maintenance*	Spin-on SCA Maintenance Element*
Liters	Gallons			
22-30	(6-8)	3P-2044 (1)	6V-3542 (1)	111-2370 (1)
30-38	(8-10)	3P-2044 (1) 6V-3542 (1)	111-2372 (1)	111-2369 (1)
38-49	(10-13)	3P-2044 (1) 8T-1589 (1)	111-2372 (1)	111-2369 (1)
49-64	(13-17)	3P-2044 (2)	8T-1589 (1)	9N-3368 (1)
64-83	(17-22)	3P-2044 (2) 8T-1589 (1)	111-2372 (1) 6V-3542 (1)	111-2371 (1)
83-114	(22-30)	3P-2044 (3) 8T-1589 (1)	3P-2044 (1)	9N-3718 (1)
114-163	(30-43)	3P-2044 (5)	3P-2044 (1) 6V-3542 (1)	111-2371 (2)
163-242	(43-64)	3P-2044 (8)	3P-2044 (2)	9N-3718 (2)

** Normal maintenance period is 250 hrs. See your Operation and Maintenance Manual for complete coolant maintenance instructions.*

( ) Indicates quantity required.

ADDITIFS POUR LIQUIDE DE REFROIDISSEMENT

AVANTAGES POUR LE CLIENT

L'additif protège contre la cavitation, la mousse, l'érosion, la corrosion et l'accumulation de dépôts dans le circuit de refroidissement.

- L'additif complémentaire fournit une quantité mesurée d'additif.

DESCRIPTION:

Les additifs s'épuisent pendant l'utilisation du moteur. C'est pourquoi l'on doit ajouter de l'additif au liquide de refroidissement/antigel pour moteurs diesel à intervalles réguliers. En plus, si l'on n'utilise pas de l'antigel entièrement formulé et pré-chargé comme le liquide de refroidissement/antigel Caterpillar pour moteurs diesel, une quantité initiale d'additif doit être ajoutée au circuit de refroidissement. La quantité d'additif à ajouter au circuit dépend de la contenance du circuit.

L'additif pour le remplissage initial est fourni sous forme liquide. L'additif pour l'entretien ultérieur est disponible sous forme liquide et sous forme d'élément à visser. (Il n'y a pas d'élément à visser pour les moteurs de la famille 3600).

NOTA:

La quantité d'additif à ajouter au remplissage initial diffère de la quantité à ajouter aux intervalles d'entretien.

Les éléments d'additif peuvent être utilisés avec tout antigel de type éthylène ou propylène-glycol conforme à la norme ASTM D4985 ou ASTM D5345.

NOTA:

A utiliser uniquement avec du liquide de refroidissement pour moteurs diesel et non avec le liquide de refroidissement longue durée.

PIÈCES NÉCESSAIRES:

Contenance du circuit de refroidissement		Additif liquide au remplissage initial	Additif liquide aux intervalles d'entretien*	Elément d'additif à visser aux intervalles d'entretien*
Litres	Gallons U.S.			
22-30	(6-8)	3P-2044 (1)	6V-3542 (1)	111-2370 (1)
30-38	(8-10)	3P-2044 (1) 6V-3542 (1)	111-2372 (1)	111-2369 (1)
38-49	(10-13)	3P-2044 (1) 8T-1589 (1)	111-2372 (1)	111-2369 (1)
49-64	(13-17)	3P-2044 (2)	8T-1589 (1)	9N-3368 (1)
64-83	(17-22)	3P-2044 (2) 8T-1589 (1)	111-2372 (1) 6V-3542 (1)	111-2371 (1)
83-114	(22-30)	3P-2044 (3) 8T-1589 (1)	3P-2044 (1)	9N-3718 (1)
114-163	(30-43)	3P-2044 (5)	3P-2044 (1) 6V-3542 (1)	111-2371 (2)
163-242	(43-64)	3P-2044 (8)	3P-2044 (2)	9N-3718 (2)

** L'intervalle d'entretien normal est de 250 heures-service. Voir le Guide d'utilisation et d'entretien pour de plus amples renseignements concernant l'entretien du circuit de refroidissement.*

( ) Indique la quantité exigée.

ADITIVOS DE REFRIGERANTE SUPLEMENTARIOS

VENTAJAS PARA EL USUARIO:

Protegen contra la cavitación, la formación de espuma, la corrosión y la acumulación de escamas en los sistemas de enfriamiento.

- Suministra un acondicionador dosificado de refrigerante.

DESCRIPCIÓN:

Los aditivos en el refrigerante se agotan con la operación normal. Por esta razón, se debe agregar Aditivo de refrigerante suplementario (SCA) a todos los refrigerantes para servicio pesado, a intervalos regulares. Además, cuando no se usa un anticongelante de precarga completo, tal como el DEAC de Caterpillar, es necesario agregar una cantidad de aditivo de refrigerante suplementario inicial al sistema de enfriamiento. La cantidad de aditivo que se debe agregar depende de la capacidad del sistema.

El SCA de llenado inicial es líquido. El que se usa para el mantenimiento está disponible tanto en líquido como en un elemento enroscable. (No hay elemento enroscable disponible para la Familia de Motores 3600).

NOTA:

La cantidad de aditivo de llenado inicial no es la misma que se agrega en los intervalos de mantenimiento.

Los elementos de aditivo de refrigerante se pueden usar con cualquier anticongelante de tipo glicol etilénico o propílico que esté de acuerdo con las especificaciones de las normas ASTM D4985 o ASTM D5345.

NOTA:

Se debe utilizar únicamente con refrigerante estándar para servicio pesado; no se debe usar con Refrigerante de Larga Duración.

PIEZAS NECESARIAS:

Capacidad del Sistema de Enfriamiento		SCA líquido de llenado inicial	SCA líquido de mantenimiento*	Elemento de mantenimiento enroscable*
litros	gal EE.UU.			
22-30	6-8	3P-2044 (1)	6V-3542 (1)	111-2370 (1)
30-38	8-10	3P-2044 (1) 6V-3542 (1)	111-2372 (1)	111-2369 (1)
38-49	10-13	3P-2044 (1) 8T-1589 (1)	111-2372 (1)	111-2369 (1)
49-64	13-17	3P-2044 (2)	8T-1589 (1)	9N-3368 (1)
64-83	17-22	3P-2044 (2) 8T-1589 (1)	111-2372 (1) 6V-3542 (1)	111-2371 (1)
83-114	22-30	3P-2044 (3) 8T-1589 (1)	3P-2044 (1)	9N-3718 (1)
114-163	30-43	3P-2044 (5)	3P-2044 (1) 6V-3542 (1)	111-2371 (2)
163-242	43-64	3P-2044 (8)	3P-2044 (2)	9N-3718 (2)

** El período normal de mantenimiento es de 250 horas. Para ver las instrucciones completas sobre el mantenimiento del refrigerante, consulte el Manual de Operación y Mantenimiento.*

( ) Indica la cantidad necesaria.

ADITIVOS SUPLEMENTARES DO LÍQUIDO ARREFECEDOR

BENEFÍCIOS PARA O CLIENTE:

Protege contra cavitação, espuma, erosão, corrosão e acúmulo de crostas nos sistemas de arrefecimento.

- Fornece uma quantidade pré-determinada de condicionador de arrefecimento.

DESCRIÇÃO:

Com a operação normal, os aditivos se esgotam do líquido arrefecedor. Por isso, Aditivos Suplementares do Líquido Arrefecedor (SCA) devem ser acrescentados a todos os líquidos arrefecedores para serviço pesado em intervalos regulares. Além disso, quando um anticongelante pré-carregado, totalmente formulado não for usado, como o DEAC Caterpillar, uma carga inicial de SCA deve ser acrescentada ao sistema de arrefecimento. A quantidade de SCA acrescentada ao sistema depende da capacidade do sistema.

O SCA para abastecimento inicial é fornecido em forma de líquido. Os aditivos suplementares (SCA) para intervalos de manutenção estão à disposição em forma líquida e como um elemento com roscas. (Exceto os Motores da Família 3600)

NOTA:

A quantidade de SCA adicionada no abastecimento inicial não é a mesma que a acrescentada nos intervalos de manutenção.

Os elementos do aditivo do líquido arrefecedor podem ser usados com qualquer tipo de anticongelante etileno ou propileno que satisfaz as Especificações ASTM D4985 ou ASTM D5345.

NOTA:

Para uso apenas com líquido arrefecedor para serviço pesado padrão, não deve ser usado com Líquido Arrefecedor de Vida Longa.

PEÇAS NECESSÁRIAS:

Capacidade do Sistema de Arrefecimento		Líquido SCA Durante Abastecimento Inicial	Líquido SCA Durante Manutenção*	Elemento de Manutenção de SCA com Roscas*
Litros	Galões			
22-30	6-8	3P-2044 (1)	6V-3542 (1)	111-2370 (1)
30-38	8-10	3P-2044 (1) 6V-3542 (1)	111-2372 (1)	111-2369 (1)
38-49	10-13	3P-2044 (1) 8T-1589 (1)	111-2372 (1)	111-2369 (1)
49-64	13-17	3P-2044 (2)	8T-1589 (1)	9N-3368 (1)
64-83	17-22	3P-2044 (2) 8T-1589 (1)	111-2372 (1) 6V-3542 (1)	111-2371 (1)
83-114	22-30	3P-2044 (3) 8T-1589 (1)	3P-2044 (1)	9N-3718 (1)
114-163	30-43	3P-2044 (5)	3P-2044 (1) 6V-3542 (1)	111-2371 (2)
163-242	43-64	3P-2044 (8)	3P-2044 (2)	9N-3718 (2)

** O período normal de manutenção é de 250 horas. Consulte o Manual de Operação e Manutenção para obter instruções completas quanto à manutenção do líquido arrefecedor.*

( ) Indica a quantidade exigida.

KÜHLMITTELZUSATZ

VORTEILE FÜR DEN KUNDEN:

Schutz gegen Kavitation, Schaumbildung, Erosion, Korrosion und Kesselsteinbildung in Kühlsystemen.

- Richtig dosierter Kühlmittelzusatz

BESCHREIBUNG:

Additive erschöpfen sich während des Motorbetriebs. Deshalb muß allen HD-Kühlmitteln regelmäßig Kühlmittelzusatz beigefügt werden. Wenn bei Erstfüllung kein vollwertiges Fertigkühlmittel, wie das Frostschutz- und Kühlmittel für Dieselmotoren von Caterpiller (DEAC), verwendet wird, muß bei Erstfüllung Kühlmittelzusatz beigefügt werden. Wieviel Kühlmittelzusatz beigefügt werden muß, hängt vom Inhalt des Kühlsystems ab.

Für Erstfüllung ist Kühlmittelzusatz nur in flüssiger Form erhältlich. Für Wartungsintervalle ist Kühlmittelzusatz in flüssiger Form und als Zusatzelement erhältlich. (Für die Motorbaureihe 3600 sind keine Zusatzelemente erhältlich.)

ANMERKUNG:

Die Kühlmittelmenge bei Erstfüllung ist nicht die gleiche Menge, die bei Wartungsintervallen beigefügt werden muß.

Die Kühlmittelzusatzelemente können mit allen Frostschutzmitteln auf Ethylen- oder Propylenglykolbasis verwendet werden, die den Standards nach ASTM D4985 oder ASTM D5345 entsprechen.

ANMERKUNG:

Den Kühlmittelzusatz nicht mit Langzeitkühlmittel (ELC) von Caterpillar verwenden. Der Kühlmittelzusatz ist nur für HD-Kühlmittel bestimmt.

TEILEBEZEICHNUNG:

Kühlsysteminhalt		Kühlmittelzusatz bei Erstfüllung	Flüssiger Kühlmittelzusatz bei Wartung*	Kühlmittelzusatzelement bei Wartung*
Liter	US-Gall.			
22-30	(6-8)	3P-2044 (1)	6V-3542 (1)	111-2370 (1)
30-38	(8-10)	3P-2044 (1) 6V-3542 (1)	111-2372 (1)	111-2369 (1)
38-49	(10-13)	3P-2044 (1) 8T-1589 (1)	111-2372 (1)	111-2369 (1)
49-64	(13-17)	3P-2044 (2)	8T-1589 (1)	9N-3368 (1)
64-83	(17-22)	3P-2044 (2) 8T-1589 (1)	111-2372 (1) 6V-3542 (1)	111-2371 (1)
83-114	(22-30)	3P-2044 (3) 8T-1589 (1)	3P-2044 (1)	9N-3718 (1)
114-163	(30-43)	3P-2044 (5)	3P-2044 (1) 6V-3542 (1)	111-2371 (2)
163-242	(43-64)	3P-2044 (8)	3P-2044 (2)	9N-3718 (2)

** Der normale Wartungsintervall beträgt 250 Betriebsstunden. Für vollständige Anweisungen zur Wartung des Kühlsystems, siehe Betriebs- und Wartungshandbuch.*

( ) Erforderliche Anzahl

MAINTENANCE PARTS

DESCRIPTION	PART NUMBER	QTY	WHERE USED	PAGE
AIR INLET AND EXHAUST SYSTEM				
FILTER ELEMENT AS-AIR (PRIMARY)	227-7448	1	AIR CLEANER GP	56
FILTER ELEMENT AS-AIR (SECONDARY)	227-7449	1	AIR CLEANER GP	56
BASIC ENGINE				
GASKET (VALVE COVER)	225-6451	1	COVER GP-VALVE MECHANISM	9
PLUG-DRAIN (ENGINE OIL)	7C-0351	2	PAN GP-OIL	26
COOLING SYSTEM				
HOSE-RADIATOR (LOWER)	210-6139	1	MOUNTING GP-RAD & OIL COOLER	48
HOSE-RADIATOR (UPPER)	210-6141	1	MOUNTING GP-RAD & OIL COOLER	48
REGULATOR GP-TEMPERATURE (WATER)	254-2267	1	CONNECTION GP-WATER	39
V-BELT	1W-2934	1	FAN GP-SUCTION	44
V-BELT SET (INCLUDES 2-BELTS)	3S-8447	1	FAN GP-SUCTION	44
		1	FAN GP-SUCTION	45
ELECTRICAL AND STARTING SYSTEM				
BATTERY (12-VOLT, MAINTENANCE FREE)	230-6368	1	BATTERY & WIRING GP	74
		1	BATTERY & WIRING GP	76
BELT-DRIVE (WARNING BEACON)	9X-8139	1	LAMP GP-WARNING BEACON	93
ELEMENT AS-JACKET WATER HEATER (120-VOLT, 1000-WATT)	219-3273	1	HEATER GP-JACKET WATER	82
FLASHER AS (12-VOLT)	7T-4848	1	WIRING GP-PLATFORM	127
FUSE (10-AMPERE)	3K-8782	1	LAMP GP-WARNING BEACON	93
FUSE (60-AMPERE)	267-2701	1	WIRING GP-PLATFORM	127
GLOW PLUG (12-VOLT)	232-6662	4	GLOW PLUG GP	81
LAMP (12-VOLT)	7X-9065	1	WIRING GP-CONSOLE	112
LAMP (12-VOLT, 21-WATT)	3C-4883	1	LIGHTING GP-FLOOD & SIGNAL	94
LAMP (12-VOLT, 21/5-WATT)	3C-6516	1	LIGHTING GP-FLOOD & SIGNAL	94
LAMP (12-VOLT, 55-WATT)	9W-0607	1	LAMP GP-FLOOD	91
		1	LAMP GP-FLOOD	92
	9X-8118	1	LAMP GP-WARNING BEACON	93
LENS-LAMP (REAR)	146-2438	1	LIGHTING GP-FLOOD & SIGNAL	94
FUEL SYSTEM				
CAP GP-FUEL FILLER (VENTED, LOCKABLE)	201-0330	1	TANK GP-FUEL	72
FILTER AS-WATER SEP & FUEL	228-9130	1	PUMP GP-FUEL PRM & PRIM FILTER	68
HYDRAULIC SYSTEM				
CAP-FILL (HYDRAULIC OIL)	237-3797	1	TANK & MTG GP-HYDRAULIC	360
FILTER AS-OIL (HYDRAULIC, FIRE RESISTANT)	134-3014	1	FILTER GP-OIL	286
FILTER AS-OIL (ULTRA HIGH EFFICIENCY)	126-1817	1	FILTER GP-OIL	286
FILTER-BREATHER (HYDRAULIC TANK)	9R-9925	1	TANK & MTG GP-HYDRAULIC	360
FILTER (FLOW REGULATOR)	227-1197	1	MANIFOLD GP-CONTROL	342

MAINTENANCE PARTS

DESCRIPTION	PART NUMBER	QTY	WHERE USED	PAGE
LUBRICATION SYSTEM				
CANISTER AS-BREATHER (CRANKCASE)	165-4021	1	BREATHER GP	35
CAP AS (ENGINE OIL FILLER)	236-6651	1	GAUGE GP-OIL LEVEL & FILLER	37
FILTER AS-ENGINE OIL	7W-2326	1	GAUGE GP-OIL LEVEL & FILLER	37
SEAL (BREATHER)	185-6643	1	BREATHER GP	35
OPERATOR STATION				
ACCUMULATOR-REFRIGERANT	170-0235	1	LINES GP-HEATER & AIR COND	598
BLADE AS-WIPER	5C-8811	1	WIPER GP-WINDOW	642
	101-0745	1	WIPER & WASHER GP-WINDOW	640
		1	WIPER GP-WINDOW	642
FILTER-CAB AIR (RECIRCULATION)	211-2660	1	AIR CONDITIONER GP	557
		1	HEATER GP-CAB	589
FILTER ELEMENT AS-AIR (CAB HEATER, AIR CONDITIONER)	211-2661	1	AIR CONDITIONER & MOUNTING GP	555
		1	HEATER GP-CAB	587
LAMP (12-VOLT)	122-7137	1	TACHOMETER GP-ELECTRIC	624
	210-8754	1	LINER GP-CAB	595
POWER TRAIN				
BREATHER	197-9155	1	AXLE GP-REAR	140
BREATHER (FRONT AXLE)	253-5024	1	AXLE GP-DRIVE & STEERING	138
BREATHER (TRANSMISSION)	7T-3251	1	TRANSMISSION GP-DIRECT DRIVE	189
		1	TRANSMISSION GP-POWER SHIFT	194
FILTER AS-OIL (EFFICIENCY) (POWER TRAIN)	119-4740	1	POWER TRAIN AR	171
PLUG AS-DRAIN (MAGNETIC)	152-6144	4	AXLE GP-DRIVE & STEERING	138
		4	AXLE GP-REAR	140
		1	DIFFERENTIAL & BEVEL GEAR GP	148
STRAINER (SUCTION)	7T-2651	1	CASE AS-TRANSMISSION	143
		1	TRANSMISSION GP-POWER SHIFT	194
SERVICE EQUIPMENT AND SUPPLIES				
PADLOCK GP (VANDALISM GUARD)	246-2641	1	LOCK GP-VANDALISM	645

PIÈCES DE RECHANGE

DESCRIPTION	NUMÉRO DE PIECÈS	QTÉ	DOMAINE D'APPLICATION	PAGE
CIRCUIT D'ADMISSION D'AIR ET D'ÉCHAPPEMENT				
ÉLÉMENT DE FILTRE À AIR (ENS) (PRINCIPAL)	227-7448	1	FILTRE A AIR (ASS)	56
ÉLÉMENT DE FILTRE À AIR (ENS) (SECONDAIRE)	227-7449	1	FILTRE A AIR (ASS)	56
CIRCUIT DE CARBURANT				
BOUCHON DE GOULOTTE DE CARBURANT (ASS) (AÉRÉ, VERROUILLABLE)	201-0330	1	RÉSERVOIR DE CARBURANT (ASS)	72
FILTRE - SÉPARATEUR D'EAU ET DE CARBURANT (ENS)	228-9130	1	POMPE D'AMORÇAGE DE CARBURANT ET FILTRE PRINCIPAL	68
CIRCUIT DE GRAISSAGE				
BOÎTIER-RENIFLARD (VILEBREQUIN)	165-4021	1	RENIFLARD (ASS)	35
BOURRELET D'ÉTANCHÉITÉ (RENIFLARD)	185-6643	1	RENIFLARD (ASS)	35
CHAPEAU (ENS) (GOULOTTE DE REMPLISSAGE D'HUILE MOTEUR)	236-6651	1	INSTRUMENT - NIVEAU D'HUILE ET GOUL. DE REMPLIS.	37
FILTRE A HUILE MOTEUR (ENS)	7W-2326	1	INSTRUMENT - NIVEAU D'HUILE ET GOUL. DE REMPLIS.	37
CIRCUIT DE REFROIDISSEMENT				
COURROIE TRAPEZOIDALE	1W-2934	1	VENTILATEUR ASPIRANT (ASS)	44
FLEXIBLE DE RADIATEUR (INFÉRIEUR)	210-6139	1	MONTAGE DE RADIATEUR ET REFROIDISSEUR D'HUILE (ASS)	48
FLEXIBLE DE RADIATEUR (SUPÉRIEUR)	210-6141	1	MONTAGE DE RADIATEUR ET REFROIDISSEUR D'HUILE (ASS)	48
JEU DE COURROIES TRAPEZOIDALES (COMPREND 2 COURROIES)	3S-8447	1	VENTILATEUR ASPIRANT (ASS)	44
		1	VENTILATEUR ASPIRANT (ASS)	45
RÉGULATEUR DE TEMPÉRATURE (ASS) (EAU)	254-2267	1	RACCORD D'EAU (ASS)	39

* TRADUCTION NON DISPONIBLE AU MOMENT DE LA PUBLICATION

PIÈCES DE RECHANGE

DESCRIPTION	NUMÉRO DE PIECÈS	QTÉ	DOMAINE D'APPLICATION	PAGE
CIRCUIT ÉLECTRIQUE ET DE DÉMARRAGE				
AMPOULE (12 VOLTS)	7X-9065	1	CABLAGE DE CONSOLE (ASS)	112
AMPOULE (12V, 21W)	3C-4883	1	ÉCLAIRAGE - PROJECTEURS ET CLIGNOTANTS (ASS)	94
AMPOULE (12V, 21/5W)	3C-6516	1	ÉCLAIRAGE - PROJECTEURS ET CLIGNOTANTS (ASS)	94
AMPOULE (12V, 55W)	9W-0607	1	LAMPE - PHARE (ASS)	91
		1	LAMPE - PHARE (ASS)	92
	9X-8118	1	LAMPE - GYROPHARE (ASS)	93
BATTERIE (12V, SANS ENTRETIEN)	230-6368	1	BATTERIE ET CÂBLAGE	74
		1	BATTERIE ET CÂBLAGE	76
BOUGIE DE PRECHAUFFAGE (12V)	232-6662	4	BOUGIE DE PRÉCHAUFFAGE (ASS)	81
CLIGNOTANT (ENS) (12 VOLTS)	7T-4848	1	CABLAGE - PLATE-FORME (ASS)	127
ÉLÉMENT DU RÉCHAUFFEUR D'EAU DES CHEMISES (ENS) (120-VOLT, 1000-WATT)	219-3273	1	EAU DES CHEMISES - RECHAUFFEUR (ASS)	82
ENTRAÎNEMENT POUR COURROIE (GYROPHARE)	9X-8139	1	LAMPE - GYROPHARE (ASS)	93
FUSIBLE (10A)	3K-8782	1	LAMPE - GYROPHARE (ASS)	93
FUSIBLE (60A)	267-2701	1	CABLAGE - PLATE-FORME (ASS)	127
LENTILLE DE LAMPE (ARRIÈRE)	146-2438	1	ÉCLAIRAGE - PROJECTEURS ET CLIGNOTANTS (ASS)	94
CIRCUIT HYDRAULIQUE				
BOUCHON DE REMPLISSAGE (HUILE HYDRAULIQUE)	237-3797	1	RÉSERVOIR HYDRAULIQUE ET MONTAGE (ASS)	360
FILTRE - RENIFLARD (RÉSERVOIR HYDRAULIQUE)	9R-9925	1	RÉSERVOIR HYDRAULIQUE ET MONTAGE (ASS)	360
FILTRE À HUILE (ENS) (HYDRAULIQUE, RÉSISTANT AU FEU)	134-3014	1	FILTRE A HUILE (ASS)	286
FILTRE À HUILE (ENS) (*ULTRA HIGH EFFICIENCY)	126-1817	1	FILTRE A HUILE (ASS)	286
FILTRE (RÉGULATEUR DE DÉBIT)	227-1197	1	COLLECTEUR - COMMANDE (ASS)	342
MATÉRIEL ET FOURNITURES D'ENTRETIEN				
CADENAS (ASS) (PROTECTION ANTIVANDALISME)	246-2641	1	VERROUILLAGE ANTI-VANDALISME (ASS)	645
MOTEUR STANDARD				
BOUCHON DE VIDANGE (HUILE MOTEUR)	7C-0351	2	HUILE MOTEUR - CARTER (ASS)	26
JOINT PLAT (CACHE-SOUPAPES)	225-6451	1	CACHE-SOUPAPES (ASS)	9

* TRADUCTION NON DISPONIBLE AU MOMENT DE LA PUBLICATION

PIÈCES DE RECHANGE

DESCRIPTION	NUMÉRO DE PIECÈS	QTÉ	DOMAINE D'APPLICATION	PAGE
POSTE DE CONDUITE				
ACCUMULATEUR - RÉFRIGÉRANT	170-0235	1	CANALISATIONS-RÉCHAUFFEUR ET CLIMATISEUR (ASS)	598
AMPOULE (12 VOLTS)	122-7137	1	COMPTE-TOURS ÉLECTRIQUE (ASS)	624
	210-8754	1	CABINE - REVÊTEMENT (ASS)	595
BALAI D'ESSUIE-GLACE (ENS)	5C-8811	1	ESSUIE-GLACE (ASS)	642
	101-0745	1	ESSUIE-GLACE (ASS)	642
		1	ESSUIE-GLACE ET LAVE-GLACE	640
ÉLÉMENT DE FILTRE À AIR (ENS) (CLIMATISATION, CHAUFFAGE DE CABINE)	211-2661	1	CHAUFFAGE DE CABINE (ASS)	587
		1	CLIMATISEUR ET MONTAGE (ASS)	555
FILTRE À AIR DE CABINE (RECIRCULATION)	211-2660	1	CHAUFFAGE DE CABINE (ASS)	589
		1	CLIMATISEUR (ASS)	557
TRANSMISSION				
BOUCHON DE VIDANGE (ENS) (MAGNÉTIQUE)	152-6144	4	ESSIEU AR (ASS)	140
		4	ESSIEU MOTEUR ET DIRECTION (ASS)	138
		1	COURONNE ET DIFFERENTIEL (ASS)	148
CREPINE (ASPIRATION)	7T-2651	1	BOÎTE POWER SHIFT (ASS)	194
		1	CARTER DE BOÎTE DE VITESSES (ENS)	143
FILTRE À HUILE (ENS) (*EFFICIENCY) (TRANSMISSION)	119-4740	1	TRANSMISSION (VERSION)	171
RENIFLARD	197-9155	1	ESSIEU AR (ASS)	140
RENIFLARD (BOîTE DE VITESSES)	7T-3251	1	BOÎTE MÉCANIQUE (ASS)	189
		1	BOÎTE POWER SHIFT (ASS)	194
RENIFLARD (ESSIEU AVANT)	253-5024	1	ESSIEU MOTEUR ET DIRECTION (ASS)	138

* TRADUCTION NON DISPONIBLE AU MOMENT DE LA PUBLICATION

PIEZAS DE MANTENIMIENTO

DESCRIPCION	NUMERO DE PIEZA	CANT	SE UTILIZA EN	PAGINA
EQUIPOS Y SUMINISTRO DE SERVICIOS				
CANDADO (GR) (PROTECCIÓN CONTRA BANDALISMO)	246-2641	1	TRABA CONTRA EL VANDALISMO (GR)	645
MOTOR BÁSICO				
EMPAQUETADURA (TAPA DE VÁLVULA)	225-6451	1	TAPA DEL MECANISMO DE VÁLVULAS (GR)	9
TAPÓN DE DRENAJE (ACEITE DE MOTOR)	7C-0351	2	CÁRTER - COLECTOR DEL (GR)	26
PUESTO DEL OPERADOR				
ACUMULADOR DE REFRIGERANTE	170-0235	1	TUBERIAS DE CALENTEDOR Y ACONDICIONADOR DE AIRE (GR)	598
ELEMENTO DEL FILTRO DE AIRE (CONJ) (CALEFACCION DE CABINA, ACONDICIONADOR DE AIRE)	211-2661	1	ACONDICIONADOR DE AIRE Y MONTAJE (GR)	555
		1	CALEFACCIÓN DE LA CABINA (GR)	587
FILTRO DE AIRE DE CABINA (RECIRCULACIÓN)	211-2660	1	ACONDICIONADOR DE AIRE (GR)	557
		1	CALEFACCIÓN DE LA CABINA (GR)	589
HOJA DE LIMPIAPARABRISAS (CONJ)	5C-8811	1	LIMPIAPARABRISAS DE LA VENTANA (GR)	642
	101-0745	1	LIMPIA Y LAVAPARABRISAS (GR)	640
		1	LIMPIAPARABRISAS DE LA VENTANA (GR)	642
LÁMPARA (12 VOLTIOS)	122-7137	1	TACÓMETRO ELÉCTRICO (GR)	624
	210-8754	1	REVESTIMIENTO DE LA CABINA (GR)	595
SISTEMA DE ADMISIÓN Y ESCAPE				
ELEMENTO DEL FILTRO DE AIRE (CONJ) (PRIMARIO)	227-7448	1	FILTRO DE AIRE (GR)	56
ELEMENTO DEL FILTRO DE AIRE (CONJ) (SECUNDARIO)	227-7449	1	FILTRO DE AIRE (GR)	56
SISTEMA DE COMBUSTIBLE				
FILTRO DE COMBUSTIBLE Y SEPARADOR DE AGUA (CONJ)	228-9130	1	BOMBA DE CEBADO Y FILTRO PRIMARIO DE COMBUSTIBLE (GR)	68
TAPA DEL TUBO DE LLENADO DE COMBUSTIBLE (GR) (VENTILACION, TRABABLE)	201-0330	1	COMBUSTIBLE - TANQUE DE (GR)	72
SISTEMA DE ENFRIAMIENTO				
CORREA TRAPEZOIDAL	1W-2934	1	SUCCIÓN - VENTILADOR DE (GR)	44
JUEGO DE CORREAS TRAPEZOIDALES (INCLUYE 2-CORREAS)	3S-8447	1	SUCCIÓN - VENTILADOR DE (GR)	44
		1	SUCCIÓN - VENTILADOR DE (GR)	45
MANGUERA DE RADIADOR (INFERIOR)	210-6139	1	GRUPO DEMONTAJE DE RADIADOR Y ENFRIAMIENTO DE ACEITE	48
MANGUERA DE RADIADOR (SUPERIOR)	210-6141	1	GRUPO DEMONTAJE DE RADIADOR Y ENFRIAMIENTO DE ACEITE	48
TEMPERATURA - REGULADOR DE (GR) (AGUA)	254-2267	1	AGUA - CONEXIÓN DE (GR)	39

* NO HAY TRADUCCION DISPONIBLE EN EL MOMENTO DE LA IMPRESION

PIEZAS DE MANTENIMIENTO

DESCRIPCION	NUMERO DE PIEZA	CANT	SE UTILIZA EN	PAGINA
SISTEMA DE LUBRICACIÓN				
FILTRO DE ACEITE DEL MOTOR (CONJ)	7W-2326	1	INDICADOR DE NIVEL DE ACEITE Y TUBO DE LLENADO	37
LATA DE RESPIRADERO (CONJ) (CÁRTER DEL MOTOR)	165-4021	1	RESPIRADERO (GR)	35
SELLO (RESPIRADERO)	185-6643	1	RESPIRADERO (GR)	35
TAPÓN (CONJ) (LLENADO DE ACEITE DE MOTOR)	236-6651	1	INDICADOR DE NIVEL DE ACEITE Y TUBO DE LLENADO	37
SISTEMA ELÉCTRICO Y DE ARRANQUE				
BATERÍA (12-VOLTIOS, LIBRE DE MANTENIMIENTO)	230-6368	1	BATERÍA Y CABLES (GR)	74
		1	BATERÍA Y CABLES (GR)	76
BUJÍA INCANDESCENTE (12 VOLTIOS)	232-6662	4	BUJÍA INCANDESCENTE (GR)	81
CONJUNTO DE DESTELLADOR (12 VOLTIOS)	7T-4848	1	CABLES DE LA PLATAFORMA (GR)	127
ELEMENTO DEL CALENTADOR DEL AGUA DE LAS CAMISAS (120 VOLTIOS, 1000 VATIOS)	219-3273	1	AGUA DE LAS CAMISAS - CALENTADOR DEL (GR)	82
FUSIBLE (10-AMPERIOS)	3K-8782	1	LÁMPARA DE BALIZA DE ADVERTENCIA (GR)	93
FUSIBLE (60 AMPERIOS)	267-2701	1	CABLES DE LA PLATAFORMA (GR)	127
LÁMPARA (12 VOLTIOS)	7X-9065	1	CABLES DE LA CONSOLA (GR)	112
LÁMPARA (12 VOLTIOS, 21 VATIOS)	3C-4883	1	LUCES DE REFLECTOR Y CAMBIO DE DIRECCION (GR)	94
LÁMPARA (12 VOLTIOS, 21/5-VATIOS)	3C-6516	1	LUCES DE REFLECTOR Y CAMBIO DE DIRECCION (GR)	94
LÁMPARA (12 VOLTIOS, 55 VATIOS)	9W-0607	1	REFLECTOR (GR)	91
		1	REFLECTOR (GR)	92
	9X-8118	1	LÁMPARA DE BALIZA DE ADVERTENCIA (GR)	93
MANDO DE CORREA (BALIZA DE ADVERTENCIA)	9X-8139	1	LÁMPARA DE BALIZA DE ADVERTENCIA (GR)	93
VIDRIO DE LA LÁMPARA (PARTE TRASERA)	146-2438	1	LUCES DE REFLECTOR Y CAMBIO DE DIRECCION (GR)	94
SISTEMA HIDRÁULICO				
FILTRO - RESPIRADERO (TANQUE HIDRÁULICO)	9R-9925	1	TANQUE HIDRÁULICO Y MONTAJE (GR)	360
FILTRO DE ACEITE (CONJ) (HIDRÁULICO, RESISTENTE AL FUEGO)	134-3014	1	FILTRO DE ACEITE (GR)	286
FILTRO DE ACEITE (CONJ) (*ULTRA HIGH EFFICIENCY)	126-1817	1	FILTRO DE ACEITE (GR)	286
FILTRO (REGULADOR DE FLUJO)	227-1197	1	CONTROL DEL MULTIPLE (GR)	342
TAPA, LLENADO (ACEITE HIDRAULICO)	237-3797	1	TANQUE HIDRÁULICO Y MONTAJE (GR)	360

* NO HAY TRADUCCION DISPONIBLE EN EL MOMENTO DE LA IMPRESION

PIEZAS DE MANTENIMIENTO

DESCRIPCION	NUMERO DE PIEZA	CANT	SE UTILIZA EN	PAGINA
TREN DE FUERZA				
COLADOR (SUCCIÓN)	7T-2651	1	CAJA DE LA TRANSMISIÓN (CONJ)	143
		1	SERVOTRANSMISIÓN (GR)	194
CONJUNTO DE TAPON, DRENAJE (MAGNÉTICO)	152-6144	1	DIFERENCIAL Y CORONA (GR)	148
		4	EJE DE IMPULSIÓN Y DE DIRECCIÓN (GR)	138
		4	EJE TRASERO (GR)	140
FILTRO DE ACEITE (CONJ) (*EFFICIENCY) (TREN DE FUERZA)	119-4740	1	TREN DE FUERZA (CONFIG)	171
RESPIRADERO	197-9155	1	EJE TRASERO (GR)	140
RESPIRADERO (EJE DELANTERO)	253-5024	1	EJE DE IMPULSIÓN Y DE DIRECCIÓN (GR)	138
RESPIRADERO (TRANSMISION)	7T-3251	1	SERVOTRANSMISIÓN (GR)	194
		1	TRANSMISION DIRECTA (GR)	189

* NO HAY TRADUCCION DISPONIBLE EN EL MOMENTO DE LA IMPRESION

PEÇAS DE MANUTENÇÃO

DESCRIÇÃO	NÚMERO DE PEÇA	QUANT	UTILIZADA EM	PÁGINA
EQUIPAMENTOS DE SERVIÇO E SUPRIMENTOS				
CADEADO (PROTETOR CONTRA VANDALISMO)	246-2641	1	CADEADO CONTRA VANDALISMO	645
MOTOR BÁSICO				
BUJÃO DO DRENO (ÓLEO DO MOTOR)	7C-0351	2	CÁRTER DO ÓLEO DO MOTOR	26
JUNTA (TAMPA DA VÁLVULA)	225-6451	1	TAMPA - MECANISMO DAS VÁLVULAS	9
POSTO DO OPERADOR				
ACUMULADOR - REFRIGERANTE	170-0235	1	TUBULAÇÕES - AQUECEDOR E AR CONDICIONADO	598
ELEMENTO DO FILTRO DE AR (AQUECEDOR, CONDICIONADOR DE AR DA CABINE)	211-2661	1	CONDICIONADOR DE AR E MONTAGEM	555
		1	AQUECEDOR DA CABINE	587
FILTRO DE AR DE CABINA (RECIRCULAÇÃO)	211-2660	1	AQUECEDOR DA CABINE	589
		1	CONDICIONADOR DE AR	557
LÂMINA DO LIMPADOR DE PÁRA-BRISA	5C-8811	1	LIMPADOR DO VIDRO	642
	101-0745	1	LIMPADOR DO VIDRO	642
		1	LIMPADOR E LAVADOR - JANELA	640
LÂMPADA (12-VOLTS)	122-7137	1	TACÔMETRO - ELÉTRICO	624
	210-8754	1	REVESTIMENTO DA CABINE	595
SISTEMA DE ADMISSÃO E ESCAPE DE AR				
ELEMENTO DO FILTRO DE AR (PRIMÁRIO)	227-7448	1	PURIFICADOR DE AR	56
ELEMENTO DO FILTRO DE AR (SECUNDÁRIO)	227-7449	1	PURIFICADOR DE AR	56
SISTEMA DE ARREFECIMENTO				
CORREIA EM V	1W-2934	1	VENTILADOR DE SUCÇÃO	44
JOGO DE CORREIAS EM V (INCLUI 2 CORREIAS)	3S-8447	1	VENTILADOR DE SUCÇÃO	44
		1	VENTILADOR DE SUCÇÃO	45
MANGUEIRA - RADIADOR (INFERIOR)	210-6139	1	SUPORTE - ARREFECEDR DE ÓLEO E RADIADOR	48
MANGUEIRA - RADIADOR (SUPERIOR)	210-6141	1	SUPORTE - ARREFECEDR DE ÓLEO E RADIADOR	48
TERMOSTATO (ÁGUA)	254-2267	1	CONEXÃO - TUBO D'ÁGUA	39
SISTEMA DE LUBRIFICAÇÃO				
FILTRO - ÓLEO DO MOTOR	7W-2326	1	VARETA DE NÍVEL E BOCAL DE ENCHIMENTO DO ÓLEO	37
LATA - RESPIRO (CÁRTER)	165-4021	1	RESPIRO	35
RETENTOR (RESPIRO)	185-6643	1	RESPIRO	35
TAMPA (BOCAL DE ENCHIMENTO DO OLEO DO MOTOR)	236-6651	1	VARETA DE NÍVEL E BOCAL DE ENCHIMENTO DO ÓLEO	37

* TRADUÇÃO NÃO DISPONÍVEL NO MOMENTO DA IMPRESSÃO

PEÇAS DE MANUTENÇÃO

DESCRIÇÃO	NÚMERO DE PEÇA	QUANT	UTILIZADA EM	PÁGINA
SISTEMA DO COMBUSTÍVEL				
FILTRO - SEPARADOR DE ÁGUA E COMBUSTÍVEL	228-9130	1	BOMBA DE ESCORVA DO COMBUSTÍVEL E DO FILTRO PRIMÁRIO	68
TAMPA - BOCAL DE ENCHIMENTO DE COMBUSTÍVEL (COM RESPIRO, TRAVÁVEL)	201-0330	1	TANQUE DE COMBUSTÍVEL	72
SISTEMA ELÉTRICO DE PARTIDA				
BATERIA (12 VOLTS, ISENTO DE MANUTENÇÃO)	230-6368	1	BATERIA E CABOS / FIOS ELÉTRICOS	74
		1	BATERIA E CABOS / FIOS ELÉTRICOS	76
CORREIA DE COMANDO (PISCA-ALERTA)	9X-8139	1	LUZ GIRATÓRIA DE ALARME	93
ELEMENTO - AQUECEDOR DE ÁGUA DA CAMISA (120 VOLTS, 1.000 WATTS)	219-3273	1	AQUECEDOR DA ÁGUA DO MOTOR	82
FUSÍVEL (10 AMPERES)	3K-8782	1	LUZ GIRATÓRIA DE ALARME	93
FUSÍVEL (60 AMPERES)	267-2701	1	CABOS/FIOS ELÉTRICOS - PLATAFORMA	127
LÂMPADA (12-VOLTS)	7X-9065	1	CABOS/FIOS ELÉTRICOS DO CONSOLE	112
LÂMPADA (12-VOLTS, 21-WATTS)	3C-4883	1	SISTEMA DE ILUMINAÇÃO - FARÓIS E SINAL	94
LÂMPADA (12-VOLTS, 21/5-WATTS)	3C-6516	1	SISTEMA DE ILUMINAÇÃO - FARÓIS E SINAL	94
LÂMPADA (12-VOLTS, 55-WATTS)	9W-0607	1	LÂMPADA - FAROL	91
		1	LÂMPADA - FAROL	92
	9X-8118	1	LUZ GIRATÓRIA DE ALARME	93
LENTE - LÂMPADA (TRASEIRO)	146-2438	1	SISTEMA DE ILUMINAÇÃO - FARÓIS E SINAL	94
LUZ INTERMITENTE (12-VOLTS)	7T-4848	1	CABOS/FIOS ELÉTRICOS - PLATAFORMA	127
VELA DE AQUECIMENTO; VELA INCANDESCENTE (12 VOLTS)	232-6662	4	VELA DE AQUECIMENTO; VELA INCANDESCENTE	81
SISTEMA HIDRÁULICO				
FILTRO - ÓLEO (SISTEMA HIDRÁULICO, RESISTENTE CONTRA FOGO)	134-3014	1	FILTRO - ÓLEO	286
FILTRO - ÓLEO (*ULTRA HIGH EFFICIENCY)	126-1817	1	FILTRO - ÓLEO	286
FILTRO - RESPIRO (TANQUE HIDRÁULICO)	9R-9925	1	TANQUE DE ÓLEO HIDRÁULICO E MONTAGEM	360
FILTRO (REGULADOR DE FLUXO)	227-1197	1	COLETOR - CONTROLE	342
TAMPA - ENCHIMENTO (ÓLEO HIDRÁULICO)	237-3797	1	TANQUE DE ÓLEO HIDRÁULICO E MONTAGEM	360

* TRADUÇÃO NÃO DISPONÍVEL NO MOMENTO DA IMPRESSÃO

PEÇAS DE MANUTENÇÃO

DESCRIÇÃO	NÚMERO DE PEÇA	QUANT	UTILIZADA EM	PÁGINA
TREM DE FORÇA				
BUJÃO-DRENAGEM (MAGNÉTICO)	152-6144	1	DIFERENCIAL E COROA	148
		4	EIXO DE PROPULSÃO E DIREÇÃO	138
		4	SEMI-EIXO TRASEIRO	140
FILTRO - ÓLEO (EFICIÊNCIA) (TREM DE FORÇA)	119-4740	1	TREM DE FORÇA	171
RESPIRO	197-9155	1	SEMI-EIXO TRASEIRO	140
RESPIRO (EIXO DIANTEIRO)	253-5024	1	EIXO DE PROPULSÃO E DIREÇÃO	138
RESPIRO (TRANSMISSÃO)	7T-3251	1	SERVOTRANSMISSÃO	194
		1	TRANSMISSÃO DIRETA	189
TELA FILTRANTE (SUCÇÃO)	7T-2651	1	CAIXA DA TRANSMISSÃO	143
		1	SERVOTRANSMISSÃO	194

* TRADUÇÃO NÃO DISPONÍVEL NO MOMENTO DA IMPRESSÃO

WARTUNGSTEILE

BESCHREIBUNG	ERSATZTEIL-NUMMER	MENGE	VERWENDET IN	SEITE
ELEKTRISCHE ANLAGE UND STARTSYSTEM				
BATTERIE (12 V, WARTUNGSFREI)	230-6368	1	BATTERIE UND VERDRAHTUNG	74
		1	BATTERIE UND VERDRAHTUNG	76
BLINKER (12 V)	7T-4848	1	FAHRERPLATTFORMVERDRAHTUNG	127
GLÜHKERZE (12 V)	232-6662	4	GLÜHKERZE	81
LAUFBAND UND ANTRIEB (RUNDUM-KENNLEUCHTE)	9X-8139	1	RUNDUM-KENNLEUCHTE	93
LEUCHTE (12 V)	7X-9065	1	KONSOLENVERDRAHTUNG	112
LEUCHTE (12 V, 21 W)	3C-4883	1	ARBEITS- U. SIGNALLEUCHTE	94
LEUCHTE (12 V, 21/5 W)	3C-6516	1	ARBEITS- U. SIGNALLEUCHTE	94
LEUCHTE (12 V, 55 W)	9W-0607	1	ARBEITSLEUCHTEN	91
		1	ARBEITSLEUCHTEN	92
	9X-8118	1	RUNDUM-KENNLEUCHTE	93
LEUCHTENLINSE (HINTEN)	146-2438	1	ARBEITS- U. SIGNALLEUCHTE	94
SICHERUNG (10 A)	3K-8782	1	RUNDUM-KENNLEUCHTE	93
SICHERUNG (60 A)	267-2701	1	FAHRERPLATTFORMVERDRAHTUNG	127
UMLAUFKÜHLWASSERHEIZUNGS-ELEMENT (120 V, 1000 W)	219-3273	1	UMLAUFKÜHLWASSERHEIZUNG	82
FAHRERHAUS				
FAHRERHAUSLUFTFILTER (UMLAUFLUFT)	211-2660	1	FAHRERHAUSHEIZUNG	589
		1	KLIMAANLAGE	557
KÄLTEMITTEL-DRUCKSPEICHER	170-0235	1	HEIZUNGS- U. KLIMAANLAGENLEITUNGEN	598
LEUCHTE (12 V)	122-7137	1	DREHZAHLMESSER, ELEKTR.	624
	210-8754	1	FAHRERHAUSAUSKLEIDUNG	595
LUFTFILTER (FAHRERHAUSHEIZUNG, KLIMAANLAGE)	211-2661	1	FAHRERHAUSHEIZUNG	587
		1	KLIMAANLAGE UND AUFHÄNGUNG	555
SCHEIBENWISCHERBLATT	5C-8811	1	SCHEIBENWISCHER	642
	101-0745	1	SCHEIBENWISCHER	642
		1	SCHEIBENWISCHER UND -WASCHANLAGE	640
HYDRAULIKSYSTEM				
EINFÜLLKAPPE (HYDRAULIKÖL)	237-3797	1	HYDRAULIKTANK UND BEFESTIGUNGSTEILE	360
ENTLÜFTERFILTER (HYDRAULIKTANK)	9R-9925	1	HYDRAULIKTANK UND BEFESTIGUNGSTEILE	360
FILTER (FLUSSSTEUERUNG)	227-1197	1	STEUERKRÜMMER	342
ÖLFILTER (HYDRAULIK, FEUERFEST)	134-3014	1	ÖLFILTER	286
ÖLFILTER (*ULTRA HIGH EFFICIENCY)	126-1817	1	ÖLFILTER	286
KRAFTSTOFFSYSTEM				
KRAFTSTOFFFILTERKAPPE (BELÜFTET, SPERRBAR)	201-0330	1	KRAFTSTOFFTANK	72
WASSERABSCHEIDER UND KRAFTSTOFFILTER	228-9130	1	KRAFTSTOFFENTLÜFTUNGSPUMPE UND -HAUPTFILTER	68

* ÜBERSETZUNG ZUM ZEITPUNKT DER DRUCKLEGUNG NICHT VORHANDEN

WARTUNGSTEILE

BESCHREIBUNG	ERSATZTEIL-NUMMER	MENGE	VERWENDET IN	SEITE
KRAFTÜBERTRAGUNG				
ABLASSSCHRAUBE (MAGNETISCH)	152-6144	1	DIFFERENTIAL UND TELLERRAD	148
		4	HINTERACHSE	140
		4	ANTRIEBS- UND LENKACHSE	138
ENTLÜFTER	197-9155	1	HINTERACHSE	140
ENTLÜFTER (GETRIEBE)	7T-3251	1	LASTSCHALTGETRIEBE	194
		1	WECHSELGETRIEBE	189
ENTLÜFTER (VORDERACHSE)	253-5024	1	ANTRIEBS- UND LENKACHSE	138
ÖLFILTER (*EFFICIENCY) (KRAFTÜBERTRAGUNG)	119-4740	1	KRAFTÜBERTRAGUNG	171
SIEB (ANSAUG)	7T-2651	1	GETRIEBEGEHÄUSE	143
		1	LASTSCHALTGETRIEBE	194
KÜHLSYSTEM				
KEILRIEMEN	1W-2934	1	SAUGLÜFTER	44
KEILRIEMENSATZ (EINSCHL. 2 RIEMEN)	3S-8447	1	SAUGLÜFTER	44
		1	SAUGLÜFTER	45
KÜHLERSCHLAUCH (OBEN)	210-6141	1	KÜHLER U. ÖLKÜHLER - BEFESTIGUNG	48
KÜHLERSCHLAUCH (UNTEN)	210-6139	1	KÜHLER U. ÖLKÜHLER - BEFESTIGUNG	48
TEMPERATURREGLER (WASSER)	254-2267	1	KÜHLWASSERANSCHLUSS	39
LUFTANSAUG- UND ABGASSYSTEM				
LUFTFILTER (HAUPTELEMENT)	227-7448	1	LUFTREINIGER	56
LUFTFILTER (HILFSELEMENT)	227-7449	1	LUFTREINIGER	56
MOTOR (GRUNDAUSFÜHRUNG)				
ABLASSSTOPFEN (MOTORÖL)	7C-0351	2	ÖLWANNE	26
DICHTUNG (VENTILDECKEL)	225-6451	1	VENTILDECKEL	9
SCHMIERSYSTEM				
DICHTUNG (ENTLÜFTER)	185-6643	1	ENTLÜFTER	35
ENTLÜFTERPATRONE (KURBELGEHÄUSE)	165-4021	1	ENTLÜFTER	35
KAPPE (MOTORÖLEINFÜLLUNG)	236-6651	1	ÖLMESSSTAB U. EINFÜLLSTUTZEN	37
ÖLFILTER	7W-2326	1	ÖLMESSSTAB U. EINFÜLLSTUTZEN	37
WARTUNGSAUSRÜSTUNG UND -ZUBEHÖR				
VORHÄNGESCHLOSS (VANDALISMUSSCHUTZ)	246-2641	1	VORHÄNGESCHLOSS	645

* ÜBERSETZUNG ZUM ZEITPUNKT DER DRUCKLEGUNG NICHT VORHANDEN

INDEX

Name	Page
A	
ACCUMULATOR GP-PILOT OIL–CHARGED	247
ACCUMULATOR GP-RIDE CONTROL–CHARGED	248
ACCUMULATOR-REFRIGERANT	598
ADAPTER GP	338
AIR CLEANER GP	55
	56
AIR CONDITIONER & MOUNTING GP	555
AIR CONDITIONER GP	557
ALTERNATOR GP-CHARGING–120-AMPERE, WITH MOUNTING	73
ARM GP-LIFT	391
ARMREST AS (LH)	616
	617
ARMREST AS (LH)	609
ARMREST AS (RH)	616
	617
ARMREST AS (RH)	609
AXLE GP-DRIVE & STEERING	138
AXLE GP-REAR	140
B	
BACKHOE AR-EXTENDABLE STICK	1
	2
BACKHOE AR-STANDARD STICK	3
BATTERY & WIRING GP	76
BATTERY & WIRING GP–STANDARD	74
BATTERY (12-VOLT, MAINTENANCE FREE)	74
	76
BELT-DRIVE (WARNING BEACON)	93
BLADE AS-WIPER	640
	642
BOOM GP	393
BOWL AS-BUCKET	425
	426
BOX GP-BATTERY	227
BRACE GP-LIFT CYLINDER	394
BRACKET AS	246
BRACKET GP-MOUNTING–MONITOR	559
BRACKET GP-TRANSPORT	643
BREATHER	140
BREATHER (FRONT AXLE)	138
BREATHER GP	35
BREATHER (TRANSMISSION)	189
	194
BUCKET AR-MULTIPURPOSE	427
	428
	429
BUCKET AS-GENERAL PURPOSE	430
	432
	434
	436
	438
BUCKET AS-HOE–HIGH CAPACITY, PIN-LOCK	440
	441
	442
	443
BUCKET GP-GENERAL PURPOSE	444
	445
	446
	447
	448
	449
	450
BUCKET GP-HOE	451
	452
	453
	454
	455
	475
	492
	493
	494
BUCKET GP-HOE–CORAL	471
	472
	473
	474
	478
BUCKET GP-HOE–HEAVY DUTY	457
	458
	459
	460
	461
	476
BUCKET GP-HOE–HEAVY-DUTY	456
BUCKET GP-HOE–HEAVY-DUTY, PIN-LOCK	479
	480
	481
	482
	483
	484
BUCKET GP-HOE–HIGH CAPACITY	462
	463
	464
	465
	491
BUCKET GP-HOE–HIGH CAPACITY, PIN-LOCK	485
	486
	487
	488
	489
	490
BUCKET GP-HOE–ROCK	466
	467
	468

INDEX

Name	Page
	469
	470
	477
BUCKET GP-MULTIPURPOSE	495
	496
	498
	500
BULLDOZER AS	502
	503
	504
	505

C

CAB AR	560
	561
	562
CAB GP	563
CAMSHAFT GP	7
CANISTER AS-BREATHER (CRANKCASE)	35
CANOPY AR	566
	567
CANOPY GP-OPEN ROPS–WITH FRONT WINDOW	570
CANOPY GP-OPEN ROPS–WITHOUT FRONT WINDOW	568
CAP AS (ENGINE OIL FILLER)	37
CAP-FILL (HYDRAULIC OIL)	360
CAP GP-FUEL FILLER (VENTED, LOCKABLE)	72
CASE AS-TRANSMISSION–FRONT	143
CASE AS-TRANSMISSION–REAR	144
CHASSIS AR	4
COMMON AR	4
COMPARTMENT GP-LITERATURE	571
COMPRESSOR & MTG GP-REFRIG	572
COMPRESSOR GP-REFRIGERANT	573
CONDENSER & MTG GP-REFRIGERANT	574
CONNECTION GP-WATER	39
CONSOLE GP-OPERATOR–FRONT	579
CONSOLE GP-OPERATOR–LH	577
CONSOLE GP-OPERATOR–RH	575
CONTROL AR-RIDE	249
CONTROL GP-COMMUNICATION–PRODUCT LINK 300	78
CONTROL GP-GOVERNOR	61
CONTROL GP-HYDRAULIC HAND–LOADER	250
	252
CONTROL GP-JOYSTICK–LH	257
	258
CONTROL GP-JOYSTICK–RH	255
	256
CONTROL GP-PARKING BRAKE	213
	214
CONTROL GP-SERVICE BRAKE–STANDARD SHIFT	215
CONTROL GP-STEERING–TILT	221
CONTROL GP-TRANSMISSION	146
COOLANT HEATER LINES	597
	598
COOLER GP-ENGINE OIL	40
	41
COOLER GP-FLTR BASE & ENG OIL	41
COOLER-OIL (ENGINE)	40
COOLING AR	43
COUNTERWEIGHT GP	228
	229
	230
COUPLER AR-QUICK–PIN-LOCK	506
COUPLER GP-QUICK–BACKHOE	507
	508
COUPLER GP-QUICK–CAT, CASE	510
COUPLER GP-QUICK–CAT, DEERE	511
COUPLER GP-QUICK–PIN-LOCK	509
COVER GP-CYLINDER HEAD	8
COVER GP (OUTLET)	366
	367
COVER GP-VALVE MECHANISM	9
COVER GP-WIPER MOTOR	581
CRANKSHAFT GP	11
CUSHION GP-SEAT	609
CYLINDER & LINES GP-THUMB	259
CYLINDER BLOCK GP	13
	15
CYLINDER GP-BACKHOE BUCKET	260
	262
CYLINDER GP-BOOM	264
	265
CYLINDER GP-BRAKE–LH	219
CYLINDER GP-BRAKE–RH	218
CYLINDER GP-EXTENDABLE STICK	267
	419
CYLINDER GP-LIFT	269
CYLINDER GP-MULTIPURPOSE BUKT	270
CYLINDER GP-STABILIZER	271
	273
CYLINDER GP-STEERING	138
CYLINDER GP-STICK	275
	277
	278
CYLINDER GP-SWING	279
CYLINDER GP-THUMB	281
CYLINDER GP-TILT	282
CYLINDER HEAD GP	16
	17

INDEX

Name	Page
D	
DIAPHRAGM (CRANKCASE PRESSURE CONTACTOR)	9
DIFFERENTIAL & BEVEL GEAR GP	148
DIFFERENTIAL GP	150, 151
DOOR GP-BATTERY	231
DOOR GP-CAB–LH	582
DOOR GP-CAB–RH	584
DRIVE & MTG GP-PUMP	284
DRIVE AR-BACKHOE LOADER– ALL WHEEL DRIVE, 2-WHEEL STEER	152
DRIVE GP-FAN	18
DRIVE GP-FLEXIBLE COUPLING	153
E	
EDGE GP-CUTTING	512, 513
ELBOW	156, 321
ELECTRONICS GP-MACHINE	79
ELECTRONICS GP-MONITOR	80
ELEMENT AS-JACKET WATER HEATER (120-VOLT, 1000-WATT)	82
ENGINE AR	5
ENGINE AR–PRIMARY	6
EXTENSION GP-EXHAUST	5
EXTENSION GP-FENDER	232
F	
FAN AS	557, 589
FAN GP-SUCTION	45
FAN GP-SUCTION– WITH AIR CONDITIONER	44
FASTENER GP-VALVE–BANK	285
FASTENER GP-VALVE (BANK)	364
FENDER GP-FRONT	233
FENDER GP-REAR	234
FILLER GP-POWER TRAIN OIL	154
FILLER GP-POWER TRAIN OIL– ALL WHEEL DRIVE, STANDARD SHIFT	156
FILM-CONTROL (BACKHOE, JOYSTICK)	560, 561, 562, 566, 567
FILM-CONTROL (LOADER, JOYSTICK)	561
FILM-CONTROL (LOADER, JOYSTICK)	562
FILM GP	644
FILM-IDENTIFICATION (CATERPILLAR, FRONT)	560
	561, 562, 567
FILM-IDENTIFICATION (CATERPILLAR, REAR)	566
FILM-IDENTIFICATION (GROUP NUMBER)	557, 589
FILM-IDENTIFICATION (STABILIZER CONTROL)	560, 566, 567
FILM-INDICATOR (BUCKET LEVEL)	289
FILM-INFORMATION (EXTENDED LIFE COOLANT-READ OMM)	645
FILM-INSTRUCTION	364
FILM-INSTRUCTION (BUCKET CONTROL)	364
FILM-INSTRUCTION (EXTENDABLE STICK PIN, READ OMM)	1, 2
FILM-INSTRUCTION (OIL FLOW DIRECTION)	294
FILM-INSTRUCTION (WASHER FILL)	628, 640
FILM-NOTICE (EXTENDABLE STICK)	305
FILM (PLATE-NAME)	248
FILM (PROTECTION)	74
FILM (STABILIZER, AUTO UP)	561, 562
FILM (START SWITCH)	647
FILM-STRIPE (YELLOW)	246
FILM (TEMPERATURE CONTROL)	555, 587
FILM-WARNING (ACCUM, HIGH PRESS, READ OMM)	323
FILM-WARNING (HIGH PRESSURE, READ OMM)	248
FILM-WARNING (HIGH PRESSURE, READ OMM, ANSI)	291, 329
FILM-WARNING (HYDRAULIC PRESSURE, READ OMM)	294, 296, 299
FILM-WARNING (JUMP START, READ OMM)	646
FILM-WARNING (LASER TRANSMITTER, READ OMM)	591
FILM-WARNING (PRODUCT LINK 300, ANSI)	83
FILTER AS-ENGINE OIL	37
FILTER AS-OIL (EFFICIENCY) (POWER TRAIN)	171
FILTER AS-OIL (HYDRAULIC, FIRE RESISTANT)	286
FILTER AS-OIL (ULTRA HIGH EFFICIENCY)	286
FILTER AS-WATER SEP & FUEL	68
FILTER BASE & ENG OIL COOLER	41

INDEX

Name	Page
FILTER-BREATHER (HYDRAULIC TANK)	360
FILTER-CAB AIR (RECIRCULATION)	557
	589
FILTER ELEMENT AS-AIR (CAB HEATER, AIR CONDITIONER)	555
	587
FILTER ELEMENT AS-AIR (PRIMARY)	56
FILTER ELEMENT AS-AIR (SECONDARY)	56
FILTER (FLOW REGULATOR)	342
FILTER GP-OIL–HYDRAULIC	286
FITTING GP-HYDRAULIC	287
FLANGE GP-WHEEL	140
	158
FLASHER AS (12-VOLT)	127
FLOOR MAT	561
	586
FLOOR MAT GP	586
FLOORPLATE GP	236
	237
FLYWHEEL GP	19
FORK GP	514
FRAME GP-LOADER–SINGLE TILT	238
FRAME GP-SWING	239
FUSE (10-AMPERE)	93
FUSE (60-AMPERE)	127

G

GASKET (VALVE COVER)	9
GAUGE AS-OIL LEVEL (DIPSTICK)	154
GAUGE GP-COOLANT TEMPERATURE	112
GAUGE GP-FUEL LEVEL	112
GAUGE GP-OIL LEVEL & FILLER	37
GAUGE GP-OIL TEMPERATURE (TORQUE CONVERTER)	112
GAUGE-OIL LEVEL	37
GAUGE-OIL LEVEL (DIPSTICK)	156
GAUGE-SIGHT	360
GEAR GP-BEVEL & PINION	148
GEAR GP-DIFFERENTIAL & BEVEL	150
GEAR GP-RING	140
	159
	160
GLOW PLUG GP	81
GLOW PLUG (12-VOLT)	81
GUARD GP-BOOM	395
GUARD GP-DRIVE SHAFT	241
GUARD GP-RADIATOR	242
GUARD GP-WORK TOOL	515

H

HANDLE GP-MODULAR	255
	256
	257
	258
HARNESS AS-CONTROL (PRODUCT LINK)	85
HARNESS AS-RADIO (PRODUCT LINK)	83
HARNESS AS-WIRING (DIFFERENTIAL LOCK)	107
HARNESS AS-WIRING (3-PIN, GAUGE)	112
HEATER GP-CAB	587
	589
HEATER GP-JACKET WATER	82
HOOD & GUARD GP	243
HOOD GP-ENGINE	245
	246
HORN AS (LOW TONE)	119
HOSE-RADIATOR (LOWER)	48
HOSE-RADIATOR (UPPER)	48
HOUSING & FLANGE GP-AXLE–LH	160
HOUSING & FLANGE GP-AXLE–RH	159
HOUSING AS-DIFFERENTIAL	148
HOUSING GP-AXLE	163
HOUSING GP-AXLE–LH	162
HOUSING GP-AXLE–RH	161
HOUSING GP-FLYWHEEL	20
HOUSING GP-FRONT	21
HYDRAULIC AR	288

I

INDICATOR-AIR FILTER SERVICE	57
INDICATOR GP-AIR FILTER CHANGE	57
INDICATOR GP-FILTER CHANGE	57
INSTALLATION GP-COMMUNICATION	83
	85
INSTALLATION GP-GRADE CONTROL	87
INSTALLATION GP-GRADE CONTROL–ACCUGRADE, MAST	89
INSTALLATION GP-MONITOR–ADVISOR	591

K

KICKOUT & POSITIONER GP	289
KIT-BRAKE CALIPER	141
KIT-BRAKE CYLINDER	218
KIT-BRAKE CYLINDER (ADJUSTER)	219
KIT-BRAKE CYLINDER (SPRING RETENTION)	219
KIT-BRAKE LINING	141
KIT-CAM (COUNTERCLOCKWISE)	141
KIT-CONTACT (STARTING MOTOR)	103
KIT-CRANKSHAFT BEARING (0.25-MM OS)	11
KIT-CRANKSHAFT BEARING (0.5-MM OS)	11
KIT-CRANKSHAFT BEARING (0.76-MM OS)	11
KIT-GEAR (STARTING MOTOR)	103
KIT-HARDWARE (STARTING MOTOR)	103
KIT-PISTON RING	28
KIT-PIVOT	221

INDEX

Name	Page
KIT-PLANETARY CARRIER	169
KIT-PLUNGER	386
KIT-REPAIR (GOVERNOR PEDAL)	605
KIT-RIDE CONTROL	291
KIT-ROD BEARING (0.25-MM OS)	11
KIT-ROD BEARING (0.51-MM OS)	11
KIT-ROD BEARING (0.76-MM OS)	11
KIT-ROLLER BEARING	169
KIT-SEAL	82
	202
	344
	347
	390
KIT-SEAL (ACCUMULATOR)	248
KIT-SEAL (PILOT VALVE)	386
	387
KIT-SEAL (VIBRATORY VALVE)	356
KIT-SERVICE	605
KIT-SLIDER BLOCK	614
KIT-SPIDER	138
KIT-SPIDER & BEARING	174
KIT-TILT PEDAL	221
KIT-VALVE (FLOW REGULATOR)	345
KIT-VALVE (PRIORITY)	345
KIT-VALVE (SHUTTLE)	345
KNOB GP-STEERING	223

L

LAMP GP-DOME	595
LAMP GP-FLOOD–SUSPENDED MOUNT	91
	92
LAMP GP-HEAD & SIGNAL	94
LAMP GP-SIGNAL	94
LAMP GP-WARNING BEACON–MAGNETIC MOUNT	93
LAMP (12-VOLT)	112
	595
	624
LAMP (12-VOLT, 21-WATT)	94
LAMP (12-VOLT, 21/5-WATT)	94
LAMP (12-VOLT, 55-WATT)	91
	92
	93
LATCH GP-CONSOLE	593
LENS-LAMP (REAR)	94
LEVER GP-GOVERNOR	61
	594
LEVER GP-HAND CONTROL	220
LIFTING GP-ENGINE	23
LIGHTING GP-FLOOD & SIGNAL–NACD, OPTIONAL	94
LIGHTING GP-WARNING BEACON	96
LINER GP-CAB	595
LINES GP-BACKHOE AUXILIARY	294
	296
	299
LINES GP-BOOM	301
LINES GP-BUCKET	303
	305
LINES GP-DRAIN	308
LINES GP-EXTENDABLE STICK	309
LINES GP-FUEL	62
LINES GP-FUEL FILTER	64
LINES GP-HEATER	597
LINES GP-HEATER & AIR COND	598
LINES GP-HYDRAULIC OIL COOLER	311
LINES GP-LIFT CYLINDER	313
LINES GP-LOADER AUXILIARY	315
LINES GP-MULTIPURPOSE BUCKET	317
	319
LINES GP-PILOT	323
	326
LINES GP-PILOT–BACKHOE BANK VALVE	321
LINES GP-POWER TRAIN OIL–DIFFERENTIAL LOCK	165
LINES GP-PUMP	327
LINES GP-RIDE CONTROL	329
LINES GP-STABILIZER	331
	335
LINES GP-STABILIZER–7-BANK	333
LINES GP-STEERING	224
LINES GP-STICK	337
LINES GP-SWING	338
LINES GP-TILT CYLINDER	340
LINES GP-TRANSMISSION COOLER	46
LINK GP-SHIPPING	645
LINK GP-THUMB	525
	526
	528
	539
	540
	541
	542
	543
	544
	545
	547
	548
	549
	551
LINK GP-THUMB–ADJUSTABLE	396
LINKAGE GP-BACKHOE BUCKET	397
LINKAGE GP-LOADER BUCKET	399
LOADER AR	401
LOCK GP-TRANSPORT	405
LOCK GP-TRANSPORT–BOOM	403
LOCK GP-TRANSPORT–STABILIZER	402
LOCK GP-VANDALISM	645

INDEX

Name	Page
M	
MANIFOLD GP-CONTROL–INLET	344, 345
MANIFOLD GP-CONTROL–OUTLET	342
MANIFOLD GP-CONTROL & SOLENOID	346
MANIFOLD GP-CONTROL & SOLENOID–BOOM, STICK, PATTERN SWITCH	347
MANIFOLD GP-HYDRAULIC	372, 374, 376, 378, 379
METER GP-SERVICE	115
MIRROR GP-REAR VIEW–INSIDE	600, 601
MIRROR GP-REAR VIEW (INSIDE)	566, 567
MODULE GP-POWER SUPPLY	89
MODULE GP-WARNING INDICATOR	112
MOTOR GP-WINDOW WIPER	602
MOTOR GP-WINDOW WIPER–FRONT	602
MOUNTING GP-AXLE	166
MOUNTING GP-BACKHOE CONTROL	348
MOUNTING GP-BANK VALVE	350
MOUNTING GP-BUCKET	516
MOUNTING GP-CAB	603
MOUNTING GP-CYLINDER–THUMB	351, 353
MOUNTING GP-ENGINE	24
MOUNTING GP-ENGINE & TMSN	25
MOUNTING GP-LINES–BACKHOE	354
MOUNTING GP-MAST–ACCUGRADE	97
MOUNTING GP-MONITOR–ACCUGRADE	604
MOUNTING GP-RAD & OIL COOLER–TRANSMISSION, HYDRAULIC OIL	48
MOUNTING GP-SENSOR–ANGLE	98
MOUNTING GP-STICK	406
MOUNTING GP-TRANSMISSION	167, 168
MOUNTING GP-WHEEL	209, 211
MOUNTING GP-WHEEL (FRONT)	206, 207, 208
MUFFLER GP	58
P	
PAD & GUARD GP-STABILIZER	409
PAD & GUARD GP-STABILIZER–STREET	407, 411
PAD & MTG GP-STABILIZER	415
PAD & MTG GP-STABILIZER–STREET	413, 414
PAD GP-STABILIZER–STREET	416, 417
PADLOCK GP (VANDALISM GUARD)	645
PAN GP-OIL	26
PEDAL GP-GOVERNOR	605
PIN AS (LOWER, UPPER)	138
PIN GP-COUPLER–MACHINE	517
PIN GP-COUPLER–PIN-LOCK	518
PISTON & ROD GP	28
PLANETARY GP-FINAL DRIVE	169, 170
PLATE & FILM GP	645, 648
PLATE-IDENTIFICATION (BUCKET)	445, 447, 486, 491, 492, 493, 494, 495, 496, 498, 500
PLATE-IDENTIFICATION (CAT)	509
PLUG AS-DRAIN (MAGNETIC)	138, 140, 148
PLUG-DRAIN (ENGINE OIL)	26
PLUG GP-CONTROL VALVE	342, 372, 374, 376, 380
PLUG GP-ENGINE	30, 31, 32
POWER TRAIN AR–ALL WHEEL DRIVE, AUTOSHIFT	171
POWER TRAIN AR–ALL WHEEL DRIVE, STD SHIFT	171
PROTECTION GP-VANDALISM	649
PULLEY GP-CRANKSHAFT	33
PUMP GP-ENGINE OIL	38
PUMP GP-FUEL INJECTION	65
PUMP GP-FUEL PRM & PRIM FILTER–WITH MOUNTING	69
PUMP GP-FUEL PRM & PRIM FILTER–WITH WATER SEPARATOR	68
PUMP GP-METERING	226
PUMP GP-PISTON	356
PUMP GP-TRANSMISSION	189, 194
PUMP GP-WATER	50

INDEX

Name	Page
R	
RADIATOR & OIL COOLER GP–HYDRAULIC, TRANSMISSION	52, 53
RADIATOR GP	52, 53
RECEIVER GP-LASER (LR21)	89
REGULATOR GP-TEMPERATURE (WATER)	39
RELAY AS (12-VOLT)	106, 109, 123, 134, 291
RELAY AS (12-VOLT)	109
RELAY AS (12-VOLT) (ACCUGRADE, MAST)	89
RELAY AS (12-VOLT) (BACKUP ALARM)	127
RELAY AS (12-VOLT) (DIFFERENTIAL LOCK)	127
RELAY AS (12-VOLT) (FUEL PUMP)	119
RELAY AS (12-VOLT) (HORN)	127
RELAY AS (12-VOLT) (IMPLEMENT DISABLE)	127
RELAY AS (12-VOLT) (POSITION LAMP)	127
RELAY AS (12-VOLT) (START)	119
RELAY AS (12-VOLT) (STARTING AID)	119
RELAY GP	99
RELAY GP–12-VOLT	100, 101
RELAY GP (12-VOLT)	123
RELAY GP (12-VOLT)	109
ROOF GP-CAB	606
ROTATING GP-PUMP	358
S	
SEAL (BREATHER)	35
SEAT BELT GP–RETRACTABLE, 2-IN	607
SEAT BELT GP–RETRACTABLE, 3-IN	608
SEAT GP	612
SEAT GP–CLOTH	613
SEAT GP–DELUXE, CLOTH	609
SEAT GP-SUSPENSION–CLOTH	617, 618
SEAT GP-SUSPENSION–DELUXE, CLOTH	614, 615
SEAT GP-SUSPENSION–VINYL	616, 618
SENDER AS-FUEL LEVEL	71
SENDER AS-TEMPERATURE (ENGINE COOLANT)	119
SENDER AS-TEMPERATURE (12-VOLT)	194
SENDER AS-TEMPERATURE (12-VOLT)	190
SENSOR AS-POSITION (ANGLE)	591
SENSOR AS-POSITION (BOOM SWING)	591
SENSOR GP-MOISTURE (WATER SEPARATOR)	68
SENSOR GP-POSITION	260, 265, 267
SENSOR GP-POSITION (LINEAR)	275
SENSOR GP-SPEED	102
SENSOR GP-SPEED (TORQUE CONVERTER OUTPUT)	189
SENSOR GP-SPEED (TRANSMISSION OUTPUT)	195
SENSOR GP-TEMPERATURE	121
SHAFT GP-AXLE	138
SHAFT GP-COUNTER	172, 189
SHAFT GP-DRIVE–FRONT	174
SHAFT GP-DRIVE–REAR	174
SHAFT GP-IDLER	175, 189
SHAFT GP-INPUT	177, 179
SHAFT GP-OUTPUT	181, 185
SHAFT GP-OUTPUT–FRONT	184
SHAFT GP-OUTPUT–REAR	183
SHAFT GP-PUMP DRIVE	359
SHIPPING AR-BUCKET	650
SOFTWARE GP-MONITOR (RECEIVER)	89
STABILIZER GP-BACKHOE	418
STARTING MOTOR GP-ELECTRIC	105
STARTING MOTOR GP-ELECTRIC–12-VOLT	103
STICK GP-EXTENDABLE	419, 421
STICK GP-HOE	423
STRAINER (SUCTION)	143, 194
SUN VISOR	627
SUSPENSION GP-SEAT	619, 622
SWITCH AS	213
SWITCH AS-COLUMN (HD LIGHT, TURN SIG, WDO WIPER)	127
SWITCH AS-FOOT (DIFFERENTIAL LOCK)	107
SWITCH AS-LIMIT	622
SWITCH AS-LIMIT (BRAKE PEDAL)	215
SWITCH AS-PRESSURE	134, 291
SWITCH AS-PRESSURE (ENGINE OIL)	108
SWITCH AS-PRESSURE (HYDRAULIC OIL FILTER BYPASS)	121
SWITCH AS-PRESSURE (REFRIGERANT)	109
SWITCH AS-ROCKER (AIR CONDITIONER, HEATER)	109
SWITCH AS-ROCKER (ALL WHEEL DRIVE)	106

INDEX

Name	Page
SWITCH AS-ROCKER (AUXILIARY HYDRAULIC FLOW)	365
SWITCH AS-ROCKER (BLOWER FAN SPEED)	123
SWITCH AS-ROCKER (BLOWER FAN SPEED)	109
SWITCH AS-ROCKER (FLOODLIGHTS, FRONT)	94
SWITCH AS-ROCKER (FLOODLIGHTS, REAR)	94
SWITCH AS-ROCKER (HEATER)	123
SWITCH AS-ROCKER (HYDRAULIC LOCKOUT)	112
SWITCH AS-ROCKER (MODE SELECT)	127
SWITCH AS-ROCKER (RIDE CONTROL)	134, 291
SWITCH AS-ROCKER (STARTING AID)	112
SWITCH AS-ROCKER (TRANSMISSION NEUTRAL LOCK)	115
SWITCH AS-ROCKER (WARNING BEACON)	112
SWITCH AS-ROCKER (WIPER, WASHER REAR)	642
SWITCH AS-ROLLER (KICKOUT, POSITIONER)	125
SWITCH GP-ALL WHEEL DRIVE–INCLUDES RELAY	106
SWITCH GP-DIFFERENTIAL LOCK–CENTER PIVOT	107
SWITCH GP-PRESSURE	215
SWITCH GP-PRESSURE–ENGINE OIL	108
SWITCH GP-PUSH BUTTON (NEUTRALIZER, DOWNSHIFT)	146
SWITCH GP-PUSH BUTTON (NEUTRALIZER, DOWNSHIFT)	250, 252
SWITCH GP-START (KEY)	112
SWITCH-TEMPERATURE (AIR CONDITIONER)	557
SWITCH-TEMPERATURE (ENGINE COOLANT)	119
SWITCH-TEMPERATURE (TIMING ADVANCE)	65
SYNCHRONIZER GP	183

T

Name	Page
TACHOMETER GP-ELECTRIC	112, 624
TANK & MTG GP-FUEL–INCLUDES STEP	70
TANK & MTG GP-HYDRAULIC	360
TANK GP-COOLANT	54
TANK GP-EXPANSION–COOLANT	54
TANK GP-FUEL	71, 72
TANK GP-HYDRAULIC	360
TANK GP-WINDOW WASHER	628, 640
THUMB AR–BACKHOE	519
THUMB AR–BACKHOE, HYDRAULIC COMMON	550
THUMB AR–BACKHOE, MANUAL COMMON	551
THUMB AR–24-IN, HYD, HEAVY-DUTY	521
THUMB AR–24-IN, HYD, HEAVY-DUTY, WITH COUPLER	522
THUMB AR–24-IN, HYD, ROCK	523
THUMB AR–24-IN, MAN, HEAVY-DUTY	525
THUMB AR–24-IN, MAN, HEAVY-DUTY, WITH COUPLER	526
THUMB AR–24-IN, MAN, ROCK	527
THUMB AR–24-IN, MAN, ROCK, WITH COUPLER	524, 528
THUMB AR–24-IN, MANUAL	519
THUMB AR–24-IN, MANUAL, WITH COUPLER	519, 539
THUMB AR–24-IN, ROCK, MANUAL	520
THUMB AR–24-IN, ROCK, MANUAL, WITH COUPLER	520
THUMB AR–30-IN, HYD, HEAVY-DUTY	531
THUMB AR–30-IN, HYD, HEAVY-DUTY, WITH COUPLER	532
THUMB AR–30-IN, HYD, ROCK	533
THUMB AR–30-IN, HYD, ROCK, WITH COUPLER	534
THUMB AR–30-IN, HYD, WITH COUPLER	529
THUMB AR–30-IN, MAN, HEAVY-DUTY, WITH COUPLER	542
THUMB AR–30-IN, MAN, ROCK, WITH COUPLER	543
THUMB AR–30-IN, MAN, WITH COUPLER	544
THUMB AR–30-IN, MANUAL, HEAVY-DUTY	540
THUMB AR–30-IN, MANUAL, ROCK	541
THUMB AR–36-IN, HYD, HEAVY-DUTY	535
THUMB AR–36-IN, HYD, HEAVY-DUTY, WITH COUPLER	536
THUMB AR–36-IN, HYD, ROCK	537
THUMB AR–36-IN, HYD, ROCK, WITH COUPLER	538
THUMB AR–36-IN, HYD, WITH COUPLER	530
THUMB AR–36-IN, MAN, HEAVY-DUTY	545
THUMB AR–36-IN, MAN, HEAVY-DUTY, WITH COUPLER	547
THUMB AR–36-IN, MAN, ROCK	546
THUMB AR–36-IN, MAN, ROCK, WITH COUPLER	548
THUMB AR–36-IN, MAN, WITH COUPLER	549
THUMB GP–BACKHOE	552
THUMB GP–BACKHOE, COMMON	553
TIE ROD GP	138

INDEX

Name	Page
TIP GP-BUCKET (SOIL)	491
	492
	493
	494
TIP GP-CHISEL	471
	472
	473
TIP GP-PENETRATION	451
	452
	453
	454
	455
	456
	457
	458
	459
	460
	461
	462
	463
	464
	465
	466
	467
	468
	469
	470
	479
	480
	481
	482
	483
	484
	485
	486
	487
	488
	489
	490
TOOTH GP-UNI	554
TRANSMISSION & MOUNTING GP	188
TRANSMISSION & MOUNTING GP–ALL WHEEL DRIVE, AUTOSHIFT	187
TRANSMISSION AR-DIRECT DRIVE–ALL WHEEL DRIVE	188
TRANSMISSION AR-POWER SHIFT–ALL WHEEL DRIVE	188
TRANSMISSION GP-DIRECT DRIVE	189
TRANSMISSION GP-POWER SHIFT	194
TRIM GP-CAB	625
TURBOCHARGER GP	59
V-BELT SET (INCLUDES 2-BELTS)	44
	45
VALVE & LINES GP-PILOT	362
VALVE & LINES GP-SOLENOID–DIFFERENTIAL LOCK	200
VALVE & MTG GP-SOLENOID	202
VALVE AR-BANK 2	364
VALVE AR-BANK 3	364
VALVE AR-BANK 6	364
VALVE AR-BANK 7	365
VALVE AR-BANK 8	365
VALVE AS-WATER	555
	587
VALVE GP-BANK 2	366
VALVE GP-BANK 3	367
VALVE GP-BANK 6	368
VALVE GP-BANK 7	369
VALVE GP-BANK 8	370
VALVE GP-BRAKE	215
VALVE GP-CHECK	345
	374
	376
	380
VALVE GP-CONTROL–AUXILIARY	382
	385
VALVE GP-CONTROL–BOOM	374
VALVE GP-CONTROL–BUCKET	379
VALVE GP-CONTROL–EXTENDABLE STICK	380
VALVE GP-CONTROL–LIFT	383
VALVE GP-CONTROL–STABILIZER	372
VALVE GP-CONTROL–STICK	376
VALVE GP-CONTROL–SWING	378
VALVE GP-CONTROL–TILT	384
VALVE GP-CROSSOVER RELIEF	338
VALVE GP-FLOW CONTROL	342
VALVE GP-PILOT–BODY	386
	387
VALVE GP-PRESSURE REDUCING	344
VALVE GP-PUMP CONTROL	388
VALVE GP-PUMP CONTROL (PRESSURE, FLOW COMPENSATOR)	356
VALVE GP-RELIEF	189
	203
	342
	345
	372
	374
	376
	378
	379
	380
	382
	384
	385

V

V-BELT	44

INDEX

Name	Page
VALVE GP-RELIEF (CUSHION CROSSOVER)	338
VALVE GP-RELIEF (TORQUE CONVERTER INLET)	194
VALVE GP-SHUTOFF	308
VALVE GP-SOLENOID	189
	202
	344
	347
	356
	389
	390
VALVE GP-SOLENOID (ACCUMULATOR)	390
VALVE GP-SOLENOID (ALL WHEEL DRIVE, CLUTCH ONE)	195
VALVE GP-SOLENOID (CLUTCH)	195
VALVE GP-SOLENOID (FORWARD)	195
VALVE GP-SOLENOID (REVERSE)	195
VALVE GP-SOLENOID (RIDE CONTROL, SWITCH)	390
VALVE GP-SOLENOID (12-VOLT) (FUEL SHUTOFF)	65
VALVE GP-TIRE	204
	205
VALVE MECHANISM GP	34
VALVE-SHUTOFF	52
	53
VISOR GP-CAB	561
	562
	627

W

Name	Page
WASHER GP-WINDOW	628
WHEEL & TIRE AR	205
	206
WHEEL & TIRE AR–2-WHEEL DRIVE, BIAS FLOTATION	206
WHEEL & TIRE GP	210
WHEEL & TIRE GP–FRONT	206
	207
	208
	209
WHEEL & TIRE GP–LH	207
	208
	209
	211
WHEEL & TIRE GP–REAR	209
	211
WHEEL & TIRE GP–RH	207
	208
	210
	212
WINDOW GP-CAB–REAR	634
WINDOW GP-CAB–UPPER, LH	630
WINDOW GP-CAB–UPPER, RH	632
WINDOW GP-DOOR–LH	636
WINDOW GP-DOOR–RH	638
WIPER & WASHER GP-WINDOW	640
WIPER GP-WINDOW	642
WIRING GP-AIR CONDITIONER	109
WIRING GP-CONSOLE–FRONT	115
WIRING GP-CONSOLE–SIDE	112
WIRING GP-CONTROL–JOYSTICK, LH	117
	118
WIRING GP-CONTROL–JOYSTICK, RH	116
WIRING GP-ENGINE	119
	121
WIRING GP-EXTENDABLE STICK	122
	419
WIRING GP-HEATER	123
WIRING GP-KICKOUT & POSITIONER	125
WIRING GP-PLATFORM	127
WIRING GP-POWER RECEPTACLE	561
	562
	566
	567
WIRING GP-REAR–BACKUP ALARM	132
WIRING GP-RIDE CONTROL	134
WIRING GP-TRANSMISSION CONTROL	136

INDEX

Désignation	Page

A

ACCUMULATEUR - COMMANDE DE TRANSLATION (ASS)	248
ACCUMULATEUR - HUILE PILOTE (ASS)	247
ACCUMULATEUR - RÉFRIGÉRANT	598
ADAPTATEUR (ASS)	338
ALTERNATEUR DE CHARGE (ASS)	73
AMPOULE (12 VOLTS)	112 595 624
AMPOULE (12V, 21W)	94
AMPOULE (12V, 21/5W)	94
AMPOULE (12V, 55W)	93
AMPOULE (12V, 55W)	91 92
ARBRE A CAMES (ASS)	7
ARBRE DE RENVOI (ASS)	175 189
ARBRE DE SORTIE (ASS)	181 183 184 185
ARBRE D'ENTRAÎNEMENT (ASS)	174
ARBRE D'ENTRÉE (ASS)	177 179
ARBRE D'ESSIEU (ASS)	138
ARBRE INTERMÉDIAIRE (ASS)	172
ARBRE INTERMÉDIAIRE (ASS)	189
*ARMREST AS (DROITE)	609 616 617
*ARMREST AS (GAUCHE)	609 616 617
AUTOCOLLANT-COMMANDE (CHARGEUSE, MANIPULATEUR)	561 562
AUTOCOLLANT (COMMANDE DE TEMPÉRATURE)	555 587
AUTOCOLLANT-COMMANDE (PELLE RÉTRO, MANIPULATEUR)	560 561 562 566
AUTOCOLLANT-COMMANDE (PELLE RÉTRO, MANIPULATEUR)	567
AUTOCOLLANT (CONTACTEUR DE DÉMARRAGE)	647
AUTOCOLLANT DE MISE EN GARDE (ACCUM, HAUTE PRESSION, LIRE LE GUIDE D'UTILISATION ET D'ENTRETIEN)	323
AUTOCOLLANT DE MISE EN GARDE (DÉMARRAGE AVEC CÂBLES VOLANTS, LIRE LE GUIDE)	646
AUTOCOLLANT DE MISE EN GARDE (HAUTE PRESSION, LIRE LE GUIDE D'UTILISATION ET D'ENTRETIEN)	248
AUTOCOLLANT DE MISE EN GARDE (HAUTE PRESSION, LIRE LE GUIDE D'UTILISATION ET D'ENTRETIEN, ANSI)	291
AUTOCOLLANT DE MISE EN GARDE (HAUTE PRESSION, LIRE LE GUIDE D'UTILISATION ET D'ENTRETIEN, ANSI)	329
AUTOCOLLANT DE MISE EN GARDE (*LASER TRANSMITTER, READ OMM)	591
AUTOCOLLANT DE MISE EN GARDE (PRESSION HYDRAULIQUE, LIRE LE GUIDE D'UTILISATION ET D'ENTRETIEN)	294 296 299
AUTOCOLLANT DE MISE EN GARDE (*PRODUCT LINK 300, ANSI)	83
AUTOCOLLANT D'IDENTIFICATION (CATERPILLAR, ARRIÈRE)	566
AUTOCOLLANT D'IDENTIFICATION (*CATERPILLAR, FRONT)	567
AUTOCOLLANT D'IDENTIFICATION (*CATERPILLAR, FRONT)	560 561 562
AUTOCOLLANT D'IDENTIFICATION (NUMÉRO D'ASSEMBLAGE)	557 589
AUTOCOLLANT D'IDENTIFICATION (*STABILIZER CONTROL)	566
AUTOCOLLANT D'IDENTIFICATION (*STABILIZER CONTROL)	560 567
AUTOCOLLANT-INFORMATION (*EXTENDED LIFE COOLANT-READ OMM)	645
AUTOCOLLANT (PLAQUE-NOM)	248
AUTOCOLLANT (*PROTECTION)	74
AUTOCOLLANT (RELEVAGE AUTOMATIQUE DU STABILISATEUR)	561 562
AXE DU COUPLER (ASS)	517 518
AXE (ENS) (INFÉRIEUR, SUPÉRIEUR)	138

B

BAÏONNETTE- NIVEAU DE CARBURANT (ASS)	112
BALAI D'ESSUIE-GLACE (ENS)	642

* TRADUCTION NON DISPONIBLE AU MOMENT DE LA PUBLICATION

INDEX

Désignation	Page
BALAI D'ESSUIE-GLACE (ENS)	640
BANDE AUTOCOLLANTE (JAUNE)	246
BARRE D'ACCOUPLEMENT (ASS)	138
BATI - CHARGEUSE (ASS)	238
BÂTI D'ORIENTATION (ASS)	239
BATTERIE ET CÂBLAGE	74
	76
BATTERIE (12V, SANS ENTRETIEN)	74
	76
BIELLETTE DE SERRE-JOINT (ASS)	525
	526
	528
	539
	540
	541
	542
	543
	544
	545
	547
	548
	549
	551
BIELLETTE DE SERRE-JOINT (ASS)	396
BLINDAGE D'ARBRE DE TRANSMISSION (ASS)	241
BLOC-CYLINDRES (ASS)	13
	15
BOITE DE VITESSES ET MONTAGE (ASS)	187
	188
BOÎTE MÉCANIQUE (ASS)	189
BOITE MECANIQUE (VERSION)	188
BOÎTE POWER SHIFT (ASS)	194
BOÎTE POWER SHIFT (VERSION)	188
BOÎTIER D'ESSIEU (ASS)	161
	162
	163
BOÎTIER-RENIFLARD (VILEBREQUIN)	35
BOUCHON DE GOULOTTE DE CARBURANT (ASS) (AÉRÉ, VERROUILLABLE)	72
BOUCHON DE MOTEUR (ASS)	30
	31
	32
BOUCHON DE REMPLISSAGE (HUILE HYDRAULIQUE)	360
BOUCHON DE VIDANGE (ENS) (MAGNÉTIQUE)	138
	140
BOUCHON DE VIDANGE (ENS) (MAGNÉTIQUE)	148
BOUCHON DE VIDANGE (HUILE MOTEUR)	26
BOUCHON-DISTRIBUTEUR (ASS)	372
	374
	376
	380
BOUCHON-DISTRIBUTEUR (ASS)	342
BOUDIN DE ROUE (ASS)	140
	158
BOUGIE DE PRÉCHAUFFAGE (ASS)	81
BOUGIE DE PRECHAUFFAGE (12V)	81
BOULONNERIE DE SOUPAPE (ASS)	285
BOULONNERIE DE SOUPAPE (ASS) (RANGÉE)	364
BOURRELET D'ÉTANCHÉITÉ (RENIFLARD)	35
BOUTON DE DIRECTION (ASS)	223
BRAS DE LEVAGE (ASS)	391
BRAS DE PELLE RETRO (ASS)	423
BRAS TÉLESCOPIQUE (ASS)	419
	421

C

CABINE - REVÊTEMENT (ASS)	595
CABINE (ASS)	563
CABINE (VERSION)	560
	561
	562
CABLAGE - CLIMATISEUR (ASS)	109
CABLAGE - COMMANDE (ASS)	116
	117
	118
CABLAGE - PLATE-FORME (ASS)	127
CABLAGE AR (ASS)	132
CÂBLAGE DE BRAS TÉLESCOPIQUE (ASS)	122
	419
CABLAGE DE COMMANDE DE BOITE (ASS)	136
CÂBLAGE DE COMMANDE DE TRANSLATION (ASS)	134
CABLAGE DE CONSOLE (ASS)	115
CABLAGE DE CONSOLE (ASS)	112
CABLAGE DE MOTEUR (ASS)	121
CABLAGE DE MOTEUR (ASS)	119
CABLAGE DE PRISE DE FORCE	561
	562
	566
	567
CÂBLAGE DE PRISE DE FORCE ET LIMITEUR (ASS)	125
CABLAGE DU CHAUFFAGE DE CABINE (ASS)	123
CACHE-SOUPAPES (ASS)	9
CADENAS (ASS) (PROTECTION ANTIVANDALISME)	645
CANALISATIONS - GODET TOUS-TRAVAUX (ASS)	317
	319

* TRADUCTION NON DISPONIBLE AU MOMENT DE LA PUBLICATION

INDEX

Désignation	Page
CANALISATIONS A COMMANDE PILOTE (ASS)	321, 323, 326
CANALISATIONS-CHARGEUSE AUXILIAIRE (ASS)	315
CANALISATIONS DE BRAS (ASS)	337
CANALISATIONS DE CARBURANT (ASS)	62
CANALISATIONS DE CHAUFFAGE (ASS)	597
CANALISATIONS DE COMMANDE DE MARCHE	329
CANALISATIONS DE DIRECTION (ASS)	224
CANALISATIONS DE POMPE (ASS)	327
CANALISATIONS DE RÉCHAUFFEUR DE LIQUIDE DE REFROIDISSEMENT	597, 598
CANALISATIONS DE REFROIDISSEUR DE TRANSMISSION (ASS)	46
CANALISATIONS DE REFROIDISSEUR D'HUILE HYDR. (ASS)	311
CANALISATIONS DE STABILISATEUR (ASS)	331, 333, 335
CANALISATIONS DE VÉRIN DE LEVAGE (ASS)	313
CANALISATIONS DE VIDANGE (ASS)	308
CANALISATIONS D'HUILE DE TRANSMISSION (ASS)	165
CANALISATIONS D'ORIENTATION (ASS)	338
CANALISATIONS DU BRAS TELESCOPIQUE (ASS)	309
CANALISATIONS DU FILTRE A CARBURANT (ASS)	64
CANALISATIONS DU VÉRIN D'INCLINAISON (ASS)	340
CANALISATIONS-RÉCHAUFFEUR ET CLIMATISEUR (ASS)	598
CANALISATIONS SECONDAIRES DE PELLE RÉTRO (ASS)	294, 296, 299
CAPOT DU MOTEUR (ASS)	245, 246
CAPOT ET PROTECTION (ASS)	243
CAPTEUR DE POSITION (ENS) (ANGLE)	591
CAPTEUR DE POSITION (ENS) (PIVOTEMENT DE FLÈCHE)	591
CAPTEUR DE TEMPERATURE (ASS)	121
CAPTEUR DE TEMPÉRATURE (ENS) (LIQUIDE DE REFROIDISSEMENT DU MOTEUR)	119
CAPTEUR DE TEMPÉRATURE (ENS) (12 VOLTS)	190, 194
CAPTEUR DE VITESSE (ASS)	102
CAPTEUR DE VITESSE (ASS) (SORTIE DE TRANSMISSION)	195
CAPTEUR DE VITESSE (ASS) (SORTIE DU CONVERTISSEUR DE COUPLE)	189
CAPTEUR D'HUMIDITÉ (ASS) (SÉPARATEUR D'EAU)	68
CARTER AV (ASS)	21
CARTER DE BOÎTE DE VITESSES (ENS)	143, 144
CARTER DE DIFFÉRENTIEL (ENS)	148
CARTER DE VOLANT (ASS)	20
CARTER ET BRIDE D'ESSIEU (ASS)	159, 160
CEINTURE DE SECURITE (ASS)	607, 608
CHAPEAU (ENS) (GOULOTTE DE REMPLISSAGE D'HUILE MOTEUR)	37
CHARGEUSE (VERSION)	401
CHAUFFAGE DE CABINE (ASS)	587, 589
CLAPET DE DÉCHARGE À DEUX VOIES (ASS)	338
CLAPET DE DECHARGE (ASS)	342, 372, 374, 376, 378, 379, 380, 382, 384, 385
CLAPET DE DECHARGE (ASS)	345
CLAPET DE DECHARGE (ASS)	189, 203
CLAPET DE DECHARGE (ASS) (*CUSHION CROSSOVER)	338
CLAPET DE DECHARGE (ASS) (ENTRÉE DU CONVERTISSEUR DE COUPLE)	194
CLAPET DE RETENUE (ENS)	345, 374, 376, 380
CLIGNOTANT (ENS) (12 VOLTS)	127
CLIMATISEUR (ASS)	557
CLIMATISEUR ET MONTAGE (ASS)	555
COLLECTEUR - COMMANDE (ASS)	342, 345
COLLECTEUR - COMMANDE (ASS)	344
COLLECTEUR HYDRAULIQUE (ASS)	372, 374, 376

* TRADUCTION NON DISPONIBLE AU MOMENT DE LA PUBLICATION

INDEX

Désignation	Page
COLLECTEUR HYDRAULIQUE (ASS)	378
	379
COMMANDE DE BOITE DE VITESSES (ASS)	146
COMMANDE DE COMMUNICATION (ASS)	78
COMMANDE DE DIRECTION (ASS)	221
COMMANDE DE FAISCEAU (ENS) (LIAISON DE PRODUIT)	85
COMMANDE DE FREIN DE STATIONNEMENT (ASS)	213
	214
COMMANDE DE RÉGULATEUR (ASS)	61
COMMANDE DE TRANSLATION (VERSION)	249
COMMANDE HYDRAULIQUE MANUELLE (ASS)	250
	252
COMPARTIMENT DE BATTERIE (ASS)	227
COMPRESSEUR DE REFRIGERANT (ASS)	573
COMPRESSEUR ET MONTAGE - RÉFRIGÉRANT (ASS)	572
COMPTE-TOURS ÉLECTRIQUE (ASS)	112
	624
COMPTEUR D'ENTRETIEN (ASS)	115
CONDENSATEUR ET MONTAGE (RÉFRIGÉRANT)	574
CONSOLE DE CONDUITE (ASS)	575
	577
	579
CONTACTEUR DE BOUTON-POUSSOIR (ASS) (NEUTRALISATION DE RÉTROGRADATION)	250
	252
CONTACTEUR DE BOUTON-POUSSOIR (ASS) (NEUTRALISATION DE RÉTROGRADATION)	146
CONTACTEUR DE TRACTION INTÉGRALE (ASS)	106
CONTACTEUR DE VERROUILLAGE DE DIFFÉRENTIEL (ASS)	107
CONTACTEUR (ENS)	213
CONTREPOIDS (ASS)	228
	229
	230
COUDE	156
	321
COUPLE CONIQUE ET DIFFÉRENTIEL	150
COUPLEUR EXPRESS (ASS)	507
	508
	509
COUPLEUR EXPRESS (ASS)	510
	511
COUPLEUR EXPRESS (VERSION)	506
COURONNE CONIQUE ET PIGNON	148
COURONNE DENTEE	140
	159
	160
COURONNE ET DIFFERENTIEL (ASS)	148
COURROIE TRAPEZOIDALE	44
COUVERCLE (ASS) (SORTIE)	366
	367
COUVERCLE DE CULASSE (ASS)	8
COUVERCLE DE MOTEUR D'ESSUIE-GLACE (ASS)	581
CREPINE (ASPIRATION)	143
	194
CULASSE (ASS)	16
	17
CULBUTERIE (ASS)	34
CUVE - GODET (ENS)	425
	426

D

Désignation	Page
DÉMARREUR ÉLECTRIQUE (ASS)	105
DÉMARREUR ÉLECTRIQUE (ASS)	103
DENT MONOBLOC (ASS)	554
DIAPHRAGME (CONTACTEUR DE PRESSION DE VILEBREQUIN)	9
DIFFERENTIEL (ASS)	150
	151
DISJONCTEUR DE SECURITE (ENS)	622
DISJONCTEUR DE SECURITE (ENS) (PÉDALE DE FREIN)	215
DISTRIBUTEUR (ASS)	372
	374
	376
	378
	379
	380
	382
DISTRIBUTEUR (ASS)	383
	384
	385
DISTRIBUTEUR DE DÉBIT (ASS)	342
DISTRIBUTEUR DE POMPE (ASS)	388
DISTRIBUTEUR DE POMPE (ASS) (COMPENSATRICE DE PRESSION, DÉBIT)	356
DISTRIBUTEUR DES FREINS (ASS)	215
DISTRIBUTEUR DOUBLE ÉLÉMENT (ASS)	366
DISTRIBUTEUR TRIPLE ÉLÉMENT (ASS)	367
DISTRIBUTEUR 6 ÉLÉMENTS (ASS)	368
DISTRIBUTEUR 6 ÉLÉMENTS (VERSION)	364
DISTRIBUTEUR 7 ÉLÉMENTS (ASS)	369
DISTRIBUTEUR 8 ÉLÉMENTS (ASS)	370
DISTRIBUTEUR 8 ÉLÉMENTS (VERSION)	365

* TRADUCTION NON DISPONIBLE AU MOMENT DE LA PUBLICATION

INDEX

Désignation	Page

E

EAU DES CHEMISES - RECHAUFFEUR (ASS) 82
ÉCLAIRAGE - GYROPHARE (ASS) 96
ÉCLAIRAGE - PROJECTEURS ET CLIGNOTANTS (ASS) 94
ECLAIRAGE DE GODET (ASS) 303
305
ÉLECTRONIQUE - MACHINE (ENS) 79
ÉLECTRONIQUE-MONITEUR (ASS) 80
ÉLÉMENT DE FILTRE À AIR (ENS) (CLIMATISATION, CHAUFFAGE DE CABINE) 555
ÉLÉMENT DE FILTRE À AIR (ENS) (CLIMATISATION, CHAUFFAGE DE CABINE) 587
ÉLÉMENT DE FILTRE À AIR (ENS) (PRINCIPAL) 56
ÉLÉMENT DE FILTRE À AIR (ENS) (SECONDAIRE) 56
ÉLÉMENT DU RÉCHAUFFEUR D'EAU DES CHEMISES (ENS) (120-VOLT, 1000-WATT) . . . 82
ENTRAÎNEMENT D'ACCOUPLEMENT FLEXIBLE (ASS) 153
ENTRAÎNEMENT DE VENTILATEUR (ASS) 18
ENTRAÎNEMENT ET MONTAGE DE POMPE (ASS) 284
ENTRAÎNEMENT POUR COURROIE (GYROPHARE) 93
ESSIEU AR (ASS) 140
ESSIEU MOTEUR ET DIRECTION (ASS) 138
ESSUIE-GLACE (ASS) 642
ESSUIE-GLACE ET LAVE-GLACE 640

F

FAISCEAU DE CABLES (ENS) (VERROUILLAGE DE DIFFÉRENTIEL) 107
FAISCEAU DE CABLES (ENS) (*3-PIN, GAUGE) 112
FAISCEAU DE RADIO (ENS) (LIAISON DE PRODUIT) 83
FILTRE - RENIFLARD (RÉSERVOIR HYDRAULIQUE) 360
FILTRE - SÉPARATEUR D'EAU ET DE CARBURANT (ENS) 68
FILTRE A AIR (ASS) 55
56
FILTRE À AIR DE CABINE (RECIRCULATION) . . . 557
589
FILTRE A HUILE (ASS) 286
FILTRE À HUILE (ENS) (*EFFICIENCY) (TRANSMISSION) 171
FILTRE À HUILE (ENS) (HYDRAULIQUE, RÉSISTANT AU FEU) 286
FILTRE À HUILE (ENS) (*ULTRA HIGH EFFICIENCY) 286
FILTRE A HUILE MOTEUR (ENS) 37
FILTRE (RÉGULATEUR DE DÉBIT) 342
FLECHE - CANALISATIONS 301
FLECHE (ASS) 393
FLEXIBLE DE RADIATEUR (INFÉRIEUR) 48
FLEXIBLE DE RADIATEUR (SUPÉRIEUR) 48
FOURCHE (ASS) 514
FREIN - MAITRE-CYLINDRE (ASS) 218
219
FREIN DE MANOEUVRE - COMMANDE (ASS) 215
FUSIBLE (10A) 93
FUSIBLE (60A) 127

G

GARDE-BOUE AR (ASS) 234
GARDE-BOUE AV (ASS) 233
GARNITURE POUR CABINE (ASS) 625
GLACE DE PORTIÈRE (ASS) 636
638
GODET - MONTAGE (ASS) 516
GODET - VERSION D'EXPÉDITION 650
GODET NORMAL (ASS) 446
447
448
449
450
GODET NORMAL (ASS) 444
445
GODET NORMAL (ENS) 430
432
434
436
438
GODET RETRO (ASS) 487
488
489
490
491
492
493
494
GODET RETRO (ASS) 452
453
454
455
456
457

* TRADUCTION NON DISPONIBLE AU MOMENT DE LA PUBLICATION

INDEX

Désignation	Page
	458
	459
	460
	461
	462
	463
	464
	465
	466
	467
	468
	469
	470
	471
	472
	473
	474
	475
	476
	477
	478
	479
	480
	481
	482
	483
	484
	485
	486
GODET RETRO (ASS)	451
GODET RETRO (ENS)	440
	441
	442
	443
GODET TOUS-TRAVAUX (ASS)	495
	496
	498
	500
GODET TOUS-TRAVAUX (VERSION)	427
	428
	429
GOULOTTE DE REMPLISSAGE D'HUILE DE TRANSMISSION	154
	156
GRAISSEUR HYDRAULIQUE (ASS)	287
GROUPE DE ROTATION DE POMPE	358
*GUARD GP-WORK TOOL	515

H

HUILE MOTEUR - CARTER (ASS)	26

I

INDICATEUR DE COLMATAGE (ASS)	57
INDICATEUR DE COLMATAGE DE FILTRE A AIR	57
INDICATEUR DE COLMATAGE DE FILTRE À AIR (ASS)	57
INSTRUMENT - NIVEAU D'HUILE ET GOUL. DE REMPLIS.	37
INSTRUMENT DE TEMPÉRATURE DE LIQUIDE DE REFROIDISSEMENT (ASS)	112
INSTRUMENT DE TEMPÉRATURE D'HUILE (ASS) (CONVERTISSEUR DE COUPLE)	112
INTERRUPTEUR A PEDALE (ENS) (VERROUILLAGE DE DIFFÉRENTIEL)	107
INTERRUPTEUR BALANCIER (ENS) (AUXILIAIRE DE DÉMARRAGE)	112
INTERRUPTEUR BALANCIER (ENS) (CLIMATISATION, CHAUFFAGE)	109
INTERRUPTEUR BALANCIER (ENS) (COMMANDE DE TRANSLATION)	134
	291
INTERRUPTEUR BALANCIER (ENS) (DÉBIT HYDRAULIQUE AUXILIAIRE)	365
INTERRUPTEUR BALANCIER (ENS) (DÉBIT HYDRAULIQUE AUXILIAIRE)	365
INTERRUPTEUR BALANCIER (ENS) (DIRECTION INTÉGRALE)	106
INTERRUPTEUR BALANCIER (ENS) (ESSUIE-GLACE, LAVE-GLACE ARRIÈRE)	642
INTERRUPTEUR BALANCIER (ENS) (*FLOODLIGHTS, FRONT)	94
INTERRUPTEUR BALANCIER (ENS) (*FLOODLIGHTS, REAR)	94
INTERRUPTEUR BALANCIER (ENS) (GYROPHARE)	112
INTERRUPTEUR BALANCIER (ENS) (MODE SÉLECTION)	127
INTERRUPTEUR BALANCIER (ENS) (RECHAUFFEUR)	123
INTERRUPTEUR BALANCIER (ENS) (*TRANSMISSION NEUTRAL LOCK)	115
INTERRUPTEUR BALANCIER (ENS) (VERROUILLAGE HYDRAULIQUE)	112
INTERRUPTEUR BALANCIER (ENS) (VITESSE DU VENTILATEUR DE SOUFFLANTE)	109
	123
INTERRUPTEUR DE DÉMARRAGE (ASS) (CLAVETTE)	112
INTERRUPTEUR ROTATIF (LIMITEUR DE LEVAGE)	125

* TRADUCTION NON DISPONIBLE AU MOMENT DE LA PUBLICATION

INDEX

Désignation	Page
J	
JAUGE DE NIVEAU D'HUILE	37
JAUGE DE NIVEAU D'HUILE (JAUGE BAÏONNETTE)	156
JAUGE D'HUILE MOTEUR (BAÏONNETTE) (ENS)	154
JEU DE COURROIES TRAPEZOIDALES (COMPREND 2 COURROIES)	44 45
JOINT PLAT (CACHE-SOUPAPES)	9
K	
KIT - COMMANDE DE TRANSLATION	291
KIT D'ARTICULATION	221
KIT DE BLOC COULISSANT	614
KIT DE BOULONNERIE (DÉMARREUR)	103
KIT DE CAME (SENS INVERSE D'HORLOGE)	141
KIT DE CONTACTEUR (DÉMARREUR)	103
KIT DE COUSSINET DE BIELLE (0,25-MM SURDIMENSIONNÉ)	11
KIT DE COUSSINET DE BIELLE (0,51-MM SURDIMENSIONNÉ)	11
KIT DE COUSSINET DE BIELLE (0,76-MM SURDIMENSIONNÉ)	11
KIT DE COUSSINET DE VILEBREQUIN (0,25-MM SURDIMENSIONNÉ)	11
KIT DE COUSSINET DE VILEBREQUIN (0,5 MM SURDIMENSIONNÉ)	11
KIT DE COUSSINET DE VILEBREQUIN (0,76-MM SURDIMENSIONNÉ)	11
KIT DE CROISILLON	138
KIT DE CROISILLON ET ROULEMENT	174
KIT DE GARNITURE DE FREIN	141
KIT DE JOINTS	82 202 344 347 390
KIT DE JOINTS (ACCUMULATEUR)	248
KIT DE JOINTS (SOUPAPE DE VIBREUR)	356
KIT DE JOINTS (SOUPAPE PILOTE)	386
KIT DE JOINTS (SOUPAPE PILOTE)	387
KIT DE PÉDALE D'INCLINAISON	221
KIT DE PISTON PLONGEUR	386
KIT DE PORTEUR PLANÉTAIRE	169
KIT DE RÉPARATION (PÉDALE DE RÉGULATEUR)	605
KIT DE ROULEMENT À GALETS	169
KIT DE SEGMENT DE PISTON	28
KIT DE SOUPAPE (PILOTE)	345
KIT DE SOUPAPE (PRIORITÉ)	345
KIT DE SOUPAPE (RÉGULATEUR DE DÉBIT)	345
KIT DE VÉRIN DE FREIN	218
KIT DE VÉRIN DE FREIN (DISPOSITIF DE RÉGLAGE)	219
KIT DE VÉRIN DE FREIN (RONDELLE-RESSORT D'ARRÊT)	219
KIT D'ENGRENAGE (DÉMARREUR)	103
KIT D'ENTRETIEN	605
KIT D'ETRIER DE FREIN	141
KLAXON (ENS) (BAS)	119
L	
LAME DE COUPE (ASS)	512 513
LAME POUR LE REFOULEMENT (ENS)	502 503 504 505
LAMPE - CLIGNOTANT DE DIRECTION (ASS)	94
LAMPE - GYROPHARE (ASS)	93
LAMPE - PHARE (ASS)	91 92
LAMPE - PHARE ET CLIGNOTANT	94
LAVE-GLACE - VITRE (ASS)	628
LENTILLE DE LAMPE (ARRIÈRE)	94
LEVIER DE COMMANDE MANUELLE	220
LEVIER DE RÉGULATEUR (ASS)	61 594
LIAISON-EXPÉDITION (ASS)	645
LIMITEUR DE LEVAGE ET RETOUR À L'ANGLE DE CAVAGE	289
LOGICIEL - ÉLECTROMODULE (ASS) (RÉCEPTEUR)	89
LOQUET (GR)-CONSOLE	593
M	
*MANIFOLD GP-CONTROL & SOLENOID	346 347
MANOCONTACT	108 215
MANOCONTACT (ENS)	134 291
MANOCONTACT (ENS) (DÉRIVATION DE FILTRE À HUILE HYDRAULIQUE)	121
MANOCONTACT (ENS) (HUILE MOTEUR)	108
MANOCONTACT (ENS) (RÉFRIGÉRANT)	109
MODULE - TÉMOIN (ASS)	112
MODULE D'ALIMENTATION (ASS)	89
MONTAGE - CAPTEUR (ASS)	98
MONTAGE-COMMUNICATION (ASS)	83
MONTAGE-COMMUNICATION (ASS)	85

* TRADUCTION NON DISPONIBLE AU MOMENT DE LA PUBLICATION

INDEX

Désignation	Page
MONTAGE DE BRAS (ASS)	406
MONTAGE DE CABINE (ASS)	603
MONTAGE DE CANALISATIONS (ASS)	354
MONTAGE DE COMMANDE DE PELLE RÉTRO	348
MONTAGE DE COMMANDE DE PROFIL LONGITUDINAL (ASS)	87
	89
MONTAGE DE MONITEUR (ASS)	591
	604
MONTAGE DE MOTEUR (ASS)	24
MONTAGE DE MOTEUR ET BOÎTE (ASS)	25
MONTAGE DE RADIATEUR ET REFROIDISSEUR D'HUILE (ASS)	48
MONTAGE DE VÉRIN (ASS)	351
	353
MONTAGE D'ESSIEU (ASS)	166
MONTAGE-DISTRIBUTEUR (ASS)	350
MONTAGE DU MAT (ASS)	97
MOTEUR D'ESSUIE-GLACE (ASS)	602
MOTEUR (VERSION)	5
	6

O

OEILLETONS DE LEVAGE MOTEUR (ASS)	23

P

PALONNIER - GROUPE DE COMMANDE (ASS)	255
	256
	257
	258
PARE-SOLEIL	627
PELLE RÉTRO - BRAS NORMAL (VERSION)	3
PELLE RÉTRO - BRAS TÉLESCOPIQUE (VERSION)	1
	2
PELLE RÉTRO - STABILISATEUR (ASS)	418
PISTON ET BIELLE (ASS)	28
PLAFONNIER (ASS)	595
PLAQUE (IDENTIFICATION) (CAT)	509
PLAQUE (IDENTIFICATION) (GODET)	445
	447
	486
	491
PLAQUE (IDENTIFICATION) (GODET)	492
	493
	494
PLAQUE (IDENTIFICATION) (GODET)	495
	496
	498
	500
PLAQUE SIGNALÉTIQUE (ASS)	644
PLAQUE SIGNALETIQUE (NIVEAU DU GODET)	289
PLAQUE SIGNALÉTIQUE (REMARQUE) (BRAS TÉLESCOPIQUE)	305
PLAQUES SIGNALETIQUES ET AUTOCOLLANTS (ASS)	645
	648
PNEU - GROUPE DE VALVE	204
	205
POCHE A DOCUMENTS (ASS)	571
POIGNÉE MODULAIRE (ASS)	255
	256
	257
	258
POINTE DE GODET (ASS) (*SOIL)	491
	492
	493
	494
POINTE PENETRATION	451
	452
	453
	454
	455
	456
	457
	458
	459
	460
	461
	462
	463
	464
	465
	466
	467
	468
	469
	470
	479
	480
	481
	482
	483
	484
	485
	486
	487
	488
	489
	490
POMPE A EAU (ASS)	50

* TRADUCTION NON DISPONIBLE AU MOMENT DE LA PUBLICATION

INDEX

Désignation	Page
POMPE A HUILE MOTEUR (ASS)	38
POMPE A PISTONS (ASS)	356
POMPE D'AMORÇAGE DE CARBURANT ET FILTRE PRINCIPAL	68 69
POMPE DE BOÎTE DE VITESSES (ASS)	189 194
POMPE DE REGULARISATION DE DEBIT (ASS)	226
POMPE D'INJECTION DE CARBURANT (ASS)	65
PORTE DE BATTERIE (ASS)	231
PORTIÈRE DE CABINE (ASS)	582 584
PROTECTION ANTIVANDALISME (ASS)	649
PROTECTION DE FLÈCHE (ASS)	395
PROTÈGE-RADIATEUR (ASS)	242

R

Désignation	Page
RACCORD D'EAU (ASS)	39
RADIATEUR (ASS)	52 53
RADIATEUR ET REFROIDISSEUR D'HUILE (ASS)	52 53
RALLONGE DE GARDE-BOUE	232
RALLONGE D'ÉCHAPPEMENT (ASS)	5
RÉCEPTEUR LASER (ASS) (LR21)	89
REDUCTEUR MARIN - MONTAGE (ASS)	167 168
REFROIDISSEMENT (VERSION)	43
REFROIDISSEUR D'HUILE (MOTEUR)	40
REFROIDISSEUR D'HUILE MOTEUR (ASS)	41
REFROIDISSEUR D'HUILE MOTEUR (ASS)	40
REFROIDISSEUR HUILE MOTEUR ET SUPPORT DE FILTRE	41
REGARD DE NIVEAU	360
RÉGULATEUR - PÉDALE (ASS)	605
RÉGULATEUR DE TEMPÉRATURE (ASS) (EAU)	39
RELAIS (ASS)	99 100 101
RELAIS (ASS) (12 VOLTS)	109 123
RELAIS (ENS) (12 VOLTS)	106 109 123 134 291
RELAIS (ENS) (12 VOLTS) (*ACCUGRADE, MAST)	89
RELAIS (ENS) (12 VOLTS) (AUXILIAIRE DE DÉMARRAGE)	119
RELAIS (ENS) (12 VOLTS) (AVERTISSEUR DE RECUL)	127
RELAIS (ENS) (12 VOLTS) (DÉMARRAGE)	119
RELAIS (ENS) (12 VOLTS) (DÉSACTIVATION DE L'ÉQUIPEMENT)	127
RELAIS (ENS) (12 VOLTS) (KLAXON)	127
RELAIS (ENS) (12 VOLTS) (POMPE À CARBURANT)	119
RELAIS (ENS) (12 VOLTS) (*POSITION LAMP)	127
RELAIS (ENS) (12 VOLTS) (VERROUILLAGE DE DIFFÉRENTIEL)	127
RENIFLARD	140
RENIFLARD (ASS)	35
RENIFLARD (BOÎTE DE VITESSES)	189 194
RENIFLARD (ESSIEU AVANT)	138
RÉSERVOIR - LAVE-GLACE (ASS)	628 640
RÉSERVOIR DE CARBURANT (ASS)	71 72
RÉSERVOIR DE CARBURANT ET MONTAGE (ASS)	70
RESERVOIR D'EXPANSION (ASS)	54
RÉSERVOIR DU LIQUIDE DE REFROIDISSEMENT (ASS)	54
RÉSERVOIR HYDRAULIQUE (ASS)	360
RÉSERVOIR HYDRAULIQUE ET MONTAGE (ASS)	360
RETROVISEUR - CABINE (ASS)	561 562
RETROVISEUR - CABINE (ASS)	627
RÉTROVISEUR (ASS)	600 601
RÉTROVISEUR (ASS) (INTÉRIEUR)	566 567
ROTATION DE LA ROUE DU VENTILATEUR SOUFFLANT	364
ROTATION DE LA ROUE DU VENTILATEUR SOUFFLANT (COMMANDE DE GODET)	364
ROTATION DE LA ROUE DU VENTILATEUR SOUFFLANT (*EXTENDABLE STICK PIN, READ OMM)	1 2
ROTATION DE LA ROUE DU VENTILATEUR SOUFFLANT (*OIL FLOW DIRECTION)	294
ROTATION DE LA ROUE DU VENTILATEUR SOUFFLANT (REMPLISSAGE DU RÉSERVOIR DE LAVE-GLACE)	628 640
ROUE - GROUPE DE MONTAGE	209

* TRADUCTION NON DISPONIBLE AU MOMENT DE LA PUBLICATION

INDEX

Désignation	Page
	211
ROUE - GROUPE DE MONTAGE (AVANT)	206
	207
	208
ROUE ET PNEU (ASS)	206
	207
	208
	209
	210
	211
	212
ROUE ET PNEU (VERSION)	205
	206

S

SEMELLE DE STABILISATEUR	416
	417
SEMELLE ET MONTAGE DE STABILISATEUR	413
	414
	415
SEMELLE ET PROTECTION DE STABILISATEUR (ASS)	407
	409
	411
SERRE-JOINT (ASS)	552
	553
*SHAFT GP-PUMP DRIVE	359
SIEGE - COUSSIN (ASS)	609
SIÈGE (ASS)	609
	612
	613
SIÈGE AVEC SUSPENSION (ASS)	614
	615
	616
	617
	618
	619
	622
SILENCIEUX (ASS)	58
SOLÉNOÏDE DE SOUPAPE ET DE CANALISATIONS (ASS)	200
SONDE - CIRCUIT DE CARBURANT	260
	265
	267
SONDE - CIRCUIT DE CARBURANT (LINÉAIRE)	275
SONDE - NIVEAU DE CARBURANT (ENS)	71
SOUPAPE - EAU	555
	587
SOUPAPE - SOLÉNOÏDE (ASS)	202
	344
	347
	356
	389
	390
SOUPAPE - SOLÉNOÏDE (ASS)	189
SOUPAPE - SOLÉNOÏDE (ASS) (ACCUMULATEUR)	390
SOUPAPE - SOLÉNOÏDE (ASS) (*ALL WHEEL DRIVE, CLUTCH ONE)	195
SOUPAPE - SOLÉNOÏDE (ASS) (CONTACTEUR DE COMMANDE ANTITANGAGE)	390
SOUPAPE - SOLÉNOÏDE (ASS) (EMBRAYAGE)	195
SOUPAPE - SOLÉNOÏDE (ASS) (INVERSION)	195
SOUPAPE - SOLÉNOÏDE (ASS) (MARCHE AV)	195
SOUPAPE - SOLÉNOÏDE (ASS) (12 VOLTS) (ARRÊT DE CARBURANT)	65
SOUPAPE D'ARRÊT	52
	53
SOUPAPE D'ARRÊT (ASS)	308
SOUPAPE ET MONTAGE - SOLÉNOÏDE	202
SOUPAPE PILOTE (ASS)	386
	387
SOUPAPE PILOTE ET CANALISATIONS (ASS)	362
SOUPAPE RÉDUCTRICE DE PRESSION (ASS)	344
SUPPORT - MONTAGE (ASS)	559
SUPPORT DE FILTRE ET REFROIDISSEUR D'HUILE MOTEUR	41
SUPPORT D'EXPÉDITION (ASS)	643
SUPPORT (ENS)	246
*SWITCH AS-COLUMN (*HD LIGHT, TURN SIG, WDO WIPER)	127
SYNCHRONISEUR (ASS)	183

T

TAPIS DE PLANCHER	561
	586
TAPIS DU PLANCHER (ASS)	586
THERMOCONTACT (AVANCE À L'INJECTION)	65
THERMOCONTACT (CLIMATISEUR)	557
THERMOCONTACT (LIQUIDE DE REFROIDISSEMENT DU MOTEUR)	119
TIMONERIE DE GODET DE CHARGEUSE (ASS)	399
TIMONERIE DE GODET RÉTRO (ASS)	397
*TIP GP-CHISEL	471
	472
	473

* TRADUCTION NON DISPONIBLE AU MOMENT DE LA PUBLICATION

INDEX

Désignation	Page
TIRANT DE VÉRIN DE LEVAGE (ASS)	394
TOIT - CABINE (ASS)	606
TOIT-ROPS OUVERT (ASS)	568
	570
TOIT (VERSION)	566
	567
TÔLE DE PLANCHER (ASS)	236
	237
TRAINS PLANÉTAIRES-RÉDUCTEURS (ASS)	169
	170
TRANSMISSION (VERSION)	171
TRANSMISSION (VERSION)	171
TURBOCOMPRESSEUR (ASS)	59

V

Désignation	Page
VENTILATEUR ASPIRANT (ASS)	44
	45
VENTILATEUR (ENS)	557
VENTILATEUR (ENS)	589
VÉRIN - GODET TOUS-TRAVAUX (ASS)	270
VERIN DE BRAS (ASS)	275
	277
	278
VERIN DE DIRECTION (ASS)	138
VERIN DE FLECHE (ASS)	264
	265
VÉRIN DE GODET RÉTRO (ASS)	260
	262
VÉRIN DE LEVAGE (ASS)	269
VÉRIN DE SERRE-JOINT (ASS)	281
VERIN DE STABILISATEUR (ASS)	271
	273
VÉRIN D'INCLINAISON (ASS)	282
VÉRIN D'ORIENTATION (ASS)	279
VÉRIN DU BRAS TELESCOPIQUE (ASS)	267
VÉRIN DU BRAS TELESCOPIQUE (ASS)	419
VÉRIN ET CANALISATIONS DE SERRE-JOINT (ASS)	259
VERROUILLAGE ANTI-VANDALISME (ASS)	645
VERROUILLAGE POUR L'EXPÉDITION (ASS)	402
	403
	405
VERSION DE CHASSIS	4
VERSION DE RANGÉE DE DISTRIBUTEURS 2	364
VERSION DE RANGÉE DE DISTRIBUTEURS 3	364
VERSION DE RANGÉE DE DISTRIBUTEURS 7	365
VERSION DE SERRE-JOINT	519
	520
	521
	522
	523
	524
	525
	526
	527
	528
	529
	530
	531
	532
	533
	534
	535
	536
	537
	538
	539
	540
	541
	542
	543
	544
	545
	546
	547
	548
	549
	550
	551
VERSION D'ENTRAÎNEMENT DE CHARGEUSE-PELLETEUSE	152
VERSION HYDRAULIQUE	288
VERSION NORMALE	4
VILEBREQUIN - POULIE (ASS)	33
VILEBREQUIN (ASS)	11
VITRE DE CABINE (ASS)	630
	632
	634
VOLANT MOTEUR (ASS)	19

* TRADUCTION NON DISPONIBLE AU MOMENT DE LA PUBLICATION

INDICE

Nombre	Página

A

ACONDICIONADOR DE AIRE (GR) 557
ACONDICIONADOR DE AIRE Y MONTAJE (GR) 555
ACOPLADOR RÁPIDO (CONFIG) 506
ACOPLADOR RÁPIDO (GR) 507, 508, 509, 510, 511
ACOPLAMIENTO FLEXIBLE - MANDO DE (GR) 153
ACUMULADOR DE ACEITE PILOTO (GR) 247
ACUMULADOR DE CONTROL DE AMORTIGUACION (GR) 248
ACUMULADOR DE REFRIGERANTE 598
ADAPTADOR (GR) 338
AGUA - CONEXIÓN DE (GR) 39
AGUA DE LAS CAMISAS - CALENTADOR DEL (GR) 82
ALFOMBRILLA DEL PISO 561, 586
ALFOMBRILLA DEL PISO (GR) 586
ALMOHADILLA Y MONTAJE DEL ESTABILIZADOR (GR) 413, 414, 415
ÁRBOL DE LEVAS (GR) 7
*ARMREST AS (IZQUIERDO) 609, 616, 617
*ARMREST AS (LADO DERECHO) 616, 617
*ARMREST AS (LADO DERECHO) 609
ARRANQUE - INTERRUPTOR DE (GR) (LLAVE) 112
ASIENTO ACOJINADO (GR) 609
ASIENTO CON SUSPENSIÓN (GR) 619, 622
ASIENTO (GR) 609, 612, 613

B

BANCADA DE VALVULAS DE 8 (CONFIG) 365
BASE DEL FILTRO Y ACEITE REFRIGERANTE DE MOTOR 41
BASTIDOR DE ROTACIÓN (GR) 239
BASTIDOR DEL CARGADOR (GR) 238
BATERÍA Y CABLES (GR) 76
BATERÍA Y CABLES (GR) 74
BATERÍA (12-VOLTIOS, LIBRE DE MANTENIMIENTO) 74, 76
BLOQUE DESLIZANTE-JUEGO 614
BLOQUE MOTOR (GR) 13, 15
BOCINA (CONJ) (TONO BAJO) 119
BOMBA - TUBERÍAS DE (GR) 327
BOMBA DE ACEITE DEL MOTOR (GR) 38
BOMBA DE AGUA (GR) 50
BOMBA DE CEBADO Y FILTRO PRIMARIO DE COMBUSTIBLE (GR) 68, 69
BOMBA DE INYECCIÓN DE COMBUSTIBLE (GR) 65
BOMBA DE LA TRANSMISIÓN (GR) 189, 194
BOMBA DE PISTONES (GR) 356
BRAZO DE RETROEXCAVADOR (GR) 423
BRAZO ESTÁNDAR DE RETROEXCAVADOR (CONFIG) 3
BRAZO EXTENDIBLE DE RETROEXCAVADOR (CONFIG) 1, 2
BRAZO EXTENSIBLE (GR) 419, 421
BUJÍA INCANDESCENTE (GR) 81
BUJÍA INCANDESCENTE (12 VOLTIOS) 81

C

CABINA (CONFIG) 560, 561, 562
CABINA (GR) 563
CABLES DE CALEFACCIÓN (GR) 123
CABLES DE CONTROL DE AMORTIGUACIÓN (GR) 134
CABLES DE LA CONSOLA (GR) 115
CABLES DE LA CONSOLA (GR) 112
CABLES DE LA PLATAFORMA (GR) 127
CABLES DEL ACONDICIONADOR DE AIRE (GR) 109
CABLES DEL CONTROL (GR) 116, 117, 118
CABLES DEL MOTOR (GR) 119, 121
CABLES DEL POSICIONADOR Y DE DESCONEXIÓN (GR) 125
CABLES DEL RECEPTÁCULO DE FUERZA (GR) 561, 562

* NO HAY TRADUCCION DISPONIBLE EN EL MOMENTO DE LA IMPRESION

INDICE

Nombre	Página
	566
	567
CABLES POSTERIORES (GR)	132
CAJA DE BATERÍA	227
CAJA DE LA TRANSMISIÓN (CONJ)	143
	144
CAJA DEL EJE (GRUPO)	161
	162
	163
CAJA DELANTERA (GR)	21
CALCOMANÍA (CONTROL DE TEMPERATURA)	555
	587
CALCOMANÍA DE ADVERTENCIA	364
CALCOMANÍA DE ADVERTENCIA (*ACCUM, HIGH PRESS, READ OMM)	323
CALCOMANÍA DE ADVERTENCIA (CONTROL DE CUCHARÓN)	364
CALCOMANÍA DE ADVERTENCIA (*EXTENDABLE STICK PIN, READ OMM)	1
	2
CALCOMANÍA DE ADVERTENCIA (*HIGH PRESSURE, READ OMM)	248
CALCOMANÍA DE ADVERTENCIA (*HIGH PRESSURE, READ OMM, ANSI)	291
	329
CALCOMANÍA DE ADVERTENCIA (*HYDRAULIC PRESSURE, READ OMM)	294
	296
	299
CALCOMANÍA DE ADVERTENCIA (*JUMP START, READ OMM)	646
CALCOMANÍA DE ADVERTENCIA (*LASER TRANSMITTER, READ OMM)	591
CALCOMANÍA DE ADVERTENCIA (LLENADO DEL DEPÓSITO DEL LAVAPARABRISAS)	628
	640
CALCOMANÍA DE ADVERTENCIA (*OIL FLOW DIRECTION)	294
CALCOMANÍA DE ADVERTENCIA (*PRODUCT LINK 300, ANSI)	83
CALCOMANÍA DE ADVERTENCIA (VARILLA RETRACTIL)	305
CALCOMANÍA DE IDENTIFICACIÓN (*CATERPILLAR, FRONT)	560
	561
	562
	567
CALCOMANÍA DE IDENTIFICACIÓN (CATERPILLAR, TRASERO)	566
CALCOMANÍA DE IDENTIFICACIÓN (NOMBRE DE GRUPO)	557
	589
CALCOMANÍA DE IDENTIFICACIÓN (*STABILIZER CONTROL)	566
CALCOMANÍA DE IDENTIFICACIÓN (*STABILIZER CONTROL)	560
	567
CALCOMANÍA DE RAYAS (AMARILLO)	246
CALCOMANÍA (INTERRUPTOR DE ARRANQUE)	647
CALCOMANÍA (PLACA, NOMBRE)	248
CALCOMANÍA (*PROTECTION)	74
CALCOMANÍA (*STABILIZER, AUTO UP)	561
	562
CALCOMANÍAS Y PLACAS DE IDENTIFICACIÓN (GR)	645
	648
CALEFACCIÓN DE LA CABINA (GR)	587
	589
CÁNCAMOS DE LEVANTAMIENTO DEL MOTOR (GR)	23
CANDADO (GR) (PROTECCIÓN CONTRA BANDALISMO)	645
CAPÓ DEL MOTOR (GR)	245
	246
CAPO Y PROTECTOR (GR)	243
CAPTADOR DE TEMPERATURA (REFRIGERANTE DEL MOTOR)	119
CAPTADOR DE TEMPERATURA (12 VOLTIOS)	190
	194
CARGA - ALTERNADOR DE (GR)	73
CARGADOR (CONFIG)	401
CÁRTER - COLECTOR DEL (GR)	26
CHASIS (CONFIG)	4
CIGÜEÑAL - POLEA DE (GR)	33
CIGÜEÑAL (GR)	11
CILINDRO DE CUCHARÓN DE USO MÚLTIPLE (GR)	270
CILINDRO DE CUCHARÓN RETROEXCAVADOR (GR)	260
CILINDRO DE CUCHARÓN RETROEXCAVADOR (GR)	262
CILINDRO DE DIRECCIÓN (GR)	138
CILINDRO DE LA PLUMA (GR)	264
	265
CILINDRO DE LEVANTAMIENTO - TUBERÍAS DEL (GR)	313
CILINDRO DE LEVANTAMIENTO (GR)	269
CILINDRO DE ROTACIÓN (GR)	279
CILINDRO DEL BRAZO EXTENSIBLE (GR)	267
CILINDRO DEL BRAZO EXTENSIBLE (GR)	419
CILINDRO DEL BRAZO (GR)	275
	277

* NO HAY TRADUCCION DISPONIBLE EN EL MOMENTO DE LA IMPRESION

INDICE

Nombre	Página
	278
CILINDRO DEL FRENO (JUEGO)	218
CILINDRO DEL FRENO (JUEGO) (*ADJUSTER)	219
CILINDRO DEL FRENO (JUEGO) (*SPRING RETENTION)	219
CILINDRO ESTABILIZADOR (GR)	271
	273
CILINDRO GR - PULGAR	281
CILINDRO Y TUBERIAS GR - PULGAR	259
CINTURÓN DE SEGURIDAD (GR)	607
	608
COLADOR (SUCCIÓN)	143
	194
COMBUSTIBLE - TANQUE DE (GR)	71
	72
COMPARTIMIENTO DE LITERATURA DE SERVICIO (GR)	571
COMPRESOR DE REFRIGERANTE (GR)	573
COMPRESOR DE REFRIGERANTE Y GRUPO DE MONTAJE	572
CONDENSADOR DEL REFRIGERANTE Y MONTAJE (GR)	574
CONEXION HIDRAULICA (GR)	287
CONFIG. DEL MANDO, CARGADOR RETROEXCAVADORA	152
CONFIGURACIÓN COMÚN	4
CONFIGURACIÓN DE ENFRIAMIENTO	43
CONFIGURACIÓN DE MOTORES	5
	6
CONJUNTO DE CABLERIA, RADIO (ESLABON DE PRODUCTO)	83
CONJUNTO DE DESTELLADOR (12 VOLTIOS)	127
CONJUNTO DE RECINTO-DIFERENCIAL	148
CONJUNTO DE TAPON, DRENAJE (MAGNÉTICO)	138
	140
	148
CONSOLA DEL OPERADOR (GR)	575
	577
	579
CONTRAPESO (GR)	228
	229
	230
CONTROL DE AMORTIGUACIÓN (CONFIG)	249
CONTROL DE COMUNICACION (GR)	78
CONTROL DE DIRECCIÓN (GR)	221
CONTROL DE LA TRANSMISIÓN (GR)	146
CONTROL DE REGULADOR (GR)	61
CONTROL DEL FRENO DE ESTACIONAMIENTO	213
	214
CONTROL DEL MULTIPLE (GR)	342
	344
	345
CONTROL HIDRÁULICO MANUAL (GR)	250
	252
CONTROL MANUAL DE PALANCA (GR)	220
CORONA (GR)	140
	159
	160
CORONA Y DIFERENCIAL (GR)	150
CORREA TRAPEZOIDAL	44
CUBIERTA DEL MOTOR DE LIMPIAPARABRISAS (GR)	581
CUCHARÓN DE EMBARQUE (CONFIG)	650
CUCHARÓN DE USO GENERAL (CONJ)	430
	432
	434
	436
	438
CUCHARÓN DE USO GENERAL (GR)	444
	445
	446
	447
	448
	449
	450
CUCHARÓN DE USO MÚLTIPLE (CONFIG)	427
	428
	429
CUCHARÓN DE USO MÚLTIPLE (GR)	495
	496
	498
	500
CUCHARÓN EXCAVADOR (CONJ)	440
	441
	442
	443
CUCHARÓN RETROEXCAVADOR (GR)	452
	453
	454
	455
	456
	457
	458
	459
	460
	461
	462
	463
	464
	465
	466
	467

* NO HAY TRADUCCION DISPONIBLE EN EL MOMENTO DE LA IMPRESION

INDICE

Nombre	Página
	468
	469
	470
	471
	472
	473
	474
	475
	476
	477
	478
	479
	480
	481
	482
	483
	484
	485
	486
	487
	488
	489
	490
	491
	492
	493
	494
CUCHARÓN RETROEXCAVADOR (GR)	451
CUCHILLA (GR)	512
	513
CULATA DE CILINDROS (GR)	16
	17

D

DETECTOR DE HUMEDAD (GR) (SEPARADOR DE AGUA)	68
DETECTOR DE NIVEL DEL COMBUSTIBLE	71
DETECTOR DE POSICIÓN (SISTEMA DE COMBUST.) (GR)	260
	265
	267
DETECTOR DE POSICIÓN (SISTEMA DE COMBUST.) (GR) (*LINEAR)	275
DIAFRAGMA (CONTACTOR DE PRESIÓN DEL CÁRTER)	9
DIENTE DE UNA PIEZA (UNI-TOOTH) (GR)	554
DIFERENCIAL (GR)	150
	151
DIFERENCIAL Y CORONA (GR)	148
DOSIFICACIÓN - BOMBA DE (GR)	226

E

EJE - GRUPO DE MONTAJE	166
EJE DE ENTRADA (GR)	177
	179
EJE DE IMPULSIÓN Y DE DIRECCIÓN (GR)	138
EJE DE MANDO (GR)	174
EJE DE SALIDA (GR)	181
	183
	184
	185
EJE GR-CONTRARIO	172
	189
EJE GR-RUEDA GUIA	175
	189
EJE TRASERO (GR)	140
*ELBOW	156
	321
ELECTRÓNICA DE LA MÁQUINA (GR)	79
ELECTRONICA DE MONITOR (GR)	80
ELEMENTO DEL CALENTADOR DEL AGUA DE LAS CAMISAS (120 VOLTIOS, 1000 VATIOS)	82
ELEMENTO DEL FILTRO DE AIRE (CONJ) (CALEFACCION DE CABINA, ACONDICIONADOR DE AIRE)	555
ELEMENTO DEL FILTRO DE AIRE (CONJ) (CALEFACCION DE CABINA, ACONDICIONADOR DE AIRE)	587
ELEMENTO DEL FILTRO DE AIRE (CONJ) (PRIMARIO)	56
ELEMENTO DEL FILTRO DE AIRE (CONJ) (SECUNDARIO)	56
EMPAQUETADURA (TAPA DE VÁLVULA)	9
ENFRIADOR DE ACEITE DEL MOTOR (GR)	41
ENFRIADOR DE ACEITE DEL MOTOR (GR)	40
ENFRIADOR DE ACEITE DEL MOTOR Y BASE DEL FILTRO	41
ENFRIADOR DE ACEITE (MOTOR)	40
ENGRANAJE DE CORONA Y PIÑÓN (GR)	148
ETIQUETA DE ADVERTENCIA (GR)	644
EXTENSIÓN DEL ESCAPE (GR)	5
EXTENSIÓN DEL GUARDABARROS (GR)	232

F

FILTRO - RESPIRADERO (TANQUE HIDRÁULICO)	360
FILTRO DE ACEITE (CONJ) (*EFFICIENCY) (TREN DE FUERZA)	171
FILTRO DE ACEITE (CONJ) (HIDRÁULICO, RESISTENTE AL FUEGO)	286
FILTRO DE ACEITE (CONJ) (*ULTRA HIGH EFFICIENCY)	286

* NO HAY TRADUCCION DISPONIBLE EN EL MOMENTO DE LA IMPRESION

INDICE

Nombre	Página
FILTRO DE ACEITE DEL MOTOR (CONJ)	37
FILTRO DE ACEITE (GR)	286
FILTRO DE AIRE DE CABINA (RECIRCULACIÓN)	557 589
FILTRO DE AIRE (GR)	55 56
FILTRO DE COMBUSTIBLE Y SEPARADOR DE AGUA (CONJ)	68
FILTRO (REGULADOR DE FLUJO)	342
FRENO DE SERVICIO - CONTROL (GR)	215
FRENO DEL CILINDRO (GR)	218 219
FUSIBLE (10-AMPERIOS)	93
FUSIBLE (60 AMPERIOS)	127

G

Nombre	Página
GRUPO DE AJUSTADOR, VÁLVULA	285
GRUPO DE AJUSTADOR, VÁLVULA (BANCO)	364
GRUPO DE AJUSTADOR, VÁLVULA (BANCO)	364
GRUPO DE BRAZO DE LEVANTAMIENTO	391
GRUPO DE EJE	138
GRUPO DE INSTALACION, CONTROL DE GRADO	87 89
GRUPO DE INTERRUPTOR-BOTON PULSADOR (NEUTRALIZADOR, REDUCCIÓN)	146
GRUPO DE INTERRUPTOR-BOTON PULSADOR (NEUTRALIZADOR, REDUCCIÓN)	250 252
GRUPO DE INTERRUPTOR, TRABA DEL DIFERENCIAL	107
GRUPO DE INTERRUPTOR-TRACCIÓN EN TODAS LAS RUEDAS	106
GRUPO DE MONTAJE-CONTROL DE RETROEXCAVADORA	348
GRUPO DE MONTAJE DE LA CABINA	603
GRUPO DE PALANCA-REGULADOR	61 594
GRUPO DE PESTAÑA, RUEDA	158
GRUPO DE PESTAÑA, RUEDA	140
GRUPO DE PESTAÑA Y RESINTO, EJE	159 160
GRUPO DE PROTECCIÓN CONTRA EL VANDALISMO	649
GRUPO DE TUBERIAS-ENFRIADOR DE TRANSMISION	46
GRUPO DE 3 VÁLVULAS HIDRÁULICAS	367
GRUPO DE 6 VALVULAS (CONFIG)	364
GRUPO DEMONTAJE DE RADIADOR Y ENFRIAMIENTO DE ACEITE	48
GRUPO GIRATORIO DE BOMBA	358
GRUPO PERILLA, DIRECCIÓN	223
*GUARD GP-WORK TOOL	515
GUARDABARROS DELANTERO (GR)	233
GUARDABARROS TRASERO (GR)	234
GUARNICIONES DE LA CABINA (GR)	625

H

Nombre	Página
HIDRÁULICA (CONFIG)	288
HOJA DE LIMPIAPARABRISAS (CONJ)	640 642
HOJA TOPADORA (CONJ)	502 503 504 505
HORQUILLA (GR)	514

I

Nombre	Página
IMPULSOR DE VENTILADOR (GR)	18
INCLINACIÓN HORIZONTAL - CILINDRO DE (GR)	282
INDICADOR DE CAMBIO DE FILTRO DE ACEITE (GR)	57
INDICADOR DE NIVEL DE ACEITE Y TUBO DE LLENADO	37
INDICADOR DE SERVICIO DEL FILTRO DE AIRE	57
INDICADOR DE SERVICIO DEL FILTRO (GR)	57
INDICADOR DE TEMPERATURA DEL REFRIGERANTE (GR)	112
INDICADOR DEL NIVEL DE ACEITE (GR)	112
INDICADOR DEL NIVEL DEL ACEITE (VARILLA) (CONJ)	154
INSTALACION DE COMUNICACION (GR)	83
INSTALACION DE COMUNICACION (GR)	85
*INSTALLATION GP-MONITOR	591
INTERRUPTOR (CONJ)	213
INTERRUPTOR DE COLUMNA (CONJ) (*HD LIGHT, TURN SIG, WDO WIPER)	127
INTERRUPTOR DE LÍMITE (CONJ)	622
INTERRUPTOR DE LÍMITE (CONJ) (PEDAL DE FRENO)	215
INTERRUPTOR DE PEDAL (CONFIG) (TRABA DE DIFERENCIAL)	107
INTERRUPTOR DE PRESIÓN (CONJ)	291
INTERRUPTOR DE PRESIÓN (CONJ)	134
INTERRUPTOR DE PRESIÓN (CONJ) (ACEITE DE MOTOR)	108

* NO HAY TRADUCCION DISPONIBLE EN EL MOMENTO DE LA IMPRESION

INDICE

Nombre	Página
INTERRUPTOR DE PRESIÓN (CONJ) (DERIVACION DEL FILTRO DEL ACEITE HIDRAULICO)	121
INTERRUPTOR DE PRESIÓN (CONJ) (REFRIGERANTE)	109
INTERRUPTOR DE PRESIÓN (GR)	215
INTERRUPTOR DE PRESIÓN (GR)	108
INTERRUPTOR DE RODILLO (CONJ) (DESCONEXIÓN, POSICIONADOR)	125
INTERRUPTOR DE TEMPERATURA (AIRE ACONDICIONADO)	557
INTERRUPTOR DE TEMPERATURA (AVANCE DE SINCRONIZACION)	65
INTERRUPTOR DE TEMPERATURA (REFRIGERANTE DEL MOTOR)	119
INTERRUPTOR DE VOLQUETE (CONJ) (ACONDICIONADOR DE AIRE, CALENTADOR)	109
INTERRUPTOR DE VOLQUETE (CONJ) (AUXILIAR DE ARRANQUE)	112
INTERRUPTOR DE VOLQUETE (CONJ) (*AUXILIARY HYDRAULIC FLOW)	365
INTERRUPTOR DE VOLQUETE (CONJ) (*AUXILIARY HYDRAULIC FLOW)	365
INTERRUPTOR DE VOLQUETE (CONJ) (BALIZA DE ADVERTENCIA)	112
INTERRUPTOR DE VOLQUETE (CONJ) (CALEFACCIÓN)	123
INTERRUPTOR DE VOLQUETE (CONJ) (CONTROL DE AMORTIGUADOR)	134 291
INTERRUPTOR DE VOLQUETE (CONJ) (ESCOBILLAS, LIMPIAPARABRISA TRASERO)	642
INTERRUPTOR DE VOLQUETE (CONJ) (*FLOODLIGHTS, FRONT)	94
INTERRUPTOR DE VOLQUETE (CONJ) (*FLOODLIGHTS, REAR)	94
INTERRUPTOR DE VOLQUETE (CONJ) (MANDO EN TODAS LAS RUEDAS)	106
INTERRUPTOR DE VOLQUETE (CONJ) (*MODE SELECT)	127
INTERRUPTOR DE VOLQUETE (CONJ) (TRABA HIDRÁULICA)	112
INTERRUPTOR DE VOLQUETE (CONJ) (*TRANSMISSION NEUTRAL LOCK)	115
INTERRUPTOR DE VOLQUETE (CONJ) (VELOCIDAD DEL VENTILADOR)	123
INTERRUPTOR DE VOLQUETE (CONJ) (VELOCIDAD DEL VENTILADOR)	109

J

Nombre	Página
JUEGO DE ANILLO DE PISTON	28
JUEGO DE COJINETE DE RODILLOS	169
JUEGO DE COJINETES DE BANCADA (0,25 MM OS)	11
JUEGO DE COJINETES DE BANCADA (0,5-MM)	11
JUEGO DE COJINETES DE BANCADA (0,76 MM OS)	11
JUEGO DE COJINETES DE BIELA (0,25 MM OS)	11
JUEGO DE COJINETES DE BIELA (0,51 MM OS)	11
JUEGO DE COJINETES DE BIELA (0,76 MM OS)	11
JUEGO DE CONTACTOR (MOTOR DE ARRANQUE)	103
JUEGO DE CONTROL DE OPERACION	291
JUEGO DE CORREAS TRAPEZOIDALES (INCLUYE 2-CORREAS)	44 45
JUEGO DE CRUCETA	138
JUEGO DE CRUCETA Y COJINETE	174
JUEGO DE EMBOLO	386
JUEGO DE ENGRANAJES (MOTOR DE ARRANQUE)	103
JUEGO DE FRENO DE HORQUILLA	141
JUEGO DE LEVA (ROTACIÓN HACIA LA IZQUIERDA)	141
JUEGO DE REPARACIÓN (TUBERÍAS DEL FRENO) (PEDAL REGULADOR)	605
JUEGO DE REVESTIMIENTO DE FRENO	141
JUEGO DE SELLOS	82 202 344 347 390
JUEGO DE SELLOS (ACUMULADOR)	248
JUEGO DE SELLOS (VÁLVULA PILOTO)	386 387
JUEGO DE SELLOS (VÁLVULA VIBRATORIA)	356
JUEGO DE SERVICIO	605
JUEGO DE TORNILLERÍA (MOTOR DE ARRANQUE)	103
JUEGO DE VÁLVULAS (LANZADERA)	345
JUEGO DE VÁLVULAS (PRIORIDAD)	345
JUEGO DE VÁLVULAS (REGULADOR DE FLUJO)	345
JUEGO-PEDAL DE INCLINACIÓN	221
JUEGO-PIVOTE	221
JUEGO-PORTA PLANETARIO	169

* NO HAY TRADUCCION DISPONIBLE EN EL MOMENTO DE LA IMPRESION

INDICE

Nombre	Página

L

LÁMPARA DE BALIZA DE ADVERTENCIA (GR) 93
LÁMPARA DE LUZ DELANTERA Y DE SEÑAL (GR) 94
LÁMPARA DEL TECHO (GR) 595
LÁMPARA (12 VOLTIOS) 112, 595, 624
LÁMPARA (12 VOLTIOS) 112
LÁMPARA (12 VOLTIOS, 21 VATIOS) 94
LÁMPARA (12 VOLTIOS, 21 VATIOS) 94
LÁMPARA (12 VOLTIOS, 21/5-VATIOS) 94
LÁMPARA (12 VOLTIOS, 55 VATIOS) 91, 92
LÁMPARA (12 VOLTIOS, 55 VATIOS) 93
LATA DE RESPIRADERO (CONJ) (CÁRTER DEL MOTOR) 35
LAVAPARABRISAS DE LA VENTANA (GR) 628
LIMPIA Y LAVAPARABRISAS (GR) 640
LIMPIAPARABRISAS DE LA VENTANA (GR) . . . 642
LUCES DE REFLECTOR Y CAMBIO DE DIRECCION (GR) 94
LUZ DE BALIZA (GR) 96
LUZ DE SEÑAL DE GIRO (GR) 94

M

MANDO DE CORREA (BALIZA DE ADVERTENCIA) 93
MANDO DE LA BOMBA Y MONTAJE (GR) 284
MANGUERA DE RADIADOR (INFERIOR) 48
MANGUERA DE RADIADOR (SUPERIOR) 48
*MANIFOLD GP-CONTROL & SOLENOID 346, 347
MANIJA MODULAR (GR) 255, 256, 257, 258
MASTIL - MONTAJE DEL (GR) 97
MAZO DE CABLES (CONJ) (TRABA DE DIFERENCIAL) 107
MAZO DE CABLES (CONJ) (*3-PIN, GAUGE) . . . 112
MAZO DE CABLES DE CONTROL (CONJ) (ESLABON DE PRODUCTO) 85
MECANISMO DE VÁLVULAS (GR) 34
MEDIDOR DE NIVEL DE ACEITE 37
MEDIDOR DE NIVEL DE ACEITE (VARILLA) . . . 156
MEDIDOR DE SERVICIO (GR) 115
MIRILLA 360
MÓDULO GR-SUMINISTRO DE POTENCIA 89
MÓDULO INDICADOR DE ADVERTENCIA (GR) 112
MONTAJE DE BANCADA DE VALVULA (GR) . . . 350
MONTAJE DE CILINDRO (GR) 351, 353
MONTAJE DE LA TRANSMISIÓN (GR) 167, 168
MONTAJE DE RUEDA (GR) 209, 211
MONTAJE DE RUEDA (GR) (DELANTERO) 206, 207, 208
MONTAJE DE TUBERIAS (GR) 354
MONTAJE DEL BRAZO (GR) 406
MONTAJE DEL CUCHARÓN (GR) 516
MONTAJE DEL MOTOR (GR) 24
MONTAJE DEL MOTOR Y LA TRANSMISIÓN (GR) 25
MONTAJE DEL SENSOR (GR) 98
MONTAJE GR-MONITOR 604
MONTAJE Y TRANSMISIÓN(GR) 187, 188
MOTOR DE ARRANQUE ELÉCTRICO (GR) 103, 105
MOTOR-LIMPIAPARABRISAS (GR) 602
MULTIPLE HIDRAULICO (GR) 372, 374, 376, 378, 379

P

PALANCA UNIVERSAL DE CONTROL (GR) 255, 256, 257, 258
PASADOR DE ACOPLADOR (GR) 517, 518
PESTILLO DE CONSOLA (GR) 593
*PIN AS (INFERIOR, SUPERIOR) 138
PISTÓN Y BIELA (GR) 28
PLACA DE CONTROL (*BACKHOE, JOYSTICK) 560, 561, 562, 566, 567
PLACA DE CONTROL (*LOADER, JOYSTICK) 561, 562
PLACA DE IDENTIFICACION (CAT) 509
PLACA DE IDENTIFICACION (CUCHARON) 486, 491, 492

* NO HAY TRADUCCION DISPONIBLE EN EL MOMENTO DE LA IMPRESION

INDICE

Nombre	Página
	493
	494
PLACA DE IDENTIFICACION (CUCHARON)	495
	496
	498
	500
PLACA DE IDENTIFICACION (CUCHARON)	445
	447
PLACA DE INFORMACION (*EXTENDED LIFE COOLANT-READ OMM)	645
PLACA INDICADORA (NIVEL DEL CUCHARON)	289
PLANCHA DEL PISO (GR)	236
	237
PLANETARIO DEL MANDO FINAL (GR)	169
	170
PLUMA (GR)	393
POSICIÓN DEL SENSOR (CONJ) (*ANGLE)	591
POSICIÓN DEL SENSOR (CONJ) (*BOOM SWING)	591
POSICIONADOR DEL CUCHARÓN Y DESCONEXIÓN (GR)	289
PROTECTOR DE LA PLUMA (GR)	395
PROTECTOR DEL EJE IMPULSOR (GR)	241
PROTECTOR DEL RADIADOR (GR)	242
PUERTA DE CABINA	582
	584
PULGAR CONFIG.	519
	520
	521
	522
	523
	524
	525
	526
	527
	528
	529
	530
	531
	532
	533
	534
	535
	536
	537
	538
	539
	540
	541
	542
	543
	544
	545
	546
	547
	548
	549
	550
	551
PULGAR GR	552
	553
PUNTA GR-CUCHARÓN (*SOIL)	491
	492
	493
	494
PUNTA GR-FORMON	471
	472
	473
PUNTA PARA PENETRACIÓN (GR)	486
PUNTA PARA PENETRACIÓN (GR)	451
	452
	453
	454
	455
	456
	457
	458
	459
	460
	461
	462
	463
	464
	465
	466
	467
	468
	469
	470
	479
	480
	481
	482
	483
	484
	485
	487
	488
	489
	490

R

RADIADOR (GR)	52
	53

* NO HAY TRADUCCION DISPONIBLE EN EL MOMENTO DE LA IMPRESION

INDICE

Nombre	Página
RADIADOR Y ENFRIADOR DE ACEITE (GR)	52
	53
*RECEIVER GP-LASER (*LR21)	89
REFLECTOR (GR)	91
	92
REGULADOR - PEDAL DEL (GR)	605
RELÉ (CONJ) (12 VOLTIOS)	106
	109
	134
	291
RELÉ (CONJ) (12 VOLTIOS)	109
	123
RELÉ (CONJ) (12 VOLTIOS) (*ACCUGRADE, MAST)	89
RELÉ (CONJ) (12 VOLTIOS) (ALARMA DE RETROCESO)	127
RELÉ (CONJ) (12 VOLTIOS) (ARRANQUE)	119
RELÉ (CONJ) (12 VOLTIOS) (AUXILIAR DE ARRANQUE)	119
RELÉ (CONJ) (12 VOLTIOS) (BOCINA)	127
RELÉ (CONJ) (12 VOLTIOS) (BOMBA DE COMBUSTIBLE)	119
RELÉ (CONJ) (12 VOLTIOS) (IMPLEMENTO DESACTIVADO)	127
RELÉ (CONJ) (12 VOLTIOS) (*POSITION LAMP)	127
RELÉ (CONJ) (12 VOLTIOS) (TRABA DE DIFERENCIAL)	127
RELÉ (GR)	99
	100
	101
RELÉ (GR) (12 VOLTIOS)	109
	123
RESPIRADERO	140
RESPIRADERO (EJE DELANTERO)	138
RESPIRADERO (GR)	35
RESPIRADERO (TRANSMISION)	189
	194
RETROEXCAVADOR - ESTABILIZADOR DEL (GR)	418
RETROVISOR (GR)	600
	601
RETROVISOR (GR) (INTERIROR)	566
	567
REVESTIMIENTO DE LA CABINA (GR)	595
RUEDA Y LLANTA (CONFIG)	205
	206
RUEDA Y NEUMÁTICO (GR)	207
	208
	209
	210
	211
	212
RUEDA Y NEUMÁTICO (GR)	206

S

Nombre	Página
SELLO (RESPIRADERO)	35
SENSOR DE TEMPERATURA (GR)	121
SENSOR DE VELOCIDAD (GR)	102
SENSOR DE VELOCIDAD (GR) (SALIDA DE LA TRANSMISION)	195
SENSOR DE VELOCIDAD (GR) (SALIDA DEL CONVERTIDOR DE PAR)	189
SERVOTRANSMISIÓN (CONFIG)	188
SERVOTRANSMISIÓN (GR)	194
*SHAFT GP-PUMP DRIVE	359
SILENCIADOR (GR)	58
SINCRONIZADOR (GR)	183
SOFTWARE DEL MONITOR (GR) (RECEPTOR)	89
SOPORTE (CONJ)	246
SOPORTE DE MONTAJE (GR)	559
SOPORTE DEL CILINDRO DE LEVANTAMIENTO (GR)	394
SOPORTE PARA EL TRANSPORTE	643
SUCCIÓN - VENTILADOR DE (GR)	44
	45
SUSPENSIÓN - ASIENTO CON (GR)	614
	615
	616
	617
	618

T

Nombre	Página
TACÓMETRO ELÉCTRICO (GR)	624
TACÓMETRO ELÉCTRICO (GR)	112
TANQUE DE COMBUSTIBLE Y GRUPO DE MONTAJE	70
TANQUE DE EXPANSIÓN (GR)	54
TANQUE DE REFRIGERANTE (GR)	54
TANQUE DEL LAVAPARABRISAS (GR)	628
TANQUE DEL LAVAPARABRISAS (GR)	640
TANQUE HIDRÁULICO (GR)	360
TANQUE HIDRÁULICO Y MONTAJE (GR)	360
TAPA DE LA BATERÍA (GR)	231
TAPA DE LA CULATA DE CILINDROS (GR)	8
TAPA DEL MECANISMO DE VÁLVULAS (GR)	9
TAPA DEL TUBO DE LLENADO DE COMBUSTIBLE (GR) (VENTILACION, TRABABLE)	72
TAPA (GR) (*OUTLET)	366
	367
TAPA, LLENADO (ACEITE HIDRAULICO)	360

* NO HAY TRADUCCION DISPONIBLE EN EL MOMENTO DE LA IMPRESION

INDICE

Nombre	Página
TAPÓN (CONJ) (LLENADO DE ACEITE DE MOTOR)	37
TAPÓN DE DRENAJE (ACEITE DE MOTOR)	26
TAPON DE VALVULA DE CONTROL (GR)	342
TAPON DE VALVULA DE CONTROL (GR)	372
	374
	376
	380
TAPÓN DEL MOTOR (GR)	30
	31
	32
TAZA DE CUCHARÓN (CONJ)	425
	426
TECHO (CONFIG)	567
TECHO (CONFIG)	566
TECHO DE LA CABINA (GR)	606
TECHO ROPS ABIERTO (GR)	568
	570
TEMPERATURA - REGULADOR DE (GR) (AGUA)	39
TERMÓMETRO DE ACEITE (GR) (CONVERTIDOR DE PAR)	112
TIRANTE DE EMBARQUE (GR)	645
TIRANTE (GR)	138
TRABA CONTRA EL VANDALISMO (GR)	645
TRABA DE TRANSPORTE DE LA MÁQUINA (GR)	402
	403
	405
TRANSMISION DIRECTA (CONFIG)	188
TRANSMISION DIRECTA (GR)	189
TREN DE FUERZA (CONFIG)	171
TUBERIAS AUXILIARES-RETROEXCAVADORA (GR)	296
	299
TUBERIAS AUXILIARES-RETROEXCAVADORA (GR)	294
TUBERÍAS CON SERVOMANDO (GR)	321
	323
	326
TUBERÍAS DE ACEITE DEL TREN DE FUERZA (GR)	165
TUBERIAS DE AUXILIAR DE CARGADOR (GR)	315
TUBERIAS DE CALEFACCION	597
	598
TUBERIAS DE CALENTEDOR Y ACONDICIONADOR DE AIRE (GR)	598
TUBERÍAS DE COMBUSTIBLE (GR)	62
TUBERIAS DE CONTROL DE LA SUSPENSIÓN (GR)	329
TUBERÍAS DE DIRECCIÓN (GR)	224
TUBERÍAS DE DRENAJE (GR)	308
TUBERÍAS DE GIRO (GR)	338
TUBERÍAS DE LA CALEFACCIÓN (GR)	597
TUBERÍAS DE LA PALANCA EXTENDIBLE (GR)	309
TUBERÍAS DE LA PLUMA (GR)	301
TUBERÍAS DEL BRAZO (GR)	337
TUBERÍAS DEL CILINDRO DE INCLINACIÓN (GR)	340
TUBERÍAS DEL CUCHARÓN DE USO MÚLTIPLE	317
	319
TUBERÍAS DEL CUCHARÓN (GR)	303
	305
TUBERÍAS DEL ENFRIADOR DE ACEITE HIDRÁULICO (GR)	311
TUBERÍAS DEL ESTABILIZADOR (GR)	331
	333
	335
TUBERÍAS DEL FILTRO DE COMBUSTIBLE	64
TUBO DE LLENADO DE ACEITE DE LA TRANSMISIÓN (GR)	154
TUBO DE LLENADO DE ACEITE DE LA TRANSMISIÓN (GR)	156
TURBOCOMPRESOR (GR)	59

V

*VALVE & LINES GP-SOLENOID	200
*VALVE GP-CROSSOVER RELIEF	338
VÁLVULA CONFIG.-BANCO 7	365
VÁLVULA DE AGUA (CONJ)	555
	587
VÁLVULA DE ALIVIO (GR)	189
	203
	342
	345
VÁLVULA DE ALIVIO (GR)	372
	374
	376
	378
	379
	380
	382
	384
	385
VÁLVULA DE ALIVIO (GR) (*CUSHION CROSSOVER)	338
VÁLVULA DE ALIVIO (GR) (ENTRADA DEL CONVERTIDOR DE PAR)	194
VÁLVULA DE CONTROL DE FLUJO (GR)	342
VALVULA DE CONTROL DE LA BOMBA (GR)	388
VALVULA DE CONTROL DE LA BOMBA (GR) (*PRESSURE, FLOW COMPENSATOR)	356

* NO HAY TRADUCCION DISPONIBLE EN EL MOMENTO DE LA IMPRESION

INDICE

Nombre	Página
VÁLVULA DE CONTROL (GR)	372
	382
	383
	384
	385
VÁLVULA DE CONTROL (GR)	374
	376
	378
	379
	380
VÁLVULA DE CORTE	52
	53
VÁLVULA DE CORTE (GR)	308
VÁLVULA DE FRENO (GR)	215
VÁLVULA DE RETENCIÓN (GR)	345
	374
	376
	380
VÁLVULA DE SOLENOIDE (GR)	189
	202
	344
	347
	356
	389
	390
VÁLVULA DE SOLENOIDE (GR) (ACOPLAMIENTO)	195
VÁLVULA DE SOLENOIDE (GR) (ACUMULADOR)	390
VÁLVULA DE SOLENOIDE (GR) (*ALL WHEEL DRIVE, CLUTCH ONE)	195
VÁLVULA DE SOLENOIDE (GR) (AVANCE)	195
VÁLVULA DE SOLENOIDE (GR) (CONTROL DE AMORTIGUADOR, INTERRUPTOR)	390
VÁLVULA DE SOLENOIDE (GR) (REVERSA)	195
VÁLVULA DE SOLENOIDE (GR) (12 VOLTIOS) (CORTE DE COMBUSTIBLE)	65
VALVULA DE SOLENOIDE Y MONTAJE (GR	202
VÁLVULA DEL NEUMÁTICO (GR)	204
	205
VÁLVULA PILOTO (GR)	386
VÁLVULA PILOTO (GR)	387
VÁLVULA REDUCTORA DE PRESIÓN (GR)	344
VÁLVULA Y TUBERÍAS PILOTO (GR)	362
VÁLVULAS HIDRÁULICAS - GRUPO DE 2	366
VÁLVULAS HIDRÁULICAS - GRUPO DE 6	368
VÁLVULAS HIDRÁULICAS - GRUPO DE 7	369
VÁLVULAS HIDRÁULICAS - GRUPO DE 8	370
VARILLAJE DE CUCHARÓN CARGADOR (GR)	399
VARILLAJE DEL CUCHARÓN RETROEXCAVADOR (GR)	397
VARILLAJE GR-PULGAR	396
	525
	526
	528
	539
	540
	541
	542
	543
	544
	545
	547
	548
	549
	551
VÁVULA CONFIG.-BANCO 2	364
VÁVULA CONFIG.-BANCO 3	364
VENTANA DE LA CABINA (GR)	630
	632
	634
VENTANA DE LA PUERTA (GR)	636
	638
VENTILADOR (CONJ)	557
	589
VIDRIO DE LA LÁMPARA (PARTE TRASERA)	94
VISERA	627
VISERA (GR)	561
	562
	627
VOLANTE - CAJA DE (GR)	20
VOLANTE (GR)	19

W

*WIRING GP-EXTENDABLE STICK	122
	419
*WIRING GP-TRANSMISSION CONTROL	136

Z

ZAPATA DE ESTABILIZADOR (GR)	416
	417
ZAPATA Y PROTECTOR DEL ESTABILIZADOR	407
	409
	411

* NO HAY TRADUCCION DISPONIBLE EN EL MOMENTO DE LA IMPRESION

ÍNDICE

Designação	Página
A	
ACOPLADOR RÁPIDO	506
	507
	508
	509
	510
	511
ACUMULADOR - REFRIGERANTE	598
ACUMULADOR D ÓLEO - PILOTO	247
ACUMULADOR DO SISTEMA DE ABSORÇÃO DE IMPACTOS	248
ADAPTADOR	338
ALAVANCA - GOVERNADOR	61
	594
ALAVANCA DE CONTROLE - MODULAR	255
	256
	257
	258
ALAVANCA DE CONTROLE MANUAL	220
ALMOFADA DO ASSENTO	609
ALOJAMENTO - DIFERENCIAL	148
ALOJAMENTO E FLANGE - EIXO	159
	160
ALTERNADOR DE CORRENTE	73
AQUECEDOR DA ÁGUA DO MOTOR	82
AQUECEDOR DA CABINE	587
	589
AR. DE EMBARQUE DA CAÇAMBA	650
ARMAÇÃO OSCILANTE	239
ARRANJO BÁSICO	4
ARREFECEDOR - ÓLEO DO MOTOR	40
	41
ARREFECEDOR DE ÓLEO DO MOTOR E BASE DO FILTRO	41
ARREFECEDOR DE ÓLEO (MOTOR)	40
ARREFECIMENTO	43
ARTICULAÇÃO DA CAÇAMBA DA RETROESCAVADEIRA	397
ARTICULAÇÃO DAS CAÇAMBAS DAS CARREGADEIRAS	399
ASSENTO	609
	612
	613
ASSENTO COM SUSPENSÃO	614
	615
	616
	617
	618
B	
BARRA DE DIREÇÃO	138
BATERIA E CABOS / FIOS ELÉTRICOS	74
	76
BATERIA (12 VOLTS, ISENTO DE MANUTENÇÃO)	74
	76
BLOCO DO MOTOR	13
	15
BOCAL DE ENCHIMENTO DE ÓLEO DO TREM DE FORÇA	154
	156
BOMBA DA TRANSMISSÃO	189
	194
BOMBA DE ÁGUA	50
BOMBA DE ESCORVA DO COMBUSTÍVEL E DO FILTRO PRIMÁRIO	68
	69
BOMBA DE INJEÇÃO DO COMBUSTÍVEL	65
BOMBA DE ÓLEO - MOTOR	38
BOMBA DE PISTÃO	356
BOMBA REGULADORA	226
BORDA CORTANTE	512
	513
BOTÃO - DIREÇÃO	223
BRAÇO - CAÇAMBA RETRO-ESCAVADORA	423
BRAÇO DE LEVANTAMENTO	391
BRAÇO ESTENDÍVEL	419
	421
BUJÃO - VÁLVULA DE CONTROLE	342
	372
	374
	376
	380
BUJÃO DO DRENO (ÓLEO DO MOTOR)	26
BUJÃO DO MOTOR	30
	31
	32
BUJÃO-DRENAGEM (MAGNÉTICO)	138
	140
	148
BUZINA (TOM BAIXO)	119
C	
CABEÇOTE DO MOTOR	16
	17
CABINE	560
	561
	562
	563
CABOS/FIOS ELÉTRICOS - ABSORÇÃO DE IMPACTOS	134
CABOS/FIOS ELÉTRICOS - AQUECEDOR	123
CABOS/FIOS ELÉTRICOS - AR CONDICIONADO	109

* TRADUÇÃO NÃO DISPONÍVEL NO MOMENTO DA IMPRESSÃO

ÍNDICE

Designação	Página
CABOS/FIOS ELÉTRICOS - CONTROLE	116
	117
	118
CABOS/FIOS ELÉTRICOS - CONTROLE DA TRANSMISSÃO	136
CABOS/FIOS ELÉTRICOS - MOTOR	119
	121
CABOS/FIOS ELÉTRICOS - PLATAFORMA	127
CABOS/FIOS ELÉTRICOS - POSICIONADOR E DESENGATE AUTOMÁTICO	125
CABOS/FIOS ELÉTRICOS - TOMADA DE FORÇA	561
	562
	566
	567
CABOS/FIOS ELÉTRICOS - TRASEIROS	132
CABOS/FIOS ELÉTRICOS DO CONSOLE	112
	115
CAÇAMBA	425
	426
CAÇAMBA - RETRO-ESCAVADORA	440
	441
	442
	443
CAÇAMBA DE MÚLTIPLAS APLICAÇÕES	427
	428
	429
	495
	496
	498
	500
CAÇAMBA DIANTEIRA	401
CAÇAMBA PARA APLICAÇÃO GERAL	430
	432
	434
	436
	438
	444
	445
	446
	447
	448
	449
	450
CAÇAMBA RETROESCAVADORA	451
	452
	453
	454
	455
	456
	457
	458
	459
	460
	461
	462
	463
	464
	465
	466
	467
	468
	469
	470
	471
	472
	473
	474
	475
	476
	477
	478
	479
	480
	481
	482
	483
	484
	485
	486
	487
	488
	489
	490
	491
	492
	493
	494
CADEADO CONTRA VANDALISMO	645
CADEADO (PROTETOR CONTRA VANDALISMO)	645
CAIXA - BATERIA	227
CAIXA DA TRANSMISSÃO	143
	144
CAIXA DIANTEIRA	21
CAIXA DO SEMI-EIXO	161
	162
	163
CAIXA DO VOLANTE DO MOTOR	20
CALÇO DO ESTABILIZADOR	416
	417
CALÇO DO ESTABILIZADOR E MONTAGEM	413
	414
	415
CAPÔ DO MOTOR	245
	246

* TRADUÇÃO NÃO DISPONÍVEL NO MOMENTO DA IMPRESSÃO

ÍNDICE

Designação	Página
CAPÔ E PROTETOR	243
CÁRTER DO ÓLEO DO MOTOR	26
CHAPA DO PISO	236
	237
CHASSI	4
CHASSI DIANTEIRO	238
CHICOTE - CABOS ELÉTRICOS (TRAVA DE DIFERENCIAL)	107
CHICOTE - CABOS ELÉTRICOS (3 PINOS, MEDIDOR)	112
CILINDRO - CAÇAMBA DE MÚLTIPLAS APLICAÇÕES	270
CILINDRO - POLEGAR	281
CILINDRO DA CAÇAMBA RETROESCAVADEIRA	260
	262
CILINDRO DA DIREÇÃO	138
CILINDRO DA LANÇA	264
	265
CILINDRO DE GIRO	279
CILINDRO DE INCLINAÇÃO	282
CILINDRO DE LEVANTAMENTO	269
CILINDRO DO BRAÇO	275
	277
	278
CILINDRO DO BRAÇO ESTENDÍVEL	267
	419
CILINDRO DO ESTABILIZADOR	271
	273
CILINDRO DO FREIO	218
	219
CILINDRO E TUBULAÇÕES-POLEGAR	259
CINTO DE SEGURANÇA	607
	608
COLETOR - CONTROLE	342
	344
	345
COLETOR-CONTROLE E SOLENÓIDE	346
	347
COLETOR HIDRÁULICO	372
	374
	376
	378
	379
COMANDO - ACOPLAMENTO FLEXÍVEL	153
COMANDO - RETROESCAVADEIRA	152
COMANDO DA BOMBA E MONTAGEM	284
COMANDO DO VENTILADOR	18
COMANDO HIDRÁULICO	288
COMPARTIMENTO PARA LITERATURA	571
COMPRESSOR DE REFRIGERANTE	573
COMPRESSOR DE REFRIGERANTE E MONTAGEM	572
CONDENSADOR DO REFRIGERANTE E MONTAGEM	574
CONDICIONADOR DE AR	557
CONDICIONADOR DE AR E MONTAGEM	555
CONEXÃO - HIDRÁULICA	287
CONEXÃO - TUBO D'ÁGUA	39
CONSOLE DO OPERADOR	575
	577
	579
CONTRAPESO	228
	229
	230
CONTROLE - ALAVANCA	255
	256
	257
	258
CONTROLE-COMUNICAÇÃO	78
CONTROLE DA TRANSMISSÃO	146
CONTROLE DE DIREÇÃO	221
CONTROLE DO FREIO DE ESTACIONAMENTO	213
	214
CONTROLE DO FREIO DE SERVIÇO	215
CONTROLE DO GOVERNADOR	61
CONTROLE HIDRÁULICO MANUAL	250
	252
CORREIA DE COMANDO (PISCA-ALERTA)	93
CORREIA EM V	44
COTOVELO	156
	321
COXIM E PROTETOR DO ESTABILIZADOR	407
	409
	411

D

DECALQUE	644
DECALQUE - ADVERTÊNCIA (ACUMULADOR, ALTA PRESS:AO, CONSULTAR OMM)	323
DECALQUE - ADVERTÊNCIA (ALTA PRESSÃO, CONSULTAR OMM)	248
DECALQUE - ADVERTÊNCIA (ALTA PRESSÃO, CONSULTAR OMM, ANSI)	329
DECALQUE - ADVERTÊNCIA (ALTA PRESSÃO, CONSULTAR OMM, ANSI)	291
DECALQUE - ADVERTÊNCIA (PARTIDA COM CABO AUXILIAR, CONSULTAR OMM)	646
DECALQUE - ADVERTÊNCIA (PRESSÃO HIDRÁULICA, LER O OMM)	294
	296
	299
DECALQUE - ADVERTÊNCIA (PRODUCT LINK 300, ANSI)	83

* TRADUÇÃO NÃO DISPONÍVEL NO MOMENTO DA IMPRESSÃO

ÍNDICE

Designação	Página
DECALQUE - ADVERTÊNCIA (TRANSMISSOR DE LASER, CONSULTAR OMM)	591
DECALQUE - AVISO (BRAÇO EXTENSÍVEL)	305
DECALQUE - CONTROLE (CARREGADEIRA, ALAVANCA DE CONTROLE)	561 562
DECALQUE - CONTROLE (RETROESCAVADEIRA, ALAVANCA DE CONTROLE)	560 561 562 566 567
DECALQUE - IDENTIFICAÇÃO (CATERPILLAR, DIANTEIRO)	560 561 562 567
DECALQUE - IDENTIFICAÇÃO (CATERPILLAR, TRASEIRO)	566
DECALQUE - IDENTIFICAÇÃO (CONTROLE DO ESTABILIZADOR)	560 566 567
DECALQUE - IDENTIFICAÇÃO (NÚMERO DE GRUPO)	557 589
DECALQUE - INDICADOR (NÍVEL DA CAÇAMBA)	289
DECALQUE - INFORMAÇÕES (LÍQUIDO ARREFECEDOR DE VIDA PROLONGADA - CONSULTE OMM)	645
DECALQUE - INSTRUÇÃO	364
DECALQUE - INSTRUÇÃO (CONTROLE DA CAÇAMBA)	364
DECALQUE - INSTRUÇÃO (ENCHIMENTO DO LAVADOR DE PÁRA-BRISA)	628 640
DECALQUE - INSTRUÇÃO (PINO DO BRAÇO ALONGÁVEL, CONSULTAR OMM)	1 2
DECALQUE - INSTRUÇÃO (SENTIDO DO FLUXO DO ÓLEO)	294
DECALQUE - TIRA (AMARELO)	246
DECALQUE (CHAVE INTERRUPTORA DE PARTIDA)	647
DECALQUE (CONTROLE DE TEMPERATURA)	555 587
DECALQUE (ESTABILIZADOR, AUTOMÁTICO, LEVANTAMENTO)	561 562
DECALQUE (PLACA - NOME)	248
DECALQUE (PROTEÇÃO)	74
DESCANSO DO BRAÇO (LADO DIREITO)	609
DESCANSO DO BRAÇO (LADO DIREITO)	616 617
DESCANSO DO BRAÇO (LADO ESQUERDO)	609 616 617
DESENGATE E POSICIONADOR DA CAÇAMBA	289
DIAFRAGMA (CONTACTOR DE PRESSÃO DO CÁRTER)	9
DIFERENCIAL	150 151
DIFERENCIAL E COROA	148

E

Designação	Página
EIXO - SAÍDA	181 183 184 185
EIXO-COMANDO DE VÁLVULA	7
EIXO-CONTADOR	172 189
EIXO DA TRANSMISSÃO	138
EIXO DE ENTRADA	177 179
EIXO DE PROPULSÃO E DIREÇÃO	138
EIXO DE TRANSMISSÃO	174
EIXO-RODA-GUIA	175 189
ELEMENTO - AQUECEDOR DE ÁGUA DA CAMISA (120 VOLTS, 1.000 WATTS)	82
ELEMENTO DO FILTRO DE AR (AQUECEDOR, CONDICIONADOR DE AR DA CABINE)	555 587
ELEMENTO DO FILTRO DE AR (PRIMÁRIO)	56
ELEMENTO DO FILTRO DE AR (SECUNDÁRIO)	56
ELO - EMBARQUE	645
ELO - POLEGAR	396 525 526 528 539 540 541 542 543 544 545 547 548

* TRADUÇÃO NÃO DISPONÍVEL NO MOMENTO DA IMPRESSÃO

ÍNDICE

Designação	Página
	549
	551
EMISSOR - NÍVEL DO COMBUSTÍVEL	71
EMISSOR - POSIÇÃO	260
	265
	267
EMISSOR - POSIÇÃO (LINEAR)	275
EMISSOR DE TEMPERATURA (LÍQUIDO ARREFECEDOR DO MOTOR)	119
EMISSOR DE TEMPERATURA (12-VOLTS)	190
	194
ENGRENAGEM ANELAR	140
	159
	160
ENGRENAGEM-COROA E PINHÃO	148
ENGRENAGEM DO DIFERENCIAL E DA COROA	150
ESPELHO RETROVISOR	600
	601
ESPELHO RETROVISOR (INTERIOR)	566
	567
ESTABILIZADOR - RETROESCAVADEIRA	418
EXTENSÃO DO TUBO DE ESCAPE	5

F

FIAÇÃO - CONTROLE (PRODUCT LINK)	85
FIAÇÃO-BRAÇO ALONGÁVEL	122
	419
FIAÇÃO-RÁDIO (PRODUCT LINK)	83
FILTRO - ÓLEO	286
FILTRO - ÓLEO DO MOTOR	37
FILTRO - ÓLEO (EFICIÊNCIA) (TREM DE FORÇA)	171
FILTRO - ÓLEO (SISTEMA HIDRÁULICO, RESISTENTE CONTRA FOGO)	286
FILTRO - ÓLEO (*ULTRA HIGH EFFICIENCY)	286
FILTRO - RESPIRO (TANQUE HIDRÁULICO)	360
FILTRO - SEPARADOR DE ÁGUA E COMBUSTÍVEL	68
FILTRO DE AR DE CABINA (RECIRCULAÇÃO)	557
	589
FILTRO (REGULADOR DE FLUXO)	342
FIXADOR - VÁLVULA	285
FIXADOR - VÁLVULA (FILA)	364
FLANGE - RODA	140
	158
FUSÍVEL (10 AMPERES)	93
FUSÍVEL (60 AMPERES)	127

G

GARFO	514
GR. PLANETÁRIO - COMANDO FINAL	169
	170
GRUPO DE VÁLVULA DE CONTROLE - 2	364
GRUPO DE VÁLVULAS - SEIS	364
GRUPO DE VÁLVULAS DE CONTROLE - DUPLO	366
GRUPO DE VÁLVULAS DE CONTROLE - OITO	370
GRUPO DE VÁLVULAS DE CONTROLE - SEIS	368
GRUPO DE VÁLVULAS DE CONTROLE - SETE	369
GRUPO DE VÁLVULAS DE CONTROLE - TRIPLO	367
GRUPO ROTATIVO DA BOMBA	358

I

INDICADOR - LIMPEZA DO FILTRO	57
INDICADOR - LIMPEZA DO FILTRO DE AR	57
INDICADOR - NÍVEL DE ÓLEO	37
INDICADOR - NÍVEL DE ÓLEO (VARETA DE NÍVEL)	156
INDICADOR - TEMPERATURA DO ÓLEO (CONVERSOR DE TORQUE)	112
INDICADOR - TROCA DO FILTRO DE AR	57
INDICADOR - VARETA DO NÍVEL DE ÓLEO	154
INSTALAÇÃO-COMUNICAÇÃO	83
	85
INSTALAÇÃO-CONTROLE DA INCLINAÇÃO	87
	89
INSTALAÇÃO-MONITOR	591
INTERRUPTOR	213
INTERRUPTOR - BALANCIM (AQUECEDOR)	123
INTERRUPTOR - BALANCIM (AUXILIAR DE PARTIDA)	112
INTERRUPTOR - BALANCIM (CONDICIONADOR DE AR, AQUECEDOR)	109
INTERRUPTOR - BALANCIM (FLUXO HIDRÁULICO AUXILIAR)	365
INTERRUPTOR - BALANCIM (FLUXO HIDRÁULICO AUXILIAR)	365
INTERRUPTOR - BALANCIM (HOLOFOTES, DIANTEIROS)	94
INTERRUPTOR - BALANCIM (HOLOFOTES, TRASEIROS)	94
INTERRUPTOR - BALANCIM (LIMPADOR, LAVADOR TRASEIRO)	642
INTERRUPTOR - BALANCIM (PISCA-ALERTA)	112

* TRADUÇÃO NÃO DISPONÍVEL NO MOMENTO DA IMPRESSÃO

ÍNDICE

Designação	Página
INTERRUPTOR - BALANCIM (SELEÇÃO DE MODO)	127
INTERRUPTOR - BALANCIM (SISTEMA DE ABSORÇÃO DE IMPACTOS)	134 291
INTERRUPTOR - BALANCIM (TRAÇÃO EM TODAS AS RODAS)	106
INTERRUPTOR - BALANCIM (TRAVA DO NEUTRO DA TRANSMISSÃO)	115
INTERRUPTOR - BALANCIM (TRAVA HIDRÁULICA)	112
INTERRUPTOR - BALANCIM (VELOCIDADE DO VENTILADOR)	123
INTERRUPTOR - BALANCIM (VELOCIDADE DO VENTILADOR)	109
INTERRUPTOR - COLUNA (FAROL, SETA DE DIREÇÃO, LIMPADOR DE VIDROS)	127
INTERRUPTOR - LIMITADOR	622
INTERRUPTOR - LIMITADOR (PEDAL DO FREIO)	215
INTERRUPTOR - PARTIDA (CHAVE)	112
INTERRUPTOR - PEDAL (TRAVA DE DIFERENCIAL)	107
INTERRUPTOR - PRESSÃO	108 134 215 291
INTERRUPTOR - PRESSÃO (FILTRO DE DERIVAÇÃO DO ÓLEO HIDRÁULICO)	121
INTERRUPTOR - PRESSÃO (ÓLEO DO MOTOR)	108
INTERRUPTOR - PRESSÃO (REFRIGERANTE)	109
INTERRUPTOR - ROLETAS (DESENGATE AUTOMÁTICO, ASSENTADOR)	125
INTERRUPTOR - TEMPERATURA (AR CONDICIONADO)	557
INTERRUPTOR - TEMPERATURA (AVANÇO DE REGULAGEM)	65
INTERRUPTOR - TEMPERATURA (LÍQUIDO ARREFECEDOR DO MOTOR)	119
INTERRUPTOR - TRAVA DO DIFERENCIAL	107
INTERRUPTOR-BOTÃO (NEUTRIZADOR, REDUÇÃO DE MARCHA)	146 250 252
INTERRUPTOR-TRAÇÃO EM TODAS AS RODAS	106

J

Designação	Página
JANELA DA CABINE	630 632
JOGO - CALIBRAGEM DO FREIO	634 141
JOGO - EXCÊNTRICO (SENTIDO ANTI-HORÁRIO)	141
JOGO - PORTA SISTEMA PLANETÁRIO	169
JOGO - SISTEMA DE ABSORÇÃO DE IMPACTOS	291
JOGO-ARTICULAÇÃO	221
JOGO DE ANEL DE PISTÃO	28
JOGO DE BLOCO DESLIZADOR	614
JOGO DE CONTATO (MOTOR DE PARTIDA)	103
JOGO DE CORREIAS EM V (INCLUI 2 CORREIAS)	44 45
JOGO DE CRUZETA	138
JOGO DE CRUZETA E MANCAL	174
JOGO DE ÊMBOLO	386
JOGO DE ENGRENAGEM (MOTOR DE PARTIDA)	103
JOGO DE FIXADORES (MOTOR DE PARTIDA)	103
JOGO DE LONA DO FREIO	141
JOGO DE MANCAL DA BIELA (0,25 MM OS)	11
JOGO DE MANCAL DA BIELA (0,51 MM OS)	11
JOGO DE MANCAL DA BIELA (0,76 MM OS)	11
JOGO DE MANCAL PRINCIPAL DO MOTOR (0,25 MM OS)	11
JOGO DE MANCAL PRINCIPAL DO MOTOR (0,5 MM OS)	11
JOGO DE MANCAL PRINCIPAL DO MOTOR (0,76 MM OS)	11
JOGO DE MANUTENÇÃO	605
JOGO DE REPARO (PEDAL DO GOVERNADOR)	605
JOGO DE RETENTOR	82 202 344 347 390
JOGO DE RETENTOR (ACUMULADOR)	248
JOGO DE RETENTOR (VÁLVULA DO SISTEMA VIBRATÓRIO)	356
JOGO DE RETENTOR (VÁLVULA PILOTO)	386 387
JOGO DE ROLAMENTO DOS ROLETES	169
JOGO DE VÁLVULA (PRIORIDADE)	345
JOGO DE VÁLVULA (REGULADOR DE FLUXO)	345
JOGO DE VÁLVULA (VAIVÉM)	345
JOGO DO CILINDRO DO FREIO	218
JOGO DO CILINDRO DO FREIO (AJUSTADOR)	219

* TRADUÇÃO NÃO DISPONÍVEL NO MOMENTO DA IMPRESSÃO

ÍNDICE

Designação	Página
JOGO DO CILINDRO DO FREIO (RETENÇÃO POR MOLA)	219
JOGO-PEDAL DE INCLINAÇÃO	221
JUNTA (TAMPA DA VÁLVULA)	9

L

LÂMINA	502 503 504 505
LÂMINA DO LIMPADOR DE PÁRA-BRISA	640 642
LÂMPADA - FAROL	91 92
LÂMPADA - SINALIZAÇÃO	94
LÂMPADA - TETO	595
LÂMPADA DIANTEIRA E DE SINAL	94
LÂMPADA (12-VOLTS)	112 595 624
LÂMPADA (12-VOLTS, 21-WATTS)	94
LÂMPADA (12-VOLTS, 21/5-WATTS)	94
LÂMPADA (12-VOLTS, 55-WATTS)	91 92 93
LANÇA	393
LATA - RESPIRO (CÁRTER)	35
LAVADOR DO VIDRO	628
LENTE - LÂMPADA (TRASEIRO)	94
LEVANTAMENTO DO MOTOR	23
LIMPADOR DO VIDRO	642
LIMPADOR E LAVADOR - JANELA	640
LISTRA DA CABINE	625
LUZ GIRATÓRIA DE ALARME	93
LUZ INTERMITENTE (12-VOLTS)	127

M

MANGUEIRA - RADIADOR (INFERIOR)	48
MANGUEIRA - RADIADOR (SUPERIOR)	48
MARCADOR DE HORAS DE SERVIÇO	115
MECANISMO DAS VÁLVULAS	34
MEDIDOR - NÍVEL DE COMBUSTÍVEL	112
MEDIDOR DE TEMPERATURA DO LÍQUIDO ARREFECEDOR	112
MÓDULO - INDICADOR DE ALARME	112
MÓDULO-SUPRIMENTO DE ENERGIA	89
MONTAGEM - BANCO DE VÁLVULAS	350
MONTAGEM - BRAÇO	406
MONTAGEM - CABINE	603
MONTAGEM - CAÇAMBA	516
MONTAGEM - CILINDRO	351 353
MONTAGEM - CONTROLE DA RETROESCAVADEIRA	348
MONTAGEM - MASTRO	97
MONTAGEM - MONITOR	604
MONTAGEM - MOTOR	24
MONTAGEM - MOTOR E TRANSMISSÃO	25
MONTAGEM - RODA	209 211
MONTAGEM - RODA (DIANTEIRO)	206 207 208
MONTAGEM - SENSOR	98
MONTAGEM - TRANSMISSÃO	167 168
MONTAGEM - TUBOS	354
MONTAGEM DO EIXO	166
MOTOR	5 6
MOTOR - LIMPADOR DO VIDRO	602
MOTOR ELÉTRICO DE PARTIDA	103 105

P

PÁRA-LAMA DIANTEIRO	233
PÁRA-LAMA-EXTENSÃO	232
PÁRA-LAMA TRASEIRO	234
PÁRA-SOL	627
PÁRA-SOL DA CABINE	561 562 627
PEDAL DO GOVERNADOR	605
PINO-ACOPLADOR	517 518
PINO (INFERIOR, SUPERIOR)	138
PISTÃO E BIELA	28
PLACA DE IDENTIFICAÇÃO (CAÇAMBA)	445 447 486 491 492 493 494 495 496 498 500
PLACA DE IDENTIFICAÇÃO (CATERPILLAR)	509
PLACA E DECALQUE	645 648
POLEGAR	519 520

* TRADUÇÃO NÃO DISPONÍVEL NO MOMENTO DA IMPRESSÃO

ÍNDICE

Designação	Página
	521
	522
	523
	524
	525
	526
	527
	528
	529
	530
	531
	532
	533
	534
	535
	536
	537
	538
	539
	540
	541
	542
	543
	544
	545
	546
	547
	548
	549
	550
	551
	552
	553
POLIA DO VIRABREQUIM	33
PONTA - PENETRAÇÃO	451
	452
	453
	454
	455
	456
	457
	458
	459
	460
	461
	462
	463
	464
	465
	466
	467
	468
	469

Designação	Página
	470
	479
	480
	481
	482
	483
	484
	485
	486
	487
	488
	489
	490
PONTA-CAÇAMBA (SOLO)	491
	492
	493
	494
PONTA-TALHADEIRA	471
	472
	473
PORTA DA CABINE	582
	584
POSIÇÃO DO SENSOR (ÂNGULO)	591
POSIÇÃO DO SENSOR (GIRO DA LANÇA)	591
PROTEÇÃO CONTRA VANDALISMO	649
PROTETOR - EIXO DE TRANSMISSÃO	241
PROTETOR - RADIADOR	242
PROTETOR DA LANÇA	395
PROTETOR-FERRAMENTA DE TRABALHO	515
PURIFICADOR DE AR	55
	56

R

RADIADOR	52
	53
RADIADOR E ARREFECEDOR DE ÓLEO	52
	53
RECEPTOR-LASER (LR21)	89
RELÉ	99
	100
	101
RELÉ (CONJ) (12-VOLTS)	106
	109
	134
	291
RELÉ (CONJ) (12-VOLTS)	109
	123
RELÉ (CONJ) (12-VOLTS) (ACCUGRADE, MASTRO)	89
RELÉ (CONJ) (12-VOLTS) (ALARME DE MARCHA-À-RÉ)	127

* TRADUÇÃO NÃO DISPONÍVEL NO MOMENTO DA IMPRESSÃO

ÍNDICE

Designação	Página
RELÉ (CONJ) (12-VOLTS) (AUXILIAR DE PARTIDA)	119
RELÉ (CONJ) (12-VOLTS) (BOMBA DE COMBUSTÍVEL)	119
RELÉ (CONJ) (12-VOLTS) (BUZINA)	127
RELÉ (CONJ) (12-VOLTS) (DESATIVAÇÃO DO IMPLEMENTO)	127
RELÉ (CONJ) (12-VOLTS) (LÂMPADA DE POSIÇÃO)	127
RELÉ (CONJ) (12-VOLTS) (PARTIDA)	119
RELÉ (CONJ) (12-VOLTS) (TRAVA DO DIFERENCIAL)	127
RELÉ (12-VOLTS)	109 123
RESPIRO	35 140
RESPIRO (EIXO DIANTEIRO)	138
RESPIRO (TRANSMISSÃO)	189 194
RETENTOR (RESPIRO)	35
RETROESCAVADEIRA - BRAÇO ESTENDÍVEL	1 2
RETROESCAVADEIRA - BRAÇO PADRÃO	3
REVESTIMENTO DA CABINE	595
RODA E PNEU	205 206 207 208 209 210 211 212

S

SEMI-EIXO TRASEIRO	140
SENSOR - TEMPERATURA	121
SENSOR DE UMIDADE (SEPARADOR DE ÁGUA)	68
SENSOR DE VELOCIDADE	102
SENSOR DE VELOCIDADE (SAÍDA DA TRANSMISSÃO)	195
SENSOR DE VELOCIDADE (SAÍDA DO CONVERSOR DE TORQUE)	189
SERVO-TRANSMISSÃO	188
SERVOTRANSMISSÃO	194
*SHAFT GP-PUMP DRIVE	359
SILENCIADOR	58
SINCRONIZADOR	183
SIST. DE ILUMINAÇÃO - PISCA-PISCA GIRATÓRIO DE ADVERTÊNCIA	96
SISTEMA DE ABSORÇÃO DE IMPACTOS	249
SISTEMA DE ILUMINAÇÃO - FARÓIS E SINAL	94
SISTEMA ELETRÔNICO - MÁQUINA	79
SISTEMA ELETRÔNICO - MONITOR	80
SOFTWARE - MONITOR (RECEPTOR)	89
SUPORTE	246
SUPORTE - ARREFECEDR DE ÓLEO E RADIADOR	48
SUPORTE - MONTAGEM	559
SUPORTE PARA TRANSPORTE	643
SUSPENSÃO - ASSENTO	619 622

T

TACÔMETRO - ELÉTRICO	112 624
TAMPA - ACESSO À BATERIA	231
TAMPA - BOCAL DE ENCHIMENTO DE COMBUSTÍVEL (COM RESPIRO, TRAVÁVEL)	72
TAMPA - CABEÇA DO CILINDRO	8
TAMPA - ENCHIMENTO (ÓLEO HIDRÁULICO)	360
TAMPA - MECANISMO DAS VÁLVULAS	9
TAMPA - MOTOR DO LIMPADOR DE PÁRA-BRISA	581
TAMPA (BOCAL DE ENCHIMENTO DO OLEO DO MOTOR)	37
TAMPA (SAÍDA)	366 367
TANQUE - LAVADOR DE JANELA	628 640
TANQUE - LÍQUIDO ARREFECEDOR	54
TANQUE DE COMBUSTÍVEL	71 72
TANQUE DE COMBUSTÍVEL E MONTAGEM	70
TANQUE DE EXPANSÃO	54
TANQUE DE ÓLEO HIDRÁULICO E MONTAGEM	360
TANQUE HIDRÁULICO	360
TAPETE	561 586
TELA FILTRANTE (SUCÇÃO)	143 194
TERMOSTATO (ÁGUA)	39
TETO - CABINE	606
TIRANTE DO CILINDRO DE LEVANTAMENTO	394
TOLDO	566 567
TOLDO - ESTRUTURA ROPS ABERTA	568 570

* TRADUÇÃO NÃO DISPONÍVEL NO MOMENTO DA IMPRESSÃO

ÍNDICE

Designação	Página
TRANSMISSÃO DIRETA	188 189
TRANSMISSÃO E MONTAGEM	187 188
TRAVA - TRANSPORTE	402 403 405
TREM DE FORÇA	171
TRINCO DE CONSOLE	593
TUBOS - ABSORÇÃO DE IMPACTOS	329
TUBOS - AQUECEDOR	597
TUBOS - ARREFECEDOR DE ÓLEO HIDRÁULICO	311
TUBOS - BOMBA	327
TUBOS - BRAÇO	337
TUBOS - BRAÇO COM EXTENSÃO	309
TUBOS - CAÇAMBA	303 305
TUBOS - CAÇAMBA DE MÚLTIPLAS APLICAÇÕES	317 319
TUBOS - CILINDRO DE INCLINAÇÃO	340
TUBOS - CILINDRO DE LEVANTAMENTO	313
TUBOS - CIRCUITO PILOTO	321 323 326
TUBOS - COMBUSTÍVEL	62
TUBOS - DIREÇÃO	224
TUBOS - DRENAGEM	308
TUBOS - ESTABILIZADOR	331 333 335
TUBOS - FILTRO DO COMBUSTÍVEL	64
TUBOS - GIRO	338
TUBOS - LANÇA	301
TUBOS - ÓLEO DA TRANSMISSÃO	165
TUBOS AUXILIARES	315
TUBOS AUXILIARES - RETROESCAVADEIRA	294 296 299
TUBOS DO AQUECEDOR	597 598
TUBULAÇÕES - AQUECEDOR E AR CONDICIONADO	598
TUBULAÇÕES-ARREFECEDOR DA TRANSMISSÃO	46
TURBOALIMENTADOR	59

U

Designação	Página
UNI-DENTE	554

V

Designação	Página
VÁLVULA-CONTROLE 3	364
VÁLVULA-CONTROLE 7	365
VÁLVULA DE ÁGUA	555 587
VÁLVULA DE ALÍVIO	189 203 342 345 372 374 376 378 379 380 382 384 385
VÁLVULA DE ALÍVIO (AMORTECEDOR DE DUAS DIREÇÕES)	338
VÁLVULA DE ALÍVIO (ENTRADA DO CONVERSOR DE TORQUE)	194
VÁLVULA DE ALÍVIO TRANSVERSAL	338
VÁLVULA DE CONTROLE	372 374 376 378 379 380 382 383 384 385
VÁLVULA DE CONTROLE - FLUXO	342
VÁLVULA DE CONTROLE DA BOMBA	388
VÁLVULA DE CONTROLE DA BOMBA (PRESSÃO, COMPENSADOR DO FLUXO)	356
VÁLVULA DE CONTROLE PILOTO	386 387
VÁLVULA DE PARADA	52 53 308
VÁLVULA DE PNEU	204 205
VÁLVULA DE REDUÇÃO DE PRESSÃO	344
VÁLVULA DE RETENÇÃO	345 374 376 380
VÁLVULA DO FREIO	215
VALVULA DO SOLENOIDE E MONTAGEM	202
VÁLVULA E TUBULAÇÕES-SOLENÓIDE	200
VÁLVULA PILOTO E TUBOS	362

* TRADUÇÃO NÃO DISPONÍVEL NO MOMENTO DA IMPRESSÃO

ÍNDICE

Designação	Página
VÁLVULA SOLENÓIDE	189 202 344 347 356 389 390
VÁLVULA SOLENÓIDE (ACUMULADOR)	390
VÁLVULA SOLENÓIDE (AVANTE)	195
VÁLVULA SOLENÓIDE (CONTROLE DE PERCURSO, INTERRUPTOR)	390
VÁLVULA SOLENÓIDE (EMBREAGEM)	195
VÁLVULA SOLENÓIDE (MARCHA À RÉ)	195
VÁLVULA SOLENÓIDE (TRAÇÃO EM TODAS AS RODAS, EMBREAGEM UM)	195
VÁLVULA SOLENÓIDE (12-VOLTS) (DESLIGAMENTO - COMBUSTÍVEL)	65
VÁLVULAS DE CONTROLE - OITO	365
VARETA DE NÍVEL E BOCAL DE ENCHIMENTO DO ÓLEO	37
VELA DE AQUECIMENTO; VELA INCANDESCENTE	81
VELA DE AQUECIMENTO; VELA INCANDESCENTE (12 VOLTS)	81
VENTILADOR	557 589
VENTILADOR DE SUCÇÃO	44 45
VIDRO DA PORTA	636 638
VIGIA	360
VIRABREQUIM	11
VOLANTE DO MOTOR	19

* TRADUÇÃO NÃO DISPONÍVEL NO MOMENTO DA IMPRESSÃO

STICHWORTVERZEICHNIS

Bezeichnung	Seite

A

ABDECKUNG (AUSLASS) 366, 367
ABLASSLEITUNGEN 308
ABLASSSCHRAUBE (MAGNETISCH) 138, 140, 148
ABLASSSTOPFEN (MOTORÖL) 26
ABSPERRVENTIL 52, 53, 308
ABTRIEBSWELLE 181, 183, 184, 185
ACHSENANBAUSATZ 166
ACHSGEHÄUSE 161, 162, 163
ACHSGEHÄUSEFLANSCH 159, 160
ACHSWELLE 138
ANSCHLUSS 338
ANTRIEB - BAGGERLADER 152
ANTRIEBS- UND LENKACHSE 138
ANTRIEBSWELLE 174, 177, 179
ANTRIEBSWELLENVERKLEIDUNG 241
ARBEITS- U. SIGNALLEUCHTE 94
ARBEITSLEUCHTEN 91, 92
*ARMREST AS (LINKS) 609, 616, 617
*ARMREST AS (RECHTS) 609, 616, 617
AUFKLEBER 644
AUFKLEBER - ANZEIGE (SCHAUFELHÖHE) . . . 289
AUFKLEBER - INFORMATION (*EXTENDED LIFE COOLANT-READ OMM) 645
AUFKLEBER (AUSFAHRBARER STIEL) 305
AUFKLEBER (GELB) 246
AUFKLEBER (KONTROLLE) (*BACKHOE, JOYSTICK) 560, 566, 567
AUFKLEBER (KONTROLLE) (*BACKHOE, JOYSTICK) 561, 562
AUFKLEBER (KONTROLLE) (*LOADER, JOYSTICK) 561, 562
AUFKLEBER (NAMENSSCHILD) 248
AUFKLEBER (*PROTECTION) 74
AUFKLEBER (*STABILIZER, AUTO UP) 561, 562
AUFKLEBER (STARTSCHALTER) 647
AUFKLEBER (TEMPERATURREGELUNG) 555, 587
AUSGLEICHSBEHÄLTER 54
AUSLEGER 393
AUSLEGERLEITUNGEN 301
AUSLEGERZYLINDER 264, 265
AUSPUFFROHRVERLÄNGERUNG 5

B

BATTERIE UND VERDRAHTUNG 74, 76
BATTERIE (12 V, WARTUNGSFREI) 74, 76
BATTERIEDECKEL 231
BATTERIEKASTEN 227
BEFESTIGUNGSHALTERUNG 559
BEFESTIGUNGSTEILE (STARTERMOTOR) 103
BETRIEBSSTUNDENZÄHLER 115
BLINKER (12 V) 127
BLINKLEUCHTE 94
BODENBLECH 236, 237
BOLZEN (UNTEN, OBEN) 138
*BOWL AS-BUCKET 425, 426
BREMSBELAG-EINBAUSATZ 141
BREMSGESTÄNGE 215
BREMSSATTEL-EINBAUSATZ 141
BREMSVENTIL 215
BREMSZYLINDER 218, 219
BREMSZYLINDER-EINBAUSATZ 218
BREMSZYLINDER-EINBAUSATZ (EINSTELLER) 219
BREMSZYLINDER-EINBAUSATZ (RÜCKHOLFEDER) 219
*BUCKET GP-GENERAL PURPOSE 444, 445, 446, 447, 448, 449, 450

* ÜBERSETZUNG ZUM ZEITPUNKT DER DRUCKLEGUNG NICHT VORHANDEN

STICHWORTVERZEICHNIS

Bezeichnung	Seite
D	
DAUMEN	519 520 521 522 523 524 525 526 527 528 529 530 531 532 533 534 535 536 537 538 539 540 541 542 543 544 545 546 547 548 549 550 551 552 553
DAUMEN - ZYLINDER U. LEITUNGEN	259
DAUMENGESTÄNGE	396 525 526 528 539 540 541 542 543 544 545 547 548 549 551
DAUMENZYLINDER	281
DICHTUNG (ENTLÜFTER)	35
DICHTUNG (VENTILDECKEL)	9
DICHTUNGSSATZ	82 202 344 347 390
DICHTUNGSSATZ (DRUCKSPEICHER)	248
DICHTUNGSSATZ (VIBRATIONSVENTIL)	356
DICHTUNGSSATZ (VORSTEUERVENTIL)	386 387
DIFFERENTIAL	150 151
DIFFERENTIAL UND TELLERRAD	148
DIFFERENTIALGETRIEBE U. TELLERRAD	150
DIFFERENZIALGEHÄUSE	148
DIFFERENZIALSPERRENSCHALTER	107
DREHSTROMGENERATOR	73
DREHZAHLMESSER, ELEKTR.	112 624
DREHZAHLSENSOR	102
DREHZAHLSENSOR (DREHMOMENTWANDLERAUSGANG)	189
DREHZAHLSENSOR (GETRIEBEAUSGANG)	195
DRUCKKOPFSCHALTER (NEUTRALISATOR, HERUNTERSCHALTEN)	250 252
DRUCKKOPFSCHALTER (NEUTRALISATOR, HERUNTERSCHALTEN)	146
DRUCKREDUZIERVENTIL	344
DRUCKSCHALTER	108 134 215 291
DRUCKSCHALTER (HYDRAULIKÖLFILTER - UMGEHUNG)	121
DRUCKSCHALTER (KÜHLMITTEL)	109
DRUCKSCHALTER (MOTORÖL)	108
DRUCKSPEICHER, HYDRAULISCHE SCHWINGUNGSDÄMPFUNG	248
E	
EINBAUSATZ - PLANIERSTEUERUNG	87 89
EINFÜLLKAPPE (HYDRAULIKÖL)	360
ELEKTRONIK - MASCHINE	79
ELEKTRONIK - MONITOR	80
ENDSCHALTER	622
ENDSCHALTER (BREMSPEDAL)	215
ENTLÜFTER	35 140
ENTLÜFTER (GETRIEBE)	189

* ÜBERSETZUNG ZUM ZEITPUNKT DER DRUCKLEGUNG NICHT VORHANDEN

STICHWORTVERZEICHNIS

Bezeichnung	Seite
	194
ENTLÜFTER (VORDERACHSE)	138
ENTLÜFTERFILTER (HYDRAULIKTANK)	360
ENTLÜFTERPATRONE (KURBELGEHÄUSE)	35

F

FAHRERHAUS	560 561 562 563
FAHRERHAUS - HALTETEILE	625
FAHRERHAUS M. OFFENEM ÜBERROLL-SCHUTZ	568 570
FAHRERHAUS, SONNENBLENDE	561 562 627
FAHRERHAUSANBAUSATZ	603
FAHRERHAUSAUSKLEIDUNG	595
FAHRERHAUSBELEUCHTUNG	595
FAHRERHAUSDACH	606
FAHRERHAUSFENSTER	630 632 634
FAHRERHAUSHEIZUNG	587 589
FAHRERHAUSLUFTFILTER (UMLAUFLUFT)	557 589
FAHRERHAUSTÜR	582 584
FAHRERPLATTFORMVERDRAHTUNG	127
FAHRERSITZ	609 612 613
FAHRERSITZFEDERUNG	619 622
FAHRWERK	4
FESTSTELLBREMSGESTÄNGE	213 214
FEUCHTIGKEITSSENSOR (WASSERABSCHEI-DER)	68
FILTER (FLUSSSTEUERUNG)	342
FILTERSOCKEL U. MOTORÖLKÜHLER	41
FUSSMATTE	561 586

G

GASPEDAL	605
GEGENGEWICHT	228 229 230
GEGENWELLE	172 189
GETRIEBE U. BEFESTIGUNG	187 188
GETRIEBEAUFLAGER	167 168
GETRIEBEGEHÄUSE	143 144
GETRIEBEKÜHLERLEITUNGEN	46
GETRIEBEÖLFÜLLSTUTZEN	154 156
GETRIEBEPUMPE	189 194
GETRIEBESTEUERUNG	146
GETRIEBESTEUERUNGS-VERDRAHTUNG	136
GETRIEBESYNCHRONISIERSATZ	183
GLEITSCHIENENBLOCK-EINBAUSATZ	614
GLÜHKERZE	81
GLÜHKERZE (12 V)	81
GRUNDAUSFÜHRUNG	4
*GUARD GP-BOOM	395
*GUARD GP-WORK TOOL	515

H

HALTERUNG	246
HANDSTEUERHEBEL	220
HECKBAGGER-TELESKOPSTIEL	1 2
HECKBAGGERLÖFFEL	440 441 442 443 451 452 453 454 455 456 457 458 459 460 461 462 463 464 465 466 467 468 469 470

* ÜBERSETZUNG ZUM ZEITPUNKT DER DRUCKLEGUNG NICHT VORHANDEN

STICHWORTVERZEICHNIS

Bezeichnung	Seite
	471
	472
	473
	474
	475
	476
	477
	478
	479
	480
	481
	482
	483
	484
	485
	486
	487
	488
	489
	490
	491
	492
	493
	494
HECKBAGGERLÖFFELGESTÄNGE	397
HECKBAGGERLÖFFELZYLINDER	260
	262
HECKBAGGERSTEURUNG - AUFHÄNGUNG	348
HEIZUNGS- U. KLIMAANLAGENLEITUNGEN	598
HEIZUNGSLEITUNGEN	597
	598
HEIZUNGSVERDRAHTUNG	123
HINTERACHSE	140
HOHLRAD	140
	159
	160
HUBARM	391
HUBMASTBEFESTIGUNG	97
HUBZYLINDER	269
HUBZYLINDER-HALTERUNG	394
HUBZYLINDERLEITUNGEN	313
HYDRAULIKFITTING	287
HYDRAULIKHANDSTEUERUNG	250
	252
HYDRAULIKÖLKÜHLERLEITUNGEN	311
HYDRAULIKPUMPE UND LEITUNGEN	327
HYDRAULIKSYSTEM	288
HYDRAULIKTANK	360
HYDRAULIKTANK UND BEFESTIGUNGSTEILE	360
HYDRAULIKVERTEILER	372
	374
	376
	378
	379
HYDRAULIKVORSTEUERVENTIL U. LEITUNGEN	362
HYDRAULISCHE SCHWINGUNGSDÄMPFUNG	249
HYDRAULISCHE SCHWINGUNGSDÄMPFUNG - EINBAUSATZ	291

I

IDENTIFIKATIONSSCHILD (CAT)	509
IDENTIFIKATIONSSCHILD (SCHAUFEL)	445
	447
	486
	491
	492
	493
	494
	495
	496
	498
	500
IDENTIFIZIERUNGS-AUFKLEBER (*CATERPILLAR, FRONT)	560
	561
	562
	567
IDENTIFIZIERUNGS-AUFKLEBER (CATERPILLAR, HINTEN)	566
IDENTIFIZIERUNGS-AUFKLEBER (GRUPPENNUMMER)	557
	589
IDENTIFIZIERUNGS-AUFKLEBER (*STABILIZER CONTROL)	566
IDENTIFIZIERUNGS-AUFKLEBER (*STABILIZER CONTROL)	560
	567
*INSTALLATION GP-MONITOR	591
INSTRUKTIONS-AUFKLEBER	364
INSTRUKTIONS-AUFKLEBER (*EXTENDABLE STICK PIN, READ OMM)	1
	2
INSTRUKTIONS-AUFKLEBER (*OIL FLOW DIRECTION)	294
INSTRUKTIONS-AUFKLEBER (SCHAUFEL-STEUERUNG)	364
INSTRUKTIONS-AUFKLEBER (SCHEIBEN-WASCHMITTEL)	628
	640

* ÜBERSETZUNG ZUM ZEITPUNKT DER DRUCKLEGUNG NICHT VORHANDEN

STICHWORTVERZEICHNIS

Bezeichnung	Seite

J

JOYSTICK -STEUERUNG 255, 256, 257, 258

K

KÄLTEMITTEL-DRUCKSPEICHER 598
KÄLTEMITTELKOMPRESSOR 573
KÄLTEMITTELKOMPRESSOR U. BEFESTIGUNG 572
KÄLTEMITTELKONDENSATOR U. BEFESTIGUNGSTEILE 574
KAPPE (MOTORÖLEINFÜLLUNG) 37
KEILRIEMEN 44
KEILRIEMENSATZ (EINSCHL. 2 RIEMEN) 44, 45
KIPPPEDAL 221
KIPPSCHALTER (ALLRADANTRIEB) 106
KIPPSCHALTER (*AUXILIARY HYDRAULIC FLOW) 365
KIPPSCHALTER (*FLOODLIGHTS, FRONT) 94
KIPPSCHALTER (*FLOODLIGHTS, REAR) 94
KIPPSCHALTER (GEBLÄSEGESCHWINDIGKEIT) 109, 123
KIPPSCHALTER (HEIZUNG) 123
KIPPSCHALTER (HYDRAULIKSPERRE) 112
KIPPSCHALTER (KLIMAANLAGE, HEIZUNG) . . . 109
KIPPSCHALTER (*MODE SELECT) 127
KIPPSCHALTER (RUNDUM-KENNLEUCHTE) 112
KIPPSCHALTER (SCHWINGUNGSDÄMPFUNG) 134, 291
KIPPSCHALTER (STARTHILFE) 112
KIPPSCHALTER (*TRANSMISSION NEUTRAL LOCK) 115
KIPPSCHALTER (WISCHER, WASCHER, HINTEN) 642
KIPPZYLINDER 282
KLIMAANLAGE 557
KLIMAANLAGE UND AUFHÄNGUNG 555
KLIMAANLAGENVERDRAHTUNG 109
KNIESTÜCK 156, 321
KOLBENPUMPE 356
KOLBENPUMPENUMLAUFSATZ 358
KOLBENRINGSATZ 28
KOMBISCHAUFEL 427, 428, 429, 495, 496, 498, 500
KOMBISCHAUFELLEITUNGEN 317, 319
KOMBISCHAUFELZYLINDER 270
KOMMUNIKATIONSEINBAUSATZ 83, 85
KONSOLENVERDRAHTUNG 112, 115
KONSOLENVERRIEGELUNG 593
KONTAKT-EINBAUSATZ (STARTERMOTOR) . . . 103
KRAFTSTOFFEINSPRITZPUMPE 65
KRAFTSTOFFENTLÜFTUNGSPUMPE UND -HAUPTFILTER 68, 69
KRAFTSTOFFFILTERKAPPE (BELÜFTET, SPERRBAR) 72
KRAFTSTOFFILTERLEITUNGEN 64
KRAFTSTOFFLEITUNGEN 62
KRAFTSTOFFSTANDANZEIGE 112
KRAFTSTOFFSTANDGEBER 71
KRAFTSTOFFTANK 71, 72
KRAFTSTOFFTANK U. BEFESTIGUNG 70
KRAFTÜBERTRAGUNG 171
KREUZGELENK-EINBAUSATZ 138
KREUZGELENKLAGER-EINBAUSATZ 174
KÜHLER 52, 53
KÜHLER U. ÖLKÜHLER - BEFESTIGUNG 48
KÜHLERNETZ UND ÖLKÜHLER 52, 53
KÜHLERSCHLAUCH (OBEN) 48
KÜHLERSCHLAUCH (UNTEN) 48
KÜHLERSCHUTZ 242
KÜHLMITTELBEHÄLTER 54
KÜHLMITTELTEMPERATURANZEIGE 112
KÜHLSYSTEM 43
KÜHLWASSERANSCHLUSS 39
KÜHLWASSERPUMPE 50
KUPPLUNGSANTRIEB, ELAST. 153
KUPPLUNGSBOLZEN 517, 518
KURBELLAGER-EINBAUSATZ (0,25 MM OS) . . . 11
KURBELLAGER-EINBAUSATZ (0,5 MM OS) 11
KURBELLAGER-EINBAUSATZ (0,76 MM OS) . . . 11
KURBELWELLE 11
KURBELWELLEN-RIEMENSCHEIBE 33

* ÜBERSETZUNG ZUM ZEITPUNKT DER DRUCKLEGUNG NICHT VORHANDEN

STICHWORTVERZEICHNIS

Bezeichnung	Seite
L	
LADERRAHMEN	238
LADERZUSATZLEITUNGEN	315
LADESCHAUFEL	401
LASTSCHALTGETRIEBE	188
	194
LAUFBAND UND ANTRIEB (RUNDUM-KENNLEUCHTE)	93
LAUFROLLENSCHALTER (AUSSCHALTER, STELLUNGSEINSTELLUNG)	125
LEITUNGS-BEFESTIGUNGSTEILE	354
LENKBETÄTIGUNG	221
LENKKNOPF	223
LENKÖLLEITUNGEN	224
LENKZYLINDER	138
LEUCHTE (12 V)	112
	595
	624
LEUCHTE (12 V, 21 W)	94
LEUCHTE (12 V, 21/5 W)	94
LEUCHTE (12 V, 55 W)	91
	92
	93
LEUCHTENLINSE (HINTEN)	94
LITERATURABLAGE	571
LÖFFELSTIEL	423
LÜFTER	557
	589
LÜFTERANTRIEB	18
LUFTFILTER (FAHRERHAUSHEIZUNG, KLIMAANLAGE)	555
	587
LUFTFILTER (HAUPTELEMENT)	56
LUFTFILTER (HILFSELEMENT)	56
LUFTFILTER-WARTUNGSANZEIGE	57
LUFTFILTERWARTUNGSANZEIGE	57
LUFTREINIGER	55
	56
M	
MAGNETVENTIL	189
	202
	344
	347
	356
	389
	390
MAGNETVENTIL (*ALL WHEEL DRIVE, CLUTCH ONE)	195
MAGNETVENTIL (DRUCKSPEICHER)	390
MAGNETVENTIL (KUPPLUNG)	195
MAGNETVENTIL (RÜCKWÄRTS)	195
MAGNETVENTIL (SCHWINGUNGSDÄMP-FUNGSSCHALTER)	390
MAGNETVENTIL (VORWÄRTS)	195
MAGNETVENTIL (12 V) (KRAFTSTOFFABSTEL-LUNG)	65
*MANIFOLD GP-CONTROL & SOLENOID	346
	347
MECHANISCHES GETRIEBE	188
MEMBRAN (KURBELGEHÄUSEDRUCKSCHAL-TER)	9
MODULARHEBEL	255
	256
	257
	258
MONITOR - SOFTWARE (EMPFÄNGER)	89
MONITORBEFESTIGUNG	604
MOTOR- UND GETRIEBEAUFLAGER	25
MOTORAUFLAGER	24
MOTORAUSFÜHRUNG	5
	6
MOTORBLOCK	13
	15
MOTORHAUBE	245
	246
MOTORHAUBE UND VERKLEIDUNG	243
MOTORHUBÖSE	23
MOTORÖLKÜHLER	40
	41
MOTORÖLKÜHLER UND FILTERSOCKEL	41
MOTORSTOPFEN	30
	31
	32
MOTORVERDRAHTUNG	119
	121
N	
NEIGEZYLINDERLEITUNGEN	340
NOCKENSATZ (NACH LINKS)	141
NOCKENWELLE	7
O	
ÖLFILTER	37
	286
ÖLFILTER (*EFFICIENCY) (KRAFTÜBERTRA-GUNG)	171
ÖLFILTER (HYDRAULIK, FEUERFEST)	286
ÖLFILTER (*ULTRA HIGH EFFICIENCY)	286
ÖLKÜHLER (MOTOR)	40
ÖLLEITUNGEN - KRAFTÜBERTRAGUNG	165
ÖLMESSSTAB	154
ÖLMESSSTAB U. EINFÜLLSTUTZEN	37

* ÜBERSETZUNG ZUM ZEITPUNKT DER DRUCKLEGUNG NICHT VORHANDEN

STICHWORTVERZEICHNIS

Bezeichnung	Seite
ÖLSTANDANZEIGE	37
ÖLSTANDANZEIGE (ÖLMESSSTAB)	156
ÖLTEMPERATURANZEIGE (DREHZAHLWANDLER)	112
ÖLWANNE	26

P

PALETTENGABEL	514
PANETENTRÄGERSATZ	169
PLANIERSCHILD	502
	503
	504
	505
PLEUELLAGER-EINBAUSATZ (0,25 MM OS)	11
PLEUELLAGER-EINBAUSATZ (0,51 MM OS)	11
PLEUELLAGER-EINBAUSATZ (0,76 MM OS)	11
PLEUELSTANGE UND KOLBEN	28
PUMPENANTRIEB U. BEFESTIGUNGSTEILE	284
PUMPENSTEUERVENTIL	388
PUMPENSTEUERVENTIL (*PRESSURE, FLOW COMPENSATOR)	356

R

RAD UND REIFEN	205
	206
	207
	208
	209
	210
	211
	212
RADAUFHAENGUNG	209
	211
RADAUFHAENGUNG (VORN)	206
	207
	208
RADFLANSCH	140
	158
RADIO - KABELSTRANG (PRODUCT LINK RADIO)	83
*RECEIVER GP-LASER (*LR21)	89
REGELERHEBEL	61
	594
REGLERSTEUERUNG	61
REIFENVENTIL	204
	205
RELAIS	99
	100
	101
RELAIS (12 V)	106
	109
	123
	134
	291
RELAIS (12 V)	109
RELAIS (12 V) (*ACCUGRADE, MAST)	89
RELAIS (12 V) (ARBEITSGERÄT DEAKTIVIEREN)	127
RELAIS (12 V) (DIFFERENTIALSPERRE)	127
RELAIS (12 V) (HUPE)	127
RELAIS (12 V) (KRAFTSTOFFPUMPE)	119
RELAIS (12 V) (*POSITION LAMP)	127
RELAIS (12 V) (RÜCKFAHRALARM)	127
RELAIS (12 V) (STARTEN)	119
RELAIS (12 V) (STARTHILFE)	119
REPARATURSATZ (DREHZAHLREGLERPEDAL)	605
ROLLENLAGER-EINBAUSATZ	169
RÜCKSPIEGEL	600
	601
RÜCKSPIEGEL (INNEN)	566
	567
RUNDUM-KENNLEUCHTE	93
	96

S

SAUGLÜFTER	44
	45
SCHALLDÄMPFER	58
SCHALTER	213
SCHALTER - ALLRADANTRIEB	106
SCHALTER, FUSSBETÄTIGT (DIFFERENTIALSPERRE)	107
SCHAUFELAUFHÄNGUNG	516
SCHAUFELAUSSCHALTER UND -EINSTELLER	289
SCHAUFELGESTÄNGE	399
SCHAUFELLEITUNGEN	303
	305
SCHAUFELTRANSPORTAUSFÜHRUNG	650
SCHAUGLAS	360
SCHEIBENWASCHANLAGE	628
SCHEIBENWASCHMITTELBEHÄLTER	628
	640
SCHEIBENWISCHER	642
SCHEIBENWISCHER UND -WASCHANLAGE	640
SCHEIBENWISCHERBLATT	640
	642
SCHEIBENWISCHERMOTOR	602
SCHEINWERFER U. RICHTUNGSLEUCHTE	94
SCHILD UND AUFKLEBER	645
	648

* ÜBERSETZUNG ZUM ZEITPUNKT DER DRUCKLEGUNG NICHT VORHANDEN

STICHWORTVERZEICHNIS

Bezeichnung	Seite
SCHMIERPUMPE	38
SCHNEIDMESSER	512
	513
SCHNELLWECHSELEINRICHTUNG	507
	508
	509
	510
	511
SCHNELLWECHSELVORRICHTUNG	506
SCHUTZABDECKUNG	649
SCHUTZBLECHE, HINTEN	234
SCHUTZBLECHE, VORNE	233
SCHUTZBLECHVERLÄNGERUNG	232
SCHWENKLEITUNGEN	338
SCHWENKRAHMEN	239
SCHWENKZYLINDER	279
SCHWINGSITZ	614
	615
	616
	617
	618
SCHWINGUNGSDÄMPFUNGSLEITUNGEN	329
SCHWINGUNGSDÄMPFUNGSVERDRAHTUNG	134
SCHWUNGRAD	19
SCHWUNGRADGEHÄUSE	20
SEITENANTRIEB - PLANETENGETRIEBE	169
	170
SEITENSTÜTZEN	418
SEITENSTÜTZENLEITUNGEN	331
	333
	335
SEITENSTÜTZENPLATTEN	416
	417
SEITENSTÜTZENPLATTEN UND SCHUTZABDECKUNG	407
	409
	411
SEITENSTÜTZENZYLINDER	271
	273
SENSORBEFESTIGUNG	98
*SHAFT GP-PUMP DRIVE	359
SICHERHEITSGURT	607
	608
SICHERUNG (10 A)	93
SICHERUNG (60 A)	127
SIEB (ANSAUG)	143
	194
SITZPOLSTER	609
SOLENOIDVENTIL U. BEFESTIGUNGSTEILE	202
SONNENBLENDE	627
SPERRVENTIL	345
	374
	376
	380
SPURSTANGE	138
STANDARDHECKBAGGERSTIEL	3
STARTERMOTOR	103
	105
STARTSCHALTER (TASTE)	112
STECKDOSENVERDRAHTUNG	561
	562
	566
	567
STELLUNGSSENSOR	260
	265
	267
STELLUNGSSENSOR (*BOOM SWING)	591
STELLUNGSSENSOR (*LINEAR)	275
STELLUNGSSENSOR (WINKEL)	591
STEUERKONSOLE	575
	577
	579
STEUERKRÜMMER	342
	344
	345
STEUERUNGS-KABELSTRANG (PRODUCT LINK RADIO)	85
STEUERUNGSVERDRAHTUNG	116
	117
	118
STEUERVENTIL	372
	374
	376
	378
	379
	380
	382
	383
	384
	385
STEUERVENTILSTOPFEN	342
	372
	374
	376
	380
STIELAUFHÄNGUNG	406
STIELZYLINDER	275
	277
	278
STIELZYLINDERLEITUNGEN	337
STIRNRADGEHÄUSE	21
STÖSSELSATZ	386
STROMVERSORGUNGSMODUL	89
STÜTZPLATTEN U. BEFESTIGUNG	413

* ÜBERSETZUNG ZUM ZEITPUNKT DER DRUCKLEGUNG NICHT VORHANDEN

STICHWORTVERZEICHNIS

Bezeichnung	Seite
	414
	415
*SWITCH AS-COLUMN (*HD LIGHT, TURN SIG, WDO WIPER)	127

T

TELESKOPSTIEL	419
	421
TELESKOPSTIELLEITUNGEN	309
TELESKOPSTIELZYLINDER	267
	419
TELLER- UND KEGELRAD	148
TEMPERATURGEBER (MOTORKÜHLMITTEL)	119
TEMPERATURGEBER (12 V)	190
	194
TEMPERATURREGLER (WASSER)	39
TEMPERATURSCHALTER (KLIMAANLAGE)	557
TEMPERATURSCHALTER (MOTORKÜHLMITTEL)	119
TEMPERATURSCHALTER (SPRITZVERSTELLUNG)	65
TEMPERATURSENSOR	121
TIEFLÖFFEL-HYDRAULIKNOTLEITUNGEN	294
	296
	299
*TIP GP-BUCKET (*SOIL)	491
	492
	493
	494
*TIP GP-CHISEL	471
	472
	473
TRANSPORTHALTERUNG	643
TRANSPORTSPERRE	402
	403
	405
	645
TURBOLADER	59
TÜRFENSTER	636
	638

U

ÜBERDRUCKVENTIL	189
	203
	342
	345
	372
	374
	376
	378
	379
	380
	382
	384
	385
ÜBERDRUCKVENTIL (*CUSHION CROSSOVER)	338
ÜBERDRUCKVENTIL (DREHMOMENTWANDLEREINLASS)	194
ÜBERTRAGUNGSSTEUERUNG	78
UMLAUFKÜHLWASSERHEIZUNG	82
UMLAUFKÜHLWASSERHEIZUNGS-ELEMENT (120 V, 1000 W)	82
UMSCHALT-UEBERDRUCKVENTIL	338
UNIVERSAL-ZAHNSPITZE	554
UNIVERSALSCHAUFEL	430
	432
	434
	436
	438

V

*VALVE & LINES GP-SOLENOID	200
VENTILANORDNUNGS-BEFESTIGUNGS-SATZ	350
VENTILBEFESTIGUNG	285
VENTILBEFESTIGUNG (BLOCK)	364
VENTILBEFESTIGUNG (BLOCK)	364
VENTILBLOCK 2	364
VENTILBLOCK 3	364
VENTILBLOCK 7	365
VENTILDECKEL	9
VENTILSATZ (FLUSSSTEUERUNG)	345
VENTILSATZ (VORRANGVENTIL)	345
VENTILSATZ (WECHSELVENTIL)	345
VENTILSATZ (2-VENTIL)	366
VENTILSATZ (3-VENTIL)	367
VENTILSATZ (6-VENTIL)	368
VENTILSATZ (7-VENTIL)	369
VENTILSATZ (8-VENTIL)	370
VENTILSTEUERUNG	34
VERDRAHTUNG - SCHAUFELAUSSCHALTER U. EINSTELLER	125
VERDRAHTUNG, HINTEN	132
VERDRAHTUNGSKABELBAUM (DIFFERENTIALSPERRE)	107
VERDRAHTUNGSKABELBAUM (*3-PIN, GAUGE)	112
VORHÄNGESCHLOSS	645
VORHÄNGESCHLOSS (VANDALISMUSSCHUTZ)	645
VORSTEUERLEITUNGEN	321

* ÜBERSETZUNG ZUM ZEITPUNKT DER DRUCKLEGUNG NICHT VORHANDEN

STICHWORTVERZEICHNIS

Bezeichnung	Seite
	323
	326
VORSTEUERÖLDRUCKSAMMLER	247
VORSTEUERUNGSSATZ	221
VORSTEUERVENTIL	386
	387

W

WARNANZEIGEMODUL	112
WARNAUFKLEBER (DRUCKSAMMLER, HOCHDRUCK, HANDBUCH LESEN)	323
WARNAUFKLEBER (HOCHDRUCK, HANDBUCH LESEN)	248
WARNAUFKLEBER (HOCHDRUCK, HANDBUCH LESEN, ANSI)	291
	329
WARNAUFKLEBER (HYDRAULIKDRUCK, BETRIEBS- U. WARTUNGSHANDBUCH LESEN)	294
	296
	299
WARNAUFKLEBER (*LASER TRANSMITTER, READ OMM)	591
WARNAUFKLEBER (*PRODUCT LINK 300, ANSI)	83
WARNAUFKLEBER (STARTHILFEKABEL, HANDBUCH LESEN)	646
WARNHORN (NIEDRIGER TON)	119
WARTUNGSSATZ	605
WASSERABSCHEIDER UND KRAFTSTOFFFILTER	68
WASSERVENTIL	555
	587
WECHSELGETRIEBE	189
WETTERDACH	566
	567
*WIRING GP-EXTENDABLE STICK	122
	419
WISCHERMOTORABDECKUNG	581

Z

ZAHNRADSATZ (STARTERMOTOR)	103
ZAHNSPITZE, SCHARF	451
	452
	453
	454
	455
	456
	457
	458
	459
	460
	461
	462
	463
	464
	465
	466
	467
	468
	469
	470
	479
	480
	481
	482
	483
	484
	485
	486
	487
	488
	489
	490
ZUFLUSSREGULIERVENTIL	342
ZUMESSPUMPE	226
ZWISCHENRADWELLE	175
	189
ZYLINDERAUFHÄNGUNG	351
	353
ZYLINDERKOPF	16
	17
ZYLINDERKOPFDECKEL	8

6

6-FACH-VENTILBLOCK	364

8

8-BLOCK-VENTILSATZ	365

* ÜBERSETZUNG ZUM ZEITPUNKT DER DRUCKLEGUNG NICHT VORHANDEN

MEMORANDA

MACHINE ARRANGEMENT

214-2553 BACKHOE AR-EXTENDABLE STICK (CHG -03 THRU -07)

S/N: HLS1-UP

AN ATTACHMENT

SMCS-6504, 6533 **i02409043**

NOTE	PART NUMBER	QTY	PART NAME 1 2 3 4 5 6 (PRODUCT LEVEL)	SEE PAGE
Y	*209-9930*	1	BOOM GP	393
Y	**210-7088**	1	CYLINDER GP-BACKHOE BUCKET	262
Y	**210-7076**	1	CYLINDER GP-BOOM	264
Y	**210-7082**	1	CYLINDER GP-STICK	277
Y	*225-8017*	1	ELECTRONICS GP-MACHINE	79
Y	*211-7601*	1	LINES GP-BOOM	301
Y	*246-9322*	1	LINES GP-BUCKET	305
Y	*211-7602*	1	LINES GP-STICK	337
Y	*213-6692*	1	LINKAGE GP-BACKHOE BUCKET	397
Y	*246-9309*	1	MOUNTING GP-LINES (BACKHOE)	354
Y	*213-6700*	1	MOUNTING GP-STICK	406
Y	*271-1405*	1	STICK GP-EXTENDABLE	421
	259-1802	2	FILM-INSTRUCTION (EXTENDABLE STICK PIN, READ OMM)	
			(ON THE RH & LH SIDE OF THE MACHINE E-STICK. ALIGN THE EDGE OF THE DECAL WITH THE E-STICK PIN HOLE)	

Y-SEPARATE ILLUSTRATION

<END>

MACHINE ARRANGEMENT

214-3758 BACKHOE AR-EXTENDABLE STICK (CHG -00 THRU -06)

S/N: HLS1-UP

AN ATTACHMENT

SMCS-6504, 6533 **i02409136**

NOTE	PART NUMBER	QTY	PART NAME 1 2 3 4 5 6 (PRODUCT LEVEL)	SEE PAGE
Y	*209-9930*	1	BOOM GP	393
Y	**268-9049**	1	CYLINDER GP-BOOM	265
Y	**210-7075**	1	CYLINDER GP-BOOM	
Y	**210-7087**	1	CYLINDER GP-BACKHOE BUCKET	260
Y	**210-7081**	1	CYLINDER GP-STICK	275
Y	*246-8042*	1	INSTALLATION GP-GRADE CONTROL	87
Y	*211-7601*	1	LINES GP-BOOM	301
Y	*246-9322*	1	LINES GP-BUCKET	305
Y	*211-7602*	1	LINES GP-STICK	337
Y	*213-6692*	1	LINKAGE GP-BACKHOE BUCKET	397
Y	*246-9309*	1	MOUNTING GP-LINES (BACKHOE)	354
Y	*213-6700*	1	MOUNTING GP-STICK	406
Y	**209-1615**	1	STICK GP-EXTENDABLE	
Y	*271-1402*	1	STICK GP-EXTENDABLE	419
Y	*227-7373*	1	ELECTRONICS GP-MACHINE	79
	213-6069	1	HARNESS AS-SENSOR	
E	**5P-0743**		HOSE (247-CM)	
E	**5P-1420**		HOSE (368-CM)	
	102-8805	1	KIT-RECEPTACLE (6-PIN)	
			(INCLUDES RECEPTACLE AS & WEDGE	
	119-3662		TUBE-HEAT SHRINK (10.85-MM DIA) (13-CM)	
	155-2271	4	KIT-CONNECTING PLUG (4-PIN)	
			(EACH PLUG KIT INCLUDES RECEPTACLE AS, WEDGE & INTERFACE SEAL)	
	259-1802	2	FILM-INSTRUCTION (EXTENDABLE STICK PIN, READ OMM)	
			(1-ON THE RH SIDE OF MACHINE E-STICK, ALIGN THE EDGE OF THE DECAL WITH THE E-STICK PIN HOLE)	
			(1-ON THE LH SIDE OF MACHINE E-STICK, ALIGN THE EDGE OF THE DECAL WITH THE E-STICK PIN HOLE)	

E-ORDER BY THE CENTIMETER
Y-SEPARATE ILLUSTRATION

<END>

MACHINE ARRANGEMENT

214-2550 BACKHOE AR-STANDARD STICK (CHG -00, -01)

S/N: HLS1-UP

AN ATTACHMENT

SMCS-6502, 6504 **i02441655**

NOTE	PART NUMBER	QTY	PART NAME 1 2 3 4 5 6 (PRODUCT LEVEL)	SEE PAGE
Y	*209-9930*	1	BOOM GP	393
Y	**210-7088**	1	CYLINDER GP-BACKHOE BUCKET	262
Y	**210-7076**	1	CYLINDER GP-BOOM	264
Y	**210-7082**	1	CYLINDER GP-STICK	277
Y	*225-8017*	1	ELECTRONICS GP-MACHINE	79
Y	*211-7601*	1	LINES GP-BOOM	301
Y	*246-9321*	1	LINES GP-BUCKET	303
Y	*211-7602*	1	LINES GP-STICK	337
Y	*213-6692*	1	LINKAGE GP-BACKHOE BUCKET	397
Y	*246-9309*	1	MOUNTING GP-LINES (BACKHOE)	354
Y	*271-8667*	1	STICK GP-HOE	423

Y-SEPARATE ILLUSTRATION

<END>

214-3755 BACKHOE AR-STANDARD STICK (CHG -00 THRU -04)

S/N: HLS1-UP

AN ATTACHMENT

SMCS-6502, 6504 **i02409082**

NOTE	PART NUMBER	QTY	PART NAME 1 2 3 4 5 6 (PRODUCT LEVEL)	SEE PAGE
Y	*209-9930*	1	BOOM GP	393
Y	**210-7087**	1	CYLINDER GP-BACKHOE BUCKET	260
Y	**210-7081**	1	CYLINDER GP-STICK	275
Y	*246-8042*	1	INSTALLATION GP-GRADE CONTROL	87
Y	*211-7601*	1	LINES GP-BOOM	301
Y	*246-9321*	1	LINES GP-BUCKET	303
Y	*211-7602*	1	LINES GP-STICK	337
Y	*213-6692*	1	LINKAGE GP-BACKHOE BUCKET	397
Y	*246-9309*	1	MOUNTING GP-LINES (BACKHOE)	354
Y	*227-7373*	1	ELECTRONICS GP-MACHINE	79
Y	**268-9049**	1	CYLINDER GP-BOOM	265
Y	*271-8667*	1	STICK GP-HOE	423
	213-6069	1	HARNESS AS-SENSOR	
	102-8805	1	KIT-RECEPTACLE (6-PIN)	
			(INCLUDES RECEPTACLE AS & WEDGE)	
E	**5P-0743**		HOSE (247-CM)	
E	**5P-1420**		HOSE (368-CM)	
E	**119-3662**		TUBE-HEAT SHRINK (10.85-MM DIA) (13-CM)	
	155-2271	4	KIT-CONNECTING PLUG (4-PIN)	
			(EACH PLUG KIT INCLUDES RECEPTACLE AS, WEDGE & INTERFACE SEAL)	

E-ORDER BY THE CENTIMETER
Y-SEPARATE ILLUSTRATION

<END>

MACHINE ARRANGEMENT

213-9287 CHASSIS AR (CHG -02 THRU -09)

S/N: HLS1-UP

PART OF 213-9273 COMMON AR

SMCS-7000 **i02364638**

NOTE	PART NUMBER	QTY	PART NAME 1 2 3 4 5 6 (PRODUCT LEVEL)	SEE PAGE
Y	*211-4285*	1	BATTERY & WIRING GP (STANDARD)	74
Y	*253-0784*	1	BOX GP-BATTERY	227
Y	*250-7915*	1	FILM GP	644
Y	*214-2000*	1	FRAME GP-LOADER (SINGLE TILT)	238
Y	*251-4519*	1	FRAME GP-SWING	239
Y	*211-3546*	1	HOOD & GUARD GP	243
Y	*206-1641*	1	LOCK GP-TRANSPORT (STABILIZER)	402
Y	*211-5182*	1	LOCK GP-TRANSPORT (BOOM)	403
Y	*248-5711*	1	PLATE & FILM GP	645
Y	*266-5834*	1	STABILIZER GP-BACKHOE	418
Y	*245-6098*	1	TANK & MTG GP-FUEL (INCLUDES STEP)	70
Y	*211-4251*	1	WIRING GP-REAR (BACKUP ALARM)	132

Y-SEPARATE ILLUSTRATION

<END>

213-9273 COMMON AR (CHG -01 THRU -06)

S/N: HLS1-UP

SMCS-7000 **i02363589**

NOTE	PART NUMBER	QTY	PART NAME 1 2 3 4 5 6 (PRODUCT LEVEL)	SEE PAGE
Y	*213-9287*	1	CHASSIS AR	4
Y	*214-2202*	1	COOLING AR	43
Y	*214-6902*	1	ENGINE AR	5
Y	*268-6455*	1	HYDRAULIC AR	288
Y	*213-9300*	1	LOADER AR	401
Y	*211-4248*	1	WIRING GP-ENGINE	119

Y-SEPARATE ILLUSTRATION

<END>

276-7465 COMMON AR (CHG -00, -01)

S/N: THP1-UP

SMCS-7000 **i02466499**

NOTE	PART NUMBER	QTY	PART NAME 1 2 3 4 5 6 (PRODUCT LEVEL)	SEE PAGE
			NO BREAKDOWN OF SERVICEABLE PARTS AVAILABLE AT TIME OF PUBLICATION	

<END>

ENGINE ARRANGEMENT

214-6902 ENGINE AR (CHG -00 THRU -06)

S/N: HLS1-UP

PART OF 213-9273 COMMON AR

SMCS-1000 **i02485107**

NOTE	PART NUMBER	QTY	PART NAME 1 2 3 4 5 6 (PRODUCT LEVEL)	SEE PAGE
Y	*224-9473*	1	AIR CLEANER GP	55
Y	*206-1640*	1	CONTROL GP-GOVERNOR	61
Y	**273-3610**	1	ENGINE AR	6
Y	*222-7091*	1	GAUGE GP-OIL LEVEL & FILLER (WITH FILTER)	37
Y	*247-5361*	1	LINES GP-FUEL	62
Y	*214-0973*	1	MOUNTING GP-ENGINE & TMSN	25
Y	*223-4960*	1	MUFFLER GP	58
Y	*253-0352*	1	PUMP GP-FUEL PRM & PRIM FILTER (WITH MOUNTING)	69
	210-6807	1	EXTENSION GP-EXHAUST	
	7E-3870	1	CLAMP	
	239-2270	1	PIPE-EXTENSION	
	178-8465	1	HARNESS AS-FUEL TANK (FUEL SHUTOFF)	
	102-8802	1	KIT-RECEPTACLE (2-PIN)	
			(INCLUDES RECEPTACLE AS & WEDGE)	
	176-1477	1	PLUG AS	
	176-1522	2	SEAL	

Y-SEPARATE ILLUSTRATION

ENGINE ARRANGEMENT

273-3610 ENGINE AR–PRIMARY (CHG -00, -01)

S/N: CRS1-UP
68 BRAKE KW (91 BHP) AT 2200 RPM
PART OF 214-6902 ENGINE AR

SMCS-1000 **i02456199**

NOTE	PART NUMBER	QTY	PART NAME 1 2 3 4 5 6 (PRODUCT LEVEL)	SEE PAGE
Y	*252-6256*	1	ALTERNATOR GP-CHARGING (120-AMPERE, WITH MOUNTING)	73
Y	*232-7528*	1	CAMSHAFT GP	7
Y	*231-0033*	1	CONNECTION GP-WATER	39
Y	*238-2799*	1	COOLER GP-FLTR BASE & ENG OIL	41
Y	*231-0149*	1	COVER GP-CYLINDER HEAD	8
Y	*246-2582*	1	COVER GP-VALVE MECHANISM	9
Y	*232-7439*	1	CRANKSHAFT GP	11
Y	*232-7606*	1	CYLINDER BLOCK GP	15
Y	*232-7524*	1	CYLINDER HEAD GP	17
Y	*251-2432*	1	DRIVE GP-FAN	18
Y	*230-7300*	1	FLYWHEEL GP	19
Y	*232-6661*	1	GLOW PLUG GP	81
Y	*236-8238*	1	HOUSING GP-FLYWHEEL	20
Y	*232-3670*	1	HOUSING GP-FRONT	21
Y	*233-7432*	1	LIFTING GP-ENGINE	23
Y	*247-4885*	1	LINES GP-FUEL FILTER	64
Y	*237-3658*	1	MOUNTING GP-ENGINE	24
Y	*237-0025*	1	PAN GP-OIL	26
Y	*232-7442*	1	PISTON & ROD GP	28
Y	*225-4317*	1	PLUG GP-ENGINE (FRONT HOUSING, CYLINDER HEAD)	30
Y	*230-7569*	1	PLUG GP-ENGINE (OIL FILL)	31
Y	**232-6204**	1	PLUG GP-ENGINE (CYLINDER HEAD)	32
Y	*230-7353*	1	PULLEY GP-CRANKSHAFT	33
Y	*230-7578*	1	PUMP GP-ENGINE OIL	38
Y	*277-5188*	1	PUMP GP-FUEL INJECTION	65
Y	*230-7355*	1	PUMP GP-WATER	50
Y	*237-0024*	1	STARTING MOTOR GP-ELECTRIC	105
Y	*237-4896*	1	SWITCH GP-PRESSURE (ENGINE OIL)	108
Y	*285-0438*	1	TURBOCHARGER GP	59
Y	*232-7526*	1	VALVE MECHANISM GP	34
	268-0867	1	CYLINDER BLOCK GP-SHORT	
			AVAILABLE REPAIR KIT(S):	
	272-2232	1	KIT-GASKET (BOTTOM)	
	277-5156	1	KIT-GASKET (TOP)	

Y-SEPARATE ILLUSTRATION

232-7528 CAMSHAFT GP (CHG -00)

S/N: CRS1-UP

PART OF 273-3610 ENGINE AR

SMCS-1210, 1211, 1212 **i01863441**

NOTE	REF NO	GRAPHIC REF	PART NUMBER	QTY	PART NAME 1 2 3 4 5 6 (PRODUCT LEVEL)	SEE PAGE
	1	1	**1B-8736**	1	KEY-WOODRUFF	
	2	1	**225-5967**	1	CAMSHAFT	

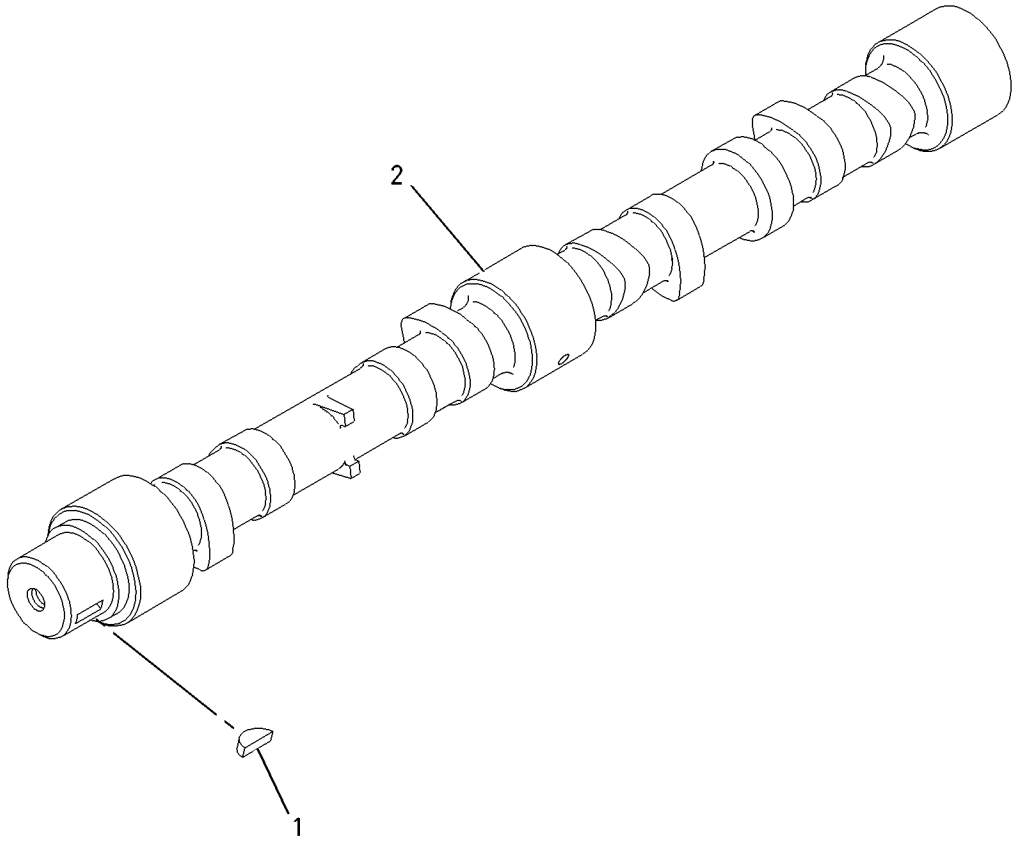

GRAPHIC #1 **<END>** g00911297

231-0149 COVER GP-CYLINDER HEAD (CHG -00)

S/N: CRS1-UP

PART OF 273-3610 ENGINE AR

SMCS-1100 **i02358991**

NOTE	REF NO	GRAPHIC REF	PART NUMBER	QTY	PART NAME 1 2 3 4 5 6 (PRODUCT LEVEL)	SEE PAGE
	1	1	**6I-0572**	12	BOLT (M8X1.25X20-MM)	
	2	1	**114-2579**	3	GASKET	
	3	1	**115-1162**	3	PLATE	

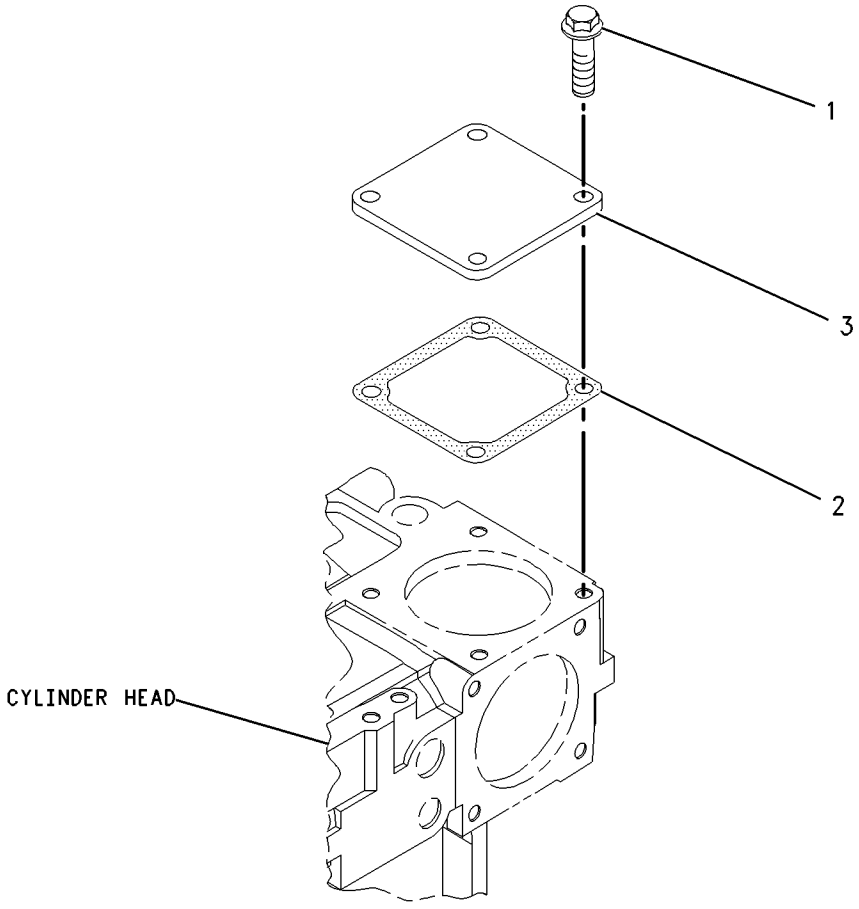

GRAPHIC #1 **<END>** g00986217

246-2582 COVER GP-VALVE MECHANISM (CHG -00, -01)

S/N: CRS1-UP

PART OF 273-3610 ENGINE AR

SMCS-1107, 1120 **i02485604**

NOTE	REF NO	GRAPHIC REF	PART NUMBER	QTY	PART NAME 1 2 3 4 5 6 (PRODUCT LEVEL)	SEE PAGE
	1	1	**6I-0260**	2	BOLT (M8X1.25X25-MM)	
	2	1	**6I-0846**	3	BOLT (M6X1X14-MM)	
	3	1	**6I-0917**	1	BOLT (M6X1X25-MM)	
	4	1	**7C-1281**	1	BRACKET	
	5	1	**100-4841**	2	BOLT (M6X1X10-MM)	
	6	1	**5D-1026**	1	CLAMP-HOSE	
	7	1	**162-1565**	1	SPRING (CRANKCASE BREATHER HOSE)	
	8	1	**198-8645**	1	HOSE (CRANKCASE BREATHER)	
	9	1	**225-6522**	1	PLUG-CUP	
	10	1	**230-9127**	1	COVER	
	11	1	**230-9144**	1	CONNECTOR	
	11A	1	**150-7732**	1	SEAL-O-RING	
	11B	1	**225-6455**	2	BOLT	
	11C	1	**225-6517**	1	GASKET	
	12	1	**237-0769**	1	SHIELD-HEAT	
	13	1	**246-1163**	1	FILLER AS-OIL	
	13A	1	**229-4896**	1	SEAL-O-RING	
	14	1	**247-7798**	1	COVER AS	
	14A	1	**225-6451**	1	GASKET (VALVE COVER)	
	14B	1	**225-6455**	10	BOLT (ISOLATOR)	
	14C	1	**225-6456**	1	SPRING (BREATHER VALVE)	
	14D	1	**225-6461**	1	CAP (BREATHER VALVE)	
	14E	1	**225-6464**	1	DIAPHRAGM (CRANKCASE PRESSURE CONTACTOR)	
	14F	1	**225-6477**	1	PLATE	
	14G	1	**225-6478**	4	SCREW-MACHINE	
	14H	1	**225-6479**	1	CAP (BREATHER VALVE)	

246-2582 **COVER GP-VALVE MECHANISM** *(contd.)* **i02485604**

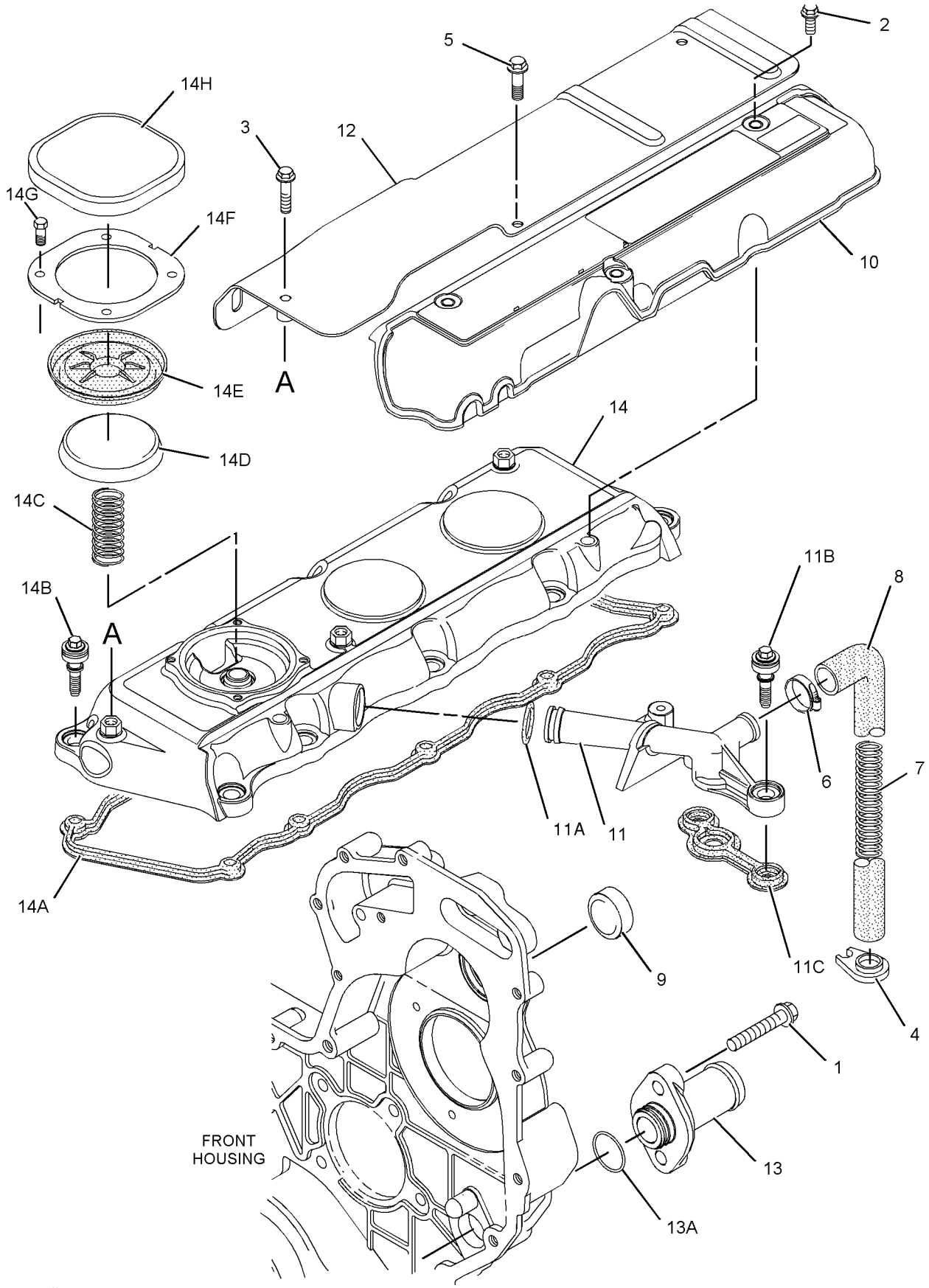

GRAPHIC #1

<END>

g01049443

232-7439 CRANKSHAFT GP (CHG -00, 232-7400-01)

S/N: CRS1-UP

PART OF 273-3610 ENGINE AR

SMCS-1202, 1203, 1204, 1230, 1231, 1232 **i02354781**

NOTE	REF NO	GRAPHIC REF	PART NUMBER	QTY	PART NAME 1 2 3 4 5 6 (PRODUCT LEVEL)	SEE PAGE
	1	1	**1B-8736**	1	KEY-WOODRUFF	
	2	1	**216-8314**	1	GEAR-CRANKSHAFT (34-TEETH)	
	3	1	**232-7400**	1	CRANKSHAFT GP	
	4	1	**225-7772**	1	BEARING SET-MAIN (STANDARD)	
AB		1	**233-3784**		KIT-CRANKSHAFT BEARING (0.25-MM OS)	
AB		1	**233-3785**		KIT-CRANKSHAFT BEARING (0.5-MM OS)	
AB		1	**233-3786**		KIT-CRANKSHAFT BEARING (0.76-MM OS)	
	5	1	**225-7781**	1	BEARING SET-ROD (STANDARD)	
AB		1	**233-3788**		KIT-ROD BEARING (0.25-MM OS)	
AB		1	**233-3789**		KIT-ROD BEARING (0.51-MM OS)	
AB		1	**233-3790**		KIT-ROD BEARING (0.76-MM OS)	
	6	1	**032-9090**	2	WASHER-THRUST (STANDARD-UPPER)	
AB		1	**067-6873**		WASHER-THRUST (0.18-MM OS) (UPPER)	
	7	1	**032-9091**	2	WASHER-THRUST (STANDARD-LOWER)	
AB		1	**067-6874**		WASHER-THRUST (0.18-MM OS) (LOWER)	

A-NOT PART OF THIS GROUP
B-USE AS REQUIRED

232-7439 **CRANKSHAFT GP** *(contd.)* **i02354781**

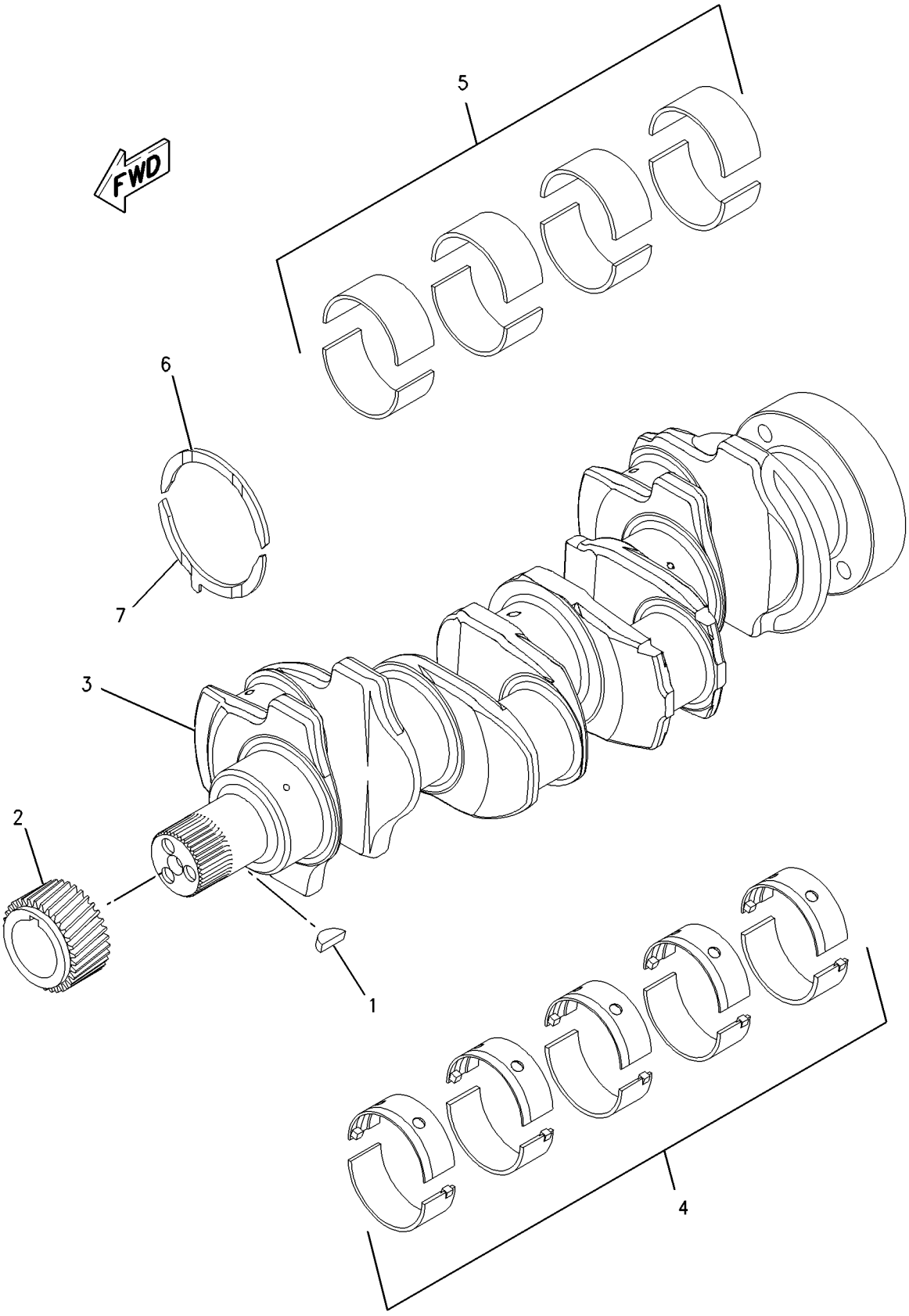

GRAPHIC #1 **<END>** g00950782

232-7604 CYLINDER BLOCK GP (CHG -00)

S/N: CRS1-UP

PART OF 232-7606 CYLINDER BLOCK GP

SMCS-1201 **i02014648**

NOTE	REF NO	GRAPHIC REF	PART NUMBER	QTY	PART NAME 1 2 3 4 5 6 (PRODUCT LEVEL)	SEE PAGE
	1	1	**6I-0572**	4	BOLT (M8X1.25X20-MM)	
	2	1	**035-8068**	10	BOLT (5/8-18X3.75-IN)	
	3	1	**067-6002**	10	DOWEL	
	4	1	**067-6006**	1	PLUG	
	5	1	**067-6043**	1	PLUG-SIDE	
	6	1	**100-4841**	4	BOLT (M6X1X10-MM)	
	7	1	**185-0884**	2	DOWEL	
	8	1	**225-7944**	1	GASKET	
	9	1	**225-8858**	2	PLUG	
	10	1	**232-3751**	1	PLATE	
	11	1	**232-7440**	1	BEARING	
	12	1	**232-7454**	4	JET AS-PISTON COOLING	
	13	1	**232-7596**	1	PLUG	
	14	1	**232-7597**	2	PLUG	
	15	1	**232-7599**	1	PLUG	
	16	1	**232-7600**	1	PLUG-CUP	
	17	1	**232-7603**	1	PLUG	

232-7604 **CYLINDER BLOCK GP** *(contd.)* **i02014648**

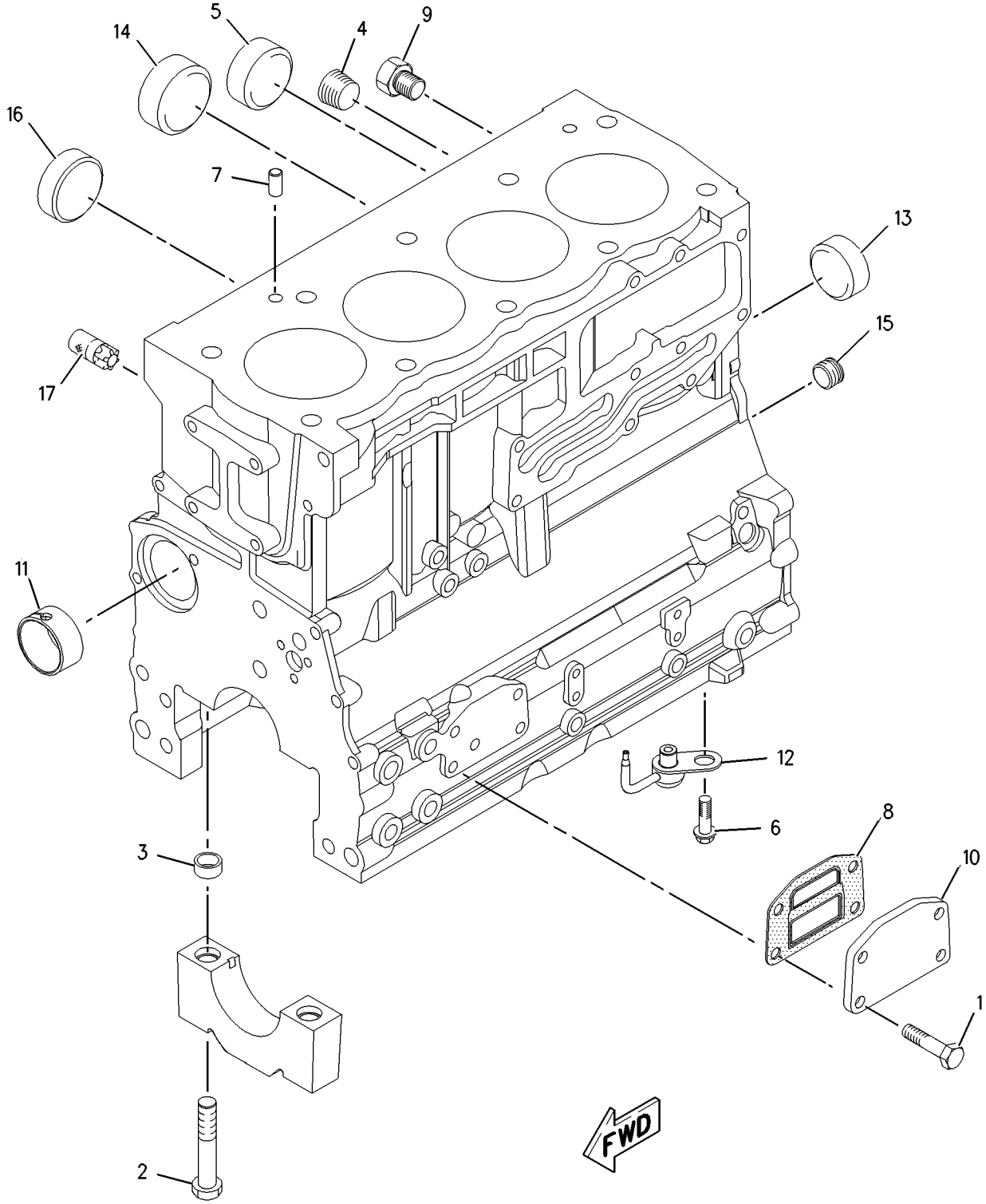

GRAPHIC #1 **<END>** g00951214

BASIC ENGINE

232-7606 CYLINDER BLOCK GP (CHG -00)

S/N: CRS1-UP

PART OF 273-3610 ENGINE AR

SMCS-1201 **i01863465**

NOTE	REF NO	GRAPHIC REF	PART NUMBER	QTY	PART NAME 1 2 3 4 5 6 (PRODUCT LEVEL)	SEE PAGE
	1	1	**209-9219**	10	BOLT (M8X1.25X16-MM)	
	2	1	**232-7449**	1	HOUSING AS	
Y	3	1	**232-7604**	1	CYLINDER BLOCK GP	13

Y-SEPARATE ILLUSTRATION

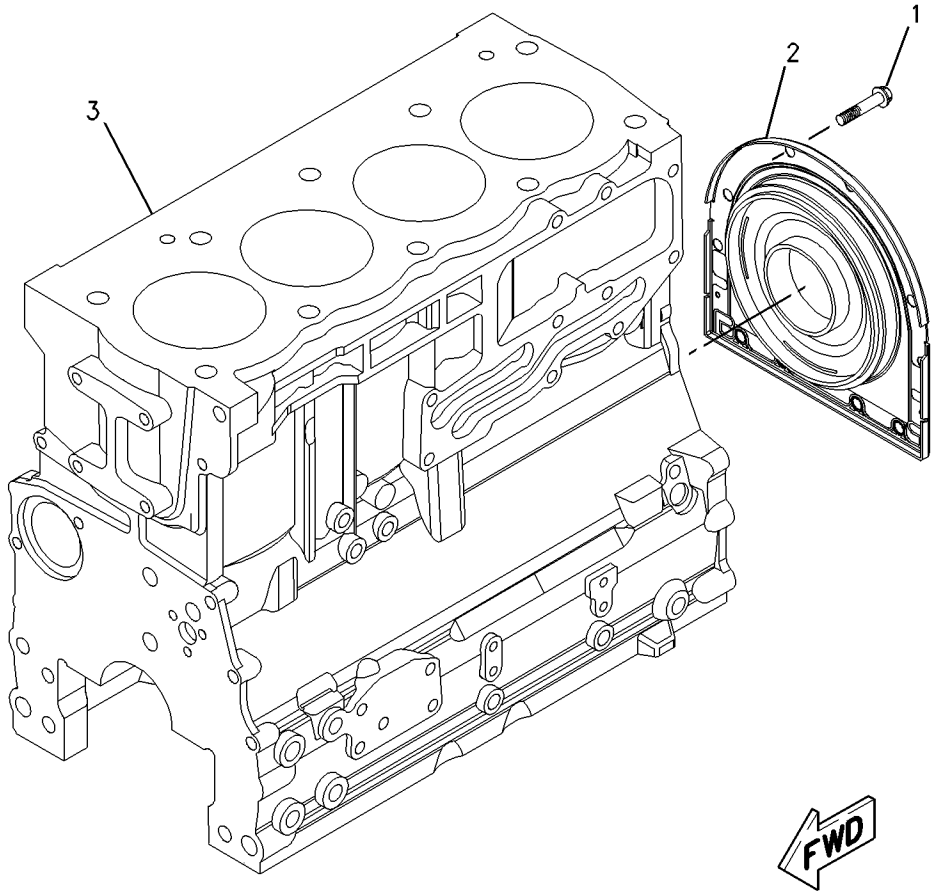

GRAPHIC #1 **<END>** g00952056

232-7519 CYLINDER HEAD GP (CHG -00, -01)

S/N: CRS1-UP

PART OF 232-7524 CYLINDER HEAD GP

SMCS-1100, 1101, 1103, 1104, 1105, 1106, 1108, 1109, 1115, 1117, 1121, 1124, 1125

i02159632

NOTE	REF NO	GRAPHIC REF	PART NUMBER	QTY	PART NAME 1 2 3 4 5 6 (PRODUCT LEVEL)	SEE PAGE
	1	1	**2B-0858**	1	PLUG-PIPE	
	2	1	**9Y-5015**	2	PLUG-FREEZE	
	3	1	**067-6006**	4	PLUG	
	4	1	**147-1979**	16	RETAINER-VALVE SPRING	
	5	1	**185-0882**	8	GUIDE-VALVE (INTAKE)	
	6	1	**199-9751**	1	SEAL-O-RING	
	7	1	**225-5493**	4	INSERT-VALVE (INLET)	
	8	1	**225-5494**	4	INSERT-VALVE (EXHAUST)	
	9	1	**225-5495**	4	VALVE-INLET	
	10	1	**225-5496**	8	SPRING-VALVE	
	11	1	**252-6438**	4	SEAL-INLET VALVE	
	12	1	**225-5498**	8	CAP	
	13	1	**225-5499**	4	VALVE-EXHAUST	
	14	1	**232-1322**	1	PLUG	
	15	1	**254-3954**	4	SEAL-EXHAUST VALVE	

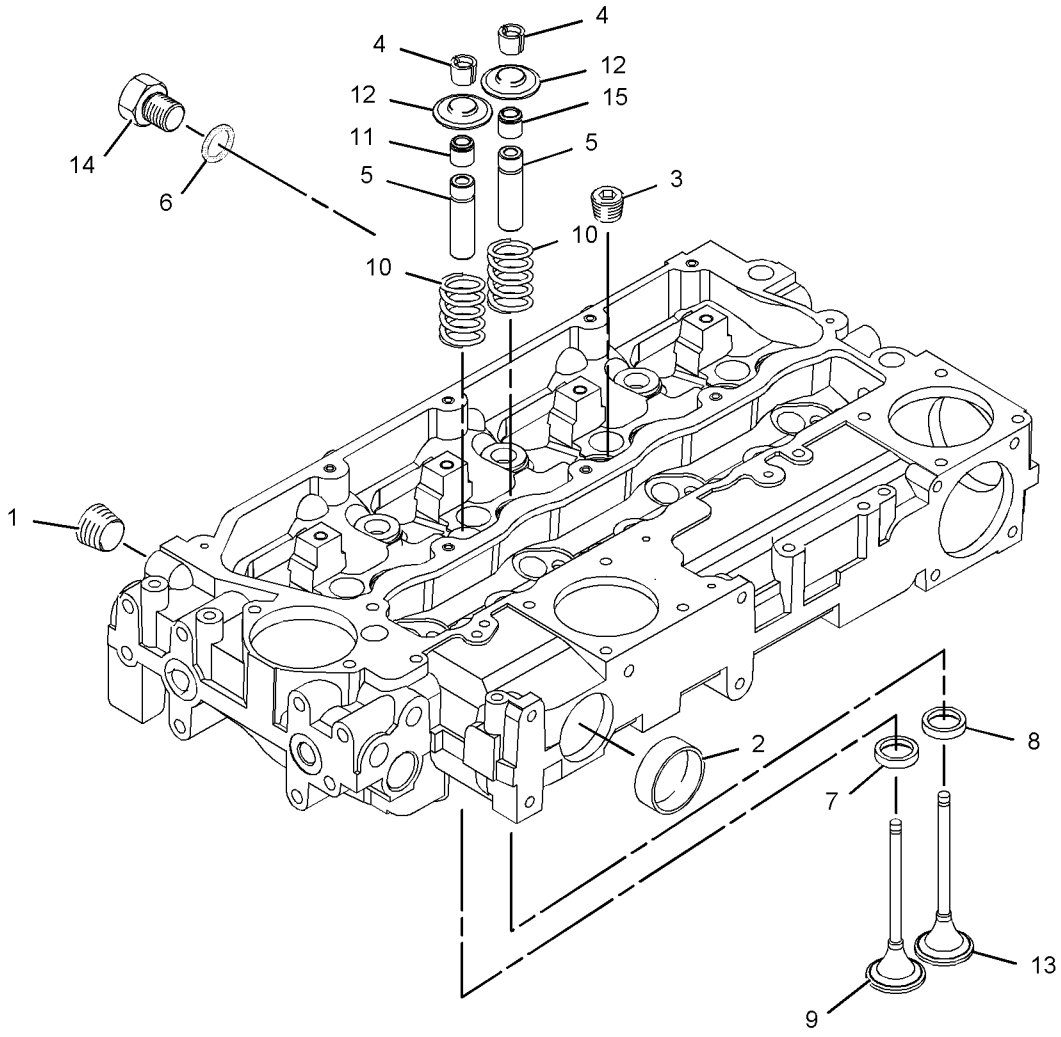

GRAPHIC #1

<END>

g01095382

232-7524 CYLINDER HEAD GP (CHG -00 THRU -02)

S/N: CRS1-UP

PART OF 273-3610 ENGINE AR

SMCS-1100, 1101, 1103, 1104, 1105, 1106, 1108, 1109, 1115, 1117, 1121, 1124, 1125

i02000189

NOTE	REF NO	GRAPHIC REF	PART NUMBER	QTY	PART NAME 1 2 3 4 5 6 (PRODUCT LEVEL)	SEE PAGE
	1	1	**225-5501**	7	BOLT (M15X1.5X137MM)	
	2	1	**225-5502**	3	BOLT (M15X1.5X162MM)	
	3	1	**240-7194**	1	GASKET-HEAD	
Y	4	1	**232-7519**	1	CYLINDER HEAD GP	16

Y-SEPARATE ILLUSTRATION

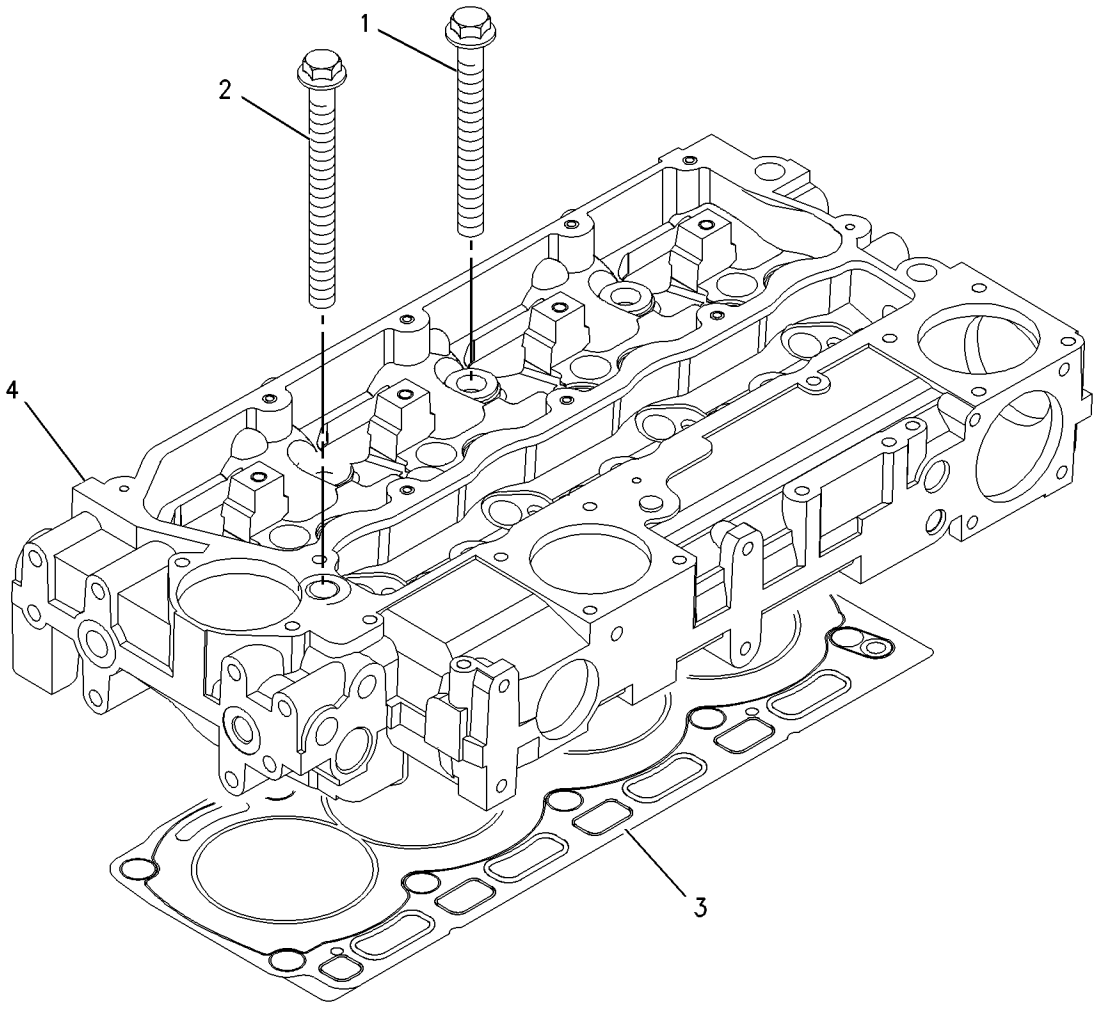

GRAPHIC #1

<END>

g00909291

BASIC ENGINE

251-2432 DRIVE GP-FAN (CHG -00)

S/N: CRS1-UP

PART OF 273-3610 ENGINE AR

SMCS-1357, 1358, 1359, 1390 **i02100116**

NOTE	REF NO	GRAPHIC REF	PART NUMBER	QTY	PART NAME 1 2 3 4 5 6 (PRODUCT LEVEL)	SEE PAGE
	1	1	**111-0859**	1	BOLT (M10X1.5X35-MM)	
	2	1	**123-2899**	4	BOLT (M10X1.5X40-MM)	
	3	1	**251-2436**	1	HOUSING AS	
	3A	1	**225-5959**	1	CLIP	
	4	1	**251-2437**	1	PLATE	

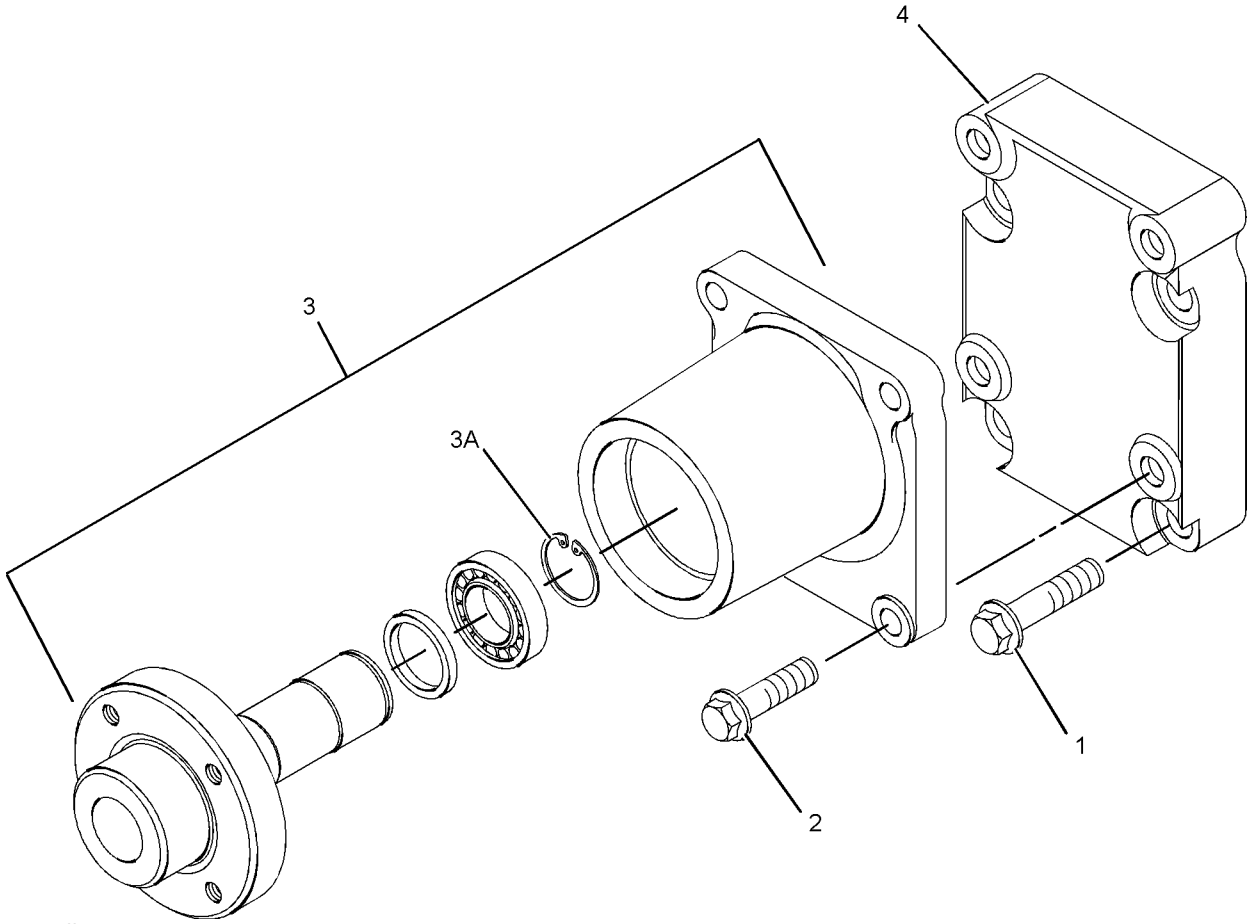

GRAPHIC #1 **<END>** g01085998

230-7300 FLYWHEEL GP (CHG -00, -01)

S/N: CRS1-UP

PART OF 273-3610 ENGINE AR

SMCS-1156, 1158 **i02004993**

NOTE	REF NO	GRAPHIC REF	PART NUMBER	QTY	PART NAME 1 2 3 4 5 6 (PRODUCT LEVEL)	SEE PAGE
	1	1	**0S-1603**	6	BOLT (1/2-20X1.5-IN)	
	2	1	**5P-8245**	6	WASHER-HARD (13.5X25.5X3-MM THK)	
	3	1	**245-9828**	1	FLYWHEEL AS	
	4	1	**033-7687**	1	RING-STARTING MOTOR (126-TEETH)	

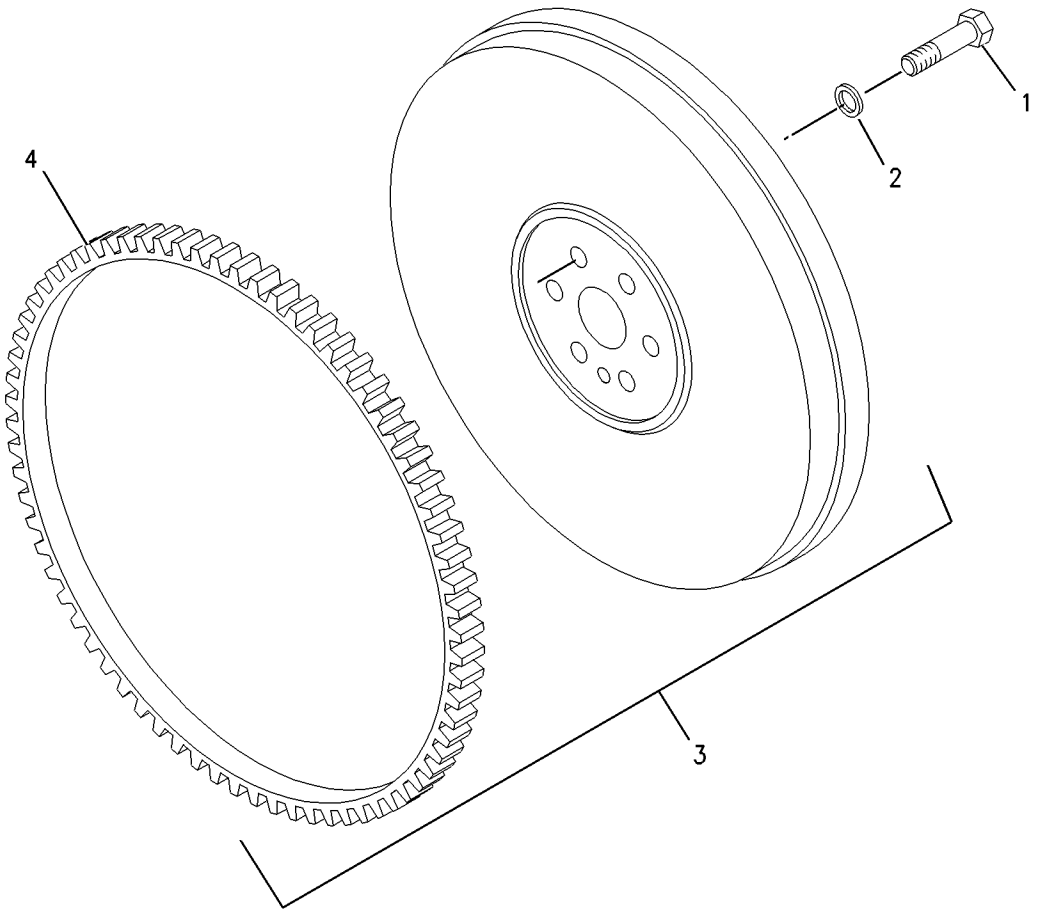

GRAPHIC #1 **<END>** g00955555

236-8238 HOUSING GP-FLYWHEEL (CHG -00)

S/N: CRS1-UP

PART OF 273-3610 ENGINE AR

SMCS-1157 **i01925943**

NOTE	REF NO	GRAPHIC REF	PART NUMBER	QTY	PART NAME 1 2 3 4 5 6 (PRODUCT LEVEL)	SEE PAGE
	1	1	**6I-0423**	2	BOLT (M12X1.75X30MM)	
	2	1	**6I-0847**	1	PLUG	
	3	1	**7W-1176**	1	PLATE-COVER	
	4	1	**7W-4642**	1	SHIELD-DUST	
	5	1	**067-6123**	2	DOWEL	
	6	1	**114-4363**	2	BOLT (M8X1.25X12MM)	
	7	1	**101-3617**	3	PLUG	
	8	1	**121-0883**	6	BOLT (M10X1.5X30MM)	
	9	1	**220-8631**	1	HOUSING-FLYWHEEL	

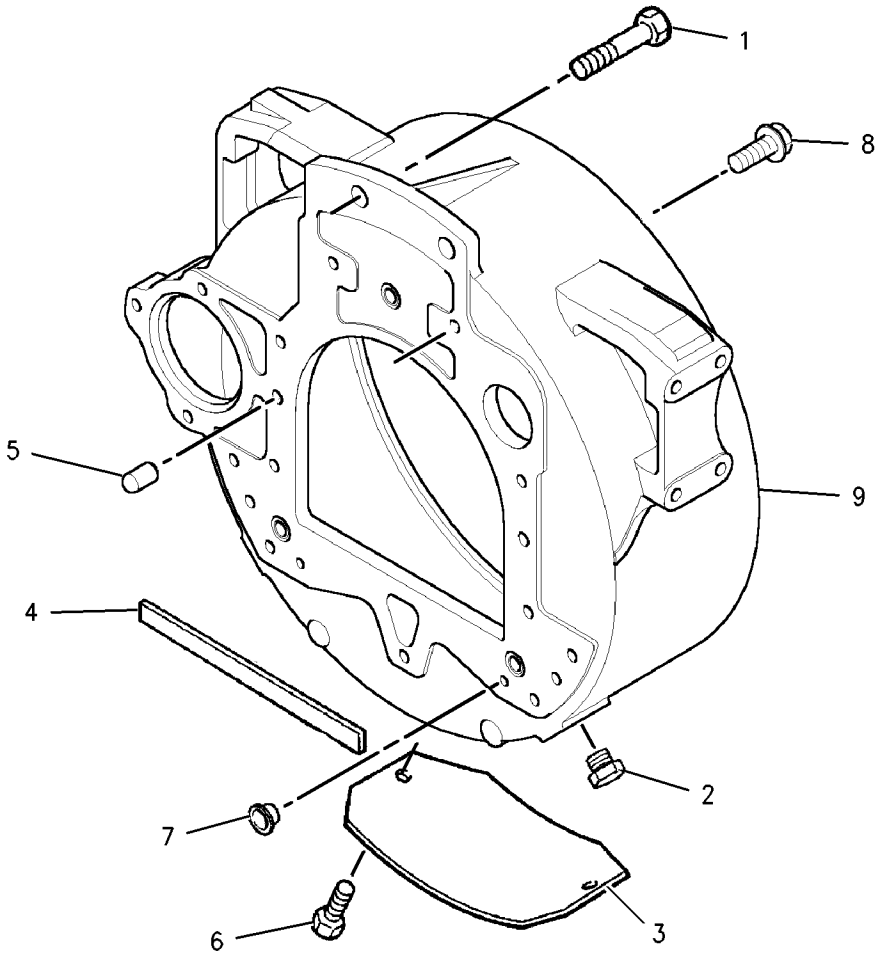

GRAPHIC #1 **<END>** g00902549

BASIC ENGINE

232-3670 HOUSING GP-FRONT

(CHG -00 THRU -07, 216-8633-01D1, 232-3657-01)

S/N: CRS1-UP

PART OF 273-3610 ENGINE AR

SMCS-1151, 1162, 1166 **i02471797**

NOTE	REF NO	GRAPHIC REF	PART NUMBER	QTY	PART NAME 1 2 3 4 5 6 (PRODUCT LEVEL)	SEE PAGE
	1	1	**1B-8736**	1	KEY-WOODRUFF	
	2	1	**6I-0217**	8	BOLT (M8X1.25X20-MM)	
M	3	1	**6I-0645**	4	BOLT (M8X1.25X25-MM)	
	4	1	**6I-0650**	3	BOLT (M10X1.5X65-MM)	
	5	1	**7C-4616**	1	BOLT (M12X1.75X45-MM)	
	6	1	**067-6179**	1	DOWEL	
	7	1	**282-9861**	1	HUB-IDLER GEAR	
	8	1	**255-1209**	1	PLATE-RETAINING	
M	9	1	**100-3751**	5	BOLT (M8X1.25X65-MM)	
	10	1	**124-3815**	10	BOLT (M8X16X1.25-MM)	
	11	1	**232-3666**	1	WASHER-THRUST	
	12	1	**251-4336**	1	GEAR AS-IDLER (73-TEETH)	
	13	1	**216-8634**	1	GEAR-CAMSHAFT (68-TEETH)	
	14	1	**225-8278**	1	HOUSING-FRONT	
	15	1	**4W-5359**	1	SEAL-CRANKSHAFT	
	16	1	**225-8281**	1	GASKET	
	17	1	**225-8282**	1	GASKET	
	18	1	**232-3657**	1	COVER AS-FRONT	
	18A	1	**225-8287**	1	GASKET	
	19	1	**133-1011**	1	WASHER	

M-METRIC PART

232-3670 **HOUSING GP-FRONT** *(contd.)* **i02471797**

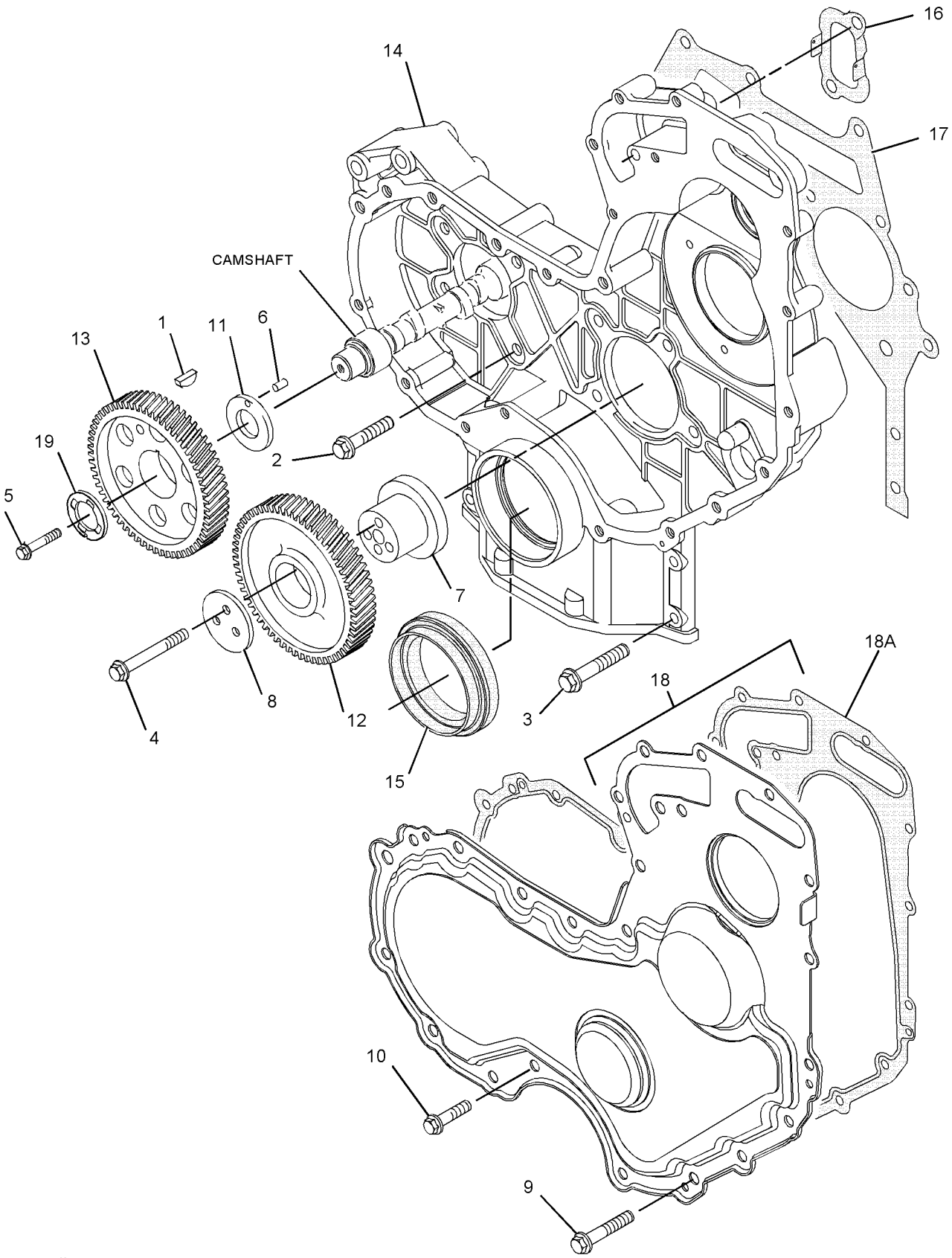

GRAPHIC #1 **<END>** g01095556

233-7432 LIFTING GP-ENGINE (CHG -00)

S/N: CRS1-UP

PART OF 273-3610 ENGINE AR

SMCS-1122 **i01876830**

NOTE	REF NO	GRAPHIC REF	PART NUMBER	QTY	PART NAME 1 2 3 4 5 6 (PRODUCT LEVEL)	SEE PAGE
	1	1	**100-4830**	4	BOLT (M10X1.5X20MM)	
	2	1	**225-8848**	2	PLATE	

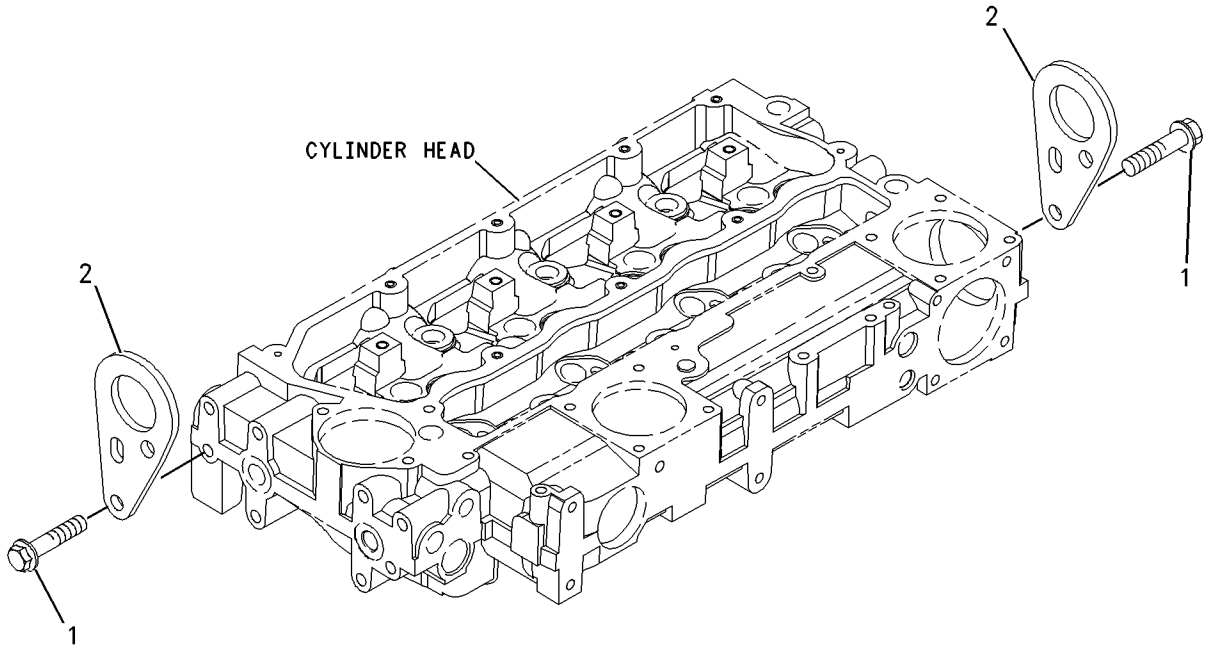

GRAPHIC #1 **<END>** g00955299

237-3658 MOUNTING GP-ENGINE (CHG -00)

S/N: CRS1-UP

PART OF 273-3610 ENGINE AR

SMCS-1152, 1153, 1154 **i01925958**

NOTE	REF NO	GRAPHIC REF	PART NUMBER	QTY	PART NAME 1 2 3 4 5 6 (PRODUCT LEVEL)	SEE PAGE
	1	1	**101-2987**	6	PLUG	
	2	1	**6H-3616**	3	PLUG-PROTECTION	
	3	1	**195-2132**	1	SUPPORT-FRONT	
	4	1	**195-2134**	1	SUPPORT-FRONT	
	5	1	**195-2136**	8	STUD	
	6	1	**195-2221**	8	NUT	

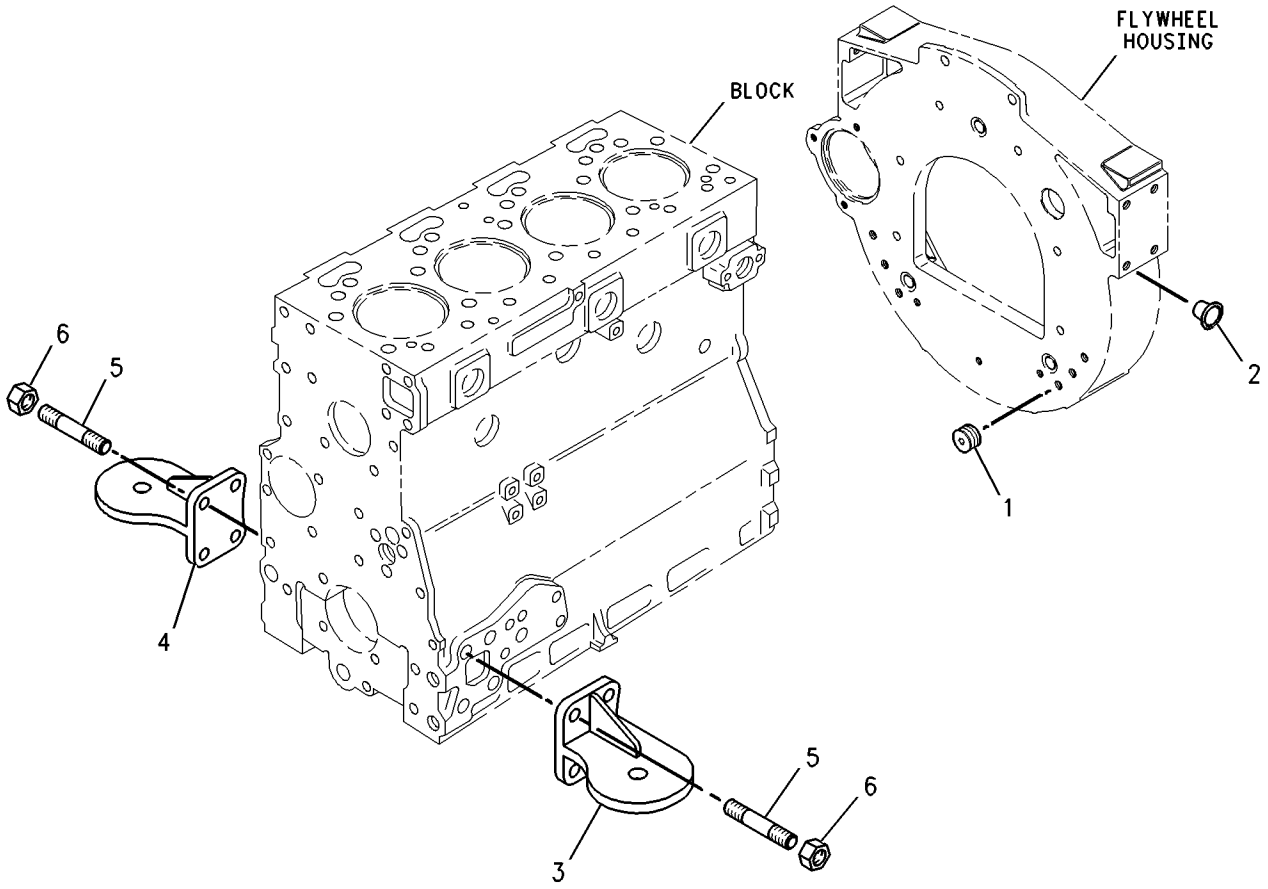

GRAPHIC #1 **<END>** g00738284

214-0973 MOUNTING GP-ENGINE & TMSN (CHG -02)

S/N: HLS1-UP

PART OF 214-6902 ENGINE AR

SMCS-1152, 1153, 1154 **i02116930**

NOTE	REF NO	GRAPHIC REF	PART NUMBER	QTY	PART NAME 1 2 3 4 5 6 (PRODUCT LEVEL)	SEE PAGE
	1	1	**9W-9910**	2	MOUNT AS	
	2	1	**9W-9915**	2	MOUNT AS	
	3	1	**9W-9953**	4	SLEEVE	
	4	1	**8T-4121**	12	WASHER-HARD (11X21X2.5-MM THK)	
M	5	1	**8T-4122**	8	WASHER-HARD (17X32X3.5-MM THK)	
M	6	1	**8T-4132**	4	NUT (M16X2-THD)	
M	7	1	**8T-4174**	4	BOLT (M16X2X120-MM)	
M	8	1	**8T-4196**	12	BOLT (M10X1.5X35-MM)	
	9	1	**9W-9952**	4	WASHER (16.75X86X8-MM THK)	

M-METRIC PART

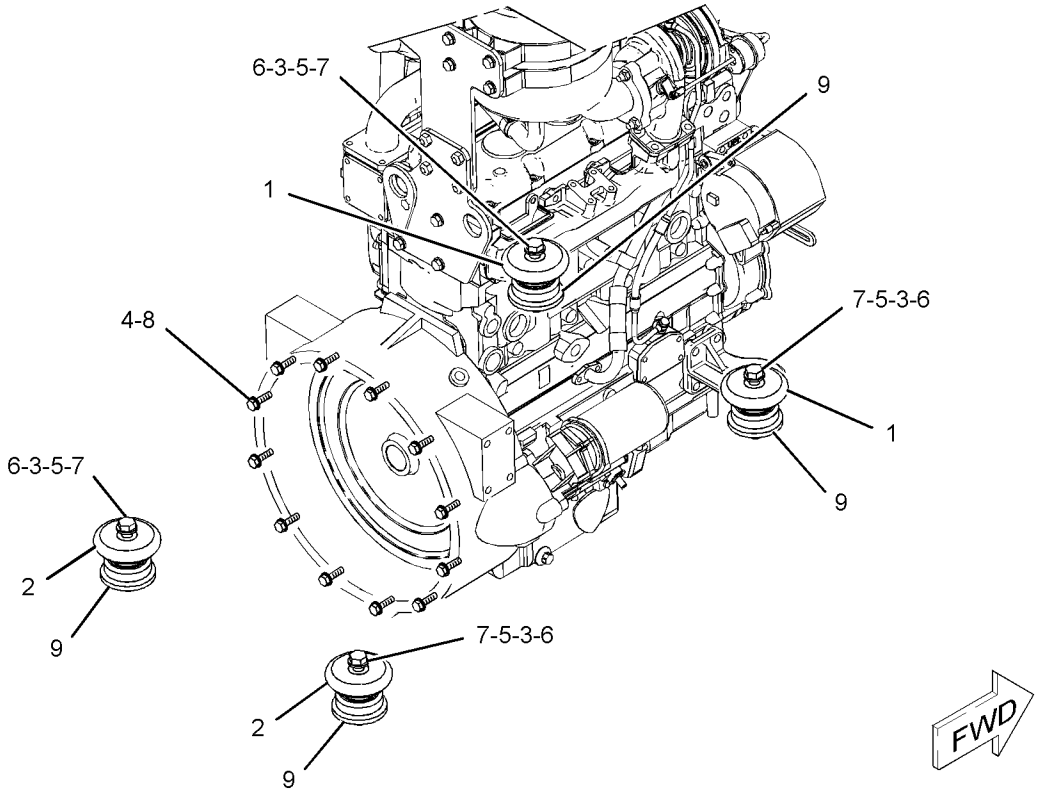

GRAPHIC #1 **<END>** g01079533

237-0025 PAN GP-OIL (CHG -00)

S/N: CRS1-UP

PART OF 273-3610 ENGINE AR

SMCS-1302 **i02151983**

NOTE	REF NO	GRAPHIC REF	PART NUMBER	QTY	PART NAME 1 2 3 4 5 6 (PRODUCT LEVEL)	SEE PAGE
	1	1	**5P-6718**	2	SEAL-O-RING (ENGINE OIL DRAIN)	
	2	1	**6I-0217**	12	BOLT (M8X1.25X20-MM)	
	3	1	**6I-0260**	2	BOLT (M8X1.25X25-MM)	
	4	1	**6I-0289**	1	PLUG	
	5	1	**6I-0363**	2	BOLT (M6X1X20-MM)	
	6	1	**6I-0572**	2	BOLT (M8X1.25X20-MM)	
	7	1	**7C-0351**	2	PLUG-DRAIN (ENGINE OIL)	
	8	1	**067-6213**	1	GASKET	
	9	1	**101-3771**	6	BOLT	
	10	1	**225-6004**	1	PAN AS-OIL	
	10A	1	**7C-1224**	2	INSERT	
	11	1	**225-6005**	1	GASKET	
	12	1	**225-6041**	1	TUBE	
	13	1	**230-8094**	1	BRIDGE	

237-0025 **PAN GP-OIL** *(contd.)* **i02151983**

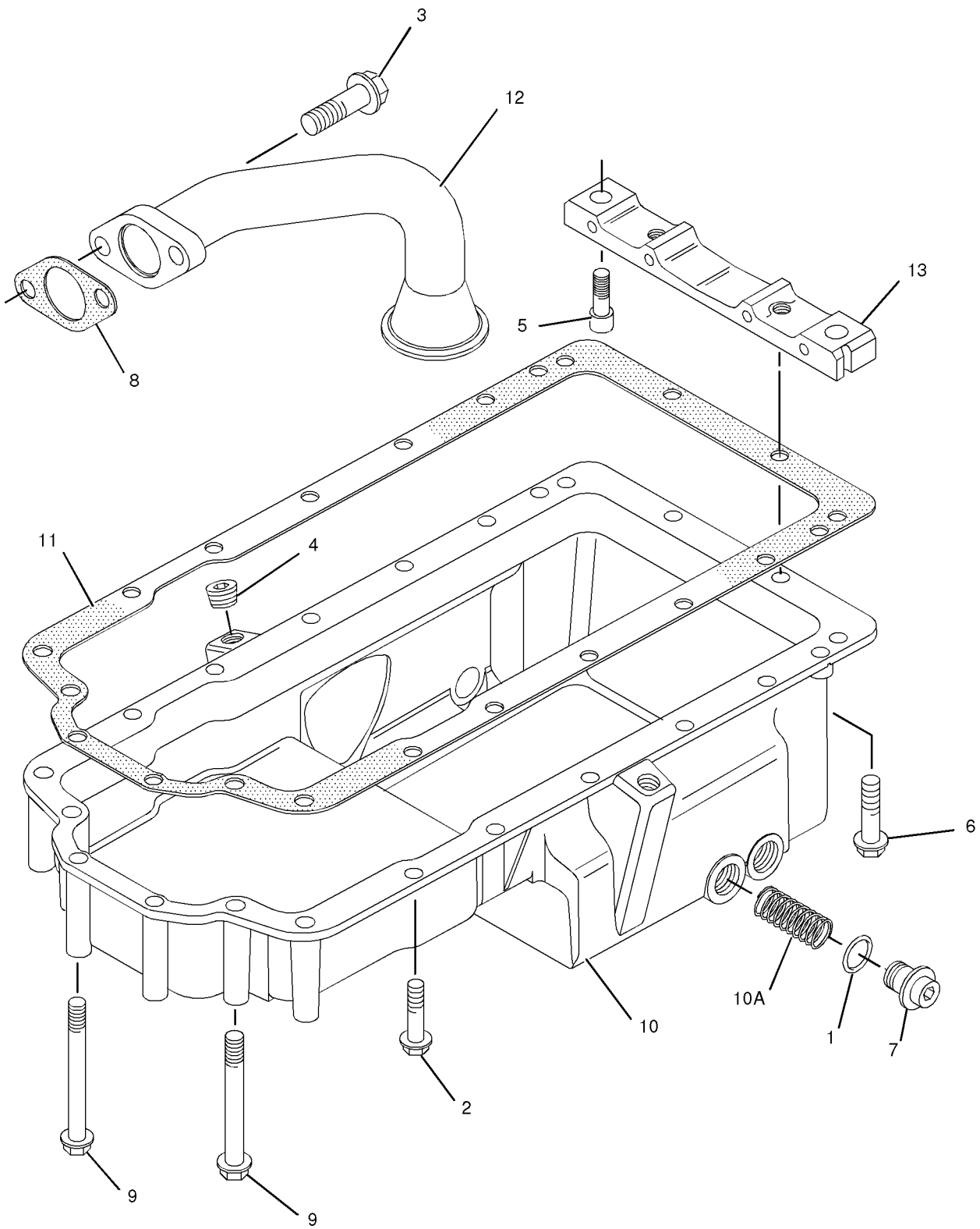

GRAPHIC #1 **<END>** g01036037

232-7442 PISTON & ROD GP (CHG -00, -01)

S/N: CRS1-UP

PART OF 273-3610 ENGINE AR

SMCS-1213, 1214, 1215, 1218, 1219, 1225, 1239 **i02138368**

NOTE	REF NO	GRAPHIC REF	PART NUMBER	QTY	PART NAME 1 2 3 4 5 6 (PRODUCT LEVEL)	SEE PAGE
	1	1	**225-5437**	4	PISTON AS	
					(EACH PISTON AS INCLUDES)	
	2	1	**124-3536**	2	RING-RETAINING	
	3	1	**225-5436**	1	KIT-PISTON RING	
BJ	4	1	**225-5441**	4	ROD AS-CONNECTING (L)	
					—OR—	
BJ		1	**225-5451**	4	ROD AS-CONNECTING (K)	
					—OR—	
BJ		1	**225-5453**	4	ROD AS-CONNECTING (J)	
					—OR—	
BJ		1	**225-5454**	4	ROD AS-CONNECTING (H)	
					—OR—	
BJ		1	**225-5458**	4	ROD AS-CONNECTING (G)	
					—OR—	
BJ		1	**225-5459**	4	ROD AS-CONNECTING (F)	
					(EACH ROD AS INCLUDES)	
	5	1	**225-5438**	1	BUSHING	
	6	1	**225-5439**	2	BOLT	

B-USE AS REQUIRED
J-ENSURE THAT CORRECT ROD LENGTH IS FITTED

232-7442 **PISTON & ROD GP** *(contd.)* **i02138368**

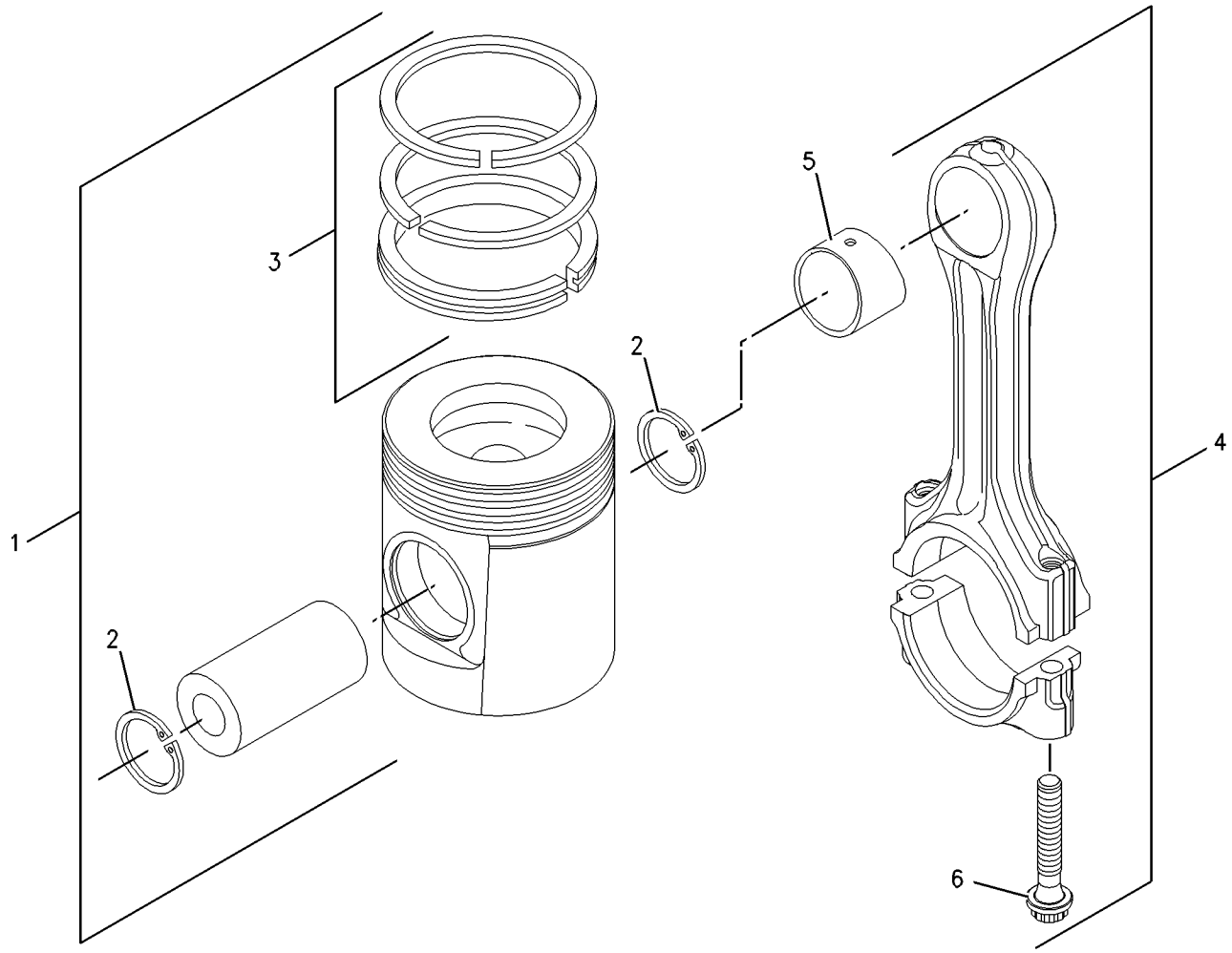

GRAPHIC #1 **<END>** g00909669

BASIC ENGINE

225-4317 PLUG GP-ENGINE (CHG -00)

S/N: CRS1-UP
FRONT HOUSING,CYLINDER HEAD
PART OF 273-3610 ENGINE AR

SMCS-1000 **i01862406**

NOTE	REF NO	GRAPHIC REF	PART NUMBER	QTY	PART NAME 1 2 3 4 5 6 (PRODUCT LEVEL)	SEE PAGE
	1	1	**2B-0858**	3	PLUG-PIPE	

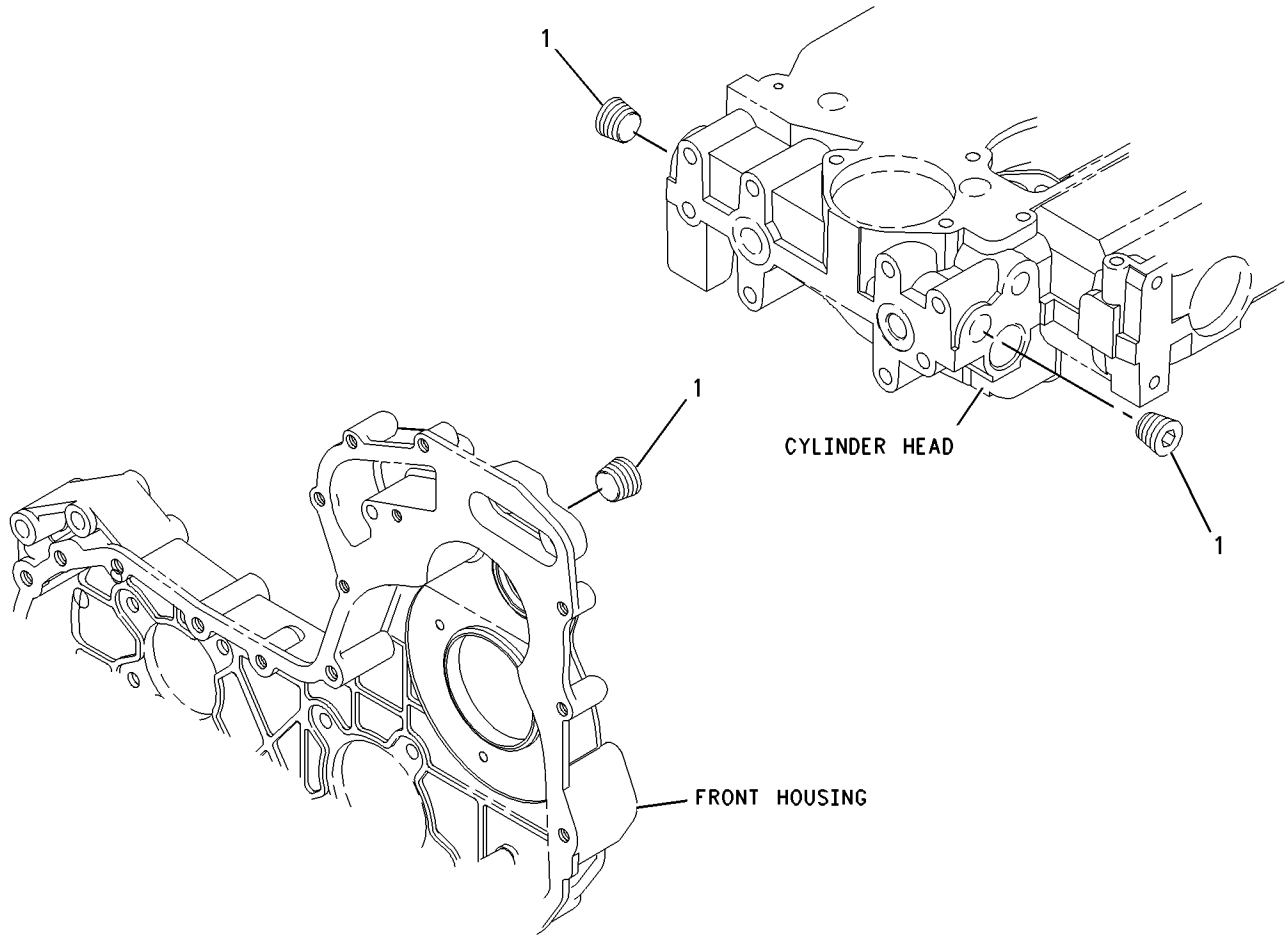

GRAPHIC #1 **<END>** g00911937

230-7569 PLUG GP-ENGINE (CHG -00)

S/N: CRS1-UP

PART OF 273-3610 ENGINE AR

SMCS-1000 **i01876806**

NOTE	REF NO	GRAPHIC REF	PART NUMBER	QTY	PART NAME 1 2 3 4 5 6 (PRODUCT LEVEL)	SEE PAGE
	1	1	**231-0046**	1	PLUG	

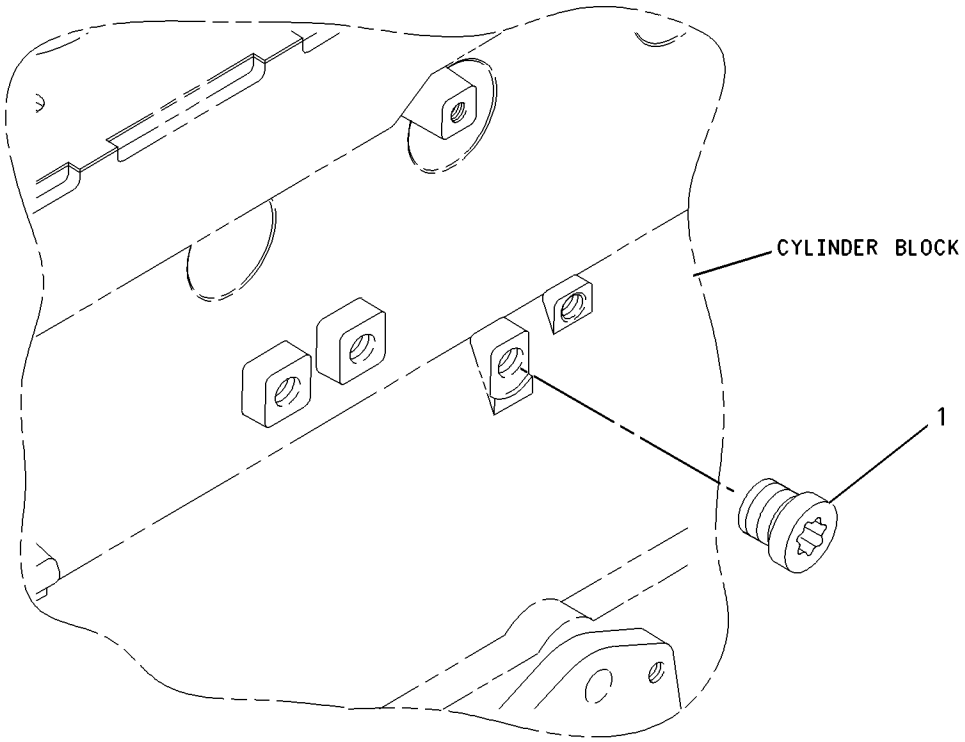

GRAPHIC #1 **<END>** g00911955

232-6204 PLUG GP-ENGINE (CHG -00)

S/N: CRS1-UP
CYLINDER HEAD
PART OF 273-3610 ENGINE AR

SMCS-1000 **i01863022**

NOTE	REF NO	GRAPHIC REF	PART NUMBER	QTY	PART NAME 1 2 3 4 5 6 (PRODUCT LEVEL)	SEE PAGE
	1	1	**199-9751**	1	SEAL-O-RING	
	2	1	**232-1322**	1	PLUG	

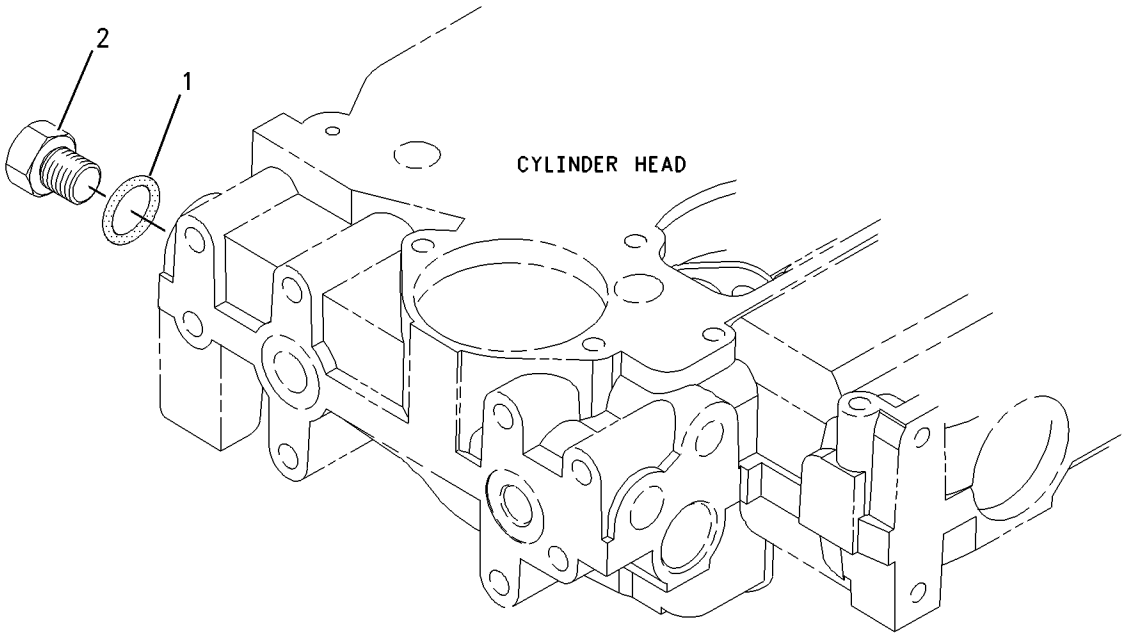

GRAPHIC #1 **<END>** g00950934

BASIC ENGINE

230-7353 PULLEY GP-CRANKSHAFT (CHG -00)

S/N: CRS1-UP

PART OF 273-3610 ENGINE AR

SMCS-1205 **i02009617**

NOTE	REF NO	GRAPHIC REF	PART NUMBER	QTY	PART NAME 1 2 3 4 5 6 (PRODUCT LEVEL)	SEE PAGE
	1	1	**6I-0501**	1	BLOCK	
	2	1	**6I-0502**	1	PULLEY	
	3	1	**7W-4634**	3	BOLT (7/16-20X1.5 IN)	

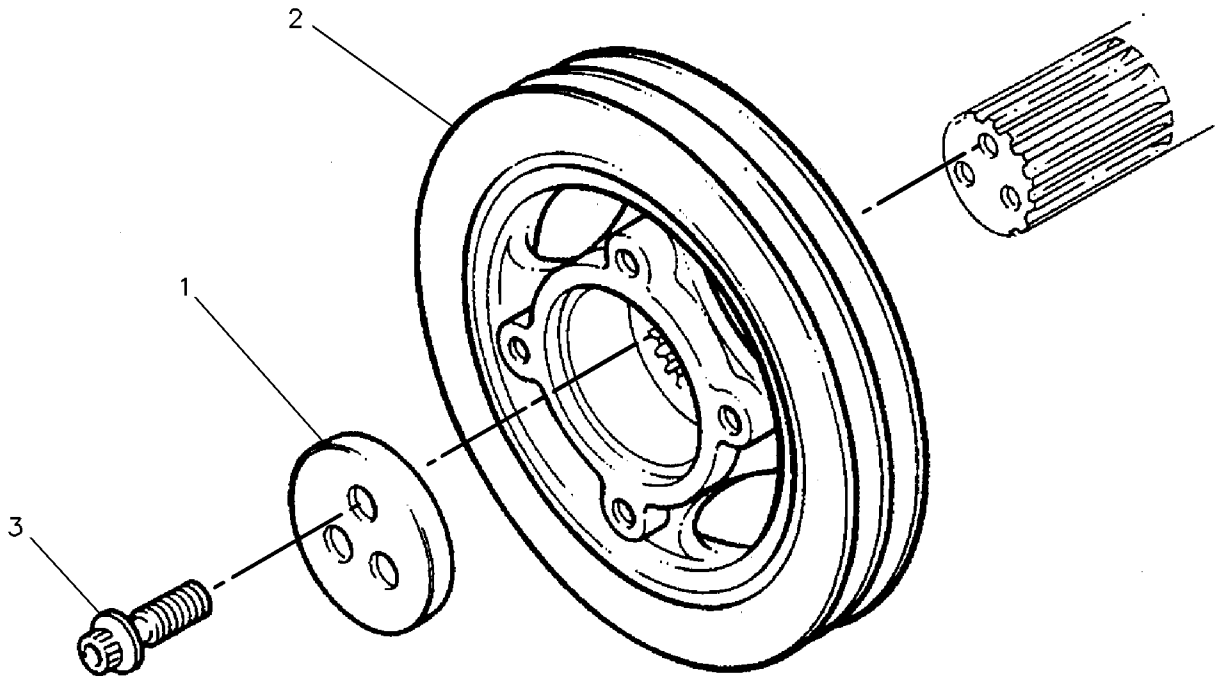

GRAPHIC #1 **<END>** g00130941

232-7526 VALVE MECHANISM GP (CHG -00)

S/N: CRS1-UP

PART OF 273-3610 ENGINE AR

SMCS-1102, 1112, 1121, 1123, 1208, 1209 **i01863433**

NOTE	REF NO	GRAPHIC REF	PART NUMBER	QTY	PART NAME 1 2 3 4 5 6 (PRODUCT LEVEL)	SEE PAGE
	1	1	**067-6095**	8	ROD	
	2	1	**138-2053**	8	TAPPET	
	3	1	**225-5963**	1	ROCKER ARM AS	
	4	1	**225-5625**	4	LEVER AS	
					(EACH INCLUDES)	
	5	1	**5B-9079**	1	NUT-JAM (3/8-24-THD)	
	6	1	**185-1546**	1	SCREW	
	7	1	**225-5634**	1	SHAFT AS	
	8	1	**225-5629**	2	PLUG	
	9	1	**225-5638**	3	SPRING	
	10	1	**225-5640**	4	LEVER AS	
					(EACH INCLUDES)	
	11	1	**5B-9079**	1	NUT-JAM (3/8-24-THD)	
	12	1	**185-1546**	1	SCREW	
	13	1	**225-5959**	2	CLIP	
	14	1	**225-5960**	1	BOLT (M8X1.25X60-MM)	
	15	1	**225-5961**	2	WASHER (26.7X34.32X0.38-MM THK)	
	16	1	**225-5962**	3	BOLT (M8X1.25X30-MM)	

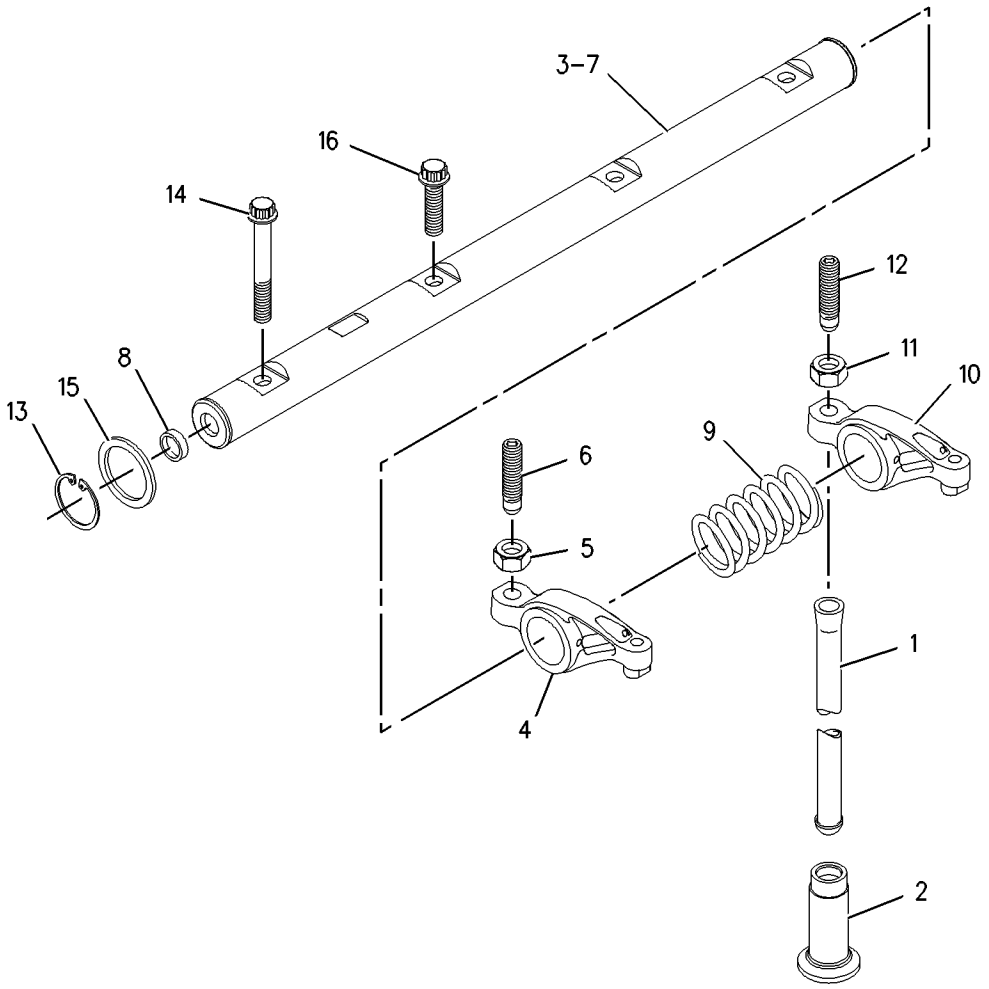

GRAPHIC #1 **<END>** g00910253

250-7963 BREATHER GP (CHG -00, -01)

S/N: HLS1-UP

AN ATTACHMENT

SMCS-1317 **i02446027**

NOTE	REF NO	GRAPHIC REF	PART NUMBER	QTY	PART NAME 1 2 3 4 5 6 (PRODUCT LEVEL)	SEE PAGE
	1	1	**6G-2263**	1	SPACER (10.5X19X28.5-MM THK)	
	2	1	**6I-1497**	1	SEAL	
	3	1	**6S-8620**	2	CLAMP-HOSE	
	4	1	**8T-9402**	3	CLAMP-HOSE	
	5	1	**165-4021**	1	CANISTER AS-BREATHER (CRANKCASE)	
		1	**185-6643**	1	SEAL (BREATHER)	
	6	1	**202-5909**	1	TUBE AS-OIL	
	7	1	**254-4418**	1	HOSE	
	8	1	**254-4419**	1	PLATE AS	
M		1	**6V-9632**	4	NUT-WELD (M6X1-THD)	
	9	1	**5P-4116**	2	WASHER-HARD (8.8X20.5X2-MM THK)	
	10	1	**6D-4246**	1	CLIP	
M	11	1	**8C-3798**	2	BOLT-LOCKING (M6X1X30)	
	12	1	**8T-4121**	1	WASHER-HARD (11X21X2.5-MM THK)	
M	13	1	**8T-4138**	2	BOLT (M6X1X20-MM)	
M	14	1	**8T-4185**	1	BOLT (M10X1.5X50-MM)	
M	15	1	**8T-4189**	2	BOLT (M8X1.25X20-MM)	
	16	1	**8T-4205**	4	WASHER-HARD (7.2X14.5X2-MM THK)	
	17	1	**8T-7529**	2	CLIP	
E	18	1	**136-1955**		HOSE (82-CM)	
E	19	1	**5P-1505**		HOSE (83-CM)	

E-ORDER BY THE CENTIMETER
M-METRIC PART

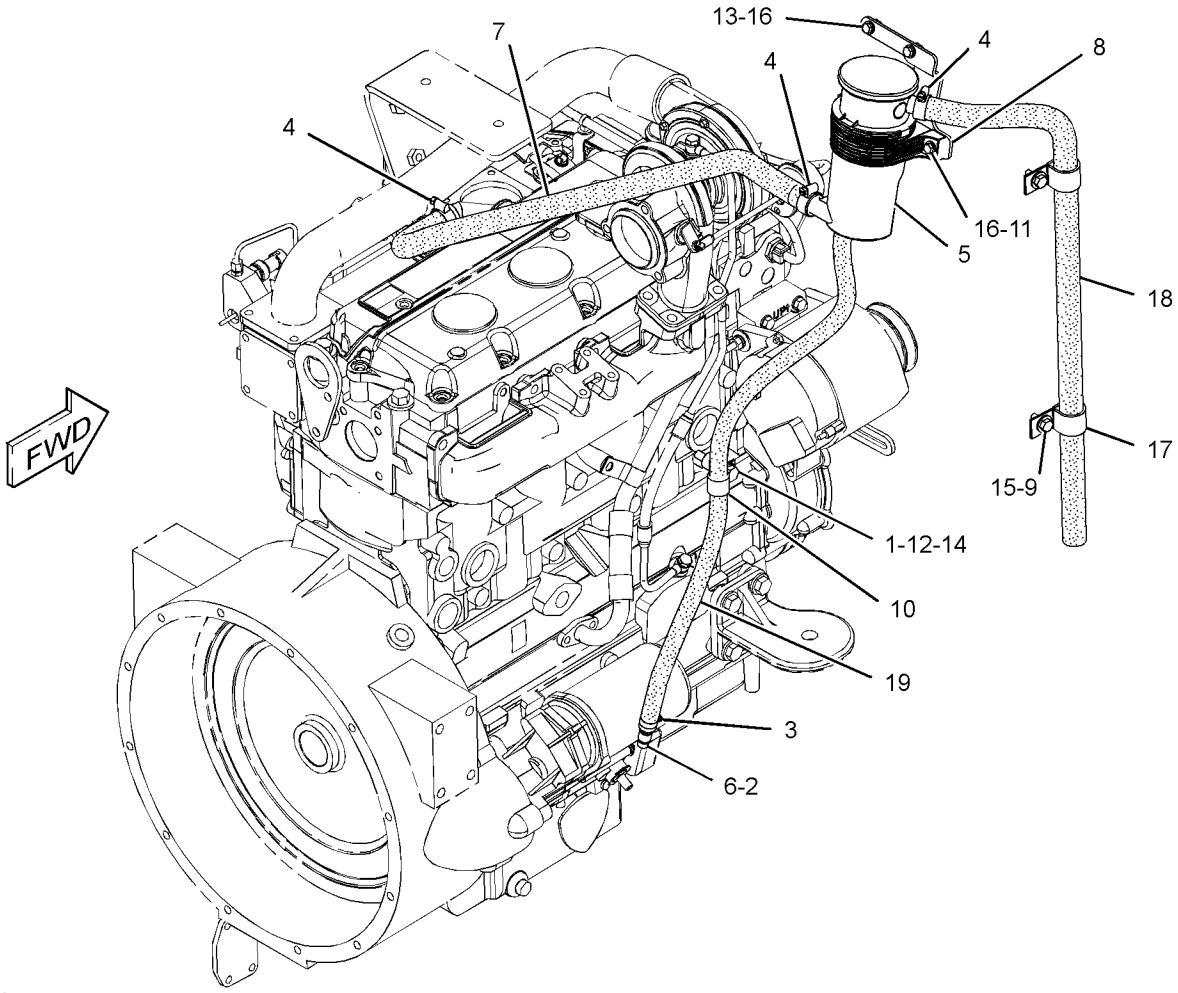

GRAPHIC #1 **<END>** g01231422

222-7091 GAUGE GP-OIL LEVEL & FILLER (CHG -00 THRU -07)

S/N: HLS1-UP

PART OF 214-6902 ENGINE AR

SMCS-1316, 1326 **i02485599**

NOTE	REF NO	GRAPHIC REF	PART NUMBER	QTY	PART NAME 1 2 3 4 5 6 (PRODUCT LEVEL)	SEE PAGE
	1	1	**6I-1497**	1	SEAL	
	2	1	**7W-2326**	1	FILTER AS-ENGINE OIL	
	3	1	**9M-7958**	1	CLAMP-HOSE	
	4	1	**127-4471**	1	CLAMP-HOSE	
	5	1	**236-6651**	1	CAP AS (ENGINE OIL FILLER)	
	6	1	**249-5046**	1	TUBE AS	
	7	1	**249-5295**	1	HOSE	
	8	1	**249-5297**	1	BRACKET AS	
M	9	1	**8T-4195**	2	BOLT (M10X1.5X30-MM)	
	10	1	**256-0143**	1	TUBE AS	
	11	1	**261-3572**	1	GAUGE-OIL LEVEL	
	12	1	**033-8248**	2	CLIP	
	13	1	**7D-7233**	1	CLIP	
	14	1	**7X-7729**	3	WASHER (11X25X3-MM THK)	
	15	1	**8T-4121**	5	WASHER-HARD (11X21X2.5-MM THK)	
M	16	1	**8T-4133**	2	NUT (M10X1.5-THD)	
M	17	1	**8T-4136**	1	BOLT (M10X1.5X25-MM)	
M	18	1	**8T-4196**	3	BOLT (M10X1.5X35-MM)	

M-METRIC PART

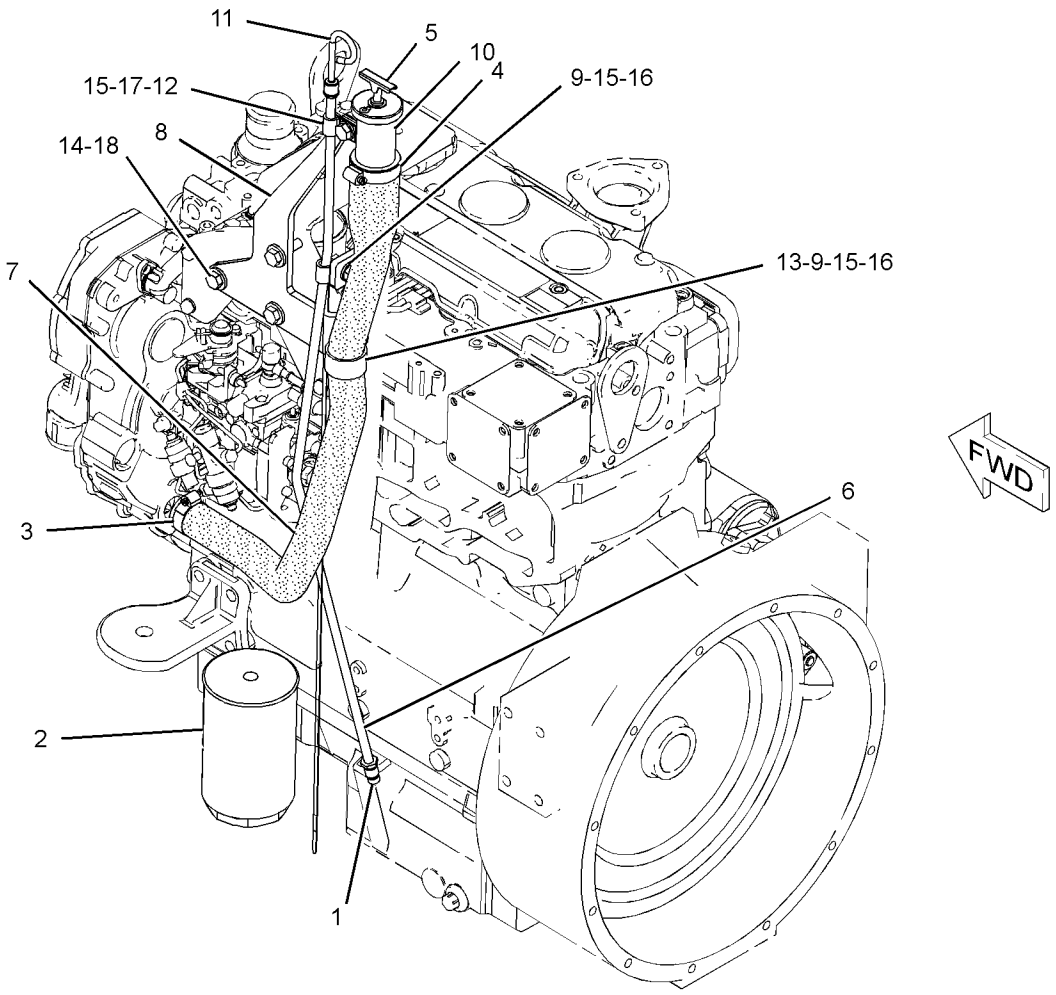

GRAPHIC #1 **<END>** g01231281

230-7578 PUMP GP-ENGINE OIL (CHG -00)

S/N: CRS1-UP

PART OF 273-3610 ENGINE AR

SMCS-1304, 1315 **i01862499**

NOTE	REF NO	GRAPHIC REF	PART NUMBER	QTY	PART NAME 1 2 3 4 5 6 (PRODUCT LEVEL)	SEE PAGE
	1	1	**100-4461**	5	BOLT (M10X50MM)	
	2	1	**225-8329**	1	PUMP AS-ENGINE OIL	

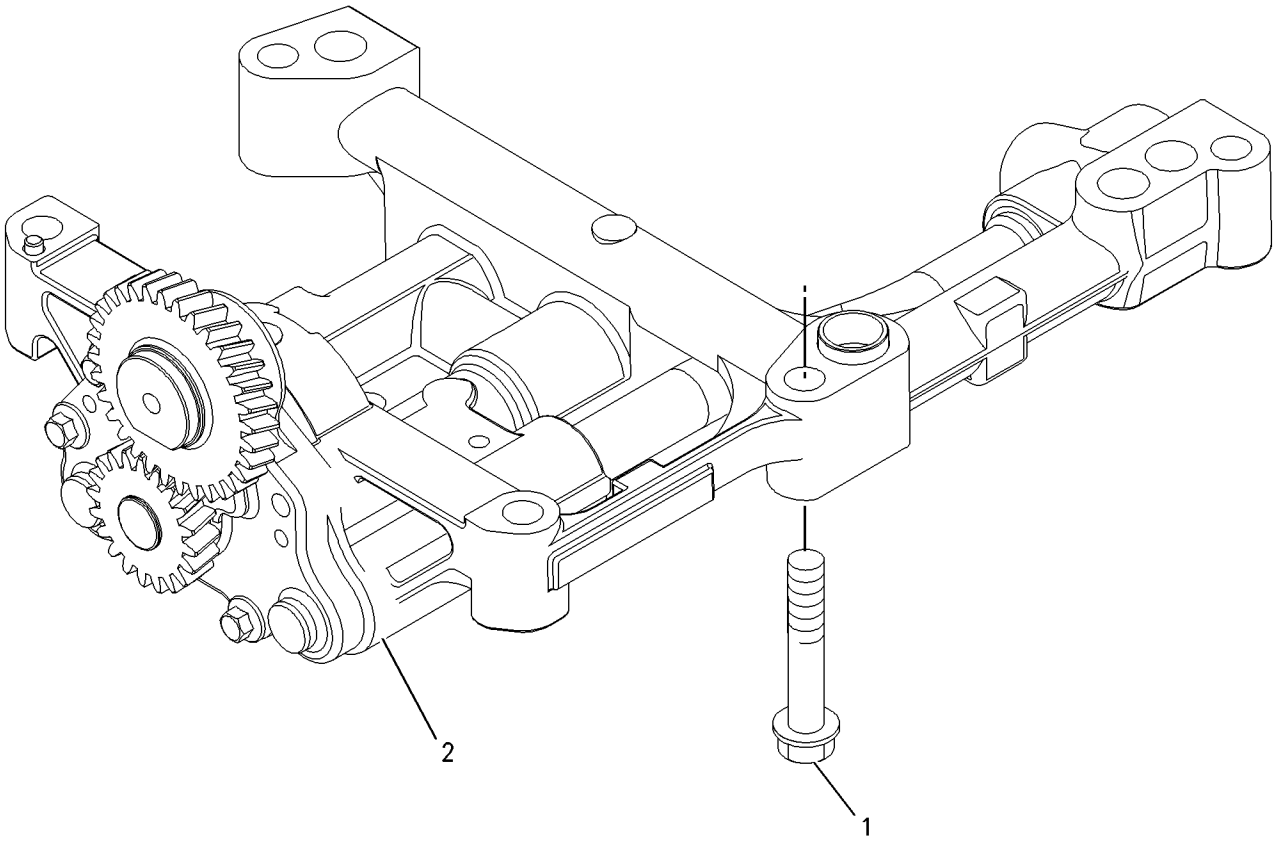

GRAPHIC #1 **<END>** g00911993

231-0033 CONNECTION GP-WATER

(CHG -00, -01, 231-0030-01, 231-0030-02)
S/N: CRS1-UP
PART OF 273-3610 ENGINE AR

SMCS-1380 **i02485601**

NOTE	REF NO	GRAPHIC REF	PART NUMBER	QTY	PART NAME 1 2 3 4 5 6 (PRODUCT LEVEL)	SEE PAGE
	1	1	**6I-0260**	2	BOLT (M8X1.25X25-MM)	
	2	1	**254-2267**	1	REGULATOR GP-TEMPERATURE (WATER)	
					(INCLUDES REGULATOR)	
	2A	1	**254-2270**	1	SEAL-O-RING (WATER TEMPERATURE REGULATOR)	

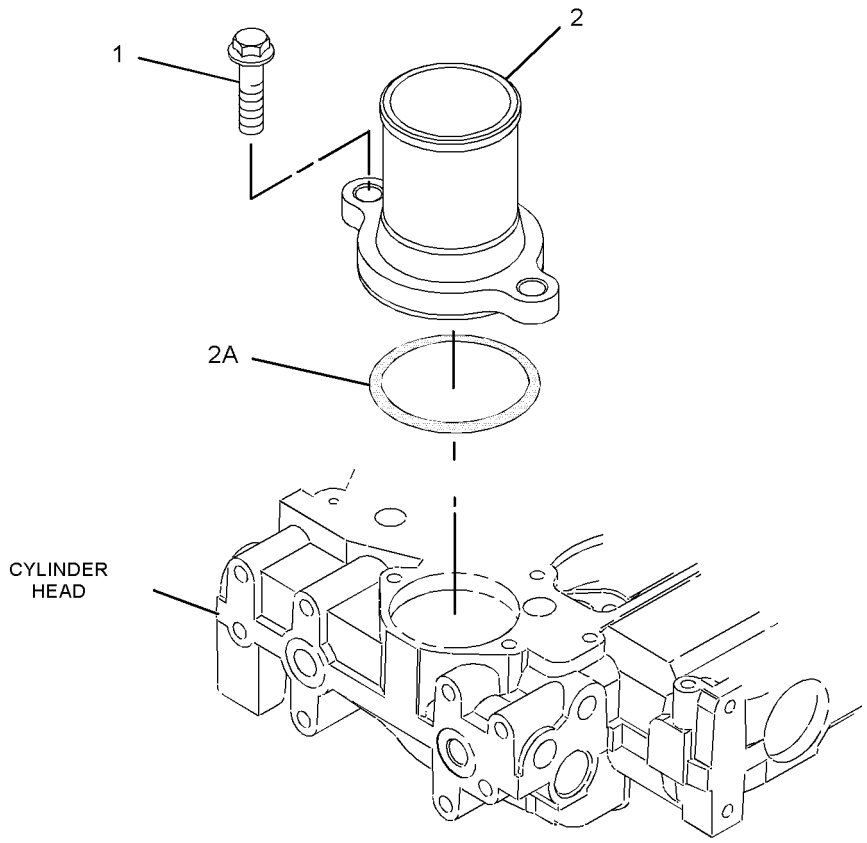

GRAPHIC #1 **<END>** g01081626

232-3722 COOLER GP-ENGINE OIL (CHG -00)

S/N: CRS1-UP

PART OF 238-2799 COOLER GP-FLTR BASE & ENG OIL

SMCS-1378 **i02253958**

NOTE	REF NO	GRAPHIC REF	PART NUMBER	QTY	PART NAME 1 2 3 4 5 6 (PRODUCT LEVEL)	SEE PAGE
	1	1	**6I-0260**	10	BOLT (M8X1.25X25-MM)	
	2	1	**6I-4374**	3	BOLT	
M	3	1	**101-3895**	4	BOLT (M8X1.25X35-MM)	
	4	1	**225-6817**	1	COOLER-OIL (ENGINE)	
	5	1	**225-6818**	2	SEAL	
	6	1	**225-6820**	1	GASKET	

M-METRIC PART

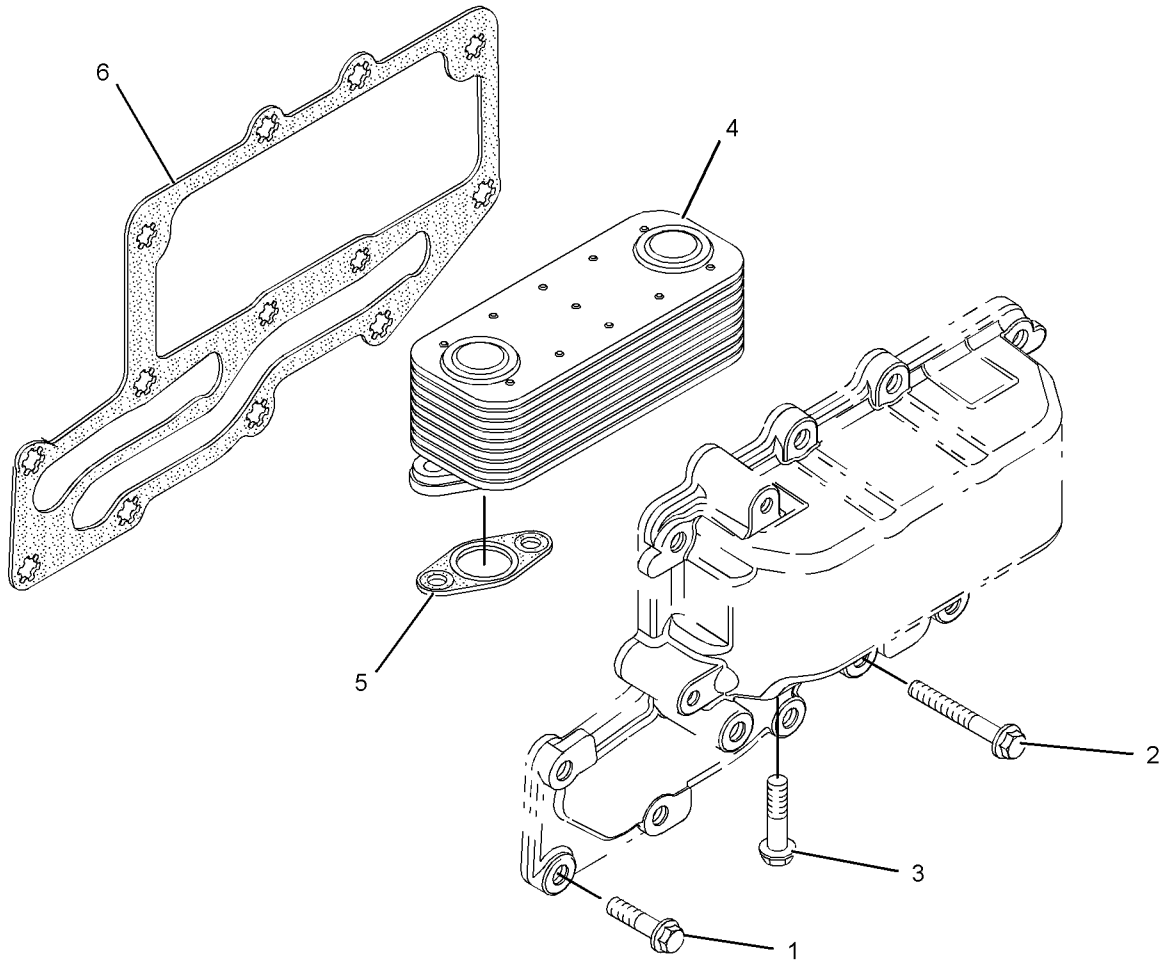

GRAPHIC #1 **<END>** g01111678

238-2799 COOLER GP-FLTR BASE & ENG OIL

(CHG -00 THRU -02)
S/N: CRS1-UP
PART OF 273-3610 ENGINE AR

SMCS-1306, 1378 **i02472437**

NOTE	REF NO	GRAPHIC REF	PART NUMBER	QTY	PART NAME 1 2 3 4 5 6 (PRODUCT LEVEL)	SEE PAGE
	1	1	**6I-0572**	4	BOLT (M8X1.25X20-MM)	
M	2	1	**6I-0645**	4	BOLT (M8X1.25X25-MM)	
	3	1	**8T-7876**	1	SEAL-O-RING	
	4	1	**225-7941**	1	PLUG	
	5	1	**225-7944**	2	GASKET	
	6	1	**249-0974**	1	HEAD AS-OIL FILTER	
Y	7	1	**232-3722**	1	COOLER GP-ENGINE OIL	40
	8	1	**232-3751**	1	PLATE	

M-METRIC PART
Y-SEPARATE ILLUSTRATION

238-2799 **COOLER GP-FLTR BASE & ENG OIL** *(contd.)* **i02472437**

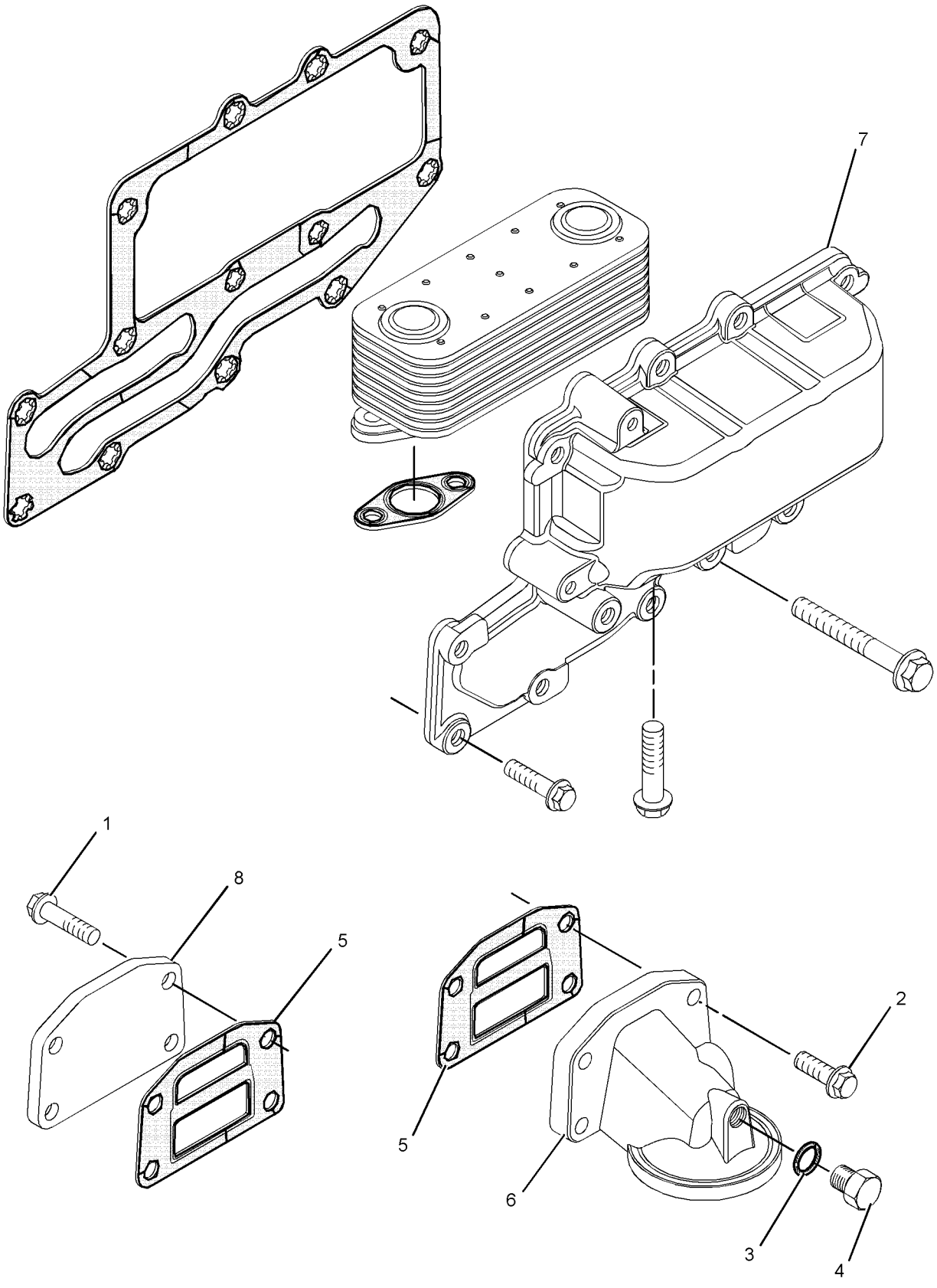

GRAPHIC #1 **<END>** g01233312

214-2202 COOLING AR (CHG -02 THRU -04)

S/N: HLS1-UP
PART OF 213-9273 COMMON AR
FOR USE WITH AIR CONDITIONER

SMCS-1350 **i02274657**

NOTE	PART NUMBER	QTY	PART NAME 1 2 3 4 5 6 (PRODUCT LEVEL)	SEE PAGE
Y	*214-3751*	1	LINES GP-TRANSMISSION COOLER	46
Y	*210-5951*	1	MOUNTING GP-RAD & OIL COOLER (TRANSMISSION, HYDRAULIC OIL)	48

Y-SEPARATE ILLUSTRATION

<END>

213-9314 FAN GP-SUCTION—WITH AIR CONDITIONER

(CHG -03 THRU -05)
S/N: HLS1-UP
PART OF 269-2127 CAB AR
AN ATTACHMENT

SMCS-1356, 1360 **i02447158**

NOTE	REF NO	GRAPHIC REF	PART NUMBER	QTY	PART NAME 1 2 3 4 5 6 (PRODUCT LEVEL)	SEE PAGE
	1	1	**3S-8447**	1	V-BELT SET (INCLUDES 2-BELTS)	
	2	1	**142-3388**	1	SPACER-FAN	
	3	1	**142-3391**	1	SPIDER AS (9-BLADE)	
	4	1	**215-3507**	1	PULLEY-FAN	
	5	1	**242-9751**	1	GUARD AS	
M	6	1	**153-3061**	4	BOLT (M8X1.25X130-MM)	
	7	1	**5P-4116**	4	WASHER-HARD (8.8X20.5X2-MM THK)	
	8	1	**8T-4224**	4	WASHER-HARD (8.8X16X2-MM THK)	
M	9	1	**8T-4908**	4	BOLT (M8X1.25X25-MM)	
	10	1	**1W-2934**	1	V-BELT	

M-METRIC PART

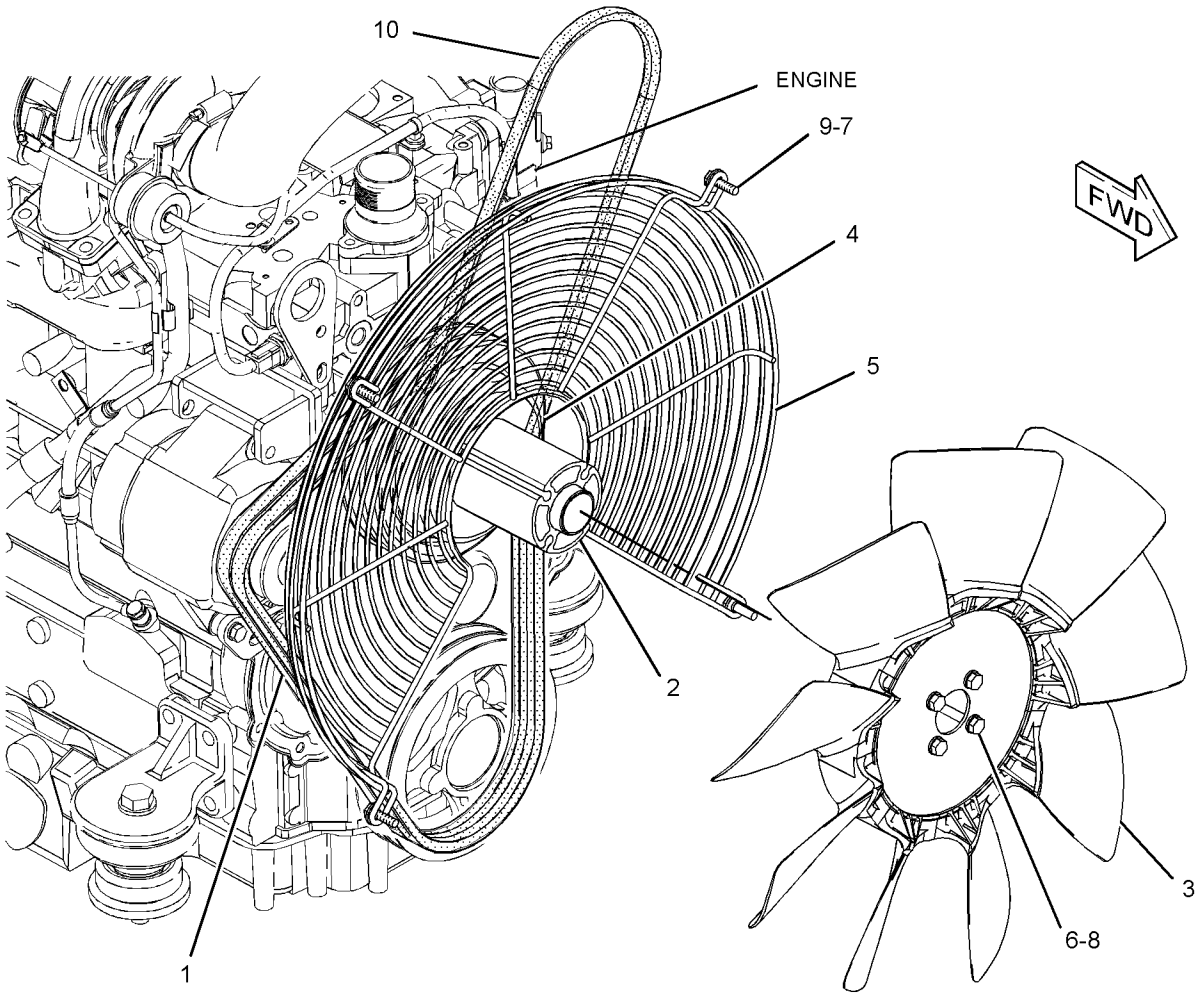

GRAPHIC #1 **<END>** g01211950

254-6101 FAN GP-SUCTION (CHG -00)

S/N: HLS1-UP

PART OF 269-2125, 269-2126 CAB AR, 269-2123, 269-2124 CANOPY AR AN ATTACHMENT

SMCS-1356, 1360 **i02446411**

NOTE	REF NO	GRAPHIC REF	PART NUMBER	QTY	PART NAME 1 2 3 4 5 6 (PRODUCT LEVEL)	SEE PAGE
	1	1	**3S-8447**	1	V-BELT SET (INCLUDES 2-BELTS)	
	2	1	**130-3879**	1	PULLEY-FAN DRIVE	
	3	1	**142-3388**	1	SPACER-FAN	
	4	1	**142-3391**	1	SPIDER AS (9-BLADE)	
	5	1	**242-9751**	1	GUARD AS	
M	6	1	**153-3061**	4	BOLT (M8X1.25X130-MM)	
	7	1	**5P-4116**	4	WASHER-HARD (8.8X20.5X2-MM THK)	
	8	1	**8T-4224**	4	WASHER-HARD (8.8X16X2-MM THK)	
M	9	1	**8T-4908**	4	BOLT (M8X1.25X25-MM)	

M-METRIC PART

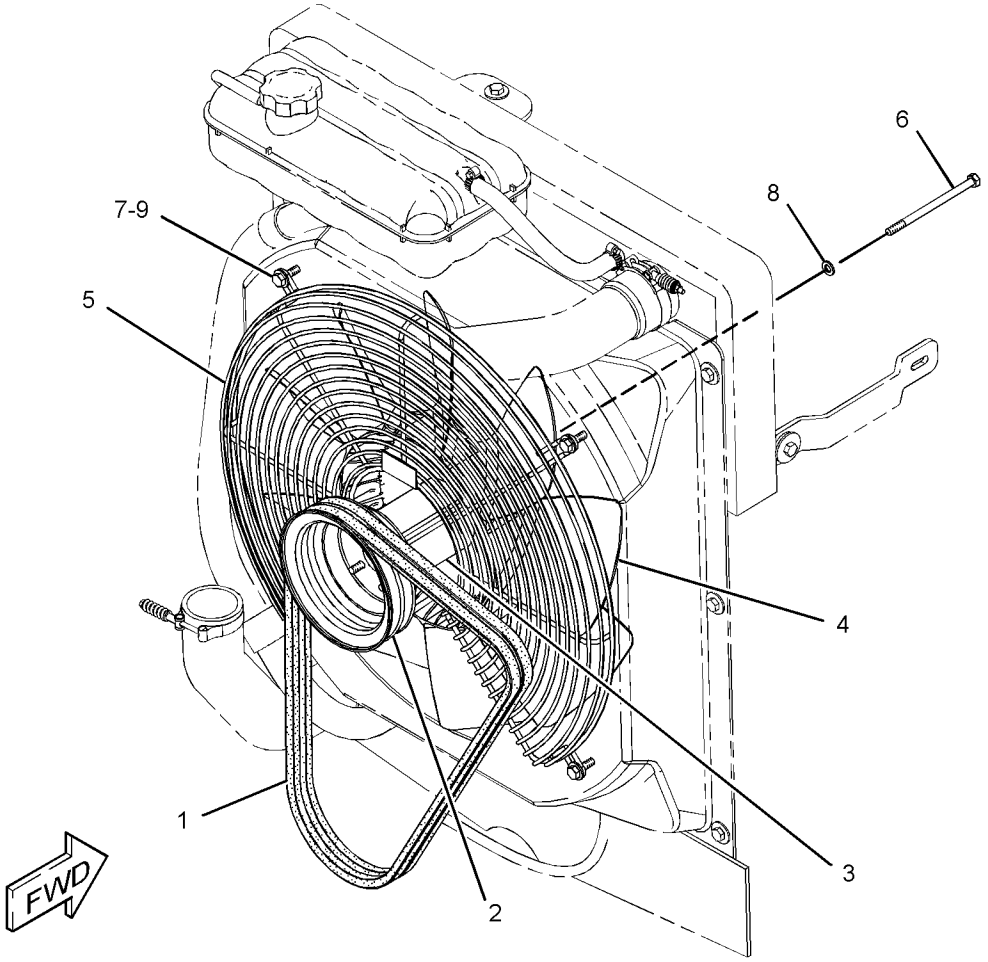

GRAPHIC #1 **<END>** g01208867

214-3751 LINES GP-TRANSMISSION COOLER (CHG -02 THRU -06)

S/N: HLS1-UP

PART OF 214-2202 COOLING AR

SMCS-1375 **i02355825**

NOTE	REF NO	GRAPHIC REF	PART NUMBER	QTY	PART NAME 1 2 3 4 5 6 (PRODUCT LEVEL)	SEE PAGE
	1	1	**118-7286**	1	BRACKET AS	
	2	1	**130-9984**	2	CLIP	
	3	1	**159-0186**	2	CLAMP	
I	4	1	**214-3753**	1	HOSE AS	
	5	1	**250-4337**	1	HOSE AS	
	6	1	*148-8339*	1	CONNECTOR AS	
		1	**6V-8716**	1	CONNECTOR	
		1	**6V-9746**	1	SEAL-O-RING	
		1	**7M-8485**	1	SEAL-O-RING	
	7	1	*148-8360*	1	ELBOW AS	
		1	**6V-9182**	1	ELBOW	
		1	**6V-9746**	1	SEAL-O-RING	
		1	**7M-8485**	1	SEAL-O-RING	
	8	1	**5P-4116**	2	WASHER-HARD (8.8X20.5X2-MM THK)	
	9	1	**8T-4121**	2	WASHER-HARD (11X21X2.5-MM THK)	
M	10	1	**8T-4136**	2	BOLT (M10X1.5X25-MM)	
M	11	1	**8T-4189**	2	BOLT (M8X1.25X20-MM)	
M	12	1	**8T-4192**	2	BOLT (M12X1.75X25-MM)	
	13	1	**8T-4223**	2	WASHER-HARD (13.5X25.5X3-MM THK)	
	14	1	**8T-7529**	3	CLIP	

I-REFER TO HYDRAULIC INFORMATION SYSTEM
M-METRIC PART

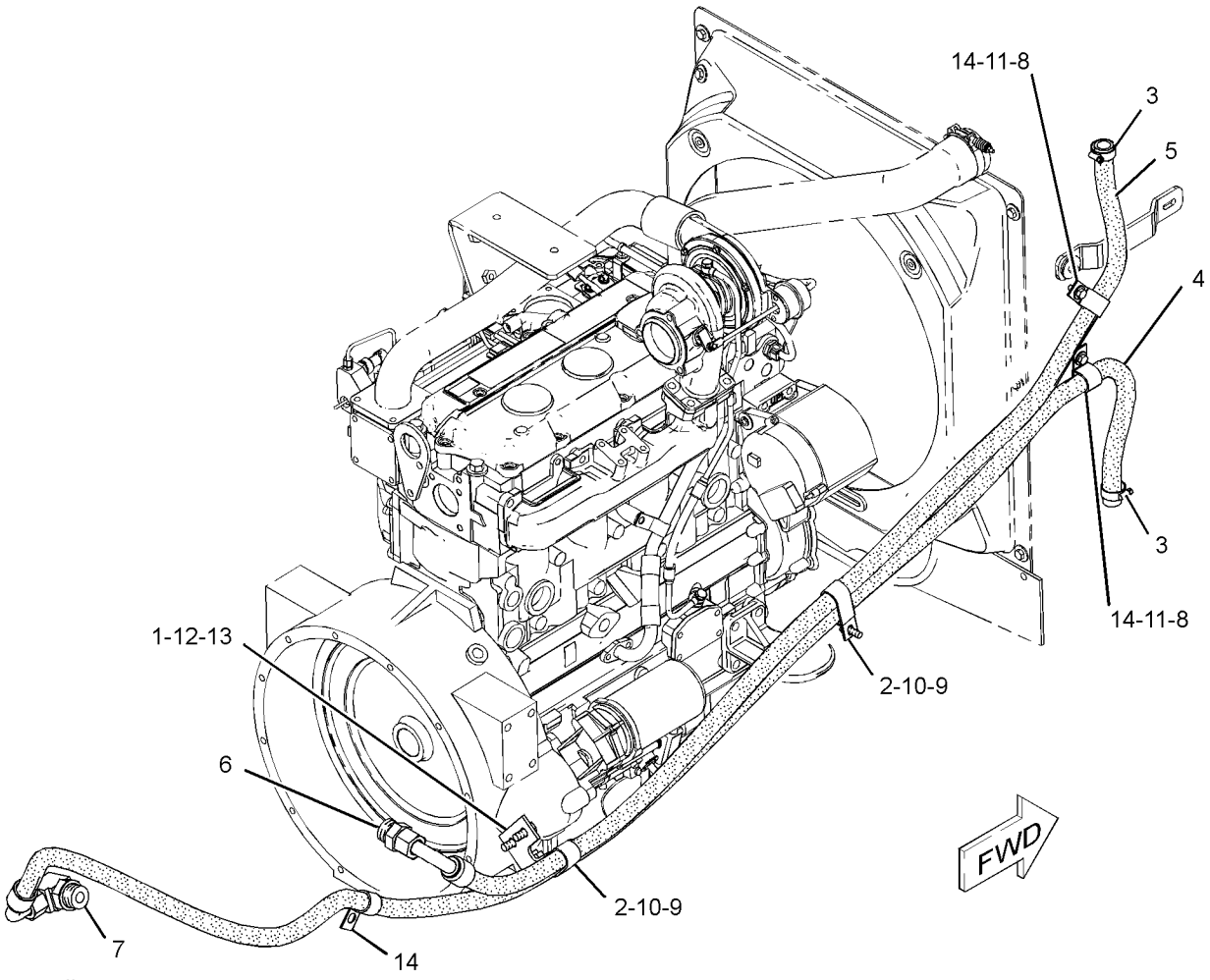

GRAPHIC #1 **<END>** g01183318

210-5951 MOUNTING GP-RAD & OIL COOLER–

TRANSMISSION, HYDRAULIC OIL (CHG -03 THRU -08)

S/N: HLS1-UP

PART OF 214-2202 COOLING AR

SMCS-1353, 1374 **i02366621**

NOTE	REF NO	GRAPHIC REF	PART NUMBER	QTY	PART NAME 1 2 3 4 5 6 (PRODUCT LEVEL)	SEE PAGE
	1	1	**2W-9710**	4	MOUNT AS	
	2	1	**6N-6984**	2	MOUNT-RUBBER	
	3	1	**123-4065**	6	RIVET-POP	
	4	1	**140-3640**	2	PLATE	
	5	1	**210-6139**	1	HOSE-RADIATOR (LOWER)	
	6	1	**210-6141**	1	HOSE-RADIATOR (UPPER)	
	7	1	**214-3647**	1	BAFFLE	
Y	8	1	*214-7407*	1	TANK GP-EXPANSION (COOLANT)	54
	9	1	**214-7457**	1	CLAMP	
	10	1	**214-7458**	1	CLAMP-HOSE	
	11	1	**216-6945**	2	CLAMP	
	12	1	**217-2308**	1	SHROUD AS	
	13	1	**7X-0579**	14	WASHER-HARD (8.8X25.5X2-MM THK)	
	14	1	**7X-0603**	4	WASHER-HARD (9.9X35X2.5-MM THK)	
M	15	1	**8T-4133**	4	NUT (M10X1.5-THD)	
M	16	1	**8T-4182**	4	BOLT (M10X1.5X45-MM)	
M	17	1	**8T-4189**	4	BOLT (M8X1.25X20-MM)	
M	18	1	**8T-4200**	10	BOLT (M8X1.25X16-MM)	
	19	1	**8T-4222**	8	WASHER-PLATED (11X32X2.5-MM THK)	
M	20	1	**8T-4908**	4	BOLT (M8X1.25X25-MM)	
E	21	1	**8C-3681**		HOSE (36-CM)	
J	22	1	**136-7728**		SEAL-COMPOSITE (4.45-DM EACH)	

E-ORDER BY THE CENTIMETER
J-ORDER BY THE DECIMETER
M-METRIC PART
Y-SEPARATE ILLUSTRATION

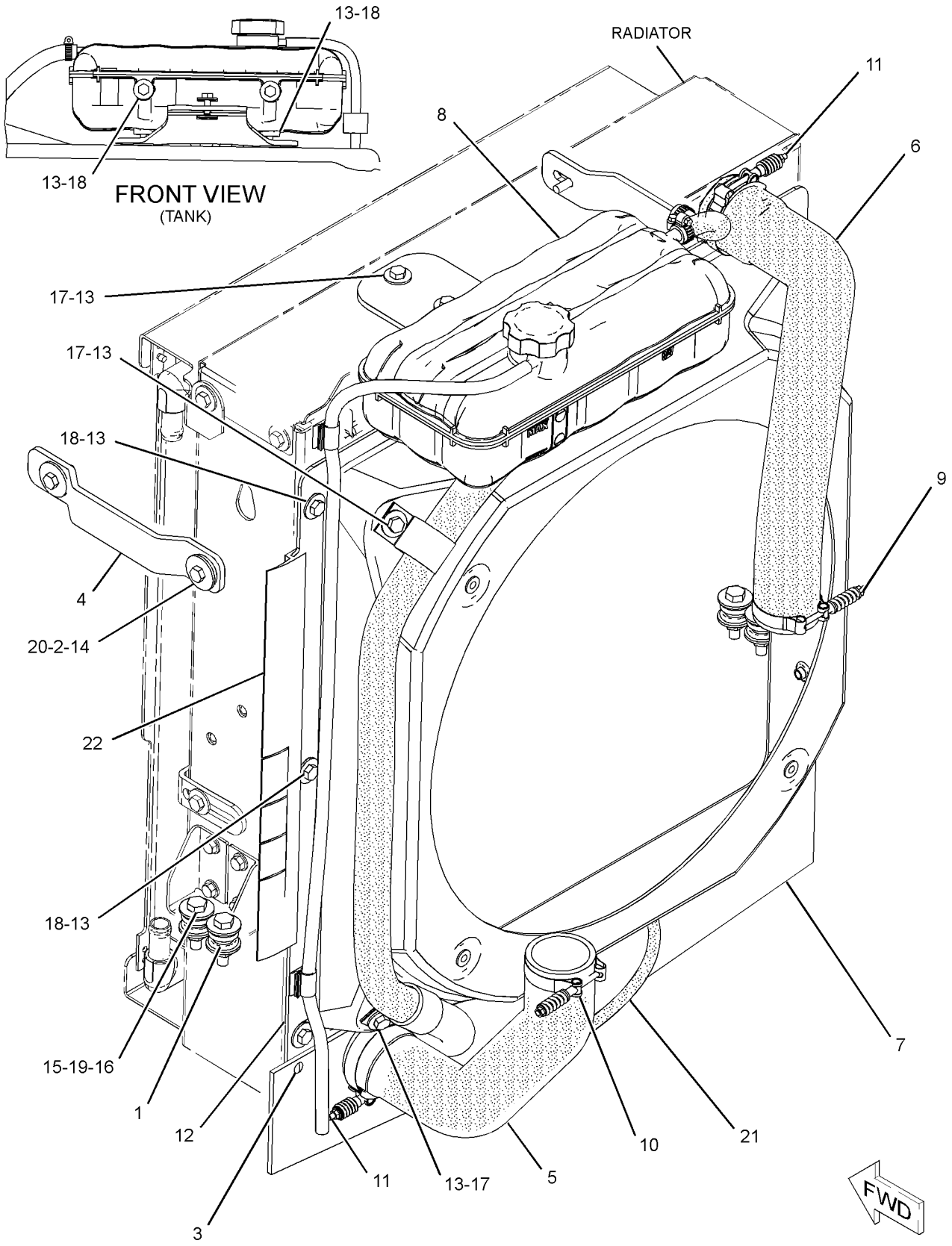

GRAPHIC #1 **<END>** g01183008

230-7355 PUMP GP-WATER (CHG -00, -01, 225-8016-01)

S/N: CRS1-UP

PART OF 273-3610 ENGINE AR

SMCS-1361 **i02469863**

NOTE	REF NO	GRAPHIC REF	PART NUMBER	QTY	PART NAME 1 2 3 4 5 6 (PRODUCT LEVEL)	SEE PAGE
	1	1	**6I-0217**	2	BOLT (M8X1.25X20-MM)	
	2	1	**6I-0254**	2	BOLT (M8X1.25X30-MM)	
M	3	1	**100-3751**	5	BOLT (M8X1.25X65-MM)	
	4	1	**113-8129**	2	BOLT (M8X75-MM)	
	5	1	**225-7741**	1	CONNECTION AS	
	6	1	**225-7738**	1	SEAL-O-RING	
	7	1	**225-7739**	1	SEAL-O-RING	
	8	1	**225-8016**	1	PUMP GP-WATER	
		1	**286-3592**	1	PUMP-GEAR	
	9	1	**225-8019**	1	GASKET	
					AVAILABLE REPAIR KIT(S):	
			247-0144	1	PUMP GP-WATER	
					(INLCUDES 2 DIFFERENT GASKETS)	

M-METRIC PART

230-7355 **PUMP GP-WATER** *(contd.)* **i02469863**

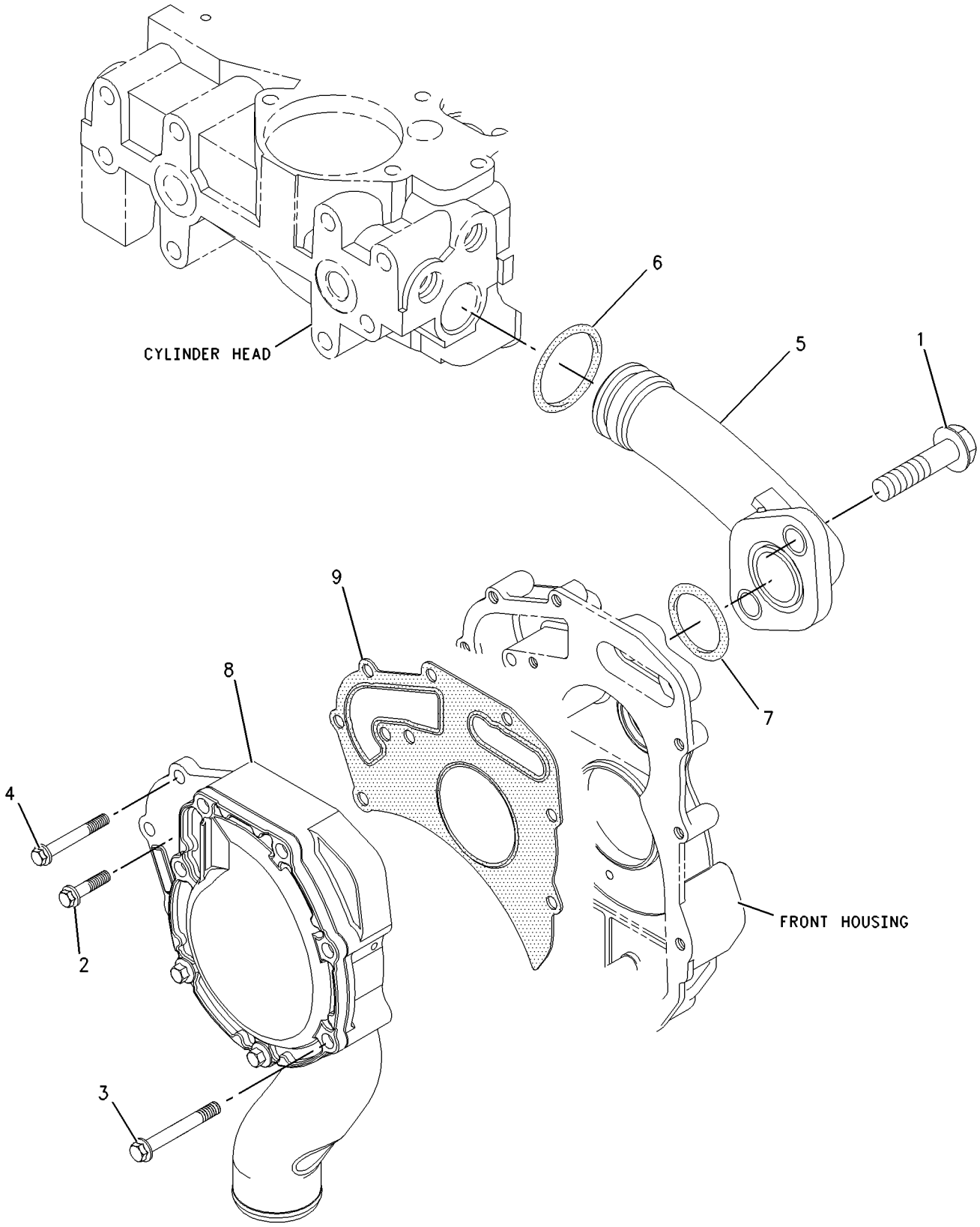

GRAPHIC #1 **<END>** g00912411

210-5949 RADIATOR & OIL COOLER GP–
HYDRAULIC, TRANSMISSION (CHG -03 THRU -07)
S/N: HLS1-UP
AN ATTACHMENT

SMCS-1351 **i02454708**

NOTE	REF NO	GRAPHIC REF	PART NUMBER	QTY	PART NAME 1 2 3 4 5 6 (PRODUCT LEVEL)	SEE PAGE
	1	1	*210-5948*	1	RADIATOR GP	
		1	**1V-6585**	1	VALVE-SHUTOFF	
	2	1	**210-5953**	1	COOLER AS-OIL (HYDRAULIC, TRANSMISSION)	
		1	**210-5954**	1	CORE AS-OIL COOLER (TRANSMISSION, 18-ROW)	
		1	**210-5955**	1	CORE AS-OIL COOLER (HYDRAULIC, 10-ROW)	
	3	1	**8C-0572**	2	WASHER (8.8X25.5X2-MM THK)	
M	4	1	**8T-4200**	2	BOLT (M8X1.25X16-MM)	

M-METRIC PART

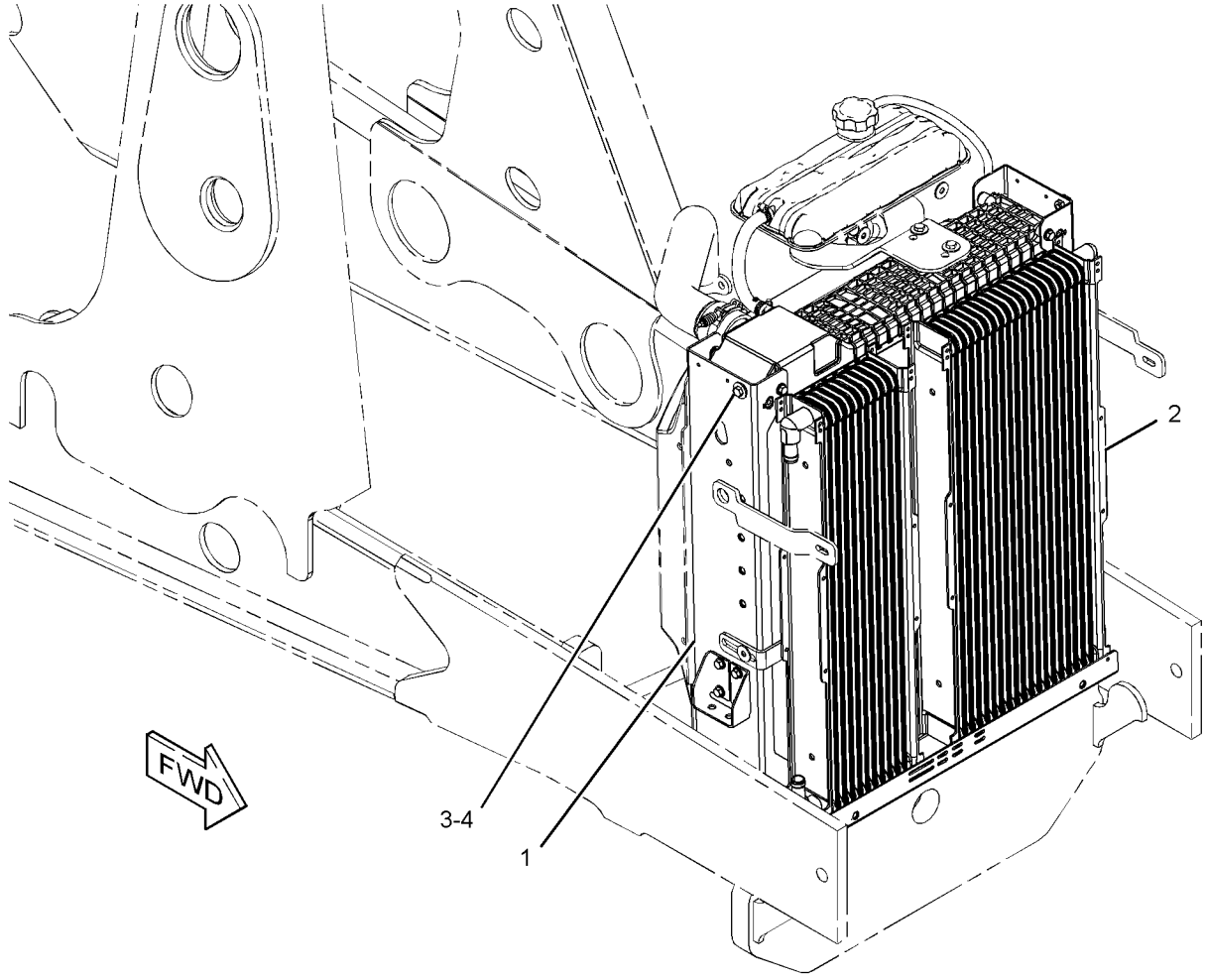

GRAPHIC #1 **<END>** g01195436

214-4749 RADIATOR & OIL COOLER GP–
HYDRAULIC, TRANSMISSION (CHG -01 THRU -04)
S/N: HLS1-UP
AN ATTACHMENT

SMCS-1351 **i02355834**

NOTE	REF NO	GRAPHIC REF	PART NUMBER	QTY	PART NAME 1 2 3 4 5 6 (PRODUCT LEVEL)	SEE PAGE
	1	1	**214-4740**	2	RADIATOR GP	
					(EACH INCLUDES)	
		1	**1V-6585**	1	VALVE-SHUTOFF	
	2	1	**214-4745**	1	COOLER AS-OIL (HYDRAULIC, TRANSMISSION)	
		1	**214-4746**	1	CORE AS-OIL COOLER (HYDRAULIC, 20-ROW)	
		1	**214-4747**	1	CORE AS-OIL COOLER (TRANSMISSION, 11-ROW)	
	3	1	**8C-0572**	2	WASHER (8.8X25.5X2-MM THK)	
M	4	1	**8T-4200**	2	BOLT (M8X1.25X16-MM)	

M-METRIC PART

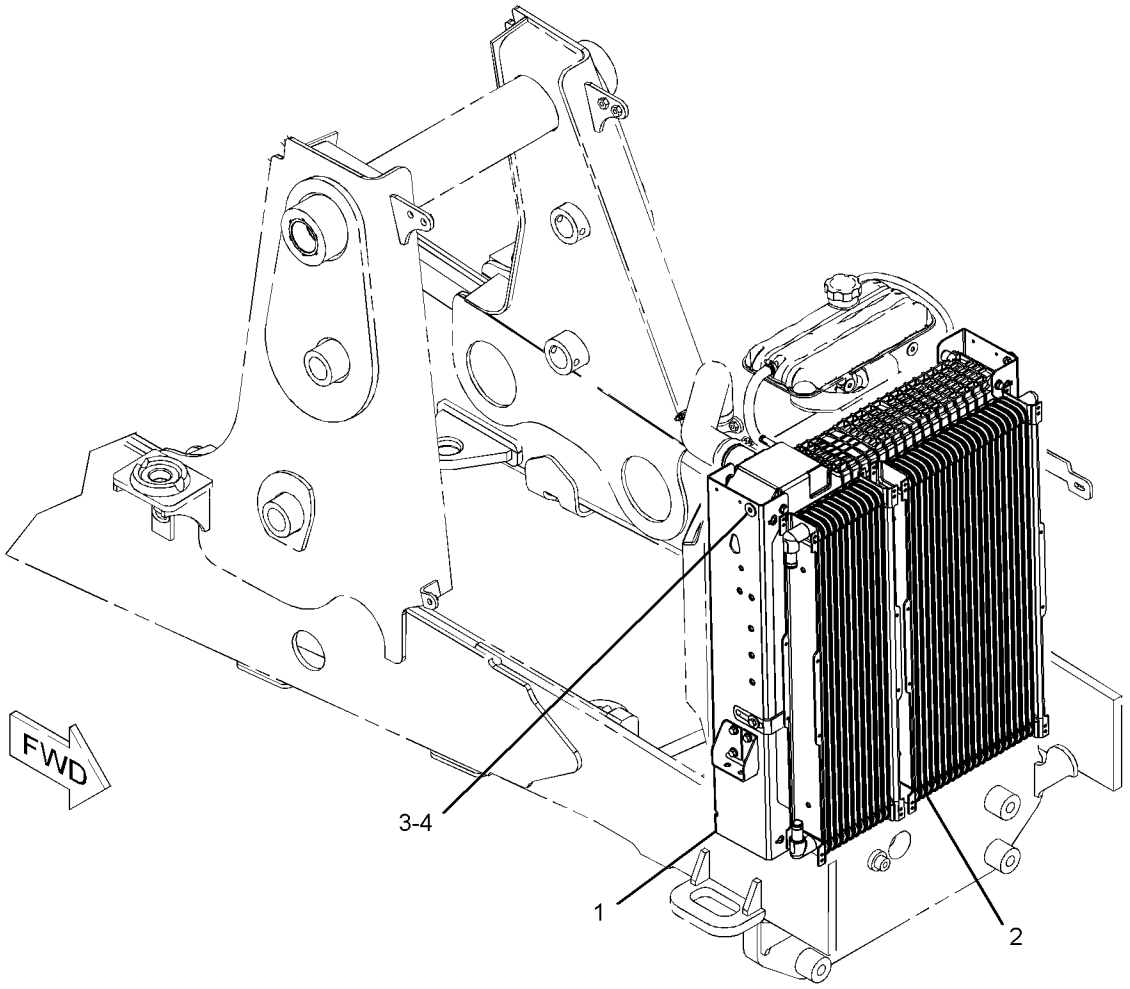

GRAPHIC #1 **<END>** g01205438

214-7407 TANK GP-EXPANSION–COOLANT (CHG -04 THRU -06)

S/N: HLS1-UP

PART OF 210-5951 MOUNTING GP-RAD & OIL COOLER

SMCS-1354 **i02369835**

NOTE	REF NO	GRAPHIC REF	PART NUMBER	QTY	PART NAME 1 2 3 4 5 6 (PRODUCT LEVEL)	SEE PAGE
	1	1	**6S-8620**	2	CLAMP-HOSE	
	2	1	**9M-7958**	2	CLAMP-HOSE	
	3	1	**031-5644**	2	CLIP	
	4	1	**247-1385**	1	TANK GP-COOLANT	
		1	**247-1384**	1	TANK AS-COOLANT	
		1	**251-3227**	1	CAP AS-RADIATOR	
	5	1	**250-2314**	1	BRACKET AS	
M		1	**8T-3612**	2	NUT-WELD (M8X1.25-THD)	
	6	1	**4D-7388**	2	CLIP	
E	7	1	**9X-2133**		HOSE (23-CM)	
E	8	1	**8C-3681**		HOSE (96-CM)	
	9	1	**259-8417**	1	HOSE	

E-ORDER BY THE CENTIMETER
M-METRIC PART

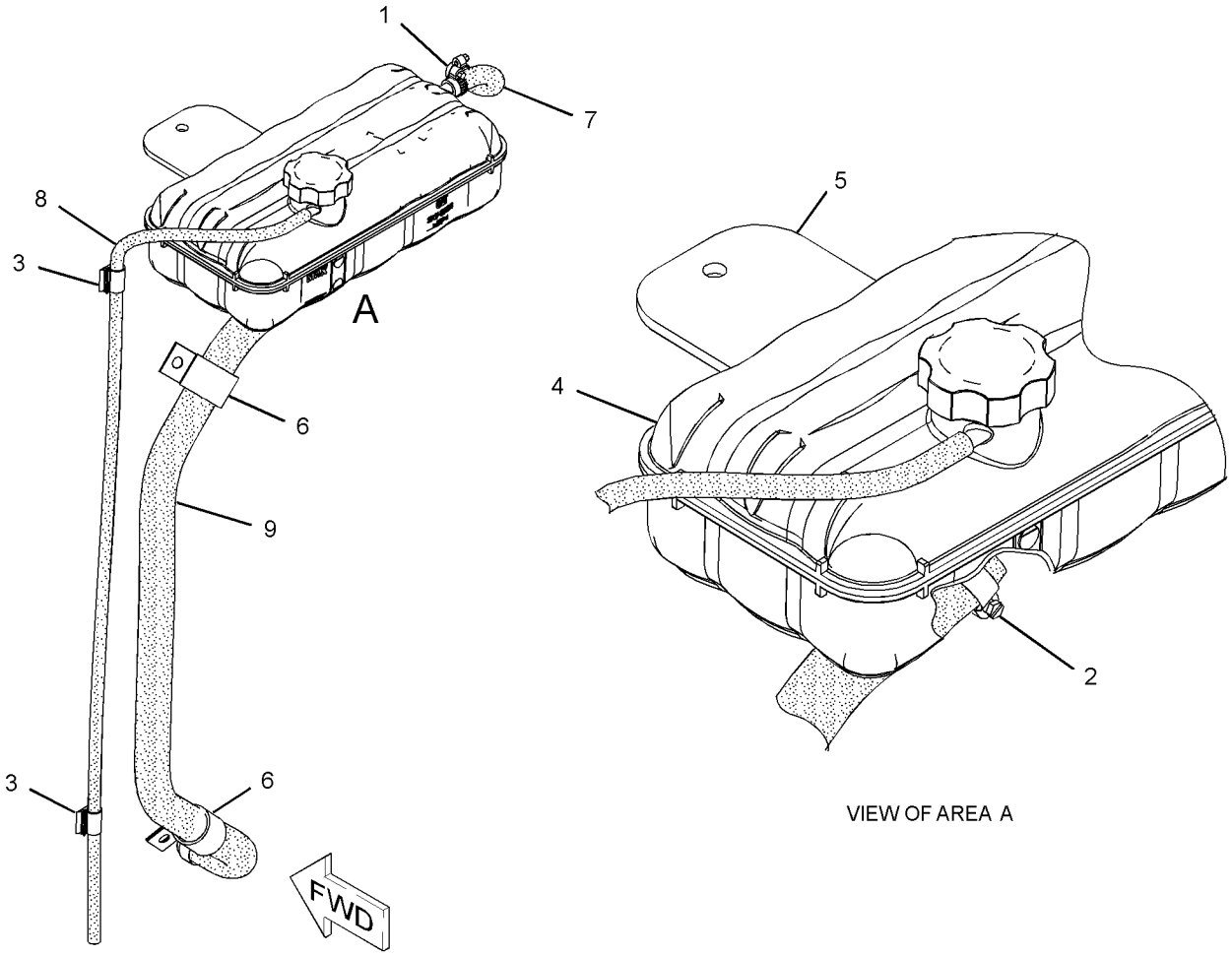

GRAPHIC #1 **<END>** g01183359

AIR INLET AND EXHAUST SYSTEM

224-9473 AIR CLEANER GP (CHG -01 THRU -06)

S/N: HLS1-UP

PART OF 214-6902 ENGINE AR

SMCS-1051, 1054 **i02369731**

NOTE	REF NO	GRAPHIC REF	PART NUMBER	QTY	PART NAME 1 2 3 4 5 6 (PRODUCT LEVEL)	SEE PAGE
	1	1	**8T-6726**	1	CLAMP-HOSE	
	2	1	**110-2445**	1	CLAMP-HOSE	
	3	1	**127-4471**	1	CLAMP-HOSE	
	4	1	**223-8995**	1	HOSE	
Y	5	1	**234-1981**	1	AIR CLEANER GP	56
	6	1	**234-2622**	1	HOSE-AIR	
	7	1	**238-9192**	1	PLATE AS	
	8	1	**248-3231**	1	DUCT-AIR	
	9	1	**249-5512**	1	SEAL	
	10	1	**253-4137**	1	SEAL	
	11	1	**253-4138**	1	STUD	
M	12	1	**096-5866**	4	BOLT (M8X1.25X75-MM)	
M	13	1	**129-3178**	1	LOCKNUT (M6X1-THD)	
	14	1	**226-0449**	1	CLAMP-HOSE	
	15	1	**7X-0586**	2	WASHER-HARD (M7.2X32X2-MM THK)	
M	16	1	**8T-4189**	2	BOLT (M8X1.25X20-MM)	
	17	1	**8T-4224**	6	WASHER-HARD (8.8X16X2-MM THK)	

M-METRIC PART
Y-SEPARATE ILLUSTRATION

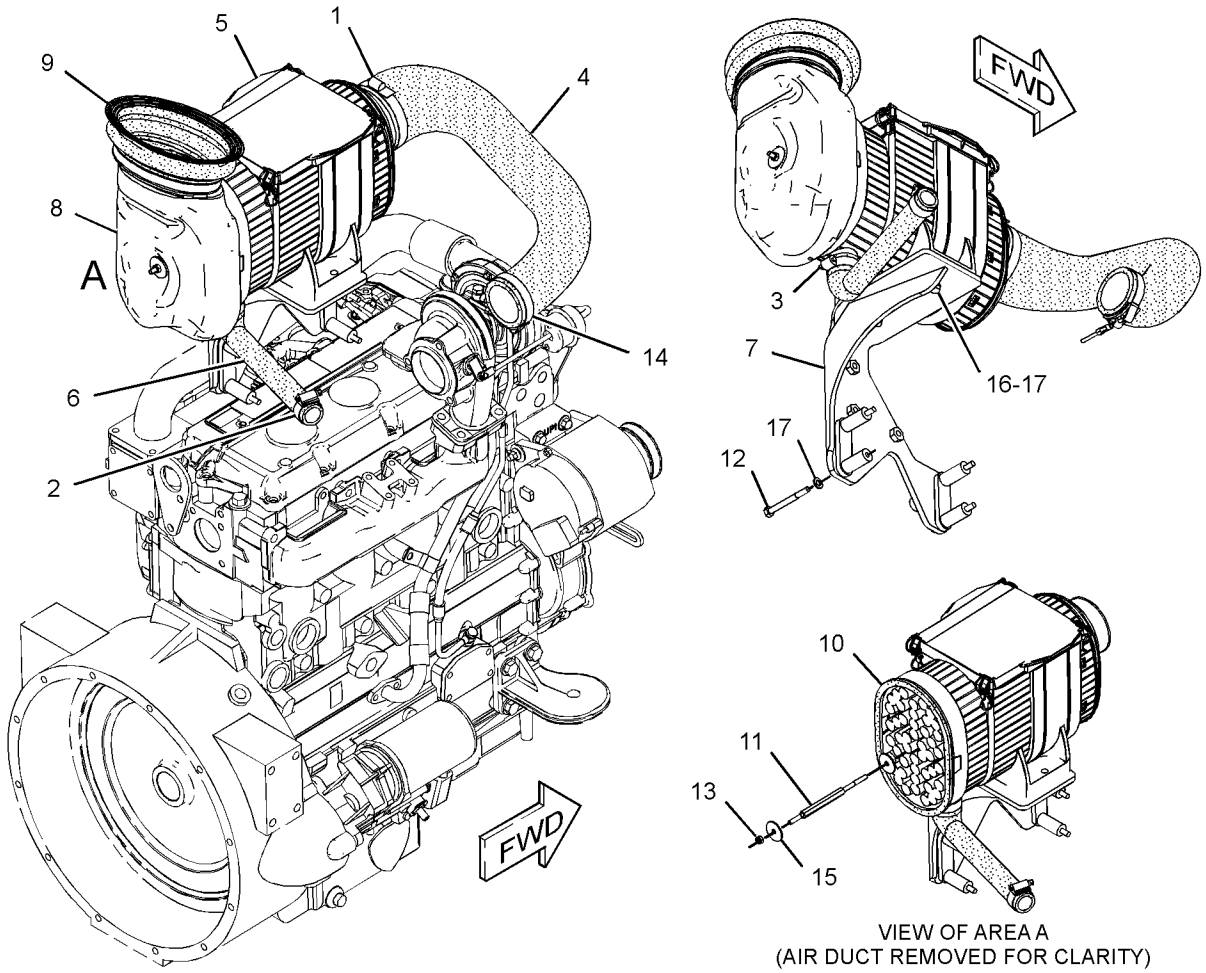

VIEW OF AREA A
(AIR DUCT REMOVED FOR CLARITY)

GRAPHIC #1 **<END>** g01183994

AIR INLET AND EXHAUST SYSTEM

234-1981 AIR CLEANER GP (CHG -00 THRU -02)

S/N: HLS1-UP

PART OF 224-9473 AIR CLEANER GP

SMCS-1051, 1054 **i02249485**

NOTE	REF NO	GRAPHIC REF	PART NUMBER	QTY	PART NAME 1 2 3 4 5 6 (PRODUCT LEVEL)	SEE PAGE
	1	1	**262-9786**	1	FRAME	
	2	1	**227-7448**	1	FILTER ELEMENT AS-AIR (PRIMARY)	
	3	1	**227-7449**	1	FILTER ELEMENT AS-AIR (SECONDARY)	
	4	1	**237-4157**	1	COVER	

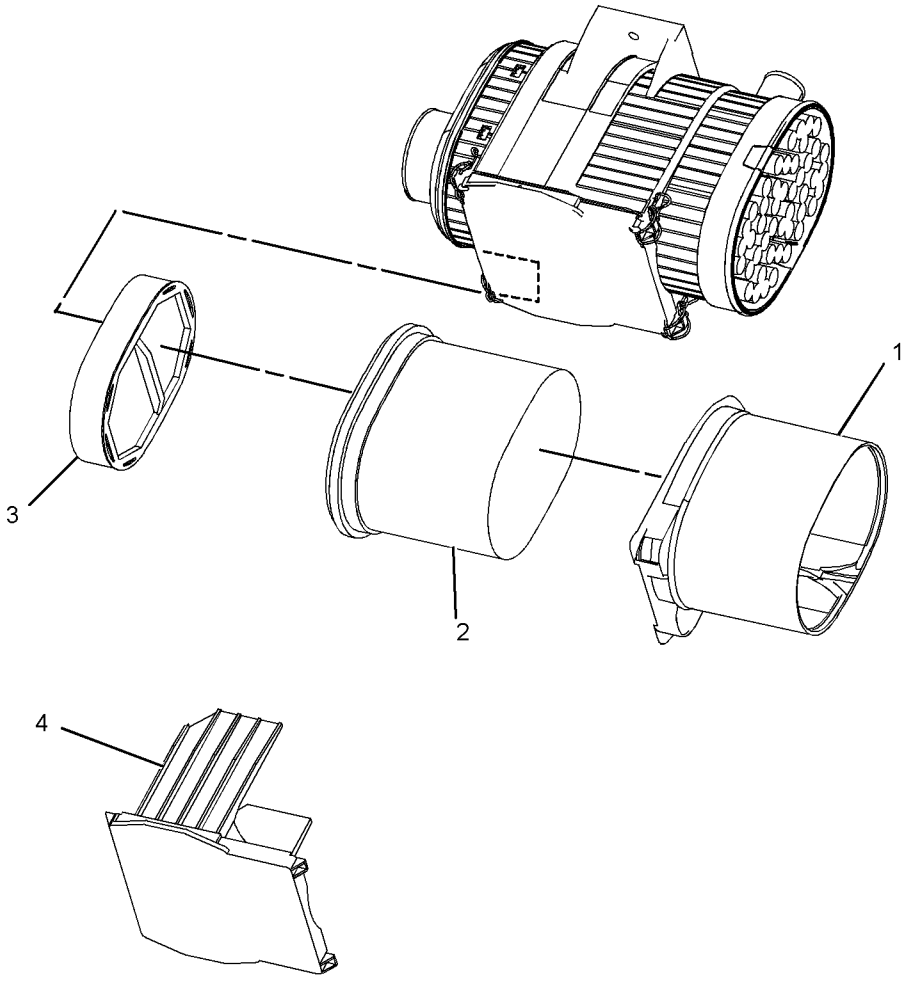

GRAPHIC #1 **<END>** g01134691

255-2279 INDICATOR GP-AIR FILTER CHANGE (CHG -00, -01)

S/N: HLS1-UP

PART OF 269-2125, 269-2126, 269-2127 CAB AR, 269-2123, 269-2124 CANOPY AR AN ATTACHMENT

SMCS-7452 **i02446415**

NOTE	REF NO	GRAPHIC REF	PART NUMBER	QTY	PART NAME 1 2 3 4 5 6 (PRODUCT LEVEL)	SEE PAGE
	1	1	**255-4692**	1	FITTING-HOSE	
	2	1	**260-1336**	1	INDICATOR GP-FILTER CHANGE	
		1	**205-1627**	1	BRACKET	
		1	**260-3122**	1	INDICATOR-AIR FILTER SERVICE	
	3	1	**4B-4863**	4	WASHER (4.7X11X1.2-MM THK)	
M	4	1	**5C-8312**	2	NUT (M4X0.7-THD)	
M	5	1	**8T-9405**	2	BOLT-SOCKET HEAD (M4X0.7X16-MM)	
D	6	1	**6V-1363**		HOSE (0.3-M)	

D-ORDER BY THE METER
M-METRIC PART

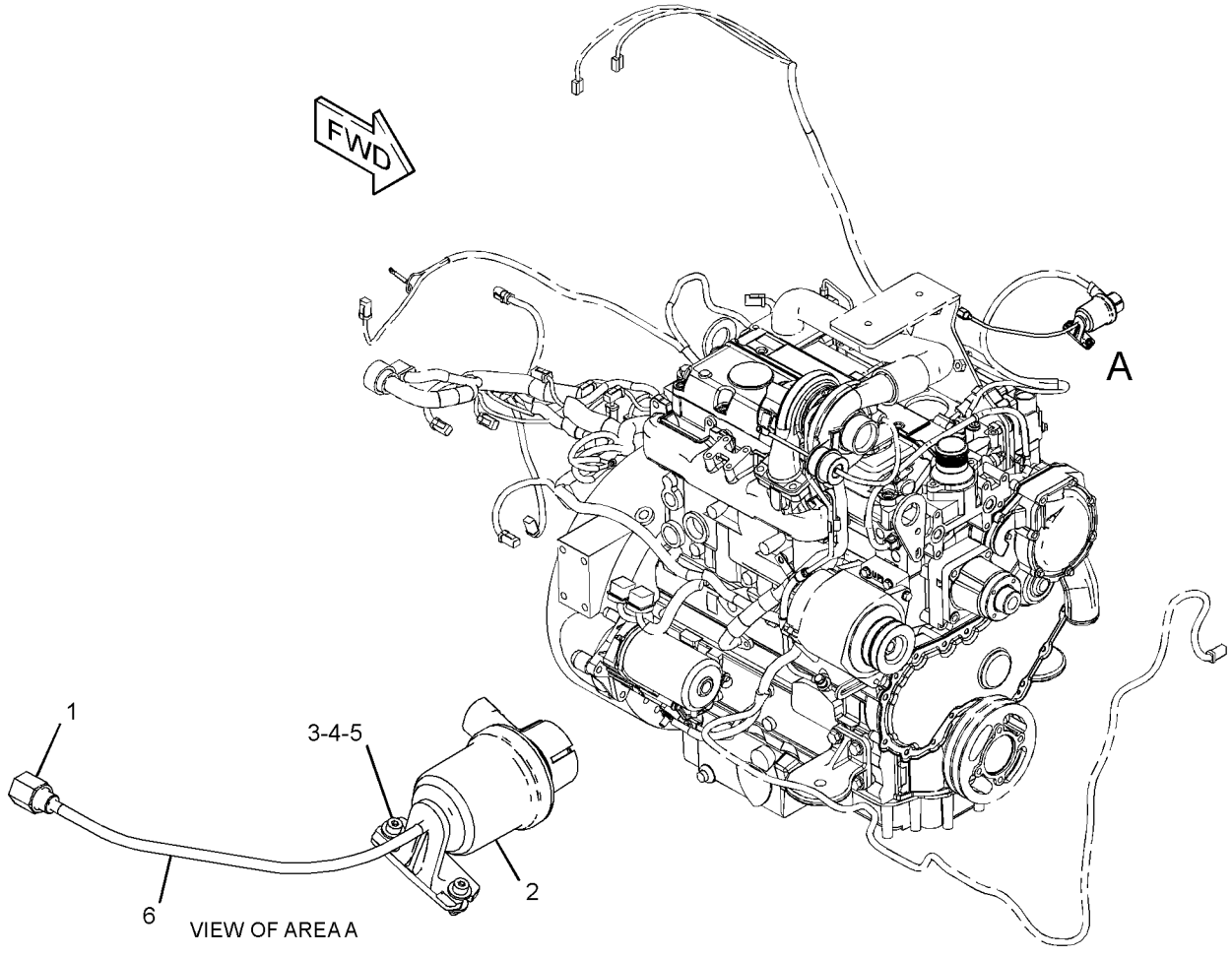

GRAPHIC #1 **<END>** g01233668

AIR INLET AND EXHAUST SYSTEM

223-4960 MUFFLER GP (CHG -01 THRU -03)

S/N: HLS1-UP

PART OF 214-6902 ENGINE AR

SMCS-1062 **i02116934**

NOTE	REF NO	GRAPHIC REF	PART NUMBER	QTY	PART NAME 1 2 3 4 5 6 (PRODUCT LEVEL)	SEE PAGE
	1	1	**6I-0364**	3	STUD (M10X1.5X30-MM)	
	2	1	**6I-0563**	3	NUT (M10X1.15-THD)	
	3	1	**235-5363**	1	MUFFLER AS	
	4	1	**237-0975**	1	PLATE AS	
M		1	**8T-3490**		NUT-WELD (M10X1.5-THD)	
	5	1	**247-4001**	1	PLATE AS	
	6	1	**254-2187**	2	CLAMP AS	
	7	1	**8T-4121**	16	WASHER-HARD (11X21X2.5-MM THK)	
M	8	1	**8T-4133**	4	NUT (M10X1.5-THD)	
M	9	1	**8T-4136**	4	BOLT (M10X1.5X25-MM)	
M	10	1	**8T-4195**	8	BOLT (M10X1.5X30-MM)	

M-METRIC PART

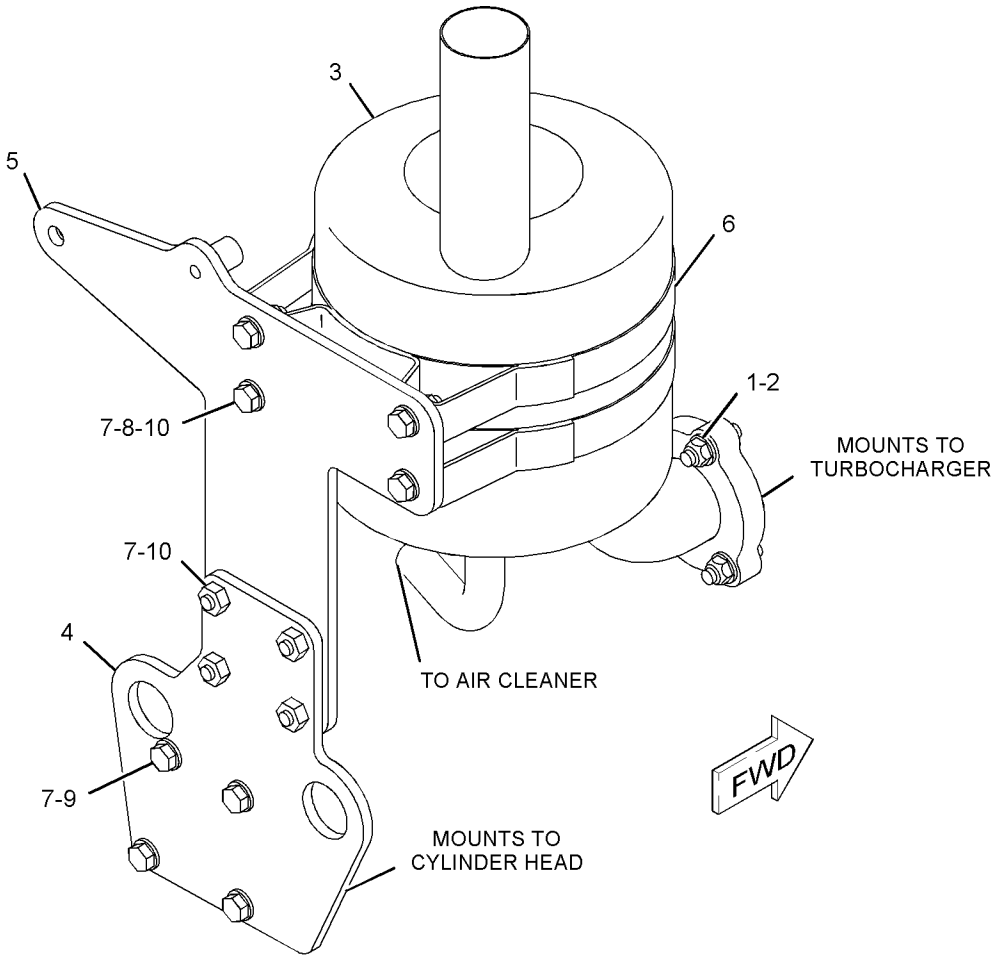

GRAPHIC #1 **<END>** g01078673

AIR INLET AND EXHAUST SYSTEM

285-0438 TURBOCHARGER GP (CHG DX00, DX01)

S/N: CRS1-UP

PART OF 273-3610 ENGINE AR

SMCS-1052, 1053 **i02439110**

NOTE	REF NO	GRAPHIC REF	PART NUMBER	QTY	PART NAME 1 2 3 4 5 6 (PRODUCT LEVEL)	SEE PAGE
	1	1	**6I-0217**	2	BOLT (M8X1.25X20-MM)	
	2	1	**6I-0254**	4	BOLT (M8X1.25X30-MM)	
	3	1	**6I-0563**	4	NUT (M10X1.15-THD)	
	4	1	**6I-0572**	4	BOLT (M8X1.25X20-MM)	
	5	1	**106-8916**	2	BOLT (M6X16-MM)	
	6	1	**141-1667**	2	CLAMP-HOSE	
	7	1	**147-5553**	4	STUD	
	8	1	**174-9638**	8	BOLT	
	9	1	**194-5390**	1	GASKET-MANIFOLD	
	10	1	**225-8533**	1	GASKET	
	11	1	**225-8534**	1	GASKET	
	12	1	**225-8536**	1	GASKET	
	13	1	**285-0432**	1	BRACKET-SUPPORT	
	14	1	**234-3030**	1	GASKET	
	15	1	**237-2799**	1	TUBE AS	
	15A	1	**225-8524**	2	BOLT (M10X1X23-MM)	
	15B	1	**225-8526**	4	WASHER (10.4X13.75X1.37-MM THK)	
	16	1	**237-3786**	1	TURBOCHARGER GP	
	17	1	**237-3791**	1	TUBE AS	
	18	1	**237-3794**	1	BOLT	
	19	1	**237-3921**	1	CLIP	
	20	1	**237-3922**	1	PIPE-EXHAUST	
	21	1	**255-3447**	1	MANIFOLD-EXHAUST	
	22	1	**263-5376**	1	HOSE	

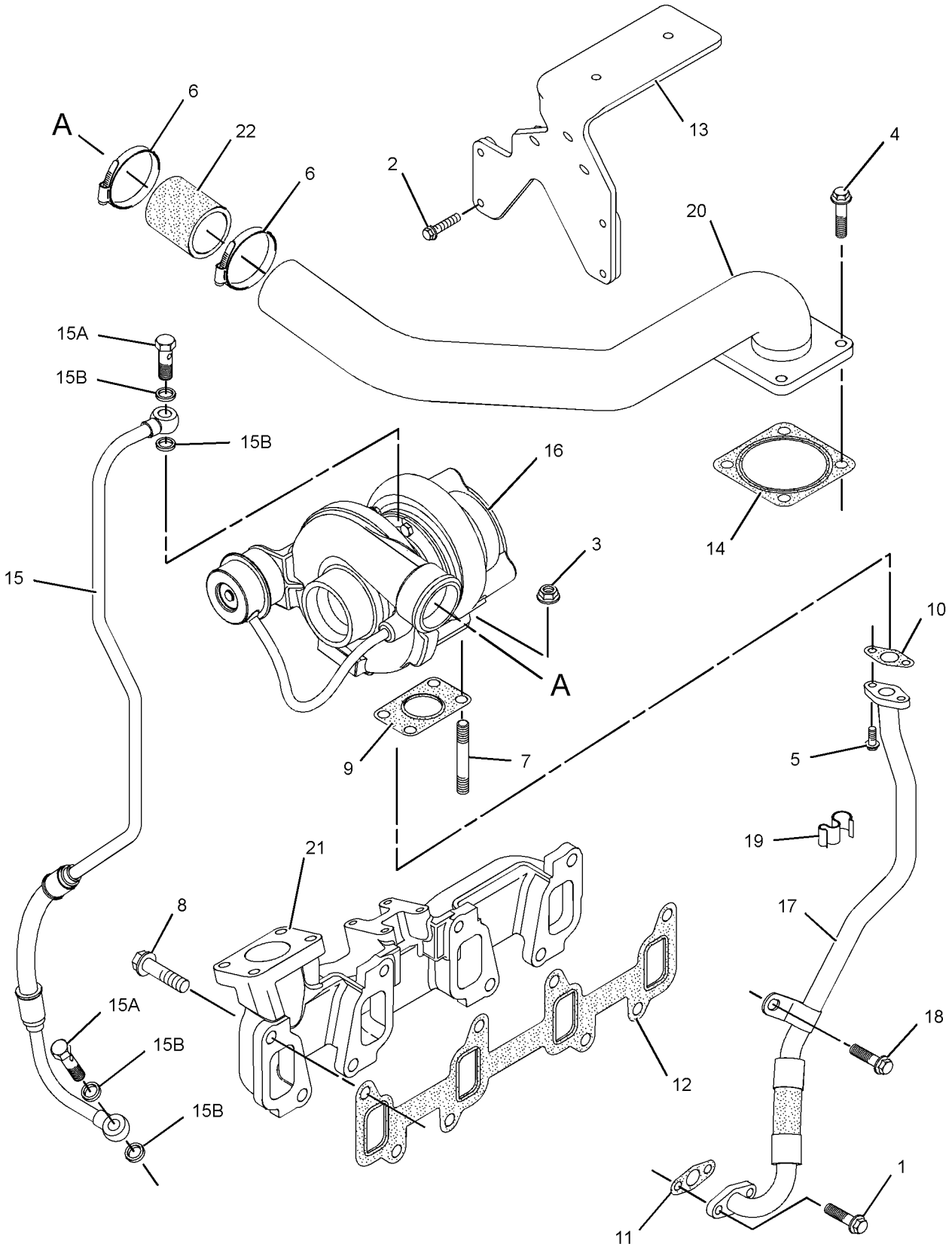

GRAPHIC #1 **<END>** g01221080

206-1640 CONTROL GP-GOVERNOR (CHG -01, -02)

S/N: HLS1-UP

PART OF 214-6902 ENGINE AR

SMCS-1265 **i02369708**

NOTE	REF NO	GRAPHIC REF	PART NUMBER	QTY	PART NAME 1 2 3 4 5 6 (PRODUCT LEVEL)	SEE PAGE
	1	1	**151-4841**	3	BLOCK	
Y	2	1	**209-3378**	1	PEDAL GP-GOVERNOR	605
	3	1	**235-0128**	1	CABLE AS	
	4	1	**239-1434**	1	PLATE	
	5	1	**239-1435**	1	BRACKET AS	
	6	1	**248-2707**	1	GROMMET	
M	7	1	**119-5025**	3	SCREW-FLAT HEAD (M6X1X25-MM)	
	8	1	**164-1395**	1	KNOB	
Y	9	1	**209-3367**	1	LEVER GP-GOVERNOR	594
	10	1	**3S-2093**	1	STRAP-CABLE	
	11	1	**7K-1181**	3	STRAP-CABLE	
M	12	1	**8T-4138**	3	BOLT (M6X1X20-MM)	
	13	1	**8T-4205**	3	WASHER-HARD (7.2X14.5X2-MM THK)	
	14	1	**8T-4224**	4	WASHER-HARD (8.8X16X2-MM THK)	
M	15	1	**8T-4908**	4	BOLT (M8X1.25X25-MM)	

M-METRIC PART
Y-SEPARATE ILLUSTRATION

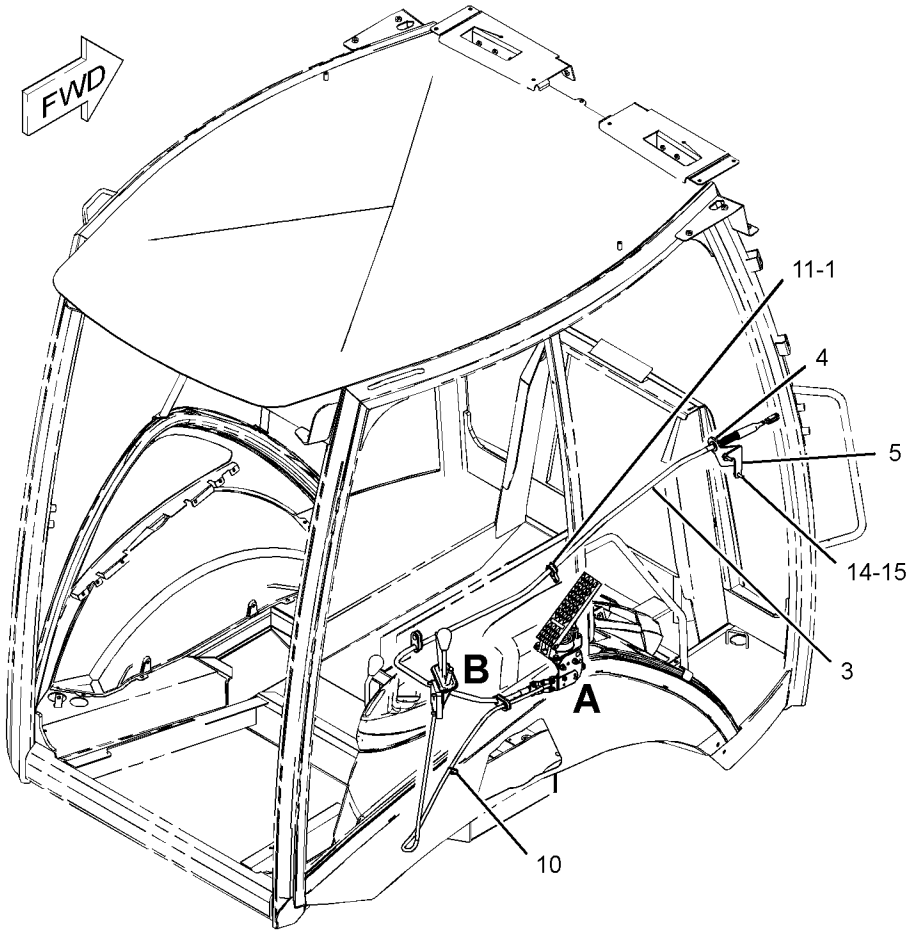

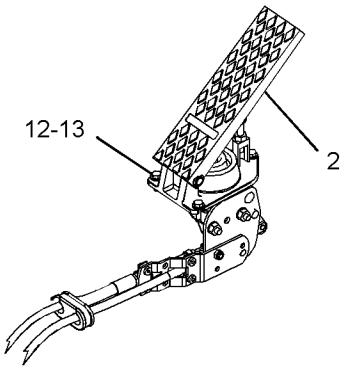

VIEW OF AREA A

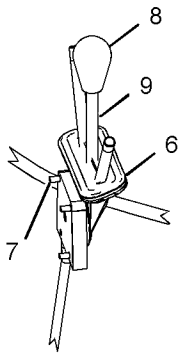

VIEW OF AREA B

GRAPHIC #1 **<END>** g01183916

247-5361 LINES GP-FUEL (CHG -01, -02)

S/N: HLS1-UP

PART OF 214-6902 ENGINE AR

SMCS-1274 **i02204300**

NOTE	REF NO	GRAPHIC REF	PART NUMBER	QTY	PART NAME 1 2 3 4 5 6 (PRODUCT LEVEL)	SEE PAGE
	1	1	**1P-4278**	10	CLAMP-HOSE	
	2	1	**4D-6988**	1	CLIP	
	3	1	**215-9515**	1	CONNECTOR-HOSE (QUICK DISCONNECT)	
	4	1	**216-6891**	1	TUBE AS	
	5	1	**216-6892**	1	TUBE AS	
	6	1	*224-5917*	1	CONNECTOR-SPECIAL	
	7	1	**241-4275**	1	TEE-SPECIAL	
	8	1	**5P-9085**	1	CLIP	
	9	1	**6K-8178**	1	CLIP	
	10	1	**7C-4354**	1	CLIP	
	11	1	**7N-3718**	1	CLIP	
	12	1	**7X-7729**	1	WASHER (11X25X3-MM THK)	
	13	1	**8M-2773**	1	CLIP	
	14	1	**8T-4121**	2	WASHER-HARD (11X21X2.5-MM THK)	
M	15	1	**8T-4133**	1	NUT (M10X1.5-THD)	
M	16	1	**8T-4136**	2	BOLT (M10X1.5X25-MM)	
M	18	1	**8T-4179**	1	BOLT (M12X1.75X20-MM)	
M	19	1	**8T-4189**	1	BOLT (M8X1.25X20-MM)	
	20	1	**8T-4223**	1	WASHER-HARD (13.5X25.5X3-MM THK)	
	21	1	**8T-4224**	1	WASHER-HARD (8.8X16X2-MM THK)	
	22	1	**9M-8406**	1	CLIP	
	23	1	**5P-1442**		HOSE (77-CM)	
	24	1	**5P-1420**		HOSE (76-CM)	
	25	1	**5P-1420**		HOSE (59-CM)	
	26	1	**5P-1420**		HOSE (55-CM)	
	27	1	**5P-1420**		HOSE (14-CM)	

M-METRIC PART

247-5361 **LINES GP-FUEL** *(contd.)* **i02204300**

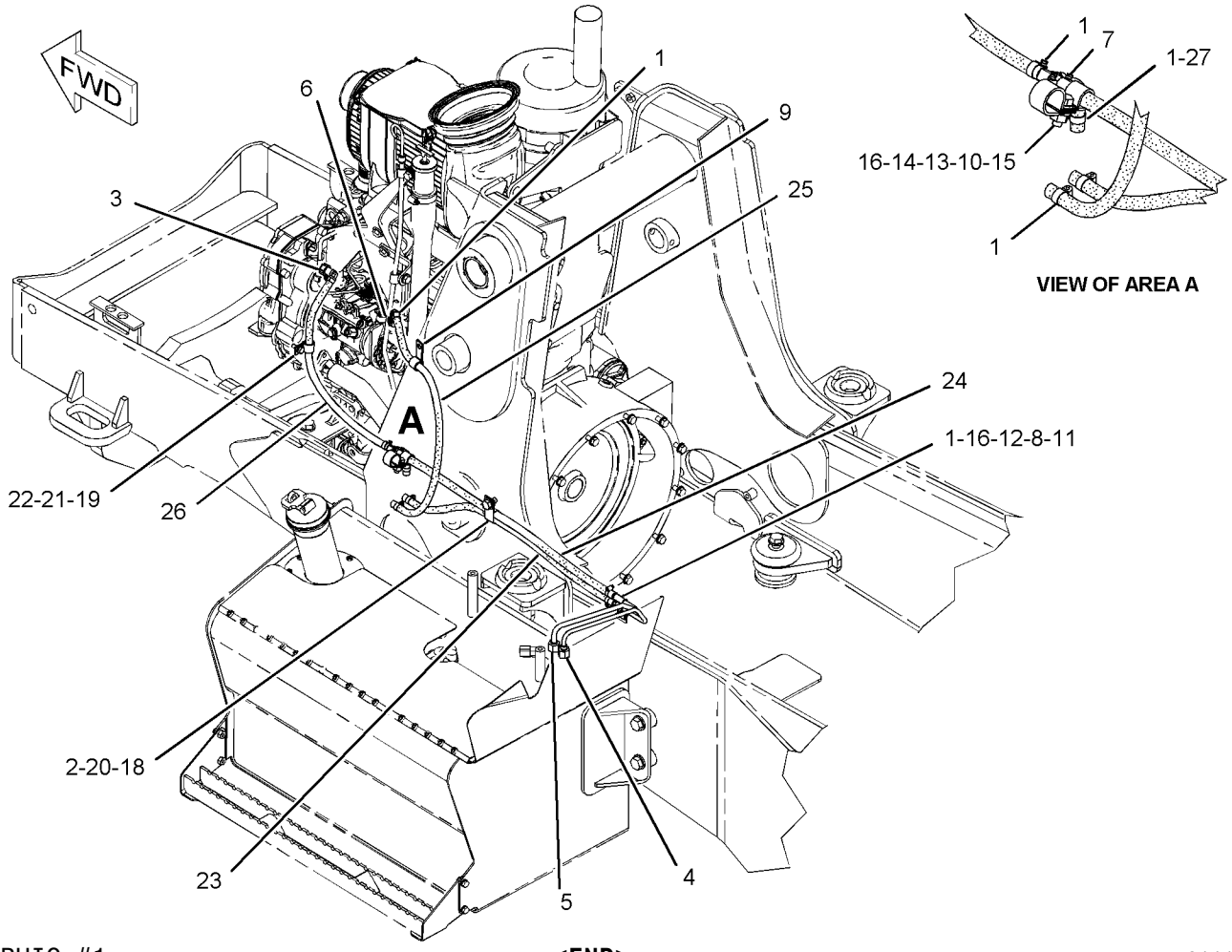

GRAPHIC #1

<END>

g01113499

FUEL SYSTEM

247-4885 LINES GP-FUEL FILTER (CHG -00, -01)

S/N: CRS1-UP

PART OF 273-3610 ENGINE AR

SMCS-1261, 1274 **i02225715**

NOTE	REF NO	GRAPHIC REF	PART NUMBER	QTY	PART NAME 1 2 3 4 5 6 (PRODUCT LEVEL)	SEE PAGE
	1	1	**247-4884**	1	TUBE AS	
	2	1	**232-3126**	1	CLIP	

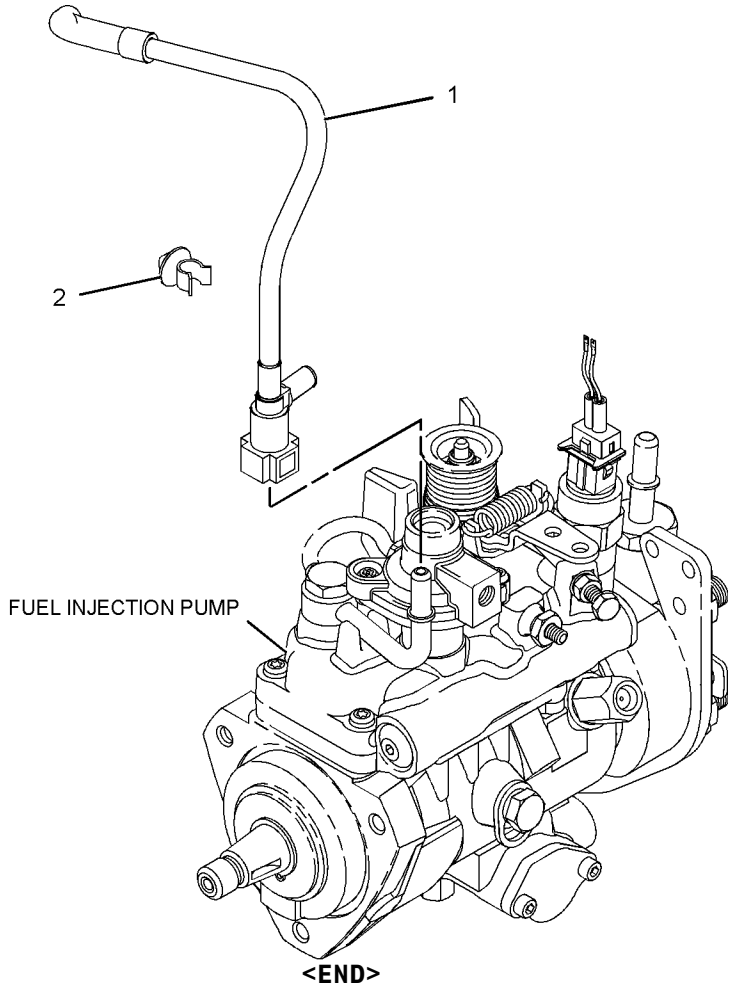

GRAPHIC #1

<END>

g01123693

277-5188 PUMP GP-FUEL INJECTION (CHG -00)

S/N: CRS1-UP

PART OF 273-3610 ENGINE AR

SMCS-1251, 1290 **i02437684**

NOTE	REF NO	GRAPHIC REF	PART NUMBER	QTY	PART NAME 1 2 3 4 5 6 (PRODUCT LEVEL)	SEE PAGE
	1	1	**6I-0217**	1	BOLT (M8X1.25X20-MM)	
	2	1	**6I-0260**	3	BOLT (M8X1.25X25-MM)	
	3	1	**6I-0291**	1	NUT (M8X1.25-THD)	
	4	2	**9F-2247**	1	PLUG-PIPE	
	5	1	**100-4830**	1	BOLT (M10X1.5X20-MM)	
	6	1	**124-3815**	1	BOLT (M8X16X1.25-MM)	
	7	1	**140-8714**	1	CLIP	
	8	1	**230-8989**	1	GEAR-FUEL PUMP	
	9	1	**230-8995**	1	TUBE AS (CYL NO.1)	
	10	1	**230-8996**	1	TUBE AS (CYL NO.2)	
	11	1	**230-8997**	1	TUBE AS (CYL NO.3)	
	12	1	**230-8998**	1	TUBE AS (CYL NO.4)	
	13	2	**232-1323**	1	PLUG-CUP	
	14	1	**232-1328**	1	CAP	
	15	2	**232-1793**	1	CABLE (TIMING ADVANCE SWITCH)	
	16	1	**232-1794**	3	HOSE	
	17	1	**232-2725**	2	CLIP	
	18	1	**232-2726**	1	CLIP	
	19	1	**232-3126**	1	CLIP	
	20	1	**232-3149**	3	WASHER (8.35X16.85X1.55-MM THK)	
	21	1	**232-3157**	1	BRACKET	
	22	1	**232-3274**	4	BOLT (M8X1.25X48.1-MM)	
	23	2	**235-1790**	1	SWITCH-TEMPERATURE (TIMING ADVANCE)	
	24	1	**236-1674**	4	INJECTOR AS-FUEL	
					(EACH INCLUDES)	
	24A	1	**140-8718**	1	WASHER	
	24B	1	**236-1673**	1	NOZZLE	
	25	1	**238-8671**	4	CLAMP-INJECTOR	
	26	1	**240-5571**	1	BRACKET	
	27	1	**249-9226**	1	PUMP GP-FUEL INJECTION	
	27A	1	**152-3968**	1	SEAL-O-RING	
	27B	1	**176-6219**	1	VALVE GP-SOLENOID (12-VOLT) (FUEL SHUTOFF)	
	27C	1	**111-3422**	1	NUT	
	27D	1	**111-3423**	1	WASHER	

277-5188 **PUMP GP-FUEL INJECTION** *(contd.)* **i02437684**

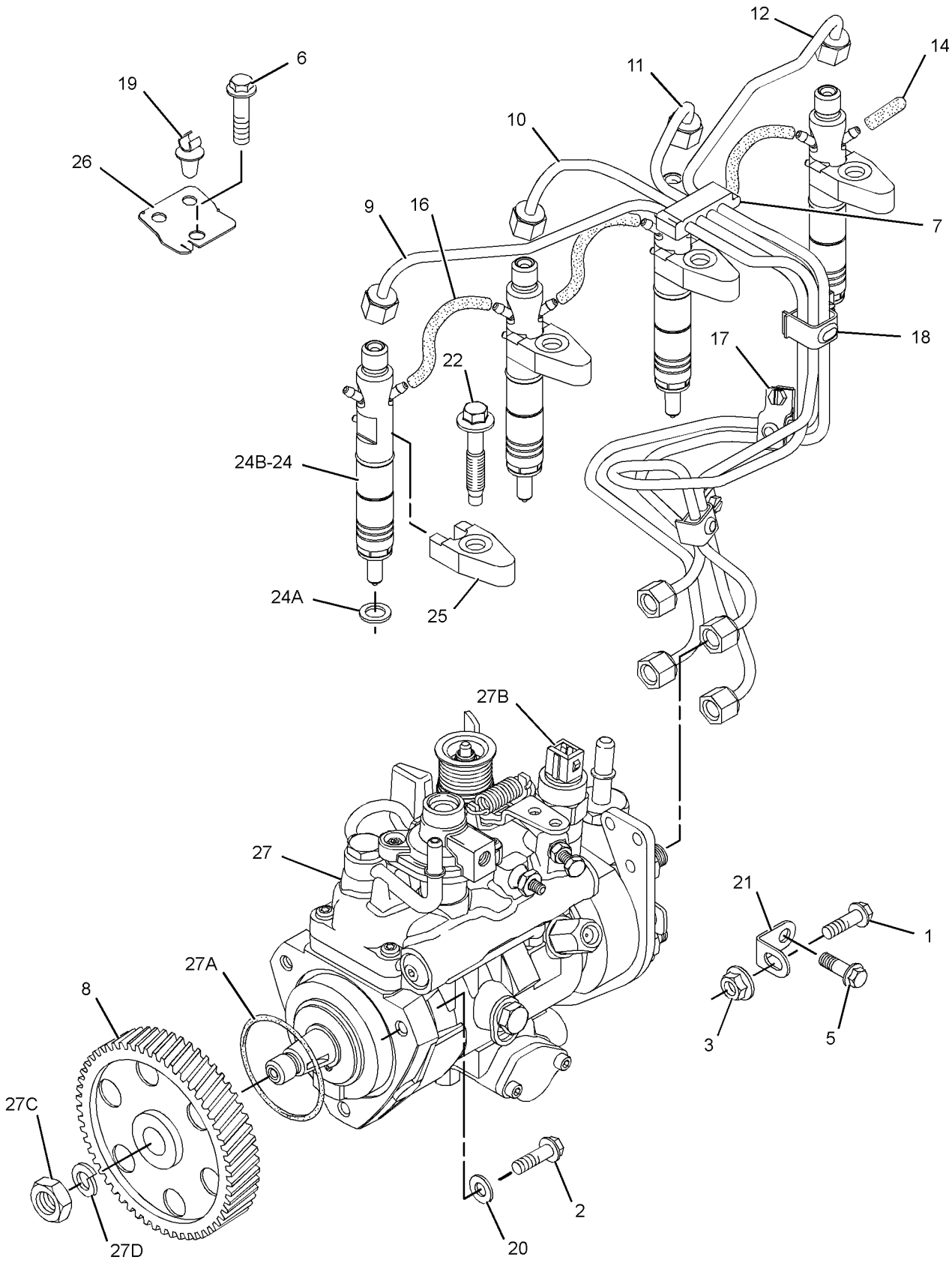

GRAPHIC #1 g01221124

277-5188 **PUMP GP-FUEL INJECTION** *(contd.)* **i02437684**

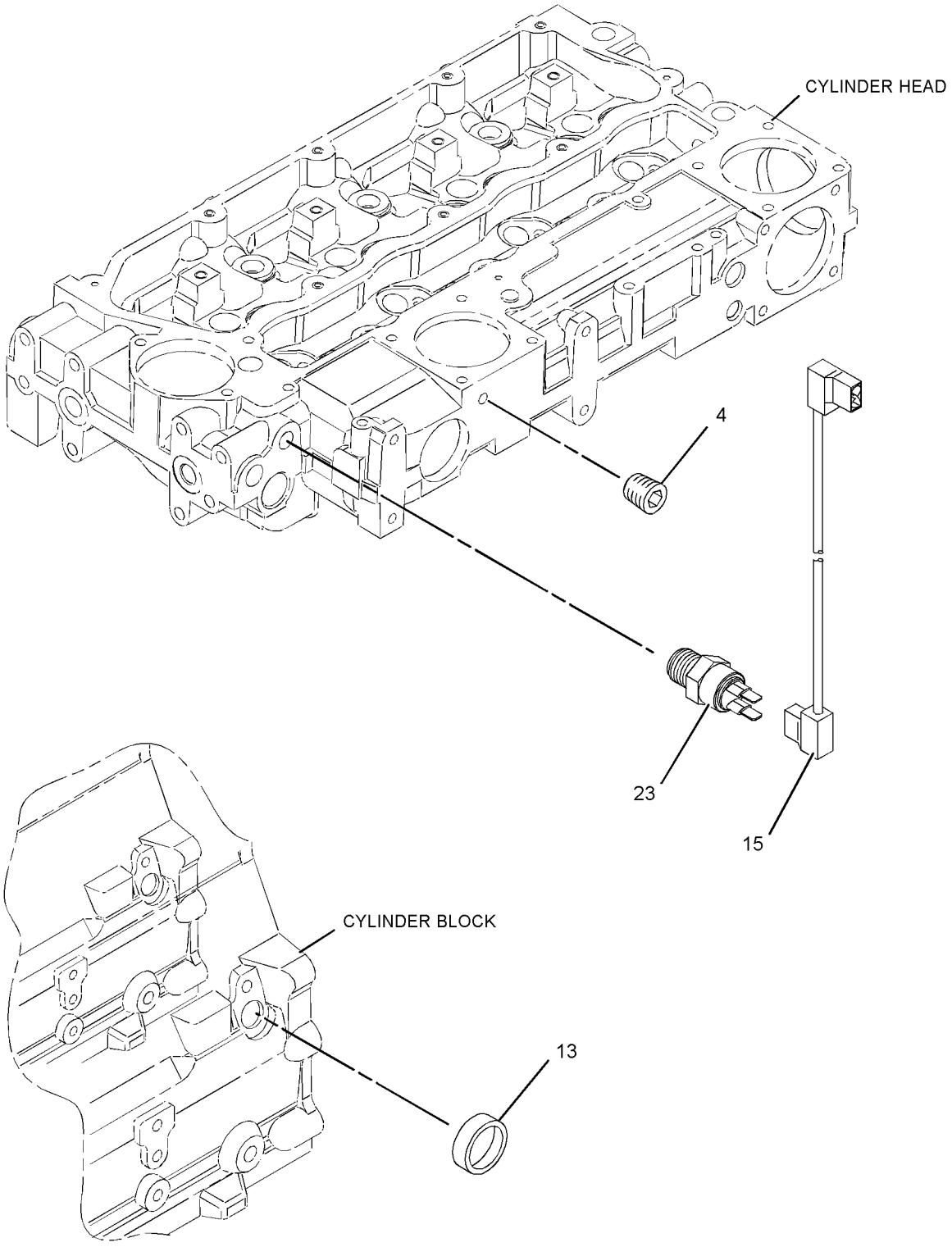

GRAPHIC #2 **<END>** g01221125

228-9129 PUMP GP-FUEL PRM & PRIM FILTER–
WITH WATER SEPARATOR (CHG -00, -01)
S/N: HLS1-UP
PART OF 253-0352 PUMP GP-FUEL PRM & PRIM FILTER

SMCS-1258, 1260, 1261 **i02249241**

NOTE	REF NO	GRAPHIC REF	PART NUMBER	QTY	PART NAME 1 2 3 4 5 6 (PRODUCT LEVEL)	SEE PAGE
	1	1	**118-8118**	1	RING-RETAINING	
	2	1	**228-9130**	1	FILTER AS-WATER SEP & FUEL	
	3	1	**228-9132**	1	FITTING	
	4	1	**193-0618**	1	SENSOR GP-MOISTURE (WATER SEPARATOR)	
	5	1	**149-9954**	1	DRAIN AS (WATER SEPARATOR)	

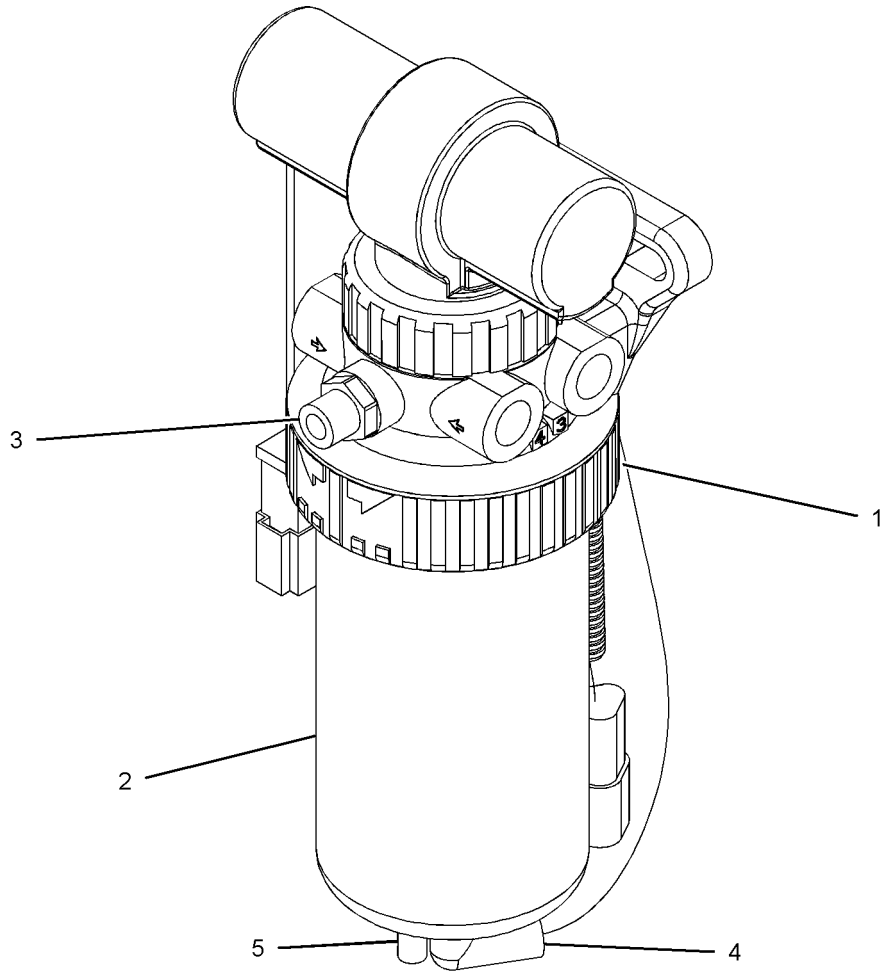

GRAPHIC #1 **<END>** g01093427

253-0352 PUMP GP-FUEL PRM & PRIM FILTER–

WITH MOUNTING (CHG -00)

S/N: HLS1-UP

PART OF 214-6902 ENGINE AR

SMCS-1258, 1260, 1261 **i02206625**

NOTE	REF NO	GRAPHIC REF	PART NUMBER	QTY	PART NAME 1 2 3 4 5 6 (PRODUCT LEVEL)	SEE PAGE
	1	1	**3S-2093**	1	STRAP-CABLE	
	2	1	**069-4080**	1	FITTING	
	3	1	*165-7951*	2	CONNECTOR AS	
					(EACH INCLUDES)	
		1	**3J-1907**	1	SEAL-O-RING	
		1	**157-1669**	1	CONNECTOR	
Y	4	1	**228-9129**	1	PUMP GP-FUEL PRM & PRIM FILTER (WITH WATER SEPARATOR)	68
	5	1	**253-0354**	1	BRACKET AS	
M		1	**6V-9632**	1	NUT-WELD (M6X1-THD)	
M		1	**8T-3490**	2	NUT-WELD (M10X1.5-THD)	
	6	1	**3J-1907**	2	SEAL-O-RING	
	7	1	**8T-4121**	4	WASHER-HARD (11X21X2.5-MM THK)	
M	8	1	**8T-4196**	2	BOLT (M10X1.5X35-MM)	
M	9	1	**8T-8894**	2	BOLT-SOCKET HEAD (M10X1.5X20-MM)	
	10	1	**9S-4191**	2	PLUG-O RING	

M-METRIC PART
Y-SEPARATE ILLUSTRATION

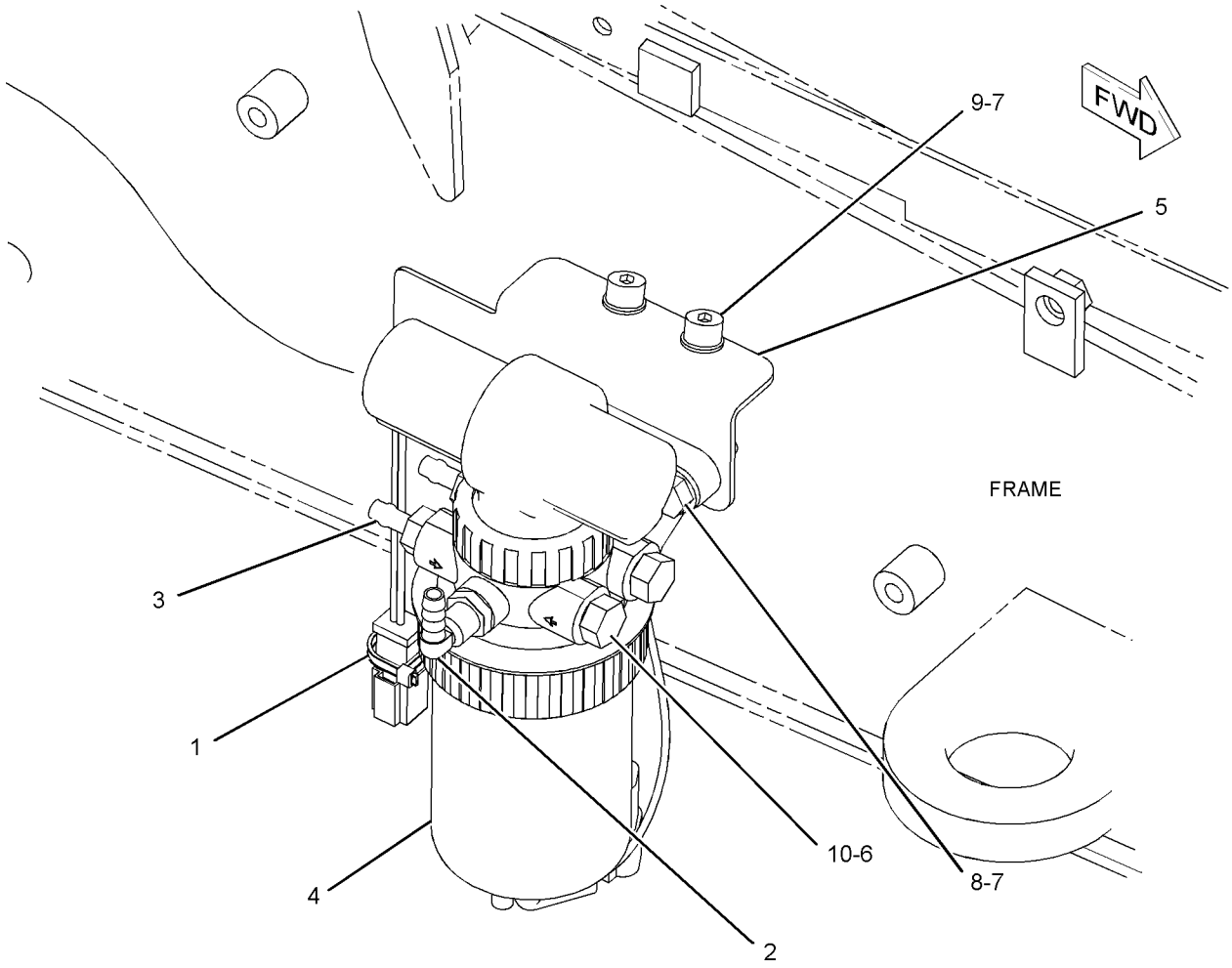

GRAPHIC #1 **<END>** g01078481

245-6098 TANK & MTG GP-FUEL—INCLUDES STEP

(CHG -00 THRU -02)
S/N: HLS1-UP
PART OF 213-9287 CHASSIS AR

SMCS-1273 **i02431123**

NOTE	REF NO	GRAPHIC REF	PART NUMBER	QTY	PART NAME 1 2 3 4 5 6 (PRODUCT LEVEL)	SEE PAGE
	1	1	**245-6101**	1	TREAD	
	2	1	**245-6103**	1	STEP AS	
Y	3	1	*245-6104*	1	TANK GP-FUEL	71
	4	1	**245-6108**	1	PLATE AS	
	5	1	**5P-4116**	7	WASHER-HARD (8.8X20.5X2-MM THK)	
M	6	1	**8T-4193**	4	BOLT (M16X2X50-MM)	
M	7	1	**8T-4122**	4	WASHER-HARD (17X32X3.5-MM THK)	
M	8	1	**8T-4189**	7	BOLT (M8X1.25X20-MM)	
M	9	1	**8T-4200**	4	BOLT (M8X1.25X16-MM)	
	10	1	**8T-4224**	4	WASHER-HARD (8.8X16X2-MM THK)	

M-METRIC PART
Y-SEPARATE ILLUSTRATION

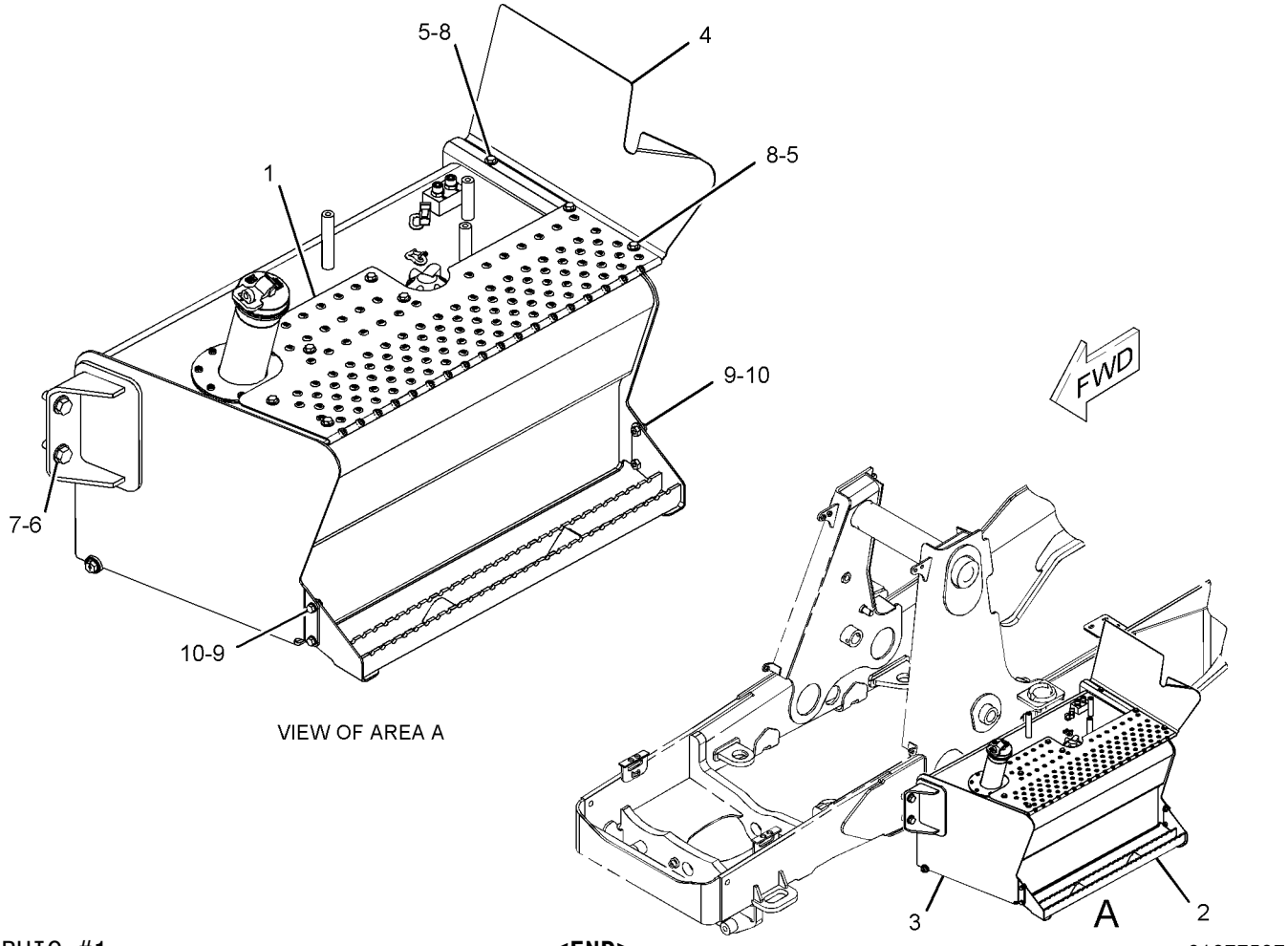

VIEW OF AREA A

GRAPHIC #1 **<END>** g01077507

245-6104 TANK GP-FUEL (CHG -00 THRU -02)

S/N: HLS1-UP

PART OF 245-6098 TANK & MTG GP-FUEL

SMCS-1273 **i02364817**

NOTE	REF NO	GRAPHIC REF	PART NUMBER	QTY	PART NAME 1 2 3 4 5 6 (PRODUCT LEVEL)	SEE PAGE
	1	1	**8L-8413**	1	STRAP-CABLE	
	2	1	**9R-7240**	1	GASKET	
	3	1	**131-0232**	1	COVER	
	4	1	**251-3231**	1	SENDER AS-FUEL LEVEL	
		1	**186-3735**	2	PIN-CONNECTOR (16-GA TO 18-GA)	
		1	**102-8802**	1	KIT-RECEPTACLE (2-PIN)	
					(INCLUDES RECEPTACLE AS & WEDGE)	
Y	5	1	**245-6105**	1	TANK GP-FUEL	72
M	6	1	**123-4950**	5	SCREW-PAN HEAD (M6X1X16-MM)	

M-METRIC PART
Y-SEPARATE ILLUSTRATION

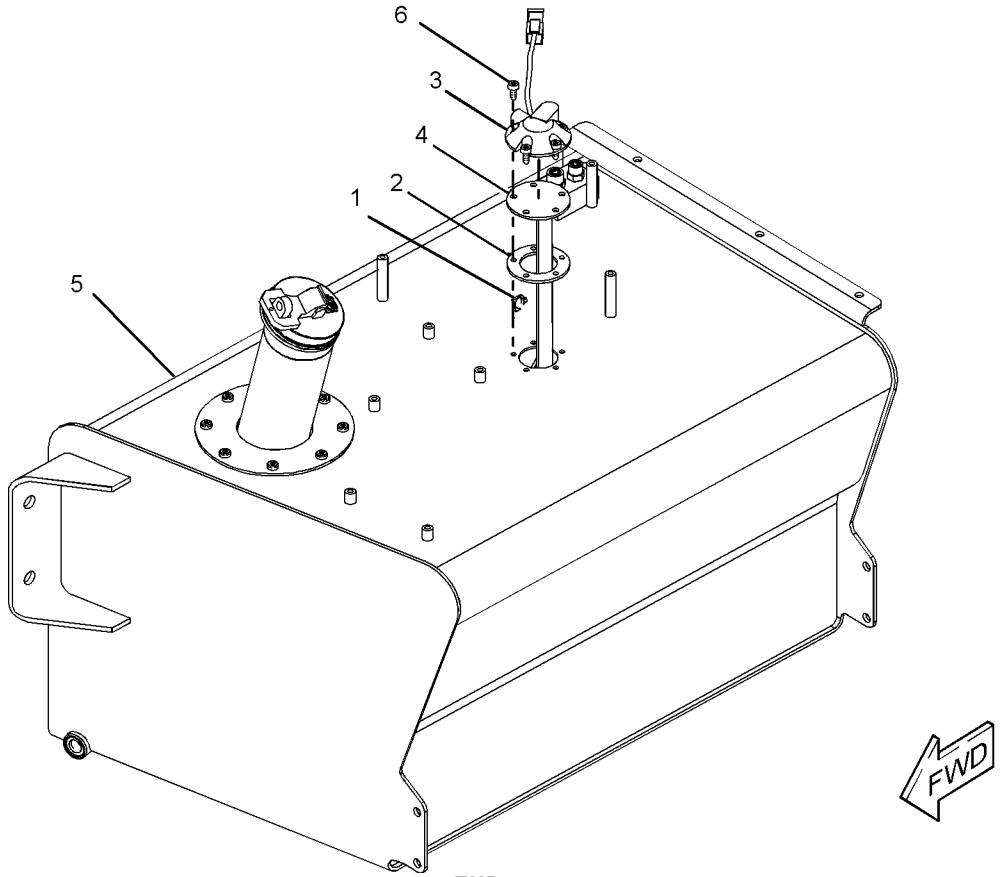

GRAPHIC #1 **<END>** g01089650

245-6105 TANK GP-FUEL (CHG -00 THRU -02)

S/N: HLS1-UP

PART OF 245-6104 TANK GP-FUEL

SMCS-1273 **i02431124**

NOTE	REF NO	GRAPHIC REF	PART NUMBER	QTY	PART NAME 1 2 3 4 5 6 (PRODUCT LEVEL)	SEE PAGE
	1	1	**201-0330**	1	CAP GP-FUEL FILLER (VENTED, LOCKABLE)	
	2	1	**201-1835**	1	TUBE AS	
	3	1	**272-0537**	1	PLUG AS	
		1	**3J-1907**	1	SEAL-O-RING	
	4	1	**245-6107**	1	TANK AS-FUEL	
	5	1	**106-8020**	1	GASKET	
M	6	1	**123-4950**	8	SCREW-PAN HEAD (M6X1X16-MM)	
	7	1	*148-8326*	2	CONNECTOR AS	
					(EACH INCLUDES)	
		1	**3J-7354**	1	SEAL-O-RING	
		1	**6V-8397**	1	SEAL-O-RING	
		1	**6V-9872**	1	CONNECTOR	

M-METRIC PART

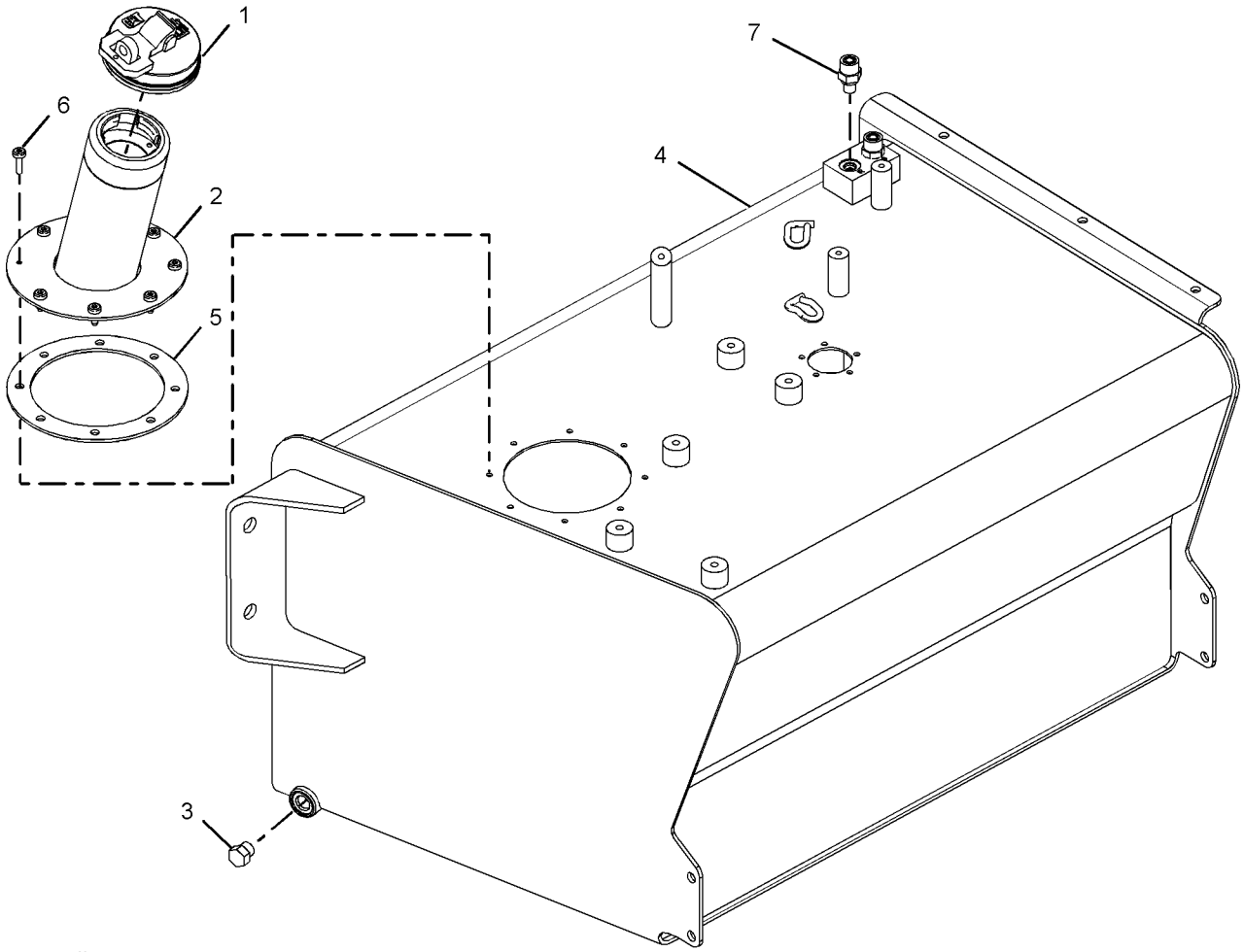

GRAPHIC #1 **<END>** g01086993

252-6256 ALTERNATOR GP-CHARGING–120-AMPERE, WITH MOUNTING (CHG -00, -01, 225-3145-00)

S/N: CRS1-UP

PART OF 273-3610 ENGINE AR

SMCS-1405 **i02212711**

NOTE	REF NO	GRAPHIC REF	PART NUMBER	QTY	PART NAME 1 2 3 4 5 6 (PRODUCT LEVEL)	SEE PAGE
	1	1	**6B-0933**	1	SPACER (10.31X19.05X6.35-MM THK)	
	2	1	**6I-0260**	1	BOLT (M8X1.25X25-MM)	
	3	1	**6I-0454**	1	BOLT (M10X1.5X70-MM)	
	4	1	**6I-0594**	1	NUT (M10X1.15-THD)	
	5	1	**7W-2632**	1	WASHER (8.5X16.8X1.6-MM THK)	
	6	1	**067-6366**	1	WASHER (M8)	
	7	1	**100-8451**	1	BOLT	
	8	1	**113-6349**	1	NUT (M12-1.75X93-MM-THD)	
	9	1	**140-8783**	2	BOLT (M10X45-MM)	
	10	1	**225-3145**	1	ALTERNATOR GP-CHARGING (120-AMPERE)	
	11	1	**233-9530**	1	BRACKET	
	12	1	**233-9531**	1	LEVER-ADJUSTING	
	13	1	**233-9532**	1	PULLEY-ALTERNATOR	

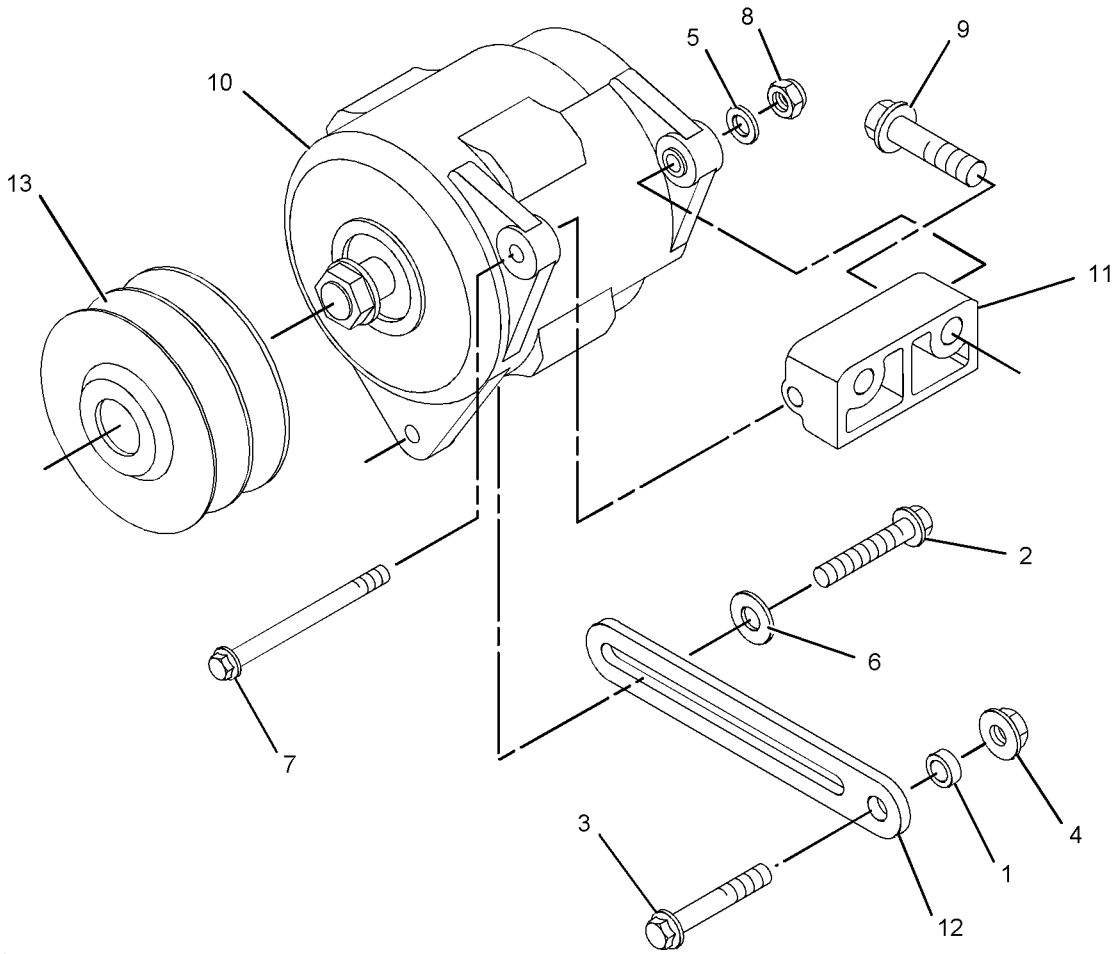

GRAPHIC #1 **<END>** g01039667

211-4285 BATTERY & WIRING GP—STANDARD (CHG -02 THRU -04)

S/N: HLS1-UP

PART OF 213-9287 CHASSIS AR

SMCS-1401, 1402, 1408 **i02430954**

NOTE	REF NO	GRAPHIC REF	PART NUMBER	QTY	PART NAME 1 2 3 4 5 6 (PRODUCT LEVEL)	SEE PAGE
	1	1	**6T-0465**	1	COVER-TERMINAL (BLACK)	
	2	1	**7K-1181**	7	STRAP-CABLE	
	3	1	**038-9317**	1	TREAD-NONSKID	
	4	1	**178-1781**	1	CLIP	
	5	1	**213-6088**	1	CABLE AS-BATTERY (NEGATIVE)	
		1	**1S-7251**	1	TERMINAL-RING (FOR 1/2-IN BOLT)	
BE		1	**5P-0747**		CABLE (00-GA, BLACK)	
		1	*229-9855*	1	TERMINAL AS-BATTERY (NEGATIVE)	
		1	**1M-6119**	1	BOLT (5/16-18X1.375-IN)	
		1	**1M-6120**	2	NUT (5/16-18-THD)	
	6	1	**213-6089**	1	CABLE AS-POWER	
	7	1	**213-6094**	1	CABLE AS	
	8	1	**230-6368**	1	BATTERY (12-VOLT, MAINTENANCE FREE)	
	9	1	**240-4639**	1	BRACKET AS	
	10	1	**246-8053**	1	CABLE AS-BATTERY (POSITIVE)	
		1	**1S-7251**	1	TERMINAL-RING (FOR 1/2-IN BOLT)	
BE		1	**5P-0761**		CABLE (00-GA, RED) (94-CM)	
		1	**8L-8413**	2	STRAP-CABLE	
		1	**8N-0869**	1	COVER-TERMINAL (RED)	
BE		1	**8Y-8081**		TUBE-CONVOLUTED (94-CM)	
	11	1	**275-3917**	1	FILM (PROTECTION)	
	12	1	**156-6175**	2	CLIP	
	13	1	**4D-6466**	2	CLIP	
	14	1	**8T-4224**	1	WASHER-HARD (8.8X16X2-MM THK)	
	15	1	**4P-7581**	1	CLIP	
M	16	1	**5C-2890**	2	NUT (M6X1-THD)	
M	17	1	**5C-7261**	1	NUT (M8X1.25-THD)	
	18	1	**7X-7729**	2	WASHER (11X25X3-MM THK)	
	19	1	**8T-4121**	3	WASHER-HARD (11X21X2.5-MM THK)	
M	20	1	**8T-4133**	1	NUT (M10X1.5-THD)	
M	21	1	**8T-4137**	4	BOLT (M10X1.5X20-MM)	
M	22	1	**8T-4138**	2	BOLT (M6X1X20-MM)	
M	23	1	**8T-4185**	1	BOLT (M10X1.5X50-MM)	
	24	1	**8T-4205**	2	WASHER-HARD (7.2X14.5X2-MM THK)	

B-USE AS REQUIRED
E-ORDER BY THE CENTIMETER
M-METRIC PART

211-4285 **BATTERY & WIRING GP** *(contd.)* **i02430954**

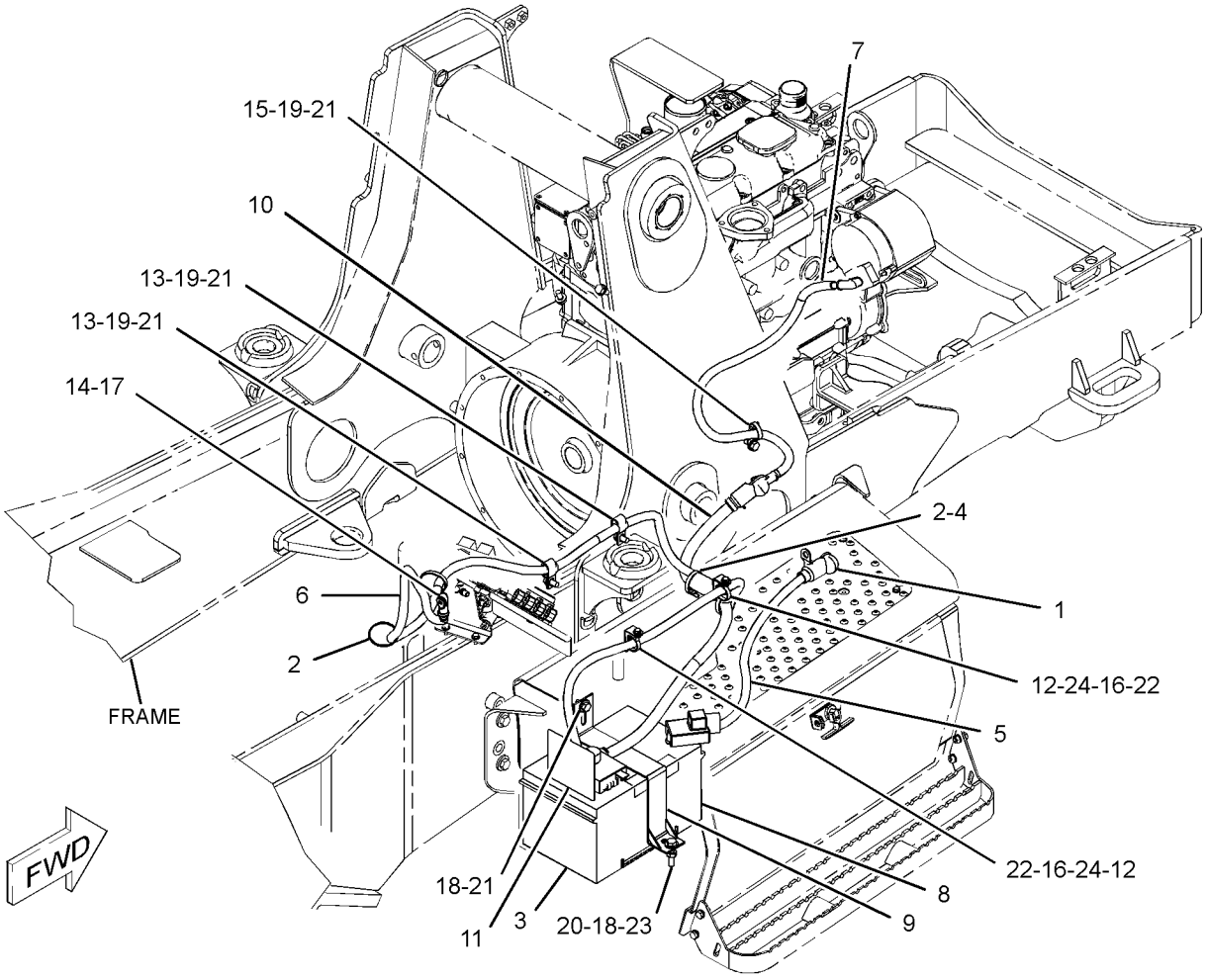

GRAPHIC #1 **<END>** g01233263

ELECTRICAL AND STARTING SYSTEM

211-4286 BATTERY & WIRING GP (CHG -02)

S/N: HLS1-UP
AN ATTACHMENT

SMCS-1401, 1402, 1408 **i02484878**

NOTE	REF NO	GRAPHIC REF	PART NUMBER	QTY	PART NAME 1 2 3 4 5 6 (PRODUCT LEVEL)	SEE PAGE
	1	1	**038-9317**	1	TREAD-NONSKID	
	2	1	**213-6091**	1	CABLE AS-BATTERY (POSITIVE)	
E		1	**5P-0761**		CABLE (00-GA, RED) (35-CM)	
		1	**7T-9987**	1	COVER-TERMINAL	
		1	**8L-8413**	2	STRAP-CABLE	
		1	**8N-0869**	1	COVER-TERMINAL (RED)	
		1	**8S-3020**	1	TERMINAL-CABLE	
BE		1	**8Y-8081**		TUBE-CONVOLUTED	
	3	1	**213-6092**	1	CABLE AS-BATTERY (NEGATIVE)	
		1	**1S-7252**	1	TERMINAL-RING (FOR 3/8-IN BOLT)	
E		1	**5P-0747**		CABLE (00-GA, BLACK) (43-CM)	
		1	**7N-5274**	1	COVER-TERMINAL (BLACK)	
		1	**8L-8413**	1	STRAP-CABLE	
	4	1	**230-6368**	1	BATTERY (12-VOLT, MAINTENANCE FREE)	
	5	1	**240-4639**	1	BRACKET AS	
	6	1	**7X-7729**	2	WASHER (11X25X3-MM THK)	
M	7	1	**8T-4133**	1	NUT (M10X1.5-THD)	
M	8	1	**8T-4137**	1	BOLT (M10X1.5X20-MM)	
M	9	1	**8T-4185**	1	BOLT (M10X1.5X50-MM)	

B-USE AS REQUIRED
E-ORDER BY THE CENTIMETER
M-METRIC PART

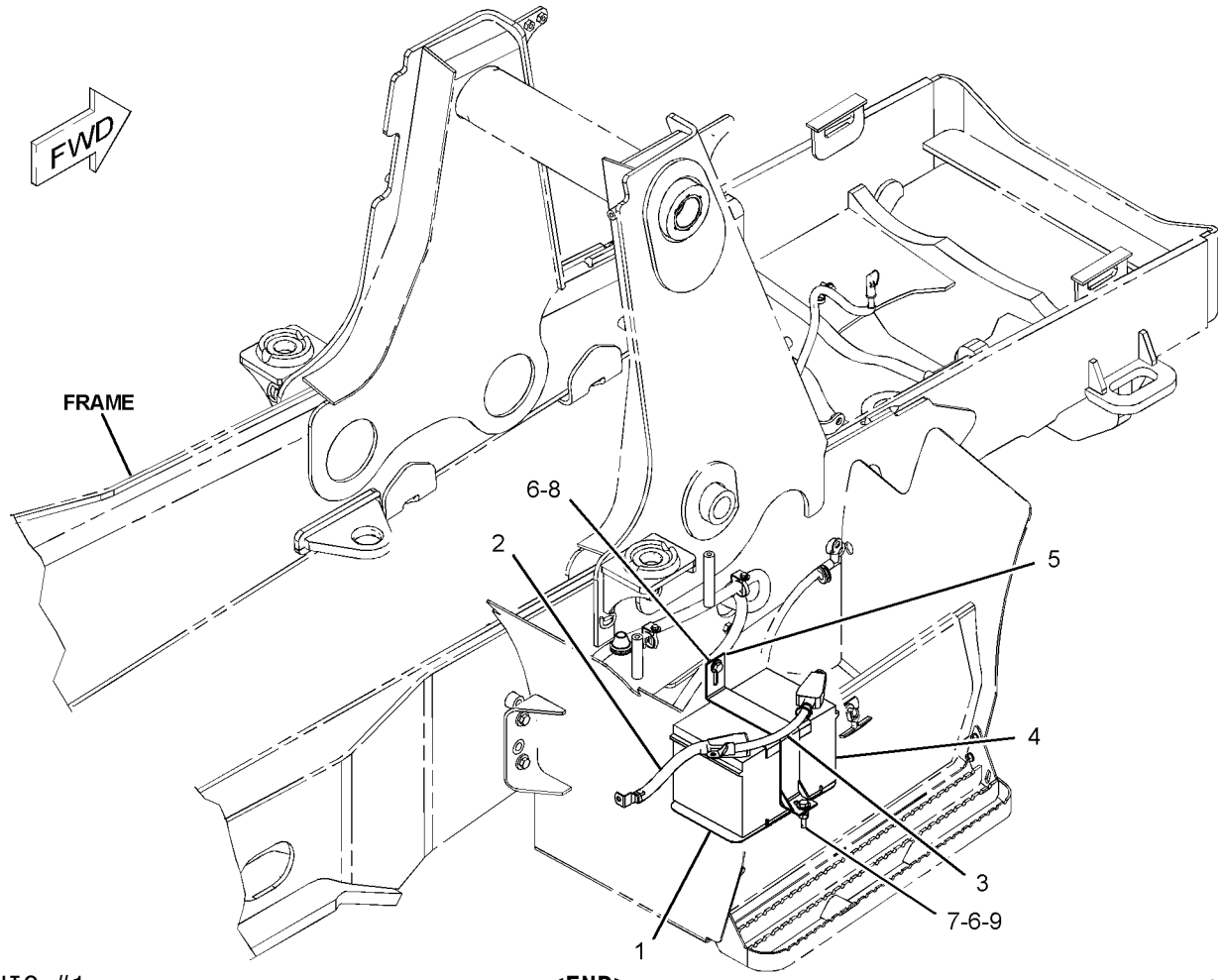

GRAPHIC #1 **<END>** g01082047

262-1421 CONTROL GP-COMMUNICATION–PRODUCT LINK 300

(CHG -00 THRU -05)
S/N: HLS1-UP
PART OF 225-7995 INSTALLATION GP-COMMUNICATION
AN ATTACHMENT

SMCS-7610, 7620 **i02480319**

NOTE	REF NO	GRAPHIC REF	PART NUMBER	QTY	PART NAME 1 2 3 4 5 6 (PRODUCT LEVEL)	SEE PAGE
	1	1	**268-4699**	1	CONTROL GP-COMMUNICATION (PRODUCT LINK 300)	
					(INCLUDES CONTROL GP AND SOFTWARE)	
	2	1	**7X-6315**	1	STRAP AS-GROUND	
	3	1	**126-7574**	1	SCREW-PAN HEAD (8-32X9.52-MM)	
	4	1	**134-4126**	1	WASHER (4.52X8.28X0.76-MM THK)	

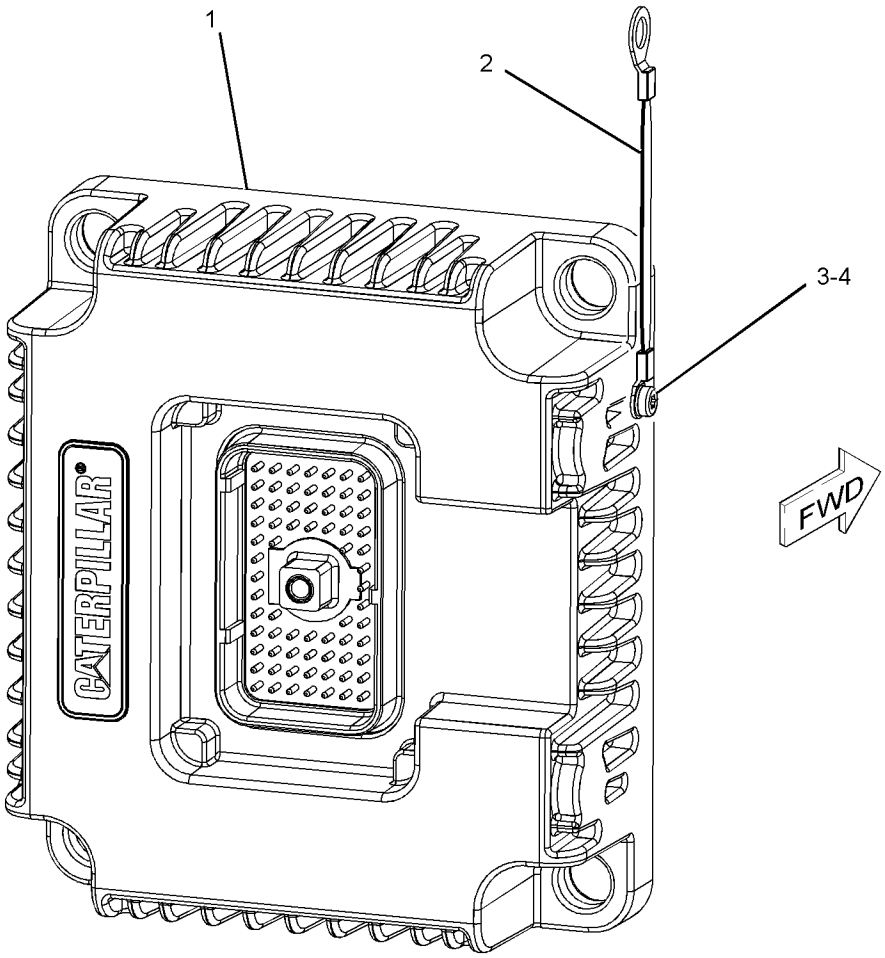

GRAPHIC #1 **<END>** g01161859

225-8017 ELECTRONICS GP-MACHINE (CHG -00, -01)

S/N: HLS1-UP

PART OF 214-2553 BACKHOE AR-EXTENDABLE STICK, 214-2550 BACKHOE AR-STANDARD STICK

AN ATTACHMENT

SMCS-7610, 7620 **i02409044**

NOTE	PART NUMBER	QTY	PART NAME 1 2 3 4 5 6 (PRODUCT LEVEL)	SEE PAGE
	252-2422	1	CONTROL GP-UNPROGRAMMED (IMPLEMENT)	
			(INCLUDES SOFTWARE)	
			—OR—	
	273-1819	1	SOFTWARE GP-MACHINE	
			(SOFTWARE ONLY)	
			-OR-	
			(OPTIONAL SERVICE REPLACEMENT)	
	273-1820	1	SERVICE GP-MACHINE	
			(INCLUDES CONTROL GP & SOFTWARE)	

<END>

227-7373 ELECTRONICS GP-MACHINE (CHG -00 THRU -03)

S/N: HLS1-UP

PART OF 214-3758 BACKHOE AR-EXTENDABLE STICK, 214-3755 BACKHOE AR-STANDARD STICK

AN ATTACHMENT

SMCS-7610, 7620 **i02441246**

NOTE	PART NUMBER	QTY	PART NAME 1 2 3 4 5 6 (PRODUCT LEVEL)	SEE PAGE
	273-1819	1	SOFTWARE GP-MACHINE	
			(SOFTWARE ONLY)	
			—OR—	
	262-1408	1	CONTROL GP-UNPROGRAMMED	
			(INCLUDES SOFTWARE)	
			-OR-	
			(OPTIONAL SERVICE REPLACEMENT)	
	273-1820	1	SERVICE GP-MACHINE	
			(INCLUDES CONTROL GP & SOFTWARE)	

<END>

ELECTRICAL AND STARTING SYSTEM

227-7374 ELECTRONICS GP-MONITOR (CHG -00, -01)

S/N: HLS1-UP

PART OF 211-4253 INSTALLATION GP-MONITOR

AN ATTACHMENT

SMCS-7490, 7610, 7620 **i02440888**

NOTE	PART NUMBER	QTY	PART NAME 1 2 3 4 5 6 (PRODUCT LEVEL)	SEE PAGE
	250-3858	1	CONTROL GP-UNPROGRAMMED (MONITOR)	
			—OR—	
	281-9366	1	SOFTWARE GP-MONITOR	
			(SOFTWARE ONLY)	
			-OR-	
			(OPTIONAL SERVICE REPLACEMENT)	
	281-9367	1	SERVICE GP-MONITOR	
			(INCLUDES DISPLAY GP & SOFTWARE)	

<END>

232-6661 GLOW PLUG GP (CHG -01, -02)

S/N: CRS1-UP

PART OF 273-3610 ENGINE AR

SMCS-1412 **i02471840**

NOTE	REF NO	GRAPHIC REF	PART NUMBER	QTY	PART NAME 1 2 3 4 5 6 (PRODUCT LEVEL)	SEE PAGE
	1	1	**286-4880**	1	BAR	
	2	1	**232-6662**	4	GLOW PLUG (12-VOLT)	

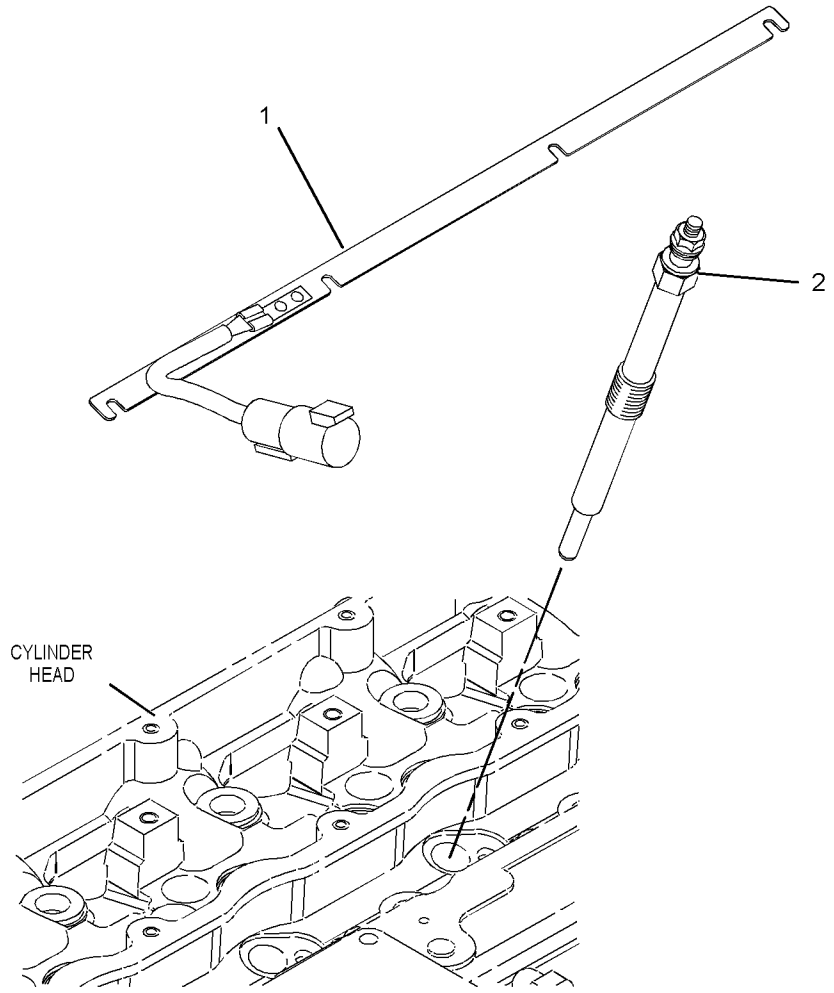

GRAPHIC #1 **<END>** g01232967

248-2214 HEATER GP-JACKET WATER (CHG -00)

S/N: HLS1-UP

AN ATTACHMENT

SMCS-1383 **i02200665**

NOTE	REF NO	GRAPHIC REF	PART NUMBER	QTY	PART NAME 1 2 3 4 5 6 (PRODUCT LEVEL)	SEE PAGE
	1	1	**3S-2093**	2	STRAP-CABLE	
	2	1	**130-0165**	1	RECEPTACLE AS	
		1	**1M-1230**	2	NUT & LOCK AS (10-32-THD)	
		1	**168-4511**	2	SCREW-PAN HEAD (10-32X1-IN)	
	3	1	**165-8357**	1	BRACKET AS	
M		1	**8T-3612**	2	NUT-WELD (M8X1.25-THD)	
	4	1	*231-3054*	1	HEATER GP-JACKET WATER	
J		1	**219-3273**	1	ELEMENT AS-JACKET WATER HEATER (120-VOLT, 1000-WATT)	
		1	**133-6517**		CAP AS-DUST	
		1	**231-3052**	1	CORD AS	
M	5	1	**8T-4189**	2	BOLT (M8X1.25X20-MM)	
	6	1	**8T-4224**	2	WASHER-HARD (8.8X16X2-MM THK)	
					AVAILABLE REPAIR KIT(S):	
J			**133-3413**	1	KIT-SEAL	
					(INCLUDES SEAL, SPACER & RINGS)	

J-KIT MARKED J AVAILABLE FOR PART MARKED J
M-METRIC PART

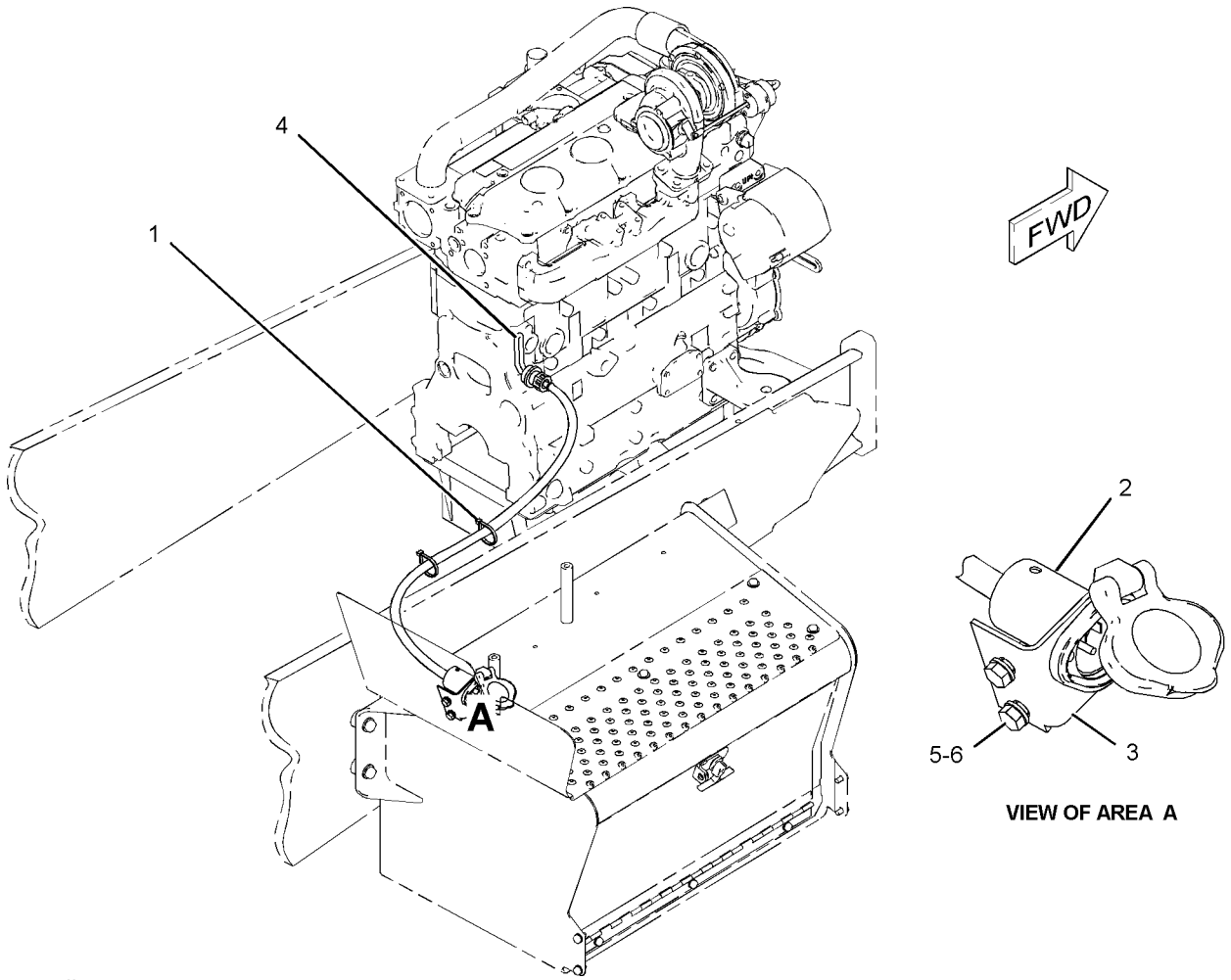

GRAPHIC #1 **<END>** g01083542

225-7994 INSTALLATION GP-COMMUNICATION

(CHG -00 THRU -02)
S/N: HLS1-UP
PART OF 225-7995 INSTALLATION GP-COMMUNICATION
AN ATTACHMENT

SMCS-7606 **i02482360**

NOTE	REF NO	GRAPHIC REF	PART NUMBER	QTY	PART NAME 1 2 3 4 5 6 (PRODUCT LEVEL)	SEE PAGE
	1	1	**7K-1181**	3	STRAP-CABLE	
	2	1	**263-7802**	1	ANTENNA AS (MAGNETIC MOUNT, PRODUCT LINK)	
	3	1	**260-7652**	1	FILM-WARNING (PRODUCT LINK 300, ANSI)	
	4	1	**256-6803**	1	HARNESS AS-RADIO (PRODUCT LINK)	
		1	**102-8801**	1	KIT-RECEPTACLE (12-PIN)	
		1	**102-8802**	1	KIT-RECEPTACLE (2-PIN)	
					(EACH RECEPTACLE KIT INCLUDES RECEPTACLE AS & WEDGE)	
		1	**155-2255**	1	KIT-CONNECTING PLUG (12-PIN)	
		1	**155-2270**	1	KIT-CONNECTING PLUG (2-PIN)	
					(EACH PLUG KIT INCLUDES PLUG AS, WEDGE & INTERFACE SEAL)	
	5	1	**263-9088**	1	RADIO GP-COMMUNICATION (PRODUCT LINK 121SR)	
M	6	1	**129-3178**	4	LOCKNUT (M6X1-THD)	
	7	1	**156-6175**	1	CLIP	
	8	1	**170-9360**	1	GROMMET	
	9	1	**3S-2093**	2	STRAP-CABLE	
	10	1	**6P-6591**	1	GROMMET	
M	11	1	**8T-4138**	4	BOLT (M6X1X20-MM)	
	12	1	**8T-4205**	7	WASHER-HARD (7.2X14.5X2-MM THK)	

M-METRIC PART

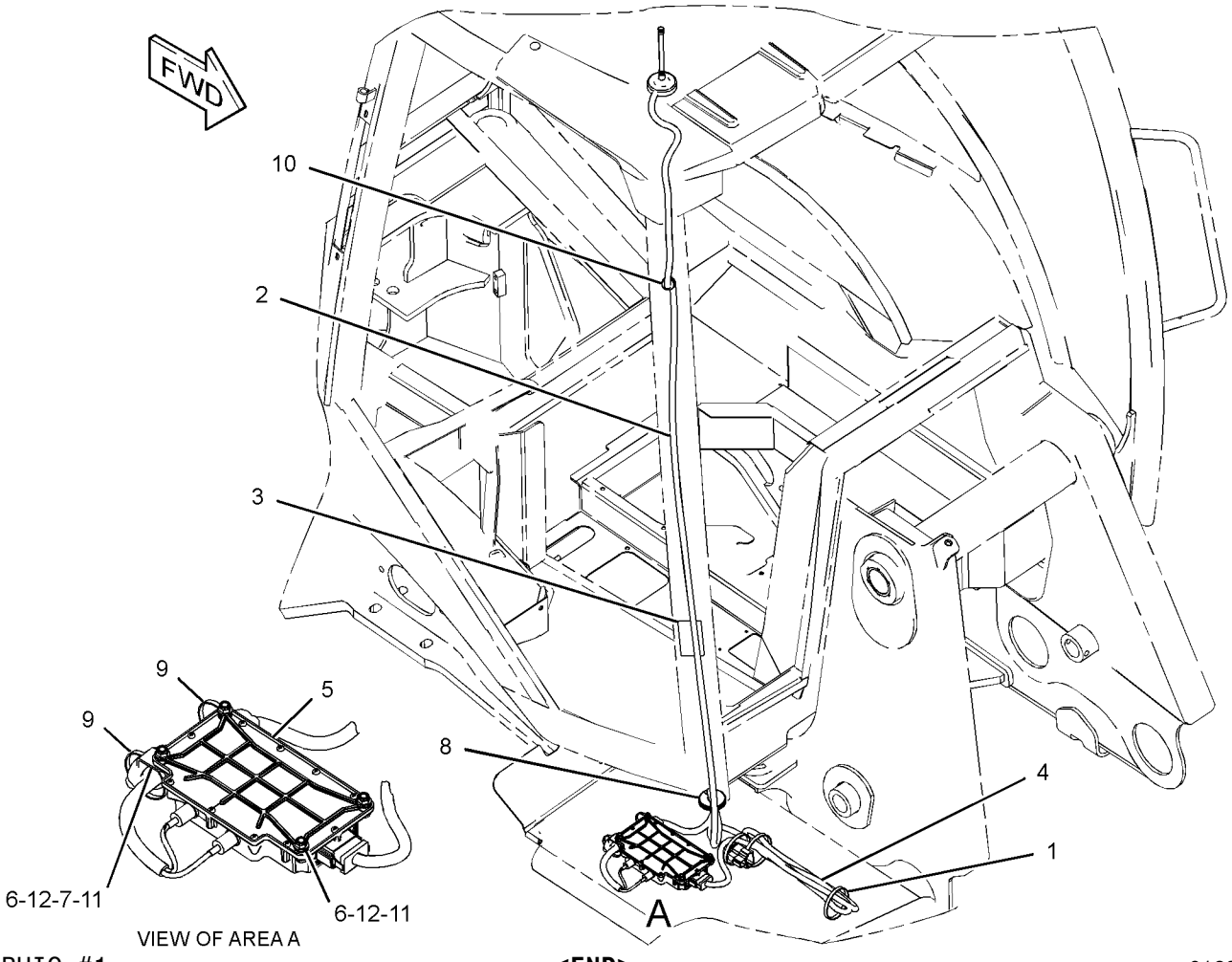

GRAPHIC #1 **<END>** g01238339

225-7995 INSTALLATION GP-COMMUNICATION

(CHG -00 THRU -02)
S/N: HLS1-UP
AN ATTACHMENT

SMCS-7606 **i02445759**

NOTE	REF NO	GRAPHIC REF	PART NUMBER	QTY	PART NAME 1 2 3 4 5 6 (PRODUCT LEVEL)	SEE PAGE
	1	1	**7K-1181**	2	STRAP-CABLE	
	2	1	**8C-5607**	8	MOUNT-ISOLATION	
	3	1	**8C-5608**	4	SPACER (6.5X9.5X25.4-MM THK)	
	4	1	**9X-6165**	8	WASHER (6.5X22X2.5-MM THK)	
Y	5	1	*225-7994*	1	INSTALLATION GP-COMMUNICATION (PRODUCT LINK 121SR)	83
	6	1	**256-6804**	1	HARNESS AS-CONTROL (PRODUCT LINK)	
		1	**102-8801**	1	KIT-RECEPTACLE (12-PIN)	
					(INCLUDES RECEPTACLE AS & WEDGE)	
		1	**155-2255**	2	KIT-CONNECTING PLUG (12-PIN)	
		1	**155-2270**	1	KIT-CONNECTING PLUG (2-PIN)	
					(EACH PLUG KIT INCLUDES PLUG AS & WEDGE)	
		1	**9X-6772**	2	STRAP-CABLE	
E		1	**125-7874**		TUBE-HEAT SHRINK (5.72-MM DIA) (20-CM)	
		1	**126-1774**	1	COVER	
		1	**160-7690**	1	PLUG AS-CONNECTOR (70-PIN)	
Y	7	1	*262-1421*	1	CONTROL GP-COMMUNICATION (PRODUCT LINK 300)	78
M	8	1	**129-3178**	4	LOCKNUT (M6X1-THD)	
M	9	1	**8C-8451**	3	BOLT (M6X1X40-MM)	
	10	1	**8T-4205**	6	WASHER-HARD (7.2X14.5X2-MM THK)	
M	11	1	**9X-2480**	1	BOLT (M6X1X45-MM)	

E-ORDER BY THE CENTIMETER
M-METRIC PART
Y-SEPARATE ILLUSTRATION

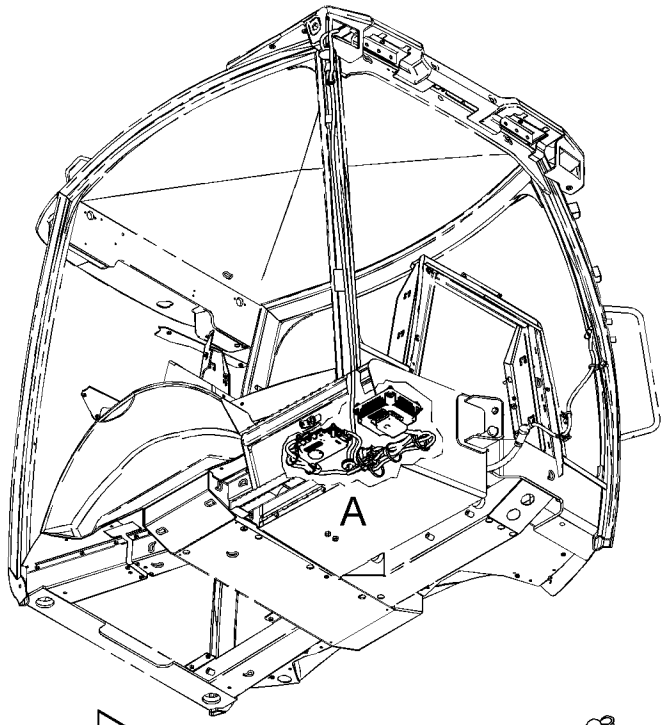

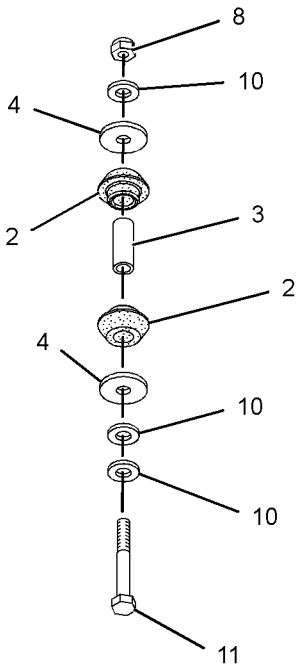

VIEW OF AREA B

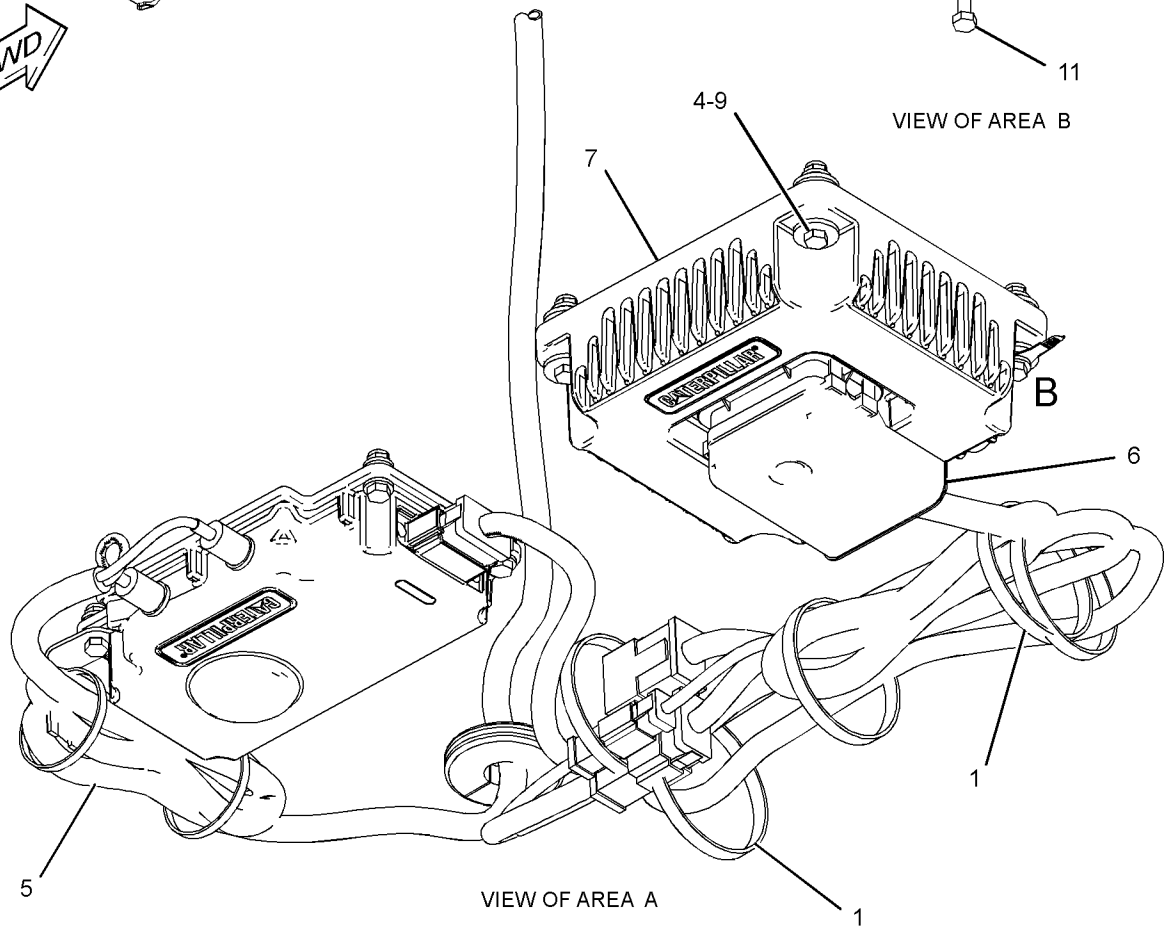

VIEW OF AREA A

GRAPHIC #1 **<END>** g01233282

246-8042 INSTALLATION GP-GRADE CONTROL

(CHG -00 THRU -03)
S/N: HLS1-UP
PART OF 214-3758 BACKHOE AR-EXTENDABLE STICK, 214-3755 BACKHOE AR-STANDARD STICK
AN ATTACHMENT

SMCS-7220 **i02441639**

NOTE	REF NO	GRAPHIC REF	PART NUMBER	QTY	PART NAME 1 2 3 4 5 6 (PRODUCT LEVEL)	SEE PAGE
	1	1	**5P-0599**	1	CLAMP-BAND	
	2	1	**5P-3860**	2	CLAMP-HOSE	
	3	1	**9R-2053**	3	BLOCK	
	4	1	**177-2215**	10	STRAP-DUAL CLAMP	
	5	1	**268-7761**	1	HARNESS AS-PLATFORM (SENSOR)	
E		1	**125-7874**		TUBE-HEAT SHRINK (5.72-MM DIA) (35-CM)	
		1	**102-8806**	1	KIT-RECEPTACLE (8-PIN)	
		1	**102-8801**	1	KIT-RECEPTACLE (12-PIN)	
					(EACH RECEPTACLE KIT INCLUDES RECEPTACLE AS & WEDGE)	
		1	**155-2255**	1	KIT-CONNECTING PLUG (12-PIN)	
		1	**155-2265**	1	KIT-CONNECTING PLUG (8-PIN)	
		1	**155-2271**	2	KIT-CONNECTING PLUG (4-PIN)	
		1	**155-2274**	1	KIT-CONNECTING PLUG (6-PIN)	
					(EACH PLUG KIT INCLUDES PLUG AS, WEDGE & INTERFACE SEAL)	
	6	1	**1S-6420**	1	CLIP	
	7	1	**3S-2093**	26	STRAP-CABLE	
E	8	1	**7I-1024**		GUARD (27-CM)	
E	9	1	**7I-1024**		GUARD (15-CM)	
E	10	1	**7I-1024**		GUARD (11-CM)	
E	11	1	**7I-1024**		GUARD (12-CM)	
E	12	1	**7I-1024**		GUARD (17-CM)	
E	13	1	**7I-1024**		GUARD (15-CM)	
E	14	1	**7I-1024**		GUARD (7-CM)	
E	15	1	**160-2250**		SLEEVE-ABRASION (50-CM)	

E-ORDER BY THE CENTIMETER

246-8042 **INSTALLATION GP-GRADE CONTROL** *(contd.)* **i02441639**

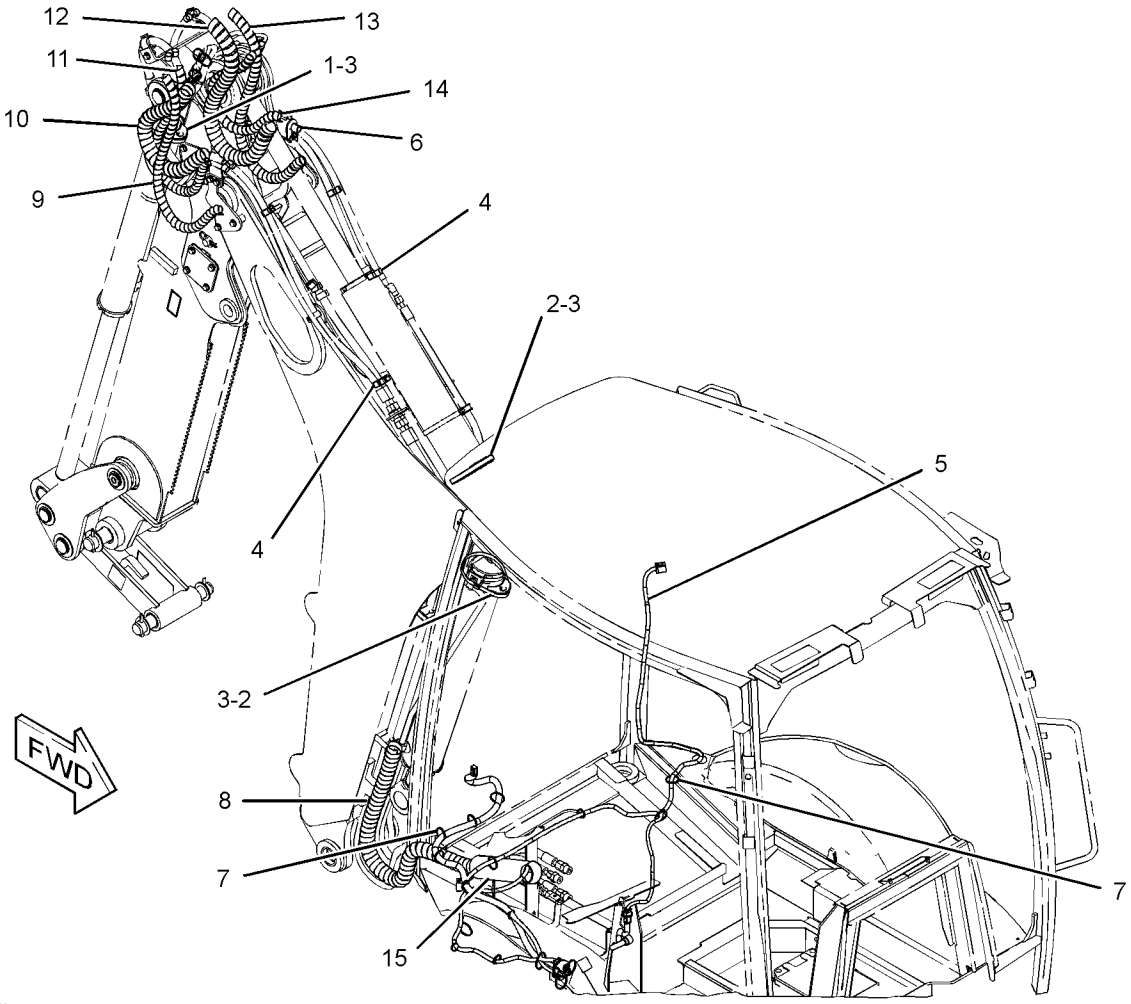

GRAPHIC #1 **<END>** g01233126

246-8045 INSTALLATION GP-GRADE CONTROL–

ACCUGRADE, MAST (CHG -00, -01)

S/N: HLS1-UP

AN ATTACHMENT

SMCS-7220 **i02445997**

NOTE	REF NO	GRAPHIC REF	PART NUMBER	QTY	PART NAME 1 2 3 4 5 6 (PRODUCT LEVEL)	SEE PAGE
	1	1	**115-1615**	1	RELAY AS (12-VOLT) (ACCUGRADE, MAST)	
Y	2	1	*211-4253*	1	INSTALLATION GP-MONITOR (ADVISOR)	591
Y	3	1	*225-4323*	1	MOUNTING GP-MAST (GRADE CONTROL)	97
	4	1	**226-2333**	1	MAST AS (ELECTRIC)	
		1	**239-9271**	1	SOFTWARE (MAST)	
	5	1	**226-2334**	1	RECEIVER GP-LASER (LR21)	
		1	**239-9272**	1	SOFTWARE GP-MONITOR (RECEIVER)	
	6	1	**226-9167**	1	ADAPTER (RECEIVER)	
	7	1	**226-9169**	1	MODULE GP-POWER SUPPLY	
	8	1	**226-9270**	1	CABLE-COILED	
	9	1	**246-8044**	1	HARNESS AS-WIRING (MAST)	
		1	**102-8803**	1	KIT-RECEPTACLE (3-PIN)	
		1	**102-8806**	1	KIT-RECEPTACLE (8-PIN)	
					(EACH RECEPTACLE KIT INCLUDES RECEPTACLE AS & WEDGE)	
		1	**155-2265**	1	KIT-CONNECTING PLUG (8-PIN)	
		1	**174-0503**	1	KIT-CONNECTING PLUG (3-PIN)	
					(EACH PLUG KIT INCLUDES PLUG AS, WEDGE & INTERFACE SEAL)	
		1	**155-2260**	1	KIT-CONNECTING PLUG (3-PIN)	
					(INCLUDES PLUG AS, WEDGES & INTERFACE SEAL)	
	10	1	**3S-2093**	15	STRAP-CABLE	
M	11	1	**8T-4138**	1	BOLT (M6X1X20-MM)	
	12	1	**8T-4205**	1	WASHER-HARD (7.2X14.5X2-MM THK)	

M-METRIC PART
Y-SEPARATE ILLUSTRATION

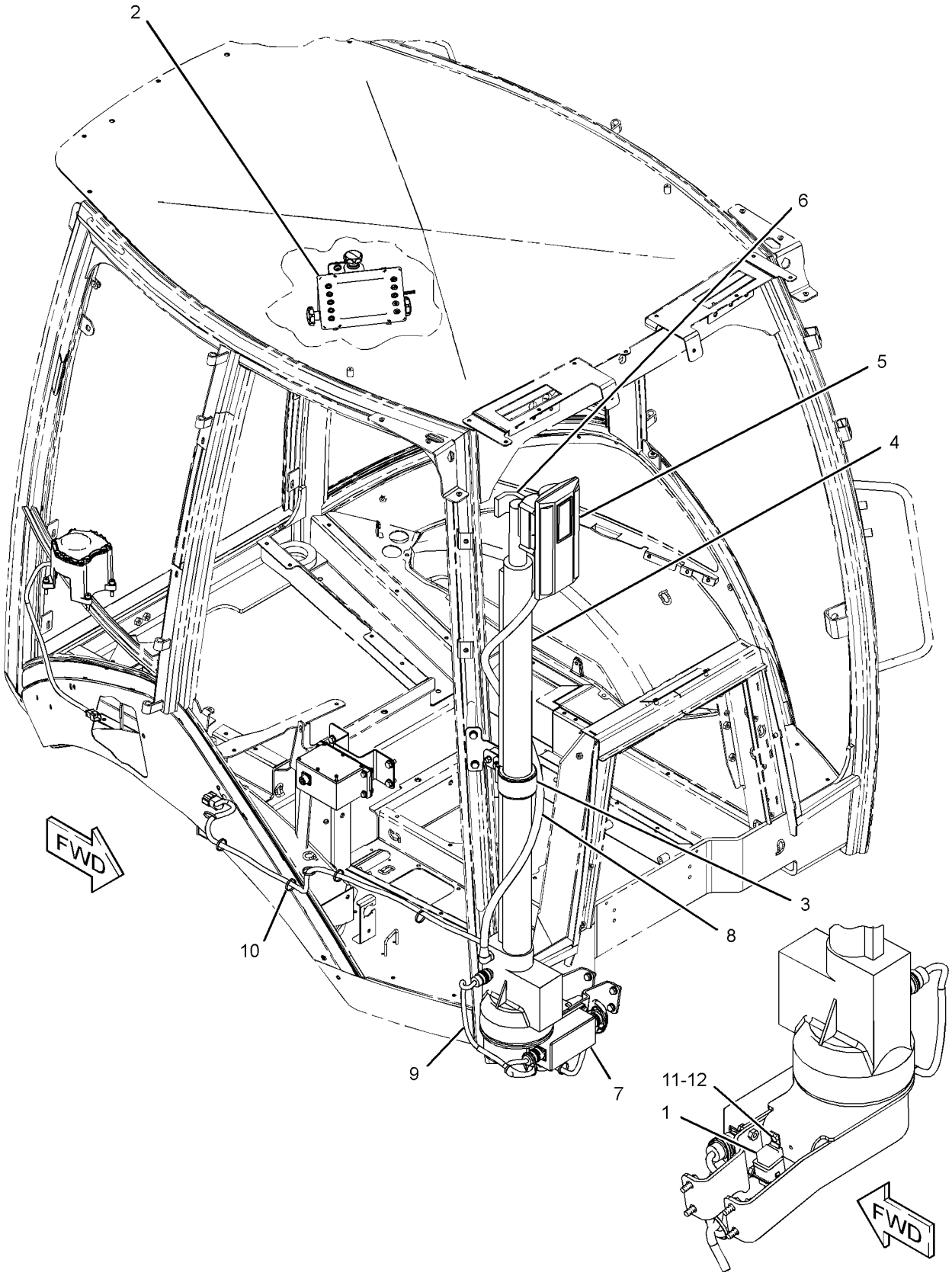

GRAPHIC #1 **<END>** g01233594

234-4328 LAMP GP-FLOOD–SUSPENDED MOUNT (CHG -00, -01)

S/N: HLS1-UP

PART OF 211-4277 LIGHTING GP-FLOOD & SIGNAL

AN ATTACHMENT

SMCS-1429, 1434 **i02274830**

NOTE	REF NO	GRAPHIC REF	PART NUMBER	QTY	PART NAME 1 2 3 4 5 6 (PRODUCT LEVEL)	SEE PAGE
	1	1	**9W-0607**	1	LAMP (12-VOLT, 55-WATT)	
M	2	1	**8T-4133**	1	NUT (M10X1.5-THD)	
	3	1	**9X-4244**	2	SCREW	
	4	1	**202-6614**	1	LENS AS (FLOODLIGHT)	
	5	1	**234-7730**	1	BODY AS	
	6	1	**164-7556**	1	CLIP (LAMP RETAINING)	
	7	1	**234-7731**	1	BRACKET AS	

M-METRIC PART

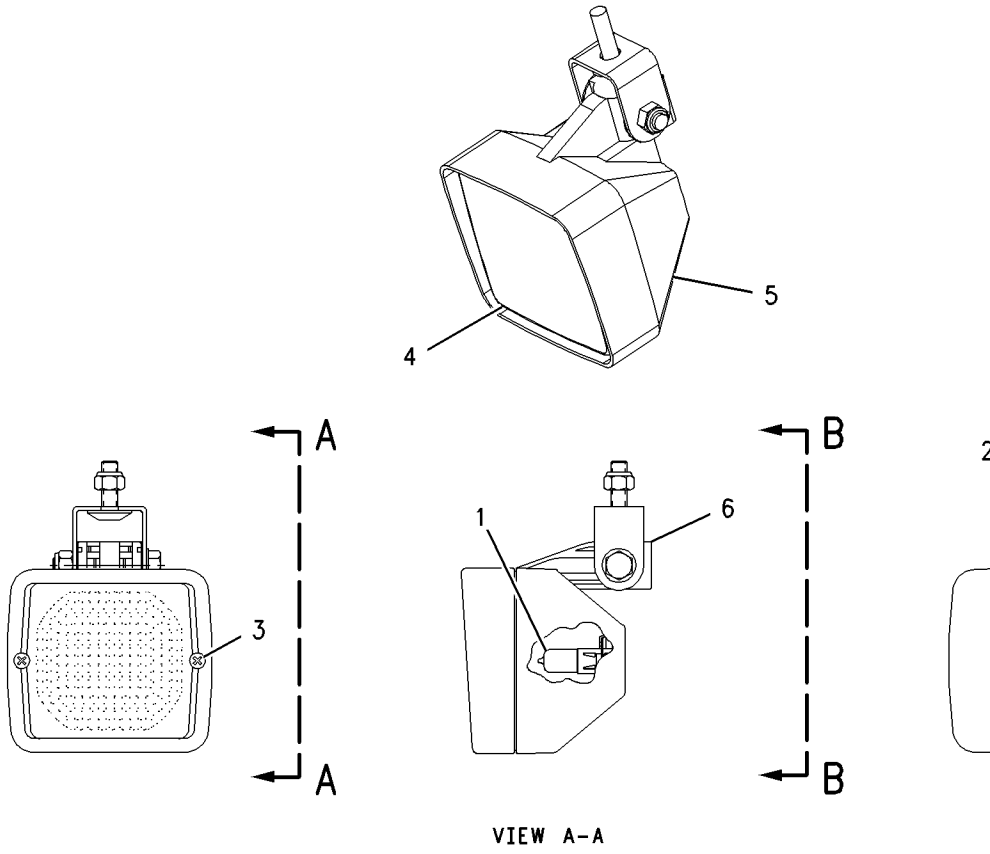

VIEW A-A VIEW B-B

GRAPHIC #1 **<END>** g01004557

234-4329 LAMP GP-FLOOD–SUSPENDED MOUNT (CHG -00, -01)

S/N: HLS1-UP

PART OF 211-4277 LIGHTING GP-FLOOD & SIGNAL

AN ATTACHMENT

SMCS-1429, 1434 **i02206639**

NOTE	REF NO	GRAPHIC REF	PART NUMBER	QTY	PART NAME 1 2 3 4 5 6 (PRODUCT LEVEL)	SEE PAGE
	1	1	**9W-0607**	1	LAMP (12-VOLT, 55-WATT)	
M	2	1	**8T-4133**	1	NUT (M10X1.5-THD)	
	3	1	**9X-4244**	2	SCREW	
	4	1	**202-6611**	1	LENS AS (FLOODLIGHT) (LONG RANGE)	
	5	1	**234-7730**	1	BODY AS	
	6	1	**164-7556**	1	CLIP (LAMP RETAINING)	
	7	1	**234-7731**	1	BRACKET AS	

M-METRIC PART

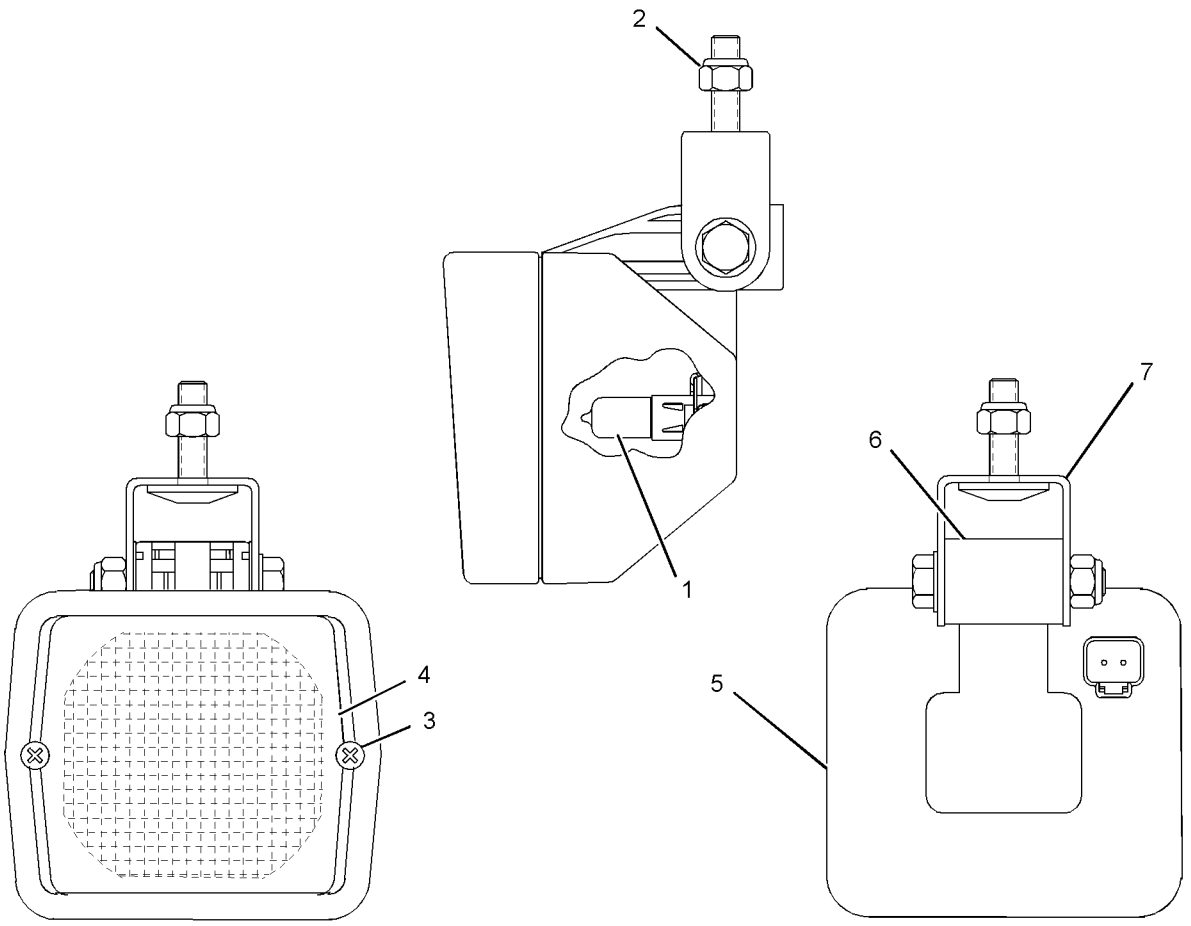

GRAPHIC #1 **<END>** g01026923

180-3664 LAMP GP-WARNING BEACON—MAGNETIC MOUNT

(CHG -00, -01)
S/N: HLS1-UP
PART OF 211-4292 LIGHTING GP-WARNING BEACON
AN ATTACHMENT

SMCS-1431 **i02467097**

NOTE	REF NO	GRAPHIC REF	PART NUMBER	QTY	PART NAME 1 2 3 4 5 6 (PRODUCT LEVEL)	SEE PAGE
	1	1	**272-9800**	1	LENS	
	2	1	**179-5434**	1	PLUG AS	
		1	**3K-8782**	1	FUSE (10-AMPERE)	
	3	1	**9X-8118**	1	LAMP (12-VOLT, 55-WATT)	
	4	1	**9X-8139**	1	BELT-DRIVE (WARNING BEACON)	
	5	1	**3K-8782**	1	FUSE (10-AMPERE)	

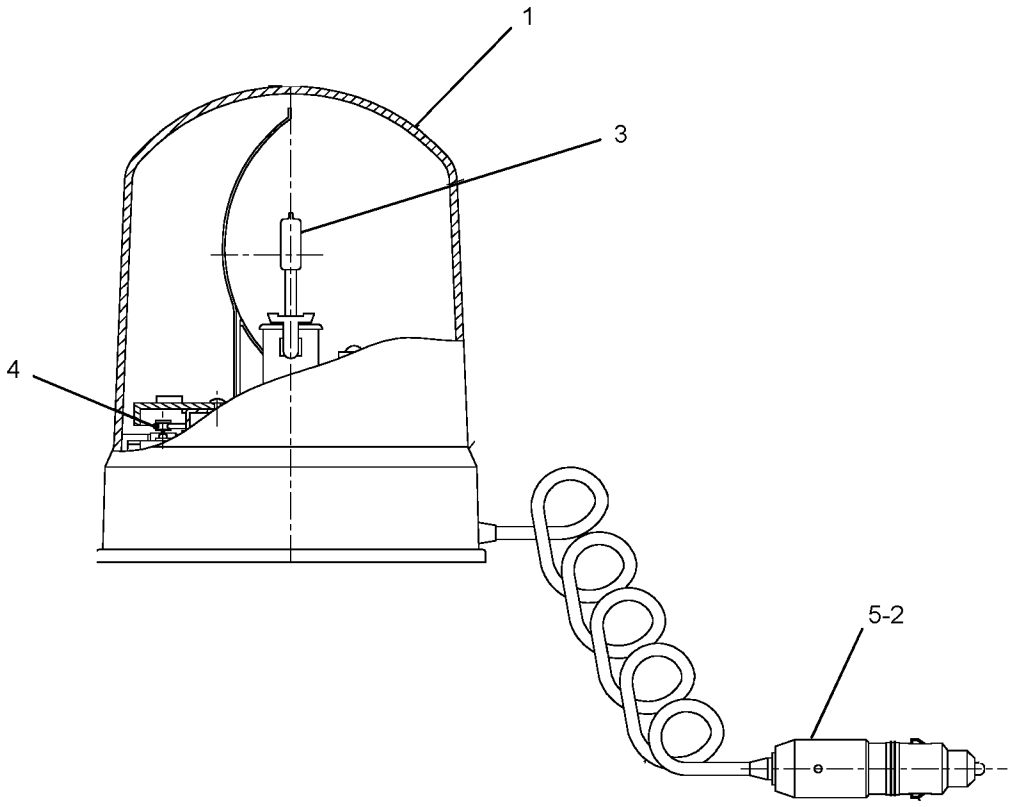

GRAPHIC #1 **<END>** g01230468

211-4277 LIGHTING GP-FLOOD & SIGNAL—NACD, OPTIONAL

(CHG -03 THRU -06)

S/N: HLS1-UP

PART OF 269-2125, 269-2126, 269-2127 CAB AR, 269-2123, 269-2124 CANOPY AR AN ATTACHMENT

SMCS-1429, 1430, 1432, 1434 **i02357744**

NOTE	REF NO	GRAPHIC REF	PART NUMBER	QTY	PART NAME 1 2 3 4 5 6 (PRODUCT LEVEL)	SEE PAGE
	1	1	**9R-1499**	2	REFLECTOR	
	2	1	**178-7539**	1	RECEPTACLE AS (POWER SUPPLY)	
	3	1	**213-6049**	1	HARNESS AS-LIGHTING (ROOF)	
		1	**8L-8413**	19	STRAP-CABLE	
E		1	**125-7874**		TUBE-HEAT SHRINK (5.72-MM DIA) (35-CM)	
E		1	**125-7875**		TUBE-HEAT SHRINK (7.44-MM DIA) (15-CM)	
		1	**155-2271**	2	KIT-CONNECTING PLUG (4-PIN)	
		1	**155-2270**	10	KIT-CONNECTING PLUG (2-PIN)	
					(EACH PLUG KIT INCLUDES PLUG AS & WEDGE)	
		1	**102-8805**	1	KIT-RECEPTACLE (6-PIN)	
		1	**102-8806**	1	KIT-RECEPTACLE (8-PIN)	
					(EACH RECEPTACLE KIT INCLUDES RECEPTACLE AS & WEDGE)	
	4	1	**214-4698**	1	SWITCH AS-ROCKER (FLOODLIGHTS, FRONT)	
		1	**111-7899**	1	GASKET	
	5	1	**214-4700**	1	SWITCH AS-ROCKER (FLOODLIGHTS, REAR)	
		1	**111-7899**	1	GASKET	
Y	6	1	**234-4328**	4	LAMP GP-FLOOD (12-VOLT, SUSPENDED MOUNT) (FRONT, REAR, WIDE RANGE)	91
Y	7	1	**234-4329**	4	LAMP GP-FLOOD (12-VOLT, SUSPENDED MOUNT) (FRONT, SIDE, LONG RANGE)	92
	8	1	**282-7833**	1	GROMMET	
	9	1	**282-7835**	1	PLATE	
	10	1	**172-6489**	2	LAMP GP-HEAD & SIGNAL	
					(EACH INCLUDES)	
		1	**3C-4883**	1	LAMP (12-VOLT, 21-WATT)	
		1	**176-0348**	1	LENS (FRONT)	
		1	**102-8802**	1	KIT-RECEPTACLE (2-PIN)	
					(INCLUDES RECEPTACLE AS & WEDGE)	
	11	1	*172-6490*	2	LAMP GP-SIGNAL	
					(EACH INCLUDES)	
		1	**3C-4883**	1	LAMP (12-VOLT, 21-WATT)	
		1	**3C-6516**	1	LAMP (12-VOLT, 21/5-WATT)	
		1	**146-2438**	1	LENS-LAMP (REAR)	
		1	**102-8804**	1	KIT-RECEPTACLE (4-PIN)	
					(INCLUDES RECEPTACLE AS & WEDGE)	
	12	1	**3S-2093**	25	STRAP-CABLE	
	13	1	**8T-4121**	2	WASHER-HARD (11X21X2.5-MM THK)	
M	14	1	**8T-4133**	1	NUT (M10X1.5-THD)	
M	15	1	**8T-4181**	2	BOLT (M6X1X20-MM)	
	16	1	**9X-8256**	2	WASHER (6.6X12X2-MM THK)	

E-ORDER BY THE CENTIMETER
M-METRIC PART
Y-SEPARATE ILLUSTRATION

211-4277 **LIGHTING GP-FLOOD & SIGNAL** *(contd.)* **i02357744**

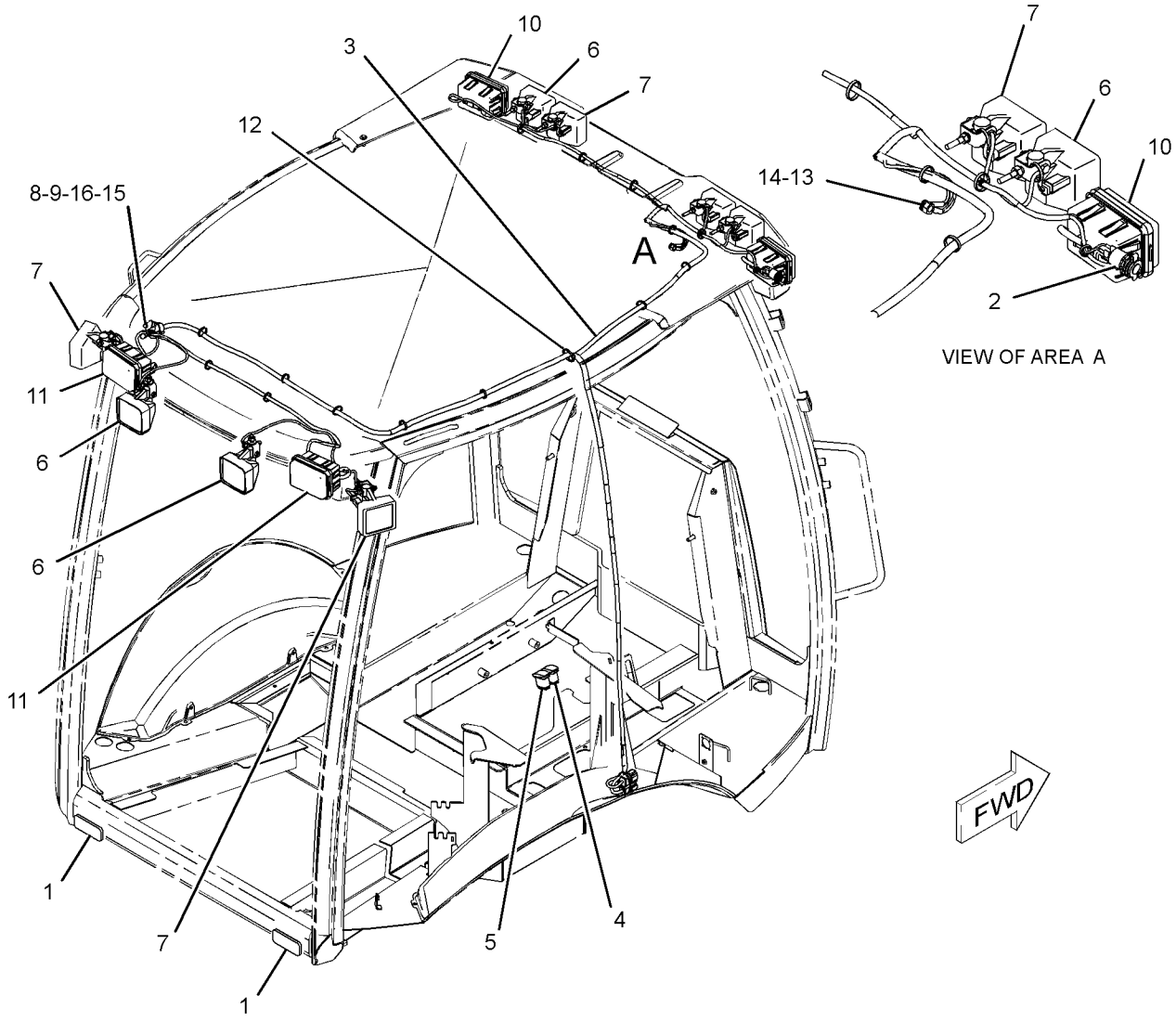

GRAPHIC #1 **<END>** g01233110

211-4292 LIGHTING GP-WARNING BEACON (CHG -03, -04)

S/N: HLS1-UP

AN ATTACHMENT

SMCS-1431 **i02467098**

NOTE	REF NO	GRAPHIC REF	PART NUMBER	QTY	PART NAME 1 2 3 4 5 6 (PRODUCT LEVEL)	SEE PAGE
	1	1	**031-5644**	1	CLIP	
Y	2	1	**180-3664**	1	LAMP GP-WARNING BEACON (12-VOLT, AMBER)	93

Y-SEPARATE ILLUSTRATION

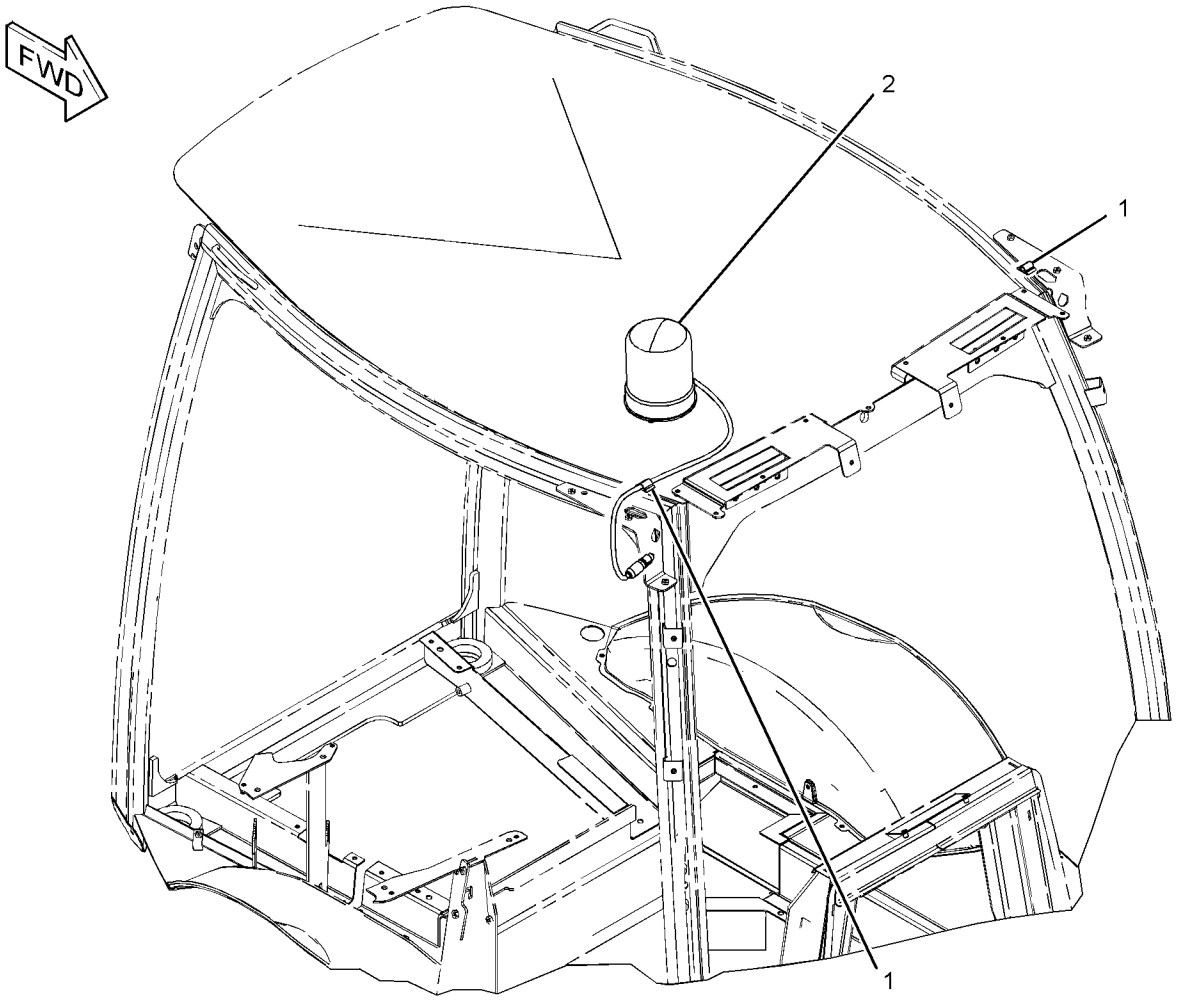

GRAPHIC #1 **<END>** g01233454

225-4323 MOUNTING GP-MAST–ACCUGRADE (CHG -01, -02)

S/N: HLS1-UP

PART OF 246-8045 INSTALLATION GP-GRADE CONTROL

AN ATTACHMENT

SMCS-6401 **i02355762**

NOTE	REF NO	GRAPHIC REF	PART NUMBER	QTY	PART NAME 1 2 3 4 5 6 (PRODUCT LEVEL)	SEE PAGE
	1	1	**9W-4361**	1	MOUNT-FLEXIBLE	
	2	1	**225-4324**	1	PLATE AS	
M		1	**8T-3612**	4	NUT-WELD (M8X1.25-THD)	
		1	**091-4113**	1	SPACER	
	3	1	**225-4326**	1	PLATE	
	4	1	**251-6708**	1	PLATE	
	5	1	**2H-3740**	1	BOLT (3/4-16X1.25-IN)	
	6	1	**5P-8248**	1	WASHER-HARD (20X36.5X3.5-MM THK)	
	7	1	**6V-1869**	1	GROMMET	
	8	1	**6V-8801**	2	NUT (3/8-16-THD)	
	9	1	**8T-4121**	8	WASHER-HARD (11X21X2.5-MM THK)	
M	10	1	**8T-4133**	1	NUT (M10X1.5-THD)	
M	11	1	**8T-4136**	5	BOLT (M10X1.5X25-MM)	
M	12	1	**8T-4137**	2	BOLT (M10X1.5X20-MM)	
	13	1	**8T-4224**	6	WASHER-HARD (8.8X16X2-MM THK)	
M	14	1	**8T-4908**	4	BOLT (M8X1.25X25-MM)	

M-METRIC PART

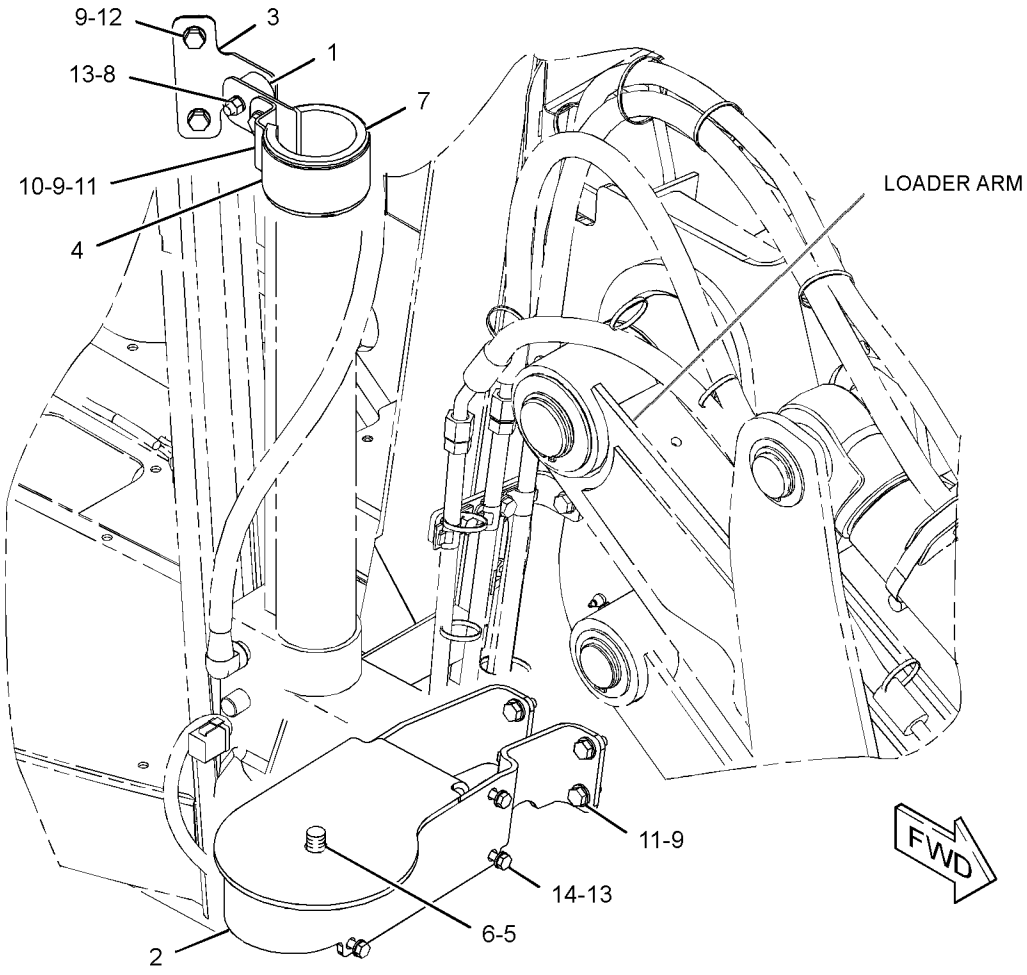

GRAPHIC #1 **<END>** g01233616

251-3200 MOUNTING GP-SENSOR–ANGLE (CHG -00, -01)

S/N: HLS1-UP
PART OF 211-4253 INSTALLATION GP-MONITOR
AN ATTACHMENT

SMCS-5736 **i02440898**

NOTE	REF NO	GRAPHIC REF	PART NUMBER	QTY	PART NAME 1 2 3 4 5 6 (PRODUCT LEVEL)	SEE PAGE
	1	1	**264-3756**	1	PLATE AS	
	4	1	**8T-4121**	3	WASHER-HARD (11X21X2.5-MM THK)	
M	5	1	**8T-4137**	3	BOLT (M10X1.5X20-MM)	
	6	1	**8T-4224**	4	WASHER-HARD (8.8X16X2-MM THK)	
M	7	1	**8T-7547**	4	BOLT (M8X1.25X30-MM)	

M-METRIC PART

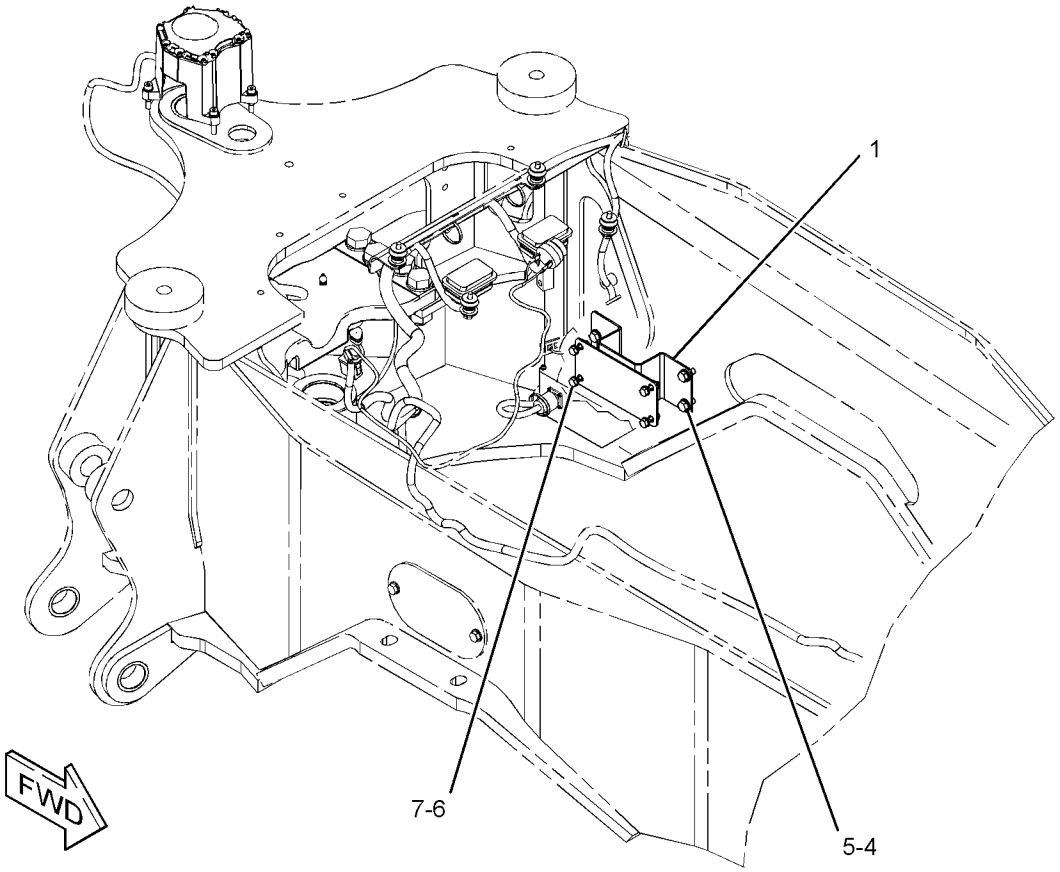

GRAPHIC #1 **<END>** g01205531

276-7287 RELAY GP (CHG -00)

S/N: HLS1-UP

PART OF 211-4268 WIRING GP-AIR CONDITIONER, 211-4269 WIRING GP-HEATER AN ATTACHMENT

SMCS-1422, 4493 **i02481639**

NOTE	REF NO	GRAPHIC REF	PART NUMBER	QTY	PART NAME 1 2 3 4 5 6 (PRODUCT LEVEL)	SEE PAGE
M	1	1	**5C-2890**	2	NUT (M6X1-THD)	
	2	1	**8T-4205**	2	WASHER-HARD (7.2X14.5X2-MM THK)	
	3	1	**1H-3244**	2	LOCKWASHER	
M	4	1	**5C-7261**	1	NUT (M8X1.25-THD)	
	5	1	**8T-4224**	1	WASHER-HARD (8.8X16X2-MM THK)	
	6	1	**267-5213**	1	COVER	
	7	1	**267-5211**	1	SEAL	

M-METRIC PART

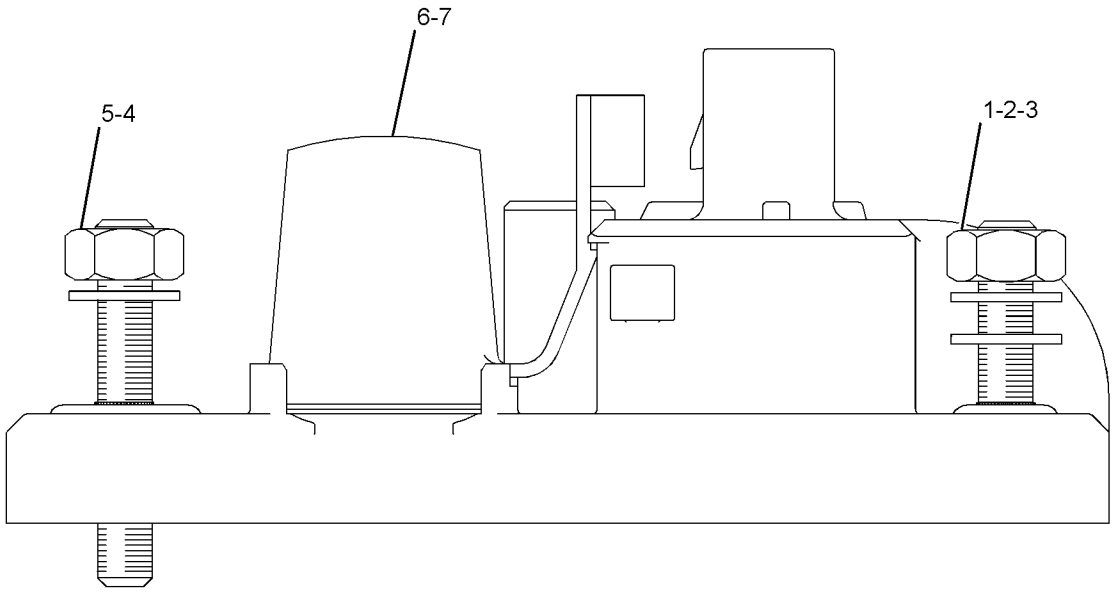

GRAPHIC #1 **<END>** g01239730

276-7290 RELAY GP–12-VOLT (CHG -00)

S/N: HLS1-UP
PART OF 211-4240 WIRING GP-PLATFORM
AN ATTACHMENT

SMCS-1422, 4493 **i02446335**

NOTE	REF NO	GRAPHIC REF	PART NUMBER	QTY	PART NAME 1 2 3 4 5 6 (PRODUCT LEVEL)	SEE PAGE
M	1	1	**5C-2890**	2	NUT (M6X1-THD)	
	2	1	**8T-4205**	2	WASHER-HARD (7.2X14.5X2-MM THK)	
	3	1	**1H-3244**	2	LOCKWASHER	
M	4	1	**5C-7261**	1	NUT (M8X1.25-THD)	
	5	1	**8T-4224**	1	WASHER-HARD (8.8X16X2-MM THK)	
	6	1	**267-5213**	1	COVER	
	7	1	**267-5211**	1	SEAL	

M-METRIC PART

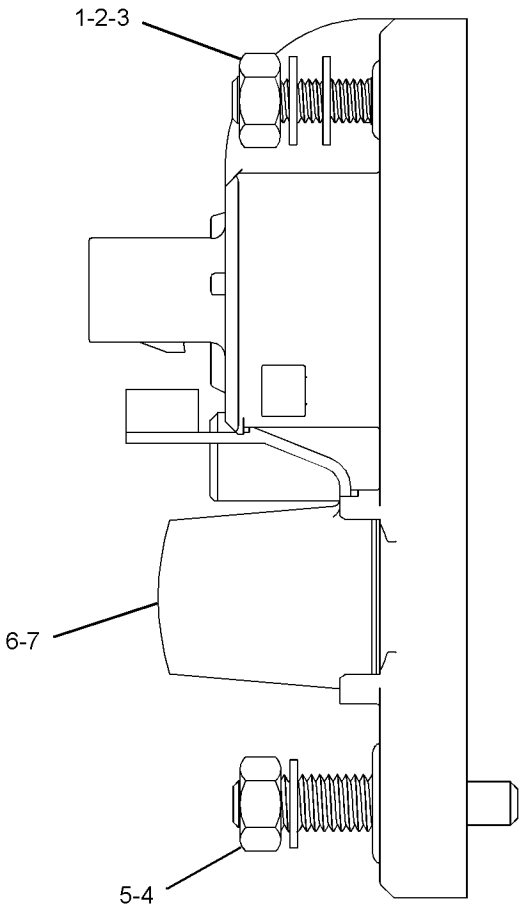

GRAPHIC #1 **<END>** g01212724

276-7291 RELAY GP–12-VOLT (CHG -00)

S/N: HLS1-UP

PART OF 211-4240 WIRING GP-PLATFORM

AN ATTACHMENT

SMCS-1422, 4493 **i02446340**

NOTE	REF NO	GRAPHIC REF	PART NUMBER	QTY	PART NAME 1 2 3 4 5 6 (PRODUCT LEVEL)	SEE PAGE
M	1	1	**5C-2890**	2	NUT (M6X1-THD)	
	2	1	**8T-4205**	2	WASHER-HARD (7.2X14.5X2-MM THK)	
	3	1	**1H-3244**	2	LOCKWASHER	
M	4	1	**5C-7261**	1	NUT (M8X1.25-THD)	
	5	1	**8T-4224**	1	WASHER-HARD (8.8X16X2-MM THK)	
	6	1	**267-5213**	1	COVER	
	7	1	**267-5211**	1	SEAL	

M-METRIC PART

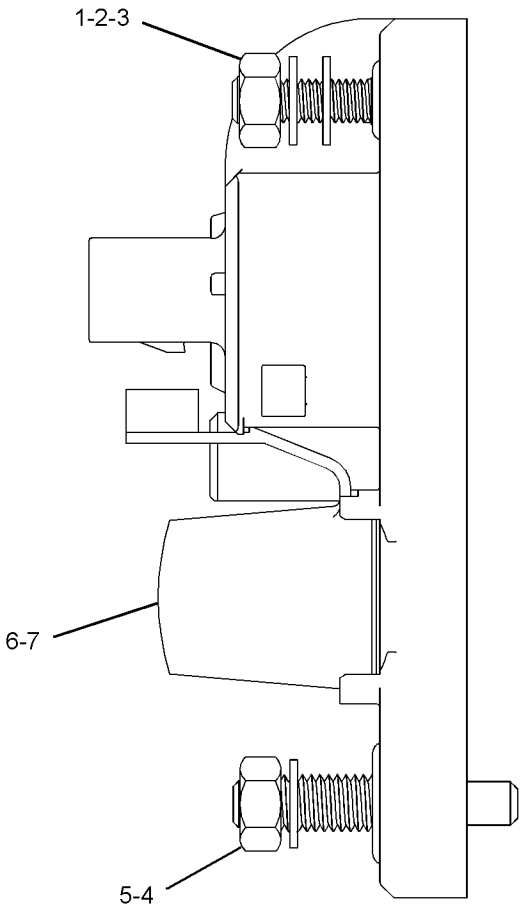

GRAPHIC #1 **<END>** g01212729

189-5746 SENSOR GP-SPEED (CHG -00, -01)

S/N: HLS1-UP
PART OF 271-3774 TRANSMISSION GP-DIRECT DRIVE
AN ATTACHMENT

SMCS-3175 **i02300261**

NOTE	REF NO	GRAPHIC REF	PART NUMBER	QTY	PART NAME 1 2 3 4 5 6 (PRODUCT LEVEL)	SEE PAGE
	1	1	**171-5349**	1	STRAP-MARKER	
	2	1	**102-8802**	1	KIT-RECEPTACLE (2-PIN)	
					(INCLUDES RECEPTACLE AS AND WEDGE)	
	3	1	**186-3735**	2	PIN-CONNECTOR (16-GA TO 18-GA)	
	4	1	**3E-3365**	1	WEDGE-RECEPTACLE LOCK (2-PIN)	
E	5	1	**9X-1386**		SLEEVE (14-CM)	

E-ORDER BY THE CENTIMETER

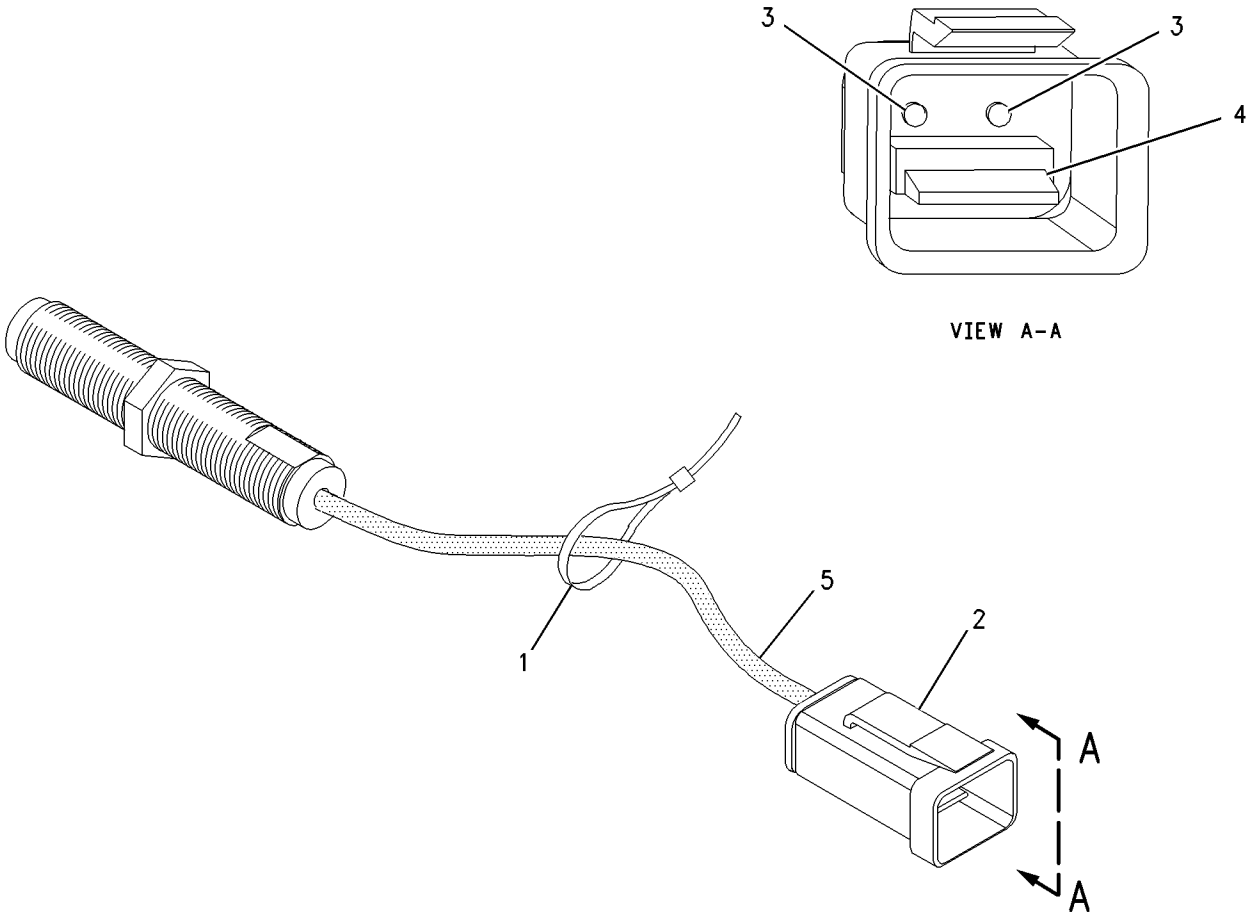

GRAPHIC #1 **<END>** g00837278

143-0539 STARTING MOTOR GP-ELECTRIC–12-VOLT*R

(CHG -00, -00D1, -01)

S/N: CRS1-UP

PART OF 237-0024 STARTING MOTOR GP-ELECTRIC

SMCS-1453 **i02474556**

NOTE	REF NO	GRAPHIC REF	PART NUMBER	QTY	PART NAME 1 2 3 4 5 6 (PRODUCT LEVEL)	SEE PAGE
	1	1	**8C-9778**	1	PLUNGER AS	
	2	1	**8C-9783**	1	GASKET	
	3	1	**2P-8104**	1	BEARING	
	4	1	**7T-6092**	1	HOLDER AS-BRUSH	
M	5	1	**8T-4133**	2	NUT (M10X1.5-THD)	
	6	1	**7T-6088**	1	BEARING AS	
	7	1	**7T-6087**	1	WASHER	
	8	1	**7T-6093**	1	CLUTCH AS	
	9	1	**8J-4455**	1	BALL	
	10	1	**7T-6090**	1	SPRING	
	11	1	**8T-4121**	2	WASHER-HARD (11X21X2.5-MM THK)	
	12	1	**3E-5153**	1	COVER-STARTING MOTOR	
M	13	1	**9X-2036**	1	SCREW-PAN HEAD	
	14	1	**8F-1434**	1	LOCKWASHER	
	15	1	**100-4113**	1	SWITCH AS (STARTING MOTOR)(12-VOLT)	
	16	1	**100-4119**	1	ARMATURE AS	
	17	1	**100-4118**	1	CASE AS-STARTING MOTOR	
	18	1	**100-4115**	1	HOUSING-STARTING MOTOR	
	19	1	**143-1344**	1	FRAME-STARTER	
	20	1	**100-3685**	1	CAP	
	21	1	**3E-5154**	1	BUSHING-STARTING MOTOR	
					AVAILABLE REPAIR KIT(S):	
			7T-6099	1	KIT-GEAR (STARTING MOTOR)	
					(INCLUDES RETAINER, PINION & ROLLERS)	
			146-6729	1	KIT-HARDWARE (STARTING MOTOR)	
					(INCLUDES BOLTS, SCREWS, SCREW ASSEMBLIES & PLATE)	
			100-4112	1	KIT-CONTACT (STARTING MOTOR)	
					(INCLUDES NUT, WASHERS, SEAL, BUSHINGS, PLATE & BOLT)	

M-METRIC PART

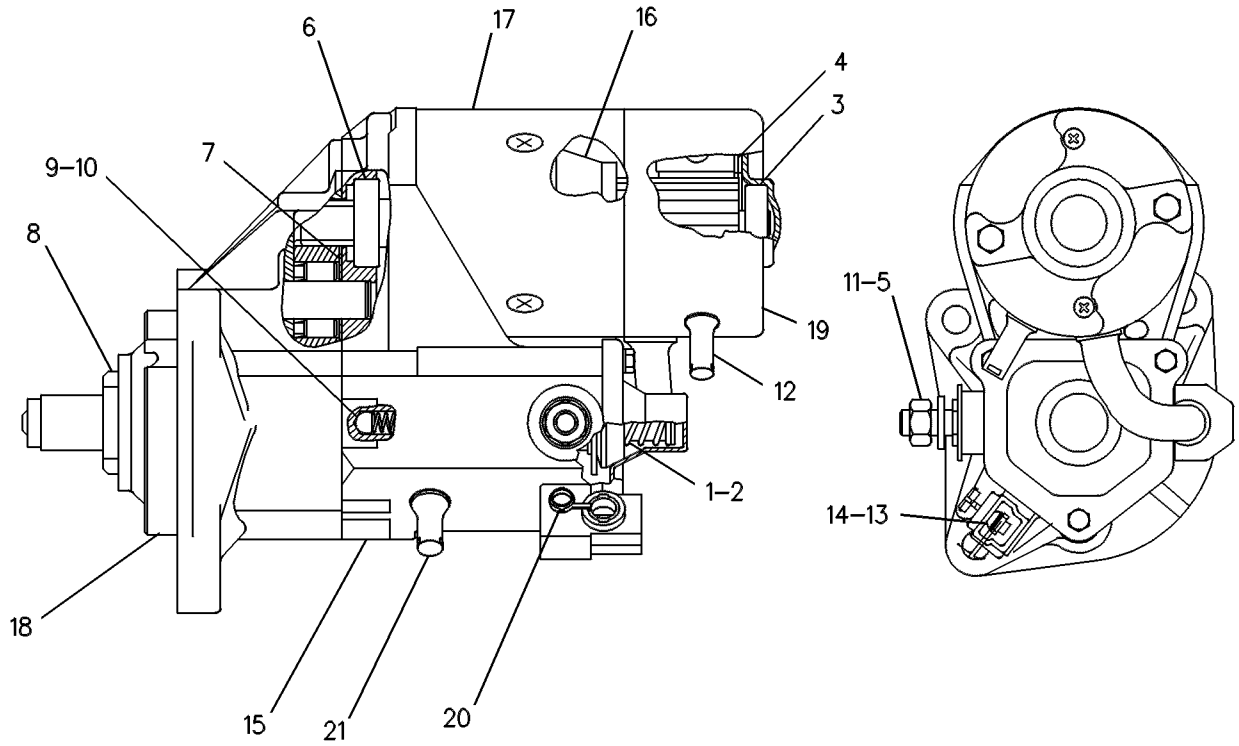

GRAPHIC #1 **<END>** g00131126

237-0024 STARTING MOTOR GP-ELECTRIC (CHG -00)

S/N: CRS1-UP

PART OF 273-3610 ENGINE AR

SMCS-1453 **i01991979**

NOTE	REF NO	GRAPHIC REF	PART NUMBER	QTY	PART NAME 1 2 3 4 5 6 (PRODUCT LEVEL)	SEE PAGE
	1	1	**6I-0364**	3	STUD (M10X1.5X30MM)	
	2	1	**6I-0594**	3	NUT (M10X1.5)	
YR	3	1	**143-0539**	1	STARTING MOTOR GP-ELECTRIC	103

R-REMFG PART MAY BE AVAILABLE
Y-SEPARATE ILLUSTRATION

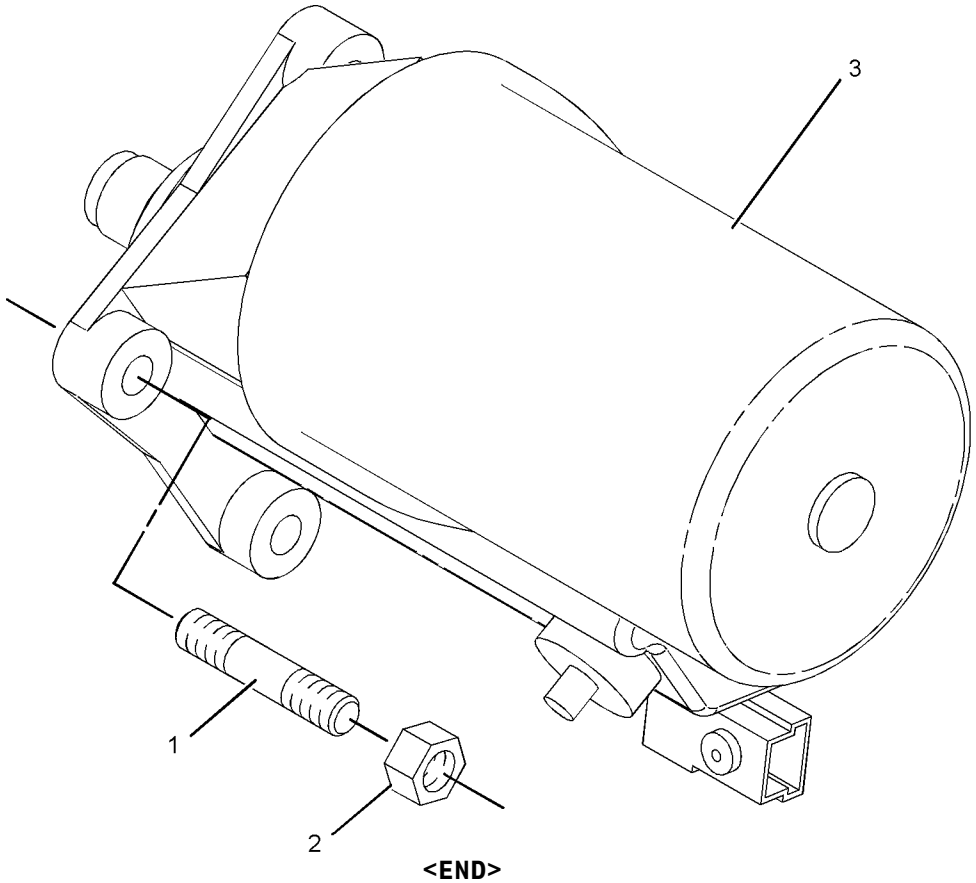

GRAPHIC #1 **<END>** g01039910

211-4267 SWITCH GP-ALL WHEEL DRIVE–INCLUDES RELAY

(CHG -01, -02)
S/N: HLS1-UP
PART OF 216-4740 DRIVE AR-BACKHOE LOADER
AN ATTACHMENT

SMCS-1435, 4493 **i02451223**

NOTE	REF NO	GRAPHIC REF	PART NUMBER	QTY	PART NAME 1 2 3 4 5 6 (PRODUCT LEVEL)	SEE PAGE
	1	1	**146-9439**	1	RELAY AS (12-VOLT)	
	2	1	**214-4692**	1	SWITCH AS-ROCKER (ALL WHEEL DRIVE)	

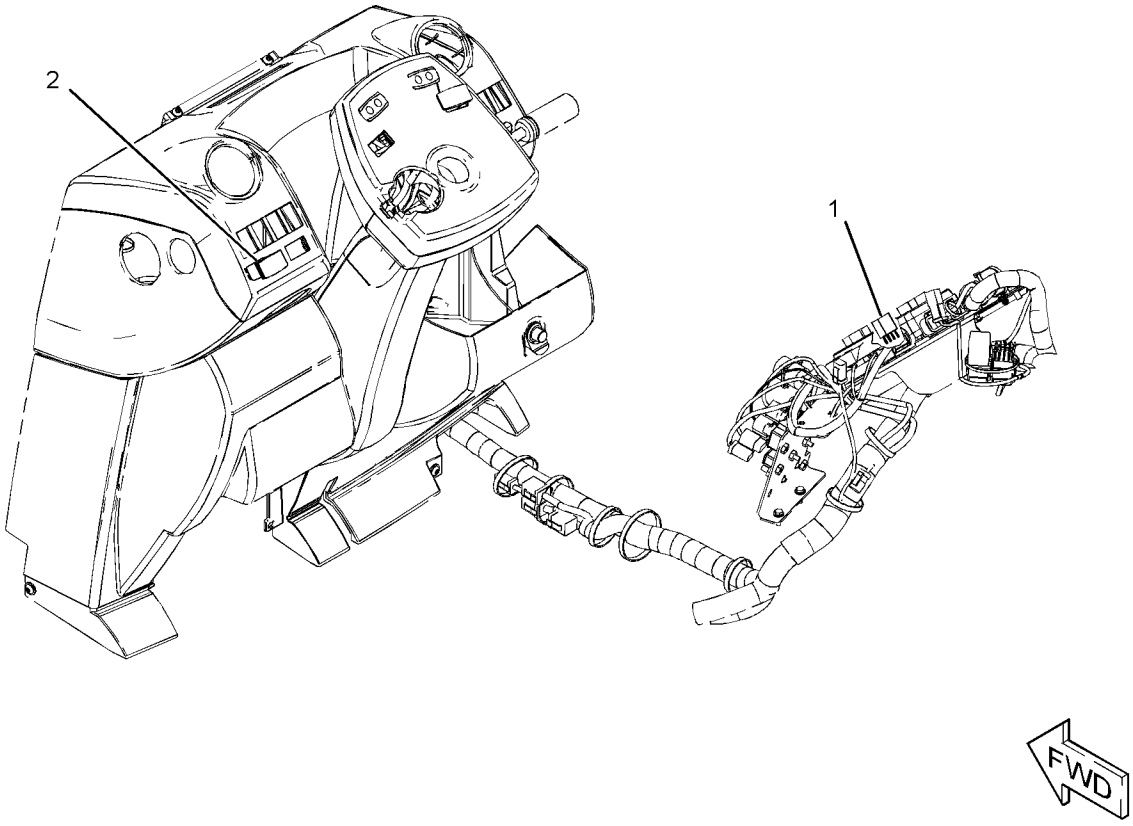

GRAPHIC #1 **<END>** g01211965

202-6010 SWITCH GP-DIFFERENTIAL LOCK–CENTER PIVOT

(CHG -00 THRU -02)
S/N: HLS1-UP
PART OF 216-3315, 216-3316 POWER TRAIN AR
AN ATTACHMENT

SMCS-1435, 3264 **i02442926**

NOTE	REF NO	GRAPHIC REF	PART NUMBER	QTY	PART NAME 1 2 3 4 5 6 (PRODUCT LEVEL)	SEE PAGE
	1	1	**201-9459**	1	BOOT	
	2	1	**204-0775**	1	SWITCH AS-FOOT (DIFFERENTIAL LOCK)	
	3	1	**205-6298**	1	ACTUATOR	
	4	1	**213-6060**	1	HARNESS AS-WIRING (DIFFERENTIAL LOCK)	
		1	**102-8802**	1	KIT-RECEPTACLE (2-PIN)	
					(INCLUDES RECEPTACLE AS & WEDGE)	
		1	**205-9362**	1	PLUG AS	

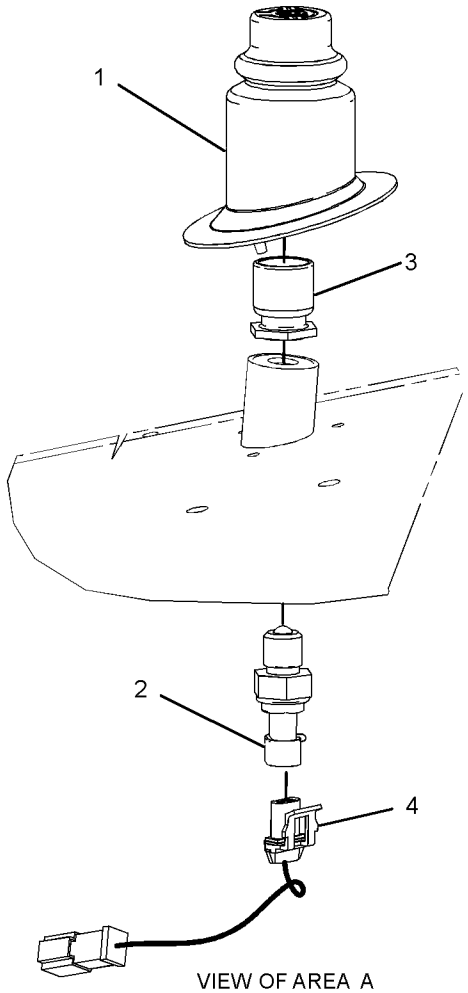

VIEW OF AREA A

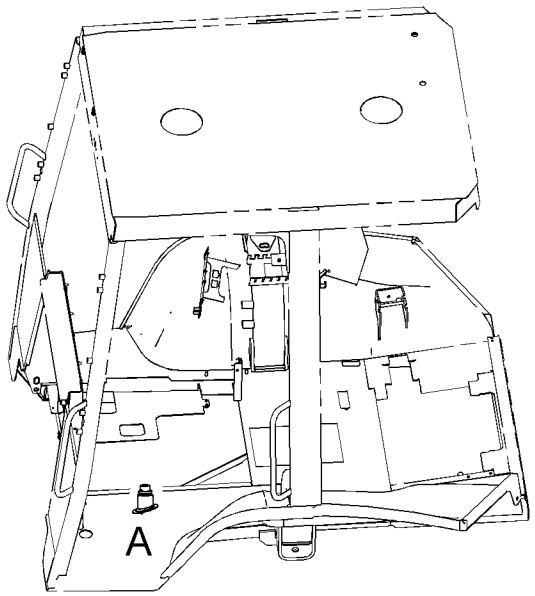

LEFT SIDE VIEW
(UPPER FRONT)

GRAPHIC #1 **<END>** g01230746

237-4896 SWITCH GP-PRESSURE–ENGINE OIL (CHG -00, -01)

S/N: CRS1-UP

PART OF 273-3610 ENGINE AR

SMCS-1435 **i02437894**

NOTE	REF NO	GRAPHIC REF	PART NUMBER	QTY	PART NAME 1 2 3 4 5 6 (PRODUCT LEVEL)	SEE PAGE
	1	1	**237-4894**	1	SWITCH AS-PRESSURE (ENGINE OIL)	
	2	1	**199-9267**	1	SEAL-O-RING	

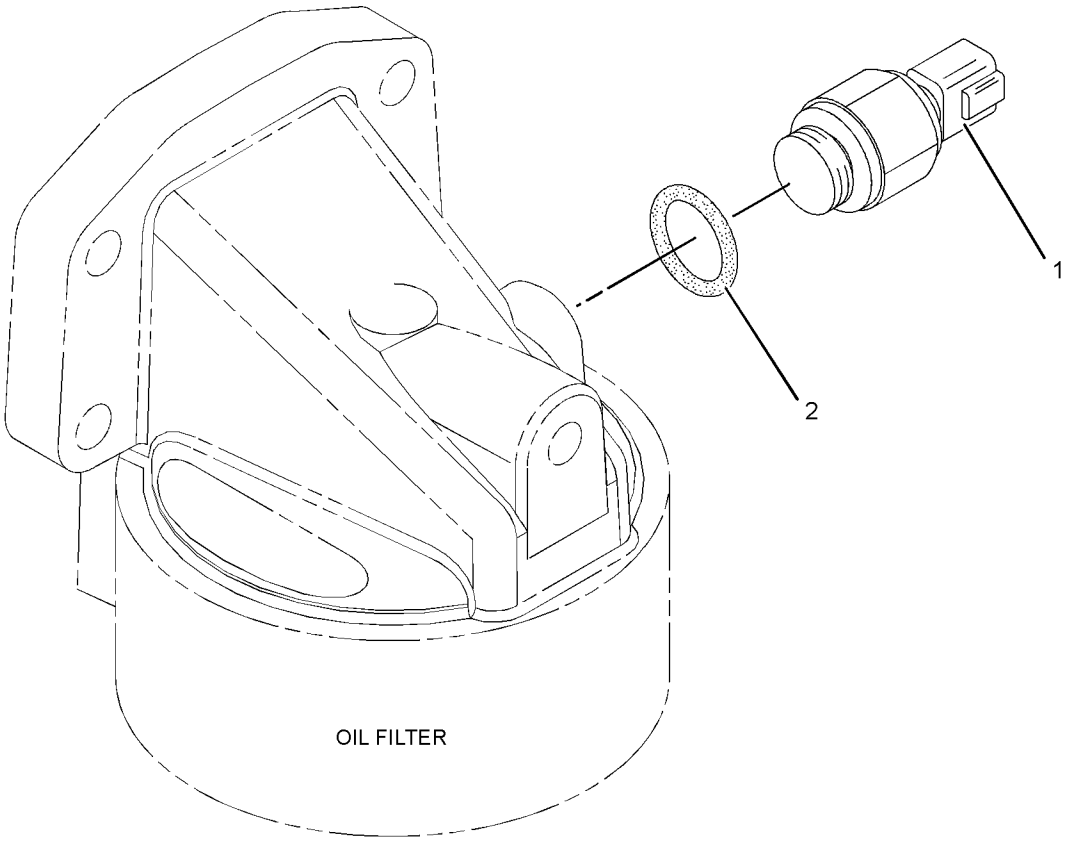

GRAPHIC #1 **<END>** g01218504

211-4268 WIRING GP-AIR CONDITIONER (CHG -03 THRU -06)

S/N: HLS1-UP
PART OF 269-2127 CAB AR
AN ATTACHMENT

SMCS-1408, 7320 **i02445880**

NOTE	REF NO	GRAPHIC REF	PART NUMBER	QTY	PART NAME 1 2 3 4 5 6 (PRODUCT LEVEL)	SEE PAGE
	1	1	**3E-9362**	1	RELAY AS (12-VOLT)	
	2	1	**6K-0806**	2	STRAP-CABLE	
	3	1	**9X-7378**	1	SEAL-O-RING	
	4	1	**106-8704**	1	SUPPRESSOR AS-ARC	
		1	**102-8802**	1	KIT-RECEPTACLE (2-PIN)	
					(INCLUDES RECEPTACLE AS & WEDGE)	
		1	**186-3735**	2	PIN-CONNECTOR (16-GA TO 18-GA)	
	5	1	**202-6108**	1	HARNESS AS-HEATER & AIR COND (POWER)	
		1	**111-6792**	1	TERMINAL-RECEPTACLE	
		1	**102-8802**	1	KIT-RECEPTACLE (2-PIN)	
					(INCLUDES RECEPTACLE AS & WEDGE)	
		1	**8L-8413**	12	STRAP-CABLE	
		1	**111-6795**	1	HOUSING-RELAY	
		1	**111-6816**	1	LOCK	
	6	1	**213-6055**	1	HARNESS AS-HEATER & AIR COND	
		1	**9X-1055**	2	TERMINAL-RECEPTACLE	
		1	**091-2436**	7	TERMINAL-BLADE	
		1	**100-5041**	2	TERMINAL-RECEPTACLE	
		1	**104-1995**	11	TERMINAL-BLADE	
		1	**122-4401**	1	TERMINAL	
		1	**8L-8413**	29	STRAP-CABLE	
		1	**213-0139**	5	PIN	
E		1	**119-3662**		TUBE-HEAT SHRINK (10.85-MM DIA) (20-CM)	
E		1	**125-7874**		TUBE-HEAT SHRINK (5.72-MM DIA) (10-CM)	
		1	**9X-1054**	1	PLUG AS-CONNECTOR (4-PIN)	
		1	**102-8802**	1	KIT-RECEPTACLE (2-PIN)	
		1	**102-8803**	1	KIT-RECEPTACLE (3-PIN)	
					(EACH RECEPTACLE KIT INCLUDES RECEPTACLE AS & WEDGE)	
		1	**177-9648**	1	KIT-CONNECTING PLUG (2-PIN)	
		1	**177-9656**	1	KIT-CONNECTING PLUG (4-PIN)	
					(EACH PLUG KIT INCLUDES PLUG AS & WEDGE)	
		1	**155-2270**	1	KIT-CONNECTING PLUG (2-PIN)	
					(INCLUDES PLUG AS, WEDGE & INTERFACE SEAL)	
	7	1	**214-4695**	1	SWITCH AS-ROCKER (BLOWER FAN SPEED)	
	8	1	**214-4718**	1	SWITCH AS-ROCKER (AIR CONDITIONER, HEATER)	
	9	1	**236-6923**	1	SWITCH AS-PRESSURE (REFRIGERANT)	
	10	1	**238-7492**	1	HARNESS AS-HEATER & AIR COND (COMPRESSOR)	
		1	**8L-8413**	1	STRAP-CABLE	
E		1	**125-7874**		TUBE-HEAT SHRINK (5.72-MM DIA) (10-CM)	
		1	**100-6674**	2	SEAL-CONNECTOR	
		1	**124-5640**	2	TERMINAL-SOCKET	
		1	**102-8802**	1	KIT-RECEPTACLE (2-PIN)	
					(INCLUDES RECEPTACLE AS & WEDGE)	
		1	**155-2270**	2	KIT-CONNECTING PLUG (2-PIN)	
					(EACH INCLUDES PLUG AS, WEDGE & INTERFACE SEAL)	
	11	1	**275-0570**	1	BAR-BUS	
Y	12	1	**276-7287**	1	RELAY GP (12-VOLT)	99
	13	1	**115-1615**	1	RELAY AS (12-VOLT)	
	14	1	**4P-8134**	1	CLIP	
	15	1	**3S-2093**	11	STRAP-CABLE	
M	16	1	**5C-2890**	1	NUT (M6X1-THD)	
M	17	1	**5C-7261**	1	NUT (M8X1.25-THD)	
M	18	1	**7X-2534**	1	BOLT (M6X1X50-MM)	

211-4268 **WIRING GP-AIR CONDITIONER** *(contd.)* **i02445880**

NOTE	REF NO	GRAPHIC REF	PART NUMBER	QTY	PART NAME 1 2 3 4 5 6 (PRODUCT LEVEL)	SEE PAGE
	19	1	**8T-4205**	1	WASHER-HARD (7.2X14.5X2-MM THK)	
	20	1	**8T-4224**	1	WASHER-HARD (8.8X16X2-MM THK)	

E-ORDER BY THE CENTIMETER
M-METRIC PART
Y-SEPARATE ILLUSTRATION

211-4268 **WIRING GP-AIR CONDITIONER** *(contd.)* **i02445880**

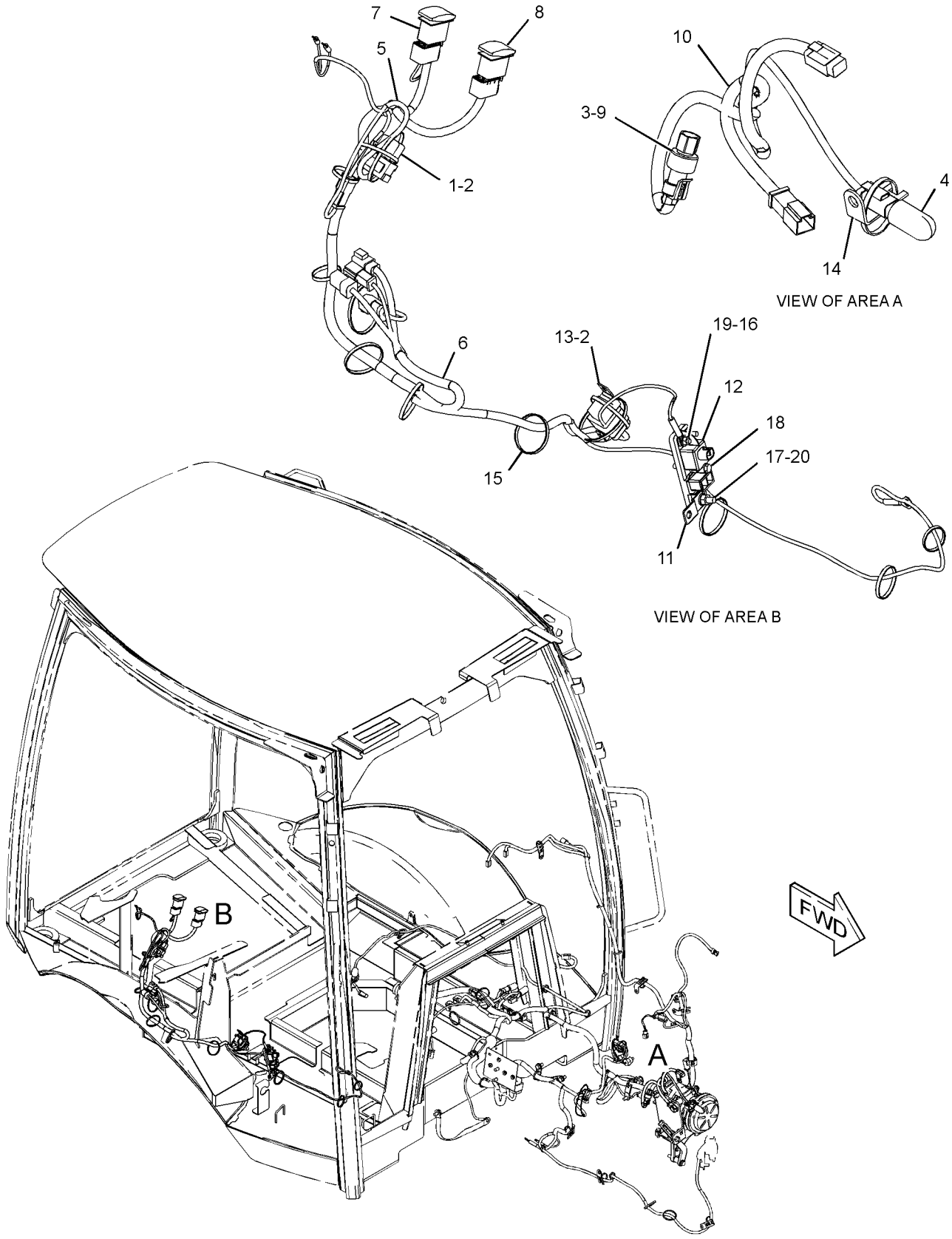

GRAPHIC #1 **<END>** g01231737

211-4241 WIRING GP-CONSOLE–SIDE (CHG -03 THRU -08)

S/N: HLS1-UP

PART OF 269-2125, 269-2126, 269-2127 CAB AR, 269-2123, 269-2124 CANOPY AR AN ATTACHMENT

SMCS-1408, 7478 **i02446404**

NOTE	REF NO	GRAPHIC REF	PART NUMBER	QTY	PART NAME 1 2 3 4 5 6 (PRODUCT LEVEL)	SEE PAGE
J	1	1	**110-7887**	1	SWITCH GP-START (KEY)	
		1	**7T-6799**	1	NUT-MOUNTING (1-32-THD)	
		1	**186-3735**	4	PIN-CONNECTOR (16-GA TO 18-GA)	
		1	**102-8804**	1	KIT-RECEPTACLE (4-PIN)	
					(INCLUDES RECEPTACLE AS & WEDGE)	
M	2	1	**197-7499**	2	BOLT (M4X0.7X25-MM)	
	3	1	**206-1345**	3	STRAP-CABLE	
	4	1	**206-1649**	1	BRACKET	
	5	1	**212-3416**	3	SCREW-PAN HEAD (8-16X0.5-IN)	
	6	1	**214-4693**	1	SWITCH AS-ROCKER (WARNING BEACON)	
	7	1	**214-4704**	1	SWITCH AS-ROCKER (HYDRAULIC LOCKOUT)	
	8	1	**214-4722**	1	SWITCH AS-ROCKER (STARTING AID)	
	9	1	**217-5364**	1	HORN	
	10	1	**226-7164**	1	GAUGE GP-COOLANT TEMPERATURE	
		1	**4B-2043**	6	NUT (8-32-THD)	
		1	**9B-7233**	3	LOCKWASHER	
		1	**7X-9065**	1	LAMP (12-VOLT)	
B	11	1	**227-1057**	6	PLUG-HOLE	
	12	1	**231-9356**	1	FILM-INDICATOR	
	13	1	**268-7758**	1	HARNESS AS-CONSOLE	
		1	**200-2213**	4	HARNESS AS-WIRING (3-PIN, GAUGE)	
		1	**167-3693**	1	PLUG AS-CONNECTOR (31-PIN)	
		1	**155-2274**	1	KIT-CONNECTING PLUG (6-PIN)	
		1	**155-2271**	1	KIT-CONNECTING PLUG (4-PIN)	
		1	**155-2255**	2	KIT-CONNECTING PLUG (12-PIN)	
					(EACH PLUG KIT INCLUDES PLUG AS, WEDGE & INTERFACE SEAL)	
		1	**091-2436**	33	TERMINAL-BLADE	
		1	**104-1995**	17	TERMINAL-BLADE	
		1	**8L-8413**	52	STRAP-CABLE	
E		1	**119-3662**		TUBE-HEAT SHRINK (10.85-MM DIA) (20-CM)	
E		1	**125-7874**		TUBE-HEAT SHRINK (5.72-MM DIA) (25-CM)	
		1	**142-9117**	1	CONNECTOR	
	14	1	**270-2729**	1	MODULE GP-WARNING INDICATOR	
		1	**102-8801**	1	KIT-RECEPTACLE (12-PIN)	
					(INCLUDES RECEPTACLE AS & WEDGE)	
		1	**232-4706**	1	GASKET	
		1	**186-3735**	9	PIN-CONNECTOR (16-GA TO 18-GA)	
		1	**8T-8737**	1	PLUG-SEAL	
	15	1	**131-1424**	1	SEAL	
	16	1	**170-6305**	1	GAUGE GP-FUEL LEVEL	
		1	**4B-2043**	3	NUT (8-32-THD)	
		1	**9B-7233**	3	LOCKWASHER	
		1	**7X-9065**	1	LAMP (12-VOLT)	
	17	1	**170-6542**	1	GAUGE GP-OIL TEMPERATURE (TORQUE CONVERTER)	
		1	**4B-2043**	3	NUT (8-32-THD)	
		1	**9B-7233**	3	LOCKWASHER	
		1	**7X-9065**	1	LAMP (12-VOLT)	
Y	18	1	**239-1080**	1	TACHOMETER GP-ELECTRIC	624
	19	1	**3S-2093**	5	STRAP-CABLE	
	20	1	**6V-3507**	3	SEAL-RECTANGULAR	
M	21	1	**8T-2659**	2	LOCKNUT (M4X0.7-THD)	

211-4241 **WIRING GP-CONSOLE** *(contd.)* **i02446404**

B-USE AS REQUIRED
E-ORDER BY THE CENTIMETER
J-REQUIRES 5P8500 KEY
M-METRIC PART
Y-SEPARATE ILLUSTRATION

211-4241 **WIRING GP-CONSOLE** *(contd.)* **i02446404**

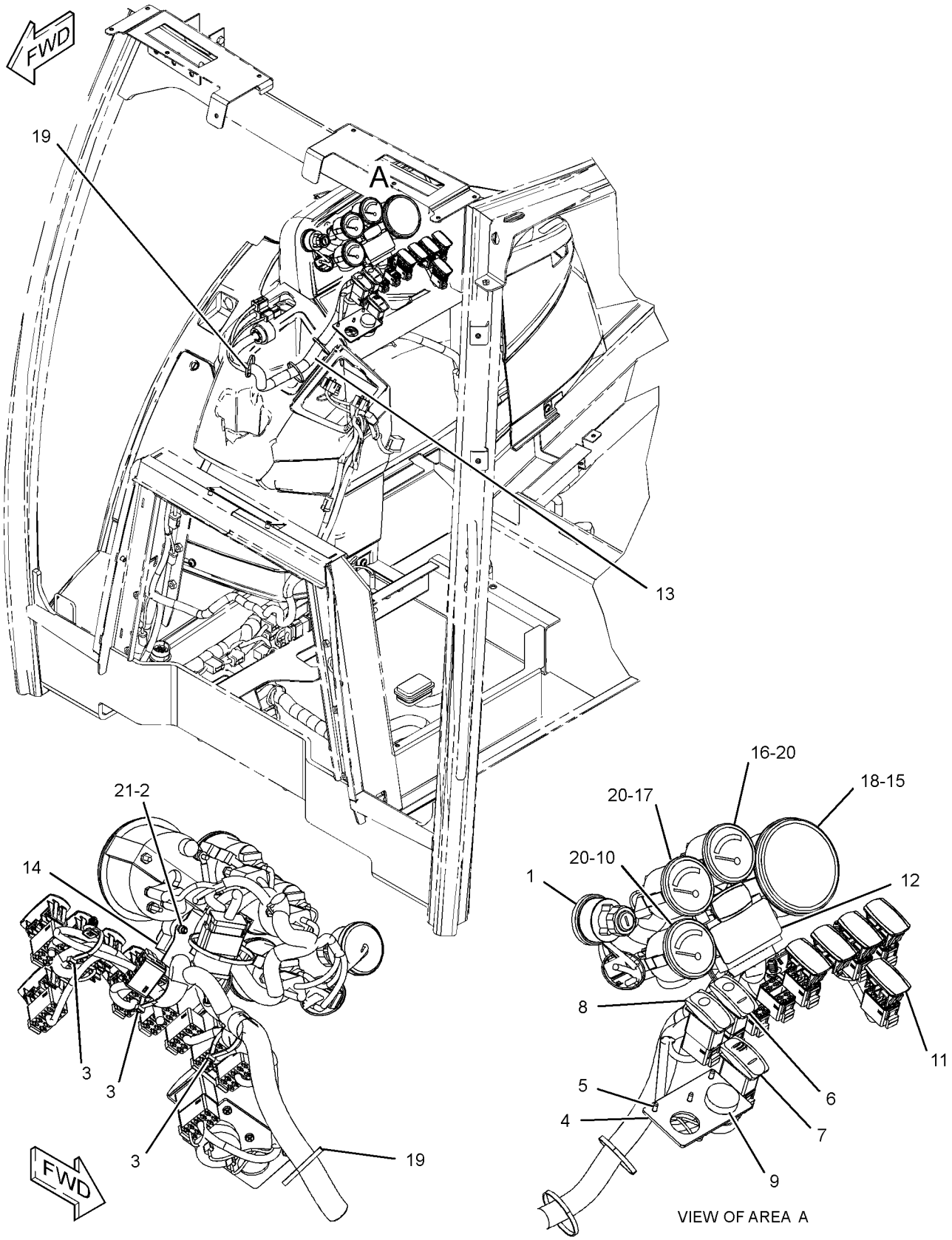

GRAPHIC #1 **<END>** g01228126

211-4245 WIRING GP-CONSOLE–FRONT (CHG -02 THRU -04)

S/N: HLS1-UP

PART OF 269-2125, 269-2126, 269-2127 CAB AR, 269-2123, 269-2124 CANOPY AR AN ATTACHMENT

SMCS-1408, 7478 **i02380928**

NOTE	REF NO	GRAPHIC REF	PART NUMBER	QTY	PART NAME 1 2 3 4 5 6 (PRODUCT LEVEL)	SEE PAGE
	1	1	**7K-1181**	3	STRAP-CABLE	
	2	1	*161-3932*	1	METER GP-SERVICE	
M		1	**5C-8312**	2	NUT (M4X0.7-THD)	
		1	**9B-7233**	2	LOCKWASHER	
		1	**096-6166**	2	WASHER-HARD (4.5X9X1-MM THK)	
	3	1	**213-6040**	1	HARNESS AS-CONSOLE	
		1	**8L-8413**	26	STRAP-CABLE	
		1	**167-3693**	1	PLUG AS-CONNECTOR (31-PIN)	
	4	1	**214-4716**	1	SWITCH AS-ROCKER (TRANSMISSION NEUTRAL LOCK)	
		1	**111-7899**	1	GASKET	
B	5	1	**227-1057**	10	PLUG-HOLE	
	6	1	**3S-2093**	3	STRAP-CABLE	

B-USE AS REQUIRED
M-METRIC PART

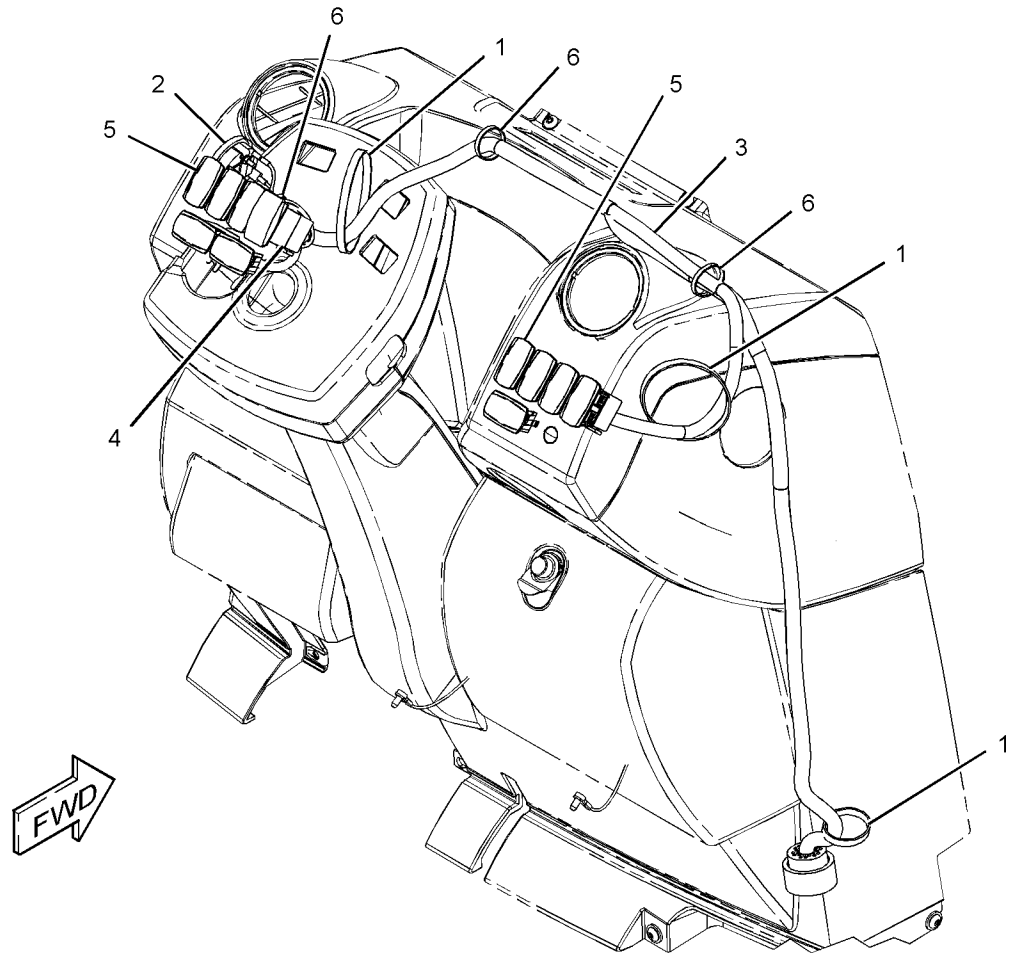

GRAPHIC #1 **<END>** g01190392

267-5633 WIRING GP-CONTROL–JOYSTICK, RH (CHG -00)

S/N: HLS1-UP
PART OF 269-2148 VALVE AR-BANK 8
AN ATTACHMENT

SMCS-1408 **i02447373**

NOTE	REF NO	GRAPHIC REF	PART NUMBER	QTY	PART NAME 1 2 3 4 5 6 (PRODUCT LEVEL)	SEE PAGE
	1	1	**206-2423**	4	SADDLE	
	2	1	**268-7756**	1	HARNESS AS-AUXILIARY	
		1	**102-8805**	1	KIT-RECEPTACLE (6-PIN)	
					(INCLUDES RECEPTACLE AS & WEDGE)	
E		1	**125-7874**		TUBE-HEAT SHRINK (5.72-MM DIA) (5-CM)	
		1	**155-2255**	1	KIT-CONNECTING PLUG (12-PIN)	
		1	**155-2270**	2	KIT-CONNECTING PLUG (2-PIN)	
					(EACH PLUG KIT INCLUDES PLUG AS, WEDGE & INTERFACE SEAL)	
	3	1	**3S-2093**	13	STRAP-CABLE	

E-ORDER BY THE CENTIMETER

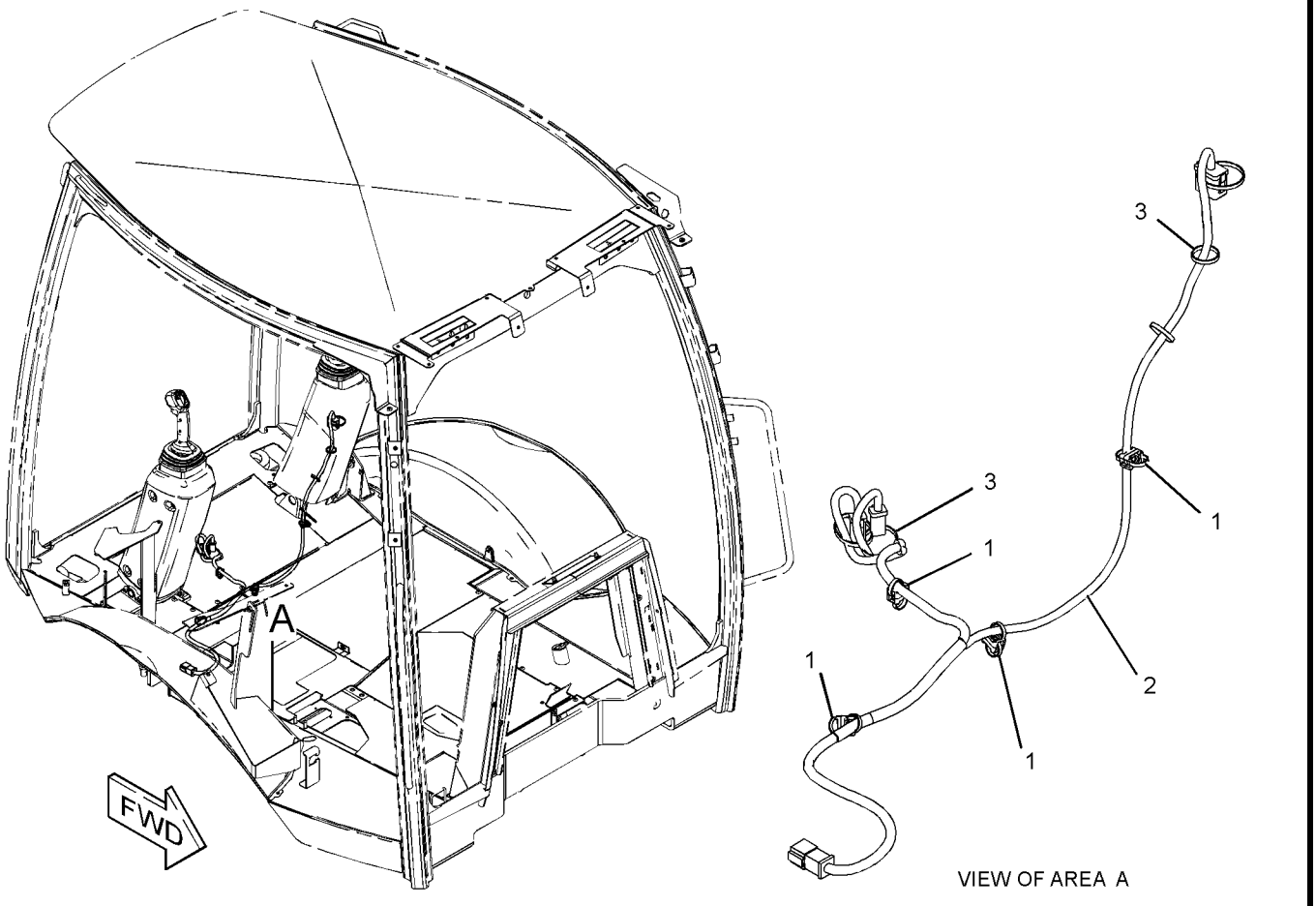

GRAPHIC #1 **<END>** g01234091

267-5634 WIRING GP-CONTROL–JOYSTICK, LH (CHG -00)

S/N: HLS1-UP
PART OF 269-2148 VALVE AR-BANK 8
AN ATTACHMENT

SMCS-1408 **i02447422**

NOTE	REF NO	GRAPHIC REF	PART NUMBER	QTY	PART NAME 1 2 3 4 5 6 (PRODUCT LEVEL)	SEE PAGE
	1	1	**206-2423**	2	SADDLE	
	2	1	**268-7757**	1	HARNESS AS-AUXILIARY	
		1	**102-8806**	1	KIT-RECEPTACLE (8-PIN)	
					(INCLUDES RECEPTACLE AS & WEDGE)	
E		1	**125-7874**		TUBE-HEAT SHRINK (5.72-MM DIA) (5-CM)	
		1	**155-2255**	1	KIT-CONNECTING PLUG (12-PIN)	
		1	**155-2270**	2	KIT-CONNECTING PLUG (2-PIN)	
					(EACH PLUG KIT INCLUDES PLUG AS, WEDGE & INTERFACE SEAL)	
	3	1	**3S-2093**	9	STRAP-CABLE	

E-ORDER BY THE CENTIMETER

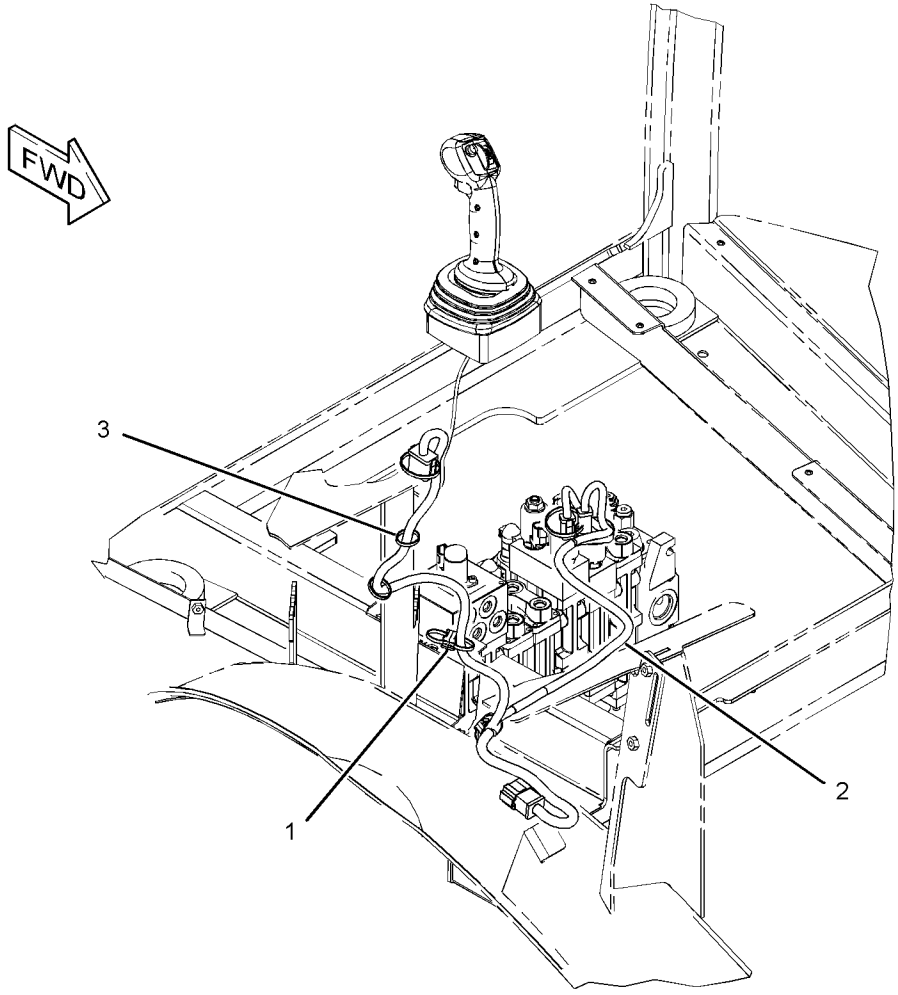

GRAPHIC #1 **<END>** g01212070

267-5635 WIRING GP-CONTROL–JOYSTICK, LH (CHG -00)

S/N: HLS1-UP
PART OF 269-2146 VALVE AR-BANK 6
AN ATTACHMENT

SMCS-1408 **i02447312**

NOTE	REF NO	GRAPHIC REF	PART NUMBER	QTY	PART NAME 1 2 3 4 5 6 (PRODUCT LEVEL)	SEE PAGE
	1	1	**206-2423**	1	SADDLE	
	2	1	**225-7988**	1	HARNESS AS-AUXILIARY	
		1	**102-8806**	1	KIT-RECEPTACLE (8-PIN)	
					(INCLUDES RECEPTACLE AS & WEDGE)	
		1	**155-2255**	1	KIT-CONNECTING PLUG (12-PIN)	
					(INCLUDES PLUG AS, WEDGE & INTERFACE SEAL)	
	3	1	**3S-2093**	6	STRAP-CABLE	

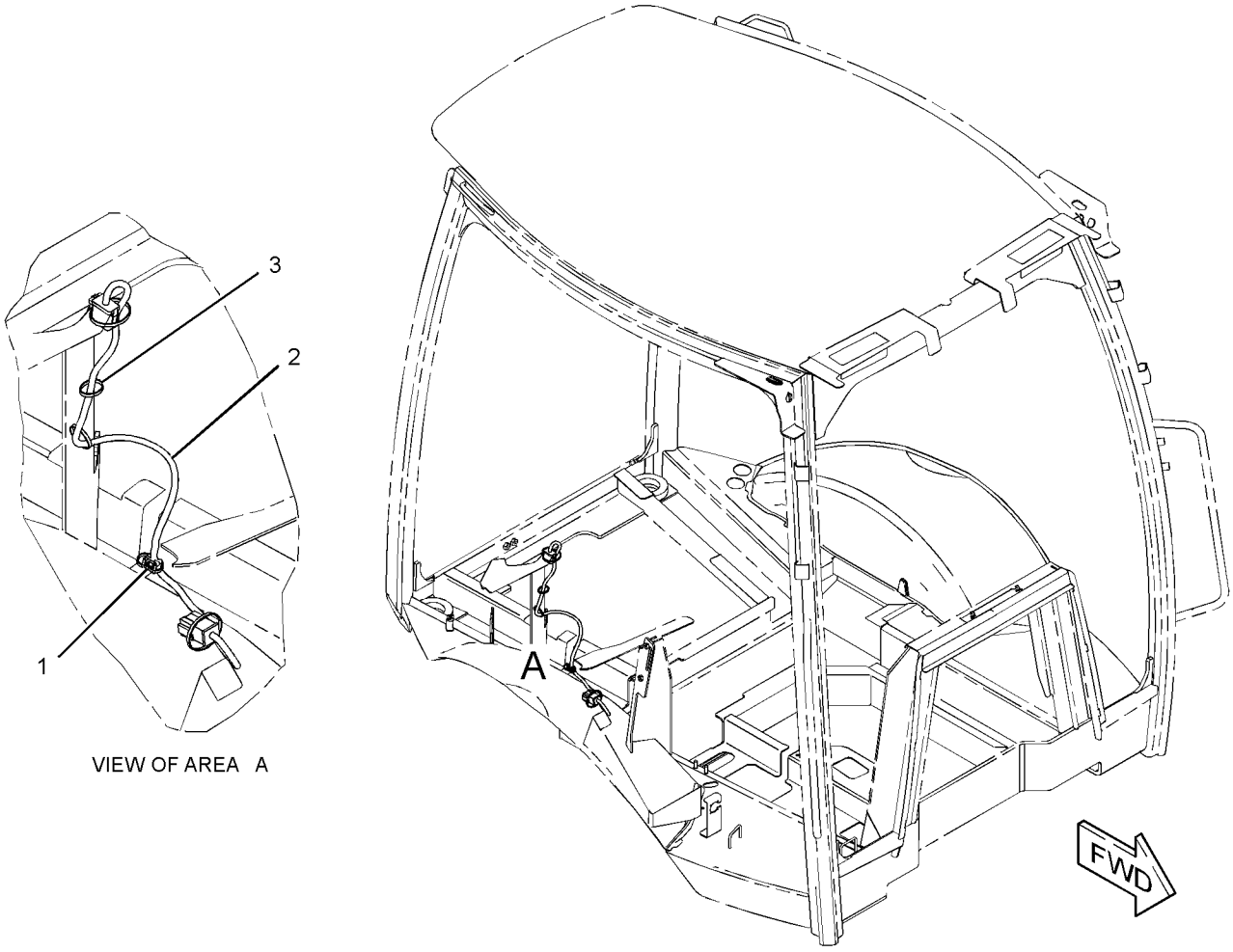

VIEW OF AREA A

GRAPHIC #1 **<END>** g01211938

211-4248 WIRING GP-ENGINE (CHG -01 THRU -06)

S/N: HLS1-UP

PART OF 213-9273 COMMON AR

SMCS-1408 **i02451221**

NOTE	REF NO	GRAPHIC REF	PART NUMBER	QTY	PART NAME 1 2 3 4 5 6 (PRODUCT LEVEL)	SEE PAGE
	1	1	**7G-1060**	1	STRAP AS-GROUND	
	2	1	**106-8704**	4	SUPPRESSOR AS-ARC	
					(EACH INCLUDES)	
		1	**102-8802**	1	KIT-RECEPTACLE (2-PIN)	
					(INCLUDES RECEPTACLE AS & WEDGE)	
		1	**186-3735**	2	PIN-CONNECTOR (16-GA TO 18-GA)	
	3	1	**235-8747**	1	SWITCH-TEMPERATURE (ENGINE COOLANT)	
	4	1	**238-9397**	1	RESISTOR AS	
		1	**102-8802**	1	KIT-RECEPTACLE (2-PIN)	
					(INCLUDES RECEPTACLE AS & WEDGE)	
		1	**186-3735**	2	PIN-CONNECTOR (16-GA TO 18-GA)	
	5	1	**244-3106**	1	SENDER AS-TEMPERATURE (ENGINE COOLANT)	
		1	**102-8802**	1	KIT-RECEPTACLE (2-PIN)	
					(INCLUDES RECEPTACLE AS & WEDGE)	
		1	**186-3735**	2	PIN-CONNECTOR (16-GA TO 18-GA)	
	6	1	**246-8051**	1	HARNESS AS-ENGINE	
		1	**6V-0491**	4	TERMINAL-BLADE	
		1	**7N-9738**	1	HOUSING-RECEPTACLE	
		1	**8L-8413**	63	STRAP-CABLE	
		1	**9X-1054**	3	PLUG AS-CONNECTOR (4-PIN)	
		1	**9X-1055**	6	TERMINAL-RECEPTACLE	
		1	**100-5041**	6	TERMINAL-RECEPTACLE	
		1	**100-6674**	2	SEAL-CONNECTOR	
E		1	**119-3662**		TUBE-HEAT SHRINK (10.85-MM DIA) (13-CM)	
		1	**123-7615**	2	CONNECTOR	
		1	**124-5640**	2	TERMINAL-SOCKET	
E		1	**125-7874**		TUBE-HEAT SHRINK (5.72-MM DIA) (20-CM)	
E		1	**125-7875**		TUBE-HEAT SHRINK (7.44-MM DIA) (15-CM)	
		1	**5P-1478**	1	TERMINAL-BLADE (10-GA TO 12-GA)	
		1	**2L-8054**	1	TERMINAL (6-GA)	
		1	**7N-7221**	1	TERMINAL (18-GA TO 22-GA)	
		1	**155-2260**	1	KIT-CONNECTING PLUG (3-PIN)	
		1	**155-2270**	19	KIT-CONNECTING PLUG (2-PIN)	
					(EACH PLUG KIT INCLUDES PLUG AS, WEDGE & INTERFACE SEAL)	
	7	1	**251-9570**	1	PLATE AS	
	8	1	**115-1615**	1	RELAY AS (12-VOLT) (FUEL PUMP)	
	8A	1	**115-1615**	1	RELAY AS (12-VOLT) (START)	
	8B	1	**115-1615**	1	RELAY AS (12-VOLT) (STARTING AID)	
	9	1	**164-9425**	1	HORN AS (LOW TONE)	
	10	1	**3S-2093**	37	STRAP-CABLE	
	11	1	**4P-7581**	10	CLIP	
	12	1	**4P-8134**	6	CLIP	
M	13	1	**5C-2874**	2	NUT (M5X0.8-THD)	
	14	1	**8F-1434**	2	LOCKWASHER	
	15	1	**8T-0328**	2	WASHER-HARD (5.5X10X1-MM THK)	
	16	1	**8T-4121**	11	WASHER-HARD (11X21X2.5-MM THK)	
M	17	1	**8T-4136**	1	BOLT (M10X1.5X25-MM)	
M	18	1	**8T-4137**	10	BOLT (M10X1.5X20-MM)	
M	19	1	**8T-4171**	3	BOLT (M6X1X12-MM)	
	20	1	**8T-4205**	3	WASHER-HARD (7.2X14.5X2-MM THK)	

E-ORDER BY THE CENTIMETER
M-METRIC PART

211-4248 **WIRING GP-ENGINE** *(contd.)* **i02451221**

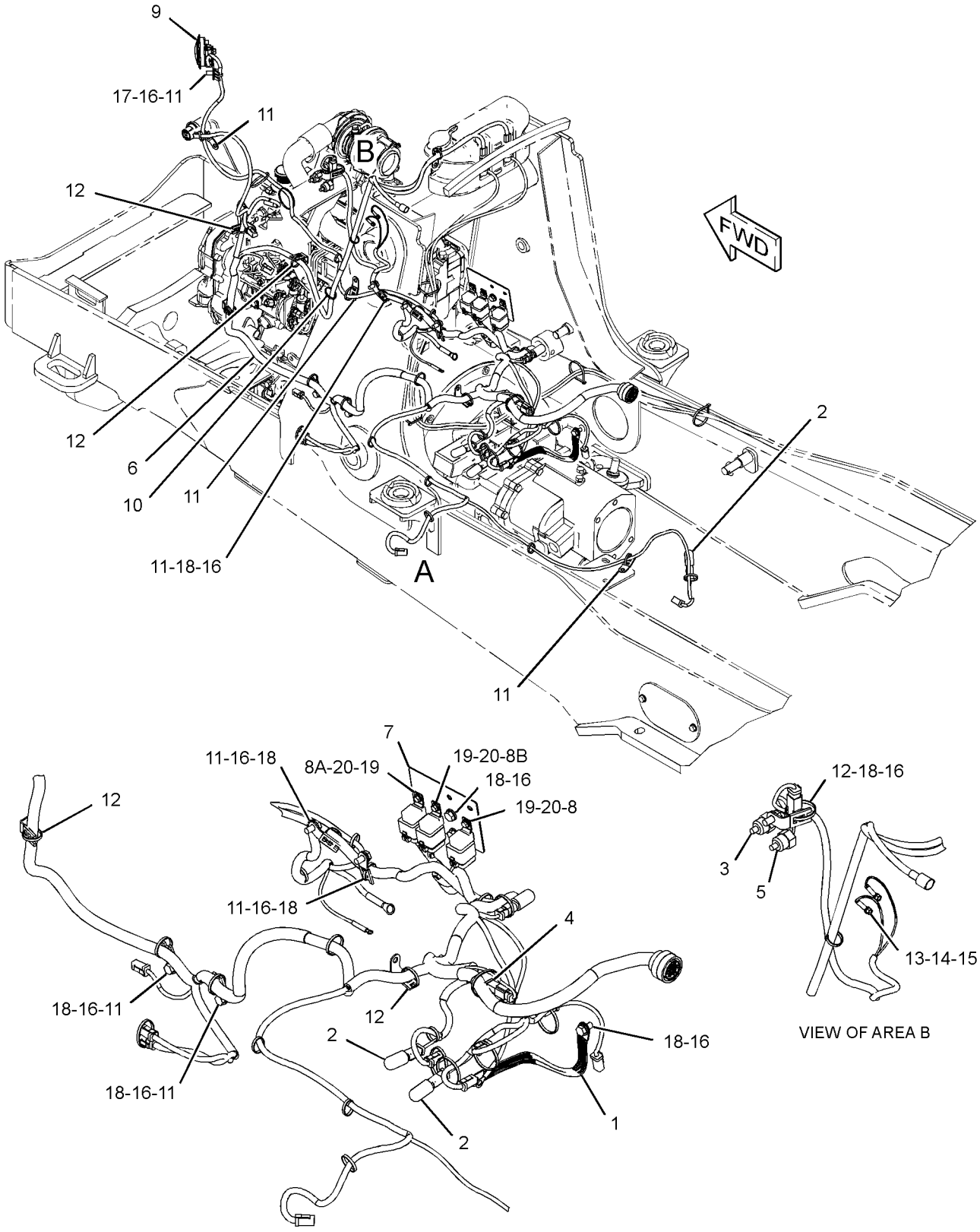

VIEW OF AREA B

VIEW OF AREA A

GRAPHIC #1 **<END>** g01225935

263-9483 WIRING GP-ENGINE (CHG -00, -01)

S/N: HLS1-UP
PART OF 269-2126, 269-2127 CAB AR
AN ATTACHMENT

SMCS-1408 **i02447141**

NOTE	REF NO	GRAPHIC REF	PART NUMBER	QTY	PART NAME 1 2 3 4 5 6 (PRODUCT LEVEL)	SEE PAGE
	1	1	**134-0404**	1	SWITCH AS-PRESSURE (HYDRAULIC OIL FILTER BYPASS)	
	2	1	**250-1448**	1	CONNECTOR	
	3	1	**263-9484**	1	HARNESS AS-SENSOR	
		1	**102-8804**	1	KIT-RECEPTACLE (4-PIN)	
					(INCLUDES RECEPTACLE AS & WEDGE)	
		1	**155-2270**	1	KIT-CONNECTING PLUG (2-PIN)	
					(INCLUDES PLUG AS, WEDGE & INTERFACE SEAL)	
	4	1	**264-4297**	1	SENSOR GP-TEMPERATURE	
		1	**137-6645**	1	PAD	
	5	1	**273-3284**	1	PLUG-ILLUMINATED	
		1	**111-7899**	1	GASKET	
	6	1	**3J-1907**	1	SEAL-O-RING	
	7	1	**3K-0360**	1	SEAL-O-RING	
	8	1	**3S-2093**	4	STRAP-CABLE	
	9	1	**4P-7581**	1	CLIP (LADDER)	

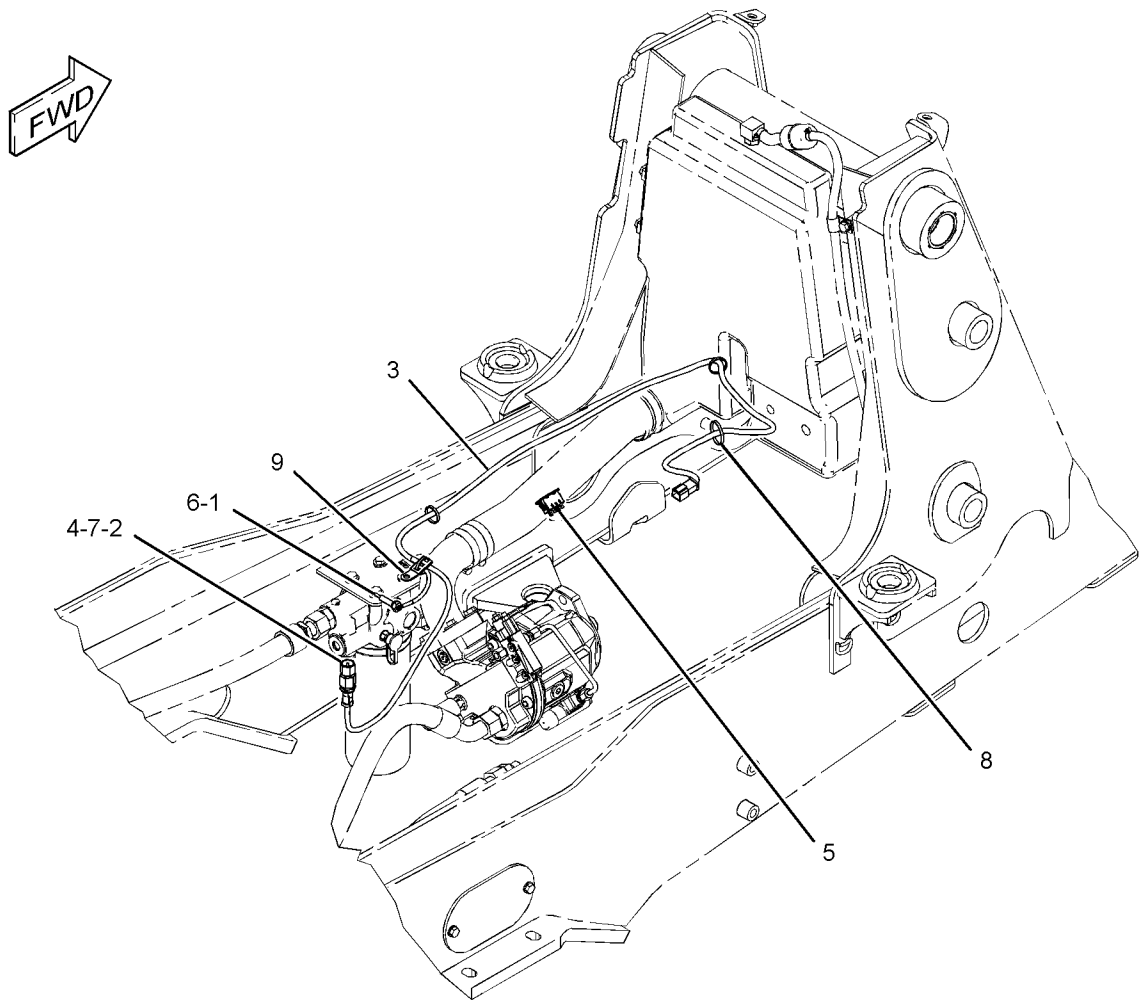

GRAPHIC #1 **<END>** g01228147

211-4260 WIRING GP-EXTENDABLE STICK (CHG -01 THRU -03)

S/N: HLS1-UP
PART OF 271-1402 STICK GP-EXTENDABLE
AN ATTACHMENT

SMCS-1408 **i02441280**

NOTE	REF NO	GRAPHIC REF	PART NUMBER	QTY	PART NAME 1 2 3 4 5 6 (PRODUCT LEVEL)	SEE PAGE
	1	1	**213-6095**	1	HARNESS AS-WIRING (EXTENDABLE STICK)	
		1	**102-8804**	1	KIT-RECEPTACLE (4-PIN)	
					(INCLUDES RECEPTACLE AS & WEDGE)	
E		1	**6V-8523**		HOSE (283-CM)	
E		1	**8T-6885**		TUBE-HEAT SHRINK (19.05-MM DIA) (10-CM)	
		1	**155-2260**	1	KIT-CONNECTING PLUG (3-PIN)	
					(INCLUDES PLUG AS, WEDGE & INTERFACE SEAL)	
	2	1	**3S-2093**	2	STRAP-CABLE	

E-ORDER BY THE CENTIMETER

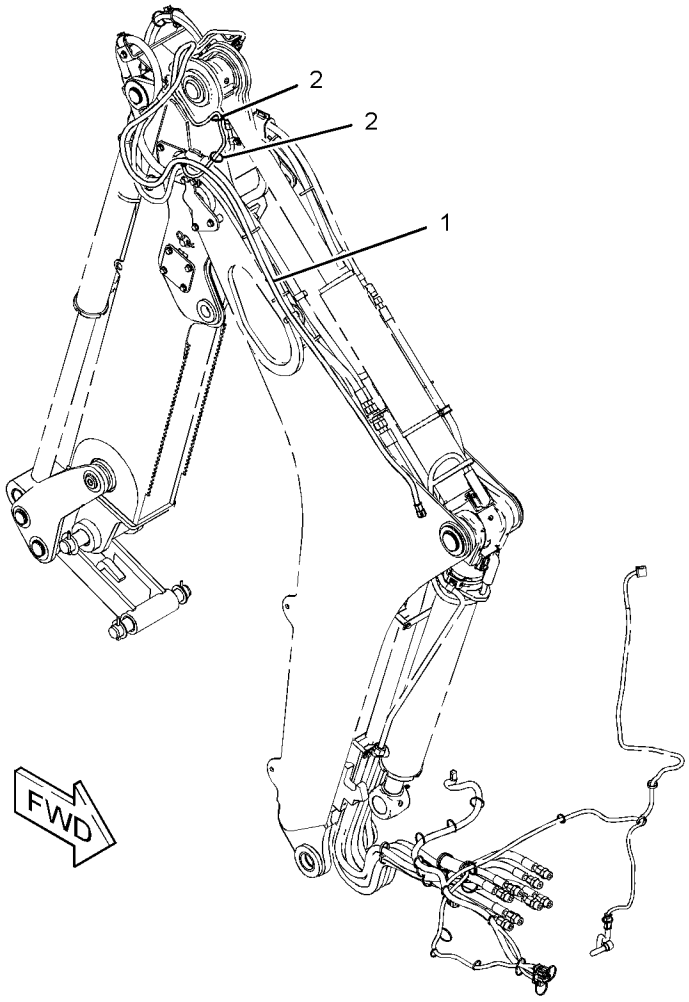

GRAPHIC #1 **<END>** g01208417

211-4269 WIRING GP-HEATER (CHG -01 THRU -03)

S/N: HLS1-UP
PART OF 269-2125, 269-2126 CAB AR
AN ATTACHMENT

SMCS-1408, 7304 **i02397280**

NOTE	REF NO	GRAPHIC REF	PART NUMBER	QTY	PART NAME 1 2 3 4 5 6 (PRODUCT LEVEL)	SEE PAGE
	1	1	**213-6055**	1	HARNESS AS-HEATER & AIR COND	
		1	**102-8802**	1	KIT-RECEPTACLE (2-PIN)	
		1	**102-8803**	1	KIT-RECEPTACLE (3-PIN)	
					(INCLUDES RECEPTACLE AS & WEDGE)	
		1	**8L-8413**	29	STRAP-CABLE	
		1	**9X-1054**	1	PLUG AS-CONNECTOR (4-PIN)	
		1	**155-2270**	1	KIT-CONNECTING PLUG (2-PIN)	
		1	**177-9648**	1	KIT-CONNECTING PLUG (2-PIN)	
		1	**177-9656**	1	KIT-CONNECTING PLUG (4-PIN)	
					(EACH INCLUDES PLUG AS & WEDGE)	
	2	1	**214-4695**	1	SWITCH AS-ROCKER (BLOWER FAN SPEED)	
		1	**111-7899**	1	GASKET	
	3	1	**214-4703**	1	SWITCH AS-ROCKER (HEATER)	
		1	**111-7899**	1	GASKET	
	4	1	**275-0570**	1	BAR-BUS	
Y	5	1	**276-7287**	1	RELAY GP (12-VOLT)	99
	6	1	**115-1615**	1	RELAY AS (12-VOLT)	
	7	1	**3S-2093**	9	STRAP-CABLE	
M	8	1	**5C-2890**	1	NUT (M6X1-THD)	
M	9	1	**5C-7261**	1	NUT (M8X1.25-THD)	
M	10	1	**7X-2534**	1	BOLT (M6X1X50-MM)	
	11	1	**8T-4205**	1	WASHER-HARD (7.2X14.5X2-MM THK)	
	12	1	**8T-4224**	1	WASHER-HARD (8.8X16X2-MM THK)	

M-METRIC PART
Y-SEPARATE ILLUSTRATION

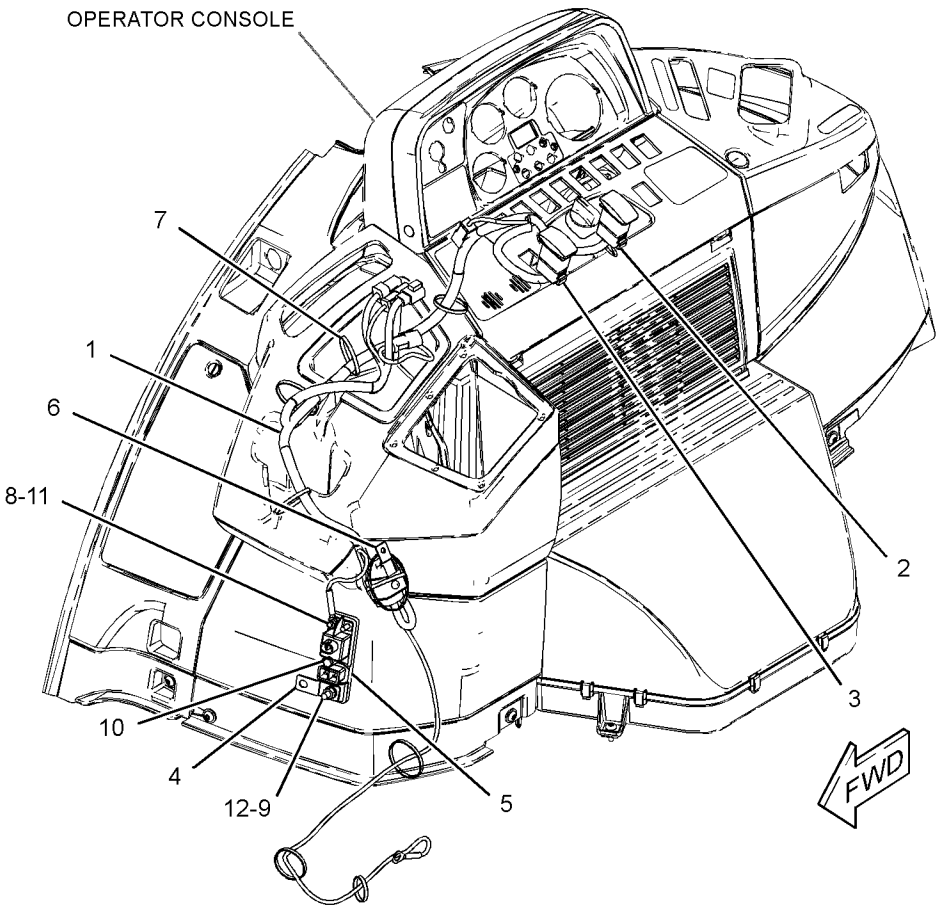

GRAPHIC #1 **<END>** g01198532

211-4262 WIRING GP-KICKOUT & POSITIONER

(CHG -01 THRU -05)
S/N: HLS1-UP
PART OF 213-9300 LOADER AR

SMCS-5109, 5112, 5734 **i02465796**

NOTE	REF NO	GRAPHIC REF	PART NUMBER	QTY	PART NAME 1 2 3 4 5 6 (PRODUCT LEVEL)	SEE PAGE
	1	1	**118-7790**	1	BRACKET AS	
	2	1	**206-1486**	1	SWITCH AS-ROLLER (KICKOUT, POSITIONER)	
		1	**2H-3922**	1	LOCKWASHER	
		1	**6V-8363**	2	SCREW (10-32X0.312-IN)	
		1	**6V-8370**	1	NUT-HEX (3/4-32-THD)	
		1	**8F-1434**	2	LOCKWASHER	
		1	**9X-0199**	1	BOOT-SWITCH	
	3	1	**233-7977**	1	HARNESS AS-WIRING (KICKOUT, POSITIONER)	
		1	**102-8803**	1	KIT-RECEPTACLE (3-PIN)	
					(INCLUDES RECEPTACLE AS & WEDGE)	
	4	1	**3S-2093**	31	STRAP-CABLE	
M	5	1	**8T-4138**	2	BOLT (M6X1X20-MM)	
	6	1	**8T-4205**	2	WASHER-HARD (7.2X14.5X2-MM THK)	
	7	1	**225-7992**	1	HARNESS AS-WIRING (KICKOUT, POSITIONER)	
		1	**9X-3401**	2	PIN-CONNECTOR (16-GA TO 18-GA) (16-GA TO 18-GA)	
		1	**8L-8413**	2	STRAP-CABLE	
		1	**102-8802**	1	KIT-RECEPTACLE (2-PIN)	
					(INCLUDES RECEPTACLE AS & WEDGE)	
		1	**155-2270**	2	KIT-CONNECTING PLUG (2-PIN)	
		1	**155-2260**	1	KIT-CONNECTING PLUG (3-PIN)	
					(EACH PLUG KIT INCLUDES PLUG AS, WEDGE & INTERFACE SEAL)	
	8	1	**9X-7344**	1	GROMMET	
G	9	1	**160-2245**		SLEEVE-ABRASION (12-IN)	

G-ORDER BY THE INCH
M-METRIC PART

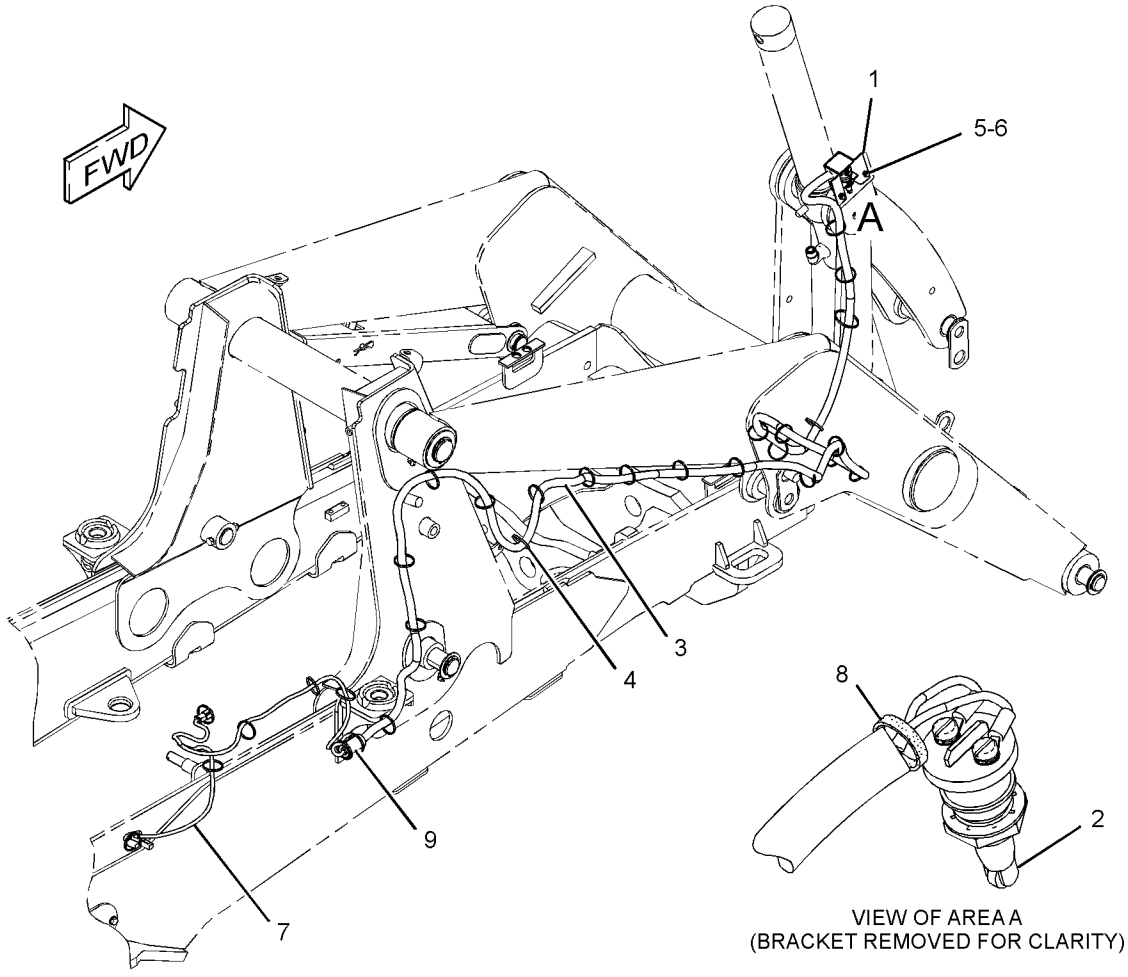

GRAPHIC #1 **<END>** g01233398

211-4240 WIRING GP-PLATFORM (CHG -03 THRU -07)

S/N: HLS1-UP

PART OF 269-2125, 269-2126, 269-2127 CAB AR, 269-2123, 269-2124 CANOPY AR AN ATTACHMENT

SMCS-1408 **i02446294**

NOTE	REF NO	GRAPHIC REF	PART NUMBER	QTY	PART NAME 1 2 3 4 5 6 (PRODUCT LEVEL)	SEE PAGE
E	1	2	**3E-8299**		SEAL (3-CM)	
E	1A	2	**3E-8299**		SEAL (3-CM)	
E	1B	1	**3E-8299**		SEAL (3-CM)	
E	2	2	**103-2543**		SEAL (1-CM)	
	3	2	**4I-3038**	8	WASHER (3.3X8X0.5-MM THK)	
	4	1	**6I-1418**	4	SPACER (8.2X12.7X28.7-MM THK)	
	5	2	**7G-1060**	1	STRAP AS-GROUND	
	6	1	**7K-1181**	32	STRAP-CABLE	
	7	1	**7T-4848**	1	FLASHER AS (12-VOLT)	
	8	2	**8T-8799**	3	BOOT	
	9	1	**8T-9655**	8	MOUNT-ISOLATION	
	10	2	**106-8704**	1	SUPPRESSOR AS-ARC	
	10A	2	**106-8704**	1	SUPPRESSOR AS-ARC	
	10B	2	**106-8704**	1	SUPPRESSOR AS-ARC	
					(EACH SUPPRESSOR AS INCLUDES)	
		2	**102-8802**	1	KIT-RECEPTACLE (2-PIN)	
					(INCLUDES RECEPTACLE AS & WEDGE)	
		2	**186-3735**	2	PIN-CONNECTOR (16-GA TO 18-GA)	
	11	2	**146-9439**	1	RELAY AS (12-VOLT) (IMPLEMENT DISABLE)	
	11A	2	**146-9439**	1	RELAY AS (12-VOLT) (HORN)	
	11B	2	**146-9439**	1	RELAY AS (12-VOLT) (DIFFERENTIAL LOCK)	
	11C	2	**146-9439**	1	RELAY AS (12-VOLT) (BACKUP ALARM)	
	11D	2	**146-9439**	1	RELAY AS (12-VOLT) (POSITION LAMP)	
	12	1	**178-7539**	1	RECEPTACLE AS (POWER SUPPLY)	
					(INCLUDES RECEPTACLE AS & WEDGE)	
	13	2	**179-6401**	4	SCREW-PAN HEAD	
	14	2	**201-1024**	2	BRACKET	
	15	2	**206-1345**	3	STRAP-CABLE	
	16	2	**206-1718**	1	BRACKET AS	
	17	1	**212-0862**	3	CLAMP-CABLE	
	18	1	**214-4694**	1	SWITCH AS-ROCKER (MODE SELECT)	
	19	2	**214-4702**	1	SWITCH AS-ROCKER (HAZARD WARNING LIGHTS)	
	20	2	**214-4717**	1	INDICATOR AS (TURN SIGNAL LH, PARKING BRAKE)	
	21	2	**214-4723**	1	INDICATOR AS (HIGH BEAM, TURN SIGNAL RH)	
	22	1	**216-9069**	1	BRACKET AS	
M		1	**6V-9632**	1	NUT-WELD (M6X1-THD)	
		1	**216-9068**	1	BRACKET	
	23	2	**225-7970**	1	BRACKET AS	
	24	1	**225-7997**	1	HARNESS AS-REAR	
		1	**102-8802**	2	KIT-RECEPTACLE (2-PIN)	
		1	**102-8804**	1	KIT-RECEPTACLE (4-PIN)	
					(EACH RECEPTACLE KIT INCLUDES RECEPTACLE AS & WEDGE)	
		1	**155-2270**	3	KIT-CONNECTING PLUG (2-PIN)	
					(EACH INCLUDES PLUG AS, WEDGE & INTERFACE SEAL)	
		1	**8L-8413**	15	STRAP-CABLE	
E		1	**125-7874**		TUBE-HEAT SHRINK (5.72-MM DIA) (20-CM)	
	25	2	**227-1057**	1	PLUG-HOLE	
	26	2	**246-2671**	1	SWITCH AS-COLUMN (HD LIGHT, TURN SIG, WDO WIPER)	
M	27	1	**138-8454**	1	SCREW-TRUSS HEAD (M4X0.7X10-MM)	
	28	2	**267-2701**	1	FUSE (60-AMPERE)	
	29	2	**268-7759**	1	HARNESS AS-POWER	
		2	*128-4168*	1	TERMINAL AS	

211-4240 **WIRING GP-PLATFORM** *(contd.)* **i02446294**

NOTE	REF NO	GRAPHIC REF	PART NUMBER	QTY	PART NAME 1 2 3 4 5 6 (PRODUCT LEVEL)	SEE PAGE
		2	**2L-8051**	1	TERMINAL (6-GA)	
		2	**5P-3455**	1	TERMINAL (8-GA, 5/16-IN SCREW)	
		2	*128-4190*	2	TERMINAL AS	
					(EACH INCLUDES)	
		2	**2L-8050**	1	TERMINAL-RING (6-GA, 1/4-IN)	
		2	**2L-8058**	1	TERMINAL-RING (8-GA, 1/4-IN)	
		2	*128-4178*	3	TERMINAL AS	
					(EACH INCLUDES)	
		2	**2L-8068**	1	TERMINAL (10-GA TO 12-GA)	
D		2	**5P-6006**		TUBE-HEAT SHRINK (9.52-MM DIA) (0.1-M)	
		2	**8L-8413**	7	STRAP-CABLE	
	30	1	**268-7760**	1	HARNESS AS-PLATFORM	
		1	**7R-2750**	42	SEAL-CONNECTOR	
		1	**8L-8413**	228	STRAP-CABLE	
		1	**9W-1951**	1	RECEPTACLE-CONNECTOR (9-PIN)	
		1	**110-0203**	2	CONNECTOR AS	
		1	**111-6795**	2	HOUSING-RELAY	
		1	**128-4123**	4	SEAL	
		1	**128-4249**	3	LOCKWASHER	
BD		1	**141-8061**		TAPE	
BD		1	**1P-0810**		TAPE-ELECTRICAL	
		1	**211-0052**	3	NUT (11/16-18-THD)	
E		1	**119-3662**		TUBE-HEAT SHRINK (10.85-MM DIA) (46-CM)	
E		1	**125-7874**		TUBE-HEAT SHRINK (5.72-MM DIA) (205-CM)	
E		1	**125-7875**		TUBE-HEAT SHRINK (7.44-MM DIA) (30-CM)	
		1	**091-2436**	19	TERMINAL-BLADE	
		1	**111-6792**	6	TERMINAL-RECEPTACLE	
		1	**111-6793**	1	TERMINAL-RECEPTACLE	
		1	**2L-8069**	3	TERMINAL (2-GA TO 10-GA)	
		1	**2L-8077**	1	TERMINAL (14-GA TO 16-GA)	
		1	**2L-8079**	2	TERMINAL (14-GA TO 16-GA)	
		1	**5P-4571**	5	TERMINAL-BLADE (14-GA)	
		1	**7R-2751**	13	PLUG-CONNECTOR	
		1	**147-1445**	1	PLUG AS-CONNECTOR (70-PIN)	
		1	**147-1446**	1	PLUG AS-CONNECTOR (70-PIN)	
					(EACH PLUG AS INCLUDES)	
		1	**159-9322**	1	SEAL-O-RING	
		1	**230-4011**	3	PLUG AS-CONNECTOR (2-PIN)	
		1	**155-2255**	7	KIT-CONNECTING PLUG (12-PIN)	
		1	**155-2265**	5	KIT-CONNECTING PLUG (8-PIN)	
		1	**155-2260**	2	KIT-CONNECTING PLUG (3-PIN)	
		1	**155-2270**	10	KIT-CONNECTING PLUG (2-PIN)	
		1	**155-2271**	7	KIT-CONNECTING PLUG (4-PIN)	
		1	**155-2274**	6	KIT-CONNECTING PLUG (6-PIN)	
					(EACH PLUG KIT INCLUDES PLUG AS, WEDGE & INTERFACE SEAL)	
		1	**196-2384**	1	KIT-PLUG (8-PIN)	
		1	**196-2385**	1	KIT-PLUG (8-PIN)	
		1	**196-2386**	1	KIT-PLUG (8-PIN)	
					(EACH PLUG KIT INCLUDES)	
		1	**196-2412**	8	TERMINAL AS	
					(EACH INCLUDES)	
		1	**7R-2750**	1	SEAL-CONNECTOR	
		1	**196-2413**	8	TERMINAL AS	
					(EACH INCLUDES)	
		1	**128-4123**	1	SEAL	
		1	**9X-4813**	1	RECEPTACLE AS-CONNECTOR (3-PIN)	
		1	**134-2540**	1	RECEPTACLE AS-CONNECTOR (3-PIN)	
		1	**167-3692**	3	RECEPTACLE AS-CONNECTOR (31-PIN)	
		1	**102-8802**	1	KIT-RECEPTACLE (2-PIN)	

211-4240 **WIRING GP-PLATFORM** *(contd.)* **i02446294**

NOTE	REF NO	GRAPHIC REF	PART NUMBER	QTY	PART NAME 1 2 3 4 5 6 (PRODUCT LEVEL)	SEE PAGE
		1	**102-8804**	2	KIT-RECEPTACLE (4-PIN)	
		1	**102-8805**	1	KIT-RECEPTACLE (6-PIN)	
		1	**102-8801**	2	KIT-RECEPTACLE (12-PIN)	
					(EACH RECEPTACLE KIT INCLUDES RECEPTACLE AS & WEDGE)	
	31	1	**274-7409**	4	SCREW-TRUSS HEAD	
	32	2	**275-0553**	1	BAR-BUS	
Y	33	2	**276-7290**	1	RELAY GP (POWER, 1)	100
Y	34	2	**276-7291**	1	RELAY GP (POWER, 2)	101
	35	1	**278-0461**	1	RELAY AS (12-VOLT) (TORQUE LIMITER)	
	36	2	**156-6175**	1	CLIP	
	37	2	**172-9200**	1	SUPPRESSOR-ARC	
	38	2	**247-8199**	1	BLOCK AS-FUSE	
	39	1	**170-9360**	1	GROMMET	
	40	1	**3S-2093**	32	STRAP-CABLE	
	41	1	**4B-4863**	1	WASHER (4.7X11X1.2-MM THK)	
	42	1	**263-9498**	1	HARNESS AS-WIRING (RESISTOR) (LADDER)	
		1	**102-8806**	1	KIT-RECEPTACLE (8-PIN)	
					(INCLUDES RECEPTACLE AS & WEDGE)	
		1	**134-2540**	1	RECEPTACLE AS-CONNECTOR (3-PIN)	
		1	**155-2260**	1	KIT-CONNECTING PLUG (3-PIN)	
					(INCLUDES PLUG AS, WEDGE & INTERFACE SEAL)	
	43	1,2	**4P-8134**	2	CLIP (LADDER)	
M	44	2	**5C-2890**	4	NUT (M6X1-THD)	
M	45	1,2	**5C-7261**	10	NUT (M8X1.25-THD)	
	46	1	**7X-0579**	8	WASHER-HARD (8.8X25.5X2-MM THK)	
M	47	2	**7X-2534**	2	BOLT (M6X1X50-MM)	
	48	2	**7X-7729**	2	WASHER (11X25X3-MM THK)	
	49	1,2	**8C-3398**	1	LOCKWASHER	
M	50	2	**8T-0352**	2	BOLT (M5X0.8X45-MM)	
	51	2	**8T-4121**	4	WASHER-HARD (11X21X2.5-MM THK)	
M	52	2	**8T-4133**	2	NUT (M10X1.5-THD)	
M	53	2	**8T-4136**	2	BOLT (M10X1.5X25-MM)	
M	54	2	**8T-4138**	7	BOLT (M6X1X20-MM)	
M	55	1,2	**8T-4200**	6	BOLT (M8X1.25X16-MM)	
	56	1,2	**8T-4205**	14	WASHER-HARD (7.2X14.5X2-MM THK)	
	57	1,2	**8T-4224**	12	WASHER-HARD (8.8X16X2-MM THK)	
	58	1,2	**6K-0806**	2	STRAP-CABLE	
	59	2	**8C-6354**	1	CAP-RECEPTACLE	

B-USE AS REQUIRED
D-ORDER BY THE METER
E-ORDER BY THE CENTIMETER
M-METRIC PART
Y-SEPARATE ILLUSTRATION

211-4240 **WIRING GP-PLATFORM** *(contd.)* **i02446294**

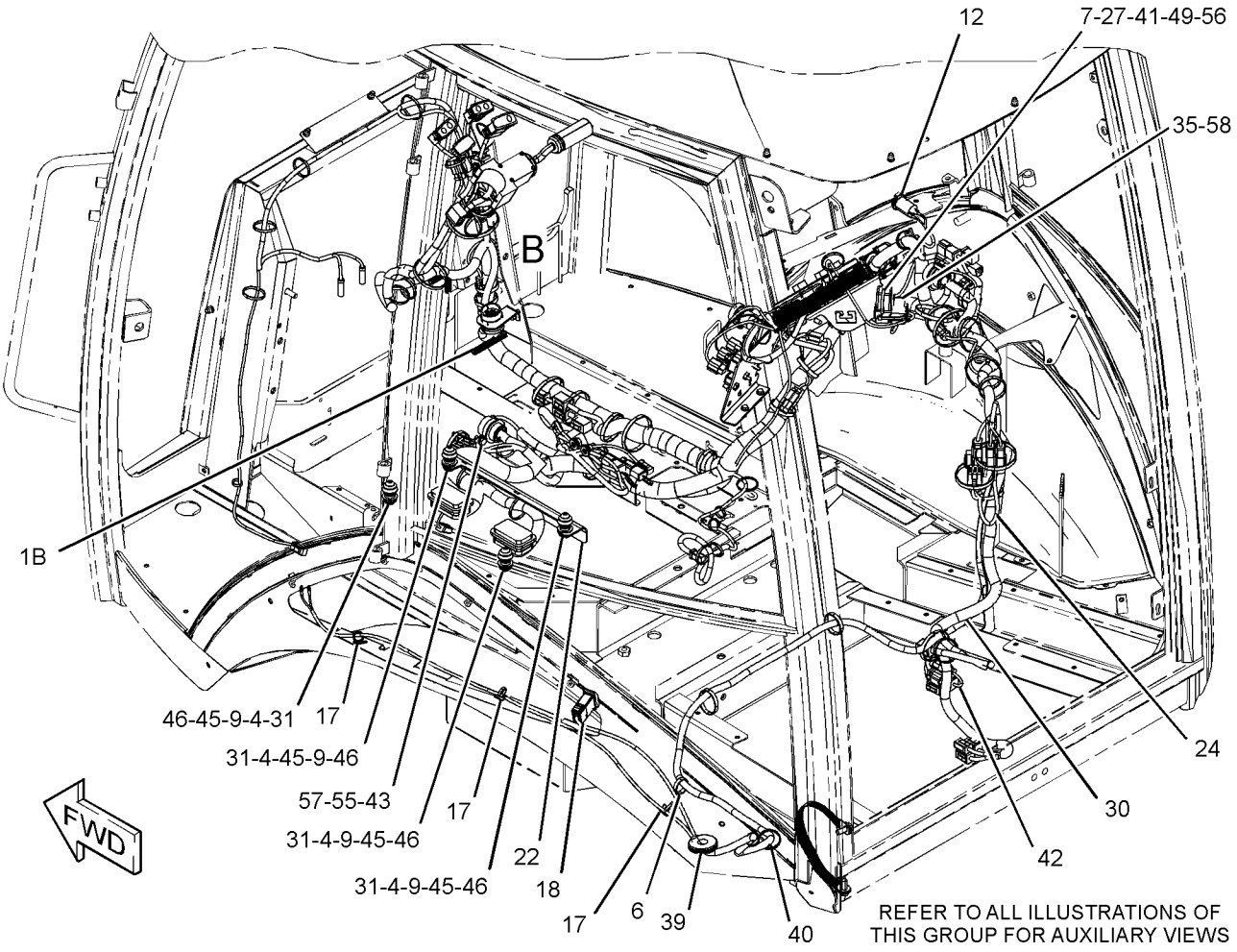

GRAPHIC #1

g01234220

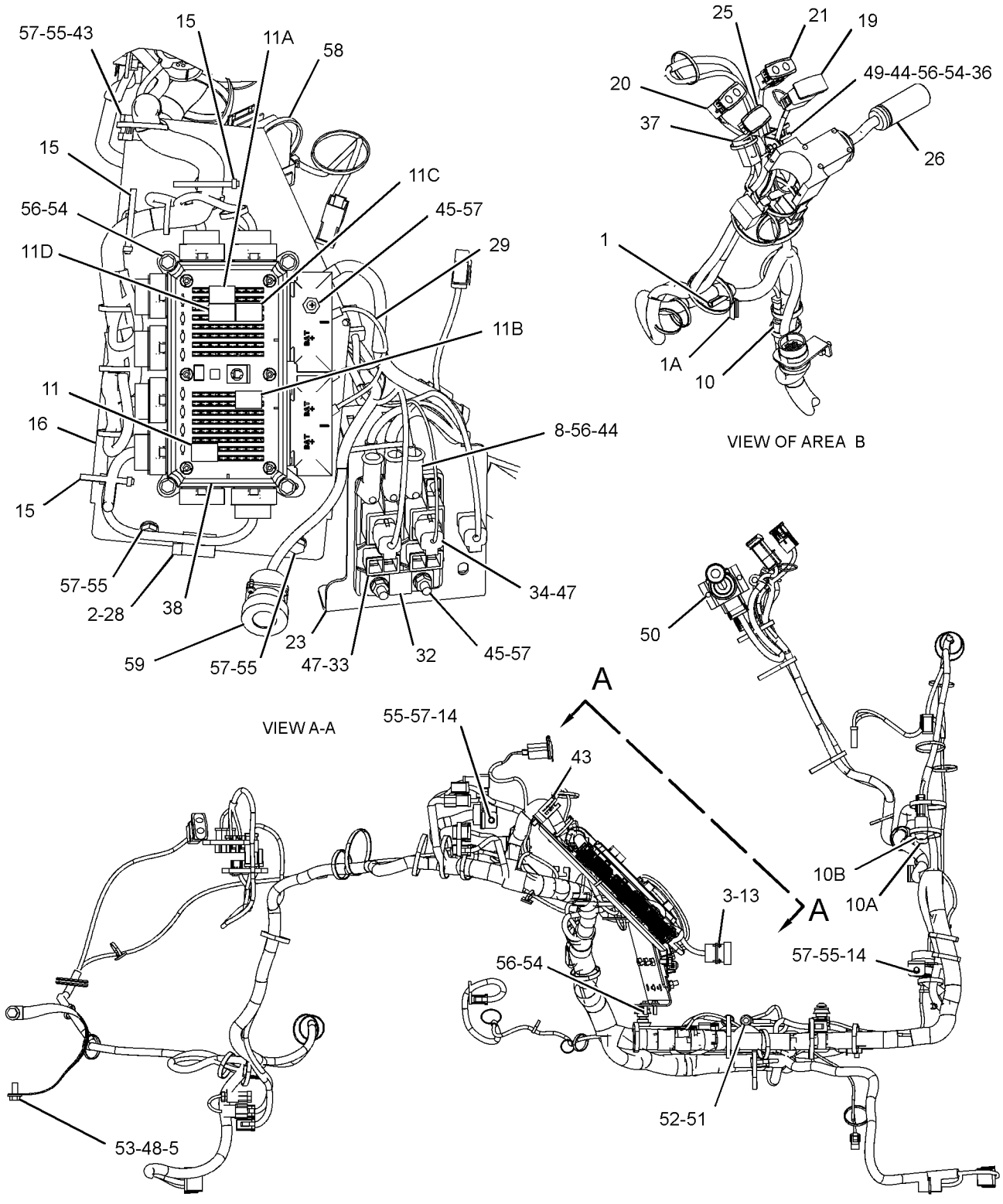

RIGHT SIDE VIEW

GRAPHIC #2 **<END>** g01234376

211-4251 WIRING GP-REAR–BACKUP ALARM (CHG -01 THRU -03)

S/N: HLS1-UP

PART OF 213-9287 CHASSIS AR

SMCS-1408 **i02431474**

NOTE	REF NO	GRAPHIC REF	PART NUMBER	QTY	PART NAME 1 2 3 4 5 6 (PRODUCT LEVEL)	SEE PAGE
	1	1	**7K-1181**	1	STRAP-CABLE	
	2	1	**9U-2277**	1	CLIP AS	
		1	**8C-3334**	1	RIVET-TUBULAR	
	3	1	**106-8704**	3	SUPPRESSOR AS-ARC	
	4	1	**154-5428**	1	ALARM AS	
		1	**102-8802**	1	KIT-RECEPTACLE (2-PIN)	
					(INCLUDES RECEPTACLE AS & WEDGE)	
	5	1	**263-9499**	1	HARNESS AS.-REAR	
		1	**102-8801**	1	KIT-RECEPTACLE (12-PIN)	
		1	**102-8805**	1	KIT-RECEPTACLE (6-PIN)	
					(EACH KIT INCLUDES RECEPTACLE AS & WEDGE)	
		1	**155-2260**	1	KIT-CONNECTING PLUG (3-PIN)	
					(INCLUDES PLUG AS, WEDGE, & INTERFACE SEAL)	
		1	**155-2270**	7	KIT-CONNECTING PLUG (2-PIN)	
					(EACH INCLUDES PLUG AS, WEDGE, & INTERFACE SEAL)	
		1	**8L-8413**	15	STRAP-CABLE	
M	6	1	**111-4627**	2	SCREW-MACHINE (M6X1X30-MM)	
	7	1	**3S-2093**	7	STRAP-CABLE	
	8	1	**4P-7581**	1	CLIP	
	9	1	**8T-4121**	1	WASHER-HARD (11X21X2.5-MM THK)	
M	10	1	**8T-4134**	1	NUT (M6X1-THD)	
	11	1	**8T-8137**	1	SEAL-FACE	
	12	1	**9X-6165**	1	WASHER (6.5X22X2.5-MM THK)	

M-METRIC PART

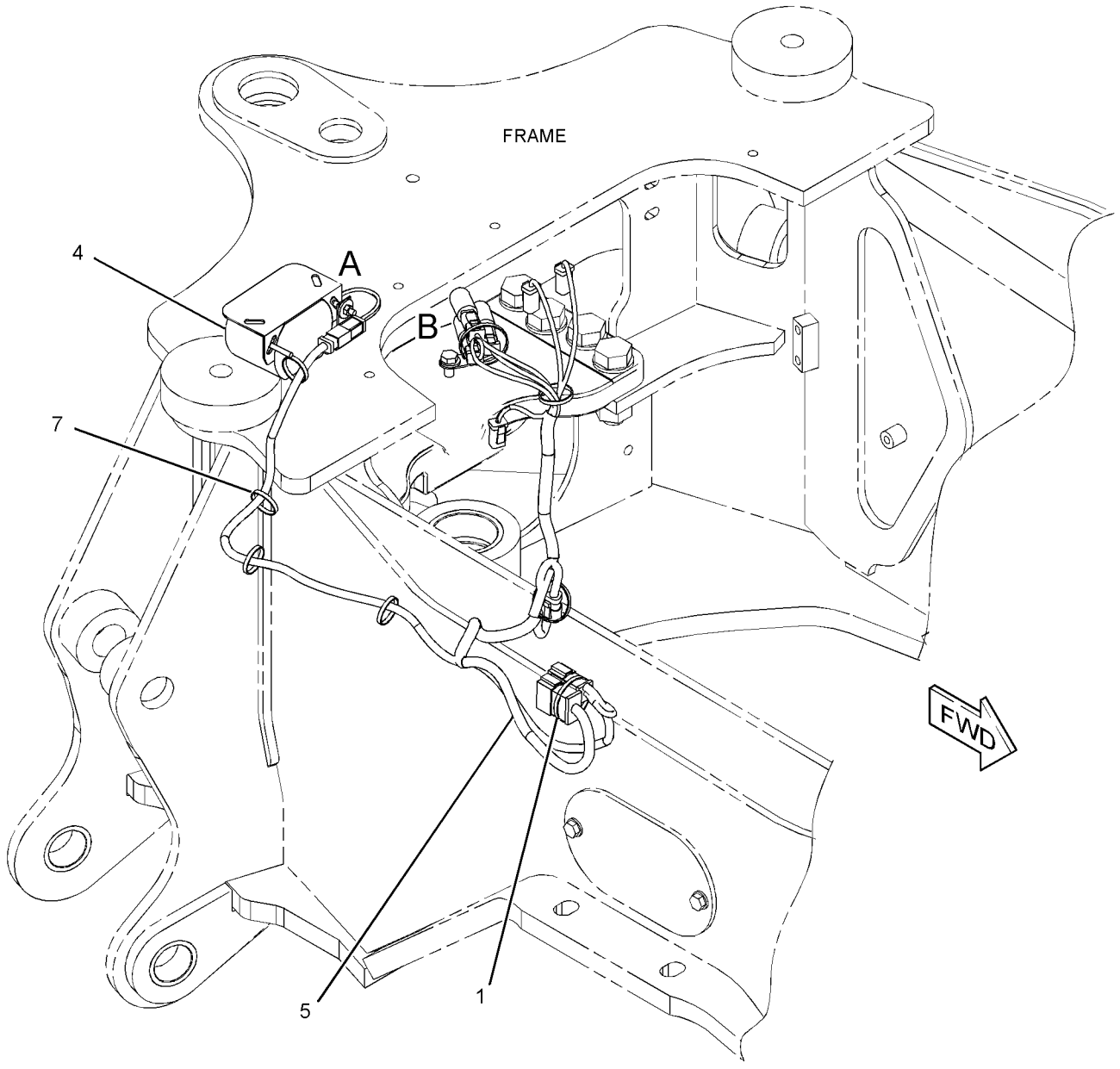

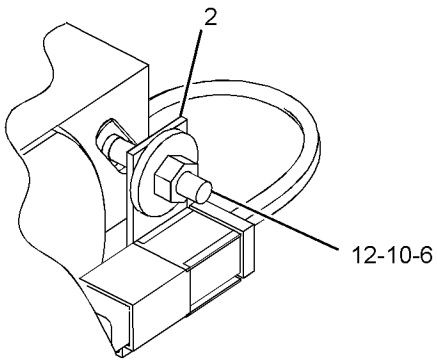

VIEW OF AREA A

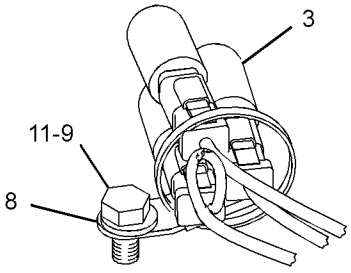

VIEW OF AREA B

GRAPHIC #1 **<END>** g01231213

211-4259 WIRING GP-RIDE CONTROL (CHG -02 THRU -04)

S/N: HLS1-UP
PART OF 209-9937 CONTROL AR-RIDE
AN ATTACHMENT

SMCS-1408 **i02440622**

NOTE	REF NO	GRAPHIC REF	PART NUMBER	QTY	PART NAME 1 2 3 4 5 6 (PRODUCT LEVEL)	SEE PAGE
	1	1	**146-9439**	1	RELAY AS (12-VOLT)	
	2	1	**246-8038**	1	HARNESS AS-RIDE CONTROL	
		1	**102-8804**	1	KIT-RECEPTACLE (4-PIN)	
					(INCLUDES RECEPTACLE AS & WEDGE)	
		1	**155-2260**	1	KIT-CONNECTING PLUG (3-PIN)	
		1	**155-2270**	1	KIT-CONNECTING PLUG (2-PIN)	
					(EACH PLUG KIT INCLUDES PLUG AS, WEDGE & INTERFACE SEAL)	
	3	1	**214-4710**	1	SWITCH AS-ROCKER (RIDE CONTROL)	
	4	1	**3S-2093**	4	STRAP-CABLE	
	5	1	**3J-1907**	1	SEAL-O-RING	
	6	1	**4P-7581**	1	CLIP	
	7	1	**106-8704**	1	SUPPRESSOR AS-ARC	
		1	**102-8802**	1	KIT-RECEPTACLE (2-PIN)	
					(INCLUDES RECEPTACLE AS & WEDGE)	
	8	1	**131-9203**	1	SWITCH AS-PRESSURE	
		1	**186-3735**	3	PIN-CONNECTOR (16-GA TO 18-GA)	
		1	**102-8803**	1	KIT-RECEPTACLE (3-PIN)	
					(INCLUDES RECEPTACLE AS & WEDGE)	

211-4259 **WIRING GP-RIDE CONTROL** *(contd.)* **i02440622**

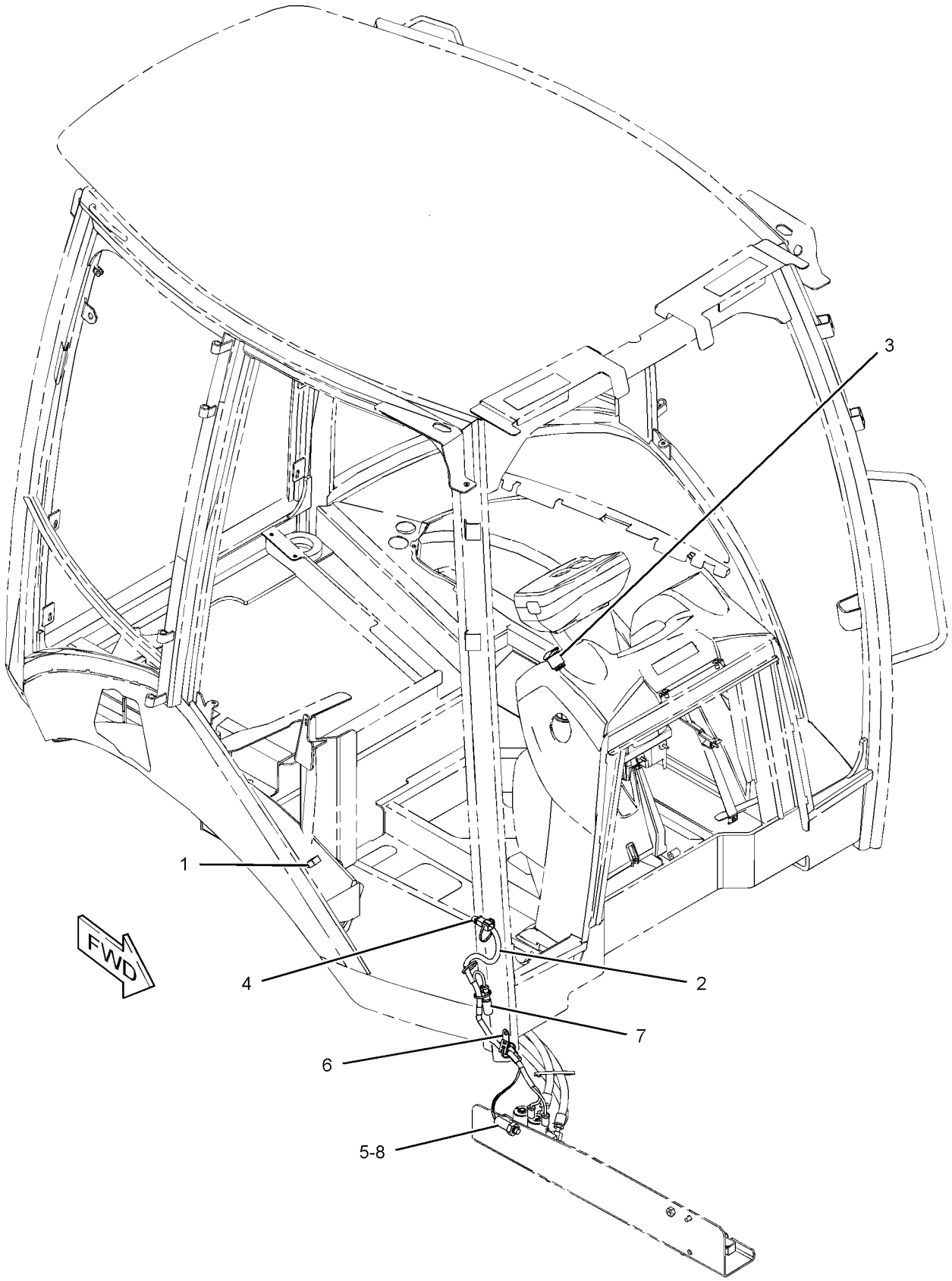

GRAPHIC #1 **<END>** g01208447

211-4254 WIRING GP-TRANSMISSION CONTROL

(CHG -02 THRU -05)
S/N: HLS1-UP
AUTOSHIFT, STANDARD SHIFT
PART OF 216-3316 POWER TRAIN AR
AN ATTACHMENT

SMCS-1408, 3168 **i02444692**

NOTE	REF NO	GRAPHIC REF	PART NUMBER	QTY	PART NAME 1 2 3 4 5 6 (PRODUCT LEVEL)	SEE PAGE
	1	1	**7K-1181**	9	STRAP-CABLE	
	2	1	**164-1368**	8	FASTENER-PANEL	
	3	1	**206-2423**	1	SADDLE	
	4	1	**213-6096**	1	HARNESS AS-PANEL (AUTOSHIFT, STAND SHIFT SWITCH)	
		1	**8L-8413**	5	STRAP-CABLE	
		1	**102-8805**	1	KIT-RECEPTACLE (6-PIN)	
					(INCLUDES RECEPTACLE AS & WEDGE)	
	5	1	**214-4691**	1	SWITCH AS-ROCKER (AUTOSHIFT, STANDARD SHIFT)	
	6	1	**225-7959**	1	HARNESS AS-TRANSMISSION	
		1	**8L-8413**	6	STRAP-CABLE	
E		1	**125-7874**		TUBE-HEAT SHRINK (5.72-MM DIA) (10-CM)	
		1	**102-8801**	1	KIT-RECEPTACLE (12-PIN)	
		1	**102-8802**	1	KIT-RECEPTACLE (2-PIN)	
					(EACH KIT INCLUDES RECEPTACLE AS & WEDGE)	
		1	**155-2256**	1	KIT-CONNECTING PLUG (12-PIN)	
					(INCLUDES PLUG AS, WEDGE & INTERFACE SEAL)	
	7	1	**232-1545**	1	PLATE AS	
	8	1	**246-8052**	1	HARNESS AS-TRANSMISSION	
E		1	**125-7875**		TUBE-HEAT SHRINK (7.44-MM DIA) (5-CM)	
		1	**102-8802**	4	KIT-RECEPTACLE (2-PIN)	
		1	**102-8805**	1	KIT-RECEPTACLE (6-PIN)	
					(EACH KIT INCLUDES RECEPTACLE AS & WEDGE)	
		1	**8L-8413**	16	STRAP-CABLE	
		1	**155-2270**	8	KIT-CONNECTING PLUG (2-PIN)	
					(INCLUDES PLUG AS, WEDGE & INTERFACE SEAL)	
	9	1	**261-2208**	1	CONTROL GP-TRANSMISSION	
	10	1	**274-9993**	1	PLATE	
M	11	1	**095-0756**	4	SCREW-MACHINE (M5X0.8X16-MM)	
	12	1	**3S-2093**	6	STRAP-CABLE	

E-ORDER BY THE CENTIMETER
M-METRIC PART

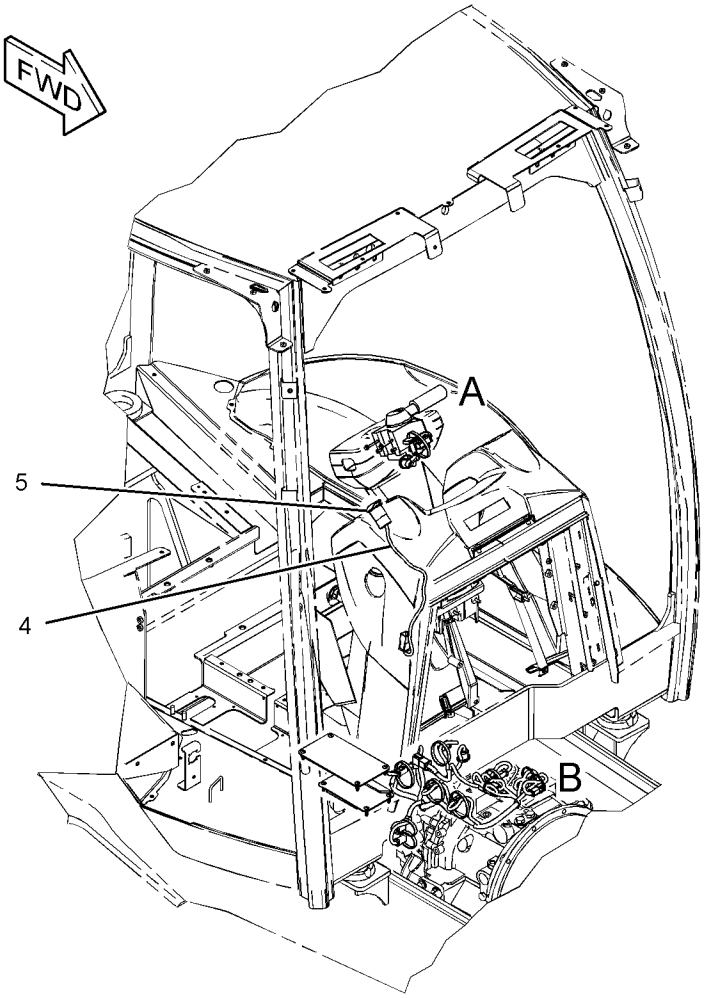

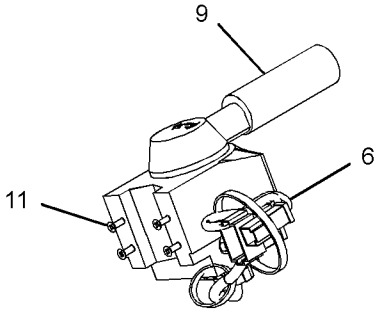

VIEW OF AREA A

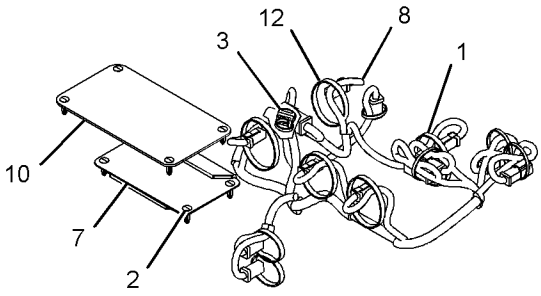

VIEW OF AREA B

GRAPHIC #1 **<END>** g01209126

230-5743 AXLE GP-DRIVE & STEERING (CHG -00 THRU -03)

S/N: HLS1-UP

PART OF 216-4740 DRIVE AR-BACKHOE LOADER AN ATTACHMENT

SMCS-3020, 3250, 3258, 3259, 3260, 3264, 3278, 4050, 4313

i02274793

NOTE	REF NO	GRAPHIC REF	PART NUMBER	QTY	PART NAME 1 2 3 4 5 6 (PRODUCT LEVEL)	SEE PAGE
	1	1	**199-0639**	4	SCREW (WHEEL HUB)	
	2	1	**207-4254**	6	BOLT (STEERING CYLINDER)	
	3	1	**207-4258**	2	NUT (M20X1.5-THD)	
	4	1	**219-8798**	2	SEAL-LIP TYPE	
	5	1	**219-8795**	1	CAP	
	6	1	**209-9875**	2	DOWEL	
	7	1	**209-7456**	2	BUSHING	
	8	1	**152-6144**	4	PLUG AS-DRAIN (MAGNETIC)	
	9	1	**208-0321**	11	BOLT-FLANGE HEAD (M12X1.75X33-MM)	
	10	1	**209-7464**	2	SEAL	
M	11	1	**199-0683**	16	BOLT (M16X2X38-MM)	
	12	1	**210-5937**	2	WASHER (46X66X3-MM THK)	
Y	13	1	**209-9882**	1	DIFFERENTIAL & BEVEL GEAR GP	148
	14	1	**210-5942**	2	RING	
	15	1	**209-9883**	1	HOUSING	
J	16	1	**210-5946**	2	SHAFT GP-AXLE	
					(EACH INCLUDES)	
		1	**174-4671**	1	YOKE	
	17	1	**209-9886**	2	TIE ROD GP	
					(EACH INCLUDES)	
		1	**204-3080**	1	BALL JOINT	
		1	**217-2883**	1	TIE ROD	
		1	**217-2885**	1	NUT	
	18	1	**209-9887**	1	BUSHING	
	19	1	**210-5947**	2	WASHER-THRUST (44.6X58X7-MM THK)	
	20	1	*216-7473*	4	PIN AS (LOWER, UPPER)	
					(EACH INCLUDES)	
		1	**198-7823**	1	BEARING AS	
		1	**198-7825**	1	SEAL	
		1	**198-7838**	1	PIN	
Y	21	1	**210-5924**	2	PLANETARY GP-FINAL DRIVE	169
Y	22	1	**209-9884**	1	HOUSING & FLANGE GP-AXLE (RH)	159
Y	23	1	**209-9885**	1	HOUSING & FLANGE GP-AXLE (LH)	160
	24	1	**211-6735**	2	SEAL-O-RING	
L	25	1	**214-5097**	1	CYLINDER GP-STEERING	
		1	**238-5254**	1	ROD	
		1	**238-5255**	2	CYLINDER HEAD	
	26	1	**253-5024**	1	BREATHER (FRONT AXLE)	
	27	1	**069-4707**	1	SEALANT (GASKET)	
	28	1	**154-5404**	2	BEARING	
B	29	1	**198-7841**	8	SHIM (0.15-MM THK)	
B	30	1	**198-7842**	4	SHIM (0.2-MM THK)	
B	31	1	**198-7843**	4	SHIM (0.5-MM THK)	
					AVAILABLE REPAIR KIT(S):	
J			**174-4643**	2	KIT-SPIDER	
					(INCLUDES SPIDER AND RINGS)	
L			**215-2023**	1	KIT-SEAL	
					(INCLUDES RINGS, SEALS AND WASHERS)	

B-USE AS REQUIRED
J-KIT MARKED J AVAILABLE FOR PART MARKED J
L-KIT MARKED L AVAILABLE FOR PART MARKED L
M-METRIC PART
Y-SEPARATE ILLUSTRATION

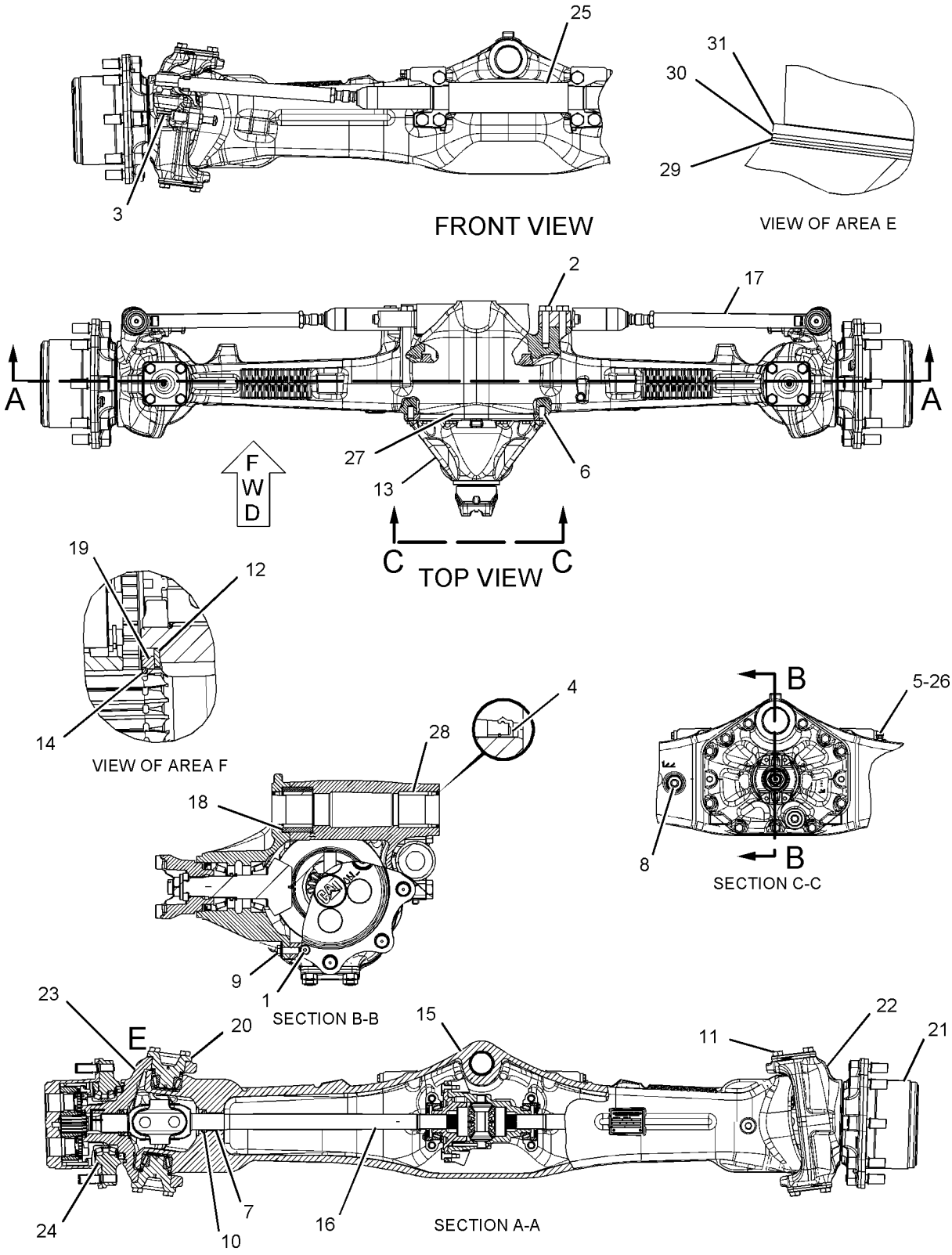

GRAPHIC #1 **<END>** g01094314

230-5739 AXLE GP-REAR (CHG -00, -01)

S/N: HLS1-UP

PART OF 216-4740 DRIVE AR-BACKHOE LOADER

AN ATTACHMENT

SMCS-3278, 3282 **i02277802**

NOTE	REF NO	GRAPHIC REF	PART NUMBER	QTY	PART NAME 1 2 3 4 5 6 (PRODUCT LEVEL)	SEE PAGE
	1	1	**199-0639**	4	SCREW (WHEEL HUB)	
	2	1	**199-0641**	2	BOLT (DIFFERENTIAL LOCK)	
	3	1	**219-8802**	2	BOLT (DIFFERENTIAL LOCK)	
	4	1	**199-0652**	2	CLIP-PIN	
	5	1	**210-3097**	2	CLIP	
	6	1	**210-3098**	2	SEAL	
	7	1	**199-0668**	2	BRACKET	
	8	1	**197-9155**	1	BREATHER	
	9	1	**199-0670**	2	BLEED SCREW	
	10	1	**198-7811**	2	DOWEL	
	11	1	**152-6144**	4	PLUG AS-DRAIN (MAGNETIC)	
	12	1	**199-0676**	2	SPRING	
	13	1	**199-0679**	2	BOLT (BRAKE)	
	14	1	**210-3099**	2	SLEEVE	
	15	1	**210-3100**	2	BUSHING	
	16	1	**199-0706**	1	PISTON	
	17	1	**199-0786**	8	PLATE	
	18	1	**199-0787**	6	PIN	
	19	1	**210-7305**	2	SHAFT	
	20	1	**210-3106**	1	BRACKET	
	21	1	**212-5713**	2	PLUG	
	22	1	**216-1608**	2	GEAR GP-RING	
					(EACH INCLUDES)	
		1	**199-0778**	1	RING-SNAP	
		1	**210-7302**	1	GEAR-RING (81-TEETH)	
		1	**226-4364**	1	HUB	
Y	23	1	*216-1609*	2	FLANGE GP-WHEEL	158
Y	24	1	**216-1610**	2	PLANETARY GP-FINAL DRIVE	170
	25	1	**217-2914**	1	COVER (DIFFERENTIAL LOCK)	
	26	1	**231-0699**	1	COVER (DIFFERENTIAL LOCK)	
	27	1	**219-8839**	1	ROD	
	28	1	**174-4647**	1	BUSHING	
	29	1	**174-4650**	1	SPACER (20X32X8-MM THK)	
	30	1	**231-0698**	2	SHAFT-AXLE	
	31	1	**226-4366**	2	NUT-SPANNER	
	32	1	**226-4365**	2	WASHER-TAB	
	33	1	**226-4367**	2	SPACER (110X123X22.99-MM THK)	
	34	1	**226-4370**	6	BOLT-SELF-LOCKING	
	35	1	**238-5291**	6	DISC-BRAKE	
	36	1	**238-5292**	2	HUB-BRAKE	
	37	1	**238-5293**	1	HOUSING-AXLE (LH)	
	38	1	**238-5294**	1	HOUSING-AXLE (RH)	
Y	39	1	*238-5289*	1	HOUSING GP-AXLE	163
	40	1	**199-0658**	2	O-RING-CAP	
	41	1	**219-8799**	2	SEAL-O-RING	
	42	1	**199-0662**	2	SEAL-O-RING	
	43	1	**130-7282**	1	BRACKET	
M	44	1	**7X-2559**	26	BOLT (M16X2X160-MM)	
	45	1	**4L-6454**	2	BOLT (3/8-16X1-IN)	
	46	1	**3J-1907**	1	SEAL-O-RING	
	47	1	**9S-8004**	1	PLUG	
	48	1	**219-8795**	1	CAP	
	49	1	**069-4707**	1	SEALANT (GASKET)	
J	50	1	**230-3809**	1	BRAKE AS	

230-5739 AXLE GP-REAR *(contd.)* i02277802

NOTE	REF NO	GRAPHIC REF	PART NUMBER	QTY	PART NAME 1 2 3 4 5 6 (PRODUCT LEVEL)	SEE PAGE
					AVAILABLE REPAIR KIT(S):	
J			**166-9413**	1	KIT-CAM (COUNTERCLOCKWISE)	
					(INCLUDES CAMS BEARINGS & RETAINER)	
J			**230-3810**	1	KIT-BRAKE LINING	
					(INCUDES LINERS AND SPRING)	
J			**230-3811**	1	KIT-BRAKE CALIPER	
					(INCLUDES SLEEVES, WASHERS, NUTS, BOLT, LININGS, BEARING & BOOT)	

J-KITS MARKED J AVAILABLE FOR PART MARKED J
M-METRIC PART
Y-SEPARATE ILLUSTRATION

230-5739 AXLE GP-REAR *(contd.)* **i02277802**

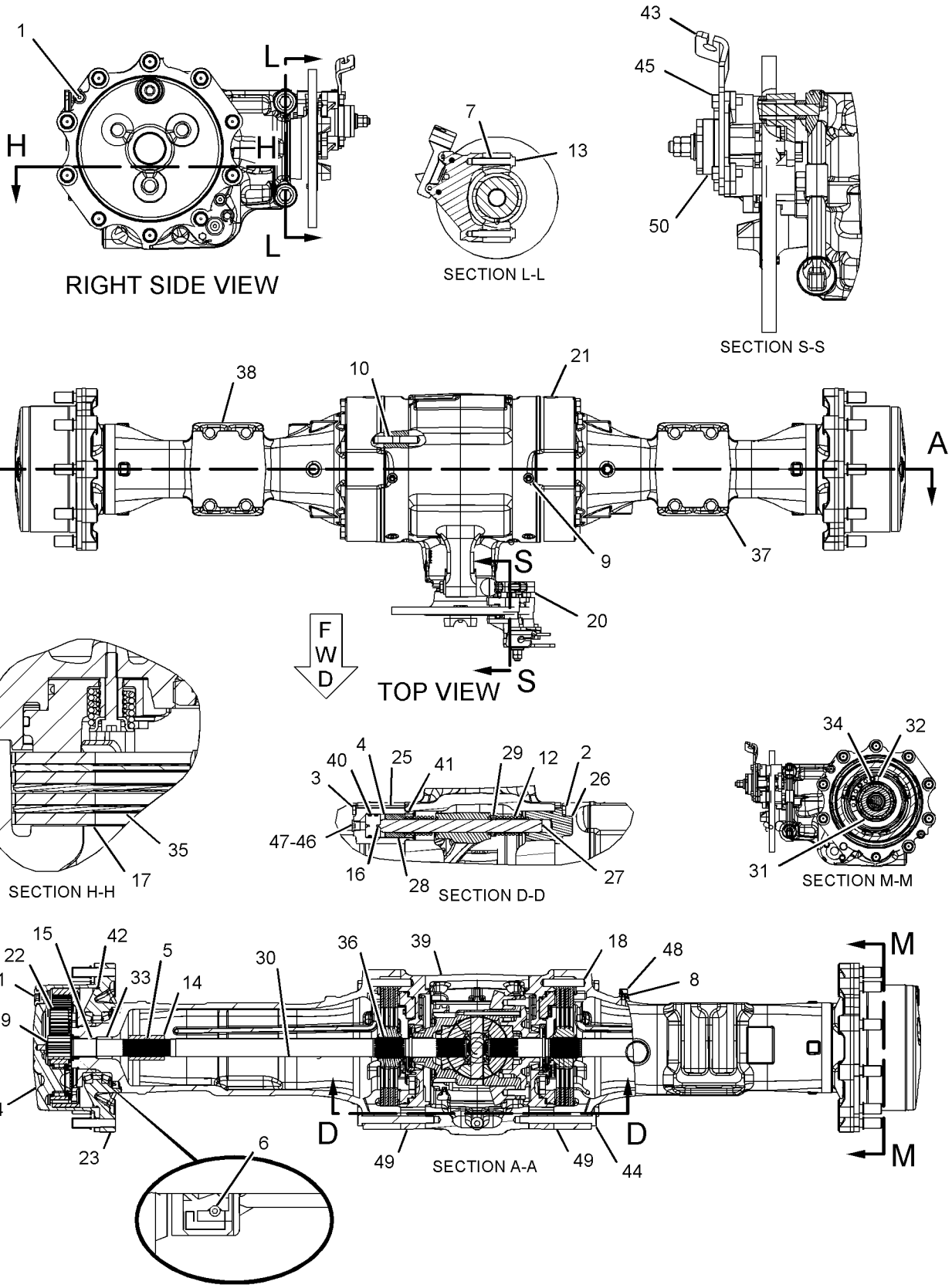

GRAPHIC #1 **<END>** g01093644

275-0468 CASE AS-TRANSMISSION–FRONT (CHG -00)

S/N: HLS1-UP

PART OF 271-3774 TRANSMISSION GP-DIRECT DRIVE

AN ATTACHMENT

SMCS-3030, 3064 **i02485611**

NOTE	REF NO	GRAPHIC REF	PART NUMBER	QTY	PART NAME 1 2 3 4 5 6 (PRODUCT LEVEL)	SEE PAGE
	1	1	**120-9762**	4	SEAL-O-RING	
M	2	1	**6V-8210**	2	BOLT (M8X1.25X16-MM)	
	3	1	**7T-2651**	1	STRAINER (SUCTION)	
	4	1	**106-9861**	1	PLATE-COVER	
	5	1	**7T-3051**	1	PLUG	
	6	1	**005-0469**	1	CUP-BEARING	
	7	1	**8T-1580**	1	CUP	
	8	1	**6Y-2737**	1	CUP-BEARING	
	9	1	**123-8906**	2	CUP-TAPERED ROLLER	
	10	1	**9W-5460**	1	RING	
	11	1	**4F-7952**	1	SEAL-O-RING	
	12	1	**275-0469**	1	CASE AS-FRONT	
	13	1	**7T-3253**	2	DOWEL	

M-METRIC PART

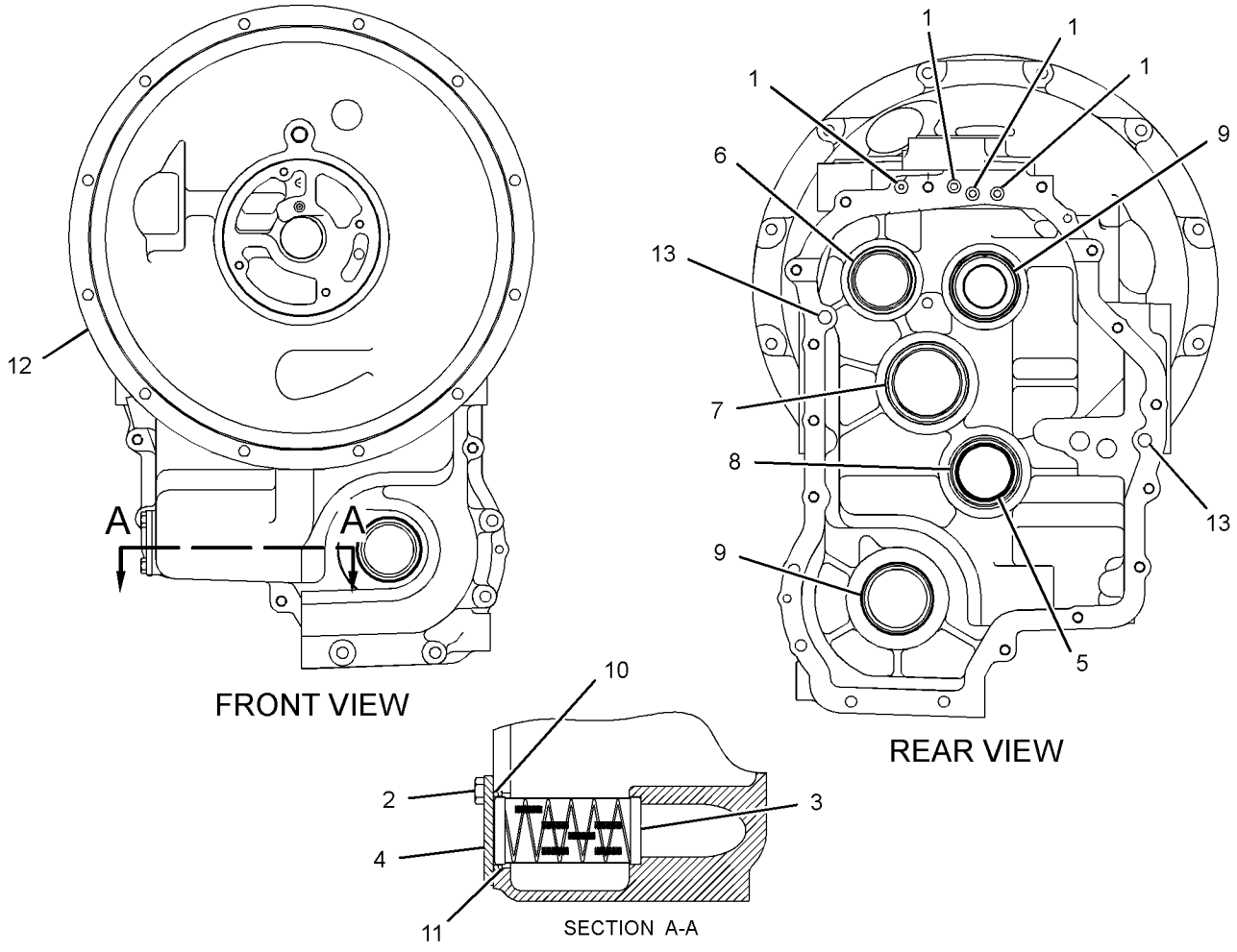

GRAPHIC #1 **<END>** g01220674

275-0470 CASE AS-TRANSMISSION–REAR (CHG -00)

S/N: HLS1-UP

PART OF 271-3774 TRANSMISSION GP-DIRECT DRIVE

AN ATTACHMENT

SMCS-3030, 3064 **i02466488**

NOTE	REF NO	GRAPHIC REF	PART NUMBER	QTY	PART NAME 1 2 3 4 5 6 (PRODUCT LEVEL)	SEE PAGE
	1	1	**123-8906**	1	CUP-TAPERED ROLLER	
B	2	1	**6T-9142**	1	SHIM (0.508-MM THK)	
B			**6T-9143**	1	SHIM (0.381-MM THK)	
B			**6T-9144**	1	SHIM (0.051-MM THK)	
B			**6T-9145**	1	SHIM (0.178-MM THK)	
B			**6T-9147**	1	SHIM (0.076-MM THK)	
	3	1	**7T-3034**	1	SPACER (56.9X64.5X1.98-MM)	
	4	1	**7T-2646**	2	SPACER (66X79.5X2.02-MM THK)	
B	5	1	**6T-9166**	2	SHIM (0.051-MM THK)	
B	6	1	**6T-9165**	2	SHIM (0.076-MM THK)	
B	7	1	**6T-9164**	2	SHIM (0.178-MM THK)	
B	8	1	**6T-9163**	2	SHIM (0.599-MM THK)	
B	9	1	**121-7399**	1	SHIM (0.05-MM THK)	
B	10	1	**121-7400**	1	SHIM (0.08-MM THK)	
B	11	1	**121-7401**	1	SHIM (0.18-MM THK)	
B	12	1	**121-7402**	1	SHIM (0.6-MM THK)	
	13	1	**121-7398**	1	SPACER (70X79.5X2-MM THK)	
	14	1	**005-0469**	1	CUP-BEARING	
	15	1	**123-8908**	2	CUP-TAPERED ROLLER	
	16	1	**123-8910**	1	CUP-TAPERED ROLLER	
	17	1	**274-8630**	1	CASE-REAR	
	18	1	**122-1879**	1	SPACER (58X67.5X2-MM THK)	
B	19	1	**104-3288**	1	SHIM (0.05-MM THK)	
B	20	1	**121-2059**	1	SHIM (0.08-MM THK)	
B	21	1	**121-2060**	1	SHIM (0.18-MM THK)	
B	22	1	**121-2061**	1	SHIM (0.6-MM THK)	

B-USE AS REQUIRED

275-0470 CASE AS-TRANSMISSION *(contd.)* **i02466488**

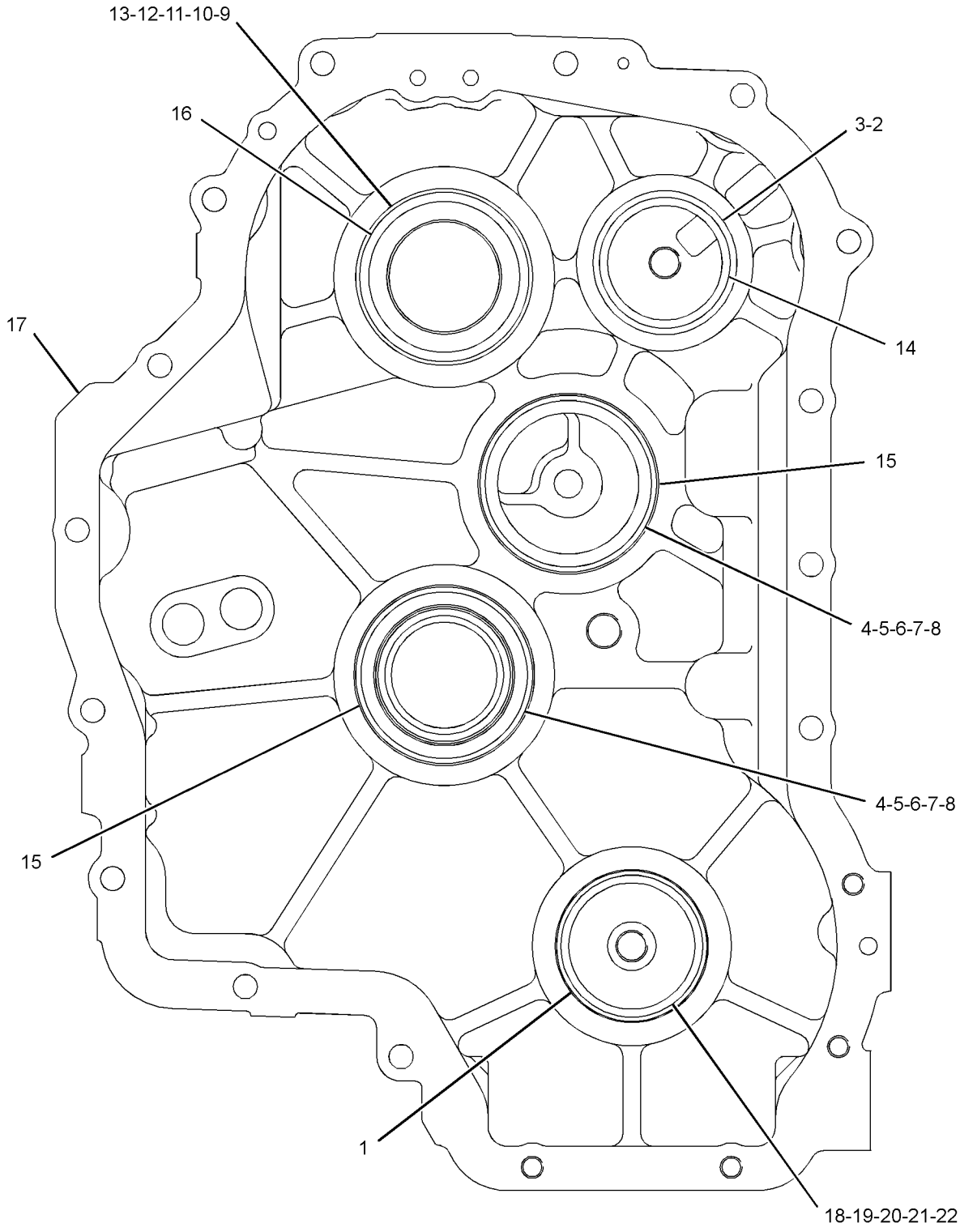

FRONT VIEW

GRAPHIC #1 **<END>** g01233212

206-1643 CONTROL GP-TRANSMISSION (CHG -02, -03)

S/N: HLS1-UP
PART OF 216-3315 POWER TRAIN AR
AN ATTACHMENT

SMCS-3065 **i02396923**

NOTE	REF NO	GRAPHIC REF	PART NUMBER	QTY	PART NAME 1 2 3 4 5 6 (PRODUCT LEVEL)	SEE PAGE
	1	1	**102-8802**	1	KIT-RECEPTACLE (2-PIN)	
					(INCLUDES RECEPTACLE AS & WEDGE)	
	2	1	**9R-1766**	1	KNOB (LOWER)	
	3	1	**9R-1767**	1	BOOT	
	4	1	**107-5591**	1	NUT-JAM (3/4-16-THD)	
	5	1	**164-1153**	1	KNOB (UPPER)	
	6	1	**164-1368**	16	FASTENER-PANEL	
	7	1	**206-1669**	1	BOOT	
	8	1	**220-3469**	1	ROD AS	
	9	1	**220-3470**	2	BOOT-SEAL	
	10	1	**230-2389**	2	PLATE	
	11	1	**230-2390**	2	PLATE	
	12	1	**261-2207**	1	CONTROL GP-HANDLE	
	13	1	**263-7261**	1	SWITCH GP-PUSH BUTTON (NEUTRALIZER, DOWNSHIFT)	
		1	**9W-0625**	1	SWITCH AS	
M	14	1	**095-0756**	4	SCREW-MACHINE (M5X0.8X16-MM)	
	15	1	**8T-4223**	1	WASHER-HARD (13.5X25.5X3-MM THK)	
M	16	1	**8T-4956**	1	BOLT (M12X1.75X35-MM)	
	17	1	**8T-9501**	2	SCREW (10-16X0.75-IN)	

M-METRIC PART

206-1643 **CONTROL GP-TRANSMISSION** *(contd.)* **i02396923**

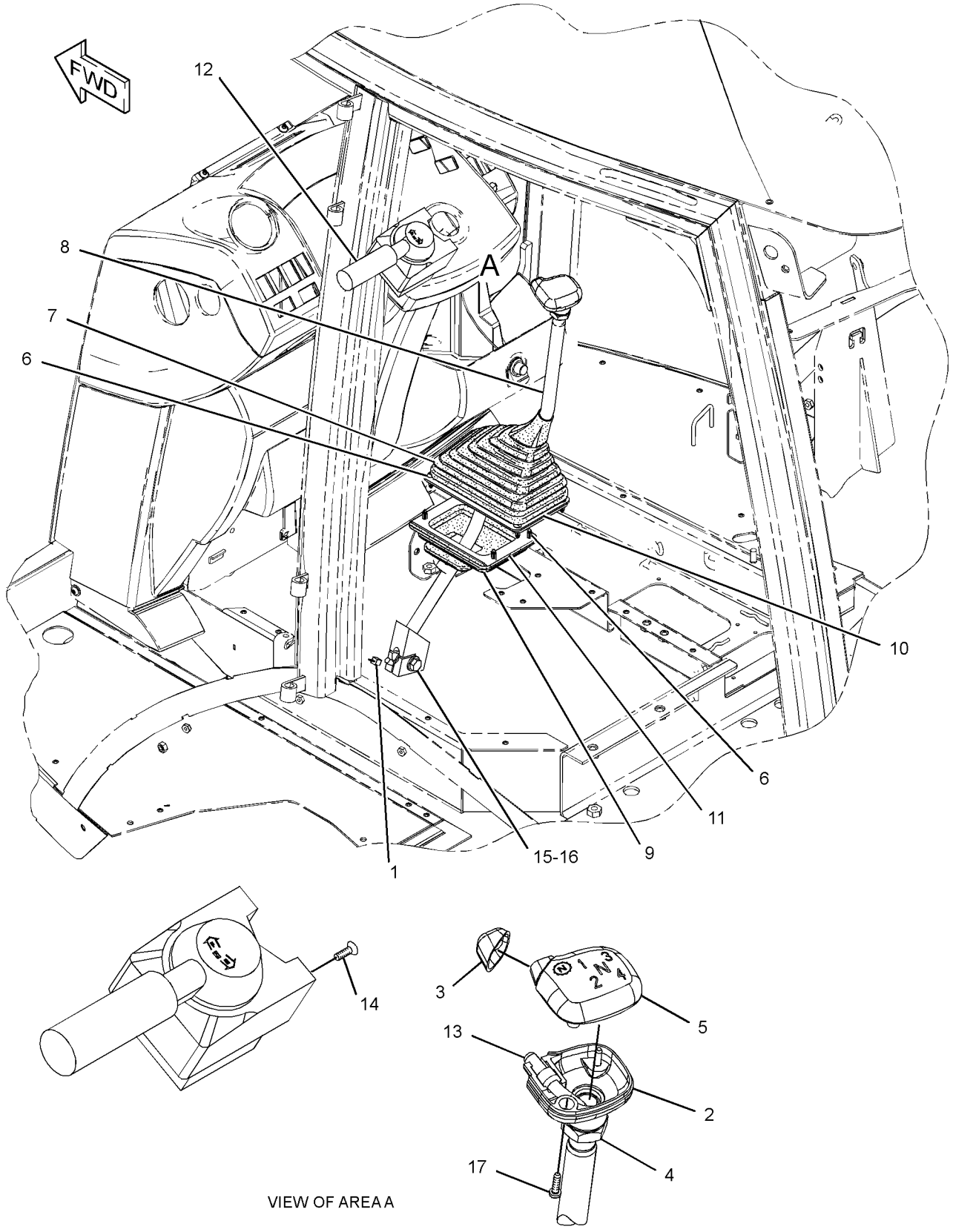

GRAPHIC #1 **<END>** g01212489

209-9882 DIFFERENTIAL & BEVEL GEAR GP (CHG -00 THRU -05)

S/N: HLS1-UP

PART OF 230-5743 AXLE GP-DRIVE & STEERING

AN ATTACHMENT

SMCS-3256, 3258, 3281, 3283, 3284 **i02310846**

NOTE	REF NO	GRAPHIC REF	PART NUMBER	QTY	PART NAME 1 2 3 4 5 6 (PRODUCT LEVEL)	SEE PAGE
	1	1	**216-4457**	1	SEAL	
	2	1	**216-4458**	2	BEARING	
	3	1	**136-7808**	1	BEARING AS-TAPERED ROLLER	
	4	1	**216-4461**	1	BEARING	
	5	1	**209-7454**	2	NUT (M94X2-THD)	
	6	1	**152-6144**	1	PLUG AS-DRAIN (MAGNETIC)	
	7	1	**209-7462**	2	WASHER (40X50X0.06-MM THK)	
	8	1	**209-7463**	1	SLEEVE (COLLAPSIBLE)	
M	9	1	**199-0695**	2	BOLT (M6X1X14-MM)	
M	10	1	**209-7472**	1	NUT (M24X1.5-THD)	
	11	1	**216-4465**	1	WASHER (24.5X52X10-MM THK)	
	12	1	**216-4464**	1	YOKE	
	13	1	**199-0858**	2	RETAINER	
	14	1	**217-2868**	1	GEAR GP-BEVEL & PINION	
		1	**216-4466**	1	GEAR GP-BEVEL & PINION	
		1	**216-4467**	1	SEAL-O-RING	
		1	**209-7462**	1	WASHER (40X50X0.06-MM THK)	
		1	**209-7463**	1	SLEEVE	
M		1	**209-7472**	1	NUT (M24X1.5-THD)	
		1	**216-4465**	1	WASHER (24.5X52X10-MM THK)	
Y	15	1	**216-9498**	1	DIFFERENTIAL GP	150
	16	1	**4J-0520**	1	SEAL-O-RING	
	17	1	**216-5515**	1	HOUSING AS-DIFFERENTIAL	
	17A	1	**208-0322**	4	BOLT-FLANGE HEAD	
	17B	1	**217-2880**	4	DOWEL	
B	18	1	**209-7473**	1	SHIM (2.5-MM THK)	
B			**219-8751**	1	SHIM (2.6-MM THK)	
B			**219-8752**	1	SHIM (2.7-MM THK)	
B			**219-8753**	1	SHIM (2.8-MM THK)	
B			**219-8754**	1	SHIM (2.9-MM THK)	
B			**219-8755**	1	SHIM (3-MM THK)	
B			**219-8756**	1	SHIM (3.1-MM THK)	
B			**219-8757**	1	SHIM (3.2-MM THK)	
B			**219-8758**	1	SHIM (3.3-MM THK)	
B			**219-8759**	1	SHIM (3.4-MM THK)	

B-USE AS REQUIRED
M-METRIC PART
Y-SEPARATE ILLUSTRATION

209-9882 DIFFERENTIAL & BEVEL GEAR GP *(contd.)* i02310846

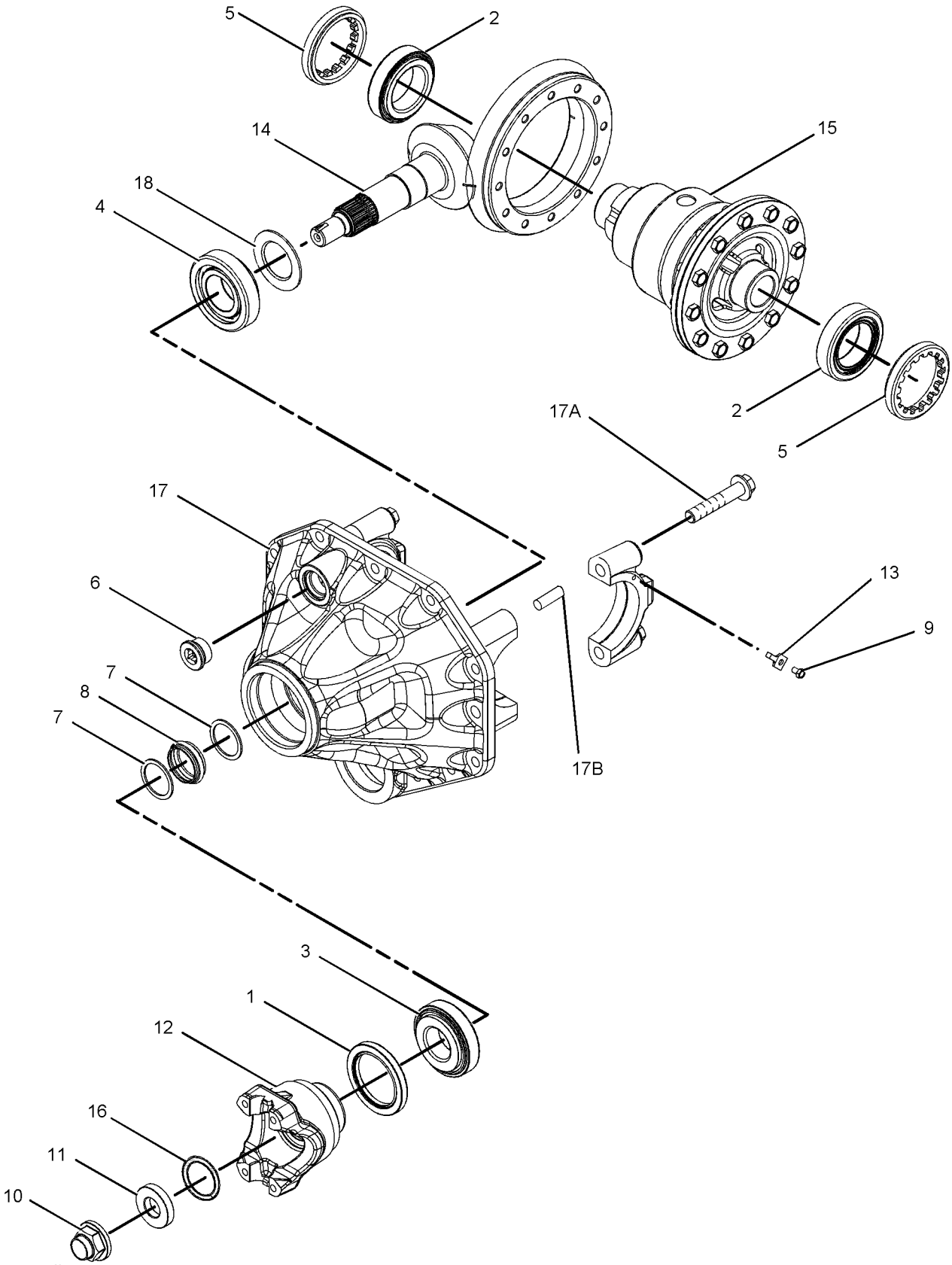

GRAPHIC #1 **<END>** g01062316

216-9498 DIFFERENTIAL GP (CHG -00 THRU -03)

S/N: HLS1-UP

PART OF 209-9882 DIFFERENTIAL & BEVEL GEAR GP

AN ATTACHMENT

SMCS-3258 **i02205174**

NOTE	REF NO	GRAPHIC REF	PART NUMBER	QTY	PART NAME 1 2 3 4 5 6 (PRODUCT LEVEL)	SEE PAGE
	1	1	**216-8687**	1	COVER (DIFFERENTIAL CASE)	
	2	1	**216-8689**	1	HOUSING-DIFFERENTIAL	
	3	1	**229-5093**	2	WASHER-THRUST (49X72X1.5-MM THK)	
M	4	1	**144-6734**	12	BOLT (M10X1.5X30-MM)	
	5	1	**211-0092**	2	WASHER-THRUST (22X42X2-MM THK)	
	6	1	**209-7455**	1	PIN	
	7	1	**216-8691**	1	RETAINER	
	8	1	**216-9497**	1	GEAR GP-DIFFERENTIAL & BEVEL	
					AVAILABLE REPAIR KIT(S):	
			216-8700		GEAR GP-BEVEL (KIT)	
					(INCLUDES PIN,WASHERS,PIN,DISC AND GEARS)	

M-METRIC PART

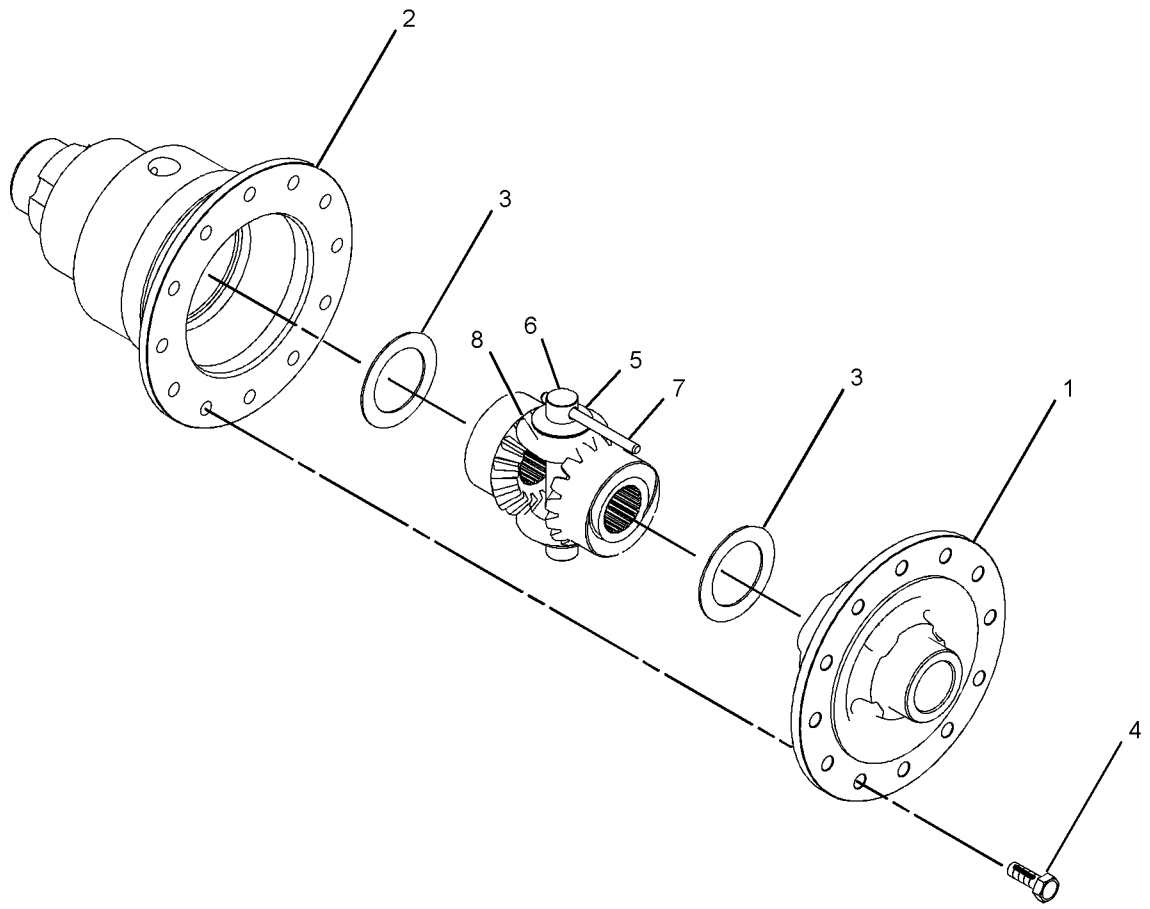

GRAPHIC #1 **<END>** g01043312

231-0692 DIFFERENTIAL GP (CHG -00)

S/N: HLS1-UP
PART OF 238-5289 HOUSING GP-AXLE
AN ATTACHMENT

SMCS-3258 **i02196803**

NOTE	REF NO	GRAPHIC REF	PART NUMBER	QTY	PART NAME 1 2 3 4 5 6 (PRODUCT LEVEL)	SEE PAGE
	1	1	**199-0673**	2	BUSHING	
	2	1	**199-0694**	12	BOLT (M14X2X40-MM)	
	3	1	**199-0756**	1	COLLAR	
	4	1	**199-0784**	1	COVER-DIFFERENTIAL	
	5	1	**199-0807**	4	PIN	
	6	1	**199-0808**	3	PIN	
	7	1	**231-0670**	1	SHAFT	
	8	1	**231-0671**	4	WASHER-THRUST	
	9	1	**231-0695**	2	WASHER-THRUST	
	10	1	**231-0693**	1	CASE-DIFFERENTIAL	
	11	1	**231-0696**	2	SHAFT	
	12	1	**231-0697**	1	RETAINER	
	13	1	**231-0694**	1	GEAR AS	
	14	1	**199-0659**	4	SEAL-PIN	

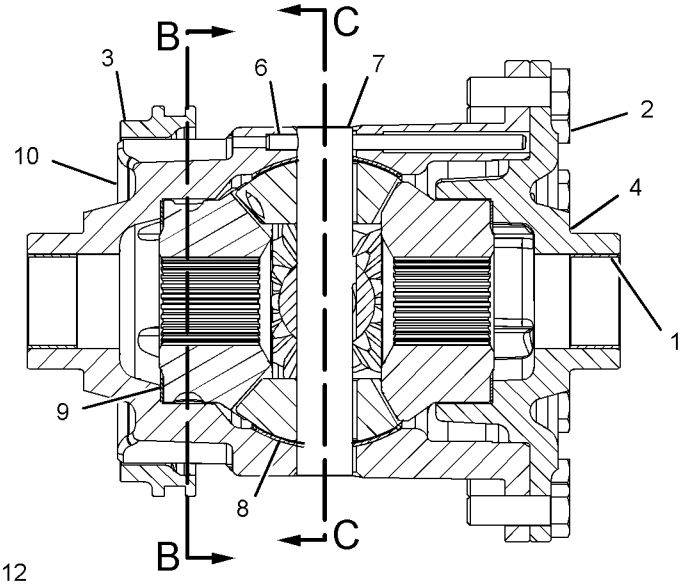

FRONT VIEW
(SECTIONED)

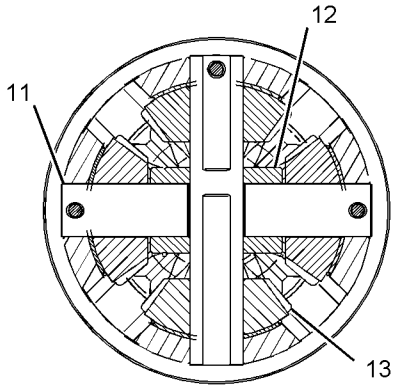

SECTION C-C

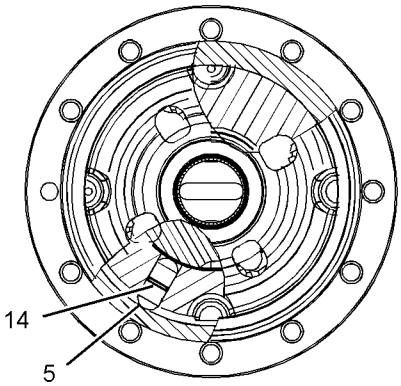

SECTION B-B

GRAPHIC #1 **<END>** g01107764

216-4740 DRIVE AR-BACKHOE LOADER–

ALL WHEEL DRIVE, 2-WHEEL STEER (CHG -04 THRU -07)

S/N: HLS1-UP

PART OF 216-3315, 216-3316 POWER TRAIN AR

AN ATTACHMENT

SMCS-3278, 4313 **i02274699**

NOTE	PART NUMBER	QTY	PART NAME 1 2 3 4 5 6 (PRODUCT LEVEL)	SEE PAGE
Y	**230-5743**	1	AXLE GP-DRIVE & STEERING (FRONT)	138
Y	**230-5739**	1	AXLE GP-REAR	140
Y	*217-9672*	1	GUARD GP-DRIVE SHAFT	241
Y	*211-6571*	1	LINES GP-STEERING	224
Y	*221-0811*	1	MOUNTING GP-AXLE	166
Y	*216-4475*	1	SHAFT GP-DRIVE (REAR)	174
Y	*211-4267*	1	SWITCH GP-ALL WHEEL DRIVE (INCLUDES RELAY)	106

Y-SEPARATE ILLUSTRATION

<END>

111-7907 DRIVE GP-FLEXIBLE COUPLING (CHG -03 THRU -06)

S/N: HLS1-UP

PART OF 214-7524 TRANSMISSION AR-DIRECT DRIVE, 251-6354 TRANSMISSION AR-POWER SHIFT AN ATTACHMENT

SMCS-3252 **i02238349**

NOTE	REF NO	GRAPHIC REF	PART NUMBER	QTY	PART NAME 1 2 3 4 5 6 (PRODUCT LEVEL)	SEE PAGE
M	1	1	**8T-4200**	8	BOLT (M8X1.25X16-MM)	
M	2	1	**6V-8455**	6	BOLT (M10X1.5X16-MM)	
	3	1	**117-9713**	1	PLATE-CONVERTER REINFORCEMENT	
	4	1	**8T-4224**	8	WASHER-HARD (8.8X16X2-MM THK)	
	5	1	**111-7906**	1	PLATE-CONVERTER DRIVE	

M-METRIC PART

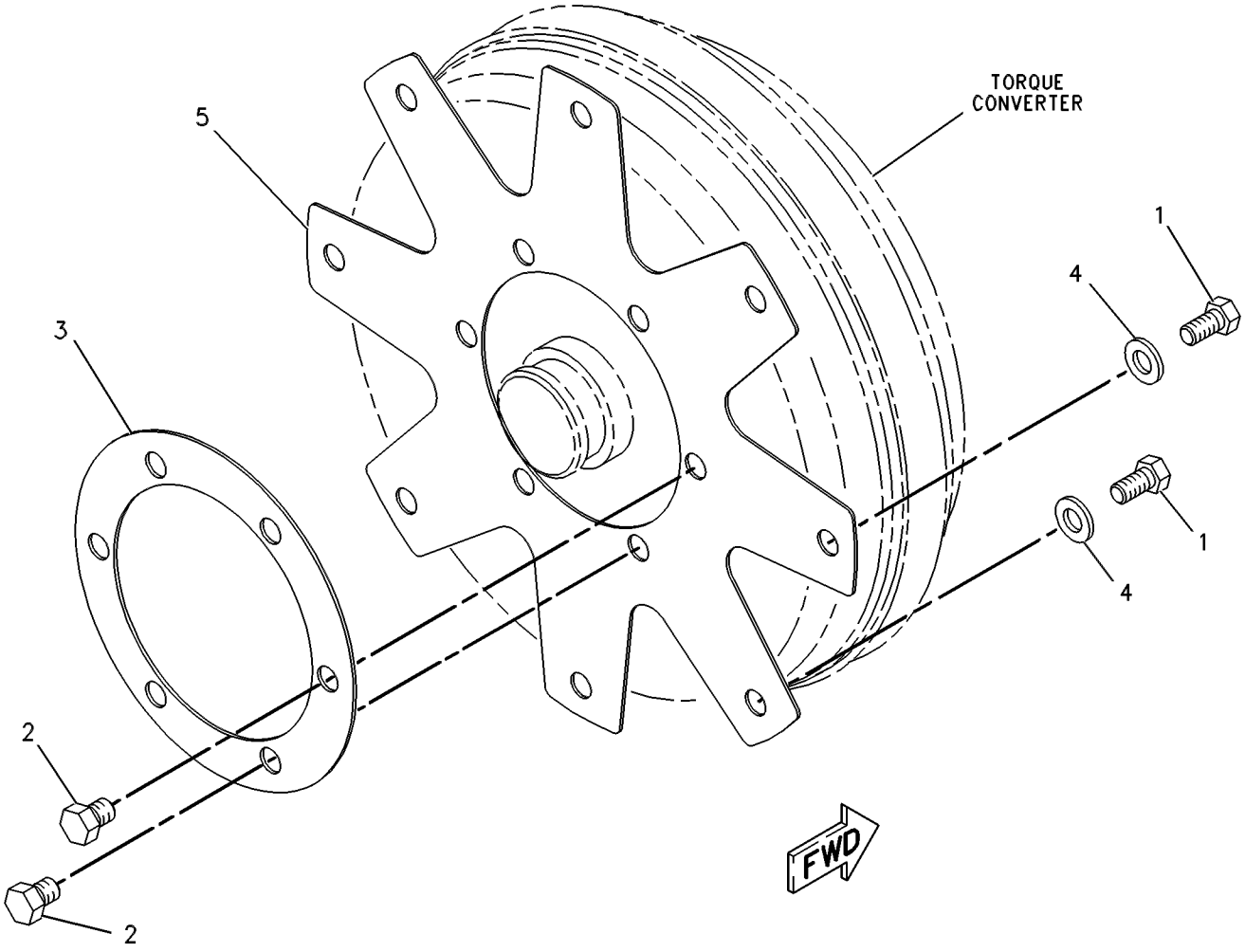

GRAPHIC #1 **<END>** g00131506

211-0073 FILLER GP-POWER TRAIN OIL (CHG -01 THRU -03)

S/N: HLS1-UP
PART OF 216-3316 POWER TRAIN AR
AN ATTACHMENT

SMCS-3005, 3081 **i02354661**

NOTE	REF NO	GRAPHIC REF	PART NUMBER	QTY	PART NAME 1 2 3 4 5 6 (PRODUCT LEVEL)	SEE PAGE
	1	1	**2B-0941**	1	SPACER (10.5X19X19-MM THK)	
	2	1	**6V-0852**	2	CAP-DUST	
	3	1	**6V-3965**	2	FITTING AS (QUICK DISCONNECT)	
	4	1	**214-3745**	1	TUBE AS	
	5	1	**218-9984**	1	GAUGE AS-OIL LEVEL (DIPSTICK)	
	6	1	**236-1583**	1	BOSS	
	7	1	*148-8368*	2	ELBOW AS	
					(EACH INCLUDES)	
		1	**3J-1907**	1	SEAL-O-RING	
		1	**4J-5477**	1	SEAL-O-RING	
		1	**6V-8627**	1	ELBOW	
	8	1	**3J-1907**	2	SEAL-O-RING	
	9	1	**4J-0522**	1	SEAL-O-RING	
	10	1	**5P-4116**	1	WASHER-HARD (8.8X20.5X2-MM THK)	
M	11	1	**7X-0818**	1	BOLT (M8X1.25X45-MM)	
	12	1	**8S-0023**	1	CLIP (SLOT)	
	13	1	**8S-0024**	1	CLIP (TAB)	
	14	1	**8T-4121**	1	WASHER-HARD (11X21X2.5-MM THK)	
M	15	1	**8T-4136**	1	BOLT (M10X1.5X25-MM)	
M	16	1	**8T-4176**	1	BOLT (M12X1.75X90-MM)	
	17	1	**8T-4223**	3	WASHER-HARD (13.5X25.5X3-MM THK)	
M	18	1	**8T-4956**	2	BOLT (M12X1.75X35-MM)	

M-METRIC PART

211-0073 **FILLER GP-POWER TRAIN OIL** *(contd.)* **i02354661**

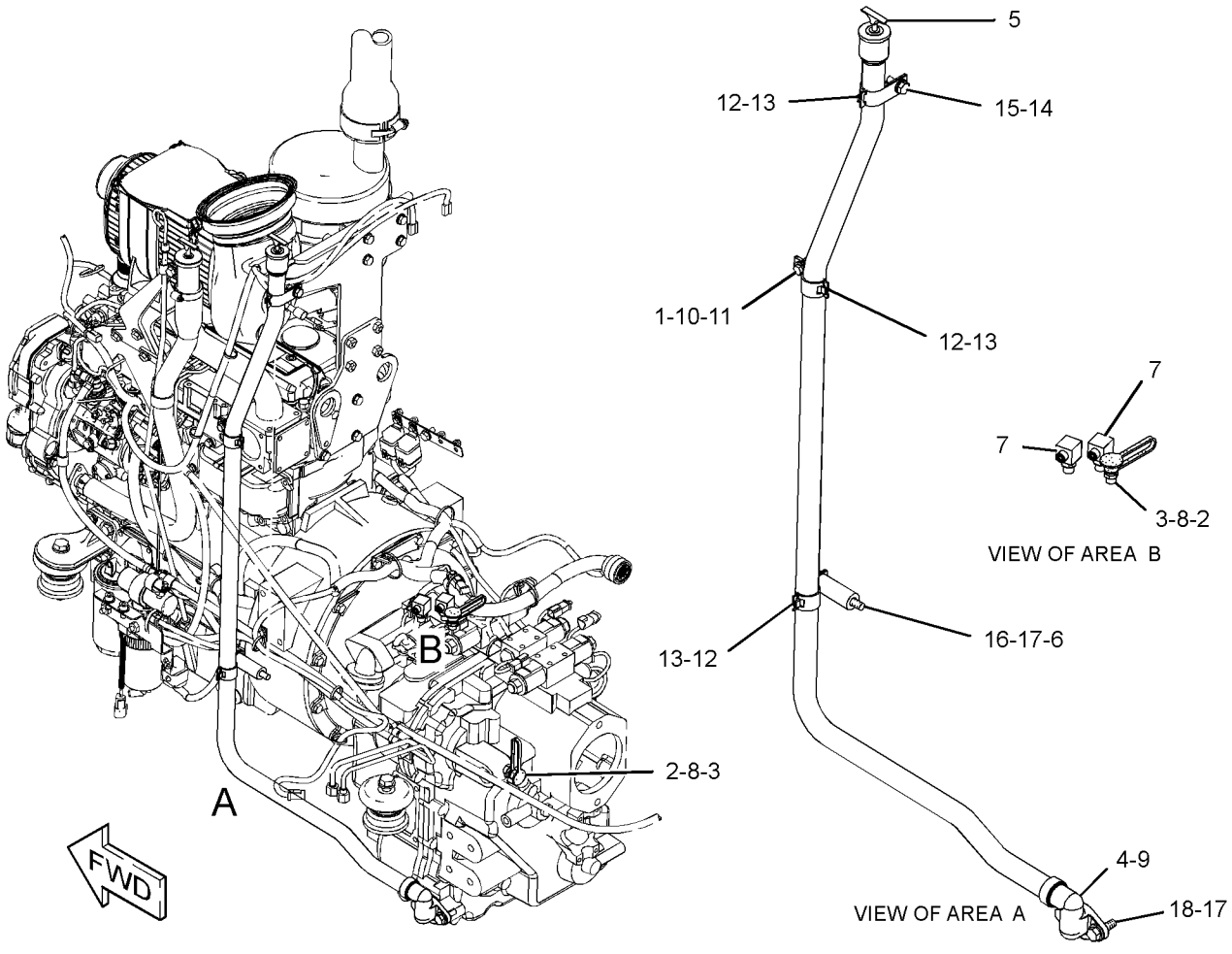

GRAPHIC #1 **<END>** g01233552

214-3740 FILLER GP-POWER TRAIN OIL–

ALL WHEEL DRIVE, STANDARD SHIFT (CHG -02 THRU -06)

S/N: HLS1-UP

PART OF 216-3315 POWER TRAIN AR

AN ATTACHMENT

SMCS-3005, 3081 **i02355840**

NOTE	REF NO	GRAPHIC REF	PART NUMBER	QTY	PART NAME 1 2 3 4 5 6 (PRODUCT LEVEL)	SEE PAGE
	1	1	**6V-0852**	2	CAP-DUST	
	2	1	**6V-3965**	2	FITTING AS (QUICK DISCONNECT)	
	3	1	**2B-0941**	1	SPACER (10.5X19X19-MM THK)	
	4	1	**271-7167**	1	GAUGE-OIL LEVEL (DIPSTICK)	
	5	1	**230-2610**	1	TUBE AS	
	6	1	*165-4931*	1	ELBOW AS	
		1	**3J-1907**	1	SEAL-O-RING	
		1	**6V-8077**	1	ELBOW	
	7	1	**3J-1907**	2	SEAL-O-RING	
	8	1	**4J-0522**	1	SEAL-O-RING	
	9	1	**236-1583**	1	BOSS	
	10	1	**8S-0023**	3	CLIP (SLOT)	
	11	1	**8S-0024**	3	CLIP (TAB)	
	12	1	**8T-4121**	1	WASHER-HARD (11X21X2.5-MM THK)	
M	13	1	**8T-4136**	1	BOLT (M10X1.5X25-MM)	
	14	1	**8T-4223**	3	WASHER-HARD (13.5X25.5X3-MM THK)	
M	15	1	**8T-4956**	2	BOLT (M12X1.75X35-MM)	
M	16	1	**8T-4176**	1	BOLT (M12X1.75X90-MM)	
	17	1	**5P-4116**	1	WASHER-HARD (8.8X20.5X2-MM THK)	
M	18	1	**7X-0818**	1	BOLT (M8X1.25X45-MM)	

M-METRIC PART

214-3740 **FILLER GP-POWER TRAIN OIL** *(contd.)* **i02355840**

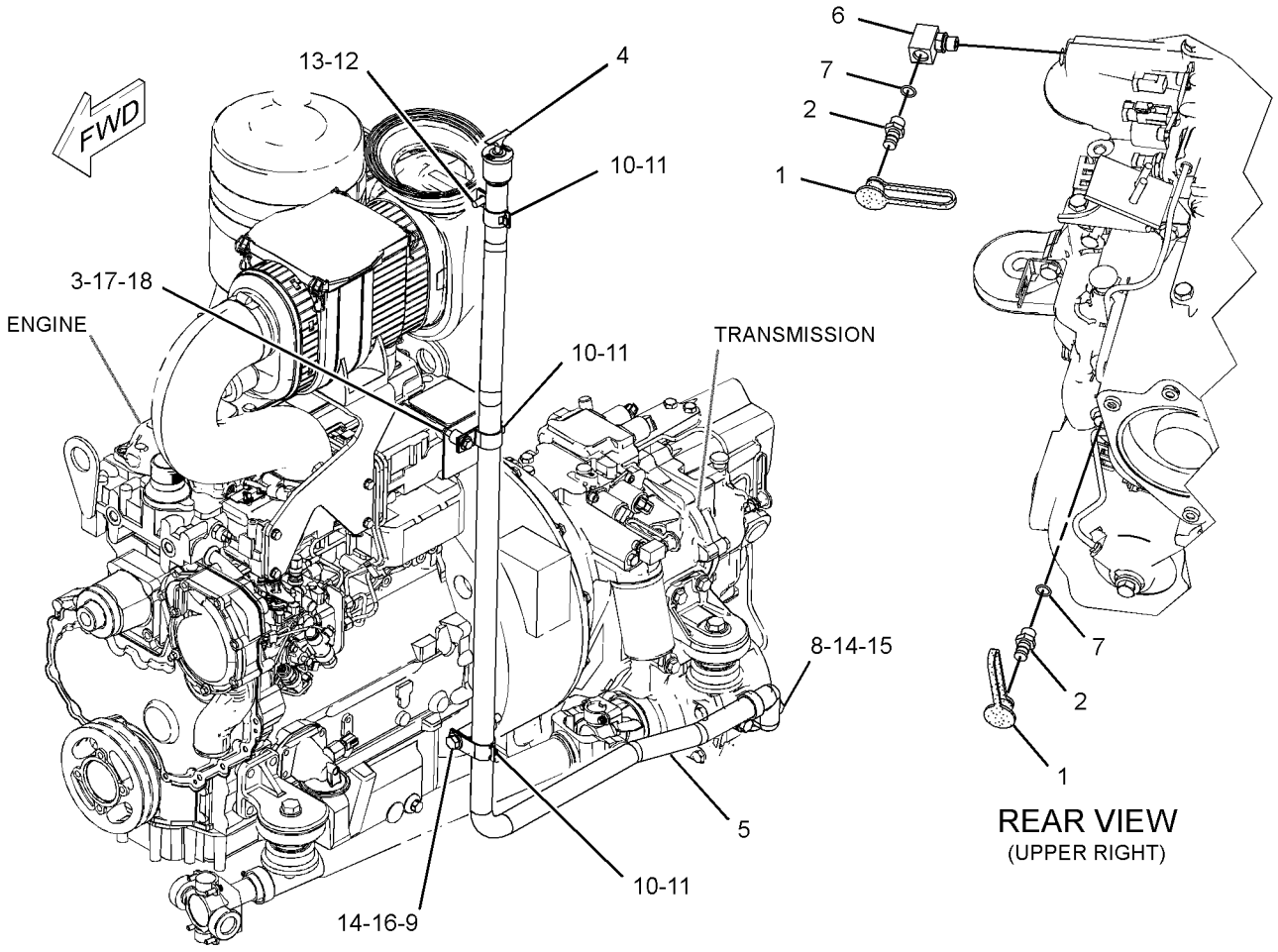

GRAPHIC #1 **<END>** g01198800

216-1609 FLANGE GP-WHEEL (CHG -04 THRU -06)

S/N: HLS1-UP

PART OF 230-5739 AXLE GP-REAR

AN ATTACHMENT

SMCS-4057 **i02361136**

NOTE	REF NO	GRAPHIC REF	PART NUMBER	QTY	PART NAME 1 2 3 4 5 6 (PRODUCT LEVEL)	SEE PAGE
	1	1	**210-5932**	2	BEARING-WHEEL	
	2	1	**216-1602**	1	FLANGE	
	3	1	**226-4346**	10	STUD	
	4	1	**229-5092**	1	SEAL	

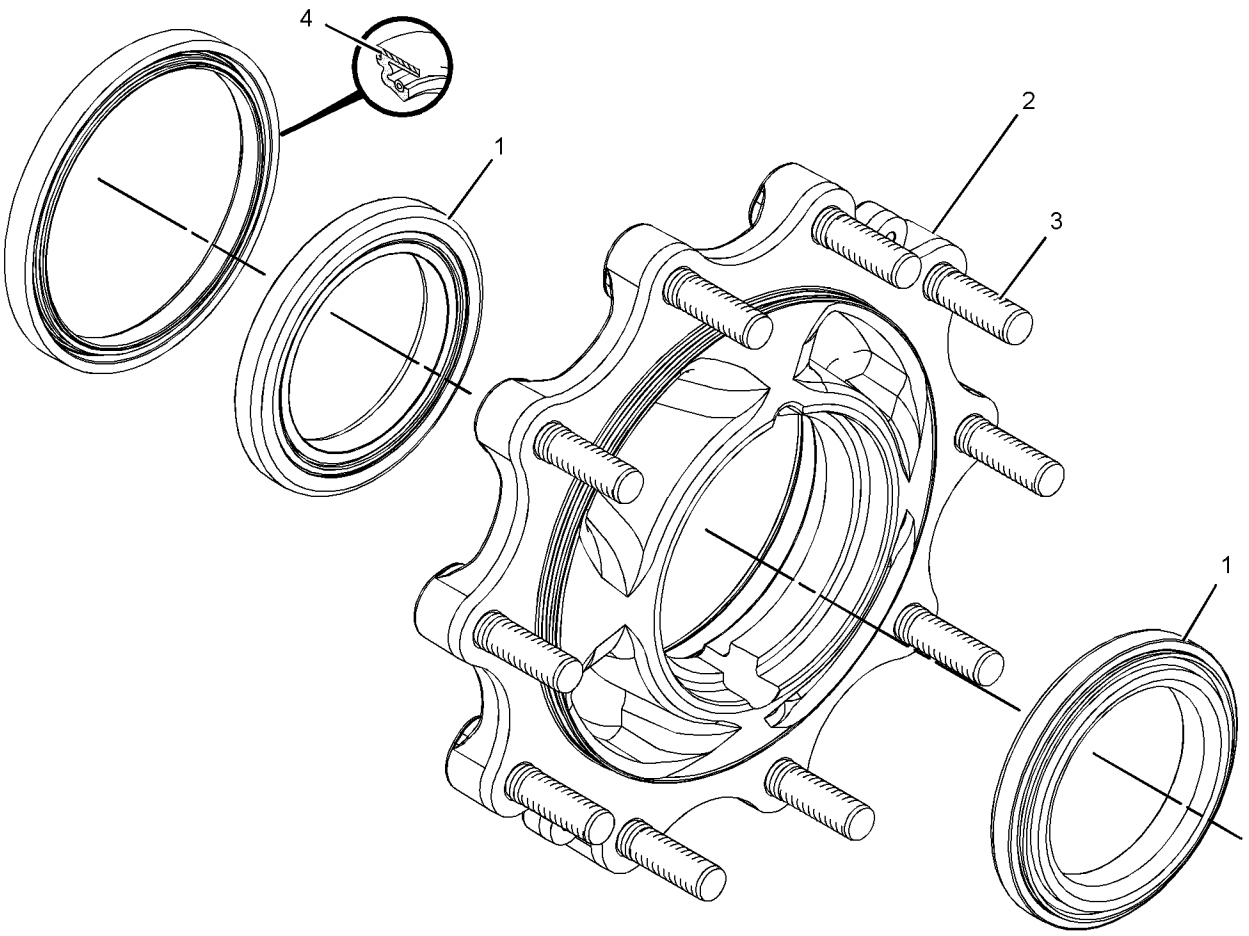

GRAPHIC #1 **<END>** g01180592

209-9884 HOUSING & FLANGE GP-AXLE–RH

(CHG -03, -04, 231-0703-03)
S/N: HLS1-UP
PART OF 230-5743 AXLE GP-DRIVE & STEERING
AN ATTACHMENT

SMCS-4057, 4234 **i02364477**

NOTE	REF NO	GRAPHIC REF	PART NUMBER	QTY	PART NAME 1 2 3 4 5 6 (PRODUCT LEVEL)	SEE PAGE
Y	1	1	**217-2877**	1	HOUSING GP-AXLE (RH)	161
J	2	1	**231-0703**	1	FLANGE AS	
	2A	1	**210-5932**	2	BEARING-WHEEL	
	2B	1	**226-4346**	8	STUD	
	2C	1	**229-5092**	1	SEAL	
	3	1	**226-4366**	1	NUT-SPANNER	
	4	1	**226-4370**	3	BOLT-SELF-LOCKING	
	5	1	**229-5085**	1	SPACER (110X123X18.36-MM THK)	
	6	1	**217-2879**	1	GEAR GP-RING	
		1	**209-7459**	1	RETAINER	
		1	**209-7461**	1	GEAR-RING	
	7	1	**226-4365**	1	WASHER-TAB	
					AVAILABLE REPAIR KIT(S):	
J			**238-5256**	1	KIT-FLANGE	

J-KIT MARKED J AVAILABLE FOR PART MARKED J
Y-SEPARATE ILLUSTRATION

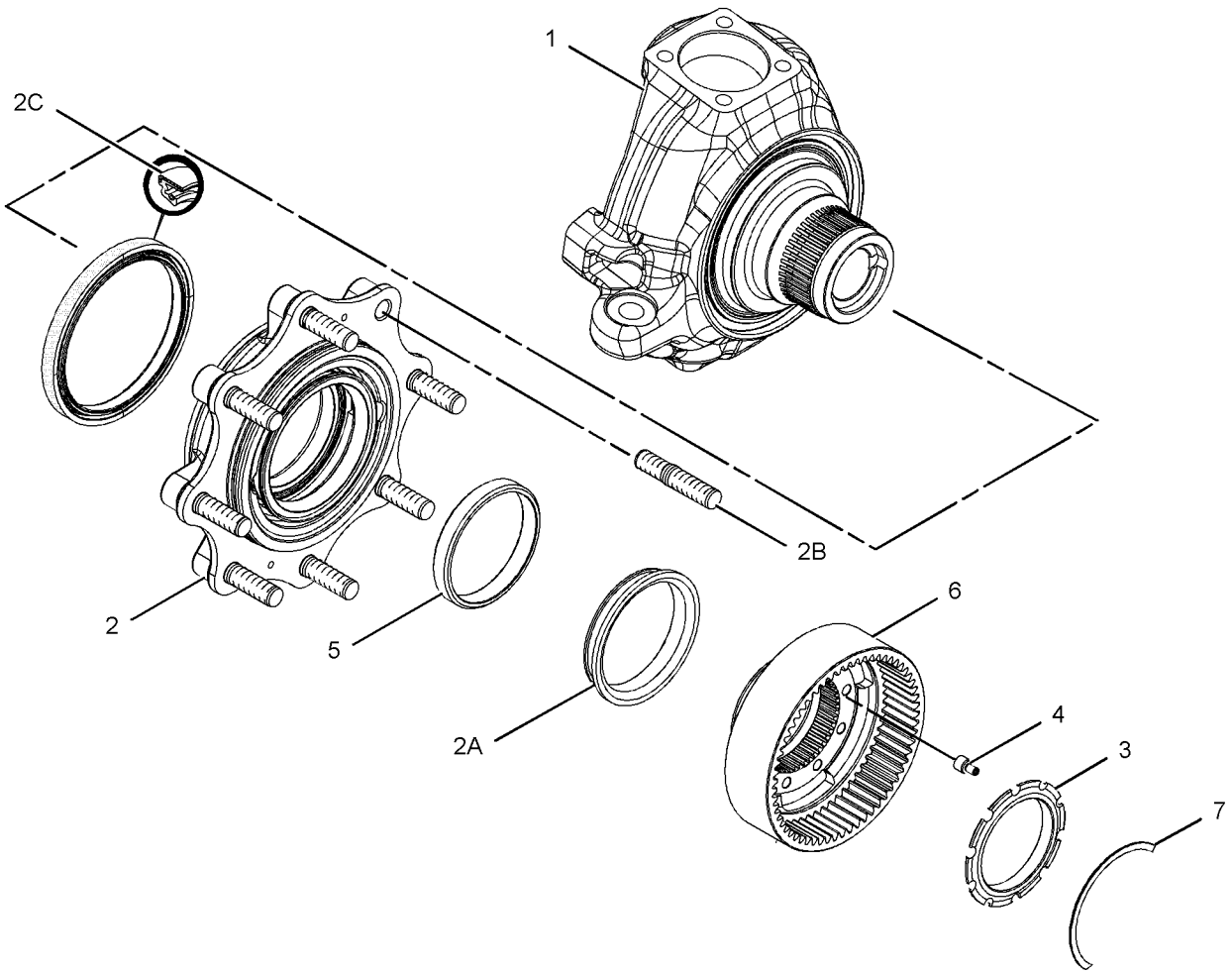

GRAPHIC #1 **<END>** g01181019

209-9885 HOUSING & FLANGE GP-AXLE–LH (CHG -03, 231-0703-03)

S/N: HLS1-UP

PART OF 230-5743 AXLE GP-DRIVE & STEERING

AN ATTACHMENT

SMCS-4057, 4234 **i02364480**

NOTE	REF NO	GRAPHIC REF	PART NUMBER	QTY	PART NAME 1 2 3 4 5 6 (PRODUCT LEVEL)	SEE PAGE
Y	1	1	**217-2878**	1	HOUSING GP-AXLE (LH)	162
J	2	1	**231-0703**	1	FLANGE AS	
	2A	1	**210-5932**	2	BEARING-WHEEL	
	2B	1	**226-4346**	8	STUD	
	2C	1	**229-5092**	1	SEAL	
	3	1	**226-4366**	1	NUT-SPANNER	
	4	1	**226-4370**	3	BOLT-SELF-LOCKING	
	5	1	**229-5085**	1	SPACER (110X123X18.36-MM THK)	
	6	1	**217-2879**	1	GEAR GP-RING	
		1	**209-7459**	1	RETAINER	
		1	**209-7461**	1	GEAR-RING	
	7	1	**226-4365**	1	WASHER-TAB	
					AVAILABLE REPAIR KIT(S):	
J			**238-5256**	1	KIT-FLANGE	

J-KIT MARKED J AVAILABLE FOR PART MARKED J
Y-SEPARATE ILLUSTRATION

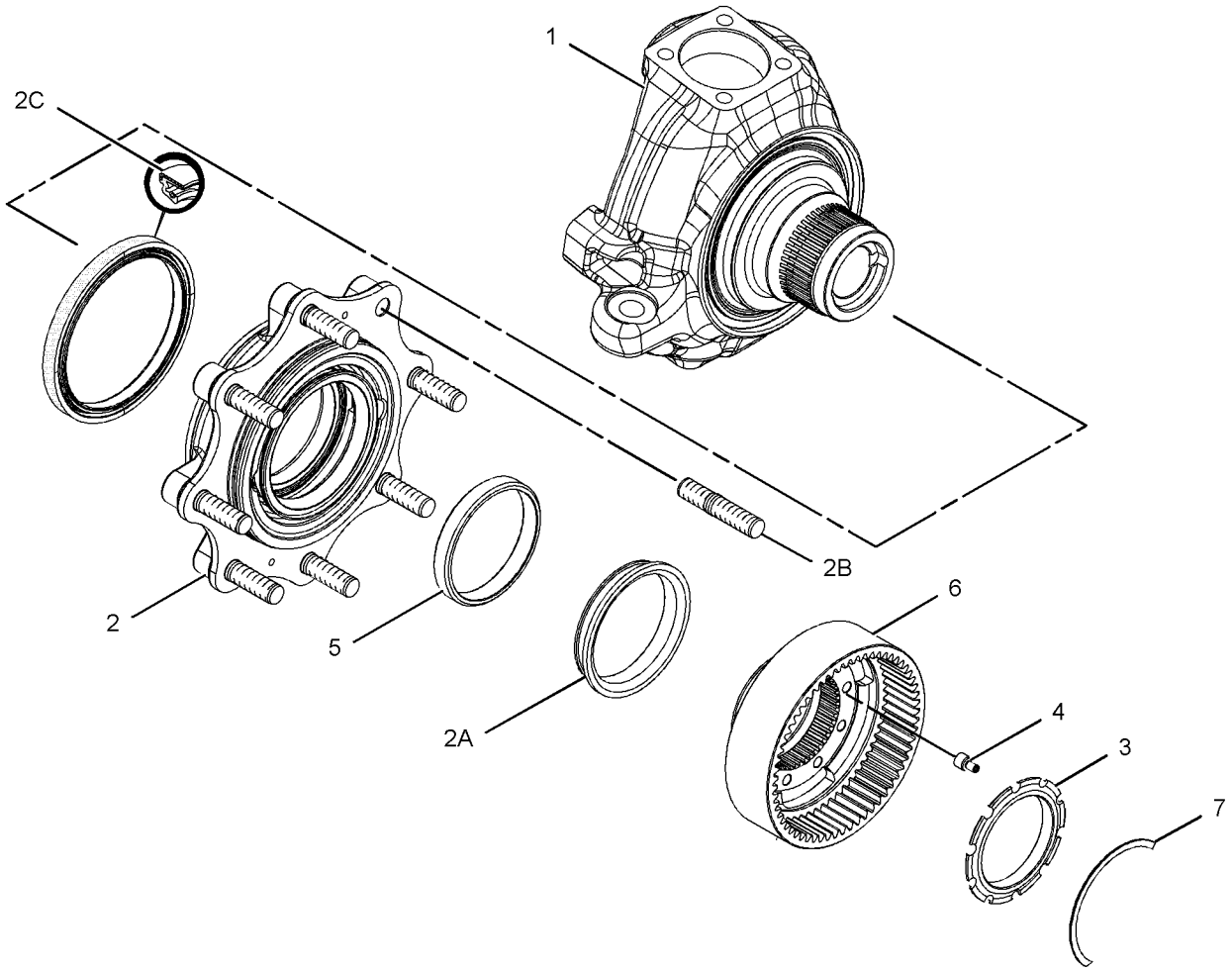

GRAPHIC #1 **<END>** g01180841

217-2877 HOUSING GP-AXLE—RH (CHG -00, -01)

S/N: HLS1-UP

PART OF 209-9884 HOUSING & FLANGE GP-AXLE

AN ATTACHMENT

SMCS-3256, 3258, 3260, 4251 **i02365010**

NOTE	REF NO	GRAPHIC REF	PART NUMBER	QTY	PART NAME 1 2 3 4 5 6 (PRODUCT LEVEL)	SEE PAGE
	1	1	**199-0648**	1	NUT-JAM (M16X2-THD)	
	2	1	**198-7814**	1	BOLT (M16X100-MM)	
	3	1	**209-7460**	1	BUSHING	
	4	1	**209-7465**	1	SEAL	
	5	1	**231-0700**	1	HOUSING	

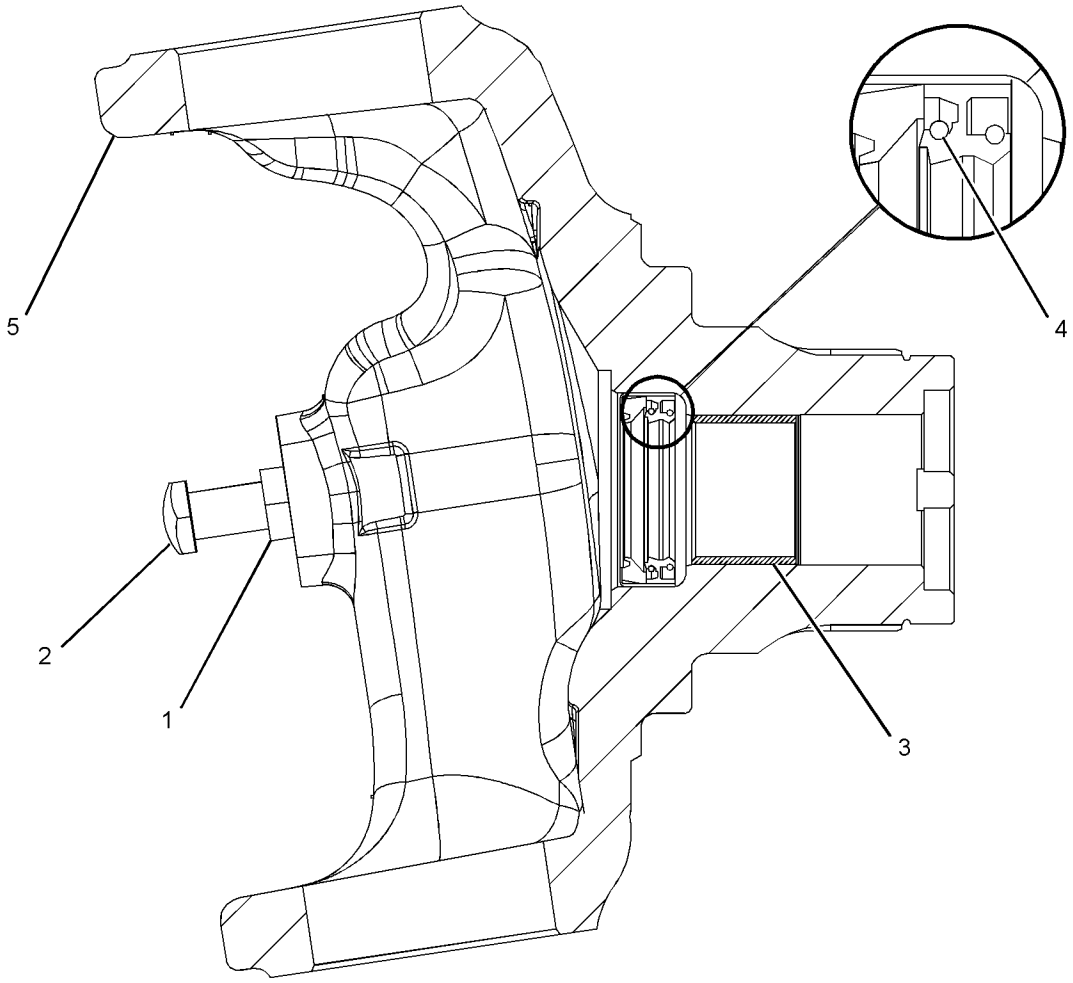

GRAPHIC #1 **<END>** g01181175

217-2878 HOUSING GP-AXLE—LH (CHG -00, -01)

S/N: HLS1-UP

PART OF 209-9885 HOUSING & FLANGE GP-AXLE

AN ATTACHMENT

SMCS-3256, 3258, 3260, 4251 **i02365011**

NOTE	REF NO	GRAPHIC REF	PART NUMBER	QTY	PART NAME 1 2 3 4 5 6 (PRODUCT LEVEL)	SEE PAGE
	1	1	**199-0648**	1	NUT-JAM (M16X2-THD)	
	2	1	**198-7814**	1	BOLT (M16X100-MM)	
	3	1	**209-7460**	1	BUSHING	
	4	1	**209-7465**	1	SEAL	
	5	1	*231-0701*	1	HOUSING	

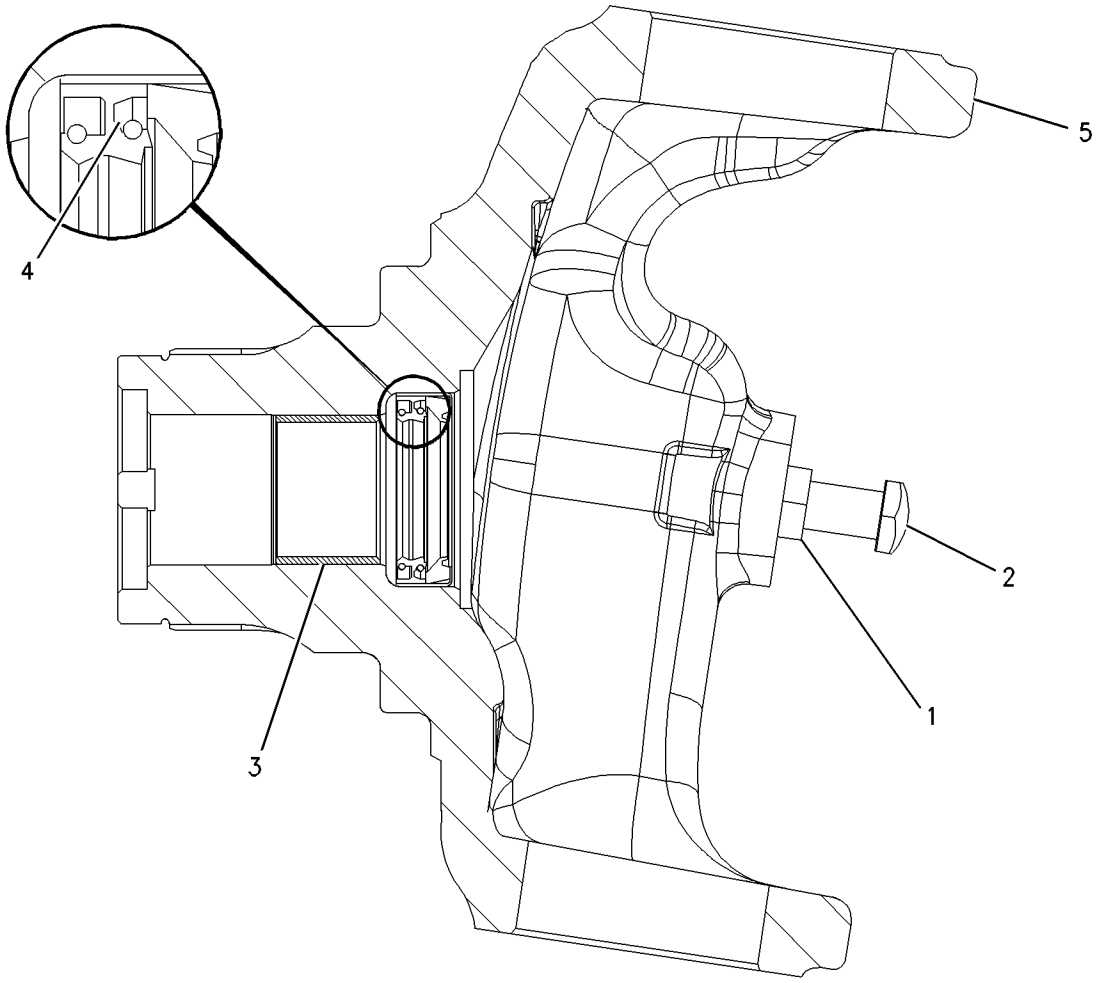

GRAPHIC #1 **<END>** g00926639

238-5289 HOUSING GP-AXLE (CHG -00)

S/N: HLS1-UP
PART OF 230-5739 AXLE GP-REAR
AN ATTACHMENT

SMCS-3256, 3258, 3260, 4251 **i02196681**

NOTE	REF NO	GRAPHIC REF	PART NUMBER	QTY	PART NAME 1 2 3 4 5 6 (PRODUCT LEVEL)	SEE PAGE
	1	1	**199-0646**	4	BOLT	
	2	1	**199-0656**	2	BEARING	
J	3	1	**199-0663**	1	SEAL-O-RING	
	4	1	**198-7811**	2	DOWEL	
	5	1	**199-0675**	2	NUT (M104X2-THD)	
J	6	1	**199-0678**	2	WASHER (45.5X55X2-MM THK)	
J	7	1	**199-0680**	1	SPACER (47X50X19.2-MM THK)	
M	8	1	**199-0695**	2	BOLT (M6X1X14-MM)	
	9	1	**199-0697**	1	SEAL	
J	10	1	**199-0785**	1	WASHER (30.5X58X10-MM THK)	
	11	1	**199-0858**	2	RETAINER	
J	12	1	**216-1604**	1	GEAR GP-BEVEL & PINION	
J	13	1	**212-5702**	1	NUT (M30X2-THD)	
	14	1	**216-1600**	1	DISC-BRAKE	
	15	1	**095-1041**	1	BEARING AS	
	16	1	**093-8828**	1	BEARING AS	
Y	17	1	**216-1612**	1	CYLINDER GP-BRAKE (RH)	218
Y	18	1	**216-1613**	1	CYLINDER GP-BRAKE (LH)	219
	19	1	**219-8836**	1	FORK	
Y	20	1	**231-0692**	1	DIFFERENTIAL GP	151
	22	1	**069-4707**	1	SEALANT (GASKET)	
B	23	1	**199-0684**	1	SHIM (2.5-MM THK)	
B	24	1	**199-0685**	1	SHIM (2.6-MM THK)	
B	25	1	**199-0686**	1	SHIM (2.7-MM THK)	
B	26	1	**199-0687**	1	SHIM (2.8-MM THK)	
B	27	1	**199-0688**	1	SHIM (2.9-MM THK)	
B	28	1	**199-0689**	1	SHIM (3-MM THK)	
B	29	1	**199-0690**	1	SHIM (3.1-MM THK)	
B	30	1	**199-0691**	1	SHIM (3.2-MM THK)	
B	31	1	**199-0692**	1	SHIM (3.3-MM THK)	
B	32	1	**199-0693**	1	SHIM (3.4-MM THK)	
					AVAILABLE REPAIR KIT(S):	
			217-2345	1	KIT-DIFFERENTIAL	
					(INCLUDES PIN, SHAFT & WASHERS)	
J			**217-2346**		KIT-BEVEL GEAR & PINION	
					(INCLUDES BEVEL GEAR, PINION & PARTS MARKED J)	

B-USE AS REQUIRED
J-KIT MARKED J AVAILABLE FOR PART(S) MARKED J
M-METRIC PART
Y-SEPARATE ILLUSTRATION

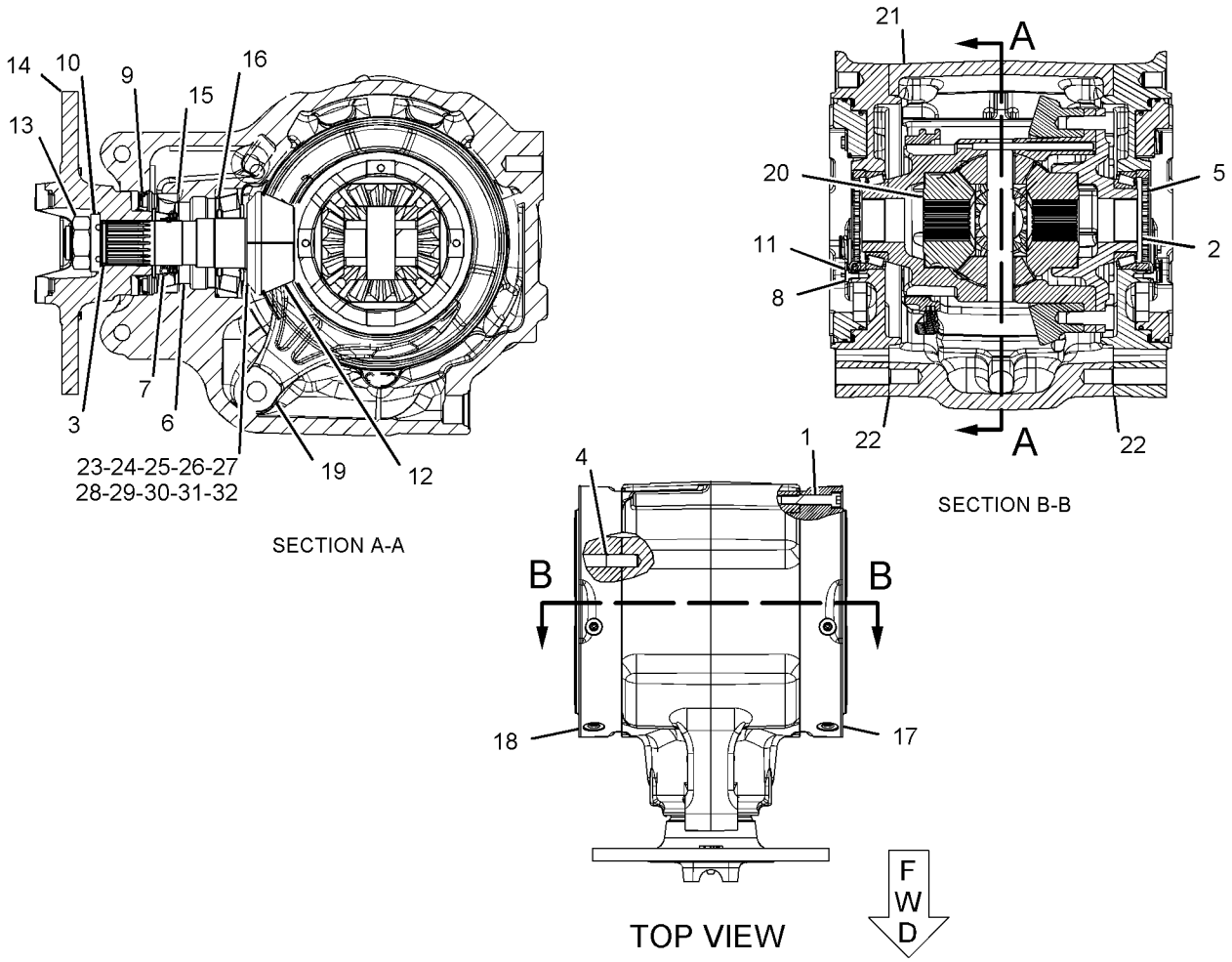

GRAPHIC #1 **<END>** g01135243

256-0546 LINES GP-POWER TRAIN OIL–DIFFERENTIAL LOCK

(CHG -00, -01)
S/N: HLS1-UP
PART OF 216-3315 POWER TRAIN AR
AN ATTACHMENT

SMCS-3016, 3154 **i02356720**

NOTE	REF NO	GRAPHIC REF	PART NUMBER	QTY	PART NAME 1 2 3 4 5 6 (PRODUCT LEVEL)	SEE PAGE
	1	1	*148-8325*	1	CONNECTOR AS	
		1	**3J-1907**	1	SEAL-O-RING	
		1	**4J-5477**	1	SEAL-O-RING	
		1	**6V-8641**	1	CONNECTOR	
I	2	1	**256-0550**	1	HOSE AS	
	3	1	*148-8368*	1	ELBOW AS	
		1	**3J-1907**	1	SEAL-O-RING	
		1	**4J-5477**	1	SEAL-O-RING	
		1	**6V-8627**	1	ELBOW	
	4	1	**151-4841**	1	BLOCK	
	5	1	**7K-1181**	1	STRAP-CABLE	

I-REFER TO HYDRAULIC INFORMATION SYSTEM

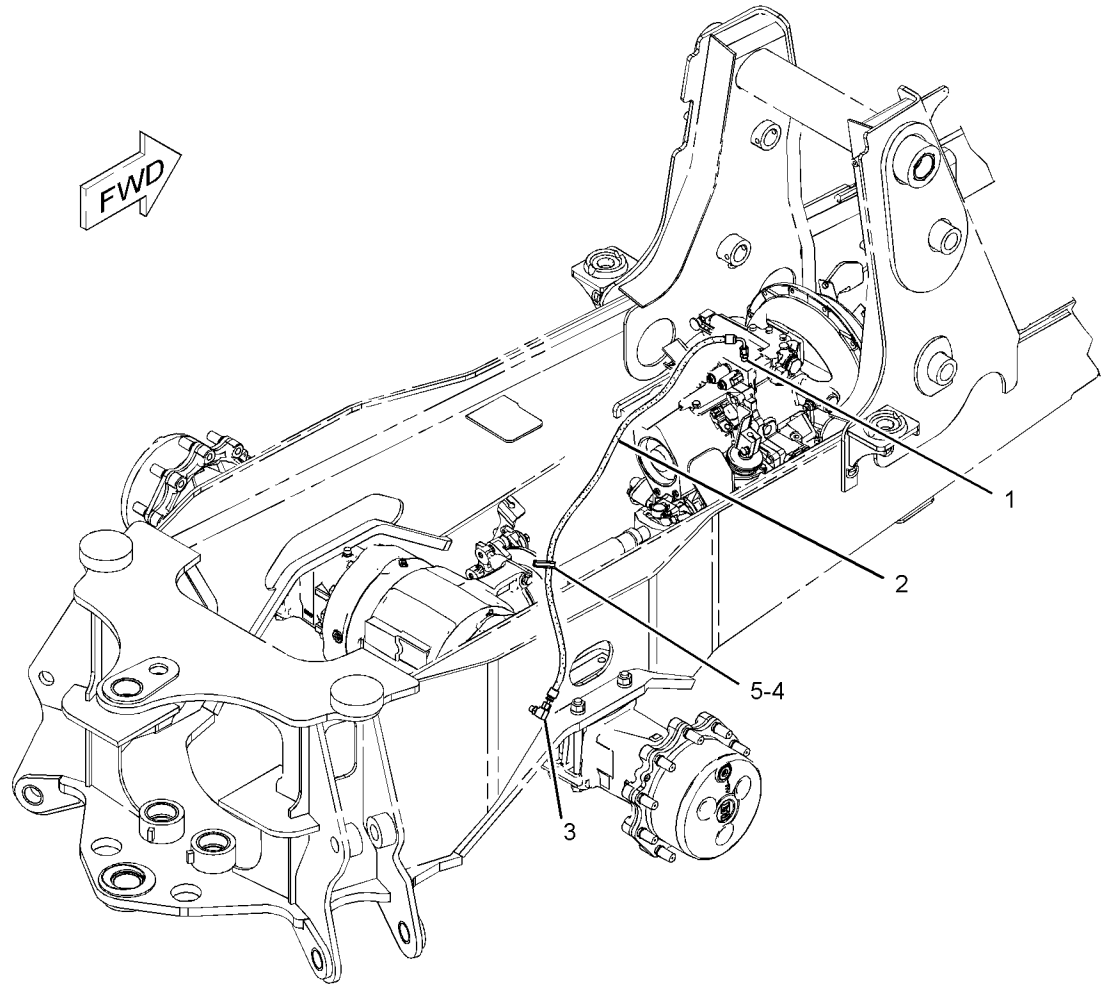

GRAPHIC #1 **<END>** g01238239

221-0811 MOUNTING GP-AXLE (CHG -02, -03)

S/N: HLS1-UP
PART OF 216-4740 DRIVE AR-BACKHOE LOADER
AN ATTACHMENT

SMCS-3268 **i02355759**

NOTE	REF NO	GRAPHIC REF	PART NUMBER	QTY	PART NAME 1 2 3 4 5 6 (PRODUCT LEVEL)	SEE PAGE
B	1	1	**1K-7082**	1	WASHER (2.266X4X0.031-IN THK)	
B	2	1	**9R-9702**	2	WASHER (56X100X1.6-MM THK)	
	3	1	**165-8996**	2	WASHER-THRUST (55.5X100.5X5-MM THK)	
	4	1	**211-9286**	1	PIN AS	
	5	1	**212-0770**	2	PLATE	
M	6	1	**089-7990**	8	BOLT (M20X2.5X250-MM)	
	7	1	**226-4192**	12	WASHER-HARD (21.5X35X8-MM THK)	
	8	1	**7X-0618**	1	WASHER-HARD (13.5X40X5-MM THK)	
M	9	1	**8T-4131**	4	NUT (M20X2.5-THD)	
M	10	1	**8T-4192**	1	BOLT (M12X1.75X25-MM)	

B-USE AS REQUIRED
M-METRIC PART

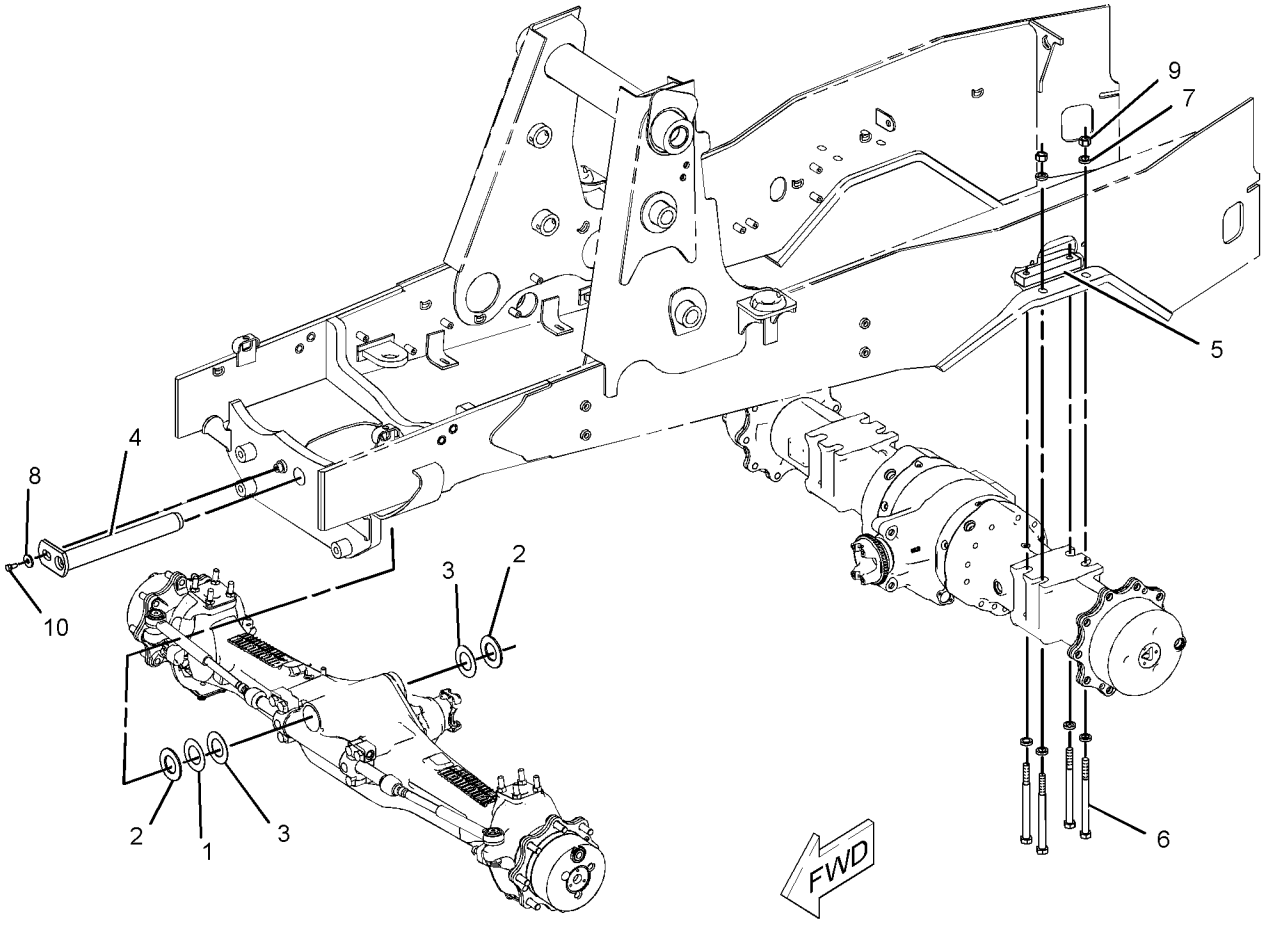

GRAPHIC #1 **<END>** g01200213

254-5703 MOUNTING GP-TRANSMISSION (CHG -00, -01)

S/N: HLS1-UP

PART OF 202-6009 TRANSMISSION & MOUNTING GP

AN ATTACHMENT

SMCS-3082 **i02444698**

NOTE	REF NO	GRAPHIC REF	PART NUMBER	QTY	PART NAME 1 2 3 4 5 6 (PRODUCT LEVEL)	SEE PAGE
	1	1	**271-7308**	1	SUPPORT AS (LH)	
	2	1	**245-4827**	1	SUPPORT AS (RH)	
M	3	1	**7X-2553**	4	BOLT (M16X2X40-MM)	
	4	1	**8T-4223**	4	WASHER-HARD (13.5X25.5X3-MM THK)	
M	5	1	**8T-4956**	4	BOLT (M12X1.75X35-MM)	
	6	1	**9X-8257**	4	WASHER (17.5X30X3.5-MM THK)	

M-METRIC PART

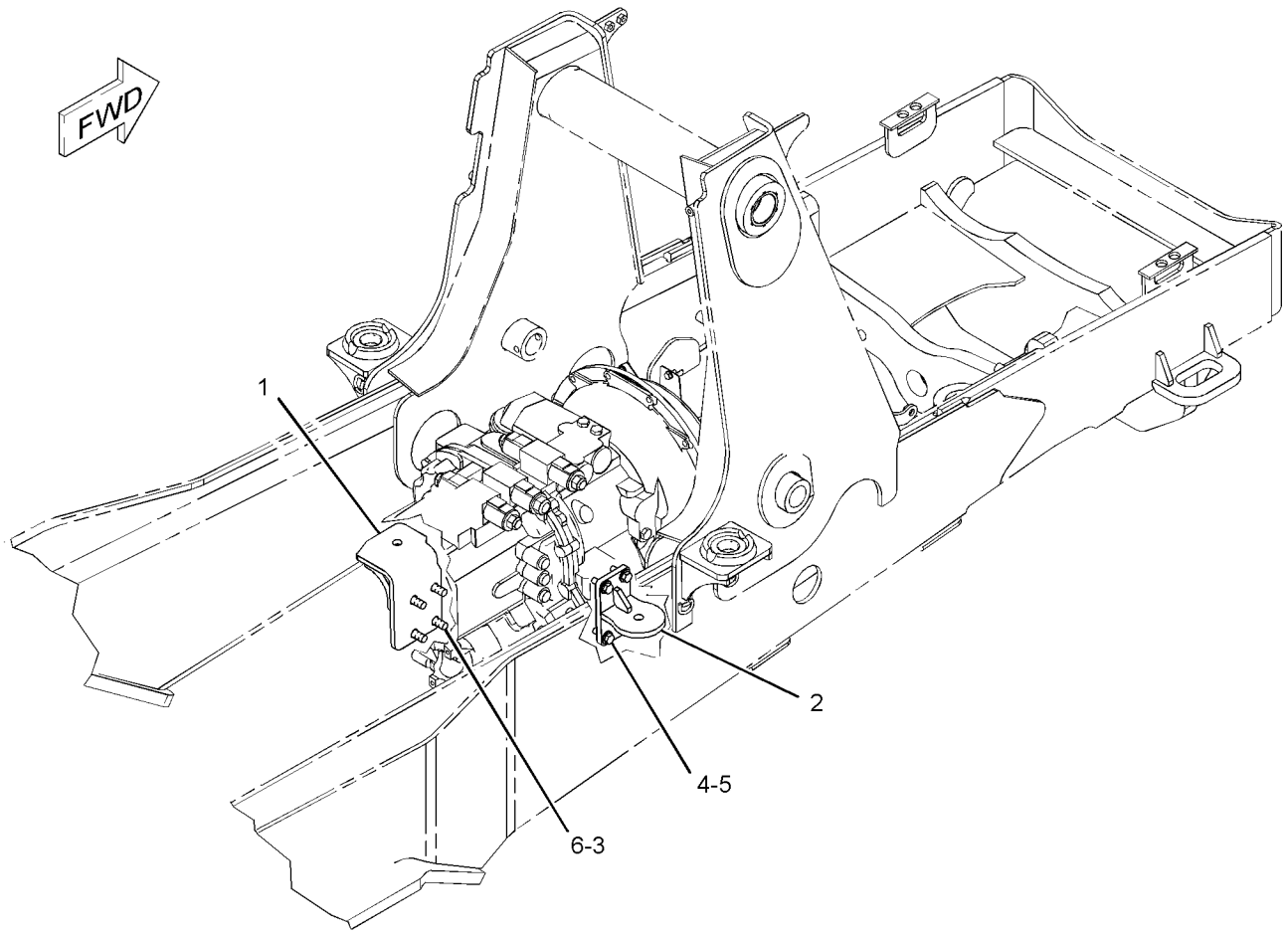

GRAPHIC #1 **<END>** g01216019

271-4487 MOUNTING GP-TRANSMISSION (CHG -01)

S/N: HLS1-UP

PART OF 271-2406 TRANSMISSION & MOUNTING GP

AN ATTACHMENT

SMCS-3082 **i02354354**

NOTE	REF NO	GRAPHIC REF	PART NUMBER	QTY	PART NAME 1 2 3 4 5 6 (PRODUCT LEVEL)	SEE PAGE
	1	1	**245-4827**	1	SUPPORT AS (RH)	
	2	1	**271-7309**	1	SUPPORT AS (LH)	
M	3	1	**7X-2553**	4	BOLT (M16X2X40-MM)	
	4	1	**8T-4223**	4	WASHER-HARD (13.5X25.5X3-MM THK)	
M	5	1	**8T-4956**	4	BOLT (M12X1.75X35-MM)	
	6	1	**9X-8257**	4	WASHER (17.5X30X3.5-MM THK)	

M-METRIC PART

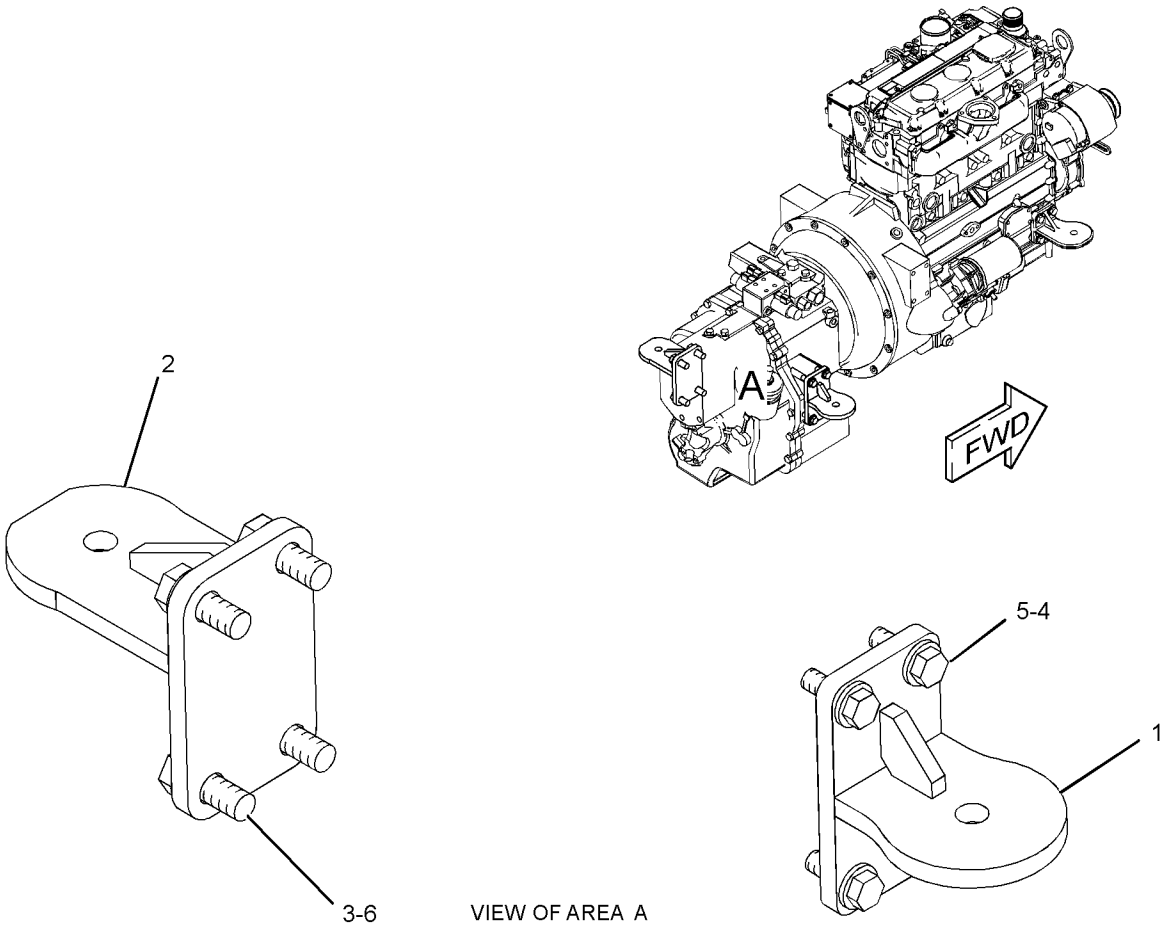

VIEW OF AREA A

GRAPHIC #1 **<END>** g01231911

210-5924 PLANETARY GP-FINAL DRIVE (CHG -00 THRU -06)

S/N: HLS1-UP

PART OF 230-5743 AXLE GP-DRIVE & STEERING

AN ATTACHMENT

SMCS-4050 **i02249722**

NOTE	REF NO	GRAPHIC REF	PART NUMBER	QTY	PART NAME 1 2 3 4 5 6 (PRODUCT LEVEL)	SEE PAGE
	1	1	**210-5931**	4	RETAINER	
	2	1	**209-4157**	4	GEAR (23-TEETH)	
	3	1	**095-0924**	4	RING-RETAINING	
					AVAILABLE REPAIR KIT(S):	
			209-7466	1	KIT-PLANETARY CARRIER	
					(INCLUDES PLUG, SHAFTS & CARRIER)	
			219-8783	23	KIT-ROLLER BEARING	
					(EACH INCLUDES NEEDLES)	

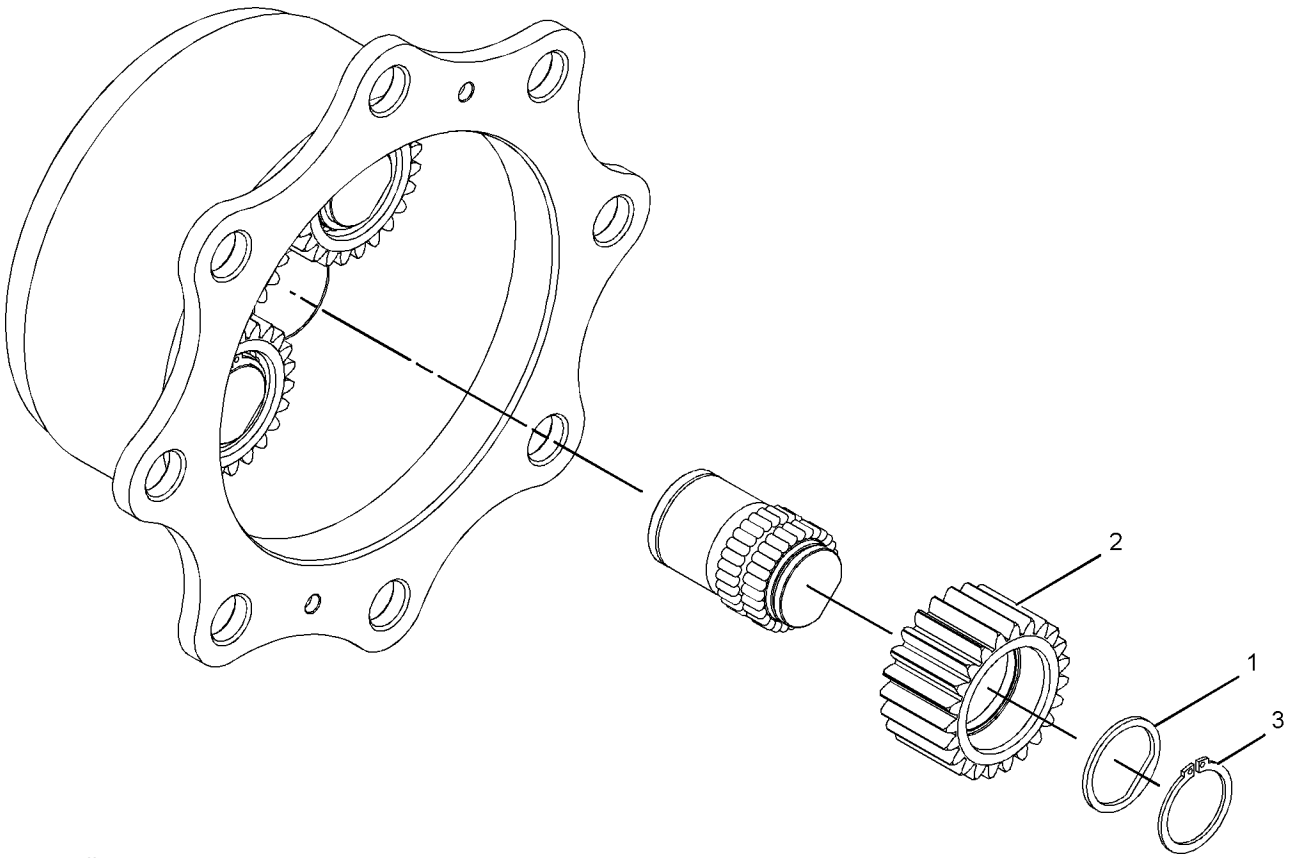

GRAPHIC #1 **<END>** g01132397

216-1610 PLANETARY GP-FINAL DRIVE (CHG -00)

S/N: HLS1-UP
PART OF 230-5739 AXLE GP-REAR
AN ATTACHMENT

SMCS-4050 **i01686952**

NOTE	REF NO	GRAPHIC REF	PART NUMBER	QTY	PART NAME 1 2 3 4 5 6 (PRODUCT LEVEL)	SEE PAGE
	1	1	**199-0653**	3	PIN	
	2	1	**207-4257**	6	BEARING	
	3	1	**199-0669**	1	PLUG	
	4	1	**199-0760**	3	BEARING	
	5	1	**213-4222**	3	WASHER	
	6	1	**207-5962**	6	WASHER	
	7	1	**216-1606**	3	GEAR-PLANET	
	8	1	**216-1601**	1	CARRIER	

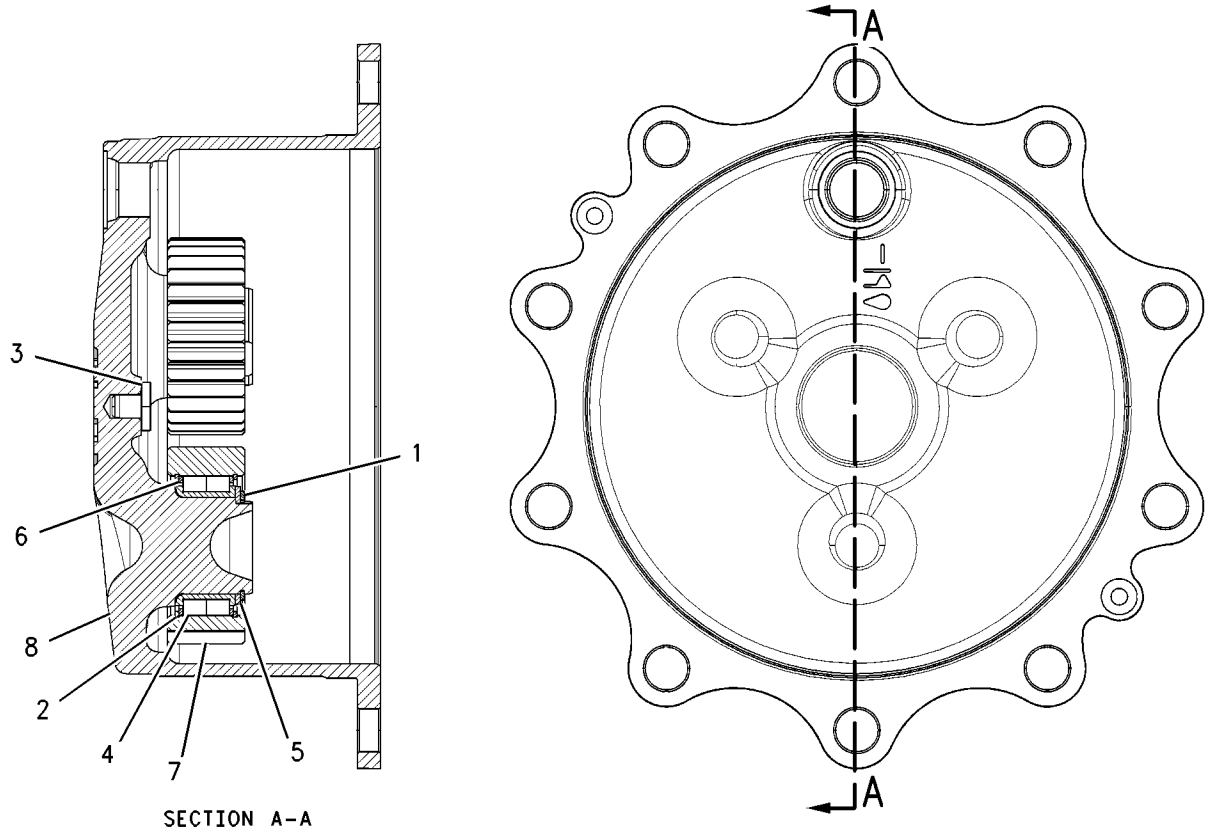

SECTION A-A

GRAPHIC #1 **<END>** g00873301

216-3315 POWER TRAIN AR—ALL WHEEL DRIVE, STD SHIFT

(CHG -03 THRU -10)
S/N: HLS1-UP
AN ATTACHMENT

SMCS-3000, 4000 **i02485679**

NOTE	PART NUMBER	QTY	PART NAME 1 2 3 4 5 6 (PRODUCT LEVEL)	SEE PAGE
Y	*206-1642*	1	CONTROL GP-PARKING BRAKE	213
Y	*206-1639*	1	CONTROL GP-SERVICE BRAKE	215
Y	*206-1643*	1	CONTROL GP-TRANSMISSION	146
Y	*112-1826*	1	DRIVE & MTG GP-PUMP	284
Y	*216-4740*	1	DRIVE AR-BACKHOE LOADER (ALL WHEEL DRIVE, 2-WHEEL STEER)	152
Y	*214-3740*	1	FILLER GP-POWER TRAIN OIL	156
Y	*256-0546*	1	LINES GP-POWER TRAIN OIL (DIFFERENTIAL LOCK)	165
Y	*216-4476*	1	SHAFT GP-DRIVE (FRONT)	174
Y	*202-6010*	1	SWITCH GP-DIFFERENTIAL LOCK	107
Y	*214-7524*	1	TRANSMISSION AR-DIRECT DRIVE	188
	119-4740	1	FILTER AS-OIL (EFFICIENCY) (POWER TRAIN)	

Y-SEPARATE ILLUSTRATION

<END>

216-3316 POWER TRAIN AR—ALL WHEEL DRIVE, AUTOSHIFT

(CHG -00 THRU -08)
S/N: HLS1-UP
AN ATTACHMENT

SMCS-3000, 4000 **i02485680**

NOTE	PART NUMBER	QTY	PART NAME 1 2 3 4 5 6 (PRODUCT LEVEL)	SEE PAGE
Y	*206-1642*	1	CONTROL GP-PARKING BRAKE	213
Y	*206-1639*	1	CONTROL GP-SERVICE BRAKE	215
Y	*112-1826*	1	DRIVE & MTG GP-PUMP	284
Y	*216-4740*	1	DRIVE AR-BACKHOE LOADER (ALL WHEEL DRIVE, 2-WHEEL STEER)	152
Y	*211-0073*	1	FILLER GP-POWER TRAIN OIL	154
Y	*233-6738*	1	SHAFT GP-DRIVE (FRONT)	174
Y	*202-6010*	1	SWITCH GP-DIFFERENTIAL LOCK	107
Y	*251-6354*	1	TRANSMISSION AR-POWER SHIFT	188
Y	*256-0545*	1	VALVE & LINES GP-SOLENOID (DIFFERENTIAL LOCK)	200
Y	*211-4254*	1	WIRING GP-TRANSMISSION CONTROL (AUTOSHIFT, STANDARD SHIFT)	136
	119-4740	1	FILTER AS-OIL (EFFICIENCY) (POWER TRAIN)	

Y-SEPARATE ILLUSTRATION

<END>

274-4580 SHAFT GP-COUNTER (CHG -00)

S/N: HLS1-UP

PART OF 274-8641 TRANSMISSION GP-POWER SHIFT

AN ATTACHMENT

SMCS-3063 **i02445198**

NOTE	REF NO	GRAPHIC REF	PART NUMBER	QTY	PART NAME 1 2 3 4 5 6 (PRODUCT LEVEL)	SEE PAGE
	1	1	**6T-9196**	1	SEAL	
	2	1	**6V-5100**	1	SEAL-O-RING	
	3	1	**6V-8757**	1	RING-RETAINING	
	4	1	**6Y-1192**	2	RING-SEAL	
	5	1	**6Y-7929**	8	DISC-FRICTION	
	6	1	**8E-5707**	1	PLATE-END	
	7	1	**122-1877**	1	WASHER-THRUST (40X65X4-MM THK)	
	8	1	**123-8907**	2	CONE-BEARING	
	9	1	**123-8908**	2	CUP-TAPERED ROLLER	
	10	1	**123-8912**	2	BEARING-ROLLER	
	11	1	**147-0203**	1	WASHER-THRUST (45.3X65X5-MM THK)	
	12	1	**147-0215**	1	GEAR (45/19-TEETH)	
	13	1	**147-0216**	1	GEAR (38/32-TEETH)	
	14	1	**147-0228**	1	PISTON-CLUTCH	
	15	1	**147-0238**	1	SPRING AS	
	16	1	**147-0258**	1	SPACER (46X50X16-MM THK)	
	17	1	**172-6050**	2	BEARING-SPECIAL	
	18	1	**173-0332**	1	SHAFT AS	
		1	**163-9091**	1	PLUG	
	19	1	**211-6752**	1	GEAR (46-TEETH)	
	20	1	**274-4553**	8	DISC-CLUTCH	
	21	1	**274-8638**	1	RING-RETAINING	

274-4580 SHAFT GP-COUNTER *(contd.)* **i02445198**

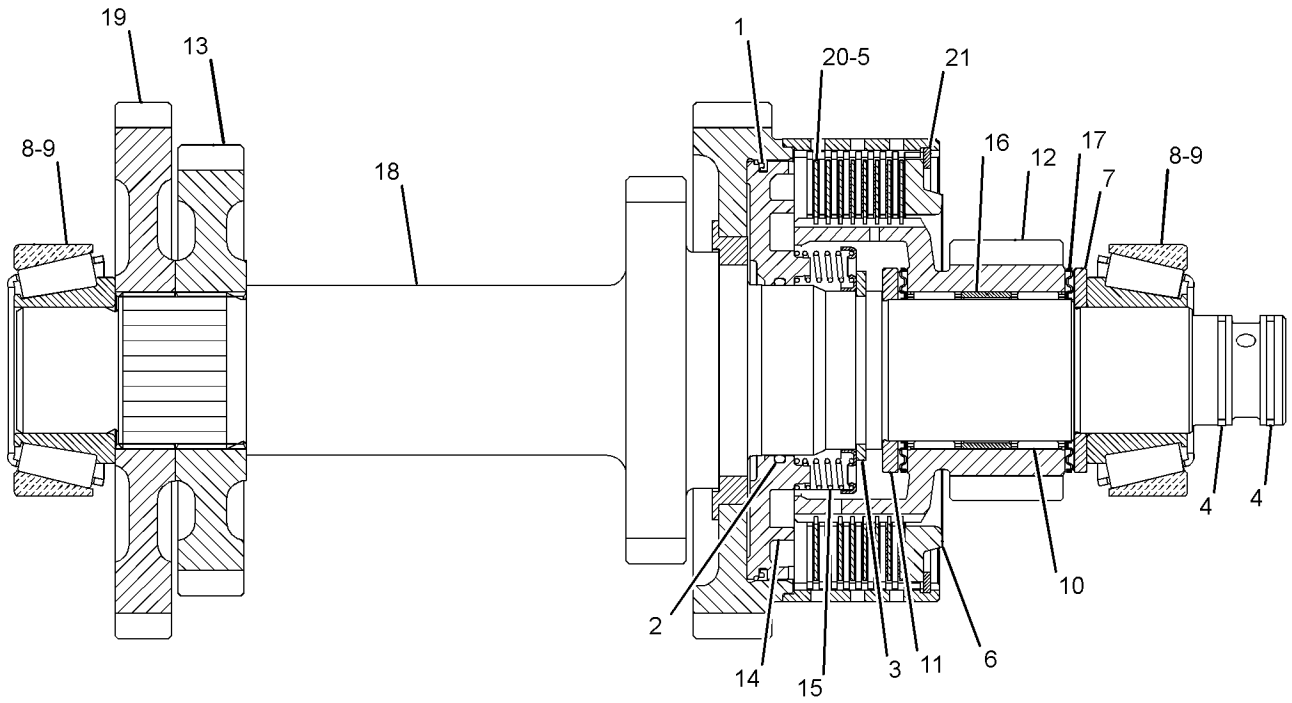

GRAPHIC #1 **<END>** g01216220

216-4475 SHAFT GP-DRIVE–REAR (CHG -01)

S/N: HLS1-UP
PART OF 216-4740 DRIVE AR-BACKHOE LOADER
AN ATTACHMENT

SMCS-3253 **i02249765**

NOTE	PART NUMBER	QTY	PART NAME 1 2 3 4 5 6 (PRODUCT LEVEL)	SEE PAGE
M	**107-6826**	8	BOLT (M24X19.1-MM)	
J	**216-4473**	1	SHAFT GP-DRIVE	
	5V-2545	4	STRAP	
			AVAILABLE REPAIR KIT(S):	
J	**117-9887**	2	KIT-SPIDER & BEARING	
			(EACH INCLUDES RINGS & SPIDER)	

J-KIT MARKED J AVAILABLE FOR PART MARKED J
M-METRIC PART

<END>

216-4476 SHAFT GP-DRIVE–FRONT (CHG -02, -03)

S/N: HLS1-UP
PART OF 216-3315 POWER TRAIN AR
AN ATTACHMENT

SMCS-3253 **i02249751**

NOTE	PART NUMBER	QTY	PART NAME 1 2 3 4 5 6 (PRODUCT LEVEL)	SEE PAGE
M	**107-6826**	8	BOLT (M24X19.1-MM)	
J	**249-5276**	1	SHAFT AS	
	5V-2545	4	STRAP	
			AVAILABLE REPAIR KIT(S):	
J	**117-9887**	2	KIT-SPIDER & BEARING	
			(EACH INCLUDES RINGS & SPIDER)	

J-KIT MARKED J AVAILABLE FOR PART MARKED J
M-METRIC PART

<END>

233-6738 SHAFT GP-DRIVE–FRONT (CHG -00, -01)

S/N: HLS1-UP
PART OF 216-3316 POWER TRAIN AR
AN ATTACHMENT

SMCS-3253 **i02249766**

NOTE	PART NUMBER	QTY	PART NAME 1 2 3 4 5 6 (PRODUCT LEVEL)	SEE PAGE
M	**107-6826**	8	BOLT (M24X19.1-MM)	
J	**233-6721**	1	SHAFT AS	
	5V-2545	4	STRAP	
			AVAILABLE REPAIR KIT(S):	
J	**117-9887**	2	KIT-SPIDER & BEARING	
			(EACH INCLUDES RINGS & SPIDER)	

J-KIT MARKED J AVAILABLE FOR PART MARKED J
M-METRIC PART

<END>

274-4561 SHAFT GP-IDLER (CHG -00, -01)

S/N: HLS1-UP

PART OF 274-8641 TRANSMISSION GP-POWER SHIFT

AN ATTACHMENT

SMCS-3063 **i02445178**

NOTE	REF NO	GRAPHIC REF	PART NUMBER	QTY	PART NAME 1 2 3 4 5 6 (PRODUCT LEVEL)	SEE PAGE
	1	1	**147-0256**	1	SHAFT AS-REVERSE	
		1	**9W-0717**	1	PLUG	
		1	**147-0270**	1	ORIFICE	
	2	1	**147-0202**	1	GEAR (45/24-TEETH)	
	3	1	**123-8905**	2	CUP-TAPERED ROLLER	
	4	1	**147-0228**	1	PISTON-CLUTCH	
	5	1	**6T-9196**	1	SEAL	
	6	1	**6V-5100**	1	SEAL-O-RING	
	7	1	**147-0238**	1	SPRING AS	
	8	1	**274-4553**	5	DISC-CLUTCH	
	9	1	**6Y-7929**	5	DISC-FRICTION	
	10	1	**147-0259**	1	SPACER (51.1X54.9X18.7-MM THK)	
	11	1	**6V-8757**	1	RING-RETAINING	
	12	1	**121-2500**	1	WASHER-THRUST (50X70X4-MM THK)	
	13	1	**172-5317**	2	BEARING-SPECIAL	
	14	1	**121-0694**	1	WASHER-THRUST (40X70X4-MM THK)	
	15	1	**6Y-1192**	2	RING-SEAL	
	16	1	**8E-5707**	1	PLATE-END	
	17	1	**274-8638**	1	RING-RETAINING	
	18	1	**7T-6655**	2	BEARING	
	19	1	**123-8906**	2	CUP-TAPERED ROLLER	

274-4561 **SHAFT GP-IDLER** *(contd.)* **i02445178**

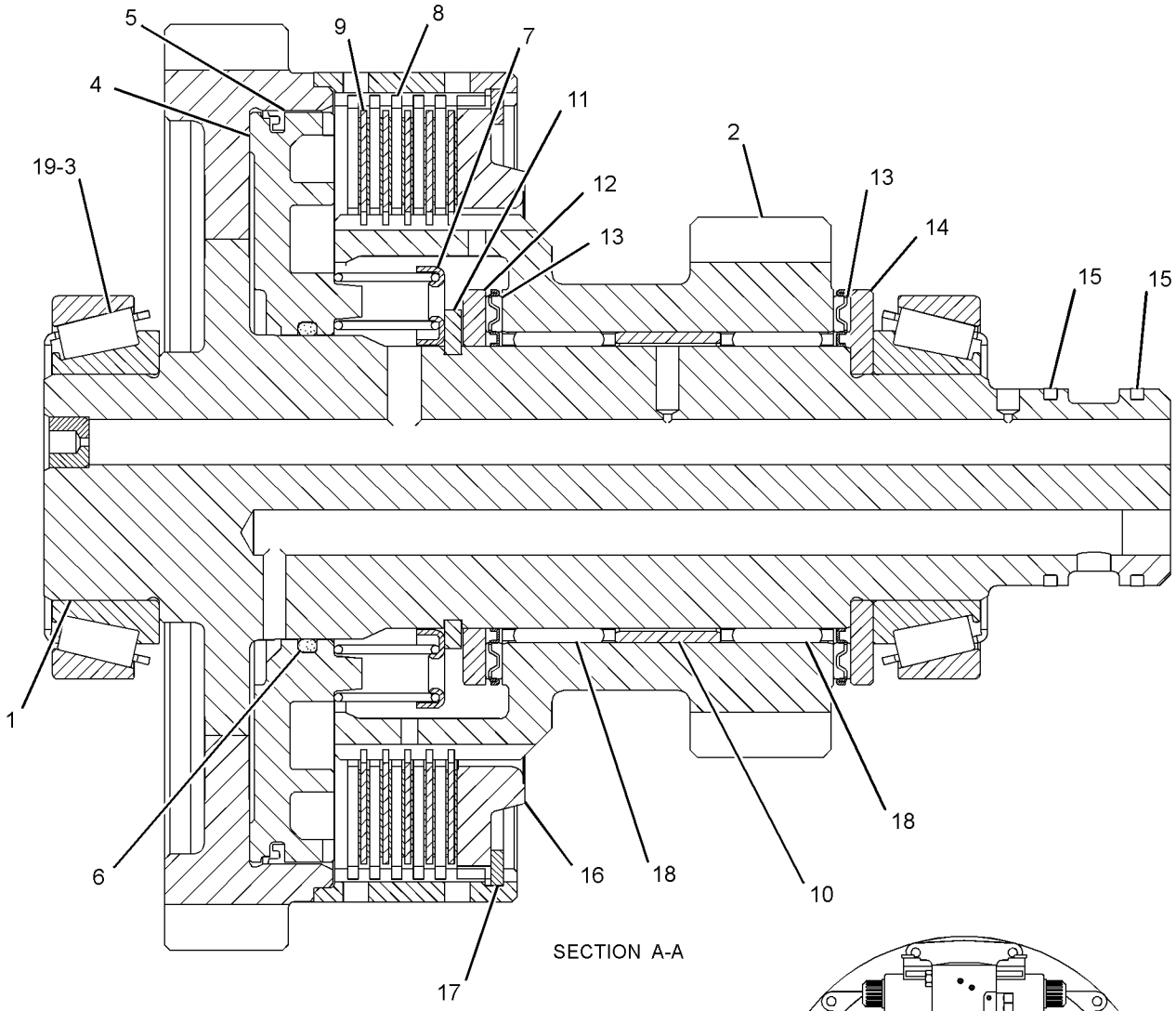

SECTION A-A

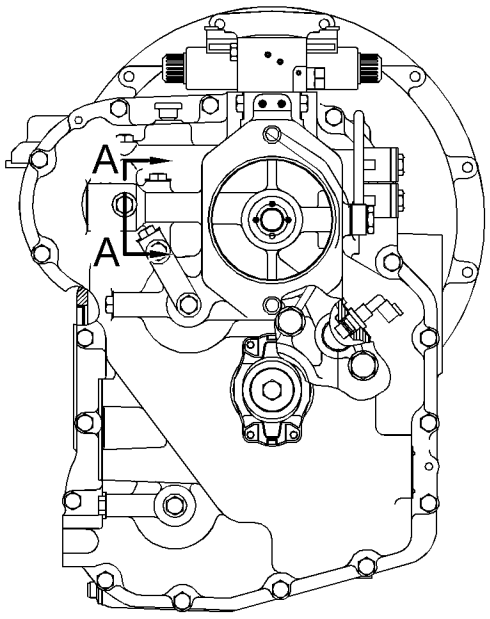

REAR VIEW

GRAPHIC #1 **<END>** g01234161

274-4578 SHAFT GP-INPUT (CHG -00)

S/N: HLS1-UP

PART OF 274-8641 TRANSMISSION GP-POWER SHIFT

AN ATTACHMENT

SMCS-3063 **i02445193**

NOTE	REF NO	GRAPHIC REF	PART NUMBER	QTY	PART NAME 1 2 3 4 5 6 (PRODUCT LEVEL)	SEE PAGE
	1	1	**6T-9196**	2	SEAL	
	2	1	**6V-5100**	2	SEAL-O-RING	
	3	1	**6V-8757**	3	RING-RETAINING	
	4	1	**6Y-7929**	11	DISC-FRICTION	
	5	1	**7T-6655**	2	BEARING	
	6	1	**8E-5707**	2	PLATE-END	
	7	1	**9U-8886**	4	RING-SEAL	
	8	1	**121-0694**	1	WASHER-THRUST (40X70X4-MM THK)	
	9	1	**121-2500**	3	WASHER-THRUST (50X70X4-MM THK)	
	10	1	**122-1886**	1	RING-SEAL	
	11	1	**123-8905**	1	CUP-TAPERED ROLLER	
	12	1	**123-8906**	1	CUP-TAPERED ROLLER	
	13	1	**123-8909**	1	CONE-BEARING	
	14	1	**123-8910**	1	CUP-TAPERED ROLLER	
	15	1	**123-8913**	2	BEARING-ROLLER	
	16	1	**147-0202**	1	GEAR (45/24-TEETH)	
	17	1	**147-0224**	1	GEAR (45/32-TEETH)	
	18	1	**147-0228**	2	PISTON-CLUTCH	
	19	1	**147-0238**	2	SPRING AS	
	20	1	**147-0257**	1	SHAFT AS-INPUT	
		1	**123-2920**	3	PLUG	
	21	1	**147-0259**	1	SPACER (51.1X54.9X18.7-MM THK)	
	22	1	**172-5317**	4	BEARING-SPECIAL	
	23	1	**274-4553**	11	DISC-CLUTCH	
	24	1	**274-8638**	2	RING-RETAINING	

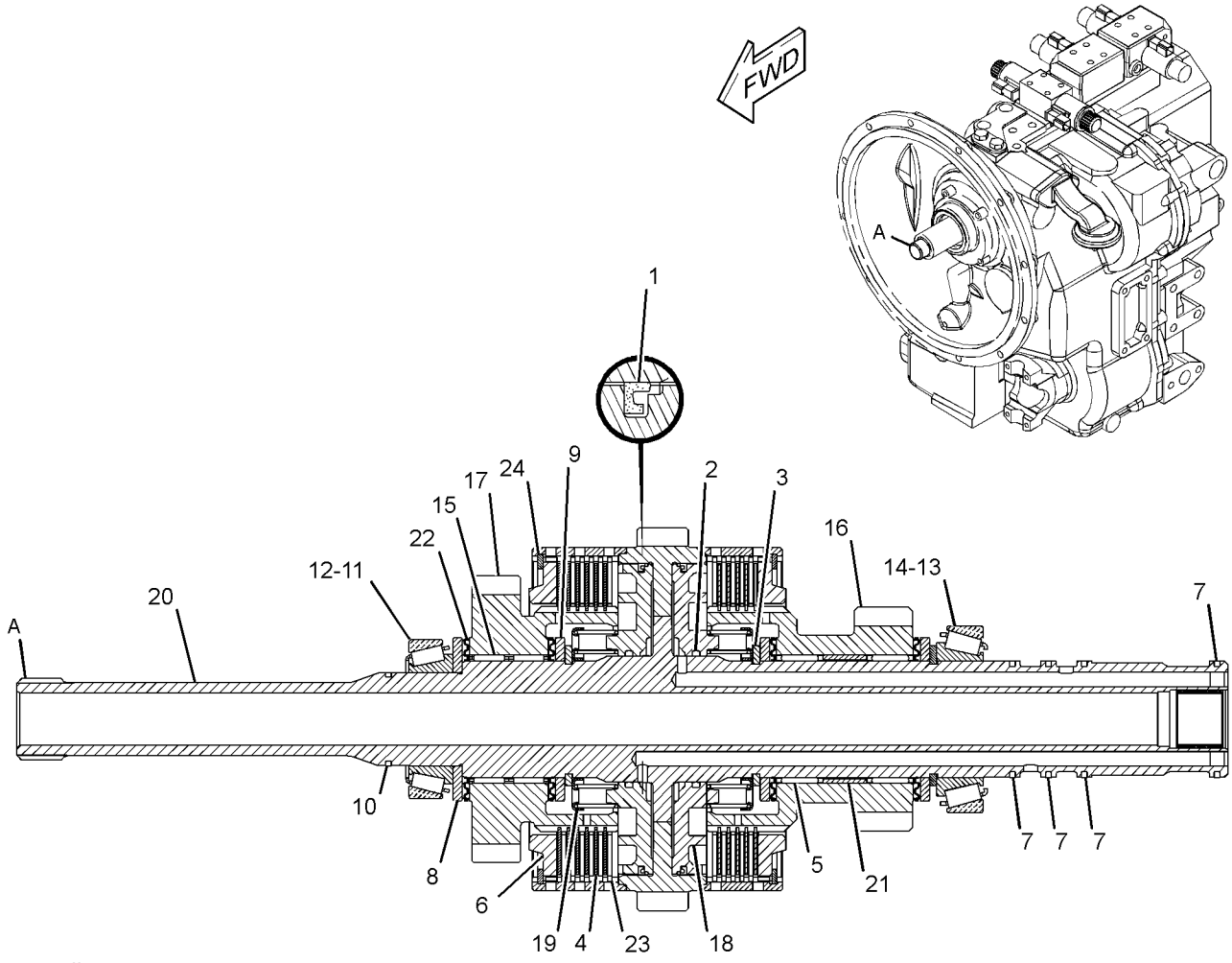

GRAPHIC #1

<END>

g01216057

275-0476 SHAFT GP-INPUT (CHG -00)

S/N: HLS1-UP

PART OF 271-3774 TRANSMISSION GP-DIRECT DRIVE

AN ATTACHMENT

SMCS-3063 **i02444909**

NOTE	REF NO	GRAPHIC REF	PART NUMBER	QTY	PART NAME 1 2 3 4 5 6 (PRODUCT LEVEL)	SEE PAGE
	1	1	**9U-8875**	2	RING-RETAINING	
	2	1	**6T-9196**	2	SEAL	
	3	1	**172-5317**	1	BEARING-SPECIAL	
	4	1	**172-6050**	1	BEARING-SPECIAL	
	5	1	**6V-5100**	2	SEAL-O-RING	
	6	1	**9U-8886**	4	RING-SEAL	
	7	1	**274-4553**	10	DISC-CLUTCH	
	8	1	**122-1886**	1	RING-SEAL	
	9	1	**238-7567**	3	RING-RETAINING	
	10	1	**121-2500**	2	WASHER-THRUST (50X70X4-MM THK)	
	11	1	**123-8905**	1	CUP-TAPERED ROLLER	
	12	1	**123-8909**	1	CONE-BEARING	
	13	1	**147-0227**	2	PISTON-CLUTCH	
	14	1	**147-0238**	2	SPRING AS	
	15	1	**147-0203**	2	WASHER-THRUST (45.3X65X5-MM THK)	
	16	1	**6Y-7957**	10	DISC-FRICTION	
	17	1	**274-8616**	1	GEAR-FORWARD	
	18	1	**274-8617**	1	GEAR-REVERSE	
	19	1	**274-8628**	1	BEARING-NEEDLE	
	20	1	**274-8629**	1	BEARING-NEEDLE	
	21	1	**274-8635**	1	RING-SNAP	
	22	1	**274-8636**	1	SHAFT AS	
	23	1	**8E-5707**	2	PLATE-END	

275-0476 SHAFT GP-INPUT *(contd.)* i02444909

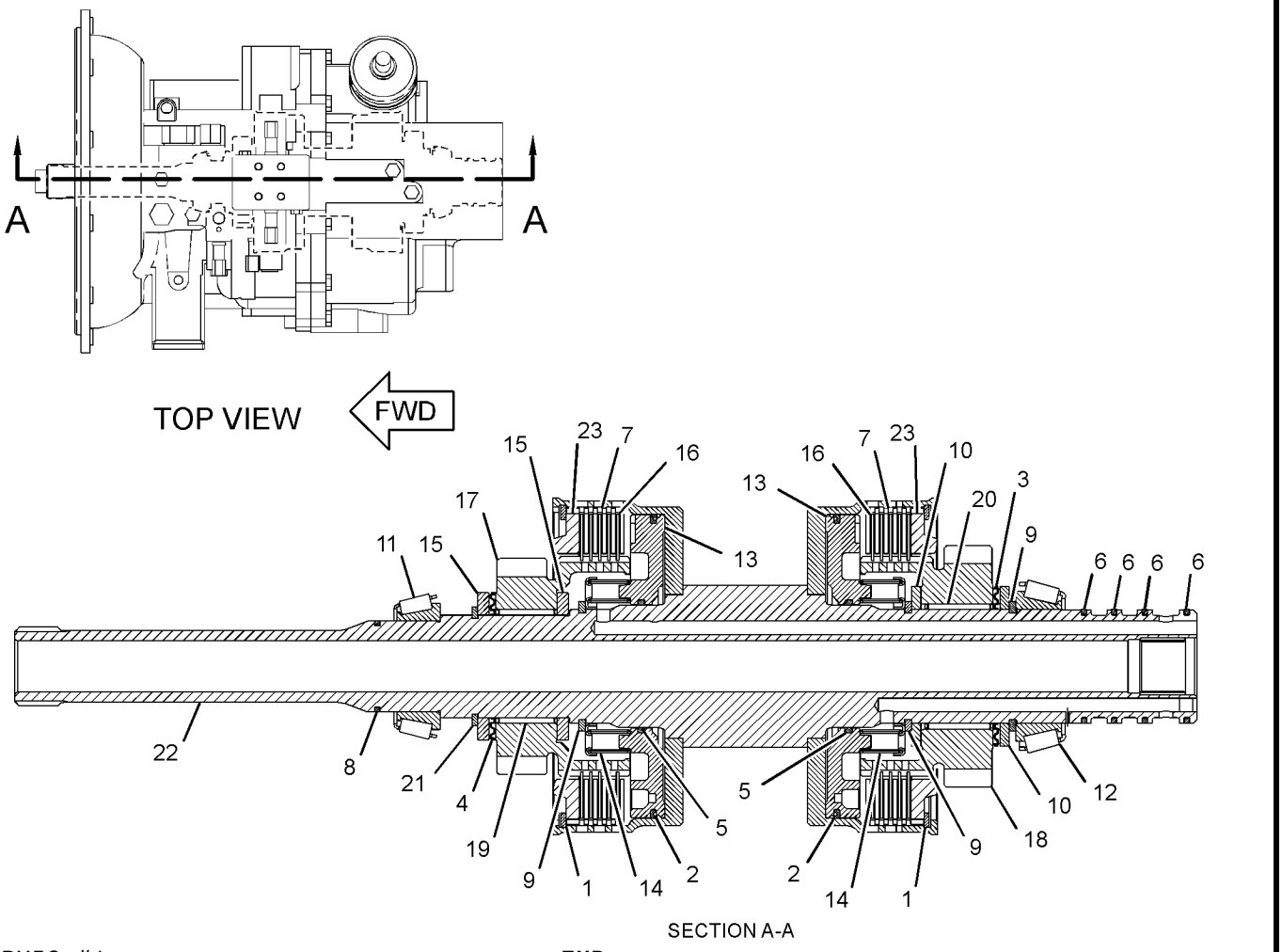

SECTION A-A

GRAPHIC #1 **<END>** g01226307

274-4582 SHAFT GP-OUTPUT (CHG -00)

S/N: HLS1-UP
PART OF 274-8641 TRANSMISSION GP-POWER SHIFT
AN ATTACHMENT

SMCS-3063 **i02445209**

NOTE	REF NO	GRAPHIC REF	PART NUMBER	QTY	PART NAME 1 2 3 4 5 6 (PRODUCT LEVEL)	SEE PAGE
	1	1	**6T-9196**	2	SEAL	
	2	1	**6Y-1192**	3	RING-SEAL	
	3	1	**6Y-7929**	13	DISC-FRICTION	
	4	1	**8E-5707**	2	PLATE-END	
	5	1	**8T-1580**	1	CUP	
	6	1	**8T-1581**	1	CONE	
	7	1	**009-2062**	2	SEAL-O-RING	
	8	1	**095-0927**	1	RING-RETAINING	
	9	1	**095-0928**	1	RING-RETAINING (EXTERNAL)	
	10	1	**121-0885**	1	RETAINER	
	11	1	**122-1877**	1	WASHER-THRUST (40X65X4-MM THK)	
	12	1	**123-8907**	1	CONE-BEARING	
	13	1	**123-8908**	1	CUP-TAPERED ROLLER	
	14	1	**123-8912**	2	BEARING-ROLLER	
	15	1	**147-0203**	1	WASHER-THRUST (45.3X65X5-MM THK)	
	16	1	**147-0205**	2	WASHER (55X78X5-MM THK)	
	17	1	**147-0242**	1	GEAR (32-TEETH)	
	18	1	**147-0248**	1	SPACER (56.2X60X15.8-MM THK)	
	19	1	**147-0260**	1	RETAINER-SPRING	
	20	1	**147-0261**	1	SHAFT AS-OUTPUT (REAR)	
		1	**9W-0717**	2	PLUG	
	21	1	**150-3757**	2	BEARING	
	22	1	**157-2088**	2	PISTON AS	
	23	1	**157-2090**	1	GEAR (38-TEETH)	
	24	1	**172-6050**	2	BEARING-SPECIAL	
	25	1	**172-6743**	2	BEARING-SPECIAL	
	26	1	**178-9566**	2	SPRING-PISTON	
	27	1	**211-6753**	1	GEAR (24-TEETH)	
	28	1	**274-4553**	13	DISC-CLUTCH	
	29	1	**274-8638**	2	RING-RETAINING	

274-4582 SHAFT GP-OUTPUT *(contd.)* **i02445209**

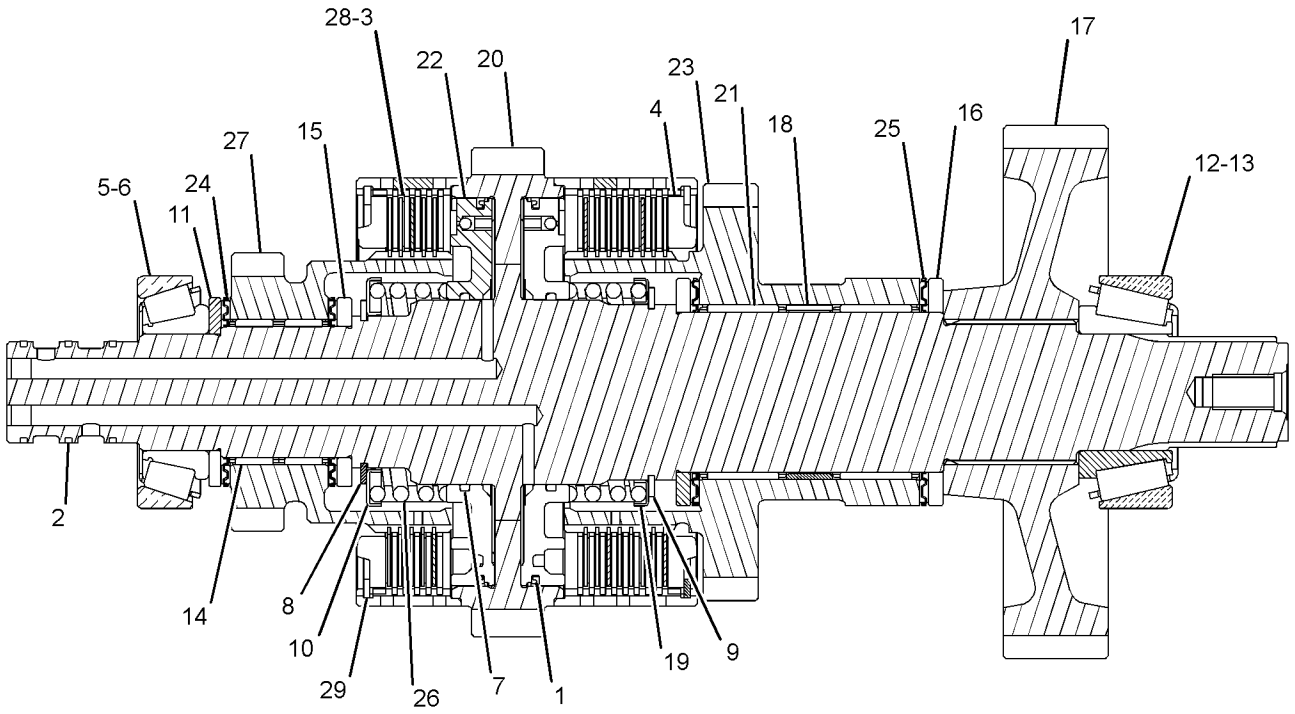

GRAPHIC #1 **<END>** g01216545

275-0478 SHAFT GP-OUTPUT–REAR (CHG -00, -01)

S/N: HLS1-UP

PART OF 271-3774 TRANSMISSION GP-DIRECT DRIVE

AN ATTACHMENT

SMCS-3063 **i02445142**

NOTE	REF NO	GRAPHIC REF	PART NUMBER	QTY	PART NAME 1 2 3 4 5 6 (PRODUCT LEVEL)	SEE PAGE
	1	1	**7T-3022**	2	SLEEVE	
	2	1	**6V-8500**	4	BEARING	
	3	1	**6T-9160**	1	GEAR (43-TEETH)	
	4	1	**7T-3017**	1	SPACER (52.5X59X9.6-MM THK)	
	5	1	**7T-3021**	2	SYNCHRONIZER GP	
	6	1	**096-5516**	1	RING-RETAINING	
	7	1	**259-1831**	1	GEAR (37-TEETH)	
	8	1	**6Y-2736**	1	CONE-BEARING	
	9	1	**123-8907**	1	CONE-BEARING	
	10	1	**274-8634**	1	SPACER	
	11	1	**274-8620**	1	GEAR-OUTPUT (37-TEETH)	
	12	1	**274-8621**	1	GEAR-OUTPUT (28-TEETH)	
	13	1	**274-8637**	1	SPACER-BEARING	
	14	1	**278-0215**	1	SHAFT-OUTPUT	
	15	1	**278-0216**	1	GEAR-OUTPUT (17-TEETH)	
	16	1	**278-0217**	2	BEARING-NEEDLE	
	17	1	**278-0218**	1	WASHER-THRUST	
	18	1	**278-0219**	1	CLIP	

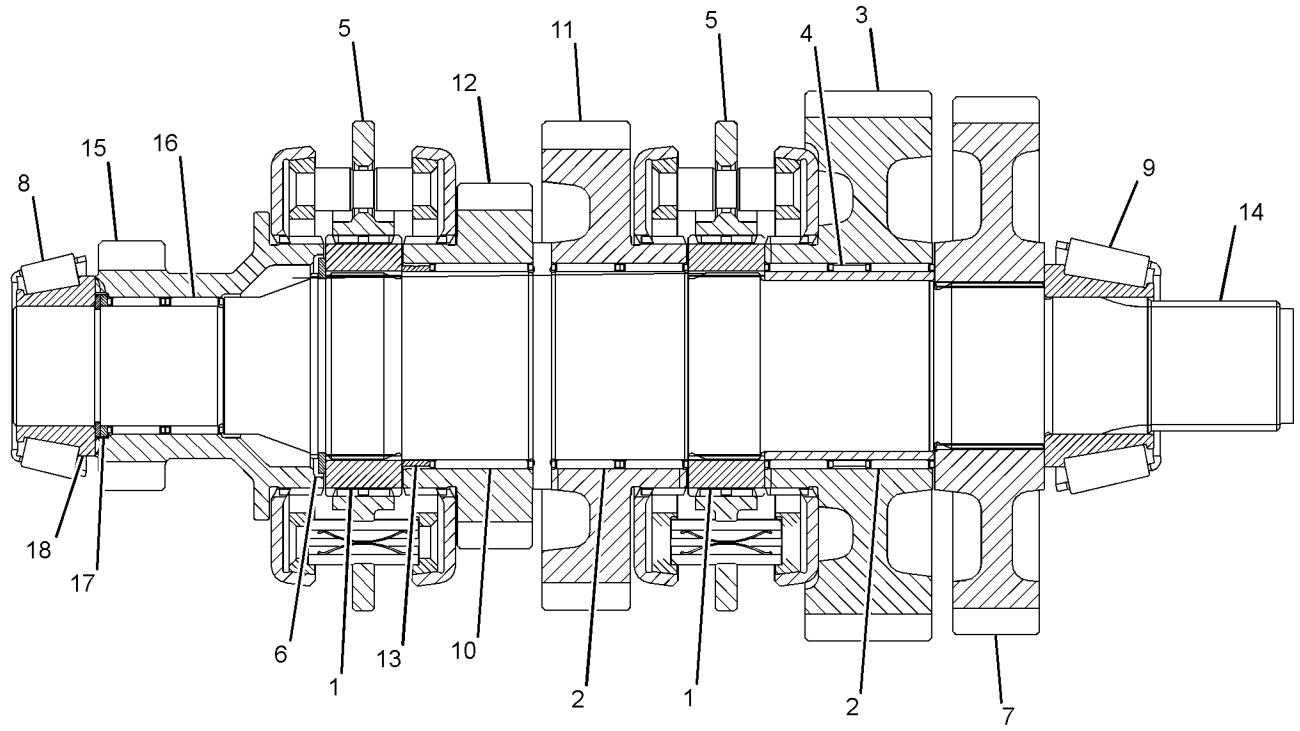

GRAPHIC #1 **<END>** g01228114

276-5337 SHAFT GP-OUTPUT—FRONT (CHG -00 THRU -02)

S/N: HLS1-UP

PART OF 271-3774 TRANSMISSION GP-DIRECT DRIVE

AN ATTACHMENT

SMCS-3063 **i02445143**

NOTE	REF NO	GRAPHIC REF	PART NUMBER	QTY	PART NAME 1 2 3 4 5 6 (PRODUCT LEVEL)	SEE PAGE
	1	1	**095-0927**	1	RING-RETAINING	
	2	1	**274-4553**	8	DISC-CLUTCH	
	3	1	**6T-9196**	1	SEAL	
	4	1	**6Y-7957**	8	DISC-FRICTION	
	5	1	**121-0697**	1	WASHER-THRUST (45X65X5-MM THK)	
	6	1	**172-6050**	2	BEARING-SPECIAL	
	7	1	**6V-5100**	1	SEAL-O-RING	
	8	1	**122-1878**	1	RING-SEAL	
	9	1	**122-1877**	1	WASHER-THRUST (40X65X4-MM THK)	
	10	1	**122-1884**	1	SPACER (45X49X8-MM THK)	
	11	1	**121-0885**	1	RETAINER	
	12	1	**121-0714**	1	PISTON	
	13	1	**123-8905**	2	CUP-TAPERED ROLLER	
	14	1	**178-9566**	1	SPRING-PISTON	
	15	1	**161-3249**	1	RING-RETAINING	
	16	1	**123-8912**	2	BEARING-ROLLER	
	17	1	**190-9767**	1	SHAFT AS (OUTPUT)	
	18	1	**121-0904**	1	GEAR AS (36-TEETH)	
	19	1	**8E-5707**	1	PLATE-END	

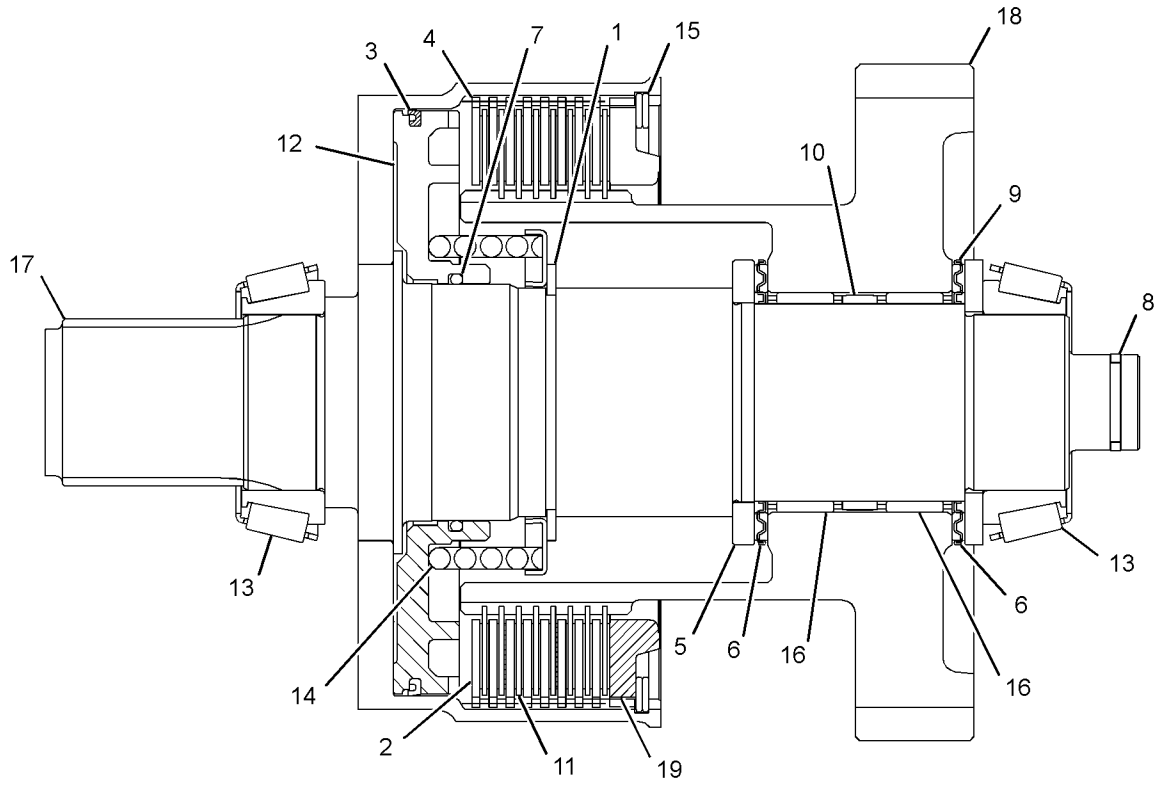

GRAPHIC #1 **<END>** g01233297

280-7007 SHAFT GP-OUTPUT (CHG -00)

S/N: HLS1-UP

PART OF 274-8641 TRANSMISSION GP-POWER SHIFT

AN ATTACHMENT

SMCS-3063 **i02445210**

NOTE	REF NO	GRAPHIC REF	PART NUMBER	QTY	PART NAME 1 2 3 4 5 6 (PRODUCT LEVEL)	SEE PAGE
	1	1	**6T-9196**	1	SEAL	
	2	1	**6V-5100**	1	SEAL-O-RING	
	3	1	**6V-8757**	1	RING-RETAINING	
	4	1	**6Y-7957**	8	DISC-FRICTION	
	5	1	**8E-5707**	1	PLATE-END	
	6	1	**122-1877**	1	WASHER-THRUST (40X65X4-MM THK)	
	7	1	**122-1878**	1	RING-SEAL	
	8	1	**122-1884**	1	SPACER (45X49X8-MM THK)	
	9	1	**123-8905**	2	CUP-TAPERED ROLLER	
	10	1	**123-8906**	2	CUP-TAPERED ROLLER	
	11	1	**123-8912**	2	BEARING-ROLLER	
	12	1	**147-0203**	1	WASHER-THRUST (45.3X65X5-MM THK)	
	13	1	**147-0207**	1	SHAFT AS-OUTPUT (FRONT)	
	14	1	**147-0210**	1	GEAR (45/36-TEETH)	
	15	1	**147-0227**	1	PISTON-CLUTCH	
	16	1	**147-0238**	1	SPRING AS	
	17	1	**161-3249**	1	RING-RETAINING	
	18	1	**172-6050**	2	BEARING-SPECIAL	
	19	1	**274-4553**	8	DISC-CLUTCH	

280-7007 SHAFT GP-OUTPUT *(contd.)* **i02445210**

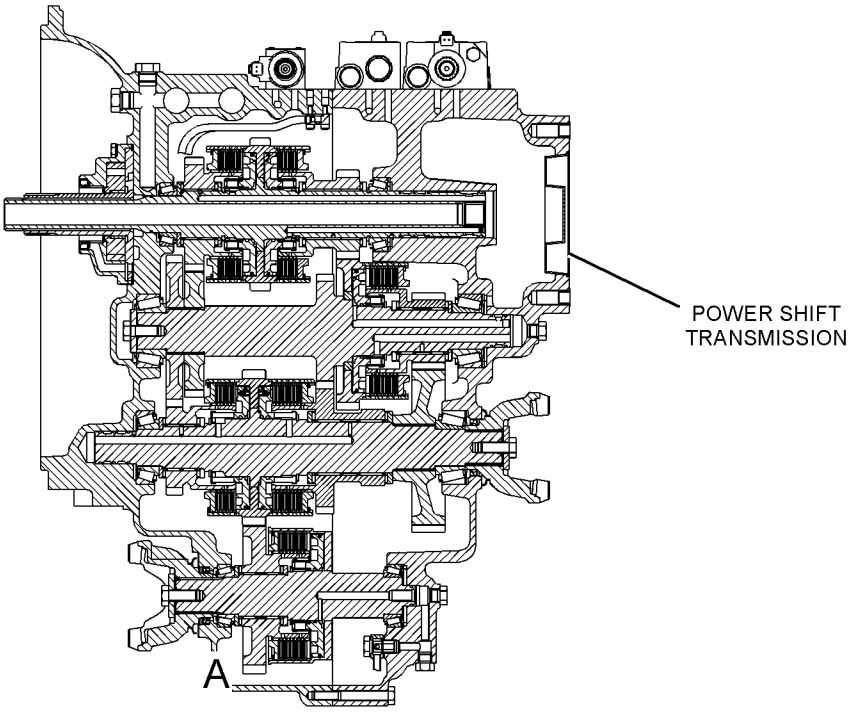

LEFT SIDE VIEW
(SECTIONED)

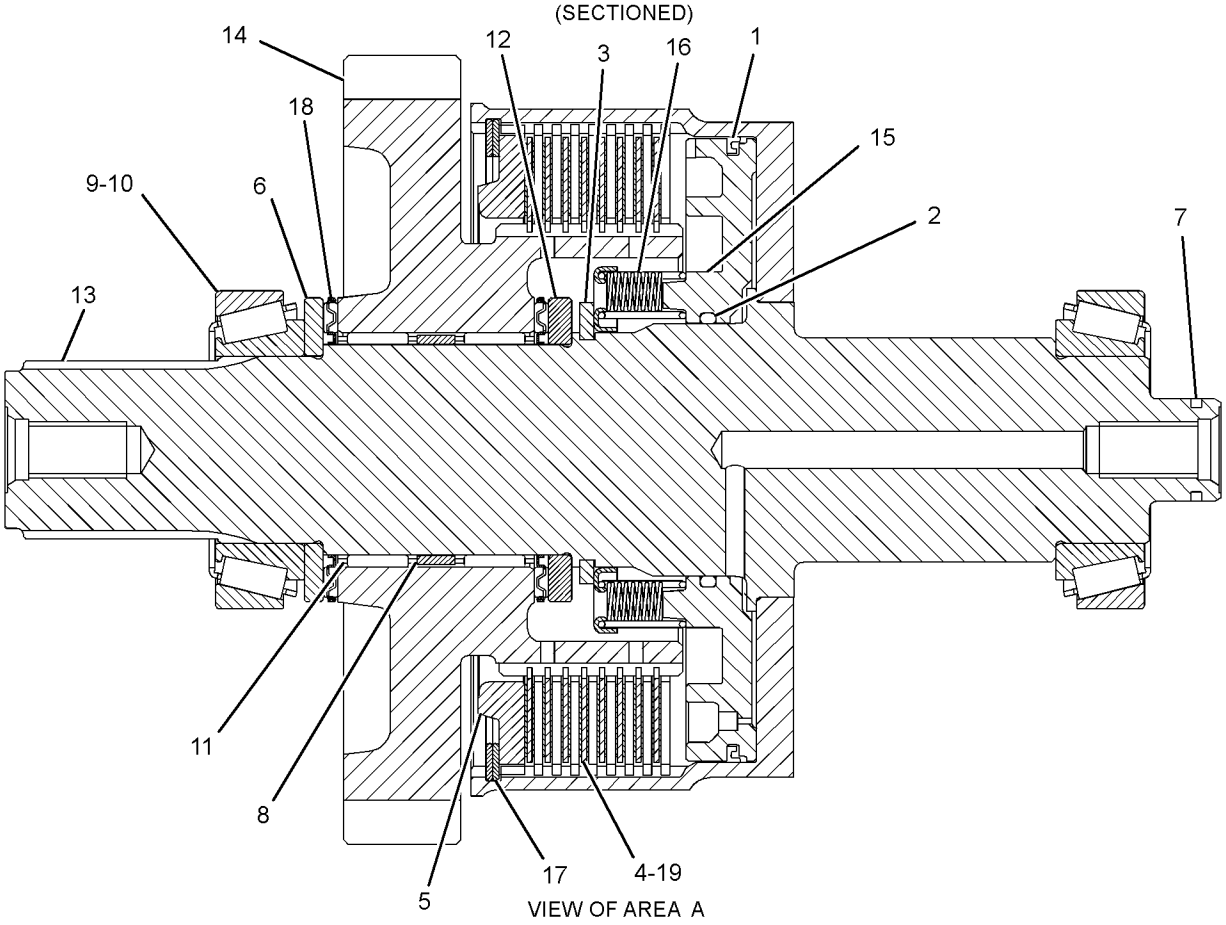

VIEW OF AREA A

GRAPHIC #1 **<END>** g01216346

202-6009 TRANSMISSION & MOUNTING GP–

ALL WHEEL DRIVE, AUTOSHIFT (CHG -00 THRU -03)

S/N: HLS1-UP

PART OF 251-6354 TRANSMISSION AR-POWER SHIFT

AN ATTACHMENT

SMCS-3030 **i02444691**

NOTE	REF NO	GRAPHIC REF	PART NUMBER	QTY	PART NAME 1 2 3 4 5 6 (PRODUCT LEVEL)	SEE PAGE
Y	1	1	*254-5703*	1	MOUNTING GP-TRANSMISSION	167
Y	2	1	**274-8641**	1	TRANSMISSION GP-POWER SHIFT	194

Y-SEPARATE ILLUSTRATION

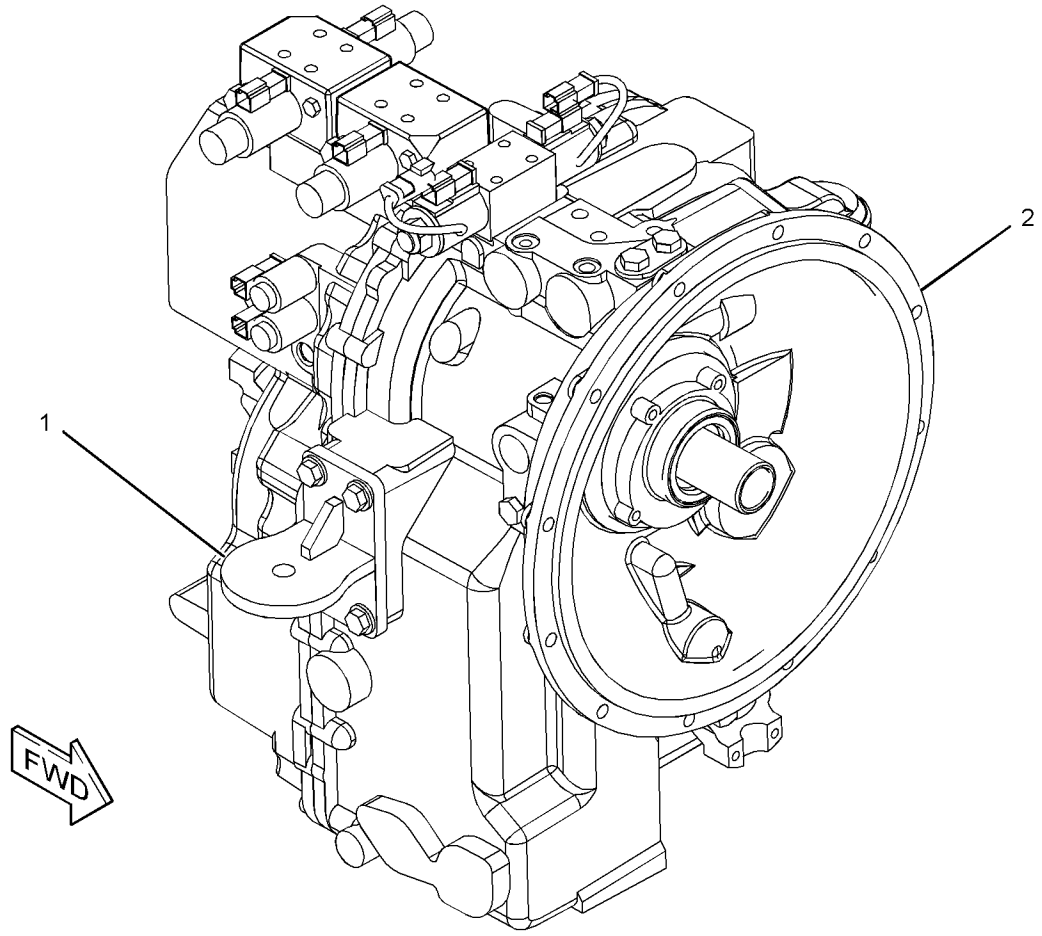

GRAPHIC #1 **<END>** g01233469

271-2406 TRANSMISSION & MOUNTING GP (CHG -01, -02)

S/N: HLS1-UP
PART OF 214-7524 TRANSMISSION AR-DIRECT DRIVE
AN ATTACHMENT

SMCS-3030 **i02354600**

NOTE	PART NUMBER	QTY	PART NAME 1 2 3 4 5 6 (PRODUCT LEVEL)	SEE PAGE
Y	*271-4487*	1	MOUNTING GP-TRANSMISSION	168
Y	**271-3774**	1	TRANSMISSION GP-DIRECT DRIVE	189

Y-SEPARATE ILLUSTRATION

<END>

214-7524 TRANSMISSION AR-DIRECT DRIVE–ALL WHEEL DRIVE (CHG -01 THRU -05)

S/N: HLS1-UP
PART OF 216-3315 POWER TRAIN AR
AN ATTACHMENT

SMCS-3030 **i02354597**

NOTE	PART NUMBER	QTY	PART NAME 1 2 3 4 5 6 (PRODUCT LEVEL)	SEE PAGE
Y	*111-7907*	1	DRIVE GP-FLEXIBLE COUPLING	153
Y	*271-2406*	1	TRANSMISSION & MOUNTING GP	188
	212-6215	1	TORQUE CONVERTER AS	

Y-SEPARATE ILLUSTRATION

<END>

251-6354 TRANSMISSION AR-POWER SHIFT–ALL WHEEL DRIVE (CHG -00, -01)

S/N: HLS1-UP
PART OF 216-3316 POWER TRAIN AR
AN ATTACHMENT

SMCS-3030 **i02452604**

NOTE	PART NUMBER	QTY	PART NAME 1 2 3 4 5 6 (PRODUCT LEVEL)	SEE PAGE
Y	*111-7907*	1	DRIVE GP-FLEXIBLE COUPLING	153
Y	*202-6009*	1	TRANSMISSION & MOUNTING GP	187
	212-6215	1	TORQUE CONVERTER AS	

Y-SEPARATE ILLUSTRATION

<END>

271-3774 TRANSMISSION GP-DIRECT DRIVE (CHG -01, -02)

S/N: HLS1-UP

PART OF 271-2406 TRANSMISSION & MOUNTING GP

AN ATTACHMENT

SMCS-3030 **i02485609**

NOTE	REF NO	GRAPHIC REF	PART NUMBER	QTY	PART NAME 1 2 3 4 5 6 (PRODUCT LEVEL)	SEE PAGE
Y	1	2	**275-0468**	1	CASE AS-TRANSMISSION (FRONT)	143
Y	2	2	**275-0470**	1	CASE AS-TRANSMISSION (REAR)	144
	3	2	**121-7385**	1	PUMP GP-TRANSMISSION	
	4	2	**216-2267**	2	SEAL-LIP TYPE	
M	5	1,3	**8C-5748**	7	BOLT (M8X1.25X55-MM)	
	6	1	**6K-0806**	1	STRAP-CABLE	
	7	3	**9P-9150**	4	WASHER (8.25X18X0.84-MM THK)	
	8	2	**275-0475**	1	SHAFT GP-IDLER	
		2	**005-0471**	2	CONE-BEARING	
		2	**274-8623**	1	SHAFT-REVERSE	
	9	2	**275-0477**	1	SHAFT GP-COUNTER	
		2	**8T-1581**	1	CONE	
		2	**123-8907**	1	CONE-BEARING	
		2	**274-8614**	1	GEAR-COUNTERSHAFT	
		2	**274-8625**	1	GEAR-COUNTERSHAFT	
Y	10	2	**275-0478**	1	SHAFT GP-OUTPUT (REAR)	183
Y	11	2	**276-5337**	1	SHAFT GP-OUTPUT (FRONT)	184
	12	2	**121-7403**	1	FORK-SHIFT	
	13	2	**121-7404**	1	FORK-SHIFT	
	14	2	**121-7389**	1	ROD AS-GEARSHIFT	
	15	2	**121-7390**	1	ROD AS-GEARSHIFT	
	16	2	**6Y-1341**	2	SPRING	
	17	2	**014-5645**	3	BALL	
	18	1	**9M-1974**	3	WASHER-HARD (8.8X16X2-MM THK)	
	19	1	**7T-3109**	1	PIN	
	20	1	**7T-3249**	2	SCREW (3/8-24X0.75-IN)	
	21	1,2,3	**9S-4191**	10	PLUG-O RING	
	22	1,2	**127-3017**	1	SEAT AS	
	23	1	**121-7391**	1	LEVER	
	24	1	**175-0054**	1	SEAL-O-RING	
	25	1	**174-9711**	1	GASKET	
	26	1	**278-0205**	1	VALVE GP-SOLENOID	
		1	**8L-2779**	4	SEAL-O-RING	
		1	**274-4557**	1	PLUG-ORIFICE	
		1	**274-4560**	2	NUT-SELF LOCKING	
		1	**280-7009**	2	COIL AS	
M	28	1	**9X-6615**	4	BOLT (M5X0.8X30-MM)	
	29	1	**248-3290**	2	VALVE GP-SOLENOID	
	30	1	**121-7396**	1	VALVE GP-RELIEF	
Y	31	1	**147-0209**	1	VALVE GP-RELIEF	203
Y	32	3	**189-5746**	1	SENSOR GP-SPEED (TORQUE CONVERTER OUTPUT)	102
	33	1	**3S-2093**	1	STRAP-CABLE	
M	34	3	**6V-8335**	14	BOLT-SELF-LOCKING (M10X1.5X40-MM)	
M	35	3	**121-9875**	4	BOLT (M10X1.5X55-MM)	
M	36	1	**6V-7731**	2	BOLT (M10X1.5X70-MM)	
M	37	3	**6V-8097**	2	BOLT (M12X1.75X30-MM)	
	38	1	**7T-3251**	1	BREATHER (TRANSMISSION)	
	39	1	**7T-3119**	1	HOUSING	
	40	1	**7T-3111**	1	COVER	
	41	2	**7T-3195**	2	WASHER (12.3X47X6.35-MM THK)	
	42	1	**6Y-2035**	1	GASKET	
	43	2	**5P-8066**	2	SEAL-O-RING	
	44	3	**122-1876**	1	TUBE	
	45	2	**122-1883**	1	SPACER (38X45X5-MM THK)	
	46	2	**122-6787**	2	YOKE AS	

271-3774 TRANSMISSION GP-DIRECT DRIVE *(contd.)* i02485609

NOTE	REF NO	GRAPHIC REF	PART NUMBER	QTY	PART NAME 1 2 3 4 5 6 (PRODUCT LEVEL)	SEE PAGE
	47	3	**6Y-1896**	1	PLUG AS	
	48	1	**4W-9972**	1	SENDER AS-TEMPERATURE (12-VOLT)	
		1	**6V-8378**	1	NUT (10-32-THD)	
		1	**8T-0328**	1	WASHER-HARD (5.5X10X1-MM THK)	
		1	**8F-1434**	1	LOCKWASHER	
	49	1,2,3	**3J-1907**	11	SEAL-O-RING	
Y	50	2	**275-0476**	1	SHAFT GP-INPUT	179

M-METRIC PART
Y-SEPARATE ILLUSTRATION

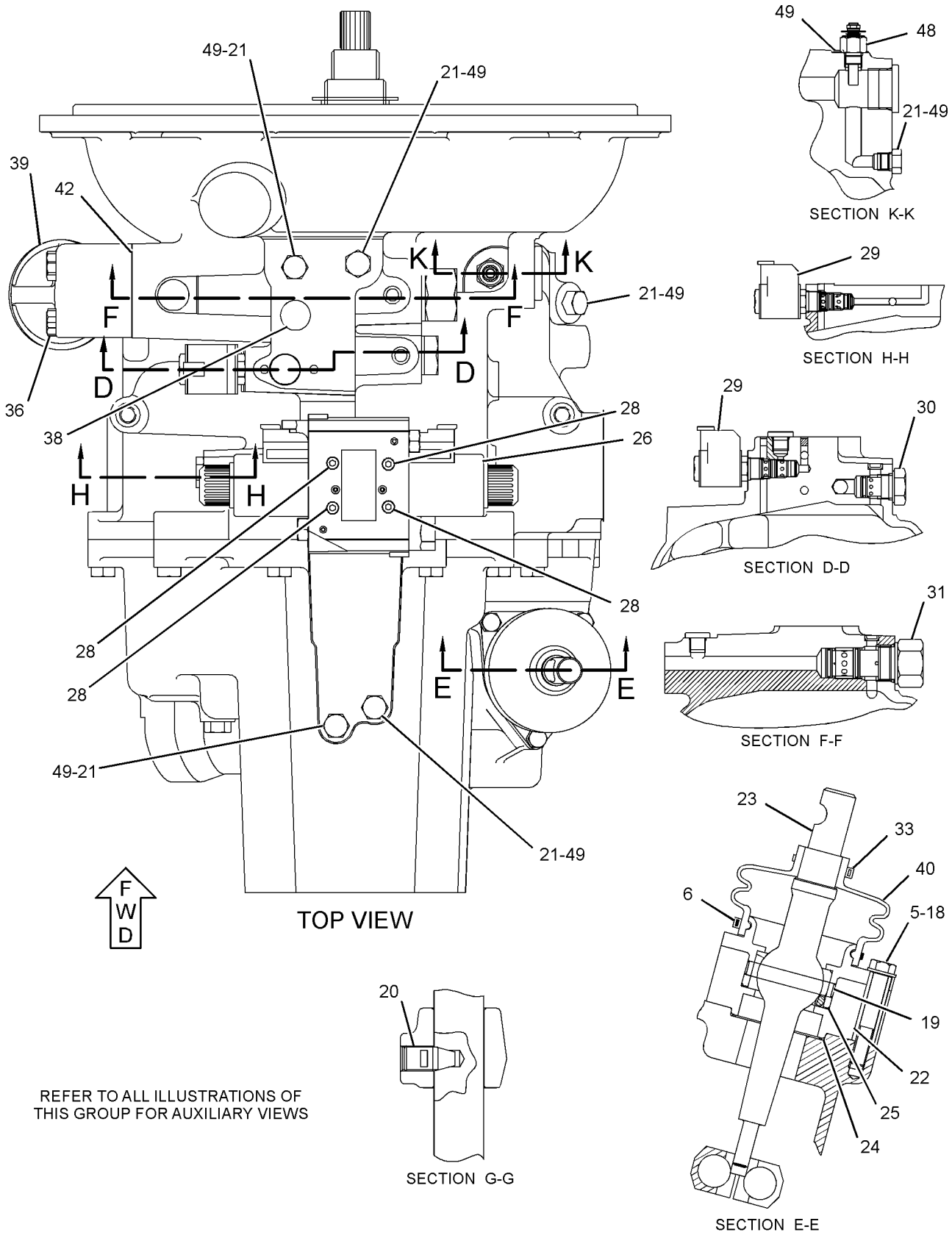

GRAPHIC #1

g01231443

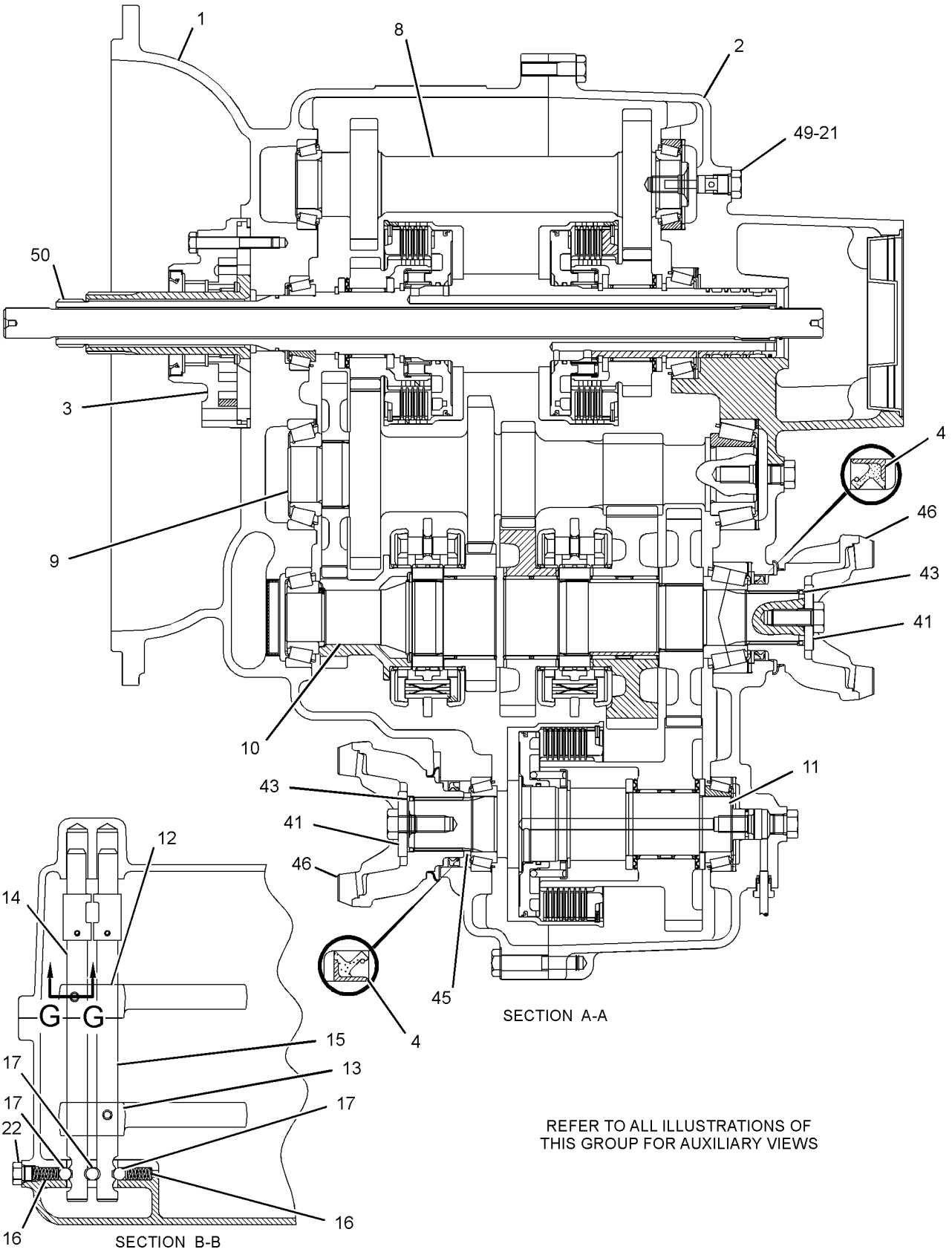

GRAPHIC #2

g01231533

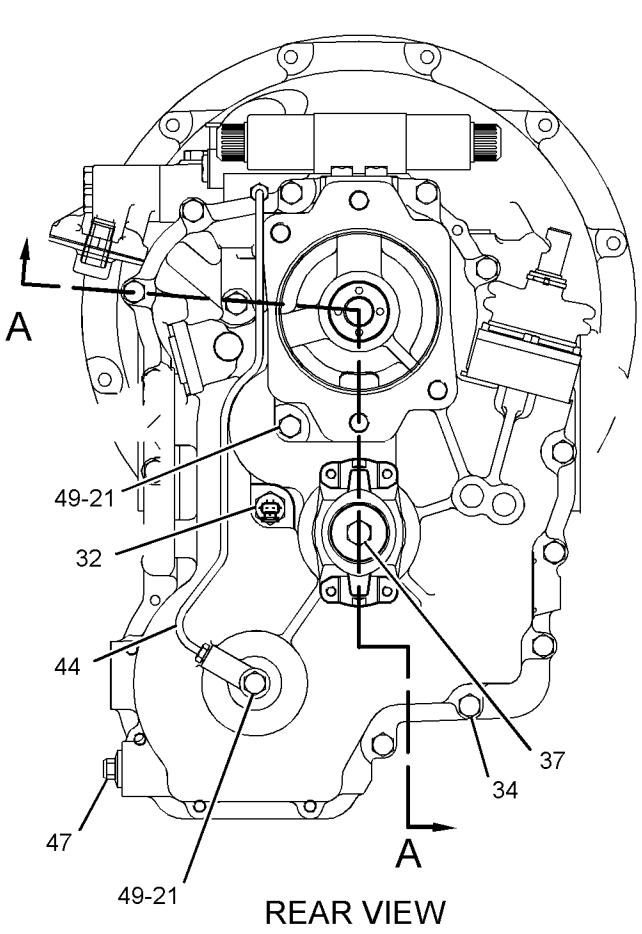

REAR VIEW

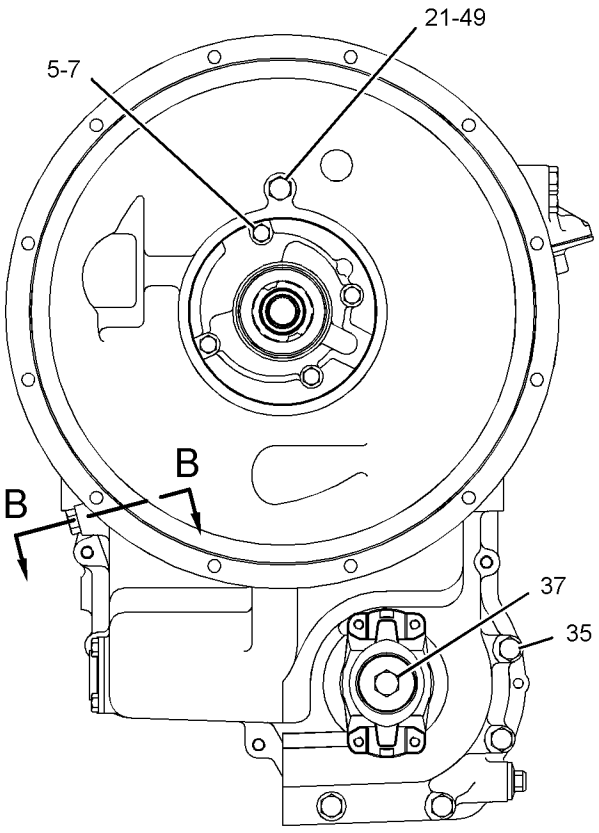

FRONT VIEW

GRAPHIC #3 **<END>** g01231534

274-8641 TRANSMISSION GP-POWER SHIFT (CHG -00, -01)

S/N: HLS1-UP

PART OF 202-6009 TRANSMISSION & MOUNTING GP

AN ATTACHMENT

SMCS-3030 **i02485610**

NOTE	REF NO	GRAPHIC REF	PART NUMBER	QTY	PART NAME 1 2 3 4 5 6 (PRODUCT LEVEL)	SEE PAGE
	1	3	**3J-1907**	1	SEAL-O-RING	
	2	3	**4J-0522**	1	SEAL-O-RING	
	3	3	**4W-9972**	1	SENDER AS-TEMPERATURE (12-VOLT)	
		3	**6V-8378**	1	NUT (10-32-THD)	
		3	**8F-1434**	1	LOCKWASHER	
		3	**8T-0328**	1	WASHER-HARD (5.5X10X1-MM THK)	
	4	2	**5P-8066**	2	SEAL-O-RING	
B	5	2	**6T-9163**	2	SHIM (0.599-MM THK)	
B	6	2	**6T-9164**	2	SHIM (0.178-MM THK)	
B	7	2	**6T-9165**	2	SHIM (0.076-MM THK)	
B	8	2	**6T-9166**	2	SHIM (0.051-MM THK)	
	9	3	**6T-9202**	2	PLUG	
M	10	1,3	**6V-5215**	2	BOLT (M8X1.25X16-MM)	
M	11	1,4	**6V-5842**	16	BOLT (M10X1.5X40-MM)	
M	12	2	**6V-8097**	2	BOLT (M12X1.75X30-MM)	
	13	1	**6Y-1896**	1	PLUG AS	
	14	2	**7T-2646**	2	SPACER (66X79.5X2.02-MM THK)	
	15	3	**7T-2651**	1	STRAINER (SUCTION)	
	16	2	**7T-3195**	2	WASHER (12.3X47X6.35-MM THK)	
	17	1	**7T-3251**	1	BREATHER (TRANSMISSION)	
	18	1	**7T-3253**	2	DOWEL	
	19	2,3	**7W-3556**	12	WASHER (14.27X20.57X1.5-MM THK)	
	20	2	**7X-4741**	1	SEAL	
M	21	2	**8C-5748**	4	BOLT (M8X1.25X55-MM)	
M	22	1	**8C-8545**	2	BOLT-SOCKET HEAD (M5X0.8X20)	
M	23	4	**8T-0271**	2	BOLT-SOCKET HEAD (M10X1.5X35-MM)	
M	24	1	**8T-0643**	1	BOLT (M10X1.5X80-MM)	
	25	2	**9P-9150**	4	WASHER (8.25X18X0.84-MM THK)	
	26	3	**9W-5460**	1	RING	
M	27	4	**9X-6615**	12	BOLT (M5X0.8X30-MM)	
B	28	1	**104-3288**	2	SHIM (0.05-MM THK)	
	29	3	**106-9861**	1	PLATE-COVER	
	30	1	**117-1385**	1	SEAL-O-RING	
	31	1	**120-9762**	5	SEAL-O-RING	
B	32	1	**121-2059**	2	SHIM (0.08-MM THK)	
B	33	1	**121-2060**	2	SHIM (0.18-MM THK)	
B	34	1	**121-2061**	2	SHIM (0.6-MM THK)	
	35	2	**121-7385**	1	PUMP GP-TRANSMISSION	
	36	3	**121-7396**	1	VALVE GP-RELIEF (TORQUE CONVERTER INLET)	
		1	**6V-4589**	1	SEAL-O-RING	
		1	**8L-2746**	1	SEAL-O-RING	
	37	2	**121-7398**	1	SPACER (70X79.5X2-MM THK)	
B	38	2	**121-7399**	1	SHIM (0.05-MM THK)	
B	39	2	**121-7400**	1	SHIM (0.08-MM THK)	
B	40	2	**121-7401**	1	SHIM (0.18-MM THK)	
B	41	2	**121-7402**	1	SHIM (0.6-MM THK)	
	42	1	**122-1879**	2	SPACER (58X67.5X2-MM THK)	
	43	1	**122-1883**	1	SPACER (38X45X5-MM THK)	
	44	2	**122-6787**	2	YOKE AS	
					(EACH INCLUDES)	
		1	**123-1377**	1	GUARD	
	45	2	**147-0201**	1	TUBE AS	
Y	46	3	**147-0209**	1	VALVE GP-RELIEF (PUMP PRESSURE)	203
	47	4	**147-0211**	1	ELBOW AS	
		4	**3G-6927**	1	ADAPTER	

274-8641 TRANSMISSION GP-POWER SHIFT *(contd.)* i02485610

NOTE	REF NO	GRAPHIC REF	PART NUMBER	QTY	PART NAME 1 2 3 4 5 6 (PRODUCT LEVEL)	SEE PAGE
	48	1	**147-0218**	1	TUBE AS-TRANSFER	
	49	3	**147-0226**	1	TUBE AS	
	50	2,3	**147-0234**	6	BOLT (9/16-18X0.83-IN)	
	51	3	**147-0236**	1	TUBE AS-TRANSFER	
	52	1,3	**147-0262**	4	WASHER (19.1X24.1X1.5-MM THK)	
	53	1,3	**147-0266**	2	BOLT (3/4-16X1.417-IN)	
	54	1,3,4	*148-8407*	15	PLUG AS	
					(EACH INCLUDES)	
		1,3,4	**3J-1907**	1	SEAL-O-RING	
		1,3,4	**9S-4191**	1	PLUG-O RING	
	55	4	**150-7732**	2	SEAL-O-RING	
	56	1	**191-8304**	1	SENSOR GP-SPEED (TRANSMISSION OUTPUT)	
	57	1,4	**205-9244**	4	PLUG	
	58	1	**216-2267**	2	SEAL-LIP TYPE	
	59	1	**248-3290**	2	VALVE GP-SOLENOID (ALL WHEEL DRIVE, CLUTCH ONE)	
	60	2	**274-4554**	1	CASE AS-FRONT	
	61	2,4	*274-4556*	3	PLUG AS	
		2,4	**8L-2786**	1	SEAL-O-RING	
		2,4	**9S-4185**	1	PLUG	
Y	62	3	**274-4561**	1	SHAFT GP-IDLER	175
	63	2	**274-4569**	1	CASE AS-REAR	
Y	64	2	**274-4578**	1	SHAFT GP-INPUT	177
Y	65	2	**274-4580**	1	SHAFT GP-COUNTER	172
Y	66	2	**274-4582**	1	SHAFT GP-OUTPUT (MAIN)	181
	67	2	**278-0205**	1	VALVE GP-SOLENOID (FORWARD)	
		1	**8L-2779**	4	SEAL-O-RING	
		1	**274-4557**	1	PLUG-ORIFICE	
		1	**274-4560**	2	NUT-SELF LOCKING	
		1	**280-7009**	2	COIL AS	
	68	2	**278-0209**	1	VALVE GP-SOLENOID (REVERSE)	
	69	2	**278-0213**	1	VALVE GP-SOLENOID (CLUTCH)	
Y	70	2	**280-7007**	1	SHAFT GP-OUTPUT	185

B-USE AS REQUIRED
M-METRIC PART
Y-SEPARATE ILLUSTRATION

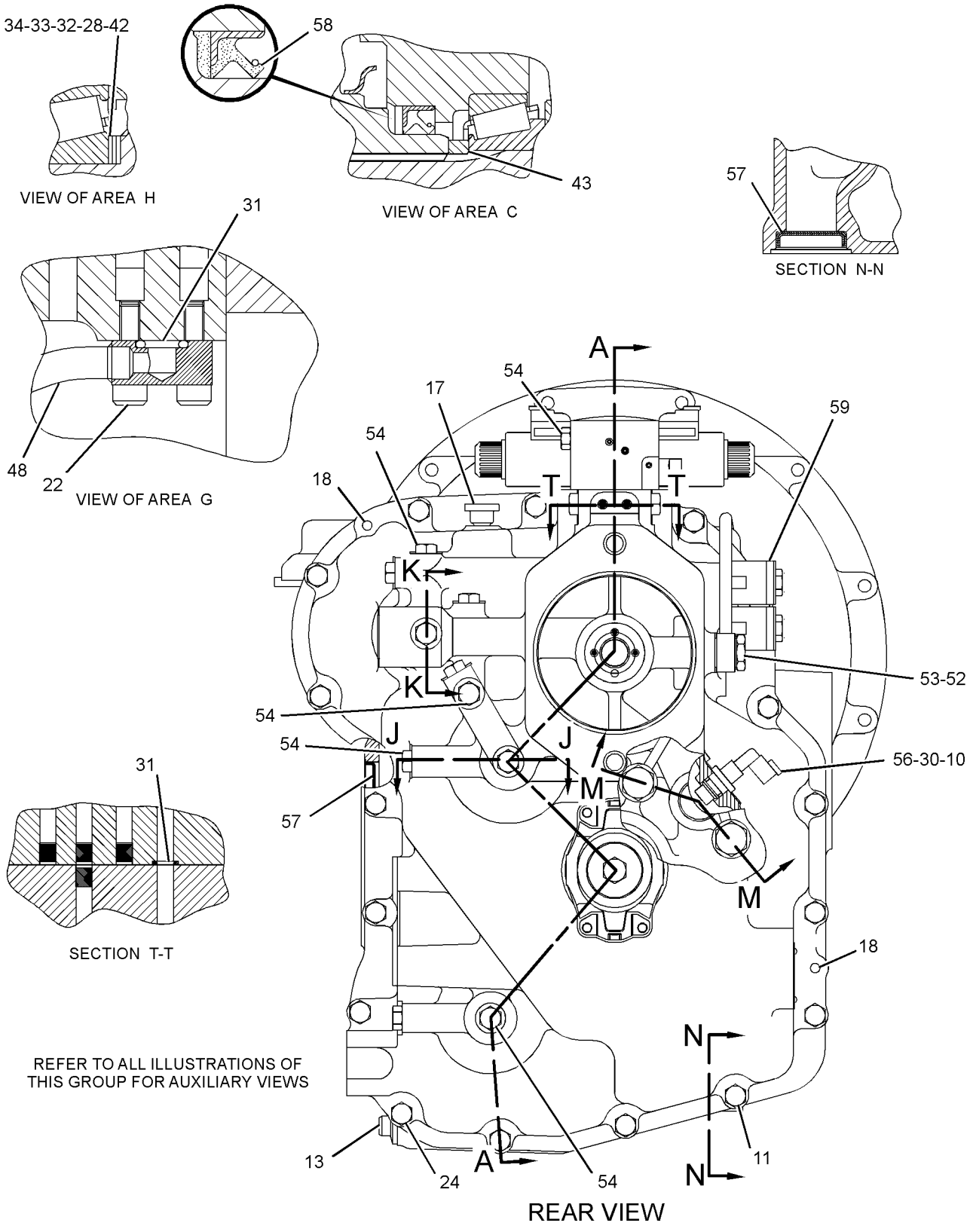

GRAPHIC #1

g01216562

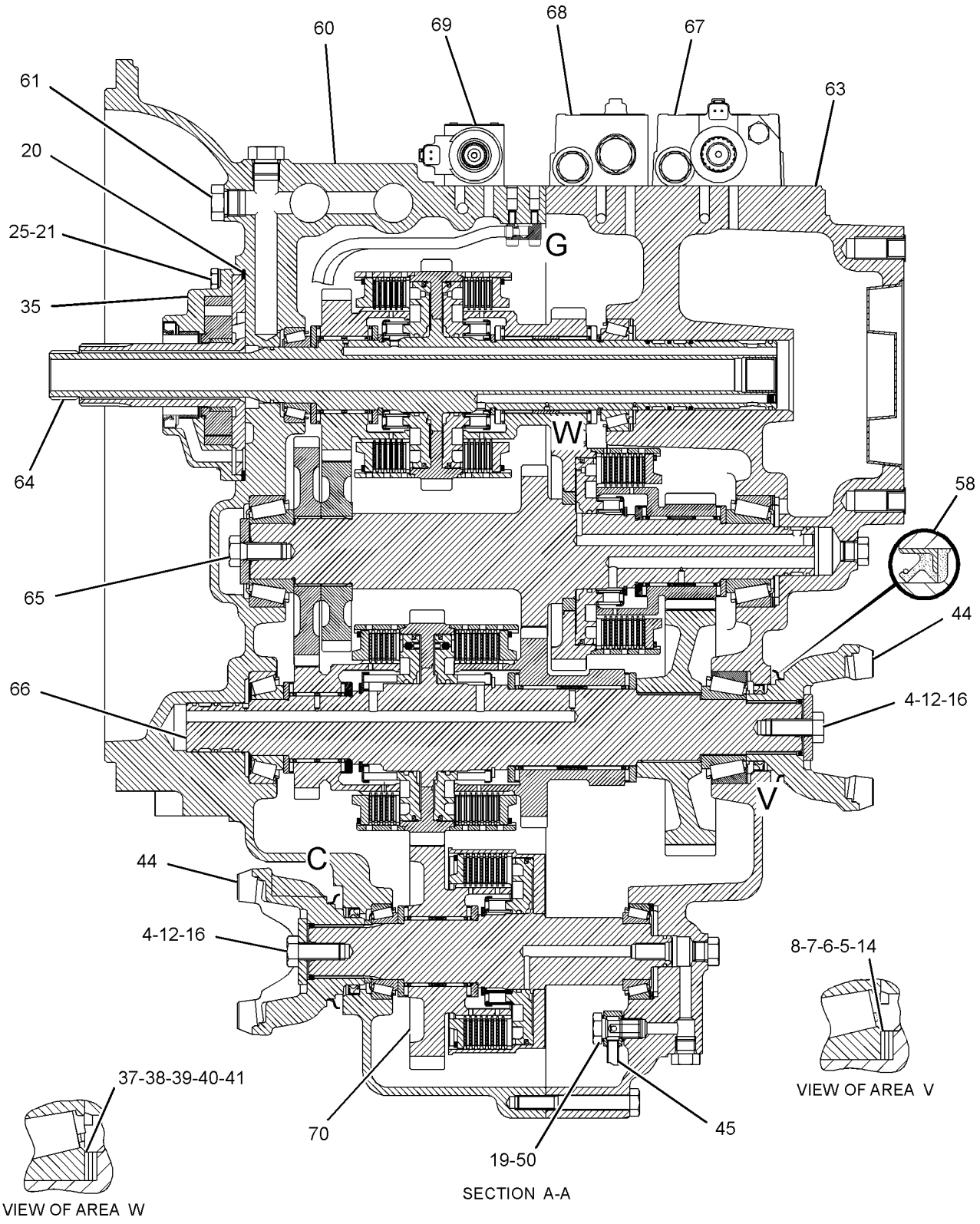

GRAPHIC #2

g01216481

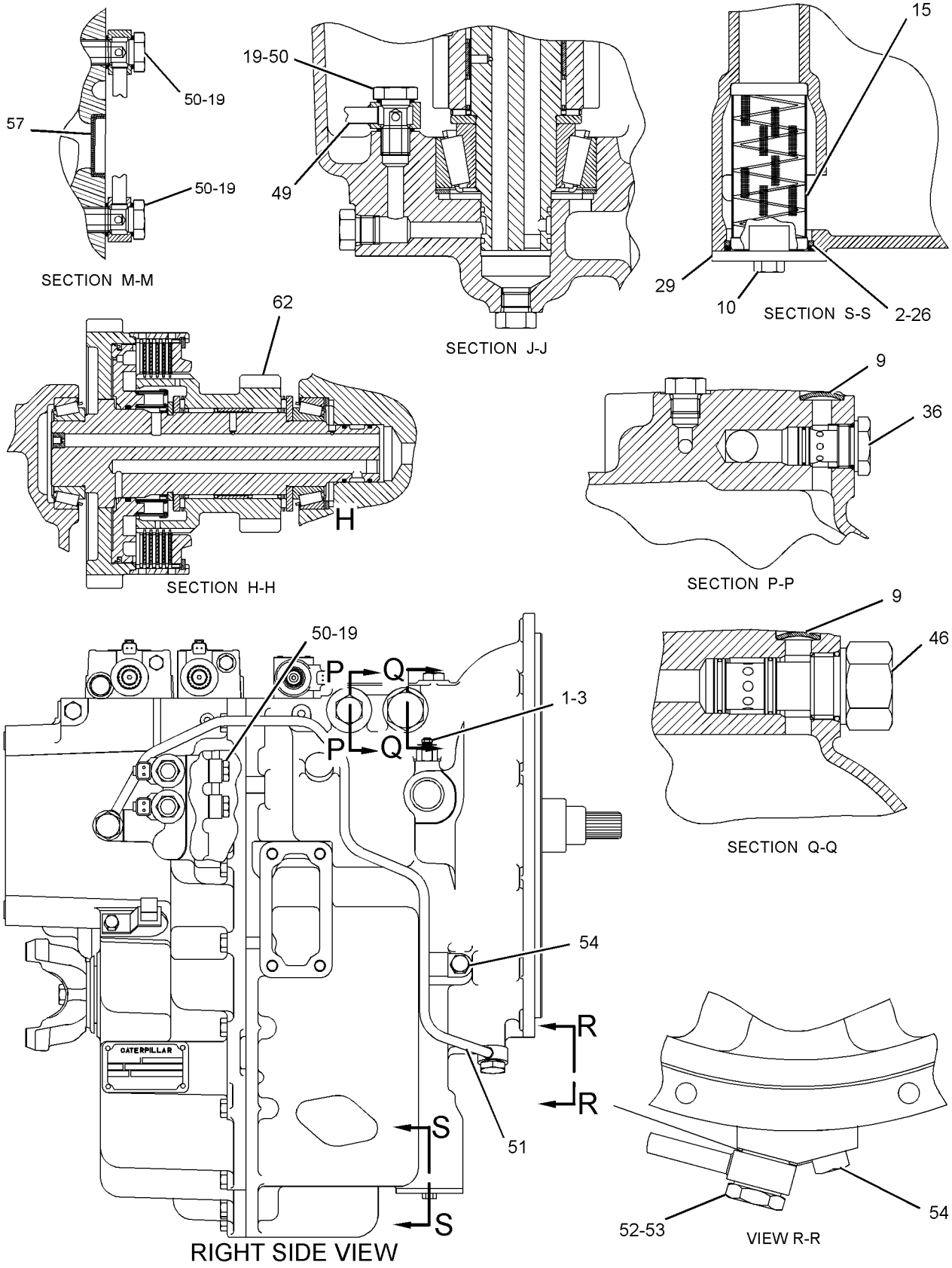

GRAPHIC #3

g01216605

274-8641 TRANSMISSION GP-POWER SHIFT *(contd.)* **i02485610**

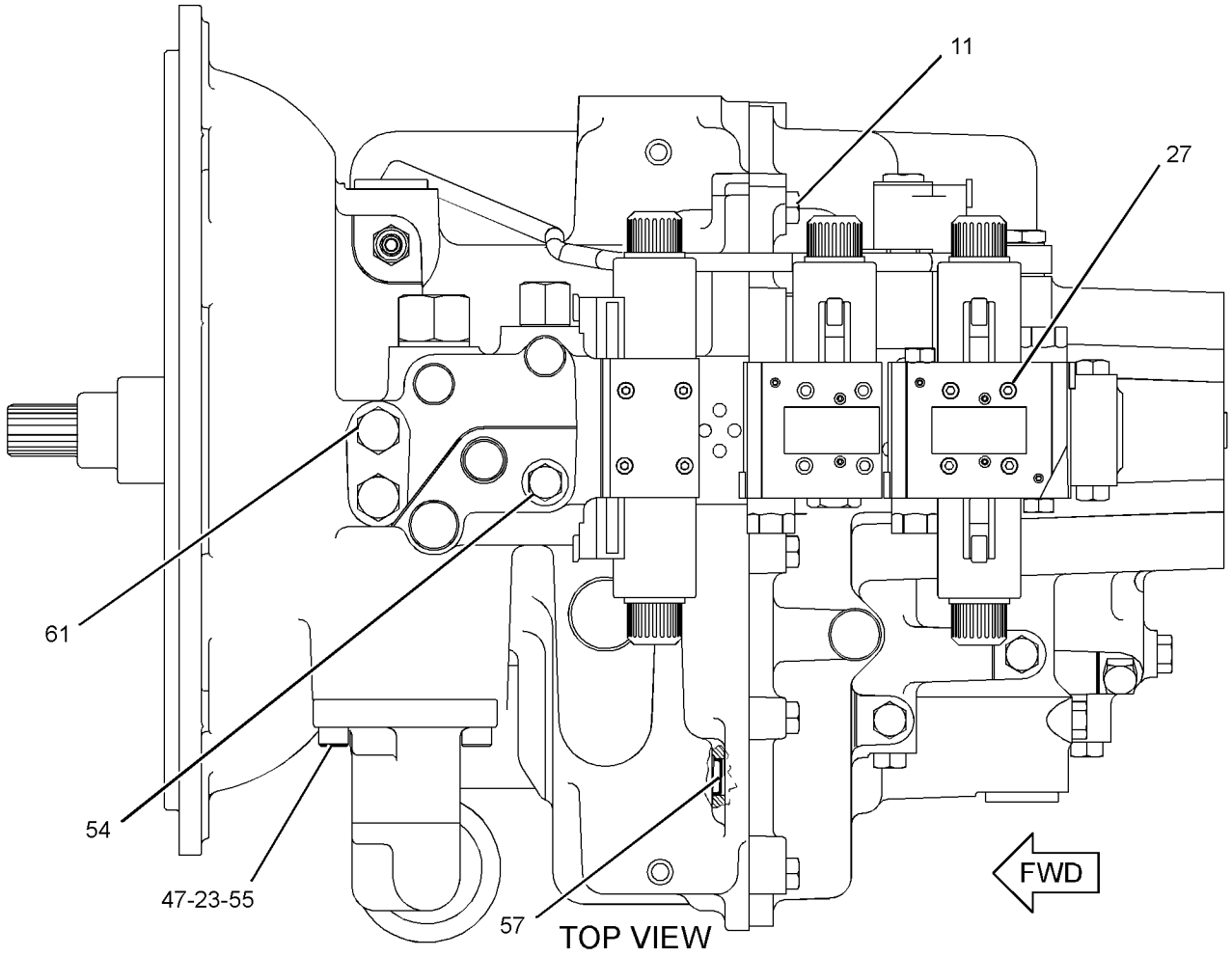

GRAPHIC #4

<END>

g01216654

256-0545 VALVE & LINES GP-SOLENOID—DIFFERENTIAL LOCK

(CHG -00 THRU -04)
S/N: HLS1-UP
PART OF 216-3316 POWER TRAIN AR
AN ATTACHMENT

SMCS-5057, 5479 **i02445201**

NOTE	REF NO	GRAPHIC REF	PART NUMBER	QTY	PART NAME 1 2 3 4 5 6 (PRODUCT LEVEL)	SEE PAGE
	1	1	*150-3033*	1	ELBOW AS	
		1	**3J-1907**	1	SEAL-O-RING	
		1	**4J-5477**	1	SEAL-O-RING	
		1	**8T-0164**	1	ELBOW	
Y	2	1	**233-7132**	1	VALVE & MTG GP-SOLENOID (DIFFERENTIAL LOCK)	202
	3	1	**151-4841**	2	BLOCK	
I	4	1	**256-0548**	2	HOSE AS	
I	5	1	**256-0549**	1	HOSE AS	
	6	1	*148-8368*	3	ELBOW AS	
					(EACH INCLUDES)	
		1	**3J-1907**	1	SEAL-O-RING	
		1	**4J-5477**	1	SEAL-O-RING	
		1	**6V-8627**	1	ELBOW	
	7	1	**8T-4121**	4	WASHER-HARD (11X21X2.5-MM THK)	
M	8	1	**8T-5005**	2	BOLT (M10X1.5X70-MM)	
	9	1	**7K-1181**	2	STRAP-CABLE	
	10	1	**285-3557**	1	PLATE AS	
M	11	1	**8T-4137**	2	BOLT (M10X1.5X20-MM)	

I-REFER TO HYDRAULIC INFORMATION SYSTEM
M-METRIC PART
Y-SEPARATE ILLUSTRATION

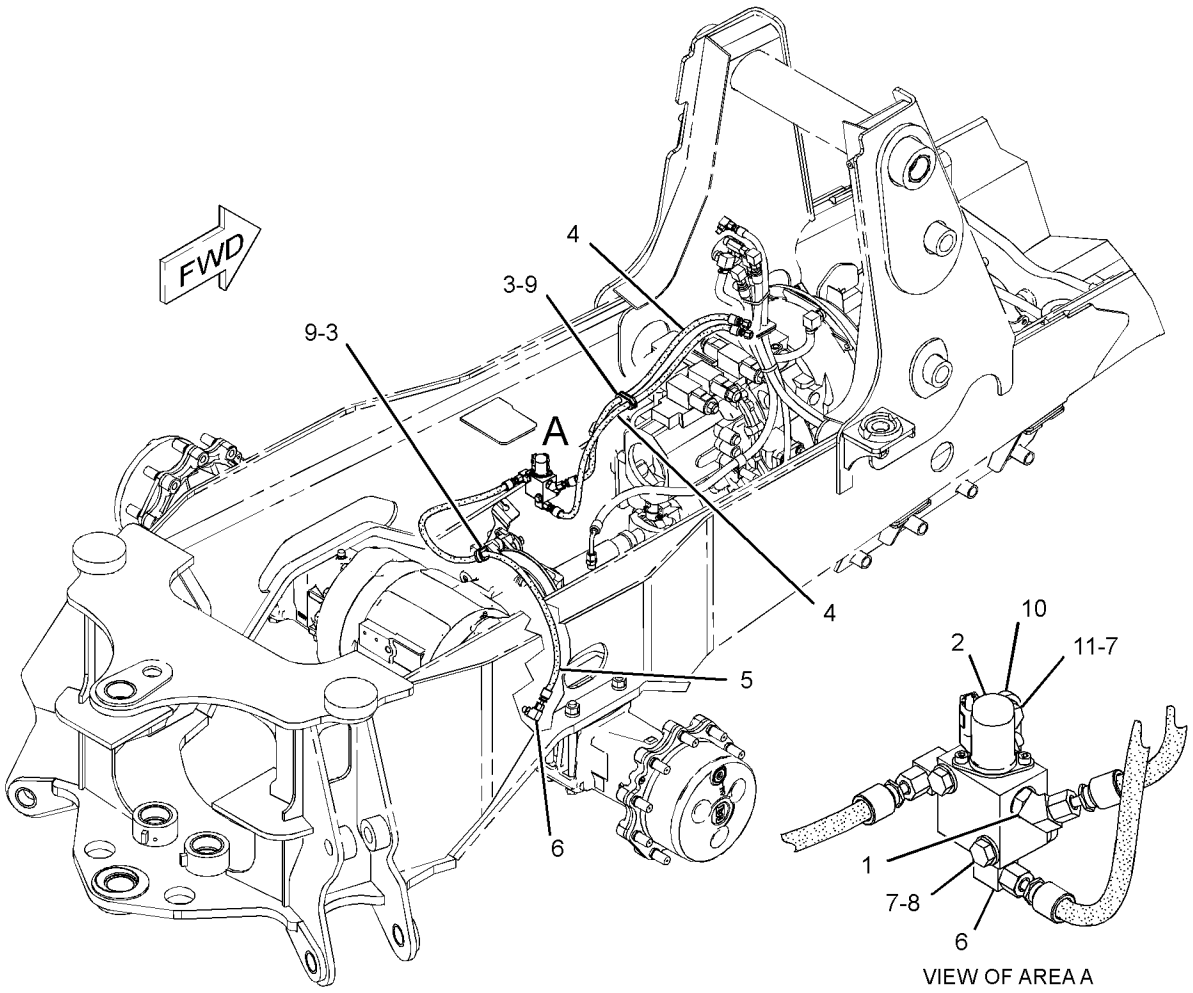

VIEW OF AREA A

GRAPHIC #1 **<END>** g01234223

233-7132 VALVE & MTG GP-SOLENOID (CHG -00 THRU -02)

S/N: HLS1-UP
PART OF 256-0545 VALVE & LINES GP-SOLENOID
AN ATTACHMENT

SMCS-5479 **i02384296**

NOTE	REF NO	GRAPHIC REF	PART NUMBER	QTY	PART NAME 1 2 3 4 5 6 (PRODUCT LEVEL)	SEE PAGE
J	1	1	**220-3398**	1	VALVE GP-SOLENOID	
M	2	1	**096-5968**	2	BOLT-SOCKET HEAD (M5X0.8X8-MM)	
					AVAILABLE REPAIR KIT(S):	
J			**250-8330**	1	KIT-SEAL	
					(INCLUDES RINGS)	

J-KIT MARKED J AVAILABLE FOR PART MARKED J
M-METRIC PART

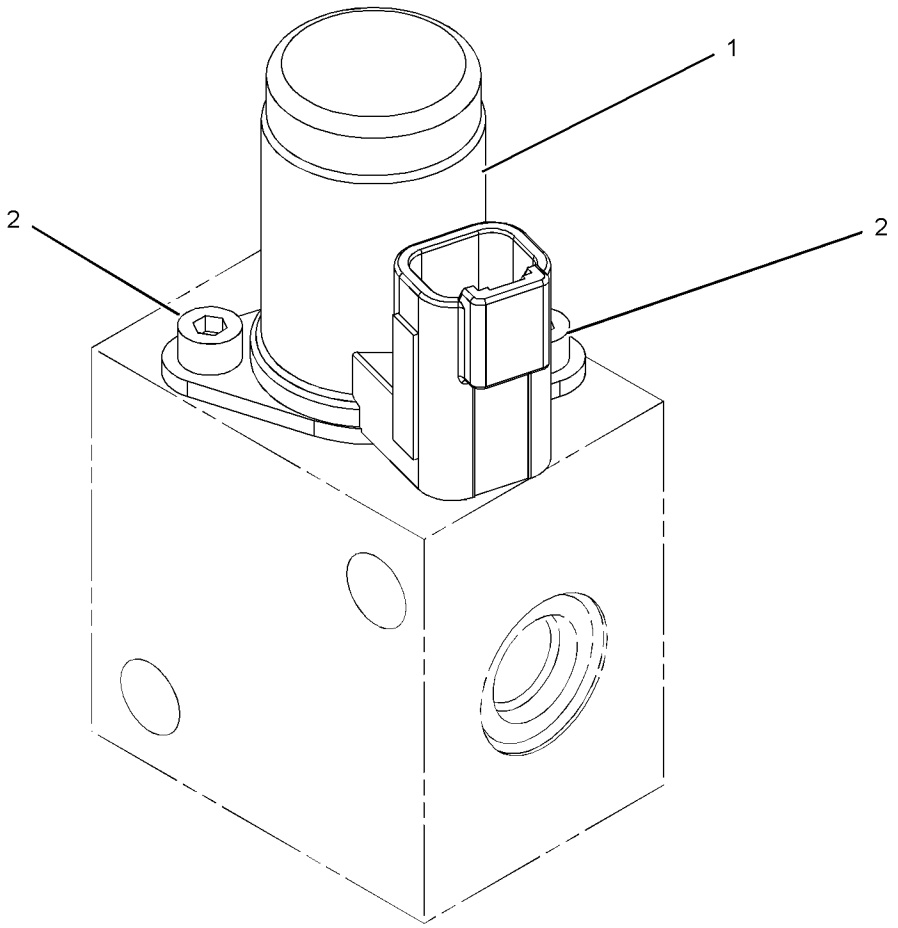

GRAPHIC #1 **<END>** g01240121

147-0209 VALVE GP-RELIEF (CHG -00)

S/N: HLS1-UP
PART OF 271-3774 TRANSMISSION GP-DIRECT DRIVE, 274-8641 TRANSMISSION GP-POWER SHIFT
AN ATTACHMENT

SMCS-3133, 3182, 3210, 3213 **i01980265**

NOTE	REF NO	GRAPHIC REF	PART NUMBER	QTY	PART NAME 1 2 3 4 5 6 (PRODUCT LEVEL)	SEE PAGE
	1	1	**7X-4744**	1	SEAL-O-RING	
	2	1	**6V-9178**	1	SEAL-O-RING	
	3	1	**106-9586**	1	SEAL-O-RING	

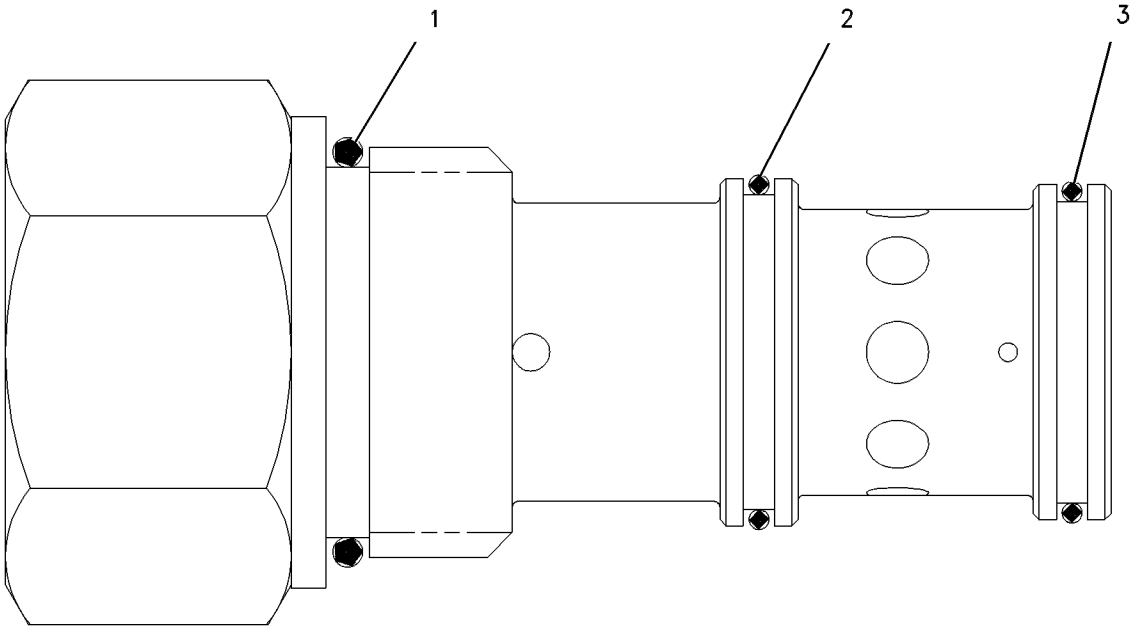

GRAPHIC #1 **<END>** g00304718

6D-0337 VALVE GP-TIRE (CHG -02)

S/N: HLS1-UP
PART OF 201-1920 VALVE GP-TIRE
AN ATTACHMENT

SMCS-4203 **i02126852**

NOTE	REF NO	GRAPHIC REF	PART NUMBER	QTY	PART NAME 1 2 3 4 5 6 (PRODUCT LEVEL)	SEE PAGE
	1	1	**6D-0443**	1	HOUSING AS-CORE	
	2	1	**2D-2628**	1	CORE-VALVE	
	3	1	**2D-2633**	1	CAP	
	4	1	**8D-2707**	1	SPUD AS	
	5	1	**2D-2629**	1	GROMMET	
	6	1	**2D-2630**	1	WASHER	
	7	1	**2D-2631**	1	NUT (0.482-26-THD)	

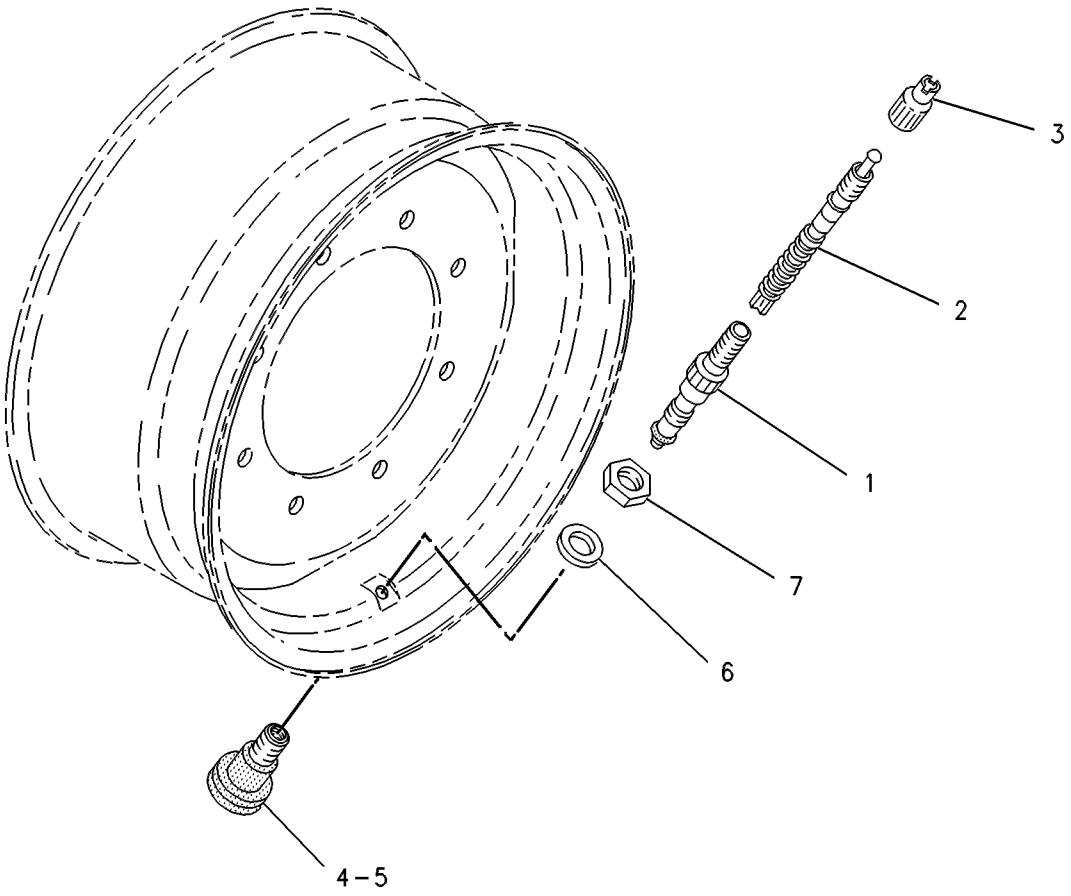

GRAPHIC #1 **<END>** g00121904

201-1920 VALVE GP-TIRE (CHG -00)

S/N: HLS1-UP
PART OF 201-1863, 201-1864, 201-1875, 201-1876, 201-1878, 201-1882, 201-1883, 201-1911, 201-1912, 201-1942, 201-1943 WHEEL & TIRE GP
AN ATTACHMENT

SMCS-4203 **i02126869**

NOTE	PART NUMBER	QTY	PART NAME 1 2 3 4 5 6 (PRODUCT LEVEL)	SEE PAGE
Y	**6D-0337**	1	VALVE GP-TIRE	204

Y-SEPARATE ILLUSTRATION

<END>

201-1918 WHEEL & TIRE AR (CHG -00)

S/N: HLS1-UP
TWO WHEEL STEER OR ALL WHEEL STEER, FOUR WHEEL DRIVE
AN ATTACHMENT

SMCS-4201, 4202, 4203, 4208, 4209 **i01685047**

NOTE	PART NUMBER	QTY	PART NAME 1 2 3 4 5 6 (PRODUCT LEVEL)	SEE PAGE
Y	*201-1874*	1	WHEEL & TIRE GP (FRONT)	207
Y	*201-1913*	1	WHEEL & TIRE GP (REAR)	211

Y-SEPARATE ILLUSTRATION

<END>

201-1923 WHEEL & TIRE AR (CHG -00)

S/N: HLS1-UP
AN ATTACHMENT

SMCS-4201, 4202, 4203, 4208, 4209 **i01589996**

NOTE	PART NUMBER	QTY	PART NAME 1 2 3 4 5 6 (PRODUCT LEVEL)	SEE PAGE
Y	*201-1862*	1	WHEEL & TIRE GP (FRONT)	206
Y	*201-1881*	1	WHEEL & TIRE GP (REAR)	209

Y-SEPARATE ILLUSTRATION

<END>

201-1925 WHEEL & TIRE AR (CHG -00)

S/N: HLS1-UP
TWO WHEEL DRIVE
AN ATTACHMENT

SMCS-4201, 4202, 4203, 4208, 4209 **i01685065**

NOTE	PART NUMBER	QTY	PART NAME 1 2 3 4 5 6 (PRODUCT LEVEL)	SEE PAGE
Y	*201-1877*	1	WHEEL & TIRE GP (FRONT)	208
Y	*201-1913*	1	WHEEL & TIRE GP (REAR)	211

Y-SEPARATE ILLUSTRATION

<END>

201-1940 WHEEL & TIRE AR—2-WHEEL DRIVE, BIAS FLOTATION

(CHG -00)
S/N: HLS1-UP
AN ATTACHMENT

SMCS-4201, 4202, 4203, 4208, 4209 **i02110529**

NOTE	PART NUMBER	QTY	PART NAME 1 2 3 4 5 6 (PRODUCT LEVEL)	SEE PAGE
Y	*201-1874*	1	WHEEL & TIRE GP (FRONT)	207
Y	*201-1941*	1	WHEEL & TIRE GP (REAR)	211

Y-SEPARATE ILLUSTRATION

<END>

201-1954 WHEEL & TIRE AR (CHG -00)

S/N: HLS1-UP
FOUR WHEEL DRIVE, TWO WHEEL STEER OR ALL WHEEL STEER
AN ATTACHMENT

SMCS-4201, 4202, 4203, 4208, 4209 **i01684120**

NOTE	PART NUMBER	QTY	PART NAME 1 2 3 4 5 6 (PRODUCT LEVEL)	SEE PAGE
Y	*201-1862*	1	WHEEL & TIRE GP (FRONT)	206
Y	*201-1913*	1	WHEEL & TIRE GP (REAR)	211

Y-SEPARATE ILLUSTRATION

<END>

201-1862 WHEEL & TIRE GP—FRONT (CHG -00)

S/N: HLS1-UP
PART OF 201-1923, 201-1954 WHEEL & TIRE AR
AN ATTACHMENT

SMCS-4201, 4202, 4203, 4208, 4209 **i02242350**

NOTE	PART NUMBER	QTY	PART NAME 1 2 3 4 5 6 (PRODUCT LEVEL)	SEE PAGE
Y	*201-1863*	1	WHEEL & TIRE GP (LH)	207
Y	*201-1864*	1	WHEEL & TIRE GP (FRONT, RH)	207
	201-1915	1	MOUNTING GP-WHEEL (FRONT)	
	8T-5439	16	WASHER (21.5X45X6-MM THK)	
M	**201-1919**	16	NUT (M20X1.5-THD)	

M-METRIC PART
Y-SEPARATE ILLUSTRATION

<END>

201-1863 WHEEL & TIRE GP—LH (CHG -00 THRU -02)

S/N: HLS1-UP
PART OF 201-1862 WHEEL & TIRE GP
AN ATTACHMENT

SMCS-4201, 4202, 4203, 4208, 4209 **i02242351**

NOTE	PART NUMBER	QTY	PART NAME 1 2 3 4 5 6 (PRODUCT LEVEL)	SEE PAGE
Y	*201-1920*	1	VALVE GP-TIRE	205
	112-9338	1	TIRE (340/80R18)	
	202-6186	1	WHEEL AS (FRONT)	

Y-SEPARATE ILLUSTRATION

<END>

201-1864 WHEEL & TIRE GP—RH (CHG -00, -01)

S/N: HLS1-UP
PART OF 201-1862 WHEEL & TIRE GP
AN ATTACHMENT

SMCS-4201, 4202, 4203, 4208, 4209 **i02242352**

NOTE	PART NUMBER	QTY	PART NAME 1 2 3 4 5 6 (PRODUCT LEVEL)	SEE PAGE
Y	*201-1920*	1	VALVE GP-TIRE	205
	112-9338	1	TIRE (340/80R18)	
	202-6186	1	WHEEL AS (FRONT)	

Y-SEPARATE ILLUSTRATION

<END>

201-1874 WHEEL & TIRE GP—FRONT (CHG -00, 201-1915-02)

S/N: HLS1-UP
PART OF 201-1918, 201-1940 WHEEL & TIRE AR
AN ATTACHMENT

SMCS-4201, 4202, 4203, 4208, 4209 **i02242353**

NOTE	PART NUMBER	QTY	PART NAME 1 2 3 4 5 6 (PRODUCT LEVEL)	SEE PAGE
Y	*201-1875*	1	WHEEL & TIRE GP (LH)	208
Y	*201-1876*	1	WHEEL & TIRE GP (RH)	208
	201-1915	1	MOUNTING GP-WHEEL (FRONT)	
	8T-5439	16	WASHER (21.5X45X6-MM THK)	
M	**178-1304**	16	NUT-HEX FLANGE (M20X1.5-THD)	

M-METRIC PART
Y-SEPARATE ILLUSTRATION

<END>

201-1875 WHEEL & TIRE GP—LH (CHG -00 THRU -02)

S/N: HLS1-UP
PART OF 201-1874 WHEEL & TIRE GP
AN ATTACHMENT

SMCS-4201, 4202, 4203, 4208, 4209 **i02242354**

NOTE	PART NUMBER	QTY	PART NAME 1 2 3 4 5 6 (PRODUCT LEVEL)	SEE PAGE
Y	*201-1920*	1	VALVE GP-TIRE	205
	9R-6481	1	TIRE (12.5/80-18)	
	202-6186	1	WHEEL AS (FRONT)	

Y-SEPARATE ILLUSTRATION

<END>

201-1876 WHEEL & TIRE GP—RH (CHG -00 THRU -02)

S/N: HLS1-UP
PART OF 201-1874 WHEEL & TIRE GP
AN ATTACHMENT

SMCS-4201, 4202, 4203, 4208, 4209 **i02242356**

NOTE	PART NUMBER	QTY	PART NAME 1 2 3 4 5 6 (PRODUCT LEVEL)	SEE PAGE
Y	*201-1920*	1	VALVE GP-TIRE	205
	9R-6481	1	TIRE (12.5/80-18)	
	202-6186	1	WHEEL AS (FRONT)	

Y-SEPARATE ILLUSTRATION

<END>

201-1877 WHEEL & TIRE GP—FRONT (CHG -00)

S/N: HLS1-UP
PART OF 201-1925 WHEEL & TIRE AR
AN ATTACHMENT

SMCS-4201, 4202, 4203, 4208, 4209 **i02242357**

NOTE	PART NUMBER	QTY	PART NAME 1 2 3 4 5 6 (PRODUCT LEVEL)	SEE PAGE
Y	*201-1878*	2	WHEEL & TIRE GP	209
	201-1915	1	MOUNTING GP-WHEEL (FRONT)	
	8T-5439	16	WASHER (21.5X45X6-MM THK)	
M	**201-1919**	16	NUT (M20X1.5-THD)	

M-METRIC PART
Y-SEPARATE ILLUSTRATION

<END>

201-1878 WHEEL & TIRE GP—FRONT (CHG -00)

S/N: HLS1-UP
PART OF 201-1877 WHEEL & TIRE GP
AN ATTACHMENT

SMCS-4201, 4202, 4203, 4208, 4209 **i02248646**

NOTE	PART NUMBER	QTY	PART NAME 1 2 3 4 5 6 (PRODUCT LEVEL)	SEE PAGE
Y	*201-1920*	1	VALVE GP-TIRE	205
	9R-1956	1	TIRE (11L-16)	
	195-6341	1	WHEEL AS (FRONT)	

Y-SEPARATE ILLUSTRATION

<END>

201-1881 WHEEL & TIRE GP—REAR (CHG -00)

S/N: HLS1-UP
PART OF 201-1923 WHEEL & TIRE AR
AN ATTACHMENT

SMCS-4201, 4202, 4203, 4208, 4209 **i01671733**

NOTE	PART NUMBER	QTY	PART NAME 1 2 3 4 5 6 (PRODUCT LEVEL)	SEE PAGE
Y	*201-1882*	1	WHEEL & TIRE GP (LH)	209
Y	*201-1883*	1	WHEEL & TIRE GP (RH)	210
	201-1916	1	MOUNTING GP-WHEEL	
	8T-5439	20	WASHER (21.5X45X6-MM THK)	
M	**201-1919**	20	NUT (M20X1.5-THD)	

M-METRIC PART
Y-SEPARATE ILLUSTRATION

<END>

201-1882 WHEEL & TIRE GP—LH (CHG -00)

S/N: HLS1-UP
PART OF 201-1881 WHEEL & TIRE GP
AN ATTACHMENT

SMCS-4201, 4202, 4203, 4208, 4209 **i01551473**

NOTE	PART NUMBER	QTY	PART NAME 1 2 3 4 5 6 (PRODUCT LEVEL)	SEE PAGE
Y	*201-1920*	1	VALVE GP-TIRE	205
J	*127-4293*	1	TIRE	
	195-6344	1	WHEEL AS (REAR)	

J-PROCURE LOCALLY
Y-SEPARATE ILLUSTRATION

<END>

201-1883 WHEEL & TIRE GP—RH (CHG -00, -01)

S/N: HLS1-UP
PART OF 201-1881 WHEEL & TIRE GP
AN ATTACHMENT

SMCS-4201, 4202, 4203, 4208, 4209 **i01551375**

NOTE	PART NUMBER	QTY	PART NAME 1 2 3 4 5 6 (PRODUCT LEVEL)	SEE PAGE
Y	*201-1920*	1	VALVE GP-TIRE	205
J	*127-4293*	1	TIRE	
	195-6344	1	WHEEL AS (REAR)	

J-PROCURE LOCALLY
Y-SEPARATE ILLUSTRATION

<END>

201-1911 WHEEL & TIRE GP (CHG -00)

S/N: HLS1-UP
LH
PART OF 201-1913 WHEEL & TIRE GP
AN ATTACHMENT

SMCS-4201, 4202, 4203, 4208, 4209 **i01671601**

NOTE	PART NUMBER	QTY	PART NAME 1 2 3 4 5 6 (PRODUCT LEVEL)	SEE PAGE
Y	*201-1920*	1	VALVE GP-TIRE	205
J	*201-1902*	1	TIRE (19.5L-24)	
	195-6344	1	WHEEL AS (REAR)	

J-PROCURE LOCALLY
Y-SEPARATE ILLUSTRATION

<END>

201-1912 WHEEL & TIRE GP (CHG -00)

S/N: HLS1-UP
RH
PART OF 201-1913 WHEEL & TIRE GP
AN ATTACHMENT

SMCS-4201, 4202, 4203, 4208, 4209 **i01671608**

NOTE	PART NUMBER	QTY	PART NAME 1 2 3 4 5 6 (PRODUCT LEVEL)	SEE PAGE
Y	*201-1920*	1	VALVE GP-TIRE	205
J	*201-1902*	1	TIRE (19.5L-24)	
	195-6344	1	WHEEL AS (REAR)	

J-PROCURE LOCALLY
Y-SEPARATE ILLUSTRATION

<END>

201-1913 WHEEL & TIRE GP—REAR (CHG -00)

S/N: HLS1-UP
PART OF 201-1918, 201-1925, 201-1954 WHEEL & TIRE AR
AN ATTACHMENT

SMCS-4201, 4202, 4203, 4208, 4209 **i02484883**

NOTE	PART NUMBER	QTY	PART NAME 1 2 3 4 5 6 (PRODUCT LEVEL)	SEE PAGE
Y	*201-1911*	1	WHEEL & TIRE GP (LH)	210
Y	*201-1912*	1	WHEEL & TIRE GP (RH)	210
	201-1916	1	MOUNTING GP-WHEEL	
	8T-5439	20	WASHER (21.5X45X6-MM THK)	
M	**201-1919**	20	NUT (M20X1.5-THD)	

M-METRIC PART
Y-SEPARATE ILLUSTRATION

<END>

201-1941 WHEEL & TIRE GP—REAR (CHG -00)

S/N: HLS1-UP
PART OF 201-1940 WHEEL & TIRE AR
AN ATTACHMENT

SMCS-4201, 4202, 4203, 4208, 4209 **i02116703**

NOTE	PART NUMBER	QTY	PART NAME 1 2 3 4 5 6 (PRODUCT LEVEL)	SEE PAGE
Y	*201-1942*	1	WHEEL & TIRE GP (LH)	211
Y	*201-1943*	1	WHEEL & TIRE GP (RH)	212
	201-1916	1	MOUNTING GP-WHEEL	
	8T-5439	20	WASHER (21.5X45X6-MM THK)	
M	**201-1919**	20	NUT (M20X1.5-THD)	

M-METRIC PART
Y-SEPARATE ILLUSTRATION

<END>

201-1942 WHEEL & TIRE GP—LH (CHG -00)

S/N: HLS1-UP
PART OF 201-1941 WHEEL & TIRE GP
AN ATTACHMENT

SMCS-4201, 4202, 4203, 4208, 4209 **i02121708**

NOTE	PART NUMBER	QTY	PART NAME 1 2 3 4 5 6 (PRODUCT LEVEL)	SEE PAGE
Y	*201-1920*	1	VALVE GP-TIRE	205
	9R-3659	1	TIRE (21-24)	
	195-6347	1	WHEEL AS (REAR)	

Y-SEPARATE ILLUSTRATION

<END>

201-1943 WHEEL & TIRE GP—RH (CHG -00)

S/N: HLS1-UP

PART OF 201-1941 WHEEL & TIRE GP

AN ATTACHMENT

SMCS-4201, 4202, 4203, 4208, 4209 **i02121711**

NOTE	PART NUMBER	QTY	PART NAME 1 2 3 4 5 6 (PRODUCT LEVEL)	SEE PAGE
Y	*201-1920*	1	VALVE GP-TIRE	205
	9R-3659	1	TIRE (21-24)	
	195-6347	1	WHEEL AS (REAR)	

Y-SEPARATE ILLUSTRATION

<END>

206-1642 CONTROL GP-PARKING BRAKE (CHG -03 THRU -05)

S/N: HLS1-UP

PART OF 216-3315, 216-3316 POWER TRAIN AR

AN ATTACHMENT

SMCS-4282, 4284 **i02442925**

NOTE	REF NO	GRAPHIC REF	PART NUMBER	QTY	PART NAME 1 2 3 4 5 6 (PRODUCT LEVEL)	SEE PAGE
	1	1	**7K-1181**	1	STRAP-CABLE	
	2	1	**9R-2806**	1	PIN	
	3	1	**9R-2807**	1	CLIP	
	4	1	**154-5416**	1	SWITCH AS	
Y	5	1	**261-5517**	1	CONTROL GP-PARKING BRAKE	214
	6	1	**261-9635**	1	BOOT (PARKING BRAKE)	
	7	1	**8T-4224**	2	WASHER-HARD (8.8X16X2-MM THK)	
M	8	1	**8T-6912**	2	BOLT (M8X1.25X50-MM)	
	9	1	**164-1368**	2	FASTENER-PANEL	

M-METRIC PART
Y-SEPARATE ILLUSTRATION

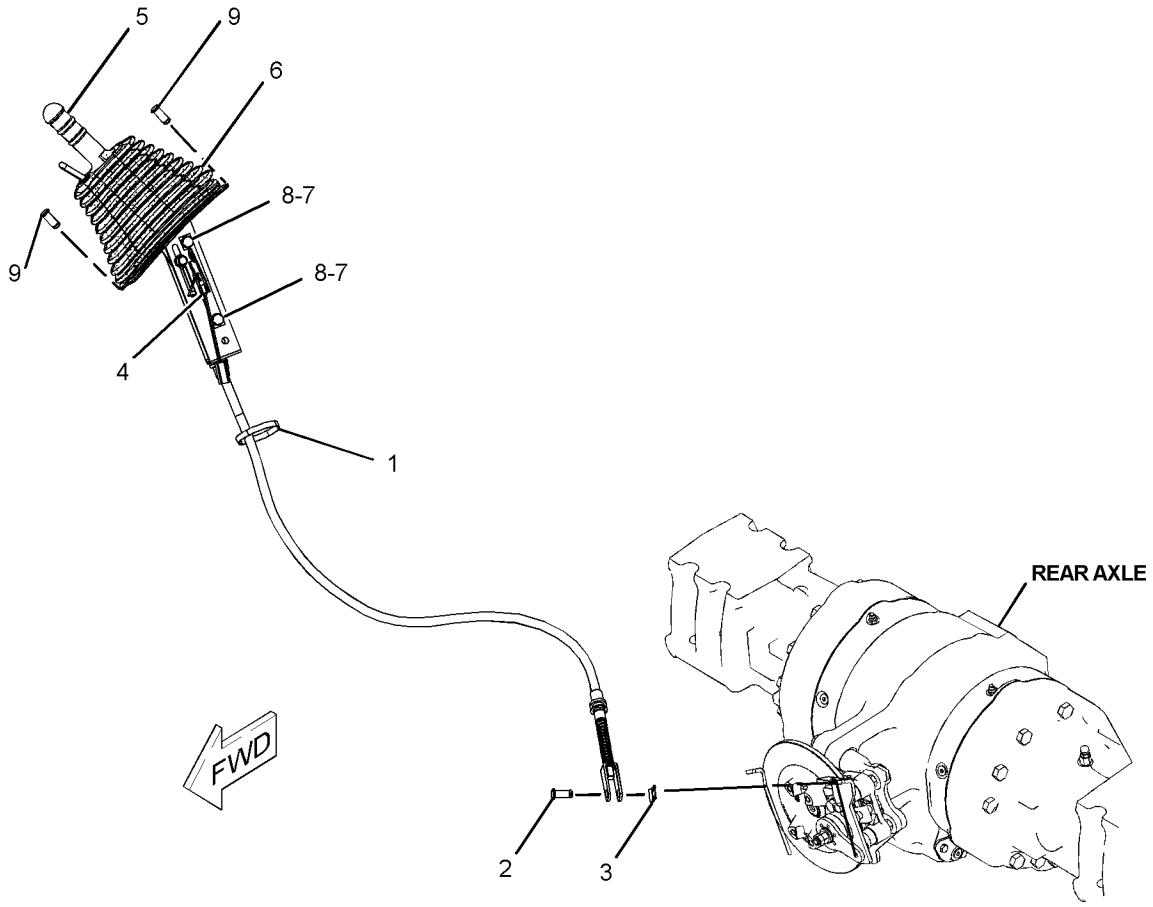

GRAPHIC #1 **<END>** g01228986

261-5517 CONTROL GP-PARKING BRAKE (CHG -00)

S/N: HLS1-UP

PART OF 206-1642 CONTROL GP-PARKING BRAKE

AN ATTACHMENT

SMCS-4282, 4284 **i02472580**

NOTE	REF NO	GRAPHIC REF	PART NUMBER	QTY	PART NAME 1 2 3 4 5 6 (PRODUCT LEVEL)	SEE PAGE
Y	1	1	**163-0753**	1	LEVER GP-HAND CONTROL	220
	2	1	**261-5519**	1	CABLE AS	
		1	**6V-8759**	1	RING-RETAINING	

Y-SEPARATE ILLUSTRATION

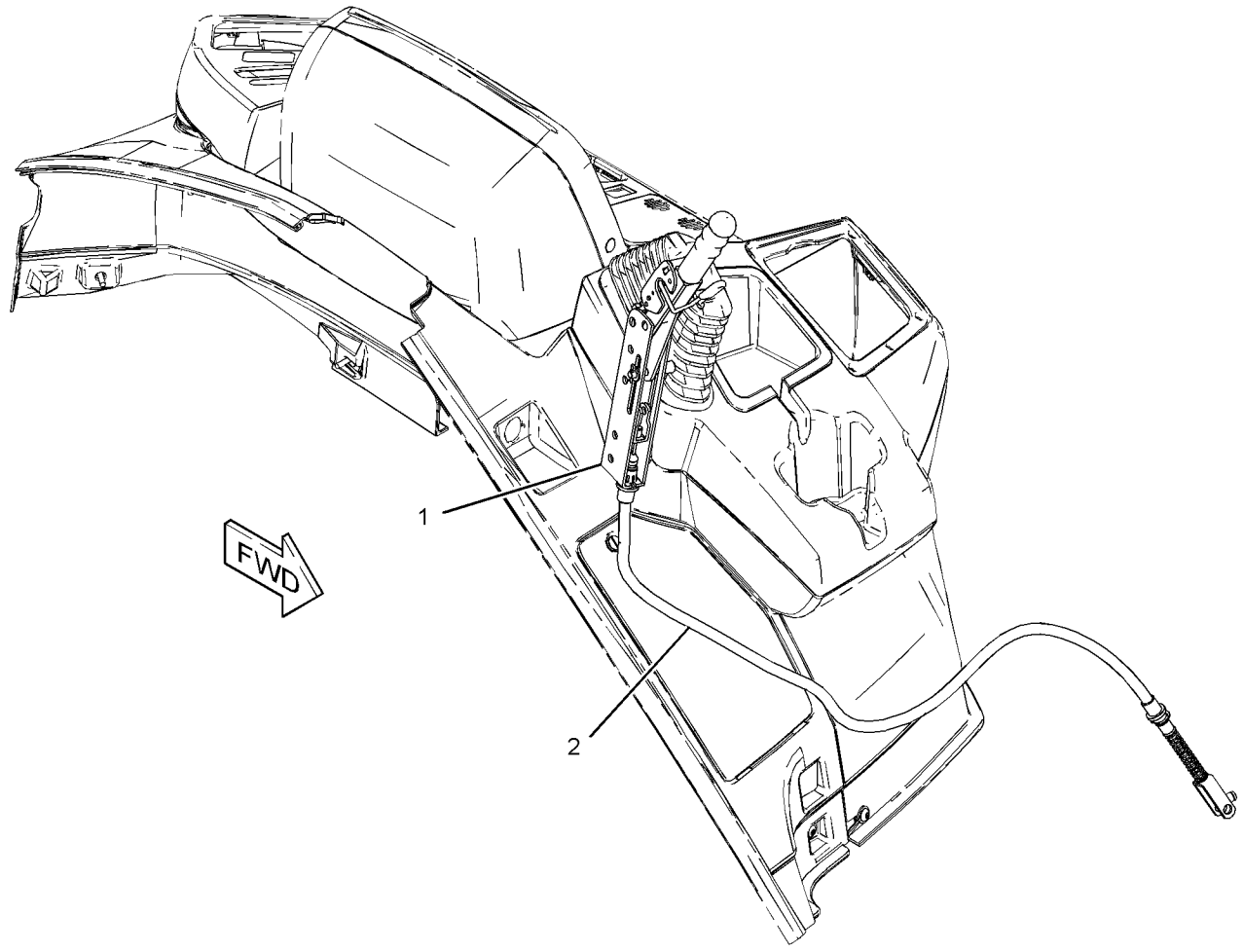

GRAPHIC #1 **<END>** g01210353

206-1639 CONTROL GP-SERVICE BRAKE–STANDARD SHIFT

(CHG -02 THRU -05)
S/N: HLS1-UP
PART OF 216-3315, 216-3316 POWER TRAIN AR
AN ATTACHMENT

SMCS-4269 **i02443780**

NOTE	REF NO	GRAPHIC REF	PART NUMBER	QTY	PART NAME 1 2 3 4 5 6 (PRODUCT LEVEL)	SEE PAGE
	1	1	**1H-1200**	1	PIN-SPRING	
	2	1	**3E-7675**	1	SWITCH GP-PRESSURE	
	3	1	**7K-1181**	1	STRAP-CABLE	
	4	1	**8T-0131**	1	ELBOW	
	5	1	**8T-1889**	2	CLIP (SLOT)	
	6	1	**8T-1890**	2	CLIP (TAB)	
	7	1	**105-8034**	2	SWITCH AS-LIMIT (BRAKE PEDAL)	
	8	1	**151-4841**	1	BLOCK	
	9	1	**156-3600**	1	FITTING	
	10	1	**156-3631**	1	FITTING	
	11	1	**165-6595**	1	PIN AS	
	12	1	*194-2903*	1	ELBOW AS	
		1	**3K-0360**	1	SEAL-O-RING	
		1	**8T-0119**	1	ELBOW	
	13	1	**201-3652**	1	PLATE	
	14	1	**202-5993**	1	PLATE	
	15	1	**206-1634**	1	PLATE AS	
	16	1	**206-1650**	1	GROMMET	
	17	1	**206-1664**	1	COVER-BRAKE	
	18	1	**206-1752**	1	PLATE AS	
	19	1	**206-1758**	1	PEDAL AS (LH)	
		1	**202-6029**	2	BEARING-SLEEVE	
	20	1	**206-1759**	1	PEDAL AS (RH)	
		1	**202-6029**	2	BEARING-SLEEVE	
	21	1	**206-1766**	2	PIN	
	22	1	**206-1767**	1	SPRING (LH)	
	23	1	**206-1768**	1	SPRING (RH)	
	24	1	**220-8226**	1	VALVE GP-BRAKE	
		1	**262-4084**	1	BOOT	
	25	1	**251-5579**	1	PLATE AS	
	26	1	**253-1549**	2	HOSE AS	
	27	1	**255-5461**	1	HOSE AS	
	28	1	**255-8280**	1	HOSE AS	
	29	1	**262-4081**	2	END-YOKE ROD	
M	30	1	**142-0485**	2	NUT-THIN (M10X1.15-THD)	
	31	1	*148-8318*	1	CONNECTOR AS	
		1	**3K-0360**	1	SEAL-O-RING	
		1	**6V-8397**	1	SEAL-O-RING	
		1	**6V-8634**	1	CONNECTOR	
	32	1	*148-8325*	4	CONNECTOR AS	
					(EACH INCLUDES)	
		1	**3J-1907**	1	SEAL-O-RING	
		1	**4J-5477**	1	SEAL-O-RING	
		1	**6V-8641**	1	CONNECTOR	
	33	1	*148-8364*	1	ELBOW AS	
		1	**3K-0360**	1	SEAL-O-RING	
		1	**6V-8398**	1	SEAL-O-RING	
		1	**6V-8625**	1	ELBOW	
	34	1	*148-8378*	1	ELBOW AS	
		1	**3J-1907**	1	SEAL-O-RING	
		1	**6V-8397**	1	SEAL-O-RING	
		1	**6V-8724**	1	ELBOW	
M	35	1	**9X-2045**	4	SCREW-TRUSS HEAD (M6X1X20-MM)	
	36	1	**3J-1907**	1	SEAL-O-RING	

206-1639 **CONTROL GP-SERVICE BRAKE** *(contd.)* **i02443780**

NOTE	REF NO	GRAPHIC REF	PART NUMBER	QTY	PART NAME 1 2 3 4 5 6 (PRODUCT LEVEL)	SEE PAGE
	37	1	**3K-0360**	2	SEAL-O-RING	
M	38	1	**5C-7261**	6	NUT (M8X1.25-THD)	
	39	1	**5P-4116**	4	WASHER-HARD (8.8X20.5X2-MM THK)	
	40	1	**6V-0826**	2	GROMMET	
	41	1	**7J-9108**	1	SEAL-O-RING	
	42	1	**7X-7729**	6	WASHER (11X25X3-MM THK)	
	43	1	**8T-4121**	2	WASHER-HARD (11X21X2.5-MM THK)	
M	44	1	**8T-4133**	2	NUT (M10X1.5-THD)	
M	45	1	**8T-4136**	6	BOLT (M10X1.5X25-MM)	
M	46	1	**8T-4138**	1	BOLT (M6X1X20-MM)	
	47	1	**8T-4205**	1	WASHER-HARD (7.2X14.5X2-MM THK)	
	48	1	**8T-4224**	4	WASHER-HARD (8.8X16X2-MM THK)	
M	49	1	**8T-4908**	2	BOLT (M8X1.25X25-MM)	
	50	1	**9D-3767**	2	PLUG-BUTTON	
	51	1	**9R-2807**	2	CLIP	
M	52	1	**9X-2044**	2	SCREW-TRUSS HEAD (M6X1X16-MM)	
	53	1	**286-1930**	2	RING-RETAINING	

M-METRIC PART

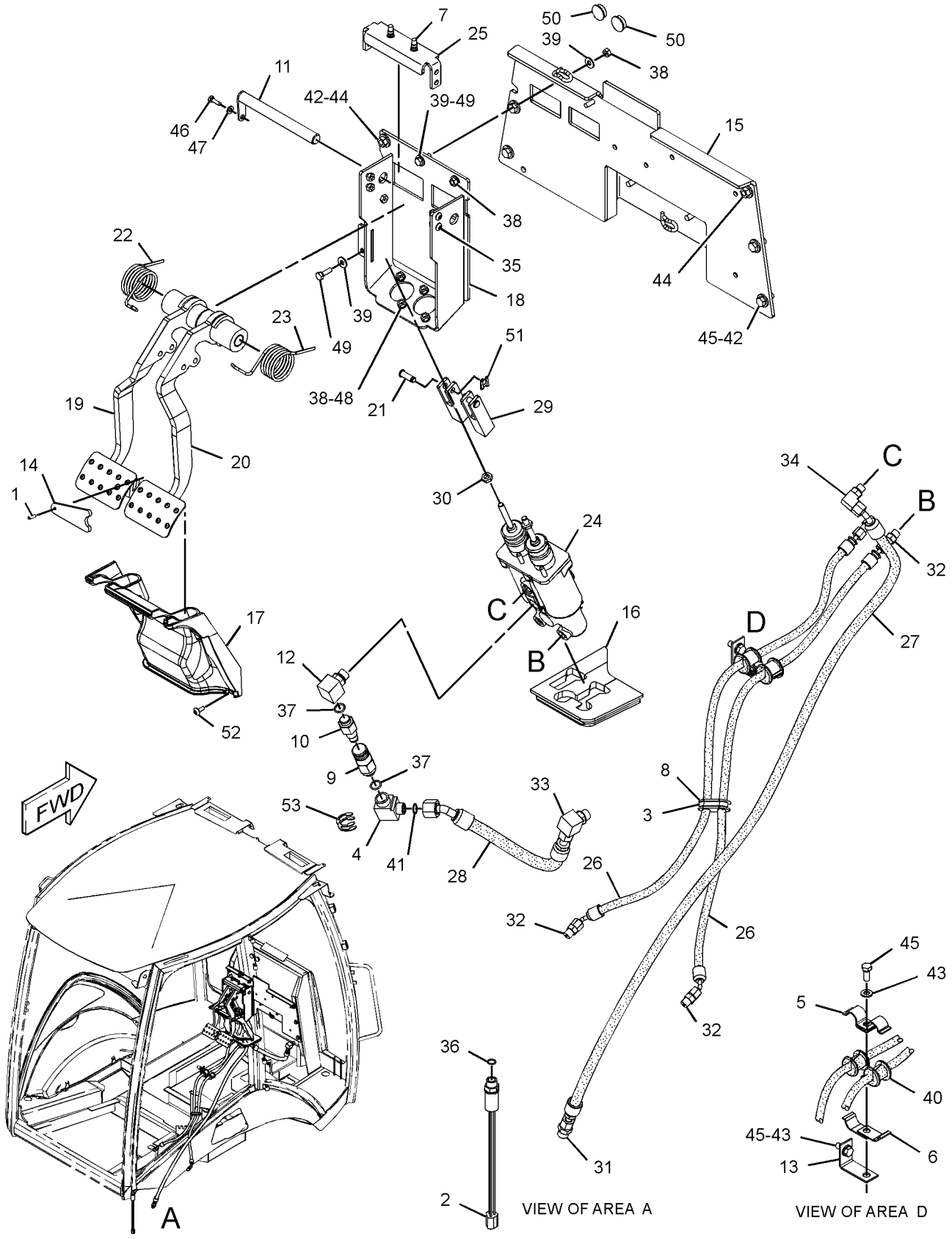

GRAPHIC #1

<END>

g01233551

216-1612 CYLINDER GP-BRAKE–RH (CHG -00, -01)

S/N: HLS1-UP
PART OF 238-5289 HOUSING GP-AXLE
AN ATTACHMENT

SMCS-4262 **i01873014**

NOTE	REF NO	GRAPHIC REF	PART NUMBER	QTY	PART NAME 1 2 3 4 5 6 (PRODUCT LEVEL)	SEE PAGE
J	1	1	**199-0640**	3	BOLT	
L	2	1	**199-0645**	3	BOLT-BRAKE	
J	3	1	**199-0672**	3	SPACER	
J	4	1	**199-0681**	3	WASHER (6.2X16.5X2MM THK)	
L	5	1	**199-0701**	3	BRAKE-COVER	
L	6	1	**199-0702**	3	SPRING	
L	7	1	**199-0703**	3	SPRING	
	8	1	**199-0752**	1	PISTON-BRAKE	
	9	1	**199-0759**	1	O-RING-INNER	
JL	10	1	**212-5712**	6	BUSHING	
	11	1	**219-8834**	1	CYLINDER-BRAKE (RH)	
	12	1	**199-0700**	1	O-RING-OUTER	
					AVAILABLE REPAIR KIT(S):	
J			**217-2347**	3	KIT-BRAKE CYLINDER	
L			**217-2349**	3	KIT-BRAKE CYLINDER	

J-KIT MARKED J SERVICES PARTS MARKED J
L-KIT MARKED L SERVICES PARTS MARKED L

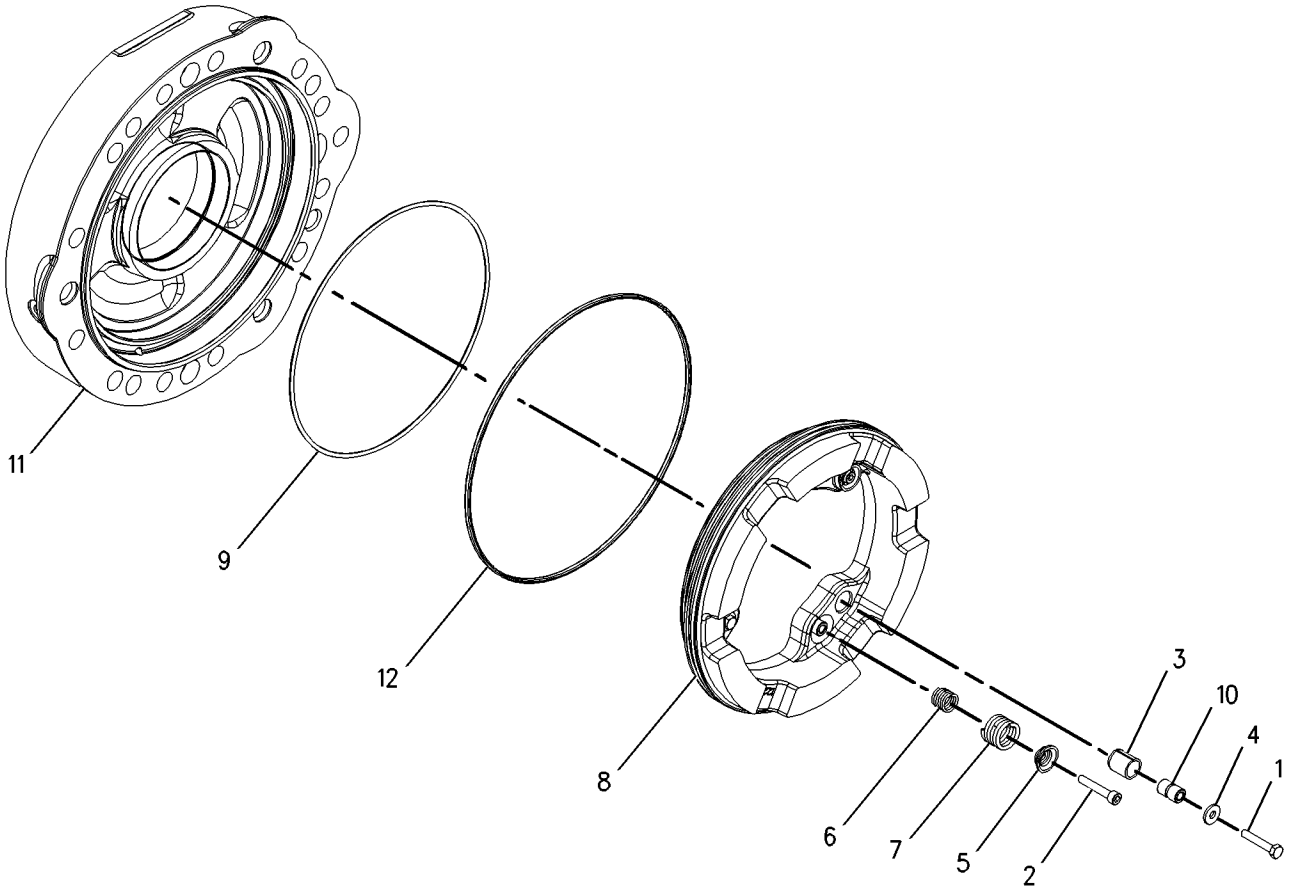

GRAPHIC #1 **<END>** g00953880

216-1613 CYLINDER GP-BRAKE–LH (CHG -00 THRU -03)

S/N: HLS1-UP

PART OF 238-5289 HOUSING GP-AXLE

AN ATTACHMENT

SMCS-4262 **i02449601**

NOTE	REF NO	GRAPHIC REF	PART NUMBER	QTY	PART NAME 1 2 3 4 5 6 (PRODUCT LEVEL)	SEE PAGE
M	1	1	**6V-2315**	3	BOLT (M6X1X35-MM)	
JLM	2	1	**1R-5396**	3	BOLT (M6X1X35-MM)	
J	3	1	**199-0672**	3	SPACER	
J	4	1	**199-0681**	3	WASHER (6.2X16.5X2-MM THK)	
L	5	1	**199-0701**	3	BRAKE-COVER	
L	6	1	**199-0702**	3	SPRING (INNER)	
L	7	1	**199-0703**	3	SPRING (OUTER)	
	8	1	**199-0752**	1	PISTON-BRAKE	
	9	1	**199-0759**	1	O-RING-INNER	
JL	10	1	**212-5712**	6	BUSHING	
	11	1	**219-8835**	1	CYLINDER-BRAKE (LH)	
	12	1	**199-0700**	1	O-RING-OUTER	
					AVAILABLE REPAIR KIT(S):	
J			**217-2347**	3	KIT-BRAKE CYLINDER (ADJUSTER)	
L			**217-2349**	3	KIT-BRAKE CYLINDER (SPRING RETENTION)	

J-KIT MARKED J INCLUDES PARTS MARKED J
L-KIT MARKED L INCLUDES PARTS MARKED L
M-METRIC PART

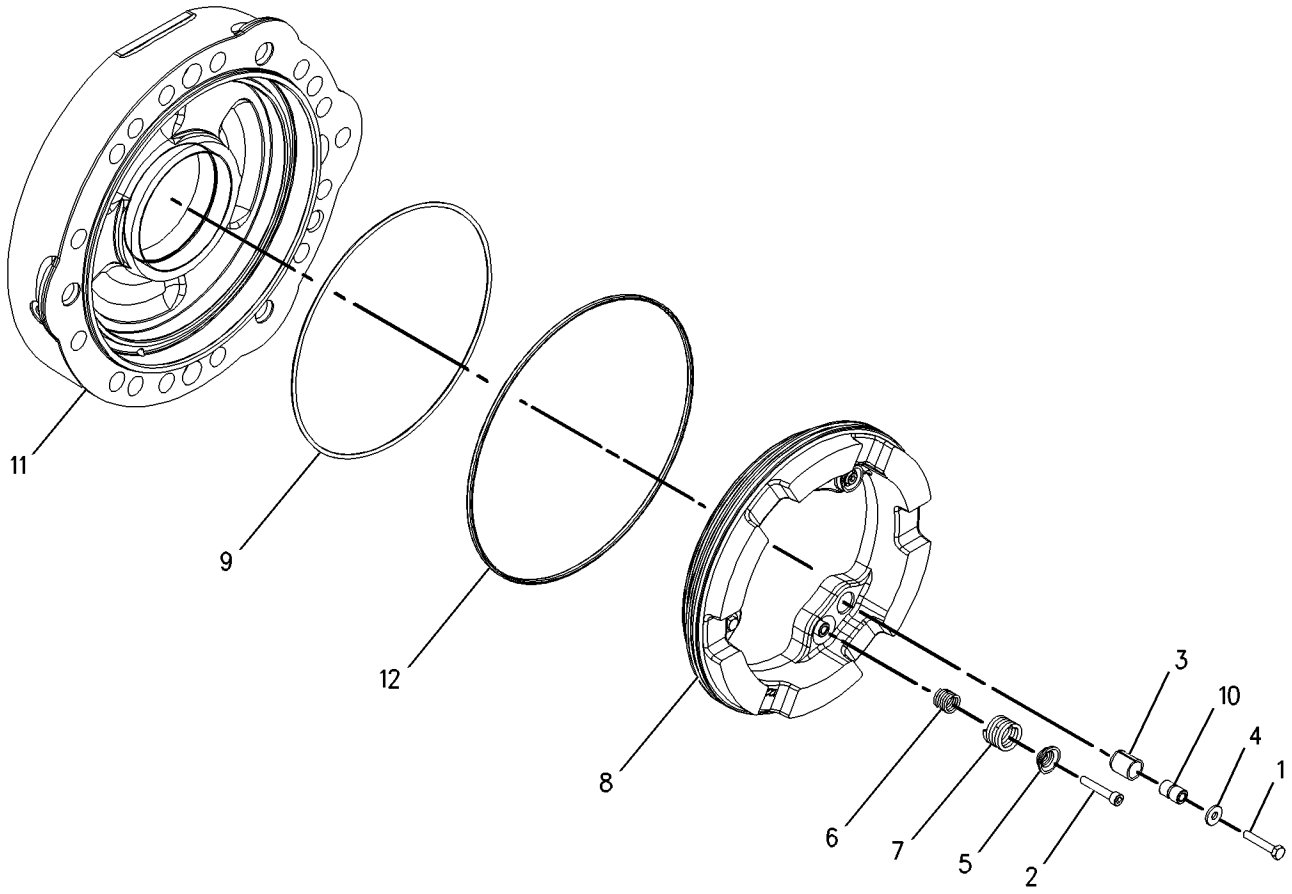

GRAPHIC #1 **<END>** g00995396

163-0753 LEVER GP-HAND CONTROL (CHG -00, -01)

S/N: HLS1-UP

PART OF 261-5517 CONTROL GP-PARKING BRAKE

AN ATTACHMENT

SMCS-4284 **i01548326**

NOTE	REF NO	GRAPHIC REF	PART NUMBER	QTY	PART NAME 1 2 3 4 5 6 (PRODUCT LEVEL)	SEE PAGE
	1	1	**7R-8239**	2	SPACER	
	2	1	**039-9133**	1	PIN	
	3	1	**164-9598**	1	GRIP	
	4	1	**164-9599**	1	COVER	
	5	1	**3B-4610**	1	PIN-COTTER	
	6	1	**8T-4224**	2	WASHER-HARD (8.8X16X2MM THK)	

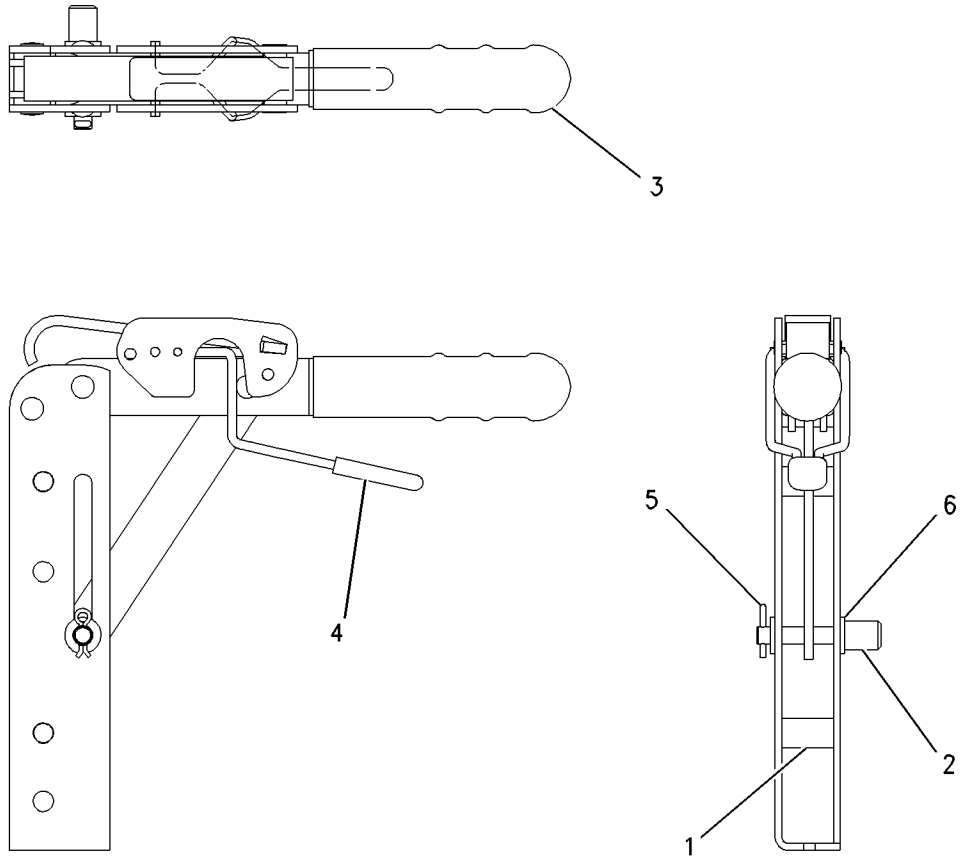

GRAPHIC #1 **<END>** g00729504

206-1633 CONTROL GP-STEERING–TILT (CHG -03 THRU -05)

S/N: HLS1-UP

PART OF 269-2125, 269-2126, 269-2127 CAB AR, 269-2123, 269-2124 CANOPY AR AN ATTACHMENT

SMCS-4309, 4310, 4322, 4338, 4343 **i02357022**

NOTE	REF NO	GRAPHIC REF	PART NUMBER	QTY	PART NAME 1 2 3 4 5 6 (PRODUCT LEVEL)	SEE PAGE
	1	1	**2T-3360**	1	BUTTON AS-HORN	
	2	1	**153-7368**	1	PLUG	
Y	3	1	**153-7369**	1	KNOB GP-STEERING	223
	4	1	**206-1632**	1	PLATE AS	
J	5	1	**206-1635**	1	COLUMN AS-STEERING	
	6	1	**217-8058**	1	WIRE AS	
	7	1	**227-1057**	1	PLUG-HOLE	
	8	1	**145-9291**	1	STEERING WHEEL AS	
	9	1	**7X-7729**	6	WASHER (11X25X3-MM THK)	
	10	1	**8T-4121**	4	WASHER-HARD (11X21X2.5-MM THK)	
M	11	1	**8T-4133**	2	NUT (M10X1.5-THD)	
M	12	1	**8T-4136**	4	BOLT (M10X1.5X25-MM)	
M	13	1	**8T-4195**	4	BOLT (M10X1.5X30-MM)	
M	14	1	**8T-6411**	1	SCREW-MACHINE (M6X1X12-MM)	
M	15	1	**8T-8894**	1	BOLT-SOCKET HEAD (M10X1.5X20-MM)	
					AVAILABLE REPAIR KIT(S):	
J			**254-9926**	1	KIT-TILT PEDAL	
					(INCLUDES SPRING, RING, PIN, SHAFT & TILT LEVER)	
J			**254-9927**	1	KIT-PIVOT	
					(INCLUDES PIVOT BUSHING & PIN)	
J			**254-9925**	1	KIT-GAS SPRING	
					(INCLUDES PINS, RING AND SPRING)	

J-KITS MARKED J AVAILABLE FOR PART(S) MARKED J
M-METRIC PART
Y-SEPARATE ILLUSTRATION

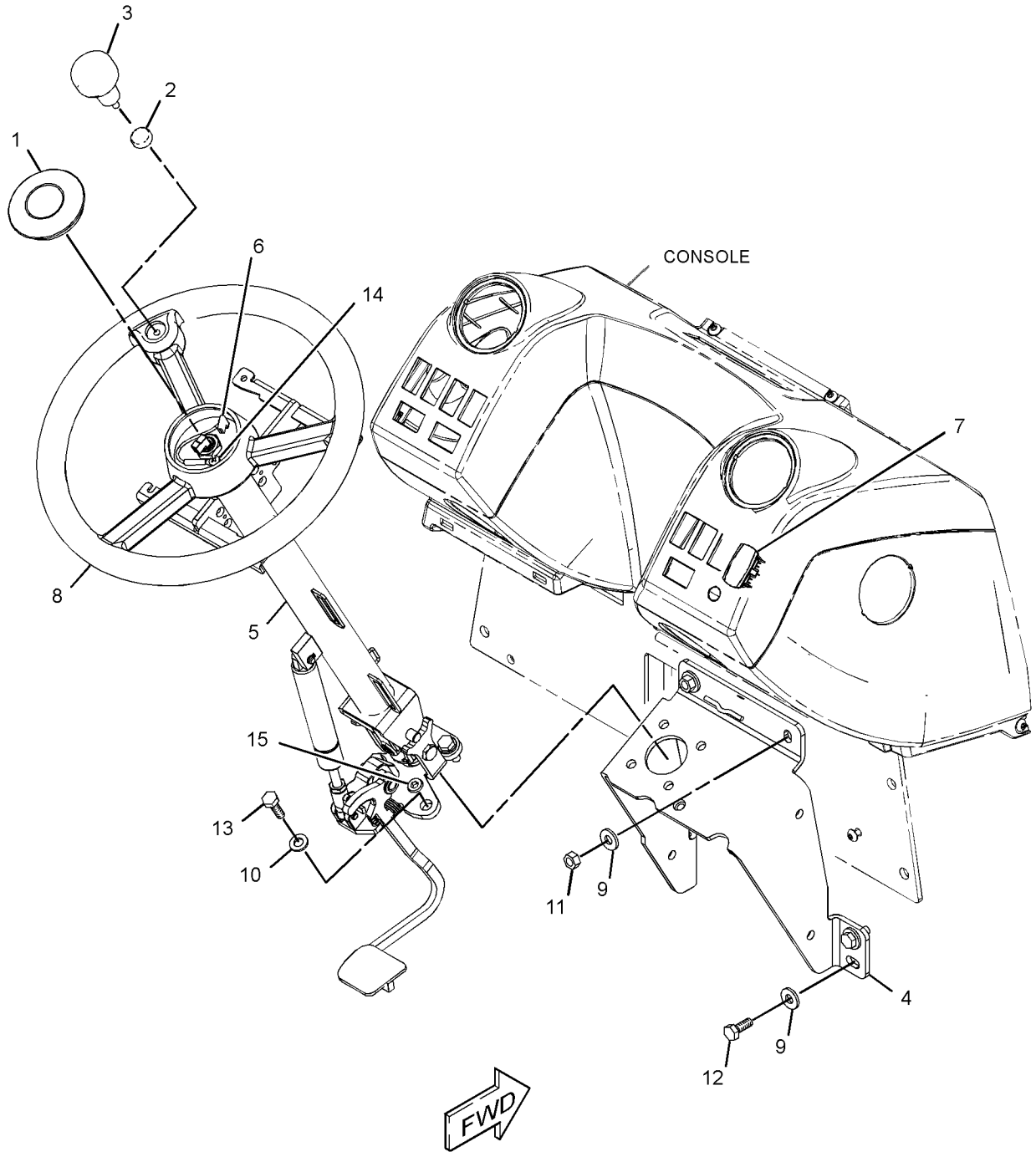

GRAPHIC #1 **<END>** g01233577

153-7369 KNOB GP-STEERING (CHG -00)

S/N: HLS1-UP
PART OF 206-1633 CONTROL GP-STEERING
AN ATTACHMENT

SMCS-4309 **i01877136**

NOTE	REF NO	GRAPHIC REF	PART NUMBER	QTY	PART NAME 1 2 3 4 5 6 (PRODUCT LEVEL)	SEE PAGE
M	1	1	**8T-6869**	1	BOLT (M8X1.25X60-MM)	
	2	1	**8T-4224**	1	WASHER-HARD (8.8X16X2-MM THK)	
M	3	1	**5C-7261**	1	NUT (M8X1.25-THD)	
Z	4	1		1	KNOB	

M-METRIC PART
Z-NOT SERVICED SEPARATELY

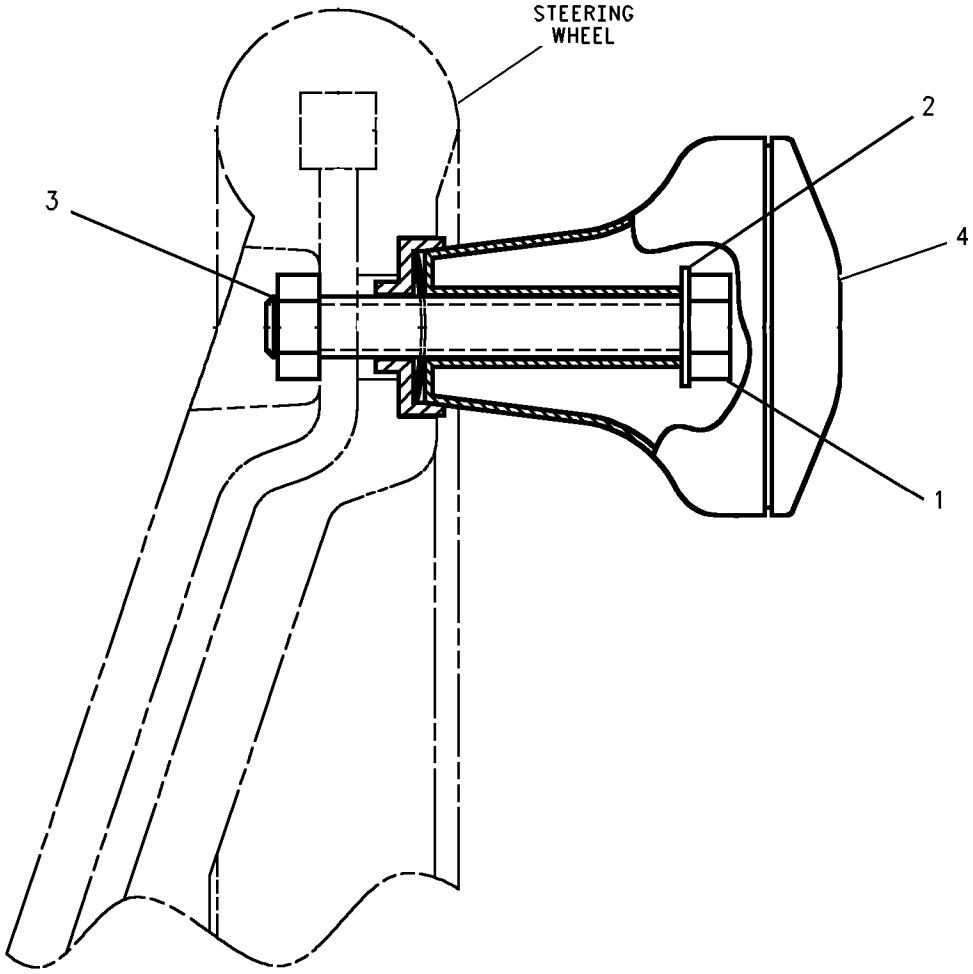

GRAPHIC #1 **<END>** g00955149

STEERING SYSTEM

211-6571 LINES GP-STEERING (CHG -02 THRU -06)

S/N: HLS1-UP

PART OF 216-4740 DRIVE AR-BACKHOE LOADER

AN ATTACHMENT

SMCS-4304 **i02451224**

NOTE	REF NO	GRAPHIC REF	PART NUMBER	QTY	PART NAME 1 2 3 4 5 6 (PRODUCT LEVEL)	SEE PAGE
E	1	1	**5P-1505**		HOSE (60-CM)	
	2	1	**5D-1026**	2	CLAMP-HOSE	
	3	1	**7K-1181**	2	STRAP-CABLE	
	4	1	**9R-3884**	1	SPACER (13X20X45-MM THK)	
	5	1	*204-0317*	1	CONNECTOR AS	
		1	**3K-0360**	1	SEAL-O-RING	
		1	**6V-8397**	1	SEAL-O-RING	
		1	**092-3635**	1	CONNECTOR	
	6	1	**206-1652**	1	SEAL	
I	7	1	**215-3881**	1	HOSE AS	
I	8	1	**215-3884**	1	HOSE AS	
	9	1	**217-8195**	1	HOSE AS	
	10	1	**217-8197**	1	HOSE AS	
	11	1	**233-6592**	1	SPACER (13X20X24-MM THK)	
	12	1	*148-8318*	3	CONNECTOR AS	
					(EACH INCLUDES)	
		1	**3K-0360**	1	SEAL-O-RING	
		1	**6V-8397**	1	SEAL-O-RING	
		1	**6V-8634**	1	CONNECTOR	
	13	1	*148-8325*	1	CONNECTOR AS	
		1	**3J-1907**	1	SEAL-O-RING	
		1	**3J-1907**	1	SEAL-O-RING	
		1	**4J-5477**	1	SEAL-O-RING	
		1	**4J-5477**	1	SEAL-O-RING	
		1	**6V-8641**	1	CONNECTOR	
		1	**6V-8641**	1	CONNECTOR	
	14	1	*148-8367*	3	ELBOW AS	
					(EACH INCLUDES)	
		1	**6V-8397**	1	SEAL-O-RING	
		1	**6V-9850**	1	ELBOW	
	15	1	*148-8369*	1	ELBOW AS	
		1	**3J-7354**	1	SEAL-O-RING	
		1	**4J-5477**	1	SEAL-O-RING	
		1	**6V-8628**	1	ELBOW	
	16	1	*148-8383*	2	ELBOW AS	
					(EACH INCLUDES)	
		1	**3K-0360**	1	SEAL-O-RING	
		1	**6V-8397**	1	SEAL-O-RING	
		1	**8T-1683**	1	ELBOW	
	17	1	*150-3026*	1	ELBOW AS	
		1	**3K-0360**	1	SEAL-O-RING	
		1	**6V-4292**	1	ELBOW	
	18	1	**5P-4295**	5	CLIP	
	19	1	**5P-7462**	1	CLIP (SLOT)	
	20	1	**5P-7463**	1	CLIP (TAB)	
	21	1	**6V-0683**	1	GROMMET	
	22	1	**8T-4121**	5	WASHER-HARD (11X21X2.5-MM THK)	
M	23	1	**8T-4136**	1	BOLT (M10X1.5X25-MM)	
M	24	1	**8T-4182**	1	BOLT (M10X1.5X45-MM)	
M	25	1	**8T-4196**	2	BOLT (M10X1.5X35-MM)	
M	26	1	**8T-5005**	1	BOLT (M10X1.5X70-MM)	
	27	1	**9M-8406**	1	CLIP	

E-ORDER BY THE CENTIMETER
I-REFER TO HYDRAULIC INFORMATION SYSTEM
M-METRIC PART

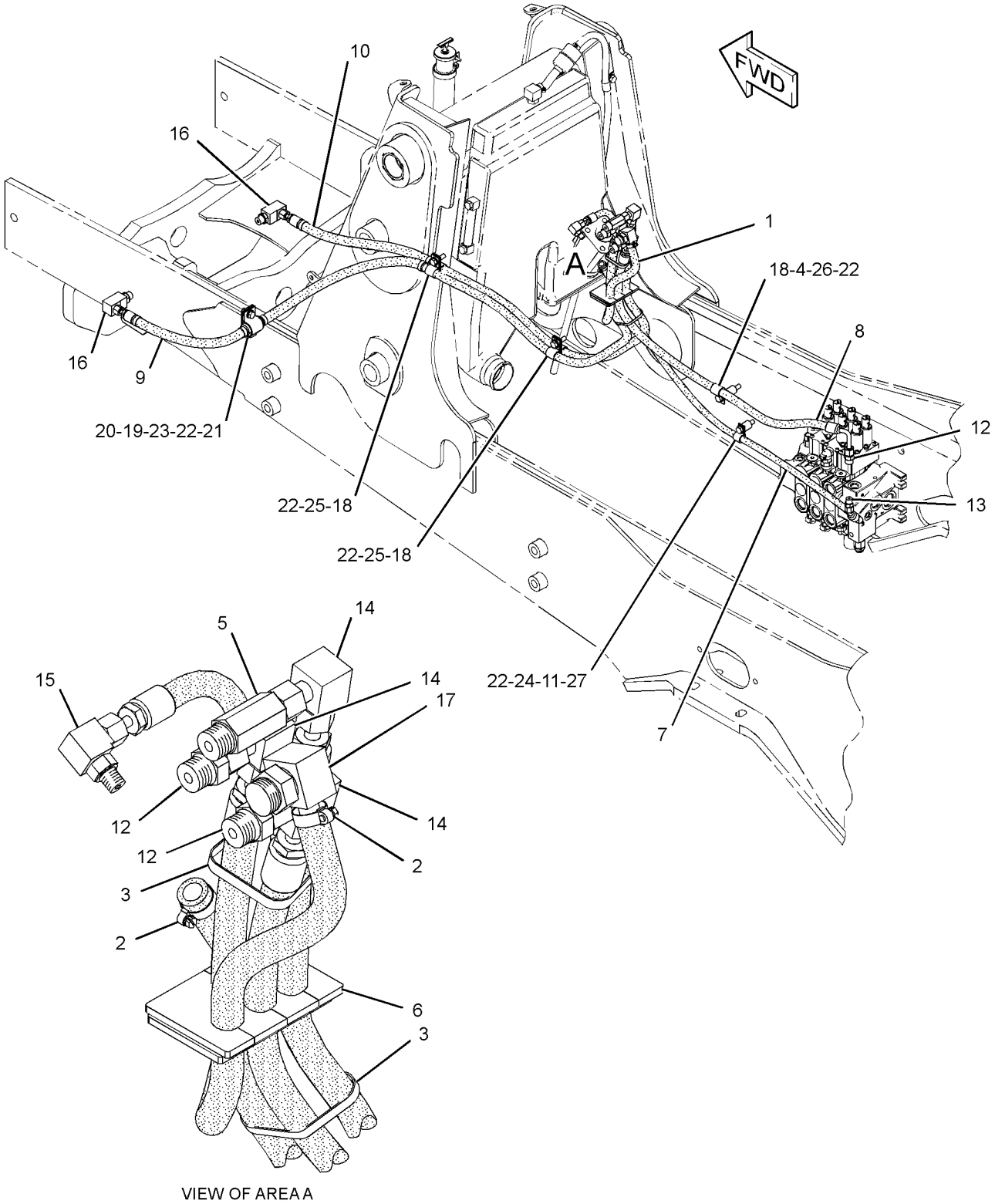

GRAPHIC #1 **<END>** g01211923

STEERING SYSTEM

210-6240 PUMP GP-METERING (CHG -01)

S/N: HLS1-UP

PART OF 268-6455 HYDRAULIC AR

SMCS-4312 **i02096817**

NOTE	REF NO	GRAPHIC REF	PART NUMBER	QTY	PART NAME 1 2 3 4 5 6 (PRODUCT LEVEL)	SEE PAGE
	1	1	**114-3928**	1	CAP - END	

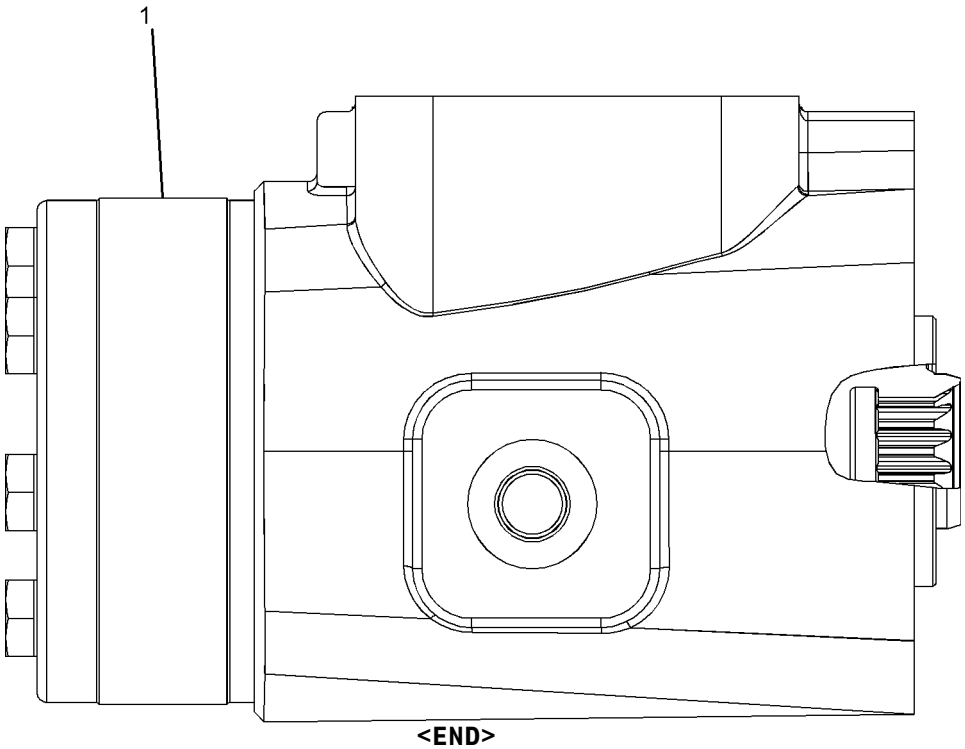

GRAPHIC #1 **<END>** g01072426

FRAME AND BODY

253-0784 BOX GP-BATTERY (CHG -00 THRU -03)

S/N: HLS1-UP

PART OF 213-9287 CHASSIS AR

SMCS-7257 **i02466370**

NOTE	REF NO	GRAPHIC REF	PART NUMBER	QTY	PART NAME 1 2 3 4 5 6 (PRODUCT LEVEL)	SEE PAGE
Y	1	1	**118-6842**	1	DOOR GP-BATTERY	231
	2	1	**118-6854**	1	TREAD	
	3	1	**164-3876**	1	STEP AS	
M		1	**8T-3612**	4	NUT-WELD (M8X1.25-THD)	
	4	1	**245-6109**	1	PLATE AS	
M		1	**8T-3612**	3	NUT-WELD (M8X1.25-THD)	
	5	1	**253-0783**	1	BOX AS-BATTERY	
	6	1	**5P-4116**	6	WASHER-HARD (8.8X20.5X2-MM THK)	
	7	1	**5G-2934**	1	PLUG	
M	8	1	**8T-4183**	4	BOLT (M12X1.75X40-MM)	
M	9	1	**8T-4189**	6	BOLT (M8X1.25X20-MM)	
M	10	1	**8T-4200**	7	BOLT (M8X1.25X16-MM)	
	11	1	**8T-4223**	4	WASHER-HARD (13.5X25.5X3-MM THK)	
	12	1	**8T-4224**	7	WASHER-HARD (8.8X16X2-MM THK)	
M	13	1	**8T-7963**	1	LOCKNUT (M8X1.25-THD)	

M-METRIC PART
Y-SEPARATE ILLUSTRATION

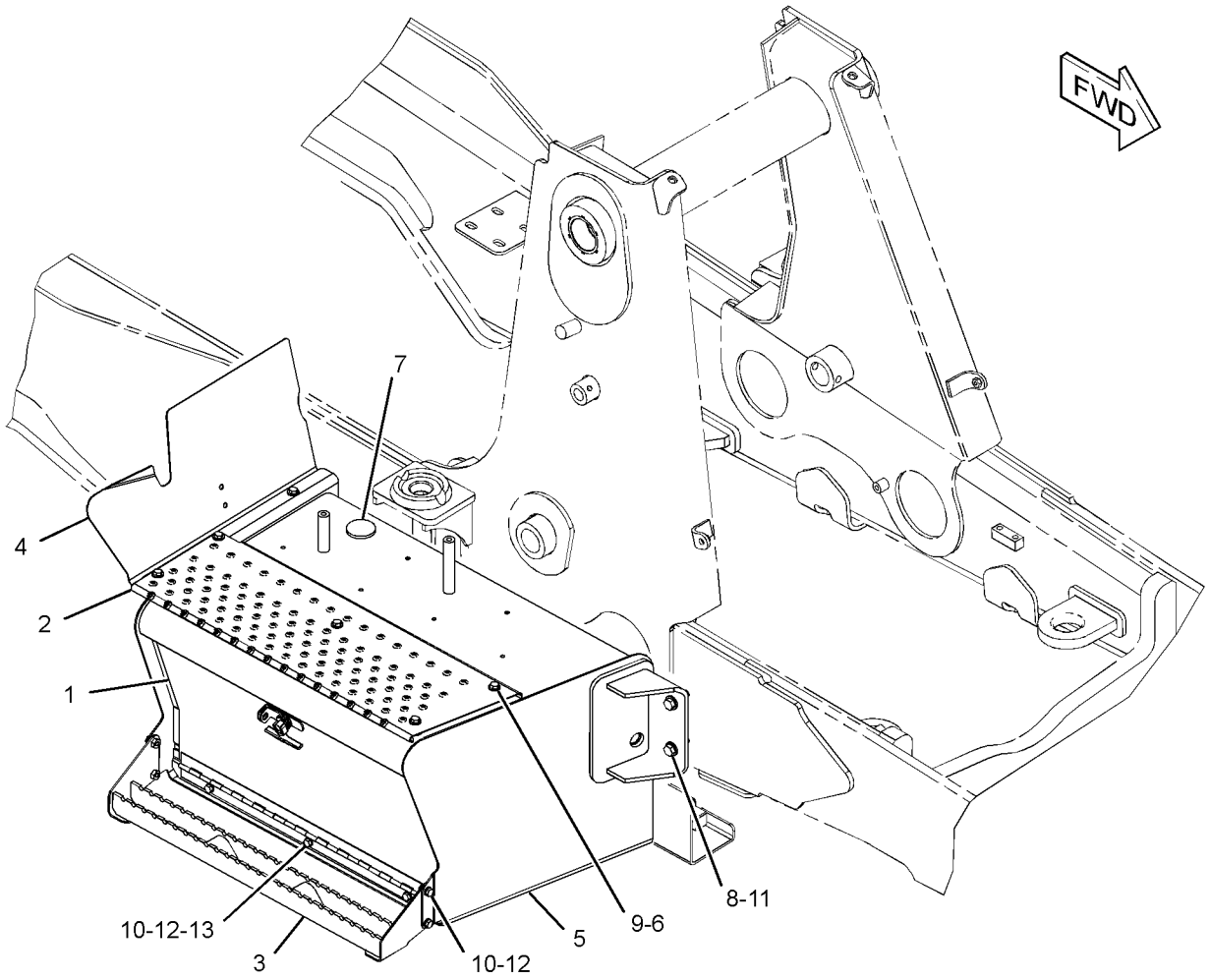

GRAPHIC #1 **<END>** g01200345

211-3649 COUNTERWEIGHT GP (CHG -02)

S/N: HLS1-UP
115-KG (250-LB)
AN ATTACHMENT

SMCS-7056 **i02110486**

NOTE	REF NO	GRAPHIC REF	PART NUMBER	QTY	PART NAME 1 2 3 4 5 6 (PRODUCT LEVEL)	SEE PAGE
	1	1	**214-3254**	1	COUNTERWEIGHT	
M	2	1	**8C-3290**	2	BOLT (M24X3X150-MM)	
	3	1	**8T-4167**	2	WASHER-HARD (26X44X4-MM THK)	

M-METRIC PART

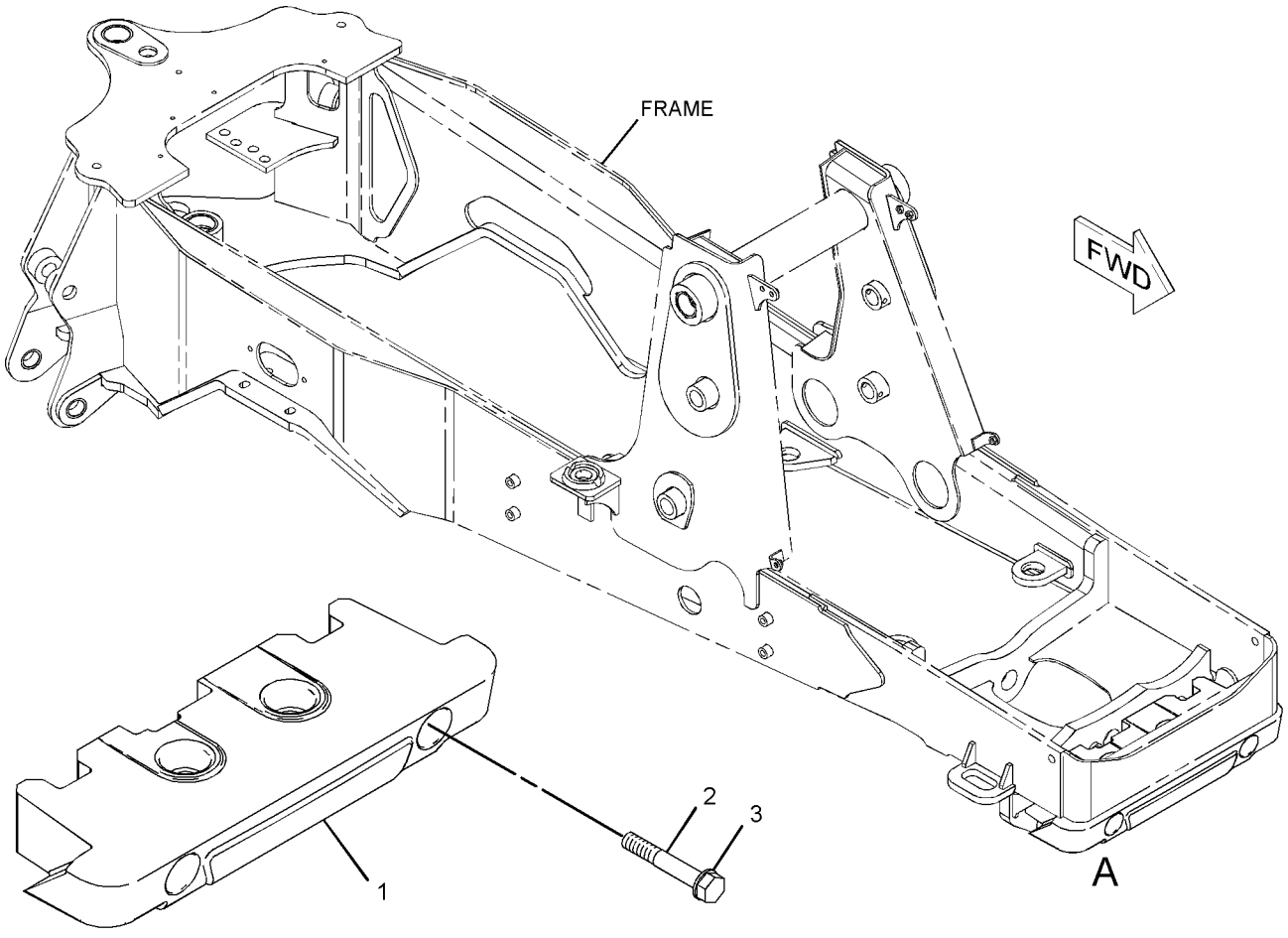

VIEW OF AREA A

GRAPHIC #1 **<END>** g01074968

252-9984 COUNTERWEIGHT GP (CHG -00)

S/N: HLS1-UP
485-KG (1070 LB)
AN ATTACHMENT

SMCS-7056 **i02116848**

NOTE	REF NO	GRAPHIC REF	PART NUMBER	QTY	PART NAME 1 2 3 4 5 6 (PRODUCT LEVEL)	SEE PAGE
	1	1	**252-9983**	1	COUNTERWEIGHT GP	
M		1	**8T-4001**	2	NUT (M24X3-THD)	
		1	**8T-4167**	2	WASHER-HARD (26X44X4-MM THK)	
M		1	**127-4834**	2	BOLT (M24X3X340-MM)	
M	2	1	**8C-3290**	4	BOLT (M24X3X150-MM)	
	3	1	**8T-4167**	4	WASHER-HARD (26X44X4-MM THK)	

M-METRIC PART

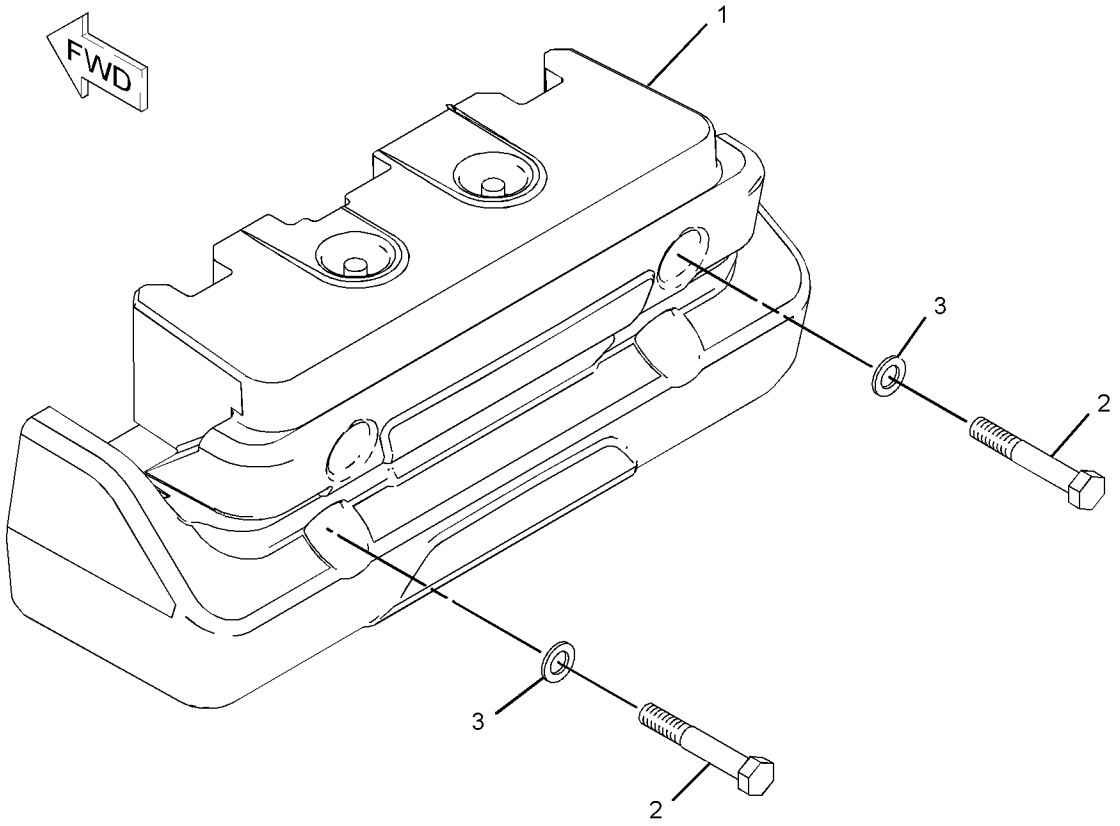

GRAPHIC #1 **<END>** g01084203

252-9986 COUNTERWEIGHT GP (CHG -00)

S/N: HLS1-UP
235-KG (515-LB)
AN ATTACHMENT

SMCS-7056 **i02406812**

NOTE	REF NO	GRAPHIC REF	PART NUMBER	QTY	PART NAME 1 2 3 4 5 6 (PRODUCT LEVEL)	SEE PAGE
	1	1	*252-9985*	1	COUNTERWEIGHT GP	
M		1	**7X-2476**	2	BOLT (M24X3X220-MM)	
M		1	**8T-4001**	2	NUT (M24X3-THD)	
		1	**8T-4167**	2	WASHER-HARD (26X44X4-MM THK)	
		1	**214-3254**	2	COUNTERWEIGHT	
M	2	1	**8C-3290**	4	BOLT (M24X3X150-MM)	
	3	1	**8T-4167**	4	WASHER-HARD (26X44X4-MM THK)	

M-METRIC PART

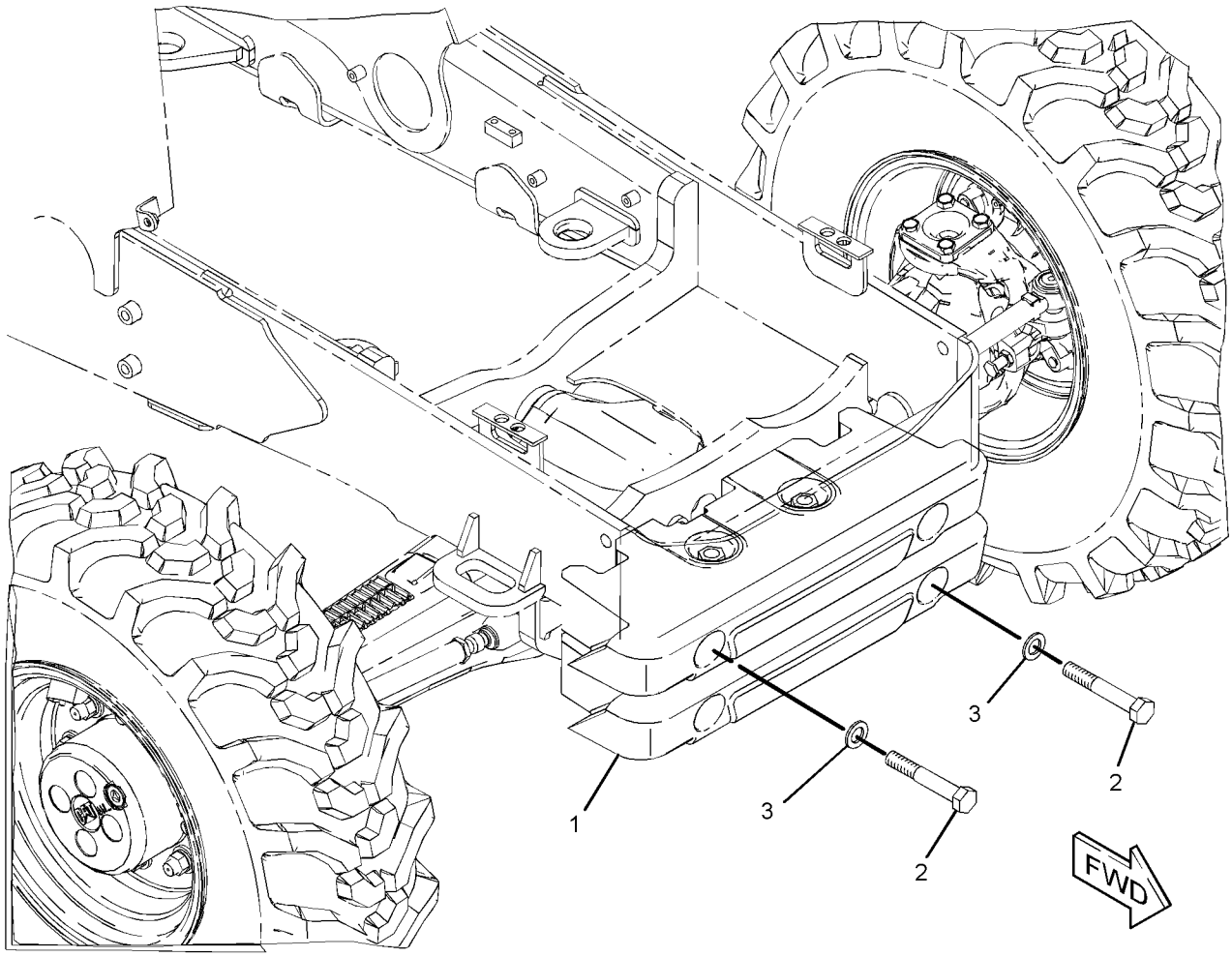

GRAPHIC #1 **<END>** g01202979

118-6842 DOOR GP-BATTERY (CHG -02 THRU -08)

S/N: HLS1-UP

PART OF 253-0784 BOX GP-BATTERY

SMCS-7273 **i02249051**

NOTE	REF NO	GRAPHIC REF	PART NUMBER	QTY	PART NAME 1 2 3 4 5 6 (PRODUCT LEVEL)	SEE PAGE
	1	1	**8C-8522**	1	PAWL-LATCH	
	2	1	**129-4741**	1	LATCH AS-T-BAR	
	3	1	**151-2963**	1	DOOR AS	
M	4	1	**6V-7743**	2	LOCKNUT (M6X1-THD)	
M	5	1	**8T-4133**	2	NUT (M10X1.5-THD)	
	6	1	**8T-4205**	2	WASHER-HARD (7.2X14.5X2-MM THK)	

M-METRIC PART

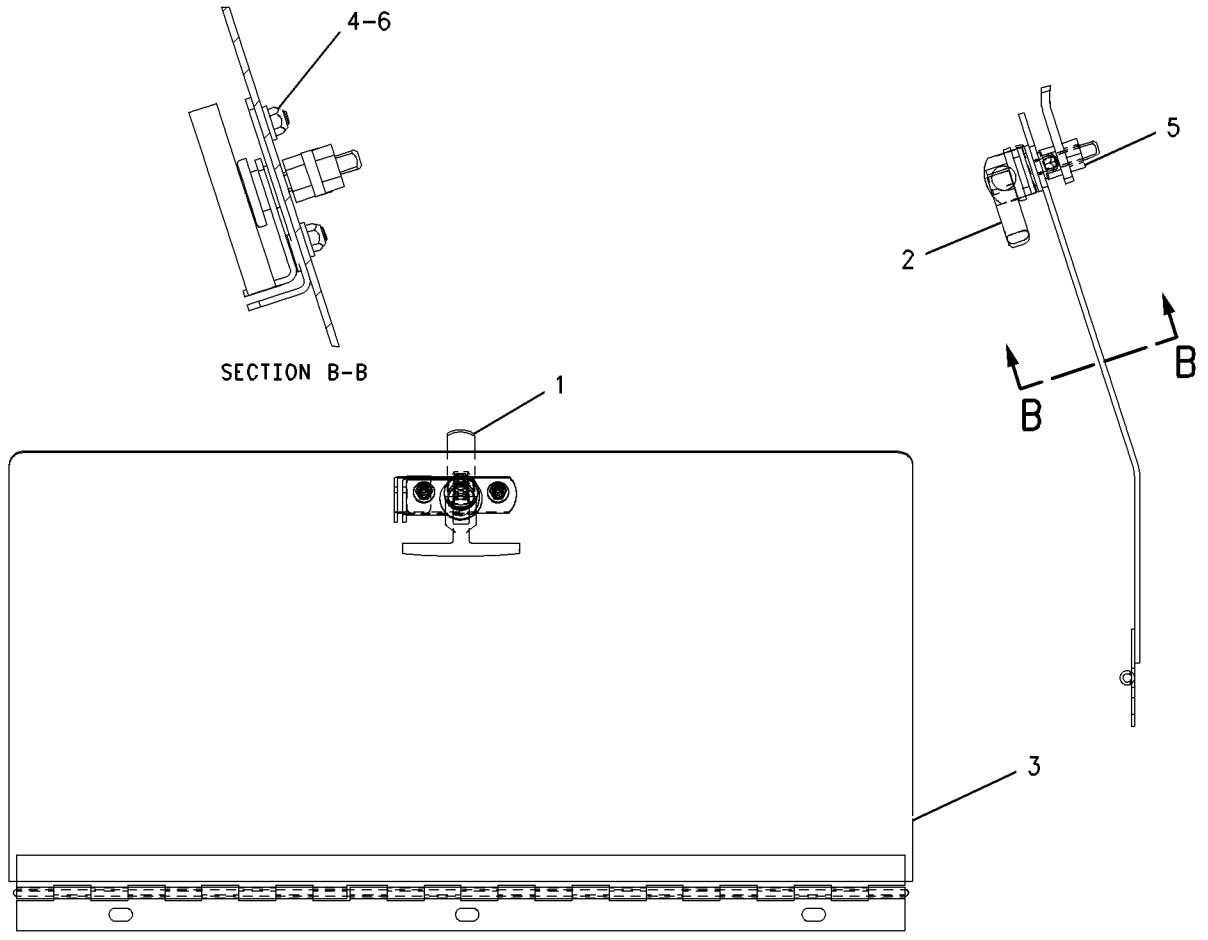

GRAPHIC #1 **<END>** g00739059

249-9328 EXTENSION GP-FENDER (CHG -01, -02)

S/N: HLS1-UP

AN ATTACHMENT

SMCS-7252 **i02446010**

NOTE	REF NO	GRAPHIC REF	PART NUMBER	QTY	PART NAME 1 2 3 4 5 6 (PRODUCT LEVEL)	SEE PAGE
	1	1	**249-9329**	1	EXTENSION-FENDER (LH)	
	2	1	**249-9330**	1	EXTENSION-FENDER (RH)	
	3	1	**251-4889**	8	WASHER-HARD	
	4	1	**251-4890**	4	SCREW-MACHINE	
	5	1	**251-4891**	4	LOCKNUT	

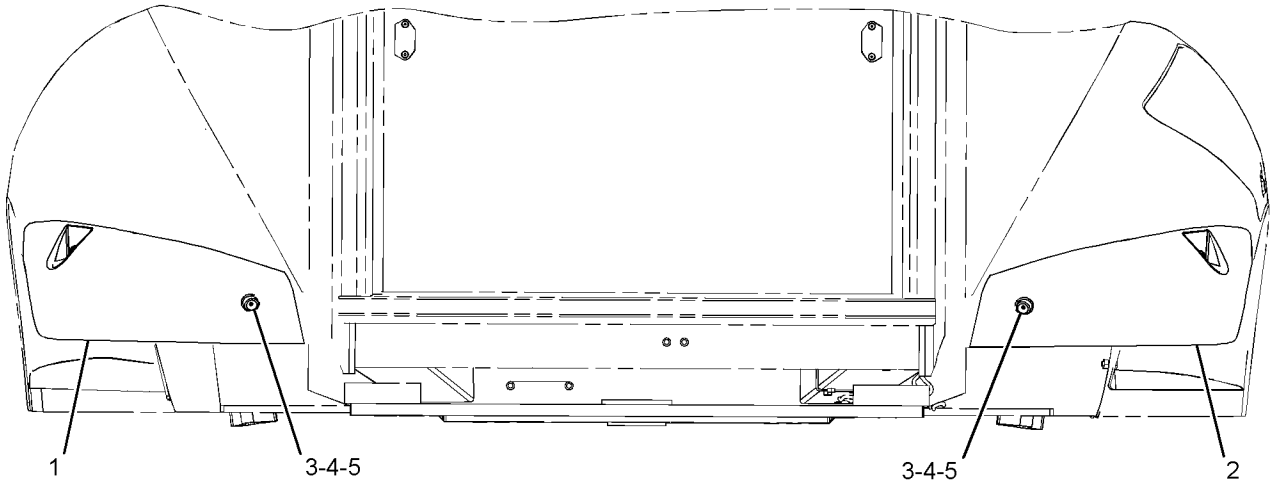

REAR VIEW

GRAPHIC #1 **<END>** g01231585

201-3954 FENDER GP-FRONT (CHG -00 THRU -03)

S/N: HLS1-UP

AN ATTACHMENT

SMCS-7252 **i02440916**

NOTE	REF NO	GRAPHIC REF	PART NUMBER	QTY	PART NAME 1 2 3 4 5 6 (PRODUCT LEVEL)	SEE PAGE
	1	1	**162-4004**	2	FENDER (FRONT)	
M	2	1	**199-0783**	4	BOLT (M16X2X38-MM)	
	3	1	**222-1801**	1	BRACKET AS (LH)	
	4	1	**222-1802**	1	BRACKET AS (RH)	
M	5	1	**6V-7744**	4	LOCKNUT (M10X1.15-THD)	
	6	1	**8T-4121**	4	WASHER-HARD (11X21X2.5-MM THK)	
M	7	1	**8T-4122**	12	WASHER-HARD (17X32X3.5-MM THK)	
M	8	1	**8T-4195**	4	BOLT (M10X1.5X30-MM)	
	9	1	**8T-4222**	4	WASHER-PLATED (11X32X2.5-MM THK)	
M	10	1	**8T-4778**	4	LOCKNUT (M16X2-THD)	

M-METRIC PART

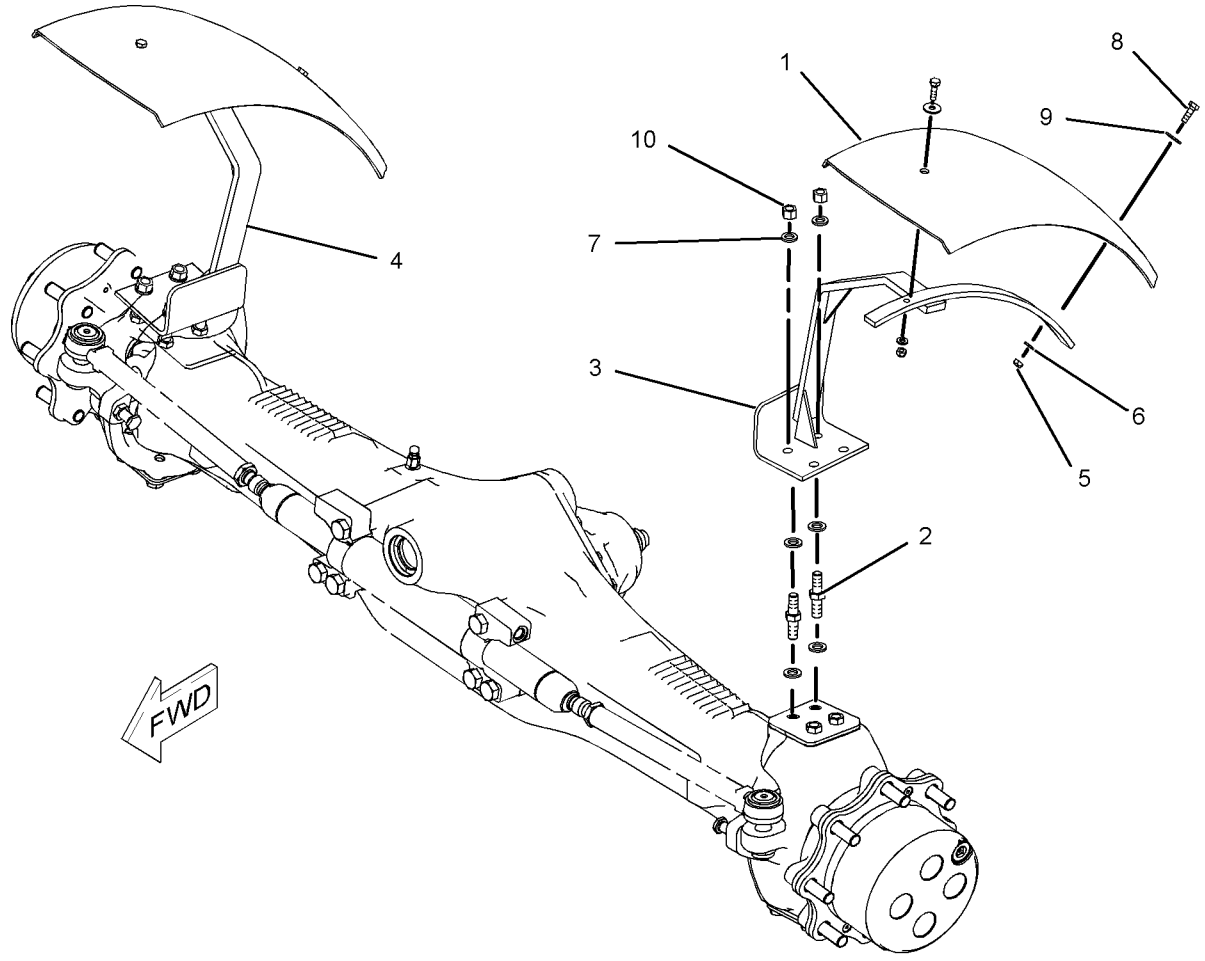

GRAPHIC #1 **<END>** g01027709

213-1891 FENDER GP-REAR (CHG -02 THRU -05)

S/N: HLS1-UP

PART OF 269-2125, 269-2126, 269-2127 CAB AR, 269-2123, 269-2124 CANOPY AR

AN ATTACHMENT

SMCS-7252 **i02381001**

NOTE	REF NO	GRAPHIC REF	PART NUMBER	QTY	PART NAME 1 2 3 4 5 6 (PRODUCT LEVEL)	SEE PAGE
E	1	1	**220-0738**		SEAL (74-CM)	
E	1A	1	**220-0738**		SEAL (118-CM)	
E	2	1	**244-3113**		SEAL (203-CM EACH)	
	3	1	**116-5763**	1	CLIP-SPRING	
M	4	1	**193-9055**	4	SCREW-HEX FLANGE	
	5	1	**211-3783**	1	FENDER-REAR (LH)	
	6	1	**213-1881**	1	FENDER-REAR (RH)	
	7	1	**213-1884**	1	CLIP	
	8	1	**213-1887**	1	COVER-FENDER	
	9	1	**213-1889**	1	PLATE	
	10	1	**225-0060**	1	GUARD	
J	11	1	**226-0291**	1	LOCK AS	
	12	1	**227-5556**	1	PLATE	
M	13	1	**127-2170**	1	SCREW-TRUSS HEAD (M8X1.25X20-MM)	
	14	1	**156-0283**	20	WASHER-HARD (8.4X35X2.5-MM THK)	
M	15	1	**6V-9189**	4	LOCKNUT (M8X1.25-THD)	
M	16	1	**8T-5091**	12	BOLT (M8X1.25X20-MM)	
M	17	1	**8T-5093**	4	BOLT-LOCKING (M8X1.25X25-MM)	

E-ORDER BY THE CENTIMETER
J-REQUIRES 5P8500 KEY
M-METRIC PART

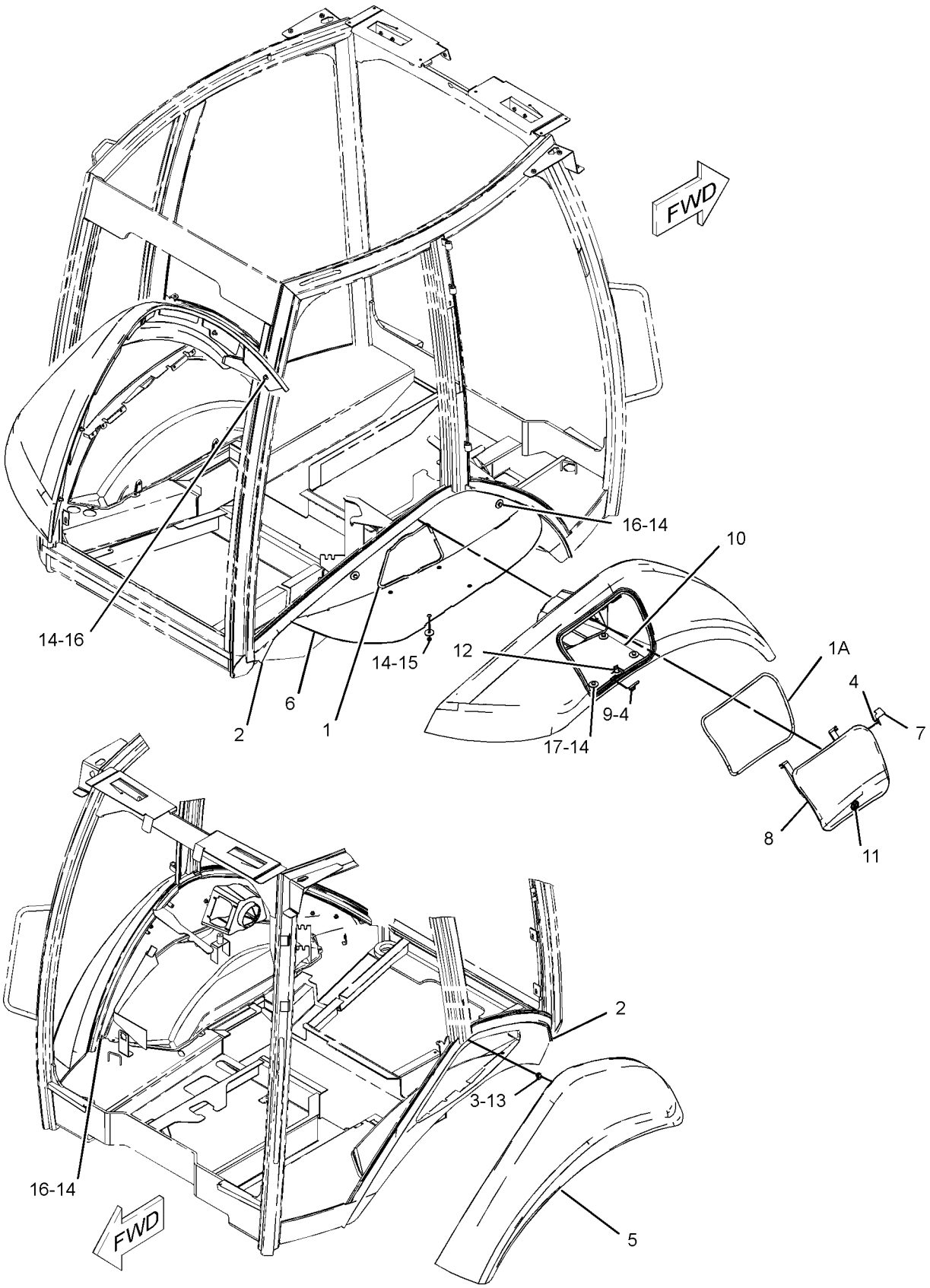

GRAPHIC #1 **<END>** g01190381

223-3965 FLOORPLATE GP (CHG -02 THRU -04)

S/N: HLS1-UP
PART OF 269-2123, 269-2124 CANOPY AR
AN ATTACHMENT

SMCS-7265 **i02446406**

NOTE	REF NO	GRAPHIC REF	PART NUMBER	QTY	PART NAME 1 2 3 4 5 6 (PRODUCT LEVEL)	SEE PAGE
	1	1	**206-1832**	1	PLATE AS	
	2	1	**223-3962**	1	PLATE AS	
	3	1	**223-4546**	1	PLATE AS	
	4	1	**232-2865**	1	PLATE AS	
	5	1	**232-2869**	1	PLATE AS	
	6	1	**232-2870**	1	PLATE AS	
	7	1	**269-3269**	1	PLATE AS	
	8	1	**283-8562**	1	PLATE AS	
	9	1	**283-8563**	1	PLATE AS	
	10	1	**9X-2038**	40	WASHER (7X19X2-MM THK)	
M	11	1	**9X-2043**	40	SCREW-TRUSS HEAD (M6X1X14-MM)	

M-METRIC PART

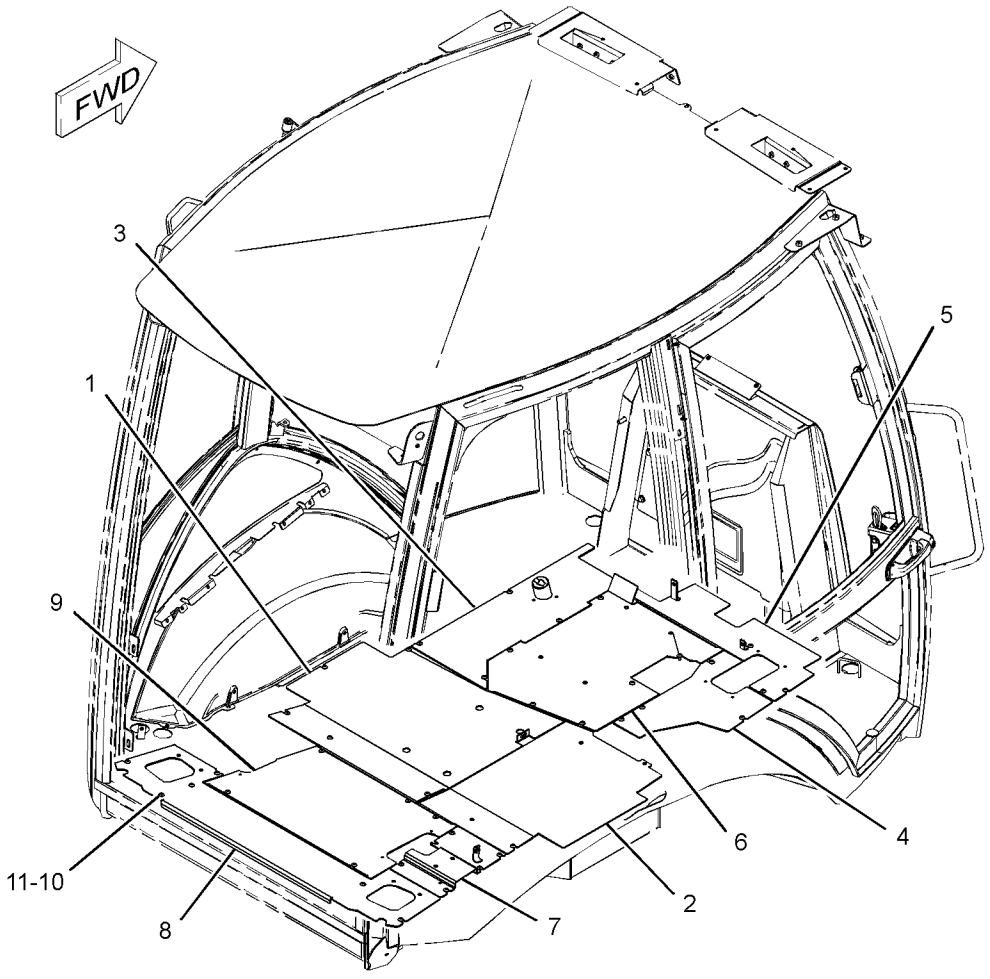

GRAPHIC #1 **<END>** g01234300

223-3966 FLOORPLATE GP (CHG -02 THRU -04)

S/N: HLS1-UP

PART OF 269-2125, 269-2126, 269-2127 CAB AR

AN ATTACHMENT

SMCS-7265 **i02447122**

NOTE	REF NO	GRAPHIC REF	PART NUMBER	QTY	PART NAME 1 2 3 4 5 6 (PRODUCT LEVEL)	SEE PAGE
	1	1	**206-1832**	1	PLATE AS	
	2	1	**269-3269**	1	PLATE AS	
	3	1	**283-8562**	1	PLATE AS	
	4	1	**206-1850**	1	PLATE AS	
	5	1	**232-2865**	1	PLATE AS	
	6	1	**223-3964**	1	PLATE AS	
	7	1	**232-2869**	1	PLATE AS	
	8	1	**223-4546**	1	PLATE AS	
	9	1	**283-8563**	1	PLATE AS	
	10	1	**9X-2038**	40	WASHER (7X19X2-MM THK)	
	11	1	**232-2870**	1	PLATE AS	
M	12	1	**9X-2043**	44	SCREW-TRUSS HEAD (M6X1X14-MM)	

M-METRIC PART

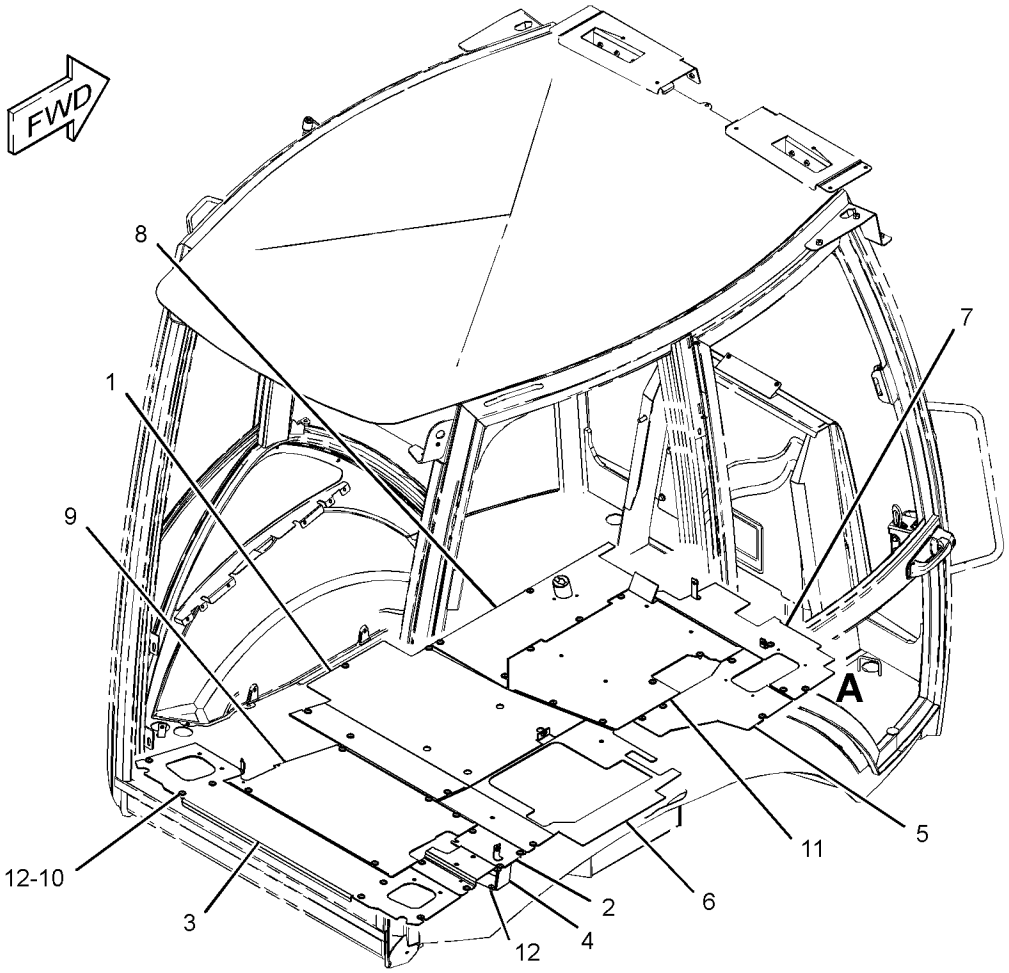

GRAPHIC #1 **<END>** g01231889

214-2000 FRAME GP-LOADER—SINGLE TILT (CHG -02 THRU -04)

S/N: HLS1-UP

PART OF 213-9287 CHASSIS AR

SMCS-7054 **i02457553**

NOTE	REF NO	GRAPHIC REF	PART NUMBER	QTY	PART NAME 1 2 3 4 5 6 (PRODUCT LEVEL)	SEE PAGE
	1	1	**9R-0481**	2	WASHER (71X110X4-MM THK)	
	2	1	**209-4777**	1	CAP & BEARING AS	
		1	**9R-4110**	2	BEARING-SLEEVE	
	3	1	**214-2001**	1	FRAME AS	
		1	**7T-1099**	20	LINK	
		1	**8Y-4489**	7	BOSS-THREADED	
M		1	**9R-2672**	36	BOSS-THREADED	
	4	1	**214-4754**	2	PLATE	
M	5	1	**114-6099**	8	BOLT (M24X3X80-MM)	
	6	1	**3B-8488**	3	FITTING-GREASE	
	7	1	**3B-8489**	2	FITTING-GREASE	
M	8	1	**8T-4001**	8	NUT (M24X3-THD)	
	9	1	**8T-4121**	4	WASHER-HARD (11X21X2.5-MM THK)	
	10	1	**8T-4167**	16	WASHER-HARD (26X44X4-MM THK)	
M	11	1	**8T-4195**	4	BOLT (M10X1.5X30-MM)	

M-METRIC PART

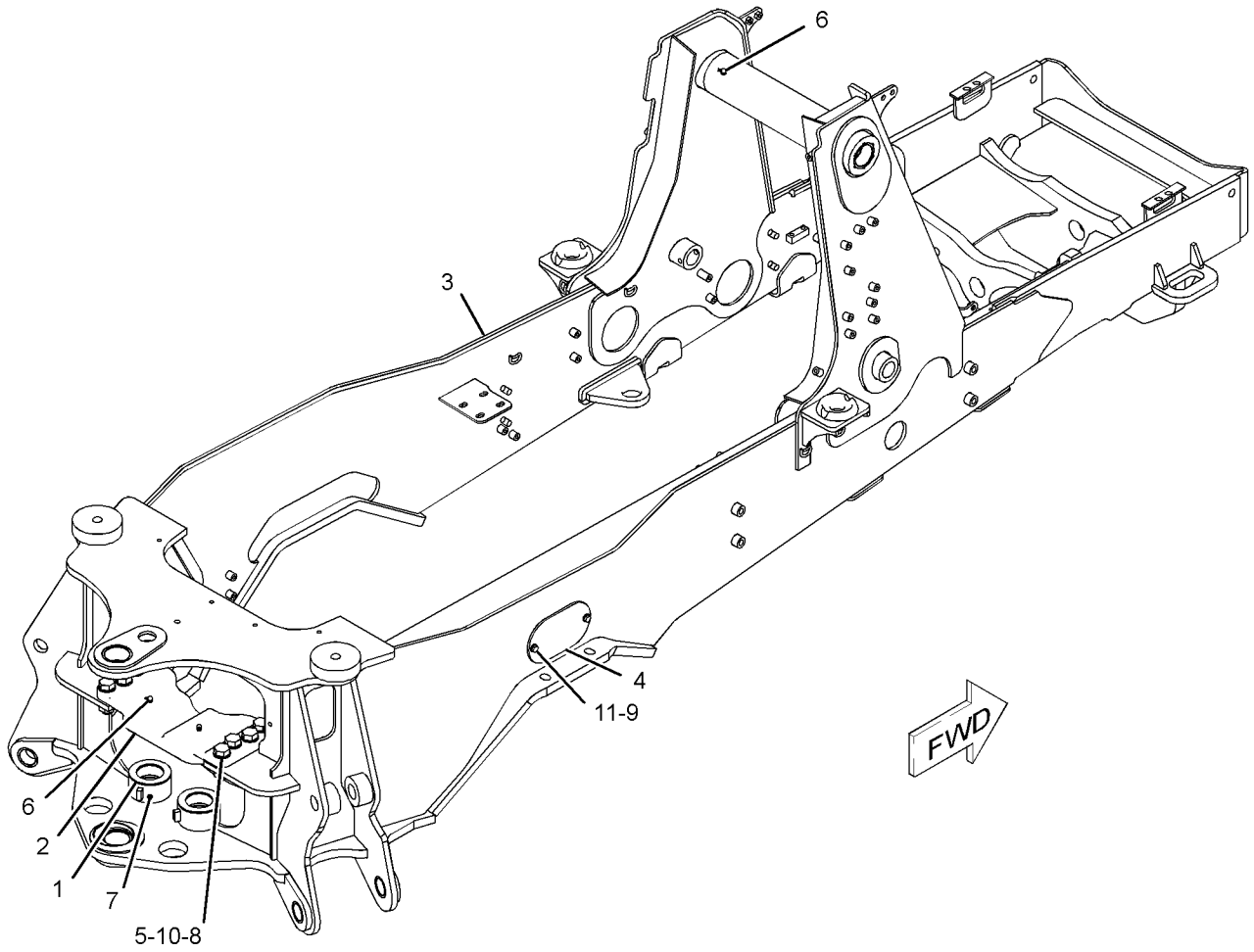

GRAPHIC #1 **<END>** g01226864

251-4519 FRAME GP-SWING (CHG -00 THRU -03)

S/N: HLS1-UP

PART OF 213-9287 CHASSIS AR

SMCS-6506 **i02356700**

NOTE	REF NO	GRAPHIC REF	PART NUMBER	QTY	PART NAME 1 2 3 4 5 6 (PRODUCT LEVEL)	SEE PAGE
	1	1	**8T-4821**	1	WASHER (13.5X40X3-MM THK)	
	2	1	**8T-4837**	1	WASHER (48X85X6-MM THK)	
	3	1	**130-0484**	1	PIN	
B	4	1	**9R-5429**	2	SPACER (67.5X120X3-MM THK)	
	5	1	**9R-7882**	1	SPACER (14X25X7-MM THK)	
B	6	1	**9R-8291**	2	SPACER (66X125X1-MM THK)	
	7	1	**270-5290**	1	BOLT-SOCKET HEAD (M12X1.75X300-MM)	
	8	1	**209-6850**	1	PIN AS	
	9	1	**209-6855**	2	PIN	
	10	1	**209-6862**	1	FRAME AS-SWING	
		1	**9R-0366**	1	WASHER (80X140X5-MM THK)	
		1	**209-6872**	1	FRAME-SWING	
		1	**213-6702**	4	BEARING-SLEEVE	
		1	**237-0944**	2	BEARING-SLEEVE	
		1	**237-0945**	2	BEARING-SLEEVE	
		1	**246-9330**	2	BEARING-SLEEVE	
	11	1	**237-5330**	2	PIN	
	12	1	**247-7631**	1	PIN AS	
	13	1	**250-0741**	1	LUG	
B	14	1	**136-7440**	2	SHIM (1-MM THK)	
	15	1	**3B-8488**	1	FITTING-GREASE	
	16	1	**3B-8489**	3	FITTING-GREASE	
M	17	1	**6V-7687**	4	LOCKNUT (M12X1.75-THD)	
M	18	1	**7Y-0589**	1	BOLT (M12X1.75X90-MM)	
M	19	1	**8T-3652**	1	NUT (M42X25-THD)	
M	20	1	**8T-4139**	1	BOLT (M12X1.75X30-MM)	
B	21	1	**8T-4821**	4	WASHER (13.5X40X3-MM THK)	
M	22	1	**8T-7930**	2	BOLT (M12X1.75X160-MM)	
	23	1	**5P-1076**	3	WASHER-HARD (13.5X30X4-MM THK)	

B-USE AS REQUIRED
M-METRIC PART

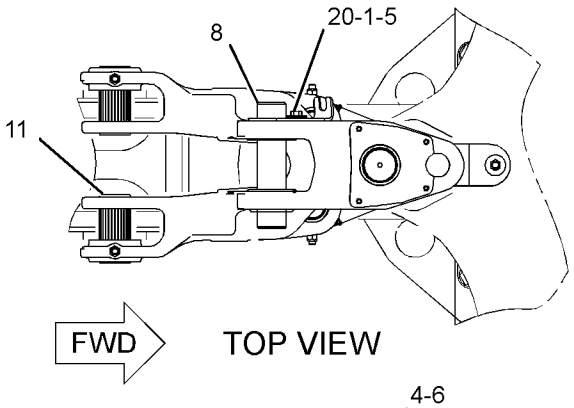

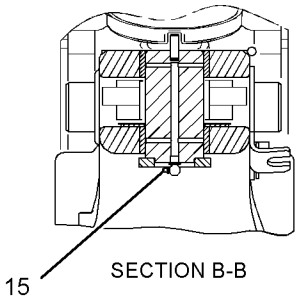

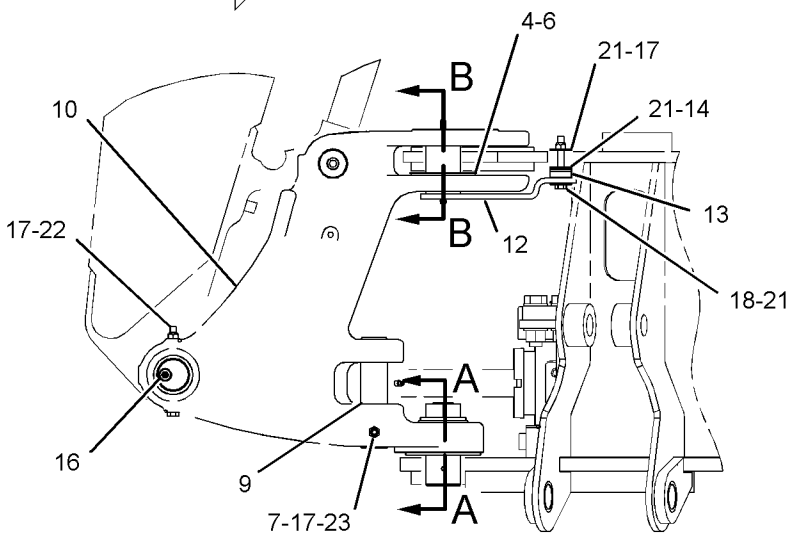

RIGHT SIDE VIEW

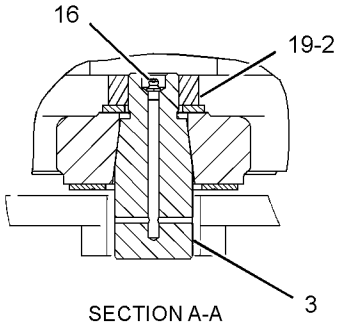

GRAPHIC #1 **<END>** g01184148

217-9672 GUARD GP-DRIVE SHAFT (CHG -02 THRU -04)

S/N: HLS1-UP

PART OF 216-4740 DRIVE AR-BACKHOE LOADER

AN ATTACHMENT

SMCS-7153 **i02149110**

NOTE	REF NO	GRAPHIC REF	PART NUMBER	QTY	PART NAME 1 2 3 4 5 6 (PRODUCT LEVEL)	SEE PAGE
	1	1	**216-5981**	1	GUARD AS	
	2	1	**220-5530**	4	BOLT-ROUND HEAD (M16X2X39.6-MM)	
M	3	1	**8T-4122**	4	WASHER-HARD (17X32X3.5-MM THK)	
M	4	1	**8T-4132**	4	NUT (M16X2-THD)	

M-METRIC PART

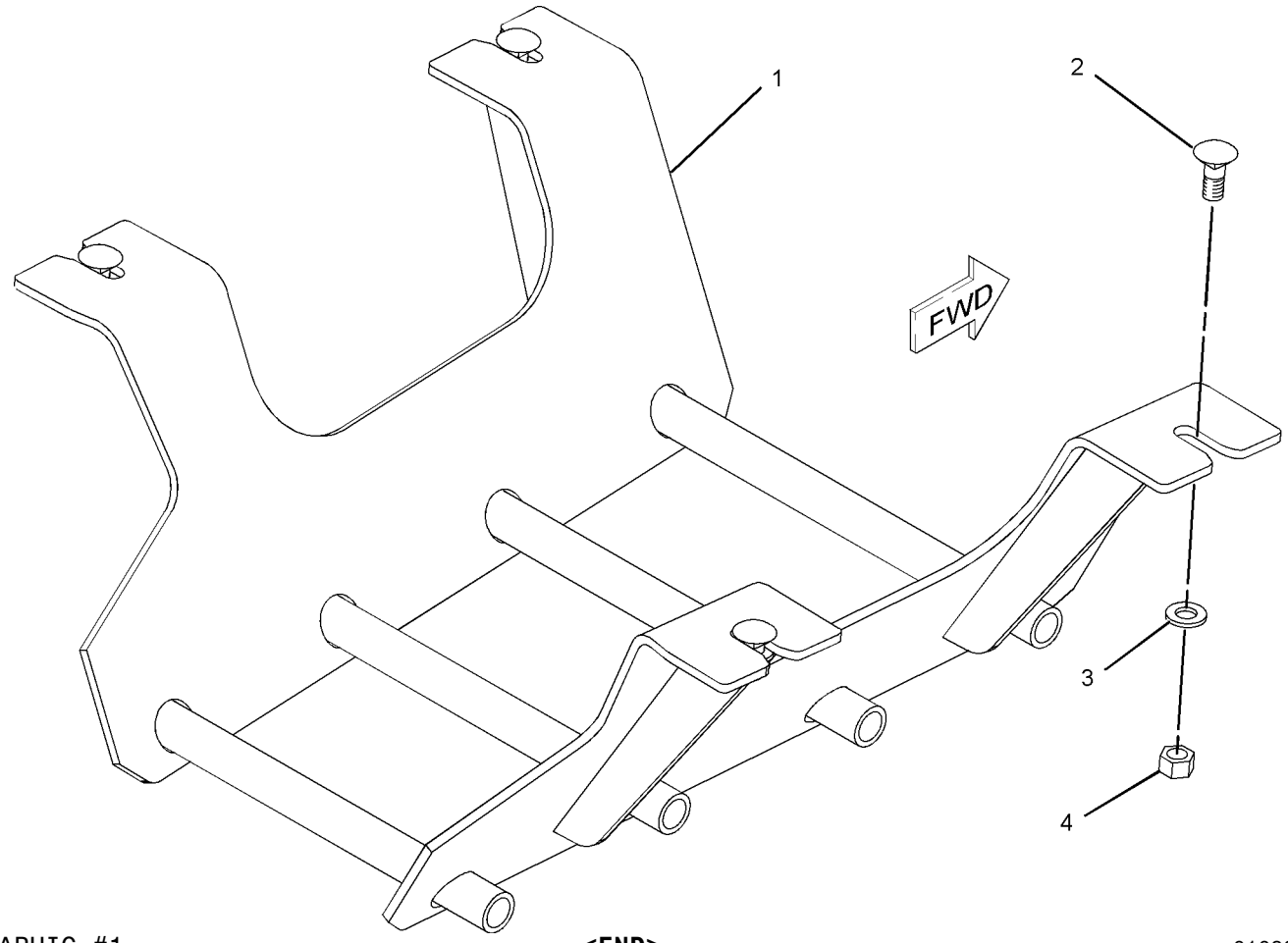

GRAPHIC #1 **<END>** g01083443

256-0324 GUARD GP-RADIATOR (CHG -00)

S/N: HLS1-UP

AN ATTACHMENT

SMCS-7155 **i02446181**

NOTE	REF NO	GRAPHIC REF	PART NUMBER	QTY	PART NAME 1 2 3 4 5 6 (PRODUCT LEVEL)	SEE PAGE
	1	1	**256-0323**	1	COVER	
M	2	1	**7X-2572**	2	BOLT (M24X3X35-MM)	
	3	1	**8T-4167**	2	WASHER-HARD (26X44X4-MM THK)	

M-METRIC PART

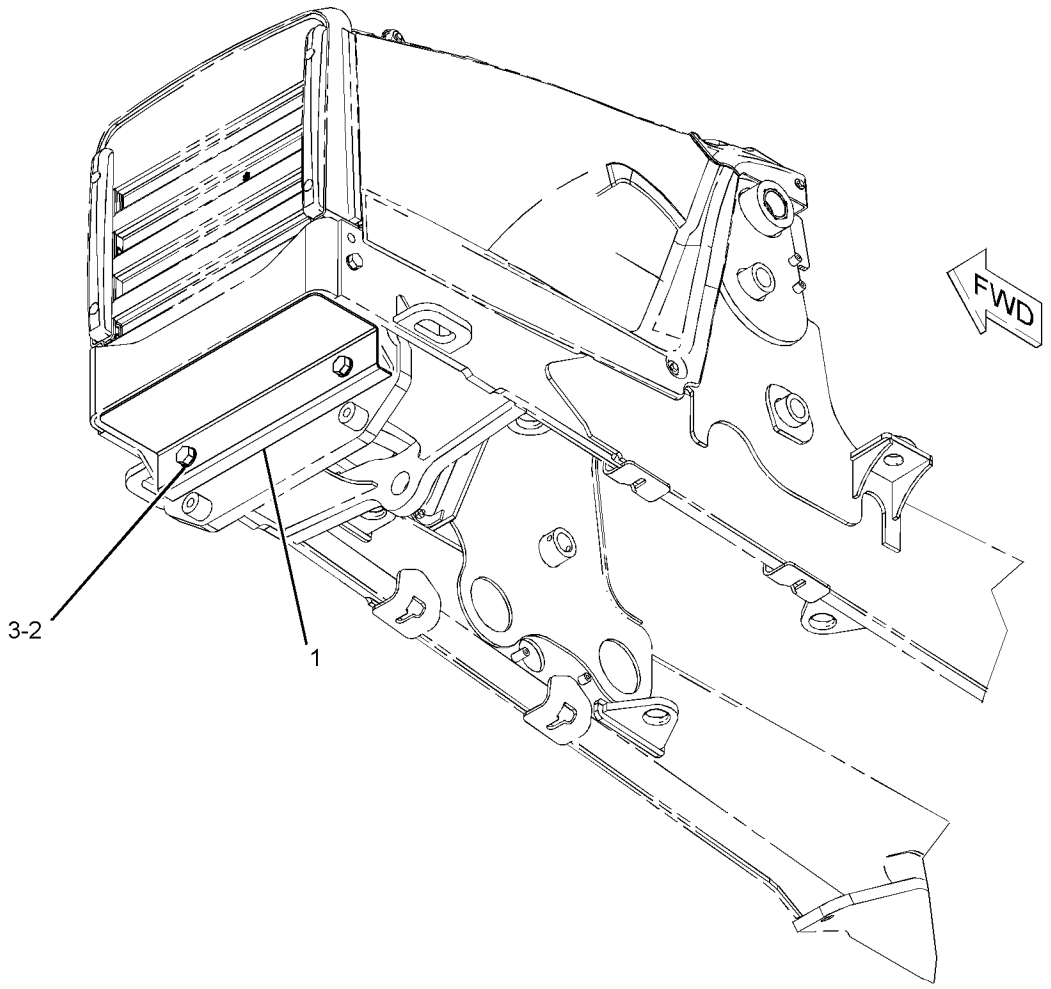

GRAPHIC #1 **<END>** g01096781

211-3546 HOOD & GUARD GP (CHG -02 THRU -06)

S/N: HLS1-UP

PART OF 213-9287 CHASSIS AR

SMCS-7150, 7251 **i02430898**

NOTE	REF NO	GRAPHIC REF	PART NUMBER	QTY	PART NAME 1 2 3 4 5 6 (PRODUCT LEVEL)	SEE PAGE
D	1	1	**6V-1580**		SEAL (0.4-M)	
	2	1	**123-0428**	2	BAR	
	3	1	**231-9363**	1	ENCLOSURE AS (RH)	
	4	1	**244-1085**	1	ENCLOSURE (LH)	
	5	1	**244-7614**	1	GUARD AS	
Y	6	1	*245-5728*	1	HOOD GP-ENGINE	245
	7	1	**247-1080**	2	BUMPER AS	
	8	1	**247-6296**	1	GRILL	
	9	1	**250-3344**	1	COWLING AS	
		1	**250-3331**	1	FILM-STRIPE (YELLOW)	
	10	1	**252-9725**	1	BRACE	
	11	1	**7X-0579**	10	WASHER-HARD (8.8X25.5X2-MM THK)	
M	12	1	**7X-2564**	2	BOLT (M20X2.5X90-MM)	
	13	1	**8T-4121**	8	WASHER-HARD (11X21X2.5-MM THK)	
	14	1	**8T-4123**	2	WASHER-PLATED (22X35X3.5-MM THK)	
M	15	1	**8T-4136**	2	BOLT (M10X1.5X25-MM)	
M	16	1	**8T-4137**	6	BOLT (M10X1.5X20-MM)	
M	17	1	**8T-4139**	2	BOLT (M12X1.75X30-MM)	
M	18	1	**8T-4189**	12	BOLT (M8X1.25X20-MM)	
	19	1	**8T-4223**	2	WASHER-HARD (13.5X25.5X3-MM THK)	
	20	1	**8T-4224**	7	WASHER-HARD (8.8X16X2-MM THK)	
M	21	1	**8T-7547**	5	BOLT (M8X1.25X30-MM)	

D-ORDER BY THE METER
M-METRIC PART
Y-SEPARATE ILLUSTRATION

211-3546 **HOOD & GUARD GP** *(contd.)* **i02430898**

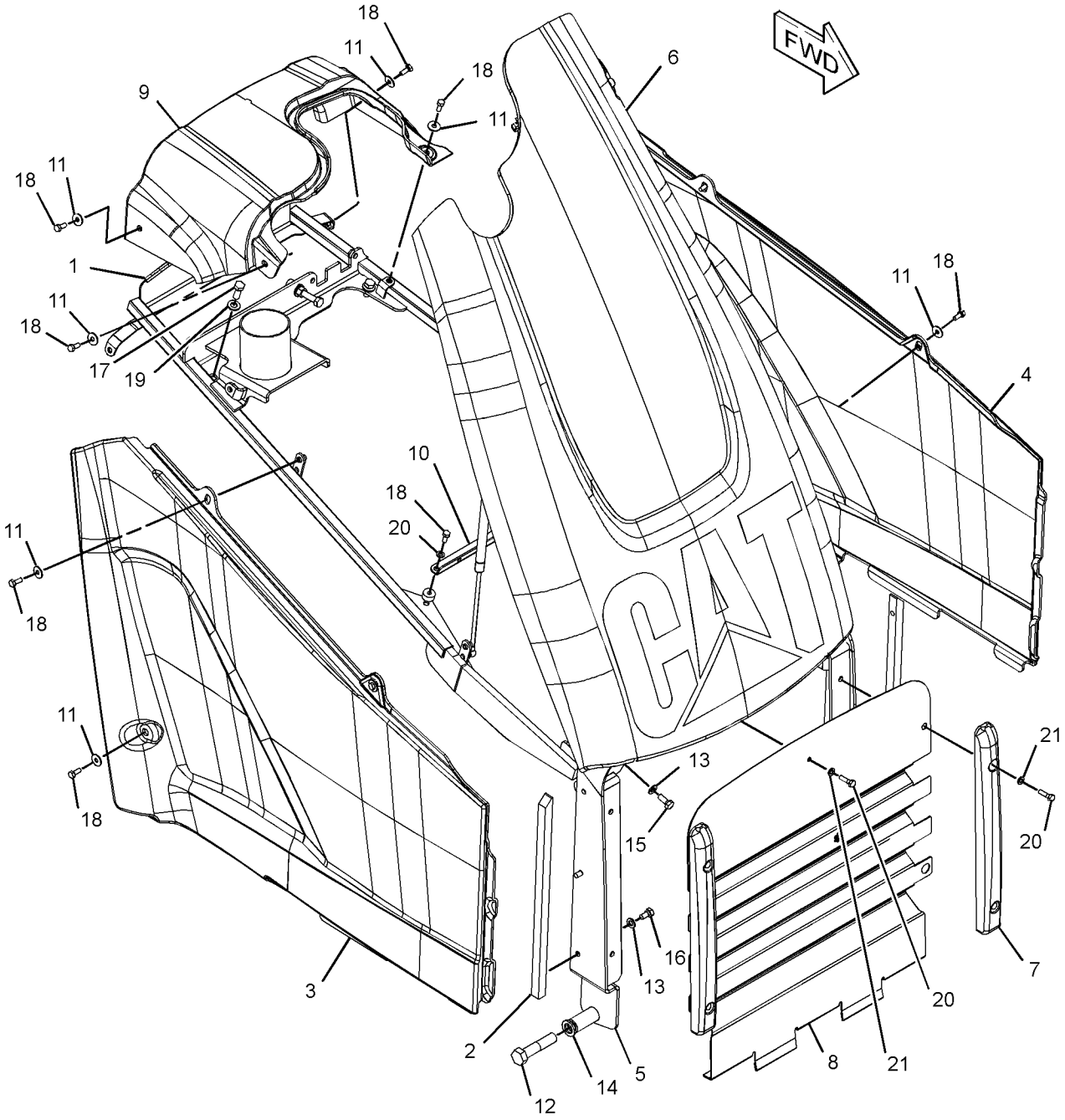

GRAPHIC #1 **<END>** g01214320

245-5728 HOOD GP-ENGINE (CHG -01 THRU -03)

S/N: HLS1-UP

PART OF 211-3546 HOOD & GUARD GP

SMCS-7251 **i02433407**

NOTE	REF NO	GRAPHIC REF	PART NUMBER	QTY	PART NAME 1 2 3 4 5 6 (PRODUCT LEVEL)	SEE PAGE
	1	1	**245-1223**	1	FRAME AS	
J	2	1	**250-5881**	1	SPRING AS-GAS (LH)	
Y	3	1	*253-5384*	1	HOOD GP-ENGINE	246
J	4	1	**254-9301**	1	SPRING AS-GAS (RH)	
	5	1	**3B-4506**	2	LOCKWASHER	
	6	1	**8T-4223**	2	WASHER-HARD (13.5X25.5X3-MM THK)	
M	7	1	**8T-4244**	2	NUT (M12X1.75-THD)	
M	8	1	**8T-4648**	1	BOLT (M12X1.75X70-MM)	
M	9	1	**8T-6869**	2	BOLT (M8X1.25X60-MM)	
					AVAILABLE REPAIR KIT(S):	
J			**275-0001**	2	KIT-GAS SPRING	
					(EACH INCLUDES STUDS & CLIPS)	

J-KIT MARKED J AVAILABLE FOR PART(S) MARKED J
M-METRIC PART
Y-SEPARATE ILLUSTRATION

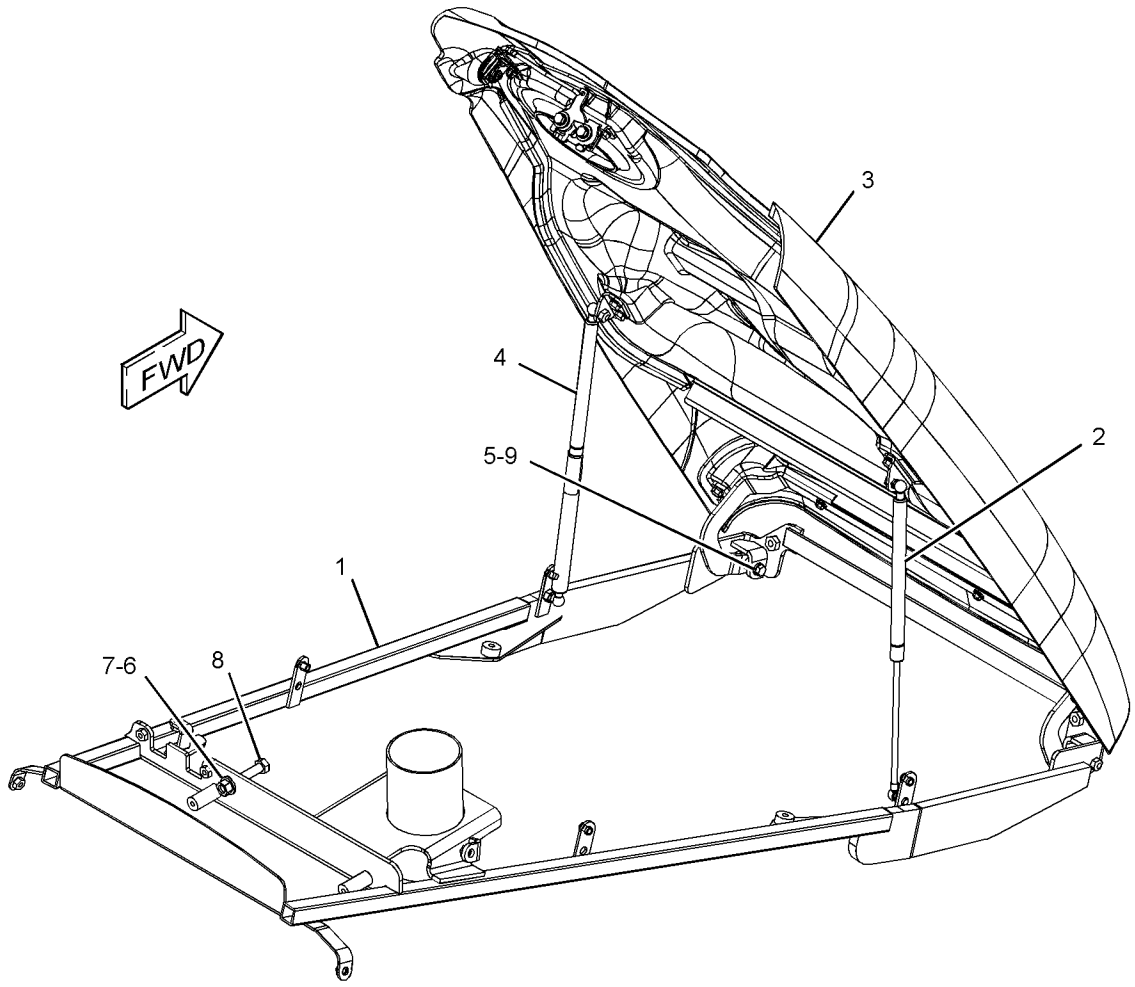

GRAPHIC #1 **<END>** g01214334

253-5384 HOOD GP-ENGINE (CHG -00 THRU -03)

S/N: HLS1-UP

PART OF 245-5728 HOOD GP-ENGINE

SMCS-7251 **i02430953**

NOTE	REF NO	GRAPHIC REF	PART NUMBER	QTY	PART NAME 1 2 3 4 5 6 (PRODUCT LEVEL)	SEE PAGE
	1	1	**5E-8557**	1	CLIP	
	2	1	**245-4914**	1	HINGE AS	
	3	1	**246-2718**	1	HOOD AS	
	4	1	**248-0395**	1	BRACKET AS	
	5	1	**250-1878**	1	FILM-IDENTIFICATION (CAT)	
	6	1	**250-3330**	1	FILM-STRIPE (YELLOW)	
	7	1	**250-6850**	2	BRACKET AS	
	8	1	**250-6858**	1	LATCH AS (HOOD)	
	9	1	**251-4374**	1	LOCK AS (HOOD)	
	10	1	**251-4375**	1	ROD	
M	11	1	**6V-8931**	4	SCREW-WASHER HEAD	
M	12	1	**7X-2537**	2	BOLT (M8X1.25X35-MM)	
M	13	1	**8T-4189**	10	BOLT (M8X1.25X20-MM)	
	14	1	**8T-4224**	16	WASHER-HARD (8.8X16X2-MM THK)	
E	15	1	**9X-8699**		SEAL (70-CM)	

E-ORDER BY THE CENTIMETER
M-METRIC PART

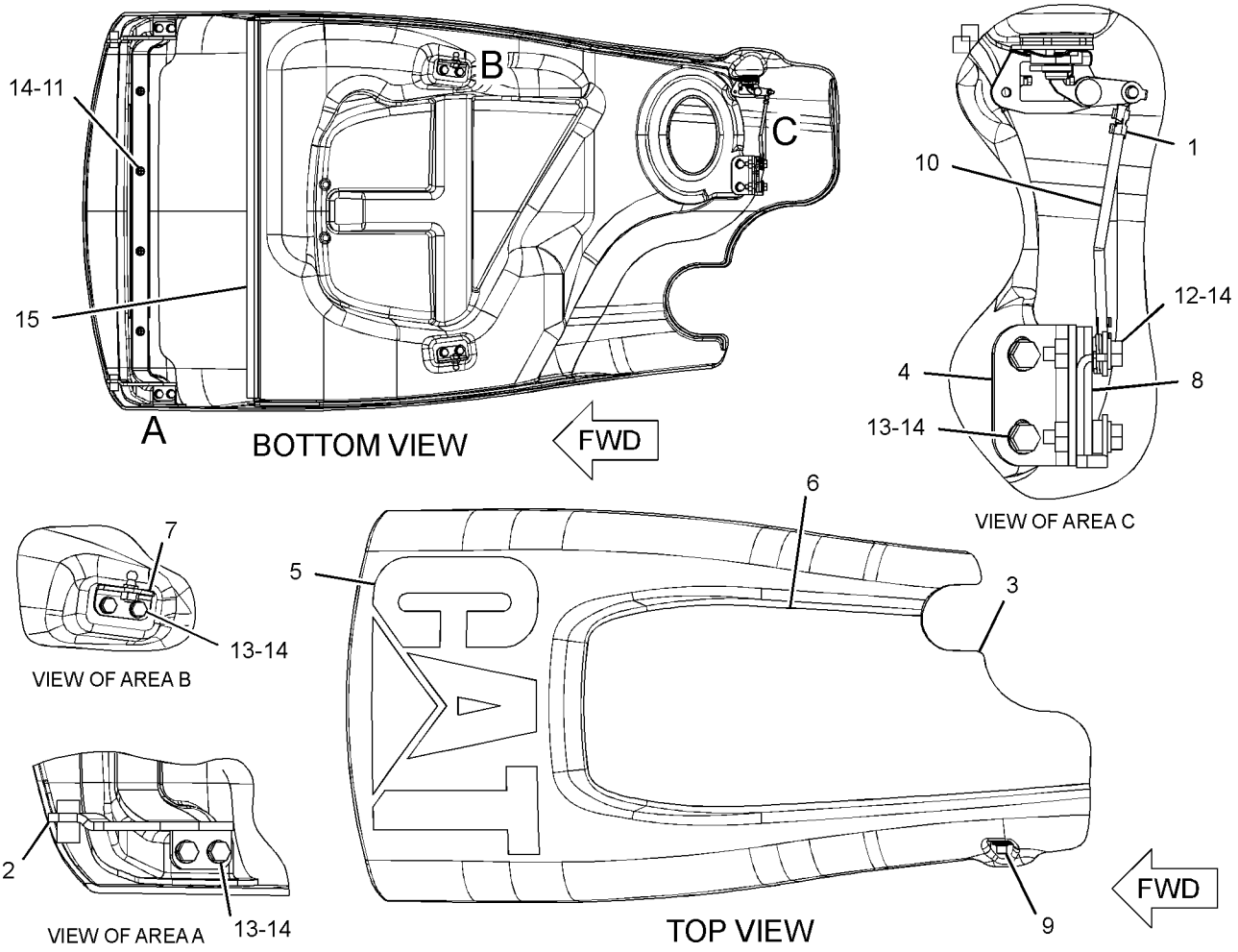

GRAPHIC #1 **<END>** g01204459

226-0420 ACCUMULATOR GP-PILOT OIL—CHARGED (CHG -00)

S/N: HLS1-UP

PART OF 267-2765 LINES GP-PILOT

SMCS-5077 **i02431359**

NOTE	REF NO	GRAPHIC REF	PART NUMBER	QTY	PART NAME 1 2 3 4 5 6 (PRODUCT LEVEL)	SEE PAGE
					(NO SERVICED PARTS)	

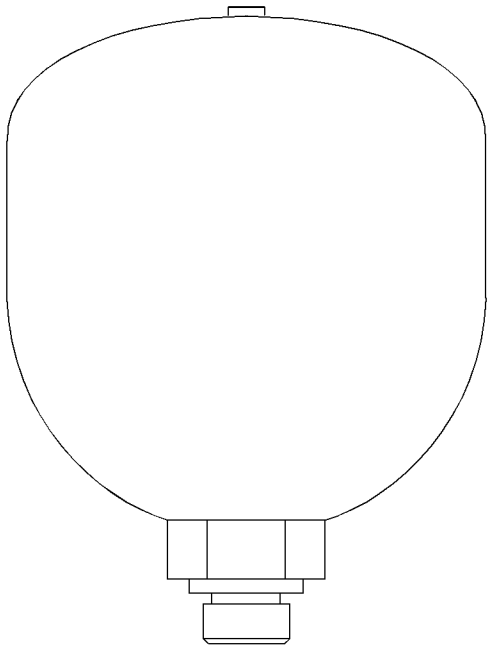

GRAPHIC #1 **<END>** g01214922

162-3960 ACCUMULATOR GP-RIDE CONTROL–CHARGED

(CHG -04 THRU -07)
S/N: HLS1-UP
PART OF 264-0187 KIT-RIDE CONTROL, 246-9802 LINES GP-RIDE CONTROL AN ATTACHMENT

SMCS-5077 **i02429597**

NOTE	REF NO	GRAPHIC REF	PART NUMBER	QTY	PART NAME 1 2 3 4 5 6 (PRODUCT LEVEL)	SEE PAGE
	1	1	**158-2306**	1	VALVE-GAS	
	2	1	**241-0037**	1	FILM-WARNING (HIGH PRESSURE, READ OMM)	
	3	1	**170-0503**	1	FILM (PLATE-NAME)	
					AVAILABLE REPAIR KIT(S):	
			160-0496	1	KIT-SEAL (ACCUMULATOR)	
					(INCLUDES SEALS)	

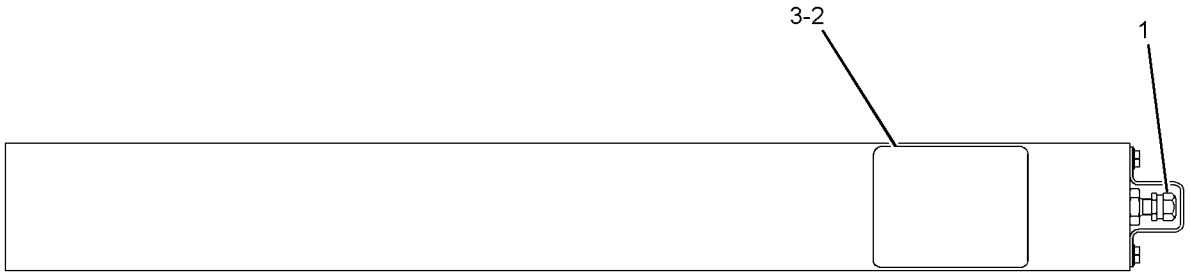

GRAPHIC #1 **<END>** g01220710

HYDRAULIC SYSTEM

209-9937 CONTROL AR-RIDE (CHG -02 THRU -06)

S/N: HLS1-UP

AN ATTACHMENT

SMCS-5004 **i02105094**

NOTE	PART NUMBER	QTY	PART NAME 1 2 3 4 5 6 (PRODUCT LEVEL)	SEE PAGE
Y	*246-9802*	1	LINES GP-RIDE CONTROL	329
Y	*211-4259*	1	WIRING GP-RIDE CONTROL	134

Y-SEPARATE ILLUSTRATION

<END>

HYDRAULIC SYSTEM

206-1645 CONTROL GP-HYDRAULIC HAND—LOADER

(CHG -01 THRU -04)
S/N: HLS1-UP
SINGLE TILT
PART OF 269-2144 VALVE AR-BANK 2
AN ATTACHMENT

SMCS-5063 **i02396926**

NOTE	REF NO	GRAPHIC REF	PART NUMBER	QTY	PART NAME 1 2 3 4 5 6 (PRODUCT LEVEL)	SEE PAGE
	1	1	**1K-0502**	7	WASHER (16.3X25.4X1.2-MM THK)	
	2	1	**2R-0364**	3	RING-RETAINING	
M	3	1	**9X-2040**	2	SCREW-TRUSS HEAD (M10X1.5X25-MM)	
	4	1	**5H-3193**	1	PIN-SPRING	
	5	1	**9R-1765**	1	KNOB (TOP)	
	6	1	**9R-1766**	1	KNOB (LOWER)	
	7	1	**9R-1767**	1	BOOT	
	8	1	**9R-9868**	1	SWITCH GP-PUSH BUTTON (NEUTRALIZER, DOWNSHIFT)	
		1	**9W-0625**	1	SWITCH AS	
		1	**9X-3401**	2	PIN-CONNECTOR (16-GA TO 18-GA)	
M	9	1	**9X-2065**	2	NUT (M10X1.15-THD)	
	10	1	**107-5591**	1	NUT-JAM (3/4-16-THD)	
M	11	1	**134-0453**	2	TURN BUCKLE	
	12	1	**164-1368**	12	FASTENER-PANEL	
	13	1	**183-3135**	1	JOINT AS	
	14	1	**183-3137**	1	PIN	
	15	1	**206-1695**	1	BOOT	
	16	1	**209-3363**	1	ROD	
	17	1	**216-3351**	1	ROD	
	18	1	**216-3358**	1	DAMPER AS (SPRING)	
		1	**095-9230**	1	PIN-SPRING	
		1	**183-3132**	1	CYLINDER	
	19	1	**216-3368**	1	GASKET	
	20	1	**220-0269**	1	SHAFT	
	21	1	**230-2510**	1	LEVER AS	
	22	1	**269-8129**	1	BRACKET AS	
	23	1	**269-8817**	1	PLATE	
	24	1	**270-2795**	1	PLATE	
	25	1	**272-7104**	1	ROD	
	26	1	**275-8869**	1	BRACKET AS	
	27	1	**179-8235**	1	LOCK PIN	
	28	1	**102-8802**	1	KIT-RECEPTACLE (2-PIN)	
					(INCLUDES RECEPTACLE AS & WEDGE)	
M	29	1	**6V-7744**	4	LOCKNUT (M10X1.15-THD)	
	30	1	**7X-7729**	4	WASHER (11X25X3-MM THK)	
	31	1	**8C-4987**	1	PIN-CLEVIS	
	32	1	**8T-4121**	3	WASHER-HARD (11X21X2.5-MM THK)	
M	33	1	**8T-4133**	6	NUT (M10X1.5-THD)	
M	34	1	**8T-4136**	1	BOLT (M10X1.5X25-MM)	
M	35	1	**8T-4137**	2	BOLT (M10X1.5X20-MM)	
M	36	1	**8T-4189**	4	BOLT (M8X1.25X20-MM)	
	37	1	**8T-4224**	4	WASHER-HARD (8.8X16X2-MM THK)	
	38	1	**8T-4773**	2	BALL JOINT	
	39	1	**8T-4815**	2	ROD END	
	40	1	**8T-9501**	2	SCREW (10-16X0.75-IN)	
	41	1	**9R-2807**	1	CLIP	
	42	1	**9R-3067**	1	PIN	

M-METRIC PART

206-1645 **CONTROL GP-HYDRAULIC HAND** *(contd.)* **i02396926**

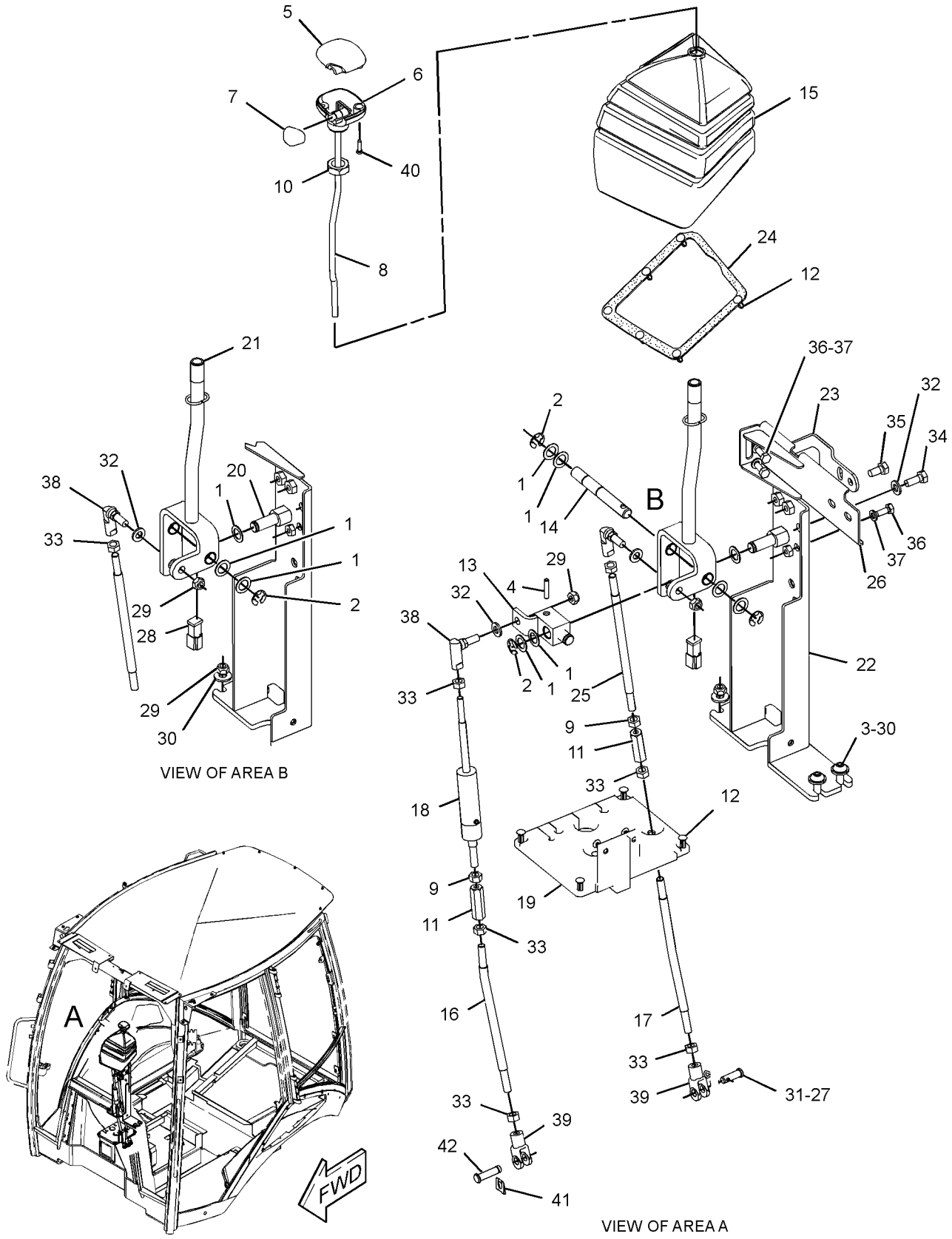

GRAPHIC #1 **<END>** g01236685

HYDRAULIC SYSTEM

209-3364 CONTROL GP-HYDRAULIC HAND—LOADER

(CHG -01 THRU -03)
S/N: HLS1-UP
PART OF 269-2145 VALVE AR-BANK 3
AN ATTACHMENT

SMCS-5063 **i02397228**

NOTE	REF NO	GRAPHIC REF	PART NUMBER	QTY	PART NAME 1 2 3 4 5 6 (PRODUCT LEVEL)	SEE PAGE
	1	1	**1K-0502**	10	WASHER (16.3X25.4X1.2-MM THK)	
	2	1	**2R-0364**	4	RING-RETAINING	
M	3	1	**9X-2040**	2	SCREW-TRUSS HEAD (M10X1.5X25-MM)	
	4	1	**5H-3193**	1	PIN-SPRING	
	5	1	**9R-1765**	1	KNOB (TOP)	
	6	1	**9R-1766**	1	KNOB (LOWER) (BOTTOM)	
	7	1	**9R-1767**	1	BOOT	
	8	1	**9R-9868**	1	SWITCH GP-PUSH BUTTON (NEUTRALIZER, DOWNSHIFT)	
		1	**9X-3401**	2	PIN-CONNECTOR (16-GA TO 18-GA)	
BD		1	**6V-2689**		TUBE-HEAT SHRINK (6.35-MM DIA) (1.1-M)	
		1	**9W-0625**	1	SWITCH AS	
M	9	1	**9X-2065**	3	NUT (M10X1.15-THD)	
	10	1	**107-5591**	1	NUT-JAM (3/4-16-THD)	
M	11	1	**134-0453**	3	TURN BUCKLE	
	12	1	**164-1368**	12	FASTENER-PANEL	
	13	1	**183-3135**	1	JOINT AS	
	14	1	**183-3137**	1	PIN	
	15	1	**206-1668**	1	BOOT	
	16	1	**209-3363**	1	ROD (LOWER)	
	17	1	**216-3350**	1	ROD	
	18	1	**216-3351**	1	ROD (LOWER)	
	19	1	**216-3358**	1	DAMPER AS (SPRING)	
		1	**095-9230**	1	PIN-SPRING	
		1	**183-3132**	1	CYLINDER	
	20	1	**216-3368**	1	GASKET	
	21	1	**220-0269**	1	SHAFT	
	22	1	**220-3251**	1	ROD	
	23	1	**230-2510**	1	LEVER AS	
	24	1	**230-3038**	1	LEVER AS	
	25	1	**269-8129**	1	BRACKET AS	
	26	1	**269-8817**	1	PLATE	
	27	1	**270-2795**	1	PLATE	
	28	1	**272-7104**	1	ROD	
	29	1	**275-8869**	1	BRACKET AS	
	30	1	**164-1395**	1	KNOB	
	31	1	**179-8235**	2	LOCK PIN	
	32	1	**102-8802**	1	KIT-RECEPTACLE (2-PIN)	
					(INCLUDES RECEPTACLE AS & WEDGE)	
M	33	1	**6V-7744**	4	LOCKNUT (M10X1.15-THD)	
	34	1,1	**7X-7729**	4	WASHER (11X25X3-MM THK)	
	35	1	**8C-4987**	2	PIN-CLEVIS	
	36	1	**8T-4121**	4	WASHER-HARD (11X21X2.5-MM THK)	
M	37	1	**8T-4133**	9	NUT (M10X1.5-THD)	
M	38	1	**8T-4136**	1	BOLT (M10X1.5X25-MM)	
M	39	1	**8T-4137**	2	BOLT (M10X1.5X20-MM)	
M	40	1	**8T-4189**	4	BOLT (M8X1.25X20-MM)	
	41	1	**8T-4224**	4	WASHER-HARD (8.8X16X2-MM THK)	
	42	1	**8T-4773**	3	BALL JOINT	
	43	1	**8T-4815**	3	ROD END	
	44	1	**8T-9501**	2	SCREW (10-16X0.75-IN)	
	45	1	**9R-2807**	1	CLIP	
	46	1	**9R-3067**	1	PIN	

B-USE AS REQUIRED
D-ORDER BY THE METER
M-METRIC PART

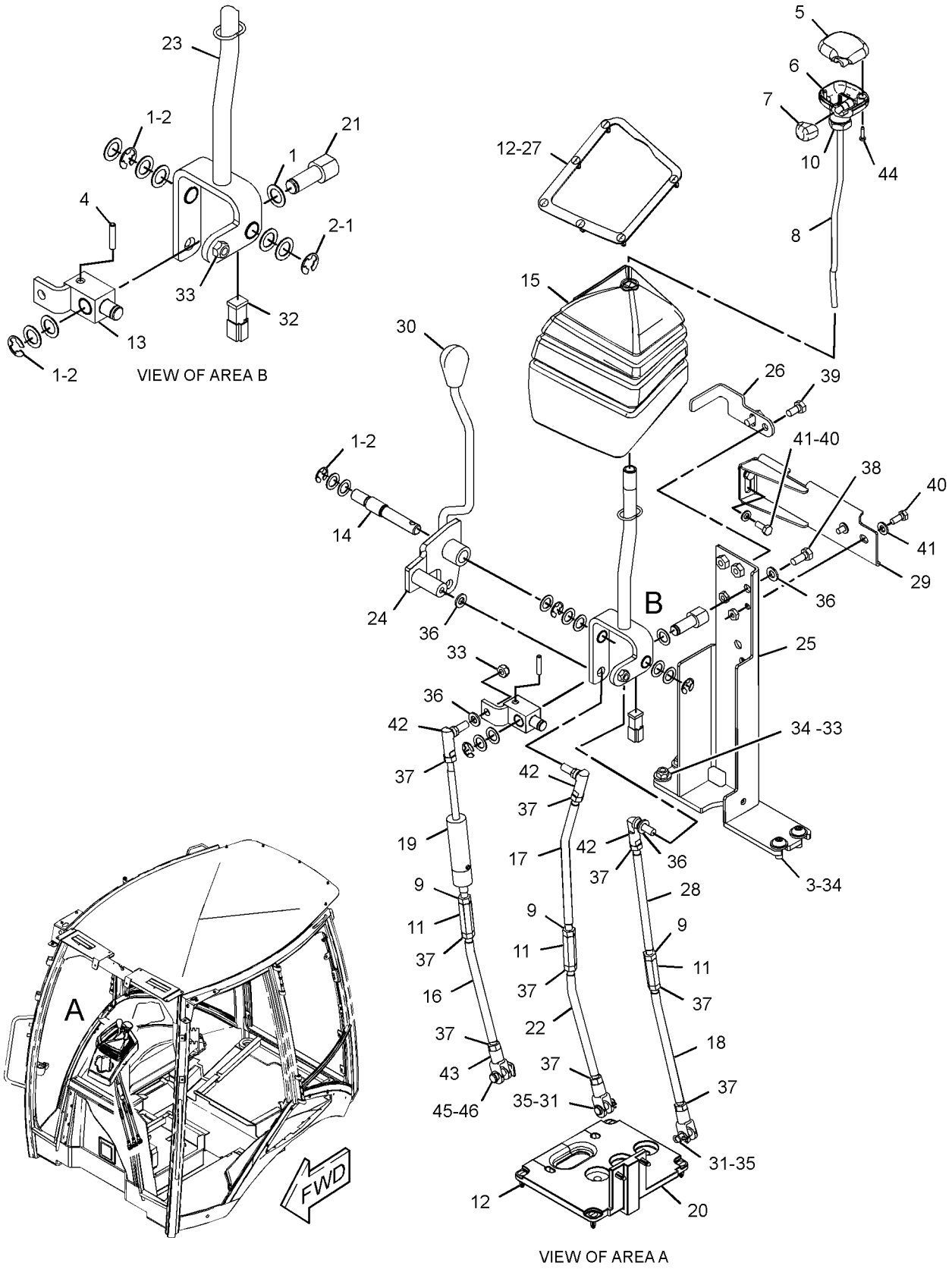

GRAPHIC #1 **<END>** g01231390

271-3095 CONTROL GP-JOYSTICK–RH (CHG -01, -02)

S/N: HLS1-UP

PART OF 269-2146 VALVE AR-BANK 6

AN ATTACHMENT

SMCS-5705 **i02447334**

NOTE	REF NO	GRAPHIC REF	PART NUMBER	QTY	PART NAME 1 2 3 4 5 6 (PRODUCT LEVEL)	SEE PAGE
	1	1	**271-3100**	1	HANDLE GP-MODULAR	
	2	1	**272-9701**	1	ADAPTER (RH)	
	3	1	**254-3437**	1	BOOT	

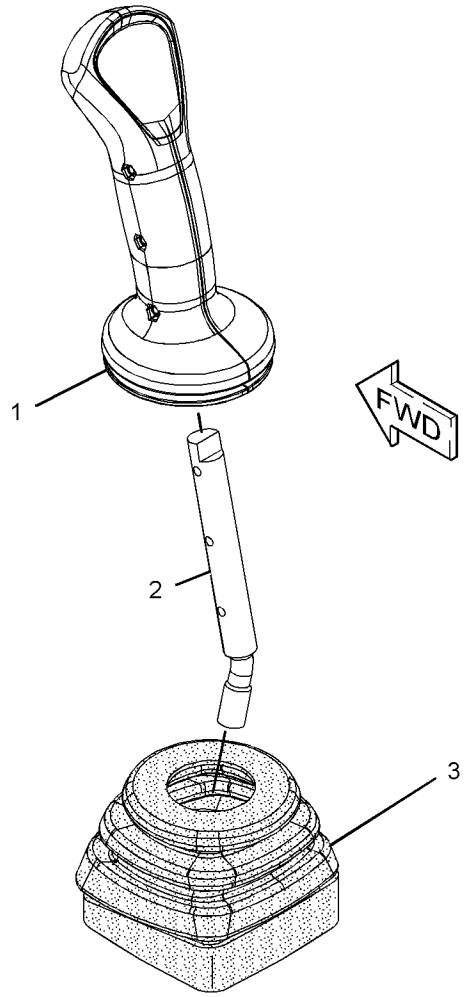

GRAPHIC #1

<END>

g01214863

271-3096 CONTROL GP-JOYSTICK–RH (CHG -01, -02)

S/N: HLS1-UP

PART OF 269-2147 VALVE AR-BANK 7, 269-2148 VALVE AR-BANK 8

AN ATTACHMENT

SMCS-5705 **i02447380**

NOTE	REF NO	GRAPHIC REF	PART NUMBER	QTY	PART NAME 1 2 3 4 5 6 (PRODUCT LEVEL)	SEE PAGE
	1	1	**271-3101**	1	HANDLE GP-MODULAR	
		1	**8T-8737**	8	PLUG-SEAL	
		1	**174-3091**	1	KIT-RECEPTACLE (12-PIN)	
					(INCLUDES RECEPTACLE AS & WEDGE)	
		1	**186-3735**	4	PIN-CONNECTOR (16-GA TO 18-GA)	
	2	1	**272-9701**	1	ADAPTER (RH)	
	3	1	**254-3437**	1	BOOT	
	4	1	**252-6934**	1	GROMMET	

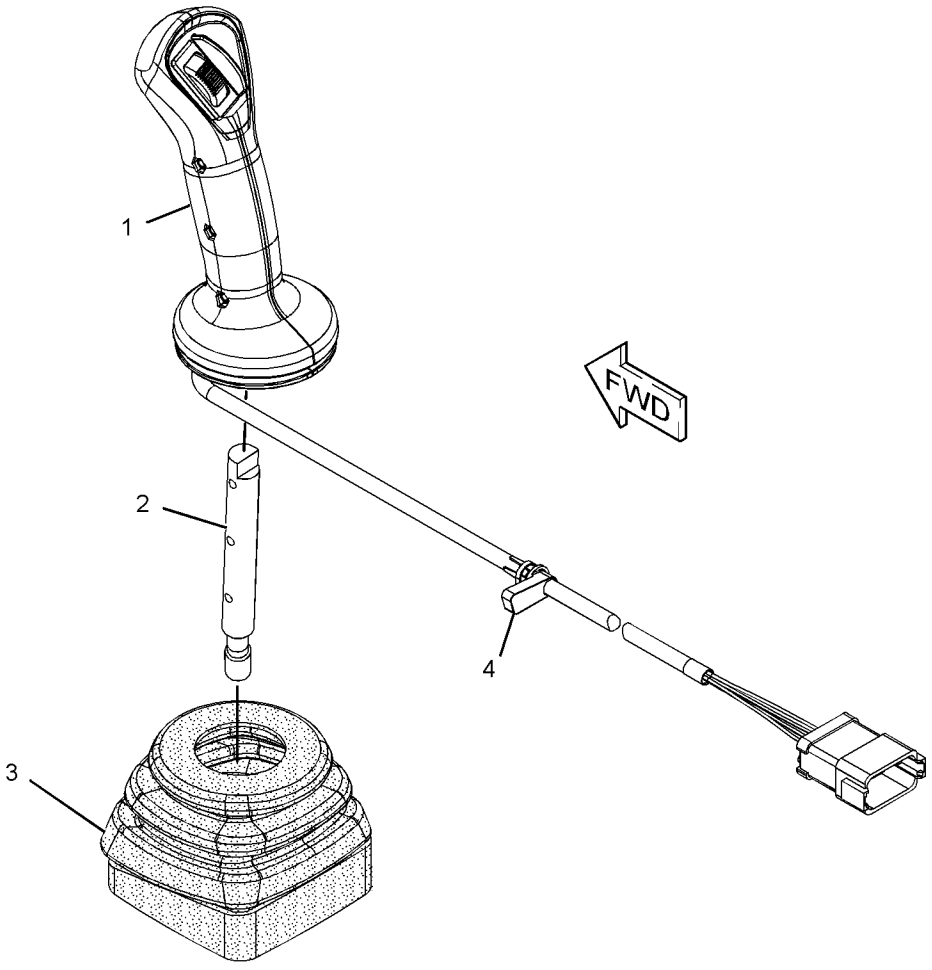

GRAPHIC #1 **<END>** g01214851

271-3097 CONTROL GP-JOYSTICK–LH (CHG -01, -02)

S/N: HLS1-UP

PART OF 269-2146 VALVE AR-BANK 6, 269-2147 VALVE AR-BANK 7

AN ATTACHMENT

SMCS-5705 **i02447335**

NOTE	REF NO	GRAPHIC REF	PART NUMBER	QTY	PART NAME 1 2 3 4 5 6 (PRODUCT LEVEL)	SEE PAGE
	1	1	**271-3103**	1	HANDLE GP-MODULAR	
		1	**8T-8737**	10	PLUG-SEAL	
		1	**174-3091**	1	KIT-RECEPTACLE (12-PIN)	
					(INCLUDES RECEPTACLE AS & WEDGE)	
		1	**186-3735**	2	PIN-CONNECTOR (16-GA TO 18-GA)	
		1	**252-6934**	1	GROMMET	
	2	1	**278-7469**	1	ADAPTER (LH)	
	3	1	**254-3437**	1	BOOT	
	4	1	**252-6934**	1	GROMMET	

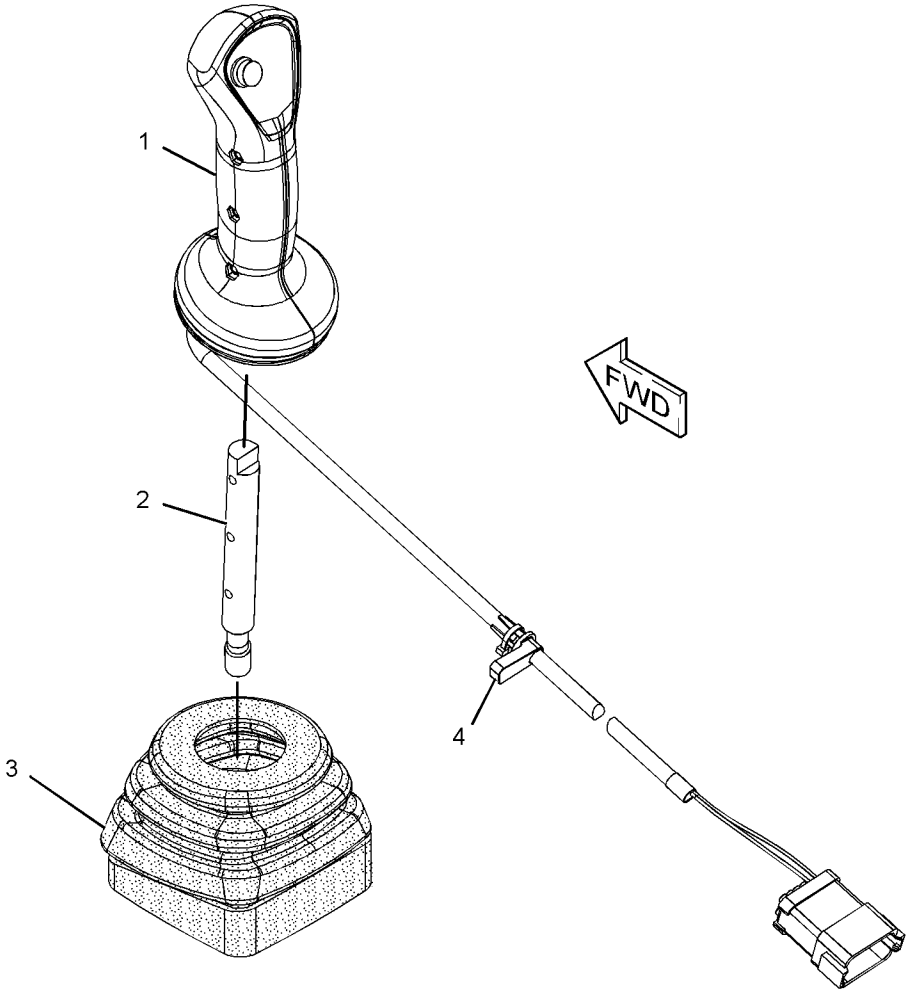

GRAPHIC #1 **<END>** g01214844

271-3099 CONTROL GP-JOYSTICK–LH (CHG -01, -02)

S/N: HLS1-UP
PART OF 269-2148 VALVE AR-BANK 8
AN ATTACHMENT

SMCS-5705 **i02447432**

NOTE	REF NO	GRAPHIC REF	PART NUMBER	QTY	PART NAME 1 2 3 4 5 6 (PRODUCT LEVEL)	SEE PAGE
	1	1	**271-3105**	1	HANDLE GP-MODULAR	
		1	**8T-8737**	6	PLUG-SEAL	
		1	**174-3091**	1	KIT-RECEPTACLE (12-PIN)	
					(INCLUDES RECEPTACLE AS & WEDGE)	
		1	**186-3735**	6	PIN-CONNECTOR (16-GA TO 18-GA)	
		1	**252-6934**	1	GROMMET	
	2	1	**278-7469**	1	ADAPTER (LH)	
	3	1	**254-3437**	1	BOOT	
	4	1	**252-6934**	1	GROMMET	

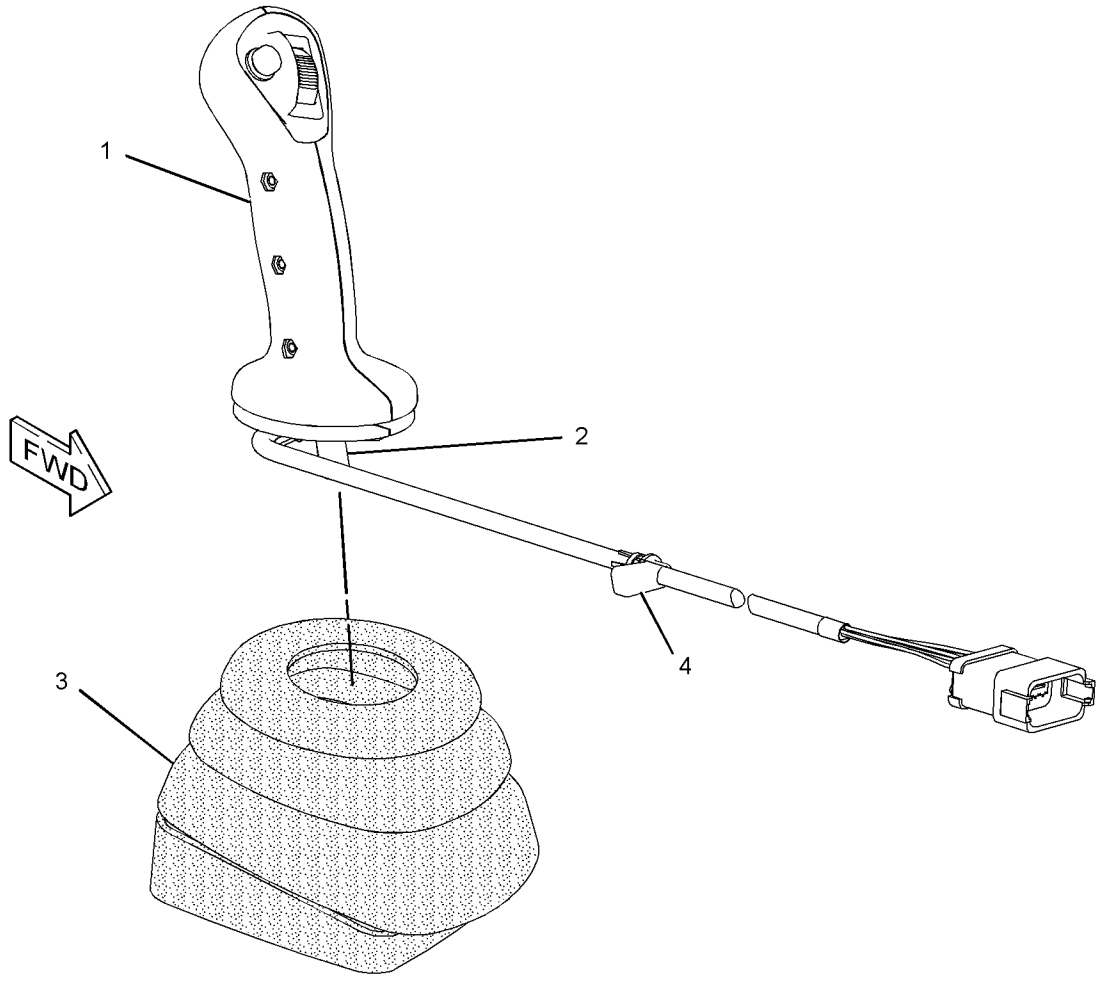

GRAPHIC #1 **<END>** g01217253

224-6237 CYLINDER & LINES GP-THUMB (CHG -01 THRU -03)

S/N: HLS1-UP

PART OF 271-3024, 271-3025, 271-3026, 271-3027, 282-0865, 282-0866, 282-0887, 282-0888, 282-0889, 282-0890, 282-0891, 282-0892, 282-0893, 282-0894, 282-5409 THUMB AR

AN ATTACHMENT

SMCS-5057, 5362 **i02449266**

NOTE	REF NO	GRAPHIC REF	PART NUMBER	QTY	PART NAME 1 2 3 4 5 6 (PRODUCT LEVEL)	SEE PAGE
	1	1	**106-0401**	1	FITTING (QUICK DISCONNECT, FEMALE)	
	2	1	**106-0406**	1	FITTING (QUICK DISCONNECT, MALE)	
I	3	1	**221-4314**	2	HOSE AS	
	4	1	**270-3409**	2	SPACER (45.24X63.5X10-MM THK)	
Y	5	1	**275-4243**	1	CYLINDER GP-THUMB	281
	6	1	*153-6252*	2	CONNECTOR AS	
					(EACH INCLUDES)	
		1	**6V-8398**	1	SEAL-O-RING	
		1	**7M-8485**	1	SEAL-O-RING	
		1	**9X-8408**	1	CONNECTOR	
	7	1	**6V-8398**	2	SEAL-O-RING	

I-REFER TO HYDRAULIC INFORMATION SYSTEM
Y-SEPARATE ILLUSTRATION

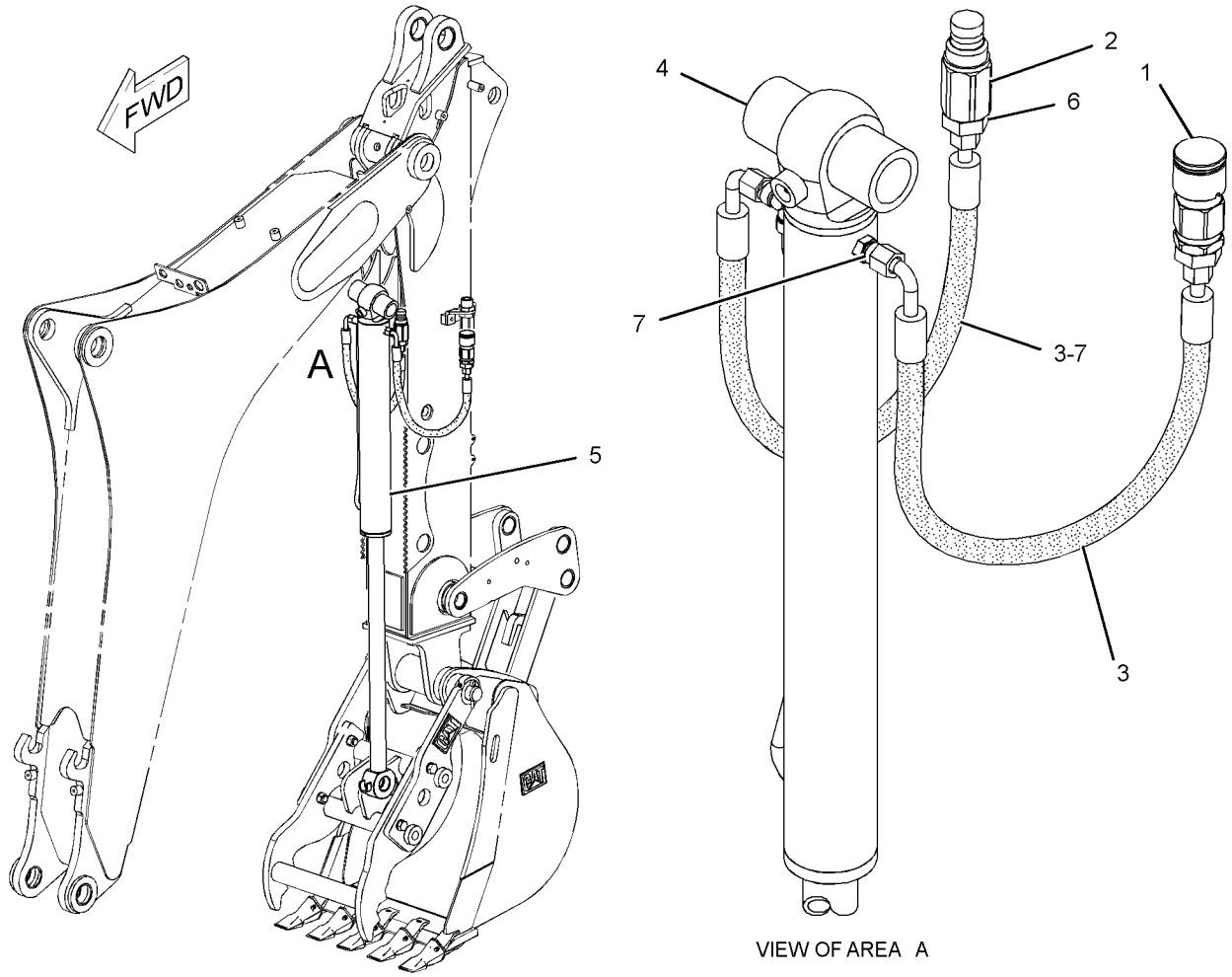

VIEW OF AREA A

GRAPHIC #1 **<END>** g01233574

HYDRAULIC SYSTEM

210-7087 CYLINDER GP-BACKHOE BUCKET (CHG -01 THRU -04)

S/N: HLS1-UP

88.9-MM (3.5-IN) BORE X 852-MM (33.5-IN) STROKE

PART OF 214-3758 BACKHOE AR-EXTENDABLE STICK, 214-3755 BACKHOE AR-STANDARD STICK

AN ATTACHMENT

SMCS-5457 **i02273391**

NOTE	REF NO	GRAPHIC REF	PART NUMBER	QTY	PART NAME 1 2 3 4 5 6 (PRODUCT LEVEL)	SEE PAGE
	1	1	**102-2244**	1	GROMMET	
	2	1	**187-3510**	1	HEAD	
	3	1	**212-0907**	1	PLATE-CONNECTOR	
	4	1	**213-4622**	1	ROD AS	
		1	**9R-0162**	2	BEARING-SLEEVE	
	5	1	**213-4625**	1	CYLINDER AS	
		1	**6V-8398**	1	SEAL-O-RING	
		1	**213-4624**	1	CAP & BEARING AS	
	6	1	**217-8763**	1	COVER-PROTECTION	
	7	1	**222-1395**	1	BOLT AS	
	8	1	**223-3356**	1	RING-WEAR	
	9	1	**228-3469**	1	PISTON	
	10	1	**102-8804**	1	KIT-RECEPTACLE (4-PIN)	
					(INCLUDES RECEPTACLE AS & WEDGE)	
	11	1	**106-1251**	1	WASHER (36.7X66X6-MM THK)	
	12	1	**167-2201**	1	SEAL AS-BUFFER	
	13	1	**167-2312**	1	SEAL-U-CUP	
	14	1	**188-2199**	1	SEAL-O-RING	
	15	1	**213-2491**	1	SENSOR GP-POSITION	
	16	1	**215-1942**	1	RING-BACKUP	
	17	1	**2H-3931**	1	SEAL-O-RING	
	18	1	**2H-4145**	1	SEAL-O-RING	
	19	1	**3V-2431**	2	WASHER (10.2X16X2-MM THK)	
	20	1	**4J-9224**	1	RING-BACKUP	
	21	1	**4S-5565**	2	BOLT (3/8-16X0.875-IN)	
	22	1	**4T-8054**	1	SEAL AS	
E	23	1	**9X-1386**		SLEEVE (12-CM)	
	24	1	**5J-8156**	1	WIPER-ROD	
	25	1	**8T-0785**	1	RING-WEAR	
	26	1	**8T-5070**	1	SETSCREW-SOCKET (3/8-16X0.5-IN)	
	27	1	**8T-8737**	1	PLUG-SEAL	
	28	1	**5J-7011**	1	SEAL	

E-ORDER BY THE CENTIMETER

210-7087 CYLINDER GP-BACKHOE BUCKET *(contd.)* i02273391

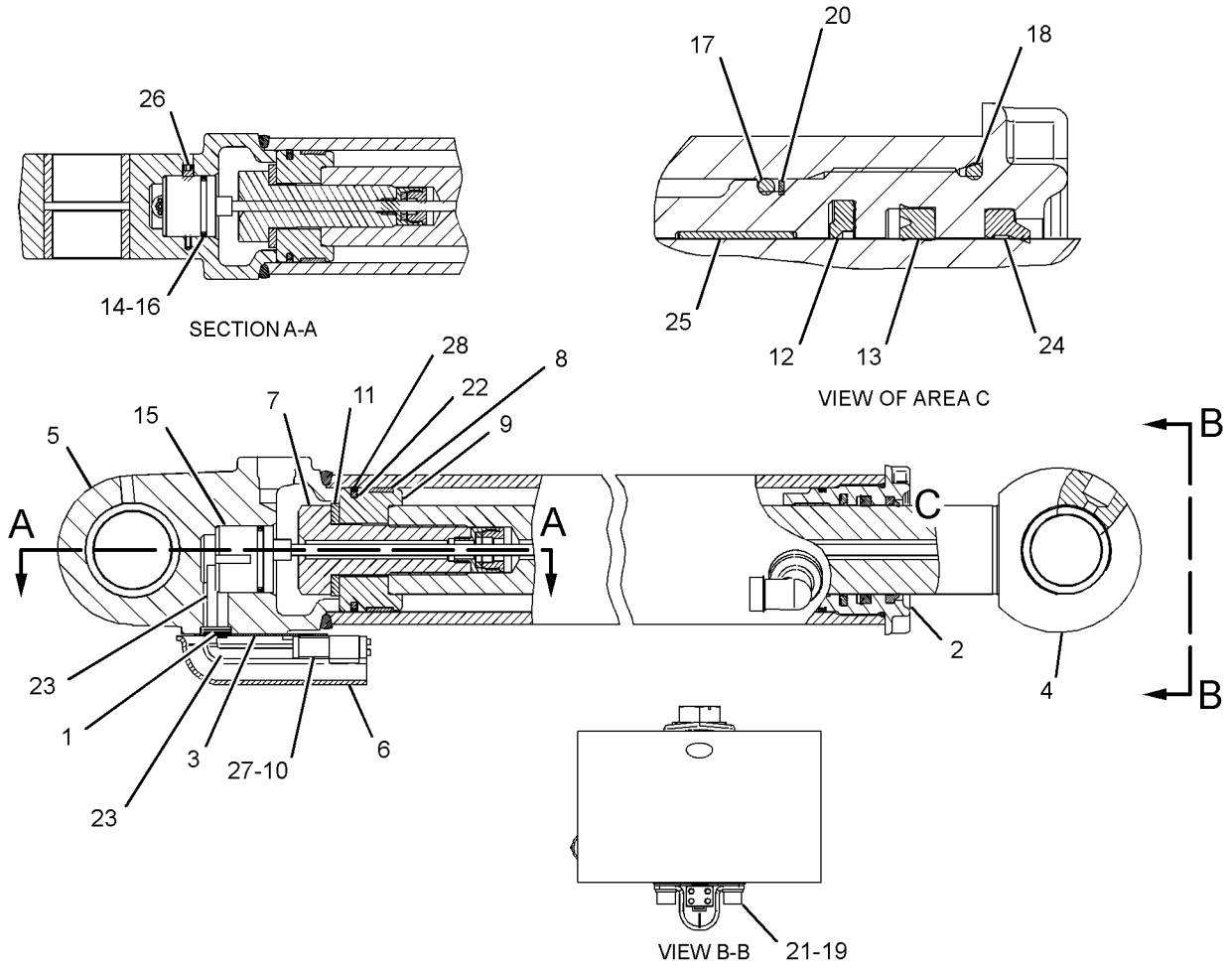

GRAPHIC #1 **<END>** g01240167

HYDRAULIC SYSTEM

210-7088 CYLINDER GP-BACKHOE BUCKET (CHG -01 THRU -03)

S/N: HLS1-UP

88.9-MM (3.5-IN) BORE X 852-MM (33.5-IN) STROKE

PART OF 214-2553 BACKHOE AR-EXTENDABLE STICK, 214-2550 BACKHOE AR-STANDARD STICK

AN ATTACHMENT

SMCS-5457 **i02122083**

NOTE	REF NO	GRAPHIC REF	PART NUMBER	QTY	PART NAME 1 2 3 4 5 6 (PRODUCT LEVEL)	SEE PAGE
	1	1	**187-3510**	1	HEAD	
	2	1	**213-4616**	1	ROD AS	
		1	**9R-0162**	2	BEARING-SLEEVE	
	3	1	**213-4620**	1	CYLINDER AS	
		1	**6V-8398**	1	SEAL-O-RING	
		1	**9R-0139**	2	BEARING-SLEEVE	
	4	1	**223-3356**	1	RING-WEAR	
	5	1	**228-9572**	1	PISTON	
	6	1	**167-2201**	1	SEAL AS-BUFFER	
	7	1	**167-2312**	1	SEAL-U-CUP	
M	8	1	**173-9683**	1	BOLT (M30X3.5X90-MM)	
	9	1	**2H-3931**	1	SEAL-O-RING	
	10	1	**2H-4145**	1	SEAL-O-RING	
	11	1	**4J-9224**	1	RING-BACKUP	
	12	1	**5J-7011**	1	SEAL	
	13	1	**5J-7012**	1	RING-EXPANDER	
	14	1	**5J-8156**	1	WIPER-ROD	
	15	1	**8T-0785**	1	RING-WEAR	
	16	1	**9X-8399**	1	WASHER (33X56X6-MM THK)	

M-METRIC PART

210-7088 CYLINDER GP-BACKHOE BUCKET *(contd.)* **i02122083**

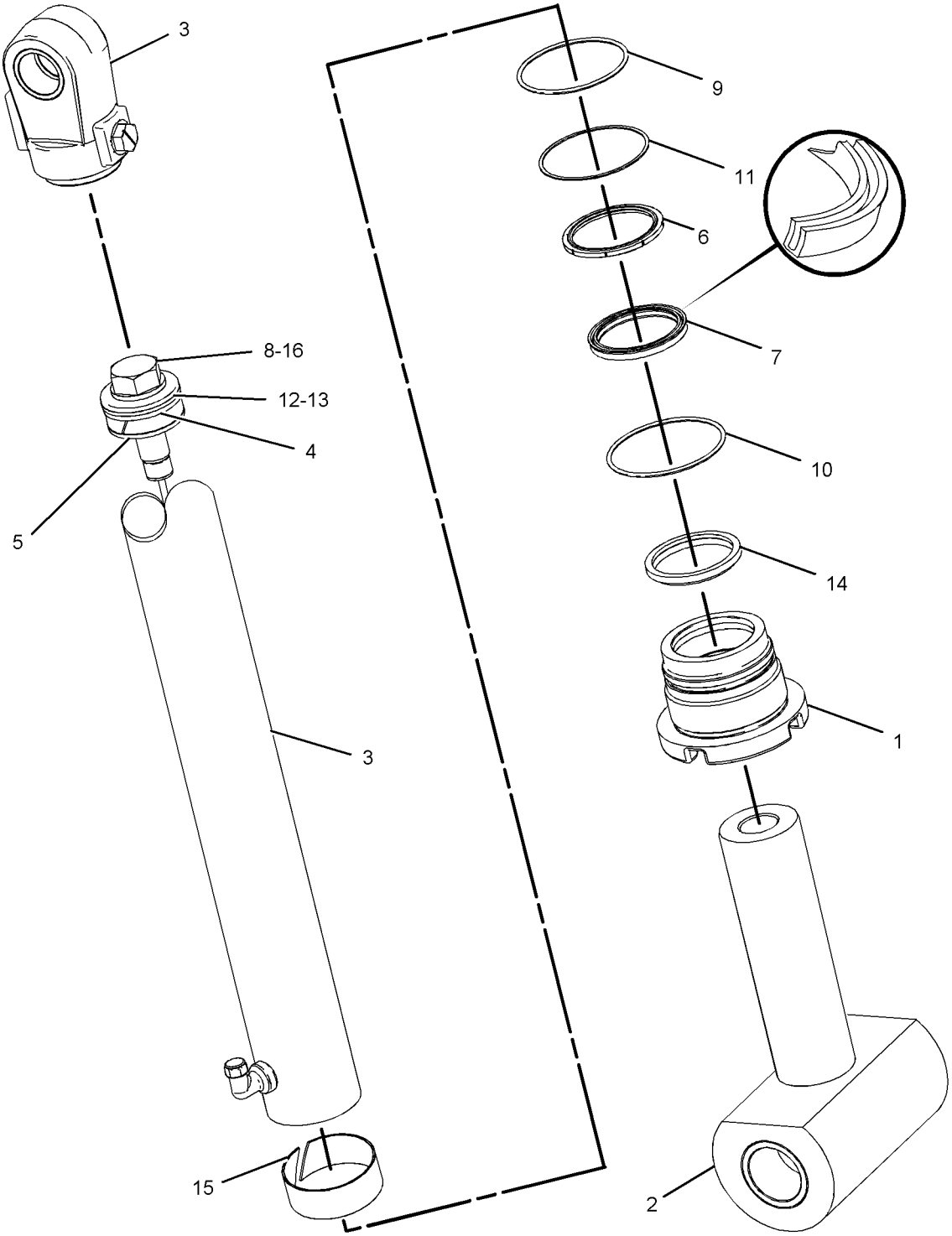

GRAPHIC #1

<END>

g01081142

210-7076 CYLINDER GP-BOOM (CHG -02 THRU -04)

S/N: HLS1-UP
120.65-MM (4.75-IN)BORE X 943-MM (37.13)STROKE
PART OF 214-2553 BACKHOE AR-EXTENDABLE STICK, 214-2550 BACKHOE AR-STANDARD STICK
AN ATTACHMENT

SMCS-5456 **i02441613**

NOTE	REF NO	GRAPHIC REF	PART NUMBER	QTY	PART NAME 1 2 3 4 5 6 (PRODUCT LEVEL)	SEE PAGE
	1	1	**273-9412**	1	HEAD	
	2	1	**276-7537**	1	CYLINDER AS	
	3	1	**212-7291**	1	PISTON	
	4	1	**223-3360**	1	RING-WEAR	
	5	1	**167-2202**	1	SEAL AS-BUFFER	
	6	1	**167-2310**	1	SEAL-U-CUP	
	7	1	**175-7902**	1	SEAL-O-RING	
	8	1	**175-7903**	1	SEAL-O-RING	
	9	1	**212-6708**	1	ROD AS	
		1	**2Y-5821**	1	RING	
		1	**9R-2700**	2	BEARING-SLEEVE	
		1	**9T-2178**	1	SPRING	
		1	**276-6142**	1	PLUNGER	
	10	1	**231-3540**	1	SEAL-WIPER	
	11	1	**2J-3961**	1	RING-BACKUP	
	12	1	**4T-8588**	1	SEAL AS	
	13	1	**5J-5731**	1	LOCKNUT (1-3/4-12-THD)	
	14	1	**9X-7260**	1	RING-WEAR	

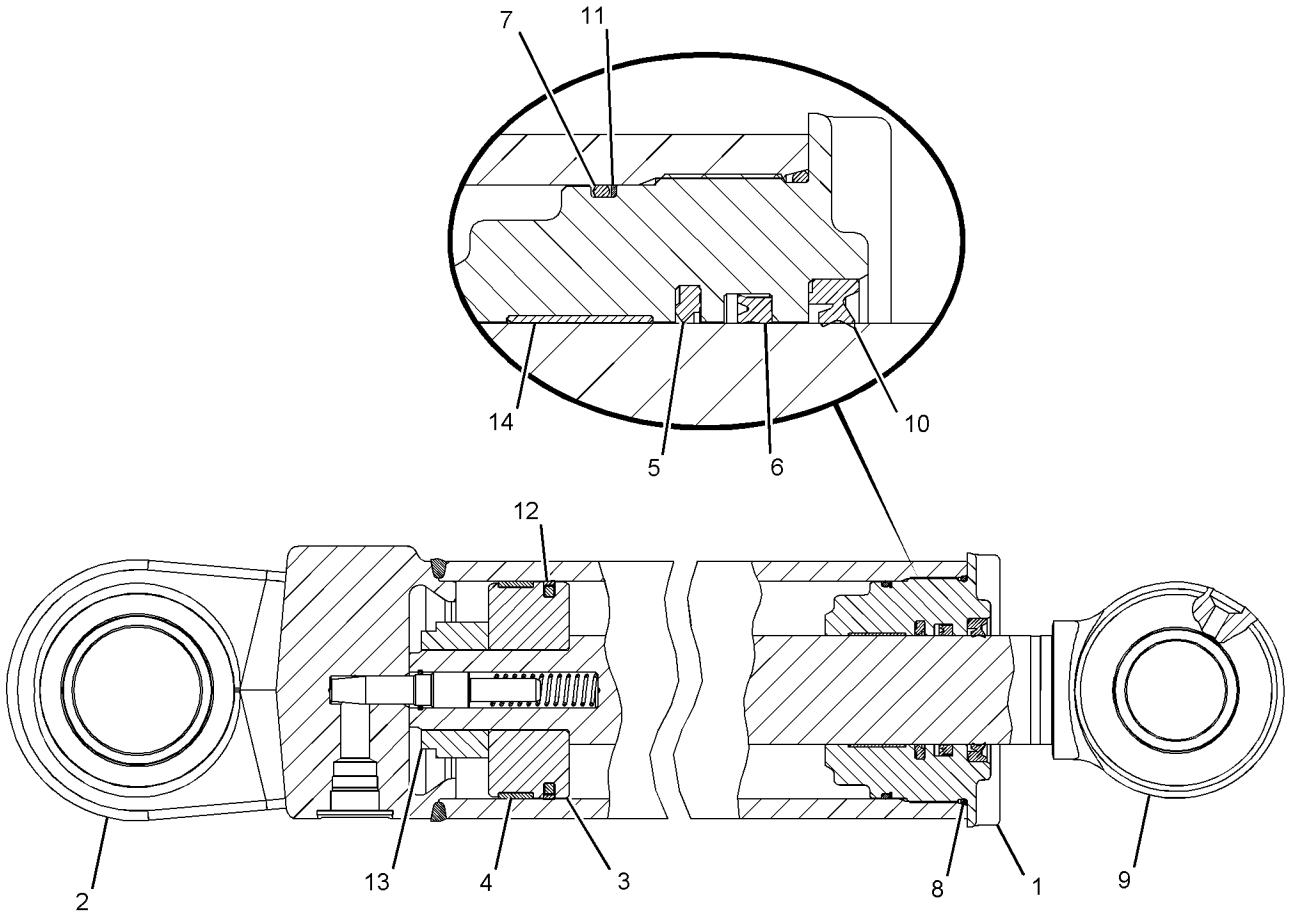

GRAPHIC #1 **<END>** g01078542

268-9049 CYLINDER GP-BOOM (CHG -01 THRU -03)

S/N: HLS1-UP

PART OF 214-3758 BACKHOE AR-EXTENDABLE STICK, 214-3755 BACKHOE AR-STANDARD STICK

AN ATTACHMENT

SMCS-5456 **i02409085**

NOTE	REF NO	GRAPHIC REF	PART NUMBER	QTY	PART NAME 1 2 3 4 5 6 (PRODUCT LEVEL)	SEE PAGE
	1	1	**3E-3377**	1	WEDGE-RECEPTACLE LOCK (4-PIN)	
	2	1	**5U-6605**	1	PLUG	
	3	1	**102-2244**	1	GROMMET	
	4	1	**159-3046**	4	BOLT (M8X1.25X20-MM)	
	5	1	**212-0907**	1	PLATE-CONNECTOR	
	6	1	**217-3312**	1	MAGNET	
	7	1	**246-9113**	1	RETAINER	
	8	1	**249-0953**	1	SEAL-RING	
	9	1	**273-9412**	1	HEAD	
	10	1	**273-9413**	1	PISTON	
	11	1	**273-9416**	1	ROD AS	
		1	**9R-2700**	2	BEARING-SLEEVE	
	12	1	**273-9417**	1	COVER	
	13	1	**273-9418**	1	CYLINDER AS	
		1	**6V-9746**	1	SEAL-O-RING	
		1	*219-1893*	1	PLUG AS	
		1	**3D-2824**	1	SEAL-O-RING	
	14	1	**274-5231**	1	PLUNGER	
	15	1	**276-1816**	1	GUARD	
	16	1	**095-1543**	1	SEAL-O-RING	
	17	1	**167-2202**	1	SEAL AS-BUFFER	
	18	1	**167-2310**	1	SEAL-U-CUP	
	19	1	**175-7902**	1	SEAL-O-RING	
	20	1	**175-7903**	1	SEAL-O-RING	
	21	1	**188-2199**	1	SEAL-O-RING	
	22	1	**212-1490**	1	SENSOR GP-POSITION	
	23	1	**215-1942**	1	RING-BACKUP	
	24	1	**231-3540**	1	SEAL-WIPER	
	25	1	**2J-3961**	1	RING-BACKUP	
	26	1	**102-8804**	1	KIT-RECEPTACLE (4-PIN)	
					(INCLUDES RECEPTACLE AS & WEDGE)	
	27	1	**3E-5003**	1	RING-RETAINING	
	28	1	**3V-2431**	2	WASHER (10.2X16X2-MM THK)	
	29	1	**4S-5565**	2	BOLT (3/8-16X0.875-IN)	
	30	1	**4T-8588**	2	SEAL AS	
	31	1	**8T-8390**	1	RING-WEAR	
	32	1	**8T-8737**	1	PLUG-SEAL	
	33	1	**9X-7260**	1	RING-WEAR	
E	34	1	**9X-1386**		SLEEVE (14-CM)	

E-ORDER BY THE CENTIMETER

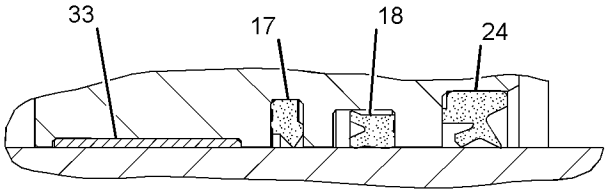

VIEW OF AREA C

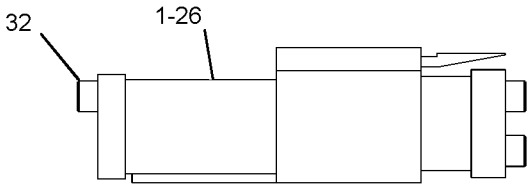

VIEW OF AREA D

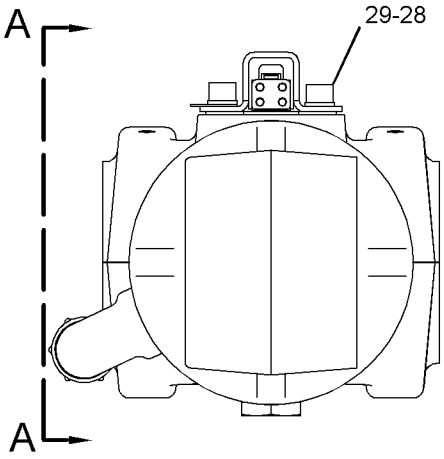

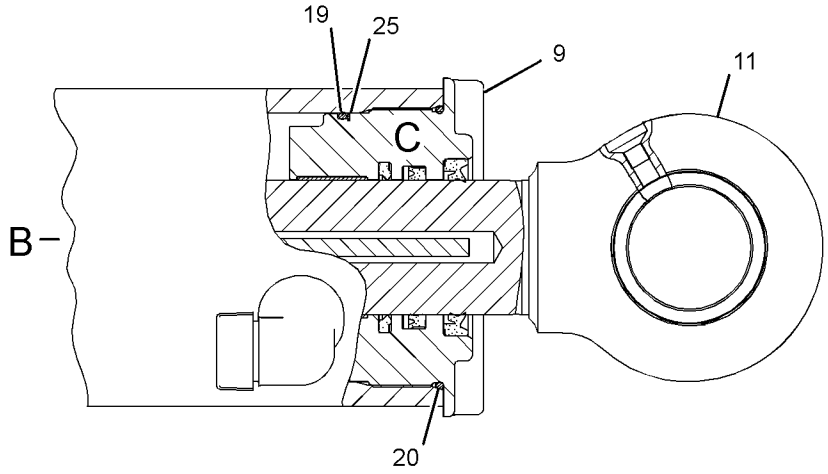

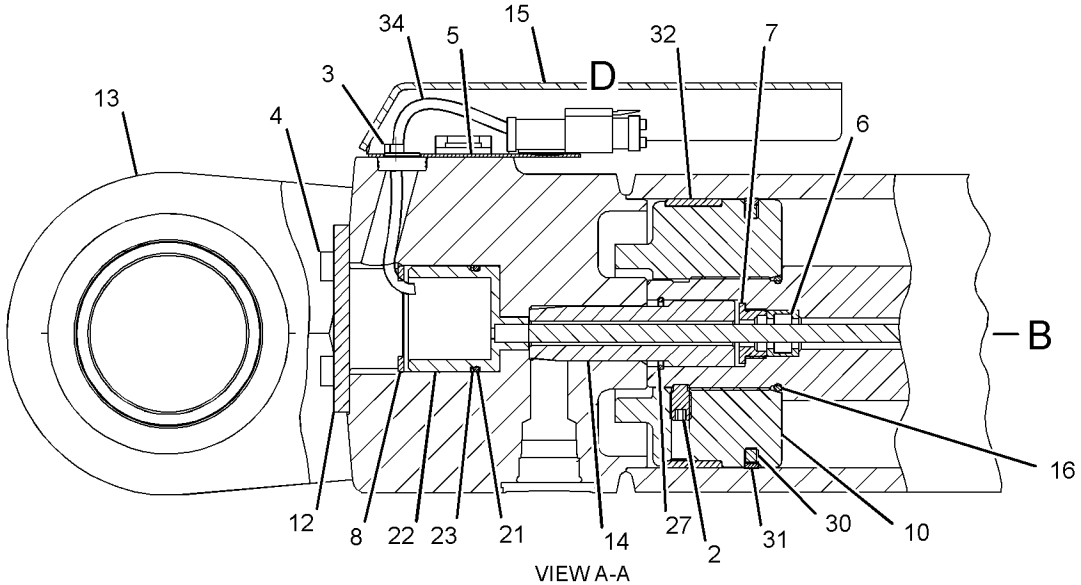

VIEW A-A

GRAPHIC #1 **<END>** g01234314

HYDRAULIC SYSTEM

210-7097 CYLINDER GP-EXTENDABLE STICK (CHG -01 THRU -03)

S/N: HLS1-UP
76-MM (3-IN) BORE X 1164-MM (45.8-IN) STROKE
PART OF 271-1402 STICK GP-EXTENDABLE
AN ATTACHMENT

SMCS-5486 **i02119865**

NOTE	REF NO	GRAPHIC REF	PART NUMBER	QTY	PART NAME 1 2 3 4 5 6 (PRODUCT LEVEL)	SEE PAGE
BE	1	1	**9X-1386**		SLEEVE	
	2	1	**102-2244**	1	GROMMET	
	3	1	**155-2260**	1	KIT-CONNECTING PLUG (3-PIN)	
	4	1	**191-6159**	1	HEAD	
	5	1	**214-6471**	1	CYLINDER AS	
		1	**6V-8398**	1	SEAL-O-RING	
	6	1	**214-6475**	1	ROD AS	
	7	1	**214-6480**	1	PISTON	
	8	1	**214-6879**	1	COVER	
	9	1	**214-6897**	1	PLATE	
	10	1	**217-3311**	1	MAGNET	
	11	1	**230-5579**	1	SCREW-BUTTON HEAD	
	12	1	**230-5580**	1	SCREW-BUTTON HEAD	
	13	1	**242-9514**	1	CARRIER	
	14	1	**242-9515**	1	RING-RETAINING	
	15	1	**167-2186**	1	SEAL AS-BUFFER	
	16	1	**167-2294**	1	SEAL-U-CUP	
	17	1	**188-2199**	1	SEAL-O-RING	
	18	1	**1H-7339**	1	SEAL-O-RING	
	19	1	**215-1942**	1	RING-BACKUP	
	20	1	**215-8934**	1	SENSOR GP-POSITION	
	21	1	**223-3353**	1	RING-WEAR	
	22	1	**226-8202**	1	SEAL-WIPER	
	23	1	**102-8803**	1	KIT-RECEPTACLE (3-PIN)	
	24	1	**4T-6780**	1	RING-WEAR	
	25	1	**5H-8848**	1	SEAL-O-RING	
	26	1	**5J-4561**	1	LOCKNUT (1-14-THD)	
	27	1	**6J-1972**	1	SEAL AS	
	28	1	**6J-5731**	1	RING-BACKUP	
	29	1	**8T-5070**	1	SETSCREW-SOCKET (3/8-16XO.5-IN)	
	30	1	**8T-8737**	3	PLUG-SEAL	

B-USE AS REQUIRED
E-ORDER BY THE CENTIMETER

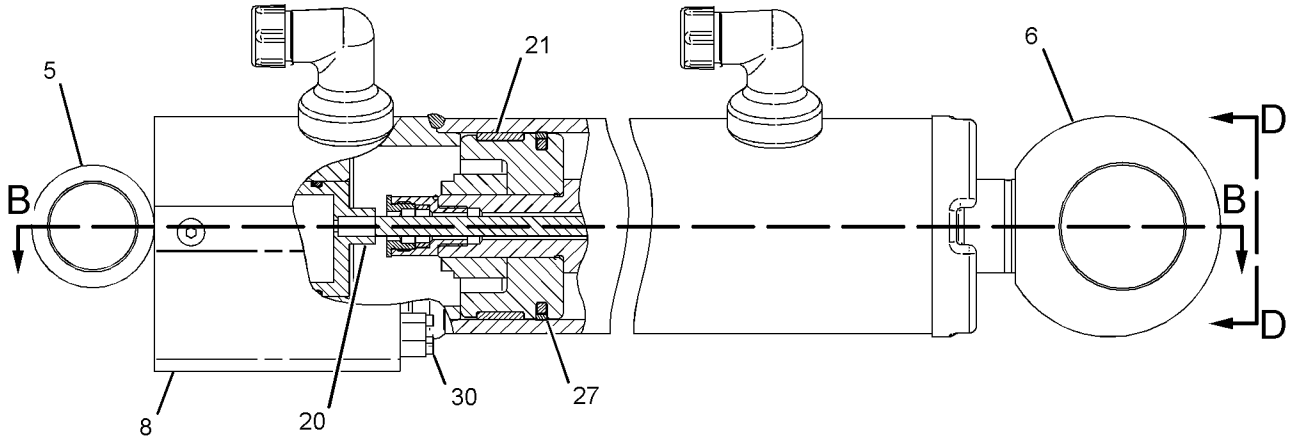

RIGHT SIDE VIEW

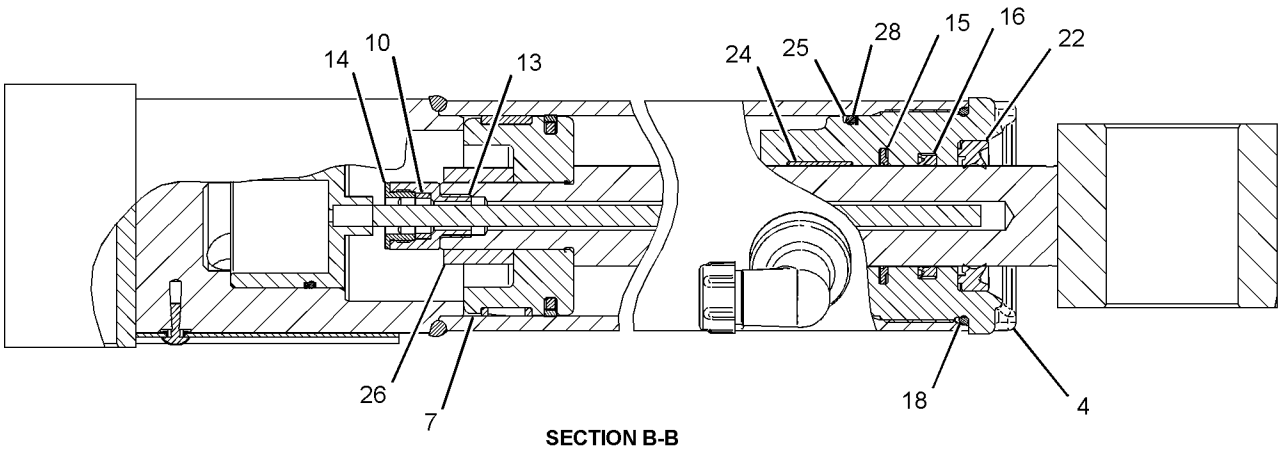

SECTION B-B

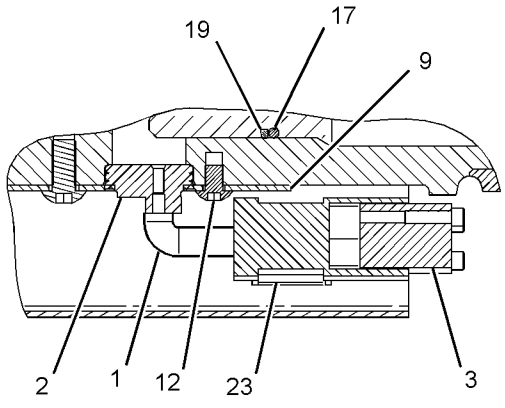

SECTION C-C

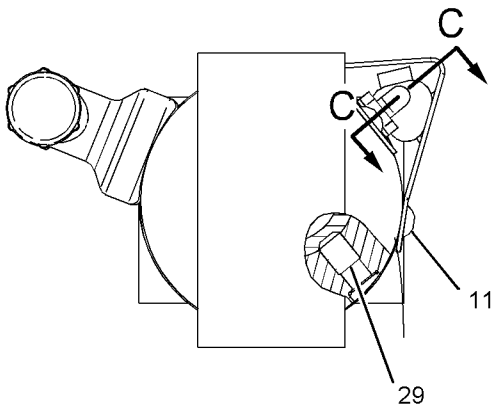

VIEW D-D

GRAPHIC #1 **<END>** g01081080

228-3509 CYLINDER GP-LIFT (CHG -00 THRU -02)

S/N: HLS1-UP
85-MM (3.3-IN) BORE X 705-MM (27.8-IN) STROKE
PART OF 213-9300 LOADER AR

SMCS-5102 **i02096850**

NOTE	REF NO	GRAPHIC REF	PART NUMBER	QTY	PART NAME 1 2 3 4 5 6 (PRODUCT LEVEL)	SEE PAGE
J	1	1	**151-2565**	1	RING-WEAR	
	2	1	**233-2571**	1	ROD AS	
	3	1	**233-2579**	1	PISTON	
J	4	1	**233-2584**	1	SEAL AS	
J	5	1	**233-2606**	1	SEAL-WIPER	
J	6	1	**233-2610**	1	SEAL-U-CUP	
	7	1	**244-3837**	1	HEAD AS	
J	8	1	**244-3838**	1	RING-BACKUP	
	9	1	**252-9206**	1	CYLINDER AS	
J	10	1	**107-6279**	1	SEAL-O-RING	
	11	1	**3B-8489**	2	FITTING-GREASE	
J	12	1	**3E-6732**	1	SEAL-O-RING	
	13	1	**9R-0153**	2	BEARING-SLEEVE	
	14	1	**9R-0321**	2	BEARING-SLEEVE	
JM	15	1	**9X-6611**	1	SETSCREW-SOCKET	
					AVAILABLE REPAIR KIT(S):	
J			**243-2276**	1	KIT-SEAL	

J-KIT MARKED J SERVICES PARTS MARKED J
M-METRIC PART

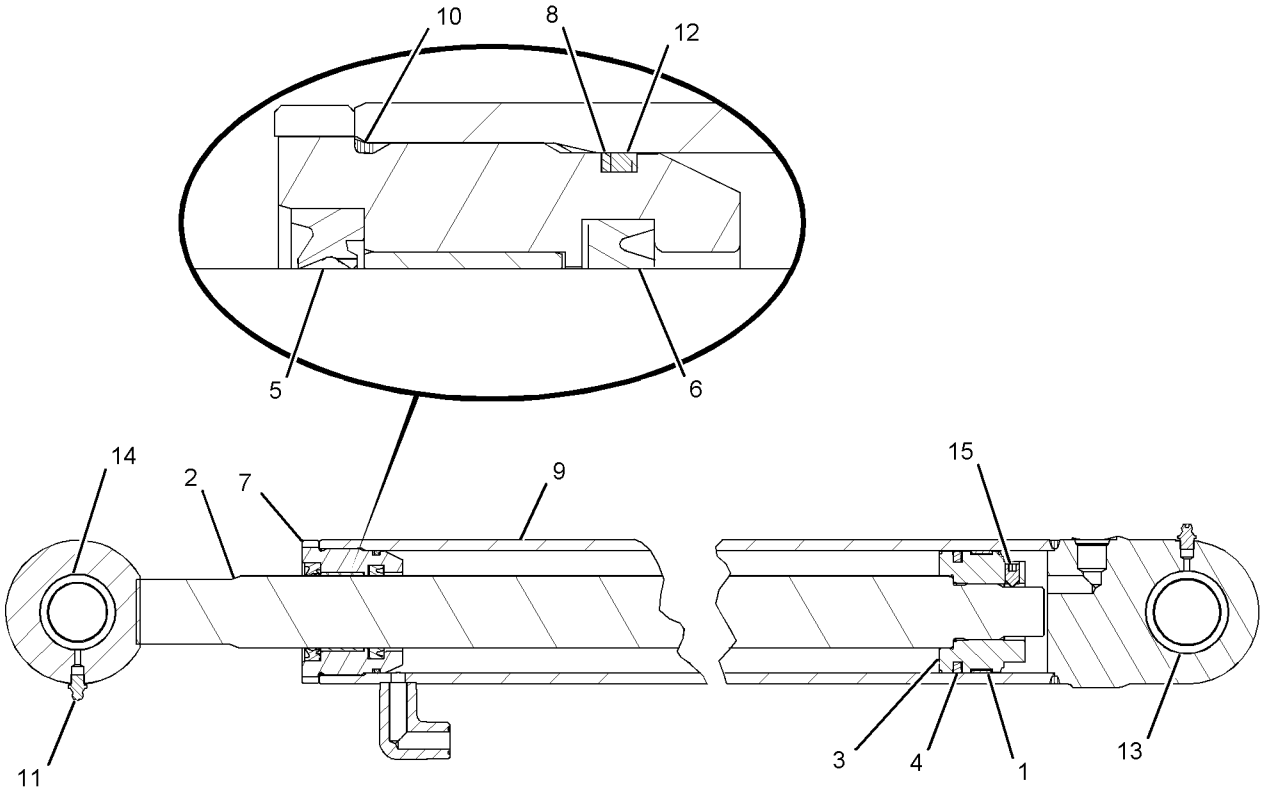

GRAPHIC #1 **<END>** g01081781

226-5540 CYLINDER GP-MULTIPURPOSE BUKT (CHG -00)

S/N: HLS1-UP
76-MM (2.99-IN) BORE X 262-MM (10.31-IN) STROKE
PART OF 216-8800, 216-8801, 216-8820, 216-8821 BUCKET GP-MULTIPURPOSE AN ATTACHMENT

SMCS-5457 **i02132079**

NOTE	REF NO	GRAPHIC REF	PART NUMBER	QTY	PART NAME 1 2 3 4 5 6 (PRODUCT LEVEL)	SEE PAGE
	1	1	**3B-8489**	2	FITTING-GREASE	
	2	1	**9S-8004**	2	PLUG	
J	3	1	**3J-1907**	2	SEAL-O-RING	
	4	1	**9T-4007**	2	BEARING	
					AVAILABLE REPAIR KIT(S):	
J			**230-9357**	1	KIT-SEAL	
					(INCLUDES WIPER SEAL, O-RINGS, MOISTURE EXCLUDER & POLYPAK	

J-KIT MARKED J SERVICES PART MARKED J

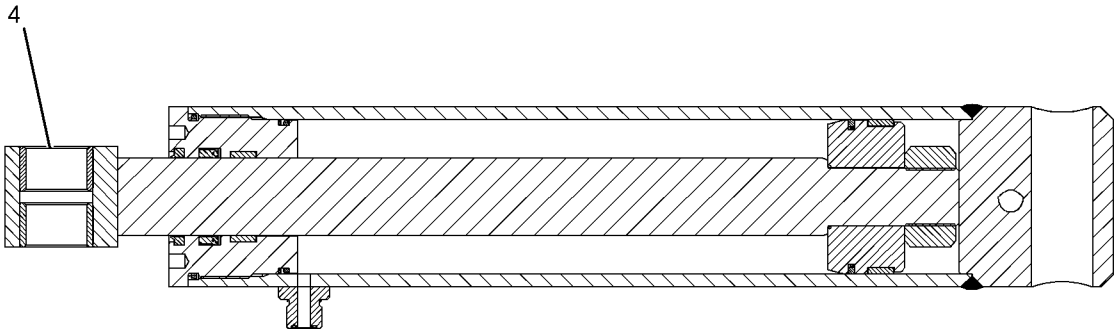

SECTION A-A



GRAPHIC #1 **<END>** g01086486

262-7049 CYLINDER GP-STABILIZER (CHG -00)

S/N: HLS1-UP
100-MM (3.9-IN) BORE X 541-MM (21.3-IN) STROKE
PART OF 268-6455 HYDRAULIC AR

SMCS-5468 **i02363608**

NOTE	REF NO	GRAPHIC REF	PART NUMBER	QTY	PART NAME 1 2 3 4 5 6 (PRODUCT LEVEL)	SEE PAGE
	1	1	**233-2576**	1	ROD AS	
	2	1	**233-2582**	1	PISTON	
J	3	1	**233-2585**	1	SEAL AS	
J	4	1	**233-2588**	1	RING-WEAR	
	5	1	**233-2594**	1	HEAD	
		1	**233-2614**	1	RING-WEAR	
	6	1	**233-2603**	1	SEAL-O-RING	
J	7	1	**233-2607**	1	SEAL AS	
J	8	1	**233-2611**	1	SEAL-U-CUP	
J	9	1	**233-2615**	1	SEAL	
J	10	1	**244-8826**	1	RING-BACKUP	
	11	1	**262-7051**	1	CYLINDER AS	
	12	1	**3B-8489**	2	FITTING-GREASE	
J	13	1	**3E-6735**	1	SEAL-O-RING	
J	14	1	**4J-0526**	1	SEAL-O-RING	
	15	1	**9R-0321**	4	BEARING-SLEEVE	
JM	16	1	**9X-6611**	1	SETSCREW-SOCKET (M10X1.5X16-MM)	
					AVAILABLE REPAIR KIT(S):	
J			**233-2623**	1	KIT-SEAL	

J-KIT(S) MARKED J SERVICES PART(S) MARKED J
M-METRIC PART

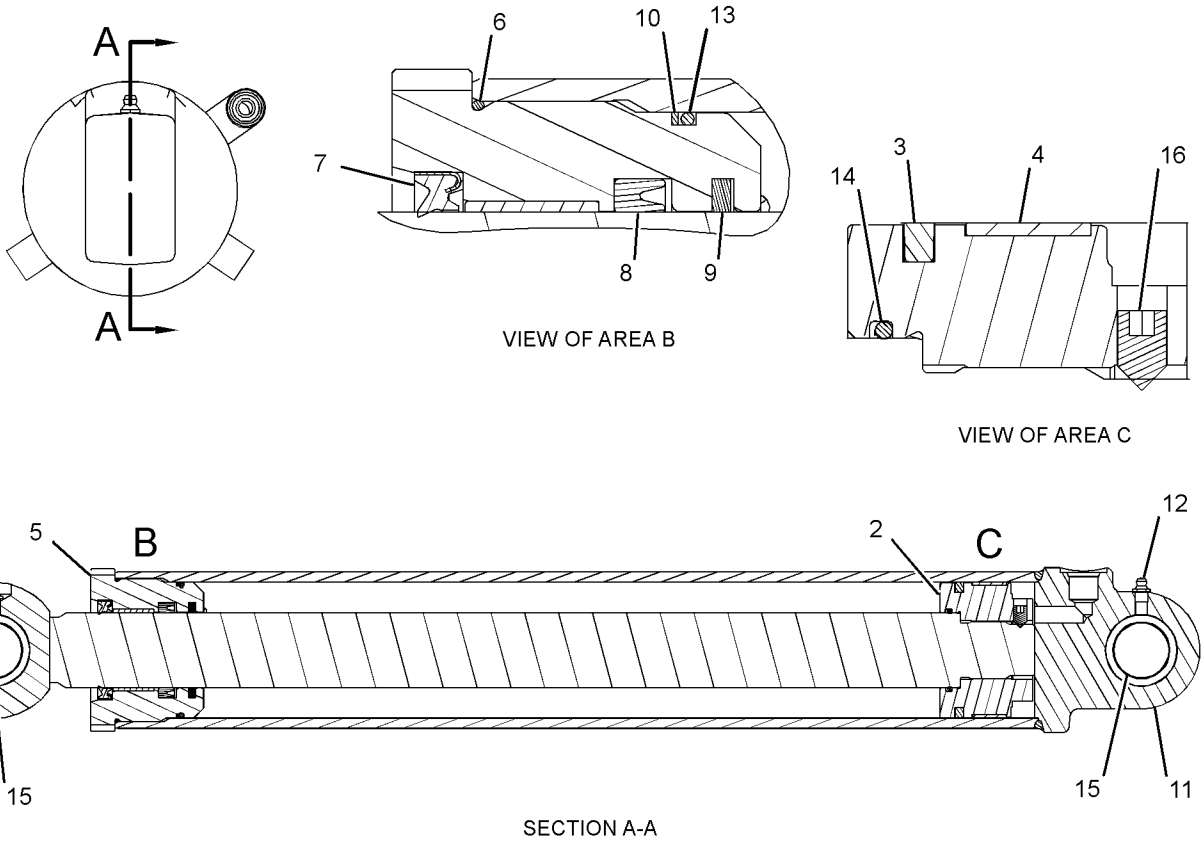

GRAPHIC #1 **<END>** g01201682

262-7050 CYLINDER GP-STABILIZER (CHG -00)

S/N: HLS1-UP
100-MM (3.9-IN) BORE X 541-MM (21.3-IN) STROKE
PART OF 268-6455 HYDRAULIC AR

SMCS-5468 **i02363609**

NOTE	REF NO	GRAPHIC REF	PART NUMBER	QTY	PART NAME 1 2 3 4 5 6 (PRODUCT LEVEL)	SEE PAGE
	1	1	**233-2576**	1	ROD AS	
	2	1	**233-2582**	1	PISTON	
	3	1	**233-2585**	1	SEAL AS	
J	4	1	**233-2588**	1	RING-WEAR	
	5	1	**233-2594**	1	HEAD	
		1	**233-2614**	1	RING-WEAR	
J	6	1	**233-2603**	1	SEAL-O-RING	
J	7	1	**233-2607**	1	SEAL AS	
J	8	1	**233-2611**	1	SEAL-U-CUP	
J	9	1	**233-2615**	1	SEAL	
J	10	1	**244-8826**	1	RING-BACKUP	
	11	1	**262-7052**	1	CYLINDER AS	
	12	1	**3B-8489**	2	FITTING-GREASE	
J	13	1	**3E-6735**	1	SEAL-O-RING	
J	14	1	**4J-0526**	1	SEAL-O-RING	
	15	1	**9R-0321**	4	BEARING-SLEEVE	
JM	16	1	**9X-6611**	1	SETSCREW-SOCKET (M10X1.5X16-MM)	
					AVAILABLE REPAIR KIT(S):	
J			**233-2623**	1	KIT-SEAL	

J-KIT MARKED J SERVICES PART(S) MARKED J)
M-METRIC PART

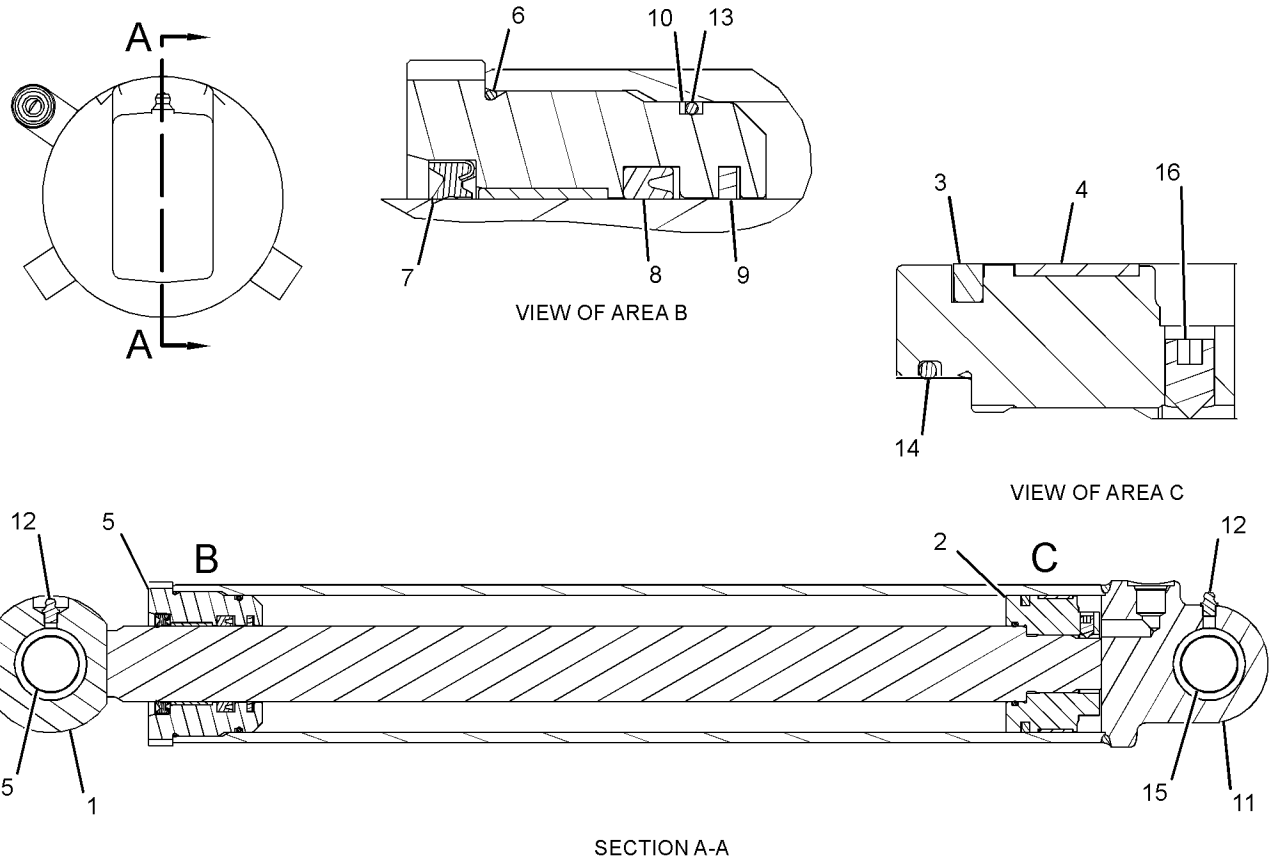

GRAPHIC #1 **<END>** g01201741

210-7081 CYLINDER GP-STICK (CHG -03, -04)

S/N: HLS1-UP

PART OF 214-3758 BACKHOE AR-EXTENDABLE STICK, 214-3755 BACKHOE AR-STANDARD STICK

AN ATTACHMENT

SMCS-5458 **i02113256**

NOTE	REF NO	GRAPHIC REF	PART NUMBER	QTY	PART NAME 1 2 3 4 5 6 (PRODUCT LEVEL)	SEE PAGE
	1	1	**5U-6605**	1	PLUG	
	2	1	**102-2244**	1	GROMMET	
	3	1	**212-0907**	1	PLATE-CONNECTOR	
	4	1	**212-1493**	1	CYLINDER AS	
		1	**6V-8398**	1	SEAL-O-RING	
	5	1	**217-3312**	1	MAGNET	
	6	1	**217-8763**	1	COVER-PROTECTION	
	7	1	**223-3360**	1	RING-WEAR	
			227-1148	1	SEAL-WIPER	
	8	1	**228-8062**	1	ROD AS	
		1	**213-6682**	2	BEARING-SLEEVE	
	9	1	**246-9113**	1	RETAINER	
	10	1	**252-5833**	1	HEAD	
	11	1	**252-9732**	1	PISTON	
	12	1	**102-8804**	1	KIT-RECEPTACLE (4-PIN)	
					(INCLUDES RECEPTACLE AS & WEDGE)	
	13	1	**146-0742**	1	RING-WEAR	
	14	1	**167-2204**	1	SEAL AS-BUFFER	
	15	1	**167-2314**	1	SEAL-U-CUP	
	16	1	**175-7902**	1	SEAL-O-RING	
	17	1	**175-7903**	1	SEAL-O-RING	
	18	1	**188-2199**	1	SEAL-O-RING	
	19	1	**215-1942**	1	RING-BACKUP	
	20	1	**217-5776**	1	SENSOR GP-POSITION (LINEAR)	
	21	1	**227-1148**	1	SEAL-WIPER	
	22	1	**2J-3961**	1	RING-BACKUP	
	23	1	**3V-2431**	2	WASHER (10.2X16X2-MM THK)	
	24	1	**4S-5565**	2	BOLT	
	25	1	**4T-8588**	1	SEAL AS	
	26	1	**8T-5070**	1	SETSCREW-SOCKET (3/8-16X0.5-IN)	
	27	1	**8T-8737**	1	PLUG-SEAL	
E	28	1	**9X-1386**	12	SLEEVE (9-CM)	
E	29	1	**9X-1386**	12	SLEEVE (5-CM)	

E-ORDER BY THE CENTIMETER

210-7081 CYLINDER GP-STICK *(contd.)* i02113256

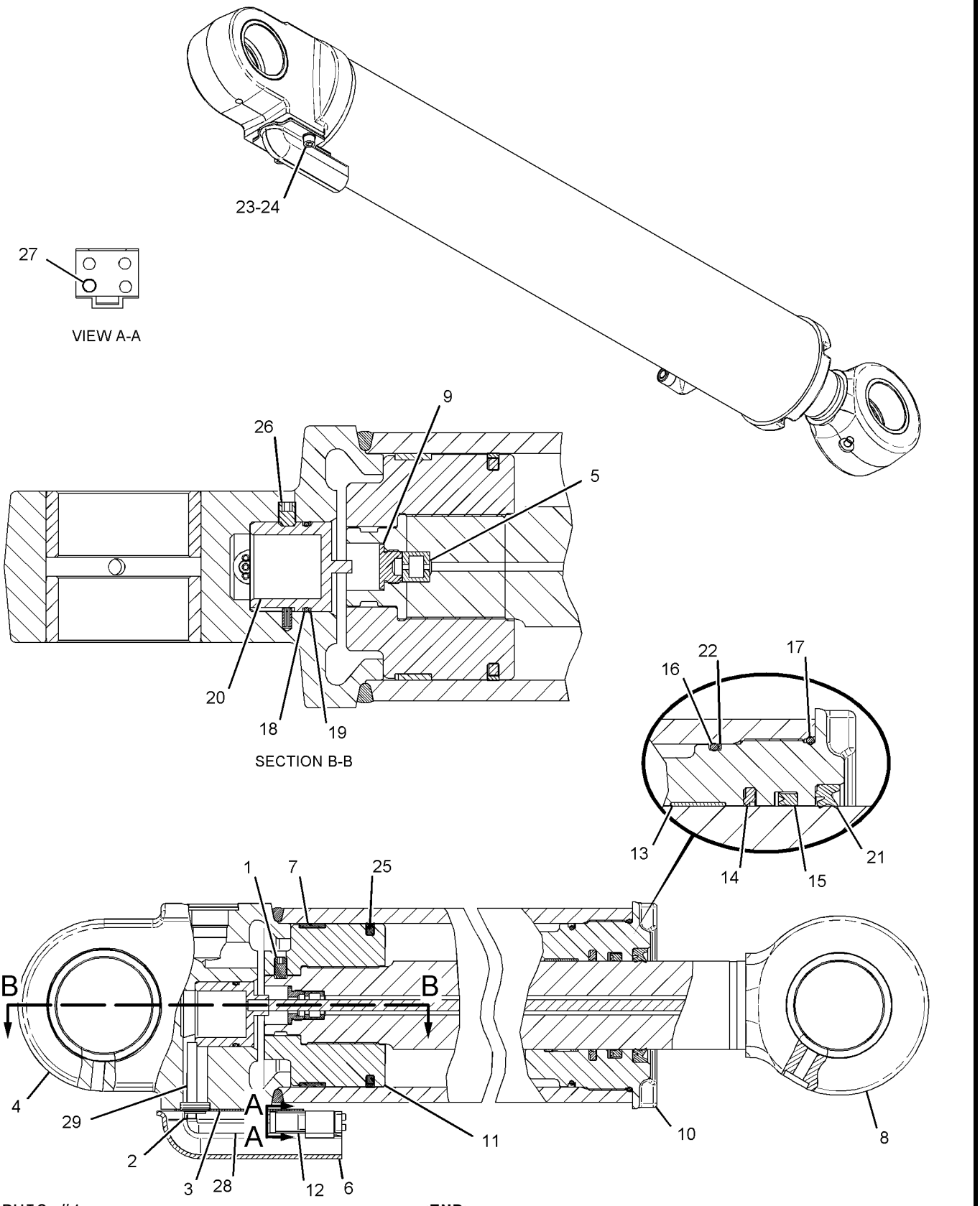

GRAPHIC #1 **<END>** g01078768

210-7082 CYLINDER GP-STICK (CHG -03, -04)

S/N: HLS1-UP
120.7-MM (4.8-IN) BORE X 679-MM (26.7-IN) STROKE
PART OF 214-2553 BACKHOE AR-EXTENDABLE STICK, 214-2550 BACKHOE AR-STANDARD STICK
AN ATTACHMENT

SMCS-5458 **i02122080**

NOTE	REF NO	GRAPHIC REF	PART NUMBER	QTY	PART NAME 1 2 3 4 5 6 (PRODUCT LEVEL)	SEE PAGE
	1	1	**212-0929**	1	CYLINDER AS	
		1	**6V-8398**	1	SEAL-O-RING	
	2	1	**223-3360**	1	RING-WEAR	
	3	1	**228-8017**	1	ROD AS	
	4	1	**252-5832**	1	PISTON	
	5	1	**252-5833**	1	HEAD	
	6	1	**146-0742**	1	RING-WEAR	
	7	1	**167-2204**	1	SEAL AS-BUFFER	
	8	1	**167-2314**	1	SEAL-U-CUP	
	9	1	**175-7902**	1	SEAL-O-RING	
	10	1	**175-7903**	1	SEAL-O-RING	
	11	1	**227-1148**	1	SEAL-WIPER	
	12	1	**2J-0564**	1	LOCKNUT (2-12-THD)	
	13	1	**2J-3961**	1	RING-BACKUP	
	14	1	**4T-8588**	1	SEAL AS	

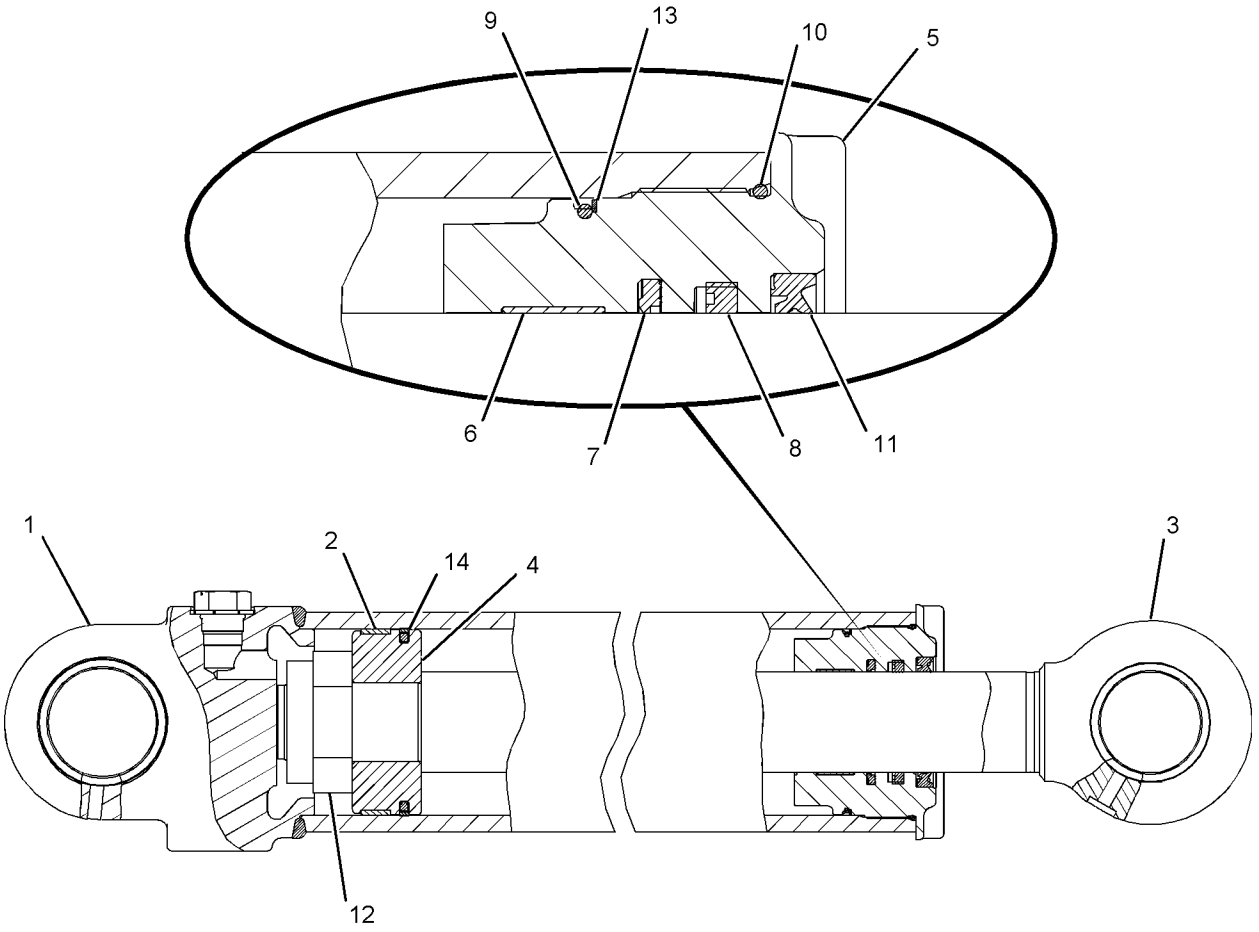

GRAPHIC #1 **<END>** g01082462

210-7098 CYLINDER GP-STICK (CHG -01 THRU -03)

S/N: HLS1-UP
76.2-MM (3-IN) BORE X 1164-MM (45.8-IN) STROKE
PART OF 271-1405 STICK GP-EXTENDABLE
AN ATTACHMENT

SMCS-5458 **i02164171**

NOTE	REF NO	GRAPHIC REF	PART NUMBER	QTY	PART NAME 1 2 3 4 5 6 (PRODUCT LEVEL)	SEE PAGE
	1	1	**191-6159**	1	HEAD	
	2	1	**215-7457**	1	ROD AS	
	3	1	**215-7460**	1	CYLINDER AS	
		1	**6V-8398**	1	SEAL-O-RING	
	4	1	**229-8911**	1	PISTON	
	5	1	**167-2186**	1	SEAL AS-BUFFER	
	6	1	**167-2294**	1	SEAL-U-CUP	
M	7	1	**173-9779**	1	BOLT (M24X3X80-MM)	
	8	1	**1H-7339**	1	SEAL-O-RING	
	9	1	**223-3353**	1	RING-WEAR	
	10	1	**226-8202**	1	SEAL-WIPER	
	11	1	**4T-6780**	1	RING-WEAR	
	12	1	**5H-8848**	1	SEAL-O-RING	
	13	1	**6J-1972**	2	SEAL AS	
	14	1	**6J-5731**	1	RING-BACKUP	
	15	1	**6V-8237**	1	WASHER (26X44X4-MM THK)	

M-METRIC PART

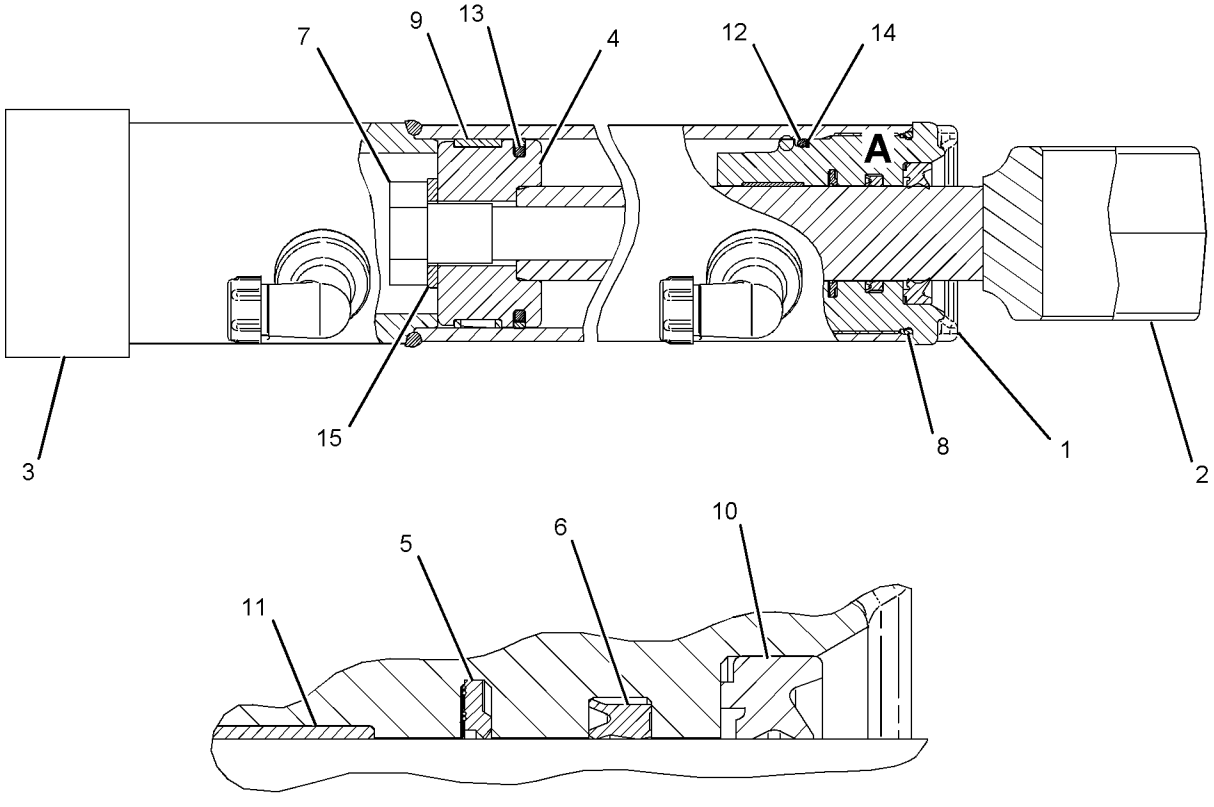

VIEW OF AREA A

GRAPHIC #1 **<END>** g01089695

278-1971 CYLINDER GP-SWING (CHG -00, -01)

S/N: HLS1-UP
100-MM (3.9-IN) BORE X 254-MM (10-IN) STROKE
PART OF 268-6455 HYDRAULIC AR

SMCS-5105 **i02430842**

NOTE	REF NO	GRAPHIC REF	PART NUMBER	QTY	PART NAME 1 2 3 4 5 6 (PRODUCT LEVEL)	SEE PAGE
	1	1	**2Y-5821**	1	RING	
	2	1	**3N-5739**	1	SPRING	
	3	1	**6E-1478**	1	PLUNGER	
	4	1	**9T-2883**	2	BEARING	
	5	1	**102-3582**	1	WASHER (11X19.5X2.5-MM THK)	
	6	1	**233-2583**	1	PISTON	
	7	1	**233-2585**	1	SEAL AS	
	8	1	**233-2589**	1	RING-WEAR	
	9	1	**233-2595**	1	HEAD AS	
		1	**233-2613**	1	BEARING	
	10	1	**233-2603**	1	SEAL-O-RING	
	11	1	**233-2606**	1	SEAL-WIPER	
	12	1	**233-2610**	1	SEAL-U-CUP	
	13	1	**233-2616**	1	SEAL	
	14	1	**233-2631**	1	ROD AS	
	15	1	**244-8826**	1	RING-BACKUP	
	16	1	**274-4274**	1	BEARING-SLEEVE	
	17	1	**278-1972**	1	CYLINDER AS	
	18	1	**3B-8489**	1	FITTING-GREASE	
	19	1	**3E-6735**	1	SEAL-O-RING	
M	20	1	**9X-6611**	1	SETSCREW-SOCKET (M10X1.5X16-MM)	
					AVAILABLE REPAIR KIT(S):	
			233-2622	1	KIT-SEAL	
					(INCLUDES SEALS, RINGS, & SETSCREW)	

M-METRIC PART

278-1971 CYLINDER GP-SWING *(contd.)* i02430842

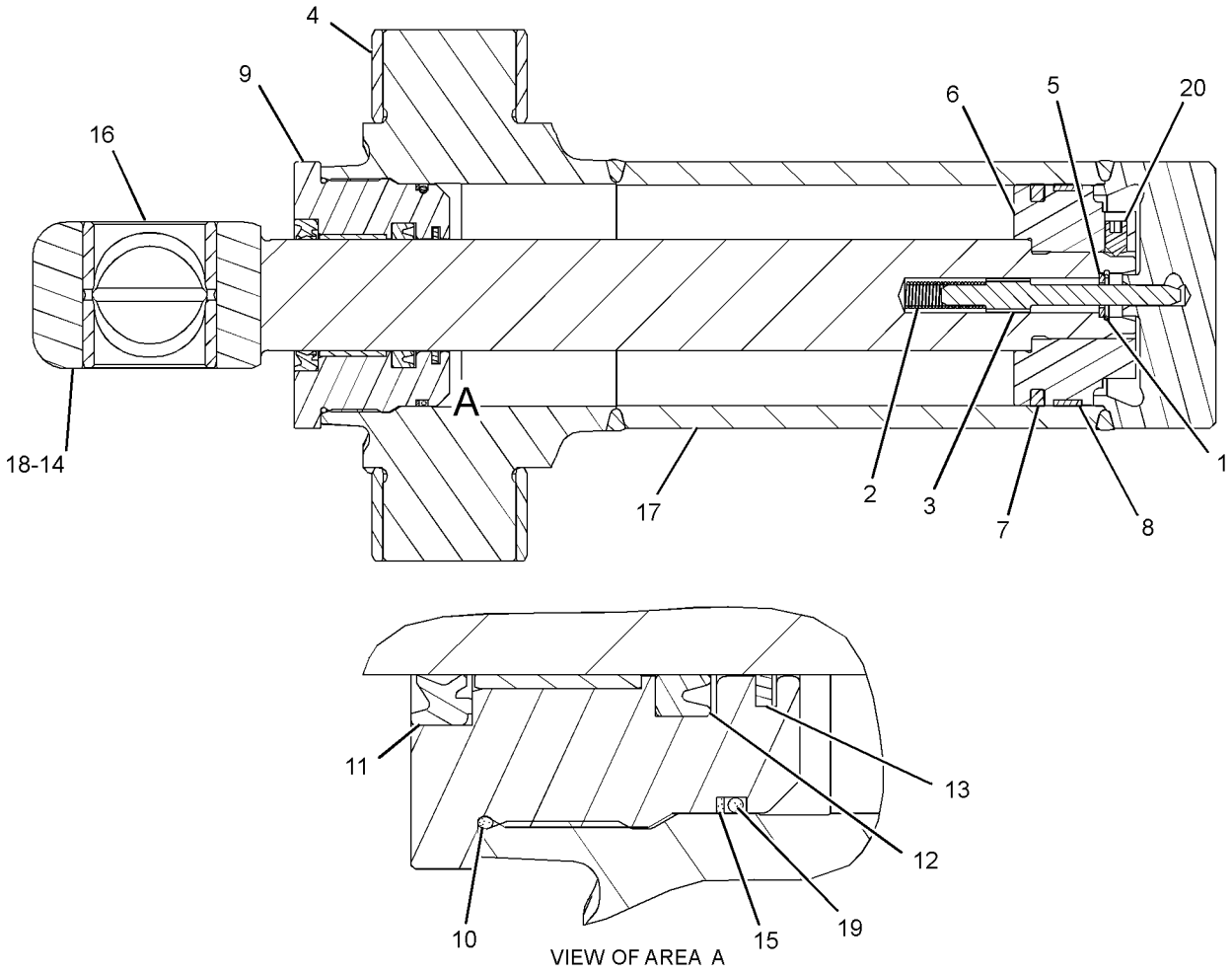

GRAPHIC #1 **<END>** g01202480

275-4243 CYLINDER GP-THUMB (CHG -00, -01)

S/N: HLS1-UP
70-MM (2.75-IN) BORE X 595-MM (23.4-IN) STROKE
PART OF 224-6237 CYLINDER & LINES GP-THUMB
AN ATTACHMENT

SMCS-5362 **i02449267**

NOTE	REF NO	GRAPHIC REF	PART NUMBER	QTY	PART NAME 1 2 3 4 5 6 (PRODUCT LEVEL)	SEE PAGE
	1	1	**276-4168**	1	CYLINDER AS	
	2	1	**276-4169**	1	ROD AS	
	3	1	**276-4170**	1	PISTON	
	4	1	**276-4171**	1	HEAD	
	5	1	**282-6836**	1	STOP	
	6	1	**3B-8489**	2	FITTING-GREASE	
	7	1	**9R-0320**	4	BEARING-SLEEVE	
					AVAILABLE REPAIR KIT(S):	
			276-4172	1	KIT-SEAL	
					(INCLUDES SEALS, RINGS & SETSCREW)	

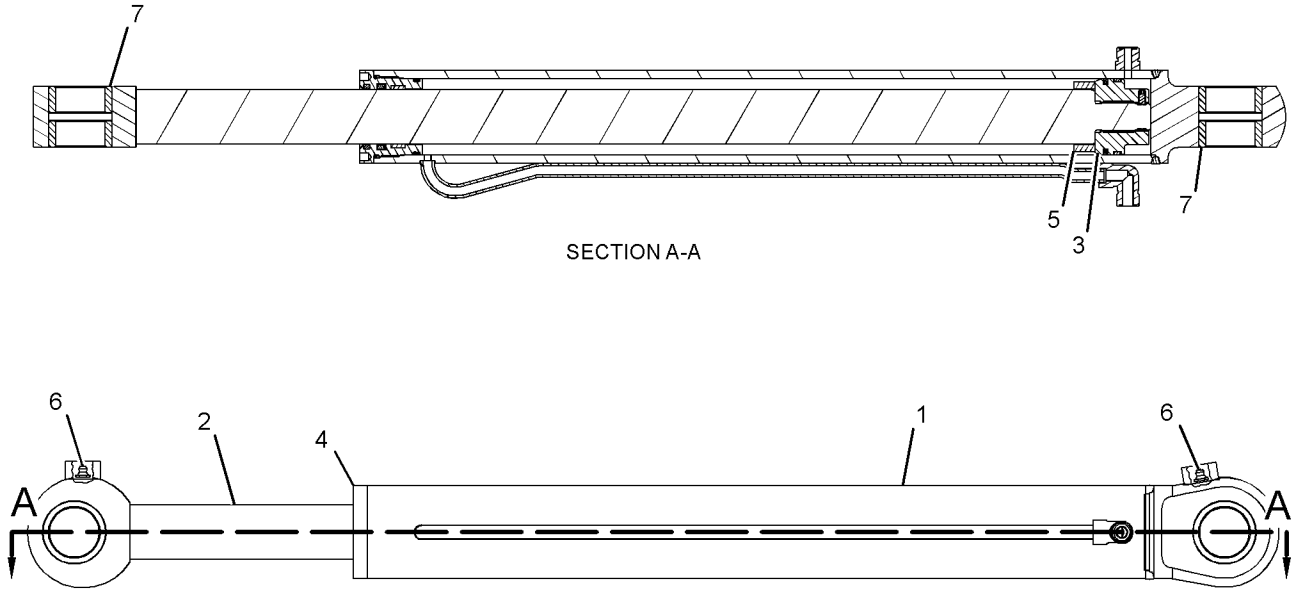

GRAPHIC #1 **<END>** g01234167

200-7128 CYLINDER GP-TILT (CHG -02 THRU -06, -06D1)

S/N: HLS1-UP

101.6-MM (4-IN) BORE X 642.1-MM (25.28-IN) STROKE

PART OF 213-9300 LOADER AR

SMCS-5104 **i02366597**

NOTE	REF NO	GRAPHIC REF	PART NUMBER	QTY	PART NAME 1 2 3 4 5 6 (PRODUCT LEVEL)	SEE PAGE
	1	1	**112-1773**	1	PISTON	
	2	1	**201-4826**	1	HEAD	
	3	1	**201-4899**	1	CYLINDER AS	
	3A	1	**6V-9746**	1	SEAL-O-RING	
	3B	1	**9T-3165**	2	BEARING	
	3C	1	**201-7659**	2	SPACER	
	4	1	**201-4902**	1	ROD AS	
	4A	1	**9R-0320**	2	BEARING-SLEEVE	
J	5	1	**229-9382**	1	SEAL-WIPER	
J	6	1	**167-2195**	1	SEAL AS-BUFFER	
J	7	1	**167-2304**	1	SEAL-U-CUP	
	8	1	**2J-3950**	1	LOCKNUT	
J	9	1	**2K-6830**	1	RING-BACKUP	
J	10	1	**4T-5613**	1	RING-WEAR	
J	11	1	**5J-5402**	1	SEAL AS	
J	12	1	**9X-4611**	1	SEAL-O-RING	
J	13	1	**6J-2797**	1	RING-WEAR	
J	14	1	**8H-7521**	1	SEAL-O-RING	
					AVAILABLE REPAIR KIT(S):	
J			**261-8625**	1	KIT-SEAL	

J-KIT MARKED J SERVICES PART(S) MARKED J

200-7128 **CYLINDER GP-TILT** *(contd.)* **i02366597**

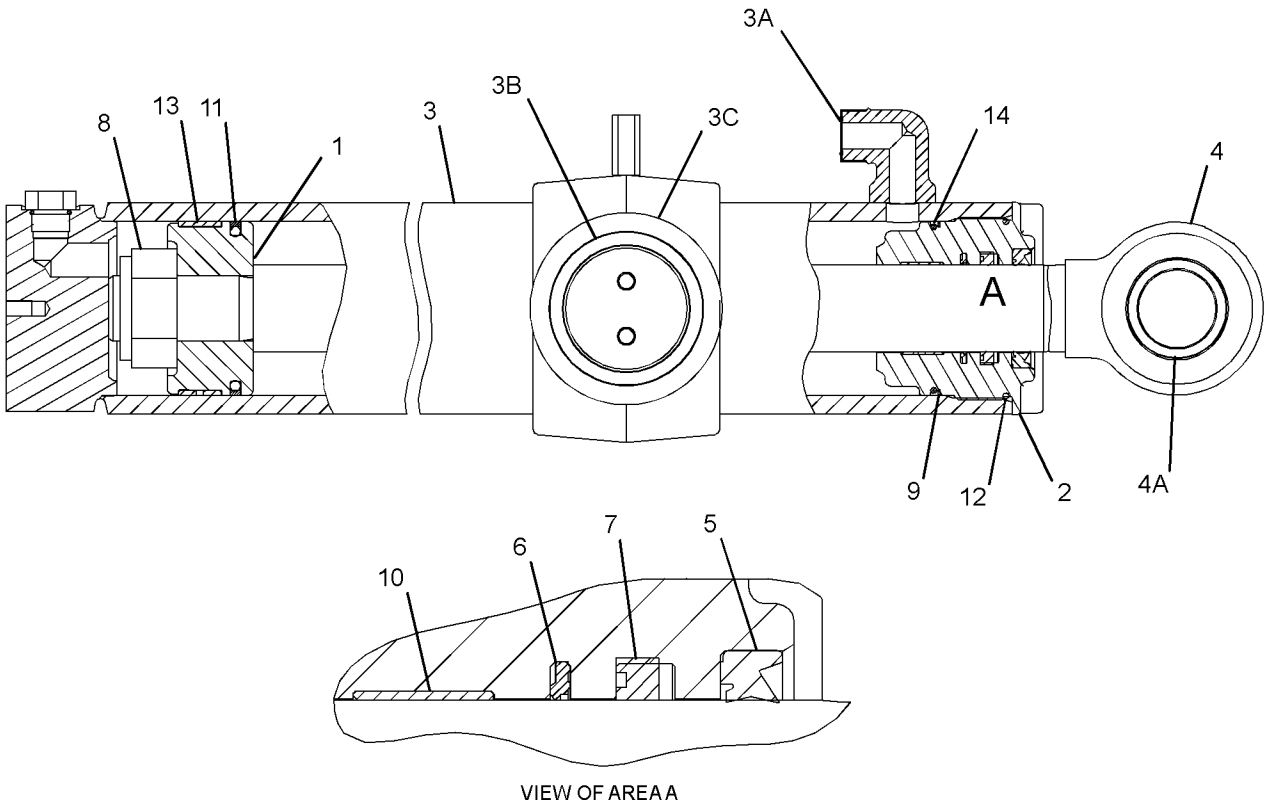

VIEW OF AREA A

GRAPHIC #1 **<END>** g01183312

112-1826 DRIVE & MTG GP-PUMP (CHG -00 THRU -06)

S/N: HLS1-UP

PART OF 216-3315, 216-3316 POWER TRAIN AR

AN ATTACHMENT

SMCS-3108, 5070 **i02442913**

NOTE	REF NO	GRAPHIC REF	PART NUMBER	QTY	PART NAME 1 2 3 4 5 6 (PRODUCT LEVEL)	SEE PAGE
M	1	1	**8T-9405**	4	BOLT-SOCKET HEAD (M4X0.7X16-MM)	
	2	1	**9U-8886**	1	RING-SEAL	
	3	1	**115-1918**	1	PLATE	
	4	1	**117-3534**	1	ADAPTER	
	5	1	**274-4555**	1	HUB	
Y	6	1	**128-5596**	1	SHAFT GP-PUMP DRIVE	359
	7	1	**5F-3106**	1	SEAL-O-RING	
M	8	1	**8T-4122**	2	WASHER-HARD (17X32X3.5-MM THK)	
M	9	1	**8T-7338**	2	BOLT (M16X2X45-MM)	

M-METRIC PART
Y-SEPARATE ILLUSTRATION

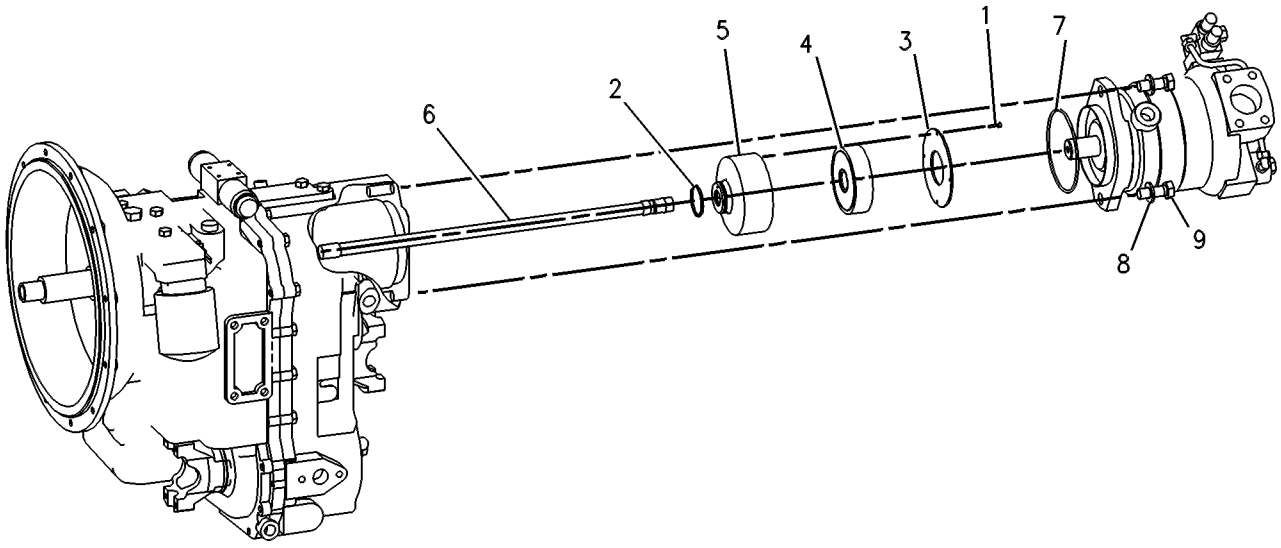

GRAPHIC #1 **<END>** g00131524

245-8769 FASTENER GP-VALVE–BANK (CHG -00)

S/N: HLS1-UP

PART OF 269-2144 VALVE AR-BANK 2, 269-2145 VALVE AR-BANK 3

AN ATTACHMENT

SMCS-5051 **i02096782**

NOTE	REF NO	GRAPHIC REF	PART NUMBER	QTY	PART NAME 1 2 3 4 5 6 (PRODUCT LEVEL)	SEE PAGE
	1	1	**8T-4121**	3	WASHER-HARD (11X21X2.5-MM THK)	
M	2	1	**8T-4186**	3	BOLT (M10X1.5X40-MM)	

M-METRIC PART

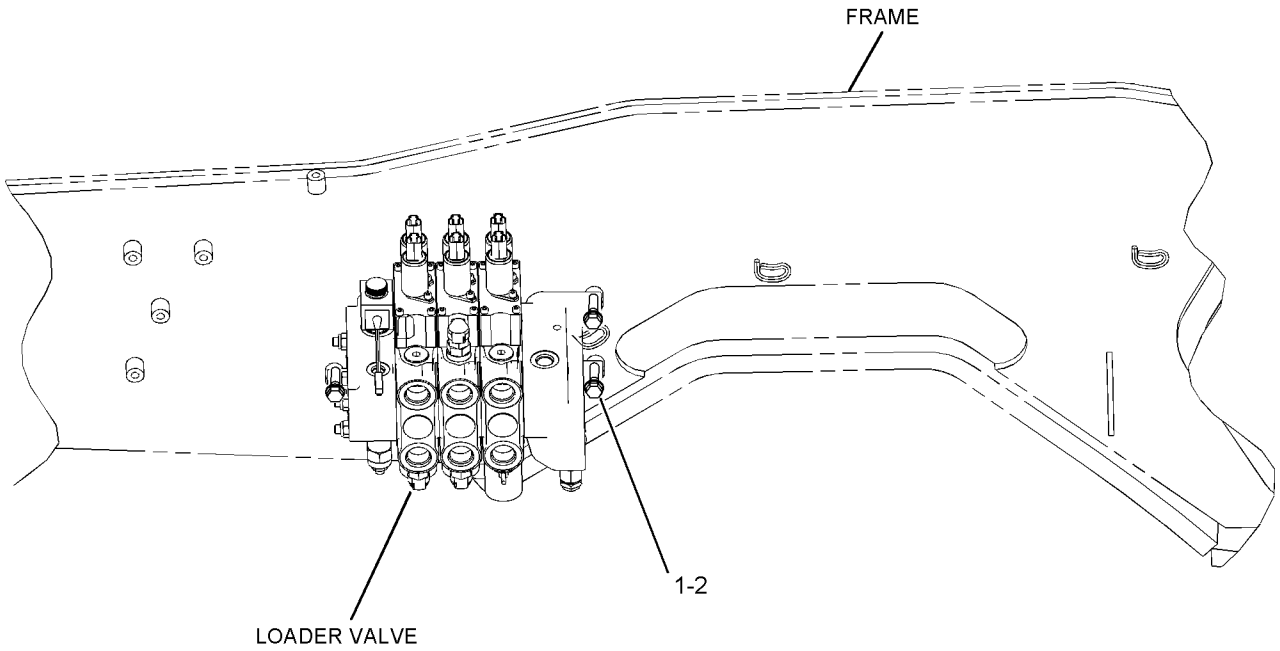

LEFT SIDE VIEW

GRAPHIC #1 **<END>** g01070282

226-9747 FILTER GP-OIL—HYDRAULIC (CHG -00 THRU -04)

S/N: HLS1-UP

PART OF 268-6455 HYDRAULIC AR

SMCS-5068 **i02433859**

NOTE	REF NO	GRAPHIC REF	PART NUMBER	QTY	PART NAME 1 2 3 4 5 6 (PRODUCT LEVEL)	SEE PAGE
	1	1	**227-3703**	1	BASE AS-FILTER (HYDRAULIC)	
	2	1	*148-8335*	1	CONNECTOR AS	
		1	**5K-9090**	1	SEAL-O-RING	
		1	**6V-8635**	1	CONNECTOR	
		1	**7M-8485**	1	SEAL-O-RING	
	3	1	*148-8407*		PLUG AS	
		1	**3J-1907**	1	SEAL-O-RING	
		1	**9S-4191**	1	PLUG-O RING	
	4	1	**6V-9830**	2	CAP AS	
	5	1	**6V-9833**	1	CAP AS	
	6	1	**8C-3451**	1	CAP-DUST	
	7	1	**126-1817**	1	FILTER AS-OIL (ULTRA HIGH EFFICIENCY)	
	8	1	**8C-3446**	1	VALVE-FLUID SAMPLING (HYDRAULIC OIL)	
F			**134-3014**	1	FILTER AS-OIL (HYDRAULIC, FIRE RESISTANT)	

F-NOT SHOWN

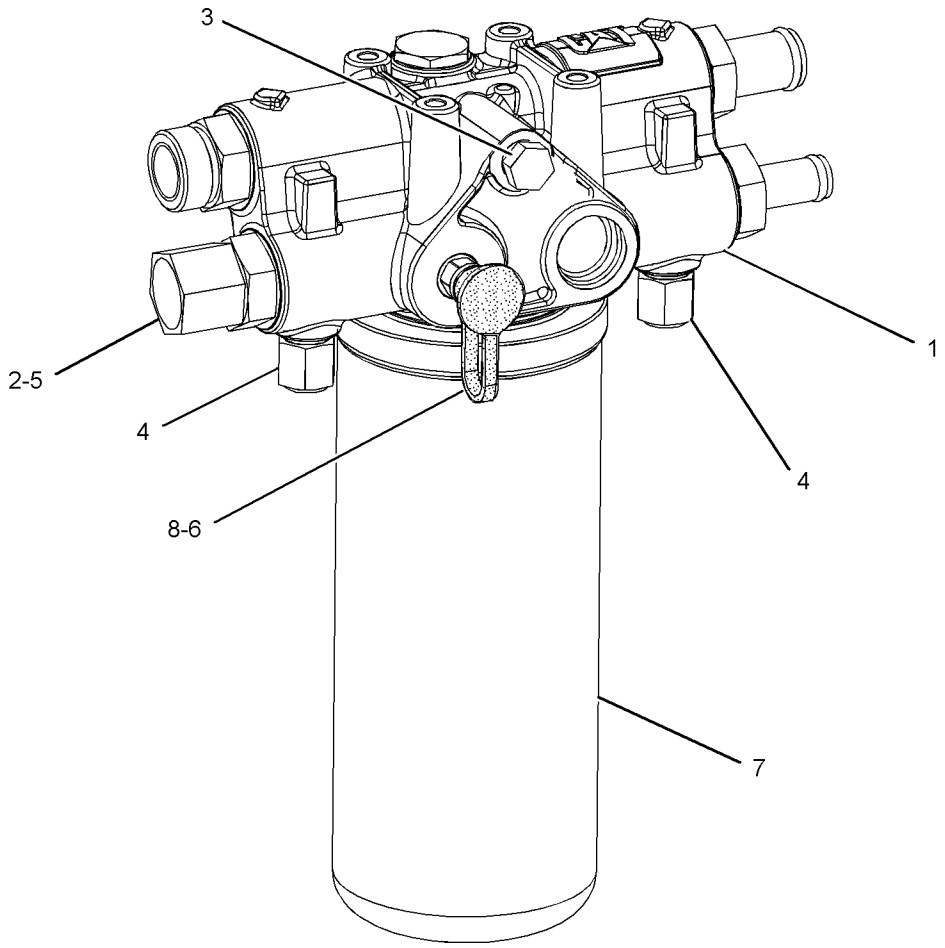

GRAPHIC #1 **<END>** g01234430

132-8769 FITTING GP-HYDRAULIC (CHG -00)

S/N: HLS1-UP

AN ATTACHMENT

SMCS-5057 **i02249052**

NOTE	REF NO	GRAPHIC REF	PART NUMBER	QTY	PART NAME 1 2 3 4 5 6 (PRODUCT LEVEL)	SEE PAGE
	1	1	**106-0406**	1	FITTING (QUICK DISCONNECT, MALE)	
	2	1	**106-0401**	1	FITTING (QUICK DISCONNECT, FEMALE)	

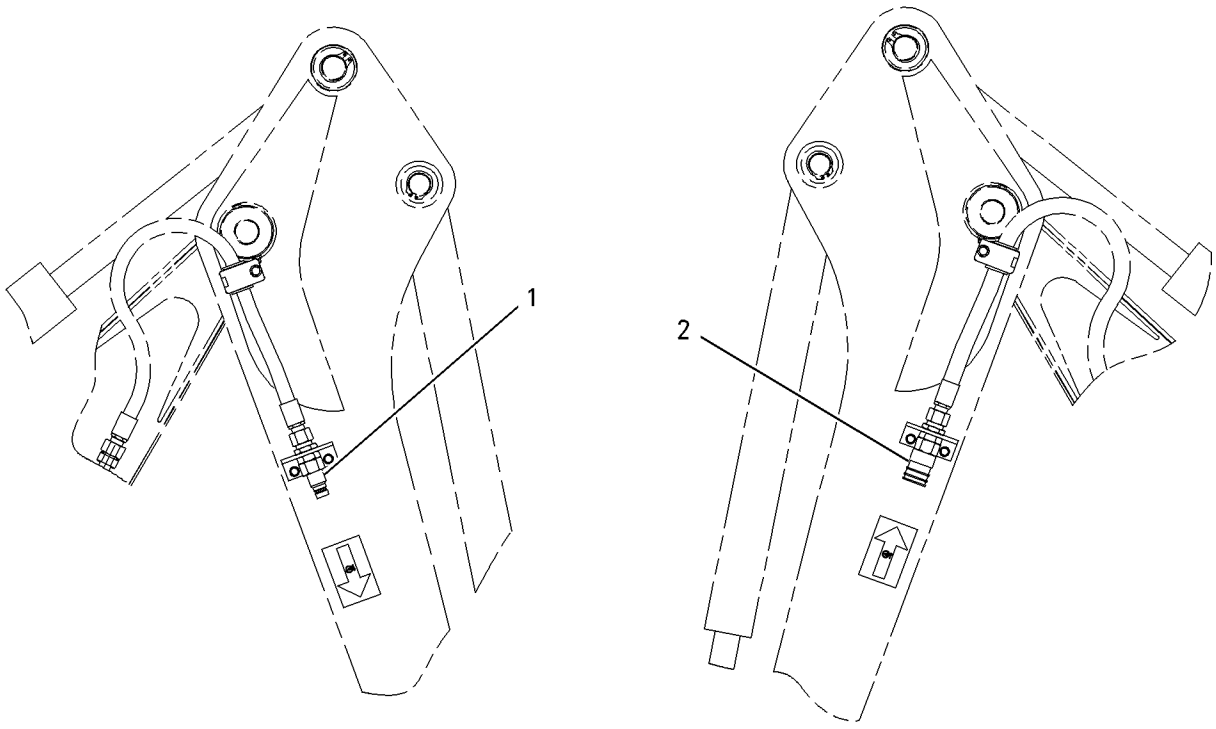

GRAPHIC #1 **<END>** g00759123

268-6455 HYDRAULIC AR (CHG -00 THRU -02)

S/N: HLS1-UP

PART OF 213-9273 COMMON AR

SMCS-5050 **i02434038**

NOTE	PART NUMBER	QTY	PART NAME 1 2 3 4 5 6 (PRODUCT LEVEL)	SEE PAGE
Y	**262-7050**	1	CYLINDER GP-STABILIZER (RH)	273
Y	**262-7049**	1	CYLINDER GP-STABILIZER (LH)	271
Y	**278-1971**	2	CYLINDER GP-SWING	279
Y	**226-9747**	1	FILTER GP-OIL (HYDRAULIC)	286
Y	*216-5332*	1	LINES GP-DRAIN	308
Y	*257-3160*	1	LINES GP-HYDRAULIC OIL COOLER	311
Y	*214-5950*	1	LINES GP-PILOT (BACKHOE BANK VALVE)	321
Y	*267-2765*	1	LINES GP-PILOT (SUPPLY)	323
Y	*267-2766*	1	LINES GP-PILOT (STABILIZER)	326
Y	*211-3607*	1	LINES GP-PUMP	327
Y	*267-2764*	1	LINES GP-SWING	338
Y	**210-6240**	1	PUMP GP-METERING (HMU)	226
Y	**267-2755**	1	PUMP GP-PISTON	356
Y	*245-8777*	1	TANK & MTG GP-HYDRAULIC	360
Y	*267-2770*	1	VALVE & LINES GP-PILOT (BACKHOE)	362

Y-SEPARATE ILLUSTRATION

<END>

268-9418 KICKOUT & POSITIONER GP (CHG -00 THRU -02)

S/N: HLS1-UP

PART OF 213-9300 LOADER AR

SMCS-5109, 5112 **i02366604**

NOTE	REF NO	GRAPHIC REF	PART NUMBER	QTY	PART NAME 1 2 3 4 5 6 (PRODUCT LEVEL)	SEE PAGE
	1	1	**8T-0706**	1	RING-RETAINING	
	2	1	**8T-5063**	1	ROD END	
	3	1	**9R-3255**	1	LEVER	
	4	1	**106-7301**	1	ROD AS	
	5	1	**112-5494**	1	LEVER AS	
		1	**7Y-0336**	1	SPACER (24.5X44X24-MM THK)	
		1	**9R-2614**	1	BEARING	
	6	1	**128-7902**	1	SPACER (60.25X75X6-MM THK)	
	7	1	**128-7903**	1	SPACER (61X114.3X3-MM THK)	
	8	1	**128-7905**	1	SPACER (61X114.3X1-MM THK)	
	9	1	**130-5891**	1	LEVER AS	
		1	**7Y-0336**	1	SPACER (24.5X44X24-MM THK)	
		1	**9R-2614**	1	BEARING	
		1	**9R-3135**	1	PIN	
	10	1	**130-7952**	1	PLATE	
	11	1	**134-5930**	1	SPACER (19X41X12.7-MM THK)	
	12	1	**140-6009**	1	LEVER AS	
	13	1	**141-6343**	1	SPRING	
	14	1	**220-5974**	1	PLATE	
	15	1	**227-5571**	1	TUBE AS	
	16	1	**268-5689**	1	FILM-INDICATOR (BUCKET LEVEL)	
					(ALIGN FILM WITH POINTER WITH BUCKET ON GROUND)	
	17	1	**272-0555**	1	PIVOT AS	
M		1	**8T-3612**	2	NUT-WELD (M8X1.25-THD)	
	18	1	**272-0557**	1	PLATE AS	
	19	1	**279-6052**	1	LINK AS	
	20	1	**1B-8736**	1	KEY-WOODRUFF	
	21	1	**3B-8489**	2	FITTING-GREASE	
	22	1	**8C-6955**	1	END-YOKE ROD	
	23	1	**8T-4123**	8	WASHER-PLATED (22X35X3.5-MM THK)	
M	24	1	**8T-4133**	2	NUT (M10X1.5-THD)	
M	25	1	**8T-4182**	1	BOLT (M10X1.5X45-MM)	
M	26	1	**8T-4189**	2	BOLT (M8X1.25X20-MM)	
	27	1	**8T-4224**	2	WASHER-HARD (8.8X16X2-MM THK)	
	28	1	**9R-2806**	2	PIN	
	29	1	**9R-2807**	4	CLIP	
	30	1	**9R-5301**	2	PIN-COTTER	

M-METRIC PART

268-9418 **KICKOUT & POSITIONER GP** *(contd.)* **i02366604**

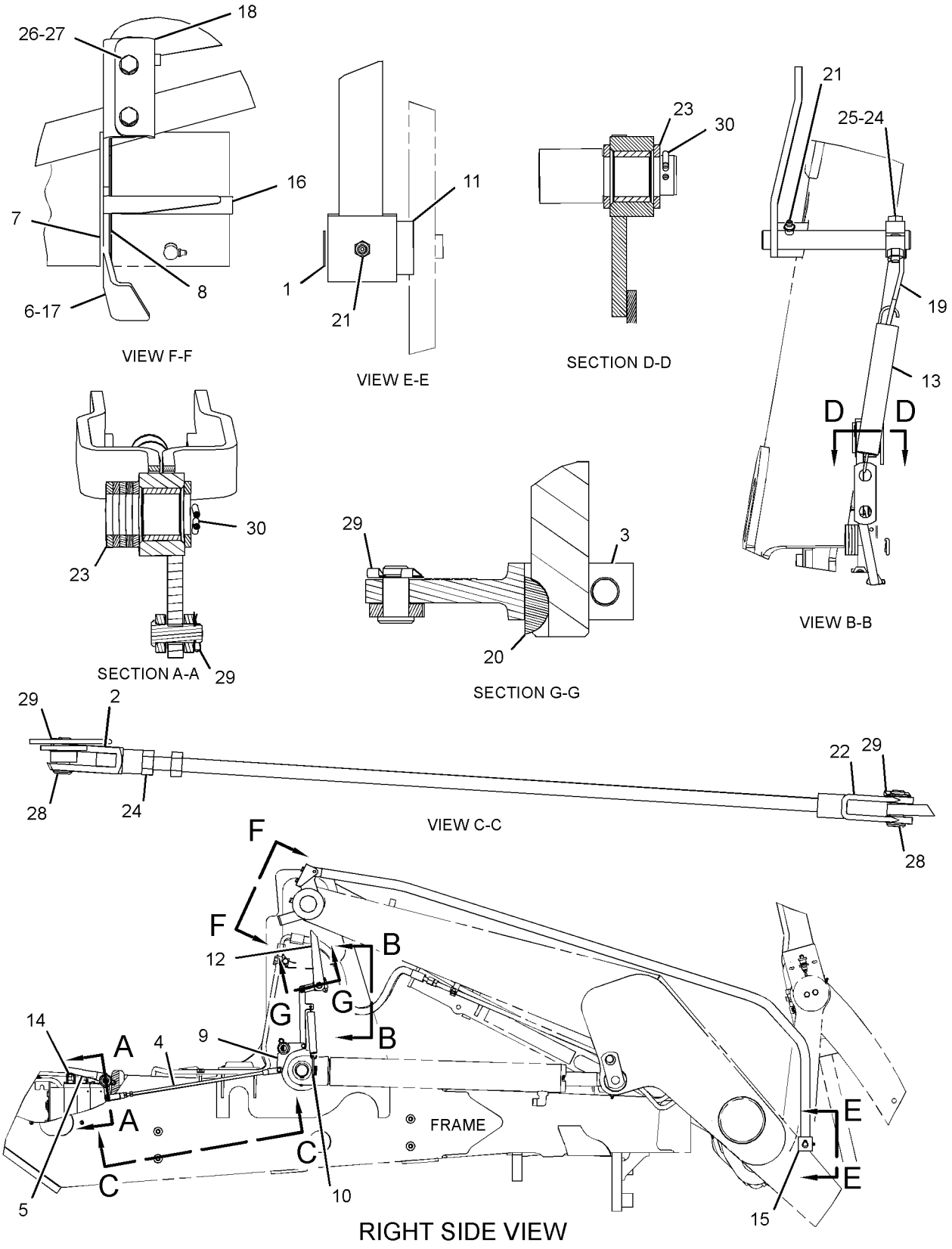

GRAPHIC #1 **<END>** g01231888

HYDRAULIC SYSTEM

264-0187 KIT-RIDE CONTROL (CHG -00, -01)

S/N: HLS1-UP

AN ATTACHMENT

SMCS-5004 **i02446268**

NOTE	REF NO	GRAPHIC REF	PART NUMBER	QTY	PART NAME 1 2 3 4 5 6 (PRODUCT LEVEL)	SEE PAGE
	1	1	**7K-1181**	2	STRAP-CABLE	
	2	1	**106-8704**	1	SUPPRESSOR AS-ARC	
		1	**102-8802**	1	KIT-RECEPTACLE (2-PIN)	
					(INCLUDES RECEPTACLE AS & WEDGE)	
		1	**186-3735**	2	PIN-CONNECTOR (16-GA TO 18-GA)	
	3	1	**146-9439**	1	RELAY AS (12-VOLT)	
Y	4	1	*162-3960*	1	ACCUMULATOR GP-RIDE CONTROL (CHARGED)	248
	5	1	**214-4710**	1	SWITCH AS-ROCKER (RIDE CONTROL)	
		1	**111-7899**	1	GASKET	
	6	1	**224-7830**	1	FILM-WARNING (HIGH PRESSURE, READ OMM, ANSI)	
Y	7	1	**245-8780**	1	VALVE GP-SOLENOID	390
	8	1	**246-8038**	1	HARNESS AS-RIDE CONTROL	
		1	**102-8804**	1	KIT-RECEPTACLE (4-PIN)	
					(INCLUDES RECEPTACLE AS & WEDGE)	
E		1	**125-7874**		TUBE-HEAT SHRINK (5.72-MM DIA) (10-CM)	
		1	**155-2260**		KIT-CONNECTING PLUG (3-PIN)	
					(INCLUDES PLUG AS, WEDGES & INTERFACE SEAL)	
		1	**155-2270**	3	KIT-CONNECTING PLUG (2-PIN)	
					(EACH INCLUDES PLUG AS, WEDGE & INTERFACE SEAL)	
	9	1	**247-0320**	1	BRACKET AS	
I	10	1	**252-1221**	1	HOSE AS	
I	11	1	**265-0868**	1	HOSE AS	
M	12	1	**096-5866**	2	BOLT (M8X1.25X75-MM)	
	13	1	**109-1633**	2	CLIP (SLOT)	
	14	1	**109-1634**	2	CLIP (TAB)	
	15	1	**131-9203**	1	SWITCH AS-PRESSURE	
		1	**3E-3370**	1	RECEPTACLE AS-CONNECTOR (3-PIN)	
		1	**3E-3371**	1	WEDGE-RECEPTACLE LOCK (3-PIN)	
		1	**8T-8729**	3	PIN-CONNECTOR	
	16	1	*148-8318*	1	CONNECTOR AS	
		1	**3K-0360**	1	SEAL-O-RING	
		1	**6V-8397**	1	SEAL-O-RING	
		1	**6V-8634**	1	CONNECTOR	
	17	1	*148-8340*	1	CONNECTOR AS	
		1	**3K-0360**	1	SEAL-O-RING	
		1	**6V-8398**	1	SEAL-O-RING	
		1	**6V-8639**	1	CONNECTOR	
	18	1	*148-8358*	2	ELBOW AS	
					(EACH INCLUDES)	
		1	**2M-9780**	1	SEAL-O-RING	
		1	**6V-8398**	1	SEAL-O-RING	
		1	**6V-8624**	1	ELBOW	
	19	1	*153-6241*	1	ELBOW AS	
		1	**6V-8398**	1	SEAL-O-RING	
		1	**8C-8989**	1	ELBOW	
	20	1	*164-5549*	1	COUPLING GP	
		1	**3J-1907**	1	SEAL-O-RING	
		1	**4I-6287**	1	COUPLING AS	
	21	1	**3J-1907**	1	SEAL-O-RING	
	22	1	**3S-2093**	5	STRAP-CABLE	
	23	1	**4P-7581**	2	CLIP	
	24	1	**8T-4121**	4	WASHER-HARD (11X21X2.5-MM THK)	
M	25	1	**8T-4137**	4	BOLT (M10X1.5X20-MM)	
M	26	1	**8T-4139**	2	BOLT (M12X1.75X30-MM)	
	27	1	**8T-4223**	2	WASHER-HARD (13.5X25.5X3-MM THK)	

264-0187 **KIT-RIDE CONTROL** *(contd.)* **i02446268**

NOTE	REF NO	GRAPHIC REF	PART NUMBER	QTY	PART NAME 1 2 3 4 5 6 (PRODUCT LEVEL)	SEE PAGE
	28	1	**8T-4224**	2	WASHER-HARD (8.8X16X2-MM THK)	

E-ORDER BY THE CENTIMETER
I-REFER TO HYDRAULIC INFORMATION SYSTEM
M-METRIC PART
Y-SEPARATE ILLUSTRATION

264-0187 **KIT-RIDE CONTROL** *(contd.)* **i02446268**

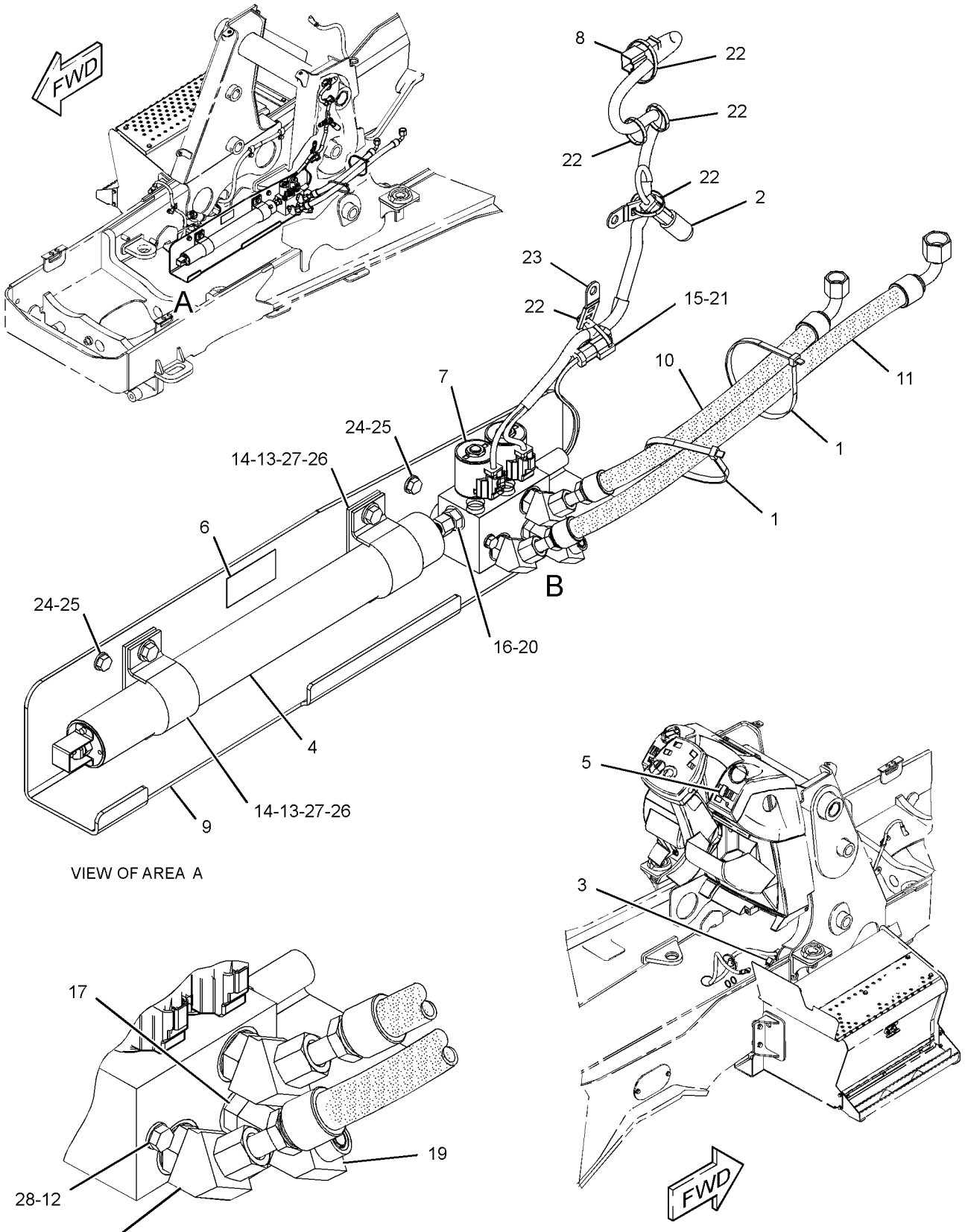

GRAPHIC #1 **<END>** g01236619

HYDRAULIC SYSTEM

249-7912 LINES GP-BACKHOE AUXILIARY (CHG -00 THRU -02)

S/N: HLS1-UP

AN ATTACHMENT

SMCS-5057 **i02446006**

NOTE	REF NO	GRAPHIC REF	PART NUMBER	QTY	PART NAME 1 2 3 4 5 6 (PRODUCT LEVEL)	SEE PAGE
	1	1	**4W-3753**	2	SPACER (13.5X25X38.1-MM THK)	
	2	1	**106-0401**	1	FITTING (QUICK DISCONNECT, FEMALE)	
	3	1	**106-0406**	1	FITTING (QUICK DISCONNECT, MALE)	
	4	1	**109-1260**	2	BRACKET	
	5	1	**144-8344**	1	SPACER (11X19X20-MM THK)	
	6	1	*155-2026*	1	UNION AS	
		1	**5K-9090**	2	SEAL-O-RING	
		1	**6V-8998**	1	UNION	
	7	1	**217-2617**	1	TUBE AS	
I	8	1	**217-2699**	1	HOSE AS	
	9	1	*241-6226*	1	TEE AS	
		1	**6V-8398**	1	SEAL-O-RING	
		1	**6V-9746**	1	SEAL-O-RING	
		1	**7J-9108**	1	SEAL-O-RING	
		1	**241-6225**	1	TEE	
	10	1	**241-8448**	2	FILM-WARNING (HYDRAULIC PRESSURE, READ OMM)	
I	11	1	**249-3818**	1	HOSE AS	
	12	1	**251-9360**	1	TUBE AS	
I	13	1	**252-0200**	1	HOSE AS	
	14	1	**277-4543**	1	BRACKET AS	
	15	1	**281-4726**	2	FILM-INSTRUCTION (OIL FLOW DIRECTION)	
	16	1	*148-8392*	1	ELBOW AS	
		1	**6V-9746**	1	SEAL-O-RING	
		1	**6V-9853**	1	ELBOW	
	17	1	*150-3053*	2	CONNECTOR AS	
					(EACH INCLUDES)	
		1	**6V-9746**	1	SEAL-O-RING	
		1	**7M-8485**	1	SEAL-O-RING	
		1	**108-3872**	1	CONNECTOR	
I	18	1	**262-4459**	1	HOSE AS	
	19	1	**2P-1293**	2	LOCKNUT (1-3/16-12-THD)	
	20	1	**5K-9090**	3	SEAL-O-RING	
	21	1	**5P-7466**	4	CLIP (SLOT)	
	22	1	**5P-7467**	4	CLIP (TAB)	
	23	1	**5P-8112**	4	GROMMET	
	24	1	**6V-1889**	2	CLIP	
	25	1	**6V-9170**	1	NUT-BULKHEAD (1-14-THD)	
	26	1	**6V-9172**	2	NUT (1-7/16-12-THD)	
	27	1	**6V-9746**	1	SEAL-O-RING	
	28	1	**7X-7729**	2	WASHER (11X25X3-MM THK)	
	29	1	**8T-1889**	3	CLIP (SLOT)	
	30	1	**8T-1890**	3	CLIP (TAB)	
	31	1	**8T-4121**	8	WASHER-HARD (11X21X2.5-MM THK)	
M	32	1	**8T-4133**	1	NUT (M10X1.5-THD)	
M	33	1	**8T-4136**	5	BOLT (M10X1.5X25-MM)	
M	34	1	**8T-4176**	2	BOLT (M12X1.75X90-MM)	
M	35	1	**8T-4185**	1	BOLT (M10X1.5X50-MM)	
M	36	1	**8T-4196**	2	BOLT (M10X1.5X35-MM)	
	37	1	**8T-4223**	2	WASHER-HARD (13.5X25.5X3-MM THK)	

I-REFER TO HYDRAULIC INFORMATION SYSTEM
M-METRIC PART

249-7912 **LINES GP-BACKHOE AUXILIARY** *(contd.)* **i02446006**

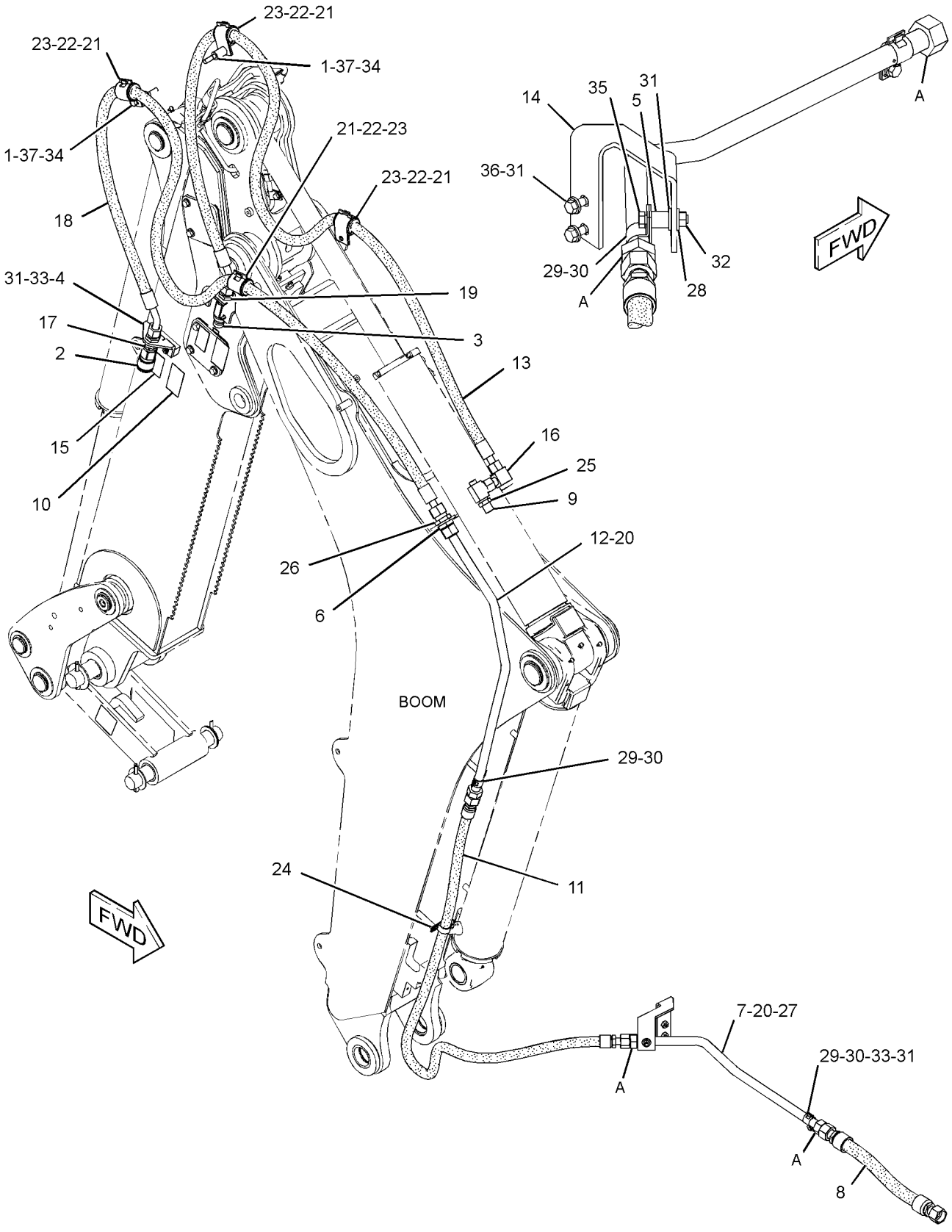

GRAPHIC #1 **<END>** g01231368

HYDRAULIC SYSTEM

262-4201 LINES GP-BACKHOE AUXILIARY (CHG -01 THRU -03)

S/N: HLS1-UP

AN ATTACHMENT

SMCS-5057 **i02446264**

NOTE	REF NO	GRAPHIC REF	PART NUMBER	QTY	PART NAME 1 2 3 4 5 6 (PRODUCT LEVEL)	SEE PAGE
	1	1	**106-0401**	1	FITTING (QUICK DISCONNECT, FEMALE)	
	2	1	**106-0406**	1	FITTING (QUICK DISCONNECT, MALE)	
	3	1	**109-1260**	2	BRACKET	
	4	1	*155-2026*	2	UNION AS	
					(EACH INCLUDES)	
		1	**5K-9090**	2	SEAL-O-RING	
		1	**6V-8998**	1	UNION	
	5	1	**228-3581**	1	FILM-WARNING (READ OMM)	
	6	2	**235-5729**	1	VALVE AS-MANUAL (DIRECTIONAL FLOW)	
	7	1	**241-8448**	2	FILM-WARNING (HYDRAULIC PRESSURE, READ OMM)	
	8	1	**251-9360**	1	TUBE AS	
	9	2	**262-3036**	1	BRACKET	
I	10	1	**262-3038**	1	HOSE AS	
	11	1	**262-3039**	1	TUBE AS	
I	12	1	**262-4203**	2	HOSE AS	
I	13	1	**262-4206**	1	HOSE AS	
I	14	1	**262-4207**	1	HOSE AS	
	15	1	**262-4217**	1	TUBE AS	
	16	2	**277-4543**	1	BRACKET AS	
	17	1,2	*148-8327*	2	CONNECTOR GP	
					(EACH INCLUDES)	
		1,2	**3D-2824**	1	SEAL-O-RING	
		1,2	**6V-8637**	1	CONNECTOR	
		1,2	**6V-9746**	1	SEAL-O-RING	
	18	2	*148-8335*	1	CONNECTOR AS	
		2	**5K-9090**	1	SEAL-O-RING	
		2	**6V-8635**	1	CONNECTOR	
		2	**7M-8485**	1	SEAL-O-RING	
	19	1	*150-3053*	2	CONNECTOR AS	
					(EACH INCLUDES)	
		1	**6V-9746**	1	SEAL-O-RING	
		1	**7M-8485**	1	SEAL-O-RING	
		1	**108-3872**	1	CONNECTOR	
	20	1	**2P-1293**	2	LOCKNUT (1-3/16-12-THD)	
	21	1	**5K-9090**	2	SEAL-O-RING	
	22	1,2	**5P-7466**	3	CLIP (SLOT)	
	23	1,2	**5P-7467**	3	CLIP (TAB)	
	24	1,2	**5P-8112**	3	GROMMET	
	25	1	**6V-1889**	2	CLIP	
	26	1	**6V-9172**	2	NUT (1-7/16-12-THD)	
	27	1	**6V-9746**	1	SEAL-O-RING	
	28	1	**7I-7412**	1	ELBOW	
	29	1	**8T-1889**	2	CLIP (SLOT)	
	30	1	**8T-1890**	2	CLIP (TAB)	
	31	1,2	**8T-4121**	8	WASHER-HARD (11X21X2.5-MM THK)	
M	32	1	**8T-4136**	4	BOLT (M10X1.5X25-MM)	
M	33	2	**8T-4137**	2	BOLT (M10X1.5X20-MM)	
M	34	2	**8T-4189**	2	BOLT (M8X1.25X20-MM)	
M	35	2	**8T-4196**	2	BOLT (M10X1.5X35-MM)	
	36	2	**8T-4223**	2	WASHER-HARD (13.5X25.5X3-MM THK)	
	37	2	**8T-4224**	2	WASHER-HARD (8.8X16X2-MM THK)	
M	38	2	**8T-4244**	1	NUT (M12X1.75-THD)	
M	39	2	**8T-4956**	1	BOLT (M12X1.75X35-MM)	

I-REFER TO HYDRAULIC INFORMATION SYSTEM
M-METRIC PART

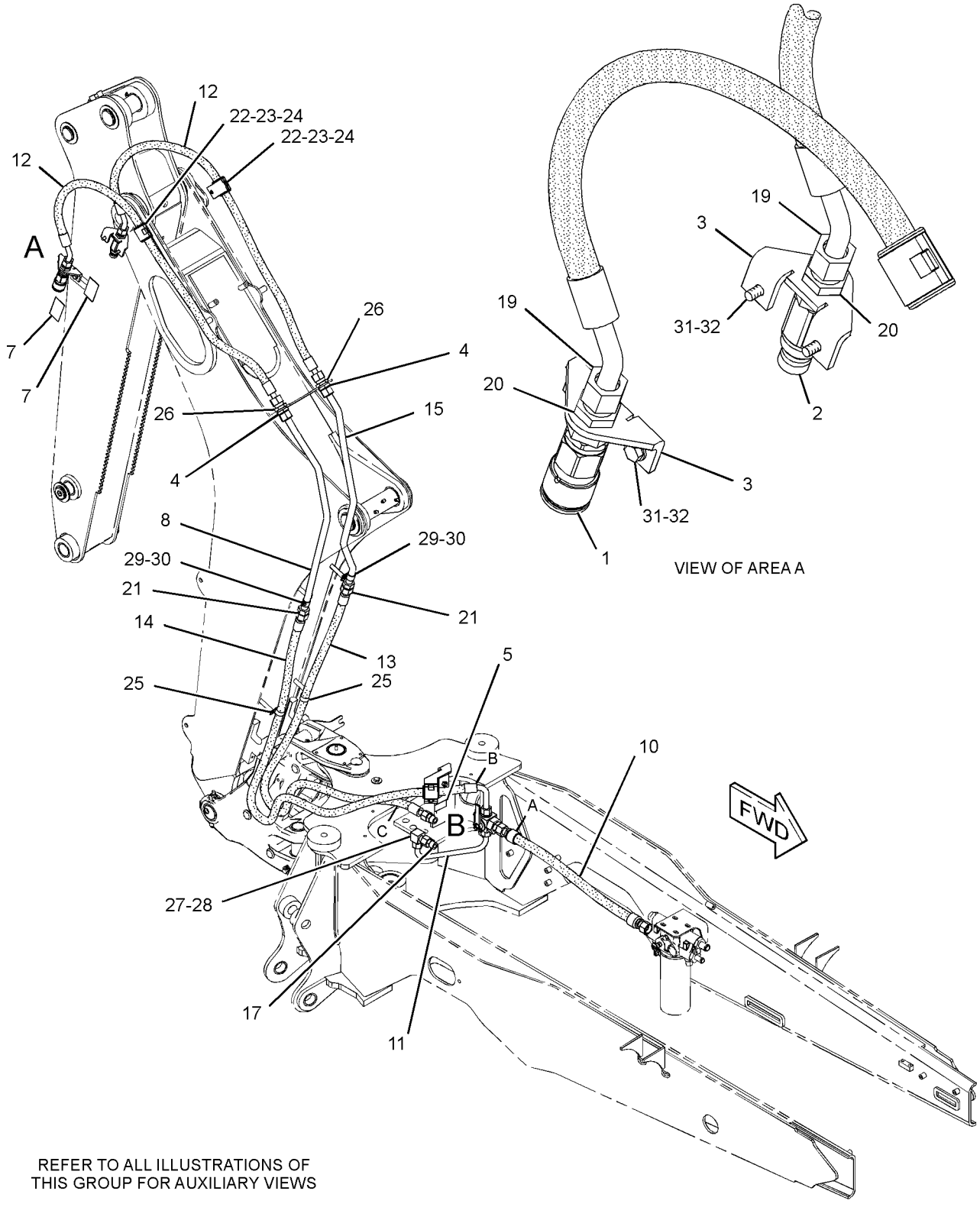

REFER TO ALL ILLUSTRATIONS OF
THIS GROUP FOR AUXILIARY VIEWS

GRAPHIC #1 g01231774

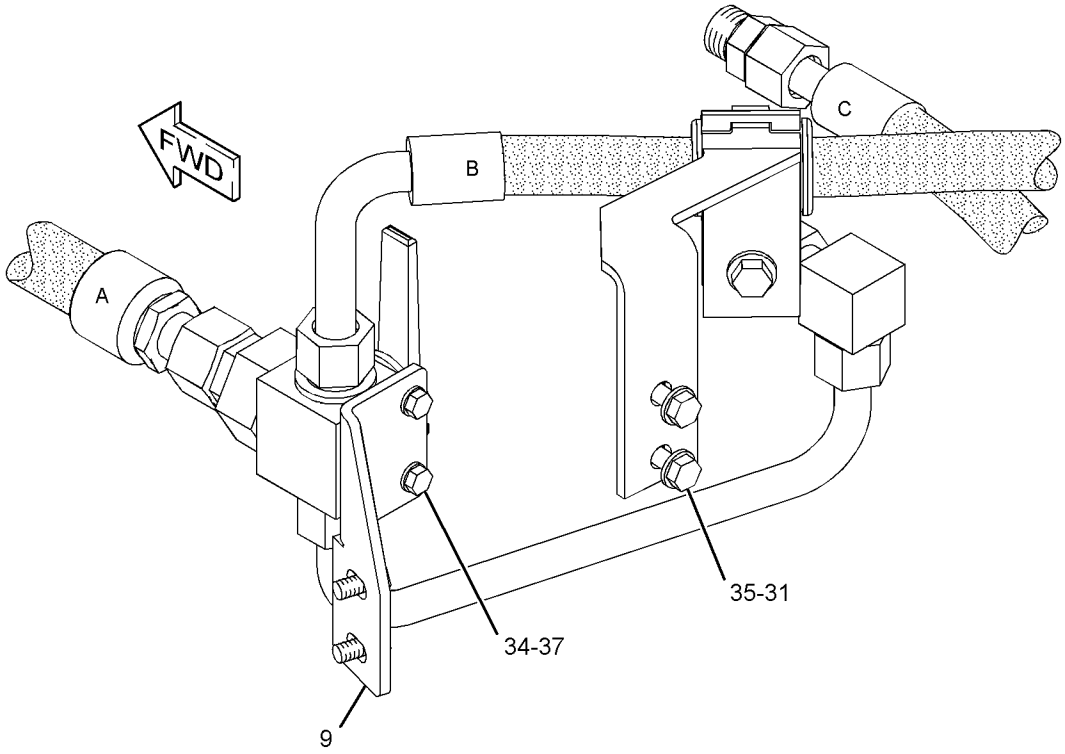

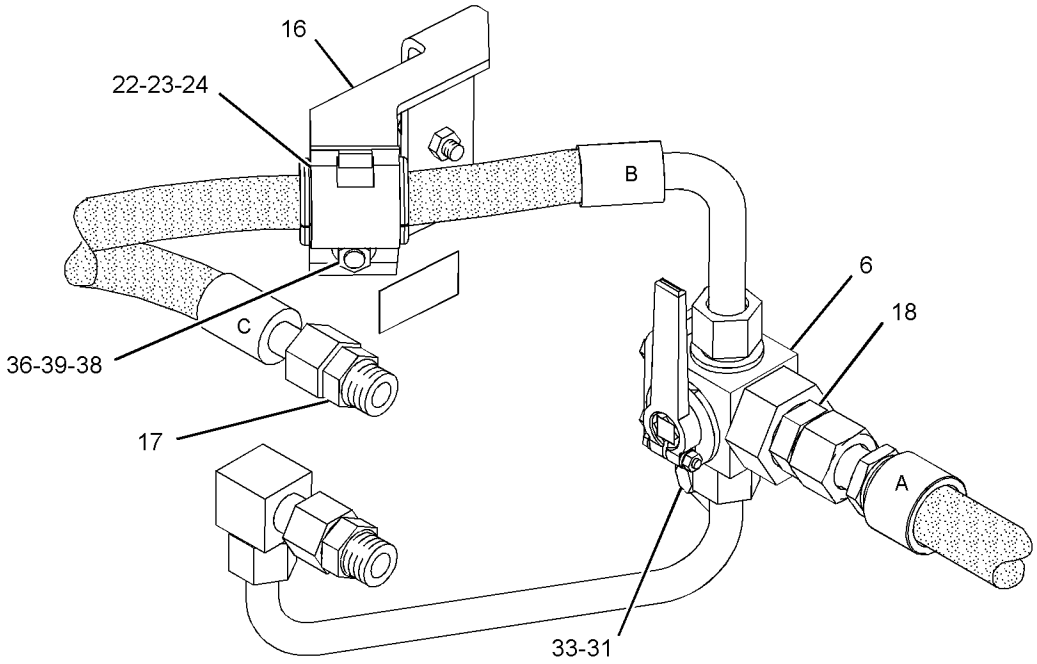

VIEW OF AREA B

GRAPHIC #2 **<END>** g01231775

HYDRAULIC SYSTEM

262-4202 LINES GP-BACKHOE AUXILIARY (CHG -01, -02)

S/N: HLS1-UP

AN ATTACHMENT

SMCS-5057 **i02446266**

NOTE	REF NO	GRAPHIC REF	PART NUMBER	QTY	PART NAME 1 2 3 4 5 6 (PRODUCT LEVEL)	SEE PAGE
	1	1	**4W-3753**	2	SPACER (13.5X25X38.1-MM THK)	
	2	1	**106-0401**	1	FITTING (QUICK DISCONNECT, FEMALE)	
	3	1	**106-0406**	1	FITTING (QUICK DISCONNECT, MALE)	
	4	1	**109-1260**	2	BRACKET	
	5	1	*155-2026*	2	UNION AS	
					(EACH INCLUDES)	
		1	**5K-9090**	2	SEAL-O-RING	
		1	**6V-8998**	1	UNION	
	6	1	**228-3581**	1	FILM-WARNING (READ OMM)	
	7	1	**235-5729**	1	VALVE AS-MANUAL (DIRECTIONAL FLOW)	
	8	1	**241-8448**	2	FILM-WARNING (HYDRAULIC PRESSURE, READ OMM)	
	9	1	**251-9360**	1	TUBE AS	
	10	1	**262-3036**	1	BRACKET	
I	11	1	**262-3038**	1	HOSE AS	
I	12	1	**262-4207**	1	HOSE AS	
I	13	1	**262-4210**	1	HOSE AS	
	14	1	**262-4211**	1	TUBE AS	
	15	1	**262-4217**	1	TUBE AS	
	16	1	**277-4543**	1	BRACKET AS	
	17	1	*148-8327*	2	CONNECTOR GP	
					(EACH INCLUDES)	
		1	**3D-2824**	1	SEAL-O-RING	
		1	**6V-8637**	1	CONNECTOR	
		1	**6V-9746**	1	SEAL-O-RING	
	18	1	*148-8335*	1	CONNECTOR AS	
		1	**5K-9090**	1	SEAL-O-RING	
		1	**6V-8635**	1	CONNECTOR	
		1	**7M-8485**	1	SEAL-O-RING	
	19	1	*150-3053*	2	CONNECTOR AS	
					(EACH INCLUDES)	
		1	**6V-9746**	1	SEAL-O-RING	
		1	**7M-8485**	1	SEAL-O-RING	
		1	**108-3872**	1	CONNECTOR	
I	20	1	**262-4459**	2	HOSE AS	
	21	1	**2P-1293**	2	LOCKNUT (1-3/16-12-THD)	
	22	1	**5K-9090**	2	SEAL-O-RING	
	23	1	**5P-7466**	5	CLIP (SLOT)	
	24	1	**5P-7467**	5	CLIP (TAB)	
	25	1	**5P-8112**	5	GROMMET	
	26	1	**6V-1889**	2	CLIP	
	27	1	**6V-9172**	2	NUT (1-7/16-12-THD)	
	28	1	**6V-9746**	1	SEAL-O-RING	
	29	1	**7I-7412**	1	ELBOW	
	30	1	**8T-1889**	2	CLIP (SLOT)	
	31	1	**8T-1890**	2	CLIP (TAB)	
	32	1	**8T-4121**	8	WASHER-HARD (11X21X2.5-MM THK)	
M	33	1	**8T-4136**	4	BOLT (M10X1.5X25-MM)	
M	34	1	**8T-4137**	2	BOLT (M10X1.5X20-MM)	
M	35	1	**8T-4176**	2	BOLT (M12X1.75X90-MM)	
M	36	1	**8T-4189**	2	BOLT (M8X1.25X20-MM)	
M	37	1	**8T-4196**	2	BOLT (M10X1.5X35-MM)	
	38	1	**8T-4223**	4	WASHER-HARD (13.5X25.5X3-MM THK)	
	39	1	**8T-4224**	2	WASHER-HARD (8.8X16X2-MM THK)	
M	40	1	**8T-4244**	1	NUT (M12X1.75-THD)	
M	41	1	**8T-4956**	1	BOLT (M12X1.75X35-MM)	

262-4202 **LINES GP-BACKHOE AUXILIARY** *(contd.)* **i02446266**

I-REFER TO HYDRAULIC INFORMATION SYSTEM
M-METRIC PART

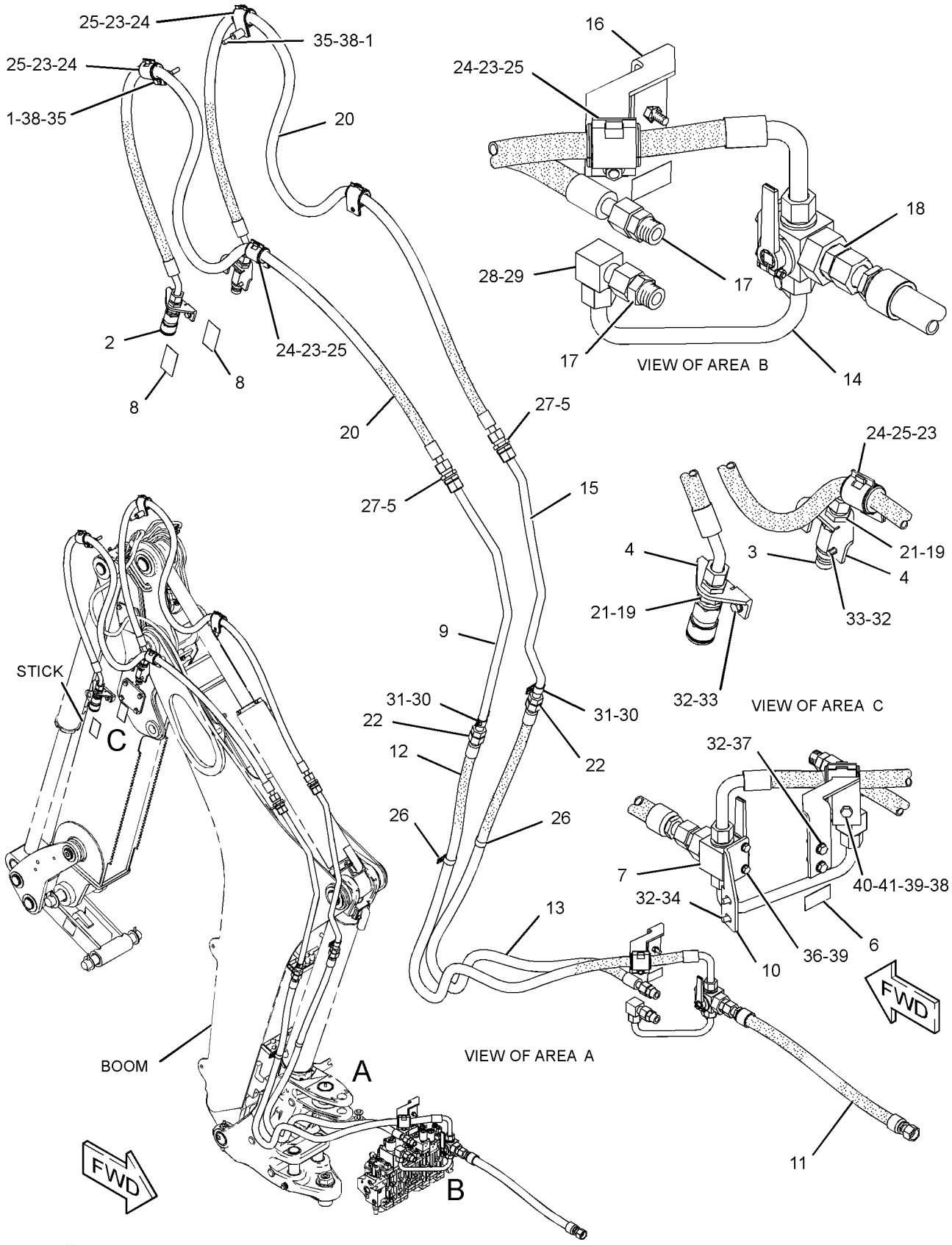

GRAPHIC #1 **<END>** g01231712

HYDRAULIC SYSTEM

211-7601 LINES GP-BOOM (CHG -01 THRU -03)

S/N: HLS1-UP

PART OF 214-2553, 214-3758 BACKHOE AR-EXTENDABLE STICK, 214-2550, 214-3755 BACKHOE AR-STANDARD STICK

AN ATTACHMENT

SMCS-5057, 5456 **i02355800**

NOTE	REF NO	GRAPHIC REF	PART NUMBER	QTY	PART NAME 1 2 3 4 5 6 (PRODUCT LEVEL)	SEE PAGE
	1	1	**5P-0599**	1	CLAMP-BAND	
	2	1	**9R-4619**	1	SUPPORT AS	
I	3	1	**220-0235**	1	HOSE AS	
	4	1	**250-0658**	1	TUBE AS	
I	5	1	**250-0804**	1	HOSE AS	
	6	1	*148-8341*	2	CONNECTOR AS	
					(EACH INCLUDES)	
		1	**3D-2824**	1	SEAL-O-RING	
		1	**6V-8713**	1	CONNECTOR	
		1	**7J-9108**	1	SEAL-O-RING	
	7	1	*148-8382*	1	ELBOW AS	
		1	**3D-2824**	1	SEAL-O-RING	
		1	**7J-9108**	1	SEAL-O-RING	
		1	**8T-0404**	1	ELBOW	
	8	1	**7J-9108**	1	SEAL-O-RING	
	9	1	**8T-1887**	1	CLIP (SLOT)	
	10	1	**8T-1888**	1	CLIP (TAB)	
	11	1	**8T-4121**	1	WASHER-HARD (11X21X2.5-MM THK)	
M	12	1	**8T-4137**	1	BOLT (M10X1.5X20-MM)	

I-REFER TO HYDRAULIC INFORMATION SYSTEM
M-METRIC PART

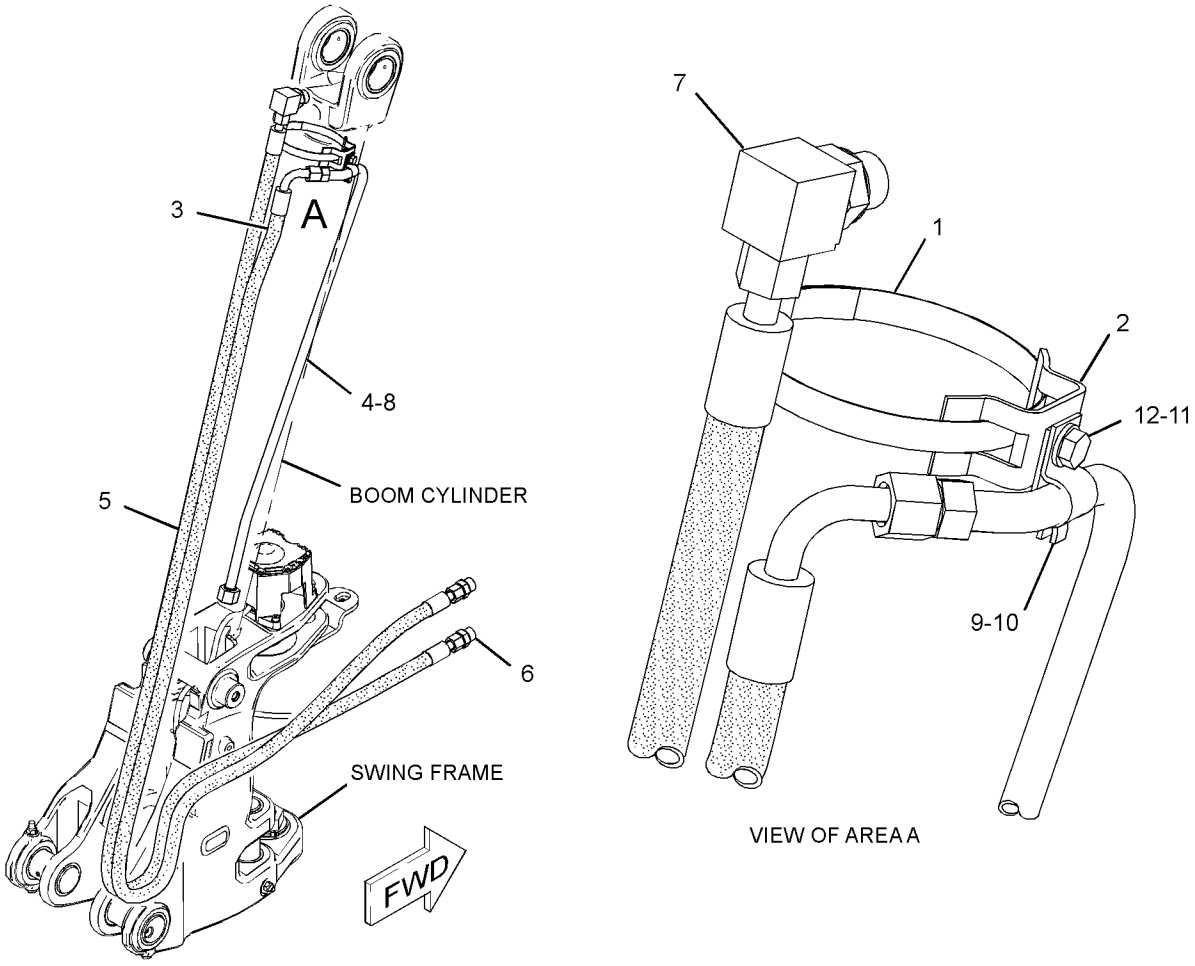

GRAPHIC #1 **<END>** g01179014

HYDRAULIC SYSTEM

246-9321 LINES GP-BUCKET (CHG -00, -01)

S/N: HLS1-UP

PART OF 214-2550, 214-3755 BACKHOE AR-STANDARD STICK

AN ATTACHMENT

SMCS-5057, 5457 **i02441620**

NOTE	REF NO	GRAPHIC REF	PART NUMBER	QTY	PART NAME 1 2 3 4 5 6 (PRODUCT LEVEL)	SEE PAGE
	1	1	**5P-0599**	1	CLAMP-BAND	
	2	1	**9R-5948**	1	BLOCK	
I	3	1	**200-6971**	1	HOSE AS	
	4	1	**248-5547**	2	PLATE	
I	5	1	**250-6755**	1	HOSE AS	
	6	1	**251-1541**	1	PLATE AS	
I	7	1	**252-0165**	1	HOSE AS	
I	8	1	**266-4326**	1	HOSE AS	
	9	1	*148-8328*	1	CONNECTOR AS	
		1	**3D-2824**	1	SEAL-O-RING	
		1	**6V-8398**	1	SEAL-O-RING	
		1	**6V-8633**	1	CONNECTOR	
	10	1	*148-8341*	1	CONNECTOR AS	
		1	**3D-2824**	1	SEAL-O-RING	
		1	**6V-8713**	1	CONNECTOR	
		1	**7J-9108**	1	SEAL-O-RING	
	11	1	*148-8382*	1	ELBOW AS	
		1	**3D-2824**	1	SEAL-O-RING	
		1	**7J-9108**	1	SEAL-O-RING	
		1	**8T-0404**	1	ELBOW	
	12	1	*148-8457*	1	UNION AS	
		1	**6V-8398**	2	SEAL-O-RING	
		1	**6V-8995**	1	UNION	
	13	1	*169-7409*	1	UNION AS	
		1	**6V-8996**	1	UNION	
		1	**7J-9108**	2	SEAL-O-RING	
	14	1	**5P-7464**	4	CLIP (SLOT)	
	15	1	**5P-7465**	4	CLIP (TAB)	
	16	1	**6V-1249**	2	GROMMET	
	17	1	**6V-1889**	1	CLIP	
	18	1	**6V-7359**	2	GROMMET	
	19	1	**6V-9169**	1	NUT-BULKHEAD (13/16-16-THD)	
	20	1	**6V-9170**	1	NUT-BULKHEAD (1-14-THD)	
	21	1	**7X-7729**	4	WASHER (11X25X3-MM THK)	
	22	1	**8T-4121**	2	WASHER-HARD (11X21X2.5-MM THK)	
M	23	1	**8T-4136**	2	BOLT (M10X1.5X25-MM)	
M	24	1	**8T-4139**	4	BOLT (M12X1.75X30-MM)	
M	25	1	**8T-4195**	4	BOLT (M10X1.5X30-MM)	
	26	1	**8T-4223**	8	WASHER-HARD (13.5X25.5X3-MM THK)	
M	27	1	**8T-4244**	2	NUT (M12X1.75-THD)	
M	28	1	**8T-4956**	2	BOLT (M12X1.75X35-MM)	
	29	1	**9X-8250**	1	CLIP	

I-REFER TO HYDRAULIC INFORMATION SYSTEM
M-METRIC PART

246-9321 **LINES GP-BUCKET** ***(contd.)*** **i02441620**

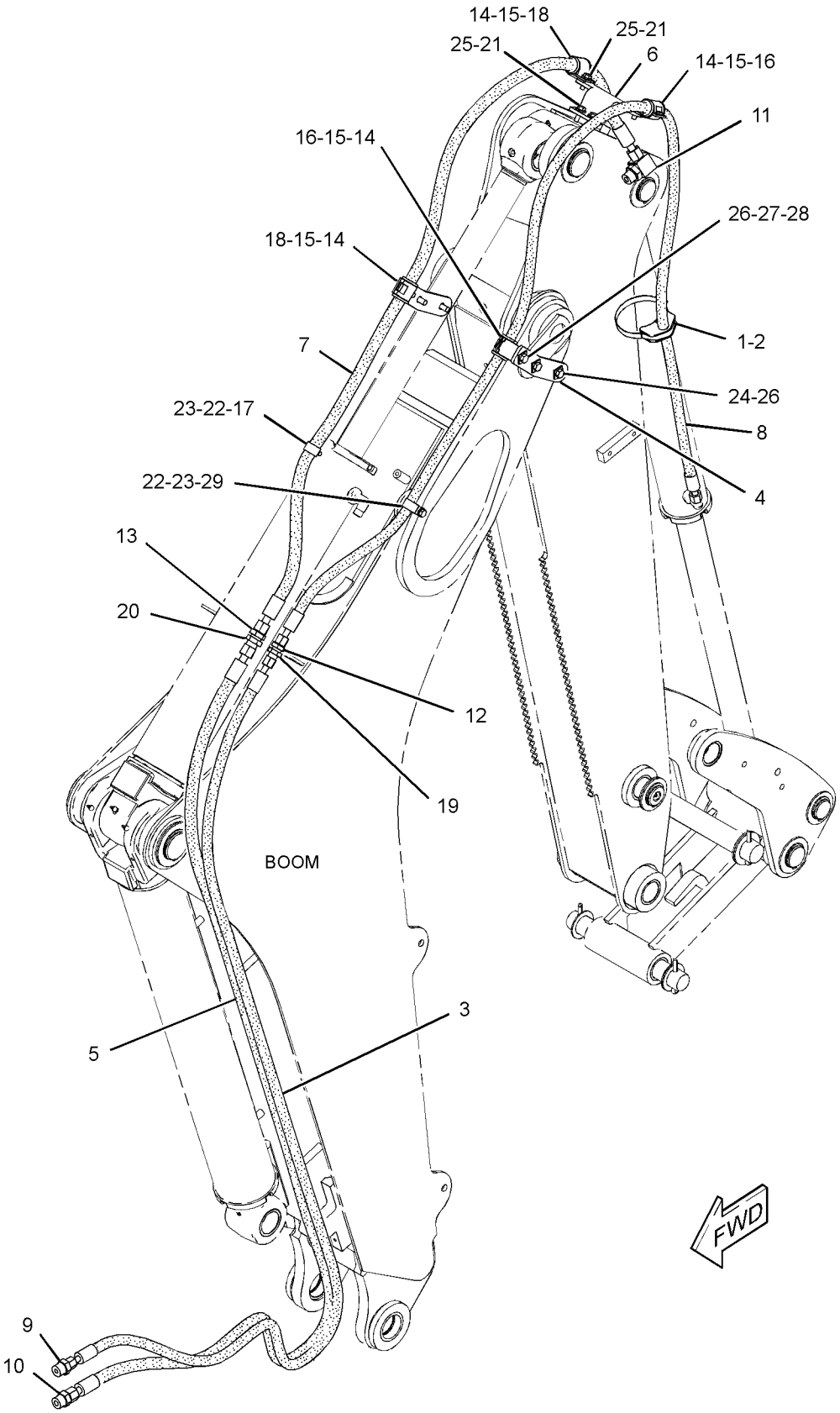

GRAPHIC #1 **<END>** g01231344

HYDRAULIC SYSTEM

246-9322 LINES GP-BUCKET (CHG -00 THRU -03)

S/N: HLS1-UP

PART OF 214-2553, 214-3758 BACKHOE AR-EXTENDABLE STICK AN ATTACHMENT

SMCS-5057, 5457 **i02441634**

NOTE	REF NO	GRAPHIC REF	PART NUMBER	QTY	PART NAME 1 2 3 4 5 6 (PRODUCT LEVEL)	SEE PAGE
	1	1	**5P-0599**	1	CLAMP-BAND	
	2	1	**9R-5948**	1	BLOCK	
I	3	1	**194-5231**	1	HOSE AS	
	4	1	**239-9427**	2	FILM-NOTICE (EXTENDABLE STICK)	
I	5	1	**250-5462**	1	HOSE AS	
I	6	1	**250-6755**	2	HOSE AS	
I	7	1	**250-6793**	1	HOSE AS	
	8	1	**262-1315**	4	PLATE	
I	9	1	**266-4570**	2	HOSE AS	
I	10	1	**266-4571**	1	HOSE AS	
	11	1	*268-1548*	1	CONNECTOR AS	
		1	**6V-8398**	1	SEAL-O-RING	
		1	**7J-9108**	1	SEAL-O-RING	
		1	**268-1547**	1	CONNECTOR	
	12	1	**281-4618**	1	PLATE AS	
		1	**283-1114**	1	PLATE	
	13	1	**281-4770**	1	PLATE AS	
		1	**262-1314**	1	PLATE	
	14	1	*148-8328*	1	CONNECTOR AS	
		1	**3D-2824**	1	SEAL-O-RING	
		1	**6V-8398**	1	SEAL-O-RING	
		1	**6V-8633**	1	CONNECTOR	
	15	1	*148-8341*	3	CONNECTOR AS	
					(EACH INCLUDES)	
		1	**3D-2824**	1	SEAL-O-RING	
		1	**6V-8713**	1	CONNECTOR	
		1	**7J-9108**	1	SEAL-O-RING	
	16	1	*148-8382*	1	ELBOW AS	
		1	**3D-2824**	1	SEAL-O-RING	
		1	**7J-9108**	1	SEAL-O-RING	
		1	**8T-0404**	1	ELBOW	
	17	1	*148-8457*	1	UNION AS	
		1	**6V-8398**	2	SEAL-O-RING	
		1	**6V-8995**	1	UNION	
	18	1	*169-7409*	1	UNION AS	
		1	**6V-8996**	1	UNION	
		1	**7J-9108**	2	SEAL-O-RING	
	19	1	**3G-8047**	1	GROMMET	
	20	1	**3G-8054**	2	CLIP (TAB)	
	21	1	**3G-8057**	2	CLIP (SLOT)	
	22	1	**5P-7464**	2	CLIP (SLOT)	
	23	1	**5P-7465**	2	CLIP (TAB)	
	24	1	**6V-1249**	1	GROMMET	
	25	1	**6V-1889**	1	CLIP	
	26	1	**6V-7359**	1	GROMMET	
	27	1	**6V-9169**	1	NUT-BULKHEAD (13/16-16-THD)	
	28	1	**6V-9170**	3	NUT-BULKHEAD (1-14-THD)	
	29	1	**6V-9990**	1	GROMMET	
	30	1	**7C-4354**	3	CLIP	
	31	1	**8T-4121**	2	WASHER-HARD (11X21X2.5-MM THK)	
M	32	1	**8T-4136**	2	BOLT (M10X1.5X25-MM)	
M	33	1	**8T-4139**	7	BOLT (M12X1.75X30-MM)	
M	34	1	**8T-4183**	2	BOLT (M12X1.75X40-MM)	
M	35	1	**8T-4194**	4	BOLT (M12X1.75X50-MM)	
	36	1	**8T-4223**	19	WASHER-HARD (13.5X25.5X3-MM THK)	

246-9322 **LINES GP-BUCKET** *(contd.)* **i02441634**

NOTE	REF NO	GRAPHIC REF	PART NUMBER	QTY	PART NAME 1 2 3 4 5 6 (PRODUCT LEVEL)	SEE PAGE
M	37	1	**8T-4244**	6	NUT (M12X1.75-THD)	

I-REFER TO HYDRAULIC INFORMATION SYSTEM
M-METRIC PART

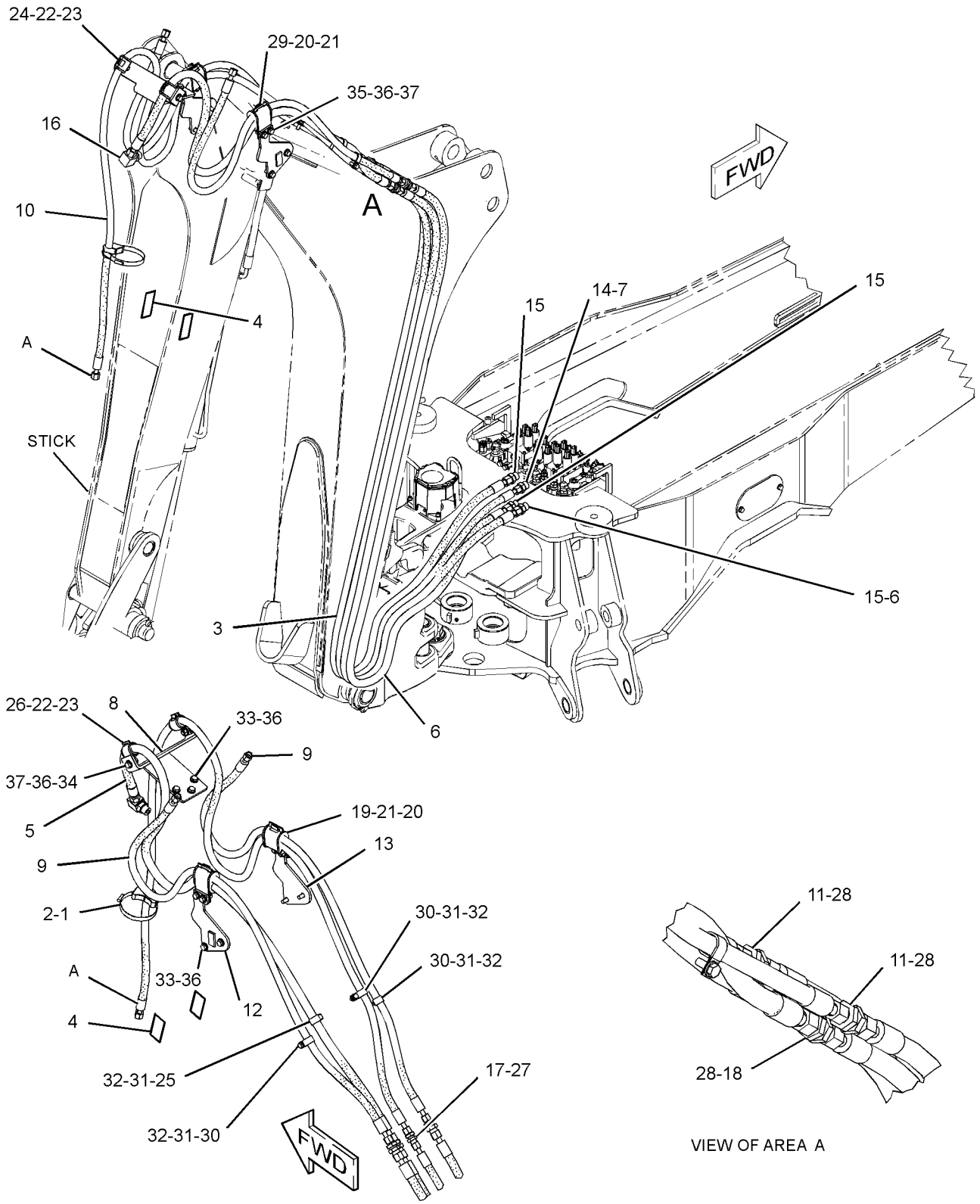

GRAPHIC #1 **<END>** g01231349

216-5332 LINES GP-DRAIN (CHG -01)

S/N: HLS1-UP

PART OF 268-6455 HYDRAULIC AR

SMCS-5057 **i02148675**

NOTE	REF NO	GRAPHIC REF	PART NUMBER	QTY	PART NAME 1 2 3 4 5 6 (PRODUCT LEVEL)	SEE PAGE
	1	1	**8T-0154**	1	CLAMP-HOSE	
	2	1	*165-2273*	1	VALVE GP-SHUTOFF	
		1	**3K-0360**	1	SEAL-O-RING	
		1	**6V-7238**	1	VALVE-SHUTOFF	
E	3	1	**5P-0743**		HOSE (35-CM)	

E-ORDER BY THE CENTIMETER

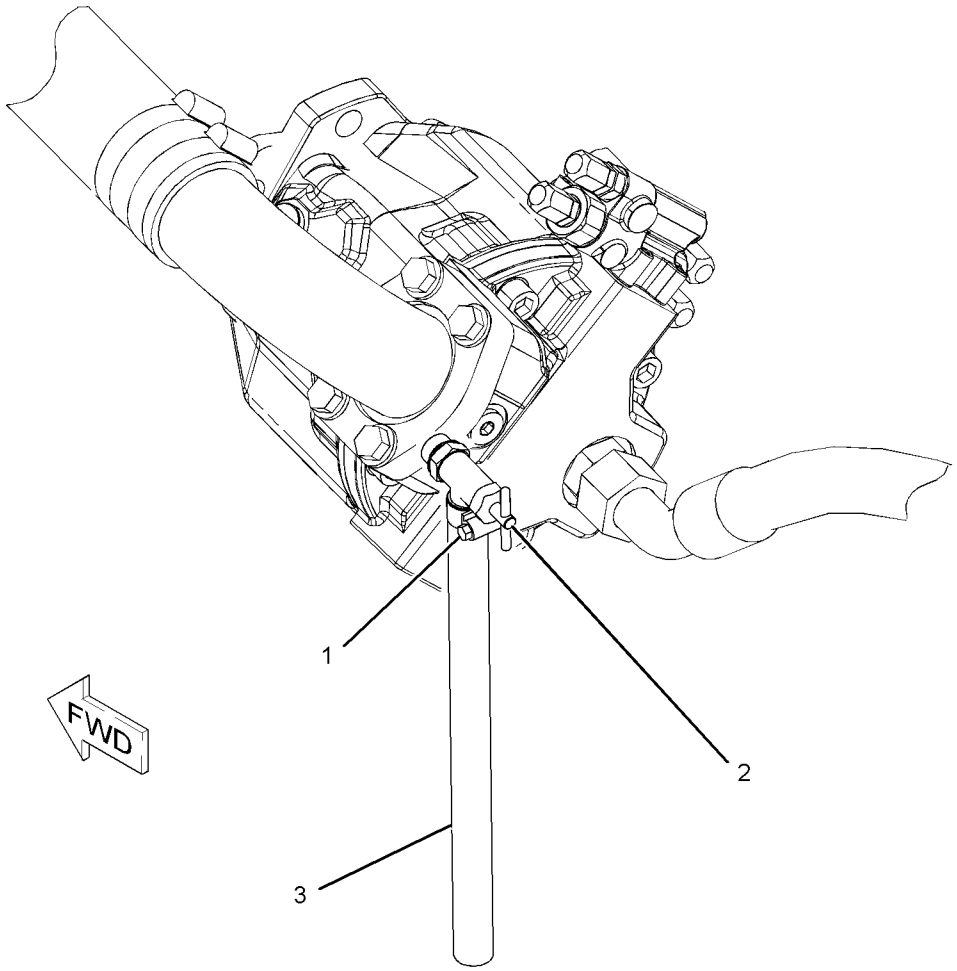

GRAPHIC #1 **<END>** g01087946

HYDRAULIC SYSTEM

247-3267 LINES GP-EXTENDABLE STICK (CHG -00 THRU -02)

S/N: HLS1-UP

PART OF 271-1402, 271-1405 STICK GP-EXTENDABLE

AN ATTACHMENT

SMCS-5057 **i02379313**

NOTE	REF NO	GRAPHIC REF	PART NUMBER	QTY	PART NAME 1 2 3 4 5 6 (PRODUCT LEVEL)	SEE PAGE
	1	1	**5P-0598**	1	CLAMP	
	2	1	**9R-2004**	1	BLOCK	
	3	1	**262-7314**	1	PLATE AS	
	4	1	**250-4325**	1	TUBE AS	
	5	1	**250-4326**	1	TUBE AS	
	6	1	**263-2121**	1	TUBE AS	
	7	1	**263-2122**	1	TUBE AS	
	8	1	**6V-8398**	4	SEAL-O-RING	
	9	1	**8T-1885**	4	CLIP (SLOT)	
	10	1	**8T-1886**	4	CLIP (TAB)	
	11	1	**8T-4121**	6	WASHER-HARD (11X21X2.5-MM THK)	
M	12	1	**8T-4136**	2	BOLT (M10X1.5X25-MM)	
	13	1	*148-8364*	1	ELBOW AS	
		1	**6V-8625**	1	ELBOW	
		1	**3K-0360**	1	SEAL-O-RING	
		1	**6V-8398**	1	SEAL-O-RING	
M	14	1	**8T-4195**	4	BOLT (M10X1.5X30-MM)	

M-METRIC PART

247-3267 **LINES GP-EXTENDABLE STICK** *(contd.)* **i02379313**

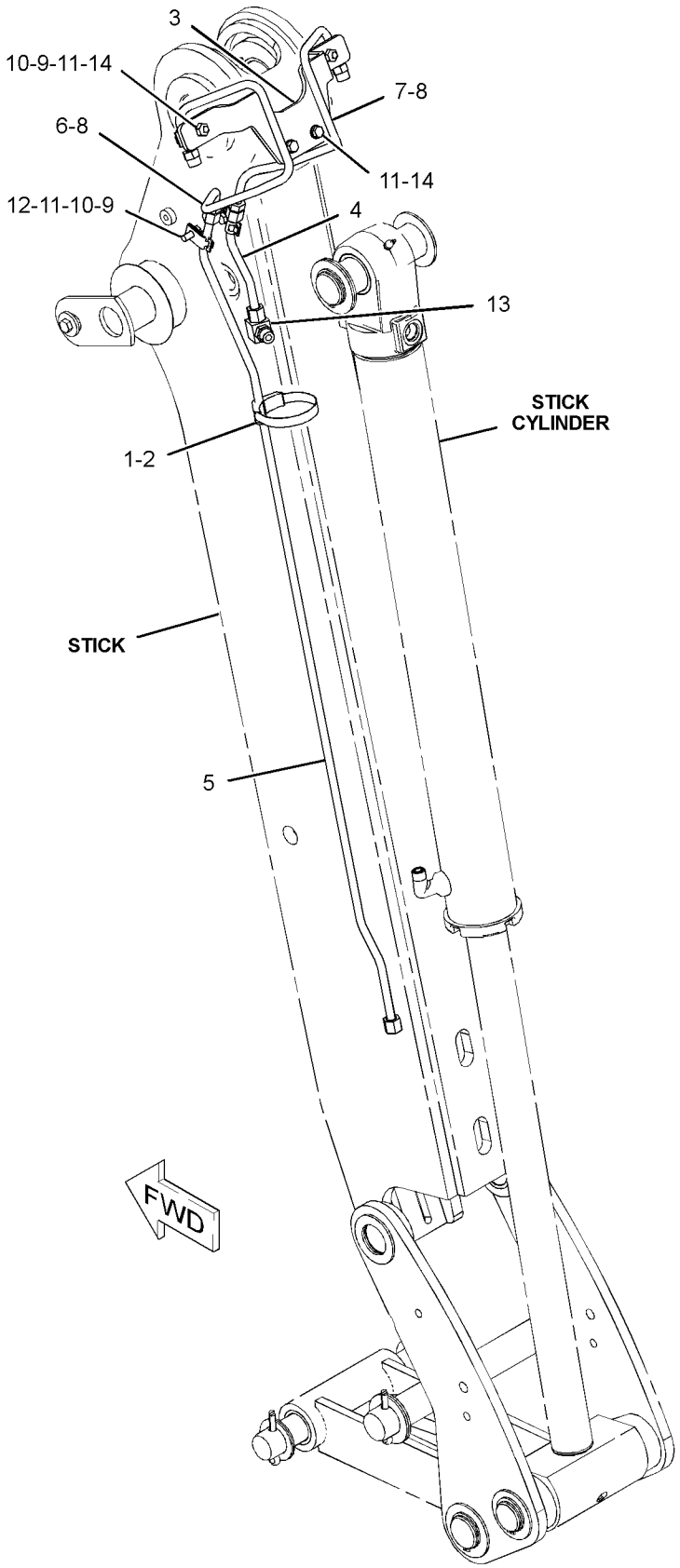

GRAPHIC #1 **<END>** g01190954

257-3160 LINES GP-HYDRAULIC OIL COOLER (CHG -00, -01)

S/N: HLS1-UP

PART OF 268-6455 HYDRAULIC AR

SMCS-1374, 5057 **i02363661**

NOTE	REF NO	GRAPHIC REF	PART NUMBER	QTY	PART NAME 1 2 3 4 5 6 (PRODUCT LEVEL)	SEE PAGE
E	1	1	**5P-1506**		HOSE (92-CM)	
	2	1	**7K-1181**	5	STRAP-CABLE	
	3	1	**130-9984**	1	CLIP	
	4	1	**159-1503**	4	CLAMP-HOSE	
I	5	1	**194-4334**	1	HOSE AS	
	6	1	**232-0252**	1	TEE	
	7	1	**235-7091**	1	HOSE	
E	8	1	**262-8088**		HOSE (223-CM)	
E	8A	1	**262-8088**		HOSE (126-CM)	
	9	1	*148-8370*	1	ELBOW AS	
		1	**6V-8398**	1	SEAL-O-RING	
		1	**6V-9851**	1	ELBOW	
E	10	1	**149-7372**		SLEEVE-ABRASION (55-CM)	
	11	1	*150-3072*	1	PLUG AS	
		1	**6V-8398**	1	SEAL-O-RING	
		1	**6V-9509**	1	PLUG	
	12	1	**5P-4116**	2	WASHER-HARD (8.8X20.5X2-MM THK)	
	13	1	**7D-7233**	2	CLIP	
	14	1	**7X-7958**	4	CLAMP-HOSE	
	15	1	**8T-4121**	2	WASHER-HARD (11X21X2.5-MM THK)	
M	16	1	**8T-4136**	1	BOLT (M10X1.5X25-MM)	
M	17	1	**8T-4137**	1	BOLT (M10X1.5X20-MM)	
M	18	1	**8T-4189**	2	BOLT (M8X1.25X20-MM)	
	19	1	**8T-7529**	3	CLIP	

E-ORDER BY THE CENTIMETER
I-REFER TO HYDRAULIC INFORMATION SYSTEM
M-METRIC PART

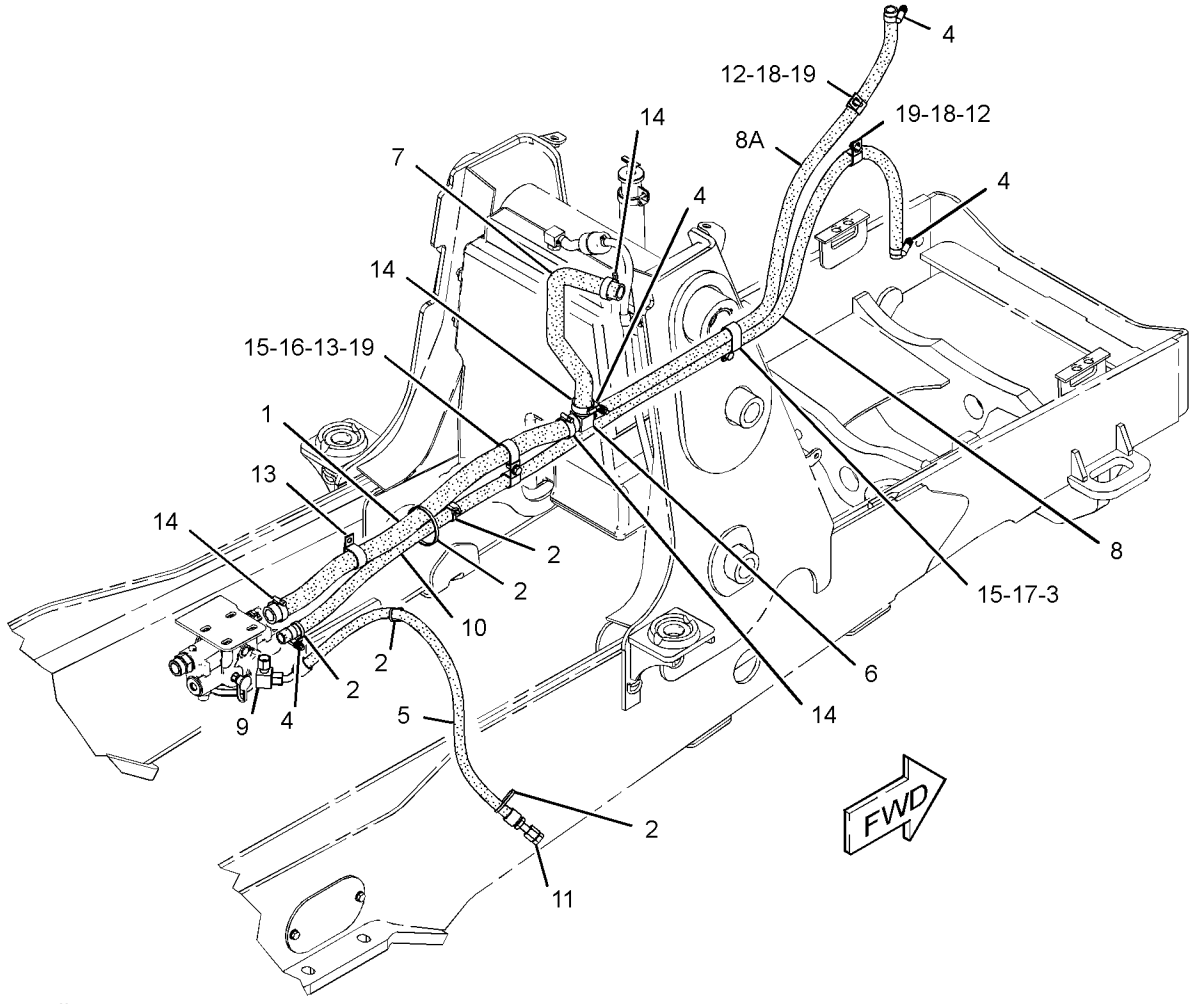

GRAPHIC #1 **<END>** g01239823

HYDRAULIC SYSTEM

246-5293 LINES GP-LIFT CYLINDER (CHG -00, -01)

S/N: HLS1-UP

PART OF 213-9300 LOADER AR

SMCS-5057, 5102 **i02365083**

NOTE	REF NO	GRAPHIC REF	PART NUMBER	QTY	PART NAME 1 2 3 4 5 6 (PRODUCT LEVEL)	SEE PAGE
	1	1	**7K-1181**	2	STRAP-CABLE	
	2	1	**8T-6726**	4	CLAMP-HOSE	
	3	1	**143-0777**	1	PLATE AS	
	4	1	**143-0779**	1	PLATE AS	
	5	1	**151-4841**	2	BLOCK	
	6	1	**158-3412**	8	CLIP (SLOT)	
	7	1	**211-3207**	1	TUBE AS	
	8	1	**211-3208**	1	TUBE AS	
	9	1	**231-2808**	1	TUBE AS	
	10	1	**231-2809**	1	TUBE AS	
I	11	1	**231-4784**	2	HOSE AS	
I	12	1	**231-4785**	2	HOSE AS	
	13	1	**249-4020**	1	TUBE AS	
	14	1	**249-4021**	1	TUBE AS	
	15	1	**249-4022**	1	TUBE AS	
	16	1	**249-4023**	1	TUBE AS	
	17	1	**249-4024**	1	TUBE AS	
	18	1	*148-8341*	1	CONNECTOR AS	
		1	**3D-2824**	1	SEAL-O-RING	
		1	**6V-8713**	1	CONNECTOR	
		1	**7J-9108**	1	SEAL-O-RING	
	19	1	*148-8390*	2	ELBOW AS	
					(EACH INCLUDES)	
		1	**2M-9780**	1	SEAL-O-RING	
		1	**6V-8626**	1	ELBOW	
		1	**7J-9108**	1	SEAL-O-RING	
	20	1	*148-8446*	2	TEE GP-SWIVEL	
					(EACH INCLUDES)	
		1	**6V-9838**	1	TEE-SWIVEL	
		1	**7J-9108**	2	SEAL-O-RING	
	21	1	*150-3063*	1	TEE AS	
		1	**3D-2824**	1	SEAL-O-RING	
		1	**7J-9108**	2	SEAL-O-RING	
		1	**120-9809**	1	TEE	
	22	1	*222-4732*	1	TEE AS	
		1	**6V-8398**	1	SEAL-O-RING	
		1	**6V-9031**	1	TEE-UNION	
		1	**7J-9108**	2	SEAL-O-RING	
	23	1	**6V-8398**	8	SEAL-O-RING	
	24	1	**6V-9830**	1	CAP AS	
	25	1	**6V-9831**	1	CAP AS	
	26	1	**8T-4121**	4	WASHER-HARD (11X21X2.5-MM THK)	
M	28	1	**8T-4136**	4	BOLT (M10X1.5X25-MM)	
	30	1	**9R-1004**	1	CLIP (TAB)	
	31	1	**9R-1005**	1	CLIP (SLOT)	
	32	1	**9R-7803**	4	CLIP (TAB)	

I-REFER TO HYDRAULIC INFORMATION SYSTEM
M-METRIC PART

246-5293 **LINES GP-LIFT CYLINDER** *(contd.)* **i02365083**

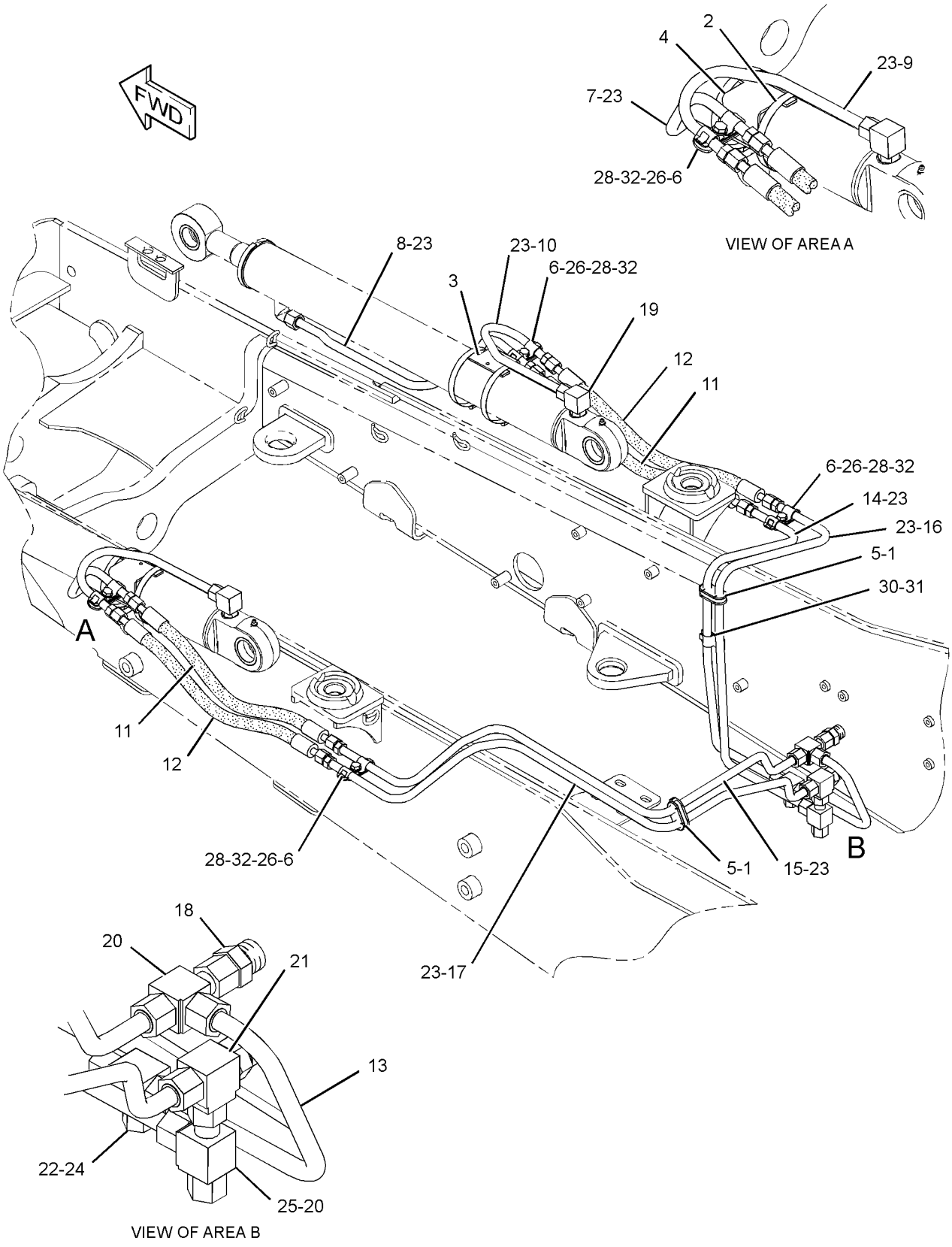

GRAPHIC #1 **<END>** g01184115

HYDRAULIC SYSTEM

246-8478 LINES GP-LOADER AUXILIARY (CHG -00, -01)

S/N: HLS1-UP
PART OF 269-2145 VALVE AR-BANK 3
AN ATTACHMENT

SMCS-5057 **i02273118**

NOTE	REF NO	GRAPHIC REF	PART NUMBER	QTY	PART NAME 1 2 3 4 5 6 (PRODUCT LEVEL)	SEE PAGE
	1	1	**7K-1181**	1	STRAP-CABLE	
	2	1	**151-4841**	1	BLOCK	
	3	1	**158-3412**	8	CLIP (SLOT)	
I	4	1	**215-7453**	2	HOSE AS	
	5	1	**215-7454**	1	TUBE AS	
	6	1	**215-7619**	1	TUBE AS	
	7	1	**231-3528**	1	BRACKET AS	
M		1	**8T-3490**	1	NUT-WELD (M10X1.5-THD)	
	8	1	**249-4034**	1	TUBE AS	
	9	1	**249-4035**	1	TUBE AS	
	10	1	**254-7271**	1	PLATE AS	
	11	1	*148-8382*	2	ELBOW AS	
					(EACH INCLUDES)	
		1	**3D-2824**	1	SEAL-O-RING	
		1	**7J-9108**	1	SEAL-O-RING	
		1	**8T-0404**	1	ELBOW	
	12	1	**6V-8398**	6	SEAL-O-RING	
	13	1	**6V-9830**	2	CAP AS	
	14	1	**8T-4121**	6	WASHER-HARD (11X21X2.5-MM THK)	
M	15	1	**8T-4136**	5	BOLT (M10X1.5X25-MM)	
M	16	1	**8T-4137**	1	BOLT (M10X1.5X20-MM)	
	17	1	**9R-7803**	4	CLIP (TAB)	

I-REFER TO HYDRAULIC INFORMATION SYSTEM
M-METRIC PART

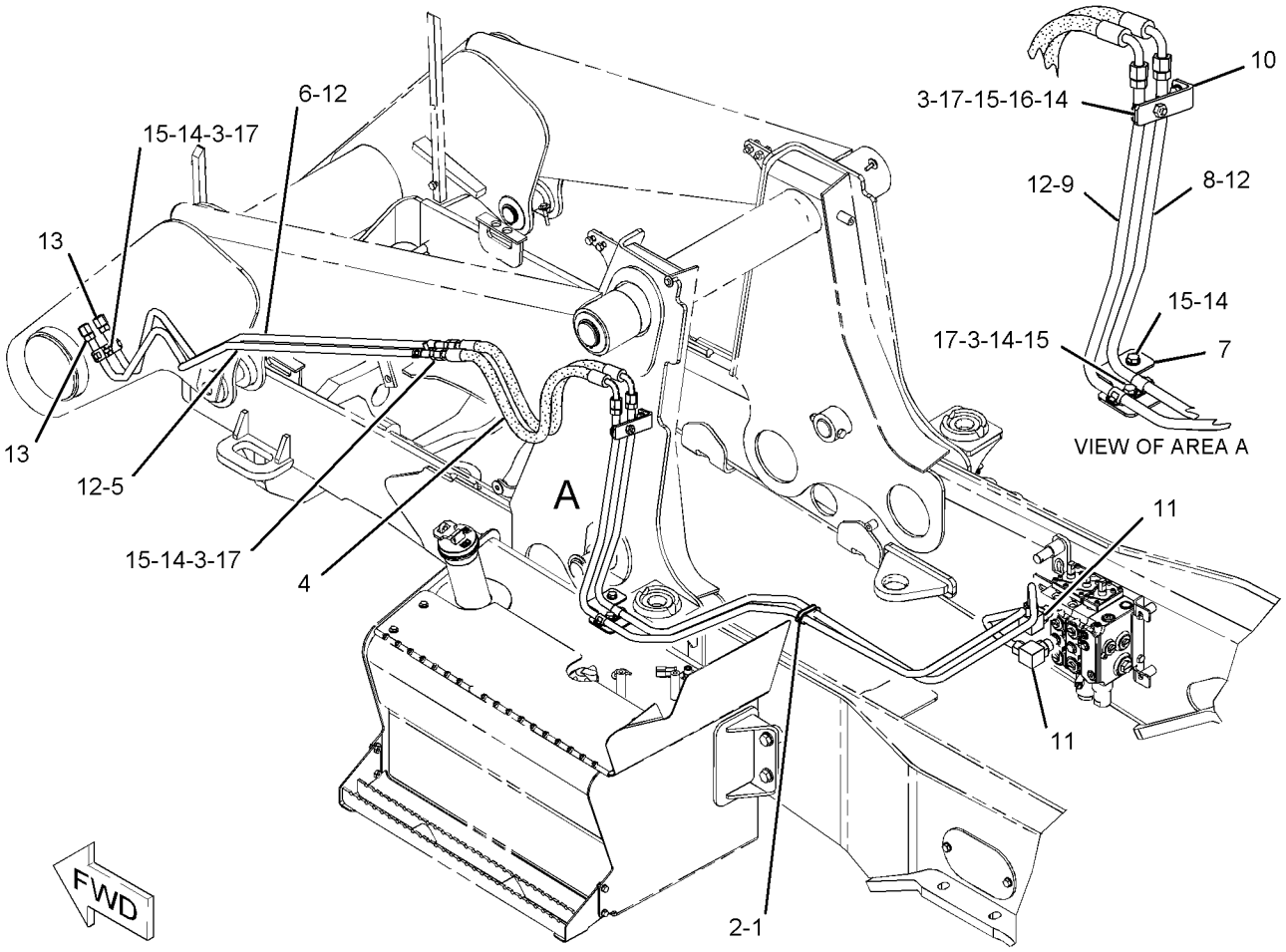

GRAPHIC #1

<END>

g01094033

251-5854 LINES GP-MULTIPURPOSE BUCKET (CHG -00, -01)

S/N: HLS1-UP

PART OF 216-8800, 216-8801 BUCKET GP-MULTIPURPOSE

AN ATTACHMENT

SMCS-5057 **i02207518**

NOTE	REF NO	GRAPHIC REF	PART NUMBER	QTY	PART NAME 1 2 3 4 5 6 (PRODUCT LEVEL)	SEE PAGE
	1	1	**8T-6726**	2	CLAMP-HOSE	
I	2	1	**8W-9230**	1	HOSE AS	
I	3	1	**9R-0418**	2	HOSE AS	
	4	1	**9R-8870**	2	BLOCK	
I	5	1	**122-0668**	1	HOSE AS	
I	6	1	**152-0816**	1	HOSE AS	
I	7	1	**251-5859**	1	HOSE AS	
	8	1	*148-8378*	2	ELBOW AS	
					(EACH INCLUDES)	
		1	**3J-1907**	1	SEAL-O-RING	
		1	**6V-8397**	1	SEAL-O-RING	
		1	**6V-8724**	1	ELBOW	
	9	1	*150-3060*	2	TEE AS	
					(EACH INCLUDES)	
		1	**6V-8397**	2	SEAL-O-RING	
		1	**6V-8398**	1	SEAL-O-RING	
		1	**8T-3444**	1	TEE-UNION	
	10	1	**6V-3341**	2	GROMMET	
	11	1	**6V-8397**	2	SEAL-O-RING	
	12	1	**8T-1891**	8	CLIP (SLOT)	
	13	1	**8T-1892**	8	CLIP (TAB)	
	14	1	**8T-1899**	2	CLIP (SLOT)	
	15	1	**8T-1900**	2	CLIP (TAB)	
	16	1	**8T-4121**	6	WASHER-HARD (11X21X2.5-MM THK)	
M	17	1	**8T-4136**	6	BOLT (M10X1.5X25-MM)	

I-REFER TO HYDRAULIC INFORMATION SYSTEM
M-METRIC PART

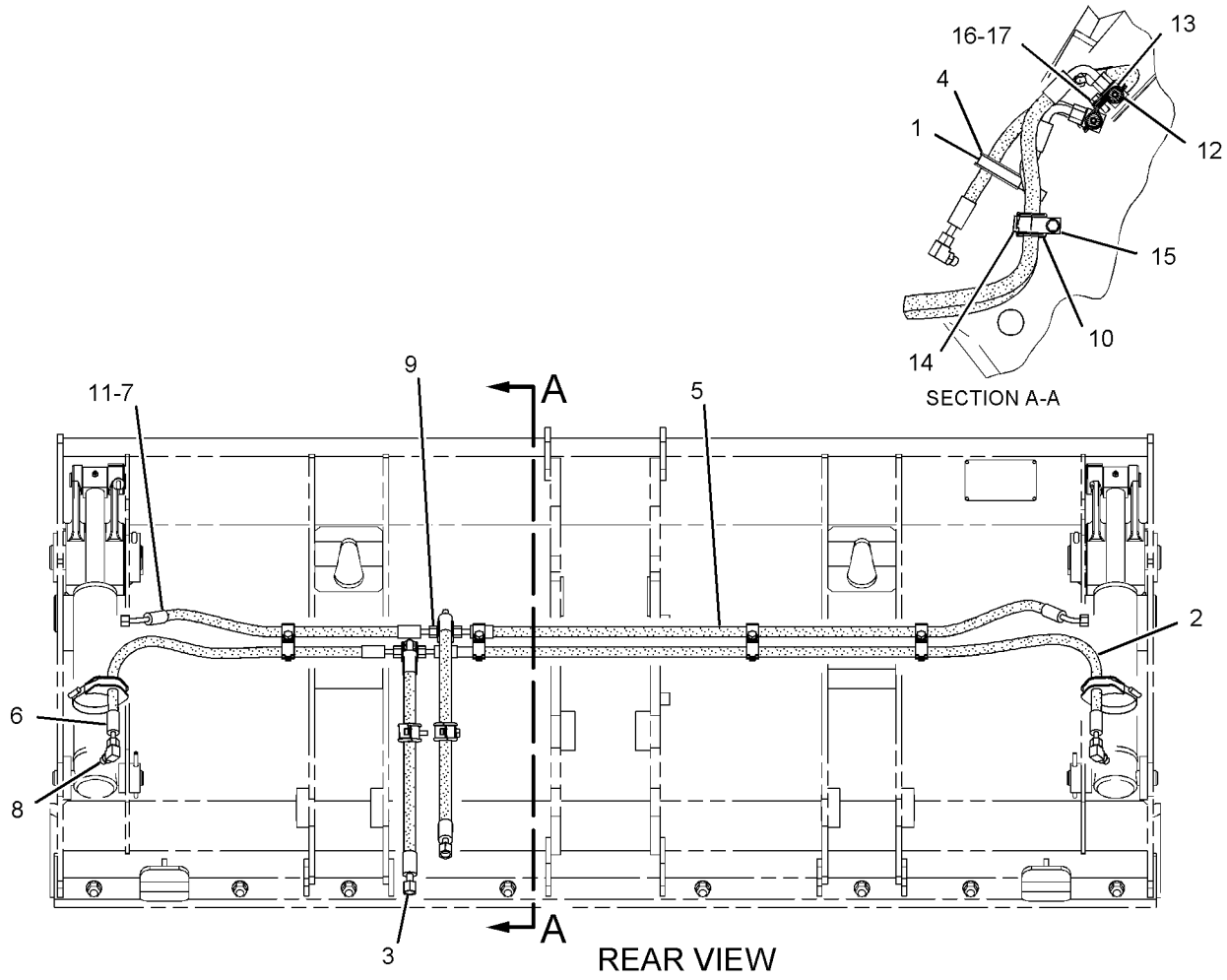

GRAPHIC #1 **<END>** g01123332

251-5855 LINES GP-MULTIPURPOSE BUCKET (CHG -00 THRU -03)

S/N: HLS1-UP

PART OF 216-8820, 216-8821 BUCKET GP-MULTIPURPOSE

AN ATTACHMENT

SMCS-5057 **i02356998**

NOTE	REF NO	GRAPHIC REF	PART NUMBER	QTY	PART NAME 1 2 3 4 5 6 (PRODUCT LEVEL)	SEE PAGE
I	1	1	**271-7389**	1	HOSE AS	
	2	1	**8T-6726**	2	CLAMP-HOSE	
I	3	1	**9C-9602**	1	HOSE AS	
I	4	1	**9R-0418**	2	HOSE AS	
	5	1	**9R-8870**	2	BLOCK	
I	6	1	**270-9176**	1	HOSE AS	
I	7	1	**272-1750**	1	HOSE AS	
	8	1	*148-8378*	2	ELBOW AS	
					(EACH INCLUDES)	
		1	**3J-1907**	1	SEAL-O-RING	
		1	**6V-8397**	1	SEAL-O-RING	
		1	**6V-8724**	1	ELBOW	
	9	1	*150-3060*	2	TEE AS	
					(EACH INCLUDES)	
		1	**6V-8397**	2	SEAL-O-RING	
		1	**6V-8398**	1	SEAL-O-RING	
		1	**8T-3444**	1	TEE-UNION	
	10	1	**6V-3341**	2	GROMMET	
	11	1	**6V-8397**	2	SEAL-O-RING	
	12	1	**8T-1891**	8	CLIP (SLOT)	
	13	1	**8T-1892**	8	CLIP (TAB)	
	14	1	**8T-1899**	2	CLIP (SLOT)	
	15	1	**8T-1900**	2	CLIP (TAB)	
	16	1	**8T-4121**	6	WASHER-HARD (11X21X2.5-MM THK)	
M	17	1	**8T-4136**	6	BOLT (M10X1.5X25-MM)	

I-REFER TO HYDRAULIC INFORMATION SYSTEM
M-METRIC PART

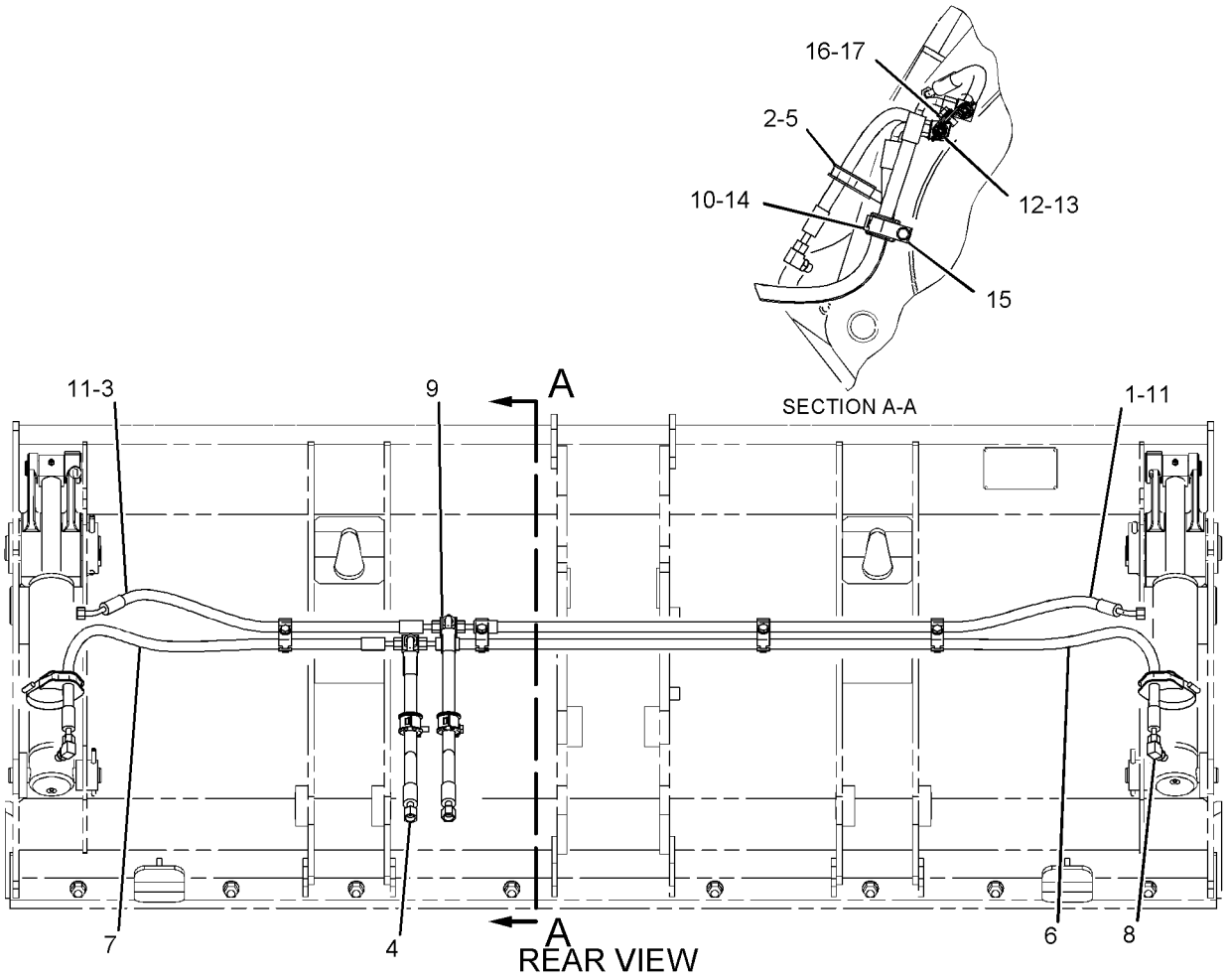

GRAPHIC #1 **<END>** g01134618

214-5950 LINES GP-PILOT–BACKHOE BANK VALVE

(CHG -03 THRU -10)
S/N: HLS1-UP
PART OF 268-6455 HYDRAULIC AR

SMCS-5057, 5059 **i02368737**

NOTE	REF NO	GRAPHIC REF	PART NUMBER	QTY	PART NAME 1 2 3 4 5 6 (PRODUCT LEVEL)	SEE PAGE
E	1	1	**5P-1505**		HOSE (69-CM)	
	2	1	**5D-1026**	2	CLAMP-HOSE	
	3	1	**6V-0852**	2	CAP-DUST	
	4	1	**7K-1181**	2	STRAP-CABLE	
I	5	1	**211-3688**	1	HOSE AS	
I	6	1	**211-3689**	1	HOSE AS	
	7	1	*150-4044*	1	CONNECTOR AS	
		1	**3J-1907**	1	SEAL-O-RING	
		1	**6V-8397**	1	SEAL-O-RING	
		1	**8T-1779**	1	CONNECTOR	
	8	1	*148-8325*	2	CONNECTOR AS	
					(EACH INCLUDES)	
		1	**3J-1907**	1	SEAL-O-RING	
		1	**4J-5477**	1	SEAL-O-RING	
		1	**6V-8641**	1	CONNECTOR	
	9	1	*148-8351*	1	ELBOW AS	
		1	**4J-5477**	1	SEAL-O-RING	
		1	**6V-9849**	1	ELBOW (SWIVEL)	
	10	1	*150-3027*	2	ELBOW AS	
					(EACH INCLUDES)	
		1	**2M-9780**	1	SEAL-O-RING	
		1	**6V-5653**	1	ELBOW	
	11	1	*150-3062*	1	TEE AS	
		1	**3J-7354**	1	SEAL-O-RING	
		1	**4J-5477**	1	SEAL-O-RING	
		1	**101-1787**	1	TEE AS	
	12	1	*164-5567*	2	FITTING AS	
					(EACH INCLUDES)	
		1	**3J-1907**	1	SEAL-O-RING	
		1	**6V-3965**	1	FITTING AS (QUICK DISCONNECT)	
	13	1	*165-4931*	1	ELBOW AS	
		1	**3J-1907**	1	SEAL-O-RING	
		1	**6V-8077**	1	ELBOW	

E-ORDER BY THE CENTIMETER
I-REFER TO HYDRAULIC INFORMATION SYSTEM

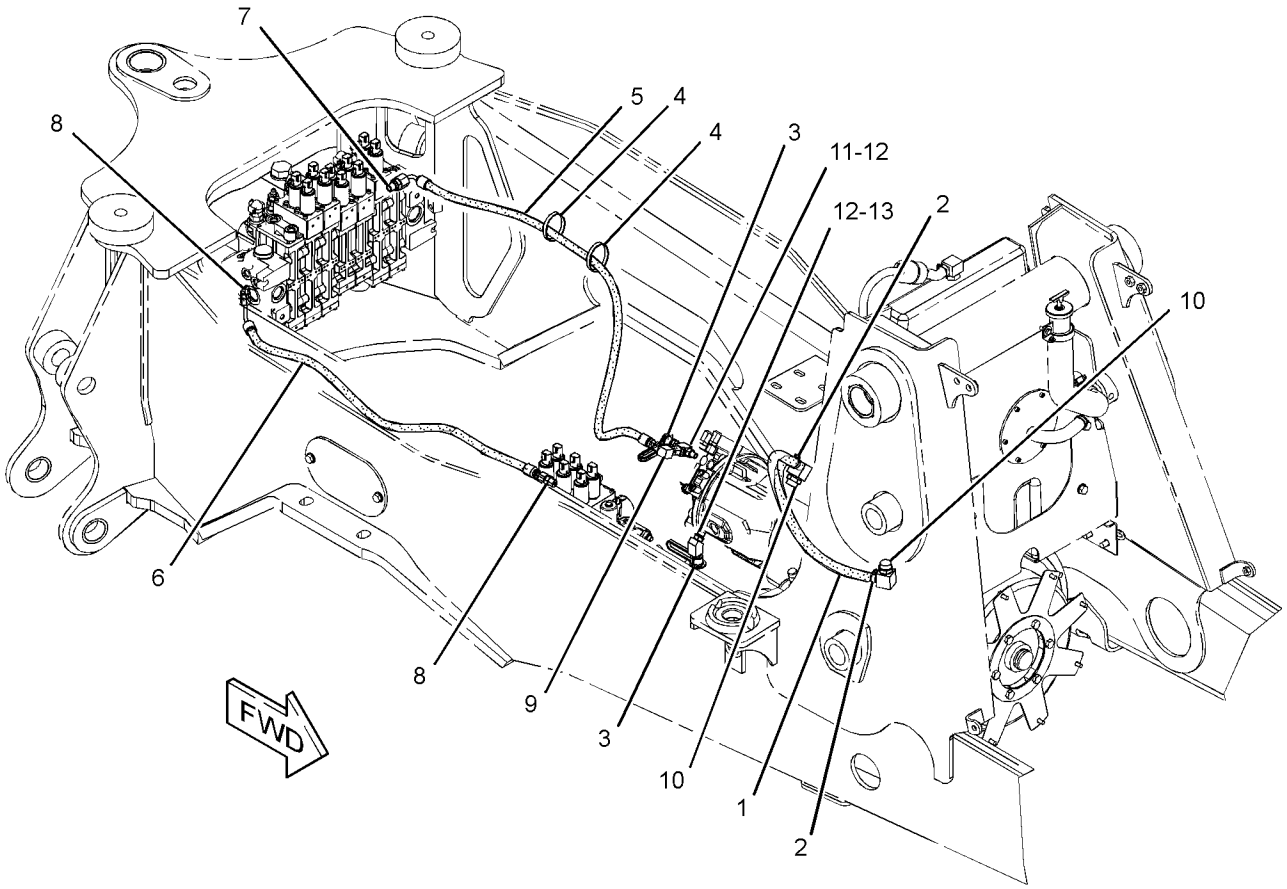

GRAPHIC #1 **<END>** g01187104

HYDRAULIC SYSTEM

267-2765 LINES GP-PILOT (CHG -01 THRU -03)

S/N: HLS1-UP

PART OF 268-6455 HYDRAULIC AR

SMCS-5057, 5059 **i02363666**

NOTE	REF NO	GRAPHIC REF	PART NUMBER	QTY	PART NAME 1 2 3 4 5 6 (PRODUCT LEVEL)	SEE PAGE
	1	1	**5D-1026**	2	CLAMP-HOSE	
E	2	1	**5P-1505**		HOSE (239-CM)	
	3	1	**6V-0852**	1	CAP-DUST	
	4	1	**7K-1181**	2	STRAP-CABLE	
	5	1	**133-5813**	6	MARKER (GRAY, P)	
	6	1	**143-3158**	1	CONNECTOR	
I	7	1	**159-3313**	1	HOSE AS	
	8	1	*164-5567*	1	FITTING AS	
		1	**3J-1907**	1	SEAL-O-RING	
		1	**6V-3965**	1	FITTING AS (QUICK DISCONNECT)	
	9	1	*164-5586*	1	TEE AS	
		1	**6V-8398**	1	SEAL-O-RING	
		1	**7X-0871**	1	TEE	
	10	1	*164-9640*	1	CONNECTOR AS	
		1	**3J-1907**	1	SEAL-O-RING	
		1	**4J-5477**	1	SEAL-O-RING	
		1	**145-2237**	1	CONNECTOR	
	11	1	*174-6740*	1	TEE AS	
		1	**2M-9780**	1	SEAL-O-RING	
		1	**122-1113**	1	TEE-O-RING	
	12	1	**205-3126**	1	HOSE AS	
I	13	1	**218-6091**	1	HOSE AS	
Y	14	1	*226-0420*	1	ACCUMULATOR GP-PILOT OIL (CHARGED)	247
	15	1	**268-0094**	1	MANIFOLD (RETURN)	
I	16	1	**268-0097**	1	HOSE AS	
I	17	1	**268-0099**	1	HOSE AS	
	18	1	**268-0106**	1	HOSE AS	
	19	1	**268-0107**	1	HOSE AS	
	20	1	**268-0108**	1	HOSE AS	
	21	1	*273-4211*	1	TEE AS	
		1	**6V-8398**	1	SEAL-O-RING	
		1	**273-4210**	1	TEE	
	22	1	**277-9708**	1	FILM-WARNING (ACCUM, HIGH PRESS, READ OMM)	
I	23	1	**144-8242**	1	HOSE AS	
	24	1	*148-8325*	6	CONNECTOR AS	
					(EACH INCLUDES)	
		1	**3J-1907**	1	SEAL-O-RING	
		1	**4J-5477**	1	SEAL-O-RING	
		1	**6V-8641**	1	CONNECTOR	
	25	1	*148-8336*	5	CONNECTOR AS	
					(EACH INCLUDES)	
		1	**3J-1907**	1	SEAL-O-RING	
		1	**6V-8397**	1	SEAL-O-RING	
		1	**6V-8636**	1	CONNECTOR	
	26	1	*148-8368*	1	ELBOW AS	
		1	**3J-1907**	1	SEAL-O-RING	
		1	**4J-5477**	1	SEAL-O-RING	
		1	**6V-8627**	1	ELBOW	
	27	1	*148-8378*	2	ELBOW AS	
					(EACH INCLUDES)	
		1	**3J-1907**	1	SEAL-O-RING	
		1	**6V-8397**	1	SEAL-O-RING	
		1	**6V-8724**	1	ELBOW	
	28	1	*148-8407*	3	PLUG AS	
					(EACH INCLUDES)	
		1	**3J-1907**	1	SEAL-O-RING	

267-2765 **LINES GP-PILOT** *(contd.)* **i02363666**

NOTE	REF NO	GRAPHIC REF	PART NUMBER	QTY	PART NAME 1 2 3 4 5 6 (PRODUCT LEVEL)	SEE PAGE
		1	**9S-4191**	1	PLUG-O RING	
	29	1	*148-8433*	1	TEE AS	
		1	**6V-8397**	2	SEAL-O-RING	
		1	**6V-9836**	1	TEE-SWIVEL	
	30	1	*153-6258*	1	CONNECTOR AS	
		1	**3J-1907**	1	SEAL-O-RING	
		1	**6V-8398**	1	SEAL-O-RING	
		1	**8T-5050**	1	CONNECTOR	
	31	1	**2M-9780**	1	SEAL-O-RING	
	32	1	**3K-0360**	1	SEAL-O-RING	
	33	1	**6V-9169**	1	NUT-BULKHEAD (13/16-16-THD)	
	34	1	**8S-0948**	1	CLIP	
	35	1	**8T-4205**	2	WASHER-HARD (7.2X14.5X2-MM THK)	
M	36	1	**8T-6974**	2	BOLT (M6X1X80-MM)	

E-ORDER BY THE CENTIMETER
I-REFER TO HYDRAULIC INFORMATION SYSTEM
M-METRIC PART
Y-SEPARATE ILLUSTRATION

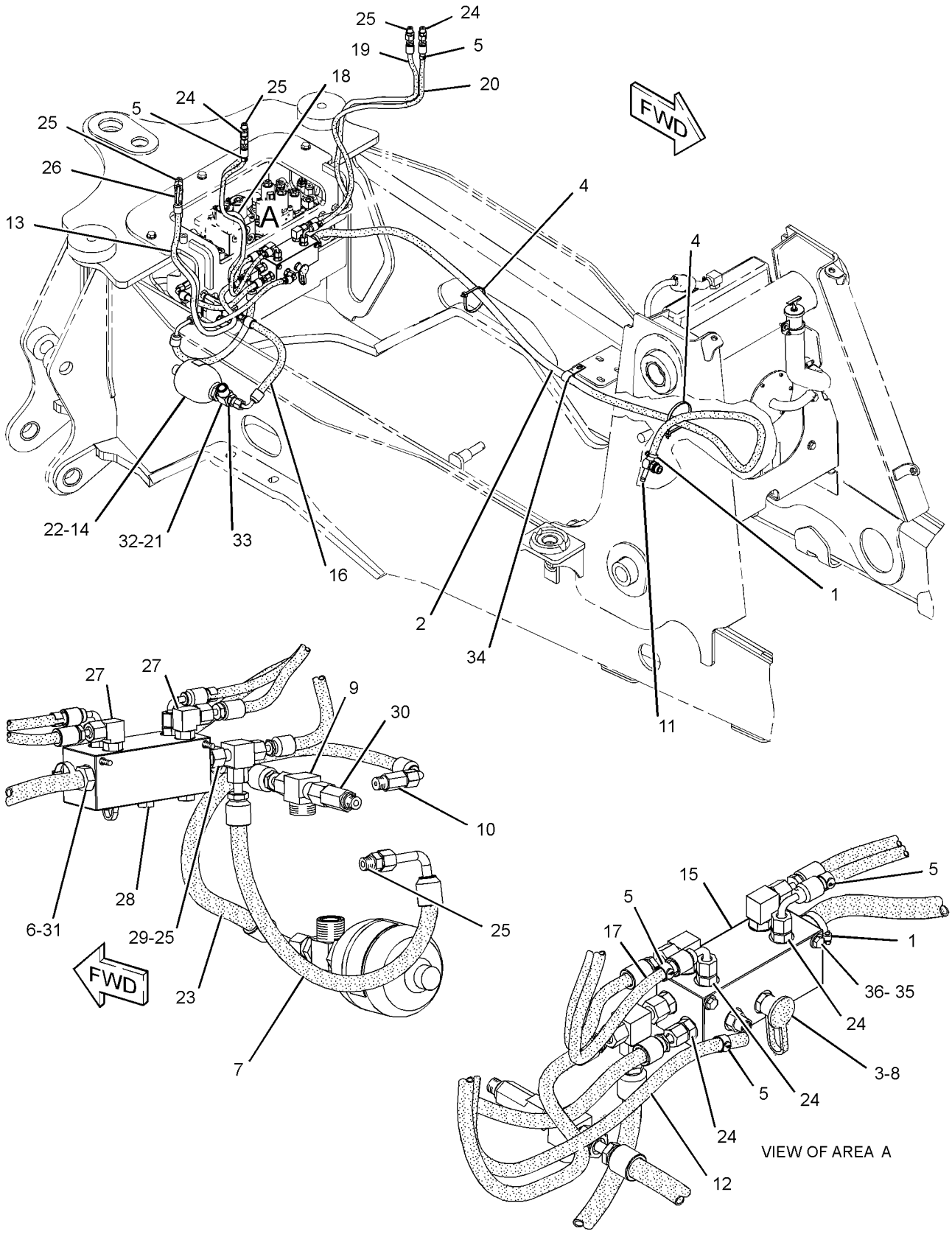

GRAPHIC #1 **<END>** g01225836

HYDRAULIC SYSTEM

267-2766 LINES GP-PILOT (CHG -00)

S/N: HLS1-UP

PART OF 268-6455 HYDRAULIC AR

SMCS-5057, 5059 **i02363667**

NOTE	REF NO	GRAPHIC REF	PART NUMBER	QTY	PART NAME 1 2 3 4 5 6 (PRODUCT LEVEL)	SEE PAGE
	1	1	**7K-1181**	2	STRAP-CABLE	
	2	1	**195-0260**	2	MARKER (BEIGE, L1)	
	3	1	**195-0261**	2	BAND-MARKER (BLACK, L2)	
	4	1	**195-0262**	2	BAND-MARKER (GREEN, R1)	
	5	1	**195-0263**	2	BAND-MARKER (PINK, R2)	
	6	1	**206-1851**	1	SEAL	
	7	1	**210-0074**	1	HOSE AS	
	8	1	**210-0075**	1	HOSE AS	
	9	1	**210-0082**	1	HOSE AS	
	10	1	**205-3126**	1	HOSE AS	
	11	1	*148-8325*	8	CONNECTOR AS	
					(EACH INCLUDES)	
		1	**3J-1907**	1	SEAL-O-RING	
		1	**4J-5477**	1	SEAL-O-RING	
		1	**6V-8641**	1	CONNECTOR	
	12	1	**160-2248**	1	SLEEVE-ABRASION (21-CM)	

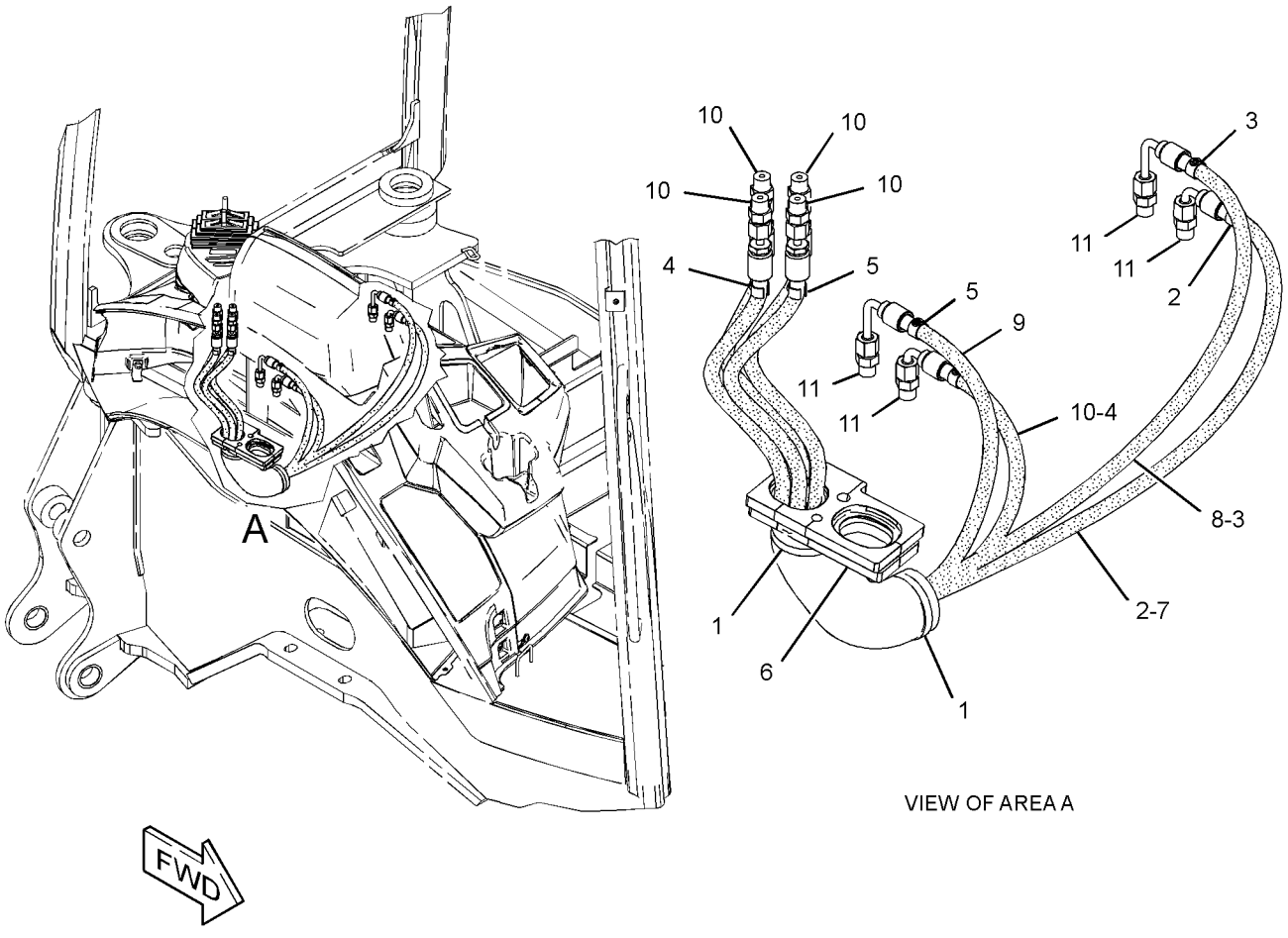

VIEW OF AREA A

GRAPHIC #1 **<END>** g01188208

HYDRAULIC SYSTEM

211-3607 LINES GP-PUMP (CHG -03 THRU -08)

S/N: HLS1-UP

PART OF 268-6455 HYDRAULIC AR

SMCS-5057 **i02433841**

NOTE	REF NO	GRAPHIC REF	PART NUMBER	QTY	PART NAME 1 2 3 4 5 6 (PRODUCT LEVEL)	SEE PAGE
	1	1	**5P-4868**	2	CLAMP-HOSE	
	2	1	**144-0367**	1	CLAMP-HOSE	
I	3	1	**176-9294**	1	HOSE AS	
I	4	1	**211-3580**	1	HOSE AS	
I	5	1	**211-3581**	1	HOSE AS	
I	6	1	**211-3583**	1	HOSE AS	
	7	1	**211-4348**	1	ELBOW	
	8	1	**235-8528**	1	HOSE	
	9	1	*148-8317*	1	CONNECTOR AS	
		1	**3D-2824**	1	SEAL-O-RING	
		1	**5K-9090**	1	SEAL-O-RING	
		1	**6V-8714**	1	CONNECTOR	
	10	1	*148-8335*	3	CONNECTOR AS	
					(EACH INCLUDES)	
		1	**5K-9090**	1	SEAL-O-RING	
		1	**6V-8635**	1	CONNECTOR	
		1	**7M-8485**	1	SEAL-O-RING	
	11	1	*148-8362*	1	ELBOW AS	
		1	**5K-9090**	1	SEAL-O-RING	
		1	**3D-2824**	1	SEAL-O-RING	
		1	**8T-6684**	1	ELBOW (90-DEG)	
	12	1	*148-8429*	2	TEE AS	
					(EACH INCLUDES)	
		1	**5K-9090**	2	SEAL-O-RING	
		1	**6V-9840**	1	TEE-SWIVEL	
	13	1	**1P-4584**	2	FLANGE-HALF	
	14	1	**6J-2680**	1	SEAL-O-RING	
	15	1	**7X-7729**	4	WASHER (11X25X3-MM THK)	
M	16	1	**8T-4136**	4	BOLT (M10X1.5X25-MM)	
M	17	1	**8T-4183**	4	BOLT (M12X1.75X40-MM)	
	18	1	**8T-4223**	4	WASHER-HARD (13.5X25.5X3-MM THK)	

I-REFER TO HYDRAULIC INFORMATION SYSTEM
M-METRIC PART

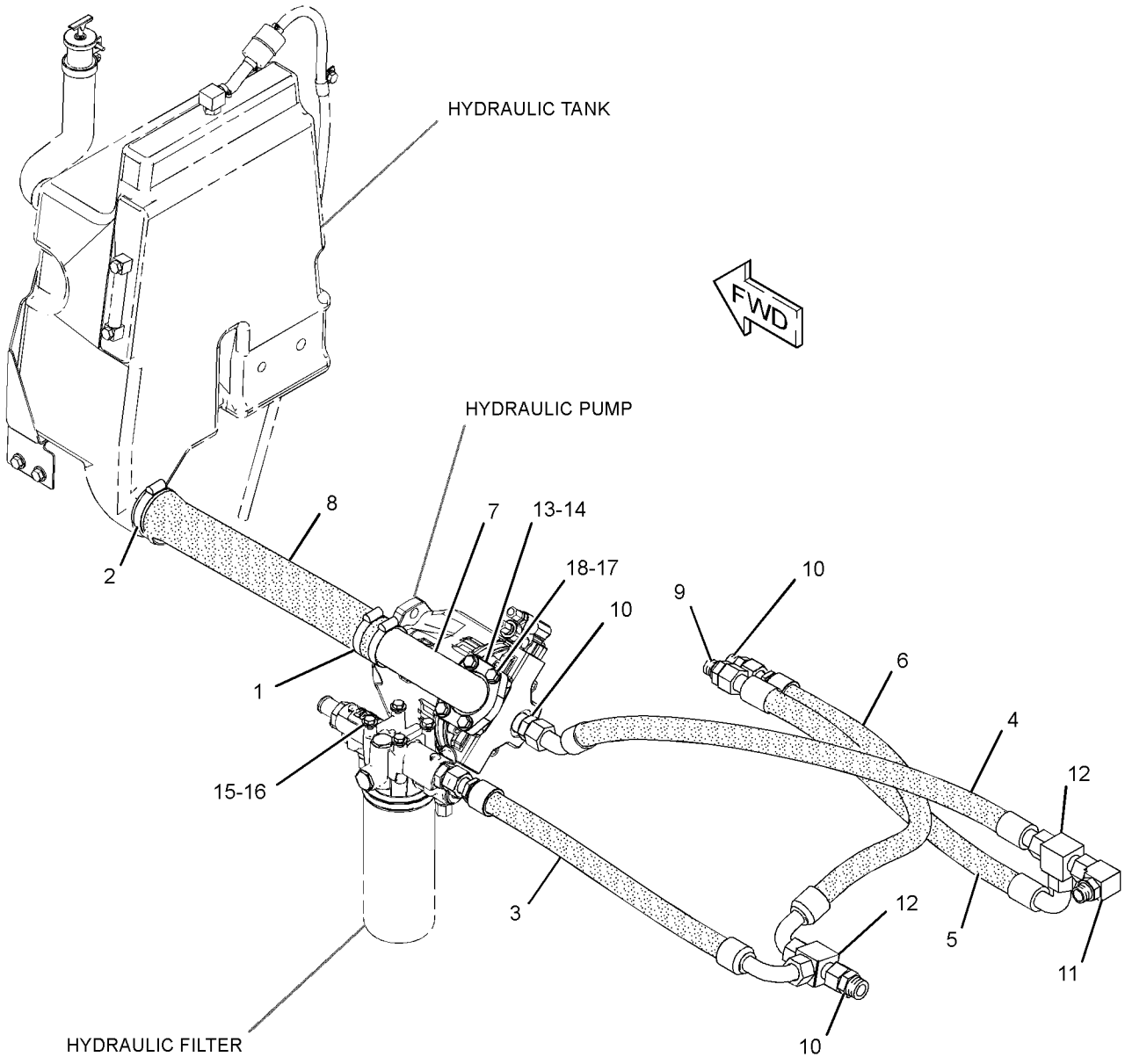

GRAPHIC #1 **<END>** g01186966

246-9802 LINES GP-RIDE CONTROL (CHG -00 THRU -06)

S/N: HLS1-UP
PART OF 209-9937 CONTROL AR-RIDE
AN ATTACHMENT

SMCS-5057, 5077 **i02357917**

NOTE	REF NO	GRAPHIC REF	PART NUMBER	QTY	PART NAME 1 2 3 4 5 6 (PRODUCT LEVEL)	SEE PAGE
	1	1	**7K-1181**	2	STRAP-CABLE	
Y	2	1	*162-3960*	1	ACCUMULATOR GP-RIDE CONTROL (CHARGED)	248
	3	1	**224-7830**	1	FILM-WARNING (HIGH PRESSURE, READ OMM, ANSI)	
Y	4	1	**245-8780**	1	VALVE GP-SOLENOID	390
	5	1	**247-0320**	1	BRACKET AS	
I	6	1	**252-1221**	1	HOSE AS	
I	7	1	**265-0868**	1	HOSE AS	
M	8	1	**096-5866**	2	BOLT (M8X1.25X75-MM)	
	9	1	**109-1633**	2	CLIP (SLOT)	
	10	1	**109-1634**	2	CLIP (TAB)	
	11	1	*148-8318*	1	CONNECTOR AS	
		1	**3K-0360**	1	SEAL-O-RING	
		1	**6V-8397**	1	SEAL-O-RING	
		1	**6V-8634**	1	CONNECTOR	
	12	1	*148-8340*	1	CONNECTOR AS	
		1	**3K-0360**	1	SEAL-O-RING	
		1	**6V-8398**	1	SEAL-O-RING	
		1	**6V-8639**	1	CONNECTOR	
	13	1	*148-8358*	2	ELBOW AS	
					(EACH INCLUDES)	
		1	**2M-9780**	1	SEAL-O-RING	
		1	**6V-8398**	1	SEAL-O-RING	
		1	**6V-8624**	1	ELBOW	
	14	1	*153-6241*	1	ELBOW AS	
		1	**6V-8398**	1	SEAL-O-RING	
		1	**8C-8989**	1	ELBOW	
	15	1	**164-5549**	1	COUPLING GP	
		1	**3J-1907**	1	SEAL-O-RING	
		1	**4I-6287**	1	COUPLING AS	
	16	1	**8T-4121**	4	WASHER-HARD (11X21X2.5-MM THK)	
M	17	1	**8T-4137**	4	BOLT (M10X1.5X20-MM)	
M	18	1	**8T-4139**	2	BOLT (M12X1.75X30-MM)	
	19	1	**8T-4223**	2	WASHER-HARD (13.5X25.5X3-MM THK)	
	20	1	**8T-4224**	2	WASHER-HARD (8.8X16X2-MM THK)	

I-REFER TO HYDRAULIC INFORMATION SYSTEM
M-METRIC PART
Y-SEPARATE ILLUSTRATION

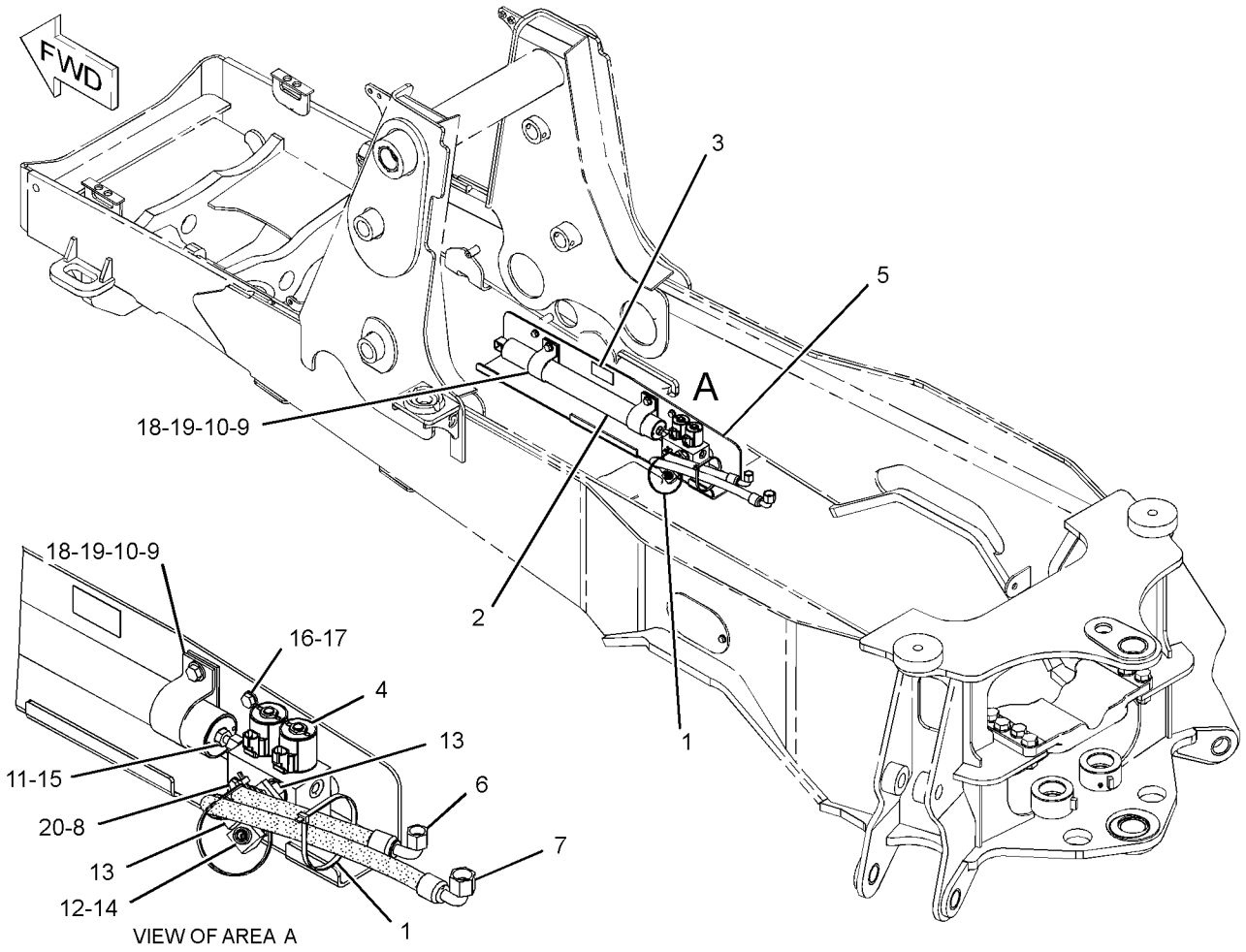

GRAPHIC #1 **<END>** g01233586

HYDRAULIC SYSTEM

215-2445 LINES GP-STABILIZER (CHG -03 THRU -05)

S/N: HLS1-UP
PART OF 269-2148 VALVE AR-BANK 8
AN ATTACHMENT

SMCS-5057, 5468 **i02447398**

NOTE	REF NO	GRAPHIC REF	PART NUMBER	QTY	PART NAME 1 2 3 4 5 6 (PRODUCT LEVEL)	SEE PAGE
	1	1	**201-3621**	1	TUBE AS	
	2	1	**201-3622**	1	TUBE AS	
	3	1	**201-3623**	1	TUBE AS	
	4	1	**201-3624**	1	TUBE AS	
	5	1	*205-2357*	2	CONNECTOR AS	
					(EACH INCLUDES)	
		1	**3D-2824**	1	SEAL-O-RING	
		1	**6V-8398**	1	SEAL-O-RING	
		1	**8T-7968**	1	CONNECTOR	
I	6	1	**252-5355**	2	HOSE AS	
I	7	1	**252-5358**	2	HOSE AS	
	8	1	*148-8328*	2	CONNECTOR AS	
					(EACH INCLUDES)	
		1	**3D-2824**	1	SEAL-O-RING	
		1	**6V-8398**	1	SEAL-O-RING	
		1	**6V-8633**	1	CONNECTOR	
	9	1	*148-8372*	2	ELBOW AS	
					(EACH INCLUDES)	
		1	**2M-9780**	1	SEAL-O-RING	
		1	**6V-8398**	1	SEAL-O-RING	
		1	**6V-8721**	1	ELBOW	
	10	1	*148-8415*	4	REDUCER AS	
					(EACH INCLUDES)	
		1	**6V-8397**	1	SEAL-O-RING	
		1	**6V-8936**	1	REDUCER	
	11	1	**5P-7462**	4	CLIP (SLOT)	
	12	1	**5P-7463**	4	CLIP (TAB)	
	13	1	**6V-0683**	4	GROMMET	
	14	1	**6V-8397**	4	SEAL-O-RING	
	15	1	**8T-1885**	4	CLIP (SLOT)	
	16	1	**8T-1886**	4	CLIP (TAB)	
	17	1	**8T-4121**	6	WASHER-HARD (11X21X2.5-MM THK)	
M	18	1	**8T-4137**	4	BOLT (M10X1.5X20-MM)	
M	19	1	**8T-4186**	2	BOLT (M10X1.5X40-MM)	

I-REFER TO HYDRAULIC INFORMATION SYSTEM
M-METRIC PART

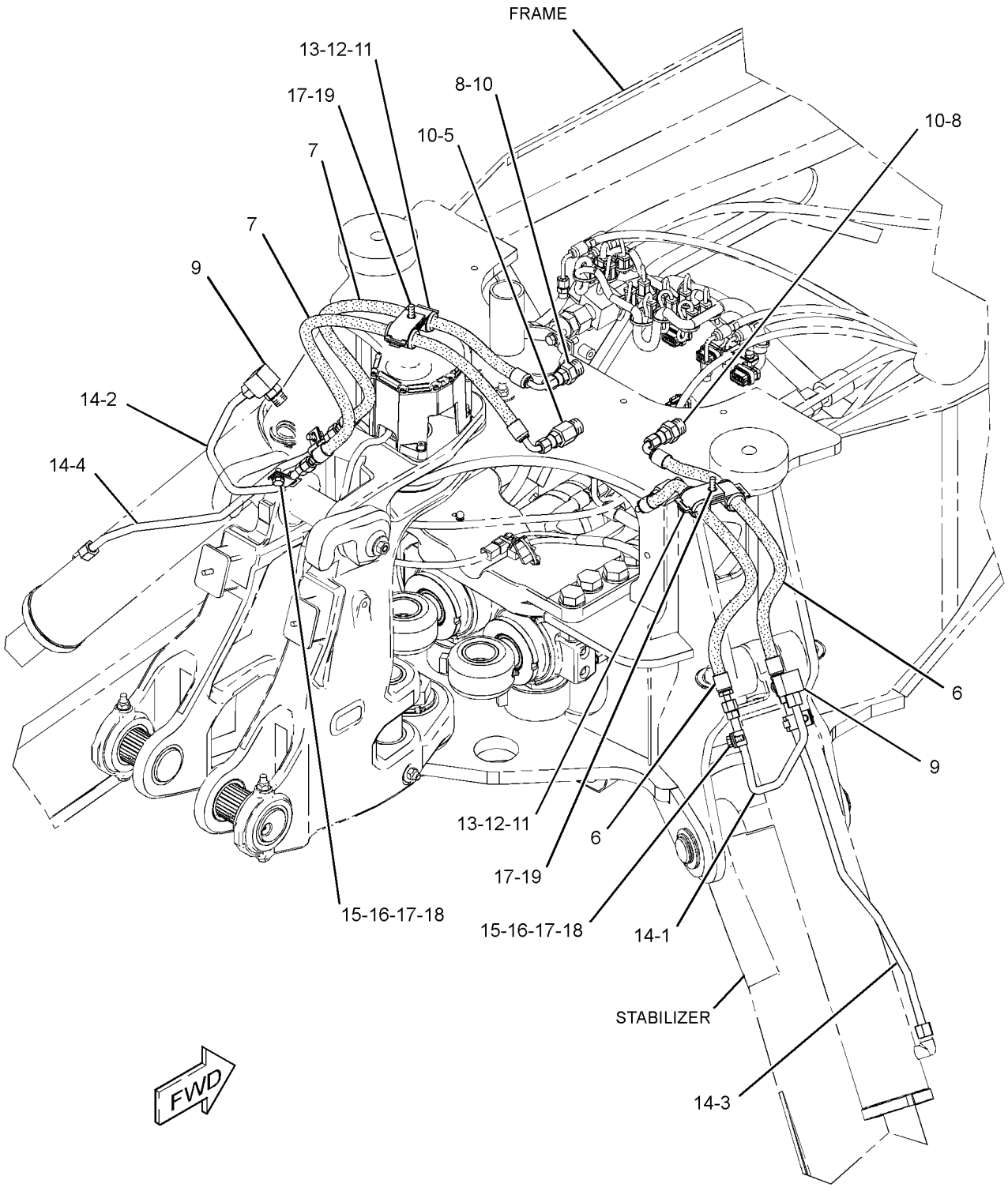

GRAPHIC #1 **<END>** g01233566

HYDRAULIC SYSTEM

222-5622 LINES GP-STABILIZER–7-BANK (CHG -01 THRU -03)

S/N: HLS1-UP

PART OF 269-2147 VALVE AR-BANK 7

AN ATTACHMENT

SMCS-5057, 5468 **i02447353**

NOTE	REF NO	GRAPHIC REF	PART NUMBER	QTY	PART NAME 1 2 3 4 5 6 (PRODUCT LEVEL)	SEE PAGE
	1	1	**201-3621**	1	TUBE AS	
	2	1	**201-3622**	1	TUBE AS	
	3	1	**201-3623**	1	TUBE AS	
	4	1	**201-3624**	1	TUBE AS	
	5	1	*205-2357*	2	CONNECTOR AS	
					(EACH INCLUDES)	
		1	**3D-2824**	1	SEAL-O-RING	
		1	**6V-8398**	1	SEAL-O-RING	
		1	**8T-7968**	1	CONNECTOR	
I	6	1	**252-5355**	2	HOSE AS	
I	7	1	**252-5357**	2	HOSE AS	
	8	1	*148-8328*	2	CONNECTOR AS	
					(EACH INCLUDES)	
		1	**3D-2824**	1	SEAL-O-RING	
		1	**6V-8398**	1	SEAL-O-RING	
		1	**6V-8633**	1	CONNECTOR	
	9	1	*148-8372*	2	ELBOW AS	
					(EACH INCLUDES)	
		1	**2M-9780**	1	SEAL-O-RING	
		1	**6V-8398**	1	SEAL-O-RING	
		1	**6V-8721**	1	ELBOW	
	10	1	*148-8415*	4	REDUCER AS	
					(EACH INCLUDES)	
		1	**6V-8397**	1	SEAL-O-RING	
		1	**6V-8936**	1	REDUCER	
	11	1	**5P-7462**	4	CLIP (SLOT)	
	12	1	**5P-7463**	4	CLIP (TAB)	
	13	1	**6V-0683**	4	GROMMET	
	14	1	**6V-8397**	4	SEAL-O-RING	
	15	1	**8T-1885**	4	CLIP (SLOT)	
	16	1	**8T-1886**	4	CLIP (TAB)	
	17	1	**8T-4121**	6	WASHER-HARD (11X21X2.5-MM THK)	
M	18	1	**8T-4137**	4	BOLT (M10X1.5X20-MM)	
M	19	1	**8T-4186**	2	BOLT (M10X1.5X40-MM)	

I-REFER TO HYDRAULIC INFORMATION SYSTEM
M-METRIC PART

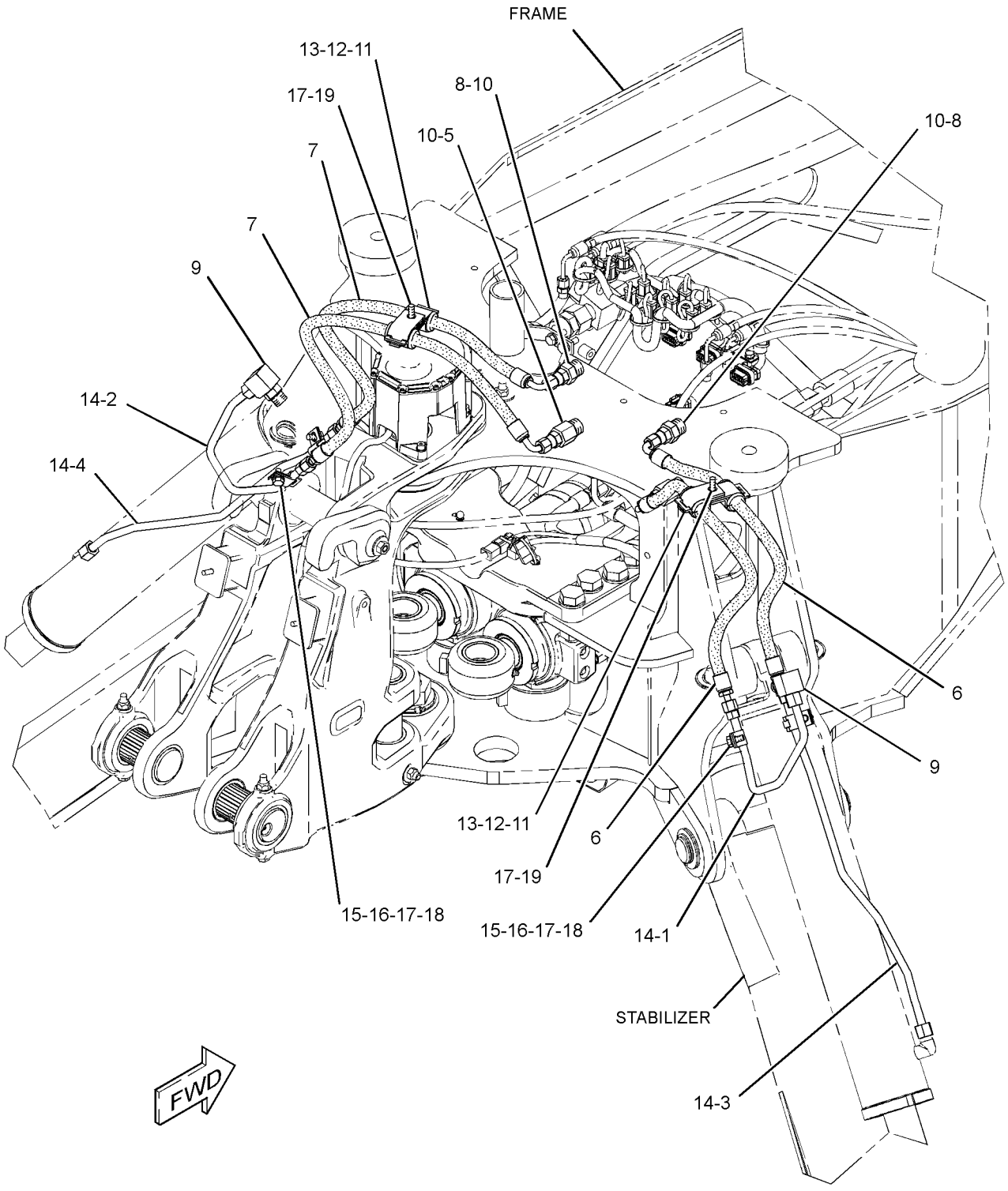

GRAPHIC #1 **<END>** g01233566

222-5623 LINES GP-STABILIZER (CHG -01 THRU -03)

S/N: HLS1-UP
PART OF 269-2146 VALVE AR-BANK 6
AN ATTACHMENT

SMCS-5057, 5468 **i02447160**

NOTE	REF NO	GRAPHIC REF	PART NUMBER	QTY	PART NAME 1 2 3 4 5 6 (PRODUCT LEVEL)	SEE PAGE
M	1	1	**8T-4186**	2	BOLT (M10X1.5X40-MM)	
	2	1	**201-3621**	1	TUBE AS	
	3	1	**201-3622**	1	TUBE AS	
	4	1	**201-3623**	1	TUBE AS	
	5	1	**201-3624**	1	TUBE AS	
	6	1	*205-2357*	2	CONNECTOR AS	
					(EACH INCLUDES)	
		1	**3D-2824**	1	SEAL-O-RING	
		1	**6V-8398**	1	SEAL-O-RING	
		1	**8T-7968**	1	CONNECTOR	
M	7	1	**8T-4137**	4	BOLT (M10X1.5X20-MM)	
I	8	1	**252-5355**	2	HOSE AS	
I	9	1	**252-5356**	2	HOSE AS	
	10	1	*148-8328*	2	CONNECTOR AS	
					(EACH INCLUDES)	
		1	**3D-2824**	1	SEAL-O-RING	
		1	**6V-8398**	1	SEAL-O-RING	
		1	**6V-8633**	1	CONNECTOR	
	11	1	*148-8372*	2	ELBOW AS	
					(EACH INCLUDES)	
		1	**2M-9780**	1	SEAL-O-RING	
		1	**6V-8398**	1	SEAL-O-RING	
		1	**6V-8721**	1	ELBOW	
	12	1	*148-8415*	4	REDUCER AS	
					(EACH INCLUDES)	
		1	**6V-8397**	1	SEAL-O-RING	
		1	**6V-8936**	1	REDUCER	
	13	1	**5P-7462**	4	CLIP (SLOT)	
	14	1	**5P-7463**	4	CLIP (TAB)	
	15	1	**6V-0683**	4	GROMMET	
	16	1	**6V-8397**	4	SEAL-O-RING	
	17	1	**8T-1885**	4	CLIP (SLOT)	
	18	1	**8T-1886**	4	CLIP (TAB)	
	19	1	**8T-4121**	6	WASHER-HARD (11X21X2.5-MM THK)	

I-REFER TO HYDRAULIC INFORMATION SYSTEM
M-METRIC PART

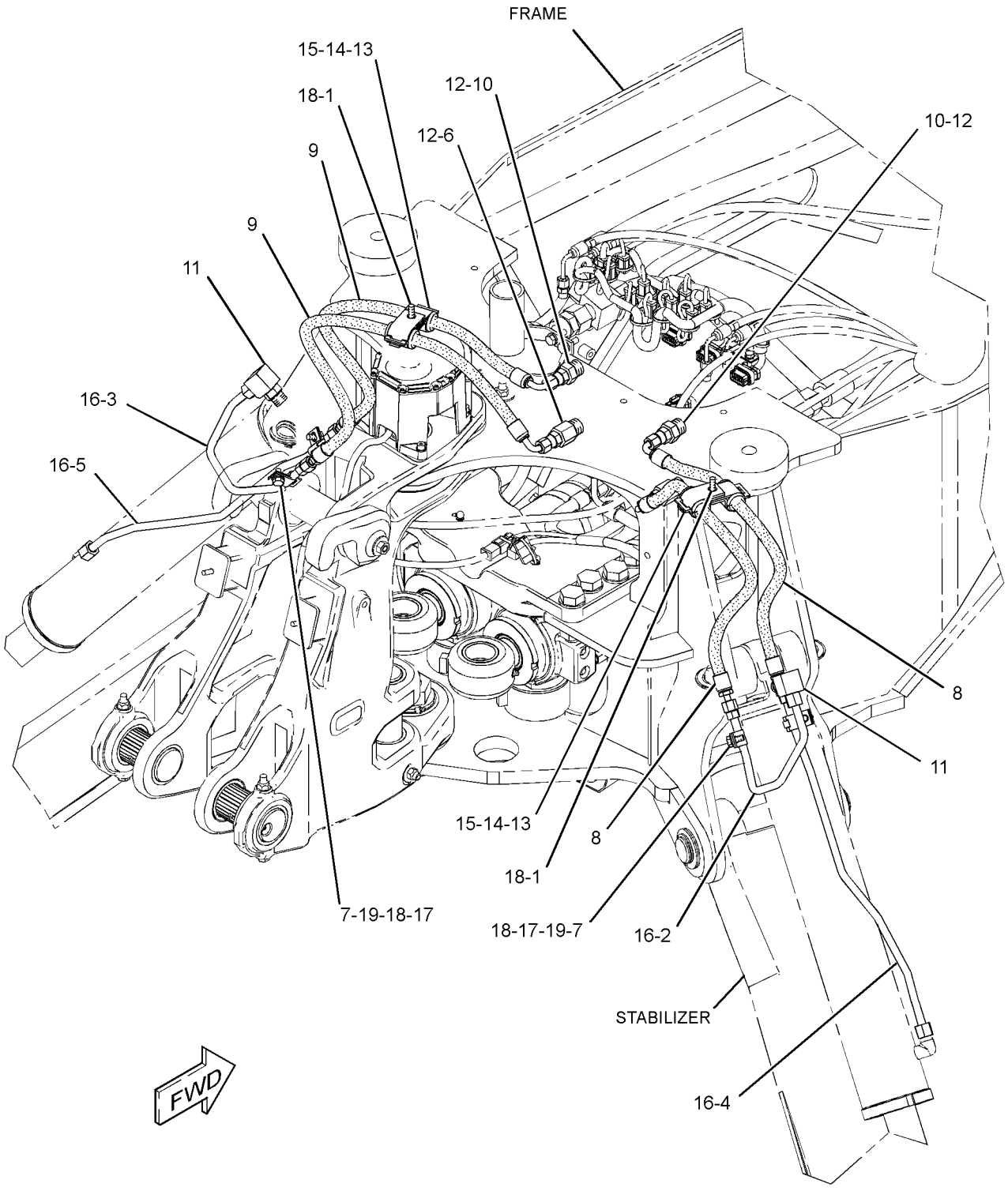

GRAPHIC #1 **<END>** g01231285

HYDRAULIC SYSTEM

211-7602 LINES GP-STICK (CHG -01 THRU -04)

S/N: HLS1-UP

PART OF 214-2553, 214-3758 BACKHOE AR-EXTENDABLE STICK, 214-2550, 214-3755 BACKHOE AR-STANDARD STICK

AN ATTACHMENT

SMCS-5057, 5458 **i02103496**

NOTE	REF NO	GRAPHIC REF	PART NUMBER	QTY	PART NAME 1 2 3 4 5 6 (PRODUCT LEVEL)	SEE PAGE
	1	1	**5P-3860**	1	CLAMP-HOSE	
	2	1	**9R-5948**	1	BLOCK	
I	3	1	**211-7766**	1	HOSE AS	
I	4	1	**211-7767**	1	HOSE AS	
	5	1	*148-8328*	1	CONNECTOR AS	
		1	**3D-2824**	1	SEAL-O-RING	
		1	**6V-8398**	1	SEAL-O-RING	
		1	**6V-8633**	1	CONNECTOR	
	6	1	**148-8341**	1	CONNECTOR AS	
		1	*3D-2824*	1	SEAL-O-RING	
		1	**6V-8713**	1	CONNECTOR	
		1	**7J-9108**	1	SEAL-O-RING	
	7	1	*153-6232*	1	ELBOW AS	
		1	**3D-2824**	1	SEAL-O-RING	
		1	**7J-9108**	1	SEAL-O-RING	
		1	**8T-0120**	1	ELBOW	

I-REFER TO HYDRAULIC INFORMATION SYSTEM

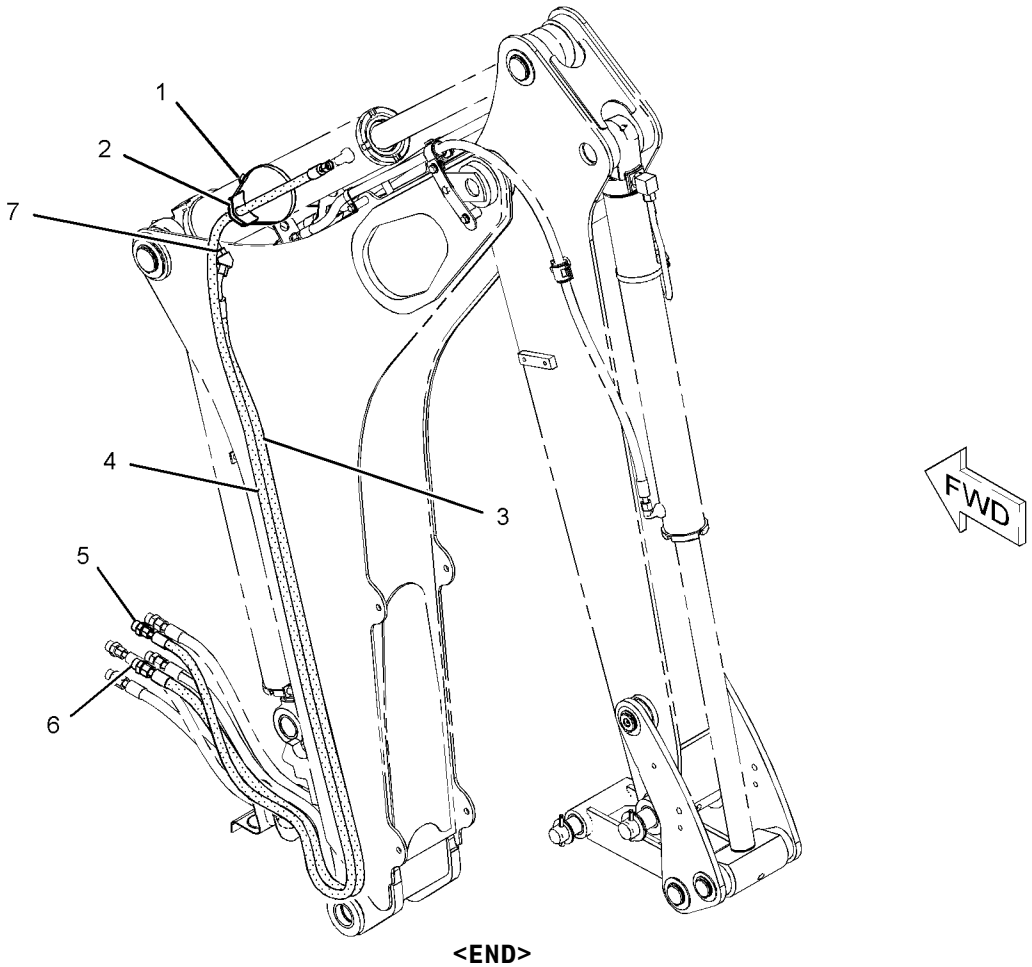

GRAPHIC #1 **<END>** g01077335

HYDRAULIC SYSTEM

267-2764 LINES GP-SWING (CHG -01, -02)

S/N: HLS1-UP

PART OF 268-6455 HYDRAULIC AR

SMCS-5057, 5105 **i02363665**

NOTE	REF NO	GRAPHIC REF	PART NUMBER	QTY	PART NAME 1 2 3 4 5 6 (PRODUCT LEVEL)	SEE PAGE
	1	1	**5P-0599**	2	CLAMP-BAND	
	2	1	**9R-2053**	2	BLOCK	
I	3	1	**9R-9005**	2	HOSE AS	
	4	1	**206-3685**	1	VALVE GP-CROSSOVER RELIEF	
		1	**7I-8084**	2	PLUG	
		1	**212-6264**	2	VALVE GP-RELIEF (CUSHION CROSSOVER)	
I	5	1	**216-2777**	1	HOSE AS	
I	6	1	**216-2778**	1	HOSE AS	
	7	1	**226-5634**	2	CONNECTOR AS	
					(EACH INCLUDES)	
		1	**3J-1907**	1	SEAL-O-RING	
		1	**4J-5477**	1	SEAL-O-RING	
		1	**167-0566**	1	CARTRIDGE	
		1	**226-5633**	1	CONNECTOR	
I	8	1	**269-0471**	1	HOSE AS	
I	9	1	**269-0472**	1	HOSE AS	
	10	1	*148-8340*	4	CONNECTOR AS	
					(EACH INCLUDES)	
		1	**3K-0360**	1	SEAL-O-RING	
		1	**6V-8398**	1	SEAL-O-RING	
		1	**6V-8639**	1	CONNECTOR	
	11	1	*148-8364*	2	ELBOW AS	
					(EACH INCLUDES)	
		1	**3K-0360**	1	SEAL-O-RING	
		1	**6V-8398**	1	SEAL-O-RING	
		1	**6V-8625**	1	ELBOW	
	12	1	*148-8428*	2	TEE AS	
					(EACH INCLUDES)	
		1	**3K-0360**	1	SEAL-O-RING	
		1	**6V-8398**	2	SEAL-O-RING	
		1	**6V-8782**	1	TEE	
	13	1	*155-7321*	2	ADAPTER GP	
					(EACH INCLUDES)	
		1	**3D-2824**	1	SEAL-O-RING	
		1	**6V-1722**	1	ADAPTER-O-RING	
M	14	1	**8T-6870**	2	BOLT (M8X1.25X70-MM)	
	15	1	*187-2120*	2	ELBOW AS	
					(EACH INCLUDES)	
		1	**4J-5477**	1	SEAL-O-RING	
		1	**8C-8408**	1	ELBOW	
	16	1	**7K-1181**	1	STRAP-CABLE	

I-REFER TO HYDRAULIC INFORMATION SYSTEM
M-METRIC PART

267-2764 **LINES GP-SWING** *(contd.)* **i02363665**

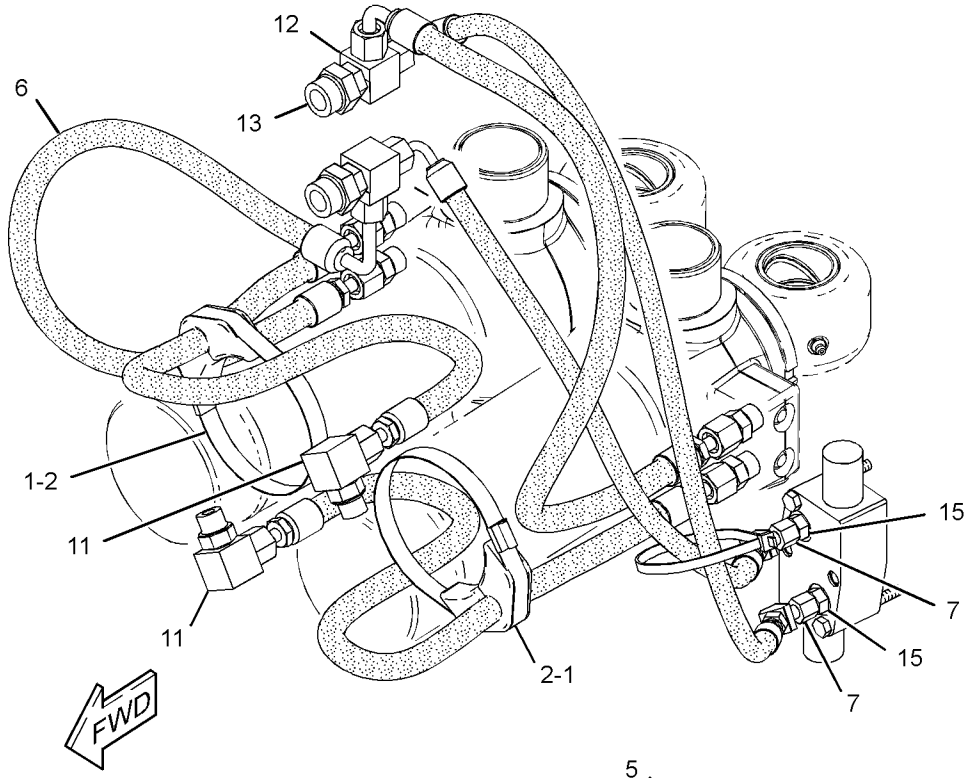

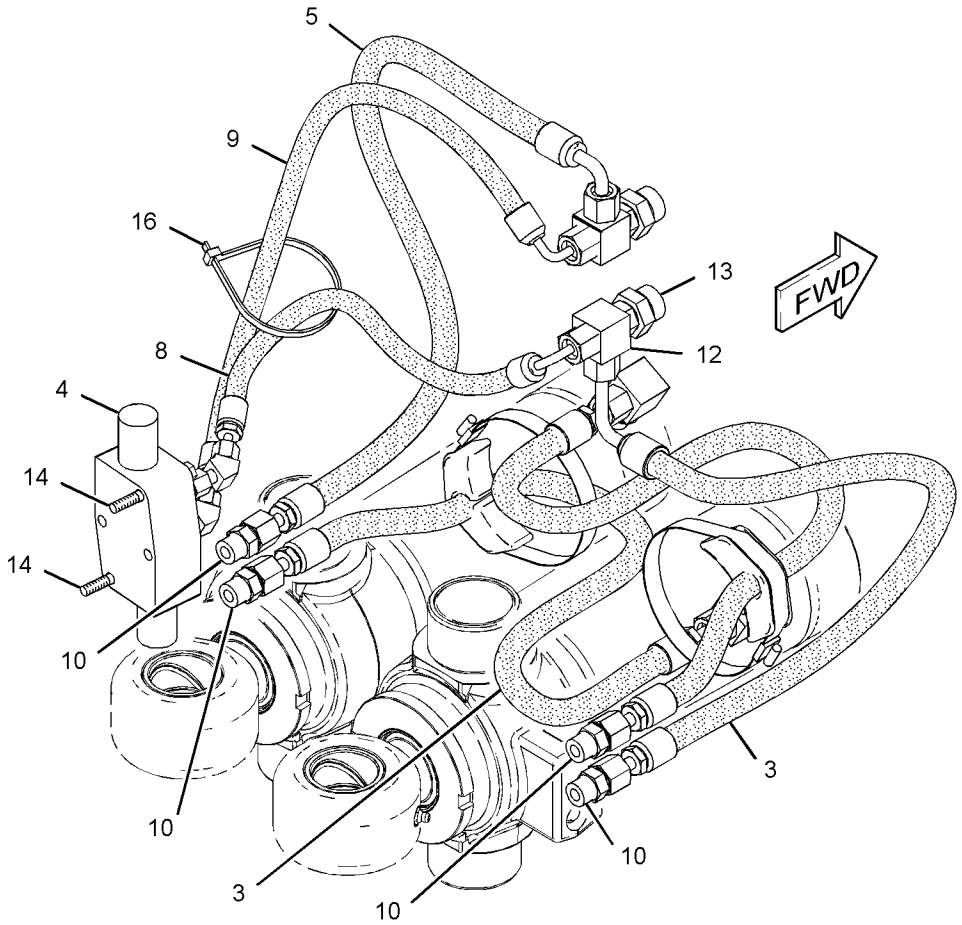

GRAPHIC #1 **<END>** g01232153

HYDRAULIC SYSTEM

246-5295 LINES GP-TILT CYLINDER (CHG -00 THRU -02)

S/N: HLS1-UP

PART OF 213-9300 LOADER AR

SMCS-5057, 5104 **i02434018**

NOTE	REF NO	GRAPHIC REF	PART NUMBER	QTY	PART NAME 1 2 3 4 5 6 (PRODUCT LEVEL)	SEE PAGE
	1	1	**7K-1181**	1	STRAP-CABLE	
I	2	1	**201-3340**	2	HOSE AS	
I	3	1	**201-3341**	2	HOSE AS	
	4	1	**201-3344**	1	TUBE AS	
	5	1	**201-3345**	1	TUBE AS	
	6	1	**201-3347**	1	TUBE AS	
	7	1	**201-4756**	1	GROMMET	
	8	1	**232-3277**	1	BRACKET AS	
	9	1	**244-3957**	1	TUBE AS	
	10	1	**251-1746**	1	TUBE AS	
	11	1	**252-0096**	1	TUBE AS	
	12	1	**254-7271**	1	PLATE AS	
	13	1	*148-8341*	2	CONNECTOR AS	
					(EACH INCLUDES)	
		1	**3D-2824**	1	SEAL-O-RING	
		1	**6V-8713**	1	CONNECTOR	
		1	**7J-9108**	1	SEAL-O-RING	
	14	1	*148-8388*	1	ELBOW AS	
		1	**2M-9780**	1	SEAL-O-RING	
		1	**6V-8629**	1	ELBOW	
		1	**6V-9746**	1	SEAL-O-RING	
	15	1	*150-3035*	2	ELBOW AS	
					(EACH INCLUDES)	
		1	**6V-9746**	1	SEAL-O-RING	
		1	**8T-1718**	1	ELBOW	
	16	1	**239-4232**	4	CLIP (SLOT)	
	17	1	**239-4235**	2	CLIP (TAB)	
	18	1	**7J-9108**	8	SEAL-O-RING	
	19	1	**8T-1887**	8	CLIP (SLOT)	
	20	1	**8T-1888**	8	CLIP (TAB)	
	21	1	**8T-4121**	8	WASHER-HARD (11X21X2.5-MM THK)	
M	22	1	**8T-4136**	7	BOLT (M10X1.5X25-MM)	
M	23	1	**8T-4195**	1	BOLT (M10X1.5X30-MM)	

I-REFER TO HYDRAULIC INFORMATION SYSTEM
M-METRIC PART

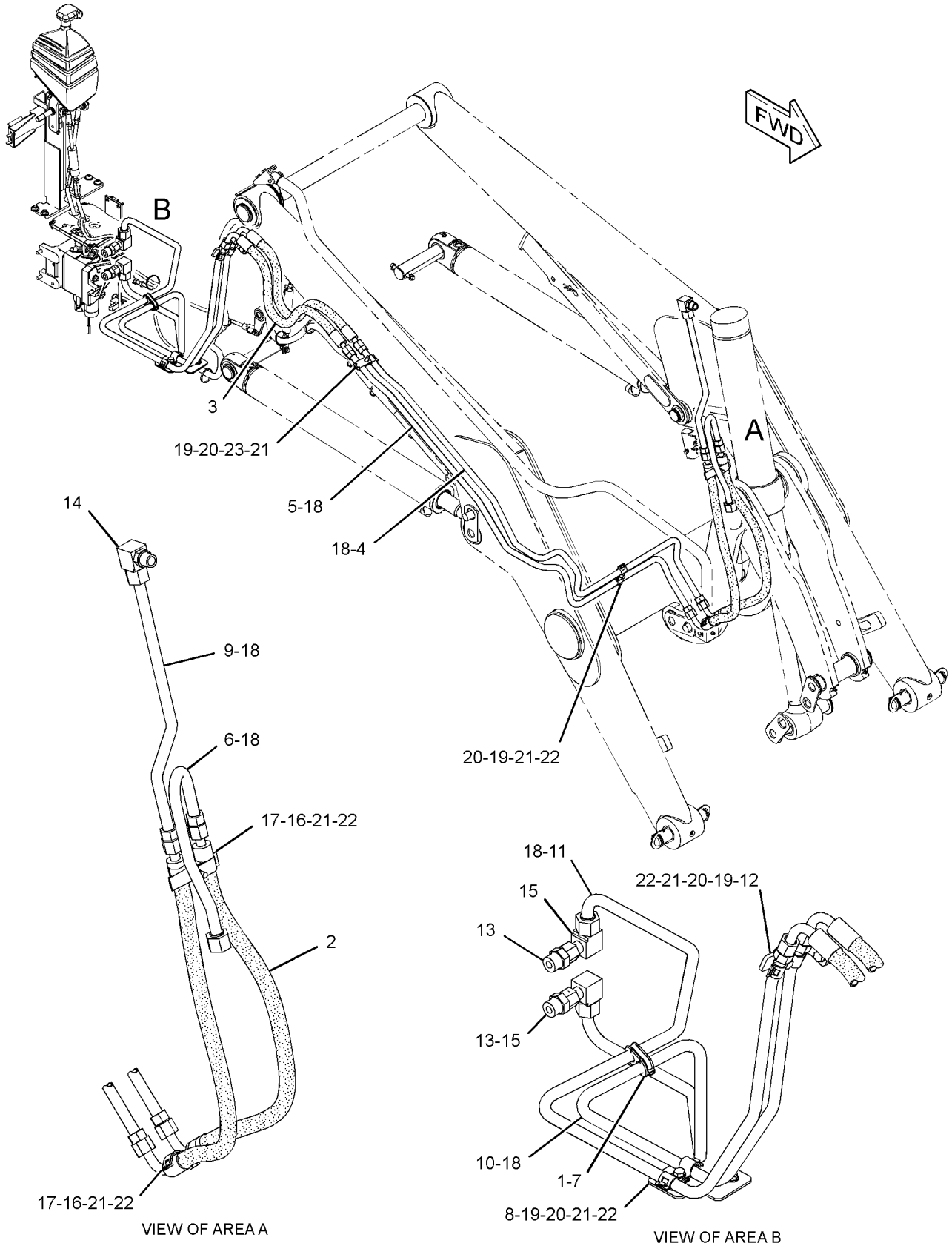

GRAPHIC #1

<END>

g01231434

269-1059 MANIFOLD GP-CONTROL–OUTLET (CHG -00)

S/N: HLS1-UP

PART OF 266-2556 VALVE GP-BANK 6, 266-2557 VALVE GP-BANK 7, 266-2558 VALVE GP-BANK 8

AN ATTACHMENT

SMCS-5264 **i02447290**

NOTE	REF NO	GRAPHIC REF	PART NUMBER	QTY	PART NAME 1 2 3 4 5 6 (PRODUCT LEVEL)	SEE PAGE
	1	1	**227-1184**	1	VALVE GP-RELIEF	
	2	1	**227-1185**	1	VALVE GP-FLOW CONTROL	
	3	1	**257-0442**	1	VALVE-RELIEF (FLUSHING)	
		1	**099-8232**	1	SEAL-O-RING	
	4	1	**257-7725**	1	PLUG GP-CONTROL VALVE	
		1	**6F-4855**	1	SEAL-O-RING	
	5	1	**9S-8005**	2	PLUG-O RING	
	6	1	**3K-0360**	2	SEAL-O-RING	
	7	1	**227-1197**	1	FILTER (FLOW REGULATOR)	
	8	1	**257-0468**	1	CAP	

269-1059 MANIFOLD GP-CONTROL *(contd.)* **i02447290**

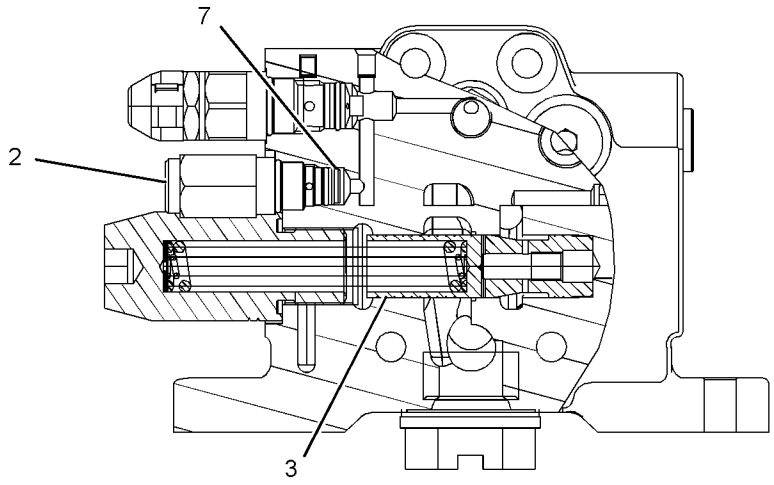

SECTION B-B

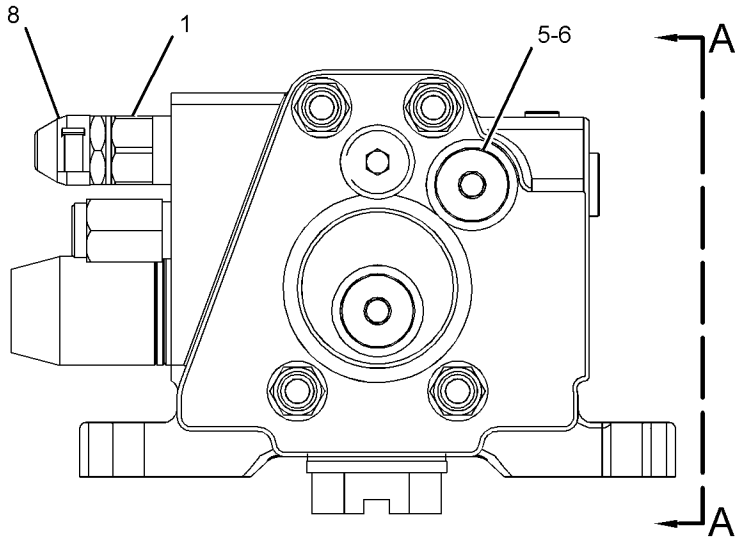

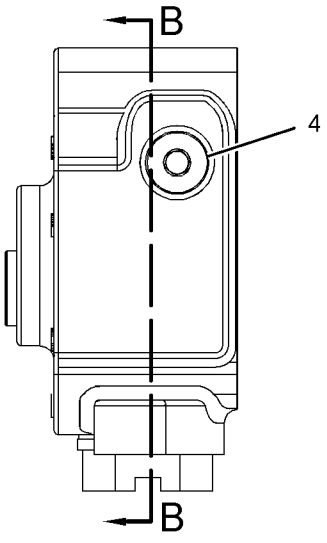

VIEW A-A

GRAPHIC #1 **<END>** g01231909

269-1060 MANIFOLD GP-CONTROL–INLET (CHG -00)

S/N: HLS1-UP

PART OF 266-2556 VALVE GP-BANK 6, 266-2557 VALVE GP-BANK 7, 266-2558 VALVE GP-BANK 8

AN ATTACHMENT

SMCS-5264 **i02447293**

NOTE	REF NO	GRAPHIC REF	PART NUMBER	QTY	PART NAME 1 2 3 4 5 6 (PRODUCT LEVEL)	SEE PAGE
J	1	1	**257-0464**	1	VALVE GP-PRESSURE REDUCING	
		1	**257-0465**	1	CAP-PROTECTION	
	2	1	**257-0440**	1	MANIFOLD GP-CONTROL (INLET)	
	3	1	**227-1189**	1	SCREEN (PILOT)	
	4	1	**9S-8004**	2	PLUG	
	5	1	**3J-1907**	2	SEAL-O-RING	
L	6	1	**200-6210**	1	VALVE GP-SOLENOID	
		1	**212-0061**	1	FLANGE	
M	7	1	**6V-8202**	1	BOLT-SOCKET HEAD (M8X1.25X16-MM)	
					AVAILABLE REPAIR KIT(S):	
J			**236-5753**	1	KIT-SEAL	
					(INCLUDES RINGS & SEALS)	
L			**200-2371**	1	KIT-SEAL	
					(INCLUDES SEALS)	

J-KIT MARKED J AVALIBLE FOR PART MARKED J
L-KIT MARKED L AVALIBLE FOR PART MARKED L
M-METRIC PART

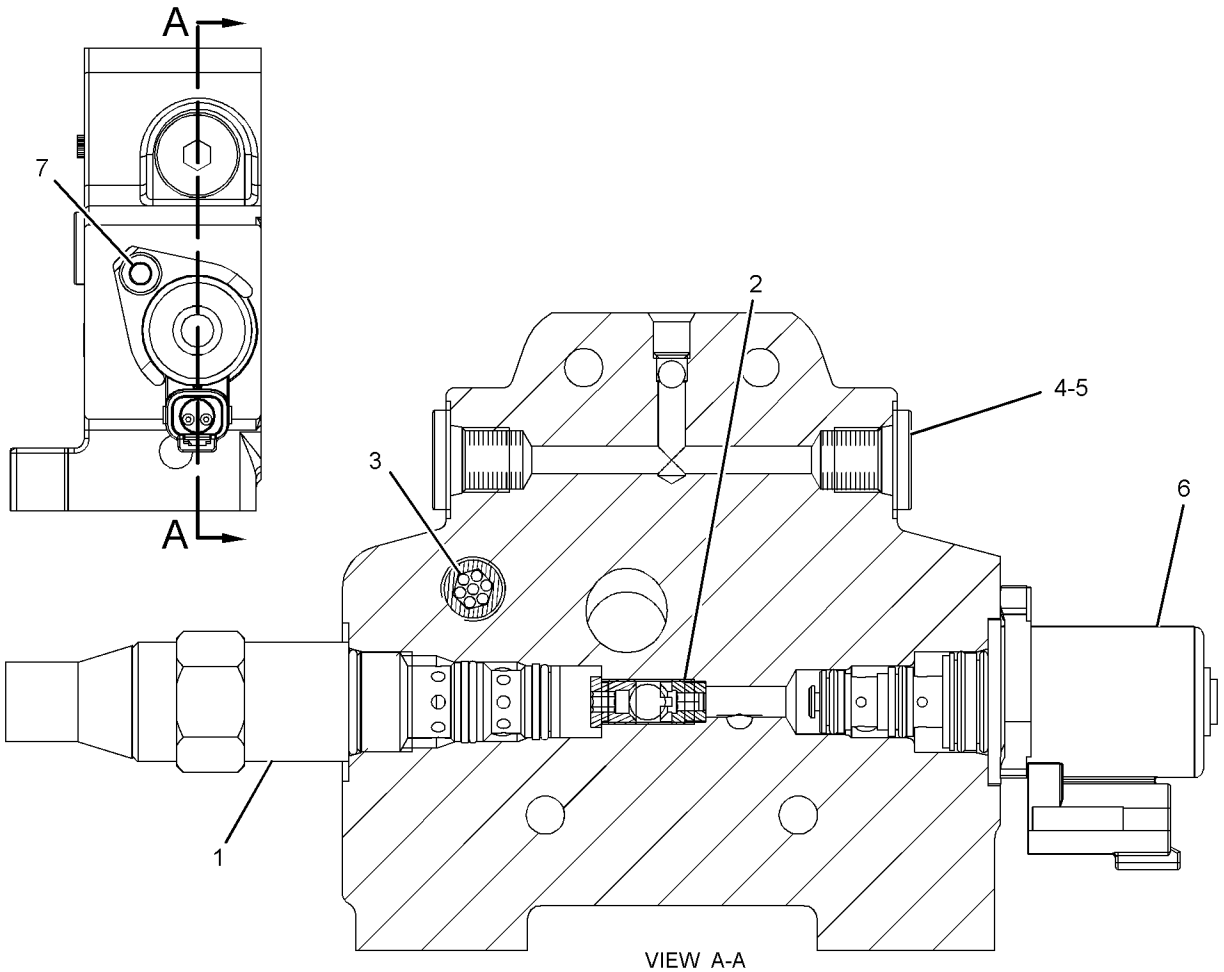

VIEW A-A

GRAPHIC #1 **<END>** g01220687

269-1080 MANIFOLD GP-CONTROL–INLET (CHG -00, -01)

S/N: HLS1-UP

PART OF 266-2552 VALVE GP-BANK 2, 266-2553 VALVE GP-BANK 3

AN ATTACHMENT

SMCS-5264 **i02433141**

NOTE	REF NO	GRAPHIC REF	PART NUMBER	QTY	PART NAME 1 2 3 4 5 6 (PRODUCT LEVEL)	SEE PAGE
	1	1	**227-1194**	1	KIT-VALVE (FLOW REGULATOR)	
		1	**099-8232**	1	SEAL-O-RING	
		1	**227-1193**	1	KIT-VALVE (PRIORITY)	
	2	1	**227-1192**	1	KIT-VALVE (SHUTTLE)	
	3	1	**227-1184**	1	VALVE GP-RELIEF	
	4	1	**257-7721**	1	VALVE GP-CHECK	
	5	1	**257-0468**	1	CAP	

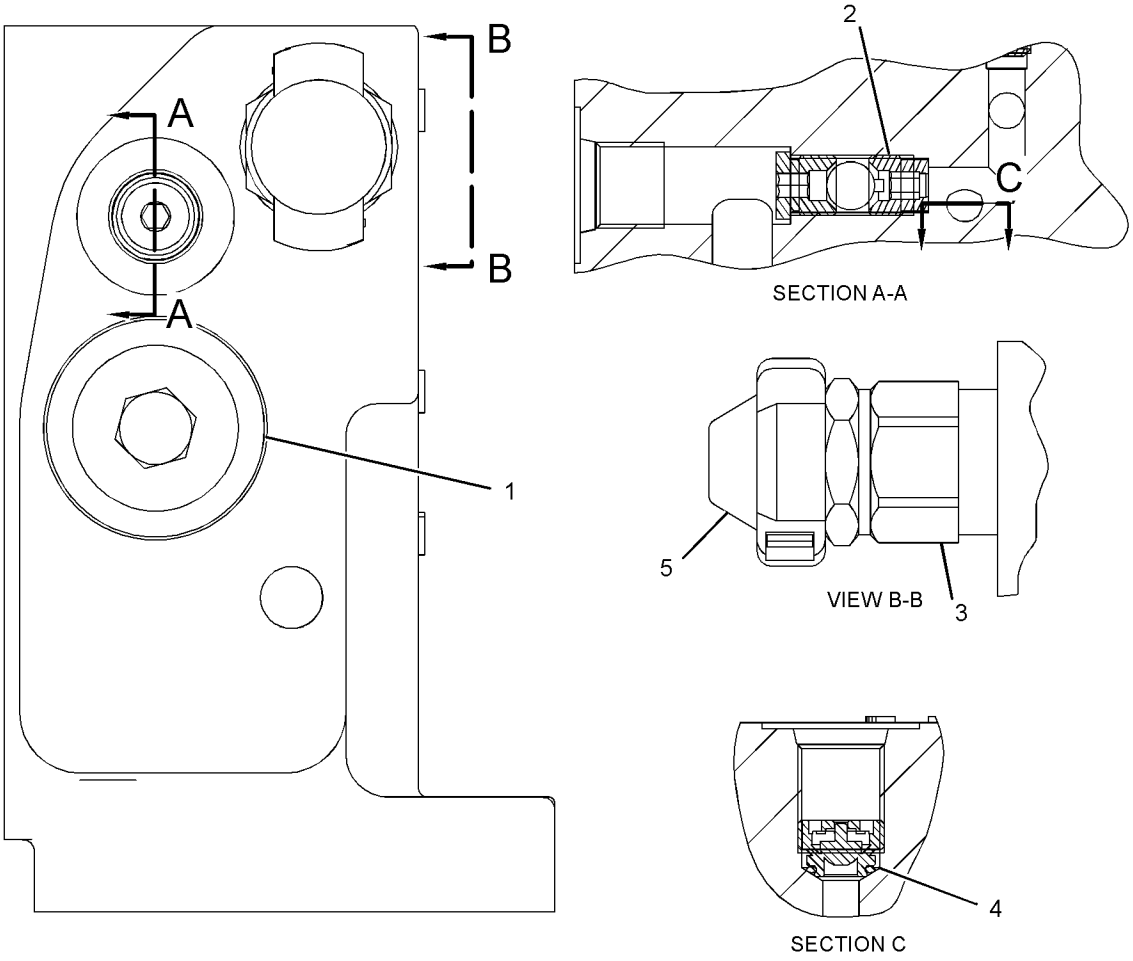

GRAPHIC #1 **<END>** g01226131

179-3543 MANIFOLD GP-CONTROL & SOLENOID (CHG -02)

S/N: HLS1-UP
PART OF 269-1066, 269-1067 VALVE GP-CONTROL
AN ATTACHMENT

SMCS-5264, 5479 **i02433140**

NOTE	REF NO	GRAPHIC REF	PART NUMBER	QTY	PART NAME 1 2 3 4 5 6 (PRODUCT LEVEL)	SEE PAGE
Y	1	1	**185-4254**	2	VALVE GP-SOLENOID (PILOT)	389

Y-SEPARATE ILLUSTRATION

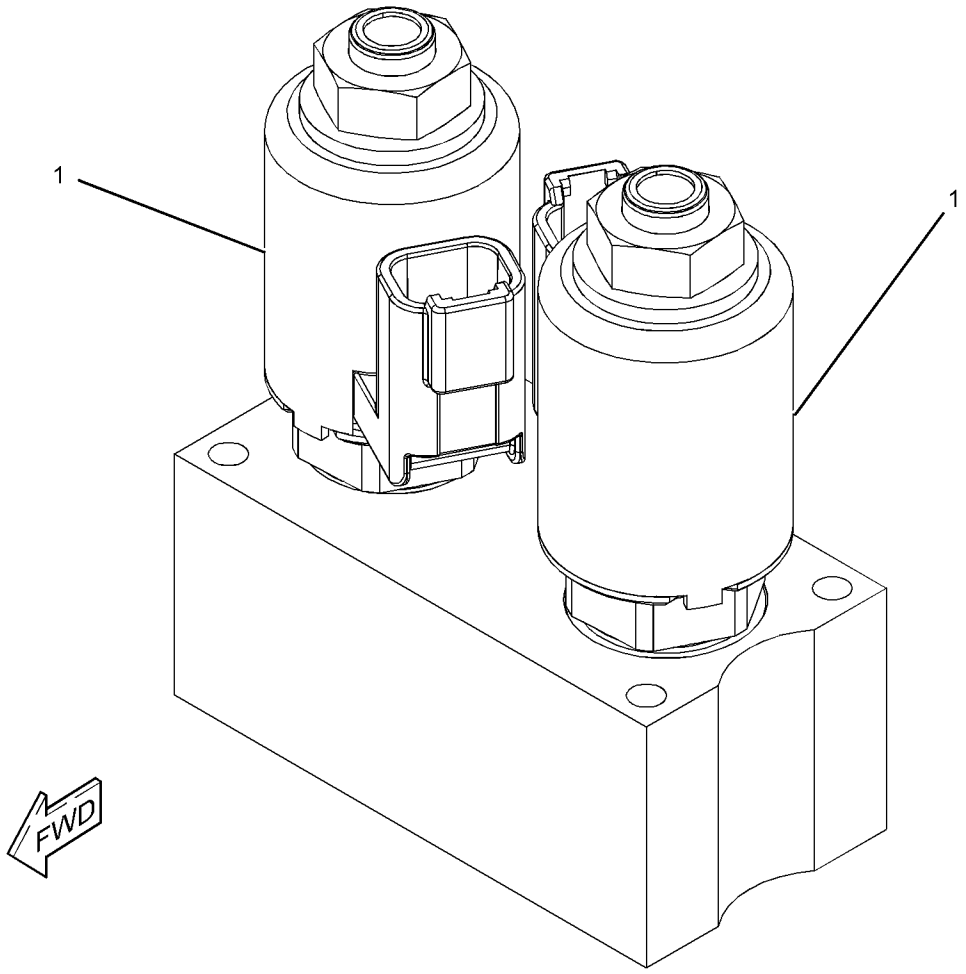

GRAPHIC #1 **<END>** g01220715

257-7724 MANIFOLD GP-CONTROL & SOLENOID–

BOOM, STICK, PATTERN SWITCH (CHG -00)

S/N: HLS1-UP

PART OF 266-2556 VALVE GP-BANK 6, 266-2557 VALVE GP-BANK 7, 266-2558 VALVE GP-BANK 8

AN ATTACHMENT

SMCS-5264, 5479 **i02447288**

NOTE	REF NO	GRAPHIC REF	PART NUMBER	QTY	PART NAME 1 2 3 4 5 6 (PRODUCT LEVEL)	SEE PAGE
J	1	1	**240-6866**	2	VALVE GP-SOLENOID	
					(EACH INCLUDES)	
		1	**238-4626**	1	COIL AS	
M	2	1	**095-0642**	4	BOLT-SOCKET HEAD (M5X0.8-THDX50-MM)	
	3	1	**3D-2992**	2	SEAL	
	4	1	**6M-5062**	2	SEAL-O-RING	
	5	1	**2D-6392**	4	SEAL-O-RING	
					AVAILABLE REPAIR KIT(S):	
J			**106-3108**	1	KIT-SEAL	

J-KIT MARKED J AVAILABLE FOR PART MARKED J
M-METRIC PART

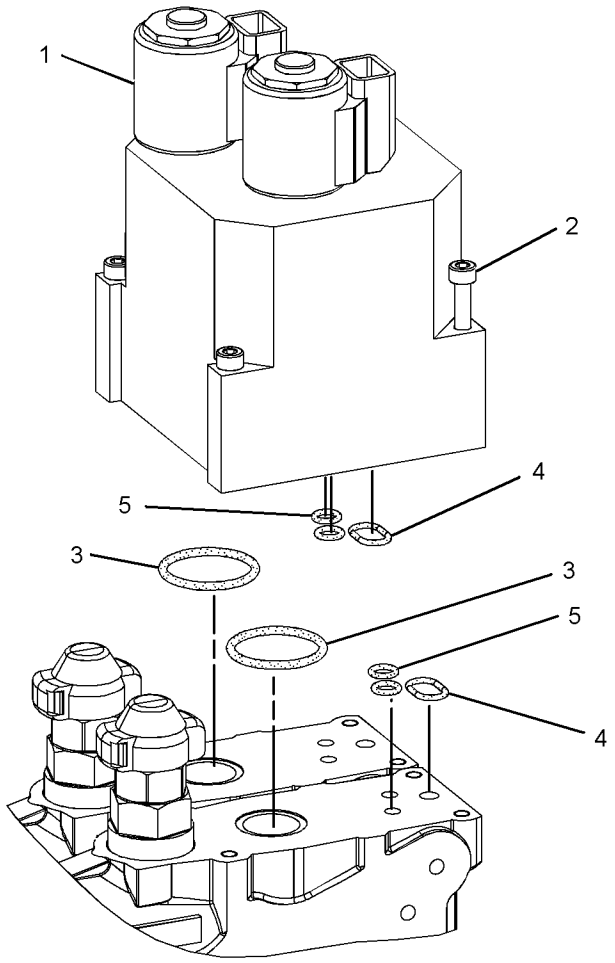

GRAPHIC #1 **<END>** g01220700

HYDRAULIC SYSTEM

269-3247 MOUNTING GP-BACKHOE CONTROL (CHG -00, -01)

S/N: HLS1-UP

PART OF 269-2125, 269-2126, 269-2127 CAB AR, 269-2123, 269-2124 CANOPY AR

AN ATTACHMENT

SMCS-5705 **i02446495**

NOTE	REF NO	GRAPHIC REF	PART NUMBER	QTY	PART NAME 1 2 3 4 5 6 (PRODUCT LEVEL)	SEE PAGE
	1	1	**110-8760**	2	STRAP	
	2	1	**164-1368**	18	FASTENER-PANEL	
	3	1	**179-2021**	2	SPRING	
	4	1	**183-4934**	2	BEARING-SELF-ALIGNING	
B	5	1	**195-7602**	2	SHIM (1.6-MM THK)	
	6	1	**261-9642**	1	COVER-CONSOLE (LH)	
	7	1	**261-9643**	1	COVER-CONSOLE (RH)	
	8	1	**267-5225**	1	BOOT	
	9	1	**267-5227**	1	BOOT	
	10	1	**268-5918**	1	STRIKER	
Y	11	1	*269-3248*	1	LATCH GP-CONSOLE	593
	12	1	**269-3250**	1	SUPPORT AS (RH)	
	13	1	**269-3254**	1	SUPPORT AS (LH)	
	14	1	**269-3257**	1	TUBE AS	
	15	1	**269-3260**	1	PLATE AS-MOUNTING	
B	16	1	**269-3262**	4	SHIM	
	17	1	**269-3263**	1	BUMPER AS	
	18	1	**269-3265**	1	STRIKER	
	19	1	**270-2794**	2	INSULATION	
	20	1	**270-5161**	1	GASKET	
	21	1	**270-5162**	1	GASKET	
	22	1	**272-7079**	1	PLATE	
	23	1	**272-7080**	1	PLATE	
	24	1	**273-1473**	1	GROMMET	
M	25	1	**7X-2533**	6	BOLT (M6X1X35-MM)	
M	26	1	**8T-0269**	8	BOLT-SOCKET HEAD (M6X1X20-MM)	
	27	1	**8T-4121**	6	WASHER-HARD (11X21X2.5-MM THK)	
M	28	1	**8T-4134**	6	NUT (M6X1-THD)	
M	29	1	**8T-4138**	2	BOLT (M6X1X20-MM)	
M	30	1	**8T-4186**	4	BOLT (M10X1.5X40-MM)	
M	31	1	**8T-4189**	4	BOLT (M8X1.25X20-MM)	
M	32	1	**8T-4195**	2	BOLT (M10X1.5X30-MM)	
M	33	1	**8T-4200**	1	BOLT (M8X1.25X16-MM)	
	34	1	**8T-4224**	4	WASHER-HARD (8.8X16X2-MM THK)	
M	35	1	**8T-4244**	2	NUT (M12X1.75-THD)	
M	36	1	**8T-8442**	2	BOLT-SOCKET HEAD (M6X1X30-MM)	
	37	1	**9X-2038**	12	WASHER (7X19X2-MM THK)	
M	38	1	**9X-2045**	6	SCREW-TRUSS HEAD (M6X1X20-MM)	
	39	1	**9X-8256**	26	WASHER (6.6X12X2-MM THK)	

B-USE AS REQUIRED
M-METRIC PART
Y-SEPARATE ILLUSTRATION

269-3247 **MOUNTING GP-BACKHOE CONTROL** *(contd.)* **i02446495**

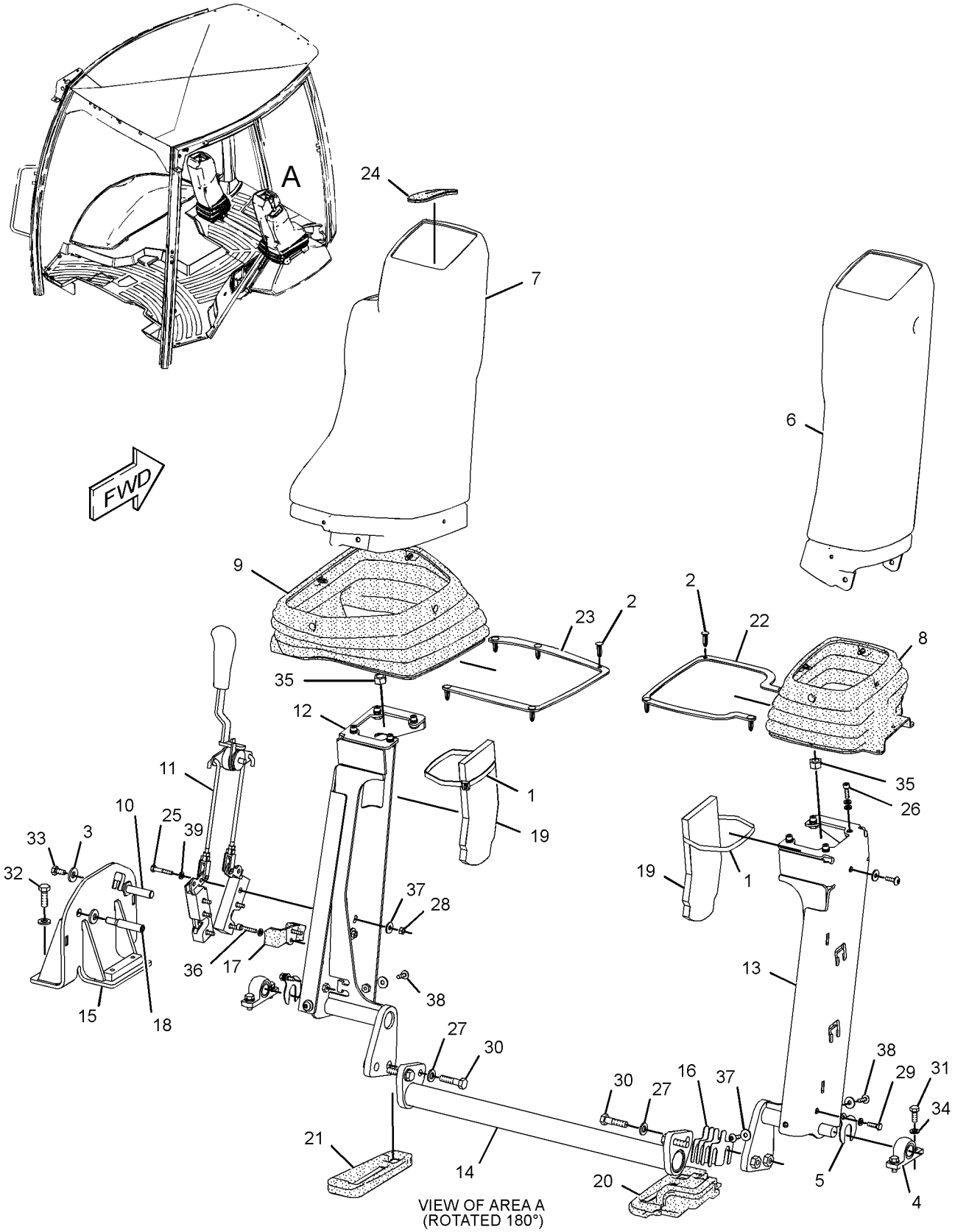

GRAPHIC #1

<END>

g01215339

245-8765 MOUNTING GP-BANK VALVE (CHG -00 THRU -02)

S/N: HLS1-UP

PART OF 269-2146 VALVE AR-BANK 6, 269-2147 VALVE AR-BANK 7, 269-2148 VALVE AR-BANK 8

AN ATTACHMENT

SMCS-5051 **i02449641**

NOTE	REF NO	GRAPHIC REF	PART NUMBER	QTY	PART NAME 1 2 3 4 5 6 (PRODUCT LEVEL)	SEE PAGE
	1	1	**245-8766**	1	BRACKET AS	
	2	1	**8T-4121**	3	WASHER-HARD (11X21X2.5-MM THK)	
M	3	1	**8T-4182**	2	BOLT (M10X1.5X45-MM)	
M	4	1	**8T-4195**	1	BOLT (M10X1.5X30-MM)	
	5	1	**8T-4223**	3	WASHER-HARD (13.5X25.5X3-MM THK)	
M	6	1	**8T-4184**	3	BOLT (M12X1.75X45-MM)	

M-METRIC PART

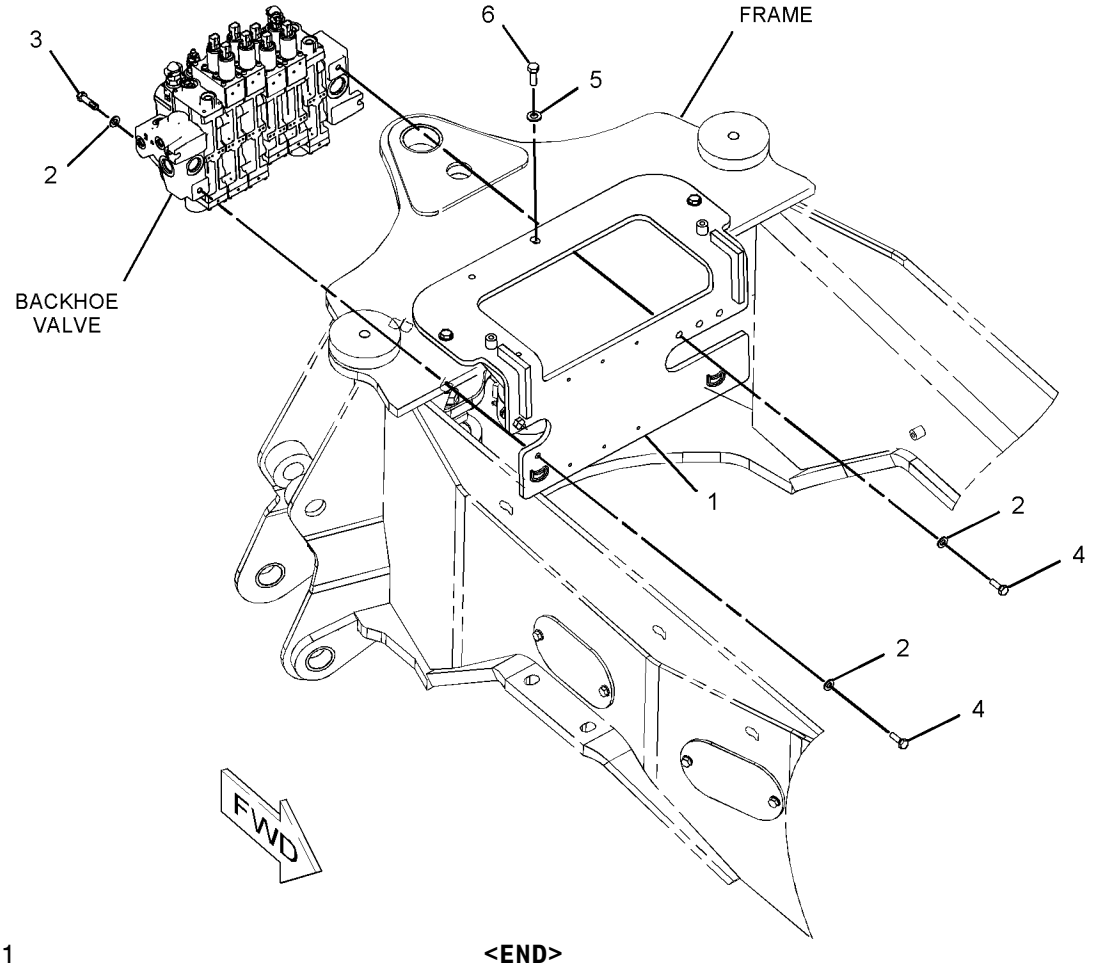

GRAPHIC #1 **<END>** g01077768

221-4265 MOUNTING GP-CYLINDER–THUMB (CHG -01 THRU -04)

S/N: HLS1-UP
PART OF 221-4260 THUMB AR
AN ATTACHMENT

SMCS-5102, 6068, 7562 **i02445754**

NOTE	REF NO	GRAPHIC REF	PART NUMBER	QTY	PART NAME 1 2 3 4 5 6 (PRODUCT LEVEL)	SEE PAGE
	1	1	**9R-1510**	8	WASHER (51X82X4-MM THK)	
	2	1	**221-4295**	1	PIN	
	3	1	**221-4296**	1	PIN	
	4	1	**221-4297**	1	PIN	
	5	1	**221-4315**	1	STOP AS	
	6	1	**221-4316**	1	BRACKET AS	
	7	1	**3B-5319**	2	PIN-COTTER	
	8	1	**6V-3213**	2	RING-RETAINING	
M	9	1	**6V-9189**	1	LOCKNUT (M8X1.25-THD)	
M	10	1	**8T-3647**	1	BOLT (M8X1.25X80-MM)	
	11	1	**9R-0158**	2	WASHER (46X69X3-MM THK)	

M-METRIC PART

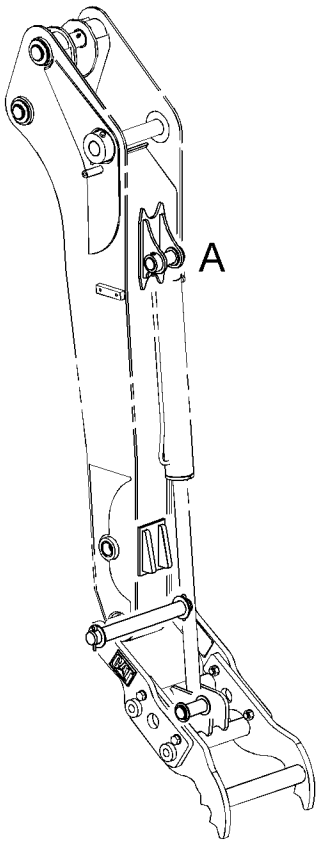

HYDRAULIC CYLINDER
STANDARD STICK

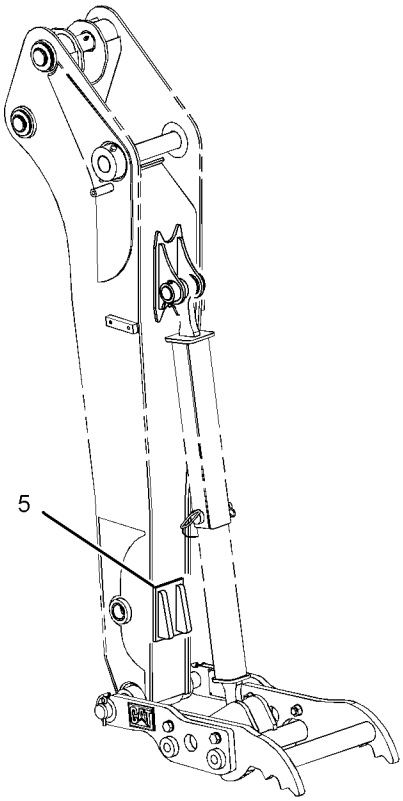

ADJUSTABLE LINK
STANDARD STICK

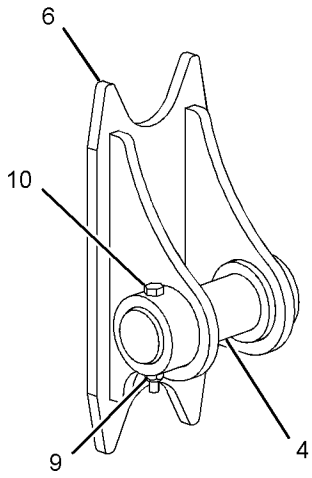

VIEW OF AREA A

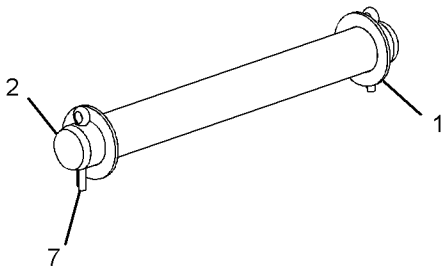

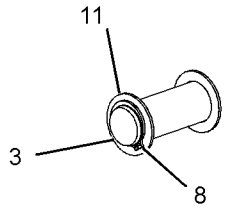

VIEW OF AREA B

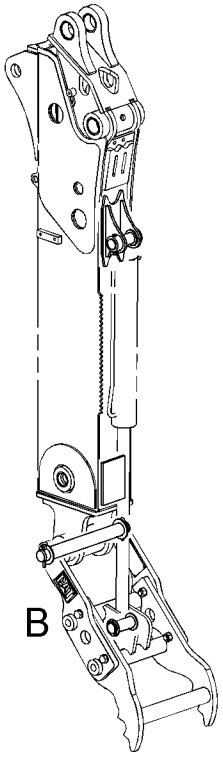

HYDRAULIC CYLINDER
EXTENDABLE STICK

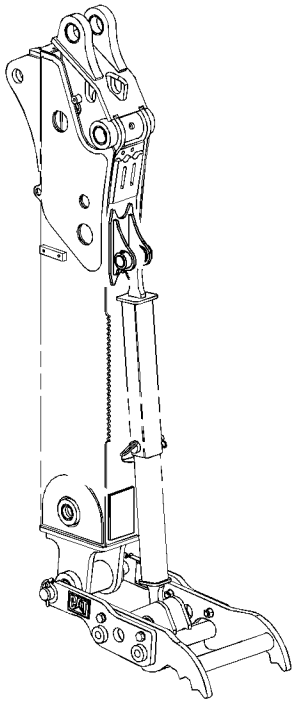

ADJUSTABLE LINK
EXTENDABLE STICK

GRAPHIC #1 **<END>** g01224751

263-8577 MOUNTING GP-CYLINDER–THUMB (CHG -01)

S/N: HLS1-UP
PART OF 271-3023 THUMB GP
AN ATTACHMENT

SMCS-5102, 6068, 7562 **i02449273**

NOTE	REF NO	GRAPHIC REF	PART NUMBER	QTY	PART NAME 1 2 3 4 5 6 (PRODUCT LEVEL)	SEE PAGE
	1	1	**9R-1510**	8	WASHER (51X82X4-MM THK)	
	2	1	**221-4295**	1	PIN	
	3	1	**221-4296**	1	PIN	
	4	1	**270-3410**	1	PIN	
	5	1	**3B-5319**	2	PIN-COTTER	
	6	1	**6V-3213**	4	RING-RETAINING	
	7	1	**9R-0158**	4	WASHER (46X69X3-MM THK)	

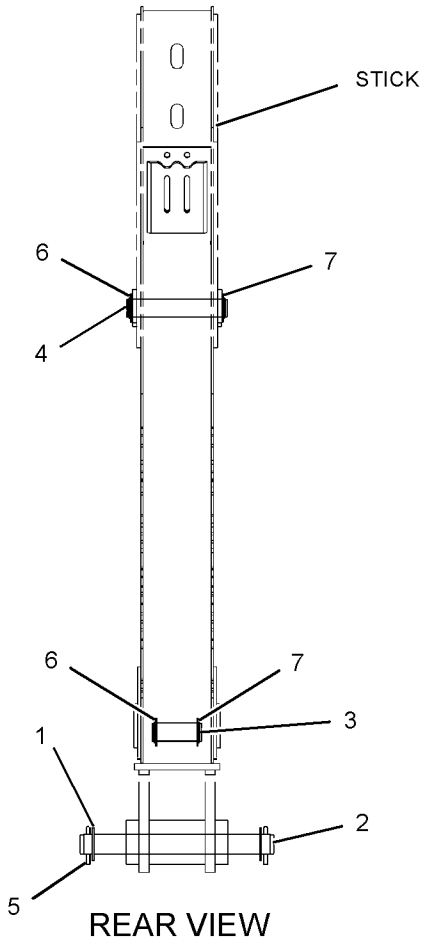

REAR VIEW

GRAPHIC #1 **<END>** g01233876

246-9309 MOUNTING GP-LINES—BACKHOE (CHG -01 THRU -03)

S/N: HLS1-UP

PART OF 214-2553, 214-3758 BACKHOE AR-EXTENDABLE STICK, 214-2550, 214-3755 BACKHOE AR-STANDARD STICK AN ATTACHMENT

SMCS-5057, 5456 **i02378922**

NOTE	REF NO	GRAPHIC REF	PART NUMBER	QTY	PART NAME 1 2 3 4 5 6 (PRODUCT LEVEL)	SEE PAGE
	1	1	**248-4274**	2	BLOCK	
	2	1	**248-4275**	2	BLOCK	
	3	1	**248-4276**	2	BLOCK	
	4	1	**248-4277**	2	PLATE	
	5	1	**8T-4121**	4	WASHER-HARD (11X21X2.5-MM THK)	
M	6	1	**8T-4196**	4	BOLT (M10X1.5X35-MM)	

M-METRIC PART

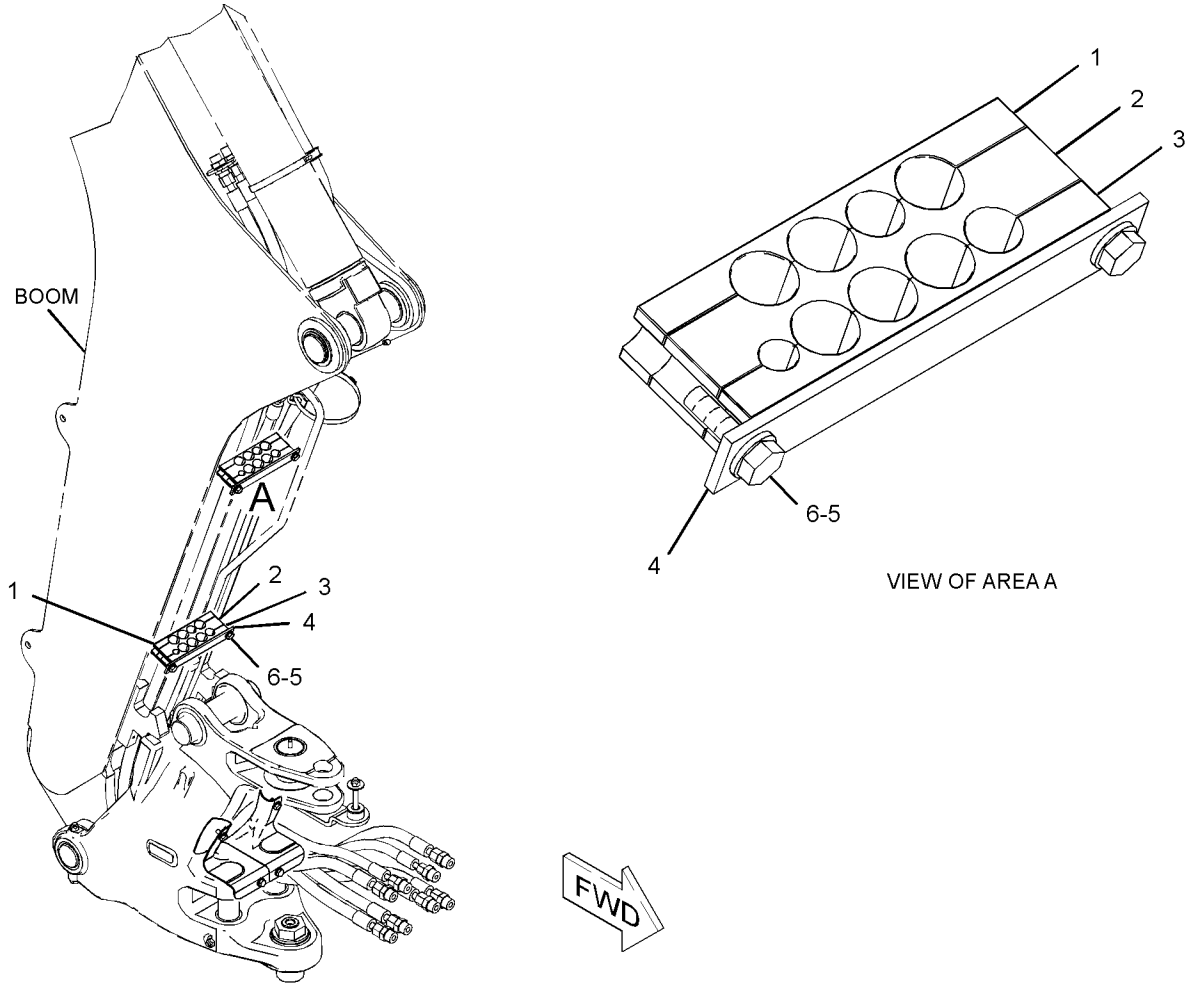

GRAPHIC #1 **<END>** g01190731

267-2755 PUMP GP-PISTON (CHG -01, -02)

S/N: HLS1-UP

PART OF 268-6455 HYDRAULIC AR

SMCS-5070 **i02433860**

NOTE	REF NO	GRAPHIC REF	PART NUMBER	QTY	PART NAME 1 2 3 4 5 6 (PRODUCT LEVEL)	SEE PAGE
	1	1	**280-7869**	1	VALVE GP-PUMP CONTROL (PRESSURE, FLOW COMPENSATOR)	
Y	2	1	**120-5726**	1	ROTATING GP-PUMP	358
	3	1	**6E-4004**	2	SEAL-SHAFT	
	4	1	**180-6213**	1	RING-RETAINING	
	5	1	**162-1604**	1	SHAFT-DRIVE	
	6	1	**3B-5790**	1	CUP-BEARING	
	7	1	**6V-2323**	1	CONE-BEARING	
	8	1	**1P-6872**	1	CUP-BEARING	
	9	1	**8C-7110**	1	CONE-BEARING	
	10	1	**6E-4003**	2	BEARING	
	11	1	**262-0347**	1	KIT-PUMP	
					(INCLUDES PISTONS, GUIDES & SPRING)	
	12	1	**173-0639**	1	SWASHPLATE AS	
	13	1	**033-6028**	1	SEAL-O-RING	
	14	1	**153-4906**	1	SEAL-O-RING	
	15	1	**9S-8004**	1	PLUG	
	16	1	**2M-9780**	1	SEAL-O-RING	
	17	1	**3E-6770**	1	SEAL-O-RING	
	18	1	**3E-6769**	4	SEAL-O-RING	
	19	1	**263-5516**	1	VALVE GP-SOLENOID	
		1	**217-3875**	1	SEAL-O-RING	
		1	**247-7054**	1	NUT	
		1	**251-2429**	1	KIT-SEAL (VIBRATORY VALVE)	
					(INCLUDES SEALS)	
		1	**282-6944**	1	COIL AS	
Y	20	1	**280-7871**	1	VALVE GP-PUMP CONTROL (POWER COMPENSATOR)	388
	21	1	**280-7868**	1	TUBE AS	
	22	1	**280-7872**	1	TUBE AS	
	23	1	**173-0641**	1	PLUG-FILTER	

Y-SEPARATE ILLUSTRATION

267-2755 PUMP GP-PISTON *(contd.)* **i02433860**

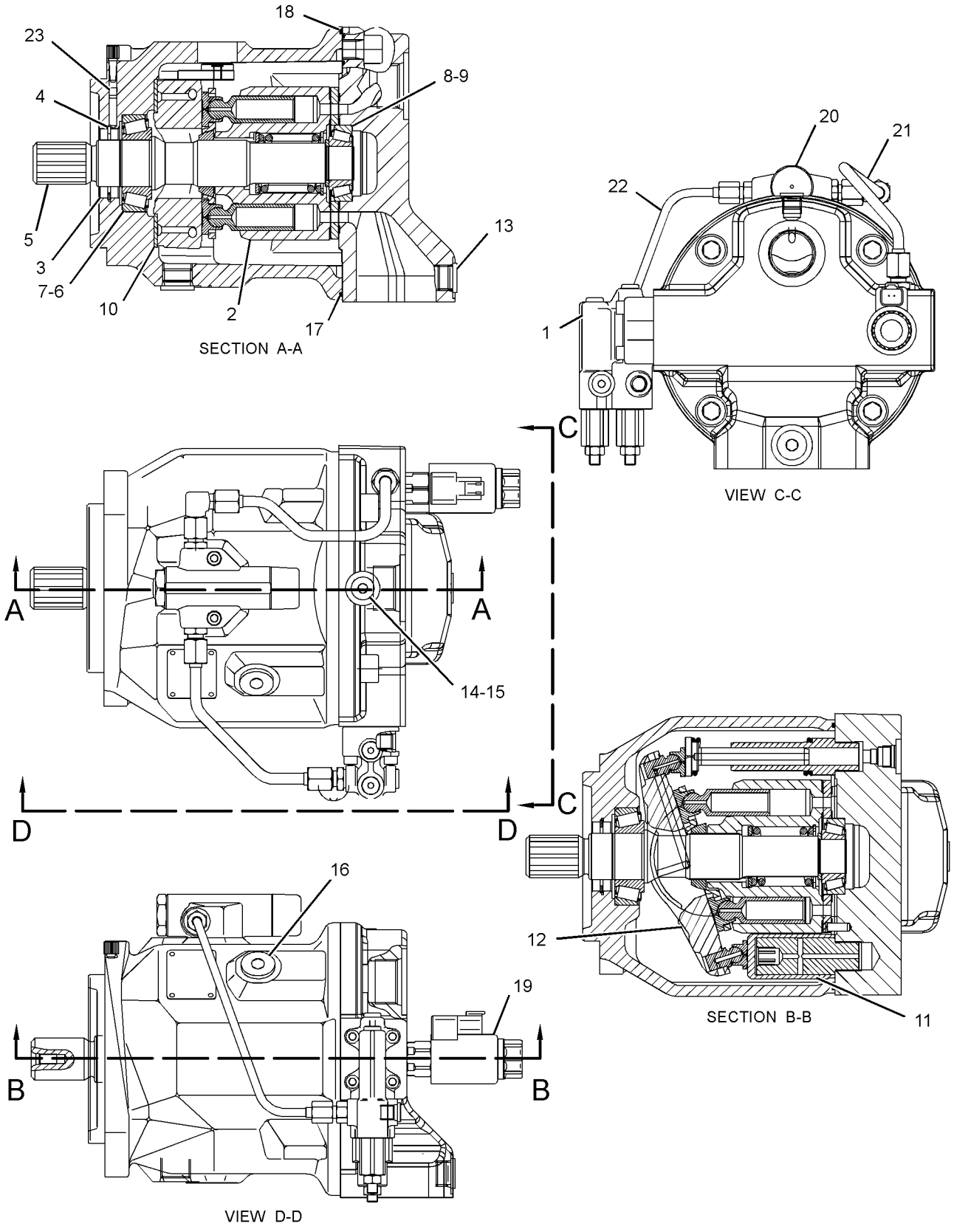

GRAPHIC #1 **<END>** g01231817

HYDRAULIC SYSTEM

120-5726 ROTATING GP-PUMP (CHG -00)

S/N: HLS1-UP

PART OF 267-2755 PUMP GP-PISTON

SMCS-5070 **i00733625**

NOTE	REF NO	GRAPHIC REF	PART NUMBER	QTY	PART NAME 1 2 3 4 5 6 (PRODUCT LEVEL)	SEE PAGE
	1	1	**6E-6151**	9	PISTON AS	
	2	1	**6E-6154**	1	PLATE-RETRACTION	
	3	1	**6E-6155**	1	BEARING	
	4	1	**6E-4007**	1	BARREL	
	5	1	**6E-3341**	1	SEAT-SPRING	
	6	1	**6E-4009**	1	SPRING	
	7	1	**6E-6158**	1	RING	
	8	1	**120-5724**	1	PLATE-VALVE	
	9	1	**6E-6157**	3	PIN	

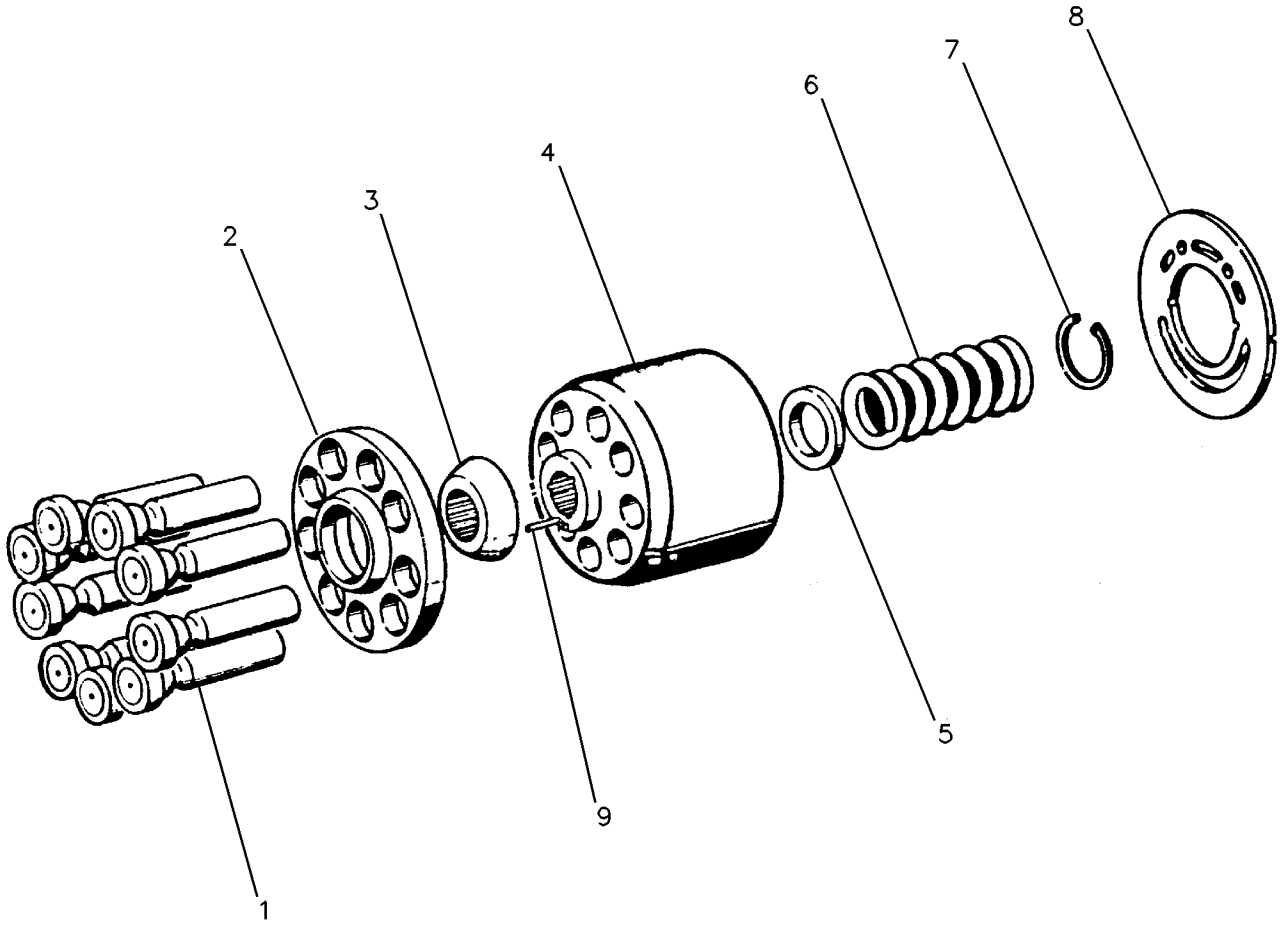

GRAPHIC #1 **<END>** g00119332

128-5596 SHAFT GP-PUMP DRIVE (CHG -02, -03)

S/N: HLS1-UP
PART OF 112-1826 DRIVE & MTG GP-PUMP
AN ATTACHMENT

SMCS-3108 **i00512642**

NOTE	REF NO	GRAPHIC REF	PART NUMBER	QTY	PART NAME 1 2 3 4 5 6 (PRODUCT LEVEL)	SEE PAGE
	1	1	**130-8150**	1	RING-RETAINING	

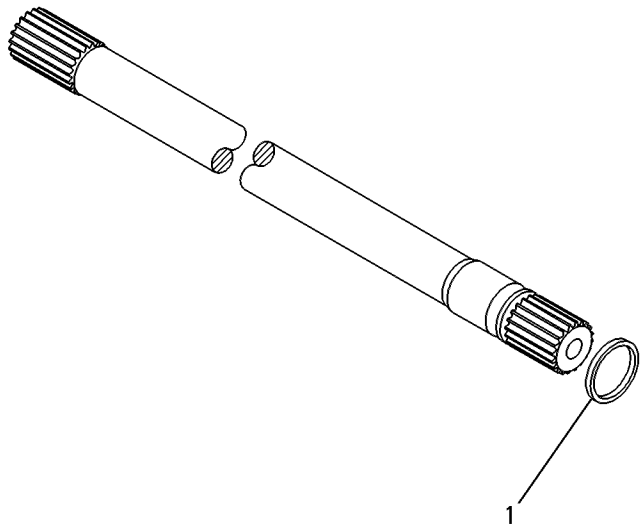

GRAPHIC #1 **<END>** g00131851

HYDRAULIC SYSTEM

245-8777 TANK & MTG GP-HYDRAULIC

(CHG -00 THRU -02, 245-8778-01)

S/N: HLS1-UP

PART OF 268-6455 HYDRAULIC AR

SMCS-5056 **i02485602**

NOTE	REF NO	GRAPHIC REF	PART NUMBER	QTY	PART NAME 1 2 3 4 5 6 (PRODUCT LEVEL)	SEE PAGE
	1	1	**1P-4278**	1	CLAMP-HOSE	
	2	1	**5D-1026**	2	CLAMP-HOSE	
E	3	1	**5P-1442**		HOSE (124-CM)	
E	4	1	**5P-1505**		HOSE (8-CM)	
	5	1	**9M-0164**	1	CLAMP-HOSE	
	6	1	**9R-9925**	1	FILTER-BREATHER (HYDRAULIC TANK)	
	7	1	**127-4471**	1	CLAMP-HOSE	
	8	1	**132-3056**	1	SEAL-O-RING	
	9	1	**210-7773**	1	BRACKET AS	
	10	1	**222-4067**	6	BOLT-SOCKET HEAD (M5X0.8X14-MM)	
	11	1	**234-6927**	1	HOSE	
	12	1	**234-8815**	1	TUBE AS	
	13	1	**235-5843**	1	DIFFUSER AS	
	14	1	**237-3797**	1	CAP-FILL (HYDRAULIC OIL)	
	15	1	*245-8778*	1	TANK GP-HYDRAULIC	
		1	**253-8295**	1	GAUGE-SIGHT	
	16	1	*150-3026*	1	ELBOW AS	
		1	**3K-0360**	1	SEAL-O-RING	
		1	**6V-4292**	1	ELBOW	
	17	1	**6D-3479**	1	CLIP	
	18	1	**8T-4121**	2	WASHER-HARD (11X21X2.5-MM THK)	
M	19	1	**8T-4137**	1	BOLT (M10X1.5X20-MM)	
M	20	1	**8T-4138**	1	BOLT (M6X1X20-MM)	
M	21	1	**8T-4139**	1	BOLT (M12X1.75X30-MM)	
M	22	1	**8T-4179**	3	BOLT (M12X1.75X20-MM)	
M	23	1	**8T-4191**	4	BOLT (M10X1.5X16-MM)	
	24	1	**8T-4223**	4	WASHER-HARD (13.5X25.5X3-MM THK)	
	25	1	**7X-7729**	4	WASHER (11X25X3-MM THK)	

E-ORDER BY THE CENTIMETER
M-METRIC PART

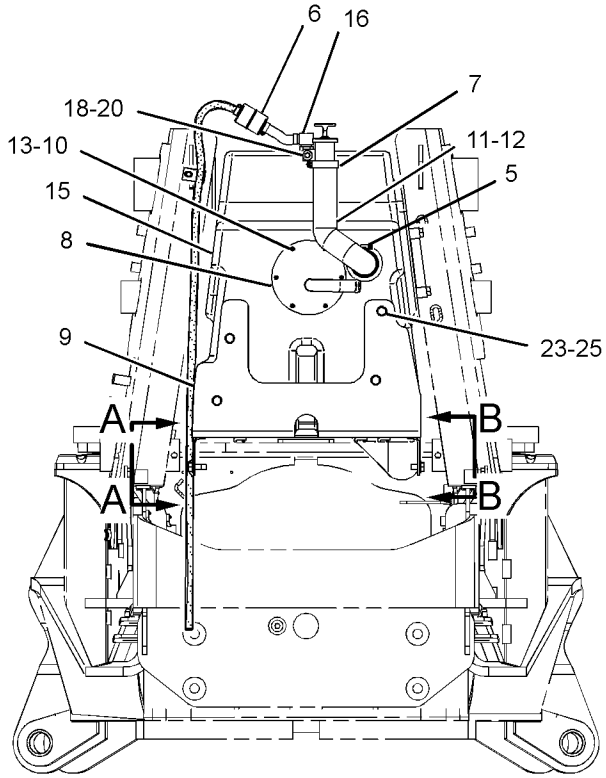

FRONT VIEW

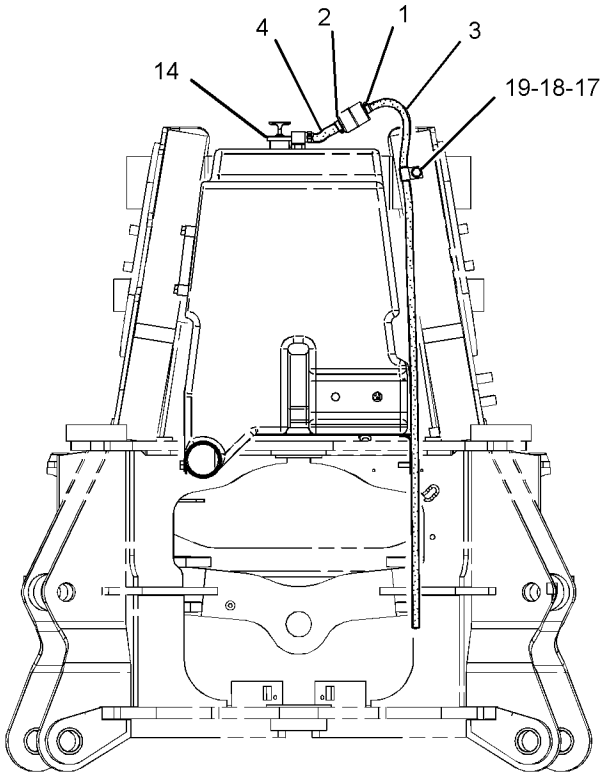

REAR VIEW

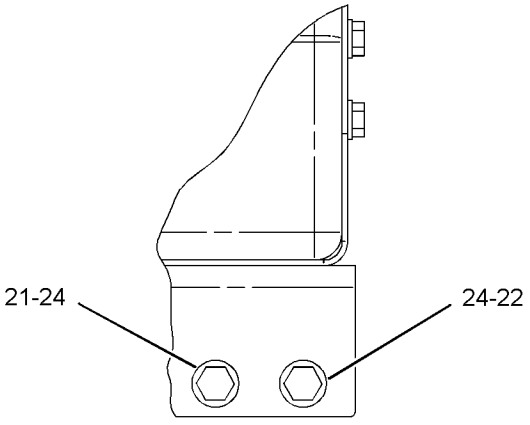

VIEW A-A

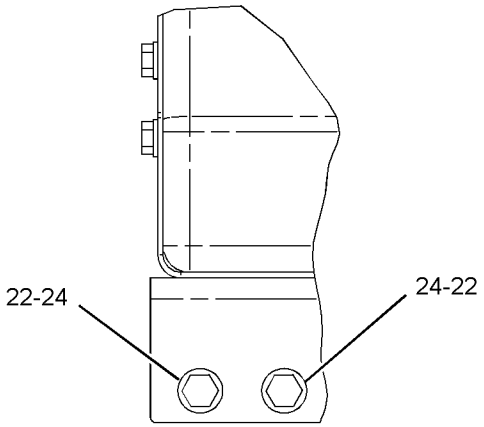

VIEW B-B

GRAPHIC #1 **<END>** g01183608

HYDRAULIC SYSTEM

267-2770 VALVE & LINES GP-PILOT (CHG -01 THRU -03)

S/N: HLS1-UP

PART OF 268-6455 HYDRAULIC AR

SMCS-5057, 5059 **i02363669**

NOTE	REF NO	GRAPHIC REF	PART NUMBER	QTY	PART NAME 1 2 3 4 5 6 (PRODUCT LEVEL)	SEE PAGE
	1	1	**4I-9521**	2	MARKER (RED, L1)	
	2	1	**4I-9522**	2	MARKER (YELLOW, L2)	
	3	1	**4I-9523**	2	MARKER (BLUE, L3)	
	4	1	**4I-9524**	2	MARKER (BROWN, L4)	
	5	1	**4I-9525**	2	MARKER (ORANGE, R1)	
	6	1	**4I-9526**	2	MARKER (WHITE, R2)	
	7	1	**4I-9527**	2	MARKER (GREEN, R3)	
	8	1	**4I-9528**	2	MARKER (PURPLE, R4)	
G	9	1	**160-2248**		SLEEVE-ABRASION (16-IN EACH)	
	10	1	**7K-1181**	6	STRAP-CABLE	
	11	1	*200-3947*	2	ADAPTER AS	
					(EACH INCLUDES)	
		1	**3J-1907**	1	SEAL-O-RING	
		1	**4J-5477**	1	SEAL-O-RING	
		1	**200-3946**	1	ADAPTER	
	12	1	**267-2758**	2	VALVE GP-PILOT	
	13	1	*268-1559*	4	ADAPTER AS	
					(EACH INCLUDES)	
		1	**3J-1907**	1	SEAL-O-RING	
		1	**4J-5477**	1	SEAL-O-RING	
		1	**209-0939**	1	ADAPTER	
	14	1	*148-8325*	10	CONNECTOR AS	
					(EACH INCLUDES)	
		1	**3J-1907**	1	SEAL-O-RING	
		1	**4J-5477**	1	SEAL-O-RING	
		1	**6V-8641**	1	CONNECTOR	
	15	1	**156-6175**	1	CLIP	
	16	1	**210-0074**	1	HOSE AS	
	17	1	**243-6523**	1	HOSE AS	
	18	1	**257-5605**	1	HOSE AS	
	19	1	**257-5606**	1	HOSE AS	
	20	1	**257-5607**	1	HOSE AS	
	21	1	**257-5608**	1	HOSE AS	
I	22	1	**268-0099**	1	HOSE AS	
	23	1	**268-0109**	1	HOSE AS	
	24	1	**9X-2038**	1	WASHER (7X19X2-MM THK)	
M	25	1	**9X-2043**	1	SCREW-TRUSS HEAD (M6X1X14-MM)	

G-ORDER BY THE INCH
I-REFER TO HYDRAULIC INFORMATION SYSTEM
M-METRIC PART

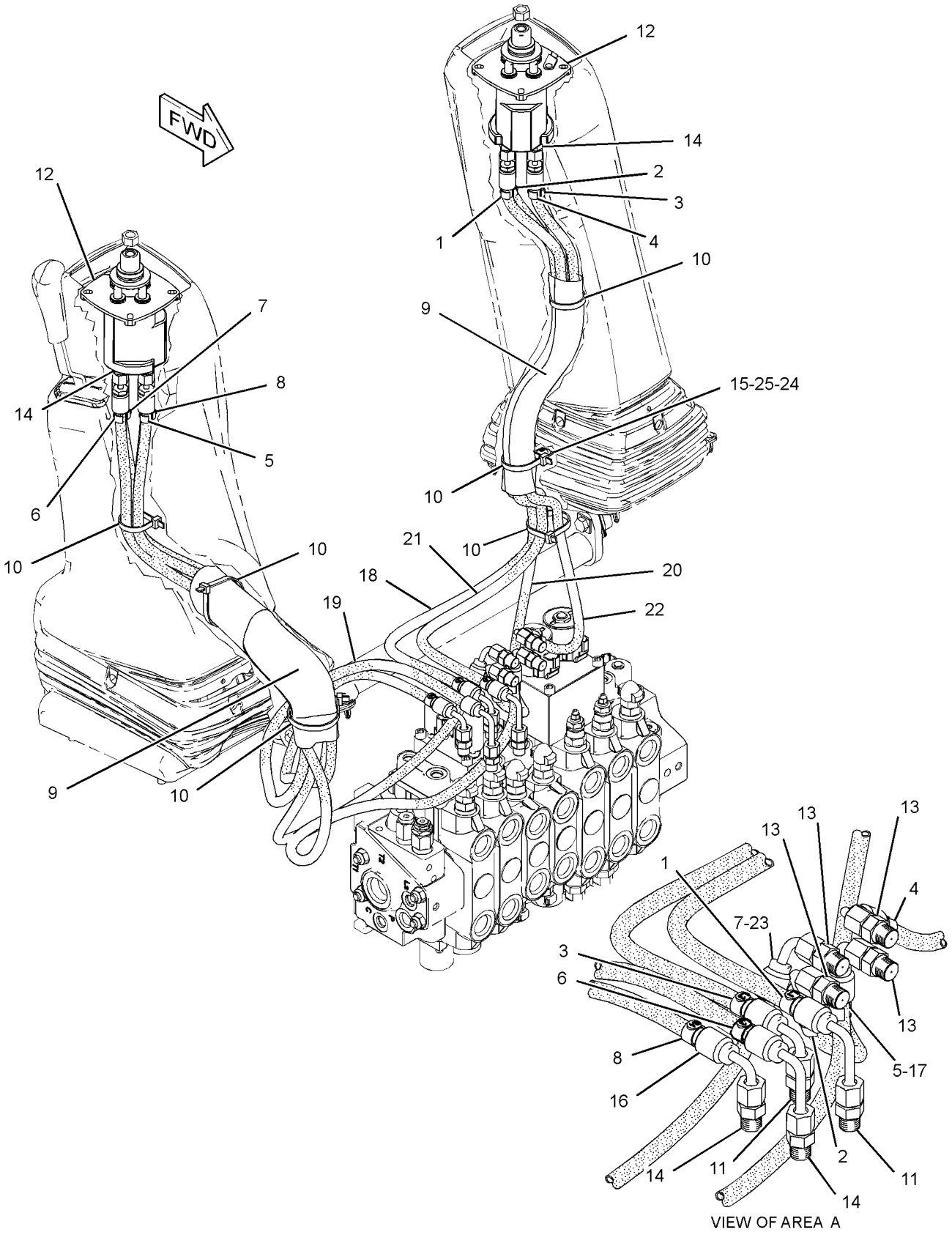

GRAPHIC #1 **<END>** g01230701

269-2144 VALVE AR-BANK 2 (CHG -00, -01)

S/N: HLS1-UP
AN ATTACHMENT

SMCS-5051 **i02447474**

NOTE	PART NUMBER	QTY	PART NAME 1 2 3 4 5 6 (PRODUCT LEVEL)	SEE PAGE
Y	*206-1645*	1	CONTROL GP-HYDRAULIC HAND	250
Y	*245-8769*	1	FASTENER GP-VALVE (BANK)	285
Y	**266-2552**	1	VALVE GP-BANK 2	366
	251-5625	1	FILM-INSTRUCTION (BUCKET CONTROL)	
			(ON RH CONSOLE IN AREA PROVIDED)	

Y-SEPARATE ILLUSTRATION

<END>

269-2145 VALVE AR-BANK 3 (CHG -00, -01)

S/N: HLS1-UP
AN ATTACHMENT

SMCS-5051 **i02447489**

NOTE	PART NUMBER	QTY	PART NAME 1 2 3 4 5 6 (PRODUCT LEVEL)	SEE PAGE
Y	*209-3364*	1	CONTROL GP-HYDRAULIC HAND	252
Y	*245-8769*	1	FASTENER GP-VALVE (BANK)	285
Y	*246-8478*	1	LINES GP-LOADER AUXILIARY	315
Y	**266-2553**	1	VALVE GP-BANK 3	367
	251-5626	1	FILM-INSTRUCTION	
			(ON RH CONSOLE IN AREA PROVIDED)	

Y-SEPARATE ILLUSTRATION

<END>

269-2146 VALVE AR-BANK 6 (CHG -00)

S/N: HLS1-UP
AN ATTACHMENT

SMCS-5051 **i02447159**

NOTE	PART NUMBER	QTY	PART NAME 1 2 3 4 5 6 (PRODUCT LEVEL)	SEE PAGE
Y	**271-3095**	1	CONTROL GP-JOYSTICK (RH)	255
Y	**271-3097**	1	CONTROL GP-JOYSTICK (LH)	257
Y	*222-5623*	1	LINES GP-STABILIZER	335
Y	*245-8765*	1	MOUNTING GP-BANK VALVE	350
Y	**266-2556**	1	VALVE GP-BANK 6	368
Y	*267-5635*	1	WIRING GP-CONTROL (JOYSTICK, LH)	118

Y-SEPARATE ILLUSTRATION

<END>

269-2147 VALVE AR-BANK 7 (CHG -00, -01)

S/N: HLS1-UP

AN ATTACHMENT

SMCS-5051 **i02447392**

NOTE	PART NUMBER	QTY	PART NAME 1 2 3 4 5 6 (PRODUCT LEVEL)	SEE PAGE
Y	**271-3096**	1	CONTROL GP-JOYSTICK (RH)	256
Y	**271-3097**	1	CONTROL GP-JOYSTICK (LH)	257
Y	*222-5622*	1	LINES GP-STABILIZER	333
Y	*245-8765*	1	MOUNTING GP-BANK VALVE	350
Y	**266-2557**	1	VALVE GP-BANK 7	369
	214-4706	1	SWITCH AS-ROCKER (AUXILIARY HYDRAULIC FLOW)	

Y-SEPARATE ILLUSTRATION

<END>

269-2148 VALVE AR-BANK 8 (CHG -00, -01)

S/N: HLS1-UP

AN ATTACHMENT

SMCS-5051 **i02447393**

NOTE	PART NUMBER	QTY	PART NAME 1 2 3 4 5 6 (PRODUCT LEVEL)	SEE PAGE
Y	**271-3096**	1	CONTROL GP-JOYSTICK (RH)	256
Y	**271-3099**	1	CONTROL GP-JOYSTICK (LH)	258
Y	*215-2445*	1	LINES GP-STABILIZER	331
Y	*245-8765*	1	MOUNTING GP-BANK VALVE	350
Y	**266-2558**	1	VALVE GP-BANK 8	370
Y	*267-5633*	1	WIRING GP-CONTROL (JOYSTICK, RH)	116
Y	*267-5634*	1	WIRING GP-CONTROL (JOYSTICK, LH)	117
	214-4706	1	SWITCH AS-ROCKER (AUXILIARY HYDRAULIC FLOW)	

Y-SEPARATE ILLUSTRATION

<END>

266-2552 VALVE GP-BANK 2 (CHG -01)

S/N: HLS1-UP
PART OF 269-2144 VALVE AR-BANK 2
AN ATTACHMENT

SMCS-5051 **i02447471**

NOTE	REF NO	GRAPHIC REF	PART NUMBER	QTY	PART NAME 1 2 3 4 5 6 (PRODUCT LEVEL)	SEE PAGE
Y	1	1	**269-1080**	1	MANIFOLD GP-CONTROL (INLET)	345
Y	2	1	**269-1091**	1	VALVE GP-CONTROL (LIFT)	383
Y	3	1	**269-1092**	1	VALVE GP-CONTROL (TILT)	384
	4	1	**269-1079**	1	COVER GP (OUTLET)	
		1	**3J-1907**	2	SEAL-O-RING	
		1	**9S-8004**	2	PLUG	
	5	1	**227-1202**	1	KIT-FASTENER	
					(INCLUDES LOCKNUTS & TIE RODS)	
	6	1	**4J-5309**	12	SEAL-O-RING	
	7	1	**6V-5326**	3	SEAL-O-RING	
	8	1	**6V-8978**	3	SEAL-O-RING	

Y-SEPARATE ILLUSTRATION

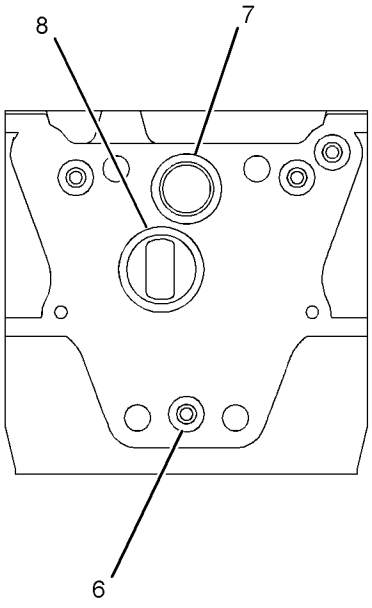

SECTION A-A

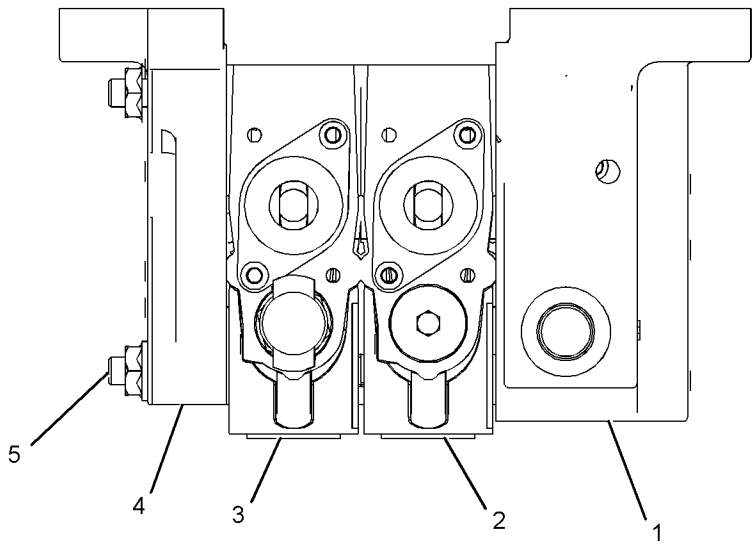

GRAPHIC #1 **<END>** g01231791

266-2553 VALVE GP-BANK 3 (CHG -01)

S/N: HLS1-UP

PART OF 269-2145 VALVE AR-BANK 3

AN ATTACHMENT

SMCS-5051 **i02447487**

NOTE	REF NO	GRAPHIC REF	PART NUMBER	QTY	PART NAME 1 2 3 4 5 6 (PRODUCT LEVEL)	SEE PAGE
Y	1	1	**269-1080**	1	MANIFOLD GP-CONTROL (INLET)	345
Y	2	1	**269-1091**	1	VALVE GP-CONTROL (LIFT)	383
Y	3	1	**269-1092**	1	VALVE GP-CONTROL (TILT)	384
Y	4	1	**269-1093**	1	VALVE GP-CONTROL (AUXILIARY)	385
	5	1	**269-1079**	1	COVER GP (OUTLET)	
		1	**3J-1907**	2	SEAL-O-RING	
		1	**9S-8004**	2	PLUG	
	6	1	**257-0453**	1	KIT-FASTENER	
					(INCLUDES LOCKNUTS & TIE RODS)	
	7	1	**4J-5309**	16	SEAL-O-RING	
	8	1	**6V-5326**	4	SEAL-O-RING	
	9	1	**6V-8978**	4	SEAL-O-RING	

Y-SEPARATE ILLUSTRATION

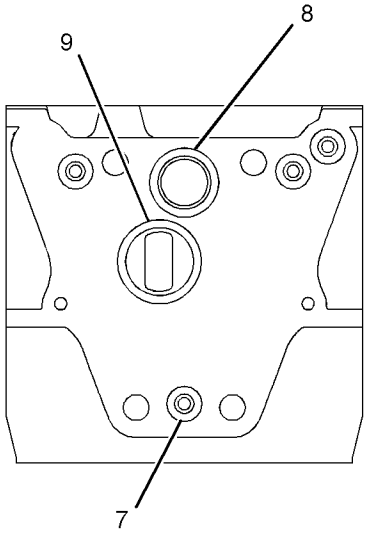

SECTION A-A

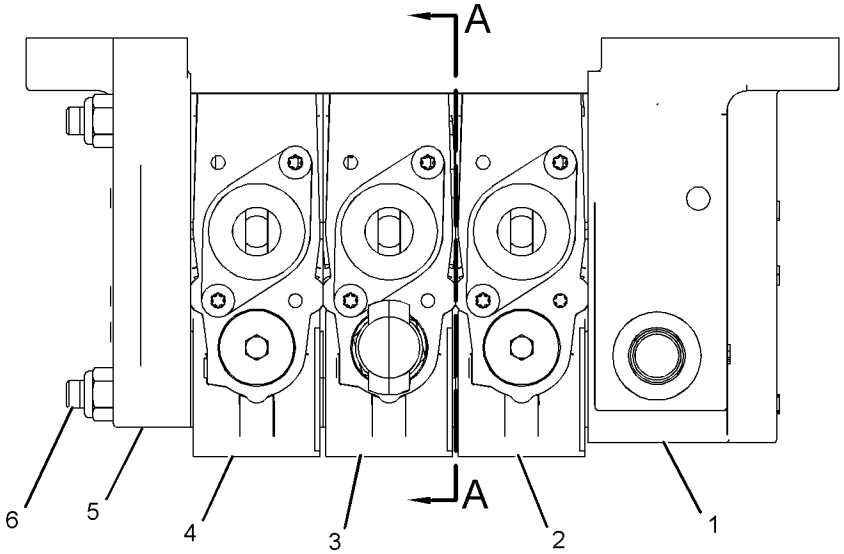

TOP VIEW

GRAPHIC #1 **<END>** g01231809

266-2556 VALVE GP-BANK 6 (CHG -01)

S/N: HLS1-UP
PART OF 269-2146 VALVE AR-BANK 6
AN ATTACHMENT

SMCS-5051 **i02447216**

NOTE	REF NO	GRAPHIC REF	PART NUMBER	QTY	PART NAME 1 2 3 4 5 6 (PRODUCT LEVEL)	SEE PAGE
Y	1	1	**269-1060**	1	MANIFOLD GP-CONTROL (INLET)	344
Y	2	1	**269-1061**	2	VALVE GP-CONTROL (STABILIZER)	372
Y	3	1	**269-1062**	1	VALVE GP-CONTROL (BOOM)	374
Y	4	1	**269-1063**	1	VALVE GP-CONTROL (STICK)	376
Y	5	1	**269-1064**	1	VALVE GP-CONTROL (SWING)	378
Y	6	1	**269-1065**	1	VALVE GP-CONTROL (BUCKET)	379
Y	7	1	**269-1059**	1	MANIFOLD GP-CONTROL (OUTLET)	342
	8	1	**257-0446**	1	KIT-FASTENER	
					(INCLUDES LOCKNUTS & TIE RODS)	
	9	1	**4J-5309**	28	SEAL-O-RING	
	10	1	**6V-5326**	7	SEAL-O-RING	
	11	1	**6V-8978**	7	SEAL-O-RING	
Y	12	1	**257-7724**	1	MANIFOLD GP-CONTROL & SOLENOID (BOOM, STICK, PATTERN SWITCH)	347

Y-SEPARATE ILLUSTRATION

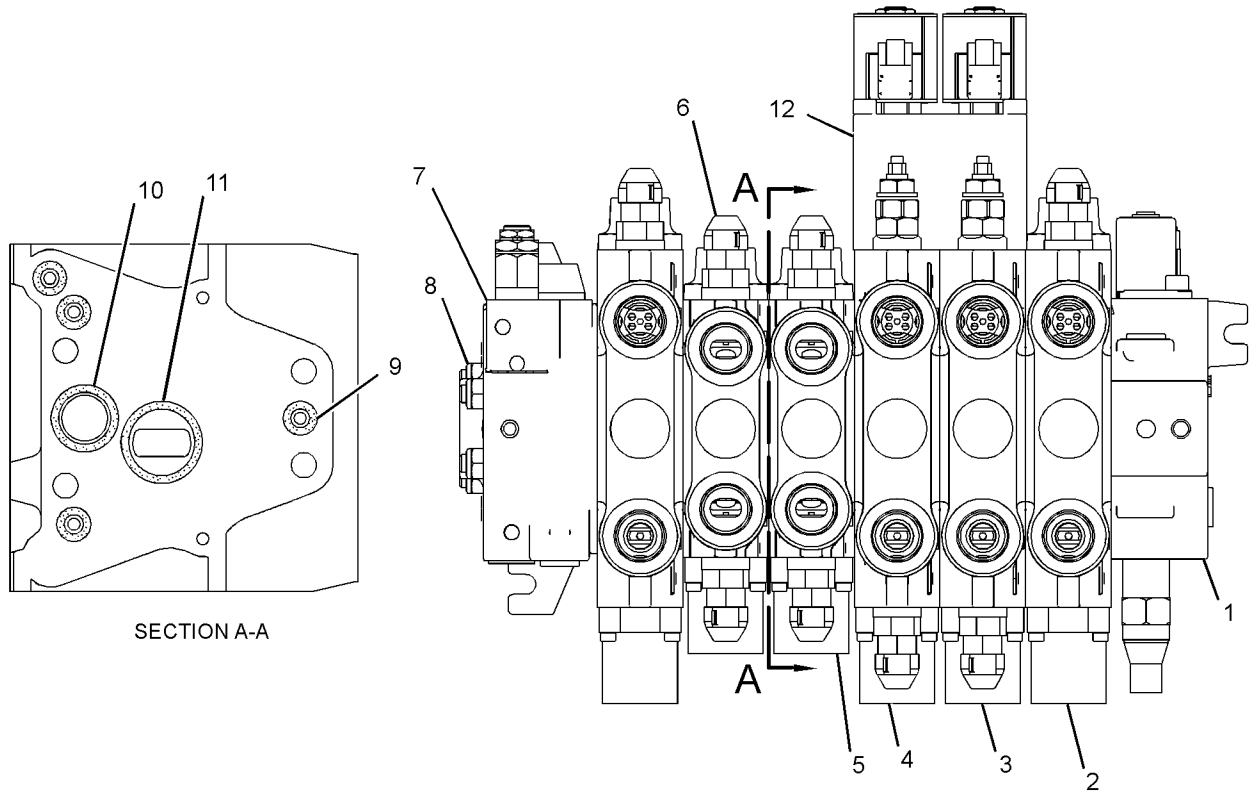

GRAPHIC #1 **<END>** g01231845

266-2557 VALVE GP-BANK 7 (CHG -01)

S/N: HLS1-UP

PART OF 269-2147 VALVE AR-BANK 7

AN ATTACHMENT

SMCS-5051 **i02447365**

NOTE	REF NO	GRAPHIC REF	PART NUMBER	QTY	PART NAME 1 2 3 4 5 6 (PRODUCT LEVEL)	SEE PAGE
Y	1	1	**269-1060**	1	MANIFOLD GP-CONTROL (INLET)	344
Y	2	1	**269-1061**	2	VALVE GP-CONTROL (STABILIZER)	372
Y	3	1	**269-1062**	1	VALVE GP-CONTROL (BOOM)	374
Y	4	1	**269-1063**	1	VALVE GP-CONTROL (STICK)	376
Y	5	1	**269-1064**	1	VALVE GP-CONTROL (SWING)	378
Y	6	1	**269-1065**	1	VALVE GP-CONTROL (BUCKET)	379
Y	7	1	**269-1066**	1	VALVE GP-CONTROL (EXTENDABLE STICK)	380
Y	8	1	**269-1059**	1	MANIFOLD GP-CONTROL (OUTLET)	342
	9	1	**257-0447**	1	KIT-FASTENER	
					(INCLUDES LOCKNUTS & TIE RODS)	
	10	1	**4J-5309**	32	SEAL-O-RING	
	11	1	**6V-5326**	8	SEAL-O-RING	
	12	1	**6V-8978**	8	SEAL-O-RING	
Y	13	1	**257-7724**	1	MANIFOLD GP-CONTROL & SOLENOID (BOOM, STICK, PATTERN SWITCH)	347

Y-SEPARATE ILLUSTRATION

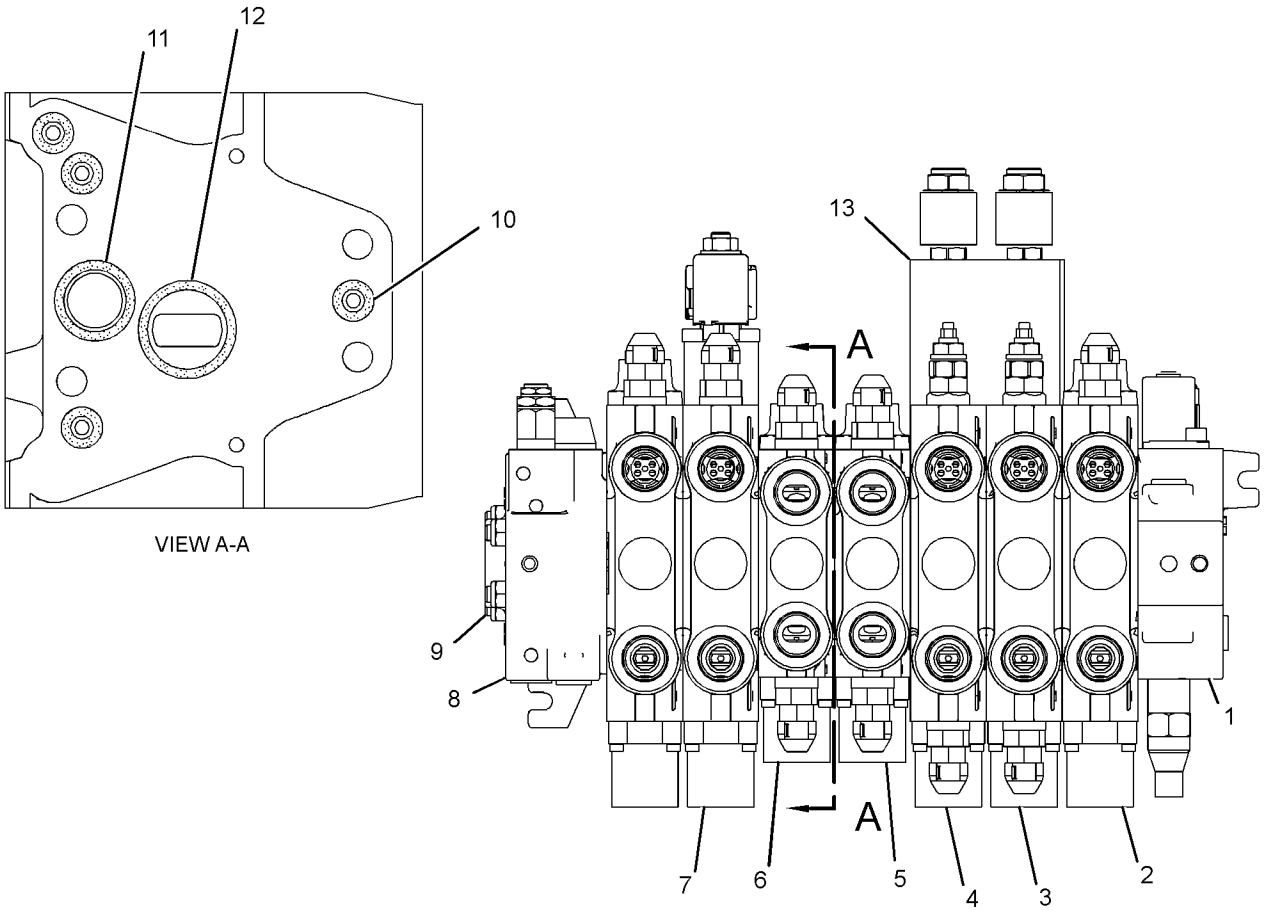

GRAPHIC #1 **<END>** g01233924

266-2558 VALVE GP-BANK 8 (CHG -01)

S/N: HLS1-UP
PART OF 269-2148 VALVE AR-BANK 8
AN ATTACHMENT

SMCS-5051 **i02447419**

NOTE	REF NO	GRAPHIC REF	PART NUMBER	QTY	PART NAME 1 2 3 4 5 6 (PRODUCT LEVEL)	SEE PAGE
Y	1	1	**269-1060**	1	MANIFOLD GP-CONTROL (INLET)	344
Y	2	1	**269-1061**	2	VALVE GP-CONTROL (STABILIZER)	372
Y	3	1	**269-1062**	1	VALVE GP-CONTROL (BOOM)	374
Y	4	1	**269-1063**	1	VALVE GP-CONTROL (STICK)	376
Y	5	1	**269-1064**	1	VALVE GP-CONTROL (SWING)	378
Y	6	1	**269-1065**	1	VALVE GP-CONTROL (BUCKET)	379
Y	7	1	**269-1066**	1	VALVE GP-CONTROL (EXTENDABLE STICK)	380
Y	8	1	**269-1067**	1	VALVE GP-CONTROL (AUXILIARY)	382
Y	9	1	**269-1059**	1	MANIFOLD GP-CONTROL (OUTLET)	342
	10	1	**257-0448**	1	KIT-FASTENER	
					(INCLUDES LOCKNUTS & TIE RODS)	
	11	1	**4J-5309**	36	SEAL-O-RING	
	12	1	**6V-5326**	9	SEAL-O-RING	
	13	1	**6V-8978**	9	SEAL-O-RING	
Y	14	1	**257-7724**	1	MANIFOLD GP-CONTROL & SOLENOID (BOOM, STICK, PATTERN SWITCH)	347

Y-SEPARATE ILLUSTRATION

266-2558 VALVE GP-BANK 8 *(contd.)* **i02447419**

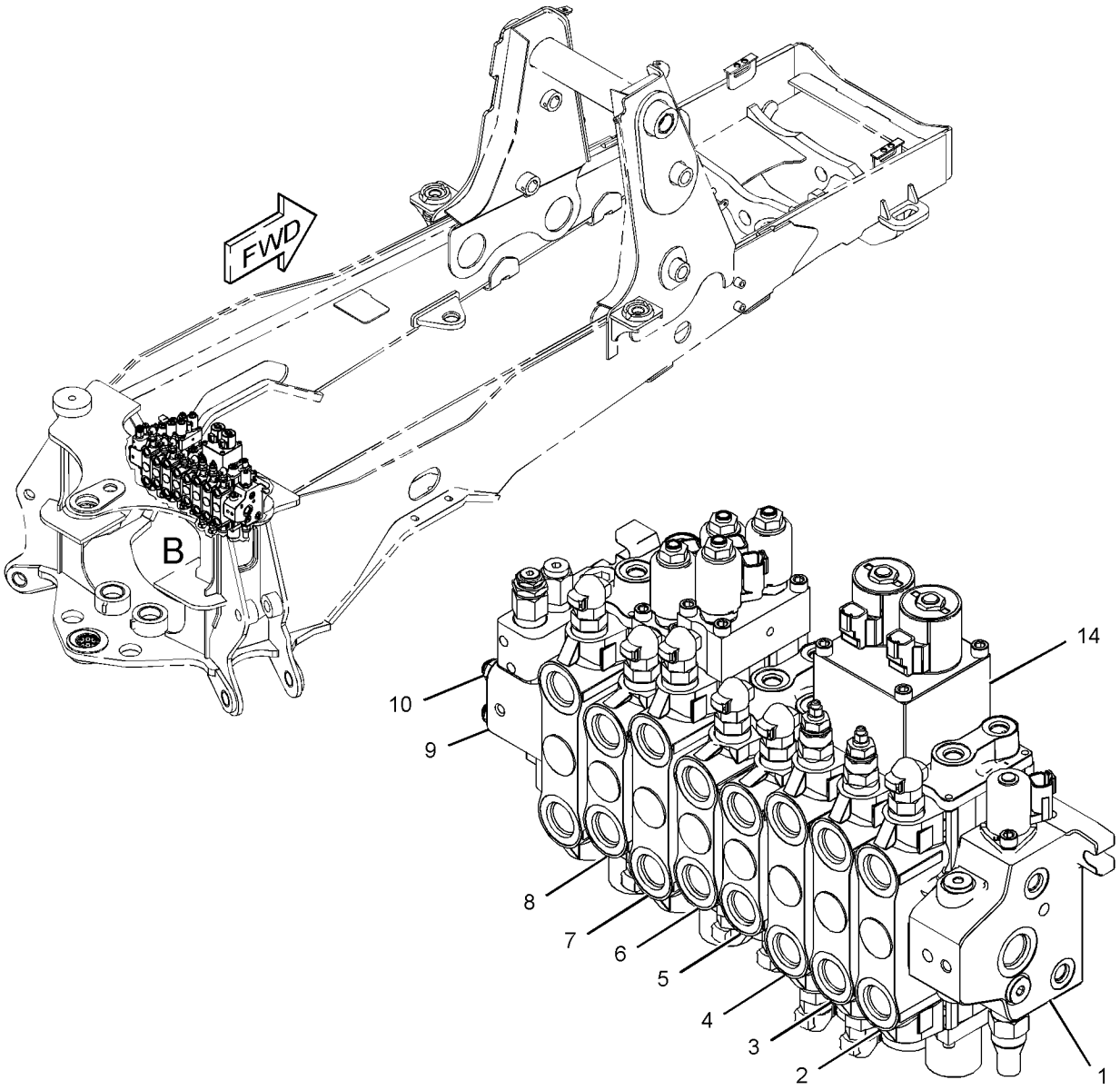

VIEW OF AREA B

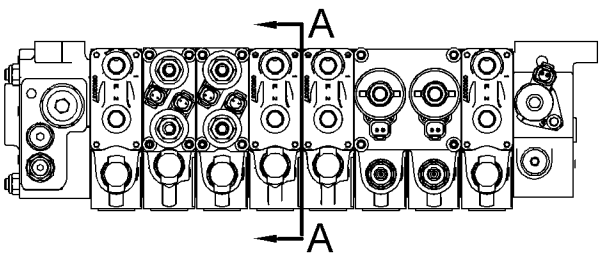

TOP VIEW

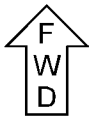

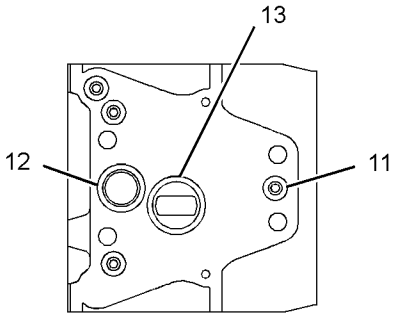

VIEW A-A

GRAPHIC #1 **<END>** g01234007

269-1061 VALVE GP-CONTROL–STABILIZER (CHG -00)

S/N: HLS1-UP

PART OF 266-2556 VALVE GP-BANK 6, 266-2557 VALVE GP-BANK 7, 266-2558 VALVE GP-BANK 8

AN ATTACHMENT

SMCS-5051 **i02447297**

NOTE	REF NO	GRAPHIC REF	PART NUMBER	QTY	PART NAME 1 2 3 4 5 6 (PRODUCT LEVEL)	SEE PAGE
	1	1	**257-7734**	1	KIT-COVER	
					(INCLUDES BOLTS, SEAL, COVER, PLUG, SPRING & RETAINERS)	
	2	1	**227-1191**	1	PLUG AS	
		1	**8J-2413**	1	SEAL-O-RING	
		1	**095-1751**	1	SEAL-O-RING	
		1	**169-1616**	1	RING-BACKUP	
	3	1	**257-0476**	1	VALVE GP-RELIEF	
		1	**8J-2413**	1	SEAL-O-RING	
		1	**095-1751**	1	SEAL-O-RING	
		1	**169-1616**	1	RING-BACKUP	
	4	1	**257-7730**	2	KIT-POPPET	
					(EACH INCLUDES POPPET AS & RODS)	
	5	1	**257-7729**	2	PLUG GP-CONTROL VALVE	
					(EACH INCLUDES)	
		1	**122-9250**	1	SEAL-O-RING	
	6	1	**257-7731**	1	MANIFOLD GP-HYDRAULIC	
		1	**5D-6543**	1	SEAL-O-RING	
		1	**5F-9144**	3	SEAL-O-RING	
M		1	**8C-8580**	4	BOLT-SOCKET HEAD (M5X0.8X16-MM)	
	7	1	**257-0468**	1	CAP	

M-METRIC PART

269-1061 VALVE GP-CONTROL *(contd.)* **i02447297**

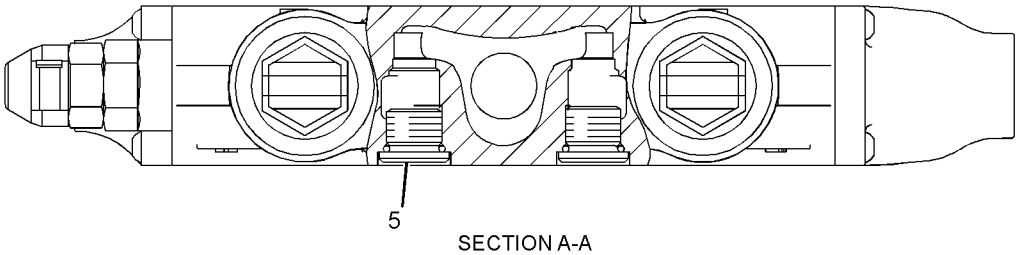

SECTION A-A

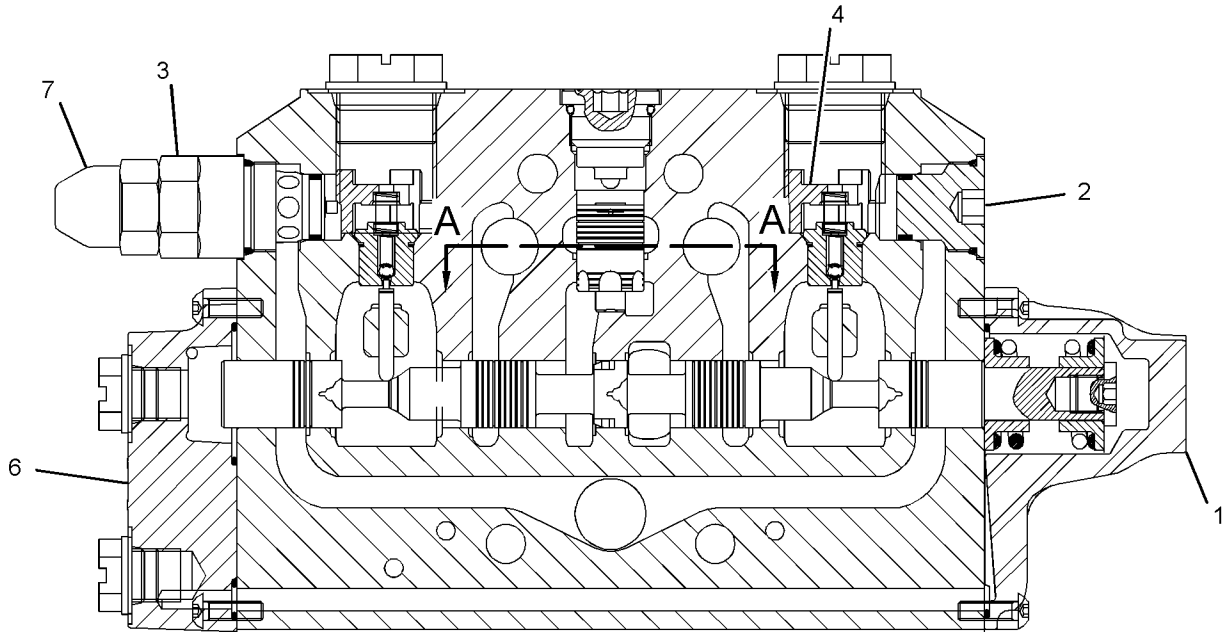

GRAPHIC #1 **<END>** g01225677

269-1062 VALVE GP-CONTROL–BOOM (CHG -00)

S/N: HLS1-UP

PART OF 266-2556 VALVE GP-BANK 6, 266-2557 VALVE GP-BANK 7, 266-2558 VALVE GP-BANK 8

AN ATTACHMENT

SMCS-5051 **i02447298**

NOTE	REF NO	GRAPHIC REF	PART NUMBER	QTY	PART NAME 1 2 3 4 5 6 (PRODUCT LEVEL)	SEE PAGE
	1	1	**257-7734**	1	KIT-COVER	
					(INCLUDES BOLTS, SEAL, COVER, PLUG, SPRING & RETAINERS)	
	2	1	**266-2585**	1	VALVE GP-RELIEF	
		1	**8J-2413**	1	SEAL-O-RING	
		1	**095-1751**	1	SEAL-O-RING	
		1	**169-1616**	1	RING-BACKUP	
	3	1	**257-7730**	1	KIT-POPPET	
					(INCLUDES POPPET AS & RODS)	
	4	1	**269-1105**	1	VALVE GP-RELIEF	
		1	**8J-2413**	1	SEAL-O-RING	
		1	**095-1751**	1	SEAL-O-RING	
		1	**169-1616**	1	RING-BACKUP	
	5	1	**257-7733**	1	VALVE GP-CHECK	
		1	**122-9250**	1	SEAL-O-RING	
	6	1	**257-7729**	1	PLUG GP-CONTROL VALVE	
		1	**122-9250**	1	SEAL-O-RING	
	7	1	**257-7731**	1	MANIFOLD GP-HYDRAULIC	
		1	**5D-6543**	1	SEAL-O-RING	
		1	**5F-9144**	3	SEAL-O-RING	
M		1	**8C-8580**	4	BOLT-SOCKET HEAD (M5X0.8X16-MM)	
	8	1	**257-0468**	1	CAP	
	9	1	**257-0466**	1	CAP	

M-METRIC PART

269-1062 VALVE GP-CONTROL *(contd.)* **i02447298**

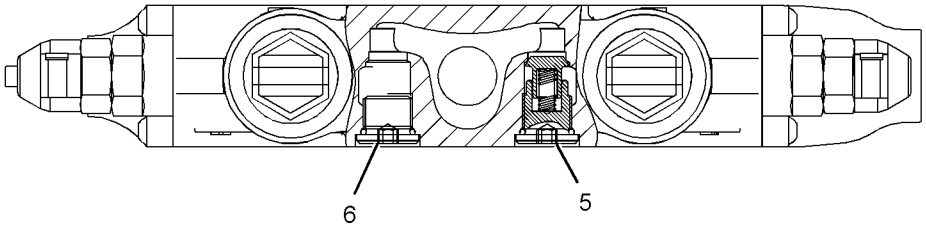

SECTION A-A

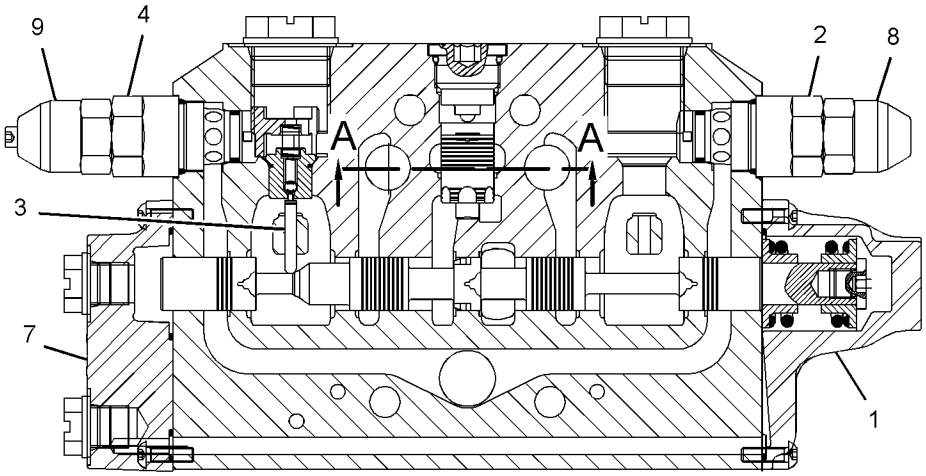

GRAPHIC #1 **<END>** g01232081

269-1063 VALVE GP-CONTROL–STICK (CHG -00)

S/N: HLS1-UP

PART OF 266-2556 VALVE GP-BANK 6, 266-2557 VALVE GP-BANK 7, 266-2558 VALVE GP-BANK 8

AN ATTACHMENT

SMCS-5051 **i02447299**

NOTE	REF NO	GRAPHIC REF	PART NUMBER	QTY	PART NAME 1 2 3 4 5 6 (PRODUCT LEVEL)	SEE PAGE
	1	1	**257-7734**	1	KIT-COVER	
					(INCLUDES BOLTS, SEAL, COVER, PLUG, SPRING & RETAINERS)	
	2	1	**266-3590**	1	VALVE GP-RELIEF	
		1	**8J-2413**	1	SEAL-O-RING	
		1	**095-1751**	1	SEAL-O-RING	
		1	**169-1616**	1	RING-BACKUP	
	3	1	**257-7730**	1	KIT-POPPET	
					(INCLUDES POPPET AS & RODS)	
	4	1	**269-1104**	1	VALVE GP-RELIEF	
		1	**8J-2413**	1	SEAL-O-RING	
		1	**095-1751**	1	SEAL-O-RING	
		1	**169-1616**	1	RING-BACKUP	
	5	1	**257-7733**	1	VALVE GP-CHECK	
		1	**122-9250**	1	SEAL-O-RING	
	6	1	**257-7729**	1	PLUG GP-CONTROL VALVE	
		1	**122-9250**	1	SEAL-O-RING	
	7	1	**257-7731**	1	MANIFOLD GP-HYDRAULIC	
		1	**5D-6543**	1	SEAL-O-RING	
		1	**5F-9144**	3	SEAL-O-RING	
M		1	**8C-8580**	4	BOLT-SOCKET HEAD (M5X0.8X16-MM)	
	8	1	**257-0468**	1	CAP	
	9	1	**257-0466**	1	CAP	

M-METRIC PART

269-1063 VALVE GP-CONTROL *(contd.)* **i02447299**

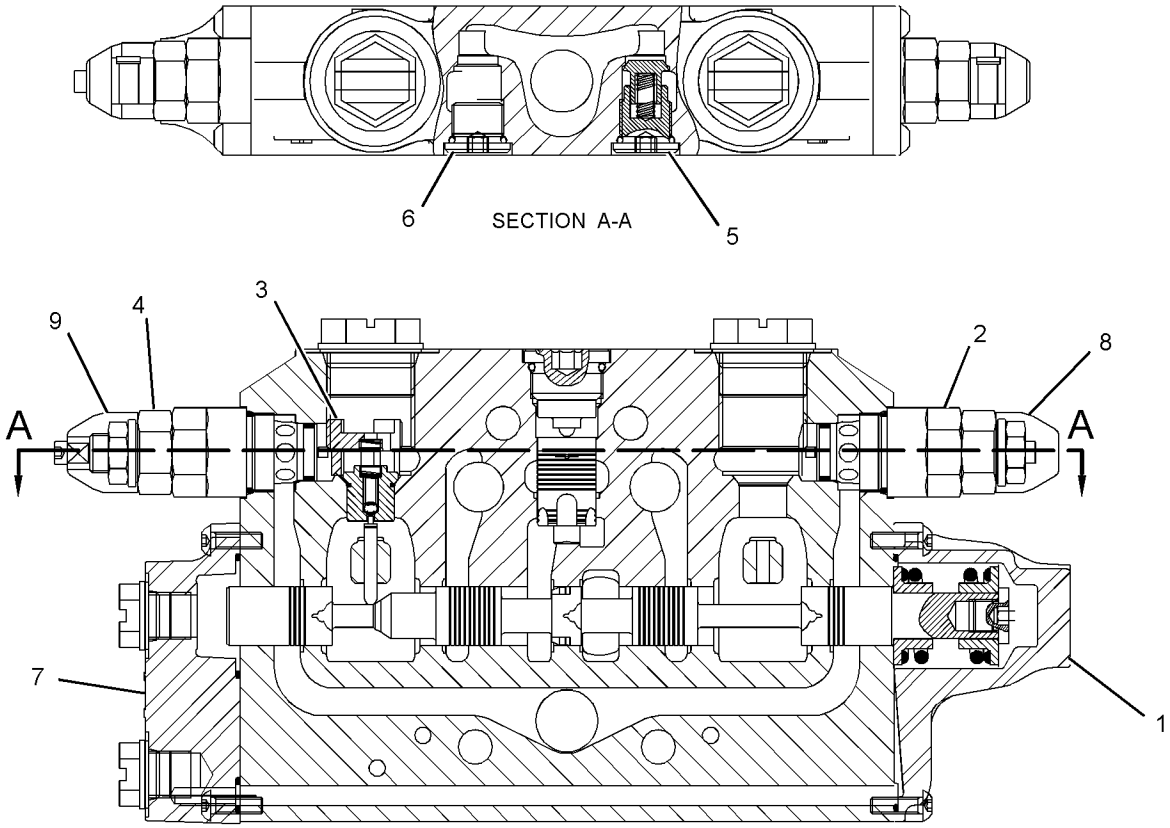

GRAPHIC #1 **<END>** g01231910

269-1064 VALVE GP-CONTROL–SWING (CHG -00)

S/N: HLS1-UP

PART OF 266-2556 VALVE GP-BANK 6, 266-2557 VALVE GP-BANK 7, 266-2558 VALVE GP-BANK 8

AN ATTACHMENT

SMCS-5051 **i02447301**

NOTE	REF NO	GRAPHIC REF	PART NUMBER	QTY	PART NAME 1 2 3 4 5 6 (PRODUCT LEVEL)	SEE PAGE
	1	1	**257-5571**	1	KIT-COVER	
					(INCLUDES BOLTS, SEALS, COVER, PLUG, SPRING & RETAINERS)	
	2	1	**266-2588**	2	VALVE GP-RELIEF	
					(EACH INCLUDES)	
		1	**8J-2413**	1	SEAL-O-RING	
		1	**095-1751**	1	SEAL-O-RING	
		1	**169-1616**	1	RING-BACKUP	
	3	1	**227-1186**	2	VALVE AS-CHECK	
	4	1	**257-7731**	1	MANIFOLD GP-HYDRAULIC	
		1	**5D-6543**	1	SEAL-O-RING	
		1	**5F-9144**	3	SEAL-O-RING	
M		1	**8C-8580**	4	BOLT-SOCKET HEAD (M5X0.8X16-MM)	
	5	1	**257-0468**	2	CAP	

M-METRIC PART

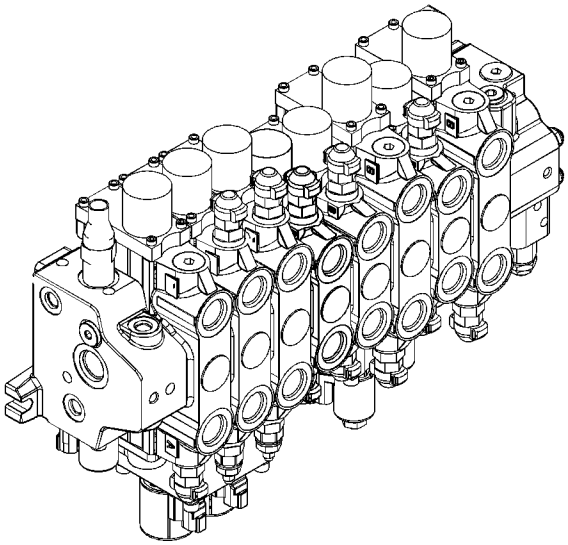

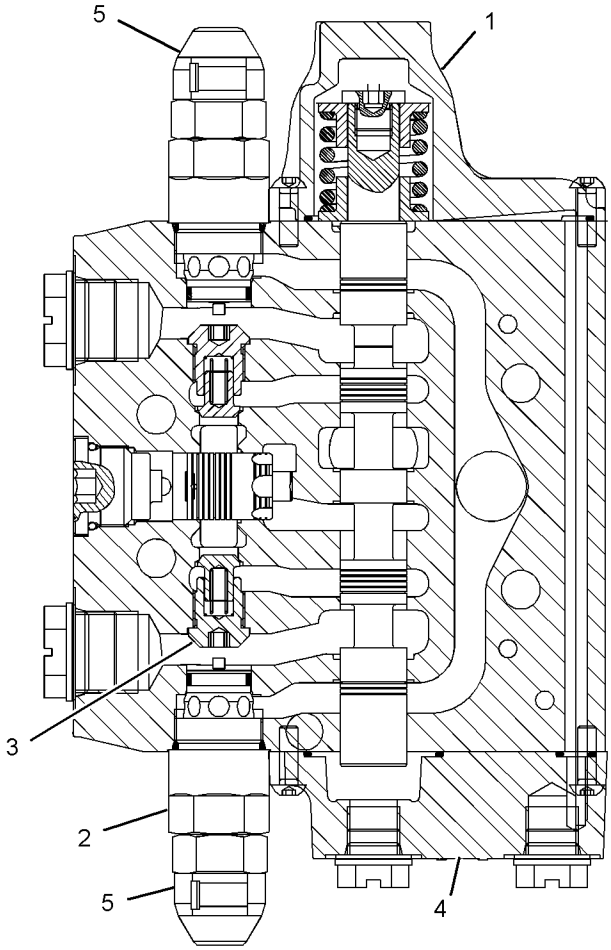

GRAPHIC #1 **<END>** g01225654

269-1065 VALVE GP-CONTROL–BUCKET (CHG -00)

S/N: HLS1-UP

PART OF 266-2556 VALVE GP-BANK 6, 266-2557 VALVE GP-BANK 7, 266-2558 VALVE GP-BANK 8

AN ATTACHMENT

SMCS-5051 **i02447303**

NOTE	REF NO	GRAPHIC REF	PART NUMBER	QTY	PART NAME 1 2 3 4 5 6 (PRODUCT LEVEL)	SEE PAGE
	1	1	**257-7734**	1	KIT-COVER	
					(INCLUDES BOLT, SEAL, COVER, PLUG, SPRING & RETAINERS)	
	2	1	**266-3591**	2	VALVE GP-RELIEF	
					(EACH INCLUDES)	
		1	**8J-2413**	1	SEAL-O-RING	
		1	**095-1751**	1	SEAL-O-RING	
		1	**169-1616**	1	RING-BACKUP	
	3	1	**227-1186**	2	VALVE AS-CHECK	
	4	1	**257-7731**	1	MANIFOLD GP-HYDRAULIC	
		1	**5D-6543**	1	SEAL-O-RING	
		1	**5F-9144**	3	SEAL-O-RING	
M		1	**8C-8580**	4	BOLT-SOCKET HEAD (M5X0.8X16-MM)	
	5	1	**257-0468**	2	CAP	

M-METRIC PART

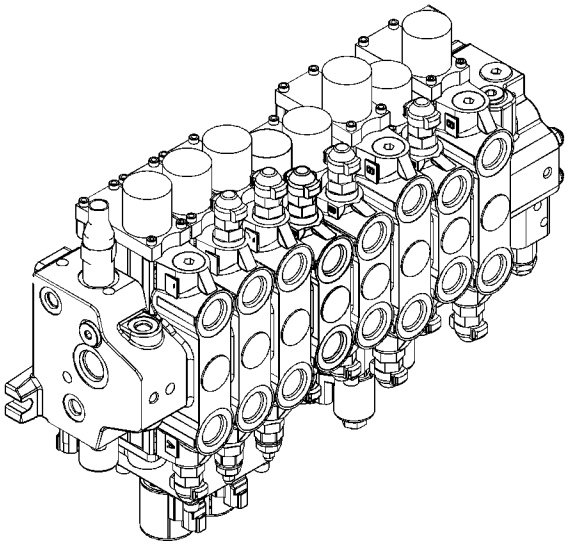

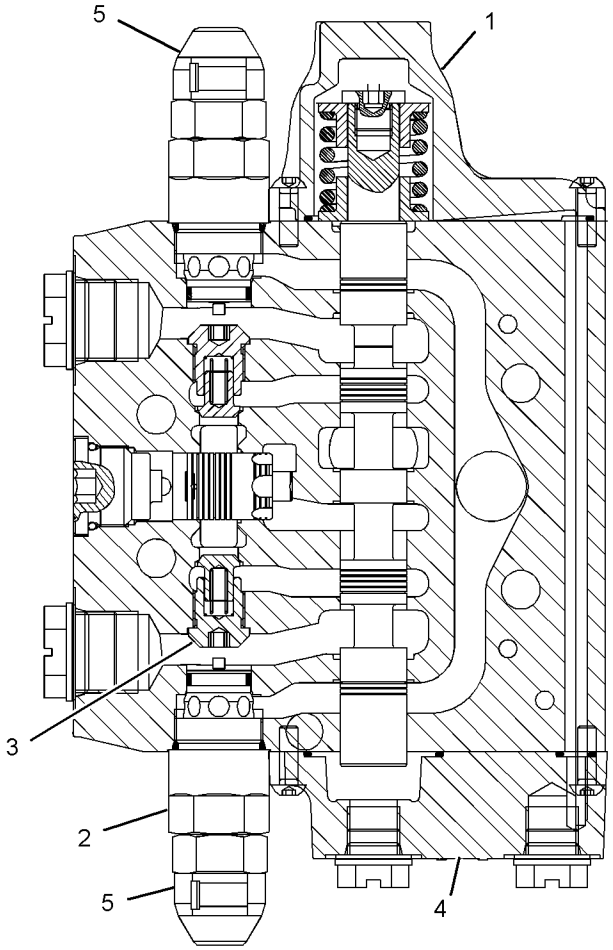

GRAPHIC #1 **<END>** g01225654

269-1066 VALVE GP-CONTROL–EXTENDABLE STICK (CHG -00)

S/N: HLS1-UP

PART OF 266-2557 VALVE GP-BANK 7, 266-2558 VALVE GP-BANK 8

AN ATTACHMENT

SMCS-5051 **i02447366**

NOTE	REF NO	GRAPHIC REF	PART NUMBER	QTY	PART NAME 1 2 3 4 5 6 (PRODUCT LEVEL)	SEE PAGE
	1	1	**257-7734**	1	KIT-COVER	
					(INCLUDES BOLTS, SEAL, COVER, PLUG, SPRING & RETAINERS)	
	2	1	**227-1191**	1	PLUG AS	
		1	**8J-2413**	1	SEAL-O-RING	
		1	**095-1751**	1	SEAL-O-RING	
		1	**169-1616**	1	RING-BACKUP	
	3	1	**257-7730**	1	KIT-POPPET	
					(INCLUDES POPPET AS & RODS)	
	4	1	**257-0475**	1	VALVE GP-RELIEF	
		1	**8J-2413**	1	SEAL-O-RING	
		1	**095-1751**	1	SEAL-O-RING	
		1	**169-1616**	1	RING-BACKUP	
	5	1	**257-7733**	1	VALVE GP-CHECK	
		1	**122-9250**	1	SEAL-O-RING	
	6	1	**257-7729**	1	PLUG GP-CONTROL VALVE	
		1	**122-9250**	1	SEAL-O-RING	
Y	7	1	*179-3543*	1	MANIFOLD GP-CONTROL & SOLENOID	346
	8	1	**5F-9144**	3	SEAL-O-RING	
	9	1	**5D-6543**	1	SEAL-O-RING	
M	10	1	**095-0642**	4	BOLT-SOCKET HEAD (M5X0.8-THDX50-MM)	
	11	1	**257-0468**	1	CAP	

M-METRIC PART
Y-SEPARATE ILLUSTRATION

269-1066 VALVE GP-CONTROL *(contd.)* **i02447366**

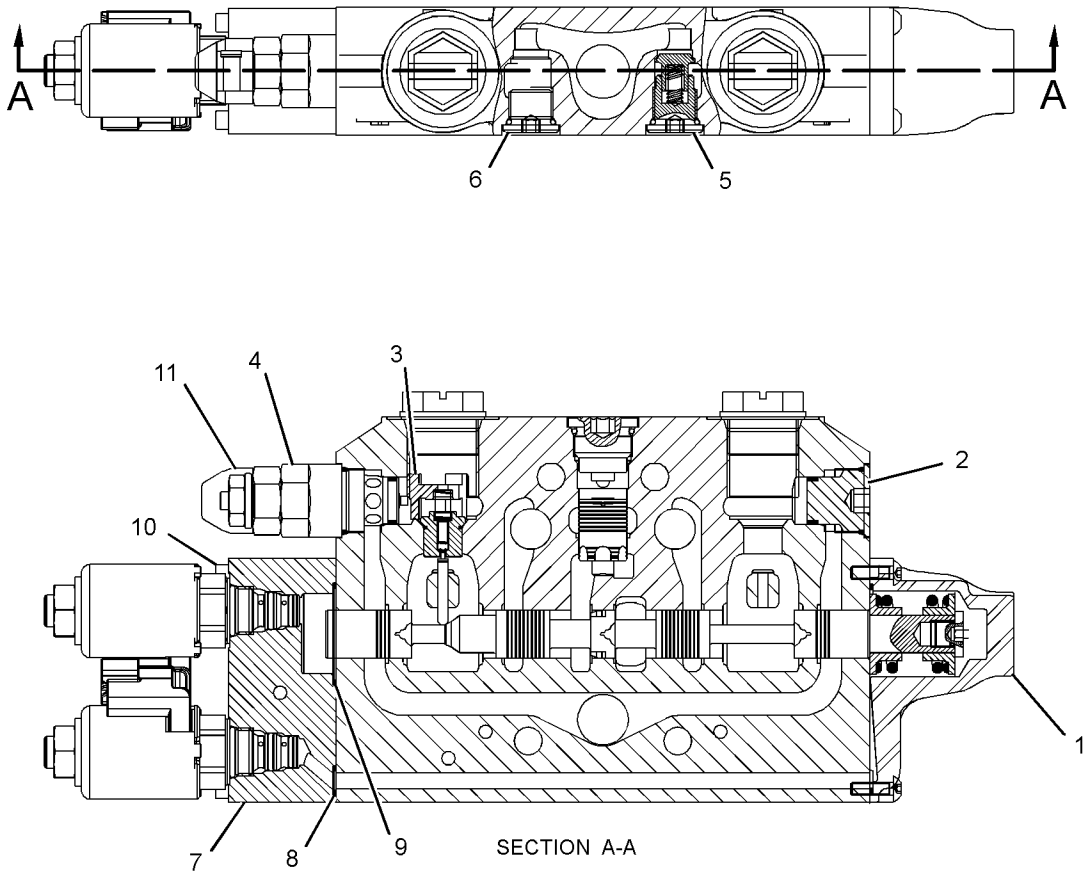

GRAPHIC #1 **<END>** g01234092

269-1067 VALVE GP-CONTROL–AUXILIARY (CHG -00)

S/N: HLS1-UP
PART OF 266-2558 VALVE GP-BANK 8
AN ATTACHMENT

SMCS-5051 **i02447424**

NOTE	REF NO	GRAPHIC REF	PART NUMBER	QTY	PART NAME 1 2 3 4 5 6 (PRODUCT LEVEL)	SEE PAGE
	1	1	**257-7734**	1	KIT-COVER	
					(INCLUDES BOLTS, SEAL, COVER, PLUG, SPRING & RETAINERS)	
	2	1	**257-0475**	2	VALVE GP-RELIEF	
					(EACH INCLUDES)	
		1	**8J-2413**	1	SEAL-O-RING	
		1	**095-1751**	1	SEAL-O-RING	
		1	**169-1616**	1	RING-BACKUP	
	3	1	**227-1186**	2	VALVE AS-CHECK	
Y	4	1	*179-3543*	1	MANIFOLD GP-CONTROL & SOLENOID	346
	5	1	**5F-9144**	3	SEAL-O-RING	
	6	1	**5D-6543**	1	SEAL-O-RING	
M	7	1	**095-0642**	4	BOLT-SOCKET HEAD (M5X0.8-THDX50-MM)	
	8	1	**257-0468**	2	CAP	

M-METRIC PART
Y-SEPARATE ILLUSTRATION

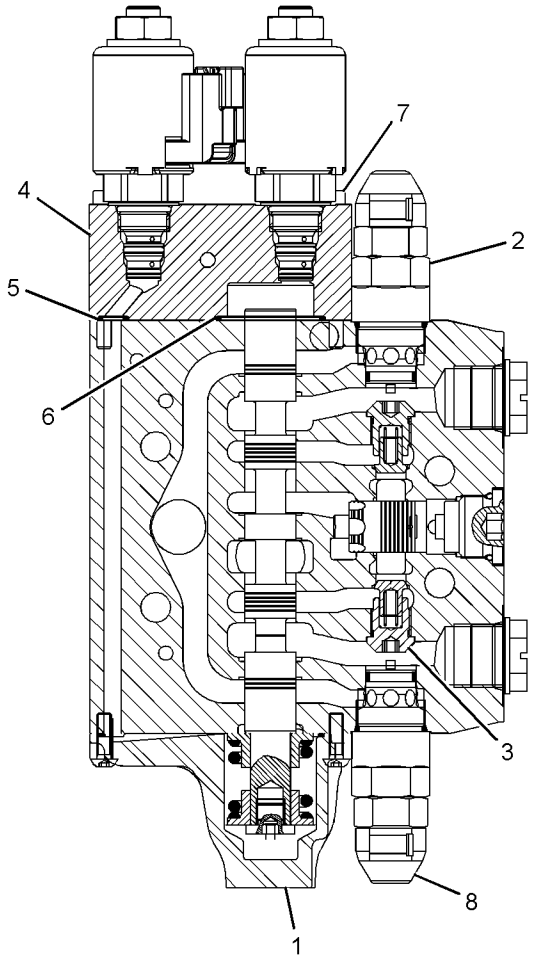

GRAPHIC #1 **<END>** g01225750

269-1091 VALVE GP-CONTROL–LIFT (CHG -00)

S/N: HLS1-UP

PART OF 266-2552 VALVE GP-BANK 2, 266-2553 VALVE GP-BANK 3

AN ATTACHMENT

SMCS-5051 **i02447472**

NOTE	REF NO	GRAPHIC REF	PART NUMBER	QTY	PART NAME 1 2 3 4 5 6 (PRODUCT LEVEL)	SEE PAGE
	1	1	**252-5068**	1	KIT-COVER	
					(INCLUDES SEALS, SPACERS, RETAINER SPRING, HOUSING, SPRING CENTERING, HOUSING BALL, BALL DETENT, SPRING DETENT, BALL,	
					RING DETENT, COVER, BOLT)	
	2	1	**252-5069**	1	KIT-ACTUATOR	
					(INCLUDES KIT-BOOT)	
	3	1	**227-1191**	2	PLUG AS	
					(EACH INCLUDES)	
		1	**8J-2413**	1	SEAL-O-RING	
		1	**095-1751**	1	SEAL-O-RING	
		1	**169-1616**	1	RING-BACKUP	
	4	1	**227-1186**	2	VALVE AS-CHECK	

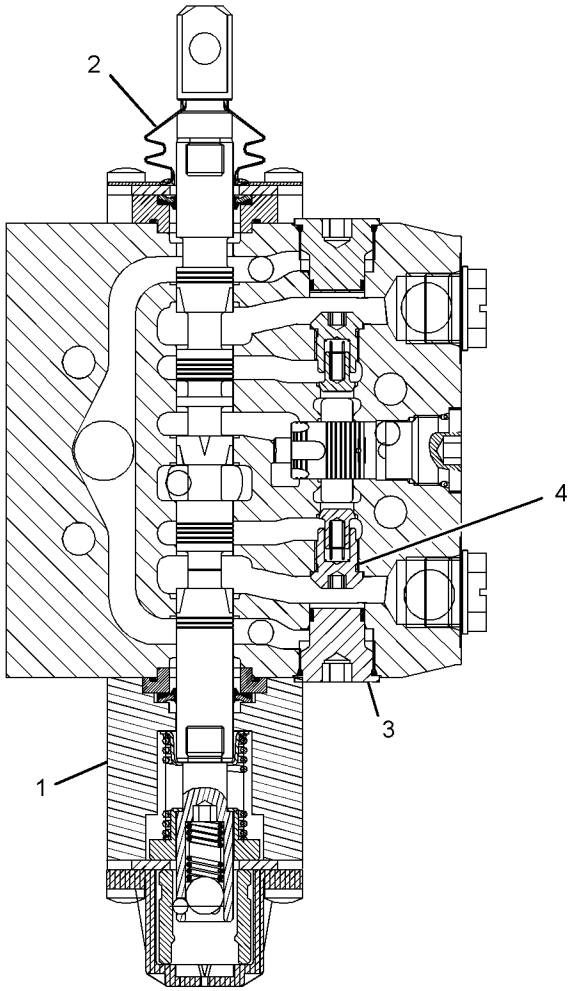

GRAPHIC #1 **<END>** g01232094

269-1092 VALVE GP-CONTROL–TILT (CHG -00)

S/N: HLS1-UP

PART OF 266-2552 VALVE GP-BANK 2, 266-2553 VALVE GP-BANK 3 AN ATTACHMENT

SMCS-5051 **i02447473**

NOTE	REF NO	GRAPHIC REF	PART NUMBER	QTY	PART NAME 1 2 3 4 5 6 (PRODUCT LEVEL)	SEE PAGE
	1	1	**257-7737**	1	KIT-COVER	
	2	1	**257-7741**	1	KIT-ACTUATOR	
					(INCLUDES KIT-BOOT, SPACER, SEAL, BOLTS & TANG)	
	3	1	**266-2586**	1	VALVE GP-RELIEF	
		1	**8J-2413**	1	SEAL-O-RING	
		1	**095-1751**	1	SEAL-O-RING	
		1	**169-1616**	1	RING-BACKUP	
	4	1	**266-3590**	1	VALVE GP-RELIEF	
		1	**8J-2413**	1	SEAL-O-RING	
		1	**095-1751**	1	SEAL-O-RING	
		1	**169-1616**	1	RING-BACKUP	
	5	1	**227-1186**	2	VALVE AS-CHECK	
	6	1	**257-0468**	2	CAP	

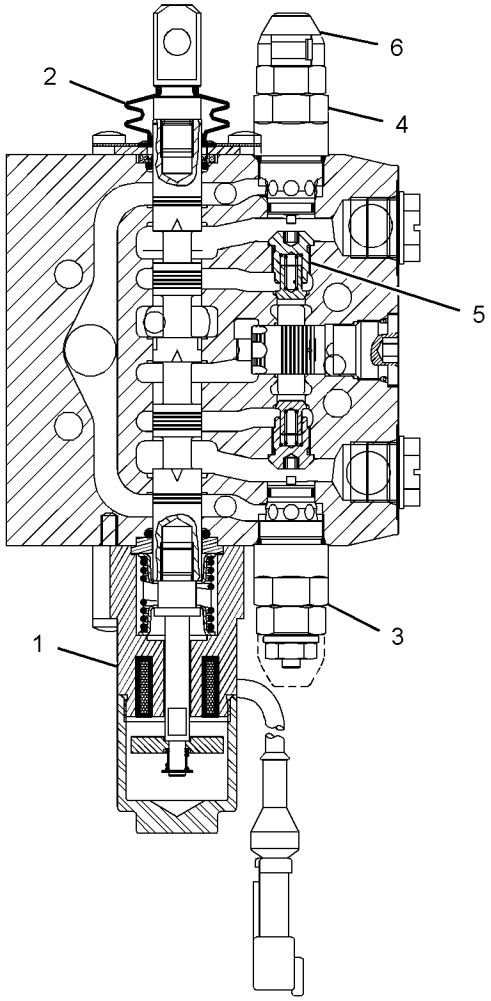

GRAPHIC #1 **<END>** g01234141

269-1093 VALVE GP-CONTROL–AUXILIARY (CHG -00)

S/N: HLS1-UP
PART OF 266-2553 VALVE GP-BANK 3
AN ATTACHMENT

SMCS-5051 **i02447488**

NOTE	REF NO	GRAPHIC REF	PART NUMBER	QTY	PART NAME 1 2 3 4 5 6 (PRODUCT LEVEL)	SEE PAGE
	1	1	**257-7739**	1	KIT-COVER	
	2	1	**257-7741**	1	KIT-ACTUATOR	
	3	1	**266-2587**	1	VALVE GP-RELIEF	
		1	**8J-2413**	1	SEAL-O-RING	
		1	**095-1751**	1	SEAL-O-RING	
		1	**169-1616**	1	RING-BACKUP	
	4	1	**227-1191**	1	PLUG AS	
		1	**8J-2413**	1	SEAL-O-RING	
		1	**095-1751**	1	SEAL-O-RING	
		1	**169-1616**	1	RING-BACKUP	
	5	1	**227-1186**	2	VALVE AS-CHECK	
	6	1	**257-0468**	1	CAP	

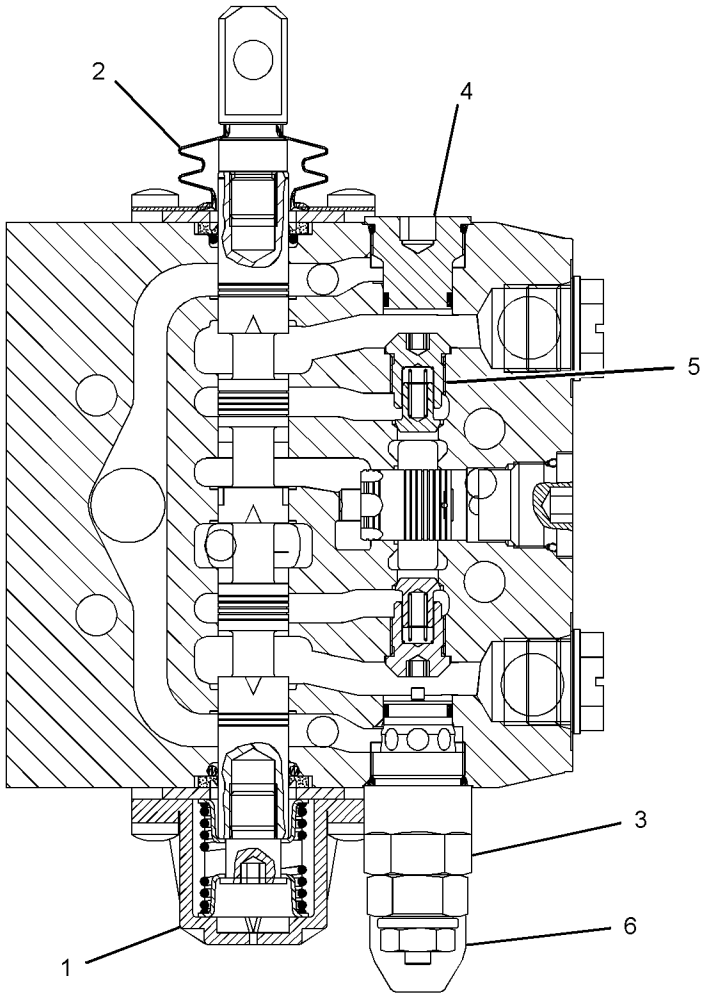

GRAPHIC #1 **<END>** g01233247

223-4713 VALVE GP-PILOT–BODY (CHG -01, -02)

S/N: HLS1-UP

PART OF 269-2125 CAB AR, 269-2123, 269-2124 CANOPY AR AN ATTACHMENT

SMCS-5059 **i02446408**

NOTE	REF NO	GRAPHIC REF	PART NUMBER	QTY	PART NAME 1 2 3 4 5 6 (PRODUCT LEVEL)	SEE PAGE
	1	1	**198-6498**	2	BOOT	
	2	1	**200-4023**	1	KIT-LEVER	
	3	1	**158-4466**	2	KIT-SPRING	
					(EACH KIT INCLUDES SPRINGS)	
	4	1	**116-4481**	2	PLATE	
	5	1	**8U-9427**	4	KIT-PLUNGER	
	6	1	**200-4022**	1	KIT-LEVER	
	7	1	**198-6515**	1	KIT-SEAL (PILOT VALVE)	
					(INLCUDES O-RINGS)	
M	8	1	**7I-8935**	2	BOLT-SOCKET HEAD (M8X1.25X75-MM)	
M	9	1	**176-8541**	2	NUT (M8X6.5-MM)	

M-METRIC PART

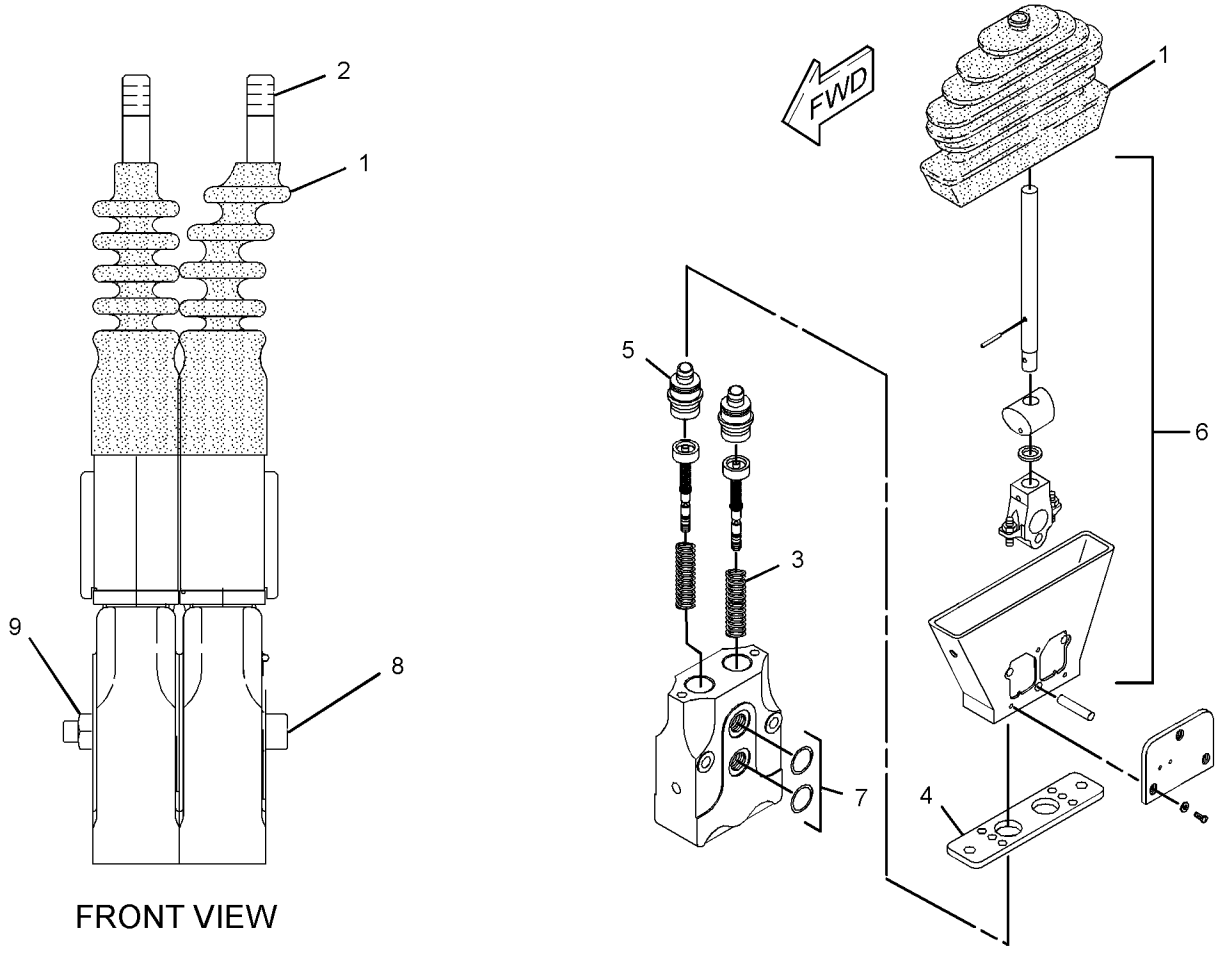

GRAPHIC #1 **<END>** g01233578

223-4715 VALVE GP-PILOT–BODY (CHG -01 THRU -03)

S/N: HLS1-UP
PART OF 269-2126, 269-2127 CAB AR
AN ATTACHMENT

SMCS-5059 **i02447130**

NOTE	REF NO	GRAPHIC REF	PART NUMBER	QTY	PART NAME 1 2 3 4 5 6 (PRODUCT LEVEL)	SEE PAGE
	1	1	**198-6498**	2	BOOT	
	2	1	**198-6522**	1	KIT-LEVER	
	3	1	**198-6516**	2	KIT-SWITCH	
	4	1	**198-6505**	2	KIT-COIL	
					(INCLUDES SOLENOID, BOLT & CONNECTOR KIT)	
	5	1	**198-6514**	2	KIT-SENSOR	
	6	1	**116-4481**	2	PLATE	
	7	1	**198-6506**	2	KIT-PLUNGER	
	8	1	**198-6499**	1	KIT-LEVER	
	9	1	**158-4466**	2	KIT-SPRING	
					(INCLUDES SPRINGS)	
	10	1	**198-6515**	1	KIT-SEAL (PILOT VALVE)	
					(INCLUDES SEALS)	
M	11	1	**7I-8935**	2	BOLT-SOCKET HEAD (M8X1.25X75-MM)	
M	12	1	**176-8541**	2	NUT (M8X6.5-MM)	

M-METRIC PART

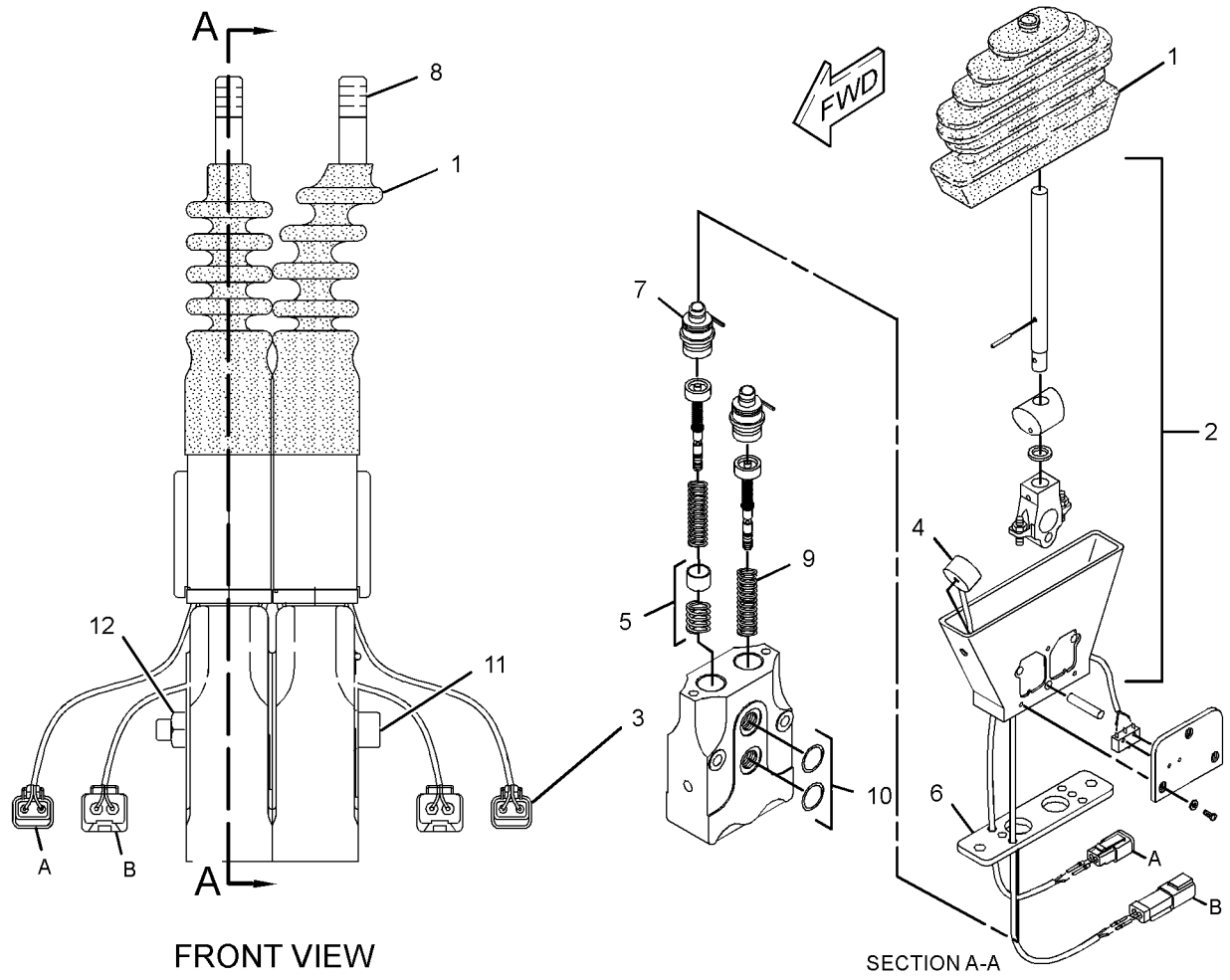

GRAPHIC #1 **<END>** g01231259

280-7871 VALVE GP-PUMP CONTROL (CHG -00)

S/N: HLS1-UP

PART OF 267-2755 PUMP GP-PISTON

SMCS-5455 **i02433864**

NOTE	REF NO	GRAPHIC REF	PART NUMBER	QTY	PART NAME 1 2 3 4 5 6 (PRODUCT LEVEL)	SEE PAGE
	1	1	**103-5520**	1	CARRIER-PIN	
	2	1	**214-0592**	1	GASKET	
M	3	1	**6V-5683**	1	BOLT (M6X1X16-MM)	
M	4	1	**3T-0849**	2	BOLT-SOCKET HEAD (M6X1X25-MM)	
	5	1	**3C-8388**	1	PIN-ROLL	
	6	1	**6V-8236**	1	PIN-SPRING	
	7	1	**105-1440**	1	CAP	
	8	1	**6V-4589**	1	SEAL-O-RING	
	9	1	**033-6044**	1	SEAL-O-RING	

M-METRIC PART

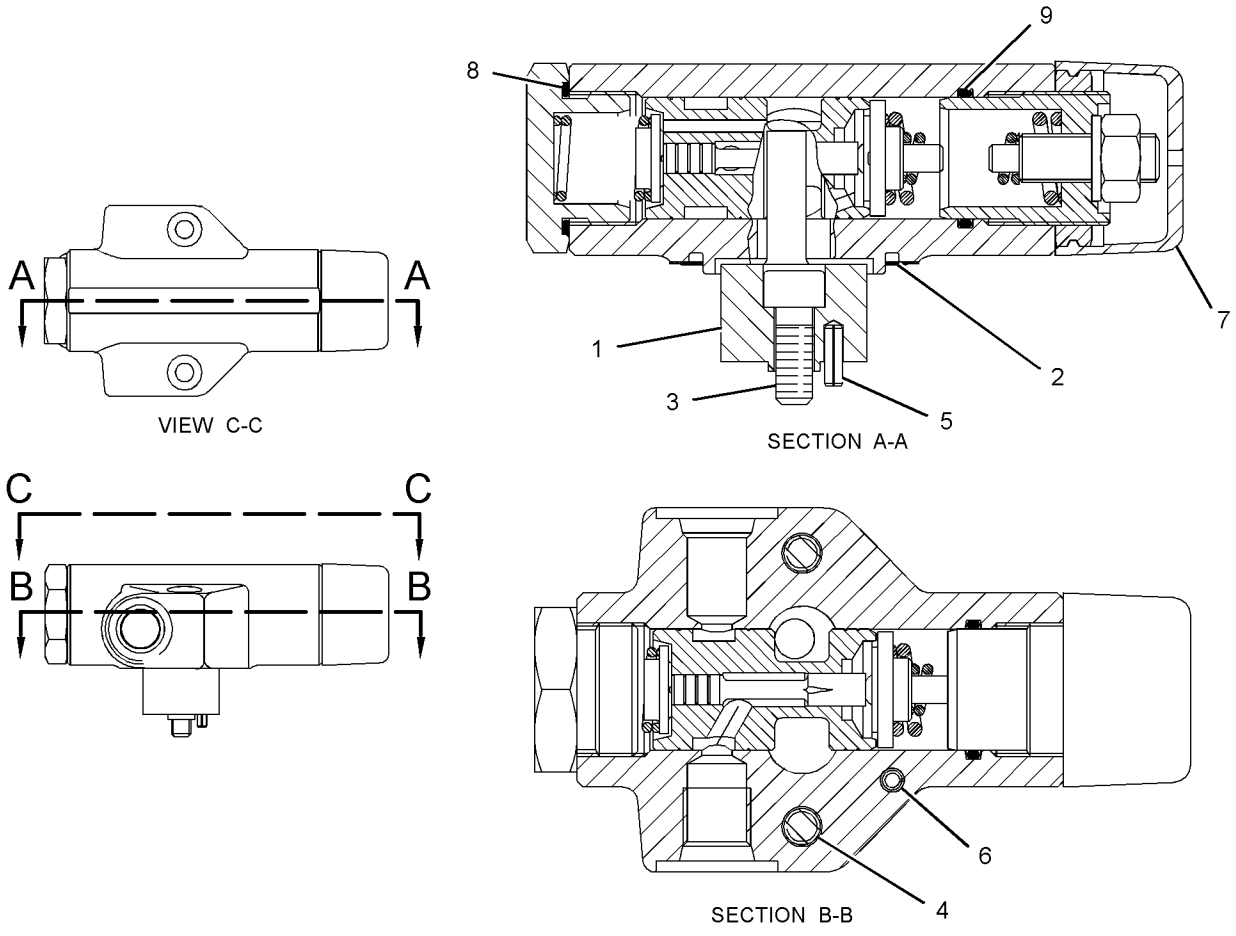

GRAPHIC #1 **<END>** g01233228

185-4254 VALVE GP-SOLENOID (CHG -01 THRU -05)

S/N: HLS1-UP

PART OF 179-3543 MANIFOLD GP-CONTROL & SOLENOID

AN ATTACHMENT

SMCS-5132, 5479 **i02372783**

NOTE	REF NO	GRAPHIC REF	PART NUMBER	QTY	PART NAME 1 2 3 4 5 6 (PRODUCT LEVEL)	SEE PAGE
	1	1	**226-9629**	1	COIL AS-SOLENOID (12-VOLT)	
	2	1	**164-2108**	1	WASHER (13.03X25.4X2.38-MM THK)	
	3	1	**218-2373**	1	NUT (1/2-28-THD)	
	4	1	*185-4253*	1	VALVE AS	

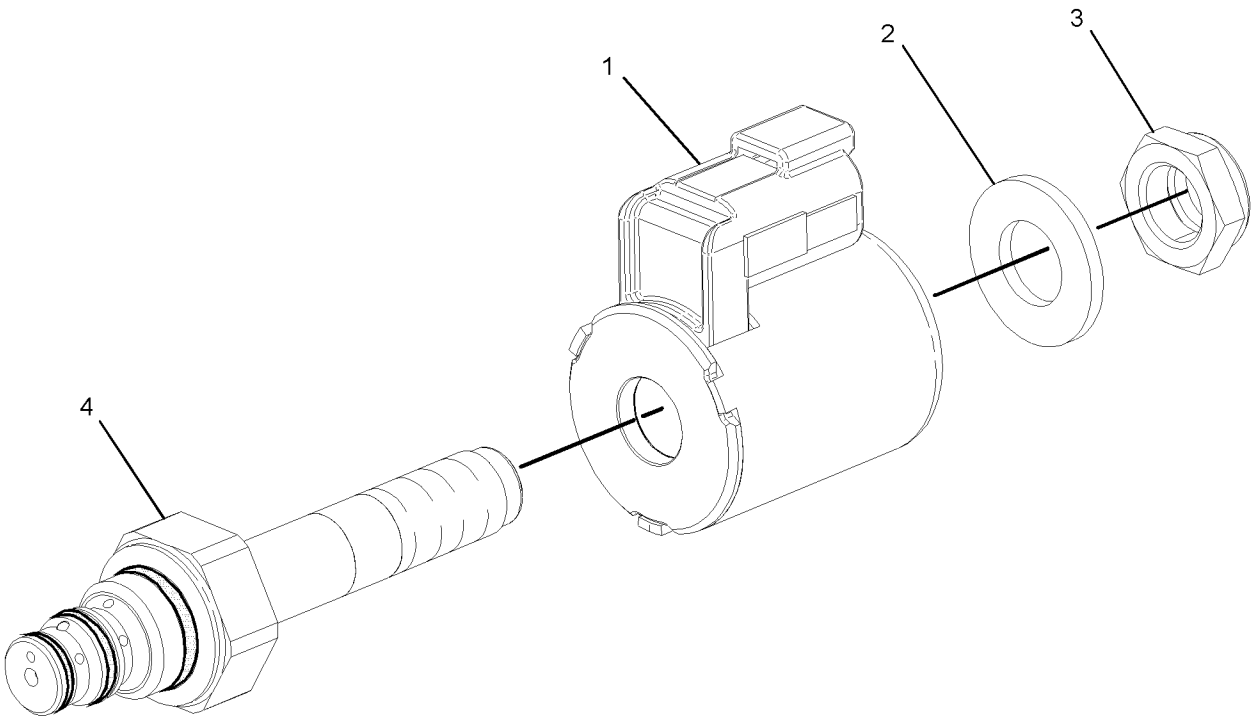

GRAPHIC #1 **<END>** g01185611

245-8780 VALVE GP-SOLENOID (CHG -00, -01)

S/N: HLS1-UP

PART OF 264-0187 KIT-RIDE CONTROL, 246-9802 LINES GP-RIDE CONTROL AN ATTACHMENT

SMCS-5132, 5479 **i02333886**

NOTE	REF NO	GRAPHIC REF	PART NUMBER	QTY	PART NAME 1 2 3 4 5 6 (PRODUCT LEVEL)	SEE PAGE
J	1	1	**249-3124**	1	VALVE GP-SOLENOID (RIDE CONTROL, SWITCH)	
L	2	1	**249-3125**	1	VALVE GP-SOLENOID (ACCUMULATOR)	
	3	1	**238-4628**	2	COIL AS	
					AVAILABLE REPAIR KIT(S):	
J			**141-0888**	1	KIT-SEAL	
L			**227-5509**	1	KIT-SEAL	

J-KIT MARKED J AVAILABLE FOR PART MARKED J
L-KIT MARKED L AVAILABLE FOR PART MARKED L

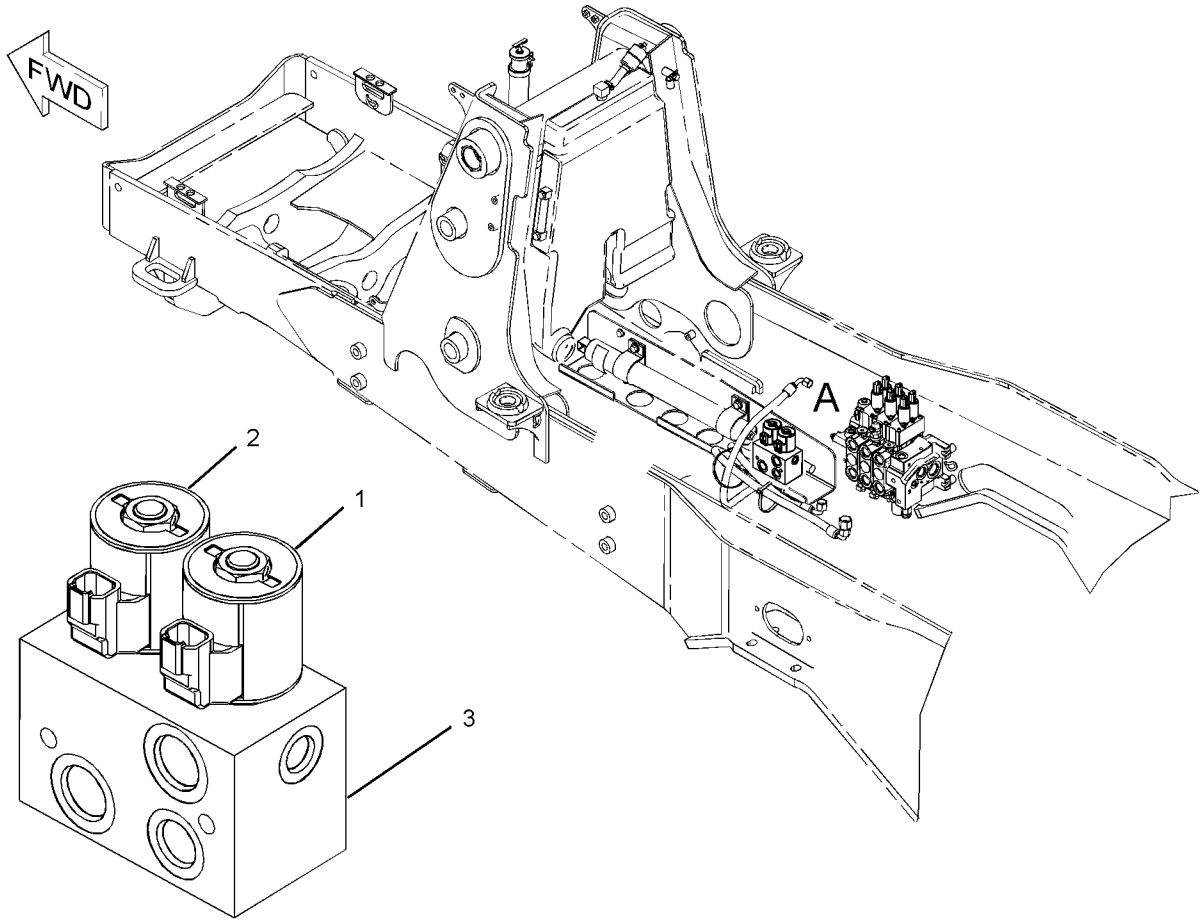

VIEW OF AREA A

GRAPHIC #1 **<END>** g01094840

227-8378 ARM GP-LIFT (CHG -00 THRU -03)

S/N: HLS1-UP

PART OF 213-9300 LOADER AR

SMCS-6118, 6119 **i02355769**

NOTE	REF NO	GRAPHIC REF	PART NUMBER	QTY	PART NAME 1 2 3 4 5 6 (PRODUCT LEVEL)	SEE PAGE
B	1	1	**9R-0109**	8	WASHER (41X64X3-MM THK)	
	2	1	**9R-0158**	2	WASHER (46X69X3-MM THK)	
	3	1	**9R-3182**	2	PIN	
B	4	1	**9R-4066**	2	WASHER (61X98X4-MM THK)	
B	5	1	**9R-8390**	2	SPACER (61X98X1-MM THK)	
	6	1	**9R-9373**	1	PIN AS	
	7	1	**127-8987**	2	RING-RETAINING	
	8	1	**128-5010**	1	PIN	
B	9	1	**128-7903**	2	SPACER (61X114.3X3-MM THK)	
B	10	1	**128-7905**	2	SPACER (61X114.3X1-MM THK)	
	11	1	**130-5451**	2	PIN	
	12	1	**132-6496**	1	PIN AS	
	13	1	**248-2257**	1	ARM AS LIFT	
		1	*248-2272*	1	ARM AS (RH)	
		1	**9R-0111**	2	BEARING-SLEEVE	
		1	**9R-6690**	2	BEARING-SLEEVE	
		1	*248-2273*	1	ARM AS (LH)	
		1	**9R-0111**	2	BEARING-SLEEVE	
		1	**9R-6690**	2	BEARING-SLEEVE	
	14	1	**3B-8488**	4	FITTING-GREASE	
	15	1	**3B-8489**	5	FITTING-GREASE	
	16	1	**6V-3213**	2	RING-RETAINING	
M	17	1	**6V-7687**	2	LOCKNUT (M12X1.75-THD)	
	18	1	**6V-8144**	6	RING-RETAINING	
M	19	1	**8T-4176**	2	BOLT (M12X1.75X90-MM)	

B-USE AS REQUIRED
M-METRIC PART

227-8378 **ARM GP-LIFT** *(contd.)* **i02355769**

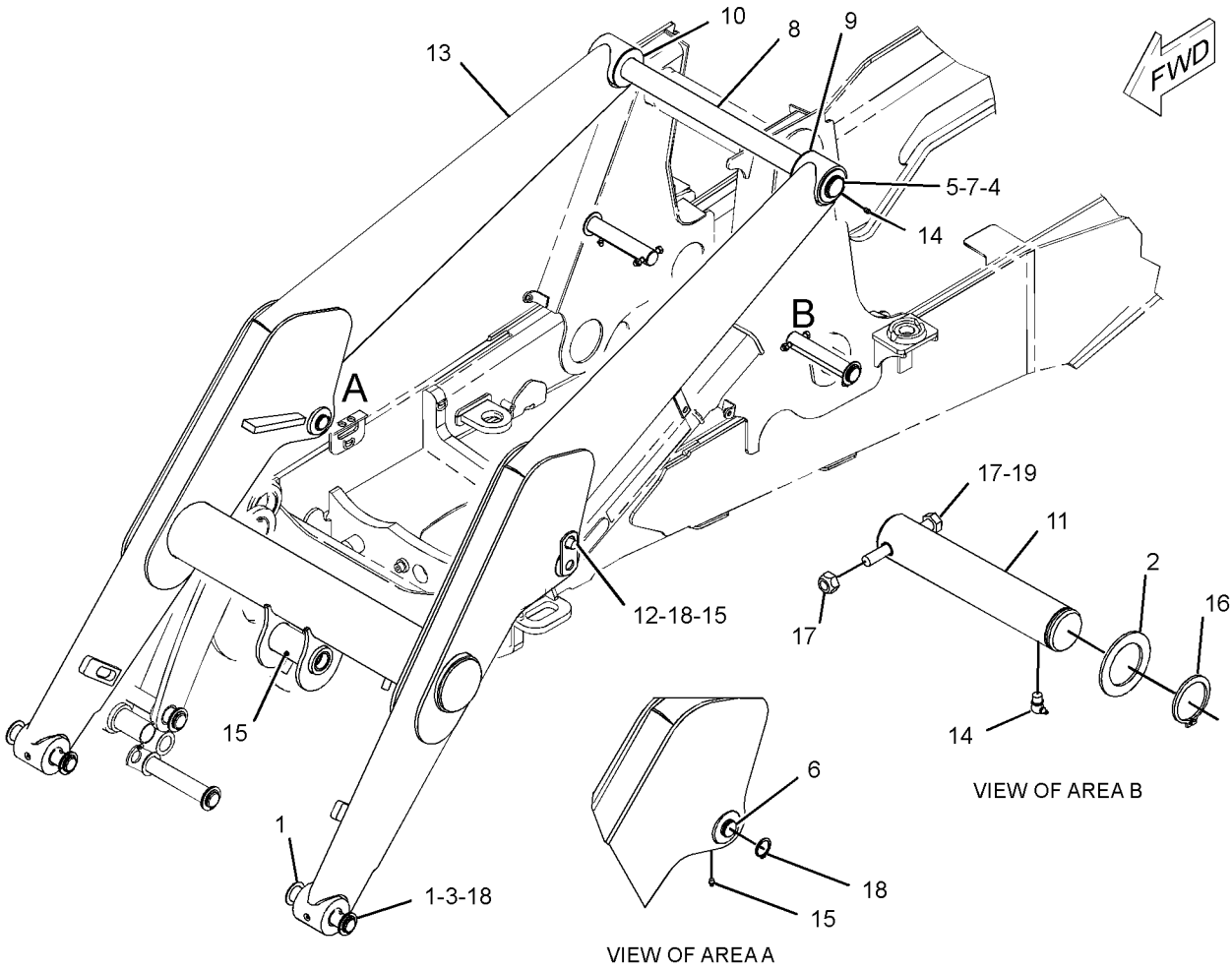

GRAPHIC #1 **<END>** g01231112

209-9930 BOOM GP (CHG -02)

S/N: HLS1-UP

PART OF 214-2553, 214-3758 BACKHOE AR-EXTENDABLE STICK, 214-2550, 214-3755 BACKHOE AR-STANDARD STICK

AN ATTACHMENT

SMCS-6501 **i02103469**

NOTE	REF NO	GRAPHIC REF	PART NUMBER	QTY	PART NAME 1 2 3 4 5 6 (PRODUCT LEVEL)	SEE PAGE
B	1	1	**9R-0481**	4	WASHER (71X110X4-MM THK)	
	2	1	**209-6166**	1	BOOM AS	
		1	**9R-9866**	4	BOSS (M10X1.5X45-MM)	
		1	**209-6173**	2	BOSS	
		1	**209-6175**	2	BOSS	
		1	**209-6176**	2	BOSS	
	2A	1	**209-6181**	2	BEARING-SLEEVE	
	2B	1	**220-1012**	2	BEARING-SLEEVE	
	3	1	**213-6693**	1	PIN	
	4	1	**095-7950**	2	RING-RETAINING	
	5	1	**3B-8488**	3	FITTING-GREASE	
	6	1	**3B-8489**	1	FITTING-GREASE	

B-USE AS REQUIRED

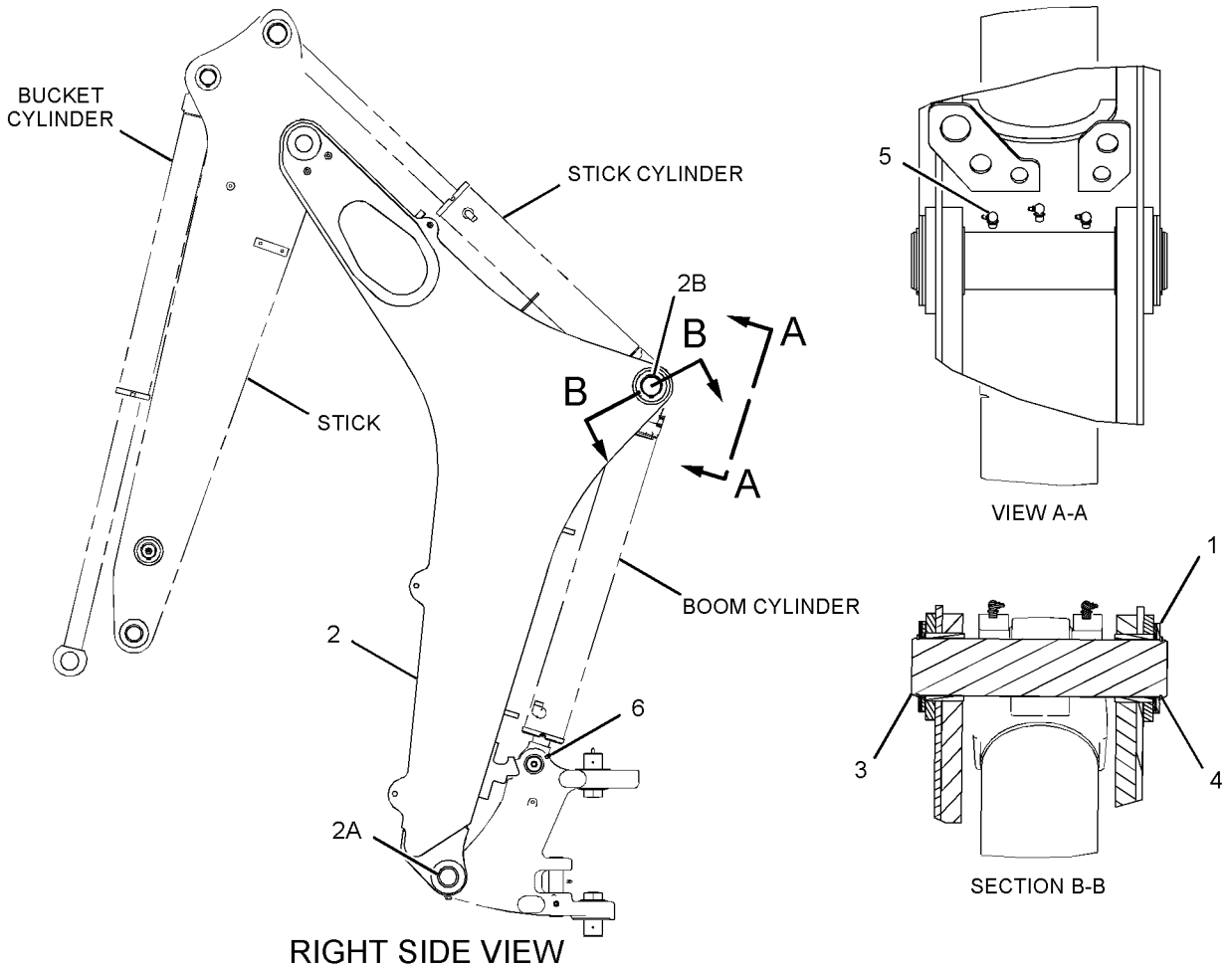

GRAPHIC #1 **<END>** g01073902

218-0745 BRACE GP-LIFT CYLINDER (CHG -01, -02)

S/N: HLS1-UP

PART OF 213-9300 LOADER AR

SMCS-7507 **i02365080**

NOTE	REF NO	GRAPHIC REF	PART NUMBER	QTY	PART NAME 1 2 3 4 5 6 (PRODUCT LEVEL)	SEE PAGE
	1	1	**9R-0109**	2	WASHER (41X64X3-MM THK)	
	2	1	**9R-0189**	1	PIN	
	3	1	**132-6497**	1	BRACE AS	
	4	1	**9R-5301**	1	PIN-COTTER	

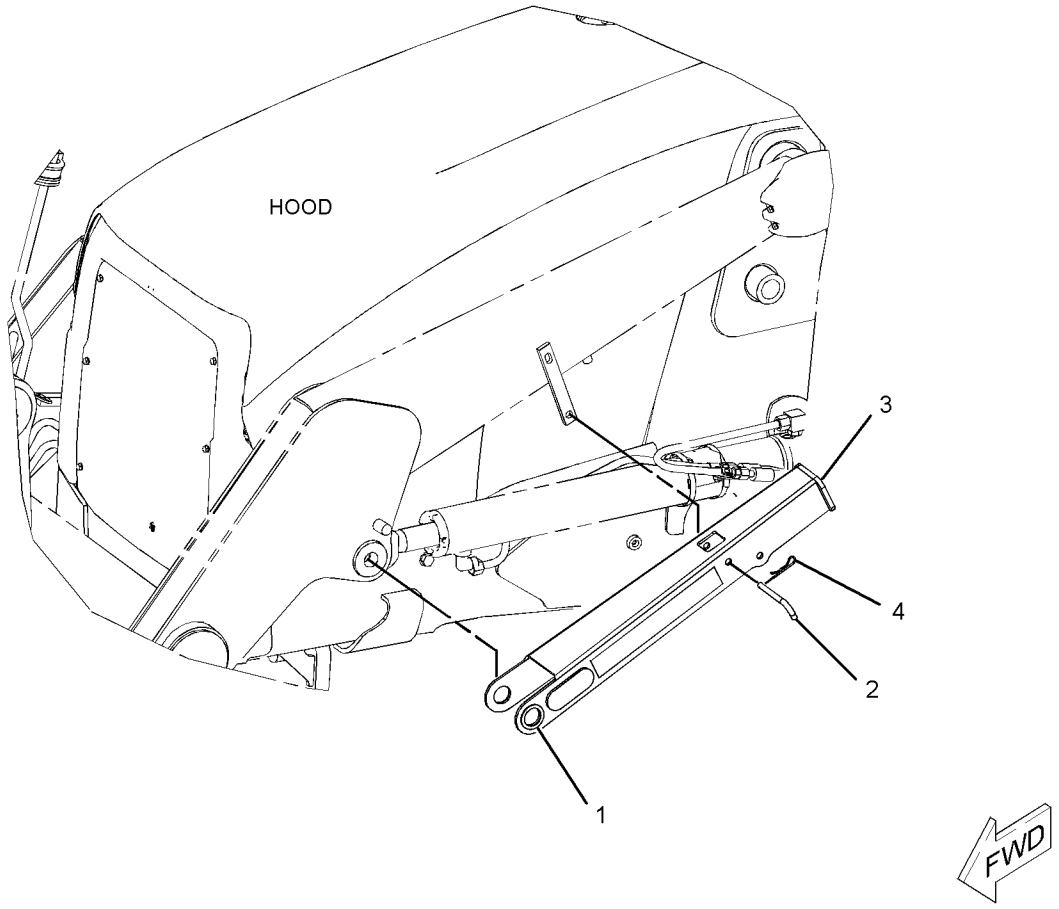

GRAPHIC #1 **<END>** g01183429

270-3204 GUARD GP-BOOM (CHG -00)

S/N: HLS1-UP

AN ATTACHMENT

SMCS-7150 **i02448779**

NOTE	REF NO	GRAPHIC REF	PART NUMBER	QTY	PART NAME 1 2 3 4 5 6 (PRODUCT LEVEL)	SEE PAGE
	1	1	**270-3205**	1	PLATE AS	
M	2	1	**8T-4184**	4	BOLT (M12X1.75X45-MM)	
	3	1	**8T-4223**	16	WASHER-HARD (13.5X25.5X3-MM THK)	

M-METRIC PART

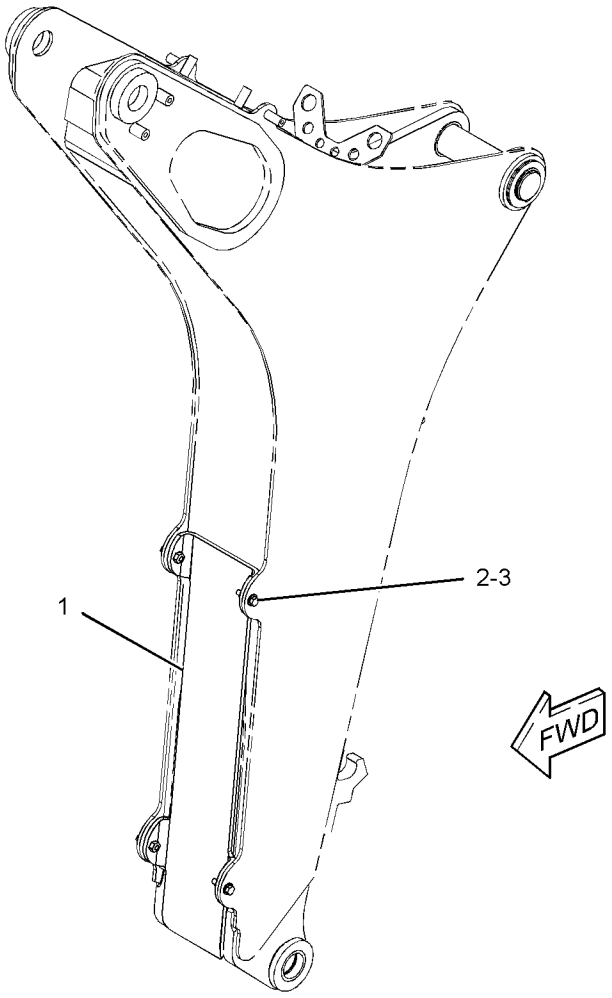

GRAPHIC #1 **<END>** g01230743

221-4276 LINK GP-THUMB–ADJUSTABLE (CHG -01)

S/N: HLS1-UP

PART OF 224-6232, 224-6233, 224-6234, 224-6235 THUMB AR

AN ATTACHMENT

SMCS-6547 **i01923588**

NOTE	REF NO	GRAPHIC REF	PART NUMBER	QTY	PART NAME 1 2 3 4 5 6 (PRODUCT LEVEL)	SEE PAGE
	1	1	**221-4271**	1	LINK AS	
	2	1	**221-4272**	1	LINK AS	
	3	1	**224-4527**	1	PIN AS	

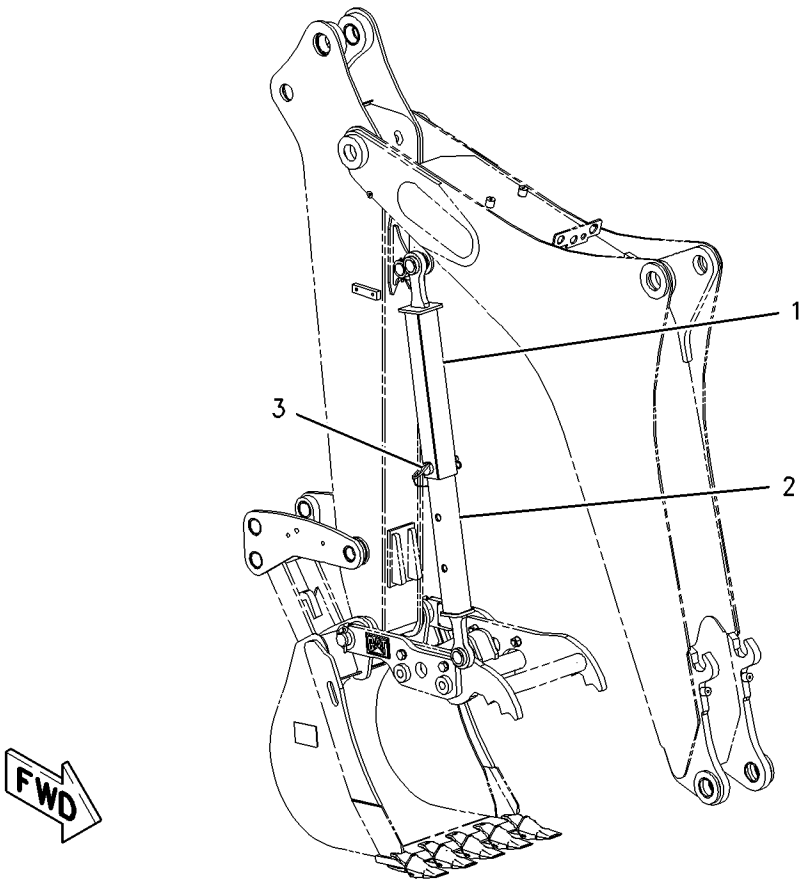

GRAPHIC #1 **<END>** g01003484

213-6692 LINKAGE GP-BACKHOE BUCKET (CHG -01, -02)

S/N: HLS1-UP

PART OF 214-2553, 214-3758 BACKHOE AR-EXTENDABLE STICK, 214-2550, 214-3755 BACKHOE AR-STANDARD STICK

AN ATTACHMENT

SMCS-6513 **i02098007**

NOTE	REF NO	GRAPHIC REF	PART NUMBER	QTY	PART NAME 1 2 3 4 5 6 (PRODUCT LEVEL)	SEE PAGE
B	1	1	**9R-0158**	5	WASHER (46X69X3-MM THK)	
B	2	1	**9R-1502**	4	WASHER (56X90X4-MM THK)	
B	3	1	**9R-1510**	9	WASHER (51X82X4-MM THK)	
	4	1	**154-5278**	1	PIN	
	5	1	**154-5279**	1	PIN	
	6	1	**154-5280**	1	PIN	
	7	1	**213-6690**	1	GUIDE AS (RH)	
		1	**9R-0162**	1	BEARING-SLEEVE	
		1	**9R-0170**	1	BEARING	
		1	**213-6687**	1	BEARING-SLEEVE	
	8	1	**213-6691**	1	GUIDE AS (LH)	
		1	**9R-0162**	1	BEARING-SLEEVE	
		1	**9R-0170**	1	BEARING	
		1	**213-6687**	1	BEARING-SLEEVE	
	9	1	**213-6698**	1	PIN	
	10	1	**213-6723**	1	LINK AS	
		1	**9R-0170**	2	BEARING	
		1	**213-6703**	2	BEARING	
	11	1	**239-9435**	1	FILM-INSTRUCTION (LINK)	
	12	1	**3B-5319**	4	PIN-COTTER	
	13	1	**3B-8489**	3	FITTING-GREASE	
	14	1	**6V-4364**	2	RING-RETAINING	
	15	1	**6V-8344**	2	RING-RETAINING	

B-USE AS REQUIRED

213-6692 **LINKAGE GP-BACKHOE BUCKET** *(contd.)* **i02098007**

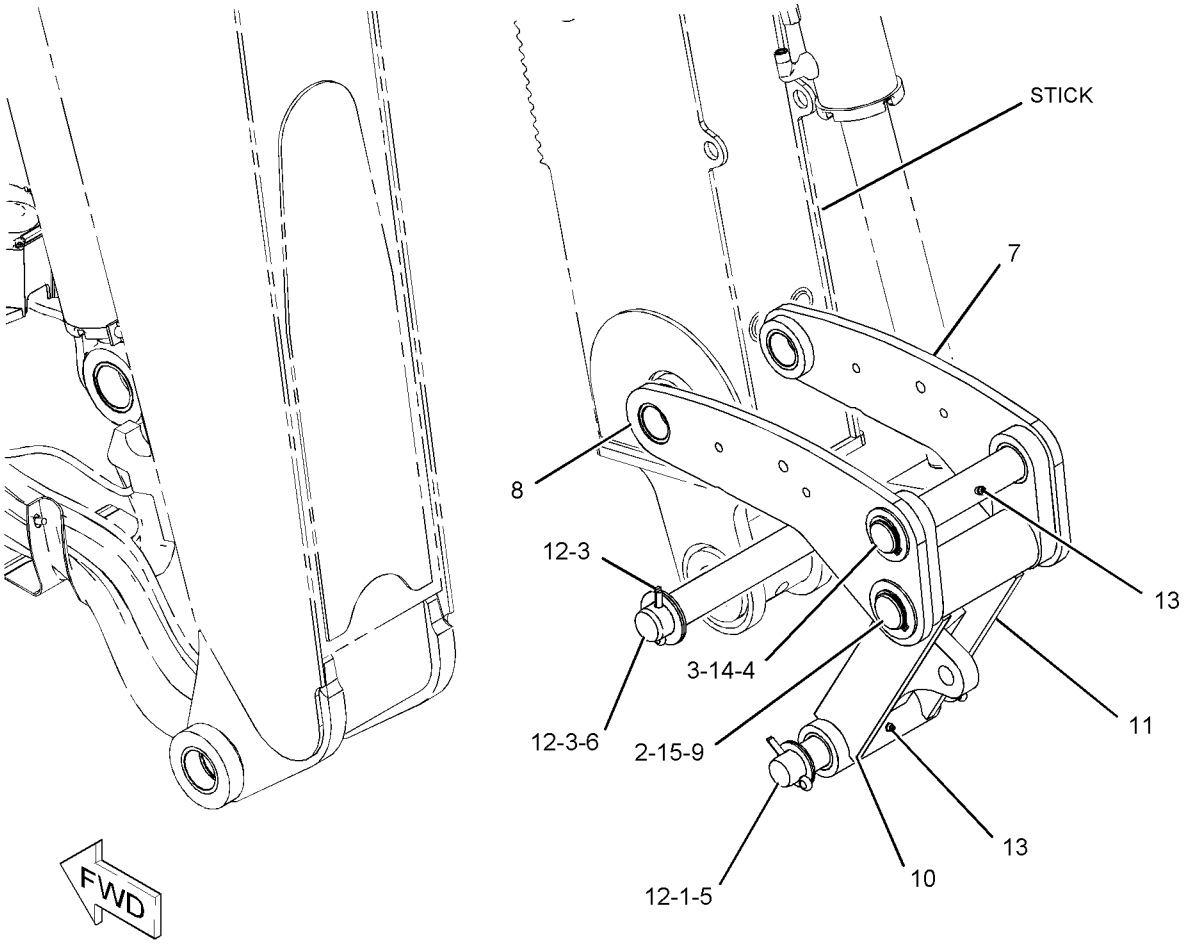

GRAPHIC #1 **<END>** g01079508

202-5720 LINKAGE GP-LOADER BUCKET (CHG -00 THRU -02)

S/N: HLS1-UP

PART OF 213-9300 LOADER AR

SMCS-6513 **i01643669**

NOTE	REF NO	GRAPHIC REF	PART NUMBER	QTY	PART NAME 1 2 3 4 5 6 (PRODUCT LEVEL)	SEE PAGE
B	1	1	**9R-0158**	8	WASHER (46X69X3-MM THK)	
	2	1	**9R-4482**	1	SPACER (52.7X60.3X99-MM)	
	3	1	**9R-4494**	2	PIN AS	
B	4	1	**111-4337**	10	WASHER (46X70X1-MM THK)	
	5	1	**200-8303**	1	LINK AS (RH)	
		1	**9R-3756**	1	BEARING-SLEEVE	
		1	**9R-5828**	1	BEARING-SLEEVE	
	6	1	**200-8306**	1	LINK AS (LH)	
		1	**9R-3756**	1	BEARING-SLEEVE	
		1	**9R-5828**	1	BEARING-SLEEVE	
	7	1	**200-8309**	1	GUIDE AS (RH)	
		1	**9R-3747**	1	BEARING-SLEEVE	
		1	**200-8308**	1	GUIDE	
		1	**200-8313**	1	PIN	
	8	1	**200-8310**	1	GUIDE AS (LH)	
		1	**9R-3747**	1	BEARING-SLEEVE	
	9	1	**200-8311**	1	PIN AS	
	10	1	**201-1838**	1	PLATE	
	11	1	**201-1840**	1	PLATE	
	12	1	**3B-8489**	7	FITTING-GREASE	
	13	1	**6V-3213**	3	RING-RETAINING	
	14	1	**8T-4121**	4	WASHER-HARD (11X21X2.5-MM THK)	
M	15	1	**8T-4137**	4	BOLT (M10X1.5X20-MM)	

B-USE AS REQUIRED
M-METRIC PART

202-5720 **LINKAGE GP-LOADER BUCKET** *(contd.)* **i01643669**

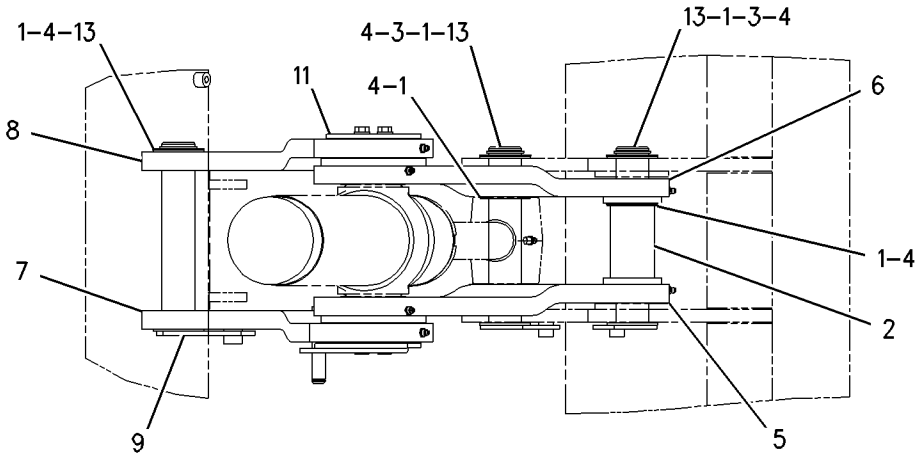

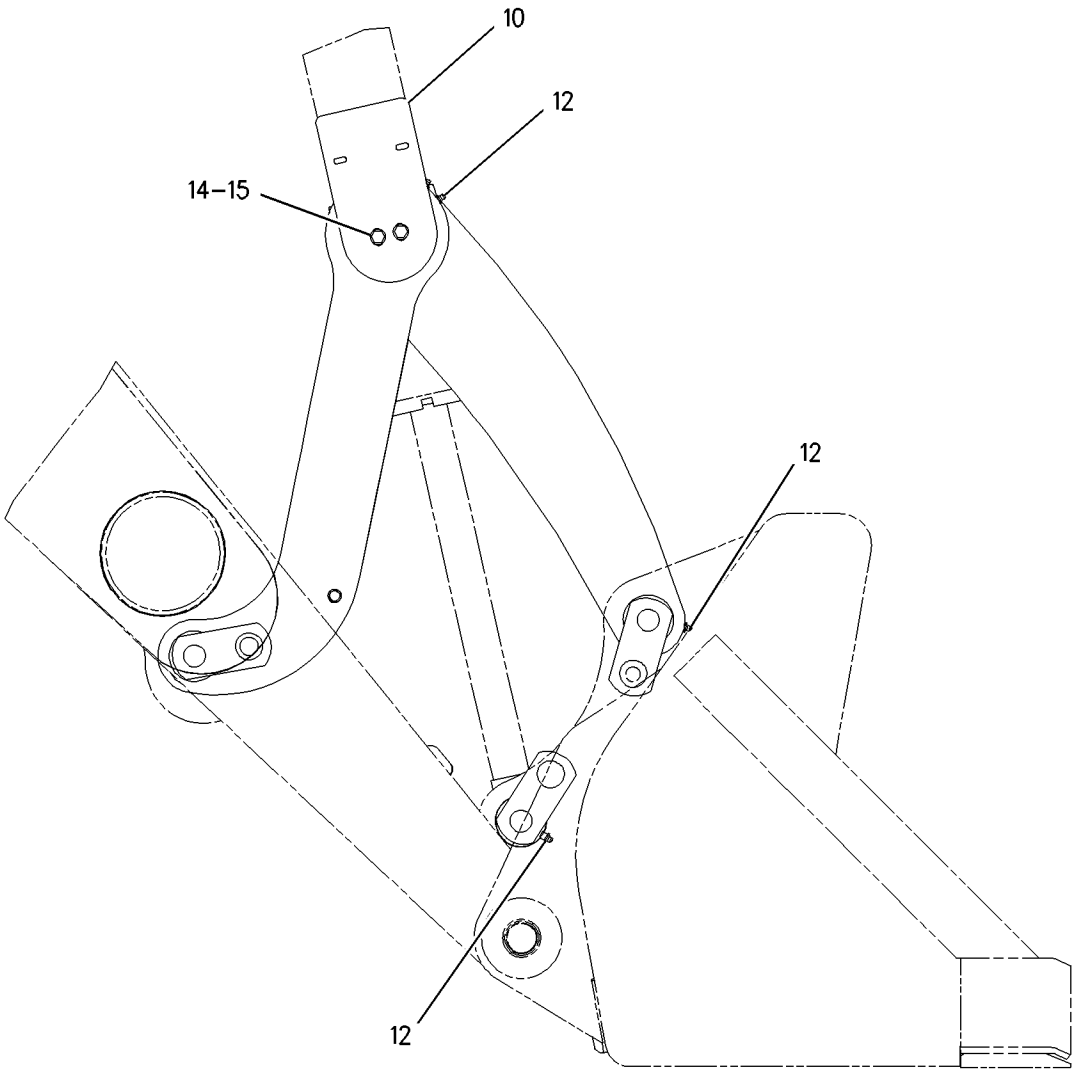

GRAPHIC #1 **<END>** g00849583

213-9300 LOADER AR (CHG -03 THRU -10)

S/N: HLS1-UP

PART OF 213-9273 COMMON AR

SMCS-6100 **i02434017**

NOTE	PART NUMBER	QTY	PART NAME 1 2 3 4 5 6 (PRODUCT LEVEL)	SEE PAGE
Y	*227-8378*	1	ARM GP-LIFT	391
Y	*218-0745*	1	BRACE GP-LIFT CYLINDER	394
Y	**228-3509**	2	CYLINDER GP-LIFT	269
Y	**200-7128**	1	CYLINDER GP-TILT	282
Y	*268-9418*	1	KICKOUT & POSITIONER GP	289
Y	*246-5293*	1	LINES GP-LIFT CYLINDER	313
Y	*246-5295*	1	LINES GP-TILT CYLINDER	340
Y	*202-5720*	1	LINKAGE GP-LOADER BUCKET	399
Y	*211-4262*	1	WIRING GP-KICKOUT & POSITIONER	125

Y-SEPARATE ILLUSTRATION

<END>

206-1641 LOCK GP-TRANSPORT–STABILIZER (CHG -02 THRU -04)

S/N: HLS1-UP

PART OF 213-9287 CHASSIS AR

SMCS-7505 **i02431475**

NOTE	REF NO	GRAPHIC REF	PART NUMBER	QTY	PART NAME 1 2 3 4 5 6 (PRODUCT LEVEL)	SEE PAGE
	1	1	**9R-8165**	1	BEARING	
	2	1	**164-1398**	2	KNOB	
	3	1	**183-6084**	1	BEARING	
	4	1	**206-1871**	1	BRACKET AS	
	5	1	**206-1874**	1	LEVER AS	
	6	1	**229-5745**	1	SPACER (8X15.875X11.6-MM THK)	
	7	1	**248-2710**	1	GROMMET	
	8	1	**164-1395**	1	KNOB	
	9	1	**5P-4116**	6	WASHER-HARD (8.8X20.5X2-MM THK)	
B	10	1	**6E-5431**	1	SHIM (0.5-MM THK)	
M	11	1	**8T-4138**	1	BOLT (M6X1X20-MM)	
M	12	1	**8T-4189**	8	BOLT (M8X1.25X20-MM)	
	13	1	**8T-4224**	4	WASHER-HARD (8.8X16X2-MM THK)	
	14	1	**8T-6902**	1	CLIP	
M	15	1	**8T-7547**	1	BOLT (M8X1.25X30-MM)	
	16	1	**9X-8256**	1	WASHER (6.6X12X2-MM THK)	

B-USE AS REQUIRED
M-METRIC PART

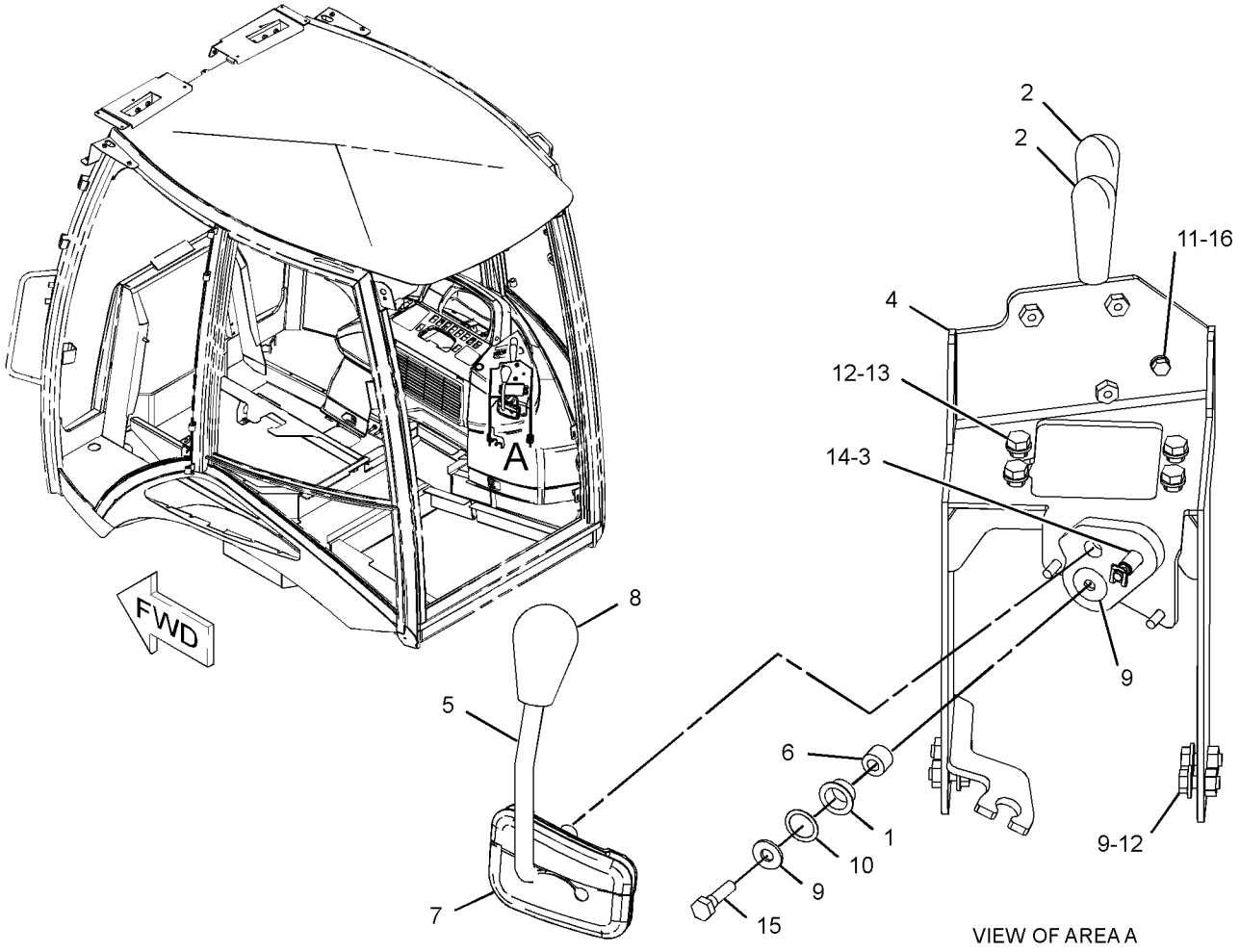

GRAPHIC #1 **<END>** g01207186

211-5182 LOCK GP-TRANSPORT–BOOM (CHG -04 THRU -08)

S/N: HLS1-UP

PART OF 213-9287 CHASSIS AR

SMCS-7505 **i02355821**

NOTE	REF NO	GRAPHIC REF	PART NUMBER	QTY	PART NAME 1 2 3 4 5 6 (PRODUCT LEVEL)	SEE PAGE
	1	1	**5P-7958**	1	SLEEVE-CABLE SPLICE	
	2	1	**9R-8594**	1	PIN AS	
	3	1	**131-8775**	1	BRACKET AS	
	4	1	**134-0143**	1	CABLE (2.38-GA)	
	5	1	**214-4285**	2	PAD AS	
	6	1	**214-6999**	1	HOOK	
	7	1	**214-7043**	1	SPACER	
	8	1	**225-8227**	1	HOOK	
	9	1	**276-2353**	1	CABLE AS	
		1	**2R-0364**	1	RING-RETAINING	
		1	**4D-9517**	1	CLIP	
		1	**6V-0826**	1	GROMMET	
		1	**279-9452**	1	CLIP	
	10	1	**3B-8489**	2	FITTING-GREASE	
M	11	1	**5A-3604**	2	BOLT-SOCKET HEAD (M8X1.25X25-MM)	
M	12	1	**5C-9553**	1	BOLT (M6X1X16-MM)	
	13	1	**6E-1135**	2	PIN	
	14	1	**8T-4121**	3	WASHER-HARD (11X21X2.5-MM THK)	
M	15	1	**8T-4137**	1	BOLT (M10X1.5X20-MM)	
M	16	1	**8T-4195**	2	BOLT (M10X1.5X30-MM)	
	17	1	**8T-4205**	1	WASHER-HARD (7.2X14.5X2-MM THK)	
	18	1	**8T-4224**	1	WASHER-HARD (8.8X16X2-MM THK)	
M	19	1	**8T-4908**	1	BOLT (M8X1.25X25-MM)	
	20	1	**214-4281**	1	PIN	

M-METRIC PART

211-5182 **LOCK GP-TRANSPORT** *(contd.)* **i02355821**

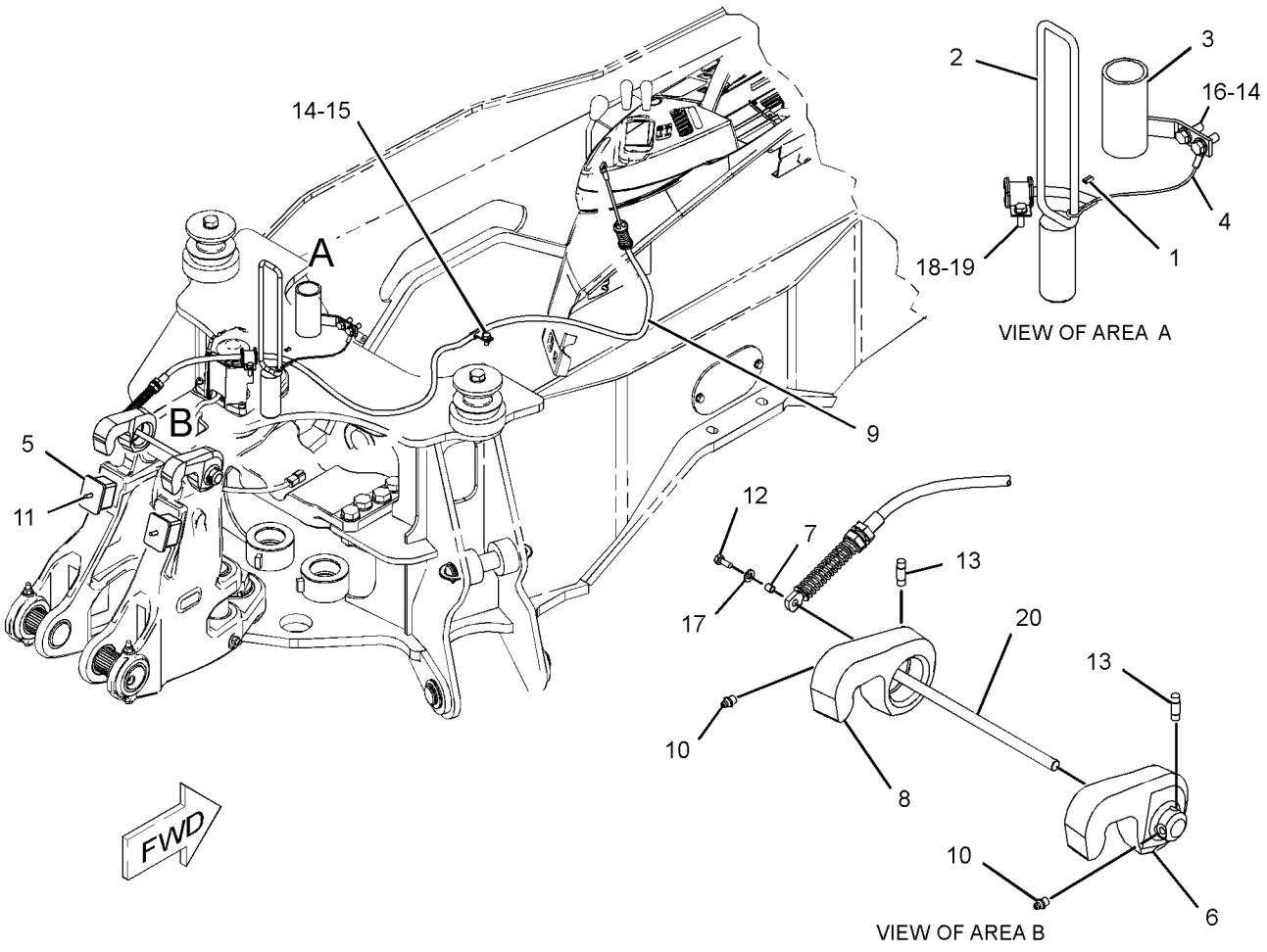

GRAPHIC #1 **<END>** g01237042

252-4660 LOCK GP-TRANSPORT (CHG -00)

S/N: HLS1-UP

AN ATTACHMENT

SMCS-7505 **i02333972**

NOTE	REF NO	GRAPHIC REF	PART NUMBER	QTY	PART NAME 1 2 3 4 5 6 (PRODUCT LEVEL)	SEE PAGE
	1	1	**9R-5301**	2	PIN-COTTER	
	2	1	**252-4659**	1	CABLE AS	
	3	1	**9R-9028**	1	PIN	

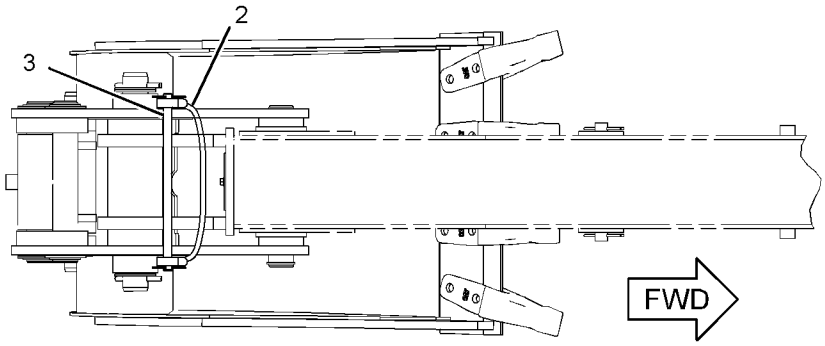

TOP VIEW

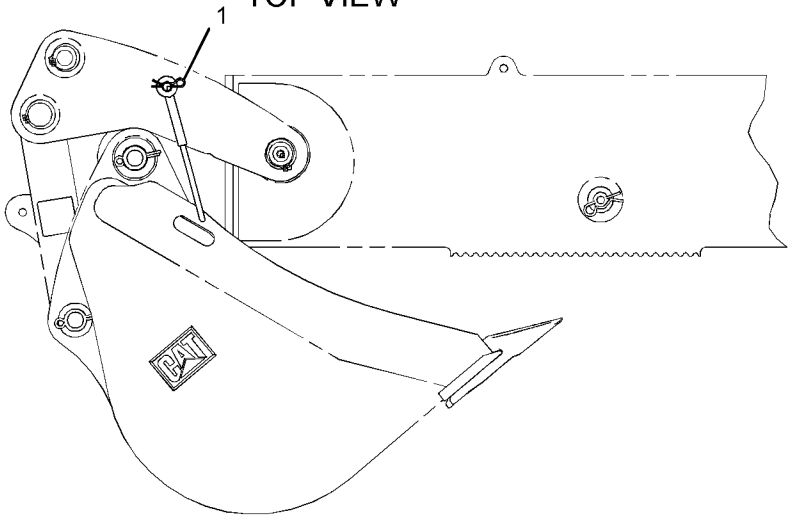

RIGHT SIDE VIEW

GRAPHIC #1 **<END>** g01178751

213-6700 MOUNTING GP-STICK (CHG -04 THRU -07)

S/N: HLS1-UP

PART OF 214-2553, 214-3758 BACKHOE AR-EXTENDABLE STICK AN ATTACHMENT

SMCS-6502 **i02355815**

NOTE	REF NO	GRAPHIC REF	PART NUMBER	QTY	PART NAME 1 2 3 4 5 6 (PRODUCT LEVEL)	SEE PAGE
B	1	1	**9R-5238**	6	SPACER (56X110X3-MM THK)	
B	2	1	**9R-1510**	3	WASHER (51X82X4-MM THK)	
B	3	1	**9R-8292**	3	SPACER (61X135X1-MM THK)	
	4	1	**213-6695**	1	PIN	
	5	1	**215-9448**	1	PIN AS	
B	6	1	**215-9690**	4	WASHER (66X100X4-MM THK)	
	7	1	**220-1019**	1	PIN	
	8	1	**095-0929**	2	RING-RETAINING	
	9	1	**3B-8488**	1	FITTING-GREASE	
	10	1	**3B-8489**	1	FITTING-GREASE	
	11	1	**6V-8344**	2	RING-RETAINING	

B-USE AS REQUIRED

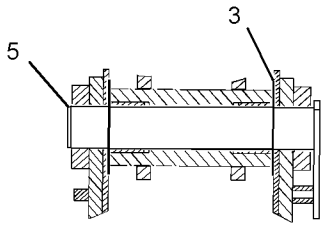

SECTION A-A

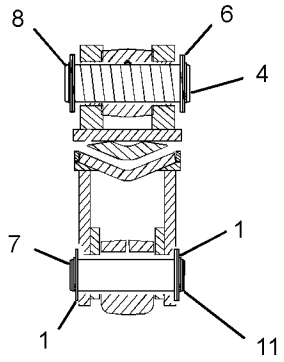

SECTION B-B

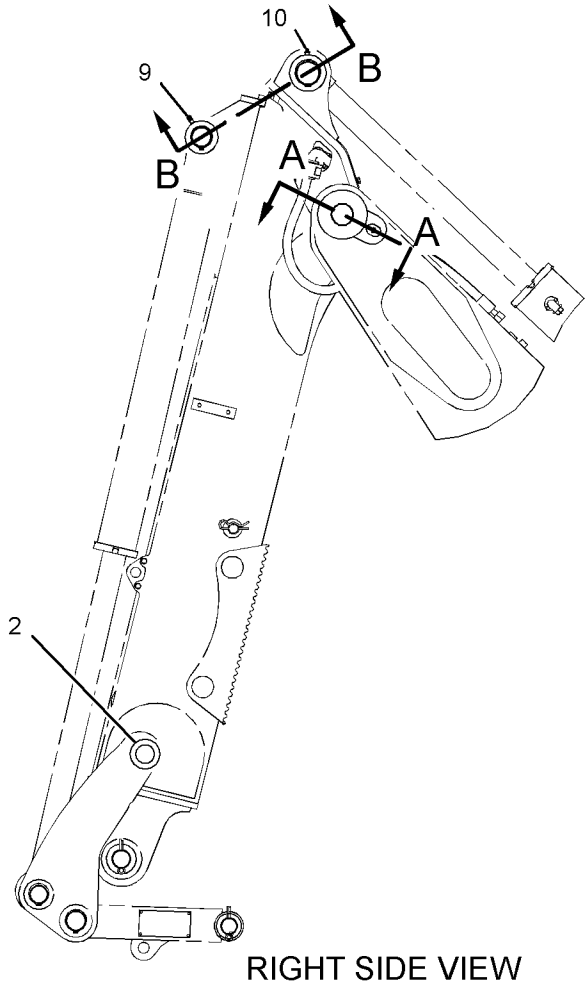

RIGHT SIDE VIEW

GRAPHIC #1 **<END>** g01208134

133-3362 PAD & GUARD GP-STABILIZER—STREET (CHG -08)

S/N: HLS1-UP

AN ATTACHMENT

SMCS-7222 **i02159628**

NOTE	REF NO	GRAPHIC REF	PART NUMBER	QTY	PART NAME 1 2 3 4 5 6 (PRODUCT LEVEL)	SEE PAGE
	1	1	**8T-4986**	4	CLAMP-HOSE	
B	2	1	**9R-0109**	12	WASHER (41X64X3-MM THK)	
BC	3	1	**9R-0158**	6	WASHER (46X69X3-MM THK)	
	4	1	**130-1638**	2	PIN	
	5	1	**188-3953**	2	PAD	
	6	1	**201-5810**	2	PLATE	
	7	1	**201-5812**	2	PLATE AS	
					(EACH INCLUDES)	
M		1	**8T-3612**	2	NUT-WELD (M8X1.25-THD)	
C	8	1	**203-7060**	2	SPACER (12.58X15.88X8-MM)	
C	9	1	**238-9546**	2	SHAFT	
CY	10	1	*238-9547*	2	PAD GP-STABILIZER (STREET)	416
C	11	1	**241-0888**	2	PLATE	
C	12	1	**241-0889**	2	GUARD AS	
					(EACH INCLUDES)	
M		1	**8T-3490**	2	NUT-WELD (M10X1.5-THD)	
	13	1	**5P-4116**	2	WASHER-HARD (8.8X20.5X2-MM THK)	
C	14	1	**6V-3213**	4	RING-RETAINING	
	15	1	**6V-8144**	4	RING-RETAINING	
M	16	1	**7X-2537**	2	BOLT (M8X1.25X35-MM)	
C	17	1	**7X-7729**	2	WASHER (11X25X3-MM THK)	
CM	18	1	**8T-4195**	2	BOLT (M10X1.5X30-MM)	

B-USE AS REQUIRED
C-CHANGE FROM PREVIOUS TYPE
M-METRIC PART
Y-SEPARATE ILLUSTRATION

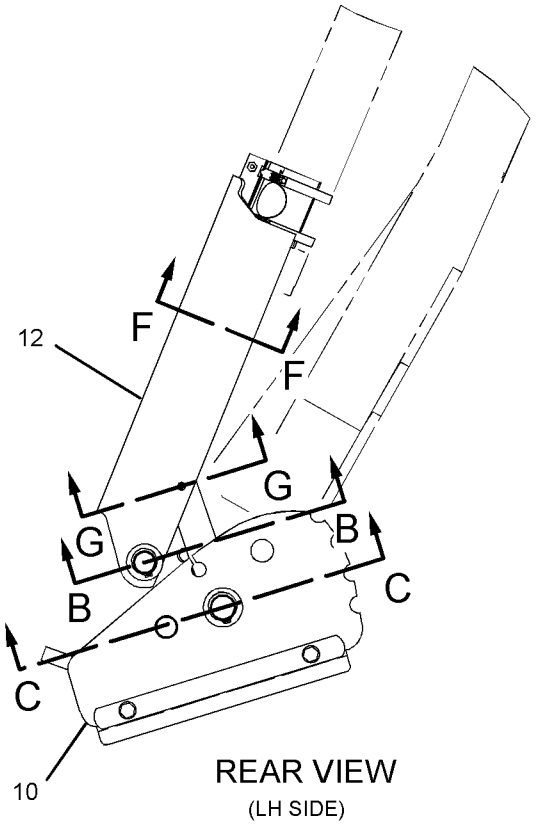

REAR VIEW
(LH SIDE)

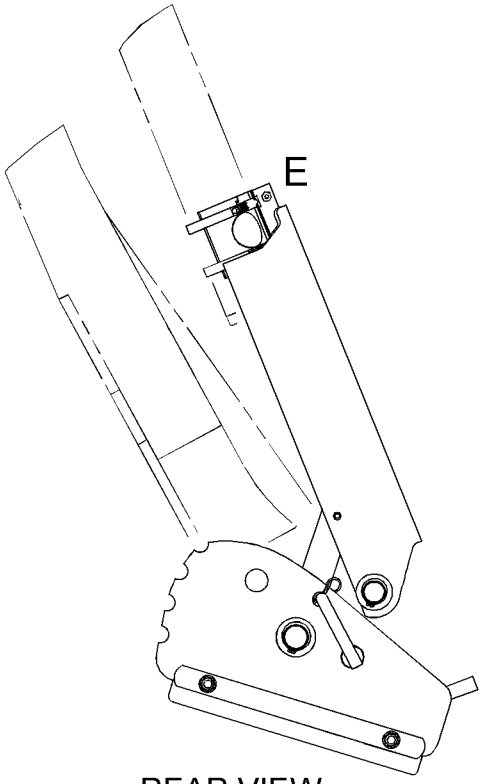

REAR VIEW
(RH SIDE)

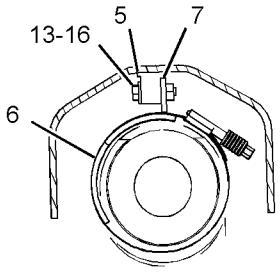

SECTION F-F

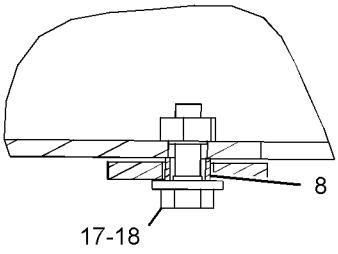

SECTION G-G

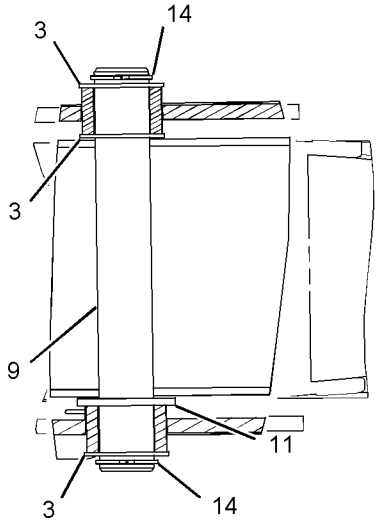

SECTION C-C

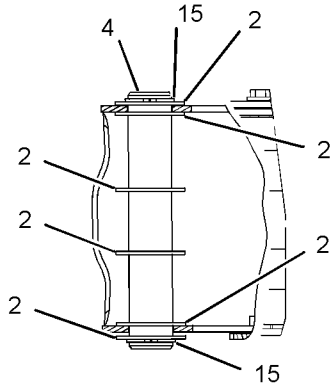

SECTION B-B

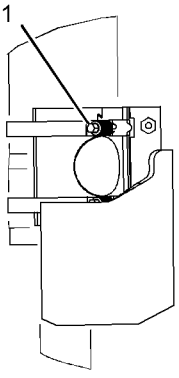

VIEW OF AREA E

GRAPHIC #1

<END>

g01105437

133-3363 PAD & GUARD GP-STABILIZER (CHG -08)

S/N: HLS1-UP

AN ATTACHMENT

SMCS-7222 **i02159634**

NOTE	REF NO	GRAPHIC REF	PART NUMBER	QTY	PART NAME 1 2 3 4 5 6 (PRODUCT LEVEL)	SEE PAGE
	1	1	**8T-4986**	4	CLAMP-HOSE	
BC	2	1	**9R-0109**	12	WASHER (41X64X3-MM THK)	
BC	3	1	**9R-0158**	6	WASHER (46X69X3-MM THK)	
	4	1	**130-1638**	2	PIN	
	5	1	**188-3953**	2	PAD	
	6	1	**201-5810**	2	PLATE	
	7	1	**201-5812**	2	PLATE AS	
					(EACH INCLUDES)	
M		1	**8T-3612**	2	NUT-WELD (M8X1.25-THD)	
		1	**201-5810**	1	PLATE	
C	8	1	**203-7060**	2	SPACER (12.58X15.88X8-MM)	
C	9	1	**238-9546**	2	SHAFT	
C	10	1	**239-1416**	2	PAD AS	
C	11	1	**241-0888**	2	PLATE	
C	12	1	**241-0889**	2	GUARD AS	
					(EACH INCLUDES)	
M		1	**8T-3490**	2	NUT-WELD (M10X1.5-THD)	
	13	1	**5P-4116**	2	WASHER-HARD (8.8X20.5X2-MM THK)	
	14	1	**6V-3213**	4	RING-RETAINING	
	15	1	**6V-8144**	4	RING-RETAINING	
M	16	1	**7X-2537**	2	BOLT (M8X1.25X35-MM)	
C	17	1	**7X-7729**	2	WASHER (11X25X3-MM THK)	
CM	18	1	**8T-4195**	2	BOLT (M10X1.5X30-MM)	

B-USE AS REQUIRED
C-CHANGE FROM PREVIOUS TYPE
M-METRIC PART

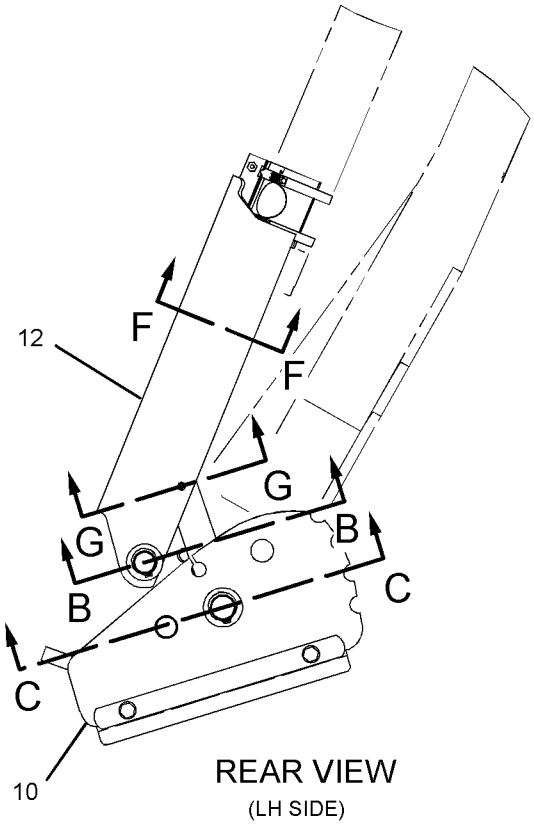

REAR VIEW
(LH SIDE)

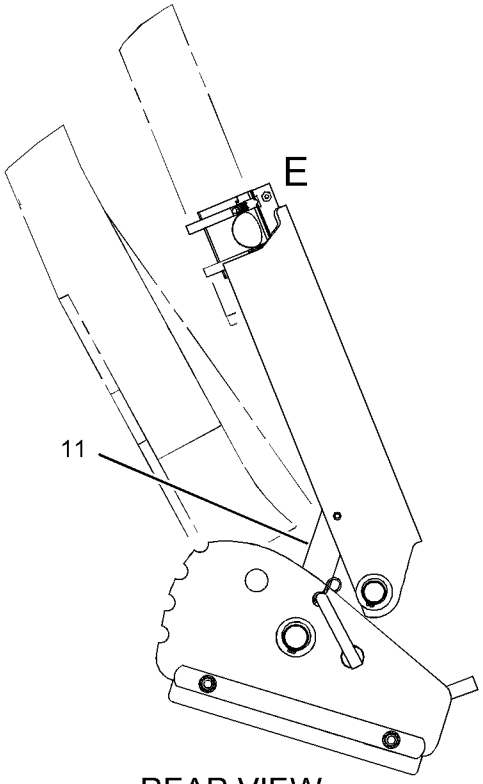

REAR VIEW
(RH SIDE)

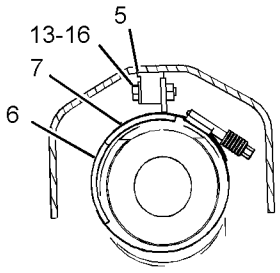

SECTION F-F

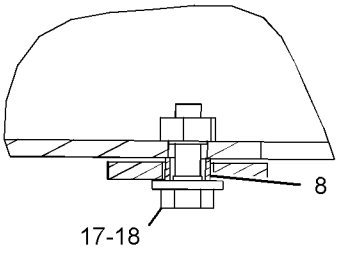

SECTION G-G

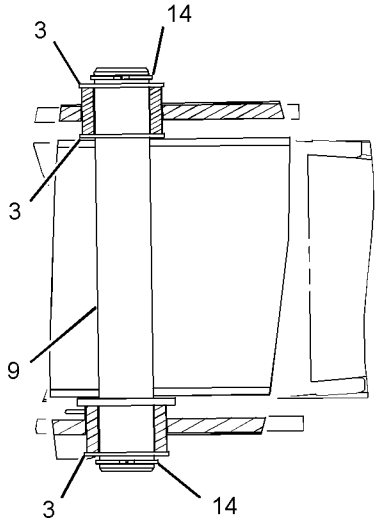

SECTION C-C

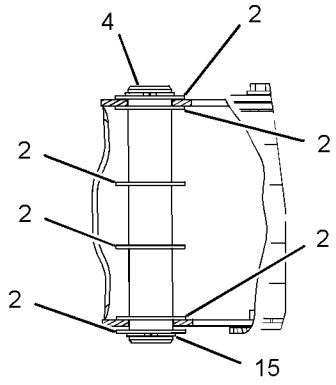

SECTION B-B

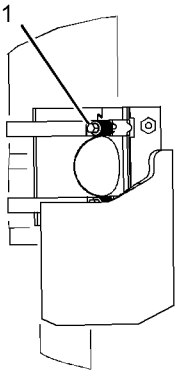

VIEW OF AREA E

GRAPHIC #1 **<END>** g01105443

133-3366 PAD & GUARD GP-STABILIZER—STREET (CHG -09)

S/N: HLS1-UP

AN ATTACHMENT

SMCS-7222 **i02159637**

NOTE	REF NO	GRAPHIC REF	PART NUMBER	QTY	PART NAME 1 2 3 4 5 6 (PRODUCT LEVEL)	SEE PAGE
	1	1	**8T-4986**	4	CLAMP-HOSE	
	2	1	**9R-0109**	12	WASHER (41X64X3-MM THK)	
C	3	1	**9R-0158**	6	WASHER (46X69X3-MM THK)	
	4	1	**130-1638**	2	PIN	
	5	1	**188-3953**	2	PAD	
	6	1	**201-5810**	2	PLATE	
	7	1	**201-5812**	2	PLATE AS	
					(EACH INCLUDES)	
M		1	**8T-3612**	2	NUT-WELD (M8X1.25-THD)	
		1	**201-5810**	1	PLATE	
C	8	1	**203-7060**	2	SPACER (12.58X15.88X8-MM)	
C	9	1	**238-9546**	2	SHAFT	
C	10	1	**241-0888**	2	PLATE	
C	11	1	**241-0889**	2	GUARD AS	
					(EACH INCLUDES)	
M		1	**8T-3490**	2	NUT-WELD (M10X1.5-THD)	
CY	12	1	*247-7555*	2	PAD GP-STABILIZER (STREET)	417
	13	1	**5P-4116**	2	WASHER-HARD (8.8X20.5X2-MM THK)	
	14	1	**6V-3213**	4	RING-RETAINING	
	15	1	**6V-8144**	4	RING-RETAINING	
M	16	1	**7X-2537**	2	BOLT (M8X1.25X35-MM)	
C	17	1	**7X-7729**	2	WASHER (11X25X3-MM THK)	
CM	18	1	**8T-4195**	2	BOLT (M10X1.5X30-MM)	

C-CHANGE FROM PREVIOUS TYPE
M-METRIC PART
Y-SEPARATE ILLUSTRATION

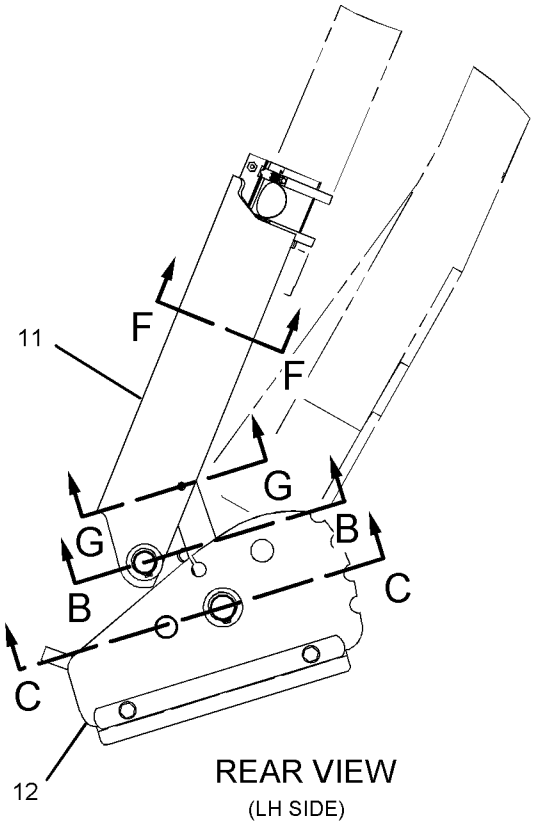

REAR VIEW
(LH SIDE)

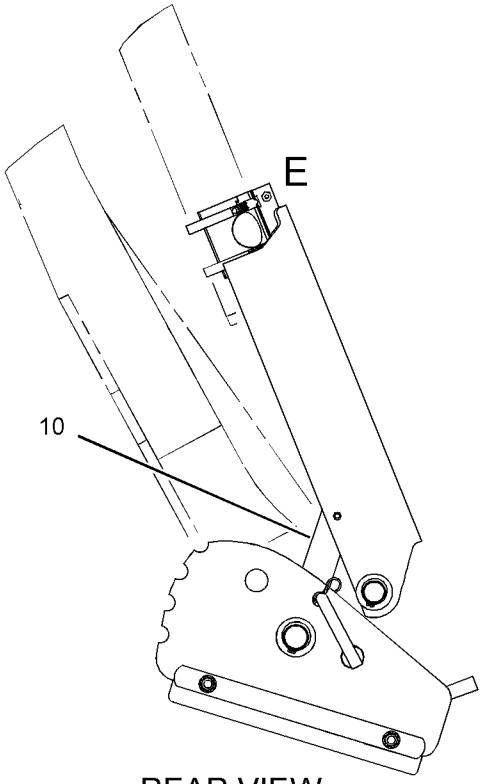

REAR VIEW
(RH SIDE)

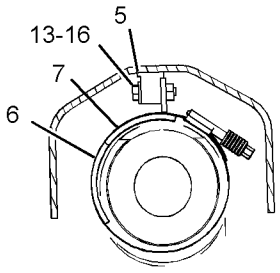

SECTION F-F

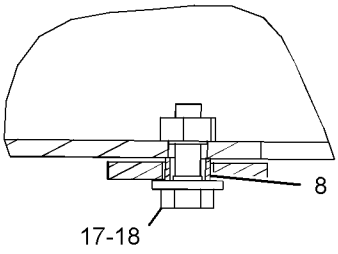

SECTION G-G

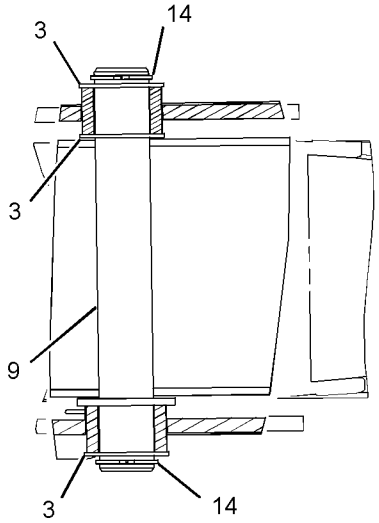

SECTION C-C

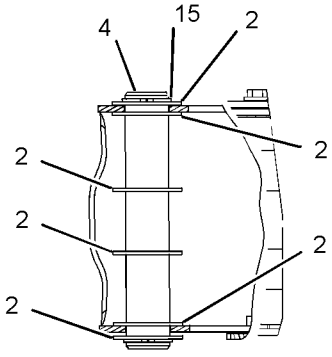

SECTION B-B

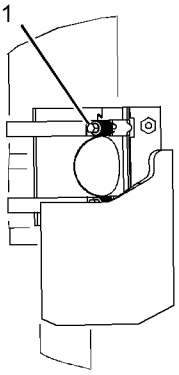

VIEW OF AREA E

GRAPHIC #1

<END>

g01107893

9R-1085 PAD & MTG GP-STABILIZER–STREET (CHG -16)

S/N: HLS1-UP

AN ATTACHMENT

SMCS-7222 **i02127794**

NOTE	REF NO	GRAPHIC REF	PART NUMBER	QTY	PART NAME 1 2 3 4 5 6 (PRODUCT LEVEL)	SEE PAGE
	1	1	**9R-0422**	2	PIN	
C	2	1	**238-9546**	2	SHAFT	
CY	3	1	**247-7555**	2	PAD GP-STABILIZER (STREET)	417
	4	1	**6V-3213**	4	RING-RETAINING	
	5	1	**6V-8144**	4	RING-RETAINING	
B	6	1	**9R-0109**	8	WASHER (41X64X3-MM THK)	
BC	7	1	**9R-0158**	16	WASHER (46X69X3-MM THK)	

B-USE AS REQUIRED
C-CHANGE FROM PREVIOUS TYPE
Y-SEPARATE ILLUSTRATION

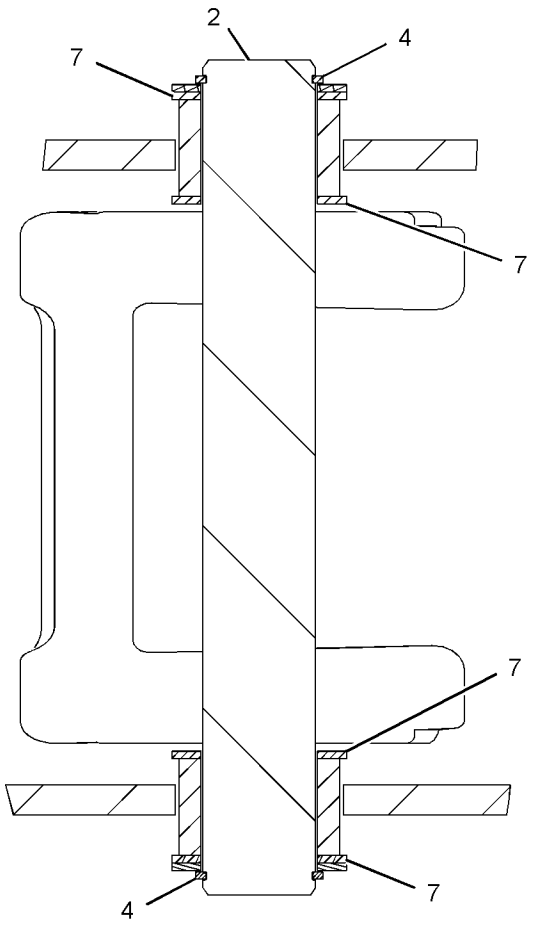

SECTION A-A

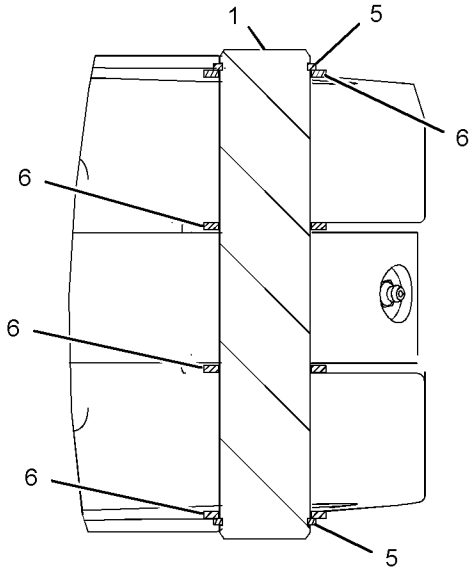

SECTION B-B

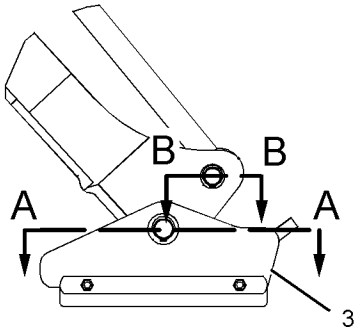

GRAPHIC #1 **<END>** g01084155

9R-6007 PAD & MTG GP-STABILIZER–STREET (CHG -16)

S/N: HLS1-UP

AN ATTACHMENT

SMCS-7222 **i02127790**

NOTE	REF NO	GRAPHIC REF	PART NUMBER	QTY	PART NAME 1 2 3 4 5 6 (PRODUCT LEVEL)	SEE PAGE
BC	1	1	**9R-0109**	10	WASHER (41X64X3-MM THK)	
BC	2	1	**9R-0158**	16	WASHER (46X69X3-MM THK)	
C	3	1	**9R-0422**	2	PIN	
C	4	1	**238-9546**	2	SHAFT	
CY	5	1	*238-9547*	2	PAD GP-STABILIZER (STREET)	416
C	6	1	**6V-3213**	4	RING-RETAINING	
	7	1	**6V-8144**	4	RING-RETAINING	

B-USE AS REQUIRED
C-CHANGE FROM PREVIOUS TYPE
Y-SEPARATE ILLUSTRATION

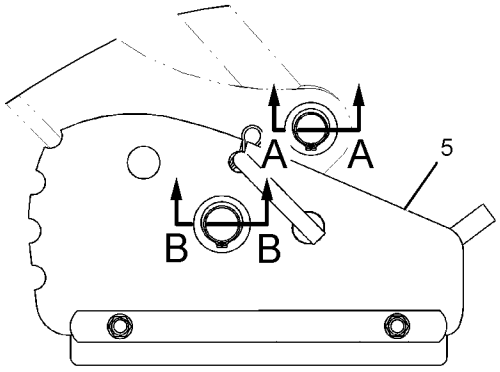

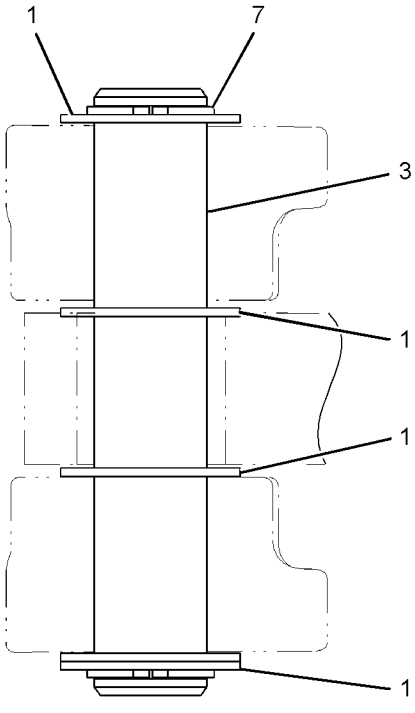

SECTION A-A

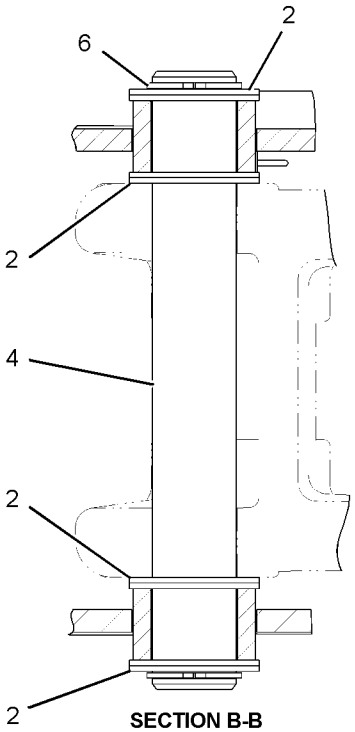

SECTION B-B

GRAPHIC #1

<END>

g01084460

116-4942 PAD & MTG GP-STABILIZER (CHG -06)

S/N: HLS1-UP
AN ATTACHMENT

SMCS-7222 **i02159221**

NOTE	REF NO	GRAPHIC REF	PART NUMBER	QTY	PART NAME 1 2 3 4 5 6 (PRODUCT LEVEL)	SEE PAGE
B	1	1	**9R-0109**	12	WASHER (41X64X3-MM THK)	
B	2	1	**9R-0158**	14	WASHER (46X69X3-MM THK)	
	3	1	**9R-0422**	2	PIN	
C	4	1	**238-9546**	2	SHAFT	
C	5	1	**239-1416**	2	PAD AS	
	6	1	**6V-3213**	4	RING-RETAINING	
	7	1	**6V-8144**	4	RING-RETAINING	

B-USE AS REQUIRED
C-CHANGE FROM PREVIOUS TYPE

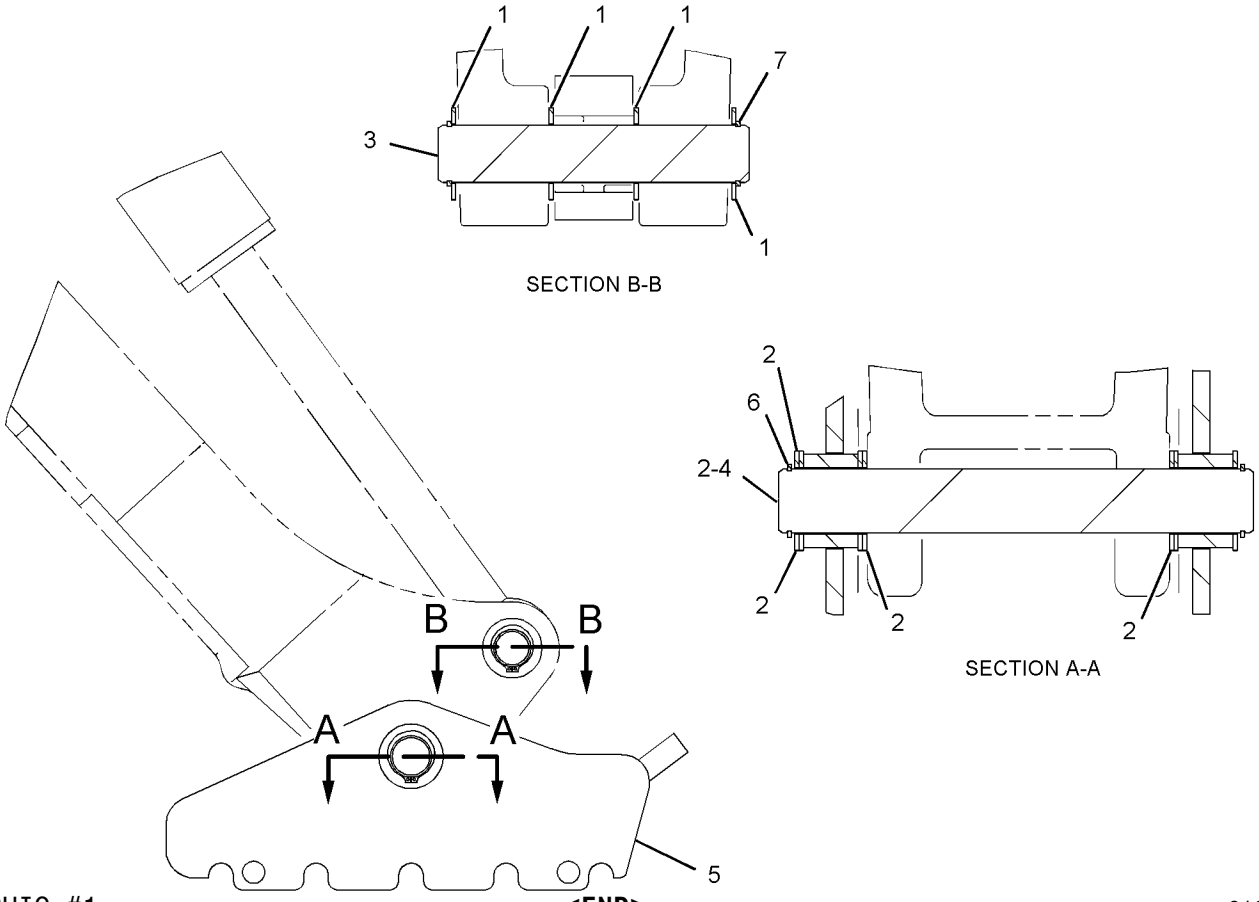

GRAPHIC #1 **<END>** g01096084

238-9547 PAD GP-STABILIZER—STREET (CHG -01, -02)

S/N: HLS1-UP

PART OF 133-3362 PAD & GUARD GP-STABILIZER, 9R-6007 PAD & MTG GP-STABILIZER

AN ATTACHMENT

SMCS-7222 **i02202299**

NOTE	REF NO	GRAPHIC REF	PART NUMBER	QTY	PART NAME 1 2 3 4 5 6 (PRODUCT LEVEL)	SEE PAGE
	1	1	**237-9349**	1	PAD AS	
	2	1	**237-9355**	1	PIN AS	
	3	1	**237-9356**	1	PAD AS	
	4	1	**241-0890**	2	SPACER (16.7X22.2X22.2-MM THK)	
	5	1	**241-0891**	2	PLATE	
	6	1	**241-0892**	1	PLATE	
	7	1	**5P-7971**	2	BOLT (5/8-11X12-IN)	
	8	1	**5P-0370**	1	LOCK PIN	
	9	1	**3K-2889**	2	LOCKNUT (5/8-11-THD)	
	10	1	**9X-8257**	2	WASHER (17.5X30X3.5-MM THK)	

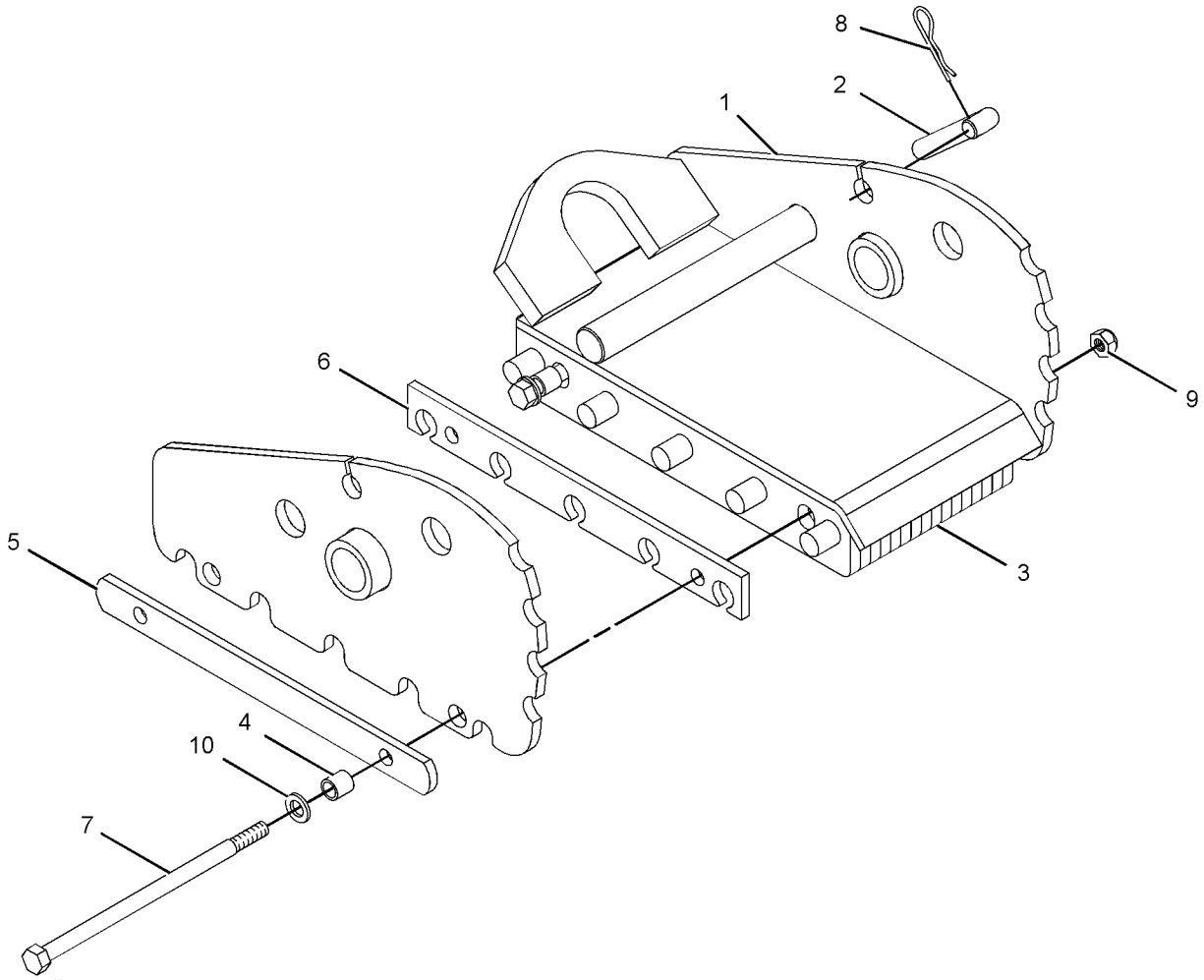

GRAPHIC #1 **<END>** g01084456

247-7555 PAD GP-STABILIZER–STREET (CHG -00, -01)

S/N: HLS1-UP

PART OF 133-3366 PAD & GUARD GP-STABILIZER, 9R-1085 PAD & MTG GP-STABILIZER

AN ATTACHMENT

SMCS-7222 **i02202704**

NOTE	REF NO	GRAPHIC REF	PART NUMBER	QTY	PART NAME 1 2 3 4 5 6 (PRODUCT LEVEL)	SEE PAGE
	1	1	**237-9356**	1	PAD AS	
	2	1	**239-1416**	1	PAD AS	
	3	1	**241-0890**	2	SPACER (16.7X22.2X22.2-MM THK)	
	4	1	**241-0891**	2	PLATE	
	5	1	**241-0892**	1	PLATE	
	6	1	**3K-2889**	2	LOCKNUT (5/8-11-THD)	
	7	1	**5P-7971**	2	BOLT (5/8-11X12-IN)	
	8	1	**9X-8257**	2	WASHER (17.5X30X3.5-MM THK)	

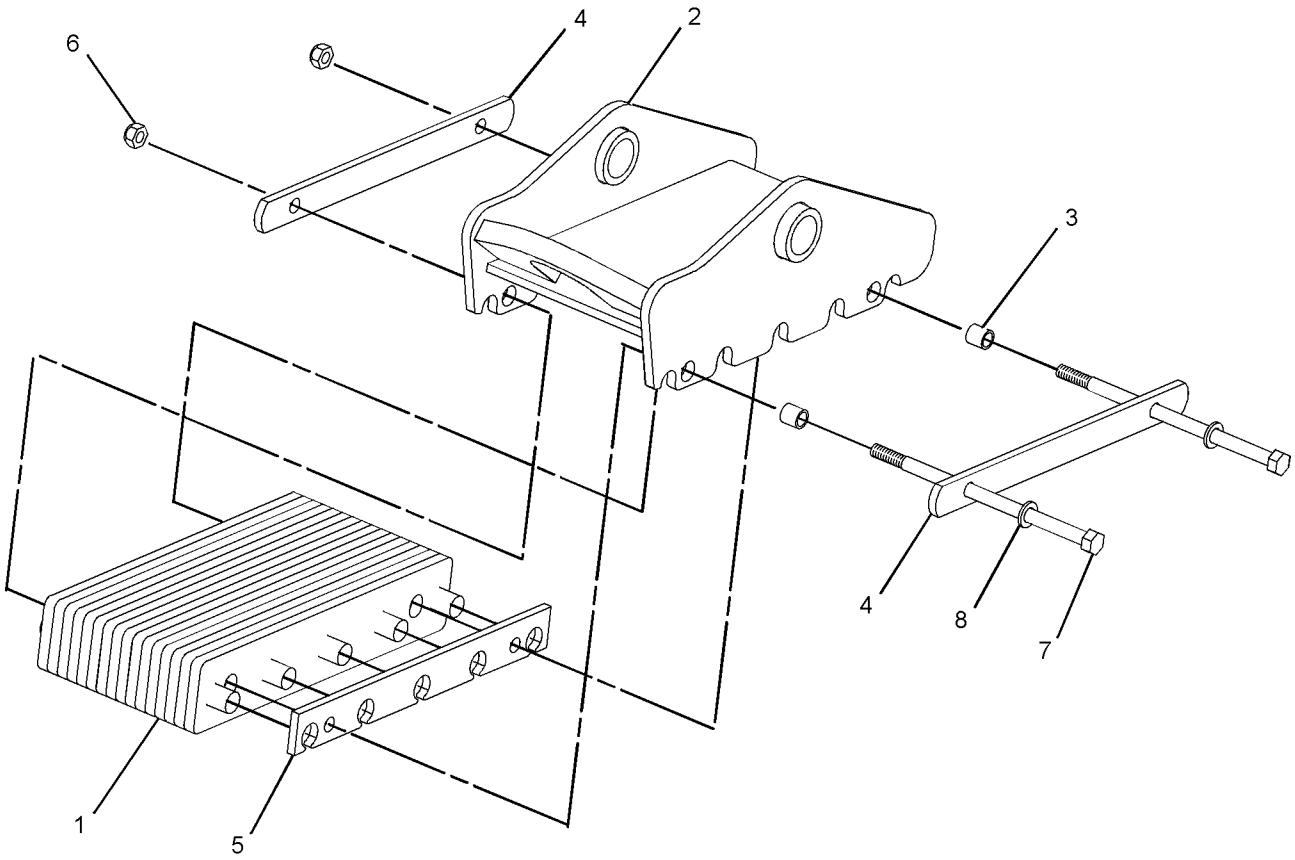

GRAPHIC #1 **<END>** g01113818

266-5834 STABILIZER GP-BACKHOE (CHG -00)

S/N: HLS1-UP

PART OF 213-9287 CHASSIS AR

SMCS-7222 **i02364684**

NOTE	REF NO	GRAPHIC REF	PART NUMBER	QTY	PART NAME 1 2 3 4 5 6 (PRODUCT LEVEL)	SEE PAGE
	1	1	**9R-0424**	2	PIN	
B	2	1	**111-4337**	2	WASHER (46X70X1-MM THK)	
B	3	1	**119-4594**	2	WASHER (41X64X1-MM THK)	
	4	1	**130-0777**	2	STABILIZER AS	
		1	**9R-0411**	2	BEARING-SLEEVE	
	5	1	**261-6703**	2	PIN	
	6	1	**6V-3213**	4	RING-RETAINING	
	7	1	**6V-8144**	4	RING-RETAINING	
B	8	1	**9R-0109**	8	WASHER (41X64X3-MM THK)	
B	9	1	**9R-0158**	14	WASHER (46X69X3-MM THK)	

B-USE AS REQUIRED

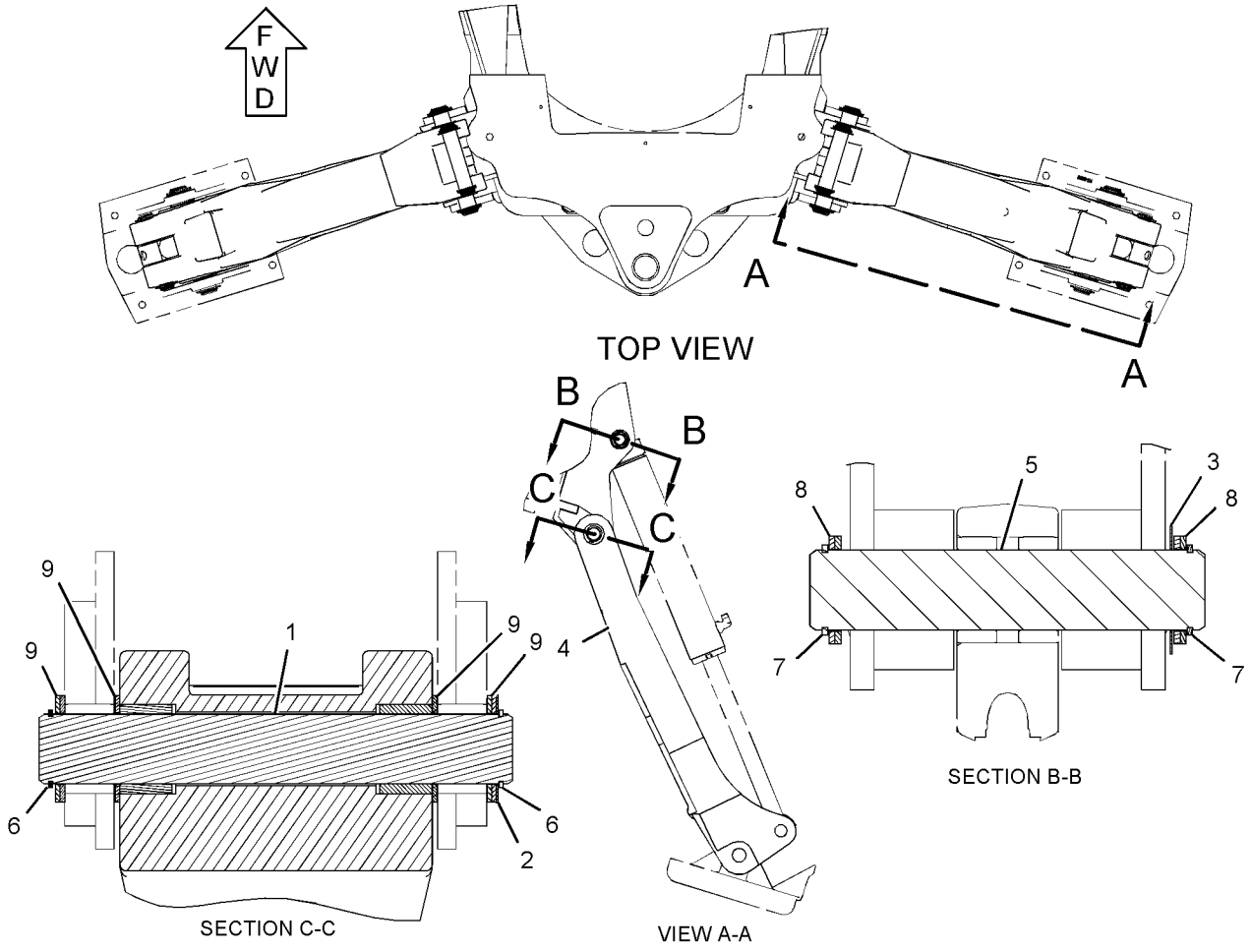

GRAPHIC #1 **<END>** g01184410

271-1402 STICK GP-EXTENDABLE (CHG -00, -01)

S/N: HLS1-UP

PART OF 214-3758 BACKHOE AR-EXTENDABLE STICK

AN ATTACHMENT

SMCS-6533 **i02409761**

NOTE	REF NO	GRAPHIC REF	PART NUMBER	QTY	PART NAME 1 2 3 4 5 6 (PRODUCT LEVEL)	SEE PAGE
	1	1	**3B-8489**	4	FITTING-GREASE	
	2	1	**9R-2959**	2	CLIP	
	3	1	**209-1616**	1	STICK AS (INNER)	
	4	1	**209-2435**	2	BLOCK	
Y	5	1	**210-7097**	1	CYLINDER GP-EXTENDABLE STICK	267
Y	6	1	*211-4260*	1	WIRING GP-EXTENDABLE STICK	122
	7	1	**214-6143**	1	PIN	
	8	1	**216-6295**	1	PLATE	
	9	1	**217-0055**	1	PIN	
	10	1	**217-1577**	2	PAD AS	
	11	1	**220-1018**	1	PIN	
	12	1	**222-5171**	2	SCREW AS (ADJUSTER)	
		1	**3E-4352**	1	WASHER-HARD (8.8X20.5X2.5-MM THK)	
M		1	**9X-2403**	1	SETSCREW-HEX SOCKET	
	13	1	**223-3926**	1	PLATE	
	14	1	**226-9764**	2	PAD AS	
	15	1	**233-5165**	4	PLATE	
B	16	1	**233-5166**	12	SHIM (1-MM THK)	
B	17	1	**233-5167**	4	SHIM (2-MM THK)	
	18	1	**233-5169**	4	PAD	
Y	19	1	*247-3267*	1	LINES GP-EXTENDABLE STICK	309
	20	1	**271-1408**	1	STICK AS	
	21	1	**284-3615**	16	SCREW-HEX SOCKET	
	22	1	**1L-3768**	2	RING-RETAINING	
	23	1	**4F-8711**	2	BUTTON-PLUG	
	24	1	**5V-7190**	4	WASHER-HARD (10.5X45.2X6-MM THK)	
	25	1	**6V-4364**	2	RING-RETAINING	
	26	1	**8T-4121**	12	WASHER-HARD (11X21X2.5-MM THK)	
M	27	1	**8T-4136**	2	BOLT (M10X1.5X25-MM)	
M	28	1	**8T-4139**	2	BOLT (M12X1.75X30-MM)	
M	29	1	**8T-4183**	2	BOLT (M12X1.75X40-MM)	
M	30	1	**8T-4194**	2	BOLT (M12X1.75X50-MM)	
M	31	1	**8T-4195**	2	BOLT (M10X1.5X30-MM)	
	32	1	**8T-4223**	26	WASHER-HARD (13.5X25.5X3-MM THK)	
M	33	1	**8T-4910**	4	BOLT (M12X1.75X60-MM)	

B-USE AS REQUIRED
M-METRIC PART
Y-SEPARATE ILLUSTRATION

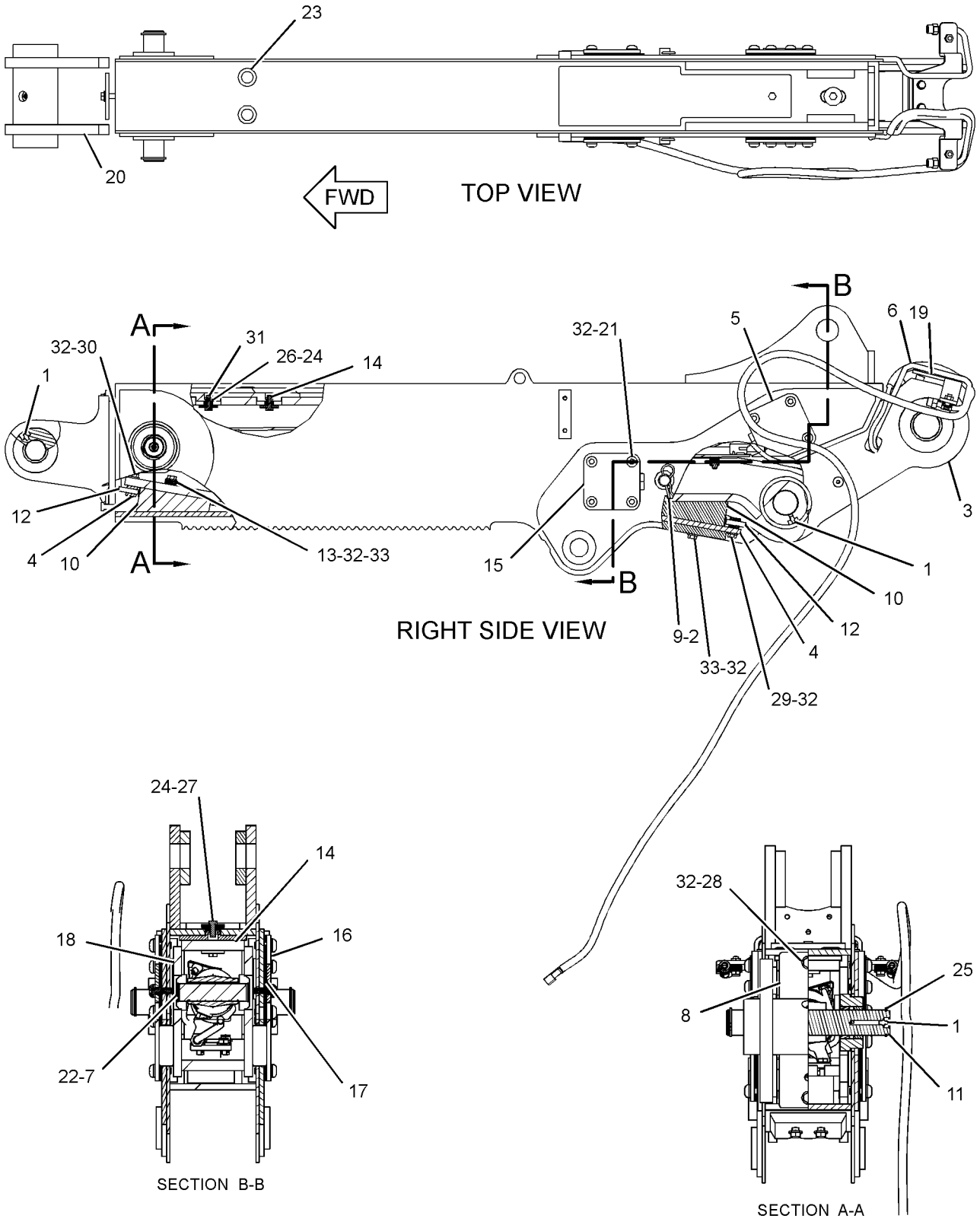

GRAPHIC #1 **<END>** g01231908

271-1405 STICK GP-EXTENDABLE (CHG -00)

S/N: HLS1-UP

PART OF 214-2553 BACKHOE AR-EXTENDABLE STICK

AN ATTACHMENT

SMCS-6533 **i02409055**

NOTE	REF NO	GRAPHIC REF	PART NUMBER	QTY	PART NAME 1 2 3 4 5 6 (PRODUCT LEVEL)	SEE PAGE
	1	1	**3B-8489**	4	FITTING-GREASE	
	2	1	**9R-2959**	2	CLIP	
	3	1	**209-1616**	1	STICK AS (INNER)	
	4	1	**209-2435**	2	BLOCK	
Y	5	1	**210-7098**	1	CYLINDER GP-STICK	278
	6	1	**214-6143**	1	PIN	
	7	1	**216-6295**	1	PLATE	
	8	1	**217-0055**	1	PIN	
	9	1	**217-1577**	2	PAD AS	
	10	1	**220-1018**	1	PIN	
	11	1	**222-5171**	2	SCREW AS (ADJUSTER)	
	12	1	**223-3926**	1	PLATE	
	13	1	**226-9764**	2	PAD AS	
	14	1	**233-5165**	4	PLATE	
	15	1	**233-5166**	12	SHIM (1-MM THK)	
	16	1	**233-5167**	4	SHIM (2-MM THK)	
	17	1	**233-5169**	4	PAD	
Y	18	1	*247-3267*	1	LINES GP-EXTENDABLE STICK	309
	19	1	**271-1408**	1	STICK AS	
	20	1	**1L-3768**	2	RING-RETAINING	
	21	1	*2Y-2881*	2	BUTTON-PLUG	
					(EACH INCLUDES)	
		1	**4F-8711**	1	BUTTON-PLUG	
	22	1	**5V-7190**	4	WASHER-HARD (10.5X45.2X6-MM THK)	
	23	1	**6V-4364**	2	RING-RETAINING	
B	24	1	**8T-4121**	12	WASHER-HARD (11X21X2.5-MM THK)	
M	25	1	**8T-4136**	2	BOLT (M10X1.5X25-MM)	
M	26	1	**8T-4139**	18	BOLT (M12X1.75X30-MM)	
M	27	1	**8T-4183**	2	BOLT (M12X1.75X40-MM)	
M	28	1	**8T-4194**	2	BOLT (M12X1.75X50-MM)	
M	29	1	**8T-4195**	2	BOLT (M10X1.5X30-MM)	
	30	1	**8T-4223**	26	WASHER-HARD (13.5X25.5X3-MM THK)	
M	31	1	**8T-4910**	4	BOLT (M12X1.75X60-MM)	

B-USE AS REQUIRED
M-METRIC PART
Y-SEPARATE ILLUSTRATION

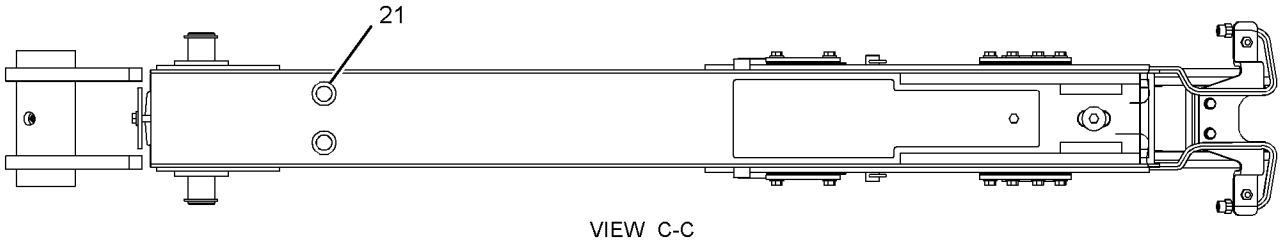

VIEW C-C

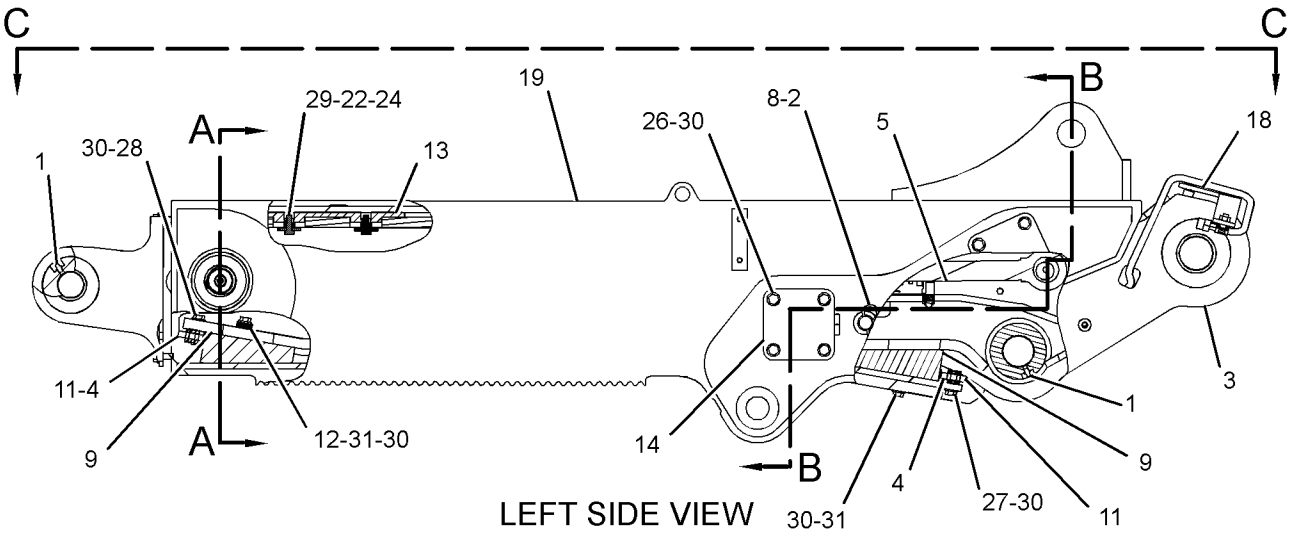

LEFT SIDE VIEW

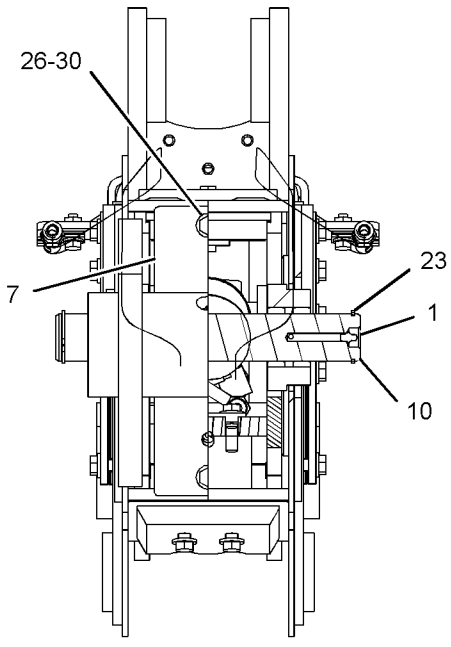

SECTION B-B

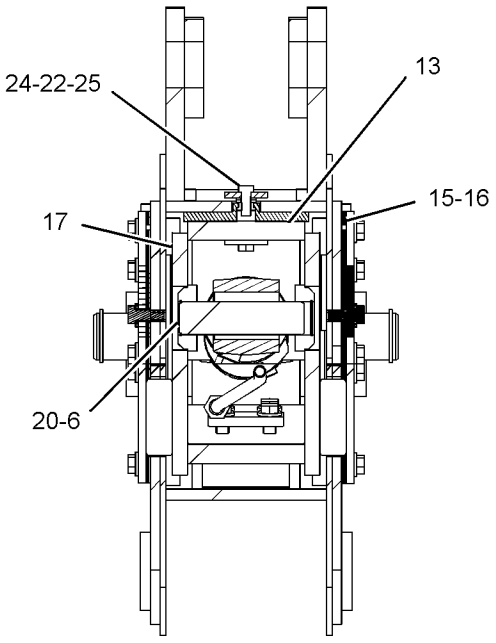

SECTION A-A

GRAPHIC #1 **<END>** g01231915

271-8667 STICK GP-HOE (CHG -00)

S/N: HLS1-UP

PART OF 214-2550, 214-3755 BACKHOE AR-STANDARD STICK

AN ATTACHMENT

SMCS-6502 **i02409087**

NOTE	REF NO	GRAPHIC REF	PART NUMBER	QTY	PART NAME 1 2 3 4 5 6 (PRODUCT LEVEL)	SEE PAGE
	1	1	**9R-1502**	4	WASHER (56X90X4-MM THK)	
	2	1	**9R-1510**	4	WASHER (51X82X4-MM THK)	
	3	1	**9R-8292**	3	SPACER (61X135X1-MM THK)	
	4	1	**213-6695**	1	PIN	
	5	1	**213-6696**	1	PIN	
	6	1	**213-6697**	1	PIN	
	7	1	**215-9448**	1	PIN AS	
	8	1	**215-9690**	4	WASHER (66X100X4-MM THK)	
	9	1	**271-8670**	1	STICK AS	
		1	**9R-0162**	4	BEARING-SLEEVE	
M		1	**9R-2672**	2	BOSS-THREADED	
		1	**107-6711**	2	BLOCK	
		1	**213-6682**	2	BEARING-SLEEVE	
		1	**213-6683**	2	BEARING-SLEEVE	
		1	**221-4315**	1	STOP AS	
		1	**221-4322**	1	PLATE	
	10	1	**095-0929**	2	RING-RETAINING	
	11	1	**3B-8488**	1	FITTING-GREASE	
	12	1	**3B-8489**	5	FITTING-GREASE	
	13	1	**6V-4364**	2	RING-RETAINING	
	14	1	**6V-8344**	2	RING-RETAINING	

M-METRIC PART

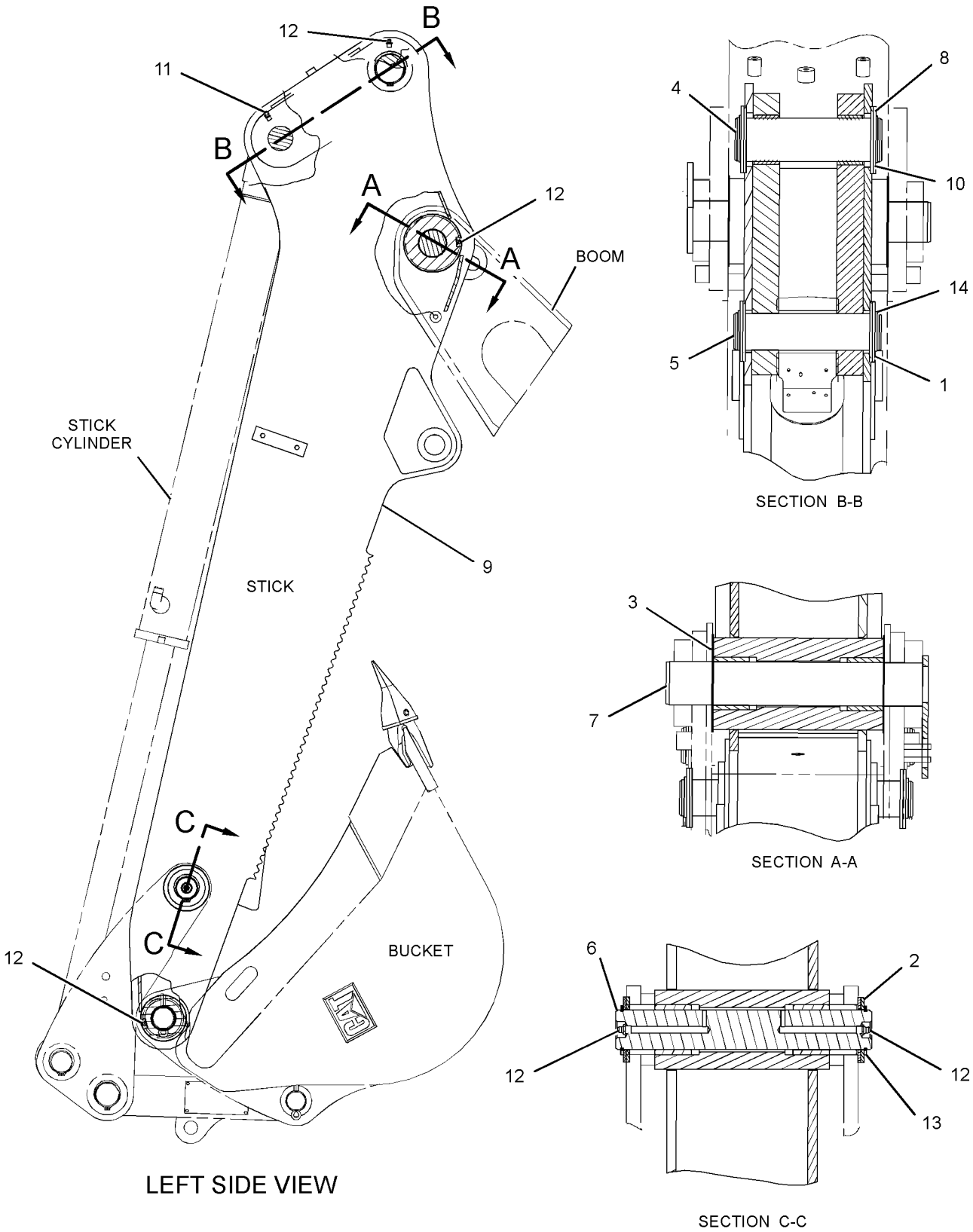

GRAPHIC #1 **<END>** g01232072

WORK TOOLS

216-8803 BOWL AS-BUCKET (CHG -02, -03)

S/N: HLS1-UP

PART OF 216-8800, 216-8801 BUCKET GP-MULTIPURPOSE AN ATTACHMENT

SMCS-6104, 6517 **i02236689**

NOTE	REF NO	GRAPHIC REF	PART NUMBER	QTY	PART NAME 1 2 3 4 5 6 (PRODUCT LEVEL)	SEE PAGE
	1	1	*216-8843*	1	PLATE AS	
		1	**216-8839**	1	PLATE (WEAR)	
		1	**9R-4672**	1	EDGE	

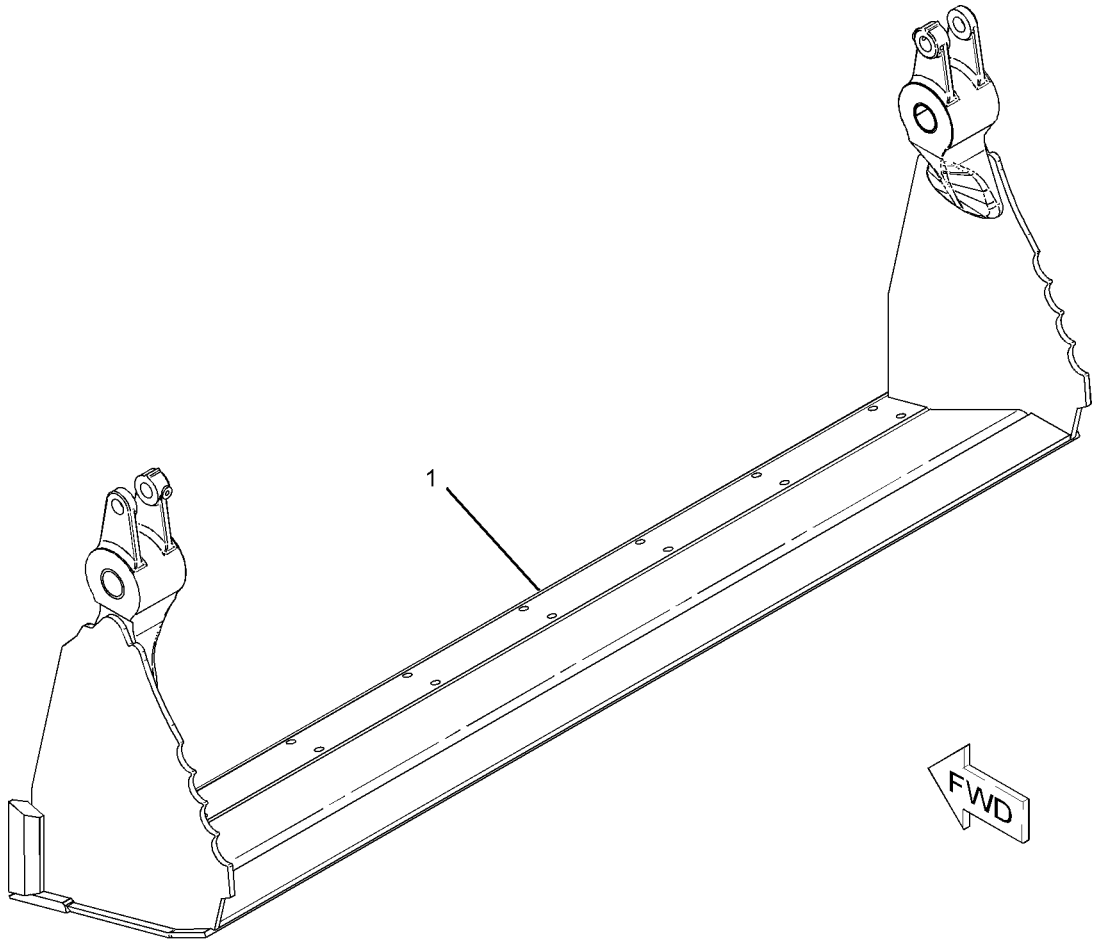

GRAPHIC #1 **<END>** g01134490

216-8826 BOWL AS-BUCKET (CHG -02, -03)

S/N: HLS1-UP

PART OF 216-8820, 216-8821 BUCKET GP-MULTIPURPOSE

AN ATTACHMENT

SMCS-6104, 6517 **i02236747**

NOTE	REF NO	GRAPHIC REF	PART NUMBER	QTY	PART NAME 1 2 3 4 5 6 (PRODUCT LEVEL)	SEE PAGE
	1	1	*216-8804*	1	PLATE AS (LH)	
		1	**9R-4675**	1	BUSHING-TERMINAL	
		1	**9R-5294**	1	HINGE	
	2	1	*216-8805*	1	PLATE AS (RH)	
		1	**9R-4675**	1	BUSHING-TERMINAL	
		1	**9R-5294**	1	HINGE	
	3	1	*216-8829*	1	PLATE AS	
		1	**9R-5313**	1	EDGE	

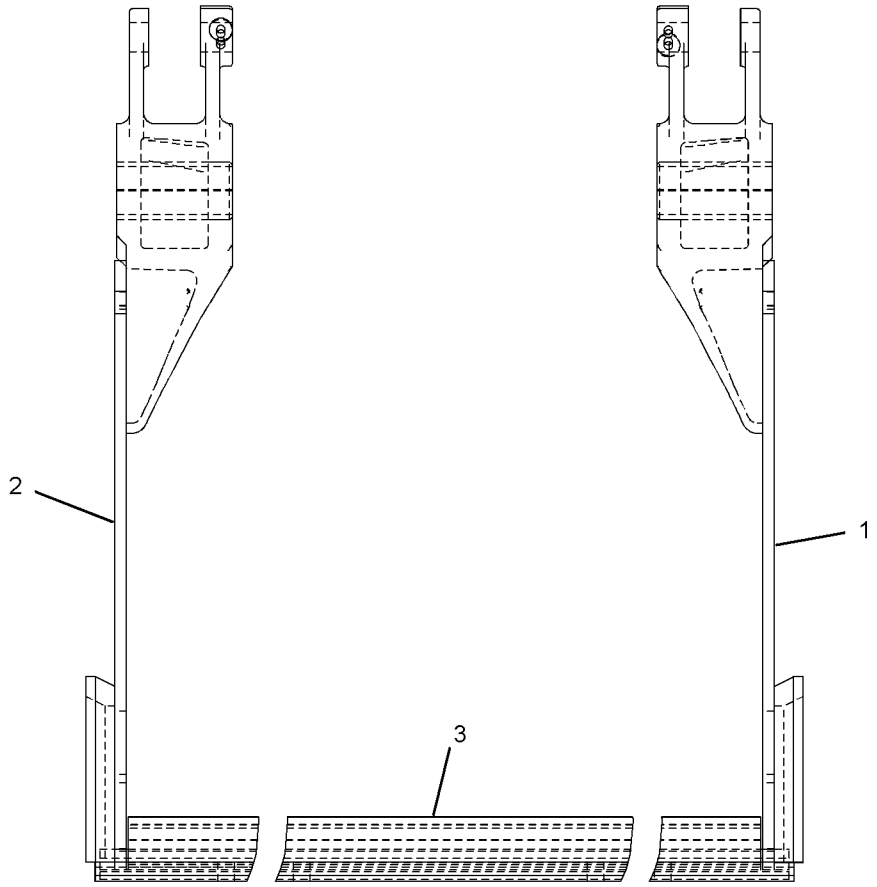

FRONT VIEW

GRAPHIC #1 **<END>** g01135645

232-2681 BUCKET AR-MULTIPURPOSE (CHG -00, -01)

S/N: HLS1-UP

AN ATTACHMENT

SMCS-6104 **i02218649**

NOTE	PART NUMBER	QTY	PART NAME 1 2 3 4 5 6 (PRODUCT LEVEL)	SEE PAGE
Y	**216-8800**	1	BUCKET GP-MULTIPURPOSE	495
Y	*9R-5321*	1	EDGE GP-CUTTING	513
Y-SEPARATE ILLUSTRATION				

<END>

232-2682 BUCKET AR-MULTIPURPOSE (CHG -00, -01)

S/N: HLS1-UP

AN ATTACHMENT

SMCS-6104 **i02207479**

NOTE	PART NUMBER	QTY	PART NAME 1 2 3 4 5 6 (PRODUCT LEVEL)	SEE PAGE
Y	**216-8800**	1	BUCKET GP-MULTIPURPOSE	495
Y	*9R-5866*	1	TOOTH GP-UNI	554
Y-SEPARATE ILLUSTRATION				

<END>

232-2683 BUCKET AR-MULTIPURPOSE (CHG -00, -01)

S/N: HLS1-UP

AN ATTACHMENT

SMCS-6104 **i02218657**

NOTE	PART NUMBER	QTY	PART NAME 1 2 3 4 5 6 (PRODUCT LEVEL)	SEE PAGE
Y	*232-2685*	1	BUCKET AR-MULTIPURPOSE	428
Y	*9R-5321*	1	EDGE GP-CUTTING	513
Y-SEPARATE ILLUSTRATION				

<END>

232-2684 BUCKET AR-MULTIPURPOSE (CHG -00, -01)

S/N: HLS1-UP

AN ATTACHMENT

SMCS-6104 **i02218679**

NOTE	PART NUMBER	QTY	PART NAME 1 2 3 4 5 6 (PRODUCT LEVEL)	SEE PAGE
Y	*232-2685*	1	BUCKET AR-MULTIPURPOSE	428
Y	*9R-5866*	1	TOOTH GP-UNI	554
Y-SEPARATE ILLUSTRATION				

<END>

232-2685 BUCKET AR-MULTIPURPOSE (CHG -00, -01)

S/N: HLS1-UP
PART OF 232-2683, 232-2684 BUCKET AR-MULTIPURPOSE
AN ATTACHMENT

SMCS-6104 **i02218717**

NOTE	PART NUMBER	QTY	PART NAME 1 2 3 4 5 6 (PRODUCT LEVEL)	SEE PAGE
Y	**216-8801**	1	BUCKET GP-MULTIPURPOSE	496
Y	**104-6310**	1	FORK GP	514
Y-SEPARATE ILLUSTRATION				

<END>

232-2686 BUCKET AR-MULTIPURPOSE (CHG -00, -01)

S/N: HLS1-UP
AN ATTACHMENT

SMCS-6104 **i02218734**

NOTE	PART NUMBER	QTY	PART NAME 1 2 3 4 5 6 (PRODUCT LEVEL)	SEE PAGE
Y	**216-8820**	1	BUCKET GP-MULTIPURPOSE	498
Y	*9R-5320*	1	EDGE GP-CUTTING	512
Y-SEPARATE ILLUSTRATION				

<END>

232-2687 BUCKET AR-MULTIPURPOSE (CHG -00, -01)

S/N: HLS1-UP
AN ATTACHMENT

SMCS-6104 **i02218740**

NOTE	PART NUMBER	QTY	PART NAME 1 2 3 4 5 6 (PRODUCT LEVEL)	SEE PAGE
Y	**216-8820**	1	BUCKET GP-MULTIPURPOSE	498
Y	*9R-5866*	1	TOOTH GP-UNI	554
Y-SEPARATE ILLUSTRATION				

<END>

232-2688 BUCKET AR-MULTIPURPOSE (CHG -00, -01)

S/N: HLS1-UP
AN ATTACHMENT

SMCS-6104 **i02218761**

NOTE	PART NUMBER	QTY	PART NAME 1 2 3 4 5 6 (PRODUCT LEVEL)	SEE PAGE
Y	*232-2690*	1	BUCKET AR-MULTIPURPOSE	429
Y	*9R-5320*	1	EDGE GP-CUTTING	512
Y-SEPARATE ILLUSTRATION				

<END>

232-2689 BUCKET AR-MULTIPURPOSE (CHG -00, -01)

S/N: HLS1-UP

AN ATTACHMENT

SMCS-6104 **i02218829**

NOTE	PART NUMBER	QTY	PART NAME 1 2 3 4 5 6 (PRODUCT LEVEL)	SEE PAGE
Y	*232-2690*	1	BUCKET AR-MULTIPURPOSE	429
Y	*9R-5866*	1	TOOTH GP-UNI	554

Y-SEPARATE ILLUSTRATION

<END>

232-2690 BUCKET AR-MULTIPURPOSE (CHG -00, -01)

S/N: HLS1-UP

PART OF 232-2688, 232-2689 BUCKET AR-MULTIPURPOSE

AN ATTACHMENT

SMCS-6104 **i02218853**

NOTE	PART NUMBER	QTY	PART NAME 1 2 3 4 5 6 (PRODUCT LEVEL)	SEE PAGE
Y	*216-8821*	1	BUCKET GP-MULTIPURPOSE	500
Y	**104-6310**	1	FORK GP	514

Y-SEPARATE ILLUSTRATION

<END>

251-1156 BUCKET AS-GENERAL PURPOSE (CHG -00, -01)

S/N: HLS1-UP
1.25 CU M (1.5 CU YD)
PART OF 251-1777 BUCKET GP-GENERAL PURPOSE
AN ATTACHMENT

SMCS-6101 **i02106199**

NOTE	REF NO	GRAPHIC REF	PART NUMBER	QTY	PART NAME 1 2 3 4 5 6 (PRODUCT LEVEL)	SEE PAGE
	1	1	*9R-5901*	1	BRACKET AS-TILT (RH)	
	1A	1	**9R-4485**	1	BOSS	
	1B	1	**9R-4486**	1	BOSS	
	2	1	*9R-5902*	1	BRACKET AS-TILT (LH)	
	2A	1	**9R-4485**	1	BOSS	
	2B	1	**9R-4486**	1	BOSS	
	3	1	**9R-0376**	2	EDGE	
	4	1	**9R-5313**	1	EDGE	
	5	1	**9R-5205**	1	EDGE (LH)	
	6	1	**9R-5206**	1	EDGE (RH)	
	7	1	*251-1168*	2	BRACKET AS-LIFT (RH)	
					(EACH INCLUDES)	
	7A	1	**9R-0111**	1	BEARING-SLEEVE	
	8	1	*251-1169*	2	BRACKET AS-LIFT (LH)	
					(EACH INCLUDES)	
	8A	1	**9R-0111**	1	BEARING-SLEEVE	

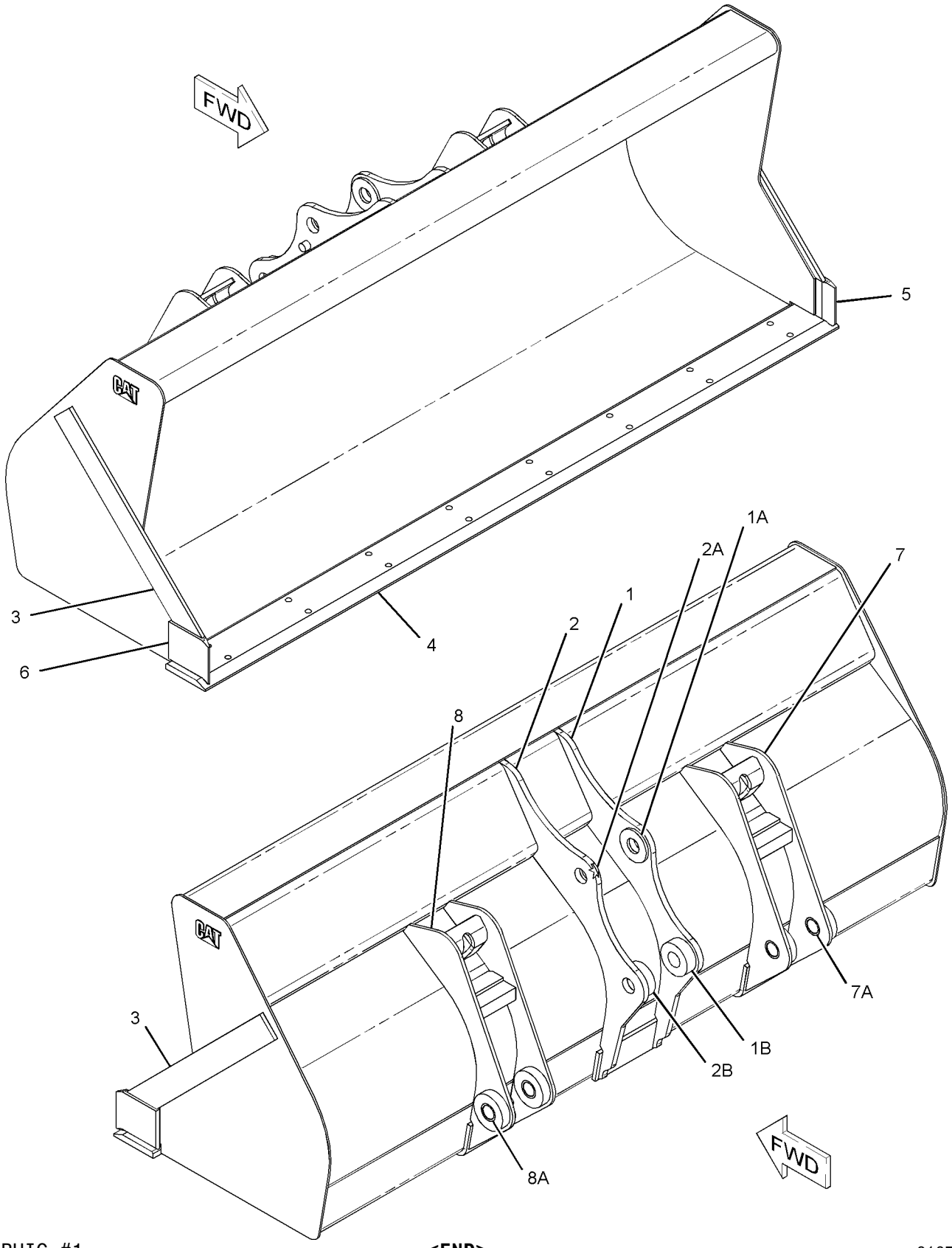

GRAPHIC #1 **<END>** g01074897

251-1157 BUCKET AS-GENERAL PURPOSE (CHG -00, -01)

S/N: HLS1-UP
0.76 CU M (1.00 CU YD)
PART OF 251-1780 BUCKET GP-GENERAL PURPOSE
AN ATTACHMENT

SMCS-6101 **i02111689**

NOTE	REF NO	GRAPHIC REF	PART NUMBER	QTY	PART NAME 1 2 3 4 5 6 (PRODUCT LEVEL)	SEE PAGE
	1	1	*9R-4483*	1	BRACKET AS-TILT (LH)	
	1A	1	**9R-4485**	1	BOSS	
	1B	1	**9R-4486**	1	BOSS	
	2	1	*9R-4487*	1	BRACKET AS-TILT (RH)	
	2A	1	**9R-4485**	1	BOSS	
	2B	1	**9R-4486**	1	BOSS	
	3	1	**9R-0347**	2	EDGE	
	4	1	**9R-4672**	1	EDGE	
	5	1	**9R-5205**	1	EDGE (LH)	
	6	1	**9R-5206**	1	EDGE (RH)	
	7	1	*251-1172*	2	BRACKET AS-LIFT (RH)	
					(EACH INCLUDES)	
	7A	1	**9R-0111**	1	BEARING-SLEEVE	
	8	1	*251-1173*	2	BRACKET AS-LIFT (LH)	
					(EACH INCLUDES)	
	8A	1	**9R-0111**	1	BEARING-SLEEVE	

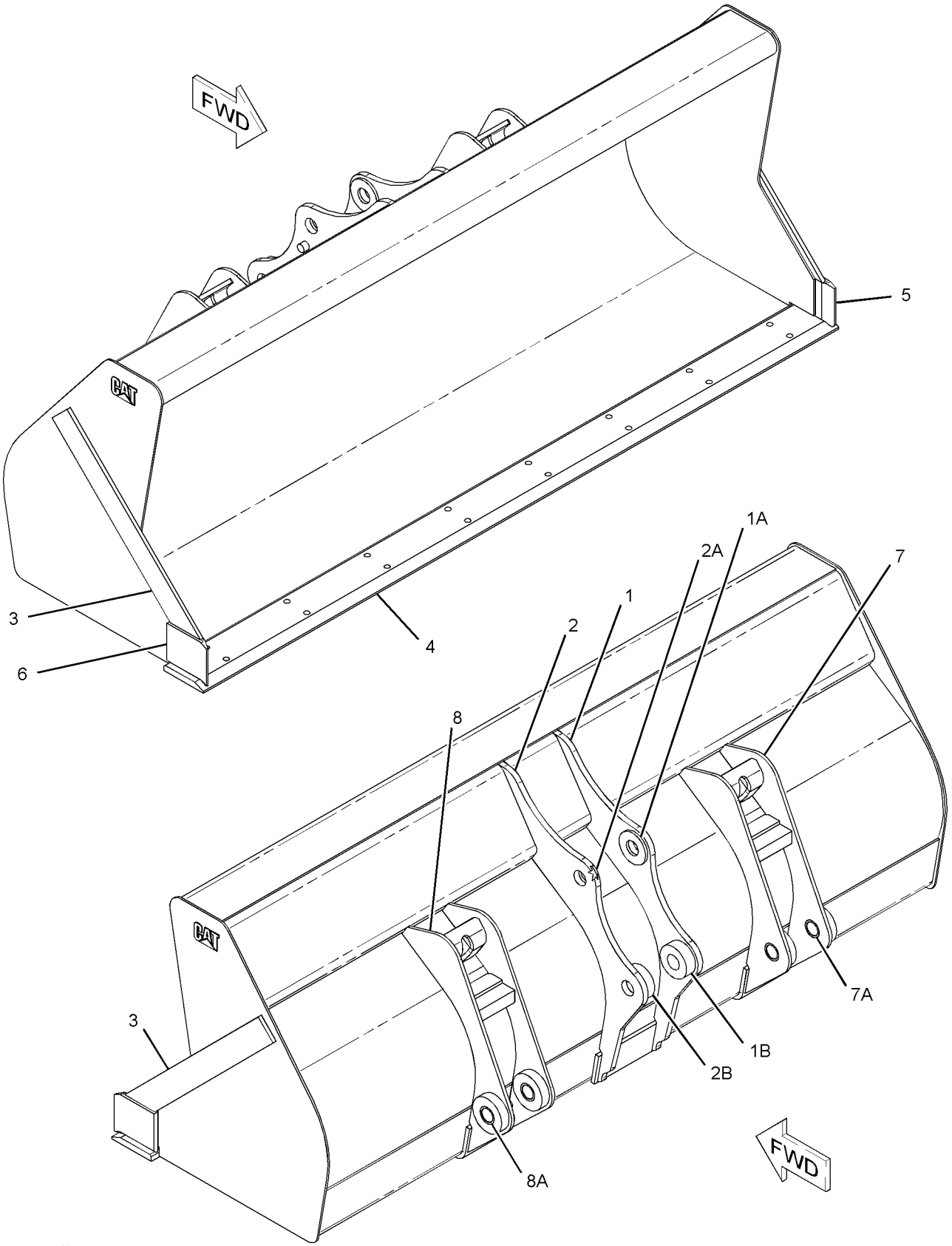

GRAPHIC #1 **<END>** g01074897

251-1158 BUCKET AS-GENERAL PURPOSE (CHG -00, -01)

S/N: HLS1-UP
1.0 CU M (1.131 CU YD)
PART OF 251-1783 BUCKET GP-GENERAL PURPOSE
AN ATTACHMENT

SMCS-6101 **i02111684**

NOTE	REF NO	GRAPHIC REF	PART NUMBER	QTY	PART NAME 1 2 3 4 5 6 (PRODUCT LEVEL)	SEE PAGE
	1	1	*9R-0371*	1	BRACKET AS-TILT (LH)	
	1A	1	**9R-4485**	1	BOSS	
	1B	1	**9R-4486**	1	BOSS	
	2	1	*9R-0372*	1	BRACKET AS-TILT (RH)	
	2A	1	**9R-4485**	1	BOSS	
	2B	1	**9R-4486**	1	BOSS	
	3	1	**9R-5832**	2	EDGE	
	4	1	**9R-5313**	1	EDGE	
	5	1	**9R-5205**	1	EDGE (LH)	
	6	1	**9R-5206**	1	EDGE (RH)	
	7	1	*251-1172*	2	BRACKET AS-LIFT (RH)	
					(EACH INCLUDES)	
	7A	1	**9R-0111**	1	BEARING-SLEEVE	
	8	1	*251-1173*	2	BRACKET AS-LIFT (LH)	
					(EACH INCLUDES)	
	8A	1	**9R-0111**	1	BEARING-SLEEVE	

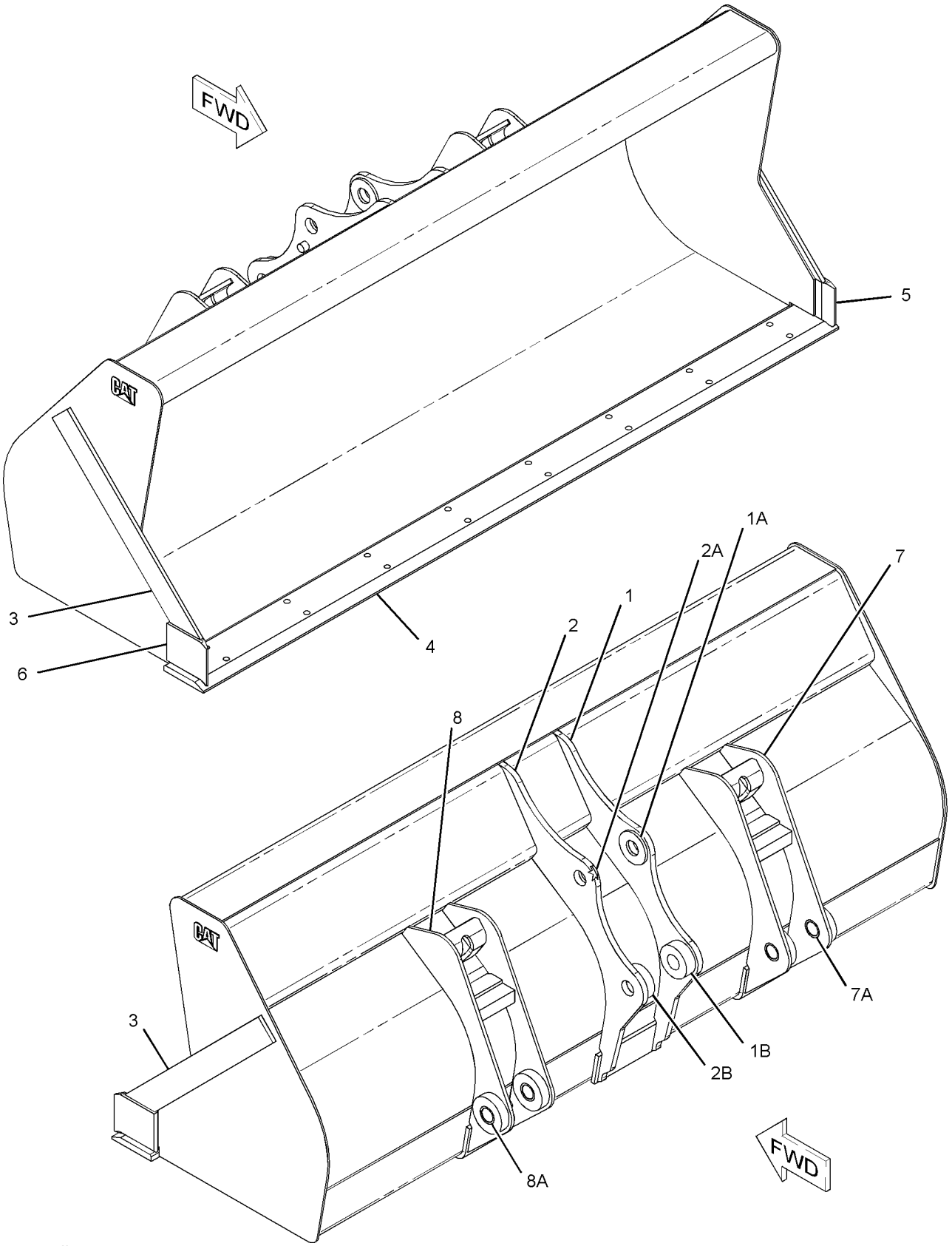

GRAPHIC #1 **<END>** g01074897

251-1159 BUCKET AS-GENERAL PURPOSE (CHG -00, -01)

S/N: HLS1-UP
1.17 CU M (1.4 CU YD)
PART OF 251-1786 BUCKET GP-GENERAL PURPOSE
AN ATTACHMENT

SMCS-6101 **i02108904**

NOTE	REF NO	GRAPHIC REF	PART NUMBER	QTY	PART NAME 1 2 3 4 5 6 (PRODUCT LEVEL)	SEE PAGE
	1	1	*9R-5901*	1	BRACKET AS-TILT (RH)	
	1A	1	**9R-4485**	1	BOSS	
	1B	1	**9R-4486**	1	BOSS	
	2	1	*9R-5902*	1	BRACKET AS-TILT (LH)	
	2A	1	**9R-4485**	1	BOSS	
	2B	1	**9R-4486**	1	BOSS	
	3	1	**9R-0376**	2	EDGE	
	4	1	**9R-4672**	1	EDGE	
	5	1	**9R-5205**	1	EDGE (LH)	
	6	1	**9R-5206**	1	EDGE (RH)	
	7	1	*251-1168*	2	BRACKET AS-LIFT (RH)	
					(EACH INCLUDES)	
	7A	1	**9R-0111**	1	BEARING-SLEEVE	
	8	1	*251-1169*	2	BRACKET AS-LIFT (LH)	
					(EACH INCLUDES)	
	8A	1	**9R-0111**	1	BEARING-SLEEVE	

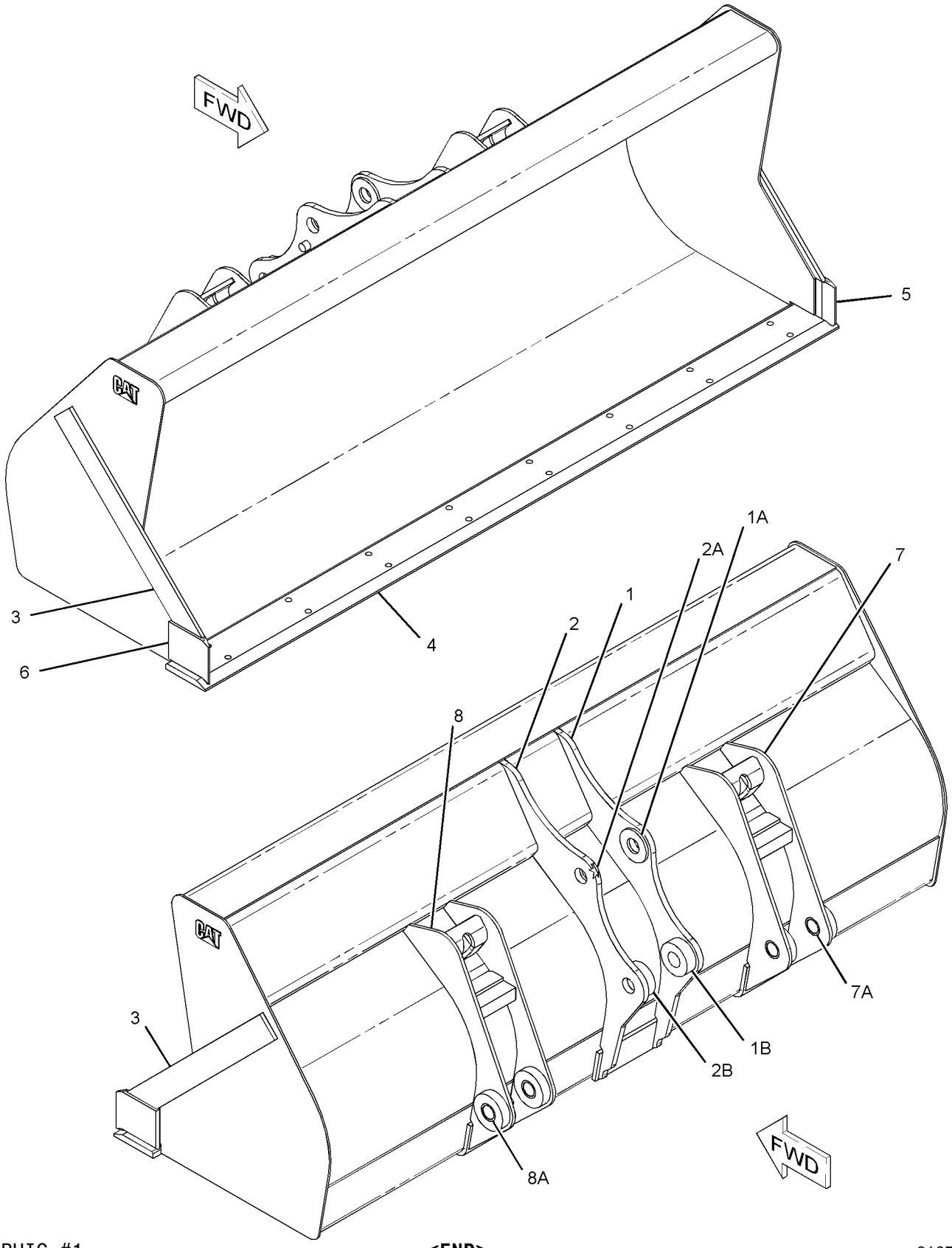

GRAPHIC #1 **<END>** g01074897

251-1160 BUCKET AS-GENERAL PURPOSE (CHG -00, -01)

S/N: HLS1-UP
0.96 CU M (1.25 CU YD)
PART OF 251-1789 BUCKET GP-GENERAL PURPOSE
AN ATTACHMENT

SMCS-6101 **i02111698**

NOTE	REF NO	GRAPHIC REF	PART NUMBER	QTY	PART NAME 1 2 3 4 5 6 (PRODUCT LEVEL)	SEE PAGE
	1	1	*9R-0371*	1	BRACKET AS-TILT (LH)	
	1A	1	**9R-4485**	1	BOSS	
	1B	1	**9R-4486**	1	BOSS	
	2	1	*9R-0372*	1	BRACKET AS-TILT (RH)	
	2A	1	**9R-4485**	1	BOSS	
	2B	1	**9R-4486**	1	BOSS	
	3	1	**9R-0376**	2	EDGE	
	4	1	**9R-4672**	1	EDGE	
	5	1	**9R-5205**	1	EDGE (LH)	
	6	1	**9R-5206**	1	EDGE (RH)	
	7	1	*251-1172*	2	BRACKET AS-LIFT (RH)	
					(EACH INCLUDES)	
	7A	1	**9R-0111**	1	BEARING-SLEEVE	
	8	1	*251-1173*	2	BRACKET AS-LIFT (LH)	
					(EACH INCLUDES)	
	8A	1	**9R-0111**	1	BEARING-SLEEVE	

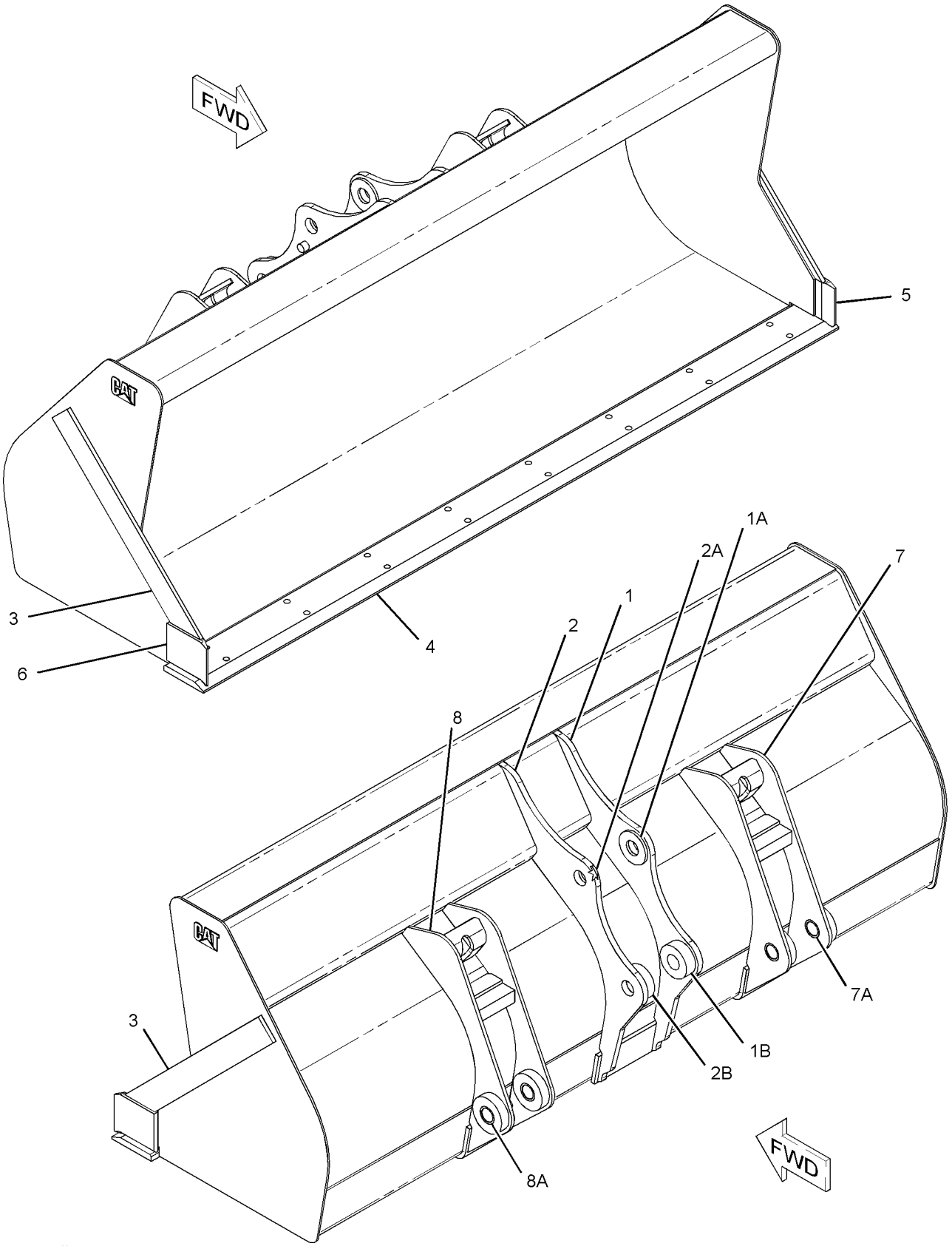

GRAPHIC #1 **<END>** g01074897

254-8939 BUCKET AS-HOE—HIGH CAPACITY, PIN-LOCK (CHG -00)

S/N: HLS1-UP
458-MM (18-IN)
PART OF 254-8940 BUCKET GP-HOE
AN ATTACHMENT

SMCS-6503 **i02284325**

NOTE	REF NO	GRAPHIC REF	PART NUMBER	QTY	PART NAME 1 2 3 4 5 6 (PRODUCT LEVEL)	SEE PAGE
	1	1	**134-5884**	1	EDGE (LH)	
	2	1	**134-5885**	1	EDGE (RH)	
	3	1	*151-7902*	1	BRACKET AS (LH)	
		1	**9R-0162**	1	BEARING-SLEEVE	
		1	**168-0480**	1	BEARING-SLEEVE	
	4	1	*151-7903*	1	BRACKET AS (RH)	
		1	**9R-0162**	1	BEARING-SLEEVE	
		1	**168-0480**	1	BEARING-SLEEVE	
	5	1	**161-4130**	2	PLATE-IDENTIFICATION (CAT)	
	6	1	**219-9483**	1	EDGE	
	7	1	**253-0234**	4	ADAPTER	

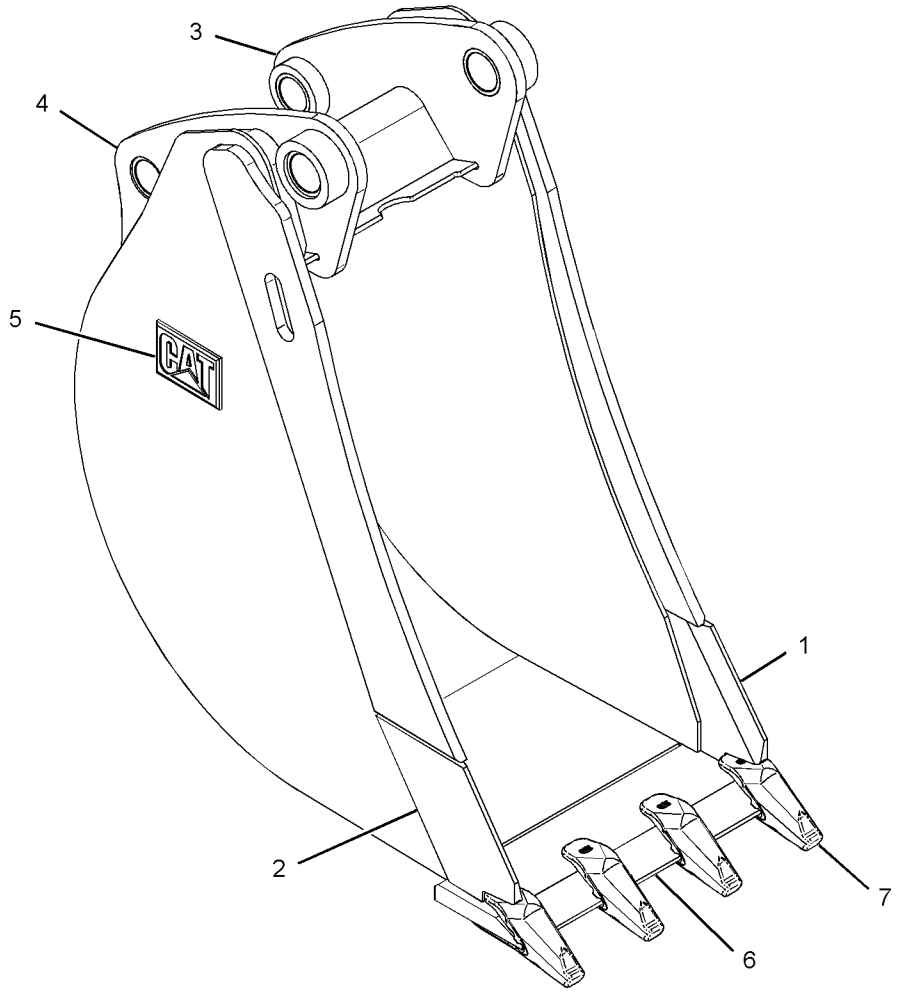

GRAPHIC #1 **<END>** g01150300

254-8944 BUCKET AS-HOE—HIGH CAPACITY, PIN-LOCK (CHG -00)

S/N: HLS1-UP
610-MM (24-IN)
PART OF 254-8941 BUCKET GP-HOE
AN ATTACHMENT

SMCS-6503 **i02284375**

NOTE	REF NO	GRAPHIC REF	PART NUMBER	QTY	PART NAME 1 2 3 4 5 6 (PRODUCT LEVEL)	SEE PAGE
	1	1	**134-5884**	1	EDGE (LH)	
	2	1	**134-5885**	1	EDGE (RH)	
	3	1	*151-7902*	1	BRACKET AS (LH)	
		1	**9R-0162**	1	BEARING-SLEEVE	
		1	**168-0480**	1	BEARING-SLEEVE	
	4	1	*151-7903*	1	BRACKET AS (RH)	
		1	**9R-0162**	1	BEARING-SLEEVE	
		1	**168-0480**	1	BEARING-SLEEVE	
	5	1	**161-4130**	2	PLATE-IDENTIFICATION (CAT)	
	6	1	**219-9484**	1	EDGE	
	7	1	**253-0234**	5	ADAPTER	

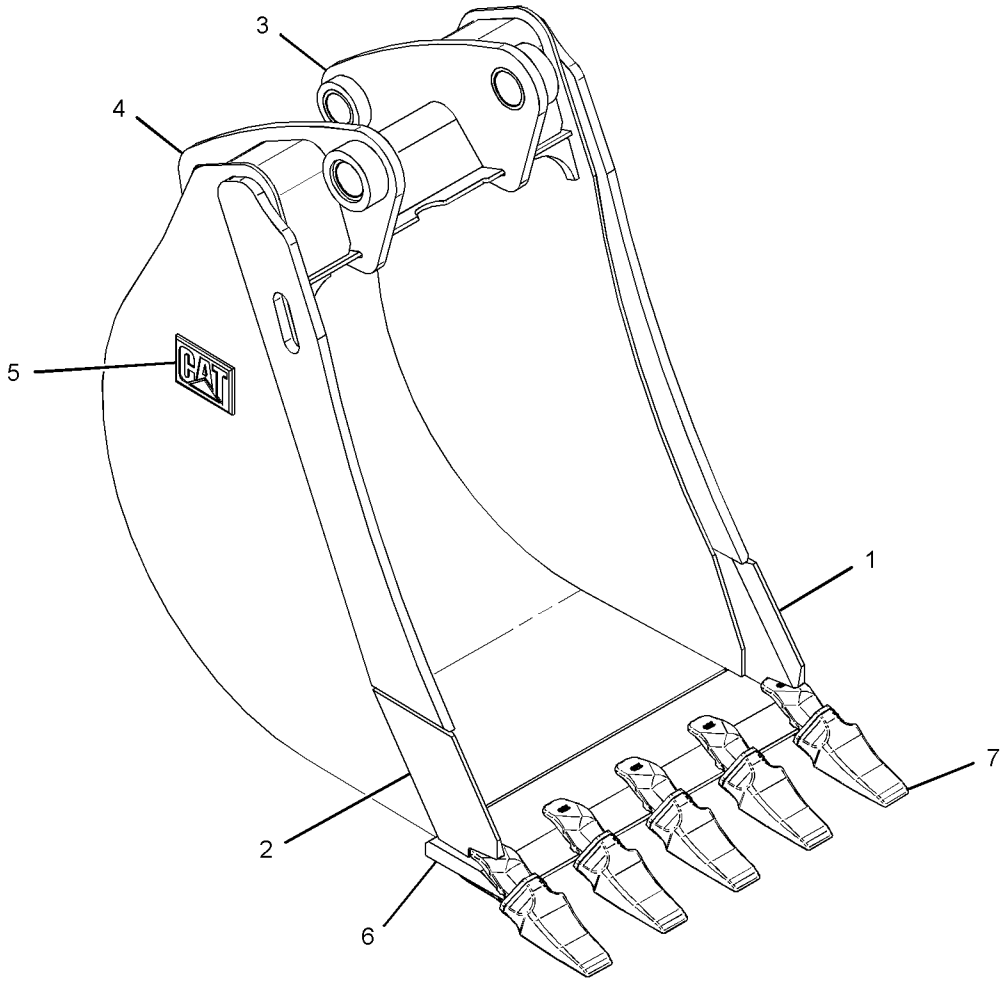

GRAPHIC #1 **<END>** g01150213

254-8945 BUCKET AS-HOE—HIGH CAPACITY, PIN-LOCK (CHG -00)

S/N: HLS1-UP
762-MM (30-IN)
PART OF 254-8942 BUCKET GP-HOE
AN ATTACHMENT

SMCS-6503 **i02284391**

NOTE	REF NO	GRAPHIC REF	PART NUMBER	QTY	PART NAME 1 2 3 4 5 6 (PRODUCT LEVEL)	SEE PAGE
	1	1	**134-5884**	1	EDGE (LH)	
	2	1	**134-5885**	1	EDGE (RH)	
	3	1	*151-7902*	1	BRACKET AS (LH)	
		1	**9R-0162**	1	BEARING-SLEEVE	
		1	**168-0480**	1	BEARING-SLEEVE	
	4	1	*151-7903*	1	BRACKET AS (RH)	
		1	**9R-0162**	1	BEARING-SLEEVE	
		1	**168-0480**	1	BEARING-SLEEVE	
	5	1	**161-4130**	2	PLATE-IDENTIFICATION (CAT)	
	6	1	**219-9485**	1	EDGE	
	7	1	**253-0234**	5	ADAPTER	

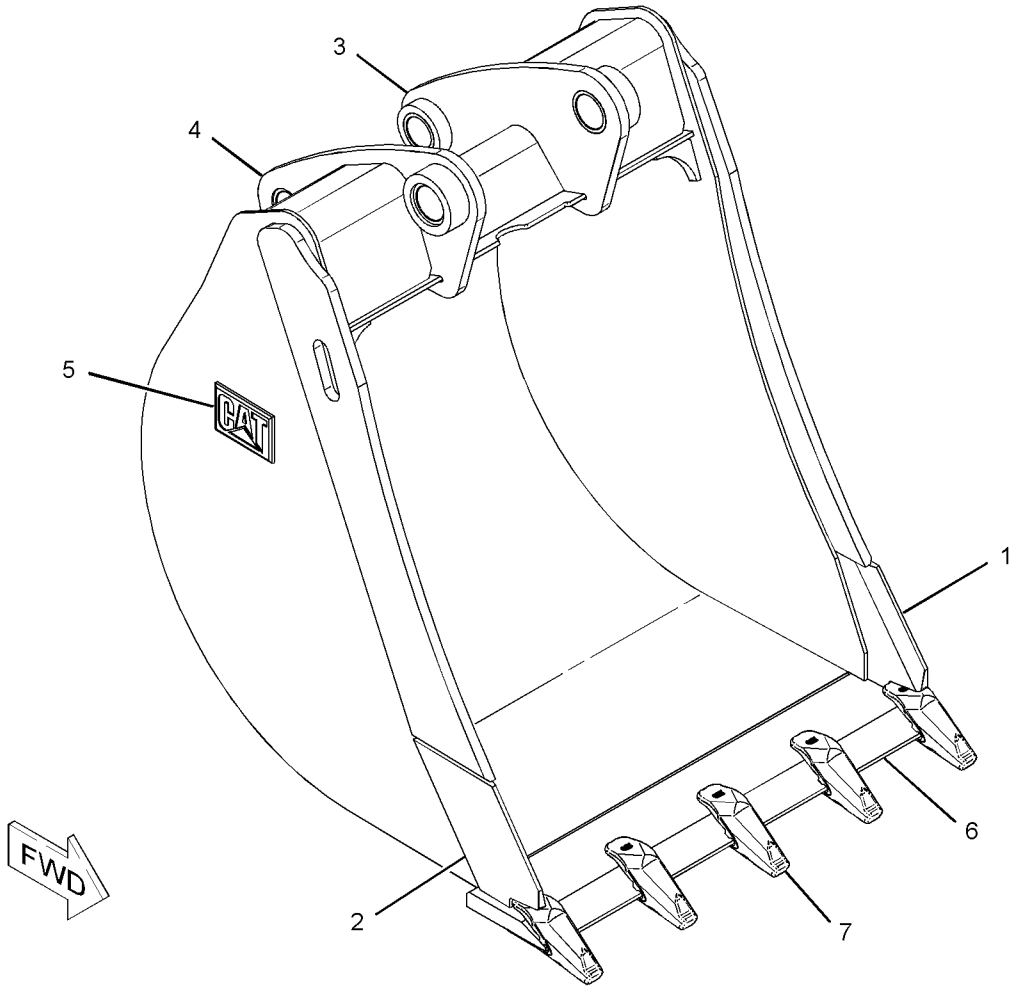

GRAPHIC #1 **<END>** g01144822

254-8946 BUCKET AS-HOE—HIGH CAPACITY, PIN-LOCK (CHG -00)

S/N: HLS1-UP
914-MM (36-IN)
PART OF 254-8943 BUCKET GP-HOE
AN ATTACHMENT

SMCS-6503 **i02284403**

NOTE	REF NO	GRAPHIC REF	PART NUMBER	QTY	PART NAME 1 2 3 4 5 6 (PRODUCT LEVEL)	SEE PAGE
	1	1	**134-5884**	1	EDGE (LH)	
	2	1	**134-5885**	1	EDGE (RH)	
	3	1	*151-7902*	1	BRACKET AS (LH)	
		1	**9R-0162**	1	BEARING-SLEEVE	
		1	**168-0480**	1	BEARING-SLEEVE	
	4	1	*151-7903*	1	BRACKET AS (RH)	
		1	**9R-0162**	1	BEARING-SLEEVE	
		1	**168-0480**	1	BEARING-SLEEVE	
	5	1	**161-4130**	2	PLATE-IDENTIFICATION (CAT)	
	6	1	**219-9486**	1	EDGE	
	7	1	**253-0234**	6	ADAPTER	

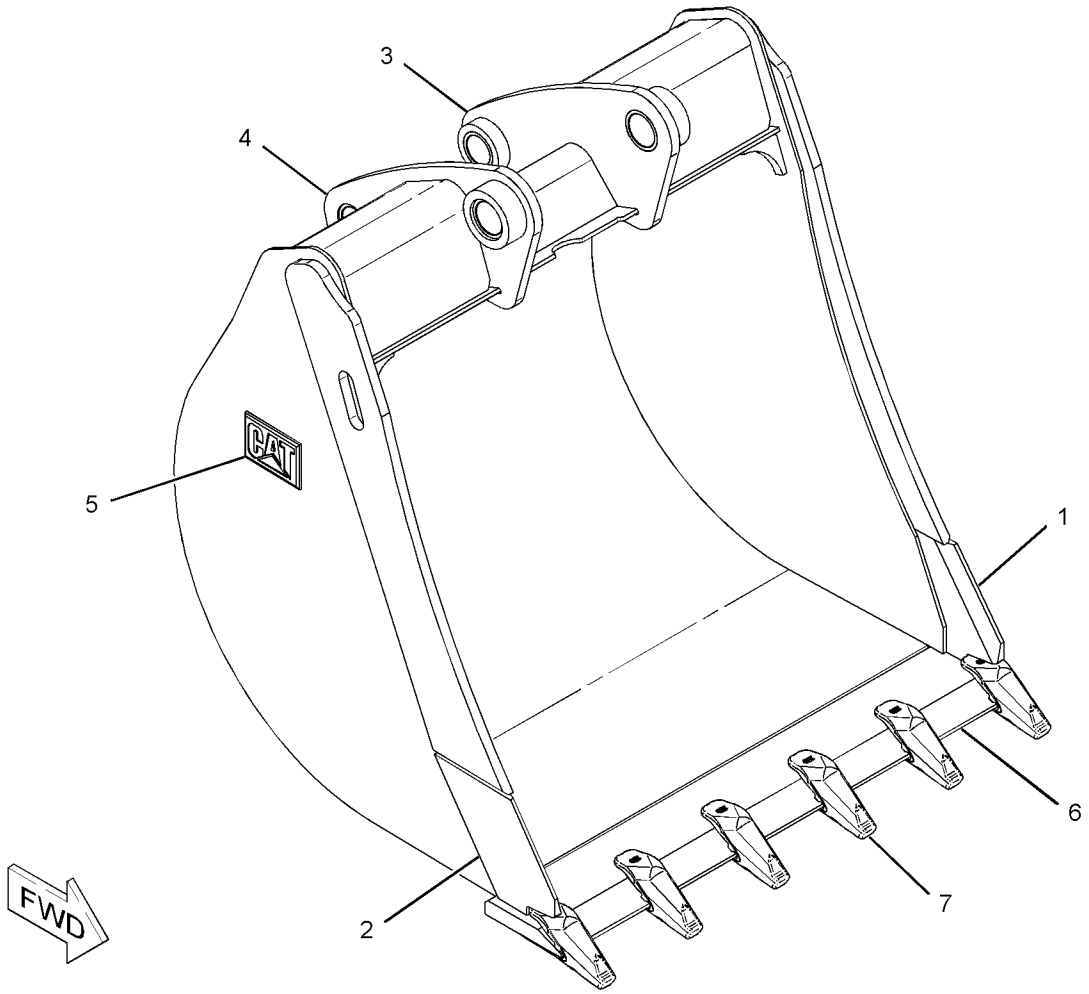

GRAPHIC #1 **<END>** g01144814

251-1775 BUCKET GP-GENERAL PURPOSE (CHG -00)

S/N: HLS1-UP

AN ATTACHMENT

SMCS-6101 **i02104816**

NOTE	PART NUMBER	QTY	PART NAME 1 2 3 4 5 6 (PRODUCT LEVEL)	SEE PAGE
Y	**251-1777**	1	BUCKET GP-GENERAL PURPOSE	445
Y	*9R-5320*	1	EDGE GP-CUTTING	512

Y-SEPARATE ILLUSTRATION

<END>

251-1776 BUCKET GP-GENERAL PURPOSE (CHG -00)

S/N: HLS1-UP

AN ATTACHMENT

SMCS-6101 **i02105044**

NOTE	PART NUMBER	QTY	PART NAME 1 2 3 4 5 6 (PRODUCT LEVEL)	SEE PAGE
Y	**251-1777**	1	BUCKET GP-GENERAL PURPOSE	445
Y	*9R-5866*	1	TOOTH GP-UNI	554

Y-SEPARATE ILLUSTRATION

<END>

251-1777 BUCKET GP-GENERAL PURPOSE (CHG -00 THRU -02)

S/N: HLS1-UP
1.25 CU M (1.5 CU YD)
PART OF 251-1775, 251-1776 BUCKET GP-GENERAL PURPOSE
AN ATTACHMENT

SMCS-6101 **i02206249**

NOTE	REF NO	GRAPHIC REF	PART NUMBER	QTY	PART NAME 1 2 3 4 5 6 (PRODUCT LEVEL)	SEE PAGE
	1	1	**137-4234**	1	PLATE-IDENTIFICATION (BUCKET)	
	2	1	**168-8389**	4	TACK-FASTENER	
Y	3	1	*251-1156*	1	BUCKET AS-GENERAL PURPOSE	430

Y-SEPARATE ILLUSTRATION

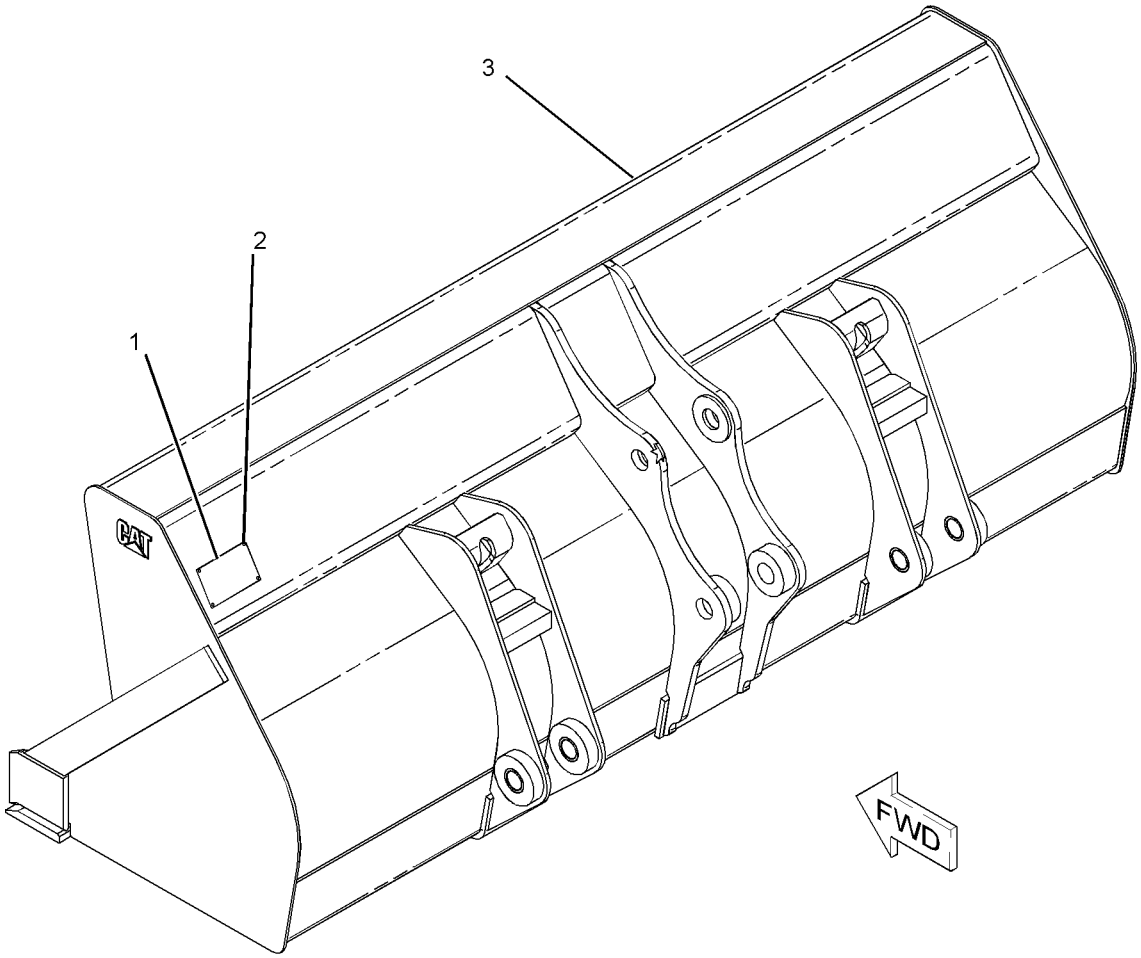

GRAPHIC #1 **<END>** g01114161

251-1778 BUCKET GP-GENERAL PURPOSE (CHG -00)

S/N: HLS1-UP

AN ATTACHMENT

SMCS-6101 **i02105045**

NOTE	PART NUMBER	QTY	PART NAME 1 2 3 4 5 6 (PRODUCT LEVEL)	SEE PAGE
Y	**251-1780**	1	BUCKET GP-GENERAL PURPOSE	447
Y	*9R-5321*	1	EDGE GP-CUTTING	513

Y-SEPARATE ILLUSTRATION

<END>

251-1779 BUCKET GP-GENERAL PURPOSE (CHG -00)

S/N: HLS1-UP

AN ATTACHMENT

SMCS-6101 **i02105046**

NOTE	PART NUMBER	QTY	PART NAME 1 2 3 4 5 6 (PRODUCT LEVEL)	SEE PAGE
Y	**251-1780**	1	BUCKET GP-GENERAL PURPOSE	447
Y	*9R-5866*	1	TOOTH GP-UNI	554

Y-SEPARATE ILLUSTRATION

<END>

251-1780 BUCKET GP-GENERAL PURPOSE (CHG -00 THRU -02)

S/N: HLS1-UP
0.76 CU M (1.0 CU YD)
PART OF 251-1778, 251-1779 BUCKET GP-GENERAL PURPOSE
AN ATTACHMENT

SMCS-6101 **i02206792**

NOTE	REF NO	GRAPHIC REF	PART NUMBER	QTY	PART NAME 1 2 3 4 5 6 (PRODUCT LEVEL)	SEE PAGE
	1	1	**137-4234**	1	PLATE-IDENTIFICATION (BUCKET)	
	2	1	**168-8389**	4	TACK-FASTENER	
Y	3	1	*251-1157*	1	BUCKET AS-GENERAL PURPOSE	432

Y-SEPARATE ILLUSTRATION

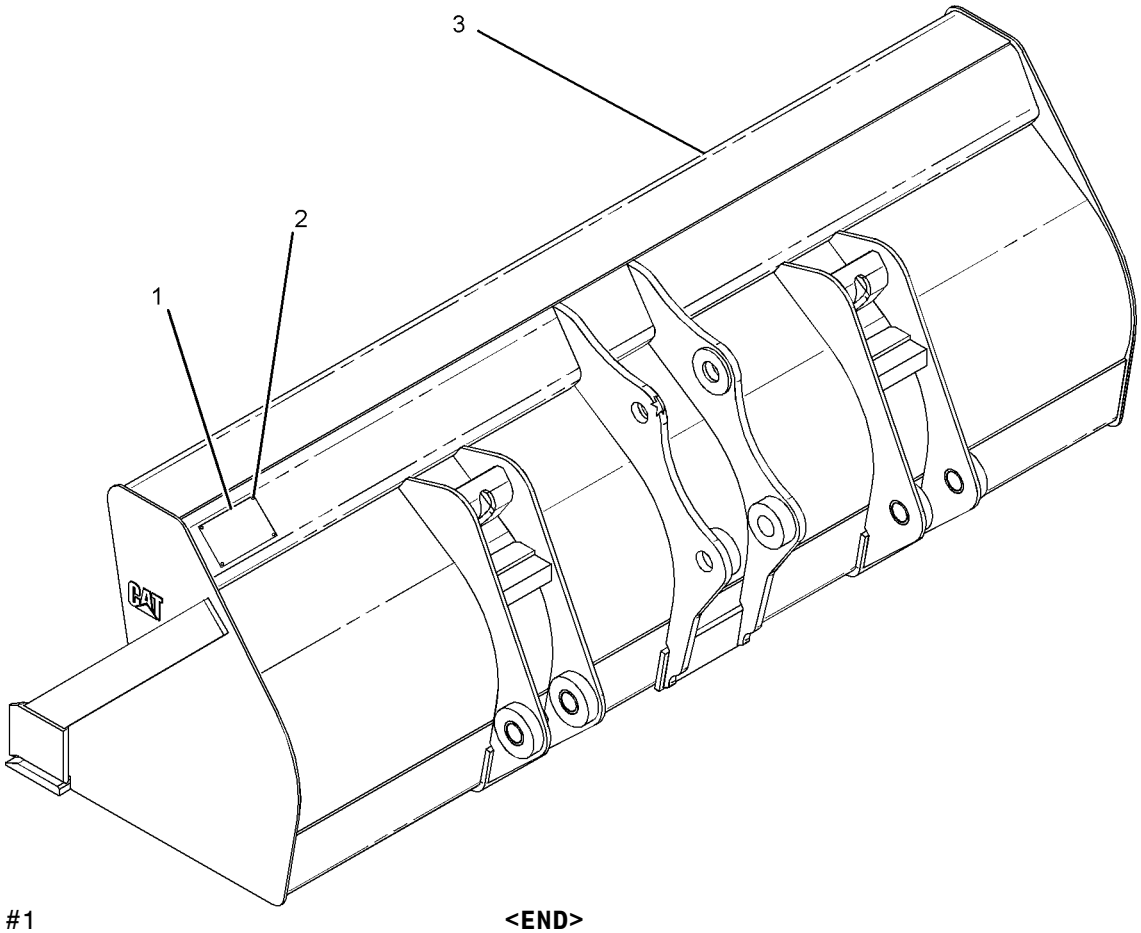

GRAPHIC #1 **<END>** g01114180

251-1781 BUCKET GP-GENERAL PURPOSE (CHG -00)

S/N: HLS1-UP

AN ATTACHMENT

SMCS-6101 **i02105047**

NOTE	PART NUMBER	QTY	PART NAME 1 2 3 4 5 6 (PRODUCT LEVEL)	SEE PAGE
Y	**251-1783**	1	BUCKET GP-GENERAL PURPOSE	448
Y	*9R-5320*	1	EDGE GP-CUTTING	512
Y-SEPARATE ILLUSTRATION				

<END>

251-1782 BUCKET GP-GENERAL PURPOSE (CHG -00)

S/N: HLS1-UP

AN ATTACHMENT

SMCS-6101 **i02105048**

NOTE	PART NUMBER	QTY	PART NAME 1 2 3 4 5 6 (PRODUCT LEVEL)	SEE PAGE
Y	**251-1783**	1	BUCKET GP-GENERAL PURPOSE	448
Y	*9R-5866*	1	TOOTH GP-UNI	554
Y-SEPARATE ILLUSTRATION				

<END>

251-1783 BUCKET GP-GENERAL PURPOSE (CHG -00 THRU -02)

S/N: HLS1-UP

PART OF 251-1781, 251-1782 BUCKET GP-GENERAL PURPOSE

AN ATTACHMENT

SMCS-6101 **i02106209**

NOTE	PART NUMBER	QTY	PART NAME 1 2 3 4 5 6 (PRODUCT LEVEL)	SEE PAGE
Y	*251-1158*	1	BUCKET AS-GENERAL PURPOSE	434
Y-SEPARATE ILLUSTRATION				

<END>

251-1784 BUCKET GP-GENERAL PURPOSE (CHG -00)

S/N: HLS1-UP

AN ATTACHMENT

SMCS-6101 **i02105049**

NOTE	PART NUMBER	QTY	PART NAME 1 2 3 4 5 6 (PRODUCT LEVEL)	SEE PAGE
Y	**251-1786**	1	BUCKET GP-GENERAL PURPOSE	449
Y	*9R-5321*	1	EDGE GP-CUTTING	513
Y-SEPARATE ILLUSTRATION				

<END>

251-1786 BUCKET GP-GENERAL PURPOSE (CHG -00 THRU -02)

S/N: HLS1-UP
PART OF 251-1784, 251-1790 BUCKET GP-GENERAL PURPOSE
AN ATTACHMENT

SMCS-6101 **i02108903**

NOTE	PART NUMBER	QTY	PART NAME 1 2 3 4 5 6 (PRODUCT LEVEL)	SEE PAGE
Y	*251-1159*	1	BUCKET AS-GENERAL PURPOSE	436
Y-SEPARATE ILLUSTRATION				

<END>

251-1787 BUCKET GP-GENERAL PURPOSE (CHG -00)

S/N: HLS1-UP
AN ATTACHMENT

SMCS-6101 **i02105050**

NOTE	PART NUMBER	QTY	PART NAME 1 2 3 4 5 6 (PRODUCT LEVEL)	SEE PAGE
Y	**251-1789**	1	BUCKET GP-GENERAL PURPOSE	449
Y	*9R-5321*	1	EDGE GP-CUTTING	513
Y-SEPARATE ILLUSTRATION				

<END>

251-1788 BUCKET GP-GENERAL PURPOSE (CHG -00)

S/N: HLS1-UP
AN ATTACHMENT

SMCS-6101 **i02105051**

NOTE	PART NUMBER	QTY	PART NAME 1 2 3 4 5 6 (PRODUCT LEVEL)	SEE PAGE
Y	**251-1789**	1	BUCKET GP-GENERAL PURPOSE	449
Y	*9R-5866*	1	TOOTH GP-UNI	554
Y-SEPARATE ILLUSTRATION				

<END>

251-1789 BUCKET GP-GENERAL PURPOSE (CHG -00 THRU -02)

S/N: HLS1-UP
PART OF 251-1787, 251-1788 BUCKET GP-GENERAL PURPOSE
AN ATTACHMENT

SMCS-6101 **i02106210**

NOTE	PART NUMBER	QTY	PART NAME 1 2 3 4 5 6 (PRODUCT LEVEL)	SEE PAGE
Y	*251-1160*	1	BUCKET AS-GENERAL PURPOSE	438
Y-SEPARATE ILLUSTRATION				

<END>

251-1790 BUCKET GP-GENERAL PURPOSE (CHG -00)

S/N: HLS1-UP

AN ATTACHMENT

SMCS-6101 **i02105052**

NOTE	PART NUMBER	QTY	PART NAME 1 2 3 4 5 6 (PRODUCT LEVEL)	SEE PAGE
Y	**251-1786**	1	BUCKET GP-GENERAL PURPOSE	449
Y	*9R-5866*	1	TOOTH GP-UNI	554

Y-SEPARATE ILLUSTRATION

<END>

219-3379 BUCKET GP-HOE (CHG -00)

S/N: HLS1-UP
305-MM (12-IN)
PART OF 219-3410 BUCKET GP-HOE
AN ATTACHMENT

SMCS-6503 **i02238703**

NOTE	REF NO	GRAPHIC REF	PART NUMBER	QTY	PART NAME 1 2 3 4 5 6 (PRODUCT LEVEL)	SEE PAGE
	1	1	*208-5245*	3	TIP GP-PENETRATION	
					(EACH INCLUDES)	
	1A	1	**201-1238**	1	PIN	
	1B	1	**201-1239**	1	RETAINER AS	
	1C	1	**208-5235**	1	TIP-PENETRATION	
	2	1	*151-7929*	1	BRACKET AS (LH)	
	2A	1	**9R-0320**	1	BEARING-SLEEVE	
	2B	1	**154-5257**	1	BEARING-SLEEVE	
	3	1	*151-7930*	1	BRACKET AS (RH)	
	3A	1	**9R-0320**	1	BEARING-SLEEVE	
	3B	1	**154-5257**	1	BEARING-SLEEVE	

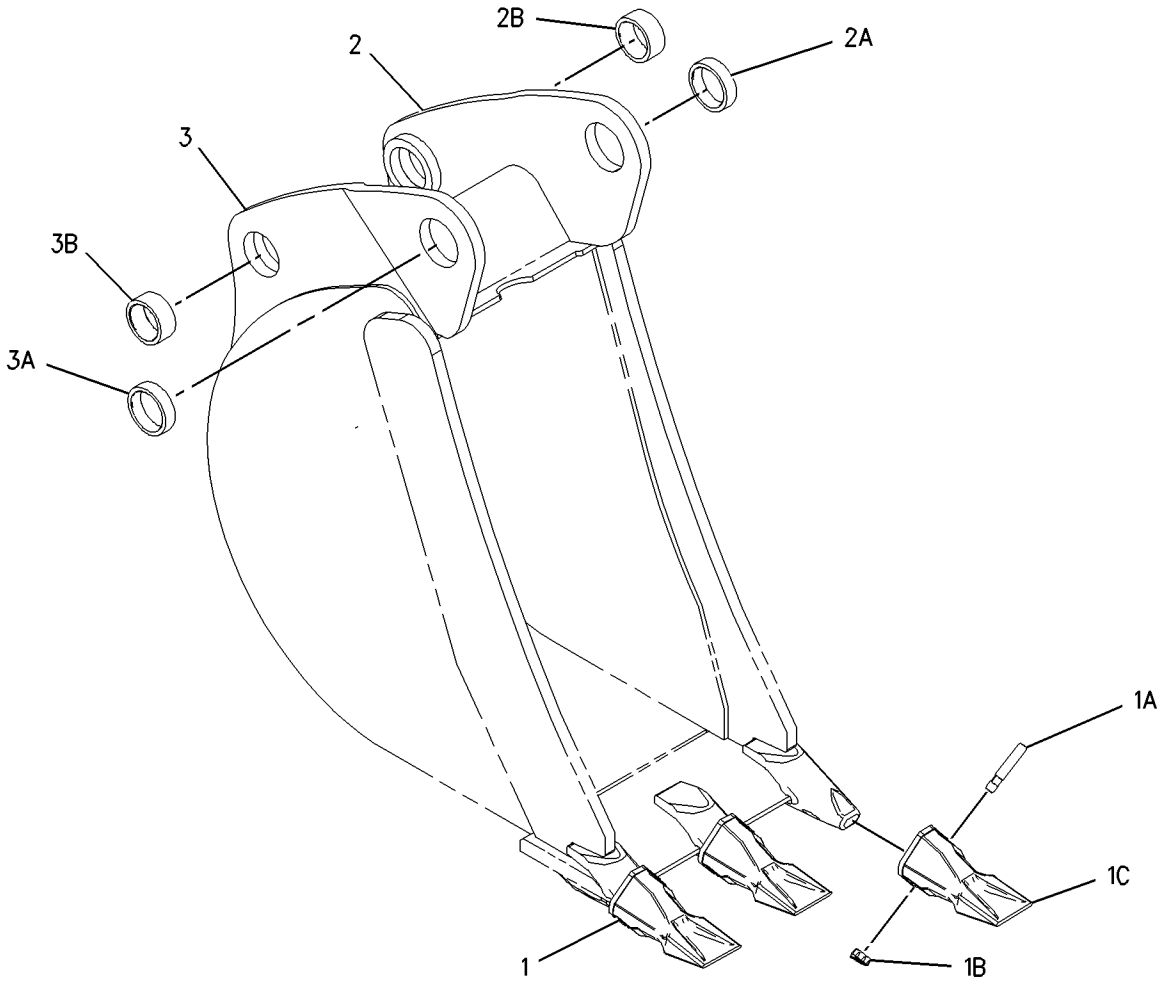

GRAPHIC #1 **<END>** g01001647

WORK TOOLS

219-3380 BUCKET GP-HOE (CHG -00)

S/N: HLS1-UP
458-MM (18-IN)
AN ATTACHMENT

SMCS-6503 **i02238704**

NOTE	REF NO	GRAPHIC REF	PART NUMBER	QTY	PART NAME 1 2 3 4 5 6 (PRODUCT LEVEL)	SEE PAGE
	1	1	*208-5245*	4	TIP GP-PENETRATION	
					(EACH INCLUDES)	
	1A	1	**201-1238**	1	PIN	
	1B	1	**201-1239**	1	RETAINER AS	
	1C	1	**208-5235**	1	TIP-PENETRATION	
	2	1	*151-7902*	1	BRACKET AS (LH)	
	2A	1	**9R-0162**	1	BEARING-SLEEVE	
	2B	1	**168-0480**	1	BEARING-SLEEVE	
	3	1	*151-7903*	1	BRACKET AS (RH)	
	3A	1	**9R-0162**	1	BEARING-SLEEVE	
	3B	1	**168-0480**	1	BEARING-SLEEVE	

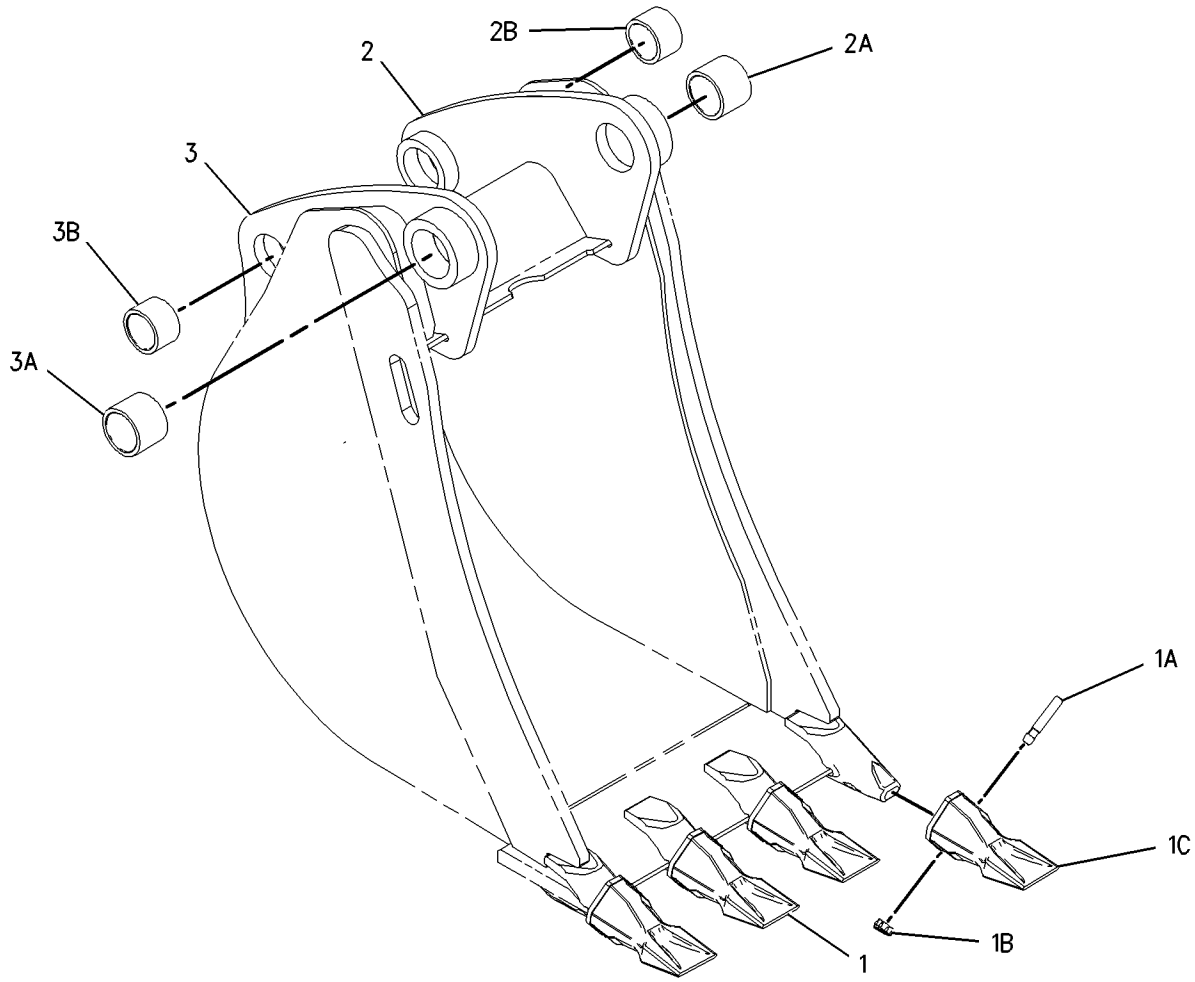

GRAPHIC #1 **<END>** g01001636

WORK TOOLS

219-3381 BUCKET GP-HOE (CHG -00)

S/N: HLS1-UP
610-MM (24-IN)
AN ATTACHMENT

SMCS-6503 **i02238705**

NOTE	REF NO	GRAPHIC REF	PART NUMBER	QTY	PART NAME 1 2 3 4 5 6 (PRODUCT LEVEL)	SEE PAGE
	1	1	*208-5245*	5	TIP GP-PENETRATION	
					(EACH INCLUDES)	
	1A	1	**201-1238**	1	PIN	
	1B	1	**201-1239**	1	RETAINER AS	
	1C	1	**208-5235**	1	TIP-PENETRATION	
	2	1	*151-7902*	1	BRACKET AS (LH)	
	2A	1	**9R-0162**	1	BEARING-SLEEVE	
	2B	1	**168-0480**	1	BEARING-SLEEVE	
	3	1	*151-7903*	1	BRACKET AS (RH)	
	3A	1	**9R-0162**	1	BEARING-SLEEVE	
	3B	1	**168-0480**	1	BEARING-SLEEVE	
	4	1	**219-9488**	1	EDGE	
	5	1	**201-1235**	5	ADAPTER	

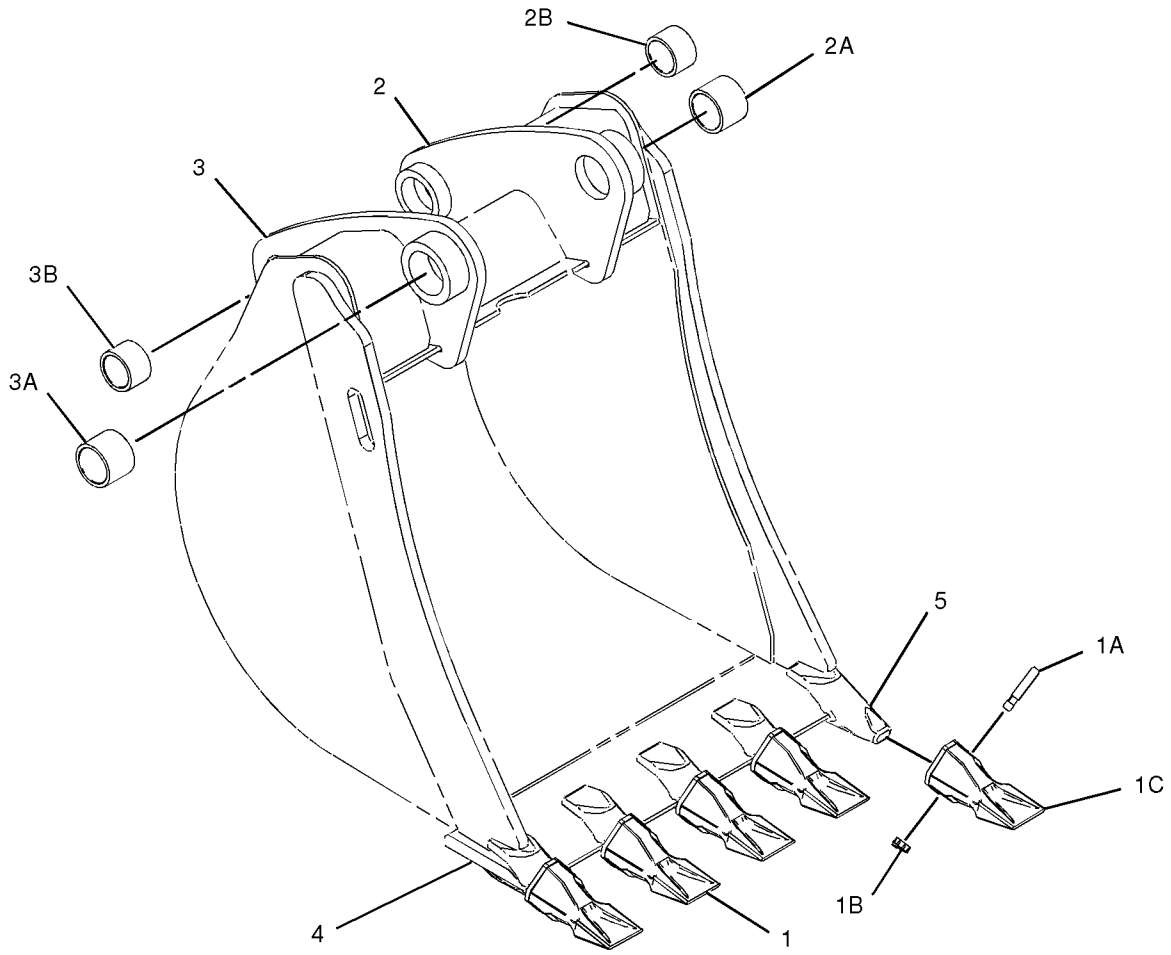

GRAPHIC #1 **<END>** g01013630

WORK TOOLS

219-3382 BUCKET GP-HOE (CHG -00)

S/N: HLS1-UP
762-MM (30-IN)
AN ATTACHMENT

SMCS-6503 **i02238706**

NOTE	REF NO	GRAPHIC REF	PART NUMBER	QTY	PART NAME 1 2 3 4 5 6 (PRODUCT LEVEL)	SEE PAGE
	1	1	*208-5245*	5	TIP GP-PENETRATION	
					(EACH INCLUDES)	
	1A	1	**201-1238**	1	PIN	
	1B	1	**201-1239**	1	RETAINER AS	
	1C	1	**208-5235**	1	TIP-PENETRATION	
	2	1	*151-7902*	1	BRACKET AS (LH)	
	2A	1	**9R-0162**	1	BEARING-SLEEVE	
	2B	1	**168-0480**	1	BEARING-SLEEVE	
	3	1	*151-7903*	1	BRACKET AS (RH)	
	3A	1	**9R-0162**	1	BEARING-SLEEVE	
	3B	1	**168-0480**	1	BEARING-SLEEVE	
	4	1	**201-1235**	5	ADAPTER	

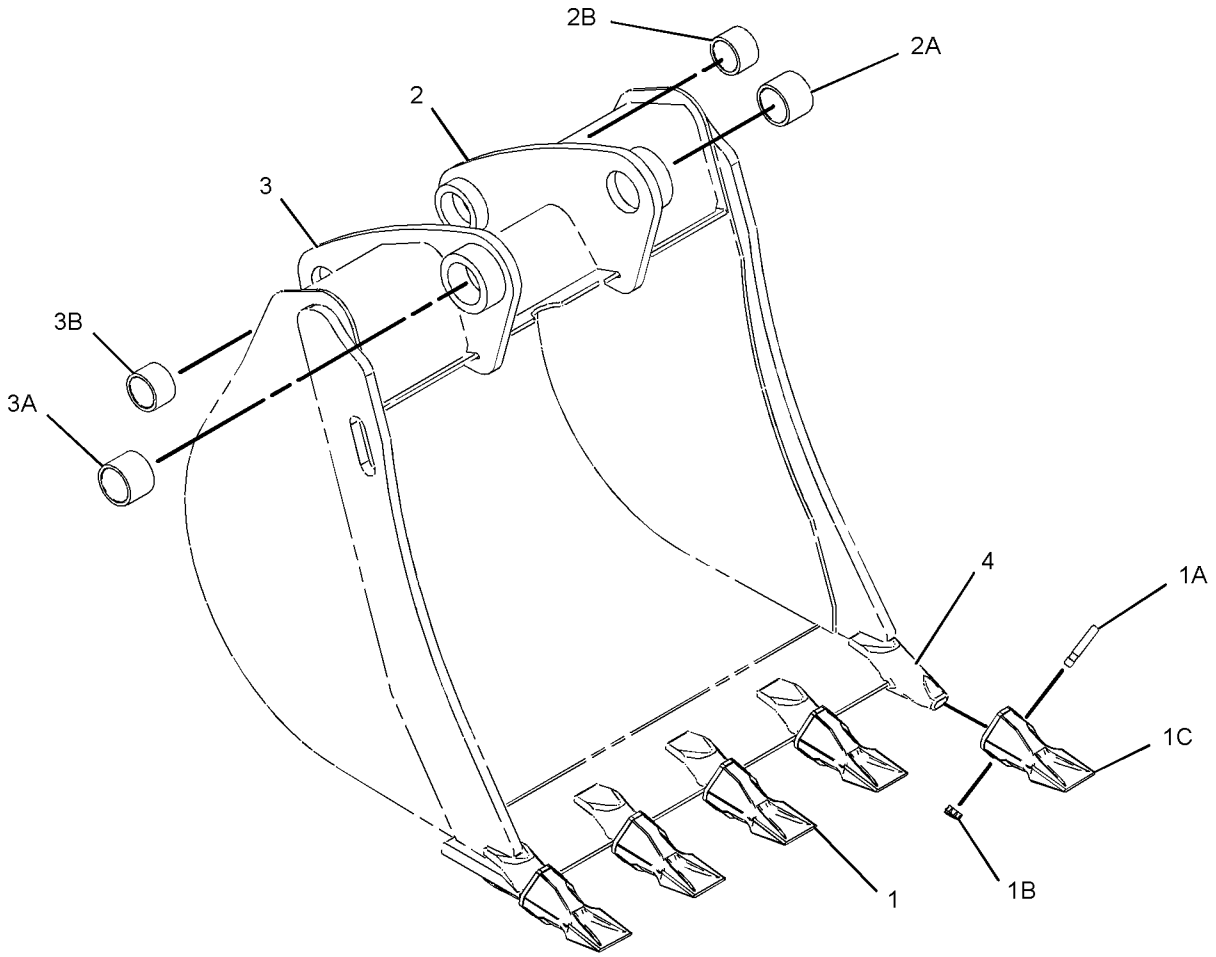

GRAPHIC #1 **<END>** g01132245

WORK TOOLS

219-3383 BUCKET GP-HOE (CHG -00)

S/N: HLS1-UP
914-MM (36-IN)
AN ATTACHMENT

SMCS-6503 **i02238707**

NOTE	REF NO	GRAPHIC REF	PART NUMBER	QTY	PART NAME 1 2 3 4 5 6 (PRODUCT LEVEL)	SEE PAGE
	1	1	*208-5245*	6	TIP GP-PENETRATION	
					(EACH INCLUDES)	
	1A	1	**201-1238**	1	PIN	
	1B	1	**201-1239**	1	RETAINER AS	
	1C	1	**208-5235**	1	TIP-PENETRATION	
	2	1	*151-7902*	1	BRACKET AS (LH)	
	2A	1	**9R-0162**	1	BEARING-SLEEVE	
	2B	1	**168-0480**	1	BEARING-SLEEVE	
	3	1	*151-7903*	1	BRACKET AS (RH)	
	3A	1	**9R-0162**	1	BEARING-SLEEVE	
	3B	1	**168-0480**	1	BEARING-SLEEVE	
	4	1	**201-1235**	5	ADAPTER	

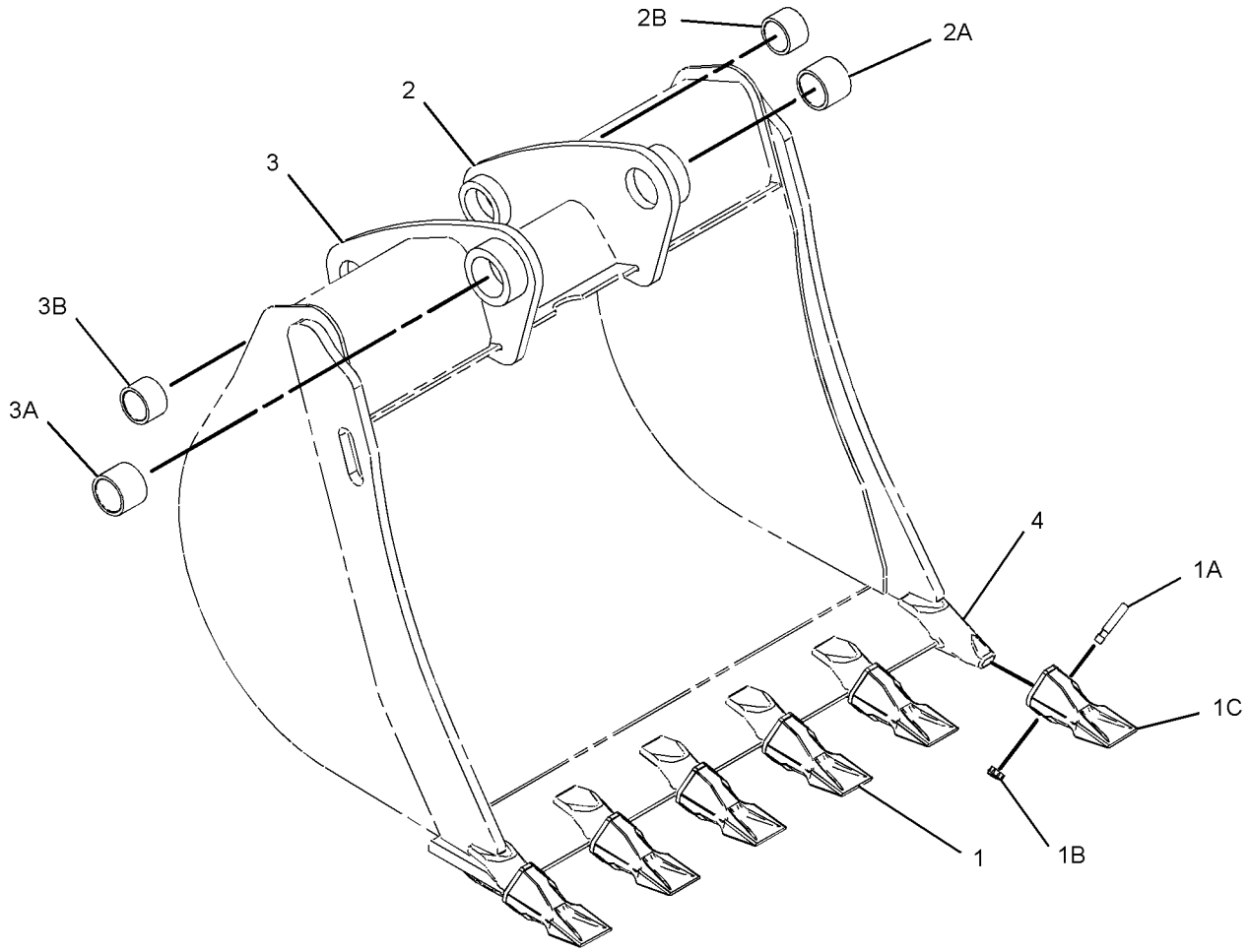

GRAPHIC #1 **<END>** g01132250

219-3384 BUCKET GP-HOE—HEAVY-DUTY (CHG -00)

S/N: HLS1-UP
305-MM (12-IN)
PART OF 219-3411 BUCKET GP-HOE
AN ATTACHMENT

SMCS-6503 **i02238708**

NOTE	REF NO	GRAPHIC REF	PART NUMBER	QTY	PART NAME 1 2 3 4 5 6 (PRODUCT LEVEL)	SEE PAGE
	1	1	*208-5245*	3	TIP GP-PENETRATION	
					(EACH INCLUDES)	
	1A	1	**201-1238**	1	PIN	
	1B	1	**201-1239**	1	RETAINER AS	
	1C	1	**208-5235**	1	TIP-PENETRATION	
	2	1	*151-7929*	1	BRACKET AS (LH)	
	2A	1	**9R-0320**	1	BEARING-SLEEVE	
	2B	1	**154-5257**	1	BEARING-SLEEVE	
	3	1	*151-7930*	1	BRACKET AS (RH)	
	3A	1	**9R-0320**	1	BEARING-SLEEVE	
	3B	1	**154-5257**	1	BEARING-SLEEVE	
	4	1	**219-9482**	1	EDGE	

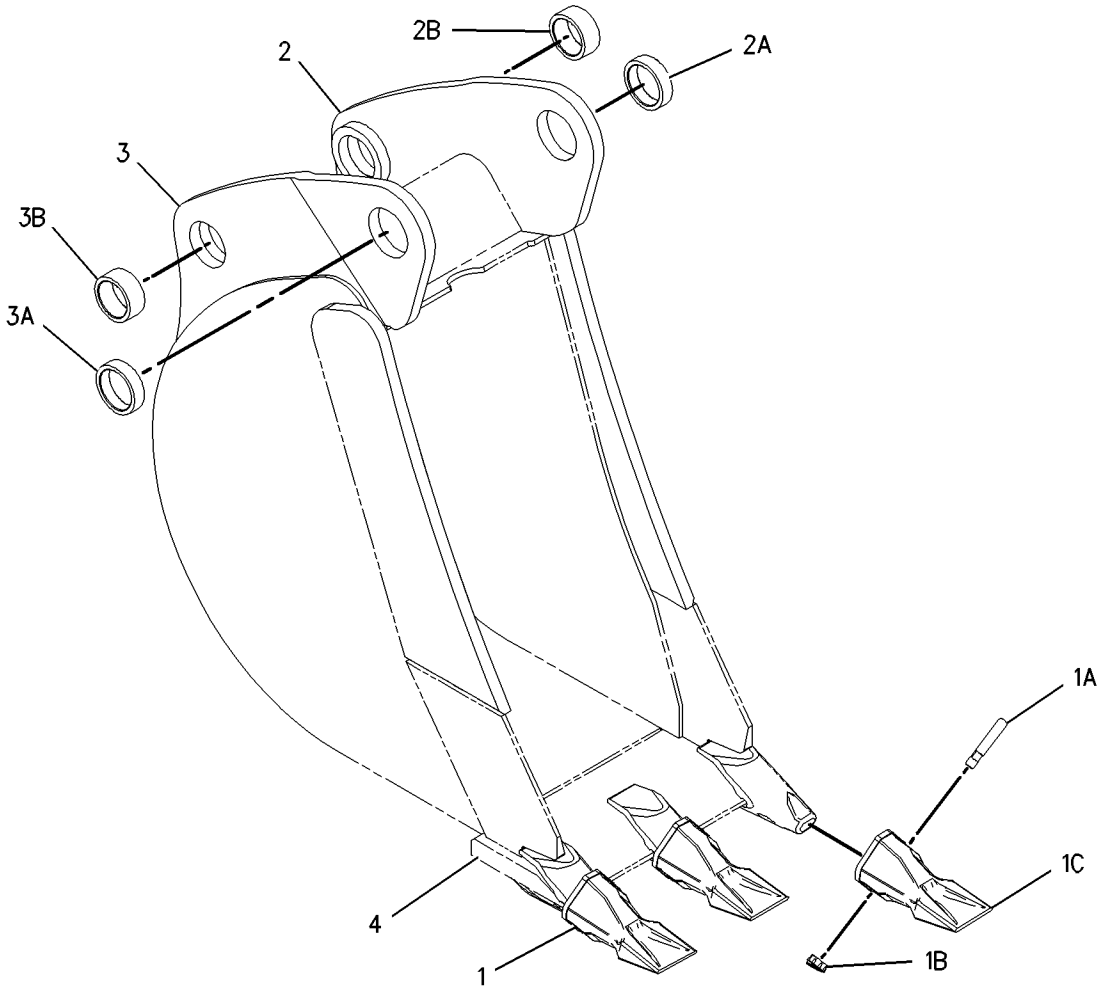

GRAPHIC #1 **<END>** g01001916

WORK TOOLS

219-3385 BUCKET GP-HOE—HEAVY DUTY (CHG -00)

S/N: HLS1-UP
407-MM (16-IN)
AN ATTACHMENT

SMCS-6503 **i02238709**

NOTE	REF NO	GRAPHIC REF	PART NUMBER	QTY	PART NAME 1 2 3 4 5 6 (PRODUCT LEVEL)	SEE PAGE
	1	1	*208-5245*	3	TIP GP-PENETRATION	
					(EACH INCLUDES)	
	1A	1	**201-1238**	1	PIN	
	1B	1	**201-1239**	1	RETAINER AS	
	1C	1	**208-5235**	1	TIP-PENETRATION	
	2	1	*151-7902*	1	BRACKET AS (LH)	
	2A	1	**9R-0162**	1	BEARING-SLEEVE	
	2B	1	**168-0480**	1	BEARING-SLEEVE	
	3	1	*151-7903*	1	BRACKET AS (RH)	
	3A	1	**9R-0162**	1	BEARING-SLEEVE	
	3B	1	**168-0480**	1	BEARING-SLEEVE	
	4	1	**219-9482**	1	EDGE	

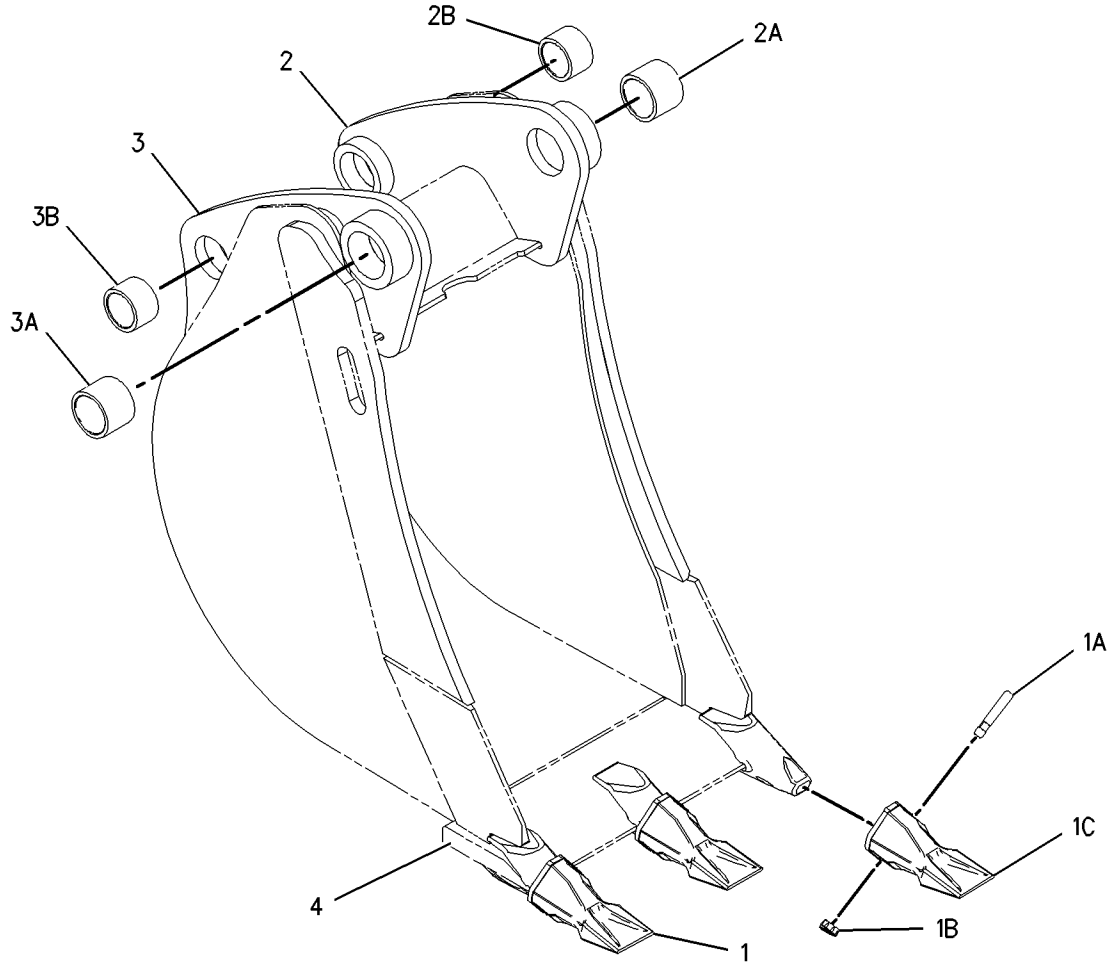

GRAPHIC #1 **<END>** g01001972

WORK TOOLS

219-3386 BUCKET GP-HOE–HEAVY DUTY (CHG -00)

S/N: HLS1-UP
458-MM (18-IN)
AN ATTACHMENT

SMCS-6503 **i02238710**

NOTE	REF NO	GRAPHIC REF	PART NUMBER	QTY	PART NAME 1 2 3 4 5 6 (PRODUCT LEVEL)	SEE PAGE
	1	1	*208-5245*	4	TIP GP-PENETRATION	
					(EACH INCLUDES)	
	1A	1	**201-1238**	1	PIN	
	1B	1	**201-1239**	1	RETAINER AS	
	1C	1	**208-5235**	1	TIP-PENETRATION	
	2	1	*151-7902*	1	BRACKET AS (LH)	
	2A	1	**9R-0162**	1	BEARING-SLEEVE	
	2B	1	**168-0480**	1	BEARING-SLEEVE	
	3	1	*151-7903*	1	BRACKET AS (RH)	
	3A	1	**9R-0162**	1	BEARING-SLEEVE	
	3B	1	**168-0480**	1	BEARING-SLEEVE	
	4	1	**219-9483**	1	EDGE	

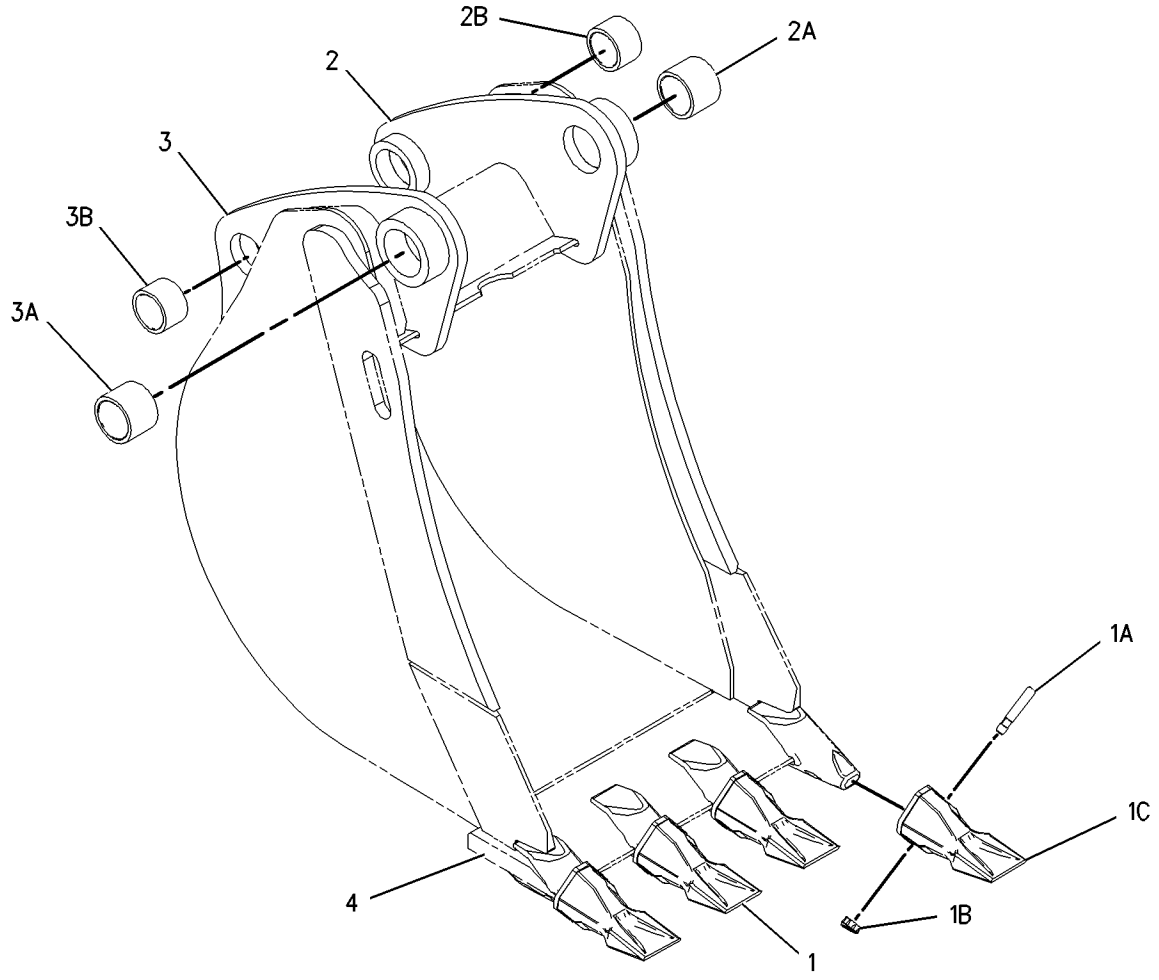

GRAPHIC #1 **<END>** g01001988

WORK TOOLS

219-3387 BUCKET GP-HOE–HEAVY DUTY (CHG -00)

S/N: HLS1-UP
610-MM (24-IN)
AN ATTACHMENT

SMCS-6503 **i02238712**

NOTE	REF NO	GRAPHIC REF	PART NUMBER	QTY	PART NAME 1 2 3 4 5 6 (PRODUCT LEVEL)	SEE PAGE
	1	1	*208-5245*	5	TIP GP-PENETRATION	
					(EACH INCLUDES)	
	1A	1	**201-1238**	1	PIN	
	1B	1	**201-1239**	1	RETAINER AS	
	1C	1	**208-5235**	1	TIP-PENETRATION	
	2	1	*151-7902*	1	BRACKET AS (LH)	
	2A	1	**9R-0162**	1	BEARING-SLEEVE	
	2B	1	**168-0480**	1	BEARING-SLEEVE	
	3	1	*151-7903*	1	BRACKET AS (RH)	
	3A	1	**9R-0162**	1	BEARING-SLEEVE	
	3B	1	**168-0480**	1	BEARING-SLEEVE	
	4	1	**219-9484**	1	EDGE	

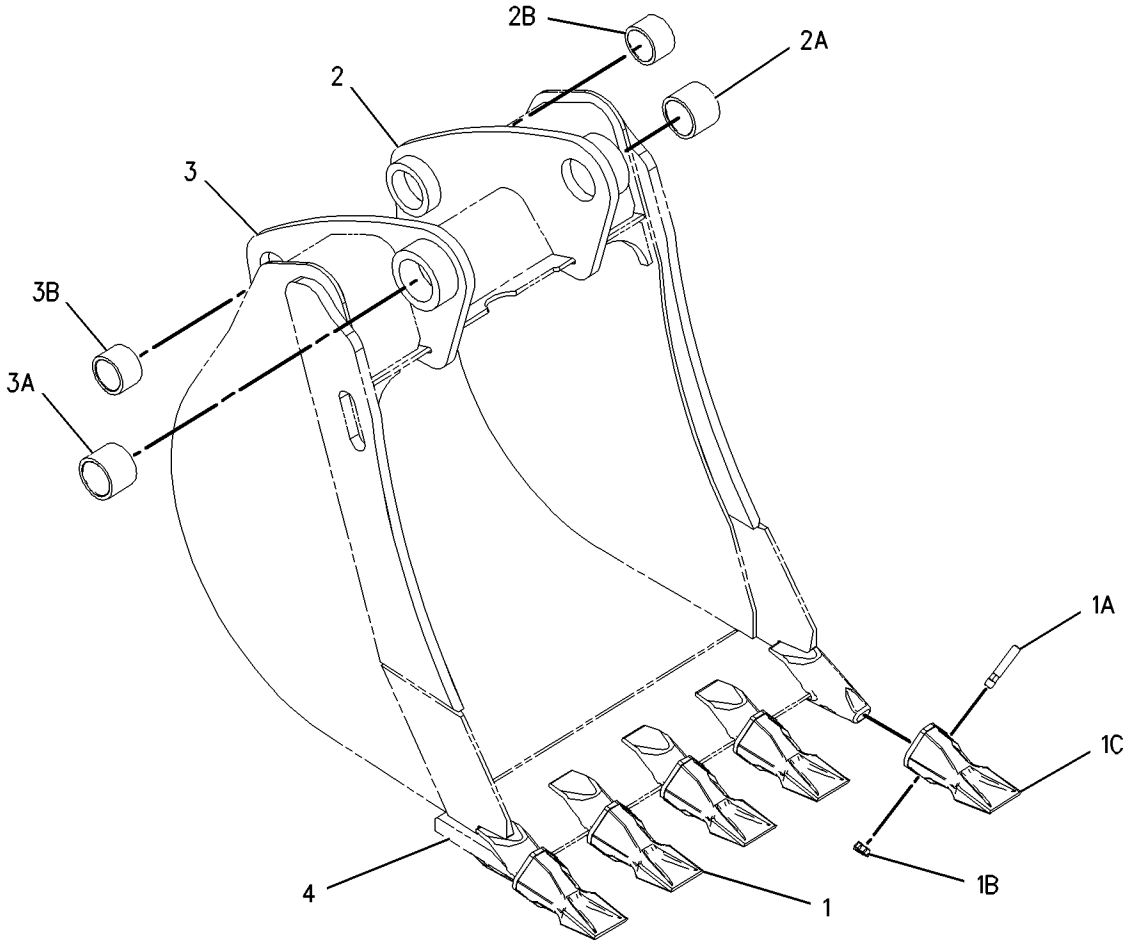

GRAPHIC #1 **<END>** g01002004

219-3388 BUCKET GP-HOE–HEAVY DUTY (CHG -00)

S/N: HLS1-UP
762-MM (30-IN)
AN ATTACHMENT

SMCS-6503 **i02238713**

NOTE	REF NO	GRAPHIC REF	PART NUMBER	QTY	PART NAME 1 2 3 4 5 6 (PRODUCT LEVEL)	SEE PAGE
	1	1	*208-5245*	5	TIP GP-PENETRATION	
					(EACH INCLUDES)	
	1A	1	**201-1238**	1	PIN	
	1B	1	**201-1239**	1	RETAINER AS	
	1C	1	**208-5235**	1	TIP-PENETRATION	
	2	1	*151-7902*	1	BRACKET AS (LH)	
	2A	1	**9R-0162**	1	BEARING-SLEEVE	
	2B	1	**168-0480**	1	BEARING-SLEEVE	
	3	1	*151-7903*	1	BRACKET AS (RH)	
	3A	1	**9R-0162**	1	BEARING-SLEEVE	
	3B	1	**168-0480**	1	BEARING-SLEEVE	
	4	1	**219-9485**	1	EDGE	

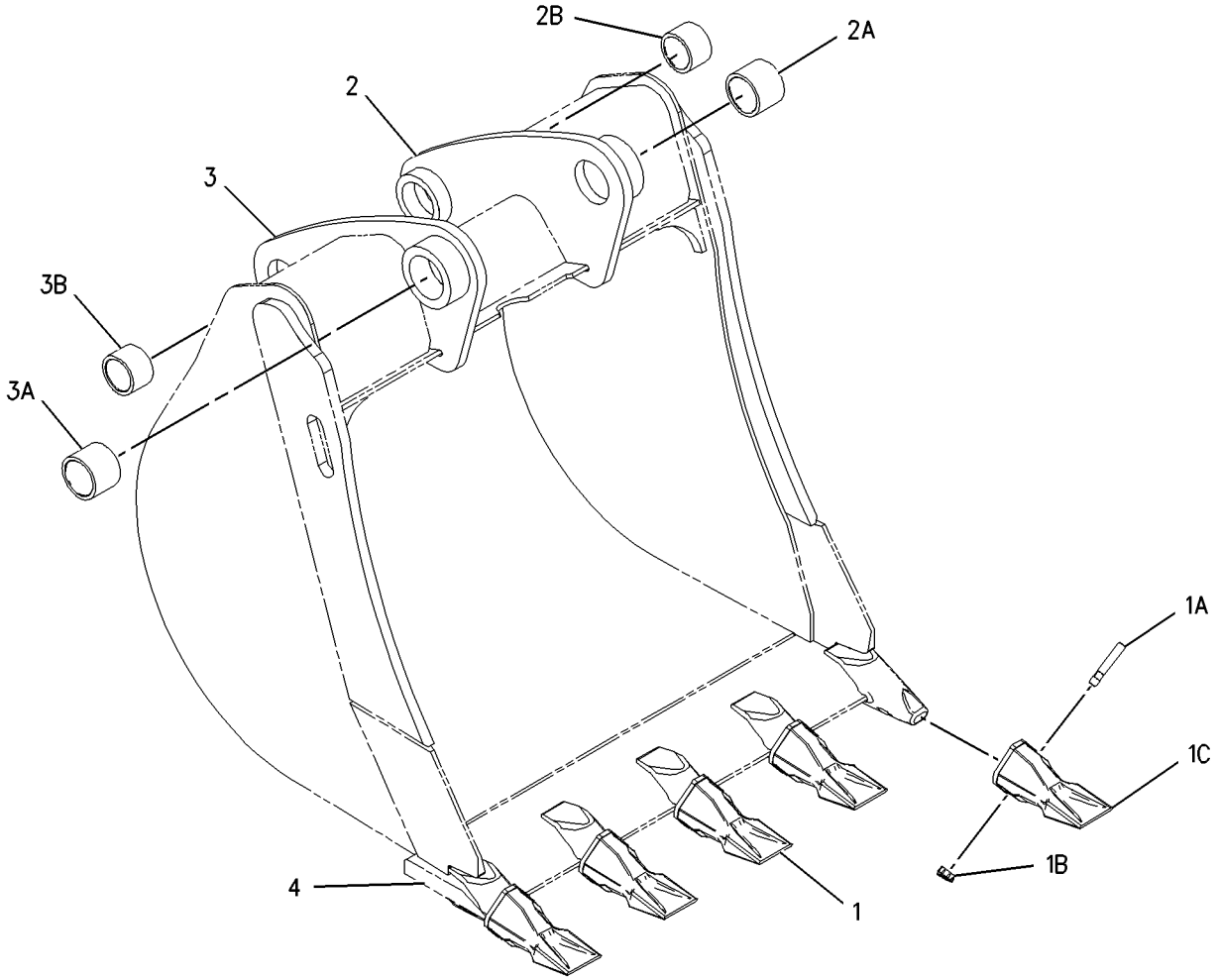

GRAPHIC #1 **<END>** g01002018

WORK TOOLS

219-3389 BUCKET GP-HOE–HEAVY DUTY (CHG -00)

S/N: HLS1-UP
914-MM (36-IN)
AN ATTACHMENT

SMCS-6503 **i02238714**

NOTE	REF NO	GRAPHIC REF	PART NUMBER	QTY	PART NAME 1 2 3 4 5 6 (PRODUCT LEVEL)	SEE PAGE
	1	1	*208-5245*	6	TIP GP-PENETRATION	
					(EACH INCLUDES)	
	1A	1	**201-1238**	1	PIN	
	1B	1	**201-1239**	1	RETAINER AS	
	1C	1	**208-5235**	1	TIP-PENETRATION	
	2	1	*151-7902*	1	BRACKET AS (LH)	
	2A	1	**9R-0162**	1	BEARING-SLEEVE	
	2B	1	**168-0480**	1	BEARING-SLEEVE	
	3	1	*151-7903*	1	BRACKET AS (RH)	
	3A	1	**9R-0162**	1	BEARING-SLEEVE	
	3B	1	**168-0480**	1	BEARING-SLEEVE	
	4	1	**219-9486**	1	EDGE	

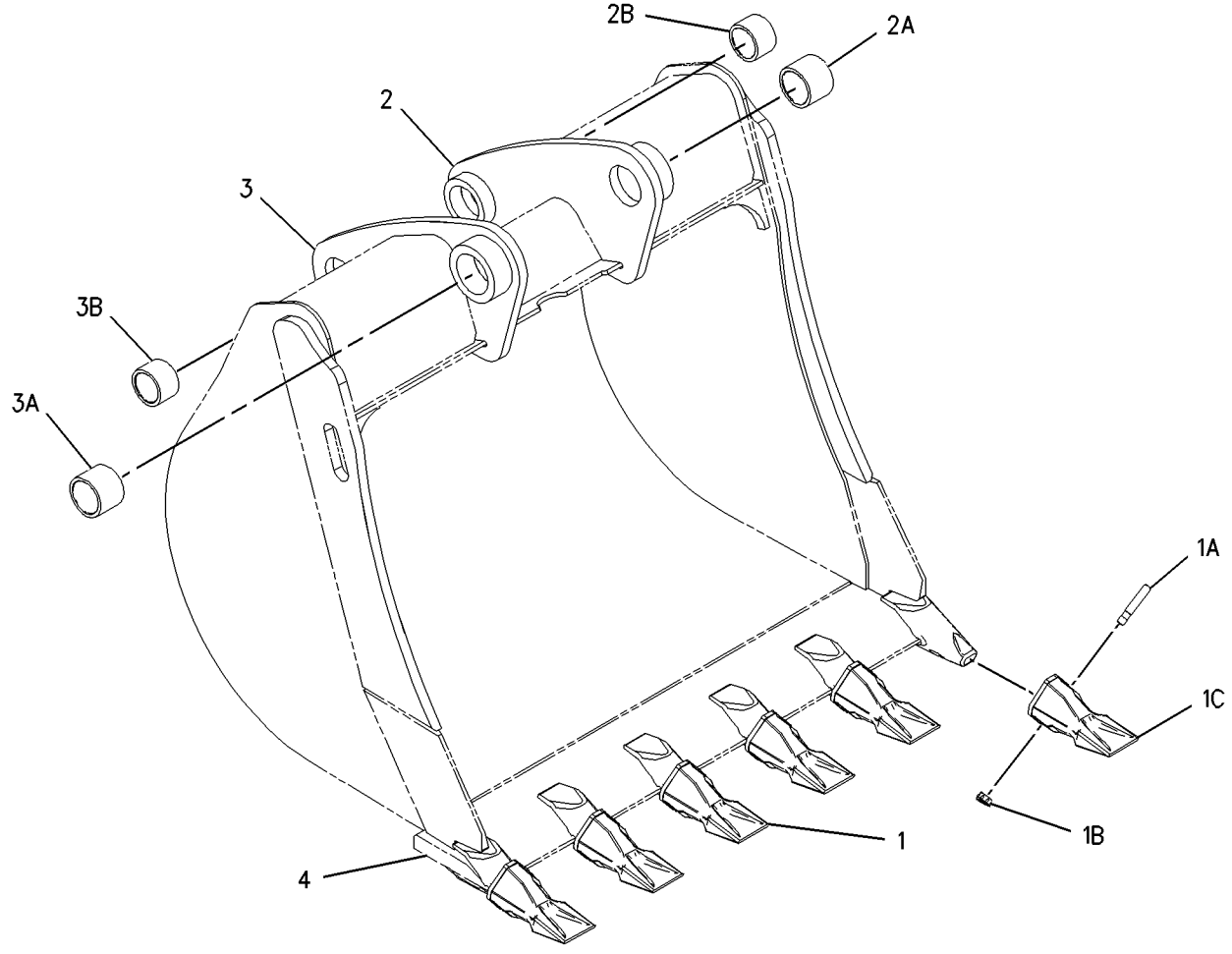

GRAPHIC #1 **<END>** g01002037

219-3390 BUCKET GP-HOE—HIGH CAPACITY (CHG -00)

S/N: HLS1-UP
458-MM (18-IN)
AN ATTACHMENT

SMCS-6503 **i02238715**

NOTE	REF NO	GRAPHIC REF	PART NUMBER	QTY	PART NAME 1 2 3 4 5 6 (PRODUCT LEVEL)	SEE PAGE
	1	1	*208-5245*	4	TIP GP-PENETRATION	
					(EACH INCLUDES)	
	1A	1	**201-1238**	1	PIN	
	1B	1	**201-1239**	1	RETAINER AS	
	1C	1	**208-5235**	1	TIP-PENETRATION	
	2	1	*151-7902*	1	BRACKET AS (LH)	
	2A	1	**9R-0162**	1	BEARING-SLEEVE	
	2B	1	**168-0480**	1	BEARING-SLEEVE	
	3	1	*151-7903*	1	BRACKET AS (RH)	
	3A	1	**9R-0162**	1	BEARING-SLEEVE	
	3B	1	**168-0480**	1	BEARING-SLEEVE	
	4	1	**219-9483**	1	EDGE	

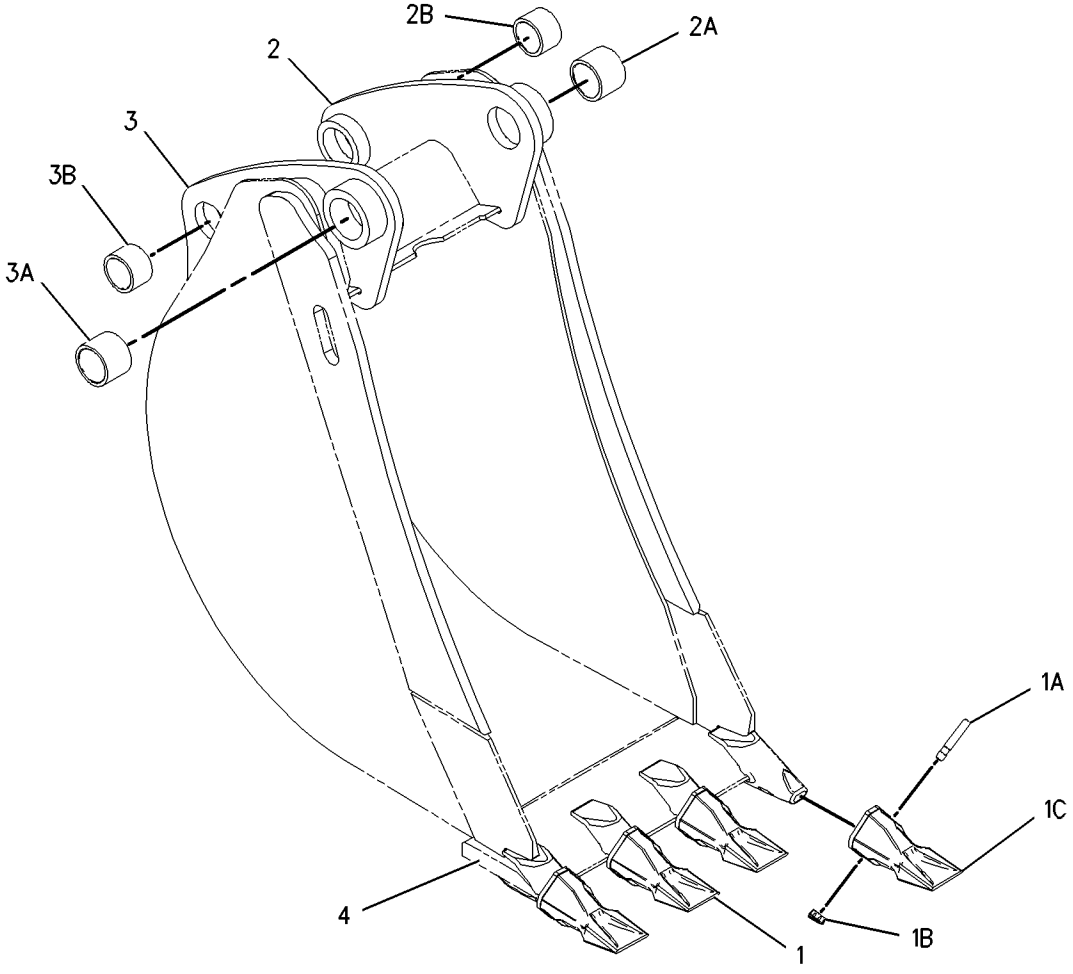

GRAPHIC #1 **<END>** g01002001

WORK TOOLS

219-3391 BUCKET GP-HOE—HIGH CAPACITY (CHG -00)

S/N: HLS1-UP
610-MM (24-IN)
AN ATTACHMENT

SMCS-6503 **i02238716**

NOTE	REF NO	GRAPHIC REF	PART NUMBER	QTY	PART NAME 1 2 3 4 5 6 (PRODUCT LEVEL)	SEE PAGE
	1	1	*208-5245*	5	TIP GP-PENETRATION	
					(EACH INCLUDES)	
	1A	1	**201-1238**	1	PIN	
	1B	1	**201-1239**	1	RETAINER AS	
	1C	1	**208-5235**	1	TIP-PENETRATION	
	2	1	*151-7902*	1	BRACKET AS (LH)	
	2A	1	**9R-0162**	1	BEARING-SLEEVE	
	2B	1	**168-0480**	1	BEARING-SLEEVE	
	3	1	**151-7903**	1	BRACKET AS (RH)	
	3A	1	**9R-0162**	1	BEARING-SLEEVE	
	3B	1	**168-0480**	1	BEARING-SLEEVE	
	4	1	**219-9484**	1	EDGE	

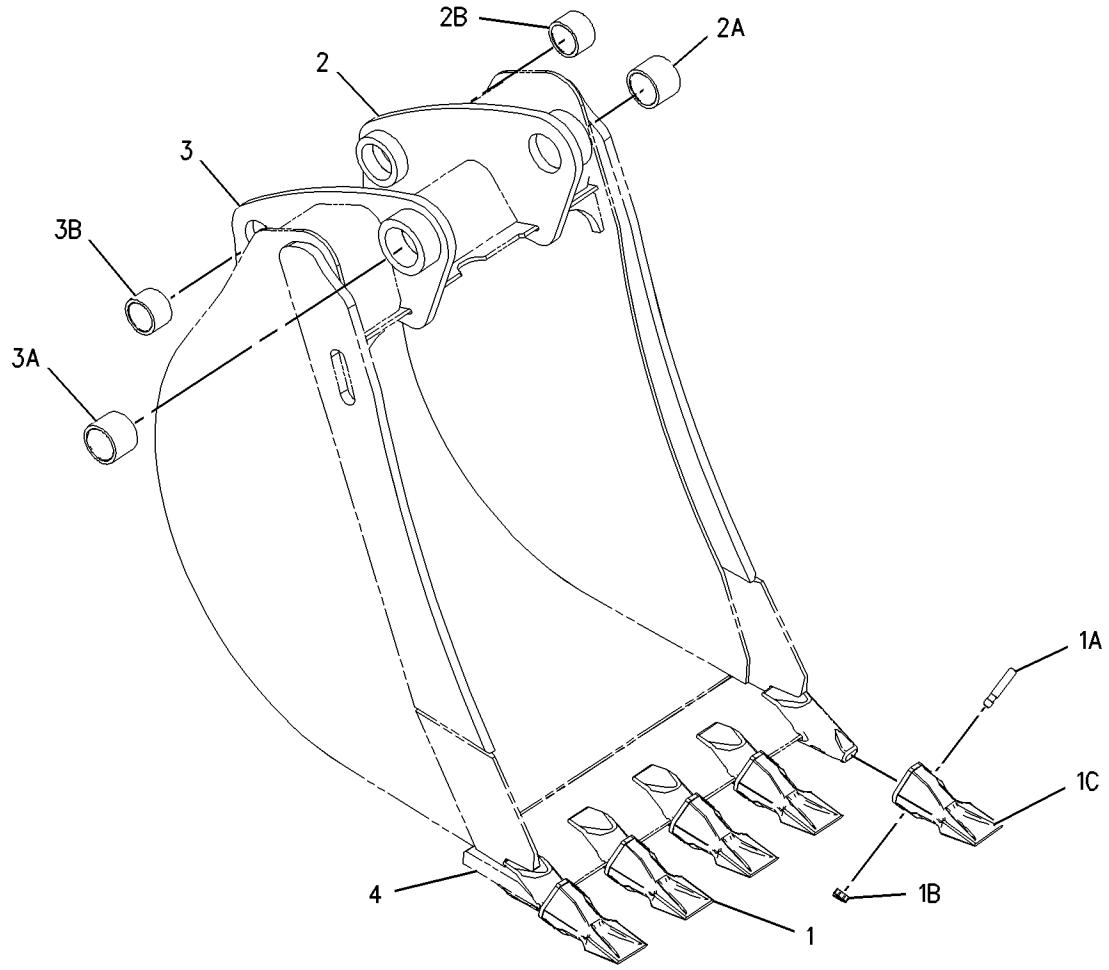

GRAPHIC #1 **<END>** g01002058

219-3392 BUCKET GP-HOE—HIGH CAPACITY (CHG -00)

S/N: HLS1-UP
762-MM (30-IN)
AN ATTACHMENT

SMCS-6503 **i02238721**

NOTE	REF NO	GRAPHIC REF	PART NUMBER	QTY	PART NAME 1 2 3 4 5 6 (PRODUCT LEVEL)	SEE PAGE
	1	1	*208-5245*	5	TIP GP-PENETRATION	
					(EACH INCLUDES)	
	1A	1	**201-1238**	1	PIN	
	1B	1	**201-1239**	1	RETAINER AS	
	1C	1	**208-5235**	1	TIP-PENETRATION	
	2	1	*151-7902*	1	BRACKET AS (LH)	
	2A	1	**9R-0162**	1	BEARING-SLEEVE	
	2B	1	**168-0480**	1	BEARING-SLEEVE	
	3	1	*151-7903*	1	BRACKET AS (RH)	
	3A	1	**9R-0162**	1	BEARING-SLEEVE	
	3B	1	**168-0480**	1	BEARING-SLEEVE	
	4	1	**219-9485**	1	EDGE	

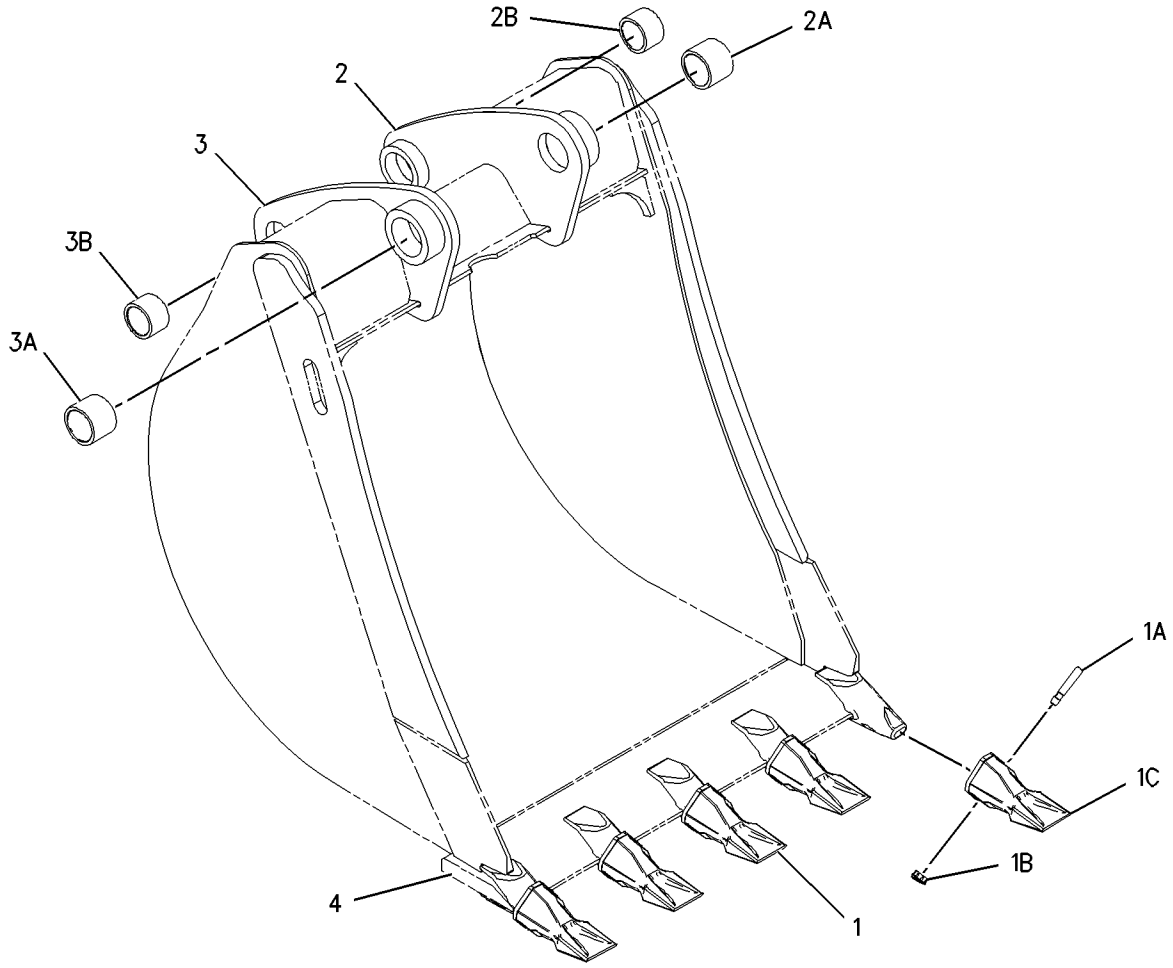

GRAPHIC #1 **<END>** g01002066

219-3393 BUCKET GP-HOE—HIGH CAPACITY (CHG -00)

S/N: HLS1-UP
914-MM (36-IN)
AN ATTACHMENT

SMCS-6503 **i02238717**

NOTE	REF NO	GRAPHIC REF	PART NUMBER	QTY	PART NAME 1 2 3 4 5 6 (PRODUCT LEVEL)	SEE PAGE
	1	1	*208-5245*	6	TIP GP-PENETRATION	
					(EACH INCLUDES)	
	1A	1	**201-1238**	1	PIN	
	1B	1	**201-1239**	1	RETAINER AS	
	1C	1	**208-5235**	1	TIP-PENETRATION	
	2	1	*151-7902*	1	BRACKET AS (LH)	
	2A	1	**9R-0162**	1	BEARING-SLEEVE	
	2B	1	**168-0480**	1	BEARING-SLEEVE	
	3	1	*151-7903*	1	BRACKET AS (RH)	
	3A	1	**9R-0162**	1	BEARING-SLEEVE	
	3B	1	**168-0480**	1	BEARING-SLEEVE	
	4	1	**219-9486**	1	EDGE	

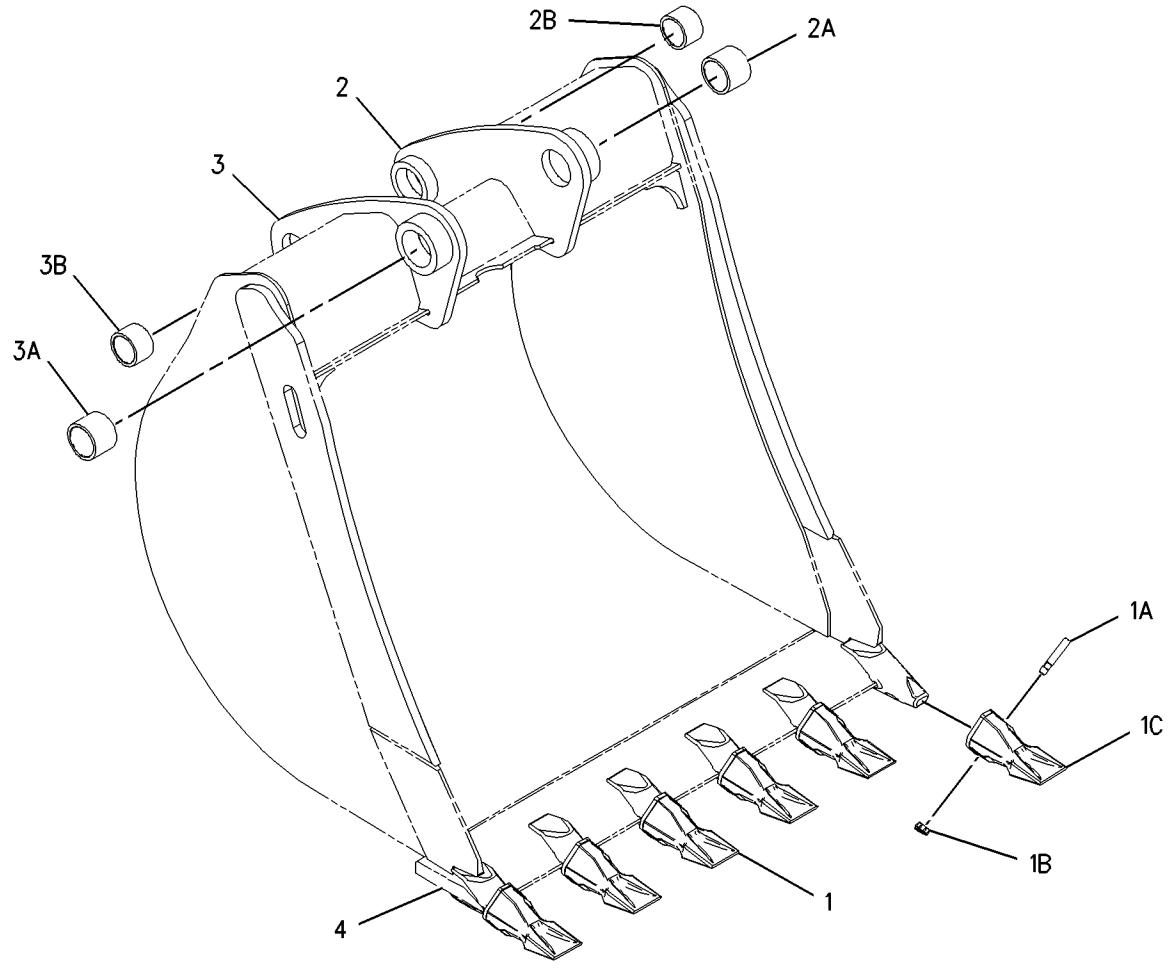

GRAPHIC #1 **<END>** g01002085

219-3394 BUCKET GP-HOE–ROCK (CHG -00)

S/N: HLS1-UP
305-MM (12-IN)
PART OF 219-3412 BUCKET GP-HOE
AN ATTACHMENT

SMCS-6503 **i02238718**

NOTE	REF NO	GRAPHIC REF	PART NUMBER	QTY	PART NAME 1 2 3 4 5 6 (PRODUCT LEVEL)	SEE PAGE
	1	1	*208-5245*	3	TIP GP-PENETRATION	
					(EACH INCLUDES)	
	1A	1	**201-1238**	1	PIN	
	1B	1	**201-1239**	1	RETAINER AS	
	1C	1	**208-5235**	1	TIP-PENETRATION	
	2	1	*151-7929*	1	BRACKET AS (LH)	
	2A	1	**9R-0320**	1	BEARING-SLEEVE	
	2B	1	**154-5257**	1	BEARING-SLEEVE	
	3	1	*151-7930*	1	BRACKET AS (RH)	
	3A	1	**9R-0320**	1	BEARING-SLEEVE	
	3B	1	**154-5257**	1	BEARING-SLEEVE	
	4	1	**219-9493**	1	EDGE	

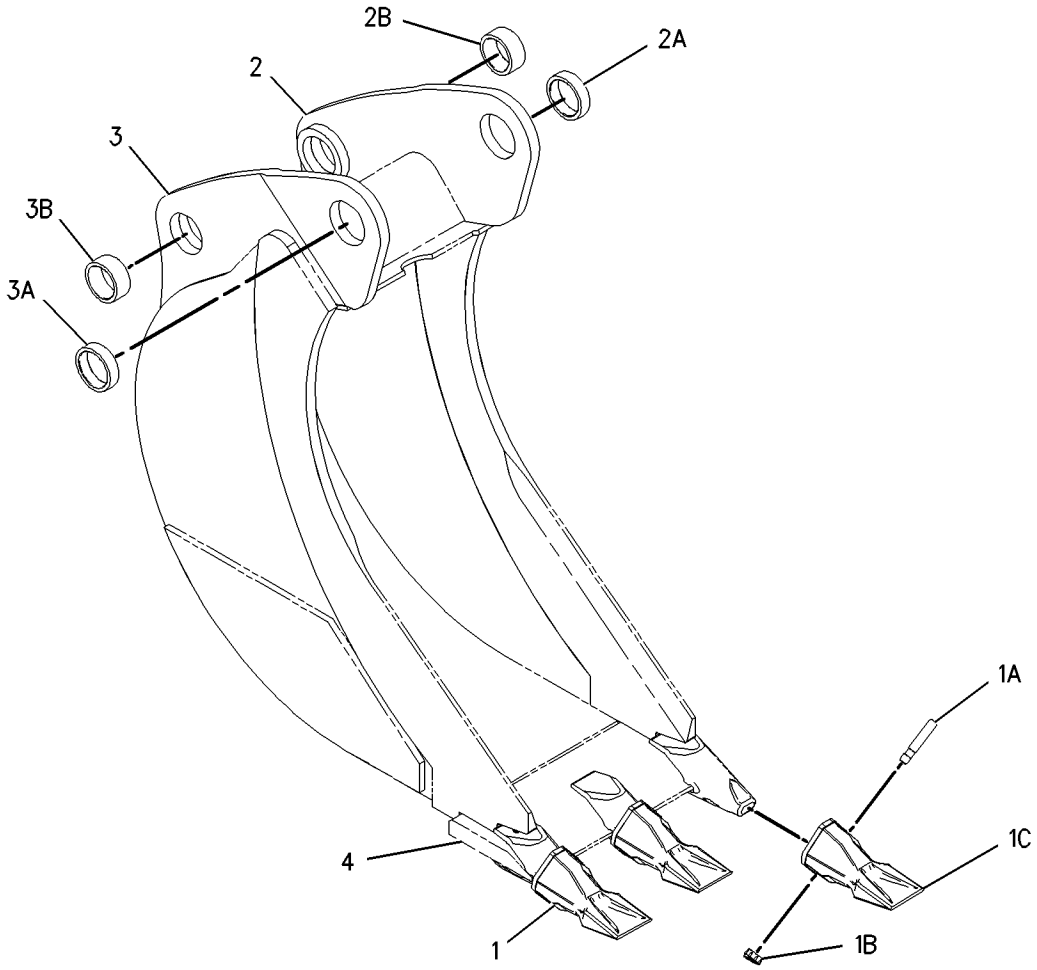

GRAPHIC #1 **<END>** g01001954

WORK TOOLS

219-3395 BUCKET GP-HOE–ROCK (CHG -00)

S/N: HLS1-UP
458-MM (18-IN)
AN ATTACHMENT

SMCS-6503 **i02485597**

NOTE	REF NO	GRAPHIC REF	PART NUMBER	QTY	PART NAME 1 2 3 4 5 6 (PRODUCT LEVEL)	SEE PAGE
	1	1	*208-5245*	4	TIP GP-PENETRATION	
					(EACH INCLUDES)	
	1A	1	**201-1238**	1	PIN	
	1B	1	**201-1239**	1	RETAINER AS	
	1C	1	**208-5235**	1	TIP-PENETRATION	
	2	1	*151-7902*	1	BRACKET AS (LH)	
	2A	1	**9R-0162**	1	BEARING-SLEEVE	
	2B	1	**168-0480**	1	BEARING-SLEEVE	
	3	1	*151-7903*	1	BRACKET AS (RH)	
	3A	1	**9R-0162**	1	BEARING-SLEEVE	
	3B	1	**168-0480**	1	BEARING-SLEEVE	
	4	1	**219-9483**	1	EDGE	

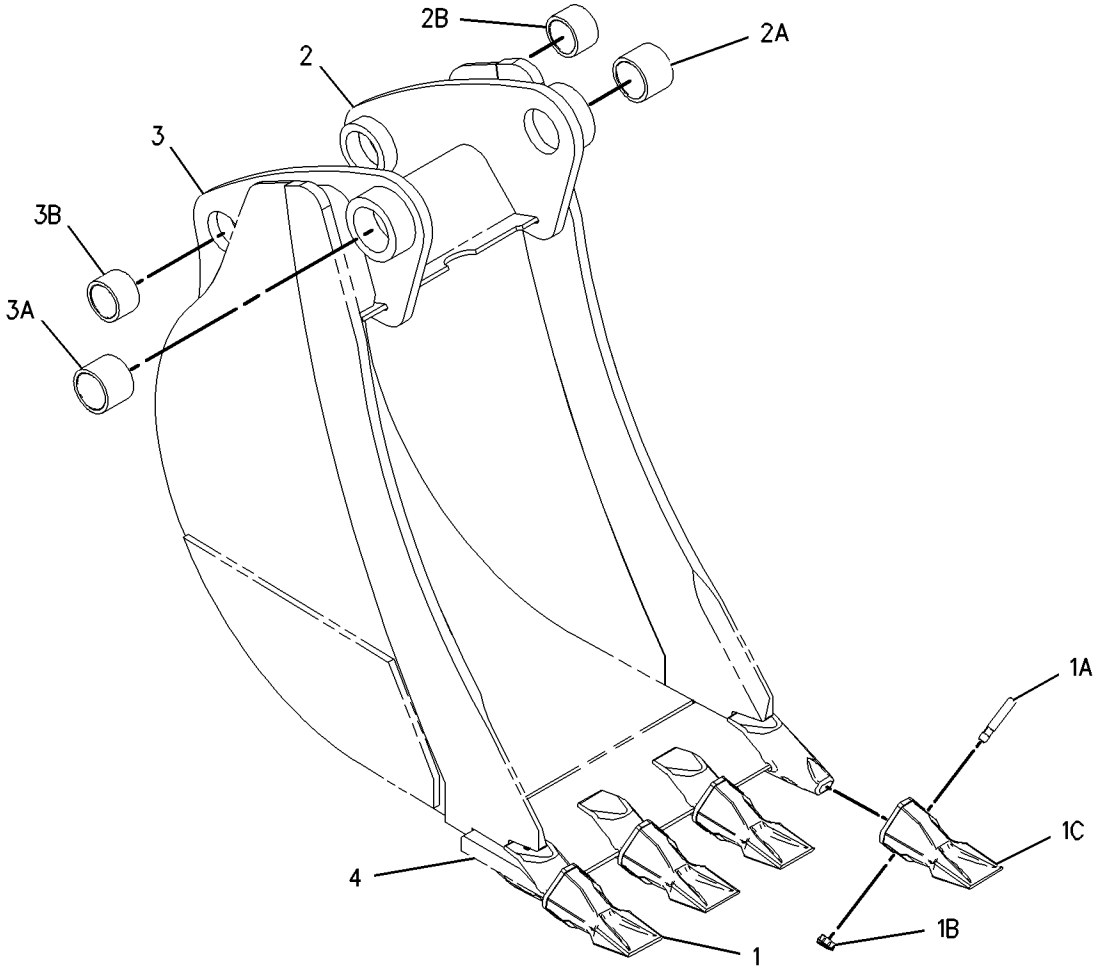

GRAPHIC #1 **<END>** g01001940

219-3396 BUCKET GP-HOE–ROCK (CHG -00)

S/N: HLS1-UP
610-MM (24-IN)
AN ATTACHMENT

SMCS-6503 **i02238736**

NOTE	REF NO	GRAPHIC REF	PART NUMBER	QTY	PART NAME 1 2 3 4 5 6 (PRODUCT LEVEL)	SEE PAGE
	1	1	*208-5245*	5	TIP GP-PENETRATION	
					(EACH INCLUDES)	
	1A	1	**201-1238**	1	PIN	
	1B	1	**201-1239**	1	RETAINER AS	
	1C	1	**208-5235**	1	TIP-PENETRATION	
	2	1	*151-7902*	1	BRACKET AS (LH)	
	2A	1	**9R-0162**	1	BEARING-SLEEVE	
	2B	1	**168-0480**	1	BEARING-SLEEVE	
	3	1	*151-7903*	1	BRACKET AS (RH)	
	3A	1	**9R-0162**	1	BEARING-SLEEVE	
	3B	1	**168-0480**	1	BEARING-SLEEVE	
	4	1	**219-9484**	1	EDGE	

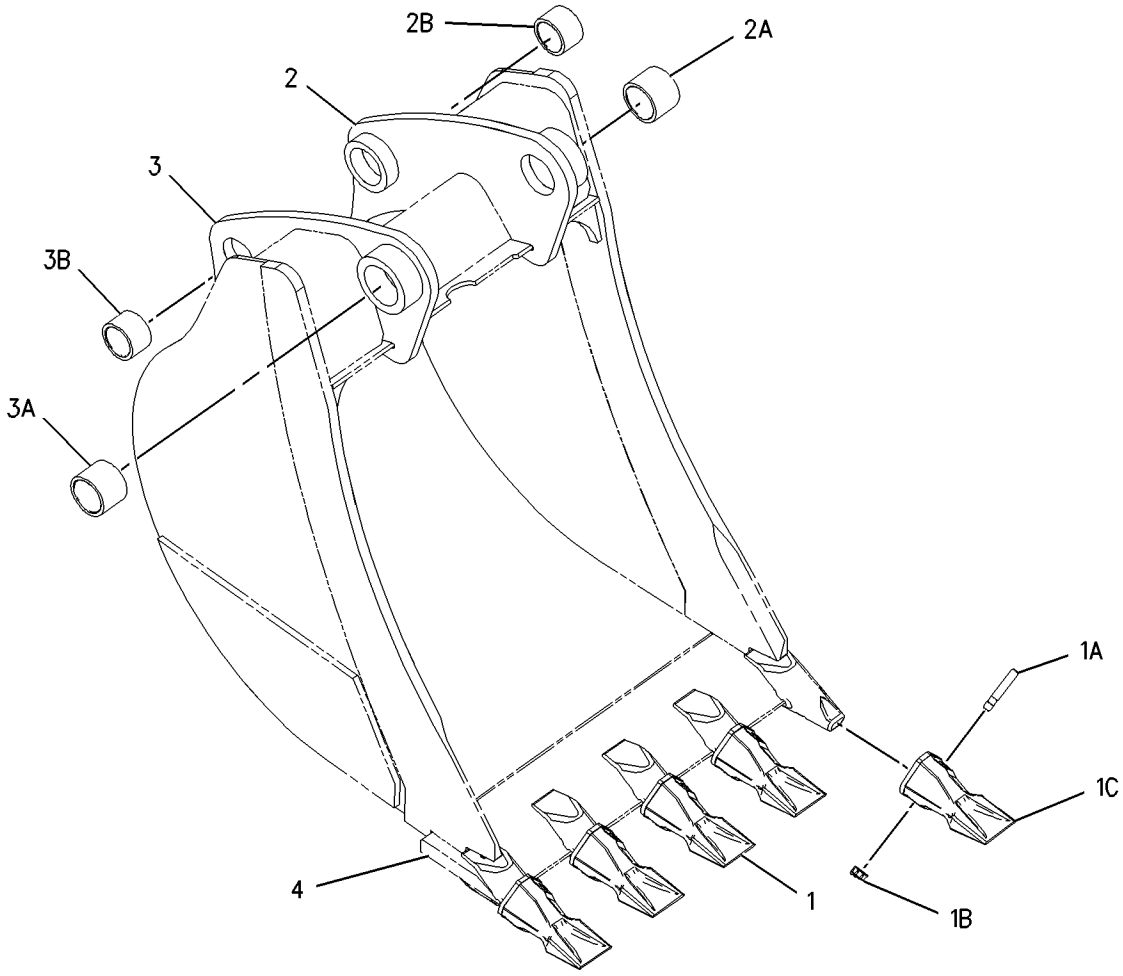

GRAPHIC #1 **<END>** g01002082

WORK TOOLS

219-3397 BUCKET GP-HOE–ROCK (CHG -00)

S/N: HLS1-UP
762-MM (30-IN)
AN ATTACHMENT

SMCS-6503 **i02238720**

NOTE	REF NO	GRAPHIC REF	PART NUMBER	QTY	PART NAME 1 2 3 4 5 6 (PRODUCT LEVEL)	SEE PAGE
	1	1	*208-5245*	5	TIP GP-PENETRATION	
					(EACH INCLUDES)	
	1A	1	**201-1238**	1	PIN	
	1B	1	**201-1239**	1	RETAINER AS	
	1C	1	**208-5235**	1	TIP-PENETRATION	
	2	1	*151-7902*	1	BRACKET AS (LH)	
	2A	1	**9R-0162**	1	BEARING-SLEEVE	
	2B	1	**168-0480**	1	BEARING-SLEEVE	
	3	1	*151-7903*	1	BRACKET AS (RH)	
	3A	1	**9R-0162**	1	BEARING-SLEEVE	
	3B	1	**168-0480**	1	BEARING-SLEEVE	
	4	1	**219-9485**	1	EDGE	

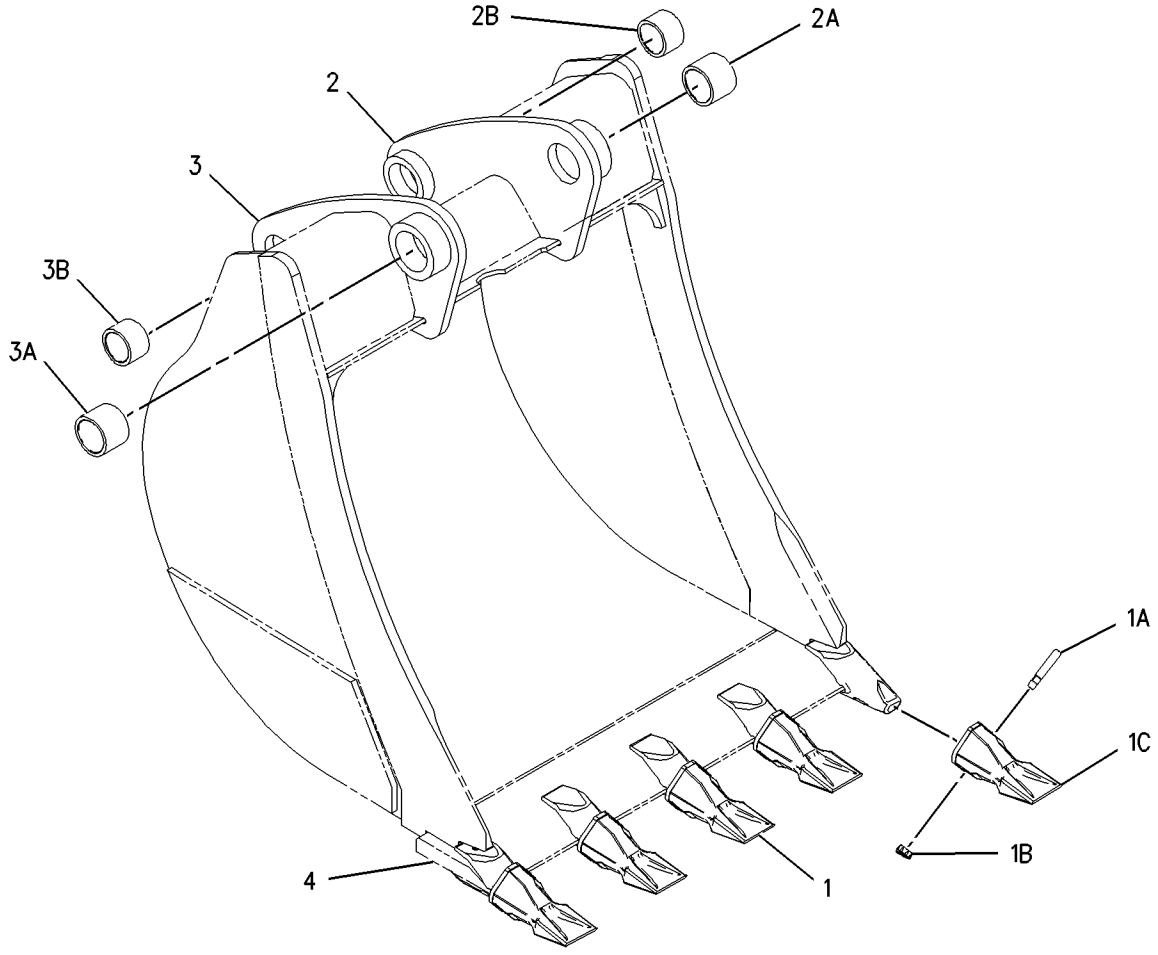

GRAPHIC #1 **<END>** g01002078

WORK TOOLS

219-3398 BUCKET GP-HOE–ROCK (CHG -00)

S/N: HLS1-UP
914-MM (36-IN)
AN ATTACHMENT

SMCS-6503 **i02238723**

NOTE	REF NO	GRAPHIC REF	PART NUMBER	QTY	PART NAME 1 2 3 4 5 6 (PRODUCT LEVEL)	SEE PAGE
	1	1	*208-5245*	6	TIP GP-PENETRATION	
					(EACH INCLUDES)	
	1A	1	**201-1238**	1	PIN	
	1B	1	**201-1239**	1	RETAINER AS	
	1C	1	**208-5235**	1	TIP-PENETRATION	
	2	1	*151-7902*	1	BRACKET AS (LH)	
	2A	1	**9R-7902**	1	COVER AS	
	2B	1	**168-0480**	1	BEARING-SLEEVE	
	3	1	*151-7903*	1	BRACKET AS (RH)	
	3A	1	**9R-0162**	1	BEARING-SLEEVE	
	3B	1	**168-0480**	1	BEARING-SLEEVE	
	4	1	**219-9486**	1	EDGE	

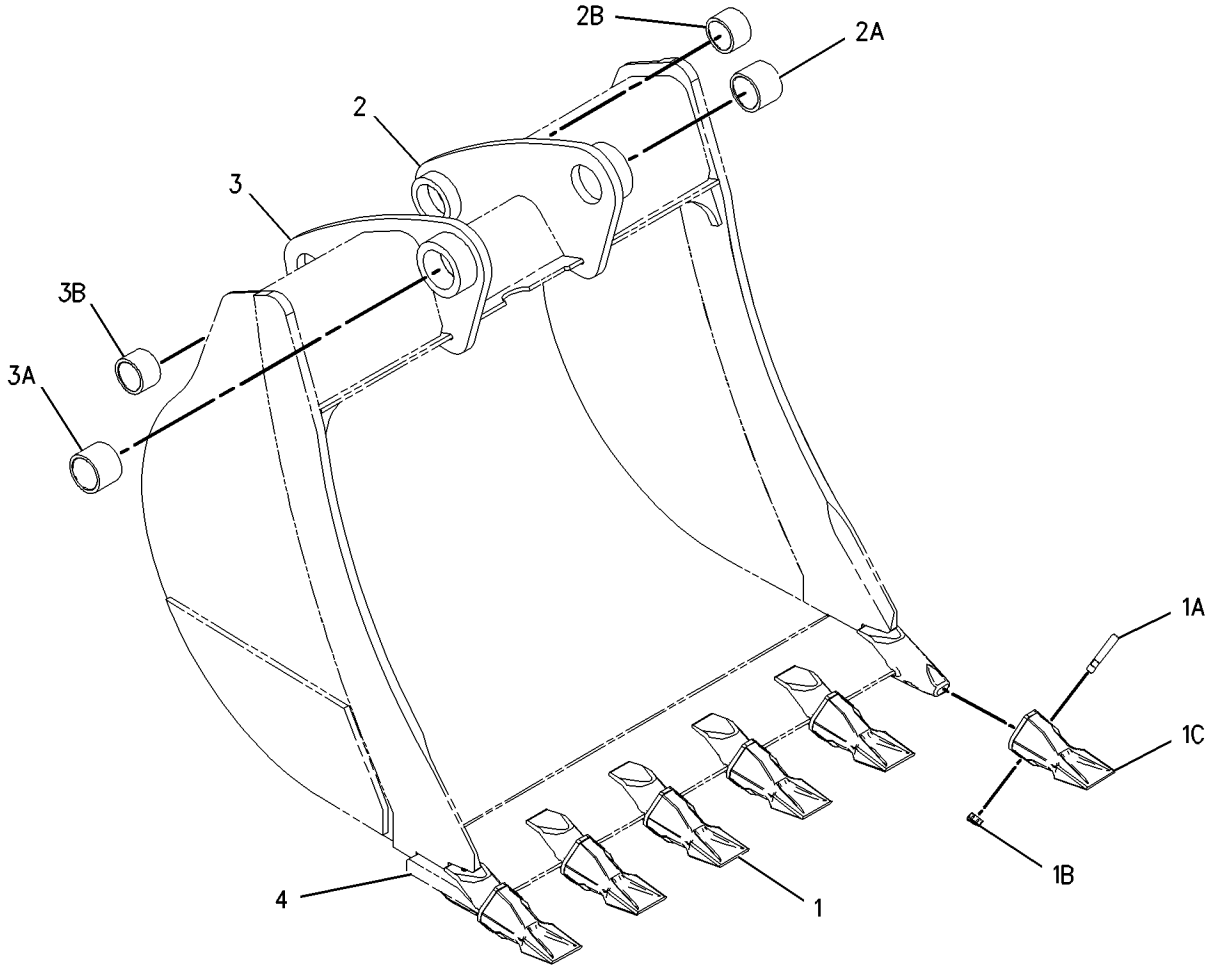

GRAPHIC #1 **<END>** g01002088

219-3399 BUCKET GP-HOE—CORAL (CHG -00)

S/N: HLS1-UP
305-MM (12-IN)
PART OF 219-3413 BUCKET GP-HOE
AN ATTACHMENT

SMCS-6503 **i02238724**

NOTE	REF NO	GRAPHIC REF	PART NUMBER	QTY	PART NAME 1 2 3 4 5 6 (PRODUCT LEVEL)	SEE PAGE
	1	1	*208-5242*	4	TIP GP-CHISEL	
					(EACH INCLUDES)	
	1A	1	**201-1238**	1	PIN	
	1B	1	**201-1239**	1	RETAINER AS	
	1C	1	**208-5232**	1	TIP-CHISEL	
	2	1	*202-4162*	1	BRACKET AS (LH)	
	2A	1	**9R-0320**	1	BEARING-SLEEVE	
	2B	1	**154-5257**	1	BEARING-SLEEVE	
	3	1	*202-4163*	1	BRACKET AS (RH)	
	3A	1	**9R-0320**	1	BEARING-SLEEVE	
	3B	1	**154-5257**	1	BEARING-SLEEVE	
	4	1	**219-9496**	1	EDGE	

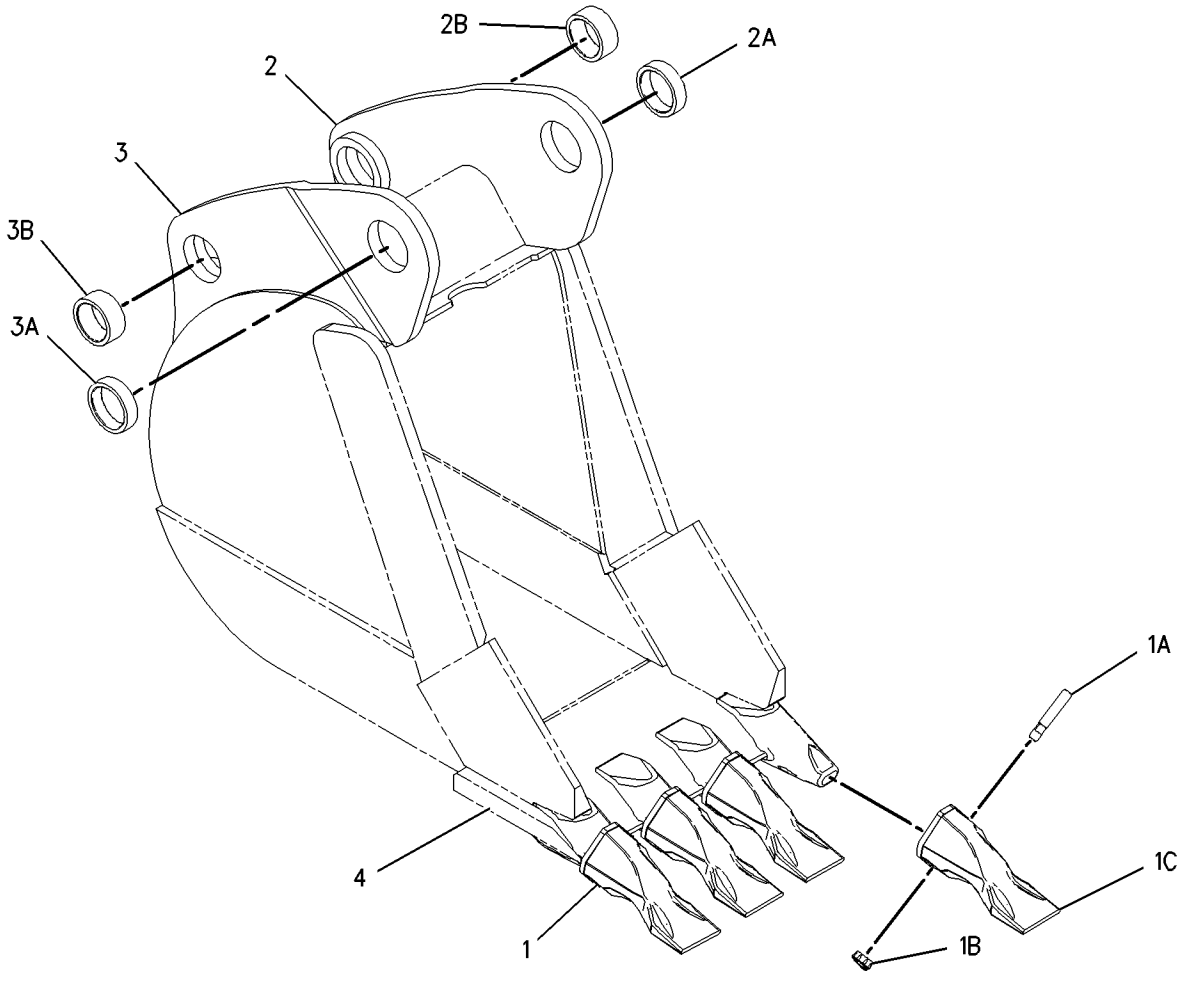

GRAPHIC #1 **<END>** g01002114

219-3400 BUCKET GP-HOE–CORAL (CHG -00)

S/N: HLS1-UP
458-MM (18-IN)
AN ATTACHMENT

SMCS-6503 **i02238725**

NOTE	REF NO	GRAPHIC REF	PART NUMBER	QTY	PART NAME 1 2 3 4 5 6 (PRODUCT LEVEL)	SEE PAGE
	1	1	*208-5242*	6	TIP GP-CHISEL	
					(EACH INCLUDES)	
	1A	1	**201-1238**	1	PIN	
	1B	1	**201-1239**	1	RETAINER AS	
	1C	1	**208-5232**	1	TIP-CHISEL	
	2	1	*202-0596*	1	BRACKET AS (LH)	
	2A	1	**9R-0162**	1	BEARING-SLEEVE	
	2B	1	**168-0480**	1	BEARING-SLEEVE	
	3	1	*202-0597*	1	BRACKET AS (RH)	
	3A	1	**9R-0162**	1	BEARING-SLEEVE	
	3B	1	**168-0480**	1	BEARING-SLEEVE	
	4	1	**219-9491**	1	EDGE	

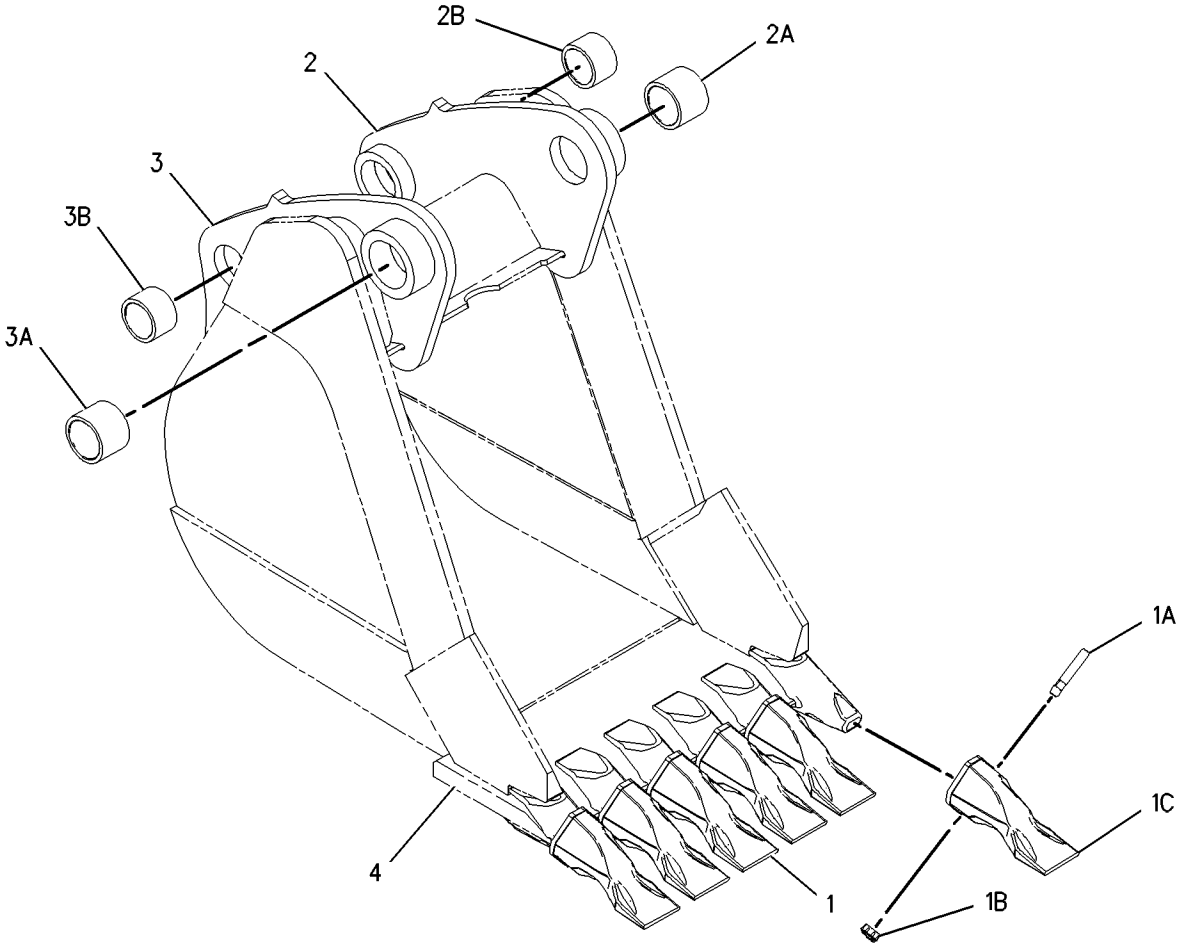

GRAPHIC #1 **<END>** g01002128

219-3401 BUCKET GP-HOE–CORAL (CHG -00)

S/N: HLS1-UP
610-MM (24-IN)
AN ATTACHMENT

SMCS-6503 **i02238726**

NOTE	REF NO	GRAPHIC REF	PART NUMBER	QTY	PART NAME 1 2 3 4 5 6 (PRODUCT LEVEL)	SEE PAGE
	1	1	*208-5242*	8	TIP GP-CHISEL	
					(EACH INCLUDES)	
	1A	1	**201-1238**	1	PIN	
	1B	1	**201-1239**	1	RETAINER AS	
	1C	1	**208-5232**	1	TIP-CHISEL	
	2	1	*202-0596*	1	BRACKET AS (LH)	
	2A	1	**9R-0162**	1	BEARING-SLEEVE	
	2B	1	**168-0480**	1	BEARING-SLEEVE	
	3	1	*202-0597*	1	BRACKET AS (RH)	
	3A	1	**9R-0162**	1	BEARING-SLEEVE	
	3B	1	**168-0480**	1	BEARING-SLEEVE	
	4	1	**219-9492**	1	EDGE	

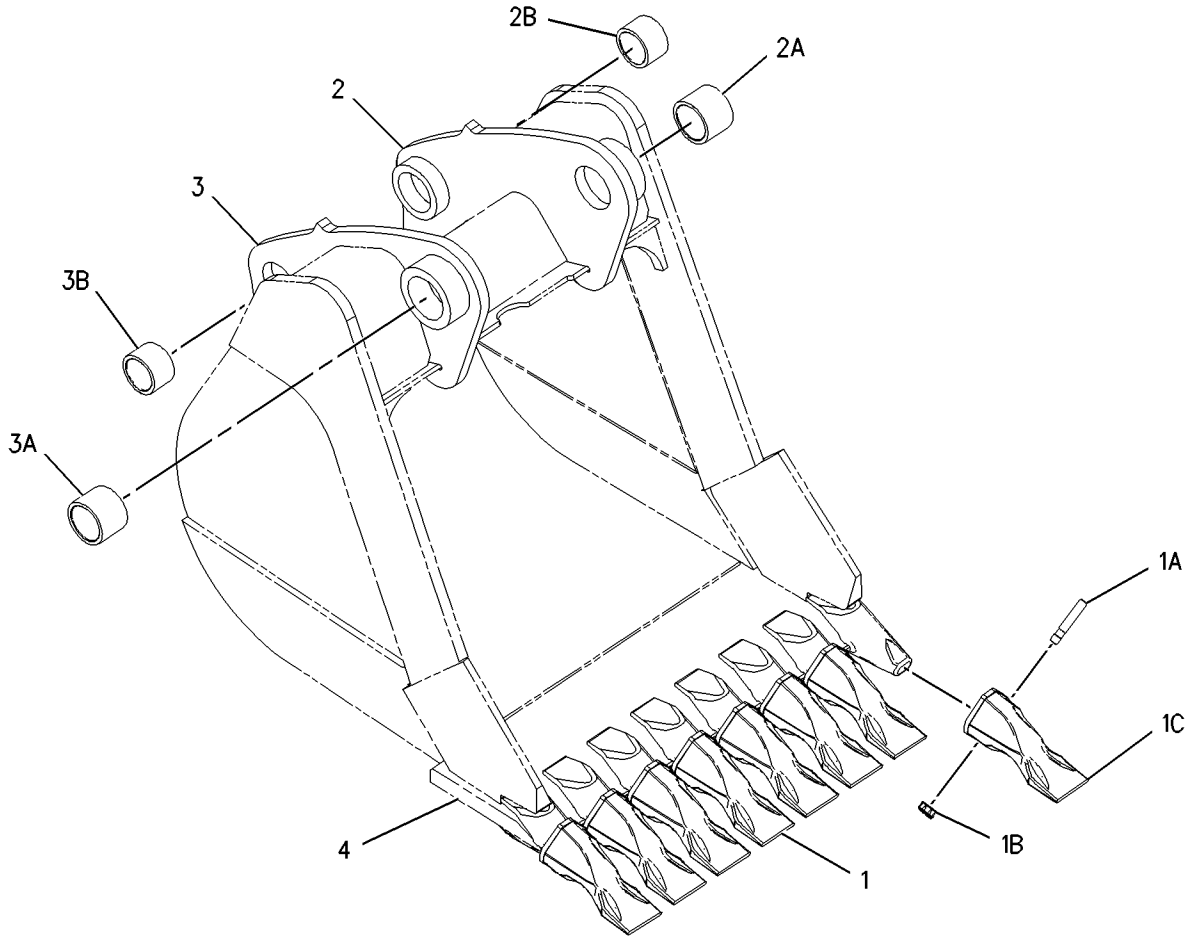

GRAPHIC #1 **<END>** g01002141

219-3402 BUCKET GP-HOE–CORAL (CHG -00)

S/N: HLS1-UP
762-MM (30-IN)
AN ATTACHMENT

SMCS-6503 **i02238727**

NOTE	REF NO	GRAPHIC REF	PART NUMBER	QTY	PART NAME 1 2 3 4 5 6 (PRODUCT LEVEL)	SEE PAGE
	1	1	*208-5242*	10	TIP GP-CHISEL	
					(EACH INCLUDES)	
	1A	1	**201-1238**	1	PIN	
	1B	1	**201-1239**	1	RETAINER AS	
	1C	1	**208-5232**	1	TIP-CHISEL	
	2	1	*202-0596*	1	BRACKET AS (LH)	
	2A	1	**9R-0162**	1	BEARING-SLEEVE	
	2B	1	**168-0480**	1	BEARING-SLEEVE	
	3	1	*202-0597*	1	BRACKET AS (RH)	
	3A	1	**9R-0162**	1	BEARING-SLEEVE	
	3B	1	**168-0480**	1	BEARING-SLEEVE	
	4	1	**219-9495**	1	EDGE	

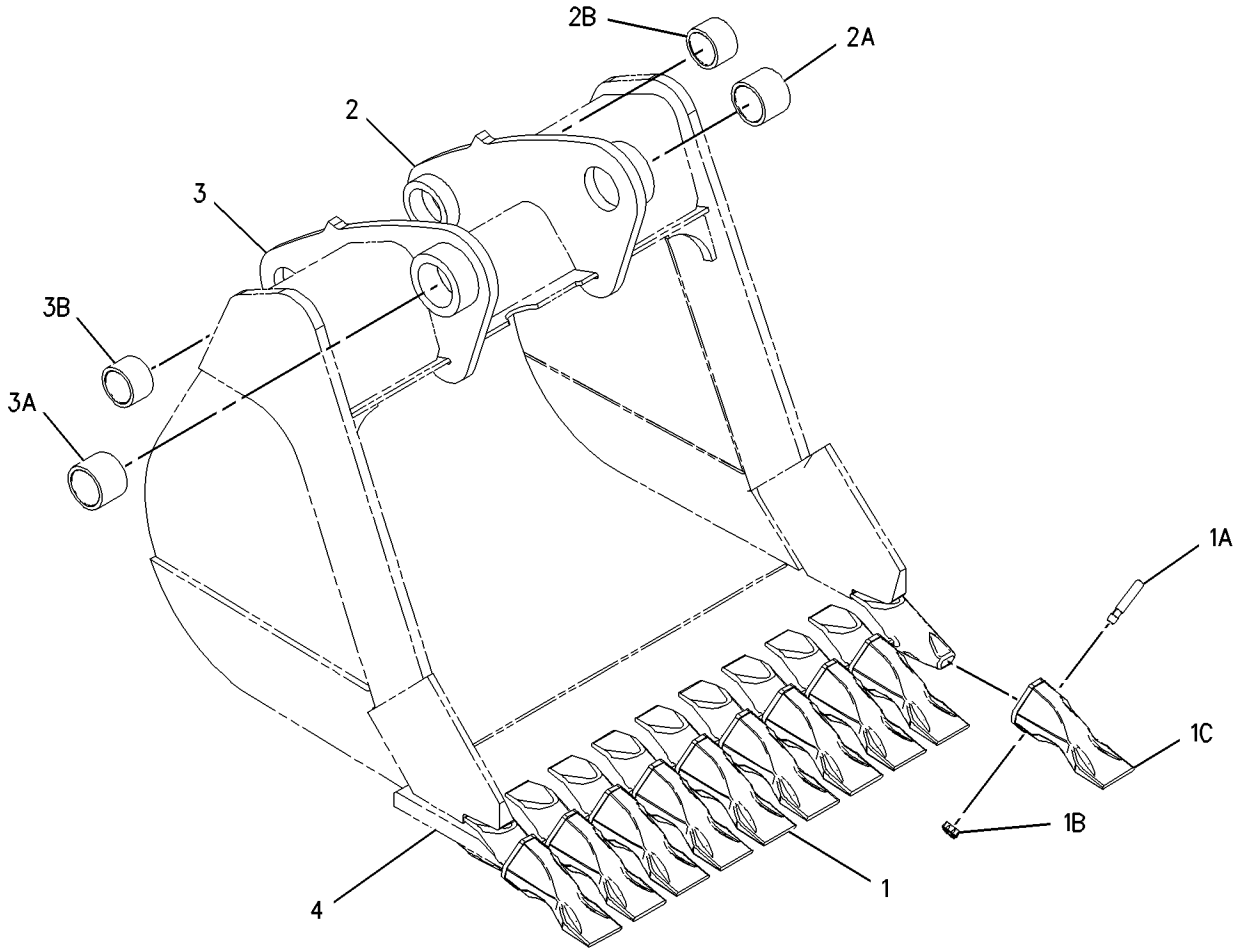

GRAPHIC #1 **<END>** g01002149

219-3410 BUCKET GP-HOE (CHG -00)

S/N: HLS1-UP
305-MM (12-IN)
AN ATTACHMENT

SMCS-6503 **i01916048**

NOTE	REF NO	GRAPHIC REF	PART NUMBER	QTY	PART NAME 1 2 3 4 5 6 (PRODUCT LEVEL)	SEE PAGE
	1	1	**6V-3213**	2	RING-RETAINING	
	2	1	**6V-4364**	2	RING-RETAINING	
	3	1	**9R-0158**	5	WASHER (46X69X3MM THK)	
	4	1	**9R-1510**	3	WASHER (4MM THK)	
	5	1	**168-0443**	1	PIN	
	6	1	**168-0444**	1	PIN	
Y	7	1	**219-3379**	1	BUCKET GP-HOE	451

Y-SEPARATE ILLUSTRATION

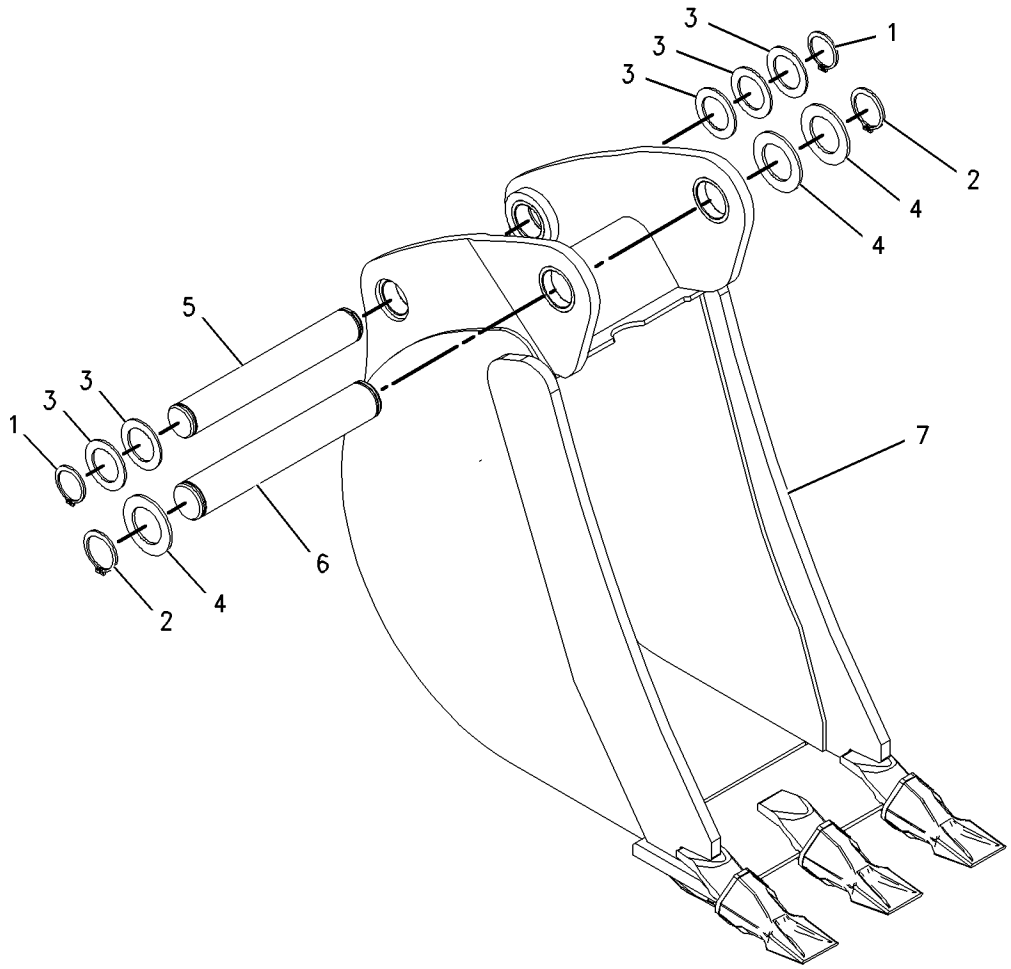

GRAPHIC #1 **<END>** g01001892

WORK TOOLS

219-3411 BUCKET GP-HOE–HEAVY DUTY (CHG -00)

S/N: HLS1-UP
305-MM (12-IN)
AN ATTACHMENT

SMCS-6503 **i01916050**

NOTE	REF NO	GRAPHIC REF	PART NUMBER	QTY	PART NAME 1 2 3 4 5 6 (PRODUCT LEVEL)	SEE PAGE
	1	1	**6V-3213**	2	RING-RETAINING	
	2	1	**6V-4364**	2	RING-RETAINING	
	3	1	**9R-0158**	5	WASHER (46X69X3-MM THK)	
	4	1	**9R-1510**	3	WASHER (51X82X4-MM THK)	
	5	1	**168-0443**	1	PIN	
	6	1	**168-0444**	1	PIN	
Y	7	1	**219-3384**	1	BUCKET GP-HOE (HEAVY-DUTY)	456

Y-SEPARATE ILLUSTRATION

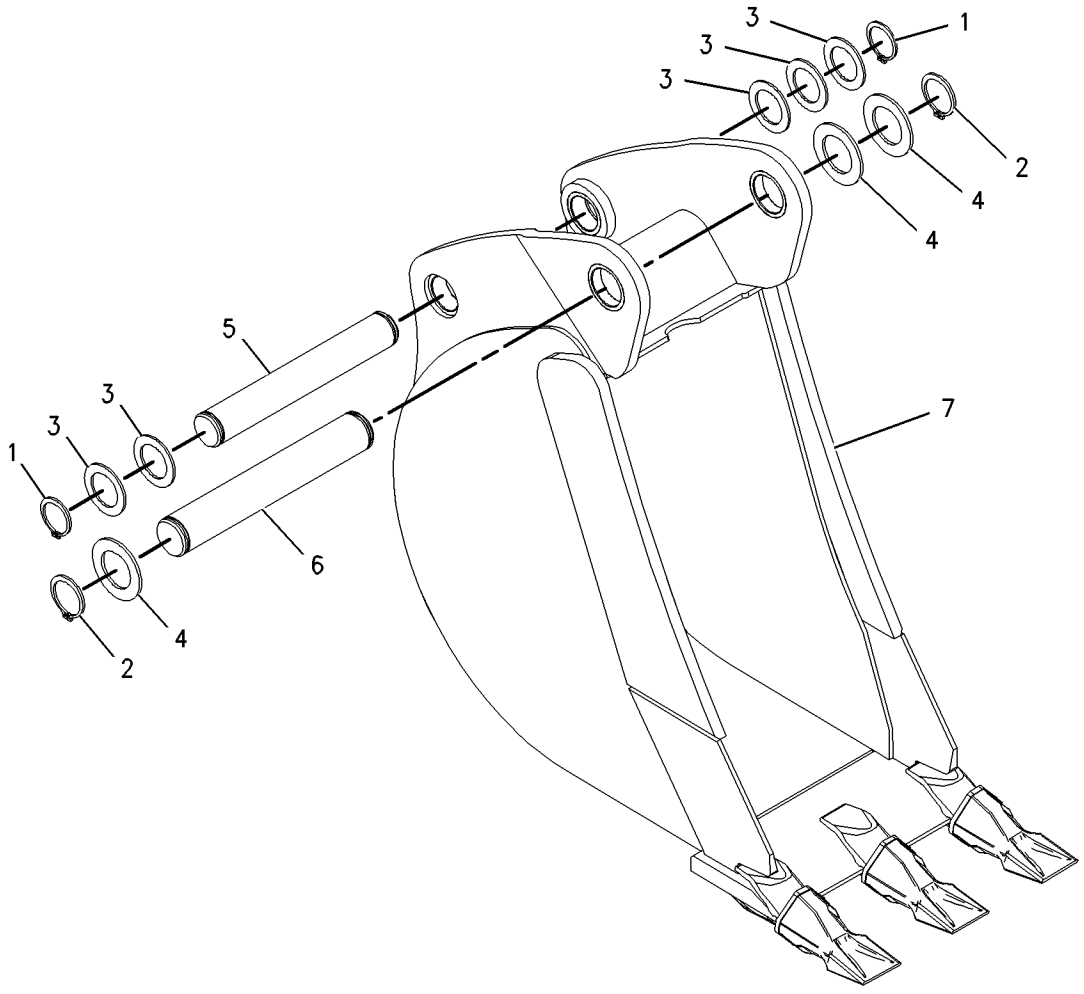

GRAPHIC #1 **<END>** g01001906

WORK TOOLS

219-3412 BUCKET GP-HOE—ROCK (CHG -00)

S/N: HLS1-UP
305-MM (12-IN)
AN ATTACHMENT

SMCS-6503 **i02250023**

NOTE	REF NO	GRAPHIC REF	PART NUMBER	QTY	PART NAME 1 2 3 4 5 6 (PRODUCT LEVEL)	SEE PAGE
	1	1	**6V-3213**	2	RING-RETAINING	
	2	1	**6V-4364**	2	RING-RETAINING	
	3	1	**9R-0158**	4	WASHER (46X69X3-MM THK)	
	4	1	**9R-1510**	3	WASHER (51X82X4-MM THK)	
	5	1	**168-0443**	1	PIN	
	6	1	**168-0444**	1	PIN	
Y	7	1	**219-3394**	1	BUCKET GP-HOE (ROCK)	466

Y-SEPARATE ILLUSTRATION

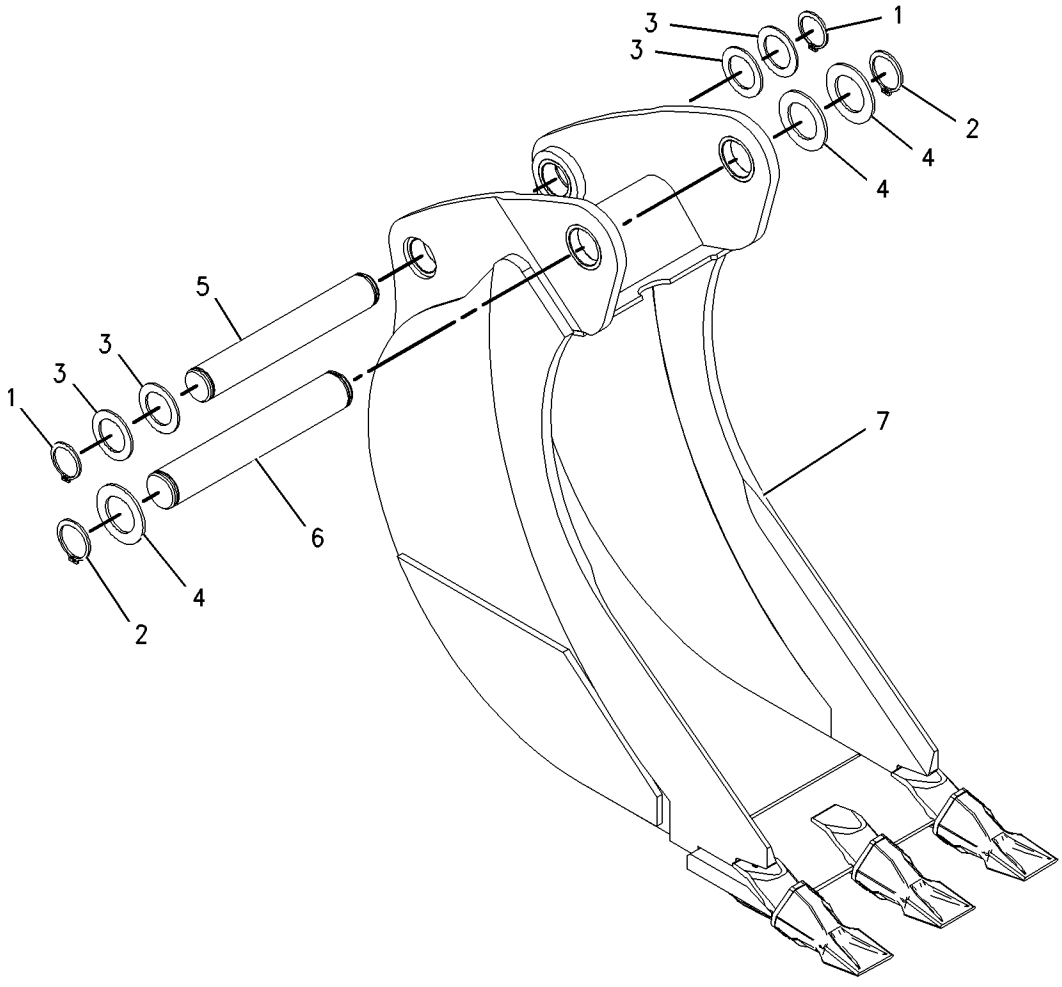

GRAPHIC #1 **<END>** g01001913

WORK TOOLS

219-3413 BUCKET GP-HOE—CORAL (CHG -00)

S/N: HLS1-UP
305-MM (12-IN)
AN ATTACHMENT

SMCS-6503 **i02250031**

NOTE	REF NO	GRAPHIC REF	PART NUMBER	QTY	PART NAME 1 2 3 4 5 6 (PRODUCT LEVEL)	SEE PAGE
	1	1	**6V-3213**	2	RING-RETAINING	
	2	1	**6V-4364**	2	RING-RETAINING	
	3	1	**9R-0158**	4	WASHER (46X69X3-MM THK)	
	4	1	**9R-1510**	3	WASHER (51X82X4-MM THK)	
	5	1	**168-0443**	1	PIN	
	6	1	**168-0444**	1	PIN	
Y	7	1	**219-3399**	1	BUCKET GP-HOE (CORAL)	471

Y-SEPARATE ILLUSTRATION

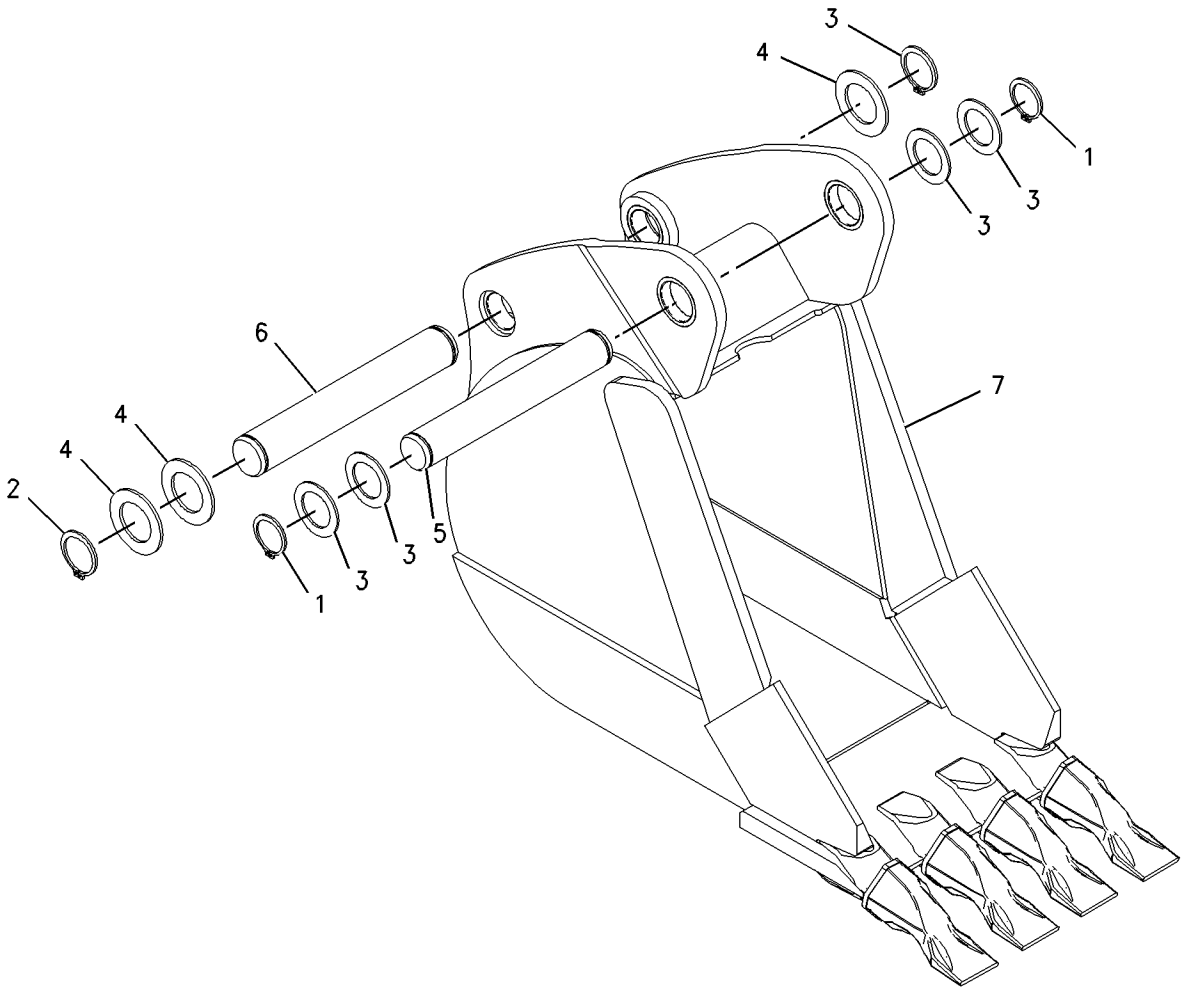

GRAPHIC #1 **<END>** g01001674

247-1947 BUCKET GP-HOE—HEAVY-DUTY, PIN-LOCK (CHG -00)

S/N: HLS1-UP
305-MM (12-IN)
AN ATTACHMENT

SMCS-6503 **i02044174**

NOTE	REF NO	GRAPHIC REF	PART NUMBER	QTY	PART NAME 1 2 3 4 5 6 (PRODUCT LEVEL)	SEE PAGE
	1	1	*208-5245*	3	TIP GP-PENETRATION	
					(EACH INCLUDES)	
	1A	1	**201-1238**	1	PIN	
	1B	1	**201-1239**	1	RETAINER AS	
	1C	1	**208-5235**	1	TIP-PENETRATION	
	2	1	*232-2752*	1	BUCKET AS	
	2A	1	**201-1234**	3	ADAPTER	
	2B	1	**9R-0431**	2	BEARING-SLEEVE	

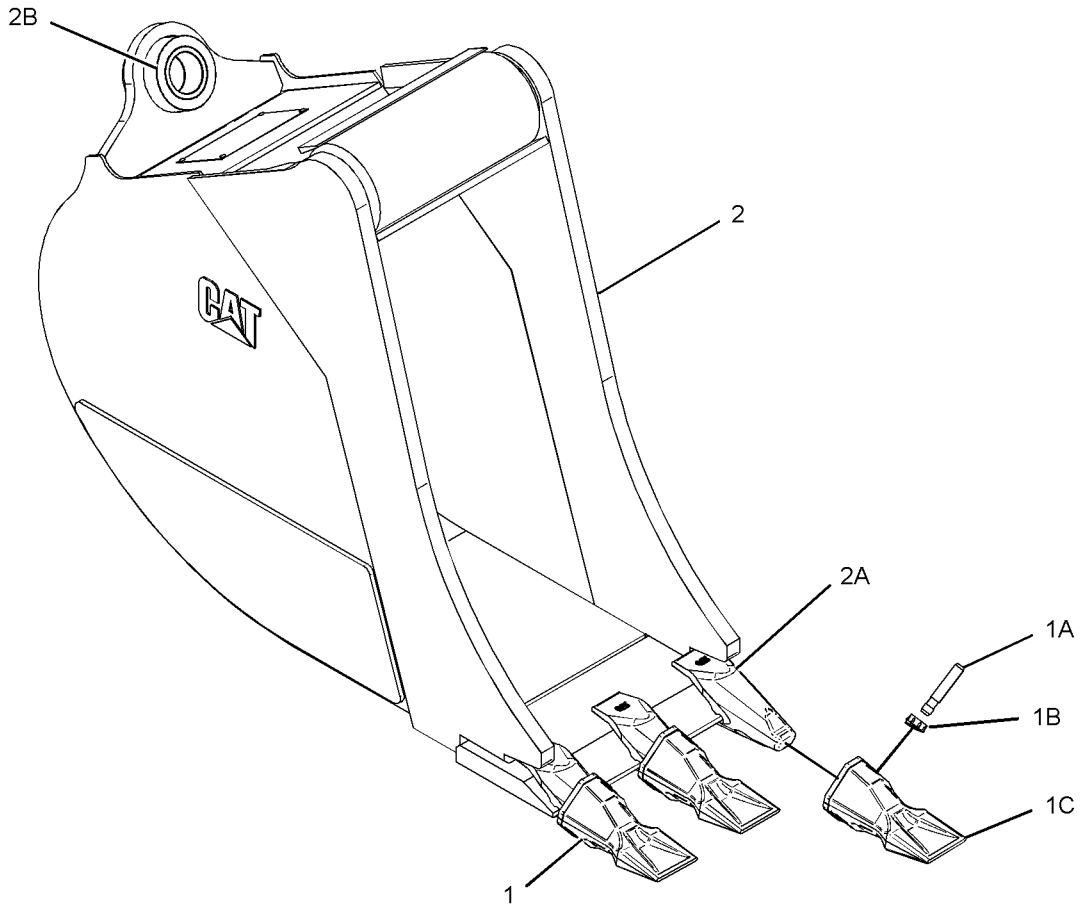

GRAPHIC #1 **<END>** g01071544

247-1948 BUCKET GP-HOE—HEAVY-DUTY, PIN-LOCK (CHG -00)

S/N: HLS1-UP
406-MM (16-IN)
AN ATTACHMENT

SMCS-6503 **i02044171**

NOTE	REF NO	GRAPHIC REF	PART NUMBER	QTY	PART NAME 1 2 3 4 5 6 (PRODUCT LEVEL)	SEE PAGE
	1	1	*208-5245*	3	TIP GP-PENETRATION	
					(EACH INCLUDES)	
	1A	1	**201-1238**	1	PIN	
	1B	1	**201-1239**	1	RETAINER AS	
	1C	1	**208-5235**	1	TIP-PENETRATION	
	2	1	*232-2753*	1	BUCKET AS	
	2A	1	**201-1234**	3	ADAPTER	
	2B	1	**9R-0431**	2	BEARING-SLEEVE	

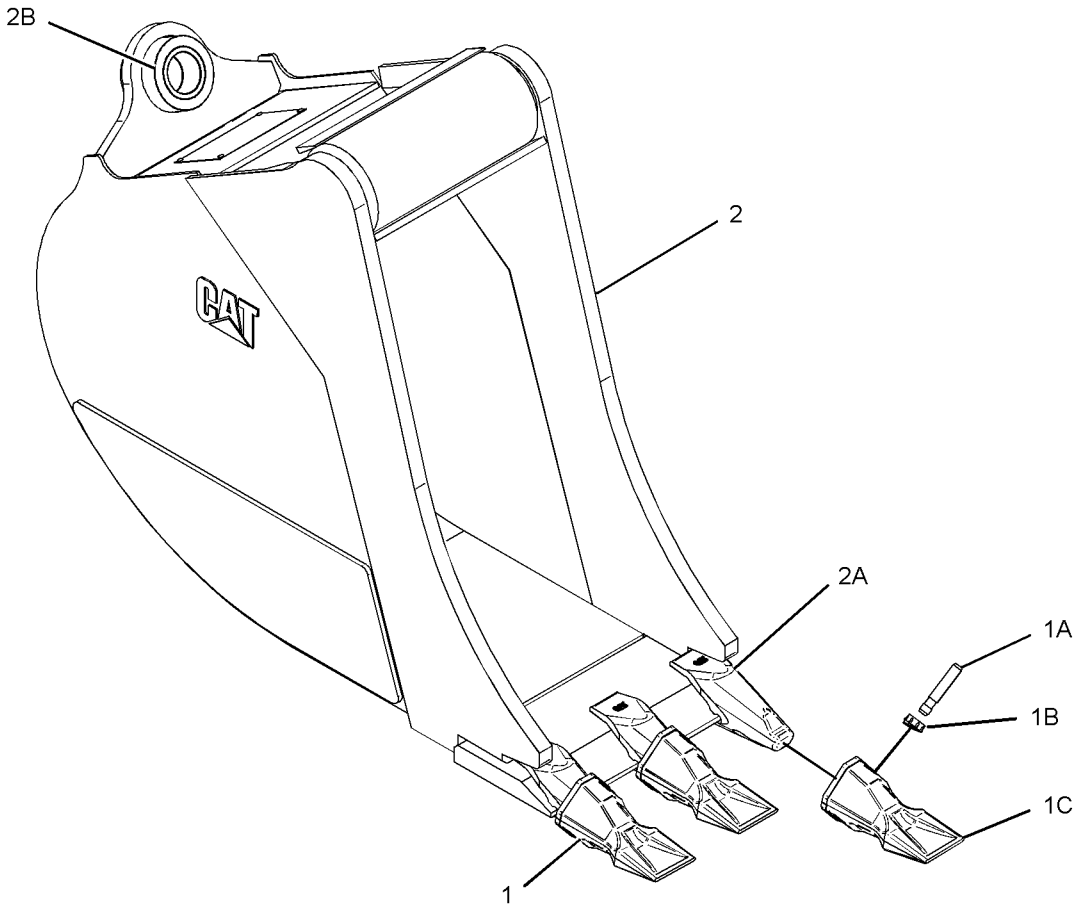

GRAPHIC #1 **<END>** g01071544

WORK TOOLS

247-1949 BUCKET GP-HOE—HEAVY-DUTY, PIN-LOCK (CHG -00)

S/N: HLS1-UP
458-MM (18-IN)
AN ATTACHMENT

SMCS-6503 **i02044168**

NOTE	REF NO	GRAPHIC REF	PART NUMBER	QTY	PART NAME 1 2 3 4 5 6 (PRODUCT LEVEL)	SEE PAGE
	1	1	*208-5245*	4	TIP GP-PENETRATION	
					(EACH INCLUDES)	
	1A	1	**201-1238**	1	PIN	
	1B	1	**201-1239**	1	RETAINER AS	
	1C	1	**208-5235**	1	TIP-PENETRATION	
	2	1	*232-2754*	1	BUCKET AS	
	2A	1	**201-1234**	4	ADAPTER	
	2B	1	**9R-0431**	2	BEARING-SLEEVE	
	2C	1	**219-9483**	1	EDGE	

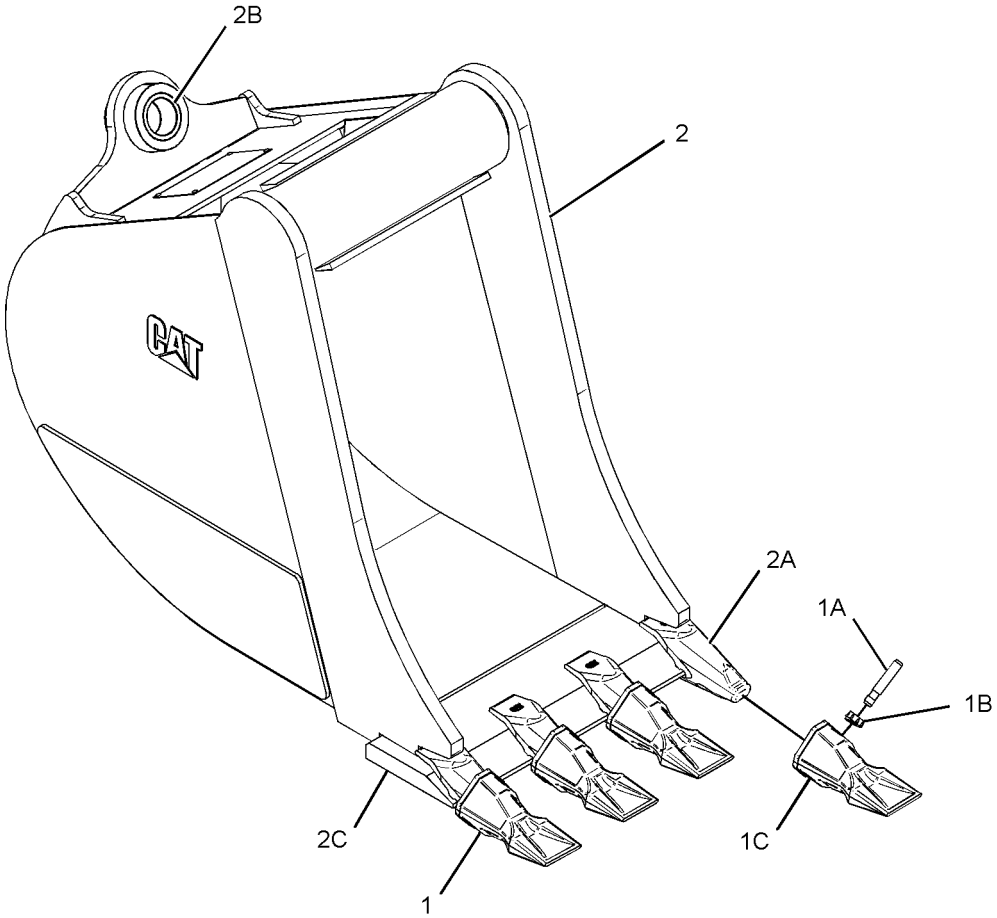

GRAPHIC #1

<END>

g01071567

247-1950 BUCKET GP-HOE—HEAVY-DUTY, PIN-LOCK (CHG -00)

S/N: HLS1-UP
610-MM (24-IN)
AN ATTACHMENT

SMCS-6503 **i02044165**

NOTE	REF NO	GRAPHIC REF	PART NUMBER	QTY	PART NAME 1 2 3 4 5 6 (PRODUCT LEVEL)	SEE PAGE
	1	1	*208-5245*	5	TIP GP-PENETRATION	
					(EACH INCLUDES)	
	1A	1	**201-1238**	1	PIN	
	1B	1	**201-1239**	1	RETAINER AS	
	1C	1	**208-5235**	1	TIP-PENETRATION	
	2	1	*232-2755*	1	BUCKET AS	
	2A	1	**201-1234**	5	ADAPTER	
	2B	1	**9R-0431**	2	BEARING-SLEEVE	
	2C	1	**219-9484**	1	EDGE	

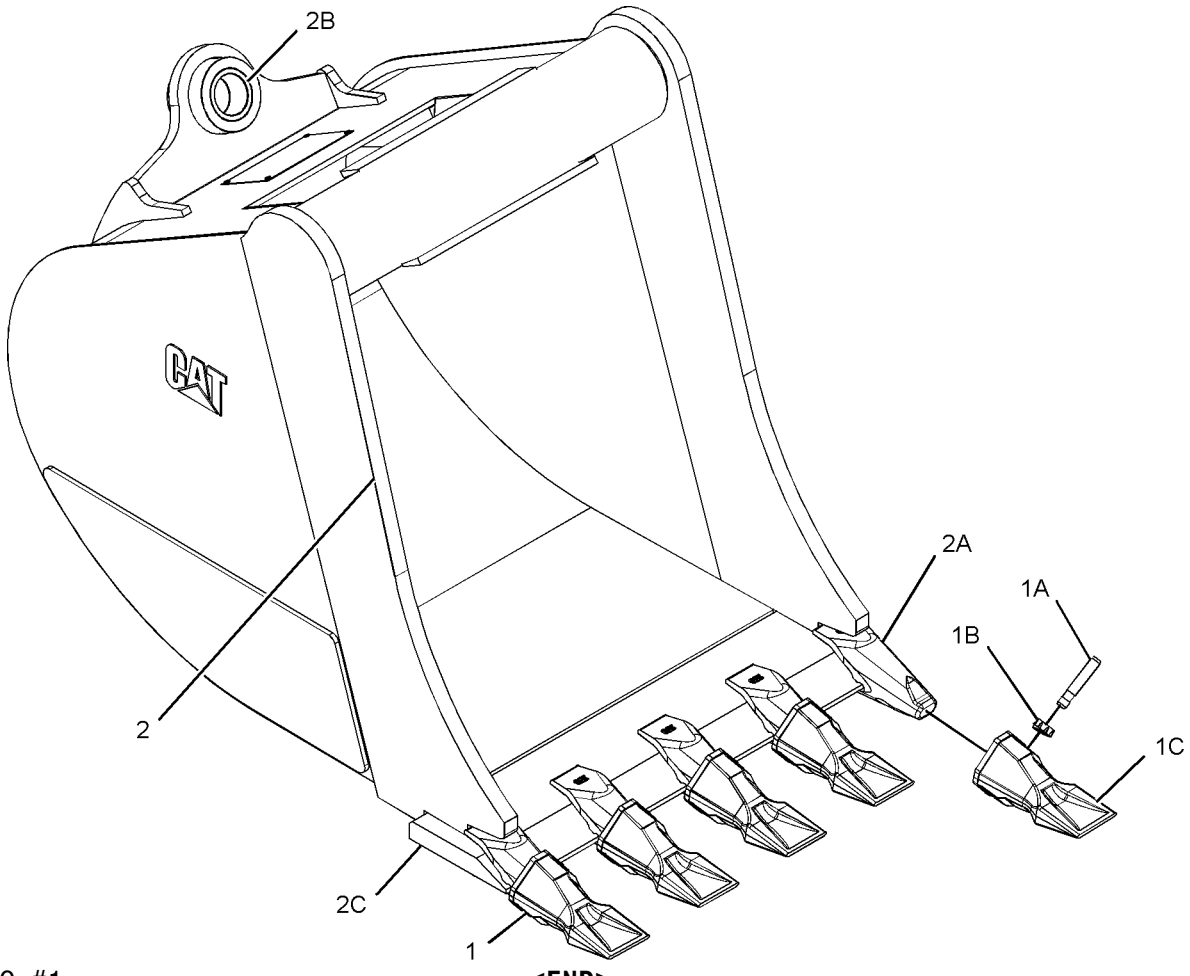

GRAPHIC #1 **<END>** g01071585

WORK TOOLS

247-1951 BUCKET GP-HOE—HEAVY-DUTY, PIN-LOCK (CHG -00)

S/N: HLS1-UP
762-MM (30-IN)
AN ATTACHMENT

SMCS-6503 **i02044162**

NOTE	REF NO	GRAPHIC REF	PART NUMBER	QTY	PART NAME 1 2 3 4 5 6 (PRODUCT LEVEL)	SEE PAGE
	1	1	*208-5245*	5	TIP GP-PENETRATION	
					(EACH INCLUDES)	
	1A	1	**201-1238**	1	PIN	
	1B	1	**201-1239**	1	RETAINER AS	
	1C	1	**208-5235**	1	TIP-PENETRATION	
	2	1	*232-2756*	1	BUCKET AS	
	2A	1	**201-1234**	5	ADAPTER	
	2B	1	**9R-0431**	2	BEARING-SLEEVE	
	2C	1	**219-9485**	1	EDGE	

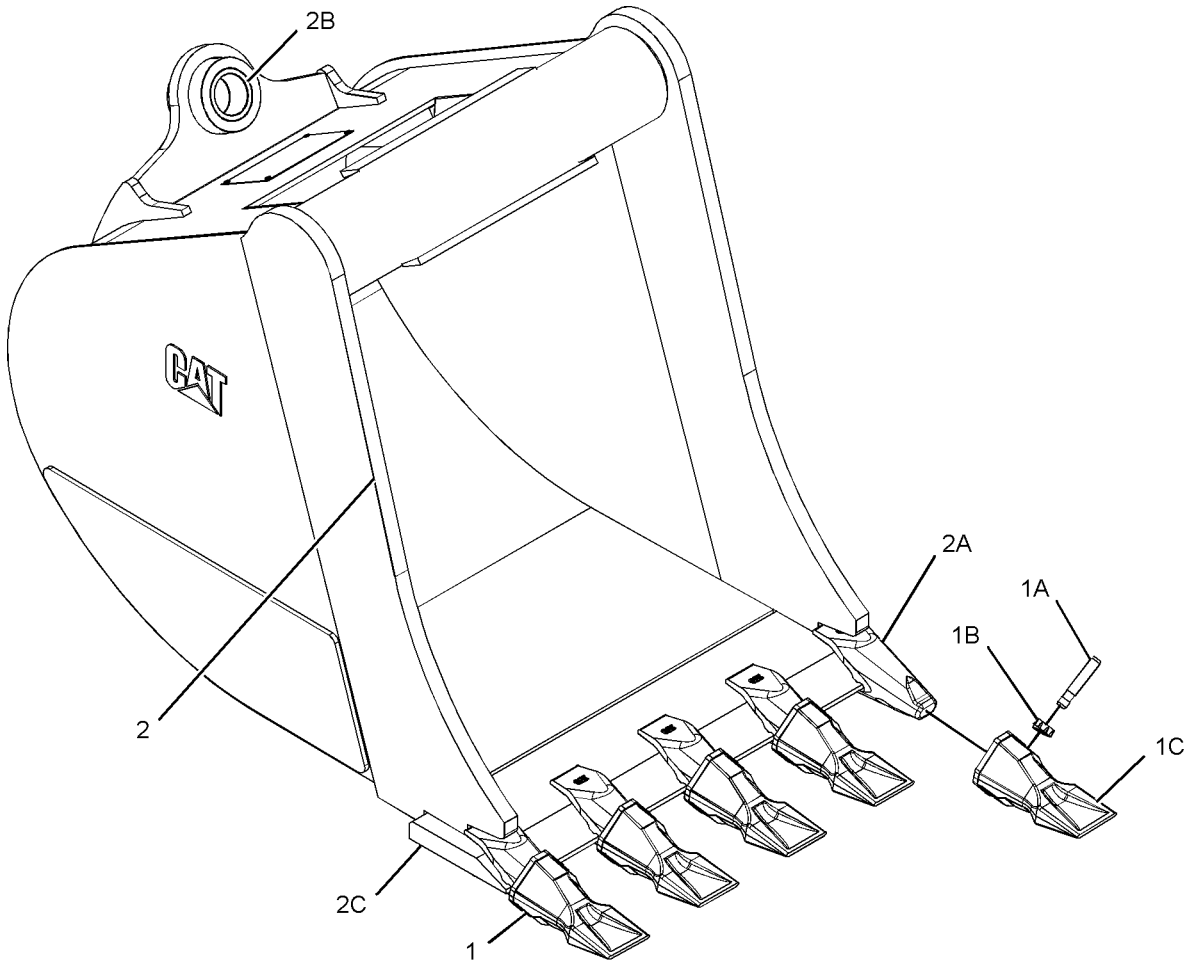

GRAPHIC #1 **<END>** g01071585

247-1952 BUCKET GP-HOE—HEAVY-DUTY, PIN-LOCK (CHG -00)

S/N: HLS1-UP
914-MM (36-IN)
AN ATTACHMENT

SMCS-6503 **i02044160**

NOTE	REF NO	GRAPHIC REF	PART NUMBER	QTY	PART NAME 1 2 3 4 5 6 (PRODUCT LEVEL)	SEE PAGE
	1	1	*208-5245*	6	TIP GP-PENETRATION	
					(EACH INCLUDES)	
	1A	1	**201-1238**	1	PIN	
	1B	1	**201-1239**	1	RETAINER AS	
	1C	1	**208-5235**	1	TIP-PENETRATION	
	2	1	*232-2757*	1	BUCKET AS	
	2A	1	**201-1234**	6	ADAPTER	
	2B	1	**9R-0431**	2	BEARING-SLEEVE	
	2C	1	**219-9486**	1	EDGE	

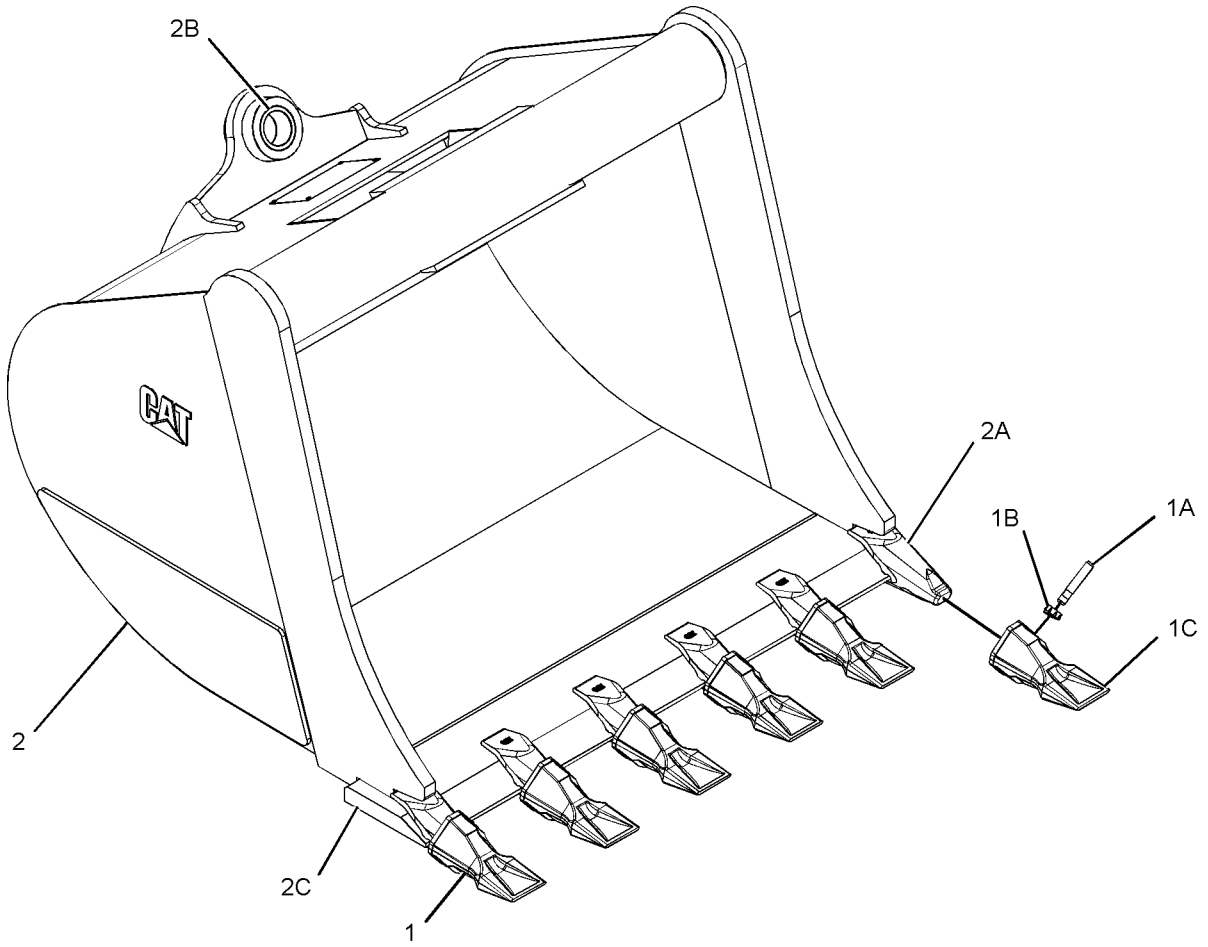

GRAPHIC #1 **<END>** g01071602

247-1953 BUCKET GP-HOE—HIGH CAPACITY, PIN-LOCK (CHG -00)

S/N: HLS1-UP
305-MM (12-IN)
AN ATTACHMENT

SMCS-6503 **i02044151**

NOTE	REF NO	GRAPHIC REF	PART NUMBER	QTY	PART NAME 1 2 3 4 5 6 (PRODUCT LEVEL)	SEE PAGE
	1	1	*208-5245*	3	TIP GP-PENETRATION	
					(EACH INCLUDES)	
	1A	1	**201-1238**	1	PIN	
	1B	1	**201-1239**	1	RETAINER AS	
	1C	1	**208-5235**	1	TIP-PENETRATION	
	2	1	*232-2758*	1	BUCKET AS	
	2A	1	**201-1234**	3	ADAPTER	
	2B	1	**9R-0431**	2	BEARING-SLEEVE	

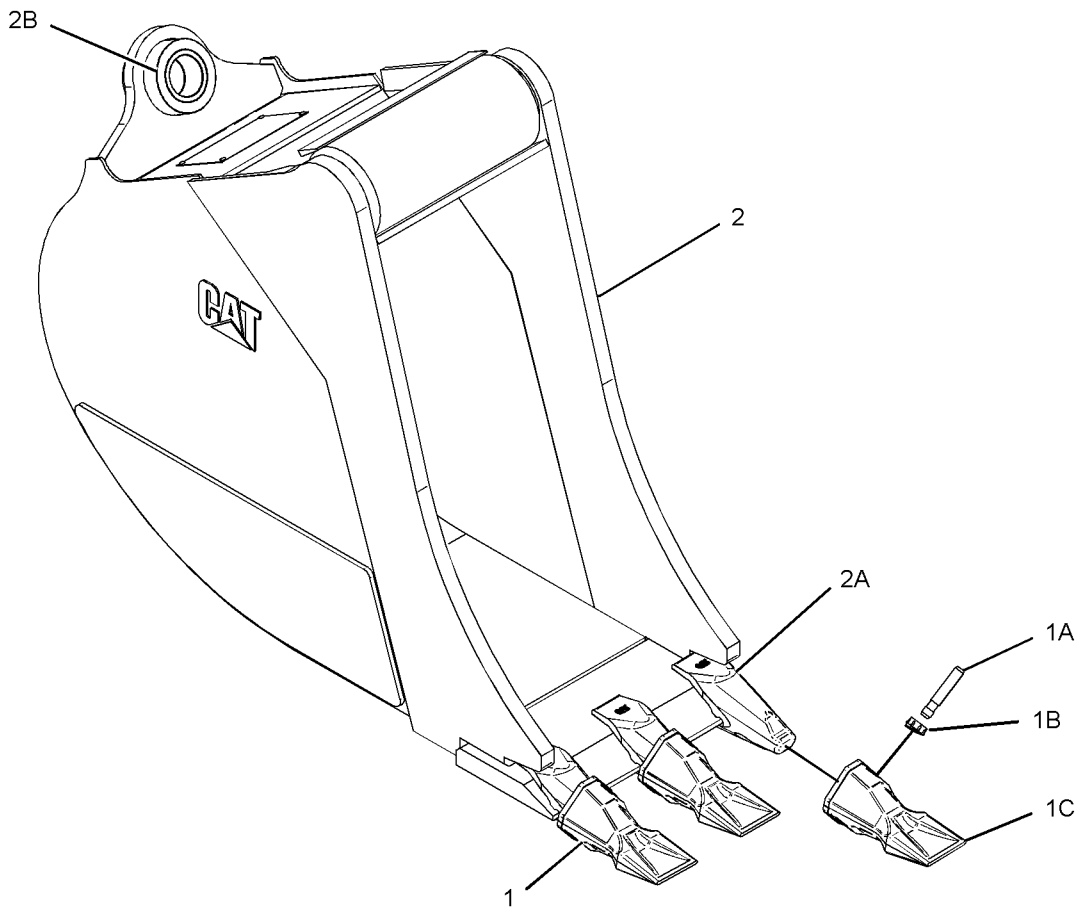

GRAPHIC #1 **<END>** g01071544

247-1954 BUCKET GP-HOE—HIGH CAPACITY, PIN-LOCK (CHG -00)

S/N: HLS1-UP
406-MM (16 IN)
AN ATTACHMENT

SMCS-6503 **i02298166**

NOTE	REF NO	GRAPHIC REF	PART NUMBER	QTY	PART NAME 1 2 3 4 5 6 (PRODUCT LEVEL)	SEE PAGE
	1	1	**137-4234**	1	PLATE-IDENTIFICATION (BUCKET)	
	2	1	**168-8389**	4	TACK-FASTENER	
	3	1	*208-5245*	3	TIP GP-PENETRATION	
					(EACH INCLUDES)	
	3A	1	**201-1238**	1	PIN	
	3B	1	**201-1239**	1	RETAINER AS	
	3C	1	**208-5235**	1	TIP-PENETRATION	
	4	1	**232-2759**	1	BUCKET AS	
		1	**248-2575**	1	EDGE	
		1	**201-1234**	3	ADAPTER	

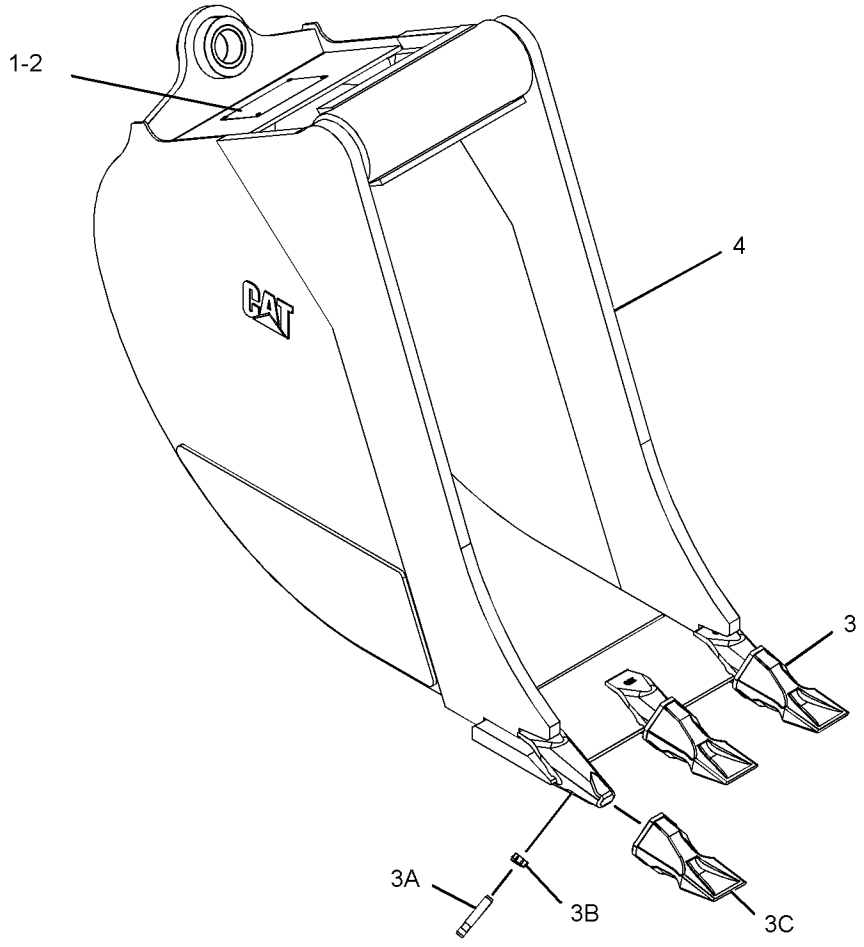

GRAPHIC #1 **<END>** g01161218

247-1955 BUCKET GP-HOE—HIGH CAPACITY, PIN-LOCK (CHG -00)

S/N: HLS1-UP
458-MM (18-IN)
AN ATTACHMENT

SMCS-6503 **i02044147**

NOTE	REF NO	GRAPHIC REF	PART NUMBER	QTY	PART NAME 1 2 3 4 5 6 (PRODUCT LEVEL)	SEE PAGE
	1	1	*208-5245*	4	TIP GP-PENETRATION	
					(EACH INCLUDES)	
	1A	1	**201-1238**	1	PIN	
	1B	1	**201-1239**	1	RETAINER AS	
	1C	1	**208-5235**	1	TIP-PENETRATION	
	2	1	*232-2760*	1	BUCKET AS	
	2A	1	**201-1234**	4	ADAPTER	
	2B	1	**9R-0431**	2	BEARING-SLEEVE	
	2C	1	**219-9483**	1	EDGE	

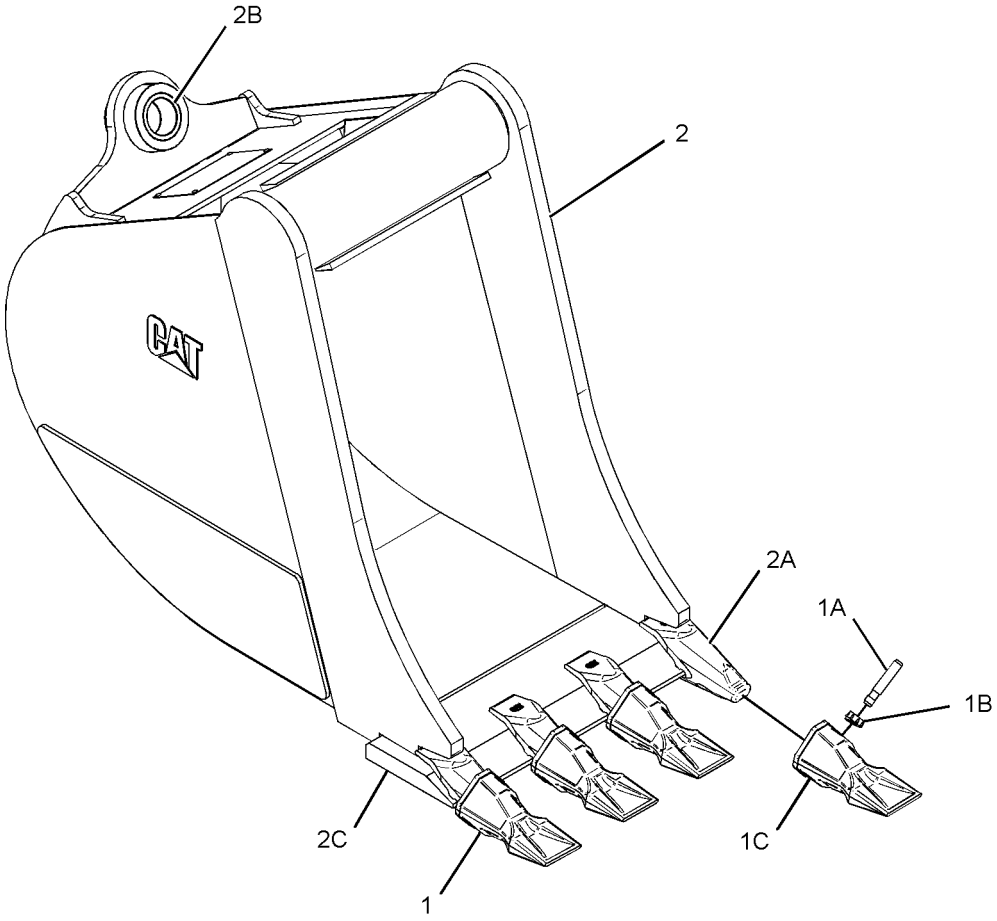

GRAPHIC #1 **<END>** g01071567

247-1956 BUCKET GP-HOE—HIGH CAPACITY, PIN-LOCK (CHG -00)

S/N: HLS1-UP
610-MM (24-IN)
AN ATTACHMENT

SMCS-6503 **i02044145**

NOTE	REF NO	GRAPHIC REF	PART NUMBER	QTY	PART NAME 1 2 3 4 5 6 (PRODUCT LEVEL)	SEE PAGE
	1	1	*208-5245*	5	TIP GP-PENETRATION	
					(EACH INCLUDES)	
	1A	1	**201-1238**	1	PIN	
	1B	1	**201-1239**	1	RETAINER AS	
	1C	1	**208-5235**	1	TIP-PENETRATION	
	2	1	*232-2761*	1	BUCKET AS	
	2A	1	**201-1234**	5	ADAPTER	
	2B	1	**9R-0431**	2	BEARING-SLEEVE	
	2C	1	**219-9484**	1	EDGE	

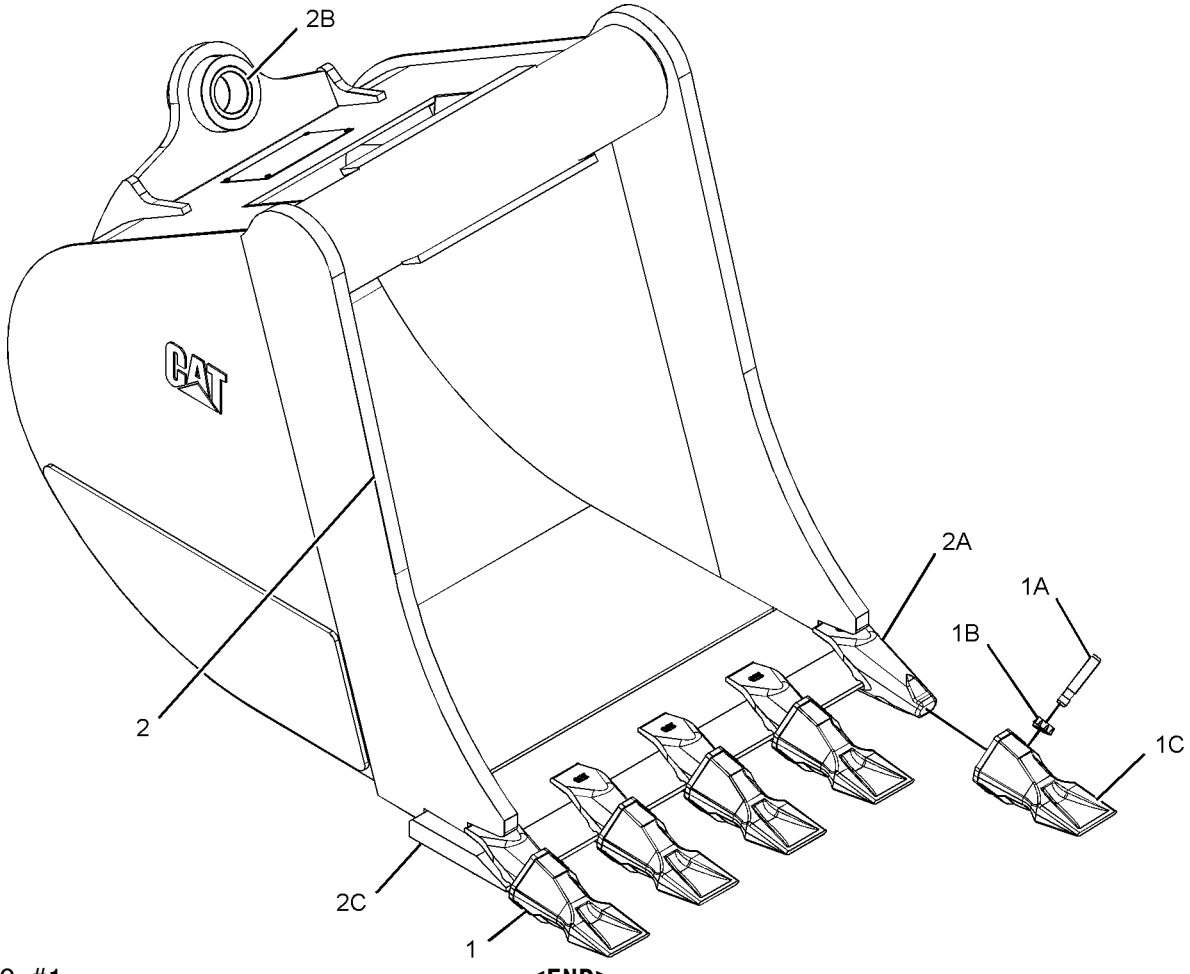

GRAPHIC #1 **<END>** g01071585

247-1957 BUCKET GP-HOE—HIGH CAPACITY, PIN-LOCK (CHG -00)

S/N: HLS1-UP
762-MM (30-IN)
AN ATTACHMENT

SMCS-6503 **i02044144**

NOTE	REF NO	GRAPHIC REF	PART NUMBER	QTY	PART NAME 1 2 3 4 5 6 (PRODUCT LEVEL)	SEE PAGE
	1	1	*208-5245*	5	TIP GP-PENETRATION	
					(EACH INCLUDES)	
	1A	1	**201-1238**	1	PIN	
	1B	1	**201-1239**	1	RETAINER AS	
	1C	1	**208-5235**	1	TIP-PENETRATION	
	2	1	*232-2762*	1	BUCKET AS	
	2A	1	**201-1234**	5	ADAPTER	
	2B	1	**9R-0431**	2	BEARING-SLEEVE	
	2C	1	**219-9485**	1	EDGE	

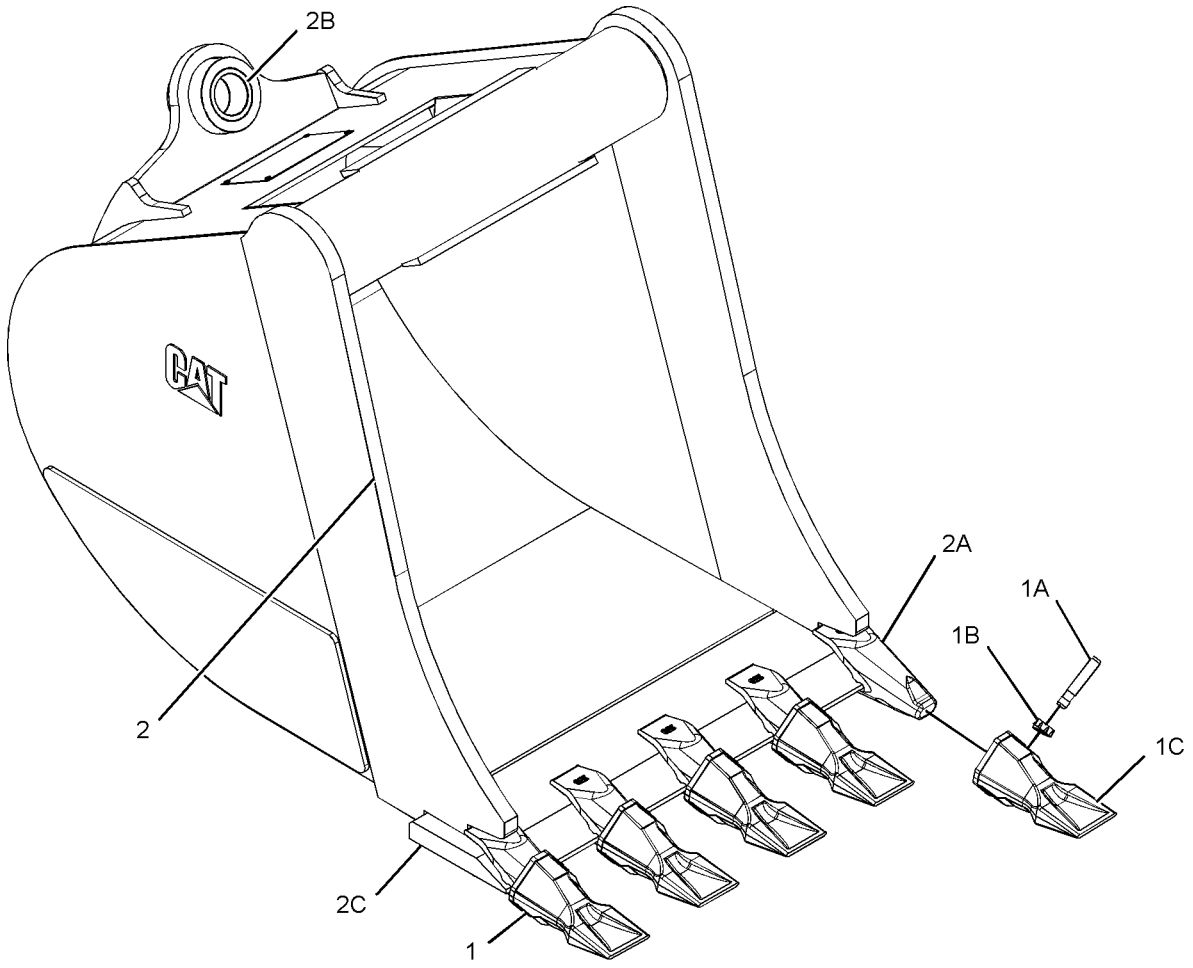

GRAPHIC #1 **<END>** g01071585

247-1958 BUCKET GP-HOE—HIGH CAPACITY, PIN-LOCK (CHG -00)

S/N: HLS1-UP
914-MM (36-IN)
AN ATTACHMENT

SMCS-6503 **i02044137**

NOTE	REF NO	GRAPHIC REF	PART NUMBER	QTY	PART NAME 1 2 3 4 5 6 (PRODUCT LEVEL)	SEE PAGE
	1	1	*208-5245*	6	TIP GP-PENETRATION	
	1A	1	**201-1238**	1	PIN	
	1B	1	**201-1239**	1	RETAINER AS	
	1C	1	**208-5235**	1	TIP-PENETRATION	
	2	1	*232-2763*	1	BUCKET AS	
	2A	1	**201-1234**	6	ADAPTER	
	2B	1	**9R-0431**	2	BEARING-SLEEVE	
	2C	1	**219-9486**	1	EDGE	

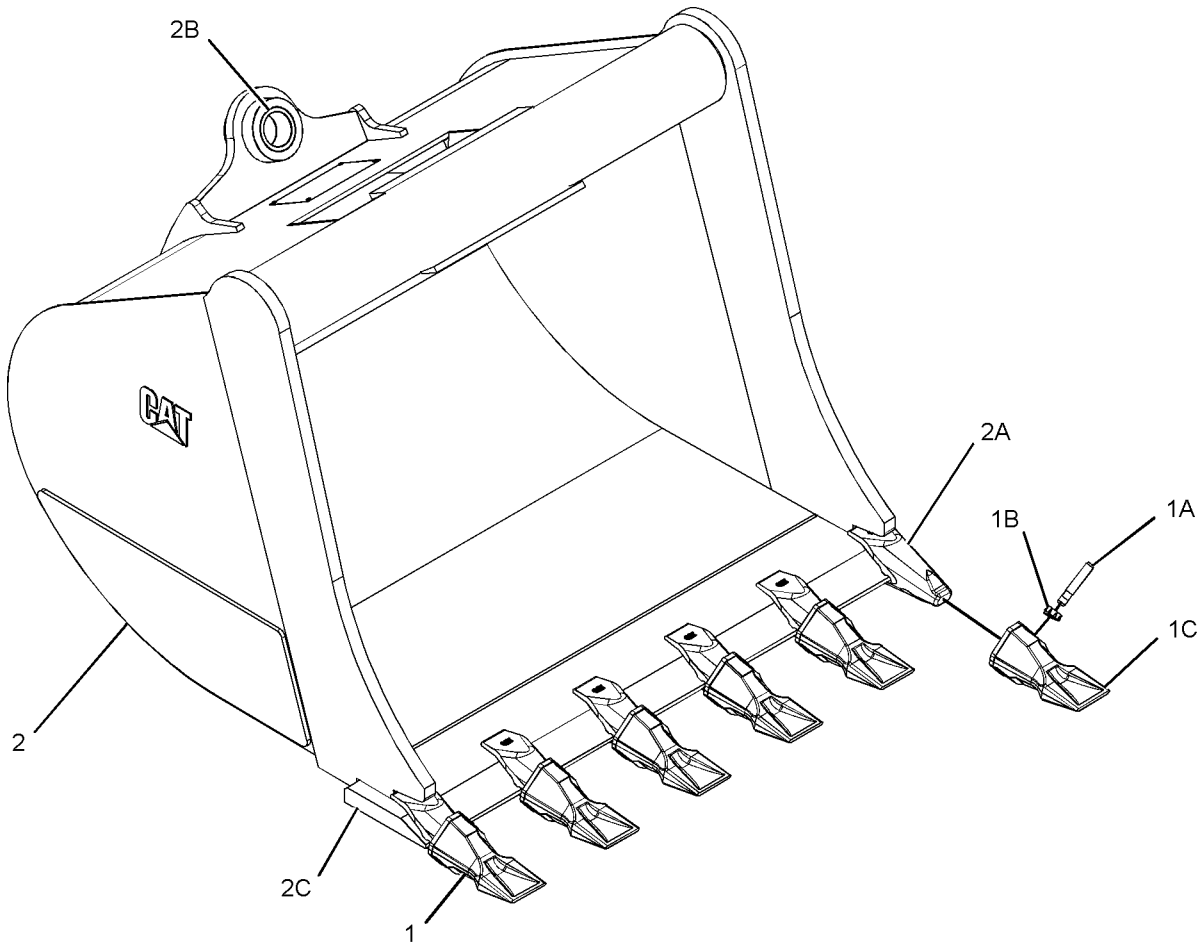

GRAPHIC #1 **<END>** g01071602

WORK TOOLS

254-8940 BUCKET GP-HOE—HIGH CAPACITY (CHG -00)

S/N: HLS1-UP
458-MM (18-IN)
AN ATTACHMENT

SMCS-6503 **i02284301**

NOTE	REF NO	GRAPHIC REF	PART NUMBER	QTY	PART NAME 1 2 3 4 5 6 (PRODUCT LEVEL)	SEE PAGE
	1	1	**137-4234**	1	PLATE-IDENTIFICATION (BUCKET)	
	2	1	**168-8389**	4	TACK-FASTENER	
	3	1	*208-5244*	4	TIP GP-BUCKET (SOIL)	
					(EACH INCLUDES)	
		1	**201-1238**	1	PIN	
		1	**201-1239**	1	RETAINER AS	
		1	**208-5234**	1	TIP-BUCKET (SOIL)	
Y	4	1	*254-8939*	1	BUCKET AS-HOE	440

Y-SEPARATE ILLUSTRATION

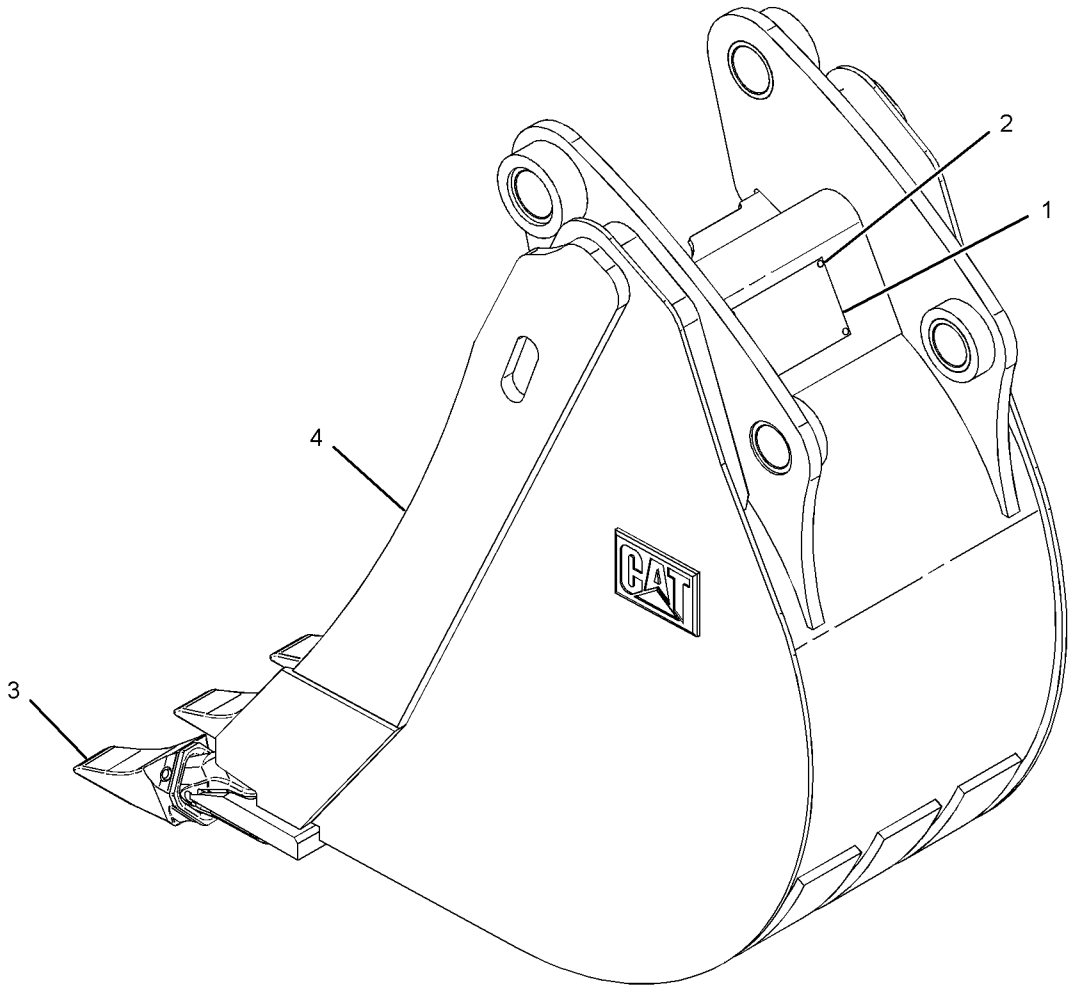

GRAPHIC #1 **<END>** g01150288

WORK TOOLS

254-8941 BUCKET GP-HOE (CHG -00)

S/N: HLS1-UP
610-MM (24-IN)
AN ATTACHMENT

SMCS-6503 **i02284371**

NOTE	REF NO	GRAPHIC REF	PART NUMBER	QTY	PART NAME 1 2 3 4 5 6 (PRODUCT LEVEL)	SEE PAGE
	1	1	**137-4234**	1	PLATE-IDENTIFICATION (BUCKET)	
	2	1	**168-8389**	4	TACK-FASTENER	
	3	1	*208-5244*	5	TIP GP-BUCKET (SOIL)	
					(EACH INCLUDES)	
		1	**201-1238**	1	PIN	
		1	**201-1239**	1	RETAINER AS	
		1	**208-5234**	1	TIP-BUCKET (SOIL)	
Y	4	1	*254-8944*	1	BUCKET AS-HOE (HIGH CAPACITY, PIN-LOCK)	441

Y-SEPARATE ILLUSTRATION

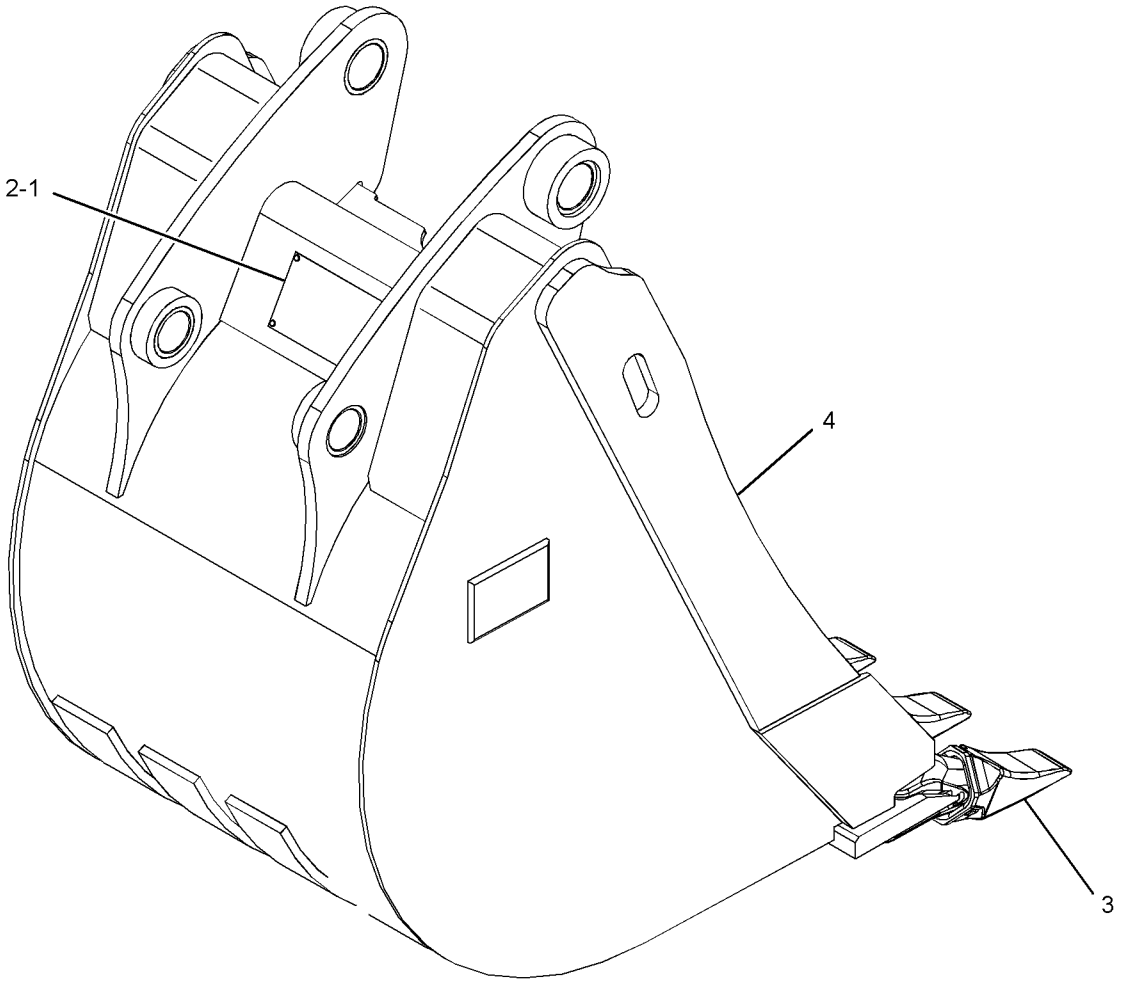

GRAPHIC #1 **<END>** g01150193

WORK TOOLS

254-8942 BUCKET GP-HOE (CHG -00)

S/N: HLS1-UP
762-MM (30-IN)
AN ATTACHMENT

SMCS-6503 **i02290138**

NOTE	REF NO	GRAPHIC REF	PART NUMBER	QTY	PART NAME 1 2 3 4 5 6 (PRODUCT LEVEL)	SEE PAGE
	1	1	**137-4234**	1	PLATE-IDENTIFICATION (BUCKET)	
	2	1	**168-8389**	4	TACK-FASTENER	
	3	1	*208-5244*	5	TIP GP-BUCKET (SOIL)	
					(EACH INCLUDES)	
		1	**201-1238**	1	PIN	
		1	**201-1239**	1	RETAINER AS	
		1	**208-5234**	1	TIP-BUCKET (SOIL)	
Y	4	1	*254-8945*	1	BUCKET AS-HOE (HIGH CAPACITY, PIN-LOCK)	442

Y-SEPARATE ILLUSTRATION

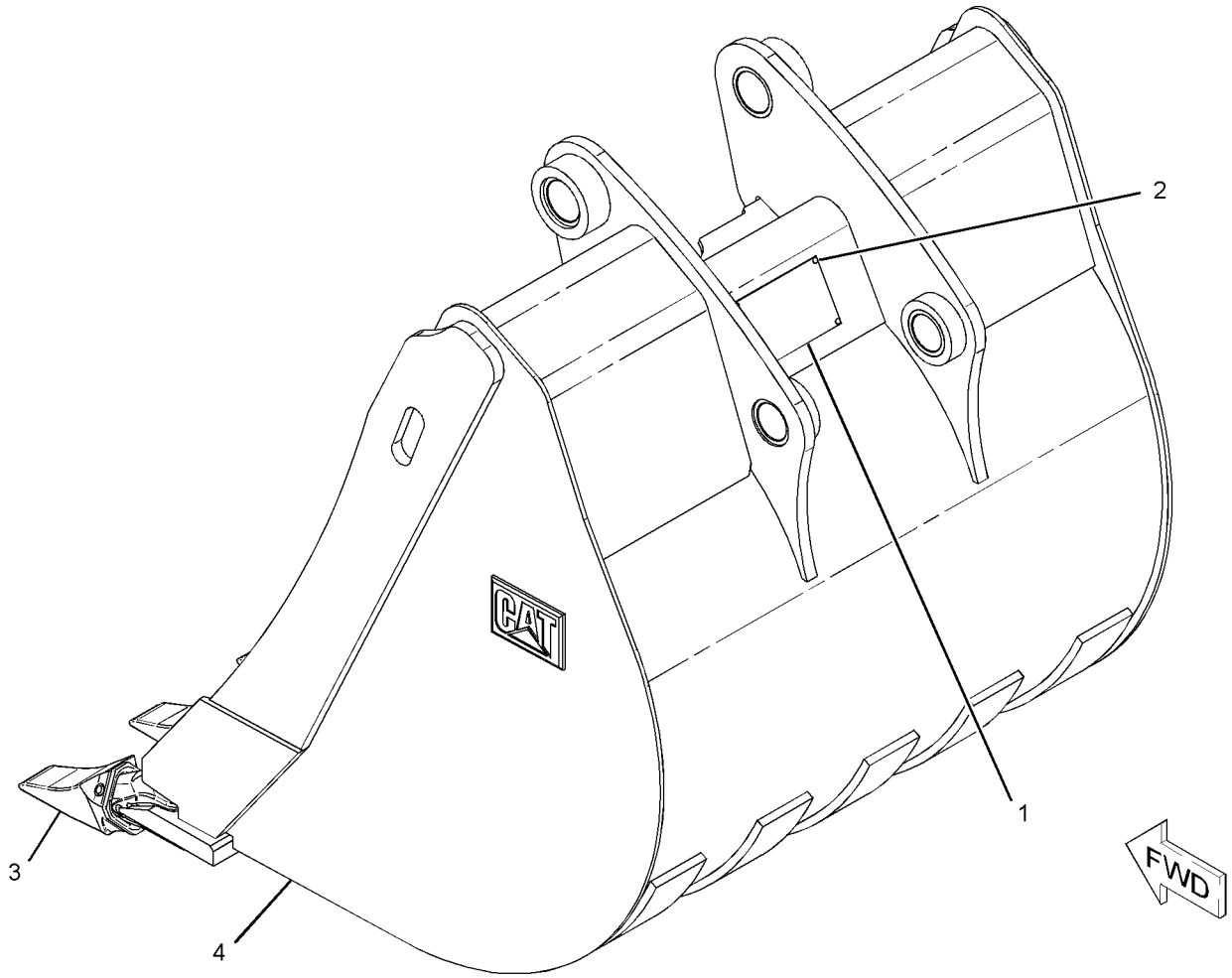

GRAPHIC #1 **<END>** g01144833

254-8943 BUCKET GP-HOE (CHG -00)

S/N: HLS1-UP
914-MM (36-IN)
AN ATTACHMENT

SMCS-6503 **i02284389**

NOTE	REF NO	GRAPHIC REF	PART NUMBER	QTY	PART NAME 1 2 3 4 5 6 (PRODUCT LEVEL)	SEE PAGE
	1	1	**137-4234**	1	PLATE-IDENTIFICATION (BUCKET)	
	2	1	**168-8389**	4	TACK-FASTENER	
	3	1	*208-5244*	6	TIP GP-BUCKET (SOIL)	
					(EACH INCLUDES)	
		1	**201-1238**		PIN	
		1	**201-1239**	1	RETAINER AS	
		1	**208-5234**	1	TIP-BUCKET (SOIL)	
Y	4	1	*254-8946*	1	BUCKET AS-HOE (HIGH CAPACITY, PIN-LOCK)	443

Y-SEPARATE ILLUSTRATION

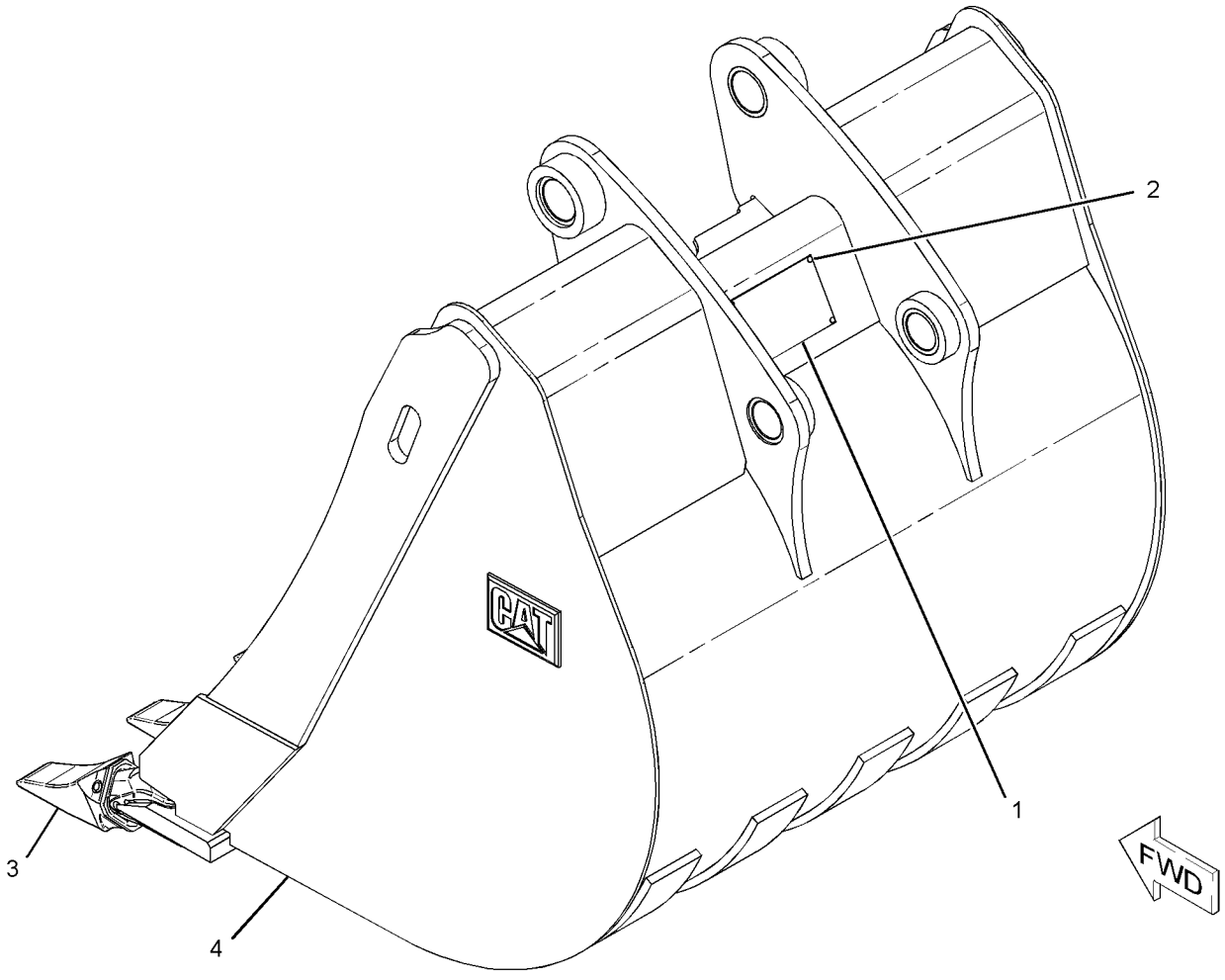

GRAPHIC #1 **<END>** g01144797

216-8800 BUCKET GP-MULTIPURPOSE (CHG -01 THRU -06)

S/N: HLS1-UP

PART OF 232-2681, 232-2682 BUCKET AR-MULTIPURPOSE

AN ATTACHMENT

SMCS-6104 **i02207498**

NOTE	REF NO	GRAPHIC REF	PART NUMBER	QTY	PART NAME 1 2 3 4 5 6 (PRODUCT LEVEL)	SEE PAGE
	1	1	**9R-4676**	2	PIN	
	2	1	**9R-4677**	2	PIN	
	3	1	**9R-4678**	2	PIN	
	4	1	**095-0865**	4	PIN-COTTER	
	5	1	**096-1820**	2	PIN-COTTER	
	6	1	*137-4234*	1	PLATE-IDENTIFICATION (BUCKET)	
	7	1	**168-8389**	4	TACK-FASTENER	
Y	8	1	**216-8802**	1	BULLDOZER AS	503
Y	9	1	**216-8803**	1	BOWL AS-BUCKET	425
Y	10	1	**226-5540**	2	CYLINDER GP-MULTIPURPOSE BUKT	270
	11	1	**233-3757**	1	EDGE	
Y	12	1	*251-5854*	1	LINES GP-MULTIPURPOSE BUCKET	317
	13	1	**3B-8489**	2	FITTING-GREASE	
	14	1	**3F-5108**	8	BOLT-PLOW (5/8-11X2.25-IN)	
	15	1	**4K-0367**	8	NUT-FULL (5/8-11-THD)	
M	16	1	**8T-4122**	8	WASHER-HARD (17X32X3.5-MM THK)	

M-METRIC PART
Y-SEPARATE ILLUSTRATION

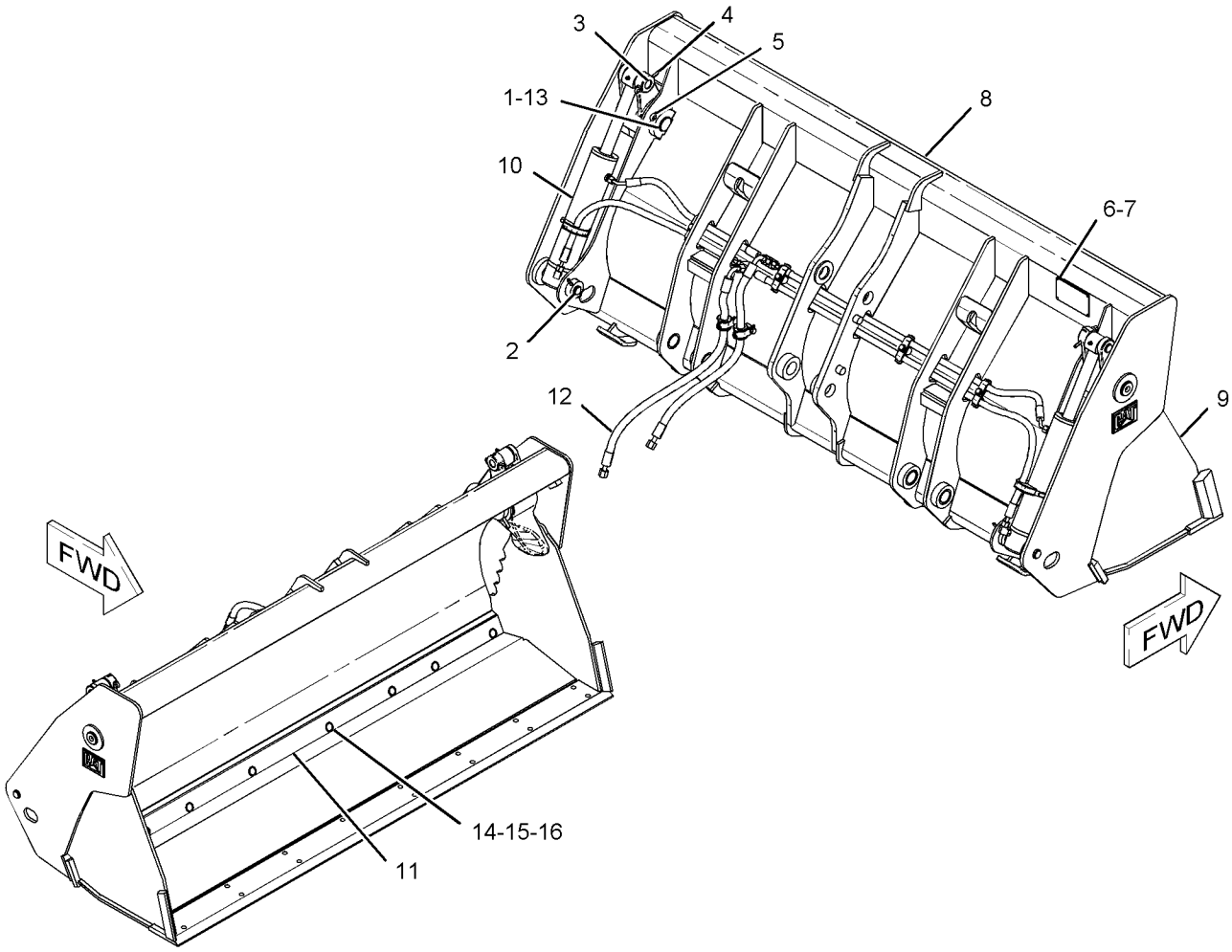

GRAPHIC #1 **<END>** g01131814

216-8801 BUCKET GP-MULTIPURPOSE (CHG -01 THRU -06)

S/N: HLS1-UP
1.0 CU M(1.31 CU YD)
PART OF 232-2685 BUCKET AR-MULTIPURPOSE
AN ATTACHMENT

SMCS-6104 **i02356568**

NOTE	REF NO	GRAPHIC REF	PART NUMBER	QTY	PART NAME 1 2 3 4 5 6 (PRODUCT LEVEL)	SEE PAGE
	1	1	**9R-4676**	2	PIN	
	2	1	**137-4234**	1	PLATE-IDENTIFICATION (BUCKET)	
	3	1	**168-8389**	4	TACK-FASTENER	
Y	4	1	**216-8803**	1	BOWL AS-BUCKET	425
Y	5	1	**216-8811**	1	BULLDOZER AS	504
Y	6	1	**226-5540**	2	CYLINDER GP-MULTIPURPOSE BUKT	270
	7	1	**233-3757**	1	EDGE	
Y	8	1	*251-5854*	1	LINES GP-MULTIPURPOSE BUCKET	317
	9	1	**095-0865**	4	PIN-COTTER	
	10	1	**096-1820**	2	PIN-COTTER	
	11	1	**3B-8489**	2	FITTING-GREASE	
	12	1	**3F-5108**	8	BOLT-PLOW (5/8-11X2.25-IN)	
	13	1	**4K-0367**	8	NUT-FULL (5/8-11-THD)	
M	14	1	**8T-4122**	8	WASHER-HARD (17X32X3.5-MM THK)	
	15	1	**9R-4677**	2	PIN	
	16	1	**9R-4678**	2	PIN	
Y	17	1	*263-8591*	1	PLATE & FILM GP	648

M-METRIC PART
Y-SEPARATE ILLUSTRATION

216-8801 BUCKET GP-MULTIPURPOSE *(contd.)* **i02356568**

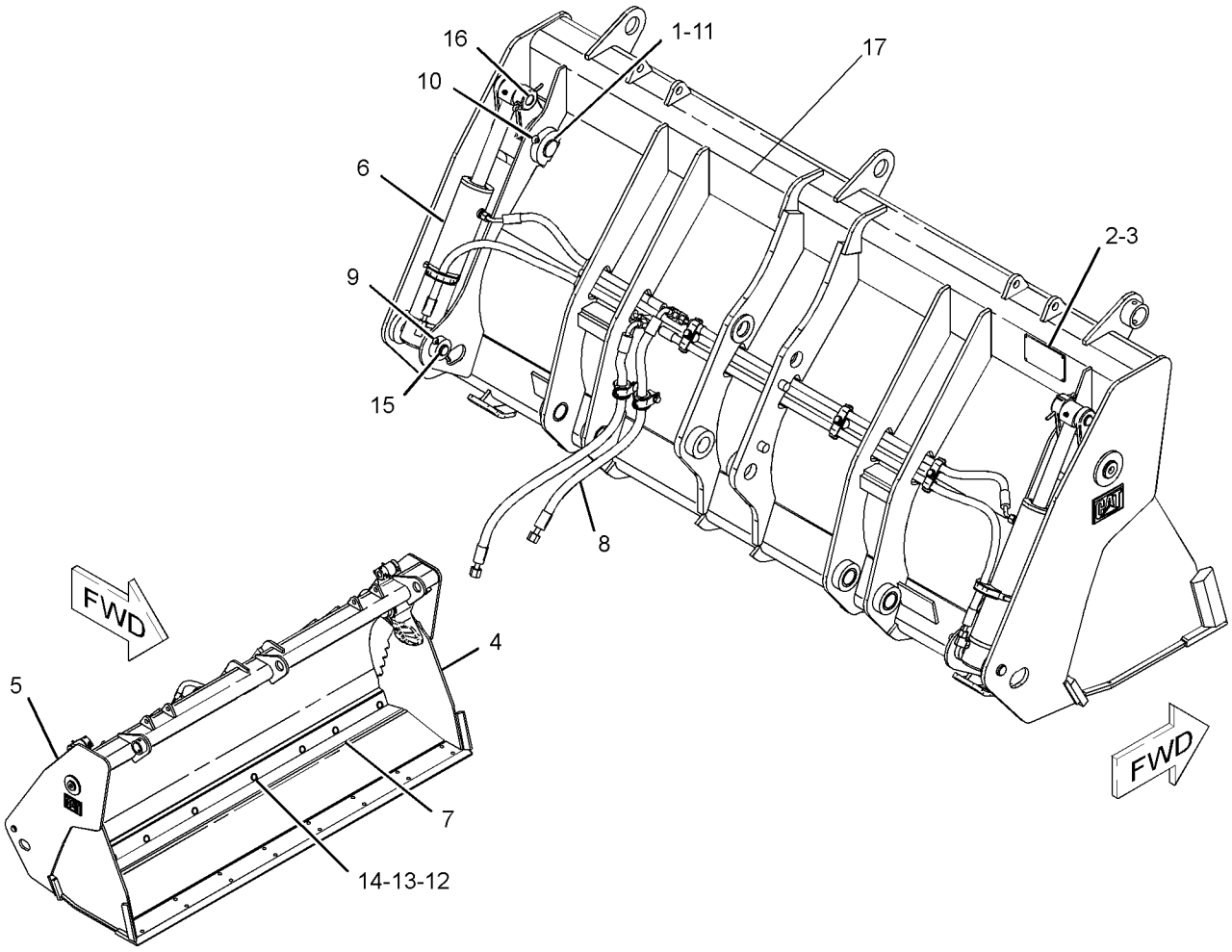

GRAPHIC #1 **<END>** g01239509

216-8820 BUCKET GP-MULTIPURPOSE (CHG -01 THRU -06)

S/N: HLS1-UP
1.1 CU M(1.4 CU YD)
PART OF 232-2686, 232-2687 BUCKET AR-MULTIPURPOSE
AN ATTACHMENT

SMCS-6104 **i02231261**

NOTE	REF NO	GRAPHIC REF	PART NUMBER	QTY	PART NAME 1 2 3 4 5 6 (PRODUCT LEVEL)	SEE PAGE
	1	1	**9R-4676**	2	PIN	
	2	1	**9R-4677**	2	PIN	
	3	1	**9R-4678**	2	PIN	
	4	1	**095-0865**	4	PIN-COTTER	
	5	1	**096-1820**	2	PIN-COTTER	
	6	1	**137-4234**	1	PLATE-IDENTIFICATION (BUCKET)	
	7	1	**168-8389**	4	TACK-FASTENER	
Y	8	1	**216-8822**	1	BULLDOZER AS	505
Y	9	1	**216-8826**	1	BOWL AS-BUCKET	426
Y	10	1	**226-5540**	2	CYLINDER GP-MULTIPURPOSE BUKT	270
	11	1	**233-0859**	1	EDGE	
Y	12	1	*251-5855*	1	LINES GP-MULTIPURPOSE BUCKET	319
	13	1	**3B-8489**	2	FITTING-GREASE	
	14	1	**3F-5108**	8	BOLT-PLOW (5/8-11X2.25-IN)	
	15	1	**4K-0367**	8	NUT-FULL (5/8-11-THD)	
M	16	1	**8T-4122**	8	WASHER-HARD (17X32X3.5-MM THK)	

M-METRIC PART
Y-SEPARATE ILLUSTRATION

216-8820 BUCKET GP-MULTIPURPOSE *(contd.)* **i02231261**

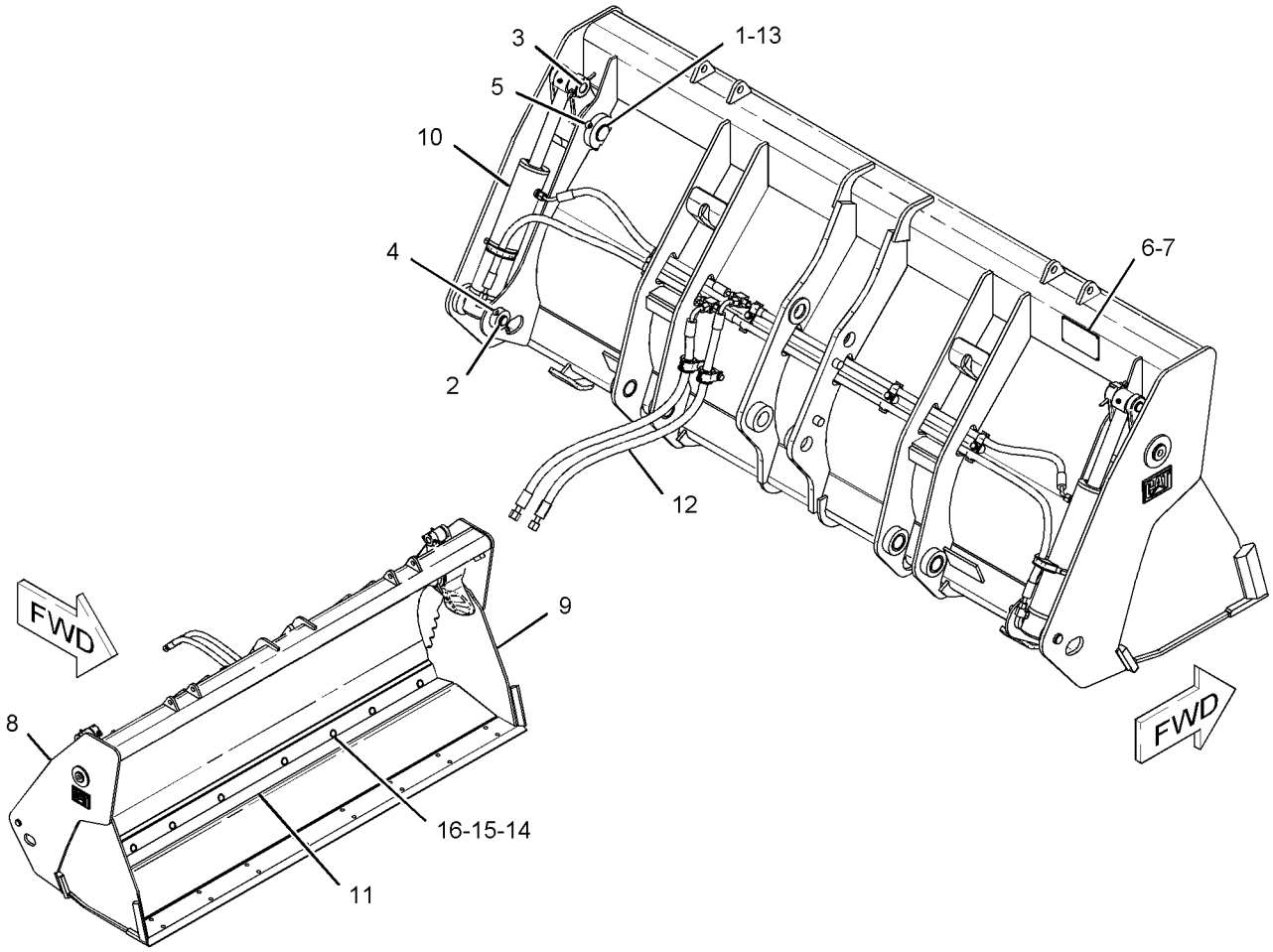

GRAPHIC #1 **<END>** g01134475

216-8821 BUCKET GP-MULTIPURPOSE (CHG -01 THRU -06)

S/N: HLS1-UP
1.1 CU M(1.4 CU YD)
PART OF 232-2690 BUCKET AR-MULTIPURPOSE
AN ATTACHMENT

SMCS-6104 **i02356569**

NOTE	REF NO	GRAPHIC REF	PART NUMBER	QTY	PART NAME 1 2 3 4 5 6 (PRODUCT LEVEL)	SEE PAGE
	1	1	**9R-4676**	2	PIN	
	2	1	**137-4234**	1	PLATE-IDENTIFICATION (BUCKET)	
	3	1	**168-8389**	4	TACK-FASTENER	
Y	4	1	**216-8762**	1	BULLDOZER AS	502
Y	5	1	**216-8826**	1	BOWL AS-BUCKET	426
Y	6	1	**226-5540**	2	CYLINDER GP-MULTIPURPOSE BUKT	270
	7	1	**233-0859**	1	EDGE	
Y	8	1	*251-5855*	1	LINES GP-MULTIPURPOSE BUCKET	319
	9	1	**095-0865**	4	PIN-COTTER	
	10	1	**096-1820**	2	PIN-COTTER	
	11	1	**3B-8489**	2	FITTING-GREASE	
	12	1	**3F-5108**	8	BOLT-PLOW (5/8-11X2.25-IN)	
	13	1	**4K-0367**	8	NUT-FULL (5/8-11-THD)	
M	14	1	**8T-4122**	8	WASHER-HARD (17X32X3.5-MM THK)	
	15	1	**9R-4677**	2	PIN	
	16	1	**9R-4678**	2	PIN	
Y	17	1	*263-8591*	1	PLATE & FILM GP	648

M-METRIC PART
Y-SEPARATE ILLUSTRATION

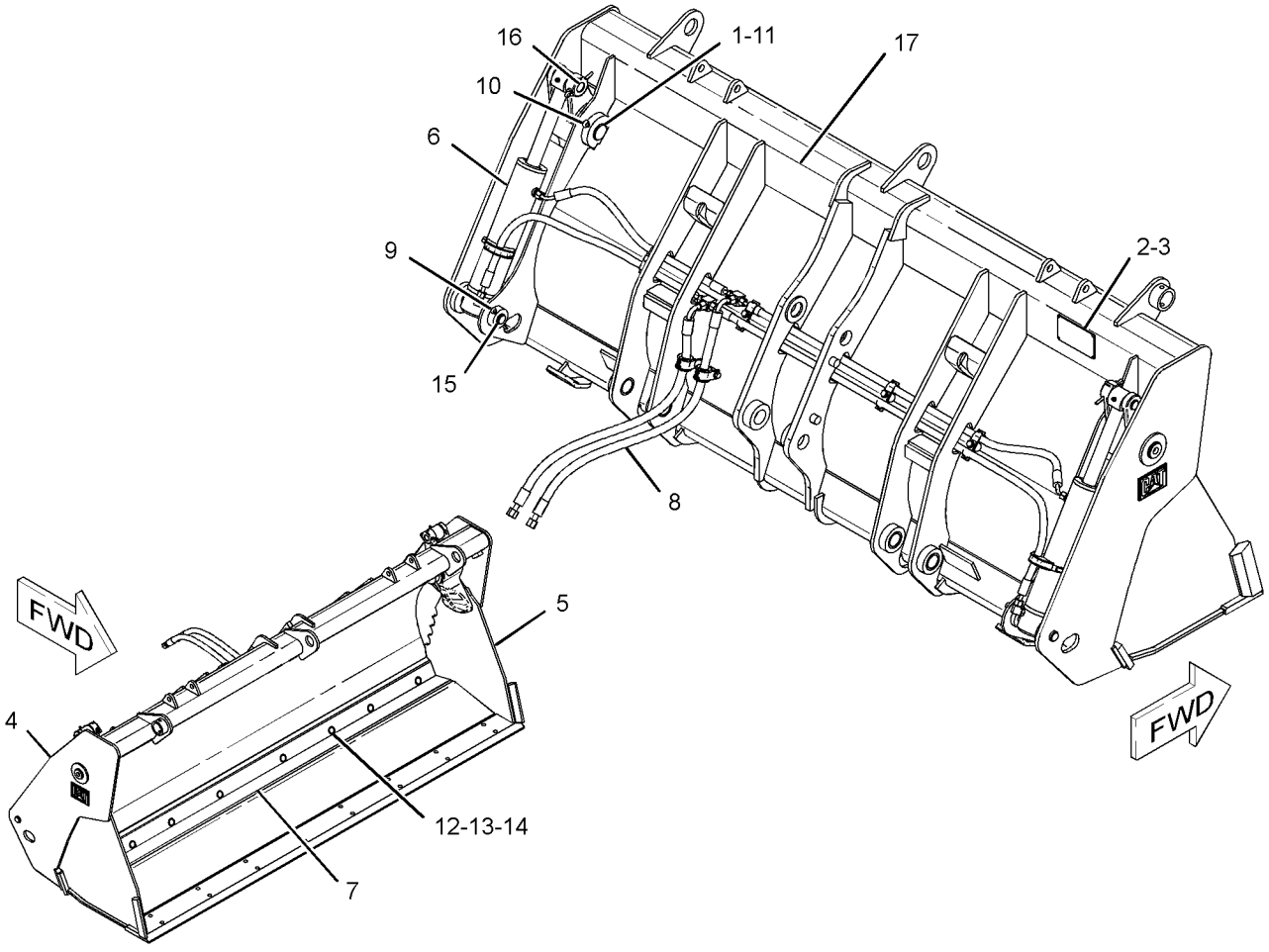

GRAPHIC #1 **<END>** g01239525

216-8762 BULLDOZER AS (CHG -01)

S/N: HLS1-UP
PART OF 216-8821 BUCKET GP-MULTIPURPOSE
FIELD REPLACEMENT FOR 216-8822—PAGE 505
AN ATTACHMENT

SMCS-6050 **i02457253**

NOTE	REF NO	GRAPHIC REF	PART NUMBER	QTY	PART NAME 1 2 3 4 5 6 (PRODUCT LEVEL)	SEE PAGE
	1	1	**216-8778**	2	BRACKET	
	2	1	**216-8780**	1	BRACKET AS	
	3	1	**216-8781**	4	BRACKET	
	4	1	**216-8822**	1	BULLDOZER AS	
	5	1	**224-6250**	2	PLATE	

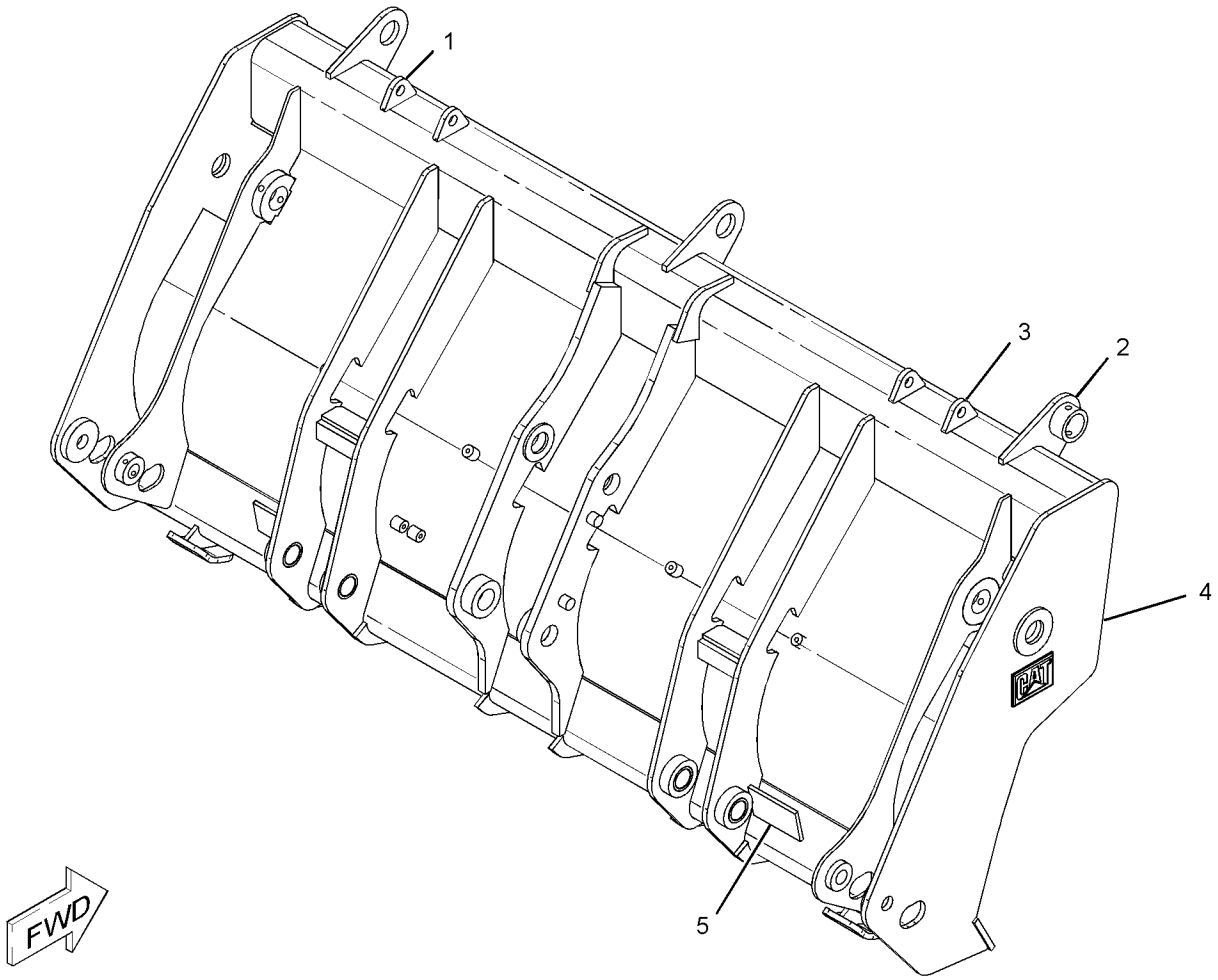

GRAPHIC #1 **<END>** g01134462

216-8802 BULLDOZER AS (CHG -02 THRU -04)

S/N: HLS1-UP
PART OF 216-8800 BUCKET GP-MULTIPURPOSE
FIELD REPLACEMENT ORDER 216-8811—PAGE 504
AN ATTACHMENT

SMCS-6050 **i02236708**

NOTE	REF NO	GRAPHIC REF	PART NUMBER	QTY	PART NAME 1 2 3 4 5 6 (PRODUCT LEVEL)	SEE PAGE
	1	1	**9R-0111**	4	BEARING-SLEEVE	
M	2	1	**9R-5271**	6	BOSS (M10X1.5X25-MM)	

M-METRIC PART

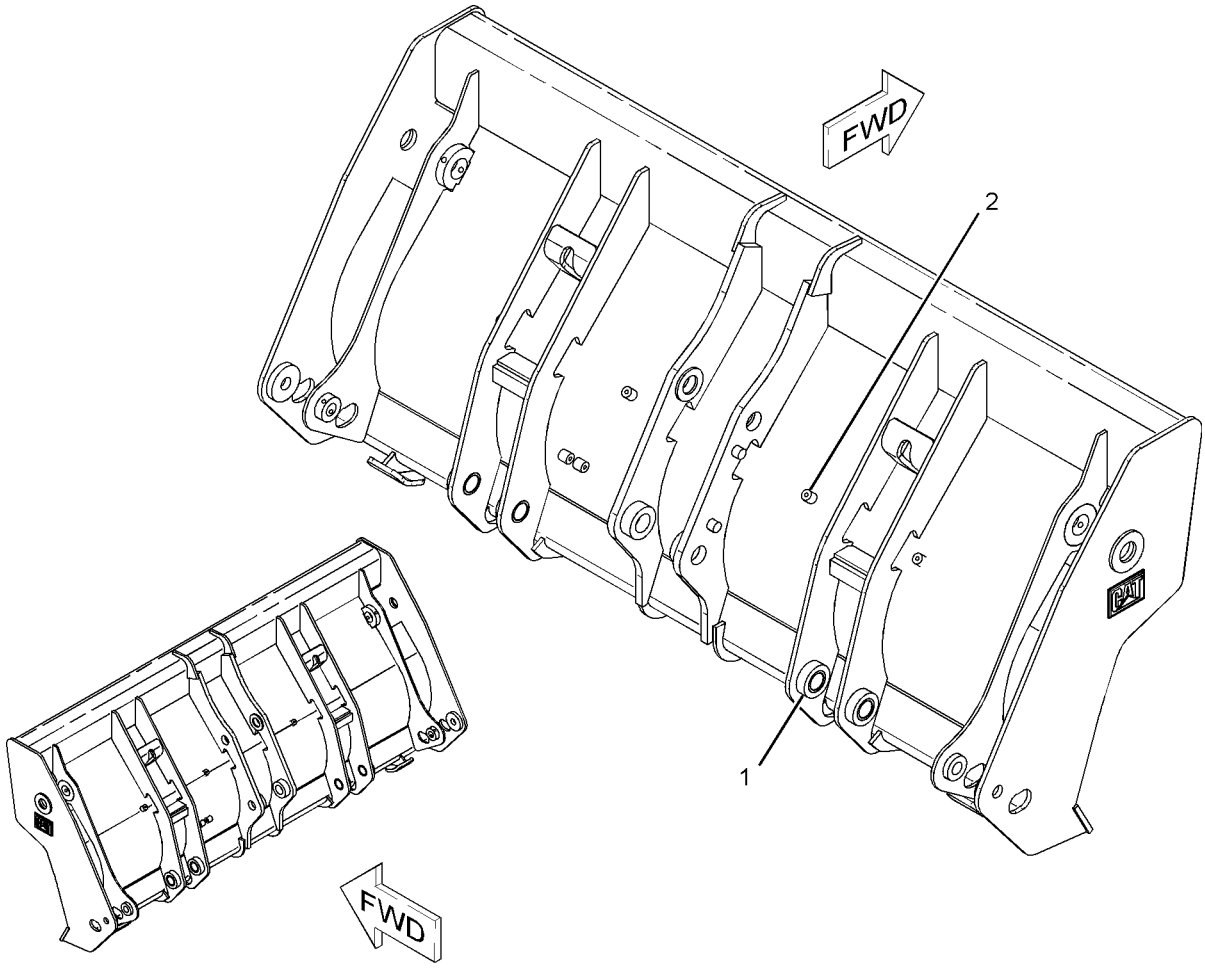

GRAPHIC #1 **<END>** g01129091

216-8811 BULLDOZER AS (CHG -01)

S/N: HLS1-UP
PART OF 216-8801 BUCKET GP-MULTIPURPOSE
FIELD REPLACEMENT FOR 216-8802—PAGE 503
AN ATTACHMENT

SMCS-6050 **i02457227**

NOTE	REF NO	GRAPHIC REF	PART NUMBER	QTY	PART NAME 1 2 3 4 5 6 (PRODUCT LEVEL)	SEE PAGE
	1	1	**216-8778**	2	BRACKET	
	2	1	**216-8780**	1	BRACKET AS	
	3	1	**216-8781**	4	BRACKET	
	4	1	**216-8802**	1	BULLDOZER AS	
	5	1	**224-6250**	2	PLATE	

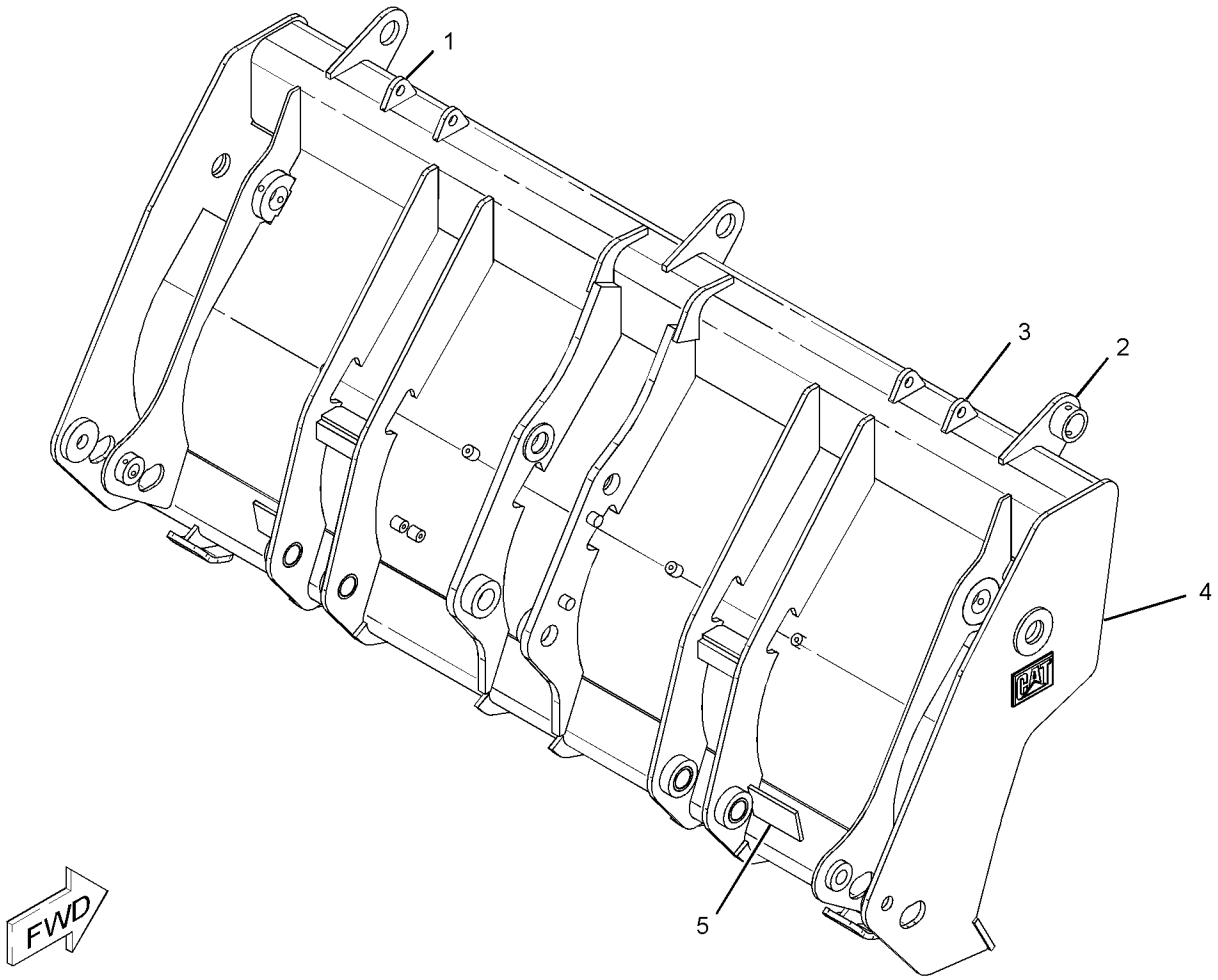

GRAPHIC #1 **<END>** g01134458

216-8822 BULLDOZER AS (CHG -02 THRU -04)

S/N: HLS1-UP
PART OF 216-8820 BUCKET GP-MULTIPURPOSE
FIELD REPLACEMENT ORDER 216-8762—PAGE 502
AN ATTACHMENT

SMCS-6050 **i02236782**

NOTE	REF NO	GRAPHIC REF	PART NUMBER	QTY	PART NAME 1 2 3 4 5 6 (PRODUCT LEVEL)	SEE PAGE
	1	1	**9R-0111**	4	BEARING-SLEEVE	
	2	1	*216-8794*	1	BRACKET AS (LH)	
	2A	1	**161-4130**	1	PLATE-IDENTIFICATION (CAT)	
	3	1	*216-8796*	1	BRACKET AS (RH)	
	3A	1	**161-4130**	1	PLATE-IDENTIFICATION (CAT)	
M	4	1	**9R-5271**	6	BOSS (M10X1.5X25-MM)	

M-METRIC PART

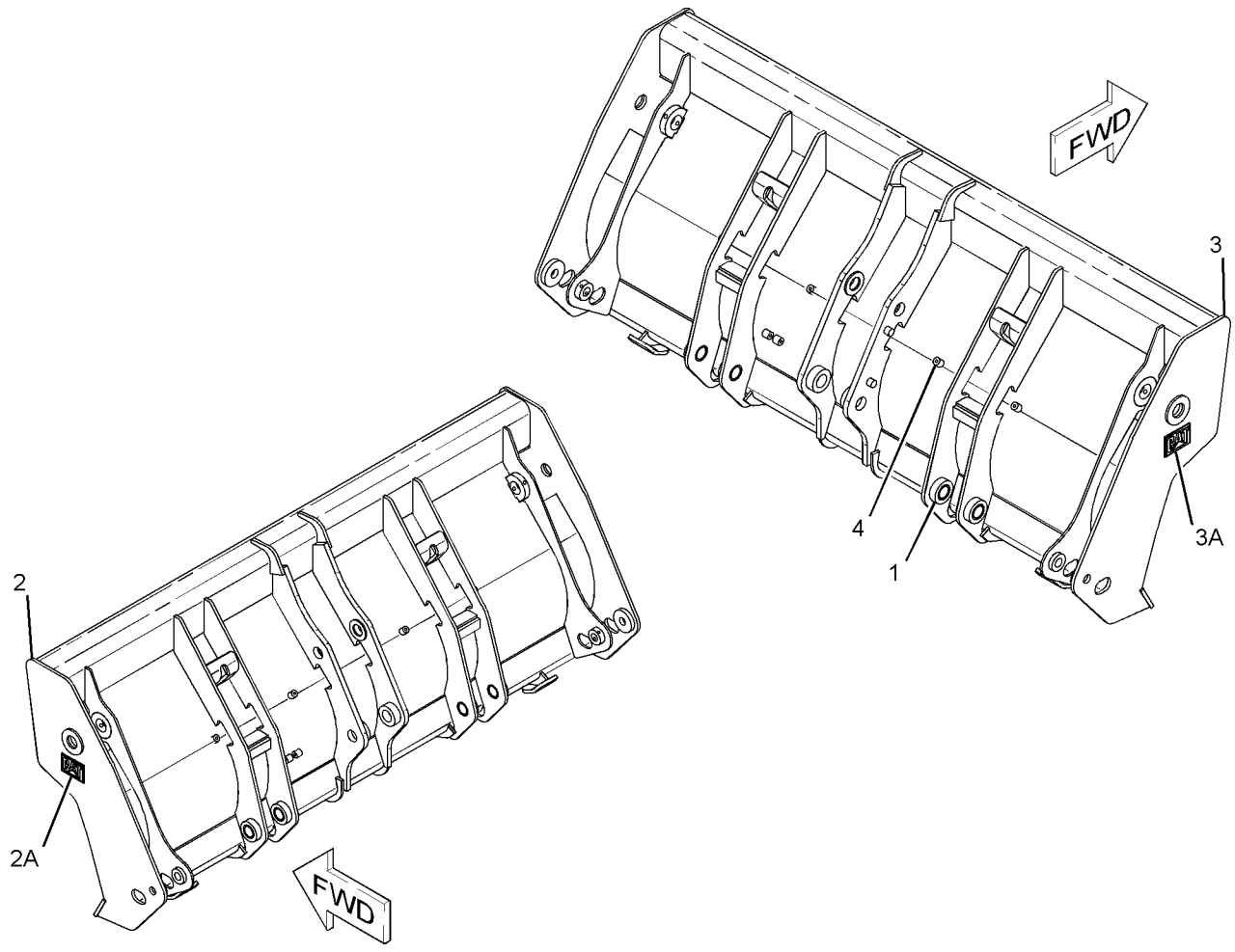

GRAPHIC #1 **<END>** g01134456

222-7379 COUPLER AR-QUICK—PIN-LOCK (CHG -01)

S/N: HLS1-UP

AN ATTACHMENT

SMCS-6129 **i02246220**

NOTE	PART NUMBER	QTY	PART NAME 1 2 3 4 5 6 (PRODUCT LEVEL)	SEE PAGE
Y	*222-7464*	1	COUPLER GP-QUICK	509
Y	*216-0928*	1	PIN GP-COUPLER (BUCKET)	518
Y	*215-9478*	1	PIN GP-COUPLER (MACHINE)	517

Y-SEPARATE ILLUSTRATION

<END>

176-6251 COUPLER GP-QUICK–BACKHOE (CHG -03 THRU -05)

S/N: HLS1-UP

PART OF 178-8850 COUPLER GP-QUICK

AN ATTACHMENT

SMCS-6129 **i02379638**

NOTE	REF NO	GRAPHIC REF	PART NUMBER	QTY	PART NAME 1 2 3 4 5 6 (PRODUCT LEVEL)	SEE PAGE
	1	1	**176-6252**	1	COUPLER	
	2	1	**200-5921**	1	HOOK	
	3	1	**132-3725**	1	SPRING	
	4	1	**132-3721**	1	PIN AS (HOOK)	
	5	1	**132-3723**	1	LOCK PIN	
	6	1	**091-5928**	1	FITTING	
	7	1	**8T-0144**	1	PIN-SPRING	
F			**132-3821**	1	LEVER-ACTUATING	

F-NOT SHOWN

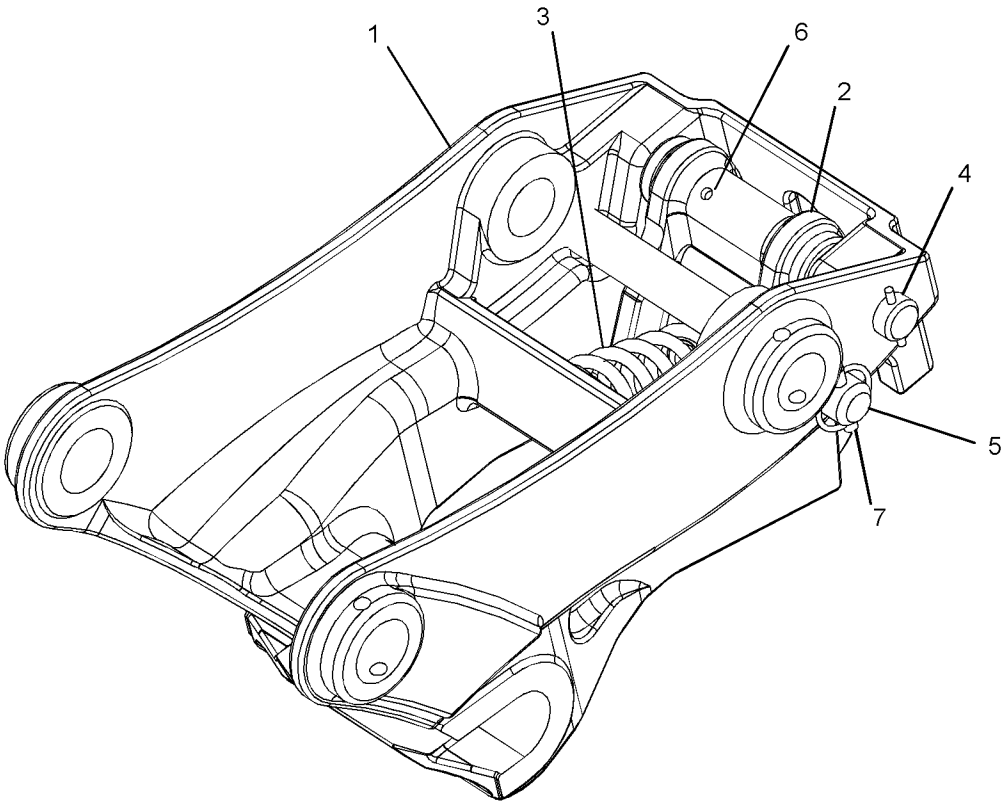

GRAPHIC #1 **<END>** g01190808

178-8850 COUPLER GP-QUICK–BACKHOE (CHG -00)

S/N: HLS1-UP

AN ATTACHMENT

SMCS-6129 **i02238678**

NOTE	REF NO	GRAPHIC REF	PART NUMBER	QTY	PART NAME 1 2 3 4 5 6 (PRODUCT LEVEL)	SEE PAGE
	1	1	**4J-1888**	2	PIN-COTTER	
	2	1	**132-3777**	1	PIN	
	3	1	**132-3778**	1	PIN	
Y	4	1	**176-6251**	1	COUPLER GP-QUICK	507

Y-SEPARATE ILLUSTRATION

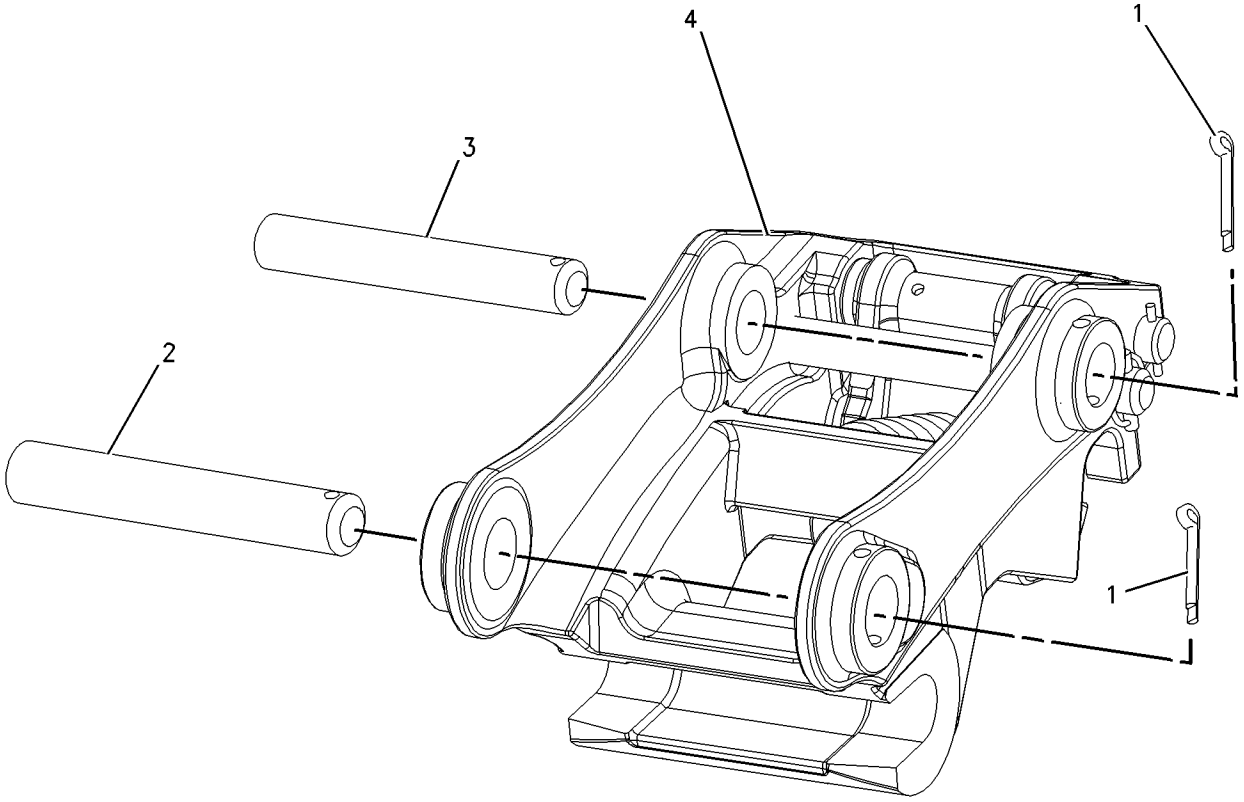

GRAPHIC #1 **<END>** g00904540

222-7464 COUPLER GP-QUICK–PIN-LOCK (CHG -02, -03)

S/N: HLS1-UP

PART OF 222-7379 COUPLER AR-QUICK

AN ATTACHMENT

SMCS-6129 **i02409083**

NOTE	REF NO	GRAPHIC REF	PART NUMBER	QTY	PART NAME 1 2 3 4 5 6 (PRODUCT LEVEL)	SEE PAGE
	1	1	**154-2704**	1	PLATE-INSTRUCTION (BUCKET SPECIFICATIONS)	
	2	1	**168-8389**	4	TACK-FASTENER	
	3	1	**276-1368**	2	BEARING-SLEEVE	
	4	1	**232-2735**	1	COUPLER AS	
	4A	1	**161-4130**	2	PLATE-IDENTIFICATION (CAT)	
	5	1	**3B-8489**	1	FITTING-GREASE	
	6	1	**9R-0320**	2	BEARING-SLEEVE	
	7	1	**9R-3700**	2	BEARING-SLEEVE	

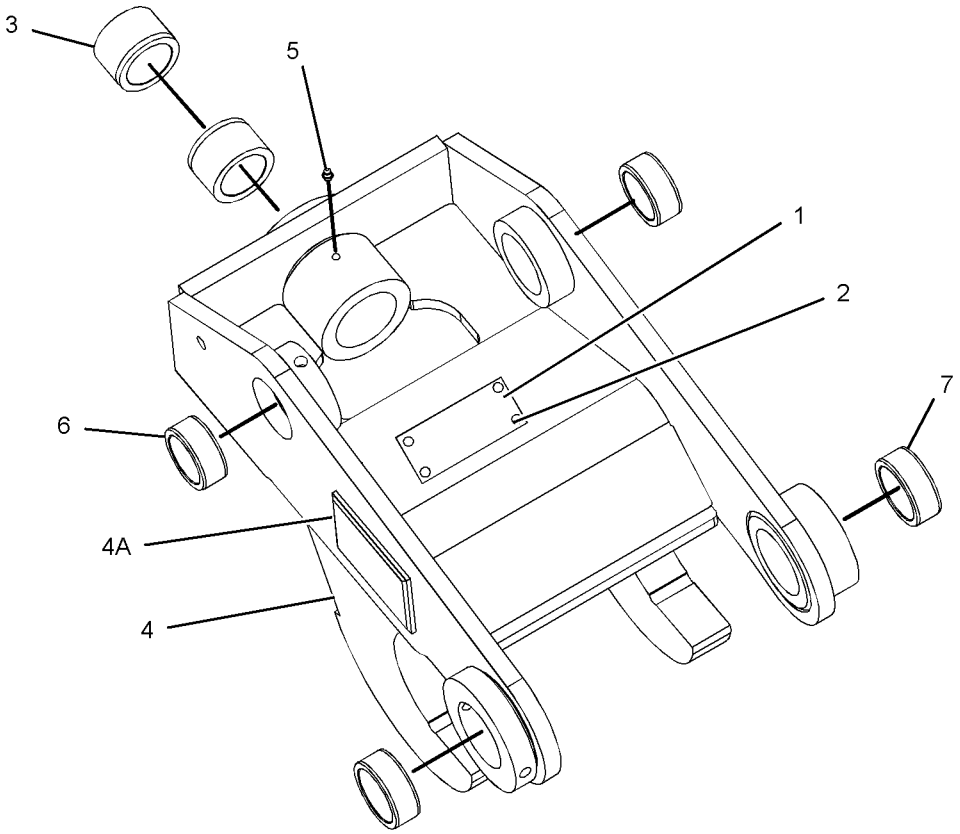

GRAPHIC #1 **<END>** g01072399

WORK TOOLS

229-7226 COUPLER GP-QUICK–CAT, CASE (CHG -00)

S/N: HLS1-UP

AN ATTACHMENT

SMCS-6129 **i01889083**

NOTE	REF NO	GRAPHIC REF	PART NUMBER	QTY	PART NAME 1 2 3 4 5 6 (PRODUCT LEVEL)	SEE PAGE
B	1	1	**9R-0158**	15	WASHER (46X69X3-MM THK)	
	2	1	**145-8348**	1	PIN AS	
	3	1	**168-0425**	1	PIN	
	4	1	**168-0446**	1	PIN	
	5	1	**168-0475**	1	PIN AS	
B	6	1	**188-9592**	7	WASHER-THRUST (39X75X2.3-MM THK)	
	7	1	**229-5535**	1	COUPLER AS	
		1	**154-2704**	1	PLATE-INSTRUCTION (BUCKET SPECIFICATIONS)	
		1	**168-8389**	4	TACK-FASTENER	
	8	1	**096-1820**	1	PIN-COTTER	
	9	1	**3B-5319**	2	PIN-COTTER	
	10	1	**6V-3213**	2	RING-RETAINING	

B-USE AS REQUIRED

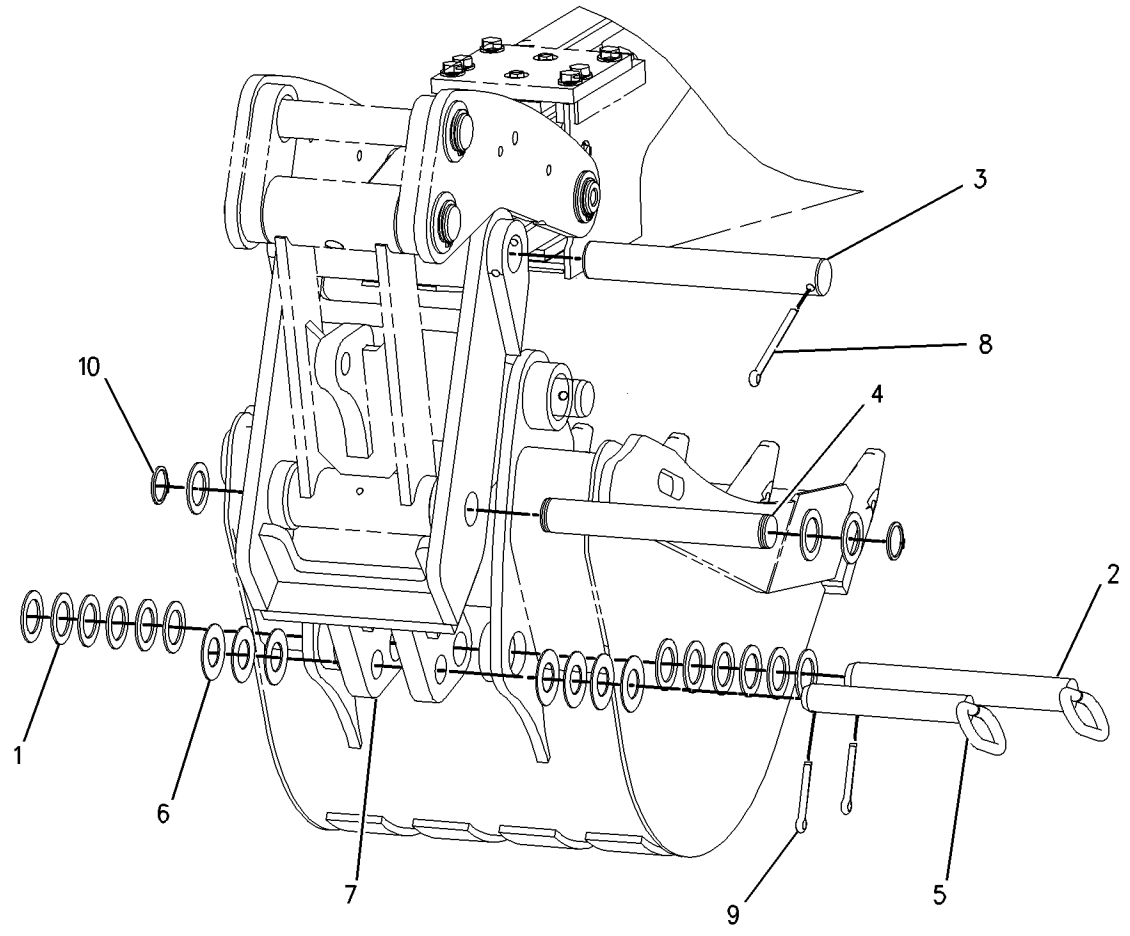

GRAPHIC #1 **<END>** g00981049

WORK TOOLS

229-7227 COUPLER GP-QUICK–CAT, DEERE (CHG -00)

S/N: HLS1-UP

AN ATTACHMENT

SMCS-6129 **i01943411**

NOTE	REF NO	GRAPHIC REF	PART NUMBER	QTY	PART NAME 1 2 3 4 5 6 (PRODUCT LEVEL)	SEE PAGE
B	1	1	**9R-0158**	15	WASHER (46X69X3-MM THK)	
	2	1	**145-8348**	1	PIN AS	
	3	1	**168-0425**	1	PIN	
	4	1	**168-0446**	1	PIN	
	5	1	**168-0445**	1	PIN AS	
B	6	1	**9R-1510**	4	WASHER (51X82X4-MM THK)	
	7	1	**229-8253**	1	COUPLER AS	
	7A	1	**154-2704**	1	PLATE-INSTRUCTION (BUCKET SPECIFICATIONS)	
	7B	1	**168-8389**	4	TACK-FASTENER	
	8	1	**096-1820**	1	PIN-COTTER	
	9	1	**3B-5319**	2	PIN-COTTER	
	10	1	**6V-3213**	2	RING-RETAINING	

B-USE AS REQUIRED

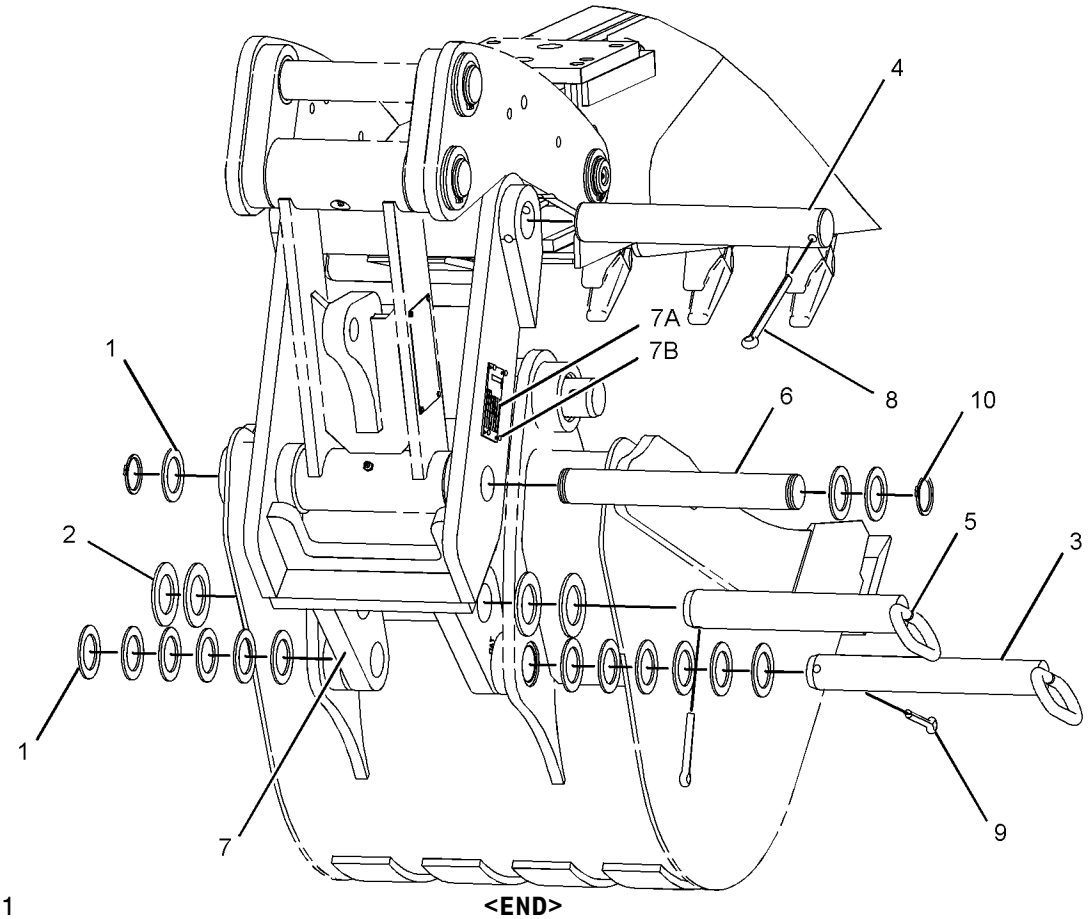

GRAPHIC #1 **<END>** g01008791

9R-5320 EDGE GP-CUTTING (CHG -02 THRU -05)

S/N: HLS1-UP

PART OF 232-2686, 232-2688 BUCKET AR-MULTIPURPOSE, 251-1775, 251-1781 BUCKET GP-GENERAL PURPOSE AN ATTACHMENT

SMCS-6801 **i02238662**

NOTE	REF NO	GRAPHIC REF	PART NUMBER	QTY	PART NAME 1 2 3 4 5 6 (PRODUCT LEVEL)	SEE PAGE
	1	1	**118-7110**	2	EDGE-CUTTING	
	2	1	**4F-3657**	8	BOLT-PLOW (5/8-11X2.75-IN)	
	3	1	**4K-0367**	8	NUT-FULL (5/8-11-THD)	
M	4	1	**8T-4122**	8	WASHER-HARD (17X32X3.5-MM THK)	

M-METRIC PART

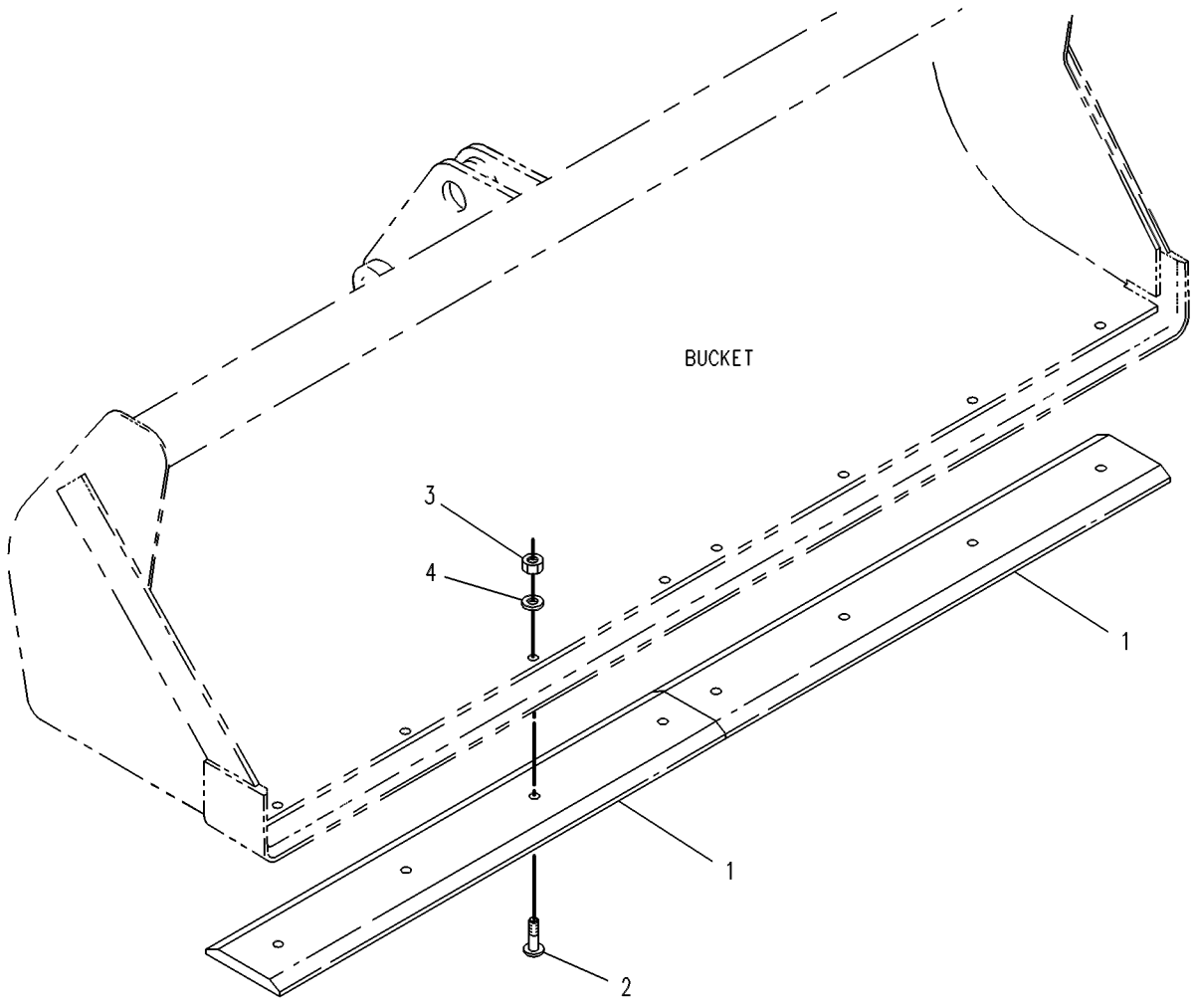

GRAPHIC #1 **<END>** g00131376

WORK TOOLS

9R-5321 EDGE GP-CUTTING (CHG -03 THRU -05)

S/N: HLS1-UP

PART OF 232-2681, 232-2683 BUCKET AR-MULTIPURPOSE, 251-1778, 251-1784, 251-1787 BUCKET GP-GENERAL PURPOSE

AN ATTACHMENT

SMCS-6801 **i02238663**

NOTE	REF NO	GRAPHIC REF	PART NUMBER	QTY	PART NAME 1 2 3 4 5 6 (PRODUCT LEVEL)	SEE PAGE
	1	1	**9W-8215**	2	EDGE-CUTTING	
	2	1	**3F-5108**	8	BOLT-PLOW (5/8-11X2.25-IN)	
	3	1	**4K-0367**	8	NUT-FULL (5/8-11-THD)	
M	4	1	**8T-4122**	8	WASHER-HARD (17X32X3.5-MM THK)	

M-METRIC PART

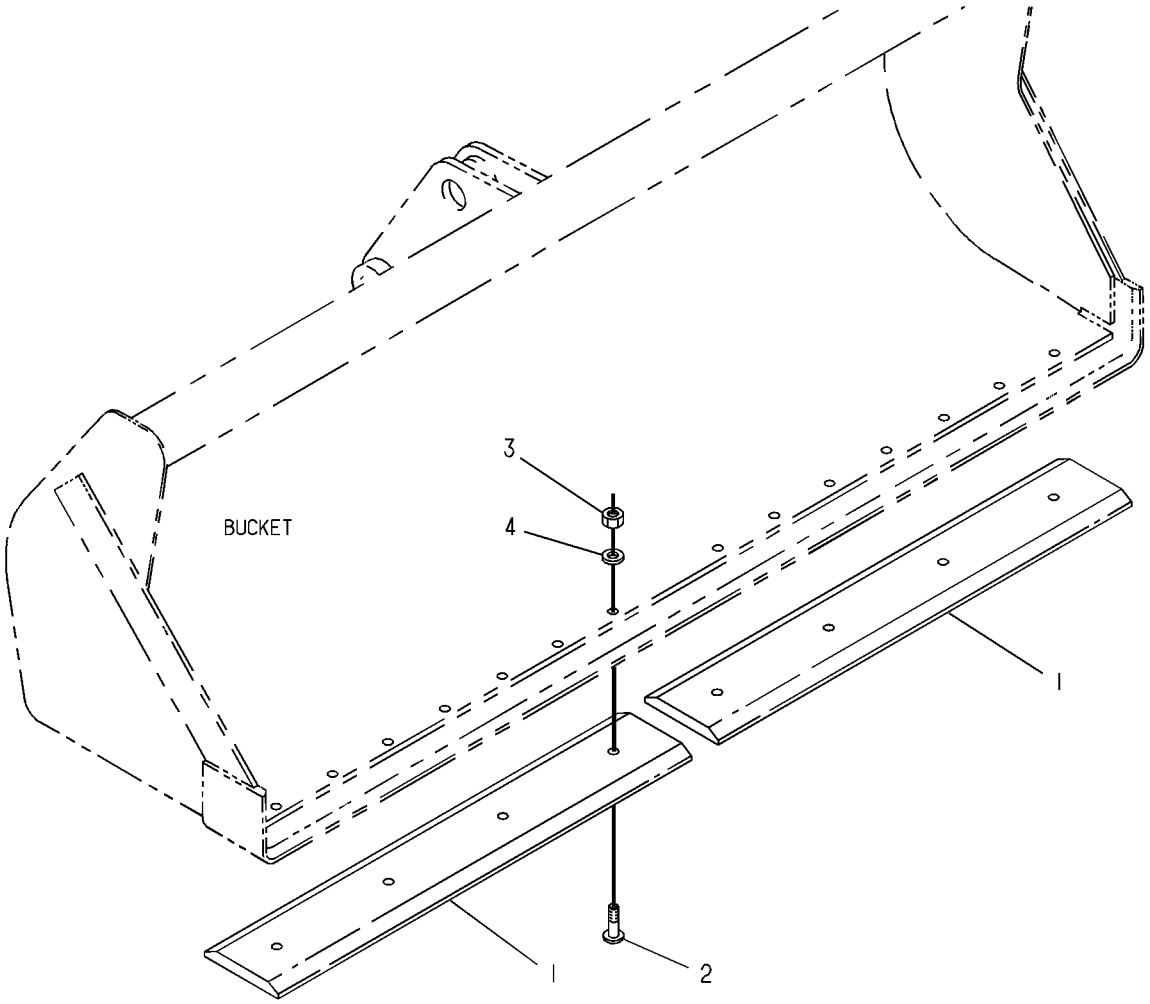

GRAPHIC #1 **<END>** g00130834

104-6310 FORK GP (CHG -00, -01)

S/N: HLS1-UP

PART OF 232-2685, 232-2690 BUCKET AR-MULTIPURPOSE

AN ATTACHMENT

SMCS-6405 **i02238666**

NOTE	REF NO	GRAPHIC REF	PART NUMBER	QTY	PART NAME 1 2 3 4 5 6 (PRODUCT LEVEL)	SEE PAGE
	1	1	**104-6311**	2	BRACKET AS	
	2	1	**104-6312**	2	FORK AS	
	3	1	**104-6316**	1	PIN	
	4	1	**104-6317**	2	PIN	
	5	1	**4J-1888**	1	PIN-COTTER	
	6	1	**9R-0109**	4	WASHER (41X64X3-MM THK)	
	7	1	**112-1776**	2	PIN AS	
	8	1	**6V-8144**	4	RING-RETAINING	
	9	1	**5D-8159**	2	PIN AS	

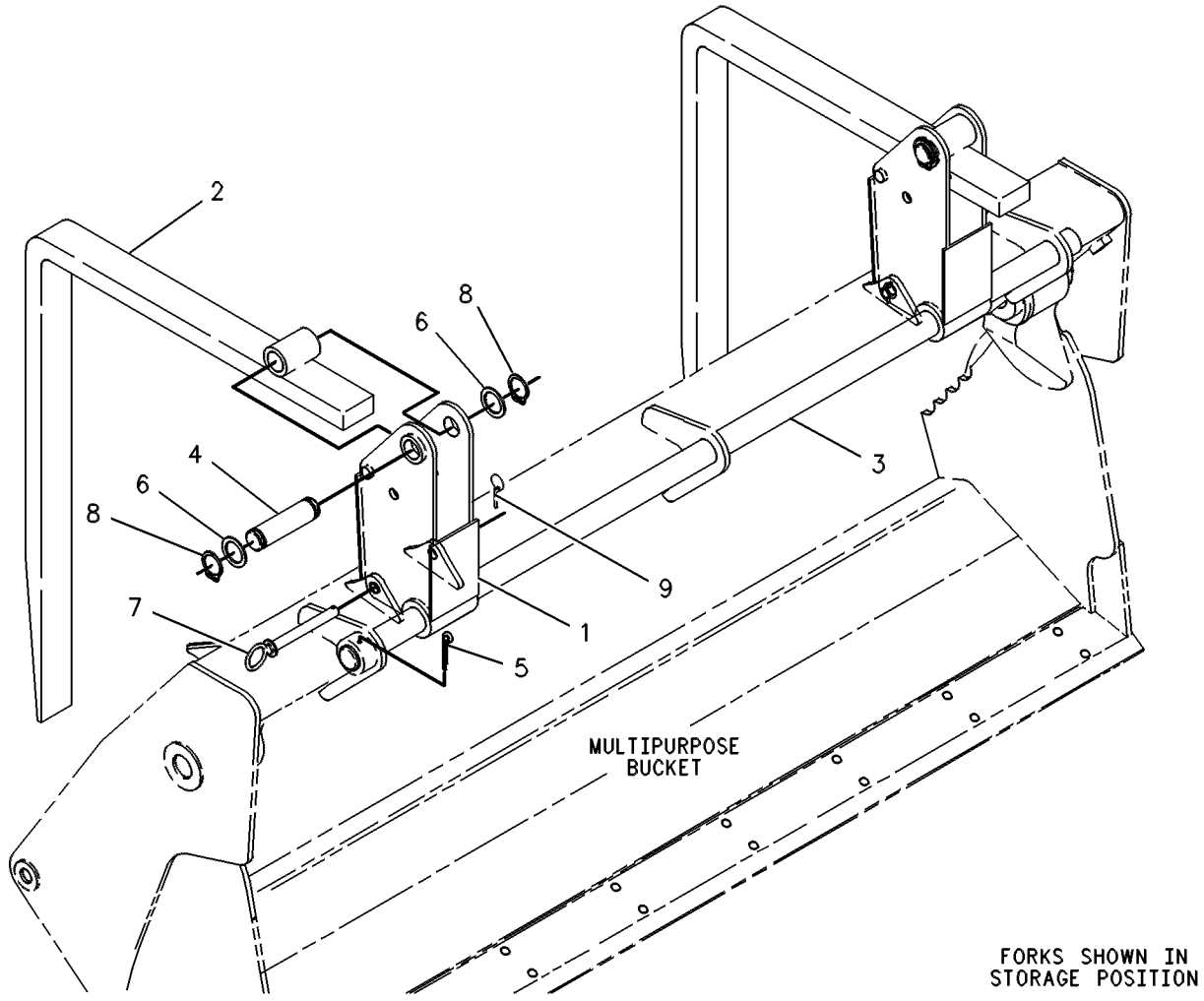

GRAPHIC #1 **<END>** g00131084

WORK TOOLS

270-3203 GUARD GP-WORK TOOL (CHG -00)

S/N: HLS1-UP

AN ATTACHMENT

SMCS-6700, 6800 **i02448683**

NOTE	REF NO	GRAPHIC REF	PART NUMBER	QTY	PART NAME 1 2 3 4 5 6 (PRODUCT LEVEL)	SEE PAGE
	1	1	**270-3206**	1	PLATE AS	
M	2	1	**8T-4184**	4	BOLT (M12X1.75X45-MM)	
	3	1	**8T-4223**	16	WASHER-HARD (13.5X25.5X3-MM THK)	

M-METRIC PART

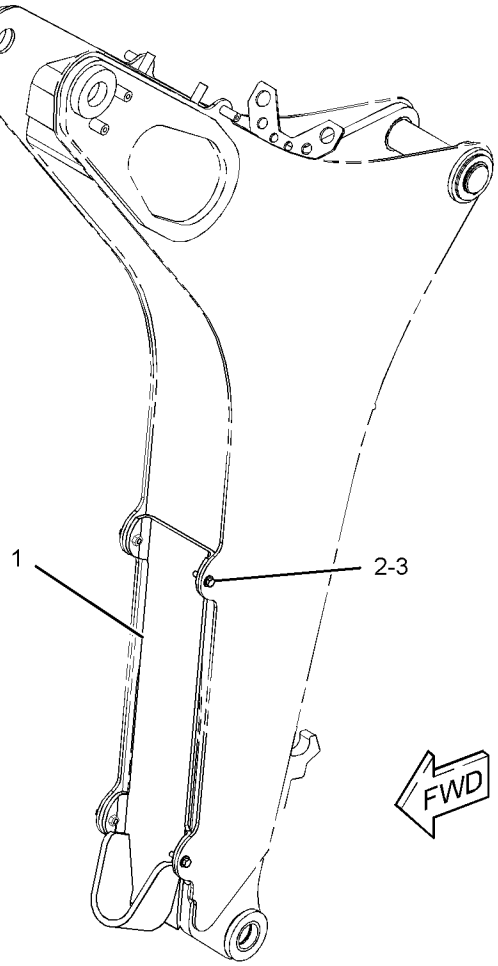

GRAPHIC #1 **<END>** g01230740

WORK TOOLS

178-3593 MOUNTING GP-BUCKET (CHG -00)

S/N: HLS1-UP
QUICK COUPLER-BACKHOE
AN ATTACHMENT

SMCS-6101 **i01351210**

NOTE	PART NUMBER	QTY	PART NAME 1 2 3 4 5 6 (PRODUCT LEVEL)	SEE PAGE
	3B-5319	4	PIN-COTTER	
	154-5279	1	PIN	
	154-5280	1	PIN	
B	**9R-0158**	5	WASHER (46X69X3-MM THK)	
B	**9R-1510**	5	WASHER (51X82X4-MM THK)	

B-USE AS REQUIRED

<END>

215-9478 PIN GP-COUPLER—MACHINE (CHG -00 THRU -02)

S/N: HLS1-UP

PART OF 222-7379 COUPLER AR-QUICK

AN ATTACHMENT

SMCS-6129 **i02445881**

NOTE	REF NO	GRAPHIC REF	PART NUMBER	QTY	PART NAME 1 2 3 4 5 6 (PRODUCT LEVEL)	SEE PAGE
	1	1	**215-3373**	1	PIN	
	2	1	**168-0425**	1	PIN	
M	3	1	**6V-7744**	2	LOCKNUT (M10X1.15-THD)	
M	4	1	**8T-4198**	2	BOLT (M10X1.5X100-MM)	

M-METRIC PART

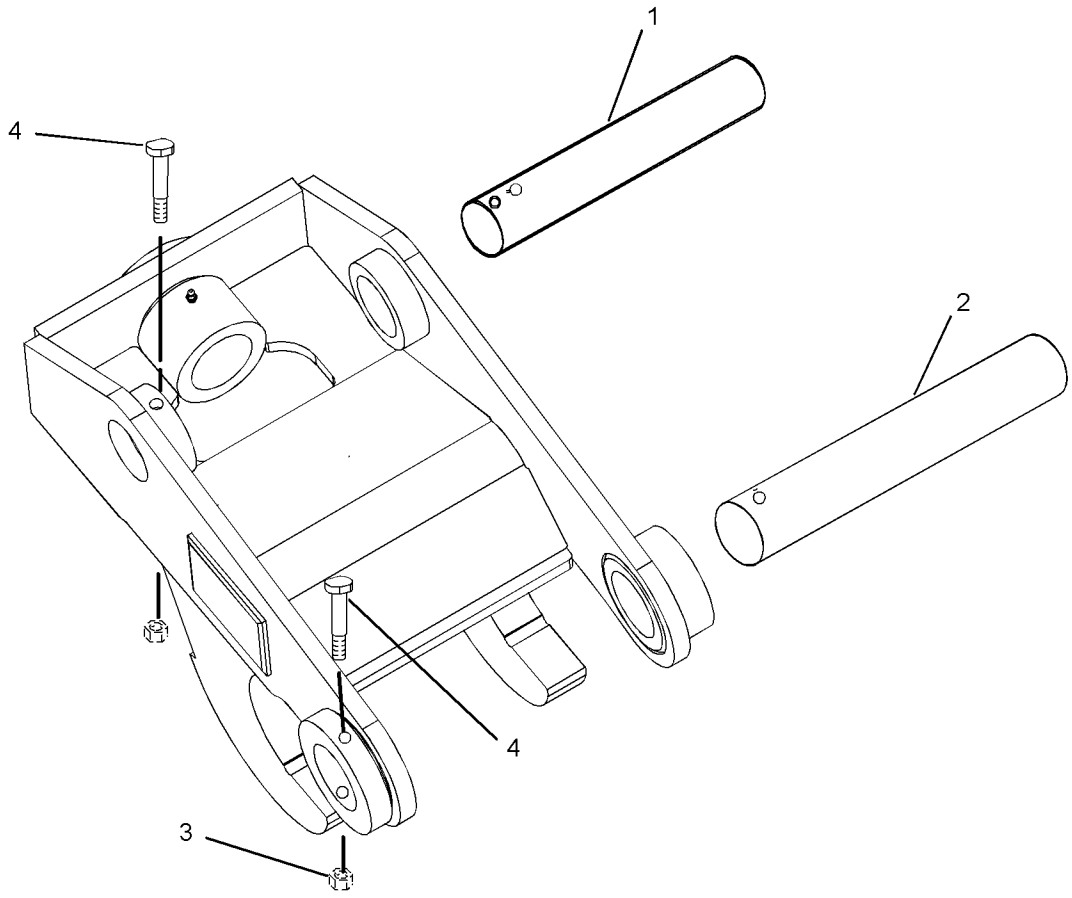

GRAPHIC #1 **<END>** g01224240

WORK TOOLS

216-0928 PIN GP-COUPLER—PIN-LOCK (CHG -00, -01)

S/N: HLS1-UP
PART OF 222-7379 COUPLER AR-QUICK
AN ATTACHMENT

SMCS-6129 **i02445882**

NOTE	REF NO	GRAPHIC REF	PART NUMBER	QTY	PART NAME 1 2 3 4 5 6 (PRODUCT LEVEL)	SEE PAGE
	1	1	**222-7411**	1	PIN AS	
	2	1	**216-3712**	1	PIN	

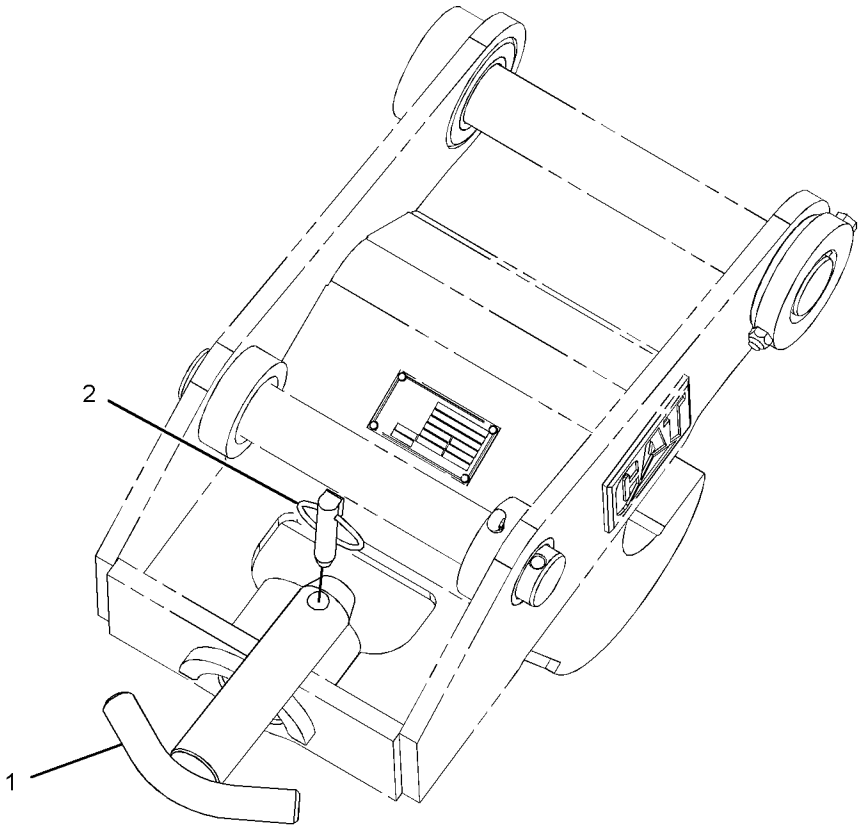

GRAPHIC #1 **<END>** g01239833

221-4260 THUMB AR–BACKHOE (CHG -01)

S/N: HLS1-UP

PART OF 224-6232, 224-6233, 224-6234, 224-6235 THUMB AR

AN ATTACHMENT

SMCS-6547 **i02208899**

NOTE	PART NUMBER	QTY	PART NAME 1 2 3 4 5 6 (PRODUCT LEVEL)	SEE PAGE
Y	*221-4265*	1	MOUNTING GP-CYLINDER (THUMB)	351
Y	*221-4267*	1	THUMB GP	552
Y-SEPARATE ILLUSTRATION				

<END>

224-6232 THUMB AR–24-IN, MANUAL (CHG -01)

S/N: HLS1-UP

AN ATTACHMENT

SMCS-6547 **i02238733**

NOTE	PART NUMBER	QTY	PART NAME 1 2 3 4 5 6 (PRODUCT LEVEL)	SEE PAGE
Y	**221-4276**	1	LINK GP-THUMB (ADJUSTABLE)	396
Y	**221-4260**	1	THUMB AR	519
	221-4282	1	TINE AS-THUMB (24-IN)	
Y-SEPARATE ILLUSTRATION				

<END>

224-6233 THUMB AR–24-IN, MANUAL, WITH COUPLER (CHG -01)

S/N: HLS1-UP

AN ATTACHMENT

SMCS-6547 **i02238735**

NOTE	PART NUMBER	QTY	PART NAME 1 2 3 4 5 6 (PRODUCT LEVEL)	SEE PAGE
Y	**221-4276**	1	LINK GP-THUMB (ADJUSTABLE)	396
Y	**221-4260**	1	THUMB AR	519
	221-4283	1	TINE AS-THUMB (24-IN)	
Y-SEPARATE ILLUSTRATION				

<END>

224-6234 THUMB AR—24-IN, ROCK, MANUAL (CHG -01)

S/N: HLS1-UP

AN ATTACHMENT

SMCS-6547 **i02238854**

NOTE	PART NUMBER	QTY	PART NAME 1 2 3 4 5 6 (PRODUCT LEVEL)	SEE PAGE
Y	**221-4276**	1	LINK GP-THUMB (ADJUSTABLE)	396
Y	**221-4260**	1	THUMB AR	519
	221-4284	1	TINE AS-THUMB (24-IN, ROCK)	

Y-SEPARATE ILLUSTRATION

<END>

224-6235 THUMB AR—24-IN, ROCK, MANUAL, WITH COUPLER (CHG -01)

S/N: HLS1-UP

AN ATTACHMENT

SMCS-6547 **i02238853**

NOTE	PART NUMBER	QTY	PART NAME 1 2 3 4 5 6 (PRODUCT LEVEL)	SEE PAGE
Y	**221-4276**	1	LINK GP-THUMB (ADJUSTABLE)	396
Y	**221-4260**	1	THUMB AR	519
	221-4285	1	TINE AS-THUMB (24-IN, ROCK)	

Y-SEPARATE ILLUSTRATION

<END>

271-3024 THUMB AR–24-IN, HYD, HEAVY-DUTY (CHG -00, -01)

S/N: HLS1-UP

AN ATTACHMENT

SMCS-6547 **i02449262**

NOTE	REF NO	GRAPHIC REF	PART NUMBER	QTY	PART NAME 1 2 3 4 5 6 (PRODUCT LEVEL)	SEE PAGE
	1	1	**221-4282**	1	TINE AS-THUMB (24-IN)	
Y	2	1	*224-6237*	1	CYLINDER & LINES GP-THUMB	259
Y	3	1	*271-3023*	1	THUMB GP	553

Y-SEPARATE ILLUSTRATION

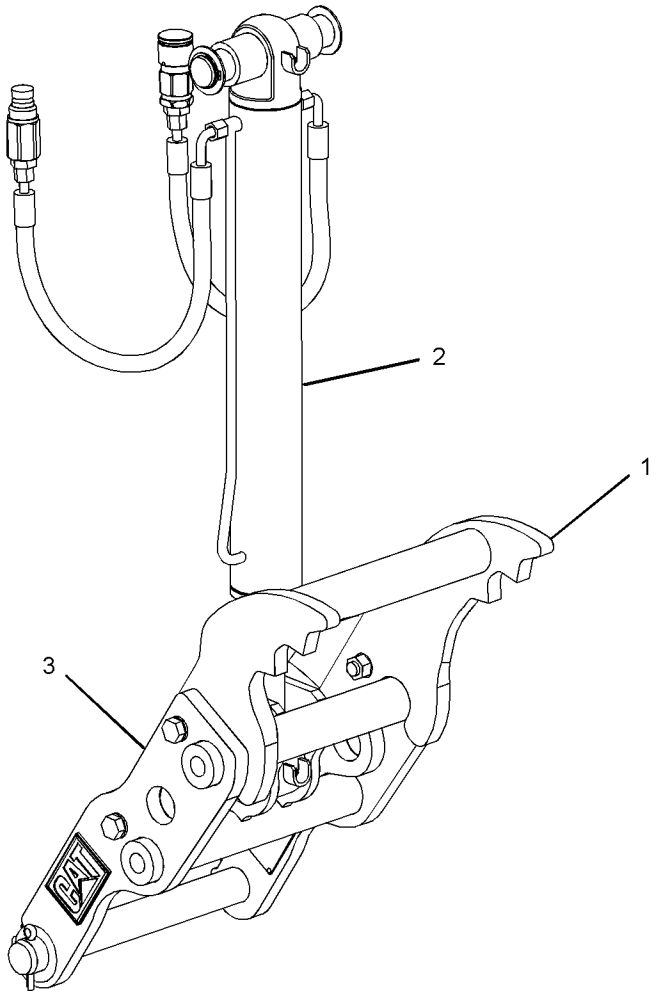

GRAPHIC #1 **<END>** g01234163

271-3025 THUMB AR–24-IN, HYD, HEAVY-DUTY, WITH COUPLER

(CHG -00, -01)
S/N: HLS1-UP
AN ATTACHMENT

SMCS-6547 **i02449274**

NOTE	REF NO	GRAPHIC REF	PART NUMBER	QTY	PART NAME 1 2 3 4 5 6 (PRODUCT LEVEL)	SEE PAGE
	1	1	**221-4283**	1	TINE AS-THUMB (24-IN)	
Y	2	1	*224-6237*	1	CYLINDER & LINES GP-THUMB	259
Y	3	1	*271-3023*	1	THUMB GP	553

Y-SEPARATE ILLUSTRATION

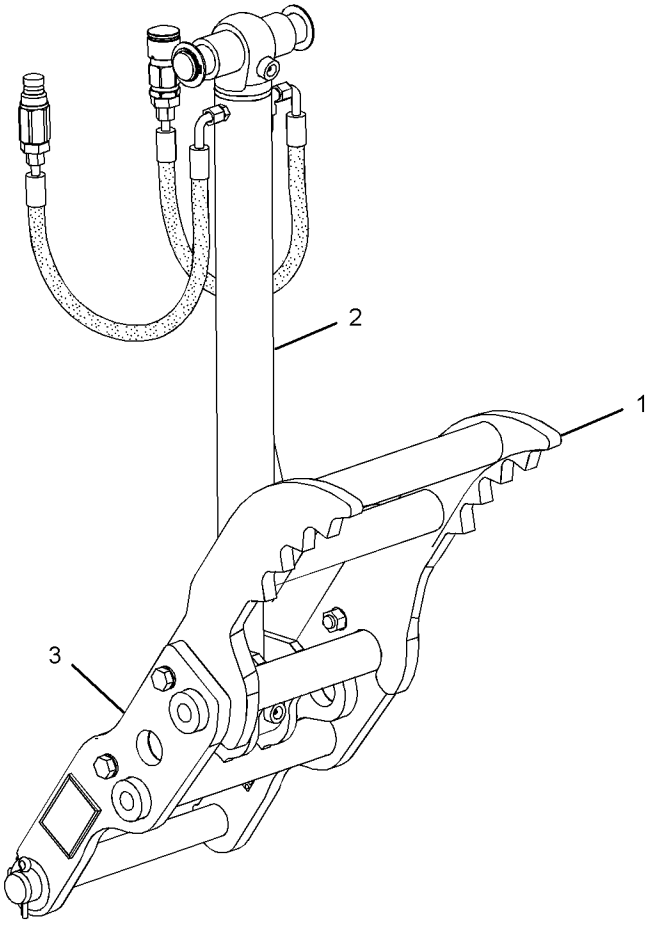

GRAPHIC #1 **<END>** g01234133

WORK TOOLS

271-3026 THUMB AR–24-IN, HYD, ROCK (CHG -00, -01)

S/N: HLS1-UP

AN ATTACHMENT

SMCS-6547 **i02449275**

NOTE	REF NO	GRAPHIC REF	PART NUMBER	QTY	PART NAME 1 2 3 4 5 6 (PRODUCT LEVEL)	SEE PAGE
	1	1	**221-4284**	1	TINE AS-THUMB (24-IN, ROCK)	
Y	2	1	*224-6237*	1	CYLINDER & LINES GP-THUMB	259
Y	3	1	*271-3023*	1	THUMB GP	553

Y-SEPARATE ILLUSTRATION

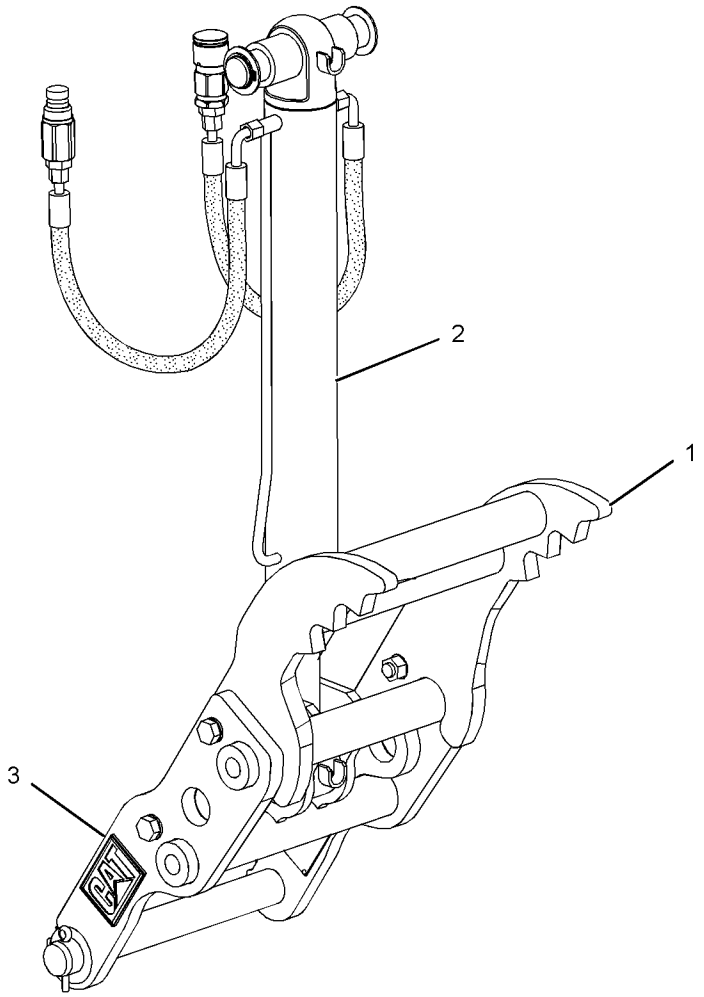

GRAPHIC #1 **<END>** g01232061

271-3027 THUMB AR–24-IN, MAN, ROCK, WITH COUPLER (CHG -00, -01)

S/N: HLS1-UP

AN ATTACHMENT

SMCS-6547 **i02449276**

NOTE	REF NO	GRAPHIC REF	PART NUMBER	QTY	PART NAME 1 2 3 4 5 6 (PRODUCT LEVEL)	SEE PAGE
	1	1	**221-4285**	1	TINE AS-THUMB (24-IN, ROCK)	
Y	2	1	*224-6237*	1	CYLINDER & LINES GP-THUMB	259
Y	3	1	*271-3023*	1	THUMB GP	553

Y-SEPARATE ILLUSTRATION

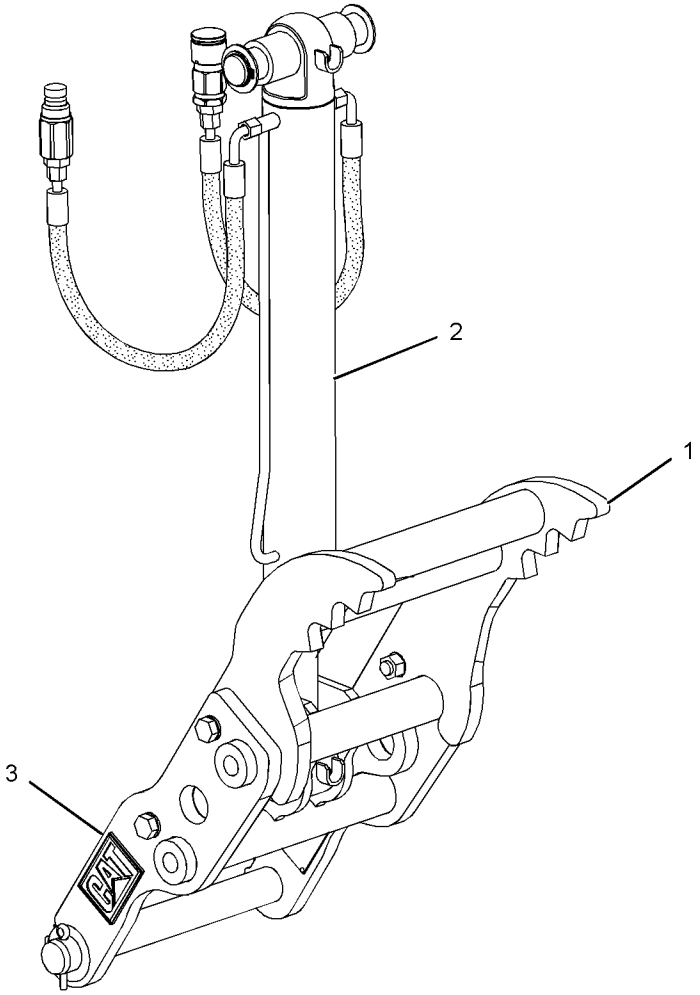

GRAPHIC #1 **<END>** g01232061

WORK TOOLS

271-3028 THUMB AR–24-IN, MAN, HEAVY-DUTY (CHG -00, -01)

S/N: HLS1-UP

AN ATTACHMENT

SMCS-6547 **i02449282**

NOTE	REF NO	GRAPHIC REF	PART NUMBER	QTY	PART NAME 1 2 3 4 5 6 (PRODUCT LEVEL)	SEE PAGE
	1	1	**221-4282**	1	TINE AS-THUMB (24-IN)	
	2	1	*263-8576*	1	LINK GP-THUMB	
		1	**221-4272**	1	LINK AS	
		1	**224-4527**	1	PIN AS	
		1	**263-8575**	1	LINK AS	
Y	3	1	*271-3023*	1	THUMB GP	553

Y-SEPARATE ILLUSTRATION

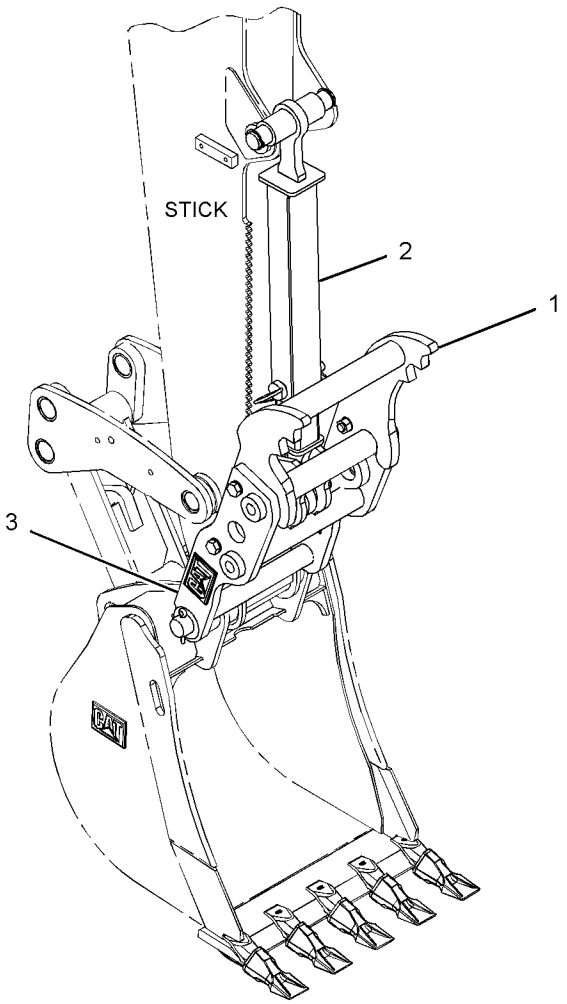

GRAPHIC #1

<END>

g01230547

271-3029 THUMB AR–24-IN, MAN, HEAVY-DUTY, WITH COUPLER

(CHG -00, -01)
S/N: HLS1-UP
AN ATTACHMENT

SMCS-6547 **i02449283**

NOTE	REF NO	GRAPHIC REF	PART NUMBER	QTY	PART NAME 1 2 3 4 5 6 (PRODUCT LEVEL)	SEE PAGE
	1	1	**221-4283**	1	TINE AS-THUMB (24-IN)	
	2	1	*263-8576*	1	LINK GP-THUMB	
		1	**221-4272**	1	LINK AS	
		1	**224-4527**	1	PIN AS	
		1	**263-8575**	1	LINK AS	
Y	3	1	*271-3023*	1	THUMB GP	553

Y-SEPARATE ILLUSTRATION

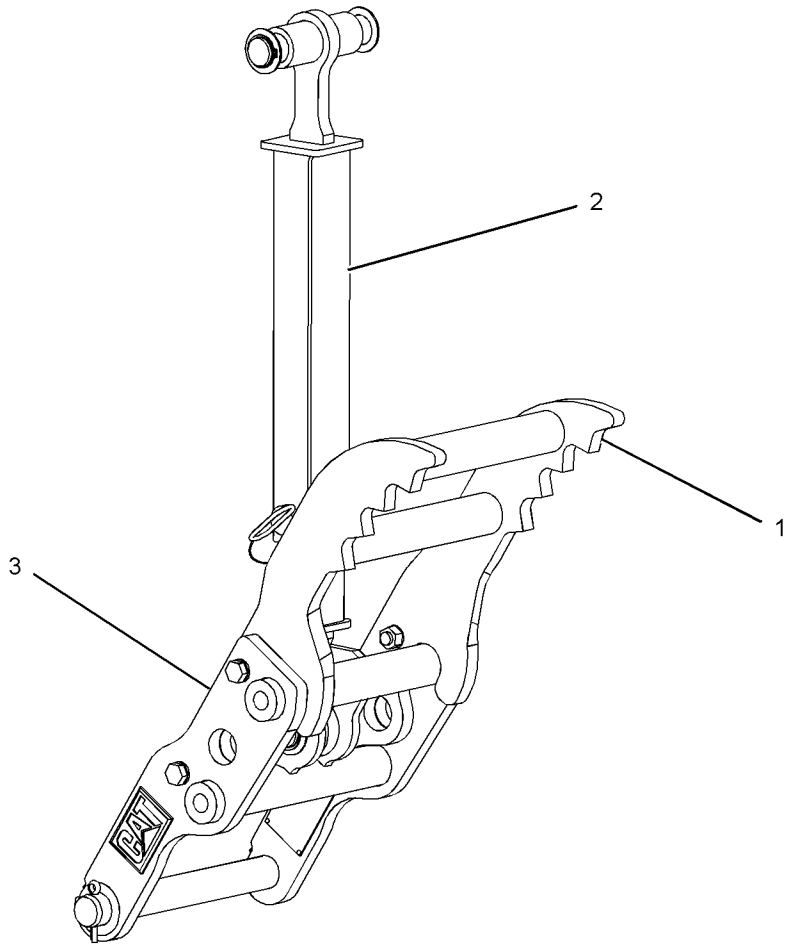

GRAPHIC #1 **<END>** g01230639

WORK TOOLS

271-3030 THUMB AR–24-IN, MAN, ROCK (CHG -00, -01)

S/N: HLS1-UP

AN ATTACHMENT

SMCS-6547 **i02449281**

NOTE	REF NO	GRAPHIC REF	PART NUMBER	QTY	PART NAME 1 2 3 4 5 6 (PRODUCT LEVEL)	SEE PAGE
	1	1	**221-4284**	1	TINE AS-THUMB (24-IN, ROCK)	
	2	1	*263-8576*	1	LINK GP-THUMB	
		1	**221-4272**	1	LINK AS	
		1	**224-4527**	1	PIN AS	
		1	**263-8575**	1	LINK AS	
Y	3	1	*271-3023*	1	THUMB GP	553

Y-SEPARATE ILLUSTRATION

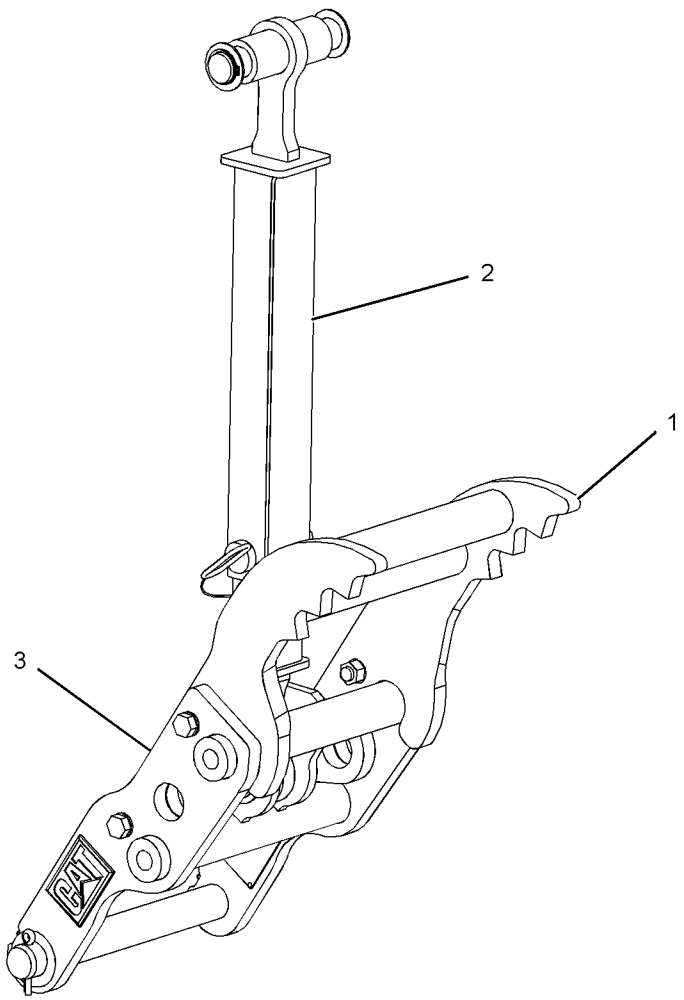

GRAPHIC #1 **<END>** g01232067

271-3031 THUMB AR–24-IN, MAN, ROCK, WITH COUPLER (CHG -00, -01)

S/N: HLS1-UP

AN ATTACHMENT

SMCS-6547 **i02449279**

NOTE	REF NO	GRAPHIC REF	PART NUMBER	QTY	PART NAME 1 2 3 4 5 6 (PRODUCT LEVEL)	SEE PAGE
	1	1	**221-4285**	1	TINE AS-THUMB (24-IN, ROCK)	
	2	1	**263-8576**	1	LINK GP-THUMB	
		1	**221-4272**	1	LINK AS	
		1	**224-4527**	1	PIN AS	
		1	**263-8575**	1	LINK AS	
Y	3	1	*271-3023*	1	THUMB GP	553

Y-SEPARATE ILLUSTRATION

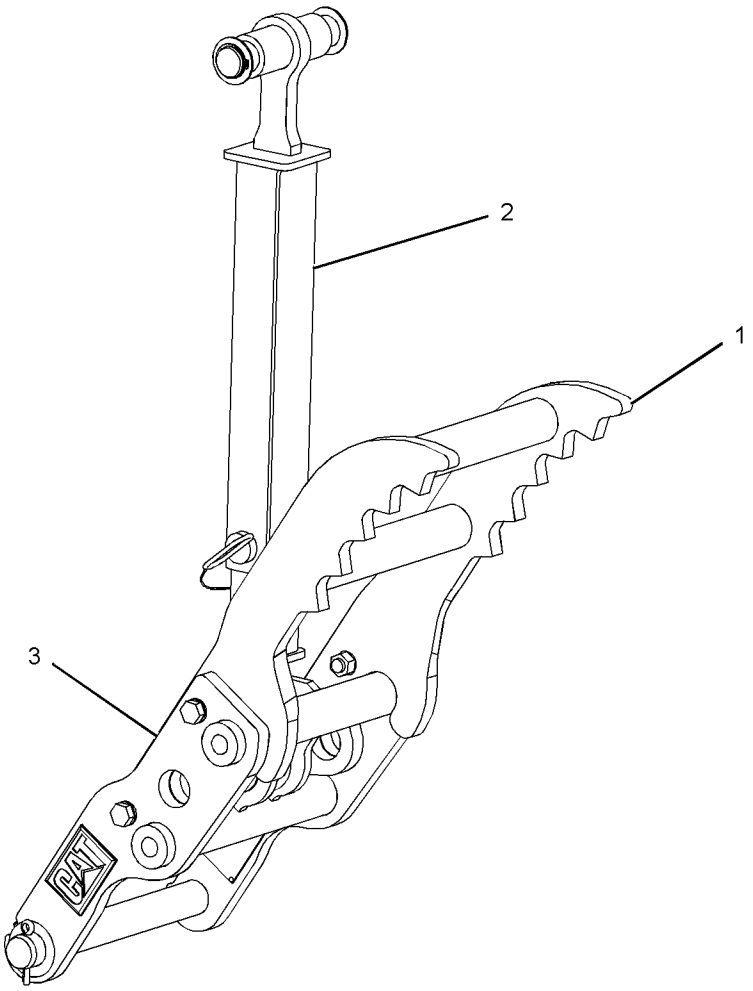

GRAPHIC #1 **<END>** g01232083

282-0865 THUMB AR–30-IN, HYD, WITH COUPLER (CHG -00)

S/N: HLS1-UP

AN ATTACHMENT

SMCS-6547 **i02449314**

NOTE	REF NO	GRAPHIC REF	PART NUMBER	QTY	PART NAME 1 2 3 4 5 6 (PRODUCT LEVEL)	SEE PAGE
Y	1	1	*224-6237*	1	CYLINDER & LINES GP-THUMB	259
Y	2	1	*271-3023*	1	THUMB GP	553
	3	1	**281-6711**	1	TINE AS-THUMB (30-IN)	

Y-SEPARATE ILLUSTRATION

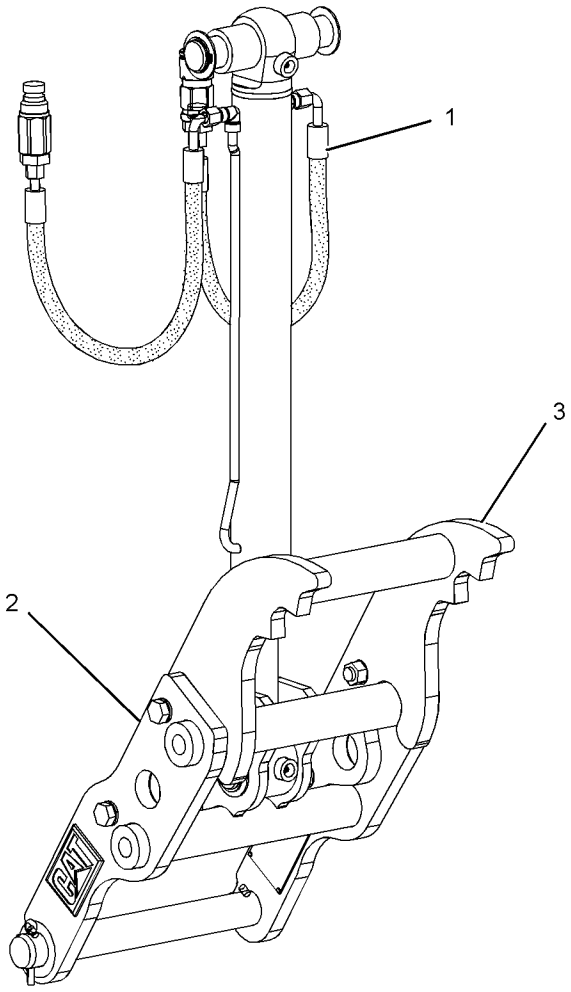

GRAPHIC #1 **<END>** g01232062

WORK TOOLS

282-0866 THUMB AR–36-IN, HYD, WITH COUPLER (CHG -00)

S/N: HLS1-UP

AN ATTACHMENT

SMCS-6547 **i02449328**

NOTE	REF NO	GRAPHIC REF	PART NUMBER	QTY	PART NAME 1 2 3 4 5 6 (PRODUCT LEVEL)	SEE PAGE
Y	1	1	*224-6237*	1	CYLINDER & LINES GP-THUMB	259
Y	2	1	*271-3023*	1	THUMB GP	553
	3	1	**281-6714**	1	TINE AS-THUMB	

Y-SEPARATE ILLUSTRATION

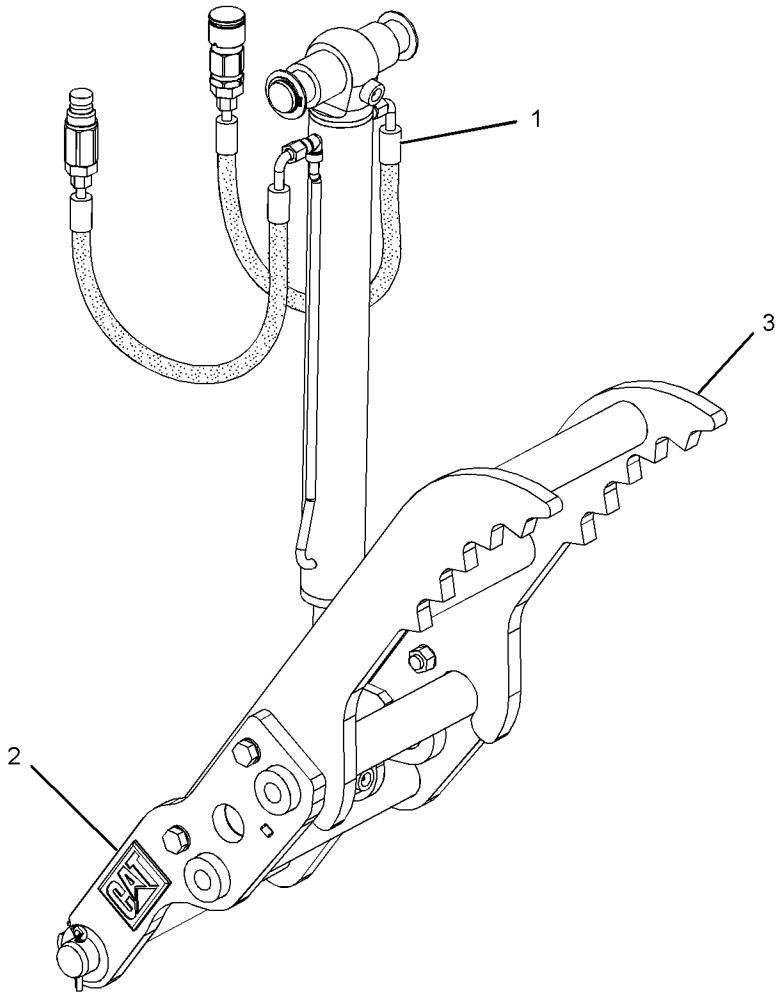

GRAPHIC #1 **<END>** g01232063

WORK TOOLS

282-0887 THUMB AR—30-IN, HYD, HEAVY-DUTY (CHG -00)

S/N: HLS1-UP

AN ATTACHMENT

SMCS-6547 **i02449320**

NOTE	REF NO	GRAPHIC REF	PART NUMBER	QTY	PART NAME 1 2 3 4 5 6 (PRODUCT LEVEL)	SEE PAGE
Y	1	1	*224-6237*	1	CYLINDER & LINES GP-THUMB	259
Y	2	1	*271-3023*	1	THUMB GP	553
	3	1	**274-5819**	1	TINE AS-THUMB (30-IN)	

Y-SEPARATE ILLUSTRATION

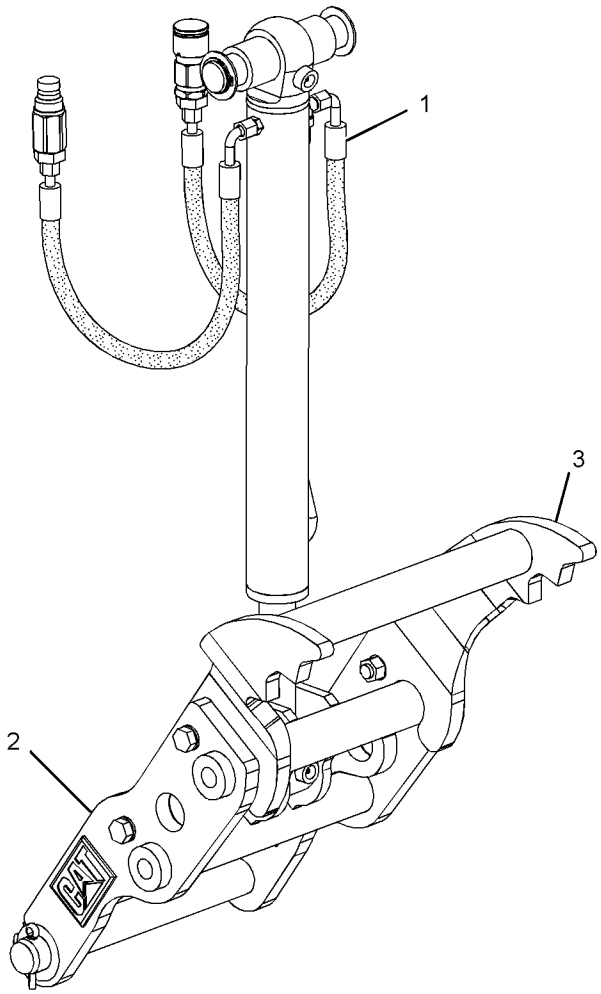

GRAPHIC #1 **<END>** g01234185

282-0888 THUMB AR–30-IN, HYD, HEAVY-DUTY, WITH COUPLER

(CHG -00)

S/N: HLS1-UP

AN ATTACHMENT

SMCS-6547 **i02449324**

NOTE	REF NO	GRAPHIC REF	PART NUMBER	QTY	PART NAME 1 2 3 4 5 6 (PRODUCT LEVEL)	SEE PAGE
Y	1	1	*224-6237*	1	CYLINDER & LINES GP-THUMB	259
Y	2	1	*271-3023*	1	THUMB GP	553
	3	1	**274-5823**	1	TINE AS-THUMB (30-IN)	

Y-SEPARATE ILLUSTRATION

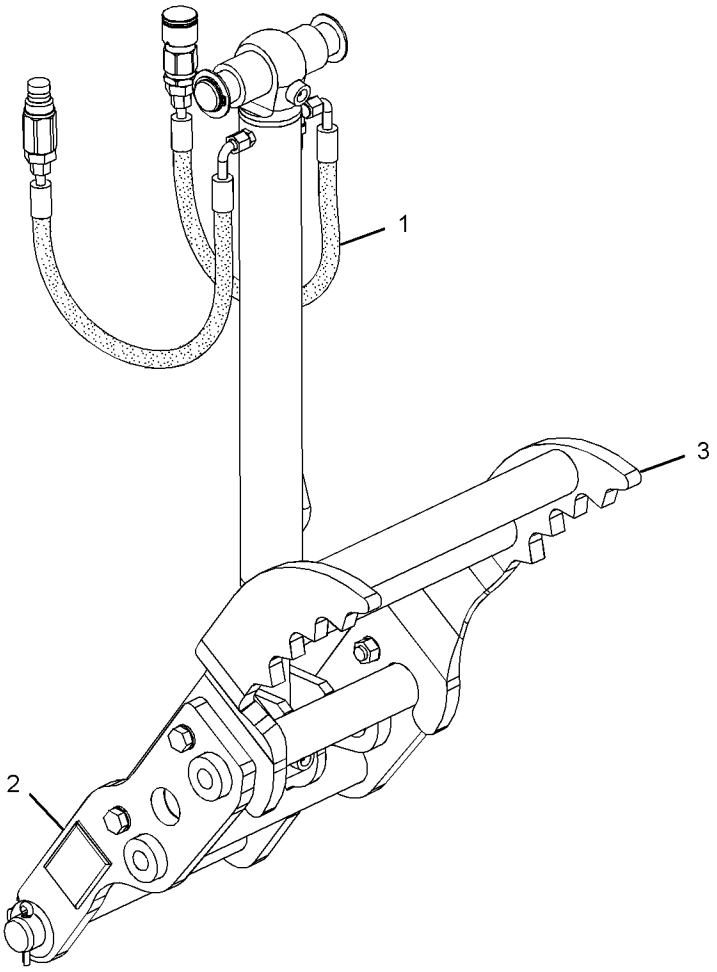

GRAPHIC #1 **<END>** g01234203

WORK TOOLS

282-0889 THUMB AR—30-IN, HYD, ROCK (CHG -00)

S/N: HLS1-UP

AN ATTACHMENT

SMCS-6547 **i02449325**

NOTE	REF NO	GRAPHIC REF	PART NUMBER	QTY	PART NAME 1 2 3 4 5 6 (PRODUCT LEVEL)	SEE PAGE
Y	1	1	*224-6237*	1	CYLINDER & LINES GP-THUMB	259
Y	2	1	*271-3023*	1	THUMB GP	553
	3	1	**274-5826**	1	TINE AS-THUMB (30-IN, ROCK)	

Y-SEPARATE ILLUSTRATION

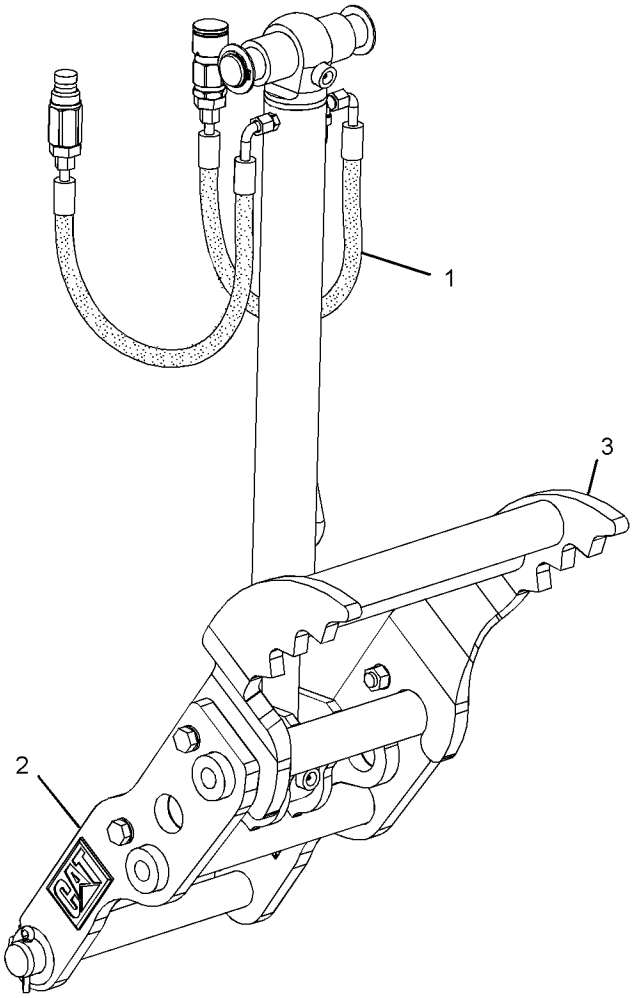

GRAPHIC #1 **<END>** g01234196

WORK TOOLS

282-0890 THUMB AR–30-IN, HYD, ROCK, WITH COUPLER (CHG -00)

S/N: HLS1-UP

AN ATTACHMENT

SMCS-6547 **i02449321**

NOTE	REF NO	GRAPHIC REF	PART NUMBER	QTY	PART NAME 1 2 3 4 5 6 (PRODUCT LEVEL)	SEE PAGE
Y	1	1	*224-6237*	1	CYLINDER & LINES GP-THUMB	259
Y	2	1	*271-3023*	1	THUMB GP	553
	3	1	**274-5829**	1	TINE AS-THUMB (30-IN, ROCK)	

Y-SEPARATE ILLUSTRATION

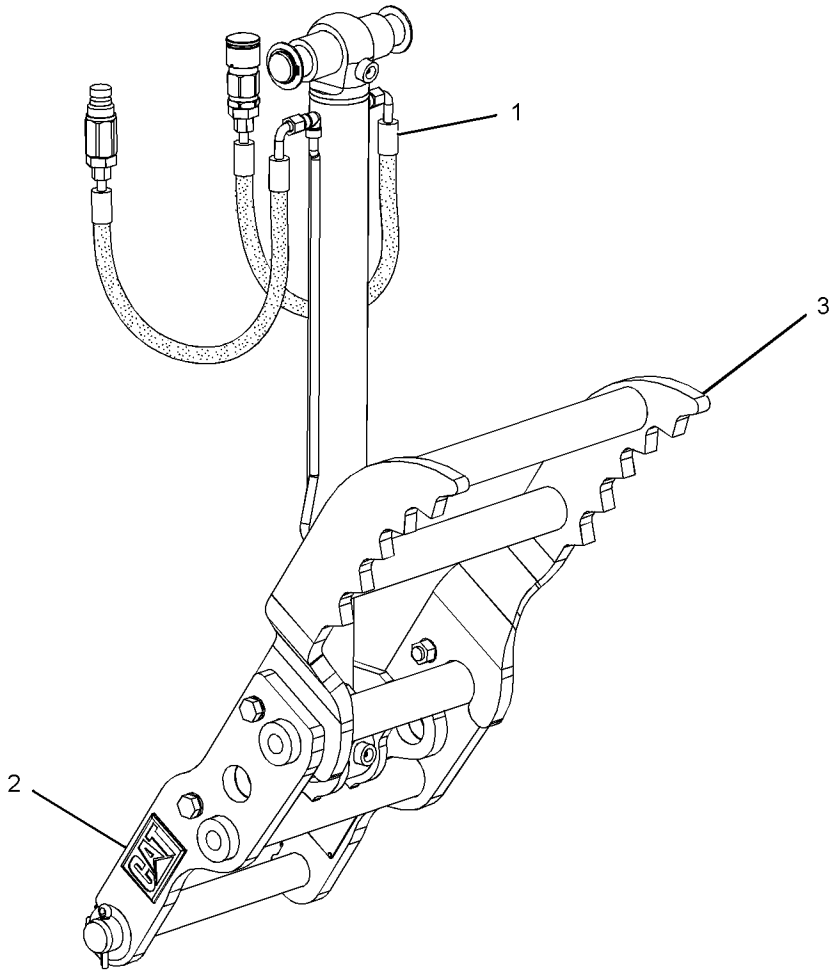

GRAPHIC #1 **<END>** g01234198

WORK TOOLS

282-0891 THUMB AR—36-IN, HYD, HEAVY-DUTY (CHG -00)

S/N: HLS1-UP

AN ATTACHMENT

SMCS-6547 **i02449329**

NOTE	REF NO	GRAPHIC REF	PART NUMBER	QTY	PART NAME 1 2 3 4 5 6 (PRODUCT LEVEL)	SEE PAGE
Y	1	1	*224-6237*	1	CYLINDER & LINES GP-THUMB	259
Y	2	1	*271-3023*	1	THUMB GP	553
	3	1	**274-5832**	1	TINE AS-THUMB (36-IN)	

Y-SEPARATE ILLUSTRATION

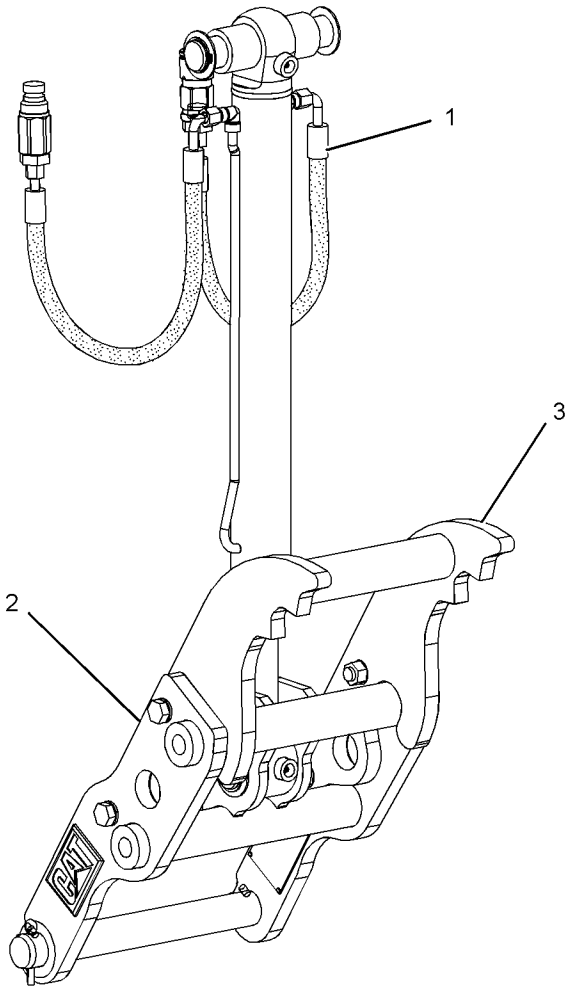

GRAPHIC #1 **<END>** g01232062

WORK TOOLS

282-0892 THUMB AR–36-IN, HYD, HEAVY-DUTY, WITH COUPLER

(CHG -00)

S/N: HLS1-UP

AN ATTACHMENT

SMCS-6547 **i02449316**

NOTE	REF NO	GRAPHIC REF	PART NUMBER	QTY	PART NAME 1 2 3 4 5 6 (PRODUCT LEVEL)	SEE PAGE
Y	1	1	*224-6237*	1	CYLINDER & LINES GP-THUMB	259
Y	2	1	*271-3023*	1	THUMB GP	553
	3	1	**274-5835**	1	TINE AS-THUMB (36-IN)	

Y-SEPARATE ILLUSTRATION

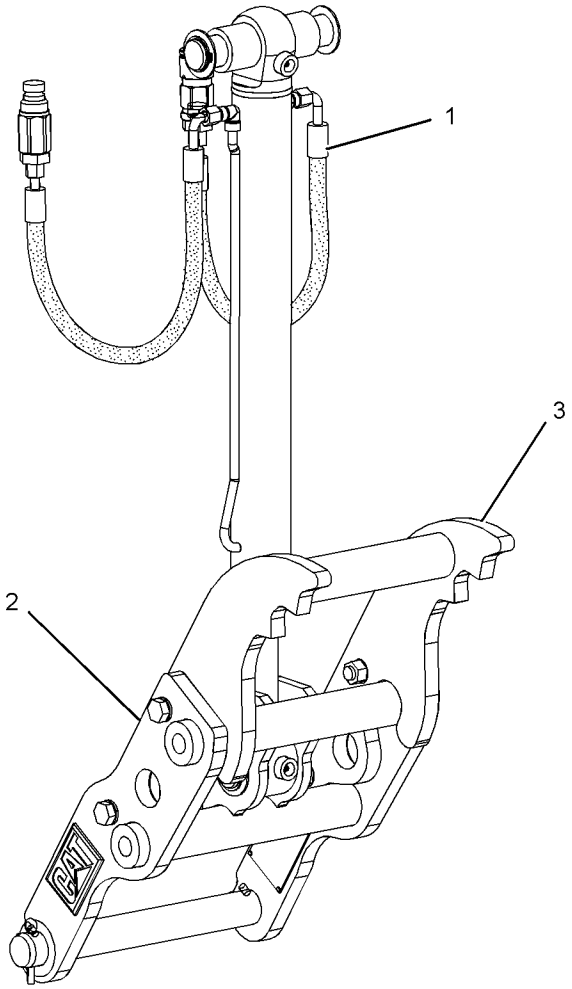

GRAPHIC #1 **<END>** g01232062

WORK TOOLS

282-0893 THUMB AR—36-IN, HYD, ROCK (CHG -00)

S/N: HLS1-UP

AN ATTACHMENT

SMCS-6547 **i02449311**

NOTE	REF NO	GRAPHIC REF	PART NUMBER	QTY	PART NAME 1 2 3 4 5 6 (PRODUCT LEVEL)	SEE PAGE
Y	1	1	*224-6237*	1	CYLINDER & LINES GP-THUMB	259
Y	2	1	*271-3023*	1	THUMB GP	553
	3	1	**274-5837**	1	TINE AS-THUMB (36-IN, ROCK)	

Y-SEPARATE ILLUSTRATION

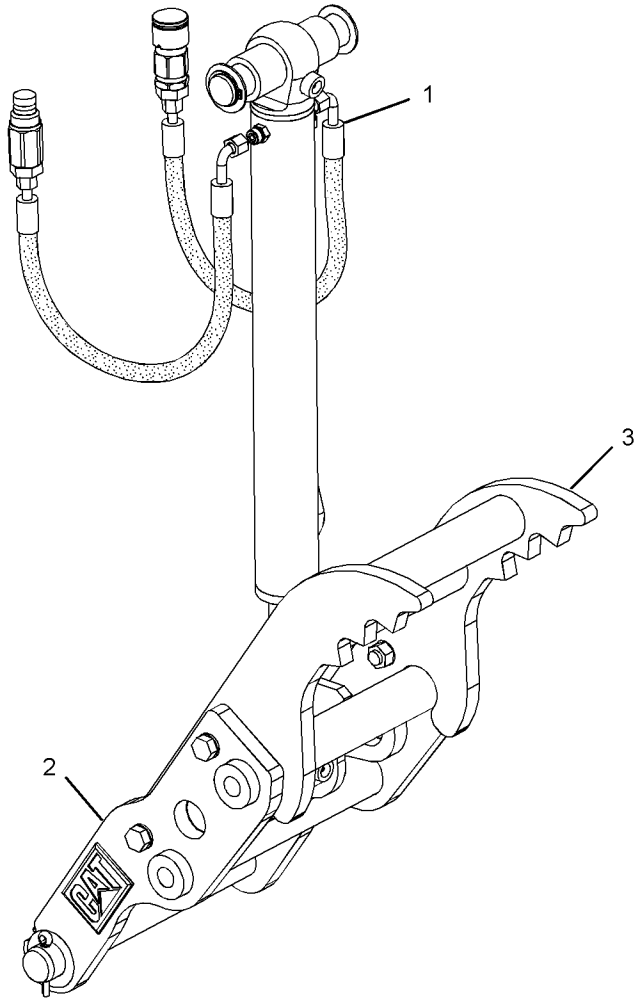

GRAPHIC #1 **<END>** g01230654

282-0894 THUMB AR–36-IN, HYD, ROCK, WITH COUPLER (CHG -00)

S/N: HLS1-UP

AN ATTACHMENT

SMCS-6547 **i02449312**

NOTE	REF NO	GRAPHIC REF	PART NUMBER	QTY	PART NAME 1 2 3 4 5 6 (PRODUCT LEVEL)	SEE PAGE
Y	1	1	*224-6237*	1	CYLINDER & LINES GP-THUMB	259
Y	2	1	*271-3023*	1	THUMB GP	553
	3	1	**274-5839**	1	TINE AS-THUMB (36-IN, ROCK)	

Y-SEPARATE ILLUSTRATION

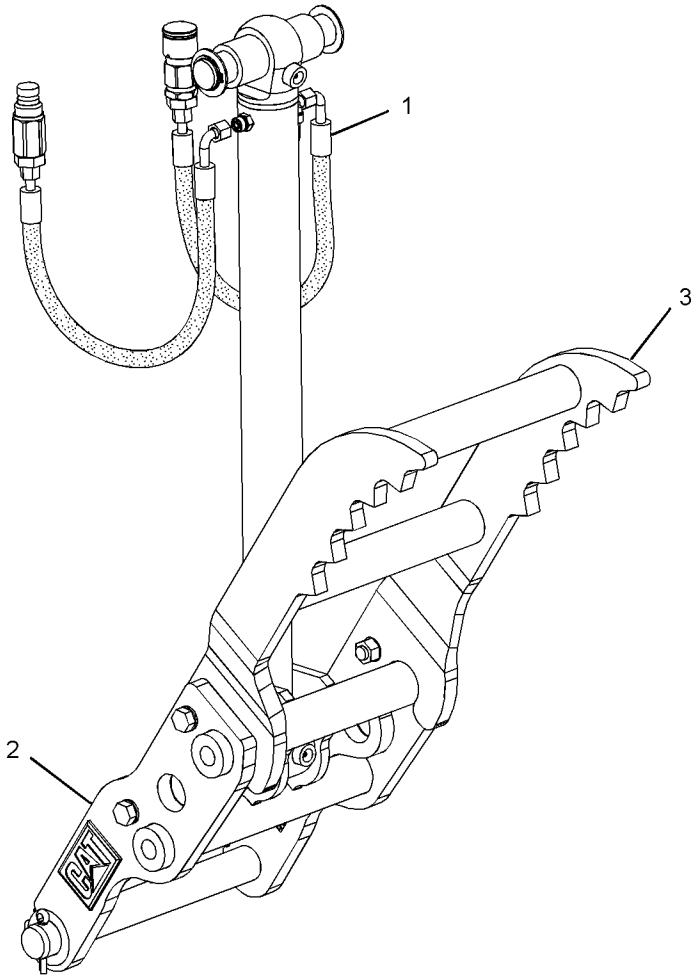

GRAPHIC #1 **<END>** g01230657

282-5398 THUMB AR–24-IN, MANUAL, WITH COUPLER (CHG -00)

S/N: HLS1-UP

AN ATTACHMENT

SMCS-6547 **i02482321**

NOTE	REF NO	GRAPHIC REF	PART NUMBER	QTY	PART NAME 1 2 3 4 5 6 (PRODUCT LEVEL)	SEE PAGE
	1	1	*263-8576*	1	LINK GP-THUMB	
		1	**221-4272**	1	LINK AS	
		1	**224-4527**	1	PIN AS	
		1	**263-8575**	1	LINK AS	
Y	2	1	*271-3023*	1	THUMB GP	553
	3	1	**281-6708**	1	TINE AS-THUMB (24-IN)	

Y-SEPARATE ILLUSTRATION

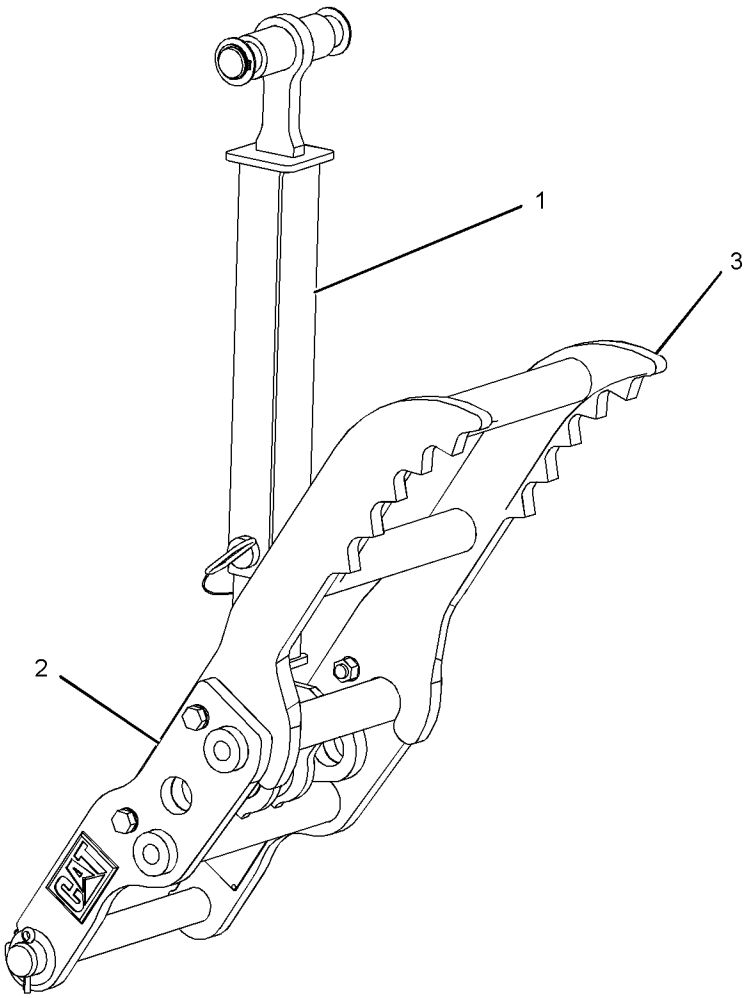

GRAPHIC #1 **<END>** g01232078

282-5399 THUMB AR–30-IN, MANUAL, HEAVY-DUTY (CHG -00)

S/N: HLS1-UP

AN ATTACHMENT

SMCS-6547 **i02449330**

NOTE	REF NO	GRAPHIC REF	PART NUMBER	QTY	PART NAME 1 2 3 4 5 6 (PRODUCT LEVEL)	SEE PAGE
	1	1	**263-8576**	1	LINK GP-THUMB	
		1	**221-4272**	1	LINK AS	
		1	**224-4527**	1	PIN AS	
		1	**263-8575**	1	LINK AS	
Y	2	1	*271-3023*	1	THUMB GP	553
	3	1	**274-5819**	1	TINE AS-THUMB (30-IN)	

Y-SEPARATE ILLUSTRATION

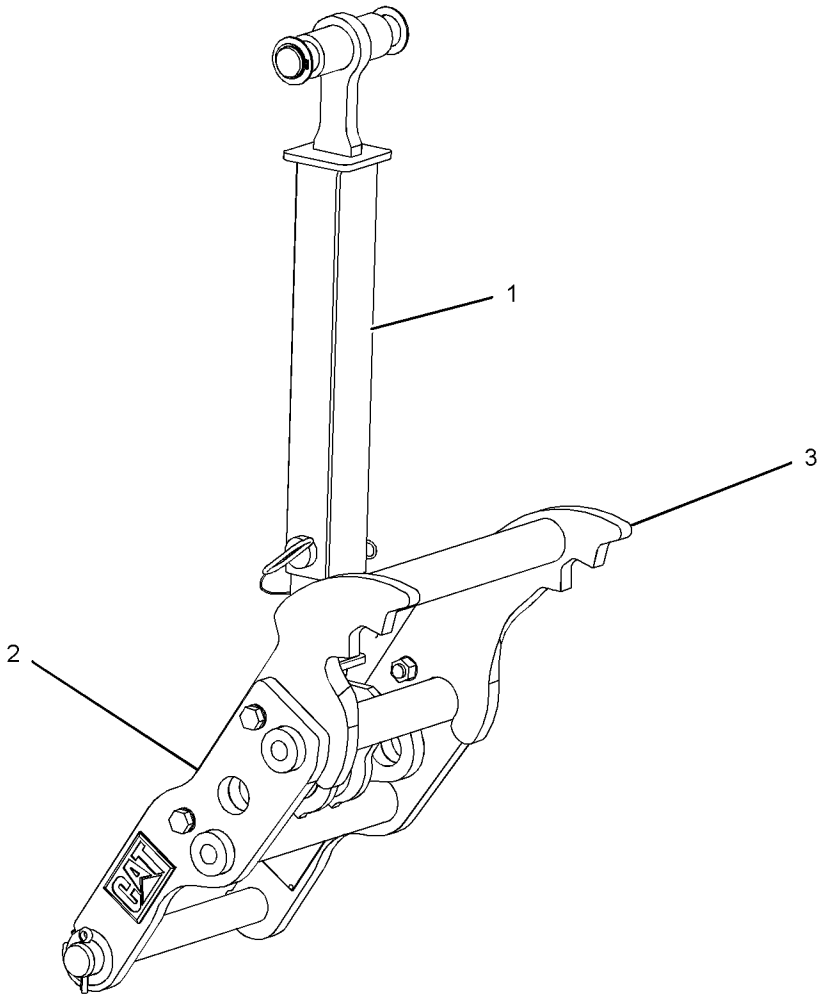

GRAPHIC #1 **<END>** g01232091

WORK TOOLS

282-5400 THUMB AR–30-IN, MANUAL, ROCK (CHG -00)

S/N: HLS1-UP

AN ATTACHMENT

SMCS-6547 **i02449322**

NOTE	REF NO	GRAPHIC REF	PART NUMBER	QTY	PART NAME 1 2 3 4 5 6 (PRODUCT LEVEL)	SEE PAGE
	1	1	*263-8576*	1	LINK GP-THUMB	
		1	**221-4272**	1	LINK AS	
		1	**224-4527**	1	PIN AS	
		1	**263-8575**	1	LINK AS	
Y	2	1	*271-3023*	1	THUMB GP	553
	3	1	**274-5826**	1	TINE AS-THUMB (30-IN, ROCK)	

Y-SEPARATE ILLUSTRATION

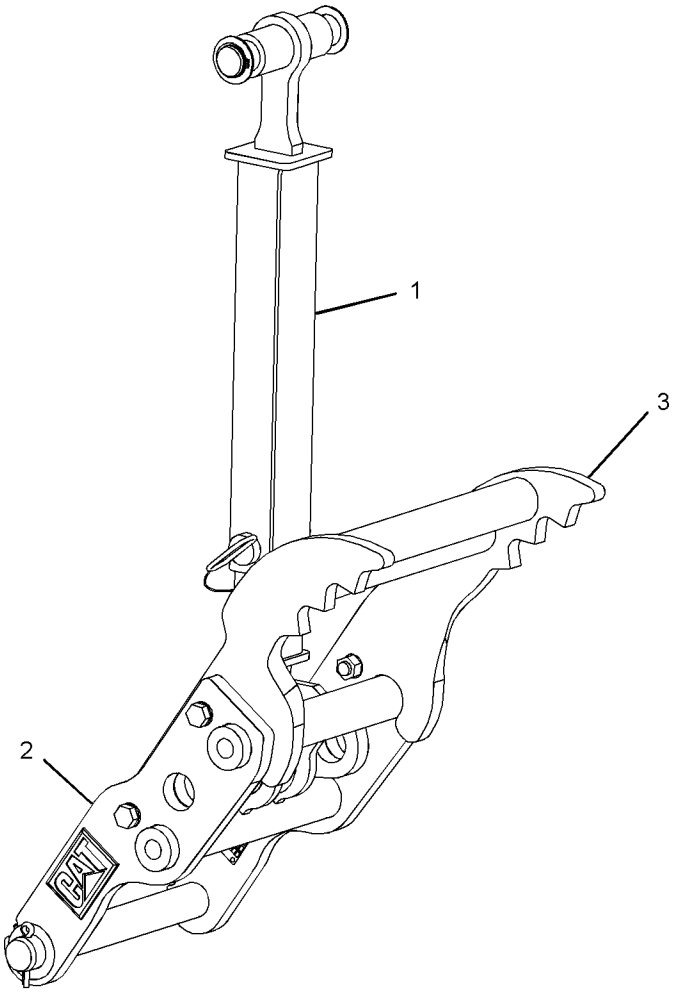

GRAPHIC #1 **<END>** g01234205

282-5401 THUMB AR–30-IN, MAN, HEAVY-DUTY, WITH COUPLER

(CHG -00)

S/N: HLS1-UP

AN ATTACHMENT

SMCS-6547 **i02449326**

NOTE	REF NO	GRAPHIC REF	PART NUMBER	QTY	PART NAME 1 2 3 4 5 6 (PRODUCT LEVEL)	SEE PAGE
	1	1	*263-8576*	1	LINK GP-THUMB	
		1	**263-8575**		LINK AS	
		1	**221-4272**	1	LINK AS	
		1	**224-4527**	1	PIN AS	
Y	2	1	*271-3023*	1	THUMB GP	553
	3	1	**274-5823**	1	TINE AS-THUMB (30-IN)	

Y-SEPARATE ILLUSTRATION

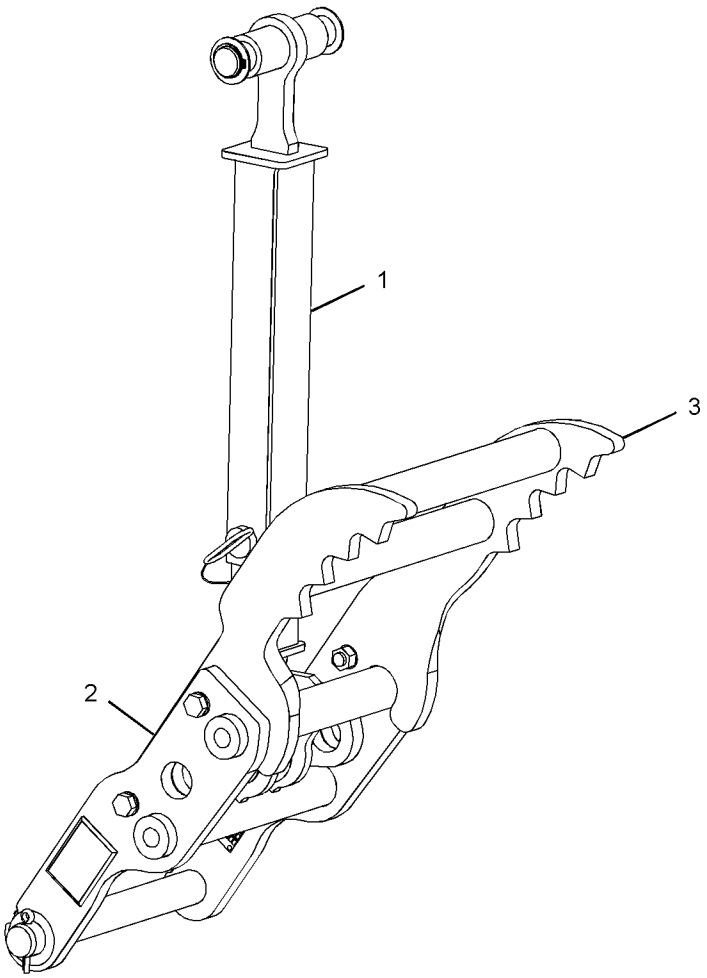

GRAPHIC #1 **<END>** g01234213

WORK TOOLS

282-5402 THUMB AR–30-IN, MAN, ROCK, WITH COUPLER (CHG -00)

S/N: HLS1-UP

AN ATTACHMENT

SMCS-6547 **i02449327**

NOTE	REF NO	GRAPHIC REF	PART NUMBER	QTY	PART NAME 1 2 3 4 5 6 (PRODUCT LEVEL)	SEE PAGE
	1	1	*263-8576*	1	LINK GP-THUMB	
		1	**263-8575**	1	LINK AS	
		1	**221-4272**	1	LINK AS	
		1	**224-4527**	1	PIN AS	
Y	2	1	*271-3023*	1	THUMB GP	553
	3	1	**274-5829**	1	TINE AS-THUMB (30-IN, ROCK)	

Y-SEPARATE ILLUSTRATION

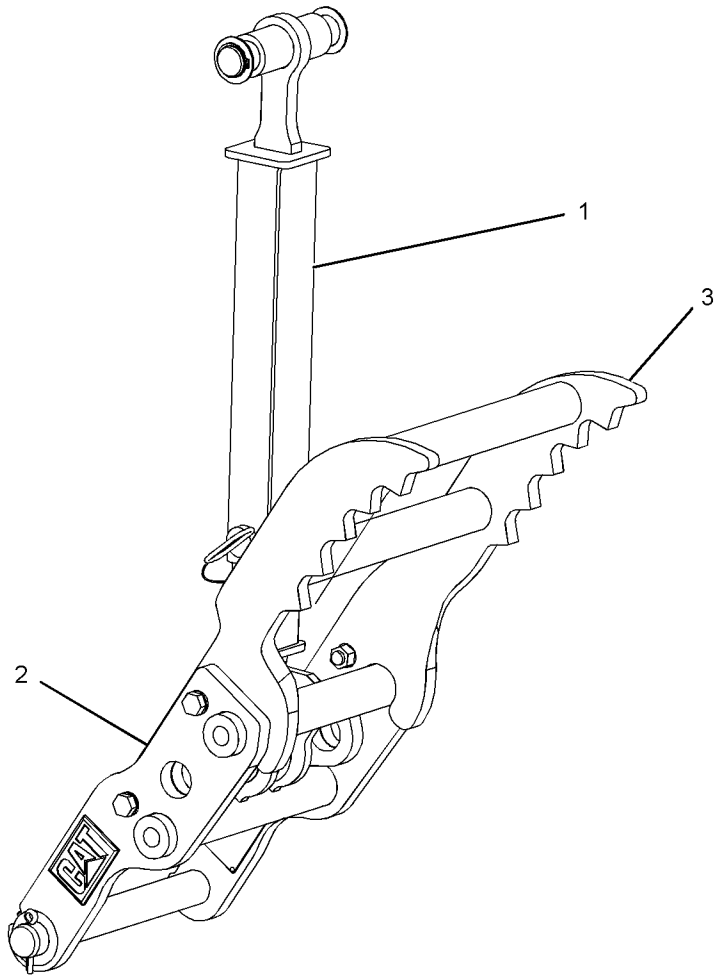

GRAPHIC #1 **<END>** g01234207

282-5403 THUMB AR—30-IN, MAN, WITH COUPLER (CHG -00)

S/N: HLS1-UP

AN ATTACHMENT

SMCS-6547 **i02449323**

NOTE	REF NO	GRAPHIC REF	PART NUMBER	QTY	PART NAME 1 2 3 4 5 6 (PRODUCT LEVEL)	SEE PAGE
	1	1	*263-8576*	1	LINK GP-THUMB	
		1	**221-4272**	1	LINK AS	
		1	**224-4527**	1	PIN AS	
		1	**263-8575**	1	LINK AS	
Y	2	1	*271-3023*	1	THUMB GP	553
	3	1	**281-6711**	1	TINE AS-THUMB (30-IN)	

Y-SEPARATE ILLUSTRATION

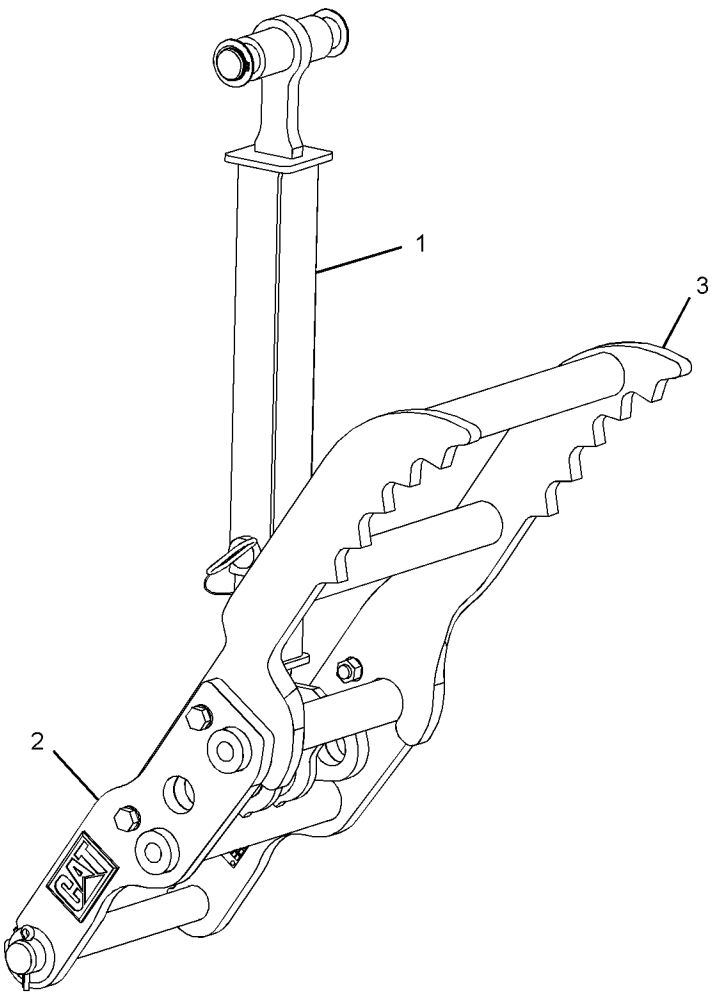

GRAPHIC #1 **<END>** g01234215

WORK TOOLS

282-5404 THUMB AR—36-IN, MAN, HEAVY-DUTY (CHG -00)

S/N: HLS1-UP

AN ATTACHMENT

SMCS-6547 **i02449331**

NOTE	REF NO	GRAPHIC REF	PART NUMBER	QTY	PART NAME 1 2 3 4 5 6 (PRODUCT LEVEL)	SEE PAGE
	1	1	**263-8576**	1	LINK GP-THUMB	
		1	**221-4272**	1	LINK AS	
		1	**224-4527**	1	PIN AS	
		1	**263-8575**	1	LINK AS	
Y	2	1	*271-3023*	1	THUMB GP	553
	3	1	**274-5832**	1	TINE AS-THUMB (36-IN)	

Y-SEPARATE ILLUSTRATION

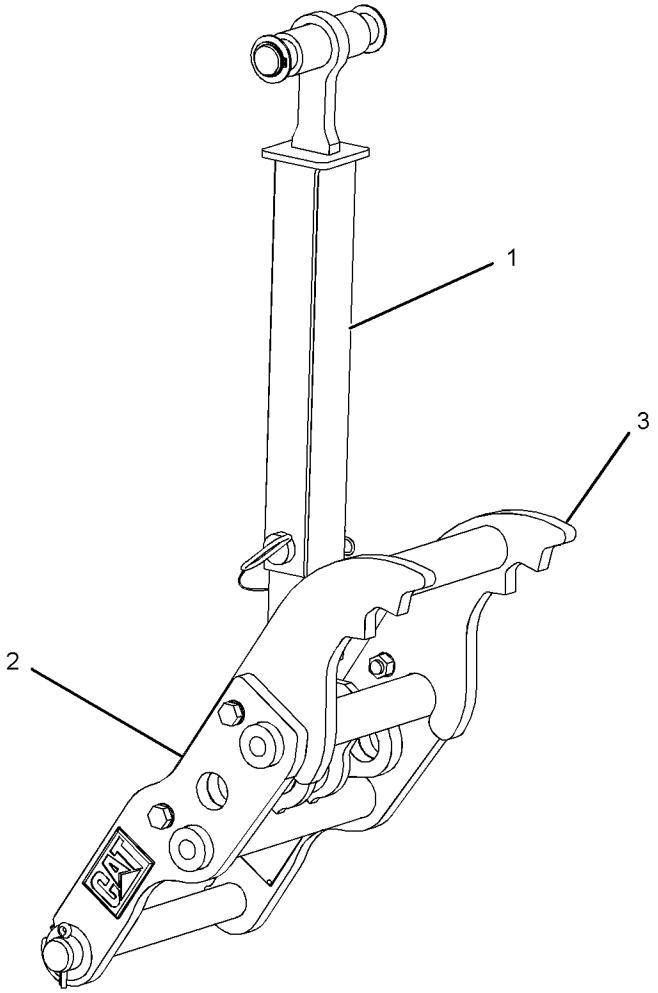

GRAPHIC #1 **<END>** g01232484

282-5405 THUMB AR–36-IN, MAN, ROCK (CHG -00)

S/N: HLS1-UP

AN ATTACHMENT

SMCS-6547 **i02449318**

NOTE	REF NO	GRAPHIC REF	PART NUMBER	QTY	PART NAME 1 2 3 4 5 6 (PRODUCT LEVEL)	SEE PAGE
	1	1	*263-8576*	1	LINK GP-THUMB	
		1	**221-4272**	1	LINK AS	
		1	**224-4527**	1	PIN AS	
		1	**263-8575**	1	LINK AS	
Y	2	1	*271-3023*	1	THUMB GP	553
	3	1	**274-5837**	1	TINE AS-THUMB (36-IN, ROCK)	

Y-SEPARATE ILLUSTRATION

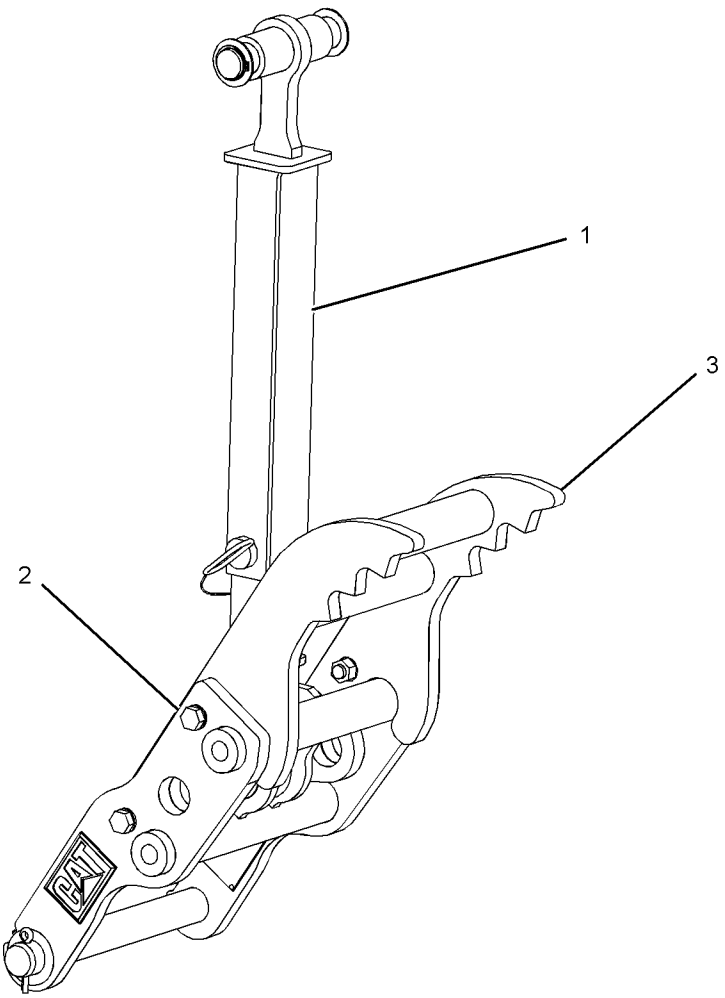

GRAPHIC #1 **<END>** g01232106

282-5406 THUMB AR–36-IN, MAN, HEAVY-DUTY, WITH COUPLER

(CHG -00)

S/N: HLS1-UP

AN ATTACHMENT

SMCS-6547 **i02449313**

NOTE	REF NO	GRAPHIC REF	PART NUMBER	QTY	PART NAME 1 2 3 4 5 6 (PRODUCT LEVEL)	SEE PAGE
	1	1	*263-8576*	1	LINK GP-THUMB	
		1	**221-4272**	1	LINK AS	
		1	**224-4527**	1	PIN AS	
		1	**263-8575**	1	LINK AS	
Y	2	1	*271-3023*	1	THUMB GP	553
	3	1	**274-5835**	1	TINE AS-THUMB (36-IN)	

Y-SEPARATE ILLUSTRATION

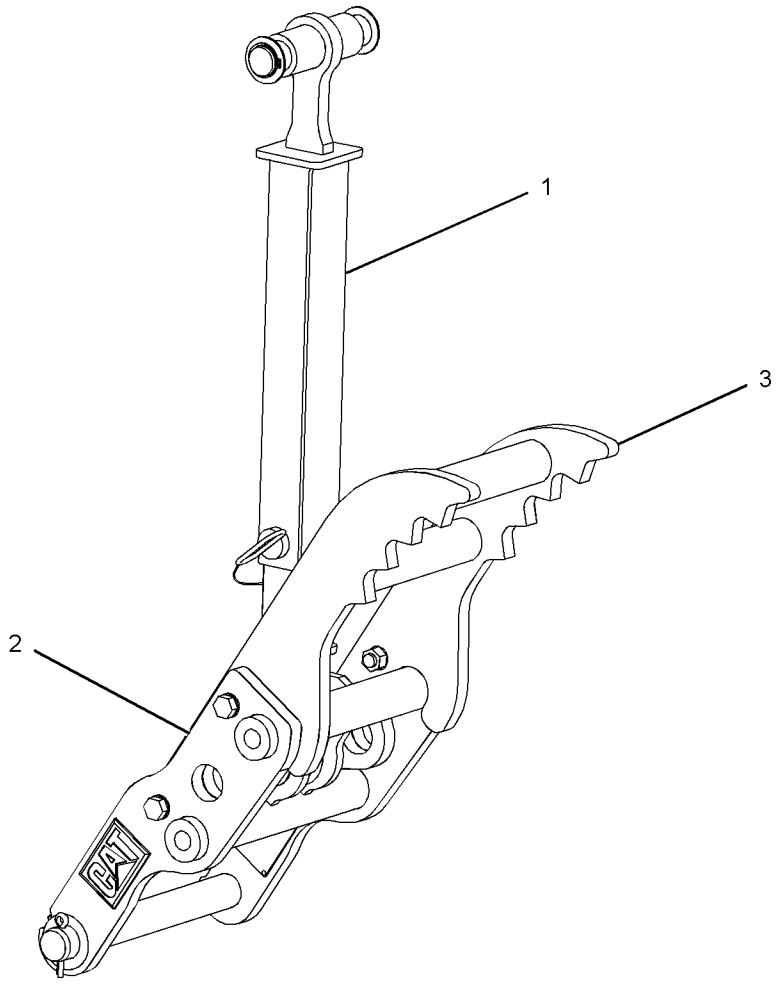

GRAPHIC #1 **<END>** g01230669

282-5407 THUMB AR—36-IN, MAN, ROCK, WITH COUPLER (CHG -00)

S/N: HLS1-UP

AN ATTACHMENT

SMCS-6547 **i02449332**

NOTE	REF NO	GRAPHIC REF	PART NUMBER	QTY	PART NAME 1 2 3 4 5 6 (PRODUCT LEVEL)	SEE PAGE
	1	1	**263-8576**	1	LINK GP-THUMB	
		1	**221-4272**	1	LINK AS	
		1	**224-4527**	1	PIN AS	
		1	**263-8575**	1	LINK AS	
Y	2	1	*271-3023*	1	THUMB GP	553
	3	1	**274-5839**	1	TINE AS-THUMB (36-IN, ROCK)	

Y-SEPARATE ILLUSTRATION

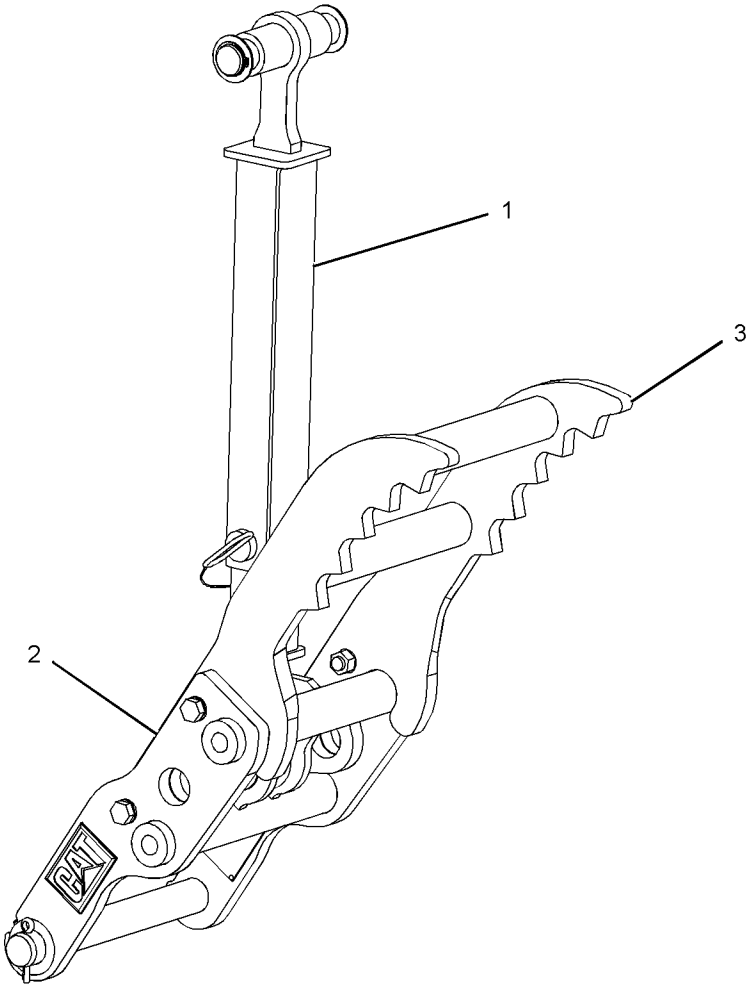

GRAPHIC #1 **<END>** g01232087

WORK TOOLS

282-5408 THUMB AR–36-IN, MAN, WITH COUPLER (CHG -00)

S/N: HLS1-UP

AN ATTACHMENT

SMCS-6547 **i02449333**

NOTE	REF NO	GRAPHIC REF	PART NUMBER	QTY	PART NAME 1 2 3 4 5 6 (PRODUCT LEVEL)	SEE PAGE
	1	1	**263-8576**	1	LINK GP-THUMB	
		1	**221-4272**	1	LINK AS	
		1	**224-4527**	1	PIN AS	
		1	**263-8575**	1	LINK AS	
Y	2	1	*271-3023*	1	THUMB GP	553
	3	1	**281-6714**	1	TINE AS-THUMB	

Y-SEPARATE ILLUSTRATION

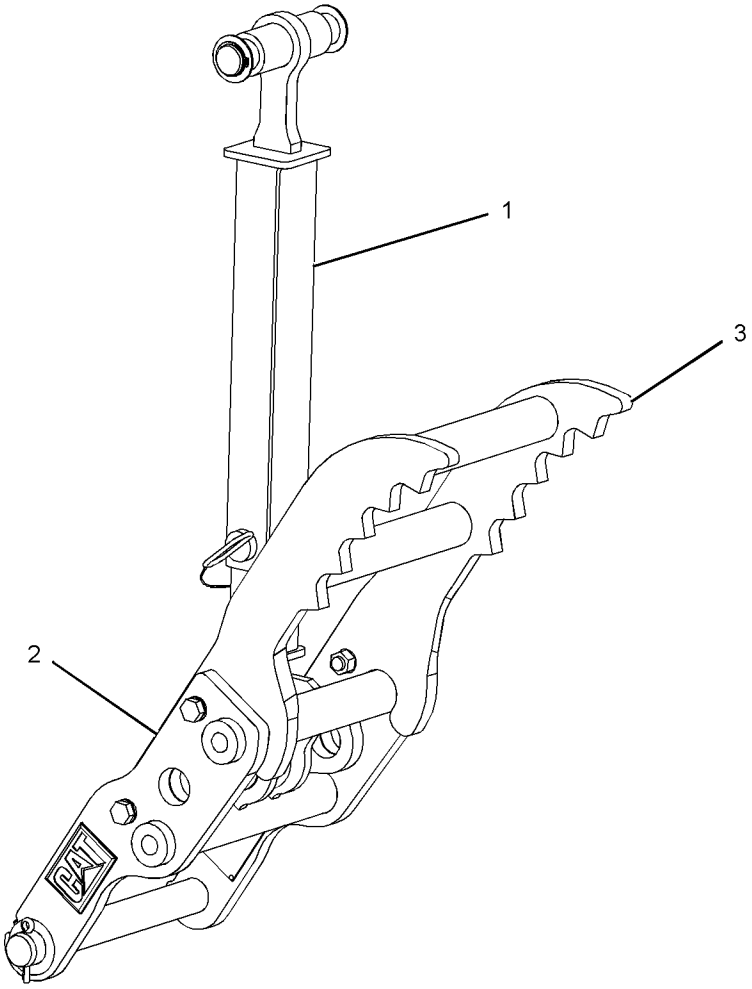

GRAPHIC #1 **<END>** g01232087

282-5409 THUMB AR–BACKHOE, HYDRAULIC COMMON (CHG -00)

S/N: HLS1-UP

AN ATTACHMENT

SMCS-6547 **i02449334**

NOTE	REF NO	GRAPHIC REF	PART NUMBER	QTY	PART NAME 1 2 3 4 5 6 (PRODUCT LEVEL)	SEE PAGE
Y	1	1	*224-6237*	1	CYLINDER & LINES GP-THUMB	259
Y	2	1	*271-3023*	1	THUMB GP	553

Y-SEPARATE ILLUSTRATION

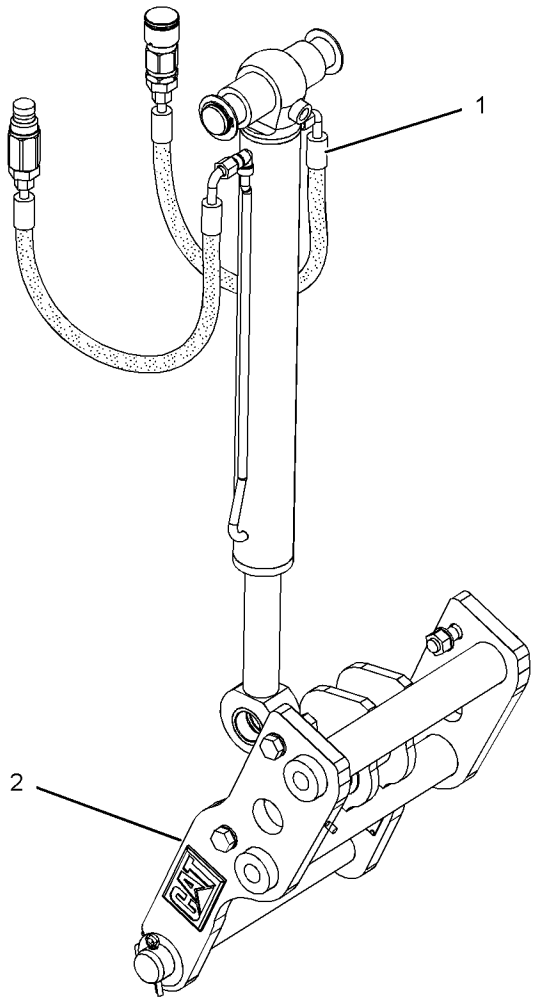

GRAPHIC #1 **<END>** g01232113

282-5410 THUMB AR–BACKHOE, MANUAL COMMON (CHG -00)

S/N: HLS1-UP

AN ATTACHMENT

SMCS-6547 **i02449335**

NOTE	REF NO	GRAPHIC REF	PART NUMBER	QTY	PART NAME 1 2 3 4 5 6 (PRODUCT LEVEL)	SEE PAGE
	1	1	**263-8576**	1	LINK GP-THUMB	
		1	**221-4272**	1	LINK AS	
		1	**224-4527**	1	PIN AS	
		1	**263-8575**	1	LINK AS	
Y	2	1	*271-3023*	1	THUMB GP	553

Y-SEPARATE ILLUSTRATION

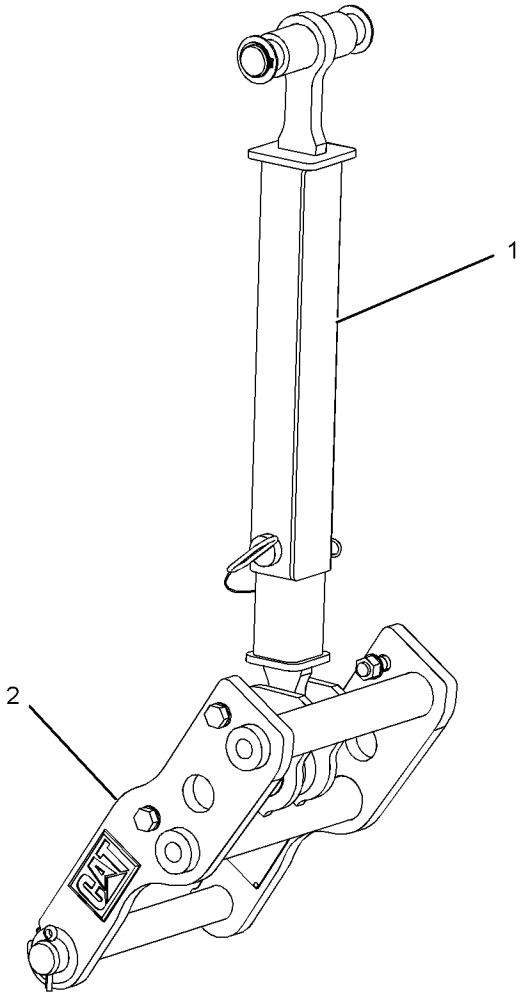

GRAPHIC #1 **<END>** g01232128

221-4267 THUMB GP–BACKHOE (CHG -01, -02)

S/N: HLS1-UP

PART OF 221-4260 THUMB AR, 271-3023 THUMB GP

AN ATTACHMENT

SMCS-6547 **i02298564**

NOTE	REF NO	GRAPHIC REF	PART NUMBER	QTY	PART NAME 1 2 3 4 5 6 (PRODUCT LEVEL)	SEE PAGE
	1	1	**221-4263**	1	LINK AS	
	2	1	**3B-8489**	2	FITTING-GREASE	
	3	1	**8T-4123**	8	WASHER-PLATED (22X35X3.5-MM THK)	
M	4	1	**6V-7742**	4	NUT-FULL (M20X2.5-THD)	
M	5	1	**8T-4187**	4	BOLT (M20X2.5X80-MM)	

M-METRIC PART

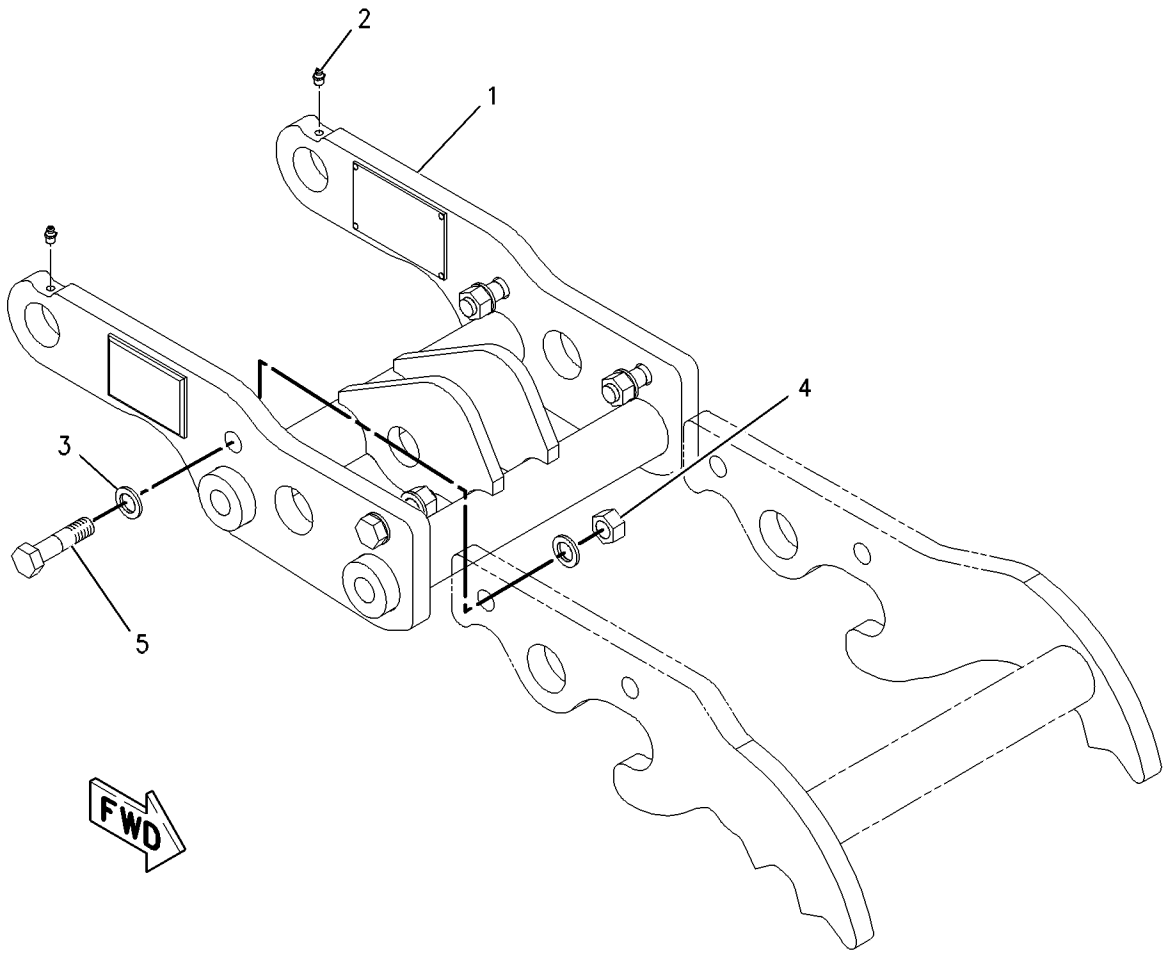

GRAPHIC #1 **<END>** g01003468

271-3023 THUMB GP—BACKHOE, COMMON (CHG -01)

S/N: HLS1-UP

PART OF 271-3024, 271-3025, 271-3026, 271-3027, 271-3028, 271-3029, 271-3030, 271-3031, 282-0865, 282-0866, 282-0887, 282-0888, 282-0889, 282-0890, 282-0891, 282-0892, 282-0893, 282-0894, 282-5398, 282-5399, 282-5400, 282-5401, 282-5402, 282-5403, 282-5404, 282-5405, 282-5406, 282-5407, 282-5408, 282-5409, 282-5410 THUMB AR

AN ATTACHMENT

SMCS-6547 **i02449272**

NOTE	REF NO	GRAPHIC REF	PART NUMBER	QTY	PART NAME 1 2 3 4 5 6 (PRODUCT LEVEL)	SEE PAGE
Y	1	1	*221-4267*	1	THUMB GP	552
Y	2	1	*263-8577*	1	MOUNTING GP-CYLINDER	353

Y-SEPARATE ILLUSTRATION

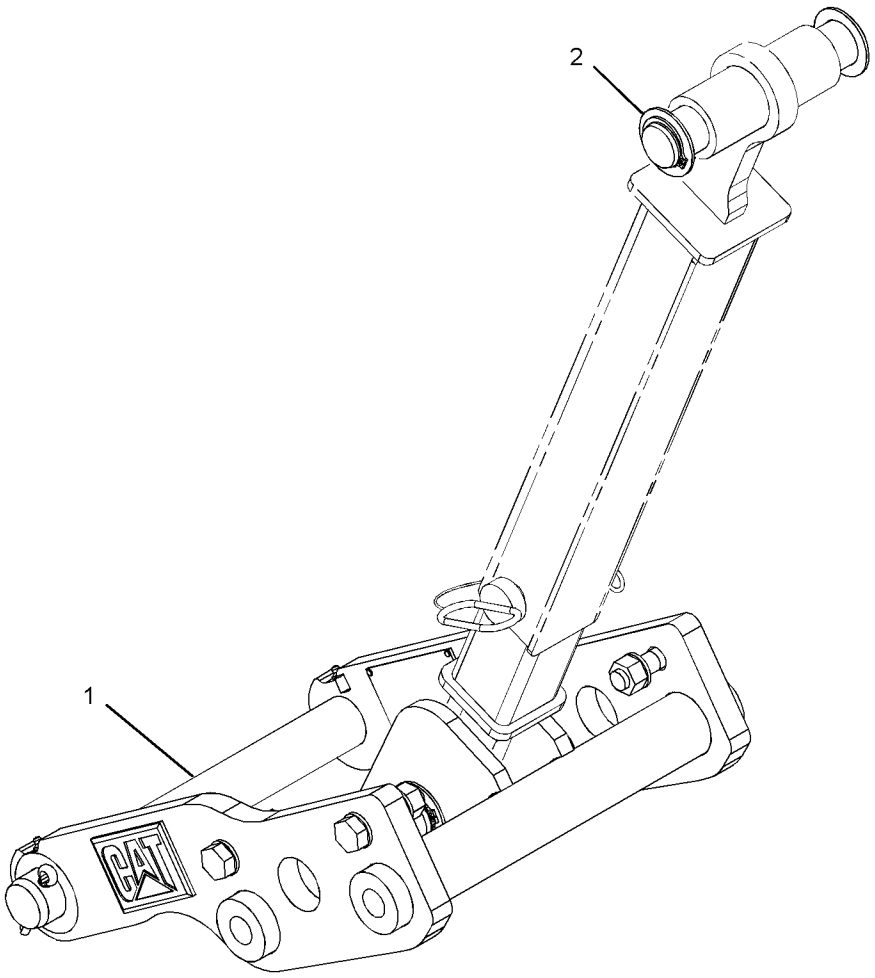

GRAPHIC #1 **<END>** g01234131

9R-5866 TOOTH GP-UNI (CHG -01 THRU -03)

S/N: HLS1-UP

PART OF 232-2682, 232-2684, 232-2687, 232-2689 BUCKET AR-MULTIPURPOSE, 251-1776, 251-1779, 251-1782, 251-1788, 251-1790 BUCKET GP-GENERAL PURPOSE

FOR USE WITH LOADER BUCKETS

AN ATTACHMENT

SMCS-6822 **i02238664**

NOTE	REF NO	GRAPHIC REF	PART NUMBER	QTY	PART NAME 1 2 3 4 5 6 (PRODUCT LEVEL)	SEE PAGE
	1	1	**135-8203**	8	TOOTH-UNI	
	2	1	**4F-3657**	16	BOLT-PLOW (5/8-11X2.75-IN)	
	3	1	**4K-0367**	16	NUT-FULL (5/8-11-THD)	

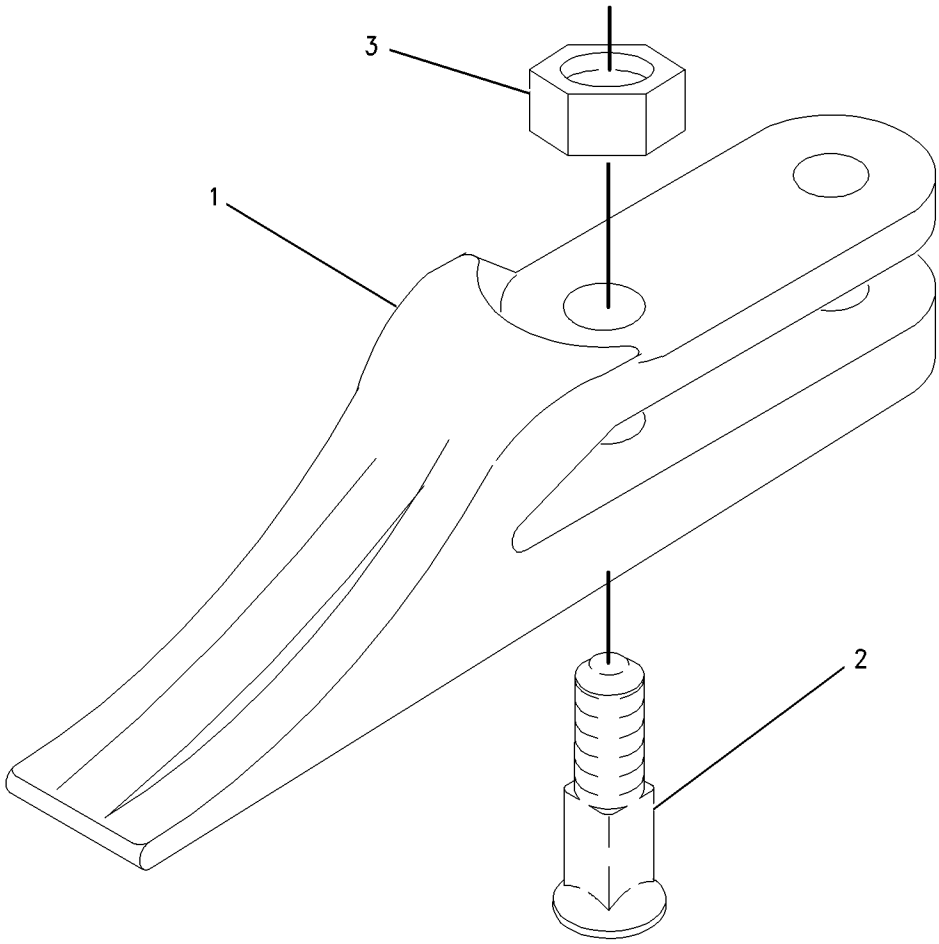

GRAPHIC #1 **<END>** g00915958

OPERATOR STATION

206-1801 AIR CONDITIONER & MOUNTING GP

(CHG -02 THRU -04)
S/N: HLS1-UP
PART OF 269-2127 CAB AR
AN ATTACHMENT

SMCS-7320 **i02397209**

NOTE	REF NO	GRAPHIC REF	PART NUMBER	QTY	PART NAME 1 2 3 4 5 6 (PRODUCT LEVEL)	SEE PAGE
E	1	1	**5P-3915**		HOSE (32-CM EACH)	
E	2	1	**6V-6813**		HOSE (29-CM)	
	3	1	**6L-4725**	2	CLAMP-HOSE	
	4	1	**8Y-5737**	1	CLAMP	
	5	1	**8Y-6967**	6	LOUVER AS	
	6	1	**9M-7959**	4	CLAMP-HOSE	
	7	1	**9N-2231**	1	GROMMET AS	
	8	1	**110-6109**	1	KNOB-CONTROL (A/C)	
	9	1	**130-4832**	2	SCREW (8-18X10-MM)	
	10	1	**206-1684**	1	COVER (CAB FILTER)	
	11	1	**164-1368**	4	FASTENER-PANEL	
	12	1	**164-8474**	2	LOUVER AS	
	13	1	**189-0881**	1	CONTROL AS	
		1	**129-1830**	1	LEVER	
	14	1	**193-3356**	1	CABLE	
	15	1	**194-5622**	1	VALVE AS-WATER	
		1	**6V-6717**	1	SCREW-WASHER HEAD (8-32X9.52-MM)	
		1	**124-0312**	2	SCREW-PAN HEAD (8-16X0.32-IN)	
	16	1	**206-1648**	1	LOUVER	
	17	1	**206-1653**	4	GASKET	
	18	1	**206-1682**	1	PANEL-CONTROL	
	19	1	**206-1803**	2	GASKET	
	20	1	**206-1804**	1	GASKET	
	21	1	**206-1805**	1	GASKET	
	22	1	**206-1806**	1	GASKET	
	23	1	**206-1807**	1	GASKET	
	24	1	**206-1808**	1	PLATE	
	25	1	**206-1809**	1	ROD AS	
		1	**5B-3254**	1	NUT-JAM (7/16-20-THD)	
	26	1	**206-1810**	1	DUCT-AIR	
	27	1	**206-1812**	1	DUCT-AIR	
	28	1	**206-1814**	1	DUCT-AIR	
	29	1	**206-1815**	1	DUCT-AIR	
	30	1	**206-1816**	1	DUCT-AIR	
	31	1	**206-1817**	2	DUCT-AIR	
	32	1	**206-1818**	1	DUCT AS-AIR	
	33	1	**206-1846**	1	INSULATION	
	34	1	**206-1847**	1	INSULATION	
Y	35	1	**210-8363**	1	AIR CONDITIONER GP	557
	36	1	**211-2661**	1	FILTER ELEMENT AS-AIR (CAB HEATER, AIR CONDITIONER)	
	37	1	**218-0666**	6	LOUVER AS	
	38	1	**231-2865**	2	TUBE	
	39	1	**255-0795**	1	FILM (TEMPERATURE CONTROL)	
	40	1	**5P-4116**	1	WASHER-HARD (8.8X20.5X2-MM THK)	
M	41	1	**111-4627**	1	SCREW-MACHINE (M6X1X30-MM)	
	42	1	**8Y-6352**	1	LOUVER AS	
	43	1	**7X-0579**	1	WASHER-HARD (8.8X25.5X2-MM THK)	
M	44	1	**8T-4200**	1	BOLT (M8X1.25X16-MM)	
	45	1	**9X-2038**	4	WASHER (7X19X2-MM THK)	
M	46	1	**9X-2045**	10	SCREW-TRUSS HEAD (M6X1X20-MM)	

E-ORDER BY THE CENTIMETER
M-METRIC PART
Y-SEPARATE ILLUSTRATION

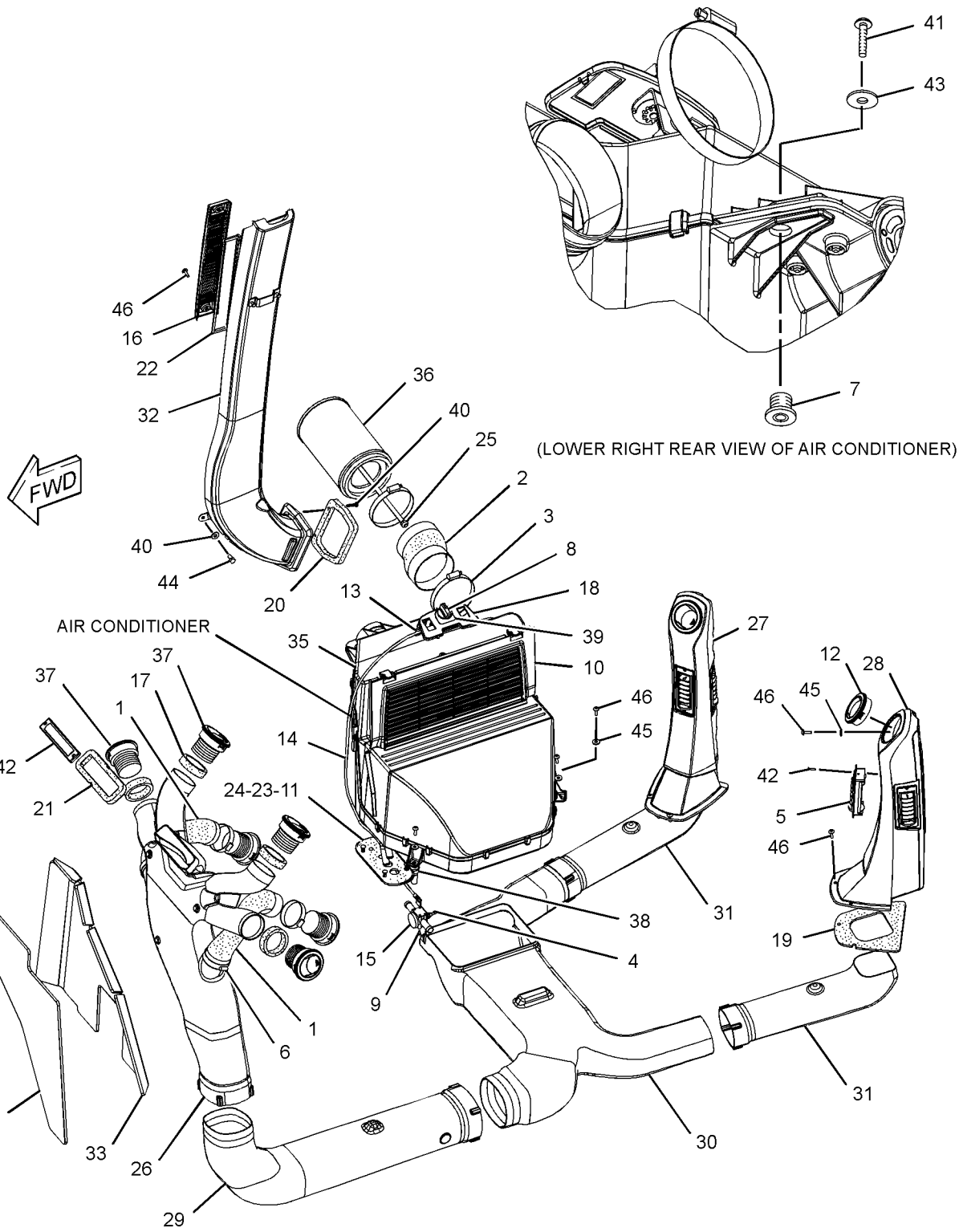

GRAPHIC #1 **<END>** g01198709

OPERATOR STATION

210-8363 AIR CONDITIONER GP (CHG -02 THRU -04)

S/N: HLS1-UP

PART OF 206-1801 AIR CONDITIONER & MOUNTING GP

AN ATTACHMENT

SMCS-7320 **i02445797**

NOTE	REF NO	GRAPHIC REF	PART NUMBER	QTY	PART NAME 1 2 3 4 5 6 (PRODUCT LEVEL)	SEE PAGE
	1	1	**8C-3756**	1	FILM-IDENTIFICATION (GROUP NUMBER)	
	2	1	**119-9631**	1	SWITCH-TEMPERATURE (AIR CONDITIONER)	
	3	1	**168-2313**	1	FAN AS	
		1	**7T-0093**	2	PIN-CONNECTOR	
		1	**177-9645**	1	KIT-RECEPTACLE (2-PIN)	
					(INCLUDES RECEPTACLE AS & WEDGE)	
	4	1	**185-4015**	11	CLIP	
	5	1	**204-9921**	1	RESISTOR AS	
	6	1	**210-7665**	1	HOUSING-TOP	
	7	1	**210-7666**	1	BAFFLE	
	8	1	**210-8401**	1	COIL AS-EVAPORATOR	
		1	**219-6288**	1	GASKET	
D		1	**5P-5688**		SEAL (1-M)	
	9	1	**211-2660**	1	FILTER-CAB AIR (RECIRCULATION)	
	10	1	**212-3416**	1	SCREW-PAN HEAD (8-16XO.5-IN)	
	11	1	**219-6281**	1	COVER AS	
		1	**219-6283**	1	LATCH	
		1	**6C-3680**	1	RIVET-POP	
	12	1	**219-6284**	2	GASKET	
	13	1	**219-6285**	1	GASKET	
	14	1	**219-6286**	1	GASKET	
	15	1	**219-6287**	2	GASKET	
	16	1	**219-6292**	1	HOUSING AS	
		1	**7H-3937**	4	LOCKWASHER	
M		1	**129-3178**	4	LOCKNUT (M6X1-THD)	
	17	1	**219-6294**	2	SEAL (DRAIN TUBE)	
	18	1	**220-3762**	1	HARNESS AS-HEATER & AIR COND	
		1	**128-7716**	1	CONNECTOR	
		1	**177-9652**	1	SEAL-RECEPTACLE	
		1	**177-9653**	1	KIT-RECEPTACLE (4-PIN)	
					(INCLUDES RECEPTACLE AS & WEDGE)	
		1	**192-2112**	5	SOCKET-TERMINAL	
		1	**155-2270**	1	KIT-CONNECTING PLUG (2-PIN)	
					(INCLUDES PLUG AS, WEDGE & INTERFACE SEAL)	
	19	1	**253-9510**	1	GUARD	
	20	1	**2S-3745**	4	SCREW-TAPPING (10-16XO.5-IN)	
M	21	1	**6V-7357**	4	BOLT (M6X1X25-MM)	
	22	1	**8T-4205**	5	WASHER-HARD (7.2X14.5X2-MM THK)	
D	23	1	**5P-5655**		SEAL (0.5-M)	
D	24	1	**5P-5637**		SEAL (0.8-M)	
E	25	1	**8C-7524**		SEAL (35-CM)	

D-ORDER BY THE METER
E-ORDER BY THE CENTIMETER
M-METRIC PART

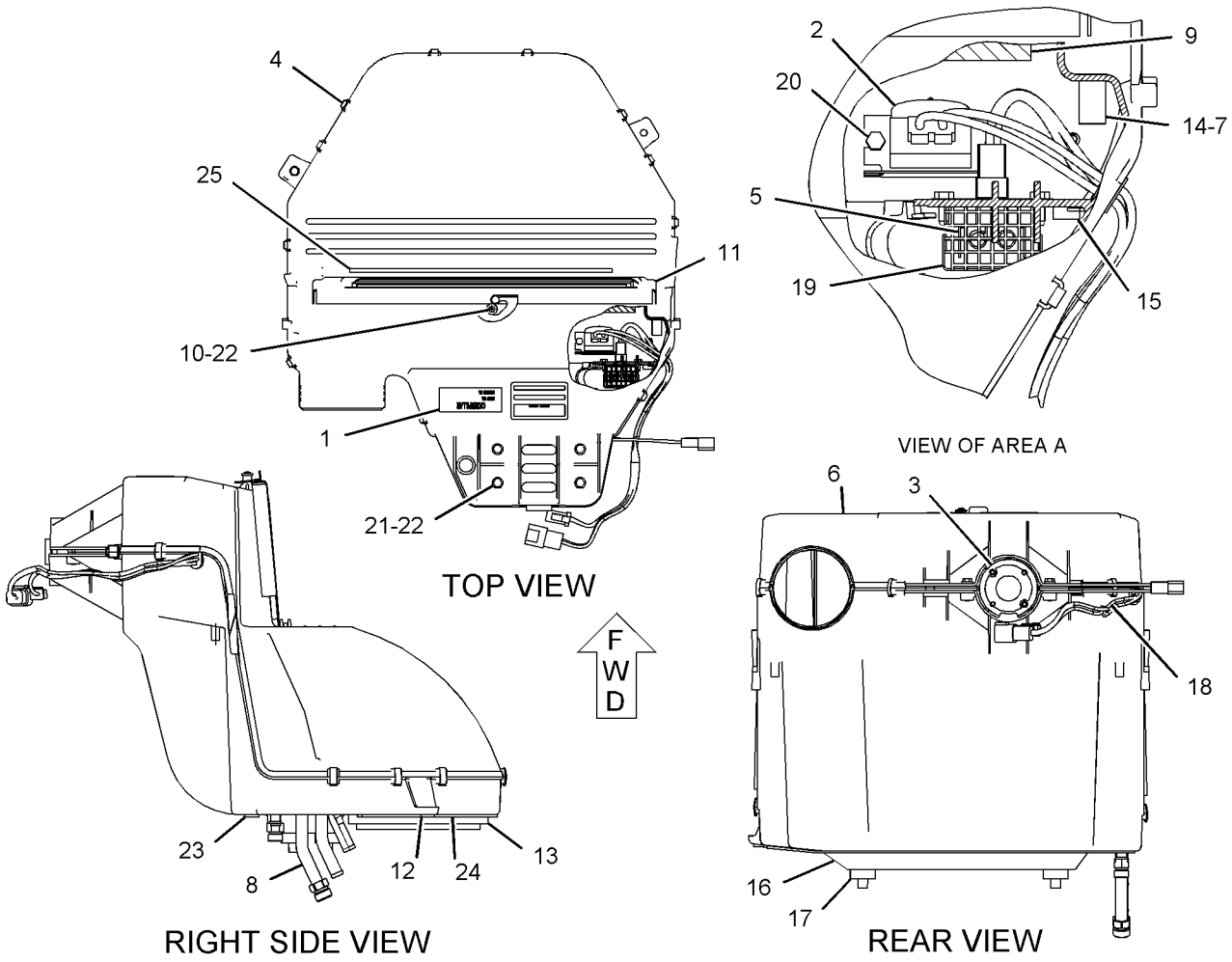

GRAPHIC #1 **<END>** g01095421

229-8743 BRACKET GP-MOUNTING—MONITOR (CHG -00)

S/N: HLS1-UP

PART OF 211-4253 INSTALLATION GP-MONITOR

AN ATTACHMENT

SMCS-7301 **i02121330**

NOTE	REF NO	GRAPHIC REF	PART NUMBER	QTY	PART NAME 1 2 3 4 5 6 (PRODUCT LEVEL)	SEE PAGE
	1	1	**9R-8165**	1	BEARING	
	2	1	**140-4107**	1	WASHER	
	3	1	**248-2284**	1	KNOB-CONTROL	
	4	1	**251-0075**	1	BRACKET	
	5	1	**251-0076**	1	BRACKET AS	
		1	**8G-0304**	1	PIN	
		1	**101-9080**	1	BOSS	
	6	1	**254-6826**	1	SPACER (10.5X14X8.8-MM THK)	
	7	1	**9K-6540**	1	WASHER-SPRING (0.63X1.25X0.04-IN THK)	
	8	1	**9X-2038**	2	WASHER (7X19X2-MM THK)	
M	9	1	**9X-2045**	2	SCREW-TRUSS HEAD (M6X1X20-MM)	

M-METRIC PART

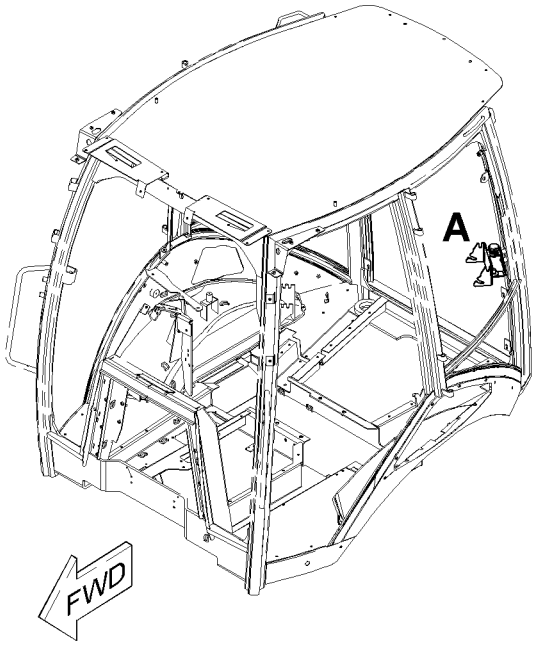

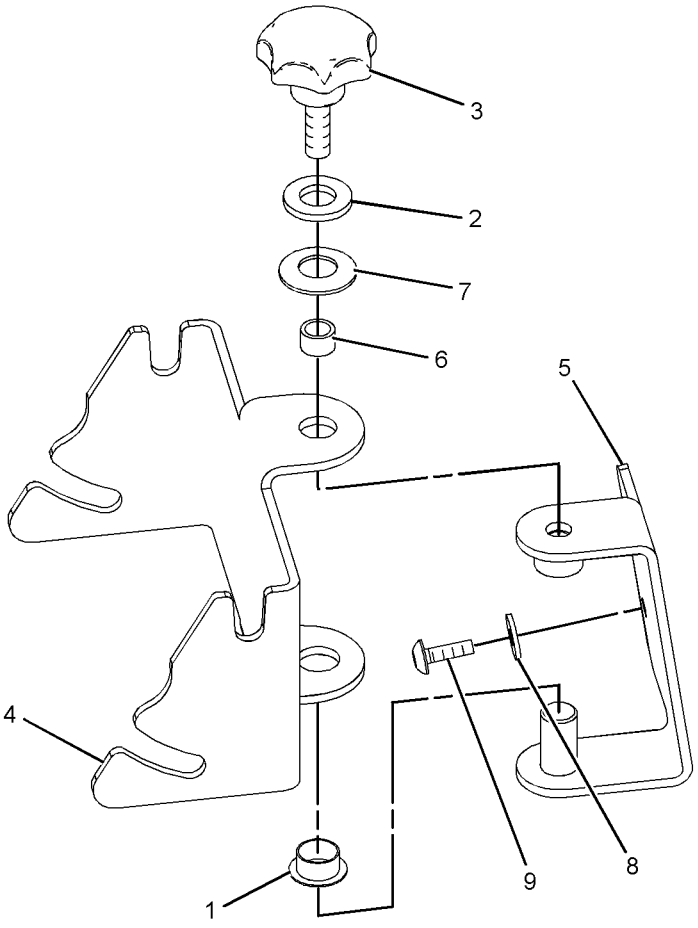

VIEW OF AREA A (EXPLODED)

GRAPHIC #1 **<END>** g01082035

OPERATOR STATION

269-2125 CAB AR (CHG -00 THRU -04)

S/N: HLS1-UP

AN ATTACHMENT

SMCS-7301 **i02471505**

NOTE	PART NUMBER	QTY	PART NAME 1 2 3 4 5 6 (PRODUCT LEVEL)	SEE PAGE
Y	**206-1889**	1	CAB GP (DOUBLE DOOR)	563
Y	*206-1700*	1	CONSOLE GP-OPERATOR (RH)	575
Y	*206-1702*	1	CONSOLE GP-OPERATOR (LH)	577
Y	*206-1703*	1	CONSOLE GP-OPERATOR (FRONT)	579
Y	*206-1633*	1	CONTROL GP-STEERING	221
Y	*254-6101*	1	FAN GP-SUCTION	45
Y	*213-1891*	1	FENDER GP-REAR	234
Y	*206-1618*	1	FLOOR MAT GP	586
Y	*223-3966*	1	FLOORPLATE GP	237
Y	*206-1800*	1	HEATER GP-CAB	587
Y	*255-2279*	1	INDICATOR GP-AIR FILTER CHANGE	57
Y	*211-4277*	1	LIGHTING GP-FLOOD & SIGNAL (NACD, OPTIONAL)	94
Y	*209-4703*	1	LINER GP-CAB	595
Y	*211-0072*	1	LINES GP-HEATER	597
Y	*205-9578*	1	MIRROR GP-REAR VIEW (INSIDE)	600
Y	*269-3247*	1	MOUNTING GP-BACKHOE CONTROL (PILOT)	348
Y	*205-9560*	1	MOUNTING GP-CAB	603
Y	*205-9569*	1	ROOF GP-CAB	606
Y	*280-7365*	1	SEAT GP-SUSPENSION (CLOTH)	618
Y	**223-4713**	1	VALVE GP-PILOT (STABILIZER)	386
Y	*206-1727*	1	WASHER GP-WINDOW	628
Y	*206-1725*	1	WIPER GP-WINDOW	642
Y	*211-4241*	1	WIRING GP-CONSOLE (SIDE)	112
Y	*211-4245*	1	WIRING GP-CONSOLE (FRONT)	115
Y	*211-4269*	1	WIRING GP-HEATER	123
Y	*211-4240*	1	WIRING GP-PLATFORM	127
	285-1203	1	LITERATURE GP	
	272-5421	1	FILM-CONTROL (BACKHOE, JOYSTICK)	
			(ON LH CONSOLE AROUND PATTERN SWITCHER)	
	250-7912	1	FILM-IDENTIFICATION (CATERPILLAR, FRONT)	
			(ON FRONT WINDSHIELD)	
	251-5628	1	FILM-IDENTIFICATION (STABILIZER CONTROL)	
			(ON RH CONSOLE NEXT TO STABILIZER CONTROLS)	
	285-1207	1	MAT-PROTECTIVE	

Y-SEPARATE ILLUSTRATION

<END>

OPERATOR STATION

269-2126 CAB AR (CHG -00 THRU -02)

S/N: HLS1-UP

AN ATTACHMENT

SMCS-7301 **i02447124**

NOTE	PART NUMBER	QTY	PART NAME 1 2 3 4 5 6 (PRODUCT LEVEL)	SEE PAGE
Y	**206-1889**	1	CAB GP (DOUBLE DOOR)	563
Y	*200-2676*	1	COMPARTMENT GP-LITERATURE (STORAGE BAG)	571
Y	*206-1700*	1	CONSOLE GP-OPERATOR (RH)	575
Y	*206-1702*	1	CONSOLE GP-OPERATOR (LH)	577
Y	*206-1703*	1	CONSOLE GP-OPERATOR (FRONT)	579
Y	*206-1633*	1	CONTROL GP-STEERING	221
Y	*254-6101*	1	FAN GP-SUCTION	45
Y	*213-1891*	1	FENDER GP-REAR	234
Y	*206-1618*	1	FLOOR MAT GP	586
Y	*223-3966*	1	FLOORPLATE GP	237
Y	*206-1800*	1	HEATER GP-CAB	587
Y	*255-2279*	1	INDICATOR GP-AIR FILTER CHANGE	57
Y	*211-4277*	1	LIGHTING GP-FLOOD & SIGNAL (NACD, OPTIONAL)	94
Y	*209-4703*	1	LINER GP-CAB	595
Y	*211-0072*	1	LINES GP-HEATER	597
Y	*205-9578*	1	MIRROR GP-REAR VIEW (INSIDE)	600
Y	*269-3247*	1	MOUNTING GP-BACKHOE CONTROL (PILOT)	348
Y	*205-9560*	1	MOUNTING GP-CAB	603
Y	*205-9569*	1	ROOF GP-CAB	606
Y	*180-5772*	1	SEAT GP-SUSPENSION (DELUXE, CLOTH)	615
Y	**223-4715**	1	VALVE GP-PILOT (STABILIZER)	387
Y	*206-1857*	1	VISOR GP-CAB	627
Y	*206-1727*	1	WASHER GP-WINDOW	628
Y	*206-1725*	1	WIPER GP-WINDOW	642
Y	*211-4241*	1	WIRING GP-CONSOLE (SIDE)	112
Y	*211-4245*	1	WIRING GP-CONSOLE (FRONT)	115
Y	*263-9483*	1	WIRING GP-ENGINE	121
Y	*211-4269*	1	WIRING GP-HEATER	123
Y	*211-4240*	1	WIRING GP-PLATFORM	127
	211-4271	1	WIRING GP-POWER RECEPTACLE	
	178-7539	1	RECEPTACLE AS (POWER SUPPLY)	
	251-3306	1	FILM (STABILIZER, AUTO UP)	
			(RH CONSOLE NEXT TO STABILIZER CONTROLS)	
	272-5420	1	FILM-CONTROL (LOADER, JOYSTICK)	
			(RH CONSOLE)	
	272-5421	1	FILM-CONTROL (BACKHOE, JOYSTICK)	
			(LH CONSOLE AROUND PATTERN SWITCHER)	
	250-7912	1	FILM-IDENTIFICATION (CATERPILLAR, FRONT)	
			(FRONT WINDSHIELD)	
	206-1716	1	FLOOR MAT	

Y-SEPARATE ILLUSTRATION

<END>

OPERATOR STATION

269-2127 CAB AR (CHG -00 THRU -02)

S/N: HLS1-UP

AN ATTACHMENT

SMCS-7301 **i02447125**

NOTE	PART NUMBER	QTY	PART NAME 1 2 3 4 5 6 (PRODUCT LEVEL)	SEE PAGE
Y	*206-1801*	1	AIR CONDITIONER & MOUNTING GP	555
Y	**206-1889**	1	CAB GP (DOUBLE DOOR)	563
Y	*200-2676*	1	COMPARTMENT GP-LITERATURE (STORAGE BAG)	571
Y	*248-5025*	1	COMPRESSOR & MTG GP-REFRIG	572
Y	*211-0705*	1	CONDENSER & MTG GP-REFRIGERANT	574
Y	*206-1700*	1	CONSOLE GP-OPERATOR (RH)	575
Y	*206-1702*	1	CONSOLE GP-OPERATOR (LH)	577
Y	*206-1703*	1	CONSOLE GP-OPERATOR (FRONT)	579
Y	*206-1633*	1	CONTROL GP-STEERING	221
Y	*213-9314*	1	FAN GP-SUCTION (WITH AIR CONDITIONER)	44
Y	*213-1891*	1	FENDER GP-REAR	234
Y	*206-1618*	1	FLOOR MAT GP	586
Y	*223-3966*	1	FLOORPLATE GP	237
Y	*255-2279*	1	INDICATOR GP-AIR FILTER CHANGE	57
Y	*211-4277*	1	LIGHTING GP-FLOOD & SIGNAL (NACD, OPTIONAL)	94
Y	*209-4703*	1	LINER GP-CAB	595
Y	*211-0071*	1	LINES GP-HEATER & AIR COND	598
Y	*205-9578*	1	MIRROR GP-REAR VIEW (INSIDE)	600
Y	*269-3247*	1	MOUNTING GP-BACKHOE CONTROL (PILOT)	348
Y	*205-9560*	1	MOUNTING GP-CAB	603
Y	*205-9569*	1	ROOF GP-CAB	606
Y	*180-5772*	1	SEAT GP-SUSPENSION (DELUXE, CLOTH)	615
Y	**223-4715**	1	VALVE GP-PILOT (STABILIZER)	387
Y	*206-1857*	1	VISOR GP-CAB	627
Y	*206-1727*	1	WASHER GP-WINDOW	628
Y	*206-1725*	1	WIPER GP-WINDOW	642
Y	*211-4268*	1	WIRING GP-AIR CONDITIONER	109
Y	*211-4241*	1	WIRING GP-CONSOLE (SIDE)	112
Y	*211-4245*	1	WIRING GP-CONSOLE (FRONT)	115
Y	*263-9483*	1	WIRING GP-ENGINE	121
Y	*211-4240*	1	WIRING GP-PLATFORM	127
	211-4271	1	WIRING GP-POWER RECEPTACLE	
	178-7539	1	RECEPTACLE AS (POWER SUPPLY)	
	251-3306	1	FILM (STABILIZER, AUTO UP)	
			(RH CONSOLE NEXT TO STABILIZER CONTROLS)	
	272-5420	1	FILM-CONTROL (LOADER, JOYSTICK)	
			(RH CONSOLE)	
	272-5421	1	FILM-CONTROL (BACKHOE, JOYSTICK)	
			(LH CONSLOLE AROUND PATTERN SWITCHER)	
	250-7912	1	FILM-IDENTIFICATION (CATERPILLAR, FRONT)	
			(FRONT WINDSHIELD)	
	206-1716	1	FLOOR MAT	

Y-SEPARATE ILLUSTRATION

<END>

OPERATOR STATION

206-1889 CAB GP (CHG -02 THRU -06)

S/N: HLS1-UP

PART OF 269-2125, 269-2126, 269-2127 CAB AR

AN ATTACHMENT

SMCS-7301 **i02445798**

NOTE	REF NO	GRAPHIC REF	PART NUMBER	QTY	PART NAME 1 2 3 4 5 6 (PRODUCT LEVEL)	SEE PAGE
	1	2	**123-0380**	2	SHIELD-STRIKER	
B	2	2	**177-4877**	4	SHIM (1-MM THK)	
	3	2	**187-0413**	2	STRIKER	
	4	2	**204-4220**	1	CANOPY AS	
		2	**204-4175**	1	ROPS AS	
	5	2	**205-9605**	1	GLASS (FRONT, LH)	
	6	2	**205-9606**	1	GLASS (FRONT, RH)	
	7	2	**205-9607**	1	GLASS (FRONT)	
Y	8	2	**205-9619**	1	WINDOW GP-CAB (UPPER, LH)	630
	9	2	**205-9622**	1	GLASS (LOWER, LH)	
Y	10	1	**205-9628**	1	WINDOW GP-CAB (UPPER, RH)	632
	11	1	**205-9631**	1	GLASS (LOWER, RH)	
	12	1	**206-1590**	4	PIN	
Y	13	2	**206-1592**	1	DOOR GP-CAB (LH)	582
Y	14	1	**206-1593**	1	DOOR GP-CAB (RH)	584
	15	2	**206-1647**	1	PLATE	
	16	2	**210-6475**	2	PLATE	
Y	17	1	**229-0300**	1	WINDOW GP-CAB (REAR)	634
	18	1	**129-5256**	12	BUSHING	
	19	1	**129-5257**	8	BUSHING	
M	20	2	**131-3987**	8	SCREW (M4X0.7X12-MM)	
	21	2	**159-4945**	2	KEEPER-REAR (LH)	
	22	2	**159-4946**	2	KEEPER	
	23	2	**5P-4116**	11	WASHER-HARD (8.8X20.5X2-MM THK)	
	24	1	**8S-7803**	8	RING-RETAINING	
M	25	2	**8T-4189**	9	BOLT (M8X1.25X20-MM)	
M	26	2	**8T-4200**	2	BOLT (M8X1.25X16-MM)	
	27	2	**9R-5616**	3	PLUG	

B-USE AS REQUIRED
M-METRIC PART
Y-SEPARATE ILLUSTRATION

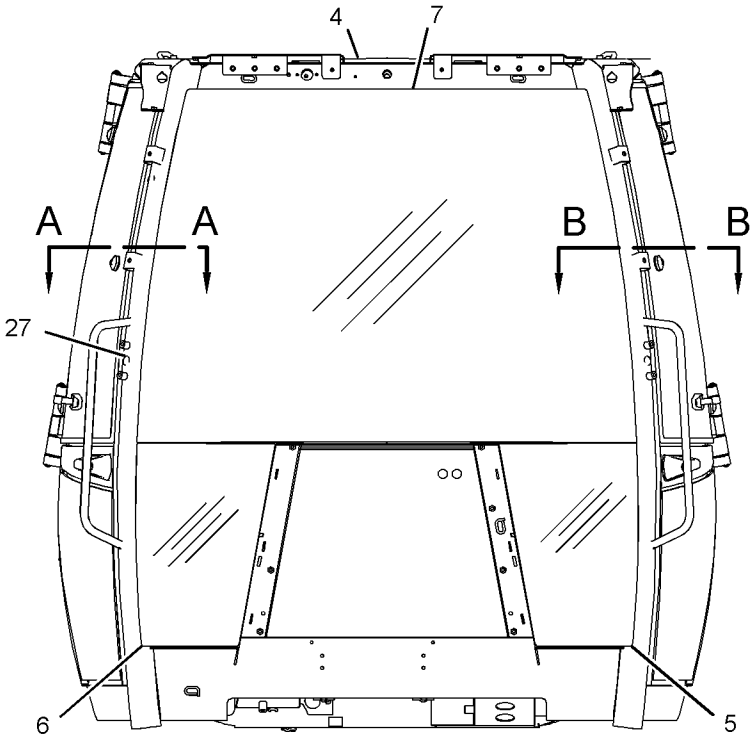

FRONT VIEW

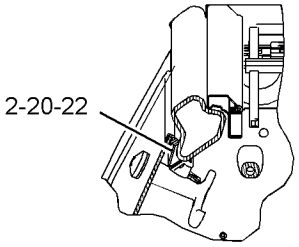

SECTION A-A

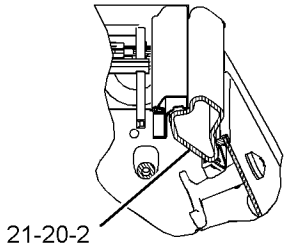

SECTION B-B

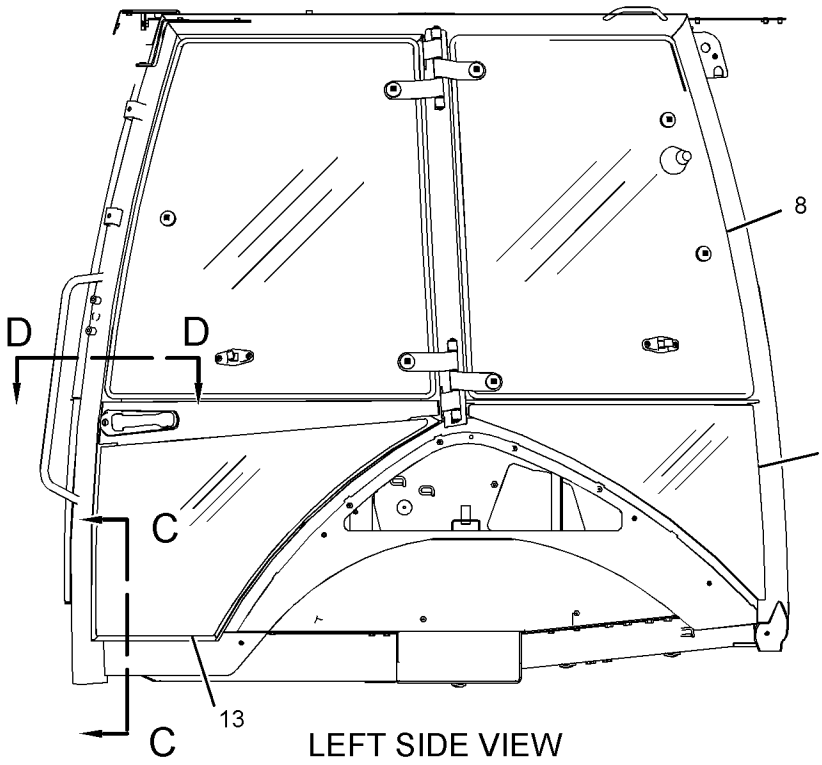

LEFT SIDE VIEW

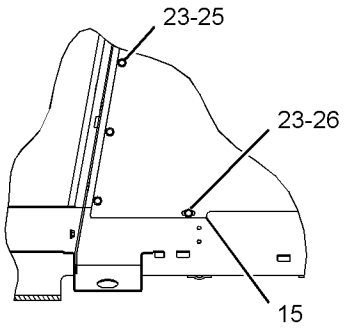

SECTION C-C

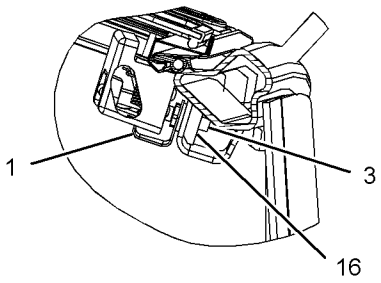

SECTION D-D

GRAPHIC #1

g01230765

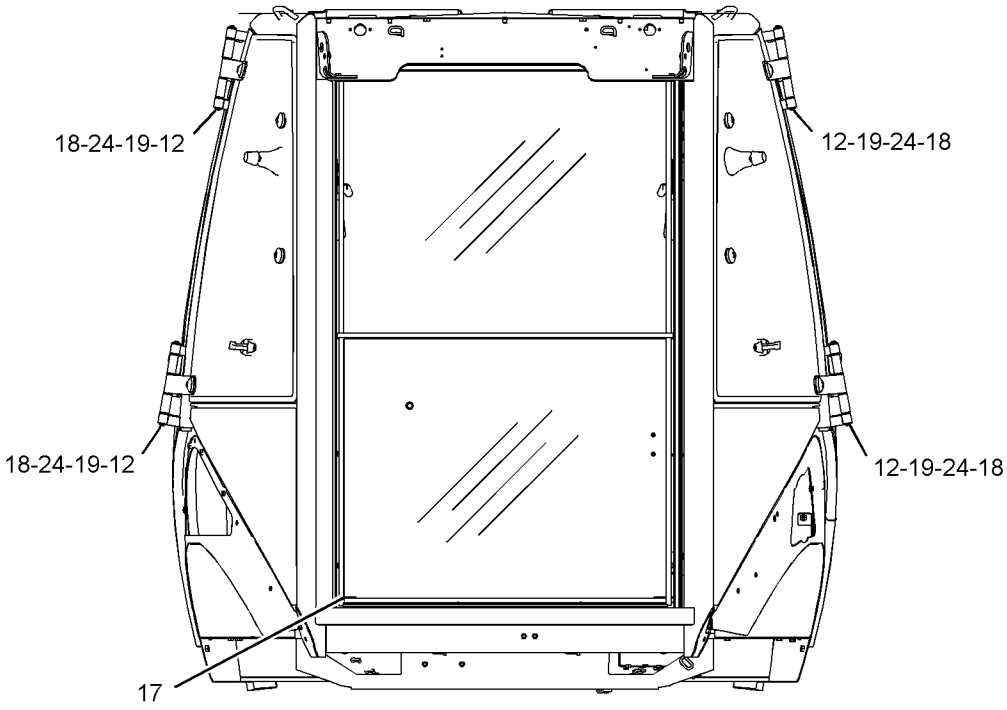

REAR VIEW

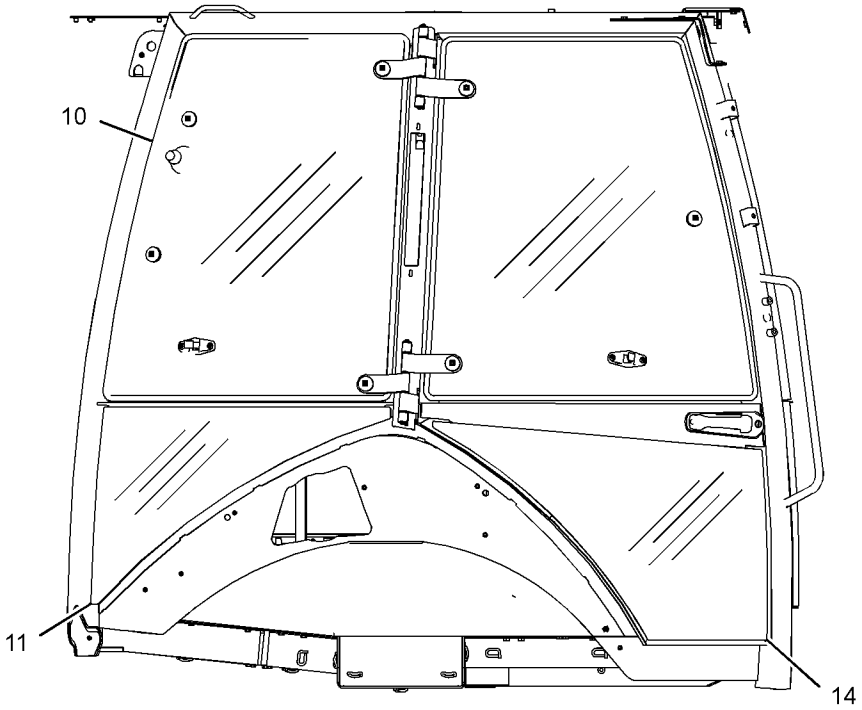

RIGHT SIDE VIEW

GRAPHIC #2

<END>

g01230764

OPERATOR STATION

269-2123 CANOPY AR (CHG -00 THRU -02)

S/N: HLS1-UP

AN ATTACHMENT

SMCS-7302 **i02446269**

NOTE	PART NUMBER	QTY	PART NAME 1 2 3 4 5 6 (PRODUCT LEVEL)	SEE PAGE
Y	*206-1884*	1	CANOPY GP-OPEN ROPS (WITHOUT FRONT WINDOW)	568
Y	*206-1700*	1	CONSOLE GP-OPERATOR (RH)	575
Y	*206-1702*	1	CONSOLE GP-OPERATOR (LH)	577
Y	*206-1703*	1	CONSOLE GP-OPERATOR (FRONT)	579
Y	*206-1633*	1	CONTROL GP-STEERING	221
Y	*254-6101*	1	FAN GP-SUCTION	45
Y	*213-1891*	1	FENDER GP-REAR	234
Y	*206-1618*	1	FLOOR MAT GP	586
Y	*223-3965*	1	FLOORPLATE GP	236
Y	*255-2279*	1	INDICATOR GP-AIR FILTER CHANGE	57
Y	*211-4277*	1	LIGHTING GP-FLOOD & SIGNAL (NACD, OPTIONAL)	94
Y	*259-6276*	1	MIRROR GP-REAR VIEW (INSIDE)	601
Y	*269-3247*	1	MOUNTING GP-BACKHOE CONTROL (PILOT)	348
Y	*205-9560*	1	MOUNTING GP-CAB	603
Y	*206-1701*	1	PROTECTION GP-VANDALISM (ROTATING GUARD)	649
Y	*205-9569*	1	ROOF GP-CAB	606
Y	*280-7364*	1	SEAT GP-SUSPENSION (VINYL)	618
Y	*206-1704*	1	TRIM GP-CAB	625
Y	**223-4713**	1	VALVE GP-PILOT (STABILIZER)	386
Y	*211-4241*	1	WIRING GP-CONSOLE (SIDE)	112
Y	*211-4245*	1	WIRING GP-CONSOLE (FRONT)	115
Y	*211-4240*	1	WIRING GP-PLATFORM	127
	211-4271	1	WIRING GP-POWER RECEPTACLE	
	178-7539		RECEPTACLE AS (POWER SUPPLY)	
	272-5421	1	FILM-CONTROL (BACKHOE, JOYSTICK)	
			(LH CONSOLE AROUND PATTERN SWITCHER)	
	256-5299	1	FILM-IDENTIFICATION (CATERPILLAR, REAR)	
			(ON CAB ROOF CENTERED HORIZONTALLY & VERTICALLY)	
	251-5628	1	FILM-IDENTIFICATION (STABILIZER CONTROL)	
			(RH CONSOLE NEXT TO STABILIZER CONTROLS)	
	227-1057	1	PLUG-HOLE	

Y-SEPARATE ILLUSTRATION

<END>

OPERATOR STATION

269-2124 CANOPY AR (CHG -00 THRU -02)

S/N: HLS1-UP

AN ATTACHMENT

SMCS-7302 **i02446517**

NOTE	PART NUMBER	QTY	PART NAME 1 2 3 4 5 6 (PRODUCT LEVEL)	SEE PAGE
Y	*206-1885*	1	CANOPY GP-OPEN ROPS	570
Y	*206-1700*	1	CONSOLE GP-OPERATOR (RH)	575
Y	*206-1702*	1	CONSOLE GP-OPERATOR (LH)	577
Y	*206-1703*	1	CONSOLE GP-OPERATOR (FRONT)	579
Y	*206-1633*	1	CONTROL GP-STEERING	221
Y	*220-3785*	1	COVER GP-WIPER MOTOR	581
Y	*254-6101*	1	FAN GP-SUCTION	45
Y	*213-1891*	1	FENDER GP-REAR	234
Y	*206-1618*	1	FLOOR MAT GP	586
Y	*223-3965*	1	FLOORPLATE GP	236
Y	*255-2279*	1	INDICATOR GP-AIR FILTER CHANGE	57
Y	*211-4277*	1	LIGHTING GP-FLOOD & SIGNAL (NACD, OPTIONAL)	94
Y	*259-6276*	1	MIRROR GP-REAR VIEW (INSIDE)	601
Y	*269-3247*	1	MOUNTING GP-BACKHOE CONTROL (PILOT)	348
Y	*205-9560*	1	MOUNTING GP-CAB	603
Y	*206-1701*	1	PROTECTION GP-VANDALISM (ROTATING GUARD)	649
Y	*205-9569*	1	ROOF GP-CAB	606
Y	*280-7364*	1	SEAT GP-SUSPENSION (VINYL)	618
Y	*206-1704*	1	TRIM GP-CAB	625
Y	**223-4713**	1	VALVE GP-PILOT (STABILIZER)	386
Y	*206-1728*	1	WIPER & WASHER GP-WINDOW	640
Y	*211-4241*	1	WIRING GP-CONSOLE (SIDE)	112
Y	*211-4245*	1	WIRING GP-CONSOLE (FRONT)	115
Y	*211-4240*	1	WIRING GP-PLATFORM	127
	211-4271	1	WIRING GP-POWER RECEPTACLE	
	178-7539	1	RECEPTACLE AS (POWER SUPPLY)	
	272-5421	1	FILM-CONTROL (BACKHOE, JOYSTICK)	
			(ON LH CONSOLE AROUND PATTERN SWITCHER)	
	250-7912	1	FILM-IDENTIFICATION (CATERPILLAR, FRONT)	
			(ON FRONT WINDSHEILD)	
	251-5628	1	FILM-IDENTIFICATION (STABILIZER CONTROL)	
			(RH CONSOLE NEXT TO STABILIZER CONTROLS)	
	227-1057	1	PLUG-HOLE	

Y-SEPARATE ILLUSTRATION

<END>

OPERATOR STATION

206-1884 CANOPY GP-OPEN ROPS—WITHOUT FRONT WINDOW

(CHG -03 THRU -07)

S/N: HLS1-UP

PART OF 269-2123 CANOPY AR

AN ATTACHMENT

SMCS-7302, 7323 **i02446271**

NOTE	REF NO	GRAPHIC REF	PART NUMBER	QTY	PART NAME 1 2 3 4 5 6 (PRODUCT LEVEL)	SEE PAGE
E	1	1	**9X-2092**		STRIP-EDGE (60-CM)	
	2	1	**204-4230**	1	CANOPY AS-OPEN ROPS	
	3	1	**205-9605**	1	GLASS (FRONT, LH)	
	4	1	**205-9606**	1	GLASS (FRONT, RH)	
	5	1	**206-1647**	1	PLATE	
	6	1	**5P-4116**	10	WASHER-HARD (8.8X20.5X2-MM THK)	
M	7	1	**8T-4189**	8	BOLT (M8X1.25X20-MM)	
M	8	1	**8T-4200**	2	BOLT (M8X1.25X16-MM)	
	9	1	**9R-5616**	3	PLUG	

E-ORDER BY THE CENTIMETER
M-METRIC PART

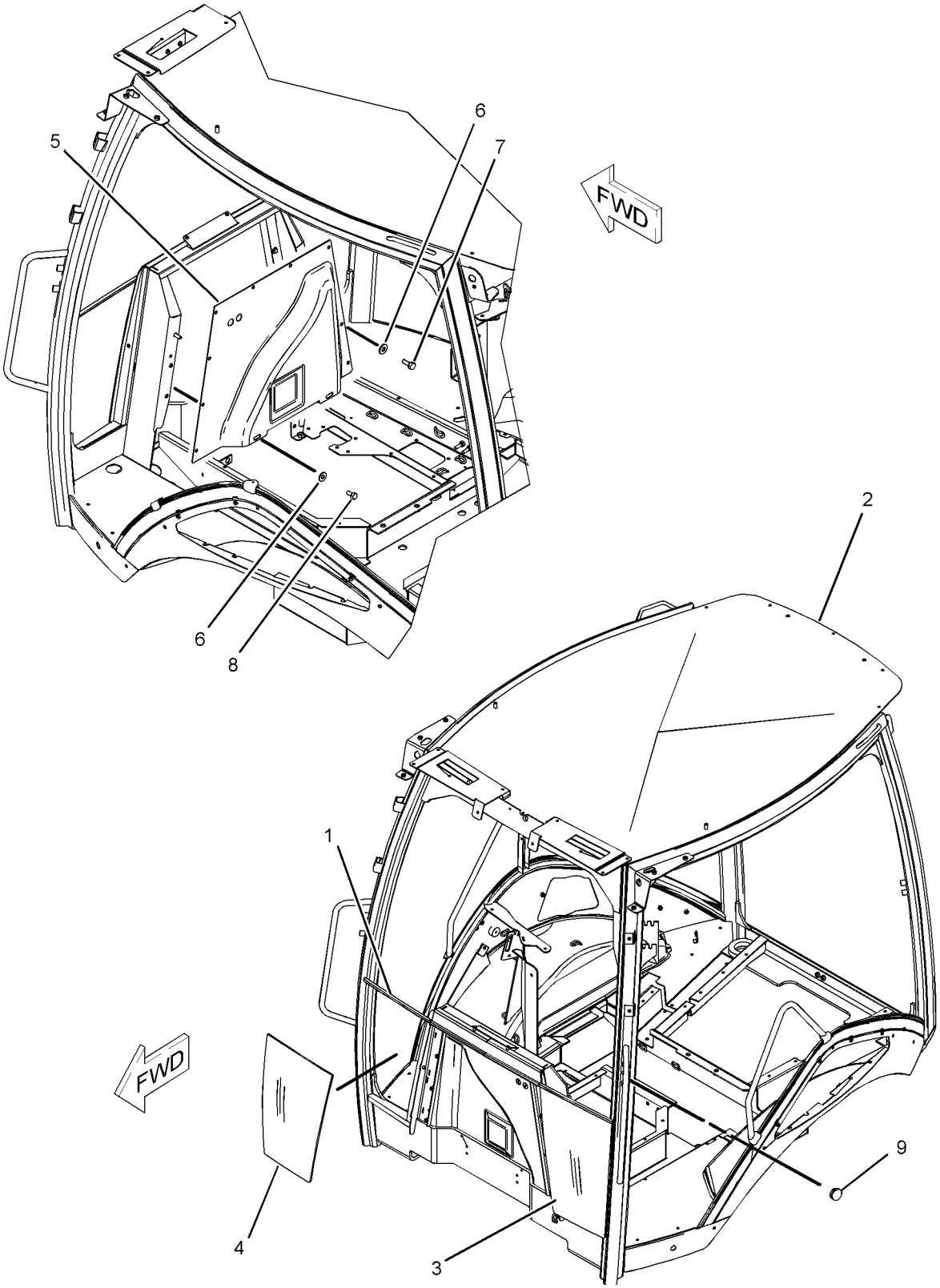

GRAPHIC #1

<END>

g01080439

OPERATOR STATION

206-1885 CANOPY GP-OPEN ROPS—WITH FRONT WINDOW

(CHG -03 THRU -07)
S/N: HLS1-UP
PART OF 269-2124 CANOPY AR
AN ATTACHMENT

SMCS-7302, 7323 **i02446598**

NOTE	REF NO	GRAPHIC REF	PART NUMBER	QTY	PART NAME 1 2 3 4 5 6 (PRODUCT LEVEL)	SEE PAGE
	1	1	**204-4220**	1	CANOPY AS	
	2	1	**205-9605**	1	GLASS (FRONT, LH)	
	3	1	**205-9606**	1	GLASS (FRONT, RH)	
	4	1	**205-9607**	1	GLASS (FRONT)	
	5	1	**206-1647**	1	PLATE	
	6	1	**5P-4116**	10	WASHER-HARD (8.8X20.5X2-MM THK)	
M	7	1	**8T-4189**	8	BOLT (M8X1.25X20-MM)	
M	8	1	**8T-4200**	2	BOLT (M8X1.25X16-MM)	
	9	1	**9R-5616**	3	PLUG	

M-METRIC PART

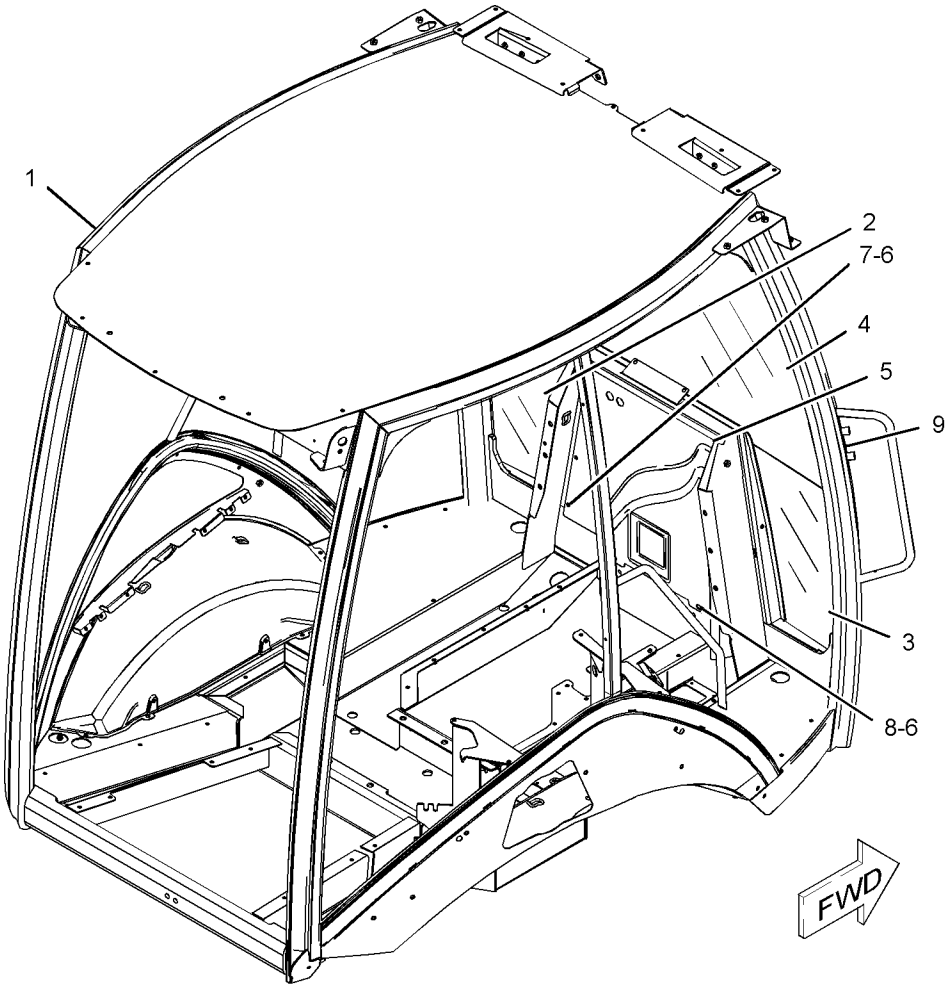

GRAPHIC #1 **<END>** g01084068

OPERATOR STATION

200-2676 COMPARTMENT GP-LITERATURE (CHG -03 THRU -05)

S/N: HLS1-UP

PART OF 269-2126, 269-2127 CAB AR

AN ATTACHMENT

SMCS-7268 **i01988666**

NOTE	REF NO	GRAPHIC REF	PART NUMBER	QTY	PART NAME 1 2 3 4 5 6 (PRODUCT LEVEL)	SEE PAGE
	1	1	**5P-7957**	1	LANYARD	
	2	1	**5P-7958**	1	SLEEVE-CABLE SPLICE	
	3	1	**5P-8500**	2	KEY	
B	4	1	**7F-3400**	2	BAG-POLYETHYLENE	

B-USE AS REQUIRED

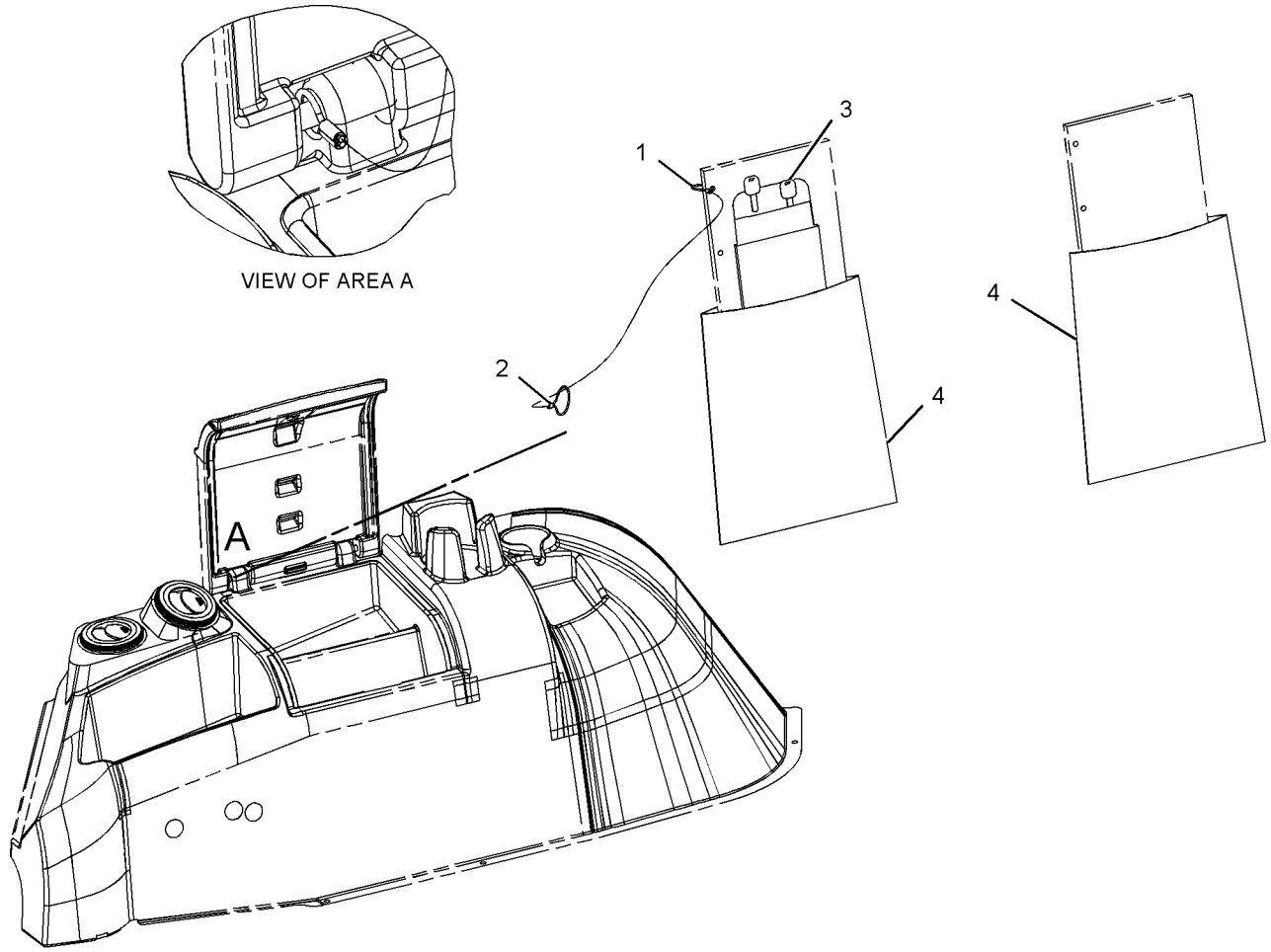

GRAPHIC #1 **<END>** g01035823

OPERATOR STATION

248-5025 COMPRESSOR & MTG GP-REFRIG (CHG -01 THRU -04)

S/N: HLS1-UP
PART OF 269-2127 CAB AR
AN ATTACHMENT

SMCS-1802 **i02356708**

NOTE	REF NO	GRAPHIC REF	PART NUMBER	QTY	PART NAME 1 2 3 4 5 6 (PRODUCT LEVEL)	SEE PAGE
	1	1	**132-4354**	1	SPACER (10.5X19X26.5-MM THK)	
Y	2	1	**214-4302**	1	COMPRESSOR GP-REFRIGERANT	573
	3	1	**248-5026**	1	BRACKET AS	
	4	1	**249-2707**	1	BRACKET	
	5	1	**249-9312**	1	PLATE	
	6	1	**5P-4116**	4	WASHER-HARD (8.8X20.5X2-MM THK)	
M	7	1	**6V-7744**	1	LOCKNUT (M10X1.15-THD)	
	8	1	**7C-9465**	1	SPACER (11.1X14.3X20-MM THK)	
M	9	1	**108-2989**	2	BOLT (M8X1.25X130-MM)	
M	10	1	**7X-2541**	2	BOLT (M8X1.25X140-MM)	
	11	1	**8T-4121**	5	WASHER-HARD (11X21X2.5-MM THK)	
M	12	1	**8T-4195**	2	BOLT (M10X1.5X30-MM)	
	13	1	**8T-4224**	2	WASHER-HARD (8.8X16X2-MM THK)	
M	14	1	**8T-5005**	1	BOLT (M10X1.5X70-MM)	
M	15	1	**8T-5436**	1	BOLT (M10X1.5X130-MM)	
M	16	1	**8T-7547**	2	BOLT (M8X1.25X30-MM)	

M-METRIC PART
Y-SEPARATE ILLUSTRATION

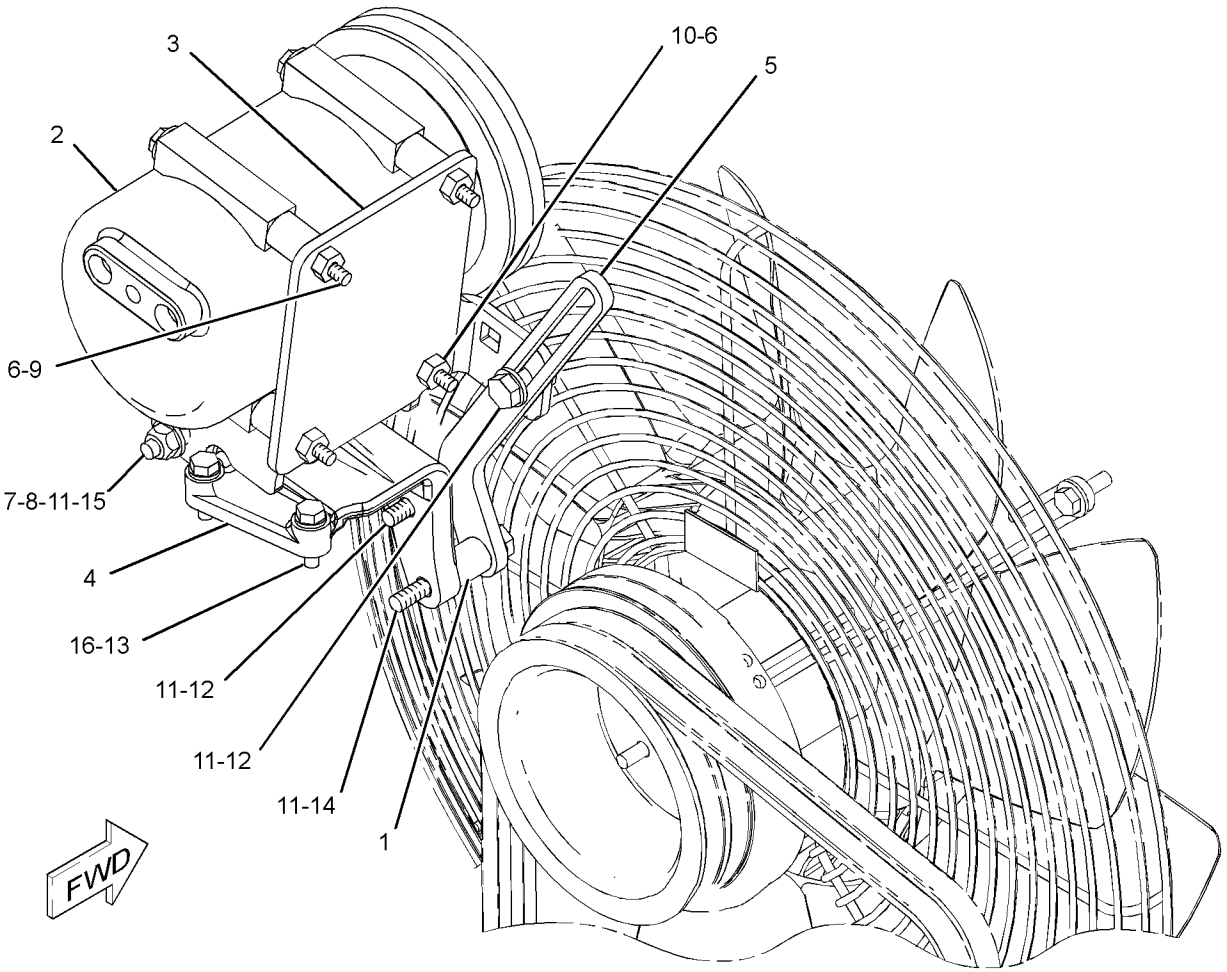

GRAPHIC #1 **<END>** g01206886

OPERATOR STATION

214-4302 COMPRESSOR GP-REFRIGERANT (CHG -02 THRU -04)

S/N: HLS1-UP

PART OF 248-5025 COMPRESSOR & MTG GP-REFRIG

AN ATTACHMENT

SMCS-1802 **i02334000**

NOTE	REF NO	GRAPHIC REF	PART NUMBER	QTY	PART NAME 1 2 3 4 5 6 (PRODUCT LEVEL)	SEE PAGE
	1	1	**102-8802**	1	KIT-RECEPTACLE (2-PIN)	
					(INCLUDES RECEPTACLE AS & WEDGE)	
	2	1	**229-4896**	2	SEAL-O-RING	
	3	1	**229-7356**	1	VALVE AS-RELIEF	

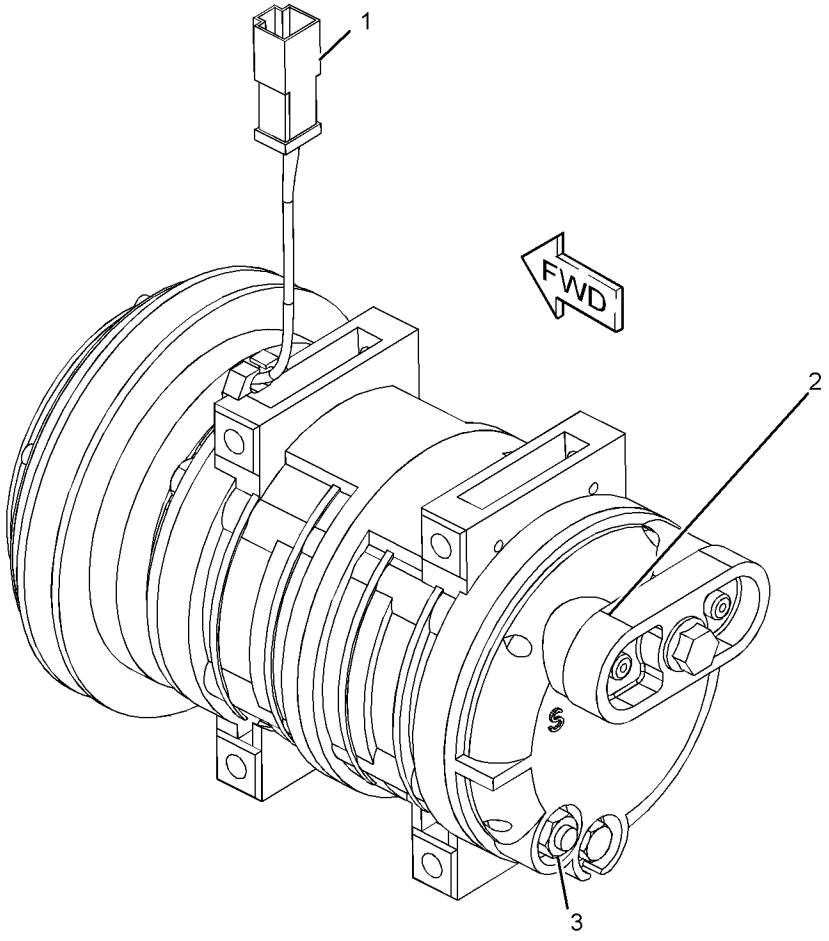

GRAPHIC #1 **<END>** g01239853

OPERATOR STATION

211-0705 CONDENSER & MTG GP-REFRIGERANT (CHG -01, -02)

S/N: HLS1-UP
PART OF 269-2127 CAB AR
AN ATTACHMENT

SMCS-1805 **i02445824**

NOTE	REF NO	GRAPHIC REF	PART NUMBER	QTY	PART NAME 1 2 3 4 5 6 (PRODUCT LEVEL)	SEE PAGE
	1	1	**211-1381**	1	CORE AS-CONDENSER	
	2	1	**7X-0579**	4	WASHER-HARD (8.8X25.5X2-MM THK)	
M	3	1	**8T-4189**	4	BOLT (M8X1.25X20-MM)	

M-METRIC PART

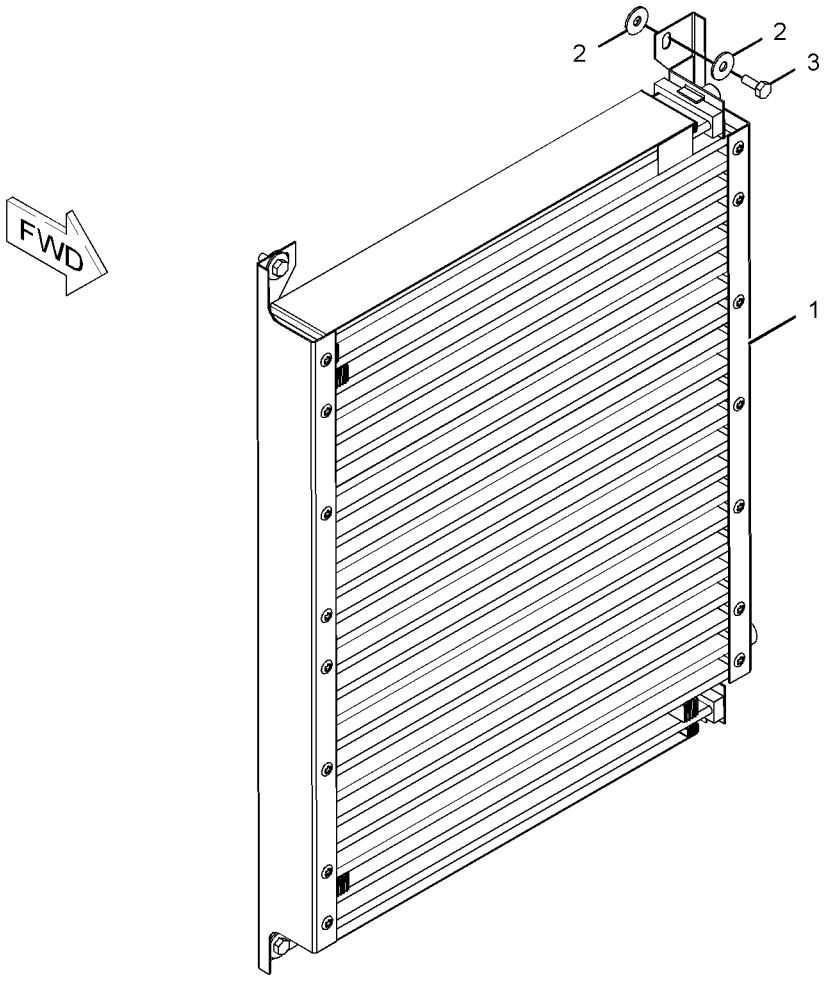

GRAPHIC #1 **<END>** g01080362

OPERATOR STATION

206-1700 CONSOLE GP-OPERATOR—RH (CHG -01 THRU -03)

S/N: HLS1-UP

PART OF 269-2125, 269-2126, 269-2127 CAB AR, 269-2123, 269-2124 CANOPY AR AN ATTACHMENT

SMCS-5258, 7451 **i02422391**

NOTE	REF NO	GRAPHIC REF	PART NUMBER	QTY	PART NAME 1 2 3 4 5 6 (PRODUCT LEVEL)	SEE PAGE
B	1	1	**2S-3163**	1	PLUG	
	2	1	**164-1178**	1	CLIP	
	3	1	**167-8251**	1	FASTENER	
	4	1	**206-1678**	1	HOUSING AS (UPPER)	
	5	1	**206-1679**	1	PANEL AS (UPPER GAUGE)	
	6	1	**206-1681**	1	PANEL AS (LOWER GAUGE)	
	7	1	**261-9645**	1	COVER AS (CONTROLS, FRONT, UPPER)	
		1	**206-1667**	1	CLIP	
	8	1	**261-9644**	1	COVER AS (CONTROLS, FRONT, LOWER)	
		1	**206-1667**	1	CLIP	
	9	1	**269-9115**	1	COVER AS (FENDER, FRONT)	
		1	**172-8591**	1	NUT-SPRING	
	10	1	**206-1690**	1	COVER (FENDER, REAR)	
	11	1	**206-1692**	1	COVER AS (CONTROLS, REAR)	
		1	**206-1667**	3	CLIP	
E	12	1	**261-9634**		SEAL-BULK (151-CM)	
B	13	1	**248-2709**	2	PLUG	
	14	1	**9X-2038**	5	WASHER (7X19X2-MM THK)	
	15	1	**206-1687**	1	COVER-FUSE	
M	16	1	**9X-2045**	16	SCREW-TRUSS HEAD (M6X1X20-MM)	

B-USE AS REQUIRED
E-ORDER BY THE CENTIMETER
M-METRIC PART

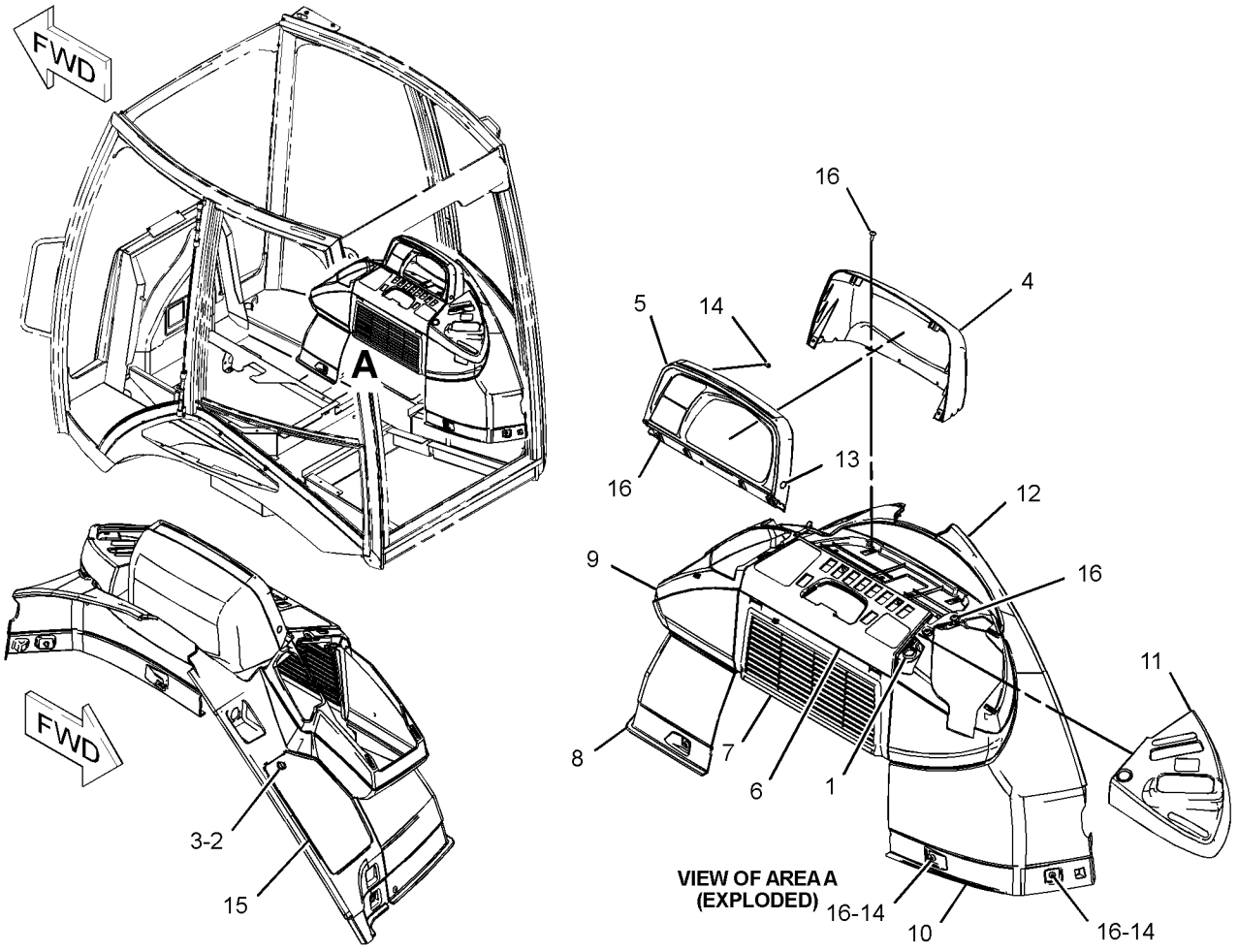

GRAPHIC #1

<END>

g01189297

OPERATOR STATION

206-1702 CONSOLE GP-OPERATOR—LH (CHG -02 THRU -04)

S/N: HLS1-UP

PART OF 269-2125, 269-2126, 269-2127 CAB AR, 269-2123, 269-2124 CANOPY AR AN ATTACHMENT

SMCS-5258, 7451 **i02445776**

NOTE	REF NO	GRAPHIC REF	PART NUMBER	QTY	PART NAME 1 2 3 4 5 6 (PRODUCT LEVEL)	SEE PAGE
E	1	1	**3E-6600**		SEAL (33-CM)	
E	2	1	**220-0738**		SEAL (170-CM)	
E	3	1	**261-9634**		SEAL-BULK (71-CM)	
E	3A	1	**261-9634**		SEAL-BULK (78-CM)	
	4	1	**206-1696**	1	CONSOLE AS	
	5	1	**206-1698**	1	DOOR-STORAGE	
	6	1	**206-1699**	1	CUP HOLDER (FRONT)	
	7	1	**206-1706**	1	BOX AS-STORAGE	
J	8	1	**206-1708**	1	LOCK AS	
	9	1	**206-1712**	1	HINGE-DOOR	
	10	1	**210-6491**	1	CUP HOLDER (REAR)	
	11	1	**249-2482**	1	PLATE	
	12	1	**261-9636**	1	BRACKET-SUPPORT	
E	13	1	**261-9637**	2	BRACKET AS	
	14	1	**261-9639**	3	SCREW-PAN HEAD (NO 12X0.5-IN)	
M	15	1	**5C-2890**	3	NUT (M6X1-THD)	
	16	1	**8T-4205**	3	WASHER-HARD (7.2X14.5X2-MM THK)	
	17	1	**9X-2038**	6	WASHER (7X19X2-MM THK)	
M	18	1	**9X-2044**	19	SCREW-TRUSS HEAD (M6X1X16-MM)	

E-ORDER BY THE CENTIMETER
J-REQUIRES 5P8500 KEY
M-METRIC PART

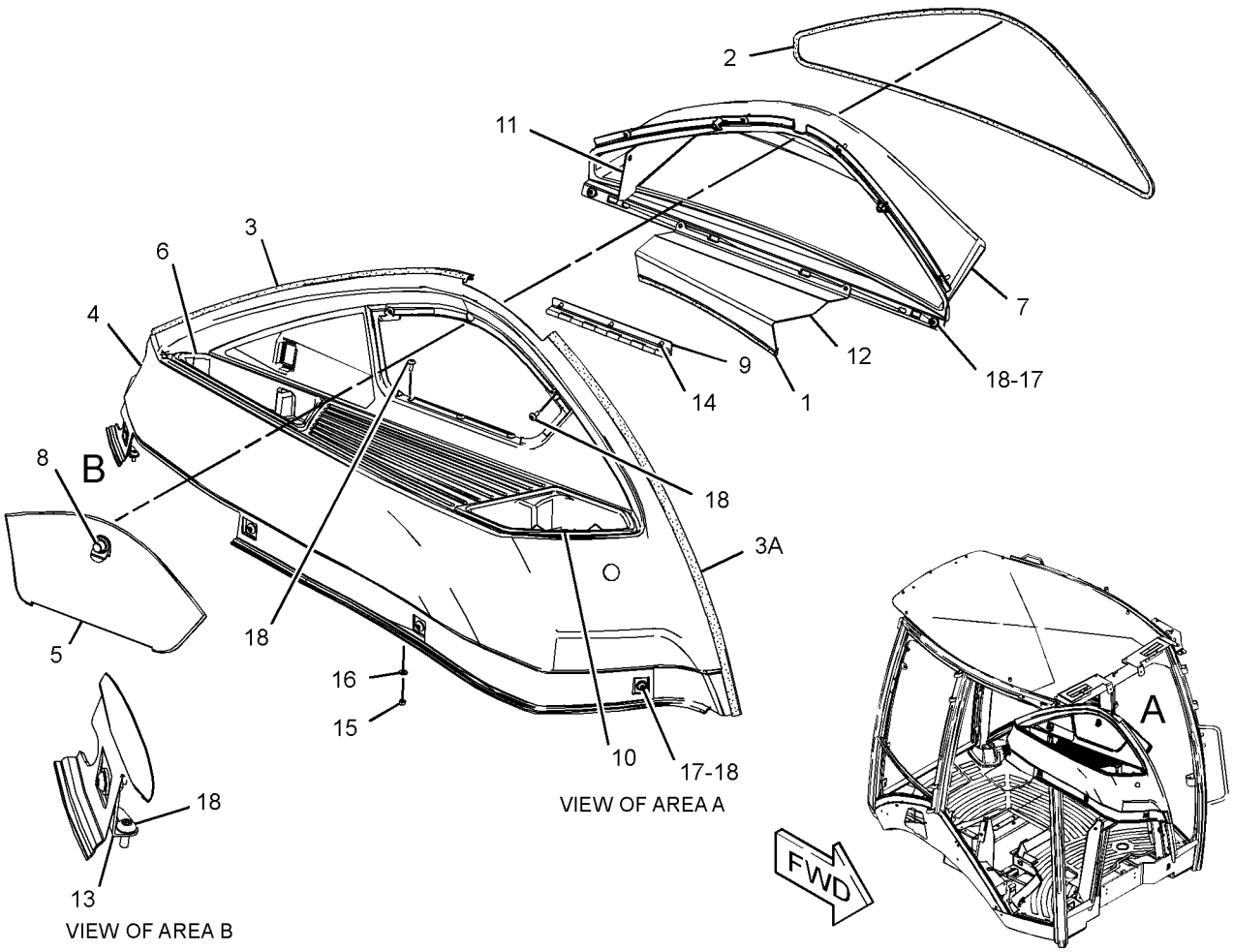

GRAPHIC #1 **<END>** g01199313

OPERATOR STATION

206-1703 CONSOLE GP-OPERATOR–FRONT (CHG -01 THRU -04)

S/N: HLS1-UP

PART OF 269-2125, 269-2126, 269-2127 CAB AR, 269-2123, 269-2124 CANOPY AR AN ATTACHMENT

SMCS-5258, 7451 **i02380807**

NOTE	REF NO	GRAPHIC REF	PART NUMBER	QTY	PART NAME 1 2 3 4 5 6 (PRODUCT LEVEL)	SEE PAGE
B	1	1	**184-5293**	1	PLUG	
	2	1	**206-1658**	1	COVER-STEERING COLUMN (UPPER)	
		1	**206-1667**	2	CLIP	
	3	1	**206-1659**	1	DOOR-STORAGE	
	4	1	**206-1660**	1	COVER AS-STEERING COLUMN (FRONT)	
		1	**206-1667**	4	CLIP	
	5	1	**206-1661**	1	COVER AS-STEERING COLUMN (REAR)	
		1	**206-1667**	4	CLIP	
	6	1	**206-1662**	1	CONSOLE AS-FRONT (UPPER)	
		1	**206-1667**	8	CLIP	
	7	1	**206-1663**	1	CONSOLE-FRONT (MIDDLE)	
J	8	1	**206-1708**	1	LOCK AS	
	9	1	**261-9639**	10	SCREW-PAN HEAD (NO 12X0.5-IN)	
E	10	1	**220-0738**		SEAL (23-CM)	
	11	1	**224-2147**	1	CONSOLE AS-FRONT (LOWER, LH)	
	12	1	**224-2149**	1	CONSOLE AS-FRONT (LOWER, RH)	
	13	1	**233-5260**	2	LANYARD	
M	14	1	**120-9027**	2	SCREW-PAN HEAD (M3X0.5X16-MM)	
	15	1	**206-1854**	1	HINGE	
M	16	1	**8T-2658**	2	LOCKNUT (M3X0.5-THD)	
M	17	1	**9X-2044**	2	SCREW-TRUSS HEAD (M6X1X16-MM)	
M	18	1	**9X-2045**	16	SCREW-TRUSS HEAD (M6X1X20-MM)	
	19	1	**258-2354**	1	BRACKET-LATCH	
	20	1	**9X-2038**	3	WASHER (7X19X2-MM THK)	
	21	1	**4I-3038**	2	WASHER (3.3X8X0.5-MM THK)	

B-USE AS REQUIRED
E-ORDER BY THE CENTIMETER
J-REQUIRES 5P-8500 KEY
M-METRIC PART

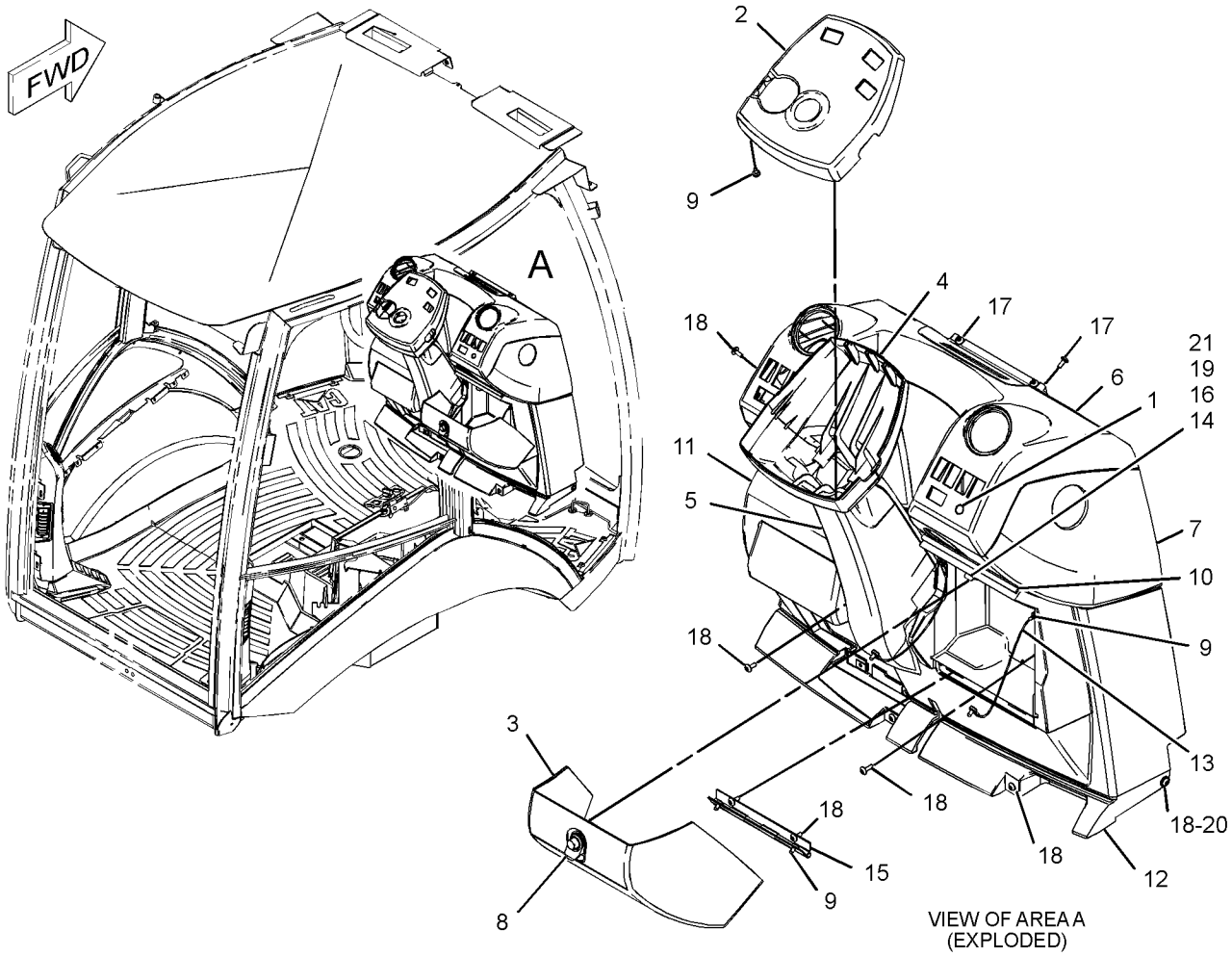

GRAPHIC #1 **<END>** g01189640

OPERATOR STATION

220-3785 COVER GP-WIPER MOTOR (CHG -01 THRU -03)

S/N: HLS1-UP

PART OF 269-2124 CANOPY AR

AN ATTACHMENT

SMCS-7305 **i02395153**

NOTE	REF NO	GRAPHIC REF	PART NUMBER	QTY	PART NAME 1 2 3 4 5 6 (PRODUCT LEVEL)	SEE PAGE
	1	1	**226-5635**	1	COVER	
M	2	1	**9X-2043**	3	SCREW-TRUSS HEAD (M6X1X14-MM)	
	3	1	**282-7835**	1	PLATE	
M	4	1	**8T-4181**	2	BOLT (M6X1X20-MM)	
	5	1	**282-7833**	1	GROMMET	
	6	1	**9X-8256**	2	WASHER (6.6X12X2-MM THK)	

M-METRIC PART

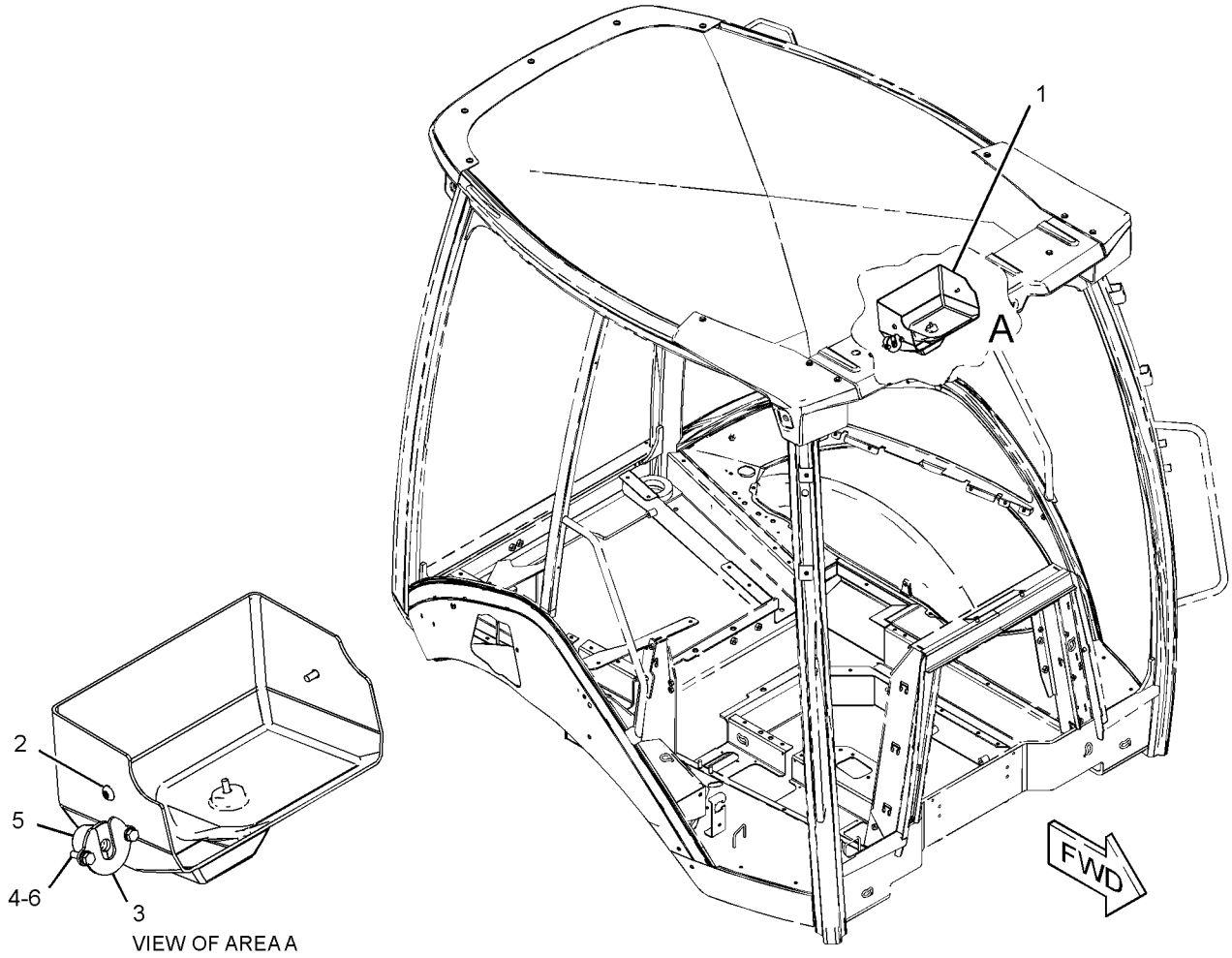

GRAPHIC #1 **<END>** g01231306

OPERATOR STATION

206-1592 DOOR GP-CAB—LH (CHG -00, -01)

S/N: HLS1-UP
PART OF 206-1889 CAB GP
AN ATTACHMENT

SMCS-7308 **i02136594**

NOTE	REF NO	GRAPHIC REF	PART NUMBER	QTY	PART NAME 1 2 3 4 5 6 (PRODUCT LEVEL)	SEE PAGE
	1	1	**132-2249**	2	SPACER (7.4X12.7X24-MM THK)	
J	2	1	**159-4269**	1	SPRING AS-GAS	
B	3	1	**177-4877**	1	SHIM (1-MM THK)	
Y	4	1	**205-9585**	1	WINDOW GP-DOOR (LH)	636
	5	1	**205-9588**	1	GLASS (LH)	
	6	1	**206-1594**	1	DOOR AS (LH)	
M		1	**8T-3612**	1	NUT-WELD (M8X1.25-THD)	
	7	1	**223-2028**	1	SEAL AS (LH)	
	8	1	**248-2714**	2	NUT-ACORN	
L	9	1	**252-1862**	1	HANDLE AS (PULL)	
	10	1	**252-1863**	1	GASKET	
	11	1	**252-1864**	1	LATCH AS (LH)	
	12	1	**253-1817**	1	SPACER (6.5X14.5X12-MM THK)	
	13	1	**253-1857**	1	PLATE	
	14	1	**253-1858**	1	COVER-LATCH	
	15	1	**254-1126**	1	PLATE	
	16	1	**254-1127**	1	PLATE	
M	17	1	**131-3987**	2	SCREW (M4X0.7X12-MM)	
	18	1	**159-4946**	1	KEEPER	
	19	1	**197-5107**	2	SCREW-TRUSS HEAD	
	20	1	**205-7048**	2	INSERT-THREADED (M6X1-6H-THD)	
M	21	1	**5C-9553**	3	BOLT (M6X1X16-MM)	
M	22	1	**5Y-0660**	1	NUT (M6-THD)	
M	23	1	**8T-3844**	1	BOLT (M6X1X70-MM)	
	24	1	**9X-2038**	4	WASHER (7X19X2-MM THK)	
M	25	1	**9X-2045**	4	SCREW-TRUSS HEAD (M6X1X20-MM)	
					AVAILABLE REPAIR KIT(S):	
J			**161-9044**	1	KIT-FITTING	
					(INCLUDES NUT & FITTING AS)	

B-USE AS REQUIRED
J-KIT MARKED J AVAILABLE FOR PART MARKED J
L-REQUIRES 5P8500 KEY
M-METRIC PART
Y-SEPARATE ILLUSTRATION

206-1592 DOOR GP-CAB *(contd.)* **i02136594**

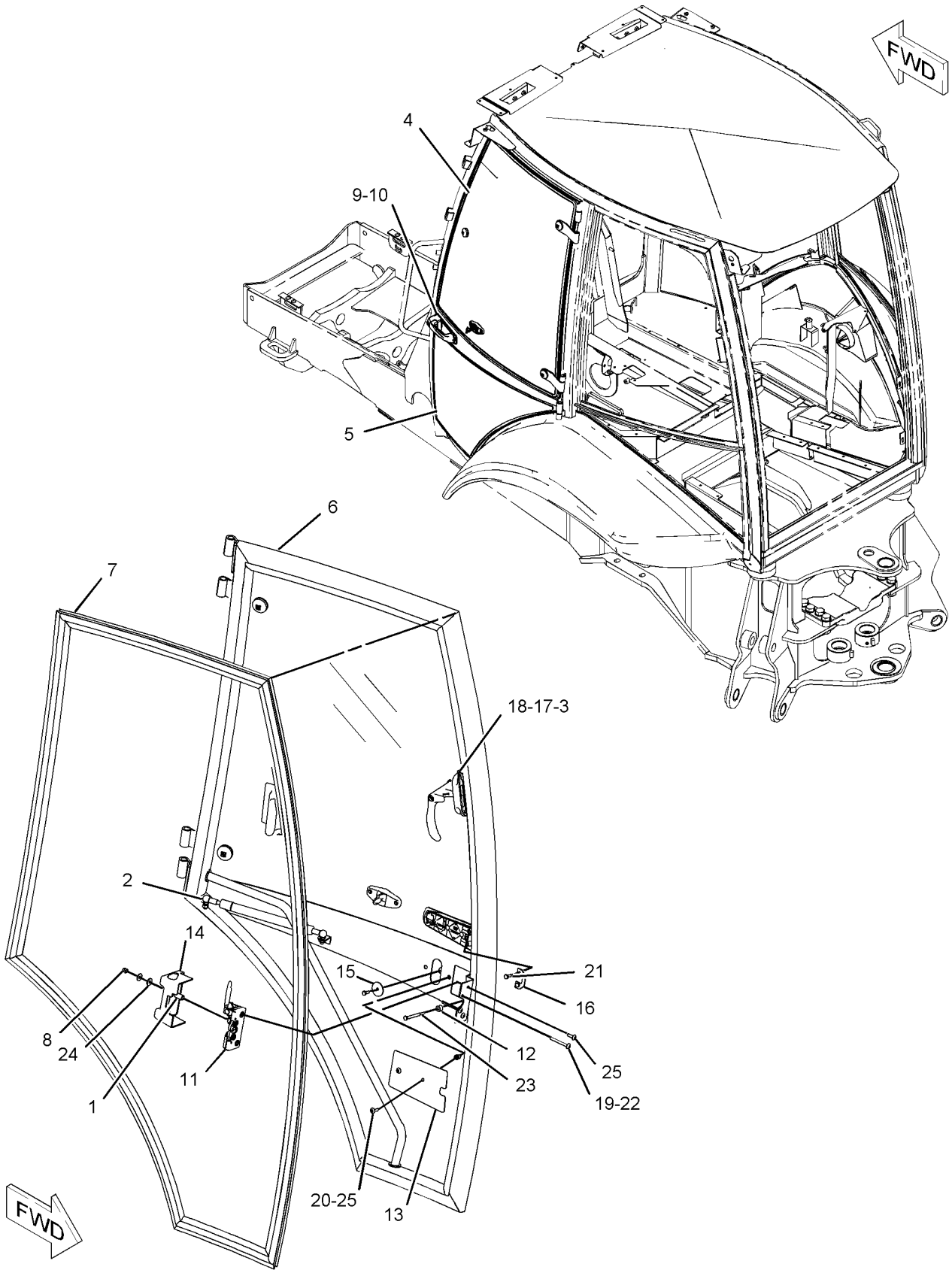

GRAPHIC #1 **<END>** g01088355

OPERATOR STATION

206-1593 DOOR GP-CAB—RH (CHG -00, -01)

S/N: HLS1-UP
PART OF 206-1889 CAB GP
AN ATTACHMENT

SMCS-7308 **i02136593**

NOTE	REF NO	GRAPHIC REF	PART NUMBER	QTY	PART NAME 1 2 3 4 5 6 (PRODUCT LEVEL)	SEE PAGE
	1	1	**132-2249**	2	SPACER (7.4X12.7X24-MM THK)	
J	2	1	**159-4269**	1	SPRING AS-GAS	
B	3	1	**177-4877**	1	SHIM (1-MM THK)	
Y	4	1	**205-9595**	1	WINDOW GP-DOOR (RH)	638
	5	1	**205-9598**	1	GLASS (RH)	
	6	1	**206-1606**	1	DOOR AS (RH)	
M		1	**8T-3612**	1	NUT-WELD (M8X1.25-THD)	
	7	1	**223-2029**	1	SEAL AS (RH)	
	8	1	**248-2714**	2	NUT-ACORN	
L	9	1	**252-1862**	1	HANDLE AS (PULL)	
	10	1	**252-1863**	1	GASKET	
	11	1	**252-1865**	1	LATCH AS (RH)	
	12	1	**253-1817**	1	SPACER (6.5X14.5X12-MM THK)	
	13	1	**253-1857**	1	PLATE	
	14	1	**253-1858**	1	COVER-LATCH	
	15	1	**254-1126**	1	PLATE	
	16	1	**254-1127**	1	PLATE	
M	17	1	**131-3987**	2	SCREW (M4X0.7X12-MM)	
	18	1	**159-4945**	1	KEEPER-REAR (LH)	
	19	1	**197-5107**	2	SCREW-TRUSS HEAD	
	20	1	**205-7048**	2	INSERT-THREADED (M6X1-6H-THD)	
M	21	1	**5C-9553**	3	BOLT (M6X1X16-MM)	
M	22	1	**5Y-0660**	1	NUT (M6-THD)	
M	23	1	**8T-3844**	1	BOLT (M6X1X70-MM)	
	24	1	**9X-2038**	4	WASHER (7X19X2-MM THK)	
M	25	1	**9X-2045**	4	SCREW-TRUSS HEAD (M6X1X20-MM)	
					AVAILABLE REPAIR KIT(S):	
J			**161-9044**	1	KIT-FITTING	
					(INCLUDES NUT & FITTING AS)	

B-USE AS REQUIRED
J-KIT MARKED J AVAILABLE FOR PART MARKED J
L-REQUIRES 5P8500 KEY
M-METRIC PART
Y-SEPARATE ILLUSTRATION

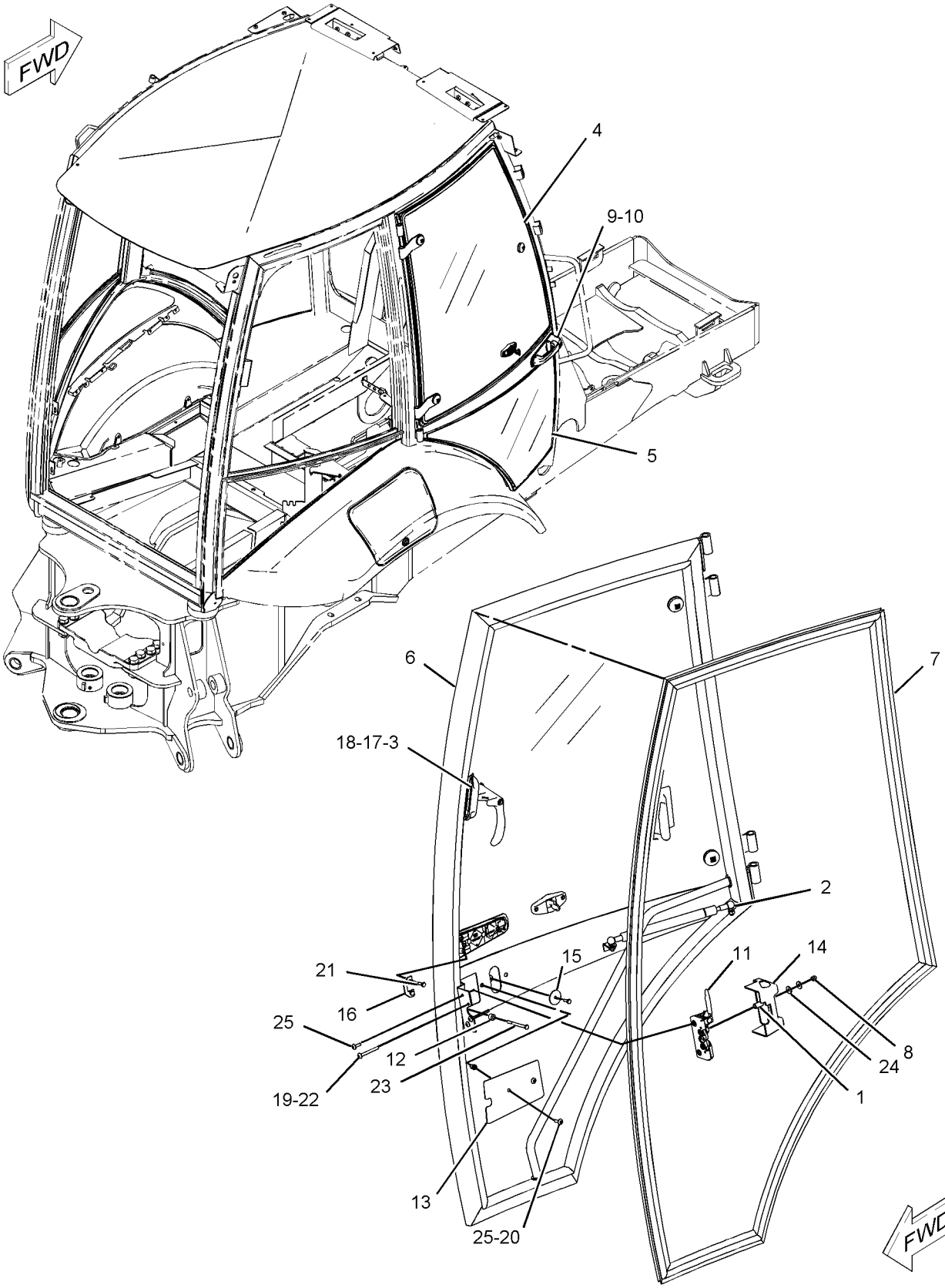

GRAPHIC #1 **<END>** g01088307

OPERATOR STATION

206-1618 FLOOR MAT GP (CHG -00, -01)

S/N: HLS1-UP

PART OF 269-2125, 269-2126, 269-2127 CAB AR, 269-2123, 269-2124 CANOPY AR AN ATTACHMENT

SMCS-7265 **i02460066**

NOTE	REF NO	GRAPHIC REF	PART NUMBER	QTY	PART NAME 1 2 3 4 5 6 (PRODUCT LEVEL)	SEE PAGE
	1	1	**247-8179**	2	PLATE	
	2	1	**284-1602**	1	FLOOR MAT	
	3	1	**1H-3244**	4	LOCKWASHER	
M	4	1	**9X-2045**	4	SCREW-TRUSS HEAD (M6X1X20-MM)	

M-METRIC PART

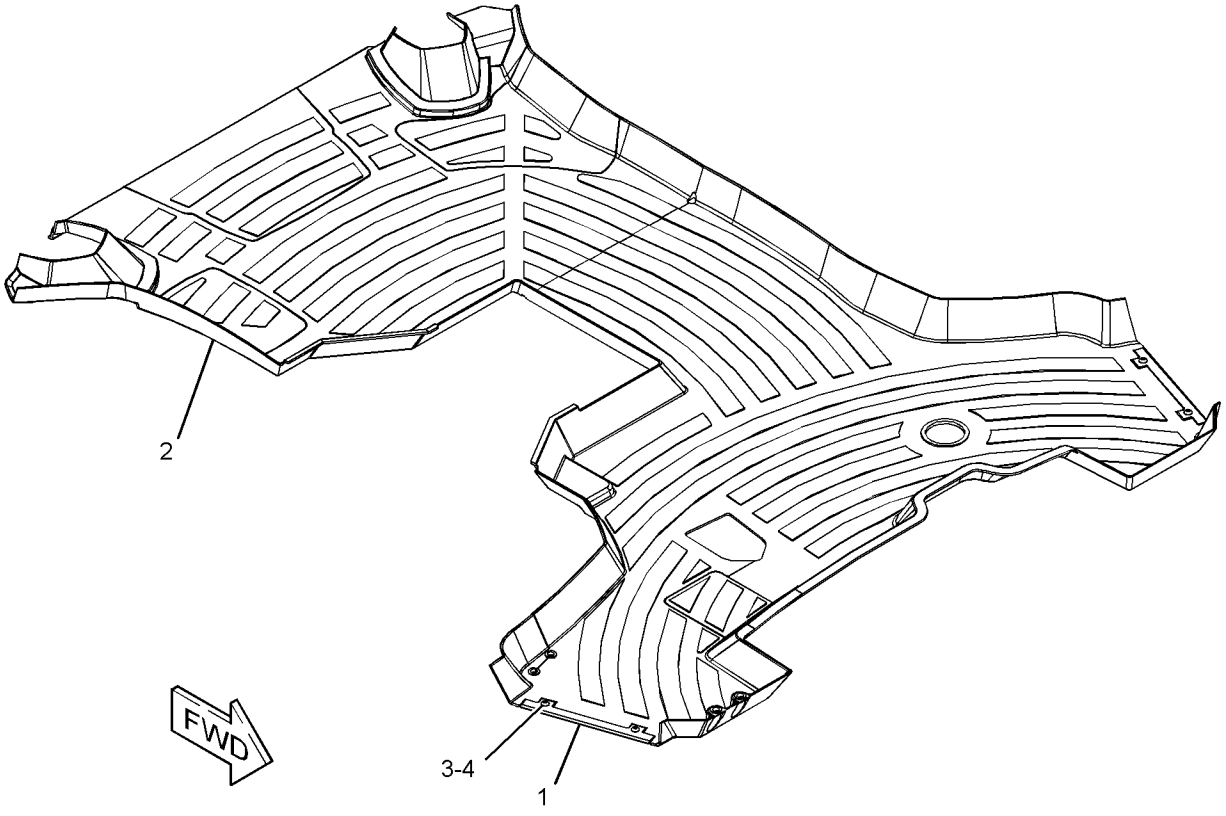

GRAPHIC #1 **<END>** g01228081

OPERATOR STATION

206-1800 HEATER GP-CAB (CHG -02 THRU -04)

S/N: HLS1-UP
PART OF 269-2125, 269-2126 CAB AR
AN ATTACHMENT

SMCS-7304 **i02396928**

NOTE	REF NO	GRAPHIC REF	PART NUMBER	QTY	PART NAME 1 2 3 4 5 6 (PRODUCT LEVEL)	SEE PAGE
E	1	1	**5P-3915**		HOSE (32-CM EACH)	
D	2	1	**6V-6813**		HOSE (0.29-M)	
	3	1	**6L-4725**	2	CLAMP-HOSE	
	4	1	**8Y-5737**	1	CLAMP	
	5	1	**8Y-6967**	6	LOUVER AS	
	6	1	**9M-7959**	4	CLAMP-HOSE	
	7	1	**9N-2231**	1	GROMMET AS	
	8	1	**110-6109**	1	KNOB-CONTROL (TEMPERATURE)	
	9	1	**130-4832**	2	SCREW (8-18X10-MM)	
	10	1	**164-1368**	4	FASTENER-PANEL	
	11	1	**164-8474**	2	LOUVER AS	
	12	1	**189-0881**	1	CONTROL AS	
		1	**129-1831**	1	CLAMP	
	13	1	**193-3356**	1	CABLE	
	14	1	**194-5622**	1	VALVE AS-WATER	
		1	**6V-6717**	1	SCREW-WASHER HEAD (8-32X9.52-MM)	
		1	**124-0312**	2	SCREW-PAN HEAD (8-16X0.32-IN)	
	15	1	**206-1648**	1	LOUVER	
	16	1	**206-1653**	4	GASKET	
	17	1	**206-1682**	1	PANEL-CONTROL (INSERT)	
	18	1	**206-1684**	1	COVER (CAB FILTER)	
	19	1	**206-1803**	2	GASKET	
	20	1	**206-1804**	1	GASKET	
	21	1	**206-1805**	1	GASKET	
	22	1	**206-1806**	1	GASKET	
	23	1	**206-1807**	1	GASKET	
	24	1	**206-1808**	1	PLATE	
	25	1	**206-1809**	1	ROD AS	
		1	**5B-3254**	1	NUT-JAM (7/16-20-THD)	
	26	1	**206-1810**	1	DUCT-AIR	
	27	1	**206-1812**	1	DUCT-AIR	
	28	1	**206-1814**	1	DUCT-AIR	
	29	1	**206-1815**	1	DUCT-AIR	
	30	1	**206-1816**	1	DUCT-AIR	
	31	1	**206-1817**	2	DUCT-AIR	
	32	1	**206-1818**	1	DUCT AS-AIR	
Y	33	1	**210-8364**	1	HEATER GP-CAB	589
	34	1	**211-2661**	1	FILTER ELEMENT AS-AIR (CAB HEATER, AIR CONDITIONER)	
	35	1	**218-0666**	6	LOUVER AS	
	36	1	**255-0795**	1	FILM (TEMPERATURE CONTROL)	
M	37	1	**111-4627**	1	SCREW-MACHINE (M6X1X30-MM)	
	38	1	**5P-4116**	1	WASHER-HARD (8.8X20.5X2-MM THK)	
	39	1	**7X-0579**	1	WASHER-HARD (8.8X25.5X2-MM THK)	
M	40	1	**8T-4200**	1	BOLT (M8X1.25X16-MM)	
	41	1	**8Y-6352**	1	LOUVER AS	
	42	1	**9X-2038**	4	WASHER (7X19X2-MM THK)	
M	43	1	**9X-2045**	10	SCREW-TRUSS HEAD (M6X1X20-MM)	

D-ORDER BY THE METER
E-ORDER BY THE CENTIMETER
M-METRIC PART
Y-SEPARATE ILLUSTRATION

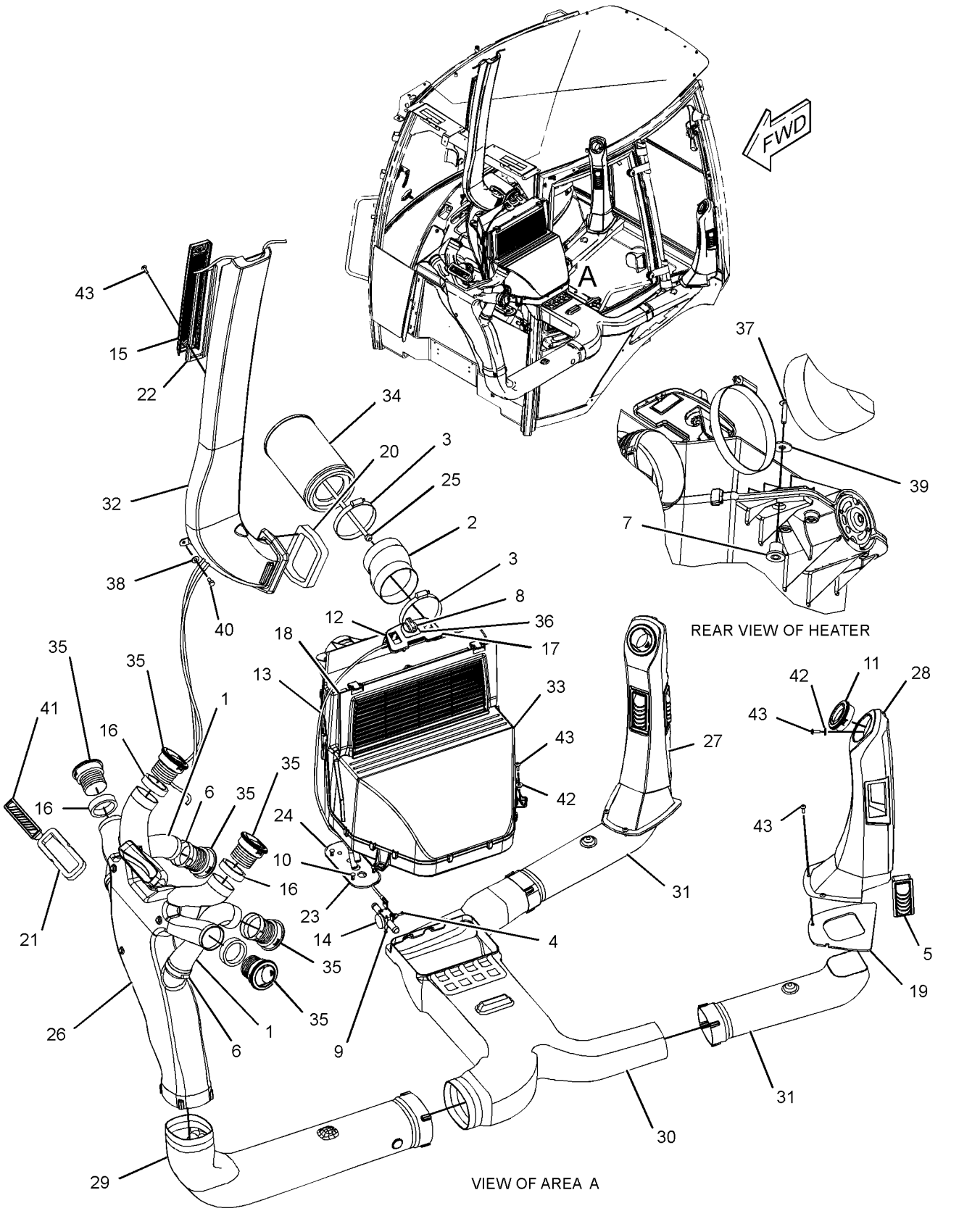

GRAPHIC #1 **<END>** g01231227

OPERATOR STATION

210-8364 HEATER GP-CAB (CHG -02, -03)

S/N: HLS1-UP

PART OF 206-1800 HEATER GP-CAB

AN ATTACHMENT

SMCS-7304 **i02250468**

NOTE	REF NO	GRAPHIC REF	PART NUMBER	QTY	PART NAME 1 2 3 4 5 6 (PRODUCT LEVEL)	SEE PAGE
	1	1	**8C-3756**	1	FILM-IDENTIFICATION (GROUP NUMBER)	
	2	1	**168-2313**	2	FAN AS	
					(EACH INCLUDES)	
		1	**177-9645**	1	KIT-RECEPTACLE (2-PIN)	
					(INCLUDES RECEPTACLE AS & WEDGE)	
		1	**177-9648**	1	KIT-CONNECTING PLUG (2-PIN)	
					(INCLUDES PLUG AS, WEDGE & INTERFACE SEAL)	
		1	**7T-0093**	2	PIN-CONNECTOR	
	3	1	**185-4015**	11	CLIP	
	4	1	**204-9921**	1	RESISTOR AS	
	5	1	**210-7665**	1	HOUSING-TOP	
	6	1	**210-7666**	1	BAFFLE	
	7	1	**210-8402**	1	COIL AS-HEATER	
BD		1	**5P-5688**		SEAL	
		1	**219-6288**	1	GASKET	
	8	1	**211-2660**	1	FILTER-CAB AIR (RECIRCULATION)	
	9	1	**212-3416**	1	SCREW-PAN HEAD (8-16XO.5-IN)	
	10	1	**219-6281**	1	COVER AS	
		1	**6C-3680**	1	RIVET-POP	
	11	1	**219-6284**	2	GASKET	
	12	1	**219-6285**	1	GASKET	
	13	1	**219-6286**	1	GASKET	
	14	1	**219-6287**	2	GASKET	
	15	1	**219-6292**	1	HOUSING AS	
		1	**7H-3937**	4	LOCKWASHER	
M		1	**129-3178**	4	LOCKNUT (M6X1 THD)	
		1	**210-7664**	1	HOUSING-BOTTOM	
	16	1	**219-6294**	2	SEAL	
	17	1	**253-2470**	1	HARNESS AS-HEATER	
		1	**177-9653**	1	KIT-RECEPTACLE (4-PIN)	
					(INCLUDES RECEPTACLE AS & WEDGE)	
		1	**155-2271**	1	KIT-CONNECTING PLUG (4-PIN)	
					(INCLUDES PLUG AS, WEDGE & INTERFACE SEAL)	
	18	1	**253-9510**	1	GUARD	
	19	1	**2S-3745**	2	SCREW-TAPPING (10-16XO.5-IN)	
M	20	1	**6V-7357**	4	BOLT (M6X1X25-MM)	
	21	1	**8T-4205**	5	WASHER-HARD (7.2X14.5X2-MM THK)	
BD	22	1	**5P-1823**		SEAL	
BD	23	1	**5P-0798**		SEAL	
BE	24	1	**8C-7524**		SEAL	

B-USE AS REQUIRED
D-ORDER BY THE METER
E-ORDER BY THE CENTIMETER
M-METRIC PART

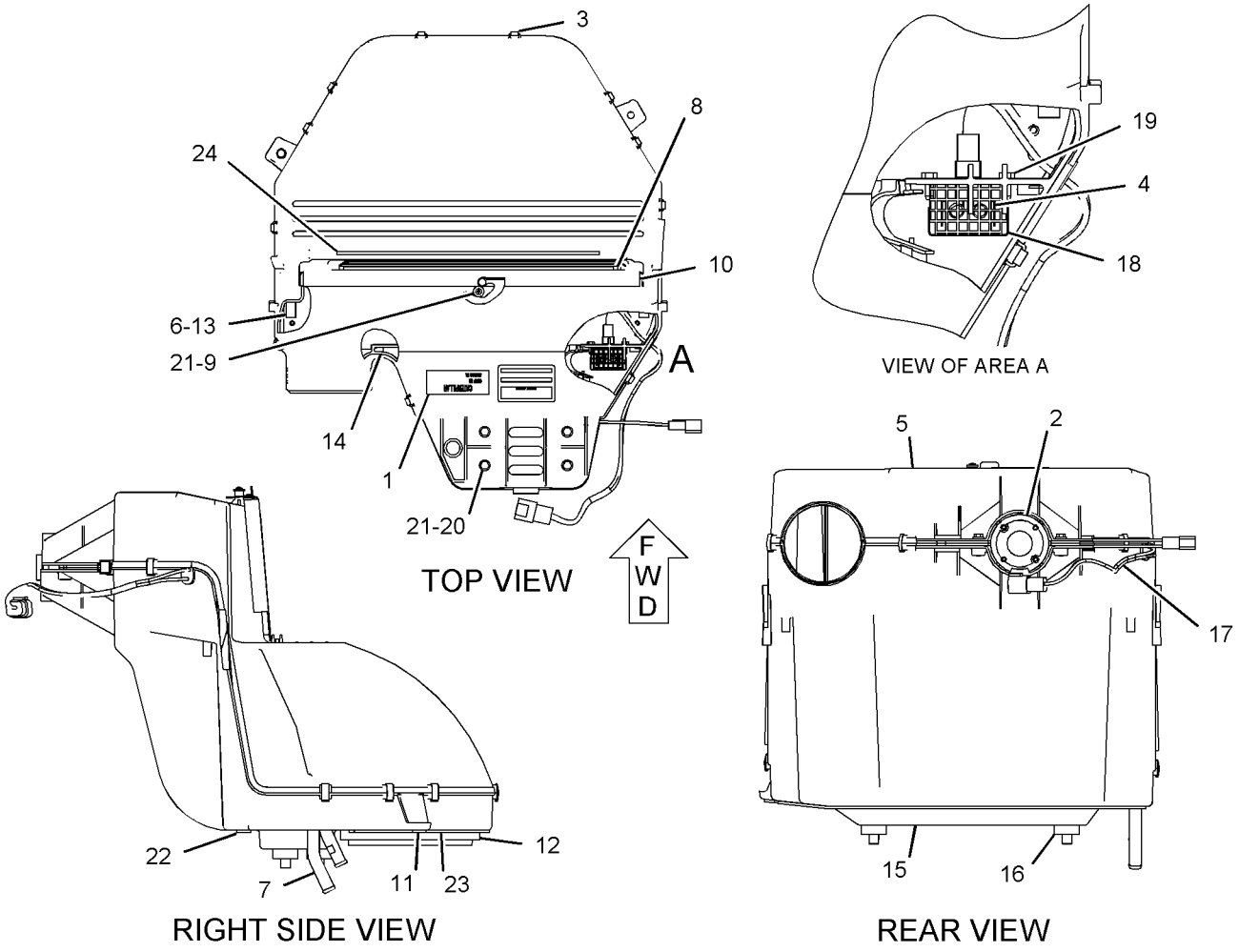

GRAPHIC #1 **<END>** g01091609

OPERATOR STATION

211-4253 INSTALLATION GP-MONITOR–ADVISOR

(CHG -02 THRU -05)

S/N: HLS1-UP

PART OF 246-8045 INSTALLATION GP-GRADE CONTROL

AN ATTACHMENT

SMCS-1408, 7490 **i02411962**

NOTE	REF NO	GRAPHIC REF	PART NUMBER	QTY	PART NAME 1 2 3 4 5 6 (PRODUCT LEVEL)	SEE PAGE
M	1	1	**136-4184**	4	BOLT-SOCKET HEAD (M8X1.25X40-MM)	
	2	1	**255-0797**	1	FILM-WARNING (LASER TRANSMITTER, READ OMM)	
	3	1	**214-4293**	1	SENSOR AS-POSITION (BOOM SWING)	
	4	1	**217-8432**	1	COUPLING	
Y	5	1	*227-7374*	1	ELECTRONICS GP-MONITOR (ADVISOR)	80
Y	6	1	*229-8743*	1	BRACKET GP-MOUNTING (MONITOR)	559
	7	1	**246-8046**	1	HARNESS AS-CONTROL	
		1	**102-8801**	1	KIT-RECEPTACLE (12-PIN)	
					(INCLUDES RECEPTACLE AS & WEDGE)	
		1	**147-1444**	1	PLUG AS-CONNECTOR (70-PIN)	
		1	**159-9322**	1	SEAL-O-RING	
	8	1	**249-5652**	1	SENSOR AS-POSITION (ANGLE)	
Y	9	1	*251-1222*	1	MOUNTING GP-MONITOR (GRADE CONTROL)	604
Y	10	1	*251-3200*	1	MOUNTING GP-SENSOR (ANGLE)	98
	11	1	**3S-2093**	2	STRAP-CABLE	
M	12	1	**8T-4171**	4	BOLT (M6X1X12-MM)	
	13	1	**8T-4205**	4	WASHER-HARD (7.2X14.5X2-MM THK)	
	14	1	**8T-4224**	4	WASHER-HARD (8.8X16X2-MM THK)	
	15	1	**256-4572**	1	FILM-WARNING (LASER TRANSMITTER, READ OMM)	
	16	1	**4P-8134**	1	CLIP	

M-METRIC PART
Y-SEPARATE ILLUSTRATION

211-4253 **INSTALLATION GP-MONITOR** *(contd.)* **i02411962**

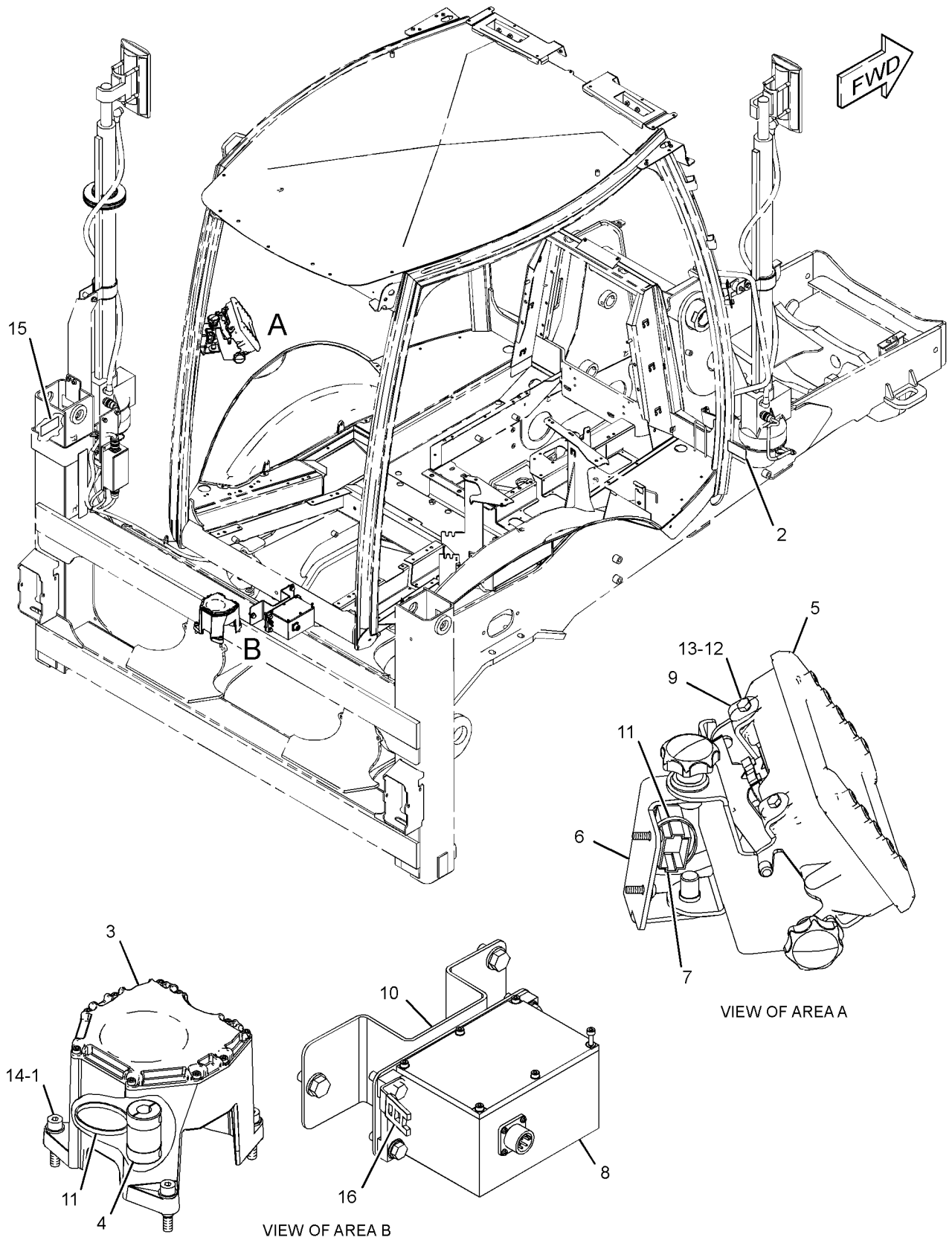

GRAPHIC #1 **<END>** g01234361

269-3248 LATCH GP-CONSOLE (CHG -00)

S/N: HLS1-UP

PART OF 269-3247 MOUNTING GP-BACKHOE CONTROL

AN ATTACHMENT

SMCS-5258 **i02446496**

NOTE	REF NO	GRAPHIC REF	PART NUMBER	QTY	PART NAME 1 2 3 4 5 6 (PRODUCT LEVEL)	SEE PAGE
	1	1	**8T-4742**	2	END-YOKE ROD	
	2	1	**8T-4744**	2	PIN AS-SPRING	
	3	1	**110-5602**	1	KNOB	
	4	1	**180-9160**	1	LATCH AS	
	5	1	**183-4911**	2	PLATE	
	6	1	**183-5443**	1	LATCH AS	
	7	1	**183-6085**	2	BEARING	
	8	1	**268-5902**	1	LEVER AS	
	9	1	**268-5903**	2	ROD	
M	10	1	**099-3649**	1	BOLT (M8X1.25X40-MM)	
	11	1	**156-0283**	3	WASHER-HARD (8.4X35X2.5-MM THK)	
	12	1	**183-4912**	1	SLEEVE	
M	13	1	**5C-2890**	2	NUT (M6X1-THD)	

M-METRIC PART

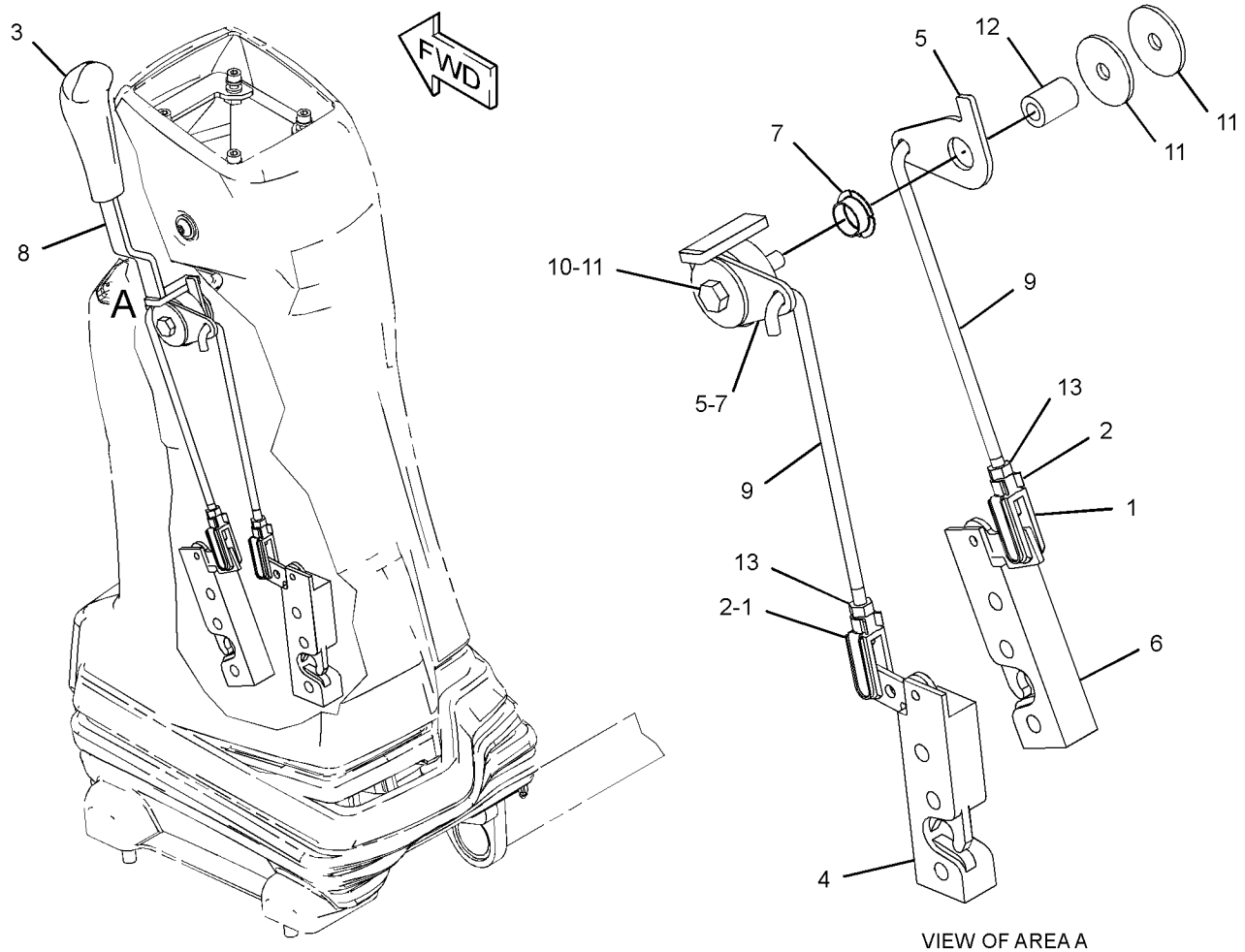

VIEW OF AREA A

GRAPHIC #1 **<END>** g01211340

OPERATOR STATION

209-3367 LEVER GP-GOVERNOR (CHG -02)

S/N: HLS1-UP

PART OF 206-1640 CONTROL GP-GOVERNOR

SMCS-1265 **i02124988**

NOTE	REF NO	GRAPHIC REF	PART NUMBER	QTY	PART NAME 1 2 3 4 5 6 (PRODUCT LEVEL)	SEE PAGE
	1	1	**8T-4742**	1	END-YOKE ROD	
	2	1	**8T-4744**	1	PIN AS-SPRING	
	3	1	**209-3366**	1	CABLE AS	
	4	1	**219-0343**	1	LEVER AS	
M	5	1	**8T-4971**	1	BOLT (M6X1X30-MM)	
M	6	1	**129-3178**	1	LOCKNUT (M6X1 THD)	

M-METRIC PART

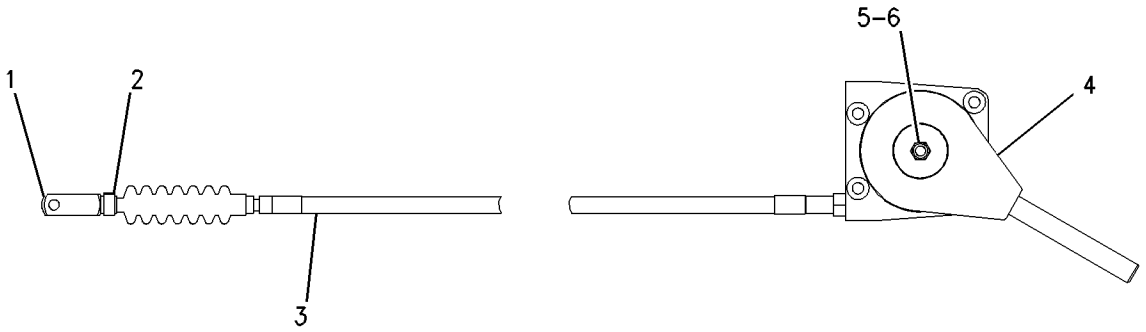

GRAPHIC #1 **<END>** g00743371

OPERATOR STATION

209-4703 LINER GP-CAB (CHG -02 THRU -05)

S/N: HLS1-UP

PART OF 269-2125, 269-2126, 269-2127 CAB AR

AN ATTACHMENT

SMCS-7329 **i02445803**

NOTE	REF NO	GRAPHIC REF	PART NUMBER	QTY	PART NAME 1 2 3 4 5 6 (PRODUCT LEVEL)	SEE PAGE
	1	1	**8E-1118**	1	ANTENNA AS	
	2	1	**8R-6111**	1	CABLE AS-COAXIAL	
	3	1	**9U-8263**	1	COVER	
	4	1	**084-4277**	1	LAMP GP-DOME	
		1	**210-8754**	1	LAMP (12-VOLT)	
M	5	1	**113-0920**	8	BOLT-SOCKET HEAD (M4X0.7X35-MM)	
	6	1	**169-7291**	2	COVER-SPEAKER	
	7	1	**209-4704**	1	LINER AS-CAB	
		1	**263-5781**	2	PLATE AS	
					(EACH INCLUDES)	
		1	**205-7047**	1	INSERT-THREADED (M4X7-6H-THD)	
	8	1	**209-4705**	1	COVER	
	9	1	**209-4716**	2	PLATE	
	10	1	**229-6052**	2	SPACER (9.7X12.7X7.5-MM THK)	
	11	1	**262-9567**	2	SPEAKER	
	12	1	**282-7832**	1	GROMMET	
	13	1	**282-7835**	1	PLATE	
M	14	1	**121-9870**	5	SCREW-MACHINE (M6X1X40-MM)	
M	15	1	**123-0707**	8	SCREW-HEX SOCKET (M4X0.7X20-MM)	
M	16	1	**8T-4181**	2	BOLT (M6X1X20-MM)	
	17	1	**9X-2038**	2	WASHER (7X19X2-MM THK)	
	18	1	**9X-8256**	2	WASHER (6.6X12X2-MM THK)	

M-METRIC PART

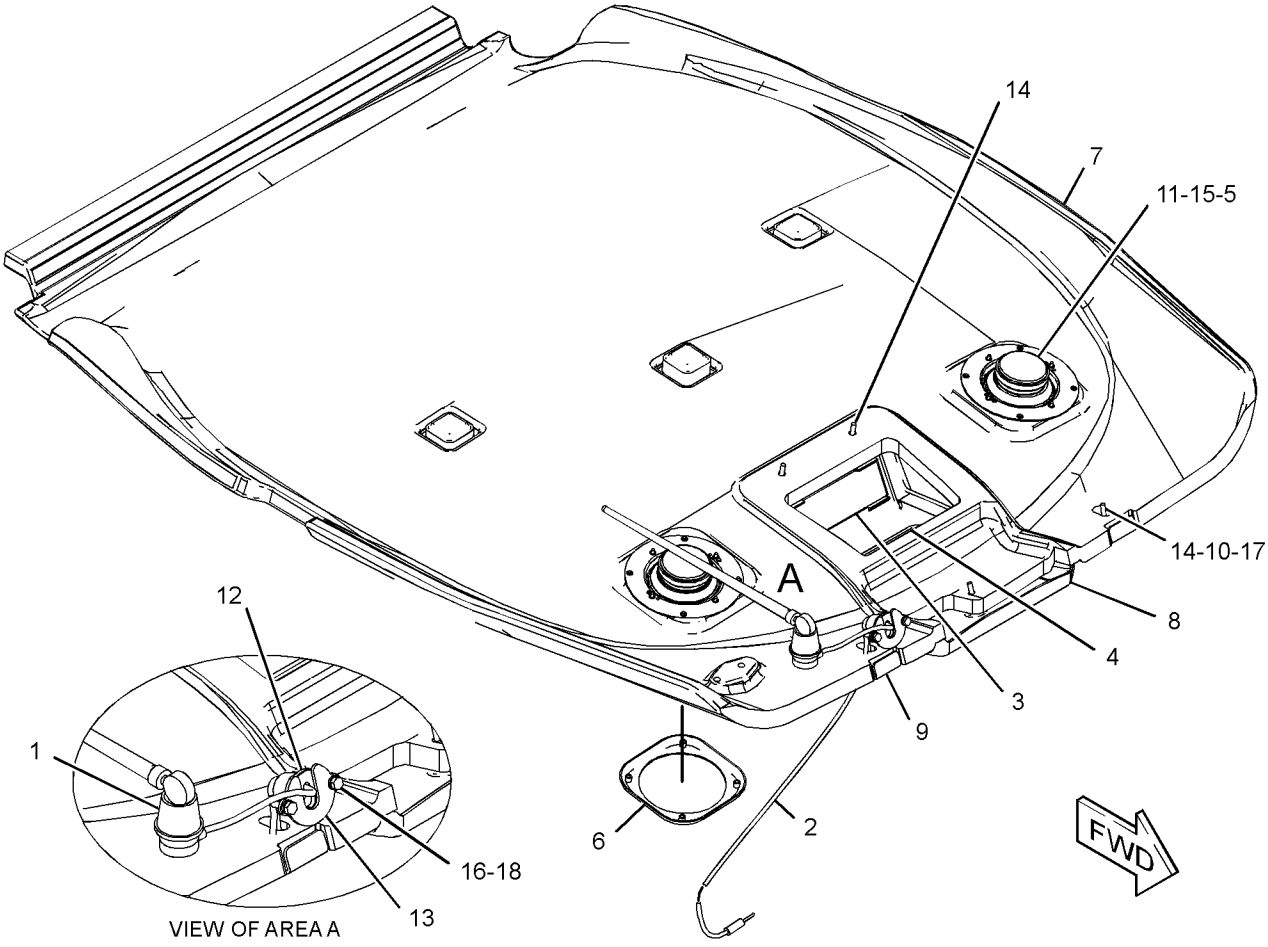

GRAPHIC #1 **<END>** g01233413

OPERATOR STATION

211-0072 LINES GP-HEATER (CHG -02 THRU -07)

S/N: HLS1-UP

PART OF 269-2125, 269-2126 CAB AR

AN ATTACHMENT

SMCS-1812 **i02466511**

NOTE	REF NO	GRAPHIC REF	PART NUMBER	QTY	PART NAME 1 2 3 4 5 6 (PRODUCT LEVEL)	SEE PAGE
M	1	1	**8T-4137**	3	BOLT (M10X1.5X20-MM)	
	2	1	**5D-1026**	8	CLAMP-HOSE	
	3	1	**6P-8855**	1	SPACER (0.56X0.625X3-IN THK)	
	4	1	**9M-4814**	1	CONNECTOR-HOSE	
	5	1	**134-3856**	1	ELBOW	
	6	1	**3E-4321**	4	CLIP	
	7	1	**7K-1181**	3	STRAP-CABLE	
	8	1	**8T-4121**	3	WASHER-HARD (11X21X2.5-MM THK)	
E	9	1	**5P-0767**		HOSE (22-CM)	
E	10	1	**5P-0767**		HOSE (65-CM)	
E	11	1	**5P-0767**		HOSE (205-CM)	
E	12	1	**5P-0767**		HOSE (260-CM)	

E-ORDER BY THE CENTIMETER
M-METRIC PART

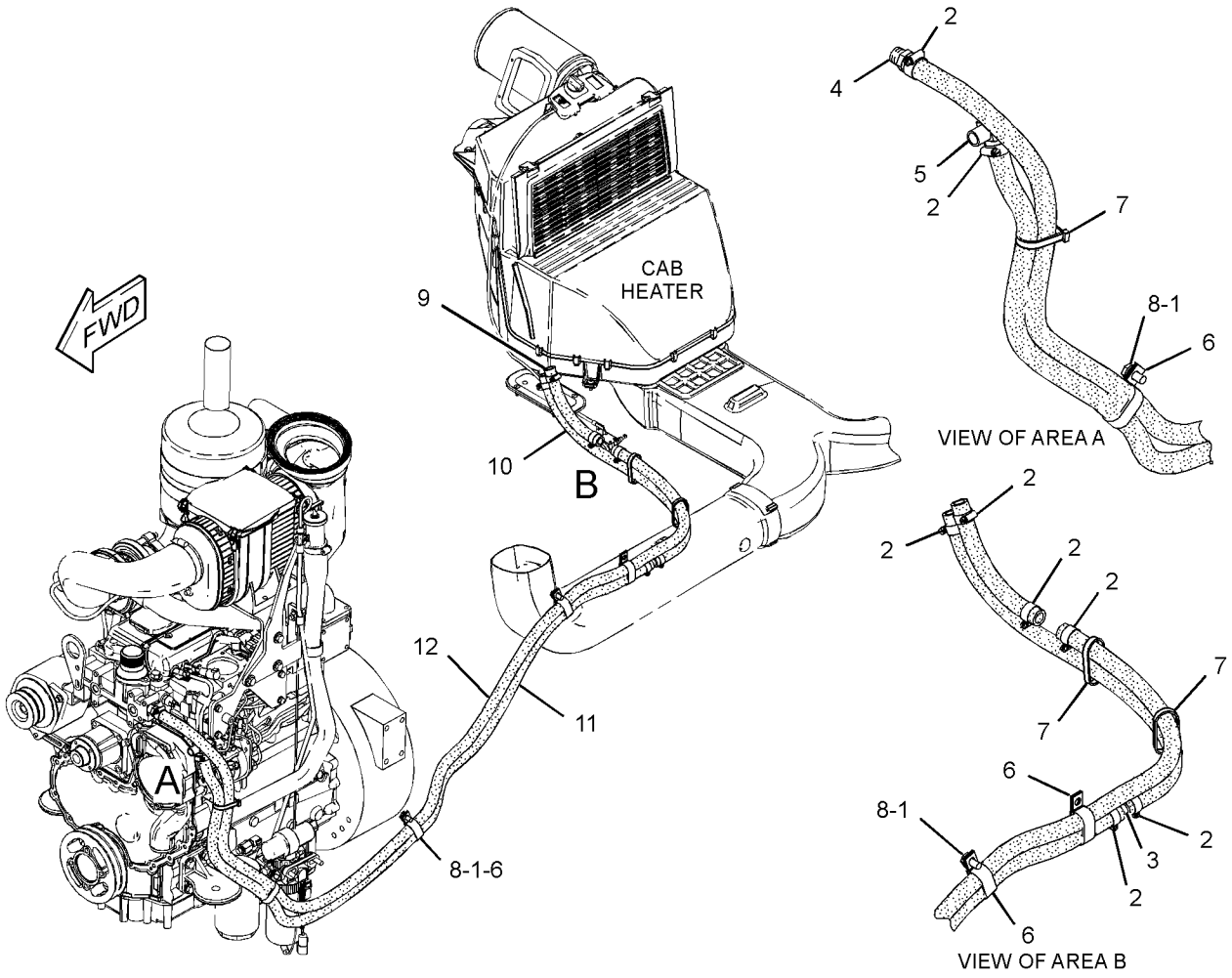

GRAPHIC #1 **<END>** g01231612

OPERATOR STATION

211-0071 LINES GP-HEATER & AIR COND (CHG -02 THRU -09)

S/N: HLS1-UP
PART OF 269-2127 CAB AR
AN ATTACHMENT

SMCS-1380, 1808, 1812 **i02397281**

NOTE	REF NO	GRAPHIC REF	PART NUMBER	QTY	PART NAME 1 2 3 4 5 6 (PRODUCT LEVEL)	SEE PAGE
E	1	1	**5P-0767**		HOSE (22-CM)	
E	2	1	**5P-0767**		HOSE (65-CM)	
E	3	1	**5P-0767**		HOSE (205-CM)	
E	4	1	**5P-0767**		HOSE (260-CM)	
	5	1	**3S-2093**	1	STRAP-CABLE	
	6	1	**6P-8855**	1	SPACER (0.56X0.625X3-IN THK)	
	7	1	**7K-1181**	6	STRAP-CABLE	
	8	1	**9M-4814**	1	CONNECTOR-HOSE	
	9	1	**105-9411**	1	SUPPORT	
	10	1	**130-9984**	2	CLIP	
	11	1	**134-3856**	1	ELBOW	
	12	1	**153-3946**	1	BRACKET	
	13	1	**153-6781**	2	U-BOLT	
	14	1	**170-0235**	1	ACCUMULATOR-REFRIGERANT	
I	15	1	**214-3735**	1	HOSE AS	
I	16	1	**214-3736**	1	HOSE AS	
I	17	1	**214-3737**	1	HOSE AS	
I	18	1	**214-3738**	1	HOSE AS	
	19	1	**214-3739**	1	HOSE AS	
	20	1	**220-8209**	1	BRACKET AS	
	21	1	**255-0800**	1	PLATE	
	22	1	**283-4237**	1	DRYER AS-AIR	
		1	**3E-0068**	1	TUBE AS-REFRIGERANT ORIFICE	
	23	1	**109-1633**	1	CLIP (SLOT)	
	24	1	**109-1634**	1	CLIP (TAB)	
M	25	1	**208-9293**	2	BOLT-FLANGE HEAD (M10X1.5X30-MM)	
	26	1	**3E-4321**	4	CLIP	
	27	1	**5D-1026**	8	CLAMP-HOSE	
	28	1	**5K-5338**	1	CLIP	
	29	1	**6V-8801**	4	NUT (3/8-16-THD)	
	30	1	**8T-4121**	11	WASHER-HARD (11X21X2.5-MM THK)	
M	31	1	**8T-4136**	3	BOLT (M10X1.5X25-MM)	
M	32	1	**8T-4137**	4	BOLT (M10X1.5X20-MM)	
M	33	1	**8T-4139**	1	BOLT (M12X1.75X30-MM)	
M	34	1	**8T-4189**	1	BOLT (M8X1.25X20-MM)	
	35	1	**8T-4223**	1	WASHER-HARD (13.5X25.5X3-MM THK)	
	36	1	**8T-4224**	1	WASHER-HARD (8.8X16X2-MM THK)	
	37	1	**9M-8406**	1	CLIP	
	38	1	**9X-7380**	2	SEAL-O-RING	
	39	1	**9X-7381**	3	SEAL-O-RING	
	40	1	**9X-7382**	1	SEAL-O-RING	
	41	1,1	**9X-7383**	2	SEAL-O-RING	

E-ORDER BY THE CENTIMETER
I-REFER TO HYDRAULIC INFORMATION SYSTEM
M-METRIC PART

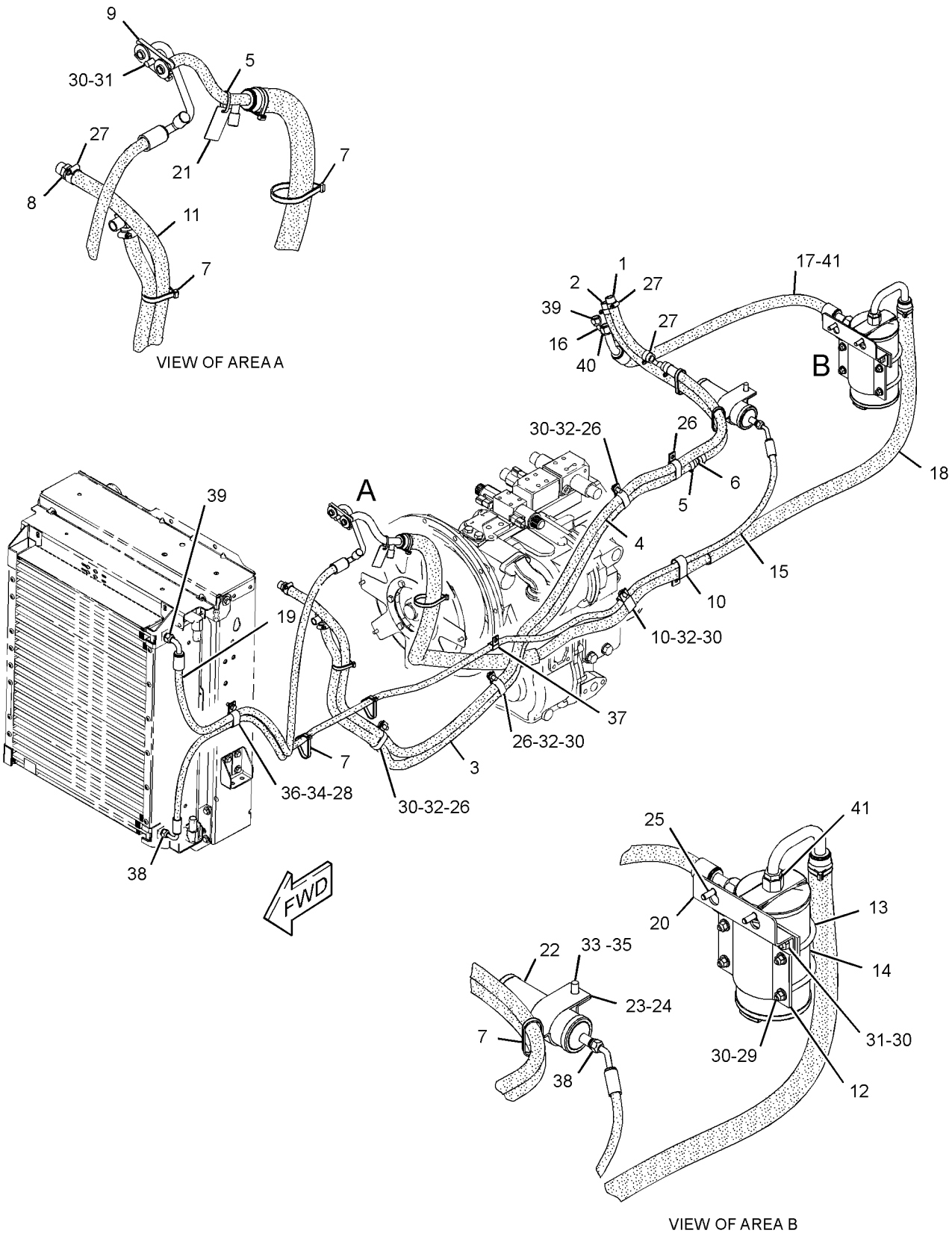

GRAPHIC #1 **<END>** g01229327

OPERATOR STATION

205-9578 MIRROR GP-REAR VIEW—INSIDE (CHG -01 THRU -03)

S/N: HLS1-UP

PART OF 269-2125, 269-2126, 269-2127 CAB AR

AN ATTACHMENT

SMCS-7319 **i02357018**

NOTE	REF NO	GRAPHIC REF	PART NUMBER	QTY	PART NAME 1 2 3 4 5 6 (PRODUCT LEVEL)	SEE PAGE
	1	1	**199-0929**	1	MIRROR AS	
	2	1	**096-6166**	2	WASHER-HARD (4.5X9X1-MM THK)	
M	3	1	**153-8004**	2	BOLT-SOCKET HEAD (M4X0.7X35-MM)	

M-METRIC PART

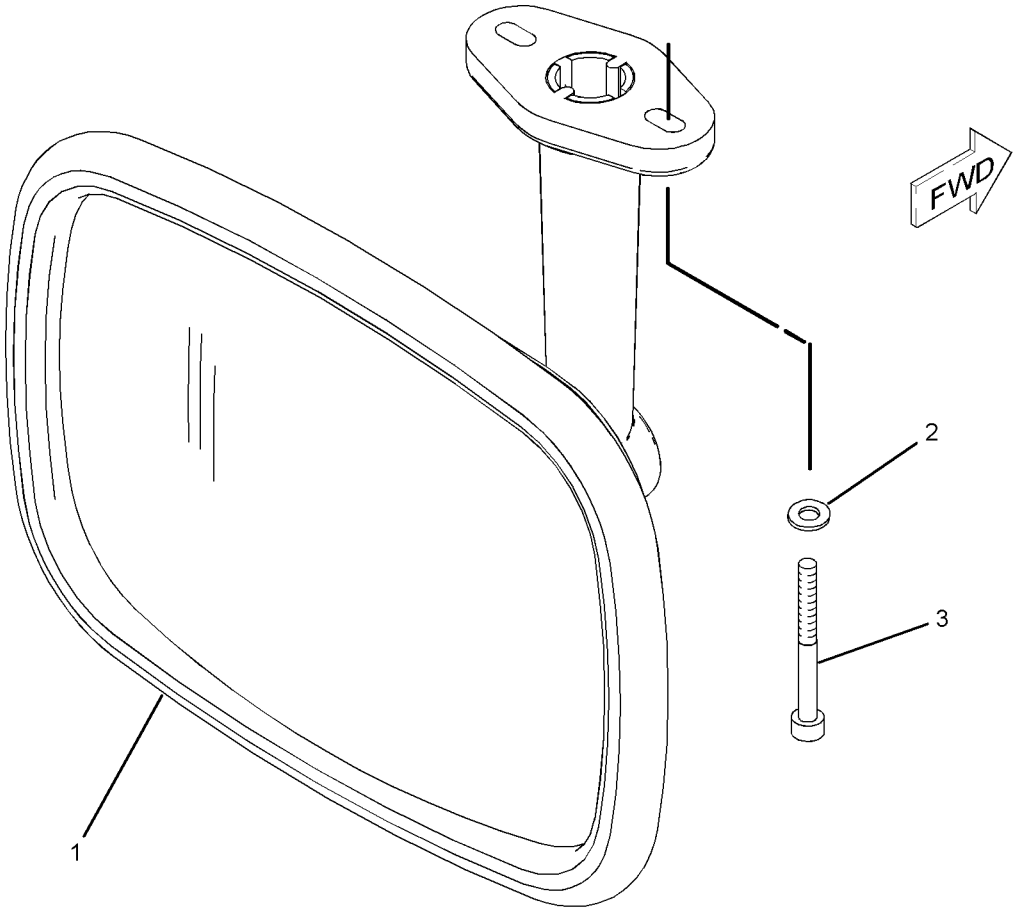

GRAPHIC #1 **<END>** g01080519

OPERATOR STATION

259-6276 MIRROR GP-REAR VIEW—INSIDE (CHG -00)

S/N: HLS1-UP

PART OF 269-2123, 269-2124 CANOPY AR

AN ATTACHMENT

SMCS-7319 **i02380434**

NOTE	REF NO	GRAPHIC REF	PART NUMBER	QTY	PART NAME 1 2 3 4 5 6 (PRODUCT LEVEL)	SEE PAGE
M	1	1	**8C-4982**	2	BOLT-SOCKET HEAD (M4X0.7X20-MM)	
	2	1	**199-0929**	1	MIRROR AS	
	3	1	**096-6166**	2	WASHER-HARD (4.5X9X1-MM THK)	

M-METRIC PART

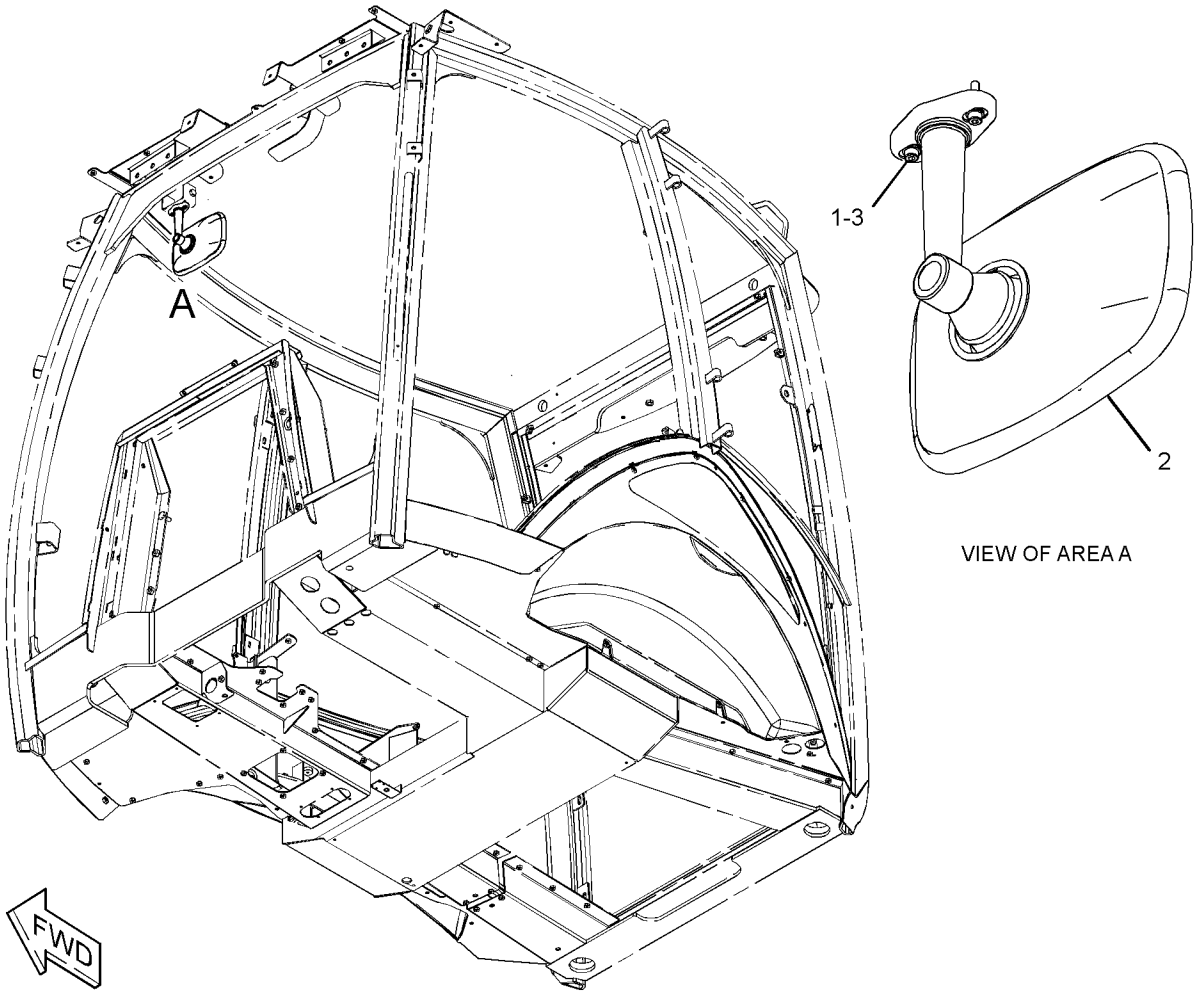

GRAPHIC #1 **<END>** g01190426

OPERATOR STATION

186-2589 MOTOR GP-WINDOW WIPER—FRONT (CHG -00 THRU -02)

S/N: HLS1-UP
12 VOLT
PART OF 206-1728 WIPER & WASHER GP-WINDOW, 206-1725 WIPER GP-WINDOW
AN ATTACHMENT

SMCS-7305 **i02445792**

NOTE	REF NO	GRAPHIC REF	PART NUMBER	QTY	PART NAME 1 2 3 4 5 6 (PRODUCT LEVEL)	SEE PAGE
M	1	1	**5C-7261**	1	NUT (M8X1.25-THD)	
	2	1	**3F-9556**	1	LOCKWASHER	
	3	1	**152-7691**	1	MOTOR GP-WINDOW WIPER	
		1	**9G-3695**	1	PLUG (GROMMET SEALING)	
		1	**102-8805**	1	KIT-RECEPTACLE (6-PIN)	
					(INCLUDES RECEPTACLE AS & WEDGE)	
		1	**186-3735**	5	PIN-CONNECTOR (16-GA TO 18-GA)	
	4	1	**206-5823**	1	CAP (WIPER)	

M-METRIC PART

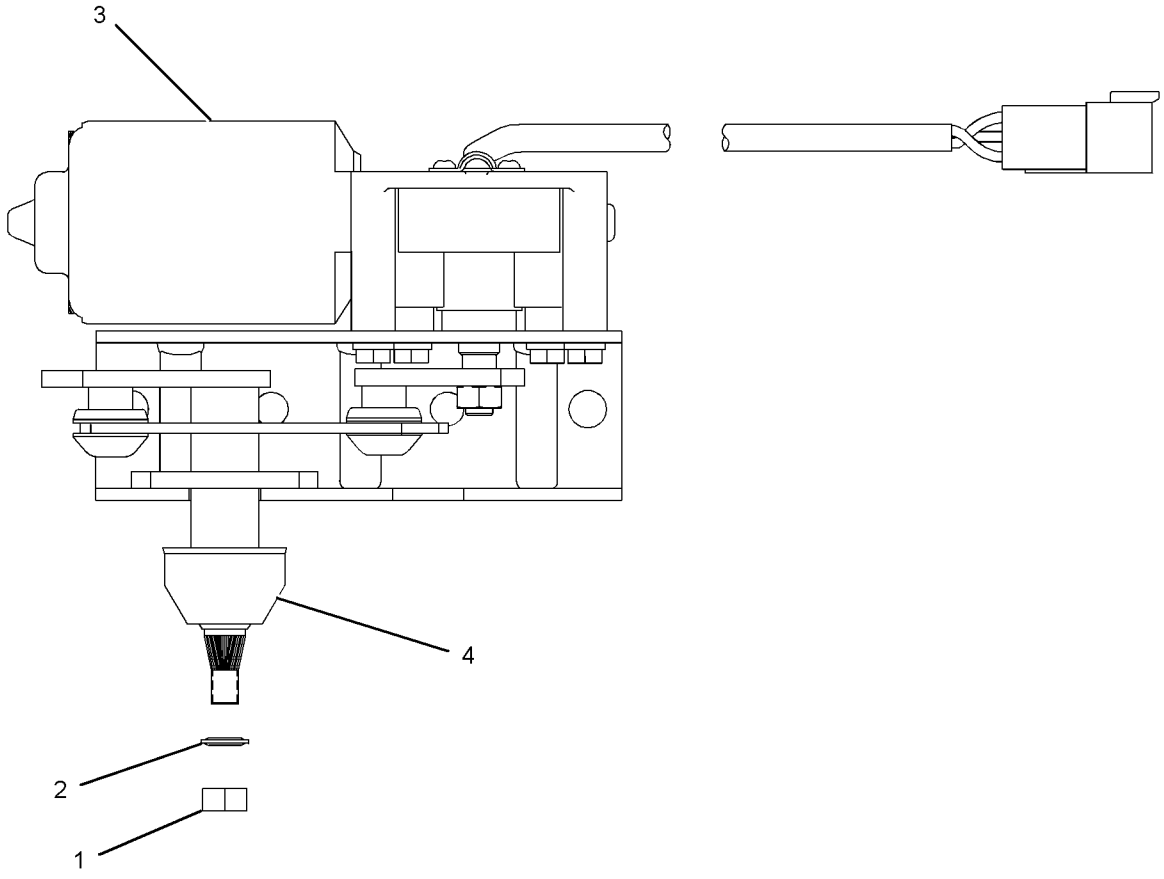

GRAPHIC #1 **<END>** g01120206

OPERATOR STATION

205-9560 MOUNTING GP-CAB (CHG -02, -03)

S/N: HLS1-UP

PART OF 269-2125, 269-2126, 269-2127 CAB AR, 269-2123, 269-2124 CANOPY AR AN ATTACHMENT

SMCS-7301 **i02358165**

NOTE	REF NO	GRAPHIC REF	PART NUMBER	QTY	PART NAME 1 2 3 4 5 6 (PRODUCT LEVEL)	SEE PAGE
	1	1	**6Y-9930**	2	MOUNT AS	
	2	1	**9R-0390**	2	MOUNT AS	
	3	1	**9W-6582**	2	SLEEVE	
M	4	1	**7X-2568**	2	BOLT (M20X2.5X180-MM)	
	5	1	**8C-3291**	2	WASHER (17X90X10-MM THK)	
	6	1	**8T-4123**	4	WASHER-PLATED (22X35X3.5-MM THK)	
M	7	1	**8T-4131**	2	NUT (M20X2.5-THD)	
M	8	1	**8T-4132**	2	NUT (M16X2-THD)	
M	9	1	**8T-4173**	2	BOLT (M16X2X110-MM)	
	10	1	**9W-6584**	2	WASHER (20.5X114X10-MM THK)	
	11	1	**9X-8257**	4	WASHER (17.5X30X3.5-MM THK)	
	12	1	**1L-6377**	2	BUTTON-PLUG	

M-METRIC PART

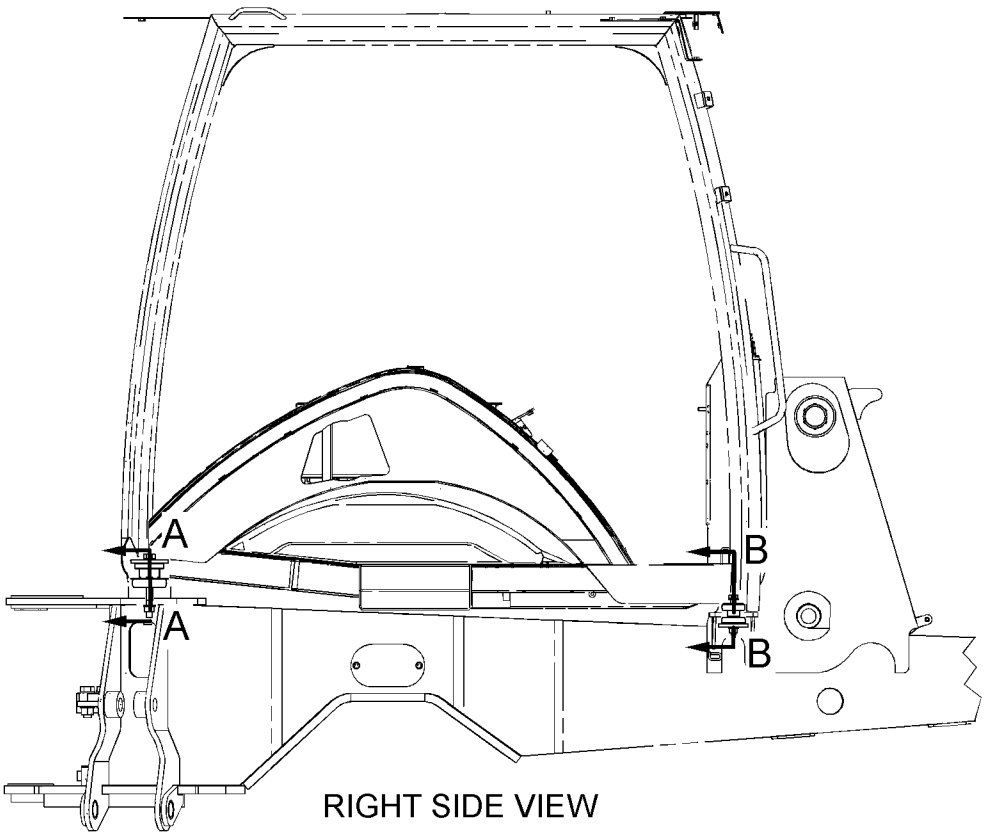

RIGHT SIDE VIEW

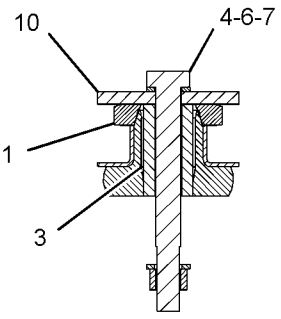

SECTION A-A

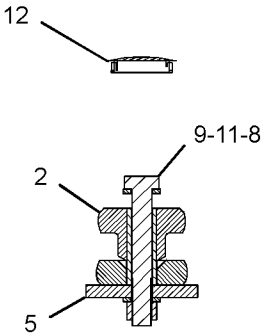

SECTION B-B

GRAPHIC #1 **<END>** g01189655

OPERATOR STATION

251-1222 MOUNTING GP-MONITOR–ACCUGRADE (CHG -00, -01)

S/N: HLS1-UP

PART OF 211-4253 INSTALLATION GP-MONITOR

AN ATTACHMENT

SMCS-7490 **i02346009**

NOTE	REF NO	GRAPHIC REF	PART NUMBER	QTY	PART NAME 1 2 3 4 5 6 (PRODUCT LEVEL)	SEE PAGE
	1	1	**095-0817**	2	LOCKWASHER	
	2	1	**248-2284**	2	KNOB-CONTROL	
	3	1	**251-0077**	1	BRACKET AS	
M		1	**8T-3490**	1	NUT-WELD (M10X1.5-THD)	
	4	1	**251-9571**	1	BRACKET AS	
M		1	**8T-3490**	1	NUT-WELD (M10X1.5-THD)	
	5	1	**8T-4121**	2	WASHER-HARD (11X21X2.5-MM THK)	

M-METRIC PART

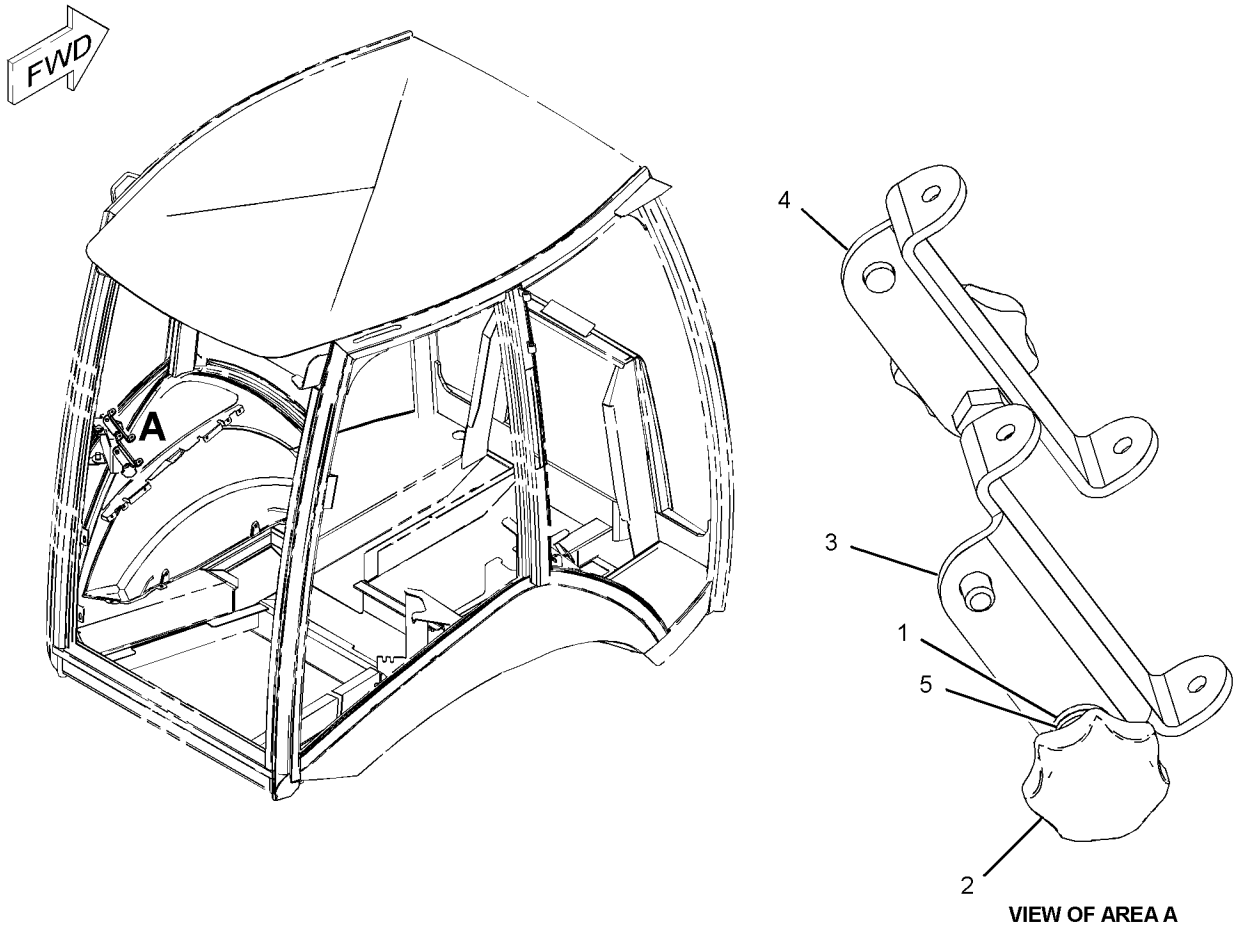

VIEW OF AREA A

GRAPHIC #1 **<END>** g01081749

OPERATOR STATION

209-3378 PEDAL GP-GOVERNOR (CHG -01 THRU -03)

S/N: HLS1-UP

PART OF 206-1640 CONTROL GP-GOVERNOR

SMCS-1265 **i02121479**

NOTE	REF NO	GRAPHIC REF	PART NUMBER	QTY	PART NAME 1 2 3 4 5 6 (PRODUCT LEVEL)	SEE PAGE
M	1	1	**129-3178**	1	LOCKNUT (M6X1 THD)	
M	2	1	**5C-7261**	1	NUT (M8X1.25-THD)	
M	3	1	**5C-9553**	1	BOLT (M6X1X16-MM)	
	4	1	**8T-4205**	1	WASHER-HARD (7.2X14.5X2-MM THK)	
M	5	1	**095-0641**	4	BOLT-SOCKET HEAD (M4X0.7X10-MM)	
	6	1	**243-0063**	1	BOOT	
	7	1	**3F-9556**	2	LOCKWASHER	
	8	1	**6V-8186**	2	NUT-FULL (5/16-24-THD)	
	9	1	**8T-6902**	3	CLIP	
M	10	1	**9X-2842**	1	BOLT (M8X1.25X45-MM)	
					AVAILABLE REPAIR KIT(S):	
			164-1154	1	KIT-SERVICE	
					(INCLUDES CLAMP & SCREWS)	
			243-0062	1	KIT-REPAIR (GOVERNOR PEDAL)	
					(INCLUDES SHAFT, CLIPS & BEARINGS)	

M-METRIC PART

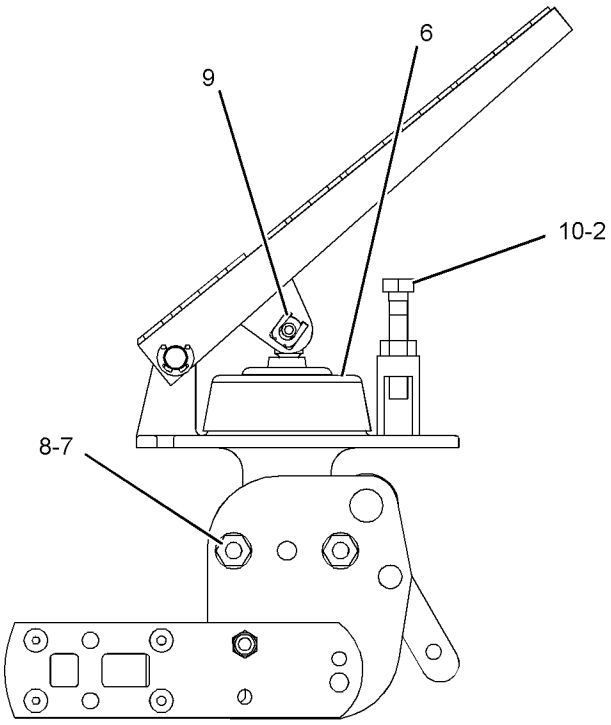

RIGHT SIDE VIEW

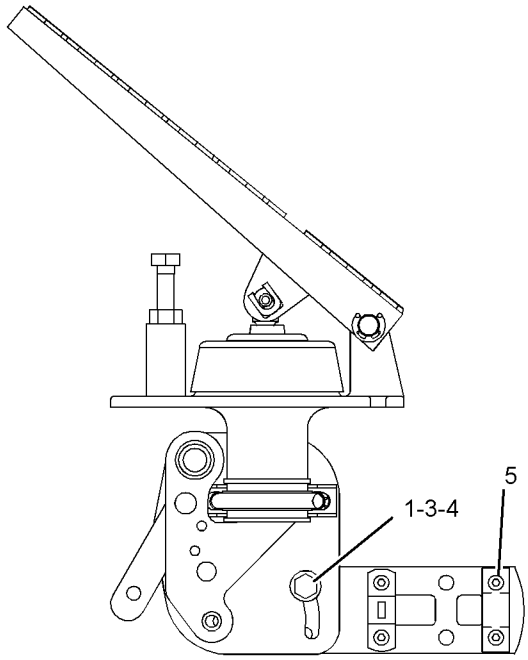

LEFT SIDE VIEW

GRAPHIC #1 **<END>** g01081364

OPERATOR STATION

205-9569 ROOF GP-CAB (CHG -02, -03)

S/N: HLS1-UP

PART OF 269-2125, 269-2126, 269-2127 CAB AR, 269-2123, 269-2124 CANOPY AR AN ATTACHMENT

SMCS-7301 **i02445788**

NOTE	REF NO	GRAPHIC REF	PART NUMBER	QTY	PART NAME 1 2 3 4 5 6 (PRODUCT LEVEL)	SEE PAGE
	1	1	**205-9570**	1	COVER-ROOF (CENTER)	
	2	1	**205-9571**	1	COVER-ROOF (REAR)	
	3	1	**205-9576**	1	COVER-ROOF (LH)	
	4	1	**205-9577**	1	COVER-ROOF (RH)	
	5	1	**5P-4115**	16	WASHER-HARD (7.2X19X2-MM THK)	
M	6	1	**8T-4138**	16	BOLT (M6X1X20-MM)	
	7	1	**9X-2038**	7	WASHER (7X19X2-MM THK)	
M	8	1	**9X-2045**	9	SCREW-TRUSS HEAD (M6X1X20-MM)	

M-METRIC PART

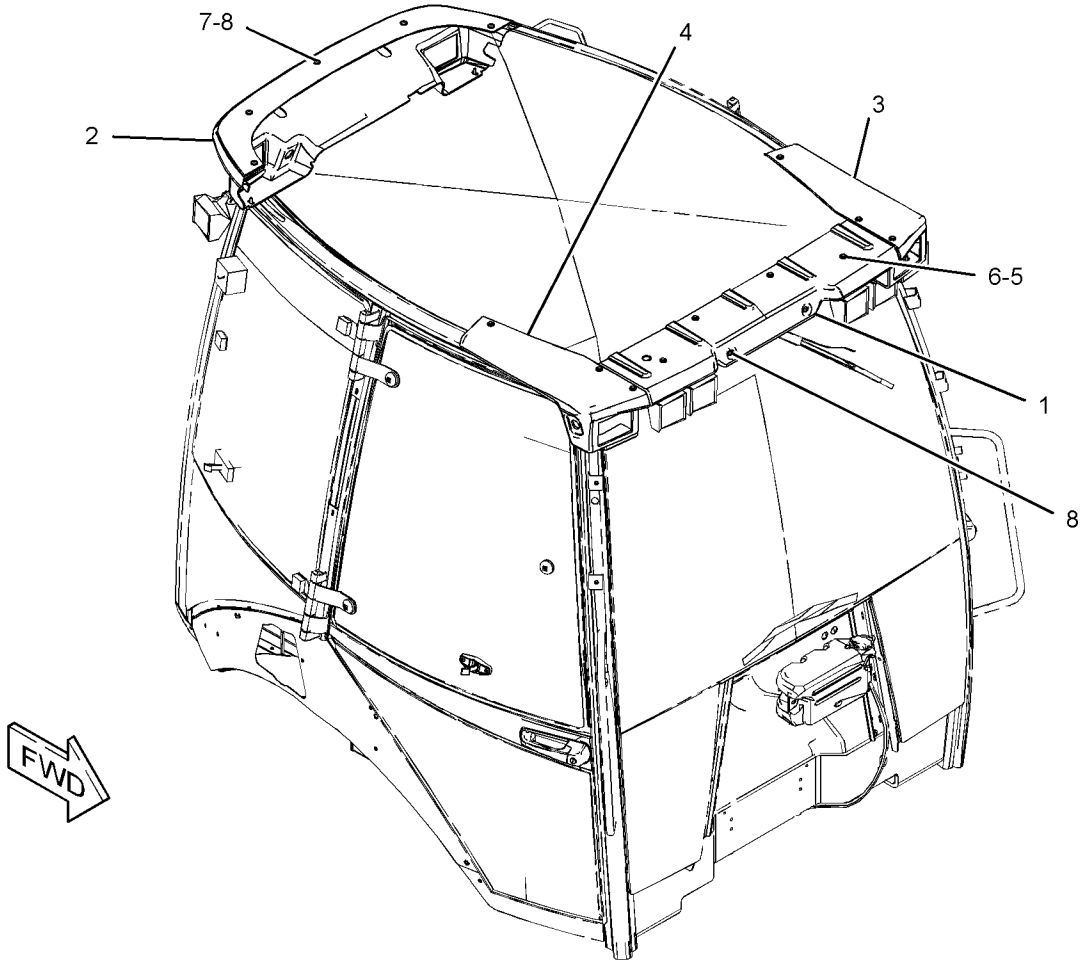

GRAPHIC #1 **<END>** g01233481

OPERATOR STATION

206-1747 SEAT BELT GP—RETRACTABLE, 2-IN (CHG -01, -02)

S/N: HLS1-UP

AN ATTACHMENT

SMCS-7327 **i02105092**

NOTE	REF NO	GRAPHIC REF	PART NUMBER	QTY	PART NAME 1 2 3 4 5 6 (PRODUCT LEVEL)	SEE PAGE
	1	1	**206-1749**	1	SEAT BELT GP	
	2	1	**8T-4223**	4	WASHER-HARD (13.5X25.5X3-MM THK)	
M	3	1	**8T-4956**	2	BOLT (M12X1.75X35-MM)	

M-METRIC PART

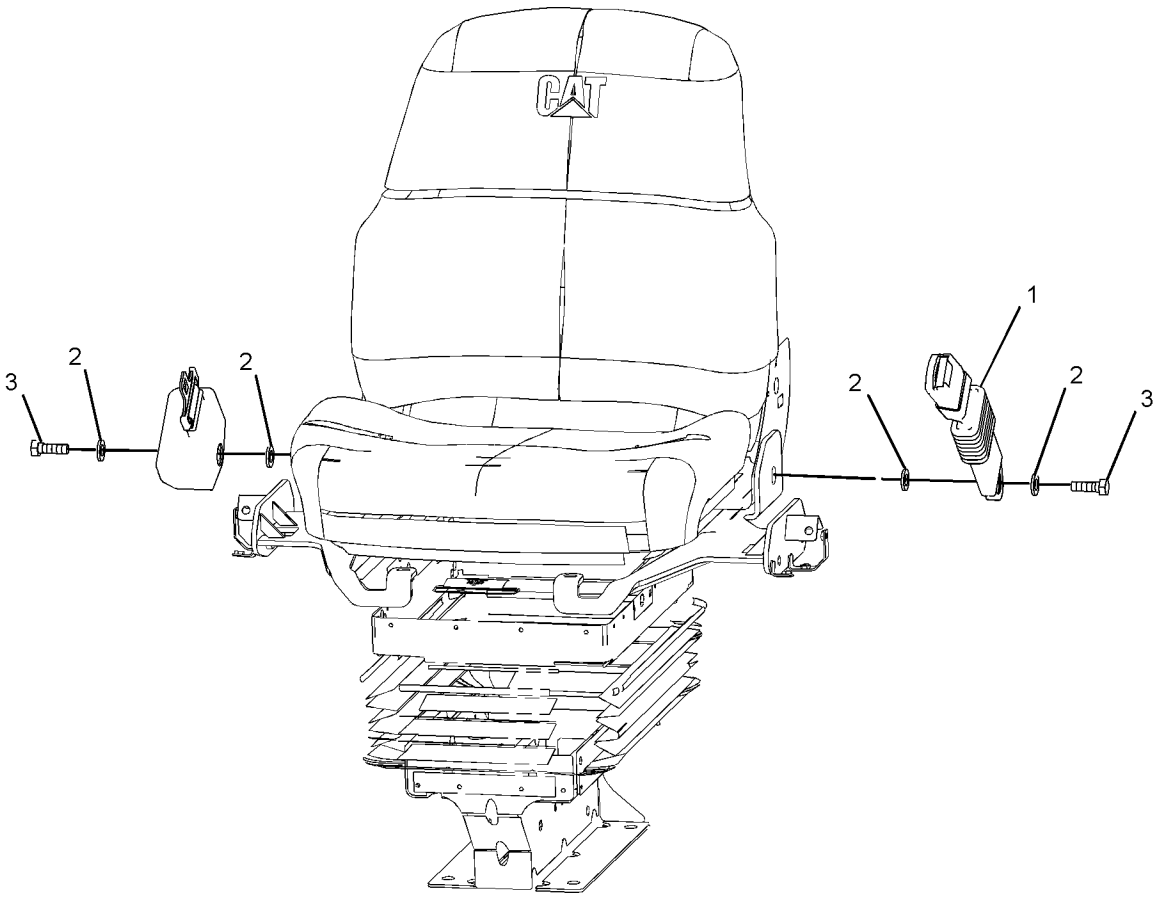

FRONT VIEW
(TOP LEFT)

GRAPHIC #1 **<END>** g01078751

OPERATOR STATION

206-1748 SEAT BELT GP–RETRACTABLE, 3-IN (CHG -01, -02)

S/N: HLS1-UP

AN ATTACHMENT

SMCS-7327 **i02105089**

NOTE	REF NO	GRAPHIC REF	PART NUMBER	QTY	PART NAME 1 2 3 4 5 6 (PRODUCT LEVEL)	SEE PAGE
	1	1	**206-1750**	1	SEAT BELT GP	
	2	1	**8T-4223**	4	WASHER-HARD (13.5X25.5X3-MM THK)	
M	3	1	**8T-4956**	2	BOLT (M12X1.75X35-MM)	

M-METRIC PART

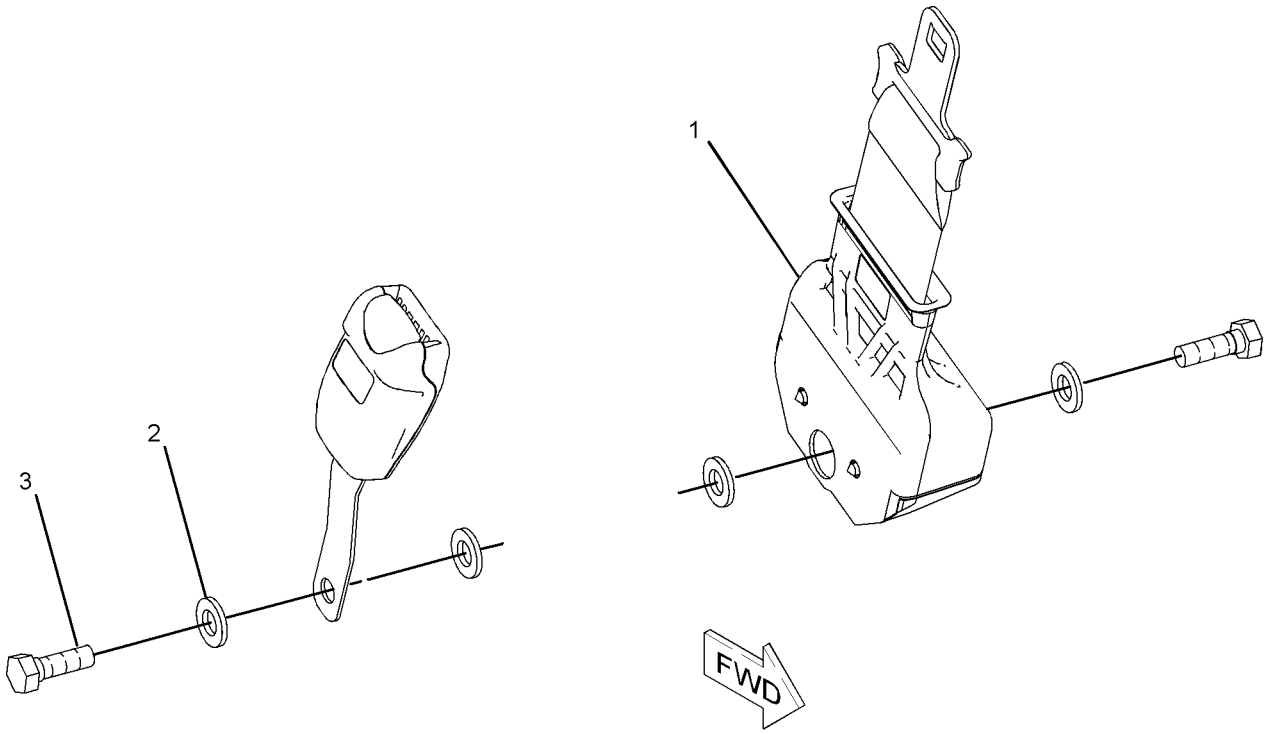

GRAPHIC #1 **<END>** g01078668

OPERATOR STATION

164-1213 SEAT GP–DELUXE, CLOTH (CHG -00, -01)

S/N: HLS1-UP

PART OF 164-1203 SEAT GP-SUSPENSION

AN ATTACHMENT

SMCS-7312, 7321, 7324, 7336 **i02310704**

NOTE	REF NO	GRAPHIC REF	PART NUMBER	QTY	PART NAME 1 2 3 4 5 6 (PRODUCT LEVEL)	SEE PAGE
	1	1	**2M-7819**	1	RING-RETAINING	
	2	1	**4B-4278**	4	WASHER (10.2X20.5X1.6-MM THK)	
	3	1	**6C-3677**	2	RIVET-POP	
	4	1	**8S-7803**	2	RING-RETAINING	
	5	1	**220-3790**	1	ARMREST AS (RH)	
M		1	**6A-9083**		SCREW-MACHINE (M6X1X15-MM)	
		1	**220-3793**	1	PAD AS	
	6	1	**031-4155**	4	LOCKNUT (5/16-18-THD)	
	7	1	**095-0878**	2	PIN-SPRING	
M	8	1	**105-3481**	2	BOLT-SOCKET HEAD (M8X1.25X20-MM)	
	9	1	**123-6077**	1	SHAFT-PIVOT	
	10	1	**132-9240**	1	LATCH AS	
	11	1	**135-1706**	1	SPRING	
	12	1	**154-8278**	1	SPRING-RETURN	
	13	1	**154-8280**	1	SPRING-RETURN	
	14	1	**154-8284**	1	TUBE	
	15	1	**161-9290**	1	WASHER (11.9X20.7X2.3-MM THK)	
	16	1	**164-1211**	1	LEVER	
	17	1	**164-1212**	1	LEVER	
	18	1	**164-1214**	4	KNOB	
	19	1	**164-1245**	1	CUSHION GP-SEAT	
		1	**164-1269**	1	BOOT	
		1	**101-0003**	3	FASTENER	
		1	**164-1272**	1	ROD AS	
		1	**164-1273**	2	SPRING-EXTENSION	
	20	1	**164-1246**	1	CUSHION AS	
	21	1	**164-1247**	1	BRACKET AS (RH)	
	22	1	**164-1249**	1	LEVER AS	
	23	1	**164-1250**	1	HANDLE	
	24	1	**164-1251**	1	SPRING	
	25	1	**164-1252**	1	SPRING	
	26	1	**220-3791**	1	ARMREST AS (LH)	
M		1	**6A-9083**	1	SCREW-MACHINE (M6X1X15-MM)	
		1	**220-3793**	1	PAD AS	
	29	1	**164-1256**	2	SPACER (19X25.4X12.5-MM THK)	
	30	1	**0S-1595**	2	BOLT (1/2-13X1.25-IN)	
	31	1	**164-1258**	1	BRACKET AS (RH)	
	32	1	**164-1259**	1	BRACKET AS (LH)	
	33	1	**164-1261**	1	BRACKET AS (LH)	
	34	1	**164-1262**	1	PAN AS	
	35	1	**164-1263**	1	PAN AS	
	36	1	**164-1264**	1	PAN AS	
	37	1	**164-1265**	4	BOLT (3/8-16X1.1-IN)	
	38	1	**164-1271**	2	SPRING	
	39	1	**164-1274**	2	BLOCK	
	40	1	**164-1275**	1	BACKREST AS	
M		1	**2W-9499**	2	BOLT (M6X1X40-MM)	
		1	**8C-0572**	2	WASHER (8.8X25.5X2-MM THK)	
	41	1	**164-1276**	2	TUBE	
	42	1	**164-1277**	2	CLIP-SPRING	
	43	1	**164-1295**	1	PLATE AS-SLIDE	
	44	1	**180-5780**	1	LEVER-TILT	
	45	1	**180-5781**	1	ROD	
	46	1	**180-5782**	1	SPRING	
	47	1	**180-5783**	1	FOLLOWER	

164-1213 SEAT GP *(contd.)* i02310704

NOTE	REF NO	GRAPHIC REF	PART NUMBER	QTY	PART NAME 1 2 3 4 5 6 (PRODUCT LEVEL)	SEE PAGE
	48	1	**180-5784**	1	LATCH AS	
	49	1	**180-5785**	1	SPRING	
	51	1	**180-5787**	1	KNOB	
	52	1	**180-5788**	1	BLOCK	
	55	1	**180-5791**	1	SUPPORT AS-SEAT (LUMBAR)	
	56	1	**195-7055**	8	WASHER-HARD (9.9X28.5X3.2-MM THK)	
	57	1	**195-9223**	4	SCREW-PAN HEAD	
M	58	1	**129-3180**	2	LOCKNUT (M12X1.75-THD)	
M	59	1	**131-3540**	12	LOCKNUT (M8X1.25-THD)	
	60	1	**1K-6872**	2	LOCKNUT (1/2-13-THD)	
	61	1	**2K-4973**	4	LOCKNUT (3/8-16-THD)	
	62	1	**2P-7864**	2	SCREW-TAPPING	
	63	1	**3B-4505**	4	LOCKWASHER	
	64	1	**4B-5271**	4	WASHER (25.5X11.2X2-MM THK)	
	65	1	**4H-1641**	2	PIN-SPRING	
	66	1	**4M-0061**	4	BOLT (5/16-18X0.75-IN)	
	67	1	**5P-8245**	4	WASHER-HARD (13.5X25.5X3-MM THK)	
	68	1	**5S-7379**	4	BOLT (3/8-16X0.875-IN)	
M	69	1	**8T-4200**	2	BOLT (M8X1.25X16-MM)	
	70	1	**8T-7566**	1	PIN-SPRING	

M-METRIC PART

164-1213 SEAT GP *(contd.)* **i02310704**

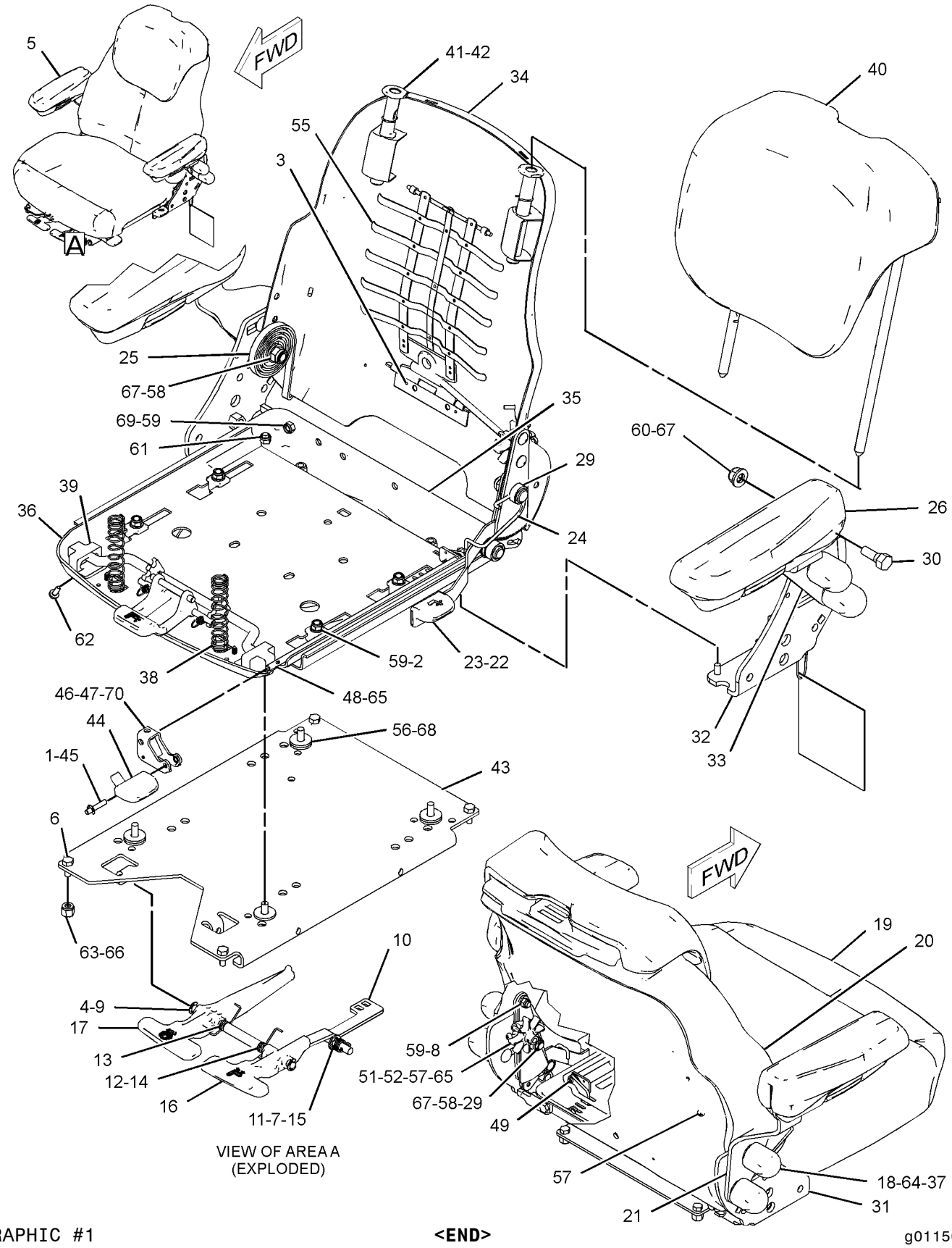

GRAPHIC #1 **<END>** g01150321

OPERATOR STATION

273-5905 SEAT GP (CHG -00)

S/N: HLS1-UP

PART OF 206-1791 SEAT GP-SUSPENSION

AN ATTACHMENT

SMCS-7312, 7321, 7324, 7336 **i02447150**

NOTE	PART NUMBER	QTY	PART NAME 1 2 3 4 5 6 (PRODUCT LEVEL)	SEE PAGE
M	**8T-4189**	2	BOLT (M8X1.25X20-MM)	
	8T-8917	2	BOLT (1/2-13X1.25-IN)	
	164-1265	1	BOLT (3/8-16X1.1-IN)	
	260-0045	1	BOLT-SHOULDER (3/8-16X1.18-IN)	
M	**105-3481**	2	BOLT-SOCKET HEAD (M8X1.25X20-MM)	
	164-1258	1	BRACKET AS (RH)	
	164-1259	1	BRACKET AS (LH)	
	164-1266	1	CUSHION AS-BACK	
	260-0058	1	CUSHION AS-SEAT	
	260-0027	1	KNOB-SLIDE	
	260-0028	1	LEVER-TILT	
	164-1249	1	LEVER AS	
M	**3T-0852**	8	LOCKNUT (M8X1.25-THD)	
M	**9X-6620**	1	LOCKNUT	
M	**129-3180**	2	LOCKNUT (M12X1.75-THD)	
	260-0029	1	PAN	
	260-0040	1	PAN	
	164-1263	1	PAN AS	
	180-5797	1	PAN AS	
	180-5781	1	ROD	
	8T-9501	2	SCREW (10-16X0.75-IN)	
M	**8T-6412**	2	SCREW-MACHINE (M6X1X20-MM)	
	195-9223	2	SCREW-PAN HEAD	
	164-1256	2	SPACER (19X25.4X12.5-MM THK)	
	164-1251	1	SPRING	
	164-1252	1	SPRING	
	164-1273	1	SPRING-EXTENSION	
	161-9283	1	WASHER (1.6-MM THK)	
	5P-8245	2	WASHER-HARD (13.5X25.5X3-MM THK)	

M-METRIC PART

<END>

OPERATOR STATION

273-6036 SEAT GP—CLOTH (CHG -00)

S/N: HLS1-UP

PART OF 206-1792 SEAT GP-SUSPENSION

AN ATTACHMENT

SMCS-7312, 7321, 7324, 7336 **i02447154**

NOTE	PART NUMBER	QTY	PART NAME 1 2 3 4 5 6 (PRODUCT LEVEL)	SEE PAGE
	164-1258	1	BRACKET AS (RH)	
	164-1259	1	BRACKET AS (LH)	
	164-1244	1	CUSHION AS-BACK	
	260-0050	1	CUSHION AS-SEAT	
	164-1249	1	LEVER AS	
	164-1263	1	PAN AS	
	180-5797	1	PAN AS	
M	**8T-4189**	2	BOLT (M8X1.25X20-MM)	
	8T-8917	2	BOLT (1/2-13X1.25-IN)	
	164-1265	1	BOLT (3/8-16X1.1-IN)	
	260-0045	1	BOLT-SHOULDER (3/8-16X1.18-IN)	
M	**105-3481**	2	BOLT-SOCKET HEAD (M8X1.25X20-MM)	
	260-0028	1	LEVER-TILT	
	260-0027	1	KNOB-SLIDE	
M	**3T-0852**	8	LOCKNUT (M8X1.25-THD)	
M	**9X-6620**	1	LOCKNUT	
M	**129-3180**	2	LOCKNUT (M12X1.75-THD)	
	260-0029	1	PAN	
	260-0040	1	PAN	
	180-5781	1	ROD	
	8T-9501	2	SCREW (10-16X0.75-IN)	
M	**8T-6412**	2	SCREW-MACHINE (M6X1X20-MM)	
	195-9223	2	SCREW-PAN HEAD	
	164-1256	2	SPACER (19X25.4X12.5-MM THK)	
	164-1251	1	SPRING	
	164-1252	1	SPRING	
	164-1273	1	SPRING-EXTENSION	
	161-9283	1	WASHER (1.6-MM THK)	
	5P-8245	2	WASHER-HARD (13.5X25.5X3-MM THK)	

M-METRIC PART

<END>

OPERATOR STATION

164-1203 SEAT GP-SUSPENSION–DELUXE, CLOTH

(CHG -02 THRU -04)
S/N: HLS1-UP
PART OF 180-5772 SEAT GP-SUSPENSION
AN ATTACHMENT

SMCS-7324, 7336 **i02151091**

NOTE	REF NO	GRAPHIC REF	PART NUMBER	QTY	PART NAME 1 2 3 4 5 6 (PRODUCT LEVEL)	SEE PAGE
	1	1	**149-4745**	2	KIT-SLIDER BLOCK	
					(EACH INCLUDES SLIDER BLOCK & BOLT)	
J	2	1	**161-9289**	2	BLOCK-SLIDER	
Y	3	1	**164-1207**	1	SUSPENSION GP-SEAT	619
Y	4	1	**164-1213**	1	SEAT GP (DELUXE, CLOTH)	609
J	5	1	**173-5787**	2	SETSCREW (1/4-20-THD)	
					AVAILABLE REPAIR KIT(S):	
J			**161-9744**	1	KIT-SLIDER BLOCK	
					(INCLUDES SLIDER BLOCKS & PARTS MARKED J)	

J-KIT MARKED J INCLUDES PARTS MARKED J
Y-SEPARATE ILLUSTRATION

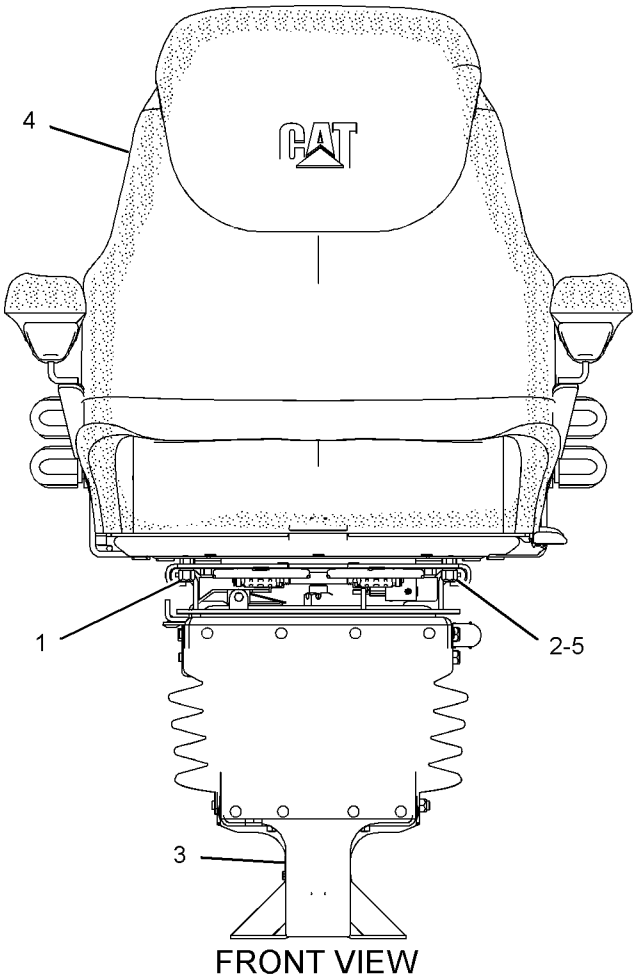

GRAPHIC #1

<END>

g01095039

180-5772 SEAT GP-SUSPENSION–DELUXE, CLOTH (CHG -00)

S/N: HLS1-UP

PART OF 269-2126, 269-2127 CAB AR

AN ATTACHMENT

SMCS-7324, 7336 **i01453042**

NOTE	PART NUMBER	QTY	PART NAME 1 2 3 4 5 6 (PRODUCT LEVEL)	SEE PAGE
M	**8T-4139**	4	BOLT (M12X1.75X30-MM)	
Y	**164-1203**	1	SEAT GP-SUSPENSION (DELUXE, CLOTH)	614
	3S-2093	1	STRAP-CABLE	
	8T-4223	4	WASHER-HARD (13.5X25.5X3-MM THK)	

M-METRIC PART
Y-SEPARATE ILLUSTRATION

<END>

OPERATOR STATION

206-1791 SEAT GP-SUSPENSION–VINYL (CHG -01, -02)

S/N: HLS1-UP
PART OF 280-7364 SEAT GP-SUSPENSION
AN ATTACHMENT

SMCS-7324, 7336 **i02445825**

NOTE	REF NO	GRAPHIC REF	PART NUMBER	QTY	PART NAME 1 2 3 4 5 6 (PRODUCT LEVEL)	SEE PAGE
	1	1	**2K-4973**	4	LOCKNUT (3/8-16-THD)	
	2	1	**4L-6454**	4	BOLT (3/8-16X1-IN)	
	3	1	**195-7055**	4	WASHER-HARD (9.9X28.5X3.2-MM THK)	
Y	4	1	*273-5905*	1	SEAT GP	612
Y	5	1	*273-6372*	1	SUSPENSION GP-SEAT	622
	6	1	**164-1265**	4	BOLT (3/8-16X1.1-IN)	
	7	1	**4B-5271**	4	WASHER (25.5X11.2X2-MM THK)	
	8	1	**164-1214**	4	KNOB	
	9	1	**164-1247**	1	BRACKET AS (RH)	
	10	1	**220-3790**	1	ARMREST AS (RH)	
M		1	**6A-9083**	1	SCREW-MACHINE (M6X1X15-MM)	
	11	1	**164-1261**	1	BRACKET AS (LH)	
	12	1	**220-3791**	1	ARMREST AS (LH)	
M		1	**6A-9083**	1	SCREW-MACHINE (M6X1X15-MM)	
	13	1	**1K-6872**	2	LOCKNUT (1/2-13-THD)	
	14	1	**0S-1595**	2	BOLT (1/2-13X1.25-IN)	
	15	1	**5P-8245**	2	WASHER-HARD (13.5X25.5X3-MM THK)	

M-METRIC PART
Y-SEPARATE ILLUSTRATION

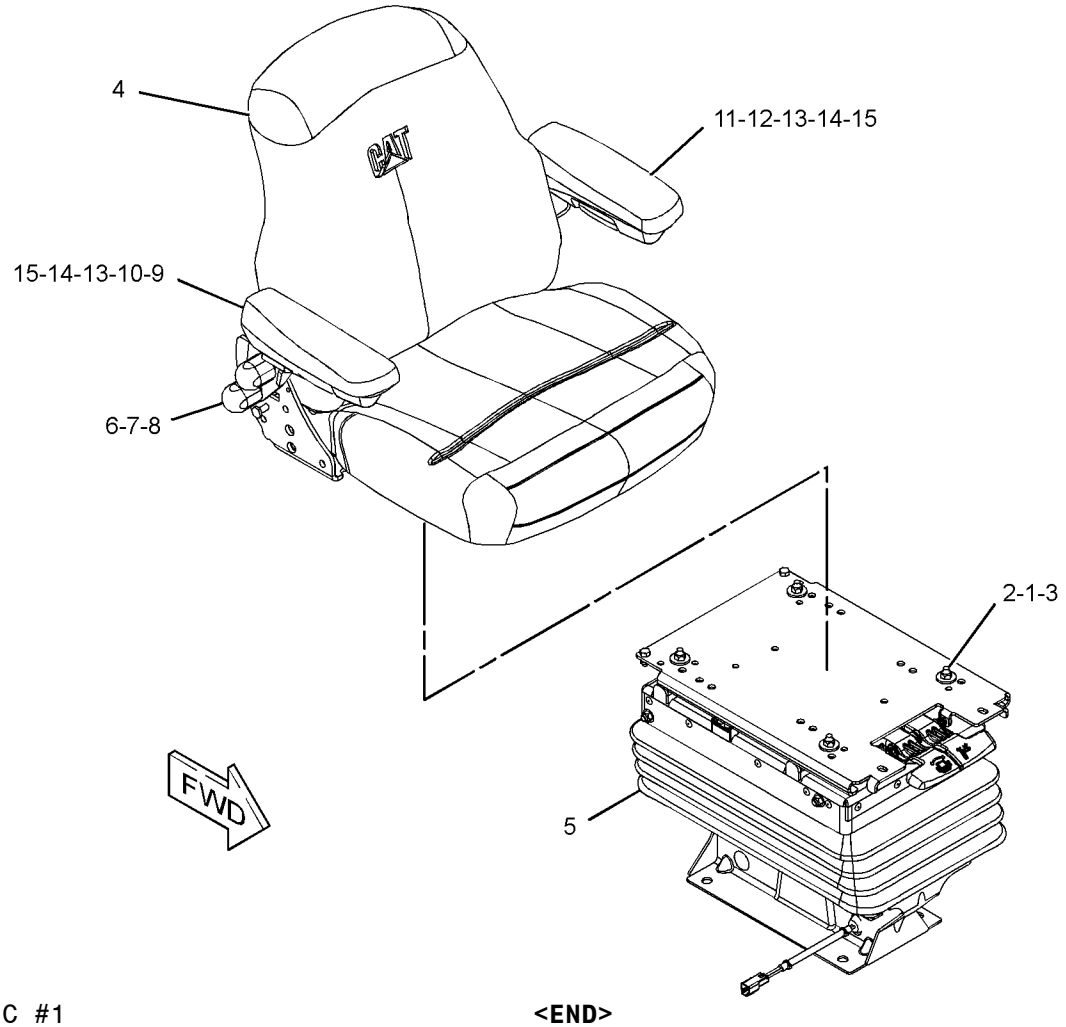

GRAPHIC #1 **<END>** g01216461

206-1792 SEAT GP-SUSPENSION–CLOTH (CHG -01, -02)

S/N: HLS1-UP

PART OF 280-7365 SEAT GP-SUSPENSION

AN ATTACHMENT

SMCS-7324, 7336 **i02447153**

NOTE	REF NO	GRAPHIC REF	PART NUMBER	QTY	PART NAME 1 2 3 4 5 6 (PRODUCT LEVEL)	SEE PAGE
	1	1	**2K-4973**	4	LOCKNUT (3/8-16-THD)	
	2	1	**4L-6454**	4	BOLT (3/8-16X1-IN)	
	3	1	**195-7055**	4	WASHER-HARD (9.9X28.5X3.2-MM THK)	
Y	4	1	**273-6036**	1	SEAT GP	613
Y	5	1	**273-6372**	1	SUSPENSION GP-SEAT	622
	6	1	**164-1265**	4	BOLT (3/8-16X1.1-IN)	
	7	1	**4B-5271**	4	WASHER (25.5X11.2X2-MM THK)	
	8	1	**164-1214**	4	KNOB	
	9	1	**164-1247**	1	BRACKET AS (RH)	
	10	1	**220-3790**	1	ARMREST AS (RH)	
	11	1	**164-1261**	1	BRACKET AS (LH)	
	12	1	**220-3791**	1	ARMREST AS (LH)	
	13	1	**1K-6872**	2	LOCKNUT (1/2-13-THD)	
	14	1	**0S-1595**	2	BOLT (1/2-13X1.25-IN)	
	15	1	**5P-8245**	2	WASHER-HARD (13.5X25.5X3-MM THK)	

Y-SEPARATE ILLUSTRATION

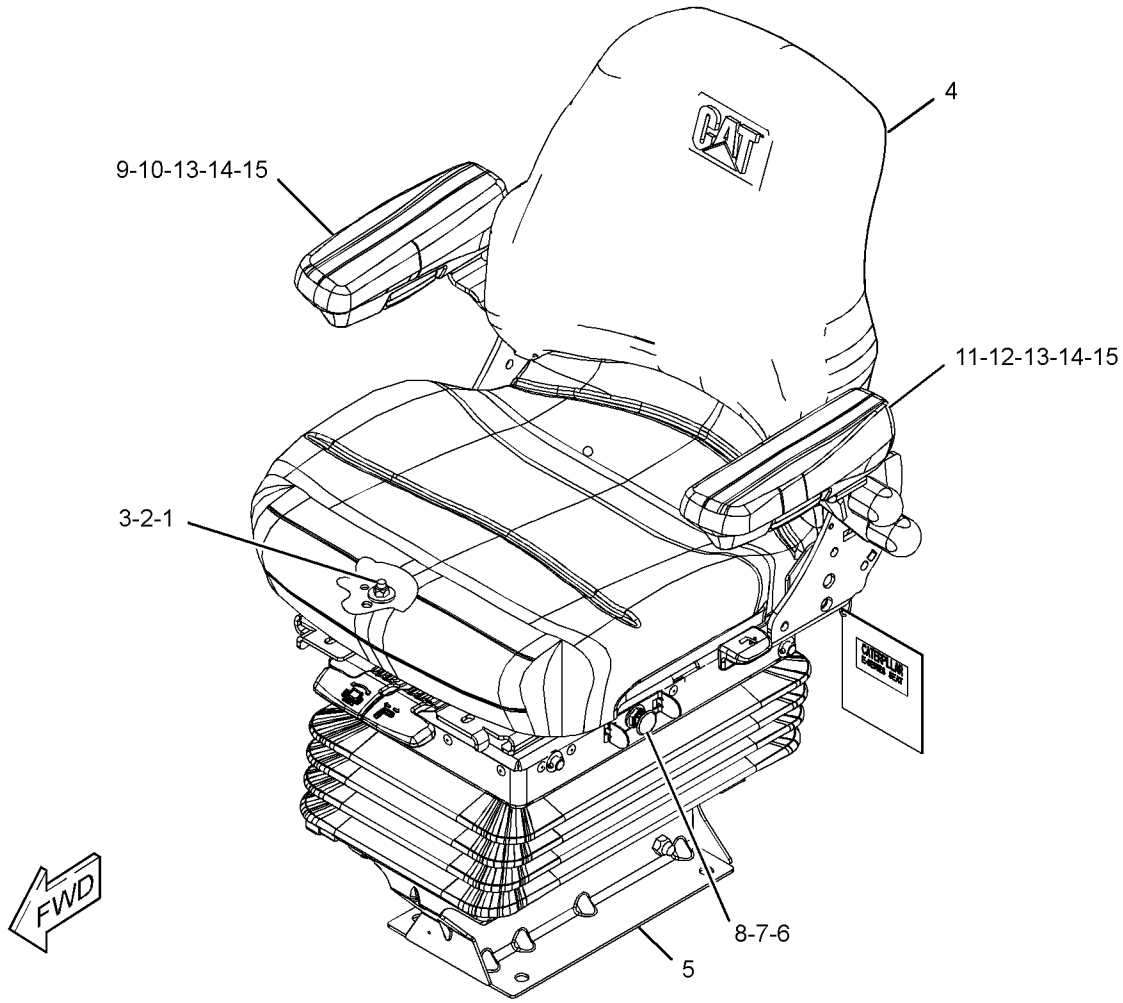

GRAPHIC #1 **<END>** g01225777

280-7364 SEAT GP-SUSPENSION—VINYL (CHG -00)

S/N: HLS1-UP
PART OF 269-2123, 269-2124 CANOPY AR
AN ATTACHMENT

SMCS-7324, 7336 **i02434492**

NOTE	PART NUMBER	QTY	PART NAME 1 2 3 4 5 6 (PRODUCT LEVEL)	SEE PAGE
Y	**206-1791**	1	SEAT GP-SUSPENSION	616
M	**8T-4139**	4	BOLT (M12X1.75X30-MM)	
	3S-2093	1	STRAP-CABLE	
	8T-4223	4	WASHER-HARD (13.5X25.5X3-MM THK)	

M-METRIC PART
Y-SEPARATE ILLUSTRATION

<END>

280-7365 SEAT GP-SUSPENSION—CLOTH (CHG -00)

S/N: HLS1-UP
PART OF 269-2125 CAB AR
AN ATTACHMENT

SMCS-7324, 7336 **i02434559**

NOTE	PART NUMBER	QTY	PART NAME 1 2 3 4 5 6 (PRODUCT LEVEL)	SEE PAGE
Y	**206-1792**	1	SEAT GP-SUSPENSION	617
M	**8T-4139**	4	BOLT (M12X1.75X30-MM)	
	3S-2093	1	STRAP-CABLE	
	8T-4223	4	WASHER-HARD (13.5X25.5X3-MM THK)	

M-METRIC PART
Y-SEPARATE ILLUSTRATION

<END>

OPERATOR STATION

164-1207 SUSPENSION GP-SEAT (CHG -02)

S/N: HLS1-UP

PART OF 164-1203 SEAT GP-SUSPENSION

AN ATTACHMENT

SMCS-7312, 7324 **i02310707**

NOTE	REF NO	GRAPHIC REF	PART NUMBER	QTY	PART NAME 1 2 3 4 5 6 (PRODUCT LEVEL)	SEE PAGE
	1	1	**111-5042**	34	FASTENER (PANEL)	
M	2	1	**129-3180**	1	LOCKNUT (M12X1.75-THD)	
	3	1	**161-9282**	1	BOLT (3/4-10X1.5)	
	4	1	**161-9283**	1	WASHER (1.6-MM THK)	
	5	1	**161-9285**	1	NUT (3/4-10-THD)	
C	6	1	**243-3593**	1	SPRING AS-AIR	
		1	**5P-6010**	1	TUBE	
		1	**130-8343**	1	SCREW-BUTTON HEAD (3/8-16X0.625-IN)	
		1	**163-1135**	1	SPRING	
		1	**164-1232**	1	PLATE	
	7	1	**237-3943**	1	BRACKET	
	8	1	**164-1208**	1	PLATE AS	
		1	**161-9286**	1	SPRING-LATCH	
		1	**161-9288**	1	SHAFT-PIVOT	
		1	**164-1294**	1	LATCH AS	
		1	**9C-4457**	1	FASTENER	
		1	**8S-7803**	1	RING-RETAINING	
	9	1	**164-1215**	1	ABSORBER AS-SHOCK	
C	10	1	**243-3594**	1	BASE	
	11	1	**164-1217**	1	ARM AS-SUSPENSION	
	12	1	**164-1218**	2	ARM AS-SUSPENSION	
	13	1	**164-1219**	1	BRACKET AS	
	14	1	**164-1220**	1	BRACKET AS	
C	15	1	**243-3595**	1	AIR COMPRESSOR GP	
	16	1	**164-1224**	2	SHAFT AS	
	17	1	**164-1225**	2	SHAFT AS	
	18	1	**164-1226**	2	SHAFT	
	19	1	**164-1228**	1	HARNESS AS-RIDE CONTROL	
	20	1	**164-1229**	4	BUMPER	
	21	1	**164-1230**	12	BEARING	
	22	1	**5V-4845**	2	BEARING	
	23	1	**164-1233**	2	SPACER (13X25.4X20.5-MM THK)	
	24	1	**164-1234**	1	PLATE	
	25	1	**164-1237**	1	BUSHING	
	26	1	**164-1238**	1	SPACER (12.8X22.2X3.1-MM THK)	
	27	1	**164-1239**	2	SPACER (13.5X19X61.9-MM THK)	
	28	1	**164-1240**	1	BOOT	
	29	1	**185-3890**	2	SCREW-PAN HEAD (8-32X33.3-MM-THD)	
	30	1	**215-8196**	1	VALVE AS	
	31	1	**215-1242**	1	RING	
M	32	1	**197-6657**	1	BOLT-ROUND HEAD (M12X1.75X80-MM-THD)	
	33	1	**1K-6872**	1	LOCKNUT (1/2-13-THD)	
	34	1	**2K-4973**	8	LOCKNUT (3/8-16-THD)	
	35	1	**3S-2093**	2	STRAP-CABLE	
	36	1	**4B-9784**	8	BALL	
	37	1	**4K-0499**	2	LOCKWASHER	
	38	1	**5M-3062**	1	BOLT (3/8-16X0.75-IN)	
	39	1	**6V-8185**	8	NUT (1/4-20-THD)	
	40	1	**7X-0481**	1	BOLT (203.2-MM)	
	41	1	**7X-0622**	2	WASHER (13X24X2.5-MM THK)	
	42	1	**8T-9364**	4	BOLT (1/4-20X0.625-IN)	
	43	1	**1H-3337**	2	BOLT (1/4-20X0.875-IN)	
	44	1	**164-1236**	2	PLATE AS	
C	45	1	**180-5794**	1	PLATE	
C	46	1	**197-6658**	2	WASHER (6.8X13X0.7-MM THK)	

164-1207 **SUSPENSION GP-SEAT** *(contd.)* **i02310707**

NOTE	REF NO	GRAPHIC REF	PART NUMBER	QTY	PART NAME 1 2 3 4 5 6 (PRODUCT LEVEL)	SEE PAGE
	47	1	**3B-4631**	1	PIN-COTTER	
	48	1	**164-1235**	1	KNOB	

C-CHANGE FROM PREVIOUS TYPE
M-METRIC PART

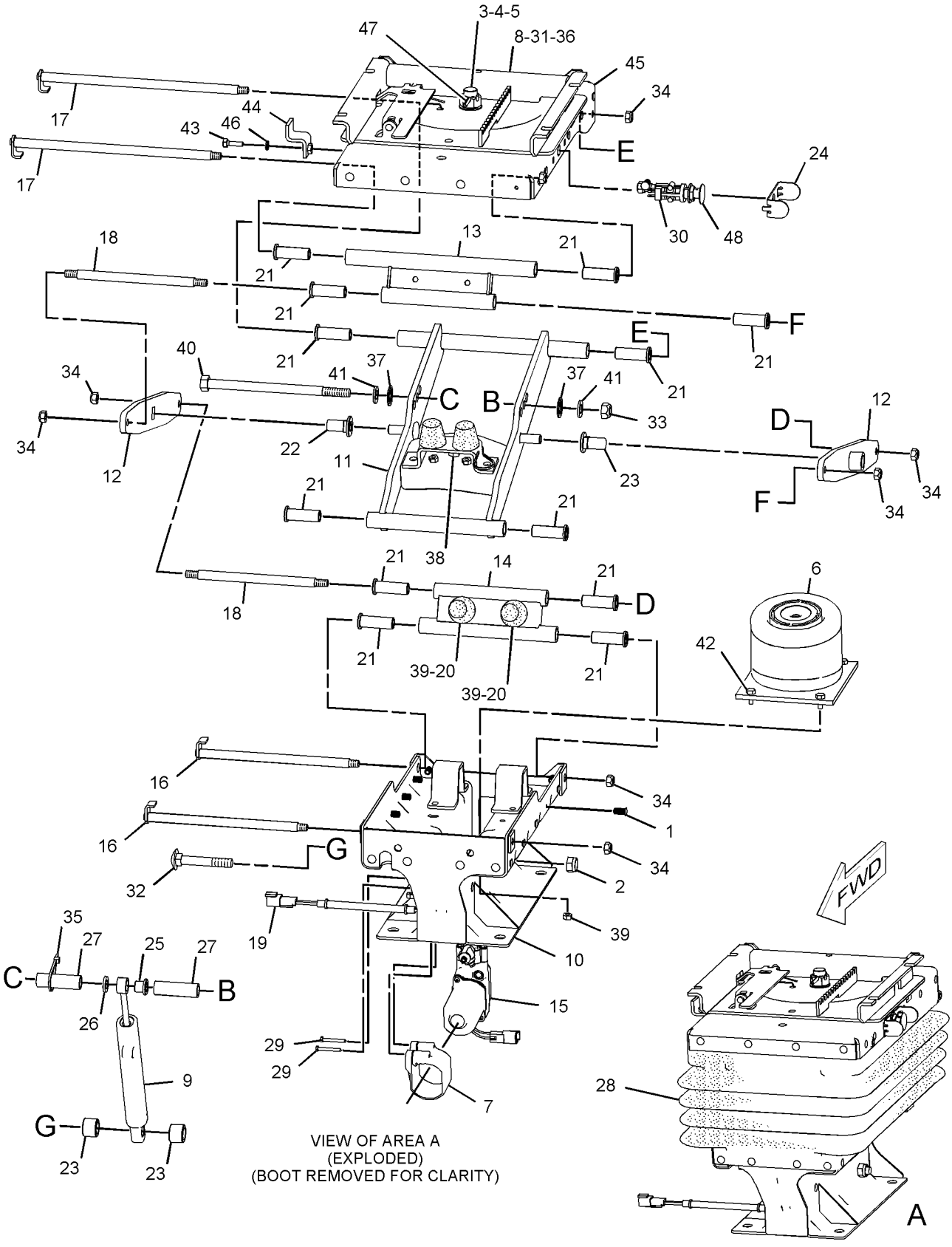

GRAPHIC #1 **<END>** g01150828

OPERATOR STATION

273-6372 SUSPENSION GP-SEAT (CHG -00)

S/N: HLS1-UP

PART OF 206-1791, 206-1792 SEAT GP-SUSPENSION

AN ATTACHMENT

SMCS-7312, 7324 **i02447147**

NOTE	PART NUMBER	QTY	PART NAME 1 2 3 4 5 6 (PRODUCT LEVEL)	SEE PAGE
	260-0059	1	AIR COMPRESSOR GP	
	164-1215	1	ABSORBER AS-SHOCK	
	164-1218	2	ARM AS-SUSPENSION	
	260-0060	1	ARM AS-SUSPENSION	
	164-1219	1	BRACKET AS (FRONT)	
	164-1220	1	BRACKET AS (REAR)	
	260-0036	1	HARNESS AS-RIDE CONTROL	
	260-0057	1	LATCH AS-SLIDE	
	260-0052	1	PLATE AS-SLIDE	
	260-0051	1	PLATE AS-UPPER	
	102-8804	1	KIT-RECEPTACLE (4-PIN)	
			(INCLUDES RECEPTACLE AS & WEDGE)	
	260-0047	2	SHAFT AS	
	218-0235	2	SWITCH AS-LIMIT	
			(EACH INCLUDES)	
	102-8803	1	KIT-RECEPTACLE (3-PIN)	
			(INCLUDES RECEPTACLE AS & WEDGE)	
	186-3735	3	PIN-CONNECTOR (16-GA TO 18-GA)	
	4B-9784	12	BALL	
	260-0063	1	BASE-SEAT	
	164-1230	12	BEARING	
	260-0067	2	BEARING	
	260-0042	1	BEARING-FLANGED	
	161-9289	2	BLOCK-SLIDER	
	260-0043	1	BLOCK-STOP	
	0S-0509	1	BOLT (3/8-16X0.75-IN)	
	1H-3337	4	BOLT (1/4-20X0.875-IN)	
	4M-0061	2	BOLT (5/16-18X0.75-IN)	
	7X-0481	1	BOLT (203.2-MM)	
	260-0041	1	BOLT	
M	**197-6657**	1	BOLT-ROUND HEAD (M12X1.75X80-MM-THD)	
	164-1240	1	BOOT	
	237-3943	1	BRACKET	
	164-1229	4	BUMPER	
	164-1237	1	BUSHING	
	111-5042	34	FASTENER	
	260-0046	1	HOUSING-UPPER	
	260-0031	1	LEVER	
	260-0032	1	LEVER	
	1K-6872	1	LOCKNUT (1/2-13-THD)	
	2D-6235	4	LOCKNUT (1/4-20-THD)	
	2K-4973	8	LOCKNUT (3/8-16-THD)	
M	**6V-7687**	1	LOCKNUT (M12X1.75-THD)	
M	**096-4882**	2	LOCKNUT (M8X1.25-THD)	
	142-2928	4	LOCKNUT (4-40-THD)	
	3B-4505	2	LOCKWASHER	
	3J-4818	2	LOCKWASHER	
	6V-8185	2	NUT (1/4-20-THD)	
	2L-5893	1	PIN-SPRING	
	4H-8380	4	PIN-SPRING	
	164-1232	1	PLATE	
	260-0044	1	PLATE-LATCH	
	5V-1497	2	RETAINER	

273-6372 SUSPENSION GP-SEAT *(contd.)* i02447147

NOTE	PART NUMBER	QTY	PART NAME 1 2 3 4 5 6 (PRODUCT LEVEL)	SEE PAGE
	260-0026	1	RING	
	8S-7803	3	RING-RETAINING	
	130-8343	1	SCREW-BUTTON HEAD (3/8-16X0.625-IN)	
	6L-7155	2	SCREW-MACHINE (1/4-20X0.5-IN)	
	173-5787	2	SETSCREW (1/4-20-THD)	
	164-1226	2	SHAFT	
	260-0049	2	SHAFT-LOWER	
	161-9288	1	SHAFT-PIVOT	
	260-0030	1	SHAFT-PIVOT	
	164-1233	2	SPACER (13X25.4X20.5-MM THK)	
	164-1238	1	SPACER (12.8X22.2X3.1-MM THK)	
	164-1239	2	SPACER (13.5X19X61.9-MM THK)	
	163-1135	1	SPRING	
	260-0034	1	SPRING-RETURN	
	260-0035	1	SPRING-RETURN	
	260-0033	1	SPRING-TORSION	
	7X-0622	6	WASHER (13X24X2.5-MM THK)	
	9X-1481	2	WASHER (1.6-MM THK)	

M-METRIC PART

<END>

239-1080 TACHOMETER GP-ELECTRIC (CHG -00)

S/N: HLS1-UP
PART OF 211-4241 WIRING GP-CONSOLE
AN ATTACHMENT

SMCS-7462 **i01986564**

NOTE	REF NO	GRAPHIC REF	PART NUMBER	QTY	PART NAME 1 2 3 4 5 6 (PRODUCT LEVEL)	SEE PAGE
	1	1	**4B-2043**	7	NUT (8-32-THD)	
	2	1	**9B-7233**	7	LOCKWASHER	
	3	1	**122-7137**	1	LAMP (12-VOLT)	
	4	1	**131-1424**	1	SEAL	

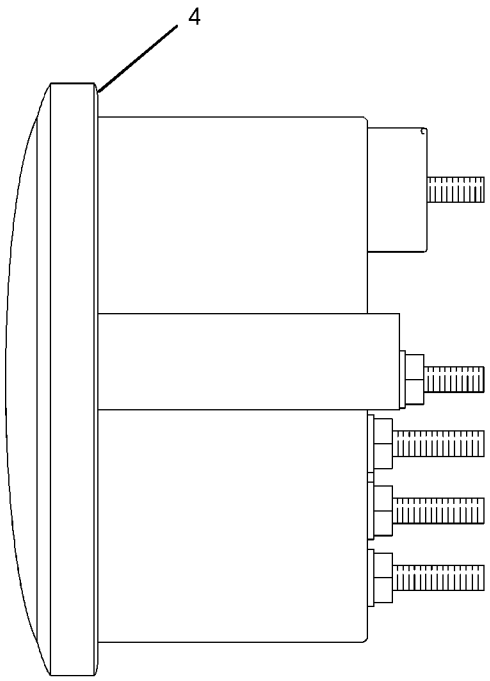

LEFT SIDE VIEW

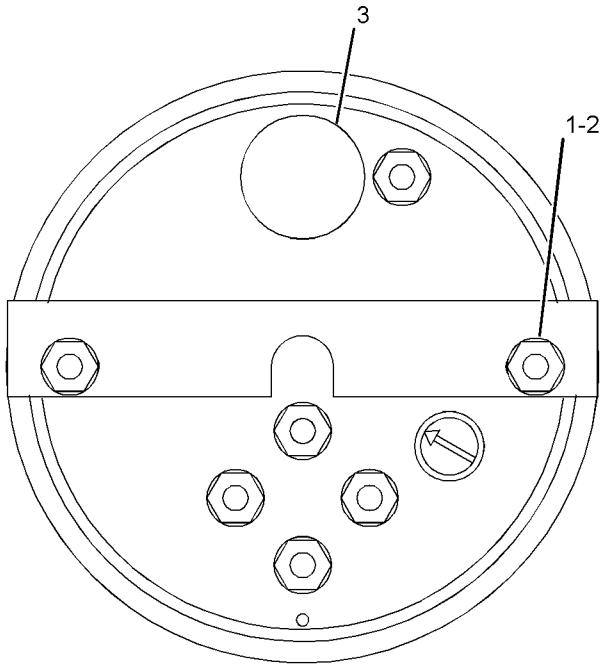

REAR VIEW

GRAPHIC #1 **<END>** g01030658

OPERATOR STATION

206-1704 TRIM GP-CAB (CHG -01 THRU -04)

S/N: HLS1-UP

PART OF 269-2123, 269-2124 CANOPY AR

AN ATTACHMENT

SMCS-7329, 7451 **i02380827**

NOTE	REF NO	GRAPHIC REF	PART NUMBER	QTY	PART NAME 1 2 3 4 5 6 (PRODUCT LEVEL)	SEE PAGE
	1	1	**6V-0292**	1	PLUG	
	2	1	**9C-4457**	4	FASTENER	
	3	1	**141-1762**	1	SPACER (21.2X25.4X20-MM THK)	
	4	1	**206-1623**	1	INSERT (LH)	
	5	1	**206-1625**	1	INSERT (RH)	
	6	1	**206-1637**	1	CONSOLE-STORAGE	
	7	1	**206-1665**	2	PLUG	
	8	1	**206-1666**	1	PLUG	
	9	1	**206-1683**	1	INSERT	
	10	1	**206-1798**	1	COVER-POST	
	11	1	**206-1799**	4	PLUG	
	12	1	**213-1888**	1	COVER-FENDER	
	13	1	**261-9632**	1	COVER AS	
	14	1	**282-7833**	1	GROMMET	
	15	1	**282-7835**	1	PLATE	
M	16	1	**6V-7744**	1	LOCKNUT (M10X1.15-THD)	
	17	1	**7X-7729**	1	WASHER (11X25X3-MM THK)	
M	18	1	**8T-4178**	1	BOLT (M10X1.5X90-MM)	
M	19	1	**8T-4181**	2	BOLT (M6X1X20-MM)	
	20	1	**9X-2038**	3	WASHER (7X19X2-MM THK)	
M	21	1	**9X-2044**	7	SCREW-TRUSS HEAD (M6X1X16-MM)	
	22	1	**9X-8256**	2	WASHER (6.6X12X2-MM THK)	

M-METRIC PART

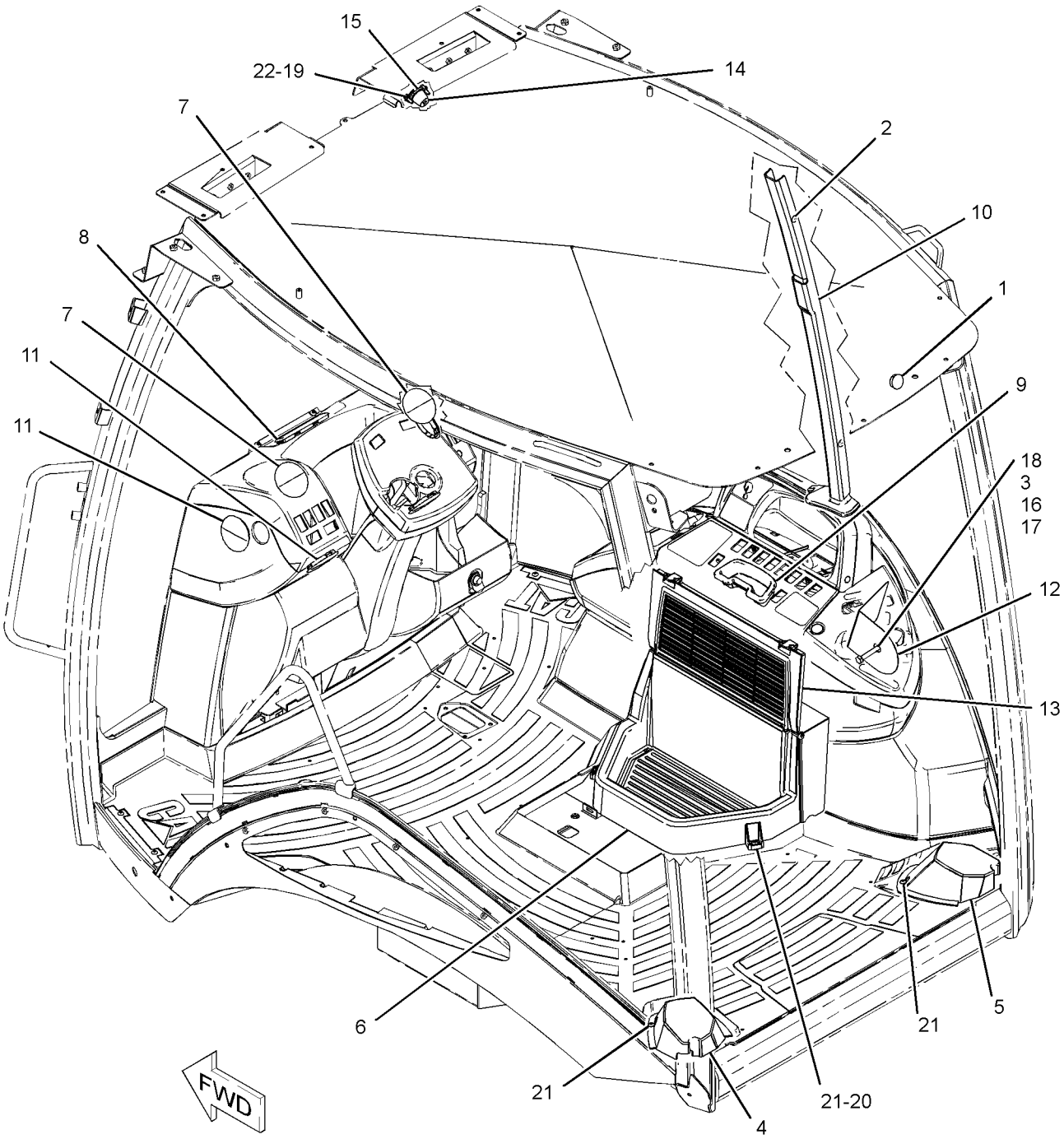

GRAPHIC #1 **<END>** g01189164

206-1857 VISOR GP-CAB (CHG -01)

S/N: HLS1-UP

PART OF 269-2126, 269-2127 CAB AR

AN ATTACHMENT

SMCS-7301 **i02114171**

NOTE	REF NO	GRAPHIC REF	PART NUMBER	QTY	PART NAME 1 2 3 4 5 6 (PRODUCT LEVEL)	SEE PAGE
	1	1	**9R-3205**	1	VISOR AS	
	2	1	**4N-9170**	2	CLIP	



GRAPHIC #1 g01077278

<END>

OPERATOR STATION

206-1727 WASHER GP-WINDOW (CHG -02 THRU -05)

S/N: HLS1-UP
PART OF 269-2125, 269-2126, 269-2127 CAB AR
AN ATTACHMENT

SMCS-7306 **i02396978**

NOTE	REF NO	GRAPHIC REF	PART NUMBER	QTY	PART NAME 1 2 3 4 5 6 (PRODUCT LEVEL)	SEE PAGE
	1	1	**282-7835**	1	PLATE	
D	2	1	**6V-0505**		SEAL (0.5-M)	
	3	1	**3S-2093**	11	STRAP-CABLE	
	4	1	**8T-1118**	1	NOZZLE AS	
	5	1	**9R-3469**	2	DIAPHRAGM	
	6	1	**9X-8372**	1	FILM-INSTRUCTION (WASHER FILL)	
	7	1	**121-6936**	1	CONNECTOR	
	8	1	**213-6051**	1	HARNESS AS-CAB	
E		1	**125-7874**		TUBE-HEAT SHRINK (5.72-MM DIA) (5-CM)	
E		1	**119-3662**		TUBE-HEAT SHRINK (10.85-MM DIA) (7-CM)	
		1	**8L-8413**	15	STRAP-CABLE	
		1	**102-8805**	1	KIT-RECEPTACLE (6-PIN)	
					(INCLUDES RECEPTACLE AS & WEDGE)	
		1	**155-2265**	1	KIT-CONNECTING PLUG (8-PIN)	
		1	**155-2271**	1	KIT-CONNECTING PLUG (4-PIN)	
		1	**155-2274**	1	KIT-CONNECTING PLUG (6-PIN)	
					(EACH PLUG KIT INCLUDES PLUG AS & WEDGE)	
	9	1	**214-3763**	1	TANK GP-WINDOW WASHER	
		1	**117-2823**	1	CAP	
		1	**117-2824**	2	GROMMET	
		1	**117-2826**	2	PUMP AS-WASHER	
		1	**214-3742**	1	TANK	
	10	1	**276-8791**	1	CLIP	
	11	1	**283-3451**	2	CONNECTOR AS	
	12	1	**156-0283**	2	WASHER-HARD (8.4X35X2.5-MM THK)	
M	13	1	**8T-5093**	2	BOLT-LOCKING (M8X1.25X25-MM)	
E	14	1	**144-0195**		HOSE (17-CM)	
E	15	1	**144-0195**		HOSE (21-CM)	
E	16	1	**144-0195**		HOSE (21-CM)	
E	17	1	**144-0195**		HOSE (81-CM)	
	18	1	**282-7833**	1	GROMMET	
	19	1	**9X-8256**	2	WASHER (6.6X12X2-MM THK)	
M	20	1	**8T-4181**	2	BOLT (M6X1X20-MM)	

D-ORDER BY THE METER
E-ORDER BY THE CENTIMETER
M-METRIC PART

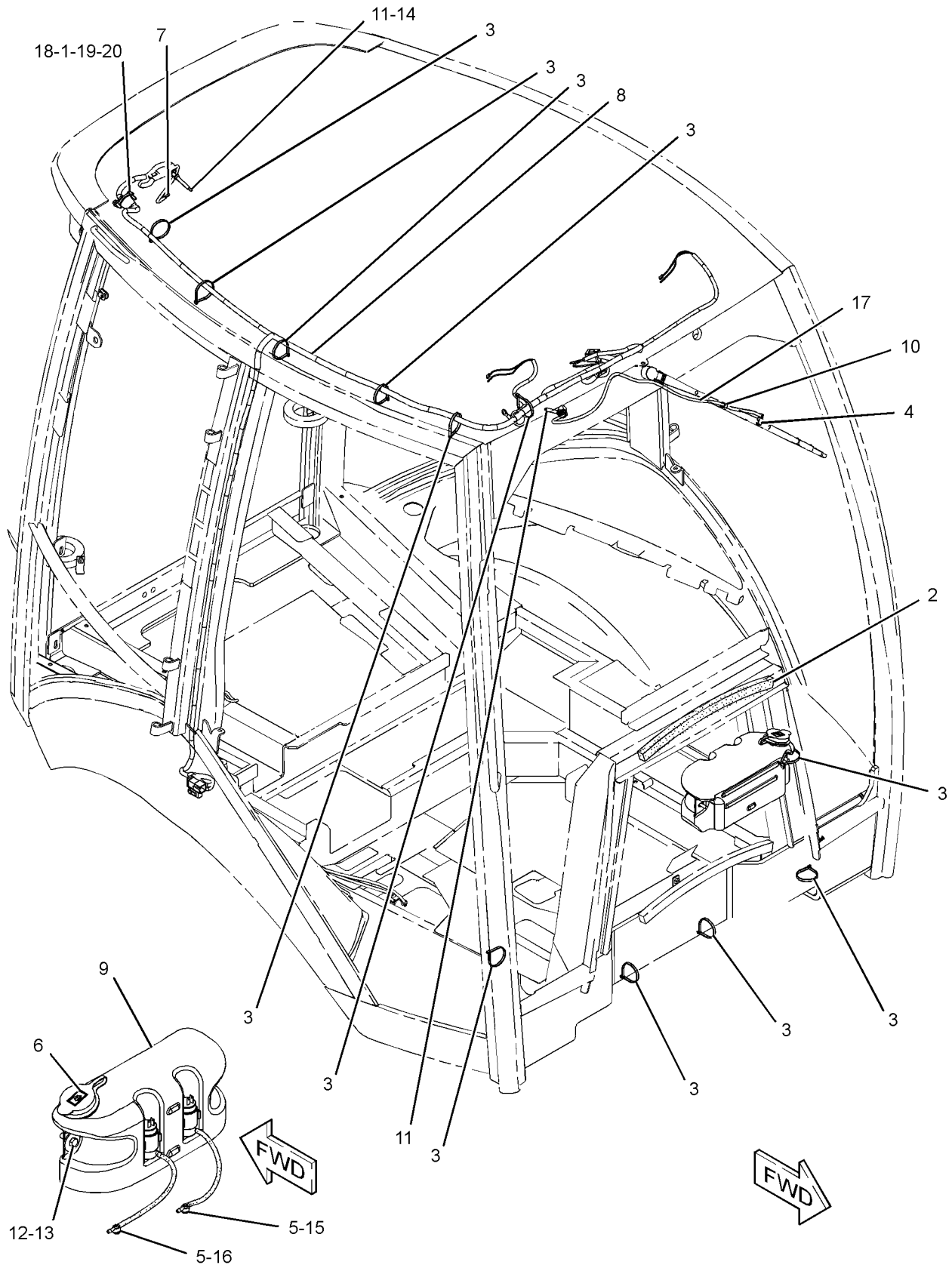

GRAPHIC #1 **<END>** g01231421

OPERATOR STATION

205-9619 WINDOW GP-CAB—UPPER, LH (CHG -01 THRU -03)

S/N: HLS1-UP
PART OF 206-1889 CAB GP
AN ATTACHMENT

SMCS-7310 **i02445800**

NOTE	REF NO	GRAPHIC REF	PART NUMBER	QTY	PART NAME 1 2 3 4 5 6 (PRODUCT LEVEL)	SEE PAGE
E	1	1	**148-5353**		SEAL (342-CM)	
	2	1	**8Y-7309**	1	RETAINER	
	3	1	**100-7608**	1	HANDLE	
	4	1	**129-8542**	6	RETAINER	
	5	1	**129-8545**	8	WASHER (13X40X3-MM THK)	
M	6	1	**136-4192**	4	BOLT (M6X1X35-MM)	
	7	1	**154-5423**	2	SPACER (6.6X12.7X17-MM THK)	
	8	1	**159-4950**	1	LATCH AS	
M		1	**5C-2874**	1	NUT (M5X0.8-THD)	
M		1	**161-6984**	1	SCREW-TRUSS HEAD (M5X0.8X20-MM)	
		1	**161-6987**	1	WASHER-HARD (5.2X16X1.5-MM THK)	
		1	**161-9294**	1	SPRING-FLAT WIRE	
M		1	**162-6556**	1	LOCKNUT (M6X1-THD)	
	9	1	**159-4951**	1	LATCH AS	
M		1	**5C-2874**	1	NUT (M5X0.8-THD)	
M		1	**161-6984**	1	SCREW-TRUSS HEAD (M5X0.8X20-MM)	
		1	**161-6987**	1	WASHER-HARD (5.2X16X1.5-MM THK)	
		1	**161-9294**	1	SPRING-FLAT WIRE	
M		1	**162-6556**	1	LOCKNUT (M6X1-THD)	
	10	1	**205-9621**	1	GLASS (UPPER, LH)	
	11	1	**205-9623**	1	HINGE (LOWER, LH)	
	12	1	**205-9624**	1	HINGE (UPPER, LH)	
	13	1	**223-2030**	1	LATCH AS (HOLD OPEN)	
M		1	**6V-7743**	2	LOCKNUT (M6X1-THD)	
M		1	**9X-2045**	2	SCREW-TRUSS HEAD (M6X1X20-MM)	
		1	**143-2827**	1	SPRING	
M	14	1	**5C-7261**	1	NUT (M8X1.25-THD)	
M	15	1	**6V-7743**	2	LOCKNUT (M6X1-THD)	
	16	1	**7X-2393**	1	BUMPER-CONICAL	

E-ORDER BY THE CENTIMETER
M-METRIC PART

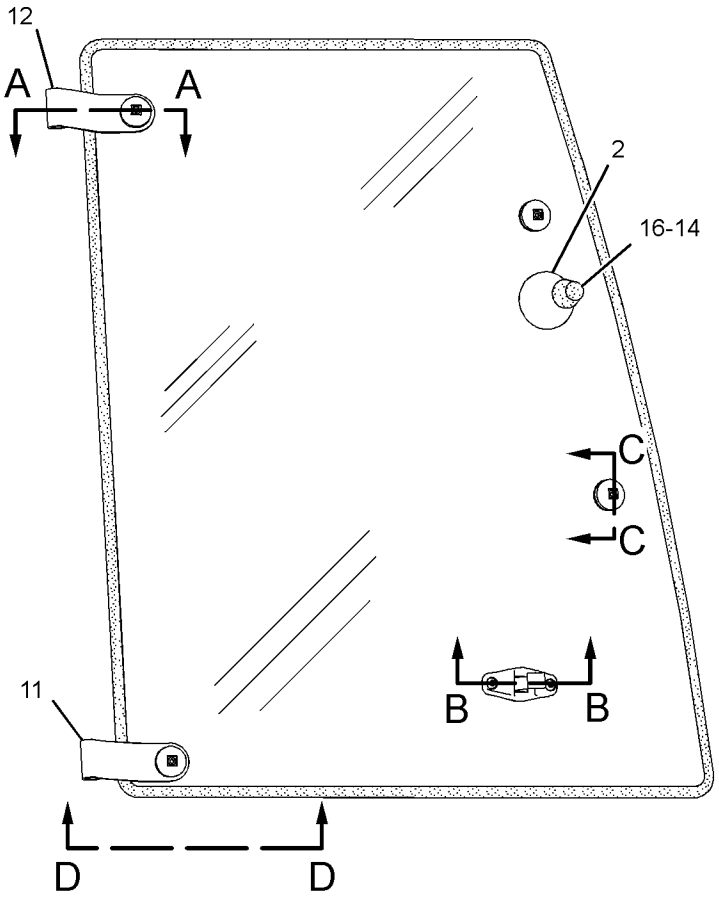

LEFT SIDE VIEW

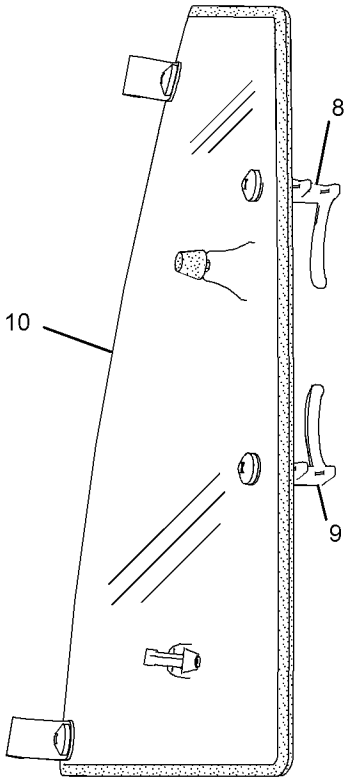

REAR VIEW

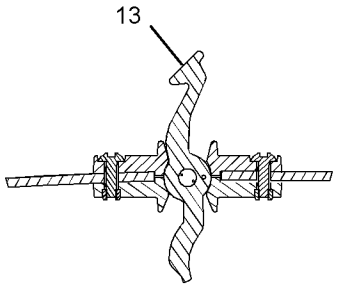

SECTION B-B

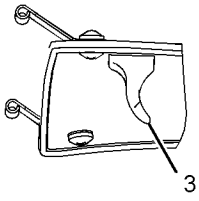

VIEW D-D

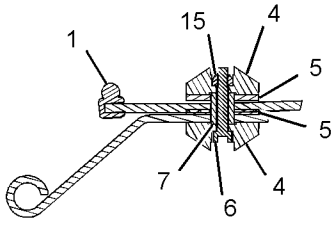

SECTION A-A

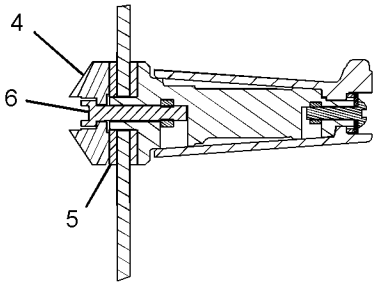

SECTION C-C

GRAPHIC #1 **<END>** g01225815

OPERATOR STATION

205-9628 WINDOW GP-CAB—UPPER, RH (CHG -01 THRU -03)

S/N: HLS1-UP
PART OF 206-1889 CAB GP
AN ATTACHMENT

SMCS-7310 **i02445802**

NOTE	REF NO	GRAPHIC REF	PART NUMBER	QTY	PART NAME 1 2 3 4 5 6 (PRODUCT LEVEL)	SEE PAGE
E	1	1	**148-5353**		SEAL (342-CM)	
	2	1	**8Y-7309**	1	RETAINER	
	3	1	**100-7608**	1	HANDLE	
	4	1	**129-8542**	6	RETAINER	
	5	1	**129-8545**	8	WASHER (13X40X3-MM THK)	
M	6	1	**136-4192**	4	BOLT (M6X1X35-MM)	
	7	1	**154-5423**	2	SPACER (6.6X12.7X17-MM THK)	
	8	1	**159-4950**	1	LATCH AS	
M		1	**162-6556**	1	LOCKNUT (M6X1-THD)	
M		1	**5C-2874**	1	NUT (M5X0.8-THD)	
M		1	**161-6984**	1	SCREW-TRUSS HEAD (M5X0.8X20-MM)	
		1	**161-6987**	1	WASHER-HARD (5.2X16X1.5-MM THK)	
		1	**161-9294**	1	SPRING-FLAT WIRE	
	9	1	**159-4951**	1	LATCH AS	
M		1	**5C-2874**	1	NUT (M5X0.8-THD)	
M		1	**161-6984**	1	SCREW-TRUSS HEAD (M5X0.8X20-MM)	
		1	**161-6987**	1	WASHER-HARD (5.2X16X1.5-MM THK)	
		1	**161-9294**	1	SPRING-FLAT WIRE	
M		1	**162-6556**	1	LOCKNUT (M6X1-THD)	
	10	1	**205-9630**	1	GLASS (UPPER, RH)	
	11	1	**205-9633**	1	HINGE (LOWER, RH)	
	12	1	**205-9634**	1	HINGE (UPPER, RH)	
	13	1	**223-2030**	1	LATCH AS (HOLD OPEN)	
M		1	**6V-7743**	2	LOCKNUT (M6X1-THD)	
M		1	**9X-2045**	2	SCREW-TRUSS HEAD (M6X1X20-MM)	
		1	**143-2827**	1	SPRING	
M	14	1	**5C-7261**	1	NUT (M8X1.25-THD)	
M	15	1	**6V-7743**	2	LOCKNUT (M6X1-THD)	
	16	1	**7X-2393**	1	BUMPER-CONICAL	

E-ORDER BY THE CENTIMETER
M-METRIC PART

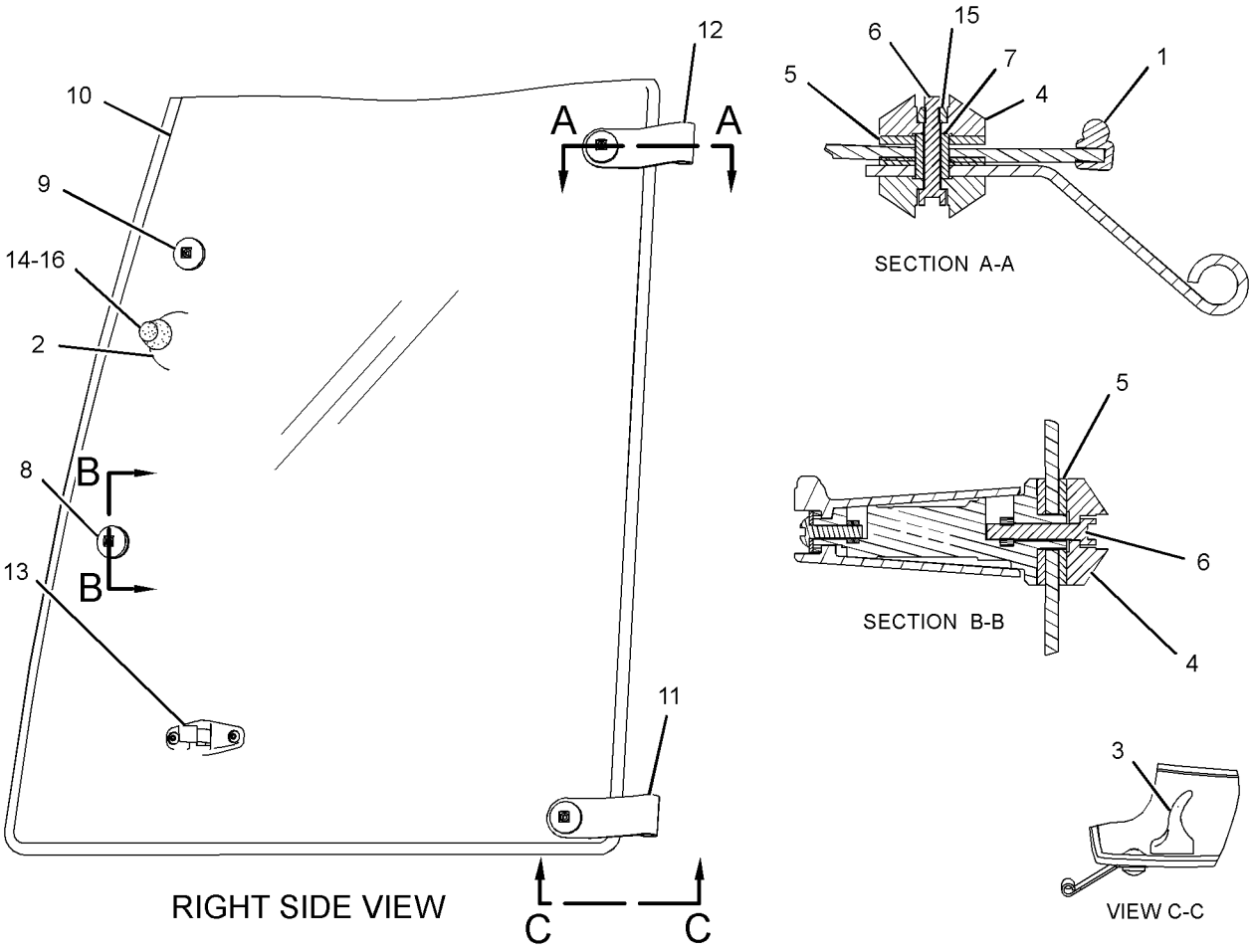

GRAPHIC #1 **<END>** g01225801

OPERATOR STATION

229-0300 WINDOW GP-CAB–REAR (CHG -00)

S/N: HLS1-UP
PART OF 206-1889 CAB GP
AN ATTACHMENT

SMCS-7310 **i02136590**

NOTE	REF NO	GRAPHIC REF	PART NUMBER	QTY	PART NAME 1 2 3 4 5 6 (PRODUCT LEVEL)	SEE PAGE
	1	1	**5P-4115**	6	WASHER-HARD (7.2X19X2-MM THK)	
M	2	1	**9X-2044**	4	SCREW-TRUSS HEAD (M6X1X16-MM)	
	3	1	**9X-2132**	4	RETAINER	
	4	1	**110-5602**	2	KNOB	
	5	1	**119-8349**	2	CAP	
	6	1	**121-9743**	1	SEAL	
M	7	1	**129-3180**	4	LOCKNUT (M12X1.75-THD)	
M	8	1	**131-8203**	4	SCREW-FLAT HEAD (M8X1.25X30-MM)	
	9	1	**146-7744**	1	KIT-LATCH (RH)	
	10	1	**146-7745**	1	KIT-LATCH (LH)	
	11	1	**164-1308**	2	ROLLER	
	12	1	**164-1328**	2	SPRING AS-GAS	
	13	1	**164-1342**	4	BOLT-SPECIAL (M10X1.5)	
	14	1	**164-1343**	4	WASHER-THRUST	
	15	1	**164-1344**	4	WASHER-THRUST	
	16	1	**164-1345**	4	BEARING	
	17	1	**164-1346**	4	STRIKER	
	18	1	**164-1351**	2	PIN	
	19	1	**164-1352**	1	LATCH AS (LH)	
	20	1	**164-1353**	1	LATCH AS (RH)	
	21	1	**167-8182**	2	BUMPER	
	22	1	**171-2870**	2	SPACER (7X10X5.4-MM THK)	
	23	1	**201-9465**	4	SHIM (1-MM THK)	
	24	1	**218-4854**	1	PLATE AS	
M		1	**9R-2672**	1	BOSS-THREADED	
	25	1	**218-4856**	1	PLATE AS	
M		1	**9R-2672**	1	BOSS-THREADED	
	26	1	**229-0298**	1	LINKAGE AS	
	27	1	**229-0305**	1	FRAME AS	
		1	**140-9921**	4	INSERT-THREADED	
	28	1	**229-0308**	1	GLASS	
	29	1	**229-0310**	1	WINDOW AS	
M		1	**8T-3612**	4	NUT-WELD (M8X1.25-THD)	
		1	**229-0309**	1	GLASS	
M	30	1	**5C-2890**	2	NUT (M6X1-THD)	
	31	1	**5P-4116**	4	WASHER-HARD (8.8X20.5X2-MM THK)	
M	32	1	**8T-4200**	4	BOLT (M8X1.25X16-MM)	
	33	1	**8T-4223**	4	WASHER-HARD (13.5X25.5X3-MM THK)	
BD	34	1	**5P-5637**		SEAL	
BE	35	1	**9X-6383**		SEAL	
BE	36	1	**164-1314**		SEAL-LAMP	
BE	37	1	**164-1354**		CHANNEL-WINDOW	

B-USE AS REQUIRED
D-ORDER BY THE METER
E-ORDER BY THE CENTIMETER
M-METRIC PART

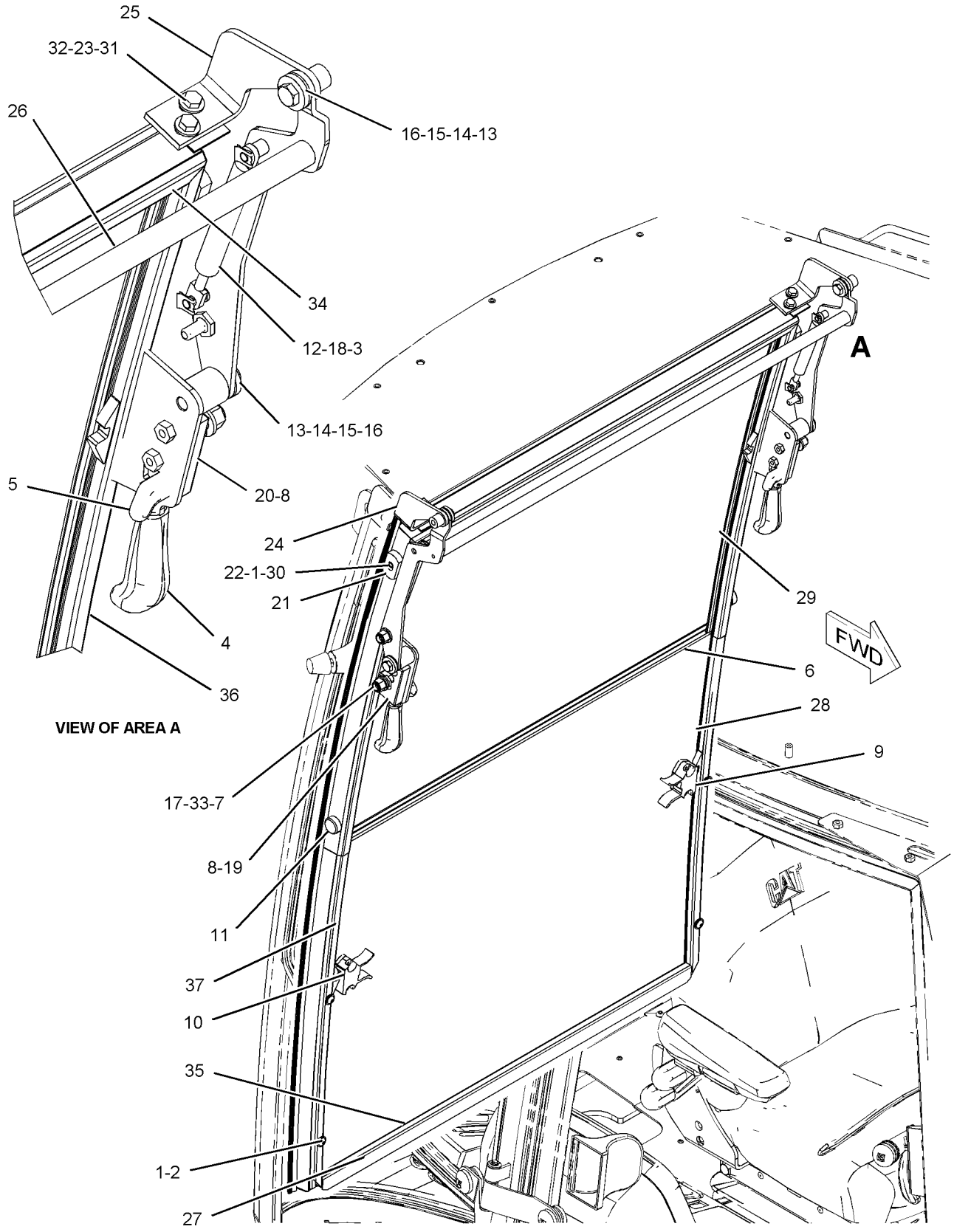

VIEW OF AREA A

GRAPHIC #1

<END>

g01085701

OPERATOR STATION

205-9585 WINDOW GP-DOOR—LH (CHG -01, -02)

S/N: HLS1-UP

PART OF 206-1592 DOOR GP-CAB

AN ATTACHMENT

SMCS-7308, 7310 **i02147199**

NOTE	REF NO	GRAPHIC REF	PART NUMBER	QTY	PART NAME 1 2 3 4 5 6 (PRODUCT LEVEL)	SEE PAGE
BE	1	1	**148-5353**		SEAL	
	2	1	**100-7608**	1	HANDLE	
	3	1	**129-8542**	5	RETAINER	
	4	1	**129-8545**	6	WASHER (13X40X3-MM THK)	
M	5	1	**136-4192**	3	BOLT (M6X1X35-MM)	
	6	1	**154-5423**	2	SPACER (6.6X12.7X17-MM THK)	
	7	1	**159-4951**	1	LATCH AS (LH)	
M		1	**5C-2874**	1	NUT (M5X0.8 THD)	
M		1	**161-6984**	1	SCREW-TRUSS HEAD (M5X0.8X20-MM)	
		1	**161-6987**	1	WASHER-HARD (5.2X16X1.5-MM THK)	
		1	**161-9294**	1	SPRING-FLAT WIRE	
M		1	**162-6556**	1	LOCKNUT (M6X1 THD)	
	8	1	**205-9587**	1	GLASS (LH)	
	9	1	**205-9590**	1	HINGE (UPPER)	
	10	1	**205-9591**	1	HINGE (LOWER)	
	11	1	**223-2030**	1	LATCH AS (HOLD OPEN)	
M		1	**6V-7743**	2	LOCKNUT (M6X1 THD)	
M		1	**9X-2045**	2	SCREW-TRUSS HEAD (M6X1X20-MM)	
		1	**143-2827**	1	SPRING	
M	12	1	**6V-7743**	2	LOCKNUT (M6X1 THD)	

B-USE AS REQUIRED
E-ORDER BY THE CENTIMETER
M-METRIC PART

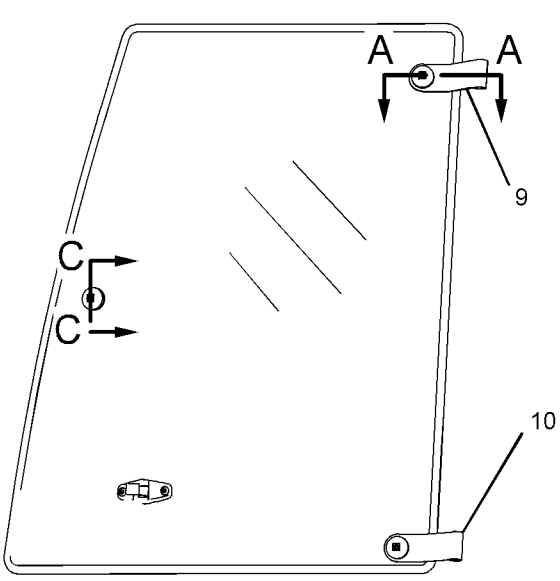

LEFT SIDE VIEW

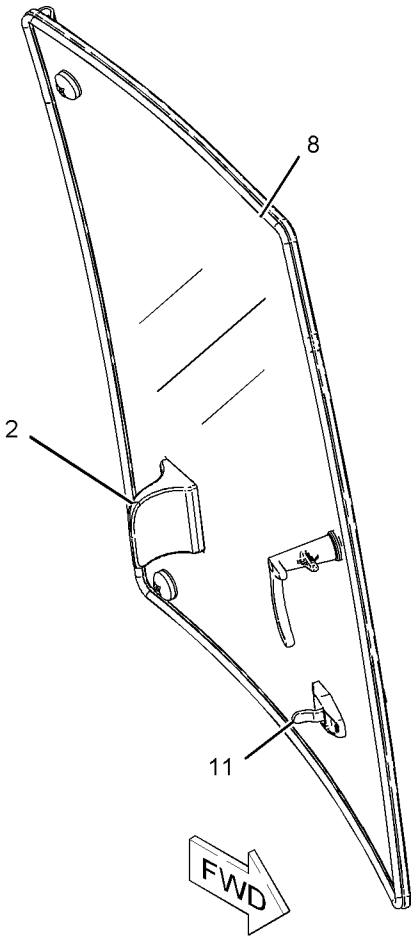

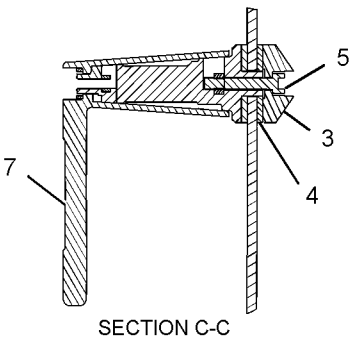

SECTION C-C

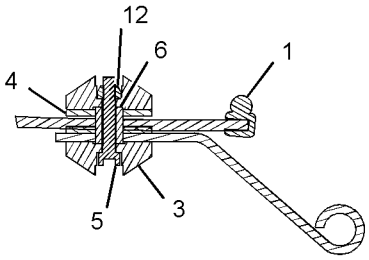

SECTION A-A

GRAPHIC #1

<END>

g01088770

OPERATOR STATION

205-9595 WINDOW GP-DOOR—RH (CHG -01, -02)

S/N: HLS1-UP
PART OF 206-1593 DOOR GP-CAB
AN ATTACHMENT

SMCS-7308, 7310 **i02144861**

NOTE	REF NO	GRAPHIC REF	PART NUMBER	QTY	PART NAME 1 2 3 4 5 6 (PRODUCT LEVEL)	SEE PAGE
BE	1	1	**148-5353**		SEAL	
	2	1	**100-7608**	1	HANDLE	
	3	1	**129-8542**	5	RETAINER	
	4	1	**129-8545**	6	WASHER (13X40X3-MM THK)	
M	5	1	**136-4192**	3	BOLT (M6X1X35-MM)	
	6	1	**154-5423**	2	SPACER (6.6X12.7X17-MM THK)	
	7	1	**159-4950**	1	LATCH AS (RH)	
M		1	**5C-2874**	1	NUT (M5X0.8 THD)	
M		1	**161-6984**	1	SCREW-TRUSS HEAD (M5X0.8X20-MM)	
		1	**161-6987**	1	WASHER-HARD (5.2X16X1.5-MM THK)	
		1	**161-9294**	1	SPRING-FLAT WIRE	
M		1	**162-6556**	1	LOCKNUT (M6X1 THD)	
	8	1	**205-9597**	1	GLASS (RH)	
	9	1	**205-9614**	1	HINGE (LOWER)	
	10	1	**205-9615**	1	HINGE (UPPER)	
	11	1	**223-2030**	1	LATCH AS (HOLD OPEN)	
M		1	**6V-7743**	2	LOCKNUT (M6X1 THD)	
M		1	**9X-2045**	2	SCREW-TRUSS HEAD (M6X1X20-MM)	
		1	**143-2827**	1	SPRING	
M	12	1	**6V-7743**	2	LOCKNUT (M6X1 THD)	

B-USE AS REQUIRED
E-ORDER BY THE CENTIMETER
M-METRIC PART

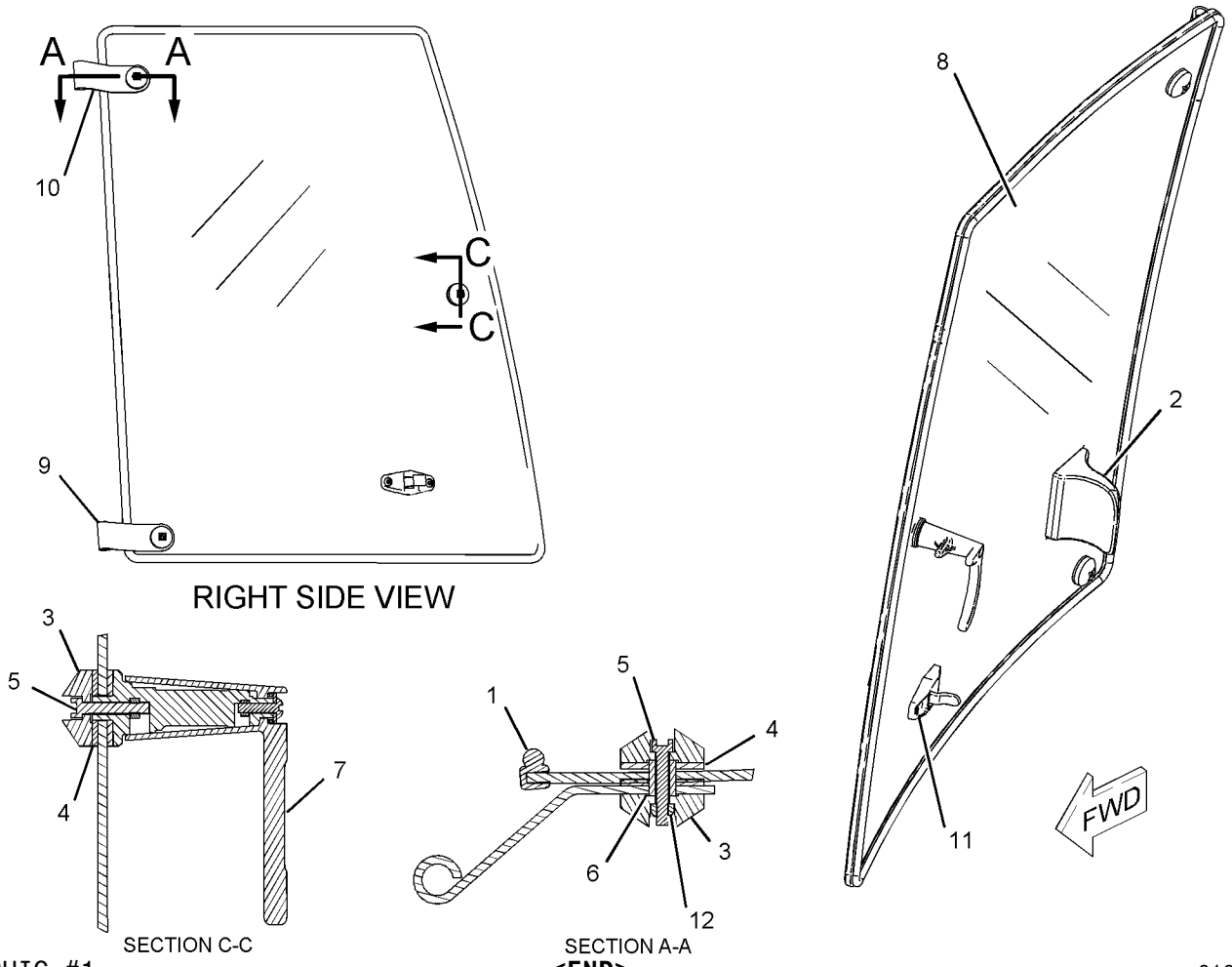

GRAPHIC #1

<END>

g01088742

OPERATOR STATION

206-1728 WIPER & WASHER GP-WINDOW (CHG -02 THRU -04)

S/N: HLS1-UP
PART OF 269-2124 CANOPY AR
AN ATTACHMENT

SMCS-7305, 7306 **i02396979**

NOTE	REF NO	GRAPHIC REF	PART NUMBER	QTY	PART NAME 1 2 3 4 5 6 (PRODUCT LEVEL)	SEE PAGE
	1	1	**3S-2093**	10	STRAP-CABLE	
	2	1	**276-8791**	1	CLIP	
	3	1	**8T-1118**	1	NOZZLE AS	
	4	1	**9R-3469**	1	DIAPHRAGM	
	5	1	**101-0745**	1	BLADE AS-WIPER	
	6	1	**283-3451**	1	CONNECTOR AS	
	7	1	**213-6051**	1	HARNESS AS-CAB	
		1	**124-8616**	2	TERMINAL-RECEPTACLE	
		1	**8L-8413**	15	STRAP-CABLE	
		1	**102-8804**	1	KIT-RECEPTACLE (4-PIN)	
		1	**102-8805**	1	KIT-RECEPTACLE (6-PIN)	
					(EACH RECEPTACLE KIT INCLUDES RECEPTACLE AS & WEDGE)	
		1	**155-2265**	1	KIT-CONNECTING PLUG (8-PIN)	
		1	**155-2271**	2	KIT-CONNECTING PLUG (4-PIN)	
		1	**155-2274**	1	KIT-CONNECTING PLUG (6-PIN)	
					(EACH PLUG KIT INCLUDES PLUG AS, WEDGE & INTERFACE SEAL)	
	8	1	**154-5410**	1	ARM AS-WIPER	
Y	9	1	**186-2589**	1	MOTOR GP-WINDOW WIPER (FRONT)	602
	10	1	**214-3763**	1	TANK GP-WINDOW WASHER	
		1	**214-3742**	1	TANK	
		1	**254-5683**	1	CAP	
		1	**254-5684**	2	PUMP AS	
		1	**254-5685**	2	GROMMET	
M	11	1	**6V-7357**	1	BOLT (M6X1X25-MM)	
	12	1	**8T-4205**	1	WASHER-HARD (7.2X14.5X2-MM THK)	
E	13	1	**144-0195**		HOSE (232-CM)	
E	14	1	**144-0195**		HOSE (79-CM)	
E	15	1	**144-0195**		HOSE (297-CM)	
	16	1	**156-0283**	2	WASHER-HARD (8.4X35X2.5-MM THK)	
	17	1	**9X-8372**	1	FILM-INSTRUCTION (WASHER FILL)	
M	18	1	**8T-5093**	2	BOLT-LOCKING (M8X1.25X25-MM)	
D	19	1	**6V-0505**		SEAL (0.5-M)	

D-ORDER BY THE METER
E-ORDER BY THE CENTIMETER
M-METRIC PART
Y-SEPARATE ILLUSTRATION

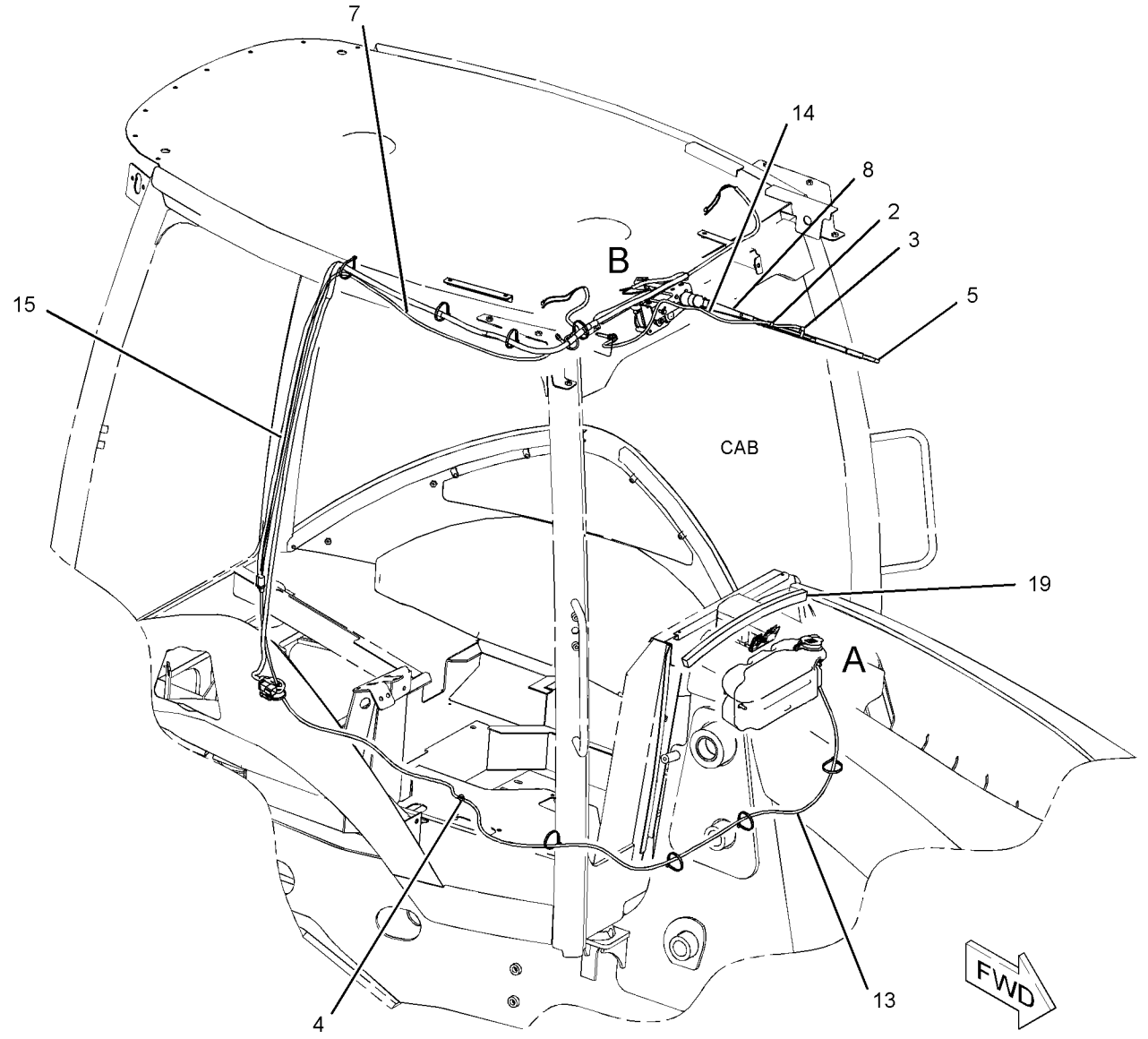

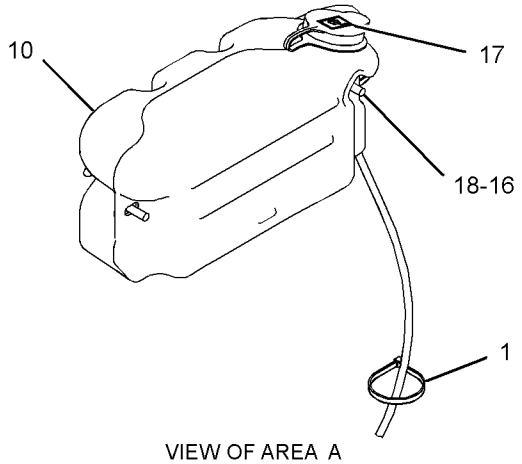

VIEW OF AREA A

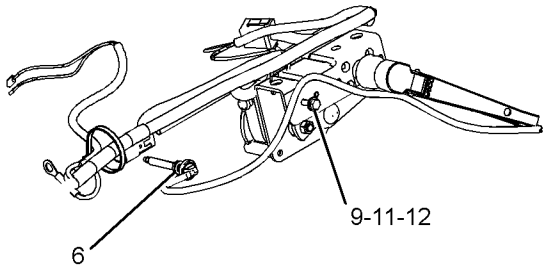

VIEW OF AREA B

GRAPHIC #1 **<END>** g01231220

OPERATOR STATION

206-1725 WIPER GP-WINDOW (CHG -02)

S/N: HLS1-UP

PART OF 269-2125, 269-2126, 269-2127 CAB AR

AN ATTACHMENT

SMCS-7305 **i02208892**

NOTE	REF NO	GRAPHIC REF	PART NUMBER	QTY	PART NAME 1 2 3 4 5 6 (PRODUCT LEVEL)	SEE PAGE
	1	1	**5C-8811**	1	BLADE AS-WIPER	
	2	1	**101-0745**	1	BLADE AS-WIPER	
	3	1	**154-5410**	1	ARM AS-WIPER	
	4	1	**160-2169**	2	SPACER (8.4-MM THK)	
JY	5	1	**186-2589**	1	MOTOR GP-WINDOW WIPER (FRONT)	602
	6	1	**214-4709**	1	SWITCH AS-ROCKER (WIPER, WASHER REAR)	
		1	**111-7899**	1	GASKET	
	7	1	**220-2000**	1	MOTOR GP-WINDOW WIPER (REAR)	
	8	1	**220-2001**	1	ARM AS-WIPER	
	9	1	**223-8263**	1	PLATE	
	10	1	**229-0306**	1	PLATE	
M	11	1	**6V-7357**	1	BOLT (M6X1X25-MM)	
M	12	1	**8T-4138**	2	BOLT (M6X1X20-MM)	
M	13	1	**8T-4171**	5	BOLT (M6X1X12-MM)	
	14	1	**8T-4205**	8	WASHER-HARD (7.2X14.5X2-MM THK)	
					AVAILABLE REPAIR KIT(S):	
J			**102-8805**		KIT-RECEPTACLE (6-PIN)	

J-KIT MARKED J IS AVAILABLE FOR PART MARKED J
M-METRIC PART
Y-SEPARATE ILLUSTRATION

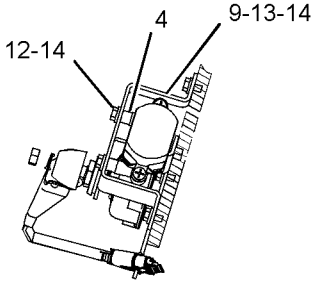

SECTION A-A

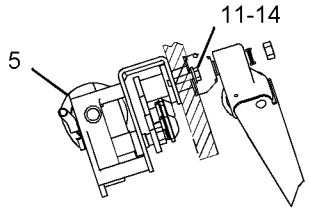

SECTION B-B

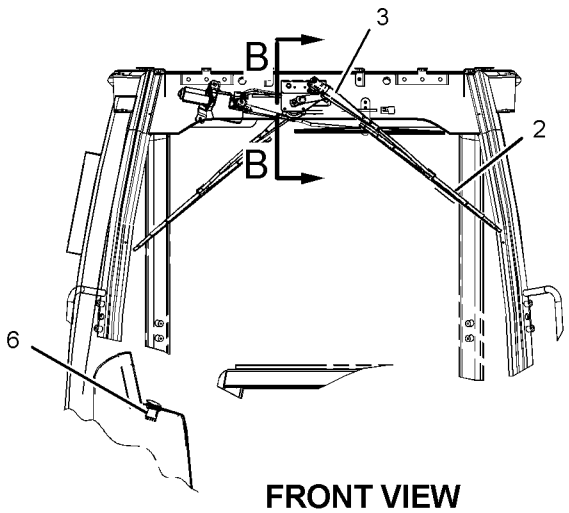

FRONT VIEW
(CAB)

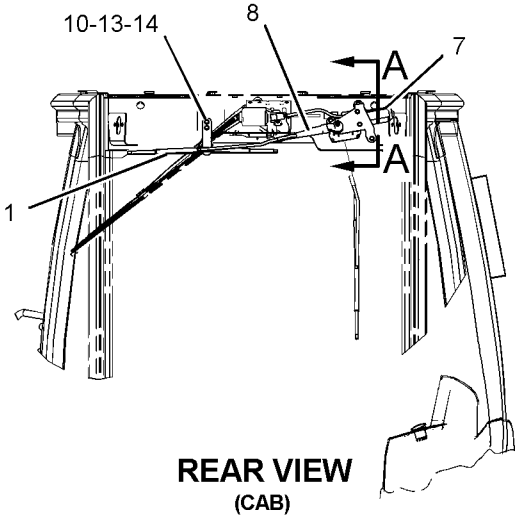

REAR VIEW
(CAB)

GRAPHIC #1 **<END>** g01083852

SERVICE EQUIPMENT AND SUPPLIES

120-9289 BRACKET GP-TRANSPORT (CHG -00 THRU -03)

S/N: HLS1-UP
PART OF 119-1530 SHIPPING AR-BUCKET
AN ATTACHMENT

SMCS-7505 **i02204843**

NOTE	REF NO	GRAPHIC REF	PART NUMBER	QTY	PART NAME 1 2 3 4 5 6 (PRODUCT LEVEL)	SEE PAGE
	1	1	**3B-5322**	2	PIN-COTTER	
	2	1	**9R-0109**	2	WASHER (41X64X3-MM THK)	
B	3	1	**9R-4066**	6	WASHER (61X98X4-MM THK)	
	4	1	**9R-6014**	4	TUBE	
	5	1	**034-1432**	2	STRAP-CABLE	
	6	1	**120-9332**	2	BLOCK	
	7	1	**120-9333**	1	TUBE	

B-USE AS REQUIRED

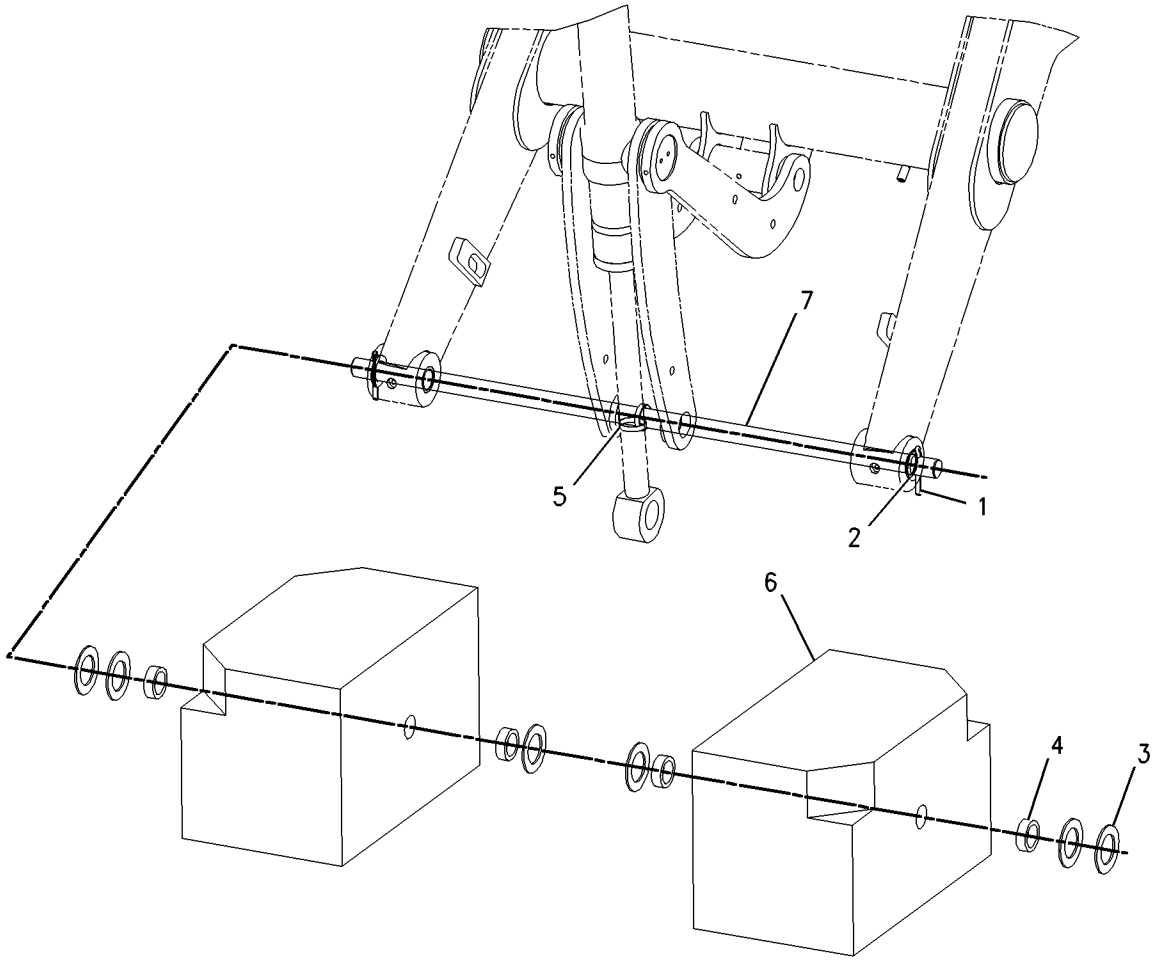

GRAPHIC #1 **<END>** g00778843

SERVICE EQUIPMENT AND SUPPLIES

250-7915 FILM GP (CHG -00)

S/N: HLS1-UP

PART OF 213-9287 CHASSIS AR

SMCS-7405, 7557 **i02365062**

NOTE	REF NO	GRAPHIC REF	PART NUMBER	QTY	PART NAME 1 2 3 4 5 6 (PRODUCT LEVEL)	SEE PAGE
	1	1	**251-5615**	1	FILM-IDENTIFICATION (420E, RH)	
	2	1	**250-7926**	2	FILM-IDENTIFICATION (CAT)	
	3	1	**251-5614**	1	FILM-IDENTIFICATION (420E, LH)	

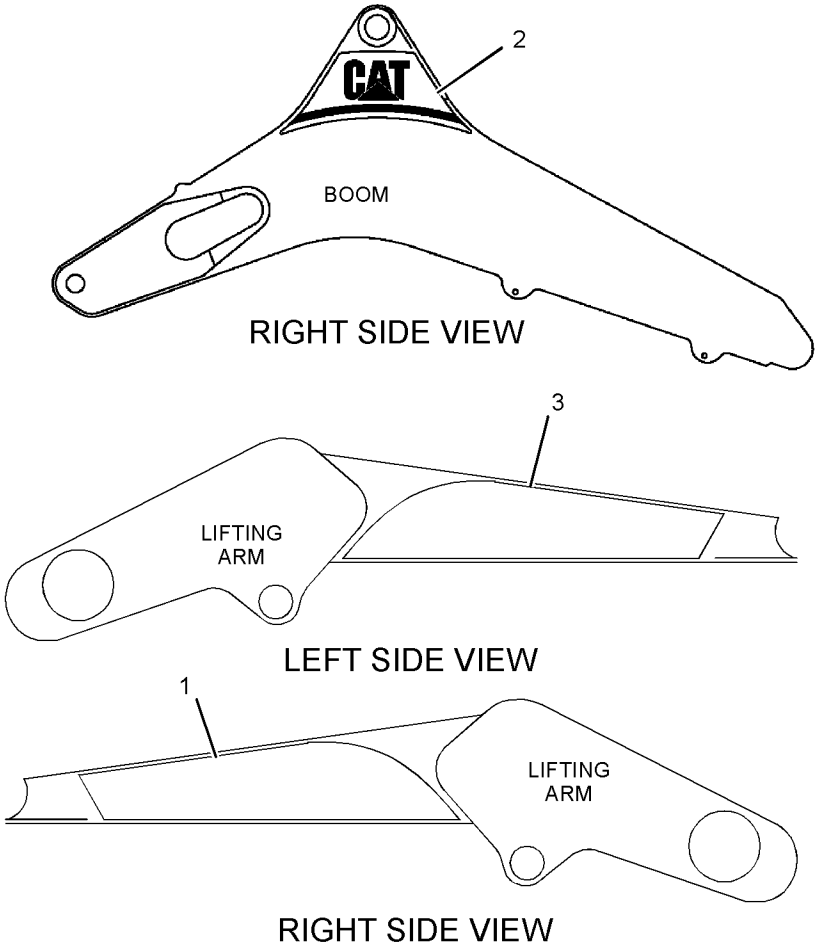

GRAPHIC #1 **<END>** g01183729

SERVICE EQUIPMENT AND SUPPLIES

175-7877 LINK GP-SHIPPING (CHG -00)

S/N: HLS1-UP
AN ATTACHMENT

SMCS-6513 **i01411821**

NOTE	PART NUMBER	QTY	PART NAME 1 2 3 4 5 6 (PRODUCT LEVEL)	SEE PAGE
	120-9286	1	PLATE	

<END>

216-0909 LOCK GP-VANDALISM (CHG -00)

S/N: HLS1-UP
AN ATTACHMENT

SMCS-7315 **i02485595**

NOTE	PART NUMBER	QTY	PART NAME 1 2 3 4 5 6 (PRODUCT LEVEL)	SEE PAGE
J	**246-2641**	1	PADLOCK GP (VANDALISM GUARD)	
J-REQUIRES 5P-8500 KEY				

<END>

248-5711 PLATE & FILM GP (CHG -00 THRU -03)

S/N: HLS1-UP
PART OF 213-9287 CHASSIS AR

SMCS-7405 **i02427980**

NOTE	PART NUMBER	QTY	PART NAME 1 2 3 4 5 6 (PRODUCT LEVEL)	SEE PAGE
	225-4150	1	PLATE-SERVICE INFORMATION (MACHINE)	
			(ON SERVICE PLATE ON MAIN FRAME TOWER)	
	239-6989	1	PLATE-SERIAL NUMBER (MACHINE)	
			(ON MAIN FRAME TOWER)	
A	**4P-6236**	1	PLATE-SERIAL NUMBER (ENGINE)	
	231-9361	1	FILM-FUSE	
			(UNDER RH CONSOLE COVER THAT COVERS THE POWER DISTRUBUTION BLOCK. ORIENT FILM SUCH THAT IT CAN BE READ WHEN THE COVER	
			IS OPEN AND THE BLOCK IS EXPOSED)	
	250-7910	1	FILM (BOOM LOCK)	
			(NEXT TO BOOM LOCK ON RH CONSOLE)	
	250-7911	1	FILM (VARIABLE SPEED)	
			(ON RH CONSOLE NEXT TO GOVERNER CONTROL HANDLE)	
	252-2157	4	FILM (TIE-DOWN)	
			(APPLY 2 FILMS, ONE ON EACH SIDE OF THE MACHINE ON THE MAIN FRAME ABOVE THE FRONT AXLE, ABOVE THE TIE DOWN MOUNTING	
			PLATE. APPLY THE OTHER 2 FILMS IN THE REAR OF THE MACHINE ON THE MAIN FRAME NEXT TO THE TIE DOWN HOLES UNDER THE	
			SWING CYLINDERS)	
	134-7258	1	FILM-INFORMATION (EXTENDED LIFE COOLANT-READ OMM)	
			(NEXT TO RADIATOR CAP. ORIENT FILM SUCH THAT IT CAN BE READ FROM THE LH SIDE OF THE MACHINE)	
	159-8033	1	FILM-IDENTIFICATION (12-VOLT)	
			(INSIDE BATTERY BOX DOOR 90 +/-5-MM FROM THE BOTTOM EDGE (SAME AS STACKING THE WARNING BATTERY FILM & THE 12 VOLT	

248-5711 **PLATE & FILM GP** *(contd.)* **i02427980**

NOTE	PART NUMBER	QTY	PART NAME 1 2 3 4 5 6 (PRODUCT LEVEL)	SEE PAGE
			FILM ON TOP OF EACH OTHER) & CENTERED BELOW THE WARNING BATTERY FILM)	
	226-1242	2	FILM-WARNING (CRUSH HAZARD, STAY BACK)	
			(ON BOOM 700-MM +/-5 UP FROM CENTER LINE OF SWING & BOOM LOWER FOOT PIN & 65-MM +/-5 OVER FROM INSIDE OF THE REAR EDGE	
			OF BOOM WRAPPER PLATE)	
	239-9429	1	FILM-WARNING (ARM BRACE, READ OMM)	
			(ON LH SIDE OF THE MACHINE ON SAFETY BRACE CENTERED FROM TOP TO BOTTOM & FROM SIDE TO SIDE)	
	225-0313	1	FILM-WARNING (JUMP START, READ OMM)	
			(INSIDE OF BATTERY BOX DOOR 150 +/-5-MM FROM THE BOTTOM EDGE (SAME AS STACKING THE NO STEP FILM ON TOP OF THE 12 VOLT	
			FILM) & THE RIGHT EDGE OF THE FILM 210 +/-5-MM FROM LEFT SIDE (SAME AS THE NO STEP FILM PLACED SIDE BY SIDE THE	
			WARNING BATTERY FILM)	
	255-0791	1	FILM-WARNING (READ OMM)	
			(ON RH CONSOLE UNDER KEYSWITCH IN AREA PROVIDED. UNIVERSAL FILM IS LOCATED ON THE UPPER HALF AND THE SEATBELT IS ON THE	
			THE LOWER HALF)	
	255-0792	1	FILM-WARNING (SEAT BELT)	
			(ON RH CONSOLE UNDER KEYSWITCH IN AREA PROVIDED. UNIVERSAL FILM IS LOCATED ON THE UPPER HALF AND THE SEATBELT IS ON THE	
			LOWER HALF)	
	219-0302	1	FILM-WARNING (NO WELD, NO DRILL)	
			(ON LH A-POST 350 +/-5-MM FROM THE FLOOR. THE UPPER FILM SHOULD BE THE NO WELD/NO DRILL & THE ROPS/FOPS FILM IN THE	
			LOWER POSITION)	
	225-0041	1	FILM-INFORMATION (ROPS, FOPS, READ OMM)	
			(ON LH A-POST 350 +/-5-MM FROM THE FLOOR. THE UPPER FILM SHOULD BE THE NO WELD/NO	
			DRILL & THE ROPS/FOPS FILM IN THE LOWER POSITION)	
	124-2456	1	FILM-INSTRUCTION (NO STEP)	
			(POSITION INSIDE BATTERY BOX DOOR WITH BOTTOM EDGE OF DECAL 275-MM FROM THE TOP EDGE COVER & THE LEFT SIDE OF DECAL	
			75-MM FROM THE LEFT SIDE OF BOX)	
	224-8945	1	FILM-WARNING (DO NOT USE ETHER)	
			(UNDER HOOD ON THE PRE-CLEANER. ORIENT FILM SUCH THAT IT CAN BE READ FROM THE LEFT SIDE OF THE MACHINE)	
	258-9999	4	FILM (LIFT EYE LOCATION)	
			(APPLY A TOTAL OF 4 FILMS. THE FIRST 2 FILMS ARE TO BE APPLIED TO THE FRONT SIDE OF THE FRONT AXLE BETWEEN THE CHASSIS	
			& WHEEL ASSEMBLY ON THE LH & RH SIDE OF THE MACHINE. THE REMAINDER 2 FILMS ARE TO BE APPLIED TO THE STAB PAD CENTERED	
			UNDER THE LIFTING HOLE ORIENTED WITH THE ARROW POINTING UP WHEN THE STABILIZER IS IN THE UPPER WARD POSITION)	
	240-7094	2	FILM-WARNING (NO ENTRANCE, EXIT)	
			(ON THE REAR OF THE CAB STRUCTURE AT THE BOTTOM 50 +/-5-MM FROM THE RED REFLECTOR TOWARD THE CENTER OF THE MACHINE FOR)	
			BOTH FILMS, CENTERED FROM TOP TO BOTTOM)	
	159-3590	1	FILM (WATER SEPARATOR)	

248-5711 **PLATE & FILM GP** ***(contd.)*** **i02427980**

NOTE	PART NUMBER	QTY	PART NAME 1 2 3 4 5 6 (PRODUCT LEVEL)	SEE PAGE
			(ON SIDE OF FUEL TANK FROM BOTTOM EDGE 40-MM UP & OVER FROM BACK EDGE 20-MM))	
	231-9358	1	FILM-IDENTIFICATION (FUSE PANEL)	
			(INSIDE RH CONSOLE ACCESS PANEL. ORIENT FILM SUCH THAT IS CAN BE READ WHILE STANDING ON THE GROUND WITH THE ACCESS DOOR	
			OPEN & VIEWING FILM)	
	255-0796	1	FILM-IDENTIFICATION (LUBRICANT POINTS)	
			(UNDER THE HOOD ON PRE-CLEANER, ORIENTED SUCH THAT IS CAN BE READ FROM THE LEFT SIDE OF THE MACHINE)	
	252-8435	1	FILM (START SWITCH)	
			(ON RH CONSOLE AROUND KEYSWITCH)	
	259-4401	1	FILM-WARNING (HOT FLUID UND PRESS, READ OMM)	
			(ON RADIATOR CAP ORIENTED SUCH THAT IT CAN BE READ FROM THE LH SIDE OF THE MACHINE)	
A-NOT PART OF THIS GROUP				

<END>

SERVICE EQUIPMENT AND SUPPLIES

263-8591 PLATE & FILM GP (CHG -00)

S/N: HLS1-UP
PART OF 216-8801, 216-8821 BUCKET GP-MULTIPURPOSE
AN ATTACHMENT

SMCS-7405 **i02444490**

NOTE	REF NO	GRAPHIC REF	PART NUMBER	QTY	PART NAME 1 2 3 4 5 6 (PRODUCT LEVEL)	SEE PAGE
	1	1	**247-6118**	2	FILM-WARNING (CRUSH HAZARD, STAY BACK)	

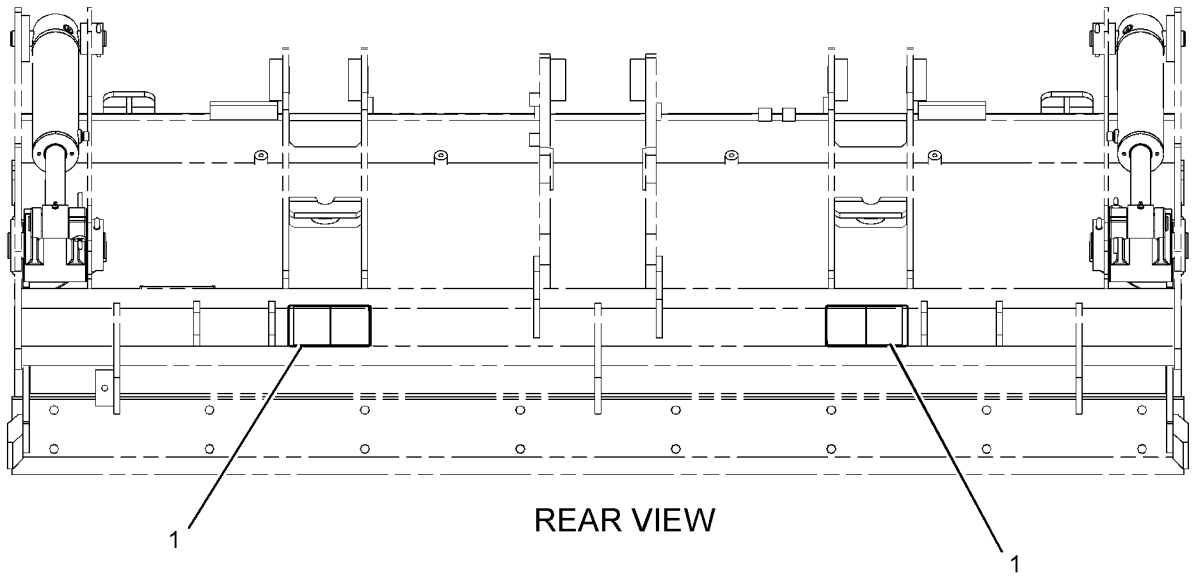

GRAPHIC #1 **<END>** g01231780

206-1701 PROTECTION GP-VANDALISM (CHG -01 THRU -03)

S/N: HLS1-UP

PART OF 269-2123, 269-2124 CANOPY AR

AN ATTACHMENT

SMCS-7315 **i02098370**

NOTE	REF NO	GRAPHIC REF	PART NUMBER	QTY	PART NAME 1 2 3 4 5 6 (PRODUCT LEVEL)	SEE PAGE
	1	1	**206-1852**	1	COVER-VANDALISM	
	2	1	**206-1853**	2	BUSHING	
	3	1	**206-1855**	1	PLATE	
	4	1	**206-1856**	1	BRACKET	
J	5	1	**226-0291**	1	LOCK AS	
M	6	1	**129-3178**	2	LOCKNUT (M6X1 THD)	
M	7	1	**174-8131**	1	SCREW-TRUSS HEAD (M4X0.7X12-MM)	
	8	1	**232-4636**	2	BOLT-CARRIAGE (M6X1-MM)	
	9	1	**8C-9660**	1	WASHER (4.6X7.9X0.8-MM THK)	
M	10	1	**8T-2659**	1	LOCKNUT (M4X0.7-THD)	
	11	1	**9X-2038**	2	WASHER (7X19X2-MM THK)	

J-REQUIRES 5P-8500 KEY
M-METRIC PART

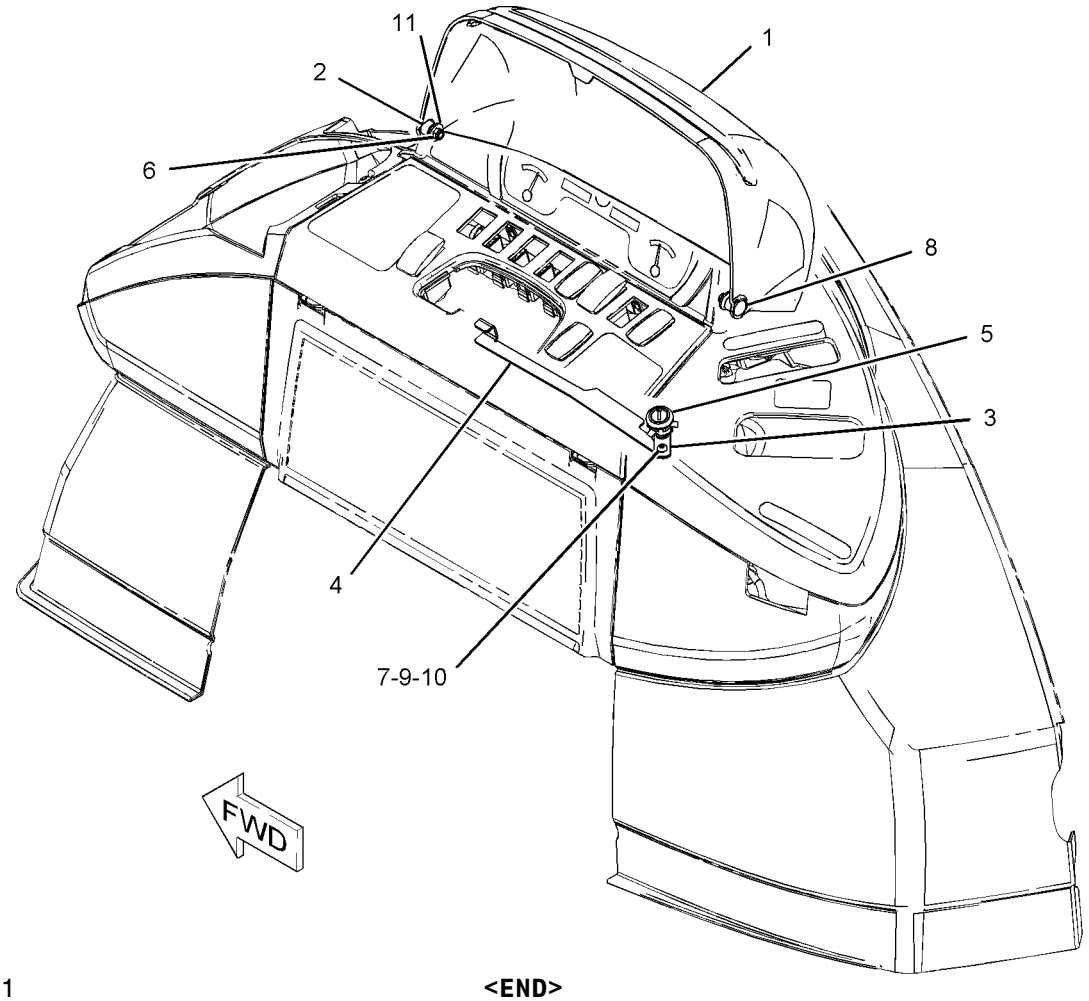

GRAPHIC #1 **<END>** g01083362

SERVICE EQUIPMENT AND SUPPLIES

119-1530 SHIPPING AR-BUCKET (CHG -00)

S/N: HLS1-UP
TRANSPORT (NO BUCKET OPTION)
AN ATTACHMENT

SMCS-7505 **i00756012**

NOTE	PART NUMBER	QTY	PART NAME 1 2 3 4 5 6 (PRODUCT LEVEL)	SEE PAGE
Y	*120-9289*	1	BRACKET GP-TRANSPORT	643

Y-SEPARATE ILLUSTRATION

<END>

PART NUMBER INDEX

Part	Page
0	
0S-0509	622
0S-1595	609
	616
	617
0S-1603	19
1	
1B-8736	7
	11
	21
	289
1H-1200	215
1H-3244	99
	100
	101
	586
1H-3337	619
	622
1H-7339	267
	278
1K-0502	250
	252
1K-6872	610
	616
	617
	619
	622
1K-7082	166
1L-3768	419
	421
1L-6377	603
1M-1230	82
1M-6119	74
1M-6120	74
1P-0810	128
1P-4278	62
	360
1P-4584	327
1P-6872	356
1R-5396	219
1S-6420	87
1S-7251	74
1S-7252	76
1V-6585	52
	53
1W-2934	44
2	
2B-0858	16
	30
2B-0941	154
	156
2D-2628	204
2D-2629	204
2D-2630	204
2D-2631	204
2D-2633	204
2D-6235	622
2D-6392	347
2H-3740	97
2H-3922	125
2H-3931	260
	262
2H-4145	260
	262
2J-0564	277
2J-3950	282
2J-3961	264
	265
	275
	277
2K-4973	610
	616
	617
	619
	622
2K-6830	282
2L-5893	622
2L-8050	128
2L-8051	128
2L-8054	119
2L-8058	128
2L-8068	128
2L-8069	128
2L-8077	128
2L-8079	128
2M-7819	609
2M-9780	291
	313
	321
	323
	324
	329
	331
	333
	335
	340
	356
2P-1293	294
	296
	299
2P-7864	610
2P-8104	103
2R-0364	250
	252
	403
2S-3163	575
2S-3745	557
	589
2T-3360	221
2W-9499	609
2W-9710	48
2Y-2881	421
2Y-5821	264
	279
3	
3B-4505	610
	622
3B-4506	245
3B-4610	220
3B-4631	620
3B-5319	351
	353
	397
	510
	511
	516
3B-5322	643
3B-5790	356
3B-8488	238
	239
	391
	393
	406
	423
3B-8489	238
	239
	269
	270
	271
	273
	279
	281
	289
	391
	393
	397
	399
	403
	406
	419
	421
	423
	495
	496
	498
	500
	509
	552
3C-4883	94
3C-6516	94
3C-8388	388
3D-2824	265
	296
	299
	301
	303
	305
	313
	315
	327
	331
	333
	335
	337
	338
	340
3D-2992	347
3E-0068	598
3E-3365	102
3E-3370	291
3E-3371	291
3E-3377	265
3E-4321	597
	598
3E-4352	419
3E-5003	265
3E-5153	103
3E-5154	103
3E-6600	577
3E-6732	269
3E-6735	271
	273
	279
3E-6769	356
3E-6770	356
3E-7675	215
3E-8299	127
3E-9362	109
3F-5108	495
	496
	498
	500
	513
3F-9556	602
	605
3G-6927	194
3G-8047	305
3G-8054	305
3G-8057	305
3J-1907	69
	72
	121
	134
	140
	154
	156
	165
	190
	194
	195
	200
	215
	224
	270
	286
	291
	317
	319
	321
	323
	324
	326
	329
	338
	344
	362
	366
	367
3J-4818	622
3J-7354	72
	224
	321
3K-0360	121
	215
	216
	224
	291
	308
	309
	324
	329

► **PRIMARY REFERENCE**

PART NUMBER INDEX

Part	Page
	338
	342
	360
3K-2889	416
	417
3K-8782	93
3N-5739	279
3S-2093	61
	69
	82
	83
	87
	89
	94
	109
	112
	115
	116
	117
	118
	119
	121
	122
	123
	125
	129
	132
	134
	136
	189
	291
	591
	598
	615
	618
	619
	628
	640
3S-8447	44
	45
3T-0849	388
3T-0852	612
	613
3V-2431	260
	265
	275

4

Part	Page
4B-2043	112
	624
4B-4278	609
4B-4863	57
	129
4B-5271	610
	616
	617
4B-9784	619
	622
4D-6466	74
4D-6988	62
4D-7388	54
4D-9517	403
4F-3657	512
	554
4F-7952	143
4F-8711	419
	421
4H-1641	610
4H-8380	622
4I-3038	127
	579
4I-6287	291
	329
4I-9521	362
4I-9522	362
4I-9523	362
4I-9524	362
4I-9525	362
4I-9526	362
4I-9527	362
4I-9528	362
4J-0520	148
4J-0522	154
	156
	194
4J-0526	271
	273
4J-1888	508
	514
4J-5309	366
	367
	368
	369
	370
4J-5477	154
	165
	200
	215
	224
	321
	323
	326
	338
	362
4J-9224	260
	262
4K-0367	495
	496
	498
	500
	512
	513
	554
4K-0499	619
4L-6454	140
	616
	617
4M-0061	610
	622
4N-9170	627
4P-6236	645
4P-7581	74
	119
	121
	132
	134
	291
4P-8134	109
	119
	129
	591
4S-5565	260
	265
	275
4T-5613	282
4T-6780	267
	278
4T-8054	260
4T-8588	264
	265
	275
	277
4W-3753	294
	299
4W-5359	21
4W-9972	190
	194

5

Part	Page
5A-3604	403
5B-3254	555
	587
5B-9079	34
5C-2874	119
	630
	632
	636
	638
5C-2890	74
	99
	100
	101
	109
	123
	129
	577
	593
	634
5C-7261	74
	99
	100
	101
	109
	123
	129
	216
	223
	602
	605
	630
	632
5C-8312	57
	115
5C-8811	642
5C-9553	403
	582
	584
	605
5D-1026	9
	224
	321
	323
	360
	597
	598
5D-6543	372
	374
	376
	378
	379
	380
	382
5D-8159	514
5E-8557	246
5F-3106	284
5F-9144	372
	374
	376
	378
	379
	380
	382
5G-2934	227
5H-3193	250
	252
5H-8848	267
	278
5J-4561	267
5J-5402	282
5J-5731	264
5J-7011	260
	262
5J-7012	262
5J-8156	260
	262
5K-5338	598
5K-9090	286
	294
	296
	299
	327
5M-3062	619
5P-0370	416
5P-0598	309
5P-0599	87
	301
	303
	305
	338
5P-0743	2
	3
	308
5P-0747	74
	76
5P-0761	74
	76
5P-0767	597
	598
5P-0798	589
5P-1076	239
5P-1420	2
	3
	62
5P-1442	62
	360
5P-1478	119

► **PRIMARY REFERENCE**

PART NUMBER INDEX

Part	Page	Part	Page	Part	Page	Part	Page
5P-1505	35	5P-7958	403		59		194
	224		571	6I-0260	9	6T-9165	144
	321	5P-7971	416		26		194
	323		417		39	6T-9166	144
	360	5P-8066	189		40		194
5P-1506	311		194		65	6T-9196	172
5P-1823	589	5P-8112	294		73		175
5P-3455	128		296	6I-0289	26		177
5P-3860	87		299	6I-0291	65		179
	337	5P-8245	19	6I-0363	26		181
5P-3915	555		610	6I-0364	58		184
	587		612		105		185
5P-4115	606		613	6I-0423	20	6T-9202	194
	634		616	6I-0454	73	6V-0292	625
5P-4116	35		617	6I-0501	33	6V-0491	119
	44	5P-8248	97	6I-0502	33	6V-0505	628
	45	5P-8500	571	6I-0563	58		640
	46	5P-9085	62		59	6V-0683	224
	70	5S-7379	610	6I-0572	8		331
	154	5U-6605	265		13		333
	156		275		26		335
	216	5V-1497	622		41	6V-0826	216
	227	5V-2545	174		59		403
	311	5V-4845	619	6I-0594	73	6V-0852	154
	402	5V-7190	419		105		156
	407		421	6I-0645	21		321
	409	5Y-0660	582		41		323
	411		584	6I-0650	21	6V-1249	303
	555			6I-0846	9		305
	563			6I-0847	20	6V-1363	57
	568	**6**		6I-0917	9	6V-1580	243
	570			6I-1418	127	6V-1722	338
	572	6A-9083	609	6I-1497	35	6V-1869	97
	587		616		37	6V-1889	294
	634	6B-0933	73	6I-4374	40		296
5P-4295	224	6C-3677	609	6J-1972	267		299
5P-4571	128	6C-3680	557		278		303
5P-4868	327		589	6J-2680	327		305
5P-5637	557	6D-0337	▶204	6J-2797	282	6V-2315	219
	634		205	6J-5731	267	6V-2323	356
5P-5655	557	6D-0443	204		278	6V-2689	252
5P-5688	557	6D-3479	360	6K-0806	109	6V-3213	351
	589	6D-4246	35		129		353
5P-6006	128	6E-1135	403		189		391
5P-6010	619	6E-1478	279	6K-8178	62		399
5P-6718	26	6E-3341	358	6L-4725	555		407
5P-7462	224	6E-4003	356		587		409
	331	6E-4004	356	6L-7155	623		411
	333	6E-4007	358	6M-5062	347		413
	335	6E-4009	358	6N-6984	48		414
5P-7463	224	6E-5431	402	6P-6591	83		415
	331	6E-6151	358	6P-8855	597		418
	333	6E-6154	358		598		475
	335	6E-6155	358	6S-8620	35		476
5P-7464	303	6E-6157	358		54		477
	305	6E-6158	358	6T-0465	74		478
5P-7465	303	6F-4855	342	6T-9142	144		510
	305	6G-2263	35	6T-9143	144		511
5P-7466	294	6H-3616	24	6T-9144	144	6V-3341	317
	296	6I-0217	21	6T-9145	144		319
	299		26	6T-9147	144	6V-3507	112
5P-7467	294		50	6T-9160	183	6V-3965	154
	296		59	6T-9163	144		156
	299		65		194		321
5P-7957	571	6I-0254	50	6T-9164	144		323

▶ **PRIMARY REFERENCE**

PART NUMBER INDEX

Part	Page
6V-4292	224
	360
6V-4364	397
	419
	421
	423
	475
	476
	477
	478
6V-4589	194
	388
6V-5100	172
	175
	177
	179
	184
	185
6V-5215	194
6V-5326	366
	367
	368
	369
	370
6V-5653	321
6V-5683	388
6V-5842	194
6V-6717	555
	587
6V-6813	555
	587
6V-7238	308
6V-7357	557
	589
	640
	642
6V-7359	303
	305
6V-7687	239
	391
	622
6V-7731	189
6V-7742	552
6V-7743	231
	630
	632
	636
	638
6V-7744	233
	250
	252
	517
	572
	625
6V-8077	156
	321
6V-8097	189
	194
6V-8144	391
	407
	409
	411
	413
	414
	415
	418
	514
6V-8185	619
	622
6V-8186	605
6V-8202	344
6V-8210	143
6V-8236	388
6V-8237	278
6V-8335	189
6V-8344	397
	406
	423
6V-8363	125
6V-8370	125
6V-8378	190
	194
6V-8397	72
	215
	224
	291
	317
	319
	321
	323
	324
	329
	331
	333
	335
6V-8398	215
	259
	260
	262
	267
	275
	277
	278
	291
	294
	303
	305
	309
	311
	313
	315
	317
	319
	323
	324
	329
	331
	333
	335
6V-8455	153
6V-8500	183
6V-8523	122
6V-8624	291
	329
6V-8625	215
	309
	338
6V-8626	313
6V-8627	154
	165
	200
	323
6V-8628	224
6V-8629	340
6V-8633	303
	305
	331
	333
	335
	337
6V-8634	215
	224
	291
	329
6V-8635	286
	296
	299
6V-8636	323
6V-8637	296
	299
6V-8639	291
	329
	338
6V-8641	165
	215
	224
	321
	323
	326
	362
6V-8713	301
	303
	305
	313
	337
	340
6V-8714	327
6V-8716	46
6V-8721	331
	333
	335
6V-8724	215
	317
	319
	323
6V-8757	172
	175
	177
	185
6V-8759	214
6V-8782	338
6V-8801	97
	598
6V-8931	246
6V-8936	331
	333
	335
6V-8978	366
	367
	368
	369
	370
6V-8995	303
	305
6V-8996	303
	305
6V-8998	294
	296
	299
6V-9031	313
6V-9169	303
	305
	324
6V-9170	294
	303
	305
6V-9172	294
	296
	299
6V-9178	203
6V-9182	46
6V-9189	234
	351
6V-9509	311
6V-9632	35
	69
	127
6V-9746	46
	265
	282
	294
	296
	299
	340
6V-9830	286
	313
	315
6V-9831	313
6V-9833	286
6V-9836	324
6V-9838	313
6V-9840	327
6V-9849	321
6V-9850	224
6V-9851	311
6V-9853	294
6V-9872	72
6V-9990	305
6Y-1192	172
	175
6Y-1341	189
6Y-1896	190
	194
6Y-2035	189
6Y-2736	183
6Y-2737	143
6Y-7929	172
	175
	177
	181
6Y-7957	179
	184
	185
6Y-9930	603

► **PRIMARY REFERENCE**

PART NUMBER INDEX

Part	Page
7	
7C-0351	26
7C-1224	26
7C-1281	9
7C-4354	62
	305
7C-4616	21
7C-9465	572
7D-7233	37
	311
7E-3870	5
7F-3400	571
7G-1060	119
	127
7H-3937	557
	589
7I-1024	87
7I-7412	296
	299
7I-8084	338
7I-8935	386
	387
7J-9108	216
	294
	301
	303
	305
	313
	315
	337
	340
7K-1181	61
	74
	83
	85
	115
	127
	132
	136
	165
	200
	213
	215
	224
	291
	311
	313
	315
	321
	323
	326
	329
	338
	340
	362
	597
	598
7M-8485	46
	259
	286
	294
	296
	299
	327
7N-3718	62
7N-5274	76
7N-7221	119
7N-9738	119
7R-2750	128
7R-2751	128
7R-8239	220
7T-0093	557
	589
7T-1099	238
7T-2646	144
	194
7T-2651	143
	194
7T-3017	183
7T-3021	183
7T-3022	183
7T-3034	144
7T-3051	143
7T-3109	189
7T-3111	189
7T-3119	189
7T-3195	189
	194
7T-3249	189
7T-3251	189
	194
7T-3253	143
	194
7T-4848	127
7T-6087	103
7T-6088	103
7T-6090	103
7T-6092	103
7T-6093	103
7T-6099	103
7T-6655	175
	177
7T-6799	112
7T-9987	76
7W-1176	20
7W-2326	37
7W-2632	73
7W-3556	194
7W-4634	33
7W-4642	20
7X-0481	619
	622
7X-0579	48
	129
	243
	555
	574
	587
7X-0586	55
7X-0603	48
7X-0618	166
7X-0622	619
	623
7X-0818	154
	156
7X-0871	323
7X-2393	630
	632
7X-2476	230
7X-2533	348
7X-2534	109
	123
	129
7X-2537	246
	407
	409
	411
7X-2541	572
7X-2553	167
	168
7X-2559	140
7X-2564	243
7X-2568	603
7X-2572	242
7X-4741	194
7X-4744	203
7X-6315	78
7X-7729	37
	62
	74
	76
	129
	216
	221
	250
	252
	294
	303
	327
	360
	407
	409
	411
	625
7X-7958	311
7X-9065	112
7Y-0336	289
7Y-0589	239
8	
8C-0572	52
	53
	609
8C-3290	228
	229
	230
8C-3291	603
8C-3334	132
8C-3398	129
8C-3446	286
8C-3451	286
8C-3681	48
	54
8C-3756	557
	589
8C-3798	35
8C-4982	601
8C-4987	250
	252
8C-5607	85
8C-5608	85
8C-5748	189
	194
8C-6354	129
8C-6955	289
8C-7110	356
8C-7524	557
	589
8C-8408	338
8C-8451	85
8C-8522	231
8C-8545	194
8C-8580	372
	374
	376
	378
	379
8C-8989	291
	329
8C-9660	649
8C-9778	103
8C-9783	103
8D-2707	204
8E-1118	595
8E-5707	172
	175
	177
	179
	181
	184
	185
8F-1434	103
	119
	125
	190
	194
8G-0304	559
8H-7521	282
8J-2413	372
	374
	376
	378
	379
	380
	382
	383
	384
	385
8J-4455	103
8L-2746	194
8L-2779	189
	195
8L-2786	195
8L-8413	71
	74
	76
	94
	109
	112
	115
	119
	123
	125
	127
	128
	132
	136

► **PRIMARY REFERENCE**

PART NUMBER INDEX

Part	Page
	628
	640
8M-2773	62
8N-0869	74
	76
8R-6111	595
8S-0023	154
	156
8S-0024	154
	156
8S-0948	324
8S-3020	76
8S-7803	563
	609
	619
	623
8T-0119	215
8T-0120	337
8T-0131	215
8T-0144	507
8T-0154	308
8T-0164	200
8T-0269	348
8T-0271	194
8T-0328	119
	190
	194
8T-0352	129
8T-0404	301
	303
	305
	315
8T-0643	194
8T-0706	289
8T-0785	260
	262
8T-1118	628
	640
8T-1580	143
	181
8T-1581	181
	189
8T-1683	224
8T-1718	340
8T-1779	321
8T-1885	309
	331
	333
	335
8T-1886	309
	331
	333
	335
8T-1887	301
	340
8T-1888	301
	340
8T-1889	215
	294
	296
	299
8T-1890	215
	294
	296
	299
8T-1891	317
	319
8T-1892	317
	319
8T-1899	317
	319
8T-1900	317
	319
8T-2658	579
8T-2659	112
	649
8T-3444	317
	319
8T-3490	58
	69
	315
	407
	409
	411
	604
8T-3612	54
	82
	97
	227
	289
	407
	409
	411
	582
	584
	634
8T-3647	351
8T-3652	239
8T-3844	582
	584
8T-4001	229
	230
	238
8T-4121	25
	35
	37
	46
	58
	62
	69
	74
	94
	97
	98
	103
	119
	129
	132
	154
	156
	200
	216
	221
	224
	233
	238
	243
	250
	252
	285
	291
	294
	296
	299
	301
	303
	305
	309
	311
	313
	315
	317
	319
	329
	331
	333
	335
	340
	348
	350
	354
	360
	399
	403
	419
	421
	572
	597
	598
	604
8T-4122	25
	70
	233
	241
	284
	495
	496
	498
	500
	512
	513
8T-4123	243
	289
	552
	603
8T-4131	166
	603
8T-4132	25
	241
	603
8T-4133	37
	48
	58
	62
	74
	76
	91
	92
	94
	97
	103
	129
	216
	221
	231
	250
	252
	289
	294
8T-4134	132
	348
8T-4136	37
	46
	58
	62
	97
	119
	129
	154
	156
	216
	221
	224
	243
	250
	252
	294
	296
	299
	303
	305
	309
	311
	313
	315
	317
	319
	327
	340
	419
	421
	598
8T-4137	74
	76
	97
	98
	119
	200
	243
	250
	252
	291
	296
	299
	301
	311
	315
	329
	331
	333
	335
	360
	399
	403
	597
	598
8T-4138	35
	61
	74
	83

PART NUMBER INDEX

Part	Page	Part	Page	Part	Page	Part	Page
	89	8T-4187	552		227		634
	125	8T-4189	35		348	8T-4224	44
	129		46		555		45
	216		48		563		55
	348		55		568		61
	360		62		570		62
	402		70		587		70
	606		82		610		74
	642		227		634		82
8T-4139	239		243	8T-4205	35		97
	243		246		61		98
	291		250		74		99
	303		252		83		100
	305		289		85		101
	329		296		89		110
	360		299		99		123
	419		311		100		129
	421		348		101		153
	598		402		110		213
	615		563		119		216
	618		568		123		220
8T-4167	228		570		125		223
	229		574		129		227
	230		598		216		243
	238		612		231		246
	242		613		324		250
8T-4171	119	8T-4191	360		403		252
	591	8T-4192	46		557		289
	642		166		577		292
8T-4173	603	8T-4193	70		589		296
8T-4174	25	8T-4194	305		591		299
8T-4176	154		419		605		329
	156		421		640		348
	294	8T-4195	37		642		402
	299		58	8T-4222	48		403
	391		221		233		572
8T-4178	625		233	8T-4223	46		591
8T-4179	62		238		62		598
	360		303		146	8T-4244	245
8T-4181	94		309		154		296
	581		340		156		299
	595		348		167		303
	625		350		168		306
	628		403		227		348
8T-4182	48		407		243	8T-4648	245
	224		409		245	8T-4742	593
	289		411		291		594
	350		419		294	8T-4744	593
8T-4183	227		421		296		594
	305		572		299	8T-4773	250
	327	8T-4196	25		303		252
	419		37		305	8T-4778	233
	421		69		327	8T-4815	250
8T-4184	350		224		329		252
	395		294		350	8T-4821	239
	515		296		360	8T-4837	239
8T-4185	35		299		395	8T-4908	44
	74		354		419		45
	76	8T-4198	517		421		48
	294	8T-4200	48		515		61
8T-4186	285		52		598		97
	331		53		607		216
	333		70		608		403
	335		129		615	8T-4910	419
	348		153		618		421

► **PRIMARY REFERENCE**

PART NUMBER INDEX

Part	Page
8T-4956	146
	154
	156
	167
	168
	296
	299
	303
	607
	608
8T-4971	594
8T-4986	407
	409
	411
8T-5005	200
	224
	572
8T-5050	324
8T-5063	289
8T-5070	260
	267
	275
8T-5091	234
8T-5093	234
	628
	640
8T-5436	572
8T-5439	206
	207
	208
	209
	211
8T-6411	221
8T-6412	612
	613
8T-6684	327
8T-6726	55
	313
	317
	319
8T-6869	223
	245
8T-6870	338
8T-6885	122
8T-6902	402
	605
8T-6912	213
8T-6974	324
8T-7338	284
8T-7529	35
	46
	311
8T-7547	98
	243
	402
	572
8T-7566	610
8T-7876	41
8T-7930	239
8T-7963	227
8T-7968	331
	333
	335
8T-8137	132
8T-8390	265
8T-8442	348
8T-8729	291
8T-8737	112
	256
	257
	258
	260
	265
	267
	275
8T-8799	127
8T-8894	69
	221
8T-8917	612
	613
8T-9364	619
8T-9402	35
8T-9405	57
	284
8T-9501	146
	250
	252
	612
	613
8T-9655	127
8U-9427	386
8W-9230	317
8Y-4489	238
8Y-5737	555
	587
8Y-6352	555
	587
8Y-6967	555
	587
8Y-7309	630
	632
8Y-8081	74
	76
9	
9B-7233	112
	115
	624
9C-4457	619
	625
9C-9602	319
9D-3767	216
9F-2247	65
9G-3695	602
9K-6540	559
9M-0164	360
9M-1974	189
9M-4814	597
	598
9M-7958	37
	54
9M-7959	555
	587
9M-8406	62
	224
	598
9N-2231	555
	587
9P-9150	189
	194
9R-0109	391
	394
	407
	409
	411
	413
	414
	415
	418
	514
	643
9R-0111	391
	430
	432
	434
	436
	438
	503
	505
9R-0139	262
9R-0153	269
9R-0158	351
	353
	391
	397
	399
	407
	409
	411
	413
	414
	415
	418
	475
	476
	477
	478
	510
	511
	516
9R-0162	260
	262
	397
	423
	440
	441
	442
	443
	452
	453
	454
	455
	457
	458
	459
	460
	461
	462
	463
	464
	465
	467
	468
	469
	470
	472
	473
	474
9R-0170	397
9R-0189	394
9R-0320	281
	282
	451
	456
	466
	471
	509
9R-0321	269
	271
	273
9R-0347	432
9R-0366	239
9R-0371	434
	438
9R-0372	434
	438
9R-0376	430
	436
	438
9R-0390	603
9R-0411	418
9R-0418	317
	319
9R-0422	413
	414
	415
9R-0424	418
9R-0431	479
	480
	481
	482
	483
	484
	485
	487
	488
	489
	490
9R-0481	238
	393
9R-1004	313
9R-1005	313
9R-1085	▶413
9R-1499	94
9R-1502	397
	423
9R-1510	351
	353
	397
	406
	423
	475
	476
	477
	478
	511
	516
9R-1765	250

▶ PRIMARY REFERENCE

PART NUMBER INDEX

Part	Page	Part	Page	Part	Page	Part	Page
	252		498	9R-7240	71		119
9R-1766	146		500	9R-7803	313		123
	250	9R-4677	495		315	9X-1055	109
	252		496	9R-7882	239		119
9R-1767	146		498	9R-7902	470	9X-1386	102
	250		500	9R-8165	402		260
	252	9R-4678	495		559		265
9R-1956	209		496	9R-8291	239		267
9R-2004	309		498	9R-8292	406		275
9R-2053	87		500		423	9X-1481	623
	338	9R-5205	430	9R-8390	391	9X-2036	103
9R-2614	289		432	9R-8594	403	9X-2038	236
9R-2672	238		434	9R-8870	317		237
	423		436		319		348
	634		438	9R-9005	338		362
9R-2700	264	9R-5206	430	9R-9028	405		555
	265		432	9R-9373	391		559
9R-2806	213		434	9R-9702	166		575
	289		436	9R-9866	393		577
9R-2807	213		438	9R-9868	250		579
	216	9R-5238	406		252		582
	250	9R-5271	503	9R-9925	360		584
	252		505	9S-4185	195		587
	289	9R-5294	426	9S-4191	69		595
9R-2959	419	9R-5301	289		189		606
	421		394		195		625
9R-3067	250		405		286		649
	252	9R-5313	426		324	9X-2040	250
9R-3135	289		430	9S-8004	140		252
9R-3182	391		434		270	9X-2043	236
9R-3205	627	9R-5320	428		344		237
9R-3255	289		444		356		362
9R-3469	628		448		366		581
	640		▶512		367	9X-2044	216
9R-3659	211	9R-5321	427	9S-8005	342		577
	212		446	9T-2178	264		579
9R-3700	509		448	9T-2883	279		625
9R-3747	399		449	9T-3165	282		634
9R-3756	399		▶513	9T-4007	270	9X-2045	215
9R-3884	224	9R-5429	239	9U-2277	132		348
9R-4066	391	9R-5616	563	9U-8263	595		555
	643		568	9U-8875	179		559
9R-4110	238		570	9U-8886	177		575
9R-4482	399	9R-5828	399		179		579
9R-4483	432	9R-5832	434		284		582
9R-4485	430	9R-5866	427	9W-0607	91		584
	432		428		92		586
	434		429	9W-0625	146		587
	436		444		250		606
	438		446		252		630
9R-4486	430		448	9W-0717	175		632
	432		449		181		636
	434		450	9W-1951	128		638
	436		▶554	9W-4361	97	9X-2065	250
	438	9R-5901	430	9W-5460	143		252
9R-4487	432		436		194	9X-2092	568
9R-4494	399	9R-5902	430	9W-6582	603	9X-2132	634
9R-4619	301		436	9W-6584	603	9X-2133	54
9R-4672	425	9R-5948	303	9W-8215	513	9X-2403	419
	432		305	9W-9910	25	9X-2480	85
	436		337	9W-9915	25	9X-2842	605
	438	9R-6007	▶414	9W-9952	25	9X-3401	125
9R-4675	426	9R-6014	643	9W-9953	25		250
9R-4676	495	9R-6481	208	9X-0199	125		252
	496	9R-6690	391	9X-1054	109	9X-4244	91

▶ **PRIMARY REFERENCE**

PART NUMBER INDEX

Part	Page
	92
9X-4611	282
9X-4813	128
9X-6165	85
	132
9X-6383	634
9X-6611	269
	271
	273
	279
9X-6615	189
	194
9X-6620	612
	613
9X-6772	85
9X-7260	264
	265
9X-7344	125
9X-7378	109
9X-7380	598
9X-7381	598
9X-7382	598
9X-7383	598
9X-8118	93
9X-8139	93
9X-8250	303
9X-8256	94
	348
	402
	581
	595
	625
	628
9X-8257	167
	168
	416
	417
	603
9X-8372	628
	640
9X-8399	262
9X-8408	259
9X-8699	246
9Y-5015	16

0

Part	Page
005-0469	143
	144
005-0471	189
009-2062	181
014-5645	189
031-4155	609
031-5644	54
	96
032-9090	11
032-9091	11
033-6028	356
033-6044	388
033-7687	19
033-8248	37
034-1432	643
035-8068	13
038-9317	74
039-9133	220
067-6002	13
067-6006	13
	16
067-6043	13
067-6095	34
067-6123	20
067-6179	21
067-6213	26
067-6366	73
067-6873	11
067-6874	11
069-4080	69
069-4707	138
	140
	163
084-4277	595
089-7990	166
091-2436	109
	112
	128
091-4113	97
091-5928	507
092-3635	224
093-8828	163
095-0641	605
095-0642	347
	380
	382
095-0756	136
	146
095-0817	604
095-0865	495
	496
	498
	500
095-0878	609
095-0924	169
095-0927	181
	184
095-0928	181
095-0929	406
	423
095-1041	163
095-1543	265
095-1751	372
	374
	376
	378
	379
	380
	382
	383
	384
	385
095-7950	393
095-9230	250
	252
096-1820	495
	496
	498
	500
	510
	511
096-4882	622
096-5516	183
096-5866	55
	291
	329
096-5968	202
096-6166	115
	600
	601
099-3649	593
099-8232	342
	345

1

Part	Page
100-3685	103
100-3751	21
	50
100-4112	103
100-4113	103
100-4115	103
100-4118	103
100-4119	103
100-4461	38
100-4830	23
	65
100-4841	9
	13
100-5041	109
	119
100-6674	109
	119
100-7608	630
	632
	636
	638
100-8451	73
101-0003	609
101-0745	640
	642
101-1787	321
101-2987	24
101-3617	20
101-3771	26
101-3895	40
101-9080	559
102-2244	260
	265
	267
	275
102-3582	279
102-8801	83
	85
	87
	112
	129
	132
	136
	591
102-8802	5
	71
	83
	94
	102
102-8803	89
	109
	123
	125
	134
	267
	622
102-8804	94
	112
	121
	122
	127
	129
	134
	260
	265
	275
	291
	622
	640
102-8805	2
	3
	94
	116
	129
	132
	136
	602
	628
	640
	642
102-8806	87
	89
	94
	117
	118
	129
103-2543	127
103-5520	388
104-1995	109
	112
104-3288	144
	194
104-6310	428
	429
	▶514
104-6311	514
104-6312	514
104-6316	514
104-6317	514

▶ PRIMARY REFERENCE

PART NUMBER INDEX

Part	Page	Part	Page	Part	Page	Part	Page
105-1440	388	111-5042	619	119-8349	634	122-1883	189
105-3481	609		622	119-9631	557		194
	612	111-6792	109	120-5724	358	122-1884	184
	613		128	120-5726	356		185
105-8034	215	111-6793	128		▶358	122-1886	177
105-9411	598	111-6795	109	120-9027	579		179
106-0401	259		128	120-9286	645	122-4401	109
	287	111-6816	109	120-9289	▶643	122-6787	189
	294	111-7899	94		650		194
	296		115	120-9332	643	122-7137	624
	299		121	120-9333	643	122-9250	372
106-0406	259		123	120-9762	143		374
	287		291		194		376
	294		642	120-9809	313		380
	296	111-7906	153	121-0694	175	123-0380	563
	299	111-7907	▶153		177	123-0428	243
106-1251	260		188	121-0697	184	123-0707	595
106-3108	347	112-1773	282	121-0714	184	123-1377	194
106-7301	289	112-1776	514	121-0883	20	123-2899	18
106-8020	72	112-1826	171	121-0885	181	123-2920	177
106-8704	109		▶284		184	123-4065	48
	119	112-5494	289	121-0904	184	123-4950	71
	127	112-9338	207	121-2059	144		72
	132	113-0920	595		194	123-6077	609
	134	113-6349	73	121-2060	144	123-7615	119
	291	113-8129	50		194	123-8905	175
106-8916	59	114-2579	8	121-2061	144		177
106-9586	203	114-3928	226		194		179
106-9861	143	114-4363	20	121-2500	175		184
	194	114-6099	238		177		185
107-5591	146	115-1162	8		179	123-8906	143
	250	115-1615	89	121-6936	628		144
	252		109	121-7385	189		175
107-6279	269		119		194		177
107-6711	423		123	121-7389	189		185
107-6826	174	115-1918	284	121-7390	189	123-8907	172
108-2989	572	116-4481	386	121-7391	189		181
108-3872	294		387	121-7396	189		183
	296	116-4942	▶415		194		189
	299	116-5763	234	121-7398	144	123-8908	144
109-1260	294	117-1385	194		194		172
	296	117-2823	628	121-7399	144		181
	299	117-2824	628		194	123-8909	177
109-1633	291	117-2826	628	121-7400	144		179
	329	117-3534	284		194	123-8910	144
	598	117-9713	153	121-7401	144		177
109-1634	291	117-9887	174		194	123-8912	172
	329	118-6842	227	121-7402	144		181
	598		▶231		194		184
110-0203	128	118-6854	227	121-7403	189		185
110-2445	55	118-7110	512	121-7404	189	123-8913	177
110-5602	593	118-7286	46	121-9743	634	124-0312	555
	634	118-7790	125	121-9870	595		587
110-6109	555	118-8118	68	121-9875	189	124-2456	646
	587	119-1530	▶650	122-0668	317	124-3536	28
110-7887	112	119-3662	2	122-1113	323	124-3815	21
110-8760	348		3	122-1876	189		65
111-0859	18		109	122-1877	172	124-5640	109
111-3422	65		112		181		119
111-3423	65		119		184	124-8616	640
111-4337	399		128		185	125-7874	85
	418		628	122-1878	184		87
111-4627	132	119-4594	418		185		94
	555	119-4740	171	122-1879	144		109
	587	119-5025	61		194		112

▶ **PRIMARY REFERENCE**

PART NUMBER INDEX

Part	Page	Part	Page	Part	Page	Part	Page
	116	130-0484	239		441	145-2237	323
	117	130-0777	418		442	145-8348	510
	119	130-1638	407		443		511
	127		409	134-5930	289	145-9291	221
	128		411	134-7258	645	146-0742	275
	136	130-3879	45	135-1706	609		277
	291	130-4832	555	135-8203	554	146-2438	94
	628		587	136-1955	35	146-6729	103
125-7875	94	130-5451	391	136-4184	591	146-7744	634
	119	130-5891	289	136-4192	630	146-7745	634
	128	130-7282	140		632	146-9439	106
	136	130-7952	289		636		127
126-1774	85	130-8150	359		638		134
126-1817	286	130-8343	619	136-7440	239		291
126-7574	78		623	136-7728	48	147-0201	194
127-2170	234	130-9984	46	136-7808	148	147-0202	175
127-3017	189		311	137-4234	445		177
127-4293	209		598		447	147-0203	172
	210	131-0232	71		486		179
127-4471	37	131-1424	112		491		181
	55		624		492		185
	360	131-3540	610		493	147-0205	181
127-4834	229	131-3987	563		494	147-0207	185
127-8987	391		582		495	147-0209	189
128-4123	128		584		496		194
128-4168	127	131-8203	634		498		▶203
128-4178	128	131-8775	403		500	147-0210	185
128-4190	128	131-9203	134	137-6645	121	147-0211	194
128-4249	128		291	138-2053	34	147-0215	172
128-5010	391	132-2249	582	138-8454	127	147-0216	172
128-5596	284		584	140-3640	48	147-0218	195
	▶359	132-3056	360	140-4107	559	147-0224	177
128-7716	557	132-3721	507	140-6009	289	147-0226	195
128-7902	289	132-3723	507	140-8714	65	147-0227	179
128-7903	289	132-3725	507	140-8718	65		185
	391	132-3777	508	140-8783	73	147-0228	172
128-7905	289	132-3778	508	140-9921	634		175
	391	132-3821	507	141-0888	390		177
129-1830	555	132-4354	572	141-1667	59	147-0234	195
129-1831	587	132-6496	391	141-1762	625	147-0236	195
129-3178	55	132-6497	394	141-6343	289	147-0238	172
	83	132-8769	▶287	141-8061	128		175
	85	132-9240	609	142-0485	215		177
	557	133-1011	21	142-2928	622		179
	589	133-3362	▶407	142-3388	44		185
	594	133-3363	▶409		45	147-0242	181
	605	133-3366	▶411	142-3391	44	147-0248	181
	649	133-3413	82		45	147-0256	175
129-3180	610	133-5813	323	142-9117	112	147-0257	177
	612	133-6517	82	143-0539	▶103	147-0258	172
	613	134-0143	403		105	147-0259	175
	619	134-0404	121	143-0777	313		177
	634	134-0453	250	143-0779	313	147-0260	181
129-4741	231		252	143-1344	103	147-0261	181
129-5256	563	134-2540	128	143-2827	630	147-0262	195
129-5257	563		129		632	147-0266	195
129-8542	630	134-3014	286		636	147-0270	175
	632	134-3856	597		638	147-1444	591
	636		598	143-3158	323	147-1445	128
	638	134-4126	78	144-0195	628	147-1446	128
129-8545	630	134-5884	440		640	147-1979	16
	632		441	144-0367	327	147-5553	59
	636		442	144-6734	150	148-5353	630
	638		443	144-8242	323		632
130-0165	82	134-5885	440	144-8344	294		636

PART NUMBER INDEX

Part	Page	Part	Page	Part	Page	Part	Page
	638	148-8390	313		442	154-5428	132
148-8317	327	148-8392	294		443	154-8278	609
148-8318	215	148-8407	195		452	154-8280	609
	224		286		453	154-8284	609
	291		323		454	155-2026	294
	329	148-8415	331		455		296
148-8325	165		333		457		299
	215		335		458	155-2255	83
	224	148-8428	338		459		85
	321	148-8429	327		460		87
	323	148-8433	324		461		112
	326	148-8446	313		462		116
	362	148-8457	303		463		117
148-8326	72		305		464		118
148-8327	296	149-4745	614		465		128
	299	149-7372	311		467	155-2256	136
148-8328	303	149-9954	68		468	155-2260	89
	305	150-3026	224		469		119
	331		360		470		122
	333	150-3027	321	151-7929	451		125
	335	150-3033	200		456		128
	337	150-3035	340		466		129
148-8335	286	150-3053	294	151-7930	451		132
	296		296		456		134
	299		299		466		267
	327	150-3060	317	152-0816	317		291
148-8336	323		319	152-3968	65	155-2265	87
148-8339	46	150-3062	321	152-6144	138		89
148-8340	291	150-3063	313		140		128
	329	150-3072	311		148		628
	338	150-3757	181	152-7691	602		640
148-8341	301	150-4044	321	153-3061	44	155-2270	83
	303	150-7732	9		45		85
	305		195	153-3946	598		94
	313	151-2565	269	153-4906	356		109
	337	151-2963	231	153-6232	337		116
	340	151-4841	61	153-6241	291		117
148-8351	321		165		329		119
148-8358	291		200	153-6252	259		121
	329		215	153-6258	324		123
148-8360	46		313	153-6781	598		125
148-8362	327		315	153-7368	221		127
148-8364	215	151-7902	440	153-7369	221		128
	309		441		▶223		132
	338		442	153-8004	600		134
148-8367	224		443	154-2704	509		136
148-8368	154		452		510		291
	165		453		511		557
	200		454	154-5257	451	155-2271	2
	323		455		456		3
148-8369	224		457		466		87
148-8370	311		458		471		94
148-8372	331		459	154-5278	397		112
	333		460	154-5279	397		128
	335		461		516		589
148-8378	215		462	154-5280	397		628
	317		463		516		640
	319		464	154-5404	138	155-2274	87
	323		465	154-5410	640		112
148-8382	301		467		642		128
	303		468	154-5416	213		628
	305		469	154-5423	630		640
	315		470		632	155-7321	338
148-8383	224	151-7903	440		636	156-0283	234
148-8388	340		441		638		593

▶ **PRIMARY REFERENCE**

PART NUMBER INDEX

Part	Page	Part	Page	Part	Page	Part	Page
	628		619	164-1234	619	164-1342	634
	640	161-9285	619	164-1235	620	164-1343	634
156-3600	215	161-9286	619	164-1236	619	164-1344	634
156-3631	215	161-9288	619	164-1237	619	164-1345	634
156-6175	74		623		622	164-1346	634
	83	161-9289	614	164-1238	619	164-1351	634
	129		622		623	164-1352	634
	362	161-9290	609	164-1239	619	164-1353	634
157-1669	69	161-9294	630		623	164-1354	634
157-2088	181		632	164-1240	619	164-1368	136
157-2090	181		636		622		146
158-2306	248		638	164-1244	613		213
158-3412	313	161-9744	614	164-1245	609		250
	315	162-1565	9	164-1246	609		252
158-4466	386	162-1604	356	164-1247	609		348
	387	162-3960	▶248		616		555
159-0186	46		291		617		587
159-1503	311		329	164-1249	609	164-1395	61
159-3046	265	162-4004	233		612		252
159-3313	323	162-6556	630		613		402
159-3590	646		632	164-1250	609	164-1398	402
159-4269	582		636	164-1251	609	164-2108	389
	584		638		612	164-3876	227
159-4945	563	163-0753	214		613	164-5549	291
	584		▶220	164-1252	609		329
159-4946	563	163-1135	619		612	164-5567	321
	582		623		613		323
159-4950	630	163-9091	172	164-1256	609	164-5586	323
	632	164-1153	146		612	164-7556	91
	638	164-1154	605		613		92
159-4951	630	164-1178	575	164-1258	609	164-8474	555
	632	164-1203	▶614		612		587
	636		615		613	164-9425	119
159-8033	645	164-1207	614	164-1259	609	164-9598	220
159-9322	128		▶619		612	164-9599	220
	591	164-1208	619		613	164-9640	323
160-0496	248	164-1211	609	164-1261	609	165-2273	308
160-2169	642	164-1212	609		616	165-4021	35
160-2245	125	164-1213	▶609		617	165-4931	156
160-2248	326		614	164-1262	609		321
	362	164-1214	609	164-1263	609	165-6595	215
160-2250	87		616		612	165-7951	69
160-7690	85		617		613	165-8357	82
161-3249	184	164-1215	619	164-1264	609	165-8996	166
	185		622	164-1265	609	166-9413	141
161-3932	115	164-1217	619		612	167-0566	338
161-4130	440	164-1218	619		613	167-2186	267
	441		622		616		278
	442	164-1219	619		617	167-2195	282
	443		622	164-1266	612	167-2201	260
	505	164-1220	619	164-1269	609		262
	509		622	164-1271	609	167-2202	264
161-6984	630	164-1224	619	164-1272	609		265
	632	164-1225	619	164-1273	609	167-2204	275
	636	164-1226	619		612		277
	638		623		613	167-2294	267
161-6987	630	164-1228	619	164-1274	609		278
	632	164-1229	619	164-1275	609	167-2304	282
	636		622	164-1276	609	167-2310	264
	638	164-1230	619	164-1277	609		265
161-9044	582		622	164-1294	619	167-2312	260
	584	164-1232	619	164-1295	609		262
161-9282	619		622	164-1308	634	167-2314	275
161-9283	612	164-1233	619	164-1314	634		277
	613		623	164-1328	634	167-3692	128

▶ **PRIMARY REFERENCE**

PART NUMBER INDEX

Part	Page	Part	Page	Part	Page	Part	Page
167-3693	112		380	176-8541	386	183-4911	593
	115		382		387	183-4912	593
167-8182	634		383	176-9294	327	183-4934	348
167-8251	575		384	177-2215	87	183-5443	593
168-0425	510		385	177-4877	563	183-6084	402
	511	169-7291	595		582	183-6085	593
	517	169-7409	303		584	184-5293	579
168-0443	475		305	177-9645	557	185-0882	16
	476	170-0235	598		589	185-0884	13
	477	170-0503	248	177-9648	109	185-1546	34
	478	170-6305	112		123	185-3890	619
168-0444	475	170-6542	112		589	185-4015	557
	476	170-9360	83	177-9652	557		589
	477		129	177-9653	557	185-4253	389
	478	171-2870	634		589	185-4254	346
168-0445	511	171-5349	102	177-9656	109		▶389
168-0446	510	172-5317	175		123	185-6643	35
	511		177	178-1304	207	186-2589	▶602
168-0475	510		179	178-1781	74		640
168-0480	440	172-6050	172	178-3593	▶516		642
	441		179	178-7539	94	186-3735	71
	442		181		127		102
	443		184		561		109
	452		185		562		112
	453	172-6489	94		566		119
	454	172-6490	94		567		127
	455	172-6743	181	178-8465	5		134
	457	172-8591	575	178-8850	▶508		256
	458	172-9200	129	178-9566	181		257
	459	173-0332	172		184		258
	460	173-0639	356	179-2021	348		291
	461	173-0641	356	179-3543	▶346		602
	462	173-5787	614		380		622
	463		623		382	187-0413	563
	464	173-9683	262	179-5434	93	187-2120	338
	465	173-9779	278	179-6401	127	187-3510	260
	467	174-0503	89	179-8235	250		262
	468	174-3091	256		252	188-2199	260
	469		257	180-3664	▶93		265
	470		258		96		267
	472	174-4643	138	180-5772	561		275
	473	174-4647	140		562	188-3953	407
	474	174-4650	140		▶615		409
168-2313	557	174-4671	138	180-5780	609		411
	589	174-6740	323	180-5781	609	188-9592	510
168-4511	82	174-8131	649		612	189-0881	555
168-8389	445	174-9638	59		613		587
	447	174-9711	189	180-5782	609	189-5746	▶102
	486	175-0054	189	180-5783	609		189
	491	175-7877	▶645	180-5784	610	190-9767	184
	492	175-7902	264	180-5785	610	191-6159	267
	493		265	180-5787	610		278
	494		275	180-5788	610	191-8304	195
	495		277	180-5791	610	192-2112	557
	496	175-7903	264	180-5794	619	193-0618	68
	498		265	180-5797	612	193-3356	555
	500		275		613		587
	509		277	180-6213	356	193-9055	234
	510	176-0348	94	180-9160	593	194-2903	215
	511	176-1477	5	183-3132	250	194-4334	311
169-1616	372	176-1522	5		252	194-5231	305
	374	176-6219	65	183-3135	250	194-5390	59
	376	176-6251	▶507		252	194-5622	555
	378		508	183-3137	250		587
	379	176-6252	507		252	195-0260	326

▶ **PRIMARY REFERENCE**

PART NUMBER INDEX

Part	Page
195-0261	326
195-0262	326
195-0263	326
195-2132	24
195-2134	24
195-2136	24
195-2221	24
195-6341	209
195-6344	209
	210
195-6347	211
	212
195-7055	610
	616
	617
195-7602	348
195-9223	610
	612
	613
196-2384	128
196-2385	128
196-2386	128
196-2412	128
196-2413	128
197-5107	582
	584
197-6657	619
	622
197-6658	619
197-7499	112
197-9155	140
198-6498	386
	387
198-6499	387
198-6505	387
198-6506	387
198-6514	387
198-6515	386
	387
198-6516	387
198-6522	387
198-7811	140
	163
198-7814	161
	162
198-7823	138
198-7825	138
198-7838	138
198-7841	138
198-7842	138
198-7843	138
198-8645	9
199-0639	138
	140
199-0640	218
199-0641	140
199-0645	218
199-0646	163
199-0648	161
	162
199-0652	140
199-0653	170
199-0656	163
199-0658	140
199-0659	151
199-0662	140
199-0663	163
199-0668	140
199-0669	170
199-0670	140
199-0672	218
	219
199-0673	151
199-0675	163
199-0676	140
199-0678	163
199-0679	140
199-0680	163
199-0681	218
	219
199-0683	138
199-0684	163
199-0685	163
199-0686	163
199-0687	163
199-0688	163
199-0689	163
199-0690	163
199-0691	163
199-0692	163
199-0693	163
199-0694	151
199-0695	148
	163
199-0697	163
199-0700	218
	219
199-0701	218
	219
199-0702	218
	219
199-0703	218
	219
199-0706	140
199-0752	218
	219
199-0756	151
199-0759	218
	219
199-0760	170
199-0778	140
199-0783	233
199-0784	151
199-0785	163
199-0786	140
199-0787	140
199-0807	151
199-0808	151
199-0858	148
	163
199-0929	600
	601
199-9267	108
199-9751	16
	32
200-2213	112
200-2371	344
200-2676	561
	562
	▶571
200-3946	362
200-3947	362
200-4022	386
200-4023	386
200-5921	507
200-6210	344
200-6971	303
200-7128	▶282
	401
200-8303	399
200-8306	399
200-8308	399
200-8309	399
200-8310	399
200-8311	399
200-8313	399
201-0330	72
201-1024	127
201-1234	479
	480
	481
	482
	483
	484
	485
	486
	487
	488
	489
	490
201-1235	453
	454
	455
201-1238	451
	452
	453
	454
	455
	456
	457
	458
	459
	460
	461
	462
	463
	464
	465
	466
	467
	468
	469
	470
	471
	472
	473
	474
	479
	480
	481
	482
201-1835	72
201-1838	399
201-1840	399
201-1862	205
	▶206
201-1863	206
	▶207
201-1864	206
	▶207
201-1874	205
	206
	▶207
201-1875	207

2

▶ PRIMARY REFERENCE

PART NUMBER INDEX

Part	Page
	▶208
201-1876	207
	▶208
201-1877	205
	▶208
201-1878	208
	▶209
201-1881	205
	▶209
201-1882	209
201-1883	209
	▶210
201-1902	210
201-1911	▶210
	211
201-1912	▶210
	211
201-1913	205
	206
	▶211
201-1915	206
	207
	208
201-1916	209
	211
201-1918	▶205
201-1919	206
	208
	209
	211
201-1920	▶205
	207
	208
	209
	210
	211
	212
201-1923	▶205
201-1925	▶205
201-1940	▶206
201-1941	206
	▶211
201-1942	211
201-1943	211
	▶212
201-1954	▶206
201-3340	340
201-3341	340
201-3344	340
201-3345	340
201-3347	340
201-3621	331
	333
	335
201-3622	331
	333
	335
201-3623	331
	333
	335
201-3624	331
	333
	335
201-3652	215
201-3954	▶233
201-4756	340
201-4826	282
201-4899	282
201-4902	282
201-5810	407
	409
	411
201-5812	407
	409
	411
201-7659	282
201-9459	107
201-9465	634
202-0596	472
	473
	474
202-0597	472
	473
	474
202-4162	471
202-4163	471
202-5720	▶399
	401
202-5909	35
202-5993	215
202-6009	▶187
	188
202-6010	▶107
	171
202-6029	215
202-6108	109
202-6186	207
	208
202-6611	92
202-6614	91
203-7060	407
	409
	411
204-0317	224
204-0775	107
204-3080	138
204-4175	563
204-4220	563
	570
204-4230	568
204-9921	557
	589
205-1627	57
205-2357	331
	333
	335
205-3126	323
	326
205-6298	107
205-7047	595
205-7048	582
	584
205-9244	195
205-9362	107
205-9560	560
	561
	562
	566
	567
	▶603
205-9569	560
	561
	562
	566
	567
	▶606
205-9570	606
205-9571	606
205-9576	606
205-9577	606
205-9578	560
	561
	562
	▶600
205-9585	582
	▶636
205-9587	636
205-9588	582
205-9590	636
205-9591	636
205-9595	584
	▶638
205-9597	638
205-9598	584
205-9605	563
	568
	570
205-9606	563
	568
	570
205-9607	563
	570
205-9614	638
205-9615	638
205-9619	563
	▶630
205-9621	630
205-9622	563
205-9623	630
205-9624	630
205-9628	563
	▶632
205-9630	632
205-9631	563
205-9633	632
205-9634	632
206-1345	112
	127
206-1486	125
206-1590	563
206-1592	563
	▶582
206-1593	563
	▶584
206-1594	582
206-1606	584
206-1618	560
	561
	562
	566
	▶586
206-1623	625
206-1625	625
206-1632	221
206-1633	▶221
	560
	561
	562
	566
	567
	606
206-1634	215
206-1635	221
206-1637	625
206-1639	171
	▶215
206-1640	5
	▶61
206-1641	4
	▶402
206-1642	171
	▶213
206-1643	▶146
	171
206-1645	▶250
	364
206-1647	563
	568
	570
206-1648	555
	587
206-1649	112
206-1650	215
206-1652	224
206-1653	555
	587
206-1658	579
206-1659	579
206-1660	579
206-1661	579
206-1662	579
206-1663	579
206-1664	215
206-1665	625
206-1666	625
206-1667	575
	579
206-1668	252
206-1669	146
206-1678	575
206-1679	575
206-1681	575
206-1682	555
	587
206-1683	625
206-1684	555
	587
206-1687	575
206-1690	575
206-1692	575
206-1695	250
206-1696	577
206-1698	577
206-1699	577
206-1700	560
	561
	562
	575

▶ **PRIMARY REFERENCE**

PART NUMBER INDEX

Part	Page
206-1701	566
	567
	▶649
206-1702	560
	561
	562
	566
	567
	▶577
206-1703	560
	561
	562
	566
	567
	▶579
206-1704	566
	567
	▶625
206-1706	577
206-1708	577
	579
206-1712	577
206-1716	561
	562
206-1718	127
206-1725	560
	561
	562
	▶642
206-1727	560
	561
	562
	▶628
206-1728	567
	▶640
206-1747	▶607
206-1748	▶608
206-1749	607
206-1750	608
206-1752	215
206-1758	215
206-1759	215
206-1766	215
206-1767	215
206-1768	215
206-1791	▶616
	618
206-1792	▶617
	618
206-1798	625
206-1799	625
206-1800	560
	561
	▶587
206-1801	▶555
	562
206-1803	555
	587
206-1804	555
	587
206-1805	555
	587
206-1806	555
	587
206-1807	555
	587
206-1808	555
	587
206-1809	555
	587
206-1810	555
	587
206-1812	555
	587
206-1814	555
	587
206-1815	555
	587
206-1816	555
	587
206-1817	555
	587
206-1818	555
	587
206-1832	236
	237
206-1846	555
206-1847	555
206-1850	237
206-1851	326
206-1852	649
206-1853	649
206-1854	579
206-1855	649
206-1856	649
206-1857	561
	562
	▶627
206-1871	402
206-1874	402
206-1884	566
	▶568
206-1885	567
	▶570
206-1889	560
	561
	562
	▶563
206-2423	116
	117
	118
	136
206-3685	338
206-5823	602
207-4254	138
207-4257	170
207-4258	138
207-5962	170
208-0321	138
208-0322	148
208-5232	471
	472
	473
	474
208-5234	491
	492
	493
	494
208-5235	451
	452
	453
	454
	455
	456
	457
	458
	459
	460
	461
	462
	463
	464
	465
	466
	467
	468
	469
	470
	479
	480
	481
	482
	483
	484
	485
	486
	487
	488
	489
	490
208-5242	471
	472
	473
	474
208-5244	491
	492
	493
	494
208-5245	451
	452
	453
	454
	455
	456
	457
	458
	459
	460
	461
	462
	463
	464
	465
	466
	467
	468
	469
	470
	479
	480
	481
	482
	483
	484
	485
208-9293	598
209-0939	362
209-1615	2
209-1616	419
	421
209-2435	419
	421
209-3363	250
	252
209-3364	▶252
	364
209-3366	594
209-3367	61
	▶594
209-3378	61
	▶605
209-4157	169
209-4703	560
	561
	562
	▶595
209-4704	595
209-4705	595
209-4716	595
209-4777	238
209-6166	393
209-6173	393
209-6175	393
209-6176	393
209-6181	393
209-6850	239
209-6855	239
209-6862	239
209-6872	239
209-7454	148
209-7455	150
209-7456	138
209-7459	159
	160
209-7460	161
	162
209-7461	159
	160
209-7462	148
209-7463	148
209-7464	138
209-7465	161
	162
209-7466	169
209-7472	148
209-7473	148
209-9219	15
209-9875	138
209-9882	138
	▶148
209-9883	138
209-9884	138
	▶159
209-9885	138
	▶160

▶ PRIMARY REFERENCE

PART NUMBER INDEX

Part	Page	Part	Page	Part	Page	Part	Page
209-9886	138	210-7666	557	211-4259	▶134	212-7291	264
209-9887	138		589		249	213-0139	109
209-9930	1	210-7773	360	211-4260	▶122	213-1881	234
	2	210-8363	555		419	213-1884	234
	3		▶557	211-4262	▶125	213-1887	234
	▶393	210-8364	587		401	213-1888	625
209-9937	▶249		▶589	211-4267	▶106	213-1889	234
210-0074	326	210-8401	557		152	213-1891	▶234
	362	210-8402	589	211-4268	▶109		560
210-0075	326	210-8754	595		562		561
210-0082	326	211-0052	128	211-4269	▶123		562
210-3097	140	211-0071	562		560		566
210-3098	140		▶598		561		567
210-3099	140	211-0072	560	211-4271	561	213-2491	260
210-3100	140		561		562	213-4222	170
210-3106	140		▶597		566	213-4616	262
210-5924	138	211-0073	▶154		567	213-4620	262
	▶169		171	211-4277	▶94	213-4622	260
210-5931	169	211-0092	150		560	213-4624	260
210-5932	158	211-0705	562		561	213-4625	260
	159		▶574		562	213-6040	115
	160	211-1381	574		566	213-6049	94
210-5937	138	211-2660	557		567	213-6051	628
210-5942	138		589	211-4285	4		640
210-5946	138	211-2661	555		▶74	213-6055	109
210-5947	138		587	211-4286	▶76		123
210-5948	52	211-3207	313	211-4292	▶96	213-6060	107
210-5949	▶52	211-3208	313	211-4348	327	213-6069	2
210-5951	43	211-3546	4	211-5182	4		3
	▶48		▶243		▶403	213-6088	74
210-5953	52	211-3580	327	211-6571	152	213-6089	74
210-5954	52	211-3581	327		▶224	213-6091	76
210-5955	52	211-3583	327	211-6735	138	213-6092	76
210-6139	48	211-3607	288	211-6752	172	213-6094	74
210-6141	48		▶327	211-6753	181	213-6095	122
210-6240	▶226	211-3649	▶228	211-7601	1	213-6096	136
	288	211-3688	321		2	213-6682	275
210-6475	563	211-3689	321		3		423
210-6491	577	211-3783	234		▶301	213-6683	423
210-6807	5	211-4240	▶127	211-7602	1	213-6687	397
210-7075	2		560		2	213-6690	397
210-7076	1		561		3	213-6691	397
	3		562		▶337	213-6692	1
	▶264		566	211-7766	337		2
210-7081	2		567	211-7767	337		3
	3	211-4241	▶112	211-9286	166		▶397
	▶275		560	212-0061	344	213-6693	393
210-7082	1		561	212-0770	166	213-6695	406
	3		562	212-0862	127		423
	▶277		566	212-0907	260	213-6696	423
210-7087	2		567		265	213-6697	423
	3	211-4245	▶115		275	213-6698	397
	▶260		560	212-0929	277	213-6700	1
210-7088	1		561	212-1490	265		2
	3		562	212-1493	275		▶406
	▶262		566	212-3416	112	213-6702	239
210-7097	▶267		567		557	213-6703	397
	419	211-4248	4		589	213-6723	397
210-7098	▶278		▶119	212-5702	163	213-9273	▶4
	421	211-4251	4	212-5712	218	213-9287	4
210-7302	140		▶132		219	213-9300	4
210-7305	140	211-4253	89	212-5713	140		▶401
210-7664	589		▶591	212-6215	188	213-9314	▶44
210-7665	557	211-4254	▶136	212-6264	338		562
	589		171	212-6708	264	214-0592	388

▶ **PRIMARY REFERENCE**

PART NUMBER INDEX

Part	Page
214-0973	5
	▶25
214-2000	4
	▶238
214-2001	238
214-2202	4
	▶43
214-2550	▶3
214-2553	▶1
214-3254	228
	230
214-3647	48
214-3735	598
214-3736	598
214-3737	598
214-3738	598
214-3739	598
214-3740	▶156
	171
214-3742	628
	640
214-3745	154
214-3751	43
	▶46
214-3753	46
214-3755	▶3
214-3758	▶2
214-3763	628
	640
214-4281	403
214-4285	403
214-4293	591
214-4302	572
	▶573
214-4691	136
214-4692	106
214-4693	112
214-4694	127
214-4695	109
	123
214-4698	94
214-4700	94
214-4702	127
214-4703	123
214-4704	112
214-4706	365
214-4709	642
214-4710	134
	291
214-4716	115
214-4717	127
214-4718	109
214-4722	112
214-4723	127
214-4740	53
214-4745	53
214-4746	53
214-4747	53
214-4749	▶53
214-4754	238
214-5097	138
214-5950	288
	▶321
214-6143	419
	421
214-6471	267
214-6475	267
214-6480	267
214-6879	267
214-6897	267
214-6902	4
	▶5
214-6999	403
214-7043	403
214-7407	48
	▶54
214-7457	48
214-7458	48
214-7524	171
	▶188
215-1242	619
215-1942	260
	265
	267
	275
215-2023	138
215-2445	▶331
	365
215-3373	517
215-3507	44
215-3881	224
215-3884	224
215-7453	315
215-7454	315
215-7457	278
215-7460	278
215-7619	315
215-8196	619
215-8934	267
215-9448	406
	423
215-9478	506
	▶517
215-9515	62
215-9690	406
	423
216-0909	▶645
216-0928	506
	▶518
216-1600	163
216-1601	170
216-1602	158
216-1604	163
216-1606	170
216-1608	140
216-1609	140
	▶158
216-1610	140
	▶170
216-1612	163
	▶218
216-1613	163
	▶219
216-2267	189
	195
216-2777	338
216-2778	338
216-3315	▶171
216-3316	▶171
216-3350	252
216-3351	250
	252
216-3358	250
	252
216-3368	250
	252
216-3712	518
216-4457	148
216-4458	148
216-4461	148
216-4464	148
216-4465	148
216-4466	148
216-4467	148
216-4473	174
216-4475	152
	▶174
216-4476	171
	▶174
216-4740	▶152
	171
216-5332	288
	▶308
216-5515	148
216-5981	241
216-6295	419
	421
216-6891	62
216-6892	62
216-6945	48
216-7473	138
216-8314	11
216-8634	21
216-8687	150
216-8689	150
216-8691	150
216-8700	150
216-8762	500
	▶502
216-8778	502
	504
216-8780	502
	504
216-8781	502
	504
216-8794	505
216-8796	505
216-8800	427
	▶495
216-8801	428
	▶496
216-8802	495
	▶503
	504
216-8803	▶425
	495
	496
216-8804	426
216-8805	426
216-8811	496
	▶504
216-8820	428
	▶498
216-8821	429
	▶500
216-8822	498
	502
	▶505
216-8826	▶426
	498
	500
216-8829	426
216-8839	425
216-8843	425
216-9068	127
216-9069	127
216-9497	150
216-9498	148
	▶150
217-0055	419
	421
217-1577	419
	421
217-2308	48
217-2345	163
217-2346	163
217-2347	218
	219
217-2349	218
	219
217-2617	294
217-2699	294
217-2868	148
217-2877	159
	▶161
217-2878	160
	▶162
217-2879	159
	160
217-2880	148
217-2883	138
217-2885	138
217-2914	140
217-3311	267
217-3312	265
	275
217-3875	356
217-5364	112
217-5776	275
217-8058	221
217-8195	224
217-8197	224
217-8432	591
217-8763	260
	275
217-9672	152
	▶241
218-0235	622
218-0666	555
	587
218-0745	▶394
	401
218-2373	389
218-4854	634
218-4856	634
218-6091	323
218-9984	154
219-0302	646
219-0343	594
219-1893	265

▶ **PRIMARY REFERENCE**

PART NUMBER INDEX

Part	Page	Part	Page	Part	Page	Part	Page
219-3273	82	219-8834	218	220-8226	215		364
219-3379	▶451	219-8835	219	220-8631	20	222-7091	5
	475	219-8836	163	221-0811	152		▶37
219-3380	▶452	219-8839	140		▶166	222-7379	▶506
219-3381	▶453	219-9482	456	221-4260	▶519	222-7411	518
219-3382	▶454		457		520	222-7464	506
219-3383	▶455	219-9483	440	221-4263	552		▶509
219-3384	▶456		458	221-4265	▶351	223-2028	582
	476		462		519	223-2029	584
219-3385	▶457		467	221-4267	519	223-2030	630
219-3386	▶458		481		▶552		632
219-3387	▶459		487		553		636
219-3388	▶460	219-9484	441	221-4271	396		638
219-3389	▶461		459	221-4272	396	223-3353	267
219-3390	▶462		463		525		278
219-3391	▶463		468		526	223-3356	260
219-3392	▶464		482		527		262
219-3393	▶465		488		528	223-3360	264
219-3394	▶466	219-9485	442		539		275
	477		460		540		277
219-3395	▶467		464		541	223-3926	419
219-3396	▶468		469		542		421
219-3397	▶469		483		543	223-3962	236
219-3398	▶470		489		544	223-3964	237
219-3399	▶471	219-9486	443		545	223-3965	▶236
	478		461		546		566
219-3400	▶472		465		547		567
219-3401	▶473		470		548	223-3966	▶237
219-3402	▶474		484		549		560
219-3410	▶475		490		551		561
219-3411	▶476	219-9488	453	221-4276	▶396		562
219-3412	▶477	219-9491	472		519	223-4546	236
219-3413	▶478	219-9492	473		520		237
219-6281	557	219-9493	466	221-4282	519	223-4713	▶386
	589	219-9495	474		521		560
219-6283	557	219-9496	471		525		566
219-6284	557	220-0235	301	221-4283	519		567
	589	220-0269	250		522	223-4715	▶387
219-6285	557		252		526		561
	589	220-0738	234	221-4284	520		562
219-6286	557		577		523	223-4960	5
	589		579		527		▶58
219-6287	557	220-1012	393	221-4285	520	223-8263	642
	589	220-1018	419		524	223-8995	55
219-6288	557		421		528	224-2147	579
	589	220-1019	406	221-4295	351	224-2149	579
219-6292	557	220-2000	642		353	224-4527	396
	589	220-2001	642	221-4296	351		525
219-6294	557	220-3251	252		353		526
	589	220-3398	202	221-4297	351		527
219-8751	148	220-3469	146	221-4314	259		528
219-8752	148	220-3470	146	221-4315	351		539
219-8753	148	220-3762	557		423		540
219-8754	148	220-3785	567	221-4316	351		541
219-8755	148		▶581	221-4322	423		542
219-8756	148	220-3790	609	222-1395	260		543
219-8757	148		616	222-1801	233		544
219-8758	148		617	222-1802	233		545
219-8759	148	220-3791	609	222-4067	360		546
219-8783	169		616	222-4732	313		547
219-8795	138		617	222-5171	419		548
	140	220-3793	609		421		549
219-8798	138	220-5530	241	222-5622	▶333		551
219-8799	140	220-5974	289		365	224-5917	62
219-8802	140	220-8209	598	222-5623	▶335	224-6232	▶519

▶ **PRIMARY REFERENCE**

PART NUMBER INDEX

Part	Page	Part	Page	Part	Page	Part	Page
224-6233	▶519	225-5963	34	226-4365	140	227-7448	56
224-6234	▶520	225-5967	7		159	227-7449	56
224-6235	▶520	225-6004	26		160	227-8378	▶391
224-6237	▶259	225-6005	26	226-4366	140		401
	521	225-6041	26		159	228-3469	260
	522	225-6451	9		160	228-3509	▶269
	523	225-6455	9	226-4367	140		401
	524	225-6456	9	226-4370	140	228-3581	296
	529	225-6461	9		159		299
	530	225-6464	9		160	228-8017	277
	531	225-6477	9	226-5540	▶270	228-8062	275
	532	225-6478	9		495	228-9129	▶68
	533	225-6479	9		496		69
	534	225-6517	9		498	228-9130	68
	535	225-6522	9		500	228-9132	68
	536	225-6817	40	226-5633	338	228-9572	262
	537	225-6818	40	226-5634	338	229-0298	634
	538	225-6820	40	226-5635	581	229-0300	563
	550	225-7738	50	226-7164	112		▶634
224-6250	502	225-7739	50	226-8202	267	229-0305	634
	504	225-7741	50		278	229-0306	642
224-7830	291	225-7772	11	226-9167	89	229-0308	634
	329	225-7781	11	226-9169	89	229-0309	634
224-8945	646	225-7941	41	226-9270	89	229-0310	634
224-9473	5	225-7944	13	226-9629	389	229-4896	9
	▶55		41	226-9747	▶286		573
225-0041	646	225-7959	136		288	229-5085	159
225-0060	234	225-7970	127	226-9764	419		160
225-0313	646	225-7988	118		421	229-5092	158
225-3145	73	225-7992	125	227-1057	112		159
225-4150	645	225-7994	▶83		115		160
225-4317	6		85		127	229-5093	150
	▶30	225-7995	▶85		221	229-5535	510
225-4323	89	225-7997	127		566	229-5745	402
	▶97	225-8016	50		567	229-6052	595
225-4324	97	225-8017	1	227-1148	275	229-7226	▶510
225-4326	97		3		277	229-7227	▶511
225-5436	28		▶79	227-1184	342	229-7356	573
225-5437	28	225-8019	50		345	229-8253	511
225-5438	28	225-8227	403	227-1185	342	229-8743	▶559
225-5439	28	225-8278	21	227-1186	378		591
225-5441	28	225-8281	21		379	229-8911	278
225-5451	28	225-8282	21		382	229-9382	282
225-5453	28	225-8287	21		383	229-9855	74
225-5454	28	225-8329	38		384	230-2389	146
225-5458	28	225-8524	59		385	230-2390	146
225-5459	28	225-8526	59	227-1189	344	230-2510	250
225-5493	16	225-8533	59	227-1191	372		252
225-5494	16	225-8534	59		380	230-2610	156
225-5495	16	225-8536	59		383	230-3038	252
225-5496	16	225-8848	23		385	230-3809	140
225-5498	16	225-8858	13	227-1192	345	230-3810	141
225-5499	16	226-0291	234	227-1193	345	230-3811	141
225-5501	17		649	227-1194	345	230-4011	128
225-5502	17	226-0420	▶247	227-1197	342	230-5579	267
225-5625	34		323	227-1202	366	230-5580	267
225-5629	34	226-0449	55	227-3703	286	230-5739	▶140
225-5634	34	226-1242	646	227-5509	390		152
225-5638	34	226-2333	89	227-5556	234	230-5743	▶138
225-5640	34	226-2334	89	227-5571	289		152
225-5959	18	226-4192	166	227-7373	2	230-6368	74
	34	226-4346	158		3		76
225-5960	34		159		▶79	230-7300	6
225-5961	34		160	227-7374	▶80		▶19
225-5962	34	226-4364	140		591	230-7353	6

▶ **PRIMARY REFERENCE**

PART NUMBER INDEX

Part	Page
	▶33
230-7355	6
	▶50
230-7569	6
	▶31
230-7578	6
	▶38
230-8094	26
230-8989	65
230-8995	65
230-8996	65
230-8997	65
230-8998	65
230-9127	9
230-9144	9
230-9357	270
231-0033	6
	▶39
231-0046	31
231-0149	6
	▶8
231-0670	151
231-0671	151
231-0692	▶151
	163
231-0693	151
231-0694	151
231-0695	151
231-0696	151
231-0697	151
231-0698	140
231-0699	140
231-0700	161
231-0701	162
231-0703	159
	160
231-2808	313
231-2809	313
231-2865	555
231-3052	82
231-3054	82
231-3528	315
231-3540	264
	265
231-4784	313
231-4785	313
231-9356	112
231-9358	647
231-9361	645
231-9363	243
232-0252	311
232-1322	16
	32
232-1323	65
232-1328	65
232-1545	136
232-1793	65
232-1794	65
232-2681	▶427
232-2682	▶427
232-2683	▶427
232-2684	▶427
232-2685	427
	▶428
232-2686	▶428
232-2687	▶428
232-2688	▶428
232-2689	▶429
232-2690	428
	429
232-2725	65
232-2726	65
232-2735	509
232-2752	479
232-2753	480
232-2754	481
232-2755	482
232-2756	483
232-2757	484
232-2758	485
232-2759	486
232-2760	487
232-2761	488
232-2762	489
232-2763	490
232-2865	236
	237
232-2869	236
	237
232-2870	236
	237
232-3126	64
	65
232-3149	65
232-3157	65
232-3274	65
232-3277	340
232-3657	21
232-3666	21
232-3670	6
	▶21
232-3722	▶40
	41
232-3751	13
	41
232-4636	649
232-4706	112
232-6204	6
	▶32
232-6661	6
	▶81
232-6662	81
232-7400	11
232-7439	6
	▶11
232-7440	13
232-7442	6
	▶28
232-7449	15
232-7454	13
232-7519	▶16
	17
232-7524	6
	▶17
232-7526	6
	▶34
232-7528	6
	▶7
232-7596	13
232-7597	13
232-7599	13
232-7600	13
232-7603	13
232-7604	▶13
	15
232-7606	6
	▶15
233-0859	498
	500
233-2571	269
233-2576	271
	273
233-2579	269
233-2582	271
	273
233-2583	279
233-2584	269
233-2585	271
	273
	279
233-2588	271
	273
233-2589	279
233-2594	271
	273
233-2595	279
233-2603	271
	273
	279
233-2606	269
	279
233-2607	271
	273
233-2610	269
	279
233-2611	271
	273
	279
233-2613	279
233-2614	271
	273
233-2615	271
	273
233-2616	279
233-2622	279
233-2623	271
	273
233-2631	279
233-3757	495
	496
233-3784	11
233-3785	11
233-3786	11
233-3788	11
233-3789	11
233-3790	11
233-5165	419
	421
233-5166	419
	421
233-5167	419
	421
233-5169	419
	421
233-5260	579
233-6592	224
233-6721	174
233-6738	171
	▶174
233-7132	200
	▶202
233-7432	6
	▶23
233-7977	125
233-9530	73
233-9531	73
233-9532	73
234-1981	55
	▶56
234-2622	55
234-3030	59
234-4328	▶91
	94
234-4329	▶92
	94
234-6927	360
234-7730	91
	92
234-7731	91
	92
234-8815	360
235-0128	61
235-1790	65
235-5363	58
235-5729	296
	299
235-5843	360
235-7091	311
235-8528	327
235-8747	119
236-1583	154
	156
236-1673	65
236-1674	65
236-5753	344
236-6651	37
236-6923	109
236-8238	6
	▶20
237-0024	6
	▶105
237-0025	6
	▶26
237-0769	9
237-0944	239
237-0945	239
237-0975	58
237-2799	59
237-3658	6
	▶24
237-3786	59
237-3791	59
237-3794	59
237-3797	360
237-3921	59
237-3922	59
237-3943	619
	622
237-4157	56
237-4894	108
237-4896	6

▶ **PRIMARY REFERENCE**

PART NUMBER INDEX

Part	Page	Part	Page	Part	Page	Part	Page
	▶108	241-0891	416	246-2671	127		▶417
237-5330	239		417	246-2718	246	247-7631	239
237-9349	416	241-0892	416	246-5293	▶313	247-7798	9
237-9355	416		417		401	247-8179	586
237-9356	416	241-4275	62	246-5295	▶340	247-8199	129
	417	241-6225	294		401	248-0395	246
238-2799	6	241-6226	294	246-8038	134	248-2214	▶82
	▶41	241-8448	294		291	248-2257	391
238-4626	347		296	246-8042	2	248-2272	391
238-4628	390		299		3	248-2273	391
238-5254	138	242-9514	267		▶87	248-2284	559
238-5255	138	242-9515	267	246-8044	89		604
238-5256	159	242-9751	44	246-8045	▶89	248-2575	486
	160		45	246-8046	591	248-2707	61
238-5289	140	243-0062	605	246-8051	119	248-2709	575
	▶163	243-0063	605	246-8052	136	248-2710	402
238-5291	140	243-2276	269	246-8053	74	248-2714	582
238-5292	140	243-3593	619	246-8478	▶315		584
238-5293	140	243-3594	619		364	248-3231	55
238-5294	140	243-3595	619	246-9113	265	248-3290	189
238-7492	109	243-6523	362		275		195
238-7567	179	244-1085	243	246-9309	1	248-4274	354
238-8671	65	244-3106	119		2	248-4275	354
238-9192	55	244-3113	234		3	248-4276	354
238-9397	119	244-3837	269		▶354	248-4277	354
238-9546	407	244-3838	269	246-9321	3	248-5025	562
	409	244-3957	340		▶303		▶572
	411	244-7614	243	246-9322	1	248-5026	572
	413	244-8826	271		2	248-5547	303
	414		273		▶305	248-5711	4
	415		279	246-9330	239		▶645
238-9547	407	245-1223	245	246-9802	249	249-0953	265
	414	245-4827	167		▶329	249-0974	41
	▶416		168	247-0144	50	249-2482	577
239-1080	112	245-4914	246	247-0320	291	249-2707	572
	▶624	245-5728	243		329	249-3124	390
239-1416	409		▶245	247-1080	243	249-3125	390
	415	245-6098	4	247-1384	54	249-3818	294
	417		▶70	247-1385	54	249-4020	313
239-1434	61	245-6101	70	247-1947	▶479	249-4021	313
239-1435	61	245-6103	70	247-1948	▶480	249-4022	313
239-2270	5	245-6104	70	247-1949	▶481	249-4023	313
239-4232	340		▶71	247-1950	▶482	249-4024	313
239-4235	340	245-6105	71	247-1951	▶483	249-4034	315
239-6989	645		▶72	247-1952	▶484	249-4035	315
239-9271	89	245-6107	72	247-1953	▶485	249-5046	37
239-9272	89	245-6108	70	247-1954	▶486	249-5276	174
239-9427	305	245-6109	227	247-1955	▶487	249-5295	37
239-9429	646	245-8765	▶350	247-1956	▶488	249-5297	37
239-9435	397		364	247-1957	▶489	249-5512	55
240-4639	74		365	247-1958	▶490	249-5652	591
	76	245-8766	350	247-3267	▶309	249-7912	▶294
240-5571	65	245-8769	▶285		419	249-9226	65
240-6866	347		364		421	249-9312	572
240-7094	646	245-8777	288	247-4001	58	249-9328	▶232
240-7194	17		▶360	247-4884	64	249-9329	232
241-0037	248	245-8778	360	247-4885	6	249-9330	232
241-0888	407	245-8780	291		▶64	250-0658	301
	409		329	247-5361	5	250-0741	239
	411		▶390		▶62	250-0804	301
241-0889	407	245-9828	19	247-6118	648	250-1448	121
	409	246-1163	9	247-6296	243	250-1878	246
	411	246-2582	6	247-7054	356	250-2314	54
241-0890	416		▶9	247-7555	411	250-3330	246
	417	246-2641	645		413	250-3331	243

▶ **PRIMARY REFERENCE**

PART NUMBER INDEX

Part	Page	Part	Page	Part	Page	Part	Page
250-3344	243	251-1787	▶449		335		187
250-3858	80	251-1788	▶449	252-5356	335	254-6101	▶45
250-4325	309	251-1789	▶449	252-5357	333		560
250-4326	309	251-1790	▶450	252-5358	331		561
250-4337	46	251-2429	356	252-5832	277		566
250-5462	305	251-2432	6	252-5833	275		567
250-5881	245		▶18		277	254-6826	559
250-6755	303	251-2436	18	252-6256	6	254-7271	315
	305	251-2437	18		▶73		340
250-6793	305	251-3200	▶98	252-6438	16	254-8939	▶440
250-6850	246		591	252-6934	256		491
250-6858	246	251-3227	54		257	254-8940	▶491
250-7910	645	251-3231	71		258	254-8941	▶492
250-7911	645	251-3306	561	252-8435	647	254-8942	▶493
250-7912	560		562	252-9206	269	254-8943	▶494
	561	251-4336	21	252-9725	243	254-8944	▶441
	562	251-4374	246	252-9732	275		492
	567	251-4375	246	252-9983	229	254-8945	▶442
250-7915	4	251-4519	4	252-9984	▶229		493
	▶644		▶239	252-9985	230	254-8946	▶443
250-7926	644	251-4889	232	252-9986	▶230		494
250-7963	▶35	251-4890	232	253-0234	440	254-9301	245
250-8330	202	251-4891	232		441	254-9925	221
251-0075	559	251-5579	215		442	254-9926	221
251-0076	559	251-5614	644		443	254-9927	221
251-0077	604	251-5615	644	253-0352	5	255-0791	646
251-1156	▶430	251-5625	364		▶69	255-0792	646
	445	251-5626	364	253-0354	69	255-0795	555
251-1157	▶432	251-5628	560	253-0783	227		587
	447		566	253-0784	4	255-0796	647
251-1158	▶434		567		▶227	255-0797	591
	448	251-5854	▶317	253-1549	215	255-0800	598
251-1159	▶436		495	253-1817	582	255-1209	21
	449		496		584	255-2279	▶57
251-1160	▶438	251-5855	▶319	253-1857	582		560
	449		498		584		561
251-1168	430		500	253-1858	582		562
	436	251-5859	317		584		566
251-1169	430	251-6354	171	253-2470	589		567
	436		▶188	253-4137	55	255-3447	59
251-1172	432	251-6708	97	253-4138	55	255-4692	57
	434	251-9360	294	253-5024	138	255-5461	215
	438		296	253-5384	245	255-8280	215
251-1173	432		299		▶246	256-0143	37
	434	251-9570	119	253-8295	360	256-0323	242
	438	251-9571	604	253-9510	557	256-0324	▶242
251-1222	591	252-0096	340		589	256-0545	171
	▶604	252-0165	303	254-1126	582		▶200
251-1541	303	252-0200	294		584	256-0546	▶165
251-1746	340	252-1221	291	254-1127	582		171
251-1775	▶444		329		584	256-0548	200
251-1776	▶444	252-1862	582	254-2187	58	256-0549	200
251-1777	444		584	254-2267	39	256-0550	165
	▶445	252-1863	582	254-2270	39	256-4572	591
251-1778	▶446		584	254-3437	255	256-5299	566
251-1779	▶446	252-1864	582		256	256-6803	83
251-1780	446	252-1865	584		257	256-6804	85
	▶447	252-2157	645		258	257-0440	344
251-1781	▶448	252-2422	79	254-3954	16	257-0442	342
251-1782	▶448	252-4659	405	254-4418	35	257-0446	368
251-1783	448	252-4660	▶405	254-4419	35	257-0447	369
251-1784	▶448	252-5068	383	254-5683	640	257-0448	370
251-1786	448	252-5069	383	254-5684	640	257-0453	367
	▶449	252-5355	331	254-5685	640	257-0464	344
	450		333	254-5703	▶167	257-0465	344

▶ **PRIMARY REFERENCE**

PART NUMBER INDEX

Part	Page
257-0466	374
	376
257-0468	342
	345
	372
	374
	376
	378
	379
	380
	382
	384
	385
257-0475	380
	382
257-0476	372
257-3160	288
	▶311
257-5571	378
257-5605	362
257-5606	362
257-5607	362
257-5608	362
257-7721	345
257-7724	▶347
	368
	369
	370
257-7725	342
257-7729	372
	374
	376
	380
257-7730	372
	374
	376
	380
257-7731	372
	374
	376
	378
	379
257-7733	374
	376
	380
257-7734	372
	374
	376
	379
	380
	382
257-7737	384
257-7739	385
257-7741	384
	385
258-2354	579
258-9999	646
259-1802	1
	2
259-1831	183
259-4401	647
259-6276	566
	567
	▶601
259-8417	54
260-0026	623
260-0027	612
	613
260-0028	612
	613
260-0029	612
	613
260-0030	623
260-0031	622
260-0032	622
260-0033	623
260-0034	623
260-0035	623
260-0036	622
260-0040	612
	613
260-0041	622
260-0042	622
260-0043	622
260-0044	622
260-0045	612
	613
260-0046	622
260-0047	622
260-0049	623
260-0050	613
260-0051	622
260-0052	622
260-0057	622
260-0058	612
260-0059	622
260-0060	622
260-0063	622
260-0067	622
260-1336	57
260-3122	57
260-7652	83
261-2207	146
261-2208	136
261-3572	37
261-5517	213
	▶214
261-5519	214
261-6703	418
261-8625	282
261-9632	625
261-9634	575
	577
261-9635	213
261-9636	577
261-9637	577
261-9639	577
	579
261-9642	348
261-9643	348
261-9644	575
261-9645	575
262-0347	356
262-1314	305
262-1315	305
262-1408	79
262-1421	▶78
	85
262-3036	296
	299
262-3038	296
	299
262-3039	296
262-4081	215
262-4084	215
262-4201	▶296
262-4202	▶299
262-4203	296
262-4206	296
262-4207	296
	299
262-4210	299
262-4211	299
262-4217	296
	299
262-4459	294
	299
262-7049	▶271
	288
262-7050	▶273
	288
262-7051	271
262-7052	273
262-7314	309
262-8088	311
262-9567	595
262-9786	56
263-2121	309
263-2122	309
263-5376	59
263-5516	356
263-5781	595
263-7261	146
263-7802	83
263-8575	525
	526
	527
	528
	539
	540
	541
	542
	543
	544
	545
	546
	547
	548
	549
	551
263-8576	525
	526
	527
	528
	539
	540
	541
	542
	543
	544
	545
	546
	547
	548
	549
263-8577	▶353
	553
263-8591	496
	500
	▶648
263-9088	83
263-9483	▶121
	561
	562
263-9484	121
263-9498	129
263-9499	132
264-0187	▶291
264-3756	98
264-4297	121
265-0868	291
	329
266-2552	364
	▶366
266-2553	364
	▶367
266-2556	364
	▶368
266-2557	365
	▶369
266-2558	365
	▶370
266-2585	374
266-2586	384
266-2587	385
266-2588	378
266-3590	376
	384
266-3591	379
266-4326	303
266-4570	305
266-4571	305
266-5834	4
	▶418
267-2701	127
267-2755	288
	▶356
267-2758	362
267-2764	288
	▶338
267-2765	288
	▶323
267-2766	288
	▶326
267-2770	288
	▶362
267-5211	99
	100
	101
267-5213	99
	100
	101
267-5225	348
267-5227	348
267-5633	▶116
	365
267-5634	▶117
	365
267-5635	▶118

▶ **PRIMARY REFERENCE**

PART NUMBER INDEX

Part	Page	Part	Page	Part	Page	Part	Page
	364		▶382		▶421	271-8667	3
268-0094	323	269-1079	366	271-1408	419		▶423
268-0097	323		367		421	271-8670	423
268-0099	323	269-1080	▶345	271-2406	▶188	272-0537	72
	362		366	271-3023	521	272-0555	289
268-0106	323		367		522	272-0557	289
268-0107	323	269-1091	366		523	272-1750	319
268-0108	323		367		524	272-2232	6
268-0109	362		▶383		525	272-5420	561
268-0867	6	269-1092	366		526		562
268-1547	305		367		527	272-5421	560
268-1548	305		▶384		528		561
268-1559	362	269-1093	367		529		562
268-4699	78		▶385		530		566
268-5689	289	269-1104	376		531		567
268-5902	593	269-1105	374		532	272-7079	348
268-5903	593	269-2123	▶566		533	272-7080	348
268-5918	348	269-2124	▶567		534	272-7104	250
268-6455	4	269-2125	▶560		535		252
	▶288	269-2126	▶561		536	272-9701	255
268-7756	116	269-2127	▶562		537		256
268-7757	117	269-2144	▶364		538	272-9800	93
268-7758	112	269-2145	▶364		539	273-1473	348
268-7759	127	269-2146	▶364		540	273-1819	79
268-7760	128	269-2147	▶365		541	273-1820	79
268-7761	87	269-2148	▶365		542	273-3284	121
268-9049	2	269-3247	▶348		543	273-3610	5
	3		560		544		▶6
	▶265		561		545	273-4210	323
268-9418	▶289		562		546	273-4211	323
	401		566		547	273-5905	▶612
269-0471	338		567		548		616
269-0472	338	269-3248	348		549	273-6036	▶613
269-1059	▶342		▶593		550		617
	368	269-3250	348		551	273-6372	616
	369	269-3254	348		▶553		617
	370	269-3257	348	271-3024	▶521		▶622
269-1060	▶344	269-3260	348	271-3025	▶522	273-9412	264
	368	269-3262	348	271-3026	▶523		265
	369	269-3263	348	271-3027	▶524	273-9413	265
	370	269-3265	348	271-3028	▶525	273-9416	265
269-1061	368	269-3269	236	271-3029	▶526	273-9417	265
	369		237	271-3030	▶527	273-9418	265
	370	269-8129	250	271-3031	▶528	274-4274	279
	▶372		252	271-3095	▶255	274-4553	172
269-1062	368	269-8817	250		364		175
	369		252	271-3096	▶256		177
	370	269-9115	575		365		179
	▶374	270-2729	112	271-3097	▶257		181
269-1063	368	270-2794	348		364		184
	369	270-2795	250		365		185
	370		252	271-3099	▶258	274-4554	195
	▶376	270-3203	▶515		365	274-4555	284
269-1064	368	270-3204	▶395	271-3100	255	274-4556	195
	369	270-3205	395	271-3101	256	274-4557	189
	370	270-3206	515	271-3103	257		195
	▶378	270-3409	259	271-3105	258	274-4560	189
269-1065	368	270-3410	353	271-3774	188		195
	369	270-5161	348		▶189	274-4561	▶175
	370	270-5162	348	271-4487	▶168		195
	▶379	270-5290	239		188	274-4569	195
269-1066	369	270-9176	319	271-7167	156	274-4578	▶177
	370	271-1402	2	271-7308	167		195
	▶380		▶419	271-7309	168	274-4580	▶172
269-1067	370	271-1405	1	271-7389	319		195

▶ **PRIMARY REFERENCE**

PART NUMBER INDEX

Part	Page
274-4582	▶181
	195
274-5231	265
274-5819	531
	540
274-5823	532
	542
274-5826	533
	541
274-5829	534
	543
274-5832	535
	545
274-5835	536
	547
274-5837	537
	546
274-5839	538
	548
274-7409	129
274-8614	189
274-8616	179
274-8617	179
274-8620	183
274-8621	183
274-8623	189
274-8625	189
274-8628	179
274-8629	179
274-8630	144
274-8634	183
274-8635	179
274-8636	179
274-8637	183
274-8638	172
	175
	177
	181
274-8641	187
	▶194
274-9993	136
275-0001	245
275-0468	▶143
	189
275-0469	143
275-0470	▶144
	189
275-0475	189
275-0476	▶179
	190
275-0477	189
275-0478	▶183
	189
275-0553	129
275-0570	109
	123
275-3917	74
275-4243	259
	▶281
275-8869	250
	252
276-1368	509
276-1816	265
276-2353	403
276-4168	281
276-4169	281
276-4170	281
276-4171	281
276-4172	281
276-5337	▶184
	189
276-6142	264
276-7287	▶99
	109
	123
276-7290	▶100
	129
276-7291	▶101
	129
276-7465	▶4
276-7537	264
276-8791	628
	640
277-4543	294
	296
	299
277-5156	6
277-5188	6
	▶65
277-9708	323
278-0205	189
	195
278-0209	195
278-0213	195
278-0215	183
278-0216	183
278-0217	183
278-0218	183
278-0219	183
278-0461	129
278-1971	▶279
	288
278-1972	279
278-7469	257
	258
279-6052	289
279-9452	403
280-7007	▶185
	195
280-7009	189
	195
280-7364	566
	567
	▶618
280-7365	560
	▶618
280-7868	356
280-7869	356
280-7871	356
	▶388
280-7872	356
281-4618	305
281-4726	294
281-4770	305
281-6708	539
281-6711	529
	544
281-6714	530
	549
281-9366	80
281-9367	80
282-0865	▶529
282-0866	▶530
282-0887	▶531
282-0888	▶532
282-0889	▶533
282-0890	▶534
282-0891	▶535
282-0892	▶536
282-0893	▶537
282-0894	▶538
282-5398	▶539
282-5399	▶540
282-5400	▶541
282-5401	▶542
282-5402	▶543
282-5403	▶544
282-5404	▶545
282-5405	▶546
282-5406	▶547
282-5407	▶548
282-5408	▶549
282-5409	▶550
282-5410	▶551
282-6836	281
282-6944	356
282-7832	595
282-7833	94
	581
	625
	628
282-7835	94
	581
	595
	625
	628
282-9861	21
283-1114	305
283-3451	628
	640
283-4237	598
283-8562	236
	237
283-8563	236
	237
284-1602	586
284-3615	419
285-0432	59
285-0438	6
	▶59
285-1203	560
285-1207	560
285-3557	200
286-1930	216
286-3592	50
286-4880	81

▶ PRIMARY REFERENCE



© 2006 Caterpillar
All Rights Reserved

Printed in U.S.A.