RUTHZIL TRATOR COMERCIAL DE PEÇAS LTDA 11 97083-6812 ROLANDO CITRANGULO

CATERPILLAR®

SEBP3703-30
March 2009

Parts Manual

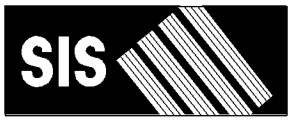

See “General Information” for New Parts Manual Features.

420E Backhoe Loader
Single Tilt, Center Pivot

HLS1-99999 (Machine)
THP1-Up (Machine)
CRS1-99999 (Engine)

Powered By 3054C Engine

This Parts Manual is also available in .PDF Format on Compact Disc (CD - ROM) - Caterpillar Form No. SERP3703.

Product and Dealer Information

Note: For product identification plate locations, see the section “Product Identification Information” in the Operation and Maintenance Manual.

Delivery Date: _____

Product Information

Model: _____

Product Identification Number: _____

Engine Serial Number: _____

Transmission Serial Number: _____

Generator Serial Number: _____

Attachment Serial Numbers: _____

Attachment Information: _____

Customer Equipment Number: _____

Dealer Equipment Number: _____

Dealer Information

Name: _____ Branch: _____

Address: _____

_____

_____

	Dealer Contact	Phone Number	Hours
Sales:	_____	_____	_____
Parts:	_____	_____	_____
Service:	_____	_____	_____

MEMORANDA

TABLE OF CONTENTS

Name	Page
GENERAL INFORMATION	A5
REPAIR ALTERNATIVES	A8
SUPPLEMENTAL COOLANT ADDITIVES	A9
MAINTENANCE PARTS	A10
INDEX	A14
MACHINE ARRANGEMENT	1
BACKHOE AR-EXTENDABLE STICK	1
BACKHOE AR-STANDARD STICK	2
CHASSIS AR	3
COMMON AR	3
DRIVE AR-BACKHOE LOADER	4
LOADER AR	4
ENGINE ARRANGEMENT	5
ENGINE AR	5
ENGINE AR-PRIMARY	7
BASIC ENGINE	10
COVER GP-CYLINDER HEAD	10
COVER GP-VALVE MECHANISM	11
CRANKSHAFT GP	17
CYLINDER BLOCK GP	20
CYLINDER HEAD GP	23
DRIVE GP-FAN	25
FLYWHEEL GP	26
HOUSING GP-FLYWHEEL	27
HOUSING GP-FRONT	28
LIFTING GP-ENGINE	30
MOUNTING GP-ENGINE	31
MOUNTING GP-ENGINE & XMSN	32
PAN GP-OIL	33
PISTON & ROD GP	35
PLUG GP-ENGINE	36
PULLEY GP-CRANKSHAFT	39
ROCKER ARM GP	40
VALVE MECHANISM GP	41
LUBRICATION SYSTEM	43
BREATHER GP	43
GAUGE GP-OIL LEVEL & FILLER	45
PUMP GP-ENGINE OIL	46
COOLING SYSTEM	47
CONNECTION GP-WATER	47
COOLER GP-ENGINE OIL	48
COOLER GP-FLTR BASE & ENG OIL	50
FAN GP-SUCTION	52
LINES GP-TRANSMISSION COOLER	55
MOUNTING & LINES GP-RADIATOR	59
MOUNTING GP-RAD & OIL COOLER	60
PUMP GP-WATER	62
RADIATOR & OIL COOLER GP	64
TANK GP-EXPANSION	66
AIR INLET AND EXHAUST SYSTEM	67
AIR CLEANER GP	67
EXTENSION GP-EXHAUST	71
INDICATOR GP-AIR FILTER CHANGE	72
MUFFLER GP	73
TURBOCHARGER GP	74
FUEL SYSTEM	78
CONTROL GP-GOVERNOR	78
FILTER GP-WATER SEP & FUEL	81
LINES GP-FUEL	82
LINES GP-FUEL FILTER	84
PUMP GP-FUEL INJECTION	85
PUMP GP-FUEL PRM & PRIM FILTER	91
TANK & MTG GP-FUEL	94
TANK GP-FUEL	95
ELECTRICAL AND STARTING SYSTEM	97
ALTERNATOR GP-CHARGING	97
BATTERY & WIRING GP	98
ELECTRONICS GP-COMMUNICATION	105
ELECTRONICS GP-MACHINE	105
ELECTRONICS GP-MONITOR	107
GLOW PLUG GP	108
GRADE CONTROL AR-LASER	109
HEATER GP-JACKET WATER	112
INSTALLATION GP-COMMUNICATION	113
LAMP GP-FLOOD	117
LAMP GP-WARNING BEACON	120
LIGHTING GP-FLOOD & SIGNAL	121
LIGHTING GP-WARNING BEACON	125
MAST GP	126
MOUNTING GP-SENSOR	127
PANEL GP-FUSE	128
RECEIVER GP-LASER	129
RELAY GP	130
SENSOR GP-SPEED	133
STARTING MOTOR GP-ELECTRIC	134
SWITCH GP-ALL WHEEL DRIVE	137
SWITCH GP-DIFFERENTIAL LOCK	138
SWITCH GP-DISCONNECT	139
SWITCH GP-PRESSURE	140
WIRING GP-AIR CONDITIONER	141
WIRING GP-CONSOLE	147
WIRING GP-CONTROL	152
WIRING GP-ENGINE	155
WIRING GP-EXTENDABLE STICK	160
WIRING GP-GRADE CONTROL	161
WIRING GP-HEATER	165
WIRING GP-KICKOUT & POSITIONER	167

TABLE OF CONTENTS

Name	Page
WIRING GP-PLATFORM	170
WIRING GP-POWER RECEPTACLE	192
WIRING GP-REAR	193
WIRING GP-RIDE CONTROL	197
WIRING GP-STABILIZER	199
WIRING GP-TRANSMISSION CONTROL	201
POWER TRAIN	202
AXLE GP-DRIVE & STEERING	202
AXLE GP-REAR	204
CASE AS-TRANSMISSION	207
CASE GP-TRANSMISSION	210
DIFFERENTIAL & BEVEL GEAR GP	215
DIFFERENTIAL GP	217
DRIVE GP-FLEXIBLE COUPLING	219
FILLER GP-POWER TRAIN OIL	220
FLANGE GP-WHEEL	226
HOUSING & FLANGE GP-AXLE	228
HOUSING GP-AXLE	230
KIT-WHEEL SPACER	234
LINES GP-POWER TRAIN OIL	235
MOUNTING GP-AXLE	236
MOUNTING GP-TRANSMISSION	237
PLANETARY GP-FINAL DRIVE	239
POWER TRAIN AR	241
SHAFT GP-COUNTER	243
SHAFT GP-DRIVE	245
SHAFT GP-IDLER	246
SHAFT GP-INPUT	248
SHAFT GP-OUTPUT	252
TRANSMISSION & MOUNTING GP	258
TRANSMISSION AR-DIRECT DRIVE	259
TRANSMISSION AR-POWER SHIFT	260
TRANSMISSION GP-DIRECT DRIVE	261
TRANSMISSION GP-POWER SHIFT	292
VALVE & LINES GP-DIFF LOCK	304
VALVE & MTG GP-SOLENOID	306
VALVE GP-RELIEF	307
VALVE GP-TIRE	308
WHEEL & TIRE AR	309
WHEEL & TIRE GP	312
BRAKING SYSTEM	326
CONTROL GP-PARKING BRAKE	326
CONTROL GP-SERVICE BRAKE	328
CYLINDER GP-BRAKE	334
LEVER GP-HAND CONTROL	336
STEERING SYSTEM	337
AXLE GP-FRONT	337
KNOB GP-STEERING	339
LINES GP-STEERING	340
PUMP GP-METERING	348
FRAME AND BODY	349
BOX GP-BATTERY	349
COUNTERWEIGHT GP	350
DOOR GP-BATTERY	354
EXTENSION GP-FENDER	355
FENDER GP-FRONT	356
FENDER GP-REAR	357
FLOORPLATE GP	359
FRAME AS-SWING	362
FRAME GP-LOADER	363
FRAME GP-SWING	365
GRILL-RADIATOR	371
GUARD GP-DRIVE SHAFT	372
GUARD GP-RADIATOR	373
HOOD & GUARD GP	374
HOOD GP-ENGINE	378
HYDRAULIC SYSTEM	381
ACCUMULATOR GP-PILOT OIL	381
ACCUMULATOR GP-RIDE CONTROL	383
CONTROL AR-RIDE	384
CYLINDER & LINES GP-THUMB	385
CYLINDER GP-BACKHOE BUCKET	390
CYLINDER GP-BOOM	394
CYLINDER GP-EXTENDABLE STICK	398
CYLINDER GP-LIFT	400
CYLINDER GP-MULTIPURPOSE BUKT	401
CYLINDER GP-STABILIZER	402
CYLINDER GP-STICK	406
CYLINDER GP-SWING	410
CYLINDER GP-THUMB	412
CYLINDER GP-TILT	413
DRIVE & MTG GP-PUMP	415
FASTENER GP-VALVE	416
FILTER GP-OIL	417
FITTING GP-HYDRAULIC	418
HYDRAULIC AR	419
INSTALLATION GP-RIDE CONTROL	420
KICKOUT & POSITIONER GP	428
LINES GP-BACKHOE AUXILIARY	432
LINES GP-BOOM	440
LINES GP-BUCKET	444
LINES GP-DRAIN	452
LINES GP-EXTENDABLE STICK	453
LINES GP-HYDRAULIC	455
LINES GP-HYDRAULIC OIL COOLER	456
LINES GP-LIFT CYLINDER	457
LINES GP-LOADER AUXILIARY	459
LINES GP-MULTIPURPOSE BUCKET	461
LINES GP-PILOT	465
LINES GP-PUMP	471
LINES GP-RIDE CONTROL	473
LINES GP-STABILIZER	477
LINES GP-STICK	495

TABLE OF CONTENTS

Name	Page
LINES GP-SWING	498
LINES GP-TILT CYLINDER	500
MANIFOLD & SOLENOID GP-CONTROL	502
MANIFOLD GP-CONTROL	505
MANIFOLD GP-RIDE CONTROL	507
MOUNTING GP-BANK VALVE	508
MOUNTING GP-CYLINDER	509
MOUNTING GP-LINES	512
PUMP GP-PISTON	515
ROTATING GP-PUMP	517
SHAFT GP-PUMP DRIVE	518
TANK & MTG GP-HYDRAULIC	519
VALVE & LINES GP-PILOT	523
VALVE AR-BANK 2	525
VALVE AR-BANK 3	525
VALVE AR-BANK 6	525
VALVE AR-BANK 7	526
VALVE AR-BANK 8	526
VALVE GP-BANK 2	527
VALVE GP-BANK 3	528
VALVE GP-BANK 6	529
VALVE GP-BANK 7	530
VALVE GP-BANK 8	531
VALVE GP-CONTROL	533
VALVE GP-PILOT	552
VALVE GP-PUMP CONTROL	555
VALVE GP-SOLENOID	556
IMPLEMENTS	557
ARM GP-LIFT	557
BOOM GP	559
BRACE GP-LIFT CYLINDER	560
GUARD GP-BOOM	561
LINK GP-THUMB	563
LINKAGE GP-BACKHOE BUCKET	564
LINKAGE GP-LOADER BUCKET	566
LOCK GP-TRANSPORT	568
MOUNTING GP-STICK	572
PAD & GUARD GP-STABILIZER	573
PAD & MTG GP-STABILIZER	591
PAD GP-STABILIZER	594
STABILIZER GP-BACKHOE	596
STICK AS	597
STICK GP-EXTENDABLE	598
STICK GP-HOE	604
WORK TOOLS	606
BUCKET AR-GENERAL PURPOSE	606
BUCKET AR-MULTIPURPOSE	606
BUCKET AS-GENERAL PURPOSE	609
BUCKET AS-HOE	617
BUCKET GP-GENERAL PURPOSE	669
BUCKET GP-HOE	676
BUCKET GP-MULTIPURPOSE	720
BULLDOZER AS	725
CLAM AS-MULTIPURPOSE BUCKET	729
COUPLER AR-QUICK	731
COUPLER GP-QUICK	732
EDGE GP-CUTTING	738
EDGE-CUTTING	740
FORK GP	741
GUARD GP-WORK TOOL	742
MOUNTING GP-BUCKET	743
MOUNTING GP-MAST	744
PIN GP-COUPLER	745
THUMB AR	747
THUMB GP	783
TINE AS-THUMB	785
TOOTH GP-UNI	787
OPERATOR STATION	788
AIR CONDITIONER & MOUNTING GP	788
BRACKET GP-MOUNTING	791
CAB AR-ENCLOSED ROPS	792
CAB AS	795
CAB GP-ENCLOSED ROPS	796
CANOPY AR-OPEN ROPS	802
CANOPY GP-OPEN ROPS	804
COMPRESSOR & MTG GP-REFRIG	807
COMPRESSOR GP-REFRIGERANT	811
CONDENSER & MTG GP-REFRIGERANT	812
CONSOLE GP-OPERATOR	813
CONTROL GP-HYDRAULIC HAND	819
CONTROL GP-JOYSTICK	824
CONTROL GP-STEERING	828
CONTROL GP-TRANSMISSION	832
COVER GP-CAB	834
COVER GP-WIPER MOTOR	835
DOOR GP-CAB	836
FLOOR MAT GP	844
HEATER GP-CAB	845
INSTALLATION GP-MONITOR	855
KIT-CAB WINDOW	857
LATCH GP-CAB DOOR & WINDOW	859
LATCH GP-CONSOLE	861
LEVER GP-GOVERNOR	862
LINER GP-CAB	863
LINES GP-HEATER	867
LINES GP-HEATER & AIR COND	868
MIRROR GP-REAR VIEW	870
MOTOR GP-WINDOW WIPER	872
MOUNTING GP-BACKHOE CONTROL	873
MOUNTING GP-CAB	876
MOUNTING GP-MONITOR	877
PEDAL GP-GOVERNOR	878
RADIO GP-COMMUNICATION	879
ROOF GP-CAB	880
SEAT BELT GP	881

TABLE OF CONTENTS

Name	Page	Name	Page
SEAT GP	883		
SEAT GP-SUSPENSION	887		
SUSPENSION GP-SEAT	894		
TACHOMETER GP-ELECTRIC	900		
TRIM GP-CAB	901		
VISOR GP-CAB	903		
WASHER GP-WINDOW	905		
WINDOW GP-CAB	909		
WINDOW GP-DOOR	917		
WIPER & WASHER GP-WINDOW	919		
WIPER GP-WINDOW	923		
SERVICE EQUIPMENT AND SUPPLIES	925		
FILM GP	925		
LINK GP-SHIPPING	926		
LOCK GP-VANDALISM	926		
PLATE & FILM GP	926		
PROTECTION GP-VANDALISM	930		
TRANSPORT AR-MACHINE	931		
TRANSPORT GP-MACHINE	933		
PART NUMBER INDEX	B1		

GENERAL INFORMATION

1. MACHINE IDENTIFICATION

Caterpillar machines are identified by Product Identification Numbers (PIN). Some components included in a machine may be identified by Serial Numbers (S/N). Typical components that will be serialized include engines, transmissions, bulldozers, and rippers. The machine and engine are further identified by arrangement numbers and in some cases modification numbers. These numbers are shown on the product identification plate(s) and on the master plate in the operator's compartment.

Caterpillar dealers need all of these numbers to determine accurate parts identification.

SIS *New Feature*

Effective First Quarter 2001 the Caterpillar Product Identification Number (PIN) changed from 8 to 17 characters. In an effort to provide uniform equipment identification, Caterpillar and other construction equipment manufacturers are moving to comply with the latest version of the product identification numbering standard. Non-road machine PINs are defined by ISO 10261. The new PIN format will apply to all Caterpillar machines and generator sets. The PIN plates and frame marking will display the 17 character PIN. The new format will look like the following:

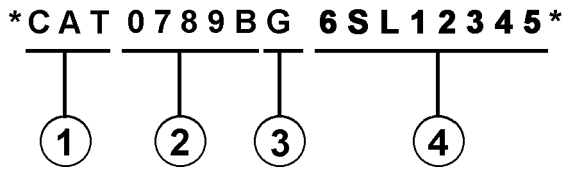

Where:

1. Caterpillar's World Manufacturing Code (characters 1-3)

2. Machine Descriptor (characters 4-8)

3. Check Character (character 9)

4. Machine Indicator Section (MIS) or Product Sequence Number (characters 10-17). These were previously referred to as the Serial Number.

Machines and generator sets produced before First Quarter 2001 will maintain their 8 character PIN format.

Components such as engines, transmissions, axles, etc. and work tools will continue to use an 8 character Serial Number (S/N).

2. ORDERING PARTS

⚠ WARNING

When replacement parts are required for this product Caterpillar recommends using Caterpillar replacement parts or parts with equivalent specifications including, but not limited to, physical dimensions, type, strength and material.

Failure to heed this warning can lead to premature failures, product damage, personal injury or death.

Quality Caterpillar replacement parts are available from Caterpillar dealers throughout the world. Their parts inventories are up to date and include all parts normally required to protect your investment in Caterpillar machines. Dealers may offer repair kits or remanufactured parts to allow selection of the most effective repair alternative for a particular situation. When ordering parts, your order should specify the quantity, part number, part name, and the serial number/product identification number of the machine for which the parts are needed.

3. PARTS MANUAL ORGANIZATION

Product information in this manual is presented as "information elements" that represent all of the components for the specific model. Engine Arrangement and Seat Group are examples of information elements. The information elements are organized alphabetically by part name and secondarily by part number within each major section of the manual.

4. TABLE OF CONTENTS

A table of contents (TOC) is found at the beginning of the manual. The TOC lists each section of the manual with a complete list of all information elements organized as they appear in the manual. Page numbers are provided for quick reference to detailed parts identification illustrations and serviceable consist lists.

5. MAINTENANCE PARTS INDEX

The Maintenance Parts Index, located near the beginning of the manual, references most frequently used maintenance part numbers, providing description, quantity, usage and page number. This information is organized alphabetically by part description.

6. INDEX

The index located near the front of the manual is an alphabetical listing of all information elements included in the manual. Page numbers are provided for quick reference to detailed parts identification illustrations and serviceable consist lists.

7. PART NUMBER INDEX

A numerical index listing all part numbers and the corresponding page number(s) appears at the back of the manual.

8. CAPTIONS

Captions located at the beginning of each information element identify the part number and part name along with additional descriptive information. PIN and S/N information found in each caption should be used to select correct information for a specific machine. Field replacement options, identification of optional attachment components, and where used ("part of") information is also provided.

The first line of a caption is shown in larger type font to indicate the beginning of an information element. Captions for additional pages that may be required to illustrate an information element will be shown in standard type font and will include the term *(contd.)* .

9. NON-SERVICED PARTS

In some instances it is necessary to display non-serviced parts that are a link to a lower level serviceable consist lists. These non-serviced part numbers are shown in *italic* type indicating that they are not available.

10. PARTS LIST REFERENCE NUMBERS

Numbers shown in the Ref No column correspond to numbers used in the associated graphic(s). An alphabetic suffix may be added to a reference number to identify lower level consist items. Numbers shown in the Graphic Ref column refer to the graphic number identifier displayed in the lower left corner of each illustration. The Graphic Ref number may be used in combination with the item Ref No to determine the correct part number. There may be intentional omission of a Ref No in a consist list as information is updated to reflect the latest serviceable part numbers.

11. INDENTED PART NAMES

When a part name is indented in a parts list, it is part of (included in) the group or assembly under which it is indented.

12. ILLUSTRATION REFERENCE LETTERS

When necessary, illustrations contain reference letters (A, B, C etc.) that are intended to track lines and harnesses from one point to another. They are also used to show where to reconnect illustrations that have been separated.

13. ABBREVIATIONS AND SYMBOLS

O.D. – Outside Diameter
I.D. – Inside Diameter
A – Not Part Of This Group
B – Use As Required
C – Change From Previous Type
D – Order By The Meter
E – Order By The Centimeter
F – Not Shown
G – Order By The Inch
I – Refer To Hydraulic Information System
M – Metric Part
R – Remfg Part May Be Available
Y – Separate Illustration
Z – Not Serviced Separately

SIS *New Feature*

14. DESCRIPTION OF TYPE CHANGES

Type - A type is defined as any configuration change that requires an additional Information Element for an Arrangement, Group, or Assembly. If serial number breaks for types are not available, a type # (Type 1, Type 2, etc.) will be displayed in the caption. These "type" changes are identified with a "C" note (change from previous type) in the Parts List. Only the "types" that apply to this Parts Manual will be included. Additional types may exist causing "C" notes to appear on an Information Element when no other types are shown.

15.<END>

This symbol indicates the end of an information element.

NOTE:

Continuing improvement and advancement of product design may cause changes to your machine which may not be included in this publication. Whenever a question arises regarding your caterpillar product or this publication, please consult your caterpillar dealer for the latest available information.

FRAME AND BODY

8E-3299 PLATFORM GP-CAB

PIN 3SK1-99999

SMCS-7253 100090751

NOTE	REF NO	GRAPHIC REF	PART NUMBER	QTY	PART NAME 1 2 3 4 5 6 (PRODUCT LEVEL)	SEE PAGE
	*	1	3T-3863	1	PLATE AS	
	2	1	6E-2662	25	BOLT (3/8-16X.750IN)	
	3	1	6F-1076	41	WASHER-HARD (38MM THK)	
	4	1	9F-1644	2	SUPPORT AS-FOOT	
	5	1	7P-2229	18	BOLT (1/2-13X1IN)	
		1	6F-	18	WASHER-HARD (41MM THK)	
	6	1	8E-8136		COVER AS-LH	
		1	9F-2978	6	NUT-WELD (3/8-16 THD)	
		1	1P-0188	1	CLIP	
	7	1	7S-3411	4	COVER	
	8	1	9J-0488	18	SCREW-HEAD (3/8-16X.875IN)	
	9	1	-4474	1	COVER	
		1	8E-897		GASKET	
	10	1	8E-3249	1		
		1	8E-3250	1	GASKET	
	11	1	3T-3838	1	HANDHOLD	
	12	1	8E-8978	1	COVER AS	
		1	9F-2978	8	NUT-WELD (3/8-16 THD)	
		1	8E-8979	1	GASKET	
	13	1	7T-0131	1	FLOORPLATE AS	
		1	1F-0748	4	NUT-WELD (1/2-13 THD)	
	14	1	7V-8067	1	PLUG-BUTTON	
	15	1	7T-0136	1	PLATE AS	
		1	9F-2978	5	NUT-WELD (3/8-16 THD)	
	16	1	7T-8066	1	COVER	
		1	7T-8779	1	GASKET	
	17	1	3T-3861	1	PLATE AS	
	18	1	6T-8364	4	BOLT (1/4-20X.625IN)	
M		1	9T-4205	4	WASHER-HARD (28MM THK)	
	19	1	6L-8494	1	FLOOR MAT	
	20	1	8E-8846	1	MODULE AS-OPERATOR	
	21	1	3T-3834	1	HANDHOLD	
	22	1	9P-8671	2	PLUG	
	23	2	6T-8364	4	BOLT (1/4-20X.625IN)	
M		2	9T-4205	4	WASHER-HARD (28MM THK)	
	24	2	6E-2662	17	BOLT (3/8-16X.750IN)	
	26	2	6F-1076	21	WASHER-HARD (38MM THK)	
	26	2	7T-0135	1	SEAL	
	27	2	7X-0075	2	BOLT (3/4-10X5IN)	
		2	7X-0682	2	WASHER-HARD (64MM THK)	
	28	2	3T-3462	2	PLATE	
	29	2	3T-8290	1	PLATE AS	
		2	7S-8828	8	SPACER	
	30	2	3T-8281	1	SEAL	
	31	2	7S-8817	1	GASKET	
	32	2	7S-8816	1	COVER AS	
		2	2R-3276	2	WASHER	
		2	6P-8626	2	SCREW-KNURLED	
	33	2	9W-3429	1	COVER	
	34	2	8E-8697	1	COVER	
	35	2	6D-3931	8	SCREW-SOCKET HEAD	
	36	2	9W-3142	8	MOUNTING	
	37	2	9W-8027	2	PLATE	
	38	2	7X-0690	2	BOLT (7/8-9X5IN)	
		2	7X-0672	2	WASHER-HARD	
	39	2	4L-8454	4	BOLT (3/8-16X1.0IN)	
	40	2	3T-4788	1	COVER	

12 FRAME AND BODY 1 of 4 SELP4570-01

FRAME AND BODY

8E-3299 PLATFORM GP-CAB (contd.)

100090751

NOTE	REF NO	GRAPHIC REF	PART NUMBER	QTY	PART NAME 1 2 3 4 5 6 (PRODUCT LEVEL)	SEE PAGE
	41	2	6E-2616	1	COVER	
	42	2	7T-0134	1	PLATE	
	43	2	7T-0138	1	GASKET	
	44	2	7S-8724	1	GASKET	
	45	2	7S-8723	1	COVER	
	46	2	6V-1950	2	PLUG-BUTTON	

M-METRIC PART

SELP4570-01 2 of 4 FRAME AND BODY 13

FRAME AND BODY

8E-3299 PLATFORM GP-CAB (contd.)

100090751

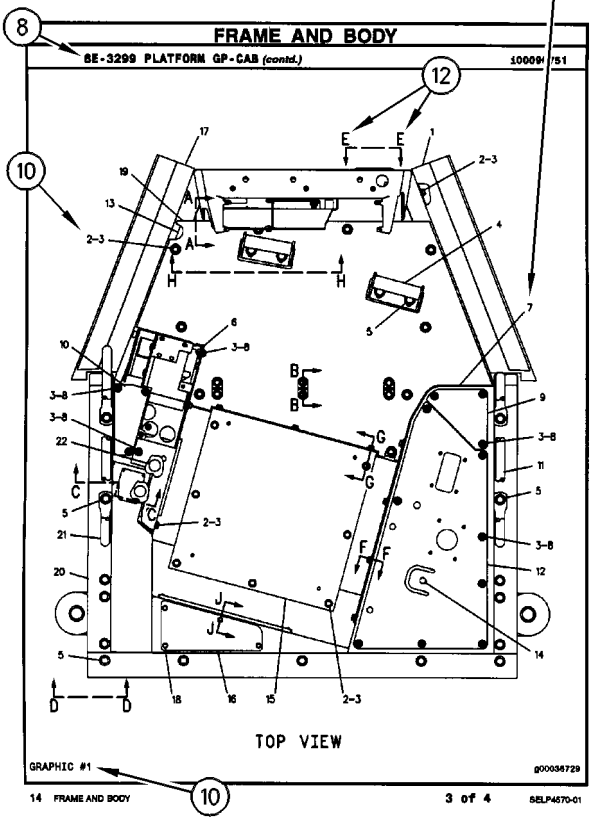

14 FRAME AND BODY 3 of 4 SELP4570-01

FRAME AND BODY

8E-3299 PLATFORM GP-CAB (contd.)

100090751

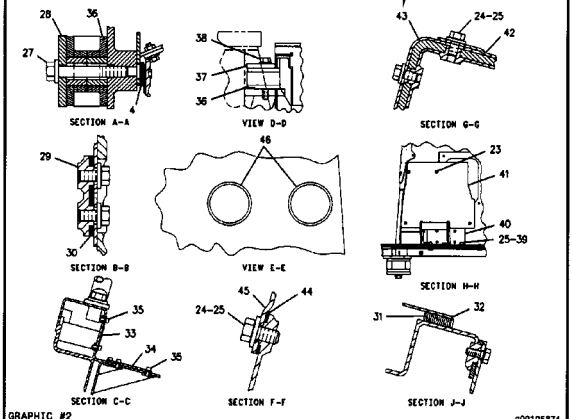

SELP4570-01 4 of 4 FRAME AND BODY 15

REPAIR ALTERNATIVES

REMANUFACTURED COMPONENTS

As an option when making repairs consider Caterpillar Remanufactured Components. Components that are available through the Caterpillar Remanufactured Program are identified three ways in the parts book:

- with the letter R in the note field of the parts list
- with an R* at the beginning of the first line of the caption
- with an *R at the end of the first line of the caption

Typical components included in the Remanufacturing Program include:

ALTERNATORS
CONNECTING RODS
CRANKSHAFTS - UNDERSIZE
CRANKSHAFTS - UPGRADE TO NEW
CYLINDER HEADS
ELECTRONIC CONTROL MODULES (ECM)
ELECTRONIC SENSORS
FUEL INJECTORS
FUEL NOZZLES
FUEL PUMPS
GOVERNORS
OIL PUMPS
PISTONS
SHORT BLOCKS
STARTERS
TURBOCHARGERS - COMPLETE
TURBOCHARGER CARTRIDGES
WATER PUMPS

Caterpillar Remanufactured engines for many engine arrangements are also available.

SUPPLEMENTAL COOLANT ADDITIVES

CUSTOMER BENEFITS:

Protects against cavitation, foam, erosion, corrosion, and scale buildup in cooling systems.

- Provides measured coolant conditioner.

DESCRIPTION:

Additives deplete from the coolant with normal operation. For this reason, Supplemental Coolant Additives (SCA) must be added to all heavy duty coolants at regular intervals. In addition, when not using a fully formulated, pre-charged antifreeze, like Caterpillar's DEAC, an initial charge of SCA must be added to the cooling system. The amount of SCA added to the system is dependent on the capacity of the system.

The SCA for initial fill is provided as a liquid. SCA's for maintenance intervals are available in liquid form and as a spin-on element. (No Spin-on available for 3600 Family of Engines)

NOTE:

The amount of SCA added at initial fill is not the same as the amount added at maintenance intervals.

The coolant additive elements can be used with any ethylene or propylene glycol type antifreeze which meets ASTM D4985 or ASTM D5345 Specifications.

NOTE:

For use with standard heavy duty coolant only, not for use with Extended Life Coolant.

PARTS NEEDED:

Cooling System Capacity		Liquid SCA at Initial Fill	Liquid SCA at Maintenance*	Spin-on SCA Maintenance Element*
Liters	Gallons			
22-30	(6-8)	3P-2044 (1)	6V-3542 (1)	111-2370 (1)
30-38	(8-10)	3P-2044 (1) 6V-3542 (1)	111-2372 (1)	111-2369 (1)
38-49	(10-13)	3P-2044 (1) 8T-1589 (1)	111-2372 (1)	111-2369 (1)
49-64	(13-17)	3P-2044 (2)	8T-1589 (1)	9N-3368 (1)
64-83	(17-22)	3P-2044 (2) 8T-1589 (1)	111-2372 (1) 6V-3542 (1)	111-2371 (1)
83-114	(22-30)	3P-2044 (3) 8T-1589 (1)	3P-2044 (1)	9N-3718 (1)
114-163	(30-43)	3P-2044 (5)	3P-2044 (1) 6V-3542 (1)	111-2371 (2)
163-242	(43-64)	3P-2044 (8)	3P-2044 (2)	9N-3718 (2)

** Normal maintenance period is 250 hrs. See your Operation and Maintenance Manual for complete coolant maintenance instructions.*

( ) Indicates quantity required.

MAINTENANCE PARTS

DESCRIPTION	PART NUMBER	QTY	WHERE USED	PAGE
AIR INLET AND EXHAUST SYSTEM				
FILTER ELEMENT AS-AIR (PRIMARY)	227-7448	1	AIR CLEANER GP	69
FILTER ELEMENT-AIR (PRIMARY)	293-4053	1	AIR CLEANER GP	70
FILTER ELEMENT-AIR (SECONDARY)	227-7449	1	AIR CLEANER GP	69
		1	AIR CLEANER GP	70
BASIC ENGINE				
GASKET (VALVE COVER)	225-6451	1	COVER GP-VALVE MECHANISM	11
		1	COVER GP-VALVE MECHANISM	13
		1	COVER GP-VALVE MECHANISM	15
PLUG-DRAIN (ENGINE OIL)	7C-0351	2	PAN GP-OIL	33
COOLING SYSTEM				
CAP AS-COOLANT TANK	251-3227	1	TANK GP-EXPANSION	66
HOSE-RADIATOR (LOWER)	210-6139	1	MOUNTING GP-RAD & OIL COOLER	60
HOSE-RADIATOR (UPPER)	210-6141	1	MOUNTING GP-RAD & OIL COOLER	60
REGULATOR GP-TEMPERATURE (INCLUDES CONNECTOR) (WATER)	254-2267	1	CONNECTION GP-WATER	47
V-BELT (AIR CONDITIONER)	1W-2934	1	FAN GP-SUCTION	52
	2P-6818	1	FAN GP-SUCTION	53
V-BELT SET (INCLUDES 2-BELTS)	3S-8447	1	FAN GP-SUCTION	52
		1	FAN GP-SUCTION	53
		1	FAN GP-SUCTION	54

MAINTENANCE PARTS

DESCRIPTION	PART NUMBER	QTY	WHERE USED	PAGE
ELECTRICAL AND STARTING SYSTEM				
BATTERY (12-VOLT, MAINTENANCE FREE)	230-6368	1	BATTERY & WIRING GP	98
		1	BATTERY & WIRING GP	100
		1	BATTERY & WIRING GP	101
		1	BATTERY & WIRING GP	103
BELT-DRIVE	9X-8139	1	LAMP GP-WARNING BEACON	120
FLASHER AS (12-VOLT)	7T-4848	1	WIRING GP-PLATFORM	170
		1	WIRING GP-PLATFORM	175
		1	WIRING GP-PLATFORM	180
FLASHER AS (12-VOLT) (HAZARD & TURN)	7T-4848	1	WIRING GP-PLATFORM	186
FUSE (10-AMPERE)	113-8490	11	PANEL GP-FUSE	128
	3K-8782	1	LAMP GP-WARNING BEACON	120
FUSE (15-AMPERE)	113-8491	13	PANEL GP-FUSE	128
FUSE (20-AMPERE)	113-8492	10	PANEL GP-FUSE	128
FUSE (40-AMPERE)	278-6377	1	RELAY GP	130
FUSE (60-AMPERE)	267-2701	2	RELAY GP	131
		1	RELAY GP	132
		1	WIRING GP-PLATFORM	171
		1	WIRING GP-PLATFORM	176
		1	WIRING GP-PLATFORM	180
		1	WIRING GP-PLATFORM	187
GLOW PLUG (12-VOLT)	232-6662	4	GLOW PLUG GP	108
KEY (BATTERY DISCONNECT)	8H-5306	1	SWITCH GP-DISCONNECT	139
LAMP (12-VOLT)	7X-9065	1	WIRING GP-CONSOLE	147
		1	WIRING GP-CONSOLE	150
LAMP (12-VOLT, 21-WATT)	3C-4883	1	LIGHTING GP-FLOOD & SIGNAL	121
		1	LIGHTING GP-FLOOD & SIGNAL	123
	9W-3326	1	LIGHTING GP-FLOOD & SIGNAL	121
		1	LIGHTING GP-FLOOD & SIGNAL	123
LAMP (12-VOLT, 5-WATT)	084-4348	1	LIGHTING GP-FLOOD & SIGNAL	121
		1	LIGHTING GP-FLOOD & SIGNAL	123
LAMP (12-VOLT, 55-WATT)	9W-0607	1	LAMP GP-FLOOD	118
		1	LAMP GP-FLOOD	119
	9X-8118	1	LAMP GP-WARNING BEACON	120
LAMP (12-VOLT, 55-WATT) (FLOODLIGHT)	9W-0607	1	LAMP GP-FLOOD	117
FUEL SYSTEM				
CAP	232-1328	1	PUMP GP-FUEL INJECTION	85
CAP-FUEL	284-9039	1	TANK GP-FUEL	96
FILTER AS-WATER SEP & FUEL	228-9130	1	PUMP GP-FUEL PRM & PRIM FILTER	91
FILTER ELEMENT-FUEL (WATER SEPARATOR)	156-1200	1	FILTER GP-WATER SEP & FUEL	81
STRAINER-FUEL (FILLER NECK SCREEN)	180-3730	1	TANK GP-FUEL	96

MAINTENANCE PARTS

DESCRIPTION	PART NUMBER	QTY	WHERE USED	PAGE
HYDRAULIC SYSTEM				
CAP-FILL (HYDRAULIC OIL)	237-3797	1	TANK & MTG GP-HYDRAULIC	519
		1	TANK & MTG GP-HYDRAULIC	521
FILTER ELEMENT-BREATHER (HYDRAULIC TANK)	9R-9925	1	TANK & MTG GP-HYDRAULIC	519
		1	TANK & MTG GP-HYDRAULIC	521
FILTER ELEMENT-OIL (FLOW REGULATOR)	227-1197	1	MANIFOLD GP-CONTROL	505
FILTER-OIL (FIRE RESISTANT)	134-3014	1	FILTER GP-OIL	417
FILTER-OIL (ULTRA HIGH EFFICIENCY)	126-1817	1	FILTER GP-OIL	417
LUBRICATION SYSTEM				
FILTER AS-ENGINE OIL	7W-2326	1	GAUGE GP-OIL LEVEL & FILLER	45
OPERATOR STATION				
BLADE AS-WIPER (500-MM) (REAR)	5C-8811	1	WIPER GP-WINDOW	923
BLADE AS-WIPER (600-MM)	101-0745	1	WIPER & WASHER GP-WINDOW	921
BLADE AS-WIPER (600-MM) (FRONT)	101-0745	1	WIPER & WASHER GP-WINDOW	919
		1	WIPER GP-WINDOW	923
FILTER ELEMENT AS-AIR (CAB HEATER)	211-2661	1	AIR CONDITIONER & MOUNTING GP	788
		1	HEATER GP-CAB	845
FILTER ELEMENT-AIR (RECIRCULATION)	211-2660	1	HEATER GP-CAB	847
		1	HEATER GP-CAB	849
		1	HEATER GP-CAB	851
		1	HEATER GP-CAB	853
LAMP (12-VOLT)	122-7137	1	TACHOMETER GP-ELECTRIC	900
	210-8754	1	LINER GP-CAB	863
		1	LINER GP-CAB	865
SEAT BELT (2-IN)	206-1749	1	SEAT BELT GP	881
SEAT BELT GP	206-1750	1	SEAT BELT GP	882

MAINTENANCE PARTS

DESCRIPTION	PART NUMBER	QTY	WHERE USED	PAGE
POWER TRAIN				
BREATHER (AXLE)	197-9155	1	AXLE GP-REAR	204
BREATHER (FRONT AXLE)	253-5024	1	AXLE GP-DRIVE & STEERING	202
BREATHER (TRANSMISSION)	7T-3251	1	TRANSMISSION GP-DIRECT DRIVE	261
		1	TRANSMISSION GP-DIRECT DRIVE	266
		1	TRANSMISSION GP-DIRECT DRIVE	272
		1	TRANSMISSION GP-DIRECT DRIVE	277
		1	TRANSMISSION GP-DIRECT DRIVE	282
		1	TRANSMISSION GP-DIRECT DRIVE	287
		1	TRANSMISSION GP-POWER SHIFT	292
		1	TRANSMISSION GP-POWER SHIFT	298
BREATHER AS (SIDE)	293-2147	1	TRANSMISSION GP-DIRECT DRIVE	281
		1	TRANSMISSION GP-DIRECT DRIVE	286
BREATHER AS (TRANSMISSION)	293-2147	1	TRANSMISSION GP-DIRECT DRIVE	271
		1	TRANSMISSION GP-DIRECT DRIVE	276
	294-9822	1	TRANSMISSION GP-DIRECT DRIVE	266
FILTER-OIL (STANDARD EFFICIENCY)	119-4740	1	POWER TRAIN AR	241
FILTER-OIL (STANDARD EFFICIENCY) (POWER TRAIN)	119-4740	1	POWER TRAIN AR	241
		1	POWER TRAIN AR	242
PLUG AS-DRAIN (MAGNETIC)	152-6144	4	AXLE GP-DRIVE & STEERING	202
		1	DIFFERENTIAL & BEVEL GEAR GP	215
PLUG AS-DRAIN (MAGNETIC) (AXLE)	152-6144	4	AXLE GP-REAR	204
STRAINER (SUCTION)	7T-2651	1	CASE AS-TRANSMISSION	207
		1	CASE GP-TRANSMISSION	210
		1	CASE GP-TRANSMISSION	213
		1	TRANSMISSION GP-POWER SHIFT	292
		1	TRANSMISSION GP-POWER SHIFT	298

INDEX

Name	Page
A	
ACCUMULATOR GP-PILOT OIL–CHARGED	381
ACCUMULATOR GP-PILOT OIL–UNCHARGED	382
ACCUMULATOR GP-RIDE CONTROL–CHARGED	383
ACCUMULATOR GP-RIDE CONTROL–UNCHARGED	384
ACCUMULATOR-REFRIGERANT (AIR CONDITIONER)	868
AIR CLEANER GP	67
	69
	70
AIR COMPRESSOR GP (SUSPENSION SEAT)	894
	896
AIR CONDITIONER & MOUNTING GP	788
ALTERNATOR GP-CHARGING–120-AMPERE, WITH MOUNTING	97
ARM GP-LIFT	557
ARMREST AS (LH)	888
ARMREST AS (RH)	888
AXLE GP-DRIVE & STEERING–FRONT	202
AXLE GP-FRONT	337
AXLE GP-REAR	204
B	
BACKHOE AR-EXTENDABLE STICK	1
BACKHOE AR-EXTENDABLE STICK–ACCUGRADE	1
BACKHOE AR-STANDARD STICK	2
BACKHOE AR-STANDARD STICK–ACCUGRADE	2
BATTERY & WIRING GP	100
BATTERY & WIRING GP–STANDARD	98
	101
	103
BATTERY (12-VOLT, MAINTENANCE FREE)	98
	100
	101
	103
BELT-DRIVE	120
BLADE AS-WIPER (500-MM) (REAR)	923
BLADE AS-WIPER (600-MM)	921
BLADE AS-WIPER (600-MM) (FRONT)	919
	923
BLOWER GP-CAB	853
BLOWER GP-CAB (HEATER)	847
	849
	851
BOOM GP	559
BOX GP-BATTERY–WITH STORAGE	349
BRACE GP-LIFT CYLINDER	560
BRACKET AS	379
BRACKET GP-MOUNTING–MONITOR	791
BRAKE GP-HYDRAULIC CALIPER	204
BREATHER (AXLE)	204
BREATHER (FRONT AXLE)	202
BREATHER (TRANSMISSION)	261
	266
	272
	277
	282
	287
	292
	298
BREATHER AS (SIDE)	281
	286
BREATHER AS (TRANSMISSION)	266
	271
	276
BREATHER GP–TURBO	43
BUCKET AR-GENERAL PURPOSE	606
BUCKET AR-MULTIPURPOSE	606
	607
	608
BUCKET AS-GENERAL PURPOSE	609
	611
	612
	614
	616
BUCKET AS-HOE	617
	618
	619
	620
	621
	622
	623
	624
	625
	626
BUCKET AS-HOE–CORAL	657
	658
	659
	660
BUCKET AS-HOE–HEAVY-DUTY	627
	628
	629
	630
	631
	632
	633
	634
	635
	636
	637
	638
BUCKET AS-HOE–HIGH CAPACITY	639

INDEX

Name	Page
	640
	641
	642
	643
	644
	645
	646
BUCKET AS-HOE–HIGH CAPACITY, PIN-LOCK	661
	662
	663
	664
	665
	666
	667
	668
BUCKET AS-HOE–ROCK	647
	648
	649
	650
	651
	652
	653
	654
	655
	656
BUCKET GP-GENERAL PURPOSE	669
	670
	671
	672
	673
	674
	675
BUCKET GP-HOE	676
	677
	678
	679
	680
	700
BUCKET GP-HOE–CORAL	696
	697
	698
	699
	703
BUCKET GP-HOE–HEAVY DUTY	701
BUCKET GP-HOE–HEAVY-DUTY	681
	682
	683
	684
	685
	686
BUCKET GP-HOE–HEAVY-DUTY, PIN-LOCK	704
	705
	706
	707
	708
	709
BUCKET GP-HOE–HIGH CAPACITY	687
	688
	689
	690
	716
BUCKET GP-HOE–HIGH CAPACITY, PIN-LOCK	710
	711
	712
	713
	714
	715
	717
	718
	719
BUCKET GP-HOE–ROCK	691
	692
	693
	694
	695
	702
BUCKET GP-MULTIPURPOSE	720
	722
	723
	724
BULLDOZER AS	725
	726
	727
	728

C

CAB AR-ENCLOSED ROPS	792
	793
	794
CAB AS	795
CAB GP-ENCLOSED ROPS	796
	799
CANOPY AR-OPEN ROPS	802
	803
CANOPY GP-OPEN ROPS–WITH FRONT WINDOW	806
CANOPY GP-OPEN ROPS–WITHOUT FRONT WINDOW	804
CAP	85
CAP AS-COOLANT TANK	66
CAP-FILL (HYDRAULIC OIL)	519
	521
CAP-FUEL	96
CARRIER AS-DIFFERENTIAL	215
CASE AS-TRANSMISSION–FRONT	207
CASE AS-TRANSMISSION–REAR	208
CASE GP-TRANSMISSION–FRONT	210

INDEX

Name	Page
	213
CASE GP-TRANSMISSION–REAR	211
CHASSIS AR	3
CLAM AS-MULTIPURPOSE BUCKET	729
	730
COMMON AR	3
COMPRESSOR & MTG GP-REFRIG	807
	809
COMPRESSOR GP-REFRIGERANT	811
CONDENSER & MTG GP-REFRIGERANT	812
CONNECTION GP-WATER	47
CONSOLE GP-OPERATOR–FRONT	817
CONSOLE GP-OPERATOR–LH	815
CONSOLE GP-OPERATOR–RH	813
CONTROL AR-RIDE	384
CONTROL GP-GOVERNOR	78
	79
CONTROL GP-HYDRAULIC HAND–LOADER	819
	821
CONTROL GP-JOYSTICK–LH	826
	827
CONTROL GP-JOYSTICK–RH	824
	825
CONTROL GP-PARKING BRAKE	326
	327
CONTROL GP-SERVICE BRAKE–STANDARD SHIFT	328
	331
CONTROL GP-STEERING–TILT	828
	830
CONTROL GP-TRANSMISSION	832
CONTROL GP-TRANSMISSION (FORWARD, NEUTRAL, REVERSE)	201
	832
CONTROL GP-UNPRGMED MONITOR (ADVISOR)	107
CONTROL GP-UNPROGRAMMED (MACHINE)	105
	106
COOLER GP-ENGINE OIL	48
	49
	50
COOLER GP-FLTR BASE & ENG OIL	50
	51
CORE AS-OIL COOLER (HYDRAULIC)	64
	65
CORE AS-OIL COOLER (TRANSMISSION)	64
	65
COUNTERWEIGHT GP	350
	351
	352
	353
COUPLER AR-QUICK–PIN-LOCK	731
COUPLER GP-QUICK–BACKHOE	732
	733
COUPLER GP-QUICK–CAT, CASE	735
COUPLER GP-QUICK–CAT, DEERE	736
COUPLER GP-QUICK–PIN-LOCK	734
COVER GP (OUTLET)	527
	528
COVER GP-CAB	834
COVER GP-CYLINDER HEAD	10
COVER GP-VALVE MECHANISM	11
	13
	15
COVER GP-WIPER MOTOR	835
CRANKSHAFT GP	17
	19
CUSHION GP-SEAT	890
	891
CYLINDER & LINES GP-THUMB	385
	386
	388
CYLINDER BLOCK GP	20
	22
CYLINDER GP-BACKHOE BUCKET	390
	392
CYLINDER GP-BOOM	394
	396
CYLINDER GP-BRAKE	334
	335
CYLINDER GP-EXTENDABLE STICK	398
	598
CYLINDER GP-LIFT	400
CYLINDER GP-MULTIPURPOSE BUKT	401
CYLINDER GP-STABILIZER–LH	402
CYLINDER GP-STABILIZER–RH	404
CYLINDER GP-STEERING	202
	337
CYLINDER GP-STICK	406
	408
	409
CYLINDER GP-SWING	410
CYLINDER GP-THUMB	412
CYLINDER GP-TILT	413
CYLINDER HEAD GP	23
	24

D

DIAPHRAGM (CRANKCASE PRESSURE CONTACTOR)	11
	13
DIFFERENTIAL & BEVEL GEAR GP	215
DIFFERENTIAL GP	217
	218
DOOR GP-BATTERY	354
DOOR GP-CAB–LH	836
	838
DOOR GP-CAB–RH	840

INDEX

Name	Page
	842
DRIVE & MTG GP-PUMP	415
DRIVE AR-BACKHOE LOADER– 2-WHEEL DRIVE, 2-WHEEL STEER	4
DRIVE AR-BACKHOE LOADER– ALL WHEEL DRIVE, 2-WHEEL STEER	4
DRIVE GP-FAN	25
DRIVE GP-FLEXIBLE COUPLING	219
E	
EDGE GP-CUTTING	738
	739
EDGE-CUTTING	740
ELECTRONICS GP-COMMUNICATION– PRODUCT LINK 300	105
ELECTRONICS GP-MACHINE	105
	106
ELECTRONICS GP-MONITOR–ADVISOR	107
ENGINE AR	5
ENGINE AR–PRIMARY	6
ENGINE AR-PRIMARY	7
	8
	9
EXTENSION GP-EXHAUST	71
EXTENSION GP-FENDER	355
F	
FAN GP-SUCTION–WITH AIR CONDITIONER	52
	53
FAN GP-SUCTION– WITHOUT AIR CONDITIONER	54
FASTENER GP-VALVE (BANK)	525
FASTENER GP-VALVE–BANK	416
FENDER GP-FRONT	356
FENDER GP-REAR	357
FILLER GP-POWER TRAIN OIL– 2-WHEEL DRIVE, STANDARD SHIFT	224
FILLER GP-POWER TRAIN OIL– ALL WHEEL DRIVE, STANDARD SHIFT	222
FILLER GP-POWER TRAIN OIL–AUTOSHIFT	220
FILM (STABILIZER, AUTO UP)	793
	794
FILM (TEMPERATURE CONTROL)	788
	845
FILM GP	925
FILM-CONTROL (BACKHOE, JOYSTICK)	792
	793
	794
	802
	803
FILM-COVER (PROTECT)	928
FILM-IDENTIFICATION (12-VOLT)	926
FILM-IDENTIFICATION (CAT)	379
	380
FILM-IDENTIFICATION (CATERPILLAR)	802
	847
	849
	851
	853
FILM-IDENTIFICATION (CATERPILLAR, FRONT)	792
	793
	794
	803
FILM-IDENTIFICATION (CONSOLE, RH)	147
	150
FILM-IDENTIFICATION (STABILIZER CONTROL)	792
	802
	803
FILM-IDENTIFICATION (START SWITCH, READ OMM)	928
FILM-INFORMATION (EXTENDED LIFE COOLANT,READ OMM)	926
FILM-INSTRUCTION (BUCKET CONTROL)	525
FILM-INSTRUCTION (EXTENDABLE STICK PIN, READ OMM)	1
FILM-INSTRUCTION (LINK)	564
FILM-INSTRUCTION (NO STEP)	927
FILM-INSTRUCTION (OIL FLOW DIRECTION)	432
FILM-INSTRUCTION (UNLOCK)	378
FILM-INSTRUCTION (WASHER FILL)	905
	907
	919
	921
FILM-STRIPE (YELLOW)	374
	376
	379
FILM-WARNING (ACCUM, HIGH PRESS, READ OMM)	383
	467
FILM-WARNING (HIGH PRESS CYLINDER, READ OMM)	422
	425
	473
FILM-WARNING (HIGH PRESS CYLINDER, READ OMM) (INTL)	475
FILM-WARNING (HIGH PRESS CYLINDER, READ OMM) (U.S.)	475
FILM-WARNING (HIGH PRESSURE, READ OMM)	383
FILM-WARNING (HIGH PRESSURE, READ OMM, U.S.)	420
FILM-WARNING (HYD PRESS, READ OMM, INTL)	432
	434

INDEX

Name	Page
FILM-WARNING (HYD PRESS, READ OMM, U.S.)	432, 434, 437
FILM-WARNING (JUMP START, READ OMM)	927
FILM-WARNING (NO WELD, NO DRILL, READ OMM)	927
FILM-WARNING (PRODUCT LINK 300, U.S.)	113, 114
FILTER AS-ENGINE OIL	45
FILTER AS-WATER SEP & FUEL	91
FILTER BASE & ENG OIL COOLER	50, 51
FILTER ELEMENT AS-AIR (CAB HEATER)	788, 845
FILTER ELEMENT AS-AIR (PRIMARY)	69
FILTER ELEMENT-AIR (PRIMARY)	70
FILTER ELEMENT-AIR (RECIRCULATION)	847, 849, 851, 853
FILTER ELEMENT-AIR (SECONDARY)	69, 70
FILTER ELEMENT-BREATHER (HYDRAULIC TANK)	519, 521
FILTER ELEMENT-FUEL (WATER SEPARATOR)	81
FILTER ELEMENT-OIL (FLOW REGULATOR)	505
FILTER GP-FUEL	81
FILTER GP-OIL–HYDRAULIC	417
FILTER GP-WATER SEP & FUEL	81
FILTER-OIL (FIRE RESISTANT)	417
FILTER-OIL (STANDARD EFFICIENCY)	241
FILTER-OIL (STANDARD EFFICIENCY) (POWER TRAIN)	241, 242
FILTER-OIL (ULTRA HIGH EFFICIENCY)	417
FINAL DRIVE GP	240
FITTING GP-HYDRAULIC	418
FLANGE GP-WHEEL	226, 227
FLASHER AS (12-VOLT)	170, 175, 180
FLASHER AS (12-VOLT) (HAZARD & TURN)	186
FLOOR MAT	844
FLOOR MAT GP	844
FLOORPLATE GP	359, 360, 361
FLYWHEEL GP	26
FORK GP	741
FRAME AS-SWING	362
FRAME GP-LOADER–SINGLE TILT	363
FRAME GP-SWING	365, 367, 369
FUSE (10-AMPERE)	120, 128
FUSE (15-AMPERE)	128
FUSE (20-AMPERE)	128
FUSE (40-AMPERE)	130
FUSE (60-AMPERE)	131, 132, 171, 176, 180, 187

G

Name	Page
GASKET (VALVE COVER)	11, 13, 15
GAUGE AS-OIL LEVEL (DIPSTICK)	220
GAUGE GP-COOLANT TEMPERATURE	147, 150
GAUGE GP-FUEL LEVEL	147, 150
GAUGE GP-OIL LEVEL & FILLER–WITH FILTER	45
GAUGE GP-OIL TEMPERATURE (TORQUE CONVERTER)	147, 150
GAUGE-OIL LEVEL (DIPSTICK)	222, 224
GAUGE-OIL LEVEL (ENGINE DIPSTICK)	45
GAUGE-SIGHT (FLUID LEVEL)	519, 521
GEAR GP-BEVEL & PINION	215
GEAR GP-DIFFERENTIAL & BEVEL	217
GEAR GP-RING	228, 229
GEAR GP-RING (REAR AXLE)	204
GLOW PLUG (12-VOLT)	108
GLOW PLUG GP	108
GRADE CONTROL AR-LASER–ACCUGRADE	111
GRADE CONTROL AR-LASER–ACCUGRADE, MAST	109
GRILL-RADIATOR–SCREEN	371
GUARD GP-BOOM	561, 562
GUARD GP-DRIVE SHAFT	372
GUARD GP-RADIATOR	373
GUARD GP-WORK TOOL	742

INDEX

Name	Page
H	
HANDLE GP-MODULAR (LH)	826, 827
HANDLE GP-MODULAR (RH)	824, 825
HARNESS AS-AUXILIARY (HORN)	154
HARNESS AS-AUXILIARY (REAR)	152, 153
HARNESS AS-CAB	171, 176, 180, 905, 907
HARNESS AS-CAB (WIPER MOTOR)	919, 921
HARNESS AS-CONSOLE (FRONT)	149
HARNESS AS-CONSOLE (SIDE)	147, 150
HARNESS AS-CONTROL (ACCUGRADE, SITE REFERENCE)	855
HARNESS AS-CONTROL (PRODUCT LINK)	115
HARNESS AS-ENGINE	155, 157
HARNESS AS-FUEL TANK (FUEL SHUTOFF)	5
HARNESS AS-HEATER	851, 853
HARNESS AS-HEATER & AIR COND	847, 849
HARNESS AS-HEATER & AIR COND (COMPRESSOR)	141, 144
HARNESS AS-HEATER & AIR COND (PLATFORM)	141, 144, 165
HARNESS AS-HEATER & AIR COND (POWER)	141, 144
HARNESS AS-LIGHTING (ROOF)	121, 123
HARNESS AS-PANEL (AUTOSHIFT, STAND SHIFT SWITCH)	201
HARNESS AS-PLATFORM	186
HARNESS AS-PLATFORM (DISPLAY)	161, 163
HARNESS AS-POWER	171, 176, 180
HARNESS AS-POWER (DISTRIBUTION)	187
HARNESS AS-RADIO (PRODUCT LINK)	113, 114
HARNESS AS-REAR	170, 175
HARNESS AS-REAR (PLATFORM)	193, 195
HARNESS AS-REAR (STABILIZER, AUTO UP)	200
HARNESS AS-RIDE CONTROL	197, 420, 422, 425, 894, 896
HARNESS AS-SENSOR	1
HARNESS AS-SENSOR (ACCUGRADE)	2
HARNESS AS-SENSOR (BOOM, STICK, BUCKET)	161, 163
HARNESS AS-SENSOR (EXTENDABLE STICK)	160
HARNESS AS-SENSOR (SWING)	161, 163
HARNESS AS-TRANSMISSION	201
HARNESS AS-WIRING	169
HARNESS AS-WIRING (AUTOSHIFT)	201
HARNESS AS-WIRING (DIFFERENTIAL LOCK)	138
HARNESS AS-WIRING (KICKOUT, POSITIONER)	167, 168, 169
HARNESS AS-WIRING (MAST)	109, 111, 126
HARNESS AS-WIRING (RESISTOR)	172, 175, 180, 186
HEATER GP-CAB	845, 847, 849, 851, 853
HEATER GP-JACKET WATER	112
HOOD & GUARD GP	374, 376
HOOD GP-ENGINE	378, 379, 380
HOSE-RADIATOR (LOWER)	60
HOSE-RADIATOR (UPPER)	60
HOUSING & FLANGE GP-AXLE–LH	229
HOUSING & FLANGE GP-AXLE–RH	228
HOUSING GP-AXLE–LH	231
HOUSING GP-AXLE–REAR	232
HOUSING GP-AXLE–RH	230
HOUSING GP-FLYWHEEL	27
HOUSING GP-FRONT	28
HYDRAULIC AR	419

INDEX

Name	Page
I	
INDICATOR AS (HIGH BEAM, TURN SIGNAL RH)	170, 175, 180, 186
INDICATOR AS (HYD OIL TEMP, FILTER)	159
INDICATOR AS (TURN SIGNAL LH, PARKING BRAKE)	170, 175, 180, 186
INDICATOR GP-AIR FILTER CHANGE	72
INDICATOR-AIR FILTER SERVICE	72
INSTALLATION GP-COMMUNICATION–PRODUCT LINK 121SR	113, 114
INSTALLATION GP-COMMUNICATION–PRODUCT LINK 300	115
INSTALLATION GP-MONITOR–ADVISOR	855
INSTALLATION GP-RIDE CONTROL–AUTOSHIFT	420, 422, 425
K	
KEY (BATTERY DISCONNECT)	139
KICKOUT & POSITIONER GP	428, 430
KIT-CAB WINDOW	857
KIT-RECEPTACLE (12-PIN)	147, 150
KIT-WHEEL SPACER	234
KNOB GP-STEERING	339, 830
L	
LAMP (12-VOLT)	147, 150, 863, 865, 900
LAMP (12-VOLT, 21-WATT)	121, 123
LAMP (12-VOLT, 5-WATT)	121, 123
LAMP (12-VOLT, 55-WATT)	118, 119, 120
LAMP (12-VOLT, 55-WATT) (FLOODLIGHT)	117
LAMP GP-DOME (12-VOLT)	863, 865
LAMP GP-FLOOD	117, 118, 119
LAMP GP-HEAD & SIGNAL (DIRECTIONAL)	121, 123
LAMP GP-SIGNAL (STOP, TAIL, TURN)	121, 123
LAMP GP-WARNING BEACON–AMBER, MAGNETIC MOUNT, ROTATING	120
LATCH GP-CAB DOOR & WINDOW	860
LATCH GP-CAB DOOR & WINDOW–RH	859
LATCH GP-CONSOLE	861
LEVER GP-GOVERNOR (HANDHELD)	78, 79
LEVER GP-GOVERNOR–HANDHELD	862
LEVER GP-HAND CONTROL	336
LIFTING GP-ENGINE	30
LIGHTING GP-FLOOD & SIGNAL–NACD, OPTIONAL	121, 123
LIGHTING GP-WARNING BEACON–AMBER, MAGNETIC MOUNT, ROTATING	125
LINER GP-CAB	863, 865
LINES GP-BACKHOE AUXILIARY	432, 434, 437
LINES GP-BOOM	440, 442
LINES GP-BUCKET	444, 446, 448, 450
LINES GP-DRAIN	452
LINES GP-EXTENDABLE STICK	453
LINES GP-FUEL	82
LINES GP-FUEL FILTER	84
LINES GP-HEATER	867
LINES GP-HEATER & AIR COND	868
LINES GP-HYDRAULIC	455
LINES GP-HYDRAULIC (BOOM)	442
LINES GP-HYDRAULIC (BUCKET)	446, 450
LINES GP-HYDRAULIC OIL COOLER	456
LINES GP-LIFT CYLINDER	457
LINES GP-LOADER AUXILIARY	459
LINES GP-MULTIPURPOSE BUCKET	461, 463
LINES GP-PILOT–SIGNAL	465
LINES GP-PILOT–STABILIZER	470
LINES GP-PILOT–WITH ACCUMULATOR	467
LINES GP-POWER TRAIN OIL–DIFFERENTIAL LOCK	235
LINES GP-PUMP	471
LINES GP-RIDE CONTROL	473

INDEX

Name	Page
	475
LINES GP-STABILIZER	477
	479
	481
LINES GP-STABILIZER–6-BANK	489
	491
	493
LINES GP-STABILIZER–7-BANK	483
	485
	487
LINES GP-STEERING	340
	342
	344
	346
LINES GP-STICK	495
	496
LINES GP-SWING	498
LINES GP-TILT CYLINDER	500
LINES GP-TRANSMISSION COOLER	55
	57
LINK GP-SHIPPING	926
LINK GP-THUMB	753
	754
	755
	756
	768
	769
	770
	771
	772
	773
	774
	775
	776
	777
	778
	782
LINK GP-THUMB–ADJUSTABLE	563
LINKAGE GP-BACKHOE BUCKET	564
LINKAGE GP-LOADER BUCKET	566
LOADER AR	4
LOCK GP-TRANSPORT	571
LOCK GP-TRANSPORT–BOOM	569
LOCK GP-TRANSPORT–STABILIZER	568
LOCK GP-VANDALISM	926

M

Name	Page
MANIFOLD & SOLENOID GP-CONTROL	502
MANIFOLD & SOLENOID GP-CONTROL–BOOM, STICK, PATTERN SWITCH	503
MANIFOLD & SOLENOID GP-CONTROL–INLET	504
MANIFOLD GP-CONTROL (INLET)	504
MANIFOLD GP-CONTROL–INLET	506
MANIFOLD GP-CONTROL–OUTLET	505
MANIFOLD GP-HYDRAULIC	533
	535
	544
	545
MANIFOLD GP-RIDE CONTROL	507
MAST GP–LASER RECEIVER	126
MIRROR GP-REAR VIEW–INTERIOR	870
	871
MODULE GP-WARNING INDICATOR (WITH ALARM, FUNCTION LIGHTS)	147
	150
MOTOR GP-WINDOW WIPER (FRONT)	872
MOTOR GP-WINDOW WIPER (REAR)	923
MOTOR GP-WINDOW WIPER–FRONT	872
MOUNTING & LINES GP-RADIATOR–TRANSMISSION, HYDRAULIC OIL	59
MOUNTING GP-AXLE	236
MOUNTING GP-BACKHOE CONTROL–PILOT	873
MOUNTING GP-BANK VALVE	508
MOUNTING GP-BUCKET	743
MOUNTING GP-CAB	876
MOUNTING GP-CYLINDER–THUMB	509
	511
MOUNTING GP-ENGINE	31
MOUNTING GP-ENGINE & XMSN	32
MOUNTING GP-LINES–BACKHOE	512
	514
MOUNTING GP-MAST–GRADE CONTROL	744
MOUNTING GP-MONITOR–ACCUGRADE	877
MOUNTING GP-RAD & OIL COOLER–TRANSMISSION, HYDRAULIC OIL	60
MOUNTING GP-SENSOR–ANGLE	127
MOUNTING GP-STICK	572
MOUNTING GP-TRANSMISSION	237
	238
MOUNTING GP-WHEEL	319
MOUNTING GP-WHEEL (FRONT)	312
	313
	314
	318
	320
	322
	324
MOUNTING GP-WHEEL (REAR)	315
	316
	317
	321
	323
	325
MUFFLER GP	73

INDEX

Name	Page
P	
PAD & GUARD GP-STABILIZER	579, 581, 583
PAD & GUARD GP-STABILIZER–STREET	573, 575, 577, 585, 587, 589
PAD & MTG GP-STABILIZER	593
PAD & MTG GP-STABILIZER–STREET	591, 592
PAD GP-STABILIZER–STREET	594, 595
PADLOCK GP (VANDALISM GUARD)	926
PAN GP-OIL	33
PANEL GP-FUSE–INCLUDES RELAY	128
PEDAL GP-GOVERNOR	878
PIN GP-COUPLER (PIN-LOCK)	731
PIN GP-COUPLER–MACHINE	745
PIN GP-COUPLER–PIN-LOCK	746
PISTON & ROD GP	35
PLANETARY GP-FINAL DRIVE	239, 240
PLATE & FILM GP	926, 929
PLATE-IDENTIFICATION (CAT)	617, 619, 621, 623, 625, 627, 629, 631, 633, 635, 637, 639, 641, 643, 645, 647, 649, 651, 653, 655, 657, 658, 659, 660, 666
PLATE-IDENTIFICATION (WORK TOOL)	670, 672, 676, 677, 678, 679, 680, 681, 682, 683, 684, 685, 686, 687, 688, 689, 690, 691, 692, 693, 694, 695, 696, 697, 698, 699, 716, 717, 718, 719
PLUG AS-DRAIN (MAGNETIC)	202, 215
PLUG AS-DRAIN (MAGNETIC) (AXLE)	204
PLUG GP-CONTROL MANIFOLD	505
PLUG GP-CONTROL VALVE	533, 535, 537, 539, 541, 543, 546
PLUG GP-ENGINE	36, 37, 38
PLUG-DRAIN (ENGINE OIL)	33
POWER TRAIN AR	241
POWER TRAIN AR– ALL WHEEL DRIVE, AUTOSHIFT	242
POWER TRAIN AR– ALL WHEEL DRIVE, STD SHIFT	241
PROTECTION GP-VANDALISM– ROTATING GUARD	930
PULLEY GP-CRANKSHAFT	39
PUMP GP-ENGINE OIL	46
PUMP GP-FUEL INJECTION	85, 88

INDEX

Name	Page
PUMP GP-FUEL PRM & PRIM FILTER–WITH MOUNTING	92, 93
PUMP GP-FUEL PRM & PRIM FILTER–WITH WATER SEPARATOR	91
PUMP GP-METERING–HMU	348
PUMP GP-PISTON	515
PUMP GP-TRANSMISSION	261, 266, 271, 276, 281, 286, 292, 298
PUMP GP-WATER	62

R

Name	Page
RADIATOR & OIL COOLER GP–HYDRAULIC, TRANSMISSION	64, 65
RADIATOR GP	64, 65
RADIO GP-COMMUNICATION–PRODUCT LINK 121SR	879
RECEIVER GP-LASER (LR400C)	109
RECEIVER GP-LASER (LR410)	129
RECEIVER GP-LASER–SINGLE	129
REGULATOR GP-TEMPERATURE (INCLUDES CONNECTOR) (WATER)	47
RELAY AS (12-VOLT) (ACCUGRADE)	111
RELAY AS (12-VOLT) (ACCUGRADE, MAST)	109
RELAY AS (12-VOLT) (AIR CONDITIONER)	141, 144, 165
RELAY AS (12-VOLT) (ALL WHEEL DRIVE)	137
RELAY AS (12-VOLT) (BACKUP ALARM)	170, 175, 180, 186
RELAY AS (12-VOLT) (DIFFERENTIAL LOCK)	170, 175, 180, 186
RELAY AS (12-VOLT) (FUEL PUMP)	155, 157
RELAY AS (12-VOLT) (HEATER, A/C POWER)	141, 144
RELAY AS (12-VOLT) (HORN)	170, 175, 180, 186
RELAY AS (12-VOLT) (IMPLEMENT DISABLE)	170, 175, 180, 186
RELAY AS (12-VOLT) (POSITION LAMP)	170, 175, 180, 186
RELAY AS (12-VOLT) (RIDE CONTROL)	197, 420, 422, 425
RELAY AS (12-VOLT) (START)	155, 157
RELAY AS (12-VOLT) (STARTING AID)	155, 157
RELAY AS (12-VOLT) (TORQUE LIMITER)	172, 177, 181, 187
RELAY AS-TIMER (12-VOLT) (STABILIZER, AUTO UP, 12-VOLT)	199, 200
RELAY GP–POWER DISTRIBUTION	130
RELAY GP–POWER, 1	131
RELAY GP–POWER, 2	132
ROCKER ARM GP	40
ROOF GP-CAB	880
ROTATING GP-PUMP	517

S

Name	Page
SEAT BELT (2-IN)	881
SEAT BELT GP	882
SEAT BELT GP–RETRACTABLE, 2-IN	881
SEAT BELT GP–RETRACTABLE, 3-IN	882
SEAT GP–CLOTH	885
SEAT GP–VINYL	883
SEAT GP-SUSPENSION–CLOTH	888, 893
SEAT GP-SUSPENSION–DELUXE, CLOTH	889, 890, 891
SEAT GP-SUSPENSION–VINYL	887, 893
SENDER AS-FUEL LEVEL	95
SENDER AS-TEMPERATURE (12-VOLT)	261, 267, 272, 277
SENDER AS-TEMPERATURE (12-VOLT) (TRANSMISSION OIL)	282, 287, 292, 298
SENDER AS-TEMPERATURE (ENGINE COOLANT)	155

INDEX

Name	Page
	157
SENSOR AS-ANGLE (AS410TC)	855
SENSOR AS-POSITION (BOOM SWING)	855
SENSOR GP-MOISTURE (WATER SEPARATOR)	91
SENSOR GP-POSITION	396
	398
SENSOR GP-POSITION (BUCKET CYLINDER)	390
SENSOR GP-POSITION (LINEAR)	406
SENSOR GP-SPEED (TORQUE CONVERTER OUTPUT)	261
	266
	271
	276
	282
	287
SENSOR GP-SPEED (TRANSMISSION OUTPUT)	293
	299
SENSOR GP-SPEED–OUTPUT–TORQUE CONVERTER	133
SENSOR GP-TEMPERATURE (HYDRAULIC OIL)	159
SERVICE GP-MACHINE	105
SERVICE GP-MONITOR	107
SHAFT GP-AXLE	202
SHAFT GP-COUNTER	243
	261
	266
	271
	276
SHAFT GP-COUNTER (TRANSMISSION)	281
	286
SHAFT GP-DRIVE–FRONT	245
SHAFT GP-DRIVE–REAR	245
SHAFT GP-IDLER	246
	261
	266
	271
	276
SHAFT GP-IDLER (TRANSMISSION)	281
	286
SHAFT GP-INPUT	248
	250
SHAFT GP-OUTPUT–FRONT	255
	257
SHAFT GP-OUTPUT–MAIN	252
SHAFT GP-OUTPUT–REAR	254
	256
SHAFT GP-PUMP DRIVE	518
SOFTWARE GP-COMMUNICATION (PRODUCT LINK 300)	105
SOFTWARE GP-MACHINE	105
SOFTWARE GP-MONITOR	107
SPRING AS-GAS (LH)	378
SPRING GP-GAS	836
	838
	840
	842
SPRING GP-GAS (RH)	378
SPRING-GAS	913
	915
STABILIZER GP-BACKHOE	596
STARTING MOTOR GP-ELECTRIC	134
STARTING MOTOR GP-ELECTRIC–12-VOLT	136
STEERING COLUMN GP (TILT)	830
STICK AS	597
STICK GP-EXTENDABLE	598
	601
STICK GP-HOE	604
STRAINER (SUCTION)	207
	210
	213
	292
	298
STRAINER-FUEL (FILLER NECK SCREEN)	96
SUN VISOR	903
	904
SUSPENSION GP-SEAT	894
	896
SWITCH AS (LOWER LIMIT)	126
SWITCH AS (PARKING BRAKE)	326
SWITCH AS (PUSH BUTTON)	819
	821
SWITCH AS (STARTING MOTOR)(12-VOLT)	134
SWITCH AS (UPPER LIMIT)	126
SWITCH AS-FOOT (DIFFERENTIAL LOCK ON, OFF)	138
SWITCH AS-LIMIT (BRAKE PEDAL)	328
	331
SWITCH AS-LIMIT (SUSPENSION SEAT)	894
SWITCH AS-MULTIFUNCTION (HD LIGHT, TURN SIG, WDO WIPER)	171
	175
	180
	186
SWITCH AS-PRESSURE (ENGINE OIL)	140
SWITCH AS-PRESSURE (HYDRAULIC OIL FILTER BYPASS)	159
SWITCH AS-PRESSURE (REFRIGERANT)	141
	144
SWITCH AS-PRESSURE (RIDE CONTROL)	197
	420
	422
	425
SWITCH AS-ROCKER (AIR CONDITIONER, HEATER SELECT)	141
	144
SWITCH AS-ROCKER (ALL WHEEL DRIVE)	137

INDEX

Name	Page
SWITCH AS-ROCKER (AUTOSHIFT, STANDARD SHIFT)	201
SWITCH AS-ROCKER (AUXILIARY HYDRAULIC FLOW)	526
SWITCH AS-ROCKER (BLOWER FAN SPEED)	141, 144, 165
SWITCH AS-ROCKER (FLOODLIGHT, FRONT)	123
SWITCH AS-ROCKER (FLOODLIGHT, REAR)	123
SWITCH AS-ROCKER (FLOODLIGHTS, FRONT)	121
SWITCH AS-ROCKER (FLOODLIGHTS, REAR)	121
SWITCH AS-ROCKER (HAZARD WARNING LIGHTS)	170, 175, 180, 186
SWITCH AS-ROCKER (HEATER)	165
SWITCH AS-ROCKER (HORN)	830
SWITCH AS-ROCKER (HYDRAULIC LOCKOUT)	150
SWITCH AS-ROCKER (HYDRAULIC LOCKOUT) (IMPLEMENT DISABLE)	147
SWITCH AS-ROCKER (MODE SELECT)	170, 175, 180, 186
SWITCH AS-ROCKER (RIDE CONTROL)	197, 420, 422, 425
SWITCH AS-ROCKER (STARTING AID)	147, 150
SWITCH AS-ROCKER (TRANSMISSION NEUTRAL LOCK)	149
SWITCH AS-ROCKER (WARNING BEACON)	147, 150
SWITCH AS-ROCKER (WIPER, WASHER, REAR)	923
SWITCH AS-ROLLER (KICKOUT, POSITIONER)	167, 168, 169
SWITCH AS-START (KEY)	147, 150
SWITCH GP-ALL WHEEL DRIVE–INCLUDES RELAY	137
SWITCH GP-DIFFERENTIAL LOCK–CENTER PIVOT MACHINE	138
SWITCH GP-DISCONNECT–BATTERY	139
SWITCH GP-PRESSURE	328
SWITCH GP-PRESSURE (BRAKE)	331
SWITCH GP-PRESSURE–ENGINE OIL	140
SWITCH GP-PUSH BUTTON (NEUTRALIZER, DOWNSHIFT)	819, 821, 832
SWITCH-TEMPERATURE (AIR CONDITIONER)	847, 849
SWITCH-TEMPERATURE (ENGINE COOLANT)	155, 157
SWITCH-TEMPERATURE (FUEL)	88
SWITCH-TEMPERATURE (TIMING ADVANCE)	85
SYNCHRONIZER GP	254, 256

T

Name	Page
TACHOMETER GP-ELECTRIC	900
TANK & MTG GP-FUEL–INCLUDES STEP	94
TANK & MTG GP-HYDRAULIC	519, 521
TANK GP-EXPANSION	66
TANK GP-EXPANSION–COOLANT	66
TANK GP-FUEL	95, 96
TANK GP-HYDRAULIC	519, 521
TANK GP-WINDOW WASHER	905, 907, 919, 921
THUMB AR–24-IN, HYD, HEAVY-DUTY	749
THUMB AR–24-IN, HYD, HEAVY-DUTY, WITH COUPLER	750
THUMB AR–24-IN, HYD, ROCK	751
THUMB AR–24-IN, HYD, ROCK, WITH COUPLER	752
THUMB AR–24-IN, HYD, WITH COUPLER	757
THUMB AR–24-IN, MANUAL	747
THUMB AR–24-IN, MANUAL, HEAVY-DUTY	753
THUMB AR–24-IN, MANUAL, HEAVY-DUTY, WITH COUPLER	754
THUMB AR–24-IN, MANUAL, ROCK	755
THUMB AR–24-IN, MANUAL, ROCK, WITH COUPLER	756
THUMB AR–24-IN, MANUAL, WITH COUPLER	747, 768
THUMB AR–24-IN, ROCK, MANUAL	747
THUMB AR–24-IN, ROCK, MANUAL, WITH COUPLER	748
THUMB AR–30-IN, HYD, HEAVY-DUTY	760

INDEX

Name	Page
THUMB AR–30-IN, HYD, HEAVY-DUTY, WITH COUPLER	761
THUMB AR–30-IN, HYD, ROCK	762
THUMB AR–30-IN, HYD, ROCK, WITH COUPLER	763
THUMB AR–30-IN, HYD, WITH COUPLER	758
THUMB AR–30-IN, MANUAL, HEAVY-DUTY	769
THUMB AR–30-IN, MANUAL, HEAVY-DUTY, WITH COUPLER	771
THUMB AR–30-IN, MANUAL, ROCK	770
THUMB AR–30-IN, MANUAL, ROCK, WITH COUPLER	772
THUMB AR–30-IN, MANUAL, WITH COUPLER	773
THUMB AR–36-IN, HYD, HEAVY-DUTY	764
THUMB AR–36-IN, HYD, HEAVY-DUTY, WITH COUPLER	765
THUMB AR–36-IN, HYD, ROCK	766
THUMB AR–36-IN, HYD, ROCK, WITH COUPLER	767
THUMB AR–36-IN, HYD, WITH COUPLER	759
THUMB AR–36-IN, MANUAL, HEAVY-DUTY	774
THUMB AR–36-IN, MANUAL, HEAVY-DUTY, WITH COUPLER	776
THUMB AR–36-IN, MANUAL, ROCK	775
THUMB AR–36-IN, MANUAL, ROCK, WITH COUPLER	777
THUMB AR–36-IN, MANUAL, WITH COUPLER	778
THUMB AR–BACKHOE	747
THUMB AR–BACKHOE, HYDRAULIC COMMON	779
	780
	781
THUMB AR–BACKHOE, MANUAL COMMON	782
THUMB GP–BACKHOE	783
THUMB GP–BACKHOE, COMMON	784
TIE ROD GP	202
	337
TINE AS-THUMB	785
	786
TIP GP-BUCKET (SOIL)	716
	717
	718
	719
TIP GP-CHISEL	696
	697
	698
	699
TIP GP-PENETRATION	676
	677
	678
	679
	680
	681
	682
	683
	684
	685
	686
	687
	688
	689
	690
	691
	692
	693
	694
	695
	704
	705
	706
	707
	708
	709
	710
	711
	712
	713
	714
	715
TOOTH GP-UNI	787
TRANSMISSION & MOUNTING GP–2-WHEEL DRIVE, STANDARD SHIFT	259
TRANSMISSION & MOUNTING GP–ALL WHEEL DRIVE, AUTOSHIFT	258
TRANSMISSION & MOUNTING GP–ALL WHEEL DRIVE, STANDARD SHIFT	259
TRANSMISSION AR-DIRECT DRIVE–2-WHEEL DRIVE, STANDARD SHIFT	259
TRANSMISSION AR-DIRECT DRIVE–ALL WHEEL DRIVE	260
TRANSMISSION AR-POWER SHIFT–ALL WHEEL DRIVE	260
TRANSMISSION GP-DIRECT DRIVE	261
	266
	271
	276
	281
	286
TRANSMISSION GP-POWER SHIFT	292
	298
TRANSPORT AR-MACHINE	931
	932
TRANSPORT GP-MACHINE	933
TRIM GP-CAB	901
TURBOCHARGER GP	74
	76

INDEX

Name	Page
V	
V-BELT (AIR CONDITIONER)	52, 53
V-BELT SET (INCLUDES 2-BELTS)	52, 53, 54
VALVE & LINES GP-DIFF LOCK	304
VALVE & LINES GP-PILOT–BACKHOE	523
VALVE & MTG GP-SOLENOID–DIFFERENTIAL LOCK	306
VALVE AR-BANK 2	525
VALVE AR-BANK 3	525
VALVE AR-BANK 6	525
VALVE AR-BANK 7	526
VALVE AR-BANK 8	526
VALVE AS-MANUAL (DIRECTIONAL FLOW)	434
VALVE AS-RELIEF	811
VALVE AS-RELIEF (FLUSHING)	505
VALVE AS-WATER	845
VALVE GP-BANK 2	527
VALVE GP-BANK 3	528
VALVE GP-BANK 6	529
VALVE GP-BANK 7	530
VALVE GP-BANK 8	531
VALVE GP-CHECK	506, 537, 539, 541, 543, 546
VALVE GP-CONTROL–AUXILIARY	548, 551
VALVE GP-CONTROL–BOOM	537, 539
VALVE GP-CONTROL–BUCKET	545
VALVE GP-CONTROL–EXTENDABLE STICK	546
VALVE GP-CONTROL–LIFT	549
VALVE GP-CONTROL–STABILIZER	533, 535
VALVE GP-CONTROL–STICK	541, 543
VALVE GP-CONTROL–SWING	544
VALVE GP-CONTROL–TILT	550
VALVE GP-CUSHION CROSSOVER RLF	498
VALVE GP-FLOW CONTROL (AUXILIARY, INLET)	505
VALVE GP-PILOT	523
VALVE GP-PILOT–STABILIZER	552
VALVE GP-PILOT–TRUCK BODY	553
VALVE GP-PRESSURE REDUCING	504
VALVE GP-PUMP CONTROL (POWER COMPENSATOR)	515
VALVE GP-PUMP CONTROL (PRESSURE, FLOW COMPENSATOR)	515
VALVE GP-PUMP CONTROL–POWER COMPENSATOR	555
VALVE GP-RELIEF	434, 533, 535, 541, 543, 544, 545, 546, 548, 550, 551
VALVE GP-RELIEF (INLET)	506
VALVE GP-RELIEF (LINE, BOOM CYLINDER HEAD END)	537, 539
VALVE GP-RELIEF (LINE, BOOM CYLINDER ROD END)	537, 539
VALVE GP-RELIEF (OUTLET)	505
VALVE GP-RELIEF (TORQUE CONVERTER INLET)	261, 266, 271, 276, 281, 286, 292, 298
VALVE GP-RELIEF–PUMP PRESSURE	307
VALVE GP-SHUTOFF	452
VALVE GP-SOLENOID	503, 504
VALVE GP-SOLENOID (12-VOLT) (AUXILIARY)	502
VALVE GP-SOLENOID (ACCUMULATOR)	507
VALVE GP-SOLENOID (ALL WHEEL DRIVE, CLUTCH ONE)	293, 299
VALVE GP-SOLENOID (CLUTCH)	293, 299
VALVE GP-SOLENOID (DIFFERENTIAL LOCK)	261, 266, 271, 276, 281, 286
VALVE GP-SOLENOID (FORWARD)	293, 299
VALVE GP-SOLENOID (FORWARD, REVERSE)	261, 266, 271

INDEX

Name	Page
	276
	281
	286
VALVE GP-SOLENOID (LOAD SENSING PRESSURE)	515
VALVE GP-SOLENOID (REVERSE)	293
	299
VALVE GP-SOLENOID (RIDE CONTROL, SWITCH)	507
VALVE GP-SOLENOID–12-VOLT	556
VALVE GP-TIRE	308
	309
VALVE MECHANISM GP	41
VISOR GP-CAB	903
	904

W

WASHER GP-WINDOW	905
	907
WHEEL & TIRE AR	310
	311
WHEEL & TIRE AR–2-WHEEL DRIVE, BIAS	309
	310
WHEEL & TIRE AR–2-WHEEL DRIVE, BIAS FLOTATION	310
WHEEL & TIRE AR–4-WHEEL DRIVE	311
	312
WHEEL & TIRE AR–ALL WHEEL DRIVE, BIAS	309
	311
WHEEL & TIRE AR–ALL WHEEL DRIVE, RADIAL	309
WHEEL & TIRE AR–ALL WHEEL DRIVE, RADIAL, BIAS	310
WHEEL & TIRE GP–FRONT	312
	313
	314
	318
	320
	324
WHEEL & TIRE GP–FRONT, LH	324
WHEEL & TIRE GP–FRONT, RH	324
WHEEL & TIRE GP–LH	312
	313
	315
	316
	317
	318
	320
	321
	322
	323
WHEEL & TIRE GP–REAR	315
	316
	317
	319
	321
	322
	323
	325
WHEEL & TIRE GP–REAR, LH	319
	325
WHEEL & TIRE GP–REAR, RH	319
	325
WHEEL & TIRE GP–RH	313
	314
	315
	316
	317
	318
	320
	321
	322
	323
WINDOW GP-CAB–REAR	913
	915
WINDOW GP-CAB–UPPER, LH	909
WINDOW GP-CAB–UPPER, RH	911
WINDOW GP-DOOR–LH	917
WINDOW GP-DOOR–RH	918
WIPER & WASHER GP-WINDOW	919
	921
WIPER GP-WINDOW	923
WIRING GP-AIR CONDITIONER	141
	144
WIRING GP-CONSOLE–FRONT	149
WIRING GP-CONSOLE–SIDE	147
	150
WIRING GP-CONTROL–JOYSTICK, LH	153
	154
WIRING GP-CONTROL–JOYSTICK, RH	152
WIRING GP-ENGINE	155
	157
	159
WIRING GP-EXTENDABLE STICK	160
	598
WIRING GP-GRADE CONTROL	161
	163
WIRING GP-HEATER	165
WIRING GP-KICKOUT & POSITIONER	167
	168
	169
WIRING GP-PLATFORM	170
	175
	180
	186
WIRING GP-POWER RECEPTACLE	192
WIRING GP-REAR–BACKUP ALARM	193
	195
WIRING GP-RIDE CONTROL	197

INDEX

Name	Page	Name	Page
WIRING GP-STABILIZER	199 200		
WIRING GP-TRANSMISSION CONTROL– AUTOSHIFT, STANDARD SHIFT	201		

MEMORANDA

MACHINE ARRANGEMENT

214-2553 BACKHOE AR-EXTENDABLE STICK

S/N: HLS1-99999
AN ATTACHMENT

SMCS-6504, 6533 **i03314980**

NOTE	PART NUMBER	QTY	PART NAME 1 2 3 4 5 6 (PRODUCT LEVEL)	SEE PAGE
Y	*209-9930*	1	BOOM GP	559
Y	**210-7088**	1	CYLINDER GP-BACKHOE BUCKET	392
Y	**210-7076**	1	CYLINDER GP-BOOM	394
Y	**210-7082**	1	CYLINDER GP-STICK	408
Y	*225-8017*	1	ELECTRONICS GP-MACHINE	105
Y	*211-7601*	1	LINES GP-BOOM	440
Y	*246-9322*	1	LINES GP-BUCKET	448
Y	*211-7602*	1	LINES GP-STICK	495
Y	*213-6692*	1	LINKAGE GP-BACKHOE BUCKET	564
Y	*246-9309*	1	MOUNTING GP-LINES	512
Y	*213-6700*	1	MOUNTING GP-STICK	572
Y	*271-1405*	1	STICK GP-EXTENDABLE	601
	259-1802	2	FILM-INSTRUCTION (EXTENDABLE STICK PIN, READ OMM)	
			(ON RH & LH SIDE OF MACHINE E-STICK. ALIGN EDGE OF DECAL WITH E-STICK PIN HOLE)	

Y-SEPARATE ILLUSTRATION

<END>

291-9205 BACKHOE AR-EXTENDABLE STICK–ACCUGRADE

S/N: HLS1-99999
AN ATTACHMENT

SMCS-6504, 6533 **i03159782**

NOTE	PART NUMBER	QTY	PART NAME 1 2 3 4 5 6 (PRODUCT LEVEL)	SEE PAGE
Y	*209-9930*	1	BOOM GP	559
Y	**210-7087**	1	CYLINDER GP-BACKHOE BUCKET	390
Y	**268-9049**	1	CYLINDER GP-BOOM	396
Y	**210-7081**	1	CYLINDER GP-STICK	406
Y	*227-7373*	1	ELECTRONICS GP-MACHINE	105
Y	*211-4253*	1	INSTALLATION GP-MONITOR (ADVISOR)	855
Y	*211-7601*	1	LINES GP-BOOM	440
Y	*246-9322*	1	LINES GP-BUCKET	448
Y	*211-7602*	1	LINES GP-STICK	495
Y	*213-6692*	1	LINKAGE GP-BACKHOE BUCKET	564
Y	*246-9309*	1	MOUNTING GP-LINES	512
Y	*213-6700*	1	MOUNTING GP-STICK	572
Y	*271-1402*	1	STICK GP-EXTENDABLE	598
Y	*246-8042*	1	WIRING GP-GRADE CONTROL	161
	290-6809	1	HARNESS AS-SENSOR	
	259-1802	2	FILM-INSTRUCTION (EXTENDABLE STICK PIN, READ OMM)	
			(1-ON RH SIDE OF MACHINE E-STICK, ALIGN EDGE OF DECAL WITH E-STICK PIN HOLE)	
			(1-ON LH SIDE OF MACHINE E-STICK, ALIGN EDGE OF DECAL WITH E-STICK PIN HOLE)	

Y-SEPARATE ILLUSTRATION

<END>

MACHINE ARRANGEMENT

214-2550 BACKHOE AR-STANDARD STICK

S/N: HLS1-99999

AN ATTACHMENT

SMCS-6502, 6504 **i02441655**

NOTE	PART NUMBER	QTY	PART NAME 1 2 3 4 5 6 (PRODUCT LEVEL)	SEE PAGE
Y	*209-9930*	1	BOOM GP	559
Y	**210-7088**	1	CYLINDER GP-BACKHOE BUCKET	392
Y	**210-7076**	1	CYLINDER GP-BOOM	394
Y	**210-7082**	1	CYLINDER GP-STICK	408
Y	*225-8017*	1	ELECTRONICS GP-MACHINE	105
Y	*211-7601*	1	LINES GP-BOOM	440
Y	*246-9321*	1	LINES GP-BUCKET	444
Y	*211-7602*	1	LINES GP-STICK	495
Y	*213-6692*	1	LINKAGE GP-BACKHOE BUCKET	564
Y	*246-9309*	1	MOUNTING GP-LINES	512
Y	*271-8667*	1	STICK GP-HOE	604
Y-SEPARATE ILLUSTRATION				

<END>

291-9204 BACKHOE AR-STANDARD STICK—ACCUGRADE

S/N: HLS1-99999

AN ATTACHMENT

SMCS-6502, 6504 **i03159821**

NOTE	PART NUMBER	QTY	PART NAME 1 2 3 4 5 6 (PRODUCT LEVEL)	SEE PAGE
Y	*209-9930*	1	BOOM GP	559
Y	**210-7087**	1	CYLINDER GP-BACKHOE BUCKET	390
Y	**268-9049**	1	CYLINDER GP-BOOM	396
Y	**210-7081**	1	CYLINDER GP-STICK	406
Y	*227-7373*	1	ELECTRONICS GP-MACHINE	105
Y	*211-4253*	1	INSTALLATION GP-MONITOR (ADVISOR)	855
Y	*211-7601*	1	LINES GP-BOOM	440
Y	*246-9321*	1	LINES GP-BUCKET	444
Y	*211-7602*	1	LINES GP-STICK	495
Y	*213-6692*	1	LINKAGE GP-BACKHOE BUCKET	564
Y	*246-9309*	1	MOUNTING GP-LINES	512
Y	*271-8667*	1	STICK GP-HOE	604
Y	*246-8042*	1	WIRING GP-GRADE CONTROL	161
	290-6808	1	HARNESS AS-SENSOR (ACCUGRADE)	
Y-SEPARATE ILLUSTRATION				

<END>

MACHINE ARRANGEMENT

213-9287 CHASSIS AR

S/N: HLS1-99999

PART OF 213-9273 COMMON AR

SMCS-7000 **i02780262**

NOTE	PART NUMBER	QTY	PART NAME 1 2 3 4 5 6 (PRODUCT LEVEL)	SEE PAGE
Y	*211-4285*	1	BATTERY & WIRING GP (STANDARD)	98
			-OR-	
Y	*290-6790*	1	BATTERY & WIRING GP (STANDARD)	101
Y	*253-0784*	1	BOX GP-BATTERY	349
Y	*250-7915*	1	FILM GP	925
Y	*214-2000*	1	FRAME GP-LOADER (SINGLE TILT)	363
Y	*251-4519*	1	FRAME GP-SWING	365
Y	*211-3546*	1	HOOD & GUARD GP	374
Y	*206-1641*	1	LOCK GP-TRANSPORT (STABILIZER)	568
Y	*211-5182*	1	LOCK GP-TRANSPORT (BOOM)	569
Y	*248-5711*	1	PLATE & FILM GP	926
Y	*266-5834*	1	STABILIZER GP-BACKHOE	596
Y	*245-6098*	1	TANK & MTG GP-FUEL (INCLUDES STEP)	94
Y	*211-4251*	1	WIRING GP-REAR (BACKUP ALARM)	193

Y-SEPARATE ILLUSTRATION

<END>

213-9273 COMMON AR

S/N: HLS1-99999

SMCS-7000 **i02363589**

NOTE	PART NUMBER	QTY	PART NAME 1 2 3 4 5 6 (PRODUCT LEVEL)	SEE PAGE
Y	*213-9287*	1	CHASSIS AR	3
Y	*214-2202*	1	MOUNTING & LINES GP-RADIATOR (TRANSMISSION, HYDRAULIC OIL)	59
Y	*214-6902*	1	ENGINE AR	5
Y	*268-6455*	1	HYDRAULIC AR	419
Y	*213-9300*	1	LOADER AR	4
Y	*211-4248*	1	WIRING GP-ENGINE	155

Y-SEPARATE ILLUSTRATION

<END>

276-7465 COMMON AR

S/N: THP1-UP

SMCS-7000 **i02466499**

NOTE	PART NUMBER	QTY	PART NAME 1 2 3 4 5 6 (PRODUCT LEVEL)	SEE PAGE
			NO BREAKDOWN OF SERVICEABLE PARTS AVAILABLE AT TIME OF PUBLICATION	

<END>

MACHINE ARRANGEMENT

216-4739 DRIVE AR-BACKHOE LOADER–

2-WHEEL DRIVE, 2-WHEEL STEER

S/N: HLS1-99999

PART OF 216-3314 POWER TRAIN AR

AN ATTACHMENT

SMCS-3268, 3278, 3282, 4304, 4313, 4334 **i02179557**

NOTE	PART NUMBER	QTY	PART NAME 1 2 3 4 5 6 (PRODUCT LEVEL)	SEE PAGE
Y	**230-5745**	1	AXLE GP-FRONT	337
Y	**230-5739**	1	AXLE GP-REAR	204
Y	*211-6570*	1	LINES GP-STEERING	340
Y	*221-0811*	1	MOUNTING GP-AXLE	236
Y	*216-4475*	1	SHAFT GP-DRIVE (REAR)	245

Y-SEPARATE ILLUSTRATION

<END>

216-4740 DRIVE AR-BACKHOE LOADER–

ALL WHEEL DRIVE, 2-WHEEL STEER

S/N: HLS1-99999

PART OF 216-3315, 216-3316 POWER TRAIN AR

AN ATTACHMENT

SMCS-3268, 3278, 3282, 4304, 4313, 4334 **i02274699**

NOTE	PART NUMBER	QTY	PART NAME 1 2 3 4 5 6 (PRODUCT LEVEL)	SEE PAGE
Y	**230-5743**	1	AXLE GP-DRIVE & STEERING (FRONT)	202
Y	**230-5739**	1	AXLE GP-REAR	204
Y	*217-9672*	1	GUARD GP-DRIVE SHAFT	372
Y	*211-6571*	1	LINES GP-STEERING	344
Y	*221-0811*	1	MOUNTING GP-AXLE	236
Y	*216-4475*	1	SHAFT GP-DRIVE (REAR)	245
Y	*211-4267*	1	SWITCH GP-ALL WHEEL DRIVE (INCLUDES RELAY)	137

Y-SEPARATE ILLUSTRATION

<END>

213-9300 LOADER AR

S/N: HLS1-99999

PART OF 213-9273 COMMON AR

SMCS-6100 **i02808584**

NOTE	PART NUMBER	QTY	PART NAME 1 2 3 4 5 6 (PRODUCT LEVEL)	SEE PAGE
Y	*227-8378*	1	ARM GP-LIFT	557
Y	*218-0745*	1	BRACE GP-LIFT CYLINDER	560
Y	**228-3509**	2	CYLINDER GP-LIFT	400
Y	**200-7128**	1	CYLINDER GP-TILT	413
Y	*268-9418*	1	KICKOUT & POSITIONER GP	430
			S/N: HLS1-4363	
Y	*220-5973*	1	KICKOUT & POSITIONER GP	428
			S/N: HLS4364-99999	
Y	*246-5293*	1	LINES GP-LIFT CYLINDER	457
Y	*214-5950*	1	LINES GP-PILOT (SIGNAL)	465
Y	*246-5295*	1	LINES GP-TILT CYLINDER	500
Y	*202-5720*	1	LINKAGE GP-LOADER BUCKET	566
Y	*211-4262*	1	WIRING GP-KICKOUT & POSITIONER	167

Y-SEPARATE ILLUSTRATION

<END>

ENGINE ARRANGEMENT

214-6902 ENGINE AR

S/N: HLS1-99999

PART OF 213-9273 COMMON AR

SMCS-1000 **i02990056**

NOTE	PART NUMBER	QTY	PART NAME 1 2 3 4 5 6 (PRODUCT LEVEL)	SEE PAGE
Y	*224-9473*	1	AIR CLEANER GP	67
Y	*206-1640*	1	CONTROL GP-GOVERNOR	78
Y	**273-3610**	1	ENGINE AR	6
			S/N: HLS1-6887	
Y	*210-6807*	1	EXTENSION GP-EXHAUST	71
Y	*285-3605*	1	FILTER GP-WATER SEP & FUEL	81
Y	*222-7091*	1	GAUGE GP-OIL LEVEL & FILLER (WITH FILTER)	45
Y	*247-5361*	1	LINES GP-FUEL	82
Y	*214-0973*	1	MOUNTING GP-ENGINE & TMSN	32
Y	*223-4960*	1	MUFFLER GP	73
Y	*253-0352*	1	PUMP GP-FUEL PRM & PRIM FILTER (WITH MOUNTING)	92
	178-8465	1	HARNESS AS-FUEL TANK (FUEL SHUTOFF)	

Y-SEPARATE ILLUSTRATION

ENGINE ARRANGEMENT

273-3610 ENGINE AR–PRIMARY

S/N: CRS1-6887
68 BRAKE KW (91 BHP) AT 2200 RPM
PART OF 214-6902 ENGINE AR

SMCS-1000 **i03381101**

NOTE	PART NUMBER	QTY	PART NAME 1 2 3 4 5 6 (PRODUCT LEVEL)	SEE PAGE
Y	*252-6256*	1	ALTERNATOR GP-CHARGING (120-AMPERE, WITH MOUNTING)	97
Y	*231-0033*	1	CONNECTION GP-WATER	47
Y	*238-2799*	1	COOLER GP-FLTR BASE & ENG OIL	50
Y	*231-0149*	1	COVER GP-CYLINDER HEAD	10
Y	*246-2582*	1	COVER GP-VALVE MECHANISM	11
Y	*308-4729*	1	CRANKSHAFT GP	19
Y	*308-4728*	1	CYLINDER BLOCK GP	22
Y	*308-4731*	1	CYLINDER HEAD GP	24
Y	*251-2432*	1	DRIVE GP-FAN	25
Y	*230-7300*	1	FLYWHEEL GP	26
Y	*232-6661*	1	GLOW PLUG GP	108
Y	*236-8238*	1	HOUSING GP-FLYWHEEL	27
Y	*313-1380*	1	HOUSING GP-FRONT	28
Y	*233-7432*	1	LIFTING GP-ENGINE	30
Y	*247-4885*	1	LINES GP-FUEL FILTER	84
Y	*237-3658*	1	MOUNTING GP-ENGINE	31
Y	*237-0025*	1	PAN GP-OIL	33
Y	*308-4730*	1	PISTON & ROD GP	35
Y	*225-4317*	1	PLUG GP-ENGINE (FRONT HOUSING, CYLINDER HEAD)	36
Y	*230-7569*	1	PLUG GP-ENGINE (OIL FILL)	37
Y	*232-6204*	1	PLUG GP-ENGINE (CYLINDER HEAD)	38
Y	*230-7353*	1	PULLEY GP-CRANKSHAFT	39
Y	*230-7578*	1	PUMP GP-ENGINE OIL	46
Y	*313-1375*	1	PUMP GP-FUEL INJECTION	85
Y	*230-7355*	1	PUMP GP-WATER	62
Y	*237-0024*	1	STARTING MOTOR GP-ELECTRIC	136
Y	*237-4896*	1	SWITCH GP-PRESSURE (ENGINE OIL)	140
Y	*237-3924*	1	TURBOCHARGER GP	74
Y	*308-4732*	1	VALVE MECHANISM GP	41
	268-0867	1	CYLINDER BLOCK GP-SHORT	
			AVAILABLE REPAIR KIT(S):	
	272-2232	1	KIT-GASKET (BOTTOM)	
	277-5156	1	KIT-GASKET (TOP)	

Y-SEPARATE ILLUSTRATION

ENGINE ARRANGEMENT

320-8414 ENGINE AR-PRIMARY

S/N: CRS1-99999
68 BRAKE KW (91 BHP) AT 2200 RPM
AN ATTACHMENT

SMCS-1000 **i02941459**

NOTE	PART NUMBER	QTY	PART NAME 1 2 3 4 5 6 (PRODUCT LEVEL)	SEE PAGE
Y	*252-6256*	1	ALTERNATOR GP-CHARGING (120-AMPERE, WITH MOUNTING)	97
Y	*231-0033*	1	CONNECTION GP-WATER	47
Y	*238-2799*	1	COOLER GP-FLTR BASE & ENG OIL	50
Y	*231-0149*	1	COVER GP-CYLINDER HEAD	10
Y	*246-2582*	1	COVER GP-VALVE MECHANISM	11
Y	*308-4729*	1	CRANKSHAFT GP	19
Y	*308-4728*	1	CYLINDER BLOCK GP	22
Y	*308-4731*	1	CYLINDER HEAD GP	24
Y	*251-2432*	1	DRIVE GP-FAN	25
Y	*230-7300*	1	FLYWHEEL GP	26
Y	*232-6661*	1	GLOW PLUG GP	108
Y	*236-8238*	1	HOUSING GP-FLYWHEEL	27
Y	*313-1380*	1	HOUSING GP-FRONT	28
Y	*233-7432*	1	LIFTING GP-ENGINE	30
Y	*247-4885*	1	LINES GP-FUEL FILTER	84
Y	*237-3658*	1	MOUNTING GP-ENGINE	31
Y	*237-0025*	1	PAN GP-OIL	33
Y	*308-4730*	1	PISTON & ROD GP	35
Y	*225-4317*	1	PLUG GP-ENGINE	36
Y	*230-7569*	1	PLUG GP-ENGINE	37
Y	*232-6204*	1	PLUG GP-ENGINE	38
Y	*230-7353*	1	PULLEY GP-CRANKSHAFT	39
Y	*230-7578*	1	PUMP GP-ENGINE OIL	46
Y	*313-1375*	1	PUMP GP-FUEL INJECTION	85
Y	*230-7355*	1	PUMP GP-WATER	62
Y	*237-0024*	1	STARTING MOTOR GP-ELECTRIC	136
Y	*237-4896*	1	SWITCH GP-PRESSURE	140
Y	*317-3111*	1	TURBOCHARGER GP	76
Y	*308-4732*	1	VALVE MECHANISM GP	41
	268-0867	1	CYLINDER BLOCK GP-SHORT	
			AVAILABLE GASKET KIT(S):	
	272-2232	1	KIT-GASKET (BOTTOM)	
	277-5156	1	KIT-GASKET (TOP)	

Y-SEPARATE ILLUSTRATION

ENGINE ARRANGEMENT

323-5725 ENGINE AR-PRIMARY

S/N: CRS1-99999
68 BRAKE KW (91 BHP) AT 2200 RPM
AN ATTACHMENT

SMCS-1000 **i03538179**

NOTE	PART NUMBER	QTY	PART NAME 1 2 3 4 5 6 (PRODUCT LEVEL)	SEE PAGE
Y	*252-6256*	1	ALTERNATOR GP-CHARGING (120-AMPERE, WITH MOUNTING)	97
Y	*231-0033*	1	CONNECTION GP-WATER	47
Y	*238-2799*	1	COOLER GP-FLTR BASE & ENG OIL	50
Y	*231-0149*	1	COVER GP-CYLINDER HEAD	10
Y	*246-2582*	1	COVER GP-VALVE MECHANISM	11
Y	*308-4729*	1	CRANKSHAFT GP	19
Y	*308-4728*	1	CYLINDER BLOCK GP	22
Y	*308-4731*	1	CYLINDER HEAD GP	24
Y	*251-2432*	1	DRIVE GP-FAN	25
Y	*230-7300*	1	FLYWHEEL GP	26
Y	*232-6661*	1	GLOW PLUG GP	108
Y	*236-8238*	1	HOUSING GP-FLYWHEEL	27
Y	*313-1380*	1	HOUSING GP-FRONT	28
Y	*233-7432*	1	LIFTING GP-ENGINE	30
Y	*247-4885*	1	LINES GP-FUEL FILTER	84
Y	*237-3658*	1	MOUNTING GP-ENGINE	31
Y	*237-0025*	1	PAN GP-OIL	33
Y	*308-4730*	1	PISTON & ROD GP	35
Y	*230-7569*	1	PLUG GP-ENGINE	37
Y	*232-6204*	1	PLUG GP-ENGINE	38
Y	*230-7578*	1	PUMP GP-ENGINE OIL	46
Y	*313-1375*	1	PUMP GP-FUEL INJECTION	85
Y	*237-0024*	1	STARTING MOTOR GP-ELECTRIC	136
Y	*237-4896*	1	SWITCH GP-PRESSURE	140
Y	*317-3111*	1	TURBOCHARGER GP	76
Y	*308-4732*	1	VALVE MECHANISM GP	41
	268-0867	1	CYLINDER BLOCK GP-SHORT	
			AVAILABLE GASKET KIT(S):	
	272-2232	1	KIT-GASKET (BOTTOM)	
	276-3420	1	KIT-GASKET (TOP)	

Y-SEPARATE ILLUSTRATION

ENGINE ARRANGEMENT

325-5121 ENGINE AR-PRIMARY

S/N: CRS1-99999
69 BRAKE KW (92 BHP) AT 2200 RPM
AN ATTACHMENT

SMCS-1000 **i03038381**

NOTE	PART NUMBER	QTY	PART NAME 1 2 3 4 5 6 (PRODUCT LEVEL)	SEE PAGE
Y	*252-6256*	1	ALTERNATOR GP-CHARGING (120-AMPERE, WITH MOUNTING)	97
Y	*231-0033*	1	CONNECTION GP-WATER	47
Y	*238-2799*	1	COOLER GP-FLTR BASE & ENG OIL	50
Y	*231-0149*	1	COVER GP-CYLINDER HEAD	10
Y	*246-2582*	1	COVER GP-VALVE MECHANISM	11
Y	*308-4729*	1	CRANKSHAFT GP	19
Y	*308-4728*	1	CYLINDER BLOCK GP	22
Y	*308-4731*	1	CYLINDER HEAD GP	24
Y	*251-2432*	1	DRIVE GP-FAN	25
Y	*230-7300*	1	FLYWHEEL GP	26
Y	*232-6661*	1	GLOW PLUG GP	108
Y	*236-8238*	1	HOUSING GP-FLYWHEEL	27
Y	*313-1380*	1	HOUSING GP-FRONT	28
Y	*233-7432*	1	LIFTING GP-ENGINE	30
Y	*247-4885*	1	LINES GP-FUEL FILTER	84
Y	*237-3658*	1	MOUNTING GP-ENGINE	31
Y	*237-0025*	1	PAN GP-OIL	33
Y	*308-4730*	1	PISTON & ROD GP	35
Y	*225-4317*	1	PLUG GP-ENGINE	36
Y	*230-7569*	1	PLUG GP-ENGINE	37
Y	*232-6204*	1	PLUG GP-ENGINE	38
Y	*230-7353*	1	PULLEY GP-CRANKSHAFT	39
Y	*230-7578*	1	PUMP GP-ENGINE OIL	46
Y	*328-8308*	1	PUMP GP-FUEL INJECTION	88
Y	*230-7355*	1	PUMP GP-WATER	62
Y	*237-0024*	1	STARTING MOTOR GP-ELECTRIC	136
Y	*237-4896*	1	SWITCH GP-PRESSURE	140
Y	*317-3111*	1	TURBOCHARGER GP	76
Y	*308-4732*	1	VALVE MECHANISM GP	41
	268-0867	1	CYLINDER BLOCK GP-SHORT	
			AVAILABLE GASKET KIT(S):	
	272-2232	1	KIT-GASKET (BOTTOM)	
			(INCLUDES GASKETS AND SEALS)	
	277-5156	1	KIT-GASKET (TOP)	
			(INCLUDES GASKETS, SEALS, AND WASHER)	

Y-SEPARATE ILLUSTRATION

231-0149 COVER GP-CYLINDER HEAD

S/N: CRS1-6887

PART OF 273-3610 ENGINE AR, 320-8414, 323-5725, 325-5121 ENGINE AR-PRIMARY

ALSO AN ATTACHMENT

SMCS-1100 **i02358991**

NOTE	REF NO	GRAPHIC REF	PART NUMBER	QTY	PART NAME 1 2 3 4 5 6 (PRODUCT LEVEL)	SEE PAGE
	1	1	**6I-0572**	12	BOLT (M8X1.25X20-MM)	
	2	1	**114-2579**	3	GASKET	
	3	1	**115-1162**	3	PLATE	

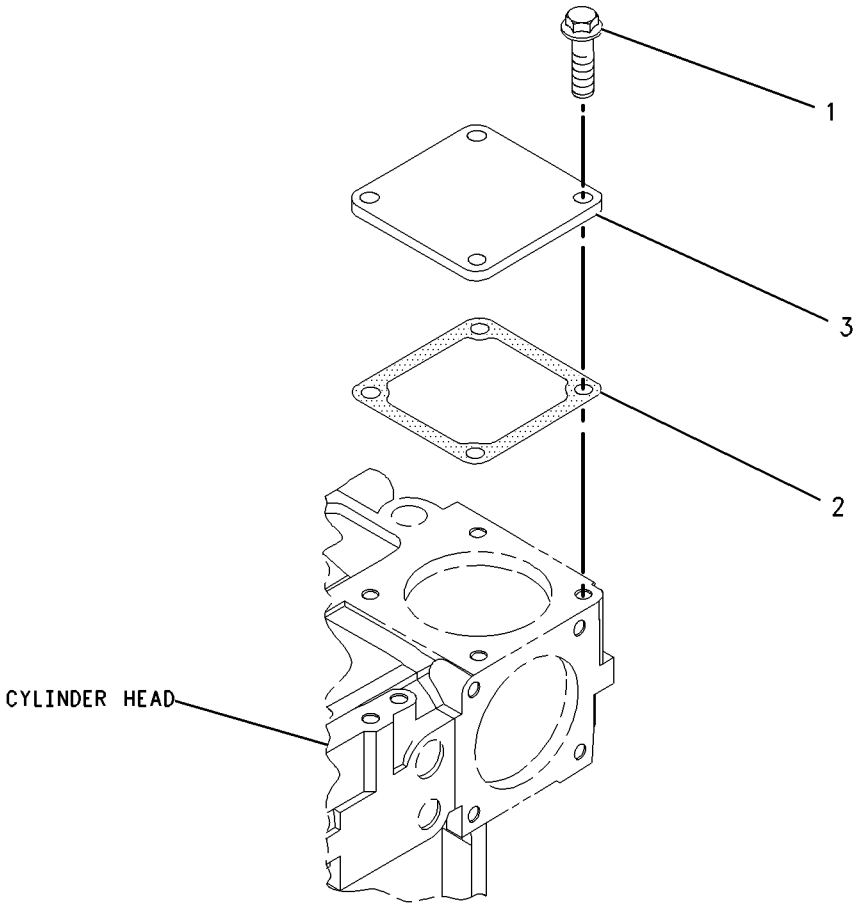

GRAPHIC #1 **<END>** g00986217

246-2582 COVER GP-VALVE MECHANISM

S/N: CRS1-99999
PART OF 273-3610 ENGINE AR
TYPE 1

SMCS-1107, 1120 **i02597668**

NOTE	REF NO	GRAPHIC REF	PART NUMBER	QTY	PART NAME 1 2 3 4 5 6 (PRODUCT LEVEL)	SEE PAGE
M	1	1	**6I-0260**	2	BOLT (M8X1.25X25-MM)	
	2	1	**6I-0846**	3	BOLT (M6X1X14-MM)	
	3	1	**6I-0917**	1	BOLT (M6X1X25-MM)	
	4	1	**7C-1281**	1	BRACKET	
M	5	1	**100-4841**	2	BOLT (M6X1X10-MM)	
	6	1	**5D-1026**	1	CLAMP-HOSE	
	7	1	**162-1565**	1	SPRING (CRANKCASE BREATHER HOSE)	
	8	1	**198-8645**	1	HOSE (CRANKCASE BREATHER)	
	9	1	**225-6522**	1	PLUG-CUP	
	10	1	**230-9127**	1	COVER	
	11	1	**230-9144**	1	CONNECTOR	
	11A	1	**150-7732**	1	SEAL-O-RING	
	11B	1	**225-6455**	2	BOLT	
	11C	1	**225-6517**	1	GASKET	
	12	1	**237-0769**	1	SHIELD-HEAT	
	13	1	**246-1163**	1	FILLER AS-OIL	
	13A	1	**229-4896**	1	SEAL-O-RING	
	14	1	**247-7798**	1	COVER AS	
	14A	1	**225-6451**	1	GASKET (VALVE COVER)	
	14B	1	**225-6455**	10	BOLT (ISOLATOR)	
	14C	1	**225-6456**	1	SPRING (BREATHER VALVE)	
	14D	1	**225-6461**	1	CAP (BREATHER VALVE)	
	14E	1	**225-6464**	1	DIAPHRAGM (CRANKCASE PRESSURE CONTACTOR)	
	14F	1	**225-6477**	1	PLATE	
	14G	1	**225-6478**	4	SCREW-MACHINE	
	14H	1	**225-6479**	1	CAP (BREATHER VALVE)	

M-METRIC PART

246-2582 **COVER GP-VALVE MECHANISM** *(contd.)* **i02597668**

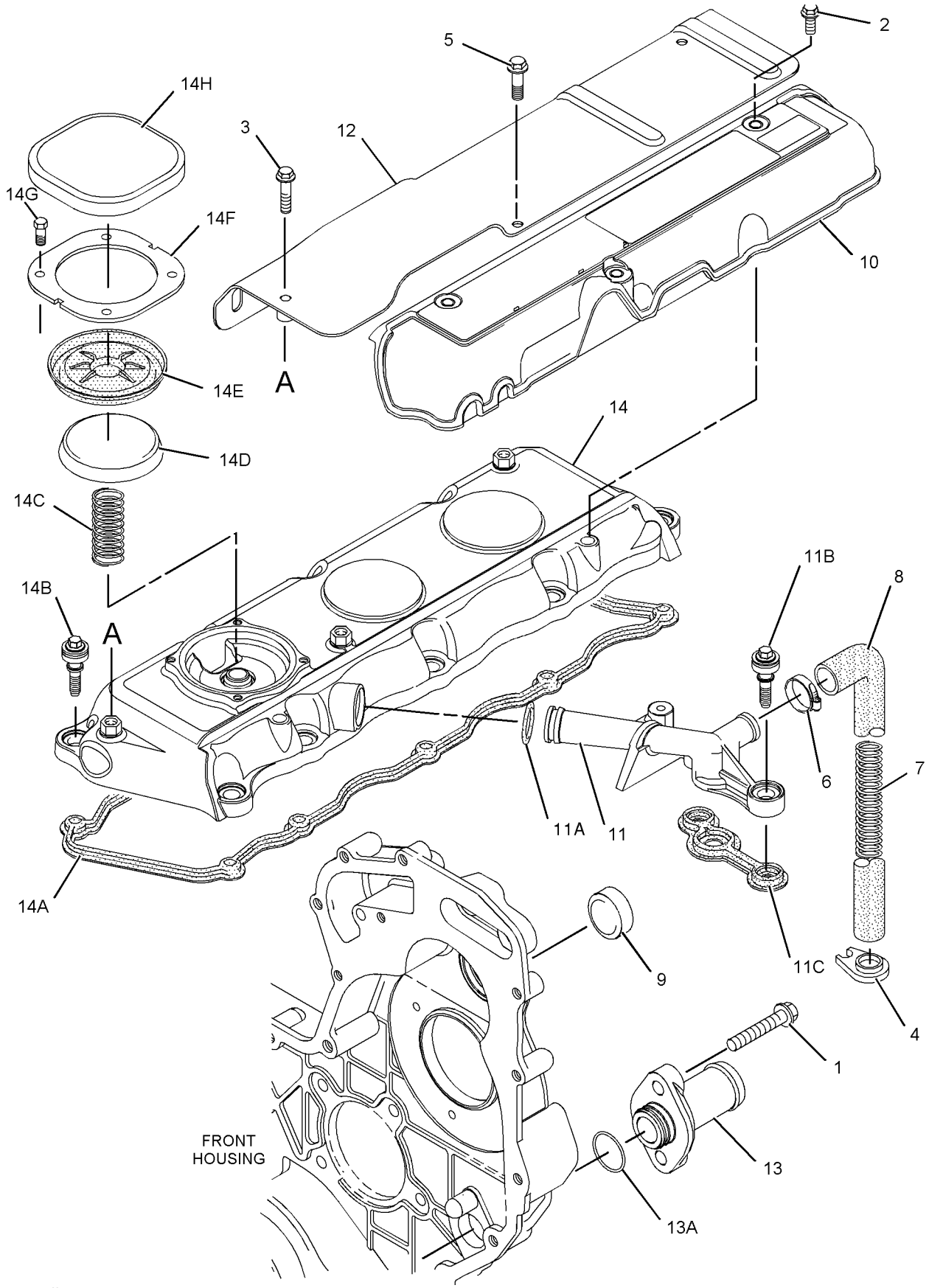

GRAPHIC #1 **<END>** g01049443

246-2582 COVER GP-VALVE MECHANISM

S/N: CRS1-99999
PART OF 273-3610 ENGINE AR
TYPE 2

SMCS-1107, 1120 **i02593772**

NOTE	REF NO	GRAPHIC REF	PART NUMBER	QTY	PART NAME 1 2 3 4 5 6 (PRODUCT LEVEL)	SEE PAGE
M	1	1	**6I-0260**	2	BOLT (M8X1.25X25-MM)	
	2	1	**6I-0846**	3	BOLT (M6X1X14-MM)	
	3	1	**6I-0917**	1	BOLT (M6X1X25-MM)	
	4	1	**7C-1281**	1	BRACKET	
M	5	1	**100-4841**	2	BOLT (M6X1X10-MM)	
	6	1	**5D-1026**	1	CLAMP-HOSE	
	7	1	**162-1565**	1	SPRING (CRANKCASE BREATHER HOSE)	
	8	1	**198-8645**	1	HOSE (CRANKCASE BREATHER)	
	9	1	**225-6522**	1	PLUG-CUP	
	10	1	**230-9127**	1	COVER (INJECTOR)	
C	11	1	**287-8573**	1	PIPE-BREATHER (BREATHER)	
	12	1	**237-0769**	1	SHIELD-HEAT	
	13	1	**246-1163**	1	FILLER AS-OIL	
	13A	1	**229-4896**	1	SEAL-O-RING	
	14	1	**247-7798**	1	COVER AS	
	14A	1	**225-6451**	1	GASKET (VALVE COVER)	
	14B	1	**225-6455**	10	BOLT (ISOLATOR)	
	14C	1	**225-6456**	1	SPRING (BREATHER VALVE)	
	14D	1	**225-6461**	1	CAP (BREATHER VALVE)	
	14E	1	**225-6464**	1	DIAPHRAGM (CRANKCASE PRESSURE CONTACTOR)	
	14F	1	**225-6477**	1	PLATE	
	14G	1	**225-6478**	4	SCREW-MACHINE	
	14H	1	**225-6479**	1	CAP (BREATHER VALVE)	
C	15	1	**100-4838**	2	BOLT (M6X20-MM)	
F			**237-0022**	1	PLATE	

C-CHANGE FROM PREVIOUS TYPE
F-NOT SHOWN
M-METRIC PART

246-2582 **COVER GP-VALVE MECHANISM** *(contd.)* **i02593772**

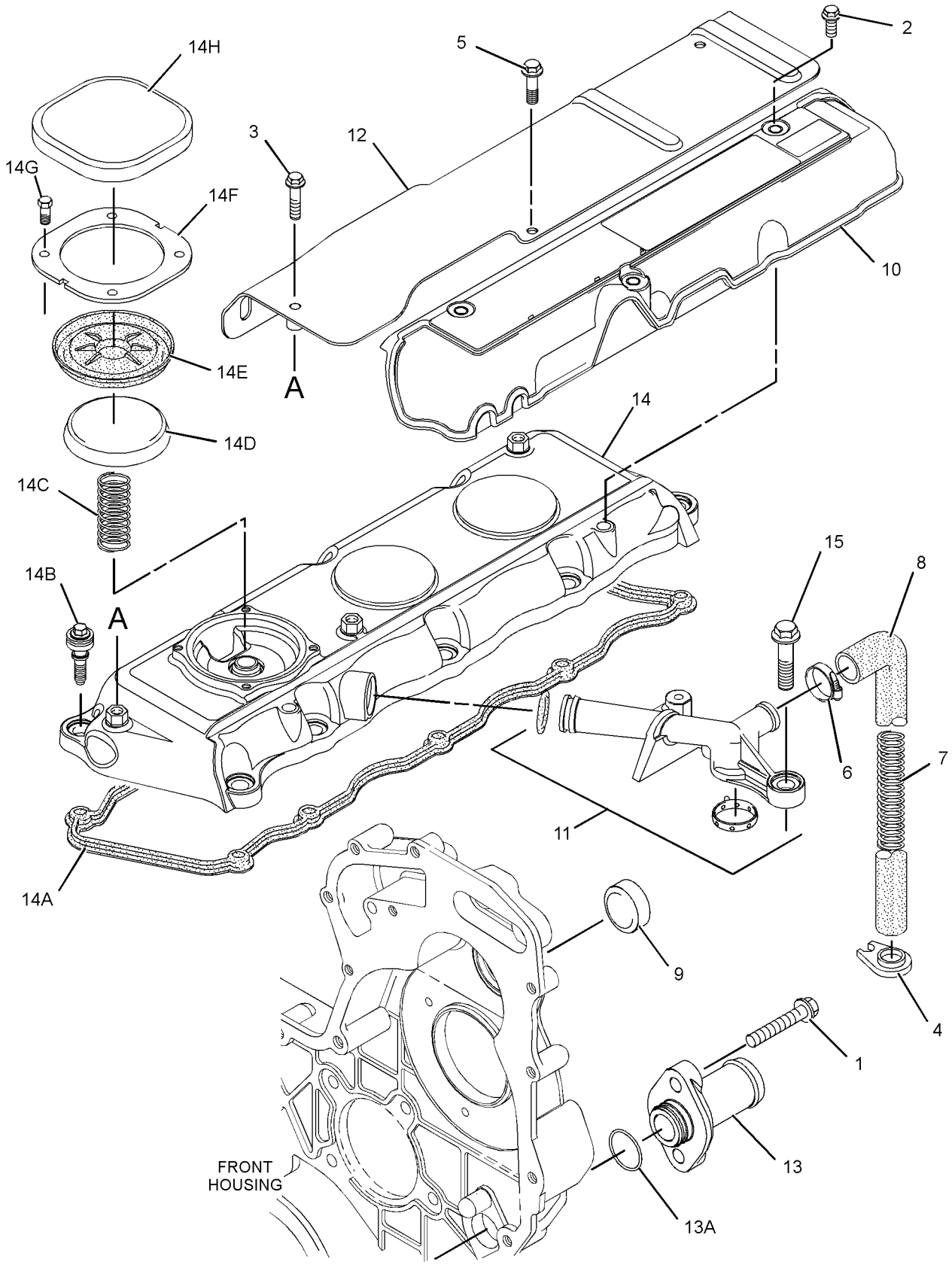

GRAPHIC #1 **<END>** g01265857

246-2582 COVER GP-VALVE MECHANISM

S/N: CRS1-6887

PART OF 273-3610 ENGINE AR, 320-8414, 323-5725, 325-5121 ENGINE AR-PRIMARY

ALSO AN ATTACHMENT

SMCS-1107, 1120 **i02702300**

NOTE	REF NO	GRAPHIC REF	PART NUMBER	QTY	PART NAME 1 2 3 4 5 6 (PRODUCT LEVEL)	SEE PAGE
M	1	1	**6I-0260**	2	BOLT (M8X1.25X25-MM)	
	2	1	**6I-0846**	3	BOLT (M6X1X14-MM)	
	3	1	**6I-0917**	1	BOLT (M6X1X25-MM)	
	4	1	**7C-1281**	1	BRACKET	
M	5	1	**100-4841**	2	BOLT (M6X1X10-MM)	
	6	1	**5D-1026**	1	CLAMP-HOSE	
	7	1	**162-1565**	1	SPRING (CRANKCASE BREATHER HOSE)	
	8	1	**198-8645**	1	HOSE (CRANKCASE BREATHER)	
	9	1	**225-6522**	1	PLUG-CUP	
	10	1	**230-9127**	1	COVER (INJECTOR)	
	11	1	**287-8573**	1	PIPE-BREATHER (BREATHER)	
	12	1	**237-0769**	1	SHIELD-HEAT	
	13	1	**246-1163**	1	FILLER AS-OIL (ENGINE)	
	13A	1	**229-4896**	1	SEAL-O-RING	
C	14	1	**308-1792**	1	COVER GP-VALVE MECHANISM	
	14A	1	**225-6451**	1	GASKET (VALVE COVER)	
	14B	1	**225-6456**	1	SPRING (BREATHER VALVE)	
	14C	1	**225-6461**	1	CAP (BREATHER VALVE)	
	14D	1	**225-6464**	1	DIAPHRAGM (CRANKCASE PRESSURE CONTACTOR)	
	14E	1	**225-6477**	1	PLATE	
	14F	1	**225-6478**	4	SCREW-MACHINE	
	14G	1	**225-6479**	1	CAP (BREATHER VALVE)	
	15	1	**100-4838**	2	BOLT (M6X20-MM)	
F			**237-0022**	1	PLATE	

C-CHANGE FROM PREVIOUS TYPE
F-NOT SHOWN
M-METRIC PART

246-2582 **COVER GP-VALVE MECHANISM** *(contd.)* **i02702300**

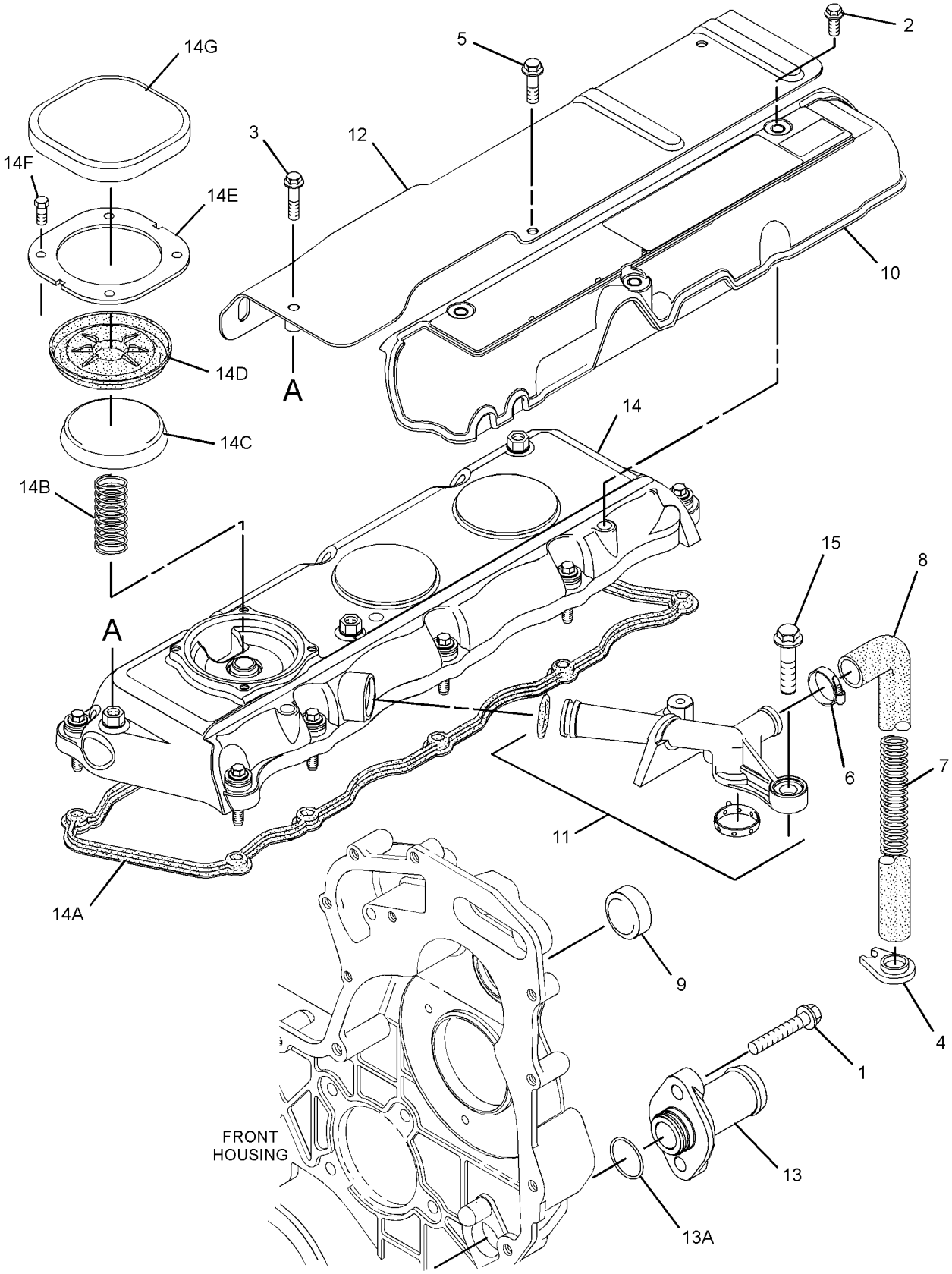

GRAPHIC #1

<END>

g01397742

232-7400 CRANKSHAFT GP

S/N: CRS1-6887
PART OF 308-4729 CRANKSHAFT GP
ALSO AN ATTACHMENT

SMCS-1202, 1203, 1204, 1230, 1231, 1232 **i03331708**

NOTE	REF NO	GRAPHIC REF	PART NUMBER	QTY	PART NAME 1 2 3 4 5 6 (PRODUCT LEVEL)	SEE PAGE
	1	1	**1B-8736**	1	KEY-WOODRUFF	
	2	1	**225-7772**	1	BEARING SET-MAIN (STANDARD)	
AB		1	**233-3785**		KIT-CRANKSHAFT BEARING (0.020-IN US ID)	
AB		1	**233-3784**		KIT-CRANKSHAFT BEARING (0.010-IN US ID)	
AB		1	**233-3786**		KIT-CRANKSHAFT BEARING (0.030-IN US ID)	
	3	1	**032-9090**	2	WASHER-THRUST (STANDARD-UPPER)	
AB		1	**067-6873**		WASHER-THRUST (0.18-MM OS)	
	4	1	**032-9091**	2	WASHER-THRUST (STANDARD-LOWER)	
AB		1	**067-6874**		WASHER-THRUST (0.18-MM OS)	
	5	1	**298-4524**	1	KIT-BEARING	
AB		1	**315-3396**		KIT-BEARING (0.25-MM OS)	
AB		1	**315-3397**		KIT-BEARING (0.5-MM OS)	
AB		1	**315-3398**		KIT-BEARING (0.75-MM OS)	

A-NOT PART OF THIS GROUP
B-USE AS REQUIRED

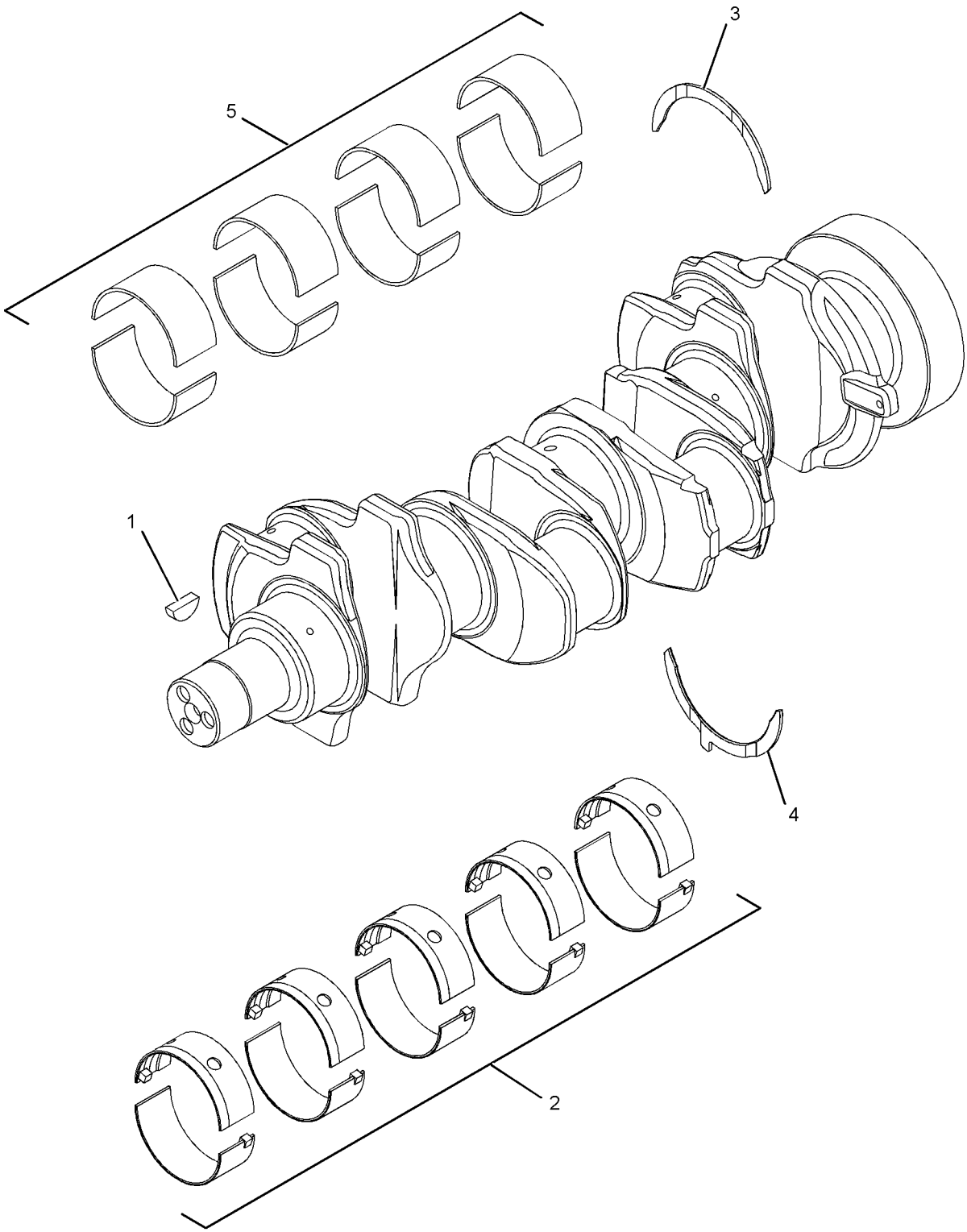

GRAPHIC #1 **<END>** g01369317

308-4729 CRANKSHAFT GP

S/N: CRS1-6887

PART OF 273-3610 ENGINE AR, 320-8414, 323-5725, 325-5121 ENGINE AR-PRIMARY

ALSO AN ATTACHMENT

SMCS-1202, 1203, 1204, 1230, 1231, 1232 **i02747293**

NOTE	REF NO	GRAPHIC REF	PART NUMBER	QTY	PART NAME 1 2 3 4 5 6 (PRODUCT LEVEL)	SEE PAGE
	1	1	**216-8314**	1	GEAR-CRANKSHAFT (34-TEETH)	
Y	2	1	**232-7400**	1	CRANKSHAFT GP	17

Y-SEPARATE ILLUSTRATION

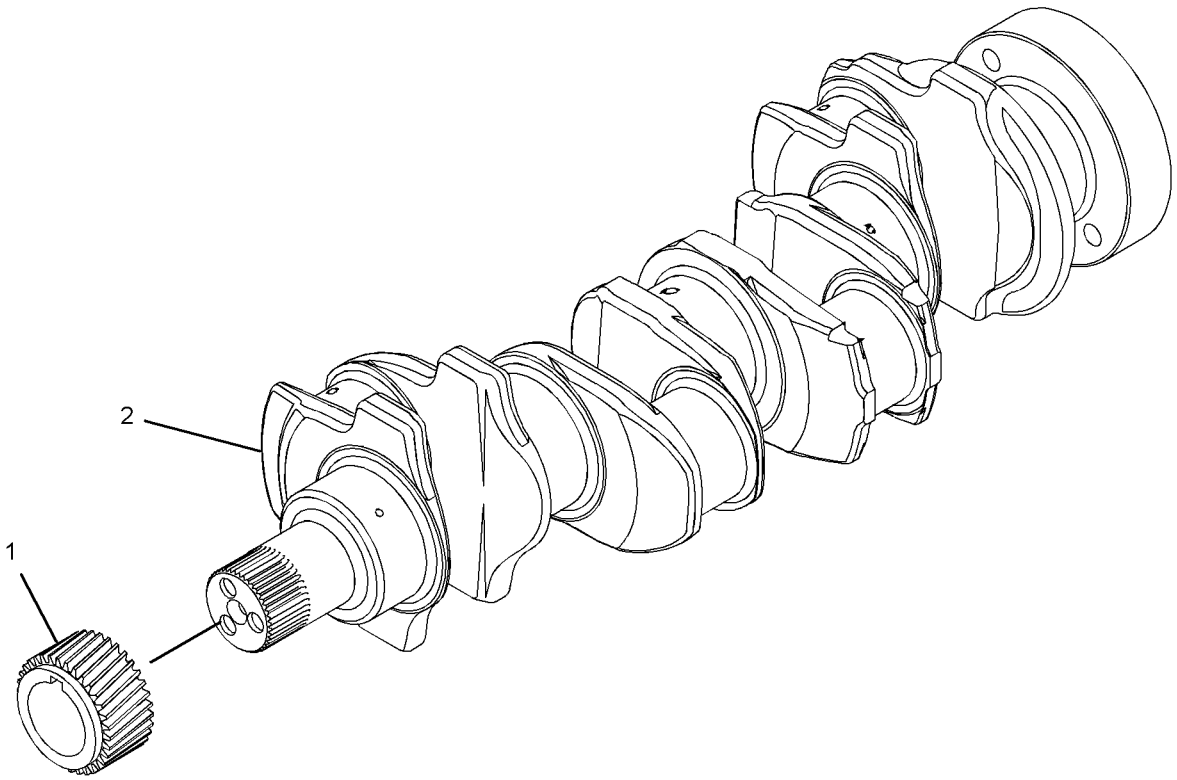

GRAPHIC #1 **<END>** g01376252

BASIC ENGINE

232-7604 CYLINDER BLOCK GP

S/N: CRS1-6887
PART OF 308-4728 CYLINDER BLOCK GP
ALSO AN ATTACHMENT

SMCS-1201 **i03251704**

NOTE	REF NO	GRAPHIC REF	PART NUMBER	QTY	PART NAME 1 2 3 4 5 6 (PRODUCT LEVEL)	SEE PAGE
	1	1	**6I-0572**	4	BOLT (M8X1.25X20-MM)	
	2	1	**035-8068**	10	BOLT (5/8-18X3.75-IN)	
	3	1	**067-6002**	10	DOWEL	
	4	1	**067-6006**	1	PLUG	
	5	1	**067-6043**	1	PLUG-SIDE	
M	6	1	**100-4841**	4	BOLT (M6X1X10-MM)	
	7	1	**185-0884**	2	DOWEL	
	8	1	**225-7944**	1	GASKET (ENGINE OIL FILTER BASE)	
	9	1	**225-8858**	2	PLUG	
	10	1	**232-3751**	1	PLATE	
	11	1	**232-7440**	1	BEARING	
	12	1	**276-5605**	4	JET AS-PISTON COOLING	
	13	1	**232-7596**	1	PLUG	
	14	1	**232-7597**	2	PLUG	
	15	1	**232-7599**	1	PLUG	
	16	1	**232-7600**	1	PLUG-CUP	
	17	1	**232-7603**	1	PLUG	

M-METRIC PART

232-7604 CYLINDER BLOCK GP *(contd.)* **i03251704**

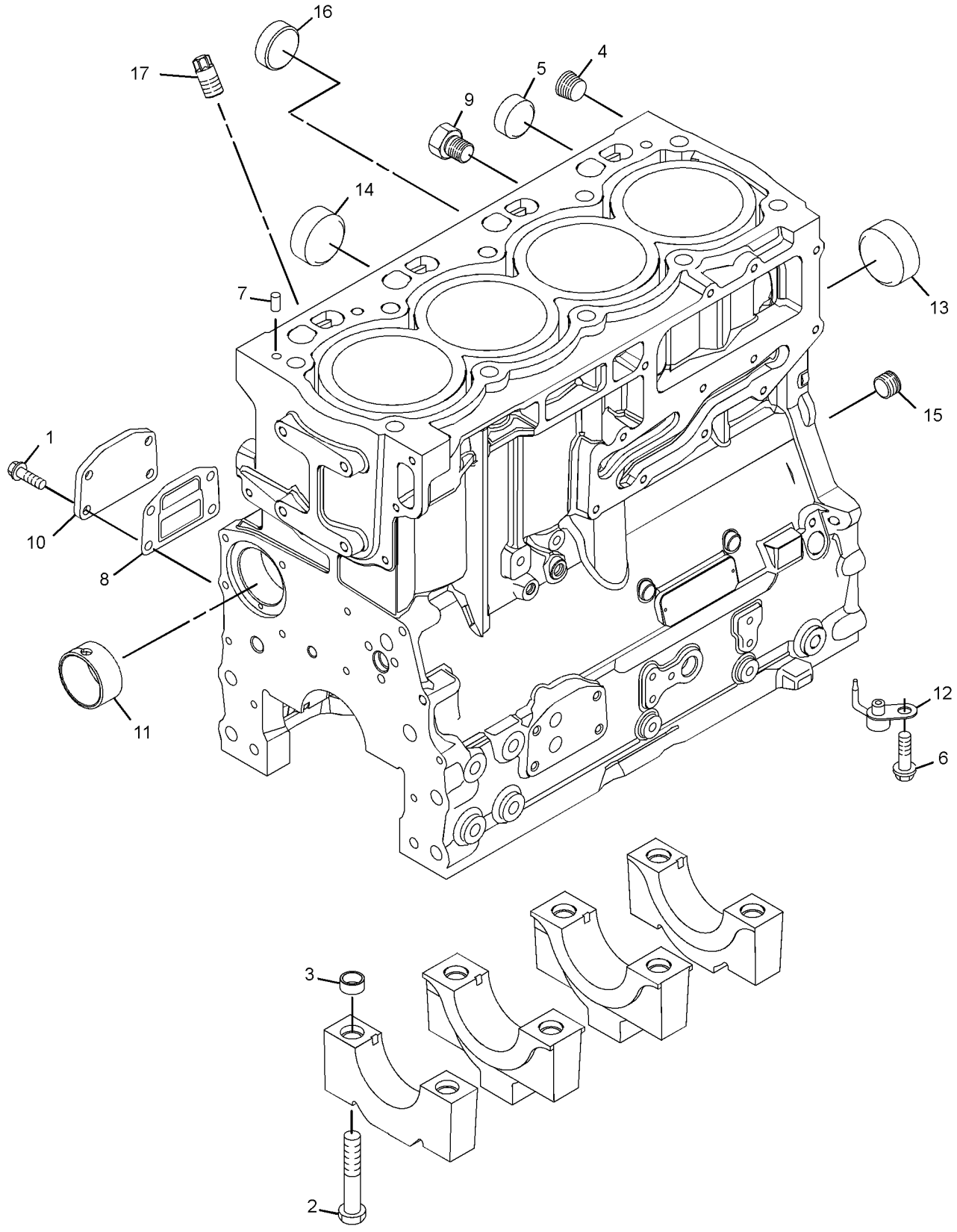

GRAPHIC #1 **<END>** g01652625

BASIC ENGINE

308-4728 CYLINDER BLOCK GP

S/N: CRS1-6887

PART OF 273-3610 ENGINE AR, 320-8414, 323-5725, 325-5121 ENGINE AR-PRIMARY
ALSO AN ATTACHMENT

SMCS-1201 **i02719089**

NOTE	REF NO	GRAPHIC REF	PART NUMBER	QTY	PART NAME 1 2 3 4 5 6 (PRODUCT LEVEL)	SEE PAGE
M	1	1	**209-9219**	10	BOLT (M8X1.25X16-MM)	
	2	1	**232-7449**	1	HOUSING AS	
Y	3	1	**232-7604**	1	CYLINDER BLOCK GP	20

M-METRIC PART
Y-SEPARATE ILLUSTRATION

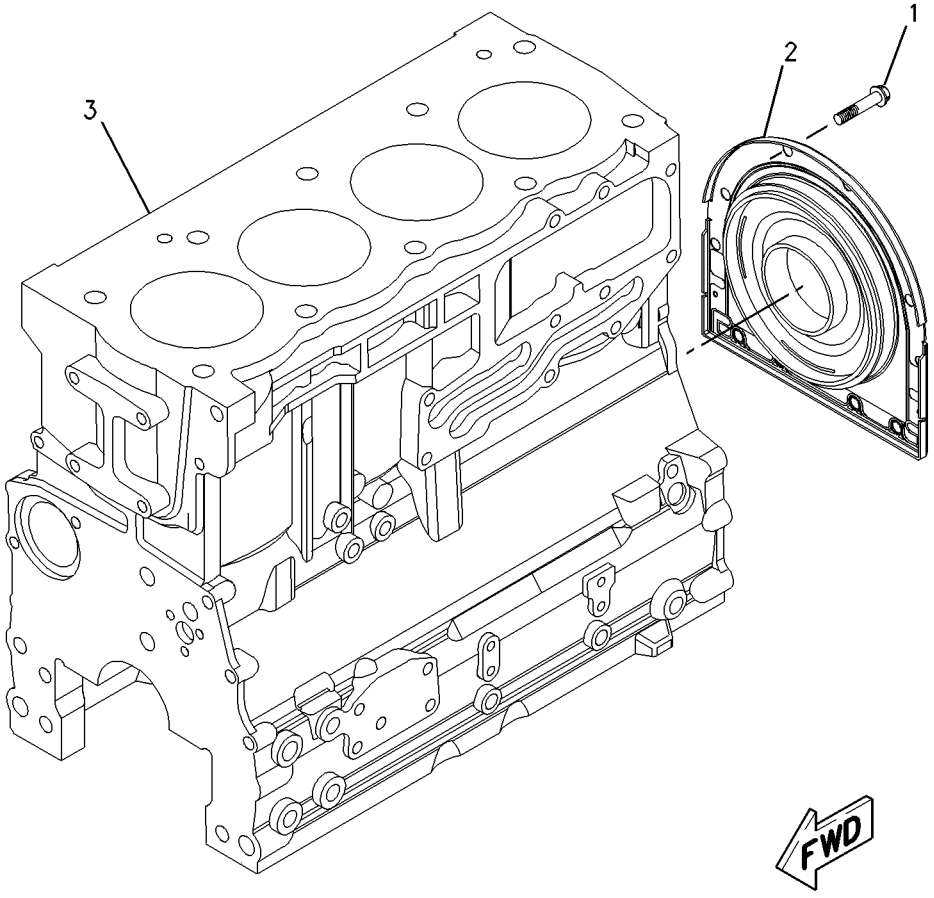

GRAPHIC #1 **<END>** g00952056

232-7519 CYLINDER HEAD GP

S/N: CRS1-6887
PART OF 308-4731 CYLINDER HEAD GP
ALSO AN ATTACHMENT

SMCS-1100, 1101, 1103, 1104, 1105, 1106, 1108, 1109, 1115, 1117, 1121, 1124, 1125

i03286641

NOTE	REF NO	GRAPHIC REF	PART NUMBER	QTY	PART NAME 1 2 3 4 5 6 (PRODUCT LEVEL)	SEE PAGE
	1	1	**2B-0858**	1	PLUG-PIPE	
	2	1	**9Y-5015**	2	PLUG-FREEZE	
	3	1	**067-6006**	4	PLUG	
	4	1	**147-1979**	16	RETAINER-VALVE SPRING	
	5	1	**185-0882**	8	GUIDE-VALVE (INTAKE)	
	6	1	**199-9751**	1	SEAL-O-RING	
	7	1	**329-6655**	4	INSERT-INLET	
	8	1	**322-9663**	4	INSERT-VALVE SEAT (EXHAUST)	
	9	1	**225-5495**	4	VALVE-INLET	
	10	1	**225-5496**	8	SPRING-VALVE	
	11	1	**252-6438**	4	SEAL-INLET VALVE	
	12	1	**225-5498**	8	CAP	
	13	1	**225-5499**	4	VALVE-EXHAUST	
	14	1	**232-1322**	1	PLUG	
	15	1	**254-3954**	4	SEAL-EXHAUST VALVE	

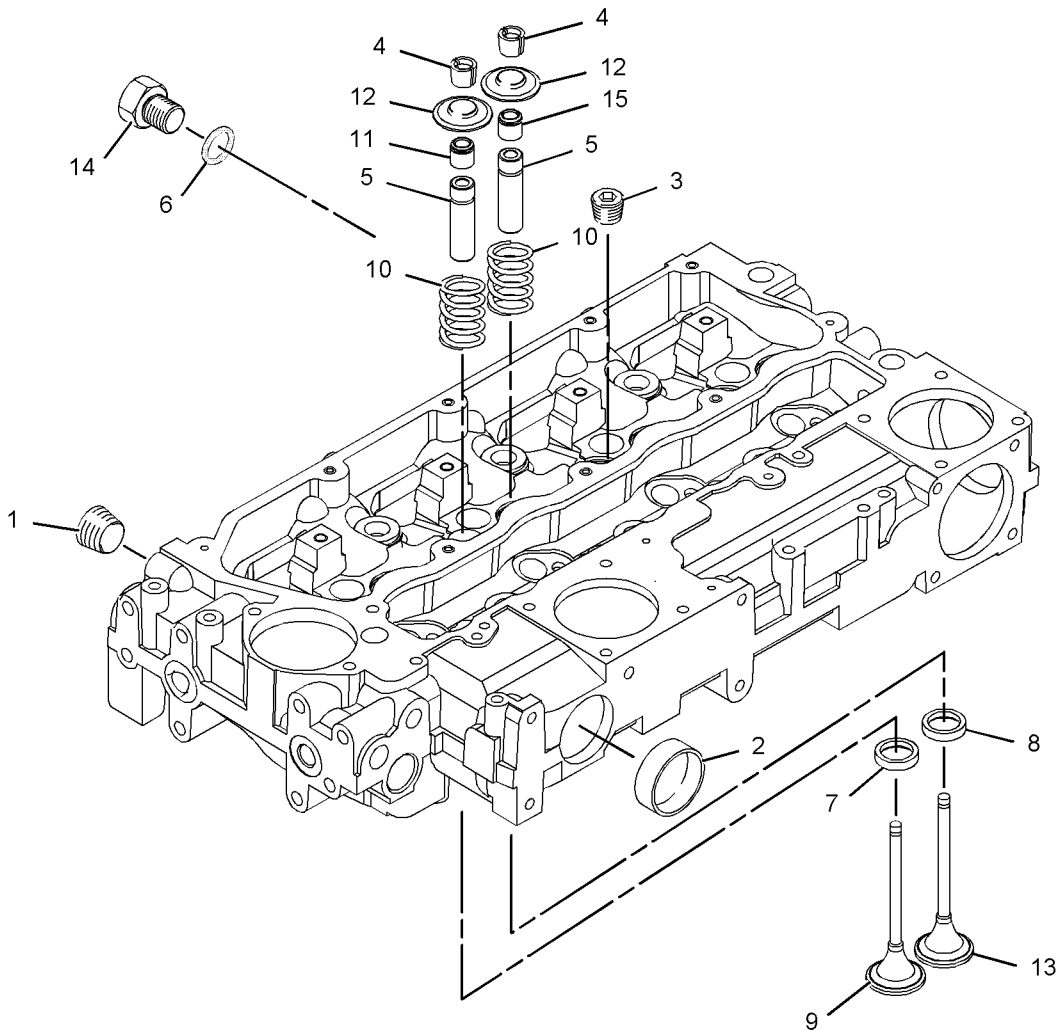

GRAPHIC #1

<END>

g01095382

308-4731 CYLINDER HEAD GP

S/N: CRS1-6887

PART OF 273-3610 ENGINE AR, 320-8414, 323-5725, 325-5121 ENGINE AR-PRIMARY
ALSO AN ATTACHMENT

SMCS-1100, 1101, 1103, 1104, 1105, 1106, 1108, 1109, 1115, 1117, 1121, 1124, 1125

i02719202

NOTE	REF NO	GRAPHIC REF	PART NUMBER	QTY	PART NAME 1 2 3 4 5 6 (PRODUCT LEVEL)	SEE PAGE
	1	1	**225-5501**	7	BOLT (M15X1.5X137-MM)	
	2	1	**225-5502**	3	BOLT (M15X1.5X162-MM)	
Y	3	1	**232-7519**	1	CYLINDER HEAD GP	23
	4	1	**258-4946**	1	GASKET-HEAD	

Y-SEPARATE ILLUSTRATION

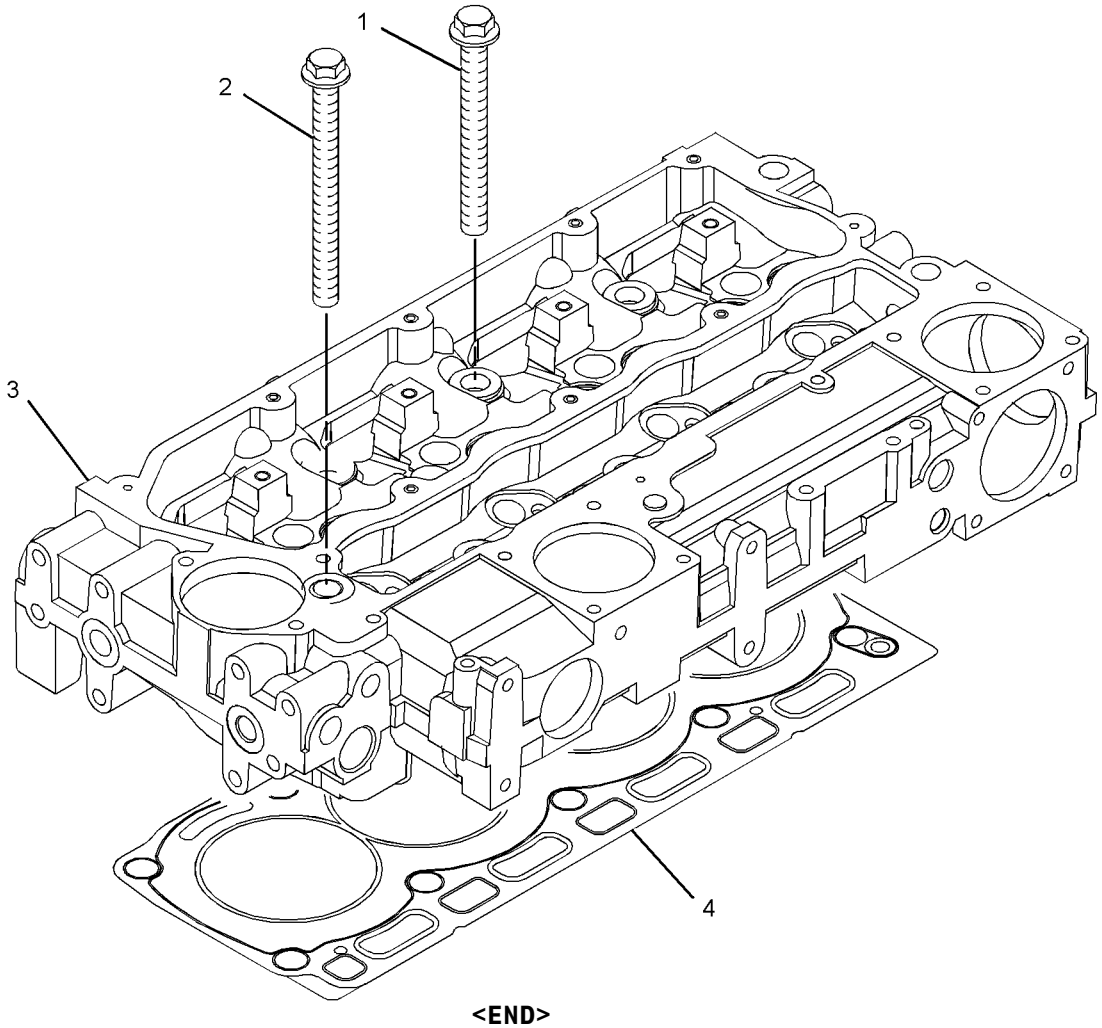

GRAPHIC #1

<END>

g01367488

BASIC ENGINE

251-2432 DRIVE GP-FAN

S/N: CRS1-6887

PART OF 273-3610 ENGINE AR, 320-8414, 323-5725, 325-5121 ENGINE AR-PRIMARY

ALSO AN ATTACHMENT

SMCS-1357, 1358, 1359, 1390 **i02100116**

NOTE	REF NO	GRAPHIC REF	PART NUMBER	QTY	PART NAME 1 2 3 4 5 6 (PRODUCT LEVEL)	SEE PAGE
	1	1	**111-0859**	1	BOLT (M10X1.5X35-MM)	
	2	1	**123-2899**	4	BOLT (M10X1.5X40-MM)	
	3	1	**251-2436**	1	HOUSING AS	
	3A	1	**225-5959**	1	CLIP	
	4	1	**251-2437**	1	PLATE	

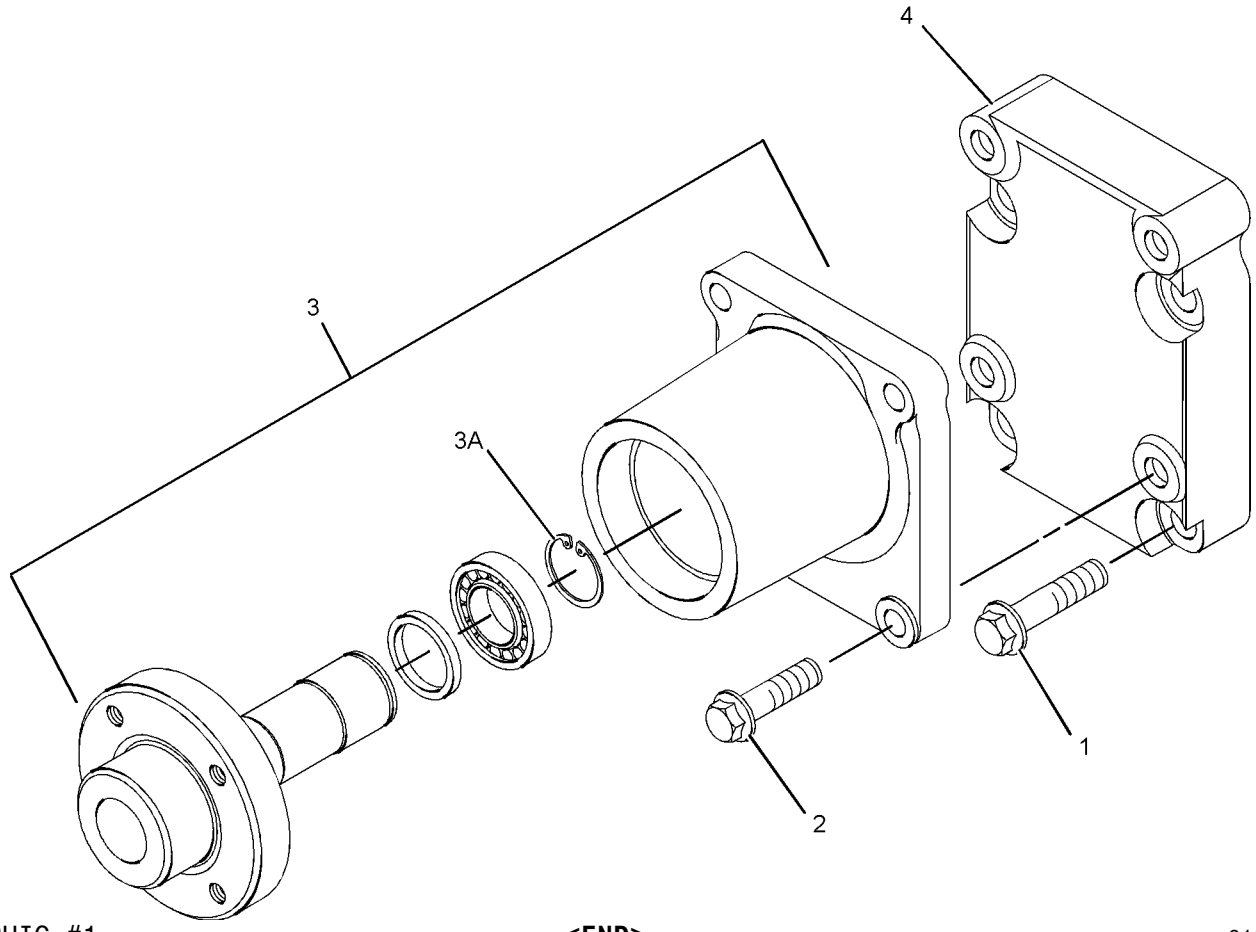

GRAPHIC #1 **<END>** g01085998

BASIC ENGINE

230-7300 FLYWHEEL GP

S/N: CRS1-6887

PART OF 273-3610 ENGINE AR, 320-8414, 323-5725, 325-5121 ENGINE AR-PRIMARY
ALSO AN ATTACHMENT

SMCS-1156, 1158 **i02004993**

NOTE	REF NO	GRAPHIC REF	PART NUMBER	QTY	PART NAME 1 2 3 4 5 6 (PRODUCT LEVEL)	SEE PAGE
	1	1	**0S-1603**	6	BOLT (1/2-20X1.5-IN)	
	2	1	**5P-8245**	6	WASHER-HARD (13.5X25.5X3-MM THK)	
	3	1	**245-9828**	1	FLYWHEEL AS	
	4	1	**033-7687**	1	RING-STARTING MOTOR (126-TEETH)	

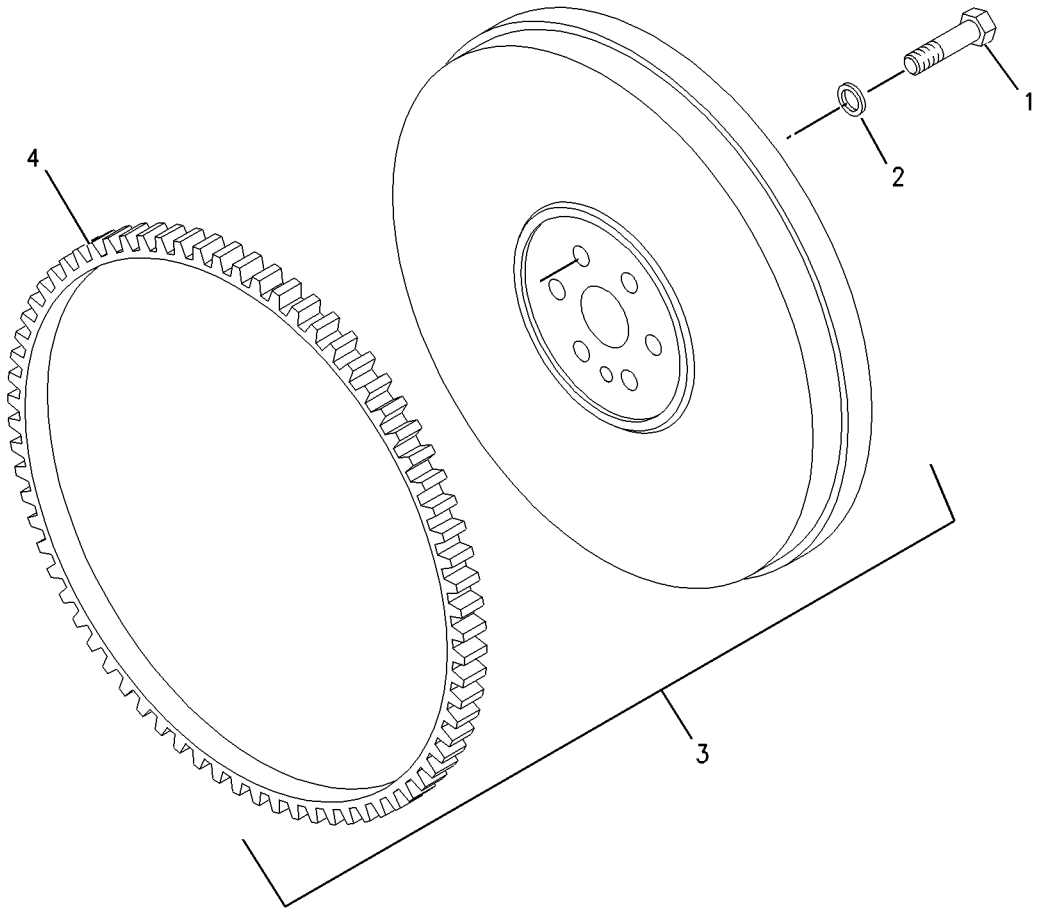

GRAPHIC #1 **<END>** g00955555

236-8238 HOUSING GP-FLYWHEEL

S/N: CRS1-6887

PART OF 273-3610 ENGINE AR, 320-8414, 323-5725, 325-5121 ENGINE AR-PRIMARY

ALSO AN ATTACHMENT

SMCS-1157 **i02527254**

NOTE	REF NO	GRAPHIC REF	PART NUMBER	QTY	PART NAME 1 2 3 4 5 6 (PRODUCT LEVEL)	SEE PAGE
M	1	1	**6I-0423**	2	BOLT (M12X1.75X30-MM)	
	2	1	**6I-0847**	2	PLUG	
	3	1	**7W-1176**	1	PLATE-COVER	
	4	1	**7W-4642**	1	SHIELD-DUST	
	5	1	**287-8597**	2	DOWEL	
	6	1	**114-4363**	2	BOLT (M8X1.25X12-MM)	
	7	1	**101-3617**	3	PLUG	
M	8	1	**121-0883**	6	BOLT (M10X1.5X30-MM)	
	9	1	**220-8631**	1	HOUSING-FLYWHEEL	

M-METRIC PART

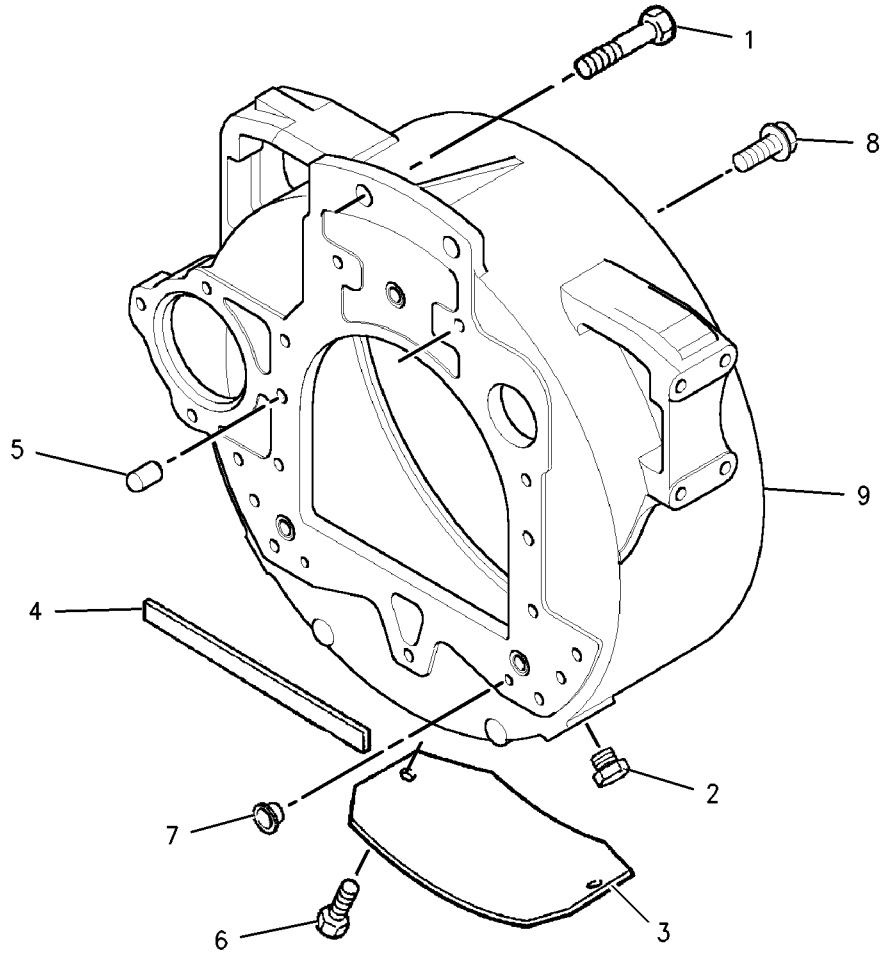

GRAPHIC #1 **<END>** g00902549

BASIC ENGINE

313-1380 HOUSING GP-FRONT

S/N: CRS1-6887

PART OF 273-3610 ENGINE AR, 320-8414, 323-5725, 325-5121 ENGINE AR-PRIMARY
ALSO AN ATTACHMENT

SMCS-1151, 1162, 1166, 1206 **i02918676**

NOTE	REF NO	GRAPHIC REF	PART NUMBER	QTY	PART NAME 1 2 3 4 5 6 (PRODUCT LEVEL)	SEE PAGE
	1	1	**1B-8736**	1	KEY-WOODRUFF	
M	2	1	**6I-0217**	8	BOLT (M8X1.25X20-MM)	
M	3	1	**6I-0645**	4	BOLT (M8X1.25X25-MM)	
M	4	1	**6I-0650**	3	BOLT (M10X1.5X65-MM)	
	5	1	**7C-4616**	1	BOLT (M12X1.75X45-MM)	
	6	1	**067-6179**	1	DOWEL	
M	7	1	**100-3751**	5	BOLT (M8X1.25X65-MM)	
M	8	1	**124-3815**	10	BOLT (M8X16X1.25-MM)	
	9	1	**133-1011**	1	WASHER	
	10	1	**216-8634**	1	GEAR-CAMSHAFT (68-TEETH)	
	11	1	**232-3657**	1	COVER AS-FRONT	
	11A	1	**225-8287**	1	GASKET	
	12	1	**232-3666**	1	WASHER-THRUST	
	13	1	**251-4336**	1	GEAR AS-IDLER (73-TEETH)	
	14	1	**277-3012**	1	GASKET-COVER (HOUSING)	
	15	1	**324-0444**	1	HUB-IDLER GEAR	
	16	1	**288-0422**	1	SEAL-OIL	
	17	1	**294-0288**	1	HOUSING-FRONT	
	18	1	**295-1711**	1	PLATE-RETAINING	

M-METRIC PART

313-1380 **HOUSING GP-FRONT** *(contd.)* **i02918676**

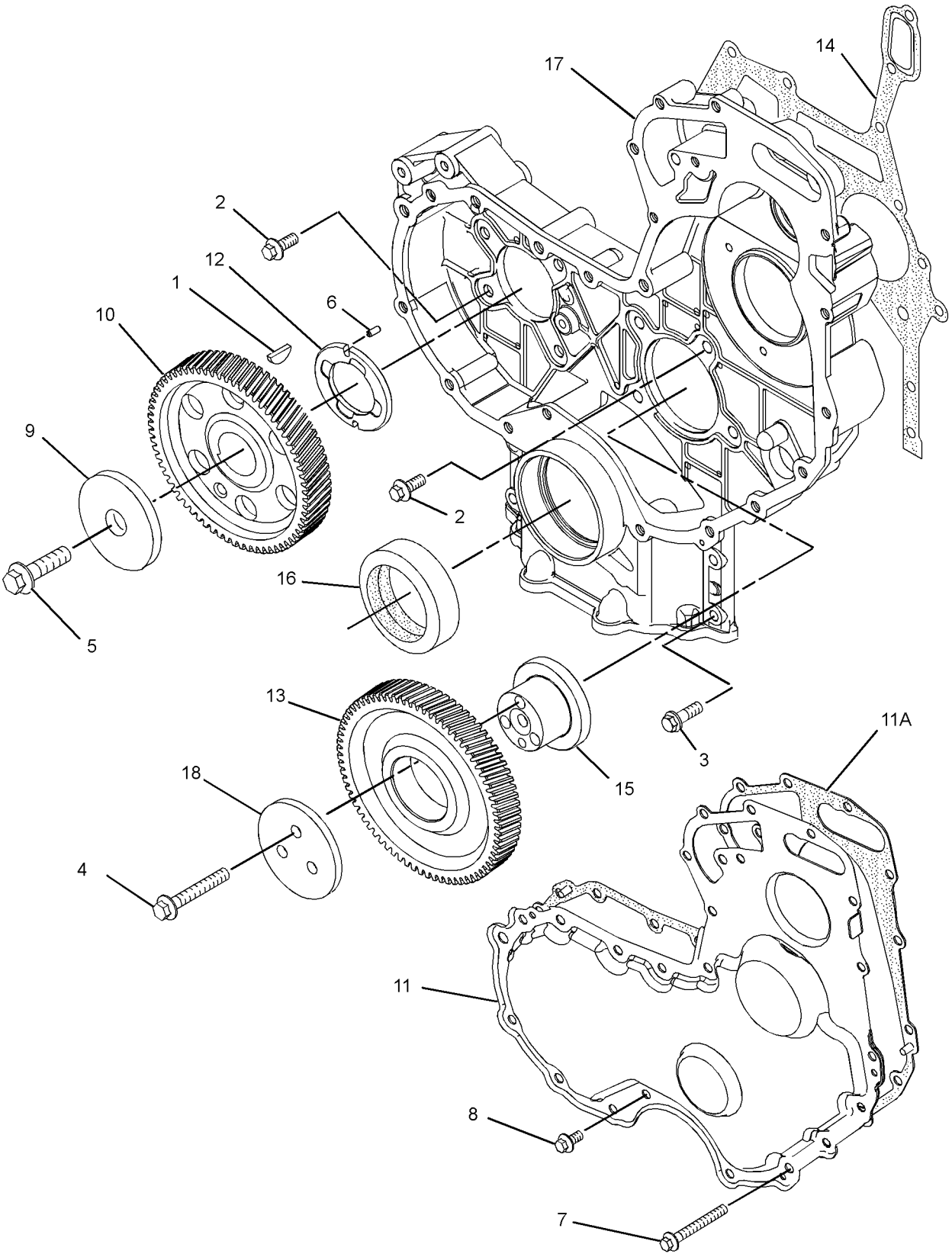

GRAPHIC #1 **<END>** g01394373

BASIC ENGINE

233-7432 LIFTING GP-ENGINE

S/N: CRS1-6887

PART OF 273-3610 ENGINE AR, 320-8414, 323-5725, 325-5121 ENGINE AR-PRIMARY

ALSO AN ATTACHMENT

SMCS-1122 **i01876830**

NOTE	REF NO	GRAPHIC REF	PART NUMBER	QTY	PART NAME 1 2 3 4 5 6 (PRODUCT LEVEL)	SEE PAGE
M	1	1	**100-4830**	4	BOLT (M10X1.5X20-MM)	
	2	1	**225-8848**	2	PLATE-LIFTING	

M-METRIC PART

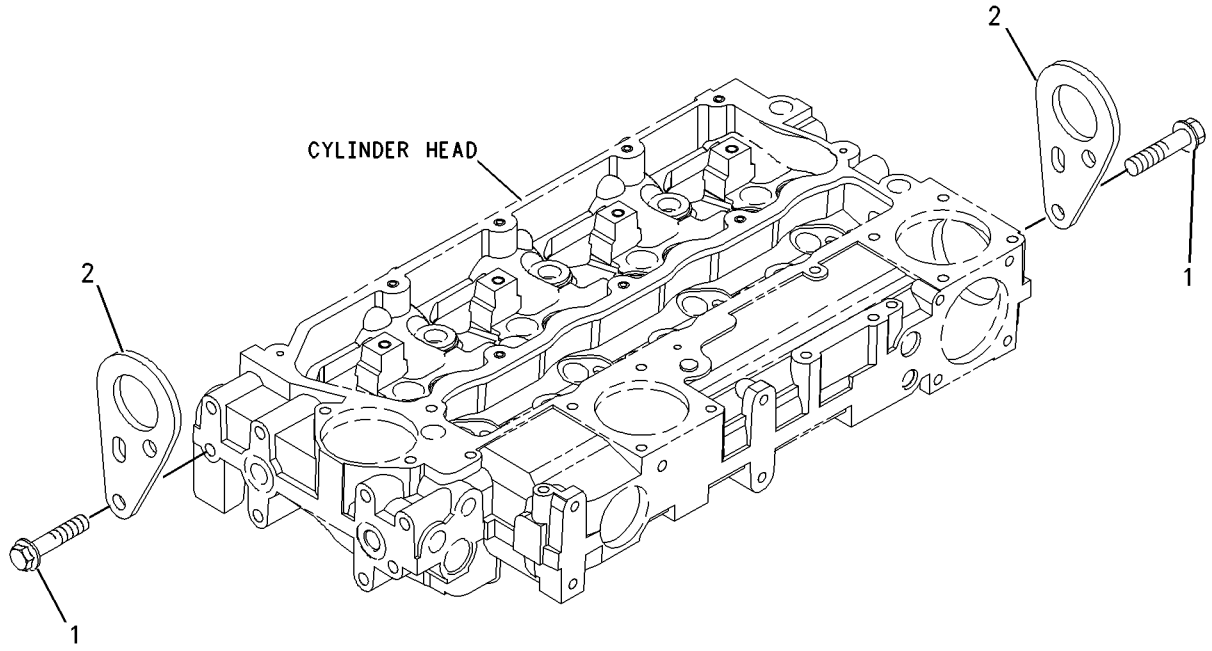

GRAPHIC #1 **<END>** g00955299

237-3658 MOUNTING GP-ENGINE

S/N: CRS1-6887

PART OF 273-3610 ENGINE AR, 320-8414, 323-5725, 325-5121 ENGINE AR-PRIMARY

ALSO AN ATTACHMENT

SMCS-1152, 1153, 1154 **i01925958**

NOTE	REF NO	GRAPHIC REF	PART NUMBER	QTY	PART NAME 1 2 3 4 5 6 (PRODUCT LEVEL)	SEE PAGE
	1	1	**101-2987**	6	PLUG	
	2	1	**6H-3616**	3	PLUG-PROTECTION	
	3	1	**195-2132**	1	SUPPORT-FRONT	
	4	1	**195-2134**	1	SUPPORT-FRONT	
	5	1	**195-2136**	8	STUD	
	6	1	**195-2221**	8	NUT	

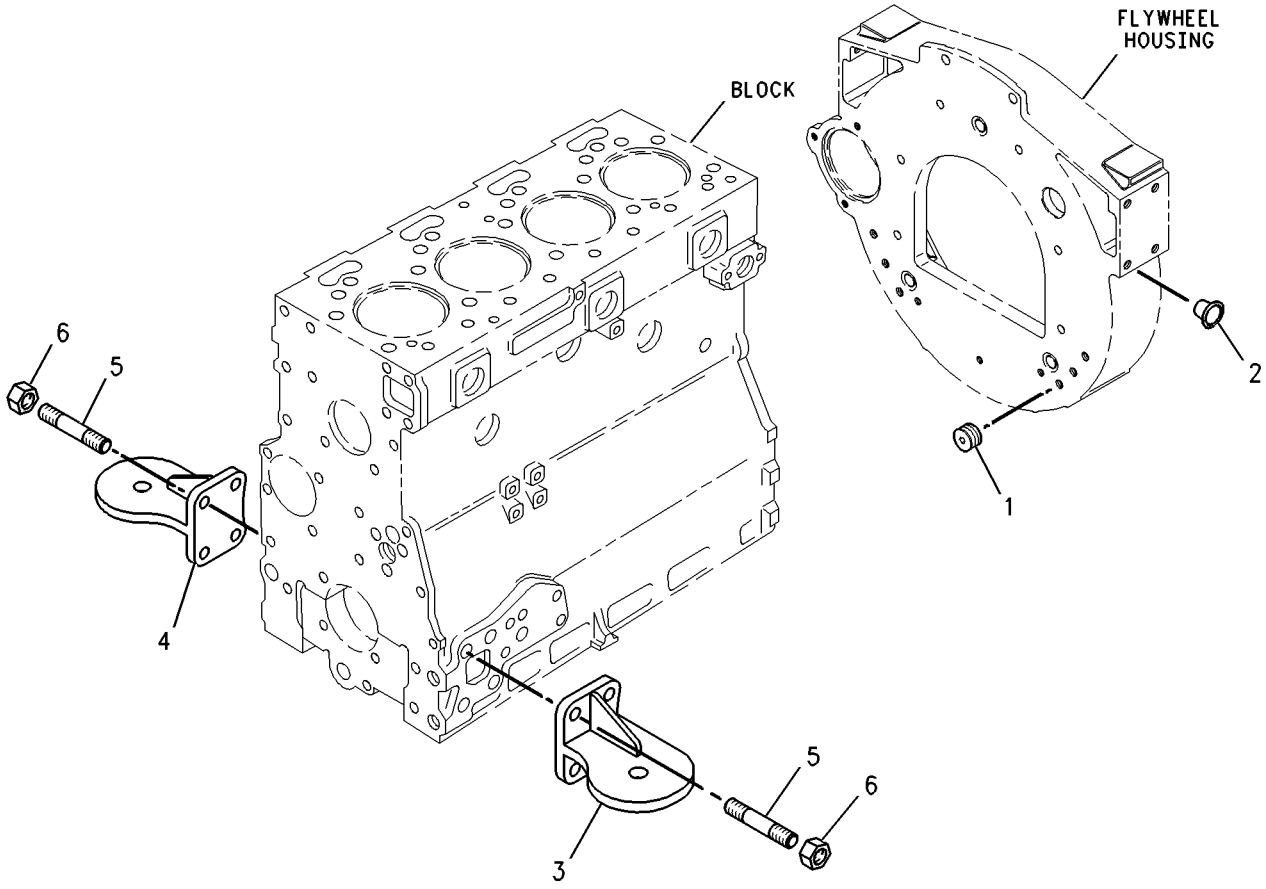

GRAPHIC #1 **<END>** g00738284

BASIC ENGINE

214-0973 MOUNTING GP-ENGINE & XMSN

S/N: HLS1-99999

PART OF 214-6902 ENGINE AR

SMCS-1152, 1153, 1154 **i02116930**

NOTE	REF NO	GRAPHIC REF	PART NUMBER	QTY	PART NAME 1 2 3 4 5 6 (PRODUCT LEVEL)	SEE PAGE
	1	1	**9W-9910**	2	MOUNT AS	
	2	1	**9W-9915**	2	MOUNT AS	
	3	1	**9W-9953**	4	SLEEVE	
	4	1	**8T-4121**	12	WASHER-HARD (11X21X2.5-MM THK)	
	5	1	**8T-4122**	8	WASHER-HARD (17X32X3.5-MM THK)	
M	6	1	**8T-4132**	4	NUT (M16X2-THD)	
M	7	1	**8T-4174**	4	BOLT (M16X2X120-MM)	
M	8	1	**8T-4196**	12	BOLT (M10X1.5X35-MM)	
	9	1	**9W-9952**	4	WASHER (16.75X86X8-MM THK)	

M-METRIC PART

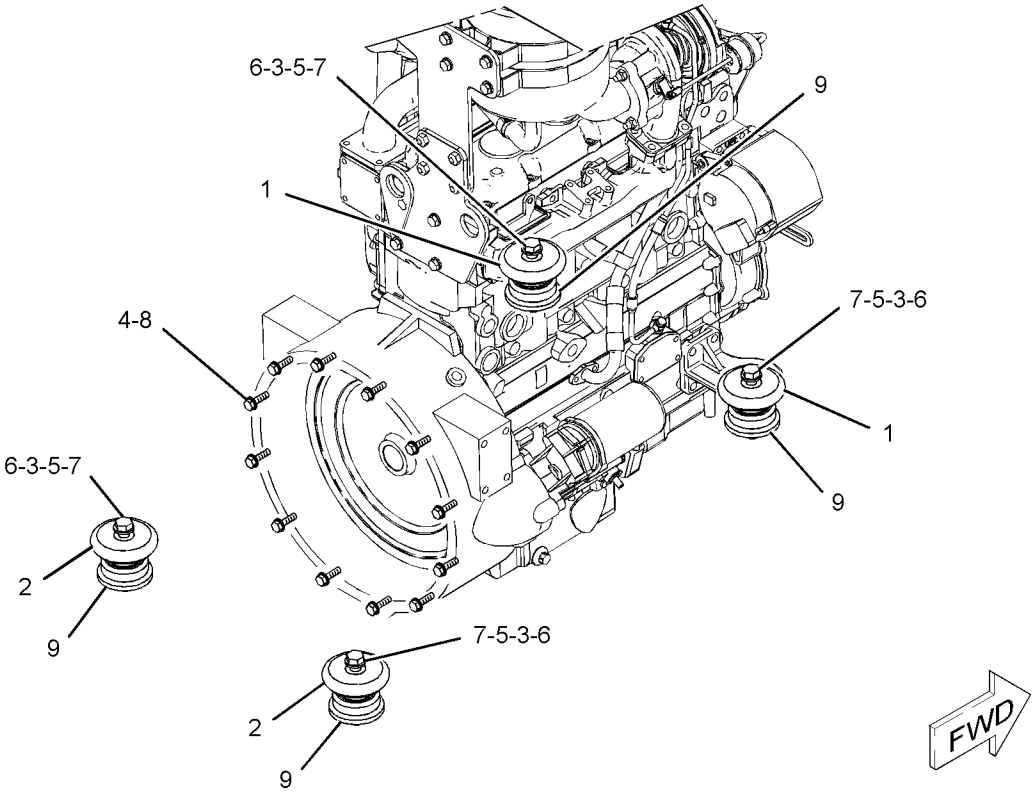

GRAPHIC #1 **<END>** g01079533

237-0025 PAN GP-OIL

S/N: CRS1-6887

PART OF 273-3610 ENGINE AR, 320-8414, 323-5725, 325-5121 ENGINE AR-PRIMARY

ALSO AN ATTACHMENT

SMCS-1302 **i02668913**

NOTE	REF NO	GRAPHIC REF	PART NUMBER	QTY	PART NAME 1 2 3 4 5 6 (PRODUCT LEVEL)	SEE PAGE
	1	1	**275-9883**	2	SEAL (ENGINE OIL DRAIN)	
M	2	1	**6I-0217**	12	BOLT (M8X1.25X20-MM)	
M	3	1	**6I-0260**	2	BOLT (M8X1.25X25-MM)	
	4	1	**6I-0289**	1	PLUG	
M	5	1	**6I-0363**	2	BOLT (M6X1X20-MM)	
	6	1	**6I-0572**	2	BOLT (M8X1.25X20-MM)	
	7	1	**7C-0351**	2	PLUG-DRAIN (ENGINE OIL)	
	8	1	**067-6213**	1	GASKET	
	9	1	**101-3771**	6	BOLT	
	10	1	**304-8764**	1	PAN AS-OIL (ENGINE) (ENGINE)	
	10A	1	**7C-1224**	2	INSERT	
	11	1	**225-6005**	1	GASKET	
	12	1	**225-6041**	1	TUBE	
	13	1	**230-8094**	1	BRIDGE	

M-METRIC PART

237-0025 **PAN GP-OIL** *(contd.)* **i02668913**

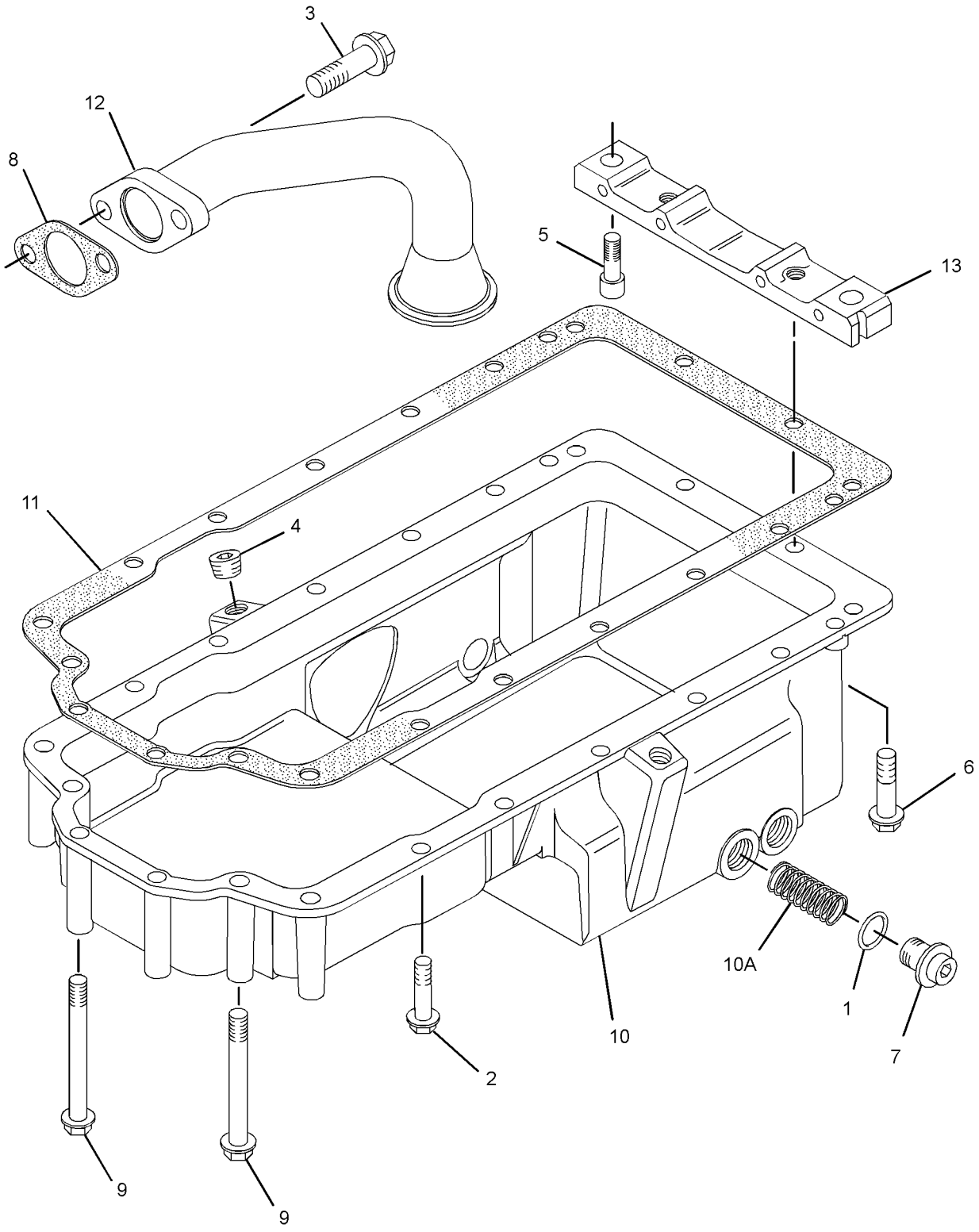

GRAPHIC #1 **<END>** g01382092

308-4730 PISTON & ROD GP

S/N: CRS1-6887

PART OF 273-3610 ENGINE AR, 320-8414, 323-5725, 325-5121 ENGINE AR-PRIMARY

ALSO AN ATTACHMENT

SMCS-1213, 1214, 1215, 1218, 1219, 1225, 1239 **i02719129**

NOTE	REF NO	GRAPHIC REF	PART NUMBER	QTY	PART NAME 1 2 3 4 5 6 (PRODUCT LEVEL)	SEE PAGE
	1	1	**225-5437**	4	PISTON AS	
					(EACH PISTON AS INCLUDES)	
	1A	1	**124-3536**	2	RING-RETAINING	
	1B	1	**225-5436**	1	KIT-PISTON RING	
BJ	2	1	**225-5441**	4	ROD AS-CONNECTING (LENGTH L)	
					—OR—	
BJ		1	**225-5451**	4	ROD AS-CONNECTING (LENGTH K)	
					—OR—	
BJ		1	**225-5453**	4	ROD AS-CONNECTING (LENGTH J)	
					—OR—	
BJ		1	**225-5454**	4	ROD AS-CONNECTING (LENGTH H)	
					—OR—	
BJ		1	**225-5458**	4	ROD AS-CONNECTING (LENGTH G)	
					—OR—	
BJ		1	**225-5459**	4	ROD AS-CONNECTING (LENGTH F)	
					(EACH ROD AS INCLUDES)	
	2A	1	**225-5438**	1	BUSHING	
	2B	1	**225-5439**	2	BOLT-SPECIAL (CONNECTING ROD)	

B-USE AS REQUIRED
J-ENSURE THAT CORRECT ROD LENGTH IS FITTED

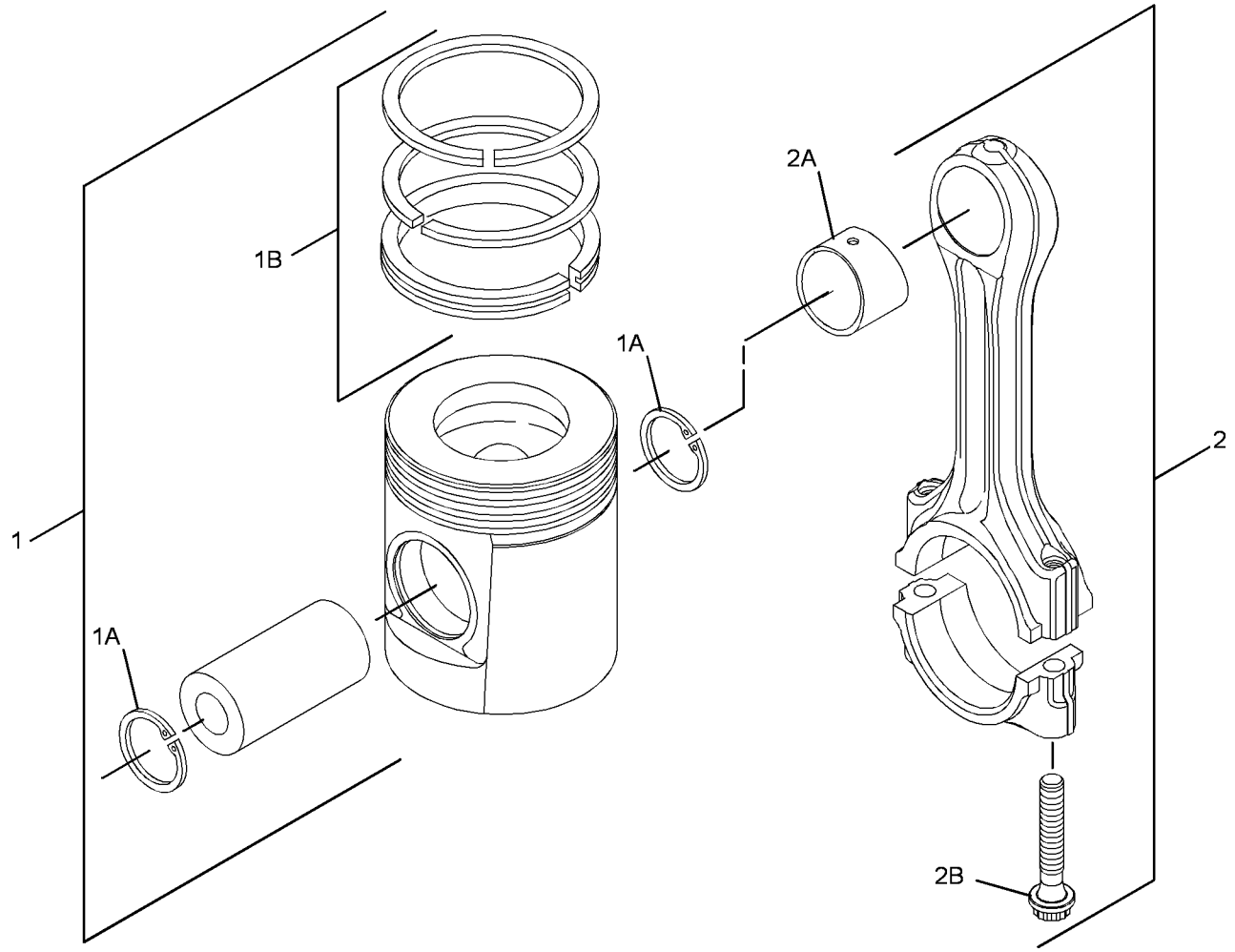

GRAPHIC #1 **<END>** g01374535

225-4317 PLUG GP-ENGINE

S/N: CRS1-6887
FRONT HOUSING,CYLINDER HEAD
PART OF 273-3610 ENGINE AR, 320-8414, 325-5121 ENGINE AR-PRIMARY
ALSO AN ATTACHMENT

SMCS-1000 **i01862406**

NOTE	REF NO	GRAPHIC REF	PART NUMBER	QTY	PART NAME 1 2 3 4 5 6 (PRODUCT LEVEL)	SEE PAGE
	1	1	**2B-0858**	3	PLUG-PIPE	

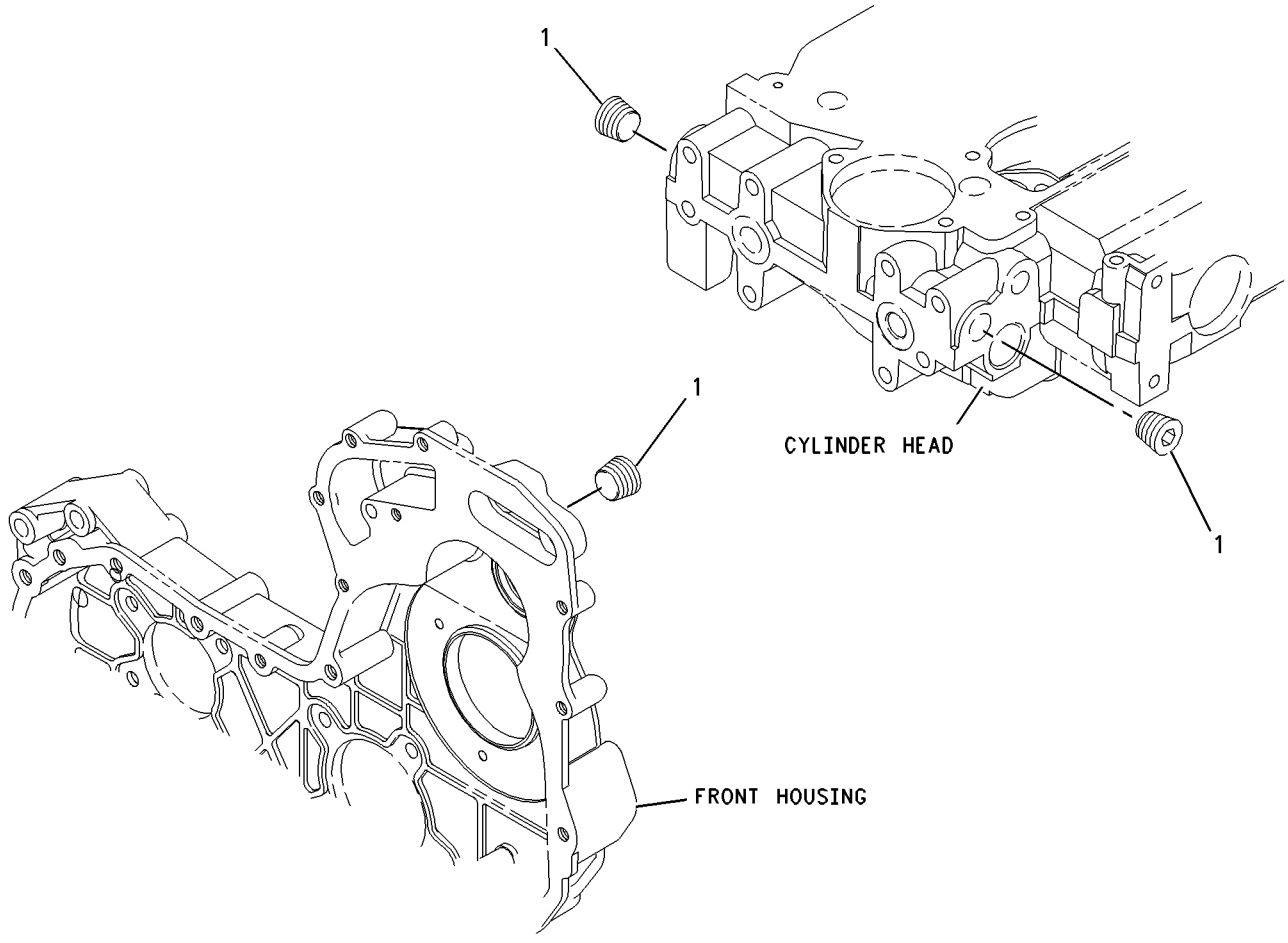

GRAPHIC #1 **<END>** g00911937

230-7569 PLUG GP-ENGINE

S/N: CRS1-6887

PART OF 273-3610 ENGINE AR, 320-8414, 323-5725, 325-5121 ENGINE AR-PRIMARY

ALSO AN ATTACHMENT

SMCS-1000 **i01876806**

NOTE	REF NO	GRAPHIC REF	PART NUMBER	QTY	PART NAME 1 2 3 4 5 6 (PRODUCT LEVEL)	SEE PAGE
	1	1	**231-0046**	1	PLUG	

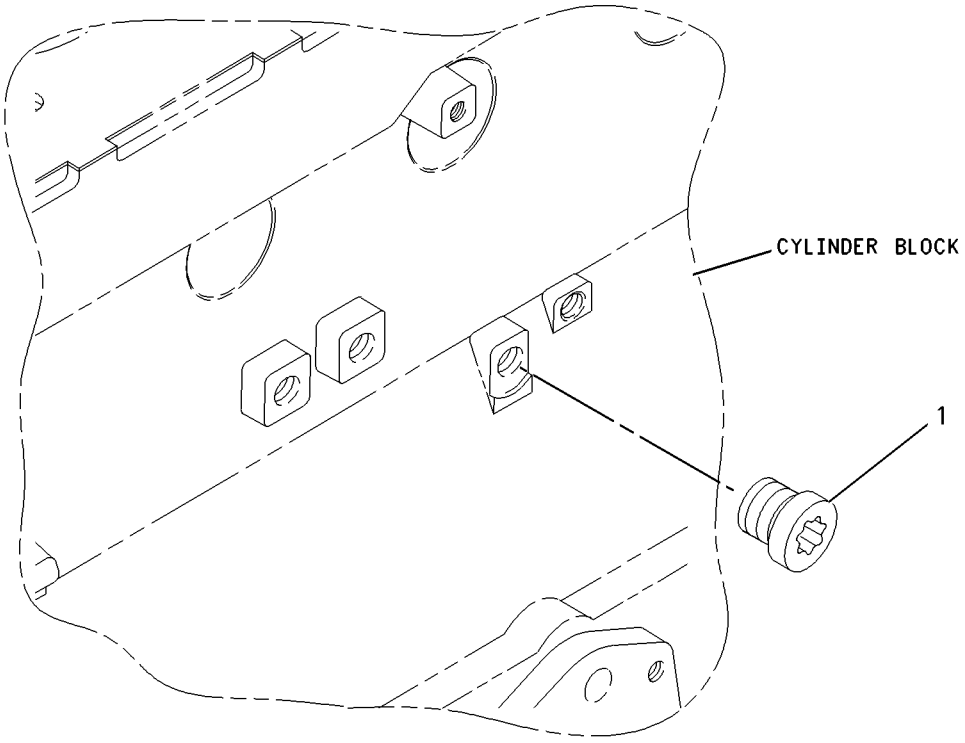

GRAPHIC #1 **<END>** g00911955

232-6204 PLUG GP-ENGINE

S/N: CRS1-6887
CYLINDER HEAD
PART OF 273-3610 ENGINE AR, 320-8414, 323-5725, 325-5121 ENGINE AR-PRIMARY
ALSO AN ATTACHMENT

SMCS-1000 **i01863022**

NOTE	REF NO	GRAPHIC REF	PART NUMBER	QTY	PART NAME 1 2 3 4 5 6 (PRODUCT LEVEL)	SEE PAGE
	1	1	**199-9751**	1	SEAL-O-RING	
	2	1	**232-1322**	1	PLUG	

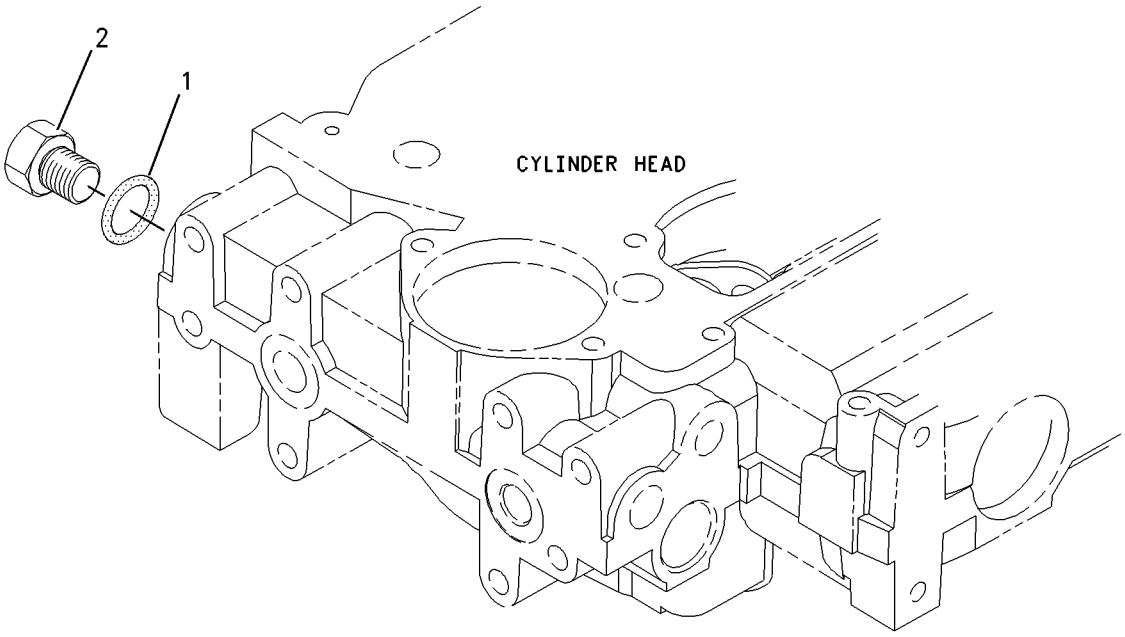

GRAPHIC #1 **<END>** g00950934

230-7353 PULLEY GP-CRANKSHAFT

S/N: CRS1-6887

PART OF 273-3610 ENGINE AR, 320-8414, 325-5121 ENGINE AR-PRIMARY

ALSO AN ATTACHMENT

SMCS-1205 **i02009617**

NOTE	REF NO	GRAPHIC REF	PART NUMBER	QTY	PART NAME 1 2 3 4 5 6 (PRODUCT LEVEL)	SEE PAGE
	1	1	**6I-0501**	1	BLOCK	
	2	1	**6I-0502**	1	PULLEY	
	3	1	**7W-4634**	3	BOLT (7/16-20X1.5 IN)	

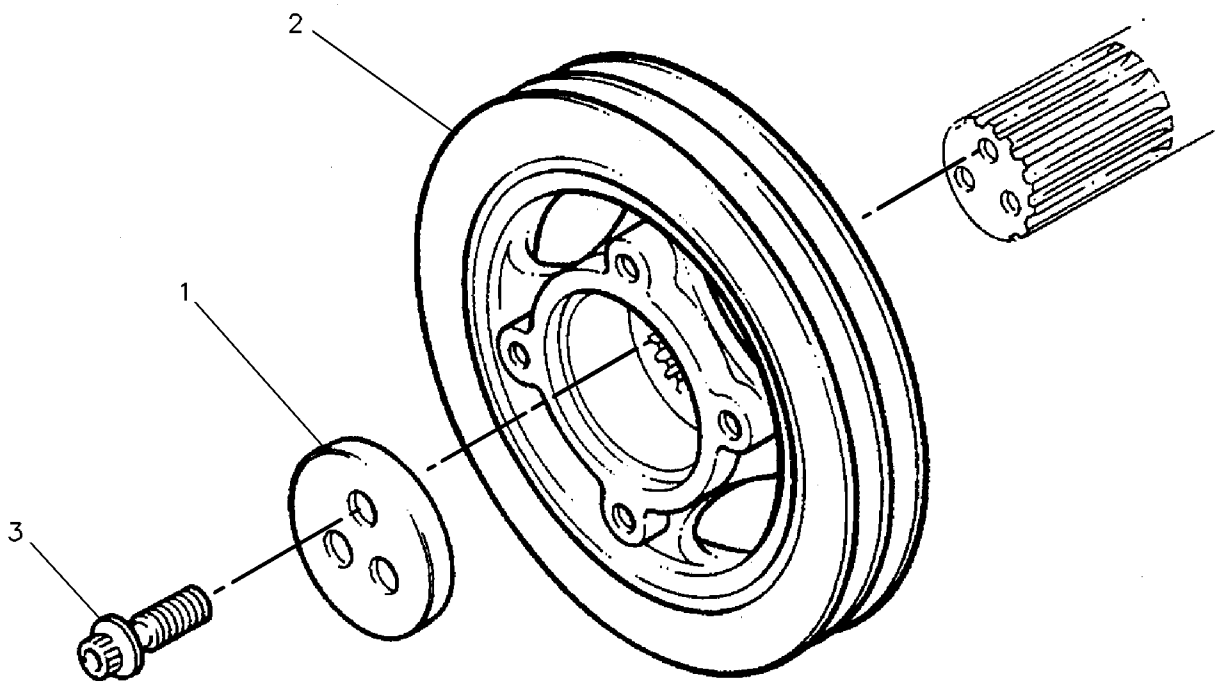

GRAPHIC #1 **<END>** g00130941

BASIC ENGINE

225-5963 ROCKER ARM GP

S/N: CRS1-6887
PART OF 308-4732 VALVE MECHANISM GP
ALSO AN ATTACHMENT

SMCS-1102, 1123 **i03255454**

NOTE	REF NO	GRAPHIC REF	PART NUMBER	QTY	PART NAME 1 2 3 4 5 6 (PRODUCT LEVEL)	SEE PAGE
	1	1	**225-5625**	4	LEVER AS	
					(EACH INCLUDES)	
	1A	1	**5B-9079**	1	NUT-JAM (3/8-24-THD)	
	1B	1	**185-1546**	1	SCREW	
	2	1	**225-5634**	1	SHAFT AS	
	2A	1	**225-5629**	2	PLUG	
	3	1	**225-5638**	3	SPRING	
	4	1	**225-5640**	4	LEVER AS	
					(EACH INCLUDES)	
	4A	1	**5B-9079**	1	NUT-JAM (3/8-24-THD)	
	4B	1	**185-1546**	1	SCREW	
	5	1	**225-5959**	2	CLIP	
	6	1	**225-5960**	1	BOLT (M8X1.25X60-MM)	
	7	1	**225-5961**	2	WASHER (26.7X34.32X0.38-MM THK)	
	8	1	**225-5962**	3	BOLT (M8X1.25X30-MM)	

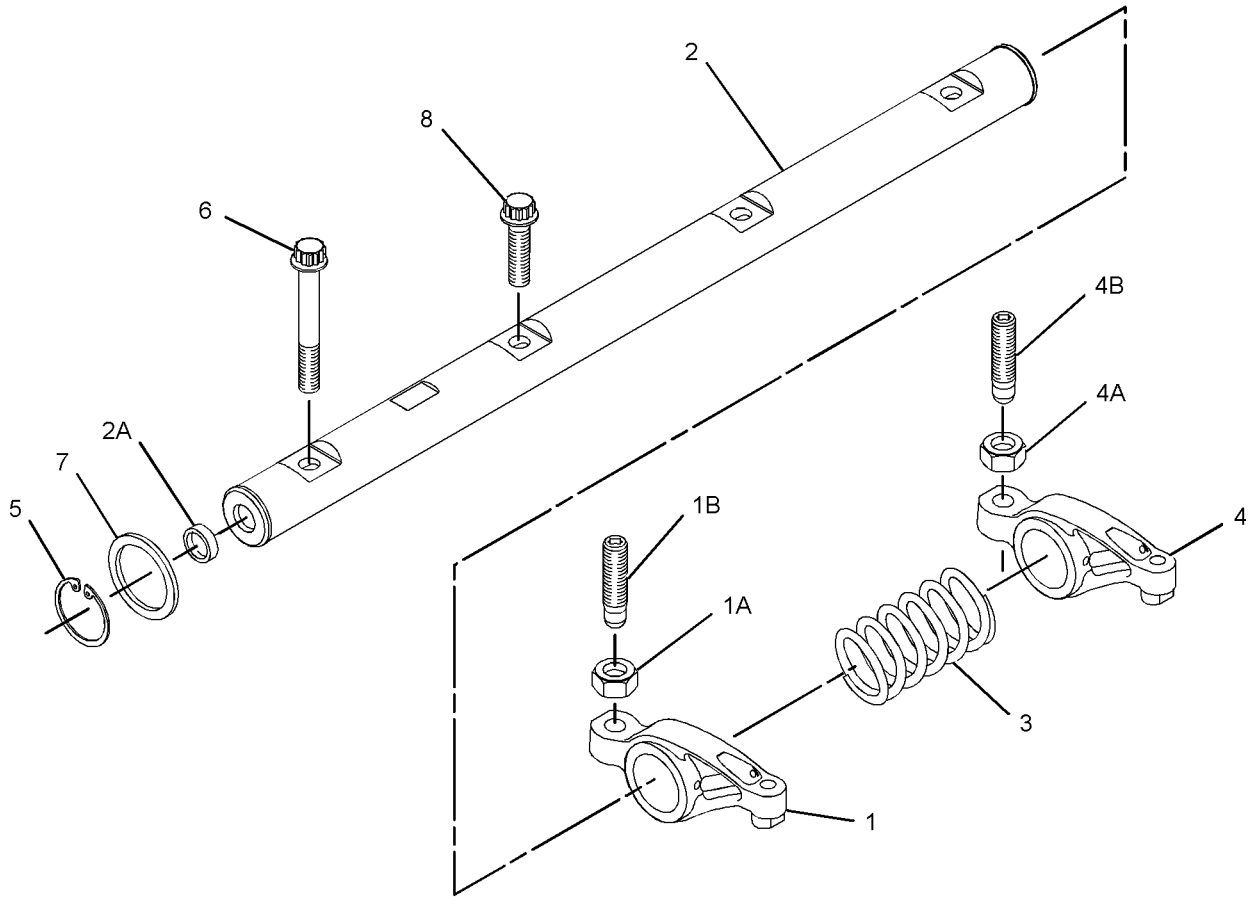

GRAPHIC #1 **<END>** g01368510

308-4732 VALVE MECHANISM GP

S/N: CRS1-6887

PART OF 273-3610 ENGINE AR, 320-8414, 323-5725, 325-5121 ENGINE AR-PRIMARY

ALSO AN ATTACHMENT

SMCS-1102, 1112, 1121, 1123, 1208, 1209 **i02719187**

NOTE	REF NO	GRAPHIC REF	PART NUMBER	QTY	PART NAME 1 2 3 4 5 6 (PRODUCT LEVEL)	SEE PAGE
	1	1	**067-6095**	8	ROD	
	2	1	**138-2053**	8	TAPPET	
Y	3	1	**225-5963**	1	ROCKER ARM GP	40
	4	1	**225-5967**	1	CAMSHAFT	

Y-SEPARATE ILLUSTRATION

308-4732 **VALVE MECHANISM GP** *(contd.)* **i02719187**

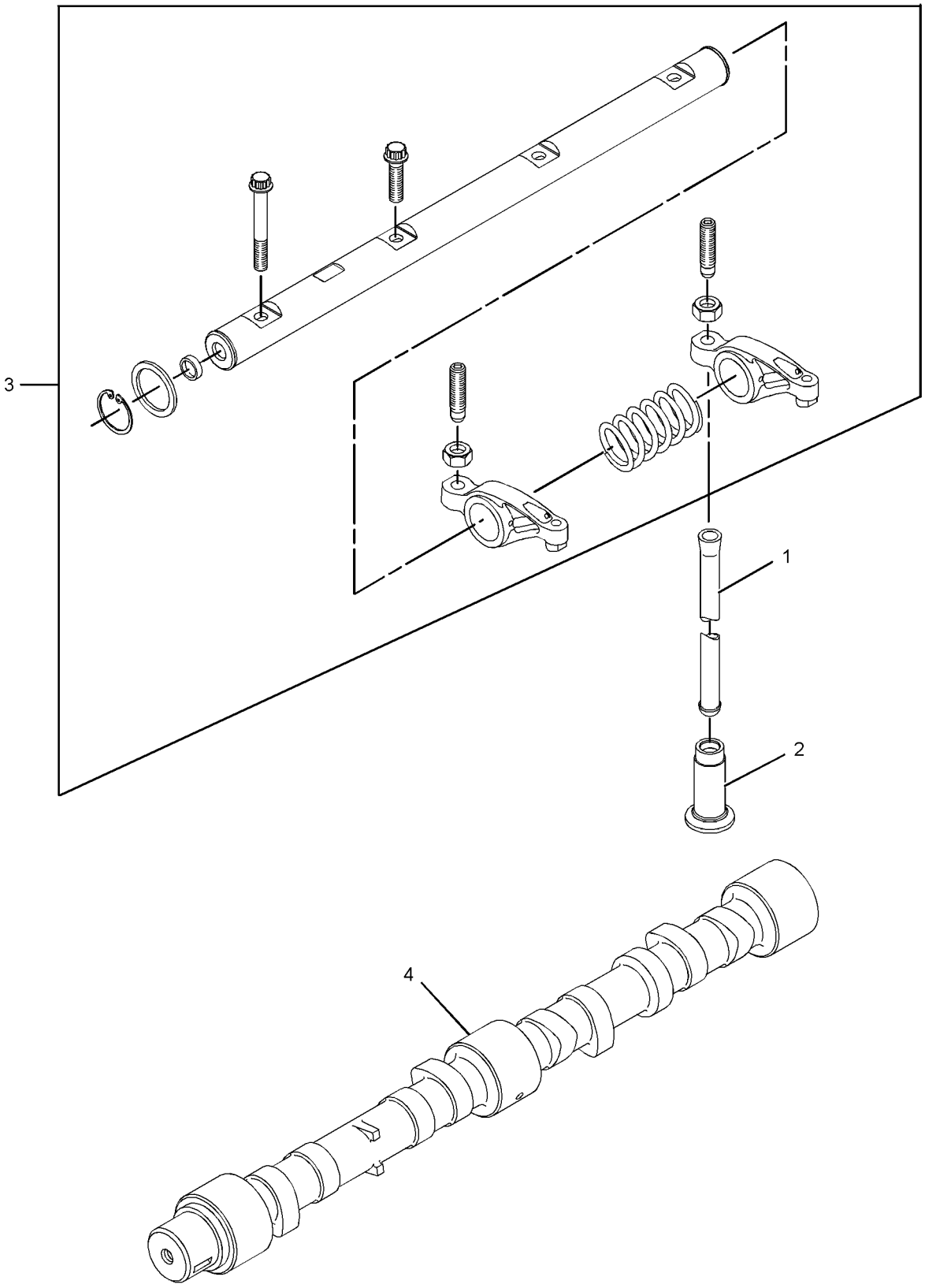

GRAPHIC #1 **<END>** g01368563

250-7963 BREATHER GP–TURBO

S/N: HLS1-99999
AN ATTACHMENT

SMCS-1317 **i03543461**

NOTE	REF NO	GRAPHIC REF	PART NUMBER	QTY	PART NAME 1 2 3 4 5 6 (PRODUCT LEVEL)	SEE PAGE
	1	1	**6G-2263**	1	SPACER (10.5X19X28.5-MM THK)	
	2	1	**6I-1497**	1	SEAL	
	3	1	**6S-8620**	2	CLAMP-HOSE	
	4	1	**8T-9402**	3	CLAMP-HOSE	
	5	1	**165-4021**	1	CANISTER AS-BREATHER (CRANKCASE)	
		1	**185-6643**	1	SEAL (BREATHER)	
	6	1	**202-5909**	1	TUBE AS-OIL	
	7	1	**254-4418**	1	HOSE	
	8	1	**311-6094**	1	PLATE AS	
	9	1	**5P-4116**	2	WASHER-HARD (8.8X20.5X2-MM THK)	
	10	1	**6D-4246**	1	CLIP	
M	11	1	**8C-3798**	2	BOLT-LOCKING (M6X1X30-MM)	
	12	1	**8T-4121**	1	WASHER-HARD (11X21X2.5-MM THK)	
M	13	1	**8T-4138**	2	BOLT (M6X1X20-MM)	
M	14	1	**8T-4185**	1	BOLT (M10X1.5X50-MM)	
M	15	1	**8T-4189**	2	BOLT (M8X1.25X20-MM)	
	16	1	**8T-4205**	4	WASHER-HARD (7.2X14.5X2-MM THK)	
	17	1	**8T-7529**	2	CLIP	
E	18	1	**136-1955**		HOSE (82-CM)	
E	19	1	**5P-1505**		HOSE (71-CM)	

E-ORDER BY THE CENTIMETER
M-METRIC PART

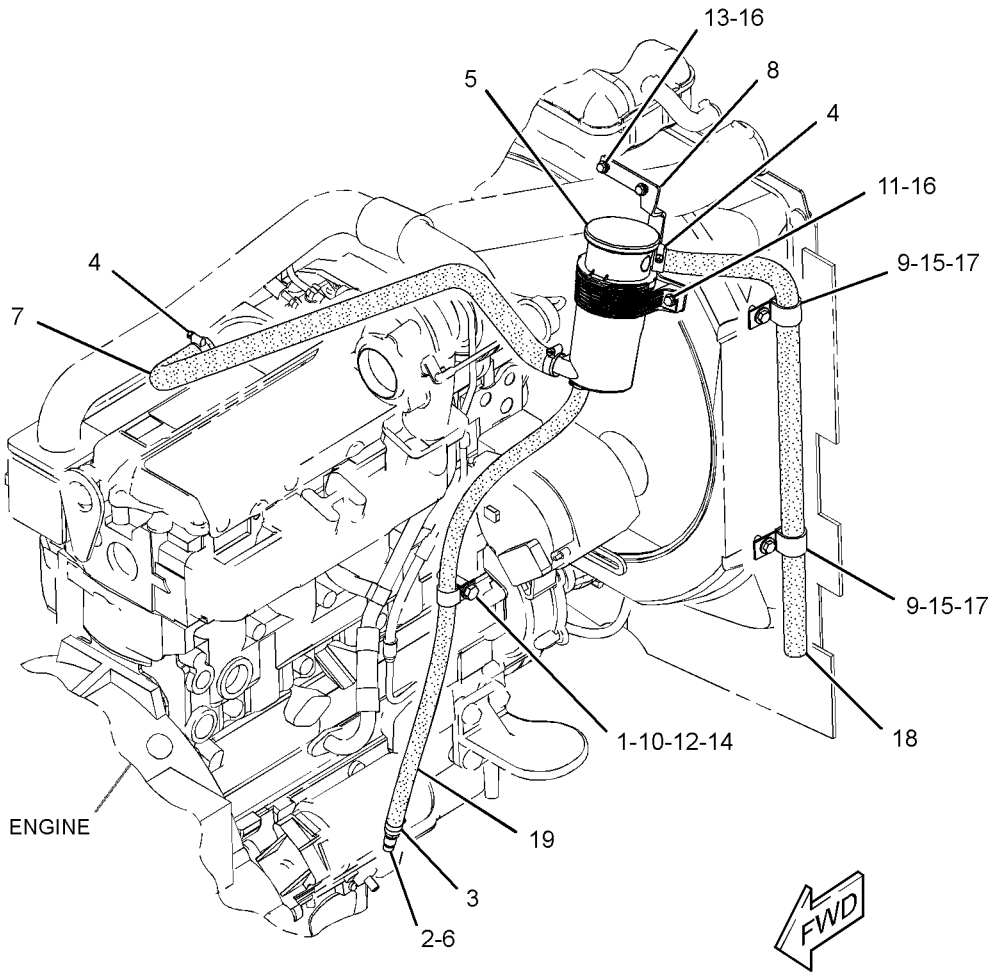

GRAPHIC #1 **<END>** g01876723

LUBRICATION SYSTEM

222-7091 GAUGE GP-OIL LEVEL & FILLER—WITH FILTER

S/N: HLS1-99999

PART OF 214-6902 ENGINE AR

SMCS-1316, 1326 **i03502082**

NOTE	REF NO	GRAPHIC REF	PART NUMBER	QTY	PART NAME 1 2 3 4 5 6 (PRODUCT LEVEL)	SEE PAGE
	1	1	**6I-1497**	1	SEAL	
	2	1	**7W-2326**	1	FILTER AS-ENGINE OIL	
	3	1	**9M-7958**	1	CLAMP-HOSE	
	4	1	**127-4471**	1	CLAMP-HOSE	
	5	1	**236-6651**	1	CAP AS (ENGINE OIL FILLER)	
	6	1	**249-5046**	1	TUBE AS	
	7	1	**249-5295**	1	HOSE (OIL FILLER)	
	8	1	**249-5297**	1	BRACKET AS	
M	9	1	**8T-4195**	2	BOLT (M10X1.5X30-MM)	
	10	1	**256-0143**	1	TUBE AS	
	11	1	**261-3572**	1	GAUGE-OIL LEVEL (ENGINE DIPSTICK)	
	12	1	**033-8248**	2	CLIP	
	13	1	**7D-7233**	1	CLIP	
	14	1	**7X-7729**	3	WASHER (11X25X3-MM THK)	
	15	1	**8T-4121**	5	WASHER-HARD (11X21X2.5-MM THK)	
M	16	1	**8T-4133**	2	NUT (M10X1.5-THD)	
M	17	1	**8T-4136**	1	BOLT (M10X1.5X25-MM)	
M	18	1	**8T-4196**	3	BOLT (M10X1.5X35-MM)	

M-METRIC PART

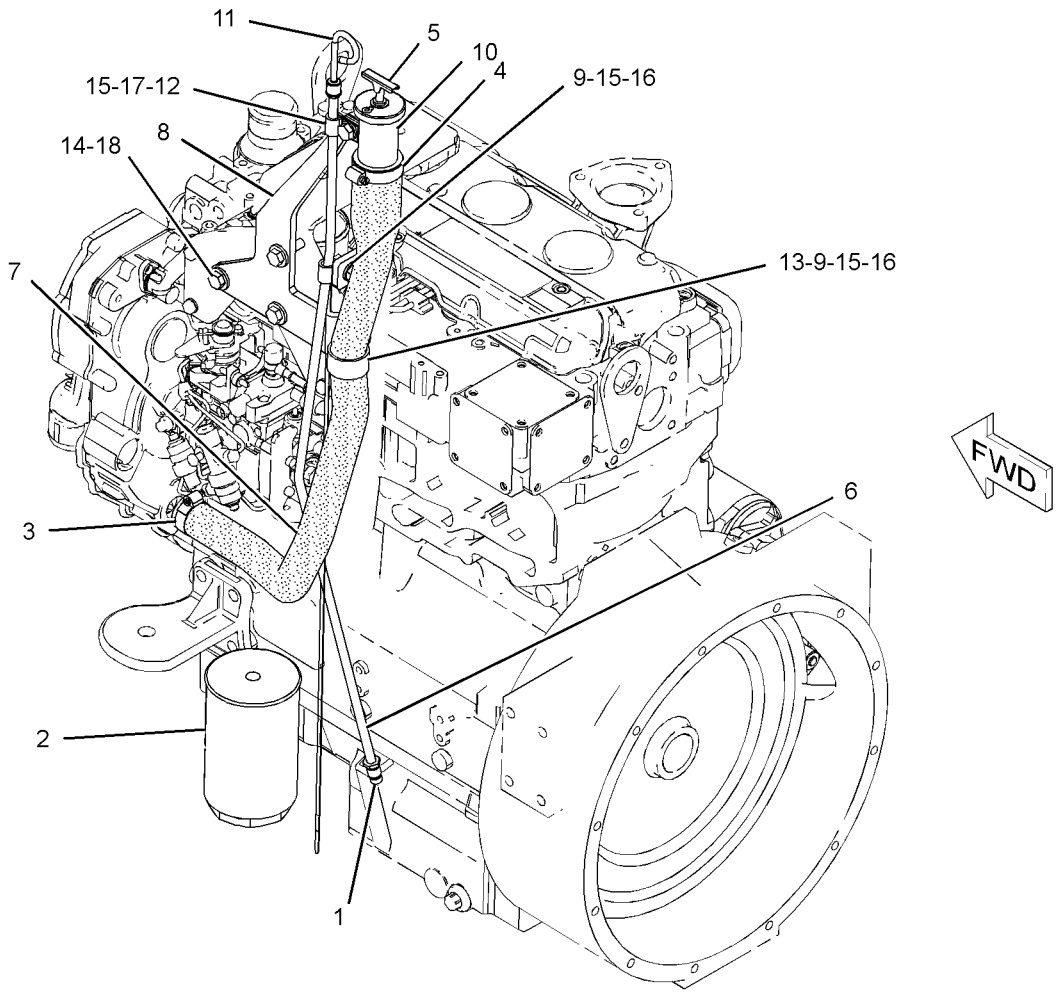

GRAPHIC #1 **<END>** g01231281

LUBRICATION SYSTEM

230-7578 PUMP GP-ENGINE OIL

S/N: CRS1-6887

PART OF 273-3610 ENGINE AR, 320-8414, 323-5725, 325-5121 ENGINE AR-PRIMARY

ALSO AN ATTACHMENT

SMCS-1304, 1315 **i01862499**

NOTE	REF NO	GRAPHIC REF	PART NUMBER	QTY	PART NAME 1 2 3 4 5 6 (PRODUCT LEVEL)	SEE PAGE
M	1	1	**100-4461**	5	BOLT (M10X1.50X50-MM)	
	2	1	**225-8329**	1	PUMP AS-ENGINE OIL	

M-METRIC PART

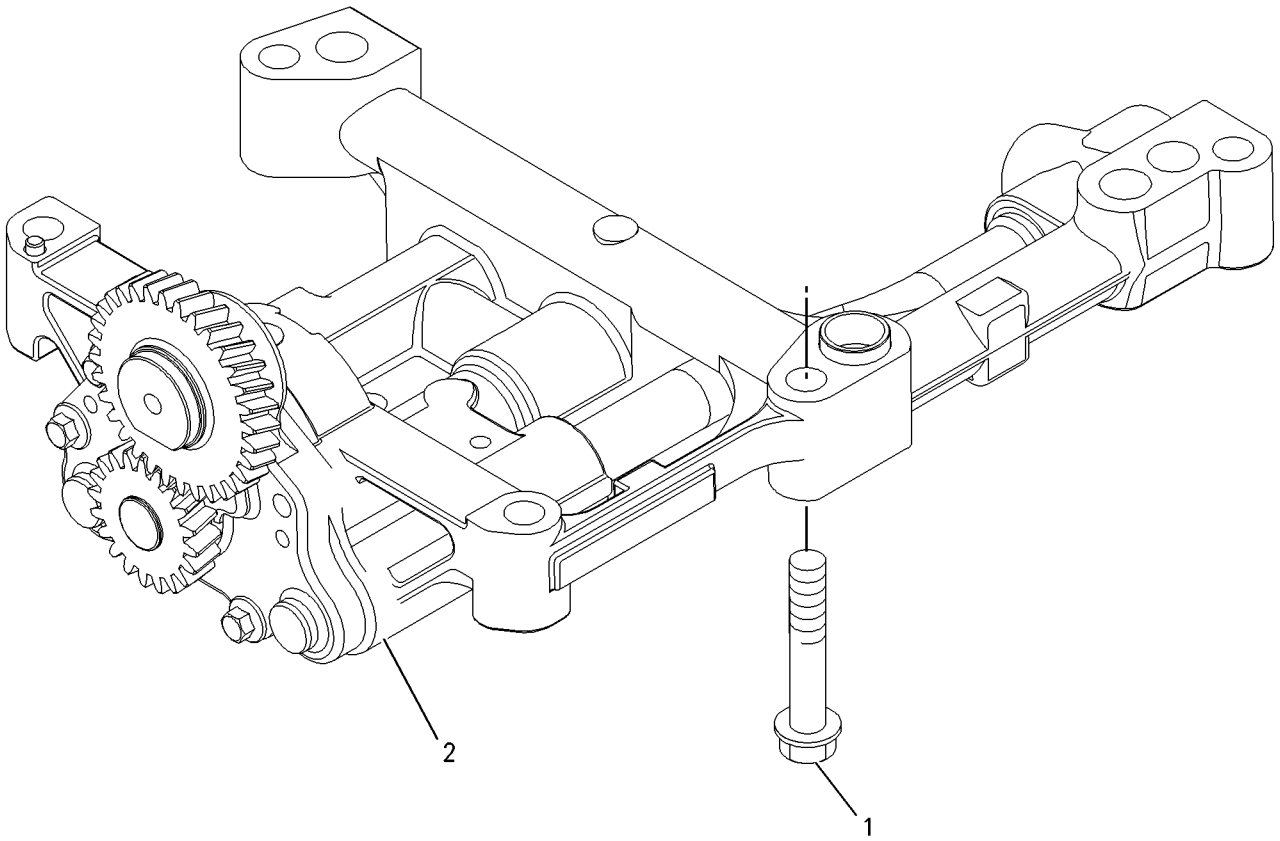

GRAPHIC #1 **<END>** g00911993

231-0033 CONNECTION GP-WATER

S/N: CRS1-6887

PART OF 273-3610 ENGINE AR, 320-8414, 323-5725, 325-5121 ENGINE AR-PRIMARY ALSO AN ATTACHMENT

SMCS-1380 **i02597614**

NOTE	REF NO	GRAPHIC REF	PART NUMBER	QTY	PART NAME 1 2 3 4 5 6 (PRODUCT LEVEL)	SEE PAGE
M	1	1	**6I-0260**	2	BOLT (M8X1.25X25-MM)	
	2	1	**254-2267**	1	REGULATOR GP-TEMPERATURE (INCLUDES CONNECTOR) (WATER)	
	2A	1	**254-2270**	1	SEAL-O-RING (WATER TEMPERATURE REGULATOR)	

M-METRIC PART

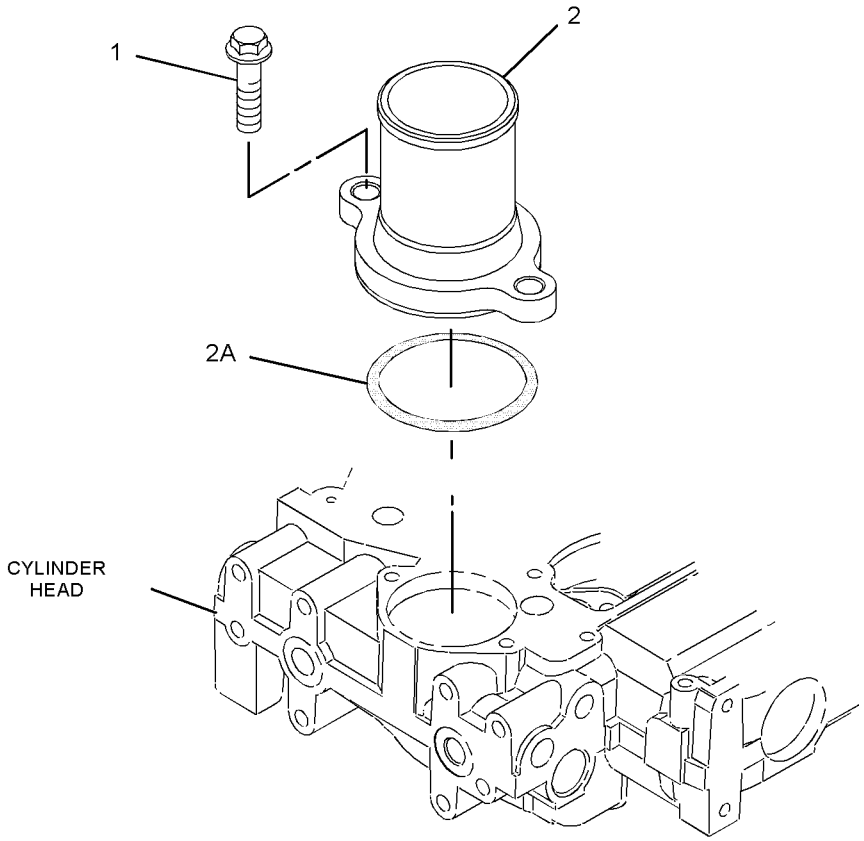

GRAPHIC #1 **<END>** g01081626

232-3722 COOLER GP-ENGINE OIL

S/N: CRS1-6887

PART OF 238-2799 COOLER GP-FLTR BASE & ENG OIL

ALSO AN ATTACHMENT

SMCS-1378 **i02525143**

NOTE	REF NO	GRAPHIC REF	PART NUMBER	QTY	PART NAME 1 2 3 4 5 6 (PRODUCT LEVEL)	SEE PAGE
M	1	1	**6I-0260**	10	BOLT (M8X1.25X25-MM)	
	2	1	**6I-4374**	3	BOLT (M8X1.25X60-MM)	
M	3	1	**101-3895**	4	BOLT (M8X1.25X35-MM)	
	4	1	**225-6817**	1	COOLER-OIL (ENGINE)	
	5	1	**225-6818**	2	SEAL	
	6	1	**272-2265**	1	SEAL	

M-METRIC PART

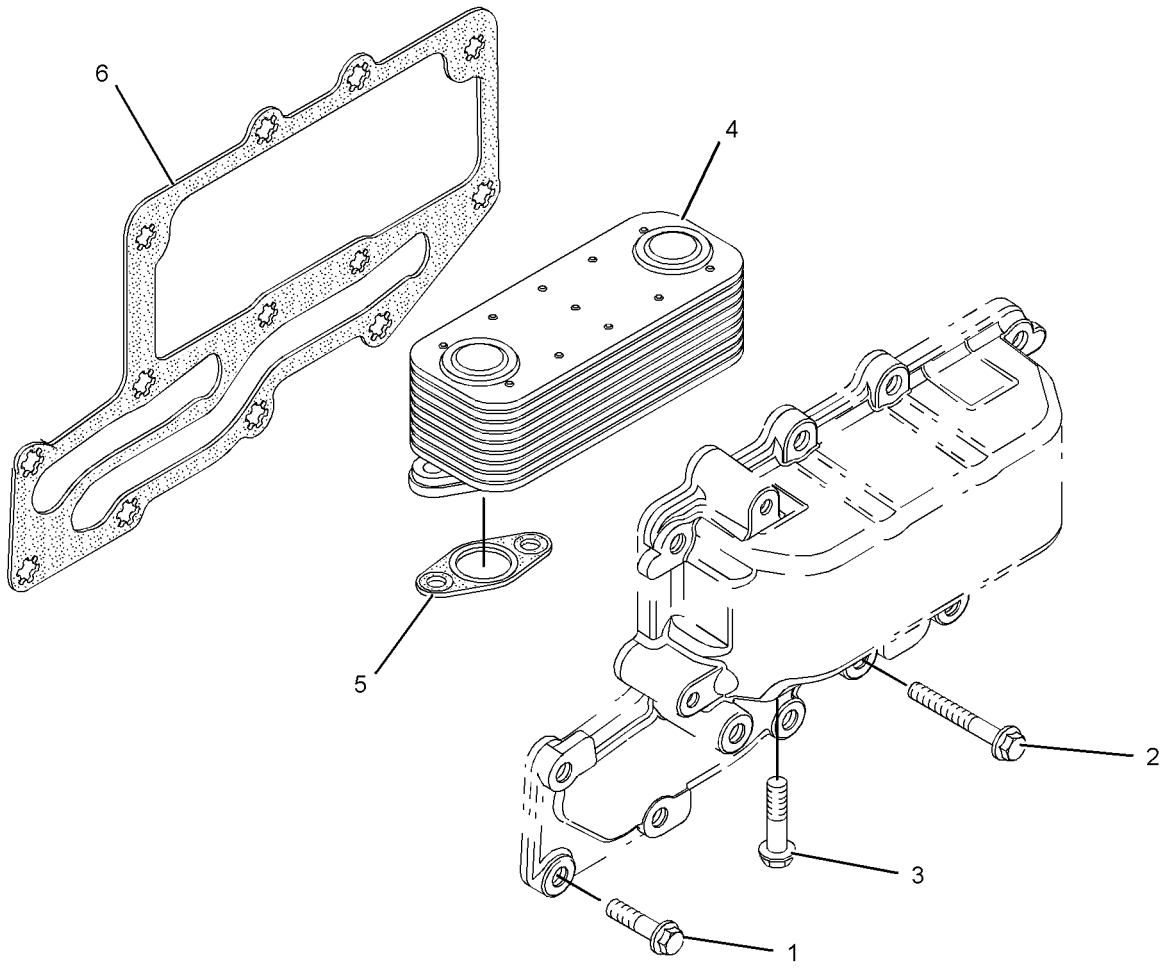

GRAPHIC #1 **<END>** g01111678

296-5616 COOLER GP-ENGINE OIL

S/N: CRS1-99999
PART OF 238-2799 COOLER GP-FLTR BASE & ENG OIL
AN ATTACHMENT

SMCS-1378 **i02654739**

NOTE	REF NO	GRAPHIC REF	PART NUMBER	QTY	PART NAME 1 2 3 4 5 6 (PRODUCT LEVEL)	SEE PAGE
	1	1	**6I-0218**	2	BOLT (M8X1.25X25-MM)	
M	2	1	**6I-0260**	8	BOLT (M8X1.25X25-MM)	
	3	1	**6I-4374**	3	BOLT (M8X1.25X60-MM)	
M	4	1	**101-3895**	4	BOLT (M8X1.25X35-MM)	
	5	1	**225-6817**	1	COOLER-OIL	
	6	1	**225-6818**	2	SEAL	
	7	1	**272-2265**	1	SEAL	

M-METRIC PART

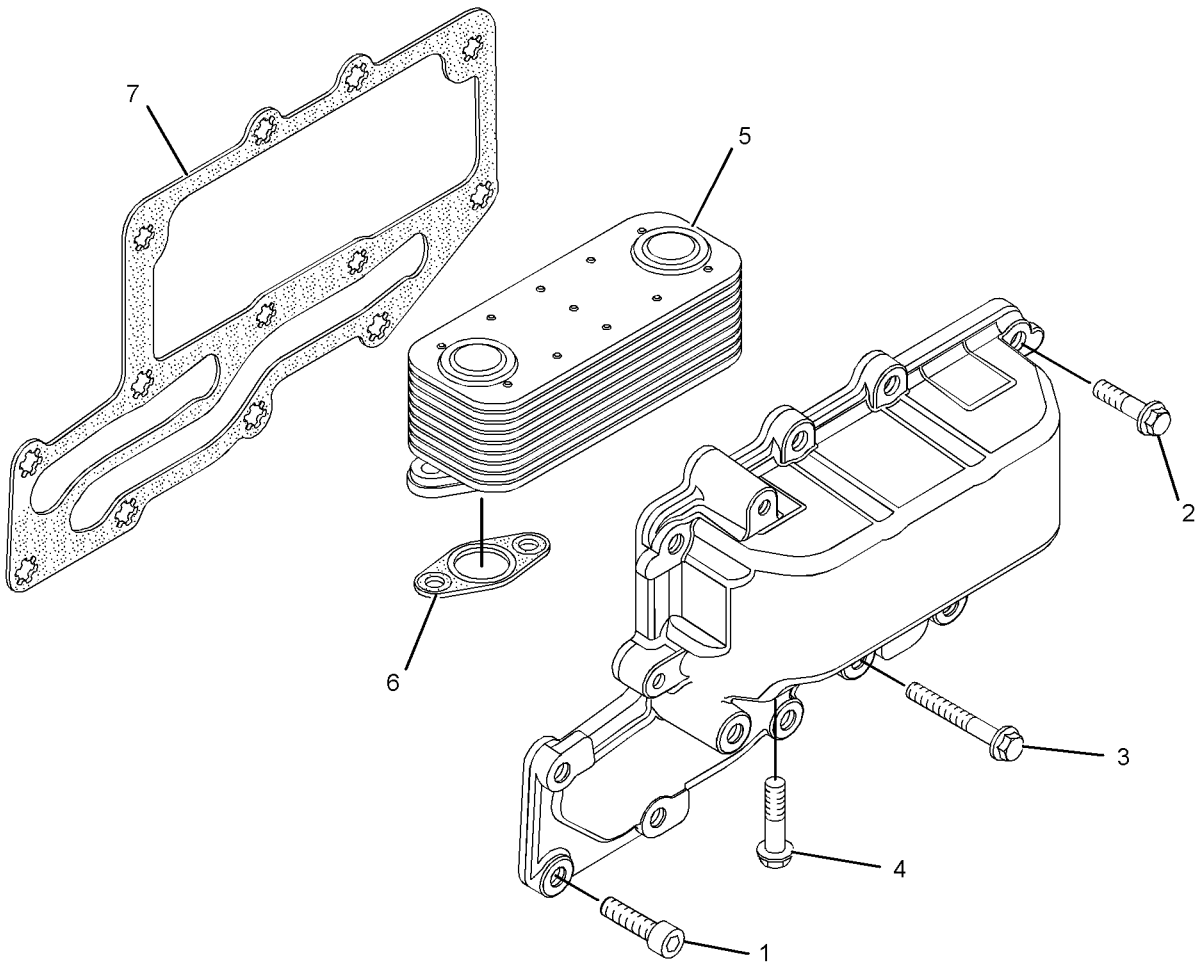

GRAPHIC #1 **<END>** g01318786

238-2799 COOLER GP-FLTR BASE & ENG OIL

S/N: CRS1-6887

PART OF 273-3610 ENGINE AR, 320-8414, 323-5725, 325-5121 ENGINE AR-PRIMARY
ALSO AN ATTACHMENT

SMCS-1306, 1378 **i02574011**

NOTE	REF NO	GRAPHIC REF	PART NUMBER	QTY	PART NAME 1 2 3 4 5 6 (PRODUCT LEVEL)	SEE PAGE
	1	1	**6I-0572**	4	BOLT (M8X1.25X20-MM)	
M	2	1	**6I-0645**	4	BOLT (M8X1.25X25-MM)	
	3	1	**8T-7876**	1	SEAL-O-RING	
	4	1	**225-7941**	1	PLUG	
	5	1	**225-7944**	2	GASKET	
	6	1	**249-0974**	1	HEAD AS-OIL FILTER	
Y	7	1	**232-3722**	1	COOLER GP-ENGINE OIL	48
	8	1	**232-3751**	1	PLATE	

M-METRIC PART
Y-SEPARATE ILLUSTRATION

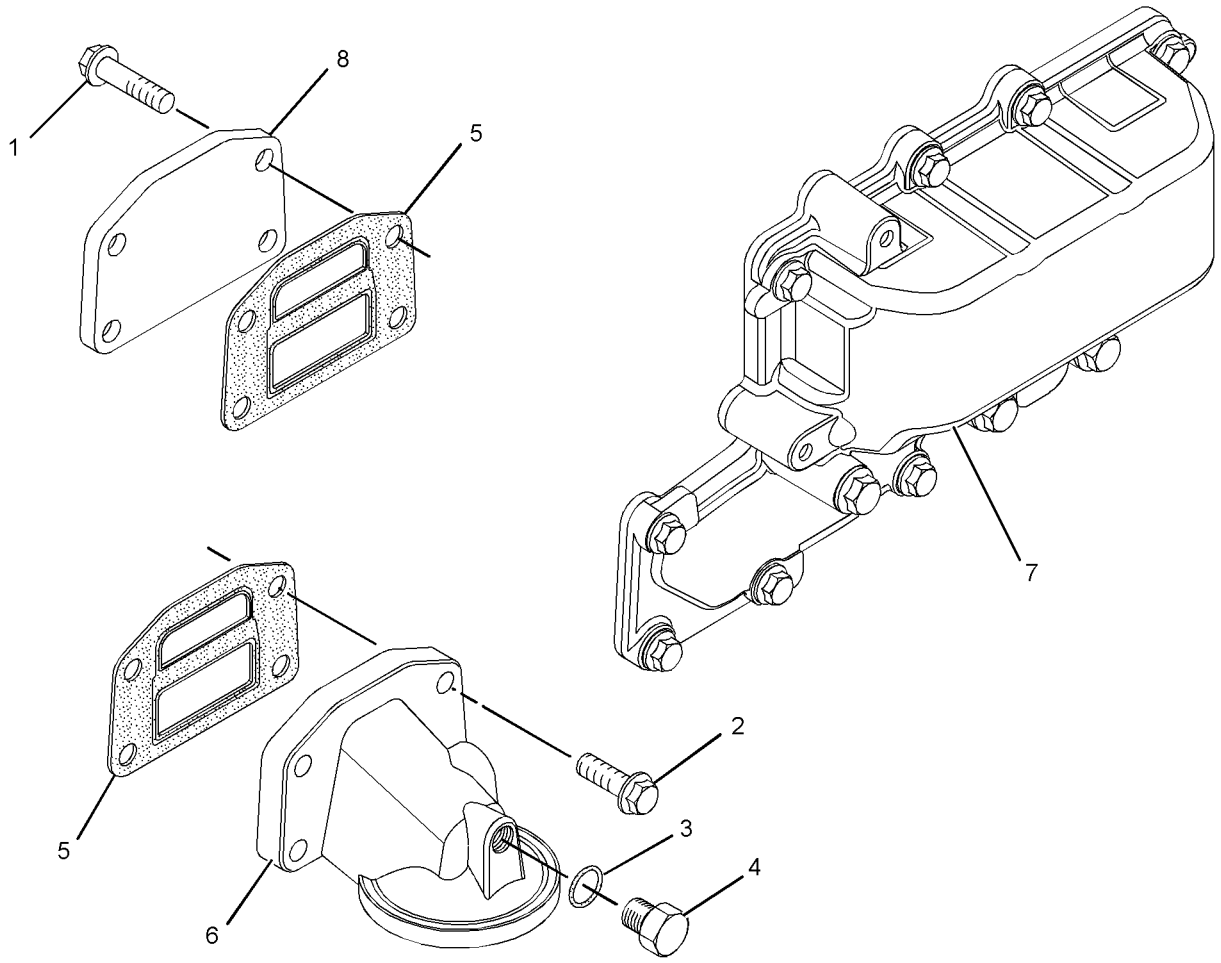

GRAPHIC #1 **<END>** g01289551

238-2799 COOLER GP-FLTR BASE & ENG OIL

S/N: CRS1-99999

PART OF 320-8414, 323-5725, 325-5121 ENGINE AR-PRIMARY

AN ATTACHMENT

SMCS-1306, 1378 **i03244621**

NOTE	REF NO	GRAPHIC REF	PART NUMBER	QTY	PART NAME 1 2 3 4 5 6 (PRODUCT LEVEL)	SEE PAGE
	1	1	**6I-0572**	4	BOLT (M8X1.25X20-MM)	
M	2	1	**6I-0645**	4	BOLT (M8X1.25X25-MM)	
	3	1	**8T-7876**	1	SEAL-O-RING	
	4	1	**225-7941**	1	PLUG	
	5	1	**225-7944**	2	GASKET	
	6	1	**249-0974**	1	HEAD AS-OIL FILTER	
CY	7	1	**296-5616**	1	COOLER GP-ENGINE OIL	49
	8	1	**232-3751**	1	PLATE	

C-CHANGE FROM PREVIOUS TYPE
M-METRIC PART
Y-SEPARATE ILLUSTRATION

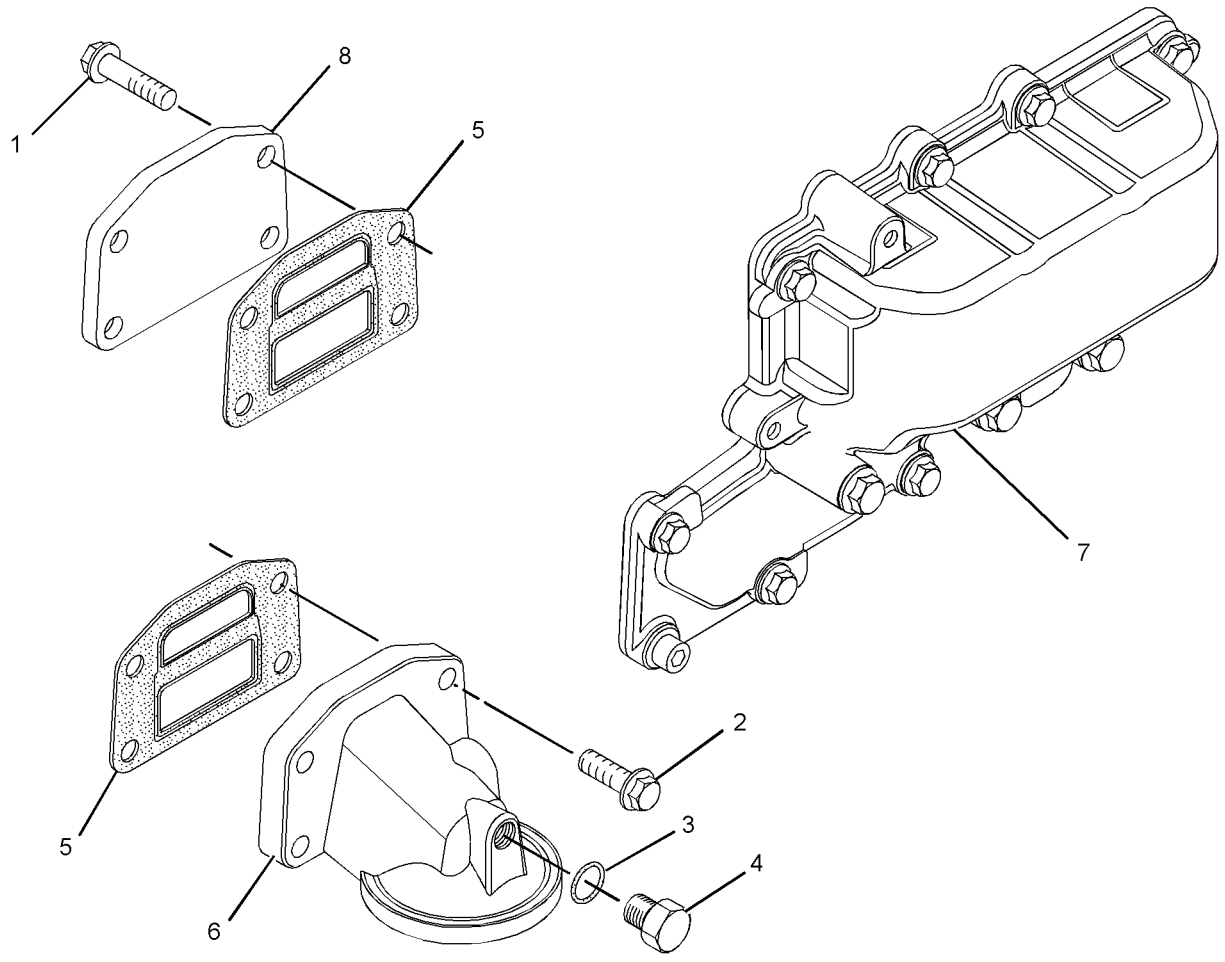

GRAPHIC #1 **<END>** g01621027

213-9314 FAN GP-SUCTION—WITH AIR CONDITIONER

S/N: HLS1-6980
PART OF 269-2127 CAB AR-ENCLOSED ROPS
AN ATTACHMENT

SMCS-1356, 1360 **i02838415**

NOTE	REF NO	GRAPHIC REF	PART NUMBER	QTY	PART NAME 1 2 3 4 5 6 (PRODUCT LEVEL)	SEE PAGE
	1	1	**3S-8447**	1	V-BELT SET (INCLUDES 2-BELTS)	
	2	1	**142-3388**	1	SPACER-FAN	
	3	1	**142-3391**	1	SPIDER AS (9-BLADE)	
	4	1	**215-3507**	1	PULLEY-FAN	
	5	1	**242-9751**	1	GUARD AS	
M	6	1	**153-3061**	4	BOLT (M8X1.25X130-MM)	
	7	1	**5P-4116**	4	WASHER-HARD (8.8X20.5X2-MM THK)	
	8	1	**8T-4224**	4	WASHER-HARD (8.8X16X2-MM THK)	
M	9	1	**8T-4908**	4	BOLT (M8X1.25X25-MM)	
	10	1	**1W-2934**	1	V-BELT (AIR CONDITIONER)	

M-METRIC PART

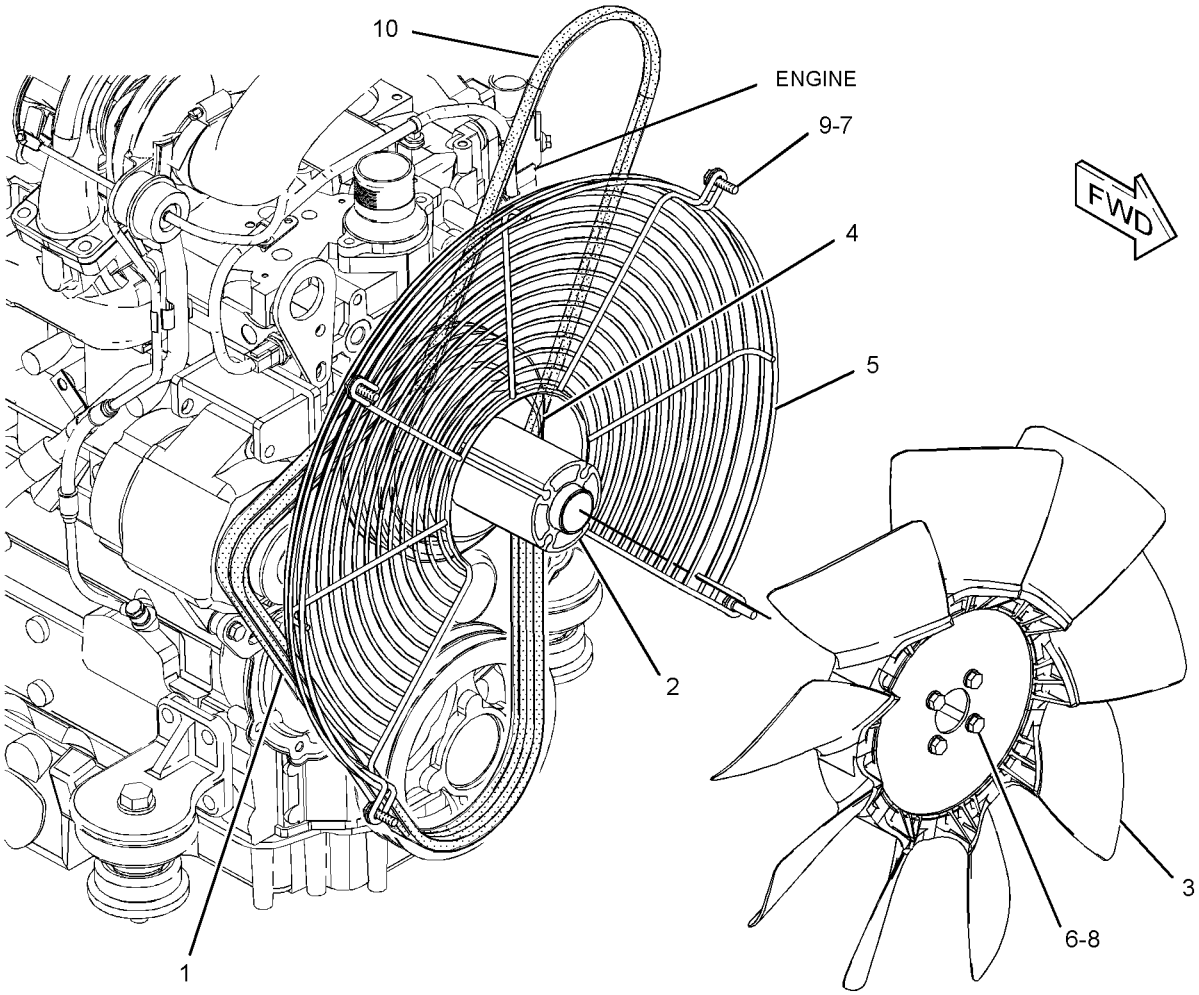

GRAPHIC #1 **<END>** g01211950

213-9314 FAN GP-SUCTION—WITH AIR CONDITIONER

S/N: HLS6981-99999

PART OF 269-2127 CAB AR-ENCLOSED ROPS

AN ATTACHMENT

SMCS-1356, 1360 **i03318481**

NOTE	REF NO	GRAPHIC REF	PART NUMBER	QTY	PART NAME 1 2 3 4 5 6 (PRODUCT LEVEL)	SEE PAGE
	1	1	**3S-8447**	1	V-BELT SET (INCLUDES 2-BELTS)	
	2	1	**142-3388**	1	SPACER-FAN	
	3	1	**142-3391**	1	SPIDER AS (9-BLADE)	
	4	1	**215-3507**	1	PULLEY-FAN	
	5	1	**242-9751**	1	GUARD AS	
M	6	1	**153-3061**	4	BOLT (M8X1.25X130-MM)	
	7	1	**5P-4116**	4	WASHER-HARD (8.8X20.5X2-MM THK)	
	8	1	**8T-4224**	4	WASHER-HARD (8.8X16X2-MM THK)	
M	9	1	**8T-4908**	4	BOLT (M8X1.25X25-MM)	
C	10	1	**2P-6818**	1	V-BELT (AIR CONDITIONER)	

C-CHANGE FROM PREVIOUS TYPE
M-METRIC PART

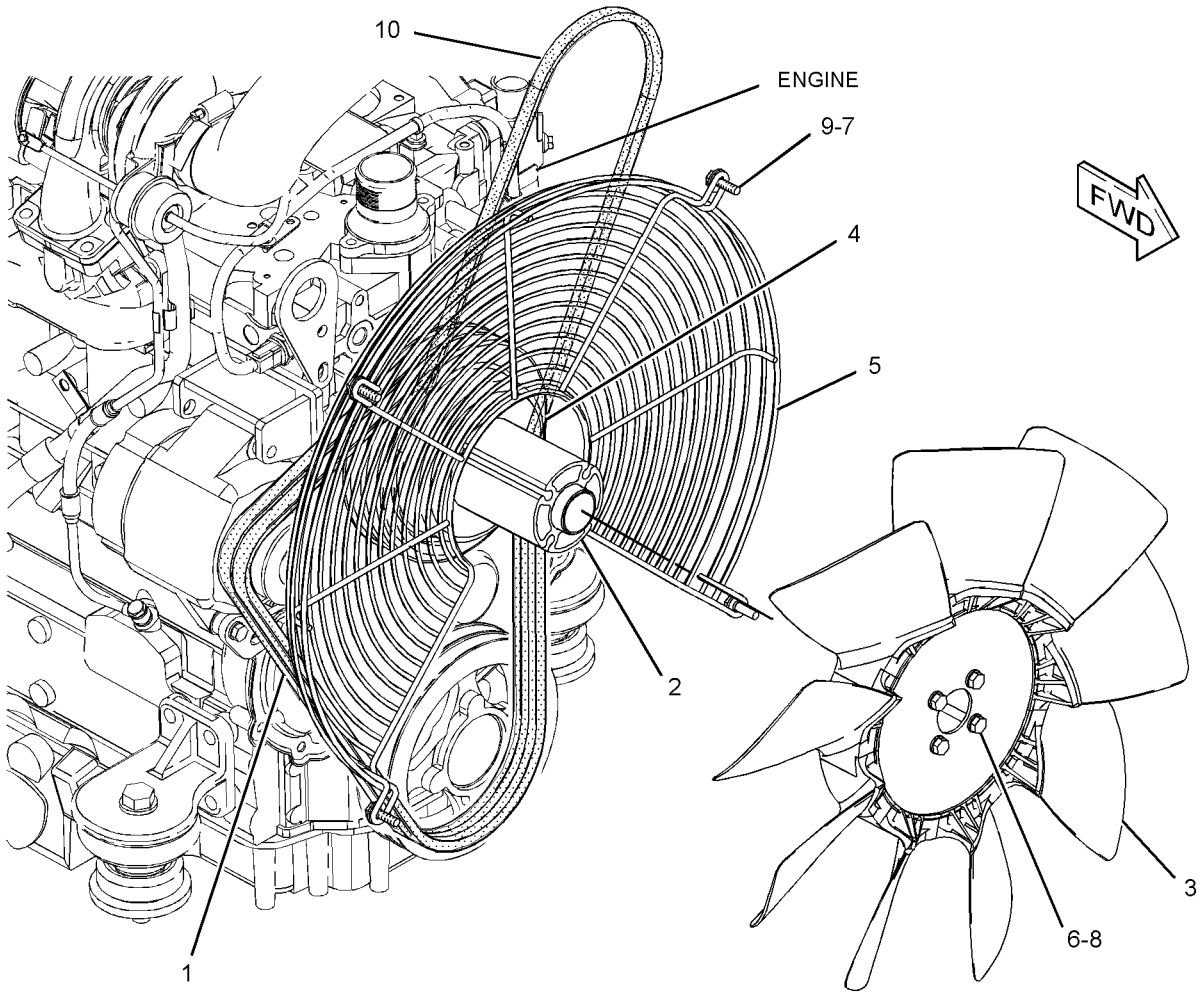

GRAPHIC #1 **<END>** g01211950

254-6101 FAN GP-SUCTION—WITHOUT AIR CONDITIONER

S/N: HLS1-99999

PART OF 269-2125, 269-2126 CAB AR-ENCLOSED ROPS, 269-2123, 269-2124 CANOPY AR-OPEN ROPS AN ATTACHMENT

SMCS-1356, 1360 **i02446411**

NOTE	REF NO	GRAPHIC REF	PART NUMBER	QTY	PART NAME 1 2 3 4 5 6 (PRODUCT LEVEL)	SEE PAGE
	1	1	**3S-8447**	1	V-BELT SET (INCLUDES 2-BELTS)	
	2	1	**130-3879**	1	PULLEY-FAN DRIVE	
	3	1	**142-3388**	1	SPACER-FAN	
	4	1	**142-3391**	1	SPIDER AS (9-BLADE)	
	5	1	**242-9751**	1	GUARD AS	
M	6	1	**153-3061**	4	BOLT (M8X1.25X130-MM)	
	7	1	**5P-4116**	4	WASHER-HARD (8.8X20.5X2-MM THK)	
	8	1	**8T-4224**	4	WASHER-HARD (8.8X16X2-MM THK)	
M	9	1	**8T-4908**	4	BOLT (M8X1.25X25-MM)	

M-METRIC PART

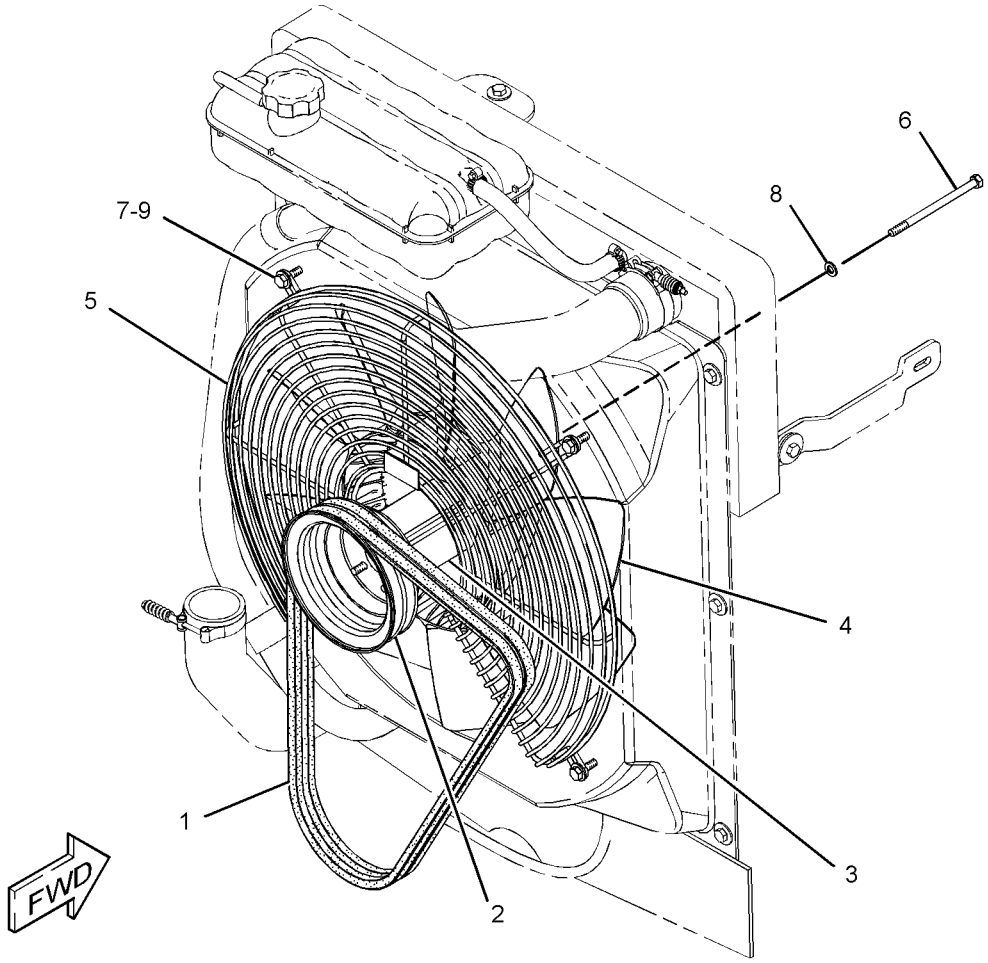

GRAPHIC #1 **<END>** g01208867

214-3751 LINES GP-TRANSMISSION COOLER

S/N: HLS1-5300

PART OF 214-2202 MOUNTING & LINES GP-RADIATOR

SMCS-1375 **i02673258**

NOTE	REF NO	GRAPHIC REF	PART NUMBER	QTY	PART NAME 1 2 3 4 5 6 (PRODUCT LEVEL)	SEE PAGE
	1	1	**118-7286**	1	BRACKET AS	
	2	1	**130-9984**	2	CLIP	
	3	1	**159-1503**	2	CLAMP-HOSE	
I	4	1	**214-3753**	1	HOSE AS	
I	5	1	**250-4337**	1	HOSE AS	
	6	1	*148-8339*	1	CONNECTOR AS	
		1	**6V-8716**	1	CONNECTOR	
		1	**6V-9746**	1	SEAL-O-RING	
		1	**7M-8485**	1	SEAL-O-RING	
	7	1	*148-8360*	1	ELBOW AS	
		1	**6V-9182**	1	ELBOW	
		1	**6V-9746**	1	SEAL-O-RING	
		1	**7M-8485**	1	SEAL-O-RING	
	8	1	**5P-4116**	2	WASHER-HARD (8.8X20.5X2-MM THK)	
	9	1	**8T-4121**	2	WASHER-HARD (11X21X2.5-MM THK)	
M	10	1	**8T-4136**	2	BOLT (M10X1.5X25-MM)	
M	11	1	**8T-4189**	2	BOLT (M8X1.25X20-MM)	
M	12	1	**8T-4192**	2	BOLT (M12X1.75X25-MM)	
	13	1	**8T-4223**	2	WASHER-HARD (13.5X25.5X3-MM THK)	
	14	1	**8T-7529**	3	CLIP	
G	15	1	**160-2246**		SLEEVE-ABRASION (10-IN)	

G-ORDER BY THE INCH
I-REFER TO HYDRAULIC INFORMATION SYSTEM
M-METRIC PART

214-3751 **LINES GP-TRANSMISSION COOLER** *(contd.)* **i02673258**

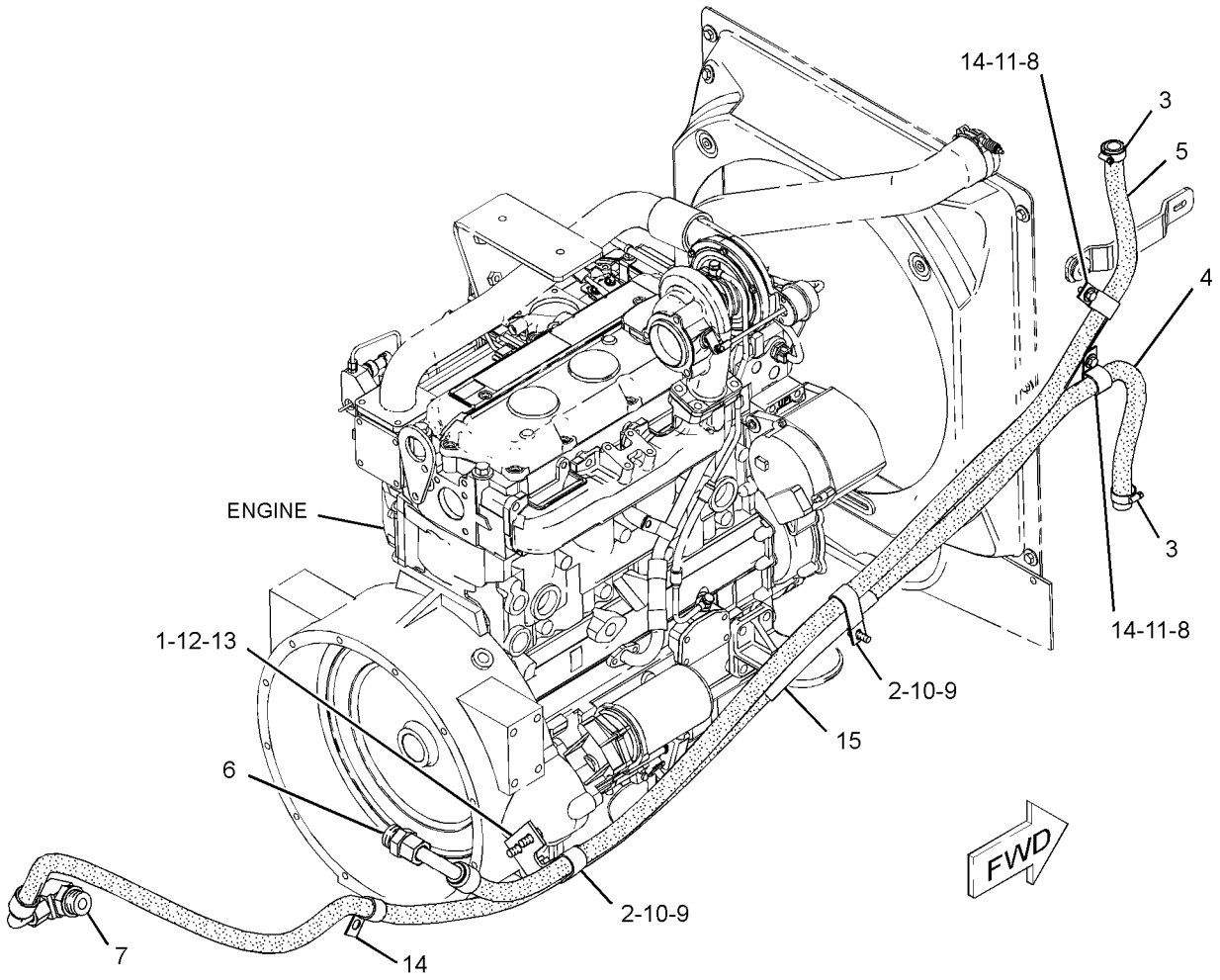

GRAPHIC #1 **<END>** g01343993

214-3751 LINES GP-TRANSMISSION COOLER

S/N: HLS5301-99999

PART OF 214-2202 MOUNTING & LINES GP-RADIATOR

SMCS-1375 **i02857462**

NOTE	REF NO	GRAPHIC REF	PART NUMBER	QTY	PART NAME 1 2 3 4 5 6 (PRODUCT LEVEL)	SEE PAGE
	1	1	**118-7286**	1	BRACKET AS	
	2	1	**130-9984**	2	CLIP	
	3	1	**159-1503**	2	CLAMP-HOSE	
I	4	1	**214-3753**	1	HOSE AS	
	5	1	**250-4337**	1	HOSE AS	
	6	1	*148-8339*	1	CONNECTOR AS	
		1	**6V-8716**	1	CONNECTOR	
		1	**6V-9746**	1	SEAL-O-RING	
		1	**7M-8485**	1	SEAL-O-RING	
	7	1	*148-8360*	1	ELBOW AS	
		1	**6V-9182**	1	ELBOW	
		1	**6V-9746**	1	SEAL-O-RING	
		1	**7M-8485**	1	SEAL-O-RING	
	8	1	**5P-4116**	2	WASHER-HARD (8.8X20.5X2-MM THK)	
	9	1	**8T-4121**	2	WASHER-HARD (11X21X2.5-MM THK)	
M	10	1	**8T-4136**	2	BOLT (M10X1.5X25-MM)	
M	11	1	**8T-4189**	2	BOLT (M8X1.25X20-MM)	
M	12	1	**8T-4192**	2	BOLT (M12X1.75X25-MM)	
	13	1	**8T-4223**	2	WASHER-HARD (13.5X25.5X3-MM THK)	
	14	1	**8T-7529**	3	CLIP	

I-REFER TO HYDRAULIC INFORMATION SYSTEM
M-METRIC PART

214-3751 **LINES GP-TRANSMISSION COOLER** *(contd.)* **i02857462**

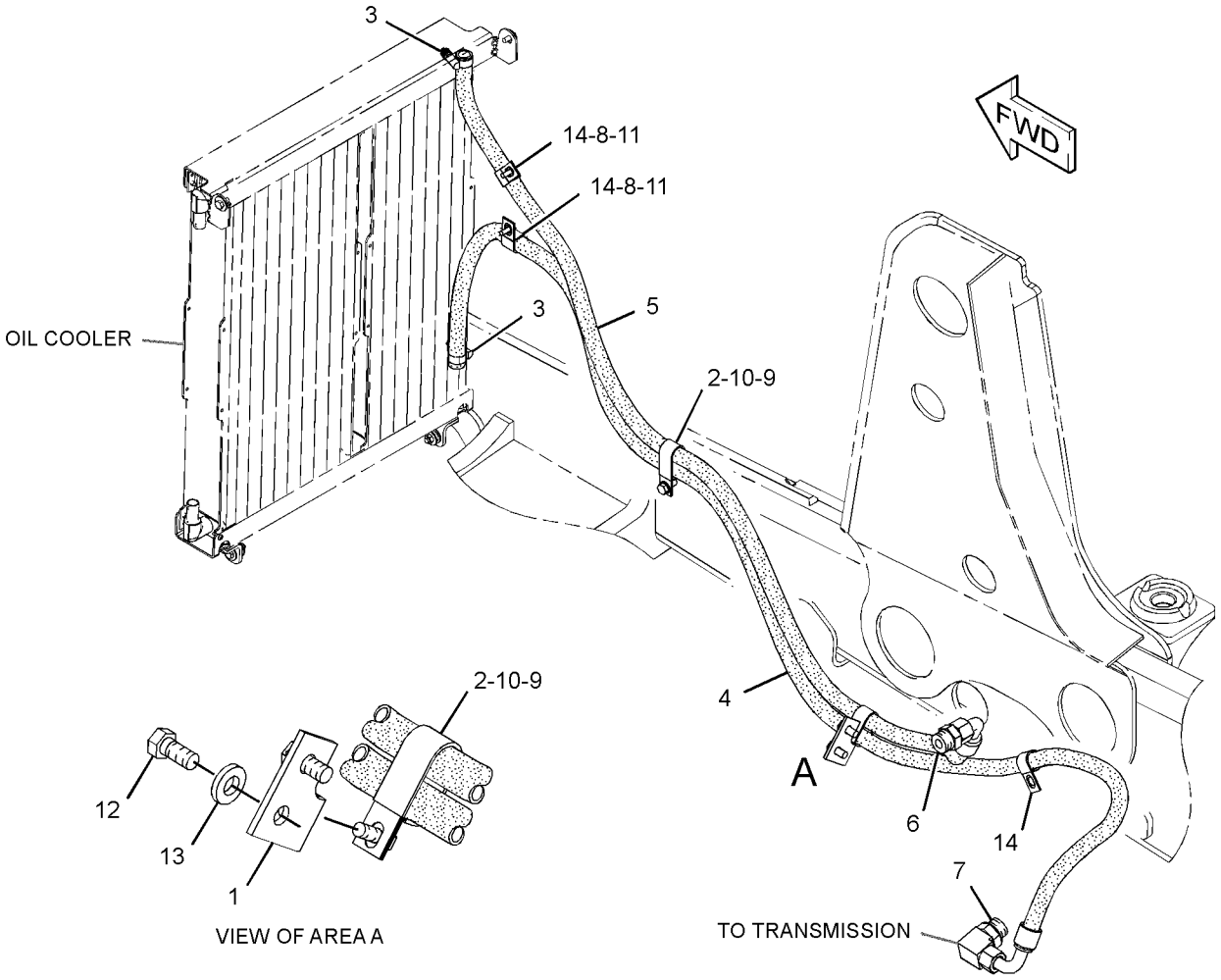

GRAPHIC #1 **<END>** g01522675

214-2202 MOUNTING & LINES GP-RADIATOR–TRANSMISSION, HYDRAULIC OIL

S/N: HLS1-99999

PART OF 213-9273 COMMON AR

FOR USE WITH AIR CONDITIONER

SMCS-1353, 1354, 1375 **i02838012**

NOTE	PART NUMBER	QTY	PART NAME 1 2 3 4 5 6 (PRODUCT LEVEL)	SEE PAGE
Y	*214-3751*	1	LINES GP-TRANSMISSION COOLER	55
Y	*210-5951*	1	MOUNTING GP-RAD & OIL COOLER (TRANSMISSION, HYDRAULIC OIL)	60

Y-SEPARATE ILLUSTRATION

<END>

210-5951 MOUNTING GP-RAD & OIL COOLER–

TRANSMISSION, HYDRAULIC OIL

S/N: HLS1-99999

PART OF 214-2202 MOUNTING & LINES GP-RADIATOR

SMCS-1353, 1374 **i02366621**

NOTE	REF NO	GRAPHIC REF	PART NUMBER	QTY	PART NAME 1 2 3 4 5 6 (PRODUCT LEVEL)	SEE PAGE
	1	1	**2W-9710**	4	MOUNT AS	
	2	1	**6N-6984**	2	MOUNT-RUBBER	
	3	1	**123-4065**	6	RIVET-POP	
	4	1	**140-3640**	2	PLATE	
	5	1	**210-6139**	1	HOSE-RADIATOR (LOWER)	
	6	1	**210-6141**	1	HOSE-RADIATOR (UPPER)	
	7	1	**214-3647**	1	BAFFLE	
Y	8	1	*214-7407*	1	TANK GP-EXPANSION (COOLANT)	66
	9	1	**214-7457**	1	CLAMP	
	10	1	**214-7458**	1	CLAMP-HOSE	
	11	1	**216-6945**	2	CLAMP-HOSE	
	12	1	**217-2308**	1	SHROUD AS	
	13	1	**7X-0579**	14	WASHER-HARD (8.8X25.5X2-MM THK)	
	14	1	**7X-0603**	4	WASHER-HARD (9.9X35X2.5-MM THK)	
M	15	1	**8T-4133**	4	NUT (M10X1.5-THD)	
M	16	1	**8T-4182**	4	BOLT (M10X1.5X45-MM)	
M	17	1	**8T-4189**	4	BOLT (M8X1.25X20-MM)	
M	18	1	**8T-4200**	10	BOLT (M8X1.25X16-MM)	
	19	1	**8T-4222**	8	WASHER-PLATED (11X32X2.5-MM THK)	
M	20	1	**8T-4908**	4	BOLT (M8X1.25X25-MM)	
E	21	1	**8C-3681**		HOSE (36-CM)	
J	22	1	**136-7728**		SEAL-COMPOSITE (4.45-DM EACH)	

E-ORDER BY THE CENTIMETER
J-ORDER BY THE DECIMETER
M-METRIC PART
Y-SEPARATE ILLUSTRATION

210-5951 **MOUNTING GP-RAD & OIL COOLER** *(contd.)* **i02366621**

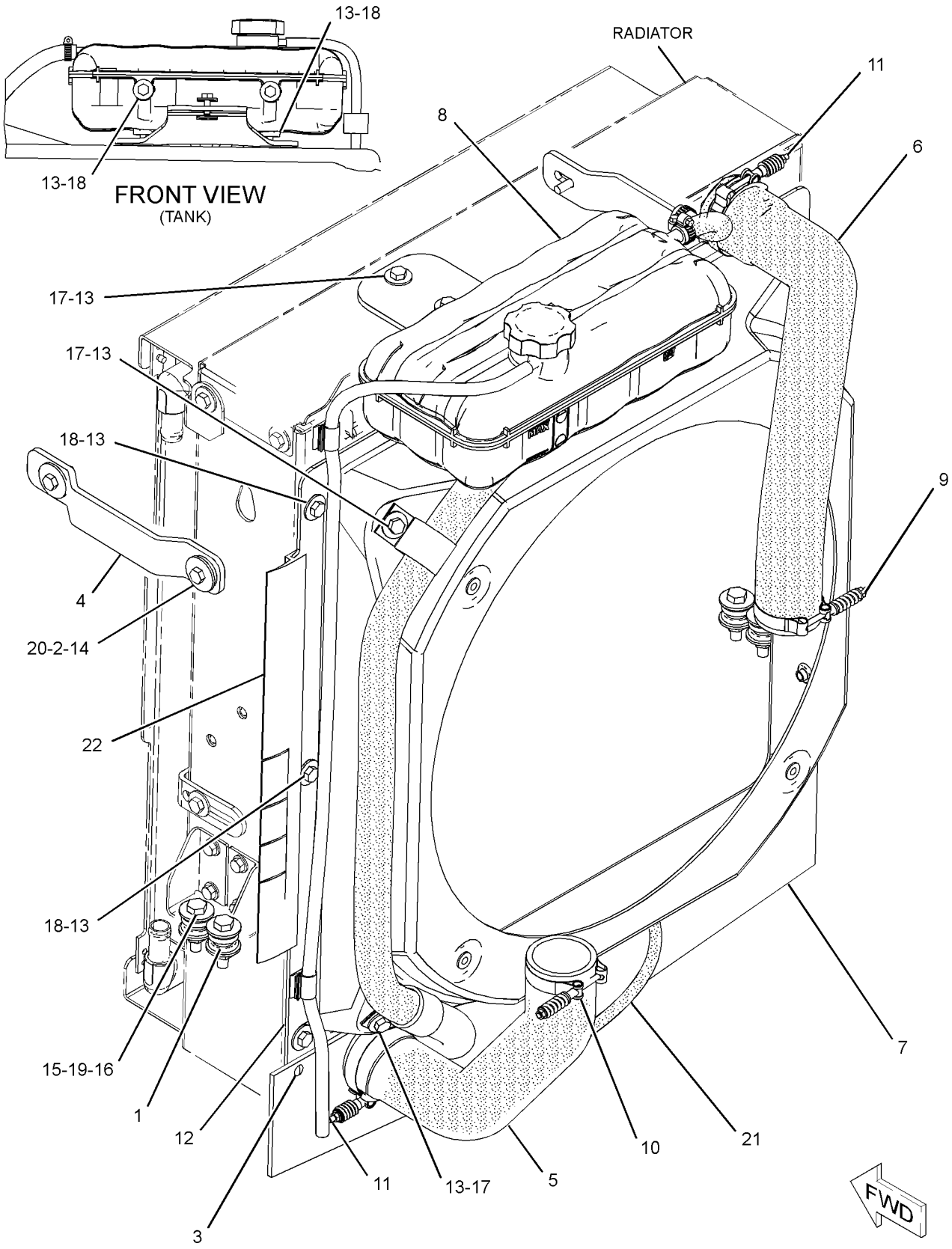

GRAPHIC #1 **<END>** g01183008

COOLING SYSTEM

230-7355 PUMP GP-WATER

S/N: CRS1-6887

PART OF 273-3610 ENGINE AR, 320-8414, 325-5121 ENGINE AR-PRIMARY

ALSO AN ATTACHMENT

SMCS-1361 **i02883542**

NOTE	REF NO	GRAPHIC REF	PART NUMBER	QTY	PART NAME 1 2 3 4 5 6 (PRODUCT LEVEL)	SEE PAGE
M	1	1	**6I-0217**	2	BOLT (M8X1.25X20-MM)	
M	2	1	**6I-0254**	2	BOLT (M8X1.25X30-MM)	
M	3	1	**100-3751**	5	BOLT (M8X1.25X65-MM)	
	4	1	**113-8129**	2	BOLT (M8X75-MM)	
	5	1	**225-7741**	1	CONNECTION AS	
	6	1	**225-7738**	1	SEAL-O-RING	
	7	1	**225-7739**	1	SEAL-O-RING	
	8	1	**225-8016**	1	PUMP GP-WATER	
	8A	1	**225-8019**	1	GASKET	
		1	**286-3592**	1	PUMP-GEAR	
					AVAILABLE REPAIR KIT(S):	
			247-0144	1	KIT-WATER PUMP	
					(INCLUDES 2 DIFFERENT GASKETS)	

M-METRIC PART

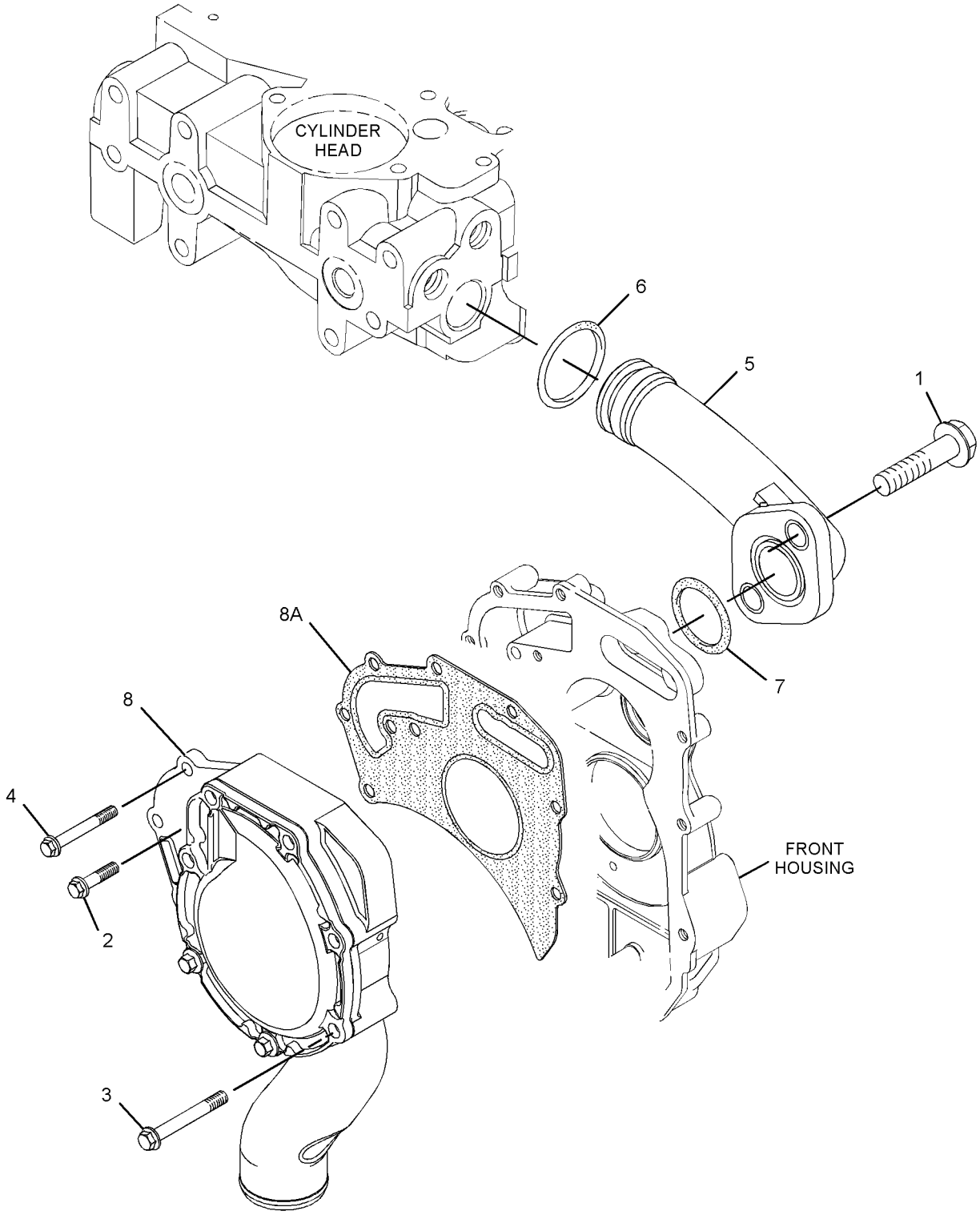

GRAPHIC #1 **<END>** g01435412

210-5949 RADIATOR & OIL COOLER GP–
HYDRAULIC, TRANSMISSION
S/N: HLS1-99999
AN ATTACHMENT

SMCS-1351 **i03514605**

NOTE	REF NO	GRAPHIC REF	PART NUMBER	QTY	PART NAME 1 2 3 4 5 6 (PRODUCT LEVEL)	SEE PAGE
	1	1	**210-5948**	1	RADIATOR GP	
		1	**1V-6585**	1	VALVE-SHUTOFF	
	2	1	**210-5953**	1	COOLER AS-OIL (HYDRAULIC, TRANSMISSION)	
	2A	1	**210-5955**	1	CORE AS-OIL COOLER (TRANSMISSION)	
	2B	1	**210-5954**	1	CORE AS-OIL COOLER (HYDRAULIC)	
	3	1	**8C-0572**	2	WASHER (8.8X25.5X2-MM THK)	
M	4	1	**8T-4200**	2	BOLT (M8X1.25X16-MM)	

M-METRIC PART

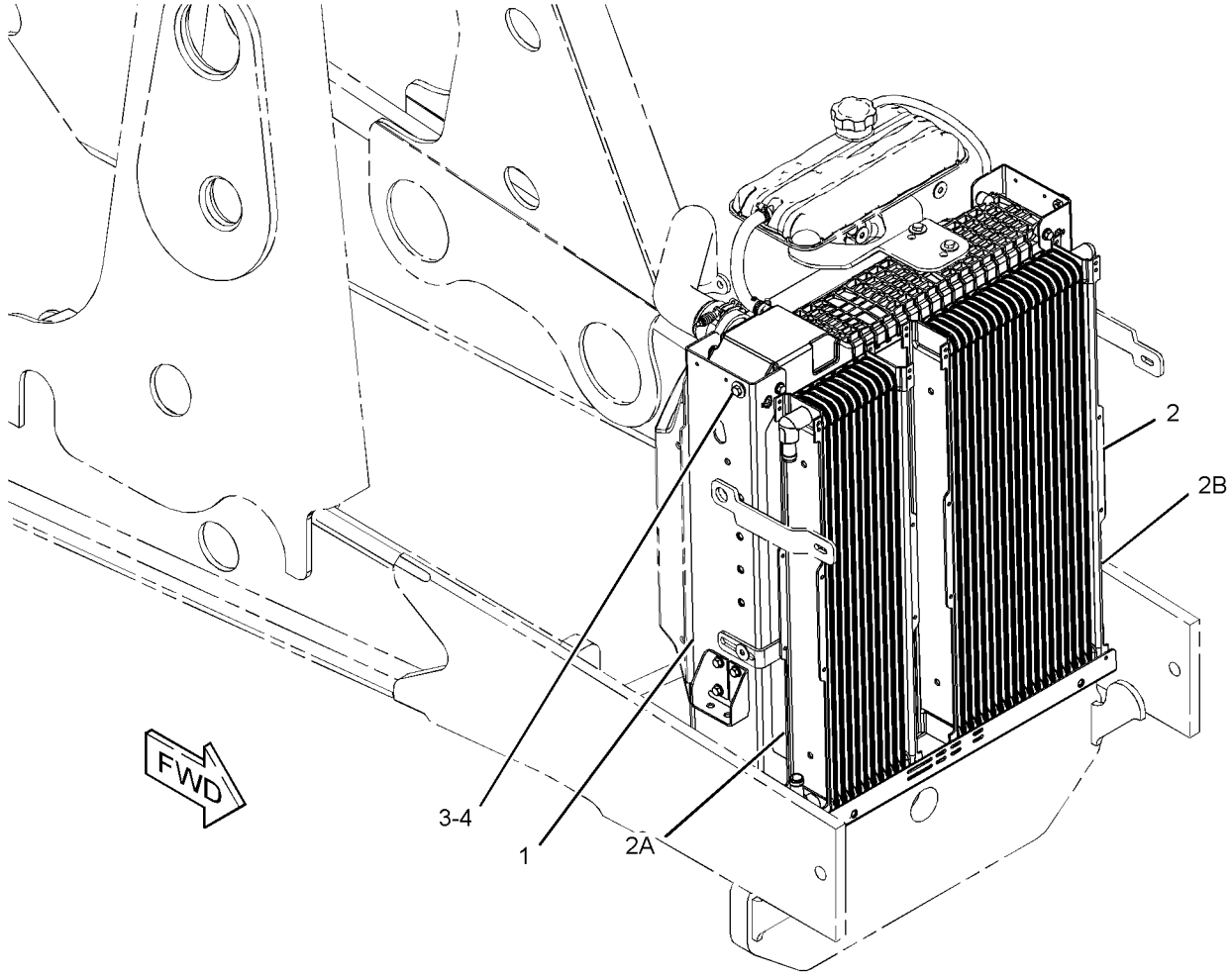

GRAPHIC #1 **<END>** g01341095

214-4749 RADIATOR & OIL COOLER GP–
HYDRAULIC, TRANSMISSION
S/N: HLS1-99999
AN ATTACHMENT

SMCS-1351 **i03514610**

NOTE	REF NO	GRAPHIC REF	PART NUMBER	QTY	PART NAME 1 2 3 4 5 6 (PRODUCT LEVEL)	SEE PAGE
	1	1	**214-4740**	1	RADIATOR GP	
		1	**1V-6585**	1	VALVE-SHUTOFF	
	2	1	**214-4745**	1	COOLER AS-OIL (HYDRAULIC, TRANSMISSION)	
		1	**214-4746**	1	CORE AS-OIL COOLER (HYDRAULIC)	
		1	**214-4747**	1	CORE AS-OIL COOLER (TRANSMISSION)	
	3	1	**8C-0572**	2	WASHER (8.8X25.5X2-MM THK)	
M	4	1	**8T-4200**	2	BOLT (M8X1.25X16-MM)	

M-METRIC PART

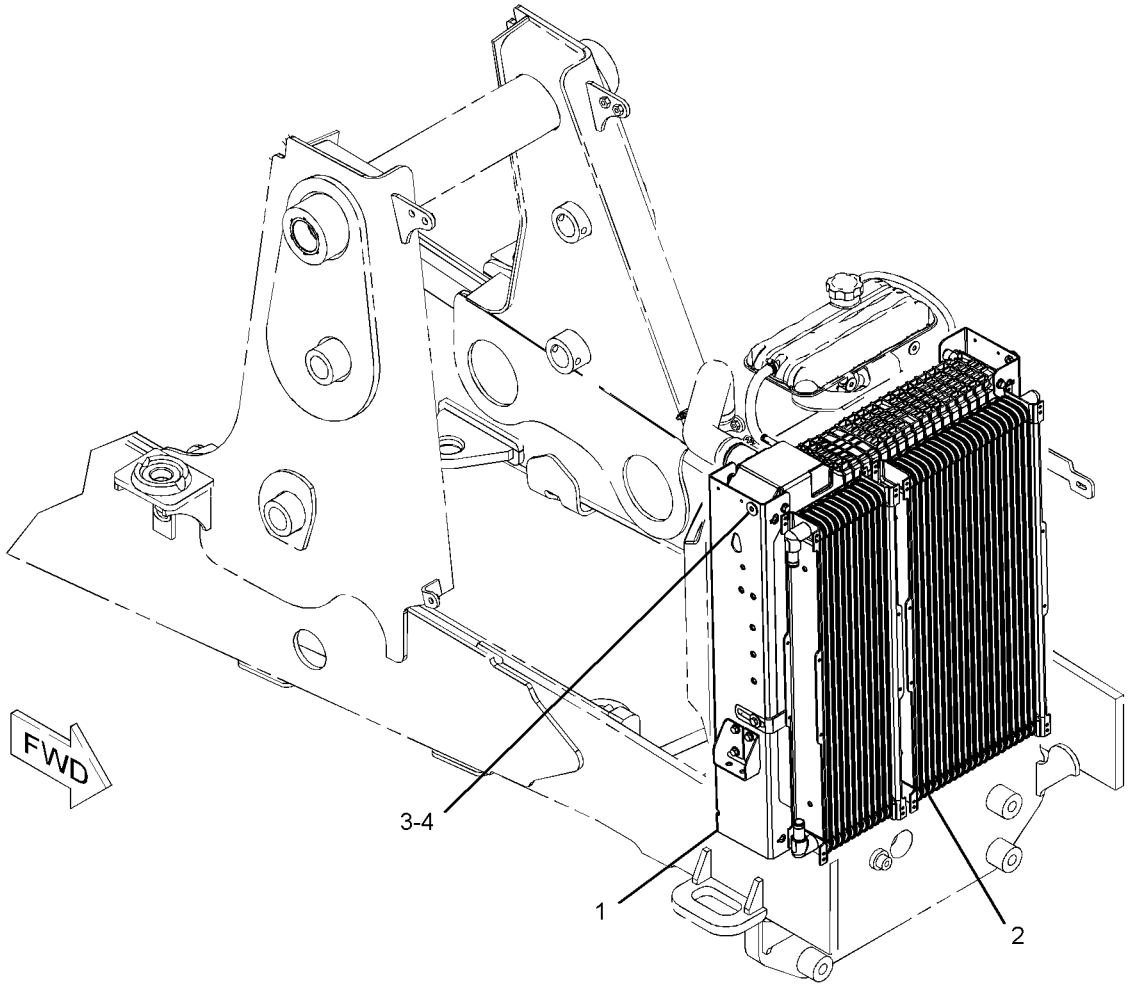

GRAPHIC #1 **<END>** g01205438

214-7407 TANK GP-EXPANSION–COOLANT

S/N: HLS1-99999

PART OF 210-5951 MOUNTING GP-RAD & OIL COOLER

SMCS-1354 **i02658756**

NOTE	REF NO	GRAPHIC REF	PART NUMBER	QTY	PART NAME 1 2 3 4 5 6 (PRODUCT LEVEL)	SEE PAGE
	1	1	**6S-8620**	2	CLAMP-HOSE	
	2	1	**9M-7958**	2	CLAMP-HOSE	
	3	1	**031-5644**	1	CLIP	
	4	1	**247-1385**	1	TANK GP-EXPANSION	
		1	**251-3227**	1	CAP AS-COOLANT TANK	
	5	1	**250-2314**	1	BRACKET AS	
M		1	**8T-3612**	2	NUT-WELD (M8X1.25-THD)	
	6	1	**4D-7388**	2	CLIP	
E	7	1	**9X-2133**		HOSE (23-CM)	
E	8	1	**8C-3681**		HOSE (96-CM)	
	9	1	**259-8417**	1	HOSE	
	10	1	**4B-0418**	1	CLIP	

E-ORDER BY THE CENTIMETER
M-METRIC PART

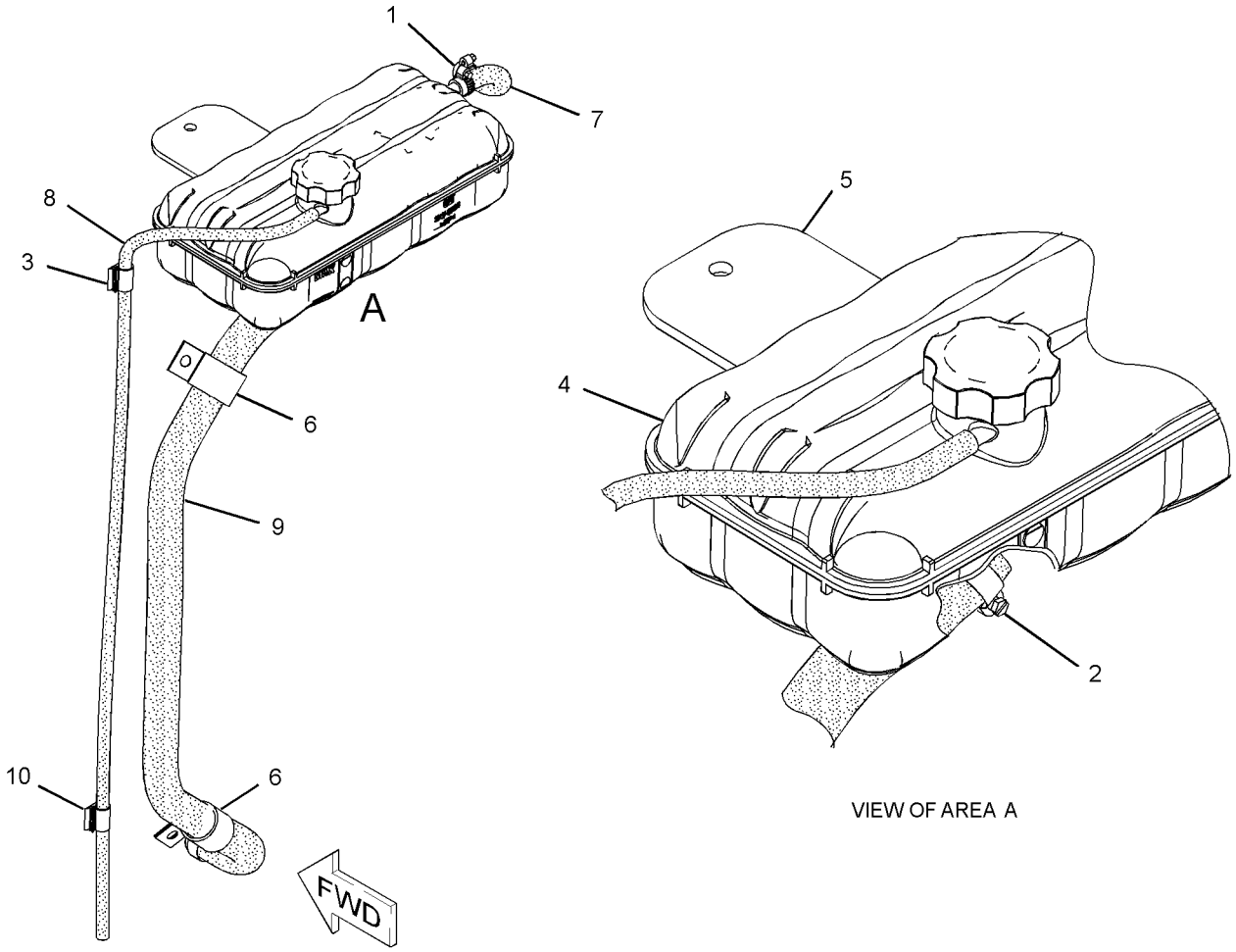

GRAPHIC #1 **<END>** g01340033

AIR INLET AND EXHAUST SYSTEM

224-9473 AIR CLEANER GP

S/N: HLS1-99999

PART OF 214-6902 ENGINE AR

SMCS-1051, 1054 **i03502160**

NOTE	REF NO	GRAPHIC REF	PART NUMBER	QTY	PART NAME 1 2 3 4 5 6 (PRODUCT LEVEL)	SEE PAGE
	1	1	**8T-6726**	1	CLAMP-HOSE	
	2	1	**110-2445**	1	CLAMP-HOSE	
	3	1	**127-4471**	1	CLAMP-HOSE	
	4	1	**223-8995**	1	HOSE	
Y	5	1	**234-1981**	1	AIR CLEANER GP	69
	6	1	**234-2622**	1	HOSE-AIR	
	7	1	**248-3231**	1	DUCT-AIR	
	8	1	**249-5512**	1	SEAL	
	9	1	**253-4137**	1	SEAL	
	10	1	**253-4138**	1	STUD	
	11	1	**288-6954**	1	PLATE AS	
M		1	**8T-3490**	3	NUT-WELD (M10X1.5-THD)	
		1	**2K-7069**	3	SPACER (0.406X0.75X2-IN THK)	
M		1	**9R-2672**	1	BOSS (M10X1.5X20-MM)	
M	12	1	**096-5866**	4	BOLT (M8X1.25X75-MM)	
M	13	1	**129-3178**	1	LOCKNUT (M6X1-THD)	
	14	1	**226-0449**	1	CLAMP-HOSE	
	15	1	**7X-0586**	2	WASHER-HARD (7.2X32X2-MM THK)	
M	16	1	**8T-4189**	2	BOLT (M8X1.25X20-MM)	
	17	1	**8T-4224**	6	WASHER-HARD (8.8X16X2-MM THK)	

M-METRIC PART
Y-SEPARATE ILLUSTRATION

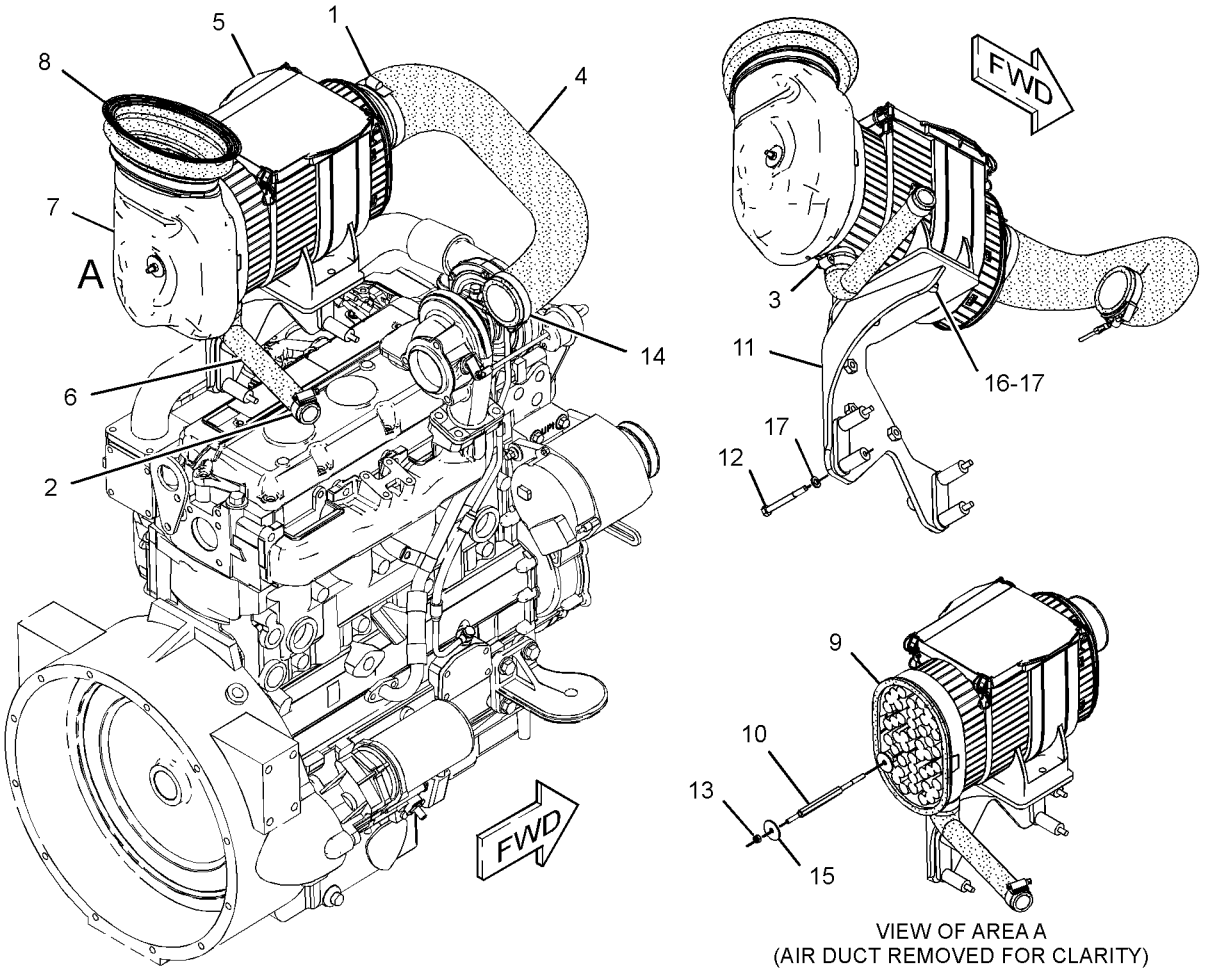

VIEW OF AREA A
(AIR DUCT REMOVED FOR CLARITY)

GRAPHIC #1 **<END>** g01310441

AIR INLET AND EXHAUST SYSTEM

234-1981 AIR CLEANER GP

S/N: HLS1-99999
PART OF 224-9473 AIR CLEANER GP
TYPE 1

SMCS-1051, 1054 **i02249485**

NOTE	REF NO	GRAPHIC REF	PART NUMBER	QTY	PART NAME 1 2 3 4 5 6 (PRODUCT LEVEL)	SEE PAGE
	1	1	**262-9786**	1	FRAME	
	2	1	**227-7448**	1	FILTER ELEMENT AS-AIR (PRIMARY)	
	3	1	**227-7449**	1	FILTER ELEMENT-AIR (SECONDARY)	
	4	1	**237-4157**	1	COVER	

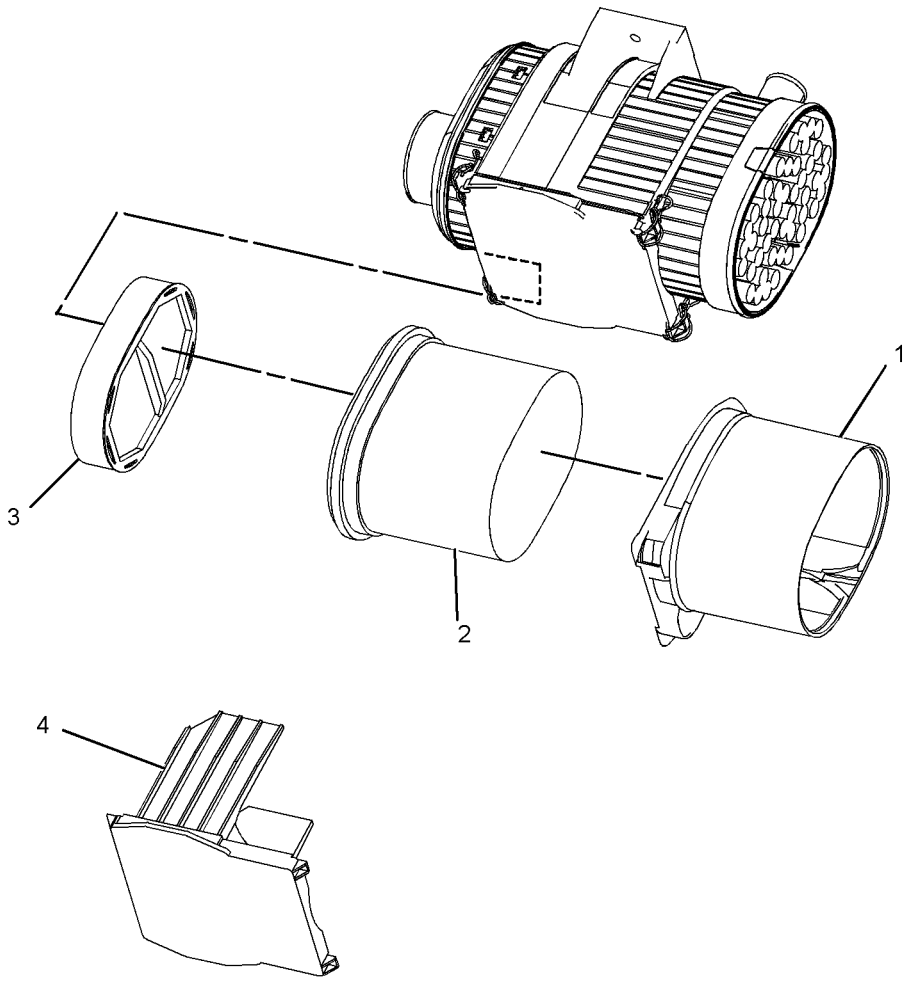

GRAPHIC #1 **<END>** g01134691

AIR INLET AND EXHAUST SYSTEM

234-1981 AIR CLEANER GP

S/N: HLS1-99999

PART OF 224-9473 AIR CLEANER GP

TYPE 2

SMCS-1051, 1054 **i02717830**

NOTE	REF NO	GRAPHIC REF	PART NUMBER	QTY	PART NAME 1 2 3 4 5 6 (PRODUCT LEVEL)	SEE PAGE
	1	1	**262-9786**	1	FRAME	
C	2	1	**293-4053**	1	FILTER ELEMENT-AIR (PRIMARY)	
	3	1	**227-7449**	1	FILTER ELEMENT-AIR (SECONDARY)	
	4	1	**237-4157**	1	COVER	

C-CHANGE FROM PREVIOUS TYPE

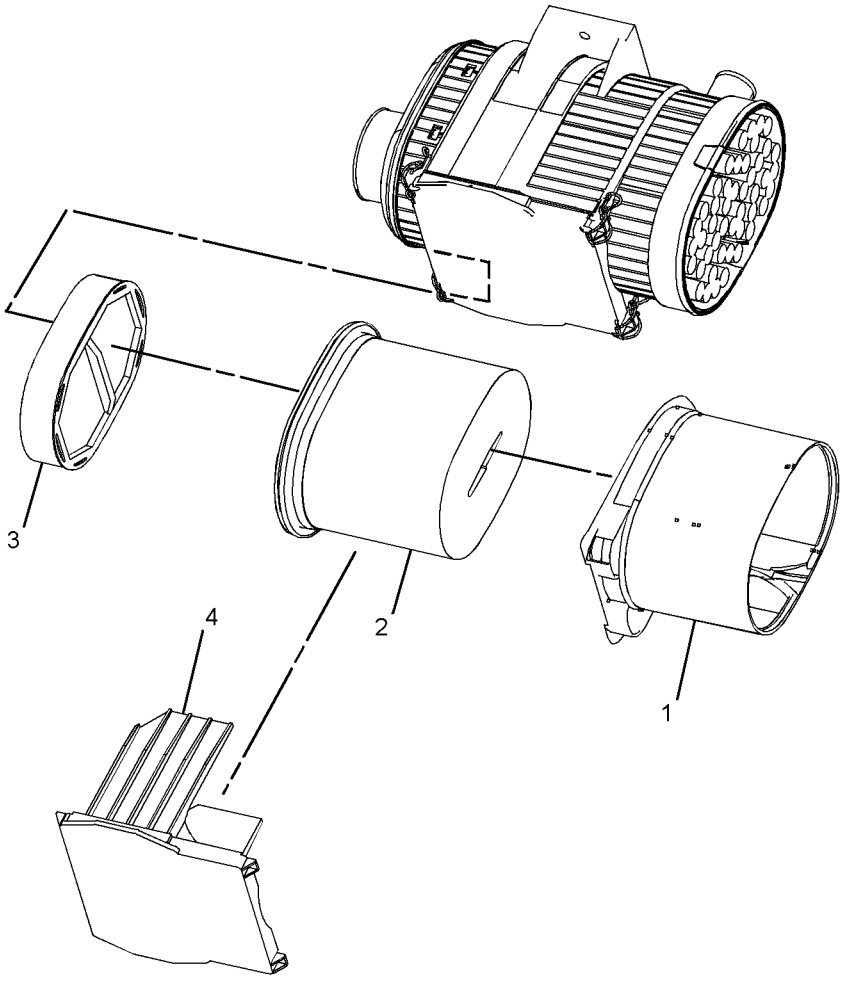

GRAPHIC #1 **<END>** g01376131

AIR INLET AND EXHAUST SYSTEM

210-6807 EXTENSION GP-EXHAUST

S/N: HLS1-99999

PART OF 214-6902 ENGINE AR

SMCS-1061 **i02972342**

NOTE	REF NO	GRAPHIC REF	PART NUMBER	QTY	PART NAME 1 2 3 4 5 6 (PRODUCT LEVEL)	SEE PAGE
	1	1	**7E-3870**	1	CLAMP-MUFFLER	
	2	1	**239-2270**	1	PIPE-EXTENSION	

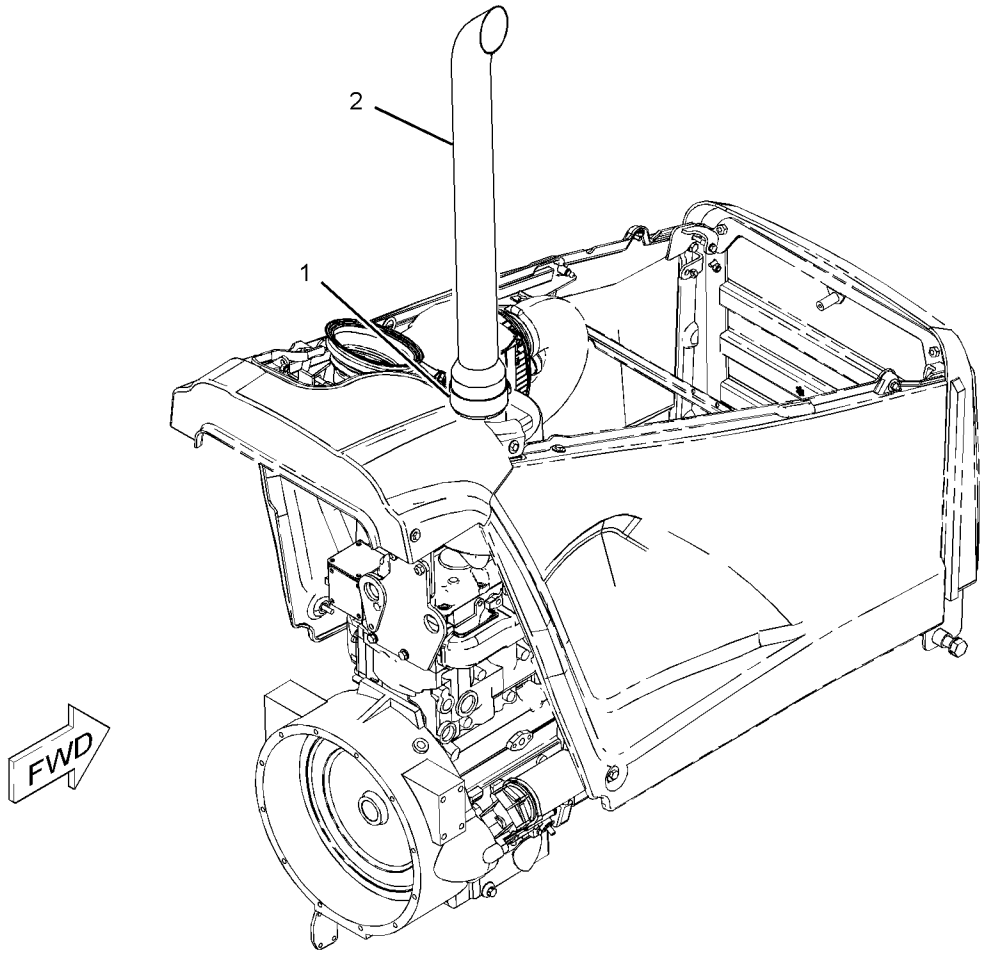

GRAPHIC #1 **<END>** g01098165

255-2279 INDICATOR GP-AIR FILTER CHANGE

S/N: HLS1-99999
PART OF 269-2125, 269-2126, 269-2127 CAB AR-ENCLOSED ROPS, 269-2123, 269-2124 CANOPY AR-OPEN ROPS
AN ATTACHMENT

SMCS-7452 **i02492180**

NOTE	REF NO	GRAPHIC REF	PART NUMBER	QTY	PART NAME 1 2 3 4 5 6 (PRODUCT LEVEL)	SEE PAGE
	1	1	**255-4692**	1	CONNECTOR-FILTER	
	2	1	**260-1336**	1	INDICATOR GP-AIR FILTER CHANGE	
		1	**205-1627**	1	BRACKET	
		1	**260-3122**	1	INDICATOR-AIR FILTER SERVICE	
	3	1	**4B-4863**	4	WASHER (4.7X11X1.2-MM THK)	
M	4	1	**5C-8312**	2	NUT (M4X0.7-THD)	
M	5	1	**8T-9405**	2	BOLT-SOCKET HEAD (M4X0.7X16-MM)	
D	6	1	**6V-1363**		HOSE (0.3-M)	

D-ORDER BY THE METER
M-METRIC PART

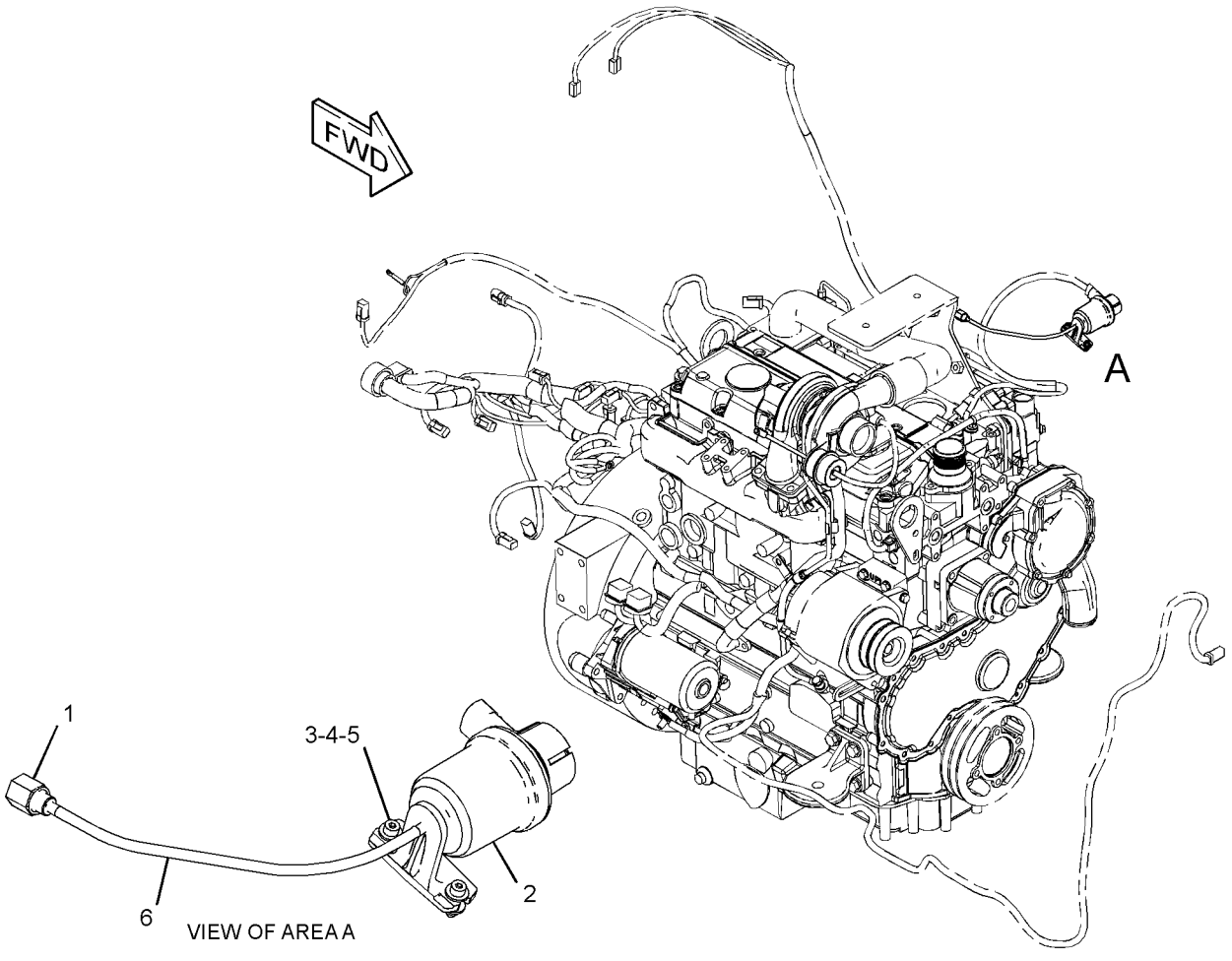

GRAPHIC #1 **<END>** g01233668

AIR INLET AND EXHAUST SYSTEM

223-4960 MUFFLER GP

S/N: HLS1-99999

PART OF 214-6902 ENGINE AR

SMCS-1062 **i02510878**

NOTE	REF NO	GRAPHIC REF	PART NUMBER	QTY	PART NAME 1 2 3 4 5 6 (PRODUCT LEVEL)	SEE PAGE
	1	1	**6I-0364**	3	STUD (M10X1.5X30-MM)	
	2	1	**6I-0563**	3	NUT (M10X1.15-THD)	
	3	1	**235-5363**	1	MUFFLER AS (TURBOCHARGED)	
	4	1	**237-0975**	1	PLATE AS	
M		1	**8T-3490**	4	NUT-WELD (M10X1.5-THD)	
	5	1	**247-4001**	1	PLATE AS	
	6	1	**254-2187**	2	CLAMP AS	
	7	1	**8T-4121**	16	WASHER-HARD (11X21X2.5-MM THK)	
M	8	1	**8T-4133**	4	NUT (M10X1.5-THD)	
M	9	1	**8T-4136**	4	BOLT (M10X1.5X25-MM)	
M	10	1	**8T-4195**	8	BOLT (M10X1.5X30-MM)	

M-METRIC PART

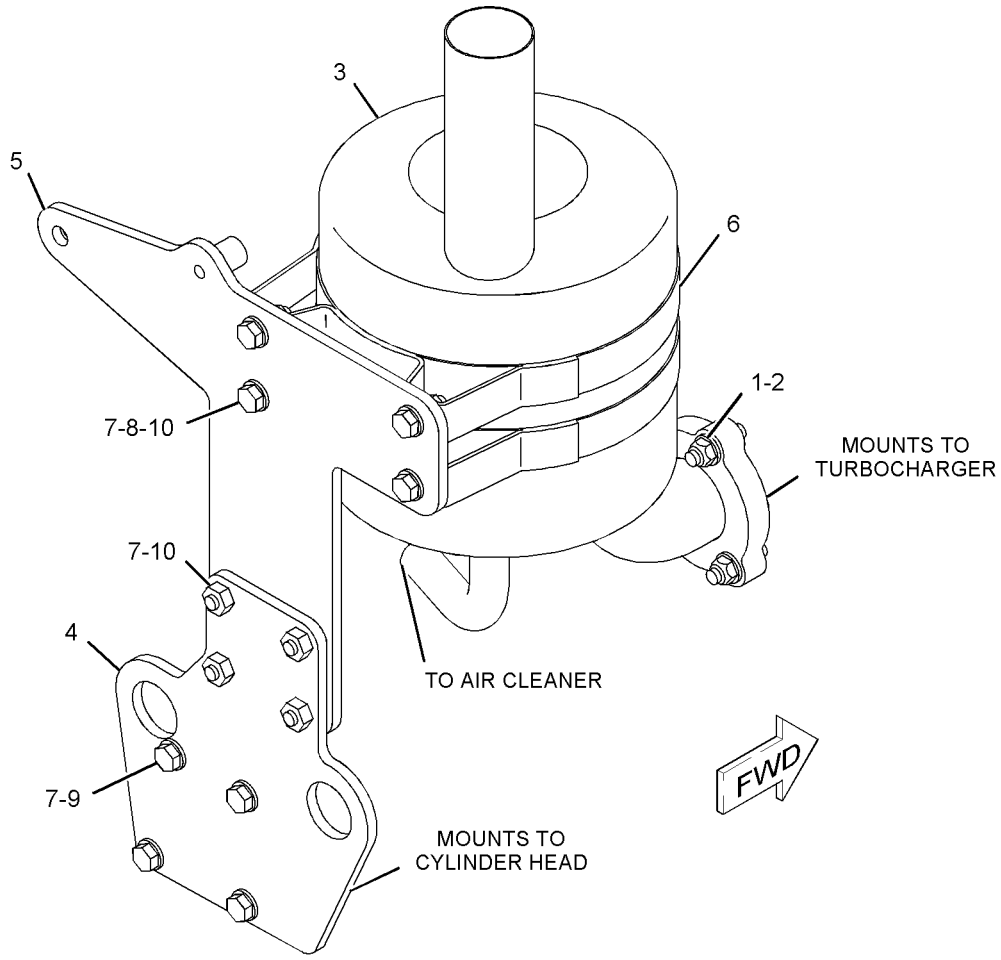

GRAPHIC #1 **<END>** g01078673

AIR INLET AND EXHAUST SYSTEM

237-3924 TURBOCHARGER GP

S/N: CRS1-6887

PART OF 273-3610 ENGINE AR

SMCS-1052, 1053 **i02903000**

NOTE	REF NO	GRAPHIC REF	PART NUMBER	QTY	PART NAME 1 2 3 4 5 6 (PRODUCT LEVEL)	SEE PAGE
M	1	1	**6I-0217**	2	BOLT (M8X1.25X20-MM)	
	2	1	**6I-0563**	4	NUT (M10X1.15-THD)	
	3	1	**6I-0572**	4	BOLT (M8X1.25X20-MM)	
	4	1	**106-8916**	2	BOLT (M6X16-MM)	
	5	1	**141-1667**	2	CLAMP-HOSE	
	6	1	**149-4236**	4	STUD	
	7	1	**174-9638**	8	BOLT	
	8	1	**194-5390**	1	GASKET-MANIFOLD	
	10	1	**225-8533**	1	GASKET (TURBOCHARGER)	
	11	1	**225-8534**	1	GASKET (TURBOCHARGER)	
	12	1	**225-8536**	1	GASKET (MANIFOLD)	
	13	1	**263-5376**	1	HOSE	
	14	1	**234-3030**	1	GASKET	
	15	1	**322-9616**	1	TUBE AS-TURBOCHARGER	
	15A	1	**225-8524**	2	BOLT-SPECIAL (BANJO)	
	15B	1	**225-8526**	4	WASHER (10.4X13.75X1.37-MM THK)	
	16	1	**237-3786**	1	TURBOCHARGER GP	
	17	1	**322-9615**	1	TUBE-TURBOCHARGER	
	18	1	**237-3794**	1	BOLT	
	19	1	**237-3921**	1	CLIP	
	20	1	**237-3922**	1	TUBE	
	21	1	**255-3447**	1	MANIFOLD-EXHAUST	

M-METRIC PART

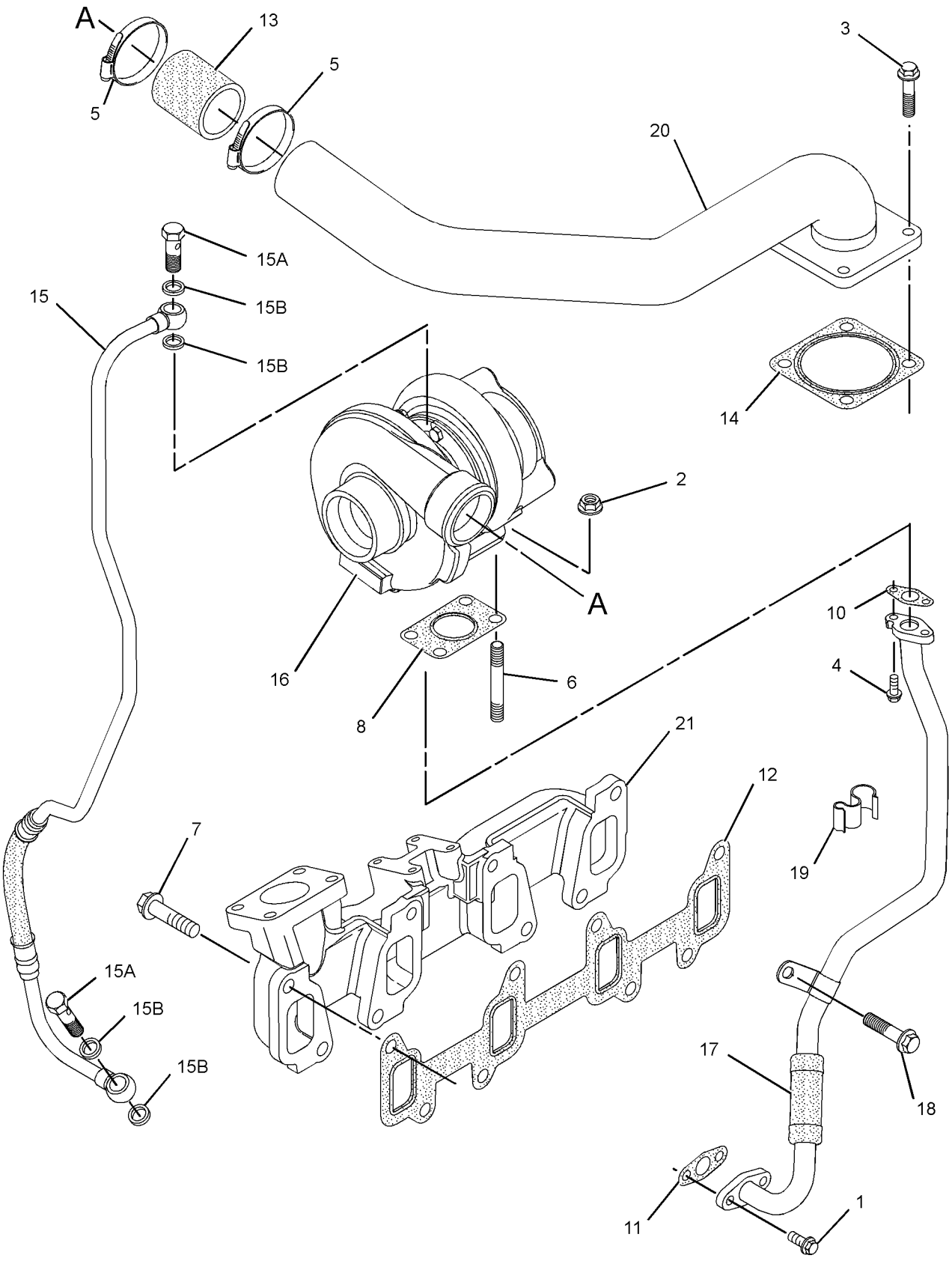

GRAPHIC #1 **<END>** g01450826

AIR INLET AND EXHAUST SYSTEM

317-3111 TURBOCHARGER GP

S/N: CRS1-99999

PART OF 320-8414, 323-5725, 325-5121 ENGINE AR-PRIMARY

AN ATTACHMENT

SMCS-1052, 1053 **i02912402**

NOTE	REF NO	GRAPHIC REF	PART NUMBER	QTY	PART NAME 1 2 3 4 5 6 (PRODUCT LEVEL)	SEE PAGE
M	1	1	**6I-0217**	2	BOLT (M8X1.25X20-MM)	
	2	1	**6I-0563**	4	NUT (M10X1.15-THD)	
	3	1	**6I-0572**	4	BOLT (M8X1.25X20-MM)	
	4	1	**106-8916**	2	BOLT (M6X16-MM)	
	5	1	**141-1667**	2	CLAMP-HOSE	
	6	1	**147-5553**	4	STUD	
	7	1	**174-9638**	8	BOLT	
	8	1	**194-5390**	1	GASKET-MANIFOLD	
	10	1	**225-8533**	1	GASKET (TURBOCHARGER)	
	11	1	**225-8534**	1	GASKET (TURBOCHARGER)	
	12	1	**225-8536**	1	GASKET (MANIFOLD)	
	13	1	**263-5376**	1	HOSE	
	14	1	**234-3030**	1	GASKET	
	15	1	**322-9616**	1	TUBE AS-TURBOCHARGER	
	15A	1	**225-8524**	2	BOLT-SPECIAL (BANJO)	
	15B	1	**225-8526**	4	WASHER (10.4X13.75X1.37-MM THK)	
	16	1	**237-3786**	1	TURBOCHARGER GP	
	17	1	**322-9615**	1	TUBE-TURBOCHARGER	
	18	1	**237-3794**	1	BOLT	
	19	1	**237-3921**	1	CLIP	
	20	1	**237-3922**	1	TUBE	
	21	1	**255-3447**	1	MANIFOLD-EXHAUST	

M-METRIC PART

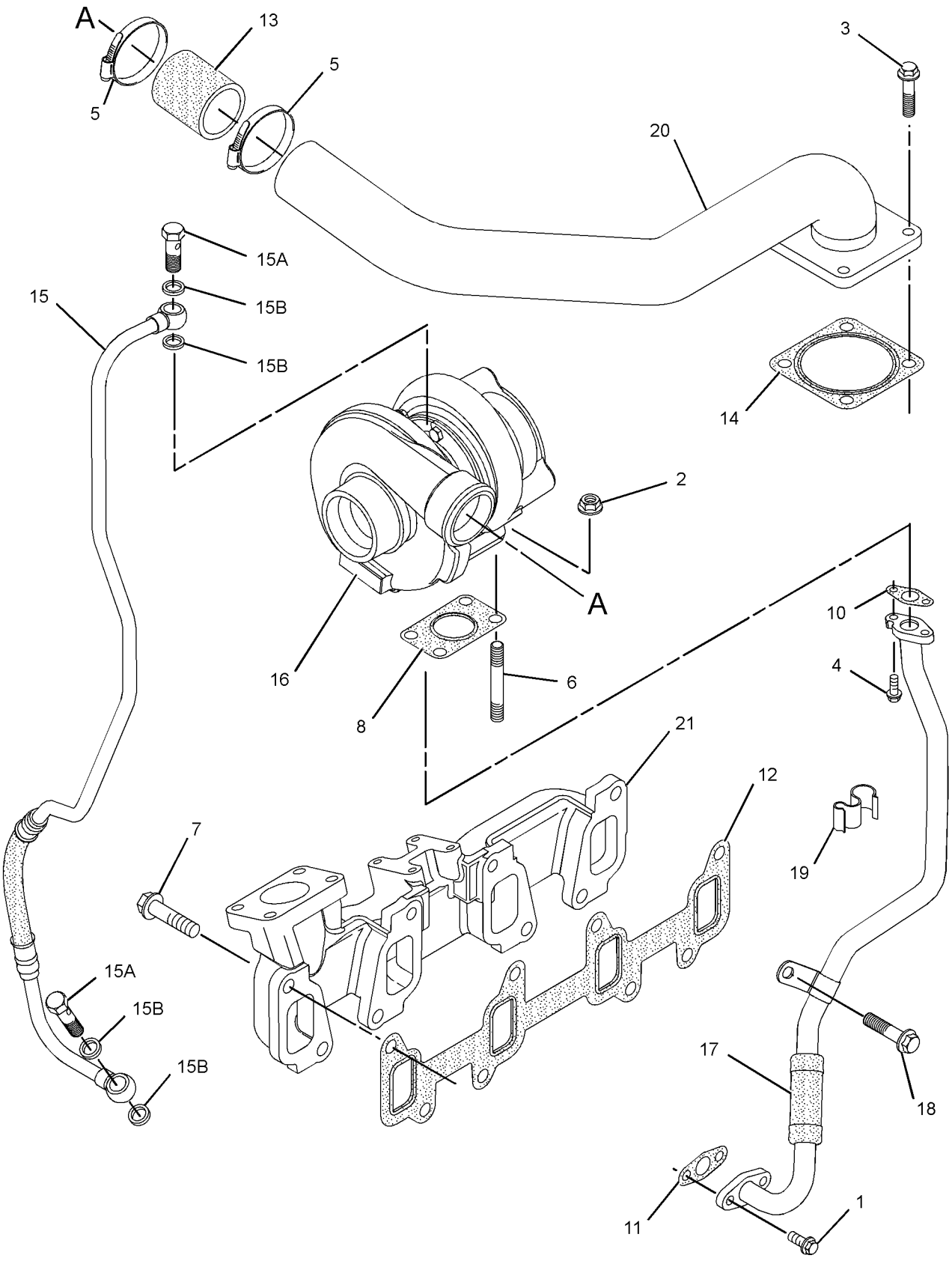

GRAPHIC #1 **<END>** g01450880

206-1640 CONTROL GP-GOVERNOR

S/N: HLS1-3401

PART OF 214-6902 ENGINE AR

SMCS-1265 **i03527960**

NOTE	REF NO	GRAPHIC REF	PART NUMBER	QTY	PART NAME 1 2 3 4 5 6 (PRODUCT LEVEL)	SEE PAGE
	1	1	**151-4841**	3	BLOCK	
Y	2	1	**209-3378**	1	PEDAL GP-GOVERNOR	878
	3	1	**235-0128**	1	CABLE AS	
M		1	**5C-2890**	2	NUT (M6X1-THD)	
	4	1	**239-1434**	1	PLATE	
	5	1	**239-1435**	1	BRACKET AS	
	6	1	**248-2707**	1	GROMMET	
M	7	1	**119-5025**	3	SCREW-FLAT HEAD (M6X1X25-MM)	
	8	1	**164-1395**	1	KNOB	
Y	9	1	**209-3367**	1	LEVER GP-GOVERNOR (HANDHELD)	862
	10	1	**3S-2093**	1	STRAP-CABLE	
	11	1	**7K-1181**	3	STRAP-CABLE	
M	12	1	**8T-4138**	3	BOLT (M6X1X20-MM)	
	13	1	**8T-4205**	3	WASHER-HARD (7.2X14.5X2-MM THK)	
	14	1	**8T-4224**	4	WASHER-HARD (8.8X16X2-MM THK)	
M	15	1	**8T-4908**	4	BOLT (M8X1.25X25-MM)	

M-METRIC PART
Y-SEPARATE ILLUSTRATION

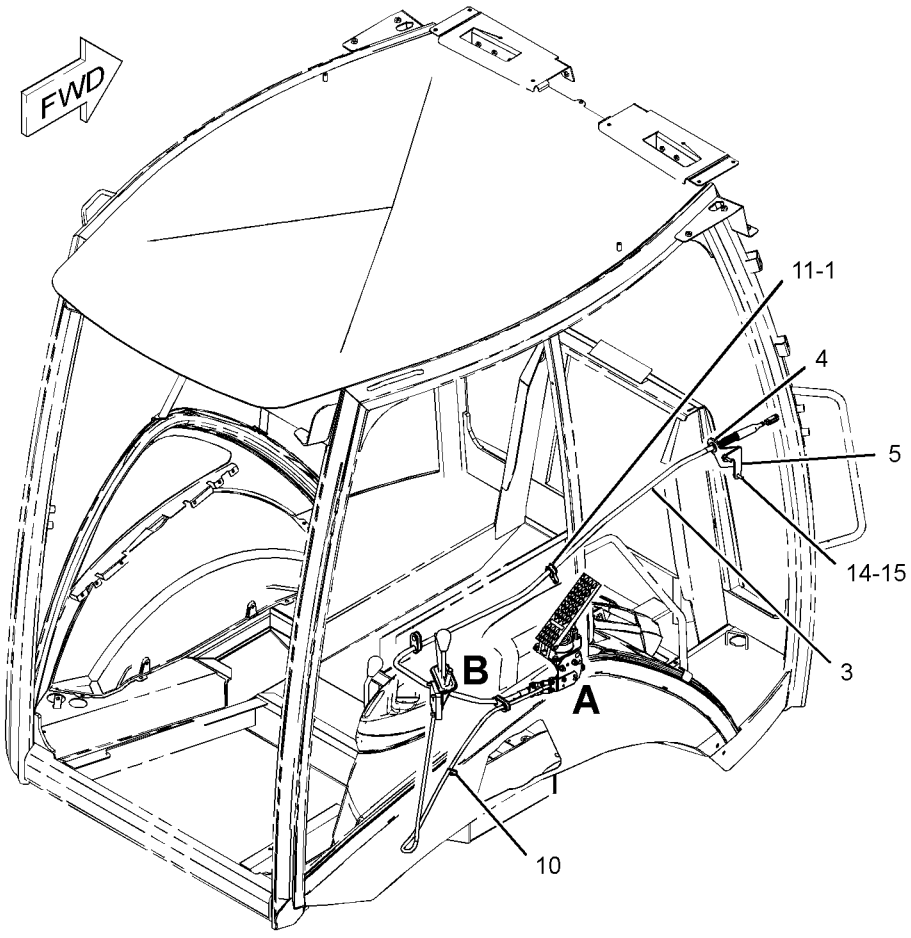

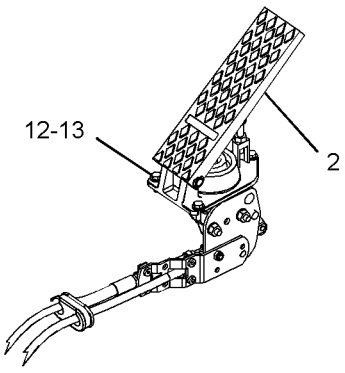

VIEW OF AREA A

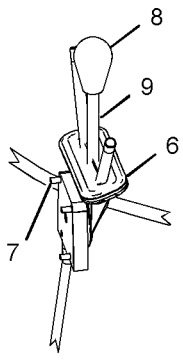

VIEW OF AREA B

GRAPHIC #1 **<END>** g01183916

206-1640 CONTROL GP-GOVERNOR

S/N: HLS3402-99999

PART OF 214-6902 ENGINE AR

SMCS-1265 **i03527938**

NOTE	REF NO	GRAPHIC REF	PART NUMBER	QTY	PART NAME 1 2 3 4 5 6 (PRODUCT LEVEL)	SEE PAGE
	1	1	**151-4841**	3	BLOCK	
Y	2	1	**209-3378**	1	PEDAL GP-GOVERNOR	878
	3	1	**235-0128**	1	CABLE AS	
M		1	**5C-2890**	2	NUT (M6X1-THD)	
		1	**8T-4742**	2	END-YOKE ROD	
		1	**8T-4744**	2	PIN AS-SPRING	
		1	**222-2690**	1	CLIP	
	4	1	**239-1434**	1	PLATE	
CM	5	1	**7X-0818**	1	BOLT (M8X1.25X45-MM)	
	6	1	**248-2707**	1	GROMMET	
M	7	1	**119-5025**	3	SCREW-FLAT HEAD (M6X1X25-MM)	
	8	1	**164-1395**	1	KNOB	
Y	9	1	**209-3367**	1	LEVER GP-GOVERNOR (HANDHELD)	862
C	10	1	**300-1702**	1	BRACKET AS	
		1	**6T-5017**	1	SPACER (2.11X12.7X24-MM THK)	
M		1	**8T-3612**	2	NUT-WELD (M8X1.25-THD)	
C	11	1	**7K-1181**	4	STRAP-CABLE	
M	12	1	**8T-4138**	3	BOLT (M6X1X20-MM)	
	13	1	**8T-4205**	3	WASHER-HARD (7.2X14.5X2-MM THK)	
	14	1	**8T-4224**	4	WASHER-HARD (8.8X16X2-MM THK)	
CM	15	1	**8T-4908**	3	BOLT (M8X1.25X25-MM)	

C-CHANGE FROM PREVIOUS TYPE
M-METRIC PART
Y-SEPARATE ILLUSTRATION

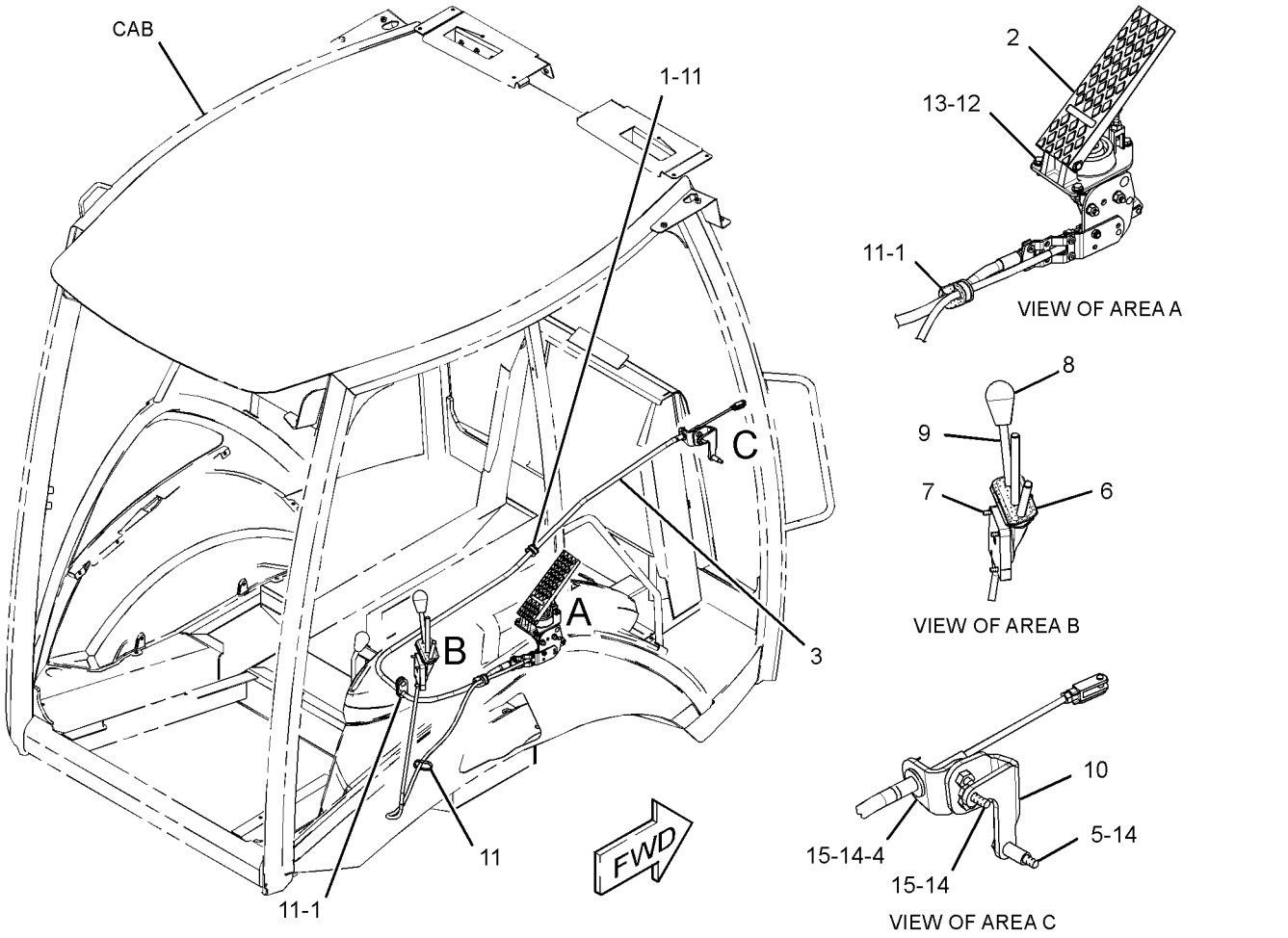

GRAPHIC #1 **<END>** g01417014

285-3605 FILTER GP-WATER SEP & FUEL

S/N: HLS1-99999

PART OF 214-6902 ENGINE AR

SMCS-1261, 1263 **i02520613**

NOTE	REF NO	GRAPHIC REF	PART NUMBER	QTY	PART NAME 1 2 3 4 5 6 (PRODUCT LEVEL)	SEE PAGE
	1	1	**151-1975**	2	CONNECTOR	
	2	1	**285-5098**	1	FILTER GP-FUEL	
		1	**118-8118**	1	RING-RETAINING	
		1	**118-8119**	1	NUT	
		1	**149-3516**	1	BASE AS	
		1	**156-1200**	1	FILTER ELEMENT-FUEL (WATER SEPARATOR)	
	3	1	*169-5861*	2	PLUG AS	
					(EACH INCLUDES)	
		1	**3K-8460**	1	PLUG	
		1	**5P-7814**	1	SEAL-O-RING	
	4	1	**5P-7814**	2	SEAL-O-RING	
	5	1	**8T-4121**	2	WASHER-HARD (11X21X2.5-MM THK)	
M	6	1	**8T-4195**	2	BOLT (M10X1.5X30-MM)	

M-METRIC PART

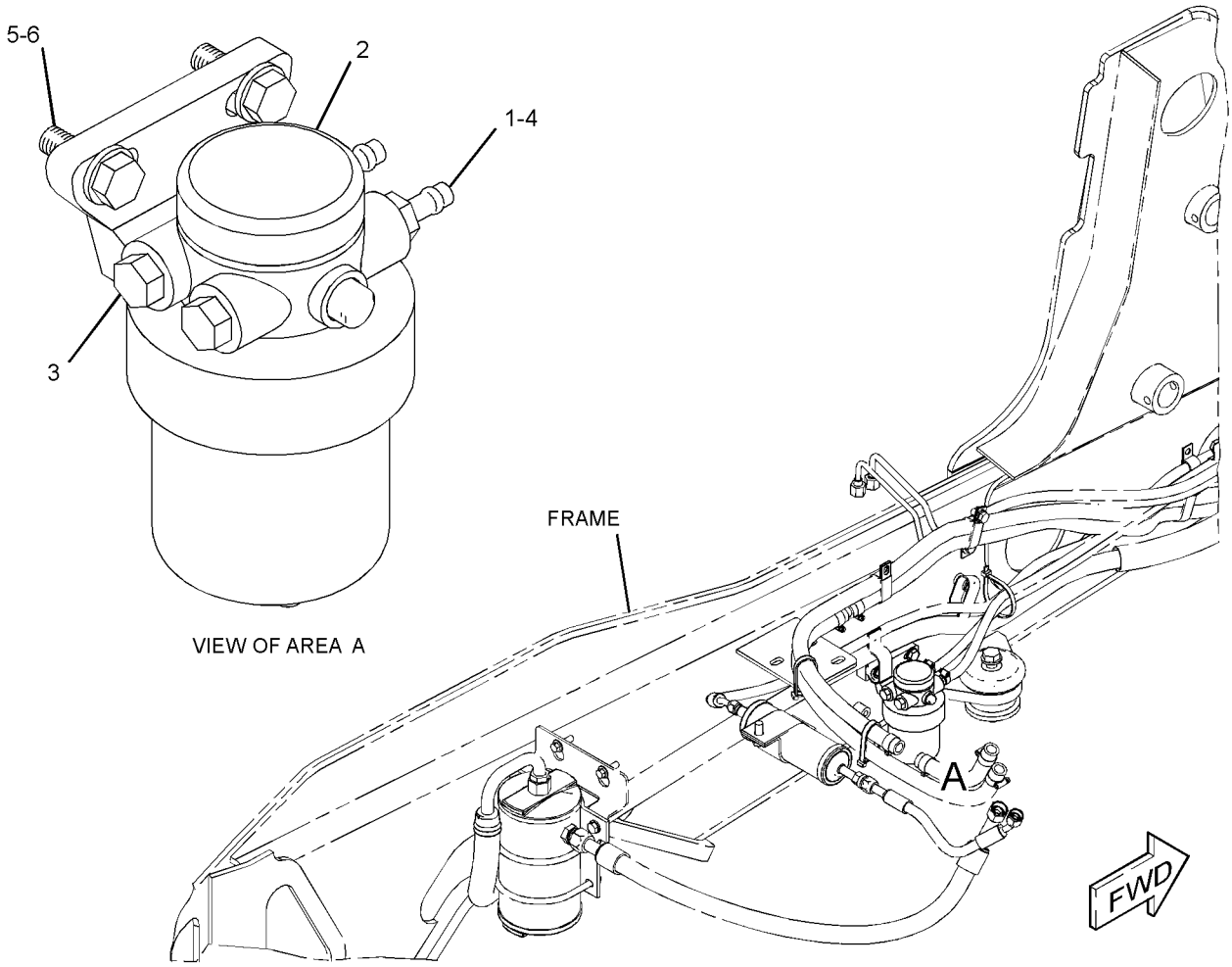

GRAPHIC #1 **<END>** g01262187

FUEL SYSTEM

247-5361 LINES GP-FUEL

S/N: HLS1-99999

PART OF 214-6902 ENGINE AR

SMCS-1274 **i03527964**

NOTE	REF NO	GRAPHIC REF	PART NUMBER	QTY	PART NAME 1 2 3 4 5 6 (PRODUCT LEVEL)	SEE PAGE
	1	1	**1P-4278**	12	CLAMP-HOSE	
	2	1	**7S-1912**	2	CLIP	
	3	1	**215-9515**	1	CONNECTOR-HOSE (QUICK DISCONNECT)	
	4	1	**216-6891**	1	TUBE AS	
	5	1	**216-6892**	1	TUBE AS	
	6	1	**224-5917**	1	CONNECTOR-SPECIAL	
	7	1	**241-4275**	1	TEE-SPECIAL	
	8	1	**5P-9085**	1	CLIP	
	9	1	**6K-8178**	1	CLIP	
	10	1	**7C-4354**	1	CLIP	
	11	1	**7N-3718**	1	CLIP	
	12	1	**7X-7729**	1	WASHER (11X25X3-MM THK)	
	13	1	**8M-2773**	1	CLIP	
	14	1	**8T-4121**	2	WASHER-HARD (11X21X2.5-MM THK)	
M	15	1	**8T-4133**	1	NUT (M10X1.5-THD)	
M	16	1	**8T-4136**	2	BOLT (M10X1.5X25-MM)	
M	17	1	**8T-4192**	1	BOLT (M12X1.75X25-MM)	
M	18	1	**8T-4189**	1	BOLT (M8X1.25X20-MM)	
	19	1	**8T-4223**	1	WASHER-HARD (13.5X25.5X3-MM THK)	
	20	1	**8T-4224**	1	WASHER-HARD (8.8X16X2-MM THK)	
	21	1	**9M-8406**	1	CLIP	
E	22	1	**5P-1442**		HOSE (76-CM)	
E	22A	1	**5P-1420**		HOSE (55-CM)	
E	22B	1	**5P-1420**		HOSE (12-CM)	
E	22C	1	**5P-1420**		HOSE (114-CM)	
E	22D	1	**5P-1420**		HOSE (91-CM)	
E	22E	1	**5P-1420**		HOSE (76-CM)	
	28	1	**7K-1181**	1	STRAP-CABLE	

E-ORDER BY THE CENTIMETER
M-METRIC PART

247-5361 **LINES GP-FUEL** *(contd.)* **i03527964**

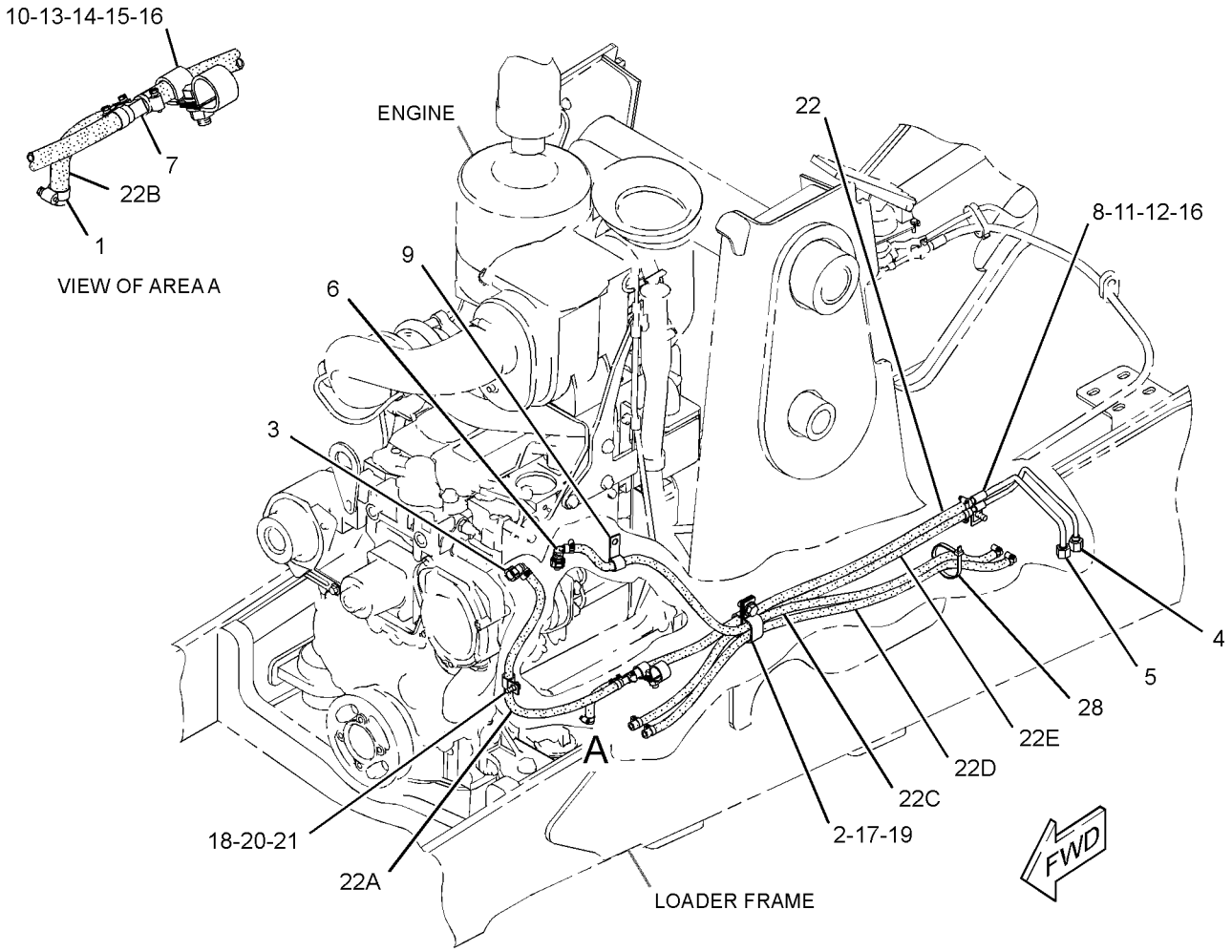

GRAPHIC #1 **<END>** g01857039

FUEL SYSTEM

247-4885 LINES GP-FUEL FILTER

S/N: CRS1-6887

PART OF 273-3610 ENGINE AR, 320-8414, 323-5725, 325-5121 ENGINE AR-PRIMARY

ALSO AN ATTACHMENT

SMCS-1261, 1274 **i02225715**

NOTE	REF NO	GRAPHIC REF	PART NUMBER	QTY	PART NAME 1 2 3 4 5 6 (PRODUCT LEVEL)	SEE PAGE
	1	1	**247-4884**	1	TUBE AS	
	2	1	**232-3126**	1	CLIP	

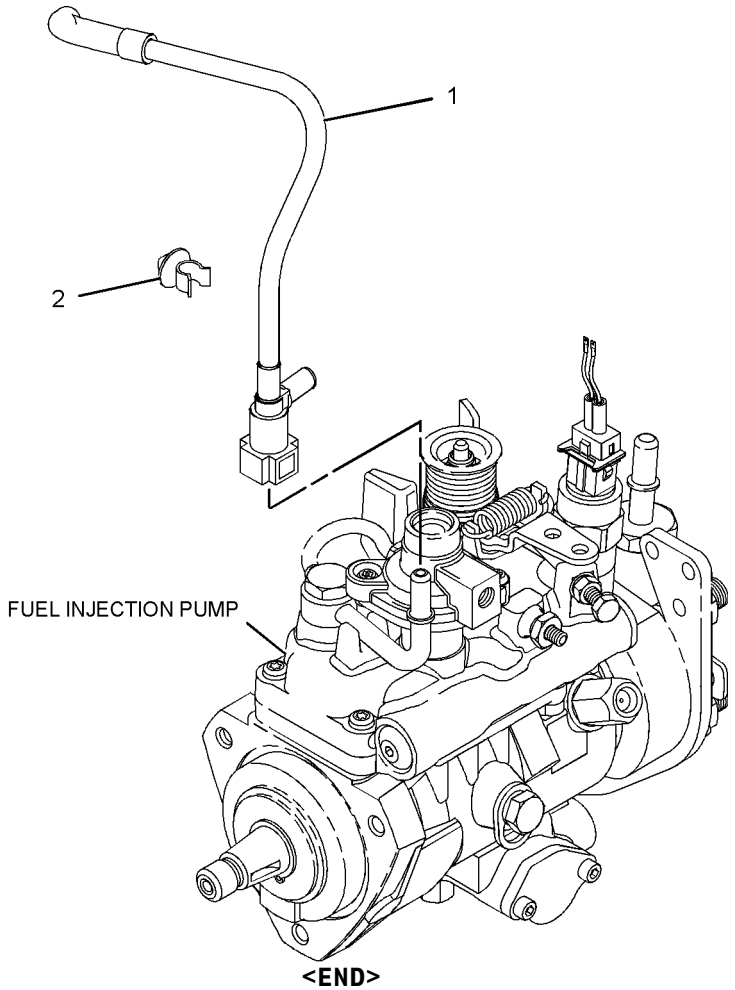

GRAPHIC #1

<END>

g01123693

313-1375 PUMP GP-FUEL INJECTION

S/N: CRS1-6887

PART OF 273-3610 ENGINE AR, 320-8414, 323-5725 ENGINE AR-PRIMARY

ALSO AN ATTACHMENT

SMCS-1251, 1290 **i03258368**

NOTE	REF NO	GRAPHIC REF	PART NUMBER	QTY	PART NAME 1 2 3 4 5 6 (PRODUCT LEVEL)	SEE PAGE
M	1	1	**6I-0217**	1	BOLT (M8X1.25X20-MM)	
M	2	1	**6I-0260**	3	BOLT (M8X1.25X25-MM)	
	3	1	**6I-0291**	1	NUT (M8X1.25-THD)	
M	4	1	**100-4830**	1	BOLT (M10X1.5X20-MM)	
M	5	1	**124-3815**	1	BOLT (M8X16X1.25-MM)	
	6	1	**140-8714**	1	CLIP	
	7	1	**230-8989**	1	GEAR-FUEL PUMP (68-TEETH)	
	8	1	**230-8995**	1	TUBE AS (CYL NO.1)	
	9	1	**230-8996**	1	TUBE AS (CYL NO.2)	
	10	1	**230-8997**	1	TUBE AS (CYL NO.3)	
	11	1	**230-8998**	1	TUBE AS (CYL NO.4)	
	12	2	**232-1323**	1	PLUG-CUP	
	13	1	**232-1328**	1	CAP	
	14	2	**232-1793**	1	CABLE	
	15	1	**232-1794**	3	HOSE	
	16	1	**232-2725**	2	CLIP	
	17	1	**232-2726**	1	CLIP	
	18	1	**232-3149**	3	WASHER (8.35X16.85X1.55-MM THK)	
	19	1	**232-3157**	1	BRACKET	
	20	1	**232-3274**	4	BOLT (M8X1.25X48.1-MM)	
	21	2	**235-1790**	1	SWITCH-TEMPERATURE (TIMING ADVANCE)	
	22	1	**236-1674**	4	INJECTOR AS-FUEL	
					(EACH INCLUDES)	
		1	**236-1673**	1	NOZZLE	
		1	**275-1038**	1	SEAL-O-RING	
	22A	1	**140-8718**	1	WASHER	
	23	1	**238-8671**	4	CLAMP-INJECTOR	
	24	1	**240-5571**	1	BRACKET	
	25	1	**274-4962**	1	PUMP GP-FUEL INJECTION	
		1	**9F-2247**	1	PLUG-PIPE	

M-METRIC PART

313-1375 **PUMP GP-FUEL INJECTION** *(contd.)* **i03258368**

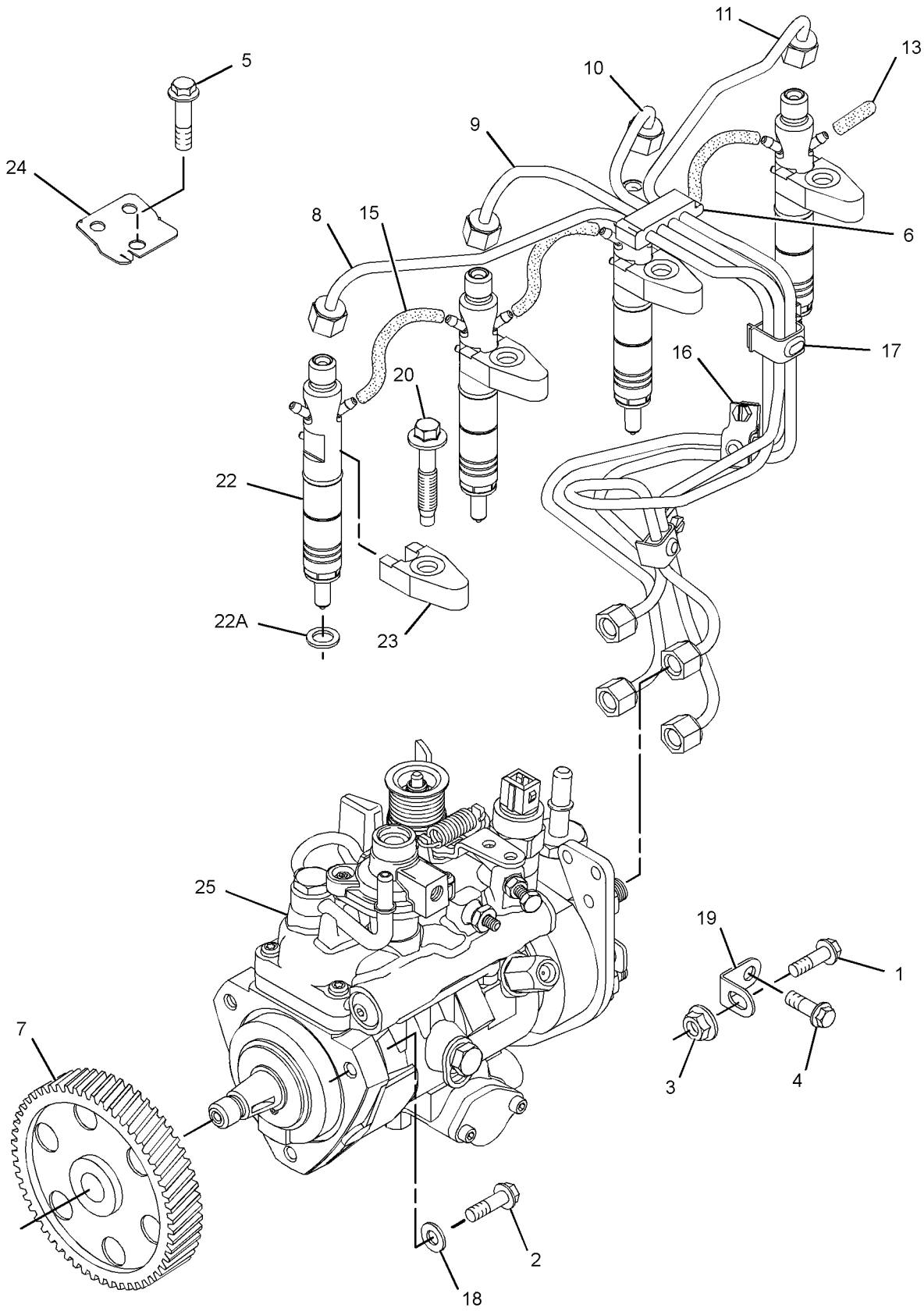

GRAPHIC #1 g01394437

313-1375 **PUMP GP-FUEL INJECTION** *(contd.)* **i03258368**

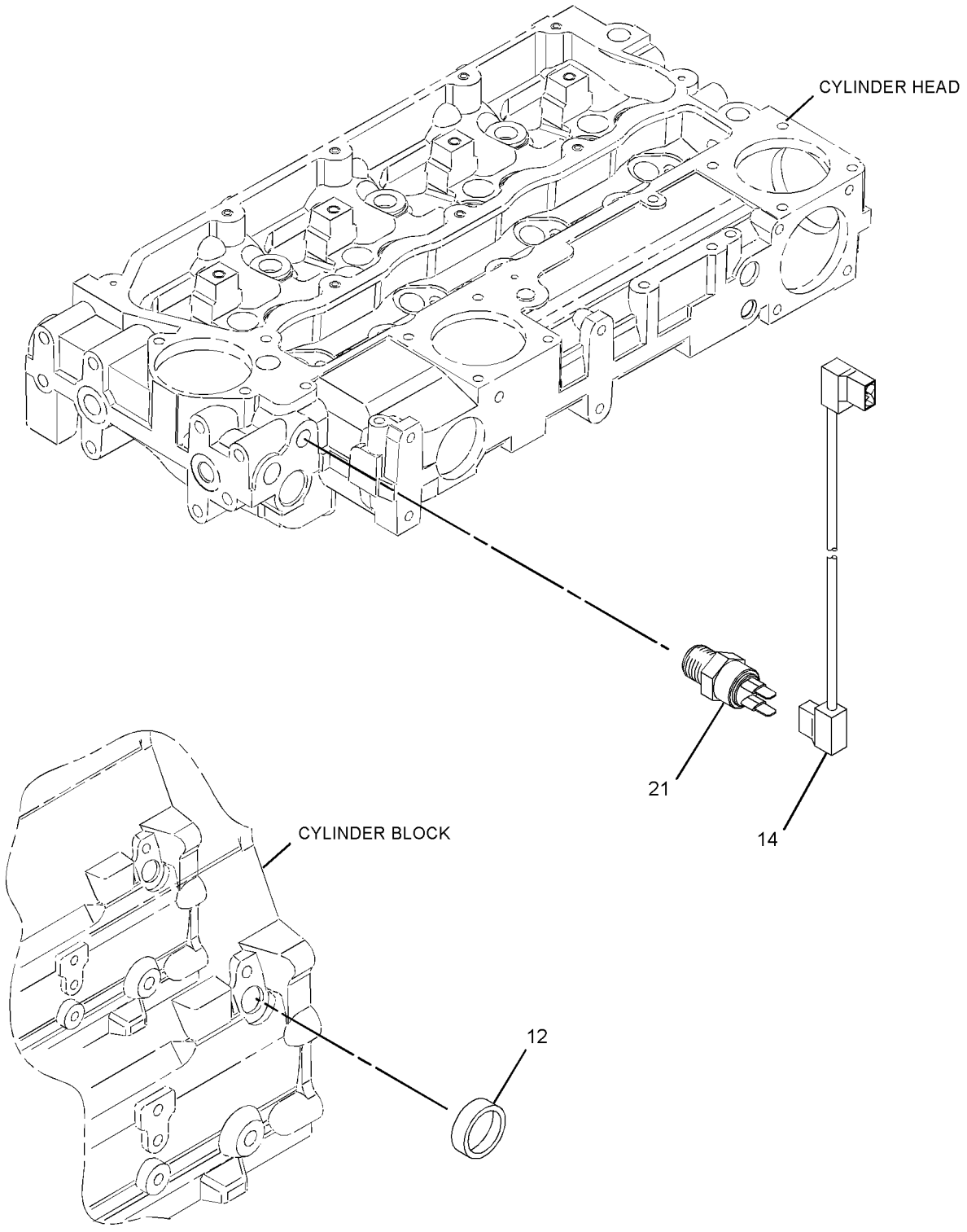

GRAPHIC #2 **<END>** g01394438

FUEL SYSTEM

328-8308 PUMP GP-FUEL INJECTION

S/N: CRS1-99999

PART OF 325-5121 ENGINE AR-PRIMARY

AN ATTACHMENT

SMCS-1251, 1290 **i03255456**

NOTE	REF NO	GRAPHIC REF	PART NUMBER	QTY	PART NAME 1 2 3 4 5 6 (PRODUCT LEVEL)	SEE PAGE
M	1	1	**6I-0217**	1	BOLT (M8X1.25X20-MM)	
M	2	1	**6I-0260**	3	BOLT (M8X1.25X25-MM)	
	3	1	**6I-0291**	1	NUT (M8X1.25-THD)	
M	4	1	**100-4830**	1	BOLT (M10X1.5X20-MM)	
M	5	1	**124-3815**	1	BOLT (M8X16X1.25-MM)	
	6	1	**140-8714**	1	CLIP	
	7	1	**230-8989**	1	GEAR-FUEL PUMP (68-TEETH)	
	8	1	**230-8995**	1	TUBE AS (CYL NO.1)	
	9	1	**230-8996**	1	TUBE AS (CYL NO.2)	
	10	1	**230-8997**	1	TUBE AS (CYL NO.3)	
	11	1	**230-8998**	1	TUBE AS (CYL NO.4)	
	12	2	**232-1323**	1	PLUG-CUP	
	13	1	**232-1328**	1	CAP	
	14	2	**232-1793**	1	CABLE	
	15	1	**232-1794**	3	HOSE	
	16	1	**232-2725**	2	CLIP	
	17	1	**232-2726**	1	CLIP	
	18	1	**232-3126**	1	CLIP	
	19	1	**232-3149**	3	WASHER (8.35X16.85X1.55-MM THK)	
	20	1	**232-3157**	1	BRACKET	
	21	1	**232-3274**	4	BOLT (M8X1.25X48.1-MM)	
	22	2	**235-1790**	1	SWITCH-TEMPERATURE (FUEL)	
	23	1	**236-1674**	4	INJECTOR AS-FUEL	
					(EACH INCLUDES)	
	23A	1	**140-8718**	1	WASHER	
	23B	1	**236-1673**	1	NOZZLE	
	23C	1	**275-1038**	1	SEAL-O-RING	
	24	1	**238-8671**	4	CLAMP-INJECTOR	
	25	1	**240-5571**	1	BRACKET	
	26	1	**274-4962**	1	PUMP GP-FUEL INJECTION	
	26A	1	**292-3462**	1	PLUG	
	27	2	**292-3462**	1	PLUG	

M-METRIC PART

328-8308 **PUMP GP-FUEL INJECTION** *(contd.)* **i03255456**

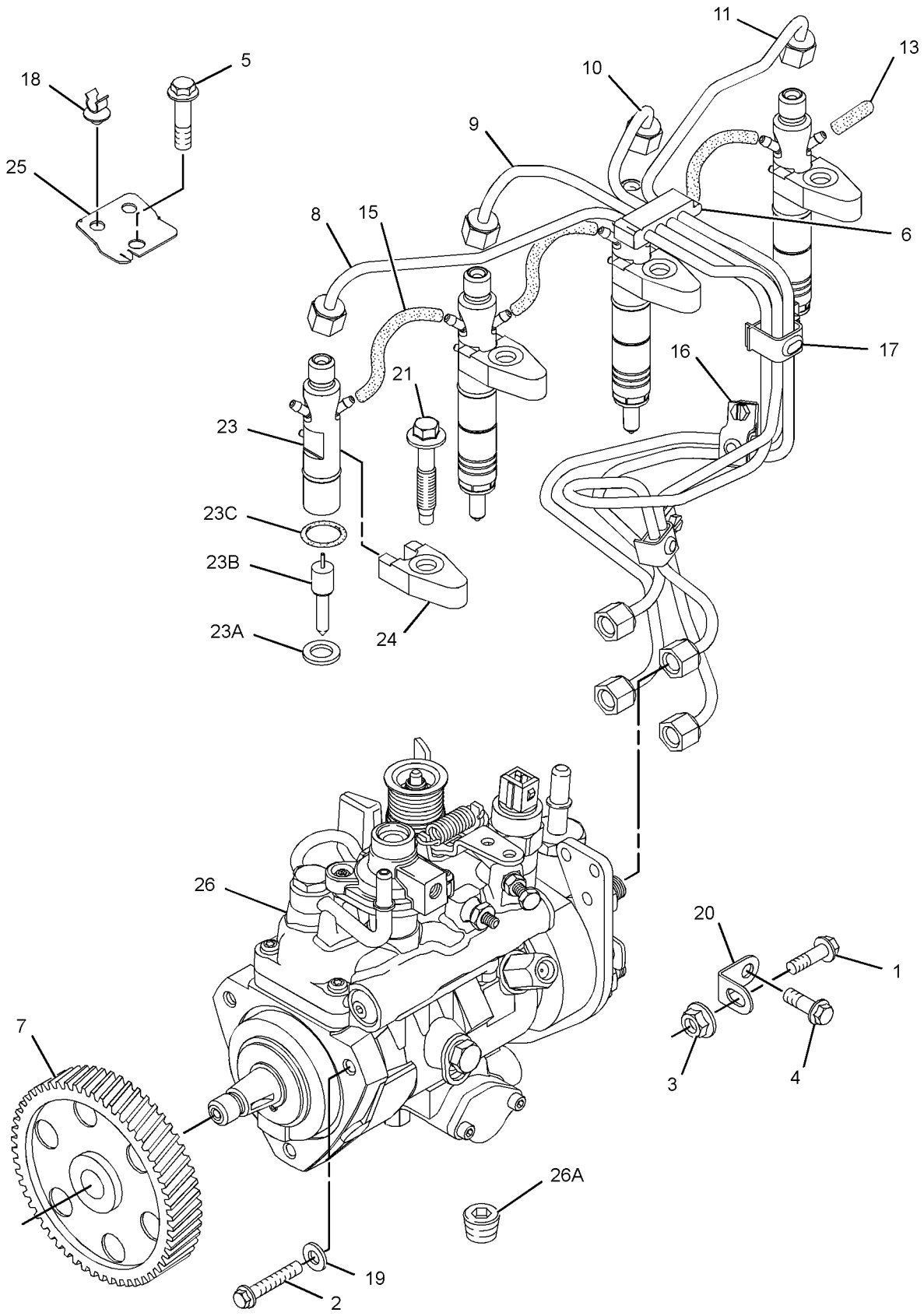

GRAPHIC #1 g01548773

328-8308 **PUMP GP-FUEL INJECTION** *(contd.)* **i03255456**

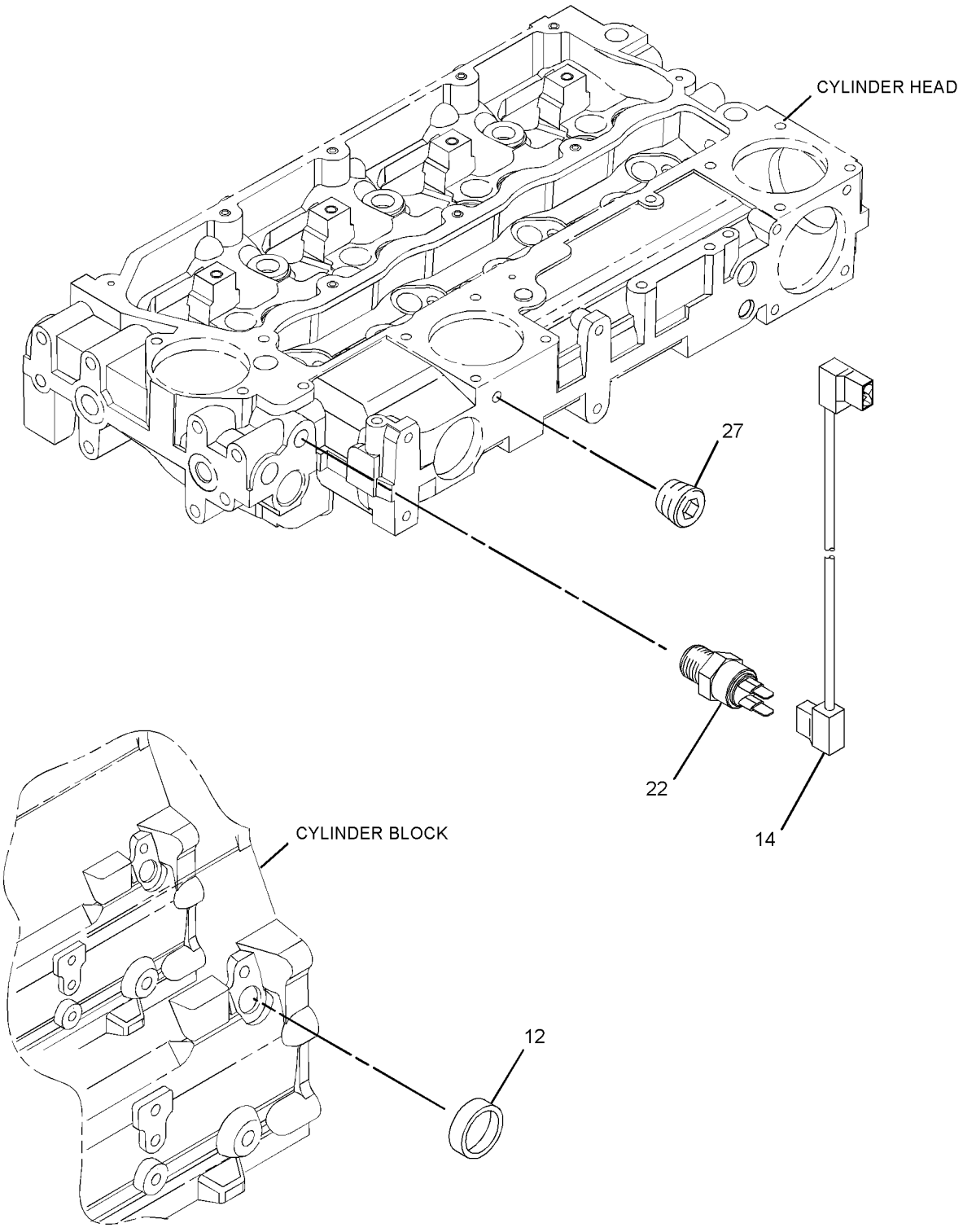

GRAPHIC #2 **<END>** g01548774

228-9129 PUMP GP-FUEL PRM & PRIM FILTER–
WITH WATER SEPARATOR
S/N: HLS1-99999

PART OF 253-0352 PUMP GP-FUEL PRM & PRIM FILTER

SMCS-1258, 1260, 1261 **i02249241**

NOTE	REF NO	GRAPHIC REF	PART NUMBER	QTY	PART NAME 1 2 3 4 5 6 (PRODUCT LEVEL)	SEE PAGE
	1	1	**118-8118**	1	RING-RETAINING	
	2	1	**228-9130**	1	FILTER AS-WATER SEP & FUEL	
	3	1	**228-9132**	1	FITTING	
	4	1	**193-0618**	1	SENSOR GP-MOISTURE (WATER SEPARATOR)	
	5	1	**149-9954**	1	DRAIN AS (WATER SEPARATOR)	

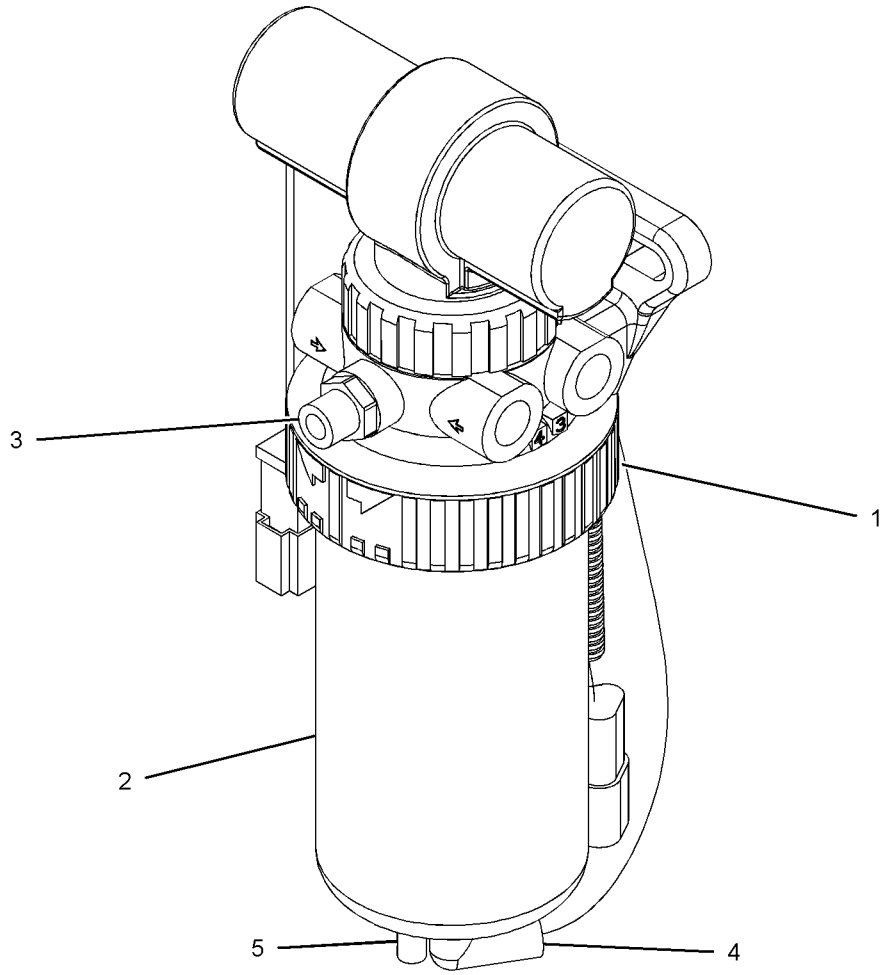

GRAPHIC #1 **<END>** g01093427

253-0352 PUMP GP-FUEL PRM & PRIM FILTER–

WITH MOUNTING

S/N: HLS1-7842

PART OF 214-6902 ENGINE AR

SMCS-1258, 1260, 1261 **i02513514**

NOTE	REF NO	GRAPHIC REF	PART NUMBER	QTY	PART NAME 1 2 3 4 5 6 (PRODUCT LEVEL)	SEE PAGE
	1	1	**3S-2093**	1	STRAP-CABLE	
	2	1	**069-4080**	1	FITTING	
	3	1	*165-7951*	2	CONNECTOR AS	
					(EACH INCLUDES)	
		1	**3J-1907**	1	SEAL-O-RING	
		1	**157-1669**	1	CONNECTOR	
Y	4	1	**228-9129**	1	PUMP GP-FUEL PRM & PRIM FILTER (WITH WATER SEPARATOR)	91
	5	1	**253-0354**	1	BRACKET AS	
	6	1	**3J-1907**	2	SEAL-O-RING	
	7	1	**8T-4121**	4	WASHER-HARD (11X21X2.5-MM THK)	
M	8	1	**8T-4196**	2	BOLT (M10X1.5X35-MM)	
M	9	1	**8T-8894**	2	BOLT-SOCKET HEAD (M10X1.5X20-MM)	
	10	1	**9S-4191**	2	PLUG-O-RING	

M-METRIC PART
Y-SEPARATE ILLUSTRATION

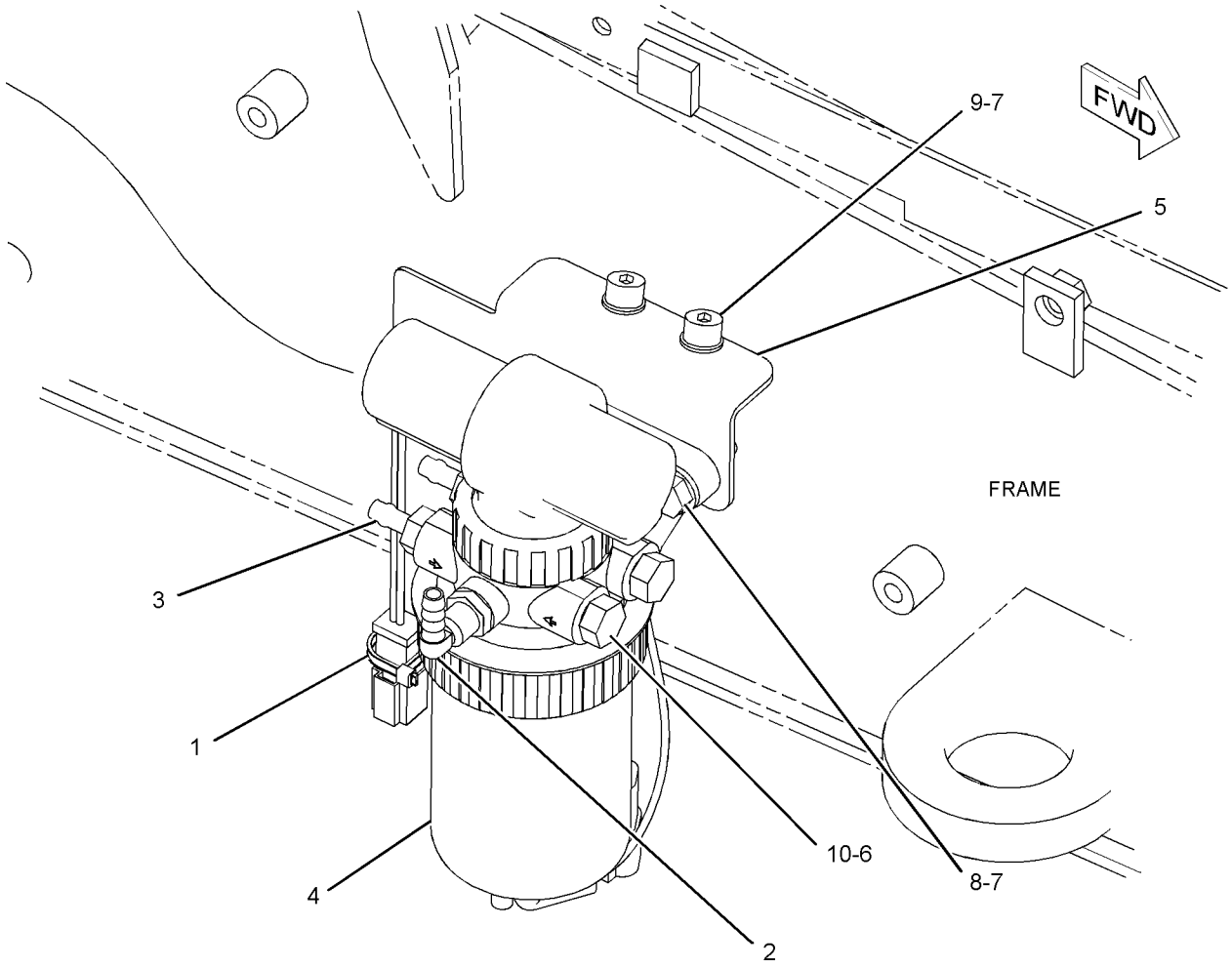

GRAPHIC #1 **<END>** g01078481

253-0352 PUMP GP-FUEL PRM & PRIM FILTER–
WITH MOUNTING
S/N: HLS7843-99999
PART OF 214-6902 ENGINE AR

SMCS-1258, 1260, 1261 **i03158703**

NOTE	REF NO	GRAPHIC REF	PART NUMBER	QTY	PART NAME 1 2 3 4 5 6 (PRODUCT LEVEL)	SEE PAGE
C	1	1	**3S-2093**	2	STRAP-CABLE	
	2	1	**069-4080**	1	FITTING	
	3	1	*165-7951*	2	CONNECTOR AS	
					(EACH INCLUDES)	
		1	**3J-1907**	1	SEAL-O-RING	
		1	**157-1669**	1	CONNECTOR	
Y	4	1	**228-9129**	1	PUMP GP-FUEL PRM & PRIM FILTER (WITH WATER SEPARATOR)	91
	5	1	**253-0354**	1	BRACKET AS	
	6	1	**3J-1907**	2	SEAL-O-RING	
	7	1	**8T-4121**	4	WASHER-HARD (11X21X2.5-MM THK)	
CM	8	1	**8T-4195**	2	BOLT (M10X1.5X30-MM)	
M	9	1	**8T-8894**	2	BOLT-SOCKET HEAD (M10X1.5X20-MM)	
	10	1	**9S-4191**	2	PLUG-O-RING	

C-CHANGE FROM PREVIOUS TYPE
M-METRIC PART
Y-SEPARATE ILLUSTRATION

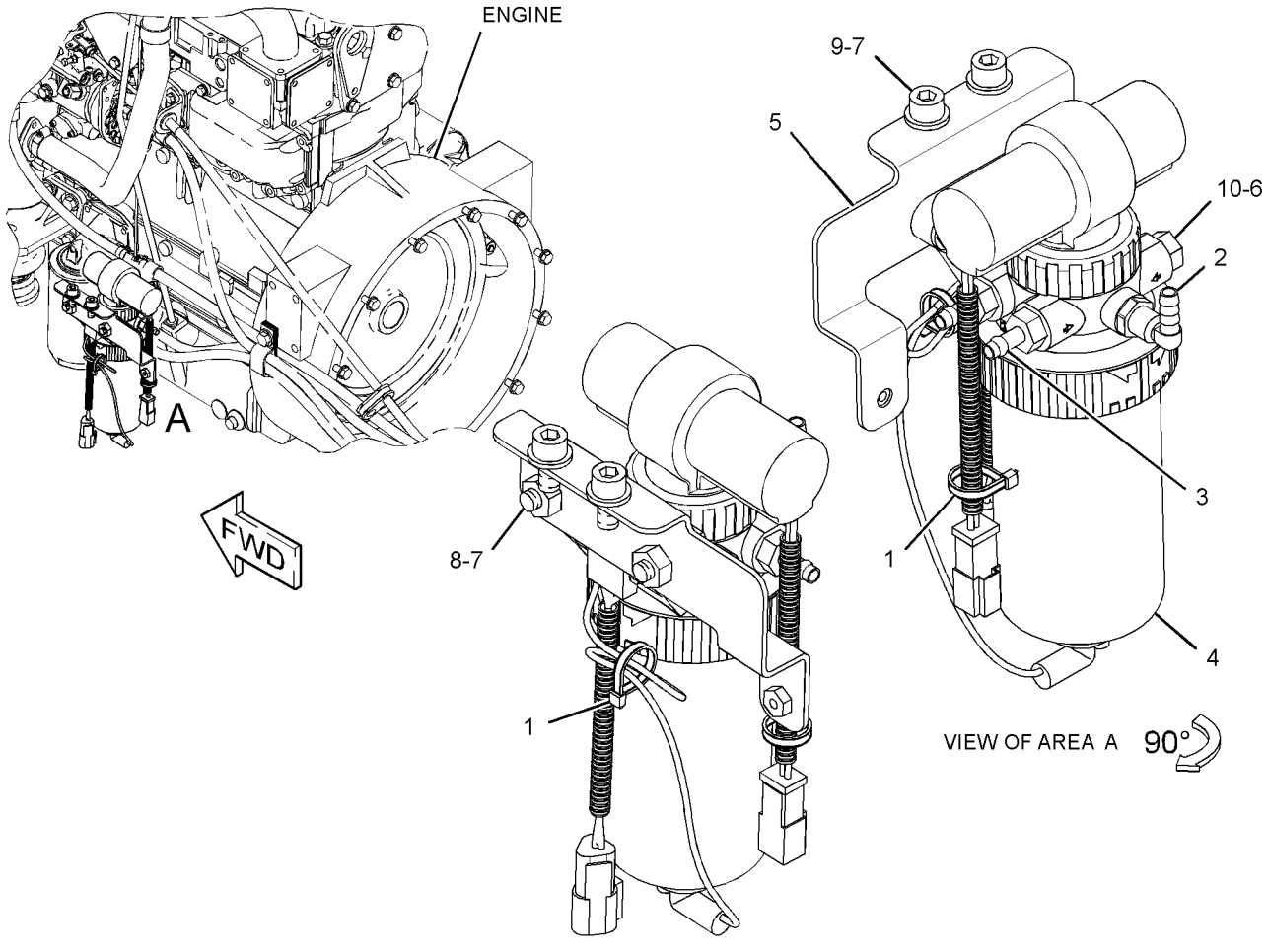

GRAPHIC #1 **<END>** g01662794

245-6098 TANK & MTG GP-FUEL—INCLUDES STEP

S/N: HLS1-99999

PART OF 213-9287 CHASSIS AR

SMCS-1273 **i02431123**

NOTE	REF NO	GRAPHIC REF	PART NUMBER	QTY	PART NAME 1 2 3 4 5 6 (PRODUCT LEVEL)	SEE PAGE
	1	1	**245-6101**	1	TREAD	
	2	1	**245-6103**	1	STEP AS	
Y	3	1	*245-6104*	1	TANK GP-FUEL	95
	4	1	**245-6108**	1	PLATE AS	
	5	1	**5P-4116**	7	WASHER-HARD (8.8X20.5X2-MM THK)	
M	6	1	**8T-4193**	4	BOLT (M16X2X50-MM)	
	7	1	**8T-4122**	4	WASHER-HARD (17X32X3.5-MM THK)	
M	8	1	**8T-4189**	7	BOLT (M8X1.25X20-MM)	
M	9	1	**8T-4200**	4	BOLT (M8X1.25X16-MM)	
	10	1	**8T-4224**	4	WASHER-HARD (8.8X16X2-MM THK)	

M-METRIC PART
Y-SEPARATE ILLUSTRATION

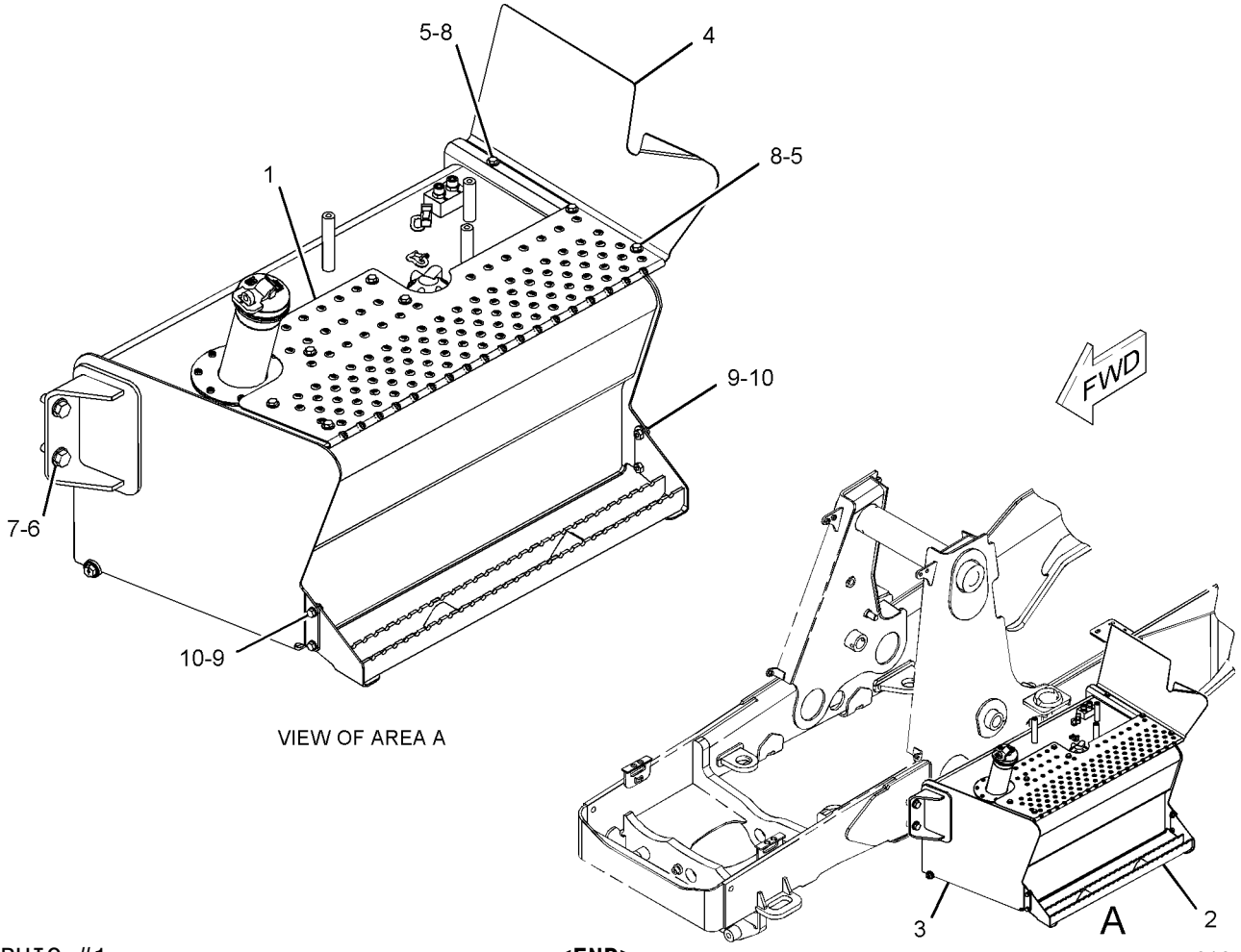

GRAPHIC #1 **<END>** g01077507

FUEL SYSTEM

245-6104 TANK GP-FUEL

S/N: HLS1-99999

PART OF 245-6098 TANK & MTG GP-FUEL

SMCS-1273 **i02864273**

NOTE	REF NO	GRAPHIC REF	PART NUMBER	QTY	PART NAME 1 2 3 4 5 6 (PRODUCT LEVEL)	SEE PAGE
	1	1	**8L-8413**	1	STRAP-CABLE	
	2	1	**9R-7240**	1	GASKET	
	3	1	**131-0232**	1	COVER	
	4	1	**251-3231**	1	SENDER AS-FUEL LEVEL	
		1	**186-3735**	2	PIN-CONNECTOR (16-GA TO 18-GA)	
		1	**102-8802**	1	KIT-RECEPTACLE (2-PIN)	
					(INCLUDES RECEPTACLE AS & WEDGE)	
Y	5	1	**245-6105**	1	TANK GP-FUEL	96
M	6	1	**184-0982**	5	SCREW-PAN HEAD (M6X1X16-MM)	

M-METRIC PART
Y-SEPARATE ILLUSTRATION

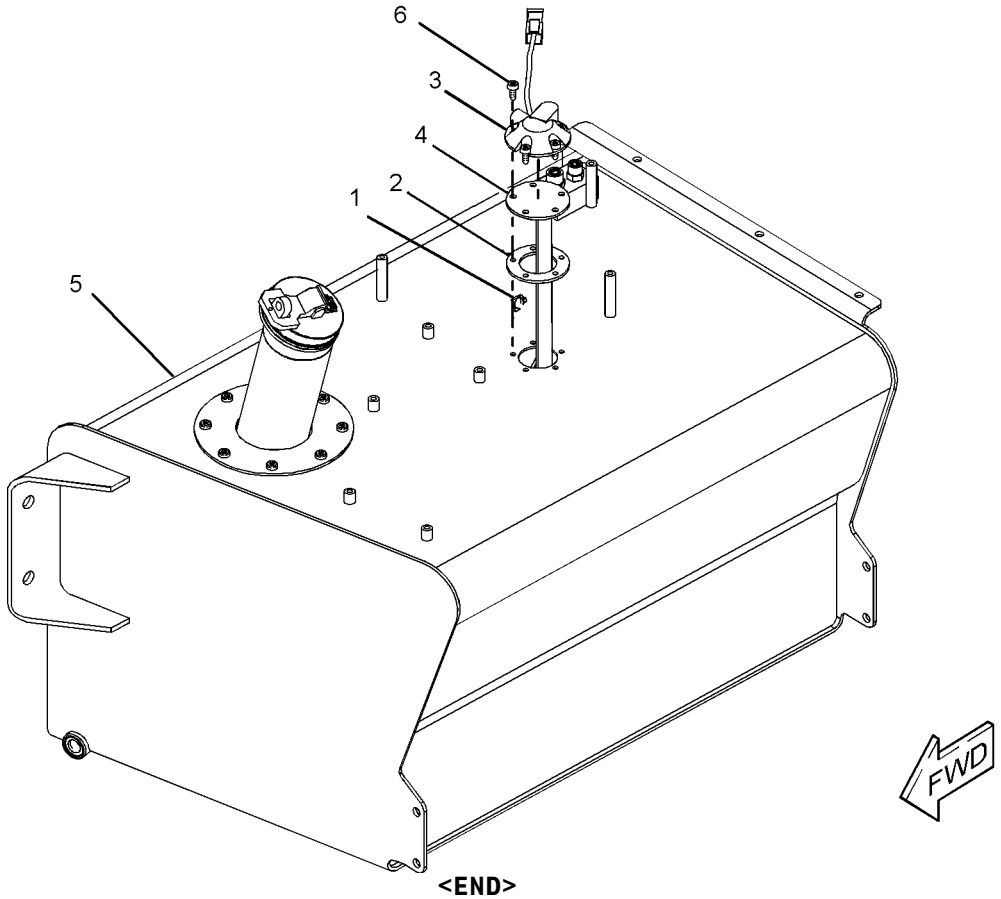

GRAPHIC #1 **<END>** g01089650

245-6105 TANK GP-FUEL

S/N: HLS1-99999

PART OF 245-6104 TANK GP-FUEL

SMCS-1273 **i03502265**

NOTE	REF NO	GRAPHIC REF	PART NUMBER	QTY	PART NAME 1 2 3 4 5 6 (PRODUCT LEVEL)	SEE PAGE
	1	1	**284-9039**	1	CAP-FUEL	
	2	1	**201-1835**	1	TUBE AS	
	3	1	**272-0537**	1	PLUG AS	
		1	**190-7634**	1	SEAL-O-RING	
	4	1	**245-6107**	1	TANK AS-FUEL	
		1	**5C-9855**	4	BOSS (M8X1.25X19-MM)	
		1	**7T-1099**	2	LINK	
	5	1	**106-8020**	1	GASKET	
M	6	1	**184-0982**	8	SCREW-PAN HEAD (M6X1X16-MM)	
	7	1	*148-8326*	2	CONNECTOR AS	
					(EACH INCLUDES)	
		1	**3J-7354**	1	SEAL-O-RING	
		1	**6V-8397**	1	SEAL-O-RING	
		1	**6V-9872**	1	CONNECTOR	
F			**180-3730**	1	STRAINER-FUEL (FILLER NECK SCREEN)	

F-NOT SHOWN
M-METRIC PART

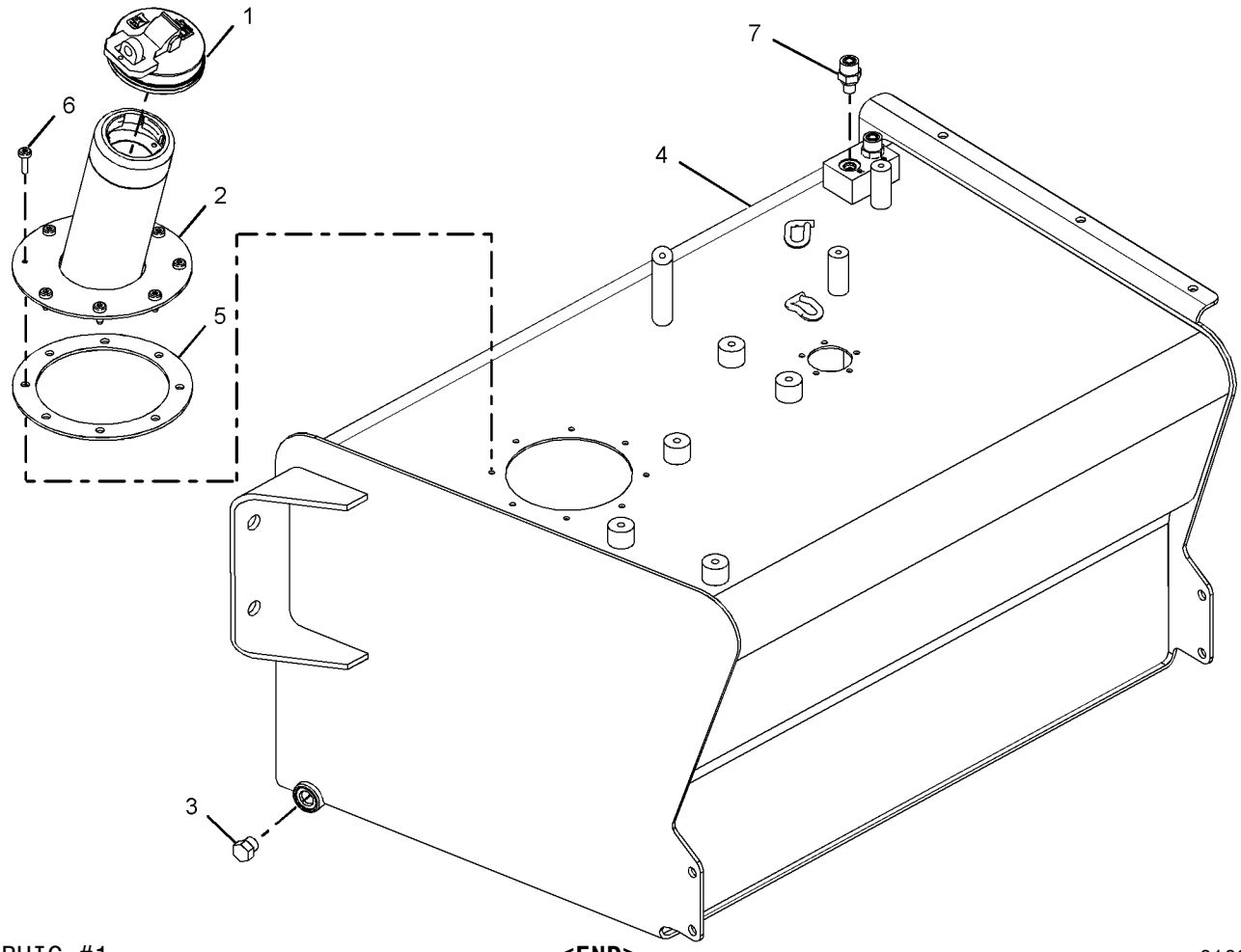

GRAPHIC #1 **<END>** g01086993

252-6256 ALTERNATOR GP-CHARGING–

120-AMPERE, WITH MOUNTING

S/N: CRS1-6887

PART OF 273-3610 ENGINE AR, 320-8414, 323-5725, 325-5121 ENGINE AR-PRIMARY

ALSO AN ATTACHMENT

SMCS-1405, 1425 **i03481600**

NOTE	REF NO	GRAPHIC REF	PART NUMBER	QTY	PART NAME 1 2 3 4 5 6 (PRODUCT LEVEL)	SEE PAGE
	1	1	**6B-0933**	1	SPACER (10.31X19.05X6.35-MM THK)	
M	2	1	**6I-0260**	1	BOLT (M8X1.25X25-MM)	
M	3	1	**6I-0454**	1	BOLT (M10X1.5X70-MM)	
	4	1	**6I-0594**	1	NUT (M10X1.15-THD)	
	5	1	**228-7391**	1	PULLEY-ALTERNATOR	
	6	1	**067-6366**	1	WASHER	
	7	1	**100-8451**	1	BOLT (M8X1.25X130-MM)	
	8	1	**113-6349**	1	NUT (M12X1.75X93-MM)	
M	9	1	**140-8783**	2	BOLT (M10X45-THD)	
	10	1	**225-3145**	1	ALTERNATOR GP-CHARGING (120-AMPERE)	
	11	1	**233-9530**	1	BRACKET	
	12	1	**233-9531**	1	LEVER-ADJUSTING	

M-METRIC PART

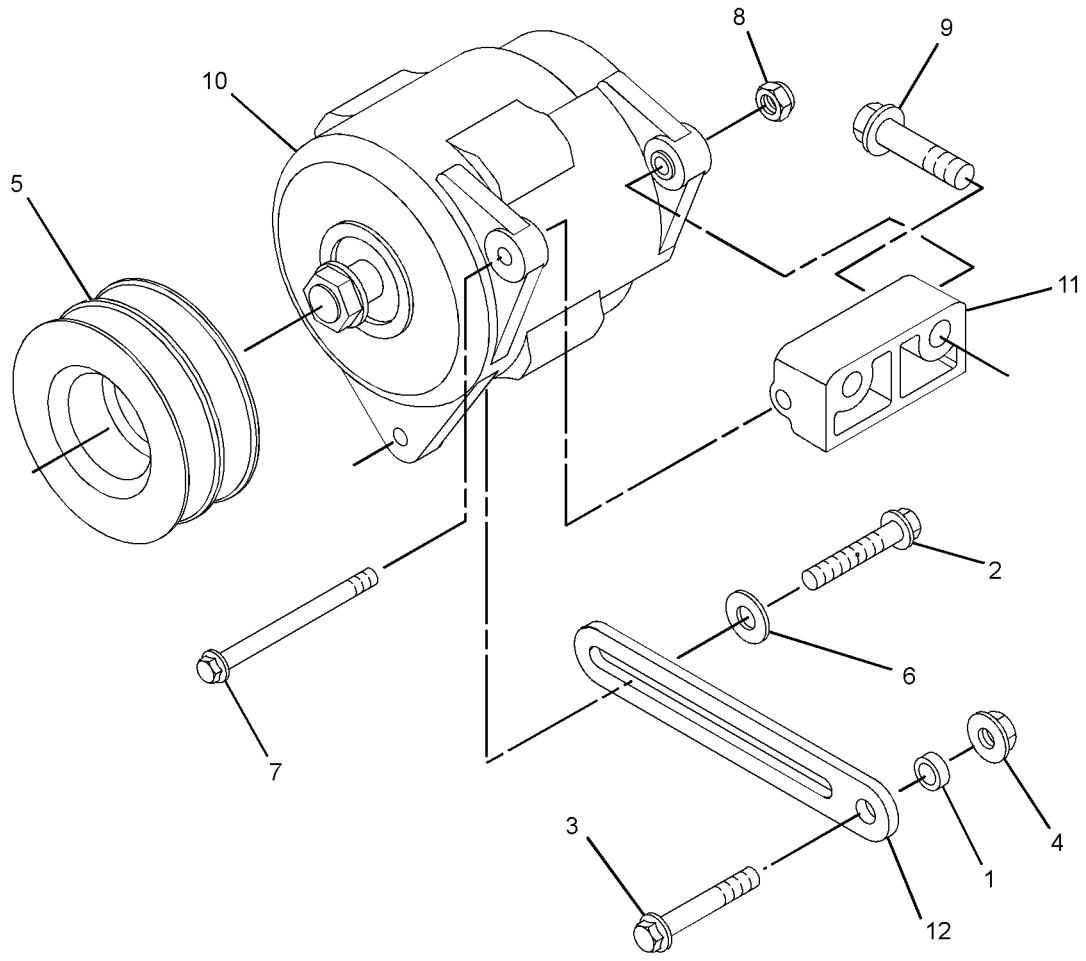

GRAPHIC #1 **<END>** g01828414

211-4285 BATTERY & WIRING GP–STANDARD

S/N: HLS1-99999

PART OF 213-9287 CHASSIS AR

SMCS-1401, 1402, 1408, 1411 **i03502300**

NOTE	REF NO	GRAPHIC REF	PART NUMBER	QTY	PART NAME 1 2 3 4 5 6 (PRODUCT LEVEL)	SEE PAGE
	1	1	**6T-0465**	1	COVER-TERMINAL (BLACK)	
	2	1	**7K-1181**	7	STRAP-CABLE	
	3	1	**038-9317**	1	TREAD-NONSKID	
	4	1	**178-1781**	1	CLIP	
	5	1	**213-6088**	1	CABLE AS-BATTERY (NEGATIVE)	
		1	**1S-7251**	1	TERMINAL-CABLE (00-GA, 1/2-IN BOLT)	
E		1	**5P-0747**		CABLE (00-GA, BLACK) (61-CM)	
	6	1	**213-6089**	1	CABLE AS-POWER	
E		1	**8C-3056**		CABLE (02-GA, RED) (230-CM)	
		1	**8T-8799**	1	BOOT	
E		1	**135-5009**		TUBE-HEAT SHRINK (32-MM DIA) (5-CM)	
E		1	**319-0755**		TUBE-CONVOLUTED (225-CM)	
	7	1	**213-6094**	1	CABLE AS (ALTERNATOR)	
		1	**8T-8799**	1	BOOT	
E		1	**125-7876**		TUBE-HEAT SHRINK (17.78-MM DIA) (7-CM)	
	8	1	**230-6368**	1	BATTERY (12-VOLT, MAINTENANCE FREE)	
	9	1	**240-4639**	1	BRACKET AS	
	10	1	**246-8053**	1	CABLE AS-BATTERY (POSITIVE)	
E		1	**5P-0761**		CABLE (00-GA, RED) (110-CM)	
		1	**8N-0869**	1	COVER-TERMINAL (RED)	
E		1	**8Y-8081**		TUBE-CONVOLUTED (105-CM)	
		1	**3S-2093**	2	STRAP-CABLE	
	11	1	**243-5027**	1	NUT AS (M6X1-THD)	
	12	1	**156-6175**	2	CLIP	
	13	1	**4D-6466**	2	CLIP	
	14	1	**8T-4224**	1	WASHER-HARD (8.8X16X2-MM THK)	
	15	1	**4P-7581**	1	CLIP	
M	16	1	**5C-2890**	2	NUT (M6X1-THD)	
M	17	1	**5C-7261**	1	NUT (M8X1.25-THD)	
	18	1	**7X-7729**	2	WASHER (11X25X3-MM THK)	
	19	1	**8T-4121**	3	WASHER-HARD (11X21X2.5-MM THK)	
M	20	1	**8T-4133**	1	NUT (M10X1.5-THD)	
M	21	1	**8T-4137**	4	BOLT (M10X1.5X20-MM)	
M	22	1	**5C-9553**	2	BOLT (M6X1X16-MM)	
M	23	1	**8T-4185**	1	BOLT (M10X1.5X50-MM)	
	24	1	**8T-4205**	4	WASHER-HARD (7.2X14.5X2-MM THK)	
	25	1	**9G-4191**	1	GROMMET	
	26	1	**4P-8134**	1	CLIP	

E-ORDER BY THE CENTIMETER
M-METRIC PART

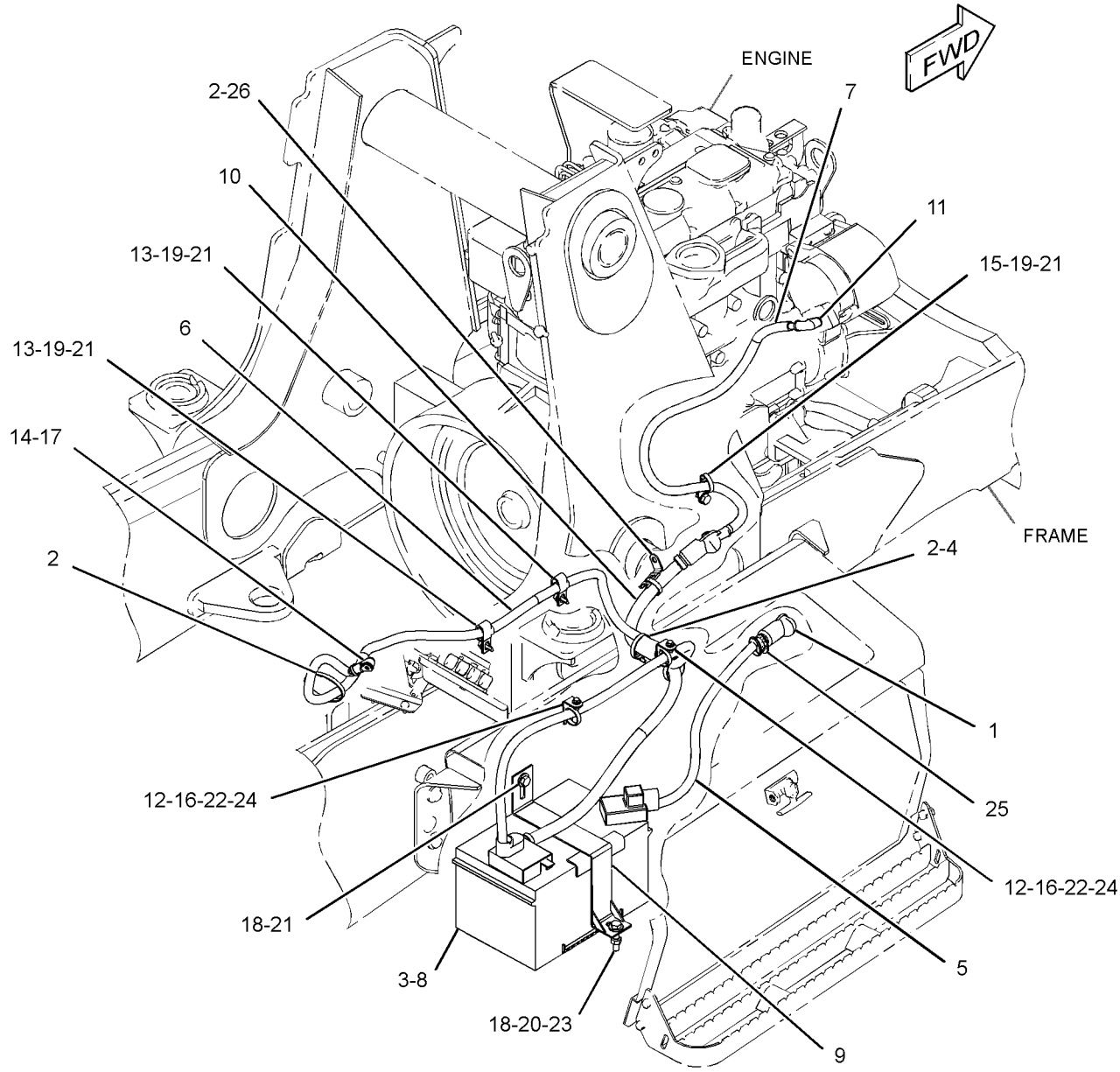

GRAPHIC #1 **<END>** g01386954

ELECTRICAL AND STARTING SYSTEM

211-4286 BATTERY & WIRING GP

S/N: HLS1-99999
AN ATTACHMENT

SMCS-1401, 1402, 1408, 1411 **i03503680**

NOTE	REF NO	GRAPHIC REF	PART NUMBER	QTY	PART NAME 1 2 3 4 5 6 (PRODUCT LEVEL)	SEE PAGE
	1	1	**038-9317**	1	TREAD-NONSKID	
	2	1	**213-6091**	1	CABLE AS-BATTERY (POSITIVE)	
		1	**3S-2093**	1	STRAP-CABLE	
E		1	**5P-0761**		CABLE (00-GA, RED) (36-CM)	
		1	**7T-9987**	1	COVER-TERMINAL (RED)	
		1	**8S-3020**	1	TERMINAL-CABLE (00-GA, 3/8-IN BOLT)	
E		1	**8Y-8081**		TUBE-CONVOLUTED (36-CM)	
		1	**3S-6049**	1	TERMINAL AS-BATTERY (POSITIVE)	
	3	1	**213-6092**	1	CABLE AS-BATTERY (NEGATIVE)	
		1	**1S-7252**	1	TERMINAL-CABLE (00-GA, 3/8-IN BOLT)	
E		1	**5P-0747**		CABLE (00-GA, BLACK) (44-CM)	
		1	**7N-5274**	1	COVER-TERMINAL (BLACK)	
		1	**3S-6050**	1	TERMINAL AS-BATTERY (NEGATIVE)	
	4	1	**230-6368**	1	BATTERY (12-VOLT, MAINTENANCE FREE)	
	5	1	**240-4639**	1	BRACKET AS	
	6	1	**7X-7729**	2	WASHER (11X25X3-MM THK)	
M	7	1	**8T-4133**	1	NUT (M10X1.5-THD)	
M	8	1	**8T-4137**	1	BOLT (M10X1.5X20-MM)	
M	9	1	**8T-4185**	1	BOLT (M10X1.5X50-MM)	

E-ORDER BY THE CENTIMETER
M-METRIC PART

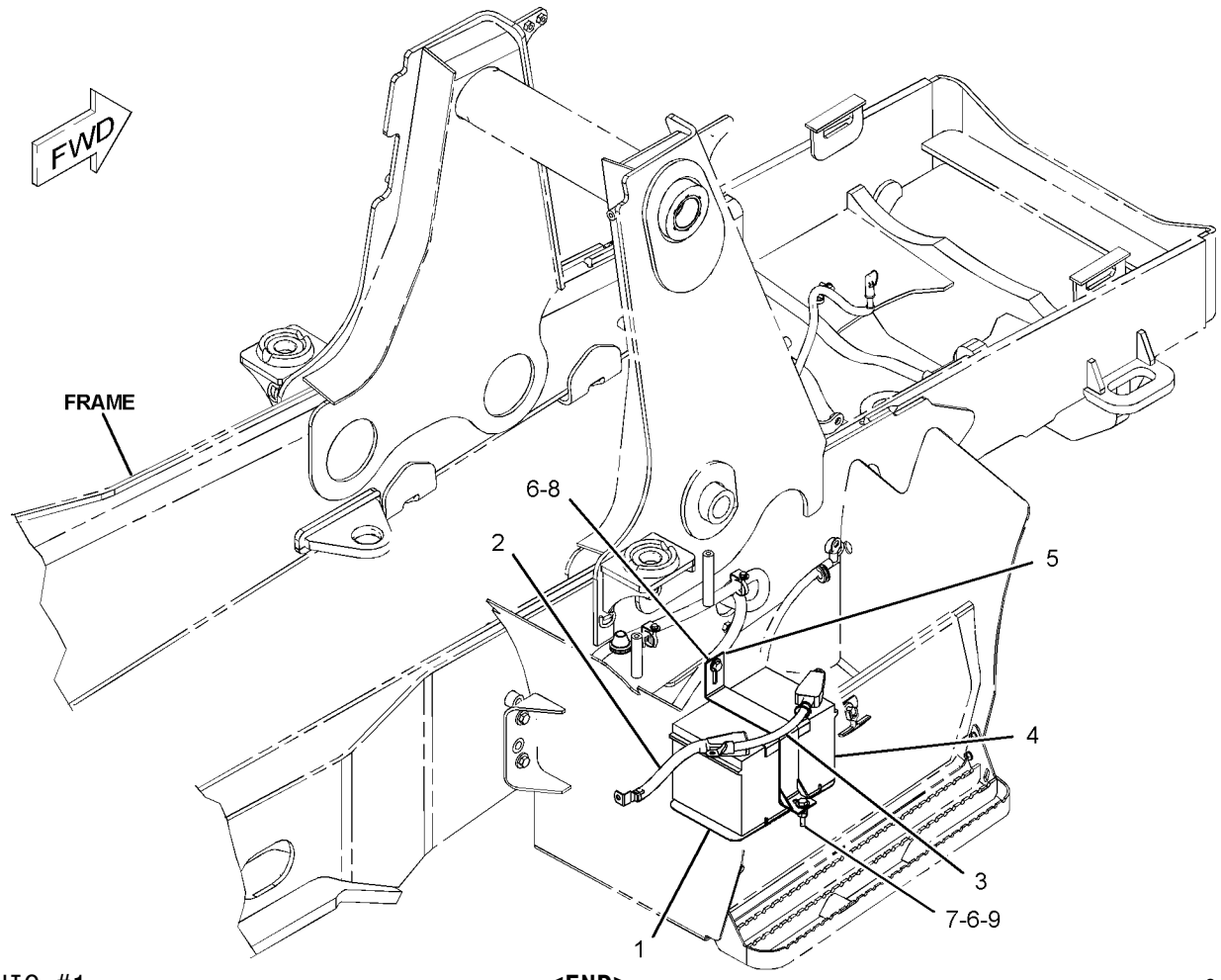

GRAPHIC #1 **<END>** g01082047

ELECTRICAL AND STARTING SYSTEM

290-6790 BATTERY & WIRING GP–STANDARD

S/N: HLS1-5359

PART OF 213-9287 CHASSIS AR

SMCS-1401, 1402, 1408, 1411 **i03527991**

NOTE	REF NO	GRAPHIC REF	PART NUMBER	QTY	PART NAME 1 2 3 4 5 6 (PRODUCT LEVEL)	SEE PAGE
	1	1	**3E-8320**	1	PLATE-INSTRUCTION (BATTERY) (DISCONNECT SWITCH)	
M	2	1	**5C-9553**	2	BOLT (M6X1X16-MM)	
	3	1	**6T-0465**	1	COVER-TERMINAL (BLACK)	
	4	1	**7K-1181**	6	STRAP-CABLE	
Y	5	1	**7N-0718**	1	SWITCH GP-DISCONNECT (BATTERY) (12-VOLT)	139
	6	1	**038-9317**	1	TREAD-NONSKID	
	7	1	**178-1781**	1	CLIP	
	8	1	**213-6089**	1	CABLE AS-POWER	
E		1	**8C-3056**		CABLE (02-GA, RED) (230-CM)	
E		1	**8Y-8080**		TUBE-CONVOLUTED (225-CM)	
E		1	**1P-0810**		TAPE-ELECTRICAL (42-CM)	
	9	1	**213-6094**	1	CABLE AS (ALTERNATOR)	
	10	1	**230-6368**	1	BATTERY (12-VOLT, MAINTENANCE FREE)	
	11	1	**240-4639**	1	BRACKET AS	
	12	1	**243-5027**	1	NUT AS (M6X1-THD)	
	13	1	**246-8053**	1	CABLE AS-BATTERY (POSITIVE)	
		1	**3S-2093**	2	STRAP-CABLE	
	14	1	**290-6791**	1	CABLE AS	
		1	**8S-3020**	1	TERMINAL-CABLE (00-GA, 3/8-IN BOLT)	
E		1	**159-8050**		CABLE (00-GA, BLACK) (44-CM)	
	15	1	**290-6792**	1	CABLE AS	
		1	**1S-7251**	1	TERMINAL-CABLE (00-GA, 1/2-IN BOLT)	
		1	**8S-3020**	1	TERMINAL-CABLE (00-GA, 3/8-IN BOLT)	
E		1	**159-8050**		CABLE (00-GA, BLACK) (6-CM)	
	16	1	**156-6175**	2	CLIP	
	17	1	**4D-6466**	2	CLIP	
	18	1	**4P-7581**	1	CLIP	
M	19	1	**5C-2890**	2	NUT (M6X1-THD)	
	20	1	**7X-7729**	2	WASHER (11X25X3-MM THK)	
	21	1	**8T-4121**	5	WASHER-HARD (11X21X2.5-MM THK)	
M	22	1	**8T-4133**	1	NUT (M10X1.5-THD)	
M	23	1	**8T-4137**	4	BOLT (M10X1.5X20-MM)	
M	24	1	**8T-4185**	1	BOLT (M10X1.5X50-MM)	
	25	1	**8T-4205**	4	WASHER-HARD (7.2X14.5X2-MM THK)	
	26	1	**9G-4191**	1	GROMMET	
E	27	1	**3E-8299**		SEAL (2-CM)	
E	27A	1	**3E-8299**		SEAL (11-CM)	
E	27B	1	**3E-8299**		SEAL (7-CM)	

E-ORDER BY THE CENTIMETER
M-METRIC PART
Y-SEPARATE ILLUSTRATION

290-6790 **BATTERY & WIRING GP** *(contd.)* **i03527991**

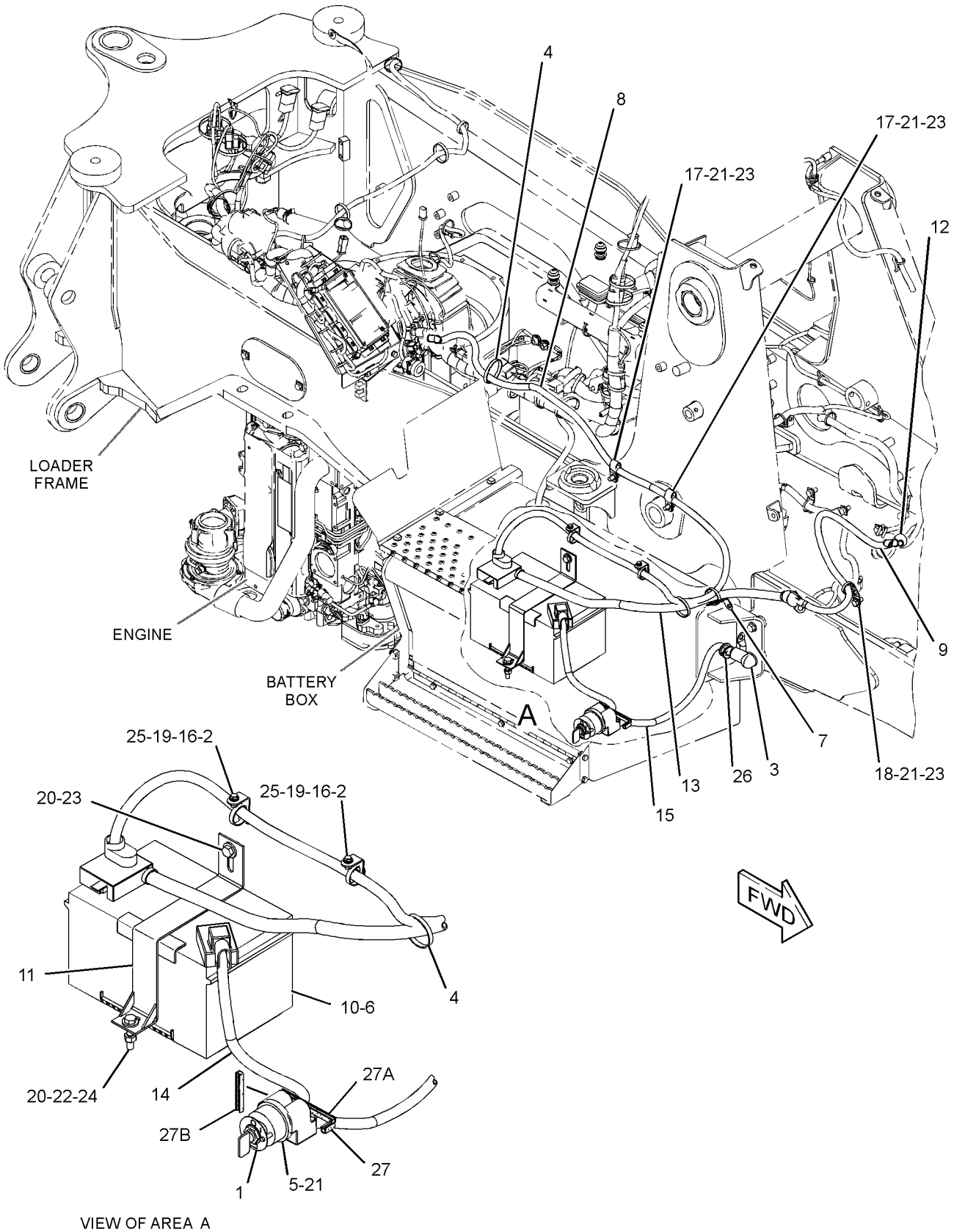

VIEW OF AREA A

GRAPHIC #1 **<END>** g01389707

290-6790 BATTERY & WIRING GP–STANDARD

S/N: HLS5360-99999
PART OF 213-9287 CHASSIS AR
ALSO AN ATTACHMENT

SMCS-1401, 1402, 1408, 1411 **i03527990**

NOTE	REF NO	GRAPHIC REF	PART NUMBER	QTY	PART NAME 1 2 3 4 5 6 (PRODUCT LEVEL)	SEE PAGE
	1	1	**3E-8320**	1	PLATE-INSTRUCTION (BATTERY) (DISCONNECT SWITCH)	
M	2	1	**5C-9553**	2	BOLT (M6X1X16-MM)	
	3	1	**6T-0465**	1	COVER-TERMINAL (BLACK)	
C	4	1	**7K-1181**	8	STRAP-CABLE	
Y	5	1	**7N-0718**	1	SWITCH GP-DISCONNECT (BATTERY) (12-VOLT)	139
	6	1	**038-9317**	1	TREAD-NONSKID	
C	7	1	**277-1873**	2	CLIP	
	8	1	**213-6089**	1	CABLE AS-POWER	
		1	**8T-8799**	1	BOOT	
E		1	**135-5009**		TUBE-HEAT SHRINK (32-MM DIA) (5-CM)	
E		1	**1P-0810**		TAPE-ELECTRICAL (42-CM)	
E		1	**8C-3056**		CABLE (02-GA, RED) (230-CM)	
E		1	**319-0755**		TUBE-CONVOLUTED (225-CM)	
	9	1	**213-6094**	1	CABLE AS (ALTERNATOR)	
		1	**8T-8799**	1	BOOT	
E		1	**125-7876**		TUBE-HEAT SHRINK (17.78-MM DIA) (7-CM)	
	10	1	**230-6368**	1	BATTERY (12-VOLT, MAINTENANCE FREE)	
	11	1	**240-4639**	1	BRACKET AS	
	12	1	**243-5027**	1	NUT AS (M6X1-THD)	
	13	1	**246-8053**	1	CABLE AS-BATTERY (POSITIVE)	
		1	**1S-7251**	1	TERMINAL-CABLE (00-GA, 1/2-IN BOLT)	
		1	**8N-0869**	1	COVER-TERMINAL (RED)	
E		1	**5P-0761**		CABLE (00-GA, RED) (110-CM)	
E		1	**8Y-8081**		TUBE-CONVOLUTED (105-CM)	
		1	**3S-2093**	2	STRAP-CABLE	
	14	1	**290-6791**	1	CABLE AS	
		1	**8S-3020**	1	TERMINAL-CABLE (00-GA, 3/8-IN BOLT)	
E		1	**159-8050**		CABLE (00-GA, BLACK) (44-CM)	
	15	1	**290-6792**	1	CABLE AS	
		1	**1S-7251**	1	TERMINAL-CABLE (00-GA, 1/2-IN BOLT)	
		1	**8S-3020**	1	TERMINAL-CABLE (00-GA, 3/8-IN BOLT)	
E		1	**159-8050**		CABLE (00-GA, BLACK) (6-CM)	
	16	1	**156-6175**	2	CLIP	
	17	1	**4D-6466**	2	CLIP	
	18	1	**4P-7581**	1	CLIP	
M	19	1	**5C-2890**	2	NUT (M6X1-THD)	
	20	1	**7X-7729**	2	WASHER (11X25X3-MM THK)	
C	21	1	**8T-4121**	7	WASHER-HARD (11X21X2.5-MM THK)	
M	22	1	**8T-4133**	1	NUT (M10X1.5-THD)	
CM	23	1	**8T-4137**	6	BOLT (M10X1.5X20-MM)	
M	24	1	**8T-4185**	1	BOLT (M10X1.5X50-MM)	
	25	1	**8T-4205**	4	WASHER-HARD (7.2X14.5X2-MM THK)	
	26	1	**9G-4191**	1	GROMMET	
C	27	1	**4P-8134**	1	CLIP	

C-CHANGE FROM PREVIOUS TYPE
E-ORDER BY THE CENTIMETER
M-METRIC PART
Y-SEPARATE ILLUSTRATION

290-6790 **BATTERY & WIRING GP** *(contd.)* **i03527990**

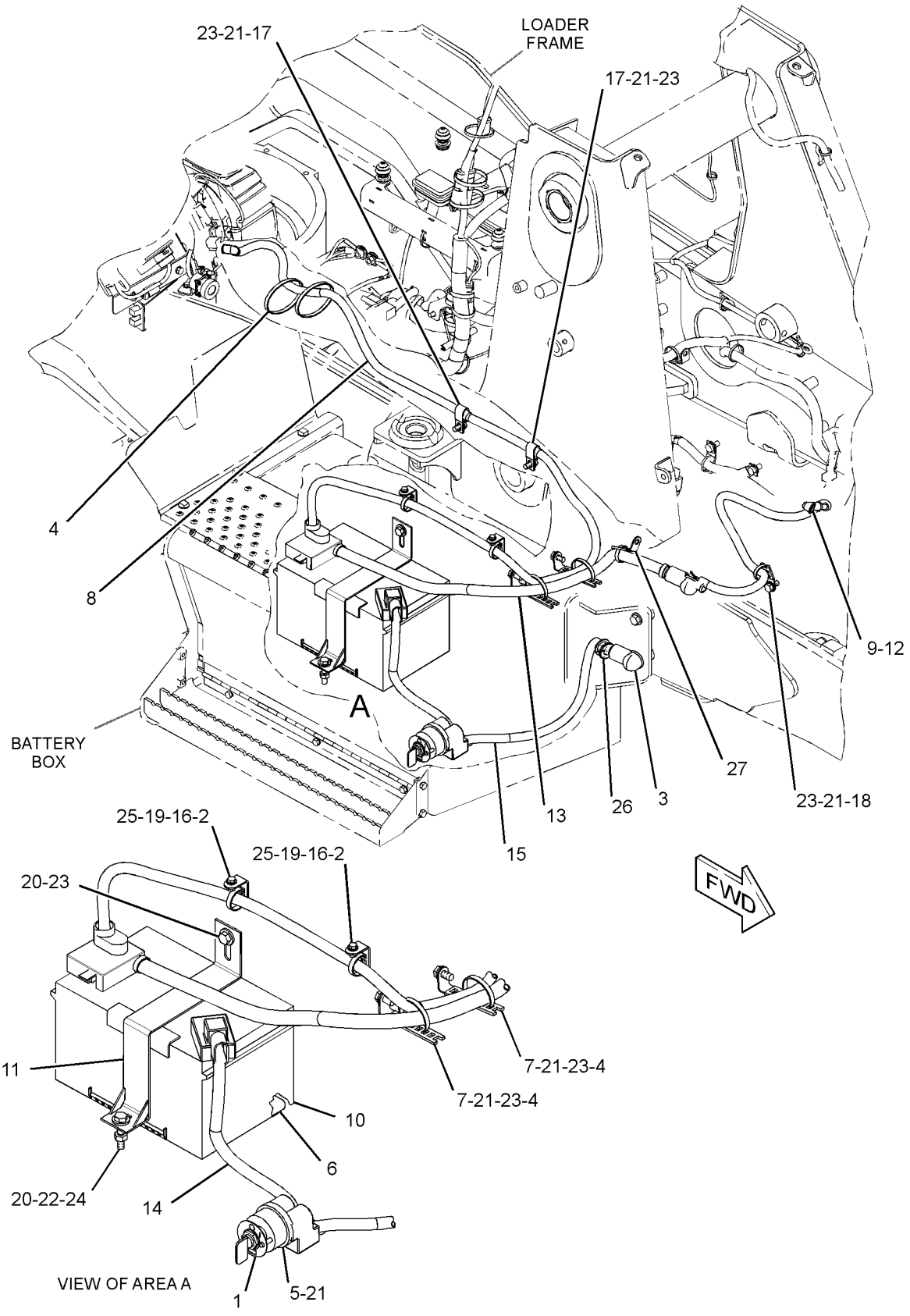

GRAPHIC #1 **<END>** g01446074

262-1421 ELECTRONICS GP-COMMUNICATION–

PRODUCT LINK 300
S/N: HLS1-99999
PART OF 225-7995 INSTALLATION GP-COMMUNICATION
AN ATTACHMENT

SMCS-7606, 7610, 7620 **i03171663**

NOTE	PART NUMBER	QTY	PART NAME 1 2 3 4 5 6 (PRODUCT LEVEL)	SEE PAGE
	330-3409	1	SOFTWARE GP-COMMUNICATION (PRODUCT LINK 300)	
			-OR-	
	330-3410	1	SERVICE GP-COMMUNICATION (PRODUCT LINK 300)	
			(OPTIONAL SERVICE REPLACEMENT)(INCLUDES CONTROL GP & SOFTWARE)	
	7X-6315	1	STRAP AS-GROUND	
	126-7574	1	SCREW-PAN HEAD (8-32X9.52-MM)	
	134-4126	1	WASHER (4.52X8.28X0.76-MM THK)	

<END>

225-8017 ELECTRONICS GP-MACHINE

S/N: HLS1-99999
PART OF 214-2553 BACKHOE AR-EXTENDABLE STICK, 214-2550 BACKHOE AR-STANDARD STICK
AN ATTACHMENT

SMCS-7610, 7620 **i03137562**

NOTE	PART NUMBER	QTY	PART NAME 1 2 3 4 5 6 (PRODUCT LEVEL)	SEE PAGE
	331-0907	1	SOFTWARE GP-MACHINE	
			-OR-	
	304-5691	1	CONTROL GP-UNPROGRAMMED (MACHINE)	
			-OR-	
	331-0921	1	SERVICE GP-MACHINE	
			(OPTIONAL SERVICE REPLACEMENT)(INCLUDES CONTROL GP & SOFTWARE)	

<END>

227-7373 ELECTRONICS GP-MACHINE

S/N: HLS1-99999
PART OF 291-9205 BACKHOE AR-EXTENDABLE STICK, 291-9204 BACKHOE AR-STANDARD STICK
AN ATTACHMENT

SMCS-7610, 7620 **i03097644**

NOTE	PART NUMBER	QTY	PART NAME 1 2 3 4 5 6 (PRODUCT LEVEL)	SEE PAGE
	331-0907	1	SOFTWARE GP-MACHINE	
			-OR-	
R	**304-5687**	1	CONTROL GP-UNPROGRAMMED (MACHINE)	
			-OR-	
	331-0920	1	SERVICE GP-MACHINE	
			(OPTIONAL SERVICE REPLACEMENT)(INCLUDES CONTROL GP & SOFTWARE)	

R-REMFG PART MAY BE AVAILABLE

<END>

ELECTRICAL AND STARTING SYSTEM

307-1496 ELECTRONICS GP-MACHINE

S/N: HLS1-99999

AN ATTACHMENT

SMCS-7610, 7620 **i02848408**

NOTE	REF NO	GRAPHIC REF	PART NUMBER	QTY	PART NAME 1 2 3 4 5 6 (PRODUCT LEVEL)	SEE PAGE
R	1	1	**252-2422**	1	CONTROL GP-UNPROGRAMMED (MACHINE)	

R-REMFG PART MAY BE AVAILABLE

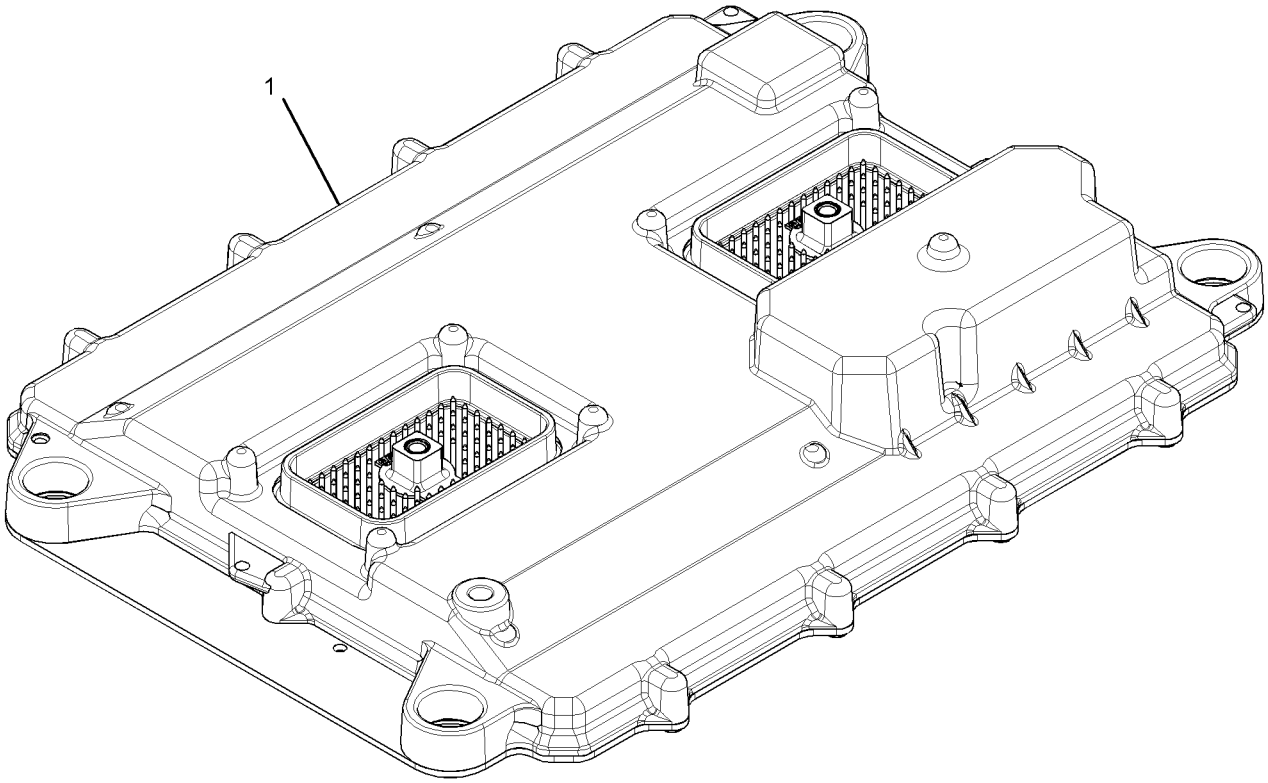

GRAPHIC #1 **<END>** g01533613

227-7374 ELECTRONICS GP-MONITOR–ADVISOR

S/N: HLS1-99999
PART OF 211-4253 INSTALLATION GP-MONITOR
AN ATTACHMENT

SMCS-7490, 7610, 7620 **i03097661**

NOTE	PART NUMBER	QTY	PART NAME 1 2 3 4 5 6 (PRODUCT LEVEL)	SEE PAGE
	330-4554	1	SOFTWARE GP-MONITOR	
			–OR–	
	284-8905	1	CONTROL GP-UNPRGMED MONITOR (ADVISOR)	
			-OR-	
	330-4555	1	SERVICE GP-MONITOR	
			(OPTIONAL SERVICE REPLACEMENT)(INCLUDES CONTROL GP & SOFTWARE)	

<END>

232-6661 GLOW PLUG GP

S/N: CRS1-6887

PART OF 273-3610 ENGINE AR, 320-8414, 323-5725, 325-5121 ENGINE AR-PRIMARY

ALSO AN ATTACHMENT

SMCS-1412 **i02757150**

NOTE	REF NO	GRAPHIC REF	PART NUMBER	QTY	PART NAME 1 2 3 4 5 6 (PRODUCT LEVEL)	SEE PAGE
	1	1	**286-4880**	1	BAR	
	2	1	**232-6662**	4	GLOW PLUG (12-VOLT)	
	3	1	**232-3126**	1	CLIP	

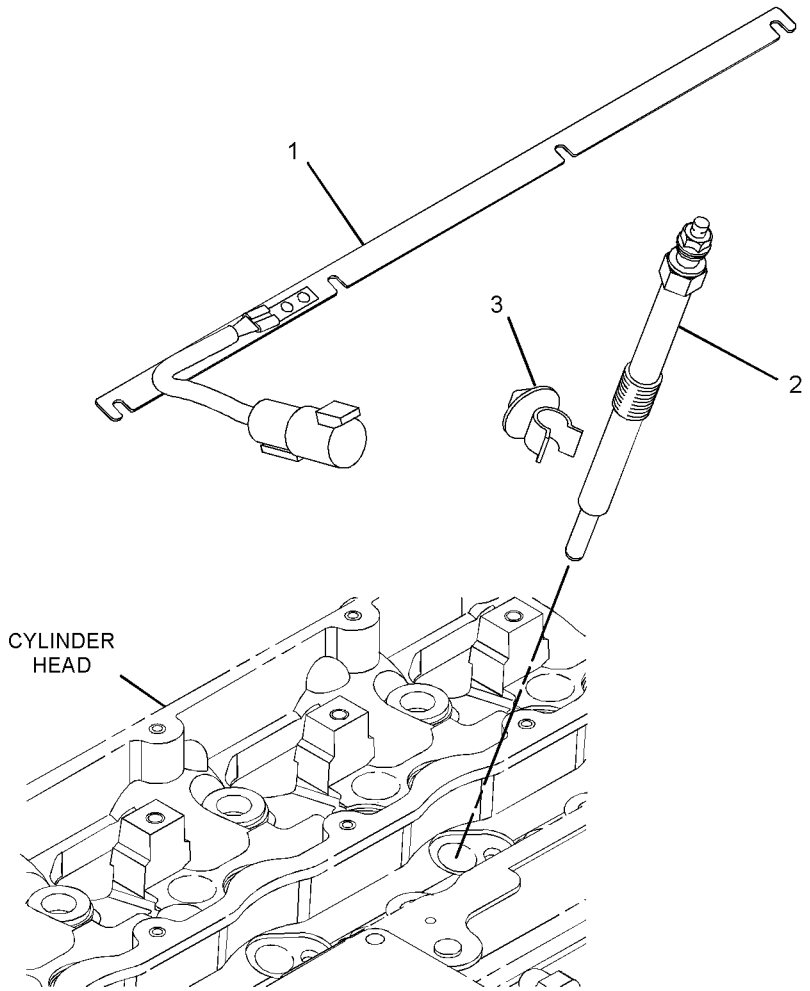

GRAPHIC #1 **<END>** g01392990

246-8045 GRADE CONTROL AR-LASER—ACCUGRADE, MAST

S/N: HLS1-99999

AN ATTACHMENT

SMCS-7220 **i03514611**

NOTE	REF NO	GRAPHIC REF	PART NUMBER	QTY	PART NAME 1 2 3 4 5 6 (PRODUCT LEVEL)	SEE PAGE
	1	1	**115-1615**	1	RELAY AS (12-VOLT) (ACCUGRADE, MAST)	
Y	2	1	*211-4253*	1	INSTALLATION GP-MONITOR (ADVISOR)	855
Y	3	1	*225-4323*	1	MOUNTING GP-MAST (GRADE CONTROL)	744
Y	4	1	**226-2333**	1	MAST GP (ELECTRIC)	126
	5	1	**226-2334**	1	RECEIVER GP-LASER (LR400C)	
		1	**239-9272**	1	SOFTWARE (RECEIVER)	
	6	1	**226-9167**	1	ADAPTER (RECEIVER)	
	7	1	**226-9169**	1	MODULE AS-POWER SUPPLY	
	8	1	**226-9270**	1	CABLE-COILED (RECEIVER)	
	9	1	**246-8044**	1	HARNESS AS-WIRING (MAST)	
	10	1	**3S-2093**	15	STRAP-CABLE	
M	11	1	**8T-4138**	1	BOLT (M6X1X20-MM)	
	12	1	**8T-4205**	1	WASHER-HARD (7.2X14.5X2-MM THK)	

M-METRIC PART
Y-SEPARATE ILLUSTRATION

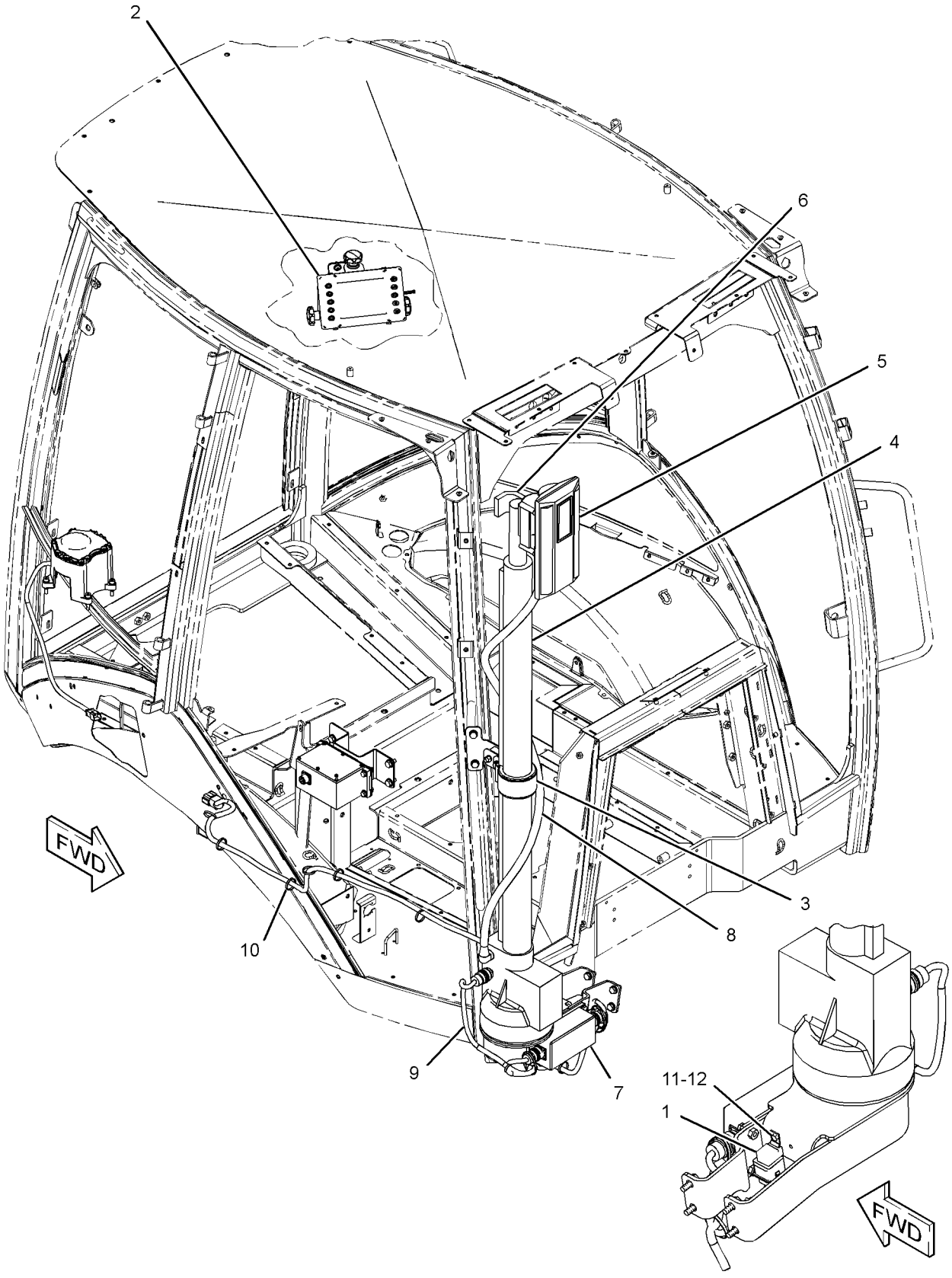

GRAPHIC #1 **<END>** g01233594

295-3179 GRADE CONTROL AR-LASER—ACCUGRADE

S/N: HLS1-99999

FOR USE WITH 291-9204—PAGE 2, 291-9205—PAGE 1

FIELD INSTALLATION

SMCS-7220 **i03527995**

NOTE	PART NUMBER	QTY	PART NAME 1 2 3 4 5 6 (PRODUCT LEVEL)	SEE PAGE
Y	*314-4029*	1	GRADE CONTROL AR-LASER (ACCUGRADE)	111
Y	**226-2333**	1	MAST GP	126
Y	*225-4323*	1	MOUNTING GP-MAST (GRADE CONTROL)	744
Y	**239-9950**	1	RECEIVER GP-LASER (SINGLE)	129

Y-SEPARATE ILLUSTRATION

<END>

314-4029 GRADE CONTROL AR-LASER—ACCUGRADE

S/N: HLS1-99999

PART OF 295-3179 GRADE CONTROL AR-LASER

SMCS-7220 **i03255482**

NOTE	PART NUMBER	QTY	PART NAME 1 2 3 4 5 6 (PRODUCT LEVEL)	SEE PAGE
M	**8T-4138**	1	BOLT (M6X1X20-MM)	
	246-8044	1	HARNESS AS-WIRING (MAST)	
	226-9169	1	MODULE AS-POWER SUPPLY	
	134-2540	1	RECEPTACLE AS (3-PIN)	
	115-1615	1	RELAY AS (12-VOLT) (ACCUGRADE)	
	3S-2093	18	STRAP-CABLE	
	7K-1181	6	STRAP-CABLE	
	8T-4121	2	WASHER-HARD (11X21X2.5-MM THK)	
	8T-4205	1	WASHER-HARD (7.2X14.5X2-MM THK)	

M-METRIC PART

<END>

248-2214 HEATER GP-JACKET WATER

S/N: HLS1-99999
120-VOLT
AN ATTACHMENT

SMCS-1383 **i02886260**

NOTE	REF NO	GRAPHIC REF	PART NUMBER	QTY	PART NAME 1 2 3 4 5 6 (PRODUCT LEVEL)	SEE PAGE
	1	1	**3S-2093**	2	STRAP-CABLE	
	2	1	**130-0165**	1	RECEPTACLE AS	
		1	**1M-1230**	2	NUT & LOCK AS (10-32-THD)	
		1	**168-4511**	2	SCREW-PAN HEAD (10-32X1-IN)	
	3	1	**165-8357**	1	BRACKET AS	
M		1	**8T-3612**	2	NUT-WELD (M8X1.25-THD)	
	4	1	*231-3054*	1	HEATER GP-JACKET WATER	
J		1	**219-3273**	1	ELEMENT AS-JACKET WATER HEATER (120-VOLT, 1000-WATT)	
		1	**133-6517**		CAP AS-DUST	
		1	**231-3052**	1	CORD AS	
M	5	1	**8T-4189**	2	BOLT (M8X1.25X20-MM)	
	6	1	**8T-4224**	2	WASHER-HARD (8.8X16X2-MM THK)	
					AVAILABLE REPAIR KIT(S):	
J			**133-3413**	1	KIT-SEAL	
					(INCLUDES SEAL, SPACER & RINGS)	

J-KIT MARKED J AVAILABLE FOR PART MARKED J
M-METRIC PART

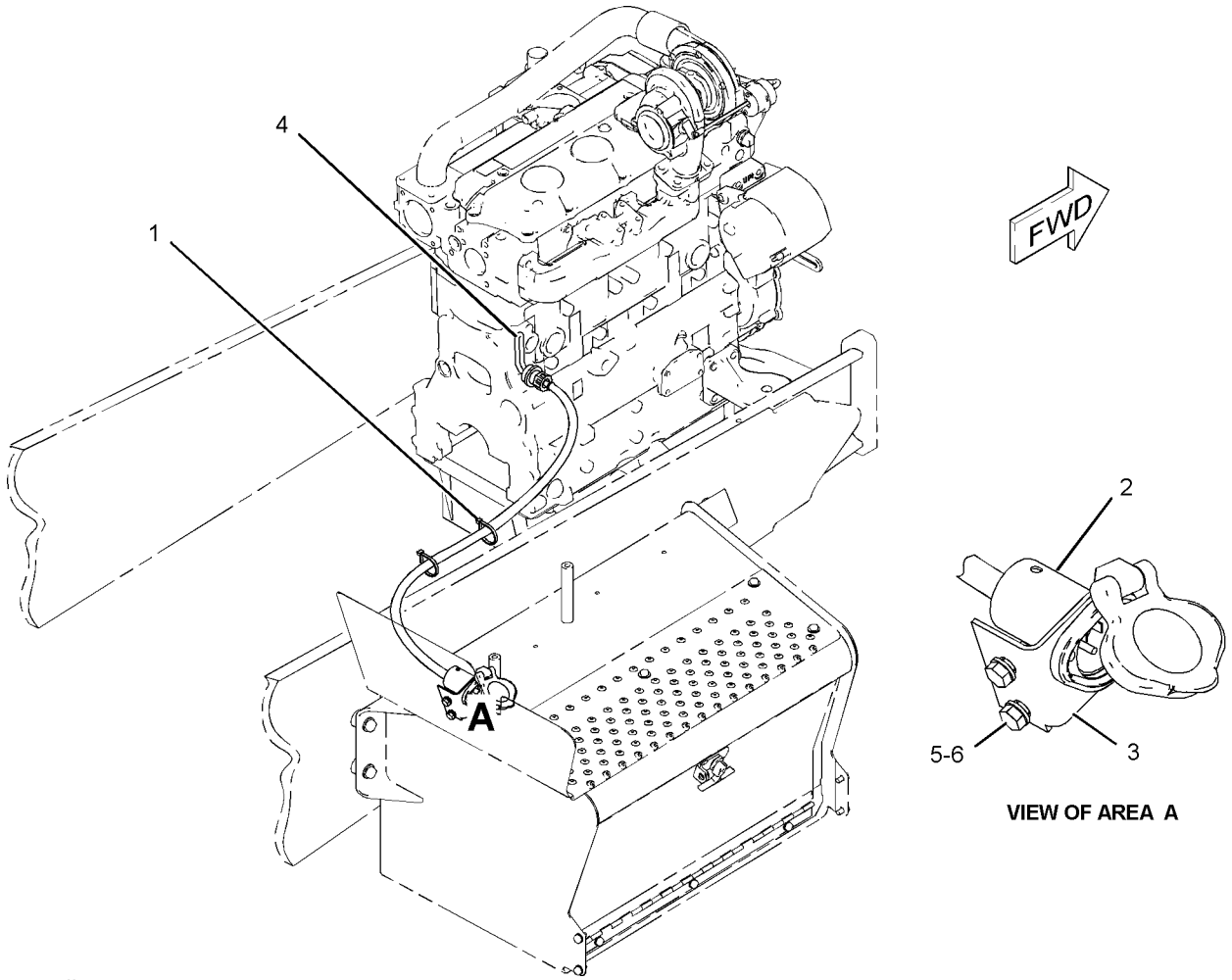

VIEW OF AREA A

GRAPHIC #1 **<END>** g01083542

225-7994 INSTALLATION GP-COMMUNICATION–

PRODUCT LINK 121SR

S/N: HLS1-99999

PART OF 225-7995 INSTALLATION GP-COMMUNICATION

AN ATTACHMENT

TYPE 1

SMCS-7606 **i03374680**

NOTE	REF NO	GRAPHIC REF	PART NUMBER	QTY	PART NAME 1 2 3 4 5 6 (PRODUCT LEVEL)	SEE PAGE
	1	1	**7K-1181**	3	STRAP-CABLE	
	2	1	**263-7802**	1	ANTENNA AS (MAGNETIC MOUNT, PRODUCT LINK)	
	3	1	**260-7652**	1	FILM-WARNING (PRODUCT LINK 300, U.S.)	
	4	1	**256-6803**	1	HARNESS AS-RADIO (PRODUCT LINK)	
Y	5	1	**263-9088**	1	RADIO GP-COMMUNICATION (PRODUCT LINK 121SR)	879
M	6	1	**129-3178**	4	LOCKNUT (M6X1-THD)	
	7	1	**156-6175**	1	CLIP	
	8	1	**170-9360**	1	GROMMET	
	9	1	**3S-2093**	2	STRAP-CABLE	
	10	1	**6P-6591**	1	GROMMET	
M	11	1	**8T-4138**	4	BOLT (M6X1X20-MM)	
	12	1	**8T-4205**	7	WASHER-HARD (7.2X14.5X2-MM THK)	

M-METRIC PART
Y-SEPARATE ILLUSTRATION

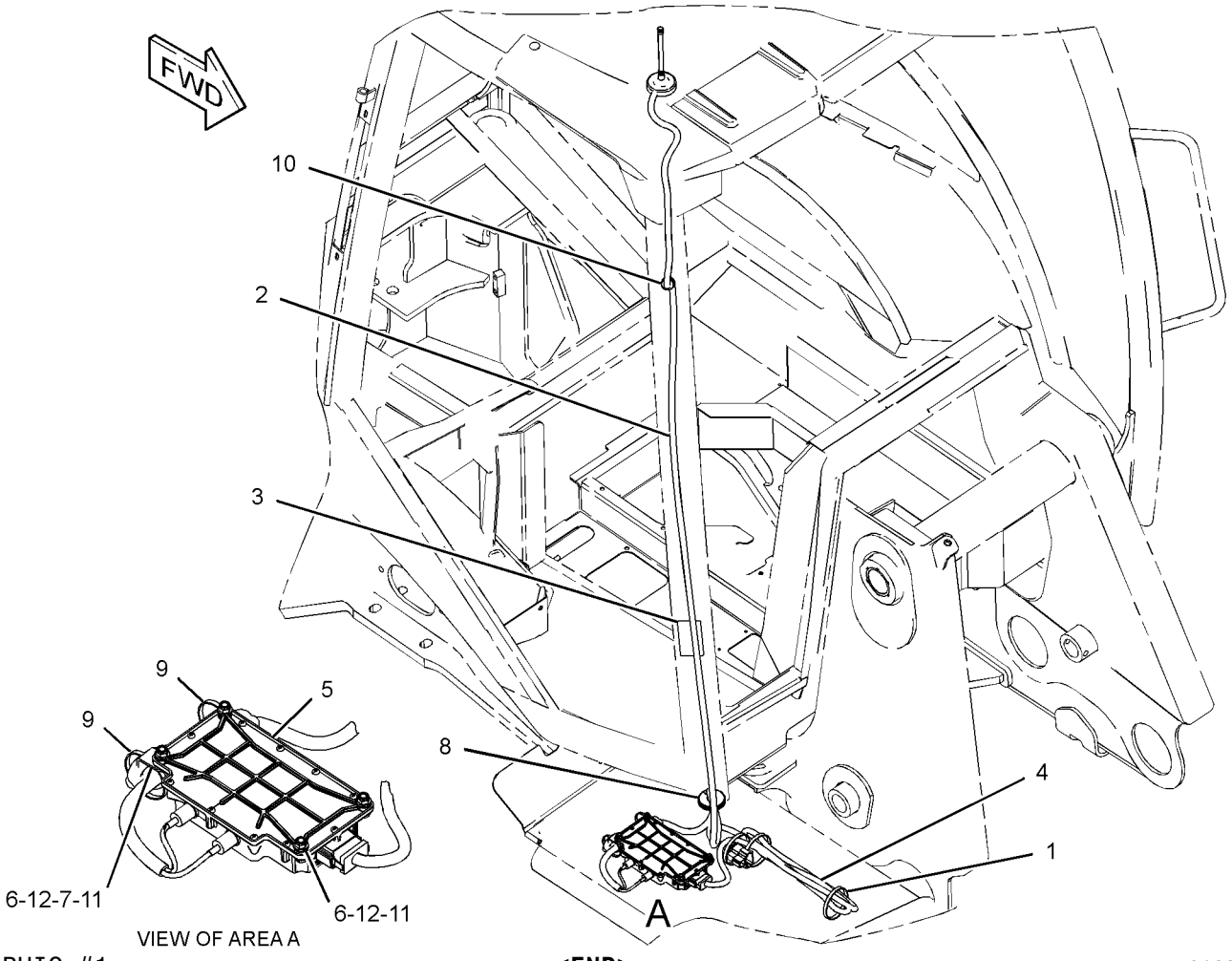

VIEW OF AREA A

GRAPHIC #1 **<END>** g01238339

225-7994 INSTALLATION GP-COMMUNICATION–

PRODUCT LINK 121SR

S/N: HLS1-99999

PART OF 225-7995 INSTALLATION GP-COMMUNICATION

AN ATTACHMENT

TYPE 2

SMCS-7606 **i02984826**

NOTE	REF NO	GRAPHIC REF	PART NUMBER	QTY	PART NAME 1 2 3 4 5 6 (PRODUCT LEVEL)	SEE PAGE
C	1	1	**7K-1181**	10	STRAP-CABLE	
C	2	1	**249-9076**	4	CLIP	
	3	1	**256-6803**	1	HARNESS AS-RADIO (PRODUCT LINK)	
	4	1	**260-7652**	1	FILM-WARNING (PRODUCT LINK 300, U.S.)	
Y	5	1	**263-9088**	1	RADIO GP-COMMUNICATION (PRODUCT LINK 121SR)	879
C	6	1	**284-8531**	1	ANTENNA AS (MAGNETIC MOUNT, PRODUCT LINK)	
M	7	1	**129-3178**	4	LOCKNUT (M6X1-THD)	
C	8	1	**156-6175**	2	CLIP	
	9	1	**170-9360**	1	GROMMET	
	10	1	**6P-6591**	1	GROMMET	
CM	11	1	**6V-7357**	4	BOLT (M6X1X25-MM)	
C	12	1	**8T-4205**	6	WASHER-HARD (7.2X14.5X2-MM THK)	

C-CHANGE FROM PREVIOUS TYPE
M-METRIC PART
Y-SEPARATE ILLUSTRATION

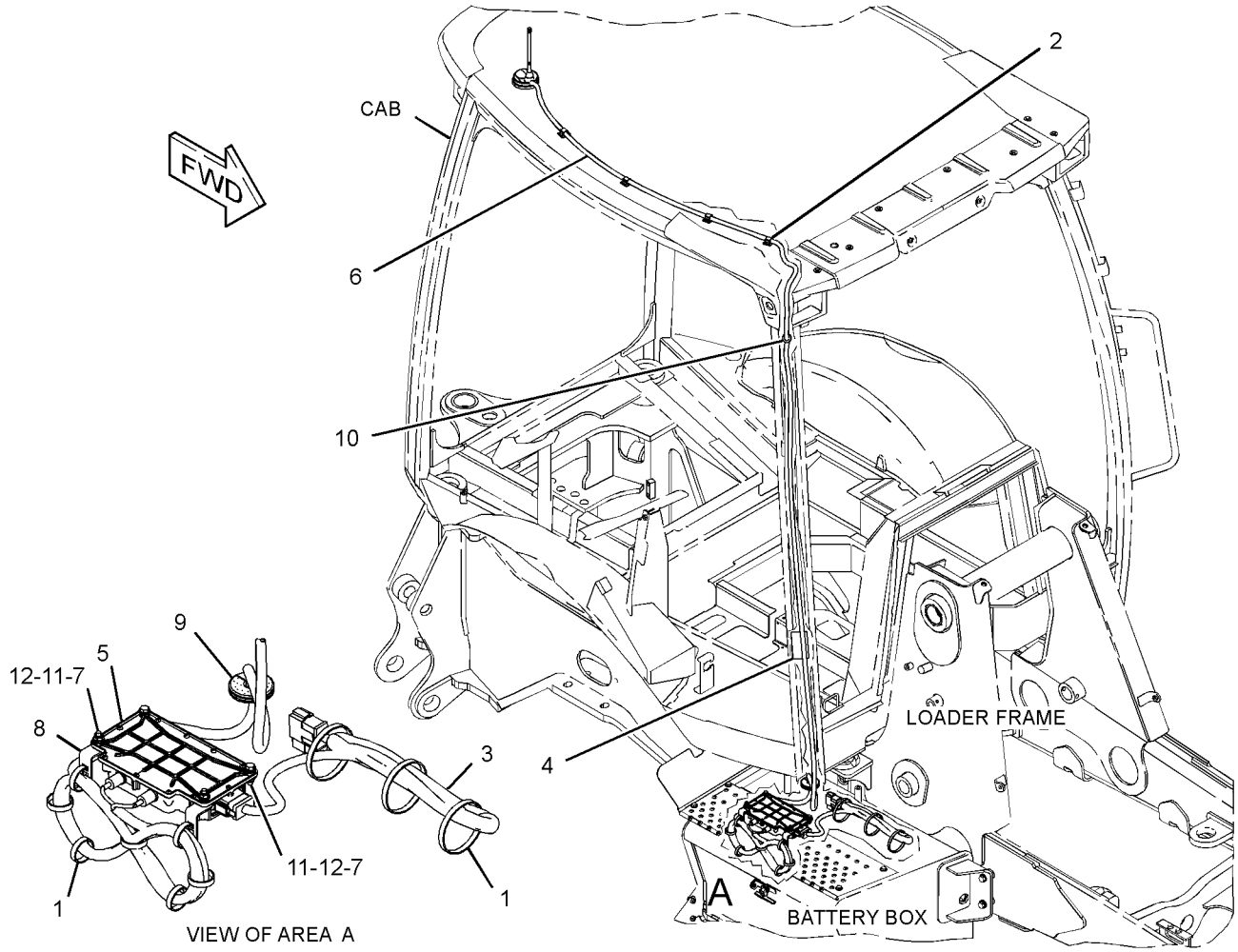

GRAPHIC #1 **<END>** g01522350

225-7995 INSTALLATION GP-COMMUNICATION–

PRODUCT LINK 300

S/N: HLS1-99999

AN ATTACHMENT

SMCS-7606 **i02843746**

NOTE	REF NO	GRAPHIC REF	PART NUMBER	QTY	PART NAME 1 2 3 4 5 6 (PRODUCT LEVEL)	SEE PAGE
	1	1	**8T-4205**	5	WASHER-HARD (7.2X14.5X2-MM THK)	
	2	1	**8C-5607**	8	MOUNT-ISOLATION	
	3	1	**8C-5608**	4	SPACER (6.5X9.5X25.4-MM THK)	
	4	1	**9X-6165**	8	WASHER (6.5X22X2.5-MM THK)	
Y	5	1	*225-7994*	1	INSTALLATION GP-COMMUNICATION (PRODUCT LINK 121SR)	113
	6	1	**256-6804**	1	HARNESS AS-CONTROL (PRODUCT LINK)	
Y	7	1	*262-1421*	1	ELECTRONICS GP-COMMUNICATION (PRODUCT LINK 300)	105
M	8	1	**129-3178**	4	LOCKNUT (M6X1-THD)	
M	9	1	**9X-2480**	4	BOLT (M6X1X45-MM)	

M-METRIC PART
Y-SEPARATE ILLUSTRATION

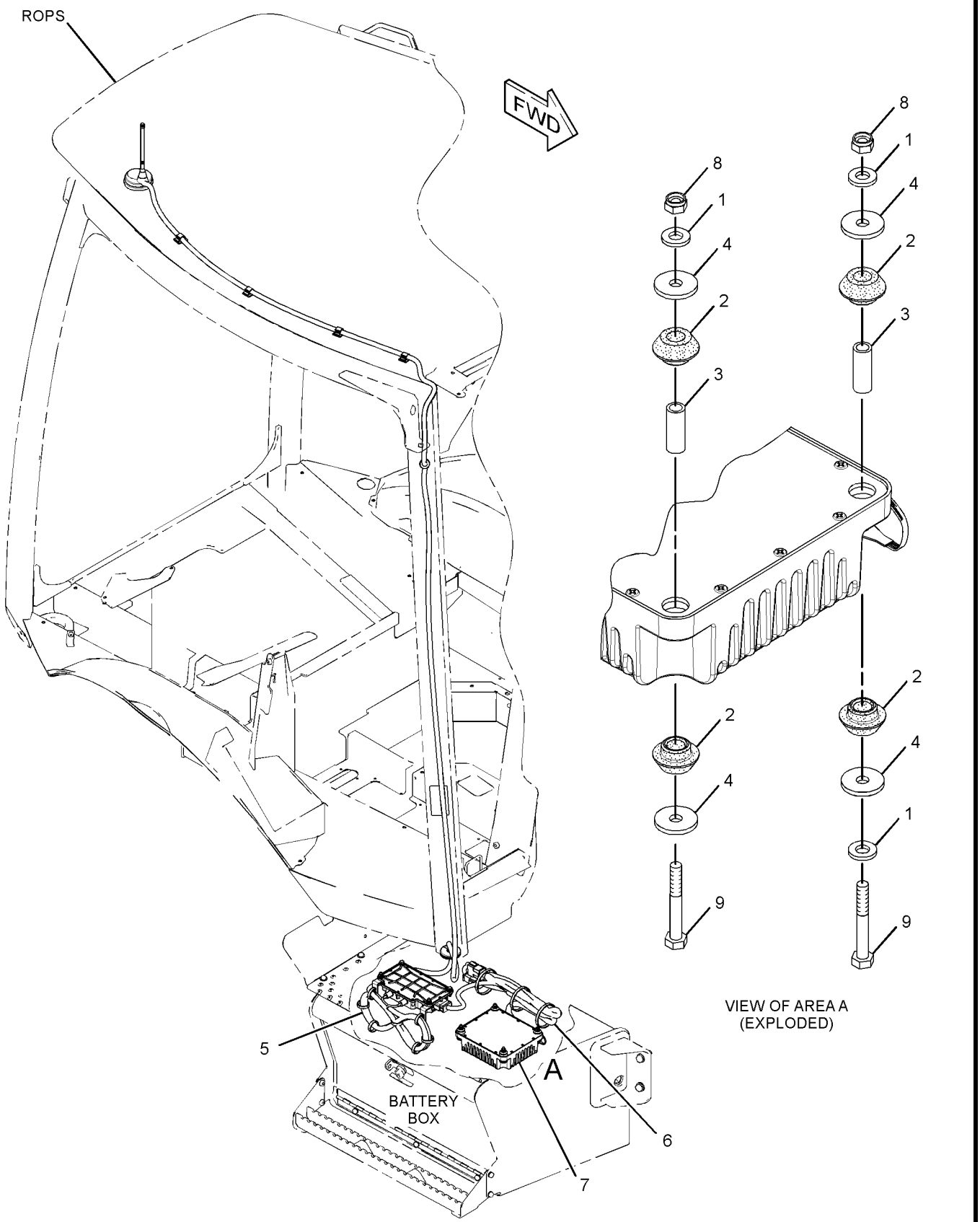

GRAPHIC #1 **<END>** g01421875

234-4328 LAMP GP-FLOOD

S/N: HLS1-99999
12-VOLT
PART OF 211-4277 LIGHTING GP-FLOOD & SIGNAL
AN ATTACHMENT

SMCS-1429, 1434 **i03505280**

NOTE	REF NO	GRAPHIC REF	PART NUMBER	QTY	PART NAME 1 2 3 4 5 6 (PRODUCT LEVEL)	SEE PAGE
	1	1	**9W-0607**	1	LAMP (12-VOLT, 55-WATT) (FLOODLIGHT)	
M	2	1	**8T-0389**	1	LOCKNUT (M10X1.5-THD)	
	3	1	**9X-4244**	2	SCREW-SPECIAL (M4X1.79X25-MM)	
	4	1	**202-6614**	1	LENS AS	
	5	1	**234-7730**	1	BODY AS	
	6	1	**164-7556**	1	BRACKET (LAMP RETAINING)	
	7	1	**234-7731**	1	BRACKET AS	
	8	1	**8T-4121**	1	WASHER-HARD (11X21X2.5-MM THK)	

M-METRIC PART

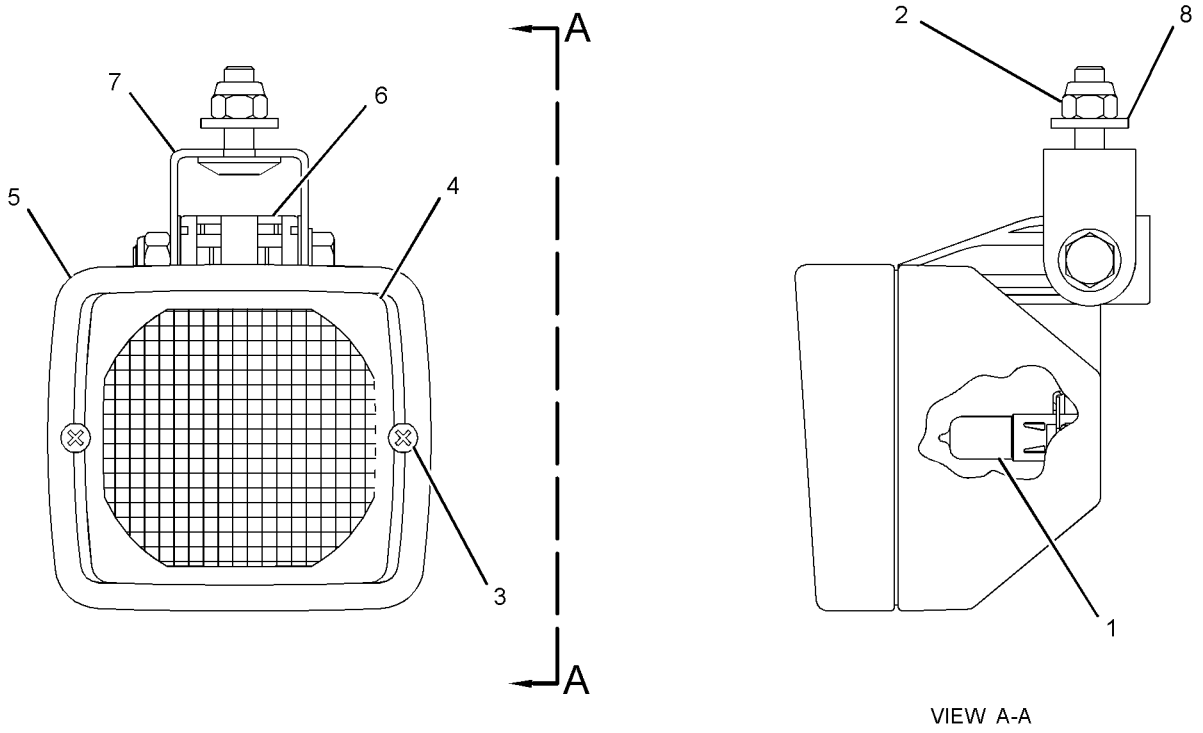

GRAPHIC #1 **<END>** g01283627

234-4329 LAMP GP-FLOOD

S/N: HLS1-99999
12-VOLT
PART OF 211-4277 LIGHTING GP-FLOOD & SIGNAL
AN ATTACHMENT

SMCS-1429, 1434 **i02532633**

NOTE	REF NO	GRAPHIC REF	PART NUMBER	QTY	PART NAME 1 2 3 4 5 6 (PRODUCT LEVEL)	SEE PAGE
	1	1	**9W-0607**	1	LAMP (12-VOLT, 55-WATT)	
M	2	1	**8T-0389**	1	LOCKNUT (M10X1.5-THD)	
	3	1	**9X-4244**	2	SCREW-SPECIAL	
	4	1	**202-6611**	1	LENS AS	
	5	1	**234-7730**	1	BODY AS	
	6	1	**164-7556**	1	BRACKET (LAMP RETAINING)	
	7	1	**234-7731**	1	BRACKET AS	
	8	1	**8T-4121**	1	WASHER-HARD (11X21X2.5-MM THK)	

M-METRIC PART

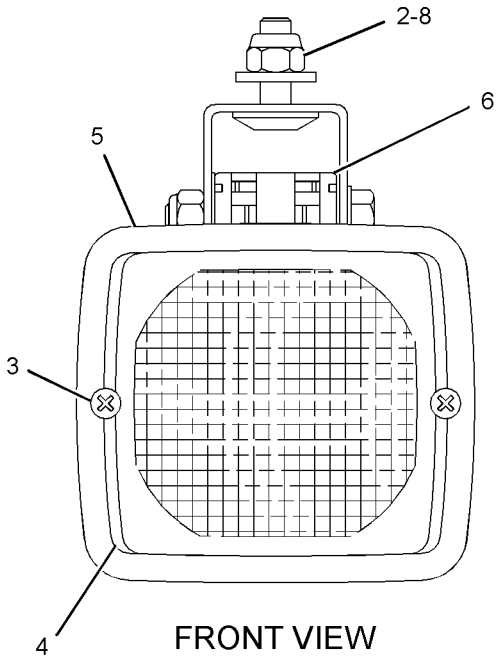

FRONT VIEW

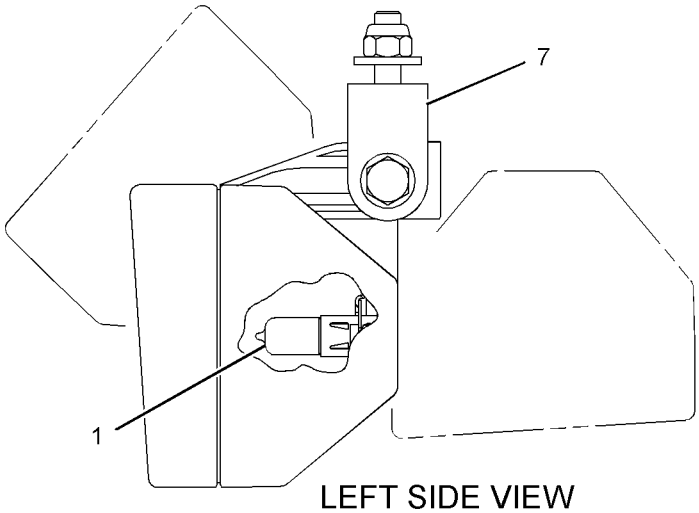

LEFT SIDE VIEW

GRAPHIC #1 **<END>** g01254669

290-5760 LAMP GP-FLOOD

S/N: HLS2256-99999
12-VOLT
PART OF 211-4277 LIGHTING GP-FLOOD & SIGNAL
AN ATTACHMENT

SMCS-1429, 1434 **i03511165**

NOTE	REF NO	GRAPHIC REF	PART NUMBER	QTY	PART NAME 1 2 3 4 5 6 (PRODUCT LEVEL)	SEE PAGE
	1	1	**9W-0607**	1	LAMP (12-VOLT, 55-WATT)	
	2	1	**9X-4244**	2	SCREW-SPECIAL (M4X1.79X25-MM)	
	3	1	**202-6611**	1	LENS AS	
	4	1	**234-7730**	1	BODY AS (FLOODLIGHT)	
	5	1	**164-7556**	1	BRACKET (LAMP RETAINING)	
M	6	1	**8T-0389**	1	LOCKNUT (M10X1.5-THD)	
	7	1	**234-7731**	1	BRACKET AS	
	8	1	**8T-4121**	1	WASHER-HARD (11X21X2.5-MM THK)	

M-METRIC PART

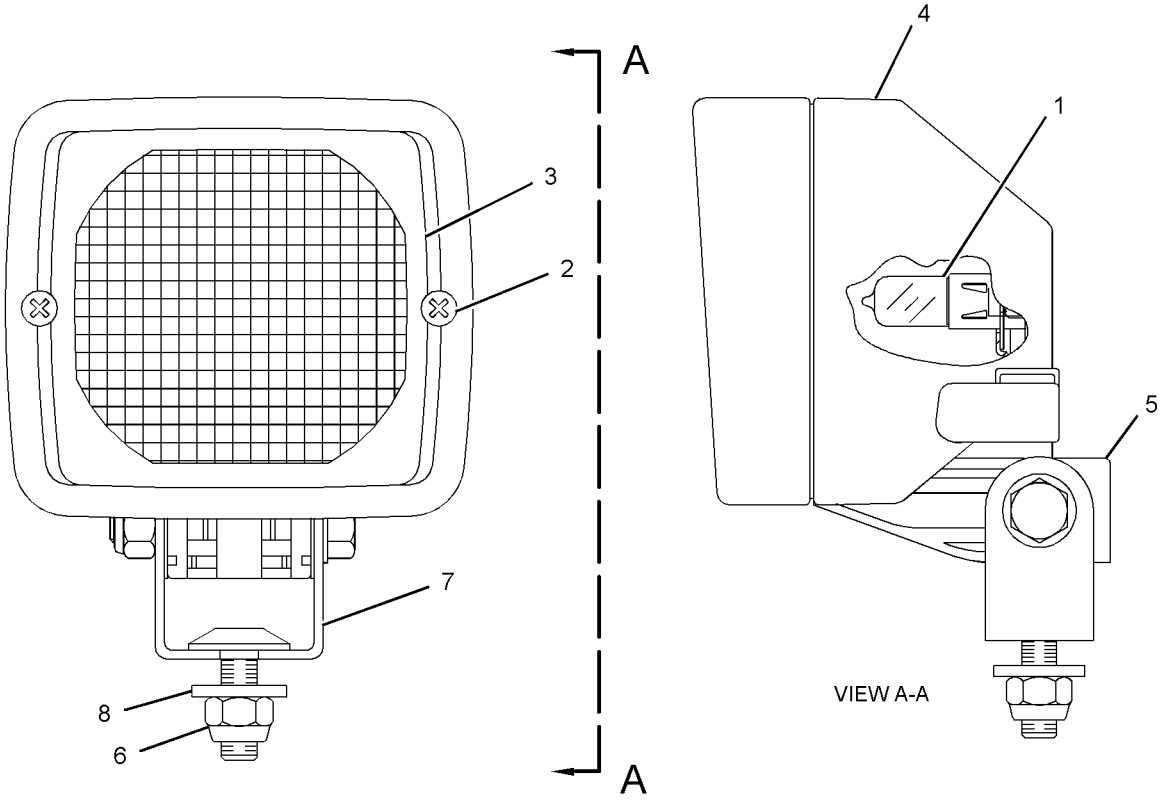

GRAPHIC #1 **<END>** g01349258

180-3664 LAMP GP-WARNING BEACON–

AMBER, MAGNETIC MOUNT, ROTATING
S/N: HLS1-99999
12-VOLT
PART OF 211-4292 LIGHTING GP-WARNING BEACON
AN ATTACHMENT

SMCS-1431 **i02887711**

NOTE	REF NO	GRAPHIC REF	PART NUMBER	QTY	PART NAME 1 2 3 4 5 6 (PRODUCT LEVEL)	SEE PAGE
	1	1	**272-9800**	1	LENS (AMBER)	
	2	1	**179-5434**	1	PLUG AS	
		1	**3K-8782**	1	FUSE (10-AMPERE)	
	3	1	**9X-8118**	1	LAMP (12-VOLT, 55-WATT)	
	4	1	**9X-8139**	1	BELT-DRIVE	
	5	1	**3K-8782**	1	FUSE (10-AMPERE)	

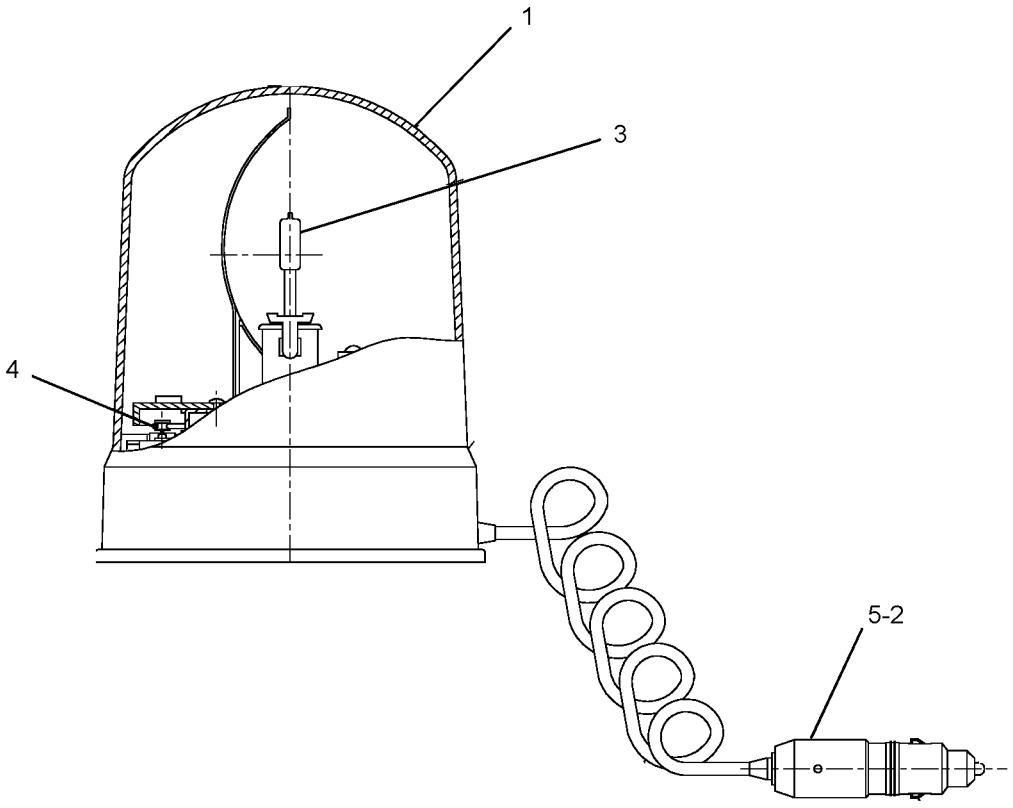

GRAPHIC #1 **<END>** g01230468

211-4277 LIGHTING GP-FLOOD & SIGNAL—NACD, OPTIONAL

S/N: HLS1-2255

PART OF 269-2125, 269-2126, 269-2127 CAB AR-ENCLOSED ROPS, 269-2123, 269-2124 CANOPY AR-OPEN ROPS AN ATTACHMENT

SMCS-1429, 1430, 1432, 1434 **i03530180**

NOTE	REF NO	GRAPHIC REF	PART NUMBER	QTY	PART NAME 1 2 3 4 5 6 (PRODUCT LEVEL)	SEE PAGE
	1	1	**9R-1499**	2	REFLECTOR	
	2	1	**178-7539**	1	RECEPTACLE AS (POWER SUPPLY)	
	3	1	**213-6049**	1	HARNESS AS-LIGHTING (ROOF)	
		1	**8L-8413**	19	STRAP-CABLE	
E		1	**125-7874**		TUBE-HEAT SHRINK (5.72-MM DIA) (35-CM)	
E		1	**125-7875**		TUBE-HEAT SHRINK (7.44-MM DIA) (15-CM)	
		1	**155-2271**	2	KIT-CONNECTING PLUG (4-PIN)	
		1	**155-2270**	10	KIT-CONNECTING PLUG (2-PIN)	
					(EACH PLUG KIT INCLUDES PLUG AS, WEDGE & INTERFACE SEAL)	
		1	**102-8805**	1	KIT-RECEPTACLE (6-PIN)	
		1	**102-8806**	1	KIT-RECEPTACLE (8-PIN)	
					(EACH RECEPTACLE KIT INCLUDES RECEPTACLE AS & WEDGE)	
	4	1	**214-4698**	1	SWITCH AS-ROCKER (FLOODLIGHTS, FRONT)	
		1	**111-7899**	1	GASKET	
	5	1	**214-4700**	1	SWITCH AS-ROCKER (FLOODLIGHTS, REAR)	
		1	**111-7899**	1	GASKET	
Y	6	1	**234-4328**	4	LAMP GP-FLOOD (12-VOLT) (FRONT, REAR, WIDE RANGE)	117
Y	7	1	**234-4329**	4	LAMP GP-FLOOD (12-VOLT) (FRONT, SIDE, LONG RANGE)	118
	8	1	**282-7833**	1	GROMMET	
	9	1	**282-7835**	1	PLATE	
	10	1	**172-6489**	2	LAMP GP-HEAD & SIGNAL (DIRECTIONAL)	
					(EACH INCLUDES)	
		1	**3C-4883**	1	LAMP (12-VOLT, 21-WATT)	
		1	**176-0348**	1	LENS	
	11	1	**172-6490**	2	LAMP GP-SIGNAL (STOP, TAIL, TURN)	
					(EACH INCLUDES)	
		1	**9W-3326**	1	LAMP (12-VOLT, 21-WATT)	
		1	**084-4348**	1	LAMP (12-VOLT, 5-WATT)	
		1	**186-3735**	4	PIN-CONNECTOR (16-GA TO 18-GA)	
		1	**267-2809**	1	LENS	
	12	1	**3S-2093**	25	STRAP-CABLE	
	13	1	**8T-4121**	10	WASHER-HARD (11X21X2.5-MM THK)	
M	14	1	**8T-4133**	9	NUT (M10X1.5-THD)	
M	15	1	**8T-4181**	2	BOLT (M6X1X20-MM)	
	16	1	**9X-8256**	2	WASHER (6.6X12X2-MM THK)	

E-ORDER BY THE CENTIMETER
M-METRIC PART
Y-SEPARATE ILLUSTRATION

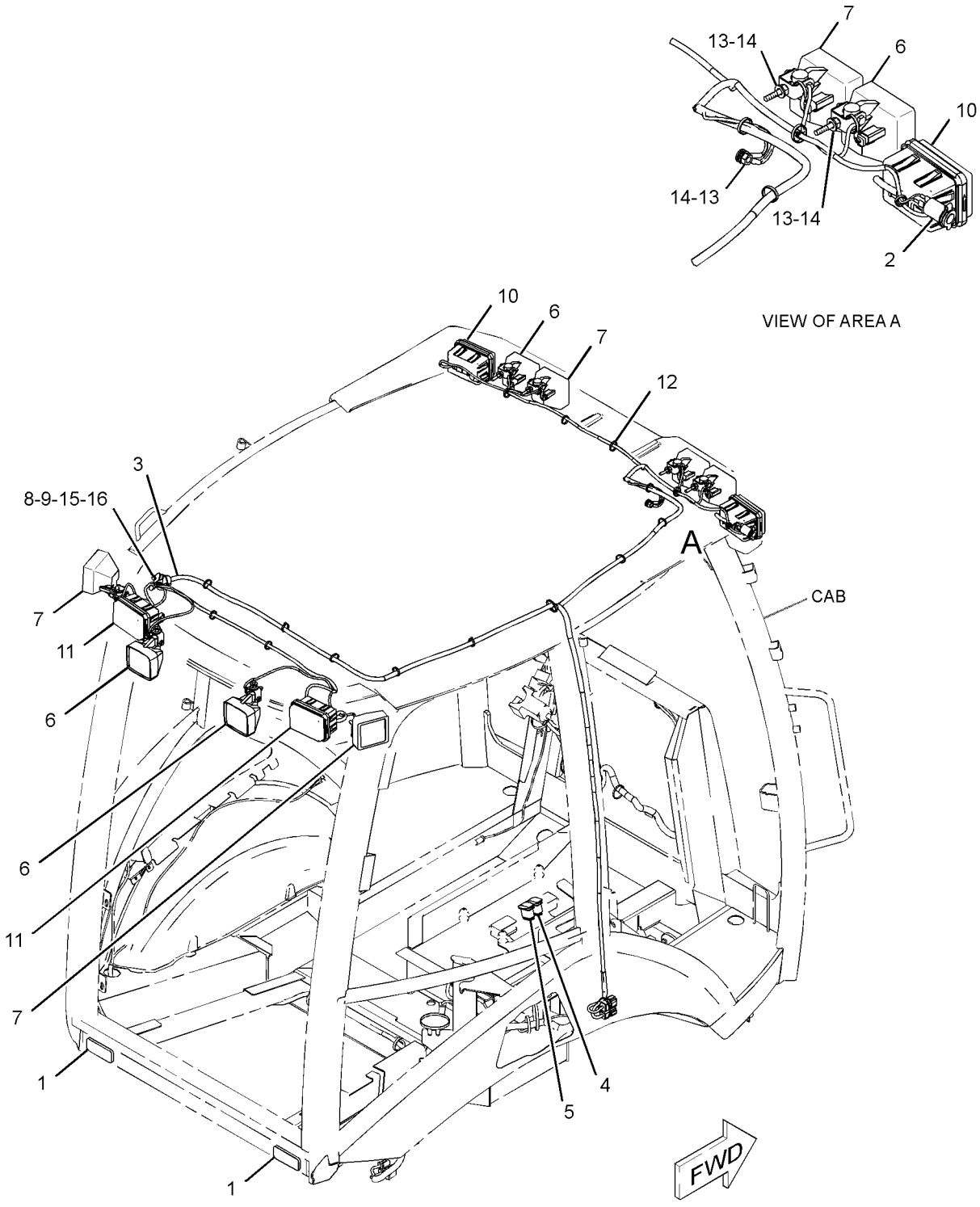

GRAPHIC #1 **<END>** g01273073

211-4277 LIGHTING GP-FLOOD & SIGNAL—NACD, OPTIONAL

S/N: HLS2256-99999

PART OF 269-2125, 269-2126, 269-2127 CAB AR-ENCLOSED ROPS, 269-2123, 269-2124 CANOPY AR-OPEN ROPS

AN ATTACHMENT

SMCS-1429, 1430, 1432, 1434 **i03503823**

NOTE	REF NO	GRAPHIC REF	PART NUMBER	QTY	PART NAME 1 2 3 4 5 6 (PRODUCT LEVEL)	SEE PAGE
	1	1	**9R-1499**	2	REFLECTOR	
	2	1	**178-7539**	1	RECEPTACLE AS (POWER SUPPLY)	
	3	1	**290-6799**	1	HARNESS AS-LIGHTING (ROOF)	
	4	1	**300-4995**	1	SWITCH AS-ROCKER (FLOODLIGHT, FRONT)	
		1	**111-7899**	1	GASKET	
	5	1	**300-4996**	1	SWITCH AS-ROCKER (FLOODLIGHT, REAR)	
		1	**111-7899**	1	GASKET	
Y	6	1	**234-4328**	4	LAMP GP-FLOOD (12-VOLT) (FRONT, REAR, WIDE RANGE)	117
CY	7	1	**234-4329**	2	LAMP GP-FLOOD (12-VOLT) (FRONT, SIDE, LONG RANGE)	118
	8	1	**282-7833**	1	GROMMET	
	9	1	**282-7835**	1	PLATE	
	10	1	**172-6489**	2	LAMP GP-HEAD & SIGNAL (DIRECTIONAL)	
					(EACH INCLUDES)	
		1	**102-8802**	1	KIT-RECEPTACLE (2-PIN)	
					(INCLUDES RECEPTACLE AS & WEDGE)	
		1	**3C-4883**	1	LAMP (12-VOLT, 21-WATT)	
		1	**176-0348**	1	LENS	
	11	1	**172-6490**	2	LAMP GP-SIGNAL (STOP, TAIL, TURN)	
					(EACH INCLUDES)	
		1	**102-8804**	1	KIT-RECEPTACLE (4-PIN)	
					(INCLUDES RECEPTACLE AS & WEDGE)	
		1	**9W-3326**	1	LAMP (12-VOLT, 21-WATT)	
		1	**084-4348**	1	LAMP (12-VOLT, 5-WATT)	
		1	**267-2809**	1	LENS	
		1	**186-3735**	4	PIN-CONNECTOR (16-GA TO 18-GA)	
	12	1	**3S-2093**	24	STRAP-CABLE	
	13	1	**8T-4121**	10	WASHER-HARD (11X21X2.5-MM THK)	
M	14	1	**8T-4133**	9	NUT (M10X1.5-THD)	
CM	15	1	**8C-3798**	2	BOLT-LOCKING (M6X1X30-MM)	
	16	1	**9X-8256**	2	WASHER (6.6X12X2-MM THK)	
CY	17	1	**290-5760**	2	LAMP GP-FLOOD (12-VOLT) (REAR OUTER)	119
C	18	1	**8F-3590**	1	LOCKWASHER	
E	19	1	**3E-6600**		SEAL (5-CM)	

C-CHANGE FROM PREVIOUS TYPE
E-ORDER BY THE CENTIMETER
M-METRIC PART
Y-SEPARATE ILLUSTRATION

211-4277 **LIGHTING GP-FLOOD & SIGNAL** *(contd.)* **i03503823**

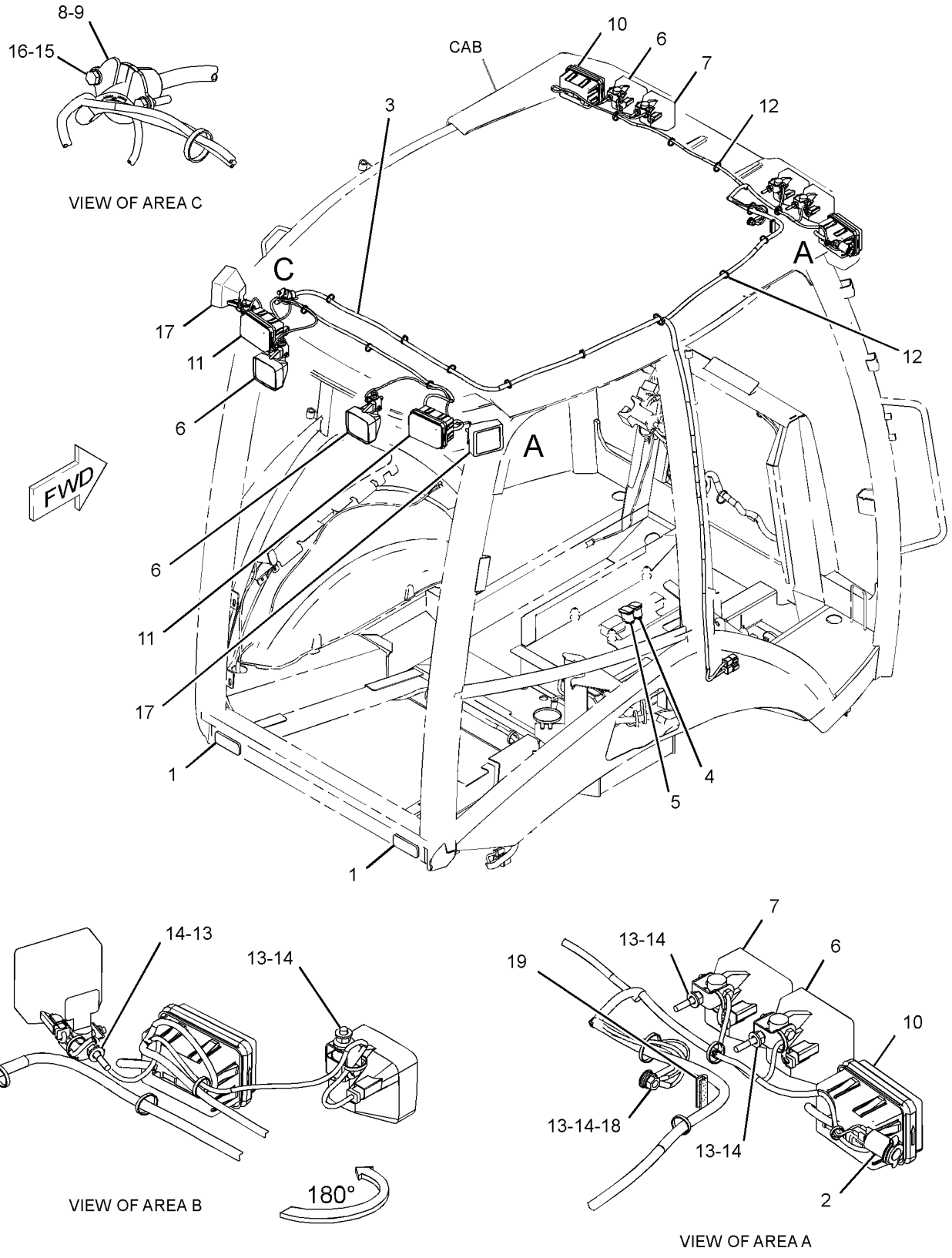

GRAPHIC #1 **<END>** g01405458

211-4292 LIGHTING GP-WARNING BEACON–
AMBER, MAGNETIC MOUNT, ROTATING
S/N: HLS1-99999
AN ATTACHMENT

SMCS-1431 **i02467098**

NOTE	REF NO	GRAPHIC REF	PART NUMBER	QTY	PART NAME 1 2 3 4 5 6 (PRODUCT LEVEL)	SEE PAGE
	1	1	**031-5644**	1	CLIP	
Y	2	1	**180-3664**	1	LAMP GP-WARNING BEACON (12-VOLT, AMBER)	120

Y-SEPARATE ILLUSTRATION

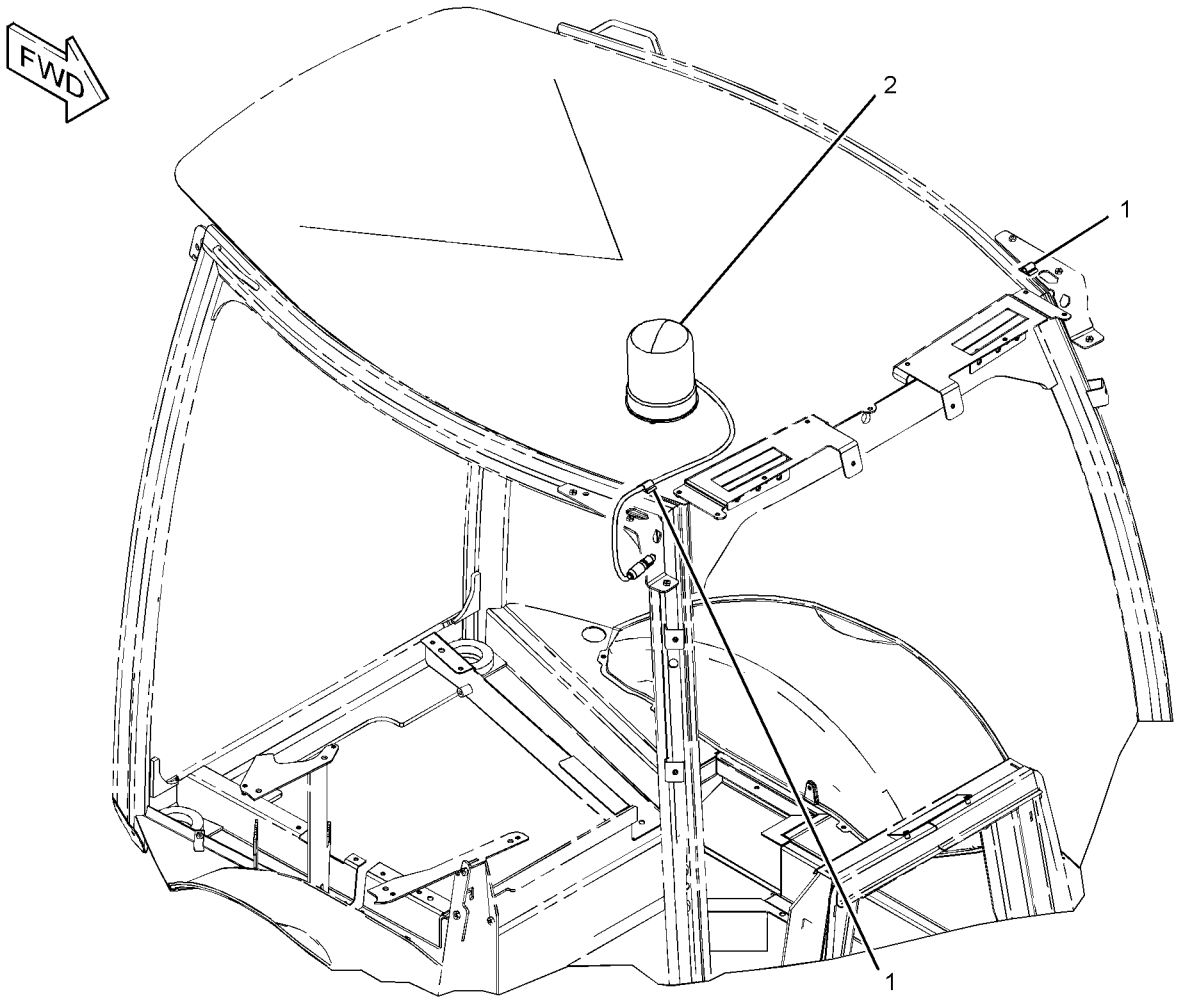

GRAPHIC #1 **<END>** g01233454

226-2333 MAST GP–LASER RECEIVER

S/N: HLS1-99999

PART OF 246-8045, 295-3179 GRADE CONTROL AR-LASER AN ATTACHMENT

SMCS-7220, 79NS **i03128384**

NOTE	PART NUMBER	QTY	PART NAME 1 2 3 4 5 6 (PRODUCT LEVEL)	SEE PAGE
	256-5732	1	HARNESS AS-WIRING (MAST)	
	256-4580	1	MOTOR AS	
	256-4579	1	SCREW AS	
	256-5720	1	SWITCH AS (UPPER LIMIT)	
	256-5721	1	SWITCH AS (LOWER LIMIT)	
	256-4581	1	BUSHING	
	256-4582	1	GEAR (141-TEETH)	
	256-5722	1	GEAR (15-TEETH)	
	260-6480	1	RING-SNAP	
	260-6478	1	SEAL-O-RING	
	256-5719	1	SEAL-WIPER	
	295-8930	1	KIT-CIRCUIT BOARD	
			(INCLUDES BOARD AS, SCREWS, LOCKWASHERS, LOCTITE, & GREASE)	
A	**245-4747**		KIT-ADAPTER (MAST)	
			(INCLUDES ADAPTER, BOLTS, & WASHER)	
			(FOR USE WITH LR400 RECEIVER)	

A-NOT PART OF THIS GROUP

<END>

251-3200 MOUNTING GP-SENSOR–ANGLE

S/N: HLS1-99999
PART OF 211-4253 INSTALLATION GP-MONITOR
AN ATTACHMENT

SMCS-5736 **i02440898**

NOTE	REF NO	GRAPHIC REF	PART NUMBER	QTY	PART NAME 1 2 3 4 5 6 (PRODUCT LEVEL)	SEE PAGE
	1	1	**264-3756**	1	PLATE AS	
	4	1	**8T-4121**	3	WASHER-HARD (11X21X2.5-MM THK)	
M	5	1	**8T-4137**	3	BOLT (M10X1.5X20-MM)	
	6	1	**8T-4224**	4	WASHER-HARD (8.8X16X2-MM THK)	
M	7	1	**8T-7547**	4	BOLT (M8X1.25X30-MM)	

M-METRIC PART

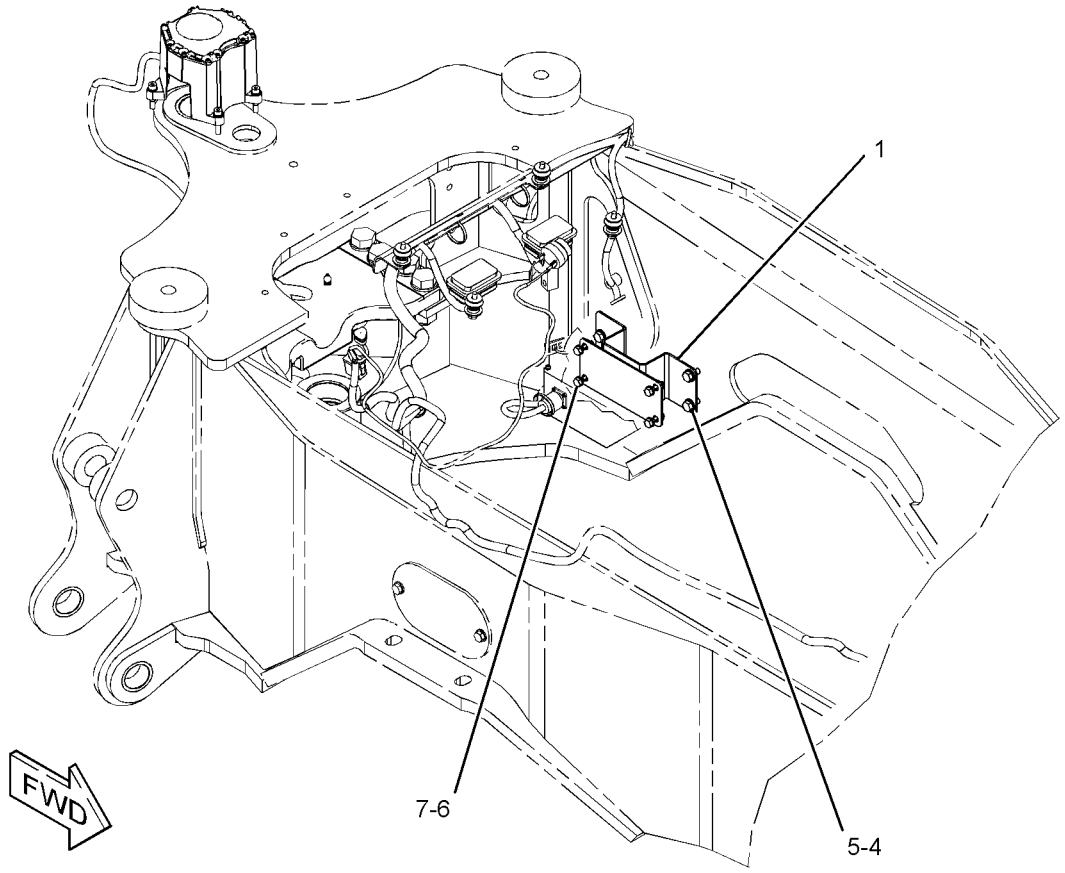

GRAPHIC #1 **<END>** g01205531

247-8199 PANEL GP-FUSE–INCLUDES RELAY

S/N: HLS1-99999
PART OF 211-4240, 290-6802 WIRING GP-PLATFORM
AN ATTACHMENT

SMCS-1417, 1422 **i02650179**

NOTE	REF NO	GRAPHIC REF	PART NUMBER	QTY	PART NAME 1 2 3 4 5 6 (PRODUCT LEVEL)	SEE PAGE
	1	1	**113-8490**	11	FUSE (10-AMPERE)	
	2	1	**113-8491**	13	FUSE (15-AMPERE)	
	3	1	**113-8492**	10	FUSE (20-AMPERE)	
	4	1	**265-8182**	1	COVER-FUSE BLOCK	
M	6	1	**5C-7261**	4	NUT (M8X1.25-THD)	
	7	1	**9F-5644**	4	LOCKWASHER	
	8	1	**7X-0608**	4	WASHER-HARD (10.2X16X2-MM THK)	

M-METRIC PART

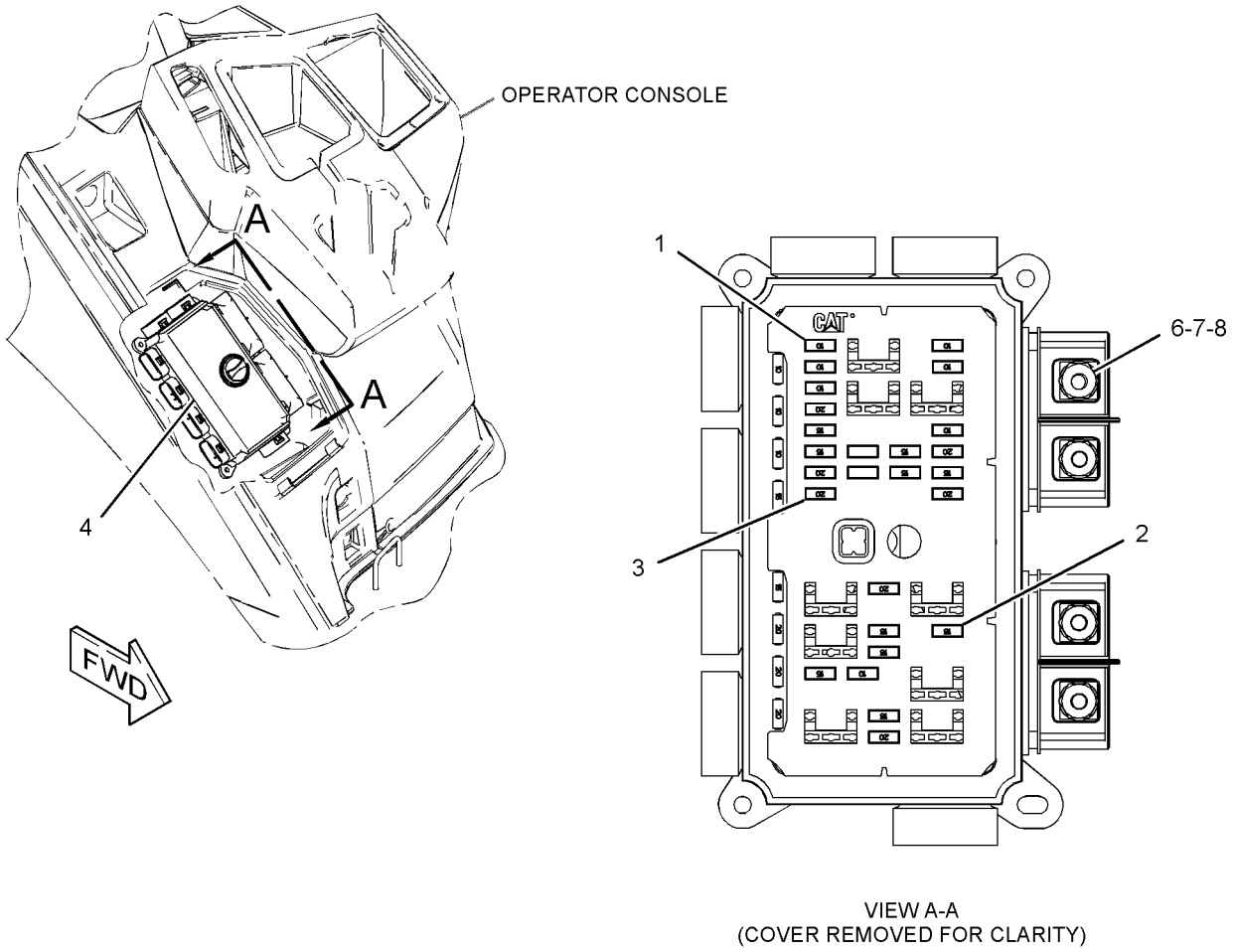

VIEW A-A
(COVER REMOVED FOR CLARITY)

GRAPHIC #1 **<END>** g01331615

ELECTRICAL AND STARTING SYSTEM

239-9950 RECEIVER GP-LASER—SINGLE

S/N: HLS1-99999

PART OF 295-3179 GRADE CONTROL AR-LASER

SMCS-7009 **i03122065**

NOTE	PART NUMBER	QTY	PART NAME 1 2 3 4 5 6 (PRODUCT LEVEL)	SEE PAGE
	253-8329	1	RECEIVER GP-LASER (LR410)	
	276-0764	1	CABLE-COILED (LASER RECEIVER)	
	257-1729	1	CASE-CARRYING	

<END>

276-7287 RELAY GP—POWER DISTRIBUTION

S/N: HLS1-99999
12-VOLT
PART OF 211-4268 WIRING GP-AIR CONDITIONER, 211-4269 WIRING GP-HEATER
AN ATTACHMENT

SMCS-1422, 4493 **i02532899**

NOTE	REF NO	GRAPHIC REF	PART NUMBER	QTY	PART NAME 1 2 3 4 5 6 (PRODUCT LEVEL)	SEE PAGE
M	1	1	**5C-2890**	2	NUT (M6X1-THD)	
	2	1	**8T-4205**	2	WASHER-HARD (7.2X14.5X2-MM THK)	
	3	1	**1H-3244**	2	LOCKWASHER	
M	4	1	**5C-7261**	1	NUT (M8X1.25-THD)	
	5	1	**8T-4224**	1	WASHER-HARD (8.8X16X2-MM THK)	
	6	1	**267-5213**	1	COVER	
	7	1	**267-5211**	1	SEAL	
	8	1	**278-6377**	1	FUSE (40-AMPERE)	

M-METRIC PART

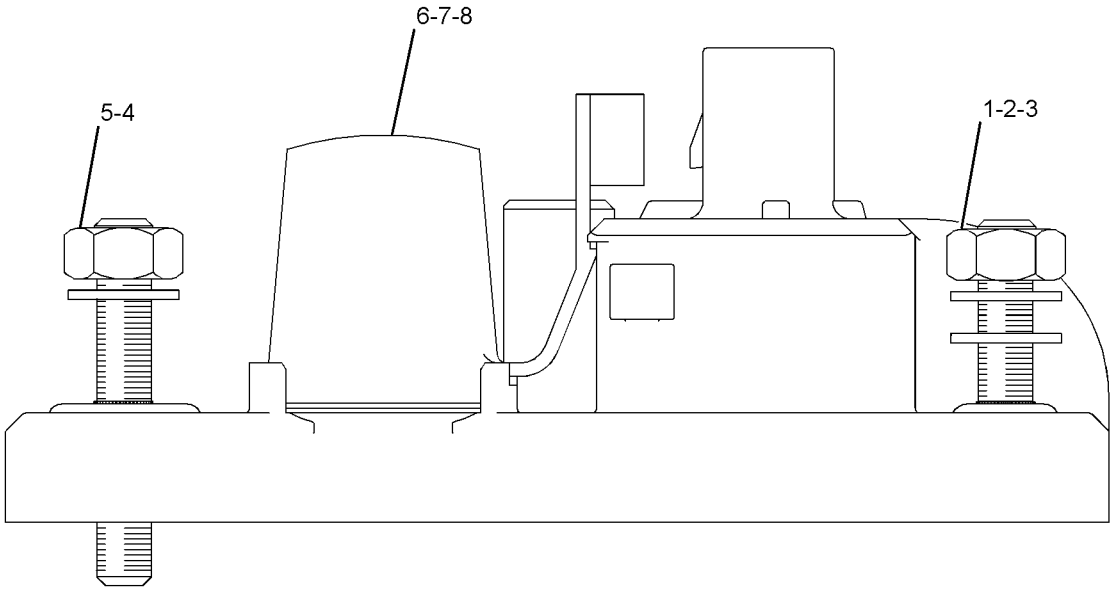

GRAPHIC #1 **<END>** g01290616

276-7290 RELAY GP–POWER, 1

S/N: HLS1-99999
12-VOLT
PART OF 211-4240, 290-6802 WIRING GP-PLATFORM
AN ATTACHMENT

SMCS-1422, 4493 **i02532900**

NOTE	REF NO	GRAPHIC REF	PART NUMBER	QTY	PART NAME 1 2 3 4 5 6 (PRODUCT LEVEL)	SEE PAGE
M	1	1	**5C-2890**	2	NUT (M6X1-THD)	
	2	1	**8T-4205**	2	WASHER-HARD (7.2X14.5X2-MM THK)	
	3	1	**1H-3244**	2	LOCKWASHER	
M	4	1	**5C-7261**	1	NUT (M8X1.25-THD)	
	5	1	**8T-4224**	1	WASHER-HARD (8.8X16X2-MM THK)	
	6	1	**267-5213**	1	COVER	
	7	1	**267-5211**	1	SEAL	
	8	1	**267-2701**	2	FUSE (60-AMPERE)	

M-METRIC PART

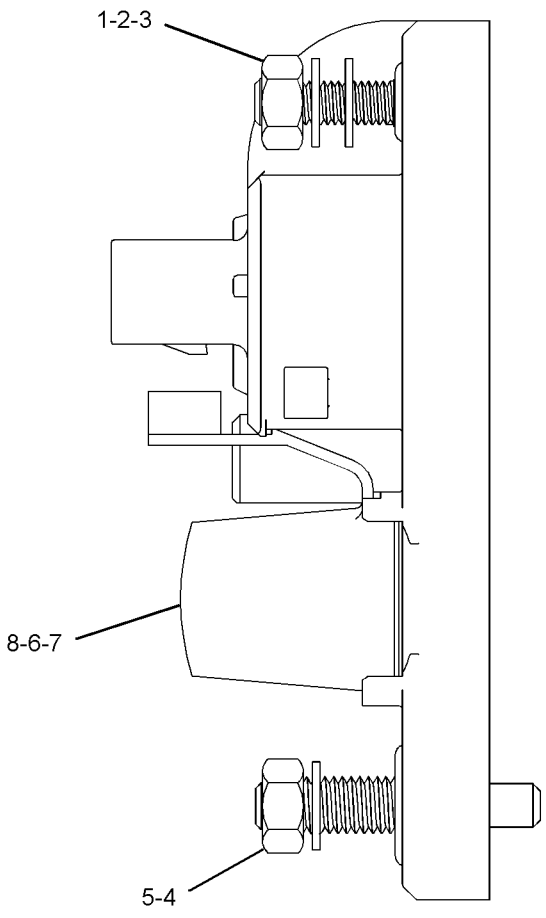

GRAPHIC #1 **<END>** g01278211

276-7291 RELAY GP–POWER, 2

S/N: HLS1-99999
12-VOLT
PART OF 211-4240, 290-6802 WIRING GP-PLATFORM
AN ATTACHMENT

SMCS-1422, 4493 **i02532901**

NOTE	REF NO	GRAPHIC REF	PART NUMBER	QTY	PART NAME 1 2 3 4 5 6 (PRODUCT LEVEL)	SEE PAGE
M	1	1	**5C-2890**	2	NUT (M6X1-THD)	
	2	1	**8T-4205**	2	WASHER-HARD (7.2X14.5X2-MM THK)	
	3	1	**1H-3244**	2	LOCKWASHER	
M	4	1	**5C-7261**	1	NUT (M8X1.25-THD)	
	5	1	**8T-4224**	1	WASHER-HARD (8.8X16X2-MM THK)	
	6	1	**267-5213**	1	COVER	
	7	1	**267-5211**	1	SEAL	
	8	1	**267-2701**	1	FUSE (60-AMPERE)	

M-METRIC PART

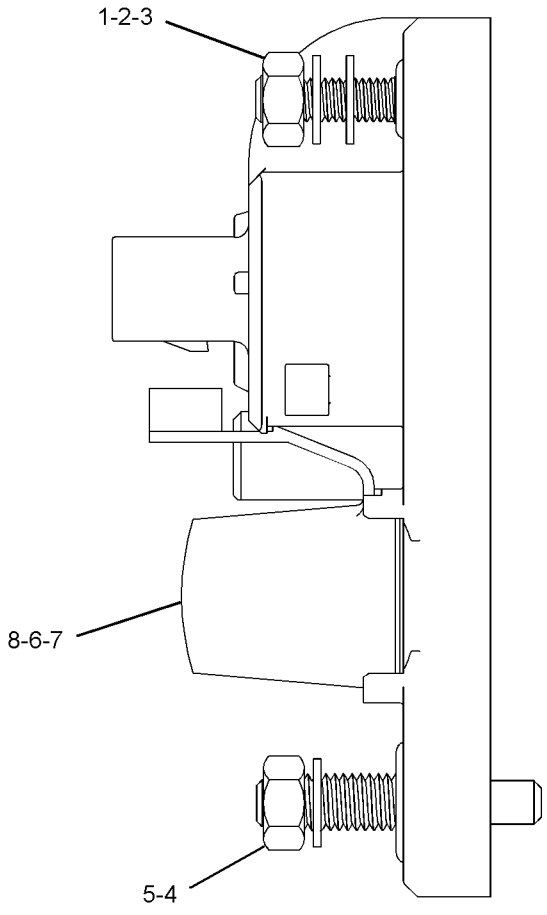

GRAPHIC #1 **<END>** g01278256

189-5746 SENSOR GP-SPEED–OUTPUT–TORQUE CONVERTER

S/N: HLS1-99999

PART OF 271-3773, 271-3774 TRANSMISSION GP-DIRECT DRIVE

AN ATTACHMENT

SMCS-3175 **i03276881**

NOTE	REF NO	GRAPHIC REF	PART NUMBER	QTY	PART NAME 1 2 3 4 5 6 (PRODUCT LEVEL)	SEE PAGE
	1	1	**171-5349**	1	STRAP-MARKER	
	2	1	**102-8802**	1	KIT-RECEPTACLE (2-PIN)	
					(INCLUDES RECEPTACLE AS & WEDGE)	
	3	1	**144-1636**	2	PIN-CONNECTOR (14-GA TO 18-GA)	
E	4	1	**9X-1386**		SLEEVE (14-CM)	

E-ORDER BY THE CENTIMETER

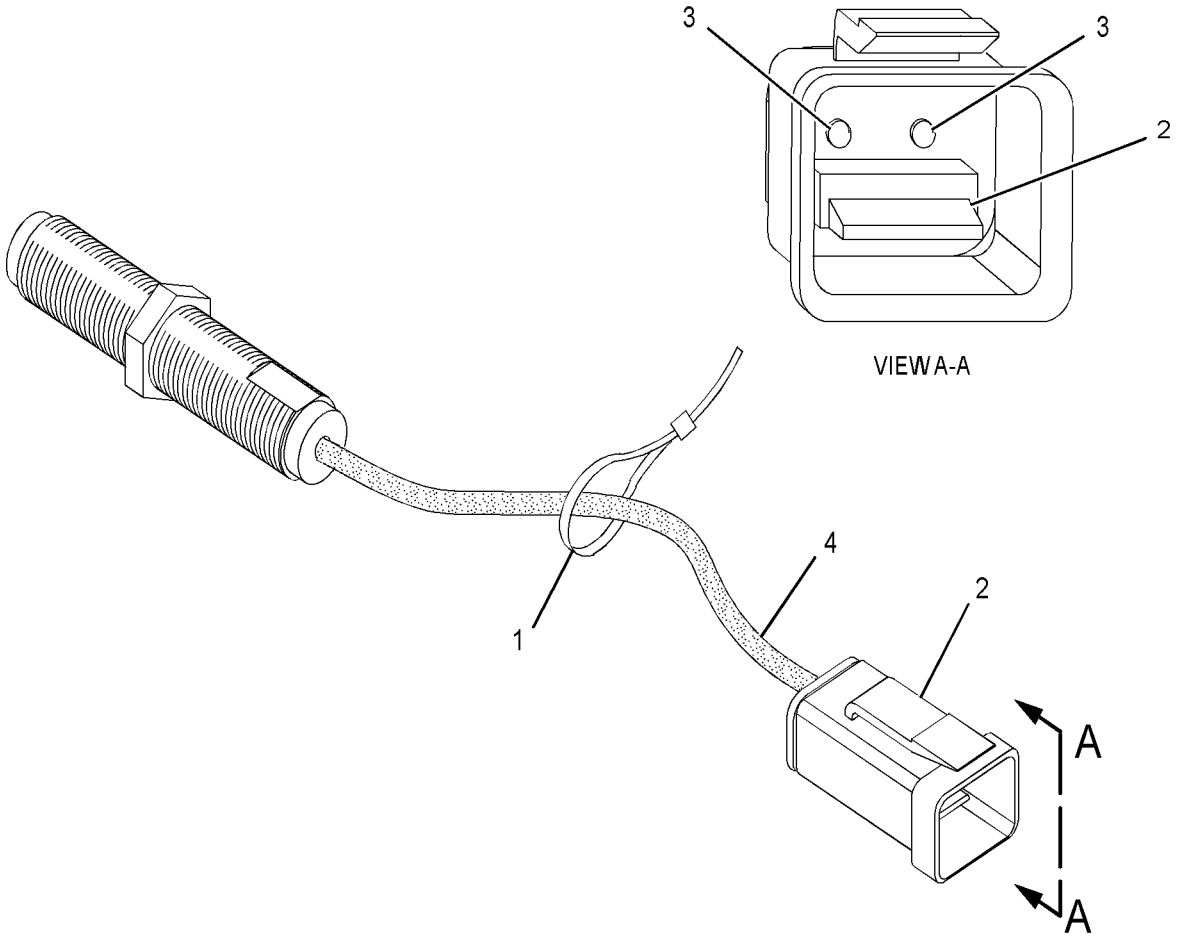

GRAPHIC #1 **<END>** g01353977

143-0539 STARTING MOTOR GP-ELECTRIC*R

S/N: CRS1-6887
12-VOLT
PART OF 237-0024 STARTING MOTOR GP-ELECTRIC
ALSO AN ATTACHMENT

SMCS-1453 **i02712964**

NOTE	REF NO	GRAPHIC REF	PART NUMBER	QTY	PART NAME 1 2 3 4 5 6 (PRODUCT LEVEL)	SEE PAGE
	1	1	**8C-9778**	1	PLUNGER AS	
	2	1	**8C-9783**	1	GASKET	
	3	1	**2P-8104**	1	BEARING	
	4	1	**7T-6092**	1	HOLDER AS-BRUSH	
M	5	1	**8T-4133**	2	NUT (M10X1.5-THD)	
	6	1	**7T-6088**	1	BEARING AS	
	7	1	**7T-6087**	1	WASHER (15.2X40X0.5-MM THK)	
	8	1	**7T-6093**	1	CLUTCH AS	
	9	1	**8J-4455**	1	BALL	
	10	1	**7T-6090**	1	SPRING	
	11	1	**8T-4121**	2	WASHER-HARD (11X21X2.5-MM THK)	
	12	1	**3E-5153**	1	COVER-STARTING MOTOR	
M	13	1	**9X-2036**	1	SCREW-PAN HEAD	
	14	1	**8F-1434**	1	LOCKWASHER	
	15	1	**100-4113**	1	SWITCH AS (STARTING MOTOR)(12-VOLT)	
	16	1	**100-4119**	1	ARMATURE AS	
	17	1	**100-4118**	1	CASE AS-STARTING MOTOR	
	18	1	**100-4115**	1	HOUSING-STARTING MOTOR	
	19	1	**143-1344**	1	FRAME-STARTER	
	20	1	**100-3685**	1	CAP	
	21	1	**3E-5154**	1	BUSHING-STARTING MOTOR	
					AVAILABLE REPAIR KIT(S):	
			7T-6099	1	KIT-GEAR (STARTING MOTOR)	
					(INCLUDES RETAINER, PINION & ROLLERS)	
			146-6729	1	KIT-HARDWARE (STARTING MOTOR)	
					(INCLUDES BOLTS, SCREWS, SCREW ASSEMBLIES & PLATE)	
			100-4112	1	KIT-CONTACT (STARTING MOTOR)	
					(INCLUDES NUT, WASHERS, SEAL, BUSHINGS, PLATE & BOLT)	

M-METRIC PART

143-0539 **STARTING MOTOR GP-ELECTRIC** *(contd.)* **i02712964**

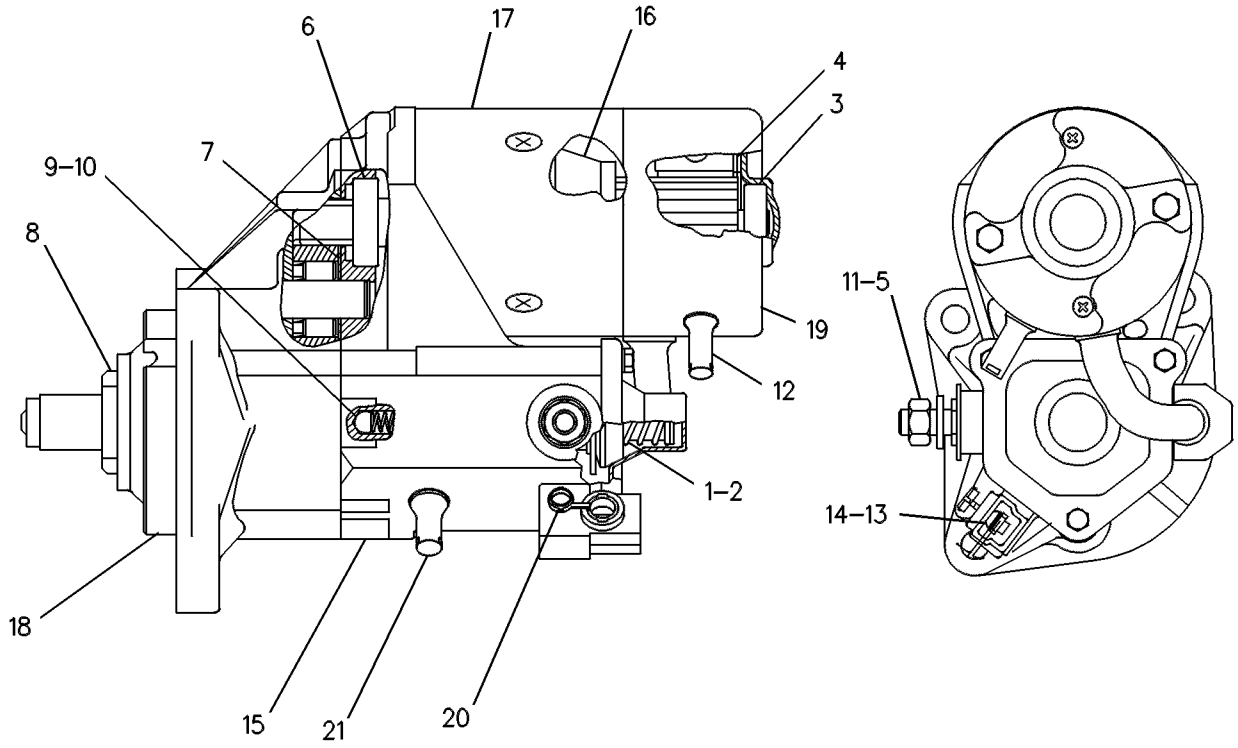

GRAPHIC #1 **<END>** g00131126

237-0024 STARTING MOTOR GP-ELECTRIC—12-VOLT

S/N: CRS1-6887

PART OF 273-3610 ENGINE AR, 320-8414, 323-5725, 325-5121 ENGINE AR-PRIMARY
ALSO AN ATTACHMENT

SMCS-1453 **i01991979**

NOTE	REF NO	GRAPHIC REF	PART NUMBER	QTY	PART NAME 1 2 3 4 5 6 (PRODUCT LEVEL)	SEE PAGE
	1	1	**6I-0364**	3	STUD (M10X1.5X30MM)	
	2	1	**6I-0594**	3	NUT (M10X1.5)	
YR	3	1	**143-0539**	1	STARTING MOTOR GP-ELECTRIC	134

R-REMFG PART MAY BE AVAILABLE
Y-SEPARATE ILLUSTRATION

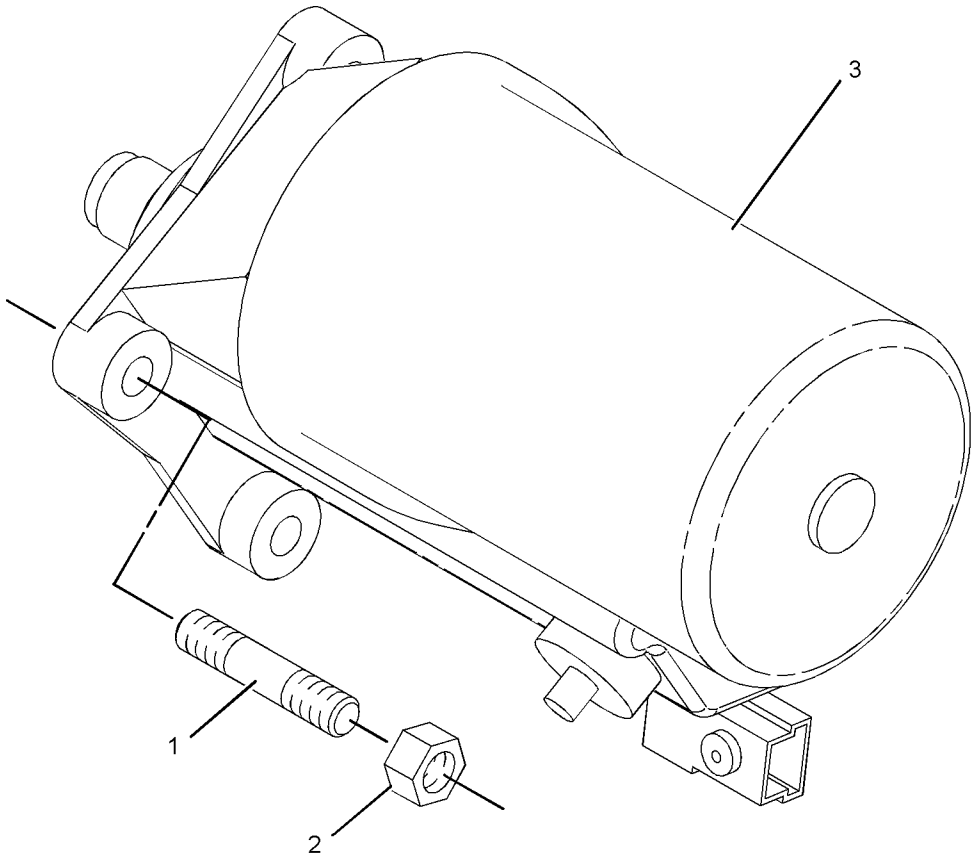

GRAPHIC #1 **<END>** g01039910

211-4267 SWITCH GP-ALL WHEEL DRIVE–INCLUDES RELAY

S/N: HLS1-99999
PART OF 216-4740 DRIVE AR-BACKHOE LOADER
AN ATTACHMENT

SMCS-1435, 4493 **i03530200**

NOTE	REF NO	GRAPHIC REF	PART NUMBER	QTY	PART NAME 1 2 3 4 5 6 (PRODUCT LEVEL)	SEE PAGE
	1	1	**146-9439**	1	RELAY AS (12-VOLT) (ALL WHEEL DRIVE)	
	2	1	**214-4692**	1	SWITCH AS-ROCKER (ALL WHEEL DRIVE)	
		1	**111-7899**	1	GASKET	

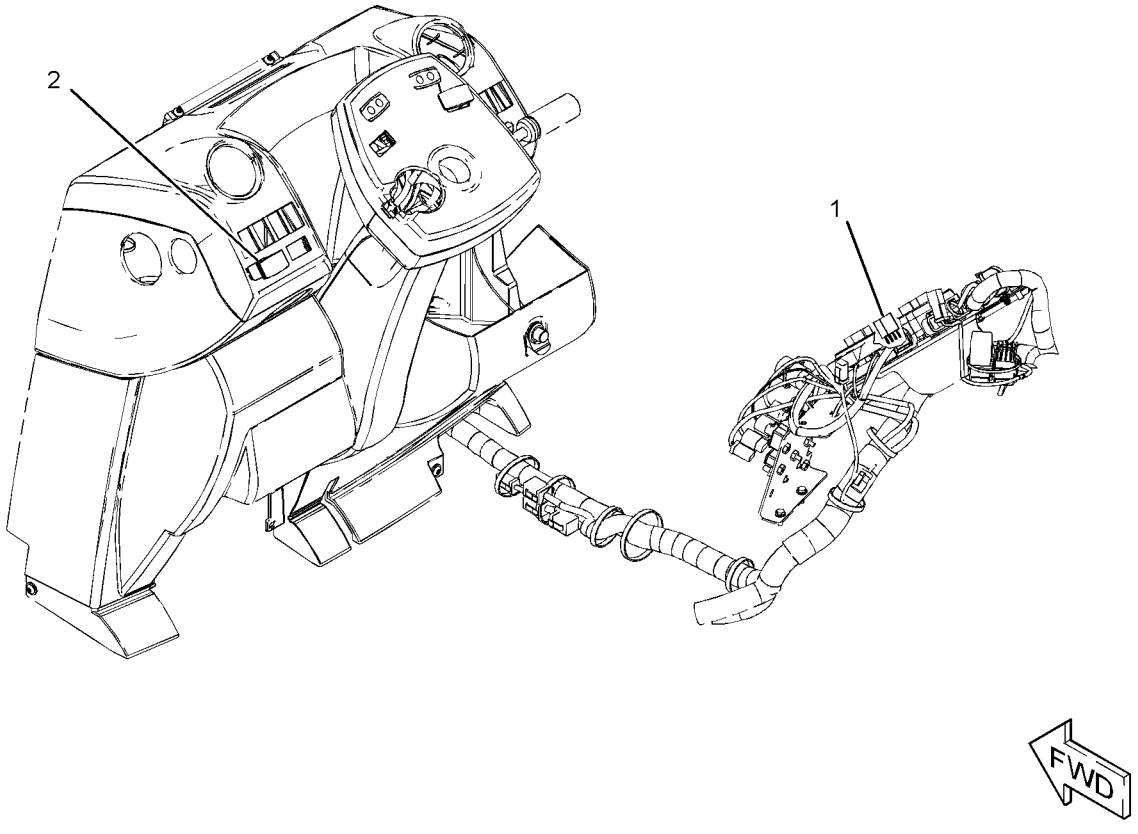

GRAPHIC #1 **<END>** g01211965

202-6010 SWITCH GP-DIFFERENTIAL LOCK–

CENTER PIVOT MACHINE
S/N: HLS1-99999
PART OF 216-3314, 216-3315, 216-3316 POWER TRAIN AR
AN ATTACHMENT

SMCS-1435, 3264 **i03375129**

NOTE	REF NO	GRAPHIC REF	PART NUMBER	QTY	PART NAME 1 2 3 4 5 6 (PRODUCT LEVEL)	SEE PAGE
	1	1	**201-9459**	1	BOOT	
	2	1	**204-0775**	1	SWITCH AS-FOOT (DIFFERENTIAL LOCK ON, OFF)	
	3	1	**205-6298**	1	ACTUATOR	
	4	1	**213-6060**	1	HARNESS AS-WIRING (DIFFERENTIAL LOCK)	

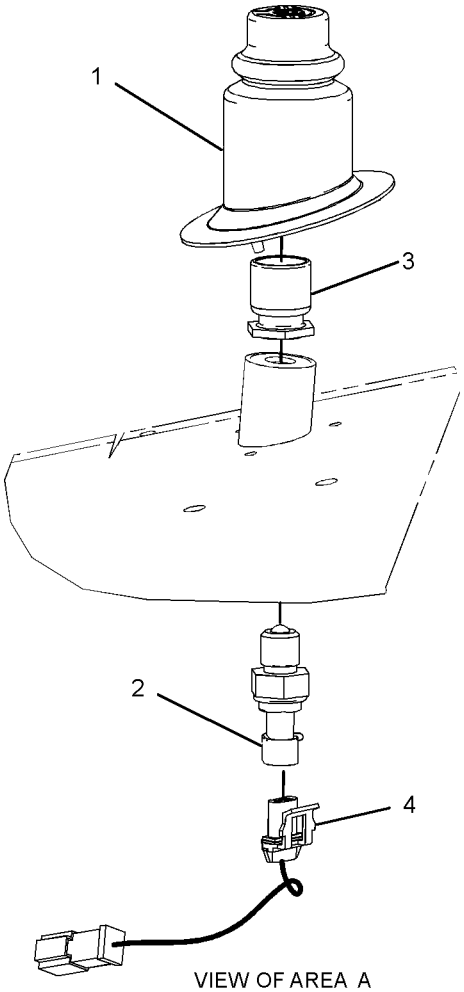

VIEW OF AREA A

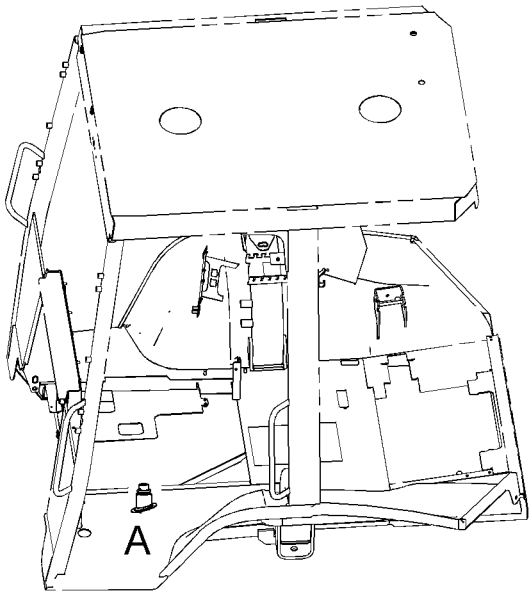

LEFT SIDE VIEW
(UPPER FRONT)

GRAPHIC #1 **<END>** g01230746

7N-0718 SWITCH GP-DISCONNECT–BATTERY

S/N: HLS1-99999
12-VOLT
PART OF 290-6790 BATTERY & WIRING GP
ALSO AN ATTACHMENT

SMCS-1411 **i02459121**

NOTE	REF NO	GRAPHIC REF	PART NUMBER	QTY	PART NAME 1 2 3 4 5 6 (PRODUCT LEVEL)	SEE PAGE
	1	1	**8H-5306**	1	KEY (BATTERY DISCONNECT)	
	2	1	**8H-5303**	1	NUT (3/4-16-THD)	
	3	1	**2H-3922**	2	LOCKWASHER	
	4	1	**9F-5644**	2	LOCKWASHER	
	5	1	**6F-7045**	2	NUT-FULL (3/8-24-THD)	

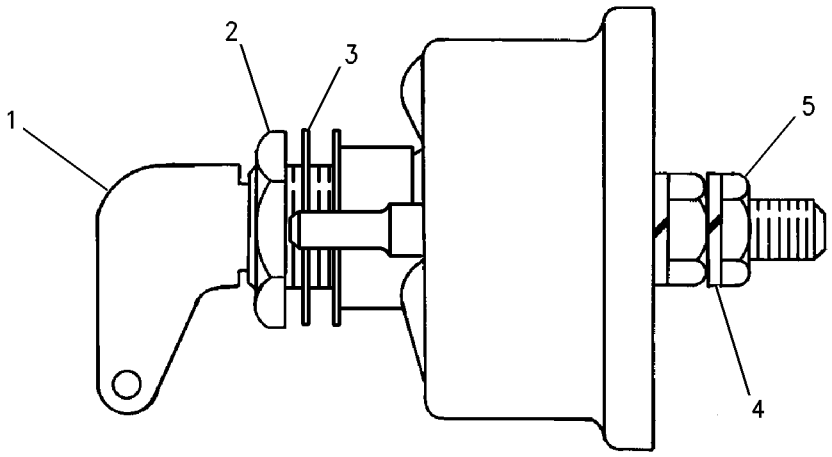

GRAPHIC #1 **<END>** g00715584

237-4896 SWITCH GP-PRESSURE–ENGINE OIL

S/N: CRS1-6887

PART OF 273-3610 ENGINE AR, 320-8414, 323-5725, 325-5121 ENGINE AR-PRIMARY
ALSO AN ATTACHMENT

SMCS-1435 **i02437894**

NOTE	REF NO	GRAPHIC REF	PART NUMBER	QTY	PART NAME 1 2 3 4 5 6 (PRODUCT LEVEL)	SEE PAGE
	1	1	**237-4894**	1	SWITCH AS-PRESSURE (ENGINE OIL)	
	2	1	**199-9267**	1	SEAL-O-RING	

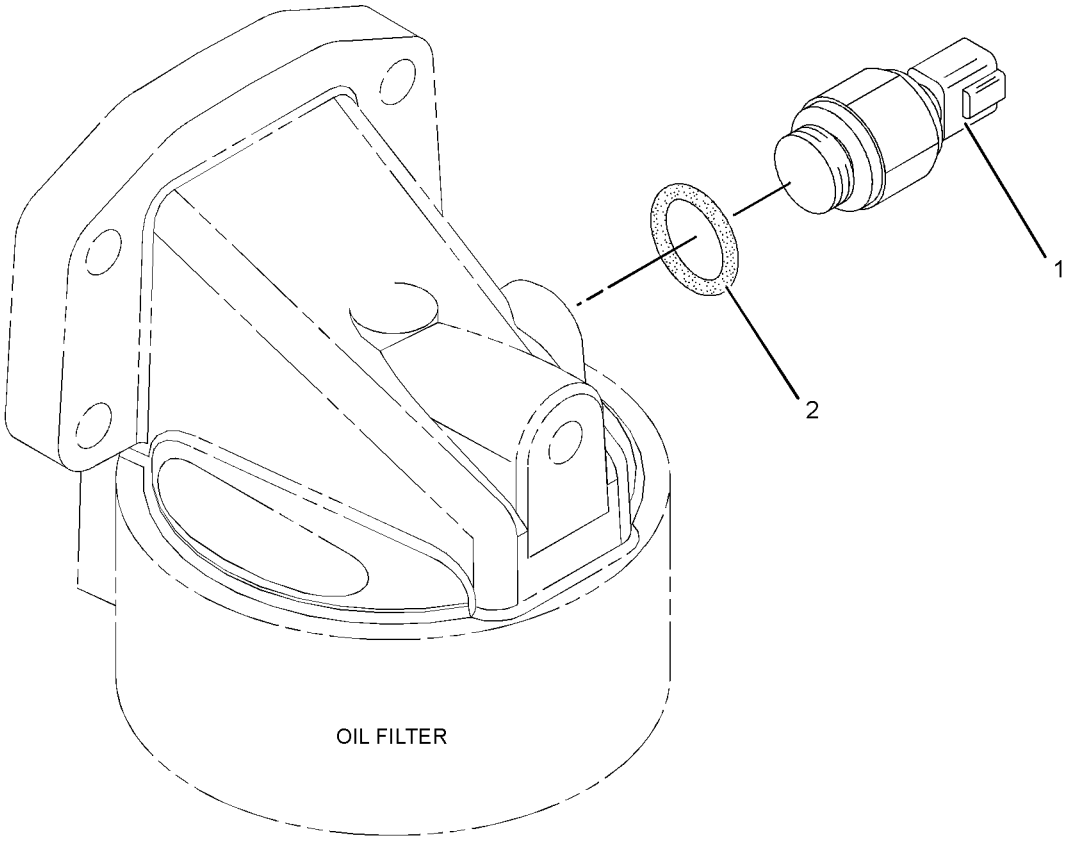

GRAPHIC #1 **<END>** g01218504

211-4268 WIRING GP-AIR CONDITIONER

S/N: HLS1-6980
PART OF 269-2127 CAB AR-ENCLOSED ROPS
AN ATTACHMENT

SMCS-1408, 7320 **i03548021**

NOTE	REF NO	GRAPHIC REF	PART NUMBER	QTY	PART NAME 1 2 3 4 5 6 (PRODUCT LEVEL)	SEE PAGE
	1	1	**3E-9362**	1	RELAY AS (12-VOLT) (HEATER, A/C POWER)	
	2	1	**6K-0806**	2	STRAP-CABLE	
	3	1	**9X-7378**	1	SEAL-O-RING	
	4	1	**106-8704**	1	SUPPRESSOR AS-ARC	
		1	**102-8802**	1	KIT-RECEPTACLE (2-PIN)	
					(INCLUDES RECEPTACLE AS & WEDGE)	
		1	**186-3735**	2	PIN-CONNECTOR (16-GA TO 18-GA)	
	5	1	**202-6108**	1	HARNESS AS-HEATER & AIR COND (POWER)	
		1	**102-8802**	1	KIT-RECEPTACLE (2-PIN)	
					(INCLUDES RECEPTACLE AS & WEDGE)	
		1	**8L-8413**	11	STRAP-CABLE	
		1	**111-6795**	1	HOUSING-RELAY	
		1	**111-6816**	1	LOCK	
		1	**180-9339**	2	PIN-CONNECTOR (14-GA TO 18-GA)	
	6	1	**213-6055**	1	HARNESS AS-HEATER & AIR COND (PLATFORM)	
		1	**102-8802**	1	KIT-RECEPTACLE (2-PIN)	
		1	**102-8803**	1	KIT-RECEPTACLE (3-PIN)	
					(EACH INCLUDES RECEPTACLE AS & WEDGE)	
		1	**8L-8413**	29	STRAP-CABLE	
		1	**8T-8737**	1	PLUG-SEAL	
		1	**9X-1054**	1	PLUG AS-CONNECTOR (4-PIN)	
E		1	**119-3662**		TUBE-HEAT SHRINK (10.85-MM DIA) (20-CM)	
E		1	**125-7874**		TUBE-HEAT SHRINK (5.72-MM DIA) (10-CM)	
		1	**155-2270**	1	KIT-CONNECTING PLUG (2-PIN)	
		1	**177-9648**	1	KIT-CONNECTING PLUG (2-PIN)	
		1	**177-9656**	1	KIT-CONNECTING PLUG (4-PIN)	
					(EACH INCLUDES WEDGE-PLUG LOCK & PLUG AS-CONNECTOR)	
		1	**180-9340**	2	SOCKET-CONNECTOR (14-GA TO 18-GA)	
		1	**213-0139**	5	PIN	
		1	**228-5856**	2	CONNECTOR	
	7	1	**214-4695**	1	SWITCH AS-ROCKER (BLOWER FAN SPEED)	
		1	**111-7899**	1	GASKET	
	8	1	**214-4718**	1	SWITCH AS-ROCKER (AIR CONDITIONER, HEATER SELECT)	
		1	**111-7899**	1	GASKET	
	9	1	**236-6923**	1	SWITCH AS-PRESSURE (REFRIGERANT)	
	10	1	**238-7492**	1	HARNESS AS-HEATER & AIR COND (COMPRESSOR)	
		1	**102-8802**	1	KIT-RECEPTACLE (2-PIN)	
					(INCLUDES RECEPTACLE AS & PLUG LOCK WEDGE)	
		1	**8L-8413**	1	STRAP-CABLE	
		1	**100-6674**	2	SEAL-CONNECTOR	
E		1	**125-7874**		TUBE-HEAT SHRINK (5.72-MM DIA) (10-CM)	
		1	**155-2270**	2	KIT-CONNECTING PLUG (2-PIN)	
					(EACH INCLUDES PLUG LOCK WEDGE & CONNECTOR PLUG AS)	
		1	**180-9339**	2	PIN-CONNECTOR (14-GA TO 18-GA)	
		1	**180-9340**	4	SOCKET-CONNECTOR (14-GA TO 18-GA)	
	11	1	**275-0570**	1	BAR-BUS	
Y	12	1	**276-7287**	1	RELAY GP (12-VOLT) (POWER DISTRIBUTION)	130
	13	1	**115-1615**	1	RELAY AS (12-VOLT) (AIR CONDITIONER)	
	14	1	**4P-8134**	2	CLIP	
	15	1	**3S-2093**	11	STRAP-CABLE	
M	16	1	**5C-2890**	1	NUT (M6X1-THD)	
M	17	1	**5C-7261**	1	NUT (M8X1.25-THD)	

211-4268 **WIRING GP-AIR CONDITIONER** *(contd.)* **i03548021**

NOTE	REF NO	GRAPHIC REF	PART NUMBER	QTY	PART NAME 1 2 3 4 5 6 (PRODUCT LEVEL)	SEE PAGE
M	18	1	**7X-2534**	1	BOLT (M6X1X50-MM)	
	19	1	**8T-4205**	1	WASHER-HARD (7.2X14.5X2-MM THK)	
	20	1	**8T-4224**	1	WASHER-HARD (8.8X16X2-MM THK)	
	21	1	**7K-1181**	1	STRAP-CABLE	
	22	1	**8T-8799**	1	BOOT	

E-ORDER BY THE CENTIMETER
M-METRIC PART
Y-SEPARATE ILLUSTRATION

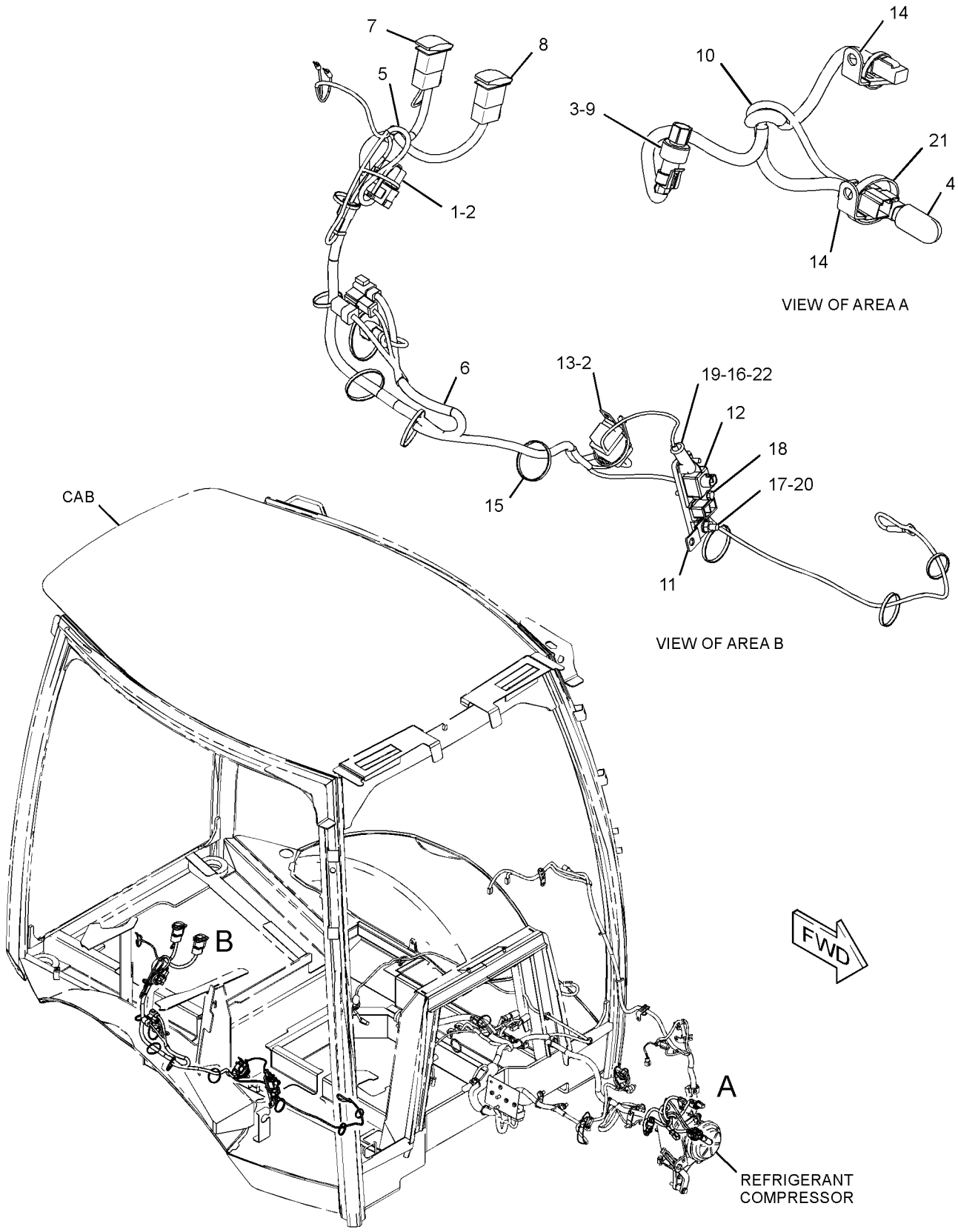

GRAPHIC #1 **<END>** g01282625

ELECTRICAL AND STARTING SYSTEM

211-4268 WIRING GP-AIR CONDITIONER

S/N: HLS6981-99999
PART OF 269-2127 CAB AR-ENCLOSED ROPS
AN ATTACHMENT

SMCS-1408, 7320 **i03548042**

NOTE	REF NO	GRAPHIC REF	PART NUMBER	QTY	PART NAME 1 2 3 4 5 6 (PRODUCT LEVEL)	SEE PAGE
	1	1	**3E-9362**	1	RELAY AS (12-VOLT) (HEATER, A/C POWER)	
	2	1	**6K-0806**	1	STRAP-CABLE	
	3	1	**9X-7378**	1	SEAL-O-RING	
	4	1	**189-3158**	1	SUPPRESSOR-ARC	
	5	1	**202-6108**	1	HARNESS AS-HEATER & AIR COND (POWER)	
		1	**102-8802**	1	KIT-RECEPTACLE (2-PIN)	
					(INCLUDES RECEPTACLE AS & WEDGE)	
		1	**8L-8413**	11	STRAP-CABLE	
		1	**111-6795**	1	HOUSING-RELAY	
		1	**111-6816**	1	LOCK	
		1	**180-9339**	2	PIN-CONNECTOR (14-GA TO 18-GA)	
	6	1	**213-6055**	1	HARNESS AS-HEATER & AIR COND (PLATFORM)	
		1	**102-8802**	1	KIT-RECEPTACLE (2-PIN)	
		1	**102-8803**	1	KIT-RECEPTACLE (3-PIN)	
					(EACH INCLUDES RECEPTACLE AS & WEDGE)	
		1	**8L-8413**	29	STRAP-CABLE	
		1	**8T-8737**	1	PLUG-SEAL	
		1	**9X-1054**	1	PLUG AS-CONNECTOR (4-PIN)	
E		1	**119-3662**		TUBE-HEAT SHRINK (10.85-MM DIA) (20-CM)	
E		1	**125-7874**		TUBE-HEAT SHRINK (5.72-MM DIA) (10-CM)	
		1	**155-2270**	1	KIT-CONNECTING PLUG (2-PIN)	
		1	**177-9648**	1	KIT-CONNECTING PLUG (2-PIN)	
		1	**177-9656**	1	KIT-CONNECTING PLUG (4-PIN)	
					(EACH INCLUDES WEDGE-PLUG LOCK & PLUG AS-CONNECTOR)	
		1	**180-9340**	2	SOCKET-CONNECTOR (14-GA TO 18-GA)	
		1	**213-0139**	5	PIN	
		1	**228-5856**	2	CONNECTOR	
	7	1	**214-4695**	1	SWITCH AS-ROCKER (BLOWER FAN SPEED)	
		1	**111-7899**	1	GASKET	
	8	1	**214-4718**	1	SWITCH AS-ROCKER (AIR CONDITIONER, HEATER SELECT)	
		1	**111-7899**	1	GASKET	
	9	1	**236-6923**	1	SWITCH AS-PRESSURE (REFRIGERANT)	
	10	1	**238-7492**	1	HARNESS AS-HEATER & AIR COND (COMPRESSOR)	
		1	**102-8802**	1	KIT-RECEPTACLE (2-PIN)	
					(INCLUDES RECEPTACLE AS & PLUG LOCK WEDGE)	
		1	**8L-8413**	1	STRAP-CABLE	
		1	**100-6674**	2	SEAL-CONNECTOR	
E		1	**125-7874**		TUBE-HEAT SHRINK (5.72-MM DIA) (10-CM)	
		1	**155-2270**	2	KIT-CONNECTING PLUG (2-PIN)	
					(EACH INCLUDES PLUG LOCK WEDGE & CONNECTOR PLUG AS)	
		1	**180-9339**	2	PIN-CONNECTOR (14-GA TO 18-GA)	
		1	**180-9340**	4	SOCKET-CONNECTOR (14-GA TO 18-GA)	
	11	1	**275-0570**	1	BAR-BUS	
Y	12	1	**276-7287**	1	RELAY GP (12-VOLT) (POWER DISTRIBUTION)	130
	13	1	**115-1615**	1	RELAY AS (12-VOLT) (AIR CONDITIONER)	
	14	1	**4P-8134**	2	CLIP	
	15	1	**3S-2093**	11	STRAP-CABLE	
M	16	1	**5C-2890**	1	NUT (M6X1-THD)	
M	17	1	**5C-7261**	1	NUT (M8X1.25-THD)	
M	18	1	**8T-4171**	1	BOLT (M6X1X12-MM)	
	19	1	**8T-4205**	2	WASHER-HARD (7.2X14.5X2-MM THK)	
	20	1	**8T-4224**	1	WASHER-HARD (8.8X16X2-MM THK)	

211-4268 **WIRING GP-AIR CONDITIONER** *(contd.)* **i03548042**

NOTE	REF NO	GRAPHIC REF	PART NUMBER	QTY	PART NAME 1 2 3 4 5 6 (PRODUCT LEVEL)	SEE PAGE
	21	1	**7K-1181**	1	STRAP-CABLE	
	22	1	**8T-8799**	1	BOOT	
	23	1	**197-5107**	1	SCREW-TRUSS HEAD (M6X1X60-MM)	

E-ORDER BY THE CENTIMETER
M-METRIC PART
Y-SEPARATE ILLUSTRATION

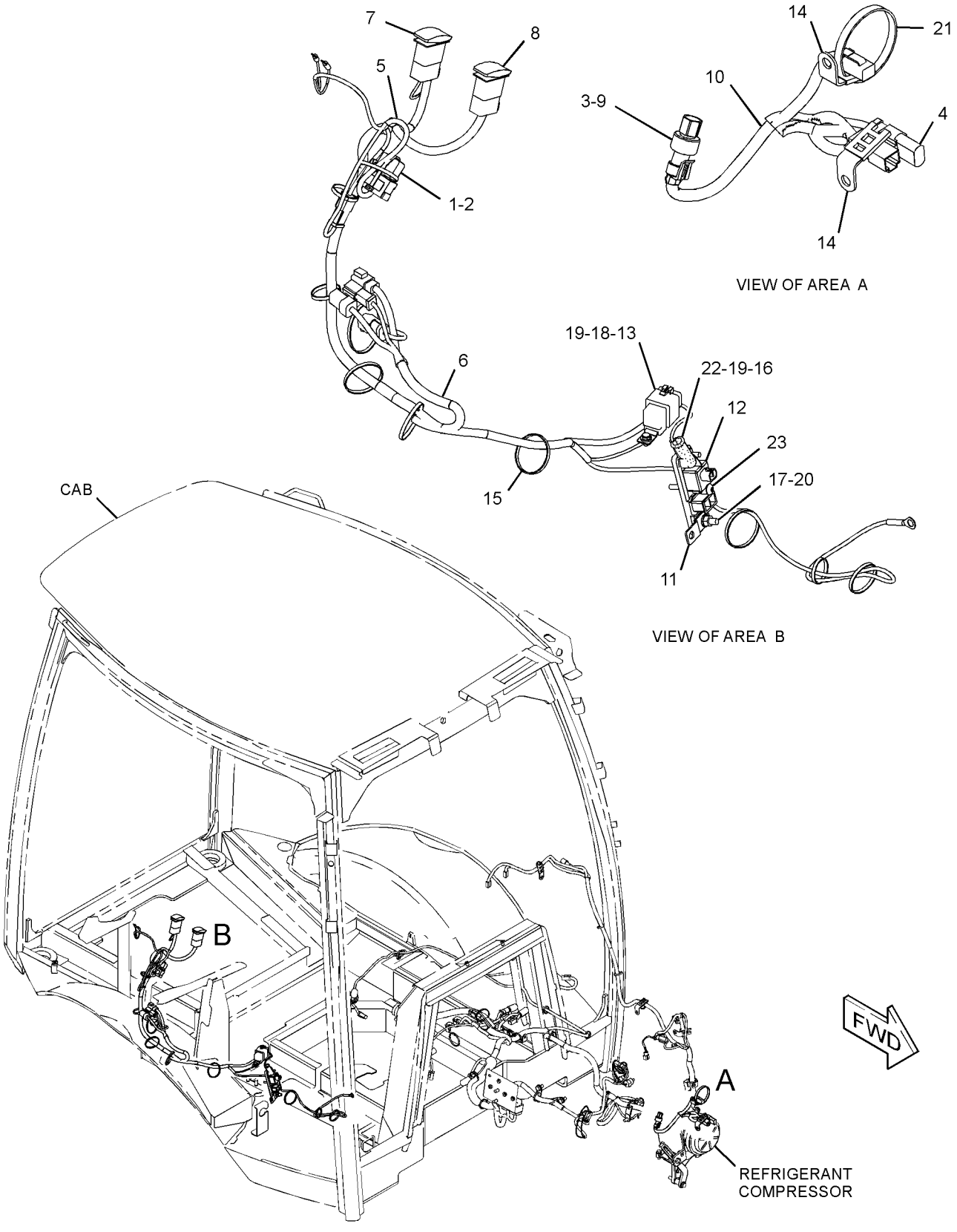

GRAPHIC #1 **<END>** g01522201

211-4241 WIRING GP-CONSOLE–SIDE

S/N: HLS1-6945
PART OF 269-2125, 269-2126, 269-2127 CAB AR-ENCLOSED ROPS, 269-2123, 269-2124 CANOPY AR-OPEN ROPS
AN ATTACHMENT

SMCS-1408 **i03530241**

NOTE	REF NO	GRAPHIC REF	PART NUMBER	QTY	PART NAME 1 2 3 4 5 6 (PRODUCT LEVEL)	SEE PAGE
J	1	1	**110-7887**	1	SWITCH AS-START (KEY)	
		1	**7T-6799**	1	NUT-MOUNTING (1-32-THD)	
		1	**186-3735**	4	PIN-CONNECTOR (16-GA TO 18-GA)	
		1	**102-8804**	1	KIT-RECEPTACLE (4-PIN)	
					(INCLUDES RECEPTACLE AS & WEDGE)	
M	2	1	**197-7499**	2	BOLT (M4X0.7X25-MM)	
	3	1	**206-1345**	3	STRAP-CABLE	
	6	1	**214-4693**	1	SWITCH AS-ROCKER (WARNING BEACON)	
		1	**111-7899**	1	GASKET	
	7	1	**300-4994**	1	SWITCH AS-ROCKER (HYDRAULIC LOCKOUT) (IMPLEMENT DISABLE)	
		1	**111-7899**	1	GASKET	
	8	1	**214-4722**	1	SWITCH AS-ROCKER (STARTING AID)	
		1	**111-7899**	1	GASKET	
	10	1	**226-7164**	1	GAUGE GP-COOLANT TEMPERATURE	
		1	**4B-2043**	6	NUT (8-32-THD)	
		1	**9B-7233**	3	LOCKWASHER	
		1	**7X-9065**	1	LAMP (12-VOLT)	
B	11	1	**227-1057**	6	PLUG-HOLE	
	12	1	**231-9356**	1	FILM-IDENTIFICATION (CONSOLE, RH)	
	13	1	**268-7758**	1	HARNESS AS-CONSOLE (SIDE)	
	14	1	**270-2729**	1	MODULE GP-WARNING INDICATOR (WITH ALARM, FUNCTION LIGHTS)	
		1	**102-8801**	1	KIT-RECEPTACLE (12-PIN)	
					(INCLUDES RECEPTACLE AS & WEDGE)	
		1	**232-4706**	1	GASKET	
		1	**186-3735**	10	PIN-CONNECTOR (16-GA TO 18-GA)	
		1	**8T-8737**	2	PLUG-SEAL	
	15	1	**131-1424**	1	SEAL	
	16	1	**170-6305**	1	GAUGE GP-FUEL LEVEL	
		1	**4B-2043**	3	NUT (8-32-THD)	
		1	**9B-7233**	3	LOCKWASHER	
		1	**7X-9065**	1	LAMP (12-VOLT)	
	17	1	**170-6542**	1	GAUGE GP-OIL TEMPERATURE (TORQUE CONVERTER)	
		1	**4B-2043**	3	NUT (8-32-THD)	
		1	**9B-7233**	3	LOCKWASHER	
		1	**7X-9065**	1	LAMP (12-VOLT)	
Y	18	1	**239-1080**	1	TACHOMETER GP-ELECTRIC	900
	19	1	**3S-2093**	5	STRAP-CABLE	
	20	1	**6V-3507**	3	SEAL-RECTANGULAR	
M	21	1	**8T-2659**	2	LOCKNUT (M4X0.7-THD)	

B-USE AS REQUIRED
J-REQUIRES CORPORATE KEY
M-METRIC PART
Y-SEPARATE ILLUSTRATION

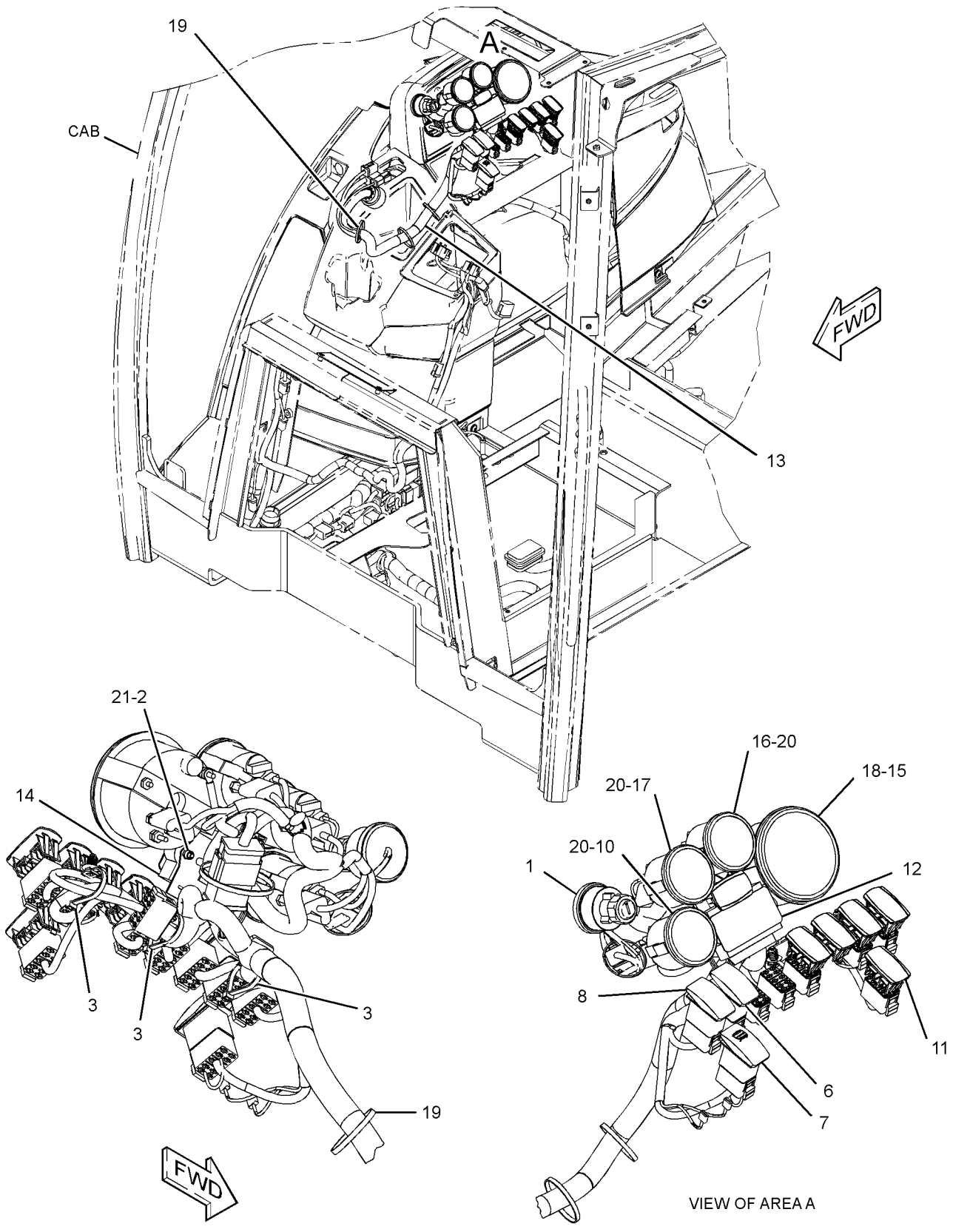

GRAPHIC #1 **<END>** g01813555

211-4245 WIRING GP-CONSOLE–FRONT

S/N: HLS1-99999
PART OF 269-2125, 269-2126, 269-2127 CAB AR-ENCLOSED ROPS, 269-2123, 269-2124 CANOPY AR-OPEN ROPS
AN ATTACHMENT

SMCS-1408 **i03530281**

NOTE	REF NO	GRAPHIC REF	PART NUMBER	QTY	PART NAME 1 2 3 4 5 6 (PRODUCT LEVEL)	SEE PAGE
	1	1	**7K-1181**	3	STRAP-CABLE	
	2	1	**268-1964**	1	KIT-SERVICE METER	
					(INCLUDES METER & FILM)	
	3	1	**213-6040**	1	HARNESS AS-CONSOLE (FRONT)	
	4	1	**214-4716**	1	SWITCH AS-ROCKER (TRANSMISSION NEUTRAL LOCK)	
		1	**111-7899**	1	GASKET	
B	5	1	**227-1057**	10	PLUG-HOLE	
	6	1	**3S-2093**	4	STRAP-CABLE	

B-USE AS REQUIRED

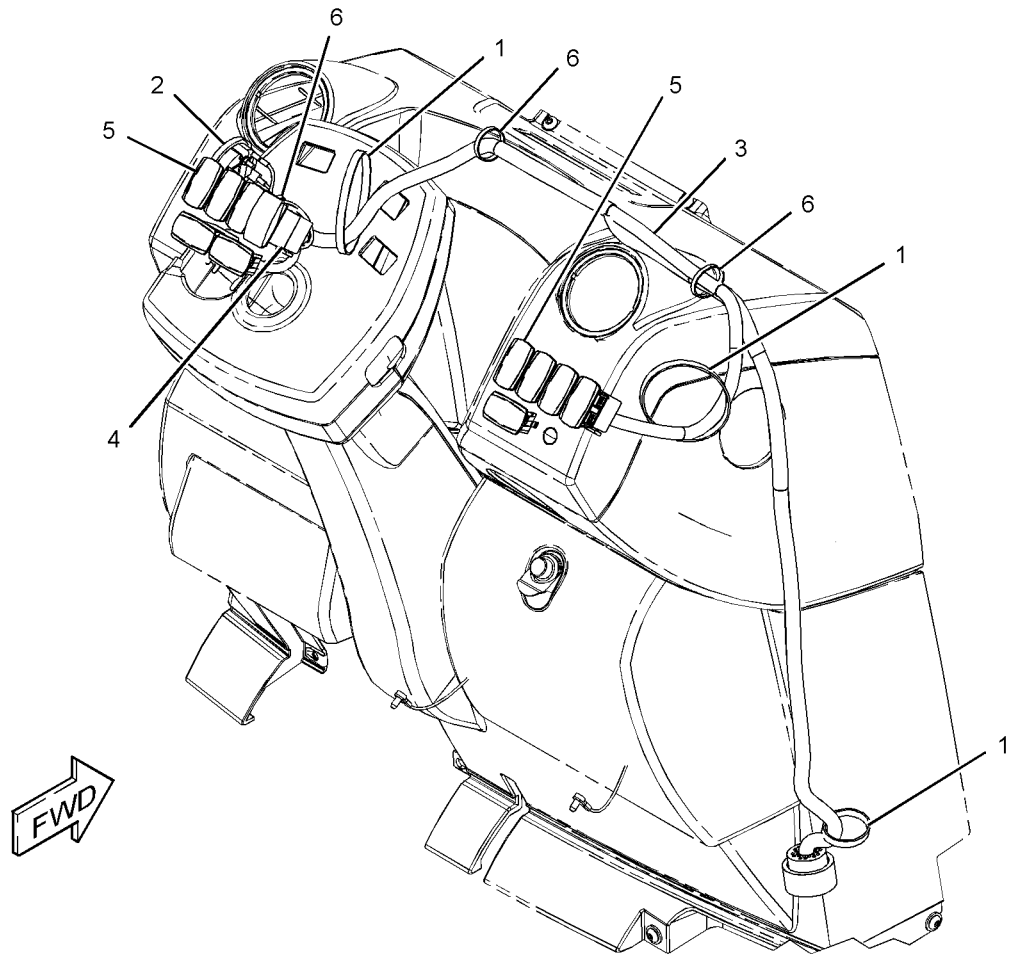

GRAPHIC #1 **<END>** g01190392

290-6803 WIRING GP-CONSOLE–SIDE

S/N: HLS6946-99999
PART OF 269-2125, 269-2126, 269-2127 CAB AR-ENCLOSED ROPS, 269-2123, 269-2124 CANOPY AR-OPEN ROPS
AN ATTACHMENT

SMCS-1408 **i03530305**

NOTE	REF NO	GRAPHIC REF	PART NUMBER	QTY	PART NAME 1 2 3 4 5 6 (PRODUCT LEVEL)	SEE PAGE
	1	1	**110-7887**	1	SWITCH AS-START (KEY)	
		1	**7T-6799**	1	NUT-MOUNTING (1-32-THD)	
		1	**186-3735**	4	PIN-CONNECTOR (16-GA TO 18-GA)	
		1	**102-8804**	1	KIT-RECEPTACLE (4-PIN)	
					(INCLUDES RECEPTACLE AS & WEDGE)	
	2	1	**131-1424**	1	SEAL	
	3	1	**170-6542**	1	GAUGE GP-OIL TEMPERATURE (TORQUE CONVERTER)	
		1	**4B-2043**	3	NUT (8-32-THD)	
		1	**7X-9065**	1	LAMP (12-VOLT)	
		1	**9B-7233**	3	LOCKWASHER	
M	4	1	**197-7499**	2	BOLT (M4X0.7X25-MM)	
	5	1	**206-1345**	3	STRAP-CABLE	
	6	1	**214-4693**	1	SWITCH AS-ROCKER (WARNING BEACON)	
		1	**111-7899**	1	GASKET	
	7	1	**214-4722**	1	SWITCH AS-ROCKER (STARTING AID)	
		1	**111-7899**	1	GASKET	
	8	1	**226-7164**	1	GAUGE GP-COOLANT TEMPERATURE	
		1	**4B-2043**	6	NUT (8-32-THD)	
		1	**7X-9065**	1	LAMP (12-VOLT)	
		1	**9B-7233**	3	LOCKWASHER	
B	9	1	**227-1057**	4	PLUG-HOLE	
	10	1	**231-9356**	1	FILM-IDENTIFICATION (CONSOLE, RH)	
Y	11	1	**239-1080**	1	TACHOMETER GP-ELECTRIC	900
	12	1	**268-7762**	1	HARNESS AS-CONSOLE (SIDE)	
	13	1	**300-4994**	1	SWITCH AS-ROCKER (HYDRAULIC LOCKOUT)	
	14	1	**311-6609**	1	MODULE GP-WARNING INDICATOR (WITH ALARM, FUNCTION LIGHTS)	
		1	**102-8801**	1	KIT-RECEPTACLE (12-PIN)	
					(INCLUDES RECEPTACLE AS & WEDGE)	
		1	**232-4706**	1	GASKET	
		1	**186-3735**	10	PIN-CONNECTOR (16-GA TO 18-GA)	
		1	**8T-8737**	2	PLUG-SEAL	
	15	1	**170-6305**	1	GAUGE GP-FUEL LEVEL	
		1	**4B-2043**	3	NUT (8-32-THD)	
		1	**7X-9065**	1	LAMP (12-VOLT)	
		1	**9B-7233**	3	LOCKWASHER	
	16	1	**3S-2093**	5	STRAP-CABLE	
	17	1	**6V-3507**	3	SEAL-RECTANGULAR	
M	18	1	**8T-2659**	2	LOCKNUT (M4X0.7-THD)	

B-USE AS REQUIRED
M-METRIC PART
Y-SEPARATE ILLUSTRATION

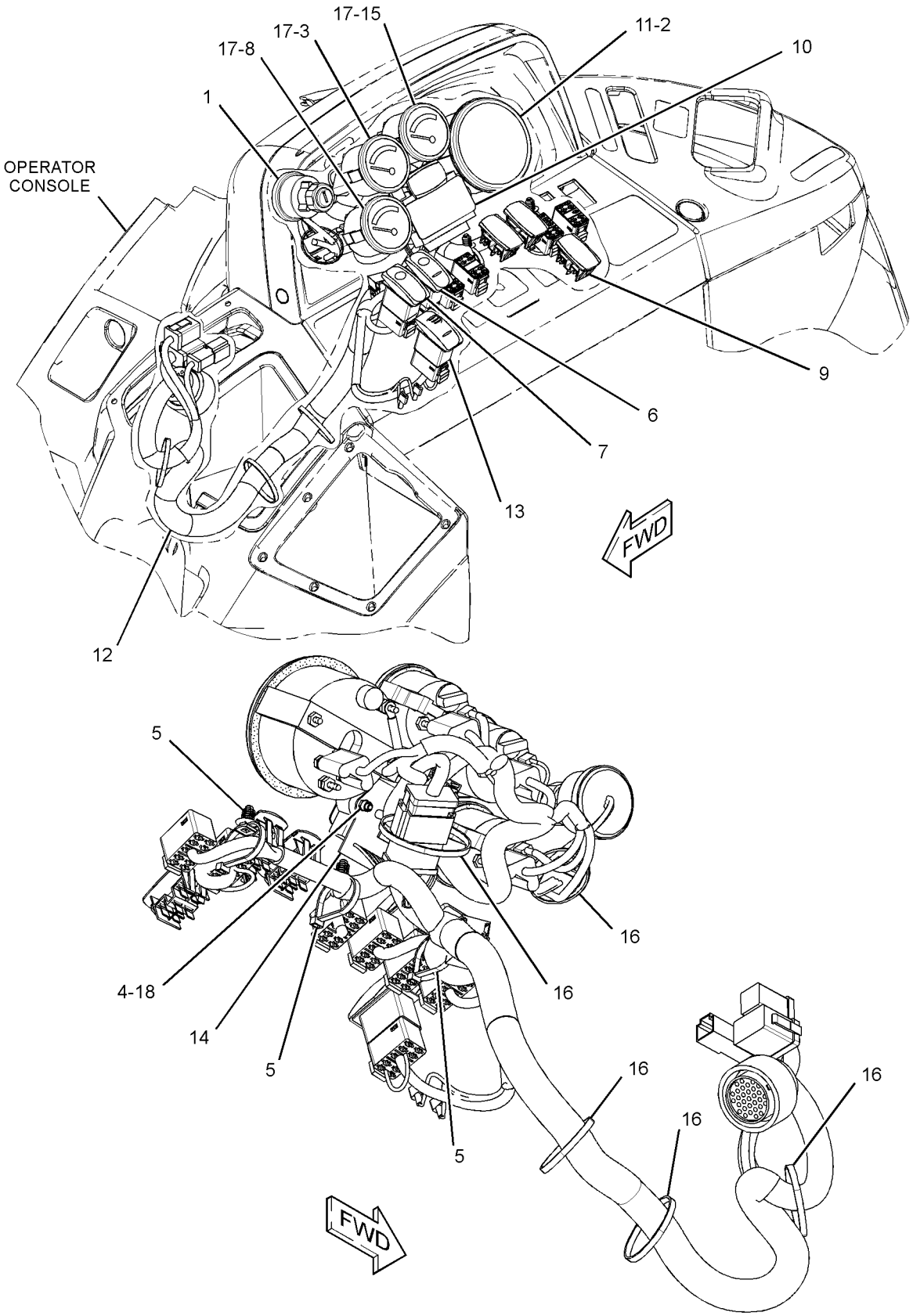

GRAPHIC #1 **<END>** g01587394

267-5633 WIRING GP-CONTROL–JOYSTICK, RH

S/N: HLS1-99999

PART OF 269-2147 VALVE AR-BANK 7, 269-2148 VALVE AR-BANK 8 AN ATTACHMENT

SMCS-1408 **i03548060**

NOTE	REF NO	GRAPHIC REF	PART NUMBER	QTY	PART NAME 1 2 3 4 5 6 (PRODUCT LEVEL)	SEE PAGE
	1	1	**206-2423**	3	SADDLE	
	2	1	**268-7756**	1	HARNESS AS-AUXILIARY (REAR)	
		1	**102-8805**	1	KIT-RECEPTACLE (6-PIN)	
					(INCLUDES RECEPTACLE AS & WEDGE-RECEPTACLE LOCK)	
		1	**8T-8737**	9	PLUG-SEAL	
E		1	**125-7874**		TUBE-HEAT SHRINK (5.72-MM DIA) (5-CM)	
		1	**155-2255**	1	KIT-CONNECTING PLUG (12-PIN)	
		1	**155-2270**	2	KIT-CONNECTING PLUG (2-PIN)	
					(EACH INCLUDES PLUG AS-CONNECTOR & WEDGE-PLUG LOCK)	
		1	**180-9339**	6	PIN-CONNECTOR (14-GA TO 18-GA)	
		1	**180-9340**	7	SOCKET-CONNECTOR (14-GA TO 18-GA)	
	3	1	**3S-2093**	8	STRAP-CABLE	
	4	1	**6K-0806**	2	STRAP-CABLE	

E-ORDER BY THE CENTIMETER

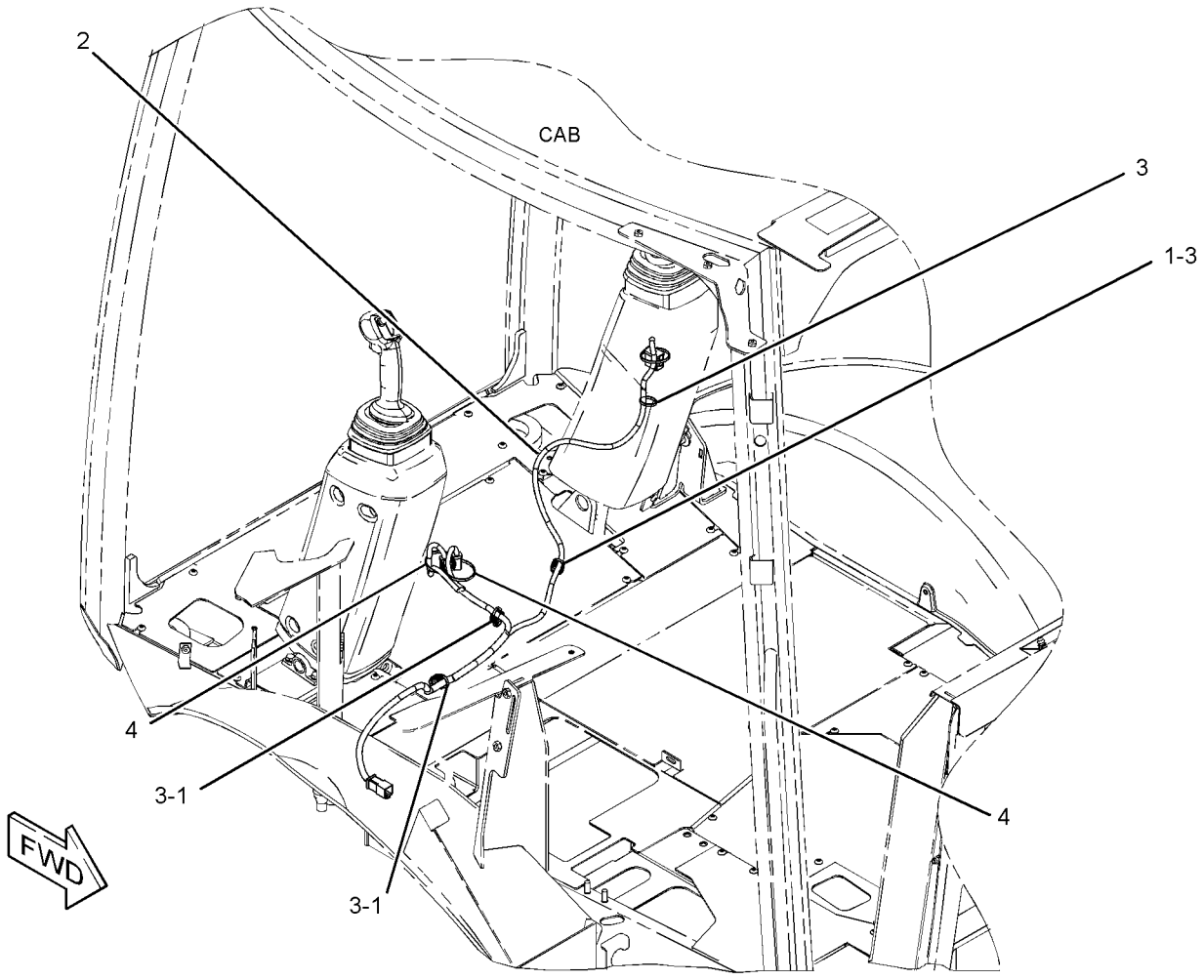

GRAPHIC #1 **<END>** g01366212

267-5634 WIRING GP-CONTROL–JOYSTICK, LH

S/N: HLS1-99999
PART OF 269-2148 VALVE AR-BANK 8
AN ATTACHMENT

SMCS-1408 **i03548063**

NOTE	REF NO	GRAPHIC REF	PART NUMBER	QTY	PART NAME 1 2 3 4 5 6 (PRODUCT LEVEL)	SEE PAGE
	1	1	**206-2423**	1	SADDLE	
	2	1	**268-7757**	1	HARNESS AS-AUXILIARY (REAR)	
		1	**102-8806**	1	KIT-RECEPTACLE (8-PIN)	
					(INCLUDES RECEPTACLE AS & WEDGE-RECEPTACLE LOCK)	
		1	**8T-8737**	7	PLUG-SEAL	
E		1	**125-7874**		TUBE-HEAT SHRINK (5.72-MM DIA) (5-CM)	
		1	**155-2255**	1	KIT-CONNECTING PLUG (12-PIN)	
		1	**155-2270**	2	KIT-CONNECTING PLUG (2-PIN)	
					(EACH INCLUDES PLUG AS-CONNECTOR & WEDGE-PLUG LOCK)	
		1	**180-9339**	8	PIN-CONNECTOR (14-GA TO 18-GA)	
		1	**180-9340**	9	SOCKET-CONNECTOR (14-GA TO 18-GA)	
	3	1	**3S-2093**	5	STRAP-CABLE	
	4	1	**6K-0806**	2	STRAP-CABLE	

E-ORDER BY THE CENTIMETER

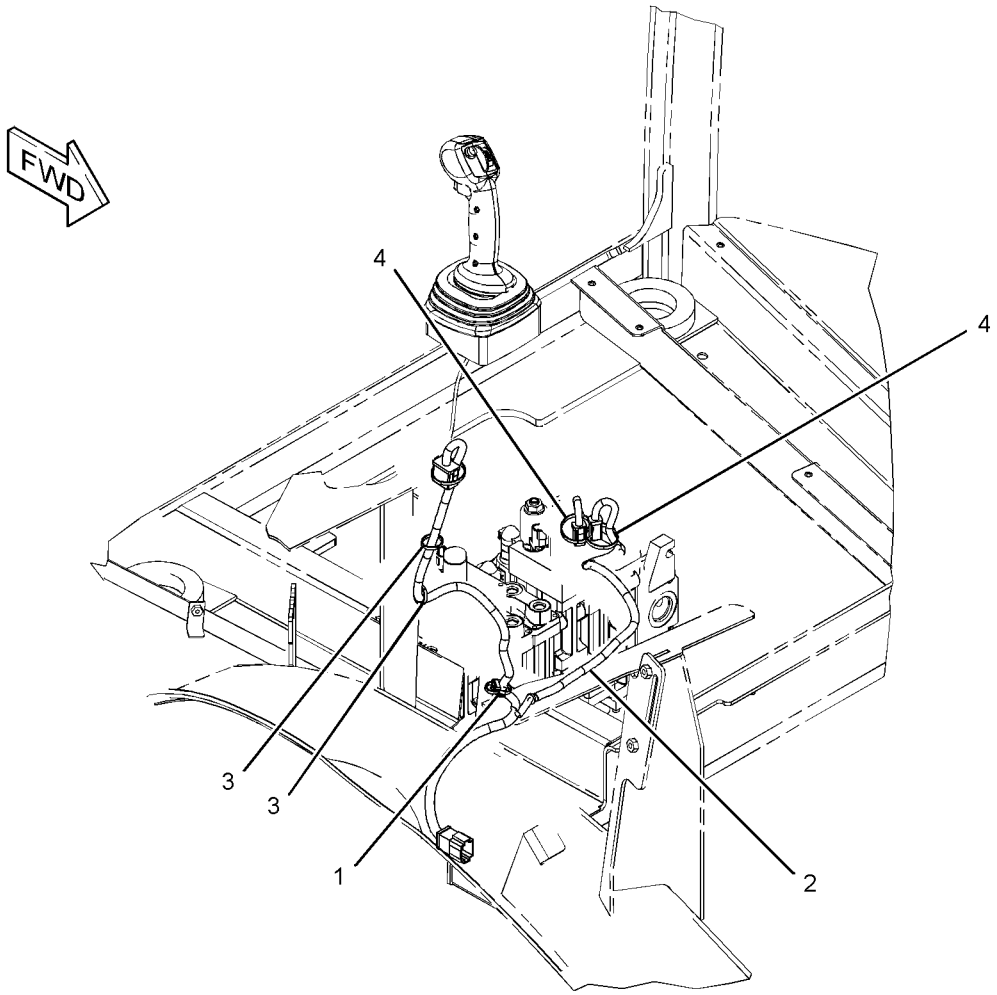

GRAPHIC #1 **<END>** g01366249

267-5635 WIRING GP-CONTROL–JOYSTICK, LH

S/N: HLS1-99999

PART OF 269-2146 VALVE AR-BANK 6, 269-2147 VALVE AR-BANK 7

AN ATTACHMENT

SMCS-1408 **i03548065**

NOTE	REF NO	GRAPHIC REF	PART NUMBER	QTY	PART NAME 1 2 3 4 5 6 (PRODUCT LEVEL)	SEE PAGE
	1	1	**206-2423**	1	SADDLE	
	2	1	**225-7988**	1	HARNESS AS-AUXILIARY (HORN)	
		1	**102-8806**	1	KIT-RECEPTACLE (8-PIN)	
					(INCLUDES RECEPTACLE AS & WEDGE-RECEPTACLE LOCK)	
		1	**8T-8737**	16	PLUG-SEAL	
		1	**155-2255**	1	KIT-CONNECTING PLUG (12-PIN)	
					(INCLUDES PLUG AS-CONNECTOR & WEDGE-PLUG LOCK)	
		1	**180-9339**	2	PIN-CONNECTOR (14-GA TO 18-GA)	
		1	**180-9340**	2	SOCKET-CONNECTOR (14-GA TO 18-GA)	
	3	1	**3S-2093**	5	STRAP-CABLE	

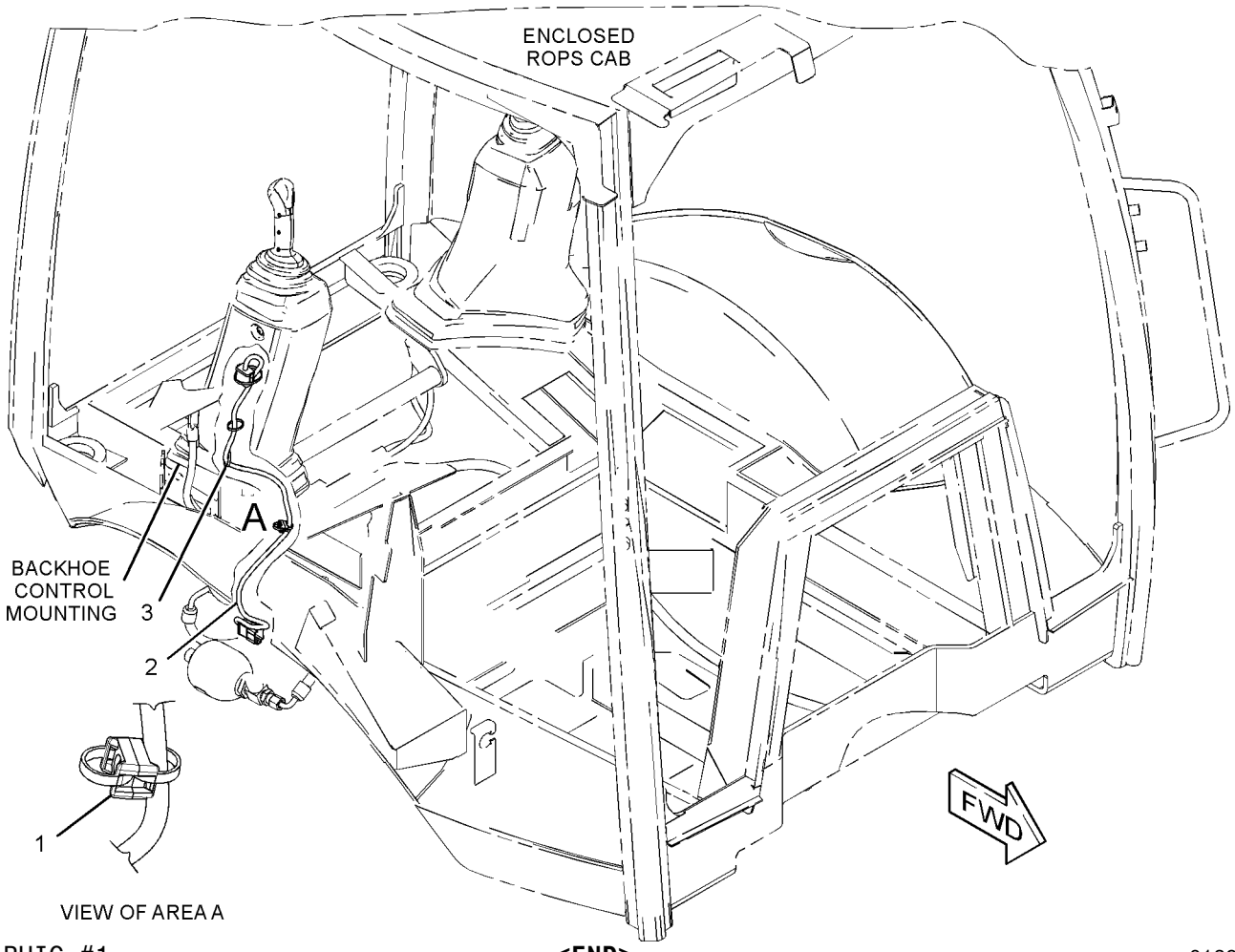

GRAPHIC #1 **<END>** g01394927

211-4248 WIRING GP-ENGINE

S/N: HLS1-99999
PART OF 213-9273 COMMON AR
TYPE 1

SMCS-1408 **i02901375**

NOTE	REF NO	GRAPHIC REF	PART NUMBER	QTY	PART NAME 1 2 3 4 5 6 (PRODUCT LEVEL)	SEE PAGE
	1	1	**3J-4818**	1	LOCKWASHER	
	2	1	**7K-1181**	16	STRAP-CABLE	
	3	1	**7Y-3883**	1	CABLE AS	
		1	**1S-7251**	2	TERMINAL-CABLE (00-GA, 1/2-IN BOLT)	
E		1	**5P-0747**		CABLE (00-GA, BLACK) (40-CM)	
	4	1	**189-3158**	4	SUPPRESSOR-ARC	
	5	1	**164-9425**	1	HORN AS (24-VOLT, LOW TONE)	
	6	1	**235-8747**	1	SWITCH-TEMPERATURE (ENGINE COOLANT)	
	7	1	**238-9397**	1	RESISTOR AS	
	8	1	**244-3106**	1	SENDER AS-TEMPERATURE (ENGINE COOLANT)	
		1	**102-8802**	1	KIT-RECEPTACLE (2-PIN)	
					(INCLUDES RECEPTACLE AS & WEDGE)	
		1	**186-3735**	2	PIN-CONNECTOR (16-GA TO 18-GA)	
	9	1	**246-8051**	1	HARNESS AS-ENGINE	
	10	1	**251-9570**	1	PLATE AS	
	11	1	**274-3774**	2	CAP-CONNECTOR	
	12	1	**115-1615**	1	RELAY AS (12-VOLT) (FUEL PUMP)	
	12A	1	**115-1615**	1	RELAY AS (12-VOLT) (START)	
	12B	1	**115-1615**	1	RELAY AS (12-VOLT) (STARTING AID)	
	13	1	**199-9751**	1	SEAL-O-RING	
	14	1	**3S-2093**	24	STRAP-CABLE	
	15	1	**4P-7581**	9	CLIP	
	16	1	**4P-8134**	7	CLIP	
M	17	1	**5C-2874**	2	NUT (M5X0.8-THD)	
	18	1	**8F-1434**	2	LOCKWASHER	
	19	1	**8F-3590**	1	LOCKWASHER	
	20	1	**8T-0328**	2	WASHER-HARD (5.5X10X1-MM THK)	
	21	1	**8T-4121**	10	WASHER-HARD (11X21X2.5-MM THK)	
M	22	1	**8T-4136**	2	BOLT (M10X1.5X25-MM)	
M	23	1	**8T-4137**	7	BOLT (M10X1.5X20-MM)	
M	24	1	**8T-4139**	1	BOLT (M12X1.75X30-MM)	
M	25	1	**8T-4171**	3	BOLT (M6X1X12-MM)	
M	26	1	**8T-4189**	3	BOLT (M8X1.25X20-MM)	
	27	1	**8T-4205**	3	WASHER-HARD (7.2X14.5X2-MM THK)	
	28	1	**8T-4223**	2	WASHER-HARD (13.5X25.5X3-MM THK)	
	29	1	**8T-4224**	4	WASHER-HARD (8.8X16X2-MM THK)	
M	30	1	**8T-5093**	1	BOLT-LOCKING (M8X1.25X25-MM)	

E-ORDER BY THE CENTIMETER
M-METRIC PART

211-4248 **WIRING GP-ENGINE** *(contd.)* **i02901375**

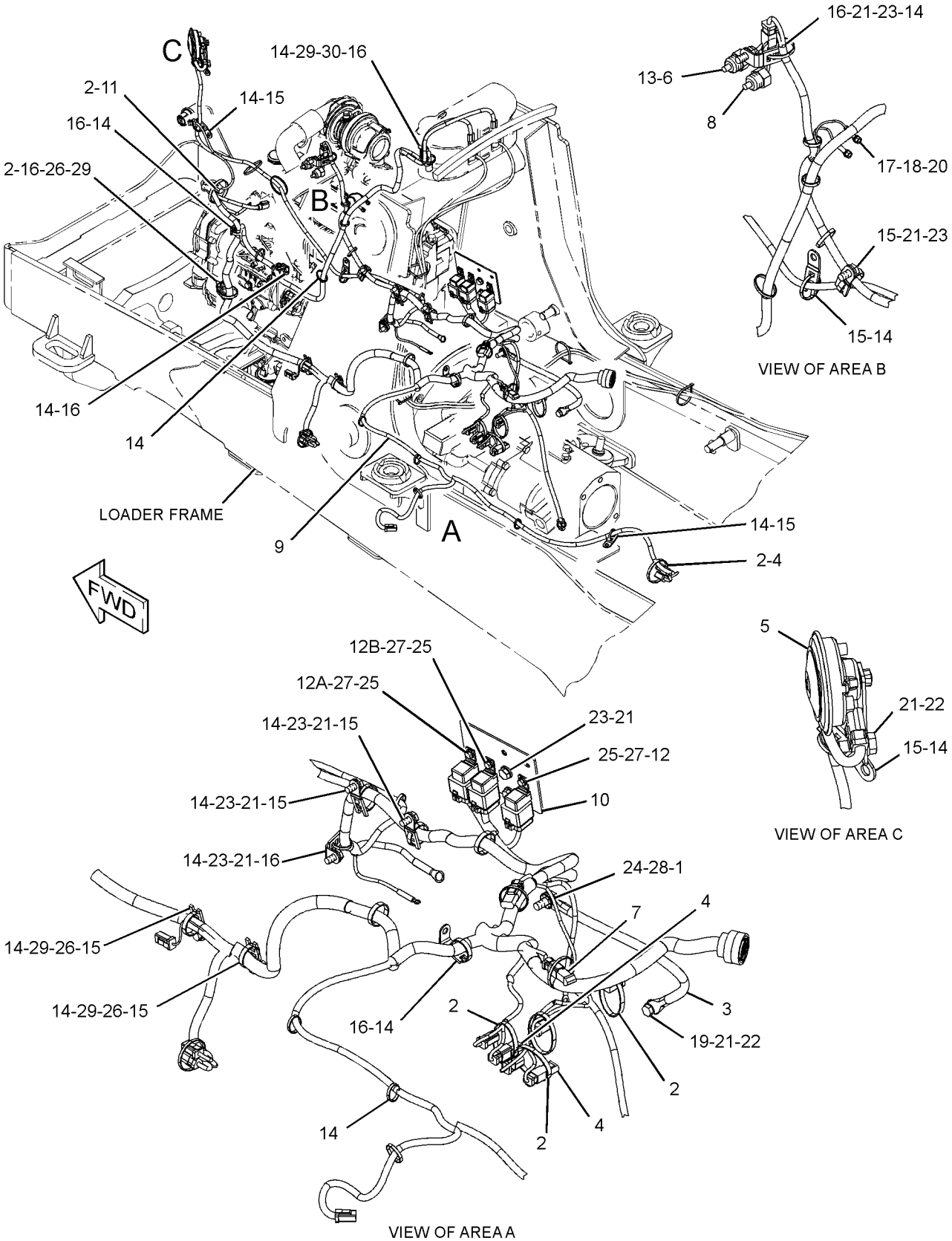

GRAPHIC #1

<END>

g01526756

211-4248 WIRING GP-ENGINE

S/N: HLS1-99999
PART OF 213-9273 COMMON AR
TYPE 2

SMCS-1408 **i03384084**

NOTE	REF NO	GRAPHIC REF	PART NUMBER	QTY	PART NAME 1 2 3 4 5 6 (PRODUCT LEVEL)	SEE PAGE
C	1	1	**7K-1181**	14	STRAP-CABLE	
	2	1	**7Y-3883**	1	CABLE AS	
		1	**1S-7251**	2	TERMINAL-CABLE (00-GA, 1/2-IN BOLT)	
E		1	**5P-0747**		CABLE (00-GA, BLACK) (40-CM)	
	3	1	**164-9425**	1	HORN AS (24-VOLT, LOW TONE)	
C	4	1	**189-3158**	1	SUPPRESSOR-ARC	
	5	1	**235-8747**	1	SWITCH-TEMPERATURE (ENGINE COOLANT)	
	6	1	**244-3106**	1	SENDER AS-TEMPERATURE (ENGINE COOLANT)	
		1	**102-8802**	1	KIT-RECEPTACLE (2-PIN)	
					(INCLUDES RECEPTACLE AS & WEDGE)	
		1	**186-3735**	2	PIN-CONNECTOR (16-GA TO 18-GA)	
	7	1	**246-8051**	1	HARNESS AS-ENGINE	
	8	1	**251-9570**	1	PLATE AS	
	9	1	**115-1615**	1	RELAY AS (12-VOLT) (FUEL PUMP)	
	9A	1	**115-1615**	1	RELAY AS (12-VOLT) (START)	
	9B	1	**115-1615**	1	RELAY AS (12-VOLT) (STARTING AID)	
	10	1	**199-9751**	1	SEAL-O-RING	
	11	1	**3J-4818**	1	LOCKWASHER	
C	12	1	**3S-2093**	29	STRAP-CABLE	
	13	1	**4P-7581**	9	CLIP	
	14	1	**4P-8134**	7	CLIP	
M	15	1	**5C-2874**	2	NUT (M5X0.8-THD)	
	16	1	**8F-1434**	2	LOCKWASHER	
	17	1	**8F-3590**	1	LOCKWASHER	
	18	1	**8T-0328**	2	WASHER-HARD (5.5X10X1-MM THK)	
	19	1	**8T-4121**	10	WASHER-HARD (11X21X2.5-MM THK)	
M	20	1	**8T-4136**	2	BOLT (M10X1.5X25-MM)	
M	21	1	**8T-4137**	7	BOLT (M10X1.5X20-MM)	
M	22	1	**8T-4139**	1	BOLT (M12X1.75X30-MM)	
M	23	1	**8T-4171**	3	BOLT (M6X1X12-MM)	
M	24	1	**8T-4189**	3	BOLT (M8X1.25X20-MM)	
	25	1	**8T-4205**	3	WASHER-HARD (7.2X14.5X2-MM THK)	
	26	1	**8T-4223**	2	WASHER-HARD (13.5X25.5X3-MM THK)	
	27	1	**8T-4224**	4	WASHER-HARD (8.8X16X2-MM THK)	
M	28	1	**8T-5093**	1	BOLT-LOCKING (M8X1.25X25-MM)	

C-CHANGE FROM PREVIOUS TYPE
E-ORDER BY THE CENTIMETER
M-METRIC PART

211-4248 **WIRING GP-ENGINE** *(contd.)* **i03384084**

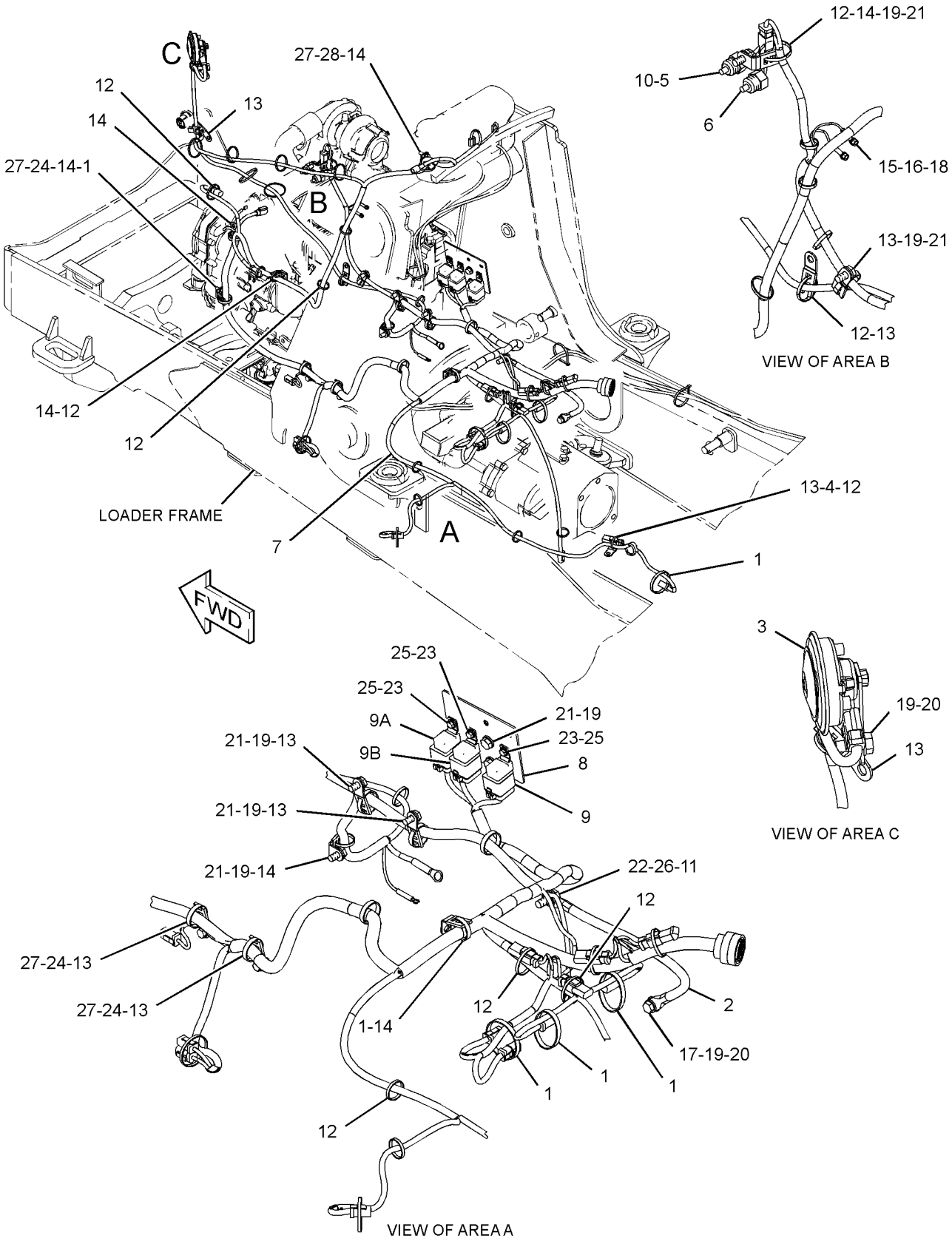

GRAPHIC #1

<END>

g01820073

263-9483 WIRING GP-ENGINE

S/N: HLS1-99999
PART OF 269-2126, 269-2127 CAB AR-ENCLOSED ROPS
AN ATTACHMENT

SMCS-1408 **i03514614**

NOTE	REF NO	GRAPHIC REF	PART NUMBER	QTY	PART NAME 1 2 3 4 5 6 (PRODUCT LEVEL)	SEE PAGE
	1	1	**134-0404**	1	SWITCH AS-PRESSURE (HYDRAULIC OIL FILTER BYPASS)	
	2	1	**250-1448**	1	CONNECTOR	
	3	1	**263-9484**	1	HARNESS AS-SENSOR (PLATFORM)	
	4	1	**264-4297**	1	SENSOR GP-TEMPERATURE (HYDRAULIC OIL)	
		1	**137-6645**	1	PAD	
	5	1	**273-3284**	1	INDICATOR AS (HYD OIL TEMP, FILTER)	
		1	**111-7899**	1	GASKET	
	6	1	**3J-1907**	1	SEAL-O-RING	
	7	1	**3K-0360**	1	SEAL-O-RING	
	8	1	**3S-2093**	4	STRAP-CABLE	
	9	1	**4P-7581**	1	CLIP	

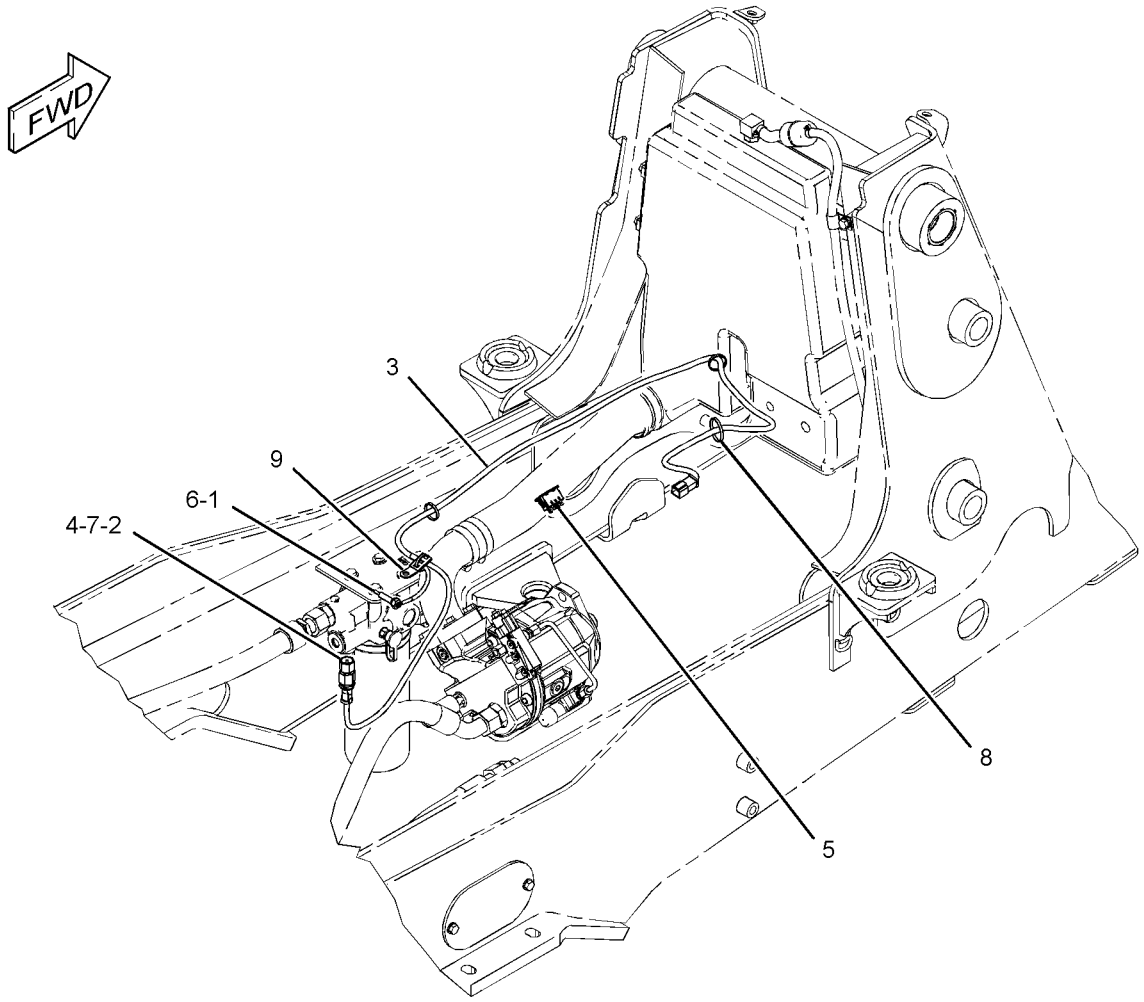

GRAPHIC #1 **<END>** g01228147

211-4260 WIRING GP-EXTENDABLE STICK

S/N: HLS1-99999
PART OF 271-1402 STICK GP-EXTENDABLE
AN ATTACHMENT

SMCS-1408 **i03375360**

NOTE	REF NO	GRAPHIC REF	PART NUMBER	QTY	PART NAME 1 2 3 4 5 6 (PRODUCT LEVEL)	SEE PAGE
	1	1	**290-6806**	1	HARNESS AS-SENSOR (EXTENDABLE STICK)	
	2	1	**3S-2093**	2	STRAP-CABLE	

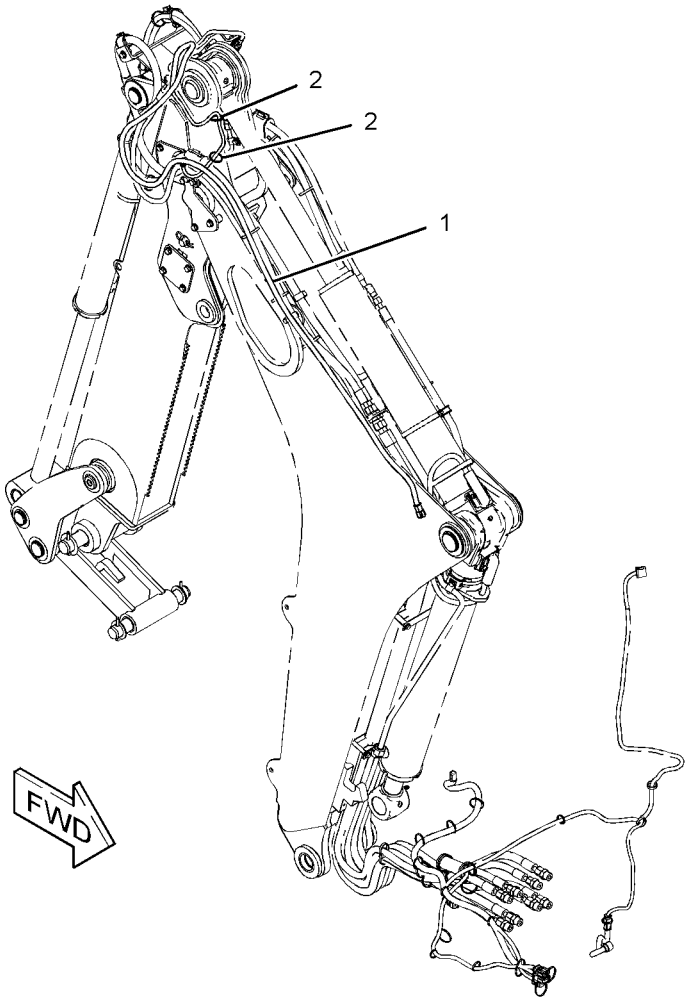

GRAPHIC #1 **<END>** g01208417

246-8042 WIRING GP-GRADE CONTROL

S/N: HLS1-7384

PART OF 291-9205 BACKHOE AR-EXTENDABLE STICK, 291-9204 BACKHOE AR-STANDARD STICK

AN ATTACHMENT

SMCS-1408 **i03045121**

NOTE	REF NO	GRAPHIC REF	PART NUMBER	QTY	PART NAME 1 2 3 4 5 6 (PRODUCT LEVEL)	SEE PAGE
	1	1	**5P-0599**	1	CLAMP-BAND	
	2	1	**5P-3860**	2	CLAMP-HOSE	
	3	1	**9R-2053**	3	BLOCK	
B	4	1	**177-2215**	11	STRAP-DUAL CLAMP	
	5	1	**268-7761**	1	HARNESS AS-PLATFORM (DISPLAY)	
	6	1	**1S-6420**	1	CLIP	
	7	1	**3S-2093**	24	STRAP-CABLE	
	9	1	**4P-7581**	1	CLIP	
	10	1	**7K-1181**	12	STRAP-CABLE	
	12	1	**232-1792**	1	HORN	
	13	1	**290-6804**	1	HARNESS AS-SENSOR (SWING)	
	14	1	**290-6805**	1	HARNESS AS-SENSOR (BOOM, STICK, BUCKET)	
	15	1	**305-3103**	1	GUARD	
	16	1	**305-3104**	2	SLEEVE-ABRASION	
B	17	1	**305-3102**	6	GUARD	

B-USE AS REQUIRED

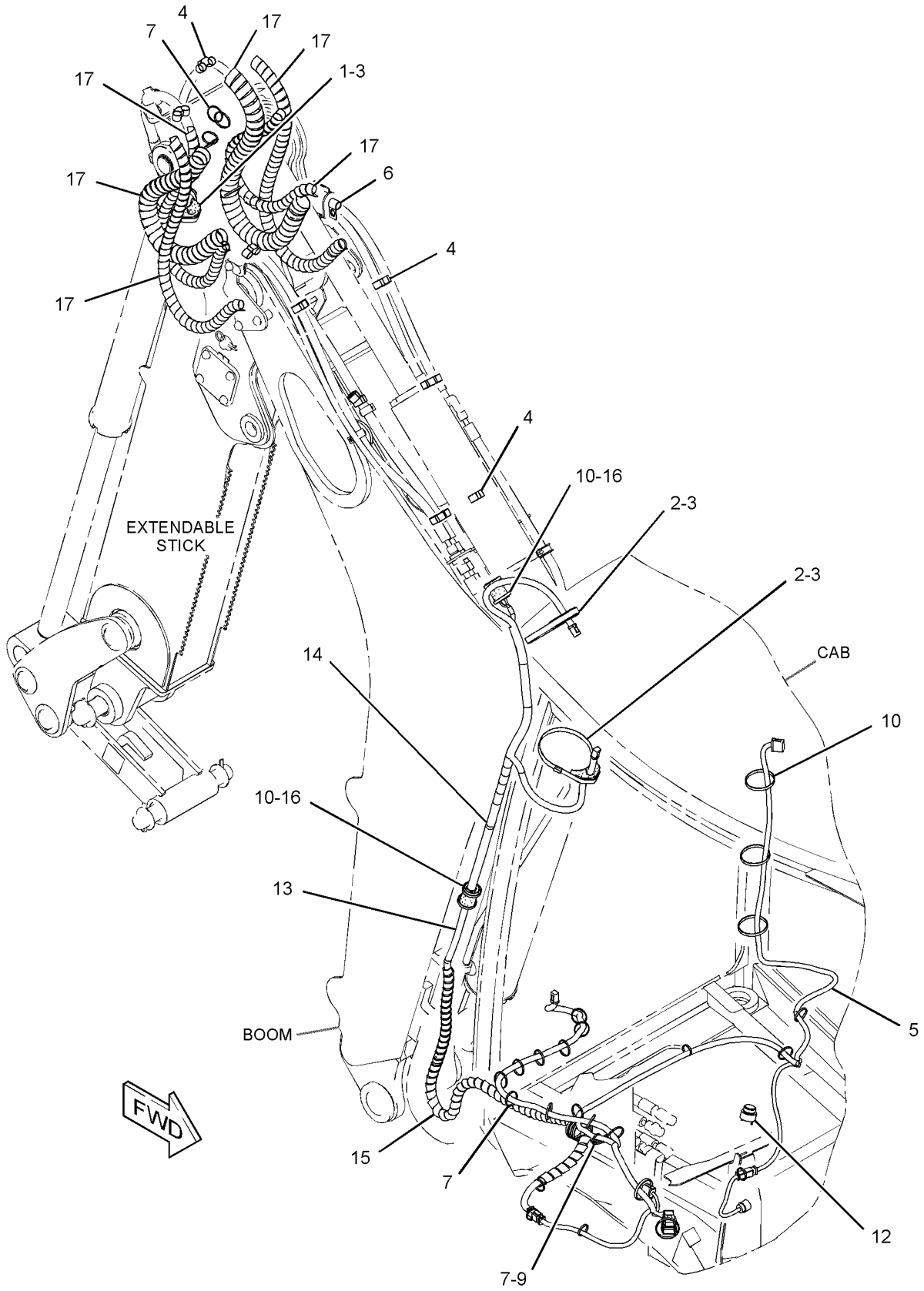

GRAPHIC #1 **<END>** g01565293

246-8042 WIRING GP-GRADE CONTROL

S/N: HLS7385-99999

PART OF 291-9205 BACKHOE AR-EXTENDABLE STICK, 291-9204 BACKHOE AR-STANDARD STICK

AN ATTACHMENT

SMCS-1408 **i03097760**

NOTE	REF NO	GRAPHIC REF	PART NUMBER	QTY	PART NAME 1 2 3 4 5 6 (PRODUCT LEVEL)	SEE PAGE
	1	1	**5P-0599**	1	CLAMP-BAND	
	2	1	**5P-3860**	2	CLAMP-HOSE	
	3	1	**9R-2053**	3	BLOCK	
B	4	1	**177-2215**	11	STRAP-DUAL CLAMP	
	5	1	**268-7761**	1	HARNESS AS-PLATFORM (DISPLAY)	
	6	1	**1S-6420**	1	CLIP	
	7	1	**3S-2093**	24	STRAP-CABLE	
	9	1	**4P-7581**	1	CLIP	
	10	1	**7K-1181**	12	STRAP-CABLE	
	12	1	**232-1792**	1	HORN	
	13	1	**290-6804**	1	HARNESS AS-SENSOR (SWING)	
	14	1	**290-6805**	1	HARNESS AS-SENSOR (BOOM, STICK, BUCKET)	
	16	1	**305-3104**	2	SLEEVE-ABRASION	
B	17	1	**305-3102**	6	GUARD	
C	18	1	**212-3416**	3	SCREW-PAN HEAD (8-16XO.5-IN)	
C	19	1	**206-1649**	1	BRACKET	

B-USE AS REQUIRED
C-CHANGE FROM PREVIOUS TYPE

246-8042 **WIRING GP-GRADE CONTROL** *(contd.)* **i03097760**

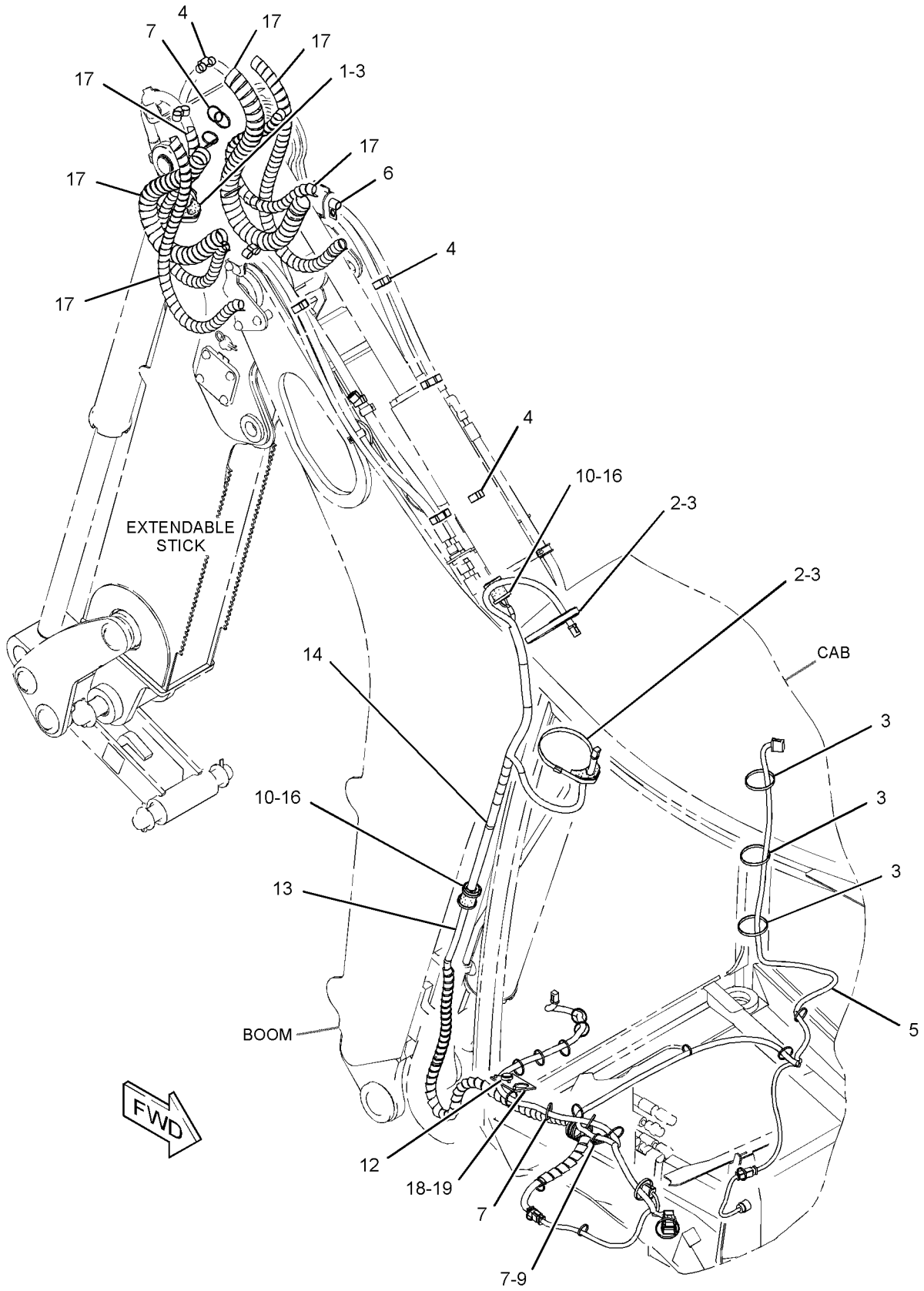

GRAPHIC #1 **<END>** g01584115

211-4269 WIRING GP-HEATER

S/N: HLS1-99999
PART OF 269-2125, 269-2126 CAB AR-ENCLOSED ROPS
AN ATTACHMENT

SMCS-1408, 7304 **i03530340**

NOTE	REF NO	GRAPHIC REF	PART NUMBER	QTY	PART NAME 1 2 3 4 5 6 (PRODUCT LEVEL)	SEE PAGE
	1	1	**213-6055**	1	HARNESS AS-HEATER & AIR COND (PLATFORM)	
	2	1	**214-4695**	1	SWITCH AS-ROCKER (BLOWER FAN SPEED)	
		1	**111-7899**	1	GASKET	
	3	1	**214-4703**	1	SWITCH AS-ROCKER (HEATER)	
		1	**111-7899**	1	GASKET	
	4	1	**275-0570**	1	BAR-BUS	
Y	5	1	**276-7287**	1	RELAY GP (12-VOLT) (POWER DISTRIBUTION)	130
	6	1	**115-1615**	1	RELAY AS (12-VOLT) (AIR CONDITIONER)	
	7	1	**3S-2093**	8	STRAP-CABLE	
M	8	1	**5C-2890**	1	NUT (M6X1-THD)	
M	9	1	**5C-7261**	1	NUT (M8X1.25-THD)	
	10	1	**197-5107**	1	SCREW-TRUSS HEAD (M6X1X60-MM)	
	11	1	**8T-4205**	2	WASHER-HARD (7.2X14.5X2-MM THK)	
	12	1	**8T-4224**	1	WASHER-HARD (8.8X16X2-MM THK)	
	13	1	**8T-8799**	1	BOOT	
M	14	1	**8T-4171**	1	BOLT (M6X1X12-MM)	

M-METRIC PART
Y-SEPARATE ILLUSTRATION

211-4269 **WIRING GP-HEATER** *(contd.)* **i03530340**

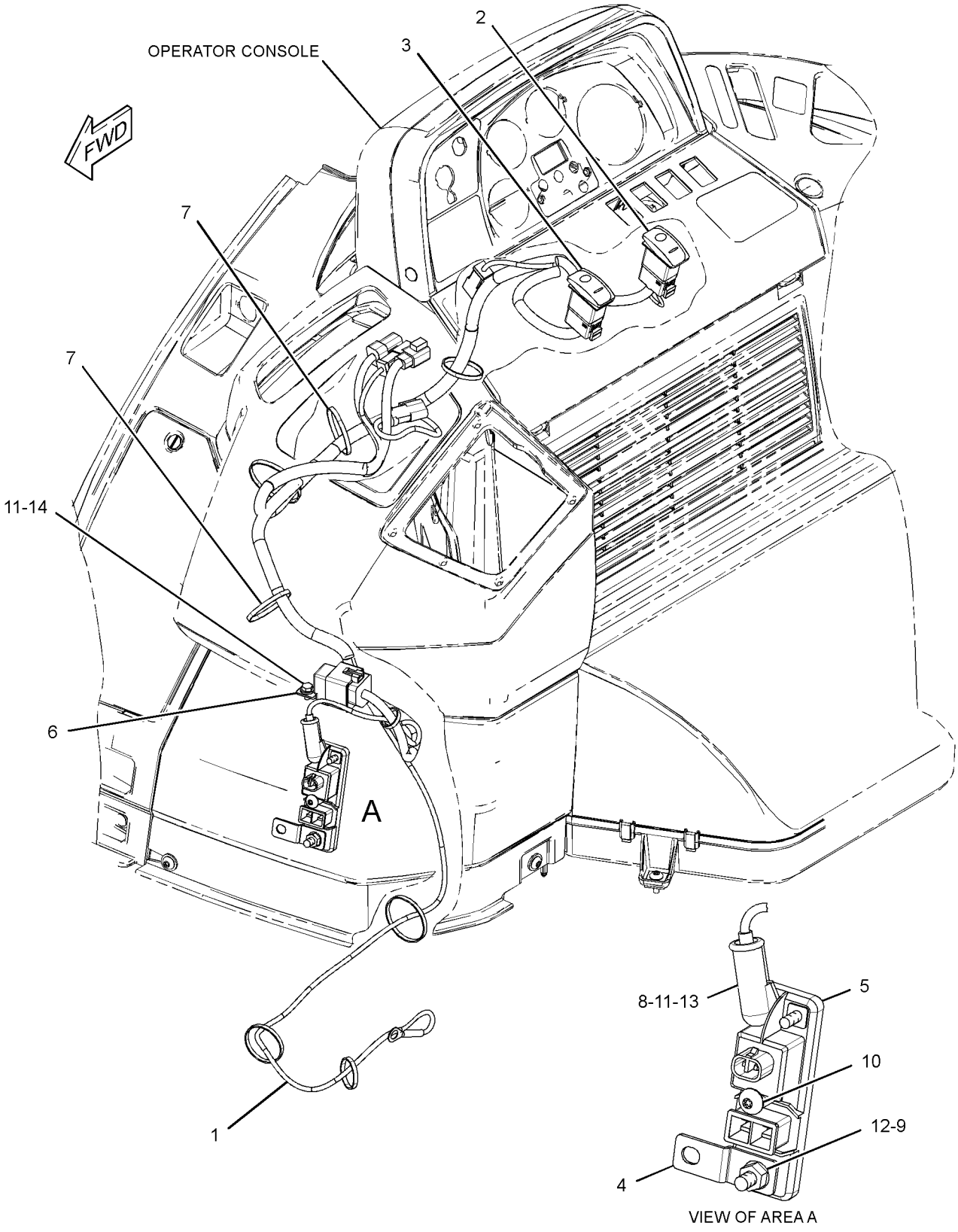

GRAPHIC #1 **<END>** g01442009

211-4262 WIRING GP-KICKOUT & POSITIONER

S/N: HLS1-99999
PART OF 213-9300 LOADER AR
TYPE 1

SMCS-5109, 5112, 5734 **i03375791**

NOTE	REF NO	GRAPHIC REF	PART NUMBER	QTY	PART NAME 1 2 3 4 5 6 (PRODUCT LEVEL)	SEE PAGE
	1	1	**118-7790**	1	BRACKET AS	
	2	1	**206-1486**	1	SWITCH AS-ROLLER (KICKOUT, POSITIONER)	
		1	**2H-3922**	1	LOCKWASHER	
		1	**6V-8363**	2	SCREW (10-32X0.312-IN)	
		1	**6V-8370**	1	NUT-HEX (3/4-32-THD)	
		1	**8F-1434**	2	LOCKWASHER	
		1	**9X-0199**	1	BOOT-SWITCH	
	3	1	**233-7977**	1	HARNESS AS-WIRING (KICKOUT, POSITIONER)	
	4	1	**3S-2093**	31	STRAP-CABLE	
M	5	1	**8T-4138**	2	BOLT (M6X1X20-MM)	
	6	1	**8T-4205**	2	WASHER-HARD (7.2X14.5X2-MM THK)	
	7	1	**225-7992**	1	HARNESS AS-WIRING (KICKOUT, POSITIONER)	
	8	1	**9X-7344**	1	GROMMET	
G	9	1	**160-2245**		SLEEVE-ABRASION (12-IN)	

G-ORDER BY THE INCH
M-METRIC PART

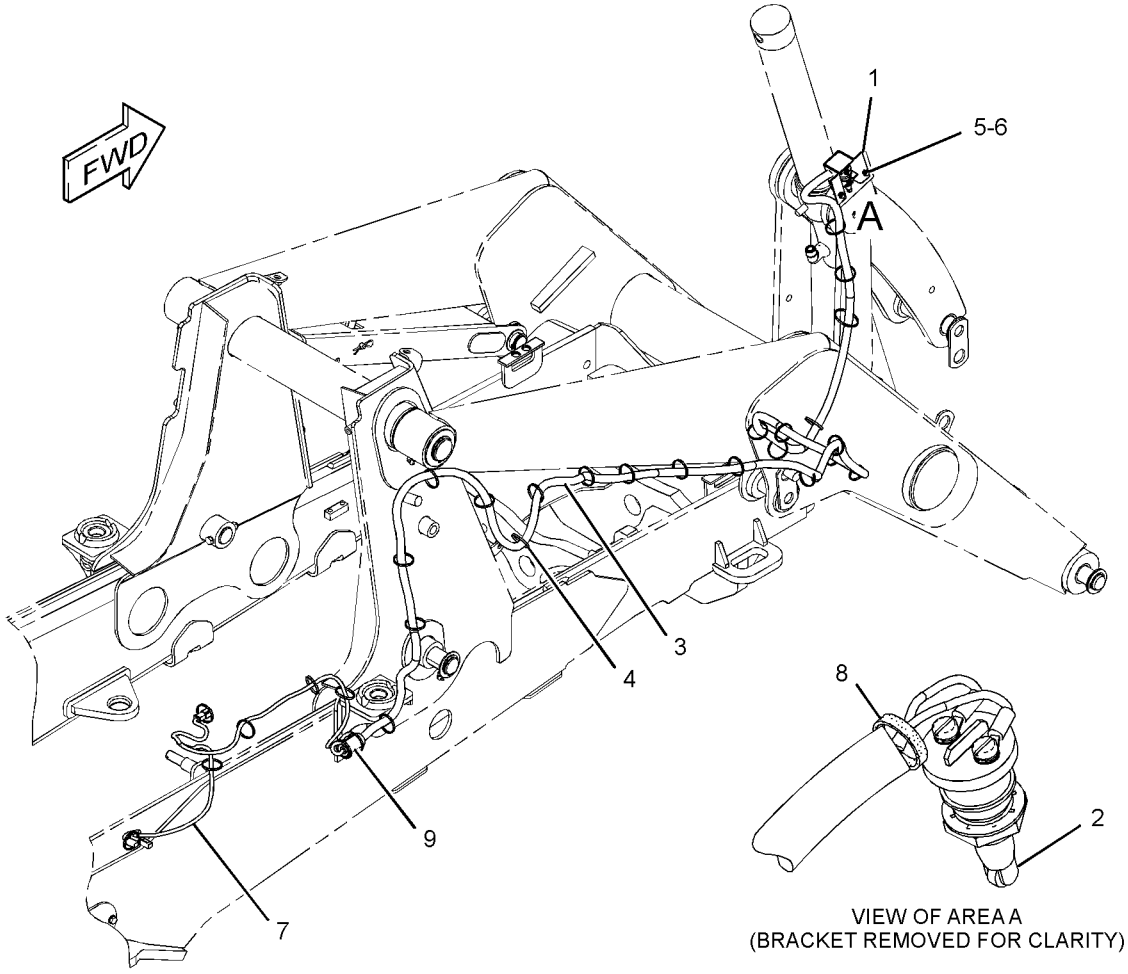

GRAPHIC #1 **<END>** g01233398

211-4262 WIRING GP-KICKOUT & POSITIONER

S/N: HLS1-99999
PART OF 213-9300 LOADER AR
TYPE 2

SMCS-5109, 5112, 5734 **i03375880**

NOTE	REF NO	GRAPHIC REF	PART NUMBER	QTY	PART NAME 1 2 3 4 5 6 (PRODUCT LEVEL)	SEE PAGE
	1	1	**118-7790**	1	BRACKET AS	
	2	1	**206-1486**	1	SWITCH AS-ROLLER (KICKOUT, POSITIONER)	
		1	**2H-3922**	1	LOCKWASHER	
		1	**6V-8363**	2	SCREW (10-32X0.312-IN)	
		1	**6V-8370**	1	NUT-HEX (3/4-32-THD)	
		1	**8F-1434**	2	LOCKWASHER	
		1	**9X-0199**	1	BOOT-SWITCH	
	3	1	**233-7977**	1	HARNESS AS-WIRING (KICKOUT, POSITIONER)	
	4	1	**3S-2093**	31	STRAP-CABLE	
M	5	1	**8T-4138**	2	BOLT (M6X1X20-MM)	
	6	1	**8T-4205**	2	WASHER-HARD (7.2X14.5X2-MM THK)	
	7	1	**225-7992**	1	HARNESS AS-WIRING (KICKOUT, POSITIONER)	
	8	1	**9X-7344**	1	GROMMET	
CG	9	1	**160-2246**		SLEEVE-ABRASION (12-IN)	

C-CHANGE FROM PREVIOUS TYPE
G-ORDER BY THE INCH
M-METRIC PART

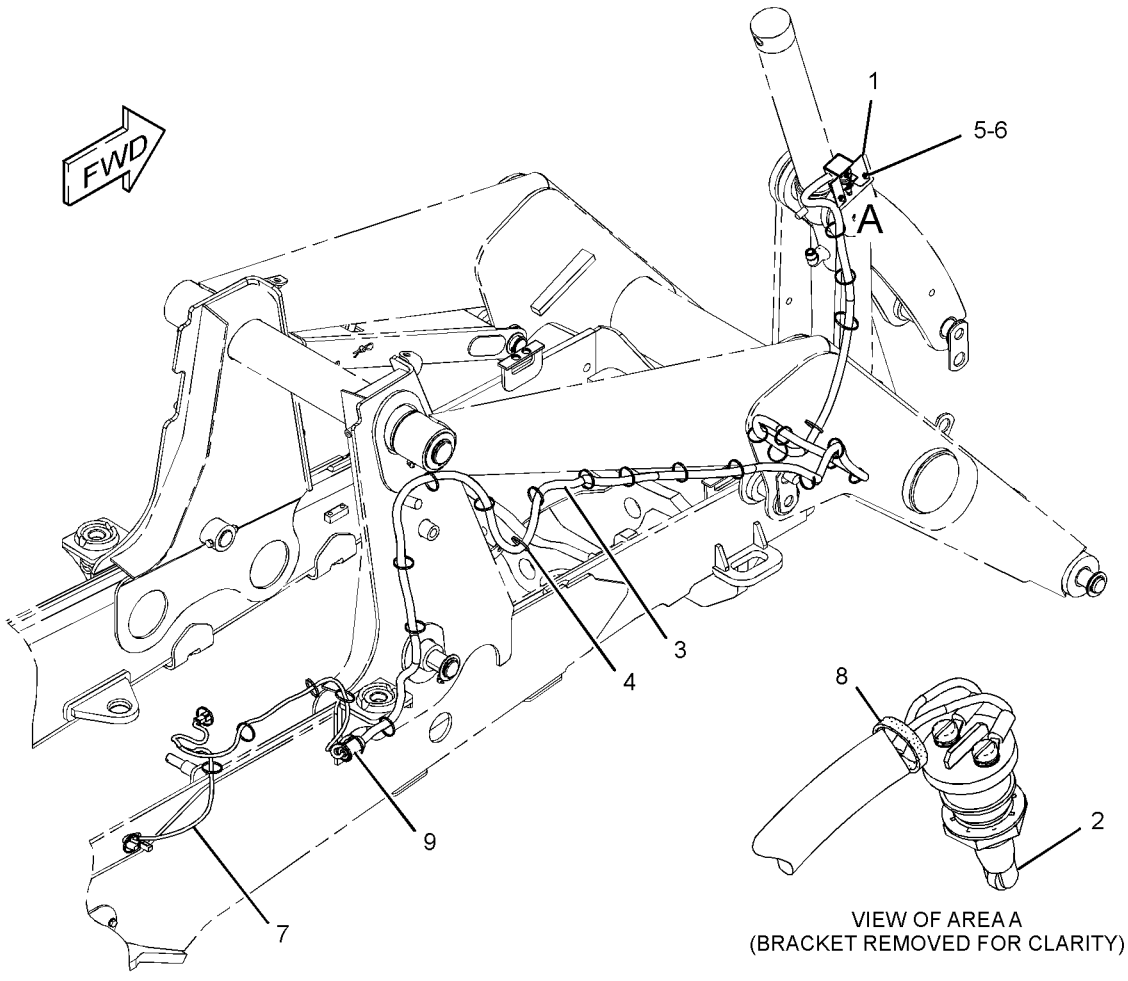

VIEW OF AREA A
(BRACKET REMOVED FOR CLARITY)

GRAPHIC #1 **<END>** g01233398

211-4262 WIRING GP-KICKOUT & POSITIONER

S/N: HLS1-99999
PART OF 213-9300 LOADER AR
TYPE 3

SMCS-5109, 5112, 5734 **i03208761**

NOTE	REF NO	GRAPHIC REF	PART NUMBER	QTY	PART NAME 1 2 3 4 5 6 (PRODUCT LEVEL)	SEE PAGE
	1	1	**118-7790**	1	BRACKET AS	
	2	1	**206-1486**	1	SWITCH AS-ROLLER (KICKOUT, POSITIONER)	
		1	**2H-3922**	1	LOCKWASHER	
		1	**6V-8363**	2	SCREW (10-32X0.312-IN)	
		1	**6V-8370**	1	NUT-HEX (3/4-32-THD)	
		1	**8F-1434**	2	LOCKWASHER	
		1	**9X-0199**	1	BOOT-SWITCH	
	3	1	**233-7977**	1	HARNESS AS-WIRING (KICKOUT, POSITIONER)	
	4	1	**3S-2093**	35	STRAP-CABLE	
M	5	1	**8T-4138**	2	BOLT (M6X1X20-MM)	
	6	1	**8T-4205**	2	WASHER-HARD (7.2X14.5X2-MM THK)	
C	7	1	**290-6801**	1	HARNESS AS-WIRING	
	8	1	**9X-7344**	1	GROMMET	
G	9	1	**160-2246**		SLEEVE-ABRASION (11.9-IN)	
C	10	1	**7K-1181**	1	STRAP-CABLE	
	11	1	**6K-0806**	2	STRAP-CABLE	

C-CHANGE FROM PREVIOUS TYPE
G-ORDER BY THE INCH
M-METRIC PART

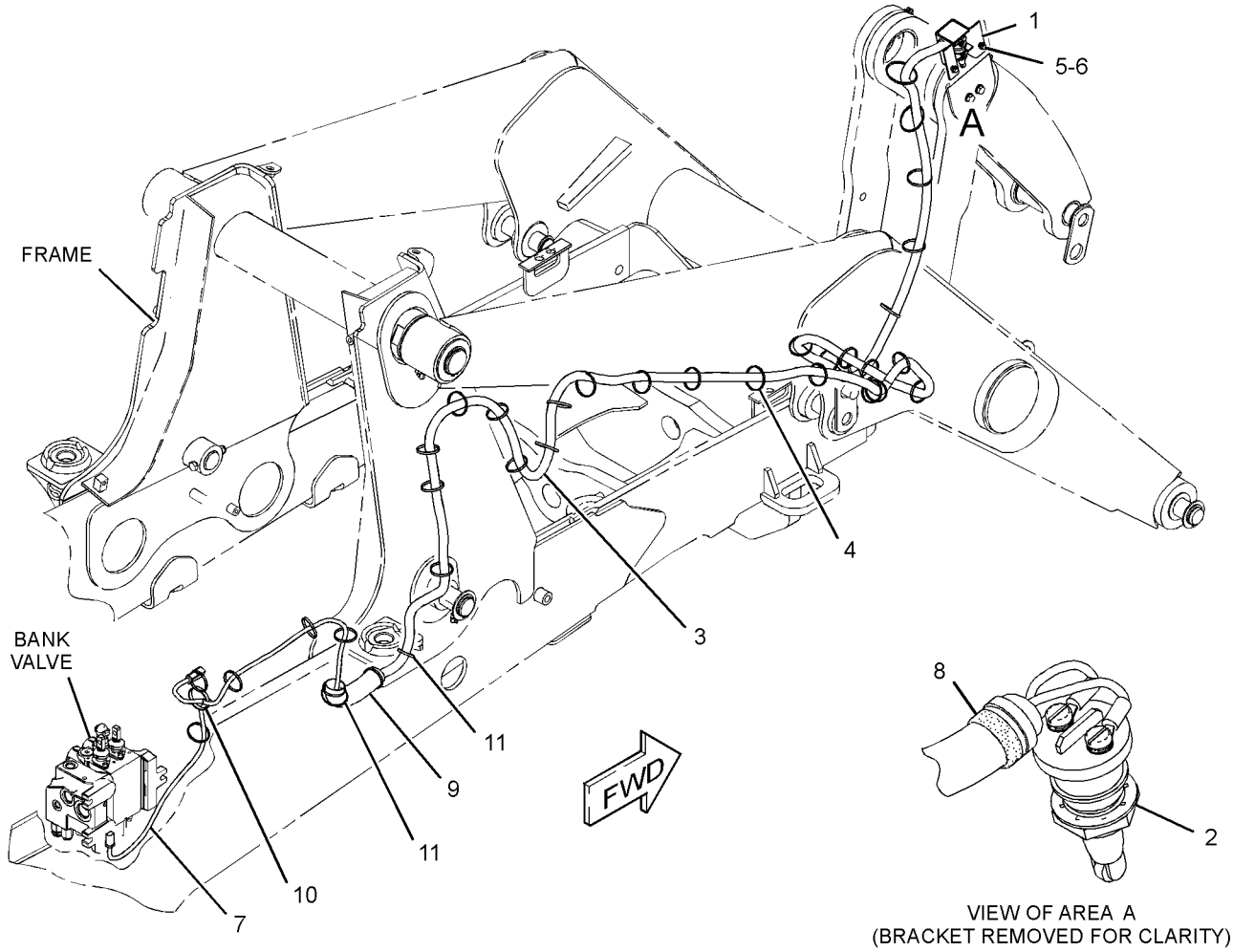

GRAPHIC #1 **<END>** g01640362

ELECTRICAL AND STARTING SYSTEM

211-4240 WIRING GP-PLATFORM

S/N: HLS1-4272

PART OF 269-2125, 269-2126, 269-2127 CAB AR-ENCLOSED ROPS, 269-2123, 269-2124 CANOPY AR-OPEN ROPS

AN ATTACHMENT

SMCS-1408 **i03548100**

NOTE	REF NO	GRAPHIC REF	PART NUMBER	QTY	PART NAME 1 2 3 4 5 6 (PRODUCT LEVEL)	SEE PAGE
E	1	2	**3E-8299**		SEAL (9-CM)	
E	1A	1	**3E-8299**		SEAL (3-CM EACH)	
E	2	1	**103-2543**		SEAL (1-CM)	
	3	1	**4I-3038**	8	WASHER (3.3X8X0.5-MM THK)	
	4	2	**6I-1418**	4	SPACER (8.2X12.7X28.7-MM THK)	
	5	1	**7G-1060**	1	STRAP AS-GROUND	
	6	2	**7K-1181**	34	STRAP-CABLE	
	7	2	**7T-4848**	1	FLASHER AS (12-VOLT)	
	8	1	**8T-8799**	3	BOOT	
	9	2	**8T-9655**	8	MOUNT-ISOLATION	
	10	1	**106-8704**	1	SUPPRESSOR AS-ARC	
	10A	1	**106-8704**	1	SUPPRESSOR AS-ARC	
	10B	1	**106-8704**	1	SUPPRESSOR AS-ARC	
					(EACH SUPPRESSOR AS INCLUDES)	
		1	**102-8802**	1	KIT-RECEPTACLE (2-PIN)	
					(INCLUDES RECEPTACLE AS & WEDGE)	
		1	**186-3735**	2	PIN-CONNECTOR (16-GA TO 18-GA)	
	11	1	**146-9439**	1	RELAY AS (12-VOLT) (IMPLEMENT DISABLE)	
	11A	1	**146-9439**	1	RELAY AS (12-VOLT) (HORN)	
	11B	1	**146-9439**	1	RELAY AS (12-VOLT) (DIFFERENTIAL LOCK)	
	11C	1	**146-9439**	1	RELAY AS (12-VOLT) (BACKUP ALARM)	
	11D	1	**146-9439**	1	RELAY AS (12-VOLT) (POSITION LAMP)	
	12	2	**178-7539**	1	RECEPTACLE AS (POWER SUPPLY)	
	13	1,2	**179-6401**	5	SCREW-PAN HEAD (6-32X0.5-IN)	
	14	1	**201-1024**	2	BRACKET	
	15	1	**206-1345**	3	STRAP-CABLE	
	16	1	**206-1718**	1	BRACKET AS	
	17	2	**212-0862**	3	CLAMP-CABLE	
	18	2	**214-4694**	1	SWITCH AS-ROCKER (MODE SELECT)	
		1	**111-7899**	1	GASKET	
	19	1	**214-4702**	1	SWITCH AS-ROCKER (HAZARD WARNING LIGHTS)	
		1	**111-7899**	1	GASKET	
	20	1	**214-4717**	1	INDICATOR AS (TURN SIGNAL LH, PARKING BRAKE)	
		1	**111-7899**	1	GASKET	
	21	1	**214-4723**	1	INDICATOR AS (HIGH BEAM, TURN SIGNAL RH)	
		1	**111-7899**	1	GASKET	
	22	2	**216-9069**	1	BRACKET AS	
M		1	**6V-9632**	1	NUT-WELD (M6X1-THD)	
	23	1	**225-7970**	1	BRACKET AS	
M		1	**6V-9632**	1	NUT-WELD (M6X1-THD)	
	24	2	**225-7997**	1	HARNESS AS-REAR	
		2	**180-9339**	8	PIN-CONNECTOR (14-GA TO 18-GA)	
		2	**155-2270**	3	KIT-CONNECTING PLUG (2-PIN)	
					(EACH INCLUDES PLUG AS, WEDGE & INTERFACE SEAL)	
		2	**102-8802**	2	KIT-RECEPTACLE (2-PIN)	
		2	**102-8804**	1	KIT-RECEPTACLE (4-PIN)	
					(EACH RECEPTACLE KIT INCLUDES RECEPTACLE AS & WEDGE)	
		2	**180-9340**	6	SOCKET-CONNECTOR (14-GA TO 18-GA)	
		2	**8L-8413**	15	STRAP-CABLE	
E		2	**125-7874**		TUBE-HEAT SHRINK (5.72-MM DIA) (20-CM)	
	25	1	**227-1057**	1	PLUG-HOLE	

211-4240 **WIRING GP-PLATFORM** *(contd.)* **i03548100**

NOTE	REF NO	GRAPHIC REF	PART NUMBER	QTY	PART NAME 1 2 3 4 5 6 (PRODUCT LEVEL)	SEE PAGE
	26	1	**246-2671**	1	SWITCH AS-MULTIFUNCTION (HD LIGHT, TURN SIG, WDO WIPER)	
M	27	1	**8T-4137**	1	BOLT (M10X1.5X20-MM)	
	28	1	**267-2701**	1	FUSE (60-AMPERE)	
	29	1	**268-7759**	1	HARNESS AS-POWER	
		1	**3S-2093**	1	STRAP-CABLE	
	30	2	**268-7760**	1	HARNESS AS-CAB	
		2	**110-0203**	10	CONNECTOR AS	
		2	**111-6795**	2	HOUSING-RELAY	
		2	**111-6816**	2	LOCK	
		2	**186-3735**	68	PIN-CONNECTOR (16-GA TO 18-GA)	
		2	**9W-0852**	3	PIN-CONNECTOR (14-GA)	
		2	**147-1445**	1	PLUG AS-CONNECTOR (70-PIN)	
		2	**159-9322**	1	SEAL-O-RING	
		2	**147-1446**	1	PLUG AS-CONNECTOR (70-PIN)	
		2	**159-9322**	1	SEAL-O-RING	
		2	**174-0503**	1	KIT-CONNECTING PLUG (3-PIN)	
		2	**155-2255**	7	KIT-CONNECTING PLUG (12-PIN)	
		2	**155-2265**	5	KIT-CONNECTING PLUG (8-PIN)	
		2	**155-2260**	3	KIT-CONNECTING PLUG (3-PIN)	
		2	**155-2270**	11	KIT-CONNECTING PLUG (2-PIN)	
		2	**155-2271**	7	KIT-CONNECTING PLUG (4-PIN)	
		2	**155-2274**	6	KIT-CONNECTING PLUG (6-PIN)	
					(EACH PLUG KIT INCLUDES PLUG AS, WEDGE & INTERFACE SEAL)	
		2	**7R-2751**	13	PLUG-CONNECTOR	
		2	**8T-8737**	117	PLUG-SEAL	
		2	**102-8802**	1	KIT-RECEPTACLE (2-PIN)	
		2	**102-8804**	2	KIT-RECEPTACLE (4-PIN)	
		2	**102-8805**	1	KIT-RECEPTACLE (6-PIN)	
		2	**102-8801**	2	KIT-RECEPTACLE (12-PIN)	
					(EACH RECEPTACLE-KIT INCLUDES RECEPTACLE AS & WEDGE)	
		2	**9X-4813**	1	RECEPTACLE AS-CONNECTOR (3-PIN)	
		2	**134-2540**	1	RECEPTACLE AS (3-PIN)	
		2	**167-3692**	3	RECEPTACLE AS-CONNECTOR (31-PIN)	
		2	**9W-1951**	1	RECEPTACLE-CONNECTOR (9-PIN)	
		2	**128-4123**	12	SEAL	
		2	**128-5016**	24	SEAL-CABLE	
		2	**7R-2750**	7	SEAL-CONNECTOR	
		2	**9W-0844**	12	SOCKET-CONNECTOR (14-GA)	
		2	**196-2412**	35	TERMINAL AS	
					(EACH INCLUDES)	
		2	**7R-2750**	1	SEAL-CONNECTOR	
		2	**186-3736**	89	SOCKET-CONNECTOR (16-GA TO 18-GA)	
		2	**9W-0844**	8	SOCKET-CONNECTOR (14-GA)	
		2	**9X-3402**	86	SOCKET-CONNECTOR (16-GA TO 18-GA)	
		2	**8L-8413**	228	STRAP-CABLE	
B		2	**141-8061**		TAPE	
		2	**091-2436**	19	TERMINAL-BLADE	
		2	**111-6792**	5	TERMINAL-RECEPTACLE	
		2	**111-6793**	1	TERMINAL-RECEPTACLE	
E		2	**119-3662**		TUBE-HEAT SHRINK (10.85-MM DIA) (46-CM)	
E		2	**125-7874**		TUBE-HEAT SHRINK (5.72-MM DIA) (205-CM)	
E		2	**125-7875**		TUBE-HEAT SHRINK (7.44-MM DIA) (25-CM)	
		2	**128-4249**	3	LOCKWASHER	
	31	2	**274-7409**	4	SCREW-TRUSS HEAD (M8X1.25X45-MM)	
	32	1	**275-0553**	1	BAR-BUS	
Y	33	1	**276-7290**	1	RELAY GP (12-VOLT) (POWER, 1)	131
Y	34	1	**276-7291**	1	RELAY GP (12-VOLT) (POWER, 2)	132

211-4240 **WIRING GP-PLATFORM** *(contd.)* **i03548100**

NOTE	REF NO	GRAPHIC REF	PART NUMBER	QTY	PART NAME 1 2 3 4 5 6 (PRODUCT LEVEL)	SEE PAGE
	35	2	**278-0461**	1	RELAY AS (12-VOLT) (TORQUE LIMITER)	
	36	1	**156-6175**	1	CLIP	
	37	1	**172-9200**	1	SUPPRESSOR-ARC	
Y	38	1	**247-8199**	1	PANEL GP-FUSE (INCLUDES RELAY)	128
	39	2	**170-9360**	1	GROMMET	
	40	2	**3S-2093**	32	STRAP-CABLE	
	41	2	**4B-4863**	1	WASHER (4.7X11X1.2-MM THK)	
	42	2	**263-9498**	1	HARNESS AS-WIRING (RESISTOR)	
		2	**180-9339**	2	PIN-CONNECTOR (14-GA TO 18-GA)	
		2	**155-2260**	1	KIT-CONNECTING PLUG (3-PIN)	
					(INCLUDES PLUG AS, WEDGE & INTERFACE SEAL)	
		2	**8T-8737**	7	PLUG-SEAL	
		2	**102-8806**	1	KIT-RECEPTACLE (8-PIN)	
					(INCLUDES RECEPTACLE AS & WEDGE)	
		2	**134-2540**	1	RECEPTACLE AS (3-PIN)	
		2	**180-9340**	2	SOCKET-CONNECTOR (14-GA TO 18-GA)	
	43	1,1,2	**4P-8134**	3	CLIP	
M	44	1	**5C-2890**	4	NUT (M6X1-THD)	
M	45	1,2	**5C-7261**	10	NUT (M8X1.25-THD)	
	46	2	**7X-0579**	8	WASHER-HARD (8.8X25.5X2-MM THK)	
M	47	1	**7X-2534**	2	BOLT (M6X1X50-MM)	
	48	1	**7X-7729**	3	WASHER (11X25X3-MM THK)	
	49	1,2	**8C-3398**	1	LOCKWASHER	
M	50	1	**8T-0352**	2	BOLT (M5X0.8X45-MM)	
	51	1	**8T-4121**	4	WASHER-HARD (11X21X2.5-MM THK)	
M	52	1	**8T-4133**	2	NUT (M10X1.5-THD)	
M	53	1	**8T-4136**	2	BOLT (M10X1.5X25-MM)	
M	54	1	**8T-4138**	7	BOLT (M6X1X20-MM)	
M	55	1,2	**8T-4200**	6	BOLT (M8X1.25X16-MM)	
	56	1,2	**8T-4205**	14	WASHER-HARD (7.2X14.5X2-MM THK)	
	57	1,2	**8T-4224**	12	WASHER-HARD (8.8X16X2-MM THK)	
	58	1,2	**6K-0806**	2	STRAP-CABLE	
	59	1	**8C-6354**	1	CAP-RECEPTACLE	

B-USE AS REQUIRED
E-ORDER BY THE CENTIMETER
M-METRIC PART
Y-SEPARATE ILLUSTRATION

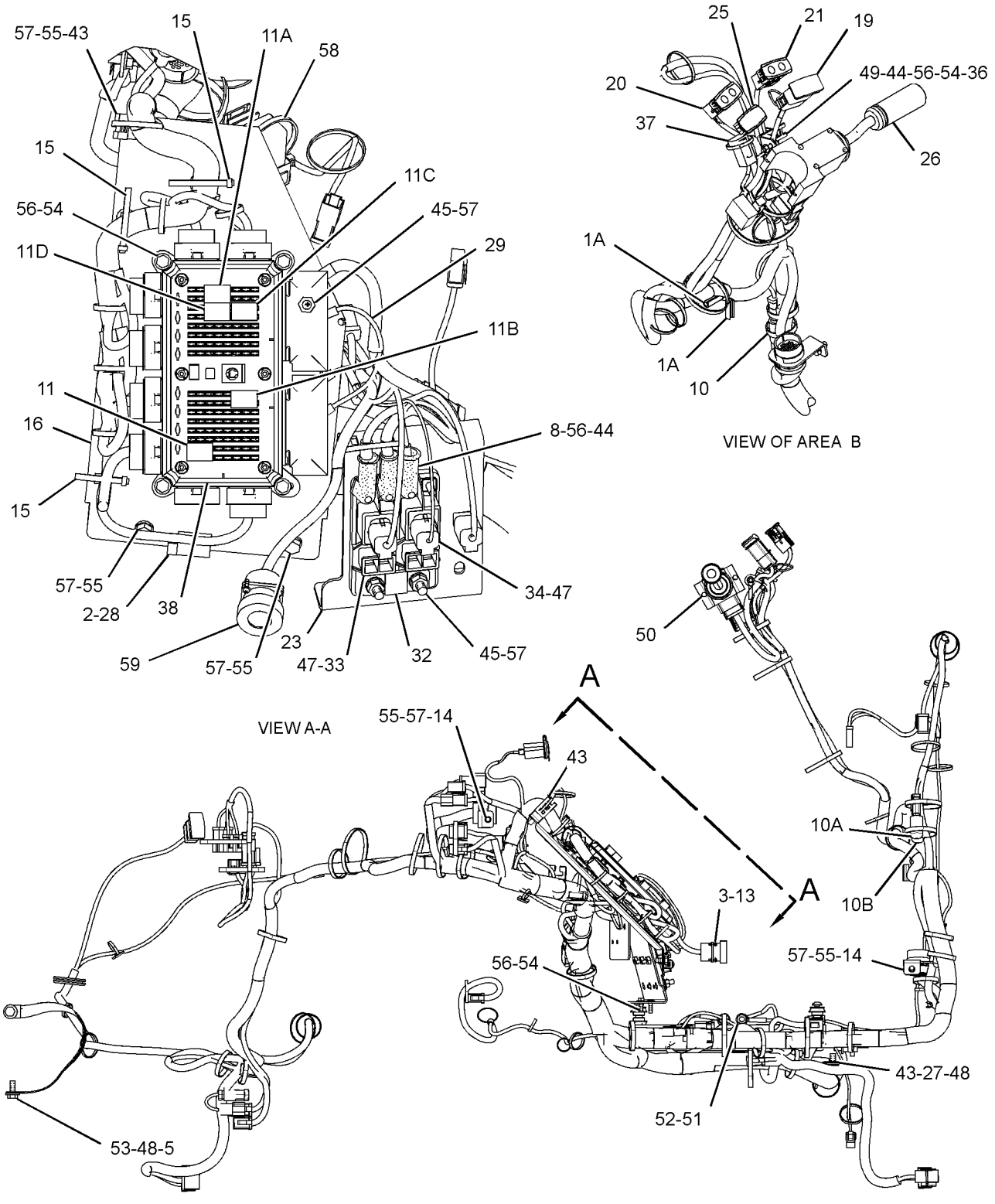

GRAPHIC #1 g01272610

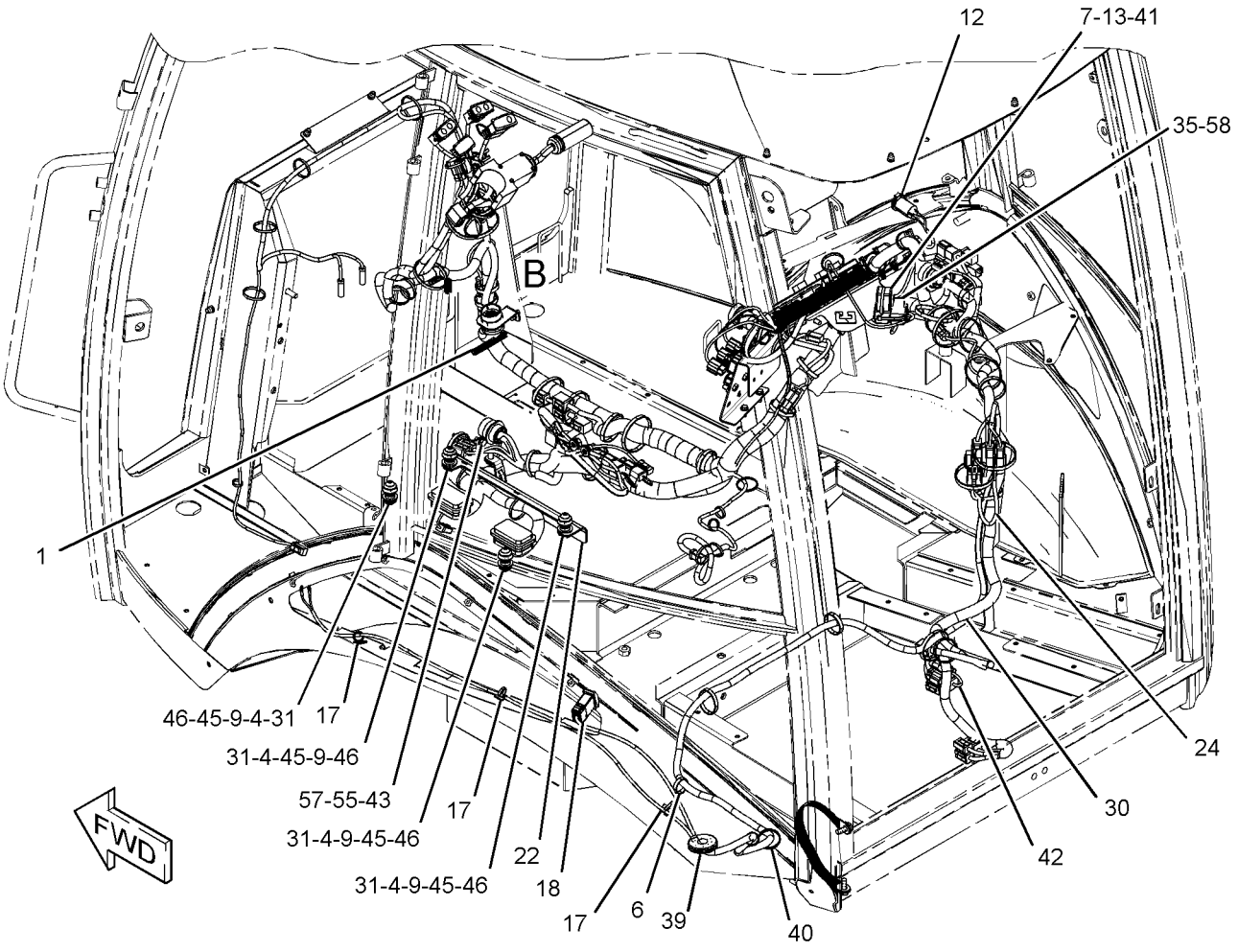

REFER TO ALL ILLUSTRATIONS OF
THIS GROUP FOR AUXILIARY VIEWS

GRAPHIC #2 **<END>** g01272609

211-4240 WIRING GP-PLATFORM

S/N: HLS4273-5819

PART OF 269-2125, 269-2126, 269-2127 CAB AR-ENCLOSED ROPS, 269-2123, 269-2124 CANOPY AR-OPEN ROPS

AN ATTACHMENT

SMCS-1408 **i03548105**

NOTE	REF NO	GRAPHIC REF	PART NUMBER	QTY	PART NAME 1 2 3 4 5 6 (PRODUCT LEVEL)	SEE PAGE
E	1	2	**103-2543**		SEAL (1-CM)	
C	2	1	**1S-9593**	3	STRAP-CABLE	
	3	1	**6I-1418**	4	SPACER (8.2X12.7X28.7-MM THK)	
	4	1	**6K-0806**	2	STRAP-CABLE	
	5	1	**7G-1060**	1	STRAP AS-GROUND	
C	6	1	**7K-1181**	33	STRAP-CABLE	
	7	1	**7T-4848**	1	FLASHER AS (12-VOLT)	
	8	2	**8C-6354**	1	CAP-RECEPTACLE	
	9	2	**8T-8799**	3	BOOT	
	10	1	**8T-9655**	8	MOUNT-ISOLATION	
C	11	2	**096-6166**	8	WASHER-HARD (4.5X9X1-MM THK)	
C	12	2	**100-5805**	1	CAP-RECEPTACLE	
	13	1	**106-8704**	3	SUPPRESSOR AS-ARC	
	14	2	**146-9439**	1	RELAY AS (12-VOLT) (IMPLEMENT DISABLE)	
	14A	2	**146-9439**	1	RELAY AS (12-VOLT) (HORN)	
	14B	2	**146-9439**	1	RELAY AS (12-VOLT) (DIFFERENTIAL LOCK)	
	14C	2	**146-9439**	1	RELAY AS (12-VOLT) (BACKUP ALARM)	
	14D	2	**146-9439**	1	RELAY AS (12-VOLT) (POSITION LAMP)	
	15	2	**172-9200**	1	SUPPRESSOR-ARC	
	16	1	**178-7539**	1	RECEPTACLE AS (POWER SUPPLY)	
	17	1,2	**179-6401**	5	SCREW-PAN HEAD (6-32X0.5-IN)	
	18	1,2	**201-1024**	2	BRACKET	
	19	2	**206-1345**	3	STRAP-CABLE	
	20	2	**206-1718**	1	BRACKET AS	
	21	1	**212-0862**	3	CLAMP-CABLE	
	22	1	**214-4694**	1	SWITCH AS-ROCKER (MODE SELECT)	
		1	**111-7899**	1	GASKET	
	23	2	**214-4702**	1	SWITCH AS-ROCKER (HAZARD WARNING LIGHTS)	
		1	**111-7899**	1	GASKET	
	24	2	**214-4717**	1	INDICATOR AS (TURN SIGNAL LH, PARKING BRAKE)	
		1	**111-7899**	1	GASKET	
	25	2	**214-4723**	1	INDICATOR AS (HIGH BEAM, TURN SIGNAL RH)	
		1	**111-7899**	1	GASKET	
	26	1	**216-9069**	1	BRACKET AS	
	27	2	**225-7970**	1	BRACKET AS	
	28	1	**225-7997**	1	HARNESS AS-REAR	
		2	**180-9339**	8	PIN-CONNECTOR (14-GA TO 18-GA)	
		2	**155-2270**	3	KIT-CONNECTING PLUG (2-PIN)	
					(EACH INCLUDES PLUG AS, WEDGE & INTERFACE SEAL)	
		2	**102-8802**	2	KIT-RECEPTACLE (2-PIN)	
		2	**102-8804**	1	KIT-RECEPTACLE (4-PIN)	
					(EACH RECEPTACLE KIT INCLUDES RECEPTACLE AS & WEDGE)	
		2	**180-9340**	6	SOCKET-CONNECTOR	
		2	**8L-8413**	15	STRAP-CABLE	
E		2	**125-7874**		TUBE-HEAT SHRINK (5.72-MM DIA) (20-CM)	
	29	2	**227-1057**	1	PLUG-HOLE	
	30	2	**246-2671**	1	SWITCH AS-MULTIFUNCTION (HD LIGHT, TURN SIG, WDO WIPER)	
Y	31	2	**247-8199**	1	PANEL GP-FUSE (INCLUDES RELAY)	128
	32	1	**263-9498**	1	HARNESS AS-WIRING (RESISTOR)	
		2	**180-9339**	2	PIN-CONNECTOR (14-GA TO 18-GA)	

211-4240 **WIRING GP-PLATFORM** *(contd.)* **i03548105**

NOTE	REF NO	GRAPHIC REF	PART NUMBER	QTY	PART NAME 1 2 3 4 5 6 (PRODUCT LEVEL)	SEE PAGE
		2	**155-2260**	1	KIT-CONNECTING PLUG (3-PIN)	
					(INCLUDES PLUG AS, WEDGE & INTERFACE SEAL)	
		2	**8T-8737**	7	PLUG-SEAL	
		2	**102-8806**	1	KIT-RECEPTACLE (8-PIN)	
					(INCLUDES RECEPTACLE AS & WEDGE)	
		2	**134-2540**	1	RECEPTACLE AS (3-PIN)	
		2	**180-9340**	2	SOCKET-CONNECTOR	
	33	2	**267-2701**	1	FUSE (60-AMPERE)	
	34	2	**268-7759**	1	HARNESS AS-POWER	
		1	**3S-2093**	1	STRAP-CABLE	
	35	1	**268-7760**	1	HARNESS AS-CAB	
		2	**110-0203**	10	CONNECTOR AS	
		2	**111-6795**	2	HOUSING-RELAY	
		2	**111-6816**	2	LOCK	
		2	**186-3735**	68	PIN-CONNECTOR (16-GA TO 18-GA)	
		2	**9W-0852**	3	PIN-CONNECTOR (14-GA)	
		2	**147-1445**	1	PLUG AS-CONNECTOR (70-PIN)	
		2	**159-9322**	1	SEAL-O-RING	
		2	**147-1446**	1	PLUG AS-CONNECTOR (70-PIN)	
		2	**159-9322**	1	SEAL-O-RING	
		2	**174-0503**	1	KIT-CONNECTING PLUG (3-PIN)	
		2	**155-2255**	7	KIT-CONNECTING PLUG (12-PIN)	
		2	**155-2265**	5	KIT-CONNECTING PLUG (8-PIN)	
		2	**155-2260**	3	KIT-CONNECTING PLUG (3-PIN)	
		2	**155-2270**	11	KIT-CONNECTING PLUG (2-PIN)	
		2	**155-2271**	7	KIT-CONNECTING PLUG (4-PIN)	
		2	**155-2274**	6	KIT-CONNECTING PLUG (6-PIN)	
					(EACH PLUG KIT INCLUDES PLUG AS, WEDGE & INTERFACE SEAL)	
		2	**7R-2751**	13	PLUG-CONNECTOR	
		2	**8T-8737**	117	PLUG-SEAL	
		2	**102-8802**	1	KIT-RECEPTACLE (2-PIN)	
		2	**102-8804**	2	KIT-RECEPTACLE (4-PIN)	
		2	**102-8805**	1	KIT-RECEPTACLE (6-PIN)	
		2	**102-8801**	2	KIT-RECEPTACLE (12-PIN)	
					(EACH RECEPTACLE-KIT INCLUDES RECEPTACLE AS & WEDGE)	
		2	**9X-4813**	1	RECEPTACLE AS-CONNECTOR (3-PIN)	
		2	**134-2540**	1	RECEPTACLE AS (3-PIN)	
		2	**167-3692**	3	RECEPTACLE AS-CONNECTOR (31-PIN)	
		2	**9W-1951**	1	RECEPTACLE-CONNECTOR (9-PIN)	
		2	**128-4123**	12	SEAL	
		2	**128-5016**	24	SEAL-CABLE	
		2	**7R-2750**	7	SEAL-CONNECTOR	
		2	**9W-0844**	12	SOCKET-CONNECTOR (14-GA)	
		2	**196-2412**	35	TERMINAL AS	
					(EACH INCLUDES)	
		2	**7R-2750**	1	SEAL-CONNECTOR	
		2	**186-3736**	89	SOCKET-CONNECTOR (16-GA TO 18-GA)	
		2	**9W-0844**	8	SOCKET-CONNECTOR (14-GA)	
		2	**9X-3402**	86	SOCKET-CONNECTOR (16-GA TO 18-GA)	
		2	**8L-8413**	228	STRAP-CABLE	
B		2	**141-8061**		TAPE	
		2	**091-2436**	19	TERMINAL-BLADE	
		2	**111-6792**	5	TERMINAL-RECEPTACLE	
		2	**111-6793**	1	TERMINAL-RECEPTACLE	
E		2	**119-3662**		TUBE-HEAT SHRINK (10.85-MM DIA) (46-CM)	
E		2	**125-7874**		TUBE-HEAT SHRINK (5.72-MM DIA) (205-CM)	
E		2	**125-7875**		TUBE-HEAT SHRINK (7.44-MM DIA) (25-CM)	

211-4240 **WIRING GP-PLATFORM** *(contd.)* **i03548105**

NOTE	REF NO	GRAPHIC REF	PART NUMBER	QTY	PART NAME 1 2 3 4 5 6 (PRODUCT LEVEL)	SEE PAGE
		2	**128-4249**	3	LOCKWASHER	
C	36	1,2	**274-3774**	5	CAP-CONNECTOR	
C	37	1	**274-3775**	2	CAP-CONNECTOR	
C	38	1,2	**274-3776**	4	CAP-SEAL	
C	39	1	**274-3777**	4	CAP-CONNECTOR	
C	40	1	**274-3778**	2	CAP-SEAL	
C	41	1,2	**274-3779**	3	CAP-SEAL	
C	42	2	**274-3780**	1	CAP	
	43	1	**274-7409**	4	SCREW-TRUSS HEAD (M8X1.25X45-MM)	
	44	2	**275-0553**	1	BAR-BUS	
Y	45	2	**276-7290**	1	RELAY GP (12-VOLT) (POWER, 1)	131
Y	46	2	**276-7291**	1	RELAY GP (12-VOLT) (POWER, 2)	132
	47	1	**278-0461**	1	RELAY AS (12-VOLT) (TORQUE LIMITER)	
C	48	2	**297-6899**	1	CHAIN AS	
		2	**297-6898**	1	RING	
D		2	**6V-1361**		CHAIN (0.2-M)	
C	49	1	**155-2271**	1	KIT-CONNECTING PLUG (4-PIN) (INCLUDES PLUG AS & WEDGE)	
	50	2	**156-6175**	1	CLIP	
	51	1	**170-9360**	1	GROMMET	
C	52	2	**197-5107**	2	SCREW-TRUSS HEAD (M6X1X60-MM)	
C	53	1	**3S-2093**	27	STRAP-CABLE	
	54	1	**4B-4863**	1	WASHER (4.7X11X1.2-MM THK)	
	55	1,2	**4P-8134**	3	CLIP	
M	56	2	**5C-2890**	4	NUT (M6X1-THD)	
M	57	1,2	**5C-7261**	10	NUT (M8X1.25-THD)	
	58	1	**7X-0579**	8	WASHER-HARD (8.8X25.5X2-MM THK)	
C	59	1	**7X-7729**	5	WASHER (11X25X3-MM THK)	
	60	2	**8C-3398**	1	LOCKWASHER	
C	61	1	**8F-3590**	4	LOCKWASHER	
M	62	2	**8T-0352**	2	BOLT (M5X0.8X45-MM)	
	63	1	**8T-4121**	4	WASHER-HARD (11X21X2.5-MM THK)	
M	64	1	**8T-4133**	2	NUT (M10X1.5-THD)	
M	65	1	**8T-4136**	2	BOLT (M10X1.5X25-MM)	
M	66	1	**8T-4137**	1	BOLT (M10X1.5X20-MM)	
M	67	1,2	**8T-4138**	7	BOLT (M6X1X20-MM)	
M	68	1,2	**8T-4200**	6	BOLT (M8X1.25X16-MM)	
	69	1,2	**8T-4205**	14	WASHER-HARD (7.2X14.5X2-MM THK)	
	70	1,2	**8T-4224**	12	WASHER-HARD (8.8X16X2-MM THK)	
E	71	1	**3E-8299**		SEAL (9-CM)	
E	71A	1	**3E-8299**		SEAL (3-CM EACH)	
C	72	1	**8T-8737**	4	PLUG-SEAL	

B-USE AS REQUIRED
C-CHANGE FROM PREVIOUS TYPE
D-ORDER BY THE METER
E-ORDER BY THE CENTIMETER
M-METRIC PART
Y-SEPARATE ILLUSTRATION

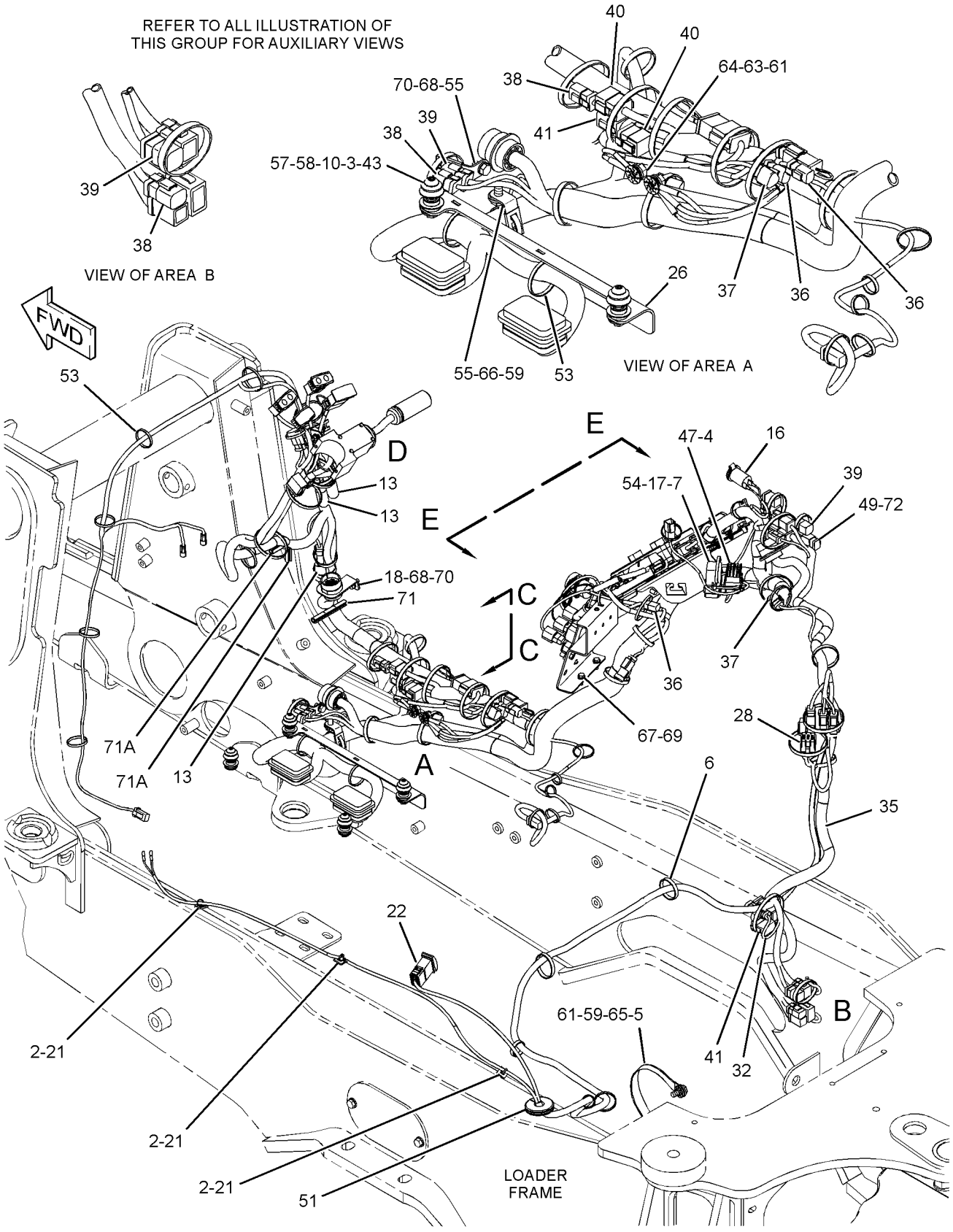

GRAPHIC #1 g01412054

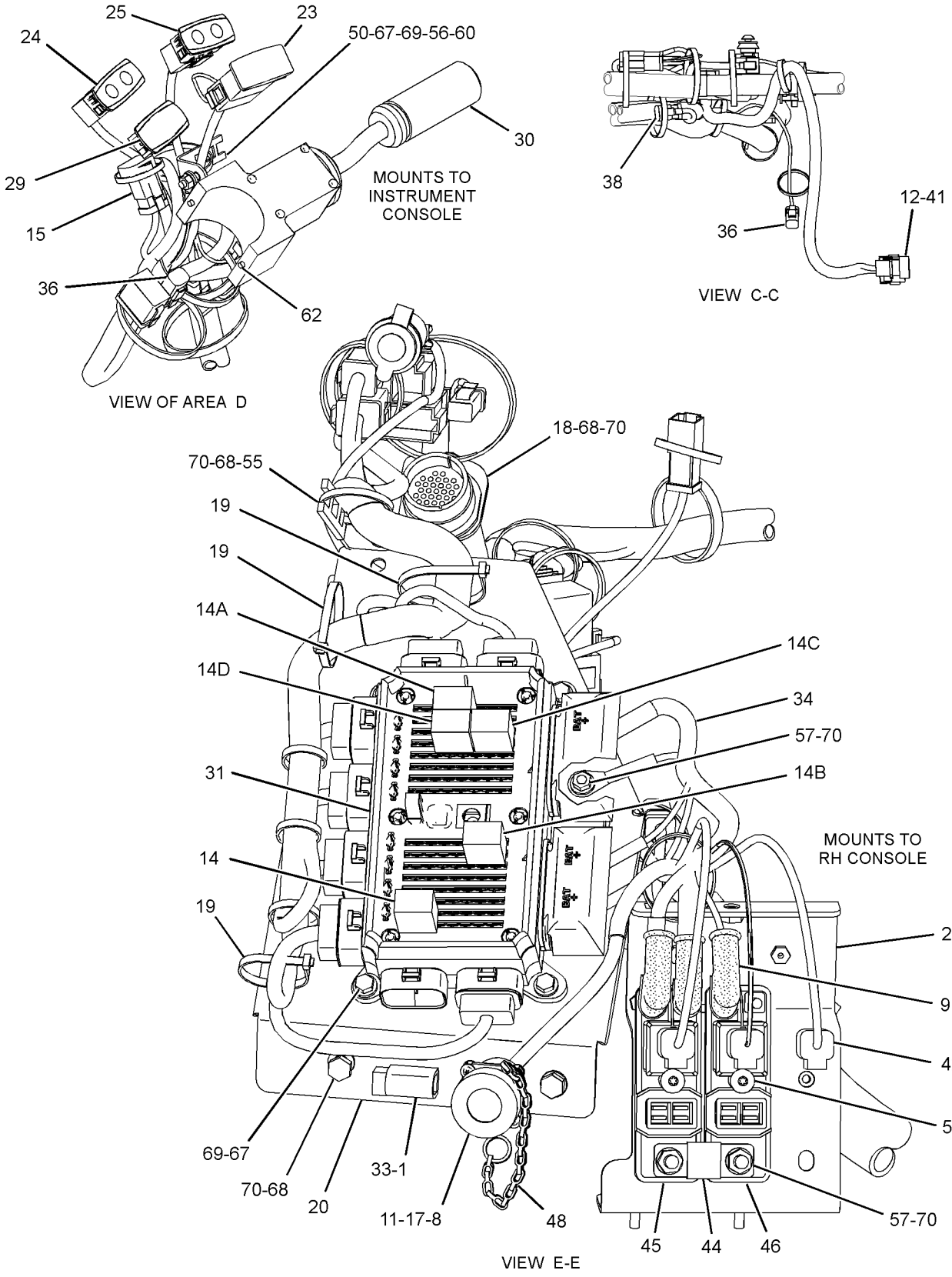

GRAPHIC #2 **<END>** g01412055

211-4240 WIRING GP-PLATFORM

S/N: HLS5820-6945

PART OF 269-2125, 269-2126, 269-2127 CAB AR-ENCLOSED ROPS, 269-2123, 269-2124 CANOPY AR-OPEN ROPS

AN ATTACHMENT

SMCS-1408 **i03549601**

NOTE	REF NO	GRAPHIC REF	PART NUMBER	QTY	PART NAME 1 2 3 4 5 6 (PRODUCT LEVEL)	SEE PAGE
E	1	3	**103-2543**		SEAL (1-CM)	
	2	1	**1S-9593**	3	STRAP-CABLE	
	3	1	**6I-1418**	4	SPACER (8.2X12.7X28.7-MM THK)	
	4	2	**6K-0806**	2	STRAP-CABLE	
	5	1	**7G-1060**	1	STRAP AS-GROUND	
C	6	1,2	**7K-1181**	31	STRAP-CABLE	
	7	2	**7T-4848**	1	FLASHER AS (12-VOLT)	
	9	3	**8T-8799**	3	BOOT	
	10	1	**8T-9655**	8	MOUNT-ISOLATION	
	11	3	**096-6166**	8	WASHER-HARD (4.5X9X1-MM THK)	
	12	3	**100-5805**	1	CAP-RECEPTACLE	
C	13	1,2	**189-3158**	3	SUPPRESSOR-ARC	
	14	3	**146-9439**	1	RELAY AS (12-VOLT) (IMPLEMENT DISABLE)	
	14A	3	**146-9439**	1	RELAY AS (12-VOLT) (HORN)	
	14B	3	**146-9439**	1	RELAY AS (12-VOLT) (DIFFERENTIAL LOCK)	
	14C	3	**146-9439**	1	RELAY AS (12-VOLT) (BACKUP ALARM)	
	14D	3	**146-9439**	1	RELAY AS (12-VOLT) (POSITION LAMP)	
	15	2	**172-9200**	1	SUPPRESSOR-ARC	
	16	2	**178-7539**	1	RECEPTACLE AS (POWER SUPPLY)	
	17	2,3	**179-6401**	5	SCREW-PAN HEAD (6-32X0.5-IN)	
	18	1,2	**201-1024**	2	BRACKET	
	19	3	**206-1345**	3	STRAP-CABLE	
	20	3	**206-1718**	1	BRACKET AS	
	21	1	**212-0862**	3	CLAMP-CABLE	
	22	1	**214-4694**	1	SWITCH AS-ROCKER (MODE SELECT)	
		1	**111-7899**	1	GASKET	
	23	2	**214-4702**	1	SWITCH AS-ROCKER (HAZARD WARNING LIGHTS)	
		1	**111-7899**	1	GASKET	
	24	2	**214-4717**	1	INDICATOR AS (TURN SIGNAL LH, PARKING BRAKE)	
		1	**111-7899**	1	GASKET	
	25	2	**214-4723**	1	INDICATOR AS (HIGH BEAM, TURN SIGNAL RH)	
		1	**111-7899**	1	GASKET	
	26	1	**216-9069**	1	BRACKET AS	
M		1	**6V-9632**	1	NUT-WELD (M6X1-THD)	
	27	3	**225-7970**	1	BRACKET AS	
	29	2	**227-1057**	1	PLUG-HOLE	
	30	2	**246-2671**	1	SWITCH AS-MULTIFUNCTION (HD LIGHT, TURN SIG, WDO WIPER)	
Y	31	3	**247-8199**	1	PANEL GP-FUSE (INCLUDES RELAY)	128
	32	1	**263-9498**	1	HARNESS AS-WIRING (RESISTOR)	
		2	**180-9339**	2	PIN-CONNECTOR (14-GA TO 18-GA)	
		2	**155-2260**	1	KIT-CONNECTING PLUG (3-PIN) (INCLUDES PLUG AS, WEDGE & INTERFACE SEAL)	
		2	**8T-8737**	7	PLUG-SEAL	
		2	**102-8806**	1	KIT-RECEPTACLE (8-PIN) (INCLUDES RECEPTACLE AS & WEDGE)	
		2	**134-2540**	1	RECEPTACLE AS (3-PIN)	
		2	**180-9340**	2	SOCKET-CONNECTOR	
	33	3	**267-2701**	1	FUSE (60-AMPERE)	
	34	3	**268-7759**	1	HARNESS AS-POWER	
		1	**3S-2093**	1	STRAP-CABLE	
	35	1	**268-7760**	1	HARNESS AS-CAB	
		2	**110-0203**	10	CONNECTOR AS	

211-4240 **WIRING GP-PLATFORM** *(contd.)* **i03549601**

NOTE	REF NO	GRAPHIC REF	PART NUMBER	QTY	PART NAME 1 2 3 4 5 6 (PRODUCT LEVEL)	SEE PAGE
		2	**111-6795**	2	HOUSING-RELAY	
		2	**111-6816**	2	LOCK	
		2	**186-3735**	68	PIN-CONNECTOR (16-GA TO 18-GA)	
		2	**9W-0852**	3	PIN-CONNECTOR (14-GA)	
		2	**147-1445**	1	PLUG AS-CONNECTOR (70-PIN)	
		2	**159-9322**	1	SEAL-O-RING	
		2	**147-1446**	1	PLUG AS-CONNECTOR (70-PIN)	
		2	**159-9322**	1	SEAL-O-RING	
		2	**174-0503**	1	KIT-CONNECTING PLUG (3-PIN)	
		2	**155-2255**	7	KIT-CONNECTING PLUG (12-PIN)	
		2	**155-2265**	5	KIT-CONNECTING PLUG (8-PIN)	
		2	**155-2260**	3	KIT-CONNECTING PLUG (3-PIN)	
		2	**155-2270**	11	KIT-CONNECTING PLUG (2-PIN)	
		2	**155-2271**	7	KIT-CONNECTING PLUG (4-PIN)	
		2	**155-2274**	6	KIT-CONNECTING PLUG (6-PIN)	
					(EACH PLUG KIT INCLUDES PLUG AS, WEDGE & INTERFACE SEAL)	
		2	**7R-2751**	13	PLUG-CONNECTOR	
		2	**8T-8737**	117	PLUG-SEAL	
		2	**102-8802**	1	KIT-RECEPTACLE (2-PIN)	
		2	**102-8804**	2	KIT-RECEPTACLE (4-PIN)	
		2	**102-8805**	1	KIT-RECEPTACLE (6-PIN)	
		2	**102-8801**	2	KIT-RECEPTACLE (12-PIN)	
					(EACH RECEPTACLE-KIT INCLUDES RECEPTACLE AS & WEDGE)	
		2	**9X-4813**	1	RECEPTACLE AS-CONNECTOR (3-PIN)	
		2	**134-2540**	1	RECEPTACLE AS (3-PIN)	
		2	**167-3692**	3	RECEPTACLE AS-CONNECTOR (31-PIN)	
		2	**9W-1951**	1	RECEPTACLE-CONNECTOR (9-PIN)	
		2	**128-4123**	12	SEAL	
		2	**128-5016**	24	SEAL-CABLE	
		2	**7R-2750**	7	SEAL-CONNECTOR	
		2	**9W-0844**	12	SOCKET-CONNECTOR (14-GA)	
		2	**196-2412**	35	TERMINAL AS	
					(EACH INCLUDES)	
		2	**7R-2750**	1	SEAL-CONNECTOR	
		2	**186-3736**	89	SOCKET-CONNECTOR (16-GA TO 18-GA)	
		2	**9W-0844**	8	SOCKET-CONNECTOR (14-GA)	
		2	**9X-3402**	86	SOCKET-CONNECTOR (16-GA TO 18-GA)	
		2	**8L-8413**	228	STRAP-CABLE	
B		2	**141-8061**		TAPE	
		2	**091-2436**	19	TERMINAL-BLADE	
		2	**111-6792**	5	TERMINAL-RECEPTACLE	
		2	**111-6793**	1	TERMINAL-RECEPTACLE	
E		2	**119-3662**		TUBE-HEAT SHRINK (10.85-MM DIA) (46-CM)	
E		2	**125-7874**		TUBE-HEAT SHRINK (5.72-MM DIA) (205-CM)	
E		2	**125-7875**		TUBE-HEAT SHRINK (7.44-MM DIA) (25-CM)	
		2	**128-4249**	3	LOCKWASHER	
	36	1,2,3	**274-3774**	5	CAP-CONNECTOR	
	37	1,2	**274-3775**	2	CAP-CONNECTOR	
C	38	1,2	**274-3776**	5	CAP-SEAL	
	39	2	**274-3777**	4	CAP-CONNECTOR	
	40	1	**274-3778**	2	CAP-SEAL	
	41	1,3	**274-3779**	3	CAP-SEAL	
	42	3	**274-3780**	1	CAP	
	43	1	**274-7409**	4	SCREW-TRUSS HEAD (M8X1.25X45-MM)	
	44	3	**275-0553**	1	BAR-BUS	
Y	45	3	**276-7290**	1	RELAY GP (12-VOLT) (POWER, 1)	131
Y	46	3	**276-7291**	1	RELAY GP (12-VOLT) (POWER, 2)	132
	47	2	**278-0461**	1	RELAY AS (12-VOLT) (TORQUE LIMITER)	

211-4240 **WIRING GP-PLATFORM** *(contd.)* **i03549601**

NOTE	REF NO	GRAPHIC REF	PART NUMBER	QTY	PART NAME 1 2 3 4 5 6 (PRODUCT LEVEL)	SEE PAGE
C	48	3	**180-9900**	1	CAP AS	
		3	**5P-7958**	1	SLEEVE-CABLE SPLICE	
		3	**8C-6354**	1	CAP-RECEPTACLE	
		3	**179-9392**	1	LANYARD	
	49	2	**155-2271**	1	KIT-CONNECTING PLUG (4-PIN)	
					(INCLUDES PLUG AS & WEDGE)	
	50	2	**156-6175**	1	CLIP	
	51	1	**170-9360**	1	GROMMET	
	52	3	**197-5107**	2	SCREW-TRUSS HEAD (M6X1X60-MM)	
C	53	1,2,3	**3S-2093**	28	STRAP-CABLE	
	54	2	**4B-4863**	1	WASHER (4.7X11X1.2-MM THK)	
	55	1,3	**4P-8134**	3	CLIP	
M	56	2,3	**5C-2890**	4	NUT (M6X1-THD)	
M	57	1,3	**5C-7261**	10	NUT (M8X1.25-THD)	
	58	1	**7X-0579**	8	WASHER-HARD (8.8X25.5X2-MM THK)	
	59	1	**7X-7729**	5	WASHER (11X25X3-MM THK)	
	60	2	**8C-3398**	1	LOCKWASHER	
	61	1,3	**8F-3590**	4	LOCKWASHER	
M	62	2	**8T-0352**	2	BOLT (M5X0.8X45-MM)	
	63	3	**8T-4121**	4	WASHER-HARD (11X21X2.5-MM THK)	
M	64	3	**8T-4133**	2	NUT (M10X1.5-THD)	
M	65	1	**8T-4136**	2	BOLT (M10X1.5X25-MM)	
M	66	1	**8T-4137**	1	BOLT (M10X1.5X20-MM)	
M	67	2,3	**8T-4138**	7	BOLT (M6X1X20-MM)	
M	68	1,2,3	**8T-4200**	6	BOLT (M8X1.25X16-MM)	
	69	2,3	**8T-4205**	14	WASHER-HARD (7.2X14.5X2-MM THK)	
	70	1,2,3	**8T-4224**	12	WASHER-HARD (8.8X16X2-MM THK)	
CE	71	1	**3E-6600**		SEAL (9-CM)	
CE	71A	2	**3E-6600**		SEAL (3-CM EACH)	
	72	2	**8T-8737**	4	PLUG-SEAL	
C	73	3	**9F-5644**	4	LOCKWASHER	

B-USE AS REQUIRED
C-CHANGE FROM PREVIOUS TYPE
E-ORDER BY THE CENTIMETER
M-METRIC PART
Y-SEPARATE ILLUSTRATION

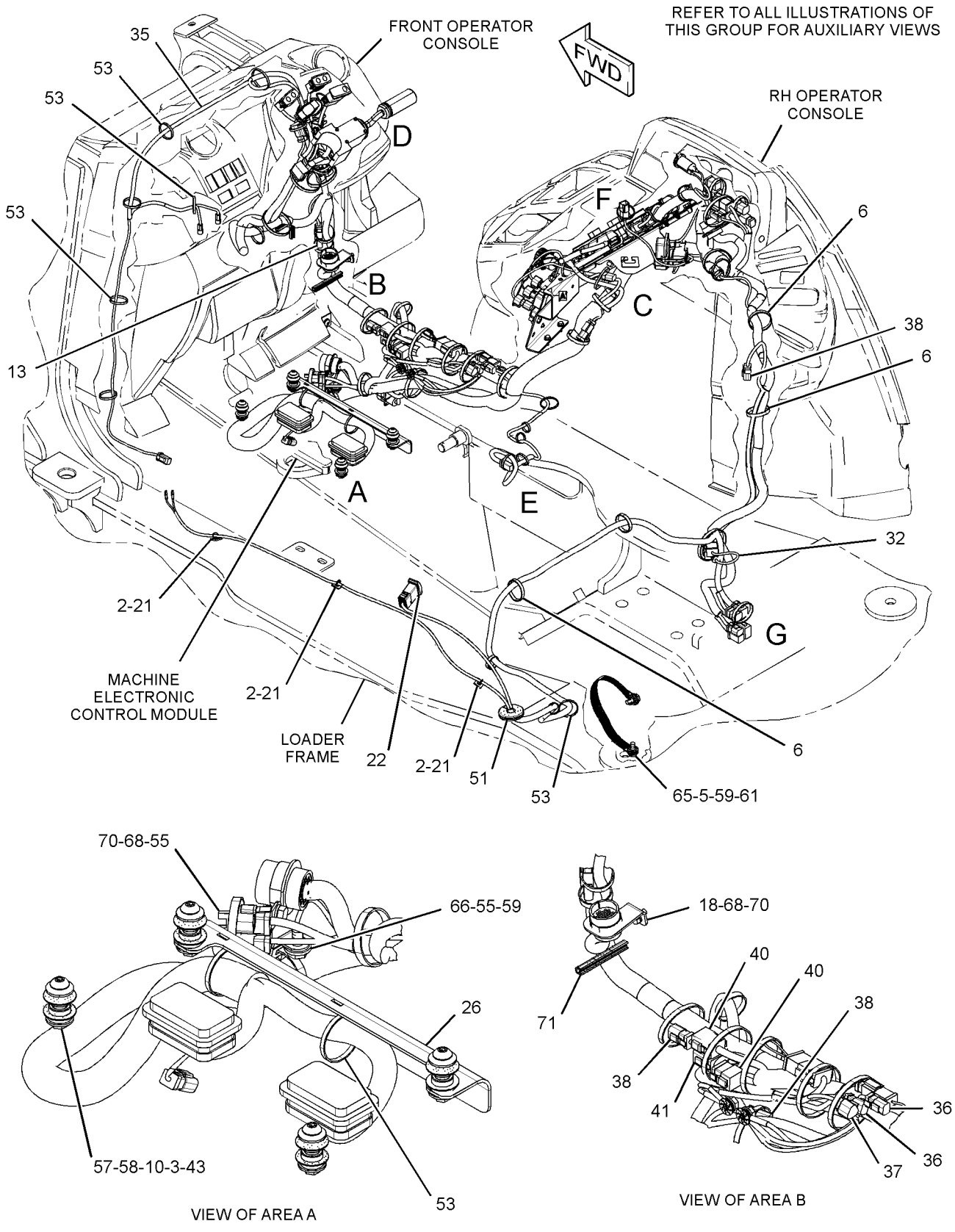

GRAPHIC #1 g01636700

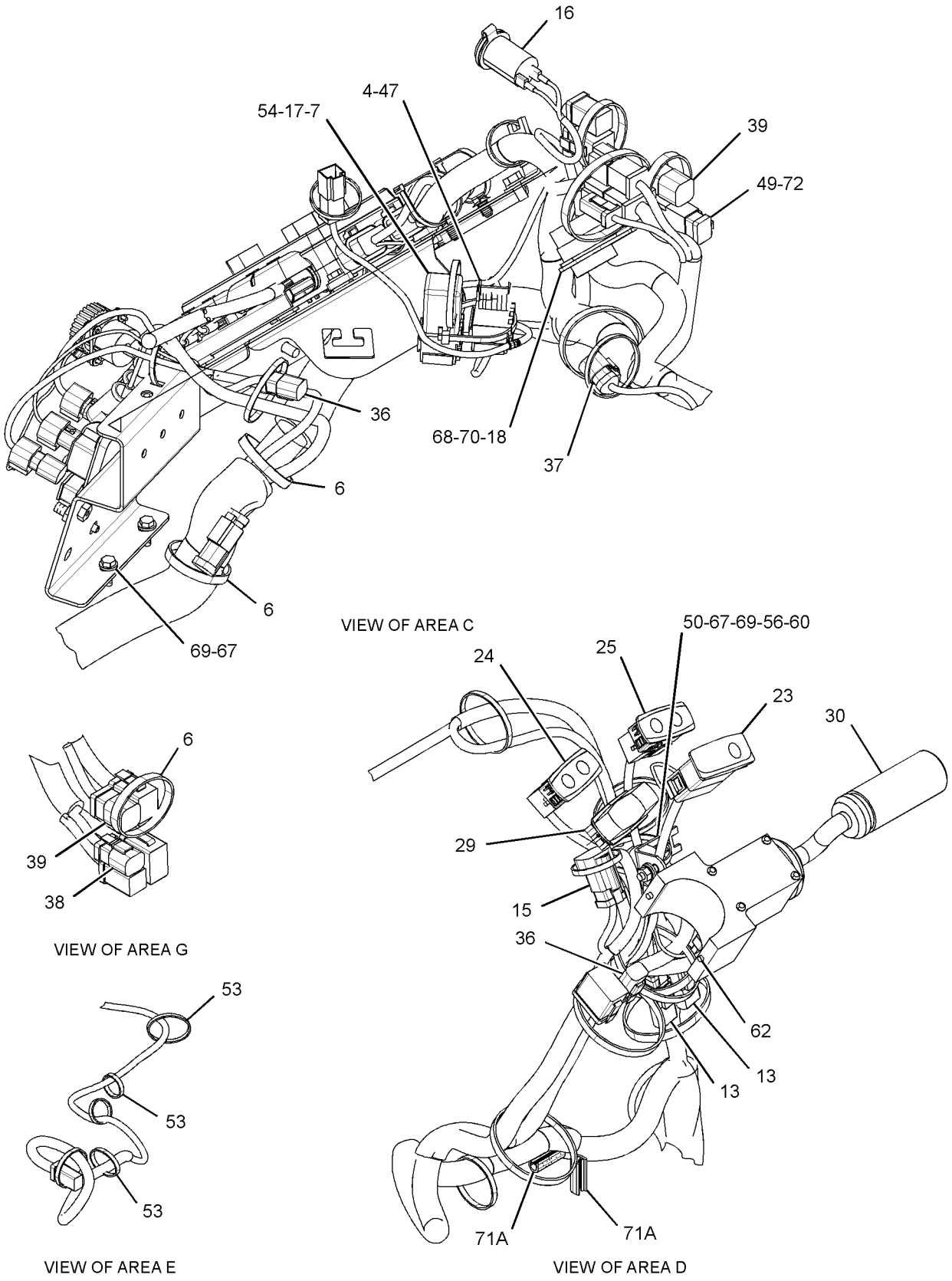

GRAPHIC #2

g01636701

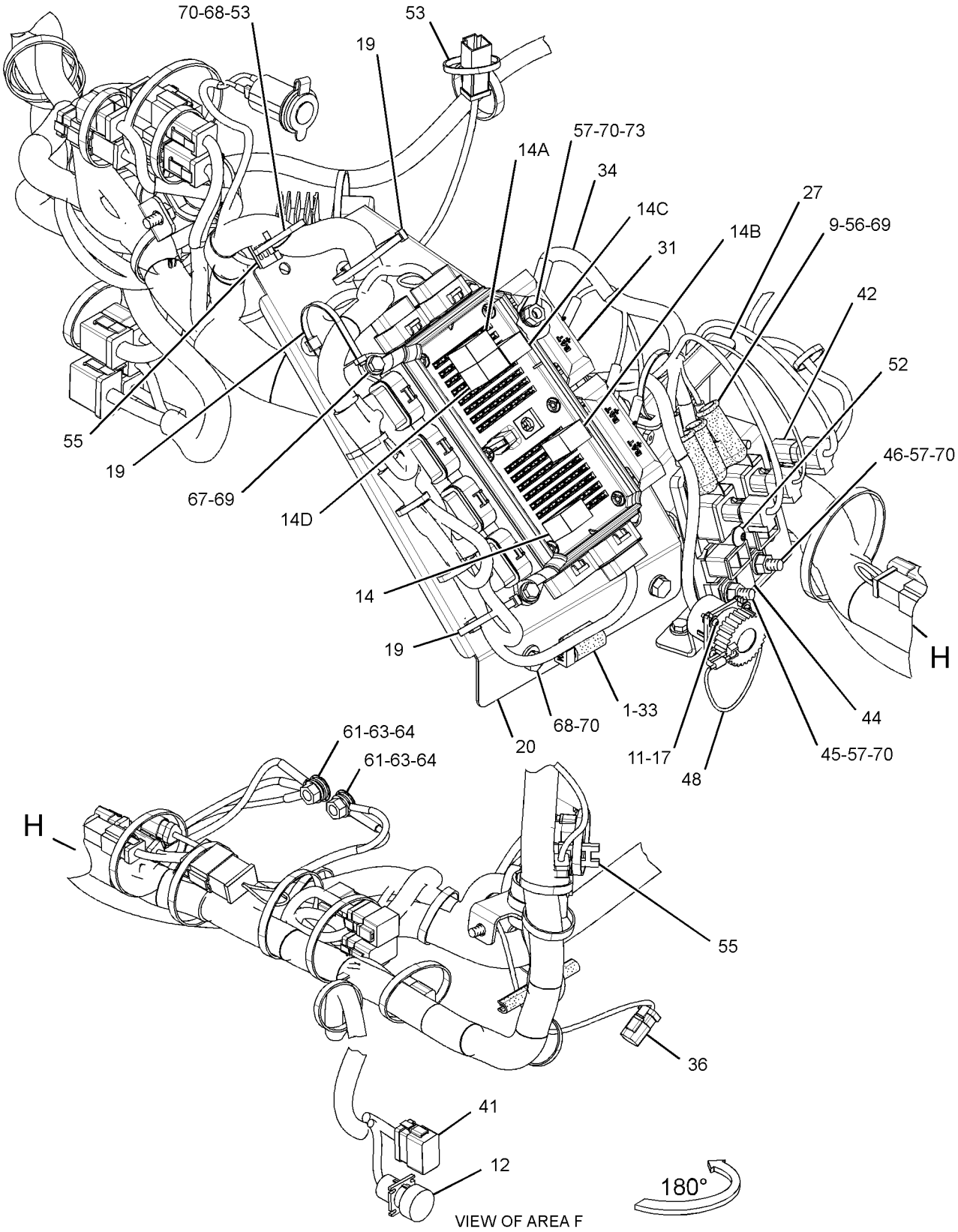

GRAPHIC #3 **<END>** g01636702

290-6802 WIRING GP-PLATFORM

S/N: HLS6946-99999

PART OF 269-2125, 269-2126, 269-2127 CAB AR-ENCLOSED ROPS, 269-2123, 269-2124 CANOPY AR-OPEN ROPS

AN ATTACHMENT

SMCS-1408 **i03548102**

NOTE	REF NO	GRAPHIC REF	PART NUMBER	QTY	PART NAME 1 2 3 4 5 6 (PRODUCT LEVEL)	SEE PAGE
E	1	3	**103-2543**		SEAL (1-CM)	
	2	1	**1S-9593**	3	STRAP-CABLE	
	3	1	**6I-1418**	4	SPACER (8.2X12.7X28.7-MM THK)	
	4	1,2	**7K-1181**	41	STRAP-CABLE	
	5	2	**7T-4848**	1	FLASHER AS (12-VOLT) (HAZARD & TURN)	
	6	3	**8T-8799**	3	BOOT	
	7	1	**8T-9655**	8	MOUNT-ISOLATION	
	8	3	**100-5805**	1	CAP-RECEPTACLE	
	9	3	**146-9439**	1	RELAY AS (12-VOLT) (IMPLEMENT DISABLE)	
	9A	3	**146-9439**	1	RELAY AS (12-VOLT) (HORN)	
	9B	3	**146-9439**	1	RELAY AS (12-VOLT) (POSITION LAMP)	
	9C	3	**146-9439**	1	RELAY AS (12-VOLT) (BACKUP ALARM)	
	9D	3	**146-9439**	1	RELAY AS (12-VOLT) (DIFFERENTIAL LOCK)	
	10	2	**172-9200**	1	SUPPRESSOR-ARC	
	11	2	**178-7539**	1	RECEPTACLE AS (POWER SUPPLY)	
	12	3	**179-6401**	4	SCREW-PAN HEAD (6-32X0.5-IN)	
	13	3	**180-9900**	1	CAP AS	
		3	**5P-7958**	1	SLEEVE-CABLE SPLICE	
		3	**8C-6354**	1	CAP-RECEPTACLE	
		3	**179-9392**	1	LANYARD	
	14	1	**189-3158**	2	SUPPRESSOR-ARC	
	15	2,3	**201-1024**	2	BRACKET	
	16	3	**206-1345**	3	STRAP-CABLE	
	17	3	**206-1718**	1	BRACKET AS	
	18	1	**212-0862**	3	CLAMP-CABLE	
	19	1	**214-4694**	1	SWITCH AS-ROCKER (MODE SELECT)	
		1	**111-7899**	1	GASKET	
	20	2	**214-4702**	1	SWITCH AS-ROCKER (HAZARD WARNING LIGHTS)	
		1	**111-7899**	1	GASKET	
	21	2	**214-4717**	1	INDICATOR AS (TURN SIGNAL LH, PARKING BRAKE)	
	22	2	**214-4723**	1	INDICATOR AS (HIGH BEAM, TURN SIGNAL RH)	
	23	1	**216-9069**	1	BRACKET AS	
	24	2	**225-7970**	1	BRACKET AS	
	25	2	**227-1057**	1	PLUG-HOLE	
	26	2	**246-2671**	1	SWITCH AS-MULTIFUNCTION (HD LIGHT, TURN SIG, WDO WIPER)	
Y	27	3	**247-8199**	1	PANEL GP-FUSE (INCLUDES RELAY)	128
	28	2	**263-9498**	1	HARNESS AS-WIRING (RESISTOR)	
		1	**180-9339**	2	PIN-CONNECTOR (14-GA TO 18-GA)	
		1	**180-9340**	2	SOCKET-CONNECTOR	
		1	**102-8806**	1	KIT-RECEPTACLE (8-PIN) (INCLUDES RECEPTACLE AS & WEDGE)	
		1	**8T-8737**	7	PLUG-SEAL	
		1	**134-2540**	1	RECEPTACLE AS (3-PIN)	
		1	**155-2260**	1	KIT-CONNECTING PLUG (3-PIN) (INCLUDES PLUG AS, INTERFACE SEAL & WEDGE)	
		1	**174-0503**	1	KIT-CONNECTING PLUG (3-PIN) (INCLUDES PLUG AS, INTERFACE SEAL & WEDGE)	
	29	1	**264-4362**	1	HARNESS AS-PLATFORM	
E		1	**125-7875**		TUBE-HEAT SHRINK (7.44-MM DIA) (40-CM)	
		1	**9X-3402**	86	SOCKET-CONNECTOR (16-GA TO 18-GA)	
		1	**128-4123**	12	SEAL	

290-6802 **WIRING GP-PLATFORM** *(contd.)* **i03548102**

NOTE	REF NO	GRAPHIC REF	PART NUMBER	QTY	PART NAME 1 2 3 4 5 6 (PRODUCT LEVEL)	SEE PAGE
		1	**128-5016**	22	SEAL-CABLE	
		1	**134-2540**	1	RECEPTACLE AS (3-PIN)	
D		1	**141-8061**		TAPE (5-M)	
		1	**147-1445**	1	PLUG AS-CONNECTOR (70-PIN)	
		1	**147-1446**	1	PLUG AS-CONNECTOR (70-PIN)	
					(EACH PLUG AS INCLUDES)	
		1	**159-9322**	1	SEAL-O-RING	
		1	**155-2255**	6	KIT-CONNECTING PLUG (12-PIN)	
					(EACH PLUG KIT INCLUDES PLUG AS, INTERFACE SEAL & WEDGE)	
		1	**196-2412**	34	TERMINAL AS	
					(EACH INCLUDES)	
		1	**7R-2750**	1	SEAL-CONNECTOR	
		1	**110-0203**	2	CONNECTOR AS	
		1	**111-6795**	2	HOUSING-RELAY	
		1	**111-6816**	2	LOCK	
		1	**186-3735**	61	PIN-CONNECTOR (16-GA TO 18-GA)	
		1	**186-3736**	56	SOCKET-CONNECTOR (16-GA TO 18-GA)	
		1	**9W-0852**	1	PIN-CONNECTOR (14-GA)	
		1	**9W-0844**	5	SOCKET-CONNECTOR (14-GA)	
E		1	**119-3662**		TUBE-HEAT SHRINK (10.85-MM DIA) (33-CM)	
E		1	**125-7874**		TUBE-HEAT SHRINK (5.72-MM DIA) (175-CM)	
		1	**102-8802**	1	KIT-RECEPTACLE (2-PIN)	
		1	**102-8804**	1	KIT-RECEPTACLE (4-PIN)	
		1	**102-8805**	1	KIT-RECEPTACLE (6-PIN)	
		1	**102-8801**	1	KIT-RECEPTACLE (12-PIN)	
					(EACH RECEPTACLE KIT INCLUDES RECEPTACLE AS & WEDGE)	
		1	**3S-2093**	129	STRAP-CABLE	
		1	**7R-2750**	6	SEAL-CONNECTOR	
		1	**7R-2751**	16	PLUG-CONNECTOR	
		1	**8T-8737**	123	PLUG-SEAL	
		1	**9W-1951**	1	RECEPTACLE-CONNECTOR (9-PIN)	
		1	**9X-4813**	1	RECEPTACLE AS-CONNECTOR (3-PIN)	
	30	3	**267-2701**	1	FUSE (60-AMPERE)	
	31	3	**268-7759**	1	HARNESS AS-POWER (DISTRIBUTION)	
		1	**3S-2093**	1	STRAP-CABLE	
	32	1,3	**274-3774**	3	CAP-CONNECTOR	
	33	1,2	**274-3775**	2	CAP-CONNECTOR	
	34	3	**274-3776**	1	CAP-SEAL	
	35	2,3	**274-3777**	5	CAP-CONNECTOR	
	36	1	**274-3778**	1	CAP-SEAL	
	37	1,2,3	**274-3779**	3	CAP-SEAL	
	38	3	**274-3780**	1	CAP	
	39	1	**274-7409**	4	SCREW-TRUSS HEAD (M8X1.25X45-MM)	
	40	3	**275-0553**	1	BAR-BUS	
Y	41	3	**276-7290**	1	RELAY GP (12-VOLT) (POWER, 1)	131
Y	42	3	**276-7291**	1	RELAY GP (12-VOLT) (POWER, 2)	132
	43	2	**278-0461**	1	RELAY AS (12-VOLT) (TORQUE LIMITER)	
	44	3	**096-6166**	8	WASHER-HARD (4.5X9X1-MM THK)	
	45	1	**132-5789**	2	CLIP	
M	46	2	**138-8454**	2	SCREW-TRUSS HEAD (M4X0.7X10-MM)	
	47	2	**155-2271**	1	KIT-CONNECTING PLUG (4-PIN)	
	48	2	**155-2274**	1	KIT-CONNECTING PLUG (6-PIN)	
					(EACH PLUG KIT INCLUDES PLUG AS, WEDGE & INTERFACE SEAL)	
	49	2	**156-6175**	1	CLIP	
	50	1	**170-9360**	1	GROMMET	
	51	3	**197-5107**	2	SCREW-TRUSS HEAD (M6X1X60-MM)	
	52	1,2,3	**3S-2093**	17	STRAP-CABLE	

290-6802 **WIRING GP-PLATFORM** *(contd.)* **i03548102**

NOTE	REF NO	GRAPHIC REF	PART NUMBER	QTY	PART NAME 1 2 3 4 5 6 (PRODUCT LEVEL)	SEE PAGE
	53	2	**4B-4863**	2	WASHER (4.7X11X1.2-MM THK)	
	54	3	**4P-8134**	1	CLIP	
M	55	2,3	**5C-2890**	4	NUT (M6X1-THD)	
M	56	1,3	**5C-7261**	10	NUT (M8X1.25-THD)	
	57	1	**7X-0579**	8	WASHER-HARD (8.8X25.5X2-MM THK)	
	58	1	**7X-7729**	5	WASHER (11X25X3-MM THK)	
	59	2	**8C-3398**	1	LOCKWASHER	
	60	1,3	**8F-3590**	8	LOCKWASHER	
M	61	2	**8T-0352**	2	BOLT (M5X0.8X45-MM)	
	62	3	**8T-4121**	4	WASHER-HARD (11X21X2.5-MM THK)	
M	63	3	**8T-4133**	2	NUT (M10X1.5-THD)	
M	64	1	**8T-4136**	2	BOLT (M10X1.5X25-MM)	
M	65	1	**8T-4137**	1	BOLT (M10X1.5X20-MM)	
M	66	2,3	**8T-4138**	7	BOLT (M6X1X20-MM)	
M	67	1,2,3	**8T-4200**	6	BOLT (M8X1.25X16-MM)	
	68	2,3	**8T-4205**	14	WASHER-HARD (7.2X14.5X2-MM THK)	
	69	1,2,3	**8T-4224**	12	WASHER-HARD (8.8X16X2-MM THK)	
	70	1	**8X-9618**	1	STRAP AS-GROUND	
E	71	2	**3E-6600**		SEAL (3-CM EACH)	
E	71A	1	**3E-6600**		SEAL (9-CM)	
	72	2	**8T-8737**	10	PLUG-SEAL	

D-ORDER BY THE METER
E-ORDER BY THE CENTIMETER
M-METRIC PART
Y-SEPARATE ILLUSTRATION

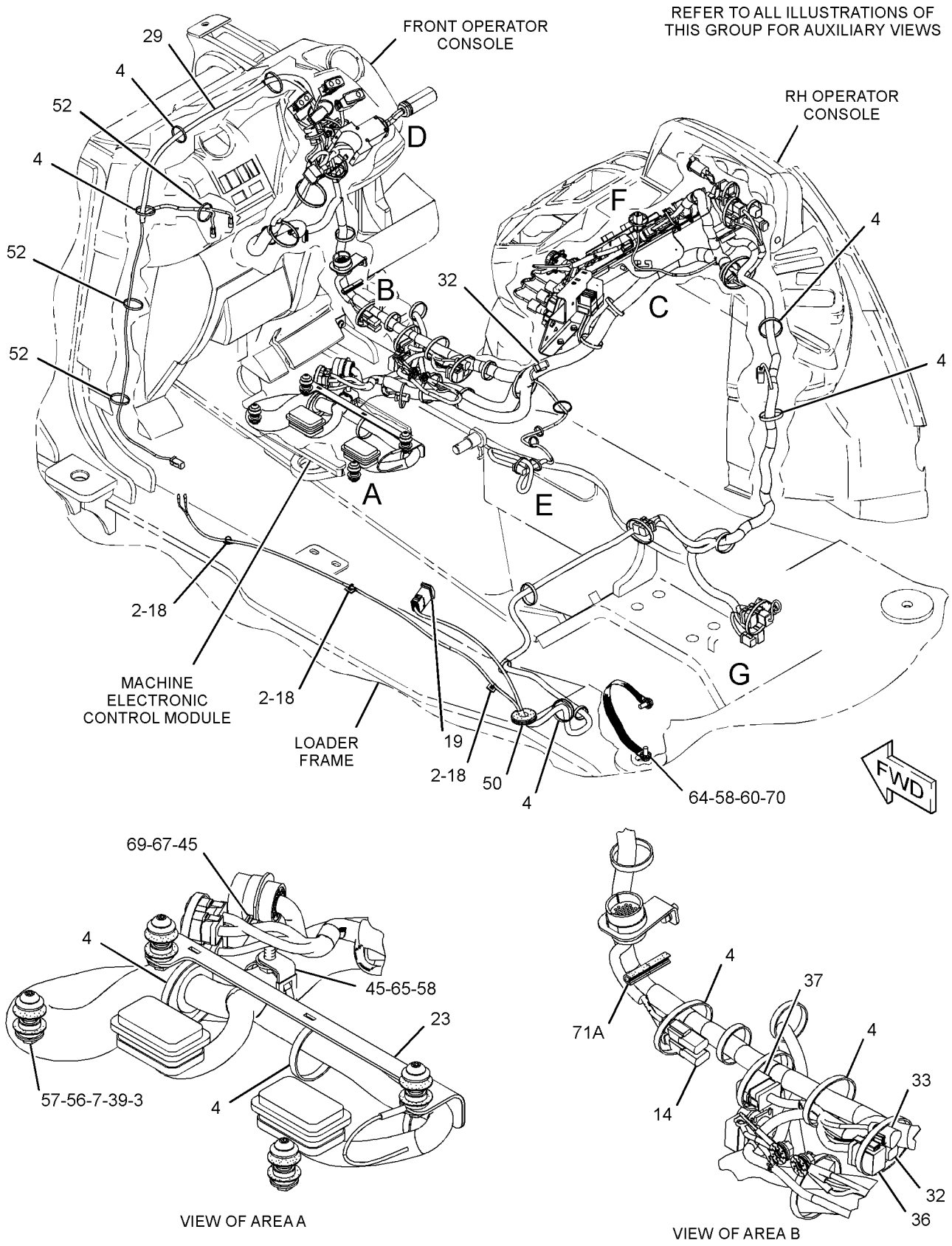

GRAPHIC #1

g01618734

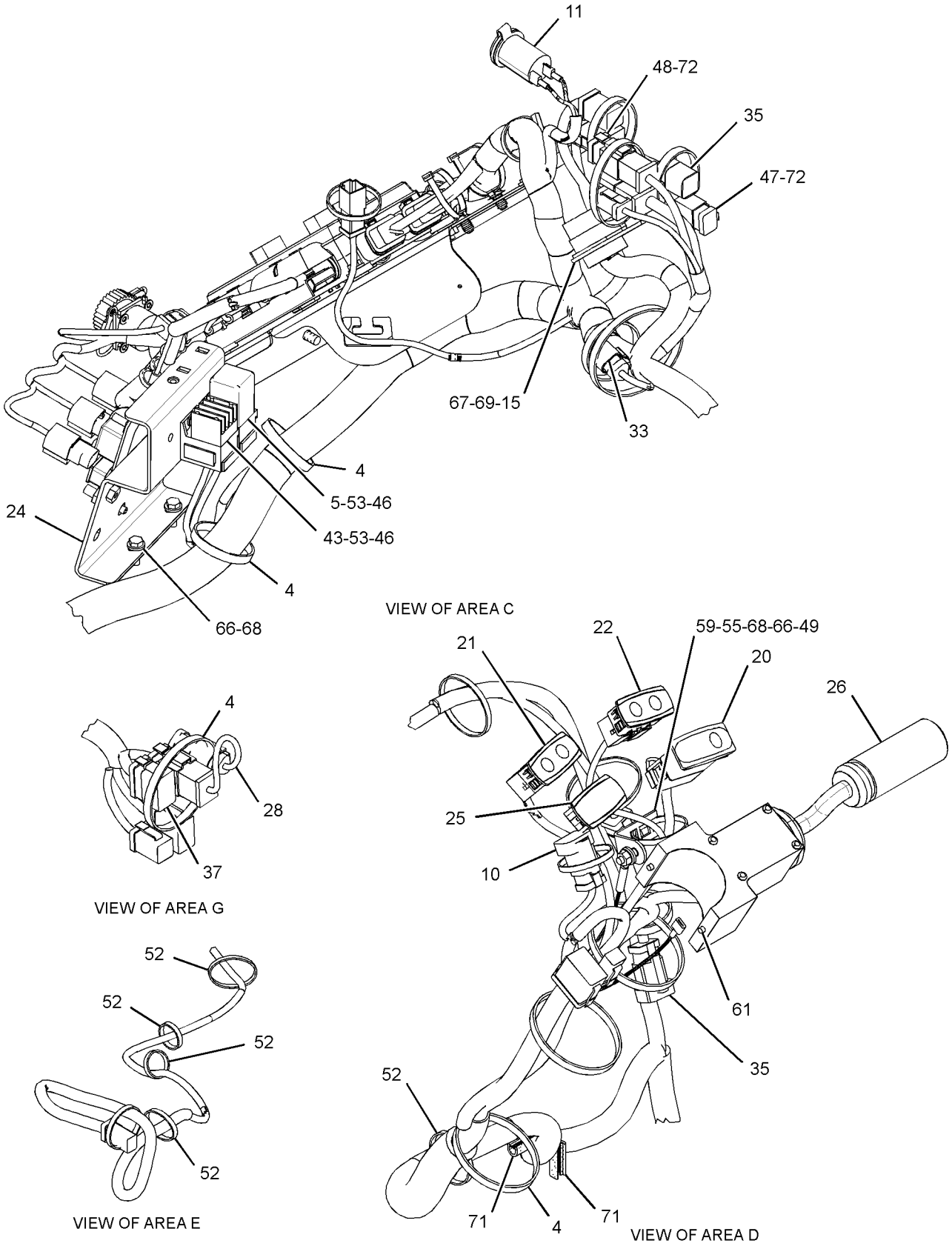

GRAPHIC #2

g01618794

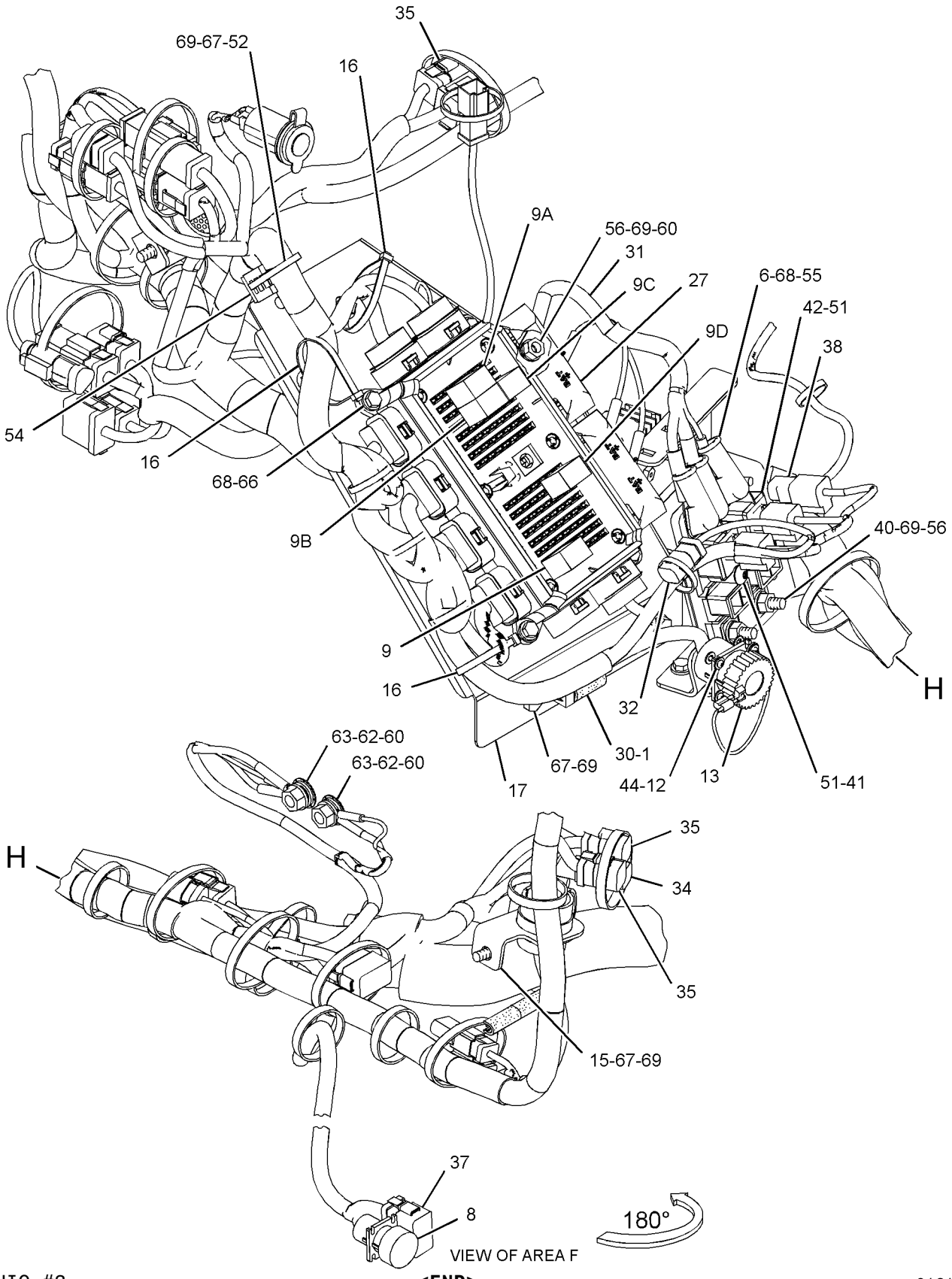

GRAPHIC #3

<END>

g01618907

211-4271 WIRING GP-POWER RECEPTACLE

S/N: HLS1-99999
PART OF 269-2126, 269-2127 CAB AR-ENCLOSED ROPS, 269-2123, 269-2124 CANOPY AR-OPEN ROPS AN ATTACHMENT

SMCS-1408, 7301 **i02973128**

NOTE	REF NO	GRAPHIC REF	PART NUMBER	QTY	PART NAME 1 2 3 4 5 6 (PRODUCT LEVEL)	SEE PAGE
	1	1	**178-7539**	1	RECEPTACLE AS (POWER SUPPLY)	

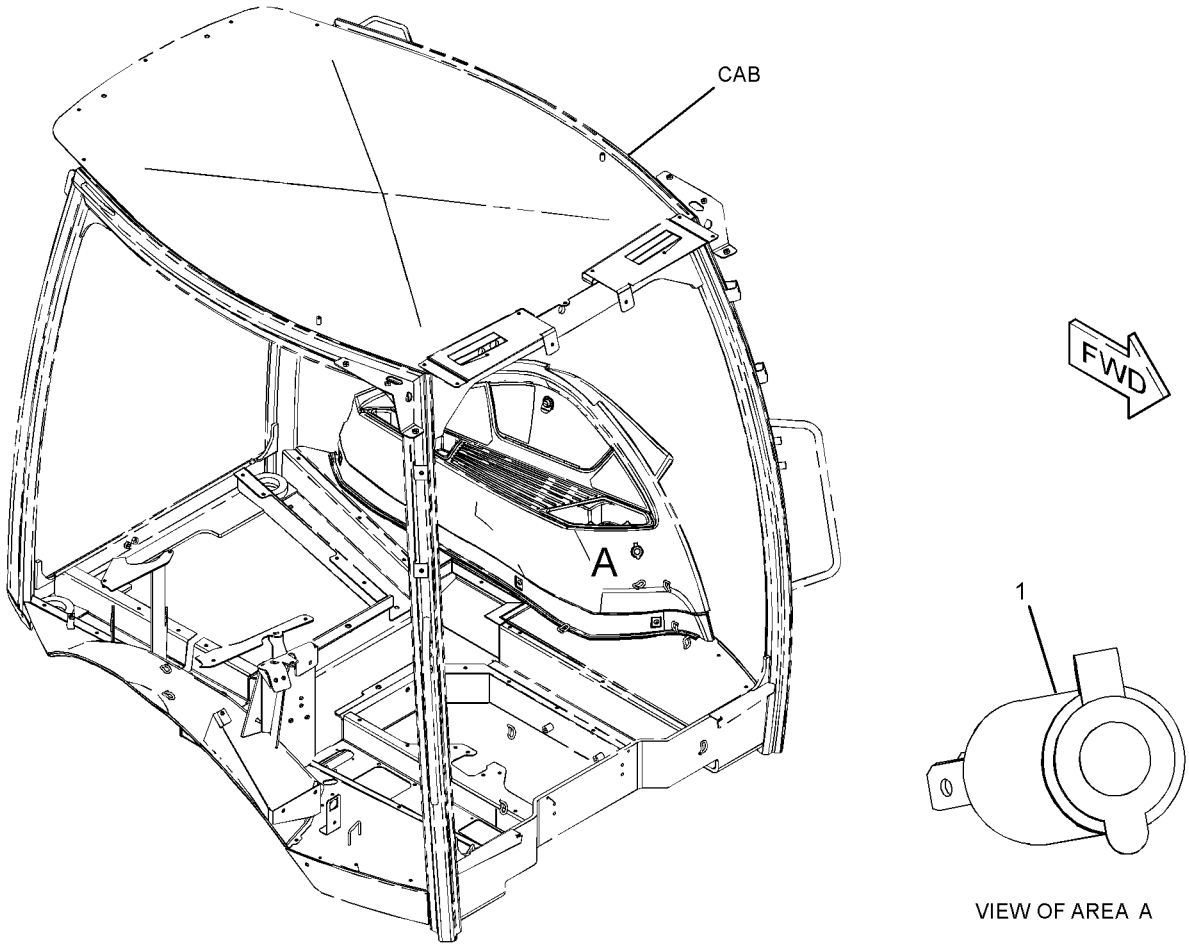

VIEW OF AREA A

GRAPHIC #1 **<END>** g01520595

211-4251 WIRING GP-REAR–BACKUP ALARM

S/N: HLS1-7041

PART OF 213-9287 CHASSIS AR

SMCS-1408 **i03527800**

NOTE	REF NO	GRAPHIC REF	PART NUMBER	QTY	PART NAME 1 2 3 4 5 6 (PRODUCT LEVEL)	SEE PAGE
	1	1	**7K-1181**	1	STRAP-CABLE	
	2	1	**9U-2277**	1	CLIP AS	
		1	**8C-3334**	1	RIVET-TUBULAR	
	3	1	**106-8704**	3	SUPPRESSOR AS-ARC	
	4	1	**154-5428**	1	ALARM AS	
		1	**102-8802**	1	KIT-RECEPTACLE (2-PIN)	
					(INCLUDES RECEPTACLE AS & WEDGE)	
	5	1	**263-9499**	1	HARNESS AS-REAR (PLATFORM)	
M	6	1	**111-4627**	2	SCREW-MACHINE (M6X1X30-MM)	
	7	1	**3S-2093**	7	STRAP-CABLE	
	8	1	**4P-7581**	1	CLIP	
	9	1	**8T-4121**	1	WASHER-HARD (11X21X2.5-MM THK)	
M	10	1	**8T-4134**	1	NUT (M6X1-THD)	
M	11	1	**8T-4137**	1	BOLT (M10X1.5X20-MM)	
	12	1	**9X-6165**	1	WASHER (6.5X22X2.5-MM THK)	

M-METRIC PART

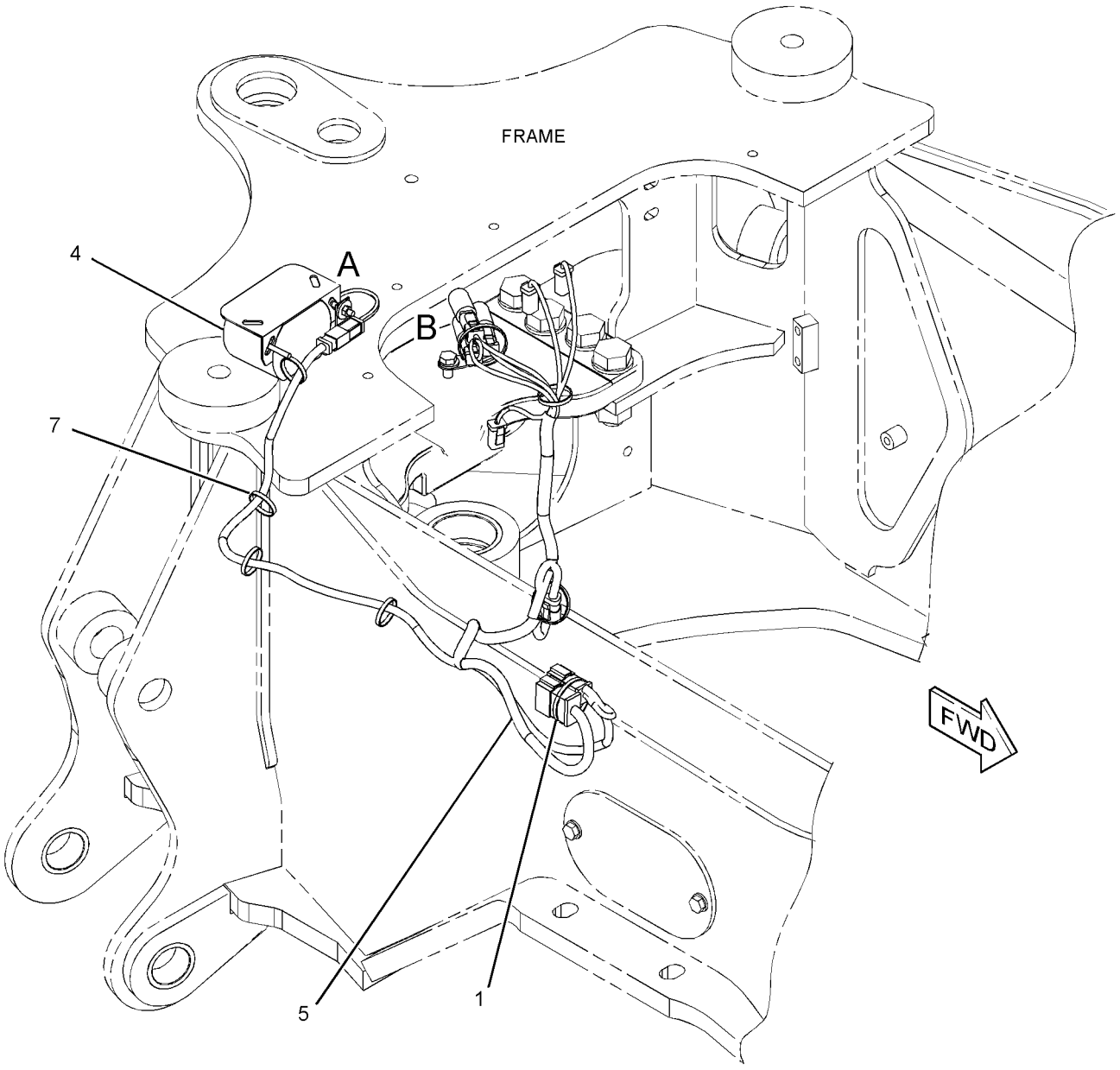

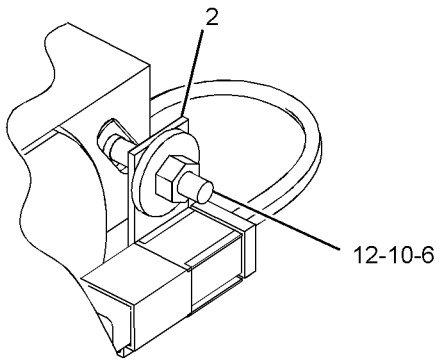

VIEW OF AREA A

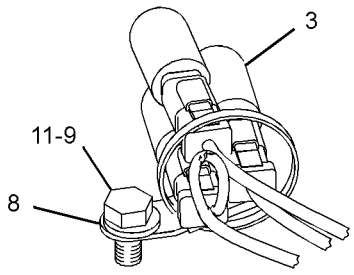

VIEW OF AREA B

GRAPHIC #1 **<END>** g01231213

211-4251 WIRING GP-REAR–BACKUP ALARM

S/N: HLS7042-99999

PART OF 213-9287 CHASSIS AR

SMCS-1408 **i03330301**

NOTE	REF NO	GRAPHIC REF	PART NUMBER	QTY	PART NAME 1 2 3 4 5 6 (PRODUCT LEVEL)	SEE PAGE
C	1	1	**7K-1181**	3	STRAP-CABLE	
	2	1	**9U-2277**	1	CLIP AS	
	3	1	**154-5428**	1	ALARM AS	
		1	**186-3735**	2	PIN-CONNECTOR (16-GA TO 18-GA)	
		1	**102-8802**	1	KIT-RECEPTACLE (2-PIN)	
					(INCLUDES RECEPTACLE AS & WEDGE)	
C	4	1	**189-3158**	2	SUPPRESSOR-ARC	
	5	1	**263-9499**	1	HARNESS AS-REAR (PLATFORM)	
M	6	1	**111-4627**	2	SCREW-MACHINE (M6X1X30-MM)	
C	7	1	**3S-2093**	5	STRAP-CABLE	
	8	1	**4P-7581**	1	CLIP	
	9	1	**8T-4121**	1	WASHER-HARD (11X21X2.5-MM THK)	
M	10	1	**8T-4134**	1	NUT (M6X1-THD)	
M	11	1	**8T-4137**	1	BOLT (M10X1.5X20-MM)	
	12	1	**9X-6165**	1	WASHER (6.5X22X2.5-MM THK)	

C-CHANGE FROM PREVIOUS TYPE
M-METRIC PART

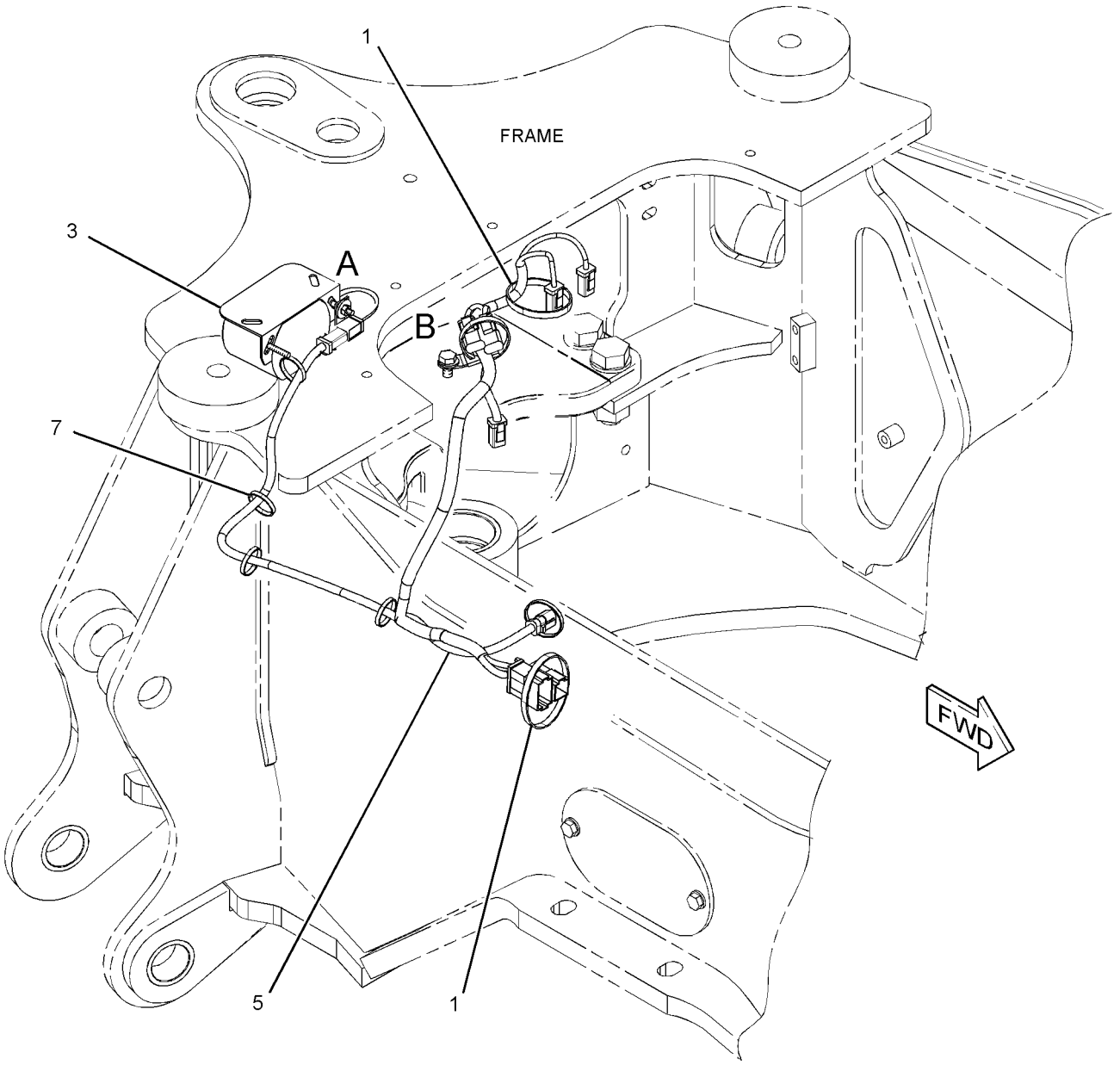

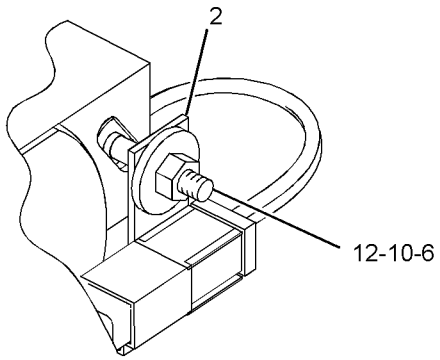

VIEW OF AREA A

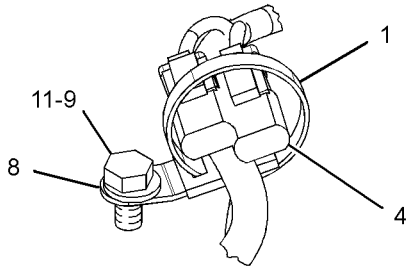

VIEW OF AREA B

GRAPHIC #1 **<END>** g01517220

211-4259 WIRING GP-RIDE CONTROL

S/N: HLS1-99999
PART OF 209-9937 CONTROL AR-RIDE
AN ATTACHMENT

SMCS-1408 **i03530383**

NOTE	REF NO	GRAPHIC REF	PART NUMBER	QTY	PART NAME 1 2 3 4 5 6 (PRODUCT LEVEL)	SEE PAGE
	1	1	**146-9439**	1	RELAY AS (12-VOLT) (RIDE CONTROL)	
	2	1	**246-8038**	1	HARNESS AS-RIDE CONTROL	
	3	1	**214-4710**	1	SWITCH AS-ROCKER (RIDE CONTROL)	
		1	**111-7899**	1	GASKET	
	4	1	**3S-2093**	4	STRAP-CABLE	
	5	1	**3J-1907**	1	SEAL-O-RING	
	6	1	**4P-7581**	1	CLIP	
	7	1	**106-8704**	1	SUPPRESSOR AS-ARC	
	8	1	**304-5696**	1	SWITCH AS-PRESSURE (RIDE CONTROL)	
		1	**186-3735**	3	PIN-CONNECTOR (16-GA TO 18-GA)	
		1	**102-8803**	1	KIT-RECEPTACLE (3-PIN)	
					(INCLUDES RECEPTACLE AS & WEDGE)	

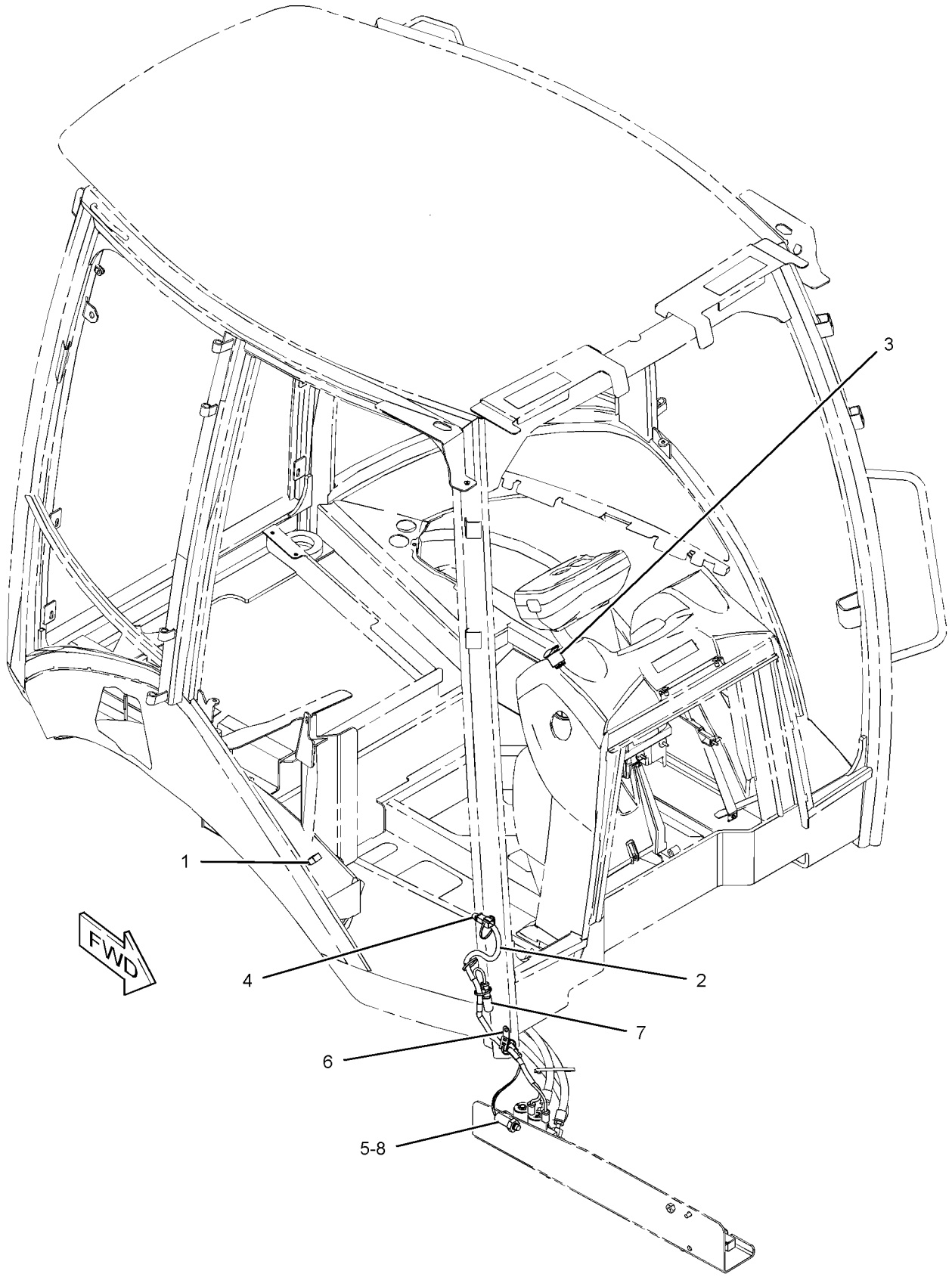

GRAPHIC #1 **<END>** g01208447

225-7996 WIRING GP-STABILIZER

S/N: HLS1-5819

PART OF 269-2126, 269-2127 CAB AR-ENCLOSED ROPS

AN ATTACHMENT

SMCS-1408, 5734 **i03527802**

NOTE	REF NO	GRAPHIC REF	PART NUMBER	QTY	PART NAME 1 2 3 4 5 6 (PRODUCT LEVEL)	SEE PAGE
	1	1	**8Y-7833**	1	WIRE AS	
	2	1	**173-7003**	1	RELAY AS-TIMER (12-VOLT) (STABILIZER, AUTO UP, 12-VOLT)	

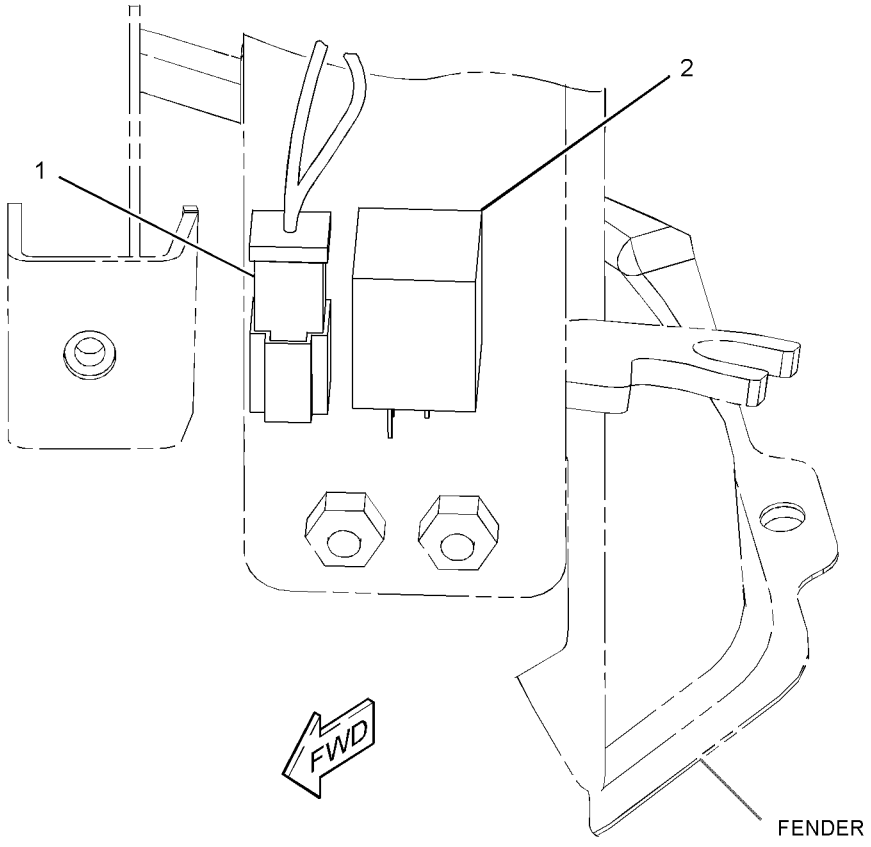

GRAPHIC #1 **<END>** g01231627

225-7996 WIRING GP-STABILIZER

S/N: HLS5820-99999

PART OF 269-2126, 269-2127 CAB AR-ENCLOSED ROPS

AN ATTACHMENT

SMCS-1408, 5734 **i03530385**

NOTE	REF NO	GRAPHIC REF	PART NUMBER	QTY	PART NAME 1 2 3 4 5 6 (PRODUCT LEVEL)	SEE PAGE
C	1	1	**7K-1181**	2	STRAP-CABLE	
	2	1	**8Y-7833**	1	WIRE AS	
	3	1	**173-7003**	1	RELAY AS-TIMER (12-VOLT) (STABILIZER, AUTO UP, 12-VOLT)	
C	4	1	**225-7997**	1	HARNESS AS-REAR (STABILIZER, AUTO UP)	
C	5	1	**6K-0806**	1	STRAP-CABLE	

C-CHANGE FROM PREVIOUS TYPE

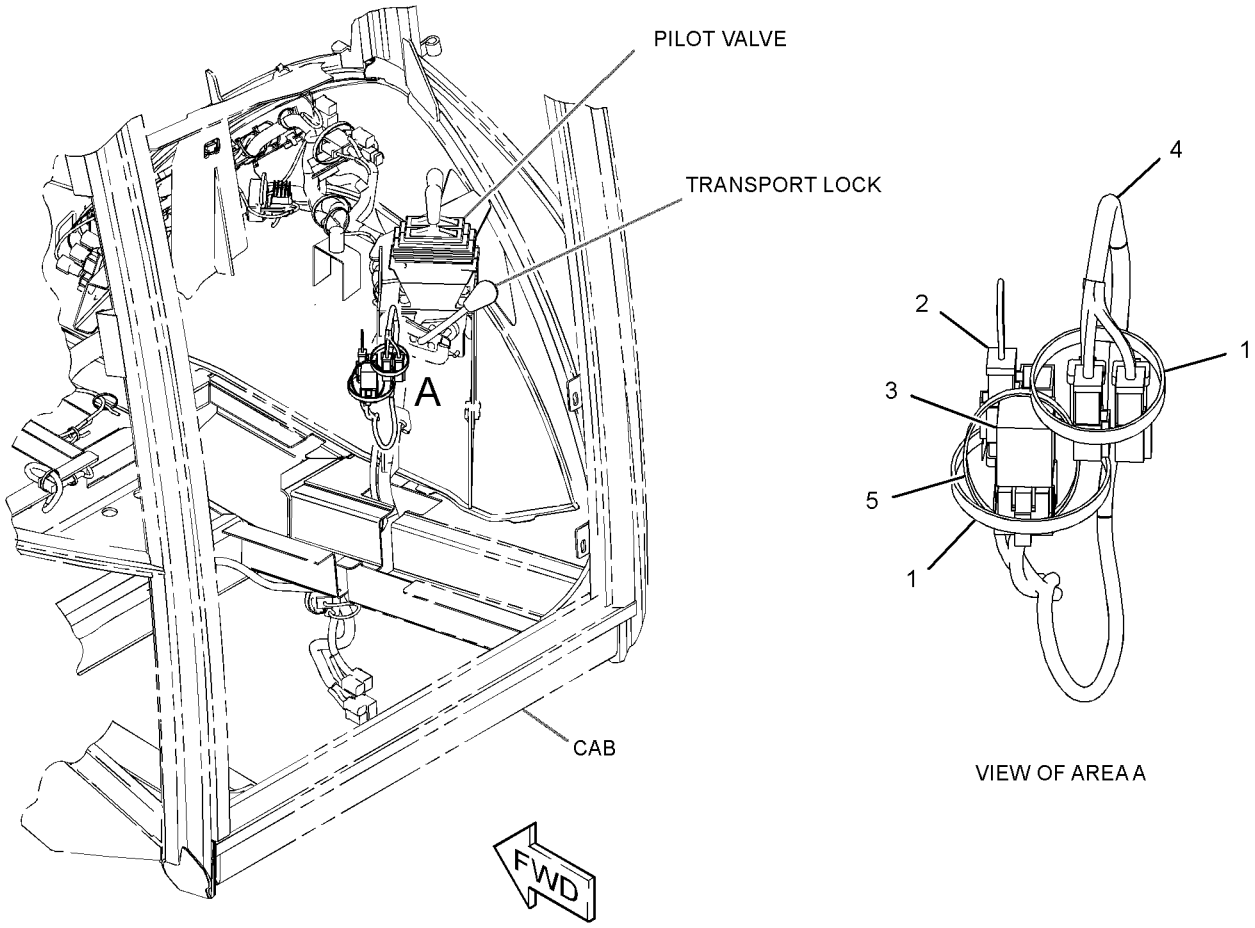

GRAPHIC #1 **<END>** g01432978

211-4254 WIRING GP-TRANSMISSION CONTROL–
AUTOSHIFT, STANDARD SHIFT
S/N: HLS1-99999
PART OF 216-3316 POWER TRAIN AR
AN ATTACHMENT

SMCS-1408, 3168 **i03530401**

NOTE	REF NO	GRAPHIC REF	PART NUMBER	QTY	PART NAME 1 2 3 4 5 6 (PRODUCT LEVEL)	SEE PAGE
	1	1	**7K-1181**	9	STRAP-CABLE	
	2	1	**164-1368**	8	FASTENER-PANEL	
	3	1	**206-2423**	1	SADDLE	
	4	1	**213-6096**	1	HARNESS AS-PANEL (AUTOSHIFT, STAND SHIFT SWITCH)	
	5	1	**214-4691**	1	SWITCH AS-ROCKER (AUTOSHIFT, STANDARD SHIFT)	
		1	**111-7899**	1	GASKET	
	6	1	**225-7959**	1	HARNESS AS-WIRING (AUTOSHIFT)	
	7	1	**232-1545**	1	PLATE AS	
	8	1	**246-8052**	1	HARNESS AS-TRANSMISSION	
	9	1	**261-2208**	1	CONTROL GP-TRANSMISSION (FORWARD, NEUTRAL, REVERSE)	
	10	1	**274-9993**	1	PLATE	
M	11	1	**095-0756**	4	SCREW-MACHINE (M5X0.8X16-MM)	
	12	1	**3S-2093**	5	STRAP-CABLE	

M-METRIC PART

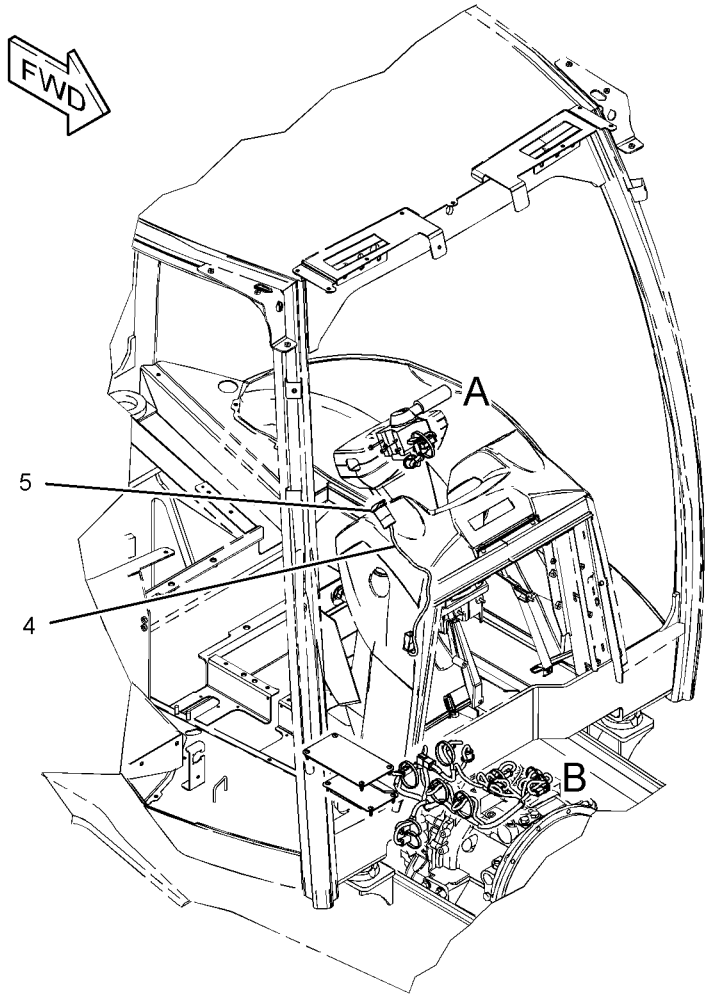

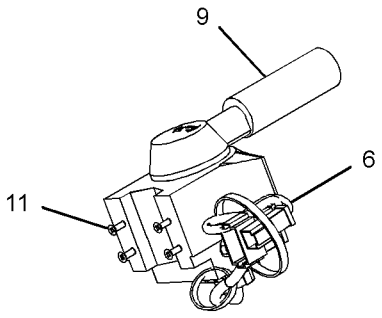

VIEW OF AREA A

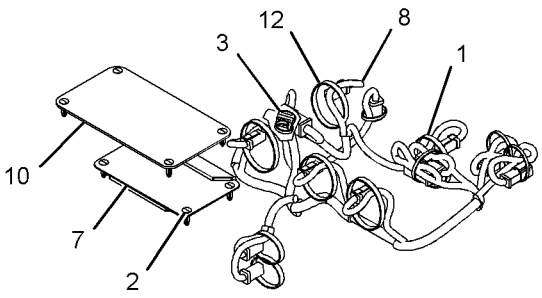

VIEW OF AREA B

GRAPHIC #1 **<END>** g01209126

230-5743 AXLE GP-DRIVE & STEERING–FRONT

S/N: HLS1-99999
PART OF 216-4740 DRIVE AR-BACKHOE LOADER
AN ATTACHMENT

SMCS-3020, 3250, 3258, 3259, 3260, 3264, 3278, 4050, 4303, 4313

i03548107

NOTE	REF NO	GRAPHIC REF	PART NUMBER	QTY	PART NAME 1 2 3 4 5 6 (PRODUCT LEVEL)	SEE PAGE
M	1	1	**8C-7505**	4	SCREW-FLAT HEAD (M8X1.25X20-MM)	
	2	1	**290-4164**	6	BOLT (M20X1.5X80-MM)	
	3	1	**207-4258**	2	NUT (M20X1.5-THD)	
	4	1	**219-8798**	2	SEAL-LIP TYPE	
	5	1	**219-8795**	1	CAP	
	6	1	**209-9875**	2	DOWEL	
	7	1	**209-7456**	2	BUSHING	
	8	1	**152-6144**	4	PLUG AS-DRAIN (MAGNETIC)	
					(EACH INCLUDES)	
		1	**6V-6228**	1	SEAL-O-RING	
	9	1	**208-0321**	11	BOLT-FLANGE HEAD (M12X1.75X33-MM)	
	10	1	**209-7464**	2	SEAL	
M	11	1	**199-0683**	16	BOLT (M16X2X38-MM)	
	12	1	**210-5937**	2	WASHER (46X66X3-MM THK)	
Y	13	1	**209-9882**	1	DIFFERENTIAL & BEVEL GEAR GP	215
	14	1	**210-5942**	2	RING	
	15	1	**209-9883**	1	HOUSING	
J	16	1	**210-5946**	2	SHAFT GP-AXLE	
					(EACH INCLUDES)	
		1	**174-4671**	1	YOKE	
	17	1	**209-9886**	2	TIE ROD GP	
					(EACH INCLUDES)	
		1	**204-3080**	1	BALL JOINT	
		1	**217-2883**	1	TIE ROD	
		1	**217-2885**	1	NUT	
	18	1	**209-9887**	1	BUSHING	
	19	1	**210-5947**	2	WASHER-THRUST (44.6X58X7-MM THK)	
	20	1	*216-7473*	4	PIN AS (UPPER)	
					(EACH INCLUDES)	
		1	**198-7823**	1	BEARING AS	
		1	**198-7825**	1	SEAL	
		1	**198-7838**	1	PIN	
Y	21	1	**210-5924**	2	PLANETARY GP-FINAL DRIVE	239
Y	22	1	**209-9884**	1	HOUSING & FLANGE GP-AXLE (RH)	228
Y	23	1	**209-9885**	1	HOUSING & FLANGE GP-AXLE (LH)	229
	24	1	**1H-8278**	2	SEAL-O-RING	
L	25	1	**214-5097**	1	CYLINDER GP-STEERING	
		1	**238-5254**	1	ROD	
		1	**238-5255**	2	CYLINDER HEAD	
	26	1	**253-5024**	1	BREATHER (FRONT AXLE)	
B	27	1	**1U-8846**		SEALANT-GASKET	
	28	1	**154-5404**	2	BEARING	
B	29	1	**198-7841**	8	SHIM (0.15-MM THK)	
B	30	1	**198-7842**	4	SHIM (0.2-MM THK)	
B	31	1	**198-7843**	4	SHIM (0.5-MM THK)	
	32	1	**5P-2931**	1	SEAL-O-RING	
					AVAILABLE REPAIR KIT(S):	
J			**174-4643**	2	KIT-SPIDER	
					(EACH INCLUDES SPIDER & RINGS)	
L			**215-2023**	1	KIT-SEAL	
					(INCLUDES RINGS, SEALS & WASHERS)	

230-5743 AXLE GP-DRIVE & STEERING *(contd.)* i03548107

B-USE AS REQUIRED
J-KIT MARKED J AVAILABLE FOR PART MARKED J
L-KIT MARKED L AVAILABLE FOR PART MARKED L
M-METRIC PART
Y-SEPARATE ILLUSTRATION

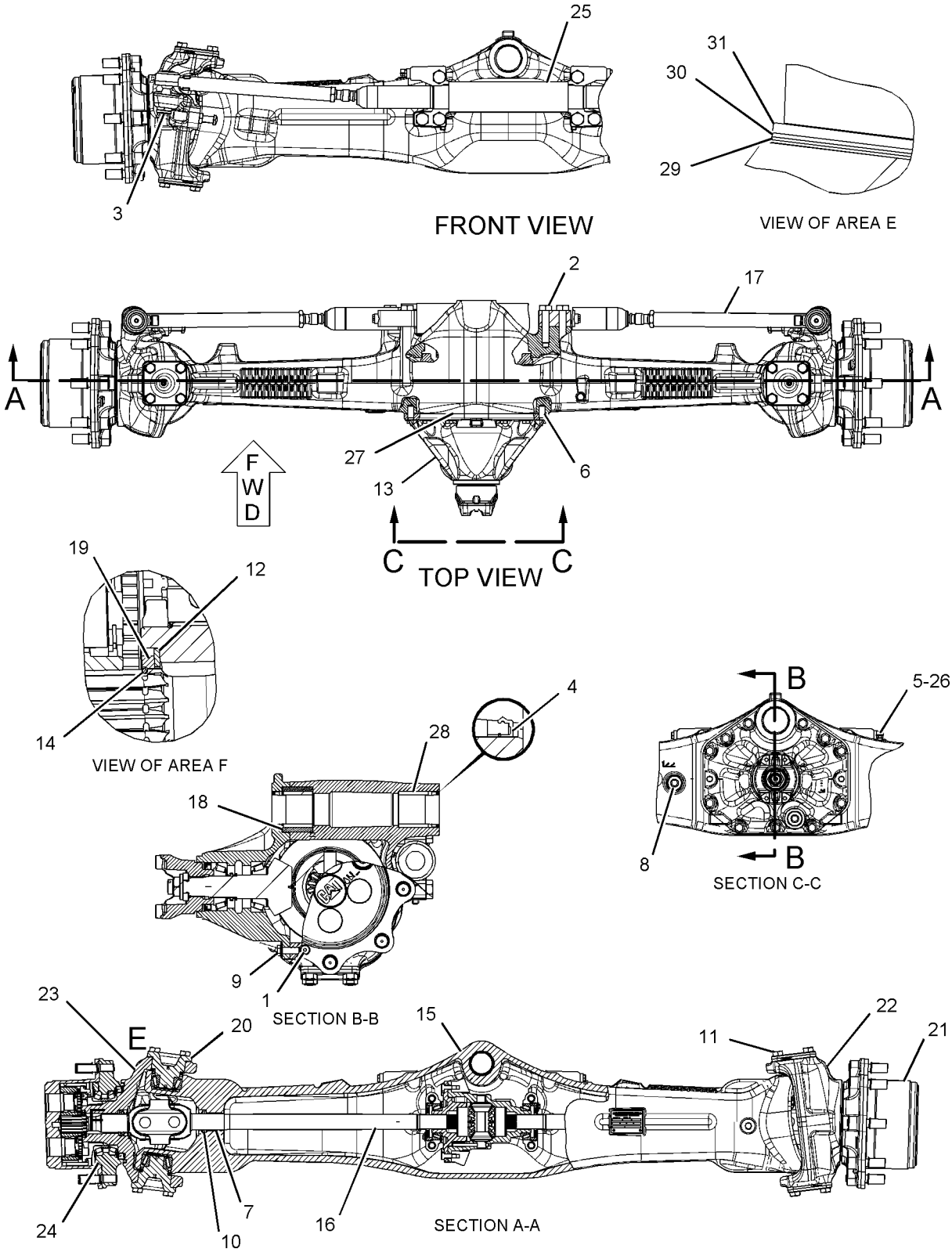

GRAPHIC #1 **<END>** g01094314

POWER TRAIN

230-5739 AXLE GP-REAR

S/N: HLS1-99999

PART OF 216-4739, 216-4740 DRIVE AR-BACKHOE LOADER

AN ATTACHMENT

SMCS-3278, 3282 **i03548141**

NOTE	REF NO	GRAPHIC REF	PART NUMBER	QTY	PART NAME 1 2 3 4 5 6 (PRODUCT LEVEL)	SEE PAGE
M	1	2	**8C-7505**	4	SCREW-FLAT HEAD (M8X1.25X20-MM)	
M	2	1	**6V-3940**	2	BOLT (M8X1.25X25-MM)	
	3	1	**199-0652**	2	CLIP-PIN	
	4	1	**9X-6378**	2	RING-RETAINING	
	5	1	**210-3098**	2	SEAL	
	6	1	**199-0668**	2	BRACKET	
	7	2	**197-9155**	1	BREATHER (AXLE)	
	8	2	**199-0670**	2	SCREW-PURGE	
	9	2	**198-7811**	2	DOWEL	
	10	1	**152-6144**	4	PLUG AS-DRAIN (MAGNETIC) (AXLE)	
					(EACH INCLUDES)	
		1	**6V-6228**	1	SEAL-O-RING	
	11	1	**199-0676**	2	SPRING	
M	12	1	**199-0679**	2	BOLT (M16X2X95-MM)	
	13	1	**210-3099**	2	SLEEVE	
	14	1	**210-3100**	2	BUSHING	
	15	1	**199-0706**	1	PISTON	
	16	2	**199-0786**	8	PLATE	
	17	2	**199-0787**	6	PIN	
	18	1	**210-7305**	2	SHAFT	
	19	2	**210-3106**	1	BRACKET	
	20	2	**212-5713**	2	PLUG	
	21	1	*216-1608*	2	GEAR GP-RING (REAR AXLE)	
					(EACH INCLUDES)	
		1	**199-0778**	1	RING-SNAP	
		1	**210-7302**	1	GEAR-RING (81-TEETH)	
		1	**226-4364**	1	HUB	
Y	22	1	*216-1609*	2	FLANGE GP-WHEEL	226
Y	23	1	**216-1610**	2	PLANETARY GP-FINAL DRIVE (AXLE)	240
	24	1	**217-2914**	1	COVER (DIFFERENTIAL LOCK)	
	25	1	**231-0699**	1	COVER (DIFFERENTIAL LOCK)	
	26	1	**219-8839**	1	ROD	
	27	1	**174-4647**	1	BUSHING	
	28	1	**174-4650**	1	SPACER (20X32X8-MM THK)	
	29	2	**231-0698**	2	SHAFT-AXLE	
	30	2	**226-4366**	2	NUT-SPANNER	
	31	2	**226-4365**	2	WASHER-TAB	
	32	1	**226-4367**	2	SPACER (110X123X22.99-MM THK)	
	33	2	**226-4370**	6	BOLT-SELF-LOCKING	
	34	2	**238-5291**	6	DISC-BRAKE (REAR AXLE)	
	35	2	**238-5292**	2	HUB-BRAKE (REAR AXLE)	
	36	2	**238-5293**	1	HOUSING-AXLE (LH)	
	37	2	**238-5294**	1	HOUSING-AXLE (RH)	
Y	38	2	*238-5289*	1	HOUSING GP-AXLE	232
	39	1	**4F-9029**	2	SEAL	
	40	1	**9X-7684**	2	SEAL-O-RING	
	41	1	**5H-4909**	2	SEAL-O-RING	
M	42	1	**8T-0292**	2	BOLT (M8X1.25X90-MM)	
	43	2	**130-7282**	1	BRACKET	
M	44	2	**7X-2559**	26	BOLT (M16X2X160-MM)	
	45	1,2	**3J-1907**	1	SEAL-O-RING	
	46	1	**9S-8004**	1	PLUG-O-RING	
B	47	2	**1U-8846**		SEALANT-GASKET	
J	48	2	**259-0127**	1	BRAKE GP-HYDRAULIC CALIPER	
	49	2	**4L-6454**	2	BOLT (3/8-16X1-IN)	

230-5739 **AXLE GP-REAR** *(contd.)* **i03548141**

NOTE	REF NO	GRAPHIC REF	PART NUMBER	QTY	PART NAME 1 2 3 4 5 6 (PRODUCT LEVEL)	SEE PAGE
	50	2	**219-8795**	1	CAP	
					AVAILABLE REPAIR KIT(S):	
J			**259-0129**	1	KIT-BRAKE CALIPER	
					(INCLUDES SLEEVE KIT, SLEEVE PROTECTORS, WASHERS & NUT)	
J			**259-0128**	1	KIT-BRAKE LINING	
					(INCLUDES LINING ASSEMBLY, SPRING, GREASE, CORRUGATED 2-WALL & INSTRUCTION SHEET)	
J			**166-9413**	1	KIT-CAM (COUNTERCLOCKWISE)	
					(INCLUDES CAMS, BALL BEARINGS & BALL RETAINERS)	

B-USE AS REQUIRED
J-KITS MARKED J SERVICE PART MARKED J
M-METRIC PART
Y-SEPARATE ILLUSTRATION

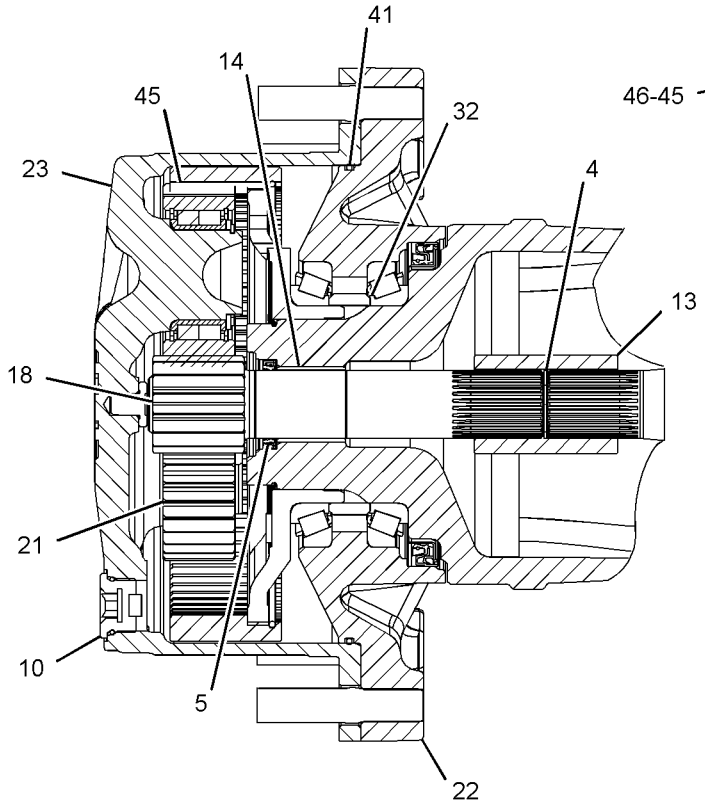

VIEW OF AREA B

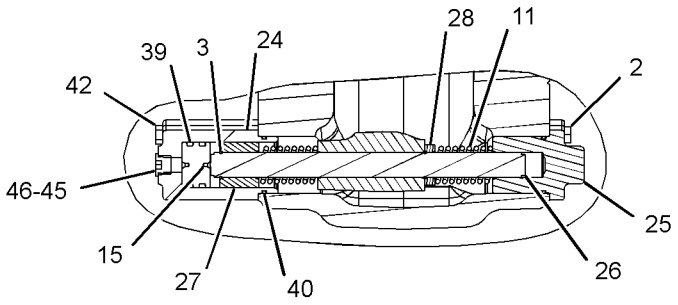

SECTION E-E

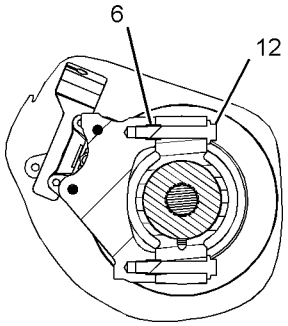

SECTION F-F

GRAPHIC #1 g01263547

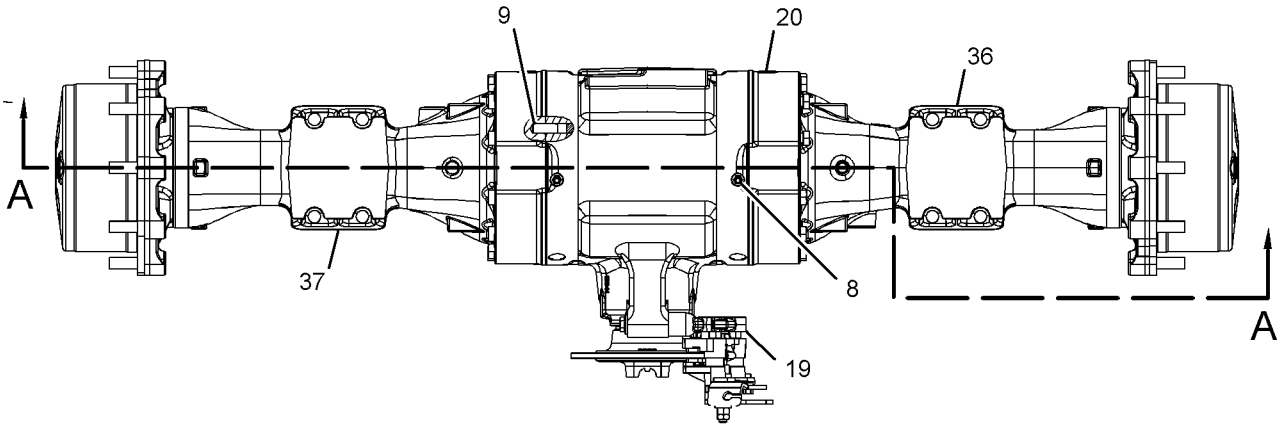

TOP VIEW

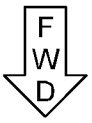

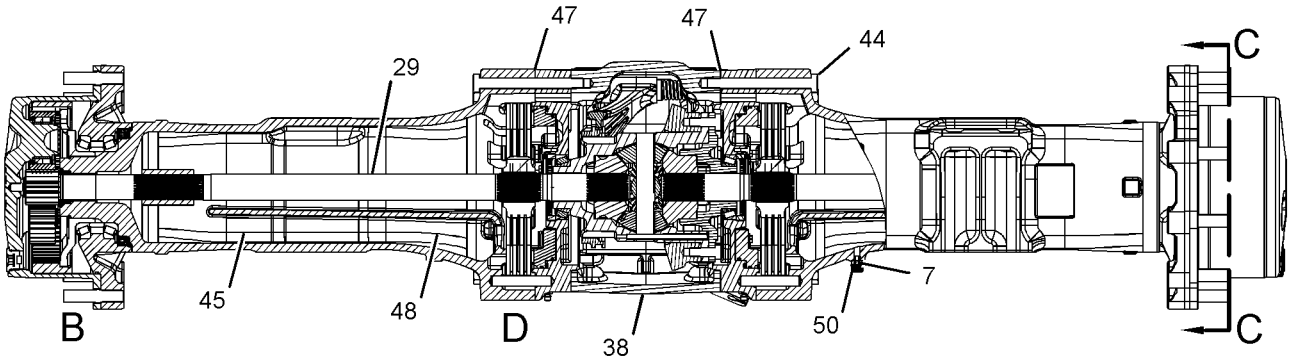

SECTION A-A

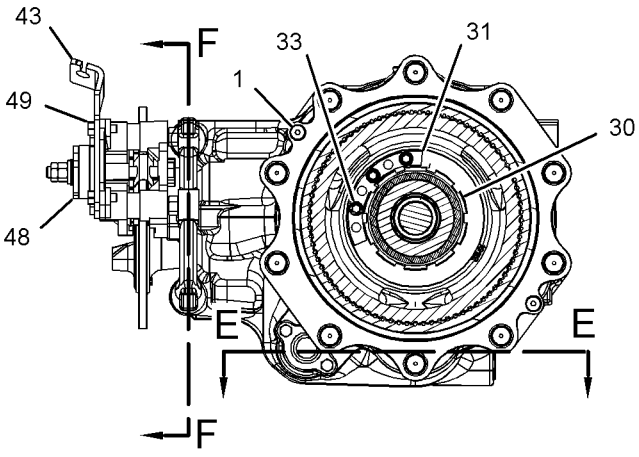

SECTION C-C

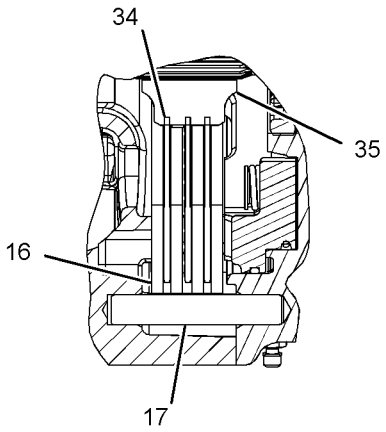

VIEW OF AREA D

REFER TO ALL ILLUSTRATIONS OF THIS GROUP FOR AUXILIARY VIEWS

GRAPHIC #2 **<END>** g01263548

275-0468 CASE AS-TRANSMISSION–FRONT

S/N: HLS1-99999
PART OF 271-3774 TRANSMISSION GP-DIRECT DRIVE
AN ATTACHMENT

SMCS-3030, 3064 **i03091844**

NOTE	REF NO	GRAPHIC REF	PART NUMBER	QTY	PART NAME 1 2 3 4 5 6 (PRODUCT LEVEL)	SEE PAGE
	1	1	**120-9762**	4	SEAL-O-RING	
M	2	1	**6V-5215**	2	BOLT (M8X1.25X16-MM)	
	3	1	**7T-2651**	1	STRAINER (SUCTION)	
	4	1	**106-9861**	1	PLATE-COVER	
	5	1	**7T-3051**	1	PLUG	
	6	1	**005-0469**	1	CUP-BEARING	
	7	1	**8T-1580**	1	CUP	
	8	1	**6Y-2737**	1	CUP-BEARING	
	9	1	**123-8906**	2	CUP-TAPERED ROLLER	
	10	1	**9W-5460**	1	RING	
	11	1	**4J-0522**	1	SEAL-O-RING	
	12	1	**275-0469**	1	CASE AS-FRONT	
		1	**122-3652**	2	PLUG	
		1	**123-2920**	3	PLUG	
		1	**237-5188**	1	PLUG-EXPANSION	
	13	1	**7T-3253**	2	DOWEL	

M-METRIC PART

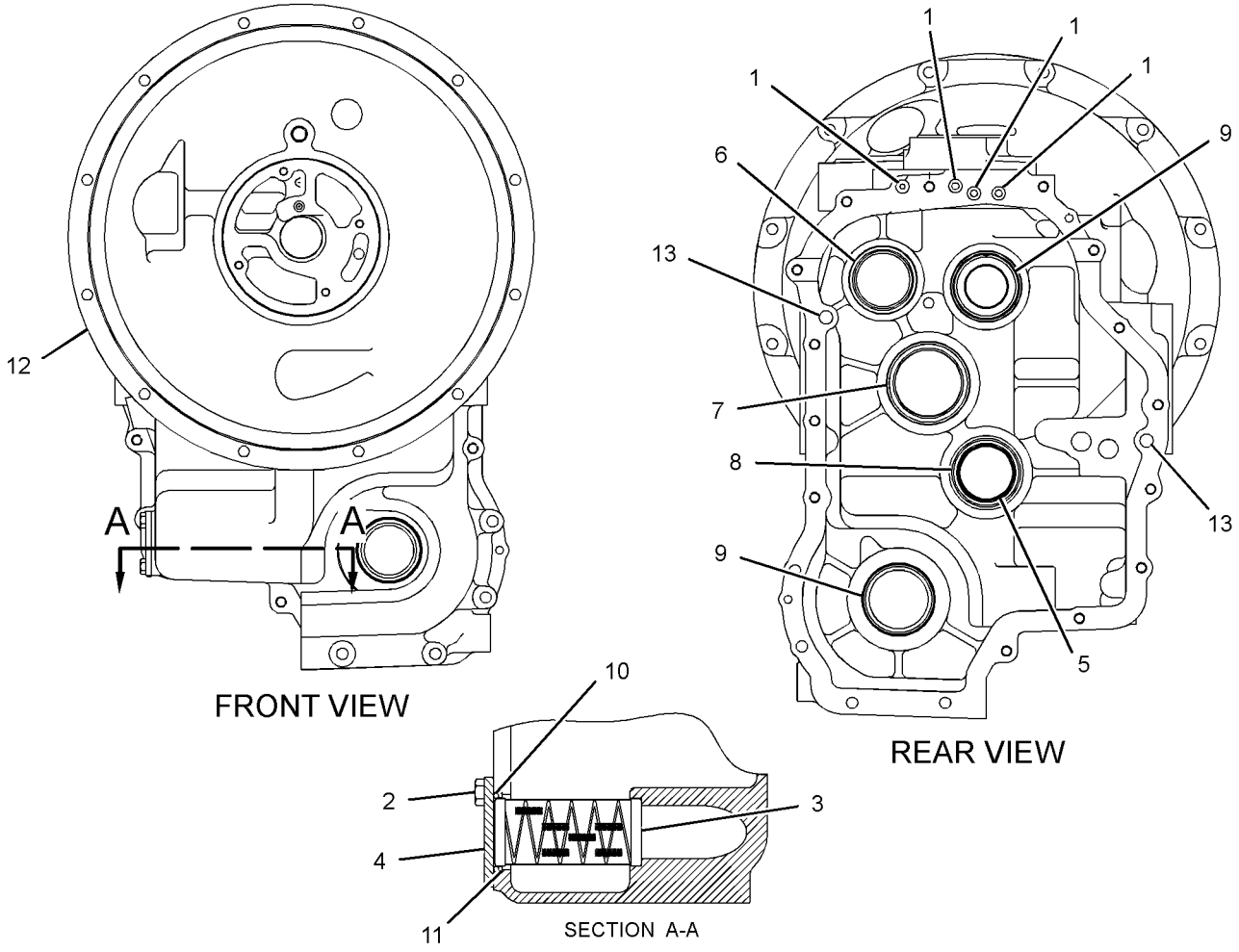

GRAPHIC #1 **<END>** g01220674

275-0470 CASE AS-TRANSMISSION–REAR

S/N: HLS1-99999
PART OF 271-3774 TRANSMISSION GP-DIRECT DRIVE
AN ATTACHMENT

SMCS-3030, 3064 **i02909070**

NOTE	REF NO	GRAPHIC REF	PART NUMBER	QTY	PART NAME 1 2 3 4 5 6 (PRODUCT LEVEL)	SEE PAGE
	1	1	**123-8906**	1	CUP-TAPERED ROLLER	
B	2	1	**6T-9144**	1	SHIM (0.051-MM THK)	
B	3	1	**6T-9147**	1	SHIM (0.076-MM THK)	
B	4	1	**6T-9146**	1	SHIM (0.127-MM THK)	
B	5	1	**6T-9145**	1	SHIM (0.178-MM THK)	
B	6	1	**6T-9143**	1	SHIM (0.381-MM THK)	
B	7	1	**6T-9142**	1	SHIM (0.508-MM THK)	
	8	1	**7T-3034**	1	SPACER (56.9X64.5X1.98-MM)	
	9	1	**7T-2646**	2	SPACER (66X79.5X2.02-MM THK)	
B	10	1	**6T-9166**	2	SHIM (0.051-MM THK)	
B	11	1	**6T-9165**	2	SHIM (0.076-MM THK)	
B	12	1	**6T-9164**	2	SHIM (0.178-MM THK)	
B	13	1	**6T-9163**	2	SHIM (0.599-MM THK)	
B	14	1	**121-7399**	1	SHIM (0.05-MM THK)	
B	15	1	**121-7400**	1	SHIM (0.08-MM THK)	
B	16	1	**121-7401**	1	SHIM (0.18-MM THK)	
B	17	1	**121-7402**	1	SHIM (0.6-MM THK)	
	18	1	**121-7398**	1	SPACER (70X79.5X2-MM THK)	
	19	1	**005-0469**	1	CUP-BEARING	
	20	1	**123-8908**	2	CUP-TAPERED ROLLER	
	21	1	**123-8910**	1	CUP-TAPERED ROLLER	
	22	1	**274-8630**	1	CASE-REAR	
	23	1	**122-1879**	1	SPACER (58X67.5X2-MM THK)	
B	24	1	**104-3288**	1	SHIM (0.05-MM THK)	
B	25	1	**121-2059**	1	SHIM (0.08-MM THK)	
B	26	1	**121-2060**	1	SHIM (0.18-MM THK)	
B	27	1	**121-2061**	1	SHIM (0.6-MM THK)	

B-USE AS REQUIRED

275-0470 CASE AS-TRANSMISSION *(contd.)* **i02909070**

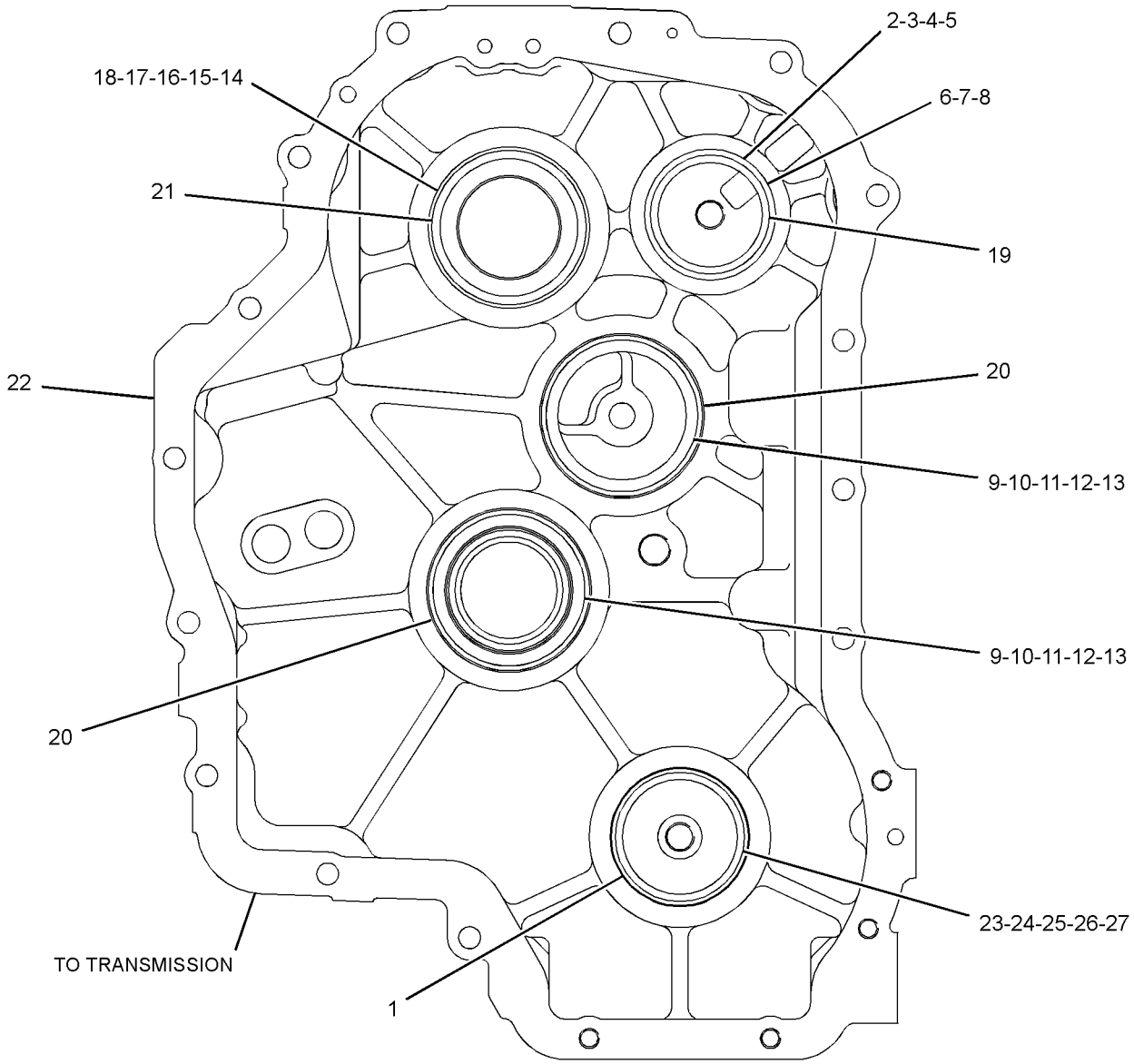

FRONT VIEW

GRAPHIC #1 **<END>** g01448510

275-0472 CASE GP-TRANSMISSION–FRONT

S/N: HLS1-99999
PART OF 271-3773 TRANSMISSION GP-DIRECT DRIVE
AN ATTACHMENT

SMCS-3030, 3064 **i03097420**

NOTE	REF NO	GRAPHIC REF	PART NUMBER	QTY	PART NAME 1 2 3 4 5 6 (PRODUCT LEVEL)	SEE PAGE
M	1	1	**6V-5215**	2	BOLT (M8X1.25X16-MM)	
	2	1	**7T-2651**	1	STRAINER (SUCTION)	
	3	1	**106-9861**	1	PLATE-COVER	
	4	1	**7T-3051**	1	PLUG	
	5	1	**005-0469**	1	CUP-BEARING	
	6	1	**8T-1580**	1	CUP	
	7	1	**6Y-2737**	1	CUP-BEARING	
	8	1	**123-8906**	1	CUP-TAPERED ROLLER	
	9	1	**9W-5460**	1	RING	
	10	1	**4J-0522**	1	SEAL-O-RING	
	11	1	**275-0471**	1	CASE AS-FRONT	
		1	**122-3652**	2	PLUG	
		1	**123-2920**	2	PLUG	
		1	**237-5188**	1	PLUG-EXPANSION	
	12	1	**7T-3253**	2	DOWEL	
	13	1	**120-9762**	3	SEAL-O-RING	

M-METRIC PART

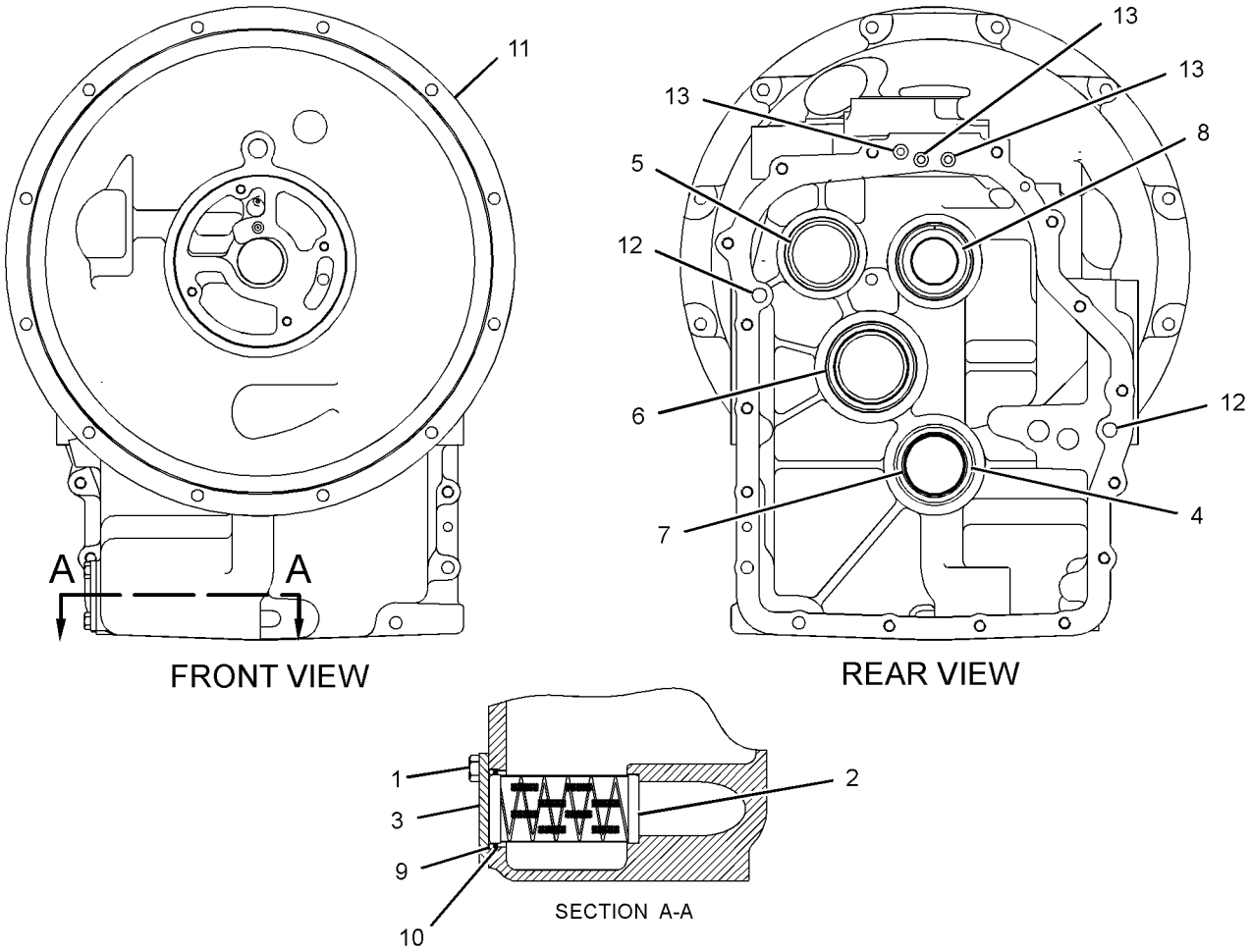

GRAPHIC #1 **<END>** g01220682

275-0474 CASE GP-TRANSMISSION–REAR

S/N: HLS1-99999
PART OF 271-3773 TRANSMISSION GP-DIRECT DRIVE
AN ATTACHMENT

SMCS-3030, 3064 **i03001554**

NOTE	REF NO	GRAPHIC REF	PART NUMBER	QTY	PART NAME 1 2 3 4 5 6 (PRODUCT LEVEL)	SEE PAGE
	1	1	**274-8632**	1	CASE-REAR	
B	2	1	**6T-9144**	1	SHIM (0.051-MM THK)	
B	3	1	**6T-9147**	1	SHIM (0.076-MM THK)	
B	4	1	**6T-9146**	1	SHIM (0.127-MM THK)	
B	5	1	**6T-9145**	1	SHIM (0.178-MM THK)	
B	6	1	**6T-9143**	1	SHIM (0.381-MM THK)	
B	7	1	**6T-9142**	1	SHIM (0.508-MM THK)	
	8	1	**7T-3034**	1	SPACER (56.9X64.5X1.98-MM)	
	9	1	**7T-2646**	2	SPACER (66X79.5X2.02-MM THK)	
B	10	1	**6T-9166**	2	SHIM (0.051-MM THK)	
B	11	1	**6T-9165**	2	SHIM (0.076-MM THK)	
B	12	1	**6T-9164**	2	SHIM (0.178-MM THK)	
B	13	1	**6T-9163**	2	SHIM (0.599-MM THK)	
B	14	1	**121-7399**	1	SHIM (0.05-MM THK)	
B	15	1	**121-7400**	1	SHIM (0.08-MM THK)	
B	16	1	**121-7401**	1	SHIM (0.18-MM THK)	
B	17	1	**121-7402**	1	SHIM (0.6-MM THK)	
	18	1	**121-7398**	1	SPACER (70X79.5X2-MM THK)	
	19	1	**005-0469**	1	CUP-BEARING	
	20	1	**123-8908**	2	CUP-TAPERED ROLLER	
	21	1	**123-8910**	1	CUP-TAPERED ROLLER	

B-USE AS REQUIRED

275-0474 CASE GP-TRANSMISSION *(contd.)* **i03001554**

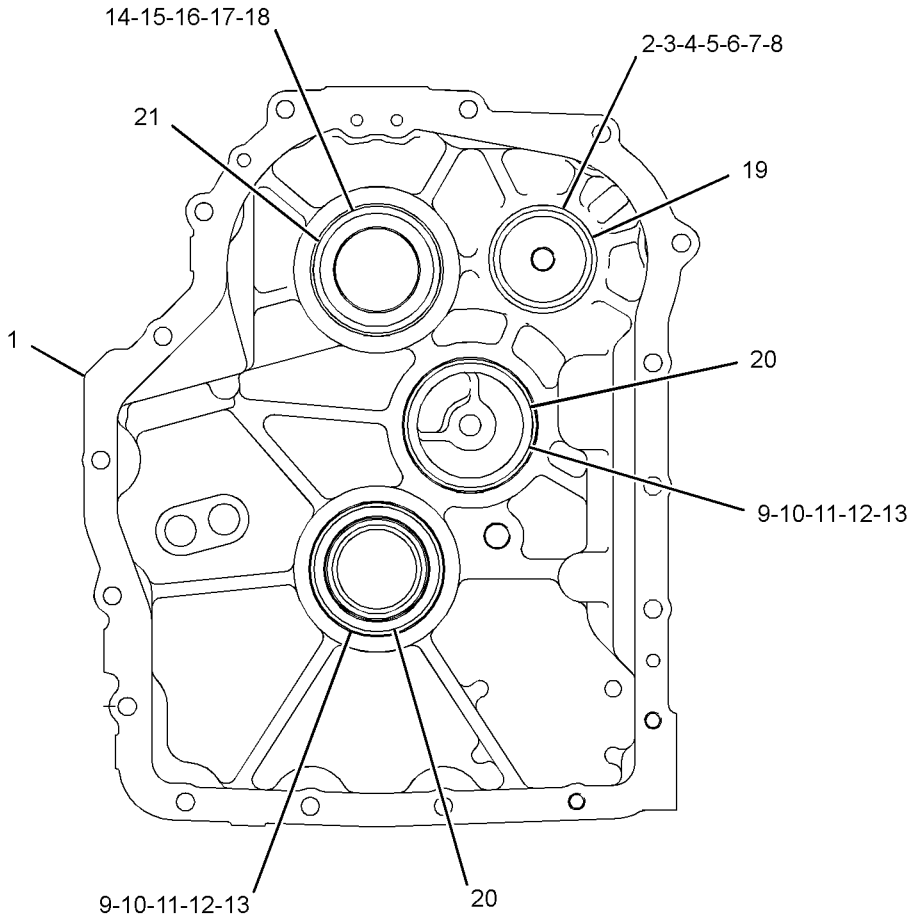

FRONT VIEW

GRAPHIC #1 **<END>** g01388814

294-9809 CASE GP-TRANSMISSION–FRONT

S/N: HLS1-99999
PART OF 271-3773 TRANSMISSION GP-DIRECT DRIVE
AN ATTACHMENT

SMCS-3030, 3064 **i02740653**

NOTE	REF NO	GRAPHIC REF	PART NUMBER	QTY	PART NAME 1 2 3 4 5 6 (PRODUCT LEVEL)	SEE PAGE
M	1	1	**6V-8210**	2	BOLT (M8X1.25X16-MM)	
	2	1	**7T-2651**	1	STRAINER (SUCTION)	
	3	1	**106-9861**	1	PLATE-COVER	
	4	1	**7T-3051**	1	PLUG	
	5	1	**005-0469**	1	CUP-BEARING	
	6	1	**8T-1580**	1	CUP (TAPERED ROLLER)	
	7	1	**6Y-2737**	1	CUP-BEARING	
	8	1	**123-8906**	1	CUP-TAPERED ROLLER	
	9	1	**4F-7952**	1	SEAL-O-RING	
	10	1	**9W-5460**	1	RING	
	11	1	*294-9808*	1	CASE AS-FRONT	
		1	**122-3652**	3	PLUG	
		1	**123-2920**	2	PLUG	
		1	**237-5188**	1	PLUG-EXPANSION	
	12	1	**7T-3253**	2	DOWEL	
	13	1	**120-9762**	3	SEAL-O-RING	

M-METRIC PART

294-9809 CASE GP-TRANSMISSION *(contd.)* **i02740653**

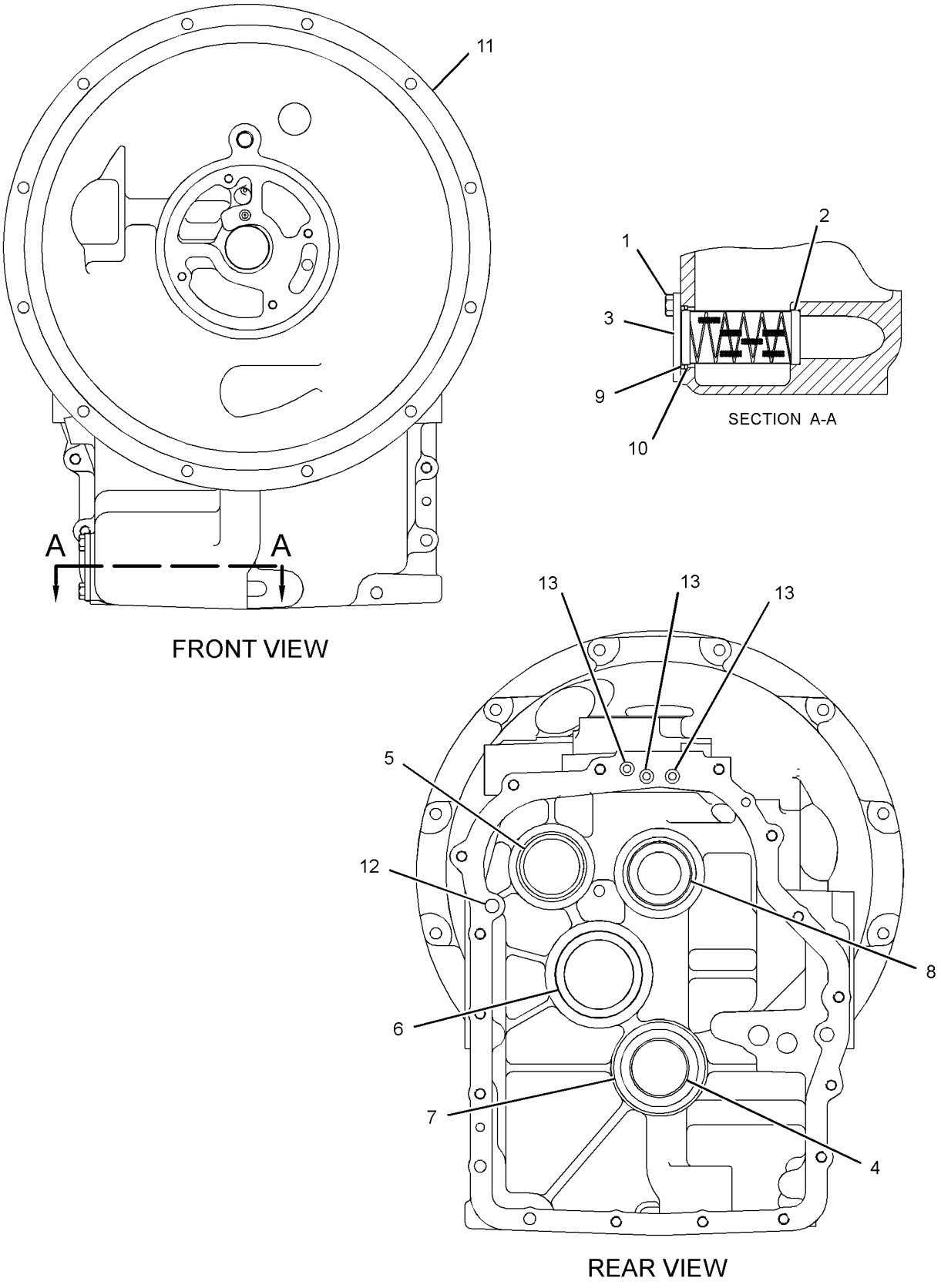

GRAPHIC #1 **<END>** g01383783

209-9882 DIFFERENTIAL & BEVEL GEAR GP

S/N: HLS1-99999
PART OF 230-5743 AXLE GP-DRIVE & STEERING
AN ATTACHMENT

SMCS-3256, 3258, 3281, 3283, 3284 **i03503960**

NOTE	REF NO	GRAPHIC REF	PART NUMBER	QTY	PART NAME 1 2 3 4 5 6 (PRODUCT LEVEL)	SEE PAGE
	1	1	**216-4457**	1	SEAL	
	2	1	**216-4458**	2	BEARING	
	3	1	**136-7808**	1	BEARING AS-TAPERED ROLLER	
	4	1	**216-4461**	1	BEARING	
	5	1	**209-7454**	2	NUT (M94X2-THD)	
	6	1	**152-6144**	1	PLUG AS-DRAIN (MAGNETIC)	
		1	**6V-6228**	1	SEAL-O-RING	
	7	1	**209-7462**	2	WASHER (40X50X2-MM THK)	
	8	1	**209-7463**	1	SLEEVE (COLLAPSIBLE)	
M	9	1	**199-0695**	2	BOLT (M6X1X14-MM)	
M	10	1	**209-7472**	1	NUT (M24X1.5-THD)	
	11	1	**216-4465**	1	WASHER (24.5X52X10-MM THK)	
	12	1	**216-4464**	1	YOKE	
	13	1	**199-0858**	2	RETAINER	
	14	1	**217-2868**	1	GEAR GP-BEVEL & PINION	
Y	15	1	**216-9498**	1	DIFFERENTIAL GP	217
	16	1	**4J-0520**	1	SEAL-O-RING	
	17	1	**216-5515**	1	CARRIER AS-DIFFERENTIAL	
	17A	1	**208-0322**	4	BOLT-FLANGE HEAD (M14X2X75-MM)	
	17B	1	**217-2880**	4	DOWEL	
B	18	1	**209-7473**	1	SHIM (2.5-MM THK)	
B			**219-8751**	1	SHIM (2.6-MM THK)	
B			**219-8752**	1	SHIM (2.7-MM THK)	
B			**219-8753**	1	SHIM (2.8-MM THK)	
B			**219-8754**	1	SHIM (2.9-MM THK)	
B			**219-8755**	1	SHIM (3-MM THK)	
B			**219-8756**	1	SHIM (3.1-MM THK)	
B			**219-8757**	1	SHIM (3.2-MM THK)	
B			**219-8758**	1	SHIM (3.3-MM THK)	
B			**219-8759**	1	SHIM (3.4-MM THK)	

B-USE AS REQUIRED
M-METRIC PART
Y-SEPARATE ILLUSTRATION

209-9882 DIFFERENTIAL & BEVEL GEAR GP *(contd.)* i03503960

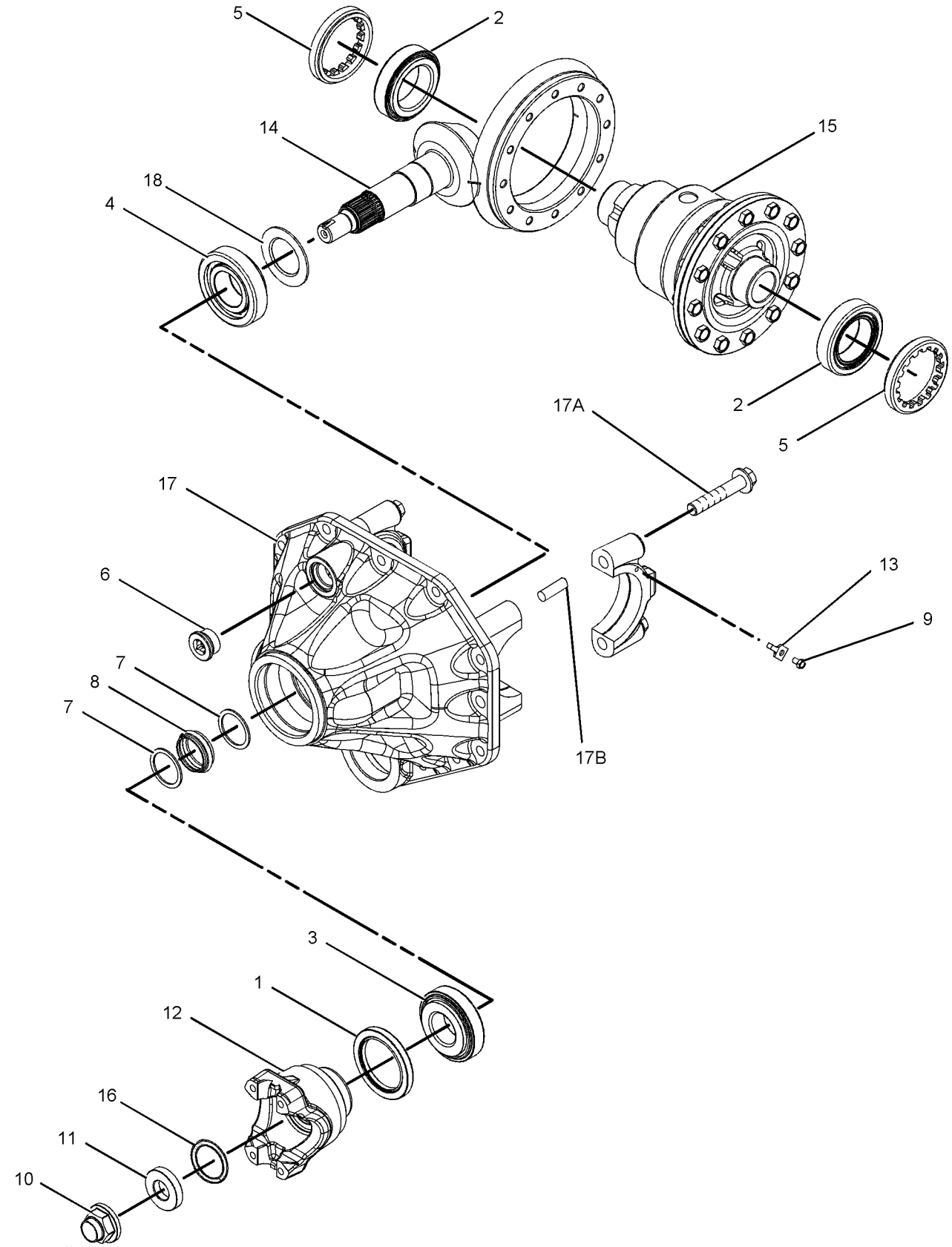

GRAPHIC #1 **<END>** g01062316

216-9498 DIFFERENTIAL GP

S/N: HLS1-99999
PART OF 209-9882 DIFFERENTIAL & BEVEL GEAR GP
AN ATTACHMENT

SMCS-3258 **i03510982**

NOTE	REF NO	GRAPHIC REF	PART NUMBER	QTY	PART NAME 1 2 3 4 5 6 (PRODUCT LEVEL)	SEE PAGE
	1	1	**216-8687**	1	COVER (DIFFERENTIAL CASE)	
	2	1	**216-8689**	1	HOUSING-DIFFERENTIAL	
J	3	1	**229-5093**	2	WASHER-THRUST (49X72X1.5-MM THK)	
M	4	1	**266-4360**	12	BOLT (M10X1.5X30-MM)	
J	5	1	**211-0092**	2	WASHER-THRUST (22X42X2-MM THK)	
J	6	1	**209-7455**	1	PIN	
J	7	1	**216-8691**	1	RETAINER	
J	8	1	**216-9497**	1	GEAR GP-DIFFERENTIAL & BEVEL	
					AVAILABLE REPAIR KIT(S):	
J			**216-8700**	1	KIT-DIFFERENTIAL	
					(INCLUDES WASHERS, PINS & GEARS)	

J-KIT MARKED J SERVICES PARTS MARKED J
M-METRIC PART

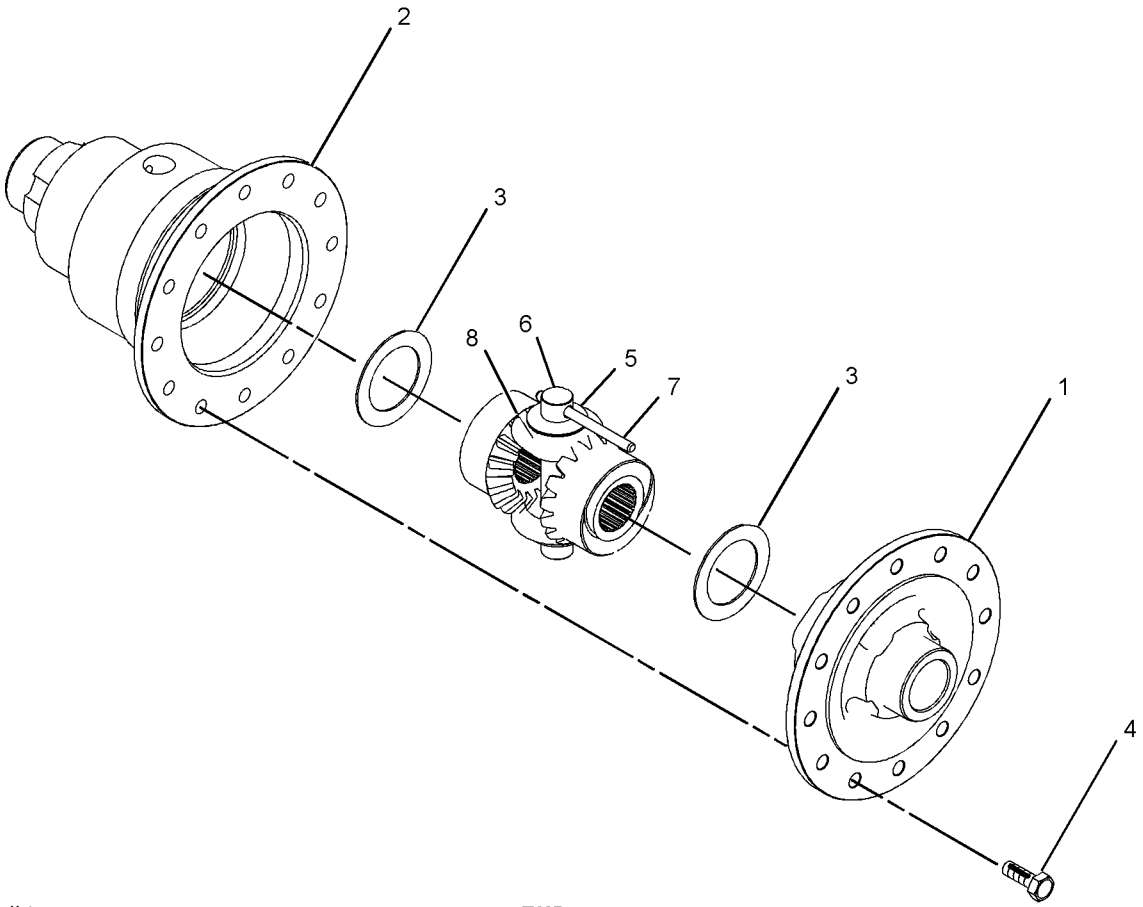

GRAPHIC #1 **<END>** g01043312

231-0692 DIFFERENTIAL GP

S/N: HLS1-99999
PART OF 238-5289 HOUSING GP-AXLE
AN ATTACHMENT

SMCS-3258 **i02196803**

NOTE	REF NO	GRAPHIC REF	PART NUMBER	QTY	PART NAME 1 2 3 4 5 6 (PRODUCT LEVEL)	SEE PAGE
	1	1	**199-0673**	2	BUSHING	
	2	1	**199-0694**	12	BOLT (M14X2X40-MM)	
	3	1	**199-0756**	1	COLLAR	
	4	1	**199-0784**	1	COVER-DIFFERENTIAL	
	5	1	**199-0807**	4	PIN	
	6	1	**199-0808**	3	PIN	
	7	1	**231-0670**	1	SHAFT	
	8	1	**231-0671**	4	WASHER-THRUST	
	9	1	**231-0695**	2	WASHER-THRUST	
	10	1	**231-0693**	1	CASE-DIFFERENTIAL	
	11	1	**231-0696**	2	SHAFT	
	12	1	**231-0697**	1	RETAINER	
	13	1	**231-0694**	1	GEAR AS	
	14	1	**199-0659**	4	SEAL-PIN	

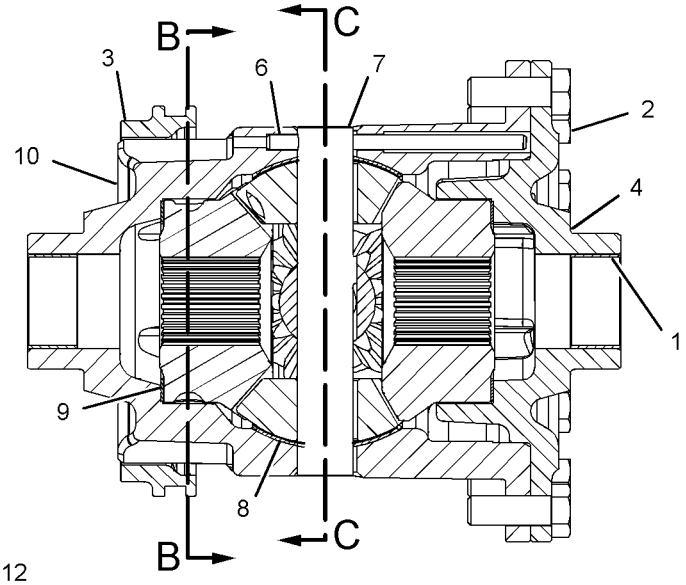

FRONT VIEW
(SECTIONED)

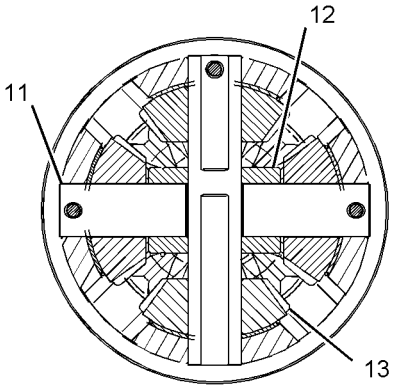

SECTION C-C

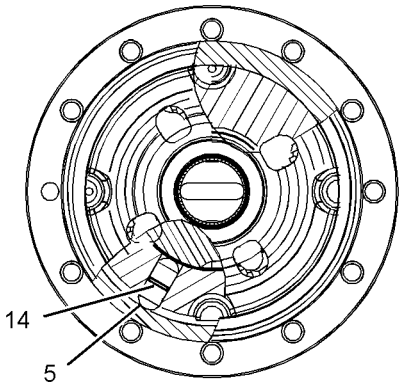

SECTION B-B

GRAPHIC #1 **<END>** g01107764

111-7907 DRIVE GP-FLEXIBLE COUPLING

S/N: HLS1-99999
PART OF 214-7523, 214-7524 TRANSMISSION AR-DIRECT DRIVE, 251-6354 TRANSMISSION AR-POWER SHIFT AN ATTACHMENT

SMCS-3252 **i02790044**

NOTE	REF NO	GRAPHIC REF	PART NUMBER	QTY	PART NAME 1 2 3 4 5 6 (PRODUCT LEVEL)	SEE PAGE
M	1	1	**8T-4200**	8	BOLT (M8X1.25X16-MM)	
M	2	1	**6V-8455**	6	BOLT (M10X1.5X16-MM)	
	3	1	**117-9713**	1	PLATE-CONVERTER REINFORCEMENT	
	4	1	**8T-4224**	8	WASHER-HARD (8.8X16X2-MM THK)	
	5	1	**111-7906**	1	PLATE-CONVERTER DRIVE	

M-METRIC PART

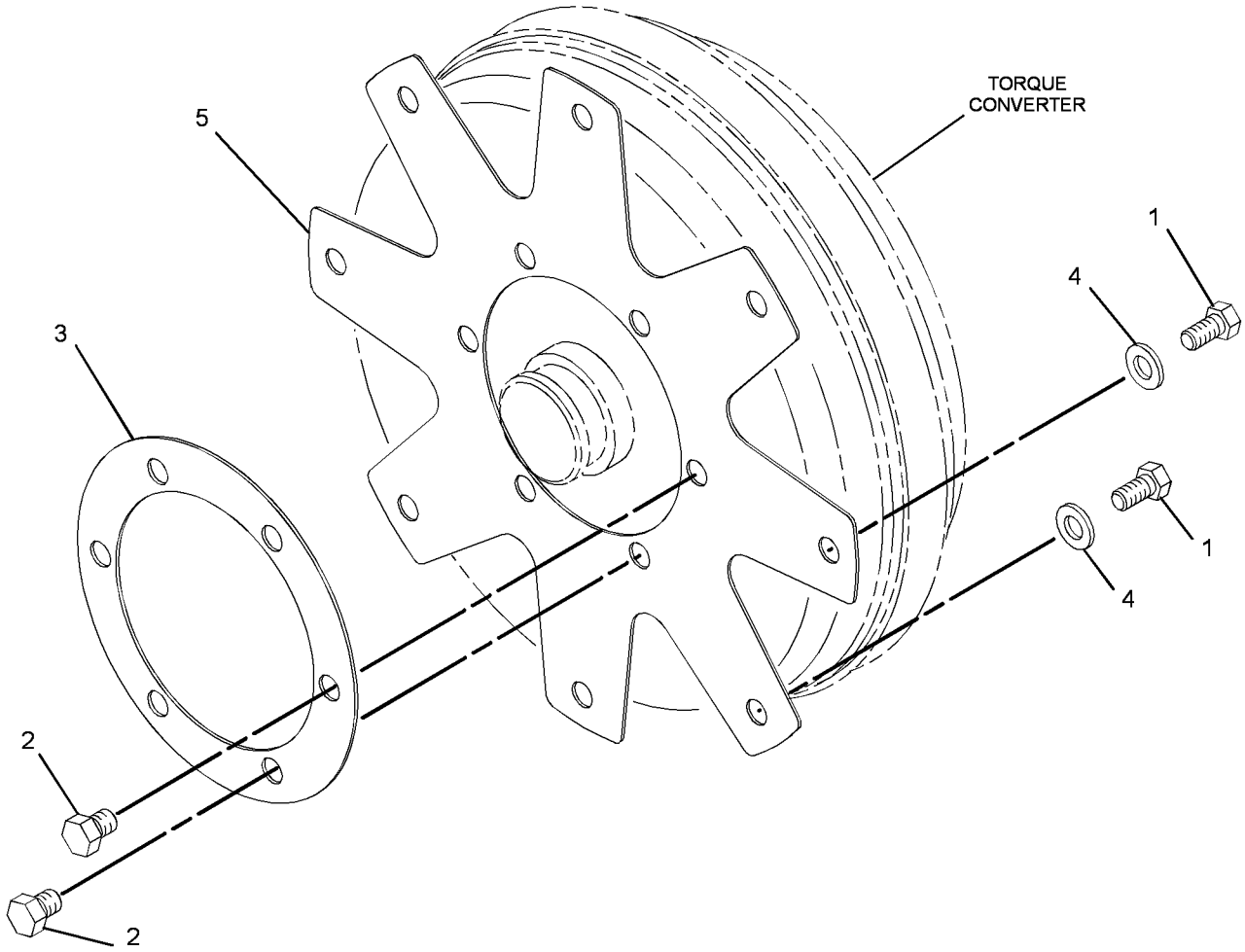

GRAPHIC #1 **<END>** g01393781

211-0073 FILLER GP-POWER TRAIN OIL—AUTOSHIFT

S/N: HLS1-99999
PART OF 216-3316 POWER TRAIN AR
AN ATTACHMENT

SMCS-3005, 3081 **i03503962**

NOTE	REF NO	GRAPHIC REF	PART NUMBER	QTY	PART NAME 1 2 3 4 5 6 (PRODUCT LEVEL)	SEE PAGE
	1	1	**2B-0941**	1	SPACER (10.5X19X19-MM THK)	
	2	1	**6V-0852**	2	CAP-DUST	
	3	1	*164-5567*	2	COUPLER AS-QUICK DISCONNECT	
					(EACH INCLUDES)	
		1	**214-7568**	1	SEAL-O-RING	
		1	**6V-3965**	1	FITTING (QUICK DISCONNECT)	
	4	1	**214-3745**	1	TUBE AS	
	5	1	**218-9984**	1	GAUGE AS-OIL LEVEL (DIPSTICK)	
	6	1	**236-1583**	1	BOSS	
	7	1	*148-8368*	2	ELBOW AS	
					(EACH INCLUDES)	
		1	**3J-1907**	1	SEAL-O-RING	
		1	**4J-5477**	1	SEAL-O-RING	
		1	**6V-8627**	1	ELBOW	
	9	1	**4J-0522**	1	SEAL-O-RING	
	10	1	**5P-4116**	1	WASHER-HARD (8.8X20.5X2-MM THK)	
M	11	1	**7X-0818**	1	BOLT (M8X1.25X45-MM)	
	12	1	**8S-0023**	3	CLIP (SLOT)	
	13	1	**8S-0024**	3	CLIP (TAB)	
	14	1	**8T-4121**	1	WASHER-HARD (11X21X2.5-MM THK)	
M	15	1	**8T-4136**	1	BOLT (M10X1.5X25-MM)	
M	16	1	**8T-4176**	1	BOLT (M12X1.75X90-MM)	
	17	1	**8T-4223**	3	WASHER-HARD (13.5X25.5X3-MM THK)	
M	18	1	**8T-4956**	2	BOLT (M12X1.75X35-MM)	

M-METRIC PART

211-0073 **FILLER GP-POWER TRAIN OIL** *(contd.)* **i03503962**

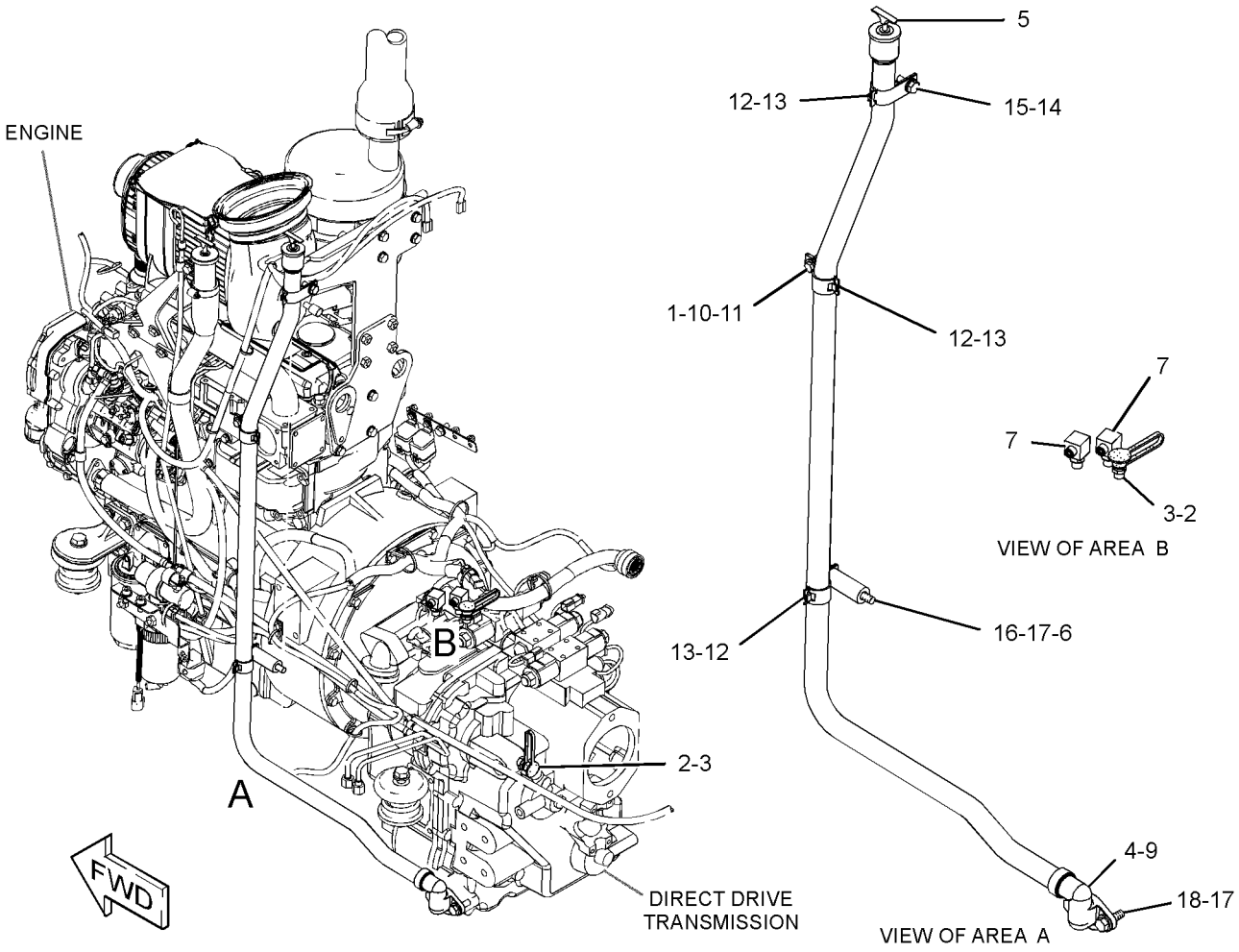

GRAPHIC #1 **<END>** g01522401

214-3740 FILLER GP-POWER TRAIN OIL–

ALL WHEEL DRIVE, STANDARD SHIFT

S/N: HLS1-99999

PART OF 216-3315 POWER TRAIN AR

AN ATTACHMENT

SMCS-3005, 3081 **i03503980**

NOTE	REF NO	GRAPHIC REF	PART NUMBER	QTY	PART NAME 1 2 3 4 5 6 (PRODUCT LEVEL)	SEE PAGE
	1	1	**6V-0852**	2	CAP-DUST	
	2	1	*164-5567*	2	COUPLER AS-QUICK DISCONNECT	
					(EACH INCLUDES)	
		1	**214-7568**	1	SEAL-O-RING	
		1	**6V-3965**	1	FITTING (QUICK DISCONNECT)	
	3	1	**2B-0941**	1	SPACER (10.5X19X19-MM THK)	
	4	1	**271-7167**	1	GAUGE-OIL LEVEL (DIPSTICK)	
	5	1	**230-2610**	1	TUBE AS	
	6	1	*165-4931*	1	ELBOW AS	
		1	**3J-1907**	1	SEAL-O-RING	
		1	**6V-8077**	1	ELBOW	
	8	1	**4J-0522**	1	SEAL-O-RING	
	9	1	**236-1583**	1	BOSS	
	10	1	**8S-0023**	3	CLIP (SLOT)	
	11	1	**8S-0024**	3	CLIP (TAB)	
	12	1	**8T-4121**	1	WASHER-HARD (11X21X2.5-MM THK)	
M	13	1	**8T-4136**	1	BOLT (M10X1.5X25-MM)	
	14	1	**8T-4223**	3	WASHER-HARD (13.5X25.5X3-MM THK)	
M	15	1	**8T-4956**	2	BOLT (M12X1.75X35-MM)	
M	16	1	**8T-4176**	1	BOLT (M12X1.75X90-MM)	
	17	1	**5P-4116**	1	WASHER-HARD (8.8X20.5X2-MM THK)	
M	18	1	**7X-0818**	1	BOLT (M8X1.25X45-MM)	

M-METRIC PART

214-3740 **FILLER GP-POWER TRAIN OIL** *(contd.)* **i03503980**

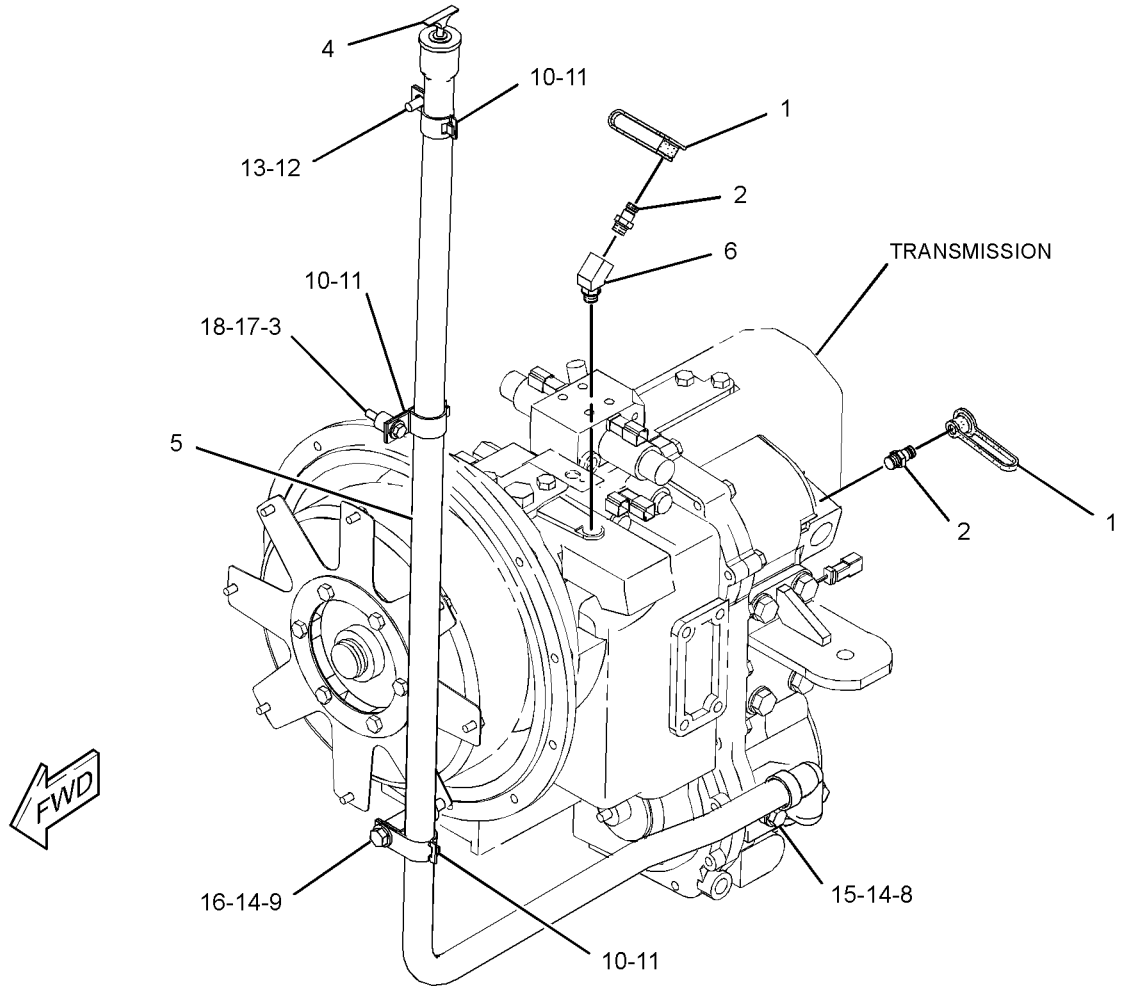

GRAPHIC #1 **<END>** g01569834

256-0551 FILLER GP-POWER TRAIN OIL–

2-WHEEL DRIVE, STANDARD SHIFT

S/N: HLS1-99999

PART OF 216-3314 POWER TRAIN AR

AN ATTACHMENT

SMCS-3005, 3081 **i03503981**

NOTE	REF NO	GRAPHIC REF	PART NUMBER	QTY	PART NAME 1 2 3 4 5 6 (PRODUCT LEVEL)	SEE PAGE
	1	1	**2B-0941**	1	SPACER (10.5X19X19-MM THK)	
	2	1	**6V-0852**	2	CAP-DUST	
	3	1	*164-5567*	2	COUPLER AS-QUICK DISCONNECT	
					(EACH INCLUDES)	
		1	**214-7568**	1	SEAL-O-RING	
		1	**6V-3965**	1	FITTING (QUICK DISCONNECT)	
	4	1	**136-3112**	1	SPACER	
	5	1	**230-2610**	1	TUBE AS	
	6	1	**236-1583**	1	BOSS	
	7	1	**271-7167**	1	GAUGE-OIL LEVEL (DIPSTICK)	
	8	1	*165-4931*	1	ELBOW AS	
		1	**3J-1907**	1	SEAL-O-RING	
		1	**6V-8077**	1	ELBOW	
	10	1	**4J-0522**	2	SEAL-O-RING	
	11	1	**5P-4116**	1	WASHER-HARD (8.8X20.5X2-MM THK)	
M	12	1	**7X-0818**	1	BOLT (M8X1.25X45-MM)	
	13	1	**8S-0023**	3	CLIP (SLOT)	
	14	1	**8S-0024**	3	CLIP (TAB)	
	15	1	**8T-4121**	1	WASHER-HARD (11X21X2.5-MM THK)	
M	16	1	**8T-4136**	1	BOLT (M10X1.5X25-MM)	
M	17	1	**8T-4176**	1	BOLT (M12X1.75X90-MM)	
M	18	1	**8T-4194**	2	BOLT (M12X1.75X50-MM)	
	19	1	**8T-4223**	3	WASHER-HARD (13.5X25.5X3-MM THK)	

M-METRIC PART

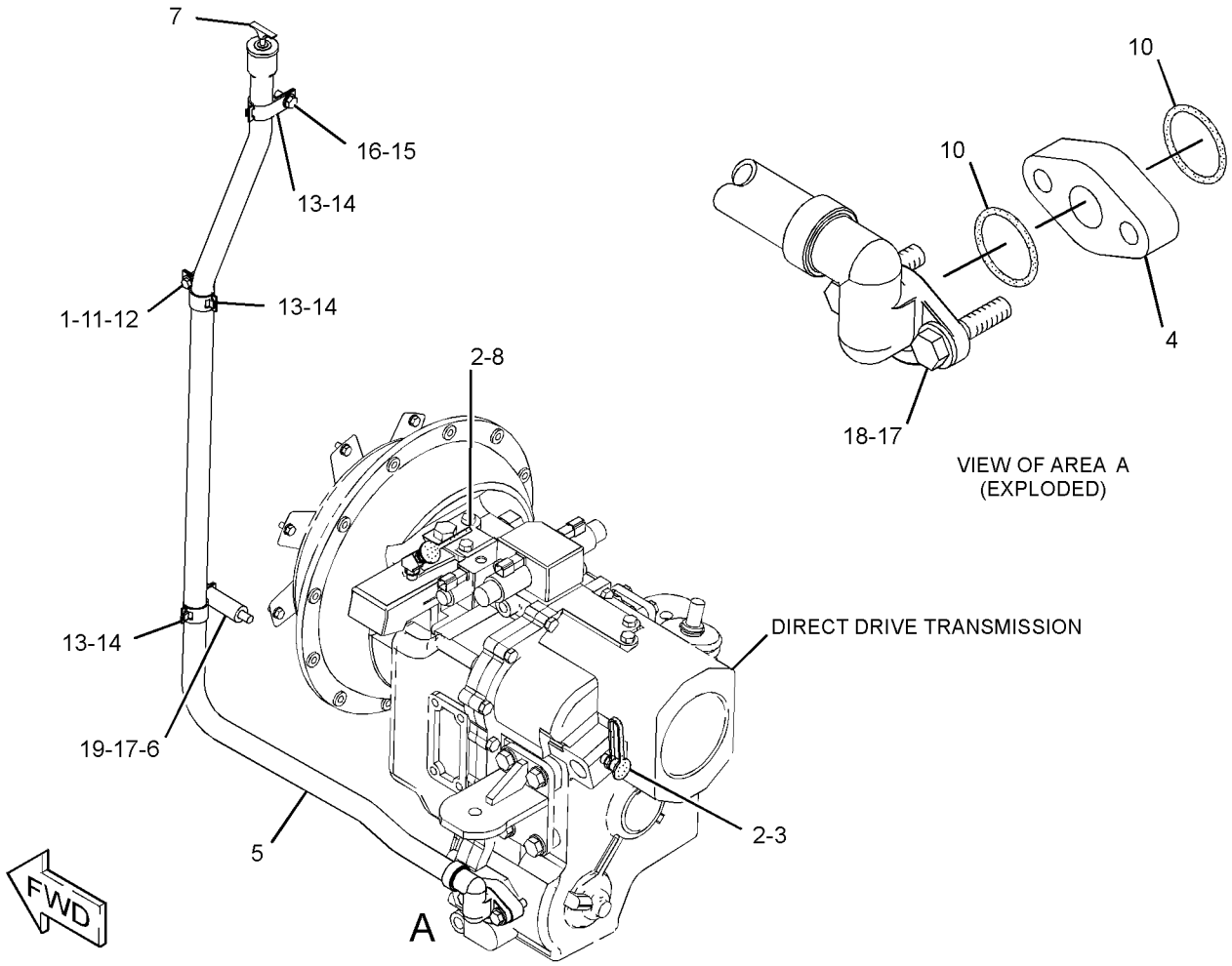

GRAPHIC #1

<END>

g01521851

216-1609 FLANGE GP-WHEEL

S/N: HLS1-99999
PART OF 230-5739 AXLE GP-REAR
AN ATTACHMENT

SMCS-4057 **i03136177**

NOTE	REF NO	GRAPHIC REF	PART NUMBER	QTY	PART NAME 1 2 3 4 5 6 (PRODUCT LEVEL)	SEE PAGE
	1	1	**210-5932**	2	BEARING-WHEEL	
J	2	1	**226-4346**	10	STUD	
	3	1	**229-5092**	1	SEAL	
					AVAILABLE REPAIR KIT(S):	
J			**231-0719**	1	FLANGE GP-WHEEL	

J-KIT MARKED J SERVICES PARTS MARKED J

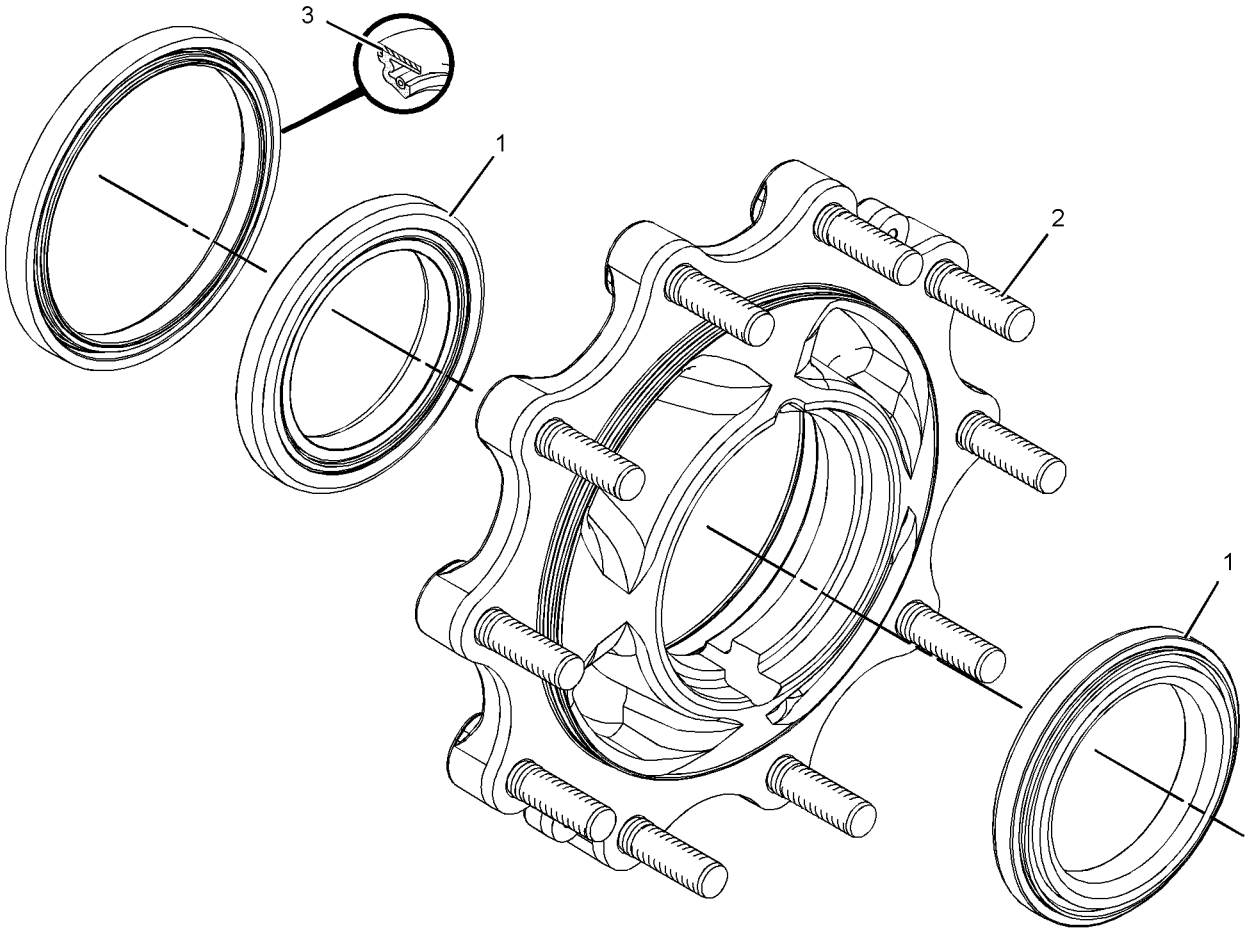

GRAPHIC #1 **<END>** g01614178

231-0683 FLANGE GP-WHEEL

S/N: HLS1-99999
PART OF 230-5745 AXLE GP-FRONT
AN ATTACHMENT

SMCS-4057 **i02581942**

NOTE	REF NO	GRAPHIC REF	PART NUMBER	QTY	PART NAME 1 2 3 4 5 6 (PRODUCT LEVEL)	SEE PAGE
	1	1	**207-4263**	1	BEARING AS	
	2	1	**207-4267**	1	BEARING AS	
	3	1	**238-5228**	1	KIT-HUB	
		1	**231-0687**	8	STUD	
	4	1	**231-0688**	1	SEAL	

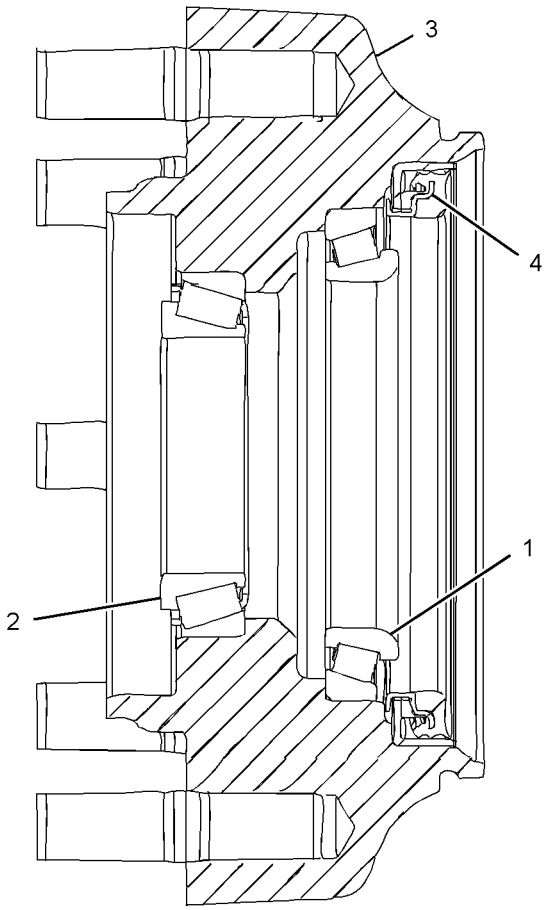

GRAPHIC #1

<END>

g01132035

209-9884 HOUSING & FLANGE GP-AXLE–RH

S/N: HLS1-99999
PART OF 230-5743 AXLE GP-DRIVE & STEERING
AN ATTACHMENT

SMCS-4057, 4234 **i03530482**

NOTE	REF NO	GRAPHIC REF	PART NUMBER	QTY	PART NAME 1 2 3 4 5 6 (PRODUCT LEVEL)	SEE PAGE
Y	1	1	**217-2877**	1	HOUSING GP-AXLE (RH)	230
J	2	1	**231-0703**	1	FLANGE AS	
	2A	1	**210-5932**	2	BEARING-WHEEL	
	2B	1	**226-4346**	8	STUD	
	2C	1	**229-5092**	1	SEAL	
	3	1	**226-4366**	1	NUT-SPANNER	
	4	1	**226-4370**	3	BOLT-SELF-LOCKING	
	5	1	**229-5085**	1	SPACER (110X123X18.36-MM THK)	
	6	1	**217-2879**	1	GEAR GP-RING	
		1	**209-7459**	1	RETAINER	
		1	**209-7461**	1	GEAR-RING	
		1	**231-0745**	1	HUB-RING GEAR	
	7	1	**226-4365**	1	WASHER-TAB	
					AVAILABLE REPAIR KIT(S):	
J			**238-5256**	1	KIT-FLANGE	
					(INCLUDES WHEEL FLANGE & STUDS)	

J-KIT MARKED J AVAILABLE FOR PART MARKED J
Y-SEPARATE ILLUSTRATION

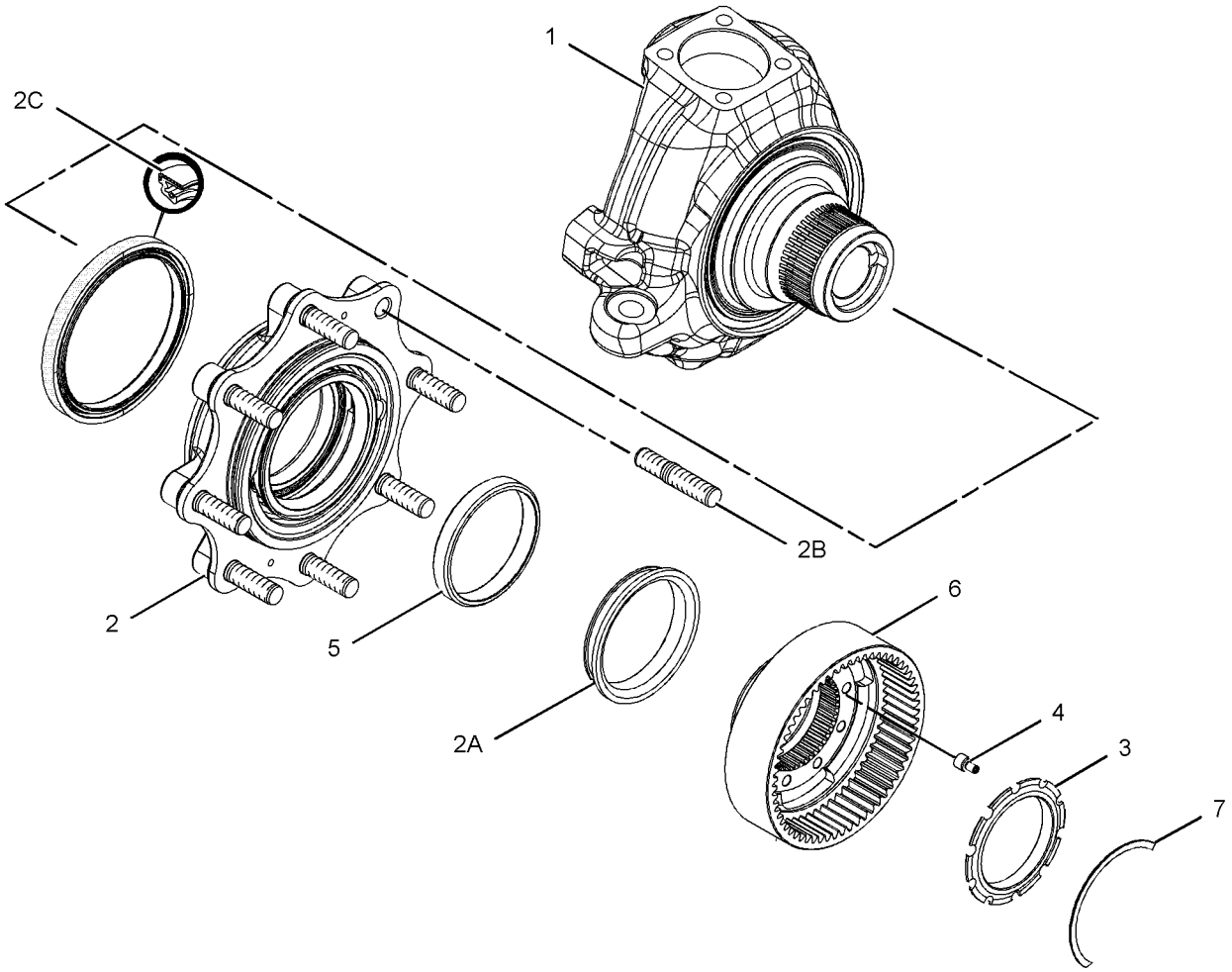

GRAPHIC #1 **<END>** g01181019

209-9885 HOUSING & FLANGE GP-AXLE–LH

S/N: HLS1-99999
PART OF 230-5743 AXLE GP-DRIVE & STEERING
AN ATTACHMENT

SMCS-4057, 4234 **i03530502**

NOTE	REF NO	GRAPHIC REF	PART NUMBER	QTY	PART NAME 1 2 3 4 5 6 (PRODUCT LEVEL)	SEE PAGE
Y	1	1	**217-2878**	1	HOUSING GP-AXLE (LH)	231
J	2	1	**231-0703**	1	FLANGE AS	
	2A	1	**210-5932**	2	BEARING-WHEEL	
	2B	1	**226-4346**	8	STUD	
	2C	1	**229-5092**	1	SEAL	
C	3	1	**226-4366**	1	NUT-SPANNER	
C	4	1	**226-4370**	3	BOLT-SELF-LOCKING	
	5	1	**229-5085**	1	SPACER (110X123X18.36-MM THK)	
C	6	1	**217-2879**	1	GEAR GP-RING	
		1	**209-7459**	1	RETAINER	
		1	**209-7461**	1	GEAR-RING	
		1	**231-0745**	1	HUB-RING GEAR	
C	7	1	**226-4365**	1	WASHER-TAB	
					AVAILABLE REPAIR KIT(S):	
J			**238-5256**	1	KIT-FLANGE	
					(INCLUDES WHEEL FLANGE & STUDS)	

C-CHANGE FROM PREVIOUS TYPE
J-KIT MARKED J AVAILABLE FOR PART MARKED J
Y-SEPARATE ILLUSTRATION

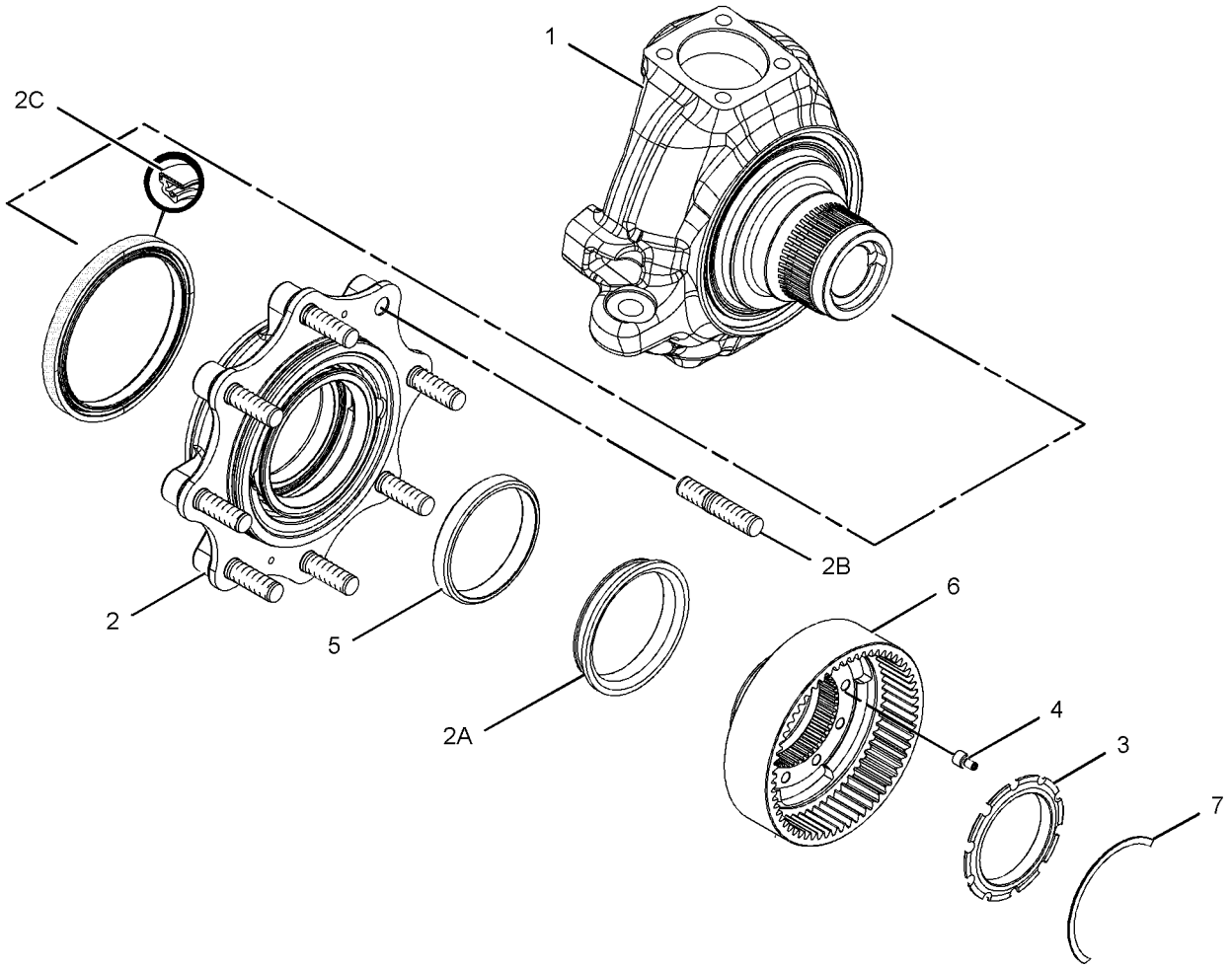

GRAPHIC #1 **<END>** g01180841

217-2877 HOUSING GP-AXLE–RH

S/N: HLS1-99999
PART OF 209-9884 HOUSING & FLANGE GP-AXLE
AN ATTACHMENT

SMCS-3256, 3258, 3260, 4251 **i02365010**

NOTE	REF NO	GRAPHIC REF	PART NUMBER	QTY	PART NAME 1 2 3 4 5 6 (PRODUCT LEVEL)	SEE PAGE
	1	1	**199-0648**	1	NUT-JAM (M16X2-THD)	
	2	1	**198-7814**	1	BOLT (M16X100-MM)	
	3	1	**209-7460**	1	BUSHING	
	4	1	**209-7465**	1	SEAL	
	5	1	**231-0700**	1	HOUSING	

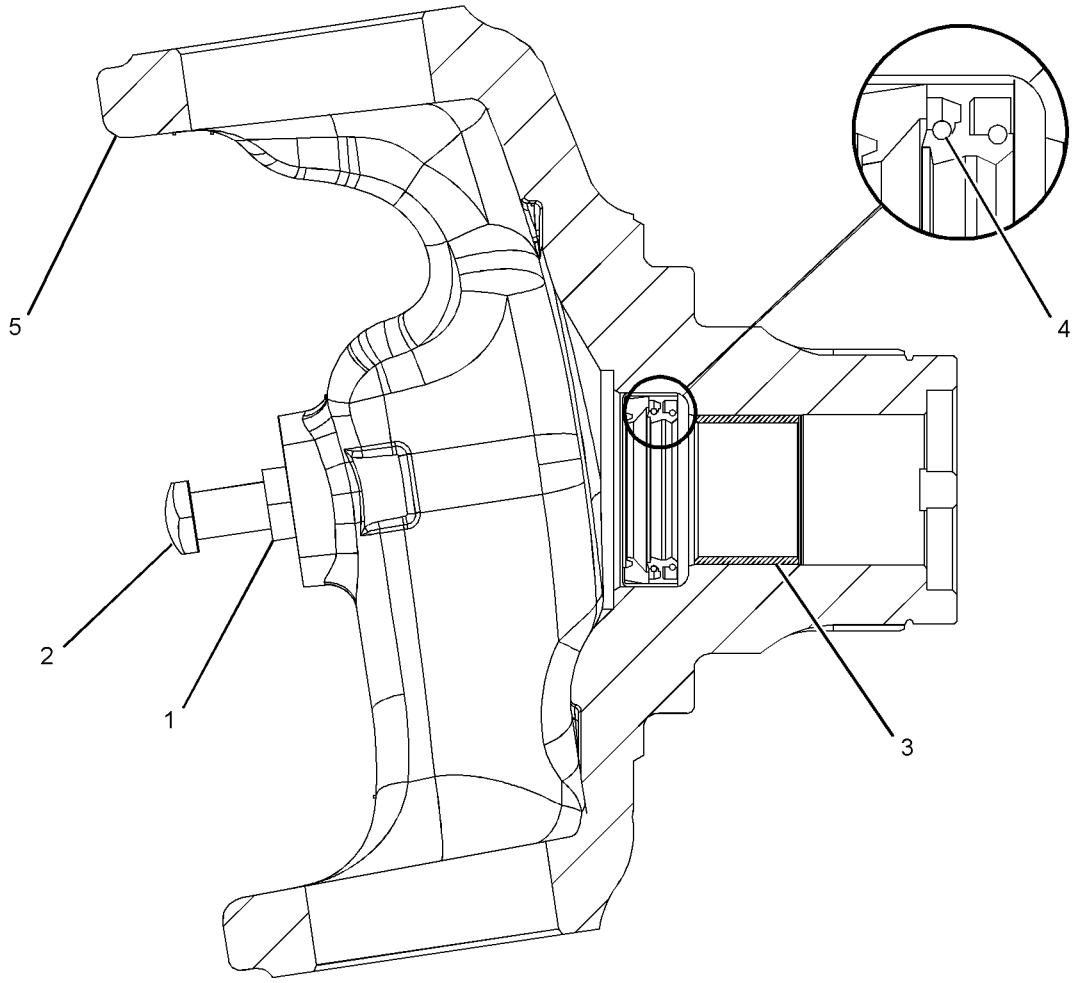

GRAPHIC #1 **<END>** g01181175

217-2878 HOUSING GP-AXLE–LH

S/N: HLS1-99999
PART OF 209-9885 HOUSING & FLANGE GP-AXLE
AN ATTACHMENT

SMCS-3256, 3258, 3260, 4251 **i03018924**

NOTE	REF NO	GRAPHIC REF	PART NUMBER	QTY	PART NAME 1 2 3 4 5 6 (PRODUCT LEVEL)	SEE PAGE
	1	1	**199-0648**	1	NUT-JAM (M16X2-THD)	
	2	1	**198-7814**	1	BOLT (M16X100-MM)	
	3	1	**209-7460**	1	BUSHING	
	4	1	**209-7465**	1	SEAL	
	5	1	**231-0701**	1	HOUSING	

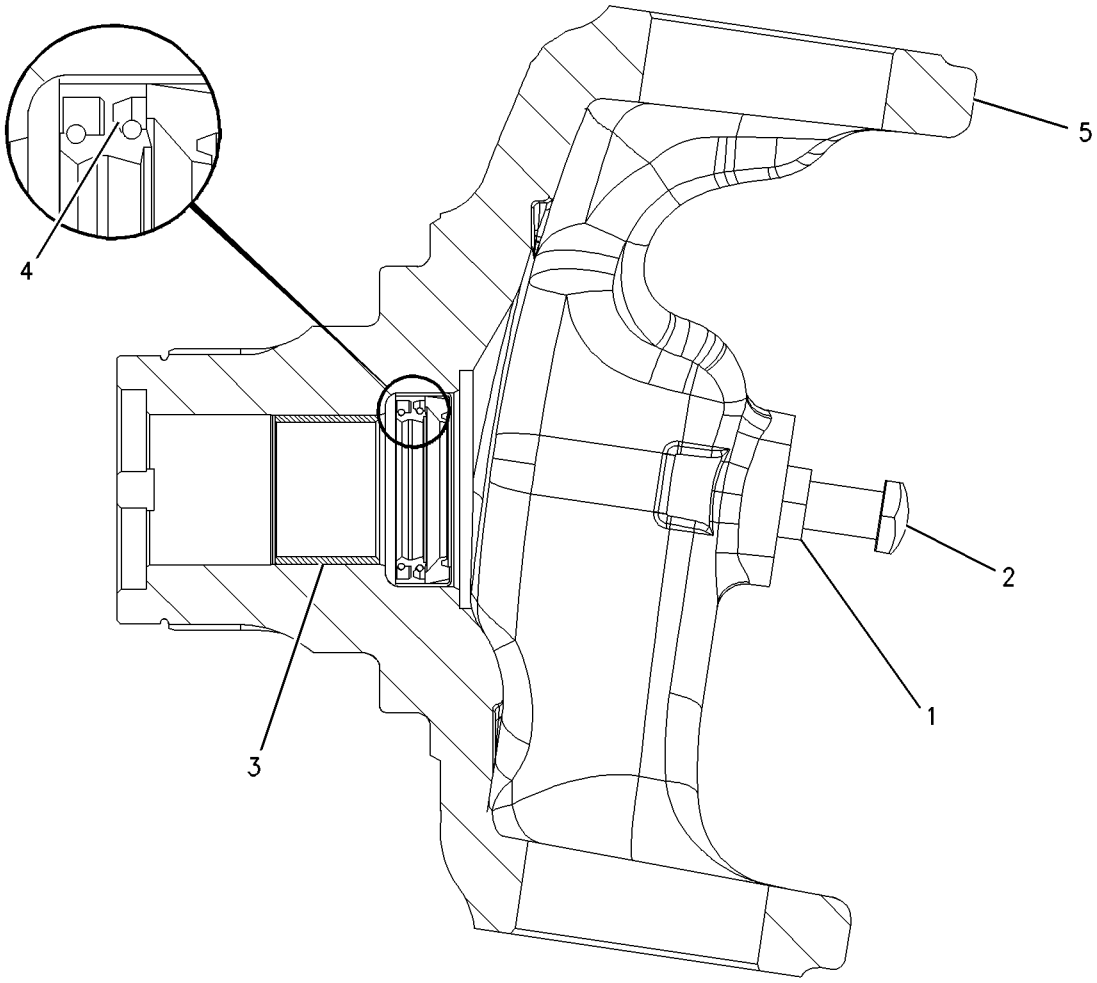

GRAPHIC #1 **<END>** g00926639

238-5289 HOUSING GP-AXLE–REAR

S/N: HLS1-99999
PART OF 230-5739 AXLE GP-REAR
AN ATTACHMENT

SMCS-3256, 3258, 3260, 4251 **i03548200**

NOTE	REF NO	GRAPHIC REF	PART NUMBER	QTY	PART NAME 1 2 3 4 5 6 (PRODUCT LEVEL)	SEE PAGE
M	1	1	**095-0674**	4	BOLT-SOCKET HEAD (M12X1.75X65-MM)	
	2	1	**199-0656**	2	BEARING	
	3	1	**199-0663**	1	SEAL-O-RING	
	4	1	**198-7811**	2	DOWEL	
	5	1	**199-0675**	2	NUT	
	6	1	**199-0678**	2	WASHER (45.5X55X2-MM THK)	
	7	1	**199-0680**	1	SPACER (47X50X19.2-MM THK)	
M	8	1	**199-0695**	2	BOLT (M6X1X14-MM)	
	9	1	**199-0697**	1	SEAL	
	10	1	**199-0785**	1	WASHER (30.5X58X10-MM THK)	
	11	1	**199-0858**	2	RETAINER	
	12	1	**217-2876**	1	KIT-BEVEL GEAR & PINION	
					(INCLUDES WASHER, SPACER. PINION, GEAR-BEVEL, NUT & SEAL-O-RING)	
	13	1	**212-5702**	1	NUT (M30X2-THD)	
	14	1	**216-1600**	1	DISC-BRAKE	
	15	1	**095-1041**	1	BEARING AS	
	16	1	**093-8828**	1	BEARING AS	
Y	17	1	**216-1612**	1	CYLINDER GP-BRAKE (RH)	334
Y	18	1	**216-1613**	1	CYLINDER GP-BRAKE (LH)	335
	19	1	**219-8836**	1	FORK	
Y	20	1	**231-0692**	1	DIFFERENTIAL GP	218
	21	1	**238-5290**	1	HOUSING-CENTER	
B	22	1	**1U-8846**		SEALANT-GASKET	
B	23	1	**199-0684**	1	SHIM (2.5-MM THK)	
B	24	1	**199-0685**	1	SHIM (2.6-MM THK)	
B	25	1	**199-0686**	1	SHIM (2.7-MM THK)	
B	26	1	**199-0687**	1	SHIM (2.8-MM THK)	
B	27	1	**199-0688**	1	SHIM (2.9-MM THK)	
B	28	1	**199-0689**	1	SHIM (3-MM THK)	
B	29	1	**199-0690**	1	SHIM (3.1-MM THK)	
B	30	1	**199-0691**	1	SHIM (3.2-MM THK)	
B	31	1	**199-0692**	1	SHIM (3.3-MM THK)	
B	32	1	**199-0693**	1	SHIM (3.4-MM THK)	
					AVAILABLE REPAIR KIT(S):	
			217-2876	1	KIT-BEVEL GEAR & PINION	
					(INCLUDES WASHER-SPACERS, SPACER, PINNION-WASHER, PINION, GEAR-BEVEL, NUT & SEAL-O-RING)	
			217-2345	1	KIT-DIFFERENTIAL	
					(INCLUDES SPIDER GEARS, WASHER-THRUSTS, DIFFERENTIAL GEARS PIN, GEAR-SIDE, DIFFERENTIAL GEAR WASHERS, SIDE GEAR & PIN)	

B-USE AS REQUIRED
M-METRIC PART
Y-SEPARATE ILLUSTRATION

238-5289 **HOUSING GP-AXLE** *(contd.)* **i03548200**

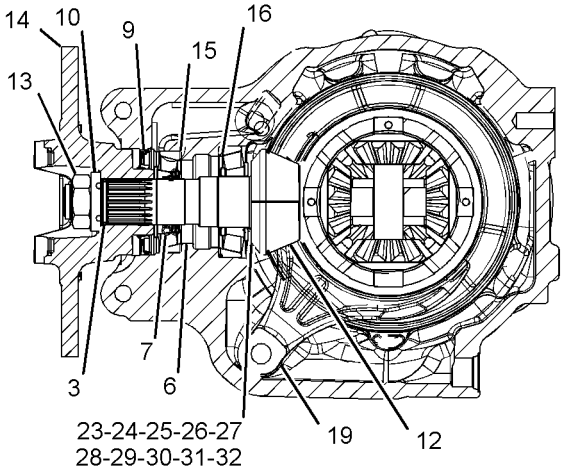

SECTION A-A

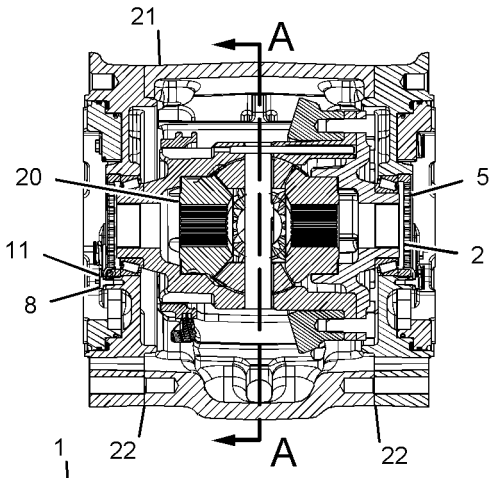

SECTION B-B

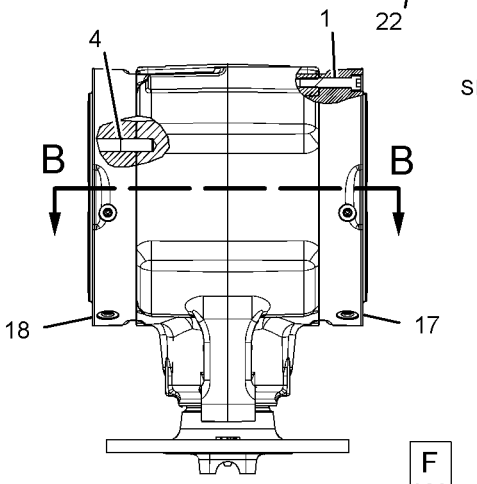

TOP VIEW

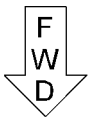

GRAPHIC #1 **<END>** g01135243

262-6227 KIT-WHEEL SPACER

S/N: HLS1-99999

FOR USE WITH REAR AXLES TO ALLOW FOR SNOW CHAINS. CANNOT BE USED WITH AWS OR COUNTRIES WITH ROADING WIDTH RESTRICTIONS

AN ATTACHMENT

SMCS-3278, 4201 **i03033083**

NOTE	REF NO	GRAPHIC REF	PART NUMBER	QTY	PART NAME 1 2 3 4 5 6 (PRODUCT LEVEL)	SEE PAGE
	1	1	**262-6204**	20	STUD	
	2	1	**267-9385**	2	SPACER-WHEEL	

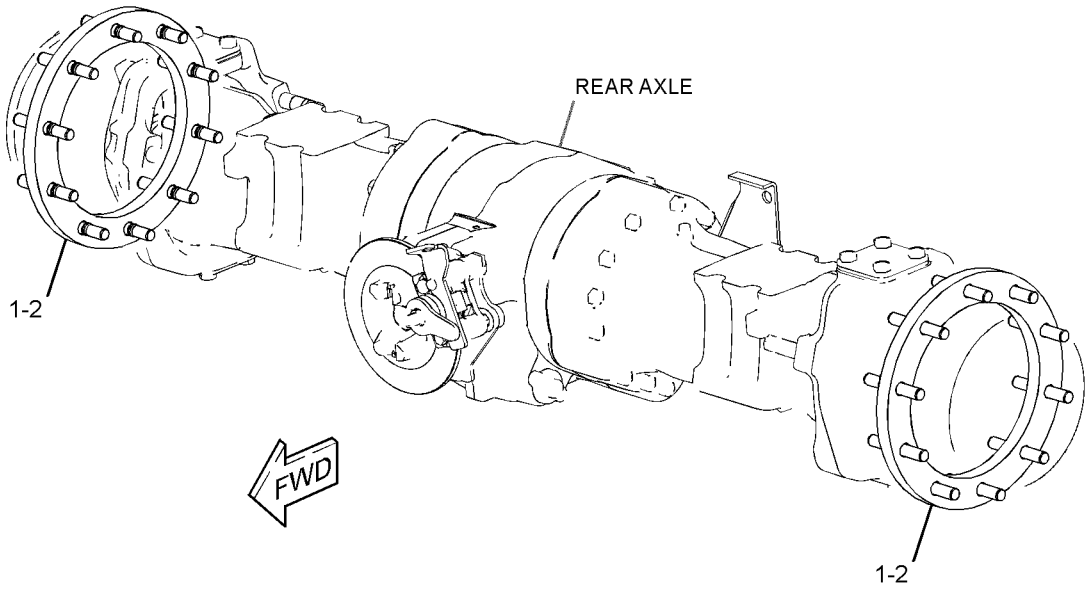

GRAPHIC #1 **<END>** g01539534

256-0546 LINES GP-POWER TRAIN OIL—DIFFERENTIAL LOCK

S/N: HLS1-99999
PART OF 216-3314, 216-3315 POWER TRAIN AR
AN ATTACHMENT

SMCS-3016, 3154 **i02356720**

NOTE	REF NO	GRAPHIC REF	PART NUMBER	QTY	PART NAME 1 2 3 4 5 6 (PRODUCT LEVEL)	SEE PAGE
	1	1	*148-8325*	1	CONNECTOR AS	
		1	**3J-1907**	1	SEAL-O-RING	
		1	**4J-5477**	1	SEAL-O-RING	
		1	**6V-8641**	1	CONNECTOR	
I	2	1	**256-0550**	1	HOSE AS	
	3	1	*148-8368*	1	ELBOW AS	
		1	**3J-1907**	1	SEAL-O-RING	
		1	**4J-5477**	1	SEAL-O-RING	
		1	**6V-8627**	1	ELBOW	
	4	1	**151-4841**	1	BLOCK	
	5	1	**7K-1181**	1	STRAP-CABLE	

I-REFER TO HYDRAULIC INFORMATION SYSTEM

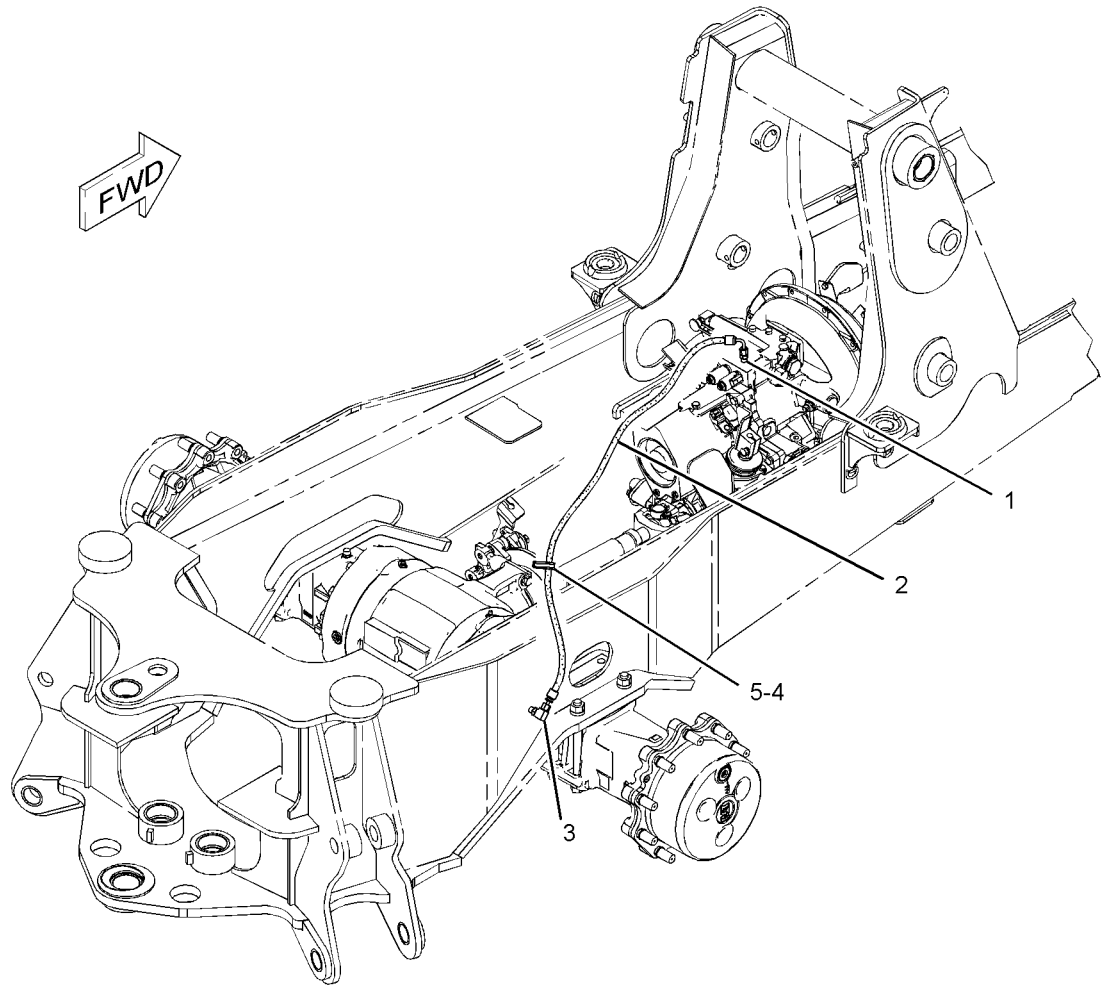

GRAPHIC #1 **<END>** g01238239

221-0811 MOUNTING GP-AXLE

S/N: HLS1-99999
PART OF 216-4739, 216-4740 DRIVE AR-BACKHOE LOADER
AN ATTACHMENT

SMCS-3268 **i02355759**

NOTE	REF NO	GRAPHIC REF	PART NUMBER	QTY	PART NAME 1 2 3 4 5 6 (PRODUCT LEVEL)	SEE PAGE
B	1	1	**1K-7082**	1	WASHER (2.266X4X0.031-IN THK)	
B	2	1	**9R-9702**	2	WASHER (56X100X1.6-MM THK)	
	3	1	**165-8996**	2	WASHER-THRUST (55.5X100.5X5-MM THK)	
	4	1	**211-9286**	1	PIN AS	
	5	1	**212-0770**	2	PLATE	
M	6	1	**089-7990**	8	BOLT (M20X2.5X250-MM)	
	7	1	**226-4192**	12	WASHER-HARD (21.5X35X8-MM THK)	
	8	1	**7X-0618**	1	WASHER-HARD (13.5X40X5-MM THK)	
M	9	1	**8T-4131**	4	NUT (M20X2.5-THD)	
M	10	1	**8T-4192**	1	BOLT (M12X1.75X25-MM)	

B-USE AS REQUIRED
M-METRIC PART

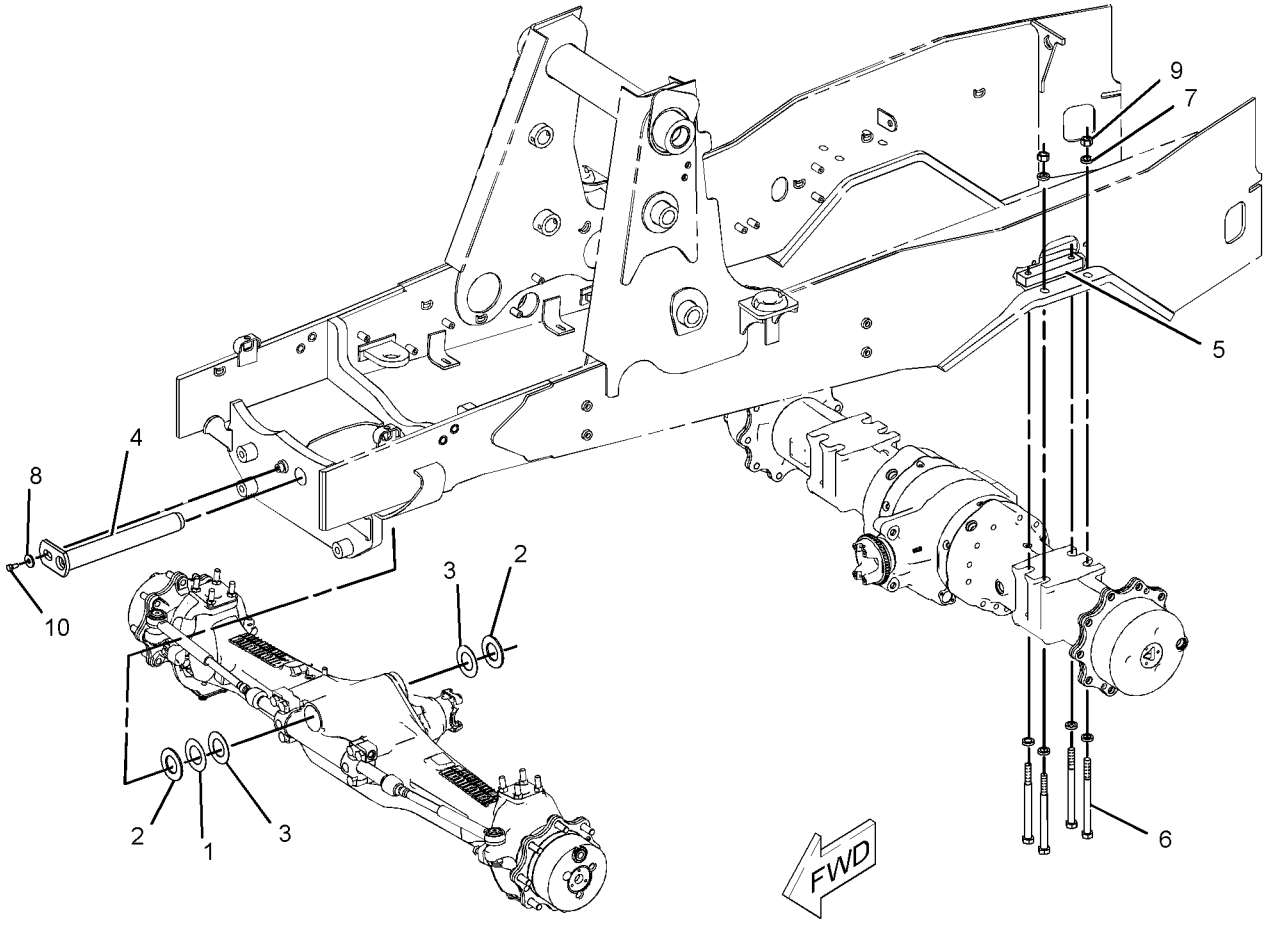

GRAPHIC #1 **<END>** g01200213

254-5703 MOUNTING GP-TRANSMISSION

S/N: HLS1-99999
PART OF 202-6009 TRANSMISSION & MOUNTING GP
AN ATTACHMENT

SMCS-3082 **i02444698**

NOTE	REF NO	GRAPHIC REF	PART NUMBER	QTY	PART NAME 1 2 3 4 5 6 (PRODUCT LEVEL)	SEE PAGE
	1	1	**271-7308**	1	SUPPORT AS (LH)	
	2	1	**245-4827**	1	SUPPORT AS (RH)	
M	3	1	**7X-2553**	4	BOLT (M16X2X40-MM)	
	4	1	**8T-4223**	4	WASHER-HARD (13.5X25.5X3-MM THK)	
M	5	1	**8T-4956**	4	BOLT (M12X1.75X35-MM)	
	6	1	**9X-8257**	4	WASHER (17.5X30X3.5-MM THK)	

M-METRIC PART

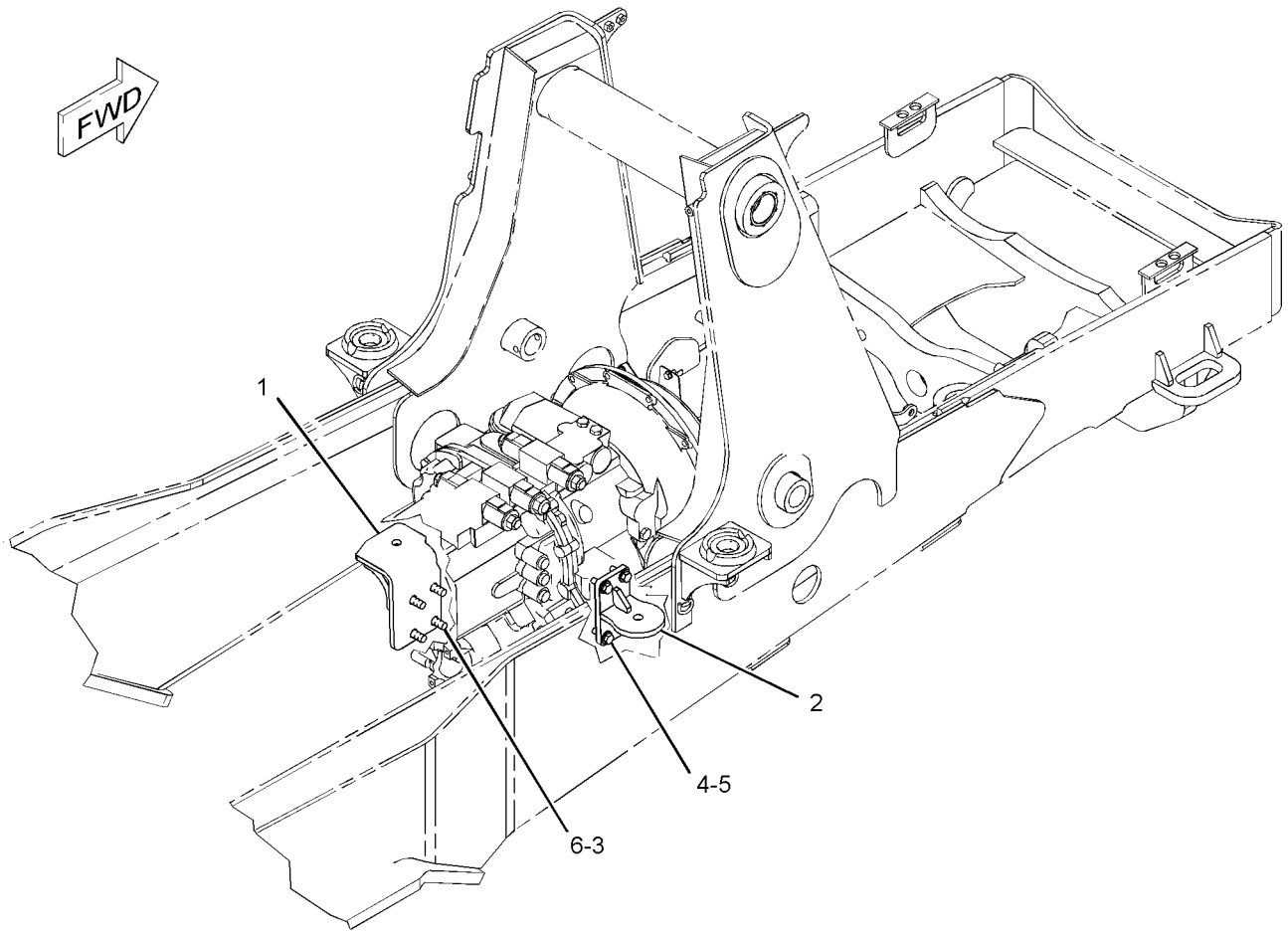

GRAPHIC #1 **<END>** g01216019

271-4487 MOUNTING GP-TRANSMISSION

S/N: HLS1-99999

PART OF 271-2405, 271-2406 TRANSMISSION & MOUNTING GP

AN ATTACHMENT

SMCS-3082 **i02354354**

NOTE	REF NO	GRAPHIC REF	PART NUMBER	QTY	PART NAME 1 2 3 4 5 6 (PRODUCT LEVEL)	SEE PAGE
	1	1	**245-4827**	1	SUPPORT AS (RH)	
	2	1	**271-7309**	1	SUPPORT AS (LH)	
M	3	1	**7X-2553**	4	BOLT (M16X2X40-MM)	
	4	1	**8T-4223**	4	WASHER-HARD (13.5X25.5X3-MM THK)	
M	5	1	**8T-4956**	4	BOLT (M12X1.75X35-MM)	
	6	1	**9X-8257**	4	WASHER (17.5X30X3.5-MM THK)	

M-METRIC PART

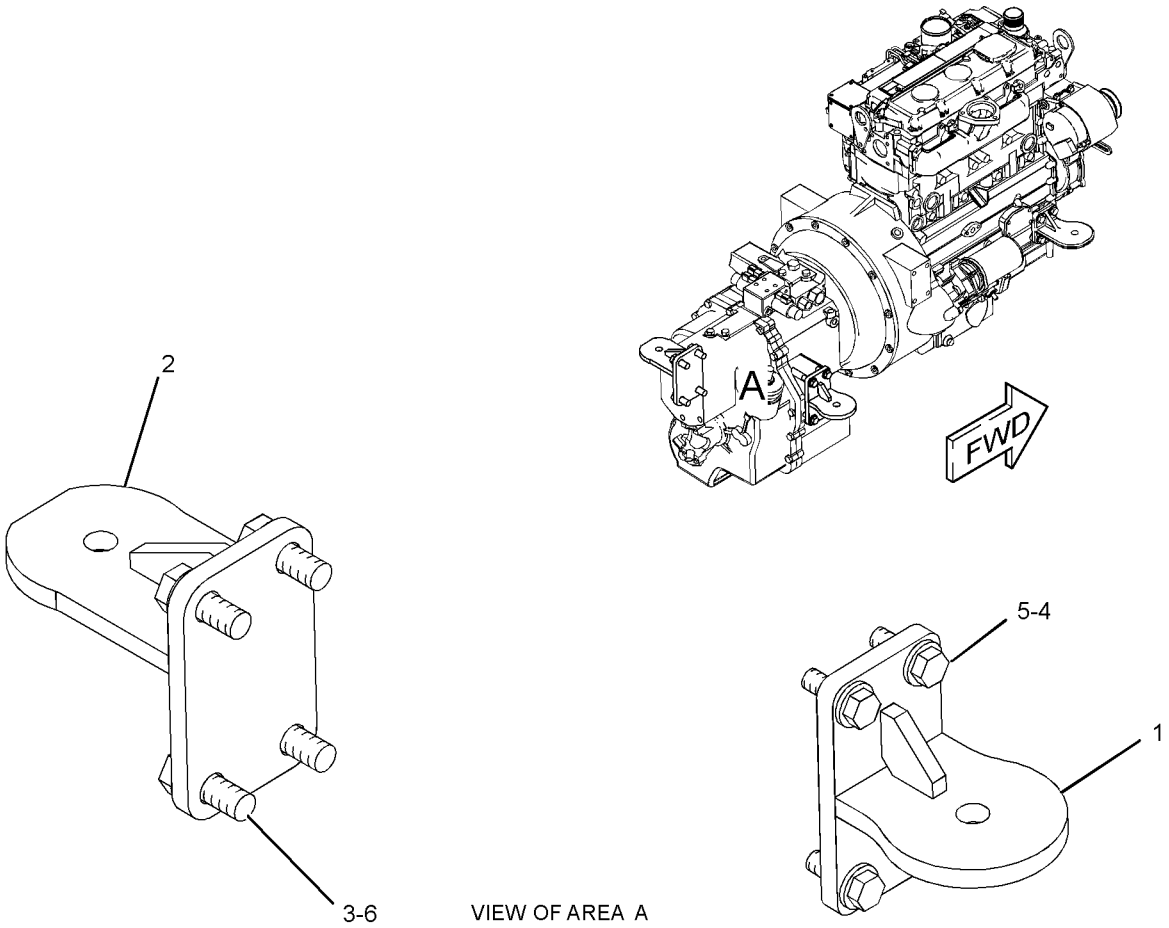

GRAPHIC #1 **<END>** g01231911

210-5924 PLANETARY GP-FINAL DRIVE

S/N: HLS1-99999
PART OF 230-5743 AXLE GP-DRIVE & STEERING
AN ATTACHMENT

SMCS-4050 **i03156025**

NOTE	REF NO	GRAPHIC REF	PART NUMBER	QTY	PART NAME 1 2 3 4 5 6 (PRODUCT LEVEL)	SEE PAGE
	1	1	**210-5931**	4	RETAINER	
	2	1	**209-4157**	4	GEAR (23-TEETH)	
	3	1	**095-0924**	4	RING-RETAINING	
					AVAILABLE REPAIR KIT(S):	
			209-7466	1	KIT-PLANETARY CARRIER	
					(INCLUDES THRUST PLUG, SUN GEAR SHAFT & PLANET CARRIER)	
			219-8783	23	KIT-ROLLER BEARING	
					(EACH INCLUDES 10 NEEDLES)	
					(SERVICED IN QUANITY OF 10, EACH GEAR REQUIRES 56 ROLLERS OR 6 KITS, EACH WHEEL END AS. REQUIRES 224 ROLLERS OR 23 KITS)	

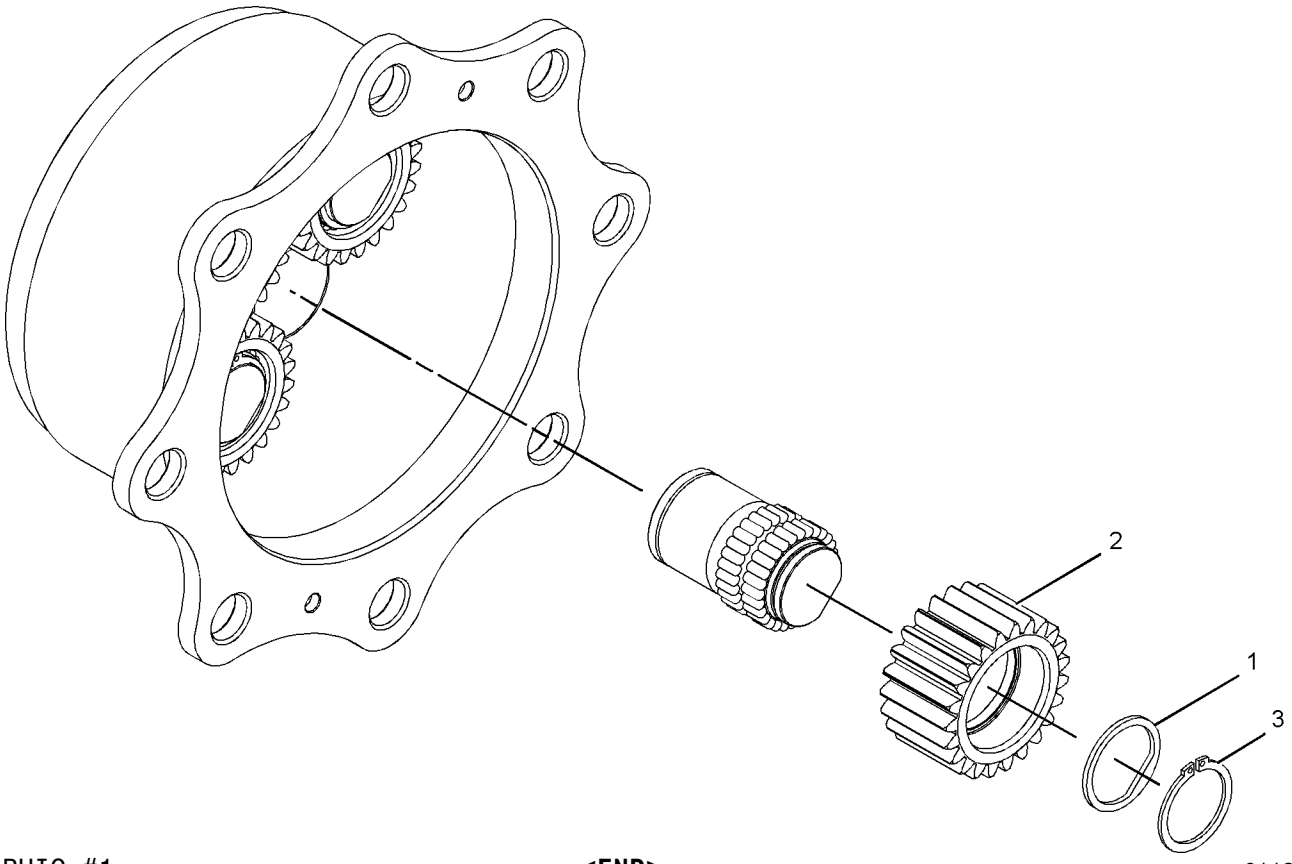

GRAPHIC #1 **<END>** g01132397

216-1610 PLANETARY GP-FINAL DRIVE

S/N: HLS1-99999
PART OF 230-5739 AXLE GP-REAR
AN ATTACHMENT

SMCS-4050 **i03511205**

NOTE	REF NO	GRAPHIC REF	PART NUMBER	QTY	PART NAME 1 2 3 4 5 6 (PRODUCT LEVEL)	SEE PAGE
	1	1	**199-0653**	3	RING-RETAINING	
	2	1	**207-4257**	6	RING-RETAINER	
	3	1	**199-0669**	1	PLUG (THRUST)	
	4	1	**199-0760**	3	BEARING	
	5	1	**213-4222**	3	WASHER (50.1X61X2.5-MM THK)	
	6	1	**207-5962**	6	WASHER (65X72X2-MM THK)	
	7	1	**216-1606**	3	GEAR-PLANETARY (31-TEETH)	
	8	1	**216-1601**	1	CARRIER	

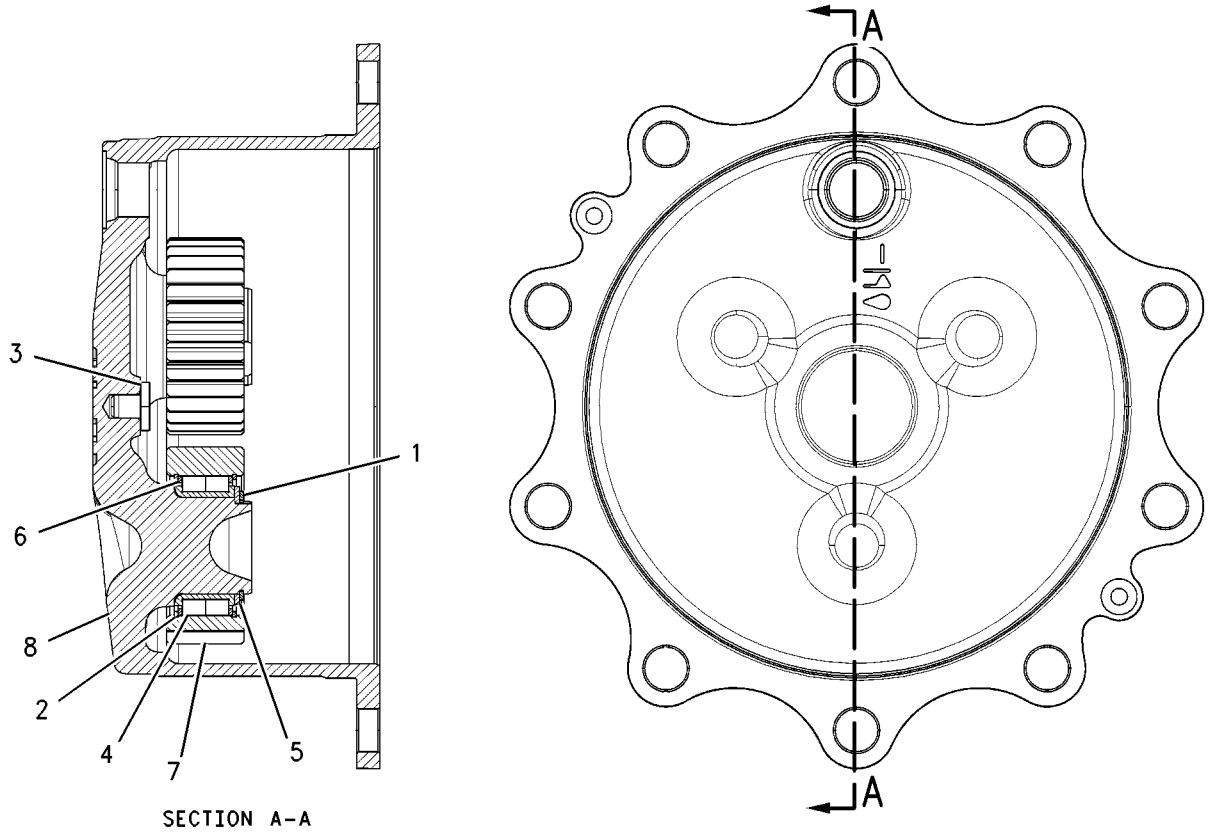

SECTION A-A

GRAPHIC #1 **<END>** g00873301

POWER TRAIN

216-3314 POWER TRAIN AR

S/N: HLS1-99999
AN ATTACHMENT

SMCS-3000, 4000 **i02837486**

NOTE	PART NUMBER	QTY	PART NAME 1 2 3 4 5 6 (PRODUCT LEVEL)	SEE PAGE
Y	*206-1642*	1	CONTROL GP-PARKING BRAKE	326
Y	*206-1639*	1	CONTROL GP-SERVICE BRAKE (STANDARD SHIFT)	328
Y	*206-1643*	1	CONTROL GP-TRANSMISSION	832
Y	*112-1826*	1	DRIVE & MTG GP-PUMP	415
Y	*216-4739*	1	DRIVE AR-BACKHOE LOADER (2-WHEEL DRIVE, 2-WHEEL STEER)	4
Y	*256-0551*	1	FILLER GP-POWER TRAIN OIL (2-WHEEL DRIVE, STANDARD SHIFT)	224
Y	*256-0546*	1	LINES GP-POWER TRAIN OIL (DIFFERENTIAL LOCK)	235
Y	*202-6010*	1	SWITCH GP-DIFFERENTIAL LOCK (CENTER PIVOT MACHINE)	138
Y	*214-7523*	1	TRANSMISSION AR-DIRECT DRIVE (2-WHEEL DRIVE, STANDARD SHIFT)	259
	119-4740	1	FILTER-OIL (STANDARD EFFICIENCY)	

Y-SEPARATE ILLUSTRATION

<END>

216-3315 POWER TRAIN AR—ALL WHEEL DRIVE, STD SHIFT

S/N: HLS1-99999
AN ATTACHMENT

SMCS-3000, 4000 **i02837487**

NOTE	PART NUMBER	QTY	PART NAME 1 2 3 4 5 6 (PRODUCT LEVEL)	SEE PAGE
Y	*206-1642*	1	CONTROL GP-PARKING BRAKE	326
Y	*206-1639*	1	CONTROL GP-SERVICE BRAKE (STANDARD SHIFT)	328
Y	*206-1643*	1	CONTROL GP-TRANSMISSION	832
Y	*112-1826*	1	DRIVE & MTG GP-PUMP	415
Y	*216-4740*	1	DRIVE AR-BACKHOE LOADER (ALL WHEEL DRIVE, 2-WHEEL STEER)	4
Y	*214-3740*	1	FILLER GP-POWER TRAIN OIL	222
Y	*256-0546*	1	LINES GP-POWER TRAIN OIL (DIFFERENTIAL LOCK)	235
Y	*216-4476*	1	SHAFT GP-DRIVE (FRONT)	245
Y	*202-6010*	1	SWITCH GP-DIFFERENTIAL LOCK (CENTER PIVOT MACHINE)	138
Y	*214-7524*	1	TRANSMISSION AR-DIRECT DRIVE (ALL WHEEL DRIVE)	260
	119-4740	1	FILTER-OIL (STANDARD EFFICIENCY) (POWER TRAIN)	

Y-SEPARATE ILLUSTRATION

<END>

216-3316 POWER TRAIN AR—ALL WHEEL DRIVE, AUTOSHIFT

S/N: HLS1-99999

AN ATTACHMENT

SMCS-3000, 4000 **i02837488**

NOTE	PART NUMBER	QTY	PART NAME 1 2 3 4 5 6 (PRODUCT LEVEL)	SEE PAGE
Y	*206-1642*	1	CONTROL GP-PARKING BRAKE	326
Y	*206-1639*	1	CONTROL GP-SERVICE BRAKE (STANDARD SHIFT)	328
Y	*112-1826*	1	DRIVE & MTG GP-PUMP	415
Y	*216-4740*	1	DRIVE AR-BACKHOE LOADER (ALL WHEEL DRIVE, 2-WHEEL STEER)	4
Y	*211-0073*	1	FILLER GP-POWER TRAIN OIL	220
Y	*233-6738*	1	SHAFT GP-DRIVE (FRONT)	245
Y	*202-6010*	1	SWITCH GP-DIFFERENTIAL LOCK (CENTER PIVOT MACHINE)	138
Y	*251-6354*	1	TRANSMISSION AR-POWER SHIFT (ALL WHEEL DRIVE, AUTOSHIFT)	260
Y	*256-0545*	1	VALVE & LINES GP-DIFF LOCK	304
Y	*211-4254*	1	WIRING GP-TRANSMISSION CONTROL (AUTOSHIFT, STANDARD SHIFT)	201
	119-4740	1	FILTER-OIL (STANDARD EFFICIENCY) (POWER TRAIN)	

Y-SEPARATE ILLUSTRATION

<END>

274-4580 SHAFT GP-COUNTER

S/N: HLS1-99999
PART OF 274-8641 TRANSMISSION GP-POWER SHIFT
AN ATTACHMENT

SMCS-3053, 3063 **i02787723**

NOTE	REF NO	GRAPHIC REF	PART NUMBER	QTY	PART NAME 1 2 3 4 5 6 (PRODUCT LEVEL)	SEE PAGE
	1	1	**294-9812**	1	RETAINER-SPRING	
	3	1	**6V-8757**	1	RING-RETAINING	
	4	1	**6Y-1192**	2	RING-SEAL	
	5	1	**6Y-7929**	8	DISC-FRICTION	
	6	1	**8E-5707**	1	PLATE-END	
	7	1	**122-1877**	1	WASHER-THRUST (40X65X4-MM THK)	
	8	1	**123-8907**	2	CONE-BEARING	
	9	1	**123-8908**	2	CUP-TAPERED ROLLER	
	10	1	**123-8912**	2	BEARING-ROLLER	
	11	1	**147-0203**	1	WASHER-THRUST (45.3X65X5-MM THK)	
	12	1	**147-0215**	1	GEAR (45/19-TEETH)	
	13	1	**147-0216**	1	GEAR (38-TEETH)	
	14	1	**294-9810**	1	PISTON	
	15	1	**147-0238**	1	SPRING AS	
	16	1	**147-0258**	1	SPACER (46X50X16-MM THK)	
	17	1	**172-6050**	2	BEARING-SPECIAL	
	18	1	**173-0332**	1	SHAFT AS	
		1	**163-9091**	1	PLUG	
	19	1	**211-6752**	1	GEAR (46-TEETH)	
	20	1	**274-4553**	8	DISC-CLUTCH	
	21	1	**274-8638**	1	RING-RETAINING	

274-4580 SHAFT GP-COUNTER *(contd.)* **i02787723**

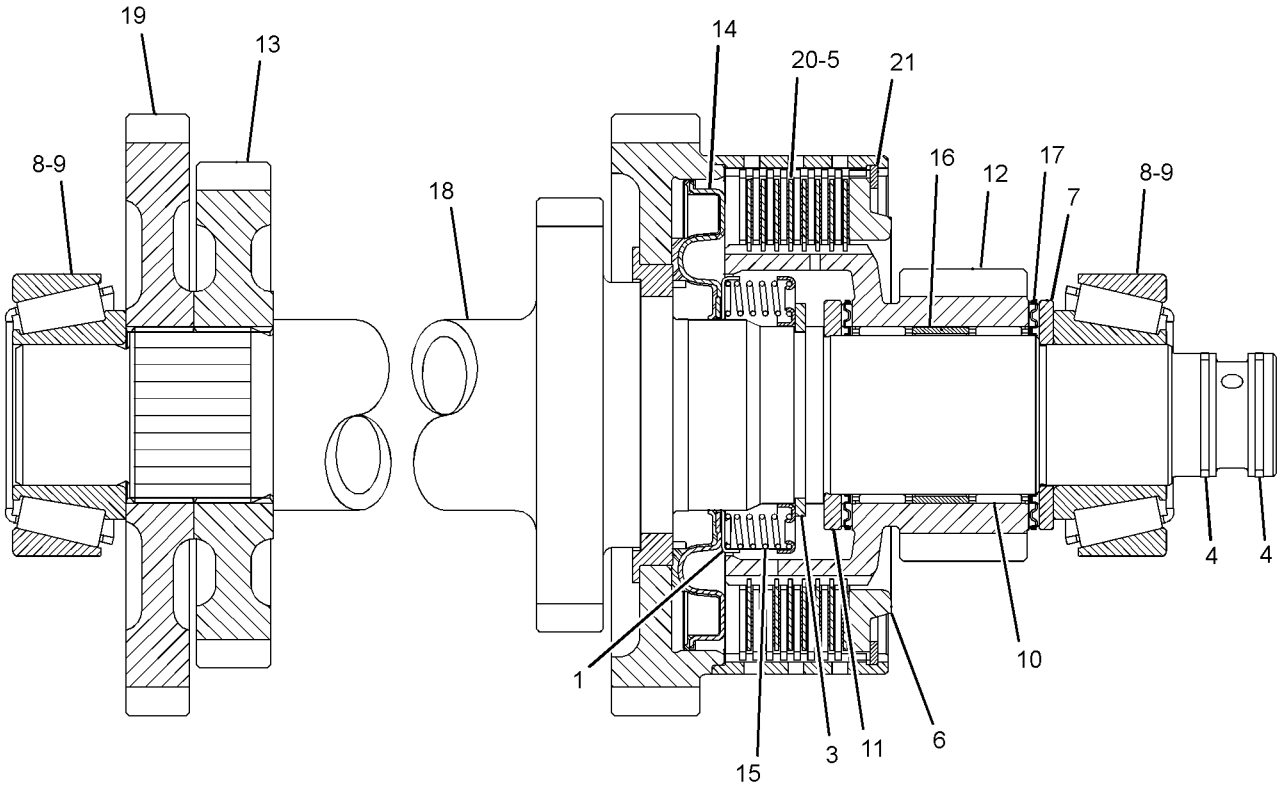

GRAPHIC #1 **<END>** g01405943

216-4475 SHAFT GP-DRIVE—REAR

S/N: HLS1-99999
PART OF 216-4739, 216-4740 DRIVE AR-BACKHOE LOADER
AN ATTACHMENT

SMCS-3253 **i03330464**

NOTE	PART NUMBER	QTY	PART NAME 1 2 3 4 5 6 (PRODUCT LEVEL)	SEE PAGE
J	**304-3269**	1	SHAFT AS (REAR)	
M	**107-6826**	8	BOLT (M24X19.1-MM)	
	5V-2545	4	STRAP	
			AVAILABLE REPAIR KIT(S):	
J	**117-9887**	2	KIT-SPIDER & BEARING (DRIVE SHAFT)	
			(EACH INCLUDES RINGS & SPIDER)	

J-KIT MARKED J AVAILABLE FOR PART MARKED J
M-METRIC PART

<END>

216-4476 SHAFT GP-DRIVE—FRONT

S/N: HLS1-99999
PART OF 216-3315 POWER TRAIN AR
AN ATTACHMENT

SMCS-3253 **i02863506**

NOTE	PART NUMBER	QTY	PART NAME 1 2 3 4 5 6 (PRODUCT LEVEL)	SEE PAGE
J	**304-3266**	1	SHAFT AS (FRONT)	
M	**107-6826**	8	BOLT (M24X19.1-MM)	
	5V-2545	4	STRAP	
			AVAILABLE REPAIR KIT(S):	
J	**117-9887**	2	KIT-SPIDER & BEARING (DRIVE SHAFT)	
			(EACH INCLUDES RINGS & SPIDER)	

J-KIT MARKED J AVAILABLE FOR PART MARKED J
M-METRIC PART

<END>

233-6738 SHAFT GP-DRIVE—FRONT

S/N: HLS1-99999
PART OF 216-3316 POWER TRAIN AR
AN ATTACHMENT

SMCS-3253 **i03530520**

NOTE	PART NUMBER	QTY	PART NAME 1 2 3 4 5 6 (PRODUCT LEVEL)	SEE PAGE
J	**304-3262**	1	SHAFT AS (FRONT)	
M	**107-6826**	8	BOLT (M24X19.1-MM)	
	5V-2545	4	STRAP	
			AVAILABLE REPAIR KIT(S):	
J	**117-9887**	2	KIT-SPIDER & BEARING (DRIVE SHAFT)	
			(EACH INCLUDES RINGS & SPIDER)	

J-KIT MARKED J SERVICES PART MARKED J
M-METRIC PART

<END>

274-4561 SHAFT GP-IDLER

S/N: HLS1-99999

PART OF 274-8641 TRANSMISSION GP-POWER SHIFT

AN ATTACHMENT

SMCS-3063 **i03504101**

NOTE	REF NO	GRAPHIC REF	PART NUMBER	QTY	PART NAME 1 2 3 4 5 6 (PRODUCT LEVEL)	SEE PAGE
	1	1	**147-0256**	1	SHAFT AS-REVERSE	
		1	**163-9091**	1	PLUG	
		1	**147-0270**	1	ORIFICE	
	2	1	**147-0202**	1	GEAR (45/24-TEETH)	
	3	1	**123-8905**	2	CUP-TAPERED ROLLER	
	4	1	**294-9810**	1	PISTON	
	5	1	**294-9812**	1	RETAINER-SPRING	
	7	1	**147-0238**	1	SPRING AS	
	8	1	**274-4553**	5	DISC-CLUTCH	
	9	1	**6Y-7929**	5	DISC-FRICTION	
	10	1	**147-0259**	1	SPACER (51.1X54.9X18.7-MM THK)	
	11	1	**6V-8757**	1	RING-RETAINING	
	12	1	**121-2500**	1	WASHER-THRUST (50X70X4-MM THK)	
	13	1	**172-5317**	2	BEARING-SPECIAL	
	14	1	**121-0694**	1	WASHER-THRUST (40X70X4-MM THK)	
	15	1	**6Y-1192**	2	RING-SEAL	
	16	1	**8E-5707**	1	PLATE-END	
	17	1	**274-8638**	1	RING-RETAINING	
	18	1	**7T-6655**	2	BEARING	
	19	1	**123-8906**	2	CUP-TAPERED ROLLER	

274-4561 SHAFT GP-IDLER *(contd.)* **i03504101**

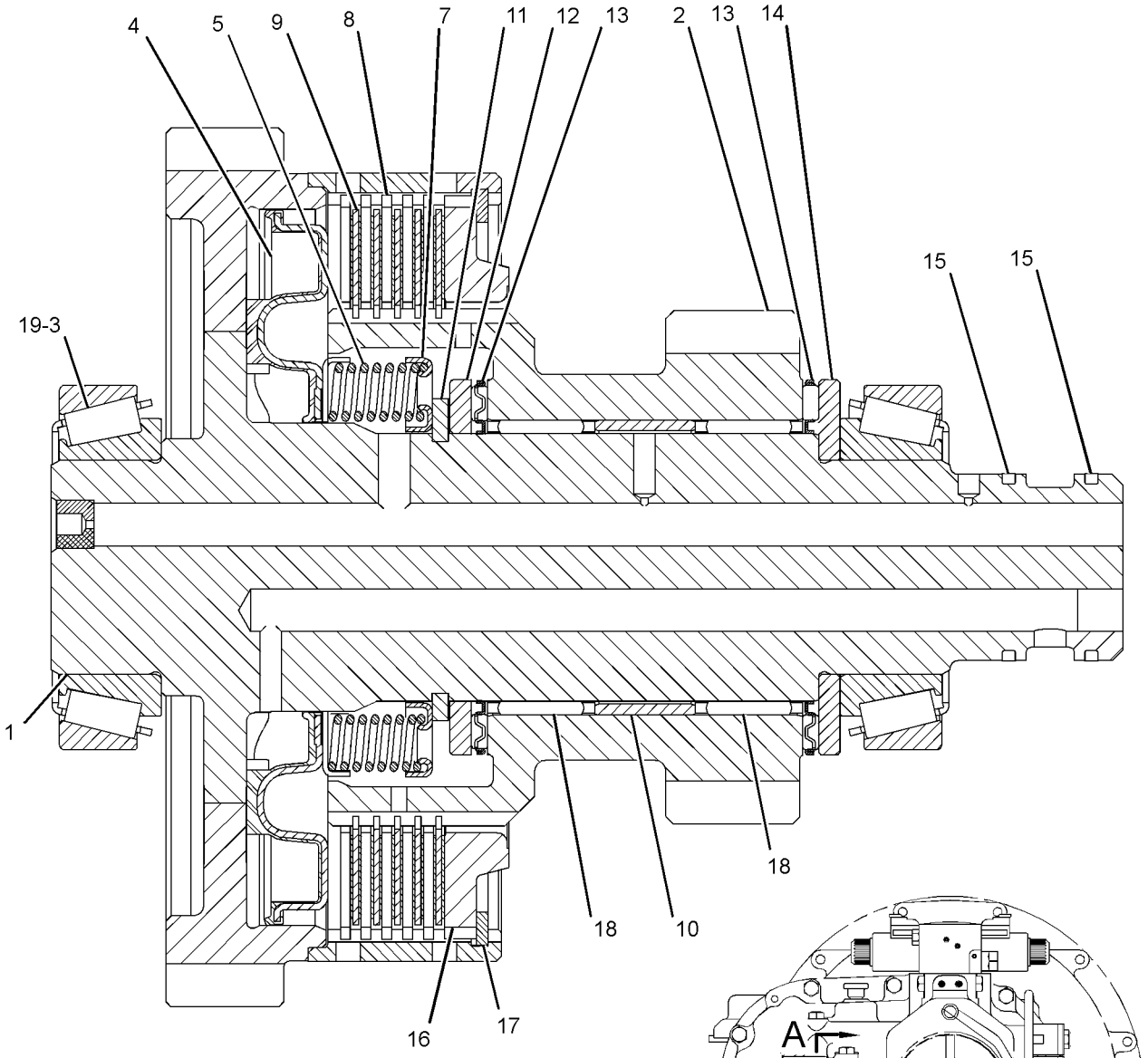

SECTION A-A

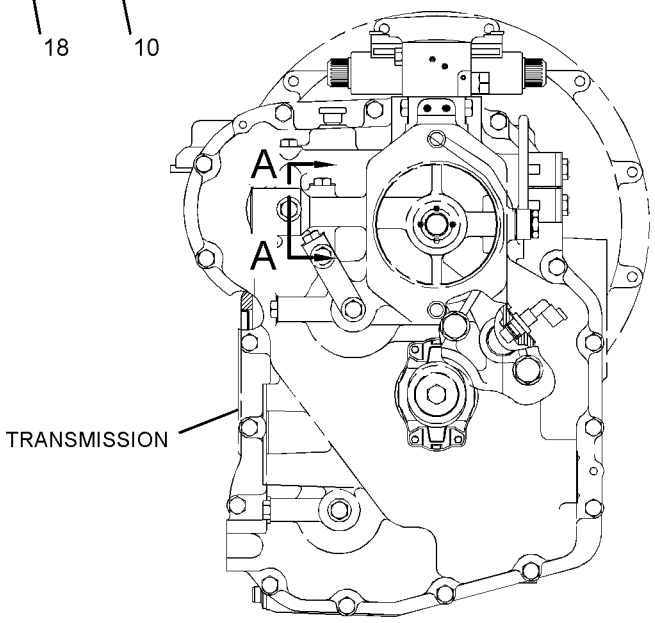

REAR VIEW

GRAPHIC #1 **<END>** g01406552

274-4578 SHAFT GP-INPUT

S/N: HLS1-99999
PART OF 274-8641 TRANSMISSION GP-POWER SHIFT
AN ATTACHMENT

SMCS-3053, 3063 **i02787722**

NOTE	REF NO	GRAPHIC REF	PART NUMBER	QTY	PART NAME 1 2 3 4 5 6 (PRODUCT LEVEL)	SEE PAGE
	1	1	**294-9812**	2	RETAINER-SPRING	
	3	1	**6V-8757**	3	RING-RETAINING	
	4	1	**6Y-7929**	11	DISC-FRICTION	
	5	1	**7T-6655**	2	BEARING	
	6	1	**8E-5707**	2	PLATE-END	
	7	1	**9U-8886**	4	RING-SEAL	
	8	1	**121-0694**	1	WASHER-THRUST (40X70X4-MM THK)	
	9	1	**121-2500**	3	WASHER-THRUST (50X70X4-MM THK)	
	10	1	**122-1886**	1	RING-SEAL	
	11	1	**123-8905**	1	CUP-TAPERED ROLLER	
	12	1	**123-8906**	1	CUP-TAPERED ROLLER	
	13	1	**123-8909**	1	CONE-BEARING	
	14	1	**123-8910**	1	CUP-TAPERED ROLLER	
	15	1	**123-8913**	2	BEARING-ROLLER	
	16	1	**147-0202**	1	GEAR (45/24-TEETH)	
	17	1	**147-0224**	1	GEAR (45/32-TEETH)	
	18	1	**294-9810**	2	PISTON	
	19	1	**147-0238**	2	SPRING AS	
	20	1	**147-0257**	1	SHAFT AS-INPUT	
		1	**123-2920**	3	PLUG	
	21	1	**147-0259**	1	SPACER (51.1X54.9X18.7-MM THK)	
	22	1	**172-5317**	4	BEARING-SPECIAL	
	23	1	**274-4553**	11	DISC-CLUTCH	
	24	1	**274-8638**	2	RING-RETAINING	

274-4578 SHAFT GP-INPUT *(contd.)* **i02787722**

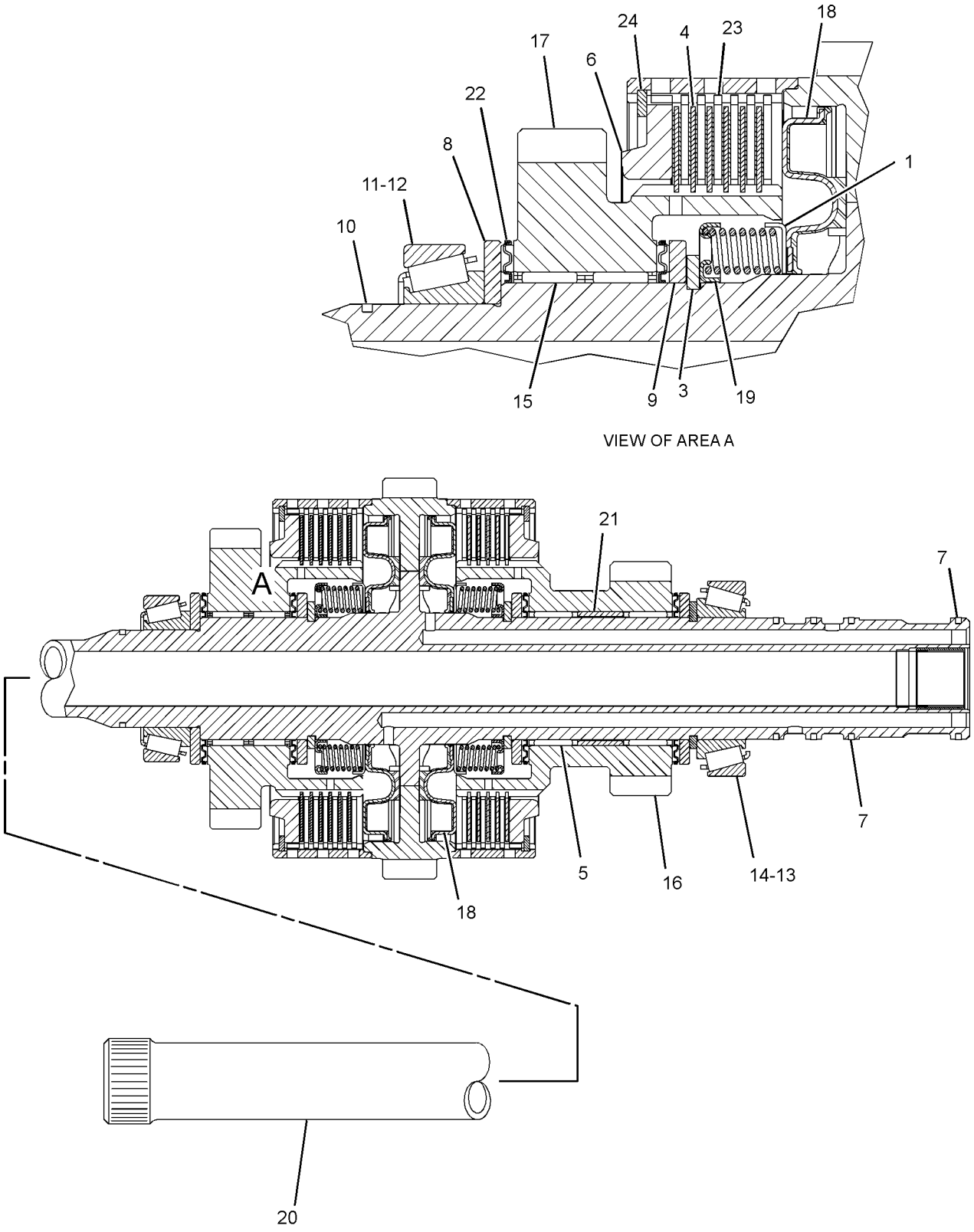

GRAPHIC #1 **<END>** g01406554

275-0476 SHAFT GP-INPUT

S/N: HLS1-99999

PART OF 271-3773, 271-3774 TRANSMISSION GP-DIRECT DRIVE

AN ATTACHMENT

SMCS-3053, 3063 **i03073141**

NOTE	REF NO	GRAPHIC REF	PART NUMBER	QTY	PART NAME 1 2 3 4 5 6 (PRODUCT LEVEL)	SEE PAGE
	1	1	**9U-8875**	2	RING-RETAINING	
	2	1	**6T-9196**	2	SEAL	
	3	1	**172-5317**	1	BEARING-SPECIAL	
	4	1	**172-6050**	1	BEARING-SPECIAL	
	5	1	**6V-5100**	2	SEAL-O-RING	
	6	1	**9U-8886**	4	RING-SEAL	
	7	1	**274-4553**	10	DISC-CLUTCH	
	8	1	**122-1886**	1	RING-SEAL	
	9	1	**6V-8757**	3	RING-RETAINING	
	10	1	**121-2500**	2	WASHER-THRUST (50X70X4-MM THK)	
	11	1	**123-8905**	1	CUP-TAPERED ROLLER	
	12	1	**123-8909**	1	CONE-BEARING	
	13	1	**147-0227**	2	PISTON-CLUTCH	
	14	1	**147-0238**	2	SPRING AS	
	15	1	**147-0203**	2	WASHER-THRUST (45.3X65X5-MM THK)	
	16	1	**6Y-7929**	10	DISC-FRICTION	
	17	1	**274-8616**	1	GEAR-FORWARD (24-TEETH)	
	18	1	**274-8617**	1	GEAR-REVERSE (27-TEETH)	
	19	1	**274-8628**	1	BEARING-NEEDLE	
	20	1	**274-8629**	1	BEARING-NEEDLE	
	21	1	**294-9821**	1	SPACER	
	22	1	**274-8636**	1	SHAFT AS (PLUG)	
	22A	1	**123-2920**	3	PLUG	
	22B	1	**123-0714**	2	BEARING	
	23	1	**8E-5707**	2	PLATE-END	

275-0476 SHAFT GP-INPUT *(contd.)* **i03073141**

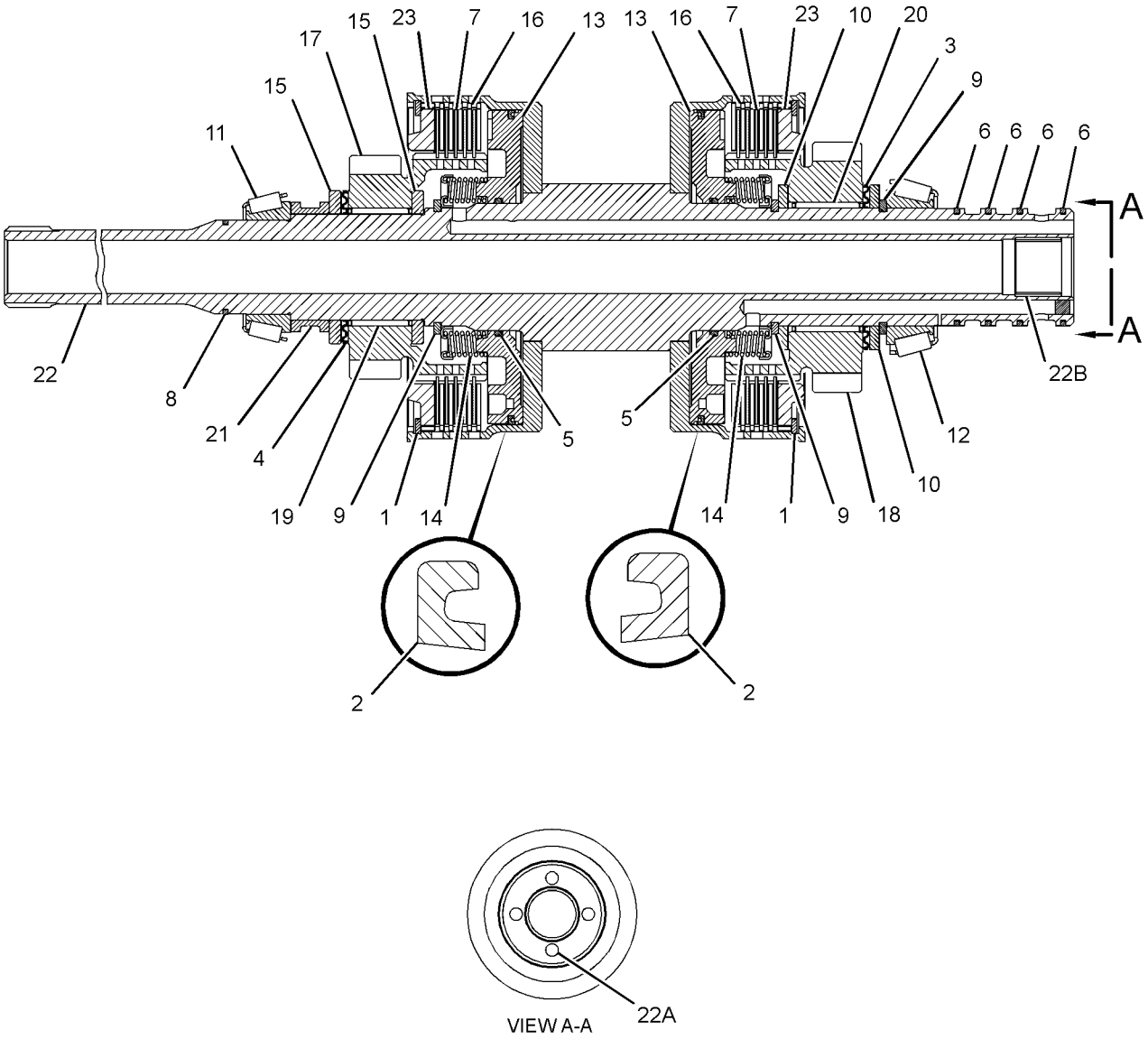

GRAPHIC #1 **<END>** g01436061

274-4582 SHAFT GP-OUTPUT—MAIN

S/N: HLS1-99999

PART OF 274-8641 TRANSMISSION GP-POWER SHIFT

AN ATTACHMENT

SMCS-3053, 3063 **i02787724**

NOTE	REF NO	GRAPHIC REF	PART NUMBER	QTY	PART NAME 1 2 3 4 5 6 (PRODUCT LEVEL)	SEE PAGE
	1	1	**274-8638**	2	RING-RETAINING	
	2	1	**6Y-1192**	3	RING-SEAL	
	3	1	**6Y-7929**	13	DISC-FRICTION	
	4	1	**8E-5707**	2	PLATE-END	
	5	1	**8T-1580**	1	CUP	
	6	1	**8T-1581**	1	CONE	
	8	1	**095-0927**	1	RING-RETAINING	
	9	1	**095-0928**	1	RING-RETAINING (EXTERNAL)	
	10	1	**121-0885**	1	RETAINER	
	11	1	**122-1877**	1	WASHER-THRUST (40X65X4-MM THK)	
	12	1	**123-8907**	1	CONE-BEARING	
	13	1	**123-8908**	1	CUP-TAPERED ROLLER	
	14	1	**123-8912**	2	BEARING-ROLLER	
	15	1	**147-0203**	1	WASHER-THRUST (45.3X65X5-MM THK)	
	16	1	**147-0205**	2	WASHER (55X78X5-MM THK)	
	17	1	**147-0242**	1	GEAR (48-TEETH)	
	18	1	**147-0248**	1	SPACER (56.2X60X15.8-MM THK)	
	19	1	**147-0260**	1	RETAINER-SPRING	
	20	1	**147-0261**	1	SHAFT AS-OUTPUT (REAR)	
		1	**9W-0717**	2	PLUG	
	21	1	**150-3757**	2	BEARING	
	22	1	**294-9811**	2	PISTON	
	23	1	**157-2090**	1	GEAR (38-TEETH)	
	24	1	**172-6050**	2	BEARING-SPECIAL	
	25	1	**172-6743**	2	BEARING-SPECIAL	
	26	1	**294-9813**	2	SPRING-WAVE	
	27	1	**211-6753**	1	GEAR (24-TEETH)	
	28	1	**274-4553**	13	DISC-CLUTCH	

274-4582 SHAFT GP-OUTPUT *(contd.)* **i02787724**

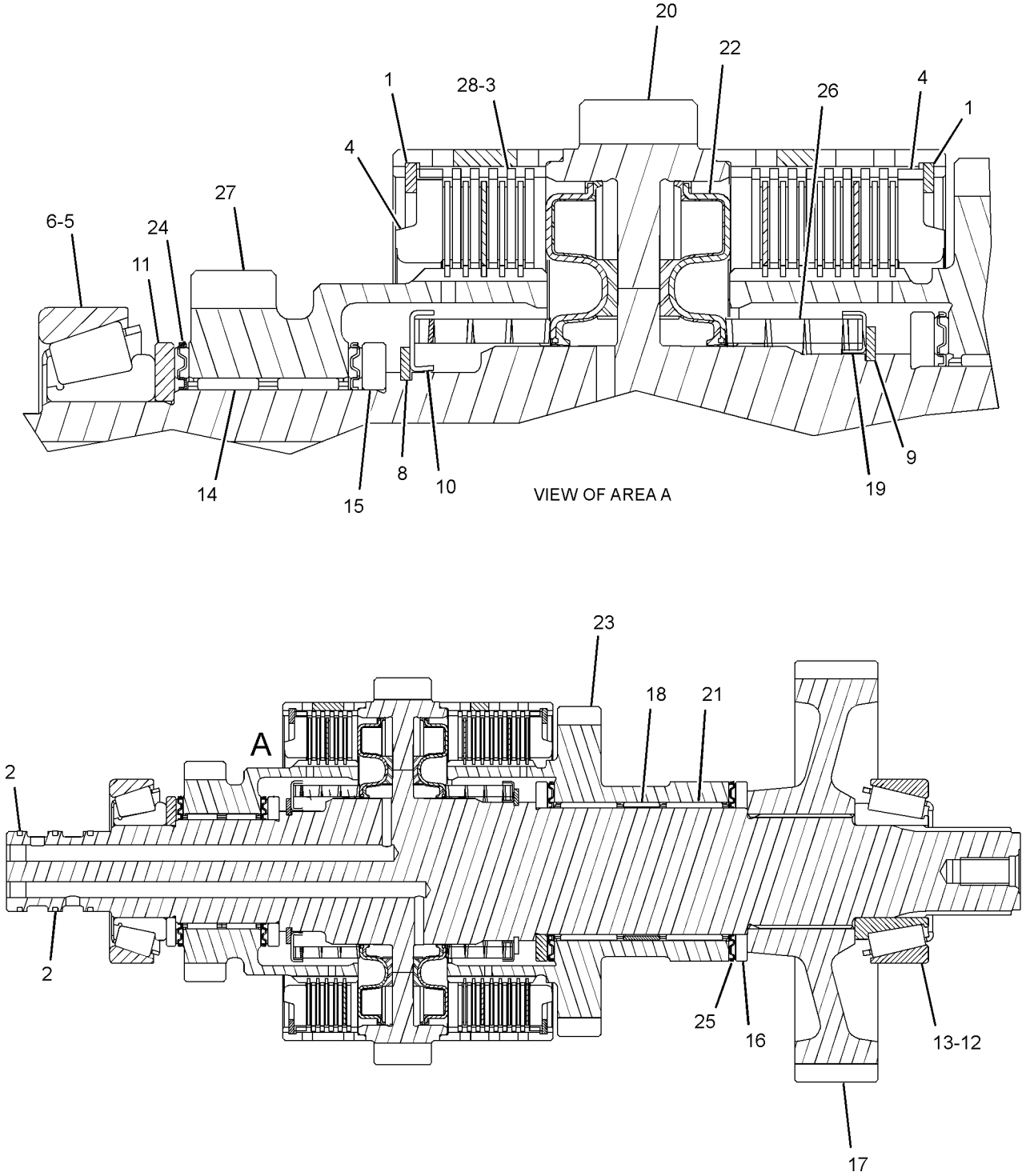

GRAPHIC #1 **<END>** g01405588

275-0478 SHAFT GP-OUTPUT–REAR

S/N: HLS1-99999

PART OF 271-3773, 271-3774 TRANSMISSION GP-DIRECT DRIVE

AN ATTACHMENT

SMCS-3053, 3063 **i02928301**

NOTE	REF NO	GRAPHIC REF	PART NUMBER	QTY	PART NAME 1 2 3 4 5 6 (PRODUCT LEVEL)	SEE PAGE
	1	1	**7T-3022**	2	SLEEVE	
	2	1	**6V-8500**	4	BEARING	
	3	1	**6T-9160**	1	GEAR (43-TEETH)	
	4	1	**7T-3017**	1	SPACER (52.5X59X9.6-MM THK)	
	5	1	**7T-3021**	2	SYNCHRONIZER GP	
	6	1	**096-5516**	1	RING-RETAINING	
	7	1	**259-1831**	1	GEAR (37-TEETH)	
	8	1	**6Y-2736**	1	CONE-BEARING	
	9	1	**123-8907**	1	CONE-BEARING	
	11	1	**274-8620**	1	GEAR-OUTPUT (37-TEETH)	
	12	1	**274-8621**	1	GEAR-OUTPUT (28-TEETH)	
	13	1	**274-8637**	1	SPACER-BEARING	
	14	1	**278-0215**	1	SHAFT-OUTPUT	
	15	1	**278-0216**	1	GEAR-OUTPUT (17-TEETH)	
	16	1	**278-0217**	1	BEARING-NEEDLE	
	17	1	**278-0218**	2	WASHER-THRUST	
	18	1	**178-8214**	1	CLIP	
	19	1	**7T-3018**	1	SLEEVE	
	20	1	**150-3757**	1	BEARING	
	21	1	**293-8761**	1	BEARING-NEEDLE	

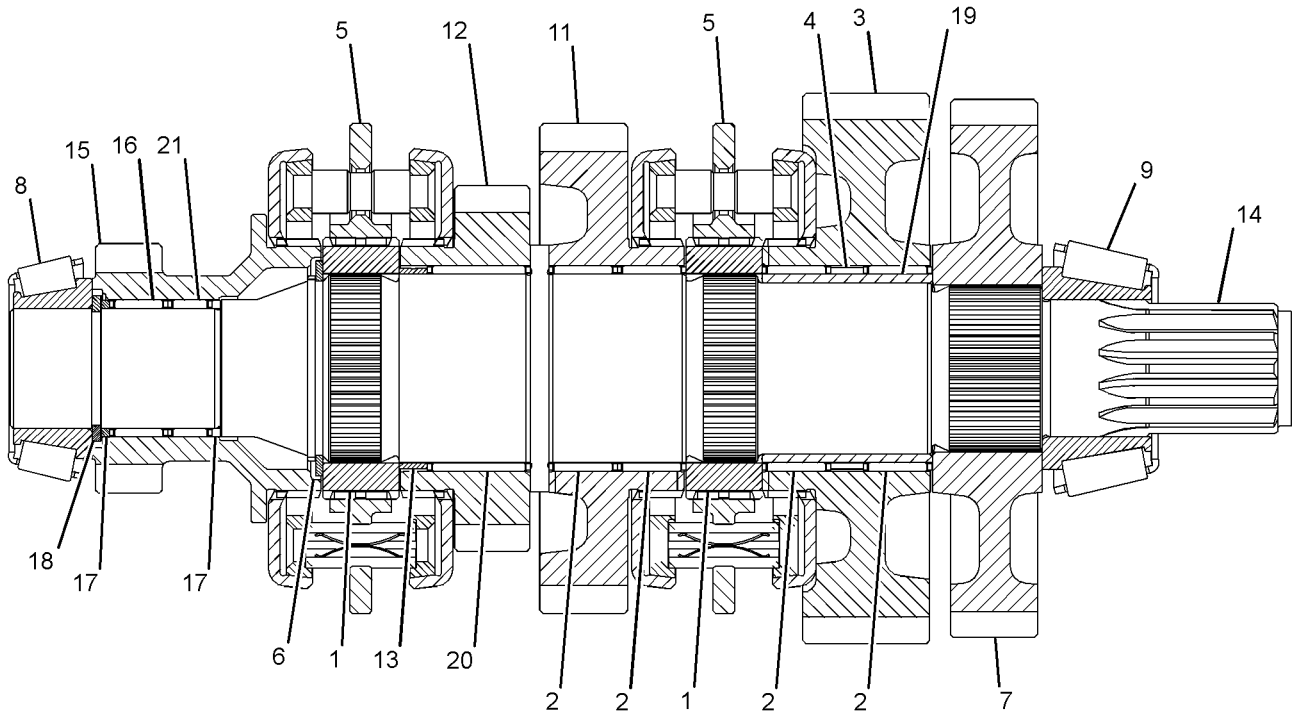

GRAPHIC #1 **<END>** g01508474

276-5337 SHAFT GP-OUTPUT–FRONT

S/N: HLS1-99999
PART OF 271-3774 TRANSMISSION GP-DIRECT DRIVE
AN ATTACHMENT

SMCS-3053, 3063 **i02445143**

NOTE	REF NO	GRAPHIC REF	PART NUMBER	QTY	PART NAME 1 2 3 4 5 6 (PRODUCT LEVEL)	SEE PAGE
	1	1	**095-0927**	1	RING-RETAINING	
	2	1	**274-4553**	8	DISC-CLUTCH	
	3	1	**6T-9196**	1	SEAL	
	4	1	**6Y-7957**	8	DISC-FRICTION	
	5	1	**121-0697**	1	WASHER-THRUST (45X65X5-MM THK)	
	6	1	**172-6050**	2	BEARING-SPECIAL	
	7	1	**6V-5100**	1	SEAL-O-RING	
	8	1	**122-1878**	1	RING-SEAL	
	9	1	**122-1877**	1	WASHER-THRUST (40X65X4-MM THK)	
	10	1	**122-1884**	1	SPACER (45X49X8-MM THK)	
	11	1	**121-0885**	1	RETAINER	
	12	1	**121-0714**	1	PISTON	
	13	1	**123-8905**	2	CUP-TAPERED ROLLER	
	14	1	**178-9566**	1	SPRING-PISTON	
	15	1	**161-3249**	1	RING-RETAINING	
	16	1	**123-8912**	2	BEARING-ROLLER	
	17	1	**190-9767**	1	SHAFT AS (OUTPUT)	
	18	1	**121-0904**	1	GEAR AS (36-TEETH)	
	19	1	**8E-5707**	1	PLATE-END	

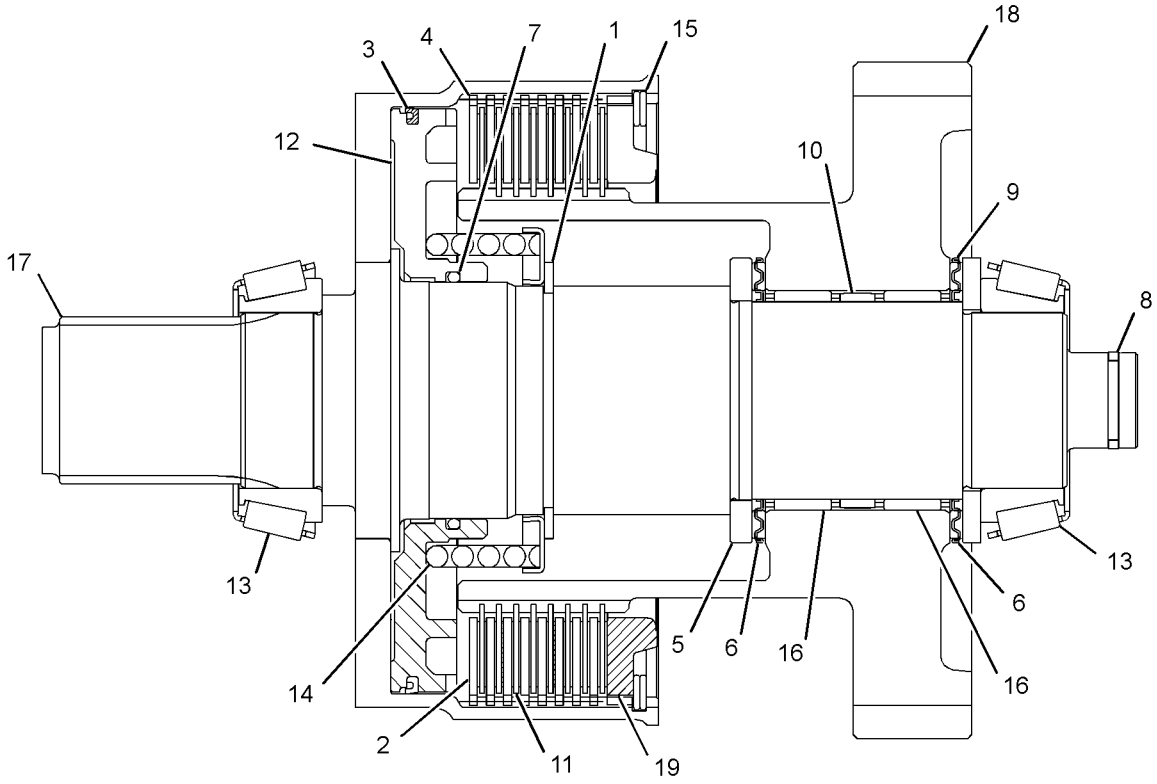

GRAPHIC #1 **<END>** g01233297

276-5339 SHAFT GP-OUTPUT–REAR

S/N: HLS1-99999
PART OF 271-3773 TRANSMISSION GP-DIRECT DRIVE
AN ATTACHMENT

SMCS-3053, 3063 **i02770380**

NOTE	REF NO	GRAPHIC REF	PART NUMBER	QTY	PART NAME 1 2 3 4 5 6 (PRODUCT LEVEL)	SEE PAGE
	1	1	**7T-3022**	2	SLEEVE	
	2	1	**6V-8500**	4	BEARING	
	3	1	**6T-9160**	1	GEAR (43-TEETH)	
	4	1	**259-1832**	1	SPACER-SPECIAL	
	5	1	**7T-3017**	1	SPACER (52.5X59X9.6-MM THK)	
	6	1	**7T-3021**	2	SYNCHRONIZER GP	
	7	1	**096-5516**	1	RING-RETAINING	
	8	1	**6Y-2736**	1	CONE-BEARING	
	9	1	**123-8907**	1	CONE-BEARING	
	10	1	**150-3757**	1	BEARING	
	11	1	**274-8620**	1	GEAR-OUTPUT (37-TEETH)	
	12	1	**274-8621**	1	GEAR-OUTPUT (28-TEETH)	
	13	1	**274-8637**	1	SPACER-BEARING	
	14	1	**278-0215**	1	SHAFT-OUTPUT	
	15	1	**278-0216**	1	GEAR-OUTPUT (17-TEETH)	
	16	1	**278-0217**	2	BEARING-NEEDLE	
	17	1	**278-0218**	1	WASHER-THRUST	
	18	1	**178-8214**	1	CLIP	

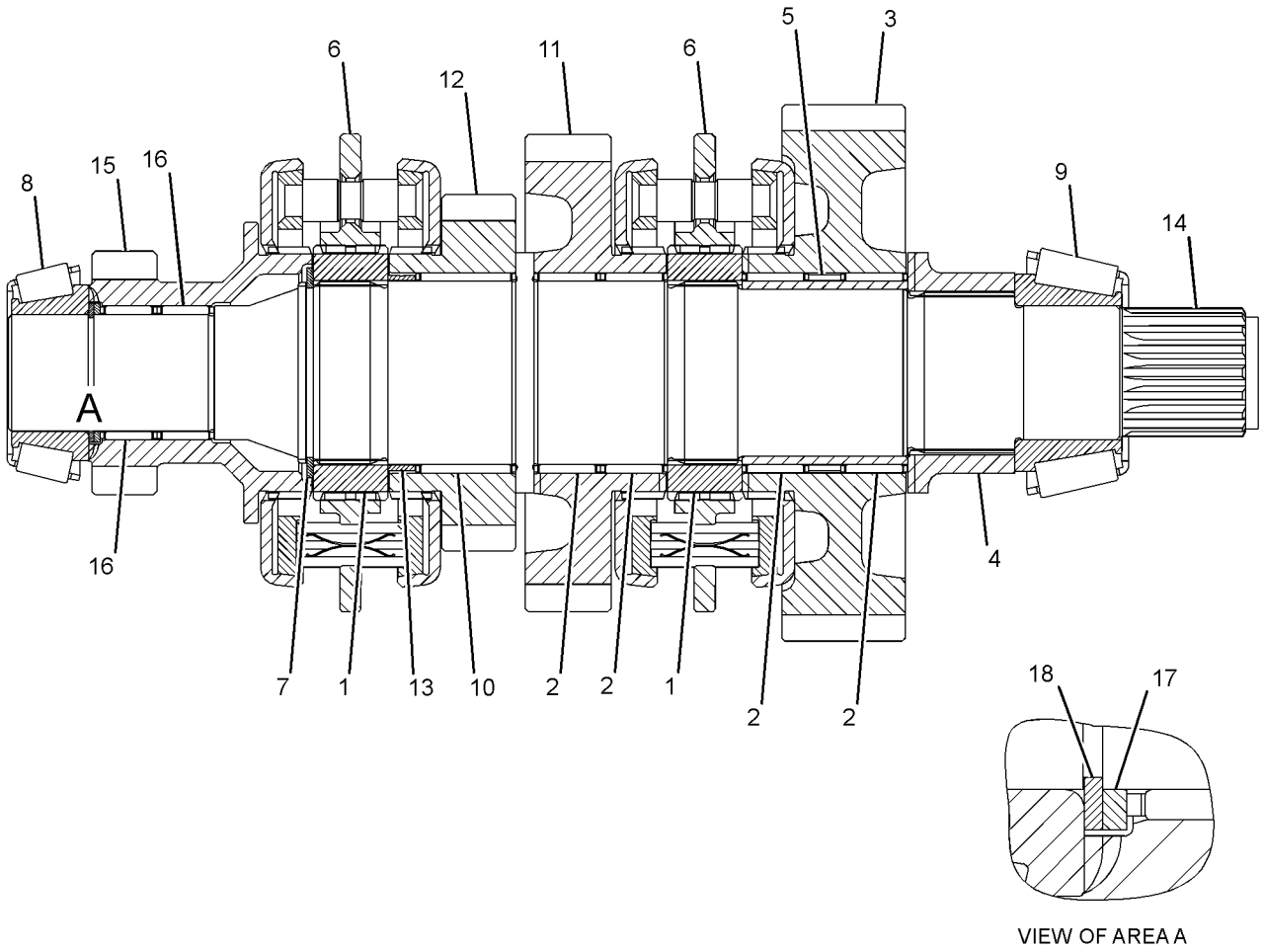

VIEW OF AREA A

GRAPHIC #1 **<END>** g01226076

280-7007 SHAFT GP-OUTPUT–FRONT

S/N: HLS1-99999
PART OF 274-8641 TRANSMISSION GP-POWER SHIFT
AN ATTACHMENT

SMCS-3053, 3063 **i02787726**

NOTE	REF NO	GRAPHIC REF	PART NUMBER	QTY	PART NAME 1 2 3 4 5 6 (PRODUCT LEVEL)	SEE PAGE
	1	1	**294-9812**	1	RETAINER-SPRING	
	3	1	**6V-8757**	1	RING-RETAINING	
	4	1	**6Y-7957**	8	DISC-FRICTION	
	5	1	**8E-5707**	1	PLATE-END	
	6	1	**122-1877**	1	WASHER-THRUST (40X65X4-MM THK)	
	7	1	**122-1878**	1	RING-SEAL	
	8	1	**122-1884**	1	SPACER (45X49X8-MM THK)	
	9	1	**123-8905**	2	CUP-TAPERED ROLLER	
	10	1	**123-8906**	2	CUP-TAPERED ROLLER	
	11	1	**123-8912**	2	BEARING-ROLLER	
	12	1	**147-0203**	1	WASHER-THRUST (45.3X65X5-MM THK)	
	13	1	**147-0207**	1	SHAFT AS-OUTPUT (FRONT)	
	14	1	**147-0210**	1	GEAR (45/36-TEETH)	
	15	1	**305-3431**	1	PISTON	
	16	1	**147-0238**	1	SPRING AS	
	17	1	**161-3249**	1	RING-RETAINING	
	18	1	**172-6050**	2	BEARING-SPECIAL	
	19	1	**274-4553**	8	DISC-CLUTCH	

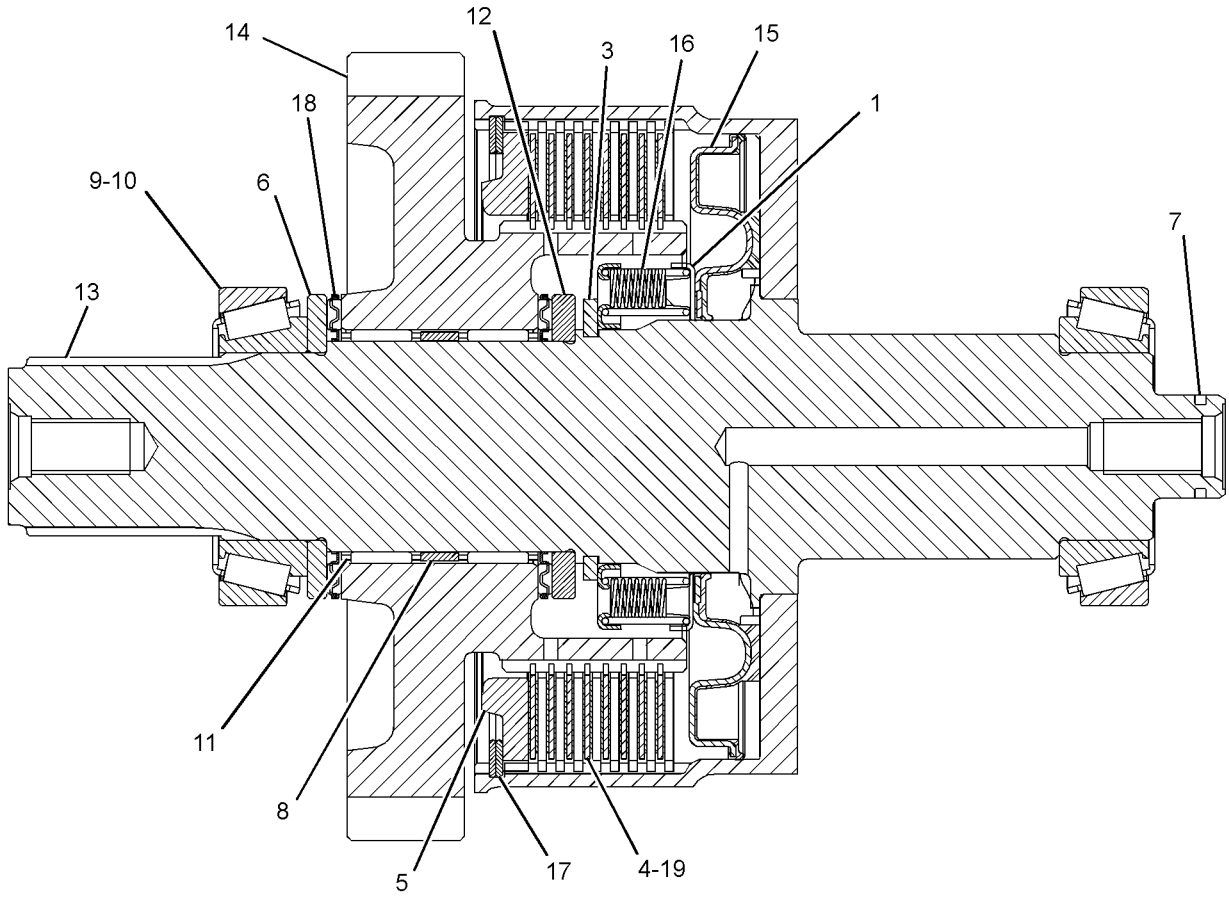

LEFT SIDE VIEW

GRAPHIC #1 **<END>** g01405501

202-6009 TRANSMISSION & MOUNTING GP–

ALL WHEEL DRIVE, AUTOSHIFT

S/N: HLS1-99999

PART OF 251-6354 TRANSMISSION AR-POWER SHIFT

AN ATTACHMENT

SMCS-3030 **i02444691**

NOTE	REF NO	GRAPHIC REF	PART NUMBER	QTY	PART NAME 1 2 3 4 5 6 (PRODUCT LEVEL)	SEE PAGE
Y	1	1	*254-5703*	1	MOUNTING GP-TRANSMISSION	237
Y	2	1	**274-8641**	1	TRANSMISSION GP-POWER SHIFT	292

Y-SEPARATE ILLUSTRATION

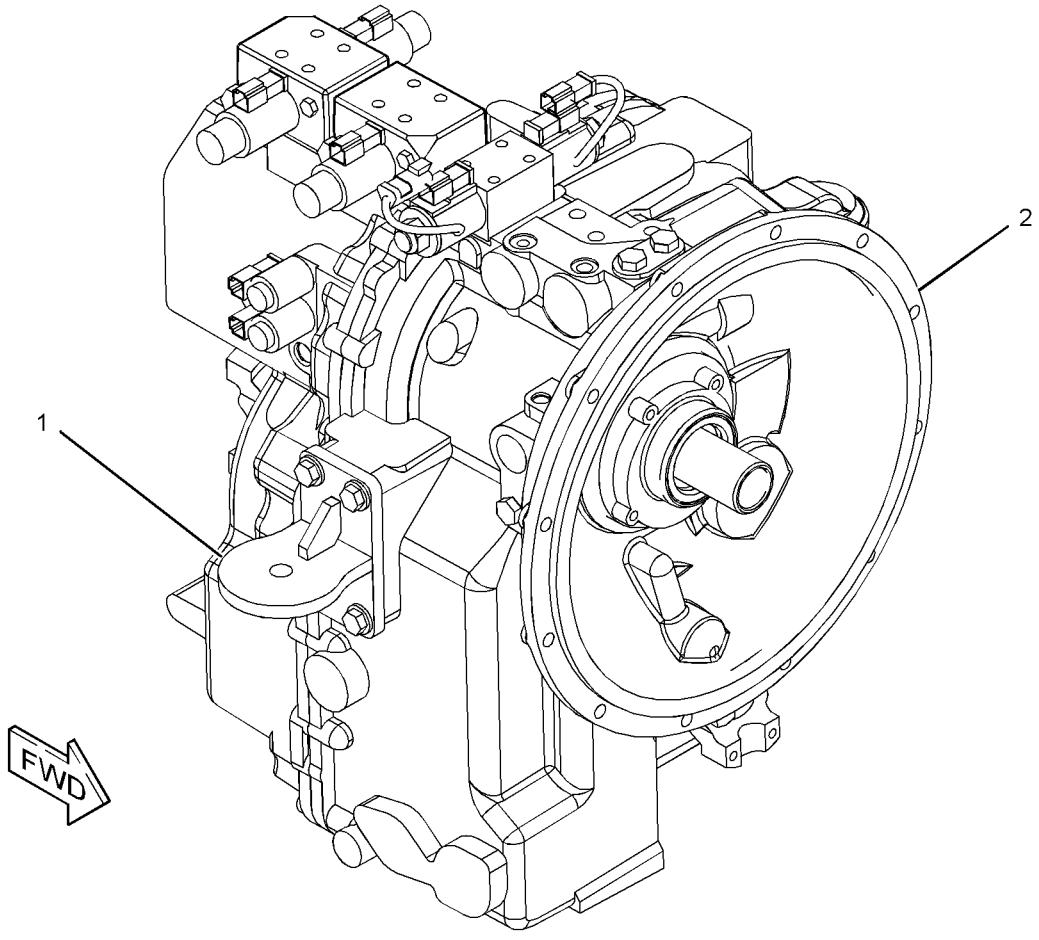

GRAPHIC #1 **<END>** g01233469

271-2405 TRANSMISSION & MOUNTING GP–
2-WHEEL DRIVE, STANDARD SHIFT
S/N: HLS1-99999
PART OF 214-7523 TRANSMISSION AR-DIRECT DRIVE
AN ATTACHMENT

SMCS-3030 **i02354348**

NOTE	PART NUMBER	QTY	PART NAME 1 2 3 4 5 6 (PRODUCT LEVEL)	SEE PAGE
Y	*271-4487*	1	MOUNTING GP-TRANSMISSION	238
Y	*271-3773*	1	TRANSMISSION GP-DIRECT DRIVE	261

Y-SEPARATE ILLUSTRATION

<END>

271-2406 TRANSMISSION & MOUNTING GP–
ALL WHEEL DRIVE, STANDARD SHIFT
S/N: HLS1-99999
PART OF 214-7524 TRANSMISSION AR-DIRECT DRIVE
AN ATTACHMENT

SMCS-3030 **i02354600**

NOTE	PART NUMBER	QTY	PART NAME 1 2 3 4 5 6 (PRODUCT LEVEL)	SEE PAGE
Y	*271-4487*	1	MOUNTING GP-TRANSMISSION	238
Y	**271-3774**	1	TRANSMISSION GP-DIRECT DRIVE	281

Y-SEPARATE ILLUSTRATION

<END>

214-7523 TRANSMISSION AR-DIRECT DRIVE–
2-WHEEL DRIVE, STANDARD SHIFT
S/N: HLS1-99999
PART OF 216-3314 POWER TRAIN AR
AN ATTACHMENT

SMCS-3030 **i03483386**

NOTE	PART NUMBER	QTY	PART NAME 1 2 3 4 5 6 (PRODUCT LEVEL)	SEE PAGE
Y	*111-7907*	1	DRIVE GP-FLEXIBLE COUPLING	219
Y	*271-2405*	1	TRANSMISSION & MOUNTING GP	259
	268-1709	1	TORQUE CONVERTER AS	

Y-SEPARATE ILLUSTRATION

<END>

214-7524 TRANSMISSION AR-DIRECT DRIVE–

ALL WHEEL DRIVE
S/N: HLS1-99999
PART OF 216-3315 POWER TRAIN AR
AN ATTACHMENT

SMCS-3030 **i03481300**

NOTE	PART NUMBER	QTY	PART NAME 1 2 3 4 5 6 (PRODUCT LEVEL)	SEE PAGE
Y	*111-7907*	1	DRIVE GP-FLEXIBLE COUPLING	219
Y	*271-2406*	1	TRANSMISSION & MOUNTING GP	259
	268-1709	1	TORQUE CONVERTER AS	

Y-SEPARATE ILLUSTRATION

<END>

251-6354 TRANSMISSION AR-POWER SHIFT–

ALL WHEEL DRIVE
S/N: HLS1-99999
PART OF 216-3316 POWER TRAIN AR
AN ATTACHMENT

SMCS-3030 **i03481302**

NOTE	PART NUMBER	QTY	PART NAME 1 2 3 4 5 6 (PRODUCT LEVEL)	SEE PAGE
Y	*111-7907*	1	DRIVE GP-FLEXIBLE COUPLING	219
Y	*202-6009*	1	TRANSMISSION & MOUNTING GP (ALL WHEEL DRIVE, AUTOSHIFT)	258
	268-1709	1	TORQUE CONVERTER AS	

Y-SEPARATE ILLUSTRATION

<END>

POWER TRAIN

271-3773 TRANSMISSION GP-DIRECT DRIVE

S/N: HLS1-99999
PART OF 271-2405 TRANSMISSION & MOUNTING GP
AN ATTACHMENT
TYPE 1

SMCS-3030 **i03256245**

NOTE	REF NO	GRAPHIC REF	PART NUMBER	QTY	PART NAME 1 2 3 4 5 6 (PRODUCT LEVEL)	SEE PAGE
Y	1	4	**275-0472**	1	CASE GP-TRANSMISSION (FRONT)	210
Y	2	4	**275-0474**	1	CASE GP-TRANSMISSION (REAR)	211
	3	4	**121-7385**	1	PUMP GP-TRANSMISSION	
	4	1	**121-7391**	1	LEVER	
	5	4	**216-2267**	1	SEAL-LIP TYPE	
	6	1	**9P-9150**	4	WASHER (8.25X18X0.84-MM THK)	
	7	4	**275-0475**	1	SHAFT GP-IDLER	
		4	**005-0471**	2	CONE-BEARING	
		4	**274-8623**	1	SHAFT-REVERSE	
Y	8	4	**275-0476**	1	SHAFT GP-INPUT	250
	9	4	**275-0477**	1	SHAFT GP-COUNTER	
		4	**8T-1581**	1	CONE	
		4	**123-8907**	1	CONE-BEARING	
		4	**274-8614**	1	GEAR-COUNTERSHAFT (37-TEETH)	
		4	**274-8625**	1	GEAR-COUNTERSHAFT (38-TEETH)	
Y	10	4	**276-5339**	1	SHAFT GP-OUTPUT (REAR)	256
	11	4	**121-7403**	1	FORK-SHIFT	
	12	4	**121-7404**	1	FORK-SHIFT	
	13	4	**121-7389**	1	ROD AS-GEARSHIFT	
	14	4	**121-7390**	1	ROD AS-GEARSHIFT	
	15	4	**6Y-1341**	2	SPRING	
	16	4	**014-5645**	3	BALL	
	17	1	**9M-1974**	3	WASHER-HARD (8.8X16X2-MM THK)	
	18	1	**7T-3109**	1	PIN	
	19	4	**7T-3249**	2	SCREW (3/8-24X0.75-IN)	
	20	1,2,3	**9S-4191**	7	PLUG-O-RING	
	21	4	**127-3017**	1	SEAT AS	
	22	3,4	**122-6785**	4	PLUG AS	
	23	1	**175-0054**	1	SEAL-O-RING	
	24	1	**174-9711**	1	GASKET	
	25	2	**278-0205**	1	VALVE GP-SOLENOID (FORWARD, REVERSE)	
		2	**8L-2779**	4	SEAL-O-RING	
		2	**274-4557**	1	PLUG-ORIFICE	
		2	**274-4560**	2	NUT-SELF LOCKING	
		2	**280-7009**	2	COIL AS	
M	26	2	**9X-6615**	4	BOLT (M5X0.8X30-MM)	
	27	2	**248-3290**	1	VALVE GP-SOLENOID (DIFFERENTIAL LOCK)	
	28	2	**121-7396**	1	VALVE GP-RELIEF (TORQUE CONVERTER INLET)	
Y	29	2	**147-0209**	1	VALVE GP-RELIEF (PUMP PRESSURE)	307
Y	30	3	**189-5746**	1	SENSOR GP-SPEED (TORQUE CONVERTER OUTPUT)	133
M	31	1	**8C-5748**	7	BOLT (M8X1.25X55-MM)	
M	32	3	**6V-8335**	17	BOLT-SELF-LOCKING (M10X1.5X40-MM)	
M	33	4	**6V-8097**	1	BOLT (M12X1.75X30-MM)	
	34	2	**7T-3251**	1	BREATHER (TRANSMISSION)	
	35	2	**7T-3119**	1	HOUSING	
M	36	2	**6V-7731**	2	BOLT (M10X1.5X70-MM)	
	37	4	**7T-3195**	1	WASHER (12.3X47X6.35-MM THK)	
	38	3	**6Y-1896**	1	PLUG AS	
	39	2	**6Y-2035**	1	GASKET	
	40	4	**5P-8066**	1	SEAL-O-RING	
	41	4	**122-6787**	1	YOKE AS	
	42	4	**4W-9972**	1	SENDER AS-TEMPERATURE (12-VOLT)	
		4	**6V-8378**	1	NUT (10-32-THD)	
		4	**8T-0328**	1	WASHER-HARD (5.5X10X1-MM THK)	

271-3773 TRANSMISSION GP-DIRECT DRIVE *(contd.)* i03256245

NOTE	REF NO	GRAPHIC REF	PART NUMBER	QTY	PART NAME 1 2 3 4 5 6 (PRODUCT LEVEL)	SEE PAGE
		4	**8F-1434**	1	LOCKWASHER	
	43	1,2,3, 4	**3J-1907**	8	SEAL-O-RING	
	44	1	**7T-3111**	1	COVER	
	45	1	**3S-2093**	1	STRAP-CABLE	
	46	1	**6K-0806**	1	STRAP-CABLE	

M-METRIC PART
Y-SEPARATE ILLUSTRATION

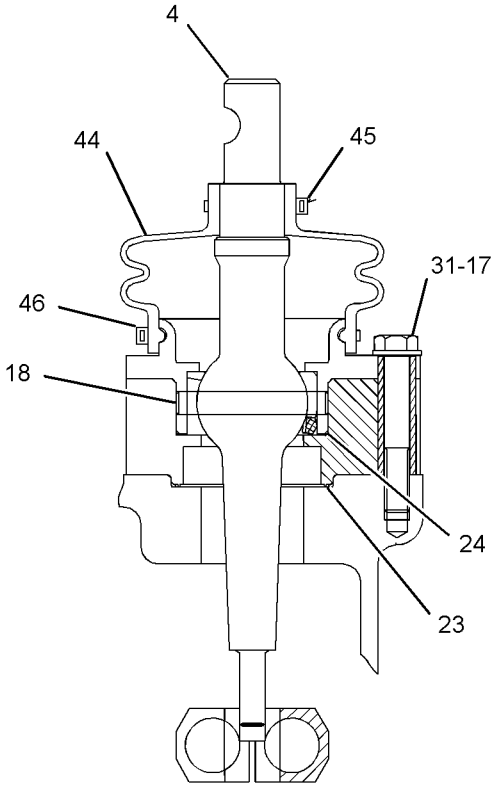

SECTION D-D

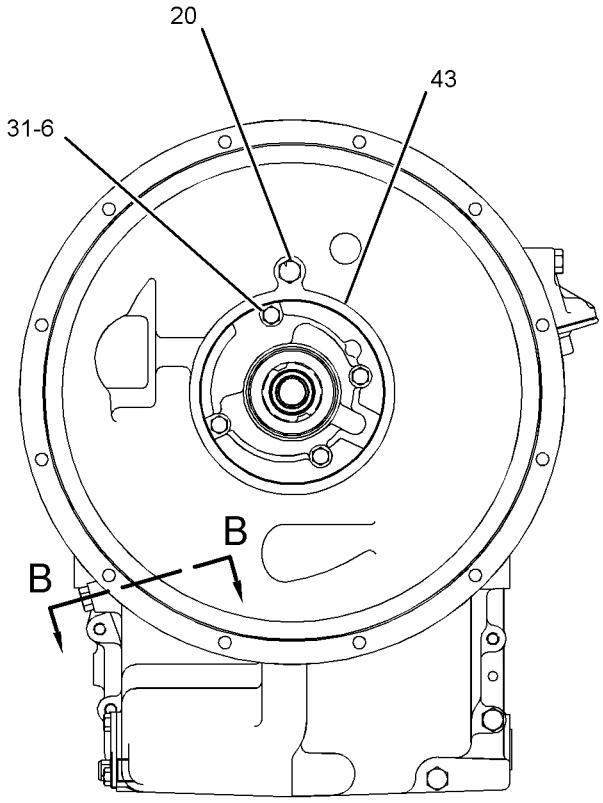

FRONT VIEW

REFER TO ALL ILLUSTRATION OF
THIS GROU PFOR AUXILIARY VIEWS

GRAPHIC #1

g01231463

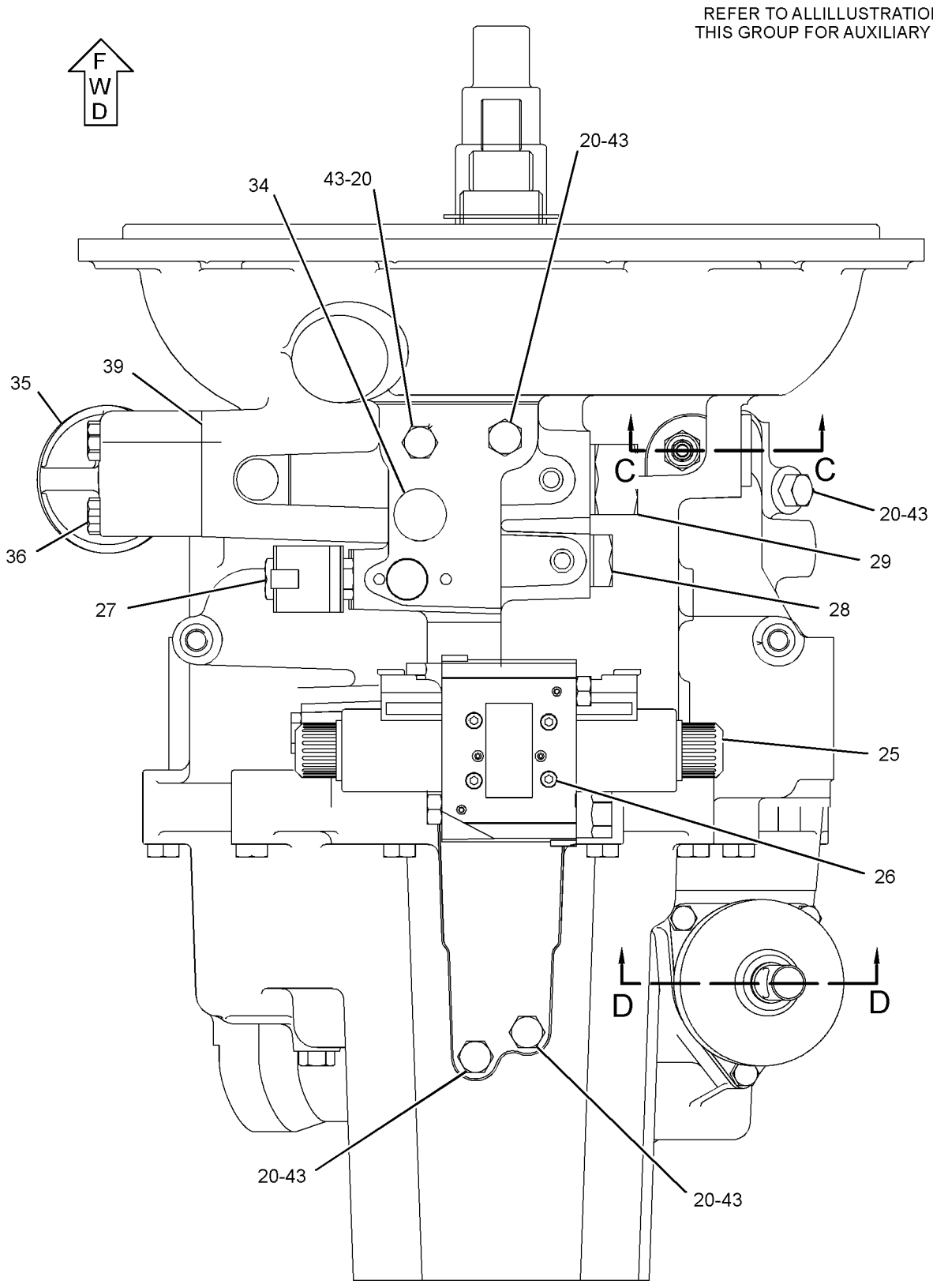

TOP VIEW

GRAPHIC #2

g01231464

REFER TO ALL ILLUSTRATION SOF
THIS GROUP FOR AUXILIARY VIEWS

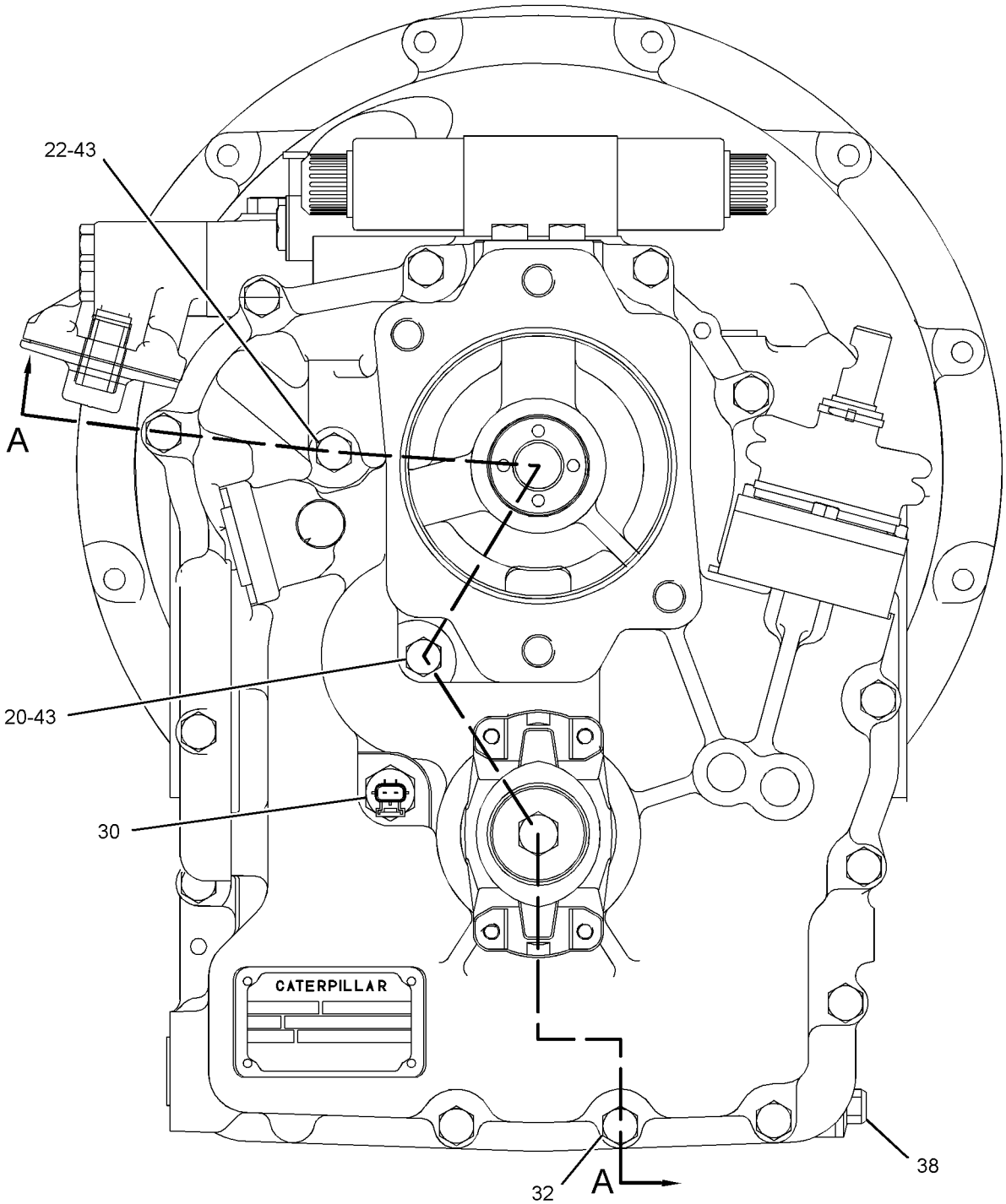

REAR VIEW

GRAPHIC #3

g01231465

271-3773 TRANSMISSION GP-DIRECT DRIVE *(contd.)* **i03256245**

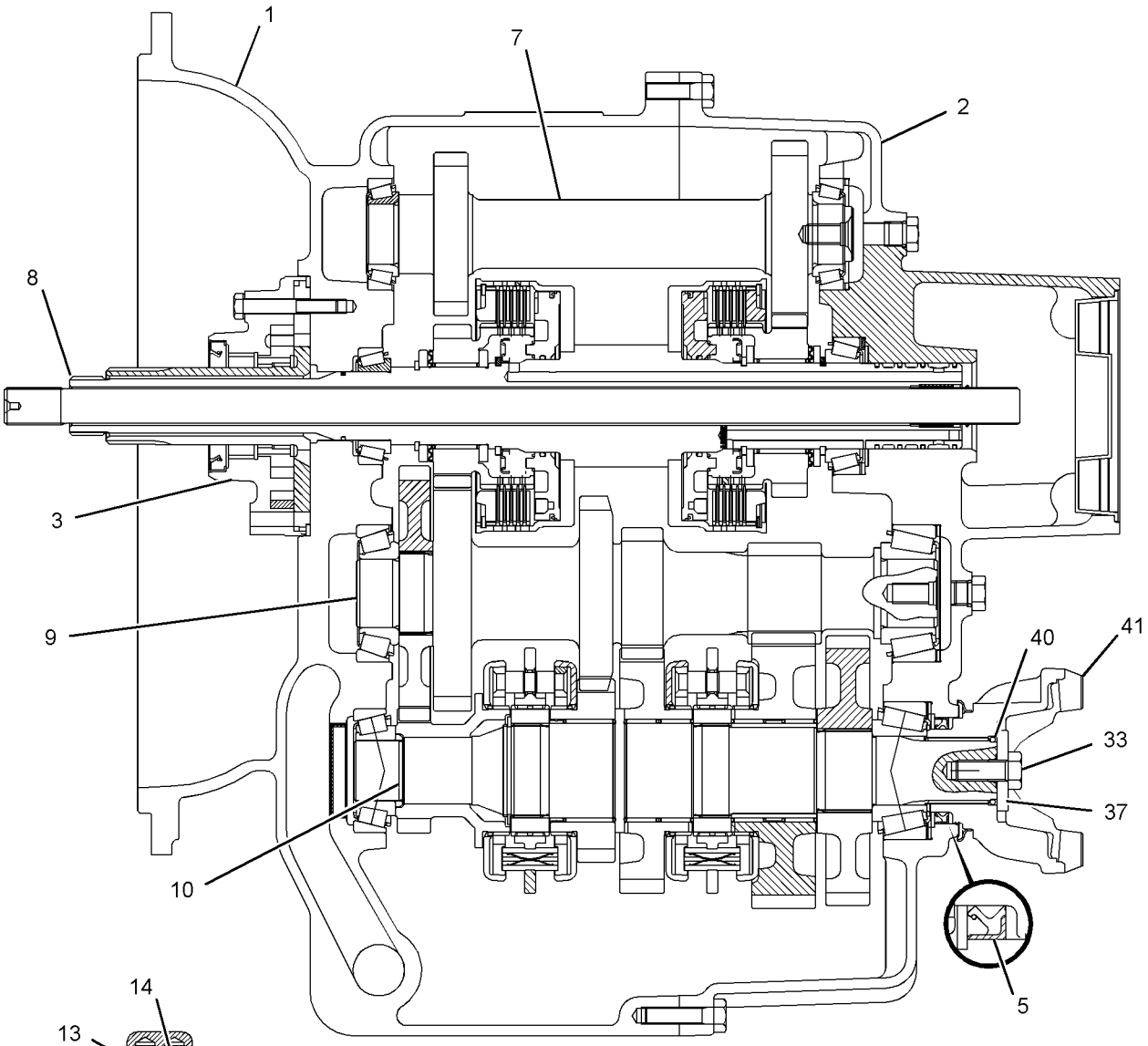

SECTION A-A

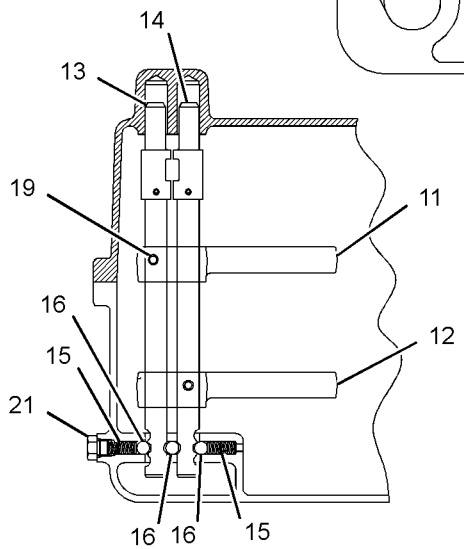

SECTION B-B

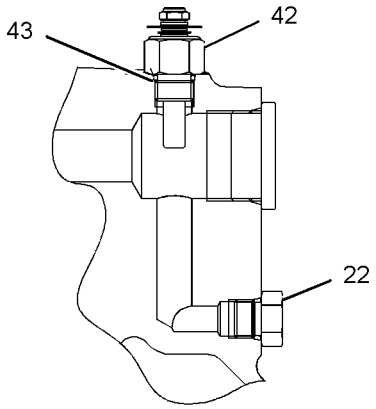

SECTION C-C

GRAPHIC #4 **<END>** g01231466

POWER TRAIN

271-3773 TRANSMISSION GP-DIRECT DRIVE

S/N: HLS1-99999
PART OF 271-2405 TRANSMISSION & MOUNTING GP
AN ATTACHMENT
TYPE 2

SMCS-3030 **i03527825**

NOTE	REF NO	GRAPHIC REF	PART NUMBER	QTY	PART NAME 1 2 3 4 5 6 (PRODUCT LEVEL)	SEE PAGE
CY	1	4	**294-9809**	1	CASE GP-TRANSMISSION (FRONT)	213
Y	2	4	**275-0474**	1	CASE GP-TRANSMISSION (REAR)	211
	3	4	**121-7385**	1	PUMP GP-TRANSMISSION	
	4	1	**121-7391**	1	LEVER	
	5	4	**216-2267**	1	SEAL-LIP TYPE	
	6	1	**9P-9150**	4	WASHER (8.25X18X0.84-MM THK)	
	7	4	**275-0475**	1	SHAFT GP-IDLER	
		4	**005-0471**	2	CONE-BEARING	
		4	**274-8623**	1	SHAFT-REVERSE	
Y	8	4	**275-0476**	1	SHAFT GP-INPUT	250
	9	4	**275-0477**	1	SHAFT GP-COUNTER	
		4	**8T-1581**	1	CONE	
		4	**123-8907**	1	CONE-BEARING	
		4	**274-8614**	1	GEAR-COUNTERSHAFT (37-TEETH)	
		4	**274-8625**	1	GEAR-COUNTERSHAFT (38-TEETH)	
CY	10	4	**275-0478**	1	SHAFT GP-OUTPUT (REAR)	254
	11	3	**121-7403**	1	FORK-SHIFT	
	12	3	**121-7404**	1	FORK-SHIFT	
	13	3	**121-7389**	1	ROD AS-GEARSHIFT	
	14	3	**121-7390**	1	ROD AS-GEARSHIFT	
	15	3	**6Y-1341**	2	SPRING	
	16	3	**014-5645**	3	BALL	
	17	1	**9M-1974**	3	WASHER-HARD (8.8X16X2-MM THK)	
	18	1	**7T-3109**	1	PIN	
	19	3	**7T-3249**	2	SCREW (3/8-24X0.75-IN)	
C	20	1,2,3, 4	**9S-4191**	9	PLUG-O-RING	
	21	1	**127-3017**	1	SEAT AS	
	23	1	**175-0054**	1	SEAL-O-RING	
	24	1	**174-9711**	1	GASKET	
	25	2	**278-0205**	1	VALVE GP-SOLENOID (FORWARD, REVERSE)	
		2	**8L-2779**	4	SEAL-O-RING	
		2	**274-4557**	1	PLUG-ORIFICE	
		2	**274-4560**	2	NUT-SELF LOCKING	
		2	**280-7009**	2	COIL AS	
M	26	2	**9X-6615**	4	BOLT (M5X0.8X30-MM)	
	27	2	**248-3290**	1	VALVE GP-SOLENOID (DIFFERENTIAL LOCK)	
	28	2	**121-7396**	1	VALVE GP-RELIEF (TORQUE CONVERTER INLET)	
Y	29	2	**147-0209**	1	VALVE GP-RELIEF (PUMP PRESSURE)	307
Y	30	3	**189-5746**	1	SENSOR GP-SPEED (TORQUE CONVERTER OUTPUT)	133
M	31	1	**8C-5748**	7	BOLT (M8X1.25X55-MM)	
M	32	3	**6V-8335**	17	BOLT-SELF-LOCKING (M10X1.5X40-MM)	
M	33	4	**6V-8097**	1	BOLT (M12X1.75X30-MM)	
C	34	3	**294-9822**	1	BREATHER AS (TRANSMISSION)	
		3	**7T-3251**	1	BREATHER (TRANSMISSION)	
		3	**250-6855**	2	WASHER (14.5X18X1.5-MM THK)	
		3	**294-9823**	1	PLUG-BREATHER	
		3	**294-9824**	1	TUBE-BREATHER	
	35	2	**7T-3119**	1	HOUSING	
M	36	2	**6V-7731**	2	BOLT (M10X1.5X70-MM)	
	37	4	**7T-3195**	1	WASHER (12.3X47X6.35-MM THK)	
	38	3	**6Y-1896**	1	PLUG AS	
	39	2	**6Y-2035**	1	GASKET	
	40	4	**5P-8066**	1	SEAL-O-RING	

271-3773 TRANSMISSION GP-DIRECT DRIVE *(contd.)* i03527825

NOTE	REF NO	GRAPHIC REF	PART NUMBER	QTY	PART NAME 1 2 3 4 5 6 (PRODUCT LEVEL)	SEE PAGE
	41	4	**122-6787**	1	YOKE AS	
	42	4	**4W-9972**	1	SENDER AS-TEMPERATURE (12-VOLT)	
		4	**6V-8378**	1	NUT (10-32-THD)	
		4	**8T-0328**	1	WASHER-HARD (5.5X10X1-MM THK)	
		4	**8F-1434**	1	LOCKWASHER	
C	43	1,2,3, 4	**3J-1907**	11	SEAL-O-RING	
	44	1	**7T-3111**	1	COVER	
C	45	1,3	**3S-2093**	2	STRAP-CABLE	
	46	1	**6K-0806**	1	STRAP-CABLE	
C	47	3	**274-8622**	1	PLUG	
C	48	4	**208-8240**	1	SEAL-LIP TYPE	
C	49	4	**7X-4741**	1	SEAL	

C-CHANGE FROM PREVIOUS TYPE
M-METRIC PART
Y-SEPARATE ILLUSTRATION

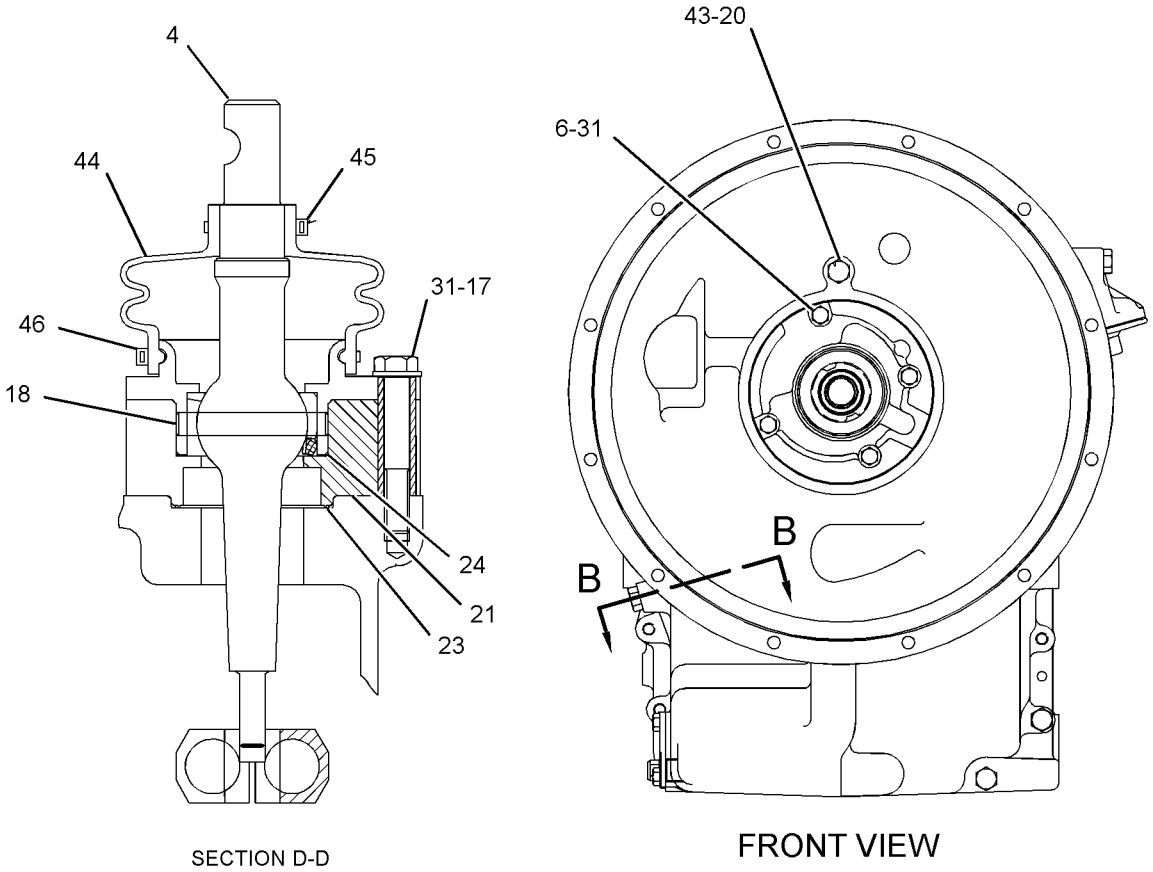

SECTION D-D

FRONT VIEW

REFER TO ALL ILLUSTRATION OF
THIS GROU PFOR AUXILIARY VIEWS

GRAPHIC #1

g01398155

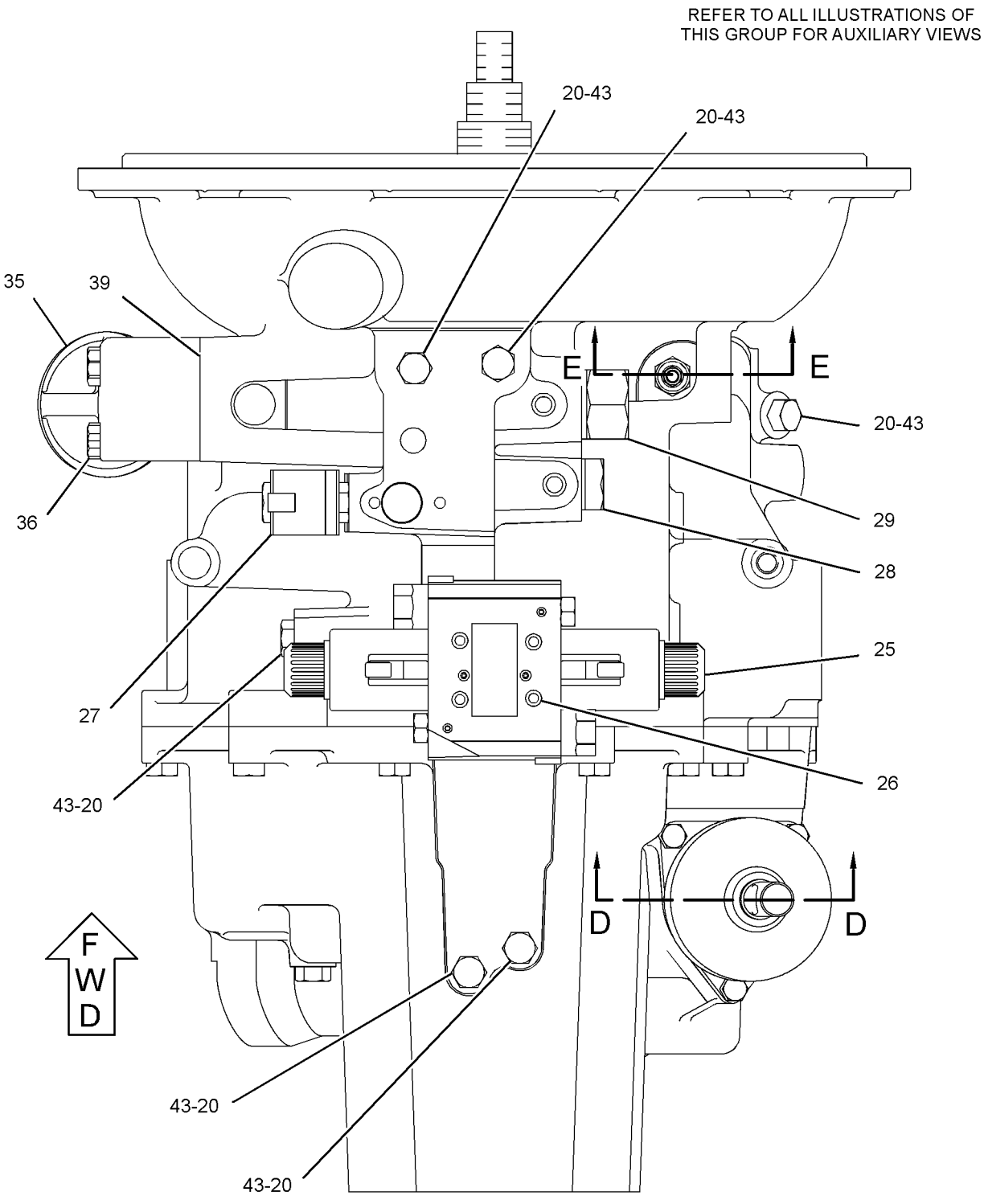

TOP VIEW

GRAPHIC #2

g01398154

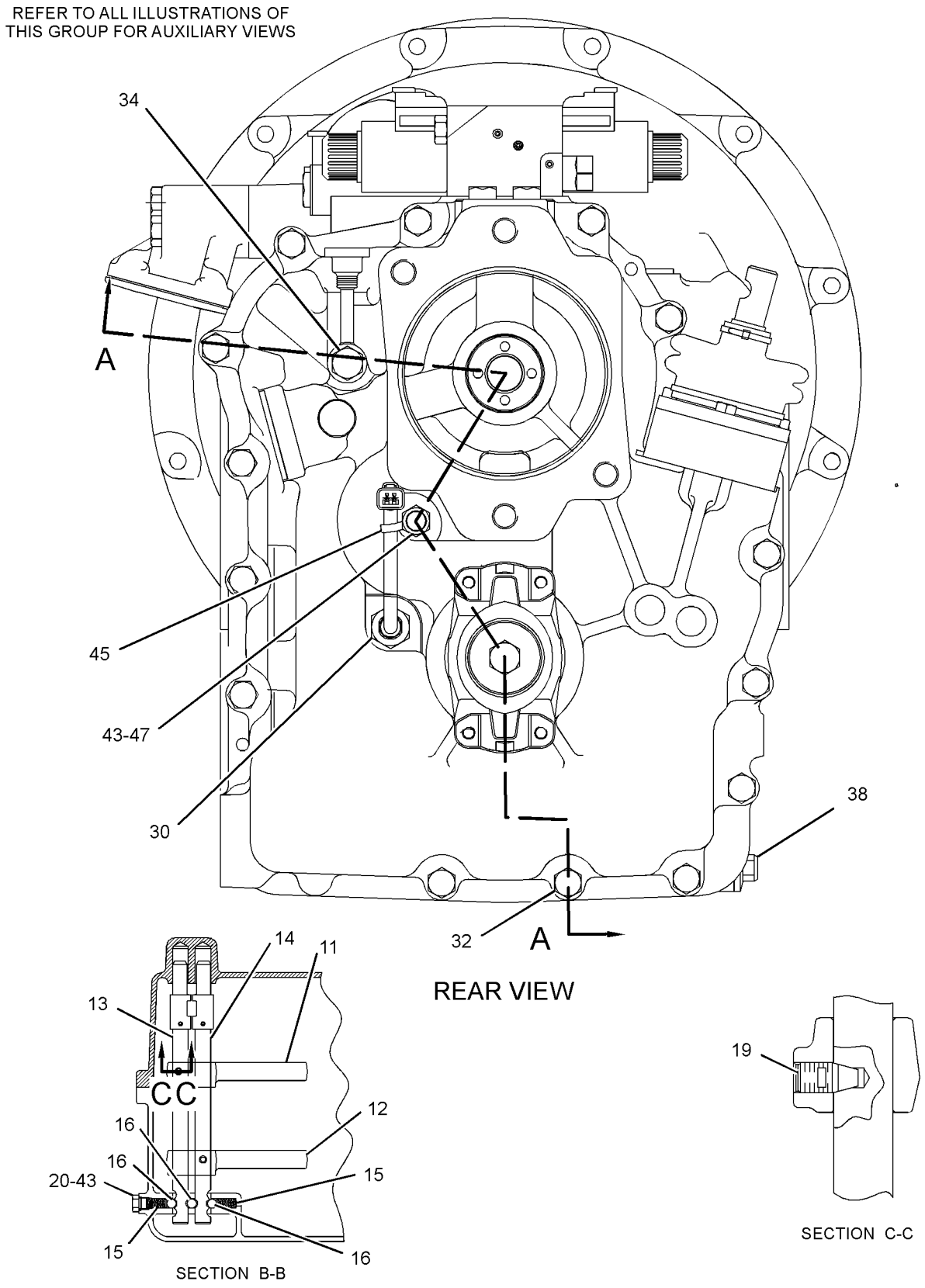

GRAPHIC #3

g01398156

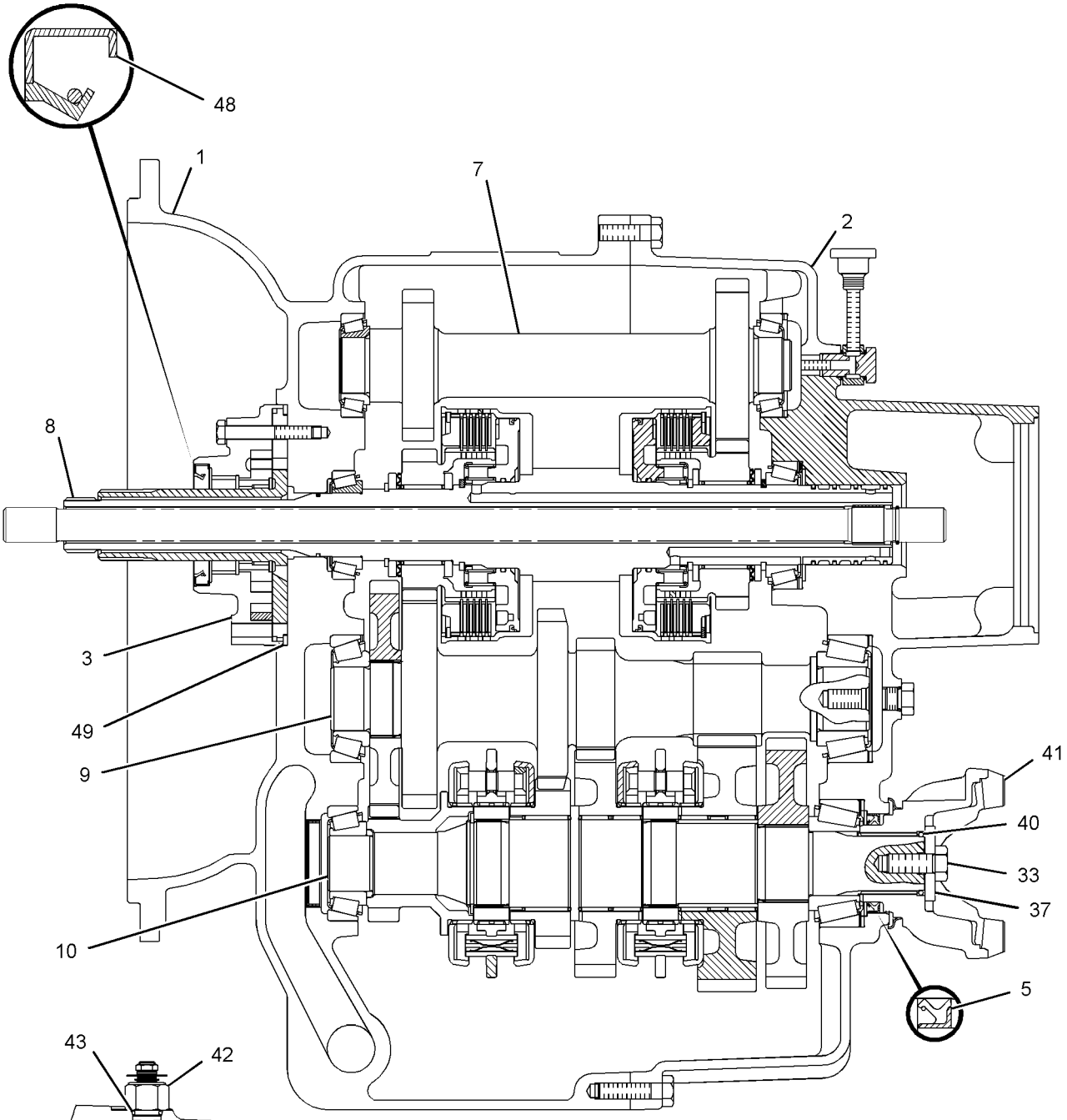

SECTION A-A

SECTION E-E

GRAPHIC #4 **<END>** g01398157

271-3773 TRANSMISSION GP-DIRECT DRIVE

S/N: HLS1-99999
PART OF 271-2405 TRANSMISSION & MOUNTING GP
AN ATTACHMENT
TYPE 3

SMCS-3030 **i03256248**

NOTE	REF NO	GRAPHIC REF	PART NUMBER	QTY	PART NAME 1 2 3 4 5 6 (PRODUCT LEVEL)	SEE PAGE
CY	1	4	**275-0472**	1	CASE GP-TRANSMISSION (FRONT)	210
Y	2	4	**275-0474**	1	CASE GP-TRANSMISSION (REAR)	211
	3	4	**121-7385**	1	PUMP GP-TRANSMISSION	
		4	**208-8240**	1	SEAL-LIP TYPE	
	4	1	**121-7391**	1	LEVER	
	5	4	**302-8432**	1	SEAL-LIP TYPE	
	6	1	**9P-9150**	4	WASHER (8.25X18X0.84-MM THK)	
	7	4	**275-0475**	1	SHAFT GP-IDLER	
		4	**005-0471**	2	CONE-BEARING	
		4	**274-8623**	1	SHAFT-REVERSE	
Y	8	4	**275-0476**	1	SHAFT GP-INPUT	250
	9	4	**275-0477**	1	SHAFT GP-COUNTER	
		4	**8T-1581**	1	CONE	
		4	**123-8907**	1	CONE-BEARING	
		4	**274-8614**	1	GEAR-COUNTERSHAFT (37-TEETH)	
		4	**274-8625**	1	GEAR-COUNTERSHAFT (38-TEETH)	
Y	10	4	**275-0478**	1	SHAFT GP-OUTPUT (REAR)	254
	11	3	**121-7403**	1	FORK-SHIFT	
	12	3	**121-7404**	1	FORK-SHIFT	
	13	3	**121-7389**	1	ROD AS-GEARSHIFT	
	14	3	**121-7390**	1	ROD AS-GEARSHIFT	
	15	3	**6Y-1341**	2	SPRING	
	16	3	**014-5645**	3	BALL	
	17	1	**9M-1974**	3	WASHER-HARD (8.8X16X2-MM THK)	
	18	1	**7T-3109**	1	PIN	
	19	3	**7T-3249**	2	SCREW (3/8-24X0.75-IN)	
C	20	1,2,3, 4	**9S-4191**	13	PLUG-O-RING	
	21	1	**127-3017**	1	SEAT AS	
	23	1	**175-0054**	1	SEAL-O-RING	
	24	1	**174-9711**	1	GASKET	
	25	2	**278-0205**	1	VALVE GP-SOLENOID (FORWARD, REVERSE)	
		2	**8L-2779**	4	SEAL-O-RING	
		2	**280-7012**	2	TUBE AS	
		2	**280-7009**	2	COIL AS	
M	26	2	**9X-6615**	4	BOLT (M5X0.8X30-MM)	
	27	2	**248-3290**	1	VALVE GP-SOLENOID (DIFFERENTIAL LOCK)	
	28	2	**121-7396**	1	VALVE GP-RELIEF (TORQUE CONVERTER INLET)	
Y	29	2	**147-0209**	1	VALVE GP-RELIEF (PUMP PRESSURE)	307
Y	30	3	**189-5746**	1	SENSOR GP-SPEED (TORQUE CONVERTER OUTPUT)	133
M	31	1	**8C-5748**	7	BOLT (M8X1.25X55-MM)	
M	32	3	**6V-8335**	17	BOLT-SELF-LOCKING (M10X1.5X40-MM)	
M	33	3,4	**6V-8097**	1	BOLT (M12X1.75X30-MM)	
C	34	3	**293-2147**	1	BREATHER AS (TRANSMISSION)	
		3	**3J-1907**	1	SEAL-O-RING	
		3	**122-6785**	1	PLUG AS	
	35	2	**7T-3119**	1	HOUSING	
M	36	2	**6V-7731**	2	BOLT (M10X1.5X70-MM)	
	37	4	**7T-3195**	1	WASHER (12.3X47X6.35-MM THK)	
	38	3	**6Y-1896**	1	PLUG AS	
	39	2	**6Y-2035**	1	GASKET	
	40	4	**5P-8066**	1	SEAL-O-RING	
	41	4	**122-6787**	1	YOKE AS	
		4	**123-1377**	1	GUARD	

271-3773 TRANSMISSION GP-DIRECT DRIVE *(contd.)* i03256248

NOTE	REF NO	GRAPHIC REF	PART NUMBER	QTY	PART NAME 1 2 3 4 5 6 (PRODUCT LEVEL)	SEE PAGE
	42	4	**4W-9972**	1	SENDER AS-TEMPERATURE (12-VOLT)	
		4	**6V-8378**	1	NUT (10-32-THD)	
		4	**8T-0328**	1	WASHER-HARD (5.5X10X1-MM THK)	
		4	**8F-1434**	1	LOCKWASHER	
C	43	1,2,3, 4	**3J-1907**	14	SEAL-O-RING	
	44	1	**7T-3111**	1	COVER	
	45	1,3	**3S-2093**	2	STRAP-CABLE	
	46	1	**6K-0806**	1	STRAP-CABLE	
	48	4	**208-8240**	1	SEAL-LIP TYPE	
	49	4	**7X-4741**	1	SEAL	
C	50	2	**7T-3251**	1	BREATHER (TRANSMISSION)	

C-CHANGE FROM PREVIOUS TYPE
M-METRIC PART
Y-SEPARATE ILLUSTRATION

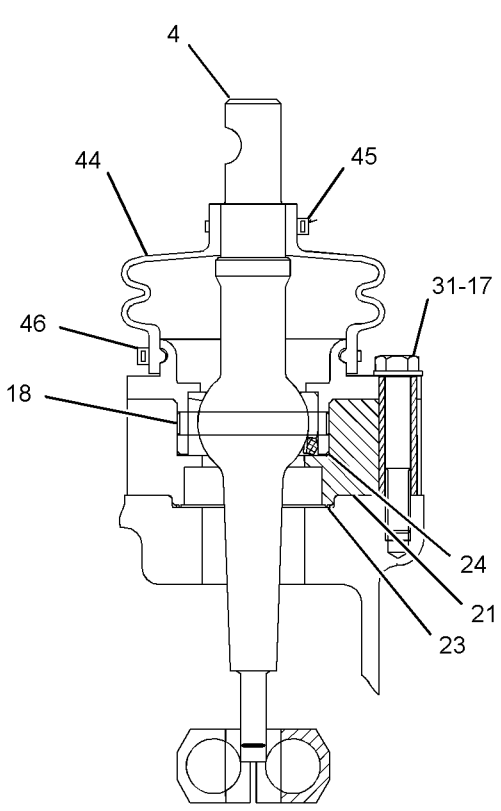

SECTION D-D

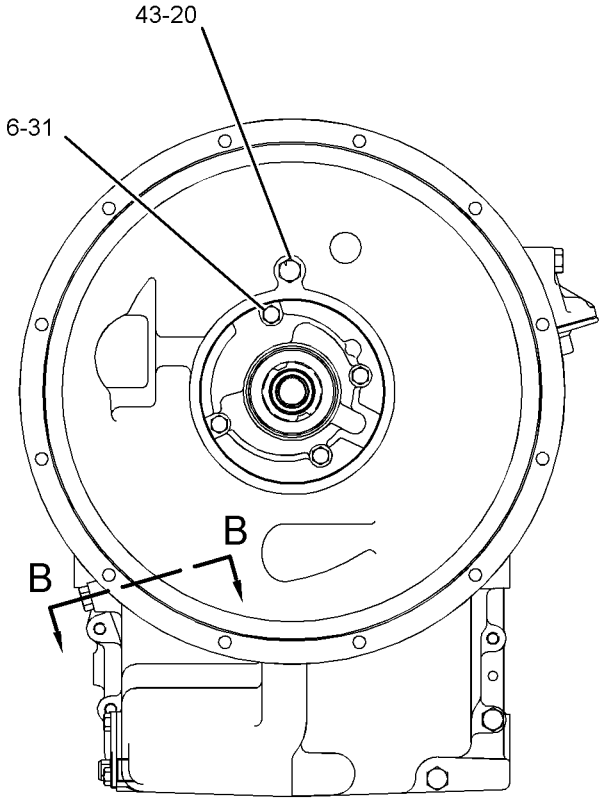

FRONT VIEW

REFER TO ALL ILLUSTRATION OF
THIS GROU PFOR AUXILIARY VIEWS

GRAPHIC #1

g01398155

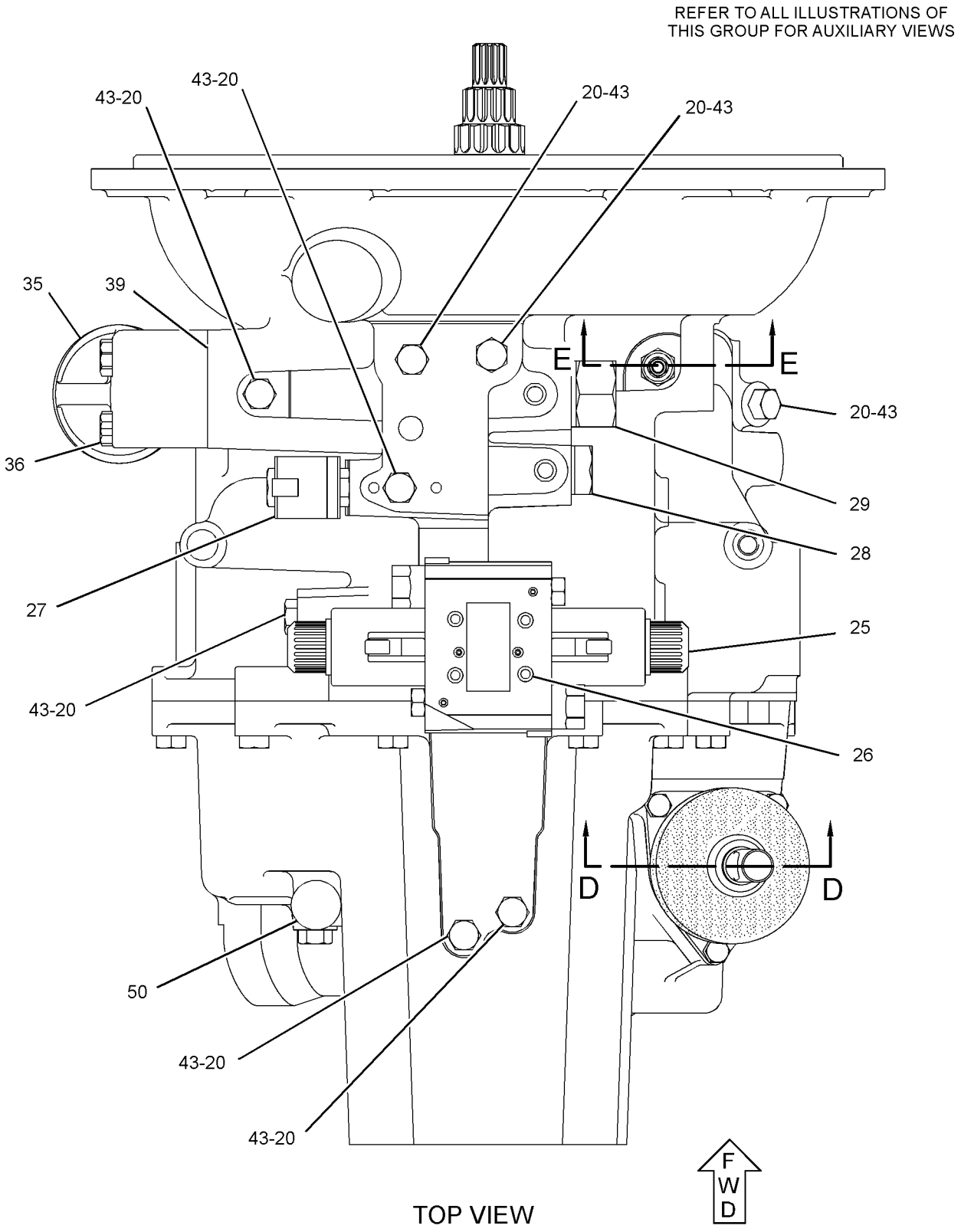

GRAPHIC #2

g01522589

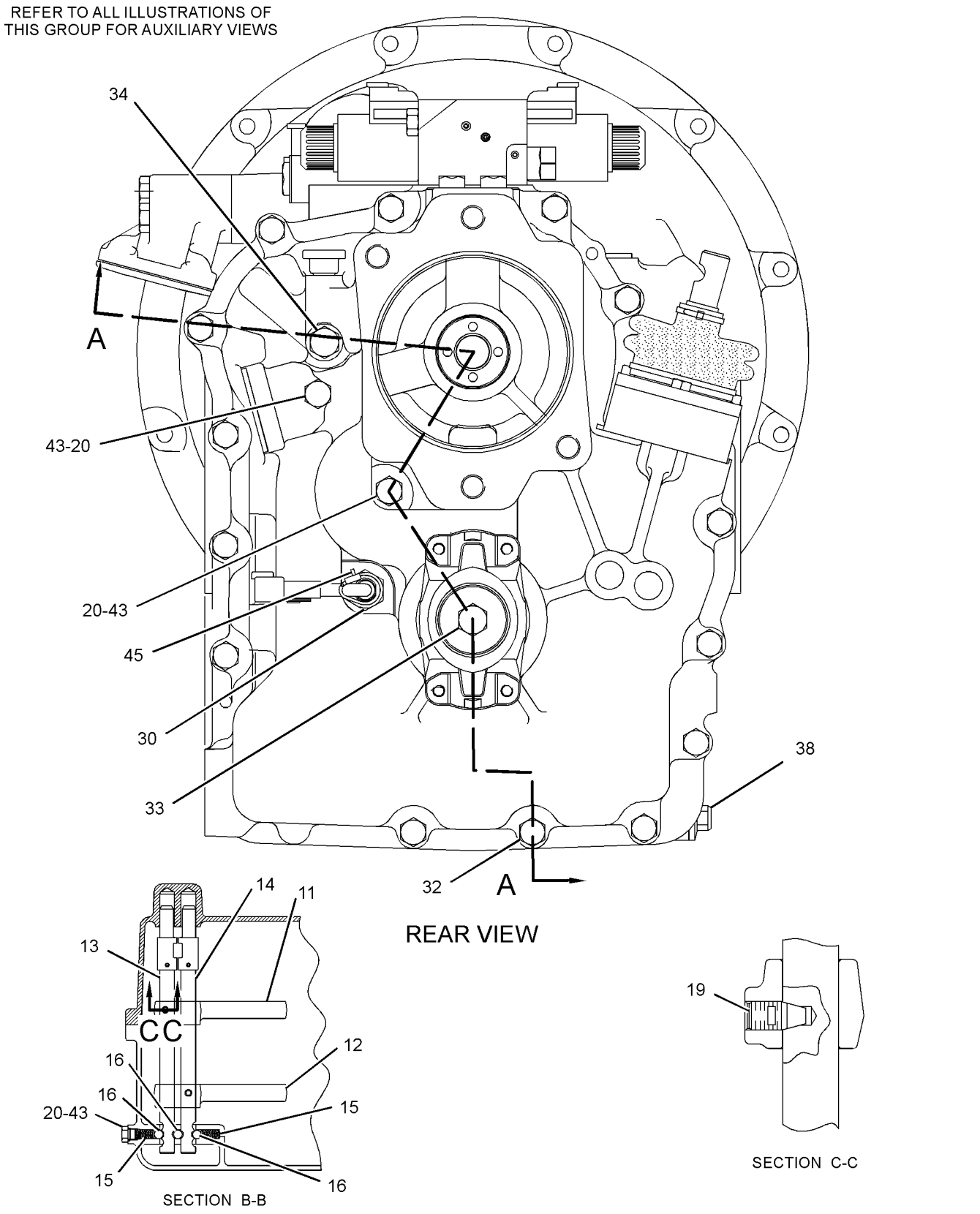

GRAPHIC #3

g01522591

271-3773 TRANSMISSION GP-DIRECT DRIVE *(contd.)* i03256248

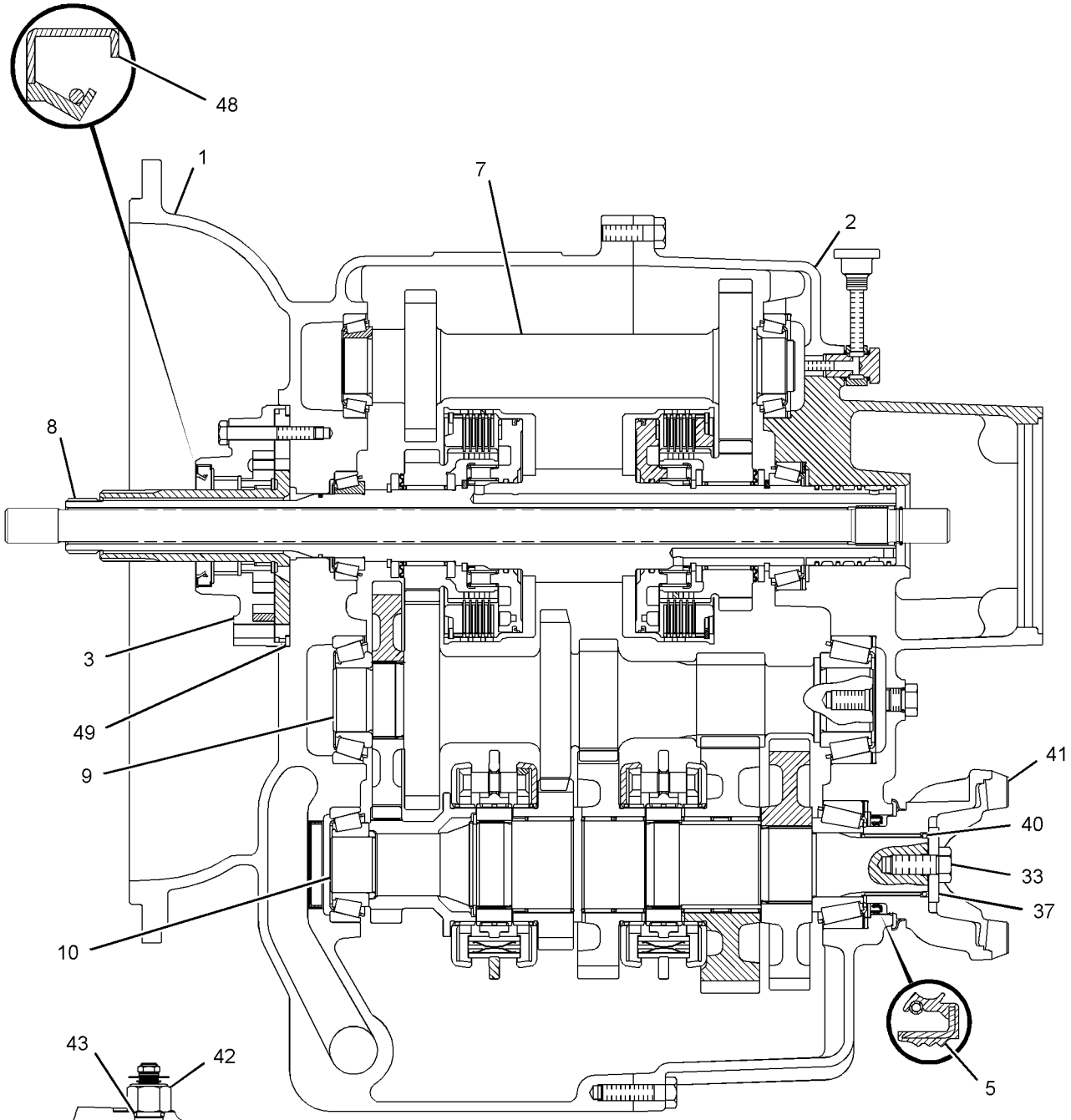

SECTION A-A

SECTION E-E

GRAPHIC #4 **<END>** g01587133

271-3773 TRANSMISSION GP-DIRECT DRIVE

S/N: HLS1-99999
PART OF 271-2405 TRANSMISSION & MOUNTING GP
AN ATTACHMENT
TYPE 4

SMCS-3030 **i03256247**

NOTE	REF NO	GRAPHIC REF	PART NUMBER	QTY	PART NAME 1 2 3 4 5 6 (PRODUCT LEVEL)	SEE PAGE
Y	1	4	**275-0472**	1	CASE GP-TRANSMISSION (FRONT)	210
Y	2	4	**275-0474**	1	CASE GP-TRANSMISSION (REAR)	211
	3	4	**121-7385**	1	PUMP GP-TRANSMISSION	
		4	**208-8240**	1	SEAL-LIP TYPE	
	4	1	**121-7391**	1	LEVER	
	5	4	**302-8432**	1	SEAL-LIP TYPE	
	6	1	**9P-9150**	4	WASHER (8.25X18X0.84-MM THK)	
	7	4	**275-0475**	1	SHAFT GP-IDLER	
		4	**005-0471**	2	CONE-BEARING	
		4	**274-8623**	1	SHAFT-REVERSE	
Y	8	4	**275-0476**	1	SHAFT GP-INPUT	250
	9	4	**275-0477**	1	SHAFT GP-COUNTER	
		4	**8T-1581**	1	CONE	
		4	**123-8907**	1	CONE-BEARING	
		4	**274-8614**	1	GEAR-COUNTERSHAFT (37-TEETH)	
		4	**274-8625**	1	GEAR-COUNTERSHAFT (38-TEETH)	
Y	10	4	**275-0478**	1	SHAFT GP-OUTPUT (REAR)	254
	11	3	**121-7403**	1	FORK-SHIFT	
	12	3	**121-7404**	1	FORK-SHIFT	
	13	3	**121-7389**	1	ROD AS-GEARSHIFT	
	14	3	**121-7390**	1	ROD AS-GEARSHIFT	
	15	3	**6Y-1341**	2	SPRING	
	16	3	**014-5645**	3	BALL	
	17	1	**9M-1974**	3	WASHER-HARD (8.8X16X2-MM THK)	
	18	1	**7T-3109**	1	PIN	
	19	3	**7T-3249**	2	SCREW (3/8-24X0.75-IN)	
C	20	1,2,3,4	*148-8407*	13	PLUG AS	
					(EACH INCLUDES)	
		1,2,3,4	**3J-1907**	1	SEAL-O-RING	
		1,2,3,4	**9S-4191**	1	PLUG-O-RING	
	21	1	**127-3017**	1	SEAT AS	
	23	1	**175-0054**	1	SEAL-O-RING	
	24	1	**174-9711**	1	GASKET	
	25	2	**278-0205**	1	VALVE GP-SOLENOID (FORWARD, REVERSE)	
		2	**8L-2779**	4	SEAL-O-RING	
		2	**280-7012**	2	TUBE AS	
		2	**280-7009**	2	COIL AS	
M	26	2	**9X-6615**	4	BOLT (M5X0.8X30-MM)	
	27	2	**248-3290**	1	VALVE GP-SOLENOID (DIFFERENTIAL LOCK)	
	28	2	**121-7396**	1	VALVE GP-RELIEF (TORQUE CONVERTER INLET)	
Y	29	2	**147-0209**	1	VALVE GP-RELIEF (PUMP PRESSURE)	307
Y	30	3	**189-5746**	1	SENSOR GP-SPEED (TORQUE CONVERTER OUTPUT)	133
M	31	1	**8C-5748**	7	BOLT (M8X1.25X55-MM)	
CM	32	3	**6V-5842**	17	BOLT (M10X1.5X40-MM)	
M	33	3,4	**6V-8097**	1	BOLT (M12X1.75X30-MM)	
	34	3	**293-2147**	1	BREATHER AS (TRANSMISSION)	
		3	**3J-1907**	1	SEAL-O-RING	
		3	**122-6785**	1	PLUG AS	
	35	2	**7T-3119**	1	HOUSING	
CM	36	2	**6V-7981**	2	BOLT (M10X1.5X70-MM)	
	37	4	**7T-3195**	1	WASHER (12.3X47X6.35-MM THK)	

271-3773 TRANSMISSION GP-DIRECT DRIVE *(contd.)* i03256247

NOTE	REF NO	GRAPHIC REF	PART NUMBER	QTY	PART NAME 1 2 3 4 5 6 (PRODUCT LEVEL)	SEE PAGE
	38	3	**6Y-1896**	1	PLUG AS	
	39	2	**6Y-2035**	1	GASKET	
	40	4	**5P-8066**	1	SEAL-O-RING	
	41	4	**122-6787**	1	YOKE AS	
		4	**123-1377**	1	GUARD	
	42	4	**4W-9972**	1	SENDER AS-TEMPERATURE (12-VOLT)	
		4	**6V-8378**	1	NUT (10-32-THD)	
		4	**8T-0328**	1	WASHER-HARD (5.5X10X1-MM THK)	
		4	**8F-1434**	1	LOCKWASHER	
C	43	4	**3J-1907**	1	SEAL-O-RING	
	44	1	**7T-3111**	1	COVER	
	45	1,3	**3S-2093**	2	STRAP-CABLE	
	46	1	**6K-0806**	1	STRAP-CABLE	
	49	4	**7X-4741**	1	SEAL	
	50	2	**7T-3251**	1	BREATHER (TRANSMISSION)	

C-CHANGE FROM PREVIOUS TYPE
M-METRIC PART
Y-SEPARATE ILLUSTRATION

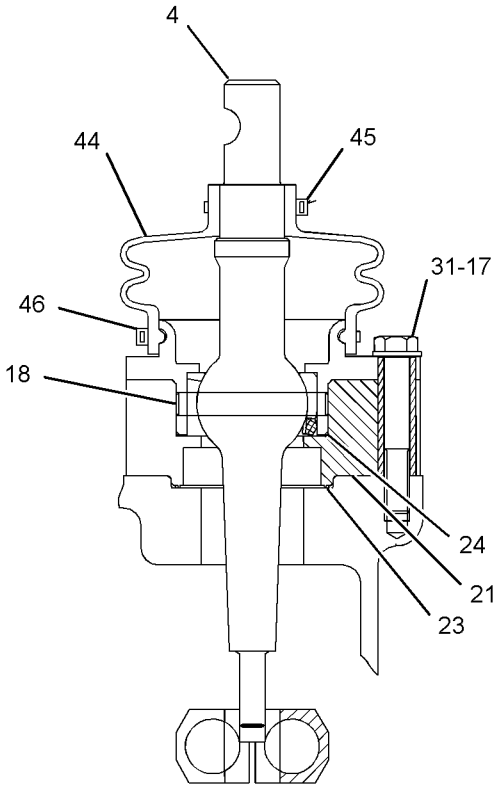

SECTION D-D

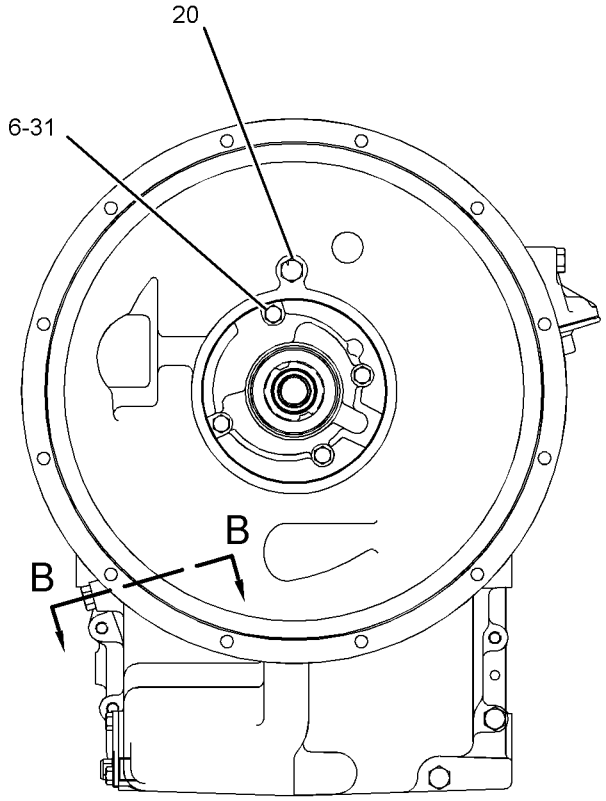

FRONT VIEW

REFER TO ALL ILLUSTRATION OF
THIS GROU PFOR AUXILIARY VIEWS

GRAPHIC #1

g01626663

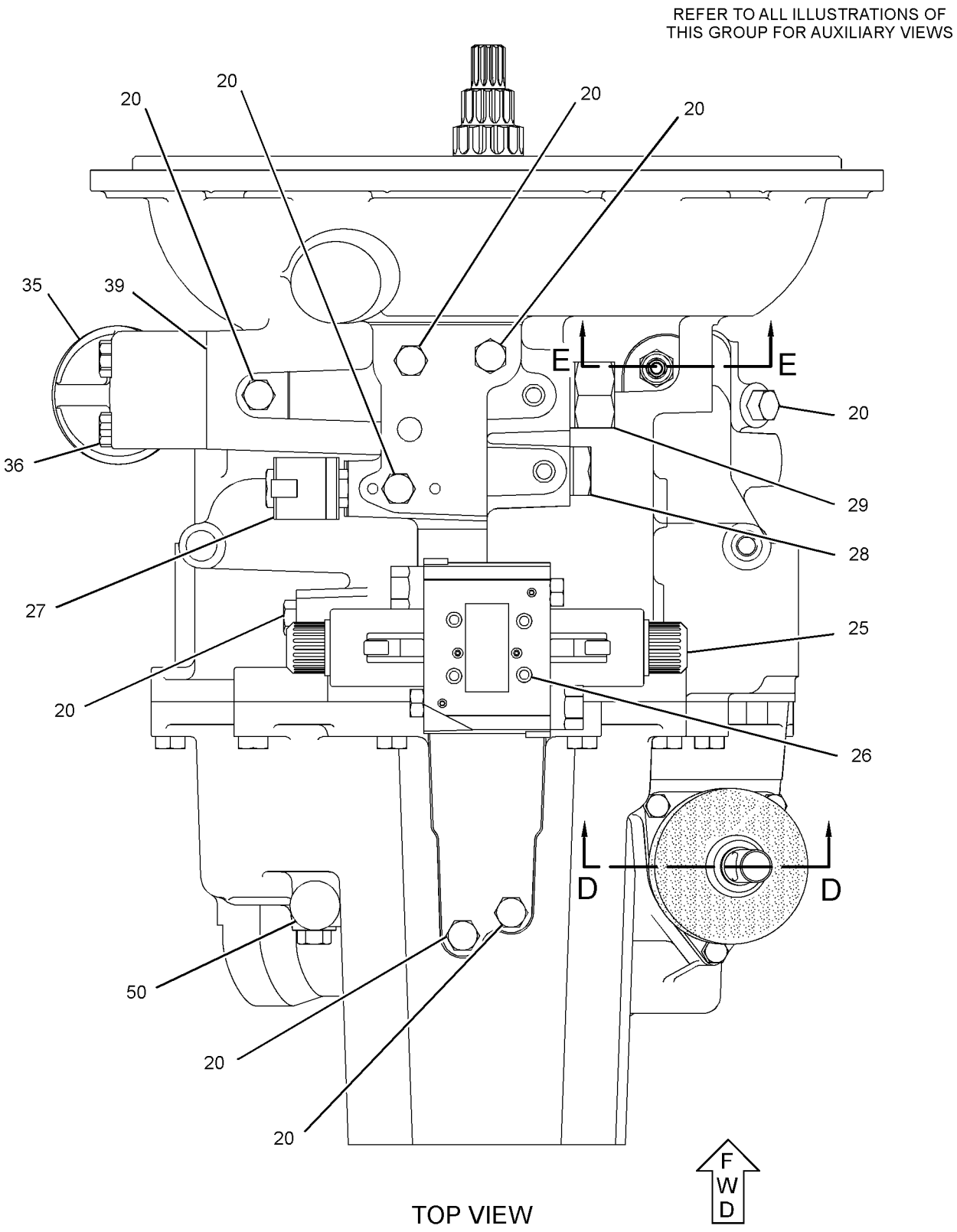

TOP VIEW

GRAPHIC #2

g01626667

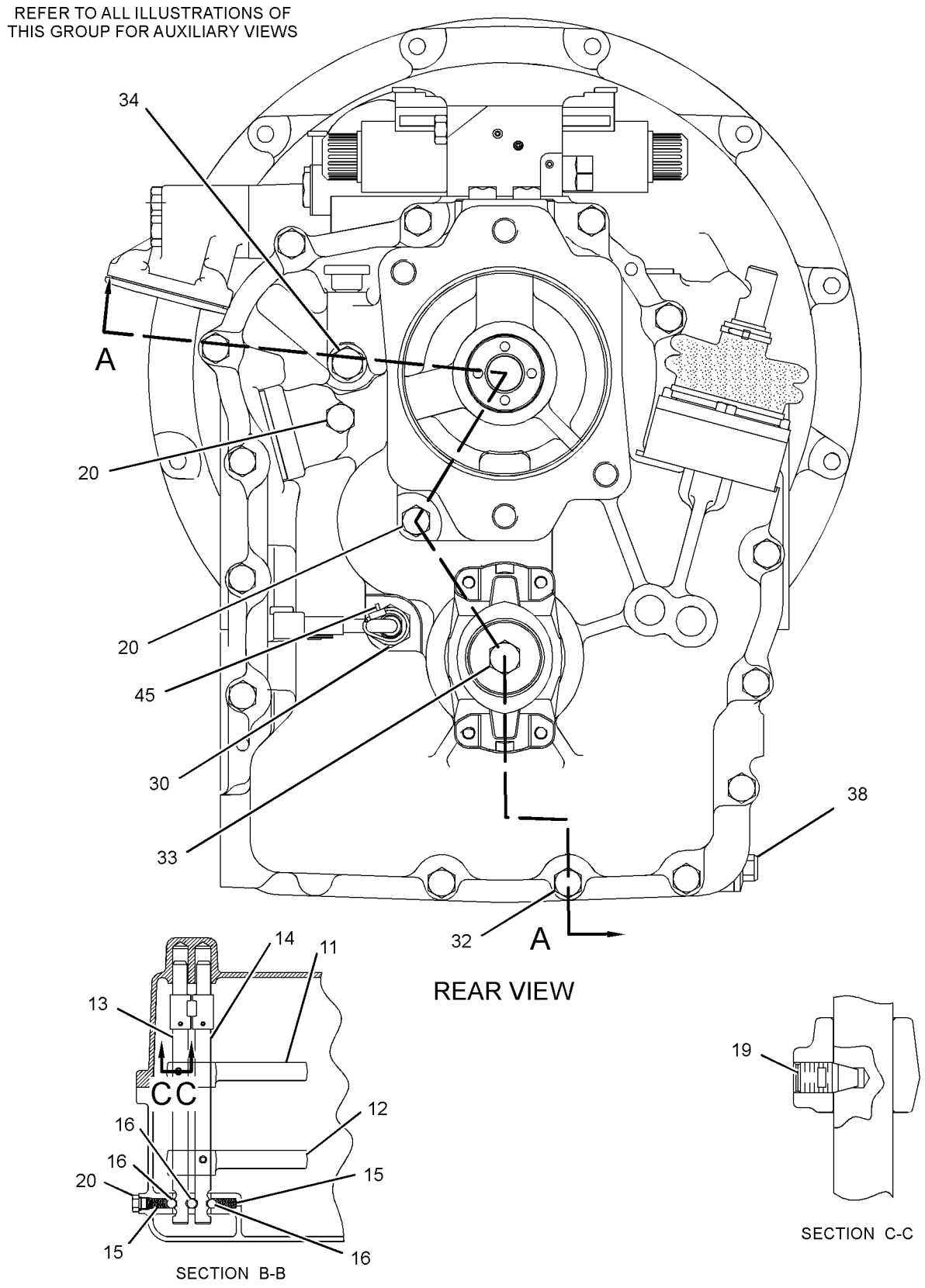

GRAPHIC #3

g01626659

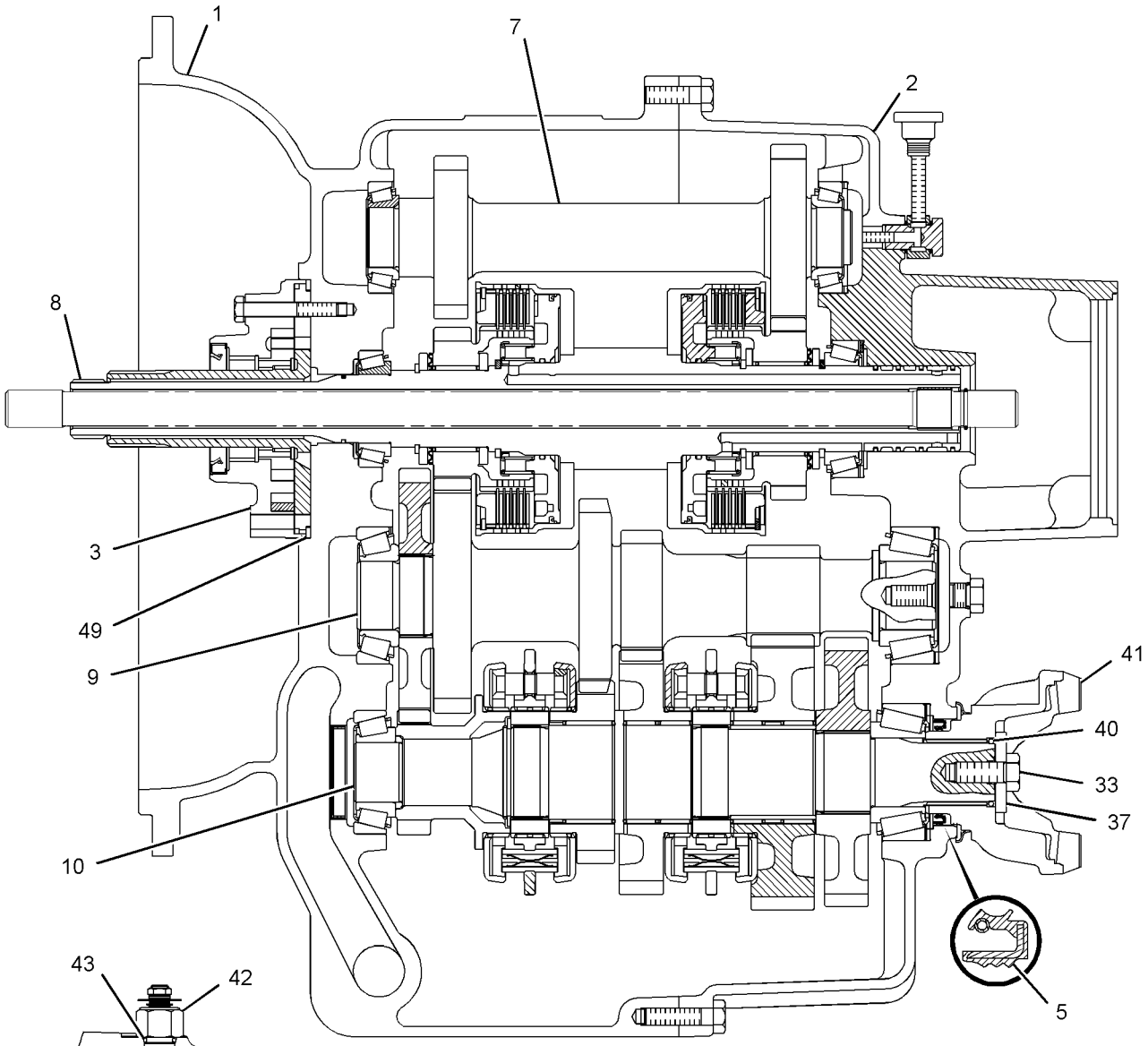

SECTION A-A

SECTION E-E

GRAPHIC #4 **<END>** g01626669

POWER TRAIN

271-3774 TRANSMISSION GP-DIRECT DRIVE

S/N: HLS1-99999
PART OF 271-2406 TRANSMISSION & MOUNTING GP
AN ATTACHMENT
TYPE 1

SMCS-3030 **i03548222**

NOTE	REF NO	GRAPHIC REF	PART NUMBER	QTY	PART NAME 1 2 3 4 5 6 (PRODUCT LEVEL)	SEE PAGE
Y	1	4	**275-0468**	1	CASE AS-TRANSMISSION (FRONT)	207
Y	2	4	**275-0470**	1	CASE AS-TRANSMISSION (REAR)	208
	3	4	**121-7385**	1	PUMP GP-TRANSMISSION	
		1	**208-8240**	1	SEAL-LIP TYPE	
	4	4	**302-8432**	2	SEAL-LIP TYPE	
M	5	3,4	**8C-5748**	7	BOLT (M8X1.25X55-MM)	
	6	4	**7X-4741**	1	SEAL	
	7	4	**9P-9150**	4	WASHER (8.25X18X0.84-MM THK)	
	8	4	**275-0475**	1	SHAFT GP-IDLER (TRANSMISSION)	
		4	**005-0471**	2	CONE-BEARING	
		4	**274-8623**	1	SHAFT-REVERSE	
	9	4	**275-0477**	1	SHAFT GP-COUNTER (TRANSMISSION)	
		4	**8T-1581**	1	CONE	
		4	**123-8907**	1	CONE-BEARING	
		4	**274-8614**	1	GEAR-COUNTERSHAFT (37-TEETH)	
		4	**274-8625**	1	GEAR-COUNTERSHAFT (38-TEETH)	
Y	10	4	**275-0478**	1	SHAFT GP-OUTPUT (REAR)	254
Y	11	4	**276-5337**	1	SHAFT GP-OUTPUT (FRONT)	255
	12	1	**121-7403**	1	FORK-SHIFT (FIRST, SECOND)	
	13	1	**121-7404**	1	FORK-SHIFT (THIRD, FOURTH)	
	14	1	**121-7389**	1	ROD AS-GEARSHIFT (FIRST, SECOND)	
	15	1	**121-7390**	1	ROD AS-GEARSHIFT (THIRD, FOURTH)	
	16	1	**6Y-1341**	2	SPRING	
	17	1	**014-5645**	3	BALL	
	18	3	**9M-1974**	3	WASHER-HARD (8.8X16X2-MM THK)	
	19	3	**7T-3109**	1	PIN	
	20	1	**7T-3249**	2	SCREW (3/8-24X0.75-IN)	
	21	1,2,3	**9S-4191**	13	PLUG-O-RING	
	22	3	**127-3017**	1	SEAT AS	
	23	3	**121-7391**	1	LEVER	
	24	3	**175-0054**	1	SEAL-O-RING	
	25	3	**174-9711**	1	GASKET	
	27	3	**278-0205**	1	VALVE GP-SOLENOID (FORWARD, REVERSE)	
		3	**8L-2779**	4	SEAL-O-RING	
		3	**280-7012**	2	TUBE AS	
		3	**280-7009**	2	COIL AS	
M	28	3	**9X-6615**	4	BOLT (M5X0.8X30-MM)	
	29	3	**248-3290**	2	VALVE GP-SOLENOID (DIFFERENTIAL LOCK)	
	30	3	**121-7396**	1	VALVE GP-RELIEF (TORQUE CONVERTER INLET)	
		1	**6V-4589**	1	SEAL-O-RING	
		1	**8L-2746**	1	SEAL-O-RING	
Y	31	3	**147-0209**	1	VALVE GP-RELIEF (PRESSURE REGULATOR)	307
	32	3	**6K-0806**	1	STRAP-CABLE	
M	34	2	**6V-8335**	14	BOLT-SELF-LOCKING (M10X1.5X40-MM)	
M	35	1	**121-9875**	4	BOLT (M10X1.5X55-MM)	
M	36	3	**6V-7731**	2	BOLT (M10X1.5X70-MM)	
M	37	1,2	**6V-8097**	2	BOLT (M12X1.75X30-MM)	
	38	2	**293-2147**	1	BREATHER AS (SIDE)	
		2	**3J-1907**	1	SEAL-O-RING	
		2	**122-6785**	1	PLUG AS	
	39	3	**7T-3119**	1	HOUSING	
	41	4	**7T-3195**	2	WASHER (12.3X47X6.35-MM THK)	
	42	3	**6Y-2035**	1	GASKET	
	43	4	**5P-8066**	2	SEAL-O-RING	

271-3774 TRANSMISSION GP-DIRECT DRIVE *(contd.)* i03548222

NOTE	REF NO	GRAPHIC REF	PART NUMBER	QTY	PART NAME 1 2 3 4 5 6 (PRODUCT LEVEL)	SEE PAGE
	44	2	**294-9820**	1	TUBE	
	45	4	**122-1883**	1	SPACER (38X45X5-MM THK)	
	46	4	**122-6787**	2	YOKE AS	
					(EACH INCLUDES)	
		1	**123-1377**	1	GUARD	
	47	2	**6Y-1896**	1	PLUG AS	
		1	**5P-6718**	1	SEAL-O-RING	
	48	2	**4W-9972**	1	SENDER AS-TEMPERATURE (12-VOLT) (TRANSMISSION OIL)	
		2	**6V-8378**	1	NUT (10-32-THD)	
		2	**8T-0328**	1	WASHER-HARD (5.5X10X1-MM THK)	
		2	**8F-1434**	1	LOCKWASHER	
	49	1,2,3	**3J-1907**	14	SEAL-O-RING	
Y	50	4	**275-0476**	1	SHAFT GP-INPUT	250
	51	3	**7T-3111**	1	COVER	
	52	2,3	**3S-2093**	2	STRAP-CABLE	
	53	4	**208-8240**	1	SEAL-LIP TYPE	
	54	2	**123-2918**	2	SLEEVE	
	55	2	**123-2919**	2	NUT (M11X1-THD)	
	56	3	**7T-3251**	1	BREATHER (TRANSMISSION)	
Y	57	2	**189-5746**	1	SENSOR GP-SPEED (TORQUE CONVERTER OUTPUT)	133

M-METRIC PART
Y-SEPARATE ILLUSTRATION

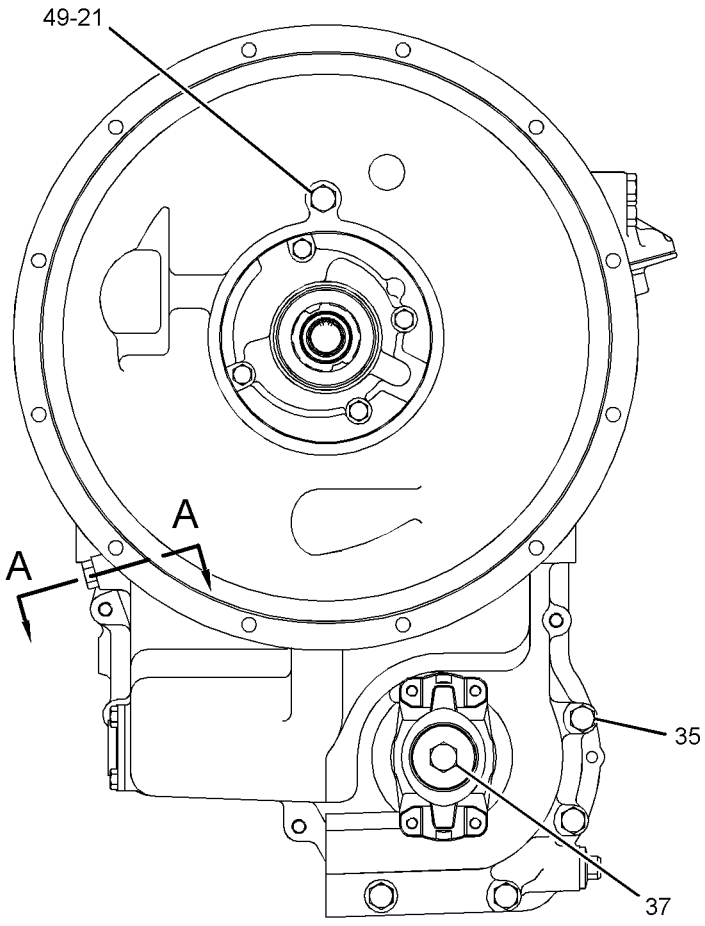

FRONT VIEW

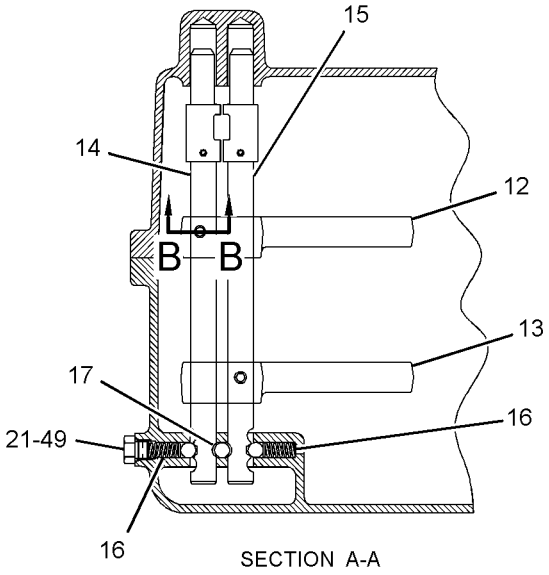

SECTION A-A

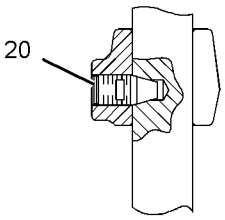

SECTION B-B

REFER TO ALL ILLUSTRATION OF THIS GROU PFOR AUXILIARY VIEWS

GRAPHIC #1

g01408855

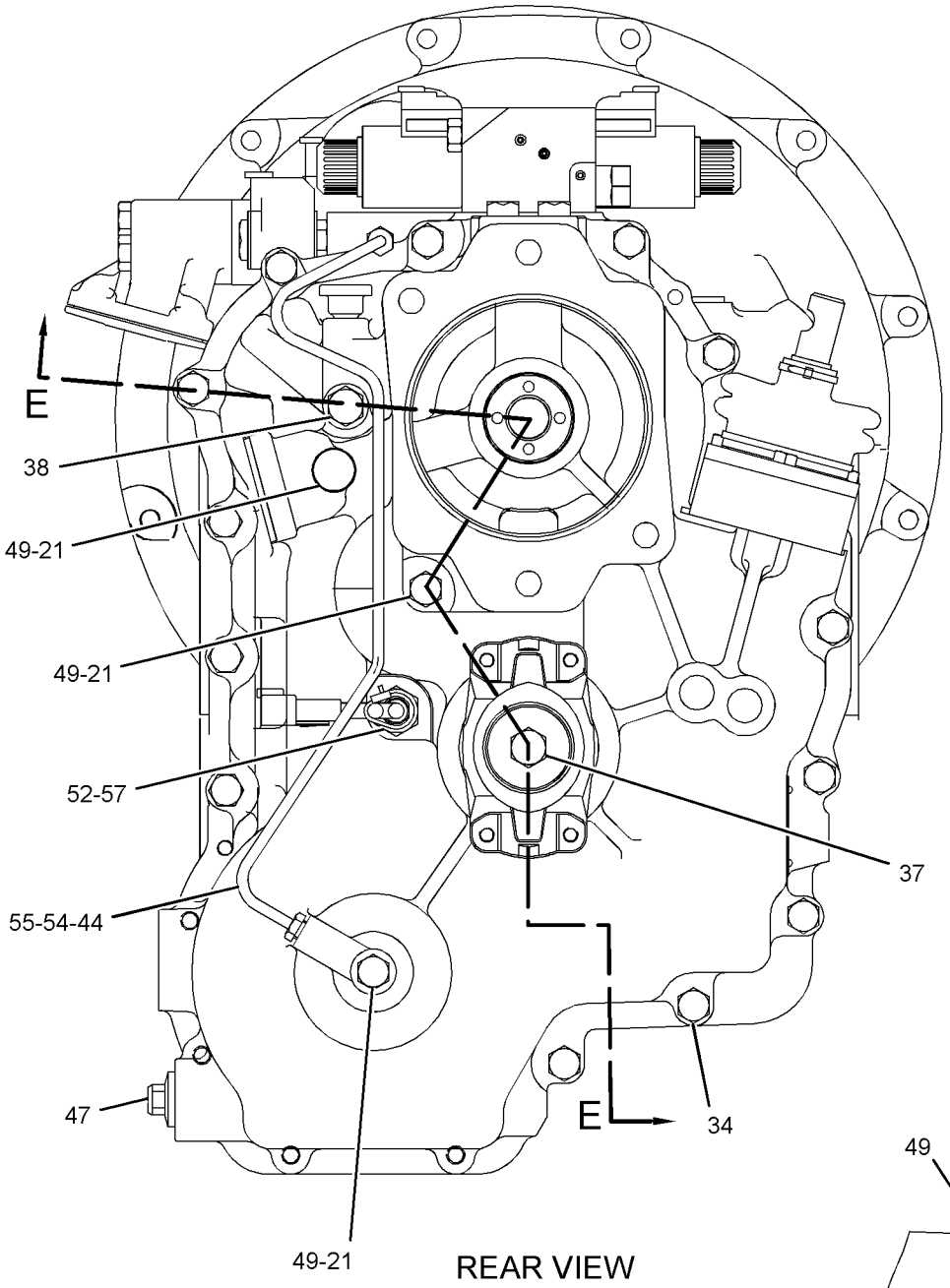

REAR VIEW

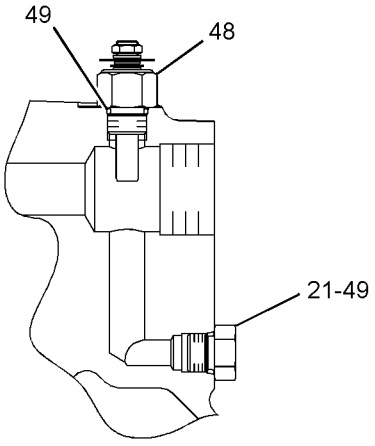

SECTION D-D

REFER TO ALL ILLUSTRATIONS OF
THIS GROUP FOR AUXILIARY VIEWS

GRAPHIC #2

g01405999

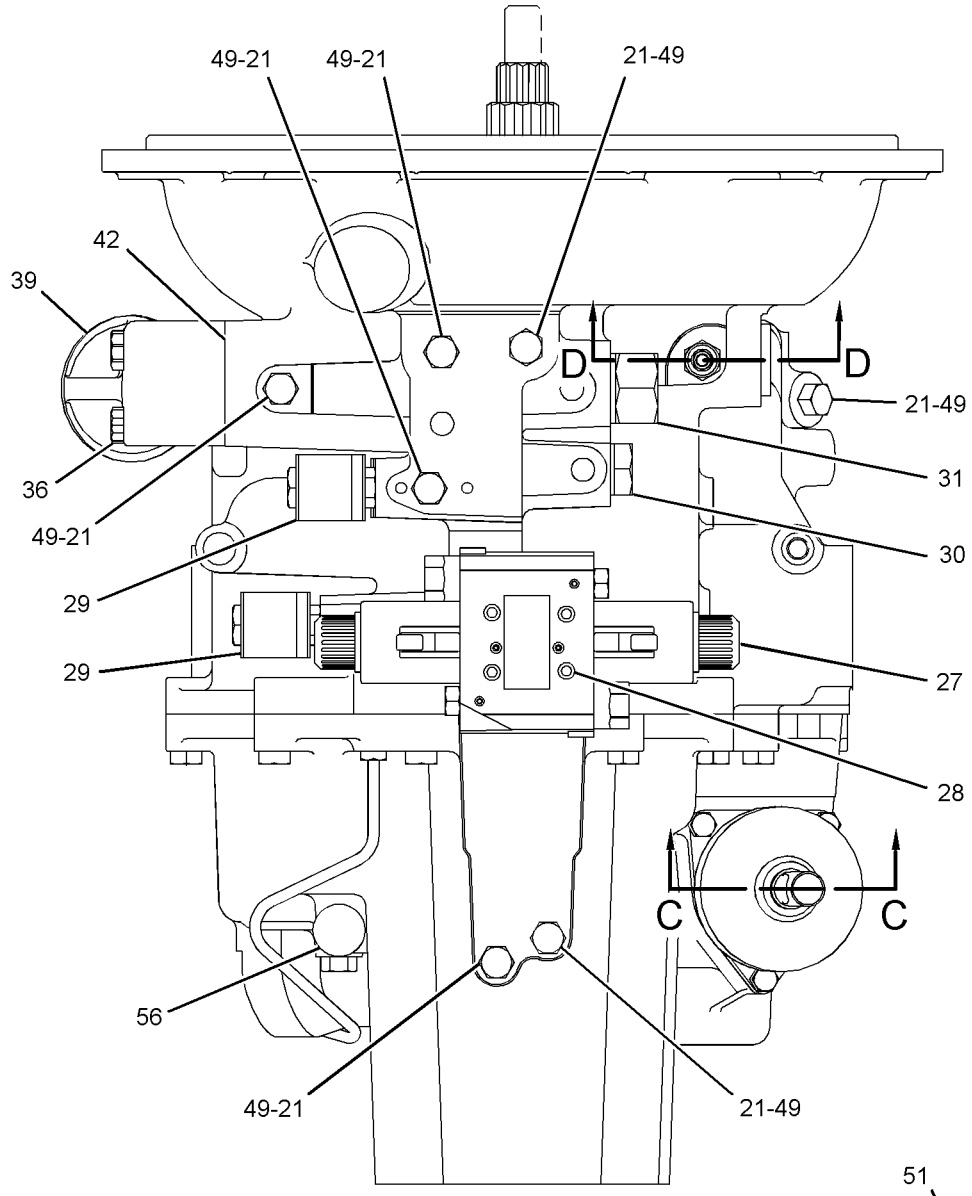

TOP VIEW

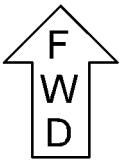

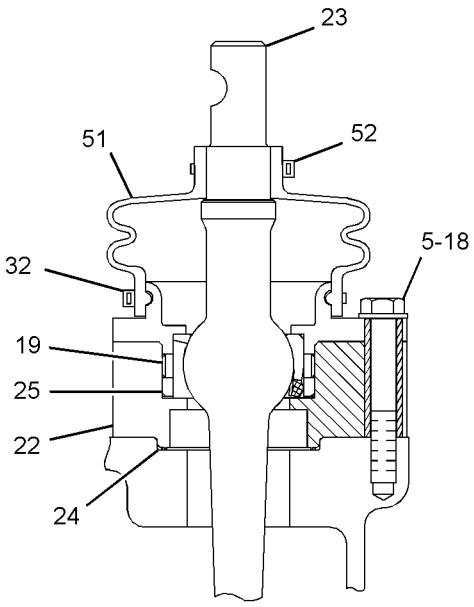

SECTION E-E

REFER TO ALL ILLUSTRATIONS OF
THIS GROUP FOR AUXILIARY VIEWS

GRAPHIC #3

g01405998

271-3774 TRANSMISSION GP-DIRECT DRIVE *(contd.)* i03548222

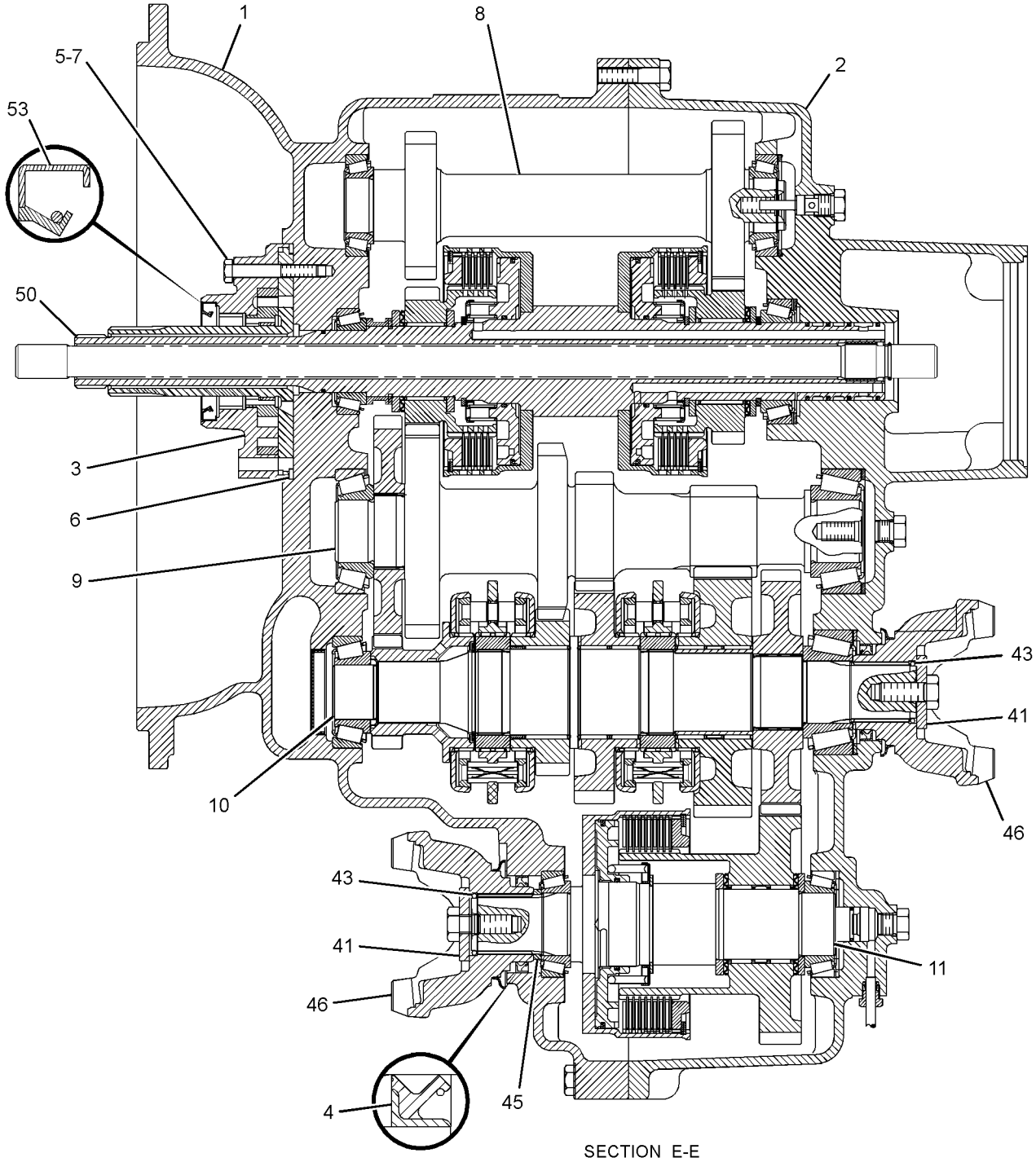

SECTION E-E

GRAPHIC #4 **<END>** g01406000

271-3774 TRANSMISSION GP-DIRECT DRIVE

S/N: HLS1-99999
PART OF 271-2406 TRANSMISSION & MOUNTING GP
AN ATTACHMENT
TYPE 2

SMCS-3030 **i03548225**

NOTE	REF NO	GRAPHIC REF	PART NUMBER	QTY	PART NAME 1 2 3 4 5 6 (PRODUCT LEVEL)	SEE PAGE
Y	1	4	**275-0468**	1	CASE AS-TRANSMISSION (FRONT)	207
Y	2	4	**275-0470**	1	CASE AS-TRANSMISSION (REAR)	208
	3	4	**121-7385**	1	PUMP GP-TRANSMISSION	
		4	**208-8240**	1	SEAL-LIP TYPE	
	4	4	**302-8432**	2	SEAL-LIP TYPE	
M	5	2,4	**8C-5748**	7	BOLT (M8X1.25X55-MM)	
	6	4	**7X-4741**	1	SEAL	
	7	4	**9P-9150**	4	WASHER (8.25X18X0.84-MM THK)	
	8	4	**275-0475**	1	SHAFT GP-IDLER (TRANSMISSION)	
		4	**005-0471**	2	CONE-BEARING	
		4	**274-8623**	1	SHAFT-REVERSE	
	9	4	**275-0477**	1	SHAFT GP-COUNTER (TRANSMISSION)	
		4	**8T-1581**	1	CONE (TAPERED ROLLER)	
		4	**123-8907**	1	CONE-BEARING	
		4	**274-8614**	1	GEAR-COUNTERSHAFT (37-TEETH)	
		4	**274-8625**	1	GEAR-COUNTERSHAFT (38-TEETH)	
Y	10	4	**275-0478**	1	SHAFT GP-OUTPUT (REAR)	254
Y	11	4	**276-5337**	1	SHAFT GP-OUTPUT (FRONT)	255
	12	1	**121-7403**	1	FORK-SHIFT (FIRST, SECOND)	
	13	1	**121-7404**	1	FORK-SHIFT (THIRD, FOURTH)	
	14	1	**121-7389**	1	ROD AS-GEARSHIFT (FIRST, SECOND)	
	15	1	**121-7390**	1	ROD AS-GEARSHIFT (THIRD, FOURTH)	
	16	1	**6Y-1341**	2	SPRING	
	17	1	**014-5645**	3	BALL	
	18	2	**9M-1974**	3	WASHER-HARD (8.8X16X2-MM THK)	
	19	2	**7T-3109**	1	PIN	
	20	1	**7T-3249**	2	SCREW (3/8-24X0.75-IN)	
C	21	1,2,3	*148-8407*	13	PLUG AS (STORAGE)	
					(EACH INCLUDES)	
		1,2,3	**3J-1907**	1	SEAL-O-RING	
		1,2,3	**9S-4191**	1	PLUG-O-RING	
	22	2	**127-3017**	1	SEAT AS (BALL)	
	23	2	**121-7391**	1	LEVER	
	24	2	**175-0054**	1	SEAL-O-RING	
	25	2	**174-9711**	1	GASKET	
	27	2	**278-0205**	1	VALVE GP-SOLENOID (FORWARD, REVERSE)	
		2	**8L-2779**	4	SEAL-O-RING	
		2	**280-7012**	2	TUBE AS	
		2	**280-7009**	2	COIL AS (12-VOLT)	
M	28	2	**9X-6615**	4	BOLT (M5X0.8X30-MM)	
	29	2	**248-3290**	2	VALVE GP-SOLENOID (DIFFERENTIAL LOCK)	
	30	2	**121-7396**	1	VALVE GP-RELIEF (TORQUE CONVERTER INLET)	
		2	**8L-2746**	1	SEAL-O-RING	
		2	**6V-4589**	1	SEAL-O-RING	
Y	31	2	**147-0209**	1	VALVE GP-RELIEF (PRESSURE REGULATOR)	307
	32	2	**6K-0806**	1	STRAP-CABLE	
CM	34	3	**6V-5842**	14	BOLT (M10X1.5X40-MM)	
M	35	1	**121-9875**	4	BOLT (M10X1.5X55-MM)	
CM	36	2	**6V-7981**	2	BOLT (M10X1.5X70-MM)	
M	37	1,3	**6V-8097**	2	BOLT (M12X1.75X30-MM)	
	38	3	**293-2147**	1	BREATHER AS (SIDE)	
		3	**3J-1907**	1	SEAL-O-RING	
		3	**122-6785**	1	PLUG AS	
	39	2	**7T-3119**	1	HOUSING (FILTER)	

271-3774 TRANSMISSION GP-DIRECT DRIVE *(contd.)* i03548225

NOTE	REF NO	GRAPHIC REF	PART NUMBER	QTY	PART NAME 1 2 3 4 5 6 (PRODUCT LEVEL)	SEE PAGE
	41	4	**7T-3195**	2	WASHER (12.3X47X6.35-MM THK)	
	42	2	**6Y-2035**	1	GASKET	
	43	4	**5P-8066**	2	SEAL-O-RING	
	44	3	**294-9820**	1	TUBE	
	45	4	**122-1883**	1	SPACER (38X45X5-MM THK)	
	46	4	**122-6787**	2	YOKE AS	
					(EACH INCLUDES)	
		4	**123-1377**	1	GUARD	
	47	3	**6Y-1896**	1	PLUG AS (TRANSMISSION DRAIN)	
		3	**5P-6718**	1	SEAL-O-RING	
	48	3	**4W-9972**	1	SENDER AS-TEMPERATURE (12-VOLT) (TRANSMISSION OIL)	
		3	**6V-8378**	1	NUT (10-32-THD)	
		3	**8T-0328**	1	WASHER-HARD (5.5X10X1-MM THK)	
		3	**8F-1434**	1	LOCKWASHER	
C	49	3	**3J-1907**	1	SEAL-O-RING	
Y	50	4	**275-0476**	1	SHAFT GP-INPUT	250
	51	2	**7T-3111**	1	COVER	
	52	2,3	**3S-2093**	2	STRAP-CABLE	
	54	3	**123-2918**	2	SLEEVE	
	55	3	**123-2919**	2	NUT (M11X1-THD)	
	56	2	**7T-3251**	1	BREATHER (TRANSMISSION)	
Y	57	3	**189-5746**	1	SENSOR GP-SPEED (TORQUE CONVERTER OUTPUT)	133

C-CHANGE FROM PREVIOUS TYPE
M-METRIC PART
Y-SEPARATE ILLUSTRATION

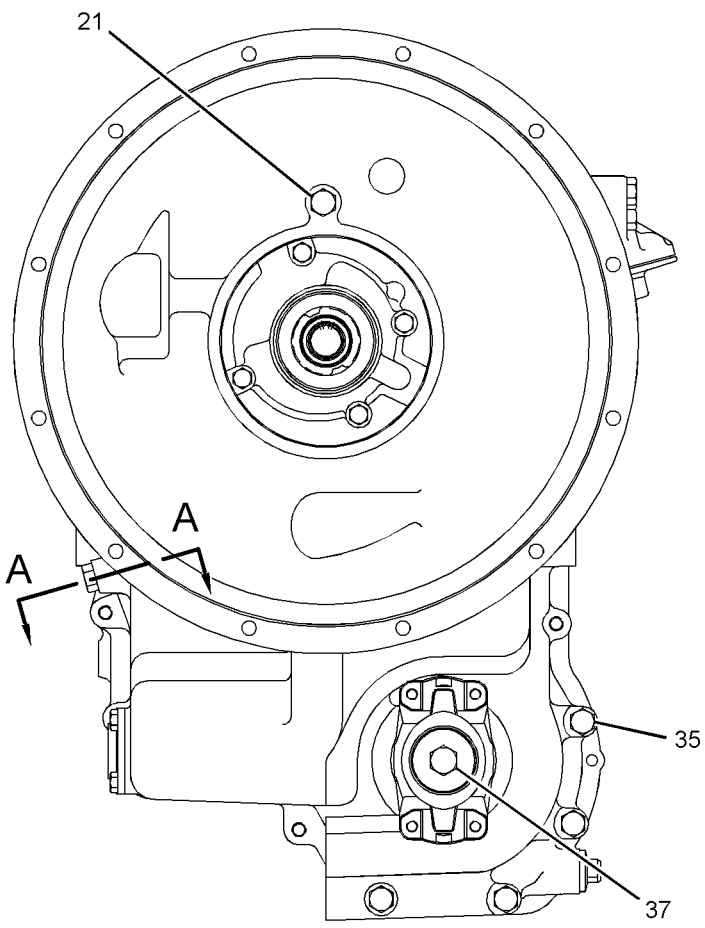

FRONT VIEW

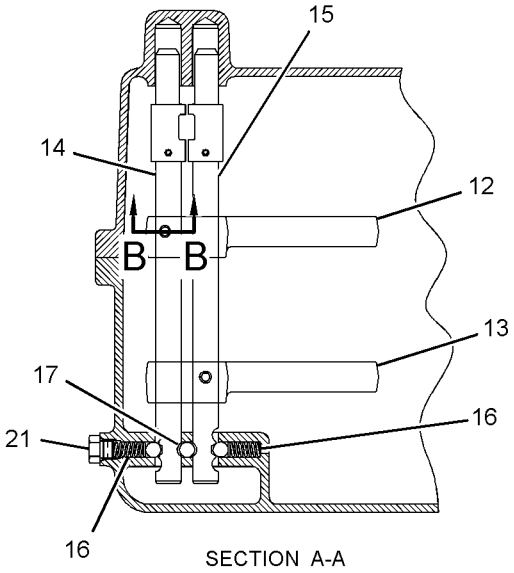

SECTION A-A

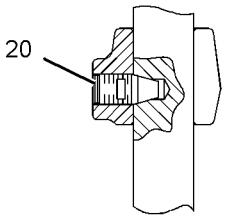

SECTION B-B

GRAPHIC #1 g01567794

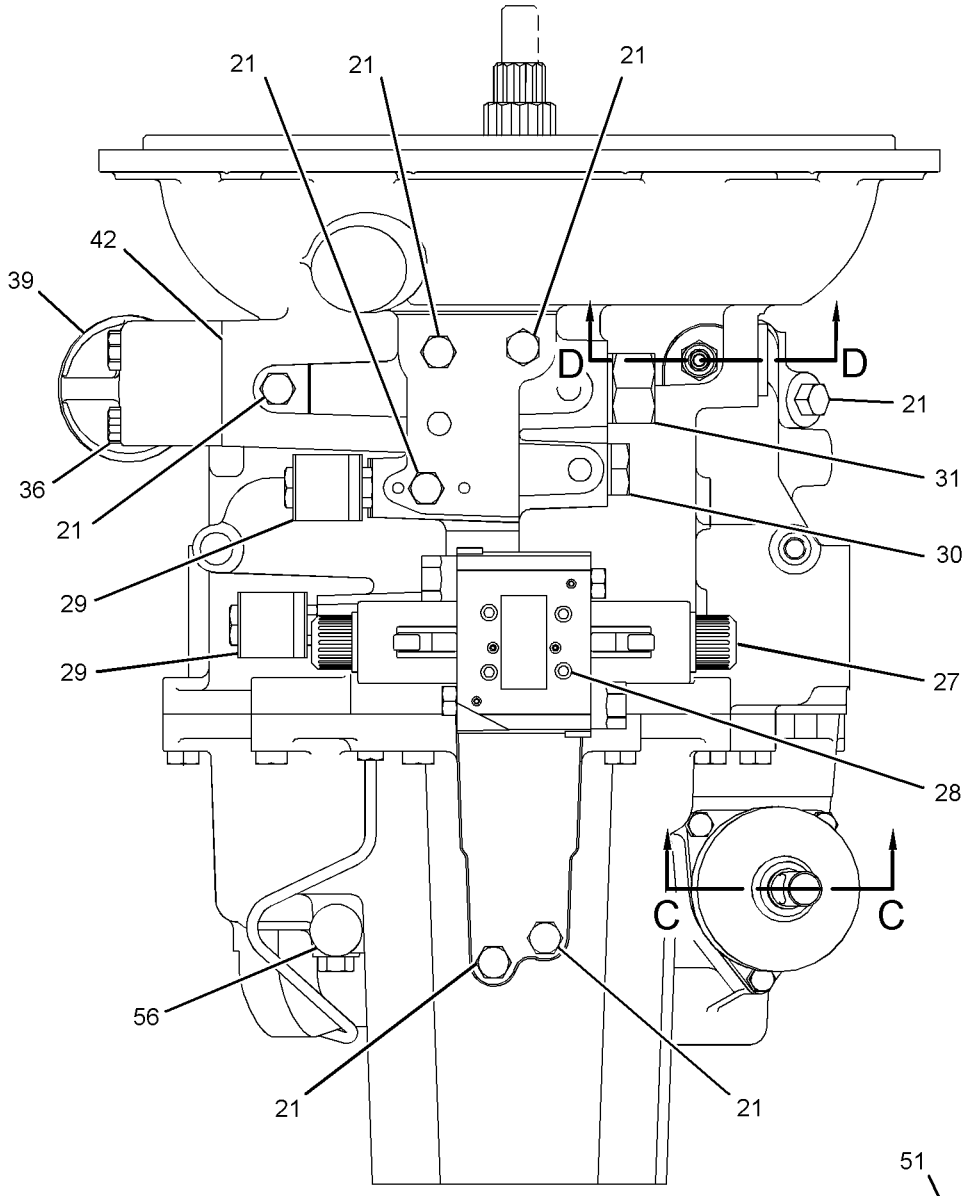

TOP VIEW

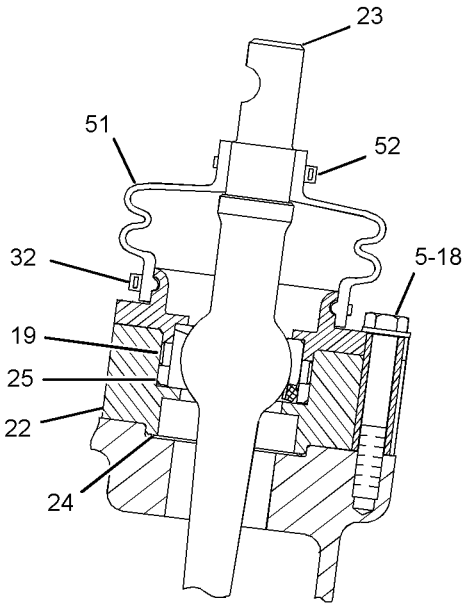

SECTION C-C

REFER TO ALL ILLUSTRATIONS OF
THIS GROUP FOR AUXILIARY VIEWS

GRAPHIC #2

g01567795

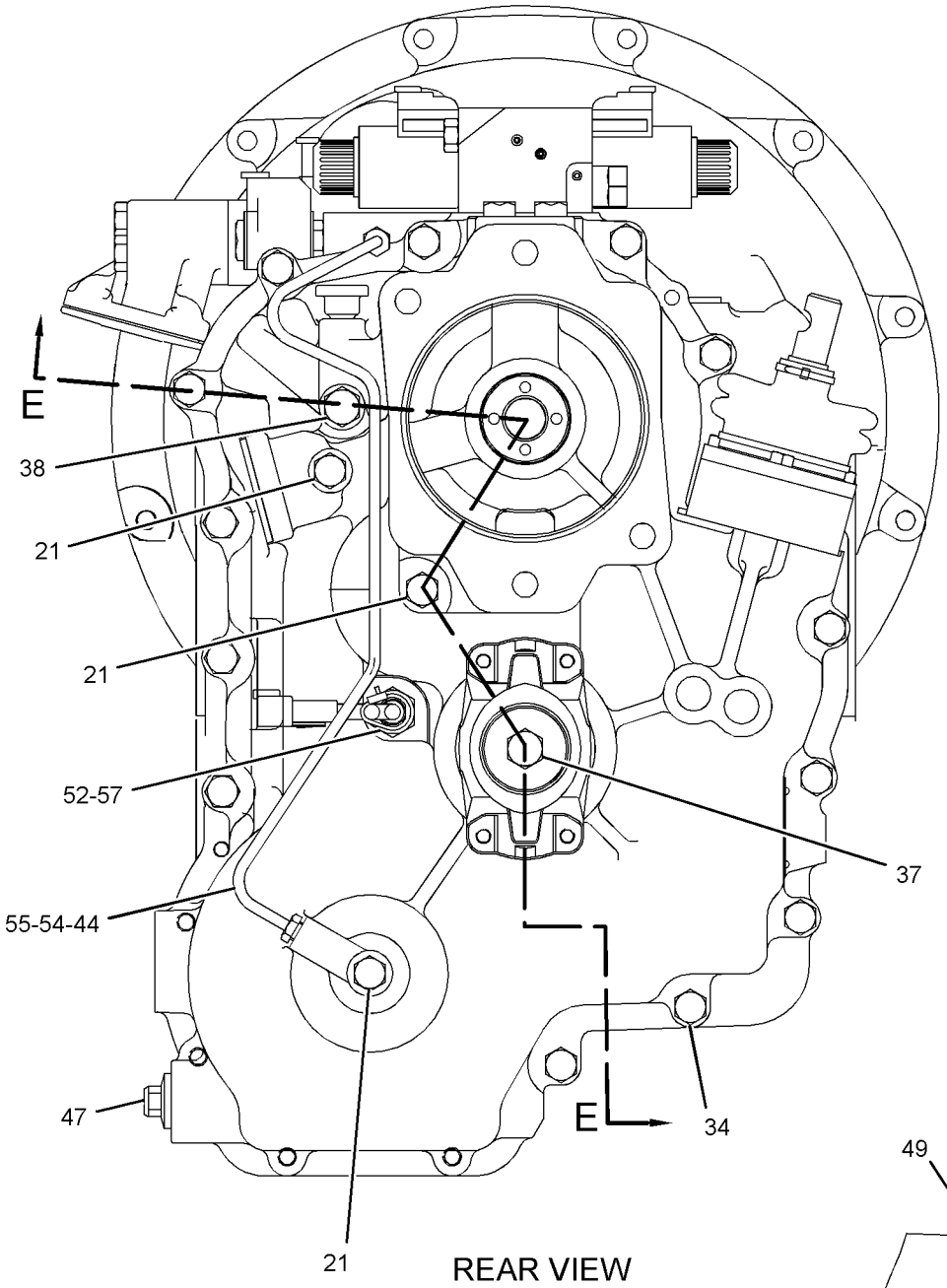

REAR VIEW

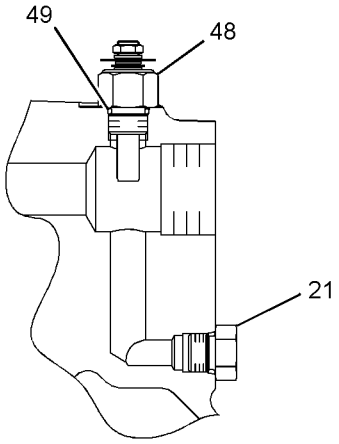

SECTION D-D

REFER TO ALL ILLUSTRATIONS OF
THIS GROUP FOR AUXILIARY VIEWS

GRAPHIC #3

g01567796

271-3774 TRANSMISSION GP-DIRECT DRIVE *(contd.)* **i03548225**

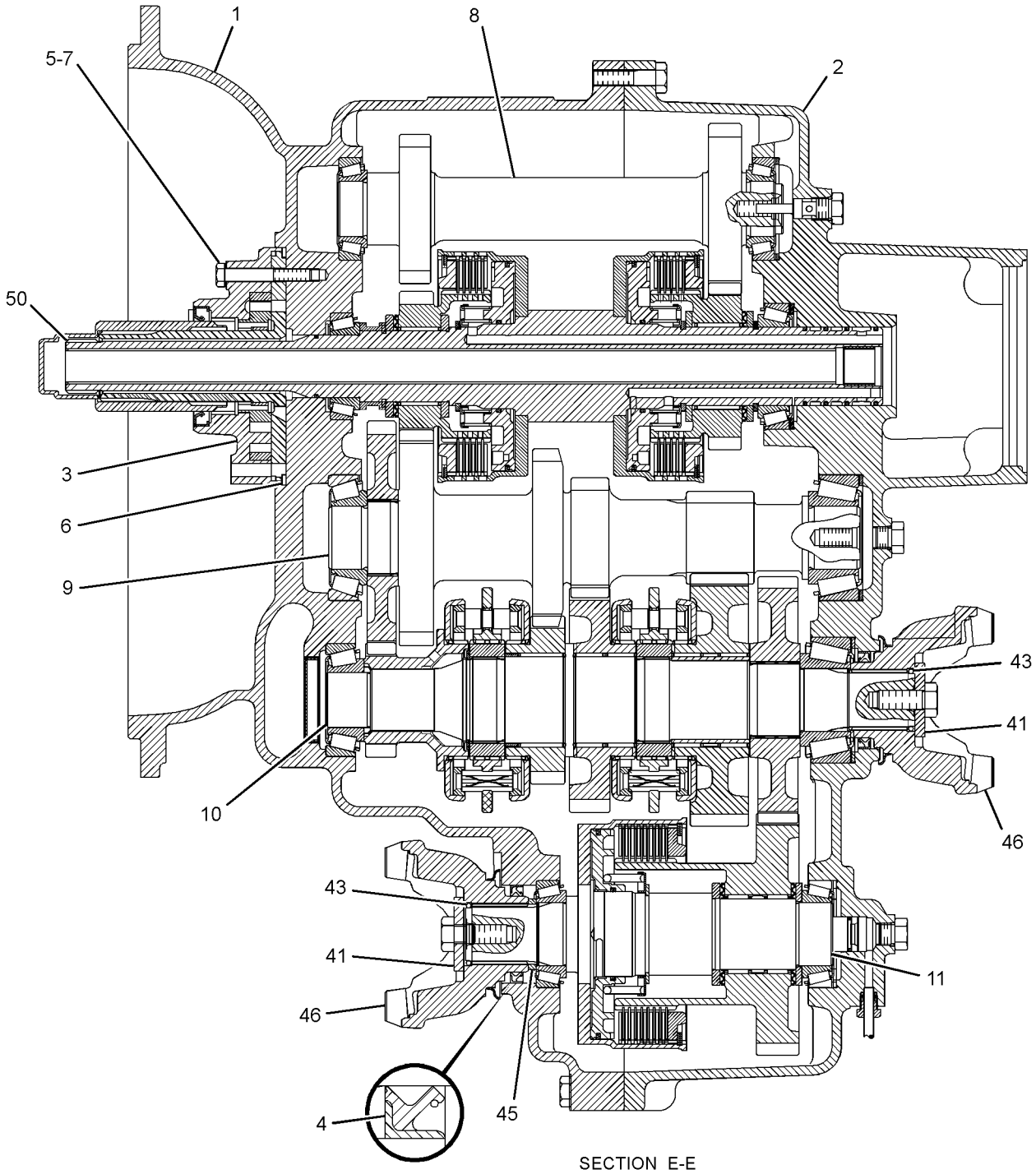

SECTION E-E

GRAPHIC #4 **<END>** g01567797

274-8641 TRANSMISSION GP-POWER SHIFT

S/N: HLS1-99999
PART OF 202-6009 TRANSMISSION & MOUNTING GP
AN ATTACHMENT
TYPE 1

SMCS-3030 **i03548241**

NOTE	REF NO	GRAPHIC REF	PART NUMBER	QTY	PART NAME 1 2 3 4 5 6 (PRODUCT LEVEL)	SEE PAGE
	1	3	**3J-1907**	1	SEAL-O-RING	
	2	3	**4J-0522**	1	SEAL-O-RING	
	3	3	**4W-9972**	1	SENDER AS-TEMPERATURE (12-VOLT) (TRANSMISSION OIL)	
		3	**6V-8378**	1	NUT (10-32-THD)	
		3	**8F-1434**	1	LOCKWASHER	
		3	**8T-0328**	1	WASHER-HARD (5.5X10X1-MM THK)	
	4	2	**5P-8066**	2	SEAL-O-RING	
B	5	2	**6T-9163**	2	SHIM (0.599-MM THK)	
B	6	2	**6T-9164**	2	SHIM (0.178-MM THK)	
B	7	2	**6T-9165**	2	SHIM (0.076-MM THK)	
B	8	2	**6T-9166**	2	SHIM (0.051-MM THK)	
	9	3	**6T-9202**	2	PLUG	
M	10	1,3	**6V-5215**	3	BOLT (M8X1.25X16-MM)	
M	11	1,4	**6V-5842**	16	BOLT (M10X1.5X40-MM)	
M	12	2	**6V-8097**	2	BOLT (M12X1.75X30-MM)	
	13	1	**6Y-1896**	1	PLUG AS	
	14	2	**7T-2646**	2	SPACER (66X79.5X2.02-MM THK)	
	15	3	**7T-2651**	1	STRAINER (SUCTION)	
	16	2	**7T-3195**	2	WASHER (12.3X47X6.35-MM THK)	
	17	1	**7T-3251**	1	BREATHER (TRANSMISSION)	
	18	1	**7T-3253**	2	DOWEL	
	19	2,3	**7W-3556**	12	WASHER (14.27X20.57X1.5-MM THK)	
	20	2	**7X-4741**	1	SEAL	
M	21	2	**8C-5748**	4	BOLT (M8X1.25X55-MM)	
M	22	1	**8C-8545**	2	BOLT-SOCKET HEAD (M5X0.8X20-MM)	
M	23	4	**8T-0271**	2	BOLT-SOCKET HEAD (M10X1.5X35-MM)	
M	24	1	**8T-0643**	1	BOLT (M10X1.5X80-MM)	
	25	2	**9P-9150**	4	WASHER (8.25X18X0.84-MM THK)	
	26	3	**9W-5460**	1	RING	
M	27	4	**9X-6615**	12	BOLT (M5X0.8X30-MM)	
B	28	1	**104-3288**	2	SHIM (0.05-MM THK)	
	29	3	**106-9861**	1	PLATE-COVER	
	30	1	**117-1385**	1	SEAL-O-RING	
	31	1	**120-9762**	5	SEAL-O-RING	
B	32	1	**121-2059**	2	SHIM (0.08-MM THK)	
B	33	1	**121-2060**	2	SHIM (0.18-MM THK)	
B	34	1	**121-2061**	2	SHIM (0.6-MM THK)	
	35	2	**121-7385**	1	PUMP GP-TRANSMISSION	
	36	3	**121-7396**	1	VALVE GP-RELIEF (TORQUE CONVERTER INLET)	
		1	**6V-4589**	1	SEAL-O-RING	
		1	**8L-2746**	1	SEAL-O-RING	
	37	2	**121-7398**	1	SPACER (70X79.5X2-MM THK)	
B	38	2	**121-7399**	1	SHIM (0.05-MM THK)	
B	39	2	**121-7400**	1	SHIM (0.08-MM THK)	
B	40	2	**121-7401**	1	SHIM (0.18-MM THK)	
B	41	2	**121-7402**	1	SHIM (0.6-MM THK)	
	42	1	**122-1879**	2	SPACER (58X67.5X2-MM THK)	
	43	1	**122-1883**	1	SPACER (38X45X5-MM THK)	
	44	2	**122-6787**	2	YOKE AS	
					(EACH INCLUDES)	
		2	**123-1377**	1	GUARD	
	45	2	**147-0201**	1	TUBE AS	
Y	46	3	**147-0209**	1	VALVE GP-RELIEF (PUMP PRESSURE)	307

274-8641 TRANSMISSION GP-POWER SHIFT *(contd.)* i03548241

NOTE	REF NO	GRAPHIC REF	PART NUMBER	QTY	PART NAME 1 2 3 4 5 6 (PRODUCT LEVEL)	SEE PAGE
	47	4	**147-0211**	1	ELBOW AS	
		4	**3G-6927**	1	ADAPTER	
	48	1	**147-0218**	1	TUBE AS-TRANSFER	
	49	3	**147-0226**	1	TUBE AS	
	50	2,3	**147-0234**	6	BOLT (9/16-18X0.83-IN)	
	51	3	**147-0236**	1	TUBE AS-TRANSFER	
	52	1,3	**147-0262**	4	WASHER (19.1X24.1X1.5-MM THK)	
	53	1,3	**147-0266**	2	BOLT (3/4-16X1.417-IN)	
	54	1,3,4	*148-8407*	15	PLUG AS	
					(EACH INCLUDES)	
		1,3,4	**3J-1907**	1	SEAL-O-RING	
		1,3,4	**9S-4191**	1	PLUG-O-RING	
	55	4	**150-7732**	2	SEAL-O-RING	
	56	1	**191-8304**	1	SENSOR GP-SPEED (TRANSMISSION OUTPUT)	
		1	**137-6645**	1	PAD	
	57	1,4	**205-9244**	4	PLUG	
	58	1	**302-8432**	2	SEAL-LIP TYPE	
	59	1	**248-3290**	2	VALVE GP-SOLENOID (ALL WHEEL DRIVE, CLUTCH ONE)	
	60	2	**274-4554**	1	CASE AS-FRONT	
	61	2,4	*274-4556*	3	PLUG AS	
					(EACH INCLUDES)	
		2,4	**8L-2786**	1	SEAL-O-RING	
		2,4	**9S-4185**	1	PLUG-O-RING	
Y	62	3	**274-4561**	1	SHAFT GP-IDLER	246
	63	2	**274-4569**	1	CASE AS-REAR	
Y	64	2	**274-4578**	1	SHAFT GP-INPUT	248
Y	65	2	**274-4580**	1	SHAFT GP-COUNTER	243
Y	66	2	**274-4582**	1	SHAFT GP-OUTPUT (MAIN)	252
	67	2	**280-7010**	1	VALVE GP-SOLENOID (FORWARD)	
	68	2	**278-0209**	1	VALVE GP-SOLENOID (REVERSE)	
					(EACH VALVE GP INCLUDES)	
		1	**8L-2779**	4	SEAL-O-RING	
		1	**280-7012**	1	TUBE AS	
		1	**280-7009**	1	COIL AS	
	69	2	**278-0213**	1	VALVE GP-SOLENOID (CLUTCH)	
		1	**8L-2779**	4	SEAL-O-RING	
		1	**218-3597**	1	PLUG-ORIFICE	
		1	**280-7009**	2	COIL AS	
		1	**286-0867**	2	TUBE AS	
Y	70	2	**280-7007**	1	SHAFT GP-OUTPUT (FRONT)	257

B-USE AS REQUIRED
M-METRIC PART
Y-SEPARATE ILLUSTRATION

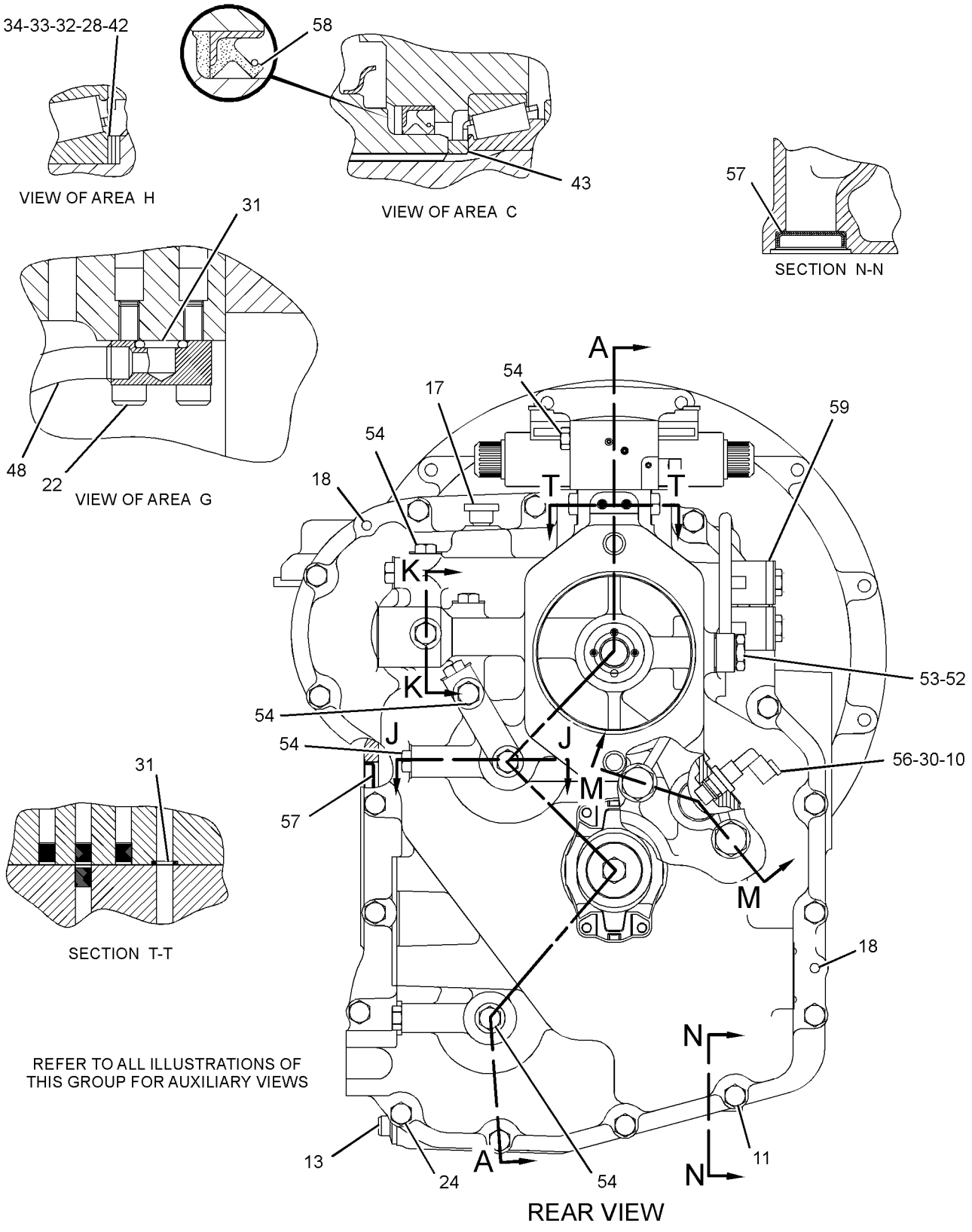

GRAPHIC #1

g01216562

REFER TO ALL ILLUSTRATIONS OF
THIS GROUP FOR AUXILIARY VIEWS

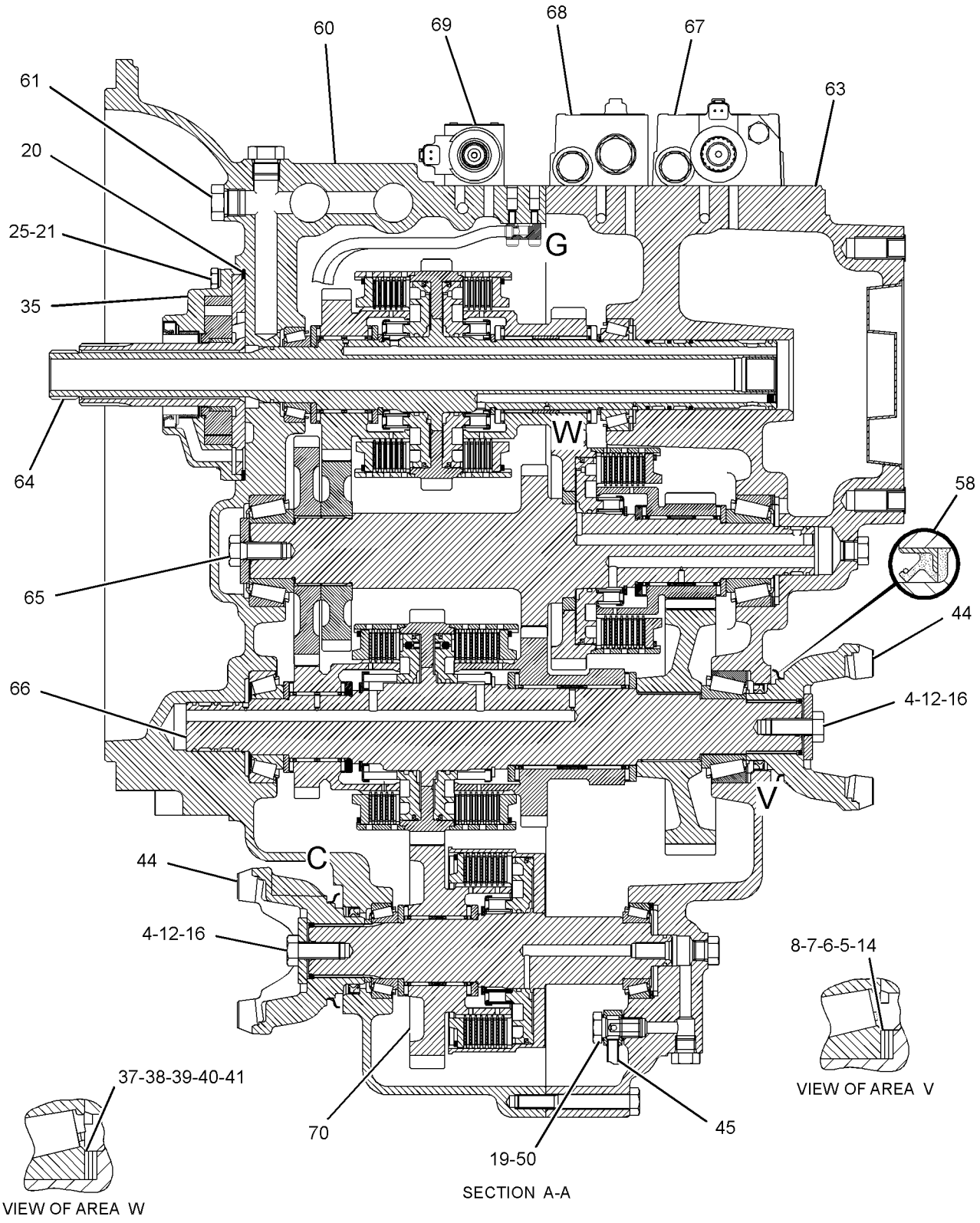

GRAPHIC #2

g01216481

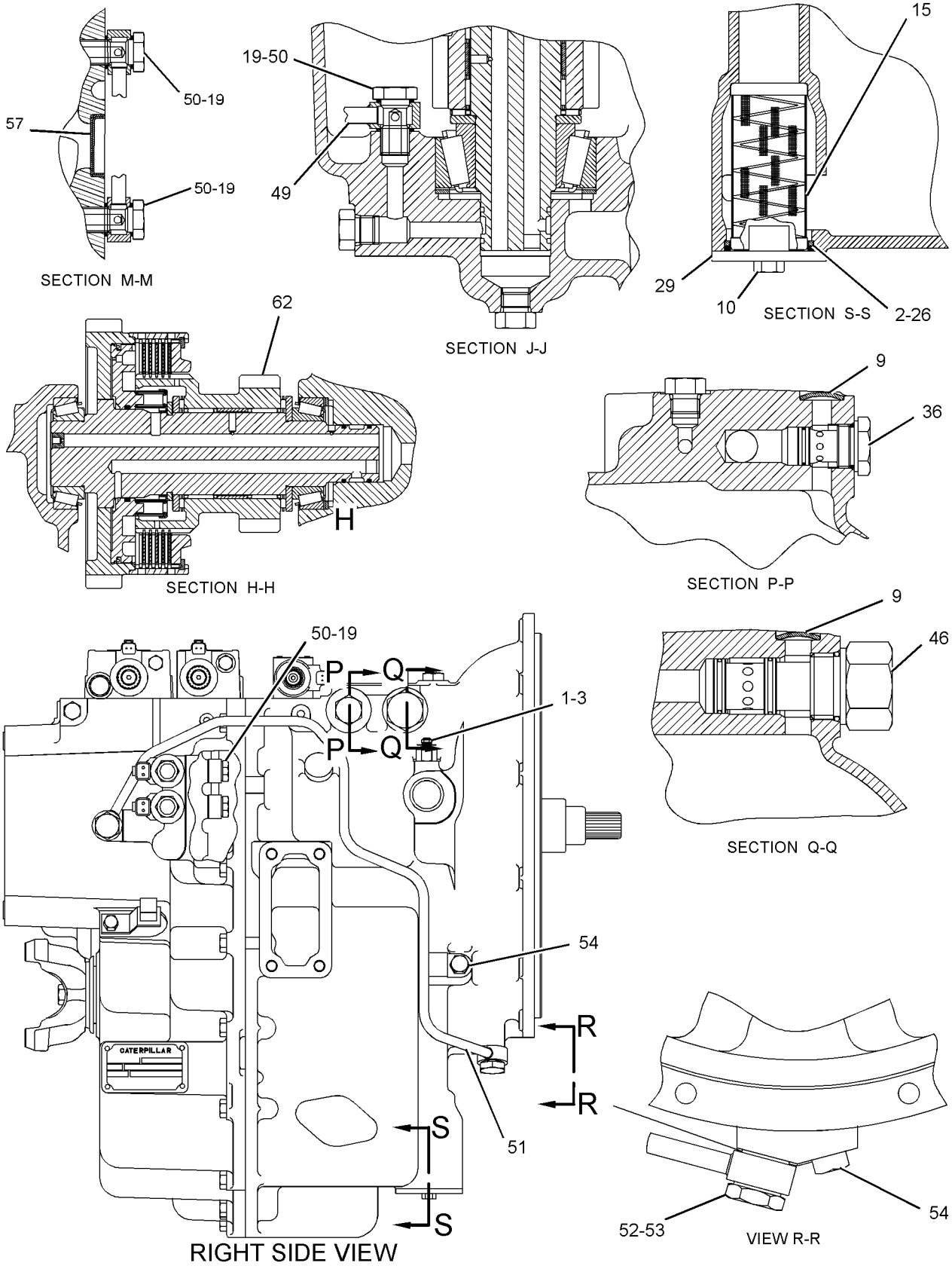

GRAPHIC #3

g01216605

274-8641 TRANSMISSION GP-POWER SHIFT *(contd.)* **i03548241**

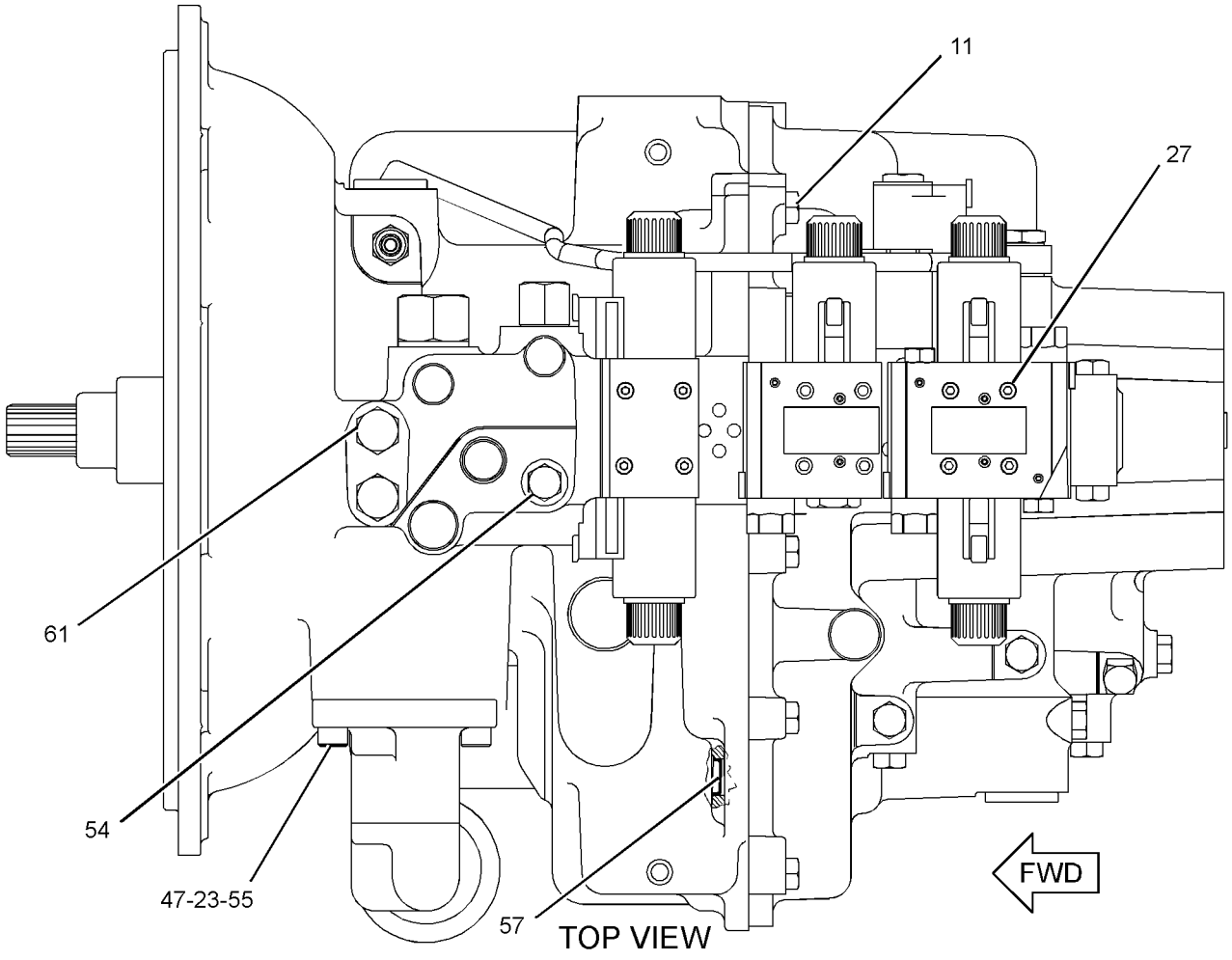

GRAPHIC #4

<END>

g01216654

274-8641 TRANSMISSION GP-POWER SHIFT

S/N: HLS1-99999
PART OF 202-6009 TRANSMISSION & MOUNTING GP
AN ATTACHMENT
TYPE 2

SMCS-3030 **i03548265**

NOTE	REF NO	GRAPHIC REF	PART NUMBER	QTY	PART NAME 1 2 3 4 5 6 (PRODUCT LEVEL)	SEE PAGE
	1	3	**3J-1907**	1	SEAL-O-RING	
	2	3	**4J-0522**	1	SEAL-O-RING	
	3	3	**4W-9972**	1	SENDER AS-TEMPERATURE (12-VOLT) (TRANSMISSION OIL)	
		3	**6V-8378**	1	NUT (10-32-THD)	
		3	**8F-1434**	1	LOCKWASHER	
		3	**8T-0328**	1	WASHER-HARD (5.5X10X1-MM THK)	
	4	2	**5P-8066**	2	SEAL-O-RING	
B	5	2	**6T-9163**	2	SHIM (0.599-MM THK)	
B	6	2	**6T-9164**	2	SHIM (0.178-MM THK)	
B	7	2	**6T-9165**	2	SHIM (0.076-MM THK)	
B	8	2	**6T-9166**	2	SHIM (0.051-MM THK)	
	9	3	**6T-9202**	2	PLUG	
M	10	1,3	**6V-5215**	3	BOLT (M8X1.25X16-MM)	
M	11	1,4	**6V-5842**	16	BOLT (M10X1.5X40-MM)	
M	12	2	**6V-8097**	2	BOLT (M12X1.75X30-MM)	
	13	1	**6Y-1896**	1	PLUG AS	
	14	2	**7T-2646**	2	SPACER (66X79.5X2.02-MM THK)	
	15	3	**7T-2651**	1	STRAINER (SUCTION)	
	16	2	**7T-3195**	2	WASHER (12.3X47X6.35-MM THK)	
	17	1	**7T-3251**	1	BREATHER (TRANSMISSION)	
	18	1	**7T-3253**	2	DOWEL	
	19	2,3	**7W-3556**	12	WASHER (14.27X20.57X1.5-MM THK)	
	20	2	**7X-4741**	1	SEAL	
M	21	2	**8C-5748**	4	BOLT (M8X1.25X55-MM)	
M	22	1	**8C-8545**	2	BOLT-SOCKET HEAD (M5X0.8X20-MM)	
M	23	4	**8T-0271**	2	BOLT-SOCKET HEAD (M10X1.5X35-MM)	
M	24	1	**8T-0643**	1	BOLT (M10X1.5X80-MM)	
	25	2	**9P-9150**	4	WASHER (8.25X18X0.84-MM THK)	
	26	3	**9W-5460**	1	RING	
M	27	4	**9X-6615**	12	BOLT (M5X0.8X30-MM)	
B	28	1	**104-3288**	2	SHIM (0.05-MM THK)	
	29	3	**106-9861**	1	PLATE-COVER	
	30	1	**117-1385**	1	SEAL-O-RING	
C	31	1	**120-9762**	3	SEAL-O-RING	
B	32	1	**121-2059**	2	SHIM (0.08-MM THK)	
B	33	1	**121-2060**	2	SHIM (0.18-MM THK)	
B	34	1	**121-2061**	2	SHIM (0.6-MM THK)	
	35	2	**121-7385**	1	PUMP GP-TRANSMISSION	
		2	**208-8240**	1	SEAL-LIP TYPE	
	36	3	**121-7396**	1	VALVE GP-RELIEF (TORQUE CONVERTER INLET)	
		1	**6V-4589**	1	SEAL-O-RING	
		1	**8L-2746**	1	SEAL-O-RING	
	37	2	**121-7398**	1	SPACER (70X79.5X2-MM THK)	
B	38	2	**121-7399**	1	SHIM (0.05-MM THK)	
B	39	2	**121-7400**	1	SHIM (0.08-MM THK)	
B	40	2	**121-7401**	1	SHIM (0.18-MM THK)	
B	41	2	**121-7402**	1	SHIM (0.6-MM THK)	
	42	1	**122-1879**	2	SPACER (58X67.5X2-MM THK)	
	43	1	**122-1883**	1	SPACER (38X45X5-MM THK)	
	44	2	**122-6787**	2	YOKE AS	
					(EACH INCLUDES)	
		2	**123-1377**	1	GUARD	
	45	2	**147-0201**	1	TUBE AS	

274-8641 TRANSMISSION GP-POWER SHIFT *(contd.)* i03548265

NOTE	REF NO	GRAPHIC REF	PART NUMBER	QTY	PART NAME 1 2 3 4 5 6 (PRODUCT LEVEL)	SEE PAGE
Y	46	3	**147-0209**	1	VALVE GP-RELIEF (PUMP PRESSURE)	307
	47	4	**147-0211**	1	ELBOW AS	
		4	**3G-6927**	1	ADAPTER	
	48	1	**147-0218**	1	TUBE AS-TRANSFER	
	49	3	**147-0226**	1	TUBE AS	
	50	2,3	**147-0234**	6	BOLT (9/16-18X0.83-IN)	
	51	3	**147-0236**	1	TUBE AS-TRANSFER	
	52	1,3	**147-0262**	4	WASHER (19.1X24.1X1.5-MM THK)	
	53	1,3	**147-0266**	2	BOLT (3/4-16X1.417-IN)	
	54	1,3,4	*148-8407*	15	PLUG AS	
					(EACH INCLUDES)	
		1,3,4	**3J-1907**	1	SEAL-O-RING	
		1,3,4	**9S-4191**	1	PLUG-O-RING	
	55	4	**150-7732**	2	SEAL-O-RING	
	56	1	**191-8304**	1	SENSOR GP-SPEED (TRANSMISSION OUTPUT)	
		1	**133-0261**	1	BRACKET	
		1	**137-6645**	1	PAD	
	57	1,4	**205-9244**	4	PLUG	
	58	1	**302-8432**	2	SEAL-LIP TYPE	
	59	1	**248-3290**	2	VALVE GP-SOLENOID (ALL WHEEL DRIVE, CLUTCH ONE)	
	60	2	**274-4554**	1	CASE AS-FRONT	
		2	**147-0268**	4	PLUG	
		2	**163-9091**	4	PLUG	
		2	**238-5261**	1	CASE-FRONT	
	61	2,4	*274-4556*	3	PLUG AS	
					(EACH INCLUDES)	
		2,4	**8L-2786**	1	SEAL-O-RING	
		2,4	**9S-4185**	1	PLUG-O-RING	
Y	62	3	**274-4561**	1	SHAFT GP-IDLER	246
	63	2	**274-4569**	1	CASE AS-REAR	
		2	**163-9091**	11	PLUG	
		2	**238-5260**	1	CASE (REAR)	
Y	64	2	**274-4578**	1	SHAFT GP-INPUT	248
Y	65	2	**274-4580**	1	SHAFT GP-COUNTER	243
Y	66	2	**274-4582**	1	SHAFT GP-OUTPUT (MAIN)	252
	67	2	**280-7010**	1	VALVE GP-SOLENOID (FORWARD)	
		2	**8L-2779**	4	SEAL-O-RING	
		2	**280-7009**	2	COIL AS	
		2	**280-7012**	2	TUBE AS	
	68	2	**278-0209**	1	VALVE GP-SOLENOID (REVERSE)	
		1	**8L-2779**	4	SEAL-O-RING	
		1	**280-7012**	1	TUBE AS	
		1	**280-7009**	1	COIL AS	
	69	2	**278-0213**	1	VALVE GP-SOLENOID (CLUTCH)	
		1	**8L-2779**	4	SEAL-O-RING	
		1	**218-3597**	1	PLUG-ORIFICE	
		1	**280-7009**	2	COIL AS	
		1	**286-0867**	2	TUBE AS	
Y	70	2	**280-7007**	1	SHAFT GP-OUTPUT (FRONT)	257

B-USE AS REQUIRED
C-CHANGE FROM PREVIOUS TYPE
M-METRIC PART
Y-SEPARATE ILLUSTRATION

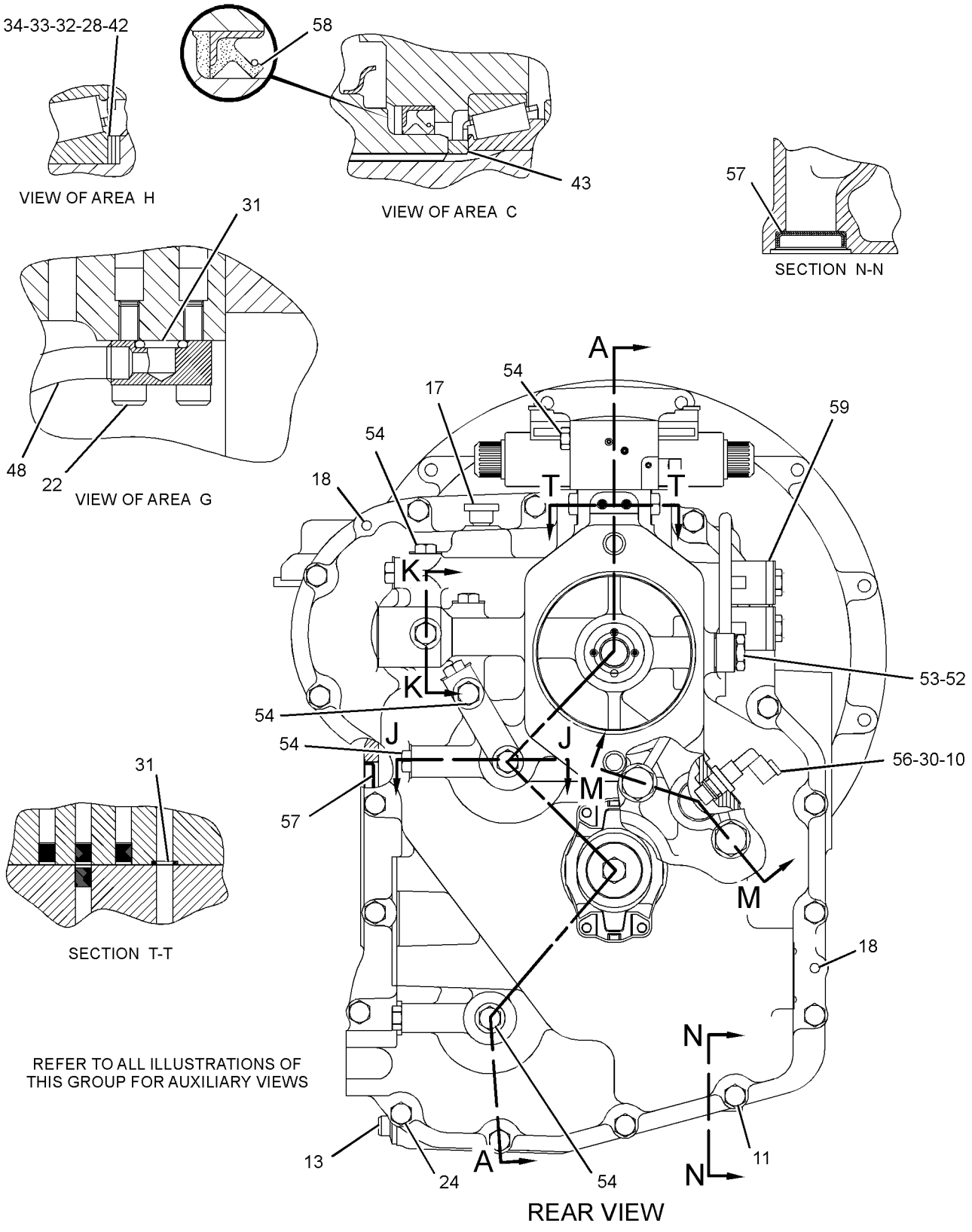

GRAPHIC #1

g01216562

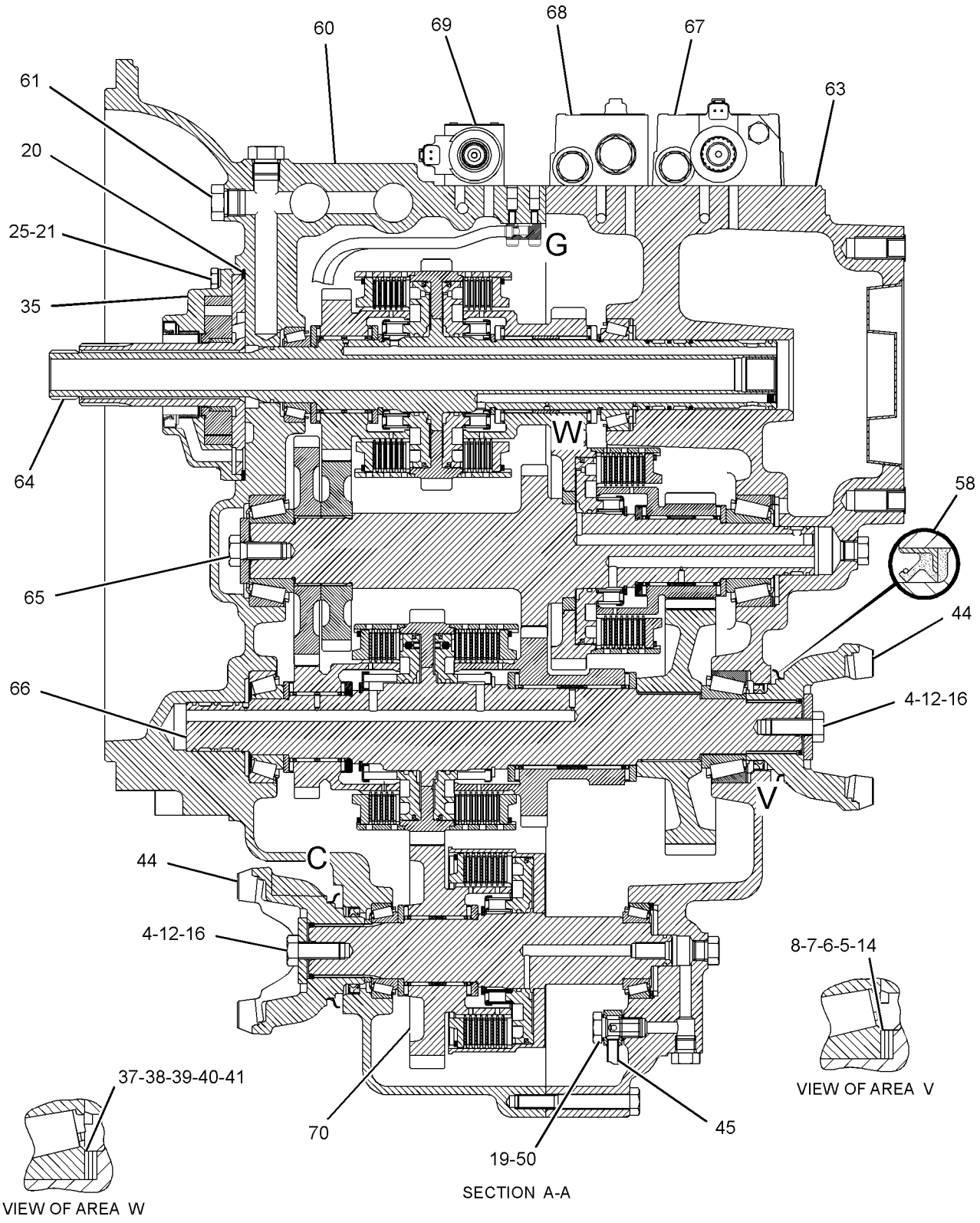

GRAPHIC #2

g01216481

274-8641 TRANSMISSION GP-POWER SHIFT *(contd.)* i03548265

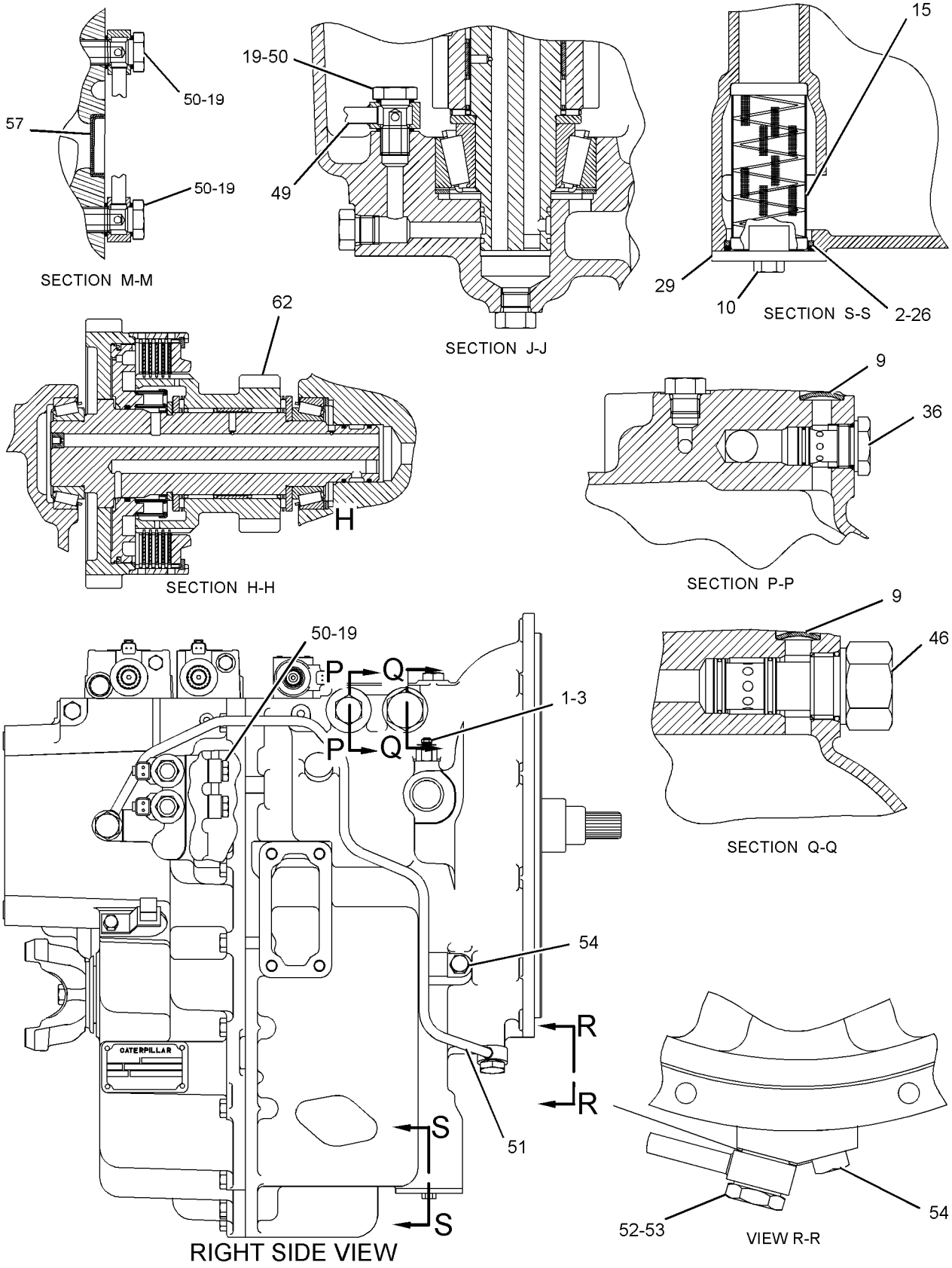

GRAPHIC #3 g01216605

274-8641 TRANSMISSION GP-POWER SHIFT *(contd.)* **i03548265**

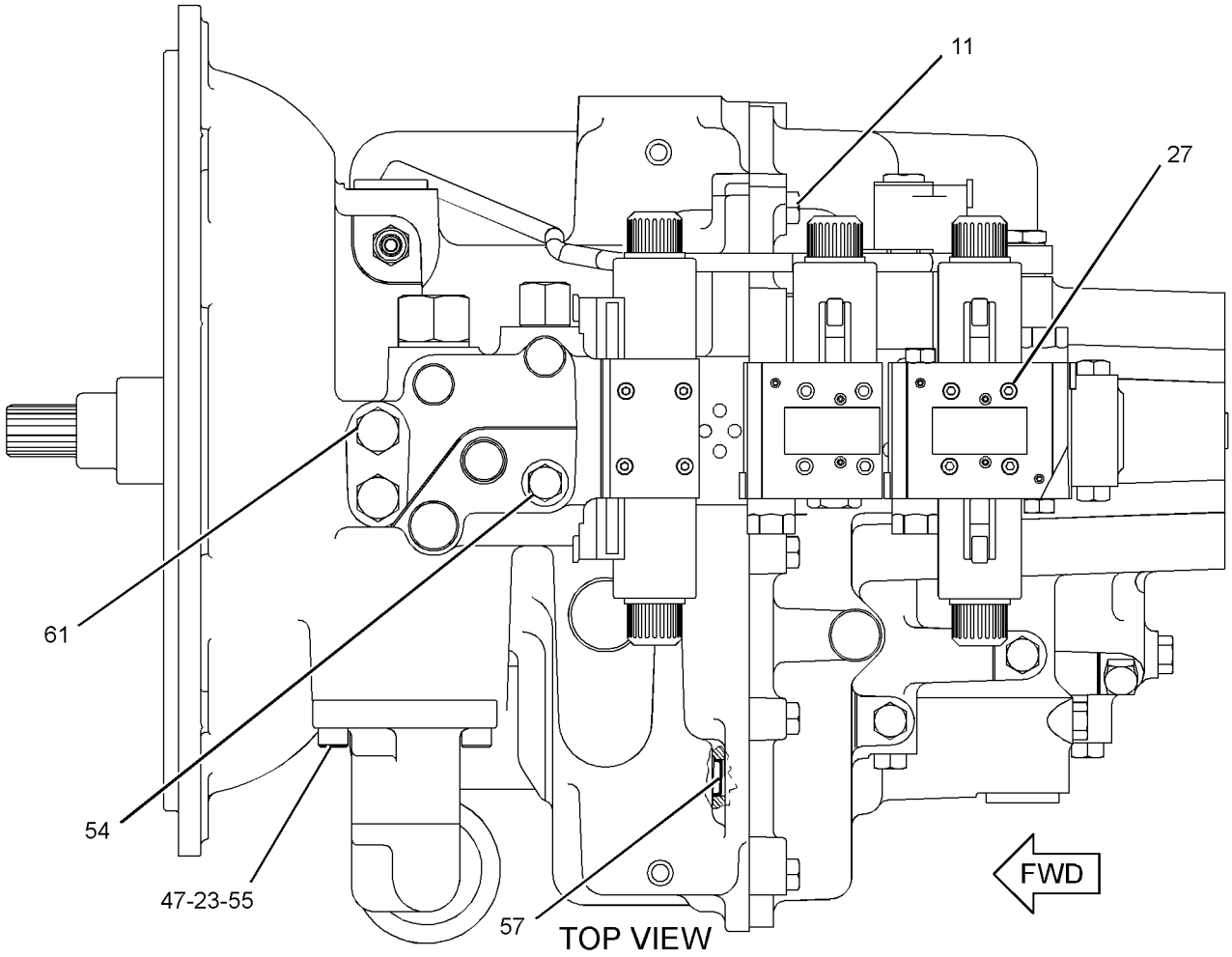

GRAPHIC #4

<END>

g01216654

256-0545 VALVE & LINES GP-DIFF LOCK

S/N: HLS1-99999
PART OF 216-3316 POWER TRAIN AR
AN ATTACHMENT

SMCS-3264, 5057, 5479 **i02445201**

NOTE	REF NO	GRAPHIC REF	PART NUMBER	QTY	PART NAME 1 2 3 4 5 6 (PRODUCT LEVEL)	SEE PAGE
	1	1	*150-3033*	1	ELBOW AS	
		1	**3J-1907**	1	SEAL-O-RING	
		1	**4J-5477**	1	SEAL-O-RING	
		1	**8T-0164**	1	ELBOW	
Y	2	1	**233-7132**	1	VALVE & MTG GP-SOLENOID (DIFFERENTIAL LOCK)	306
	3	1	**151-4841**	2	BLOCK	
I	4	1	**256-0548**	2	HOSE AS	
I	5	1	**256-0549**	1	HOSE AS	
	6	1	*148-8368*	3	ELBOW AS	
					(EACH INCLUDES)	
		1	**3J-1907**	1	SEAL-O-RING	
		1	**4J-5477**	1	SEAL-O-RING	
		1	**6V-8627**	1	ELBOW	
	7	1	**8T-4121**	4	WASHER-HARD (11X21X2.5-MM THK)	
M	8	1	**8T-5005**	2	BOLT (M10X1.5X70-MM)	
	9	1	**7K-1181**	2	STRAP-CABLE	
	10	1	**285-3557**	1	PLATE AS	
M	11	1	**8T-4137**	2	BOLT (M10X1.5X20-MM)	

I-REFER TO HYDRAULIC INFORMATION SYSTEM
M-METRIC PART
Y-SEPARATE ILLUSTRATION

256-0545 **VALVE & LINES GP-DIFF LOCK** *(contd.)* **i02445201**

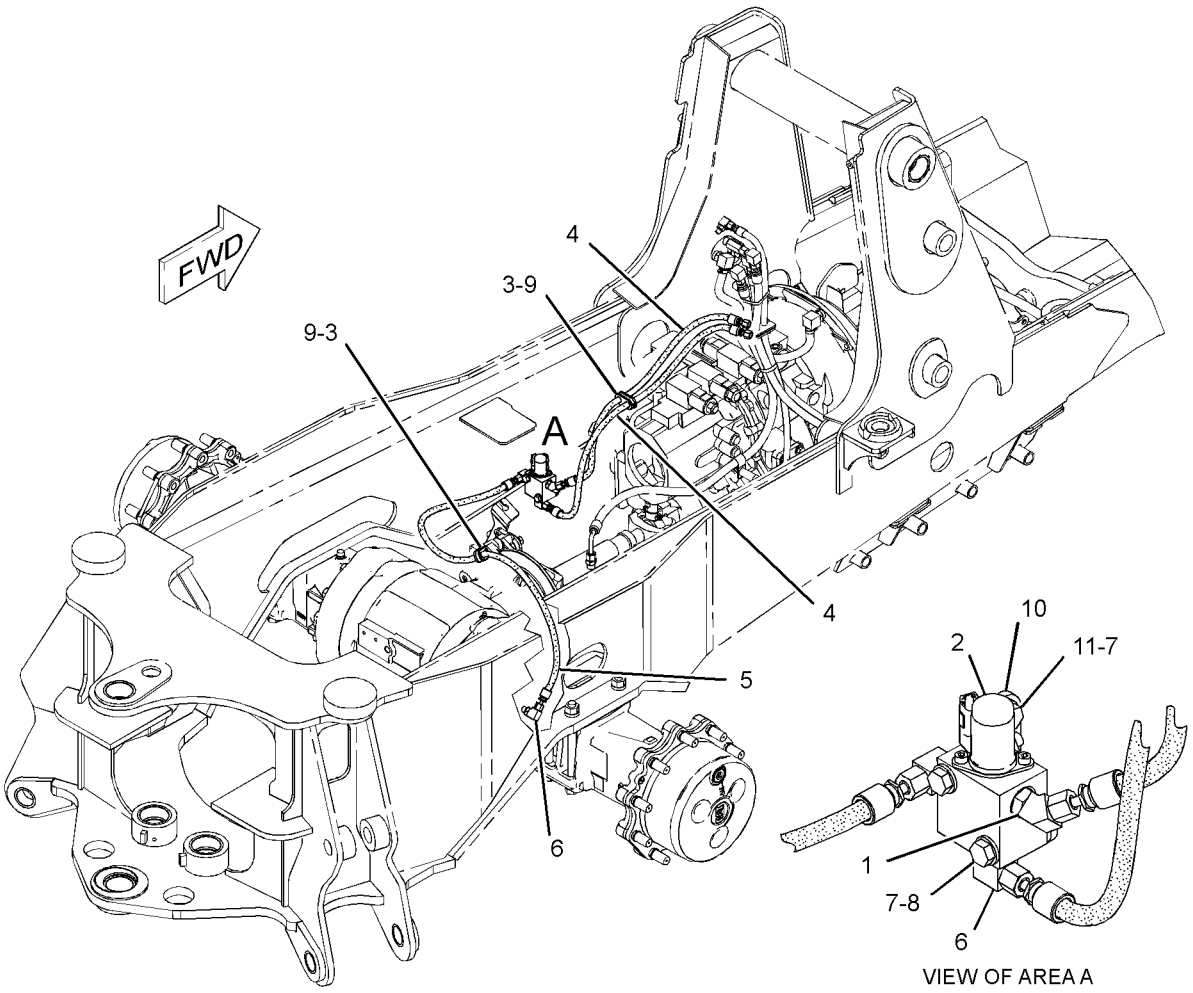

VIEW OF AREA A

GRAPHIC #1 **<END>** g01234223

233-7132 VALVE & MTG GP-SOLENOID–DIFFERENTIAL LOCK

S/N: HLS1-99999

PART OF 256-0545 VALVE & LINES GP-DIFF LOCK

AN ATTACHMENT

SMCS-5479 **i03330469**

NOTE	REF NO	GRAPHIC REF	PART NUMBER	QTY	PART NAME 1 2 3 4 5 6 (PRODUCT LEVEL)	SEE PAGE
J	1	1	**220-3398**	1	VALVE GP-SOLENOID (DIFFERENTIAL LOCK)	
M	2	1	**096-5968**	2	BOLT-SOCKET HEAD (M5X0.8X8-MM)	
					AVAILABLE REPAIR KIT(S):	
J			**250-8330**	1	KIT-SEAL	
					(INCLUDES RINGS)	

J-KIT MARKED J AVAILABLE FOR PART MARKED J
M-METRIC PART

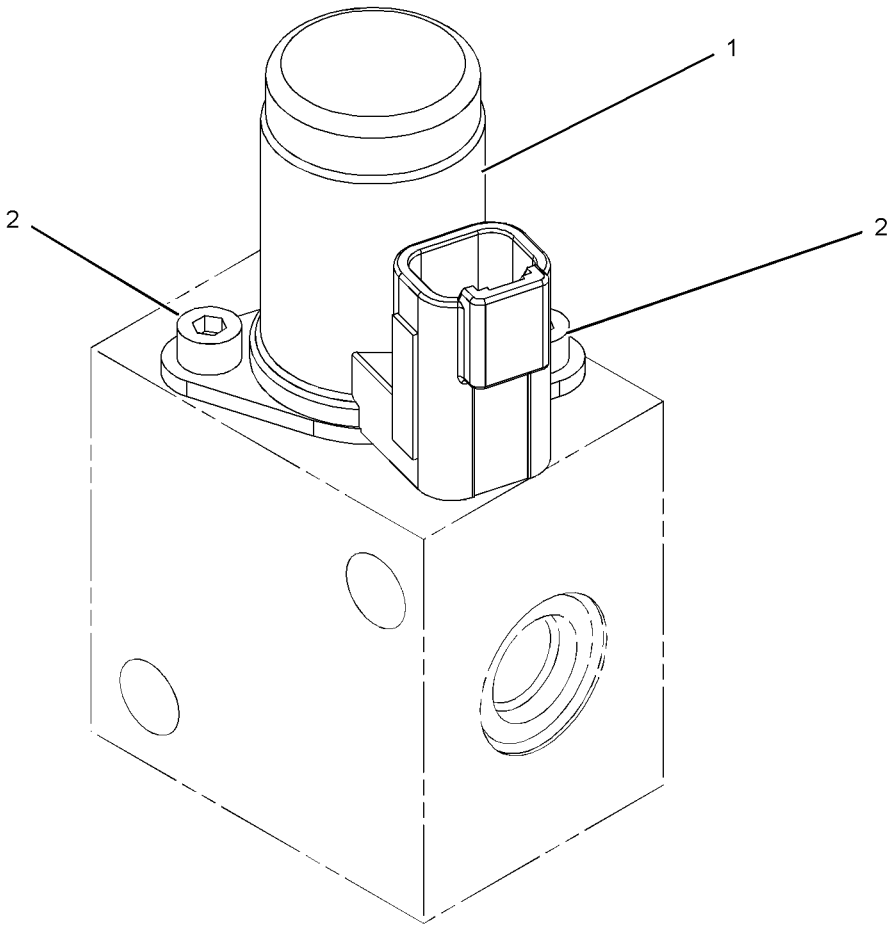

GRAPHIC #1 **<END>** g01240121

147-0209 VALVE GP-RELIEF–PUMP PRESSURE

S/N: HLS1-99999
PART OF 271-3773, 271-3774 TRANSMISSION GP-DIRECT DRIVE, 274-8641
TRANSMISSION GP-POWER SHIFT
AN ATTACHMENT

SMCS-3133, 3182, 3210, 3213 **i01980265**

NOTE	REF NO	GRAPHIC REF	PART NUMBER	QTY	PART NAME 1 2 3 4 5 6 (PRODUCT LEVEL)	SEE PAGE
	1	1	**7X-4744**	1	SEAL-O-RING	
	2	1	**6V-9178**	1	SEAL-O-RING	
	3	1	**106-9586**	1	SEAL-O-RING	

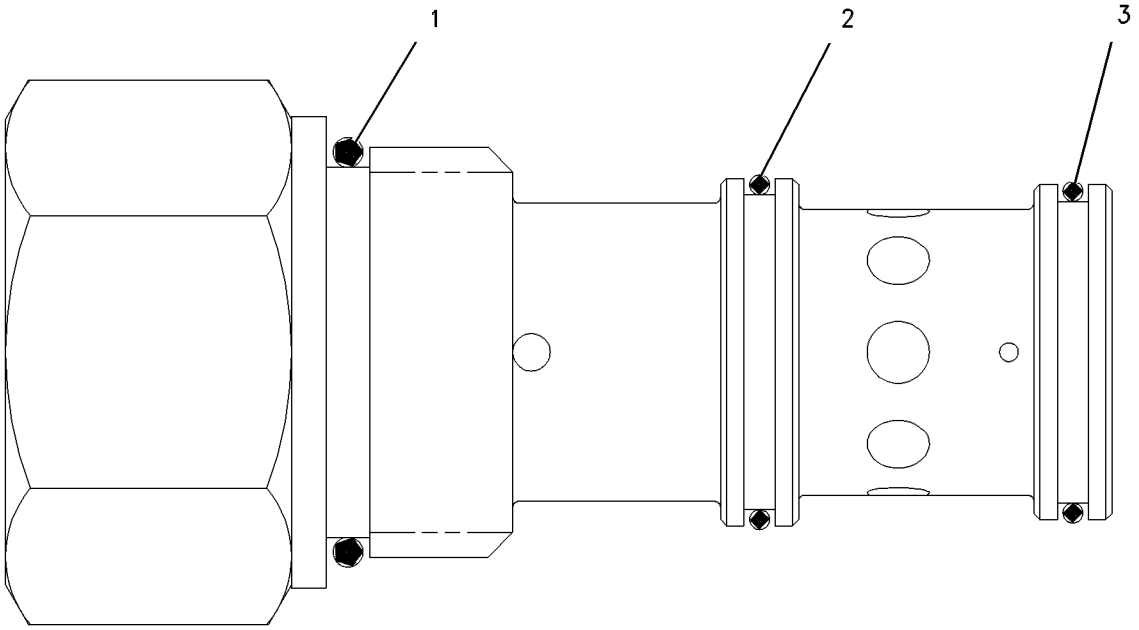

GRAPHIC #1 **<END>** g00304718

6D-0337 VALVE GP-TIRE

S/N: HLS1-99999
PART OF 201-1920 VALVE GP-TIRE
AN ATTACHMENT

SMCS-4203 **i02126852**

NOTE	REF NO	GRAPHIC REF	PART NUMBER	QTY	PART NAME 1 2 3 4 5 6 (PRODUCT LEVEL)	SEE PAGE
	1	1	**6D-0443**	1	HOUSING AS-CORE	
	2	1	**2D-2628**	1	CORE-VALVE	
	3	1	**2D-2633**	1	CAP	
	4	1	**8D-2707**	1	SPUD AS	
	5	1	**2D-2629**	1	GROMMET	
	6	1	**2D-2630**	1	WASHER	
	7	1	**2D-2631**	1	NUT (0.482-26-THD)	

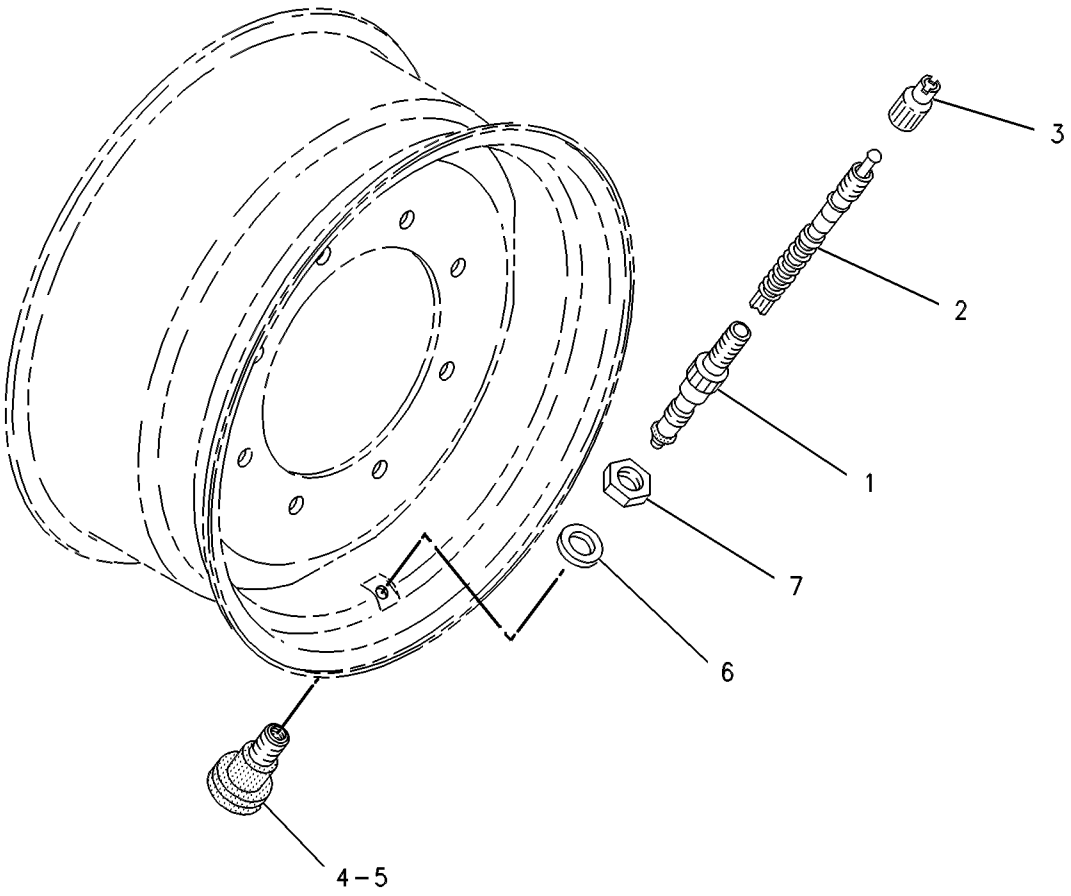

GRAPHIC #1 **<END>** g00121904

201-1920 VALVE GP-TIRE

S/N: HLS1-99999
PART OF 201-1863, 201-1864, 201-1875, 201-1876, 201-1878, 201-1882, 201-1883, 201-1911, 201-1912, 201-1942, 201-1943, 201-1960, 201-1961, 282-3860, 282-3861, 282-3863, 282-3864, 282-3866, 282-3867, 282-3869, 282-3870, 282-3872, 282-3873, 303-0428, 303-0429, 322-4572, 322-4573 WHEEL & TIRE GP
AN ATTACHMENT

SMCS-4203 **i02126869**

NOTE	PART NUMBER	QTY	PART NAME 1 2 3 4 5 6 (PRODUCT LEVEL)	SEE PAGE
Y	**6D-0337**	1	VALVE GP-TIRE	308
Y-SEPARATE ILLUSTRATION				

<END>

201-1918 WHEEL & TIRE AR—ALL WHEEL DRIVE, BIAS

S/N: HLS1-99999
AN ATTACHMENT

SMCS-4201, 4202, 4203, 4208, 4209 **i01685047**

NOTE	PART NUMBER	QTY	PART NAME 1 2 3 4 5 6 (PRODUCT LEVEL)	SEE PAGE
Y	*201-1874*	1	WHEEL & TIRE GP (FRONT)	313
Y	*201-1913*	1	WHEEL & TIRE GP (REAR)	316
Y-SEPARATE ILLUSTRATION				

<END>

201-1923 WHEEL & TIRE AR—ALL WHEEL DRIVE, RADIAL

S/N: HLS1-99999
AN ATTACHMENT

SMCS-4201, 4202, 4203, 4208, 4209 **i01589996**

NOTE	PART NUMBER	QTY	PART NAME 1 2 3 4 5 6 (PRODUCT LEVEL)	SEE PAGE
Y	*201-1862*	1	WHEEL & TIRE GP (FRONT)	312
Y	*201-1881*	1	WHEEL & TIRE GP (REAR)	315
Y-SEPARATE ILLUSTRATION				

<END>

201-1925 WHEEL & TIRE AR—2-WHEEL DRIVE, BIAS

S/N: HLS1-99999
AN ATTACHMENT

SMCS-4201, 4202, 4203, 4208, 4209 **i01685065**

NOTE	PART NUMBER	QTY	PART NAME 1 2 3 4 5 6 (PRODUCT LEVEL)	SEE PAGE
Y	*201-1877*	1	WHEEL & TIRE GP (FRONT)	314
Y	*201-1913*	1	WHEEL & TIRE GP (REAR)	316
Y-SEPARATE ILLUSTRATION				

<END>

201-1940 WHEEL & TIRE AR—2-WHEEL DRIVE, BIAS FLOTATION

S/N: HLS1-99999

AN ATTACHMENT

SMCS-4201, 4202, 4203, 4208, 4209 **i02110529**

NOTE	PART NUMBER	QTY	PART NAME 1 2 3 4 5 6 (PRODUCT LEVEL)	SEE PAGE
Y	*201-1874*	1	WHEEL & TIRE GP (FRONT)	313
Y	*201-1941*	1	WHEEL & TIRE GP (REAR)	317

Y-SEPARATE ILLUSTRATION

<END>

201-1954 WHEEL & TIRE AR—ALL WHEEL DRIVE, RADIAL, BIAS

S/N: HLS1-99999

AN ATTACHMENT

SMCS-4201, 4202, 4203, 4208, 4209 **i01684120**

NOTE	PART NUMBER	QTY	PART NAME 1 2 3 4 5 6 (PRODUCT LEVEL)	SEE PAGE
Y	*201-1862*	1	WHEEL & TIRE GP (FRONT)	312
Y	*201-1913*	1	WHEEL & TIRE GP (REAR)	316

Y-SEPARATE ILLUSTRATION

<END>

282-3847 WHEEL & TIRE AR

S/N: HLS1-99999

AN ATTACHMENT

SMCS-4201, 4202, 4203, 4208, 4209 **i02452276**

NOTE	PART NUMBER	QTY	PART NAME 1 2 3 4 5 6 (PRODUCT LEVEL)	SEE PAGE
Y	*201-1949*	1	WHEEL & TIRE GP (FRONT)	318
Y	*282-3859*	1	WHEEL & TIRE GP (REAR)	319

Y-SEPARATE ILLUSTRATION

<END>

282-3853 WHEEL & TIRE AR—2-WHEEL DRIVE, BIAS

S/N: HLS1-99999

AN ATTACHMENT

SMCS-4201, 4202, 4203, 4208, 4209 **i02502831**

NOTE	PART NUMBER	QTY	PART NAME 1 2 3 4 5 6 (PRODUCT LEVEL)	SEE PAGE
Y	*282-3862*	1	WHEEL & TIRE GP (FRONT)	320
Y	*282-3865*	1	WHEEL & TIRE GP (REAR)	321

Y-SEPARATE ILLUSTRATION

<END>

282-3854 WHEEL & TIRE AR—ALL WHEEL DRIVE, BIAS

S/N: HLS1-99999
AN ATTACHMENT

SMCS-4201, 4202, 4203, 4208, 4209 **i02502983**

NOTE	PART NUMBER	QTY	PART NAME 1 2 3 4 5 6 (PRODUCT LEVEL)	SEE PAGE
Y	*282-3865*	1	WHEEL & TIRE GP (REAR)	321
Y	*282-3868*	1	WHEEL & TIRE GP (FRONT)	322

Y-SEPARATE ILLUSTRATION

<END>

282-3855 WHEEL & TIRE AR—4-WHEEL DRIVE

S/N: HLS1-99999
AN ATTACHMENT

SMCS-4201, 4202, 4203, 4208, 4209 **i02503000**

NOTE	PART NUMBER	QTY	PART NAME 1 2 3 4 5 6 (PRODUCT LEVEL)	SEE PAGE
Y	*282-3868*	1	WHEEL & TIRE GP (FRONT)	322
Y	*282-3871*	1	WHEEL & TIRE GP (REAR)	323

Y-SEPARATE ILLUSTRATION

<END>

282-3857 WHEEL & TIRE AR

S/N: HLS1-99999
AN ATTACHMENT

SMCS-4201, 4202, 4203, 4208, 4209 **i02502997**

NOTE	PART NUMBER	QTY	PART NAME 1 2 3 4 5 6 (PRODUCT LEVEL)	SEE PAGE
Y	*201-1949*	1	WHEEL & TIRE GP (FRONT)	318
Y	*282-3865*	1	WHEEL & TIRE GP (REAR)	321

Y-SEPARATE ILLUSTRATION

<END>

282-3858 WHEEL & TIRE AR

S/N: HLS1-99999
AN ATTACHMENT

SMCS-4201, 4202, 4203, 4208, 4209 **i02503060**

NOTE	PART NUMBER	QTY	PART NAME 1 2 3 4 5 6 (PRODUCT LEVEL)	SEE PAGE
Y	*201-1881*	1	WHEEL & TIRE GP (REAR)	315
Y	*201-1949*	1	WHEEL & TIRE GP (FRONT)	318

Y-SEPARATE ILLUSTRATION

<END>

320-2384 WHEEL & TIRE AR—4-WHEEL DRIVE

S/N: HLS1-99999
AN ATTACHMENT

SMCS-4201, 4202, 4203, 4208, 4209 **i03149764**

NOTE	PART NUMBER	QTY	PART NAME 1 2 3 4 5 6 (PRODUCT LEVEL)	SEE PAGE
Y	*303-0418*	1	WHEEL & TIRE GP (FRONT)	324
Y	*322-4571*	1	WHEEL & TIRE GP (REAR)	325

Y-SEPARATE ILLUSTRATION

<END>

320-2385 WHEEL & TIRE AR—4-WHEEL DRIVE

S/N: HLS1-99999
AN ATTACHMENT

SMCS-4201, 4202, 4203, 4208, 4209 **i03430400**

NOTE	PART NUMBER	QTY	PART NAME 1 2 3 4 5 6 (PRODUCT LEVEL)	SEE PAGE
Y	*303-0418*	1	WHEEL & TIRE GP (FRONT)	324
Y	*282-3865*	1	WHEEL & TIRE GP (REAR)	321

Y-SEPARATE ILLUSTRATION

<END>

201-1862 WHEEL & TIRE GP—FRONT

S/N: HLS1-99999
PART OF 201-1923, 201-1954 WHEEL & TIRE AR
AN ATTACHMENT

SMCS-4201, 4202, 4203, 4208, 4209 **i02242350**

NOTE	PART NUMBER	QTY	PART NAME 1 2 3 4 5 6 (PRODUCT LEVEL)	SEE PAGE
Y	*201-1863*	1	WHEEL & TIRE GP (LH)	312
Y	*201-1864*	1	WHEEL & TIRE GP (RH)	313
	201-1915	1	MOUNTING GP-WHEEL (FRONT)	
	8T-5439	16	WASHER-HARD (21.5X45X6-MM THK)	
M	**201-1919**	16	NUT (M20X1.5-THD)	

M-METRIC PART
Y-SEPARATE ILLUSTRATION

<END>

201-1863 WHEEL & TIRE GP—LH

S/N: HLS1-99999
10X18
PART OF 201-1862 WHEEL & TIRE GP
AN ATTACHMENT

SMCS-4201, 4202, 4203, 4208, 4209 **i02597582**

NOTE	PART NUMBER	QTY	PART NAME 1 2 3 4 5 6 (PRODUCT LEVEL)	SEE PAGE
Y	*201-1920*	1	VALVE GP-TIRE	309
	112-9338	1	TIRE (340/80-R18)	
	202-6186	1	WHEEL AS (FRONT)	

Y-SEPARATE ILLUSTRATION

<END>

201-1864 WHEEL & TIRE GP—RH

S/N: HLS1-99999
10X18
PART OF 201-1862 WHEEL & TIRE GP
AN ATTACHMENT

SMCS-4201, 4202, 4203, 4208, 4209 **i02597583**

NOTE	PART NUMBER	QTY	PART NAME 1 2 3 4 5 6 (PRODUCT LEVEL)	SEE PAGE
Y	*201-1920*	1	VALVE GP-TIRE	309
	112-9338	1	TIRE (340/80-R18)	
	202-6186	1	WHEEL AS (FRONT)	

Y-SEPARATE ILLUSTRATION

<END>

201-1874 WHEEL & TIRE GP—FRONT

S/N: HLS1-99999
PART OF 201-1918, 201-1940 WHEEL & TIRE AR
AN ATTACHMENT

SMCS-4201, 4202, 4203, 4208, 4209 **i02242353**

NOTE	PART NUMBER	QTY	PART NAME 1 2 3 4 5 6 (PRODUCT LEVEL)	SEE PAGE
Y	*201-1875*	1	WHEEL & TIRE GP (LH)	313
Y	*201-1876*	1	WHEEL & TIRE GP (RH)	314
	201-1915	1	MOUNTING GP-WHEEL (FRONT)	
	8T-5439	16	WASHER-HARD (21.5X45X6-MM THK)	
M	**178-1304**	16	NUT-HEX FLANGE (M20X1.5-THD)	

M-METRIC PART
Y-SEPARATE ILLUSTRATION

<END>

201-1875 WHEEL & TIRE GP—LH

S/N: HLS1-99999
10X18
PART OF 201-1874 WHEEL & TIRE GP
AN ATTACHMENT

SMCS-4201, 4202, 4203, 4208, 4209 **i02597584**

NOTE	PART NUMBER	QTY	PART NAME 1 2 3 4 5 6 (PRODUCT LEVEL)	SEE PAGE
Y	*201-1920*	1	VALVE GP-TIRE	309
	9R-6481	1	TIRE (12.5/80-18)	
	202-6186	1	WHEEL AS (FRONT)	

Y-SEPARATE ILLUSTRATION

<END>

201-1876 WHEEL & TIRE GP–RH

S/N: HLS1-99999
10X18
PART OF 201-1874 WHEEL & TIRE GP
AN ATTACHMENT

SMCS-4201, 4202, 4203, 4208, 4209 **i02597585**

NOTE	PART NUMBER	QTY	PART NAME 1 2 3 4 5 6 (PRODUCT LEVEL)	SEE PAGE
Y	*201-1920*	1	VALVE GP-TIRE	309
	9R-6481	1	TIRE (12.5/80-18)	
	202-6186	1	WHEEL AS (FRONT)	

Y-SEPARATE ILLUSTRATION

<END>

201-1877 WHEEL & TIRE GP–FRONT

S/N: HLS1-99999
PART OF 201-1925 WHEEL & TIRE AR
AN ATTACHMENT

SMCS-4201, 4202, 4203, 4208, 4209 **i02242357**

NOTE	PART NUMBER	QTY	PART NAME 1 2 3 4 5 6 (PRODUCT LEVEL)	SEE PAGE
Y	*201-1878*	2	WHEEL & TIRE GP (FRONT)	314
	201-1915	1	MOUNTING GP-WHEEL (FRONT)	
	8T-5439	16	WASHER-HARD (21.5X45X6-MM THK)	
M	**201-1919**	16	NUT (M20X1.5-THD)	

M-METRIC PART
Y-SEPARATE ILLUSTRATION

<END>

201-1878 WHEEL & TIRE GP–FRONT

S/N: HLS1-99999
8X16
PART OF 201-1877 WHEEL & TIRE GP
AN ATTACHMENT

SMCS-4201, 4202, 4203, 4208, 4209 **i02597586**

NOTE	PART NUMBER	QTY	PART NAME 1 2 3 4 5 6 (PRODUCT LEVEL)	SEE PAGE
Y	*201-1920*	1	VALVE GP-TIRE	309
	9R-1956	1	TIRE (11L-16)	
	195-6341	1	WHEEL AS (FRONT)	

Y-SEPARATE ILLUSTRATION

<END>

201-1881 WHEEL & TIRE GP—REAR

S/N: HLS1-99999
PART OF 201-1923, 282-3858 WHEEL & TIRE AR
AN ATTACHMENT

SMCS-4201, 4202, 4203, 4208, 4209 **i03527828**

NOTE	PART NUMBER	QTY	PART NAME 1 2 3 4 5 6 (PRODUCT LEVEL)	SEE PAGE
Y	*201-1882*	1	WHEEL & TIRE GP (LH)	315
Y	*201-1883*	1	WHEEL & TIRE GP (RH)	315
	201-1916	1	MOUNTING GP-WHEEL (REAR)	
	8T-5439	20	WASHER-HARD (21.5X45X6-MM THK)	
M	**201-1919**	20	NUT (M20X1.5-THD)	

M-METRIC PART
Y-SEPARATE ILLUSTRATION

<END>

201-1882 WHEEL & TIRE GP—LH

S/N: HLS1-99999
PART OF 201-1881 WHEEL & TIRE GP
AN ATTACHMENT

SMCS-4201, 4202, 4203, 4208, 4209 **i03510988**

NOTE	PART NUMBER	QTY	PART NAME 1 2 3 4 5 6 (PRODUCT LEVEL)	SEE PAGE
Y	*201-1920*	1	VALVE GP-TIRE	309
	195-6344	1	WHEEL AS (REAR)	
	127-4293	1	TIRE (19.5-R24)	

Y-SEPARATE ILLUSTRATION

<END>

201-1883 WHEEL & TIRE GP—RH

S/N: HLS1-99999
PART OF 201-1881 WHEEL & TIRE GP
AN ATTACHMENT

SMCS-4201, 4202, 4203, 4208, 4209 **i03510990**

NOTE	PART NUMBER	QTY	PART NAME 1 2 3 4 5 6 (PRODUCT LEVEL)	SEE PAGE
Y	*201-1920*	1	VALVE GP-TIRE	309
	195-6344	1	WHEEL AS (REAR)	
	127-4293	1	TIRE (19.5-R24)	

Y-SEPARATE ILLUSTRATION

<END>

201-1911 WHEEL & TIRE GP—LH

S/N: HLS1-99999
PART OF 201-1913 WHEEL & TIRE GP
AN ATTACHMENT

SMCS-4201, 4202, 4203, 4208, 4209 **i03510991**

NOTE	PART NUMBER	QTY	PART NAME 1 2 3 4 5 6 (PRODUCT LEVEL)	SEE PAGE
Y	*201-1920*	1	VALVE GP-TIRE	309
	195-6344	1	WHEEL AS (REAR)	
	201-1902	1	TIRE (19.5L-24)	

Y-SEPARATE ILLUSTRATION

<END>

201-1912 WHEEL & TIRE GP—RH

S/N: HLS1-99999
PART OF 201-1913 WHEEL & TIRE GP
AN ATTACHMENT

SMCS-4201, 4202, 4203, 4208, 4209 **i03510992**

NOTE	PART NUMBER	QTY	PART NAME 1 2 3 4 5 6 (PRODUCT LEVEL)	SEE PAGE
Y	*201-1920*	1	VALVE GP-TIRE	309
	195-6344	1	WHEEL AS (REAR)	
	201-1902	1	TIRE (19.5L-24)	

Y-SEPARATE ILLUSTRATION

<END>

201-1913 WHEEL & TIRE GP—REAR

S/N: HLS1-99999
PART OF 201-1918, 201-1925, 201-1954 WHEEL & TIRE AR
AN ATTACHMENT

SMCS-4201, 4202, 4203, 4208, 4209 **i03527861**

NOTE	PART NUMBER	QTY	PART NAME 1 2 3 4 5 6 (PRODUCT LEVEL)	SEE PAGE
Y	*201-1911*	1	WHEEL & TIRE GP (LH)	316
Y	*201-1912*	1	WHEEL & TIRE GP (RH)	316
	201-1916	1	MOUNTING GP-WHEEL (REAR)	
	8T-5439	20	WASHER-HARD (21.5X45X6-MM THK)	
M	**201-1919**	20	NUT (M20X1.5-THD)	

M-METRIC PART
Y-SEPARATE ILLUSTRATION

<END>

201-1941 WHEEL & TIRE GP—REAR

S/N: HLS1-99999
PART OF 201-1940 WHEEL & TIRE AR
AN ATTACHMENT

SMCS-4201, 4202, 4203, 4208, 4209 **i03527863**

NOTE	PART NUMBER	QTY	PART NAME 1 2 3 4 5 6 (PRODUCT LEVEL)	SEE PAGE
Y	*201-1942*	1	WHEEL & TIRE GP (LH)	317
Y	*201-1943*	1	WHEEL & TIRE GP (RH)	317
	201-1916	1	MOUNTING GP-WHEEL (REAR)	
	8T-5439	20	WASHER-HARD (21.5X45X6-MM THK)	
M	**201-1919**	20	NUT (M20X1.5-THD)	

M-METRIC PART
Y-SEPARATE ILLUSTRATION

<END>

201-1942 WHEEL & TIRE GP—LH

S/N: HLS1-99999
PART OF 201-1941 WHEEL & TIRE GP
AN ATTACHMENT

SMCS-4201, 4202, 4203, 4208, 4209 **i03386462**

NOTE	PART NUMBER	QTY	PART NAME 1 2 3 4 5 6 (PRODUCT LEVEL)	SEE PAGE
Y	*201-1920*	1	VALVE GP-TIRE	309
	272-5111	1	WHEEL AS (REAR)	
	9R-3659	1	TIRE (21-24)	

Y-SEPARATE ILLUSTRATION

<END>

201-1943 WHEEL & TIRE GP—RH

S/N: HLS1-99999
PART OF 201-1941 WHEEL & TIRE GP
AN ATTACHMENT

SMCS-4201, 4202, 4203, 4208, 4209 **i03397844**

NOTE	PART NUMBER	QTY	PART NAME 1 2 3 4 5 6 (PRODUCT LEVEL)	SEE PAGE
Y	*201-1920*	1	VALVE GP-TIRE	309
	272-5111	1	WHEEL AS (REAR)	
	9R-3659	1	TIRE (21-24)	

Y-SEPARATE ILLUSTRATION

<END>

201-1949 WHEEL & TIRE GP—FRONT

S/N: HLS1-99999
PART OF 282-3847, 282-3857, 282-3858 WHEEL & TIRE AR
AN ATTACHMENT

SMCS-4201, 4202, 4203, 4208, 4209 **i02430038**

NOTE	PART NUMBER	QTY	PART NAME 1 2 3 4 5 6 (PRODUCT LEVEL)	SEE PAGE
Y	*201-1960*	1	WHEEL & TIRE GP (LH)	318
Y	*201-1961*	1	WHEEL & TIRE GP (RH)	318
	201-1915	1	MOUNTING GP-WHEEL (FRONT)	
	8T-5439	16	WASHER-HARD (21.5X45X6-MM THK)	
M	**201-1919**	16	NUT (M20X1.5-THD)	

M-METRIC PART
Y-SEPARATE ILLUSTRATION

<END>

201-1960 WHEEL & TIRE GP—LH

S/N: HLS1-99999
10X18
PART OF 201-1949 WHEEL & TIRE GP
AN ATTACHMENT

SMCS-4201, 4202, 4203, 4208, 4209 **i02430050**

NOTE	PART NUMBER	QTY	PART NAME 1 2 3 4 5 6 (PRODUCT LEVEL)	SEE PAGE
Y	*201-1920*	1	VALVE GP-TIRE	309
	202-6186	1	WHEEL AS (FRONT)	
	201-1879	1	TIRE (12.5/80-R18)	

Y-SEPARATE ILLUSTRATION

<END>

201-1961 WHEEL & TIRE GP—RH

S/N: HLS1-99999
10X18
PART OF 201-1949 WHEEL & TIRE GP
AN ATTACHMENT

SMCS-4201, 4202, 4203, 4208, 4209 **i02430055**

NOTE	PART NUMBER	QTY	PART NAME 1 2 3 4 5 6 (PRODUCT LEVEL)	SEE PAGE
Y	*201-1920*	1	VALVE GP-TIRE	309
	202-6186	1	WHEEL AS (FRONT)	
	201-1879	1	TIRE (12.5/80-R18)	

Y-SEPARATE ILLUSTRATION

<END>

282-3859 WHEEL & TIRE GP—REAR

S/N: HLS1-99999
PART OF 282-3847 WHEEL & TIRE AR
AN ATTACHMENT

SMCS-4201, 4202, 4203, 4208, 4209 **i02452283**

NOTE	PART NUMBER	QTY	PART NAME 1 2 3 4 5 6 (PRODUCT LEVEL)	SEE PAGE
Y	*282-3860*	1	WHEEL & TIRE GP (LH)	319
Y	*282-3861*	1	WHEEL & TIRE GP (RH)	319
	201-1916	1	MOUNTING GP-WHEEL	

Y-SEPARATE ILLUSTRATION

<END>

282-3860 WHEEL & TIRE GP—REAR, LH

S/N: HLS1-99999
PART OF 282-3859 WHEEL & TIRE GP
AN ATTACHMENT

SMCS-4201, 4202, 4203, 4208, 4209 **i02452319**

NOTE	PART NUMBER	QTY	PART NAME 1 2 3 4 5 6 (PRODUCT LEVEL)	SEE PAGE
Y	*201-1920*	1	VALVE GP-TIRE	309
	195-6344	1	WHEEL AS (REAR)	
	276-5021	1	TIRE (19.5-LR24)	

Y-SEPARATE ILLUSTRATION

<END>

282-3861 WHEEL & TIRE GP—REAR, RH

S/N: HLS1-99999
PART OF 282-3859 WHEEL & TIRE GP
AN ATTACHMENT

SMCS-4201, 4202, 4203, 4208, 4209 **i02452324**

NOTE	PART NUMBER	QTY	PART NAME 1 2 3 4 5 6 (PRODUCT LEVEL)	SEE PAGE
Y	*201-1920*	1	VALVE GP-TIRE	309
	195-6344	1	WHEEL AS (REAR)	
	276-5021	1	TIRE (19.5-LR24)	

Y-SEPARATE ILLUSTRATION

<END>

282-3862 WHEEL & TIRE GP–FRONT

S/N: HLS1-99999
PART OF 282-3853 WHEEL & TIRE AR
AN ATTACHMENT

SMCS-4201, 4202, 4203, 4208, 4209 **i03514645**

NOTE	PART NUMBER	QTY	PART NAME 1 2 3 4 5 6 (PRODUCT LEVEL)	SEE PAGE
Y	*282-3863*	1	WHEEL & TIRE GP (FRONT, LH)	320
Y	*282-3864*	1	WHEEL & TIRE GP (FRONT, RH)	320
	201-1915	1	MOUNTING GP-WHEEL (FRONT)	
	8T-5439	16	WASHER-HARD (21.5X45X6-MM THK)	
M	**201-1919**	16	NUT (M20X1.5-THD)	

M-METRIC PART
Y-SEPARATE ILLUSTRATION

<END>

282-3863 WHEEL & TIRE GP–LH

S/N: HLS1-99999
PART OF 282-3862 WHEEL & TIRE GP
AN ATTACHMENT

SMCS-4201, 4202, 4203, 4208, 4209 **i03397847**

NOTE	PART NUMBER	QTY	PART NAME 1 2 3 4 5 6 (PRODUCT LEVEL)	SEE PAGE
Y	*201-1920*	1	VALVE GP-TIRE	309
	195-6341	1	WHEEL AS (FRONT)	
	276-8086	1	TIRE (11L-16)	

Y-SEPARATE ILLUSTRATION

<END>

282-3864 WHEEL & TIRE GP–RH

S/N: HLS1-99999
PART OF 282-3862 WHEEL & TIRE GP
AN ATTACHMENT

SMCS-4201, 4202, 4203, 4208, 4209 **i03397851**

NOTE	PART NUMBER	QTY	PART NAME 1 2 3 4 5 6 (PRODUCT LEVEL)	SEE PAGE
Y	*201-1920*	1	VALVE GP-TIRE	309
	195-6341	1	WHEEL AS (FRONT)	
	276-8086	1	TIRE (11L-16)	

Y-SEPARATE ILLUSTRATION

<END>

282-3865 WHEEL & TIRE GP—REAR

S/N: HLS1-99999
PART OF 282-3853, 282-3854, 282-3857, 320-2385 WHEEL & TIRE AR
AN ATTACHMENT

SMCS-4201, 4202, 4203, 4208, 4209 **i03514661**

NOTE	PART NUMBER	QTY	PART NAME 1 2 3 4 5 6 (PRODUCT LEVEL)	SEE PAGE
Y	*282-3866*	1	WHEEL & TIRE GP (LH)	321
Y	*282-3867*	1	WHEEL & TIRE GP (RH)	321
	201-1916	1	MOUNTING GP-WHEEL (REAR)	
	8T-5439	20	WASHER-HARD (21.5X45X6-MM THK)	
M	**201-1919**	20	NUT (M20X1.5-THD)	

M-METRIC PART
Y-SEPARATE ILLUSTRATION

<END>

282-3866 WHEEL & TIRE GP—LH

S/N: HLS1-99999
PART OF 282-3865 WHEEL & TIRE GP
AN ATTACHMENT

SMCS-4201, 4202, 4203, 4208, 4209 **i03397860**

NOTE	PART NUMBER	QTY	PART NAME 1 2 3 4 5 6 (PRODUCT LEVEL)	SEE PAGE
Y	*201-1920*	1	VALVE GP-TIRE	309
	195-6344	1	WHEEL AS (REAR)	
	276-6820	1	TIRE (19.5L-24)	

Y-SEPARATE ILLUSTRATION

<END>

282-3867 WHEEL & TIRE GP—RH

S/N: HLS1-99999
PART OF 282-3865 WHEEL & TIRE GP
AN ATTACHMENT

SMCS-4201, 4202, 4203, 4208, 4209 **i03397861**

NOTE	PART NUMBER	QTY	PART NAME 1 2 3 4 5 6 (PRODUCT LEVEL)	SEE PAGE
Y	*201-1920*	1	VALVE GP-TIRE	309
	195-6344	1	WHEEL AS (REAR)	
	276-6820	1	TIRE (19.5L-24)	

Y-SEPARATE ILLUSTRATION

<END>

282-3868 WHEEL & TIRE GP—REAR

S/N: HLS1-99999
PART OF 282-3854, 282-3855 WHEEL & TIRE AR
AN ATTACHMENT

SMCS-4201, 4202, 4203, 4208, 4209 **i03514665**

NOTE	PART NUMBER	QTY	PART NAME 1 2 3 4 5 6 (PRODUCT LEVEL)	SEE PAGE
Y	*282-3869*	1	WHEEL & TIRE GP (LH)	322
Y	*282-3870*	1	WHEEL & TIRE GP (RH)	322
	201-1915	1	MOUNTING GP-WHEEL (FRONT)	
	8T-5439	16	WASHER-HARD (21.5X45X6-MM THK)	
M	**201-1919**	16	NUT (M20X1.5-THD)	

M-METRIC PART
Y-SEPARATE ILLUSTRATION

<END>

282-3869 WHEEL & TIRE GP—LH

S/N: HLS1-99999
PART OF 282-3868 WHEEL & TIRE GP
AN ATTACHMENT

SMCS-4201, 4202, 4203, 4208, 4209 **i03397882**

NOTE	PART NUMBER	QTY	PART NAME 1 2 3 4 5 6 (PRODUCT LEVEL)	SEE PAGE
Y	*201-1920*	1	VALVE GP-TIRE	309
	202-6186	1	WHEEL AS (FRONT)	
	286-9087	1	TIRE (12.5/80-18)	

Y-SEPARATE ILLUSTRATION

<END>

282-3870 WHEEL & TIRE GP—RH

S/N: HLS1-99999
PART OF 282-3868 WHEEL & TIRE GP
AN ATTACHMENT

SMCS-4201, 4202, 4203, 4208, 4209 **i03514423**

NOTE	PART NUMBER	QTY	PART NAME 1 2 3 4 5 6 (PRODUCT LEVEL)	SEE PAGE
Y	*201-1920*	1	VALVE GP-TIRE	309
	202-6186	1	WHEEL AS (FRONT)	
	286-9087	1	TIRE (12.5/80-18)	

Y-SEPARATE ILLUSTRATION

<END>

282-3871 WHEEL & TIRE GP—REAR

S/N: HLS1-99999
PART OF 282-3855 WHEEL & TIRE AR
AN ATTACHMENT

SMCS-4201, 4202, 4203, 4208, 4209 **i03527868**

NOTE	PART NUMBER	QTY	PART NAME 1 2 3 4 5 6 (PRODUCT LEVEL)	SEE PAGE
Y	*282-3872*	1	WHEEL & TIRE GP (LH)	323
Y	*282-3873*	1	WHEEL & TIRE GP (RH)	323
	201-1916	1	MOUNTING GP-WHEEL (REAR)	
	8T-5439	20	WASHER-HARD (21.5X45X6-MM THK)	
M	**201-1919**	20	NUT (M20X1.5-THD)	

M-METRIC PART
Y-SEPARATE ILLUSTRATION

<END>

282-3872 WHEEL & TIRE GP—LH

S/N: HLS1-99999
PART OF 282-3871 WHEEL & TIRE GP
AN ATTACHMENT

SMCS-4201, 4202, 4203, 4208, 4209 **i03397900**

NOTE	PART NUMBER	QTY	PART NAME 1 2 3 4 5 6 (PRODUCT LEVEL)	SEE PAGE
Y	*201-1920*	1	VALVE GP-TIRE	309
	272-5111	1	WHEEL AS (REAR)	
	272-5116	1	TIRE (21L-24)	

Y-SEPARATE ILLUSTRATION

<END>

282-3873 WHEEL & TIRE GP—RH

S/N: HLS1-99999
18L X 24W
PART OF 282-3871 WHEEL & TIRE GP
AN ATTACHMENT

SMCS-4201, 4202, 4203, 4208, 4209 **i02650171**

NOTE	PART NUMBER	QTY	PART NAME 1 2 3 4 5 6 (PRODUCT LEVEL)	SEE PAGE
Y	*201-1920*	1	VALVE GP-TIRE	309
	272-5111	1	WHEEL AS (REAR)	
	272-5116	1	TIRE (21L-24)	

Y-SEPARATE ILLUSTRATION

<END>

303-0418 WHEEL & TIRE GP—FRONT

S/N: HLS1-99999
PART OF 320-2384, 320-2385 WHEEL & TIRE AR
AN ATTACHMENT

SMCS-4201, 4202, 4203, 4208, 4209 **i03514666**

NOTE	PART NUMBER	QTY	PART NAME 1 2 3 4 5 6 (PRODUCT LEVEL)	SEE PAGE
Y	*303-0428*	1	WHEEL & TIRE GP (FRONT, LH)	324
Y	*303-0429*	1	WHEEL & TIRE GP (FRONT, RH)	324
	201-1915	1	MOUNTING GP-WHEEL (FRONT)	
	8T-5439	16	WASHER-HARD (21.5X45X6-MM THK)	
M	**201-1919**	16	NUT (M20X1.5-THD)	

M-METRIC PART
Y-SEPARATE ILLUSTRATION

<END>

303-0428 WHEEL & TIRE GP—FRONT, LH

S/N: HLS1-99999
PART OF 303-0418 WHEEL & TIRE GP
AN ATTACHMENT

SMCS-4201, 4202, 4203, 4208, 4209 **i03149791**

NOTE	PART NUMBER	QTY	PART NAME 1 2 3 4 5 6 (PRODUCT LEVEL)	SEE PAGE
Y	*201-1920*	1	VALVE GP-TIRE	309
	259-2940	1	TIRE (340/80-R18)	
	202-6186	1	WHEEL AS (FRONT)	

Y-SEPARATE ILLUSTRATION

<END>

303-0429 WHEEL & TIRE GP—FRONT, RH

S/N: HLS1-99999
PART OF 303-0418 WHEEL & TIRE GP
AN ATTACHMENT

SMCS-4201, 4202, 4203, 4208, 4209 **i03149794**

NOTE	PART NUMBER	QTY	PART NAME 1 2 3 4 5 6 (PRODUCT LEVEL)	SEE PAGE
Y	*201-1920*	1	VALVE GP-TIRE	309
	259-2940	1	TIRE (340/80-R18)	
	202-6186	1	WHEEL AS (FRONT)	

Y-SEPARATE ILLUSTRATION

<END>

322-4571 WHEEL & TIRE GP—REAR

S/N: HLS1-99999
PART OF 320-2384 WHEEL & TIRE AR
AN ATTACHMENT

SMCS-4201, 4202, 4203, 4208, 4209 **i02954272**

NOTE	PART NUMBER	QTY	PART NAME 1 2 3 4 5 6 (PRODUCT LEVEL)	SEE PAGE
Y	*322-4572*	1	WHEEL & TIRE GP	325
Y	*322-4573*	1	WHEEL & TIRE GP	325
	201-1916	1	MOUNTING GP-WHEEL (REAR)	
	8T-5439	20	WASHER-HARD (21.5X45X6-MM THK)	
M	**201-1919**	20	NUT (M20X1.5-THD)	

M-METRIC PART
Y-SEPARATE ILLUSTRATION

<END>

322-4572 WHEEL & TIRE GP—REAR, LH

S/N: HLS1-99999
PART OF 322-4571 WHEEL & TIRE GP
AN ATTACHMENT

SMCS-4201, 4202, 4203, 4208, 4209 **i02954273**

NOTE	PART NUMBER	QTY	PART NAME 1 2 3 4 5 6 (PRODUCT LEVEL)	SEE PAGE
Y	*201-1920*	1	VALVE GP-TIRE	309
	322-4574	1	TIRE (500/70-R24)	
	195-6344	1	WHEEL AS (REAR)	

Y-SEPARATE ILLUSTRATION

<END>

322-4573 WHEEL & TIRE GP—REAR, RH

S/N: HLS1-99999
PART OF 322-4571 WHEEL & TIRE GP
AN ATTACHMENT

SMCS-4201, 4202, 4203, 4208, 4209 **i02954274**

NOTE	PART NUMBER	QTY	PART NAME 1 2 3 4 5 6 (PRODUCT LEVEL)	SEE PAGE
Y	*201-1920*	1	VALVE GP-TIRE	309
	322-4574	1	TIRE (500/70-R24)	
	195-6344	1	WHEEL AS (REAR)	

Y-SEPARATE ILLUSTRATION

<END>

206-1642 CONTROL GP-PARKING BRAKE

S/N: HLS1-99999
PART OF 216-3314, 216-3315, 216-3316 POWER TRAIN AR
AN ATTACHMENT

SMCS-4282, 4284 **i03530581**

NOTE	REF NO	GRAPHIC REF	PART NUMBER	QTY	PART NAME 1 2 3 4 5 6 (PRODUCT LEVEL)	SEE PAGE
	1	1	**7K-1181**	1	STRAP-CABLE	
	2	1	**9R-2806**	1	PIN	
	3	1	**9R-2807**	1	CLIP	
	4	1	**154-5416**	1	SWITCH AS (PARKING BRAKE)	
		1	**155-2270**	1	KIT-CONNECTING PLUG (2-PIN)	
					(INCLUDES WEDGE & PLUG AS)	
Y	5	1	**261-5517**	1	CONTROL GP-PARKING BRAKE	327
	6	1	**261-9635**	1	BOOT (PARKING BRAKE)	
	7	1	**8T-4224**	2	WASHER-HARD (8.8X16X2-MM THK)	
M	8	1	**8T-6912**	2	BOLT (M8X1.25X50-MM)	
	9	1	**164-1368**	2	FASTENER-PANEL	

M-METRIC PART
Y-SEPARATE ILLUSTRATION

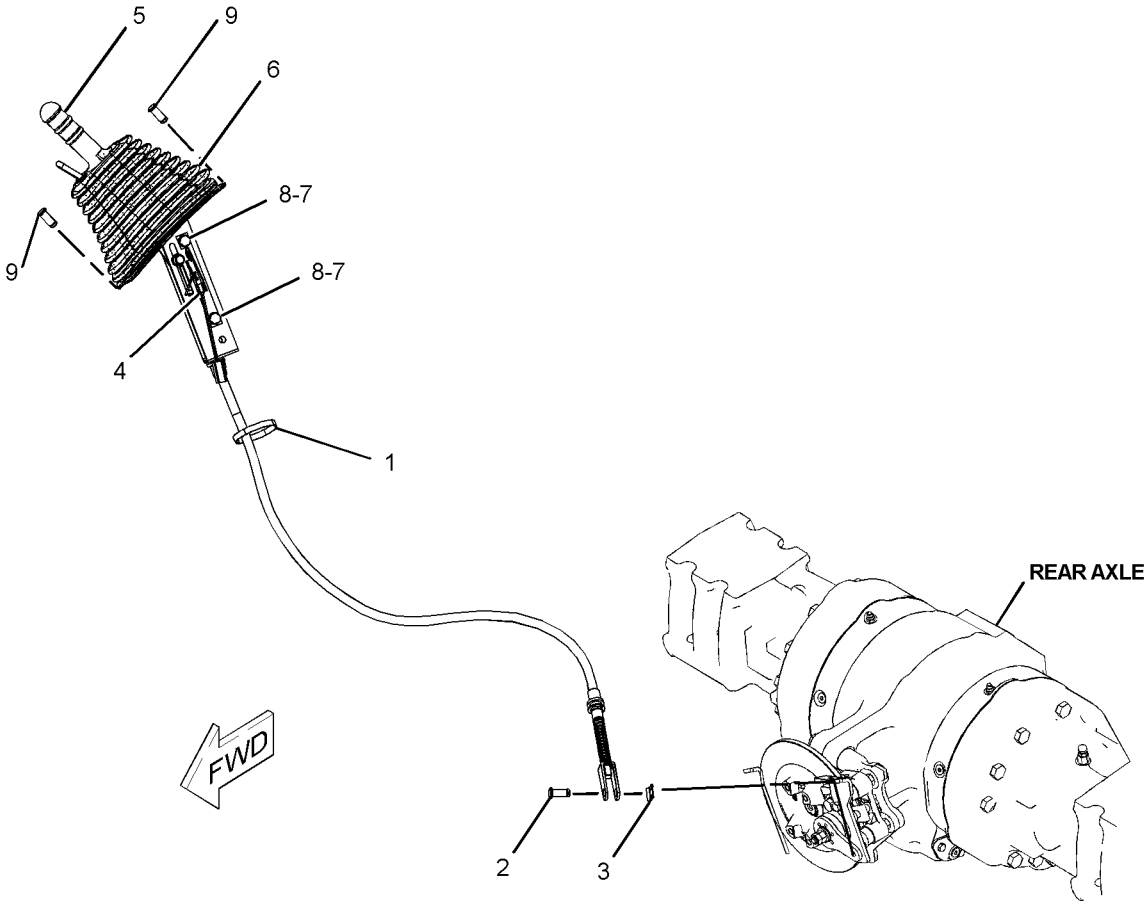

GRAPHIC #1 **<END>** g01228986

261-5517 CONTROL GP-PARKING BRAKE

S/N: HLS1-99999

PART OF 206-1642 CONTROL GP-PARKING BRAKE

AN ATTACHMENT

SMCS-4282, 4284 **i02472580**

NOTE	REF NO	GRAPHIC REF	PART NUMBER	QTY	PART NAME 1 2 3 4 5 6 (PRODUCT LEVEL)	SEE PAGE
Y	1	1	**163-0753**	1	LEVER GP-HAND CONTROL	336
	2	1	**261-5519**	1	CABLE AS	
		1	**6V-8759**	1	RING-RETAINING	

Y-SEPARATE ILLUSTRATION

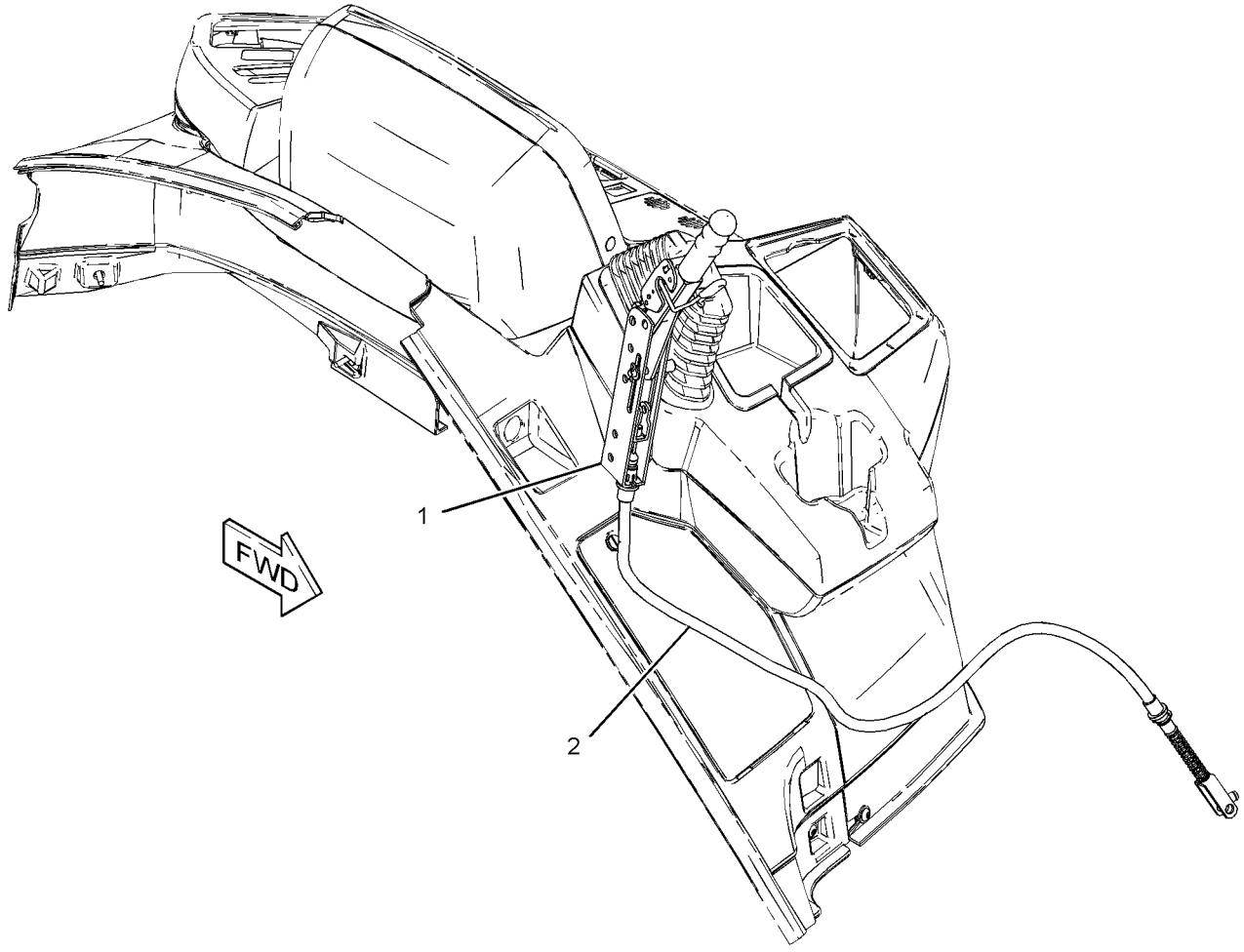

GRAPHIC #1 **<END>** g01210353

BRAKING SYSTEM

206-1639 CONTROL GP-SERVICE BRAKE—STANDARD SHIFT

S/N: HLS1-3399

PART OF 216-3314, 216-3315, 216-3316 POWER TRAIN AR

AN ATTACHMENT

SMCS-4269 **i03378560**

NOTE	REF NO	GRAPHIC REF	PART NUMBER	QTY	PART NAME 1 2 3 4 5 6 (PRODUCT LEVEL)	SEE PAGE
	1	1	**2K-5986**	1	PIN-SPRING	
	2	1	**3E-7675**	1	SWITCH GP-PRESSURE	
		1	**102-8803**	1	KIT-RECEPTACLE (3-PIN)	
					(INCLUDES RECEPTACLE AS & WEDGE)	
		1	**186-3735**	3	PIN-CONNECTOR (16-GA TO 18-GA)	
	3	1	**7K-1181**	1	STRAP-CABLE	
	4	1	**8T-0131**	1	ELBOW	
	5	1	**8T-1889**	2	CLIP (SLOT)	
	6	1	**8T-1890**	2	CLIP (TAB)	
	7	1	**105-8034**	2	SWITCH AS-LIMIT (BRAKE PEDAL)	
	8	1	**151-4841**	1	BLOCK	
	9	1	**156-3600**	1	FITTING	
	10	1	**156-3631**	1	FITTING	
	11	1	**165-6595**	1	PIN AS	
	12	1	*194-2903*	1	ELBOW AS	
		1	**3K-0360**	1	SEAL-O-RING	
		1	**8T-0119**	1	ELBOW	
	13	1	**201-3652**	1	PLATE AS	
	14	1	**202-5993**	1	PLATE	
	15	1	**206-1634**	1	PLATE AS	
	16	1	**206-1650**	1	GROMMET	
	17	1	**291-8379**	1	COVER-BRAKE	
	18	1	**206-1752**	1	PLATE AS	
	19	1	**275-0652**	1	PEDAL AS (LH)	
		1	**202-6029**	2	BEARING-SLEEVE	
	20	1	**275-0653**	1	PEDAL AS (RH)	
		1	**202-6029**	2	BEARING-SLEEVE	
	21	1	**206-1766**	2	PIN	
	22	1	**206-1767**	1	SPRING (LH)	
	23	1	**206-1768**	1	SPRING (RH)	
	24	1	**220-8226**	1	VALVE AS-BRAKE	
		1	**262-4084**	1	BOOT	
	25	1	**298-3599**	1	PLATE AS	
	26	1	**253-1549**	2	HOSE AS	
I	27	1	**255-5461**	1	HOSE AS	
I	28	1	**255-8280**	1	HOSE AS	
	29	1	**262-4081**	2	END-YOKE ROD	
M	30	1	**142-0485**	2	NUT (M10X1.15-THD)	
	31	1	*148-8318*	1	CONNECTOR AS	
		1	**3K-0360**	1	SEAL-O-RING	
		1	**6V-8397**	1	SEAL-O-RING	
		1	**6V-8634**	1	CONNECTOR	
	32	1	*148-8325*	4	CONNECTOR AS	
					(EACH INCLUDES)	
		1	**3J-1907**	1	SEAL-O-RING	
		1	**4J-5477**	1	SEAL-O-RING	
		1	**6V-8641**	1	CONNECTOR	
	33	1	*148-8364*	1	ELBOW AS	
		1	**3K-0360**	1	SEAL-O-RING	
		1	**6V-8398**	1	SEAL-O-RING	
		1	**6V-8625**	1	ELBOW	
	34	1	*148-8378*	1	ELBOW AS	
		1	**3J-1907**	1	SEAL-O-RING	
		1	**6V-8397**	1	SEAL-O-RING	
		1	**6V-8724**	1	ELBOW	

206-1639 **CONTROL GP-SERVICE BRAKE** *(contd.)* **i03378560**

NOTE	REF NO	GRAPHIC REF	PART NUMBER	QTY	PART NAME 1 2 3 4 5 6 (PRODUCT LEVEL)	SEE PAGE
M	35	1	**9X-2045**	4	SCREW-TRUSS HEAD (M6X1X20-MM)	
	36	1	**3J-1907**	1	SEAL-O-RING	
	37	1	**3K-0360**	2	SEAL-O-RING	
M	38	1	**5C-7261**	6	NUT (M8X1.25-THD)	
	39	1	**5P-4116**	4	WASHER-HARD (8.8X20.5X2-MM THK)	
	40	1	**6V-0826**	2	GROMMET	
	41	1	**7J-9108**	1	SEAL-O-RING	
	42	1	**7X-7729**	6	WASHER (11X25X3-MM THK)	
	43	1	**8T-4121**	2	WASHER-HARD (11X21X2.5-MM THK)	
M	44	1	**8T-4133**	2	NUT (M10X1.5-THD)	
M	45	1	**8T-4136**	6	BOLT (M10X1.5X25-MM)	
M	46	1	**8T-4138**	1	BOLT (M6X1X20-MM)	
	47	1	**8T-4205**	1	WASHER-HARD (7.2X14.5X2-MM THK)	
	48	1	**8T-4224**	4	WASHER-HARD (8.8X16X2-MM THK)	
M	49	1	**8T-4908**	2	BOLT (M8X1.25X25-MM)	
	50	1	**9D-3767**	2	PLUG-BUTTON	
	51	1	**9R-2807**	2	CLIP	
M	52	1	**9X-2044**	2	SCREW-TRUSS HEAD (M6X1X16-MM)	
	53	1	**286-1930**	2	RING-RETAINING	
M	54	1	**5C-2890**	1	NUT (M6X1-THD)	
M	55	1	**6V-7357**	1	BOLT (M6X1X25-MM)	

I-REFER TO HYDRAULIC INFORMATION SYSTEM
M-METRIC PART

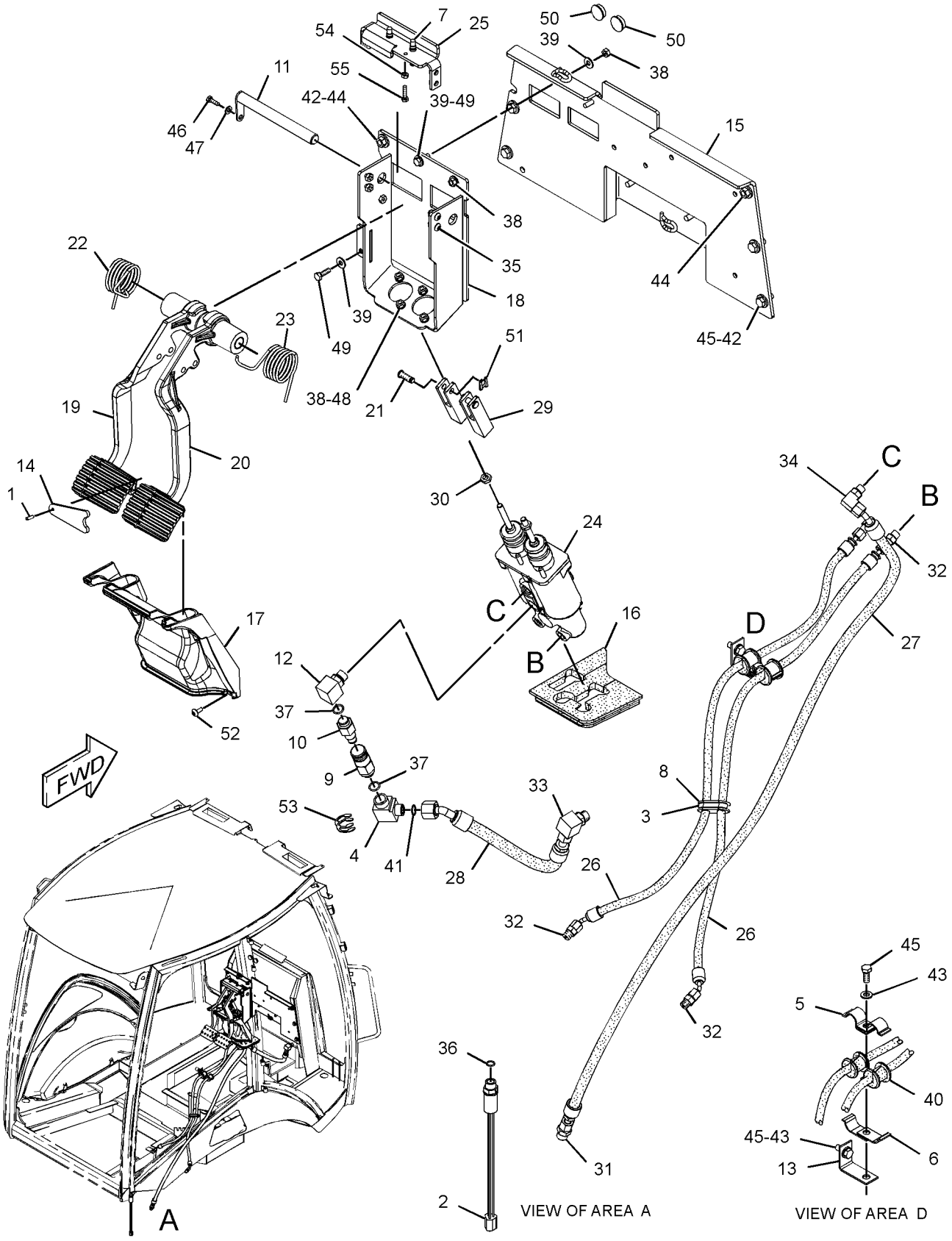

GRAPHIC #1 **<END>** g01342024

206-1639 CONTROL GP-SERVICE BRAKE—STANDARD SHIFT

S/N: HLS3400-99999

PART OF 216-3314, 216-3315, 216-3316 POWER TRAIN AR

AN ATTACHMENT

SMCS-4269 **i03330480**

NOTE	REF NO	GRAPHIC REF	PART NUMBER	QTY	PART NAME 1 2 3 4 5 6 (PRODUCT LEVEL)	SEE PAGE
	1	2	**2K-5986**	1	PIN-SPRING	
	2	1	**3E-7675**	1	SWITCH GP-PRESSURE (BRAKE)	
		1	**102-8803**	1	KIT-RECEPTACLE (3-PIN)	
					(INCLUDES RECEPTACLE AS AND WEDGE)	
		1	**186-3735**	3	PIN-CONNECTOR (16-GA TO 18-GA)	
	3	2	**7K-1181**	1	STRAP-CABLE	
	4	2	**8T-0131**	1	ELBOW	
	7	2	**105-8034**	2	SWITCH AS-LIMIT (BRAKE PEDAL)	
	8	2	**151-4841**	1	BLOCK	
	9	2	**156-3600**	1	FITTING	
	10	2	**156-3631**	1	FITTING	
	11	2	**165-6595**	1	PIN AS	
	12	2	*194-2903*	1	ELBOW AS	
		2	**3K-0360**	1	SEAL-O-RING	
		2	**8T-0119**	1	ELBOW	
	14	2	**202-5993**	1	PLATE	
	15	2	**206-1634**	1	PLATE AS	
	16	2	**206-1650**	1	GROMMET	
	17	2	**291-8379**	1	COVER-BRAKE	
	18	2	**206-1752**	1	PLATE AS	
	19	2	**275-0652**	1	PEDAL AS (LH)	
		2	**202-6029**	2	BEARING-SLEEVE	
	20	2	**275-0653**	1	PEDAL AS (RH)	
		2	**202-6029**	2	BEARING-SLEEVE	
	21	2	**206-1766**	2	PIN	
	22	2	**206-1767**	1	SPRING (LH)	
	23	2	**206-1768**	1	SPRING (RH)	
	24	2	**220-8226**	1	VALVE AS-BRAKE	
		2	**262-4084**	1	BOOT	
	25	2	**298-3599**	1	PLATE AS	
	26	2	**253-1549**	2	HOSE AS	
I	27	2	**255-5461**	1	HOSE AS	
I	28	2	**255-8280**	1	HOSE AS	
	29	2	**262-4081**	2	END-YOKE ROD	
M	30	2	**142-0485**	2	NUT (M10X1.15-THD)	
	31	2	*148-8318*	1	CONNECTOR AS	
		2	**3K-0360**	1	SEAL-O-RING	
		2	**6V-8397**	1	SEAL-O-RING	
		2	**6V-8634**	1	CONNECTOR	
	32	2	*148-8325*	4	CONNECTOR AS	
					(EACH INCLUDES)	
		2	**3J-1907**	1	SEAL-O-RING	
		2	**4J-5477**	1	SEAL-O-RING	
		2	**6V-8641**	1	CONNECTOR	
	33	2	*148-8364*	1	ELBOW AS	
		2	**3K-0360**	1	SEAL-O-RING	
		2	**6V-8398**	1	SEAL-O-RING	
		2	**6V-8625**	1	ELBOW	
	34	2	*148-8378*	1	ELBOW AS	
		2	**3J-1907**	1	SEAL-O-RING	
		2	**6V-8397**	1	SEAL-O-RING	
		2	**6V-8724**	1	ELBOW	
M	35	2	**9X-2045**	6	SCREW-TRUSS HEAD (M6X1X20-MM)	
	36	1	**3J-1907**	1	SEAL-O-RING	
	37	2	**3K-0360**	2	SEAL-O-RING	

206-1639 **CONTROL GP-SERVICE BRAKE** *(contd.)* **i03330480**

NOTE	REF NO	GRAPHIC REF	PART NUMBER	QTY	PART NAME 1 2 3 4 5 6 (PRODUCT LEVEL)	SEE PAGE
M	38	2	**5C-7261**	6	NUT (M8X1.25-THD)	
	39	2	**5P-4116**	4	WASHER-HARD (8.8X20.5X2-MM THK)	
	41	2	**7J-9108**	1	SEAL-O-RING	
	42	2	**7X-7729**	6	WASHER (11X25X3-MM THK)	
C	43	2	**8T-4121**	1	WASHER-HARD (11X21X2.5-MM THK)	
M	44	2	**8T-4133**	2	NUT (M10X1.5-THD)	
CM	45	2	**8T-4136**	5	BOLT (M10X1.5X25-MM)	
M	46	2	**8T-4138**	1	BOLT (M6X1X20-MM)	
	47	2	**8T-4205**	1	WASHER-HARD (7.2X14.5X2-MM THK)	
	48	2	**8T-4224**	4	WASHER-HARD (8.8X16X2-MM THK)	
M	49	2	**8T-4908**	2	BOLT (M8X1.25X25-MM)	
	50	2	**9D-3767**	2	PLUG-BUTTON	
	51	2	**9R-2807**	2	CLIP	
	53	2	**286-1930**	2	RING-RETAINING	
M	54	2	**5C-2890**	1	NUT (M6X1-THD)	
M	55	2	**6V-7357**	1	BOLT (M6X1X25-MM)	
C	56	2	**4D-6466**	1	CLIP	
	57	2	**9X-2038**	4	WASHER (7X19X2-MM THK)	

C-CHANGE FROM PREVIOUS TYPE
I-REFER TO HYDRAULIC INFORMATION SYSTEM
M-METRIC PART

REFER TO ALL ILLUSTRATIONS OF THIS GROUP FOR AUXILIARY VIEWS

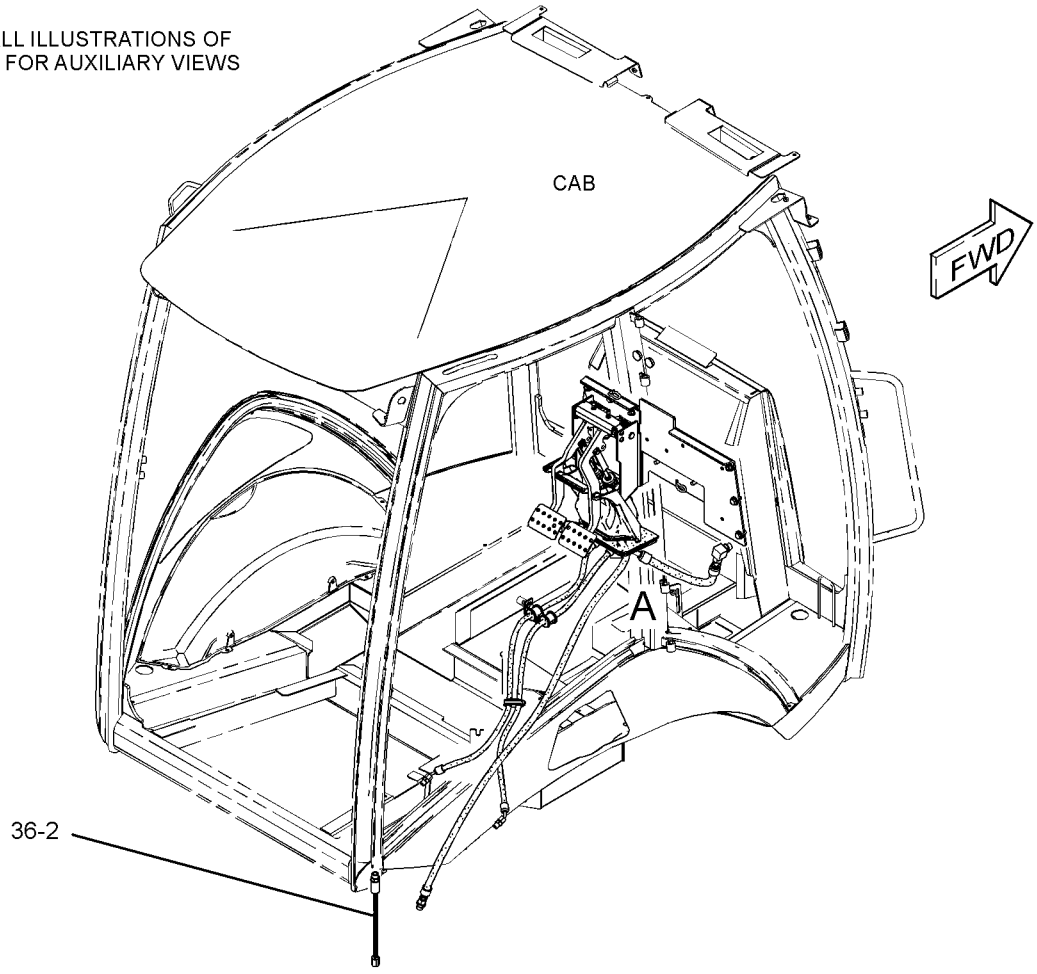

GRAPHIC #1 g01565438

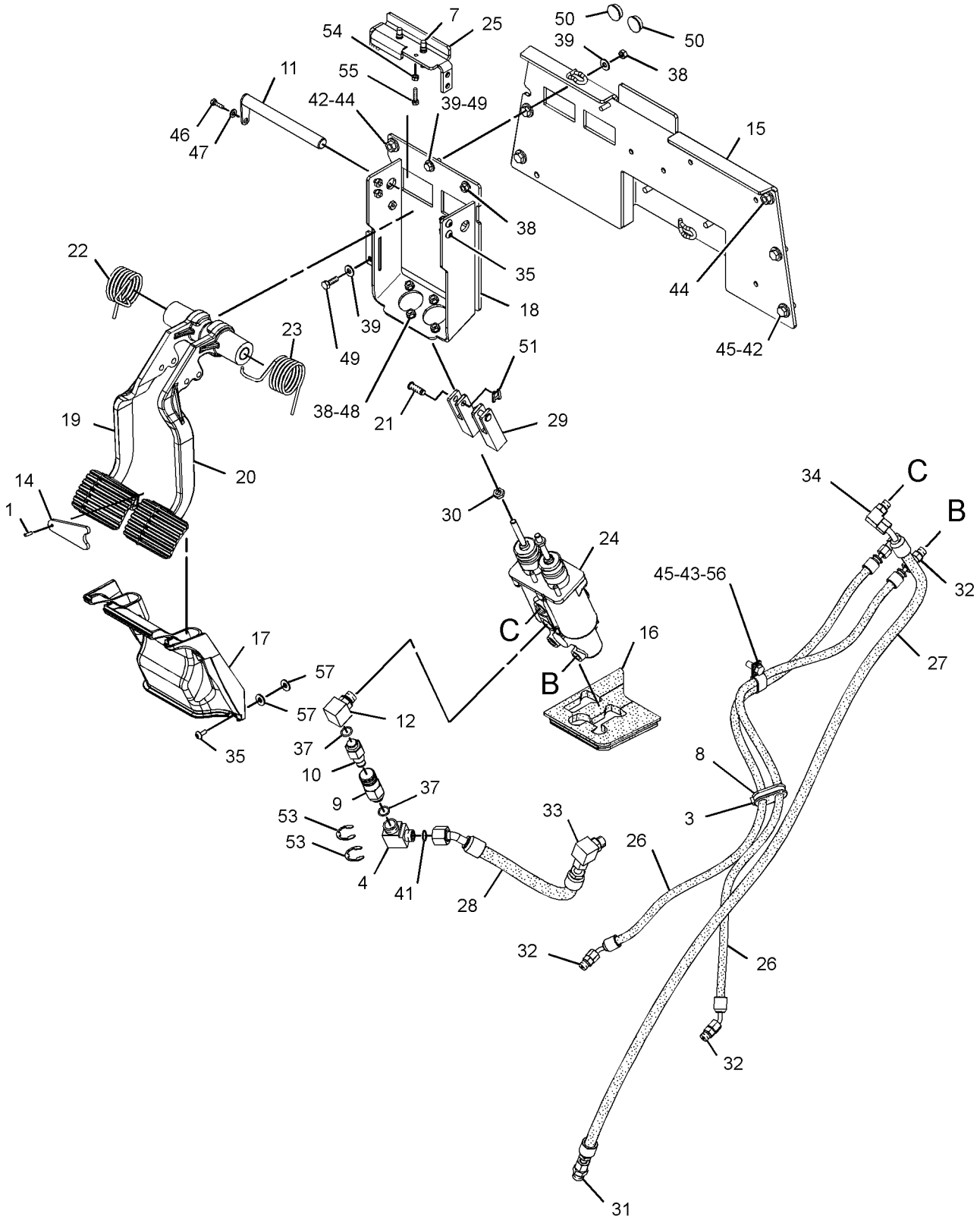

VIEW OF AREA A
(EXPLODED)

GRAPHIC #2 **<END>** g01565437

BRAKING SYSTEM

216-1612 CYLINDER GP-BRAKE

S/N: HLS1-99999
PART OF 238-5289 HOUSING GP-AXLE
AN ATTACHMENT

SMCS-4262 **i01873014**

NOTE	REF NO	GRAPHIC REF	PART NUMBER	QTY	PART NAME 1 2 3 4 5 6 (PRODUCT LEVEL)	SEE PAGE
J	1	1	**199-0640**	3	BOLT	
L	2	1	**199-0645**	3	BOLT	
J	3	1	**199-0672**	3	SPACER-SPECIAL	
J	4	1	**199-0681**	3	WASHER (6.2X16.5X2-MM THK)	
L	5	1	**199-0701**	3	BRAKE-COVER	
L	6	1	**199-0702**	3	SPRING (INNER)	
L	7	1	**199-0703**	3	SPRING (OUTER)	
	8	1	**199-0752**	1	PISTON-BRAKE	
	9	1	**199-0759**	1	O-RING-INNER	
JL	10	1	**212-5712**	6	BUSHING	
	11	1	**219-8834**	1	CYLINDER-BRAKE (RH)	
	12	1	**199-0700**	1	O-RING-OUTER	
					AVAILABLE REPAIR KIT(S):	
J			**217-2347**	3	KIT-BRAKE CYLINDER (ADJUSTER)	
L			**217-2349**	3	KIT-BRAKE CYLINDER (SPRING RETENTION)	

J-KIT MARKED J SERVICES PARTS MARKED J
L-KIT MARKED L SERVICES PARTS MARKED L

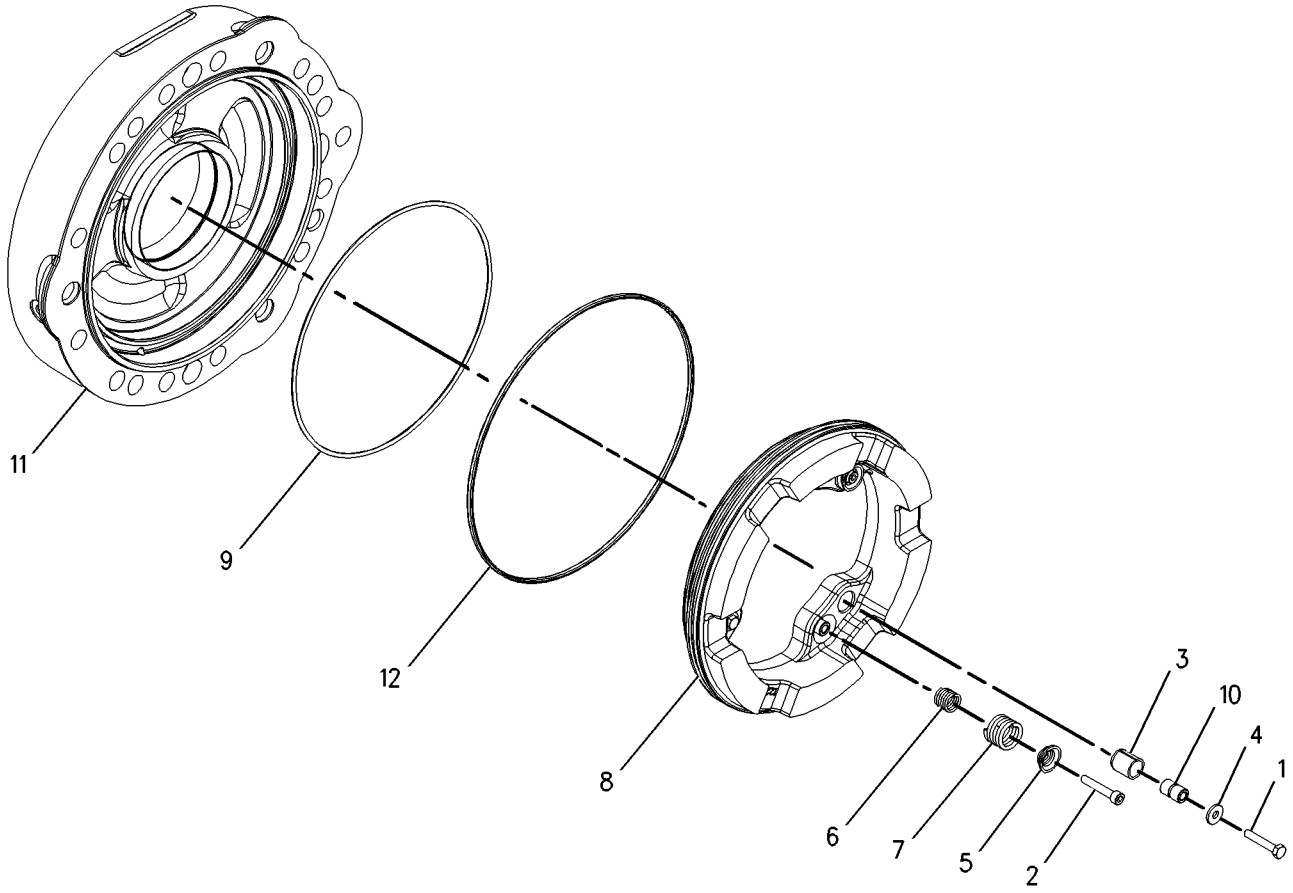

GRAPHIC #1 **<END>** g00953880

BRAKING SYSTEM

216-1613 CYLINDER GP-BRAKE

S/N: HLS1-99999
PART OF 238-5289 HOUSING GP-AXLE
AN ATTACHMENT

SMCS-4262 **i02449601**

NOTE	REF NO	GRAPHIC REF	PART NUMBER	QTY	PART NAME 1 2 3 4 5 6 (PRODUCT LEVEL)	SEE PAGE
M	1	1	**6V-2315**	3	BOLT (M6X1X35-MM)	
JLM	2	1	**1R-5396**	3	BOLT (M6X1X35-MM)	
J	3	1	**199-0672**	3	SPACER-SPECIAL	
J	4	1	**199-0681**	3	WASHER (6.2X16.5X2-MM THK)	
L	5	1	**199-0701**	3	BRAKE-COVER	
L	6	1	**199-0702**	3	SPRING (INNER)	
L	7	1	**199-0703**	3	SPRING (OUTER)	
	8	1	**199-0752**	1	PISTON-BRAKE	
	9	1	**199-0759**	1	O-RING-INNER	
JL	10	1	**212-5712**	6	BUSHING	
	11	1	**219-8835**	1	CYLINDER-BRAKE (LH)	
	12	1	**199-0700**	1	O-RING-OUTER	
					AVAILABLE REPAIR KIT(S):	
J			**217-2347**	3	KIT-BRAKE CYLINDER (ADJUSTER)	
L			**217-2349**	3	KIT-BRAKE CYLINDER (SPRING RETENTION)	

J-KIT MARKED J INCLUDES PARTS MARKED J
L-KIT MARKED L INCLUDES PARTS MARKED L
M-METRIC PART

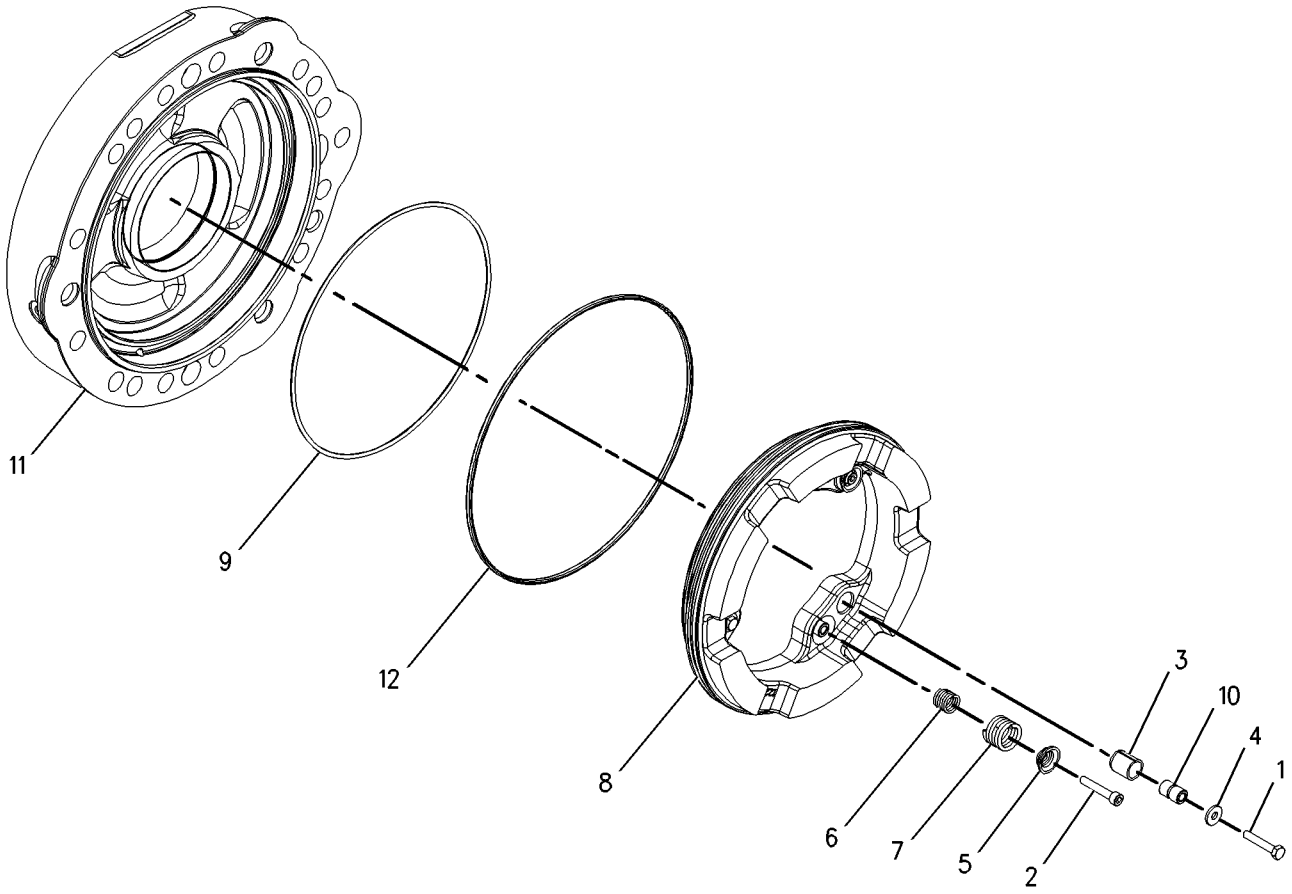

GRAPHIC #1 **<END>** g00995396

163-0753 LEVER GP-HAND CONTROL

S/N: HLS1-99999
PART OF 261-5517 CONTROL GP-PARKING BRAKE
AN ATTACHMENT

SMCS-4284 **i01548326**

NOTE	REF NO	GRAPHIC REF	PART NUMBER	QTY	PART NAME 1 2 3 4 5 6 (PRODUCT LEVEL)	SEE PAGE
	1	1	**7R-8239**	2	SPACER	
	2	1	**039-9133**	1	PIN	
	3	1	**164-9598**	1	GRIP	
	4	1	**164-9599**	1	COVER	
	5	1	**3B-4610**	1	PIN-COTTER	
	6	1	**8T-4224**	2	WASHER-HARD (8.8X16X2MM THK)	

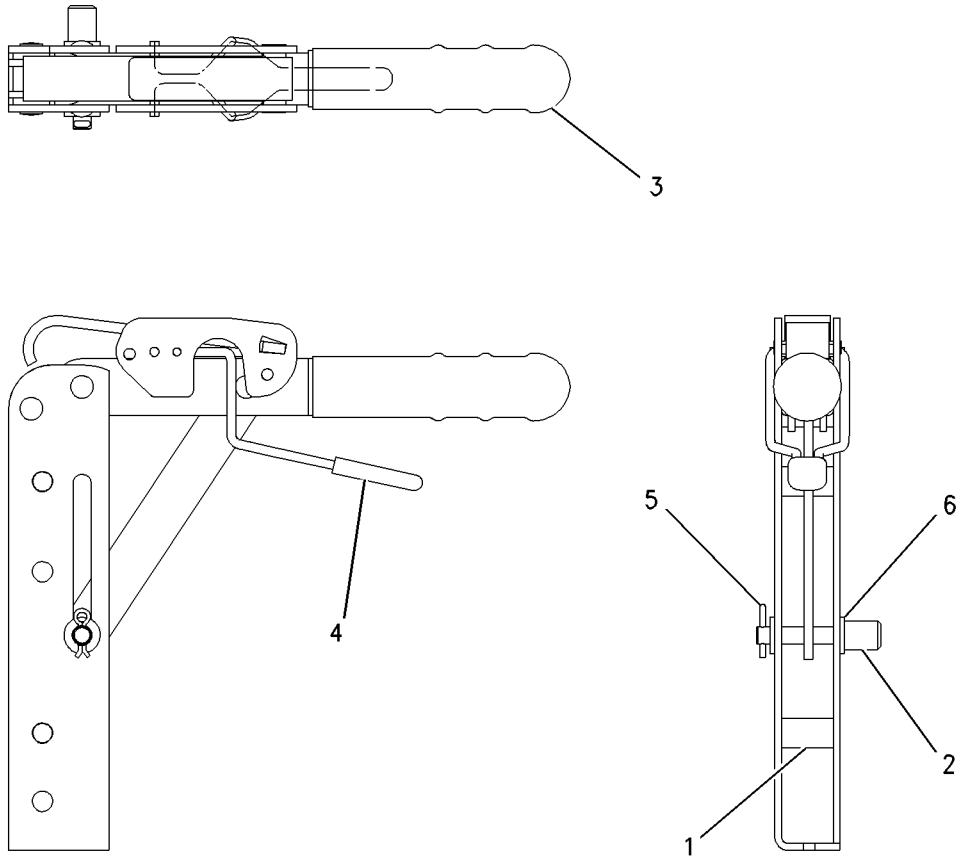

GRAPHIC #1 **<END>** g00729504

STEERING SYSTEM

230-5745 AXLE GP-FRONT

S/N: HLS1-99999
PART OF 216-4739 DRIVE AR-BACKHOE LOADER
AN ATTACHMENT

SMCS-3282, 4303 **i03505220**

NOTE	REF NO	GRAPHIC REF	PART NUMBER	QTY	PART NAME 1 2 3 4 5 6 (PRODUCT LEVEL)	SEE PAGE
	1	1	**207-4254**	6	BOLT (STEERING CYLINDER)	
	2	1	**207-4255**	2	PLUG	
	3	1	**199-0648**	2	NUT-JAM (M16X2-THD)	
	4	1	**207-4258**	2	NUT (M20X1.5-THD)	
	5	1	**207-4260**	2	SEAL-O-RING	
	6	1	**219-8798**	2	SEAL-LIP TYPE	
M	7	1	**199-0683**	16	BOLT (M16X2X38-MM)	
	8	1	**207-4262**	2	BOLT (STEERING STOP)	
	9	1	**198-7825**	4	SEAL	
	10	1	**207-4266**	2	RETAINER	
	11	1	**198-7838**	4	PIN	
	12	1	**207-4268**	1	BEAM	
	13	1	**207-4271**	2	COVER	
Y	14	1	**231-0683**	2	FLANGE GP-WHEEL	227
	15	1	**231-0684**	1	HOUSING (RH)	
	16	1	**231-0685**	1	HOUSING (LH)	
	17	1	**207-4272**	2	TIE ROD GP	
					(EACH INCLUDES)	
		1	**204-3080**	1	BALL JOINT	
		1	**216-4459**	1	TIE ROD	
		1	**243-5026**	1	NUT-SPECIAL	
	18	1	**154-5404**	2	BEARING	
M	19	1	**8T-4139**	6	BOLT (M12X1.75X30-MM)	
J	20	1	**214-5097**	1	CYLINDER GP-STEERING	
		1	**238-5254**	1	ROD	
		1	**238-5255**	2	CYLINDER HEAD	
	21	1	**198-7823**	4	BEARING AS	
B	22	1	**198-7841**	4	SHIM (0.15-MM THK)	
B	23	1	**198-7842**	4	SHIM (0.2-MM THK)	
B	24	1	**198-7843**	4	SHIM (0.5-MM THK)	
					AVAILABLE REPAIR KIT(S):	
J			**215-2023**	1	KIT-SEAL	
					(INCLUDES RINGS, SEALS, WASHERS & WIPERS)	

B-USE AS REQUIRED
J-KIT MARKED J AVAILABLE FOR PART MARKED J
M-METRIC PART
Y-SEPARATE ILLUSTRATION

230-5745 AXLE GP-FRONT *(contd.)* i03505220

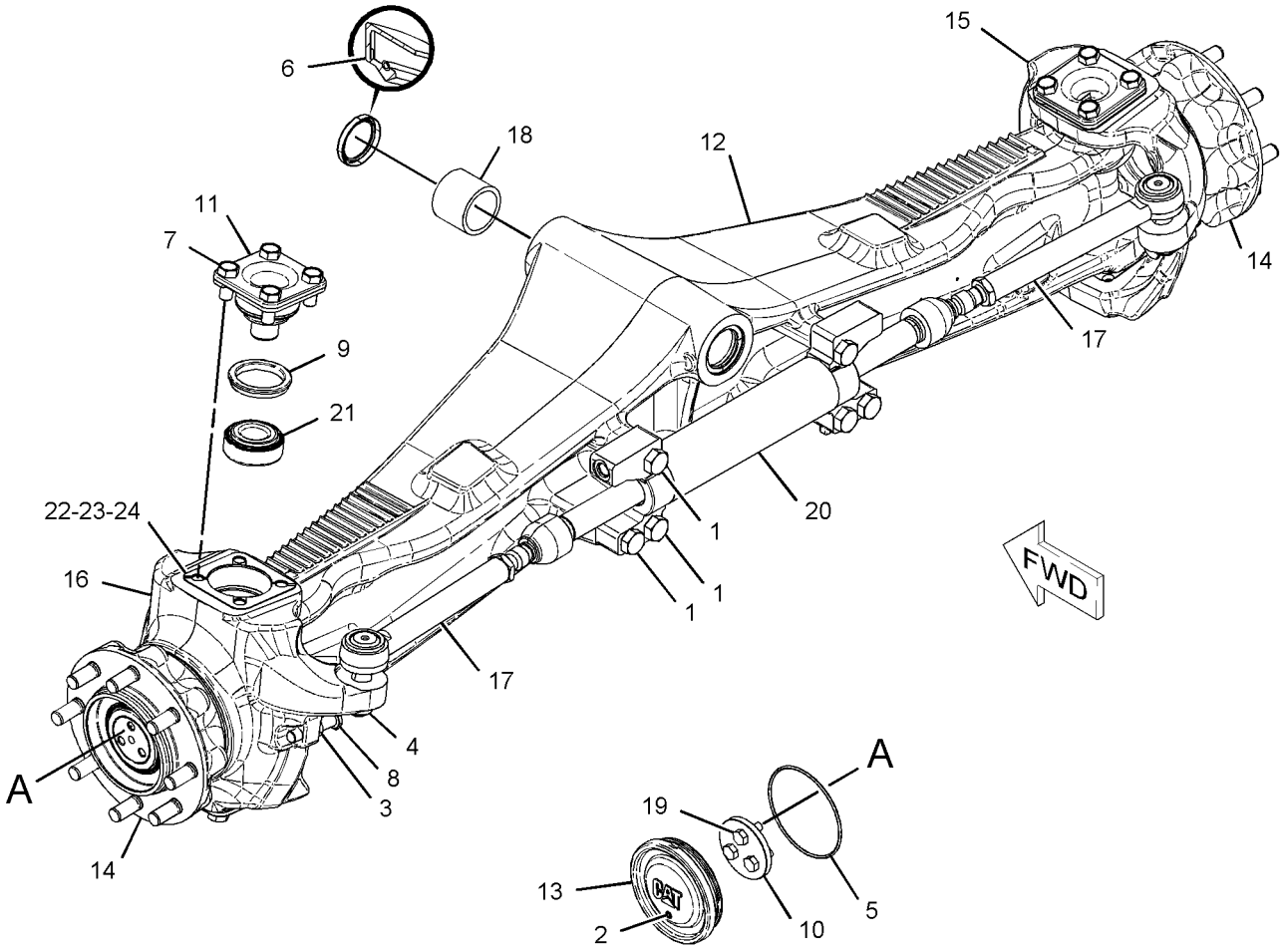

GRAPHIC #1 **<END>** g01118534

153-7369 KNOB GP-STEERING

S/N: HLS1-99999
STEERING WHEEL
PART OF 206-1633, 218-4453 CONTROL GP-STEERING
AN ATTACHMENT

SMCS-4309 **i03516163**

NOTE	REF NO	GRAPHIC REF	PART NUMBER	QTY	PART NAME 1 2 3 4 5 6 (PRODUCT LEVEL)	SEE PAGE
M	1	1	**8T-6869**	1	BOLT (M8X1.25X60-MM)	
	2	1	**8T-4224**	1	WASHER-HARD (8.8X16X2-MM THK)	
M	3	1	**5C-7261**	1	NUT (M8X1.25-THD)	

M-METRIC PART

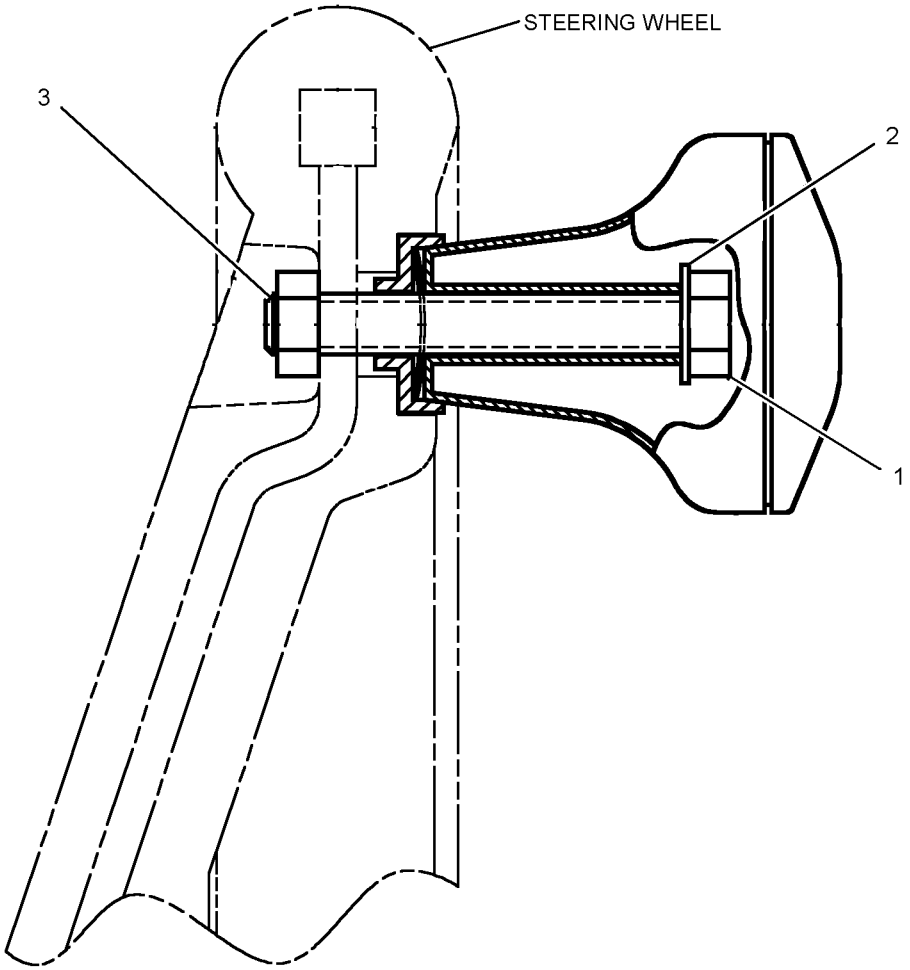

GRAPHIC #1 **<END>** g01847193

STEERING SYSTEM

211-6570 LINES GP-STEERING

S/N: HLS1-4480
PART OF 216-4739 DRIVE AR-BACKHOE LOADER
AN ATTACHMENT

SMCS-4304 **i03514668**

NOTE	REF NO	GRAPHIC REF	PART NUMBER	QTY	PART NAME 1 2 3 4 5 6 (PRODUCT LEVEL)	SEE PAGE
E	1	1	**5P-1505**		HOSE (60-CM)	
	2	1	**5D-1026**	2	CLAMP-HOSE	
	3	1	**7K-1181**	2	STRAP-CABLE	
	4	1	**9R-3884**	1	SPACER (13X20X45-MM THK)	
M	5	1	**8T-6466**	1	BOLT (M10X1.5X60-MM)	
	6	1	*204-0317*	1	CONNECTOR AS	
		1	**3K-0360**	1	SEAL-O-RING	
		1	**6V-8397**	1	SEAL-O-RING	
		1	**092-3635**	1	CONNECTOR	
	7	1	**206-1652**	1	SEAL	
I	8	1	**215-3881**	1	HOSE AS	
I	9	1	**215-3882**	1	HOSE AS	
I	10	1	**215-3883**	1	HOSE AS	
I	11	1	**215-3884**	1	HOSE AS	
	12	1	*148-8318*	3	CONNECTOR AS	
					(EACH INCLUDES)	
		1	**3K-0360**	1	SEAL-O-RING	
		1	**6V-8397**	1	SEAL-O-RING	
		1	**6V-8634**	1	CONNECTOR	
	13	1	*148-8325*	1	CONNECTOR AS	
		1	**3J-1907**	1	SEAL-O-RING	
		1	**4J-5477**	1	SEAL-O-RING	
		1	**6V-8641**	1	CONNECTOR	
	14	1	*148-8367*	2	ELBOW AS	
					(EACH INCLUDES)	
		1	**6V-8397**	1	SEAL-O-RING	
		1	**6V-9850**	1	ELBOW	
	15	1	*148-8369*	1	ELBOW AS	
		1	**3J-7354**	1	SEAL-O-RING	
		1	**4J-5477**	1	SEAL-O-RING	
		1	**6V-8628**	1	ELBOW	
	16	1	*148-8374*	2	ELBOW AS	
					(EACH INCLUDES)	
		1	**3K-0360**	1	SEAL-O-RING	
		1	**6V-8397**	1	SEAL-O-RING	
		1	**6V-8723**	1	ELBOW	
	17	1	*150-3026*	1	ELBOW AS	
		1	**3K-0360**	1	SEAL-O-RING	
		1	**6V-4292**	1	ELBOW	
	18	1	**9M-8406**	1	CLIP	
	19	1	**5P-4295**	5	CLIP	
	20	1	**8T-4121**	4	WASHER-HARD (11X21X2.5-MM THK)	
M	21	1	**8T-4137**	1	BOLT (M10X1.5X20-MM)	
M	22	1	**8T-4196**	2	BOLT (M10X1.5X35-MM)	

E-ORDER BY THE CENTIMETER
I-REFER TO HYDRAULIC INFORMATION SYSTEM
M-METRIC PART

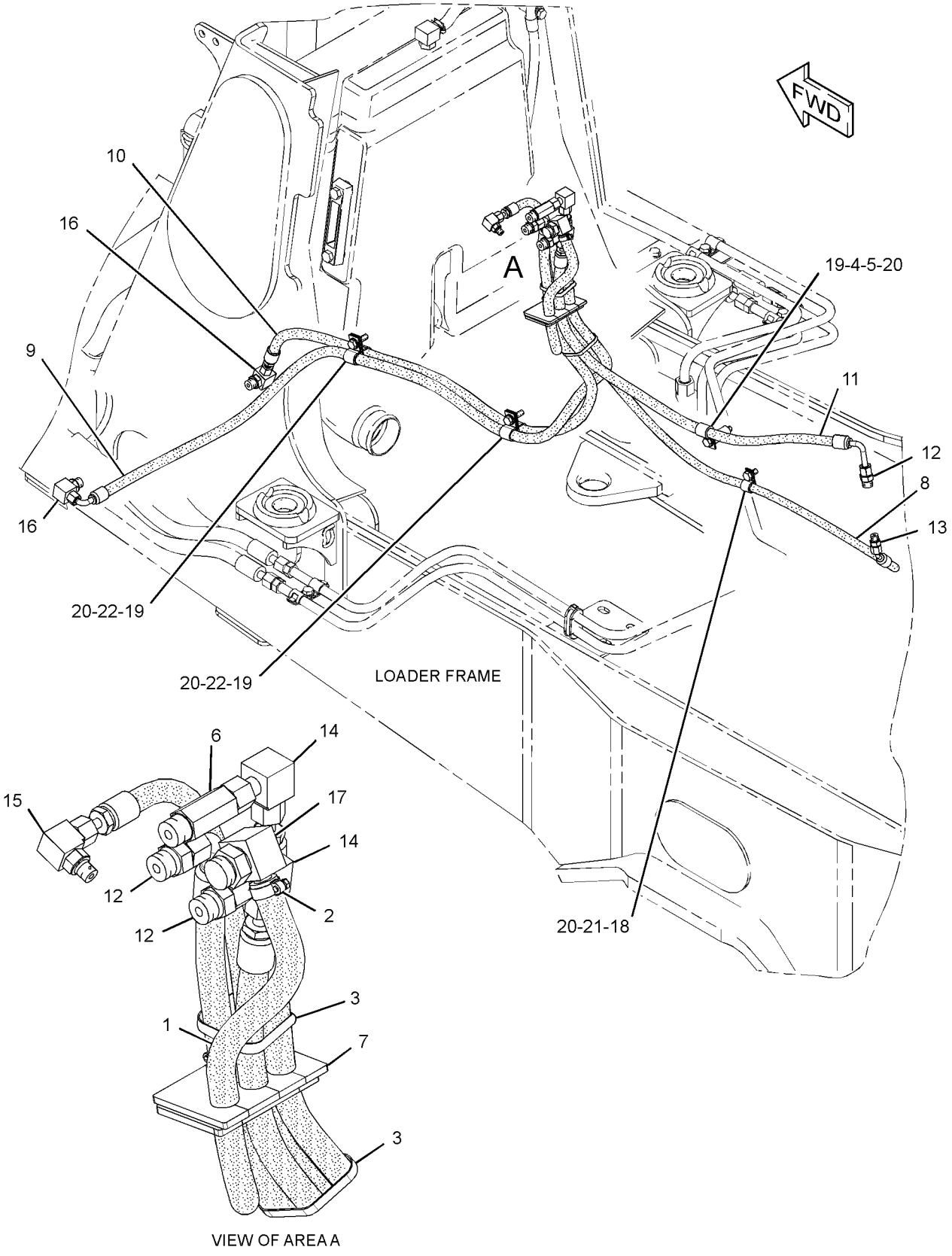

GRAPHIC #1 **<END>** g01339091

STEERING SYSTEM

211-6570 LINES GP-STEERING

S/N: HLS4481-99999
PART OF 216-4739 DRIVE AR-BACKHOE LOADER
AN ATTACHMENT

SMCS-4304 **i02840350**

NOTE	REF NO	GRAPHIC REF	PART NUMBER	QTY	PART NAME 1 2 3 4 5 6 (PRODUCT LEVEL)	SEE PAGE
E	1	1	**5P-1505**		HOSE (60-CM)	
	2	1	**5D-1026**	2	CLAMP-HOSE	
	3	1	**7K-1181**	2	STRAP-CABLE	
C	4	1	**236-1583**	1	BOSS	
CM	5	1	**8T-4172**	1	BOLT (M10X1.5X80-MM)	
	6	1	*204-0317*	1	CONNECTOR AS	
		1	**3K-0360**	1	SEAL-O-RING	
		1	**6V-8397**	1	SEAL-O-RING	
		1	**092-3635**	1	CONNECTOR	
	7	1	**206-1652**	1	SEAL	
I	8	1	**215-3881**	1	HOSE AS	
I	9	1	**215-3882**	1	HOSE AS	
I	10	1	**215-3883**	1	HOSE AS	
I	11	1	**215-3884**	1	HOSE AS	
	12	1	*148-8318*	3	CONNECTOR AS	
					(EACH INCLUDES)	
		1	**3K-0360**	1	SEAL-O-RING	
		1	**6V-8397**	1	SEAL-O-RING	
		1	**6V-8634**	1	CONNECTOR	
	13	1	*148-8325*	1	CONNECTOR AS	
		1	**3J-1907**	1	SEAL-O-RING	
		1	**4J-5477**	1	SEAL-O-RING	
		1	**6V-8641**	1	CONNECTOR	
	14	1	*148-8367*	2	ELBOW AS	
					(EACH INCLUDES)	
		1	**6V-8397**	1	SEAL-O-RING	
		1	**6V-9850**	1	ELBOW	
	15	1	*148-8369*	1	ELBOW AS	
		1	**3J-7354**	1	SEAL-O-RING	
		1	**4J-5477**	1	SEAL-O-RING	
		1	**6V-8628**	1	ELBOW	
	16	1	*148-8374*	2	ELBOW AS	
					(EACH INCLUDES)	
		1	**3K-0360**	1	SEAL-O-RING	
		1	**6V-8397**	1	SEAL-O-RING	
		1	**6V-8723**	1	ELBOW	
	17	1	*150-3026*	1	ELBOW AS	
		1	**3K-0360**	1	SEAL-O-RING	
		1	**6V-4292**	1	ELBOW	
	18	1	**9M-8406**	1	CLIP	
	19	1	**5P-4295**	5	CLIP	
	20	1	**8T-4121**	4	WASHER-HARD (11X21X2.5-MM THK)	
M	21	1	**8T-4137**	1	BOLT (M10X1.5X20-MM)	
M	22	1	**8T-4196**	2	BOLT (M10X1.5X35-MM)	

C-CHANGE FROM PREVIOUS TYPE
E-ORDER BY THE CENTIMETER
I-REFER TO HYDRAULIC INFORMATION SYSTEM
M-METRIC PART

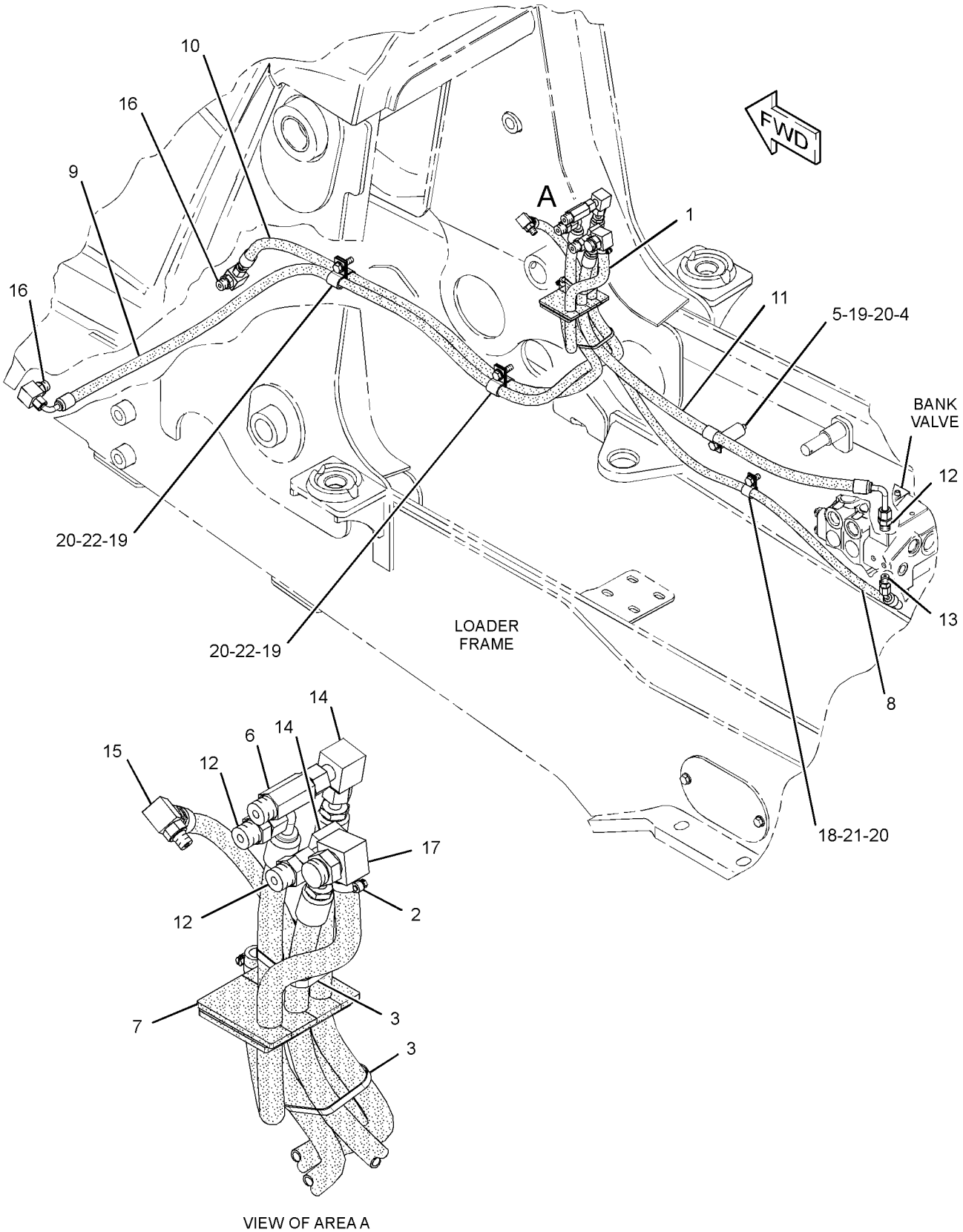

VIEW OF AREA A

GRAPHIC #1 **<END>** g01421865

STEERING SYSTEM

211-6571 LINES GP-STEERING

S/N: HLS1-4480
PART OF 216-4740 DRIVE AR-BACKHOE LOADER
AN ATTACHMENT

SMCS-4304 **i02651005**

NOTE	REF NO	GRAPHIC REF	PART NUMBER	QTY	PART NAME 1 2 3 4 5 6 (PRODUCT LEVEL)	SEE PAGE
E	1	1	**5P-1505**		HOSE (60-CM)	
	2	1	**5D-1026**	2	CLAMP-HOSE	
	3	1	**7K-1181**	2	STRAP-CABLE	
	4	1	**9R-3884**	1	SPACER (13X20X45-MM THK)	
	5	1	*204-0317*	1	CONNECTOR AS	
		1	**3K-0360**	1	SEAL-O-RING	
		1	**6V-8397**	1	SEAL-O-RING	
		1	**092-3635**	1	CONNECTOR	
	6	1	**206-1652**	1	SEAL	
I	7	1	**215-3881**	1	HOSE AS	
I	8	1	**215-3884**	1	HOSE AS	
	9	1	**217-8195**	1	HOSE AS	
	10	1	**217-8197**	1	HOSE AS	
	11	1	**233-6592**	1	SPACER (13X20X24-MM THK)	
	12	1	*148-8318*	3	CONNECTOR AS	
					(EACH INCLUDES)	
		1	**3K-0360**	1	SEAL-O-RING	
		1	**6V-8397**	1	SEAL-O-RING	
		1	**6V-8634**	1	CONNECTOR	
	13	1	*148-8325*	1	CONNECTOR AS	
		1	**3J-1907**	1	SEAL-O-RING	
		1	**4J-5477**	1	SEAL-O-RING	
		1	**6V-8641**	1	CONNECTOR	
	14	1	*148-8367*	3	ELBOW AS	
					(EACH INCLUDES)	
		1	**6V-8397**	1	SEAL-O-RING	
		1	**6V-9850**	1	ELBOW	
	15	1	*148-8369*	1	ELBOW AS	
		1	**3J-7354**	1	SEAL-O-RING	
		1	**4J-5477**	1	SEAL-O-RING	
		1	**6V-8628**	1	ELBOW	
	16	1	*148-8383*	2	ELBOW AS	
					(EACH INCLUDES)	
		1	**3K-0360**	1	SEAL-O-RING	
		1	**6V-8397**	1	SEAL-O-RING	
		1	**8T-1683**	1	ELBOW	
	17	1	*150-3026*	1	ELBOW AS	
		1	**3K-0360**	1	SEAL-O-RING	
		1	**6V-4292**	1	ELBOW	
	18	1	**5P-4295**	5	CLIP	
	19	1	**5P-7462**	1	CLIP (SLOT)	
	20	1	**5P-7463**	1	CLIP (TAB)	
	21	1	**6V-0683**	1	GROMMET	
	22	1	**8T-4121**	5	WASHER-HARD (11X21X2.5-MM THK)	
M	23	1	**8T-4136**	1	BOLT (M10X1.5X25-MM)	
M	24	1	**8T-4182**	1	BOLT (M10X1.5X45-MM)	
M	25	1	**8T-4196**	2	BOLT (M10X1.5X35-MM)	
M	26	1	**8T-6466**	1	BOLT (M10X1.5X60-MM)	
	27	1	**9M-8406**	1	CLIP	

E-ORDER BY THE CENTIMETER
I-REFER TO HYDRAULIC INFORMATION SYSTEM
M-METRIC PART

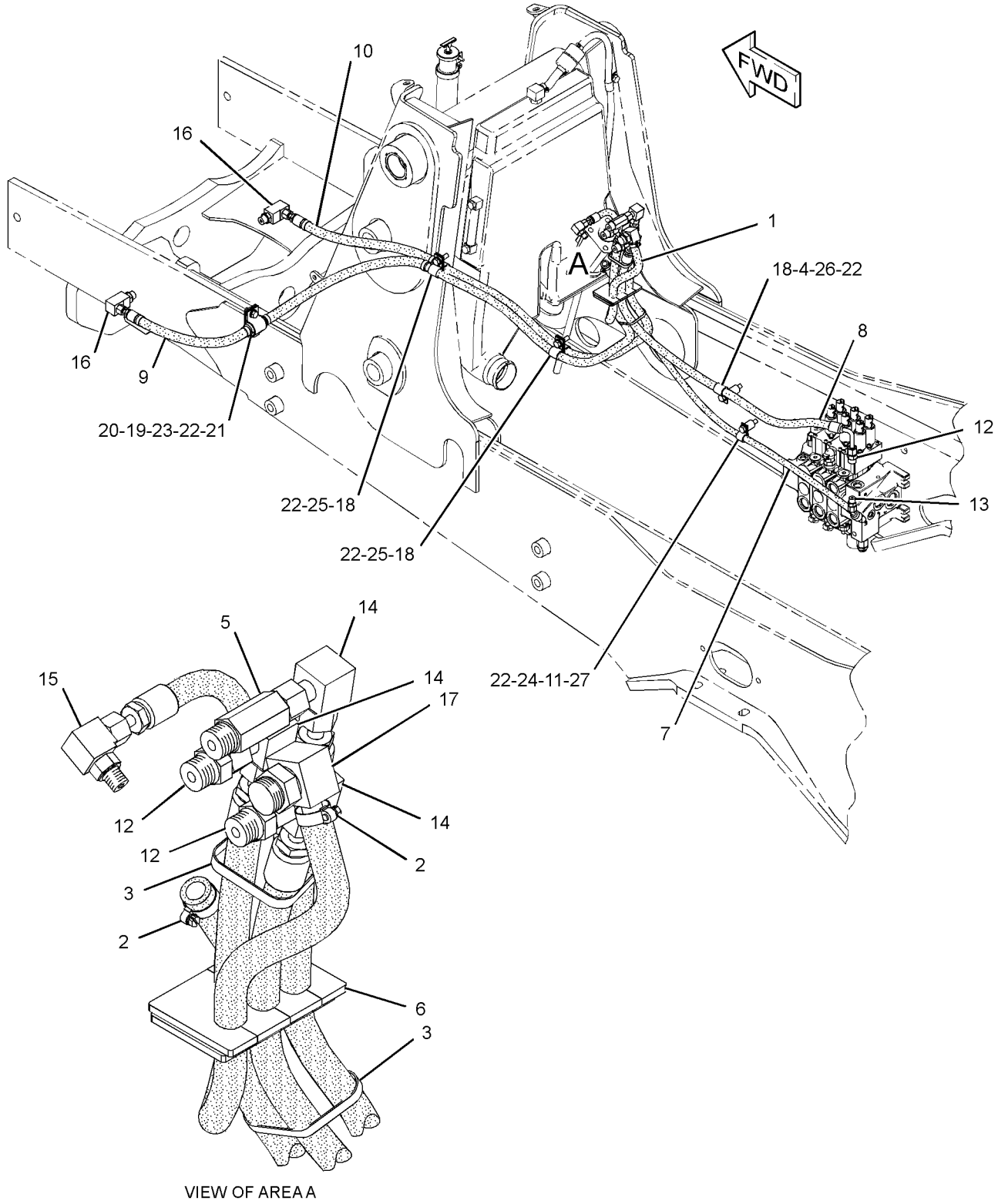

GRAPHIC #1 **<END>** g01335751

STEERING SYSTEM

211-6571 LINES GP-STEERING

S/N: HLS4481-99999
PART OF 216-4740 DRIVE AR-BACKHOE LOADER
AN ATTACHMENT

SMCS-4304 **i02840352**

NOTE	REF NO	GRAPHIC REF	PART NUMBER	QTY	PART NAME 1 2 3 4 5 6 (PRODUCT LEVEL)	SEE PAGE
E	1	1	**5P-1505**		HOSE (60-CM)	
	2	1	**5D-1026**	2	CLAMP-HOSE	
	3	1	**7K-1181**	2	STRAP-CABLE	
C	4	1	**236-1583**	1	BOSS	
	5	1	*204-0317*	1	CONNECTOR AS	
		1	**3K-0360**	1	SEAL-O-RING	
		1	**6V-8397**	1	SEAL-O-RING	
		1	**092-3635**	1	CONNECTOR	
	6	1	**206-1652**	1	SEAL	
I	7	1	**215-3881**	1	HOSE AS	
I	8	1	**215-3884**	1	HOSE AS	
	9	1	**217-8195**	1	HOSE AS	
	10	1	**217-8197**	1	HOSE AS	
	11	1	**233-6592**	1	SPACER (13X20X24-MM THK)	
	12	1	*148-8318*	3	CONNECTOR AS	
					(EACH INCLUDES)	
		1	**3K-0360**	1	SEAL-O-RING	
		1	**6V-8397**	1	SEAL-O-RING	
		1	**6V-8634**	1	CONNECTOR	
	13	1	*148-8325*	1	CONNECTOR AS	
		1	**3J-1907**	1	SEAL-O-RING	
		1	**4J-5477**	1	SEAL-O-RING	
		1	**6V-8641**	1	CONNECTOR	
	14	1	*148-8367*	3	ELBOW AS	
					(EACH INCLUDES)	
		1	**6V-8397**	1	SEAL-O-RING	
		1	**6V-9850**	1	ELBOW	
	15	1	*148-8369*	1	ELBOW AS	
		1	**3J-7354**	1	SEAL-O-RING	
		1	**4J-5477**	1	SEAL-O-RING	
		1	**6V-8628**	1	ELBOW	
	16	1	*148-8383*	2	ELBOW AS	
					(EACH INCLUDES)	
		1	**3K-0360**	1	SEAL-O-RING	
		1	**6V-8397**	1	SEAL-O-RING	
		1	**8T-1683**	1	ELBOW	
	17	1	*150-3026*	1	ELBOW AS	
		1	**3K-0360**	1	SEAL-O-RING	
		1	**6V-4292**	1	ELBOW	
	18	1	**5P-4295**	5	CLIP	
	19	1	**5P-7462**	1	CLIP (SLOT)	
	20	1	**5P-7463**	1	CLIP (TAB)	
	21	1	**6V-0683**	1	GROMMET	
	22	1	**8T-4121**	5	WASHER-HARD (11X21X2.5-MM THK)	
M	23	1	**8T-4136**	1	BOLT (M10X1.5X25-MM)	
M	24	1	**8T-4182**	1	BOLT (M10X1.5X45-MM)	
M	25	1	**8T-4196**	2	BOLT (M10X1.5X35-MM)	
CM	26	1	**8T-4172**	1	BOLT (M10X1.5X80-MM)	
	27	1	**9M-8406**	1	CLIP	

C-CHANGE FROM PREVIOUS TYPE
E-ORDER BY THE CENTIMETER
I-REFER TO HYDRAULIC INFORMATION SYSTEM
M-METRIC PART

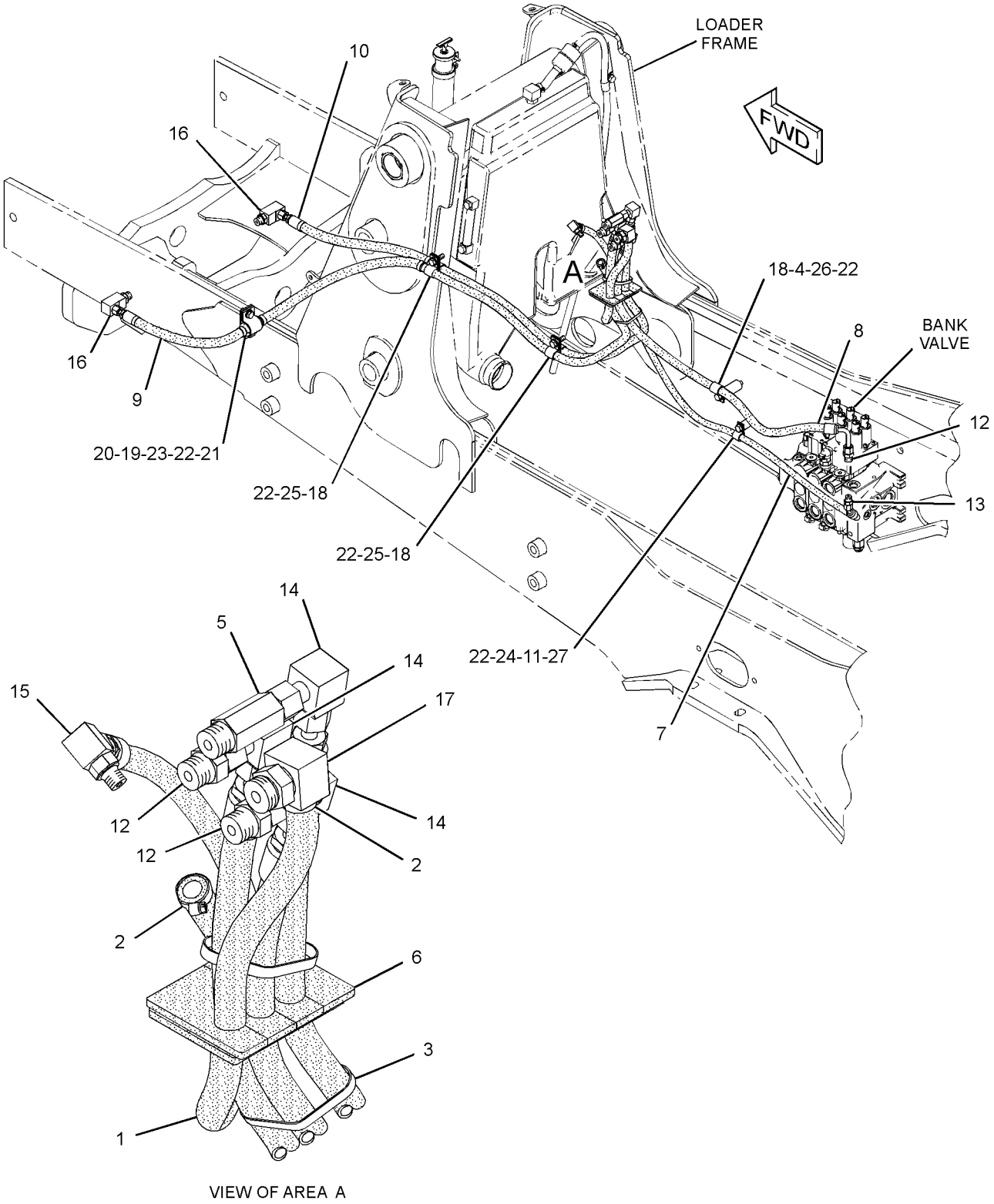

VIEW OF AREA A

GRAPHIC #1 **<END>** g01421446

STEERING SYSTEM

210-6240 PUMP GP-METERING—HMU

S/N: HLS1-99999

PART OF 268-6455 HYDRAULIC AR

SMCS-4312 **i02096817**

NOTE	REF NO	GRAPHIC REF	PART NUMBER	QTY	PART NAME 1 2 3 4 5 6 (PRODUCT LEVEL)	SEE PAGE
	1	1	**114-3928**	1	CAP - END	

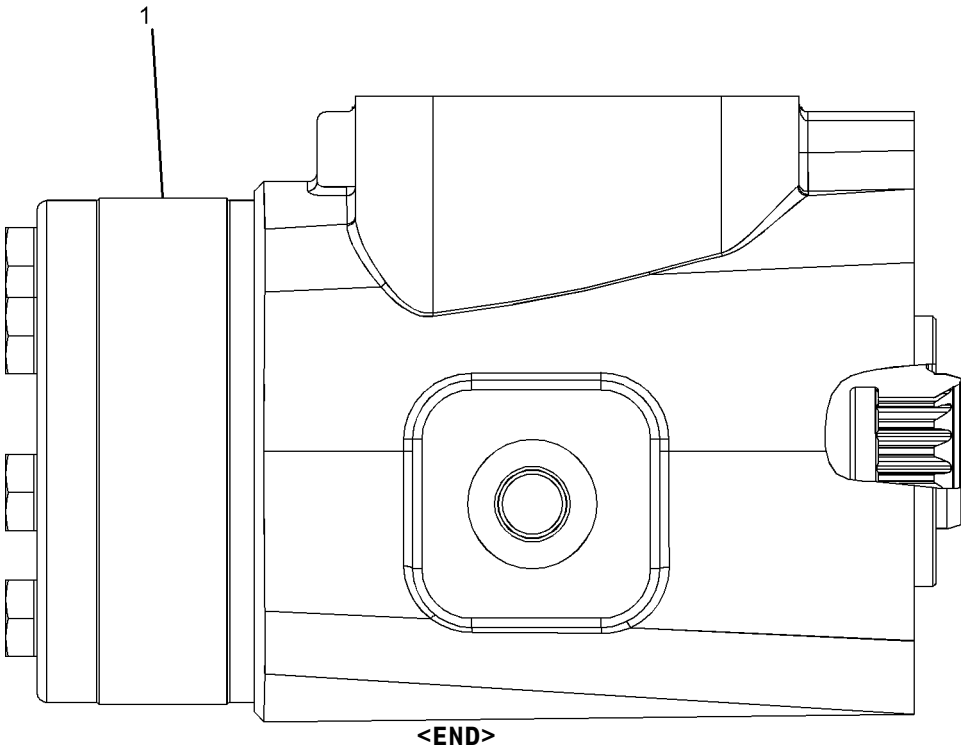

GRAPHIC #1 **<END>** g01072426

253-0784 BOX GP-BATTERY—WITH STORAGE

S/N: HLS1-99999

PART OF 213-9287 CHASSIS AR

SMCS-7257 **i02772589**

NOTE	REF NO	GRAPHIC REF	PART NUMBER	QTY	PART NAME 1 2 3 4 5 6 (PRODUCT LEVEL)	SEE PAGE
Y	1	1	**118-6842**	1	DOOR GP-BATTERY	354
	2	1	**118-6854**	1	TREAD	
	3	1	**164-3876**	1	STEP AS	
M		1	**8T-3612**	4	NUT-WELD (M8X1.25-THD)	
	4	1	**245-6109**	1	PLATE AS	
	5	1	**253-0783**	1	BOX AS-BATTERY	
	6	1	**5P-4116**	6	WASHER-HARD (8.8X20.5X2-MM THK)	
	7	1	**5G-2934**	1	PLUG	
M	8	1	**8T-4183**	4	BOLT (M12X1.75X40-MM)	
M	9	1	**8T-4189**	9	BOLT (M8X1.25X20-MM)	
M	10	1	**8T-4200**	7	BOLT (M8X1.25X16-MM)	
	11	1	**8T-4223**	5	WASHER-HARD (13.5X25.5X3-MM THK)	
	12	1	**8T-4224**	10	WASHER-HARD (8.8X16X2-MM THK)	
M	13	1	**8T-7963**	1	LOCKNUT (M8X1.25-THD)	
	14	1	**295-8472**	1	BRACKET AS	

M-METRIC PART
Y-SEPARATE ILLUSTRATION

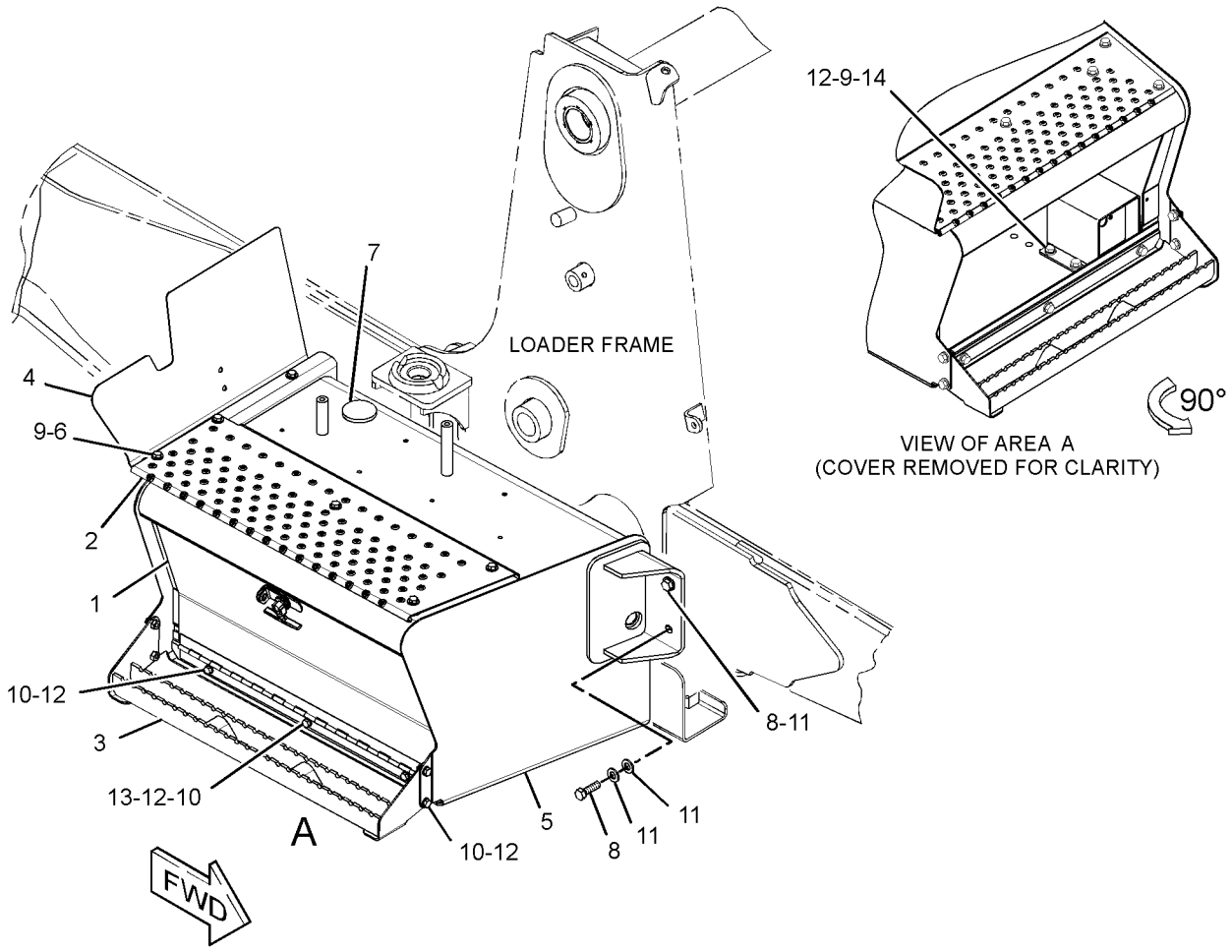

GRAPHIC #1 **<END>** g01388013

FRAME AND BODY

211-3649 COUNTERWEIGHT GP

S/N: HLS1-99999
115-KG (250-LB)
AN ATTACHMENT

SMCS-7056 **i03514442**

NOTE	REF NO	GRAPHIC REF	PART NUMBER	QTY	PART NAME 1 2 3 4 5 6 (PRODUCT LEVEL)	SEE PAGE
	1	1	**214-3254**	1	COUNTERWEIGHT (115-KG (250-LB))	
M	2	1	**8C-3290**	2	BOLT (M24X3X150-MM)	
	3	1	**8T-4167**	2	WASHER-HARD (26X44X4-MM THK)	

M-METRIC PART

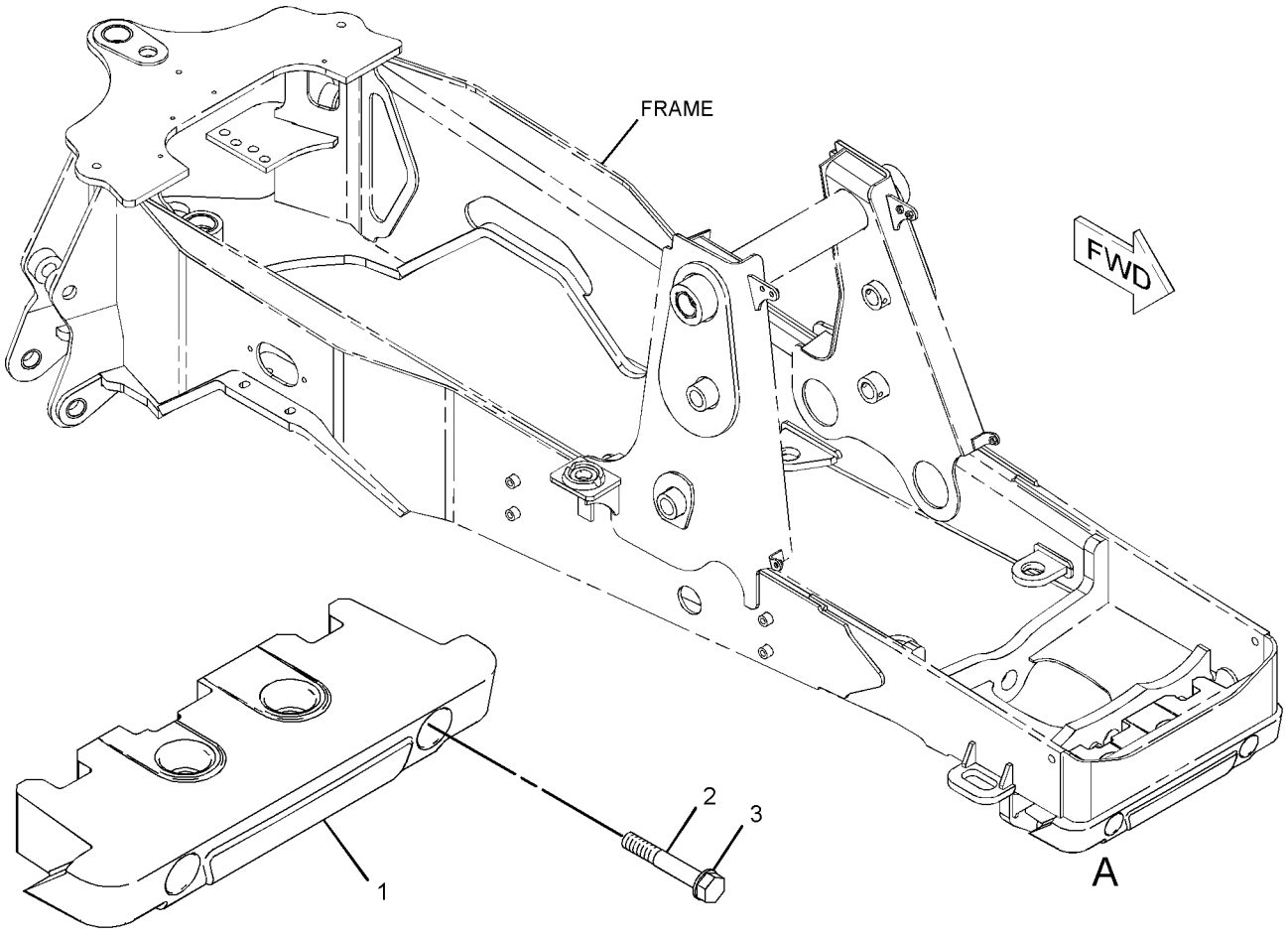

VIEW OF AREA A
GRAPHIC #1

<END>

g01074968

252-9983 COUNTERWEIGHT GP

S/N: HLS1-99999
485-KG (1070-LB)
PART OF 252-9984 COUNTERWEIGHT GP
AN ATTACHMENT

SMCS-7056 **i03498381**

NOTE	REF NO	GRAPHIC REF	PART NUMBER	QTY	PART NAME 1 2 3 4 5 6 (PRODUCT LEVEL)	SEE PAGE
	1	1	**214-3255**	1	COUNTERWEIGHT (320-KG (700-LB))	
	2	1	**247-8222**	1	COUNTERWEIGHT (170-KG (375-LB))	
M	3	1	**127-4834**	2	BOLT (M24X3X340-MM)	
M	4	1	**8T-4001**	2	NUT (M24X3-THD)	
	5	1	**8T-4167**	2	WASHER-HARD (26X44X4-MM THK)	

M-METRIC PART

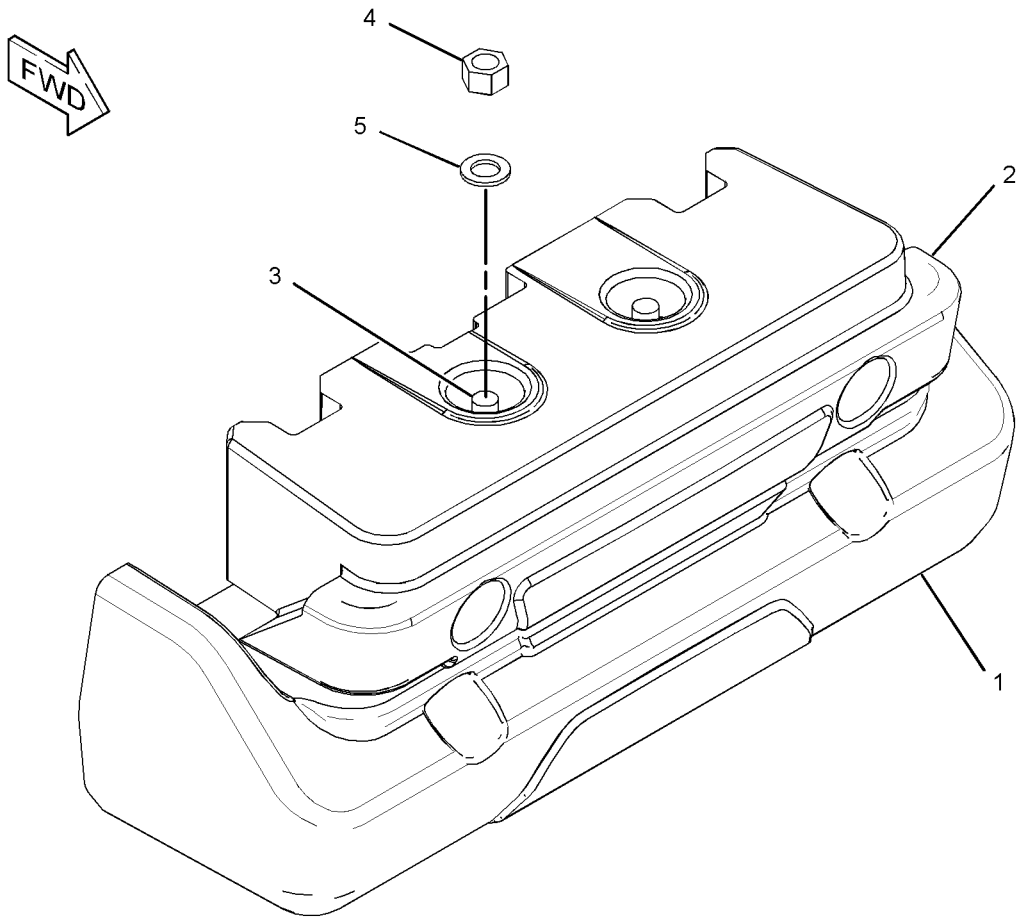

GRAPHIC #1 **<END>** g01834874

252-9984 COUNTERWEIGHT GP

S/N: HLS1-99999
485-KG (1070 LB)
AN ATTACHMENT

SMCS-7056 **i03498342**

NOTE	REF NO	GRAPHIC REF	PART NUMBER	QTY	PART NAME 1 2 3 4 5 6 (PRODUCT LEVEL)	SEE PAGE
Y	1	1	*252-9983*	1	COUNTERWEIGHT GP	351
M	2	1	**8C-3290**	4	BOLT (M24X3X150-MM)	
	3	1	**8T-4167**	4	WASHER-HARD (26X44X4-MM THK)	

M-METRIC PART
Y-SEPARATE ILLUSTRATION

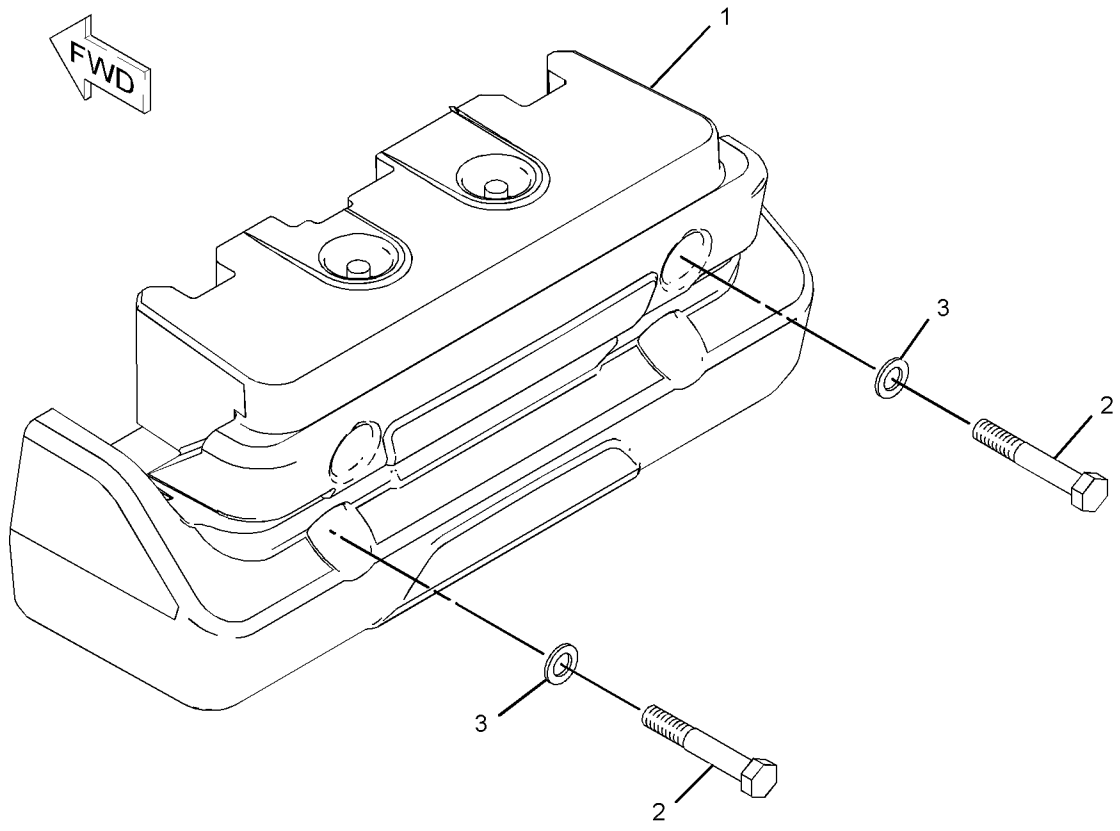

GRAPHIC #1 **<END>** g01084203

FRAME AND BODY

252-9986 COUNTERWEIGHT GP

S/N: HLS1-99999
235-KG (515-LB)
AN ATTACHMENT

SMCS-7056 **i03505240**

NOTE	REF NO	GRAPHIC REF	PART NUMBER	QTY	PART NAME 1 2 3 4 5 6 (PRODUCT LEVEL)	SEE PAGE
	1	1	*252-9985*	1	COUNTERWEIGHT GP	
M		1	**7X-2476**	2	BOLT (M24X3X220-MM)	
M		1	**8T-4001**	2	NUT (M24X3-THD)	
		1	**8T-4167**	2	WASHER-HARD (26X44X4-MM THK)	
		1	**214-3254**	2	COUNTERWEIGHT (115-KG (250-LB))	
M	2	1	**8C-3290**	4	BOLT (M24X3X150-MM)	
	3	1	**8T-4167**	4	WASHER-HARD (26X44X4-MM THK)	

M-METRIC PART

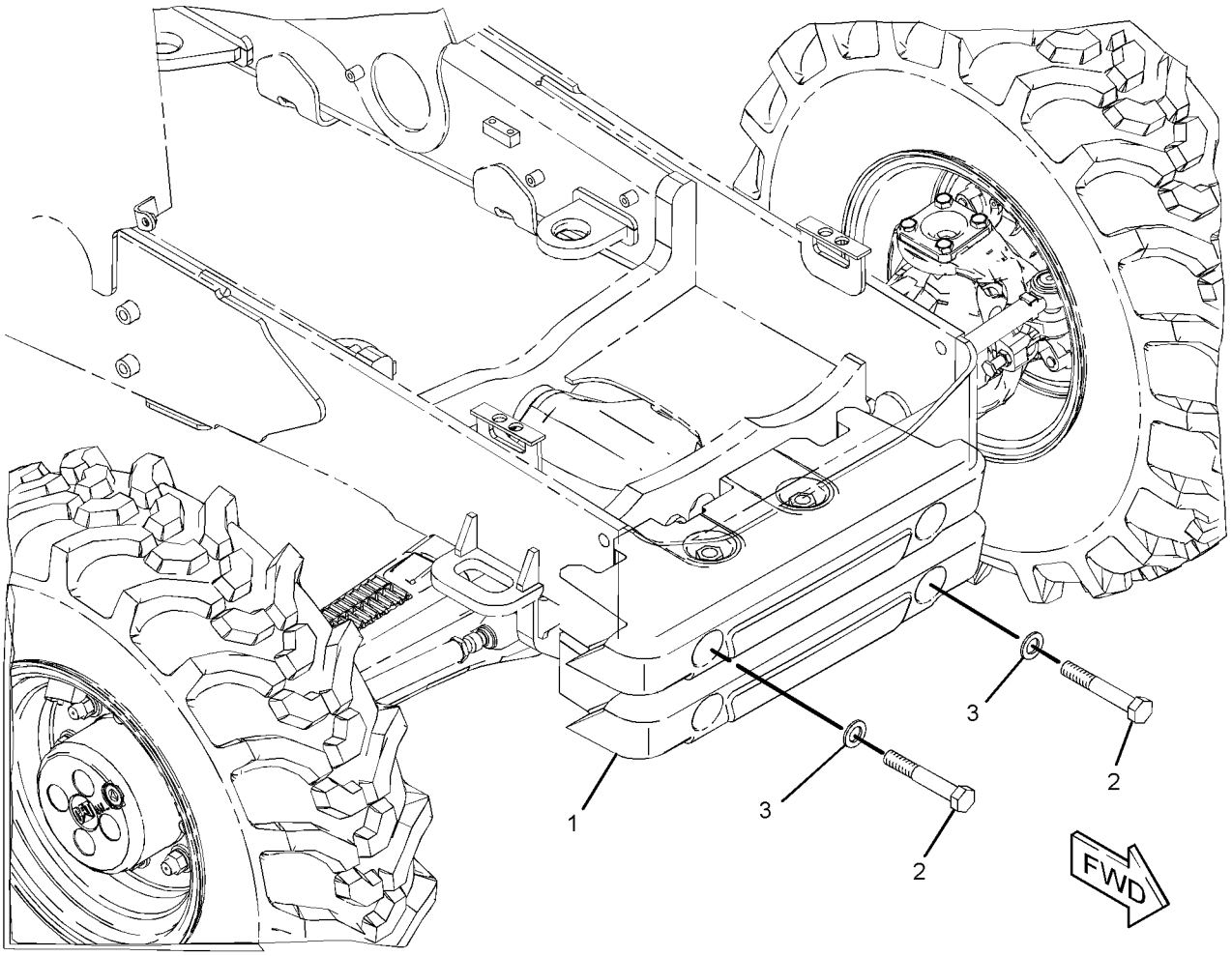

GRAPHIC #1 **<END>** g01202979

FRAME AND BODY

118-6842 DOOR GP-BATTERY

S/N: HLS1-99999

PART OF 253-0784 BOX GP-BATTERY

SMCS-7273 **i02249051**

NOTE	REF NO	GRAPHIC REF	PART NUMBER	QTY	PART NAME 1 2 3 4 5 6 (PRODUCT LEVEL)	SEE PAGE
	1	1	**8C-8522**	1	PAWL-LATCH	
	2	1	**129-4741**	1	LATCH AS-T-BAR	
	3	1	**151-2963**	1	DOOR AS	
M	4	1	**6V-7743**	2	LOCKNUT (M6X1-THD)	
M	5	1	**8T-4133**	2	NUT (M10X1.5-THD)	
	6	1	**8T-4205**	2	WASHER-HARD (7.2X14.5X2-MM THK)	

M-METRIC PART

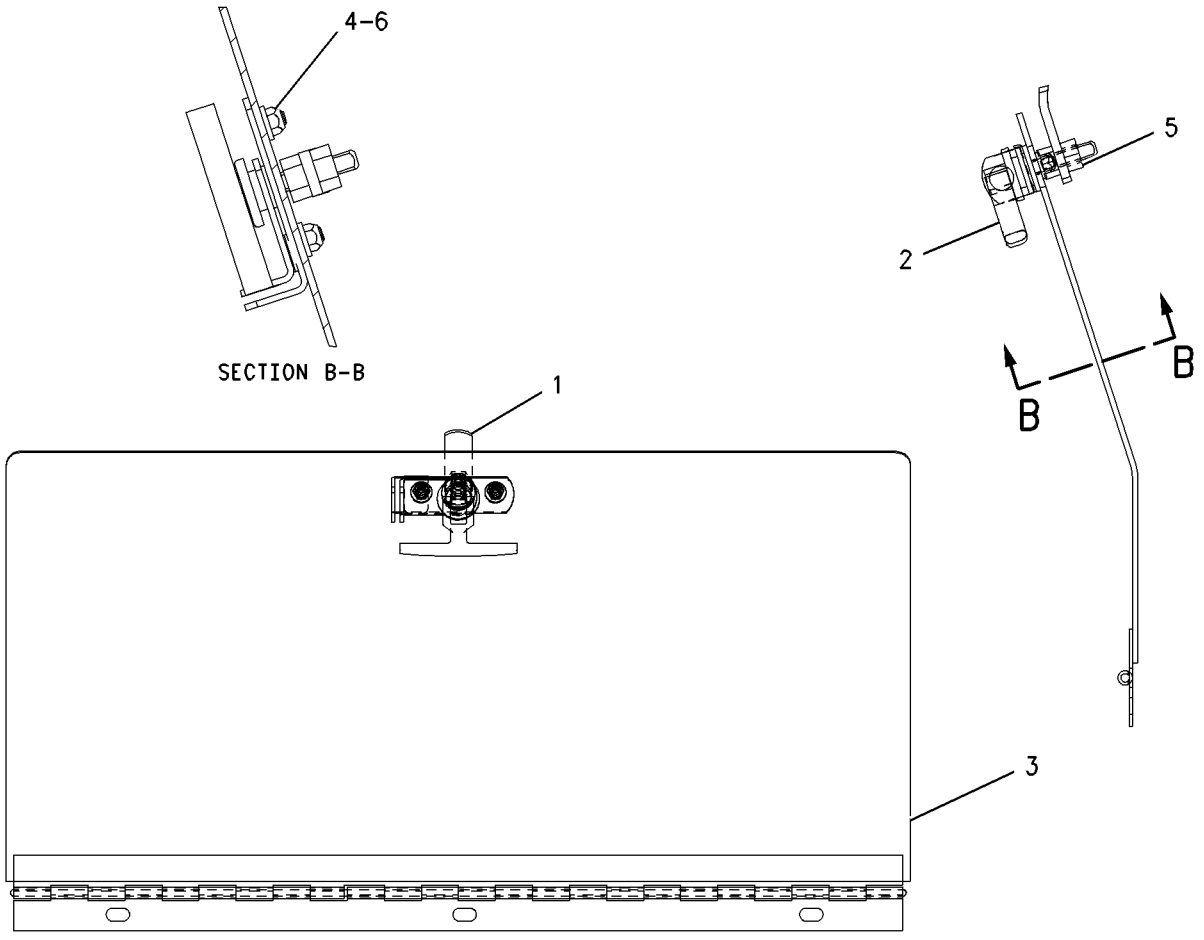

GRAPHIC #1 **<END>** g00739059

249-9328 EXTENSION GP-FENDER

S/N: HLS1-99999
AN ATTACHMENT

SMCS-7252 **i03511001**

NOTE	REF NO	GRAPHIC REF	PART NUMBER	QTY	PART NAME 1 2 3 4 5 6 (PRODUCT LEVEL)	SEE PAGE
	1	1	**249-9329**	1	EXTENSION-FENDER (LH)	
	2	1	**249-9330**	1	EXTENSION-FENDER (RH)	
	3	1	**251-4889**	8	WASHER-HARD (7.2X14.5X2-MM THK)	
	4	1	**251-4890**	4	SCREW-MACHINE (M6X1X25-MM)	
	5	1	**251-4891**	4	LOCKNUT (M6X1-THD)	

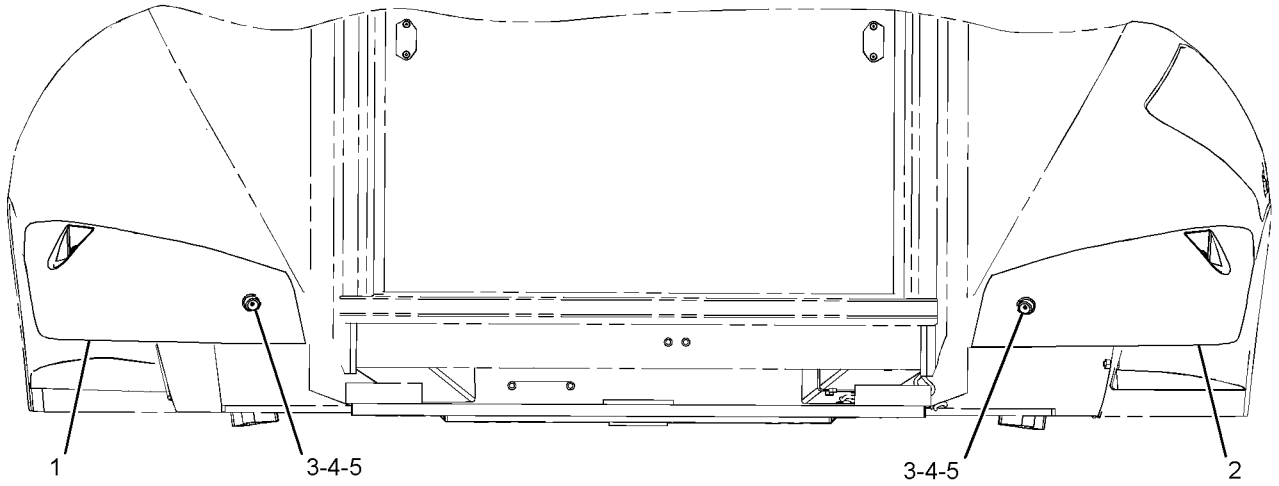

REAR VIEW

GRAPHIC #1 **<END>** g01231585

FRAME AND BODY

201-3954 FENDER GP-FRONT

S/N: HLS1-99999
FOR USE WITH AWD MACHINES ONLY
AN ATTACHMENT

SMCS-7252 **i02597587**

NOTE	REF NO	GRAPHIC REF	PART NUMBER	QTY	PART NAME 1 2 3 4 5 6 (PRODUCT LEVEL)	SEE PAGE
	1	1	**162-4004**	2	FENDER (FRONT)	
M	2	1	**199-0783**	4	BOLT (M16X2X38-MM)	
	3	1	**222-1801**	1	BRACKET AS (LH)	
	4	1	**222-1802**	1	BRACKET AS (RH)	
M	5	1	**6V-7744**	4	LOCKNUT (M10X1.5-THD)	
	6	1	**8T-4121**	4	WASHER-HARD (11X21X2.5-MM THK)	
	7	1	**8T-4122**	12	WASHER-HARD (17X32X3.5-MM THK)	
M	8	1	**8T-4195**	4	BOLT (M10X1.5X30-MM)	
	9	1	**8T-4222**	4	WASHER-PLATED (11X32X2.5-MM THK)	
M	10	1	**8T-4778**	4	LOCKNUT (M16X2-THD)	

M-METRIC PART

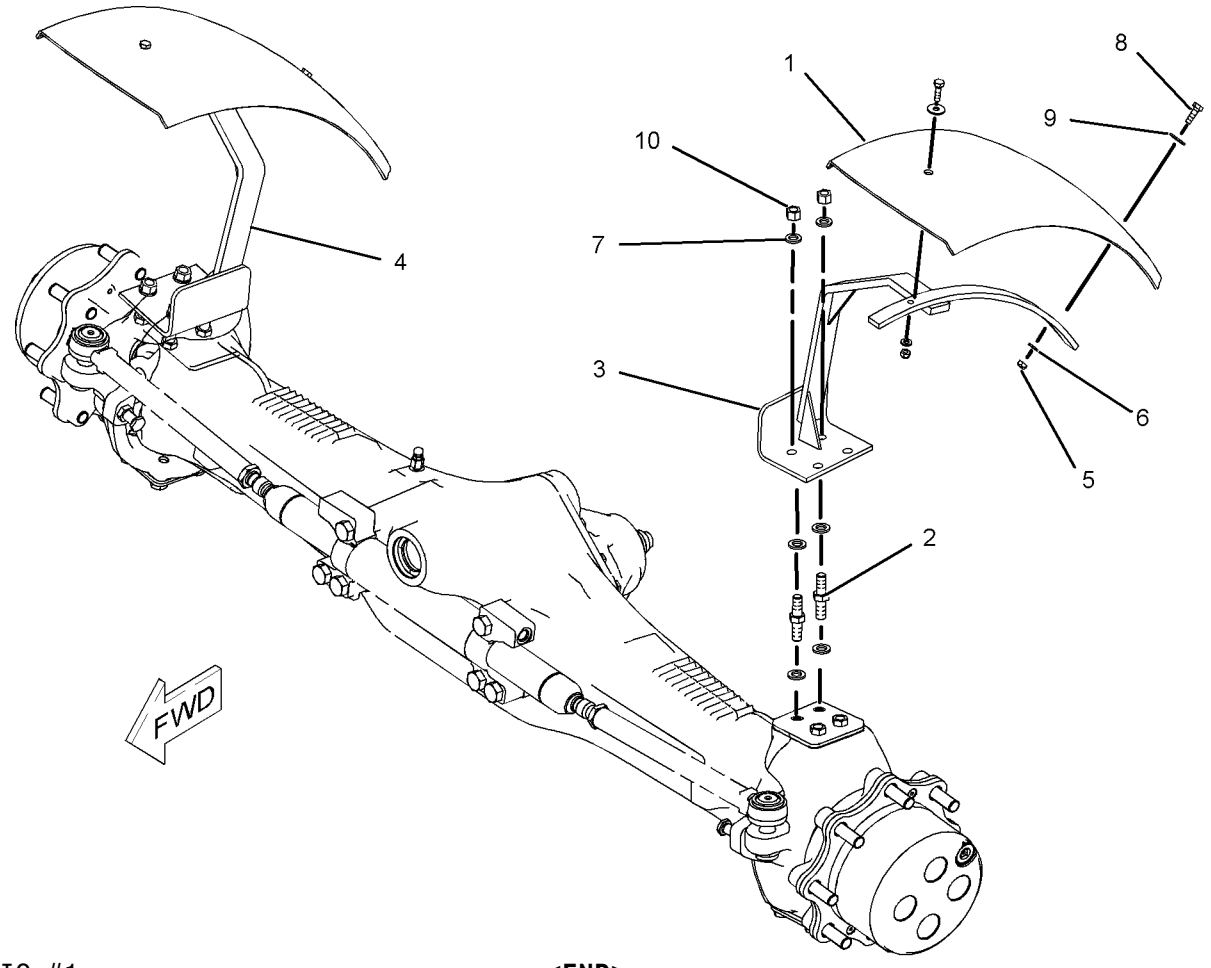

GRAPHIC #1 **<END>** g01027709

213-1891 FENDER GP-REAR

S/N: HLS1-99999
PART OF 269-2125, 269-2126, 269-2127 CAB AR-ENCLOSED ROPS, 269-2123, 269-2124 CANOPY AR-OPEN ROPS
AN ATTACHMENT

SMCS-7252 **i02815163**

NOTE	REF NO	GRAPHIC REF	PART NUMBER	QTY	PART NAME 1 2 3 4 5 6 (PRODUCT LEVEL)	SEE PAGE
M	1	1	**8T-5093**	4	BOLT-LOCKING (M8X1.25X25-MM)	
E	2	1	**244-3113**		SEAL (210-CM EACH)	
	3	1	**116-5763**	1	CLIP-SPRING	
M	4	1	**193-9055**	4	SCREW-HEX FLANGE (M4X1.79X17-MM)	
	5	1	**211-3783**	1	FENDER-REAR (LH)	
	6	1	**213-1881**	1	FENDER-REAR (RH)	
	7	1	**213-1884**	1	CLIP	
	8	1	**213-1887**	1	COVER-FENDER	
	9	1	**213-1889**	1	PLATE	
	10	1	**225-0060**	1	GUARD	
J	11	1	**226-0291**	1	LOCK AS (PROTECTION)	
	12	1	**227-5556**	1	PLATE	
M	13	1	**7Y-9099**	1	SCREW-TRUSS HEAD (M8X1.25X25-MM)	
	14	1	**156-0283**	20	WASHER-HARD (8.4X35X2.5-MM THK)	
M	15	1	**5C-7261**	4	NUT (M8X1.25-THD)	
M	16	1	**8T-5091**	12	BOLT (M8X1.25X20-MM)	
L	17	1	**5P-0805**		SEAL (8-DM)	
E	18	1	**220-0738**		SEAL (118-CM)	

E-ORDER BY THE CENTIMETER
J-REQUIRES 5P8500 KEY
L-ORDER BY THE DECIMETER
M-METRIC PART

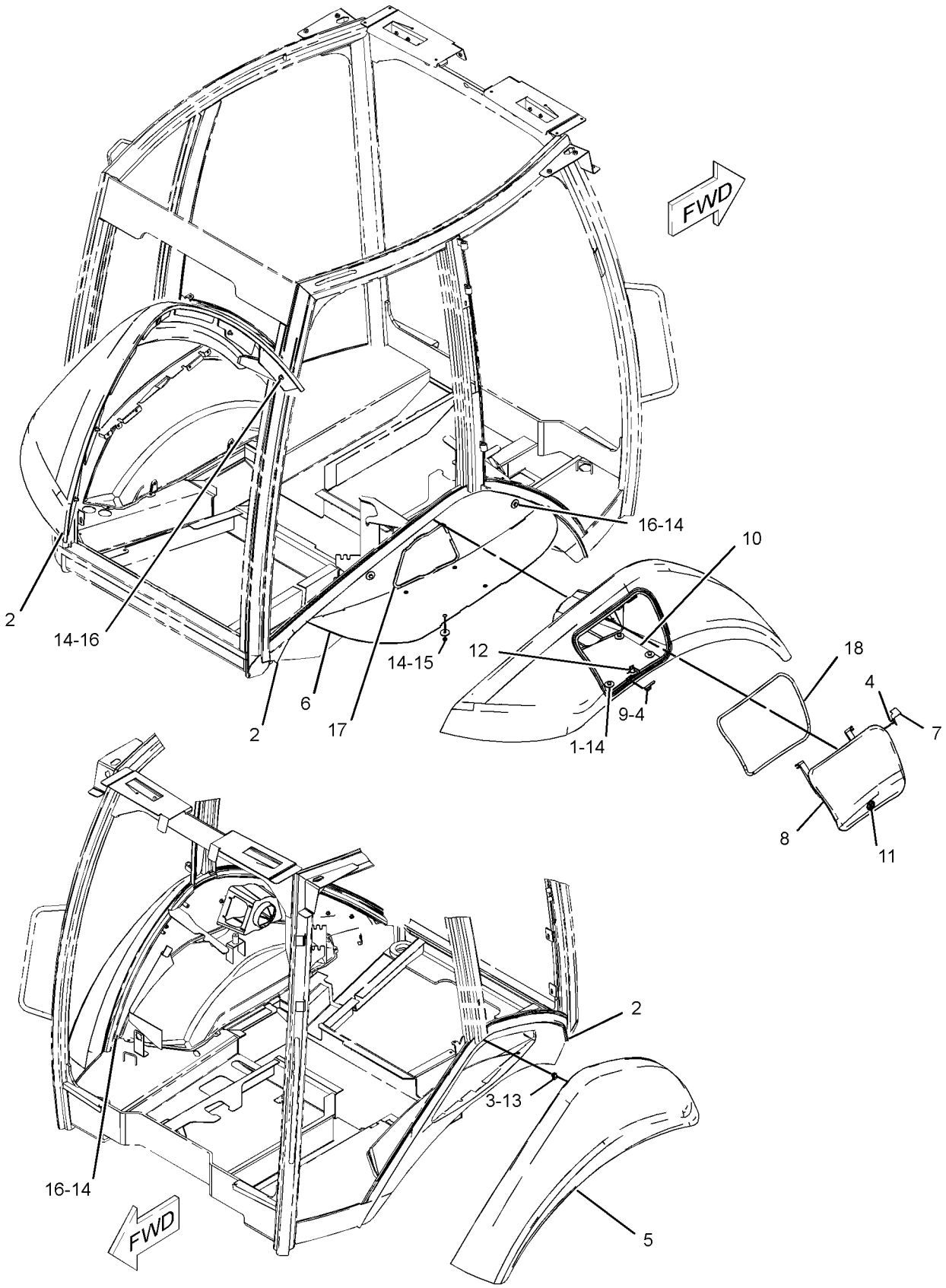

GRAPHIC #1 **<END>** g01275112

223-3965 FLOORPLATE GP

S/N: HLS1-6311
PART OF 269-2123, 269-2124 CANOPY AR-OPEN ROPS
AN ATTACHMENT

SMCS-7265 **i02446406**

NOTE	REF NO	GRAPHIC REF	PART NUMBER	QTY	PART NAME 1 2 3 4 5 6 (PRODUCT LEVEL)	SEE PAGE
	1	1	**206-1832**	1	PLATE AS	
	2	1	**223-3962**	1	PLATE AS	
	3	1	**223-4546**	1	PLATE AS	
	4	1	**232-2865**	1	PLATE AS	
	5	1	**232-2869**	1	PLATE AS	
	6	1	**232-2870**	1	PLATE AS	
	7	1	**269-3269**	1	PLATE AS	
	8	1	**283-8562**	1	PLATE AS	
	9	1	**283-8563**	1	PLATE AS	
	10	1	**9X-2038**	40	WASHER (7X19X2-MM THK)	
M	11	1	**9X-2043**	40	SCREW-TRUSS HEAD (M6X1X14-MM)	

M-METRIC PART

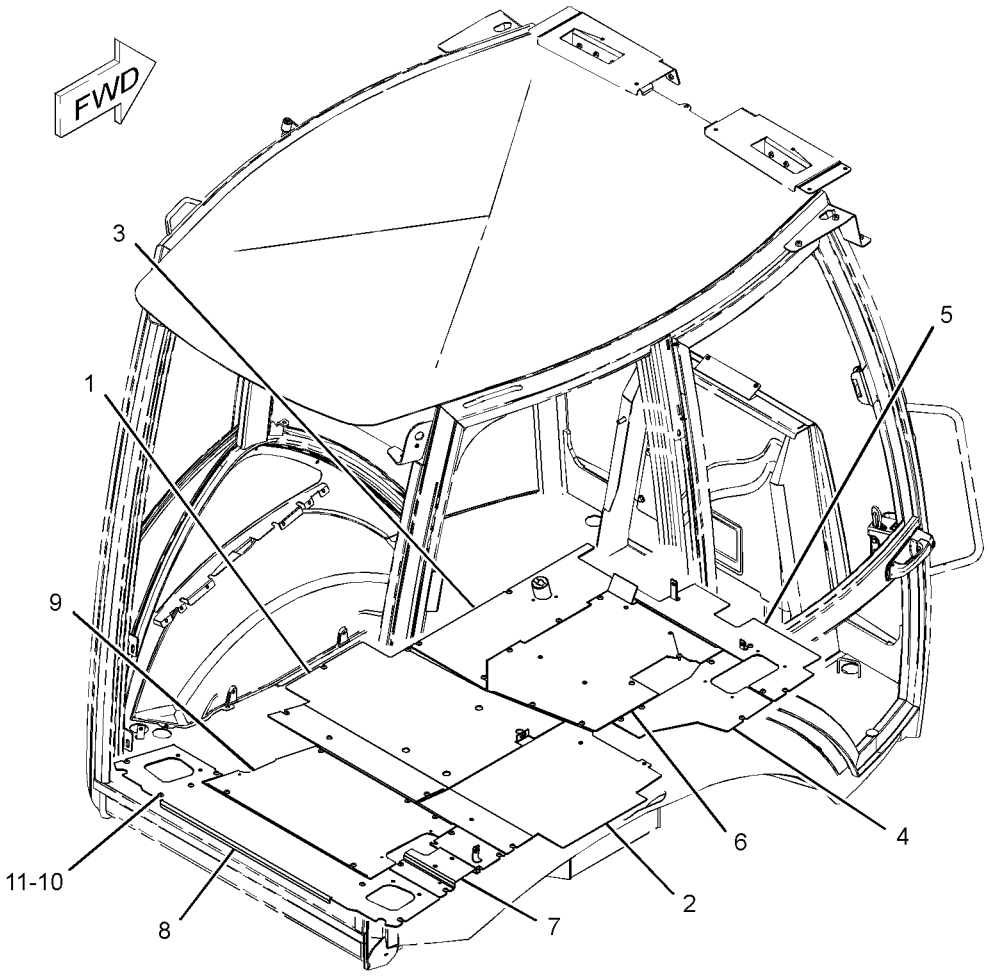

GRAPHIC #1 **<END>** g01234300

FRAME AND BODY

223-3966 FLOORPLATE GP

S/N: HLS1-6266

PART OF 269-2125, 269-2126, 269-2127 CAB AR-ENCLOSED ROPS

AN ATTACHMENT

SMCS-7265 **i02447122**

NOTE	REF NO	GRAPHIC REF	PART NUMBER	QTY	PART NAME 1 2 3 4 5 6 (PRODUCT LEVEL)	SEE PAGE
	1	1	**206-1832**	1	PLATE AS	
	2	1	**269-3269**	1	PLATE AS	
	3	1	**283-8562**	1	PLATE AS	
	4	1	**206-1850**	1	PLATE AS	
	5	1	**232-2865**	1	PLATE AS	
	6	1	**223-3964**	1	PLATE AS	
	7	1	**232-2869**	1	PLATE AS	
	8	1	**223-4546**	1	PLATE AS	
	9	1	**283-8563**	1	PLATE AS	
	10	1	**9X-2038**	40	WASHER (7X19X2-MM THK)	
	11	1	**232-2870**	1	PLATE AS	
M	12	1	**9X-2043**	44	SCREW-TRUSS HEAD (M6X1X14-MM)	

M-METRIC PART

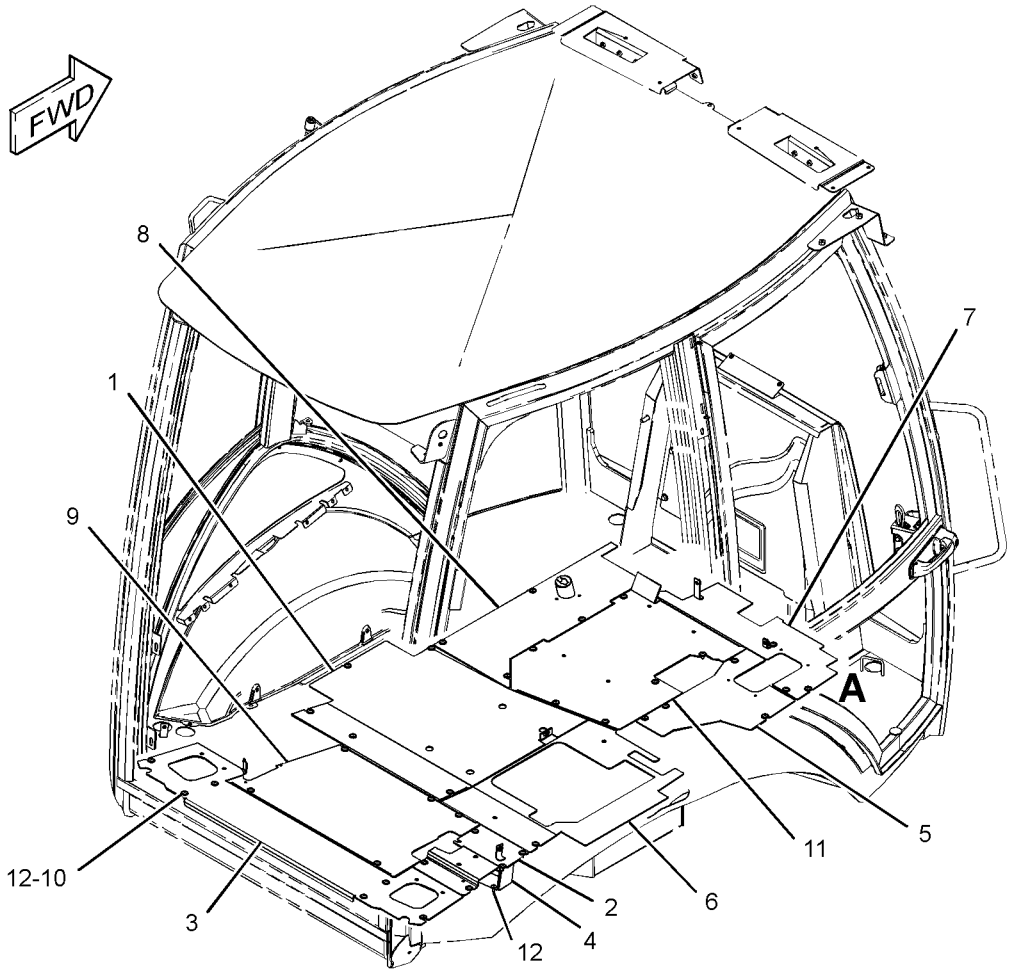

GRAPHIC #1 **<END>** g01231889

284-2757 FLOORPLATE GP

S/N: HLS6216-99999
PART OF 269-2125, 269-2126, 269-2127 CAB AR-ENCLOSED ROPS, 269-2123, 269-2124 CANOPY AR-OPEN ROPS
AN ATTACHMENT

SMCS-7265 **i02818626**

NOTE	REF NO	GRAPHIC REF	PART NUMBER	QTY	PART NAME 1 2 3 4 5 6 (PRODUCT LEVEL)	SEE PAGE
	1	1	**206-1832**	1	PLATE AS	
	2	1	**223-4546**	1	PLATE AS	
	3	1	**232-2865**	1	PLATE AS	
	4	1	**232-2869**	1	PLATE AS	
	5	1	**232-2870**	1	PLATE AS	
	6	1	**269-3269**	1	PLATE AS	
	7	1	**275-9907**	1	PLATE AS	
M		1	**6V-9632**	6	NUT-WELD (M6X1-THD)	
	8	1	**283-8563**	1	PLATE AS	
	9	1	**299-3442**	1	PLATE AS	
M		1	**6V-9632**	6	NUT-WELD (M6X1-THD)	
	10	1	**299-4777**	1	PLATE AS	
	11	1	**9X-2038**	39	WASHER (7X19X2-MM THK)	
M	12	1	**9X-2043**	43	SCREW-TRUSS HEAD (M6X1X14-MM)	

M-METRIC PART

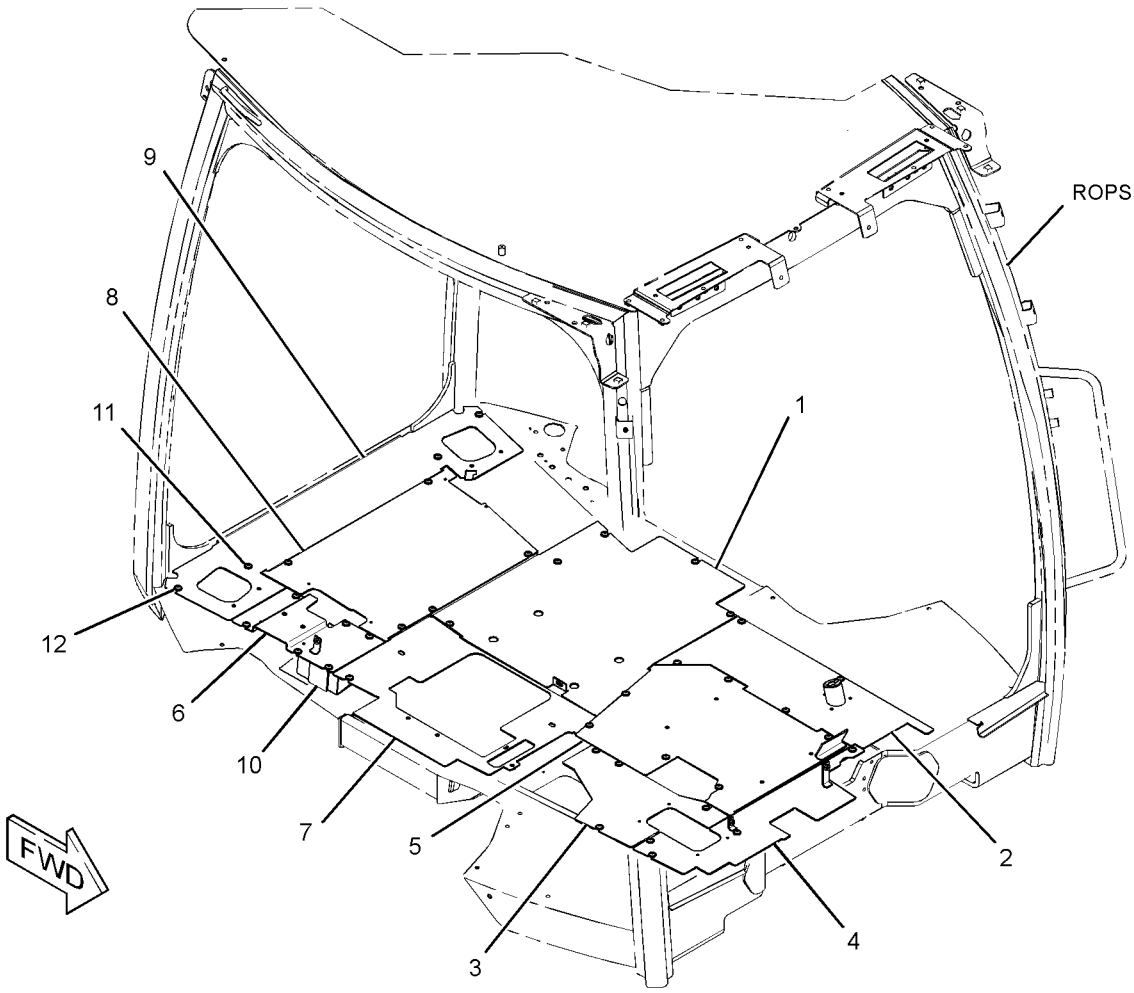

GRAPHIC #1 **<END>** g01414043

FRAME AND BODY

316-1079 FRAME AS-SWING

S/N: HLS6459-99999

PART OF 251-4519 FRAME GP-SWING

SMCS-6506 **i02957161**

NOTE	REF NO	GRAPHIC REF	PART NUMBER	QTY	PART NAME 1 2 3 4 5 6 (PRODUCT LEVEL)	SEE PAGE
	1	1	**9R-0366**	1	WASHER (80X140X5-MM THK)	
	2	1	**213-6702**	4	BEARING-SLEEVE	
	3	1	**237-0944**	2	BEARING-SLEEVE	
	4	1	**262-7043**	2	BEARING	
	5	1	**278-5454**	2	BEARING-SLEEVE	

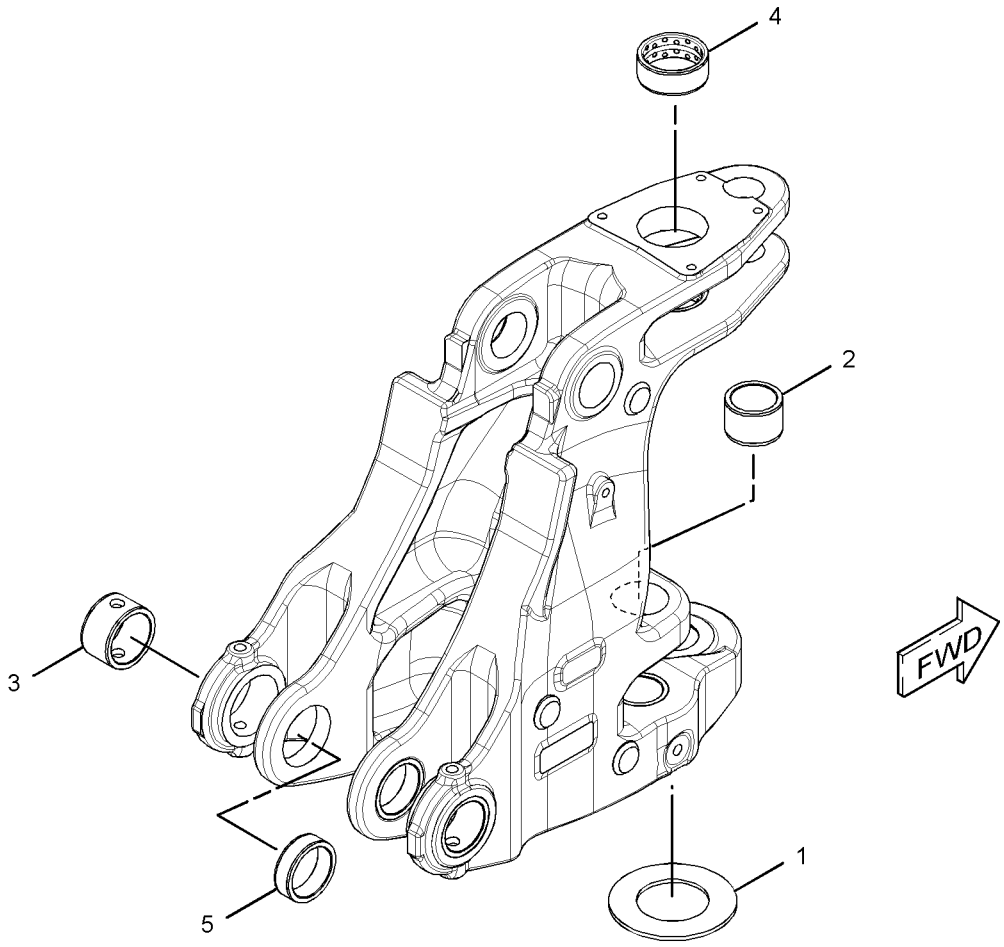

GRAPHIC #1 **<END>** g01521948

214-2000 FRAME GP-LOADER—SINGLE TILT

S/N: HLS1-99999

PART OF 213-9287 CHASSIS AR

SMCS-7054 **i02894977**

NOTE	REF NO	GRAPHIC REF	PART NUMBER	QTY	PART NAME 1 2 3 4 5 6 (PRODUCT LEVEL)	SEE PAGE
	1	1	**9R-0481**	2	WASHER (71X110X4-MM THK)	
	2	1	**209-4777**	1	CAP & BEARING AS	
		1	**9R-4110**	2	BEARING-SLEEVE	
	3	1	**214-2001**	1	FRAME AS	
	3A	1	**278-7695**	1	BEARING-SLEEVE	
	3B	1	**9R-0431**	4	BEARING-SLEEVE	
	3C	1	**9R-0431**	4	BEARING-SLEEVE	
	3D	1	**278-7066**	4	BEARING	
	3E	1	**262-7044**	1	BEARING	
	4	1	**214-4754**	2	PLATE	
M	5	1	**114-6099**	8	BOLT (M24X3X80-MM)	
	6	1	**3B-8488**	3	FITTING-GREASE	
	7	1	**3B-8489**	2	FITTING-GREASE	
M	8	1	**8T-4001**	8	NUT (M24X3-THD)	
	9	1	**8T-4121**	4	WASHER-HARD (11X21X2.5-MM THK)	
	10	1	**8T-4167**	16	WASHER-HARD (26X44X4-MM THK)	
M	11	1	**8T-4195**	4	BOLT (M10X1.5X30-MM)	

M-METRIC PART

214-2000 **FRAME GP-LOADER** *(contd.)* **i02894977**

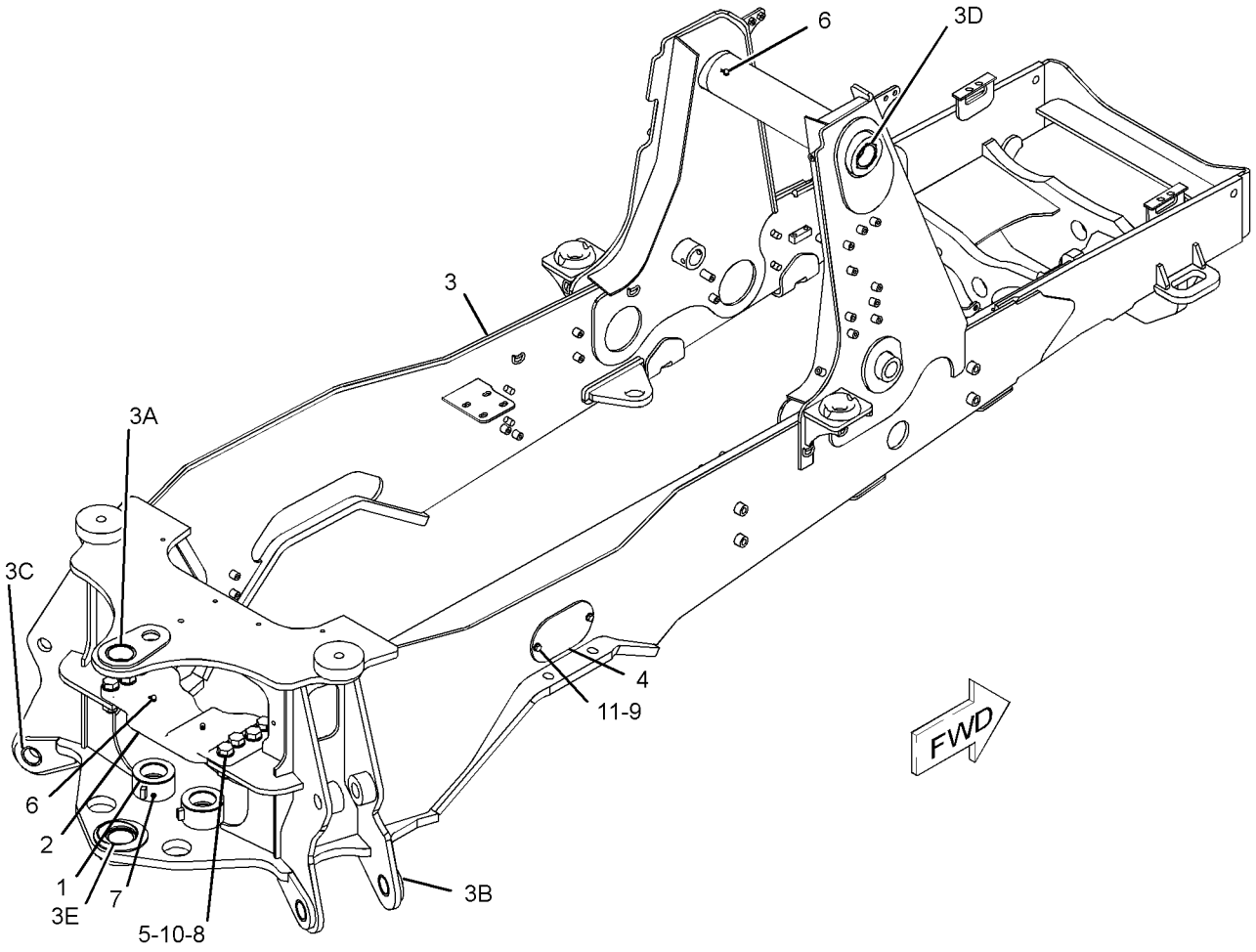

GRAPHIC #1 **<END>** g01376272

FRAME AND BODY

251-4519 FRAME GP-SWING

S/N: HLS1-6458

PART OF 213-9287 CHASSIS AR

SMCS-6506 **i02997644**

NOTE	REF NO	GRAPHIC REF	PART NUMBER	QTY	PART NAME 1 2 3 4 5 6 (PRODUCT LEVEL)	SEE PAGE
B	1	1	**8T-4821**	5	WASHER (13.5X40X3-MM THK)	
	2	1	**8T-4837**	1	WASHER (48X85X6-MM THK)	
	3	1	**300-5440**	1	PIN	
B	4	1	**176-0626**	2	WASHER (67.5X120X3-MM THK)	
	5	1	**9R-7882**	1	SPACER (14X25X7-MM THK)	
B	6	1	**9R-8291**	2	SPACER (66X125X1-MM THK)	
	7	1	**270-5290**	1	BOLT-SOCKET HEAD (M12X1.75X300-MM)	
	8	1	**209-6850**	1	PIN AS	
	9	1	**209-6855**	2	PIN	
	10	1	**209-6862**	1	FRAME AS-SWING	
	10A	1	**9R-0366**	1	WASHER (80X140X5-MM THK)	
	10B	1	**213-6702**	4	BEARING-SLEEVE	
	10C	1	**237-0944**	2	BEARING-SLEEVE	
	10D	1	**262-7043**	2	BEARING	
	10E	1	**278-5454**	2	BEARING-SLEEVE	
	11	1	**237-5330**	2	PIN	
	12	1	**290-8156**	1	PIN AS	
		1	**9F-2049**	1	DOWEL	
	13	1	**250-0741**	1	LUG	
B	14	1	**136-7440**	2	SHIM (1-MM THK)	
	15	1	**3B-8488**	1	FITTING-GREASE	
	16	1	**3B-8489**	3	FITTING-GREASE	
M	17	1	**6V-7687**	4	LOCKNUT (M12X1.75-THD)	
M	18	1	**8T-6868**	1	BOLT (M12X1.75X80-MM)	
M	19	1	**8T-3652**	1	NUT (M42X25-THD)	
M	20	1	**8T-4139**	1	BOLT (M12X1.75X30-MM)	
M	22	1	**8T-7930**	2	BOLT (M12X1.75X160-MM)	
	23	1	**5P-1076**	4	WASHER-HARD (13.5X30X4-MM THK)	

B-USE AS REQUIRED
M-METRIC PART

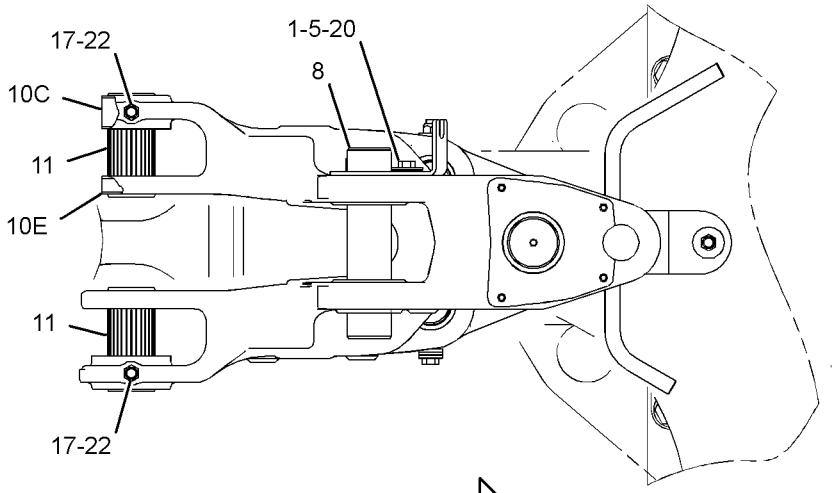

TOP VIEW FWD

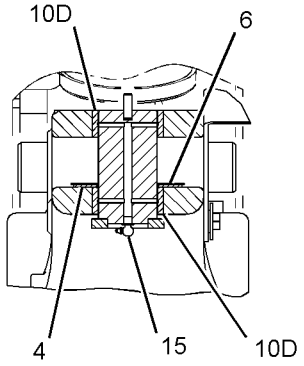

SECTION A-A

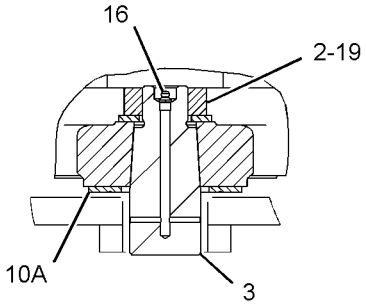

SECTION B-B

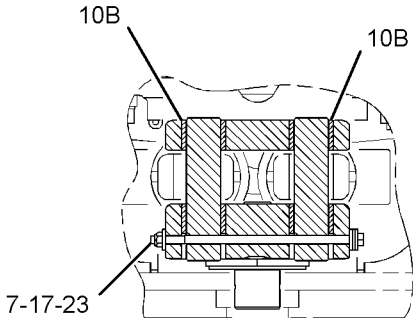

SECTION C-C

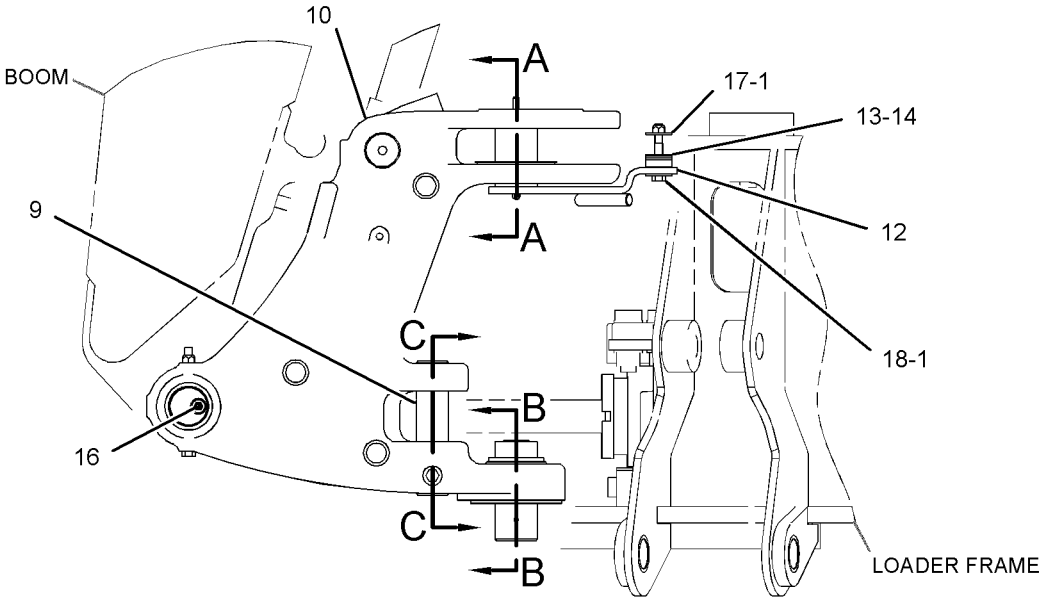

RIGHT SIDE VIEW

GRAPHIC #1 **<END>** g01520331

251-4519 FRAME GP-SWING

S/N: HLS6459-8202

PART OF 213-9287 CHASSIS AR

SMCS-6506 **i02957153**

NOTE	REF NO	GRAPHIC REF	PART NUMBER	QTY	PART NAME 1 2 3 4 5 6 (PRODUCT LEVEL)	SEE PAGE
	1	1	**8T-4821**	5	WASHER (13.5X40X3-MM THK)	
	2	1	**8T-4837**	1	WASHER (48X85X6-MM THK)	
	3	1	**300-5440**	1	PIN	
BC	4	1	**176-0626**	2	WASHER (67.5X120X3-MM THK)	
	5	1	**9R-7882**	1	SPACER (14X25X7-MM THK)	
B	6	1	**9R-8291**	2	SPACER (66X125X1-MM THK)	
	7	1	**270-5290**	1	BOLT-SOCKET HEAD (M12X1.75X300-MM)	
	8	1	**209-6850**	1	PIN AS	
	9	1	**209-6855**	2	PIN	
CY	10	1	**316-1079**	1	FRAME AS-SWING	362
	11	1	**237-5330**	2	PIN	
	12	1	**290-8156**	1	PIN AS	
		1	**9F-2049**	1	DOWEL	
	13	1	**250-0741**	1	LUG	
B	14	1	**136-7440**	2	SHIM (1-MM THK)	
	15	1	**3B-8486**	1	FITTING-GREASE	
	16	1	**3B-8489**	3	FITTING-GREASE	
M	17	1	**6V-7687**	4	LOCKNUT (M12X1.75-THD)	
M	18	1	**8T-6868**	1	BOLT (M12X1.75X80-MM)	
M	19	1	**8T-3652**	1	NUT (M42X25-THD)	
M	20	1	**8T-4139**	1	BOLT (M12X1.75X30-MM)	
C	21	1	**5P-1076**	3	WASHER-HARD (13.5X30X4-MM THK)	
M	22	1	**8T-7930**	2	BOLT (M12X1.75X160-MM)	

B-USE AS REQUIRED
C-CHANGE FROM PREVIOUS TYPE
M-METRIC PART
Y-SEPARATE ILLUSTRATION

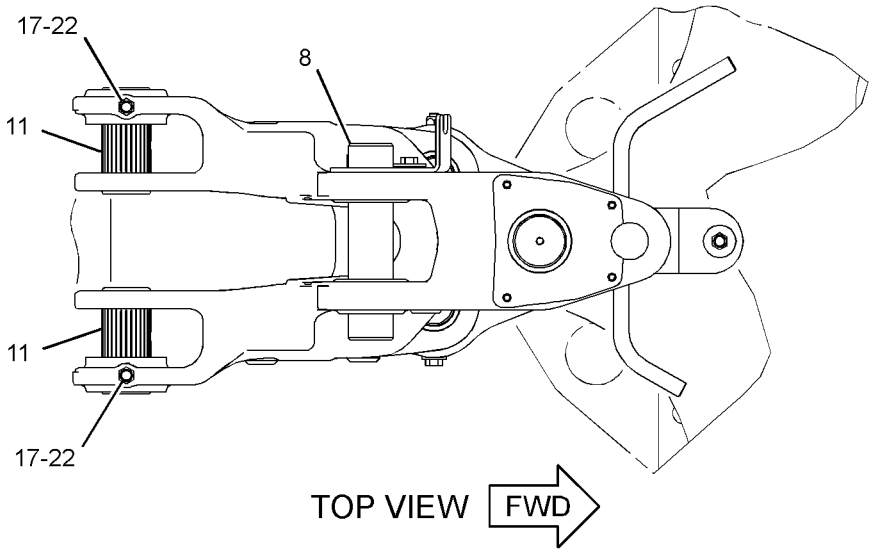

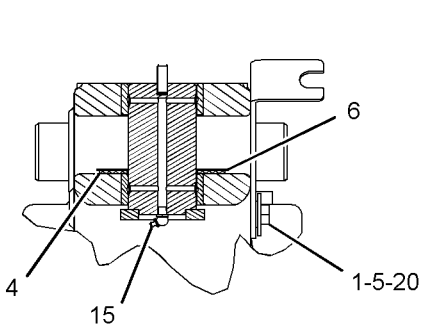

SECTION A-A

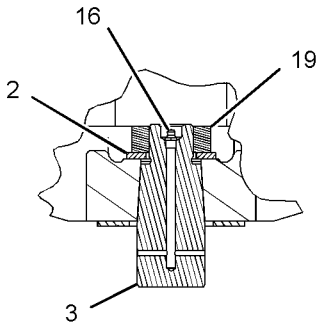

SECTION B-B

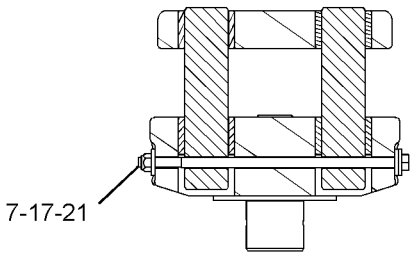

SECTION C-C

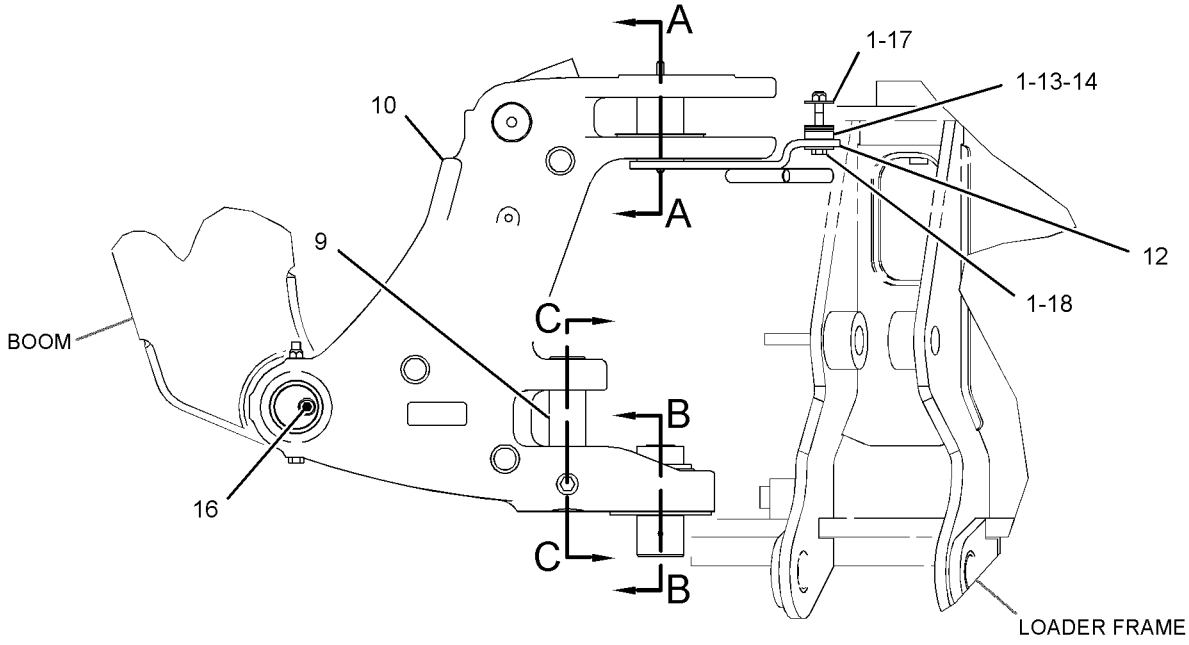

RIGHT SIDE VIEW

GRAPHIC #1

<END>

g01517969

251-4519 FRAME GP-SWING

S/N: HLS8203-99999

PART OF 213-9287 CHASSIS AR

SMCS-6506 **i03248822**

NOTE	REF NO	GRAPHIC REF	PART NUMBER	QTY	PART NAME 1 2 3 4 5 6 (PRODUCT LEVEL)	SEE PAGE
	1	1	**8T-4821**	5	WASHER (13.5X40X3-MM THK)	
	2	1	**8T-4837**	1	WASHER (48X85X6-MM THK)	
	3	1	**300-5440**	1	PIN	
B	4	1	**176-0626**	2	WASHER (67.5X120X3-MM THK)	
	5	1	**9R-7882**	1	SPACER (14X25X7-MM THK)	
B	6	1	**9R-8291**	2	SPACER (66X125X1-MM THK)	
	7	1	**270-5290**	1	BOLT-SOCKET HEAD (M12X1.75X300-MM)	
	8	1	**209-6850**	1	PIN AS	
	9	1	**209-6855**	2	PIN	
Y	10	1	**316-1079**	1	FRAME AS-SWING	362
	11	1	**237-5330**	2	PIN	
C	12	1	**328-8776**	1	PIN AS	
		1	**9F-2049**	1	DOWEL	
	13	1	**250-0741**	1	LUG	
B	14	1	**136-7440**	2	SHIM (1-MM THK)	
C	15	1	**3B-8486**	2	FITTING-GREASE	
	16	1	**3B-8489**	3	FITTING-GREASE	
M	17	1	**6V-7687**	4	LOCKNUT (M12X1.75-THD)	
M	18	1	**8T-6868**	1	BOLT (M12X1.75X80-MM)	
M	19	1	**8T-3652**	1	NUT (M42X25-THD)	
M	20	1	**8T-4139**	1	BOLT (M12X1.75X30-MM)	
	21	1	**5P-1076**	3	WASHER-HARD (13.5X30X4-MM THK)	
M	22	1	**8T-7930**	2	BOLT (M12X1.75X160-MM)	

B-USE AS REQUIRED
C-CHANGE FROM PREVIOUS TYPE
M-METRIC PART
Y-SEPARATE ILLUSTRATION

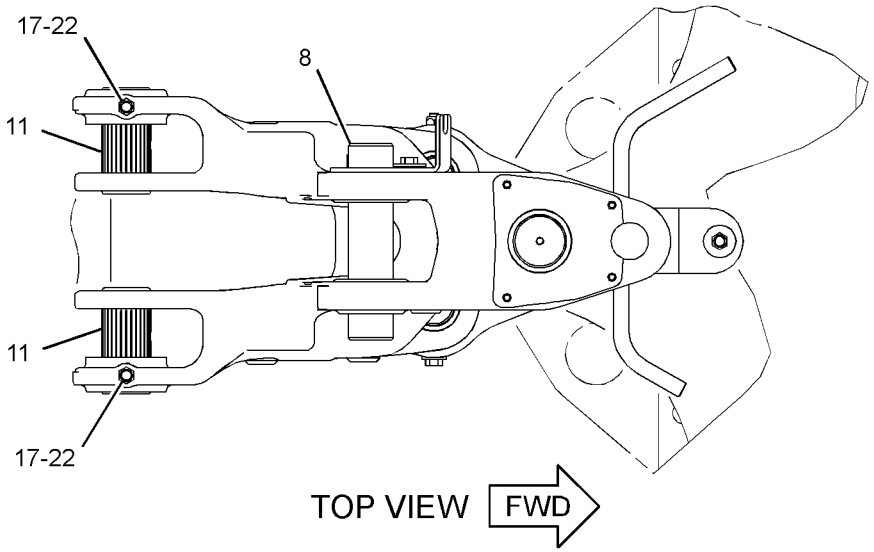

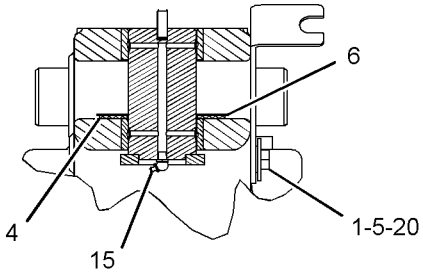

SECTION A-A

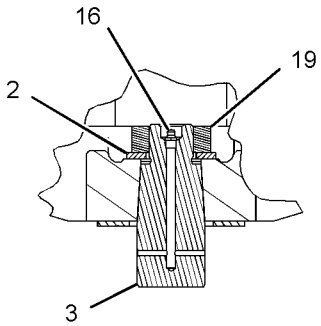

SECTION B-B

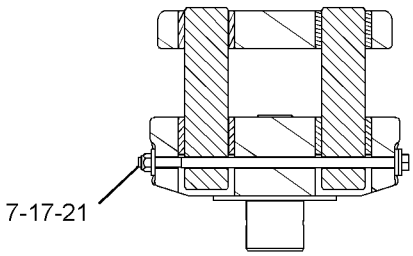

SECTION C-C

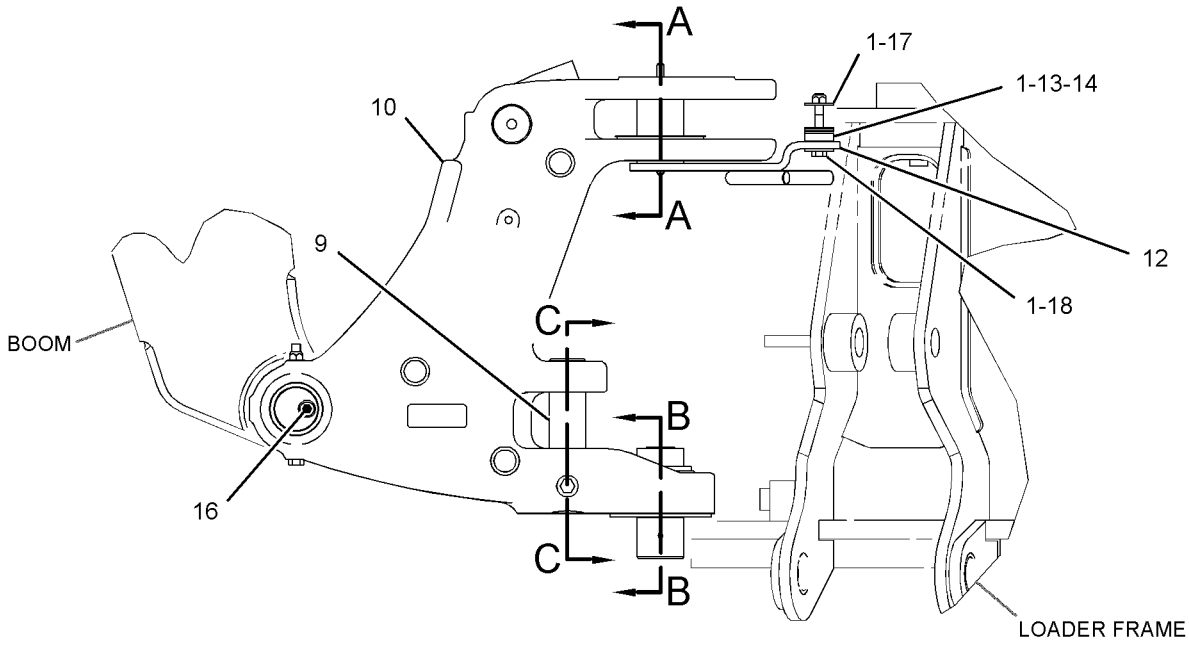

RIGHT SIDE VIEW

GRAPHIC #1

<END>

g01517969

254-2463 GRILL-RADIATOR–SCREEN

S/N: HLS1-99999
AN ATTACHMENT

SMCS-7170 **i03549724**

NOTE	REF NO	GRAPHIC REF	PART NUMBER	QTY	PART NAME 1 2 3 4 5 6 (PRODUCT LEVEL)	SEE PAGE
					(NO SERVICED PARTS)	

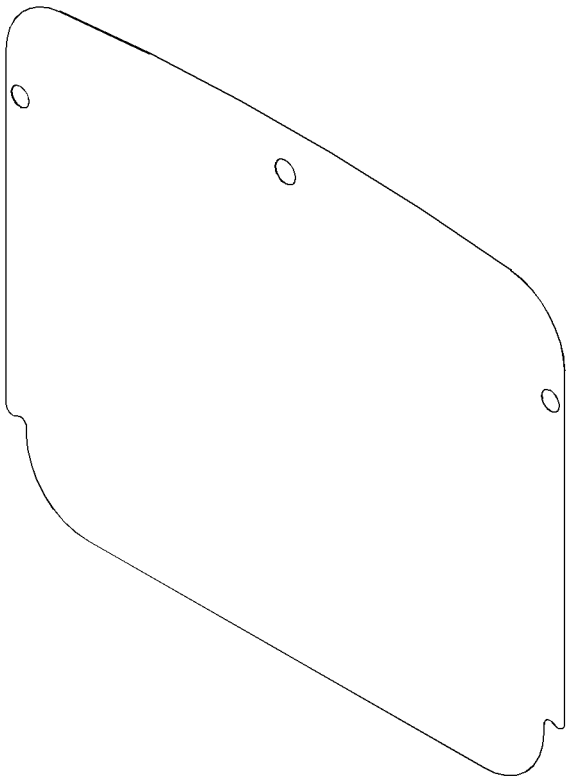

GRAPHIC #1 **<END>** g01878354

217-9672 GUARD GP-DRIVE SHAFT

S/N: HLS1-99999
PART OF 216-4740 DRIVE AR-BACKHOE LOADER
AN ATTACHMENT

SMCS-7153 **i02531163**

NOTE	REF NO	GRAPHIC REF	PART NUMBER	QTY	PART NAME 1 2 3 4 5 6 (PRODUCT LEVEL)	SEE PAGE
	1	1	**216-5981**	1	GUARD AS	
M	2	1	**290-3347**	4	BOLT-CARRIAGE (M16X2X40-MM)	
	3	1	**8T-4122**	4	WASHER-HARD (17X32X3.5-MM THK)	
M	4	1	**8T-4132**	4	NUT (M16X2-THD)	

M-METRIC PART

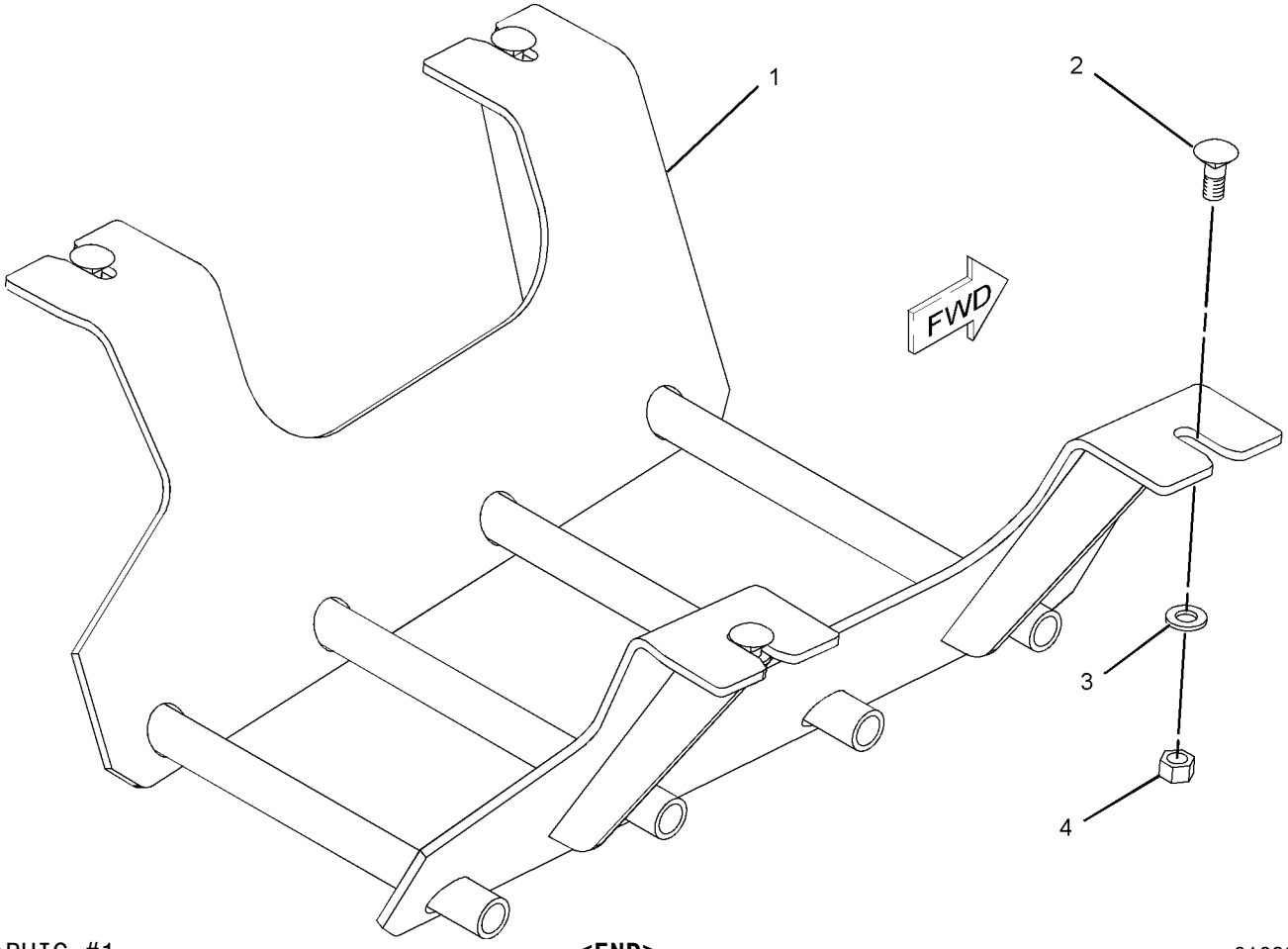

GRAPHIC #1 **<END>** g01083443

FRAME AND BODY

256-0324 GUARD GP-RADIATOR

S/N: HLS1-99999
AN ATTACHMENT

SMCS-7155 **i02446181**

NOTE	REF NO	GRAPHIC REF	PART NUMBER	QTY	PART NAME 1 2 3 4 5 6 (PRODUCT LEVEL)	SEE PAGE
	1	1	**256-0323**	1	COVER	
M	2	1	**7X-2572**	2	BOLT (M24X3X35-MM)	
	3	1	**8T-4167**	2	WASHER-HARD (26X44X4-MM THK)	

M-METRIC PART

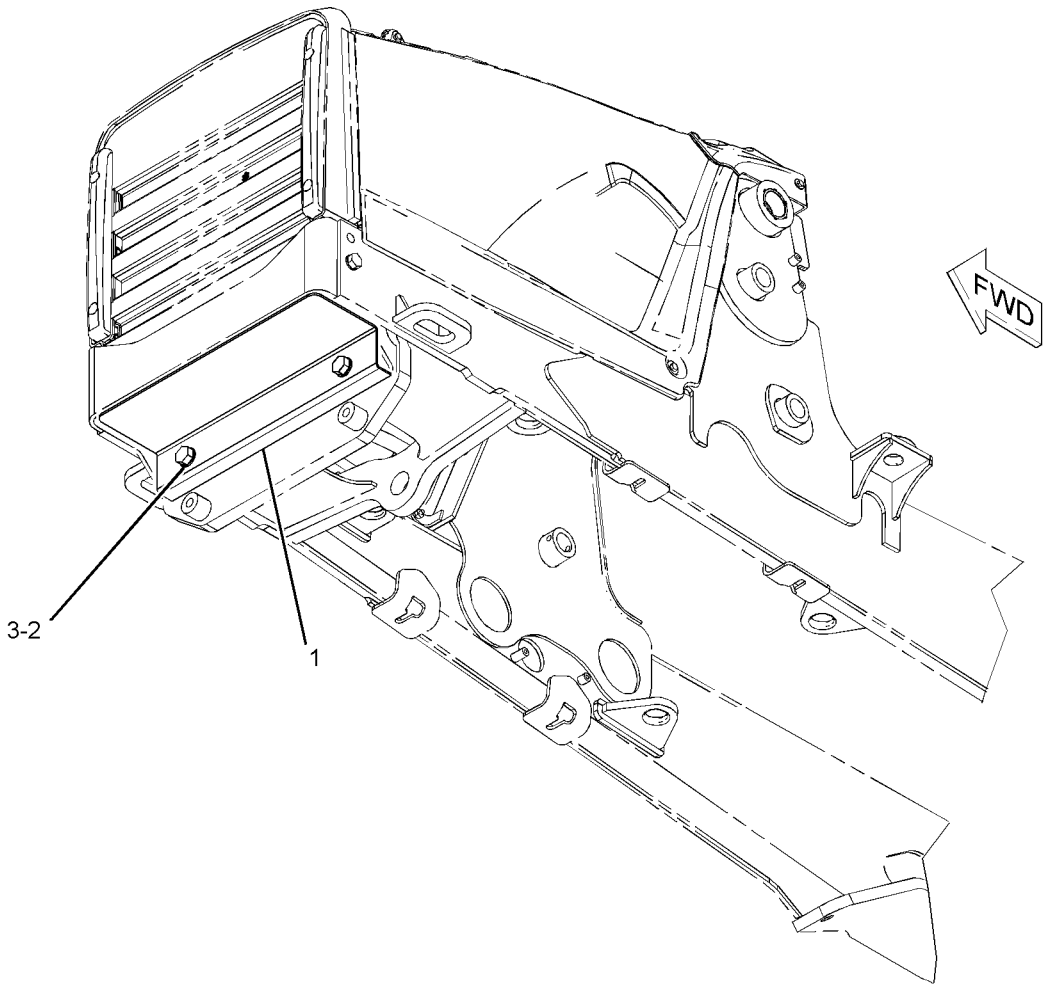

GRAPHIC #1 **<END>** g01096781

FRAME AND BODY

211-3546 HOOD & GUARD GP

S/N: HLS1-99999
PART OF 213-9287 CHASSIS AR
TYPE 1

SMCS-7150, 7170, 7251, 7263 **i03549560**

NOTE	REF NO	GRAPHIC REF	PART NUMBER	QTY	PART NAME 1 2 3 4 5 6 (PRODUCT LEVEL)	SEE PAGE
D	1	1	**6V-1580**		SEAL (0.4-M)	
	2	1	**123-0428**	2	BAR	
	3	1	**231-9363**	1	ENCLOSURE AS (RH)	
		1	**275-0002**	1	INSULATION	
		1	**244-1086**	1	ENCLOSURE (RH)	
	4	1	**244-1085**	1	ENCLOSURE (LH)	
	5	1	**244-7614**	1	GUARD AS	
Y	6	1	*245-5728*	1	HOOD GP-ENGINE	378
	7	1	**247-1080**	2	BUMPER AS	
	8	1	**247-6296**	1	GRILL	
	9	1	**250-3344**	1	COWLING AS	
		1	**250-3331**	1	FILM-STRIPE (YELLOW)	
		1	**244-2041**	1	COWLING	
	10	1	**252-9725**	1	BRACE	
	11	1	**7X-0579**	10	WASHER-HARD (8.8X25.5X2-MM THK)	
M	12	1	**7X-2564**	2	BOLT (M20X2.5X90-MM)	
	13	1	**8T-4121**	8	WASHER-HARD (11X21X2.5-MM THK)	
	14	1	**8T-4123**	2	WASHER (22X35X3.5-MM THK)	
M	15	1	**8T-4136**	2	BOLT (M10X1.5X25-MM)	
M	16	1	**8T-4137**	6	BOLT (M10X1.5X20-MM)	
M	17	1	**8T-4139**	2	BOLT (M12X1.75X30-MM)	
M	18	1	**8T-4189**	12	BOLT (M8X1.25X20-MM)	
	19	1	**8T-4223**	2	WASHER-HARD (13.5X25.5X3-MM THK)	
	20	1	**8T-4224**	7	WASHER-HARD (8.8X16X2-MM THK)	
M	21	1	**8T-7547**	5	BOLT (M8X1.25X30-MM)	

D-ORDER BY THE METER
M-METRIC PART
Y-SEPARATE ILLUSTRATION

211-3546 **HOOD & GUARD GP** *(contd.)* **i03549560**

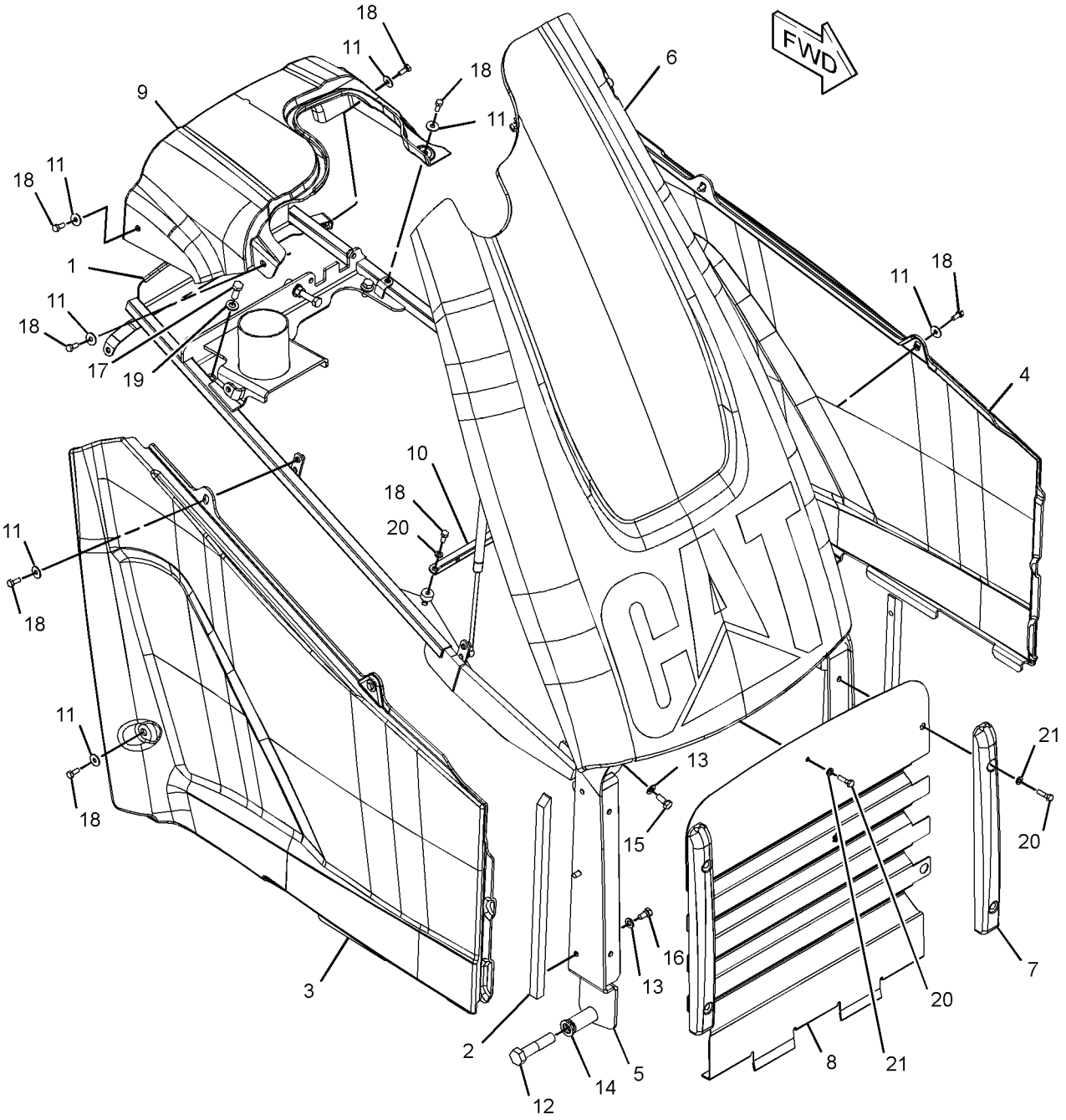

GRAPHIC #1 **<END>** g01214320

FRAME AND BODY

211-3546 HOOD & GUARD GP

S/N: HLS1-99999
PART OF 213-9287 CHASSIS AR
TYPE 2

SMCS-7150, 7170, 7251, 7263 **i03549561**

NOTE	REF NO	GRAPHIC REF	PART NUMBER	QTY	PART NAME 1 2 3 4 5 6 (PRODUCT LEVEL)	SEE PAGE
D	1	1	**6V-1580**		SEAL (0.4-M)	
	2	1	**123-0428**	2	BAR	
	3	1	**231-9363**	1	ENCLOSURE AS (RH)	
		1	**275-0002**	1	INSULATION	
		1	**244-1086**	1	ENCLOSURE (RH)	
	4	1	**244-1085**	1	ENCLOSURE (LH)	
	5	1	**244-7614**	1	GUARD AS	
Y	6	1	*245-5728*	1	HOOD GP-ENGINE	378
	7	1	**247-1080**	2	BUMPER AS	
	8	1	**247-6296**	1	GRILL	
	9	1	*250-3344*	1	COWLING AS	
		1	**250-3331**	1	FILM-STRIPE (YELLOW)	
		1	**244-2041**	1	COWLING	
C	10	1	**320-9655**	1	PLATE AS	
	11	1	**7X-0579**	10	WASHER-HARD (8.8X25.5X2-MM THK)	
M	12	1	**7X-2564**	2	BOLT (M20X2.5X90-MM)	
C	13	1	**8T-4121**	8	WASHER-HARD (11X21X2.5-MM THK)	
	14	1	**8T-4123**	2	WASHER (22X35X3.5-MM THK)	
M	15	1	**8T-4136**	2	BOLT (M10X1.5X25-MM)	
CM	16	1	**8T-4137**	6	BOLT (M10X1.5X20-MM)	
M	17	1	**8T-4139**	2	BOLT (M12X1.75X30-MM)	
CM	18	1	**8T-4189**	12	BOLT (M8X1.25X20-MM)	
	19	1	**8T-4223**	2	WASHER-HARD (13.5X25.5X3-MM THK)	
C	20	1	**8T-4224**	7	WASHER-HARD (8.8X16X2-MM THK)	
M	21	1	**8T-7547**	5	BOLT (M8X1.25X30-MM)	

C-CHANGE FROM PREVIOUS TYPE
D-ORDER BY THE METER
M-METRIC PART
Y-SEPARATE ILLUSTRATION

211-3546 **HOOD & GUARD GP** *(contd.)* **i03549561**

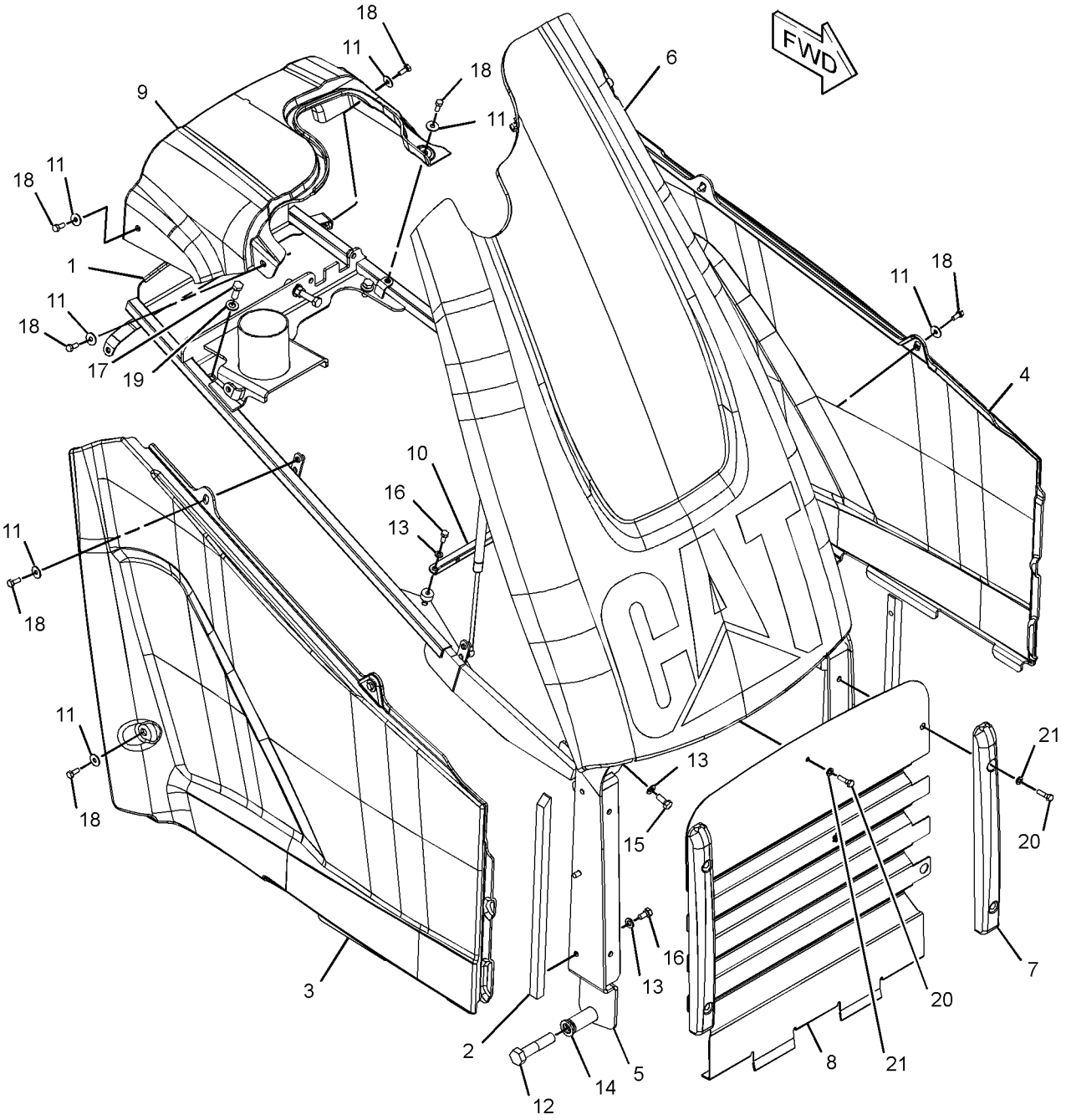

GRAPHIC #1 **<END>** g01560693

FRAME AND BODY

245-5728 HOOD GP-ENGINE

S/N: HLS1-99999

PART OF 211-3546 HOOD & GUARD GP

SMCS-7251 **i03160701**

NOTE	REF NO	GRAPHIC REF	PART NUMBER	QTY	PART NAME 1 2 3 4 5 6 (PRODUCT LEVEL)	SEE PAGE
	1	1	**318-9453**	1	FRAME AS	
J	2	1	**250-5881**	1	SPRING GP-GAS (RH)	
Y	3	1	*253-5384*	1	HOOD GP-ENGINE	379
J	4	1	**254-9301**	1	SPRING AS-GAS (LH)	
	5	1	**3B-4505**	2	LOCKWASHER	
	6	1	**8T-4223**	2	WASHER-HARD (13.5X25.5X3-MM THK)	
M	7	1	**8T-4244**	2	NUT (M12X1.75-THD)	
M	8	1	**8T-4648**	1	BOLT (M12X1.75X70-MM)	
M	9	1	**8T-6869**	2	BOLT (M8X1.25X60-MM)	
	10	1	**288-1157**	1	FILM-INSTRUCTION (UNLOCK)	
	11	1	**8T-4224**	4	WASHER-HARD (8.8X16X2-MM THK)	
					AVAILABLE REPAIR KIT(S):	
J			**275-0001**	2	KIT-GAS SPRING	
					(EACH INCLUDES STUDS & CLIPS)	

J-KIT MARKED J SERVICES PART(S) MARKED J
M-METRIC PART
Y-SEPARATE ILLUSTRATION

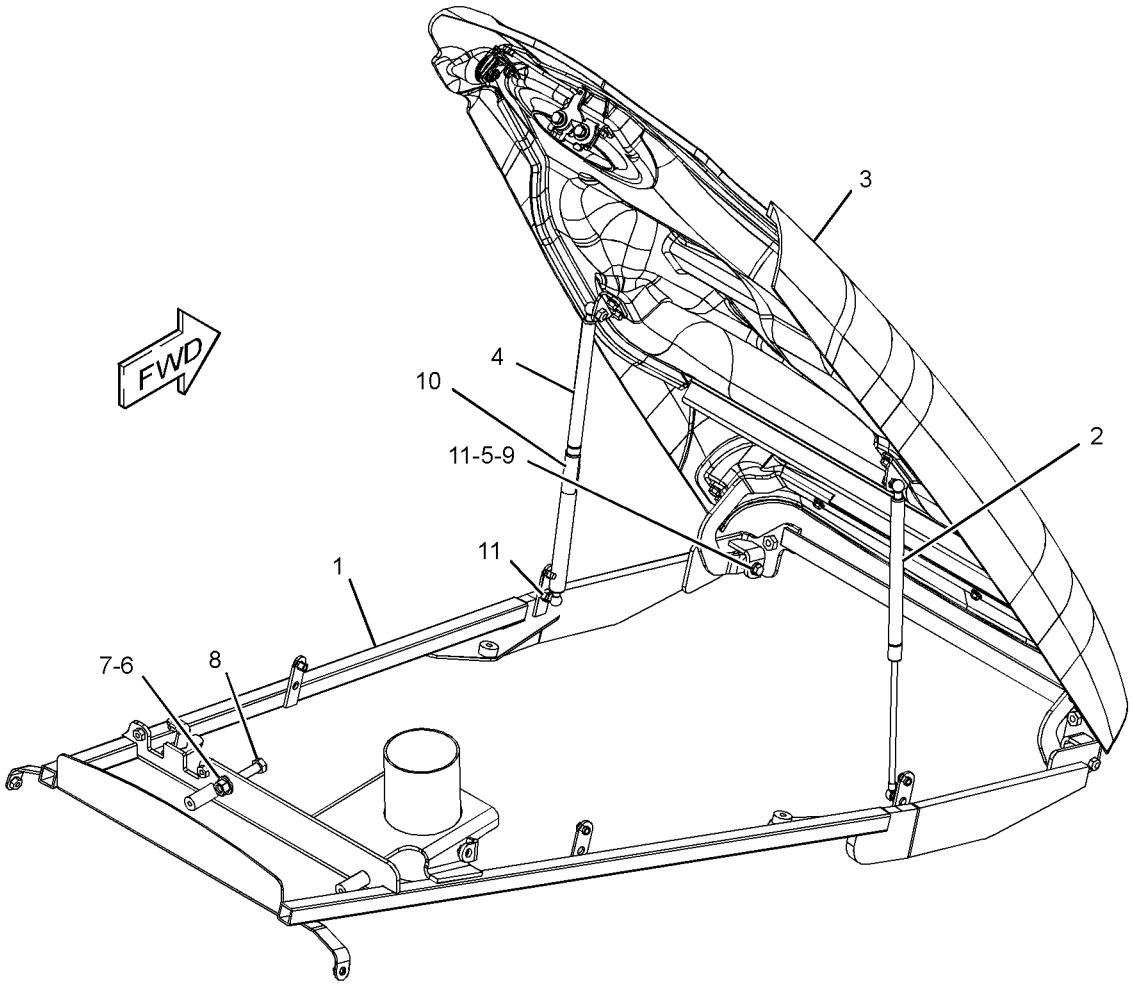

GRAPHIC #1 **<END>** g01281696

253-5384 HOOD GP-ENGINE

S/N: HLS1-99999
PART OF 245-5728 HOOD GP-ENGINE
TYPE 1

SMCS-7251 **i02707232**

NOTE	REF NO	GRAPHIC REF	PART NUMBER	QTY	PART NAME 1 2 3 4 5 6 (PRODUCT LEVEL)	SEE PAGE
	1	1	**5E-8557**	1	CLIP	
	2	1	**245-4914**	1	HINGE AS	
	3	1	**246-2718**	1	HOOD AS	
	4	1	**248-0395**	1	BRACKET AS	
	5	1	**250-1878**	1	FILM-IDENTIFICATION (CAT)	
	6	1	**250-3330**	1	FILM-STRIPE (YELLOW)	
	7	1	**250-6850**	2	BRACKET AS	
	8	1	**250-6858**	1	LATCH AS (HOOD)	
	9	1	**251-4374**	1	LOCK AS (HOOD)	
	10	1	**251-4375**	1	ROD	
	11	1	**6V-5834**	2	SCREW-HEAD (10-14X0.75-IN)	
M	12	1	**7X-2537**	2	BOLT (M8X1.25X35-MM)	
M	13	1	**8T-4189**	10	BOLT (M8X1.25X20-MM)	
	14	1	**8T-4224**	12	WASHER-HARD (8.8X16X2-MM THK)	
E	15	1	**9X-8699**		SEAL (70-CM)	
	16	1	**7X-0620**	2	WASHER-HARD (5.5X13X1.6-MM THK)	

E-ORDER BY THE CENTIMETER
M-METRIC PART

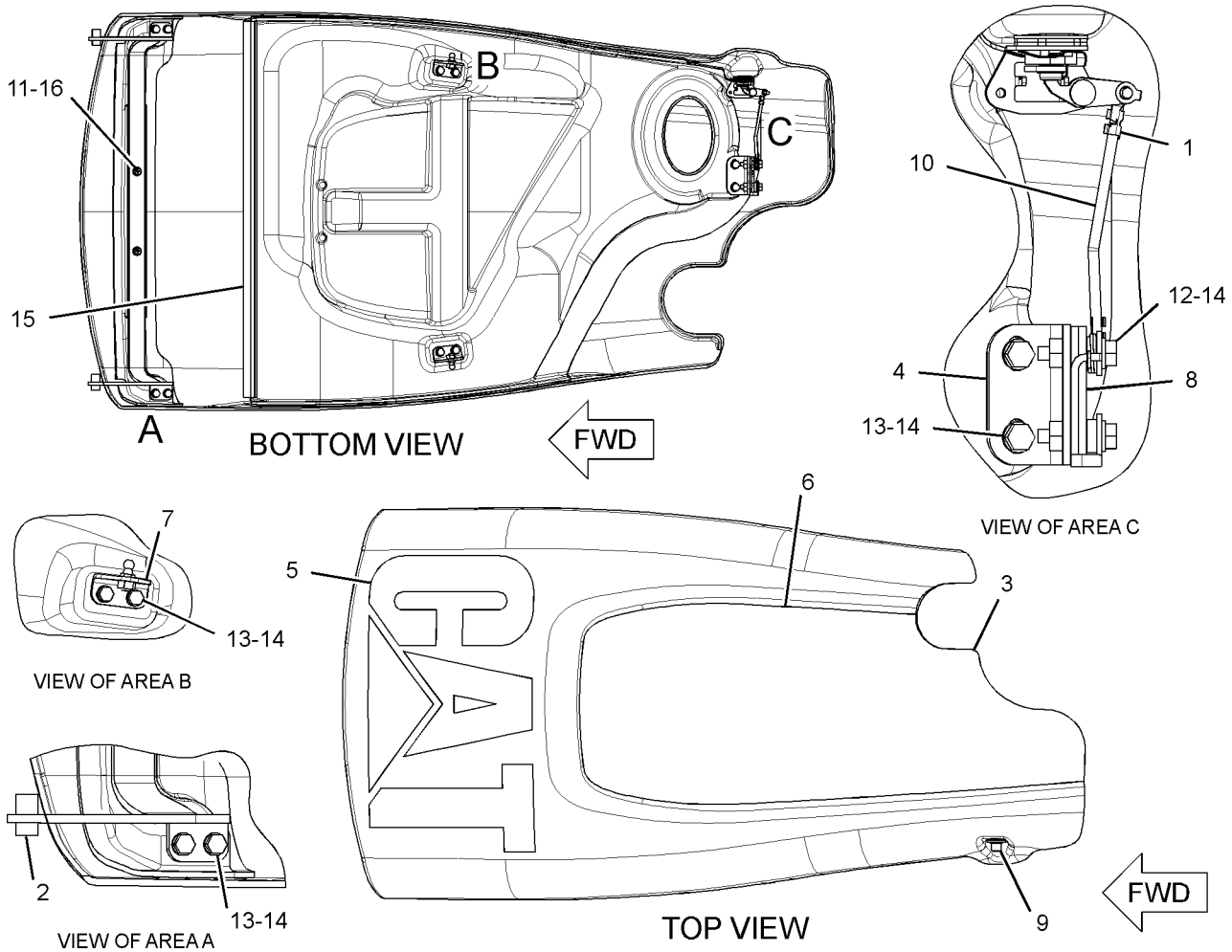

GRAPHIC #1

<END>

g01364466

FRAME AND BODY

253-5384 HOOD GP-ENGINE

S/N: HLS1-99999
PART OF 245-5728 HOOD GP-ENGINE
TYPE 2

SMCS-7251 **i03444002**

NOTE	REF NO	GRAPHIC REF	PART NUMBER	QTY	PART NAME 1 2 3 4 5 6 (PRODUCT LEVEL)	SEE PAGE
	1	1	**5E-8557**	1	CLIP	
C	2	1	**318-4217**	1	HINGE AS (RH)	
	3	1	**246-2718**	1	HOOD AS	
	4	1	**248-0395**	1	BRACKET AS	
	5	1	**250-1878**	1	FILM-IDENTIFICATION (CAT)	
E	6	1	**9X-8699**		SEAL (70-CM)	
	7	1	**250-6850**	2	BRACKET AS	
	8	1	**250-6858**	1	LATCH AS (HOOD)	
	9	1	**251-4374**	1	LOCK AS (HOOD)	
	10	1	**251-4375**	1	ROD	
C	11	1	**318-4222**	1	HINGE AS (LH)	
M	12	1	**7X-2537**	2	BOLT (M8X1.25X35-MM)	
M	13	1	**8T-4189**	10	BOLT (M8X1.25X20-MM)	
	14	1	**8T-4224**	12	WASHER-HARD (8.8X16X2-MM THK)	

C-CHANGE FROM PREVIOUS TYPE
E-ORDER BY THE CENTIMETER
M-METRIC PART

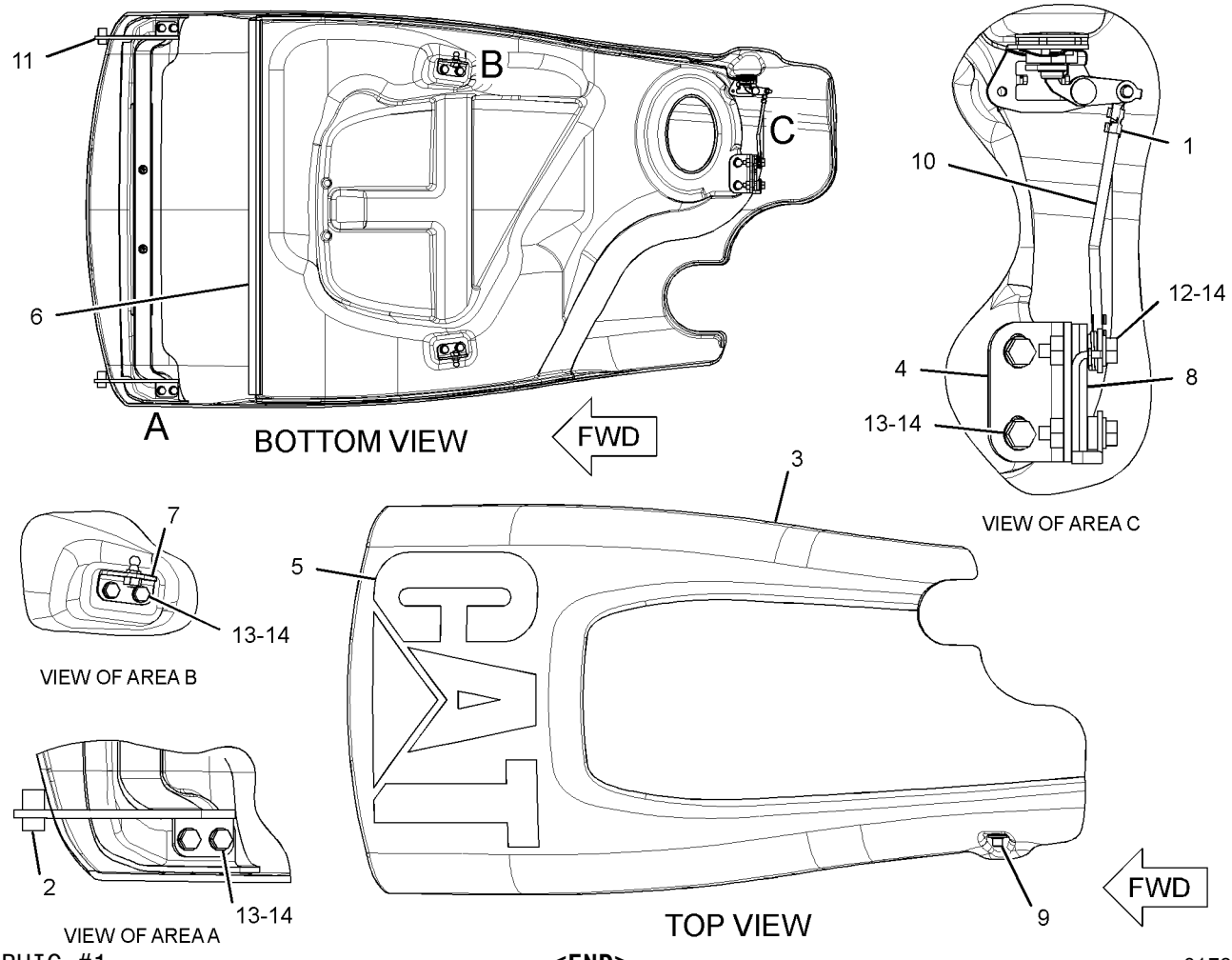

GRAPHIC #1 **<END>** g01797993

HYDRAULIC SYSTEM

226-0420 ACCUMULATOR GP-PILOT OIL—CHARGED

S/N: HLS1-99999
PART OF 267-2765 LINES GP-PILOT
FIELD REPLACEMENT ORDER 230-3489—PAGE 382

SMCS-5077 **i02431359**

NOTE	REF NO	GRAPHIC REF	PART NUMBER	QTY	PART NAME 1 2 3 4 5 6 (PRODUCT LEVEL)	SEE PAGE
					(NO SERVICED PARTS)	

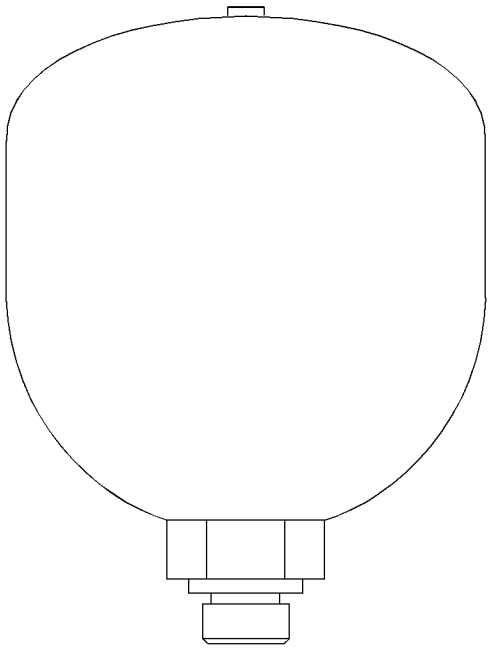

GRAPHIC #1 **<END>** g01214922

HYDRAULIC SYSTEM

230-3489 ACCUMULATOR GP-PILOT OIL—UNCHARGED

S/N: HLS1-99999

FIELD REPLACEMENT FOR 226-0420—PAGE 381

SMCS-5077 **i02039724**

NOTE	REF NO	GRAPHIC REF	PART NUMBER	QTY	PART NAME 1 2 3 4 5 6 (PRODUCT LEVEL)	SEE PAGE
					(NO SERVICED PARTS)	

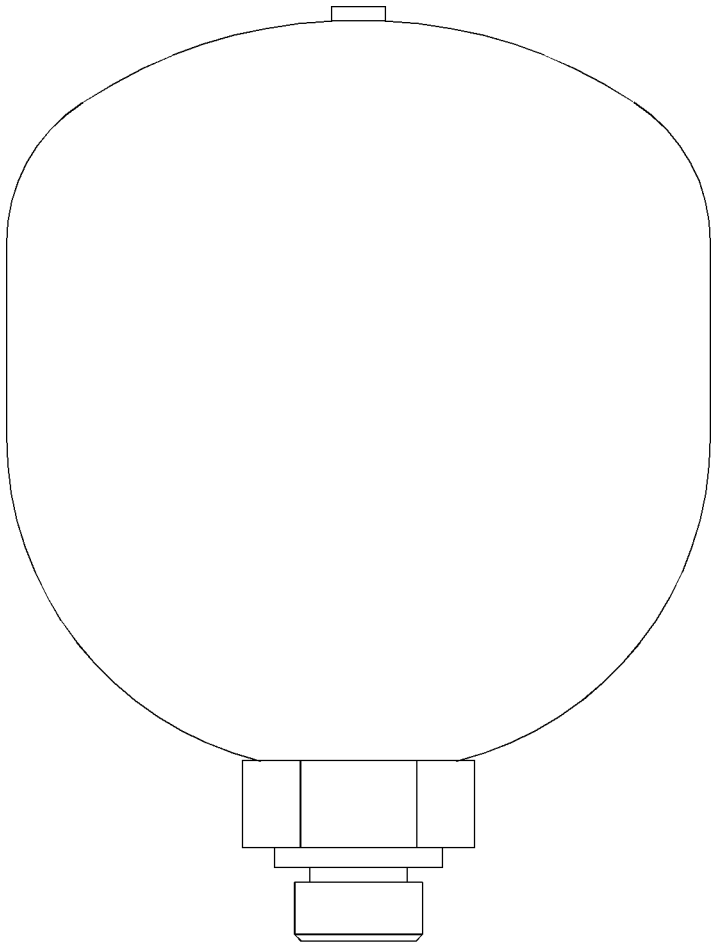

GRAPHIC #1

<END>

g01049358

162-3960 ACCUMULATOR GP-RIDE CONTROL–CHARGED

S/N: HLS1-99999
PART OF 162-3961 ACCUMULATOR GP-RIDE CONTROL, 264-0187 INSTALLATION GP-RIDE CONTROL, 246-9802 LINES GP-RIDE CONTROL
FIELD REPLACEMENT ORDER 162-3961–PAGE 384
AN ATTACHMENT

SMCS-5077 **i02886373**

NOTE	REF NO	GRAPHIC REF	PART NUMBER	QTY	PART NAME 1 2 3 4 5 6 (PRODUCT LEVEL)	SEE PAGE
	1	1	**158-2306**	1	VALVE-GAS	
	2	1	**241-0037**	1	FILM-WARNING (HIGH PRESSURE, READ OMM)	
	3	1	**170-0503**	1	FILM-WARNING (ACCUM, HIGH PRESS, READ OMM)	
					AVAILABLE REPAIR KIT(S):	
			160-0496	1	KIT-SEAL (ACCUMULATOR)	
					(INCLUDES SEALS)	

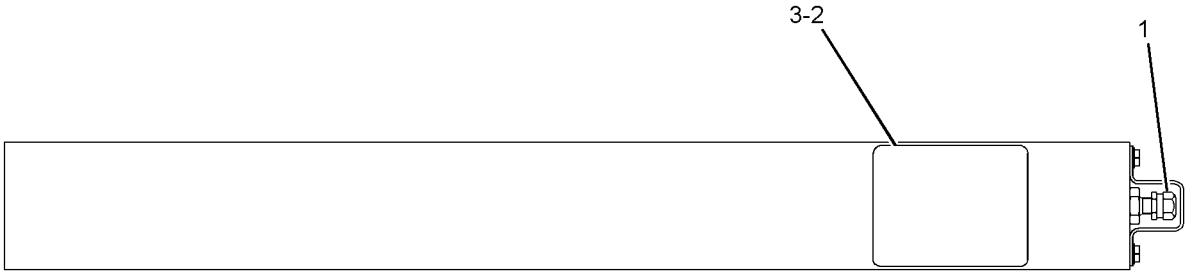

GRAPHIC #1 **<END>** g01220710

HYDRAULIC SYSTEM

162-3961 ACCUMULATOR GP-RIDE CONTROL—UNCHARGED

S/N: HLS1-99999
PART OF 264-0187 INSTALLATION GP-RIDE CONTROL
FIELD REPLACEMENT FOR 162-3960—PAGE 383
AN ATTACHMENT

SMCS-5077 **i03511003**

NOTE	PART NUMBER	QTY	PART NAME 1 2 3 4 5 6 (PRODUCT LEVEL)	SEE PAGE
Y	**162-3960**	1	ACCUMULATOR GP-RIDE CONTROL (CHARGED)	383

Y-SEPARATE ILLUSTRATION

<END>

209-9937 CONTROL AR-RIDE

S/N: HLS1-99999
AN ATTACHMENT

SMCS-5004 **i02105094**

NOTE	PART NUMBER	QTY	PART NAME 1 2 3 4 5 6 (PRODUCT LEVEL)	SEE PAGE
Y	*246-9802*	1	LINES GP-RIDE CONTROL	473
Y	*211-4259*	1	WIRING GP-RIDE CONTROL	197

Y-SEPARATE ILLUSTRATION

<END>

224-6237 CYLINDER & LINES GP-THUMB

S/N: HLS1-99999
PART OF 271-3024, 271-3025, 271-3026, 271-3027, 281-6716, 282-0865, 282-0866, 282-0887, 282-0888, 282-0889, 282-0890, 282-0891, 282-0892, 282-0893, 282-0894, 282-5409 THUMB AR
AN ATTACHMENT
TYPE 1

SMCS-5057, 5362 **i02501589**

NOTE	REF NO	GRAPHIC REF	PART NUMBER	QTY	PART NAME 1 2 3 4 5 6 (PRODUCT LEVEL)	SEE PAGE
	1	1	**106-0401**	1	FITTING (QUICK DISCONNECT, FEMALE)	
	2	1	**106-0406**	1	FITTING (QUICK DISCONNECT, MALE)	
I	3	1	**221-4314**	2	HOSE AS	
	4	1	**270-3409**	2	SPACER (45.24X63.5X10-MM THK)	
Y	5	1	**275-4243**	1	CYLINDER GP-THUMB	412
	6	1	*153-6252*	2	CONNECTOR AS	
					(EACH INCLUDES)	
		1	**6V-8398**	1	SEAL-O-RING	
		1	**7M-8485**	1	SEAL-O-RING	
		1	**9X-8408**	1	CONNECTOR	
	7	1	**6V-8398**	2	SEAL-O-RING	

I-REFER TO HYDRAULIC INFORMATION SYSTEM
Y-SEPARATE ILLUSTRATION

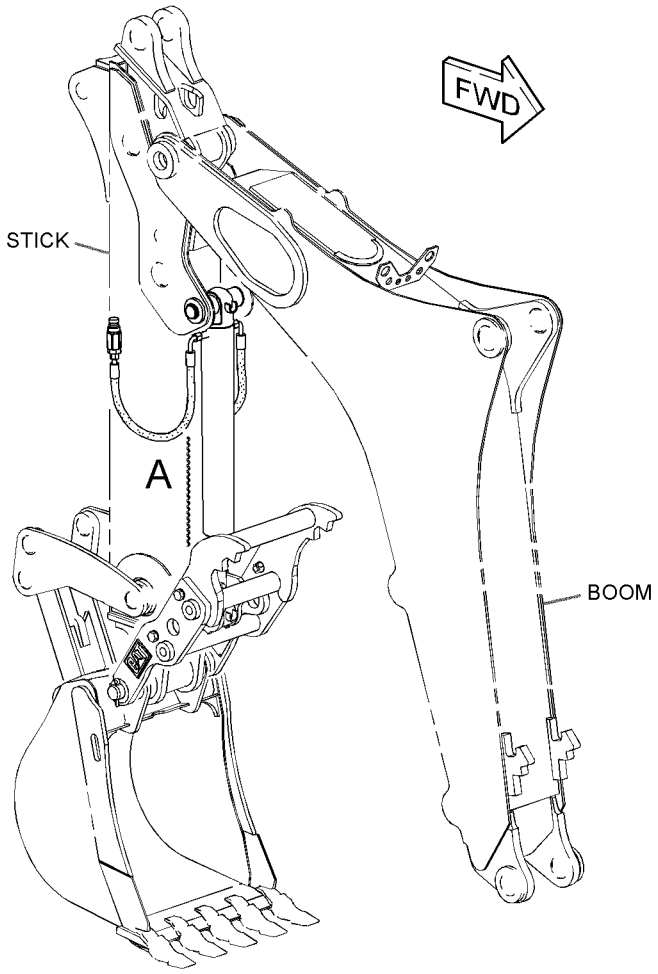

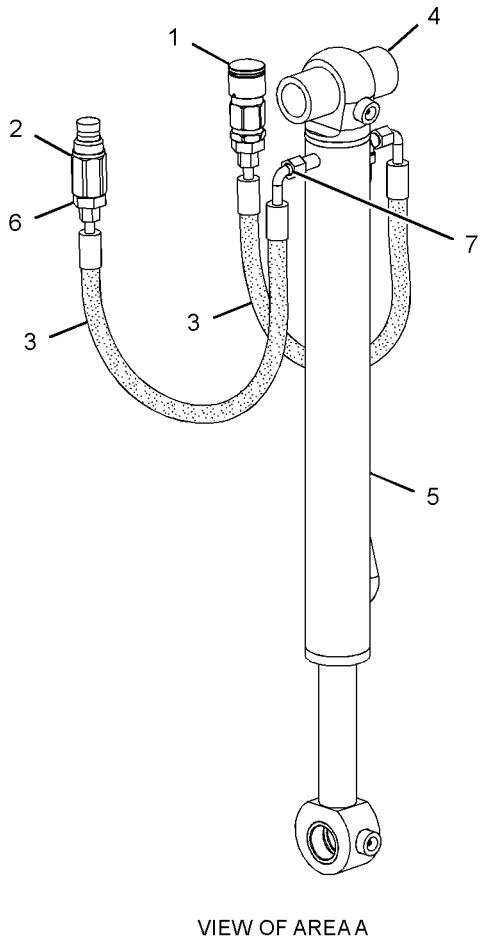

VIEW OF AREA A

GRAPHIC #1 **<END>** g01290622

HYDRAULIC SYSTEM

224-6237 CYLINDER & LINES GP-THUMB

S/N: HLS1-99999
PART OF 271-3024, 271-3025, 271-3026, 271-3027, 281-6716, 282-0865, 282-0866, 282-0887, 282-0888, 282-0889, 282-0890, 282-0891, 282-0892, 282-0893, 282-0894, 282-5409 THUMB AR
AN ATTACHMENT
TYPE 2

SMCS-5057, 5362 **i02783040**

NOTE	REF NO	GRAPHIC REF	PART NUMBER	QTY	PART NAME 1 2 3 4 5 6 (PRODUCT LEVEL)	SEE PAGE
I	1	1	**221-4314**	2	HOSE AS	
	2	1	**270-3409**	2	SPACER (45.24X63.5X10-MM THK)	
Y	3	1	**275-4243**	1	CYLINDER GP-THUMB	412
C	4	1	**278-4497**	1	BRACKET	
C	5	1	**278-4498**	1	BRACKET	
C	6	1	**280-2652**	2	VALVE-BALL	
C	7	1	**294-0973**	1	TOOL	
C	8	1	*148-8340*	2	CONNECTOR AS	
					(EACH INCLUDES)	
		1	**3K-0360**	1	SEAL-O-RING	
		1	**6V-8398**	1	SEAL-O-RING	
		1	**6V-8639**	1	CONNECTOR	
C	9	1	*148-8392*	2	ELBOW AS	
					(EACH INCLUDES)	
		1	**6V-9746**	1	SEAL-O-RING	
		1	**6V-9853**	1	ELBOW	
C	10	1	*148-8449*	2	TEE AS-SWIVEL	
					(EACH INCLUDES)	
		1	**6V-9746**	2	SEAL-O-RING	
		1	**6V-9839**	1	TEE-SWIVEL	
C	11	1	**3K-0360**	2	SEAL-O-RING	
	12	1	**6V-8398**	2	SEAL-O-RING	
C	13	1	**7C-4354**	2	CLIP	
C	14	1	**7I-1036**	2	COUPLING AS	
C	15	1	**8T-4121**	8	WASHER-HARD (11X21X2.5-MM THK)	
CM	16	1	**8T-4133**	2	NUT (M10X1.5-THD)	
CM	17	1	**8T-4136**	6	BOLT (M10X1.5X25-MM)	

C-CHANGE FROM PREVIOUS TYPE
I-REFER TO HYDRAULIC INFORMATION SYSTEM
M-METRIC PART
Y-SEPARATE ILLUSTRATION

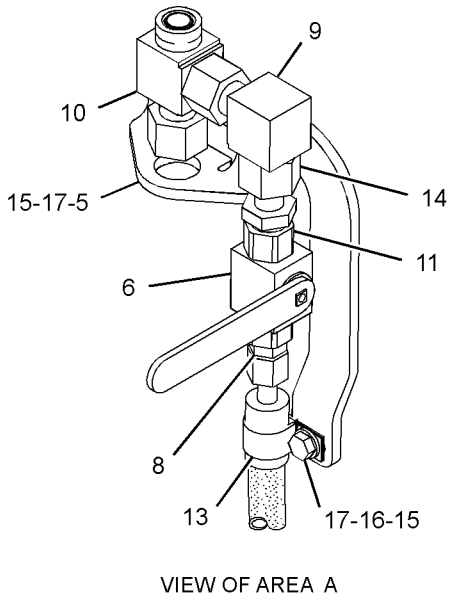

VIEW OF AREA A

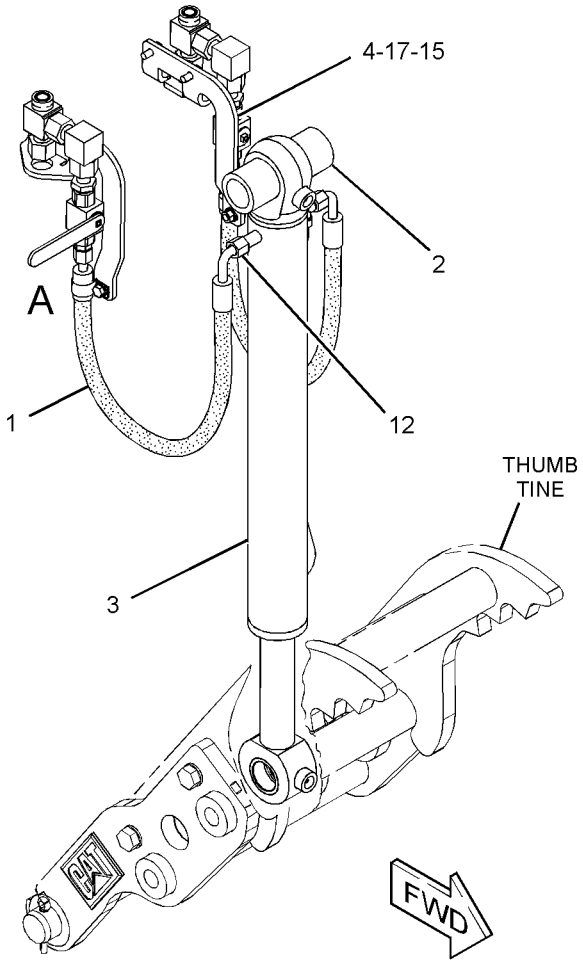

GRAPHIC #1 **<END>** g01392330

HYDRAULIC SYSTEM

299-5362 CYLINDER & LINES GP-THUMB

S/N: HLS1-99999
PART OF 282-5409 THUMB AR
AN ATTACHMENT

SMCS-5057, 5362 **i03517920**

NOTE	REF NO	GRAPHIC REF	PART NUMBER	QTY	PART NAME 1 2 3 4 5 6 (PRODUCT LEVEL)	SEE PAGE
I	1	1	**221-4314**	2	HOSE AS	
	2	1	**270-3409**	2	SPACER (45.24X63.5X10-MM THK)	
Y	3	1	**275-4243**	1	CYLINDER GP-THUMB	412
	4	1	**278-4497**	1	BRACKET	
	5	1	**278-4498**	1	BRACKET	
	6	1	**280-2652**	2	VALVE-BALL	
	7	1	**294-0973**	1	TOOL	
	8	1	*148-8340*	2	CONNECTOR AS	
					(EACH INCLUDES)	
		1	**3K-0360**	1	SEAL-O-RING	
		1	**6V-8398**	1	SEAL-O-RING	
		1	**6V-8639**	1	CONNECTOR	
	9	1	*148-8392*	2	ELBOW AS	
					(EACH INCLUDES)	
		1	**6V-9746**	1	SEAL-O-RING	
		1	**6V-9853**	1	ELBOW	
	10	1	*148-8449*	2	TEE AS-SWIVEL	
					(EACH INCLUDES)	
		1	**6V-9746**	2	SEAL-O-RING	
		1	**6V-9839**	1	TEE-SWIVEL	
	11	1	**3K-0360**	2	SEAL-O-RING	
	12	1	**6V-8398**	2	SEAL-O-RING	
	13	1	**6V-1889**	2	CLIP	
	14	1	**7I-1036**	2	COUPLING AS	
	15	1	**8T-4121**	8	WASHER-HARD (11X21X2.5-MM THK)	
M	16	1	**8T-4133**	2	NUT (M10X1.5-THD)	
M	17	1	**8T-4136**	4	BOLT (M10X1.5X25-MM)	
M	18	1	**8T-4195**	2	BOLT (M10X1.5X30-MM)	

I-REFER TO HYDRAULIC INFORMATION SYSTEM
M-METRIC PART
Y-SEPARATE ILLUSTRATION

299-5362 **CYLINDER & LINES GP-THUMB** *(contd.)* **i03517920**

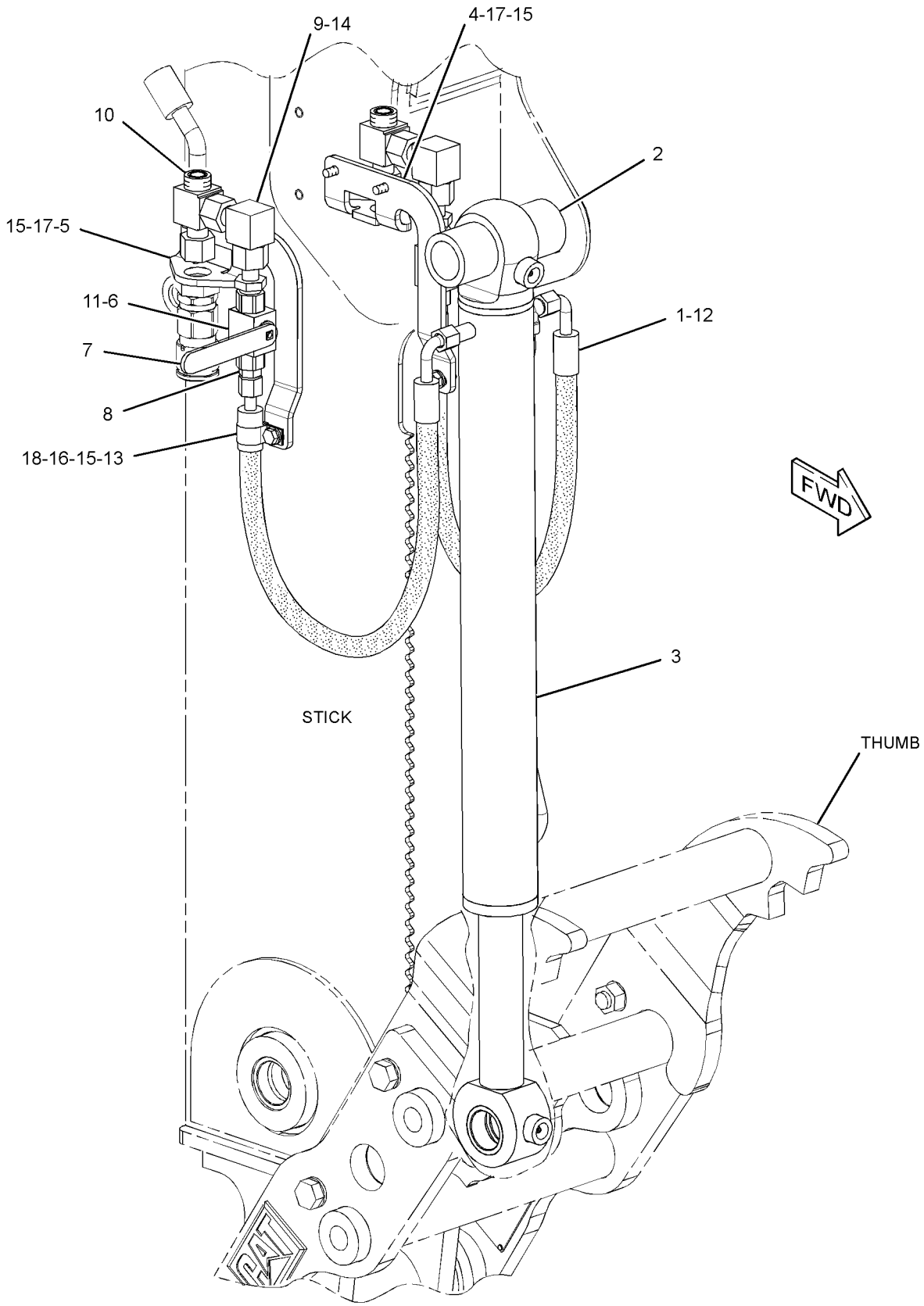

GRAPHIC #1 **<END>** g01456457

HYDRAULIC SYSTEM

210-7087 CYLINDER GP-BACKHOE BUCKET

S/N: HLS1-99999

88.9-MM (3.5-IN) BORE X 852-MM (33.5-IN) STROKE

PART OF 291-9205 BACKHOE AR-EXTENDABLE STICK, 291-9204 BACKHOE AR-STANDARD STICK

AN ATTACHMENT

SMCS-5457 **i03356081**

NOTE	REF NO	GRAPHIC REF	PART NUMBER	QTY	PART NAME 1 2 3 4 5 6 (PRODUCT LEVEL)	SEE PAGE
	1	1	**102-2244**	1	GROMMET	
	2	1	**187-3510**	1	HEAD	
	3	1	**212-0907**	1	PLATE-CONNECTOR	
	4	1	**213-4622**	1	ROD AS	
	4A	1	**9R-0162**	2	BEARING-SLEEVE	
	5	1	**213-4625**	1	CYLINDER AS	
	5A	1	**6V-8398**	1	SEAL-O-RING	
	5B	1	*213-4624*	1	CAP & BEARING AS	
	5C	1	**9R-0139**	2	BEARING-SLEEVE	
	5D	1	**095-0879**	1	PIN-SPRING	
	6	1	**217-8763**	1	COVER-PROTECTION	
	7	1	**222-1395**	1	BOLT AS	
	8	1	**223-3356**	1	RING-WEAR	
	9	1	**228-3469**	1	PISTON	
	10	1	**102-8804**	1	KIT-RECEPTACLE (4-PIN) (INCLUDES RECEPTACLE AS & WEDGE)	
	11	1	**106-1251**	1	WASHER (36.7X66X6-MM THK)	
	12	1	**167-2201**	1	SEAL AS-BUFFER	
	13	1	**167-2312**	1	SEAL-U-CUP	
	14	1	**188-2199**	1	SEAL-O-RING	
	15	1	**213-2491**	1	SENSOR GP-POSITION (BUCKET CYLINDER)	
	16	1	**215-1942**	1	RING-BACKUP	
	17	1	**6V-6707**	1	SEAL-O-RING	
	18	1	**2H-4145**	1	SEAL-O-RING	
	19	1	**3V-2431**	2	WASHER (10.2X16X2-MM THK)	
	20	1	**4J-9224**	1	RING-BACKUP	
	21	1	**4S-5565**	2	BOLT (3/8-16X0.875-IN)	
	22	1	**5J-7012**	1	RING-EXPANDER	
E	23	1	**9X-1386**		SLEEVE (3.5-CM)	
E	23A	1	**9X-1386**		SLEEVE (8.5-CM)	
	24	1	**5J-8156**	1	WIPER-ROD	
	25	1	**8T-0785**	1	RING-WEAR	
	26	1	**8T-5070**	1	SETSCREW-SOCKET (3/8-16X0.5-IN)	
	27	1	**8T-8737**	1	PLUG-SEAL	
	28	1	**5J-7011**	1	SEAL	

E-ORDER BY THE CENTIMETER

210-7087 CYLINDER GP-BACKHOE BUCKET *(contd.)* i03356081

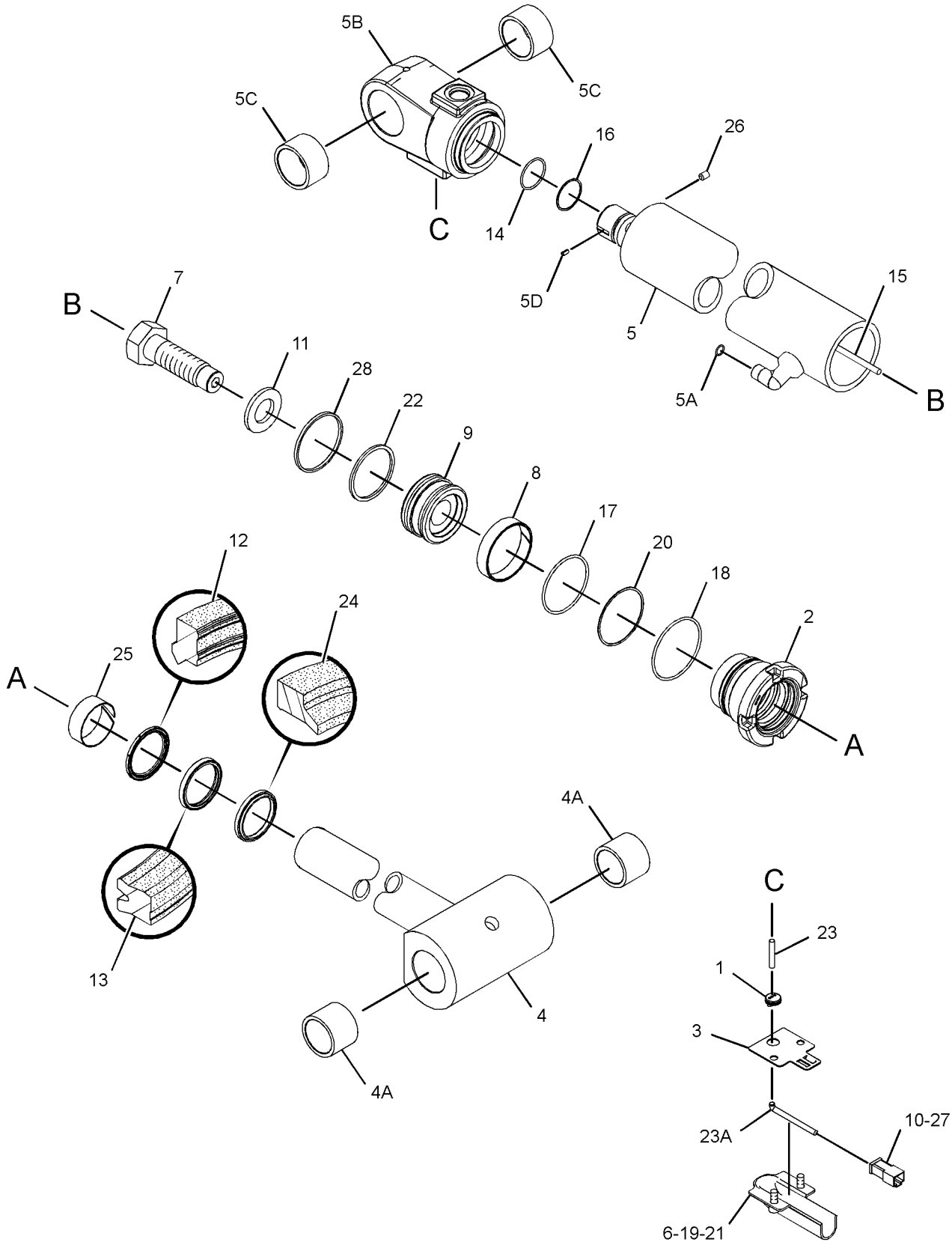

GRAPHIC #1 **<END>** g01731774

210-7088 CYLINDER GP-BACKHOE BUCKET

S/N: HLS1-99999

88.9-MM (3.5-IN) BORE X 852-MM (33.5-IN) STROKE

PART OF 214-2553 BACKHOE AR-EXTENDABLE STICK, 214-2550 BACKHOE AR-STANDARD STICK

AN ATTACHMENT

SMCS-5457 **i03308320**

NOTE	REF NO	GRAPHIC REF	PART NUMBER	QTY	PART NAME 1 2 3 4 5 6 (PRODUCT LEVEL)	SEE PAGE
	1	1	**187-3510**	1	HEAD	
	2	1	**213-4616**	1	ROD AS	
		1	**9R-0162**	2	BEARING-SLEEVE	
	3	1	**213-4620**	1	CYLINDER AS	
	4	1	**223-3356**	1	RING-WEAR	
	5	1	**228-9572**	1	PISTON	
	6	1	**167-2201**	1	SEAL AS-BUFFER	
	7	1	**167-2312**	1	SEAL-U-CUP	
M	8	1	**173-9683**	1	BOLT (M30X3.5X90-MM)	
	9	1	**6V-6707**	1	SEAL-O-RING	
	10	1	**2H-4145**	1	SEAL-O-RING	
	11	1	**4J-9224**	1	RING-BACKUP	
	12	1	**5J-7011**	1	SEAL	
	13	1	**5J-7012**	1	RING-EXPANDER	
	14	1	**5J-8156**	1	WIPER-ROD	
	15	1	**8T-0785**	1	RING-WEAR	
	16	1	**9X-8399**	1	WASHER (33X56X6-MM THK)	

M-METRIC PART

210-7088 CYLINDER GP-BACKHOE BUCKET *(contd.)* **i03308320**

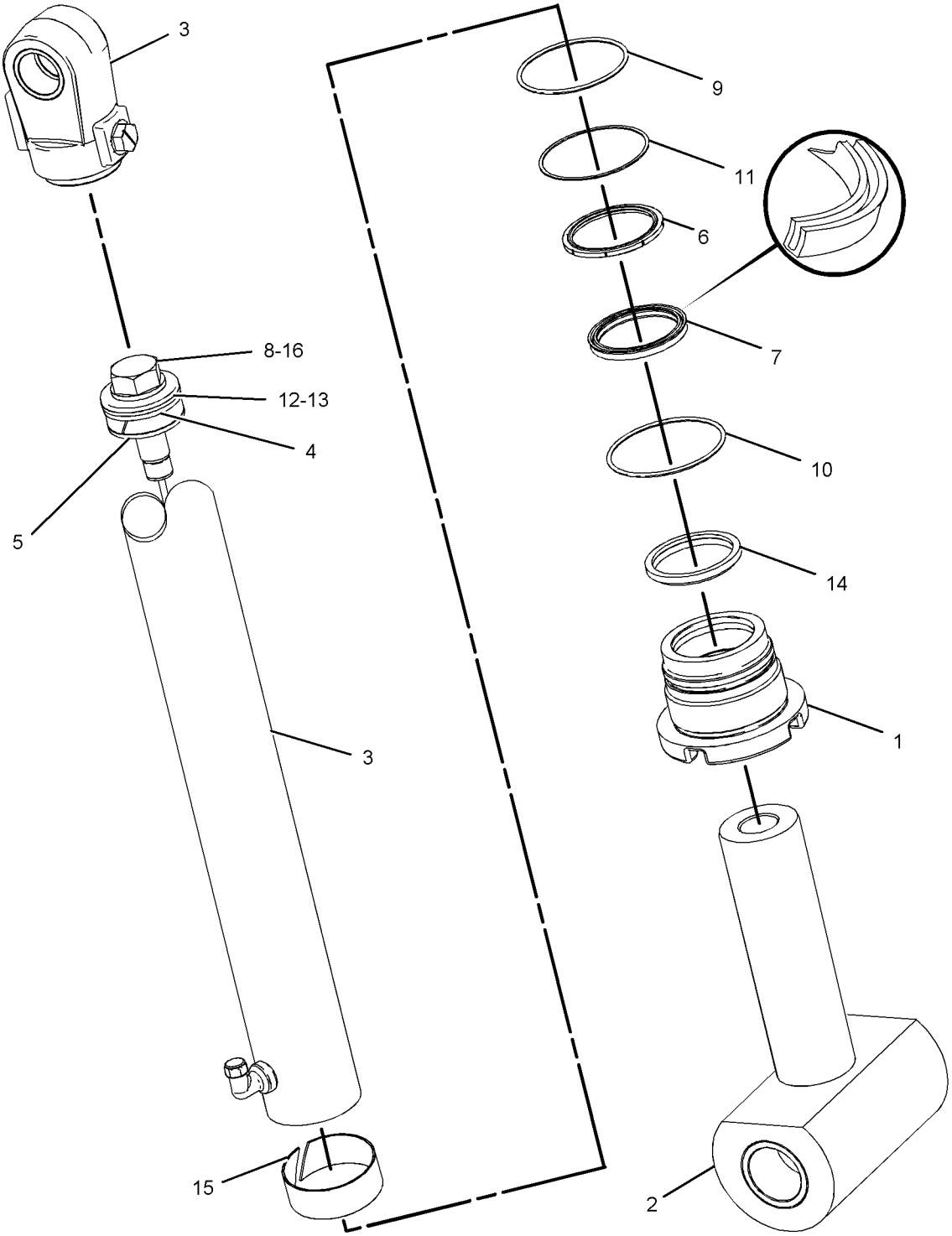

GRAPHIC #1

<END>

g01081142

HYDRAULIC SYSTEM

210-7076 CYLINDER GP-BOOM

S/N: HLS1-99999
120.65-MM (4.75-IN)BORE X 943-MM (37.13-IN)STROKE
PART OF 214-2553 BACKHOE AR-EXTENDABLE STICK, 214-2550 BACKHOE AR-STANDARD STICK
AN ATTACHMENT

SMCS-5456 **i02639330**

NOTE	REF NO	GRAPHIC REF	PART NUMBER	QTY	PART NAME 1 2 3 4 5 6 (PRODUCT LEVEL)	SEE PAGE
	1	1	**273-9412**	1	HEAD	
	2	1	**276-7537**	1	CYLINDER AS	
	3	1	**212-7291**	1	PISTON	
J	4	1	**223-3360**	1	RING-WEAR	
J	5	1	**167-2202**	1	SEAL AS-BUFFER	
J	6	1	**167-2310**	1	SEAL-U-CUP	
J	7	1	**175-7902**	1	SEAL-O-RING	
J	8	1	**175-7903**	1	SEAL-O-RING	
	9	1	**212-6708**	1	ROD AS	
		1	**2Y-5821**	1	RING	
		1	**9R-2700**	2	BEARING-SLEEVE	
		1	**9T-2178**	1	SPRING	
		1	**276-6142**	1	PLUNGER	
J	10	1	**231-3540**	1	SEAL-WIPER	
J	11	1	**2J-3961**	1	RING-BACKUP	
J	12	1	**4T-8588**	1	SEAL AS	
	13	1	**5J-5731**	1	LOCKNUT (1-3/4-12-THD)	
J	14	1	**9X-7260**	1	RING-WEAR	
					AVAILABLE REPAIR KIT(S):	
J			**295-9893**	1	KIT-SEAL	
					(INCLUDES SEALS & RINGS)	

J-KIT MARKED J SERVICES PARTS MARKED J

210-7076 CYLINDER GP-BOOM *(contd.)* **i02639330**

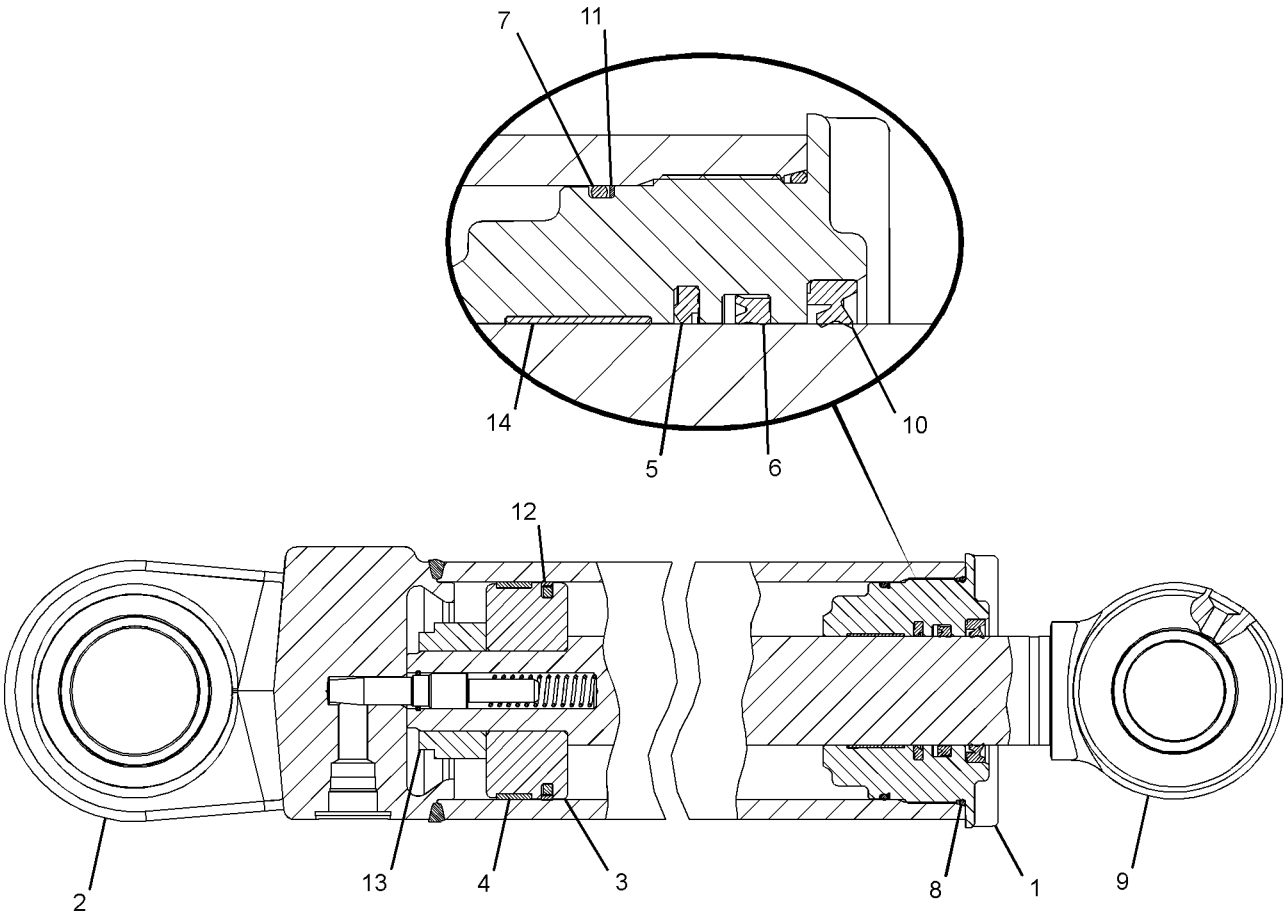

GRAPHIC #1 **<END>** g01339560

HYDRAULIC SYSTEM

268-9049 CYLINDER GP-BOOM

S/N: HLS1-99999
120.65-MM(4.75-IN)BORE X 923-MM(36.34-IN)STROKE
PART OF 291-9205 BACKHOE AR-EXTENDABLE STICK, 291-9204 BACKHOE AR-STANDARD STICK
AN ATTACHMENT

SMCS-5456 **i02755843**

NOTE	REF NO	GRAPHIC REF	PART NUMBER	QTY	PART NAME 1 2 3 4 5 6 (PRODUCT LEVEL)	SEE PAGE
	1	1	**102-2244**	1	GROMMET	
	3	1	**167-2202**	1	SEAL AS-BUFFER	
	4	1	**212-0907**	1	PLATE-CONNECTOR	
	5	1	**217-3312**	1	MAGNET	
	6	1	**246-9113**	1	RETAINER	
	7	1	**273-9412**	1	HEAD	
	8	1	**273-9413**	1	PISTON	
	9	1	**273-9416**	1	ROD AS	
	9A	1	**9R-2700**	2	BEARING-SLEEVE	
	10	1	**273-9418**	1	CYLINDER AS	
		1	**6V-9746**	1	SEAL-O-RING	
	11	1	**274-5231**	1	PLUNGER	
	12	1	**276-1816**	1	GUARD	
	13	1	**300-7930**	1	RING-RETAINING	
	14	1	**305-0042**	1	SETSCREW	
	15	1	**309-6232**	1	COVER	
	16	1	**095-1543**	1	SEAL-O-RING	
	17	1	**095-1608**	1	SEAL-O-RING	
	18	1	**167-2310**	1	SEAL-U-CUP	
	19	1	**175-7902**	1	SEAL-O-RING	
	20	1	**175-7903**	1	SEAL-O-RING	
	21	1	**188-2199**	1	SEAL-O-RING	
	22	1	**212-1490**	1	SENSOR GP-POSITION	
	23	1	**215-1942**	1	RING-BACKUP	
	24	1	**231-3540**	1	SEAL-WIPER	
	25	1	**2J-3961**	1	RING-BACKUP	
	26	1	**102-8804**	1	KIT-RECEPTACLE (4-PIN)	
					(INCLUDES RECEPTACLE AS & WEDGE)	
	27	1	**3V-2431**	2	WASHER (10.2X16X2-MM THK)	
	28	1	**4S-5565**	2	BOLT (3/8-16X0.875-IN)	
	30	1	**4T-8588**	1	SEAL AS	
	31	1	**6S-3146**	1	WASHER-DISC	
	32	1	**8T-8390**	1	RING-WEAR	
	33	1	**8T-8737**	1	PLUG-SEAL	
	34	1	**9X-7260**	1	RING-WEAR	
E	35	1	**9X-1386**		SLEEVE (14-CM)	

E-ORDER BY THE CENTIMETER

268-9049 CYLINDER GP-BOOM *(contd.)* **i02755843**

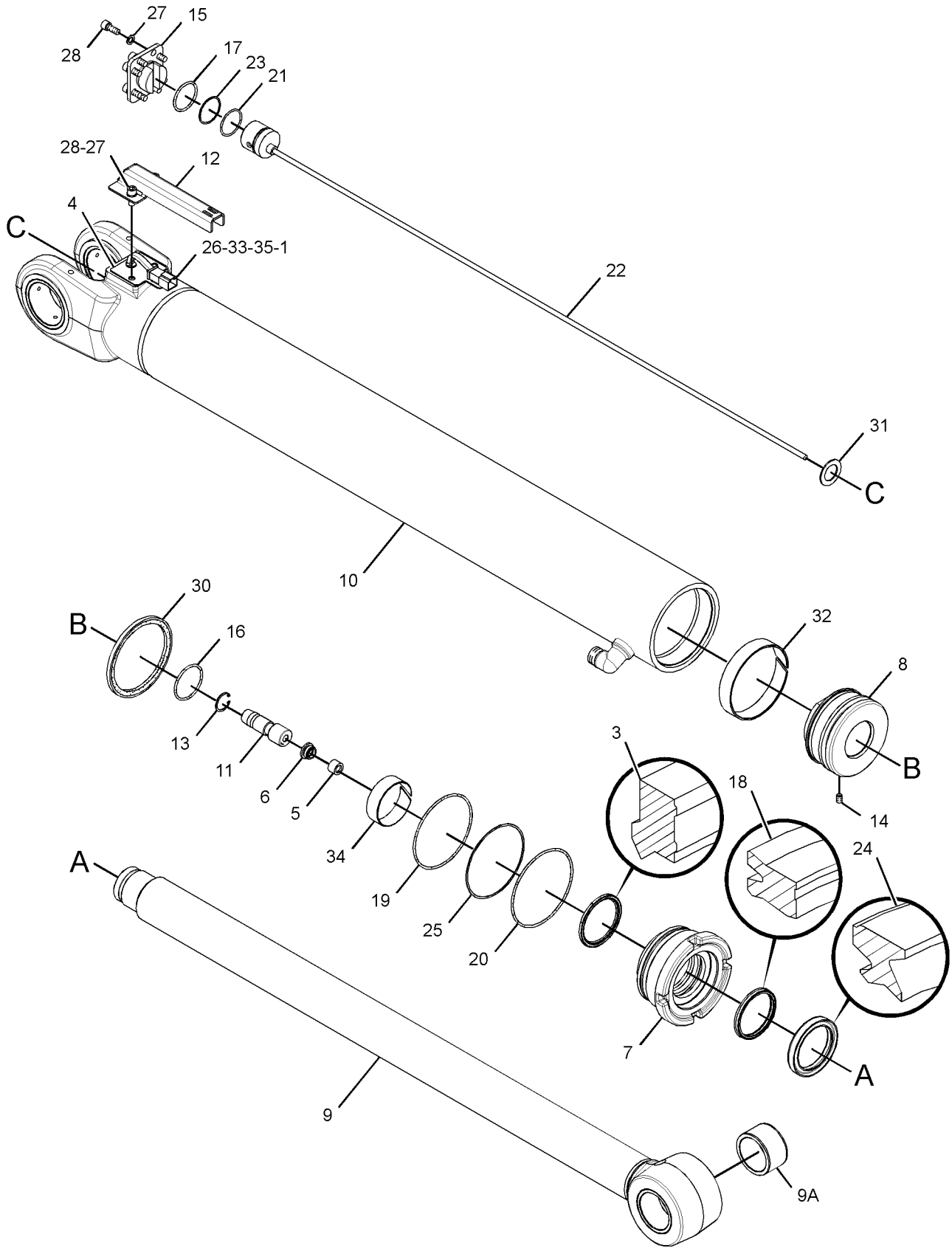

GRAPHIC #1 **<END>** g01387331

HYDRAULIC SYSTEM

210-7097 CYLINDER GP-EXTENDABLE STICK

S/N: HLS1-99999
76-MM (3-IN) BORE X 1164-MM (45.8-IN) STROKE
PART OF 271-1402 STICK GP-EXTENDABLE
AN ATTACHMENT

SMCS-5486 **i03462730**

NOTE	REF NO	GRAPHIC REF	PART NUMBER	QTY	PART NAME 1 2 3 4 5 6 (PRODUCT LEVEL)	SEE PAGE
E	1	1	**9X-1386**		SLEEVE (1-CM)	
	2	1	**102-2244**	1	GROMMET	
	3	1	**155-2260**	1	KIT-CONNECTING PLUG (3-PIN)	
					(INCLUDES PLUG ASSEMBLY & WEDGE)	
	4	1	**191-6159**	1	HEAD	
	5	1	**214-6471**	1	CYLINDER AS	
		1	**6V-8398**	1	SEAL-O-RING	
	6	1	**214-6475**	1	ROD AS	
	7	1	**214-6480**	1	PISTON	
	8	1	**214-6879**	1	COVER	
	9	1	**214-6897**	1	PLATE	
	10	1	**217-3311**	1	MAGNET	
	11	1	**230-5579**	1	SCREW-BUTTON HEAD	
	12	1	**230-5580**	1	SCREW-BUTTON HEAD	
	13	1	**242-9514**	1	CARRIER	
	14	1	**242-9515**	1	RING-RETAINING	
	15	1	**167-2186**	1	SEAL AS-BUFFER	
	16	1	**167-2294**	1	SEAL-U-CUP	
	17	1	**188-2199**	1	SEAL-O-RING	
	18	1	**1H-7339**	1	SEAL-O-RING	
	19	1	**215-1942**	1	RING-BACKUP	
	20	1	**215-8934**	1	SENSOR GP-POSITION	
	21	1	**223-3353**	1	RING-WEAR	
	22	1	**226-8202**	1	SEAL-WIPER	
	23	1	**102-8803**	1	KIT-RECEPTACLE (3-PIN)	
					(INCLUDES RECEPTACLE ASSEMBLY & WEDGE)	
	24	1	**4T-6780**	1	RING-WEAR	
	25	1	**6J-2680**	1	SEAL-O-RING	
	26	1	**5J-4561**	1	LOCKNUT (1-14-THD)	
	27	1	**6J-1972**	1	SEAL AS	
	28	1	**6J-5731**	1	RING-BACKUP	
	29	1	**8T-5070**	1	SETSCREW-SOCKET (3/8-16X0.5-IN)	
	30	1	**8T-8737**	3	PLUG-SEAL	

E-ORDER BY THE CENTIMETER

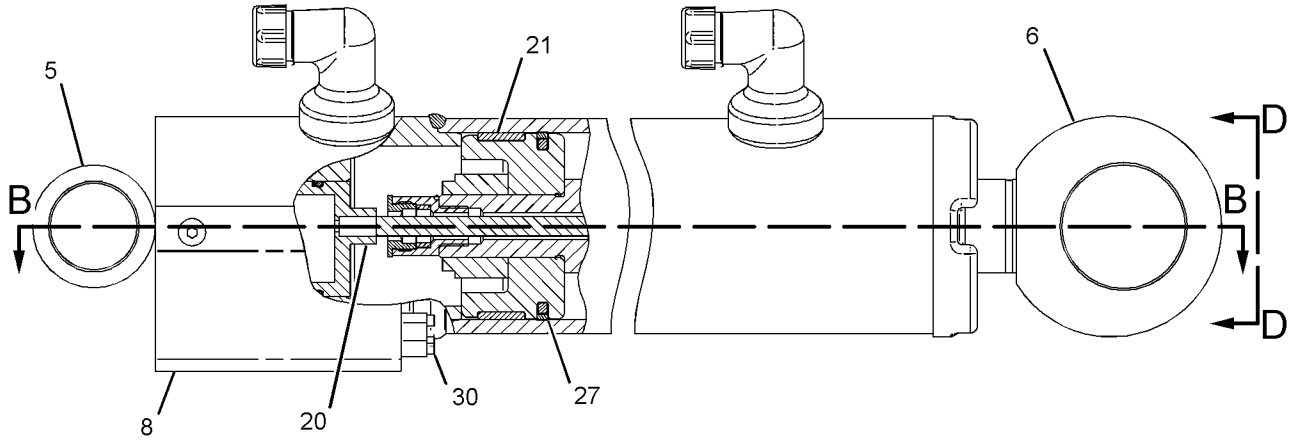

RIGHT SIDE VIEW

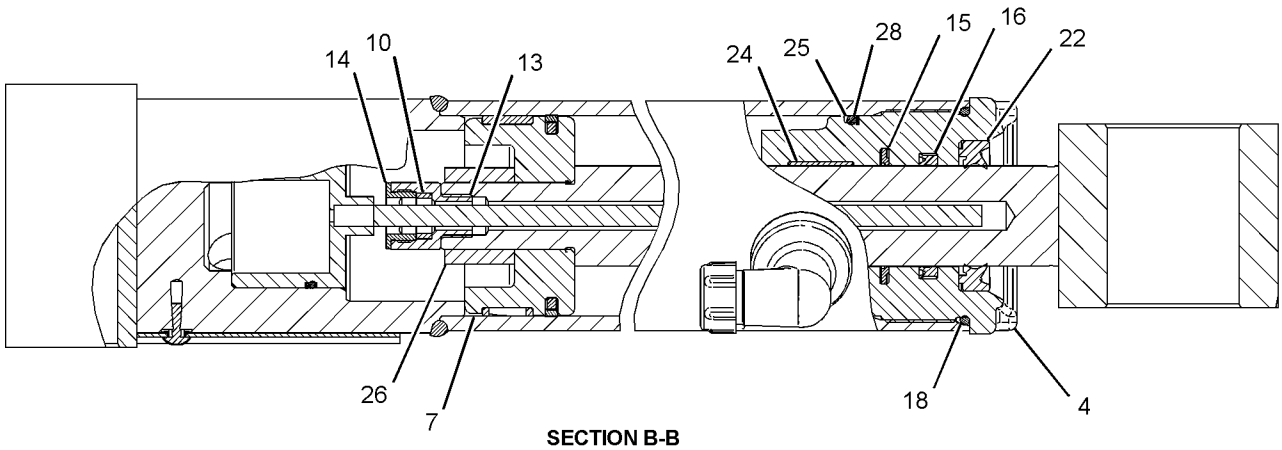

SECTION B-B

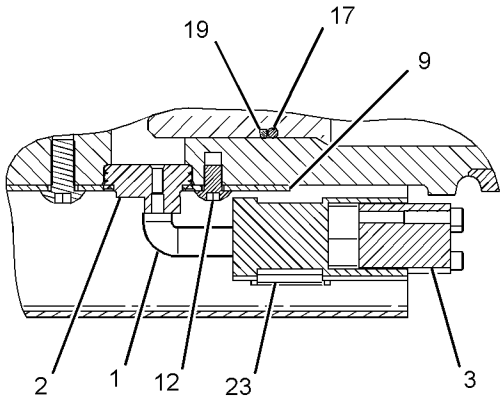

SECTION C-C

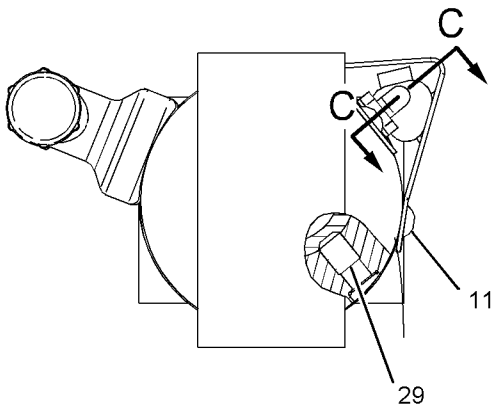

VIEW D-D

GRAPHIC #1 **<END>** g01081080

HYDRAULIC SYSTEM

228-3509 CYLINDER GP-LIFT

S/N: HLS1-99999
85-MM (3.3-IN) BORE X 705-MM (27.8-IN) STROKE
PART OF 213-9300 LOADER AR

SMCS-5102 **i03505304**

NOTE	REF NO	GRAPHIC REF	PART NUMBER	QTY	PART NAME 1 2 3 4 5 6 (PRODUCT LEVEL)	SEE PAGE
J	1	1	**151-2565**	1	RING-WEAR	
	2	1	**233-2571**	1	ROD AS	
	3	1	**233-2579**	1	PISTON	
J	4	1	**233-2584**	1	SEAL AS	
J	5	1	**233-2606**	1	SEAL-WIPER	
J	6	1	**233-2610**	1	SEAL-U-CUP	
	7	1	**244-3837**	1	HEAD AS	
		1	**233-2613**	1	BEARING	
J	8	1	**244-3838**	1	RING-BACKUP	
	9	1	**252-9206**	1	CYLINDER AS	
J	10	1	**107-6279**	1	SEAL-O-RING	
	11	1	**3B-8489**	2	FITTING-GREASE	
J	12	1	**3E-6732**	1	SEAL-O-RING	
	13	1	**9R-0153**	2	BEARING-SLEEVE	
	14	1	**9R-0321**	2	BEARING-SLEEVE	
JM	15	1	**9X-6611**	1	SETSCREW-SOCKET (M10X1.5X16-MM)	
					AVAILABLE REPAIR KIT(S):	
J			**243-2276**	1	KIT-SEAL	

J-KIT MARKED J SERVICES PARTS MARKED J
M-METRIC PART

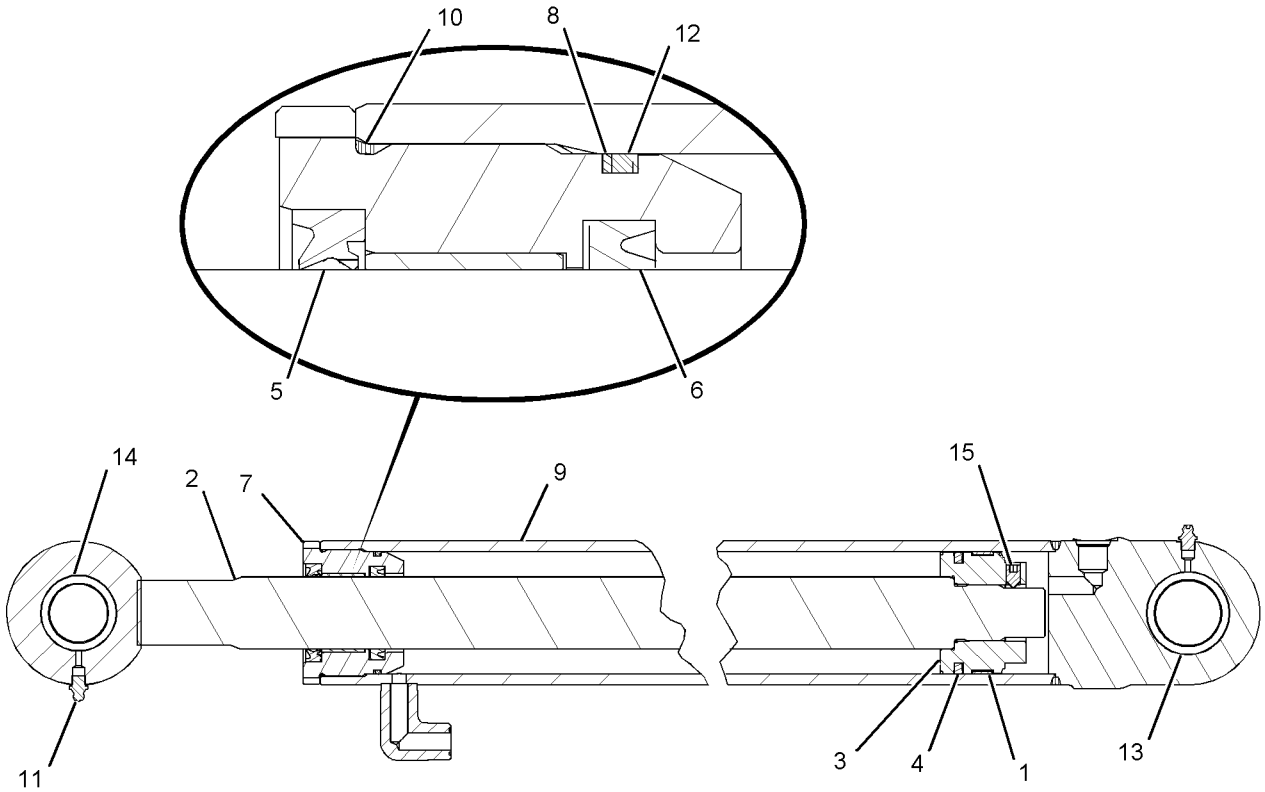

GRAPHIC #1 **<END>** g01081781

226-5540 CYLINDER GP-MULTIPURPOSE BUKT

S/N: HLS1-99999
76-MM (2.99-IN) BORE X 262-MM (10.31-IN) STROKE
PART OF 216-8800, 216-8801, 216-8820, 216-8821 BUCKET GP-MULTIPURPOSE AN ATTACHMENT

SMCS-5457 **i02597612**

NOTE	REF NO	GRAPHIC REF	PART NUMBER	QTY	PART NAME 1 2 3 4 5 6 (PRODUCT LEVEL)	SEE PAGE
	1	1	**3B-8489**	2	FITTING-GREASE	
	2	1	**9S-8004**	2	PLUG-O-RING	
	3	1	**3J-1907**	2	SEAL-O-RING	
	4	1	**9T-4007**	2	BEARING	
					AVAILABLE REPAIR KIT(S):	
			230-9357	1	KIT-SEAL	
					(INCLUDES WIPER SEAL, O-RINGS, MOISTURE EXCLUDER & POLYPAK)	

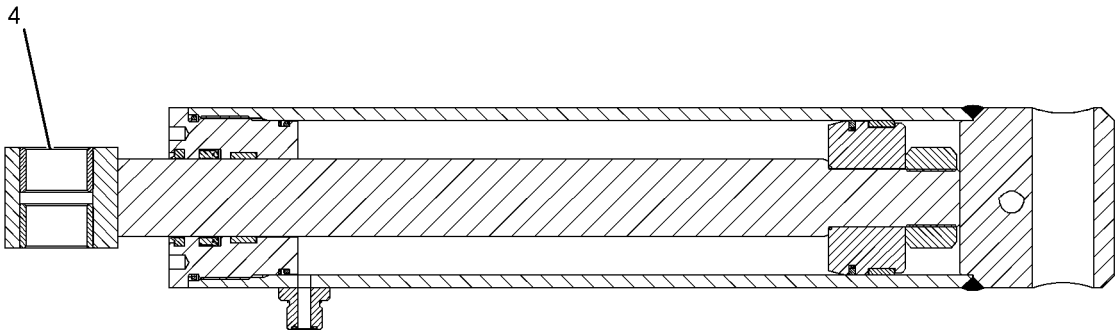

SECTION A-A



GRAPHIC #1 **<END>** g01086486

HYDRAULIC SYSTEM

262-7049 CYLINDER GP-STABILIZER–LH

S/N: HLS1-99999
100-MM (3.9-IN) BORE X 541-MM (21.3-IN) STROKE
PART OF 268-6455 HYDRAULIC AR

SMCS-5468 **i03317247**

NOTE	REF NO	GRAPHIC REF	PART NUMBER	QTY	PART NAME 1 2 3 4 5 6 (PRODUCT LEVEL)	SEE PAGE
	1	1	**233-2576**	1	ROD AS	
	2	1	**233-2582**	1	PISTON	
J	3	1	**233-2585**	1	SEAL AS	
J	4	1	**233-2588**	1	RING-WEAR	
	5	1	**233-2594**	1	HEAD AS	
		1	**233-2614**	1	RING-WEAR	
J	6	1	**233-2603**	1	SEAL-O-RING	
J	7	1	**233-2607**	1	SEAL AS	
J	8	1	**233-2611**	1	SEAL-U-CUP	
J	9	1	**233-2615**	1	SEAL	
J	10	1	**244-8826**	1	RING-BACKUP	
	11	1	**262-7051**	1	CYLINDER AS	
	12	1	**3B-8489**	2	FITTING-GREASE	
J	13	1	**3E-6735**	1	SEAL-O-RING	
J	14	1	**4J-0526**	1	SEAL-O-RING	
	15	1	**9R-0321**	4	BEARING-SLEEVE	
JM	16	1	**9X-6611**	1	SETSCREW-SOCKET (M10X1.5X16-MM)	
					AVAILABLE REPAIR KIT(S):	
J			**233-2623**	1	KIT-SEAL	

J-KIT(S) MARKED J SERVICES PART(S) MARKED J
M-METRIC PART

262-7049 CYLINDER GP-STABILIZER *(contd.)* **i03317247**

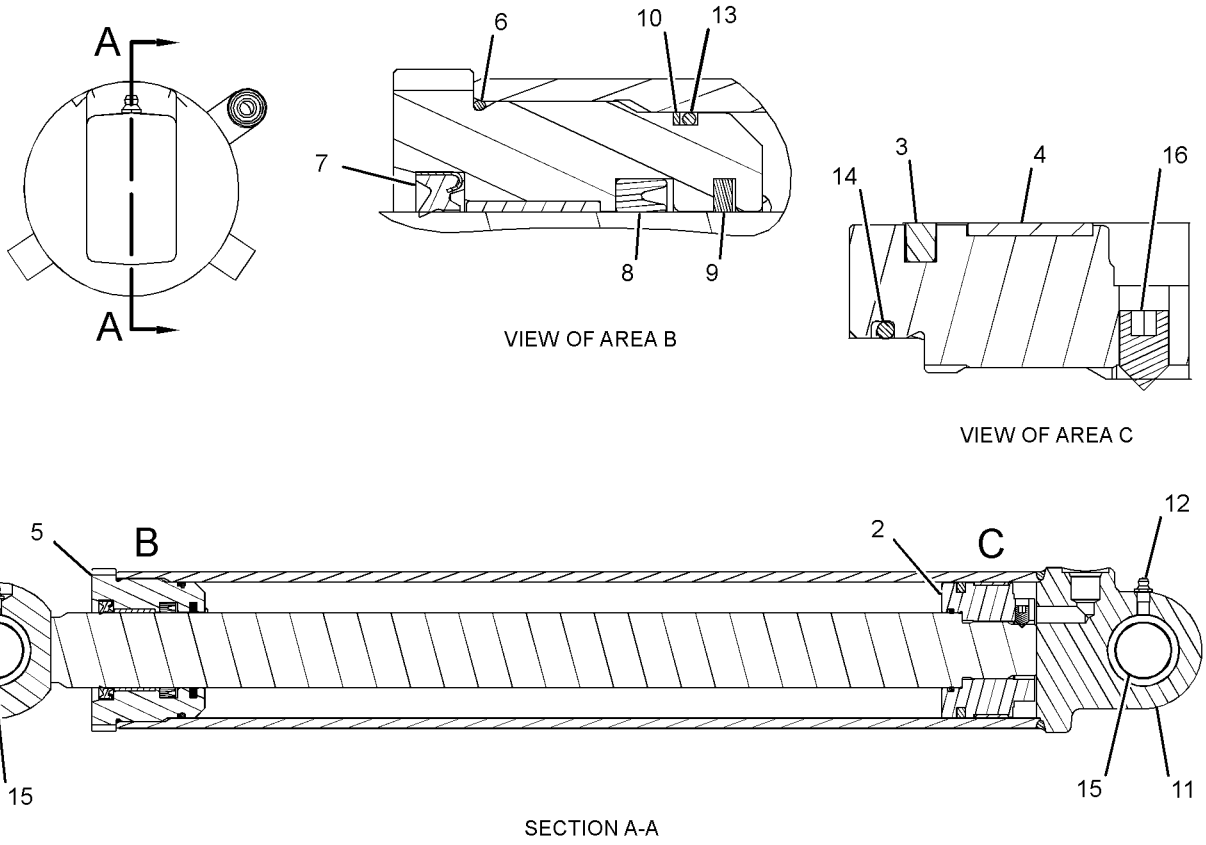

GRAPHIC #1 **<END>** g01201682

262-7050 CYLINDER GP-STABILIZER–RH

S/N: HLS1-99999
100-MM (3.9-IN) BORE X 541-MM (21.3-IN) STROKE
PART OF 268-6455 HYDRAULIC AR

SMCS-5468 **i02510963**

NOTE	REF NO	GRAPHIC REF	PART NUMBER	QTY	PART NAME 1 2 3 4 5 6 (PRODUCT LEVEL)	SEE PAGE
	1	1	**233-2576**	1	ROD AS	
	2	1	**233-2582**	1	PISTON	
J	3	1	**233-2585**	1	SEAL AS	
J	4	1	**233-2588**	1	RING-WEAR	
	5	1	**233-2594**	1	HEAD AS	
		1	**233-2614**	1	RING-WEAR	
J	6	1	**233-2603**	1	SEAL-O-RING	
J	7	1	**233-2607**	1	SEAL AS	
J	8	1	**233-2611**	1	SEAL-U-CUP	
J	9	1	**233-2615**	1	SEAL	
J	10	1	**244-8826**	1	RING-BACKUP	
	11	1	**262-7052**	1	CYLINDER AS	
	12	1	**3B-8489**	2	FITTING-GREASE	
J	13	1	**3E-6735**	1	SEAL-O-RING	
J	14	1	**4J-0526**	1	SEAL-O-RING	
	15	1	**9R-0321**	4	BEARING-SLEEVE	
JM	16	1	**9X-6611**	1	SETSCREW-SOCKET (M10X1.5X16-MM)	
					AVAILABLE REPAIR KIT(S):	
J			**233-2623**	1	KIT-SEAL	

J-KIT MARKED J SERVICES PART(S) MARKED J)
M-METRIC PART

262-7050 CYLINDER GP-STABILIZER *(contd.)* **i02510963**

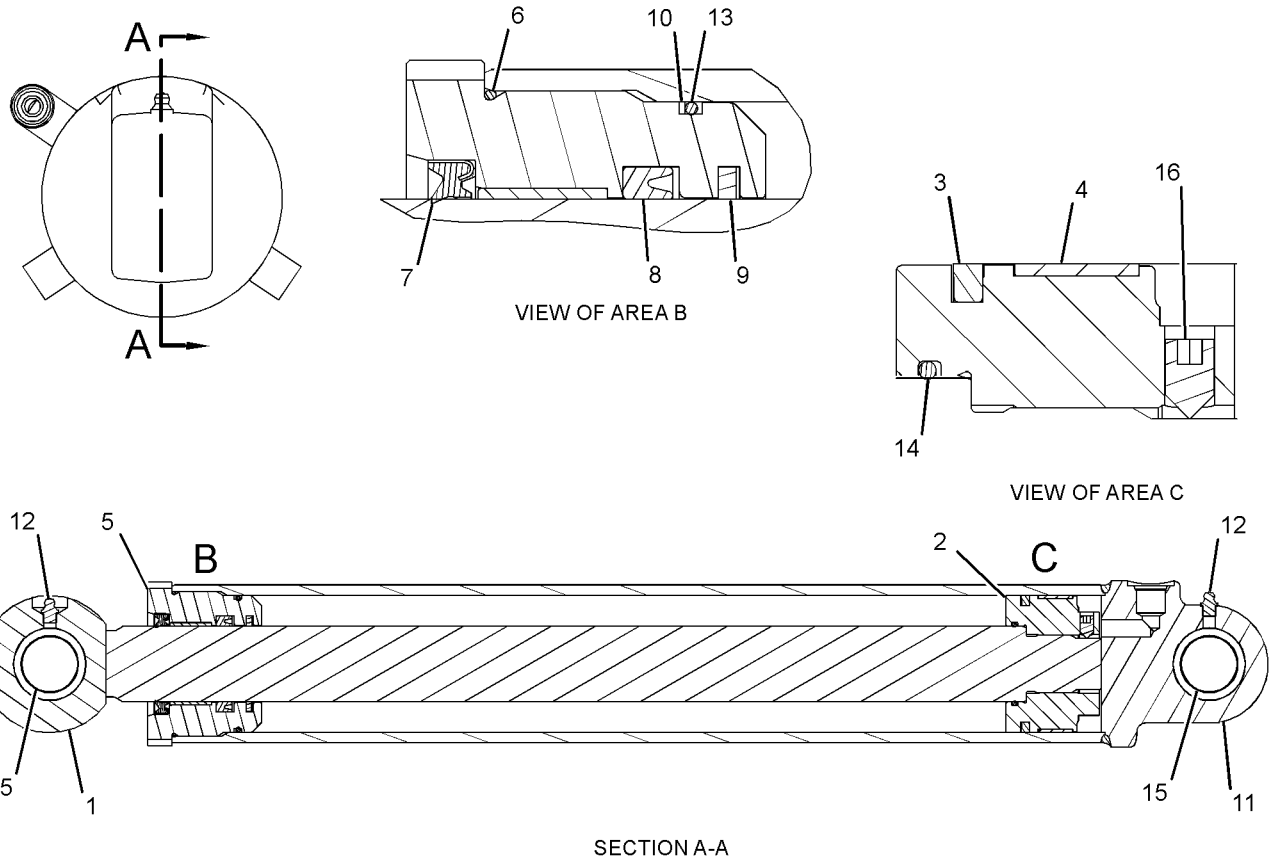

GRAPHIC #1 **<END>** g01201741

HYDRAULIC SYSTEM

210-7081 CYLINDER GP-STICK

S/N: HLS1-99999

120.65-MM(4.75-IN)BORE X 679-MM(26.7-IN) STROKE

PART OF 291-9205 BACKHOE AR-EXTENDABLE STICK, 291-9204 BACKHOE AR-STANDARD STICK

AN ATTACHMENT

SMCS-5458 **i03018503**

NOTE	REF NO	GRAPHIC REF	PART NUMBER	QTY	PART NAME 1 2 3 4 5 6 (PRODUCT LEVEL)	SEE PAGE
	1	1	**5U-6605**	1	PLUG	
	2	1	**102-2244**	1	GROMMET	
	3	1	**212-0907**	1	PLATE-CONNECTOR	
	4	1	**212-1493**	1	CYLINDER AS	
		1	**6V-8398**	1	SEAL-O-RING	
	5	1	**217-3312**	1	MAGNET	
	6	1	**276-1816**	1	GUARD	
	7	1	**223-3360**	1	RING-WEAR	
	8	1	**228-8062**	1	ROD AS	
		1	**213-6682**	2	BEARING-SLEEVE	
	9	1	**246-9113**	1	RETAINER	
	10	1	**252-5833**	1	HEAD	
	11	1	**252-9732**	1	PISTON	
	12	1	**102-8804**	1	KIT-RECEPTACLE (4-PIN)	
					(INCLUDES RECEPTACLE AS & WEDGE)	
	13	1	**146-0742**	1	RING-WEAR	
	14	1	**167-2204**	1	SEAL AS-BUFFER	
	15	1	**167-2314**	1	SEAL-U-CUP	
	16	1	**175-7902**	1	SEAL-O-RING	
	17	1	**175-7903**	1	SEAL-O-RING	
	18	1	**188-2199**	1	SEAL-O-RING	
	19	1	**215-1942**	1	RING-BACKUP	
	20	1	**217-5776**	1	SENSOR GP-POSITION (LINEAR)	
	21	1	**227-1148**	1	SEAL-WIPER	
	22	1	**2J-3961**	1	RING-BACKUP	
	23	1	**3V-2431**	2	WASHER (10.2X16X2-MM THK)	
	24	1	**4S-5565**	2	BOLT (3/8-16X0.875-IN)	
	25	1	**4T-8588**	2	SEAL AS	
	26	1	**8T-5070**	1	SETSCREW-SOCKET (3/8-16X0.5-IN)	
	27	1	**8T-8737**	1	PLUG-SEAL	
E	28	1	**9X-1386**		SLEEVE (9-CM)	
E	28A	1	**9X-1386**		SLEEVE (5-CM)	

E-ORDER BY THE CENTIMETER

210-7081 CYLINDER GP-STICK *(contd.)* i03018503

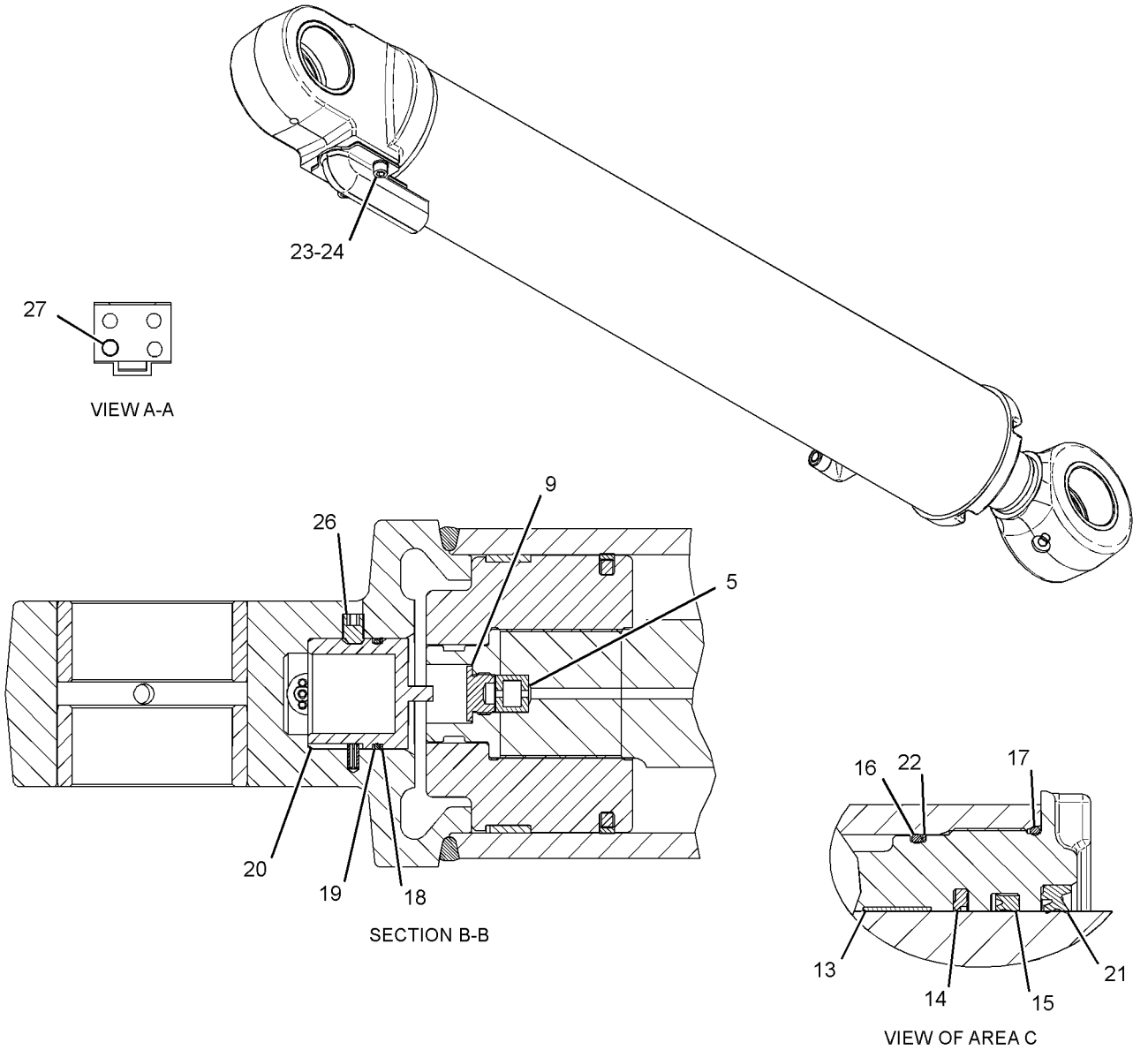

GRAPHIC #1 **<END>** g01256807

HYDRAULIC SYSTEM

210-7082 CYLINDER GP-STICK

S/N: HLS1-99999
120.7-MM (4.8-IN) BORE X 679-MM (26.7-IN) STROKE
PART OF 214-2553 BACKHOE AR-EXTENDABLE STICK, 214-2550 BACKHOE AR-STANDARD STICK
AN ATTACHMENT

SMCS-5458 **i02122080**

NOTE	REF NO	GRAPHIC REF	PART NUMBER	QTY	PART NAME 1 2 3 4 5 6 (PRODUCT LEVEL)	SEE PAGE
	1	1	**212-0929**	1	CYLINDER AS	
		1	**6V-8398**	1	SEAL-O-RING	
	2	1	**223-3360**	1	RING-WEAR	
	3	1	**228-8017**	1	ROD AS	
	4	1	**252-5832**	1	PISTON	
	5	1	**252-5833**	1	HEAD	
	6	1	**146-0742**	1	RING-WEAR	
	7	1	**167-2204**	1	SEAL AS-BUFFER	
	8	1	**167-2314**	1	SEAL-U-CUP	
	9	1	**175-7902**	1	SEAL-O-RING	
	10	1	**175-7903**	1	SEAL-O-RING	
	11	1	**227-1148**	1	SEAL-WIPER	
	12	1	**2J-0564**	1	LOCKNUT (2-12-THD)	
	13	1	**2J-3961**	1	RING-BACKUP	
	14	1	**4T-8588**	1	SEAL AS	

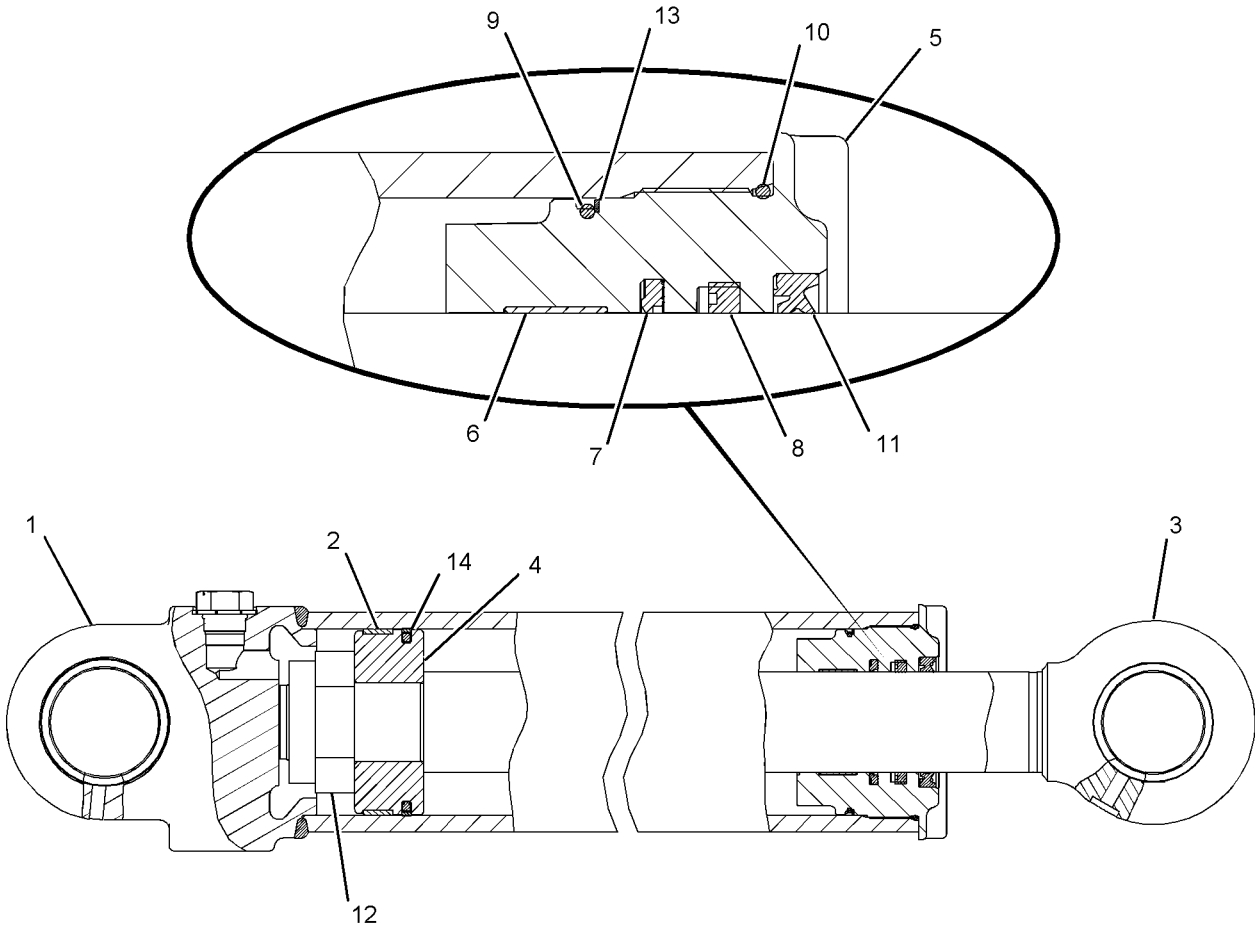

GRAPHIC #1 **<END>** g01082462

HYDRAULIC SYSTEM

210-7098 CYLINDER GP-STICK

S/N: HLS1-99999
76.2-MM (3-IN) BORE X 1164-MM (45.8-IN) STROKE
PART OF 271-1405 STICK GP-EXTENDABLE
AN ATTACHMENT

SMCS-5458 **i03266245**

NOTE	REF NO	GRAPHIC REF	PART NUMBER	QTY	PART NAME 1 2 3 4 5 6 (PRODUCT LEVEL)	SEE PAGE
	1	1	**191-6159**	1	HEAD	
	2	1	**215-7457**	1	ROD AS	
	3	1	**215-7460**	1	CYLINDER AS	
		1	**6V-8398**	1	SEAL-O-RING	
	4	1	**229-8911**	1	PISTON	
	5	1	**167-2186**	1	SEAL AS-BUFFER	
	6	1	**167-2294**	1	SEAL-U-CUP	
M	7	1	**173-9779**	1	BOLT (M24X3X80-MM)	
	8	1	**1H-7339**	1	SEAL-O-RING	
	9	1	**223-3353**	1	RING-WEAR	
	10	1	**226-8202**	1	SEAL-WIPER	
	11	1	**4T-6780**	1	RING-WEAR	
	12	1	**6J-2680**	1	SEAL-O-RING	
	13	1	**6J-1972**	1	SEAL AS	
	14	1	**6J-5731**	1	RING-BACKUP	
	15	1	**6V-8237**	1	WASHER (26X44X4-MM THK)	

M-METRIC PART

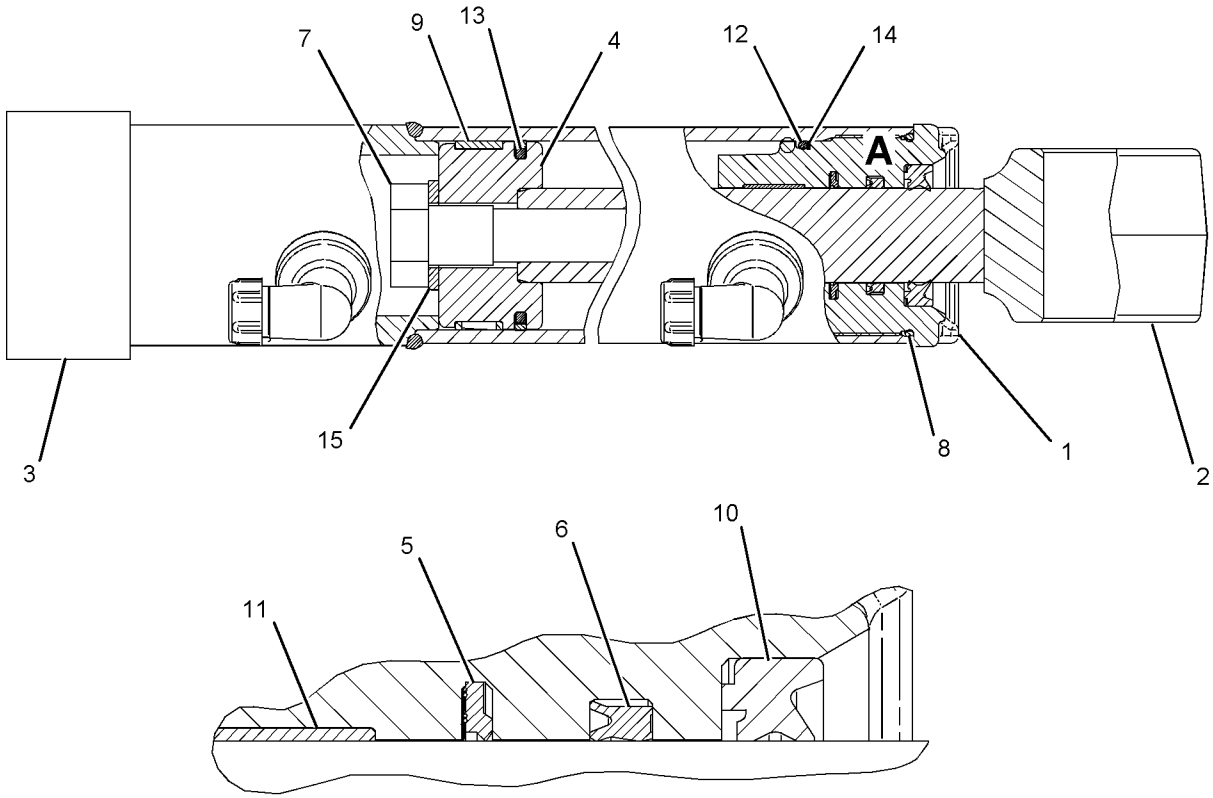

VIEW OF AREA A

GRAPHIC #1 **<END>** g01089695

HYDRAULIC SYSTEM

278-1971 CYLINDER GP-SWING

S/N: HLS1-99999
100-MM (3.9-IN) BORE X 254-MM (10-IN) STROKE. RH
PART OF 268-6455 HYDRAULIC AR

SMCS-5105 **i03379020**

NOTE	REF NO	GRAPHIC REF	PART NUMBER	QTY	PART NAME 1 2 3 4 5 6 (PRODUCT LEVEL)	SEE PAGE
	1	1	**2Y-5821**	1	RING	
	2	1	**3N-5739**	1	SPRING	
	3	1	**6E-1478**	1	PLUNGER	
	4	1	**9T-2883**	2	BEARING	
	5	1	**102-3582**	1	WASHER (11X19.5X2.5-MM THK)	
	6	1	**233-2583**	1	PISTON	
J	7	1	**233-2585**	1	SEAL AS	
J	8	1	**233-2589**	1	RING-WEAR	
	9	1	**233-2595**	1	HEAD AS	
	9A	1	**233-2613**	1	BEARING	
J	10	1	**233-2603**	1	SEAL-O-RING	
J	11	1	**233-2606**	1	SEAL-WIPER	
J	12	1	**233-2610**	1	SEAL-U-CUP	
J	13	1	**233-2616**	1	SEAL	
	14	1	**233-2631**	1	ROD AS	
J	15	1	**244-8826**	1	RING-BACKUP	
	16	1	**274-4274**	1	BEARING-SLEEVE	
	17	1	**278-1972**	1	CYLINDER AS	
	18	1	**3B-8489**	1	FITTING-GREASE	
J	19	1	**3E-6735**	1	SEAL-O-RING	
JM	20	1	**9X-6611**	1	SETSCREW-SOCKET (M10X1.5X16-MM)	
					AVAILABLE REPAIR KIT(S):	
J			**233-2622**	1	KIT-SEAL	

J-KIT MARKED J SERVICES PARTS MARKED J
M-METRIC PART

278-1971 CYLINDER GP-SWING *(contd.)* **i03379020**

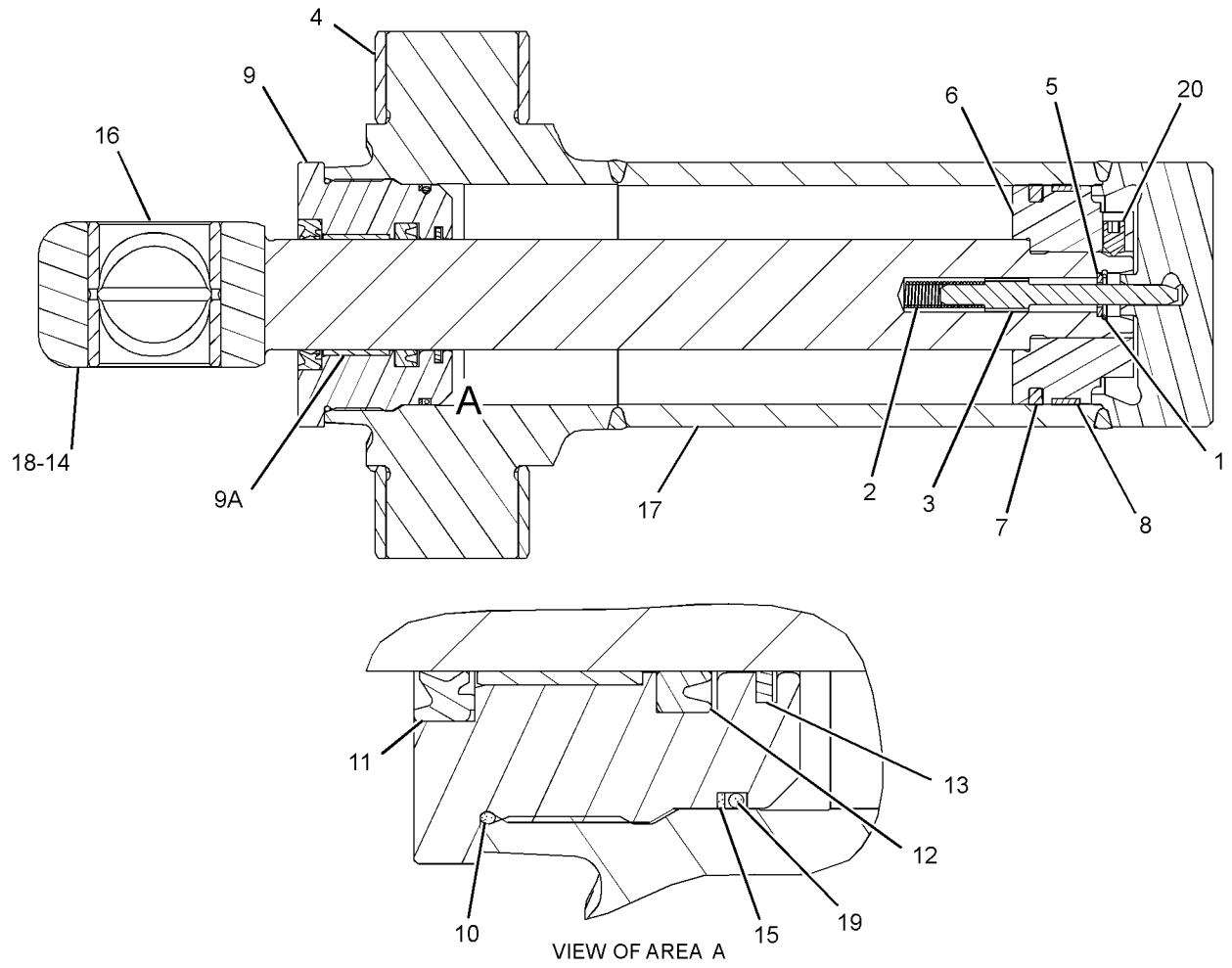

GRAPHIC #1 **<END>** g01746113

275-4243 CYLINDER GP-THUMB

S/N: HLS1-99999
70-MM (2.75-IN) BORE X 595-MM (23.4-IN) STROKE
PART OF 224-6237, 299-5362 CYLINDER & LINES GP-THUMB
AN ATTACHMENT

SMCS-5362 **i02598424**

NOTE	REF NO	GRAPHIC REF	PART NUMBER	QTY	PART NAME 1 2 3 4 5 6 (PRODUCT LEVEL)	SEE PAGE
	1	1	**276-4168**	1	CYLINDER AS	
	2	1	**276-4169**	1	ROD AS	
	3	1	**276-4170**	1	PISTON	
	4	1	**276-4171**	1	HEAD	
	5	1	**282-6836**	1	STOP	
	6	1	**3B-8489**	2	FITTING-GREASE	
	7	1	**9R-0320**	4	BEARING-SLEEVE	
					AVAILABLE REPAIR KIT(S):	
			276-4172	1	KIT-SEAL	
					(INCLUDES SEALS, RINGS & SETSCREW)	

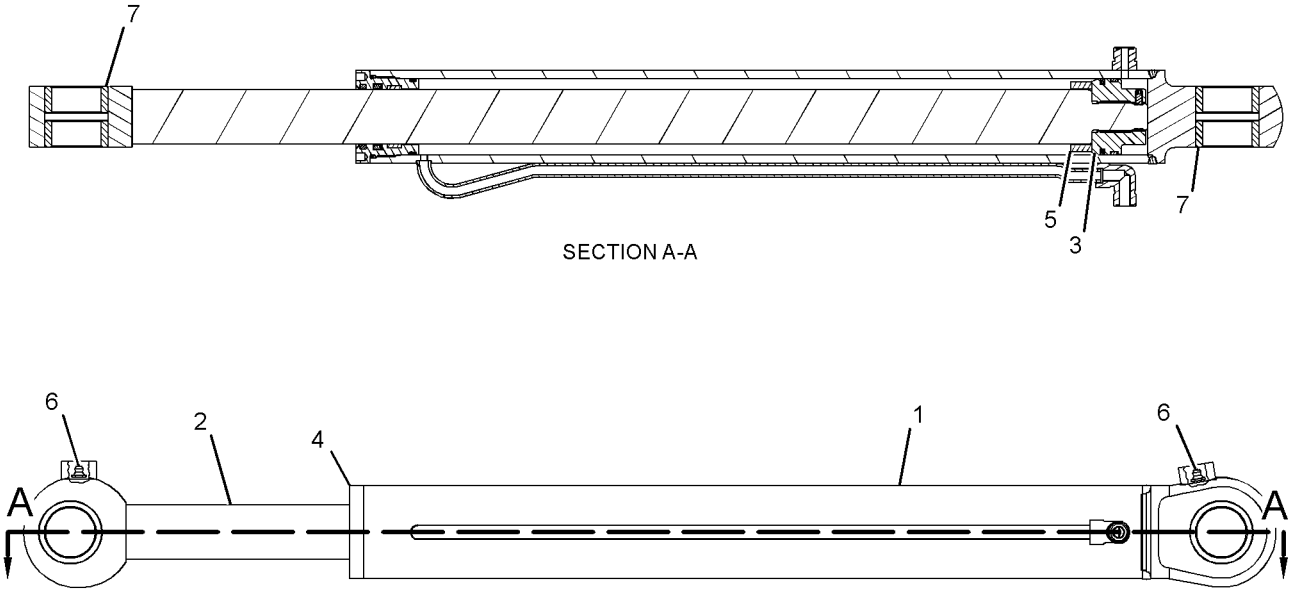

GRAPHIC #1 **<END>** g01234167

200-7128 CYLINDER GP-TILT

S/N: HLS1-99999
101.6-MM (4-IN) BORE X 642.1-MM (25.28-IN) STROKE
PART OF 213-9300 LOADER AR

SMCS-5104 **i03505381**

NOTE	REF NO	GRAPHIC REF	PART NUMBER	QTY	PART NAME 1 2 3 4 5 6 (PRODUCT LEVEL)	SEE PAGE
	1	1	**112-1773**	1	PISTON	
	2	1	**201-4826**	1	HEAD	
	3	1	**201-4899**	1	CYLINDER AS	
	3A	1	**6V-9746**	1	SEAL-O-RING	
	3B	1	**9T-3165**	2	BEARING	
	3C	1	**201-7659**	2	SPACER	
	4	1	**201-4902**	1	ROD AS	
	4A	1	**9R-0320**	2	BEARING-SLEEVE	
J	5	1	**229-9382**	1	SEAL-WIPER	
J	6	1	**167-2195**	1	SEAL AS-BUFFER	
J	7	1	**167-2304**	1	SEAL-U-CUP	
	8	1	**2J-3950**	1	LOCKNUT (1-1/2-12-THD)	
J	9	1	**2K-6830**	1	RING-BACKUP	
J	10	1	**4T-5613**	1	RING-WEAR	
J	11	1	**5J-5402**	1	SEAL AS	
J	12	1	**9X-4611**	1	SEAL-O-RING	
J	13	1	**6J-2797**	1	RING-WEAR	
J	14	1	**8H-7521**	1	SEAL-O-RING	
					AVAILABLE REPAIR KIT(S):	
J			**261-8625**	1	KIT-SEAL	

J-KIT MARKED J SERVICES PART(S) MARKED J

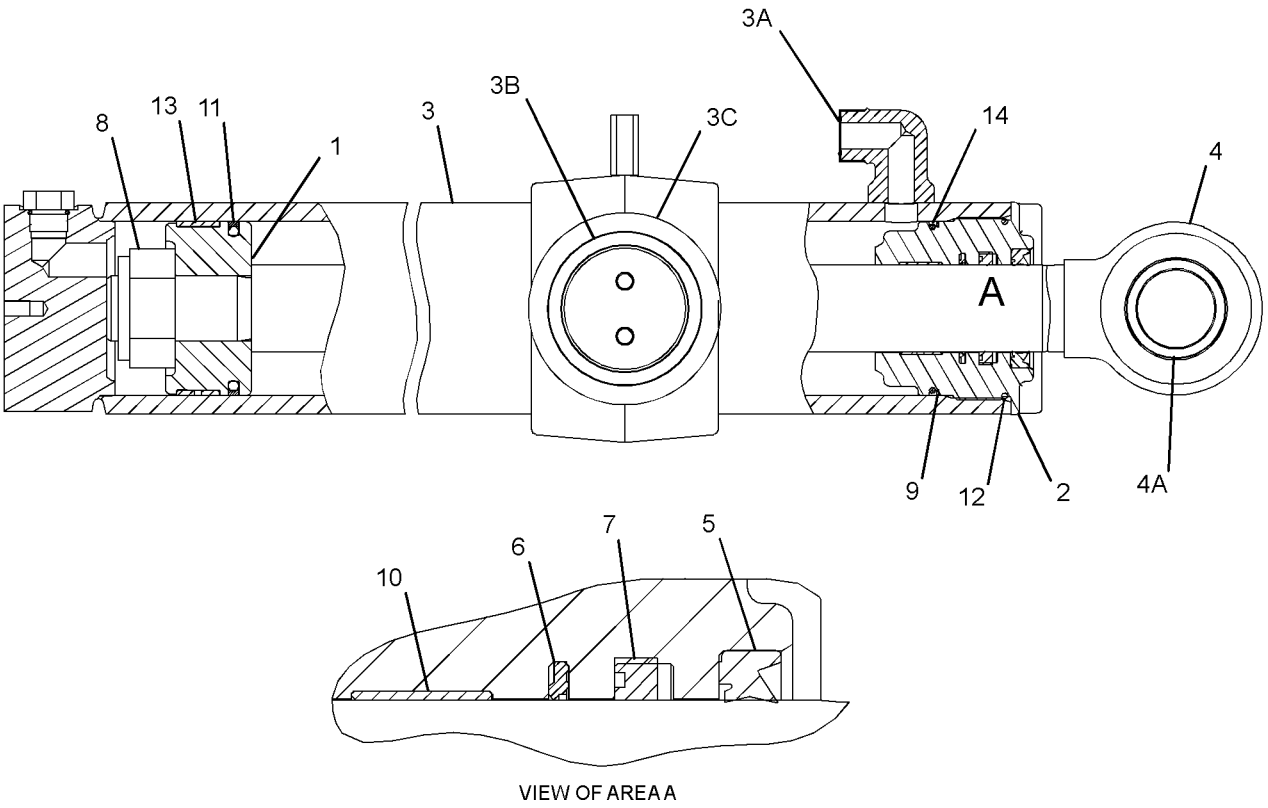

GRAPHIC #1 **<END>** g01183312

112-1826 DRIVE & MTG GP-PUMP

S/N: HLS1-99999
PART OF 216-3314, 216-3315, 216-3316 POWER TRAIN AR
AN ATTACHMENT

SMCS-3108, 5070 **i03477528**

NOTE	REF NO	GRAPHIC REF	PART NUMBER	QTY	PART NAME 1 2 3 4 5 6 (PRODUCT LEVEL)	SEE PAGE
M	1	1	**8T-9405**	4	BOLT-SOCKET HEAD (M4X0.7X16-MM)	
	2	1	**9U-8886**	1	RING-SEAL	
	3	1	**115-1918**	1	PLATE	
	4	1	**117-3534**	1	ADAPTER	
	5	1	**274-4555**	1	HUB	
Y	6	1	**128-5596**	1	SHAFT GP-PUMP DRIVE	518
	7	1	**175-7904**	1	SEAL-O-RING	
	8	1	**8T-4122**	2	WASHER-HARD (17X32X3.5-MM THK)	
M	9	1	**8T-7338**	2	BOLT (M16X2X45-MM)	

M-METRIC PART
Y-SEPARATE ILLUSTRATION

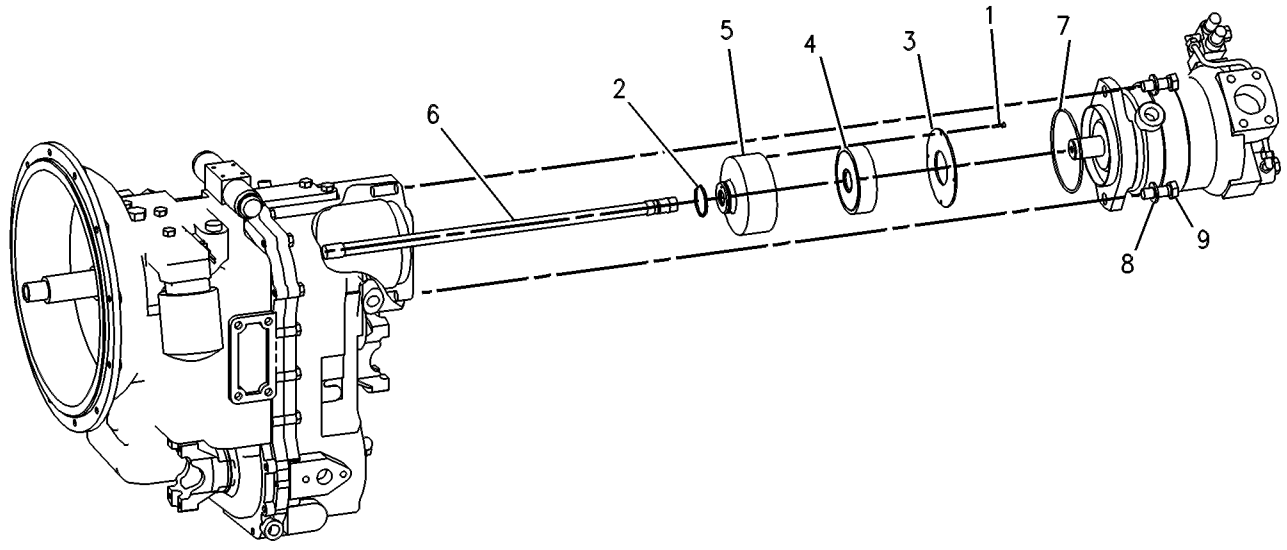

GRAPHIC #1 **<END>** g00131524

245-8769 FASTENER GP-VALVE–BANK

S/N: HLS1-99999
PART OF 269-2144 VALVE AR-BANK 2, 269-2145 VALVE AR-BANK 3
AN ATTACHMENT

SMCS-5051 **i02096782**

NOTE	REF NO	GRAPHIC REF	PART NUMBER	QTY	PART NAME 1 2 3 4 5 6 (PRODUCT LEVEL)	SEE PAGE
	1	1	**8T-4121**	3	WASHER-HARD (11X21X2.5-MM THK)	
M	2	1	**8T-4186**	3	BOLT (M10X1.5X40-MM)	

M-METRIC PART

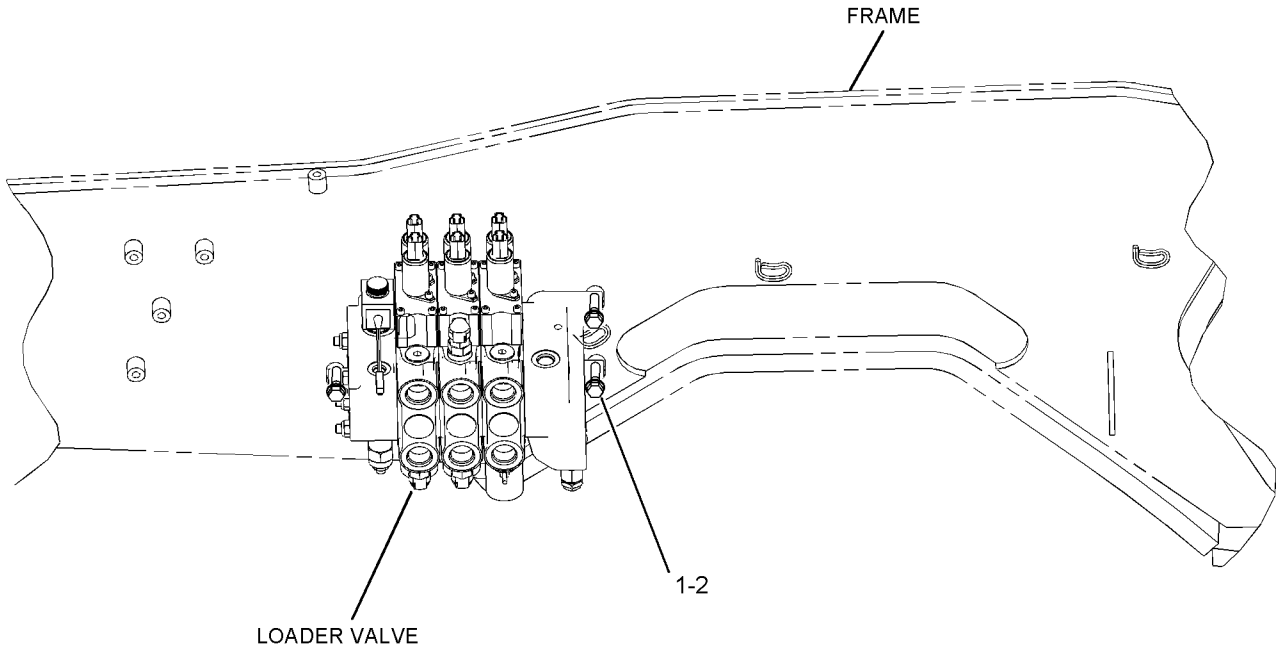

LEFT SIDE VIEW

GRAPHIC #1 **<END>** g01070282

226-9747 FILTER GP-OIL–HYDRAULIC

S/N: HLS1-99999

PART OF 268-6455 HYDRAULIC AR

SMCS-5068 **i03018507**

NOTE	REF NO	GRAPHIC REF	PART NUMBER	QTY	PART NAME 1 2 3 4 5 6 (PRODUCT LEVEL)	SEE PAGE
	1	1	**227-3703**	1	BASE AS-FILTER (HYDRAULIC)	
	2	1	*148-8335*	1	CONNECTOR AS	
		1	**5K-9090**	1	SEAL-O-RING	
		1	**6V-8635**	1	CONNECTOR	
		1	**7M-8485**	1	SEAL-O-RING	
	3	1	*148-8407*	1	PLUG AS	
		1	**3J-1907**	1	SEAL-O-RING	
		1	**9S-4191**	1	PLUG-O-RING	
	4	1	**6V-9830**	2	CAP AS	
	5	1	**6V-9833**	1	CAP AS	
	6	1	**8C-3451**	1	CAP-DUST	
	7	1	**126-1817**	1	FILTER-OIL (ULTRA HIGH EFFICIENCY)	
	8	1	**8C-3446**	1	VALVE-FLUID SAMPLING (HYDRAULIC OIL)	
F			**134-3014**	1	FILTER-OIL (FIRE RESISTANT)	

F-NOT SHOWN

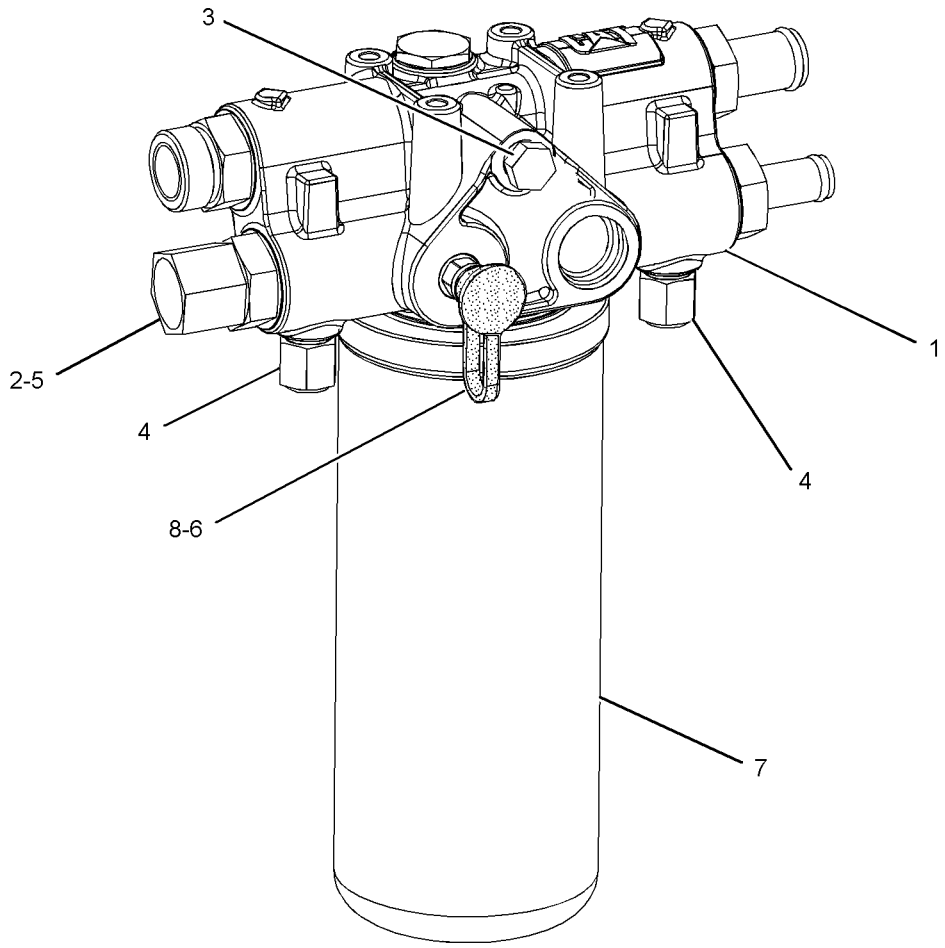

GRAPHIC #1 **<END>** g01234430

HYDRAULIC SYSTEM

132-8769 FITTING GP-HYDRAULIC

S/N: HLS1-99999

AN ATTACHMENT

SMCS-5057 **i02249052**

NOTE	REF NO	GRAPHIC REF	PART NUMBER	QTY	PART NAME 1 2 3 4 5 6 (PRODUCT LEVEL)	SEE PAGE
	1	1	**106-0406**	1	FITTING (QUICK DISCONNECT, MALE)	
	2	1	**106-0401**	1	FITTING (QUICK DISCONNECT, FEMALE)	

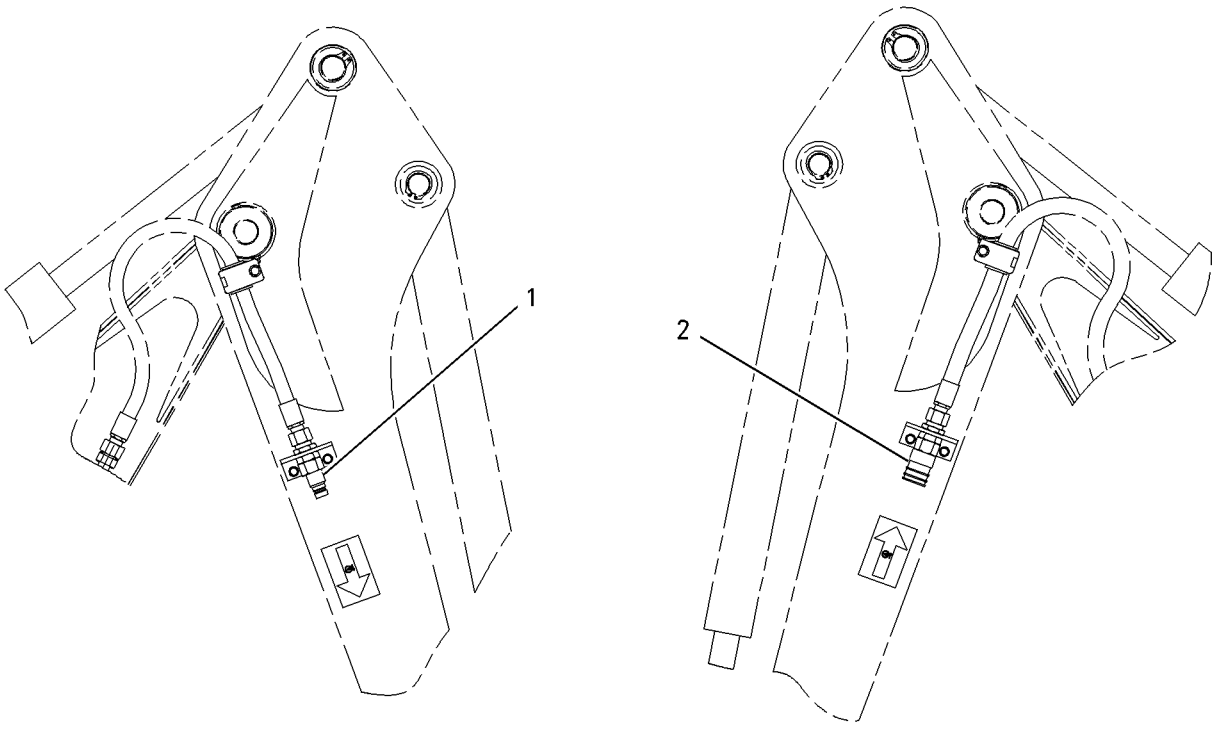

GRAPHIC #1 **<END>** g00759123

HYDRAULIC SYSTEM

268-6455 HYDRAULIC AR

S/N: HLS1-99999

PART OF 213-9273 COMMON AR

SMCS-5050 **i02521334**

NOTE	PART NUMBER	QTY	PART NAME 1 2 3 4 5 6 (PRODUCT LEVEL)	SEE PAGE
Y	**262-7050**	1	CYLINDER GP-STABILIZER (RH)	404
Y	**262-7049**	1	CYLINDER GP-STABILIZER (LH)	402
Y	**278-1971**	2	CYLINDER GP-SWING	410
Y	**226-9747**	1	FILTER GP-OIL (HYDRAULIC)	417
Y	*216-5332*	1	LINES GP-DRAIN	452
Y	*257-3160*	1	LINES GP-HYDRAULIC OIL COOLER	456
Y	*267-2765*	1	LINES GP-PILOT (WITH ACCUMULATOR)	467
Y	*267-2766*	1	LINES GP-PILOT (STABILIZER)	470
Y	*211-3607*	1	LINES GP-PUMP	471
Y	*267-2764*	1	LINES GP-SWING	498
Y	**210-6240**	1	PUMP GP-METERING (HMU)	348
Y	**267-2755**	1	PUMP GP-PISTON	515
Y	*245-8777*	1	TANK & MTG GP-HYDRAULIC	519
Y	*267-2770*	1	VALVE & LINES GP-PILOT (BACKHOE)	523

Y-SEPARATE ILLUSTRATION

<END>

HYDRAULIC SYSTEM

264-0187 INSTALLATION GP-RIDE CONTROL–AUTOSHIFT

S/N: HLS1-99999
AN ATTACHMENT
TYPE 1

SMCS-1408, 5004, 5057, 5077 **i03530645**

NOTE	REF NO	GRAPHIC REF	PART NUMBER	QTY	PART NAME 1 2 3 4 5 6 (PRODUCT LEVEL)	SEE PAGE
	1	1	**7K-1181**	2	STRAP-CABLE	
	2	1	**106-8704**	1	SUPPRESSOR AS-ARC	
		1	**102-8802**	1	KIT-RECEPTACLE (2-PIN)	
					(INCLUDES RECEPTACLE AS & WEDGE)	
		1	**186-3735**	2	PIN-CONNECTOR (16-GA TO 18-GA)	
	3	1	**146-9439**	1	RELAY AS (12-VOLT) (RIDE CONTROL)	
Y	4	1	*162-3960*	1	ACCUMULATOR GP-RIDE CONTROL (CHARGED)	383
	5	1	**214-4710**	1	SWITCH AS-ROCKER (RIDE CONTROL)	
		1	**111-7899**	1	GASKET	
	6	1	**224-7830**	1	FILM-WARNING (HIGH PRESSURE, READ OMM, U.S.)	
Y	7	1	**245-8780**	1	MANIFOLD GP-RIDE CONTROL	507
	8	1	**246-8038**	1	HARNESS AS-RIDE CONTROL	
	9	1	**247-0320**	1	BRACKET AS	
I	10	1	**252-1221**	1	HOSE AS	
I	11	1	**265-0868**	1	HOSE AS	
M	12	1	**096-5866**	2	BOLT (M8X1.25X75-MM)	
	13	1	**109-1633**	2	CLIP (SLOT)	
	14	1	**109-1634**	2	CLIP (TAB)	
	15	1	**131-9203**	1	SWITCH AS-PRESSURE (RIDE CONTROL)	
		1	**102-8803**	1	KIT-RECEPTACLE (3-PIN)	
					(INCLUDES RECEPTACLE AS & WEDGE)	
		1	**8T-8729**	3	PIN-CONNECTOR (16-GA TO 18-GA)	
	16	1	*148-8318*	1	CONNECTOR AS	
		1	**3K-0360**	1	SEAL-O-RING	
		1	**6V-8397**	1	SEAL-O-RING	
		1	**6V-8634**	1	CONNECTOR	
	17	1	*148-8340*	1	CONNECTOR AS	
		1	**3K-0360**	1	SEAL-O-RING	
		1	**6V-8398**	1	SEAL-O-RING	
		1	**6V-8639**	1	CONNECTOR	
	18	1	*148-8358*	2	ELBOW AS	
					(EACH INCLUDES)	
		1	**2M-9780**	1	SEAL-O-RING	
		1	**6V-8398**	1	SEAL-O-RING	
		1	**6V-8624**	1	ELBOW	
	19	1	*153-6241*	1	ELBOW AS	
		1	**6V-8398**	1	SEAL-O-RING	
		1	**8C-8989**	1	ELBOW	
	20	1	*164-5549*	1	COUPLING AS	
		1	**3J-1907**	1	SEAL-O-RING	
		1	**4I-6287**	1	COUPLING	
	21	1	**3J-1907**	1	SEAL-O-RING	
	22	1	**3S-2093**	5	STRAP-CABLE	
	23	1	**4P-7581**	2	CLIP	
	24	1	**8T-4121**	4	WASHER-HARD (11X21X2.5-MM THK)	
M	25	1	**8T-4137**	4	BOLT (M10X1.5X20-MM)	
M	26	1	**8T-4139**	2	BOLT (M12X1.75X30-MM)	
	27	1	**8T-4223**	2	WASHER-HARD (13.5X25.5X3-MM THK)	
	28	1	**8T-4224**	2	WASHER-HARD (8.8X16X2-MM THK)	

I-REFER TO HYDRAULIC INFORMATION SYSTEM
M-METRIC PART
Y-SEPARATE ILLUSTRATION

264-0187 **INSTALLATION GP-RIDE CONTROL** *(contd.)* **i03530645**

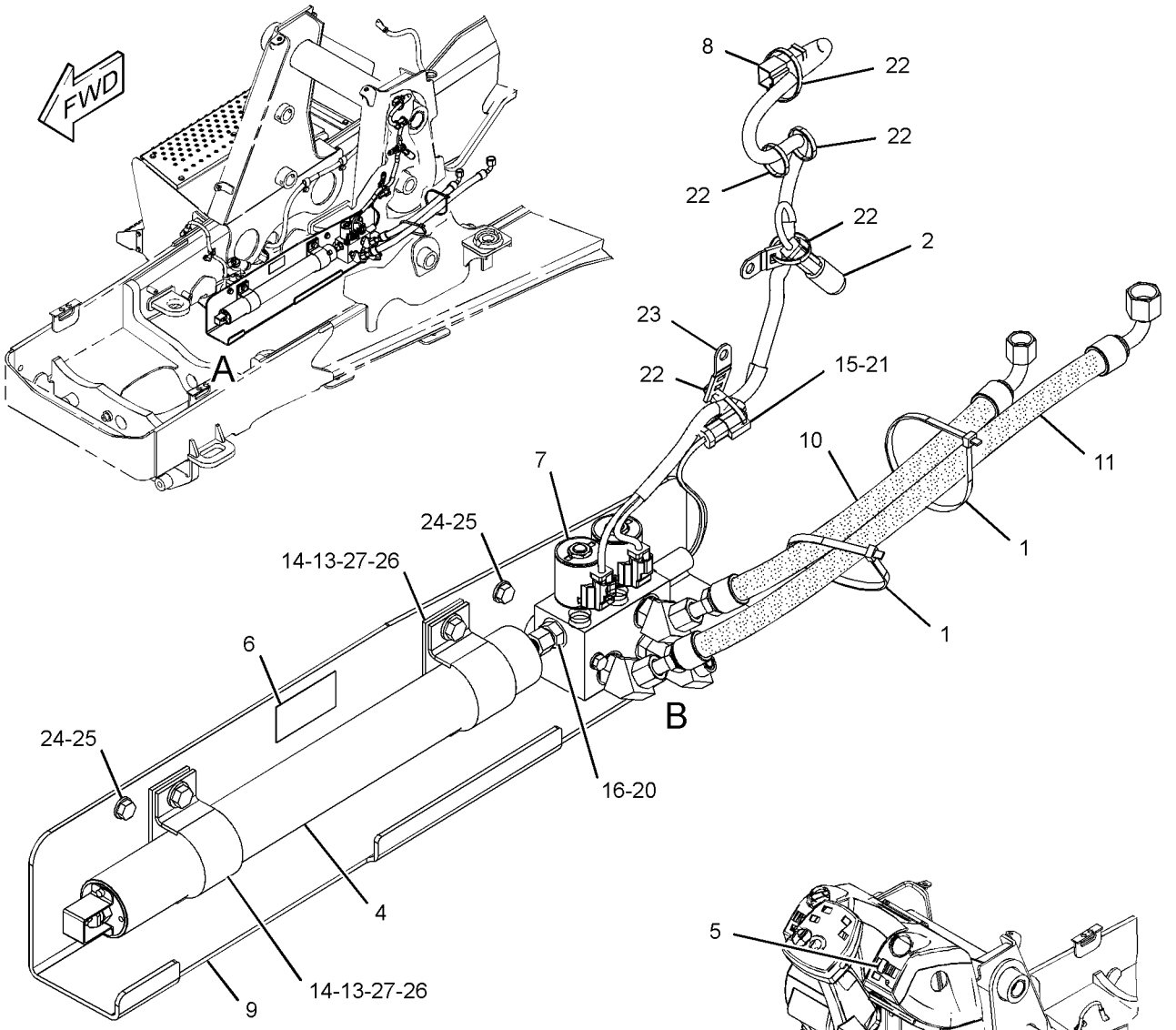

VIEW OF AREA A

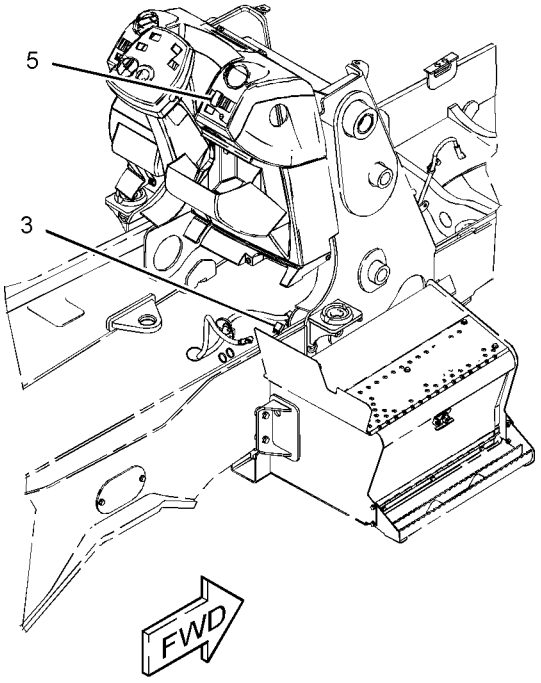

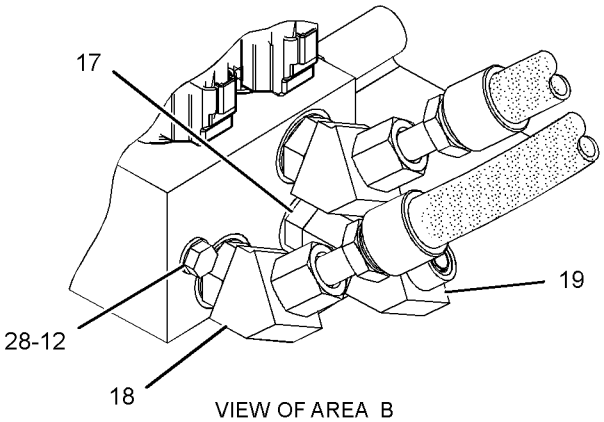

VIEW OF AREA B

GRAPHIC #1 **<END>** g01236619

HYDRAULIC SYSTEM

264-0187 INSTALLATION GP-RIDE CONTROL–AUTOSHIFT

S/N: HLS1-99999
AN ATTACHMENT
TYPE 2

SMCS-1408, 5004, 5057, 5077 **i03514460**

NOTE	REF NO	GRAPHIC REF	PART NUMBER	QTY	PART NAME 1 2 3 4 5 6 (PRODUCT LEVEL)	SEE PAGE
	1	2	**7K-1181**	2	STRAP-CABLE	
	2	1	**106-8704**	1	SUPPRESSOR AS-ARC	
	3	2	**146-9439**	1	RELAY AS (12-VOLT) (RIDE CONTROL)	
Y	4	1	*162-3960*	1	ACCUMULATOR GP-RIDE CONTROL (CHARGED)	383
	5	2	**214-4710**	1	SWITCH AS-ROCKER (RIDE CONTROL)	
		2	**111-7899**	1	GASKET	
C	6	1	**279-5016**	1	FILM-WARNING (HIGH PRESS CYLINDER, READ OMM)	
Y	7	2	**245-8780**	1	MANIFOLD GP-RIDE CONTROL	507
	8	2	**246-8038**	1	HARNESS AS-RIDE CONTROL	
	9	1	**247-0320**	1	BRACKET AS	
I	10	2	**252-1221**	1	HOSE AS	
I	11	2	**265-0868**	1	HOSE AS	
M	12	2	**096-5866**	2	BOLT (M8X1.25X75-MM)	
	13	1	**109-1633**	2	CLIP (SLOT)	
	14	1	**109-1634**	2	CLIP (TAB)	
	15	2	**131-9203**	1	SWITCH AS-PRESSURE (RIDE CONTROL)	
		2	**102-8803**	1	KIT-RECEPTACLE (3-PIN)	
					(INCLUDES RECEPTACLE AS & WEDGE)	
		2	**186-3735**	3	PIN-CONNECTOR (16-GA TO 18-GA)	
C	16	1	*148-8354*	1	ELBOW AS	
		1	**3K-0360**	1	SEAL-O-RING	
		1	**6V-8398**	1	SEAL-O-RING	
		1	**6V-9002**	1	ELBOW	
	17	2	*148-8340*	1	CONNECTOR AS	
		2	**3K-0360**	1	SEAL-O-RING	
		2	**6V-8398**	1	SEAL-O-RING	
		2	**6V-8639**	1	CONNECTOR	
	18	2	*148-8358*	2	ELBOW AS	
					(EACH INCLUDES)	
		2	**2M-9780**	1	SEAL-O-RING	
		2	**6V-8398**	1	SEAL-O-RING	
		2	**6V-8624**	1	ELBOW	
	19	2	*153-6241*	1	ELBOW AS	
		2	**6V-8398**	1	SEAL-O-RING	
		2	**8C-8989**	1	ELBOW	
C	20	2	*148-8365*	1	ELBOW AS	
		2	**8T-6876**	1	ELBOW	
		2	**3J-1907**	1	SEAL-O-RING	
		2	**6V-8398**	1	SEAL-O-RING	
	21	2	**3J-1907**	1	SEAL-O-RING	
	22	1,2	**3S-2093**	5	STRAP-CABLE	
	23	1,2	**4P-7581**	2	CLIP	
C	24	1,2	**8T-4121**	3	WASHER-HARD (11X21X2.5-MM THK)	
CM	25	1,2	**8T-4137**	2	BOLT (M10X1.5X20-MM)	
M	26	1	**8T-4139**	2	BOLT (M12X1.75X30-MM)	
	27	1	**8T-4223**	2	WASHER-HARD (13.5X25.5X3-MM THK)	
	28	2	**8T-4224**	2	WASHER-HARD (8.8X16X2-MM THK)	
C	29	1	**292-8222**	1	TUBE AS	
CM	30	2	**8T-7004**	1	STUD-TAPERLOCK (M10X1.5X35-MM)	
CM	31	2	**8T-4133**	1	NUT (M10X1.5-THD)	

C-CHANGE FROM PREVIOUS TYPE
I-REFER TO HYDRAULIC INFORMATION SYSTEM
M-METRIC PART
Y-SEPARATE ILLUSTRATION

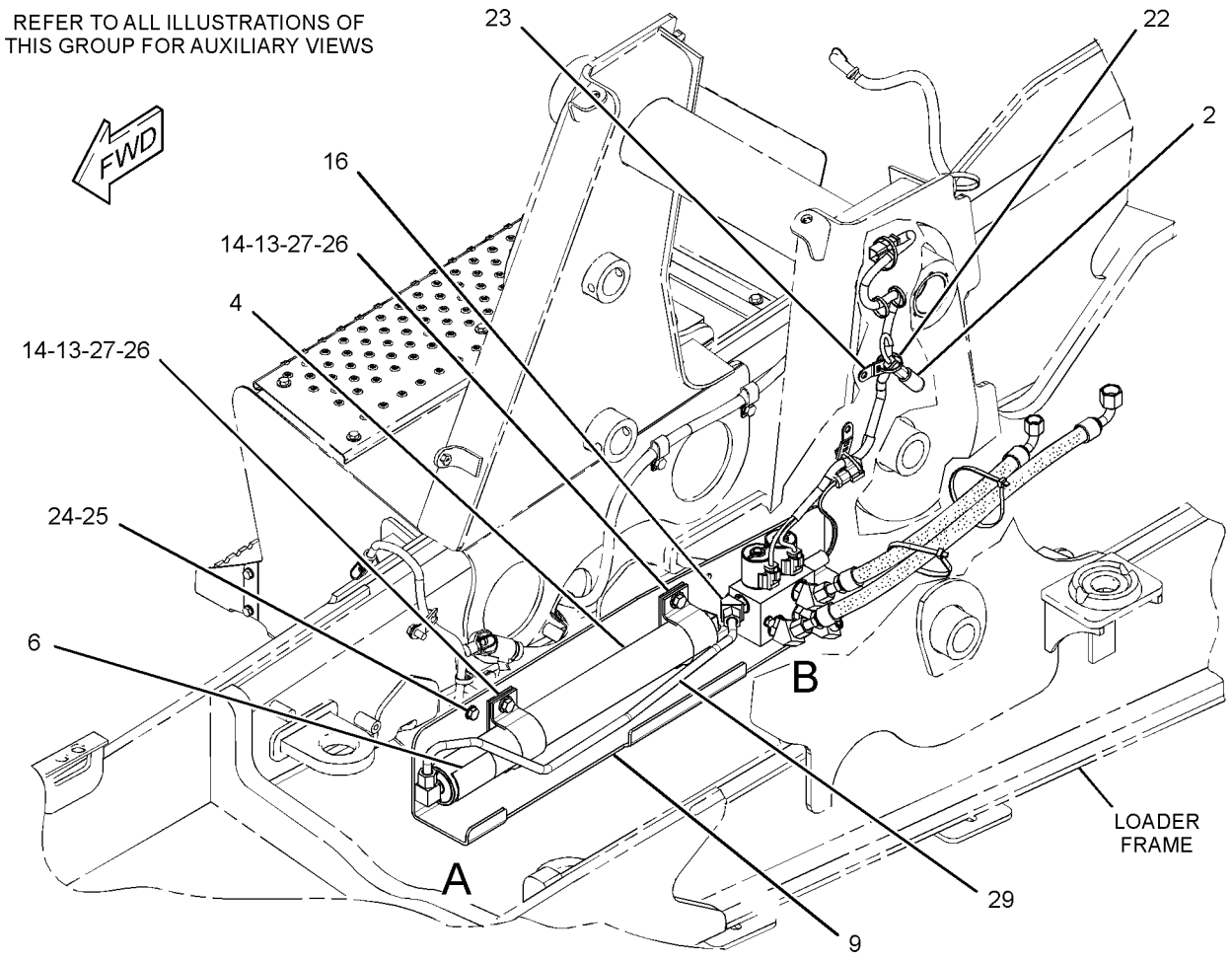

GRAPHIC #1 g01515795

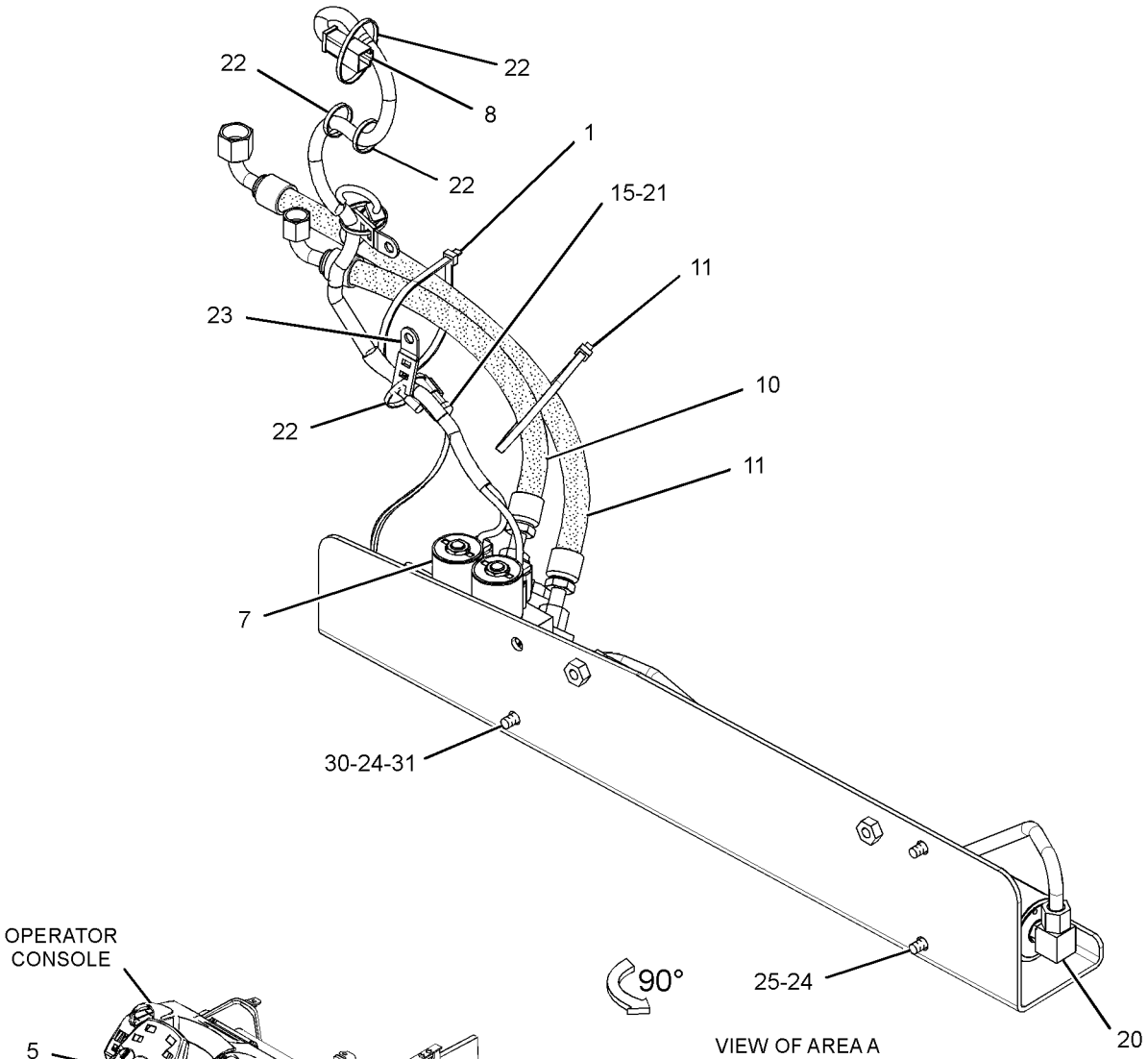

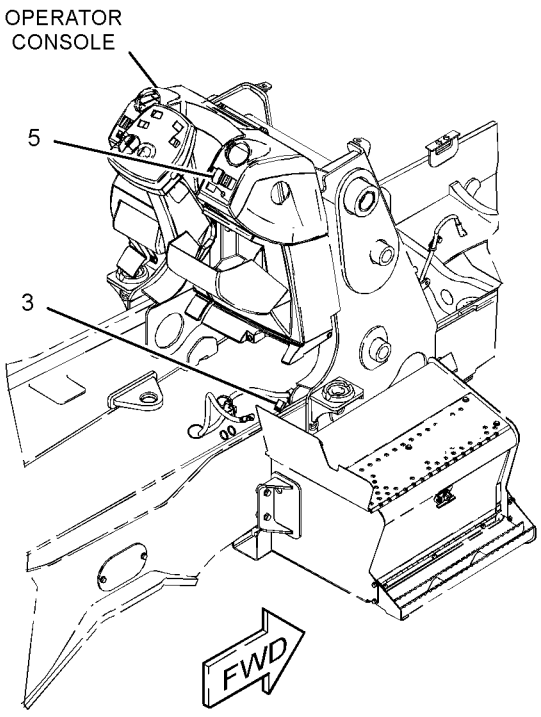

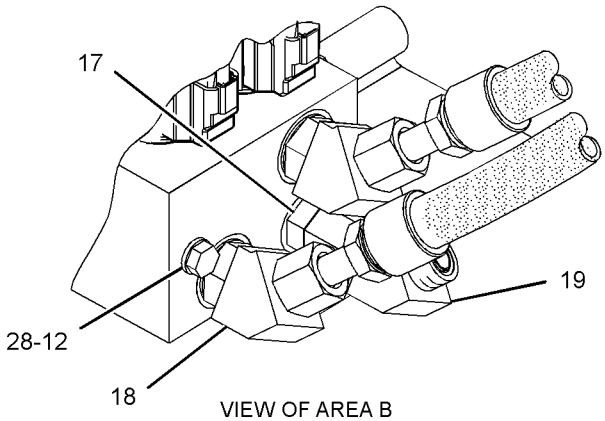

GRAPHIC #2 **<END>** g01516442

264-0187 INSTALLATION GP-RIDE CONTROL–AUTOSHIFT

S/N: HLS1-99999
AN ATTACHMENT
TYPE 3

SMCS-1408, 5004, 5057, 5077 **i03530660**

NOTE	REF NO	GRAPHIC REF	PART NUMBER	QTY	PART NAME 1 2 3 4 5 6 (PRODUCT LEVEL)	SEE PAGE
	1	1,2	**7K-1181**	3	STRAP-CABLE	
	2	1	**189-3158**	1	SUPPRESSOR-ARC	
	3	2	**146-9439**	1	RELAY AS (12-VOLT) (RIDE CONTROL)	
CY	4	1	**162-3961**	1	ACCUMULATOR GP-RIDE CONTROL (UNCHARGED)	384
	5	2	**214-4710**	1	SWITCH AS-ROCKER (RIDE CONTROL)	
		1	**111-7899**	1	GASKET	
	6	1	**279-5016**	1	FILM-WARNING (HIGH PRESS CYLINDER, READ OMM)	
Y	7	2	**245-8780**	1	MANIFOLD GP-RIDE CONTROL	507
	8	2	**246-8038**	1	HARNESS AS-RIDE CONTROL	
	9	1	**247-0320**	1	BRACKET AS	
I	10	2	**252-1221**	1	HOSE AS	
I	11	2	**265-0868**	1	HOSE AS	
M	12	2	**096-5866**	2	BOLT (M8X1.25X75-MM)	
	13	1	**109-1633**	2	CLIP (SLOT)	
	14	1	**109-1634**	2	CLIP (TAB)	
	15	2	**304-5696**	1	SWITCH AS-PRESSURE (RIDE CONTROL)	
		2	**102-8803**	1	KIT-RECEPTACLE (3-PIN)	
					(INCLUDES RECEPTACLE AS & WEDGE)	
		2	**186-3735**	3	PIN-CONNECTOR (16-GA TO 18-GA)	
	16	1	*148-8354*	1	ELBOW AS	
		1	**3K-0360**	1	SEAL-O-RING	
		1	**6V-8398**	1	SEAL-O-RING	
		1	**6V-9002**	1	ELBOW	
	17	2	*148-8340*	1	CONNECTOR AS	
		2	**3K-0360**	1	SEAL-O-RING	
		2	**6V-8398**	1	SEAL-O-RING	
		2	**6V-8639**	1	CONNECTOR	
	18	2	*148-8358*	2	ELBOW AS	
					(EACH INCLUDES)	
		2	**2M-9780**	1	SEAL-O-RING	
		2	**6V-8398**	1	SEAL-O-RING	
		2	**6V-8624**	1	ELBOW	
	19	2	*153-6241*	1	ELBOW AS	
		2	**6V-8398**	1	SEAL-O-RING	
		2	**8C-8989**	1	ELBOW	
	20	2	*148-8365*	1	ELBOW AS	
		2	**8T-6876**	1	ELBOW	
		2	**3J-1907**	1	SEAL-O-RING	
		2	**6V-8398**	1	SEAL-O-RING	
	21	2	**3J-1907**	1	SEAL-O-RING	
	22	1,2	**3S-2093**	5	STRAP-CABLE	
	23	1,2	**4P-7581**	2	CLIP	
	24	1,2	**8T-4121**	3	WASHER-HARD (11X21X2.5-MM THK)	
M	25	1,2	**8T-4137**	3	BOLT (M10X1.5X20-MM)	
M	26	1	**8T-4139**	2	BOLT (M12X1.75X30-MM)	
	27	1	**8T-4223**	2	WASHER-HARD (13.5X25.5X3-MM THK)	
	28	2	**8T-4224**	2	WASHER-HARD (8.8X16X2-MM THK)	
	29	1	**292-8222**	1	TUBE AS	
	30	1	*148-8370*	1	ELBOW AS	
		1	**6V-8398**	1	SEAL-O-RING	
		1	**6V-9851**	1	ELBOW	
I	31	1	**141-7684**	1	HOSE AS	

C-CHANGE FROM PREVIOUS TYPE
I-REFER TO HYDRAULIC INFORMATION SYSTEM
M-METRIC PART
Y-SEPARATE ILLUSTRATION

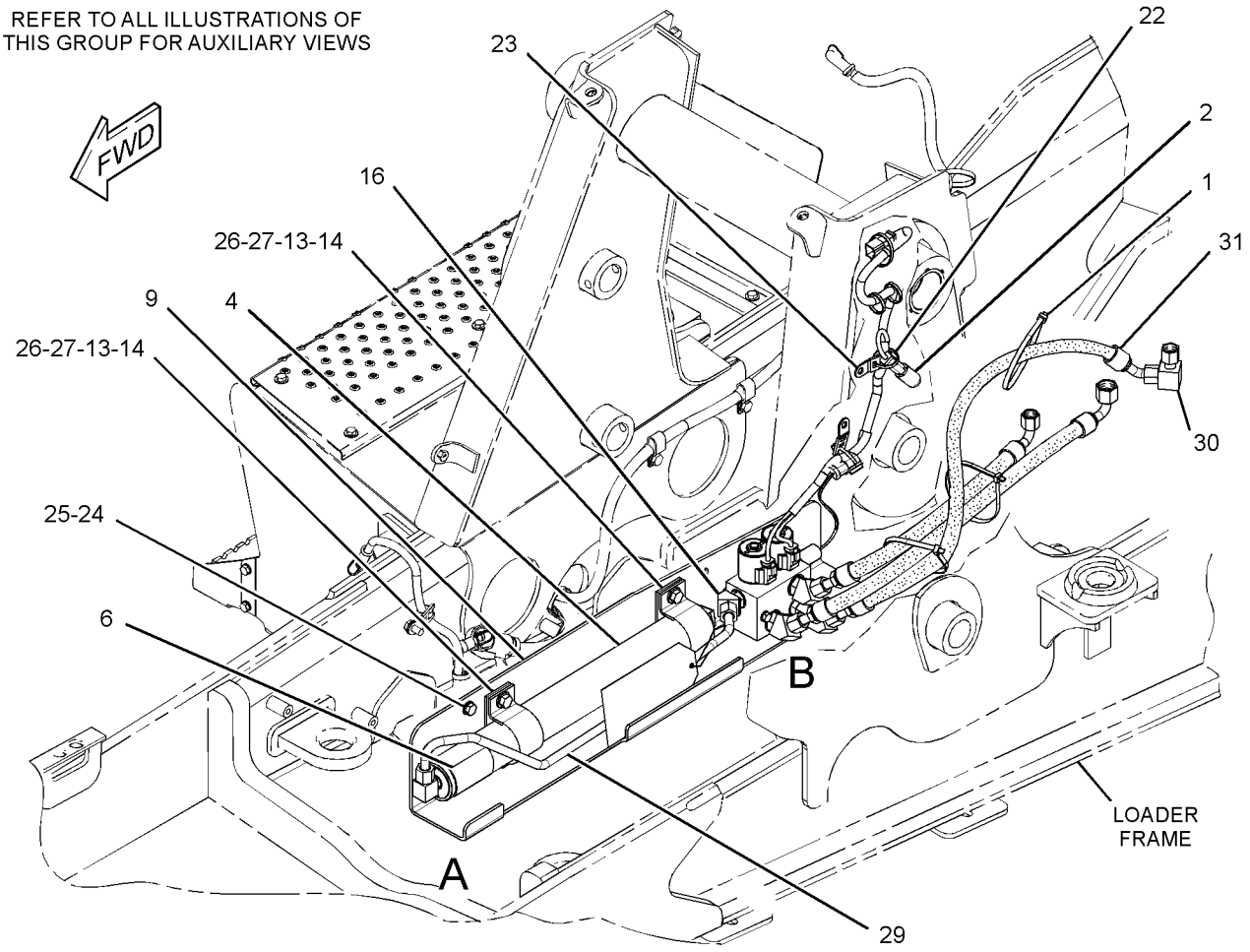

GRAPHIC #1 g01584453

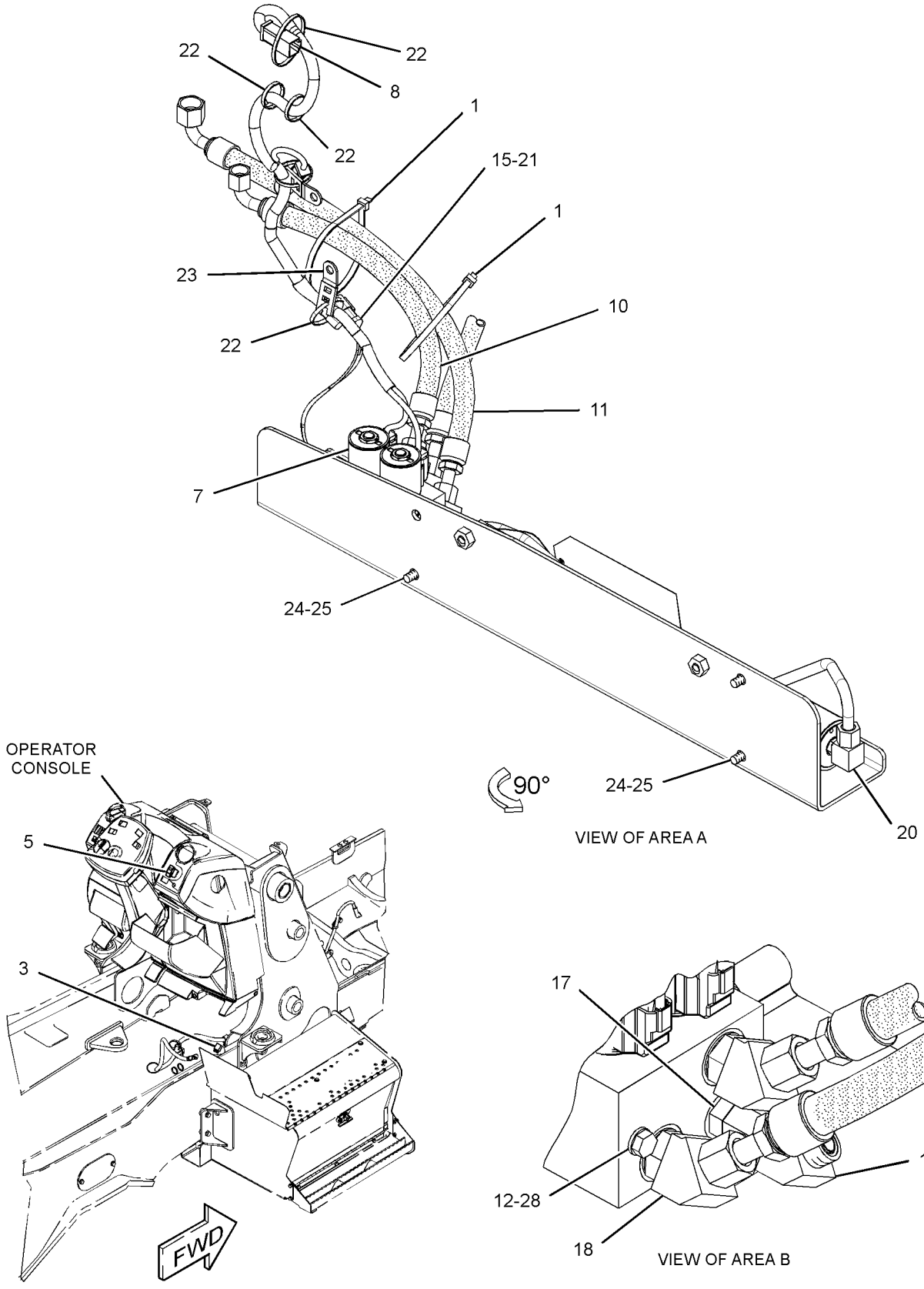

GRAPHIC #2 **<END>** g01584455

HYDRAULIC SYSTEM

220-5973 KICKOUT & POSITIONER GP

S/N: HLS4364-99999

PART OF 213-9300 LOADER AR

SMCS-5109, 5112 **i02808587**

NOTE	REF NO	GRAPHIC REF	PART NUMBER	QTY	PART NAME 1 2 3 4 5 6 (PRODUCT LEVEL)	SEE PAGE
	1	1	**290-8140**	1	LEVER AS	
		1	**7Y-0336**	1	SPACER (24.5X44X24-MM THK)	
		1	**9R-2614**	1	BEARING	
M	2	1	**8T-4189**	2	BOLT (M8X1.25X20-MM)	
C	3	1	**268-5689**	1	FILM-IDENTIFICATION (BUCKET LEVEL)	
	4	1	**8T-0706**	1	RING-RETAINING	
	5	1	**8T-5063**	1	ROD END	
	6	1	**9R-3255**	1	LEVER	
	7	1	**9R-5301**	2	PIN-COTTER	
	8	1	**128-7902**	1	SPACER (60.25X75X6-MM THK)	
B	9	1	**128-7903**	1	SPACER (61X114.3X3-MM THK)	
B	10	1	**128-7905**	1	SPACER (61X114.3X1-MM THK)	
	11	1	**279-6052**	1	LINK AS	
	12	1	**130-5891**	1	LEVER AS	
	13	1	**130-7952**	1	PLATE	
	14	1	**140-6009**	1	LEVER AS	
	15	1	**141-6343**	1	SPRING	
	16	1	**290-8139**	1	PLATE AS	
		1	**220-5974**	1	PLATE	
	17	1	**106-7301**	1	ROD AS	
C	18	1	**297-2831**	1	PIPE AS	
	19	1	**272-0555**	1	PIVOT AS	
	20	1	**1B-8736**	1	KEY-WOODRUFF	
	21	1	**3B-8489**	2	FITTING-GREASE	
	22	1	**272-0557**	1	PLATE AS	
	23	1	**8C-6955**	1	END-YOKE ROD	
	24	1	**8T-4123**	8	WASHER (22X35X3.5-MM THK)	
M	25	1	**8T-4133**	2	NUT (M10X1.5-THD)	
M	26	1	**8T-4182**	1	BOLT (M10X1.5X45-MM)	
	27	1	**9R-2806**	2	PIN	
	28	1	**9R-2807**	4	CLIP	
	29	1	**8T-4224**	2	WASHER-HARD (8.8X16X2-MM THK)	

B-USE AS REQUIRED
C-CHANGE FROM PREVIOUS TYPE
M-METRIC PART

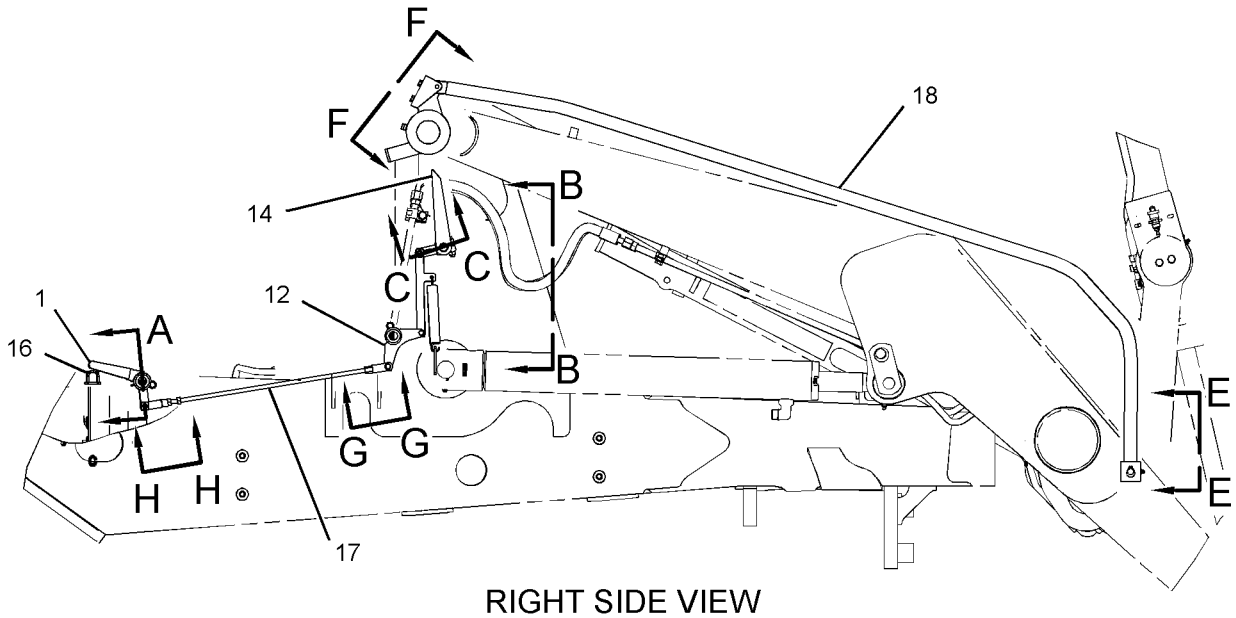

RIGHT SIDE VIEW

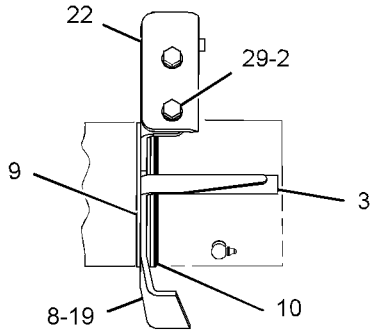

VIEW F-F

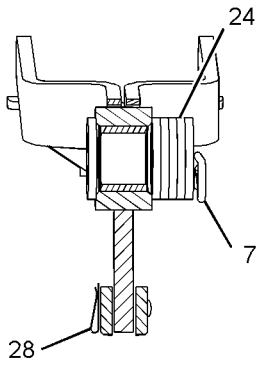

SECTION A

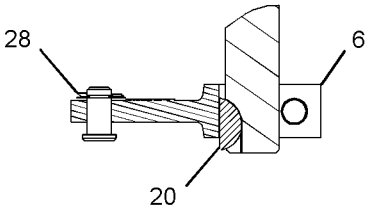

SECTION C-C

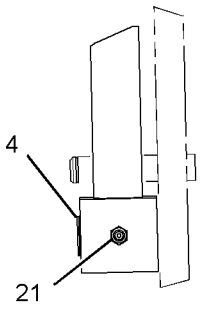

VIEW E-E

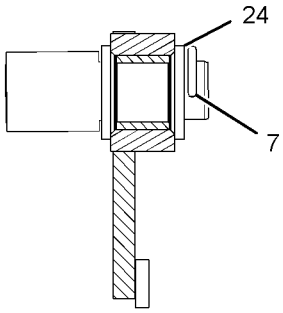

SECTION D-D

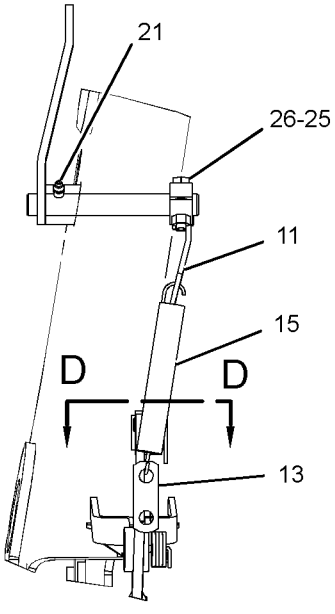

VIEW B-B

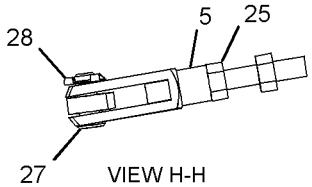

VIEW H-H

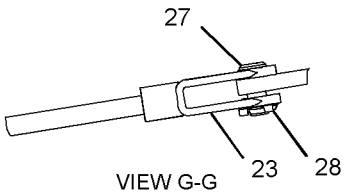

VIEW G-G

GRAPHIC #1

<END>

g01398339

HYDRAULIC SYSTEM

268-9418 KICKOUT & POSITIONER GP

S/N: HLS1-4363

PART OF 213-9300 LOADER AR

SMCS-5109, 5112 **i02523407**

NOTE	REF NO	GRAPHIC REF	PART NUMBER	QTY	PART NAME 1 2 3 4 5 6 (PRODUCT LEVEL)	SEE PAGE
	1	1	**8T-0706**	1	RING-RETAINING	
	2	1	**8T-5063**	1	ROD END	
	3	1	**9R-3255**	1	LEVER	
	4	1	**106-7301**	1	ROD AS	
	5	1	**290-8140**	1	LEVER AS	
		1	**7Y-0336**	1	SPACER (24.5X44X24-MM THK)	
		1	**9R-2614**	1	BEARING	
	6	1	**128-7902**	1	SPACER (60.25X75X6-MM THK)	
	7	1	**128-7903**	1	SPACER (61X114.3X3-MM THK)	
	8	1	**128-7905**	1	SPACER (61X114.3X1-MM THK)	
	9	1	**130-5891**	1	LEVER AS	
		1	**7Y-0336**	1	SPACER (24.5X44X24-MM THK)	
		1	**9R-2614**	1	BEARING	
		1	**9R-3135**	1	PIN	
	10	1	**130-7952**	1	PLATE	
	11	1	**134-5930**	1	SPACER (19X41X12.7-MM THK)	
	12	1	**140-6009**	1	LEVER AS	
	13	1	**141-6343**	1	SPRING	
	14	1	**290-8139**	1	PLATE AS	
	15	1	**227-5571**	1	TUBE AS	
	16	1	**268-5689**	1	FILM-IDENTIFICATION (BUCKET LEVEL)	
					(ALIGN FILM WITH POINTER WITH BUCKET ON GROUND)	
	17	1	**272-0555**	1	PIVOT AS	
	18	1	**272-0557**	1	PLATE AS	
	19	1	**279-6052**	1	LINK AS	
	20	1	**1B-8736**	1	KEY-WOODRUFF	
	21	1	**3B-8489**	2	FITTING-GREASE	
	22	1	**8C-6955**	1	END-YOKE ROD	
	23	1	**8T-4123**	8	WASHER (22X35X3.5-MM THK)	
M	24	1	**8T-4133**	2	NUT (M10X1.5-THD)	
M	25	1	**8T-4182**	1	BOLT (M10X1.5X45-MM)	
M	26	1	**8T-4189**	2	BOLT (M8X1.25X20-MM)	
	27	1	**8T-4224**	2	WASHER-HARD (8.8X16X2-MM THK)	
	28	1	**9R-2806**	2	PIN	
	29	1	**9R-2807**	4	CLIP	
	30	1	**9R-5301**	2	PIN-COTTER	

M-METRIC PART

268-9418 **KICKOUT & POSITIONER GP** *(contd.)* **i02523407**

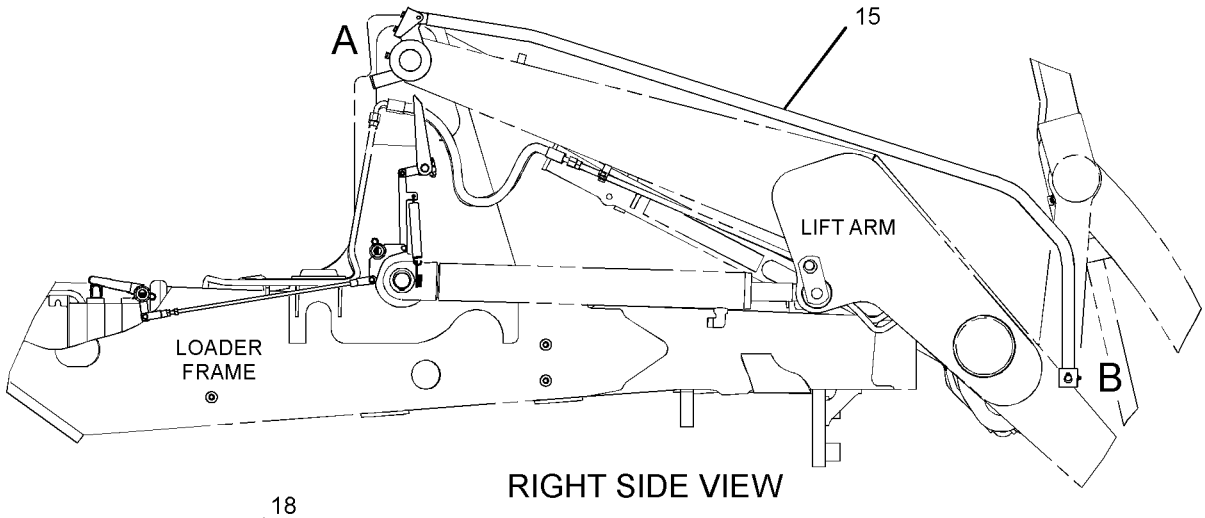

RIGHT SIDE VIEW

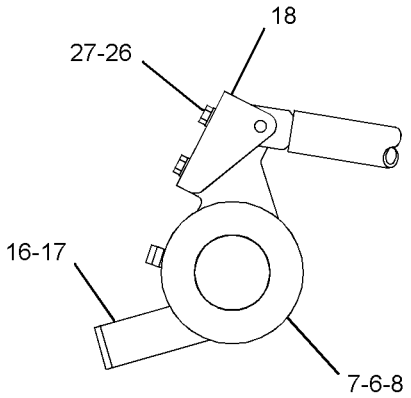

VIEW OF AREA A

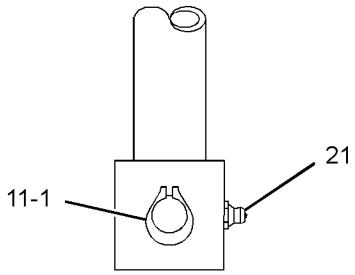

VIEW OF AREA B

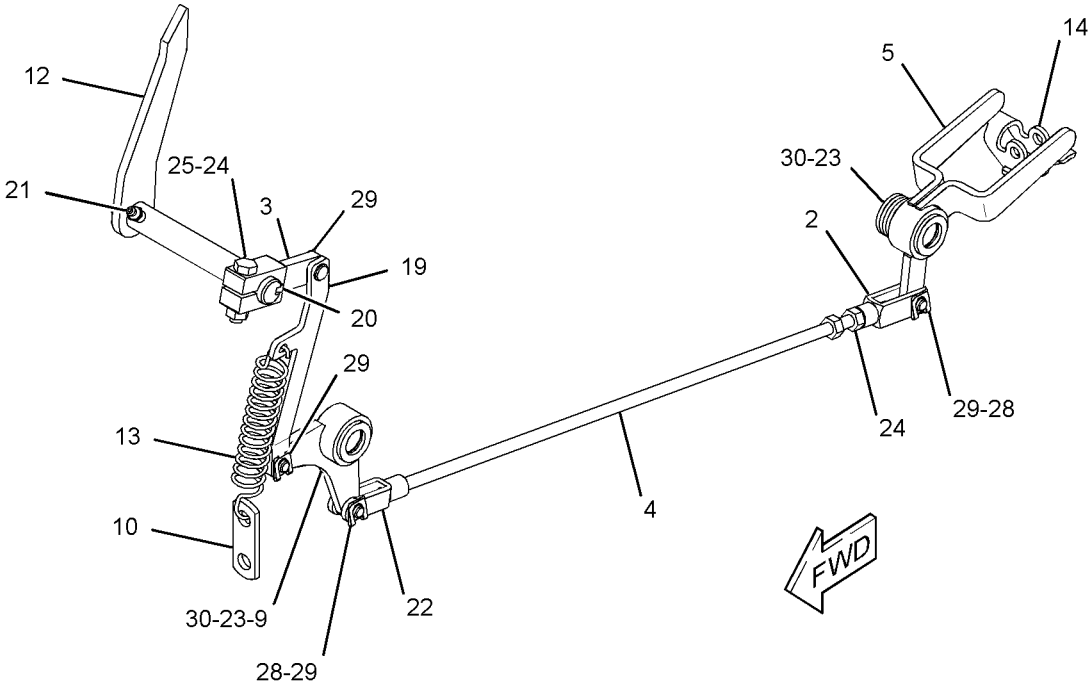

GRAPHIC #1 **<END>** g01289837

HYDRAULIC SYSTEM

249-7912 LINES GP-BACKHOE AUXILIARY

S/N: HLS1-99999
FOR USE WITH 214-2553—PAGE 1, 269-2148—PAGE 526
AN ATTACHMENT

SMCS-5057 **i03347868**

NOTE	REF NO	GRAPHIC REF	PART NUMBER	QTY	PART NAME 1 2 3 4 5 6 (PRODUCT LEVEL)	SEE PAGE
	1	1	**4W-3753**	2	SPACER (13.5X25X38.1-MM THK)	
	2	1	**106-0401**	1	FITTING (QUICK DISCONNECT, FEMALE)	
	3	1	**106-0406**	1	FITTING (QUICK DISCONNECT, MALE)	
	4	1	**109-1260**	2	BRACKET	
	5	1	**144-8344**	1	SPACER (11X19X20-MM THK)	
	6	1	*155-2026*	1	UNION AS	
		1	**5K-9090**	2	SEAL-O-RING	
		1	**6V-8998**	1	UNION	
	7	1	**217-2617**	1	TUBE AS	
I	8	1	**217-2699**	1	HOSE AS	
	9	1	*241-6226*	1	TEE AS	
		1	**6V-8398**	1	SEAL-O-RING	
		1	**6V-9746**	1	SEAL-O-RING	
		1	**7J-9108**	1	SEAL-O-RING	
		1	**241-6225**	1	TEE	
	10	1	**241-8448**	2	FILM-WARNING (HYD PRESS, READ OMM, U.S.)	
I	11	1	**290-6711**	1	HOSE AS	
	12	1	**251-9360**	1	TUBE AS	
I	13	1	**252-0200**	1	HOSE AS	
	14	1	**277-4543**	1	BRACKET AS	
	15	1	**281-4726**	2	FILM-INSTRUCTION (OIL FLOW DIRECTION)	
	16	1	*148-8392*	1	ELBOW AS	
		1	**6V-9746**	1	SEAL-O-RING	
		1	**6V-9853**	1	ELBOW	
	17	1	*150-3053*	2	CONNECTOR AS	
					(EACH INCLUDES)	
		1	**6V-9746**	1	SEAL-O-RING	
		1	**7M-8485**	1	SEAL-O-RING	
		1	**108-3872**	1	CONNECTOR	
I	18	1	**262-4459**	1	HOSE AS	
	19	1	**2P-1293**	2	LOCKNUT (1-3/16-12-THD)	
	20	1	**5K-9090**	2	SEAL-O-RING	
	21	1	**5P-7466**	4	CLIP (SLOT)	
	22	1	**5P-7467**	4	CLIP (TAB)	
	23	1	**5P-8112**	4	GROMMET	
	24	1	**8S-0023**	1	CLIP (SLOT)	
	25	1	**6V-9170**	1	NUT-BULKHEAD (1-14-THD)	
	26	1	**6V-9172**	1	NUT (1-7/16-12-THD)	
	27	1	**6V-9746**	1	SEAL-O-RING	
	28	1	**7X-7729**	2	WASHER (11X25X3-MM THK)	
	29	1	**8T-1889**	3	CLIP (SLOT)	
	30	1	**8T-1890**	3	CLIP (TAB)	
	31	1	**8T-4121**	8	WASHER-HARD (11X21X2.5-MM THK)	
M	32	1	**8T-4133**	1	NUT (M10X1.5-THD)	
M	33	1	**8T-4136**	5	BOLT (M10X1.5X25-MM)	
M	34	1	**7X-2549**	2	BOLT (M12X1.75X100-MM)	
M	35	1	**8T-4185**	1	BOLT (M10X1.5X50-MM)	
M	36	1	**8T-4196**	2	BOLT (M10X1.5X35-MM)	
	37	1	**8T-4223**	2	WASHER-HARD (13.5X25.5X3-MM THK)	
	38	1	**8S-0024**	1	CLIP (TAB)	
	39	1	**241-8450**	2	FILM-WARNING (HYD PRESS, READ OMM, INTL)	

I-REFER TO HYDRAULIC INFORMATION SYSTEM
M-METRIC PART

249-7912 **LINES GP-BACKHOE AUXILIARY** *(contd.)* **i03347868**

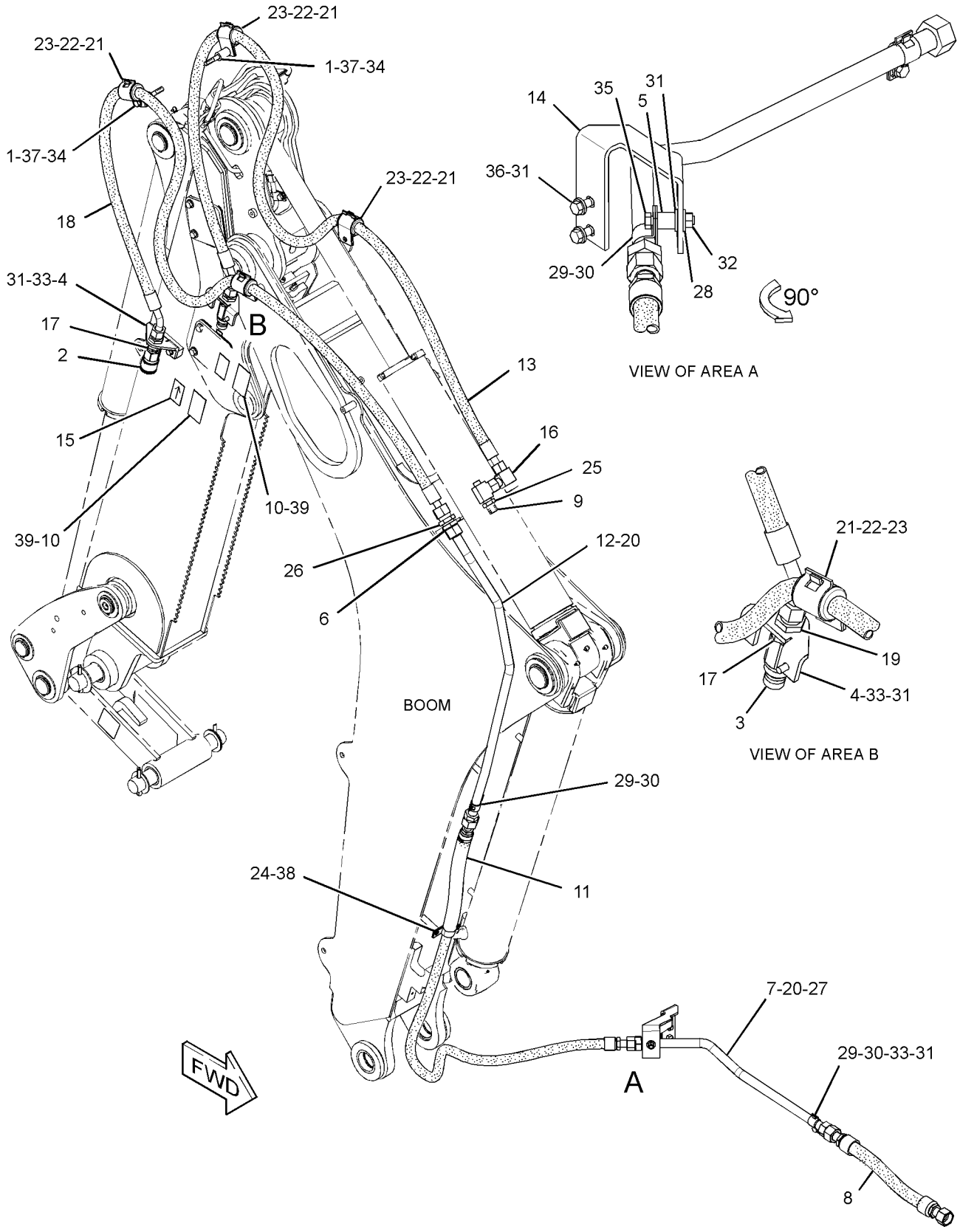

GRAPHIC #1 **<END>** g01805176

HYDRAULIC SYSTEM

262-4201 LINES GP-BACKHOE AUXILIARY

S/N: HLS1-99999

FOR USE WITH 214-2550—PAGE 2, 269-2147—PAGE 526, 269-2148—PAGE 526 AN ATTACHMENT

SMCS-5057 **i03347864**

NOTE	REF NO	GRAPHIC REF	PART NUMBER	QTY	PART NAME 1 2 3 4 5 6 (PRODUCT LEVEL)	SEE PAGE
	1	2	**106-0401**	1	FITTING (QUICK DISCONNECT, FEMALE)	
	2	2	**106-0406**	1	FITTING (QUICK DISCONNECT, MALE)	
	3	2	**278-4497**	1	BRACKET	
	4	2	**144-8344**	1	SPACER (11X19X20-MM THK)	
	5	1	*155-2026*	2	UNION AS	
					(EACH INCLUDES)	
		1	**5K-9090**	2	SEAL-O-RING	
		1	**6V-8998**	1	UNION	
	6	2	**235-5729**	1	VALVE AS-MANUAL (DIRECTIONAL FLOW)	
		2	**6V-9746**	2	SEAL-O-RING	
	7	2	**241-8448**	2	FILM-WARNING (HYD PRESS, READ OMM, U.S.)	
	8	1	**251-9360**	1	TUBE AS	
	9	2	**257-0475**	1	VALVE GP-RELIEF	
		2	**8J-2413**	1	SEAL-O-RING	
		2	**095-1751**	1	SEAL-O-RING	
		2	**169-1616**	1	RING-BACKUP	
	10	2	**262-3036**	1	BRACKET	
I	11	1	**262-3038**	1	HOSE AS	
	12	2	**262-3039**	1	TUBE AS	
I	13	1	**262-4203**	2	HOSE AS	
	14	1	**262-4217**	1	TUBE AS	
	15	2	**277-4543**	1	BRACKET AS	
	16	2	**286-0689**	1	TUBE AS	
	17	2	*148-8327*	2	CONNECTOR AS	
					(EACH INCLUDES)	
		2	**3D-2824**	1	SEAL-O-RING	
		2	**6V-8637**	1	CONNECTOR	
		2	**6V-9746**	1	SEAL-O-RING	
	18	2	*148-8335*	1	CONNECTOR AS	
		2	**5K-9090**	1	SEAL-O-RING	
		2	**6V-8635**	1	CONNECTOR	
		2	**7M-8485**	1	SEAL-O-RING	
	19	2	*150-3053*	2	CONNECTOR AS	
					(EACH INCLUDES)	
		2	**6V-9746**	1	SEAL-O-RING	
		2	**7M-8485**	1	SEAL-O-RING	
		2	**108-3872**	1	CONNECTOR	
	20	2	*260-9143*	2	ELBOW AS	
					(EACH INCLUDES)	
		2	**6V-9746**	1	SEAL-O-RING	
		2	**109-5825**	1	ELBOW	
I	21	1	**290-6711**	1	HOSE AS	
I	22	1	**290-6712**	1	HOSE AS	
	23	2	**2P-1293**	2	LOCKNUT (1-3/16-12-THD)	
	24	1	**5K-9090**	2	SEAL-O-RING	
	25	2	**5P-4116**	2	WASHER-HARD (8.8X20.5X2-MM THK)	
	26	2	**5P-7466**	2	CLIP (SLOT)	
	27	2	**5P-7467**	2	CLIP (TAB)	
	28	2	**5P-8112**	2	GROMMET	
	29	1	**6V-9172**	2	NUT (1-7/16-12-THD)	
	30	2	**6V-9746**	1	SEAL-O-RING	
	31	2	**241-8450**	2	FILM-WARNING (HYD PRESS, READ OMM, INTL)	
	32	1	**8S-0023**	2	CLIP (SLOT)	
	33	1	**8S-0024**	2	CLIP (TAB)	
	34	2	**8T-1887**	1	CLIP (SLOT)	

262-4201 **LINES GP-BACKHOE AUXILIARY** *(contd.)* **i03347864**

NOTE	REF NO	GRAPHIC REF	PART NUMBER	QTY	PART NAME 1 2 3 4 5 6 (PRODUCT LEVEL)	SEE PAGE
	35	2	**8T-1888**	1	CLIP (TAB)	
	36	1	**8T-1889**	2	CLIP (SLOT)	
	37	1	**8T-1890**	2	CLIP (TAB)	
	38	2	**8T-4121**	12	WASHER-HARD (11X21X2.5-MM THK)	
M	39	2	**8T-4133**	1	NUT (M10X1.5-THD)	
M	40	2	**8T-4136**	4	BOLT (M10X1.5X25-MM)	
M	41	2	**8T-4137**	2	BOLT (M10X1.5X20-MM)	
M	42	2	**8T-4185**	1	BOLT (M10X1.5X50-MM)	
M	43	2	**8T-4189**	2	BOLT (M8X1.25X20-MM)	
M	44	2	**8T-4196**	2	BOLT (M10X1.5X35-MM)	
M	45	2	**8T-4910**	2	BOLT (M12X1.75X60-MM)	
	46	2	**278-4498**	1	BRACKET	
	47	2	**6V-9832**	2	CAP AS (AUX HYD FUNCTION)	
	48	2	*148-8449*	2	TEE AS-SWIVEL	
					(EACH INCLUDES)	
		2	**6V-9746**	2	SEAL-O-RING	
		2	**6V-9839**	1	TEE-SWIVEL	
	49	1	**204-2281**	1	STRAP-TIE	

I-REFER TO HYDRAULIC INFORMATION SYSTEM
M-METRIC PART

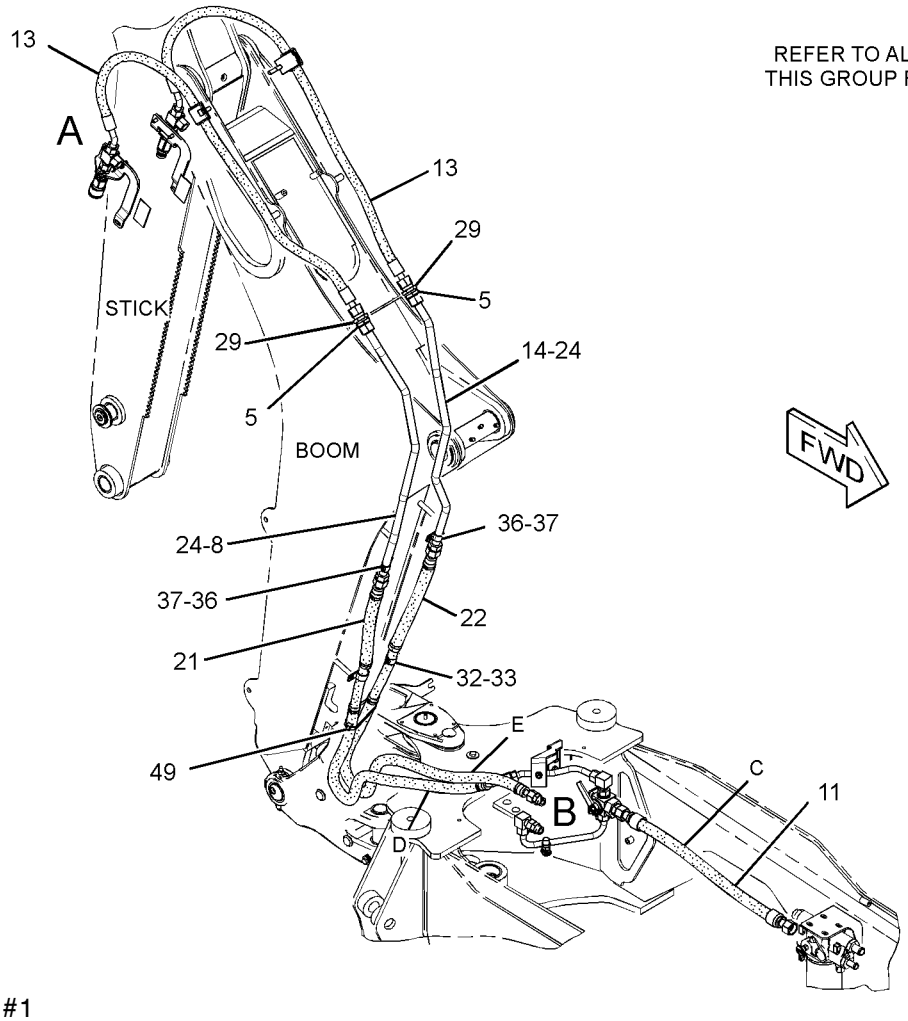

REFER TO ALL ILLUSTRATIONS OF THIS GROUP FOR AUXILIARY VIEWS

GRAPHIC #1

g01488094

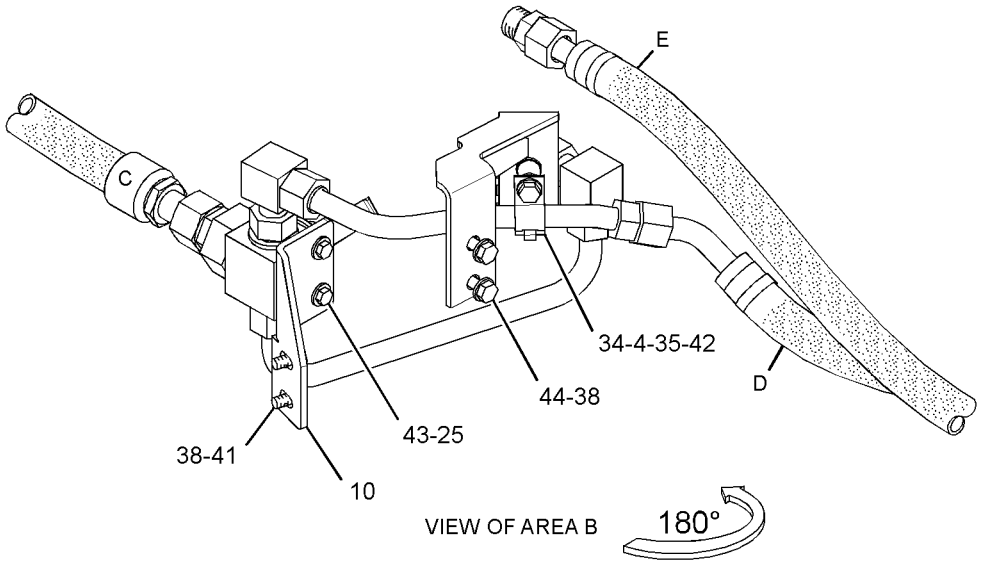

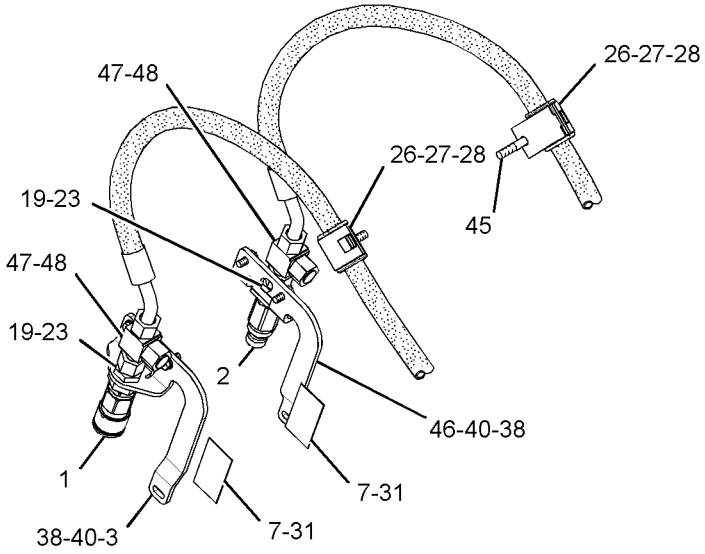

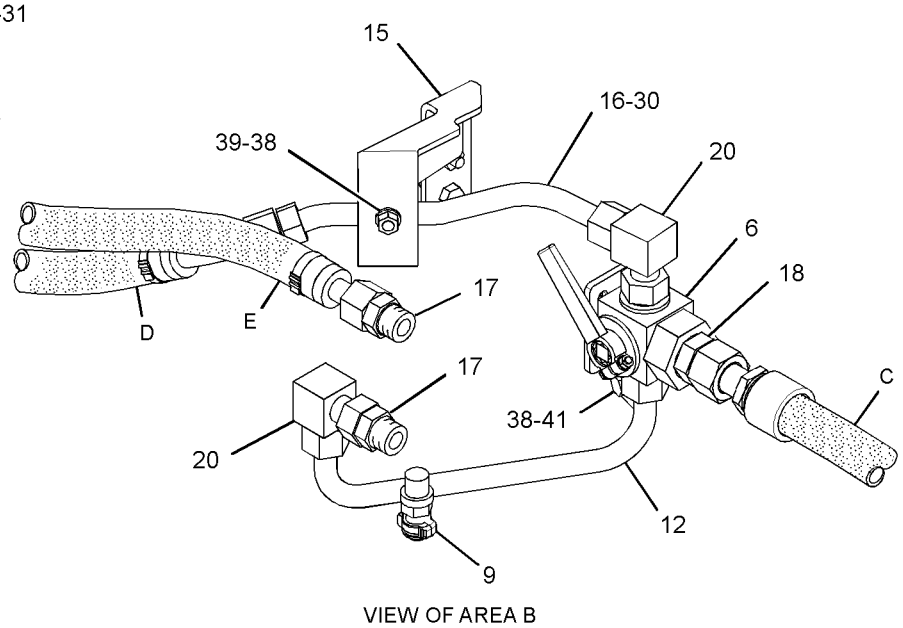

GRAPHIC #2 **<END>** g01781216

HYDRAULIC SYSTEM

262-4202 LINES GP-BACKHOE AUXILIARY

S/N: HLS1-99999
FOR USE WITH 214-2553—PAGE 1, 269-2148—PAGE 526
AN ATTACHMENT

SMCS-5057 **i03514681**

NOTE	REF NO	GRAPHIC REF	PART NUMBER	QTY	PART NAME 1 2 3 4 5 6 (PRODUCT LEVEL)	SEE PAGE
	1	1	**4W-3753**	2	SPACER (13.5X25X38.1-MM THK)	
	2	1	**106-0401**	1	FITTING (QUICK DISCONNECT, FEMALE)	
	3	1	**106-0406**	1	FITTING (QUICK DISCONNECT, MALE)	
	4	1	**278-4497**	1	BRACKET	
	5	1	*155-2026*	2	UNION AS	
					(EACH INCLUDES)	
		1	**5K-9090**	2	SEAL-O-RING	
		1	**6V-8998**	1	UNION	
	7	1	**235-5729**	1	VALVE AS-MANUAL (DIRECTIONAL FLOW)	
	8	1	**241-8448**	2	FILM-WARNING (HYD PRESS, READ OMM, U.S.)	
	9	1	**251-9360**	1	TUBE AS	
	10	1	**262-3036**	1	BRACKET	
I	11	1	**262-3038**	1	HOSE AS	
I	12	1	**290-6711**	1	HOSE AS	
	13	1	**278-4498**	1	BRACKET	
	14	1	**262-4211**	1	TUBE AS	
	15	1	**262-4217**	1	TUBE AS	
	16	1	**277-4543**	1	BRACKET AS	
	17	1	*148-8327*	2	CONNECTOR AS	
					(EACH INCLUDES)	
		1	**3D-2824**	1	SEAL-O-RING	
		1	**6V-8637**	1	CONNECTOR	
		1	**6V-9746**	1	SEAL-O-RING	
	18	1	*148-8335*	1	CONNECTOR AS	
		1	**5K-9090**	1	SEAL-O-RING	
		1	**6V-8635**	1	CONNECTOR	
		1	**7M-8485**	1	SEAL-O-RING	
	19	1	*150-3053*	2	CONNECTOR AS	
					(EACH INCLUDES)	
		1	**6V-9746**	1	SEAL-O-RING	
		1	**7M-8485**	1	SEAL-O-RING	
		1	**108-3872**	1	CONNECTOR	
I	20	1	**262-4459**	2	HOSE AS	
	21	1	**2P-1293**	2	LOCKNUT (1-3/16-12-THD)	
	22	1	**5K-9090**	2	SEAL-O-RING	
	23	1	**5P-7466**	4	CLIP (SLOT)	
	24	1	**5P-7467**	2	CLIP (TAB)	
	25	1	**5P-8112**	4	GROMMET	
	26	1	**204-2281**	1	STRAP-TIE	
	27	1	**6V-9172**	2	NUT (1-7/16-12-THD)	
	28	1	**6V-9746**	1	SEAL-O-RING	
	29	1	*148-8449*	2	TEE AS-SWIVEL	
					(EACH INCLUDES)	
		1	**6V-9746**	2	SEAL-O-RING	
		1	**6V-9839**	1	TEE-SWIVEL	
	30	1	**8T-1889**	2	CLIP (SLOT)	
	31	1	**8T-1890**	2	CLIP (TAB)	
	32	1	**8T-4121**	12	WASHER-HARD (11X21X2.5-MM THK)	
M	33	1	**8T-4136**	4	BOLT (M10X1.5X25-MM)	
M	34	1	**8T-4137**	2	BOLT (M10X1.5X20-MM)	
M	35	1	**7X-2549**	2	BOLT (M12X1.75X100-MM)	
M	36	1	**8T-4189**	2	BOLT (M8X1.25X20-MM)	
M	37	1	**8T-4196**	2	BOLT (M10X1.5X35-MM)	
	38	1	**8T-4223**	2	WASHER-HARD (13.5X25.5X3-MM THK)	
	39	1	**286-0689**	1	TUBE AS	

262-4202 **LINES GP-BACKHOE AUXILIARY** *(contd.)* **i03514681**

NOTE	REF NO	GRAPHIC REF	PART NUMBER	QTY	PART NAME 1 2 3 4 5 6 (PRODUCT LEVEL)	SEE PAGE
I	40	1	**290-6712**	1	HOSE AS	
	41	1	*260-9143*	2	ELBOW AS (90-DEG)	
					(EACH INCLUDES)	
		1	**6V-9746**	1	SEAL-O-RING	
		1	**109-5825**	1	ELBOW	
	42	1	**144-8344**	1	SPACER (11X19X20-MM THK)	
M	43	1	**8T-4185**	1	BOLT (M10X1.5X50-MM)	
M	44	1	**8T-4133**	1	NUT (M10X1.5-THD)	
	45	1	**8T-1888**	1	CLIP (TAB)	
	46	1	**8T-1887**	1	CLIP (SLOT)	
	47	1	**8S-0024**	2	CLIP (TAB)	
	48	1	**8S-0023**	2	CLIP (SLOT)	
	49	1	**5P-4116**	2	WASHER-HARD (8.8X20.5X2-MM THK)	
	50	1	**6V-9832**	2	CAP AS	
	51	1	**330-9416**	2	CLIP (SLOT)	

I-REFER TO HYDRAULIC INFORMATION SYSTEM
M-METRIC PART

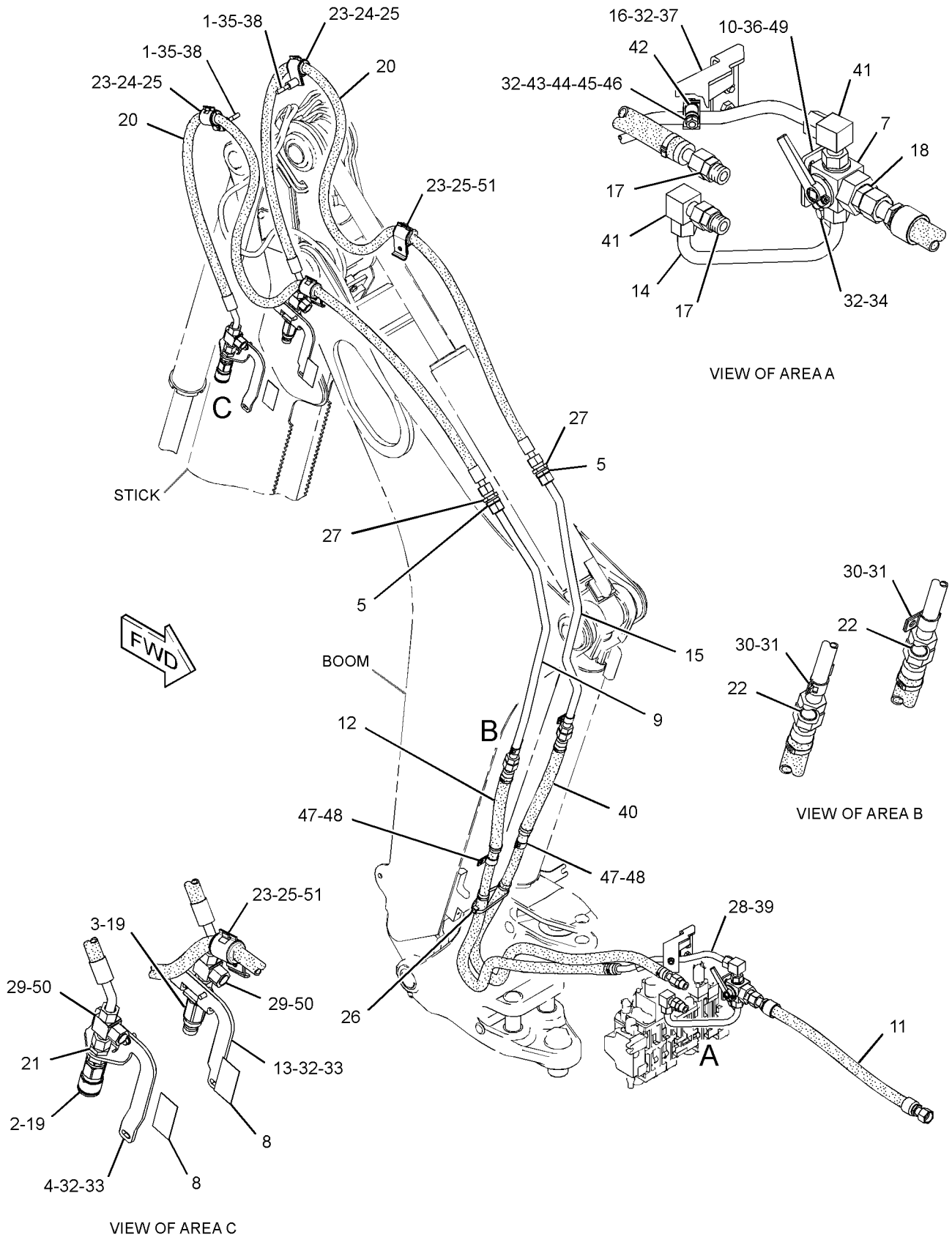

GRAPHIC #1 **<END>** g01818774

HYDRAULIC SYSTEM

211-7601 LINES GP-BOOM

S/N: HLS1-4357

PART OF 214-2553, 291-9205 BACKHOE AR-EXTENDABLE STICK, 214-2550, 291-9204 BACKHOE AR-STANDARD STICK

AN ATTACHMENT

SMCS-5057, 5456 **i02755947**

NOTE	REF NO	GRAPHIC REF	PART NUMBER	QTY	PART NAME 1 2 3 4 5 6 (PRODUCT LEVEL)	SEE PAGE
	1	1	**5P-0599**	1	CLAMP-BAND	
	2	1	**9R-4619**	1	SUPPORT AS	
M		1	**6V-8224**	1	NUT-WELD (M10X1.15-THD)	
I	3	1	**290-6700**	1	HOSE AS	
	4	1	**250-0658**	1	TUBE AS	
I	5	1	**250-0804**	1	HOSE AS	
	6	1	*148-8341*	2	CONNECTOR AS	
					(EACH INCLUDES)	
		1	**3D-2824**	1	SEAL-O-RING	
		1	**6V-8713**	1	CONNECTOR	
		1	**7J-9108**	1	SEAL-O-RING	
	7	1	*148-8382*	1	ELBOW AS	
		1	**3D-2824**	1	SEAL-O-RING	
		1	**7J-9108**	1	SEAL-O-RING	
		1	**8T-0404**	1	ELBOW	
	8	1	**7J-9108**	1	SEAL-O-RING	
	9	1	**8T-1887**	1	CLIP (SLOT)	
	10	1	**8T-1888**	1	CLIP (TAB)	
	11	1	**8T-4121**	1	WASHER-HARD (11X21X2.5-MM THK)	
M	12	1	**8T-4137**	1	BOLT (M10X1.5X20-MM)	

I-REFER TO HYDRAULIC INFORMATION SYSTEM
M-METRIC PART

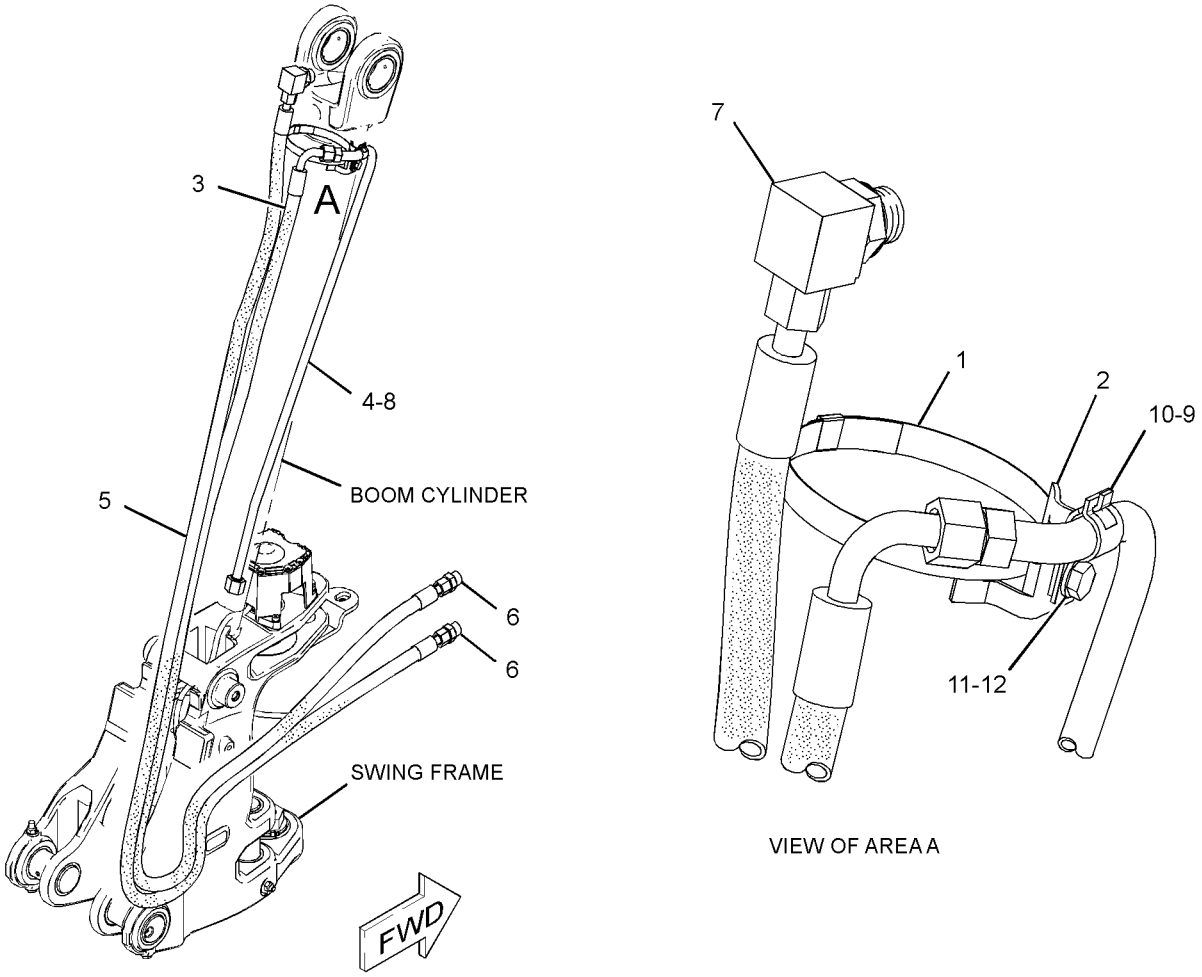

GRAPHIC #1 **<END>** g01384581

HYDRAULIC SYSTEM

211-7601 LINES GP-BOOM

S/N: HLS4358-99999

PART OF 214-2553, 291-9205 BACKHOE AR-EXTENDABLE STICK, 214-2550, 291-9204 BACKHOE AR-STANDARD STICK AN ATTACHMENT

SMCS-5057, 5456 **i03537693**

NOTE	REF NO	GRAPHIC REF	PART NUMBER	QTY	PART NAME 1 2 3 4 5 6 (PRODUCT LEVEL)	SEE PAGE
	1	1	**5P-0599**	1	CLAMP-BAND	
	2	1	**9R-4619**	1	SUPPORT AS	
M		1	**6V-8224**	1	NUT-WELD (M10X1.15-THD)	
I	3	1	**142-1072**	1	HOSE AS	
	4	1	**7K-1181**	1	STRAP-CABLE	
	5	1	**250-0658**	1	TUBE AS	
CI	6	1	**311-2505**	1	HOSE AS	
C	7	1	*311-2510*	1	LINES GP-HYDRAULIC (BOOM)	
I		1	**311-2519**	1	HOSE AS	
I		1	**311-2501**	1	HOSE AS	
	8	1	*148-8341*	2	CONNECTOR AS	
					(EACH INCLUDES)	
		1	**3D-2824**	1	SEAL-O-RING	
		1	**6V-8713**	1	CONNECTOR	
		1	**7J-9108**	1	SEAL-O-RING	
	9	1	*148-8382*	1	ELBOW AS	
		1	**3D-2824**	1	SEAL-O-RING	
		1	**7J-9108**	1	SEAL-O-RING	
		1	**8T-0404**	1	ELBOW	
C	10	1	**7J-9108**	3	SEAL-O-RING	
	11	1	**8T-1887**	1	CLIP (SLOT)	
	12	1	**8T-1888**	1	CLIP (TAB)	
	13	1	**8T-4121**	1	WASHER-HARD (11X21X2.5-MM THK)	
M	14	1	**8T-4137**	1	BOLT (M10X1.5X20-MM)	

C-CHANGE FROM PREVIOUS TYPE
I-REFER TO HYDRAULIC INFORMATION SYSTEM
M-METRIC PART

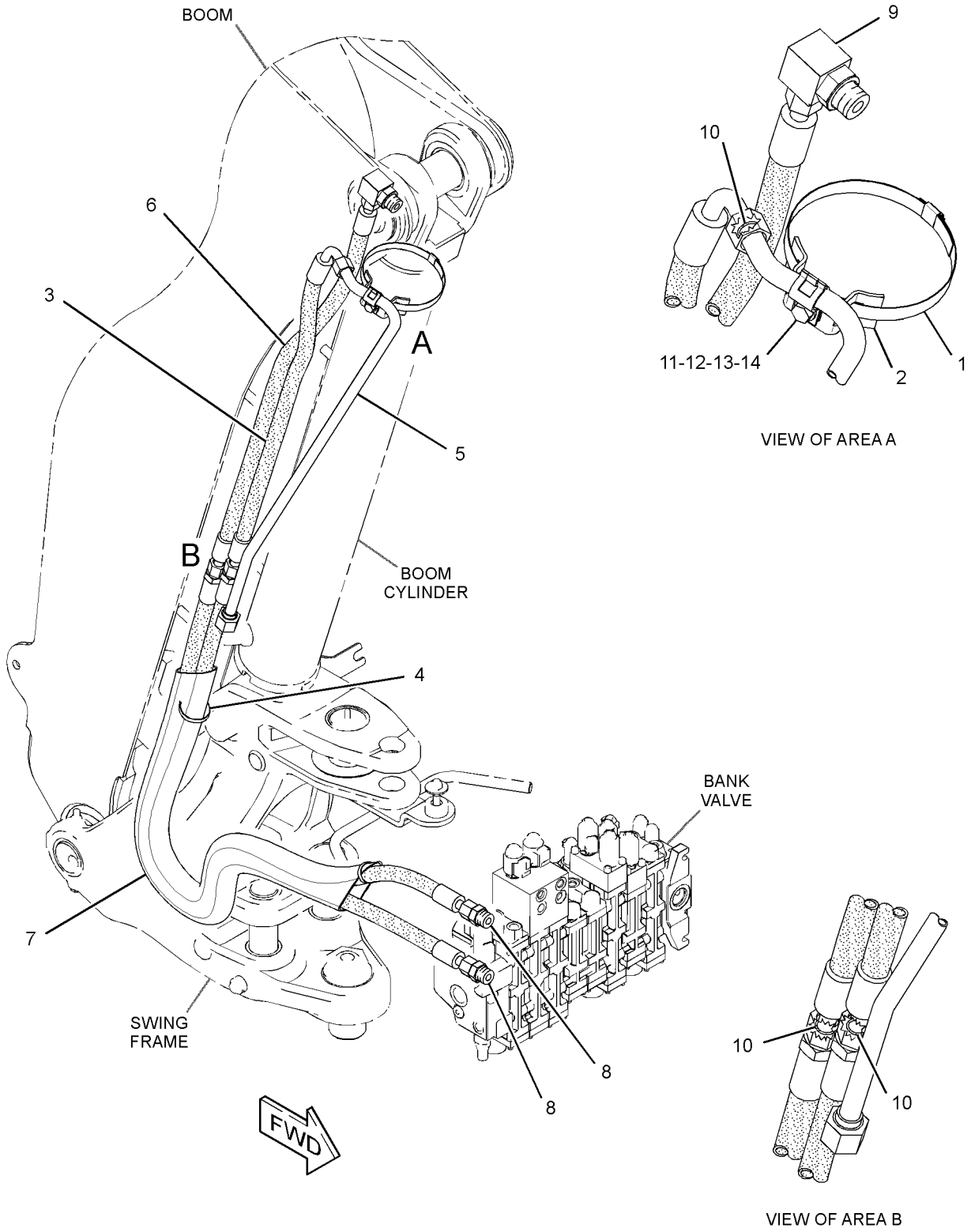

GRAPHIC #1 **<END>** g01871793

HYDRAULIC SYSTEM

246-9321 LINES GP-BUCKET

S/N: HLS1-4357

PART OF 214-2550, 291-9204 BACKHOE AR-STANDARD STICK

AN ATTACHMENT

SMCS-5057, 5457 **i02527627**

NOTE	REF NO	GRAPHIC REF	PART NUMBER	QTY	PART NAME 1 2 3 4 5 6 (PRODUCT LEVEL)	SEE PAGE
	1	1	**5P-0599**	1	CLAMP-BAND	
	2	1	**9R-5948**	1	BLOCK	
I	3	1	**200-6971**	1	HOSE AS	
	4	1	**248-5547**	2	PLATE	
I	5	1	**250-6755**	1	HOSE AS	
	6	1	**251-1541**	1	PLATE AS	
I	7	1	**252-0165**	1	HOSE AS	
I	8	1	**266-4326**	1	HOSE AS	
	9	1	*148-8328*	1	CONNECTOR AS	
		1	**3D-2824**	1	SEAL-O-RING	
		1	**6V-8398**	1	SEAL-O-RING	
		1	**6V-8633**	1	CONNECTOR	
	10	1	*148-8341*	1	CONNECTOR AS	
		1	**3D-2824**	1	SEAL-O-RING	
		1	**6V-8713**	1	CONNECTOR	
		1	**7J-9108**	1	SEAL-O-RING	
	11	1	*148-8382*	1	ELBOW AS	
		1	**3D-2824**	1	SEAL-O-RING	
		1	**7J-9108**	1	SEAL-O-RING	
		1	**8T-0404**	1	ELBOW	
	12	1	*148-8457*	1	UNION AS	
		1	**6V-8398**	2	SEAL-O-RING	
		1	**6V-8995**	1	UNION	
	13	1	*169-7409*	1	UNION AS	
		1	**6V-8996**	1	UNION	
		1	**7J-9108**	2	SEAL-O-RING	
	14	1	**5P-7464**	4	CLIP (SLOT)	
	15	1	**5P-7465**	4	CLIP (TAB)	
	16	1	**6V-1249**	2	GROMMET	
	17	1	**6V-1889**	1	CLIP	
	18	1	**6V-7359**	2	GROMMET	
	19	1	**6V-9169**	1	NUT-BULKHEAD (13/16-16-THD)	
	20	1	**6V-9170**	1	NUT-BULKHEAD (1-14-THD)	
	21	1	**7X-7729**	4	WASHER (11X25X3-MM THK)	
	22	1	**8T-4121**	2	WASHER-HARD (11X21X2.5-MM THK)	
M	23	1	**8T-4136**	2	BOLT (M10X1.5X25-MM)	
M	24	1	**8T-4139**	4	BOLT (M12X1.75X30-MM)	
M	25	1	**8T-4195**	4	BOLT (M10X1.5X30-MM)	
	26	1	**8T-4223**	8	WASHER-HARD (13.5X25.5X3-MM THK)	
M	27	1	**8T-4244**	2	NUT (M12X1.75-THD)	
M	28	1	**8T-4183**	2	BOLT (M12X1.75X40-MM)	
	29	1	**7C-4354**	1	CLIP	

I-REFER TO HYDRAULIC INFORMATION SYSTEM
M-METRIC PART

246-9321 **LINES GP-BUCKET** *(contd.)* **i02527627**

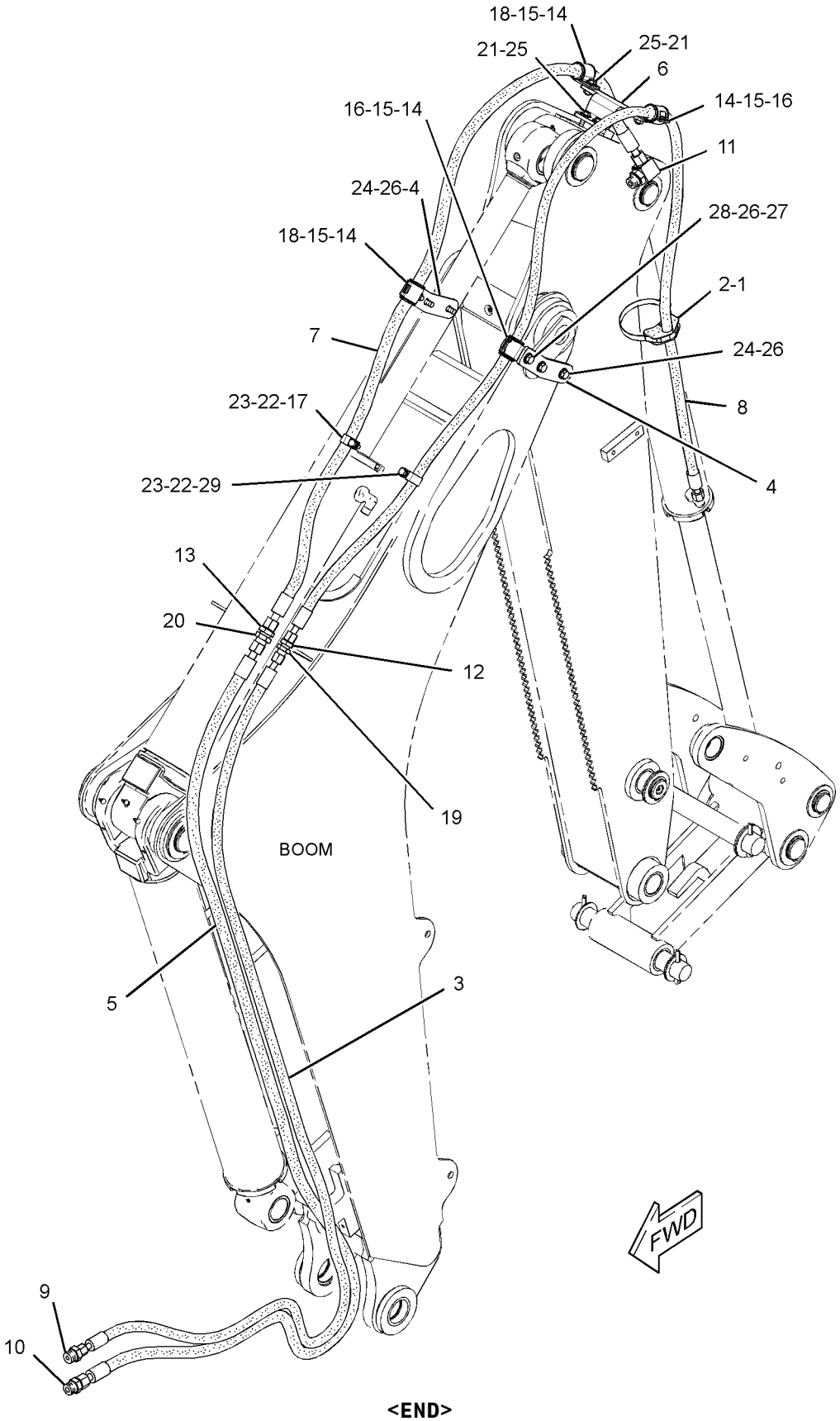

GRAPHIC #1 **<END>** g01328522

HYDRAULIC SYSTEM

246-9321 LINES GP-BUCKET

S/N: HLS4358-99999
PART OF 214-2550, 291-9204 BACKHOE AR-STANDARD STICK
AN ATTACHMENT

SMCS-5057, 5457 **i03538546**

NOTE	REF NO	GRAPHIC REF	PART NUMBER	QTY	PART NAME 1 2 3 4 5 6 (PRODUCT LEVEL)	SEE PAGE
	1	1	**5P-0599**	1	CLAMP-BAND	
	2	1	**9R-5948**	1	BLOCK	
	3	1	**7K-1181**	1	STRAP-CABLE	
CI	4	1	**231-0215**	1	HOSE AS	
	5	1	**248-5547**	2	PLATE	
	6	1	**251-1541**	1	PLATE AS	
I	7	1	**252-0165**	1	HOSE AS	
I	8	1	**266-4326**	1	HOSE AS	
C	9	1	*268-1548*	1	CONNECTOR AS	
		1	**6V-8398**	1	SEAL-O-RING	
		1	**7J-9108**	1	SEAL-O-RING	
		1	**268-1547**	1	CONNECTOR	
CI	10	1	**311-2498**	1	HOSE AS	
C	11	1	*311-2510*	1	LINES GP-HYDRAULIC (BUCKET)	
I		1	**311-2519**	1	HOSE AS	
I		1	**311-2501**	1	HOSE AS	
C	12	1	*148-8341*	2	CONNECTOR AS	
					(EACH INCLUDES)	
		1	**3D-2824**	1	SEAL-O-RING	
		1	**6V-8713**	1	CONNECTOR	
		1	**7J-9108**	1	SEAL-O-RING	
	13	1	*148-8382*	1	ELBOW AS	
		1	**3D-2824**	1	SEAL-O-RING	
		1	**7J-9108**	1	SEAL-O-RING	
		1	**8T-0404**	1	ELBOW	
	14	1	*169-7409*	1	UNION AS	
		1	**6V-8996**	1	UNION	
		1	**7J-9108**	2	SEAL-O-RING	
	15	1	**5P-7464**	4	CLIP (SLOT)	
	16	1	**5P-7465**	4	CLIP (TAB)	
	17	1	**6V-1249**	2	GROMMET	
	18	1	**6V-1889**	1	CLIP	
	19	1	**6V-7359**	2	GROMMET	
C	20	1	**6V-9170**	2	NUT-BULKHEAD (1-14-THD)	
	21	1	**7C-4354**	1	CLIP	
C	22	1	**7J-9108**	2	SEAL-O-RING	
	23	1	**7X-7729**	4	WASHER (11X25X3-MM THK)	
	24	1	**8T-4121**	2	WASHER-HARD (11X21X2.5-MM THK)	
M	25	1	**8T-4136**	2	BOLT (M10X1.5X25-MM)	
M	26	1	**8T-4139**	4	BOLT (M12X1.75X30-MM)	
M	27	1	**8T-4183**	2	BOLT (M12X1.75X40-MM)	
M	28	1	**8T-4195**	4	BOLT (M10X1.5X30-MM)	
	29	1	**8T-4223**	8	WASHER-HARD (13.5X25.5X3-MM THK)	
M	30	1	**8T-4244**	2	NUT (M12X1.75-THD)	

C-CHANGE FROM PREVIOUS TYPE
I-REFER TO HYDRAULIC INFORMATION SYSTEM
M-METRIC PART

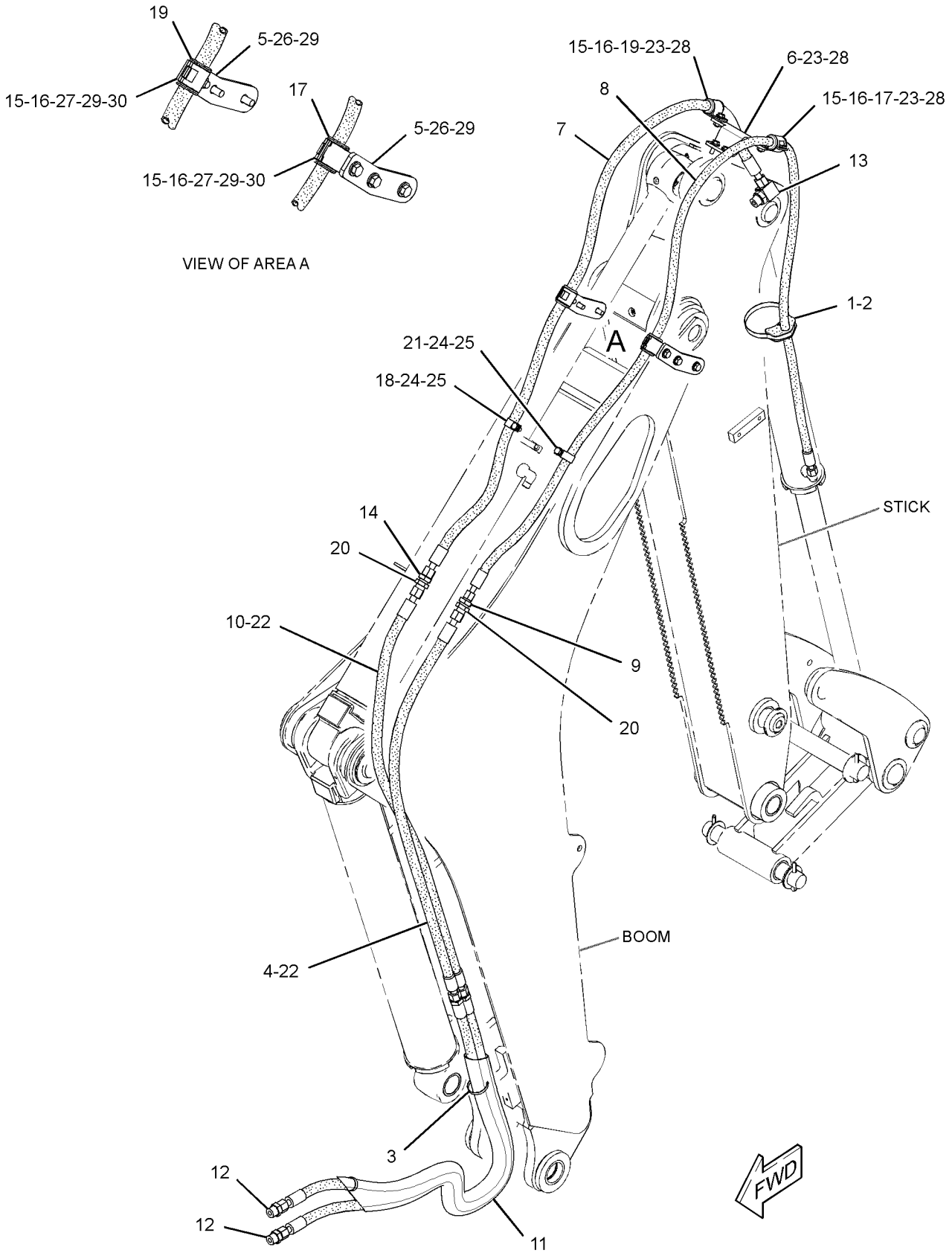

GRAPHIC #1

<END>

g01871236

HYDRAULIC SYSTEM

246-9322 LINES GP-BUCKET

S/N: HLS1-4357

PART OF 214-2553, 291-9205 BACKHOE AR-EXTENDABLE STICK

AN ATTACHMENT

SMCS-5057, 5457 **i02502671**

NOTE	REF NO	GRAPHIC REF	PART NUMBER	QTY	PART NAME 1 2 3 4 5 6 (PRODUCT LEVEL)	SEE PAGE
	1	1	**5P-0599**	1	CLAMP-BAND	
	2	1	**9R-5948**	1	BLOCK	
I	3	1	**297-4081**	1	HOSE AS	
I	5	1	**250-5462**	1	HOSE AS	
I	6	1	**250-6755**	2	HOSE AS	
I	7	1	**200-6971**	1	HOSE AS	
	8	1	**262-1315**	4	PLATE	
I	9	1	**266-4570**	2	HOSE AS	
I	10	1	**266-4571**	1	HOSE AS	
	11	1	*268-1548*	1	CONNECTOR AS	
		1	**6V-8398**	1	SEAL-O-RING	
		1	**7J-9108**	1	SEAL-O-RING	
		1	**268-1547**	1	CONNECTOR	
	12	1	**281-4618**	1	PLATE AS	
		1	**283-1114**	1	PLATE	
	13	1	**281-4770**	1	PLATE AS	
	14	1	*148-8328*	1	CONNECTOR AS	
		1	**3D-2824**	1	SEAL-O-RING	
		1	**6V-8398**	1	SEAL-O-RING	
		1	**6V-8633**	1	CONNECTOR	
	15	1	*148-8341*	3	CONNECTOR AS	
					(EACH INCLUDES)	
		1	**3D-2824**	1	SEAL-O-RING	
		1	**6V-8713**	1	CONNECTOR	
		1	**7J-9108**	1	SEAL-O-RING	
	16	1	*148-8382*	1	ELBOW AS	
		1	**3D-2824**	1	SEAL-O-RING	
		1	**7J-9108**	1	SEAL-O-RING	
		1	**8T-0404**	1	ELBOW	
	17	1	*148-8457*	1	UNION AS	
		1	**6V-8398**	2	SEAL-O-RING	
		1	**6V-8995**	1	UNION	
	18	1	*169-7409*	1	UNION AS	
		1	**6V-8996**	1	UNION	
		1	**7J-9108**	2	SEAL-O-RING	
	19	1	**3G-8047**	1	GROMMET	
	20	1	**3G-8054**	2	CLIP (TAB)	
	21	1	**3G-8057**	2	CLIP (SLOT)	
	22	1	**5P-7464**	2	CLIP (SLOT)	
	23	1	**5P-7465**	2	CLIP (TAB)	
	24	1	**6V-1249**	1	GROMMET	
	25	1	**6V-1889**	1	CLIP	
	26	1	**6V-7359**	1	GROMMET	
	27	1	**6V-9169**	1	NUT-BULKHEAD (13/16-16-THD)	
	28	1	**6V-9170**	3	NUT-BULKHEAD (1-14-THD)	
	29	1	**6V-9990**	1	GROMMET	
	30	1	**7C-4354**	3	CLIP	
	31	1	**8T-4121**	2	WASHER-HARD (11X21X2.5-MM THK)	
M	32	1	**8T-4136**	2	BOLT (M10X1.5X25-MM)	
M	33	1	**8T-4139**	7	BOLT (M12X1.75X30-MM)	
M	34	1	**8T-4183**	2	BOLT (M12X1.75X40-MM)	
M	35	1	**8T-4194**	4	BOLT (M12X1.75X50-MM)	
	36	1	**8T-4223**	19	WASHER-HARD (13.5X25.5X3-MM THK)	
M	37	1	**8T-4244**	6	NUT (M12X1.75-THD)	

246-9322 **LINES GP-BUCKET** *(contd.)* **i02502671**

I-REFER TO HYDRAULIC INFORMATION SYSTEM
M-METRIC PART

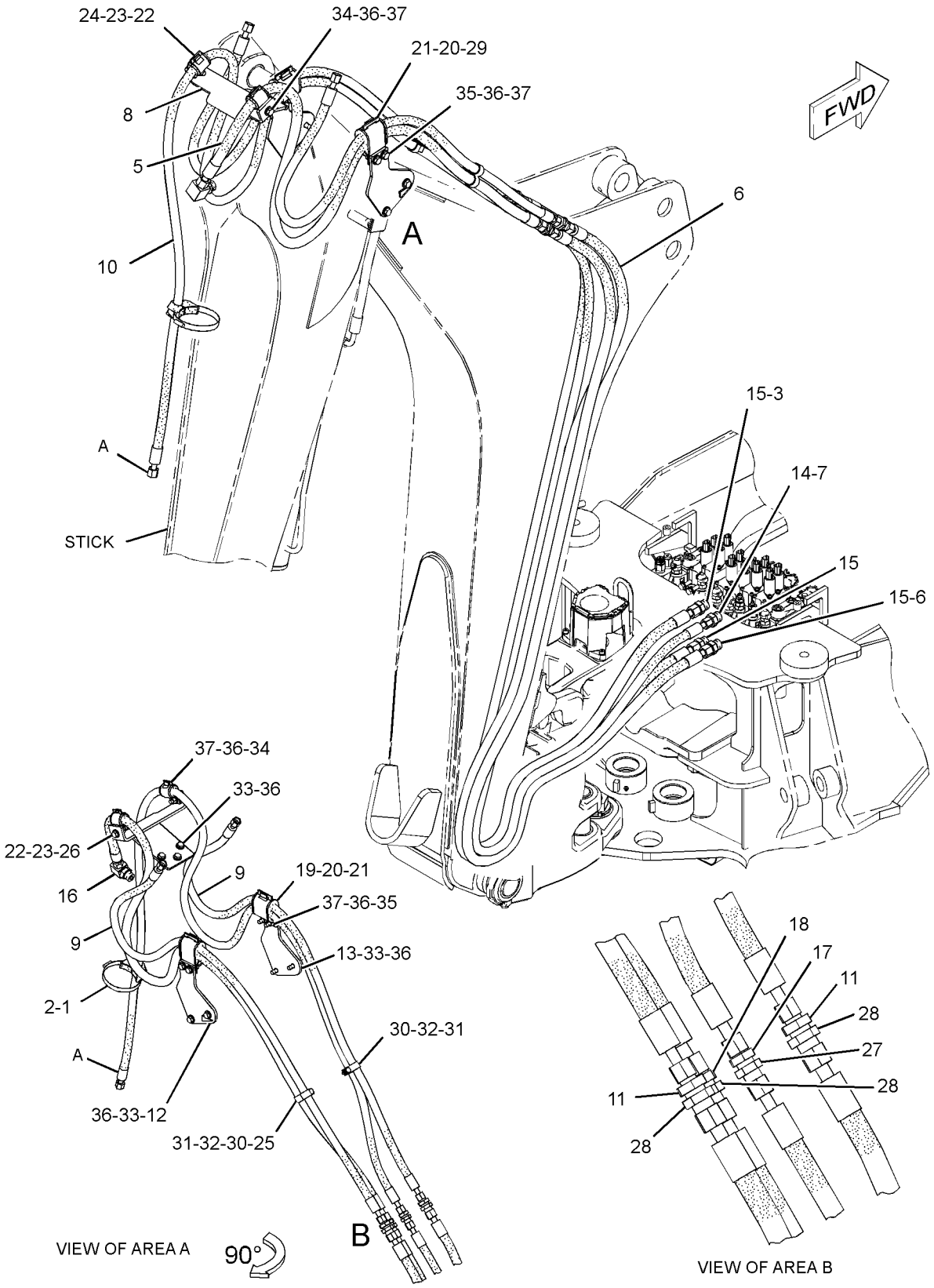

GRAPHIC #1 **<END>** g01329745

HYDRAULIC SYSTEM

246-9322 LINES GP-BUCKET

S/N: HLS4358-99999

PART OF 214-2553, 291-9205 BACKHOE AR-EXTENDABLE STICK AN ATTACHMENT

SMCS-5057, 5457 **i03543619**

NOTE	REF NO	GRAPHIC REF	PART NUMBER	QTY	PART NAME 1 2 3 4 5 6 (PRODUCT LEVEL)	SEE PAGE
	1	1	**5P-0599**	1	CLAMP-BAND	
	2	1	**9R-5948**	1	BLOCK	
CI	4	1	**231-0215**	2	HOSE AS	
I	5	1	**250-5462**	1	HOSE AS	
	6	1	**262-1315**	1	PLATE	
I	7	1	**266-4570**	2	HOSE AS	
I	8	1	**266-4571**	1	HOSE AS	
C	9	1	*268-1548*	3	CONNECTOR AS	
					(EACH INCLUDES)	
		1	**268-1547**	1	CONNECTOR	
		1	**6V-8398**	1	SEAL-O-RING	
		1	**7J-9108**	1	SEAL-O-RING	
	10	1	**323-7311**	2	PLATE	
CI	12	1	**311-2498**	2	HOSE AS	
C	13	1	*311-2510*	2	LINES GP-HYDRAULIC (BUCKET)	
					(EACH INCLUDES)	
I		1	**311-2501**	1	HOSE AS	
I		1	**311-2519**	1	HOSE AS	
C	14	1	*148-8341*	4	CONNECTOR AS	
					(EACH INCLUDES)	
		1	**6V-8713**	1	CONNECTOR	
		1	**3D-2824**	1	SEAL-O-RING	
		1	**7J-9108**	1	SEAL-O-RING	
	15	1	*148-8382*	1	ELBOW AS	
		1	**8T-0404**	1	ELBOW	
		1	**3D-2824**	1	SEAL-O-RING	
		1	**7J-9108**	1	SEAL-O-RING	
	16	1	*169-7409*	1	UNION AS	
		1	**6V-8996**	1	UNION	
		1	**7J-9108**	2	SEAL-O-RING	
	17	1	**3G-8047**	1	GROMMET	
	18	1	**3G-8054**	2	CLIP (TAB)	
	19	1	**3G-8057**	2	CLIP (SLOT)	
	20	1	**5P-7464**	2	CLIP (SLOT)	
	21	1	**5P-7465**	2	CLIP (TAB)	
	22	1	**6V-1249**	1	GROMMET	
	23	1	**6V-1889**	1	CLIP	
	24	1	**6V-7359**	1	GROMMET	
C	25	1	**6V-9170**	4	NUT-BULKHEAD (1-14-THD)	
	26	1	**6V-9990**	1	GROMMET	
	27	1	**7C-4354**	3	CLIP	
C	28	1	**7J-9108**	4	SEAL-O-RING	
	29	1	**8T-4121**	2	WASHER-HARD (11X21X2.5-MM THK)	
M	30	1	**8T-4136**	2	BOLT (M10X1.5X25-MM)	
M	31	1	**8T-4139**	7	BOLT (M12X1.75X30-MM)	
M	32	1	**8T-4183**	2	BOLT (M12X1.75X40-MM)	
M	33	1	**8T-4194**	4	BOLT (M12X1.75X50-MM)	
	34	1	**8T-4223**	19	WASHER-HARD (13.5X25.5X3-MM THK)	
M	35	1	**8T-4244**	6	NUT (M12X1.75-THD)	
	36	1	**7K-1181**	2	STRAP-CABLE	

C-CHANGE FROM PREVIOUS TYPE
I-REFER TO HYDRAULIC INFORMATION SYSTEM
M-METRIC PART

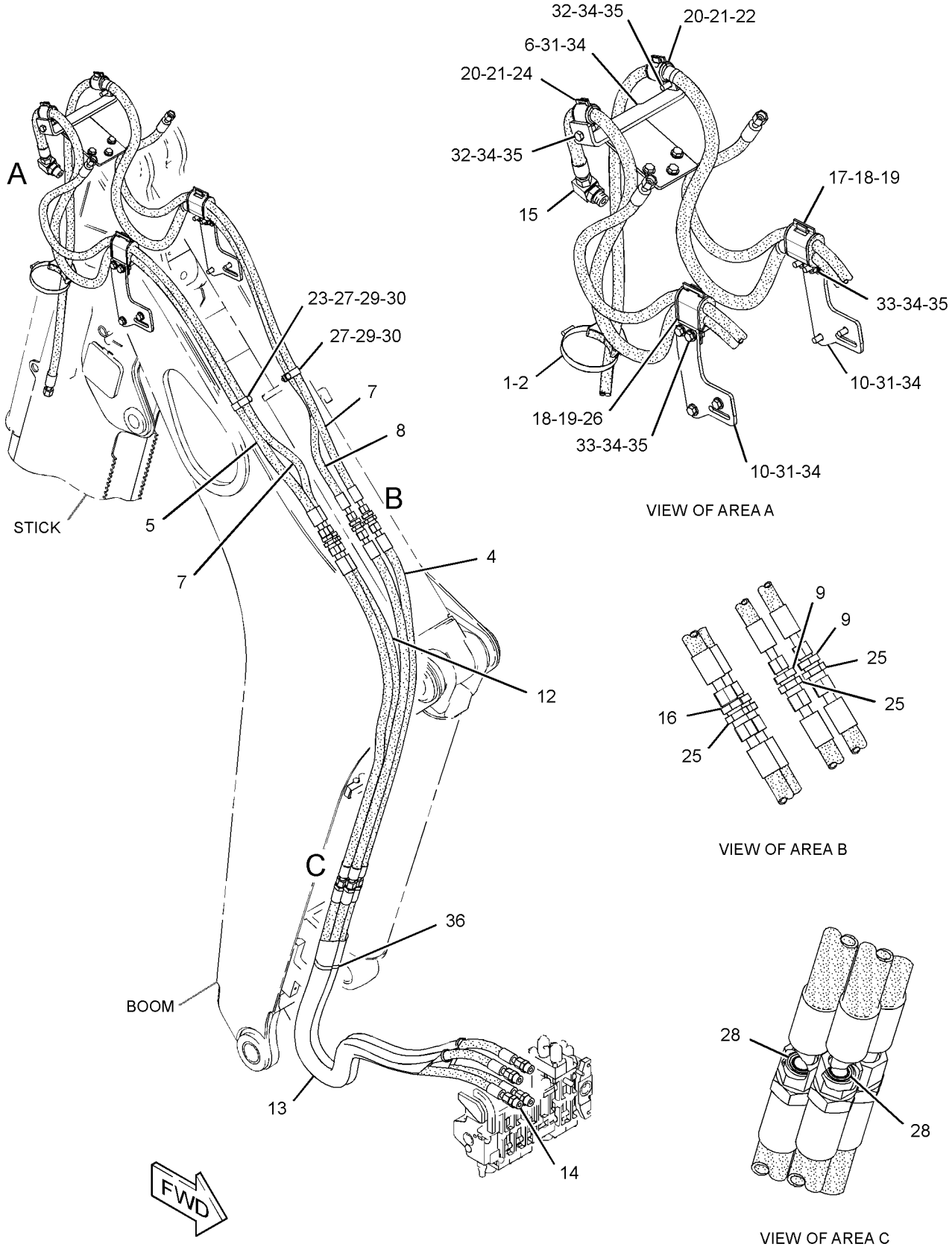

GRAPHIC #1

<END>

g01876703

HYDRAULIC SYSTEM

216-5332 LINES GP-DRAIN

S/N: HLS1-99999

PART OF 268-6455 HYDRAULIC AR

SMCS-5057 **i03505400**

NOTE	REF NO	GRAPHIC REF	PART NUMBER	QTY	PART NAME 1 2 3 4 5 6 (PRODUCT LEVEL)	SEE PAGE
	1	1	**8T-0154**	1	CLAMP-HOSE	
	2	1	*165-2273*	1	VALVE GP-SHUTOFF	
		1	**3K-0360**	1	SEAL-O-RING	
		1	**6V-7238**	1	VALVE-SHUTOFF	
E	3	1	**5P-0743**		HOSE (35-CM)	

E-ORDER BY THE CENTIMETER

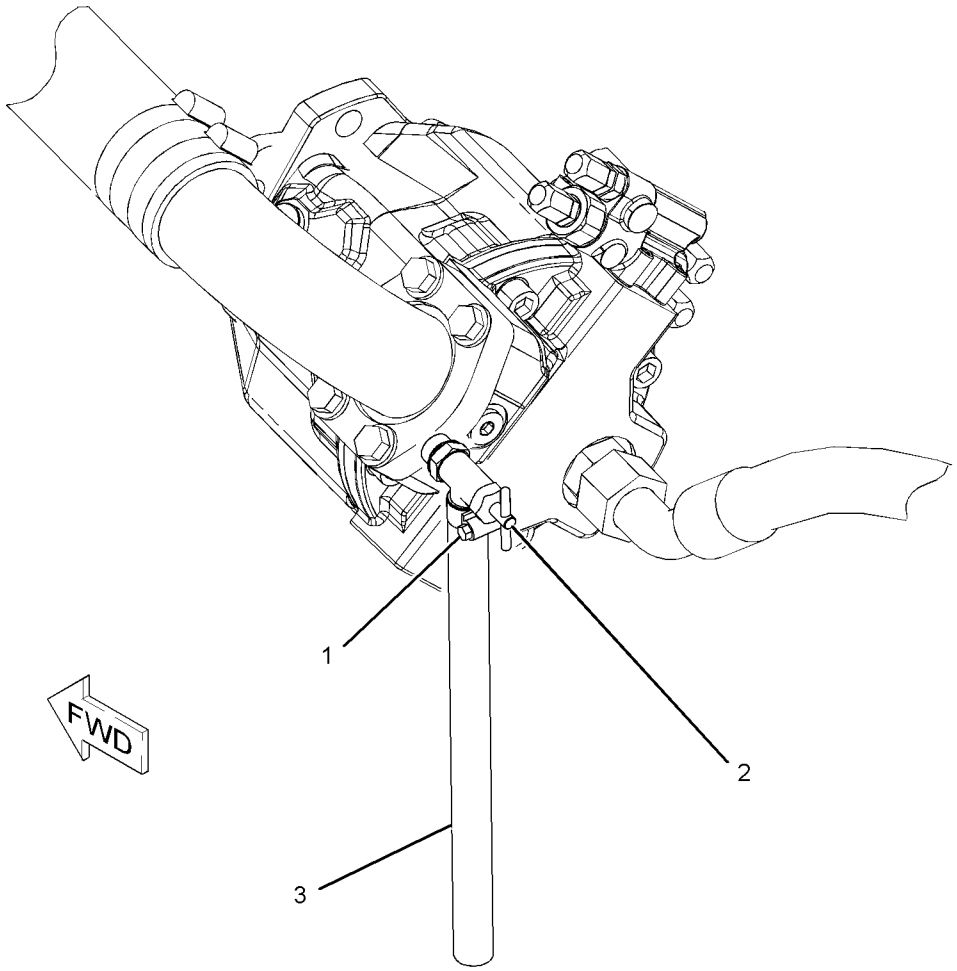

GRAPHIC #1 **<END>** g01087946

HYDRAULIC SYSTEM

247-3267 LINES GP-EXTENDABLE STICK

S/N: HLS1-99999

PART OF 271-1402, 271-1405 STICK GP-EXTENDABLE

AN ATTACHMENT

SMCS-5057 **i02666993**

NOTE	REF NO	GRAPHIC REF	PART NUMBER	QTY	PART NAME 1 2 3 4 5 6 (PRODUCT LEVEL)	SEE PAGE
	1	1	**8T-6726**	3	CLAMP-HOSE	
	2	1	**9R-2053**	3	BLOCK	
	3	1	**262-7314**	1	PLATE AS	
I	4	1	**221-3234**	1	HOSE AS	
I	5	1	**290-6023**	1	HOSE AS	
	6	1	**305-3570**	1	TUBE AS	
	7	1	**305-3571**	1	TUBE AS	
	8	1	**6V-8398**	4	SEAL-O-RING	
	9	1	**8T-1885**	2	CLIP (SLOT)	
	10	1	**8T-1886**	2	CLIP (TAB)	
	11	1	**8T-4121**	6	WASHER-HARD (11X21X2.5-MM THK)	
M	12	1	**8T-4136**	2	BOLT (M10X1.5X25-MM)	
	13	1	*148-8364*	1	ELBOW AS	
		1	**3K-0360**	1	SEAL-O-RING	
		1	**6V-8625**	1	ELBOW	
		1	**6V-8398**	1	SEAL-O-RING	
M	14	1	**8T-4195**	4	BOLT (M10X1.5X30-MM)	
	15	1	**206-2423**	2	SADDLE	
	16	1	**8T-1892**	2	CLIP (TAB)	
	17	1	**8T-1891**	2	CLIP (SLOT)	
	18	1	**7K-1181**	4	STRAP-CABLE	

I-REFER TO HYDRAULIC INFORMATION SYSTEM
M-METRIC PART

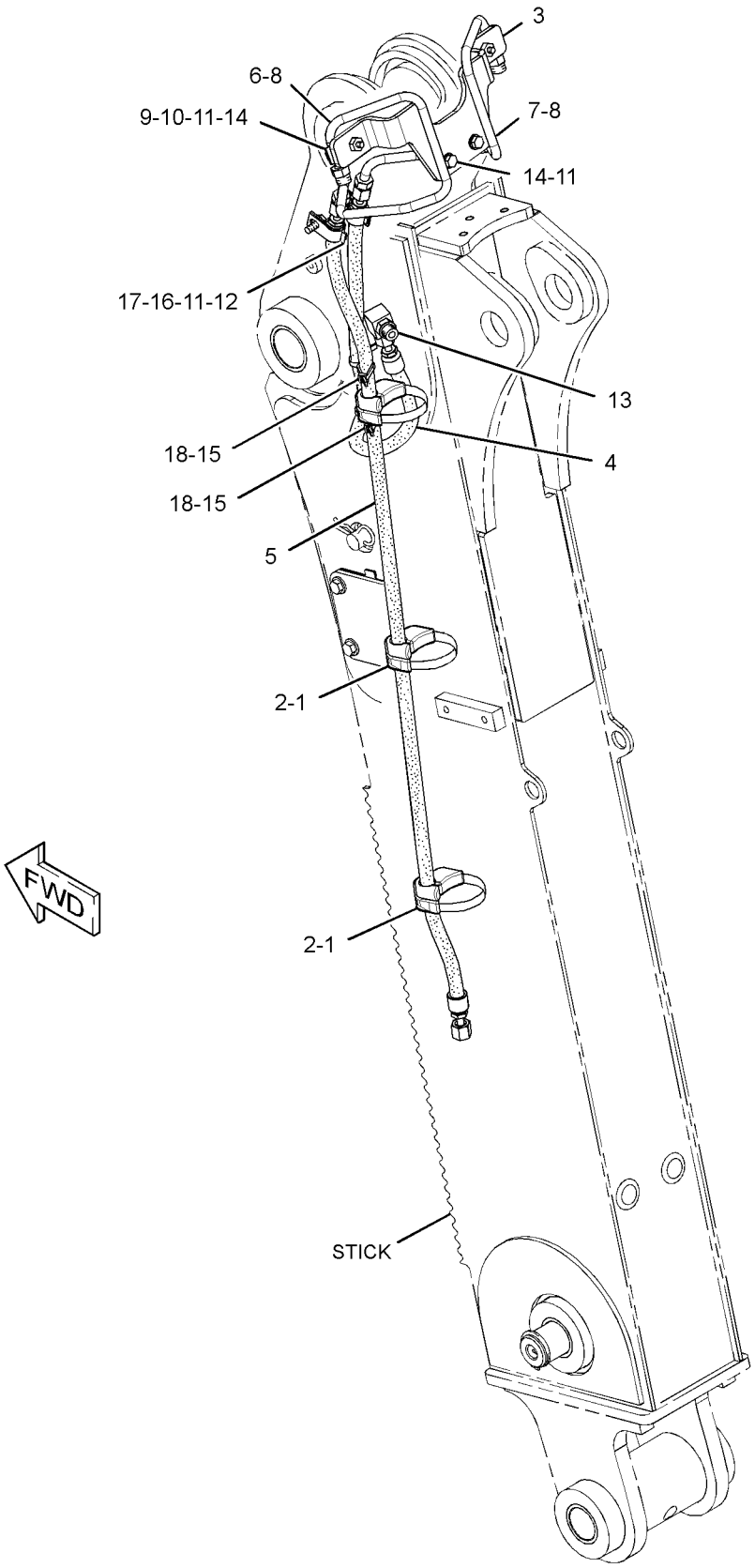

GRAPHIC #1 **<END>** g01316423

311-2509 LINES GP-HYDRAULIC

S/N: HLS4358-99999

PART OF 211-7602 LINES GP-STICK

AN ATTACHMENT

SMCS-5057 **i02891253**

NOTE	REF NO	GRAPHIC REF	PART NUMBER	QTY	PART NAME 1 2 3 4 5 6 (PRODUCT LEVEL)	SEE PAGE
I	1	1	**311-2501**	1	HOSE AS	
I	2	1	**311-2518**	1	HOSE AS	

I-REFER TO HYDRAULIC INFORMATION SYSTEM

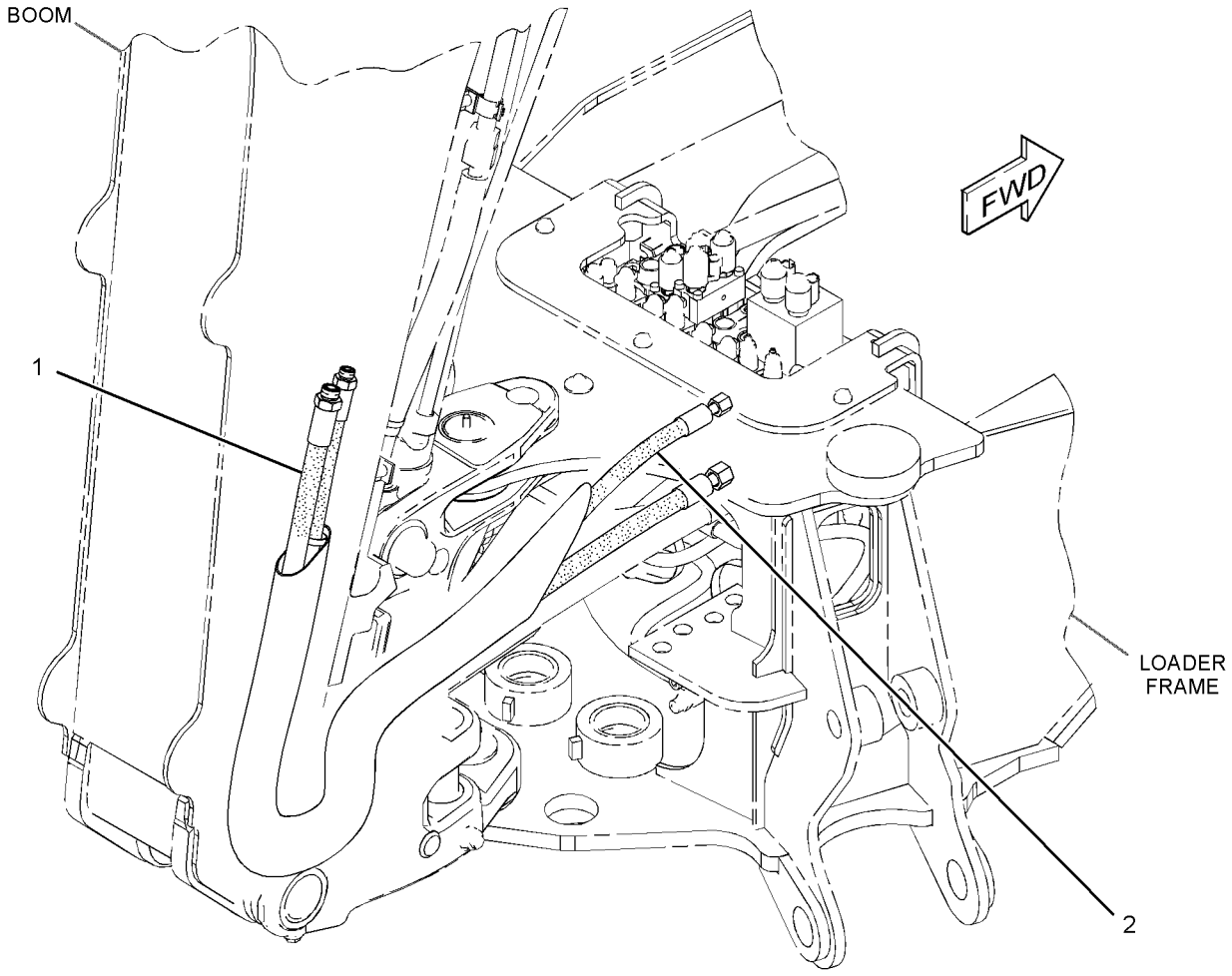

GRAPHIC #1 **<END>** g01445674

HYDRAULIC SYSTEM

257-3160 LINES GP-HYDRAULIC OIL COOLER

S/N: HLS1-99999

PART OF 268-6455 HYDRAULIC AR

SMCS-1374, 5057 **i03528251**

NOTE	REF NO	GRAPHIC REF	PART NUMBER	QTY	PART NAME 1 2 3 4 5 6 (PRODUCT LEVEL)	SEE PAGE
E	1	1	**5P-1506**		HOSE (92-CM)	
	2	1	**7K-1181**	4	STRAP-CABLE	
	3	1	**130-9984**	1	CLIP	
	4	1	**159-1503**	4	CLAMP-HOSE	
	5	1	**7X-7729**	1	WASHER (11X25X3-MM THK)	
	6	1	**232-0252**	1	TEE	
	7	1	**235-7091**	1	HOSE	
E	8	1	**262-8088**		HOSE (223-CM)	
E	8A	1	**262-8088**		HOSE (126-CM)	
	10	1	**3S-8536**	1	SPACER (0.406X0.656X0.38-IN THK)	
E	11	1	**149-7372**		SLEEVE-ABRASION (55-CM)	
	13	1	**5P-4116**	2	WASHER-HARD (8.8X20.5X2-MM THK)	
	14	1	**7D-7233**	2	CLIP	
	15	1	**7X-7958**	4	CLAMP-HOSE	
	16	1	**8T-4121**	1	WASHER-HARD (11X21X2.5-MM THK)	
M	17	1	**8T-4136**	1	BOLT (M10X1.5X25-MM)	
M	18	1	**8T-4195**	1	BOLT (M10X1.5X30-MM)	
M	19	1	**8T-4189**	2	BOLT (M8X1.25X20-MM)	
	20	1	**8T-7529**	3	CLIP	

E-ORDER BY THE CENTIMETER
M-METRIC PART

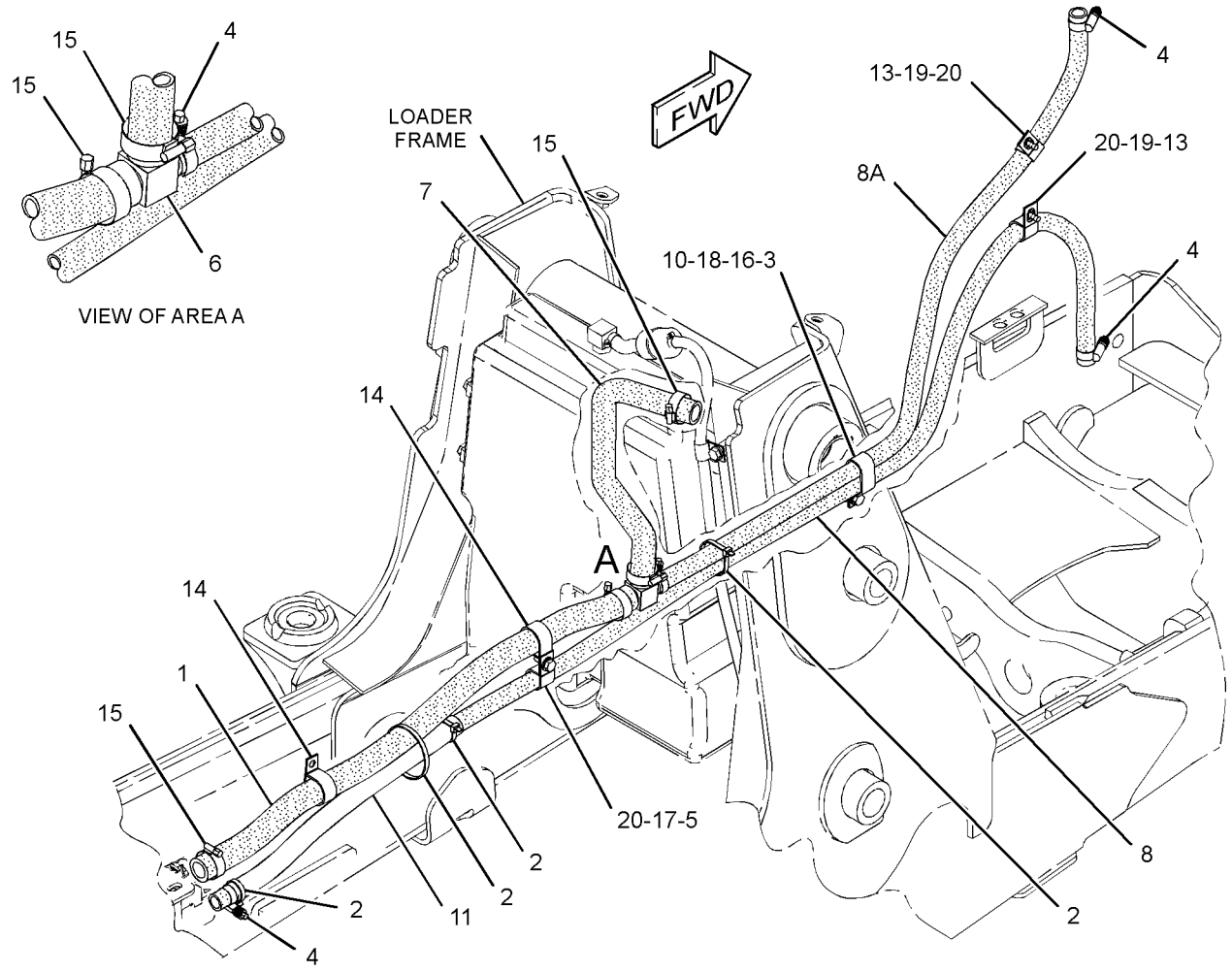

GRAPHIC #1 **<END>** g01865794

246-5293 LINES GP-LIFT CYLINDER

S/N: HLS1-99999

PART OF 213-9300 LOADER AR

SMCS-5057, 5102 **i02592184**

NOTE	REF NO	GRAPHIC REF	PART NUMBER	QTY	PART NAME 1 2 3 4 5 6 (PRODUCT LEVEL)	SEE PAGE
	1	1	**7K-1181**	2	STRAP-CABLE	
	2	1	**8T-6726**	4	CLAMP-HOSE	
	3	1	**143-0777**	1	PLATE AS	
	4	1	**143-0779**	1	PLATE AS	
	5	1	**151-4841**	2	BLOCK	
	6	1	**158-3412**	10	CLIP (SLOT)	
	7	1	**211-3207**	1	TUBE AS	
	8	1	**211-3208**	1	TUBE AS	
	9	1	**231-2808**	1	TUBE AS	
	10	1	**231-2809**	1	TUBE AS	
I	11	1	**231-4784**	2	HOSE AS	
I	12	1	**231-4785**	2	HOSE AS	
	13	1	**249-4020**	1	TUBE AS	
	14	1	**249-4021**	1	TUBE AS	
	15	1	**249-4022**	1	TUBE AS	
	16	1	**249-4023**	1	TUBE AS	
	17	1	**249-4024**	1	TUBE AS	
	18	1	*148-8341*	1	CONNECTOR AS	
		1	**3D-2824**	1	SEAL-O-RING	
		1	**6V-8713**	1	CONNECTOR	
		1	**7J-9108**	1	SEAL-O-RING	
	19	1	*148-8390*	2	ELBOW AS	
					(EACH INCLUDES)	
		1	**2M-9780**	1	SEAL-O-RING	
		1	**6V-8626**	1	ELBOW	
		1	**7J-9108**	1	SEAL-O-RING	
	20	1	*148-8446*	2	TEE AS-SWIVEL	
					(EACH INCLUDES)	
		1	**6V-9838**	1	TEE-SWIVEL	
		1	**7J-9108**	2	SEAL-O-RING	
	21	1	*150-3063*	1	TEE AS	
		1	**3D-2824**	1	SEAL-O-RING	
		1	**7J-9108**	2	SEAL-O-RING	
		1	**120-9809**	1	TEE	
	22	1	*222-4732*	1	TEE AS	
		1	**6V-8398**	1	SEAL-O-RING	
		1	**6V-9031**	1	TEE-UNION	
		1	**7J-9108**	2	SEAL-O-RING	
	23	1	**6V-8398**	8	SEAL-O-RING	
	24	1	**6V-9830**	1	CAP AS	
	25	1	**6V-9831**	1	CAP AS	
	26	1	**8T-4121**	6	WASHER-HARD (11X21X2.5-MM THK)	
M	28	1	**8T-4136**	5	BOLT (M10X1.5X25-MM)	
	32	1	**9R-7803**	5	CLIP (TAB)	
M	33	1	**8T-4133**	1	NUT (M10X1.5-THD)	

I-REFER TO HYDRAULIC INFORMATION SYSTEM
M-METRIC PART

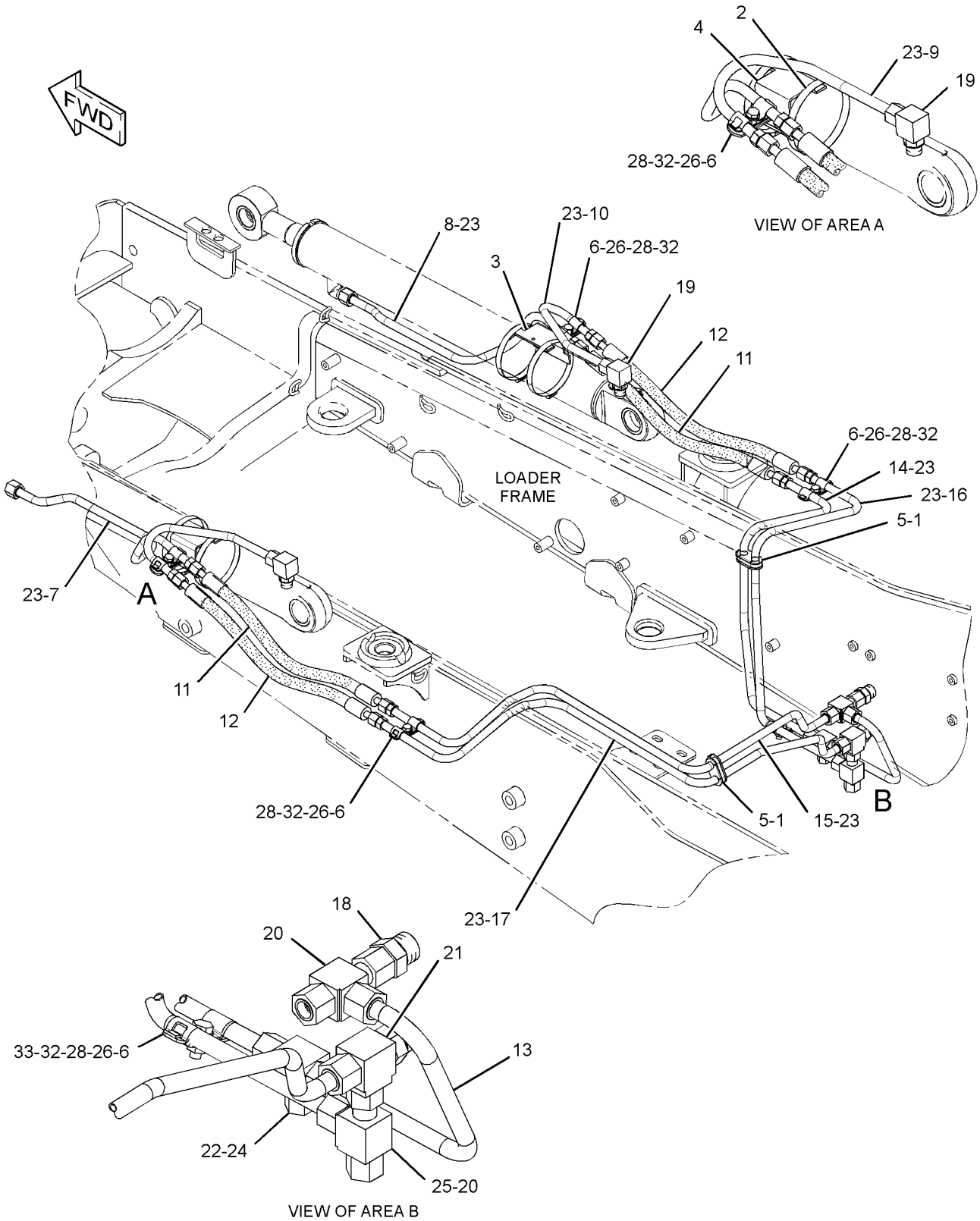

GRAPHIC #1 **<END>** g01310476

HYDRAULIC SYSTEM

246-8478 LINES GP-LOADER AUXILIARY

S/N: HLS1-99999
PART OF 269-2145 VALVE AR-BANK 3
AN ATTACHMENT

SMCS-5057 **i02273118**

NOTE	REF NO	GRAPHIC REF	PART NUMBER	QTY	PART NAME 1 2 3 4 5 6 (PRODUCT LEVEL)	SEE PAGE
	1	1	**7K-1181**	1	STRAP-CABLE	
	2	1	**151-4841**	1	BLOCK	
	3	1	**158-3412**	8	CLIP (SLOT)	
I	4	1	**215-7453**	2	HOSE AS	
	5	1	**215-7454**	1	TUBE AS	
	6	1	**215-7619**	1	TUBE AS	
	7	1	**231-3528**	1	BRACKET AS	
M		1	**8T-3490**	1	NUT-WELD (M10X1.5-THD)	
	8	1	**249-4034**	1	TUBE AS	
	9	1	**249-4035**	1	TUBE AS	
	10	1	**254-7271**	1	PLATE AS	
	11	1	*148-8382*	2	ELBOW AS	
					(EACH INCLUDES)	
		1	**3D-2824**	1	SEAL-O-RING	
		1	**7J-9108**	1	SEAL-O-RING	
		1	**8T-0404**	1	ELBOW	
	12	1	**6V-8398**	6	SEAL-O-RING	
	13	1	**6V-9830**	2	CAP AS	
	14	1	**8T-4121**	6	WASHER-HARD (11X21X2.5-MM THK)	
M	15	1	**8T-4136**	5	BOLT (M10X1.5X25-MM)	
M	16	1	**8T-4137**	1	BOLT (M10X1.5X20-MM)	
	17	1	**9R-7803**	4	CLIP (TAB)	

I-REFER TO HYDRAULIC INFORMATION SYSTEM
M-METRIC PART

246-8478 **LINES GP-LOADER AUXILIARY** *(contd.)* **i02273118**

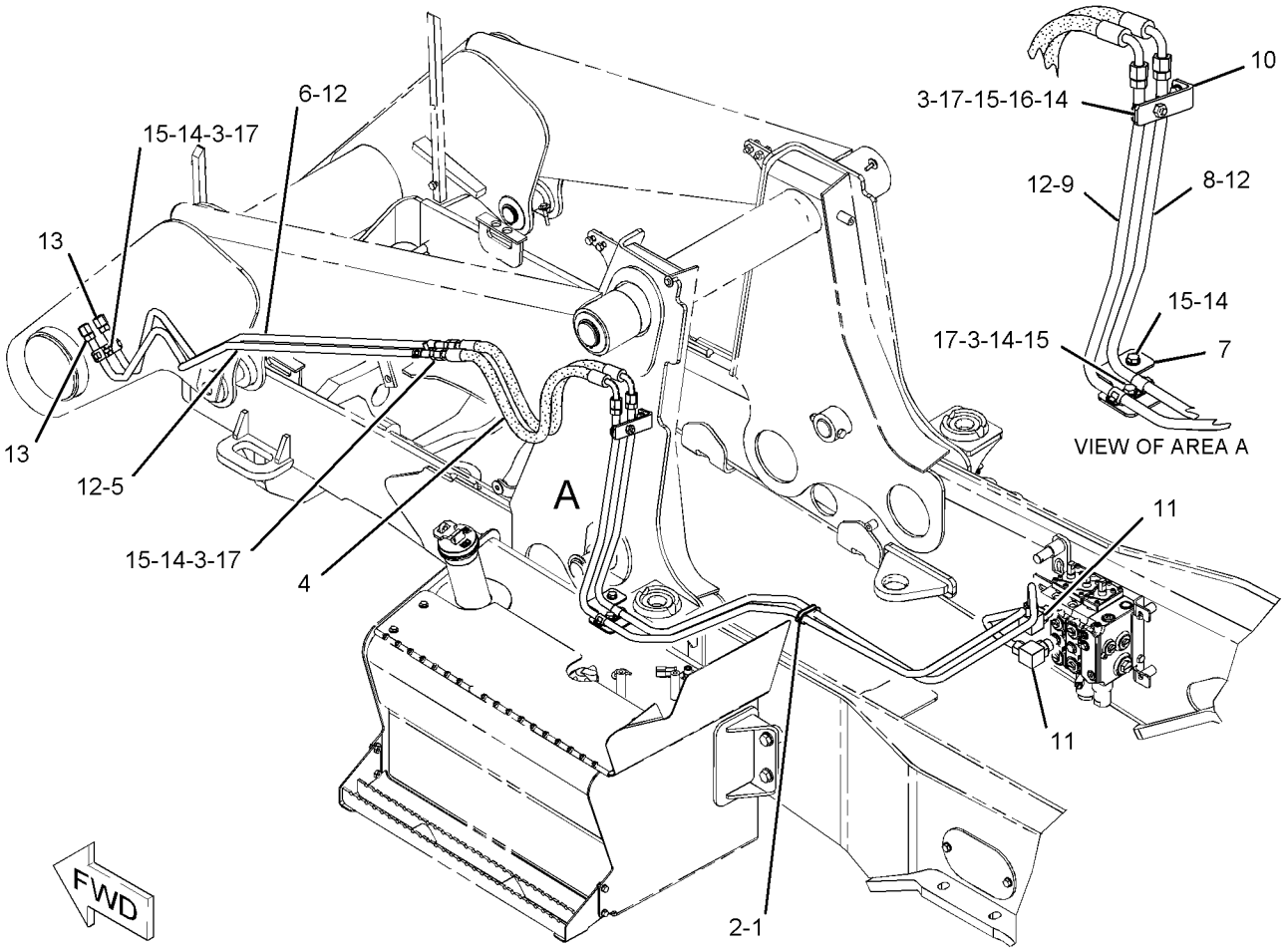

GRAPHIC #1

<END>

g01094033

HYDRAULIC SYSTEM

251-5854 LINES GP-MULTIPURPOSE BUCKET

S/N: HLS1-99999
PART OF 216-8800, 216-8801 BUCKET GP-MULTIPURPOSE
AN ATTACHMENT

SMCS-5057 **i03488600**

NOTE	REF NO	GRAPHIC REF	PART NUMBER	QTY	PART NAME 1 2 3 4 5 6 (PRODUCT LEVEL)	SEE PAGE
	1	1	**8T-6726**	2	CLAMP-HOSE	
I	2	1	**8W-9230**	1	HOSE AS	
I	3	1	**9R-0418**	2	HOSE AS	
	4	1	**9R-8870**	2	BLOCK	
I	5	1	**122-0668**	1	HOSE AS	
I	6	1	**152-0816**	1	HOSE AS	
I	7	1	**251-5859**	1	HOSE AS	
	8	1	*148-8378*	2	ELBOW AS	
					(EACH INCLUDES)	
		1	**3J-1907**	1	SEAL-O-RING	
		1	**6V-8397**	1	SEAL-O-RING	
		1	**6V-8724**	1	ELBOW	
	9	1	*150-3060*	2	TEE AS	
					(EACH INCLUDES)	
		1	**6V-8397**	2	SEAL-O-RING	
		1	**6V-8398**	1	SEAL-O-RING	
		1	**8T-3444**	1	TEE-UNION	
	10	1	**6V-3341**	2	GROMMET	
	11	1	**6V-8397**	2	SEAL-O-RING	
	12	1	**121-8004**	8	CLAMP	
	13	1	**4V-0612**	4	PLATE	
	14	1	**8T-1899**	2	CLIP (SLOT)	
	15	1	**8T-1900**	2	CLIP (TAB)	
	16	1	**8T-4121**	2	WASHER-HARD (11X21X2.5-MM THK)	
M	17	1	**8T-4136**	2	BOLT (M10X1.5X25-MM)	
	18	1	**7X-0440**	4	BOLT (5/16-18X1.75-IN)	

I-REFER TO HYDRAULIC INFORMATION SYSTEM
M-METRIC PART

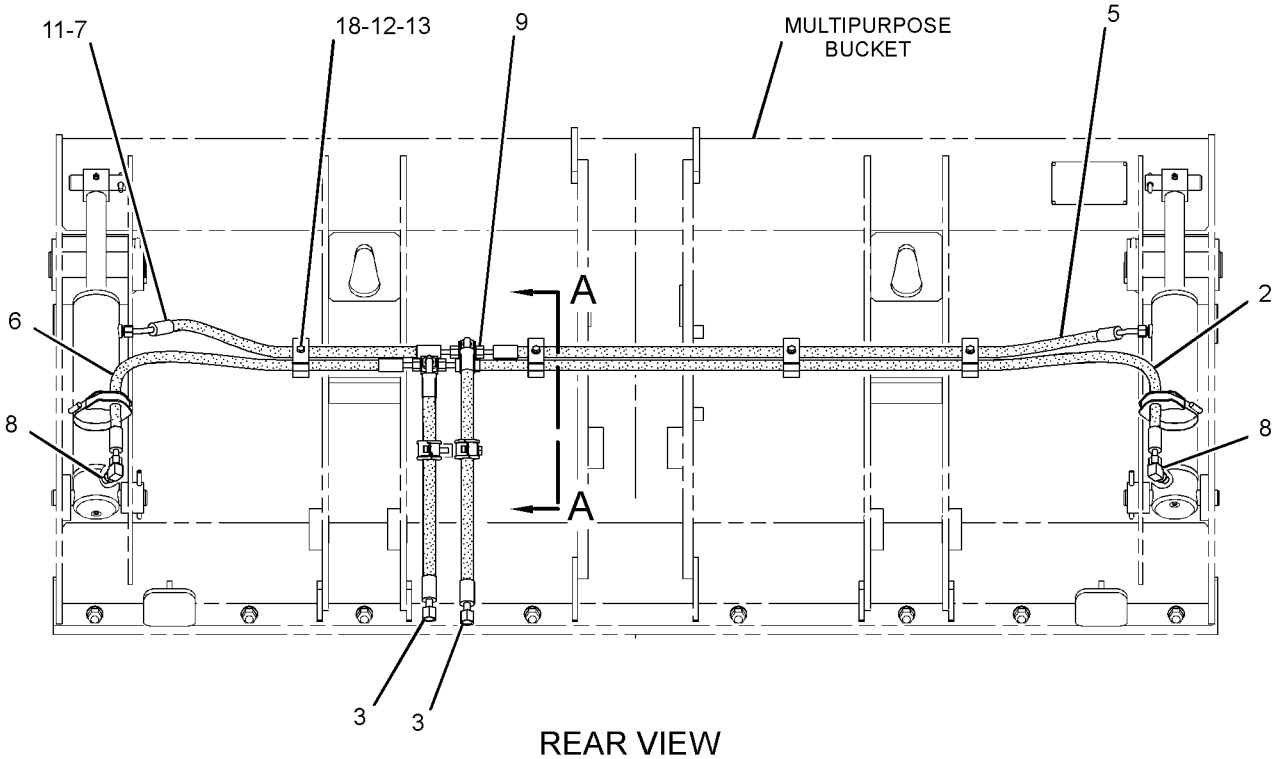

REAR VIEW

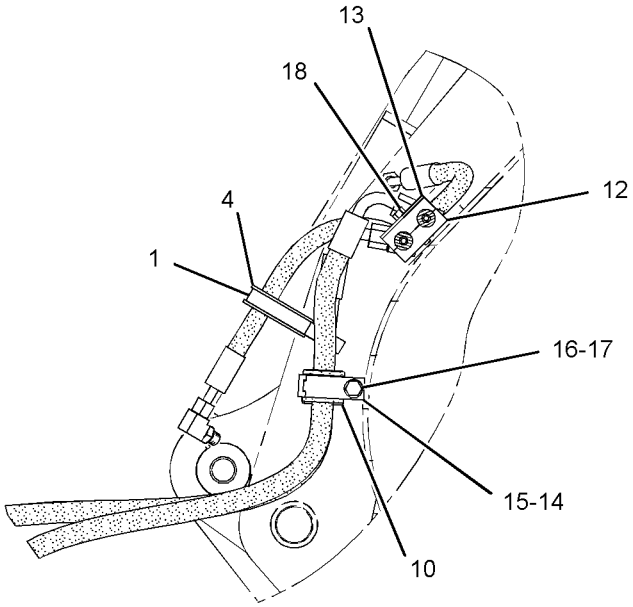

SECTION A-A

GRAPHIC #1 **<END>** g01476453

HYDRAULIC SYSTEM

251-5855 LINES GP-MULTIPURPOSE BUCKET

S/N: HLS1-99999

PART OF 216-8820, 216-8821 BUCKET GP-MULTIPURPOSE

AN ATTACHMENT

SMCS-5057 **i03488622**

NOTE	REF NO	GRAPHIC REF	PART NUMBER	QTY	PART NAME 1 2 3 4 5 6 (PRODUCT LEVEL)	SEE PAGE
I	1	1	**271-7389**	1	HOSE AS	
	2	1	**8T-6726**	2	CLAMP-HOSE	
I	3	1	**141-8437**	1	HOSE AS	
I	4	1	**9R-0418**	2	HOSE AS	
	5	1	**9R-8870**	2	BLOCK	
I	6	1	**270-9176**	1	HOSE AS	
I	7	1	**272-1750**	1	HOSE AS	
	8	1	*148-8378*	2	ELBOW AS	
					(EACH INCLUDES)	
		1	**3J-1907**	1	SEAL-O-RING	
		1	**6V-8397**	1	SEAL-O-RING	
		1	**6V-8724**	1	ELBOW	
	9	1	*150-3060*	2	TEE AS	
					(EACH INCLUDES)	
		1	**6V-8397**	2	SEAL-O-RING	
		1	**6V-8398**	1	SEAL-O-RING	
		1	**8T-3444**	1	TEE-UNION	
	10	1	**6V-3341**	2	GROMMET	
	11	1	**6V-8397**	2	SEAL-O-RING	
	14	1	**8T-1899**	2	CLIP (SLOT)	
	15	1	**8T-1900**	2	CLIP (TAB)	
	16	1	**8T-4121**	2	WASHER-HARD (11X21X2.5-MM THK)	
M	17	1	**8T-4136**	2	BOLT (M10X1.5X25-MM)	
	19	1	**7X-0440**	4	BOLT (5/16-18X1.75-IN)	
	20	1	**4V-0612**	4	PLATE	
	21	1	**121-8004**	8	CLAMP	

I-REFER TO HYDRAULIC INFORMATION SYSTEM
M-METRIC PART

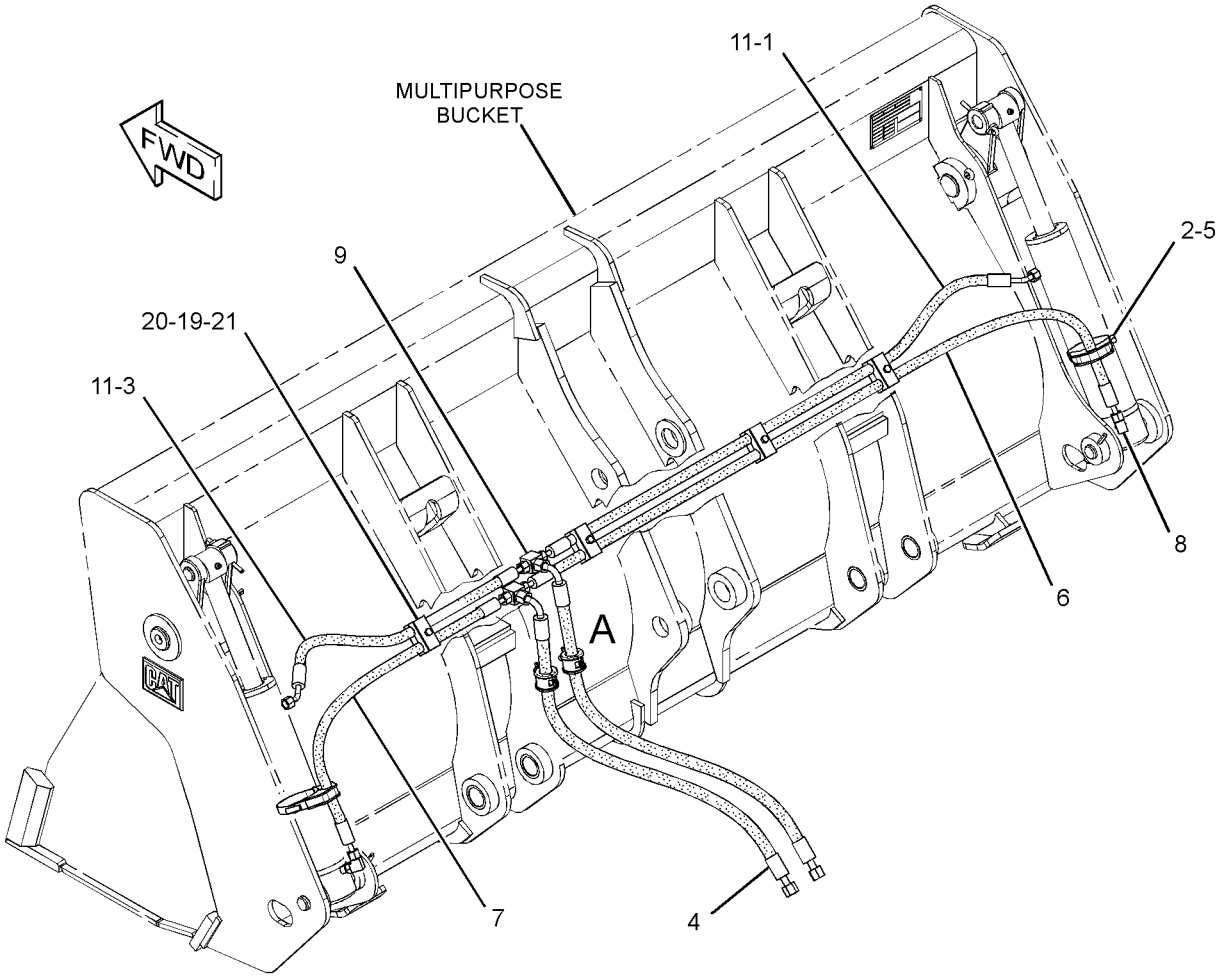

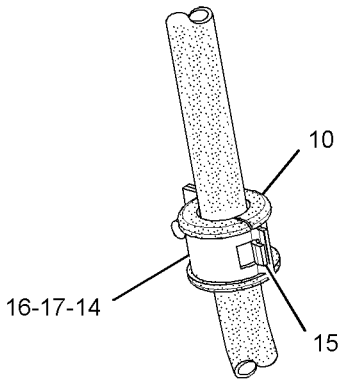

VIEW OF AREA A

GRAPHIC #1 **<END>** g01476493

214-5950 LINES GP-PILOT–SIGNAL

S/N: HLS1-99999

PART OF 213-9300 LOADER AR

SMCS-5057, 5059 **i02737334**

NOTE	REF NO	GRAPHIC REF	PART NUMBER	QTY	PART NAME 1 2 3 4 5 6 (PRODUCT LEVEL)	SEE PAGE
E	1	1	**5P-1505**		HOSE (73-CM)	
	2	1	**5D-1026**	2	CLAMP-HOSE	
	3	1	**6V-0852**	2	CAP-DUST	
	4	1	**7K-1181**	3	STRAP-CABLE	
I	5	1	**211-3688**	1	HOSE AS	
I	6	1	**211-3689**	1	HOSE AS	
	7	1	*150-4044*	1	CONNECTOR AS	
		1	**3J-1907**	1	SEAL-O-RING	
		1	**6V-8397**	1	SEAL-O-RING	
		1	**8T-1779**	1	CONNECTOR	
	8	1	*148-8325*	2	CONNECTOR AS	
					(EACH INCLUDES)	
		1	**3J-1907**	1	SEAL-O-RING	
		1	**4J-5477**	1	SEAL-O-RING	
		1	**6V-8641**	1	CONNECTOR	
	9	1	*148-8351*	1	ELBOW AS	
		1	**4J-5477**	1	SEAL-O-RING	
		1	**6V-9849**	1	ELBOW	
	10	1	*150-3027*	2	ELBOW AS	
					(EACH INCLUDES)	
		1	**2M-9780**	1	SEAL-O-RING	
		1	**6V-5653**	1	ELBOW	
	11	1	*150-3062*	1	TEE AS	
		1	**3J-7354**	1	SEAL-O-RING	
		1	**4J-5477**	1	SEAL-O-RING	
		1	**101-1787**	1	TEE AS	
	12	1	*164-5567*	2	COUPLER AS-QUICK DISCONNECT	
					(EACH INCLUDES)	
		1	**3J-1907**	1	SEAL-O-RING	
		1	**6V-3965**	1	FITTING (QUICK DISCONNECT)	
	13	1	*165-4931*	1	ELBOW AS	
		1	**3J-1907**	1	SEAL-O-RING	
		1	**6V-8077**	1	ELBOW	

E-ORDER BY THE CENTIMETER
I-REFER TO HYDRAULIC INFORMATION SYSTEM

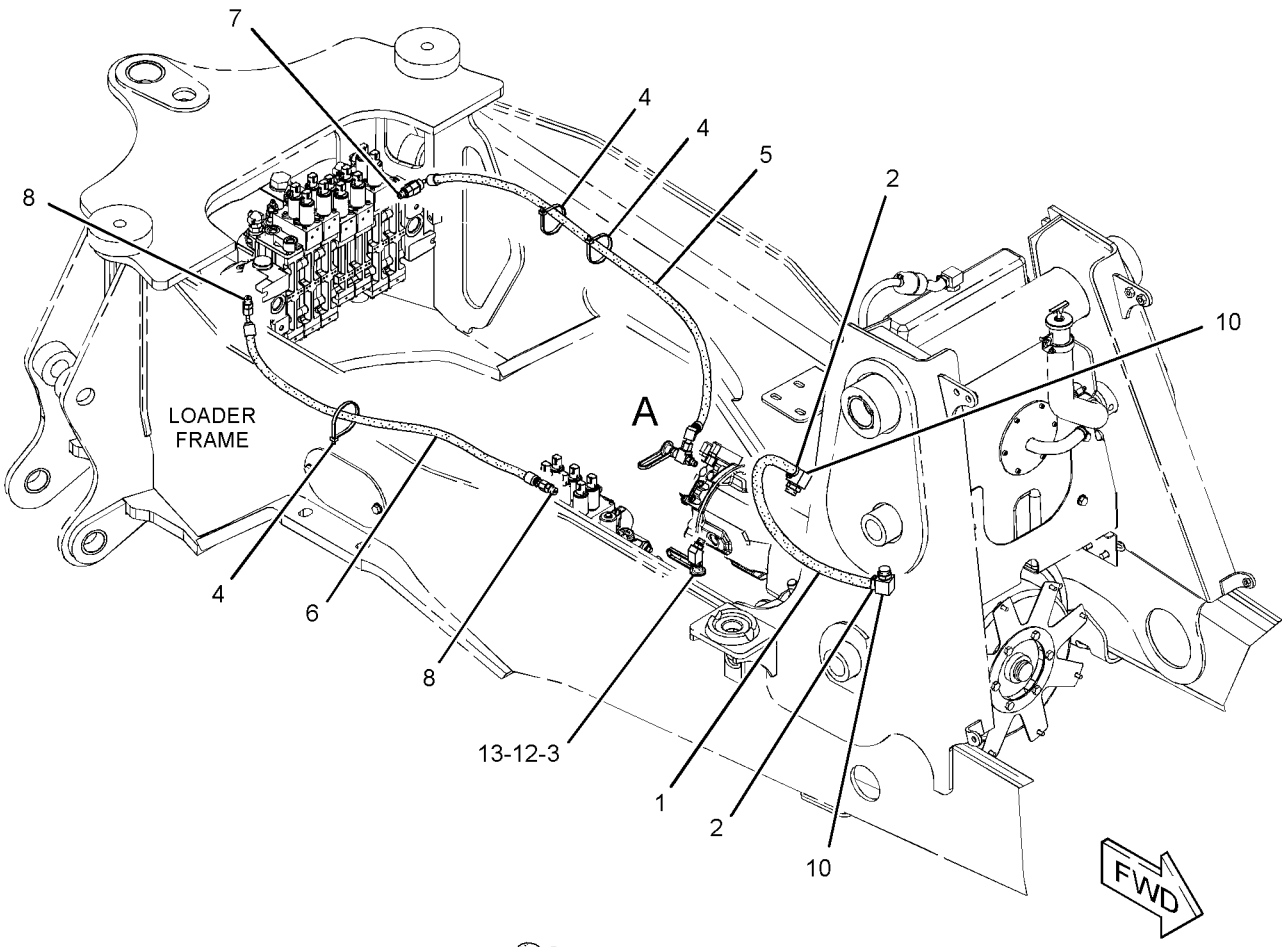

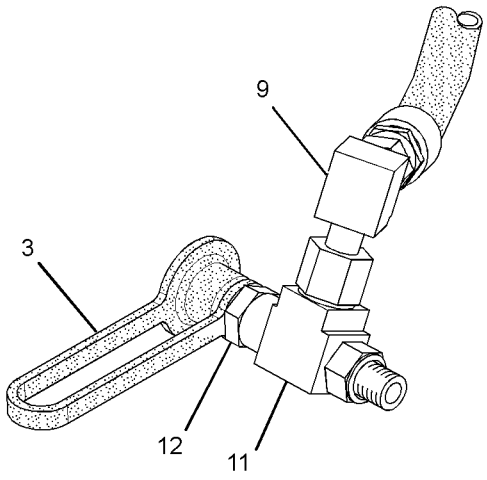

VIEW OF AREA A

GRAPHIC #1 **<END>** g01376425

HYDRAULIC SYSTEM

267-2765 LINES GP-PILOT—WITH ACCUMULATOR

S/N: HLS1-99999

PART OF 268-6455 HYDRAULIC AR

SMCS-5057, 5059 **i02730903**

NOTE	REF NO	GRAPHIC REF	PART NUMBER	QTY	PART NAME 1 2 3 4 5 6 (PRODUCT LEVEL)	SEE PAGE
	1	1	**5D-1026**	2	CLAMP-HOSE	
E	2	1	**5P-1505**		HOSE (239-CM)	
	3	1	**6V-0852**	1	CAP-DUST	
	4	1	**7K-1181**	2	STRAP-CABLE	
	5	1	**133-5813**	6	BAND-MARKER (GRAY, P)	
	6	1	**143-3158**	1	CONNECTOR	
I	7	1	**159-3313**	1	HOSE AS	
	8	1	*164-5567*	1	COUPLER AS-QUICK DISCONNECT	
		1	**3J-1907**	1	SEAL-O-RING	
		1	**6V-3965**	1	FITTING (QUICK DISCONNECT)	
	9	1	*164-5586*	1	TEE AS	
		1	**6V-8398**	1	SEAL-O-RING	
		1	**7X-0871**	1	TEE	
	10	1	*164-9640*	1	CONNECTOR AS	
		1	**3J-1907**	1	SEAL-O-RING	
		1	**4J-5477**	1	SEAL-O-RING	
		1	**145-2237**	1	CONNECTOR	
	11	1	*174-6740*	1	TEE AS	
		1	**2M-9780**	1	SEAL-O-RING	
		1	**122-1113**	1	TEE-O-RING	
	12	1	**205-3126**	1	HOSE AS	
I	13	1	**218-6091**	1	HOSE AS	
Y	14	1	*226-0420*	1	ACCUMULATOR GP-PILOT OIL (CHARGED)	381
	15	1	**268-0094**	1	MANIFOLD (RETURN)	
I	16	1	**268-0097**	1	HOSE AS	
I	17	1	**268-0099**	1	HOSE AS	
	18	1	**268-0106**	1	HOSE AS	
	19	1	**268-0107**	1	HOSE AS	
	20	1	**268-0108**	1	HOSE AS	
	21	1	*273-4211*	1	TEE AS	
		1	**6V-8398**	1	SEAL-O-RING	
		1	**273-4210**	1	TEE	
	22	1	**277-9708**	1	FILM-WARNING (ACCUM, HIGH PRESS, READ OMM)	
I	23	1	**144-8242**	1	HOSE AS	
	24	1	*148-8325*	6	CONNECTOR AS	
					(EACH INCLUDES)	
		1	**3J-1907**	1	SEAL-O-RING	
		1	**4J-5477**	1	SEAL-O-RING	
		1	**6V-8641**	1	CONNECTOR	
	25	1	*148-8336*	5	CONNECTOR AS	
					(EACH INCLUDES)	
		1	**3J-1907**	1	SEAL-O-RING	
		1	**6V-8397**	1	SEAL-O-RING	
		1	**6V-8636**	1	CONNECTOR	
	26	1	*148-8368*	1	ELBOW AS	
		1	**3J-1907**	1	SEAL-O-RING	
		1	**4J-5477**	1	SEAL-O-RING	
		1	**6V-8627**	1	ELBOW	
	27	1	*148-8378*	2	ELBOW AS	
					(EACH INCLUDES)	
		1	**3J-1907**	1	SEAL-O-RING	
		1	**6V-8397**	1	SEAL-O-RING	
		1	**6V-8724**	1	ELBOW	
	28	1	*148-8407*	3	PLUG AS	
					(EACH INCLUDES)	
		1	**3J-1907**	1	SEAL-O-RING	

267-2765 **LINES GP-PILOT** *(contd.)* **i02730903**

NOTE	REF NO	GRAPHIC REF	PART NUMBER	QTY	PART NAME 1 2 3 4 5 6 (PRODUCT LEVEL)	SEE PAGE
		1	**9S-4191**	1	PLUG-O-RING	
	29	1	*148-8433*	1	TEE AS	
		1	**6V-8397**	2	SEAL-O-RING	
		1	**6V-9836**	1	TEE-SWIVEL	
	30	1	*153-6258*	1	CONNECTOR AS	
		1	**3J-1907**	1	SEAL-O-RING	
		1	**6V-8398**	1	SEAL-O-RING	
		1	**8T-5050**	1	CONNECTOR	
	31	1	**2M-9780**	1	SEAL-O-RING	
	32	1	**3K-0360**	1	SEAL-O-RING	
	33	1	**6V-9169**	1	NUT-BULKHEAD (13/16-16-THD)	
	34	1	**8S-0948**	1	CLIP	
	35	1	**8T-4205**	2	WASHER-HARD (7.2X14.5X2-MM THK)	
M	36	1	**8T-6974**	2	BOLT (M6X1X80-MM)	

E-ORDER BY THE CENTIMETER
I-REFER TO HYDRAULIC INFORMATION SYSTEM
M-METRIC PART
Y-SEPARATE ILLUSTRATION

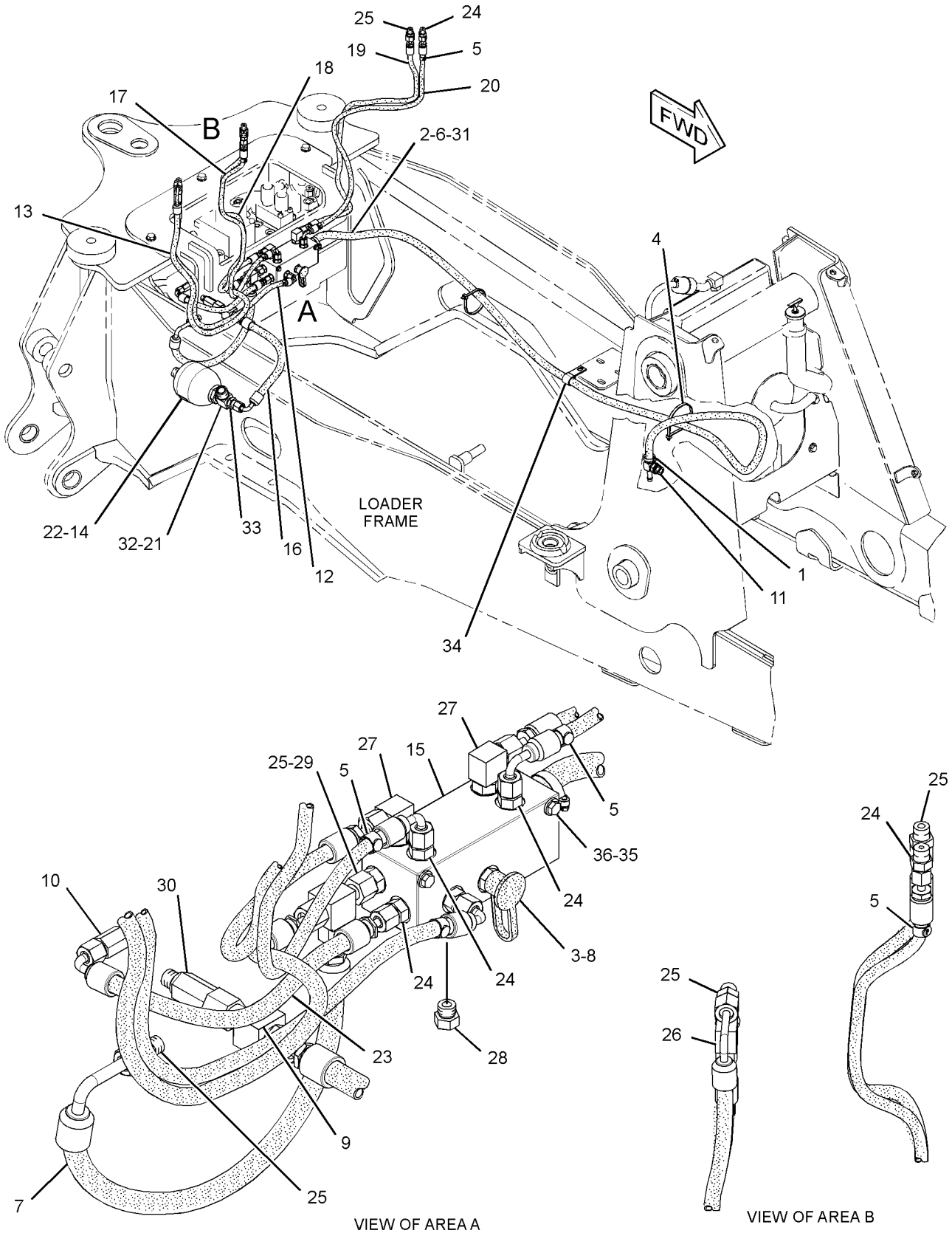

GRAPHIC #1 **<END>** g01394929

HYDRAULIC SYSTEM

267-2766 LINES GP-PILOT–STABILIZER

S/N: HLS1-99999

PART OF 268-6455 HYDRAULIC AR

SMCS-5057, 5059 **i03018509**

NOTE	REF NO	GRAPHIC REF	PART NUMBER	QTY	PART NAME 1 2 3 4 5 6 (PRODUCT LEVEL)	SEE PAGE
	1	1	**7K-1181**	2	STRAP-CABLE	
	2	1	**195-0260**	2	MARKER (BEIGE, L1)	
	3	1	**195-0261**	2	BAND-MARKER (BLACK, L2)	
	4	1	**195-0262**	2	BAND-MARKER (GREEN, R1)	
	5	1	**195-0263**	2	BAND-MARKER (PINK, R2)	
	6	1	**206-1851**	1	SEAL	
	7	1	**210-0074**	1	HOSE AS	
	8	1	**210-0075**	1	HOSE AS	
	9	1	**210-0082**	1	HOSE AS	
	10	1	**210-0079**	1	HOSE AS	
	11	1	*148-8325*	8	CONNECTOR AS	
					(EACH INCLUDES)	
		1	**3J-1907**	1	SEAL-O-RING	
		1	**4J-5477**	1	SEAL-O-RING	
		1	**6V-8641**	1	CONNECTOR	
G	12	1	**160-2248**		SLEEVE-ABRASION (8.3-IN)	

G-ORDER BY THE INCH

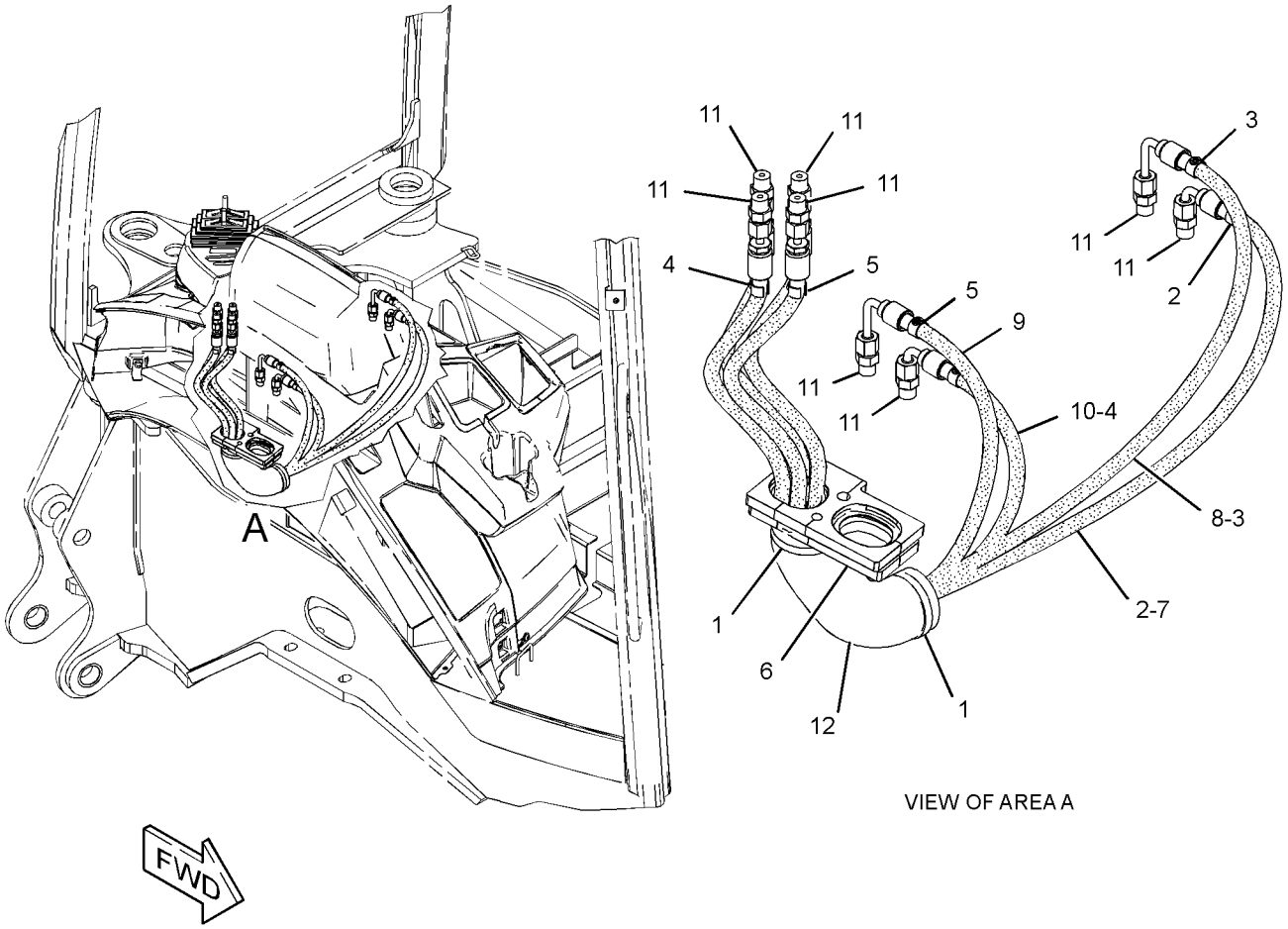

VIEW OF AREA A

GRAPHIC #1 **<END>** g01414836

HYDRAULIC SYSTEM

211-3607 LINES GP-PUMP

S/N: HLS1-99999

PART OF 268-6455 HYDRAULIC AR

SMCS-5057 **i02433841**

NOTE	REF NO	GRAPHIC REF	PART NUMBER	QTY	PART NAME 1 2 3 4 5 6 (PRODUCT LEVEL)	SEE PAGE
	1	1	**5P-4868**	2	CLAMP-HOSE	
	2	1	**144-0367**	1	CLAMP-HOSE	
I	3	1	**176-9294**	1	HOSE AS	
I	4	1	**211-3580**	1	HOSE AS	
I	5	1	**211-3581**	1	HOSE AS	
I	6	1	**211-3583**	1	HOSE AS	
	7	1	**211-4348**	1	ELBOW AS	
	8	1	**235-8528**	1	HOSE	
	9	1	*148-8317*	1	CONNECTOR AS	
		1	**3D-2824**	1	SEAL-O-RING	
		1	**5K-9090**	1	SEAL-O-RING	
		1	**6V-8714**	1	CONNECTOR	
	10	1	*148-8335*	3	CONNECTOR AS	
					(EACH INCLUDES)	
		1	**5K-9090**	1	SEAL-O-RING	
		1	**6V-8635**	1	CONNECTOR	
		1	**7M-8485**	1	SEAL-O-RING	
	11	1	*148-8362*	1	ELBOW AS	
		1	**5K-9090**	1	SEAL-O-RING	
		1	**3D-2824**	1	SEAL-O-RING	
		1	**8T-6684**	1	ELBOW	
	12	1	*148-8429*	2	TEE AS	
					(EACH INCLUDES)	
		1	**5K-9090**	2	SEAL-O-RING	
		1	**6V-9840**	1	TEE-SWIVEL	
	13	1	**1P-4584**	2	FLANGE-HALF	
	14	1	**6J-2680**	1	SEAL-O-RING	
	15	1	**7X-7729**	4	WASHER (11X25X3-MM THK)	
M	16	1	**8T-4136**	4	BOLT (M10X1.5X25-MM)	
M	17	1	**8T-4183**	4	BOLT (M12X1.75X40-MM)	
	18	1	**8T-4223**	4	WASHER-HARD (13.5X25.5X3-MM THK)	

I-REFER TO HYDRAULIC INFORMATION SYSTEM
M-METRIC PART

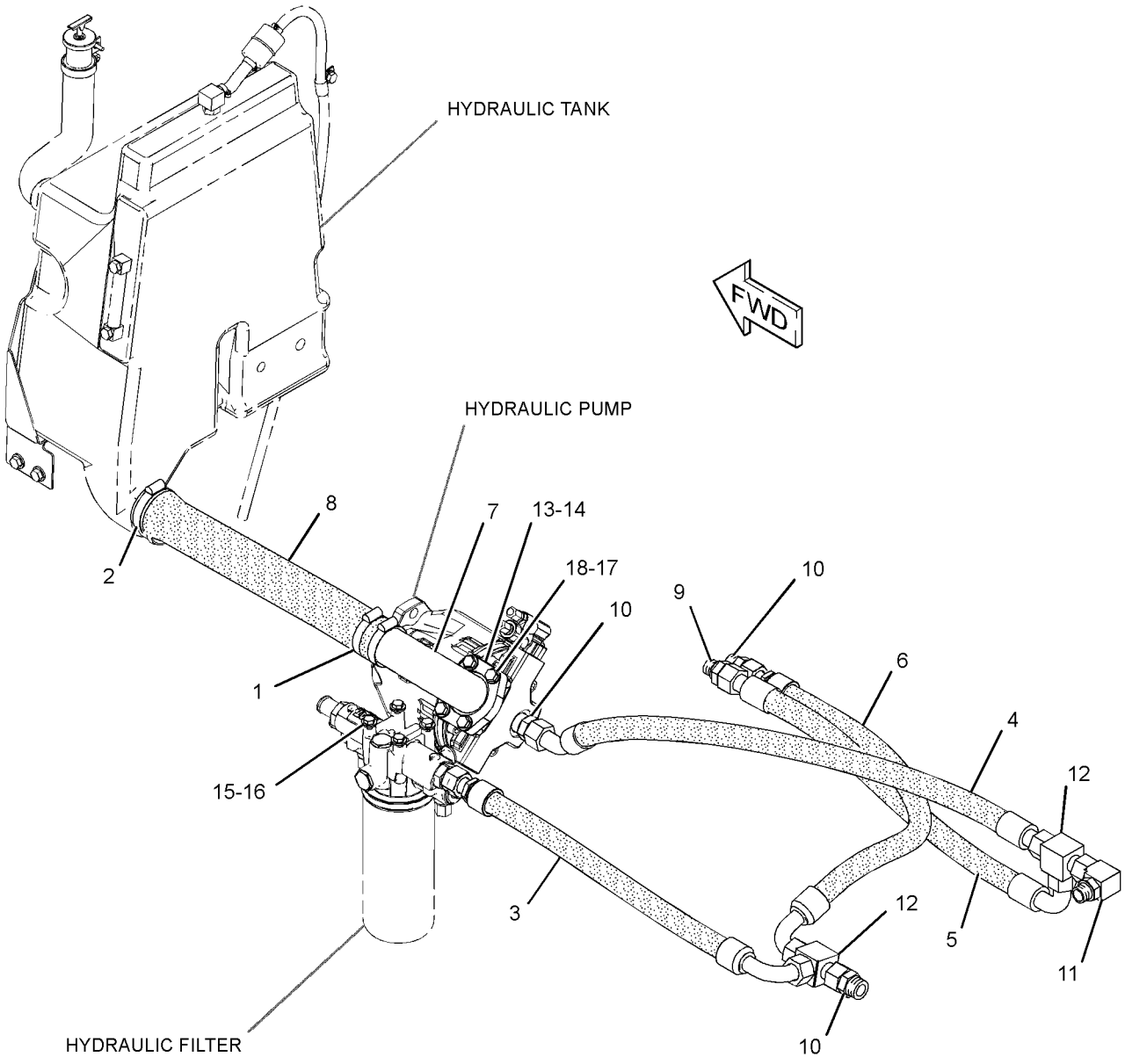

GRAPHIC #1 **<END>** g01186966

HYDRAULIC SYSTEM

246-9802 LINES GP-RIDE CONTROL

S/N: HLS1-3016
PART OF 209-9937 CONTROL AR-RIDE
AN ATTACHMENT

SMCS-5057, 5077, 5264 **i02545872**

NOTE	REF NO	GRAPHIC REF	PART NUMBER	QTY	PART NAME 1 2 3 4 5 6 (PRODUCT LEVEL)	SEE PAGE
	1	1	**7K-1181**	2	STRAP-CABLE	
Y	2	1	*162-3960*	1	ACCUMULATOR GP-RIDE CONTROL (CHARGED)	383
	3	1	**279-5016**	1	FILM-WARNING (HIGH PRESS CYLINDER, READ OMM)	
Y	4	1	**245-8780**	1	MANIFOLD GP-RIDE CONTROL	507
	5	1	**247-0320**	1	BRACKET AS	
I	6	1	**252-1221**	1	HOSE AS	
I	7	1	**265-0868**	1	HOSE AS	
M	8	1	**096-5866**	2	BOLT (M8X1.25X75-MM)	
	9	1	**109-1633**	2	CLIP (SLOT)	
	10	1	**109-1634**	2	CLIP (TAB)	
	11	1	*148-8318*	1	CONNECTOR AS	
		1	**3K-0360**	1	SEAL-O-RING	
		1	**6V-8397**	1	SEAL-O-RING	
		1	**6V-8634**	1	CONNECTOR	
	12	1	*148-8340*	1	CONNECTOR AS	
		1	**3K-0360**	1	SEAL-O-RING	
		1	**6V-8398**	1	SEAL-O-RING	
		1	**6V-8639**	1	CONNECTOR	
	13	1	*148-8358*	2	ELBOW AS	
					(EACH INCLUDES)	
		1	**2M-9780**	1	SEAL-O-RING	
		1	**6V-8398**	1	SEAL-O-RING	
		1	**6V-8624**	1	ELBOW	
	14	1	*153-6241*	1	ELBOW AS	
		1	**6V-8398**	1	SEAL-O-RING	
		1	**8C-8989**	1	ELBOW	
	15	1	*164-5549*	1	COUPLING AS	
		1	**3J-1907**	1	SEAL-O-RING	
		1	**4I-6287**	1	COUPLING	
	16	1	**8T-4121**	4	WASHER-HARD (11X21X2.5-MM THK)	
M	17	1	**8T-4137**	4	BOLT (M10X1.5X20-MM)	
M	18	1	**8T-4956**	2	BOLT (M12X1.75X35-MM)	
	19	1	**8T-4223**	8	WASHER-HARD (13.5X25.5X3-MM THK)	
	20	1	**8T-4224**	2	WASHER-HARD (8.8X16X2-MM THK)	

I-REFER TO HYDRAULIC INFORMATION SYSTEM
M-METRIC PART
Y-SEPARATE ILLUSTRATION

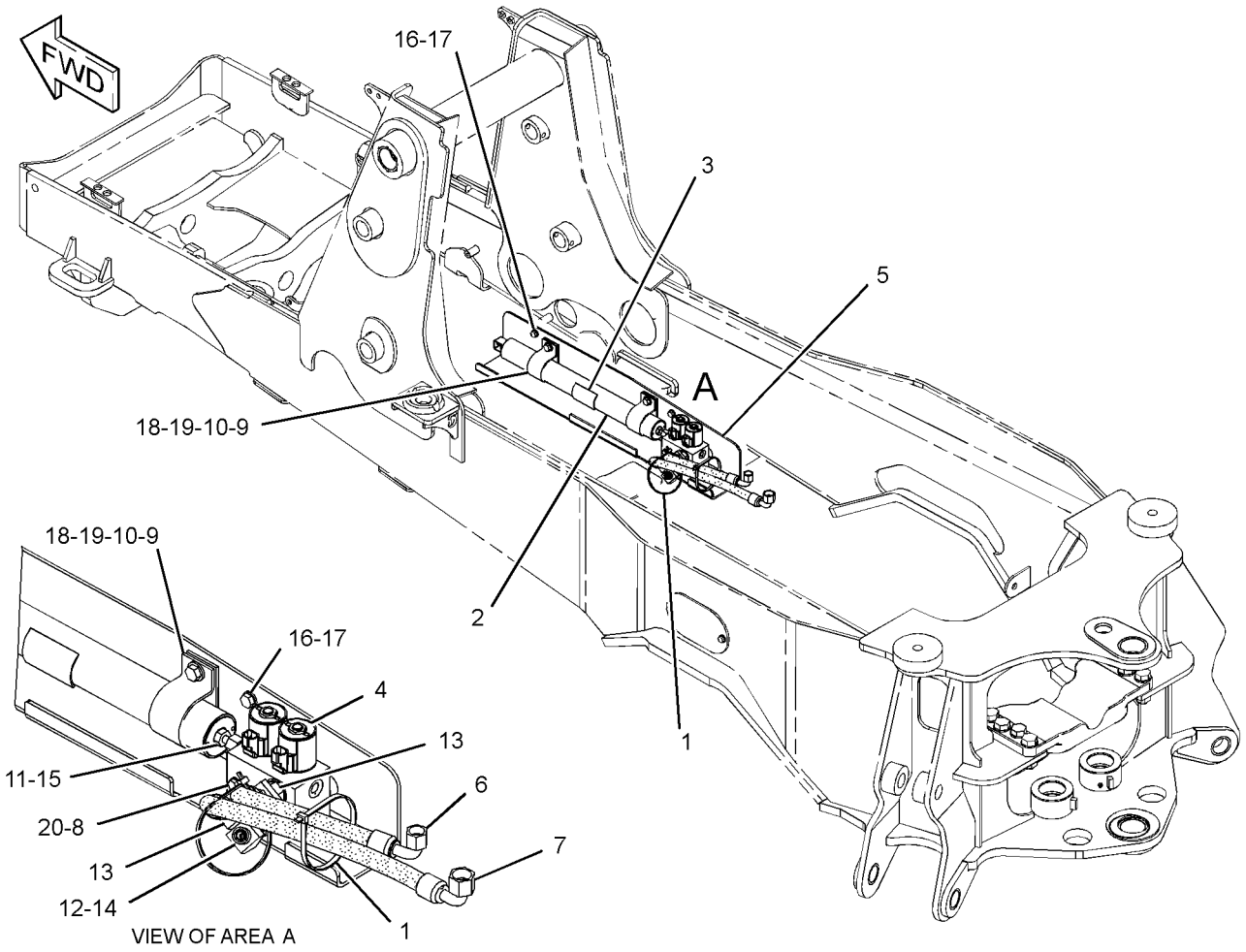

GRAPHIC #1 **<END>** g01260995

HYDRAULIC SYSTEM

246-9802 LINES GP-RIDE CONTROL

S/N: HLS3017-99999

PART OF 209-9937 CONTROL AR-RIDE

AN ATTACHMENT

SMCS-5057, 5077, 5264 **i03345660**

NOTE	REF NO	GRAPHIC REF	PART NUMBER	QTY	PART NAME 1 2 3 4 5 6 (PRODUCT LEVEL)	SEE PAGE
	1	1	**7K-1181**	3	STRAP-CABLE	
Y	2	1	*162-3960*	1	ACCUMULATOR GP-RIDE CONTROL (CHARGED)	383
B	3	1	**279-5016**	1	FILM-WARNING (HIGH PRESS CYLINDER, READ OMM) (U.S.)	
Y	4	1	**245-8780**	1	MANIFOLD GP-RIDE CONTROL	507
	5	1	**247-0320**	1	BRACKET AS	
I	6	1	**252-1221**	1	HOSE AS	
I	7	1	**265-0868**	1	HOSE AS	
M	8	1	**096-5866**	2	BOLT (M8X1.25X75-MM)	
	9	1	**109-1633**	2	CLIP (SLOT)	
	10	1	**109-1634**	2	CLIP (TAB)	
	11	1	**276-2334**	1	FILM-WARNING (HIGH PRESS CYLINDER, READ OMM) (INTL)	
	12	1	*148-8340*	1	CONNECTOR AS	
		1	**3K-0360**	1	SEAL-O-RING	
		1	**6V-8398**	1	SEAL-O-RING	
		1	**6V-8639**	1	CONNECTOR	
	13	1	*148-8358*	2	ELBOW AS	
					(EACH INCLUDES)	
		1	**2M-9780**	1	SEAL-O-RING	
		1	**6V-8398**	1	SEAL-O-RING	
		1	**6V-8624**	1	ELBOW	
	14	1	*153-6241*	1	ELBOW AS	
		1	**6V-8398**	1	SEAL-O-RING	
		1	**8C-8989**	1	ELBOW	
C	16	1	**8T-4121**	3	WASHER-HARD (11X21X2.5-MM THK)	
CM	17	1	**8T-4137**	3	BOLT (M10X1.5X20-MM)	
M	18	1	**8T-4139**	2	BOLT (M12X1.75X30-MM)	
C	19	1	**8T-4223**	2	WASHER-HARD (13.5X25.5X3-MM THK)	
	20	1	**8T-4224**	2	WASHER-HARD (8.8X16X2-MM THK)	
C	21	1	**292-8222**	1	TUBE AS	
C	22	1	*148-8365*	1	ELBOW AS	
		1	**3J-1907**	1	SEAL-O-RING	
		1	**6V-8398**	1	SEAL-O-RING	
		1	**8T-6876**	1	ELBOW	
C	23	1	*148-8354*	1	ELBOW AS	
		1	**3K-0360**	1	SEAL-O-RING	
		1	**6V-8398**	1	SEAL-O-RING	
		1	**6V-9002**	1	ELBOW	
	24	1	*148-8370*	1	ELBOW AS	
		1	**6V-8398**	1	SEAL-O-RING	
		1	**6V-9851**	1	ELBOW	
I	25	1	**194-4334**	1	HOSE AS	

B-USE AS REQUIRED
C-CHANGE FROM PREVIOUS TYPE
I-REFER TO HYDRAULIC INFORMATION SYSTEM
M-METRIC PART
Y-SEPARATE ILLUSTRATION

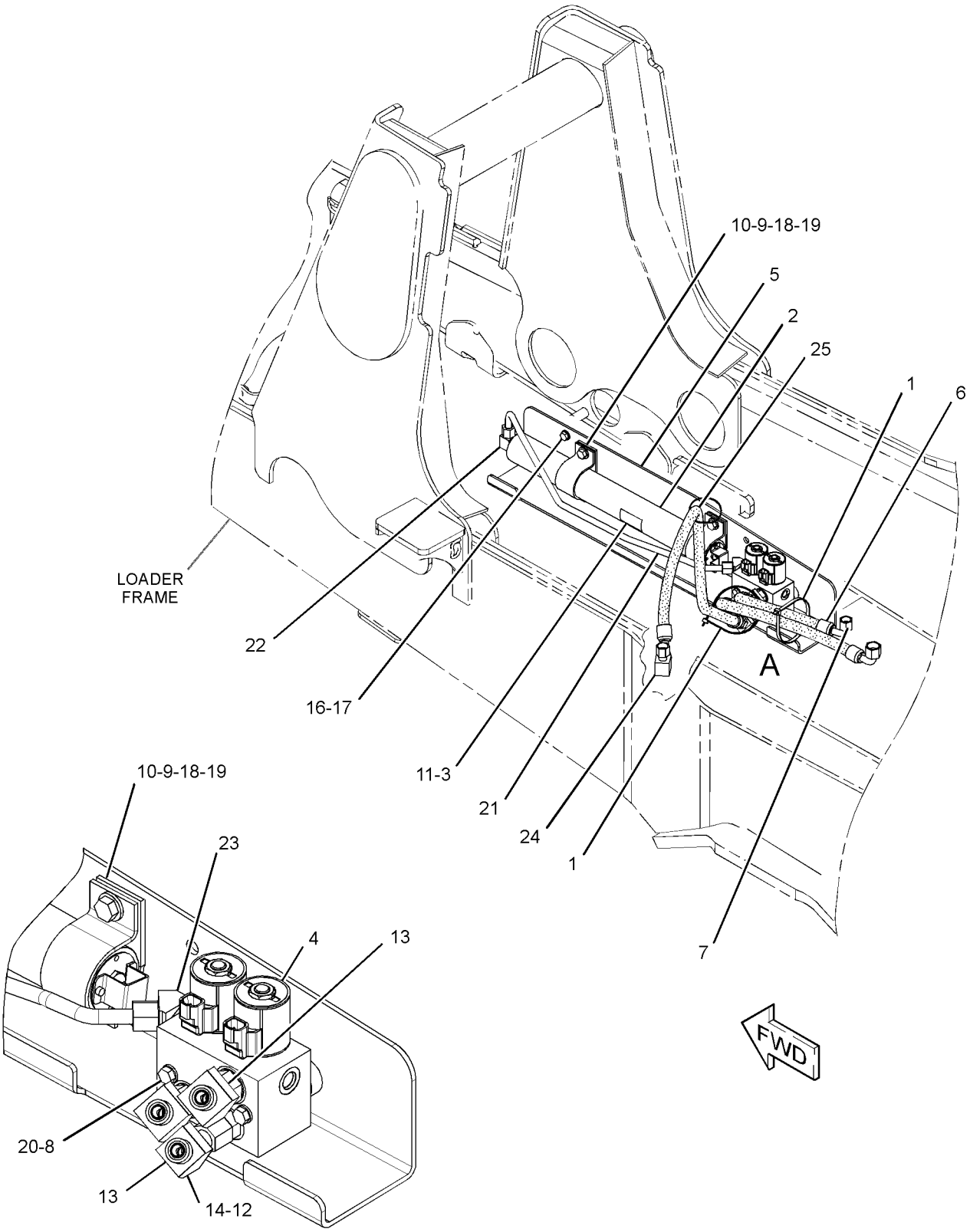

VIEW OF AREA A
(HOSES REMOVED FOR CLARITY)

GRAPHIC #1 **<END>** g01805193

HYDRAULIC SYSTEM

215-2445 LINES GP-STABILIZER

S/N: HLS1-3968
PART OF 269-2148 VALVE AR-BANK 8
AN ATTACHMENT

SMCS-5057, 5468 **i02505738**

NOTE	REF NO	GRAPHIC REF	PART NUMBER	QTY	PART NAME 1 2 3 4 5 6 (PRODUCT LEVEL)	SEE PAGE
	1	1	**201-3621**	1	TUBE AS	
	2	1	**201-3622**	1	TUBE AS	
	3	1	**201-3623**	1	TUBE AS	
	4	1	**201-3624**	1	TUBE AS	
	5	1	*205-2357*	2	CONNECTOR AS	
					(EACH INCLUDES)	
		1	**3D-2824**	1	SEAL-O-RING	
		1	**6V-8398**	1	SEAL-O-RING	
		1	**8T-7968**	1	CONNECTOR	
I	6	1	**252-5355**	2	HOSE AS	
I	7	1	**252-5358**	2	HOSE AS	
	8	1	*148-8328*	2	CONNECTOR AS	
					(EACH INCLUDES)	
		1	**3D-2824**	1	SEAL-O-RING	
		1	**6V-8398**	1	SEAL-O-RING	
		1	**6V-8633**	1	CONNECTOR	
	9	1	*148-8372*	2	ELBOW AS	
					(EACH INCLUDES)	
		1	**2M-9780**	1	SEAL-O-RING	
		1	**6V-8398**	1	SEAL-O-RING	
		1	**6V-8721**	1	ELBOW	
	10	1	*148-8415*	4	REDUCER AS	
					(EACH INCLUDES)	
		1	**6V-8397**	1	SEAL-O-RING	
		1	**6V-8936**	1	REDUCER	
	11	1	**5P-7462**	4	CLIP (SLOT)	
	12	1	**5P-7463**	4	CLIP (TAB)	
	13	1	**6V-0683**	4	GROMMET	
	14	1	**6V-8397**	4	SEAL-O-RING	
	15	1	**8T-1885**	4	CLIP (SLOT)	
	16	1	**8T-1886**	4	CLIP (TAB)	
	17	1	**8T-4121**	6	WASHER-HARD (11X21X2.5-MM THK)	
M	18	1	**8T-4137**	4	BOLT (M10X1.5X20-MM)	
M	19	1	**8T-4196**	2	BOLT (M10X1.5X35-MM)	

I-REFER TO HYDRAULIC INFORMATION SYSTEM
M-METRIC PART

215-2445 **LINES GP-STABILIZER** *(contd.)* **i02505738**

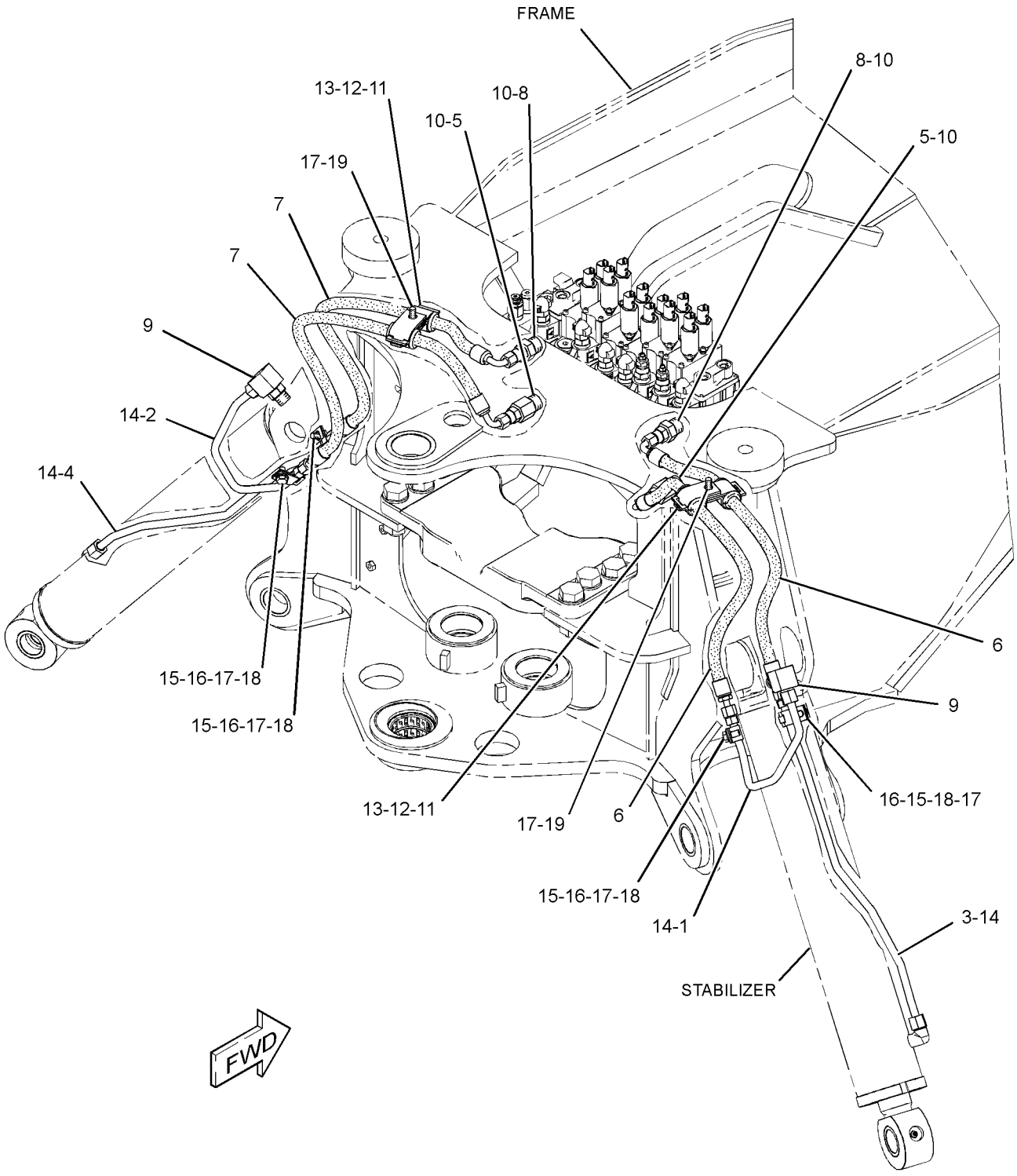

GRAPHIC #1 **<END>** g01271186

HYDRAULIC SYSTEM

215-2445 LINES GP-STABILIZER

S/N: HLS3969-6886
PART OF 269-2148 VALVE AR-BANK 8
AN ATTACHMENT

SMCS-5057, 5468 **i02772637**

NOTE	REF NO	GRAPHIC REF	PART NUMBER	QTY	PART NAME 1 2 3 4 5 6 (PRODUCT LEVEL)	SEE PAGE
	1	1	**201-3621**	1	TUBE AS	
	2	1	**201-3622**	1	TUBE AS	
	3	1	**201-3623**	1	TUBE AS	
	4	1	**201-3624**	1	TUBE AS	
	5	1	*205-2357*	2	CONNECTOR AS	
					(EACH INCLUDES)	
		1	**3D-2824**	1	SEAL-O-RING	
		1	**6V-8398**	1	SEAL-O-RING	
		1	**8T-7968**	1	CONNECTOR	
CI	6	1	**252-5355**	1	HOSE AS	
I	7	1	**252-5358**	2	HOSE AS	
	8	1	*148-8328*	2	CONNECTOR AS	
					(EACH INCLUDES)	
		1	**3D-2824**	1	SEAL-O-RING	
		1	**6V-8398**	1	SEAL-O-RING	
		1	**6V-8633**	1	CONNECTOR	
	9	1	*148-8372*	2	ELBOW AS	
					(EACH INCLUDES)	
		1	**2M-9780**	1	SEAL-O-RING	
		1	**6V-8398**	1	SEAL-O-RING	
		1	**6V-8721**	1	ELBOW	
	10	1	*148-8415*	4	REDUCER AS	
					(EACH INCLUDES)	
		1	**6V-8397**	1	SEAL-O-RING	
		1	**6V-8936**	1	REDUCER	
	11	1	**5P-7462**	4	CLIP (SLOT)	
	12	1	**5P-7463**	4	CLIP (TAB)	
	13	1	**6V-0683**	4	GROMMET	
	14	1	**6V-8397**	4	SEAL-O-RING	
	15	1	**8T-1885**	4	CLIP (SLOT)	
	16	1	**8T-1886**	4	CLIP (TAB)	
	17	1	**8T-4121**	6	WASHER-HARD (11X21X2.5-MM THK)	
M	18	1	**8T-4137**	4	BOLT (M10X1.5X20-MM)	
M	19	1	**8T-4196**	2	BOLT (M10X1.5X35-MM)	
CI	20	1	**308-7376**	1	HOSE AS	

C-CHANGE FROM PREVIOUS TYPE
I-REFER TO HYDRAULIC INFORMATION SYSTEM
M-METRIC PART

215-2445 **LINES GP-STABILIZER** *(contd.)* **i02772637**

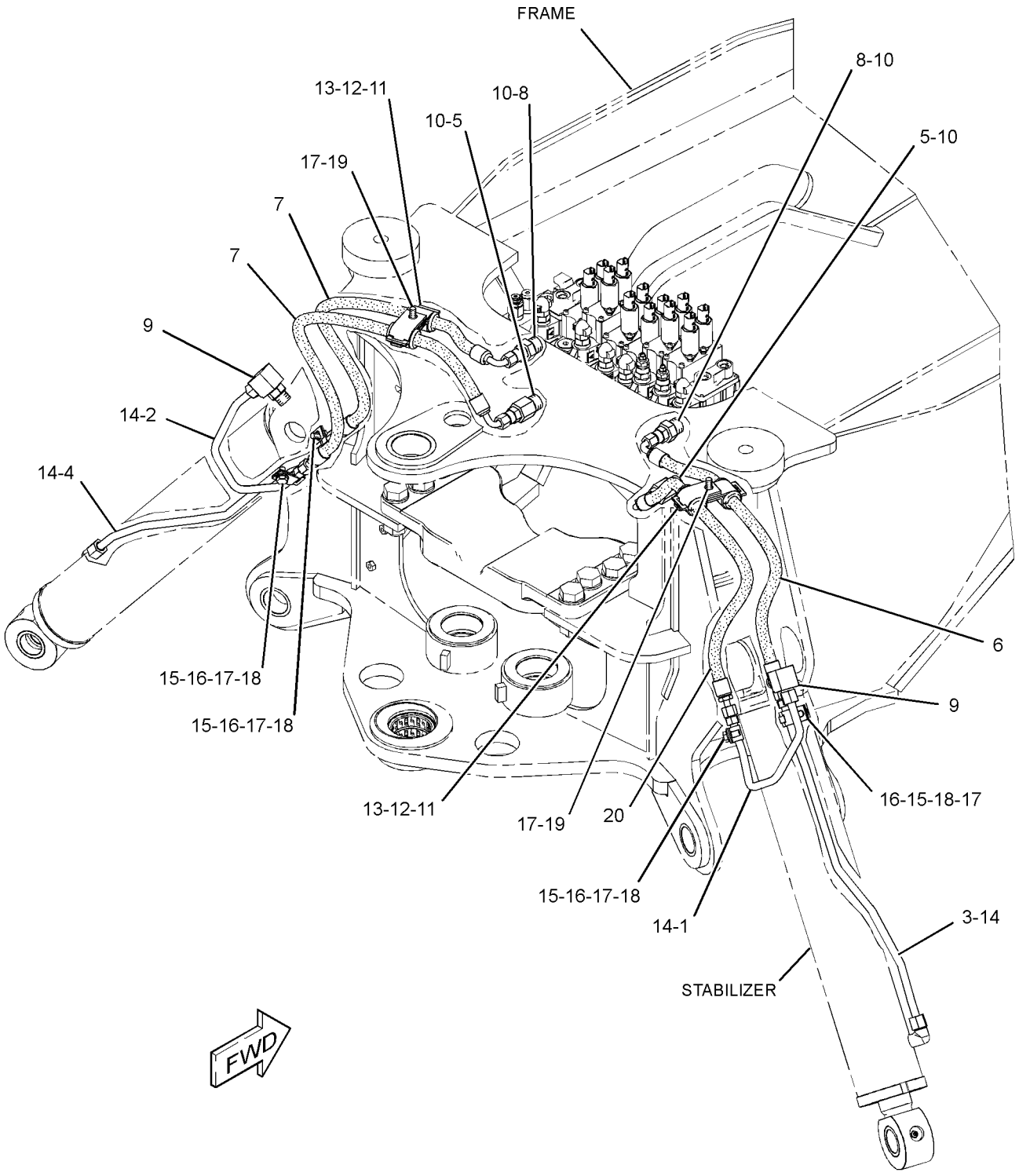

GRAPHIC #1 **<END>** g01390093

HYDRAULIC SYSTEM

215-2445 LINES GP-STABILIZER

S/N: HLS6887-99999
PART OF 269-2148 VALVE AR-BANK 8
AN ATTACHMENT

SMCS-5057, 5468 **i03021264**

NOTE	REF NO	GRAPHIC REF	PART NUMBER	QTY	PART NAME 1 2 3 4 5 6 (PRODUCT LEVEL)	SEE PAGE
	1	1	**201-3621**	1	TUBE AS	
	2	1	**201-3622**	1	TUBE AS	
	3	1	**201-3623**	1	TUBE AS	
	4	1	**201-3624**	1	TUBE AS	
C	5	1	*205-2357*	1	CONNECTOR AS	
		1	**3D-2824**	1	SEAL-O-RING	
		1	**6V-8398**	1	SEAL-O-RING	
		1	**8T-7968**	1	CONNECTOR	
CI	6	1	**317-2129**	2	HOSE AS	
CI	7	1	**317-2130**	1	HOSE AS	
CI	8	1	**317-2168**	1	HOSE AS	
	9	1	*148-8372*	2	ELBOW AS	
					(EACH INCLUDES)	
		1	**2M-9780**	1	SEAL-O-RING	
		1	**6V-8398**	1	SEAL-O-RING	
		1	**6V-8721**	1	ELBOW	
C	10	1	*148-8381*	2	ELBOW AS	
					(EACH INCLUDES)	
		1	**3D-2824**	1	SEAL-O-RING	
		1	**6V-8398**	1	SEAL-O-RING	
		1	**8T-5429**	1	ELBOW	
C	11	1	*155-6258*	1	ELBOW AS	
		1	**3D-2824**	1	SEAL-O-RING	
		1	**6V-8398**	1	SEAL-O-RING	
		1	**127-1647**	1	ELBOW	
	12	1	**5P-7462**	4	CLIP (SLOT)	
	13	1	**5P-7463**	4	CLIP (TAB)	
	14	1	**6V-0683**	4	GROMMET	
	15	1	**6V-8397**	4	SEAL-O-RING	
	16	1	**8T-1885**	4	CLIP (SLOT)	
	17	1	**8T-1886**	4	CLIP (TAB)	
	18	1	**8T-4121**	6	WASHER-HARD (11X21X2.5-MM THK)	
M	19	1	**8T-4137**	4	BOLT (M10X1.5X20-MM)	
M	20	1	**8T-4196**	2	BOLT (M10X1.5X35-MM)	

C-CHANGE FROM PREVIOUS TYPE
I-REFER TO HYDRAULIC INFORMATION SYSTEM
M-METRIC PART

215-2445 **LINES GP-STABILIZER** *(contd.)* **i03021264**

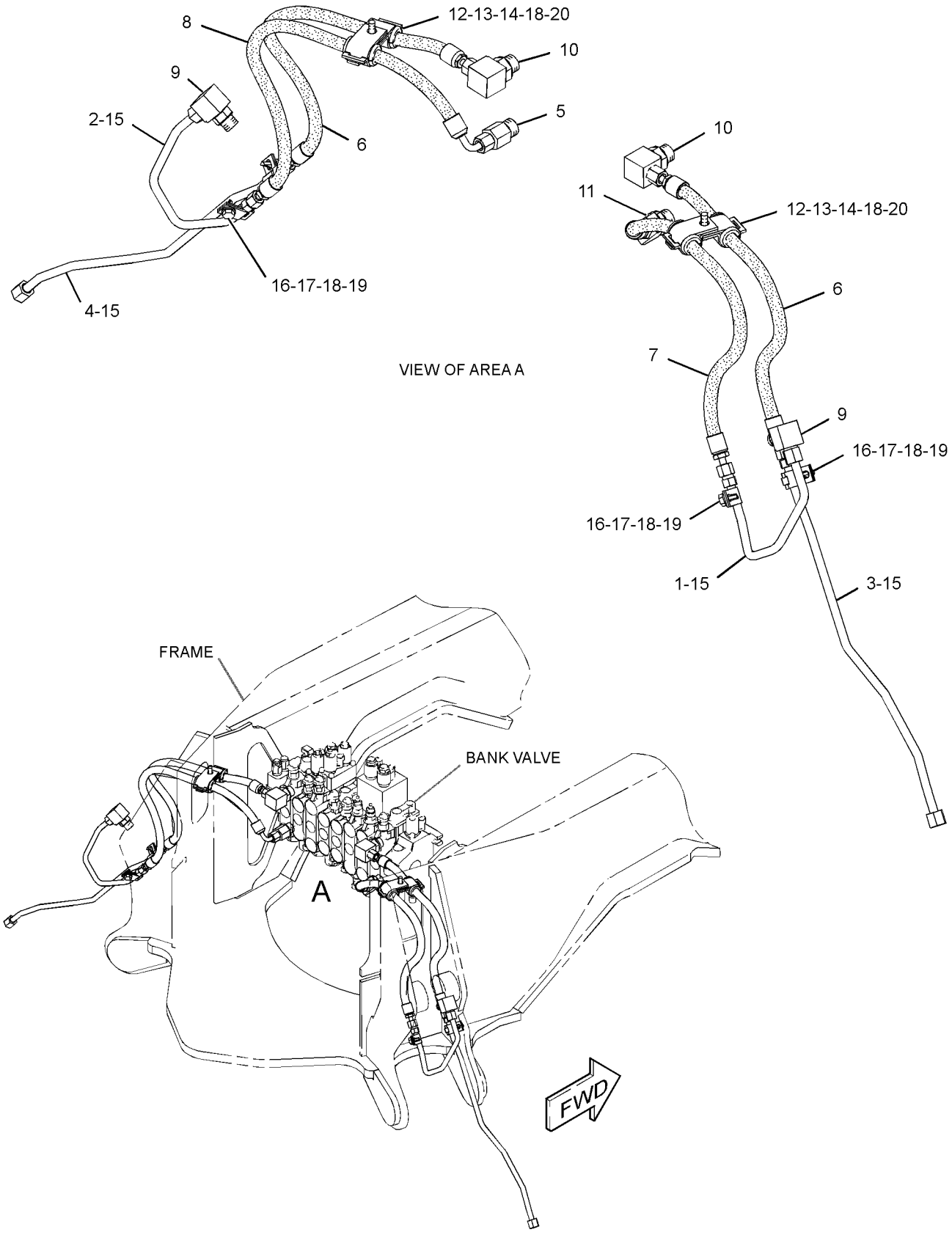

GRAPHIC #1 **<END>** g01567759

HYDRAULIC SYSTEM

222-5622 LINES GP-STABILIZER–7-BANK

S/N: HLS1-3968
PART OF 269-2147 VALVE AR-BANK 7
AN ATTACHMENT

SMCS-5057, 5468 **i02505739**

NOTE	REF NO	GRAPHIC REF	PART NUMBER	QTY	PART NAME 1 2 3 4 5 6 (PRODUCT LEVEL)	SEE PAGE
	1	1	**201-3621**	1	TUBE AS	
	2	1	**201-3622**	1	TUBE AS	
	3	1	**201-3623**	1	TUBE AS	
	4	1	**201-3624**	1	TUBE AS	
	5	1	*205-2357*	2	CONNECTOR AS	
					(EACH INCLUDES)	
		1	**3D-2824**	1	SEAL-O-RING	
		1	**6V-8398**	1	SEAL-O-RING	
		1	**8T-7968**	1	CONNECTOR	
I	6	1	**252-5355**	2	HOSE AS	
I	7	1	**252-5357**	2	HOSE AS	
	8	1	*148-8328*	2	CONNECTOR AS	
					(EACH INCLUDES)	
		1	**3D-2824**	1	SEAL-O-RING	
		1	**6V-8398**	1	SEAL-O-RING	
		1	**6V-8633**	1	CONNECTOR	
	9	1	*148-8372*	2	ELBOW AS	
					(EACH INCLUDES)	
		1	**2M-9780**	1	SEAL-O-RING	
		1	**6V-8398**	1	SEAL-O-RING	
		1	**6V-8721**	1	ELBOW	
	10	1	*148-8415*	4	REDUCER AS	
					(EACH INCLUDES)	
		1	**6V-8397**	1	SEAL-O-RING	
		1	**6V-8936**	1	REDUCER	
	11	1	**5P-7462**	4	CLIP (SLOT)	
	12	1	**5P-7463**	4	CLIP (TAB)	
	13	1	**6V-0683**	4	GROMMET	
	14	1	**6V-8397**	4	SEAL-O-RING	
	15	1	**8T-1885**	4	CLIP (SLOT)	
	16	1	**8T-1886**	4	CLIP (TAB)	
	17	1	**8T-4121**	6	WASHER-HARD (11X21X2.5-MM THK)	
M	18	1	**8T-4137**	4	BOLT (M10X1.5X20-MM)	
M	19	1	**8T-4196**	2	BOLT (M10X1.5X35-MM)	

I-REFER TO HYDRAULIC INFORMATION SYSTEM
M-METRIC PART

222-5622 **LINES GP-STABILIZER** *(contd.)* **i02505739**

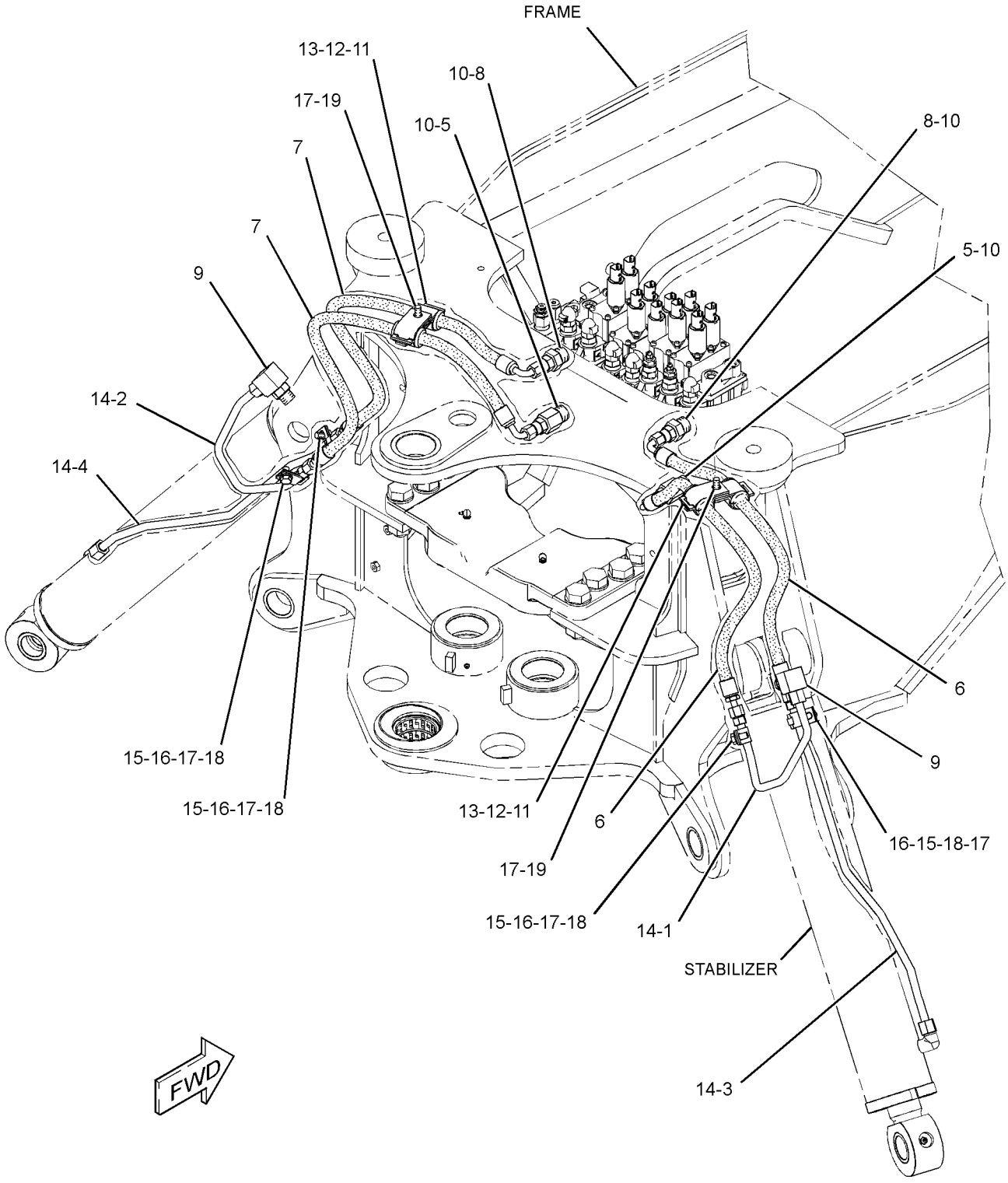

GRAPHIC #1 **<END>** g01271350

HYDRAULIC SYSTEM

222-5622 LINES GP-STABILIZER–7-BANK

S/N: HLS3969-6886
PART OF 269-2147 VALVE AR-BANK 7
AN ATTACHMENT

SMCS-5057, 5468 **i02772639**

NOTE	REF NO	GRAPHIC REF	PART NUMBER	QTY	PART NAME 1 2 3 4 5 6 (PRODUCT LEVEL)	SEE PAGE
	1	1	**201-3621**	1	TUBE AS	
	2	1	**201-3622**	1	TUBE AS	
	3	1	**201-3623**	1	TUBE AS	
	4	1	**201-3624**	1	TUBE AS	
	5	1	*205-2357*	2	CONNECTOR AS	
					(EACH INCLUDES)	
		1	**3D-2824**	1	SEAL-O-RING	
		1	**6V-8398**	1	SEAL-O-RING	
		1	**8T-7968**	1	CONNECTOR	
CI	6	1	**252-5355**	1	HOSE AS	
I	7	1	**252-5357**	2	HOSE AS	
	8	1	*148-8328*	2	CONNECTOR AS	
					(EACH INCLUDES)	
		1	**3D-2824**	1	SEAL-O-RING	
		1	**6V-8398**	1	SEAL-O-RING	
		1	**6V-8633**	1	CONNECTOR	
	9	1	*148-8372*	2	ELBOW AS	
					(EACH INCLUDES)	
		1	**2M-9780**	1	SEAL-O-RING	
		1	**6V-8398**	1	SEAL-O-RING	
		1	**6V-8721**	1	ELBOW	
	10	1	*148-8415*	4	REDUCER AS	
					(EACH INCLUDES)	
		1	**6V-8397**	1	SEAL-O-RING	
		1	**6V-8936**	1	REDUCER	
	11	1	**5P-7462**	4	CLIP (SLOT)	
	12	1	**5P-7463**	4	CLIP (TAB)	
	13	1	**6V-0683**	4	GROMMET	
	14	1	**6V-8397**	4	SEAL-O-RING	
	15	1	**8T-1885**	4	CLIP (SLOT)	
	16	1	**8T-1886**	4	CLIP (TAB)	
	17	1	**8T-4121**	6	WASHER-HARD (11X21X2.5-MM THK)	
M	18	1	**8T-4137**	4	BOLT (M10X1.5X20-MM)	
M	19	1	**8T-4196**	2	BOLT (M10X1.5X35-MM)	
CI	20	1	**308-7376**	1	HOSE AS	

C-CHANGE FROM PREVIOUS TYPE
I-REFER TO HYDRAULIC INFORMATION SYSTEM
M-METRIC PART

222-5622 **LINES GP-STABILIZER** *(contd.)* **i02772639**

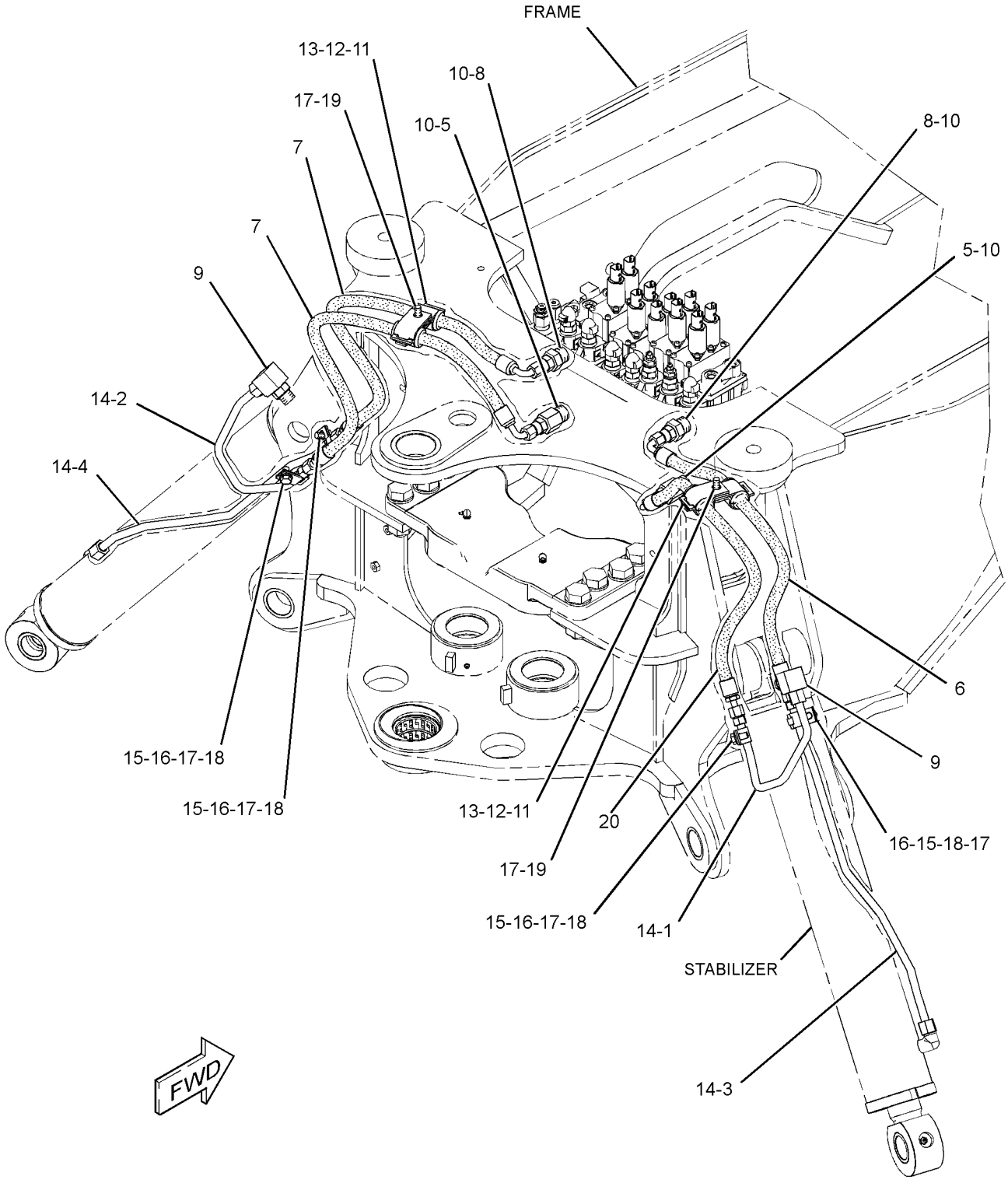

GRAPHIC #1 **<END>** g01388082

HYDRAULIC SYSTEM

222-5622 LINES GP-STABILIZER–7-BANK

S/N: HLS6887-99999
PART OF 269-2147 VALVE AR-BANK 7
AN ATTACHMENT

SMCS-5057, 5468 **i03021265**

NOTE	REF NO	GRAPHIC REF	PART NUMBER	QTY	PART NAME 1 2 3 4 5 6 (PRODUCT LEVEL)	SEE PAGE
	1	1	**201-3621**	1	TUBE AS	
	2	1	**201-3622**	1	TUBE AS	
	3	1	**201-3623**	1	TUBE AS	
	4	1	**201-3624**	1	TUBE AS	
C	5	1	*205-2357*	1	CONNECTOR AS	
		1	**3D-2824**	1	SEAL-O-RING	
		1	**6V-8398**	1	SEAL-O-RING	
		1	**8T-7968**	1	CONNECTOR	
CI	6	1	**317-2129**	1	HOSE AS	
CI	7	1	**317-2130**	2	HOSE AS	
CI	8	1	**317-2131**	1	HOSE AS	
	9	1	*148-8372*	2	ELBOW AS	
					(EACH INCLUDES)	
		1	**2M-9780**	1	SEAL-O-RING	
		1	**6V-8398**	1	SEAL-O-RING	
		1	**6V-8721**	1	ELBOW	
C	10	1	*148-8381*	2	ELBOW AS	
					(EACH INCLUDES)	
		1	**3D-2824**	1	SEAL-O-RING	
		1	**6V-8398**	1	SEAL-O-RING	
		1	**8T-5429**	1	ELBOW	
C	11	1	*155-6258*	1	ELBOW AS	
		1	**3D-2824**	1	SEAL-O-RING	
		1	**6V-8398**	1	SEAL-O-RING	
		1	**127-1647**	1	ELBOW	
	12	1	**5P-7462**	4	CLIP (SLOT)	
	13	1	**5P-7463**	4	CLIP (TAB)	
	14	1	**6V-0683**	4	GROMMET	
	15	1	**6V-8397**	4	SEAL-O-RING	
	16	1	**8T-1885**	4	CLIP (SLOT)	
	17	1	**8T-1886**	4	CLIP (TAB)	
	18	1	**8T-4121**	6	WASHER-HARD (11X21X2.5-MM THK)	
M	19	1	**8T-4137**	4	BOLT (M10X1.5X20-MM)	
M	20	1	**8T-4196**	2	BOLT (M10X1.5X35-MM)	

C-CHANGE FROM PREVIOUS TYPE
I-REFER TO HYDRAULIC INFORMATION SYSTEM
M-METRIC PART

222-5622 **LINES GP-STABILIZER** *(contd.)* **i03021265**

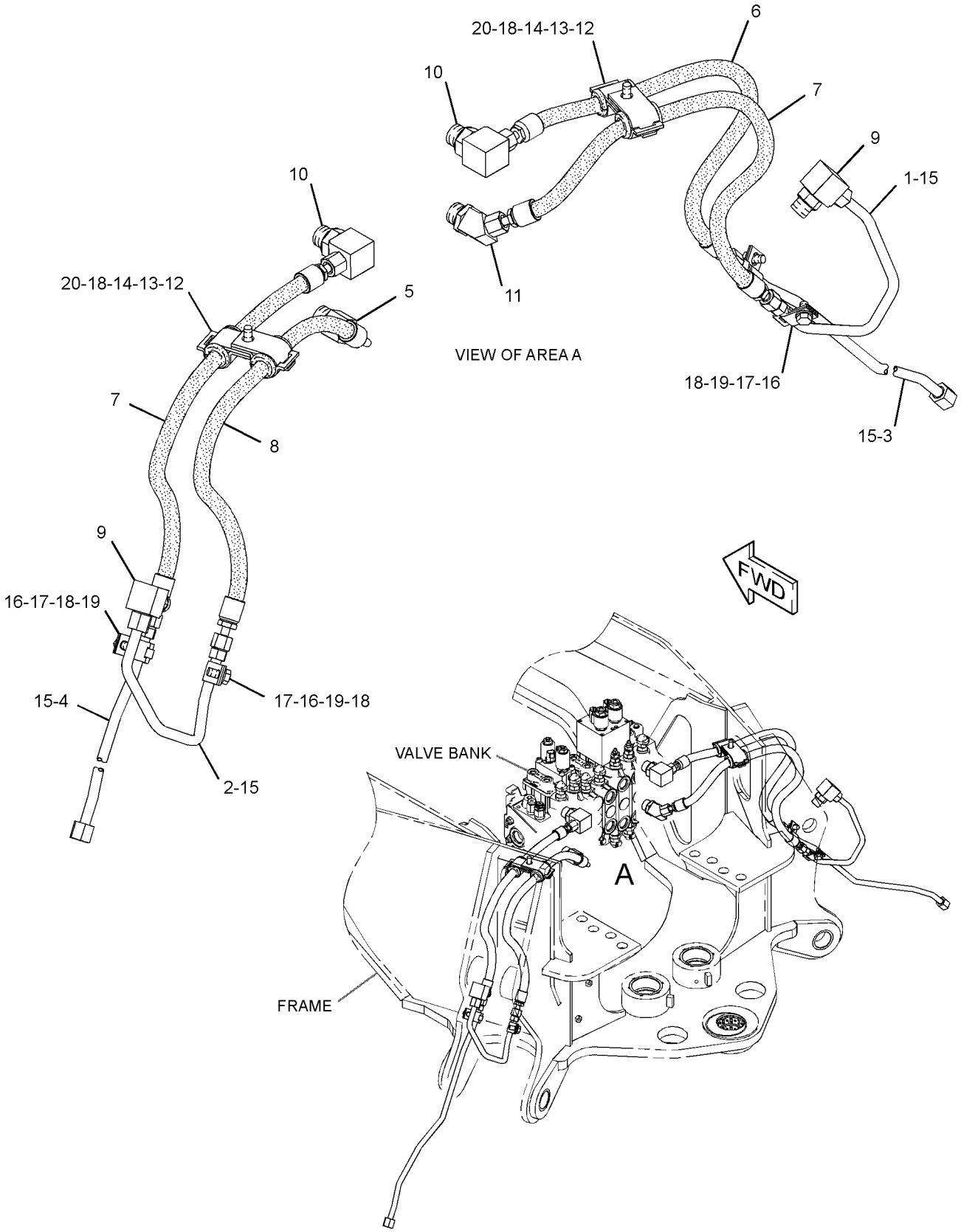

GRAPHIC #1 **<END>** g01567703

HYDRAULIC SYSTEM

222-5623 LINES GP-STABILIZER–6-BANK

S/N: HLS1-3968
PART OF 269-2146 VALVE AR-BANK 6
AN ATTACHMENT

SMCS-5057, 5468 **i02509403**

NOTE	REF NO	GRAPHIC REF	PART NUMBER	QTY	PART NAME 1 2 3 4 5 6 (PRODUCT LEVEL)	SEE PAGE
M	1	1	**8T-4196**	2	BOLT (M10X1.5X35-MM)	
	2	1	**201-3621**	1	TUBE AS	
	3	1	**201-3622**	1	TUBE AS	
	4	1	**201-3623**	1	TUBE AS	
	5	1	**201-3624**	1	TUBE AS	
	6	1	*205-2357*	2	CONNECTOR AS	
					(EACH INCLUDES)	
		1	**3D-2824**	1	SEAL-O-RING	
		1	**6V-8398**	1	SEAL-O-RING	
		1	**8T-7968**	1	CONNECTOR	
M	7	1	**8T-4137**	4	BOLT (M10X1.5X20-MM)	
I	8	1	**252-5355**	2	HOSE AS	
I	9	1	**252-5356**	2	HOSE AS	
	10	1	*148-8328*	2	CONNECTOR AS	
					(EACH INCLUDES)	
		1	**3D-2824**	1	SEAL-O-RING	
		1	**6V-8398**	1	SEAL-O-RING	
		1	**6V-8633**	1	CONNECTOR	
	11	1	*148-8372*	2	ELBOW AS	
					(EACH INCLUDES)	
		1	**2M-9780**	1	SEAL-O-RING	
		1	**6V-8398**	1	SEAL-O-RING	
		1	**6V-8721**	1	ELBOW	
	12	1	*148-8415*	4	REDUCER AS	
					(EACH INCLUDES)	
		1	**6V-8397**	1	SEAL-O-RING	
		1	**6V-8936**	1	REDUCER	
	13	1	**5P-7462**	4	CLIP (SLOT)	
	14	1	**5P-7463**	4	CLIP (TAB)	
	15	1	**6V-0683**	4	GROMMET	
	16	1	**6V-8397**	4	SEAL-O-RING	
	17	1	**8T-1885**	4	CLIP (SLOT)	
	18	1	**8T-1886**	4	CLIP (TAB)	
	19	1	**8T-4121**	6	WASHER-HARD (11X21X2.5-MM THK)	

I-REFER TO HYDRAULIC INFORMATION SYSTEM
M-METRIC PART

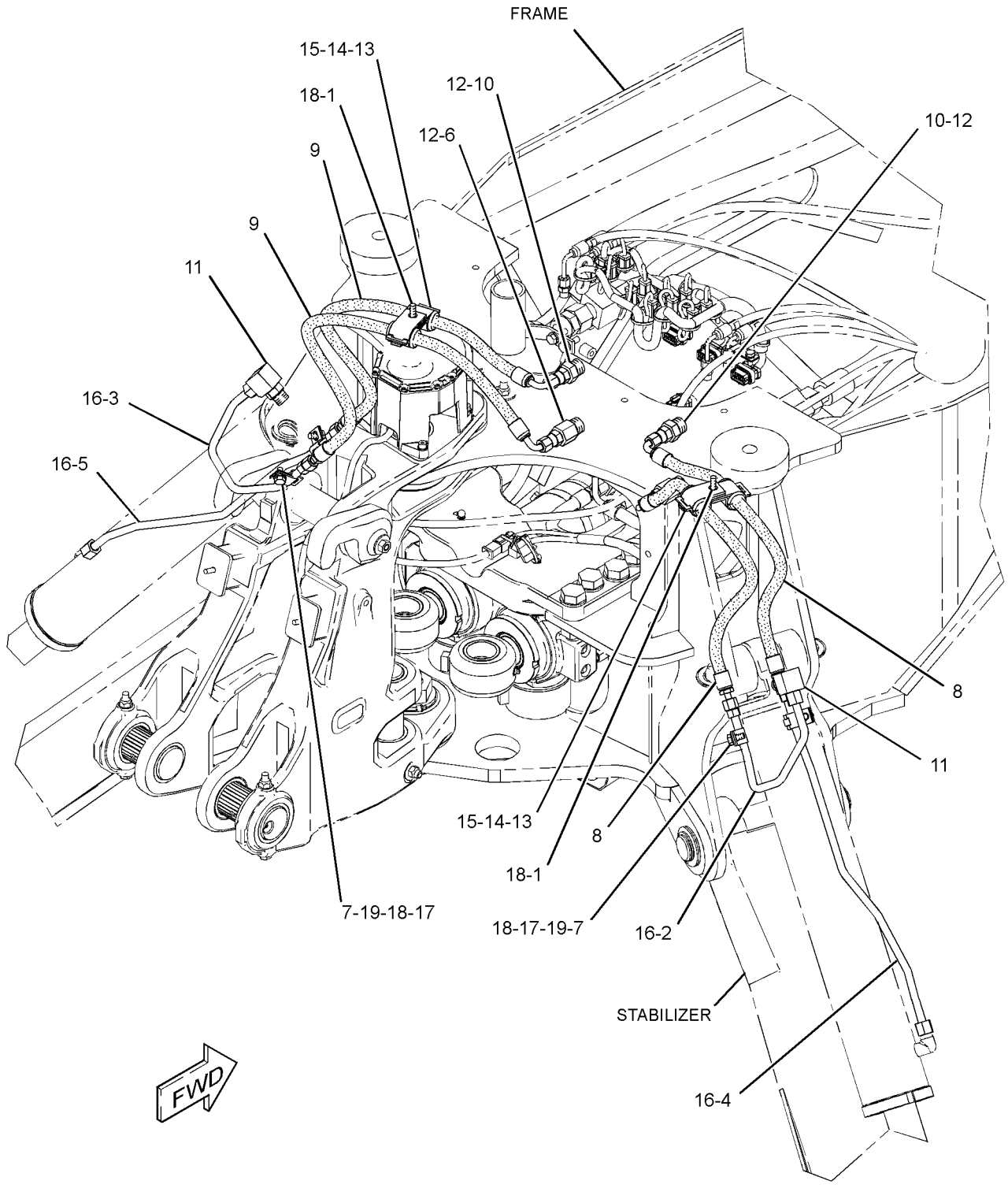

GRAPHIC #1 **<END>** g01231285

HYDRAULIC SYSTEM

222-5623 LINES GP-STABILIZER—6-BANK

S/N: HLS3969-6886
PART OF 269-2146 VALVE AR-BANK 6
AN ATTACHMENT

SMCS-5057, 5468 **i02772641**

NOTE	REF NO	GRAPHIC REF	PART NUMBER	QTY	PART NAME 1 2 3 4 5 6 (PRODUCT LEVEL)	SEE PAGE
M	1	1	**8T-4196**	2	BOLT (M10X1.5X35-MM)	
	2	1	**201-3621**	1	TUBE AS	
	3	1	**201-3622**	1	TUBE AS	
	4	1	**201-3623**	1	TUBE AS	
	5	1	**201-3624**	1	TUBE AS	
	6	1	*205-2357*	2	CONNECTOR AS	
					(EACH INCLUDES)	
		1	**3D-2824**	1	SEAL-O-RING	
		1	**6V-8398**	1	SEAL-O-RING	
		1	**8T-7968**	1	CONNECTOR	
M	7	1	**8T-4137**	4	BOLT (M10X1.5X20-MM)	
CI	8	1	**252-5355**	1	HOSE AS	
I	9	1	**252-5356**	2	HOSE AS	
	10	1	*148-8328*	2	CONNECTOR AS	
					(EACH INCLUDES)	
		1	**3D-2824**	1	SEAL-O-RING	
		1	**6V-8398**	1	SEAL-O-RING	
		1	**6V-8633**	1	CONNECTOR	
	11	1	*148-8372*	2	ELBOW AS	
					(EACH INCLUDES)	
		1	**2M-9780**	1	SEAL-O-RING	
		1	**6V-8398**	1	SEAL-O-RING	
		1	**6V-8721**	1	ELBOW	
	12	1	*148-8415*	4	REDUCER AS	
					(EACH INCLUDES)	
		1	**6V-8397**	1	SEAL-O-RING	
		1	**6V-8936**	1	REDUCER	
	13	1	**5P-7462**	4	CLIP (SLOT)	
	14	1	**5P-7463**	4	CLIP (TAB)	
	15	1	**6V-0683**	4	GROMMET	
	16	1	**6V-8397**	4	SEAL-O-RING	
	17	1	**8T-1885**	4	CLIP (SLOT)	
	18	1	**8T-1886**	4	CLIP (TAB)	
	19	1	**8T-4121**	6	WASHER-HARD (11X21X2.5-MM THK)	
CI	20	1	**308-7376**	1	HOSE AS	

C-CHANGE FROM PREVIOUS TYPE
I-REFER TO HYDRAULIC INFORMATION SYSTEM
M-METRIC PART

222-5623 **LINES GP-STABILIZER** *(contd.)* **i02772641**

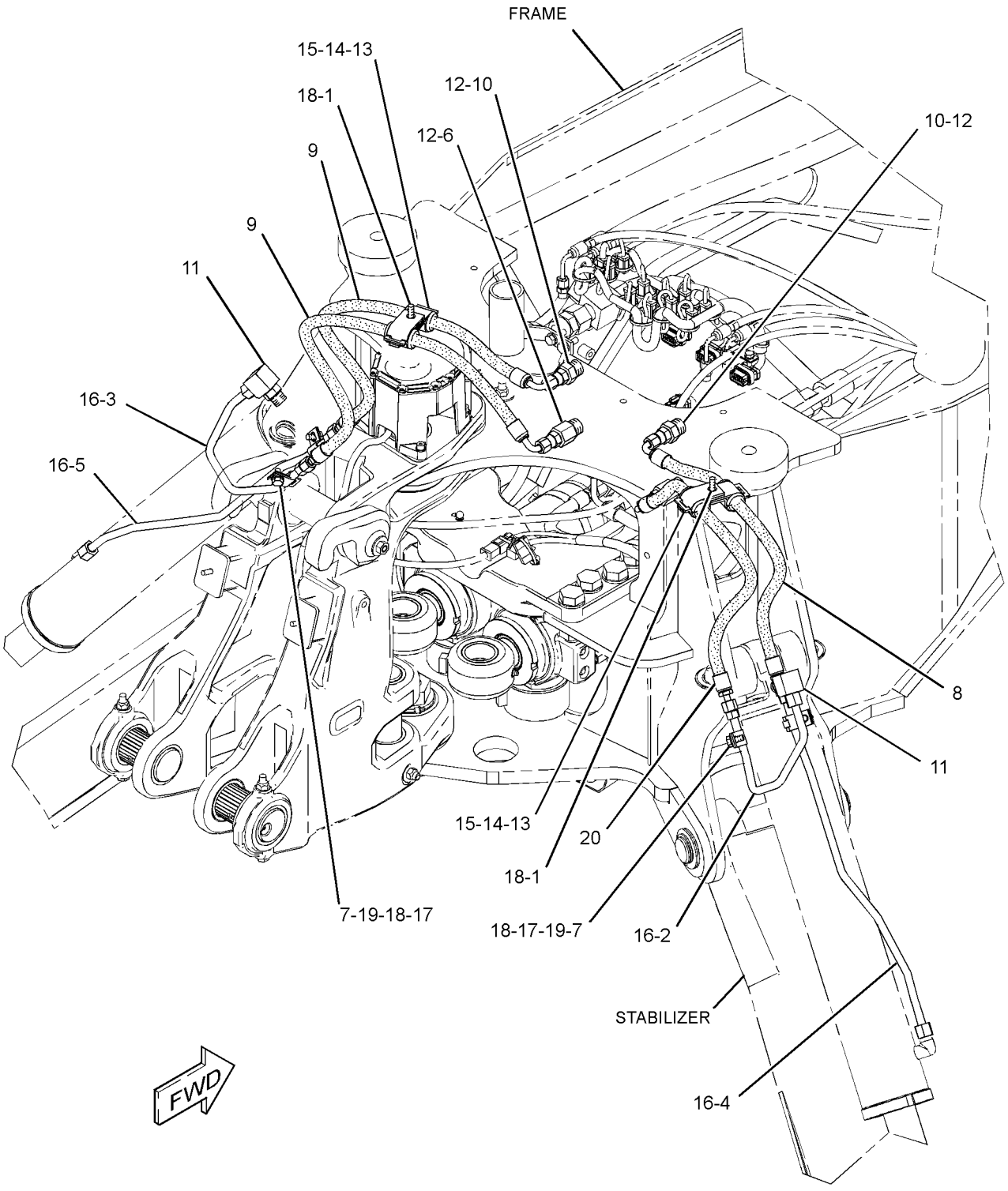

GRAPHIC #1 **<END>** g01388094

HYDRAULIC SYSTEM

222-5623 LINES GP-STABILIZER—6-BANK

S/N: HLS6887-99999
PART OF 269-2146 VALVE AR-BANK 6
AN ATTACHMENT

SMCS-5057, 5468 **i02965863**

NOTE	REF NO	GRAPHIC REF	PART NUMBER	QTY	PART NAME 1 2 3 4 5 6 (PRODUCT LEVEL)	SEE PAGE
M	1	1	**8T-4196**	2	BOLT (M10X1.5X35-MM)	
	2	1	**201-3621**	1	TUBE AS	
	3	1	**201-3622**	1	TUBE AS	
	4	1	**201-3623**	1	TUBE AS	
	5	1	**201-3624**	1	TUBE AS	
C	6	1	*205-2357*	1	CONNECTOR AS	
		1	**3D-2824**	1	SEAL-O-RING	
		1	**6V-8398**	1	SEAL-O-RING	
		1	**8T-7968**	1	CONNECTOR	
M	7	1	**8T-4137**	4	BOLT (M10X1.5X20-MM)	
CI	8	1	**317-2129**	1	HOSE AS	
CI	9	1	**317-2127**	1	HOSE AS	
C	10	1	*148-8381*	2	ELBOW AS	
					(EACH INCLUDES)	
		1	**3D-2824**	1	SEAL-O-RING	
		1	**6V-8398**	1	SEAL-O-RING	
		1	**8T-5429**	1	ELBOW	
	11	1	*148-8372*	2	ELBOW AS	
					(EACH INCLUDES)	
		1	**2M-9780**	1	SEAL-O-RING	
		1	**6V-8398**	1	SEAL-O-RING	
		1	**6V-8721**	1	ELBOW	
CI	12	1	**317-2128**	1	HOSE AS	
	13	1	**5P-7462**	4	CLIP (SLOT)	
	14	1	**5P-7463**	4	CLIP (TAB)	
	15	1	**6V-0683**	4	GROMMET	
	16	1	**6V-8397**	4	SEAL-O-RING	
	17	1	**8T-1885**	4	CLIP (SLOT)	
	18	1	**8T-1886**	4	CLIP (TAB)	
	19	1	**8T-4121**	6	WASHER-HARD (11X21X2.5-MM THK)	
CI	20	1	**317-2130**	1	HOSE AS	
C	21	1	*155-6258*	1	ELBOW AS	
		1	**3D-2824**	1	SEAL-O-RING	
		1	**6V-8398**	1	SEAL-O-RING	
		1	**127-1647**	1	ELBOW	

C-CHANGE FROM PREVIOUS TYPE
I-REFER TO HYDRAULIC INFORMATION SYSTEM
M-METRIC PART

222-5623 **LINES GP-STABILIZER** *(contd.)* **i02965863**

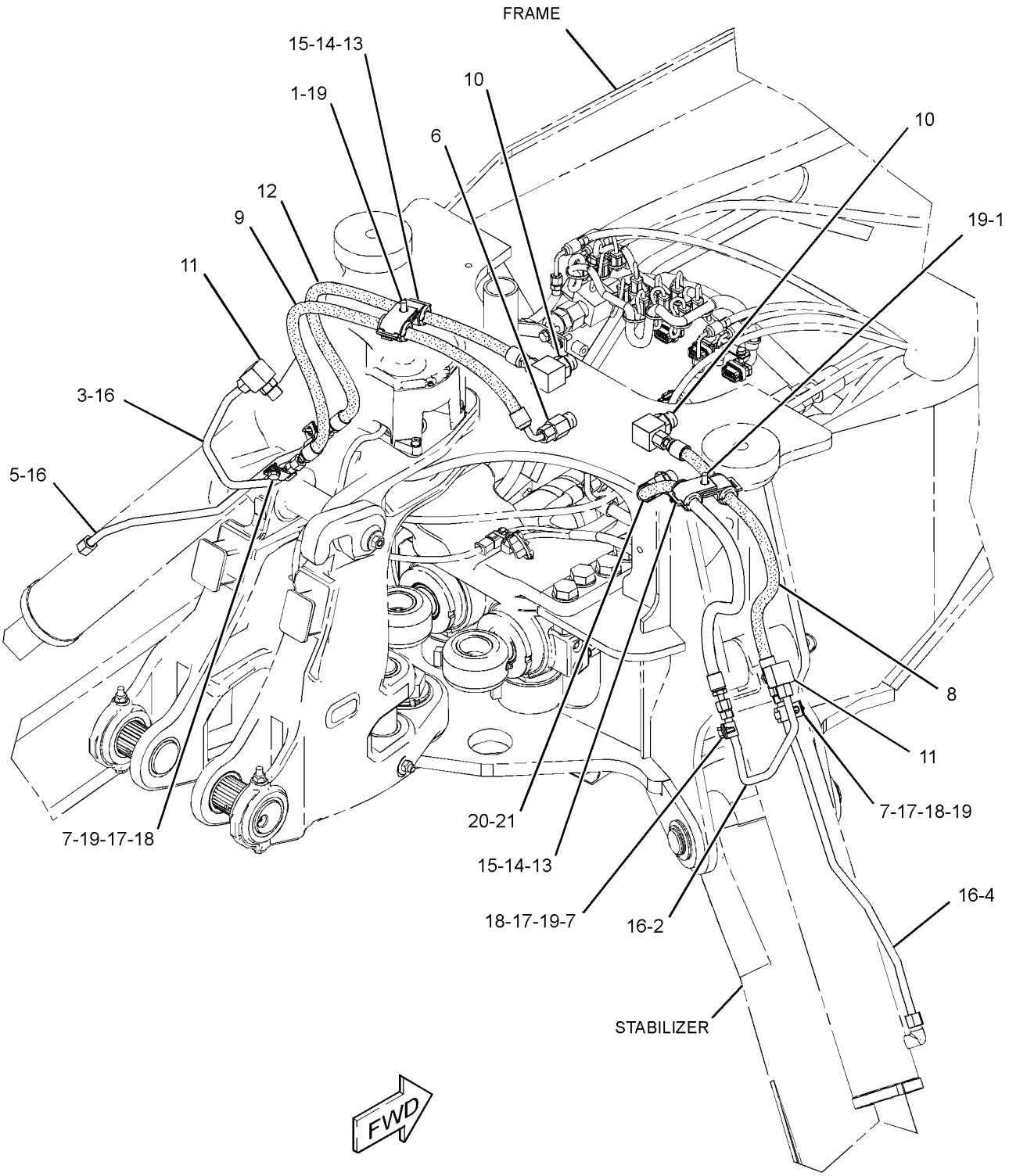

GRAPHIC #1 **<END>** g01498653

HYDRAULIC SYSTEM

211-7602 LINES GP-STICK

S/N: HLS1-4357
PART OF 214-2553, 291-9205 BACKHOE AR-EXTENDABLE STICK, 214-2550, 291-9204 BACKHOE AR-STANDARD STICK
AN ATTACHMENT

SMCS-5057 **i02103496**

NOTE	REF NO	GRAPHIC REF	PART NUMBER	QTY	PART NAME 1 2 3 4 5 6 (PRODUCT LEVEL)	SEE PAGE
	1	1	**5P-3860**	1	CLAMP-HOSE	
	2	1	**9R-5948**	1	BLOCK	
I	3	1	**211-7766**	1	HOSE AS	
I	4	1	**211-7767**	1	HOSE AS	
	5	1	*148-8328*	1	CONNECTOR AS	
		1	**3D-2824**	1	SEAL-O-RING	
		1	**6V-8398**	1	SEAL-O-RING	
		1	**6V-8633**	1	CONNECTOR	
	6	1	**148-8341**	1	CONNECTOR AS	
		1	*3D-2824*	1	SEAL-O-RING	
		1	**6V-8713**	1	CONNECTOR	
		1	**7J-9108**	1	SEAL-O-RING	
	7	1	*153-6232*	1	ELBOW AS	
		1	**3D-2824**	1	SEAL-O-RING	
		1	**7J-9108**	1	SEAL-O-RING	
		1	**8T-0120**	1	ELBOW	

I-REFER TO HYDRAULIC INFORMATION SYSTEM

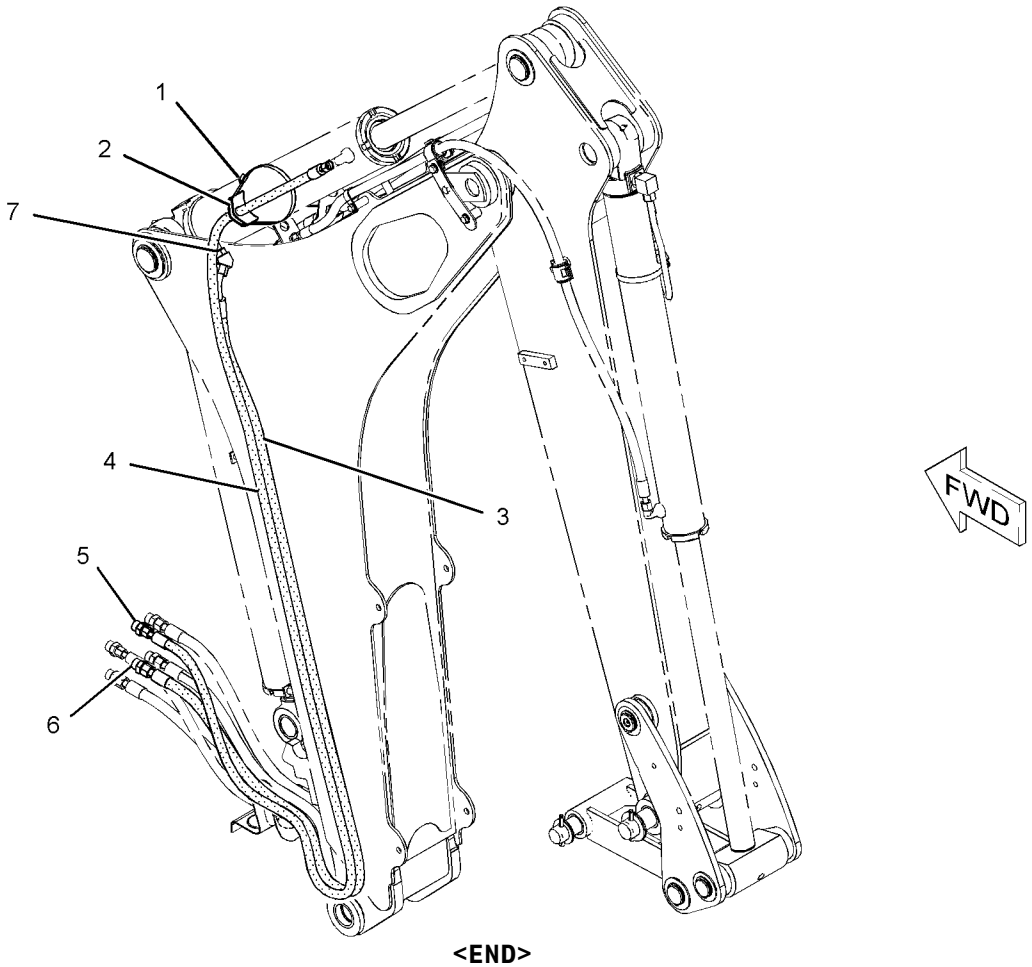

GRAPHIC #1 **<END>** g01077335

HYDRAULIC SYSTEM

211-7602 LINES GP-STICK

S/N: HLS4358-99999

PART OF 214-2553, 291-9205 BACKHOE AR-EXTENDABLE STICK, 214-2550, 291-9204 BACKHOE AR-STANDARD STICK

AN ATTACHMENT

SMCS-5057 **i03537697**

NOTE	REF NO	GRAPHIC REF	PART NUMBER	QTY	PART NAME 1 2 3 4 5 6 (PRODUCT LEVEL)	SEE PAGE
	1	1	**5P-3860**	1	CLAMP-HOSE	
	2	1	**9R-5948**	1	BLOCK	
CI	3	1	**278-1170**	1	HOSE AS	
CI	4	1	**311-2503**	1	HOSE AS	
	5	1	*148-8328*	1	CONNECTOR AS	
		1	**3D-2824**	1	SEAL-O-RING	
		1	**6V-8398**	1	SEAL-O-RING	
		1	**6V-8633**	1	CONNECTOR	
	6	1	*148-8341*	1	CONNECTOR AS	
		1	**3D-2824**	1	SEAL-O-RING	
		1	**6V-8713**	1	CONNECTOR	
		1	**7J-9108**	1	SEAL-O-RING	
	7	1	*153-6232*	1	ELBOW AS	
		1	**3D-2824**	1	SEAL-O-RING	
		1	**7J-9108**	1	SEAL-O-RING	
		1	**8T-0120**	1	ELBOW	
CY	8	1	*311-2509*	1	LINES GP-HYDRAULIC (STICK)	455
	9	1	**7K-1181**	1	STRAP-CABLE	
	10	1	**7J-9108**	1	SEAL-O-RING	
	11	1	**6V-8398**	1	SEAL-O-RING	

C-CHANGE FROM PREVIOUS TYPE
I-REFER TO HYDRAULIC INFORMATION SYSTEM
Y-SEPARATE ILLUSTRATION

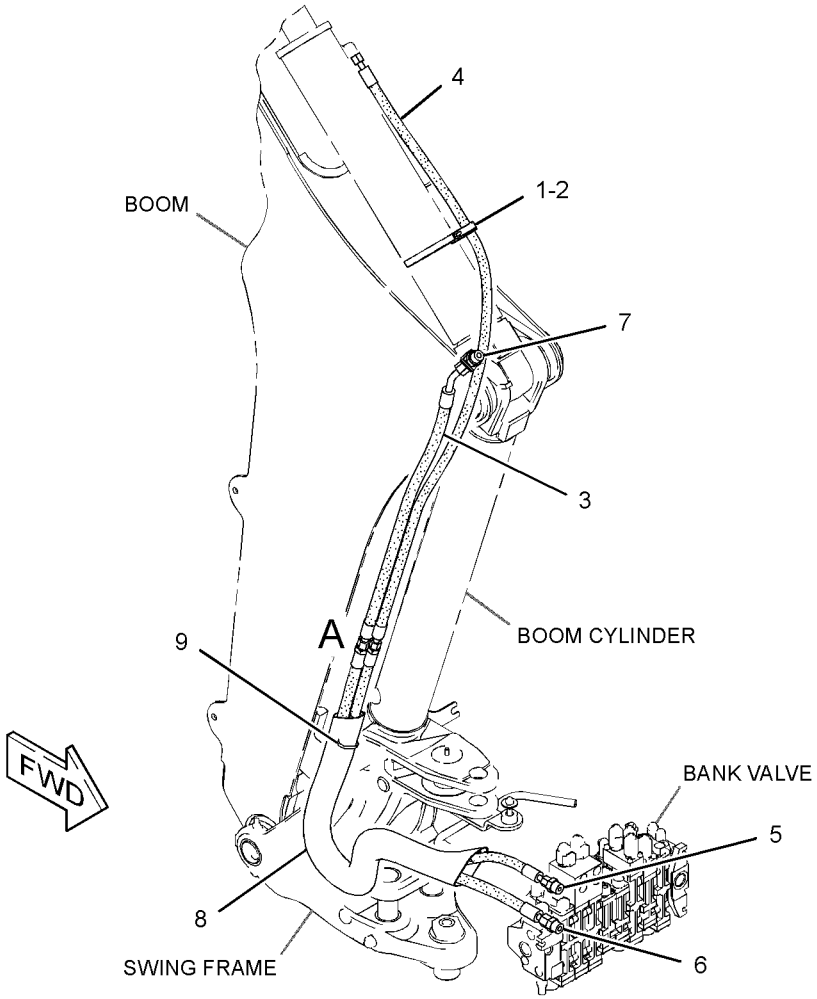

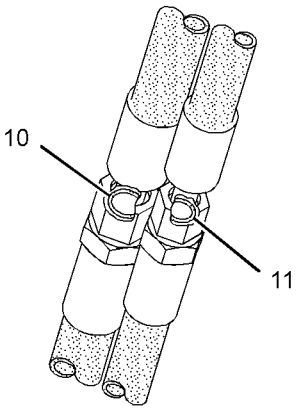

VIEW OF AREA A

GRAPHIC #1

<END>

g01871277

HYDRAULIC SYSTEM

267-2764 LINES GP-SWING

S/N: HLS1-99999

PART OF 268-6455 HYDRAULIC AR

SMCS-5057, 5105 **i03505420**

NOTE	REF NO	GRAPHIC REF	PART NUMBER	QTY	PART NAME 1 2 3 4 5 6 (PRODUCT LEVEL)	SEE PAGE
	1	1	**5P-0599**	2	CLAMP-BAND	
	2	1	**9R-2053**	2	BLOCK	
I	3	1	**9R-9005**	2	HOSE AS	
	4	1	**206-3685**	1	VALVE GP-CUSHION CROSSOVER RLF	
		1	**7I-8084**	2	PLUG	
I	5	1	**216-2777**	1	HOSE AS	
I	6	1	**216-2778**	1	HOSE AS	
	7	1	**226-5634**	2	CONNECTOR AS	
					(EACH INCLUDES)	
		1	**3J-1907**	1	SEAL-O-RING	
		1	**4J-5477**	1	SEAL-O-RING	
		1	**167-0566**	1	CARTRIDGE	
		1	**226-5633**	1	CONNECTOR	
I	8	1	**269-0471**	1	HOSE AS	
I	9	1	**269-0472**	1	HOSE AS	
	10	1	*148-8340*	4	CONNECTOR AS	
					(EACH INCLUDES)	
		1	**3K-0360**	1	SEAL-O-RING	
		1	**6V-8398**	1	SEAL-O-RING	
		1	**6V-8639**	1	CONNECTOR	
	11	1	*148-8364*	2	ELBOW AS	
					(EACH INCLUDES)	
		1	**3K-0360**	1	SEAL-O-RING	
		1	**6V-8398**	1	SEAL-O-RING	
		1	**6V-8625**	1	ELBOW	
	12	1	*148-8428*	2	TEE AS	
					(EACH INCLUDES)	
		1	**3K-0360**	1	SEAL-O-RING	
		1	**6V-8398**	2	SEAL-O-RING	
		1	**6V-8782**	1	TEE	
	13	1	*155-7321*	2	ADAPTER AS	
					(EACH INCLUDES)	
		1	**3D-2824**	1	SEAL-O-RING	
		1	**6V-1722**	1	ADAPTER-O-RING	
M	14	1	**8T-6870**	2	BOLT (M8X1.25X70-MM)	
	15	1	*187-2120*	2	ELBOW AS	
					(EACH INCLUDES)	
		1	**4J-5477**	1	SEAL-O-RING	
		1	**8C-8408**	1	ELBOW	
	16	1	**7K-1181**	1	STRAP-CABLE	
	17	1	**8T-4224**	2	WASHER-HARD (8.8X16X2-MM THK)	

I-REFER TO HYDRAULIC INFORMATION SYSTEM
M-METRIC PART

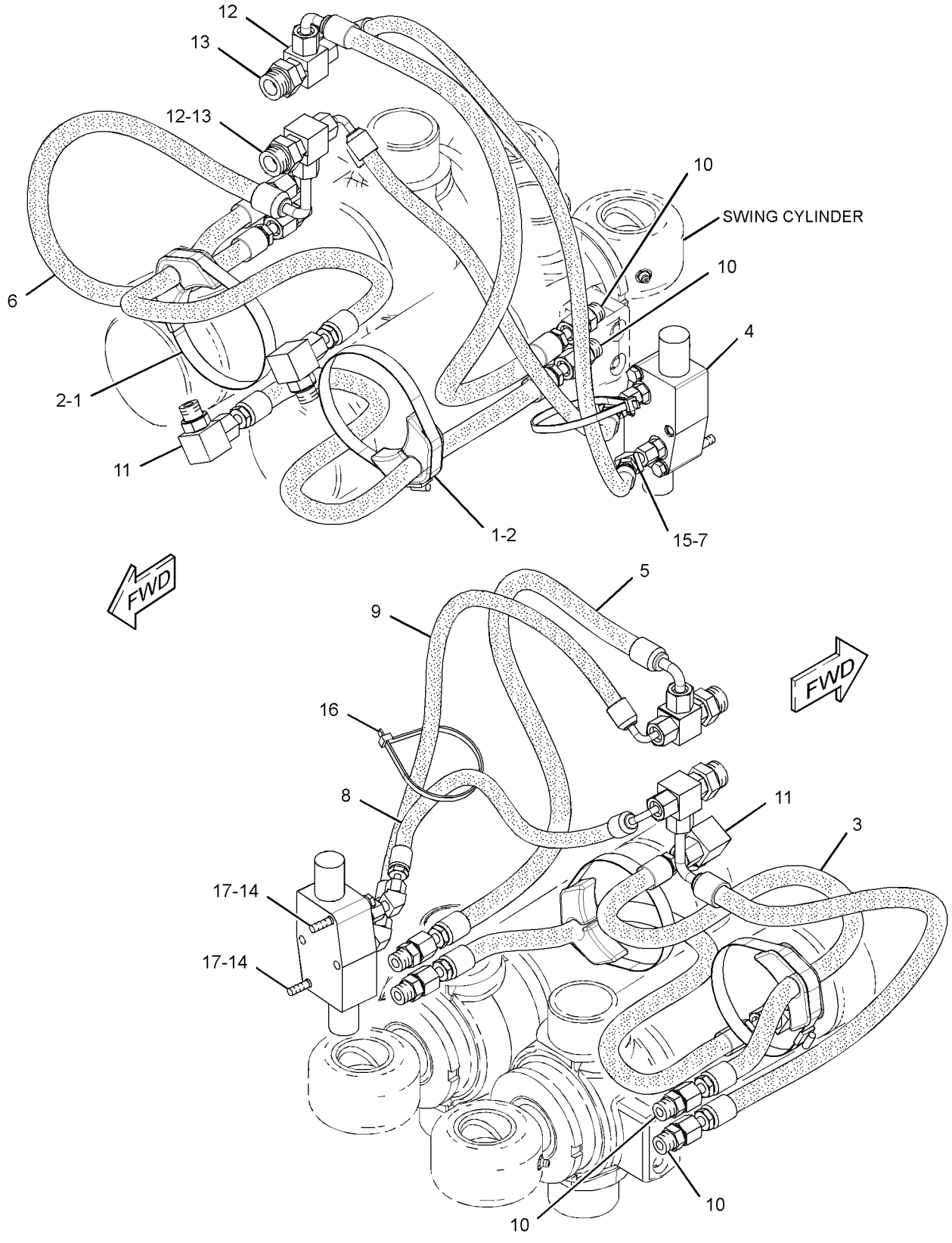

GRAPHIC #1 **<END>** g01376459

HYDRAULIC SYSTEM

246-5295 LINES GP-TILT CYLINDER

S/N: HLS1-99999

PART OF 213-9300 LOADER AR

SMCS-5057, 5104 **i03304162**

NOTE	REF NO	GRAPHIC REF	PART NUMBER	QTY	PART NAME 1 2 3 4 5 6 (PRODUCT LEVEL)	SEE PAGE
	1	1	**7K-1181**	1	STRAP-CABLE	
I	2	1	**201-3340**	2	HOSE AS	
I	3	1	**201-3341**	2	HOSE AS	
	4	1	**295-8495**	1	TUBE AS	
	5	1	**295-8496**	1	TUBE AS	
	6	1	**288-9954**	1	TUBE AS	
	7	1	**201-4756**	1	GROMMET	
	8	1	**232-3277**	1	BRACKET AS	
	9	1	**244-3957**	1	TUBE AS	
	10	1	**251-1746**	1	TUBE AS	
	11	1	**252-0096**	1	TUBE AS	
	12	1	**254-7271**	1	PLATE AS	
	13	1	*148-8341*	2	CONNECTOR AS	
					(EACH INCLUDES)	
		1	**3D-2824**	1	SEAL-O-RING	
		1	**6V-8713**	1	CONNECTOR	
		1	**7J-9108**	1	SEAL-O-RING	
	14	1	*148-8388*	1	ELBOW AS	
		1	**2M-9780**	1	SEAL-O-RING	
		1	**6V-8629**	1	ELBOW	
		1	**6V-9746**	1	SEAL-O-RING	
	15	1	*150-3035*	2	ELBOW AS	
					(EACH INCLUDES)	
		1	**6V-9746**	1	SEAL-O-RING	
		1	**8T-1718**	1	ELBOW	
	16	1	**239-4232**	4	CLIP (SLOT)	
	17	1	**239-4235**	2	CLIP (TAB)	
	18	1	**7J-9108**	8	SEAL-O-RING	
	19	1	**8T-1887**	8	CLIP (SLOT)	
	20	1	**8T-1888**	8	CLIP (TAB)	
	21	1	**8T-4121**	10	WASHER-HARD (11X21X2.5-MM THK)	
M	22	1	**8T-4136**	5	BOLT (M10X1.5X25-MM)	
M	23	1	**8T-4195**	2	BOLT (M10X1.5X30-MM)	
M	24	1	**8T-4196**	1	BOLT (M10X1.5X35-MM)	

I-REFER TO HYDRAULIC INFORMATION SYSTEM
M-METRIC PART

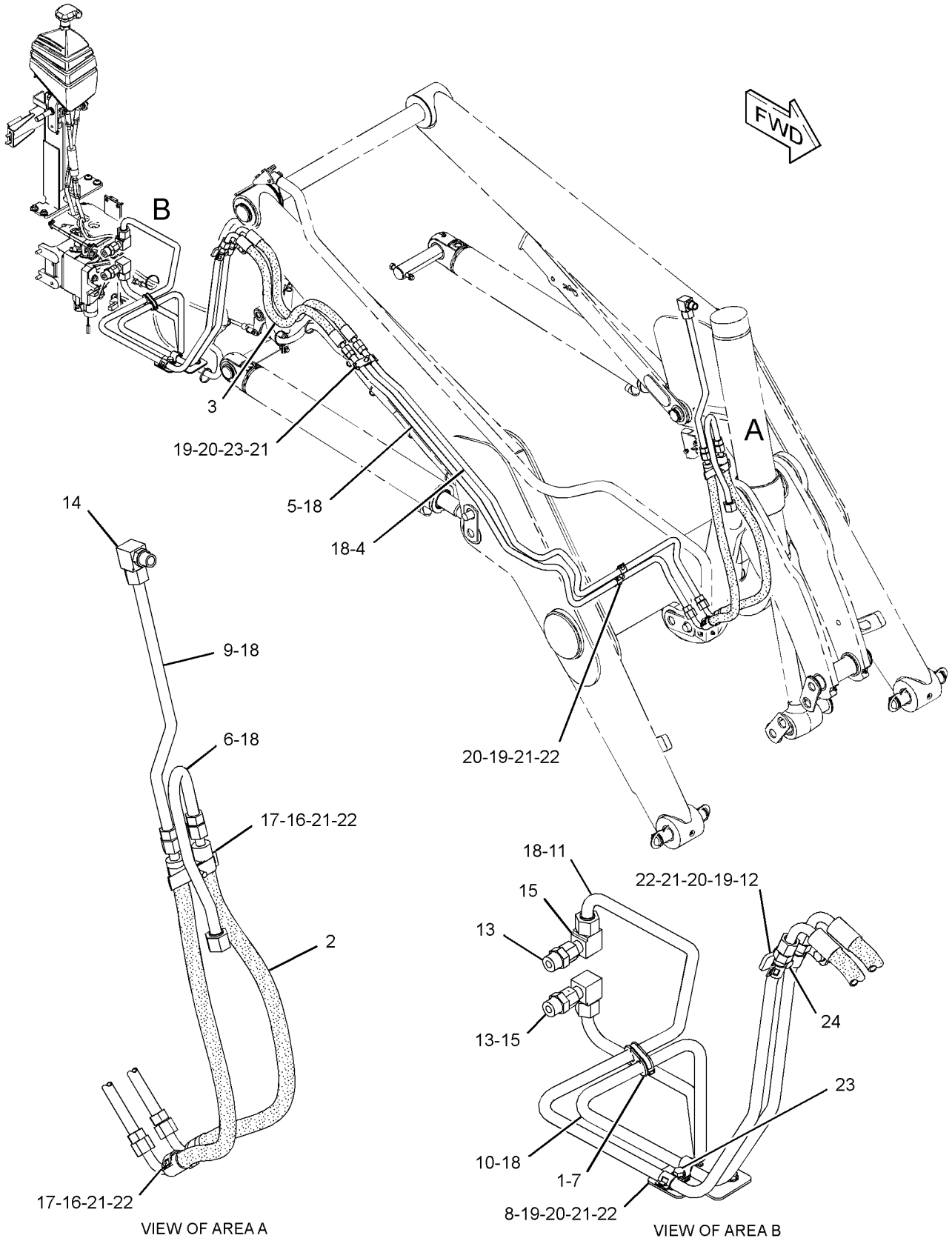

VIEW OF AREA A

VIEW OF AREA B

GRAPHIC #1

<END>

g01336652

HYDRAULIC SYSTEM

179-3543 MANIFOLD & SOLENOID GP-CONTROL

S/N: HLS1-99999
PART OF 269-1066, 269-1067 VALVE GP-CONTROL
AN ATTACHMENT

SMCS-5264, 5479 **i03514722**

NOTE	REF NO	GRAPHIC REF	PART NUMBER	QTY	PART NAME 1 2 3 4 5 6 (PRODUCT LEVEL)	SEE PAGE
Y	1	1	**185-4254**	2	VALVE GP-SOLENOID (12-VOLT) (AUXILIARY)	556

Y-SEPARATE ILLUSTRATION

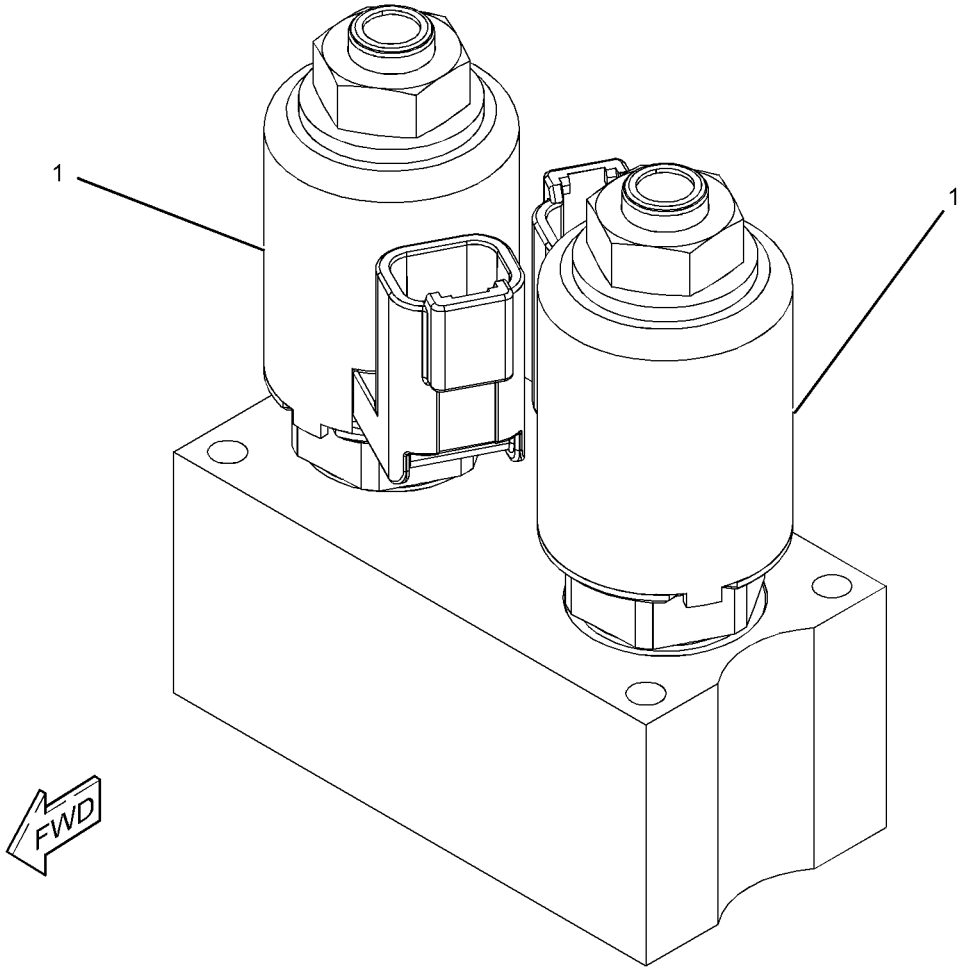

GRAPHIC #1 **<END>** g01220715

257-7724 MANIFOLD & SOLENOID GP-CONTROL–
BOOM, STICK, PATTERN SWITCH
S/N: HLS1-99999
PART OF 266-2556 VALVE GP-BANK 6, 266-2557 VALVE GP-BANK 7, 266-2558 VALVE GP-BANK 8
AN ATTACHMENT

SMCS-5264, 5479 **i02699083**

NOTE	REF NO	GRAPHIC REF	PART NUMBER	QTY	PART NAME 1 2 3 4 5 6 (PRODUCT LEVEL)	SEE PAGE
J	1	1	**240-6866**	2	VALVE GP-SOLENOID	
					(EACH INCLUDES)	
		1	**238-4626**	1	COIL AS	
M	2	1	**095-0642**	4	BOLT-SOCKET HEAD (M5X0.8X50-MM)	
	3	1	**3D-2992**	2	SEAL	
	4	1	**6M-5062**	2	SEAL-O-RING	
	5	1	**2D-6392**	4	SEAL-O-RING	
					AVAILABLE REPAIR KIT(S):	
J			**106-3108**	1	KIT-SEAL	

J-KIT MARKED J AVAILABLE FOR PART MARKED J
M-METRIC PART

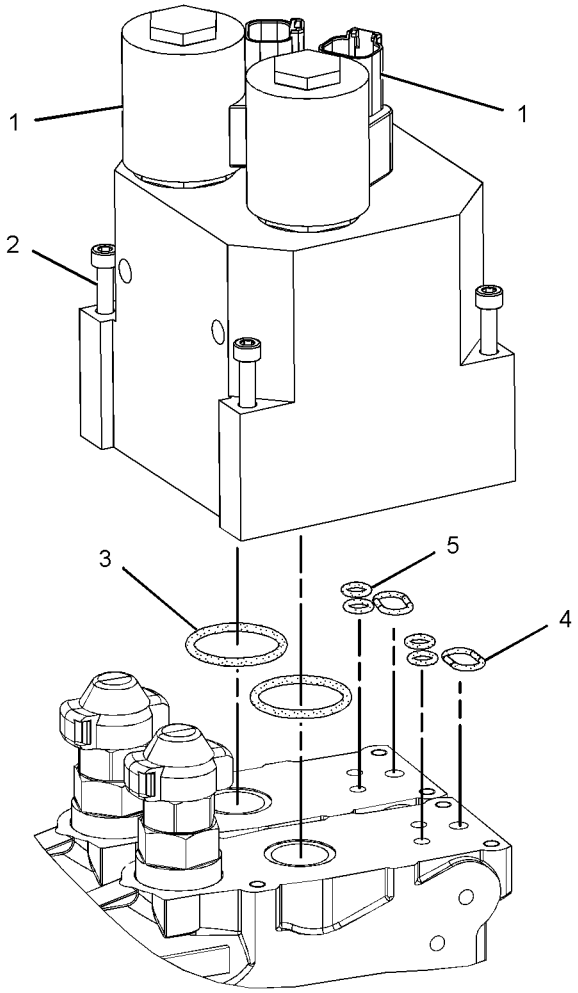

GRAPHIC #1 **<END>** g01356664

269-1060 MANIFOLD & SOLENOID GP-CONTROL–INLET

S/N: HLS1-99999

PART OF 266-2556 VALVE GP-BANK 6, 266-2557 VALVE GP-BANK 7, 266-2558 VALVE GP-BANK 8

AN ATTACHMENT

SMCS-5264, 5479 **i02841310**

NOTE	REF NO	GRAPHIC REF	PART NUMBER	QTY	PART NAME 1 2 3 4 5 6 (PRODUCT LEVEL)	SEE PAGE
J	1	1	**257-0464**	1	VALVE GP-PRESSURE REDUCING	
	1A	1	**257-0465**	1	CAP-PROTECTION	
	2	1	**257-0440**	1	MANIFOLD GP-CONTROL (INLET)	
	3	1	**227-1189**	1	SCREEN (PILOT)	
	4	1	**9S-8004**	2	PLUG-O-RING	
	5	1	**3J-1907**	2	SEAL-O-RING	
L	6	1	**200-6210**	1	VALVE GP-SOLENOID	
		1	**212-0061**	1	FLANGE	
M	7	1	**6V-8202**	1	BOLT-SOCKET HEAD (M8X1.25X16-MM)	
					AVAILABLE REPAIR KIT(S):	
J			**236-5753**	1	KIT-SEAL (HYDRAULIC VALVE)	
					(INCLUDES RINGS & SEALS)	
L			**200-2371**	1	KIT-SEAL (SOLENOID VALVE)	
					(INCLUDES SEALS)	

J-KIT MARKED J AVALIBLE FOR PART MARKED J
L-KIT MARKED L AVALIBLE FOR PART MARKED L
M-METRIC PART

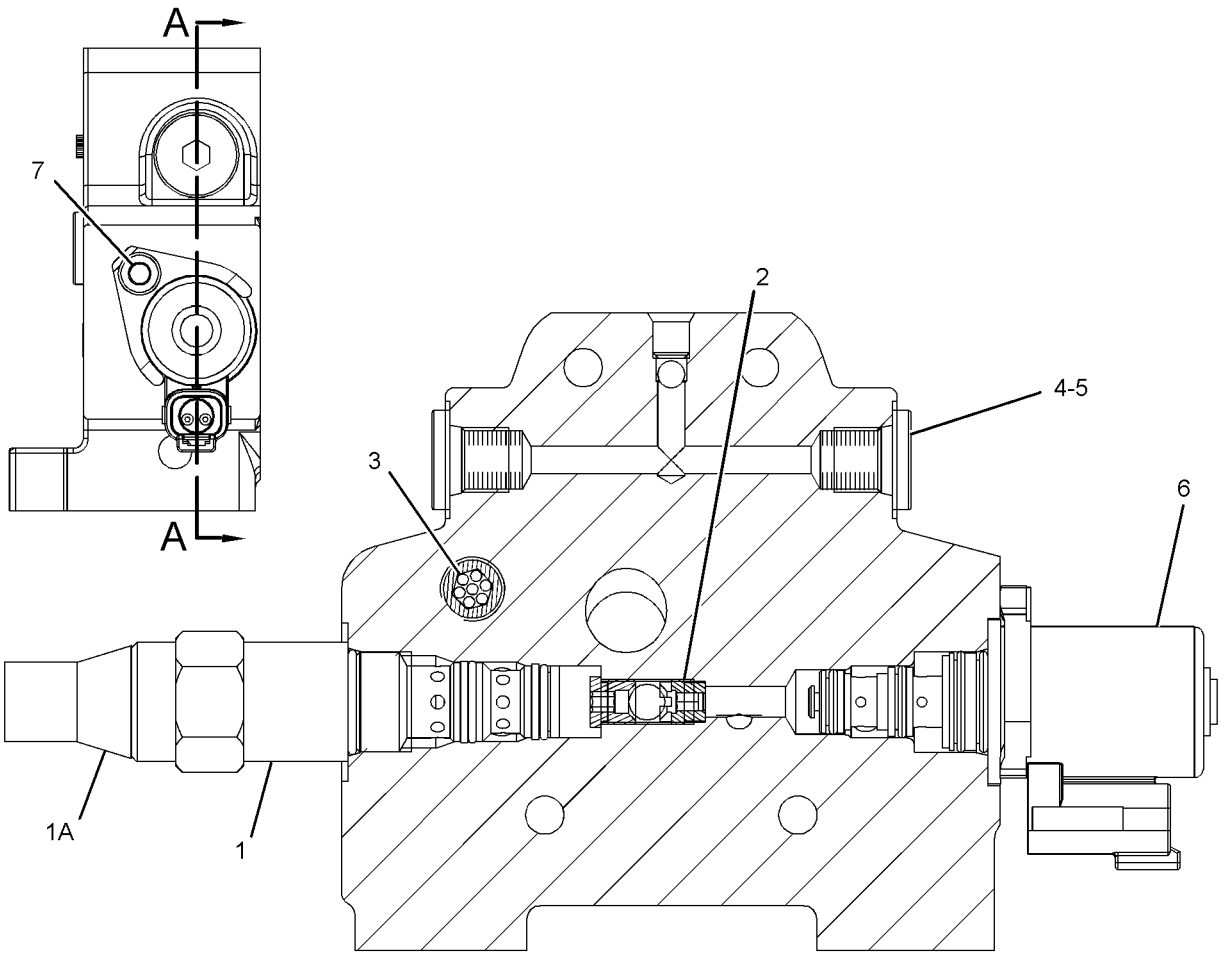

SECTION A-A

GRAPHIC #1 **<END>** g01424691

269-1059 MANIFOLD GP-CONTROL–OUTLET

S/N: HLS1-99999
PART OF 266-2556 VALVE GP-BANK 6, 266-2557 VALVE GP-BANK 7, 266-2558 VALVE GP-BANK 8
AN ATTACHMENT

SMCS-5264 **i03167362**

NOTE	REF NO	GRAPHIC REF	PART NUMBER	QTY	PART NAME 1 2 3 4 5 6 (PRODUCT LEVEL)	SEE PAGE
	1	1	**330-3979**	1	VALVE GP-RELIEF (OUTLET)	
	2	1	**227-1185**	1	VALVE GP-FLOW CONTROL (AUXILIARY, INLET)	
	3	1	**292-8989**	1	VALVE AS-RELIEF (FLUSHING)	
		1	**099-8232**	1	SEAL-O-RING	
	4	1	**257-7725**	1	PLUG GP-CONTROL MANIFOLD	
		1	**6F-4855**	1	SEAL-O-RING	
	5	1	**9S-8005**	2	PLUG-O-RING	
	6	1	**3K-0360**	2	SEAL-O-RING	
	7	1	**227-1197**	1	FILTER ELEMENT-OIL (FLOW REGULATOR)	
	8	1	**257-0468**	1	CAP-PROTECTION	

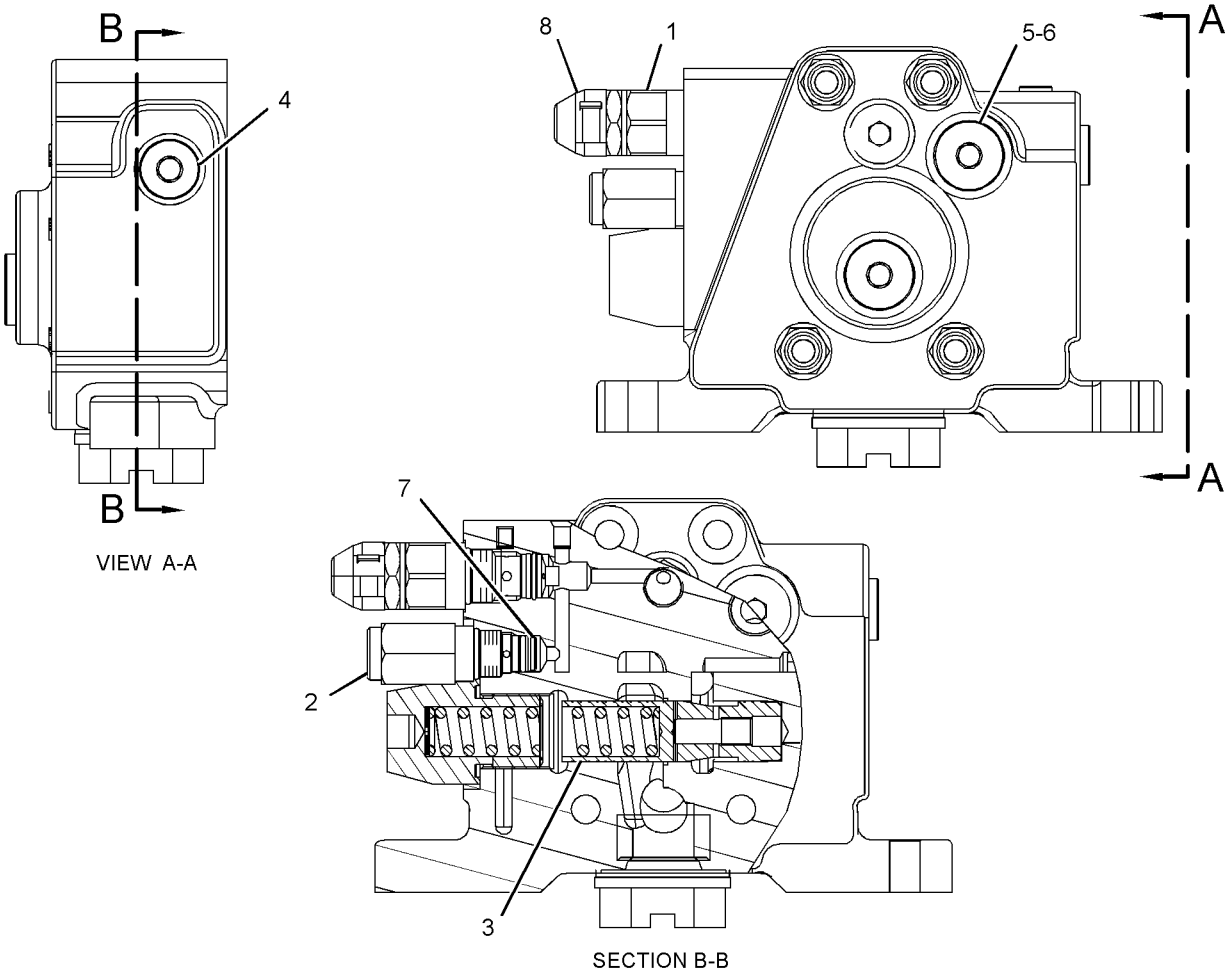

GRAPHIC #1 **<END>** g01341672

HYDRAULIC SYSTEM

269-1080 MANIFOLD GP-CONTROL–INLET

S/N: HLS1-99999
PART OF 266-2552 VALVE GP-BANK 2, 266-2553 VALVE GP-BANK 3
AN ATTACHMENT

SMCS-5264 **i03516000**

NOTE	REF NO	GRAPHIC REF	PART NUMBER	QTY	PART NAME 1 2 3 4 5 6 (PRODUCT LEVEL)	SEE PAGE
	1	1	**227-1194**	1	KIT-VALVE (FLOW REGULATOR)	
					(INCLUDES SEAL-O-RING & KIT-VALVE)	
	2	1	**227-1192**	1	KIT-VALVE (SHUTTLE)	
	3	1	**330-3979**	1	VALVE GP-RELIEF (INLET)	
	4	1	**257-7721**	1	VALVE GP-CHECK	
	5	1	**257-0468**	1	CAP-PROTECTION	

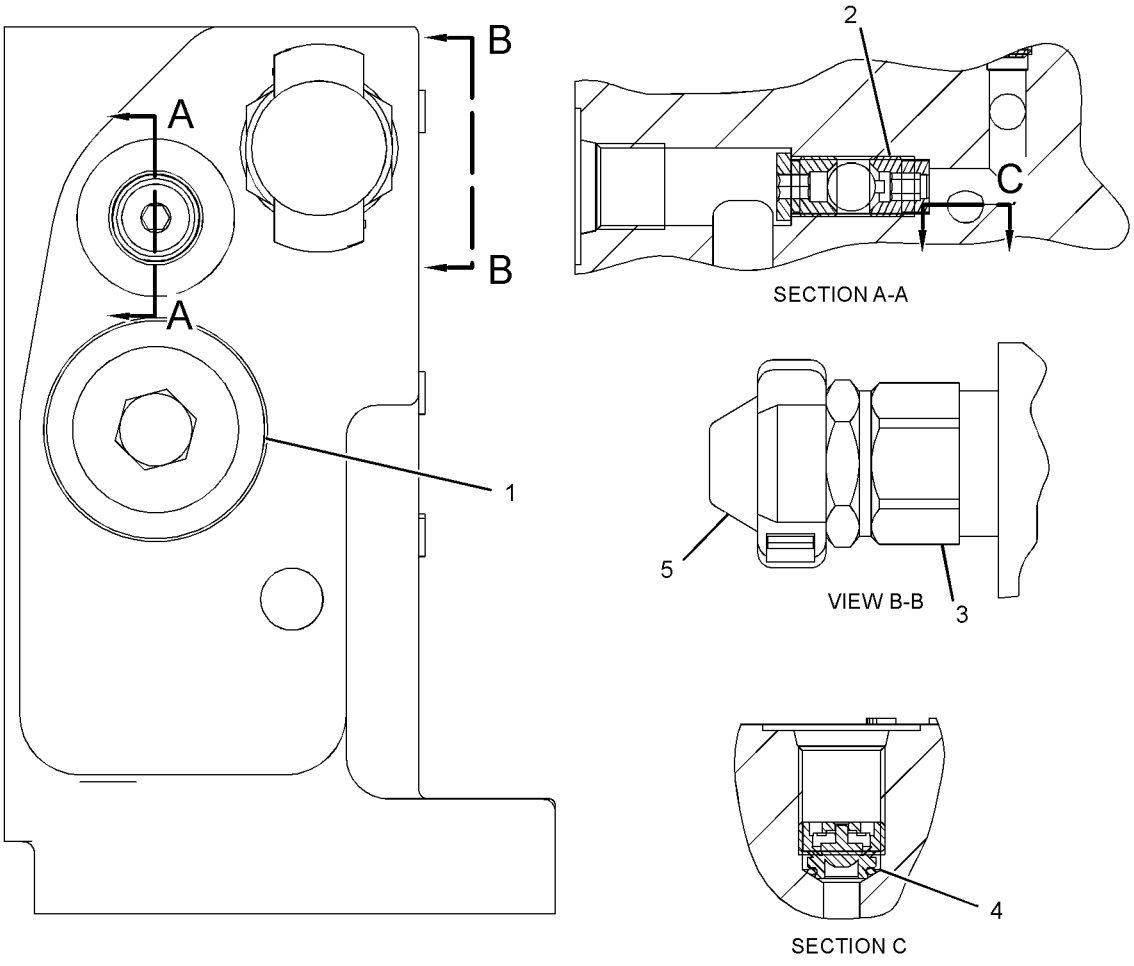

GRAPHIC #1 **<END>** g01226131

HYDRAULIC SYSTEM

245-8780 MANIFOLD GP-RIDE CONTROL

S/N: HLS1-99999

PART OF 264-0187 INSTALLATION GP-RIDE CONTROL, 246-9802 LINES GP-RIDE CONTROL

AN ATTACHMENT

SMCS-5264 **i03549600**

NOTE	REF NO	GRAPHIC REF	PART NUMBER	QTY	PART NAME 1 2 3 4 5 6 (PRODUCT LEVEL)	SEE PAGE
J	1	1	**249-3124**	1	VALVE GP-SOLENOID (RIDE CONTROL, SWITCH)	
L	2	1	**249-3125**	1	VALVE GP-SOLENOID (ACCUMULATOR)	
	3	1	**238-4628**	2	COIL AS	
					AVAILABLE REPAIR KIT(S):	
J			**141-0888**	1	KIT-SEAL	
					(INCLUDES SEAL-O-RINGS & BACK-UP RING)	
L			**227-5509**	1	KIT-SEAL	

J-KIT MARKED J AVAILABLE FOR PART MARKED J
L-KIT MARKED L AVAILABLE FOR PART MARKED L

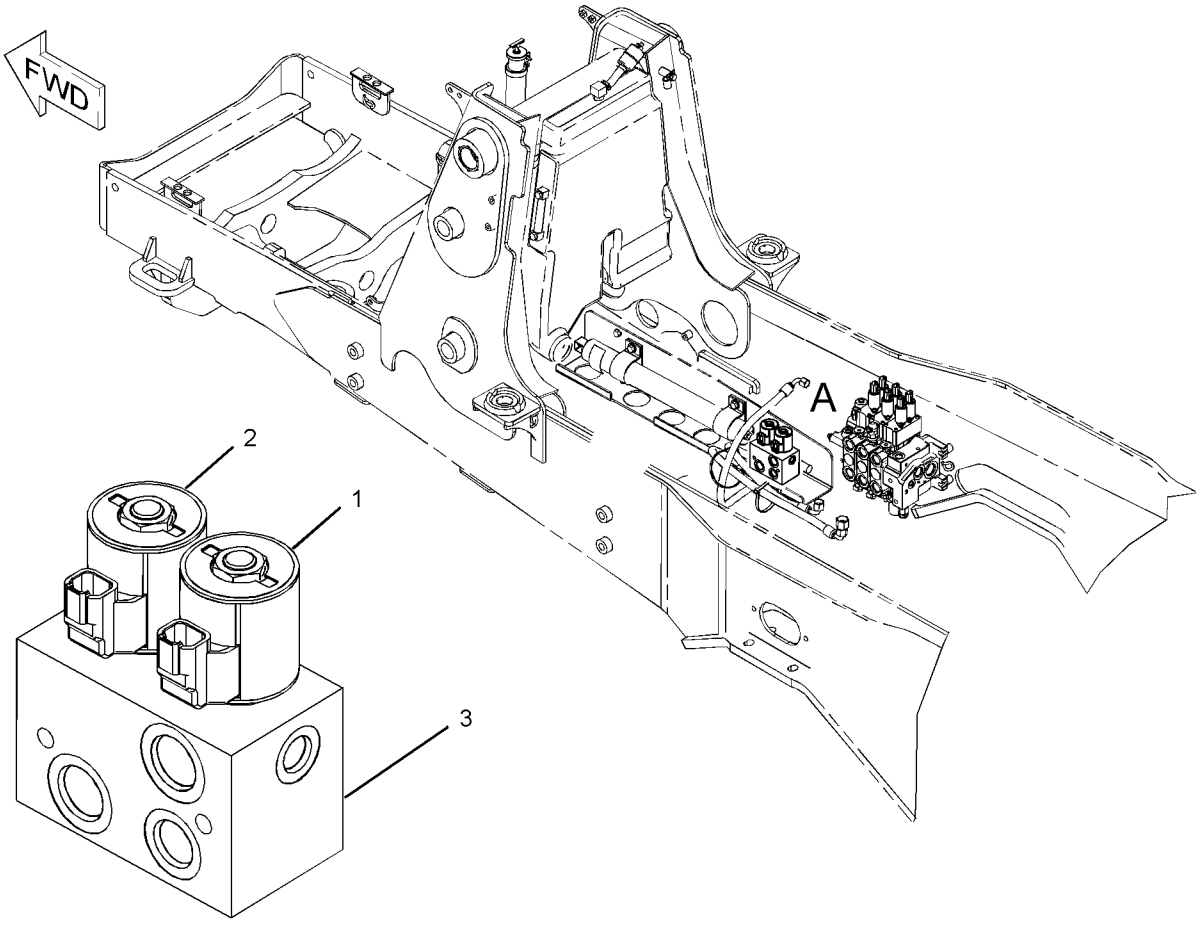

VIEW OF AREA A

GRAPHIC #1 **<END>** g01094840

HYDRAULIC SYSTEM

245-8765 MOUNTING GP-BANK VALVE

S/N: HLS1-99999

PART OF 269-2146 VALVE AR-BANK 6, 269-2147 VALVE AR-BANK 7, 269-2148 VALVE AR-BANK 8

AN ATTACHMENT

SMCS-5051 **i02449641**

NOTE	REF NO	GRAPHIC REF	PART NUMBER	QTY	PART NAME 1 2 3 4 5 6 (PRODUCT LEVEL)	SEE PAGE
	1	1	**245-8766**	1	BRACKET AS	
	2	1	**8T-4121**	3	WASHER-HARD (11X21X2.5-MM THK)	
M	3	1	**8T-4182**	2	BOLT (M10X1.5X45-MM)	
M	4	1	**8T-4195**	1	BOLT (M10X1.5X30-MM)	
	5	1	**8T-4223**	3	WASHER-HARD (13.5X25.5X3-MM THK)	
M	6	1	**8T-4184**	3	BOLT (M12X1.75X45-MM)	

M-METRIC PART

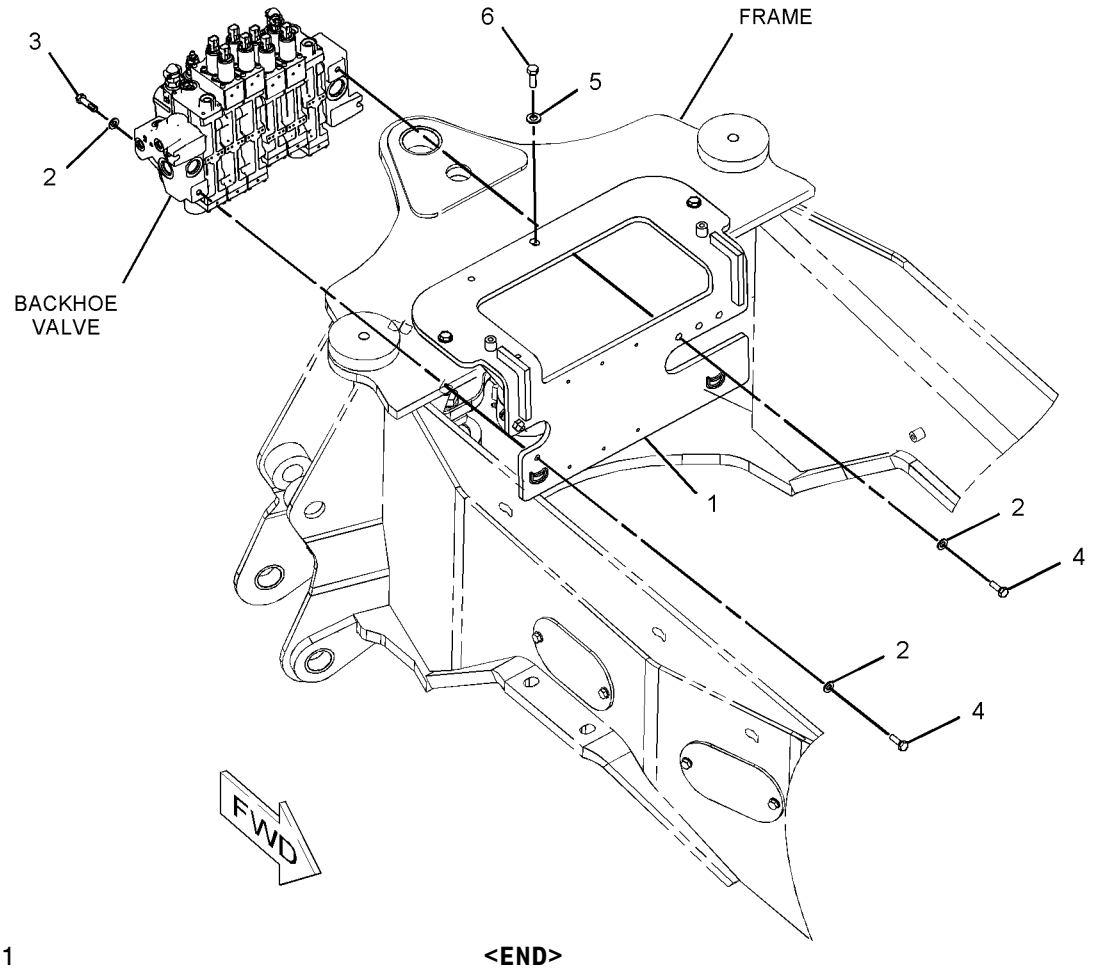

GRAPHIC #1 **<END>** g01077768

221-4265 MOUNTING GP-CYLINDER–THUMB

S/N: HLS1-99999
PART OF 221-4260 THUMB AR
AN ATTACHMENT

SMCS-5102, 6068, 7562 **i02445754**

NOTE	REF NO	GRAPHIC REF	PART NUMBER	QTY	PART NAME 1 2 3 4 5 6 (PRODUCT LEVEL)	SEE PAGE
	1	1	**9R-1510**	8	WASHER (51X82X4-MM THK)	
	2	1	**221-4295**	1	PIN	
	3	1	**221-4296**	1	PIN	
	4	1	**221-4297**	1	PIN	
	5	1	**221-4315**	1	STOP AS	
	6	1	**221-4316**	1	BRACKET AS	
	7	1	**3B-5319**	2	PIN-COTTER	
	8	1	**6V-3213**	2	RING-RETAINING	
M	9	1	**6V-9189**	1	LOCKNUT (M8X1.25-THD)	
M	10	1	**8T-3647**	1	BOLT (M8X1.25X80-MM)	
	11	1	**9R-0158**	2	WASHER (46X69X3-MM THK)	

M-METRIC PART

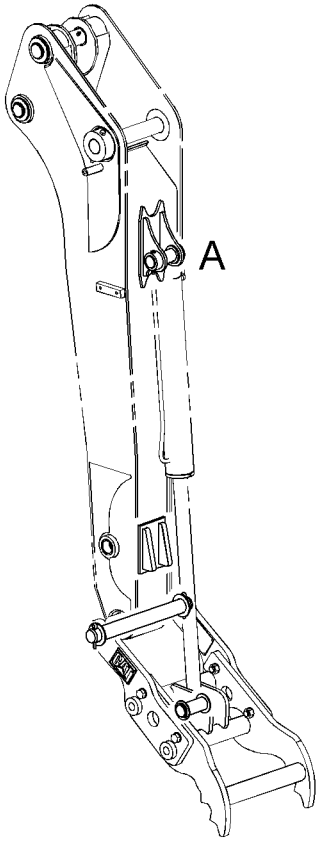

HYDRAULIC CYLINDER
STANDARD STICK

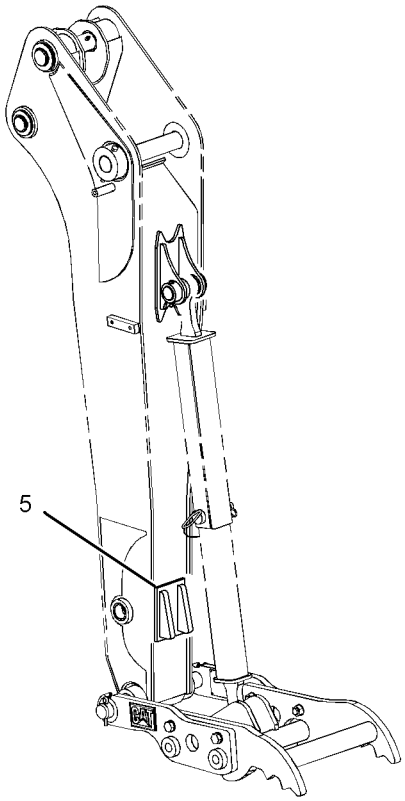

ADJUSTABLE LINK
STANDARD STICK

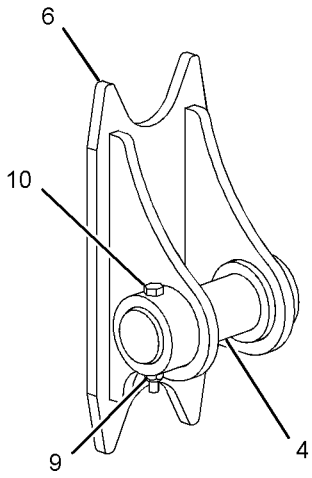

VIEW OF AREA A

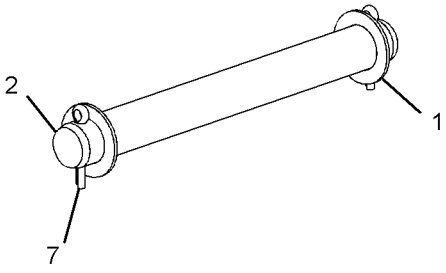

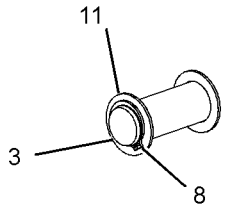

VIEW OF AREA B

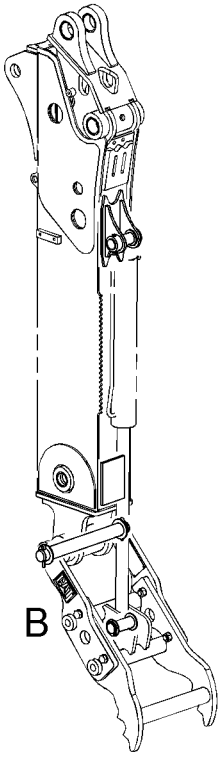

HYDRAULIC CYLINDER
EXTENDABLE STICK

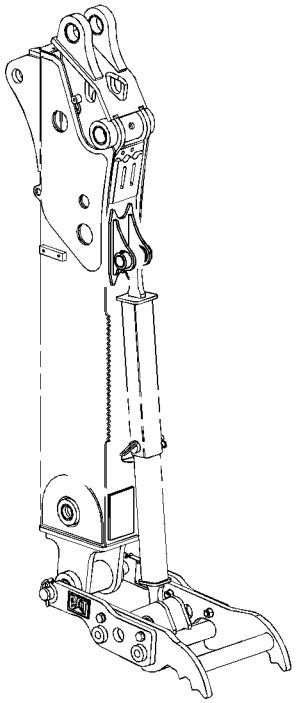

ADJUSTABLE LINK
EXTENDABLE STICK

GRAPHIC #1 **<END>** g01224751

263-8577 MOUNTING GP-CYLINDER–THUMB

S/N: HLS1-99999
PART OF 271-3023 THUMB GP
AN ATTACHMENT

SMCS-5102, 6068, 7562 **i02894715**

NOTE	REF NO	GRAPHIC REF	PART NUMBER	QTY	PART NAME 1 2 3 4 5 6 (PRODUCT LEVEL)	SEE PAGE
B	1	1	**9R-1510**	24	WASHER (51X82X4-MM THK)	
	2	1	**221-4295**	1	PIN	
	3	1	**221-4296**	1	PIN	
	4	1	**270-3410**	1	PIN	
	5	1	**3B-5319**	2	PIN-COTTER	
	6	1	**6V-3213**	4	RING-RETAINING (EXTERNAL)	
BM	7	1	**6V-7744**	1	LOCKNUT (M10X1.5-THD)	
BM	8	1	**8T-6685**	1	BOLT (M10X1.5X110-MM)	
B	9	1	**9R-0158**	6	WASHER (46X69X3-MM THK)	

B-USE AS REQUIRED
M-METRIC PART

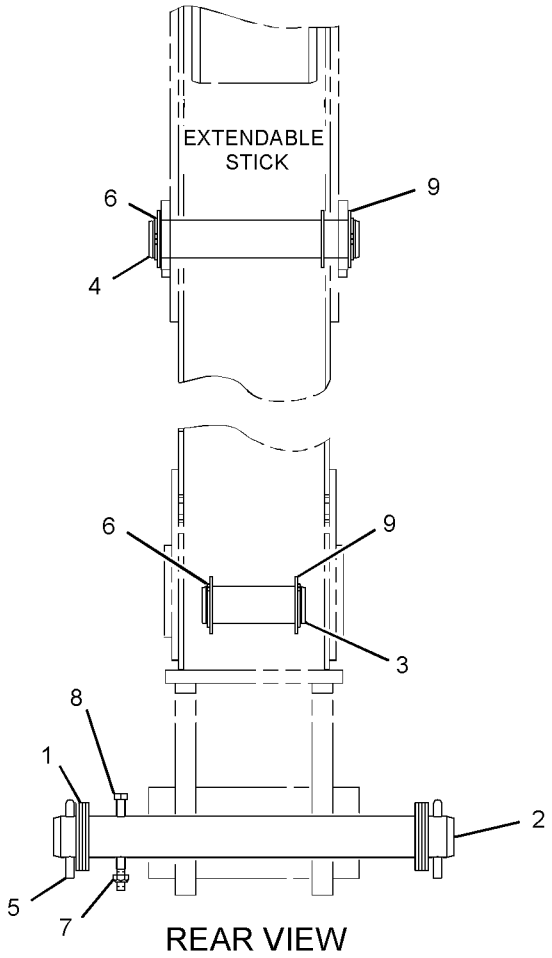

GRAPHIC #1 **<END>** g01445039

HYDRAULIC SYSTEM

246-9309 MOUNTING GP-LINES–BACKHOE

S/N: HLS1-99999

PART OF 214-2553, 291-9205 BACKHOE AR-EXTENDABLE STICK, 214-2550, 291-9204 BACKHOE AR-STANDARD STICK

AN ATTACHMENT

TYPE 1

SMCS-5057 **i02378922**

NOTE	REF NO	GRAPHIC REF	PART NUMBER	QTY	PART NAME 1 2 3 4 5 6 (PRODUCT LEVEL)	SEE PAGE
	1	1	**248-4274**	2	BLOCK	
	2	1	**248-4275**	2	BLOCK	
	3	1	**248-4276**	2	BLOCK	
	4	1	**248-4277**	2	PLATE	
	5	1	**8T-4121**	4	WASHER-HARD (11X21X2.5-MM THK)	
M	6	1	**8T-4196**	4	BOLT (M10X1.5X35-MM)	

M-METRIC PART

246-9309 **MOUNTING GP-LINES** *(contd.)* **i02378922**

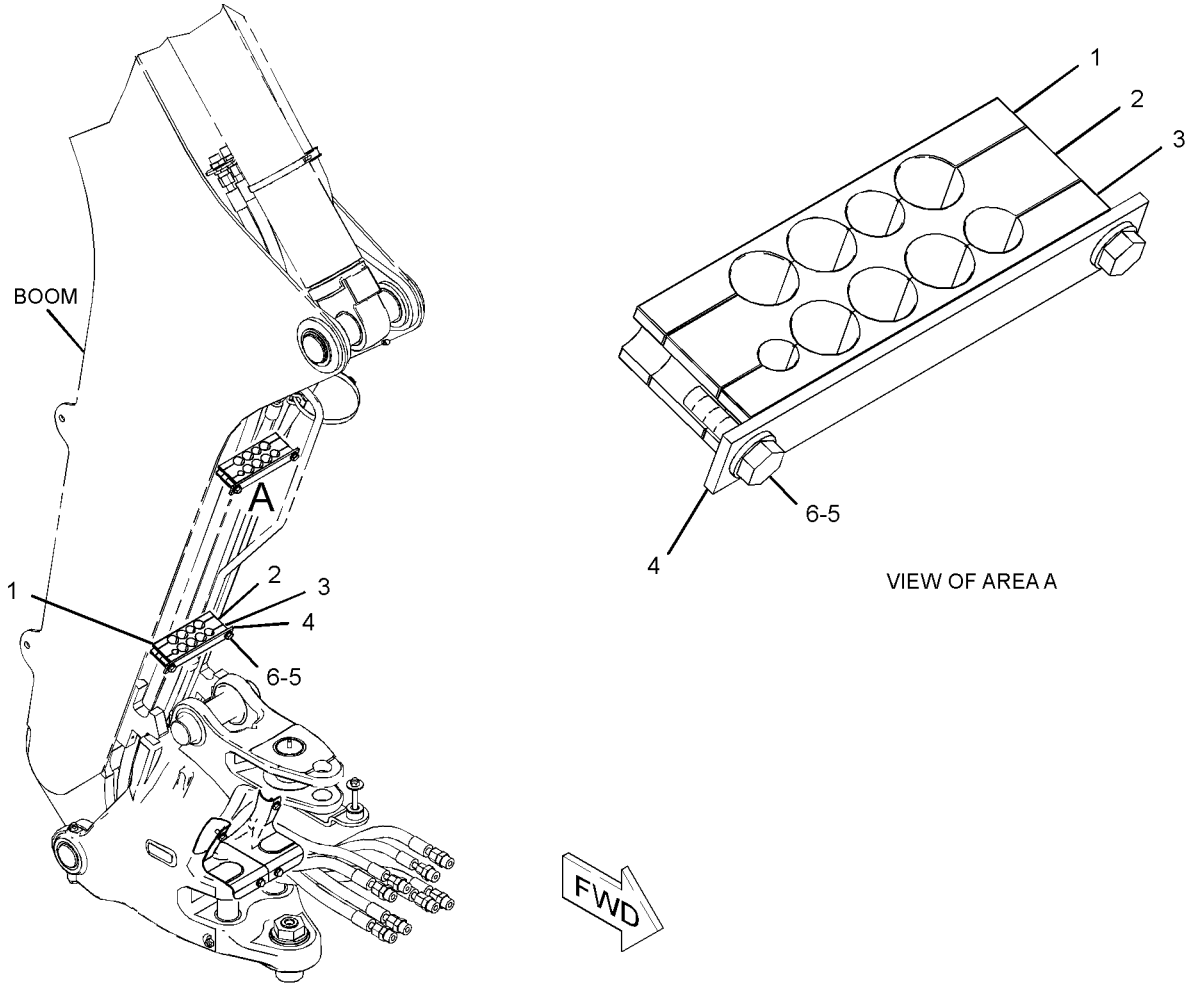

GRAPHIC #1 **<END>** g01190731

246-9309 MOUNTING GP-LINES–BACKHOE

S/N: HLS1-99999
PART OF 214-2553, 291-9205 BACKHOE AR-EXTENDABLE STICK, 214-2550, 291-9204 BACKHOE AR-STANDARD STICK
AN ATTACHMENT
TYPE 2

SMCS-5057 **i03383080**

NOTE	REF NO	GRAPHIC REF	PART NUMBER	QTY	PART NAME 1 2 3 4 5 6 (PRODUCT LEVEL)	SEE PAGE
	1	1	**248-4277**	2	PLATE	
C	2	1	**311-2513**	2	BLOCK	
C	3	1	**311-2514**	2	BLOCK	
C	4	1	**311-2515**	2	BLOCK	
	5	1	**8T-4121**	4	WASHER-HARD (11X21X2.5-MM THK)	
M	6	1	**8T-4196**	4	BOLT (M10X1.5X35-MM)	

C-CHANGE FROM PREVIOUS TYPE
M-METRIC PART

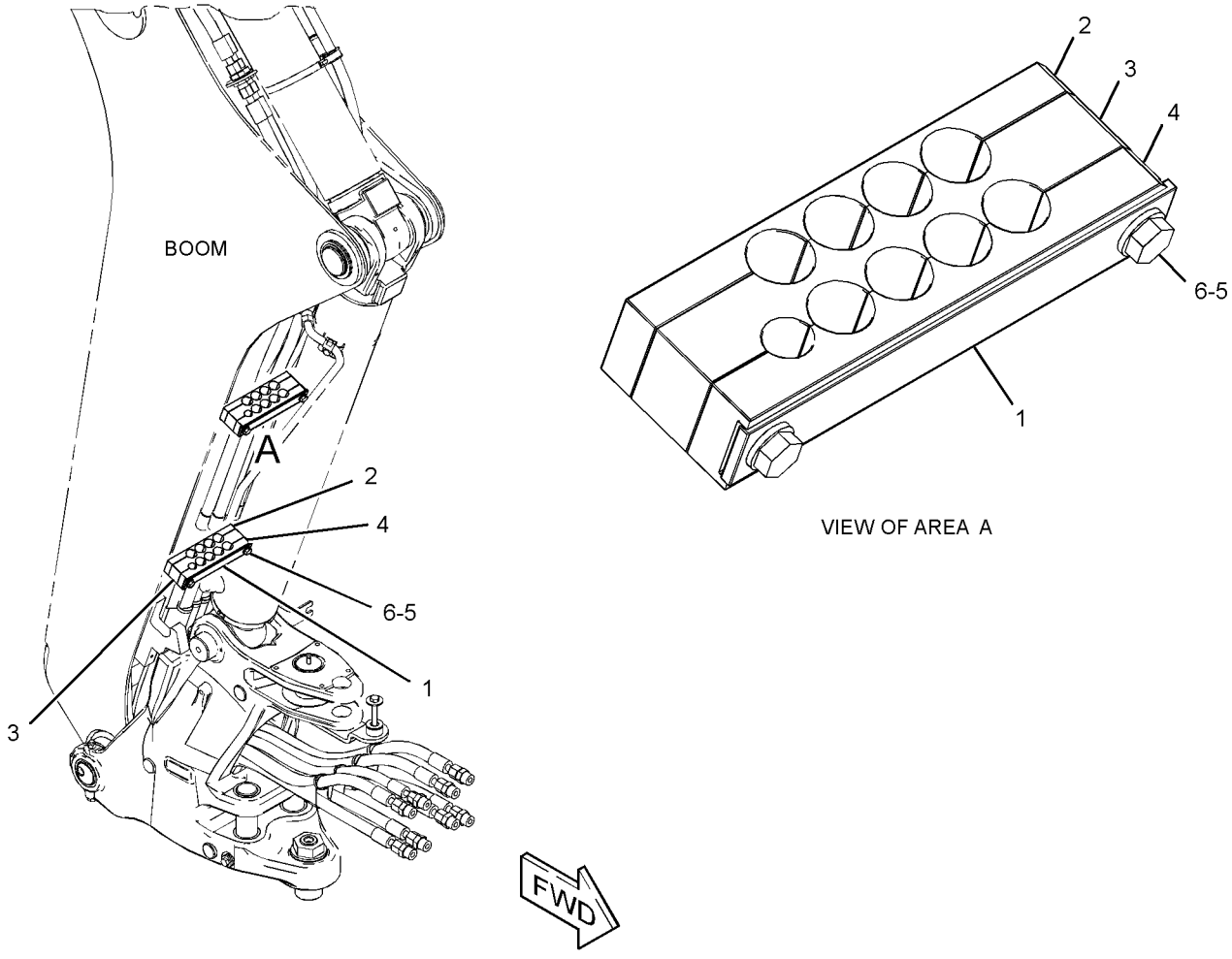

GRAPHIC #1 **<END>** g01807197

267-2755 PUMP GP-PISTON*R

S/N: HLS1-99999

PART OF 268-6455 HYDRAULIC AR

SMCS-5070 **i03527874**

NOTE	REF NO	GRAPHIC REF	PART NUMBER	QTY	PART NAME 1 2 3 4 5 6 (PRODUCT LEVEL)	SEE PAGE
	1	1	**280-7869**	1	VALVE GP-PUMP CONTROL (PRESSURE, FLOW COMPENSATOR)	
		1	**6E-6528**	2	SEAL	
M		1	**8T-8442**	4	BOLT-SOCKET HEAD (M6X1X30-MM)	
		1	**033-6043**	2	SEAL-O-RING	
		1	**280-7870**	1	GASKET	
Y	2	1	**6E-4006**	1	ROTATING GP-PUMP	517
	3	1	**6E-4004**	2	SEAL-SHAFT	
	4	1	**180-6213**	1	RING-RETAINING	
	5	1	**162-1604**	1	SHAFT-DRIVE	
	6	1	**3B-5790**	1	CUP-BEARING	
	7	1	**6V-2323**	1	CONE-BEARING	
	8	1	**1P-6872**	1	CUP-BEARING	
	9	1	**109-1779**	1	CONE-BEARING	
	10	1	**6E-4003**	2	BEARING	
	11	1	**262-0347**	1	KIT-PUMP	
					(INCLUDES PISTONS, GUIDES & SPRING)	
	12	1	**173-0639**	1	SWASHPLATE AS	
	13	1	**033-6028**	1	SEAL-O-RING	
	14	1	**153-4906**	1	SEAL-O-RING	
	15	1	**9S-8004**	1	PLUG-O-RING	
	16	1	**2M-9780**	1	SEAL-O-RING	
	17	1	**3E-6770**	1	SEAL-O-RING	
	18	1	**3E-6769**	4	SEAL-O-RING	
	19	1	**263-5516**	1	VALVE GP-SOLENOID (LOAD SENSING PRESSURE)	
		1	**217-3875**	1	SEAL-O-RING	
		1	**247-7054**	1	COLLAR-LOCKING	
		1	**251-2429**	1	KIT-SEAL (SOLENOID VALVE)	
					(INCLUDES SEALS)	
		1	**282-6944**	1	COIL AS	
Y	20	1	**299-3932**	1	VALVE GP-PUMP CONTROL (POWER COMPENSATOR)	555
	21	1	**280-7868**	1	TUBE AS	
	22	1	**280-7872**	1	TUBE AS	
	23	1	**173-0641**	1	PLUG-FILTER	

M-METRIC PART
Y-SEPARATE ILLUSTRATION

267-2755 PUMP GP-PISTON *(contd.)* i03527874

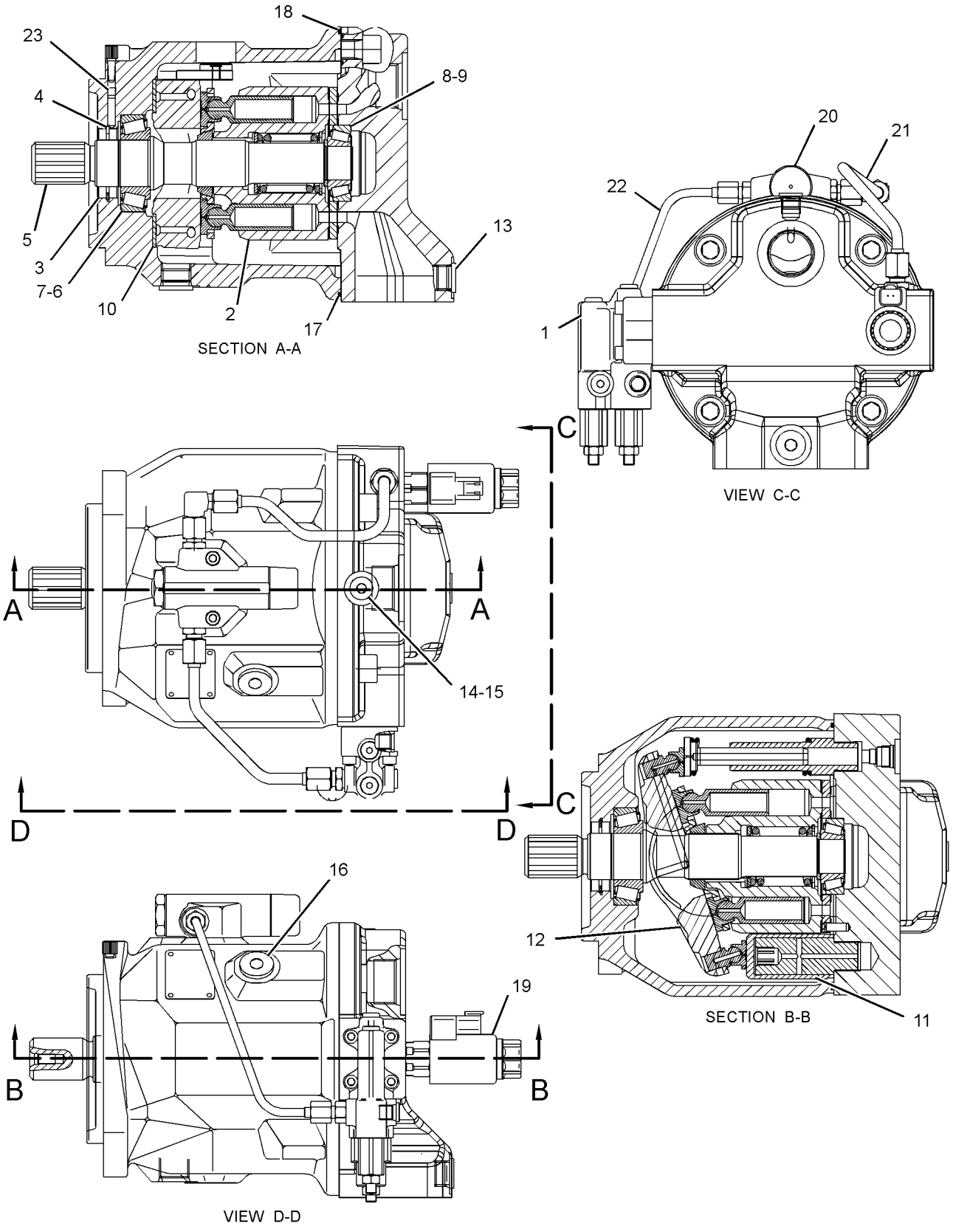

GRAPHIC #1 **<END>** g01231817

6E-4006 ROTATING GP-PUMP

S/N: HLS1-99999

PART OF 267-2755 PUMP GP-PISTON

SMCS-5070 **i03008659**

NOTE	REF NO	GRAPHIC REF	PART NUMBER	QTY	PART NAME 1 2 3 4 5 6 (PRODUCT LEVEL)	SEE PAGE
	1	1	**235-5767**	9	PISTON AS	
	2	1	**6E-6154**	1	PLATE-RETRACTION	
	3	1	**6E-6155**	1	BEARING	
	4	1	**196-0226**	1	BARREL	
	5	1	**6E-3341**	1	SEAT-SPRING	
	6	1	**6E-4009**	1	SPRING	
	7	1	**6E-6158**	1	RING	
	8	1	**120-5724**	1	PLATE-VALVE	
	9	1	**168-3379**	3	PIN	

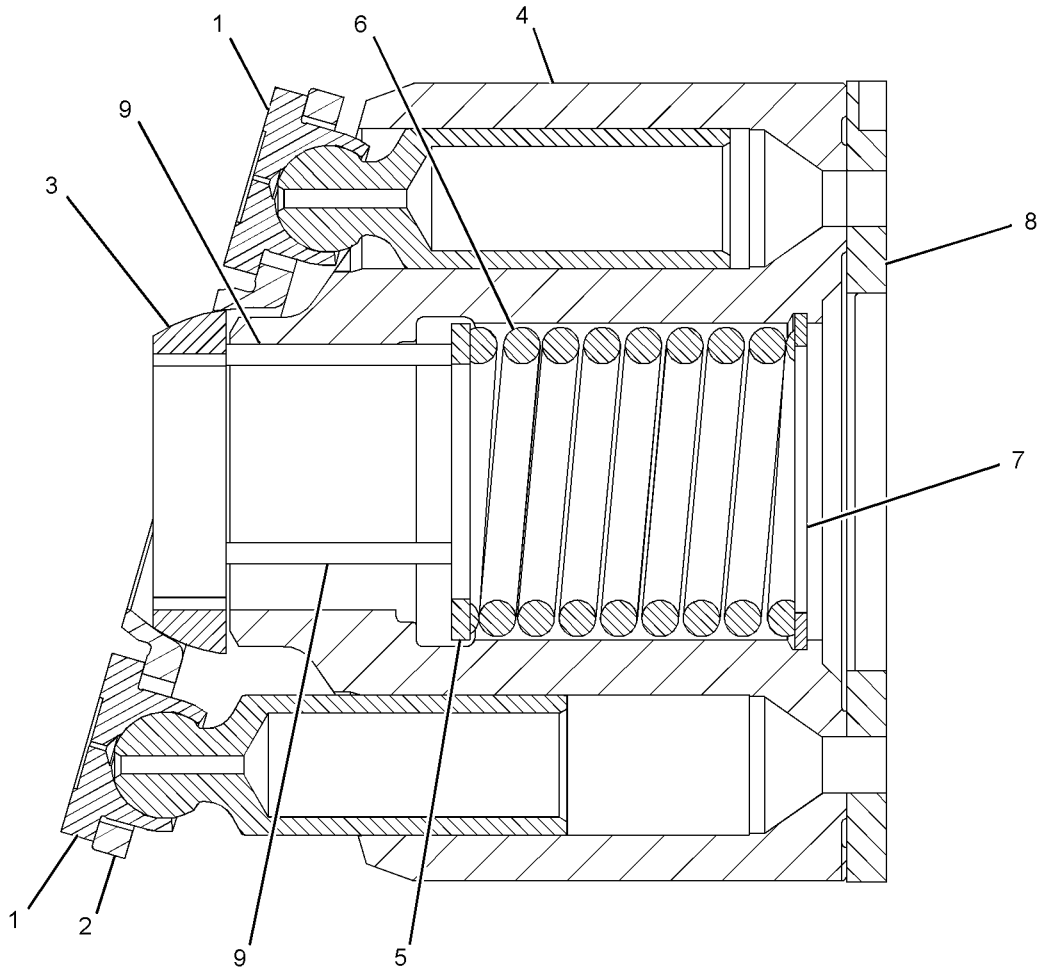

GRAPHIC #1 **<END>** g01441829

HYDRAULIC SYSTEM

128-5596 SHAFT GP-PUMP DRIVE

S/N: HLS1-99999
PART OF 112-1826 DRIVE & MTG GP-PUMP
AN ATTACHMENT

SMCS-3108 **i00512642**

NOTE	REF NO	GRAPHIC REF	PART NUMBER	QTY	PART NAME 1 2 3 4 5 6 (PRODUCT LEVEL)	SEE PAGE
	1	1	**130-8150**	1	RING-RETAINING	

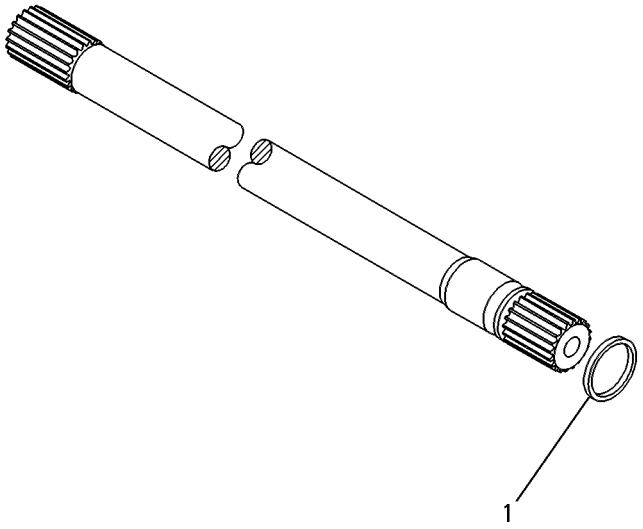

GRAPHIC #1 **<END>** g00131851

HYDRAULIC SYSTEM

245-8777 TANK & MTG GP-HYDRAULIC

S/N: HLS1-3741

PART OF 268-6455 HYDRAULIC AR

SMCS-5056 **i03527878**

NOTE	REF NO	GRAPHIC REF	PART NUMBER	QTY	PART NAME 1 2 3 4 5 6 (PRODUCT LEVEL)	SEE PAGE
	1	1	**1P-4278**	1	CLAMP-HOSE	
	2	1	**5D-1026**	2	CLAMP-HOSE	
E	3	1	**5P-1442**		HOSE (124-CM)	
E	4	1	**5P-1505**		HOSE (8-CM)	
	5	1	**9M-0164**	1	CLAMP-HOSE	
	6	1	**9R-9925**	1	FILTER ELEMENT-BREATHER (HYDRAULIC TANK)	
	7	1	**127-4471**	1	CLAMP-HOSE	
	8	1	**132-3056**	1	SEAL-O-RING	
	9	1	**210-7773**	1	BRACKET AS	
	10	1	**222-4067**	6	BOLT-SOCKET HEAD (M5X0.8X14-MM)	
	11	1	**234-6927**	1	HOSE	
	12	1	**293-4671**	1	TUBE AS	
	13	1	**235-5843**	1	DIFFUSER AS	
	14	1	**237-3797**	1	CAP-FILL (HYDRAULIC OIL)	
	15	1	*245-8778*	1	TANK GP-HYDRAULIC	
		1	**246-5286**	1	TANK	
		1	**253-8295**	1	GAUGE-SIGHT (FLUID LEVEL)	
	16	1	*150-3026*	1	ELBOW AS	
		1	**3K-0360**	1	SEAL-O-RING	
		1	**6V-4292**	1	ELBOW	
	17	1	**6D-3479**	1	CLIP	
	18	1	**8T-4121**	2	WASHER-HARD (11X21X2.5-MM THK)	
M	19	1	**8T-4137**	2	BOLT (M10X1.5X20-MM)	
	20	1	**7X-7729**	4	WASHER (11X25X3-MM THK)	
M	21	1	**8T-4139**	1	BOLT (M12X1.75X30-MM)	
M	22	1	**8T-4179**	3	BOLT (M12X1.75X20-MM)	
M	23	1	**8T-4191**	4	BOLT (M10X1.5X16-MM)	
	24	1	**8T-4223**	4	WASHER-HARD (13.5X25.5X3-MM THK)	

E-ORDER BY THE CENTIMETER
M-METRIC PART

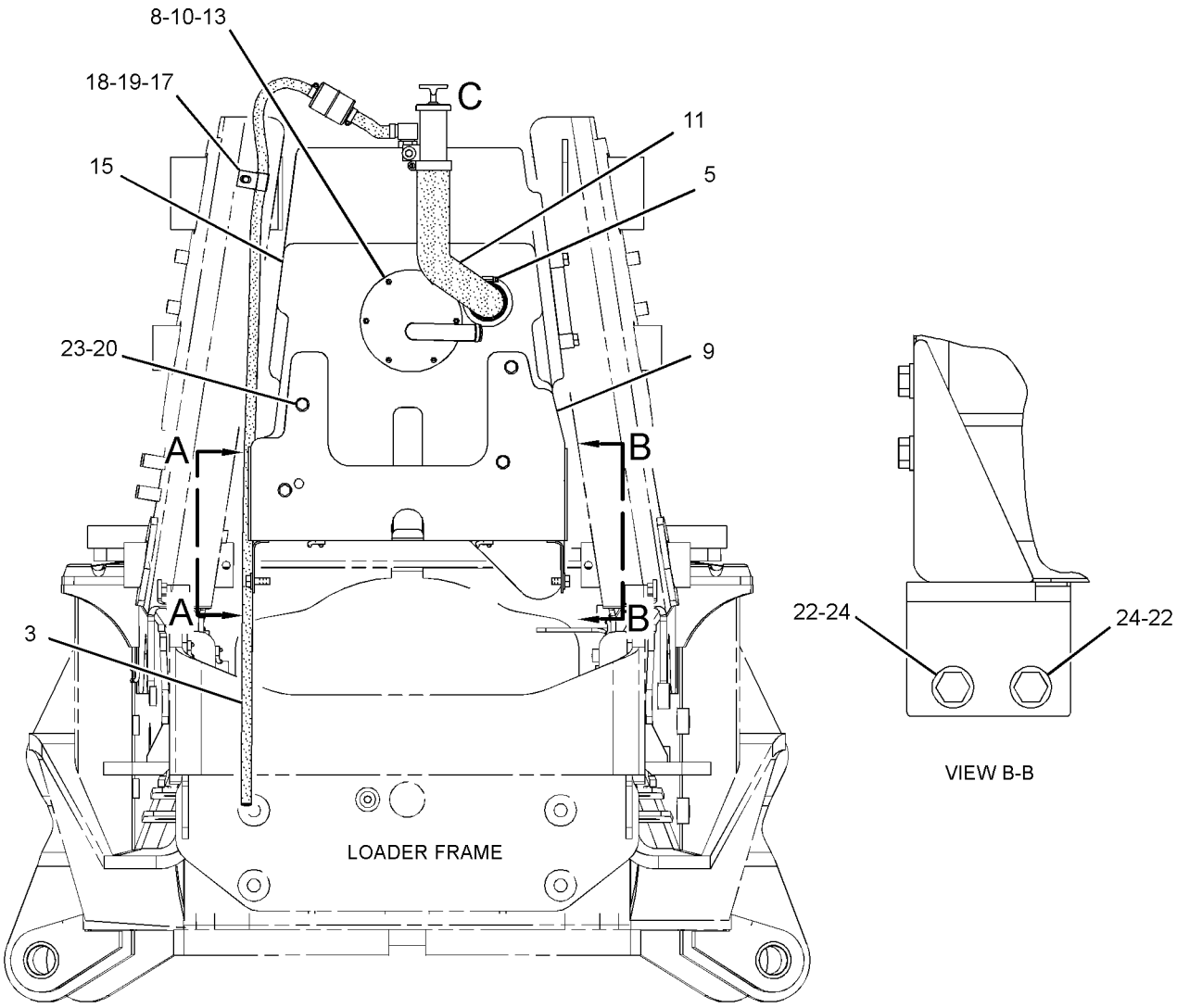

FRONT VIEW

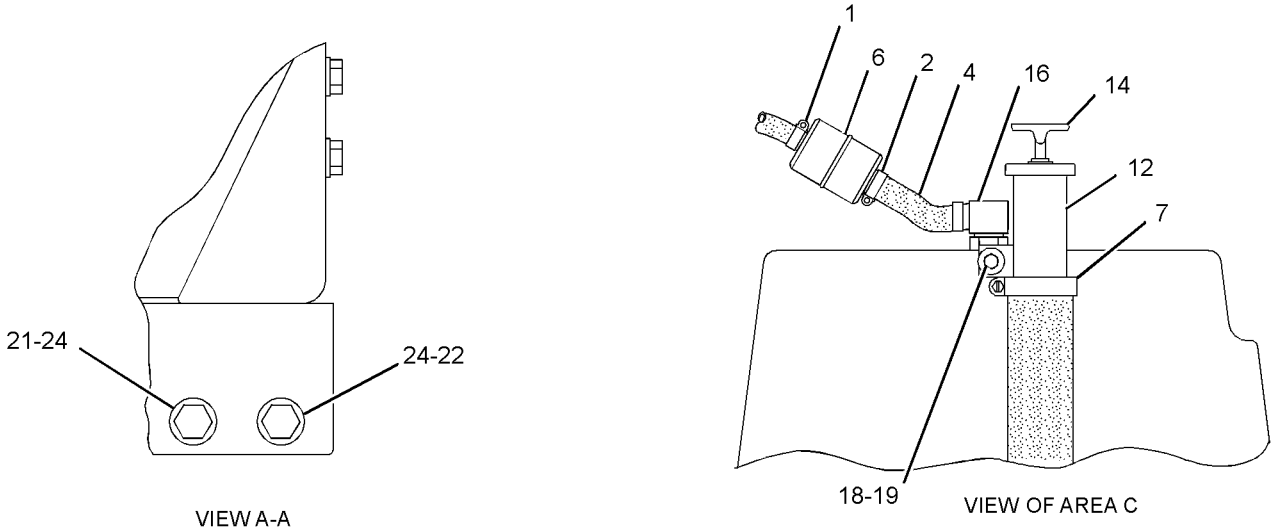

GRAPHIC #1 **<END>** g01343487

245-8777 TANK & MTG GP-HYDRAULIC

S/N: HLS3742-99999

PART OF 268-6455 HYDRAULIC AR

SMCS-5056 **i03505427**

NOTE	REF NO	GRAPHIC REF	PART NUMBER	QTY	PART NAME 1 2 3 4 5 6 (PRODUCT LEVEL)	SEE PAGE
C	1	1	**5P-4961**	3	CLAMP-HOSE	
CE	3	1	**5P-1442**		HOSE (8-CM)	
CE	3A	1	**5P-1442**		HOSE (124-CM)	
	5	1	**9M-0164**	1	CLAMP-HOSE	
	6	1	**9R-9925**	1	FILTER ELEMENT-BREATHER (HYDRAULIC TANK)	
	7	1	**127-4471**	1	CLAMP-HOSE	
	8	1	**132-3056**	1	SEAL-O-RING	
	9	1	**210-7773**	1	BRACKET AS	
	10	1	**222-4067**	6	BOLT-SOCKET HEAD (M5X0.8X14-MM)	
	11	1	**234-6927**	1	HOSE	
	12	1	**293-4671**	1	TUBE AS	
	13	1	**235-5843**	1	DIFFUSER AS	
	14	1	**237-3797**	1	CAP-FILL (HYDRAULIC OIL)	
	15	1	*245-8778*	1	TANK GP-HYDRAULIC	
		1	**246-5286**	1	TANK	
		1	**253-8295**	1	GAUGE-SIGHT (FLUID LEVEL)	
C	16	1	*217-8185*	1	ELBOW AS	
		1	**3K-0360**	1	SEAL-O-RING	
		1	**9X-3982**	1	ELBOW	
	17	1	**6D-3479**	1	CLIP	
	18	1	**8T-4121**	2	WASHER-HARD (11X21X2.5-MM THK)	
M	19	1	**8T-4137**	2	BOLT (M10X1.5X20-MM)	
	20	1	**7X-7729**	4	WASHER (11X25X3-MM THK)	
M	21	1	**8T-4139**	1	BOLT (M12X1.75X30-MM)	
M	22	1	**8T-4179**	3	BOLT (M12X1.75X20-MM)	
M	23	1	**8T-4191**	4	BOLT (M10X1.5X16-MM)	
	24	1	**8T-4223**	4	WASHER-HARD (13.5X25.5X3-MM THK)	
	25	1	**8T-0328**	6	WASHER-HARD (5.5X10X1-MM THK)	

C-CHANGE FROM PREVIOUS TYPE
E-ORDER BY THE CENTIMETER
M-METRIC PART

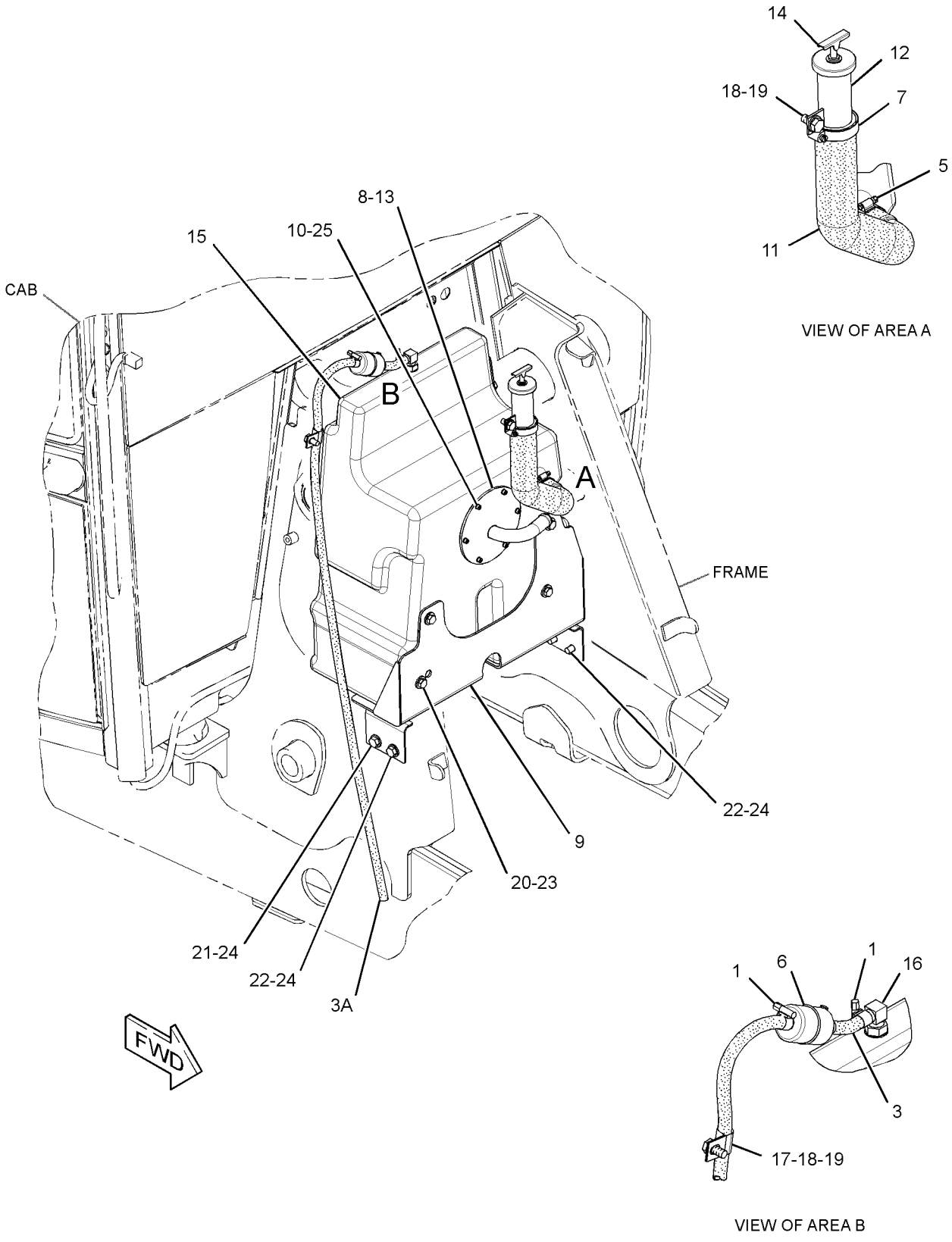

GRAPHIC #1 **<END>** g01818680

267-2770 VALVE & LINES GP-PILOT–BACKHOE

S/N: HLS1-99999

PART OF 268-6455 HYDRAULIC AR

SMCS-5057, 5059 **i03120804**

NOTE	REF NO	GRAPHIC REF	PART NUMBER	QTY	PART NAME 1 2 3 4 5 6 (PRODUCT LEVEL)	SEE PAGE
	1	1	**4I-9521**	2	BAND-MARKER (RED, L1)	
	2	1	**4I-9522**	2	BAND-MARKER (YELLOW, L2)	
	3	1	**4I-9523**	2	BAND-MARKER (BLUE, L3)	
	4	1	**4I-9524**	2	BAND-MARKER (BROWN, L4)	
	5	1	**4I-9525**	2	BAND-MARKER (ORANGE, R1)	
	6	1	**4I-9526**	2	BAND-MARKER (WHITE, R2)	
	7	1	**4I-9527**	2	BAND-MARKER (GREEN, R3)	
	8	1	**4I-9528**	2	BAND-MARKER (PURPLE, R4)	
G	9	1	**160-2248**		SLEEVE-ABRASION (16-IN EACH)	
	10	1	**7K-1181**	6	STRAP-CABLE	
	11	1	*200-3947*	2	ADAPTER AS	
					(EACH INCLUDES)	
		1	**3J-1907**	1	SEAL-O-RING	
		1	**4J-5477**	1	SEAL-O-RING	
		1	**200-3946**	1	ADAPTER	
	12	1	**267-2758**	2	VALVE GP-PILOT	
	13	1	*268-1559*	4	ADAPTER AS	
					(EACH INCLUDES)	
		1	**3J-1907**	1	SEAL-O-RING	
		1	**4J-5477**	1	SEAL-O-RING	
		1	**209-0939**	1	ADAPTER	
	14	1	*148-8325*	10	CONNECTOR AS	
					(EACH INCLUDES)	
		1	**3J-1907**	1	SEAL-O-RING	
		1	**4J-5477**	1	SEAL-O-RING	
		1	**6V-8641**	1	CONNECTOR	
	15	1	**156-6175**	1	CLIP	
	16	1	**210-0074**	1	HOSE AS	
	17	1	**243-6523**	1	HOSE AS	
	18	1	**257-5605**	1	HOSE AS	
	19	1	**257-5606**	1	HOSE AS	
	20	1	**257-5607**	1	HOSE AS	
	21	1	**257-5608**	1	HOSE AS	
I	22	1	**268-0099**	1	HOSE AS	
	23	1	**268-0109**	1	HOSE AS	
	24	1	**9X-2038**	1	WASHER (7X19X2-MM THK)	
M	25	1	**9X-2043**	1	SCREW-TRUSS HEAD (M6X1X14-MM)	

G-ORDER BY THE INCH
I-REFER TO HYDRAULIC INFORMATION SYSTEM
M-METRIC PART

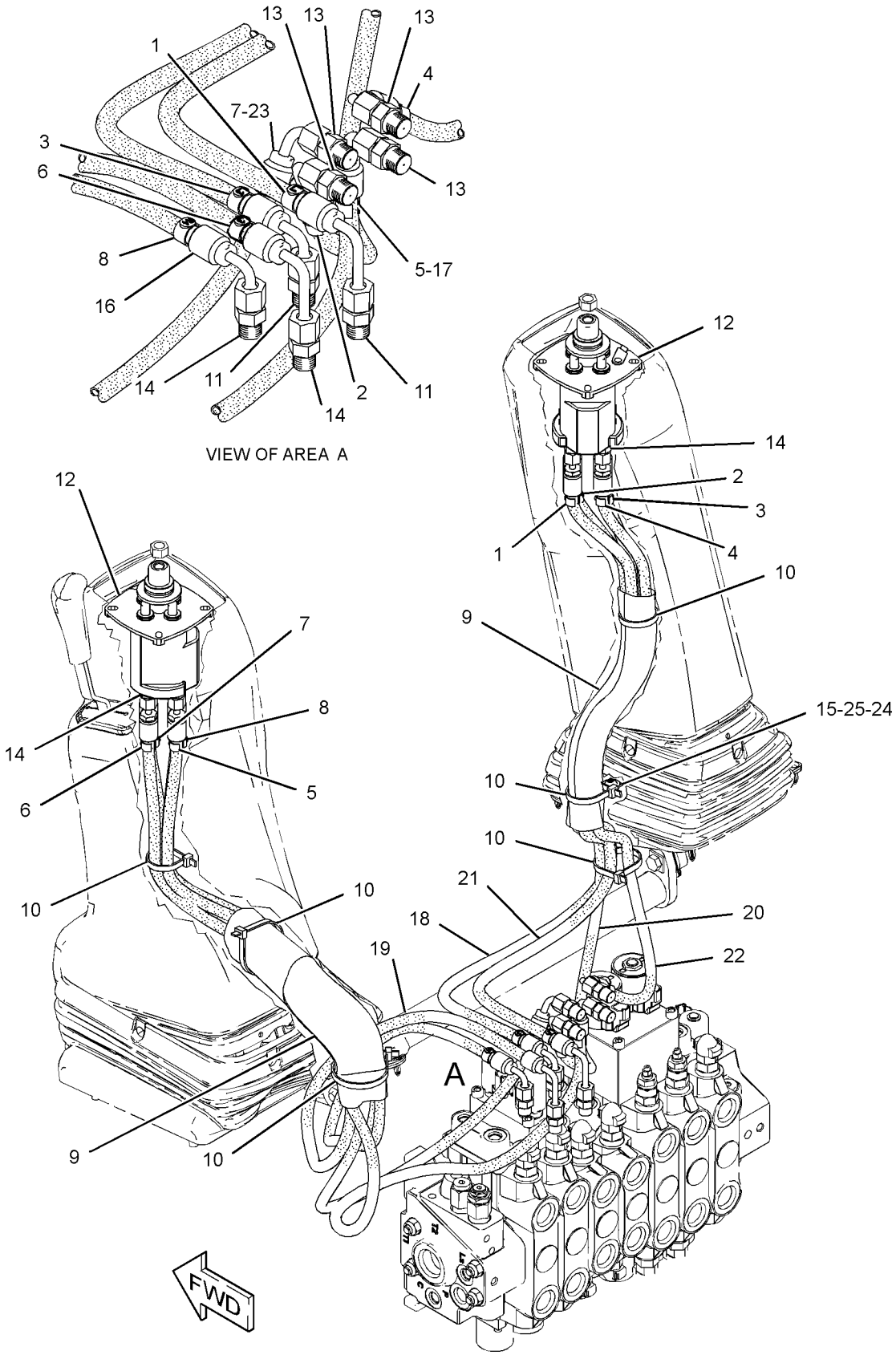

GRAPHIC #1 **<END>** g01597117

269-2144 VALVE AR-BANK 2

S/N: HLS1-99999
AN ATTACHMENT

SMCS-5051 **i02838057**

NOTE	PART NUMBER	QTY	PART NAME 1 2 3 4 5 6 (PRODUCT LEVEL)	SEE PAGE
Y	*206-1645*	1	CONTROL GP-HYDRAULIC HAND (LOADER)	819
Y	*245-8769*	1	FASTENER GP-VALVE (BANK)	416
Y	**266-2552**	1	VALVE GP-BANK 2	527
	251-5625	1	FILM-INSTRUCTION (BUCKET CONTROL)	
			(ON RH CONSOLE IN AREA PROVIDED)	

Y-SEPARATE ILLUSTRATION

<END>

269-2145 VALVE AR-BANK 3

S/N: HLS1-99999
AN ATTACHMENT

SMCS-5051 **i02838058**

NOTE	PART NUMBER	QTY	PART NAME 1 2 3 4 5 6 (PRODUCT LEVEL)	SEE PAGE
Y	*209-3364*	1	CONTROL GP-HYDRAULIC HAND (LOADER)	821
Y	*245-8769*	1	FASTENER GP-VALVE (BANK)	416
Y	*246-8478*	1	LINES GP-LOADER AUXILIARY	459
Y	**266-2553**	1	VALVE GP-BANK 3	528
	251-5626	1	FILM-INSTRUCTION (BUCKET CONTROL)	
			(ON RH CONSOLE IN AREA PROVIDED)	

Y-SEPARATE ILLUSTRATION

<END>

269-2146 VALVE AR-BANK 6

S/N: HLS1-99999
AN ATTACHMENT

SMCS-5051 **i02447159**

NOTE	PART NUMBER	QTY	PART NAME 1 2 3 4 5 6 (PRODUCT LEVEL)	SEE PAGE
Y	**271-3095**	1	CONTROL GP-JOYSTICK (RH)	824
Y	**271-3097**	1	CONTROL GP-JOYSTICK (LH)	826
Y	*222-5623*	1	LINES GP-STABILIZER	489
Y	*245-8765*	1	MOUNTING GP-BANK VALVE	508
Y	**266-2556**	1	VALVE GP-BANK 6	529
Y	*267-5635*	1	WIRING GP-CONTROL (JOYSTICK, LH)	154

Y-SEPARATE ILLUSTRATION

<END>

HYDRAULIC SYSTEM

269-2147 VALVE AR-BANK 7

S/N: HLS1-99999
AN ATTACHMENT

SMCS-5051 **i03530741**

NOTE	PART NUMBER	QTY	PART NAME 1 2 3 4 5 6 (PRODUCT LEVEL)	SEE PAGE
Y	**271-3096**	1	CONTROL GP-JOYSTICK (RH)	825
Y	**271-3097**	1	CONTROL GP-JOYSTICK (LH)	826
Y	*222-5622*	1	LINES GP-STABILIZER	483
Y	*245-8765*	1	MOUNTING GP-BANK VALVE	508
Y	**266-2557**	1	VALVE GP-BANK 7	530
Y	*267-5633*	1	WIRING GP-CONTROL (JOYSTICK, RH)	152
Y	*267-5635*	1	WIRING GP-CONTROL (JOYSTICK, LH)	154
B	**6V-9831**	2	CAP AS	
B	*148-8341*	2	CONNECTOR AS	
			(EACH INCLUDES)	
	3D-2824	1	SEAL-O-RING	
	6V-8713	1	CONNECTOR	
	7J-9108	1	SEAL-O-RING	
	214-4706	1	SWITCH AS-ROCKER (AUXILIARY HYDRAULIC FLOW)	
	111-7899	1	GASKET	

B-USE AS REQUIRED
Y-SEPARATE ILLUSTRATION

<END>

269-2148 VALVE AR-BANK 8

S/N: HLS1-99999
AN ATTACHMENT

SMCS-5051 **i03530742**

NOTE	PART NUMBER	QTY	PART NAME 1 2 3 4 5 6 (PRODUCT LEVEL)	SEE PAGE
Y	**271-3096**	1	CONTROL GP-JOYSTICK (RH)	825
Y	**271-3099**	1	CONTROL GP-JOYSTICK (LH)	827
Y	*215-2445*	1	LINES GP-STABILIZER	477
Y	*245-8765*	1	MOUNTING GP-BANK VALVE	508
Y	**266-2558**	1	VALVE GP-BANK 8	531
Y	*267-5633*	1	WIRING GP-CONTROL (JOYSTICK, RH)	152
Y	*267-5634*	1	WIRING GP-CONTROL (JOYSTICK, LH)	153
B	**6V-9831**	4	CAP AS	
B	*148-8341*	4	CONNECTOR AS	
			(EACH INCLUDES)	
	3D-2824	1	SEAL-O-RING	
	6V-8713	1	CONNECTOR	
	7J-9108	1	SEAL-O-RING	
	214-4706	1	SWITCH AS-ROCKER (AUXILIARY HYDRAULIC FLOW)	
	111-7899	1	GASKET	

B-USE AS REQUIRED
Y-SEPARATE ILLUSTRATION

<END>

HYDRAULIC SYSTEM

266-2552 VALVE GP-BANK 2

S/N: HLS1-99999
PART OF 269-2144 VALVE AR-BANK 2
AN ATTACHMENT

SMCS-5051 **i02447471**

NOTE	REF NO	GRAPHIC REF	PART NUMBER	QTY	PART NAME 1 2 3 4 5 6 (PRODUCT LEVEL)	SEE PAGE
Y	1	1	**269-1080**	1	MANIFOLD GP-CONTROL (INLET)	506
Y	2	1	**269-1091**	1	VALVE GP-CONTROL (LIFT)	549
Y	3	1	**269-1092**	1	VALVE GP-CONTROL (TILT)	550
	4	1	**269-1079**	1	COVER GP (OUTLET)	
		1	**3J-1907**	2	SEAL-O-RING	
		1	**9S-8004**	2	PLUG-O-RING	
	5	1	**227-1202**	1	KIT-FASTENER	
					(INCLUDES LOCKNUTS & TIE RODS)	
	6	1	**4J-5309**	12	SEAL-O-RING	
	7	1	**6V-5326**	3	SEAL-O-RING	
	8	1	**6V-8978**	3	SEAL-O-RING	

Y-SEPARATE ILLUSTRATION

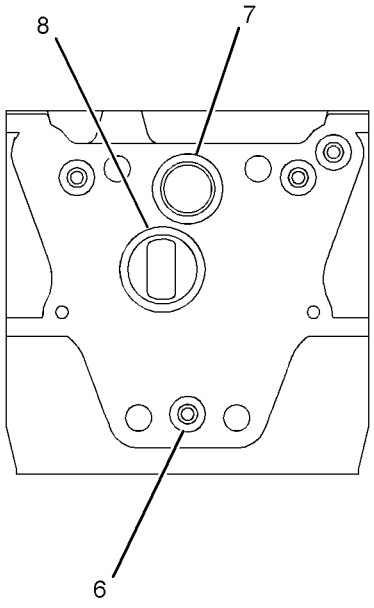

SECTION A-A

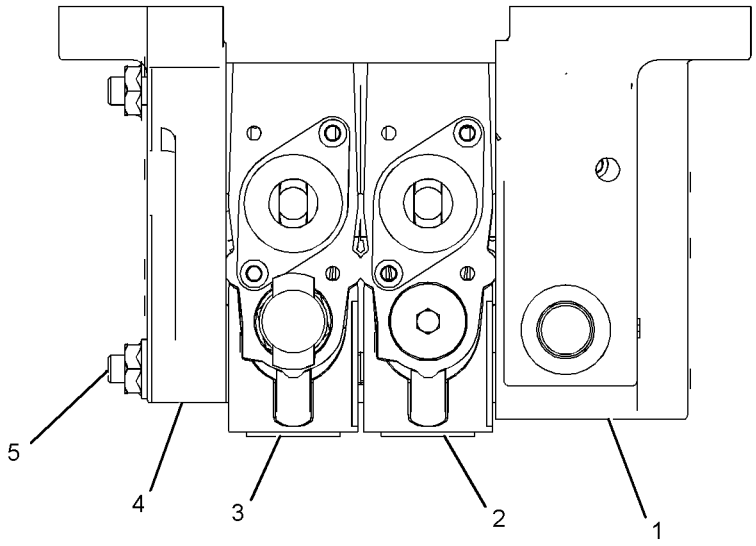

GRAPHIC #1 **<END>** g01231791

266-2553 VALVE GP-BANK 3

S/N: HLS1-99999
PART OF 269-2145 VALVE AR-BANK 3
AN ATTACHMENT

SMCS-5051 **i02447487**

NOTE	REF NO	GRAPHIC REF	PART NUMBER	QTY	PART NAME 1 2 3 4 5 6 (PRODUCT LEVEL)	SEE PAGE
Y	1	1	**269-1080**	1	MANIFOLD GP-CONTROL (INLET)	506
Y	2	1	**269-1091**	1	VALVE GP-CONTROL (LIFT)	549
Y	3	1	**269-1092**	1	VALVE GP-CONTROL (TILT)	550
Y	4	1	**269-1093**	1	VALVE GP-CONTROL (AUXILIARY)	551
	5	1	**269-1079**	1	COVER GP (OUTLET)	
		1	**3J-1907**	2	SEAL-O-RING	
		1	**9S-8004**	2	PLUG-O-RING	
	6	1	**257-0453**	1	KIT-FASTENER	
					(INCLUDES LOCKNUTS & TIE RODS)	
	7	1	**4J-5309**	16	SEAL-O-RING	
	8	1	**6V-5326**	4	SEAL-O-RING	
	9	1	**6V-8978**	4	SEAL-O-RING	

Y-SEPARATE ILLUSTRATION

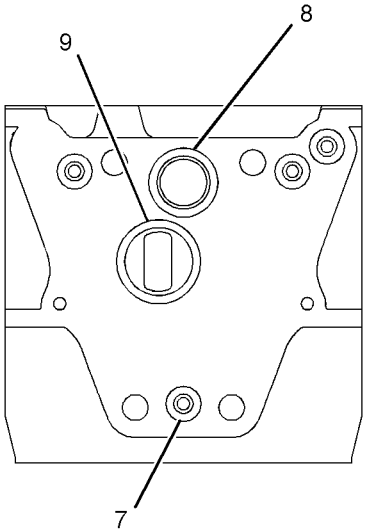

SECTION A-A

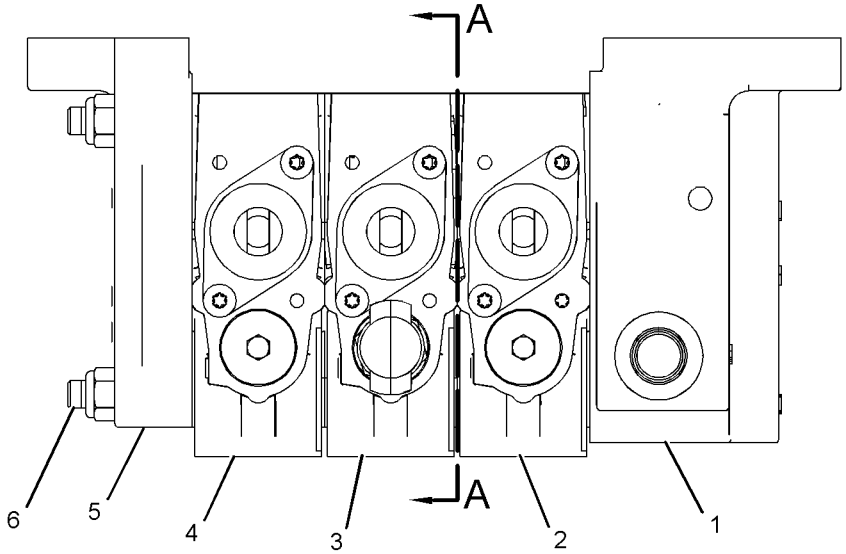

TOP VIEW

GRAPHIC #1 **<END>** g01231809

266-2556 VALVE GP-BANK 6

S/N: HLS1-99999
PART OF 269-2146 VALVE AR-BANK 6
AN ATTACHMENT

SMCS-5051 **i02447216**

NOTE	REF NO	GRAPHIC REF	PART NUMBER	QTY	PART NAME 1 2 3 4 5 6 (PRODUCT LEVEL)	SEE PAGE
Y	1	1	**269-1060**	1	MANIFOLD & SOLENOID GP-CONTROL (INLET)	504
Y	2	1	**269-1061**	2	VALVE GP-CONTROL (STABILIZER)	533
Y	3	1	**269-1062**	1	VALVE GP-CONTROL (BOOM)	537
Y	4	1	**269-1063**	1	VALVE GP-CONTROL (STICK)	541
Y	5	1	**269-1064**	1	VALVE GP-CONTROL (SWING)	544
Y	6	1	**269-1065**	1	VALVE GP-CONTROL (BUCKET)	545
Y	7	1	**269-1059**	1	MANIFOLD GP-CONTROL (OUTLET)	505
	8	1	**257-0446**	1	KIT-FASTENER	
					(INCLUDES LOCKNUTS & TIE RODS)	
	9	1	**4J-5309**	28	SEAL-O-RING	
	10	1	**6V-5326**	7	SEAL-O-RING	
	11	1	**6V-8978**	7	SEAL-O-RING	
Y	12	1	**257-7724**	1	MANIFOLD & SOLENOID GP-CONTROL (BOOM, STICK, PATTERN SWITCH)	503

Y-SEPARATE ILLUSTRATION

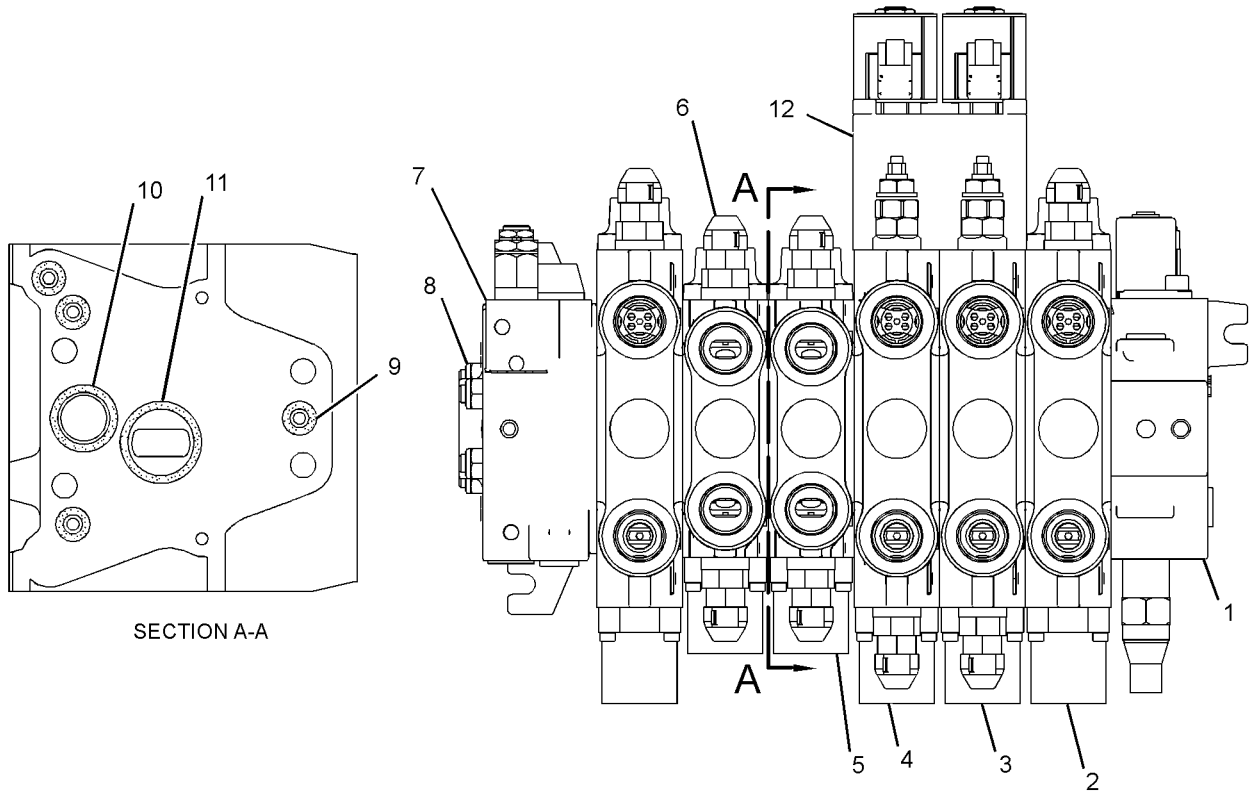

GRAPHIC #1 **<END>** g01231845

HYDRAULIC SYSTEM

266-2557 VALVE GP-BANK 7

S/N: HLS1-99999
PART OF 269-2147 VALVE AR-BANK 7
AN ATTACHMENT

SMCS-5051 **i02447365**

NOTE	REF NO	GRAPHIC REF	PART NUMBER	QTY	PART NAME 1 2 3 4 5 6 (PRODUCT LEVEL)	SEE PAGE
Y	1	1	**269-1060**	1	MANIFOLD & SOLENOID GP-CONTROL (INLET)	504
Y	2	1	**269-1061**	2	VALVE GP-CONTROL (STABILIZER)	533
Y	3	1	**269-1062**	1	VALVE GP-CONTROL (BOOM)	537
Y	4	1	**269-1063**	1	VALVE GP-CONTROL (STICK)	541
Y	5	1	**269-1064**	1	VALVE GP-CONTROL (SWING)	544
Y	6	1	**269-1065**	1	VALVE GP-CONTROL (BUCKET)	545
Y	7	1	**269-1066**	1	VALVE GP-CONTROL (EXTENDABLE STICK)	546
Y	8	1	**269-1059**	1	MANIFOLD GP-CONTROL (OUTLET)	505
	9	1	**257-0447**	1	KIT-FASTENER	
					(INCLUDES LOCKNUTS & TIE RODS)	
	10	1	**4J-5309**	32	SEAL-O-RING	
	11	1	**6V-5326**	8	SEAL-O-RING	
	12	1	**6V-8978**	8	SEAL-O-RING	
Y	13	1	**257-7724**	1	MANIFOLD & SOLENOID GP-CONTROL (BOOM, STICK, PATTERN SWITCH)	503

Y-SEPARATE ILLUSTRATION

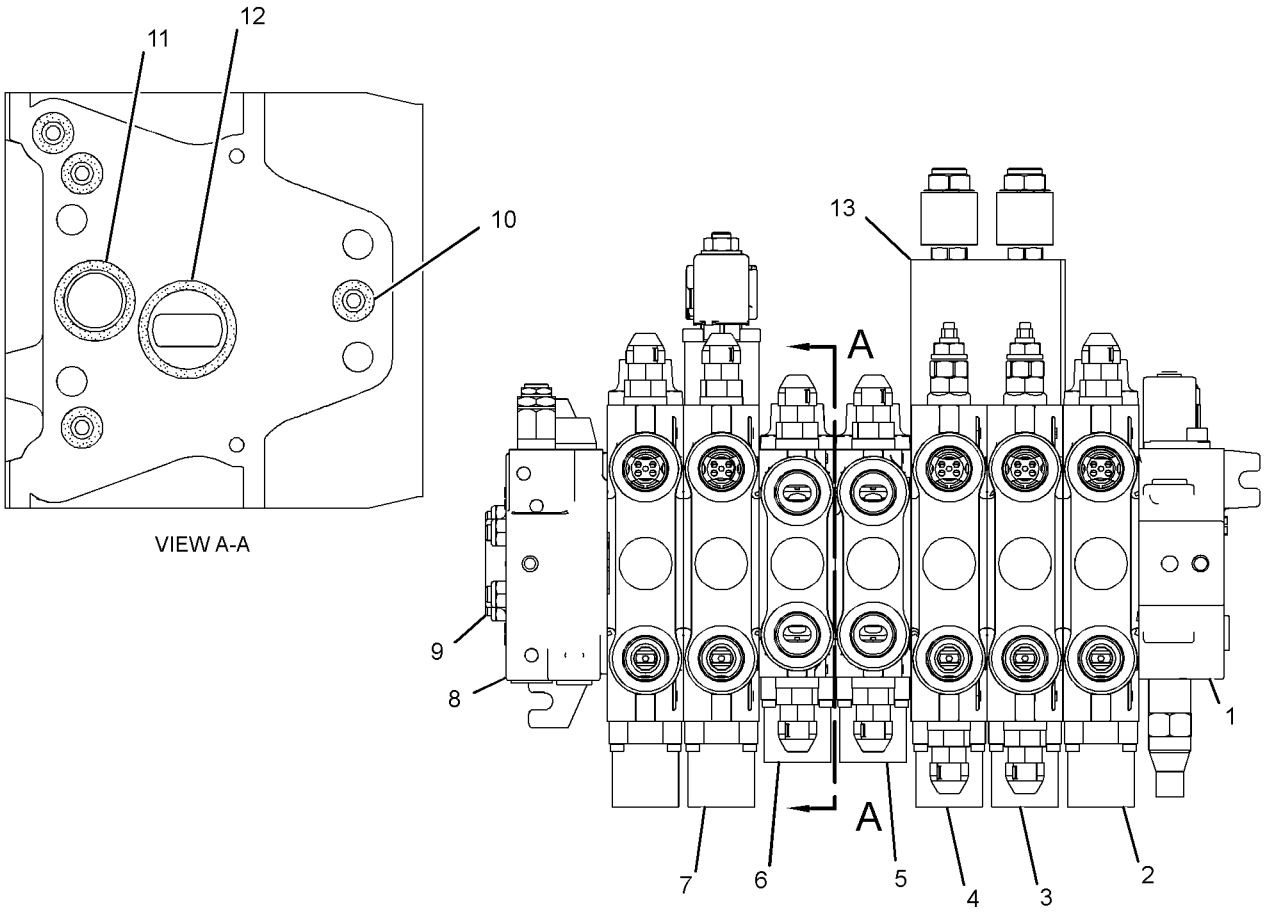

GRAPHIC #1 **<END>** g01233924

266-2558 VALVE GP-BANK 8

S/N: HLS1-99999
PART OF 269-2148 VALVE AR-BANK 8
AN ATTACHMENT

SMCS-5051 **i02447419**

NOTE	REF NO	GRAPHIC REF	PART NUMBER	QTY	PART NAME 1 2 3 4 5 6 (PRODUCT LEVEL)	SEE PAGE
Y	1	1	**269-1060**	1	MANIFOLD & SOLENOID GP-CONTROL (INLET)	504
Y	2	1	**269-1061**	2	VALVE GP-CONTROL (STABILIZER)	533
Y	3	1	**269-1062**	1	VALVE GP-CONTROL (BOOM)	537
Y	4	1	**269-1063**	1	VALVE GP-CONTROL (STICK)	541
Y	5	1	**269-1064**	1	VALVE GP-CONTROL (SWING)	544
Y	6	1	**269-1065**	1	VALVE GP-CONTROL (BUCKET)	545
Y	7	1	**269-1066**	1	VALVE GP-CONTROL (EXTENDABLE STICK)	546
Y	8	1	**269-1067**	1	VALVE GP-CONTROL (AUXILIARY)	548
Y	9	1	**269-1059**	1	MANIFOLD GP-CONTROL (OUTLET)	505
	10	1	**257-0448**	1	KIT-FASTENER	
					(INCLUDES LOCKNUTS & TIE RODS)	
	11	1	**4J-5309**	36	SEAL-O-RING	
	12	1	**6V-5326**	9	SEAL-O-RING	
	13	1	**6V-8978**	9	SEAL-O-RING	
Y	14	1	**257-7724**	1	MANIFOLD & SOLENOID GP-CONTROL (BOOM, STICK, PATTERN SWITCH)	503

Y-SEPARATE ILLUSTRATION

266-2558 VALVE GP-BANK 8 *(contd.)* i02447419

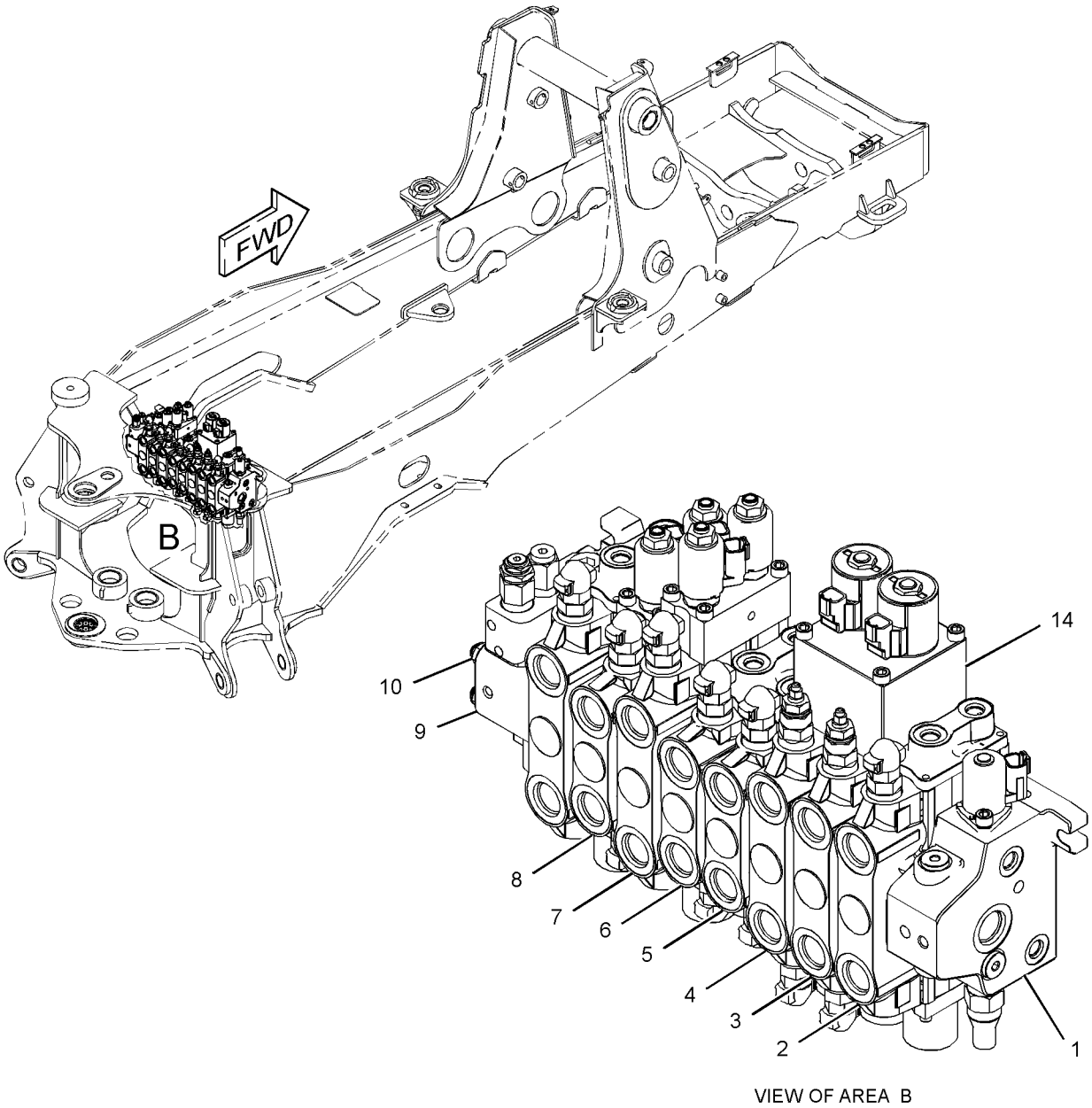

VIEW OF AREA B

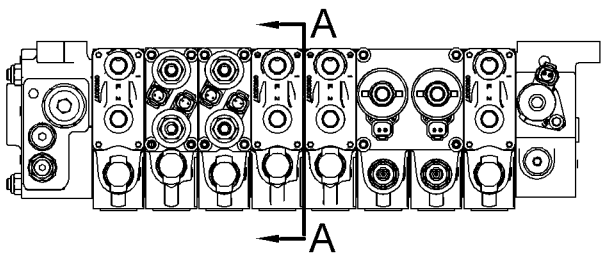

TOP VIEW

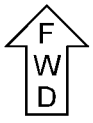

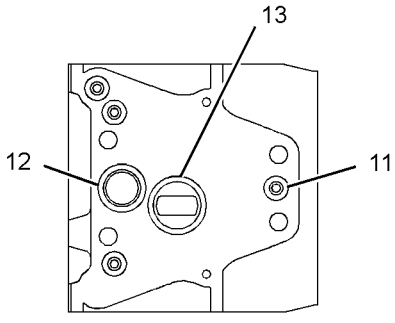

VIEW A-A

GRAPHIC #1 **<END>** g01234007

269-1061 VALVE GP-CONTROL–STABILIZER

S/N: HLS1-99999

PART OF 266-2556 VALVE GP-BANK 6, 266-2557 VALVE GP-BANK 7, 266-2558 VALVE GP-BANK 8

AN ATTACHMENT

TYPE 1

SMCS-5051 **i02447297**

NOTE	REF NO	GRAPHIC REF	PART NUMBER	QTY	PART NAME 1 2 3 4 5 6 (PRODUCT LEVEL)	SEE PAGE
	1	1	**257-7734**	1	KIT-COVER (CONTROL VALVE)	
					(INCLUDES BOLTS, SEAL, COVER, PLUG, SPRING & RETAINERS)	
	2	1	**227-1191**	1	PLUG AS	
		1	**8J-2413**	1	SEAL-O-RING	
		1	**095-1751**	1	SEAL-O-RING	
		1	**169-1616**	1	RING-BACKUP	
	3	1	**257-0476**	1	VALVE GP-RELIEF	
		1	**8J-2413**	1	SEAL-O-RING	
		1	**095-1751**	1	SEAL-O-RING	
		1	**169-1616**	1	RING-BACKUP	
	4	1	**257-7730**	2	KIT-POPPET (CONTROL VALVE)	
					(EACH INCLUDES POPPET AS & RODS)	
	5	1	**257-7729**	2	PLUG GP-CONTROL VALVE	
					(EACH INCLUDES)	
		1	**122-9250**	1	SEAL-O-RING	
	6	1	**257-7731**	1	MANIFOLD GP-HYDRAULIC	
		1	**5D-6543**	1	SEAL-O-RING	
		1	**5F-9144**	3	SEAL-O-RING	
M		1	**8C-8580**	4	BOLT-SOCKET HEAD (M5X0.8X16-MM)	
	7	1	**257-0468**	1	CAP-PROTECTION	

M-METRIC PART

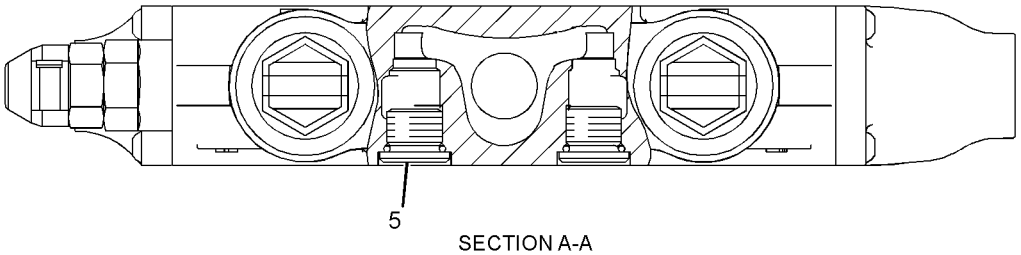

SECTION A-A

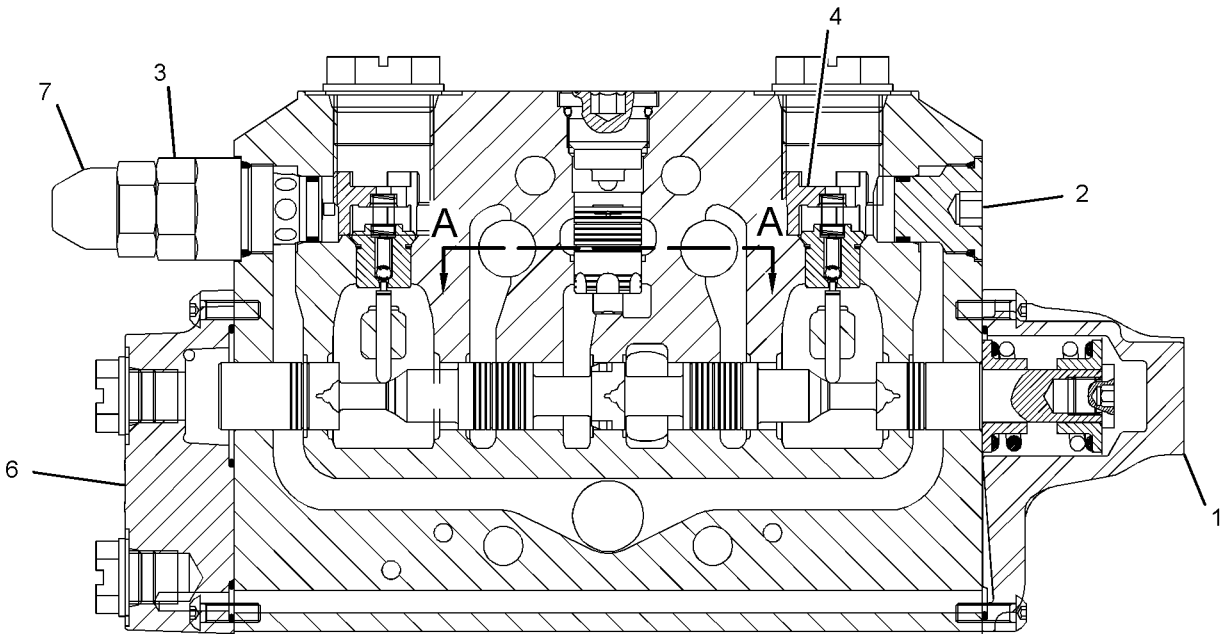

GRAPHIC #1 **<END>** g01225677

HYDRAULIC SYSTEM

269-1061 VALVE GP-CONTROL–STABILIZER

S/N: HLS1-99999
PART OF 266-2556 VALVE GP-BANK 6, 266-2557 VALVE GP-BANK 7, 266-2558 VALVE GP-BANK 8
AN ATTACHMENT
TYPE 2

SMCS-5051 **i02658911**

NOTE	REF NO	GRAPHIC REF	PART NUMBER	QTY	PART NAME 1 2 3 4 5 6 (PRODUCT LEVEL)	SEE PAGE
	1	1	**257-7734**	1	KIT-COVER (CONTROL VALVE)	
					(INCLUDES BOLTS, SEAL-O-RING, COVER, PLUG, SPRING & RETAINERS)	
	2	1	**227-1191**	1	PLUG AS	
		1	**8J-2413**	1	SEAL-O-RING	
		1	**095-1751**	1	SEAL-O-RING	
		1	**169-1616**	1	RING-BACKUP	
C	3	1	**294-0933**	1	VALVE GP-RELIEF	
		1	**8J-2413**	1	SEAL-O-RING	
		1	**095-1751**	1	SEAL-O-RING	
		1	**169-1616**	1	RING-BACKUP	
	4	1	**257-7730**	2	KIT-POPPET (CONTROL VALVE)	
					(EACH INCLUDES POPPET AS & RODS)	
	5	1	**257-7729**	2	PLUG GP-CONTROL VALVE	
					(EACH INCLUDES)	
		1	**122-9250**	1	SEAL-O-RING	
	6	1	**257-7731**	1	MANIFOLD GP-HYDRAULIC	
		1	**5D-6543**	1	SEAL-O-RING	
		1	**5F-9144**	3	SEAL-O-RING	
M		1	**8C-8580**	4	BOLT-SOCKET HEAD (M5X0.8X16-MM)	
	7	1	**257-0468**	1	CAP-PROTECTION	

C-CHANGE FROM PREVIOUS TYPE
M-METRIC PART

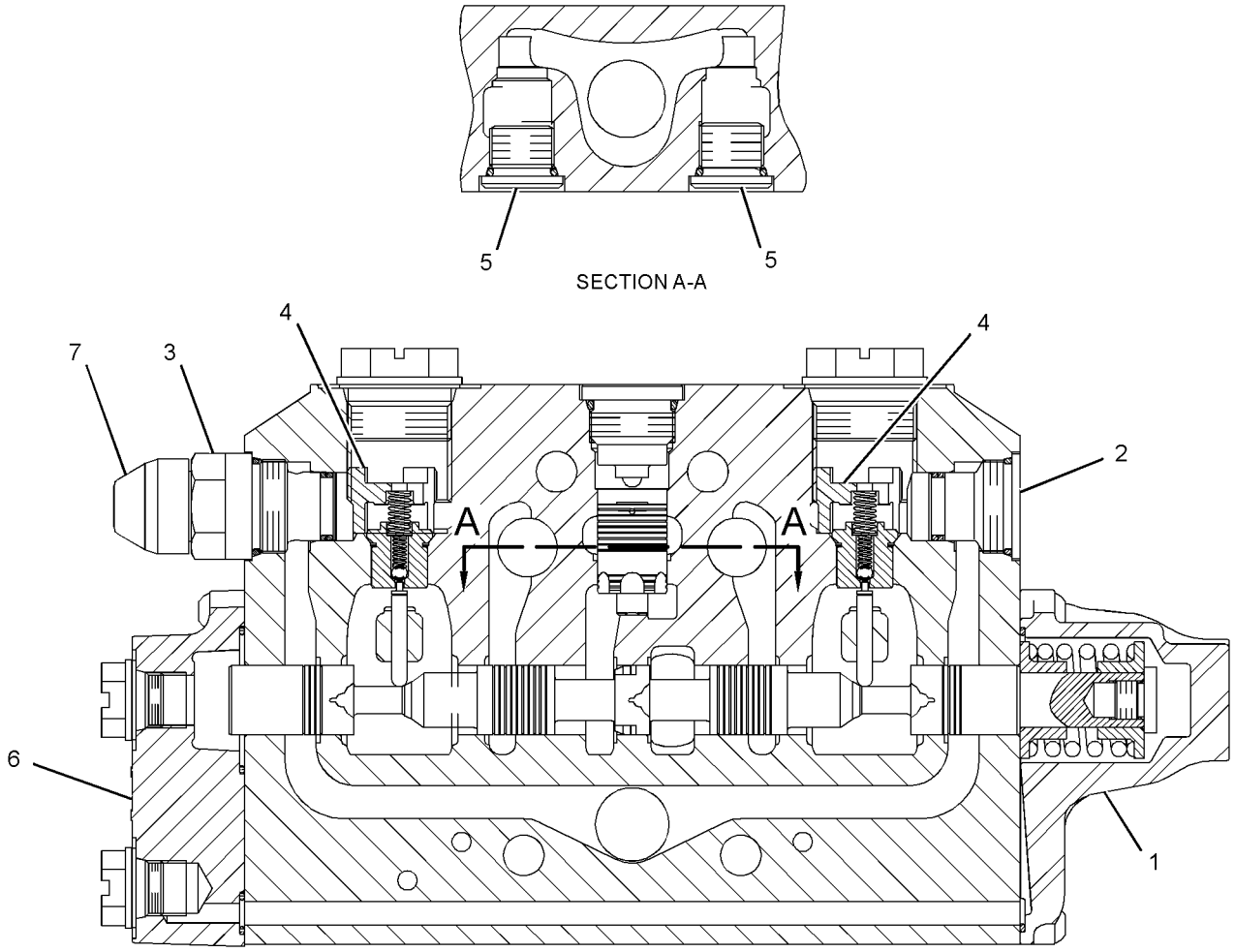

GRAPHIC #1 **<END>** g01340920

269-1062 VALVE GP-CONTROL–BOOM

S/N: HLS1-99999

PART OF 266-2556 VALVE GP-BANK 6, 266-2557 VALVE GP-BANK 7, 266-2558 VALVE GP-BANK 8

AN ATTACHMENT

TYPE 1

SMCS-5051 **i02502853**

NOTE	REF NO	GRAPHIC REF	PART NUMBER	QTY	PART NAME 1 2 3 4 5 6 (PRODUCT LEVEL)	SEE PAGE
	1	1	**257-7734**	1	KIT-COVER (CONTROL VALVE)	
					(INCLUDES BOLTS, SEAL-O-RING, COVER, PLUG, SPRING & RETAINERS)	
	2	1	**257-7730**	1	KIT-POPPET (CONTROL VALVE)	
					(INCLUDES POPPET AS & RODS)	
	3	1	**266-2585**	1	VALVE GP-RELIEF (LINE, BOOM CYLINDER HEAD END)	
		1	**8J-2413**	1	SEAL-O-RING	
		1	**095-1751**	1	SEAL-O-RING	
		1	**169-1616**	1	RING-BACKUP	
	4	1	**266-3591**	1	VALVE GP-RELIEF (LINE, BOOM CYLINDER ROD END)	
		1	**8J-2413**	1	SEAL-O-RING	
		1	**095-1751**	1	SEAL-O-RING	
		1	**169-1616**	1	RING-BACKUP	
	5	1	**257-7733**	1	VALVE GP-CHECK	
		1	**122-9250**	1	SEAL-O-RING	
	6	1	**257-7729**	1	PLUG GP-CONTROL VALVE	
		1	**122-9250**	1	SEAL-O-RING	
	7	1	**257-0468**	1	CAP-PROTECTION	
	8	1	**257-0466**	1	CAP-PROTECTION	

269-1062 VALVE GP-CONTROL *(contd.)* i02502853

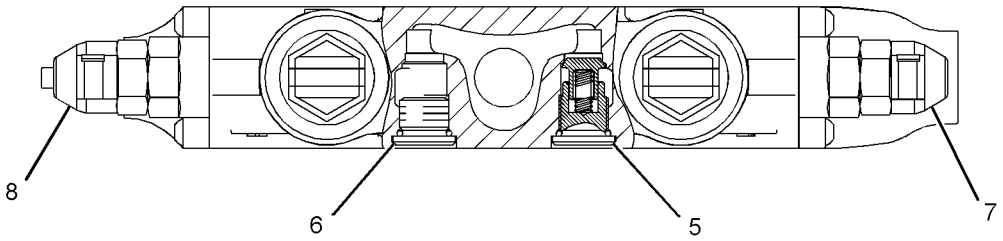

SECTION A-A

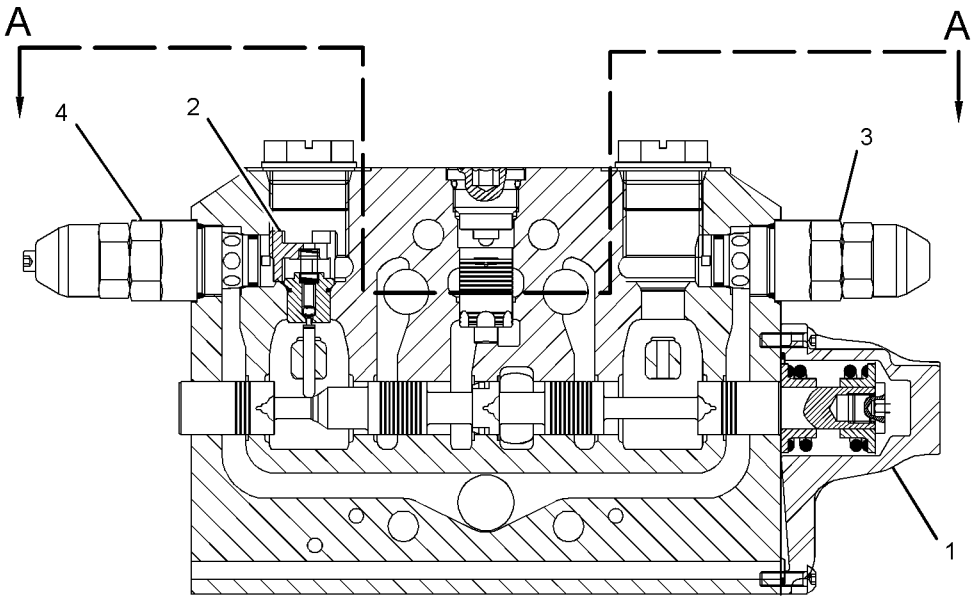

GRAPHIC #1 **<END>** g01290096

269-1062 VALVE GP-CONTROL–BOOM

S/N: HLS1-99999
PART OF 266-2556 VALVE GP-BANK 6, 266-2557 VALVE GP-BANK 7, 266-2558 VALVE GP-BANK 8
AN ATTACHMENT
TYPE 2

SMCS-5051 **i02650960**

NOTE	REF NO	GRAPHIC REF	PART NUMBER	QTY	PART NAME 1 2 3 4 5 6 (PRODUCT LEVEL)	SEE PAGE
	1	1	**257-7734**	1	KIT-COVER (CONTROL VALVE)	
					(INCLUDES BOLTS, SEAL-O-RING, COVER, PLUG, SPRING & RETAINERS)	
	2	1	**257-7730**	1	KIT-POPPET (CONTROL VALVE)	
					(INCLUDES POPPET AS & RODS)	
	3	1	**266-2585**	1	VALVE GP-RELIEF (LINE, BOOM CYLINDER HEAD END)	
		1	**8J-2413**	1	SEAL-O-RING	
		1	**095-1751**	1	SEAL-O-RING	
		1	**169-1616**	1	RING-BACKUP	
C	4	1	**266-3591**	1	VALVE GP-RELIEF (LINE, BOOM CYLINDER ROD END)	
		1	**8J-2413**	1	SEAL-O-RING	
		1	**095-1751**	1	SEAL-O-RING	
		1	**169-1616**	1	RING-BACKUP	
	5	1	**257-7733**	1	VALVE GP-CHECK	
		1	**122-9250**	1	SEAL-O-RING	
	6	1	**257-7729**	1	PLUG GP-CONTROL VALVE	
		1	**122-9250**	1	SEAL-O-RING	
C	7	1	**257-0468**	2	CAP-PROTECTION	

C-CHANGE FROM PREVIOUS TYPE

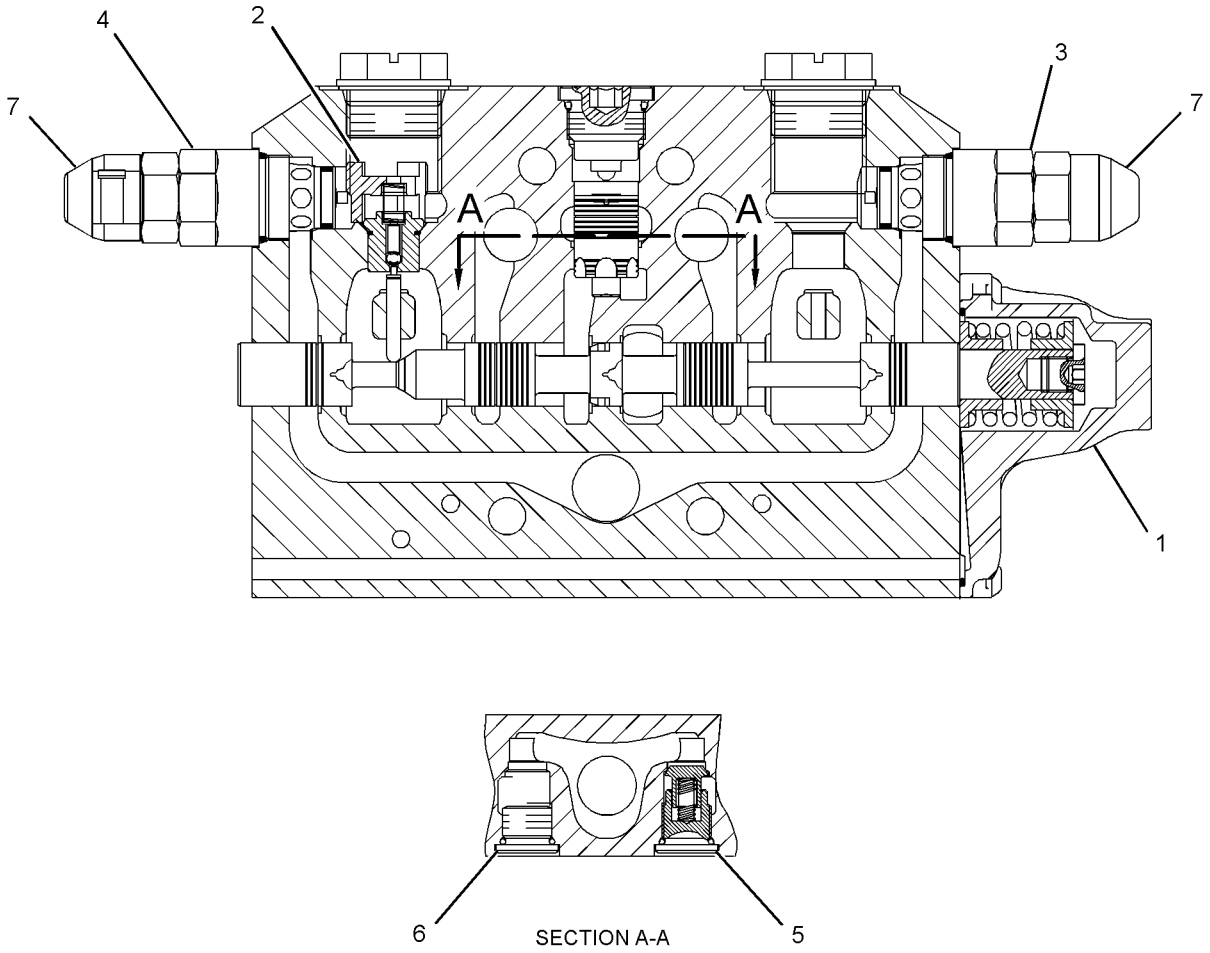

GRAPHIC #1 **<END>** g01342409

269-1063 VALVE GP-CONTROL–STICK

S/N: HLS1-99999
PART OF 266-2556 VALVE GP-BANK 6, 266-2557 VALVE GP-BANK 7, 266-2558 VALVE GP-BANK 8
AN ATTACHMENT
TYPE 1

SMCS-5051 **i02502854**

NOTE	REF NO	GRAPHIC REF	PART NUMBER	QTY	PART NAME 1 2 3 4 5 6 (PRODUCT LEVEL)	SEE PAGE
	1	1	**257-7734**	1	KIT-COVER (CONTROL VALVE)	
					(INCLUDES BOLTS, SEAL, COVER, PLUG, SPRING & RETAINERS)	
	2	1	**266-3590**	1	VALVE GP-RELIEF	
		1	**8J-2413**	1	SEAL-O-RING	
		1	**095-1751**	1	SEAL-O-RING	
		1	**169-1616**	1	RING-BACKUP	
	3	1	**257-7730**	1	KIT-POPPET (CONTROL VALVE)	
					(INCLUDES POPPET AS & RODS)	
	4	1	**269-1104**	1	VALVE GP-RELIEF	
		1	**8J-2413**	1	SEAL-O-RING	
		1	**095-1751**	1	SEAL-O-RING	
		1	**169-1616**	1	RING-BACKUP	
	5	1	**257-7733**	1	VALVE GP-CHECK	
		1	**122-9250**	1	SEAL-O-RING	
	6	1	**257-7729**	1	PLUG GP-CONTROL VALVE	
		1	**122-9250**	1	SEAL-O-RING	
	8	1	**257-0468**	1	CAP-PROTECTION	
	9	1	**257-0466**	1	CAP-PROTECTION	

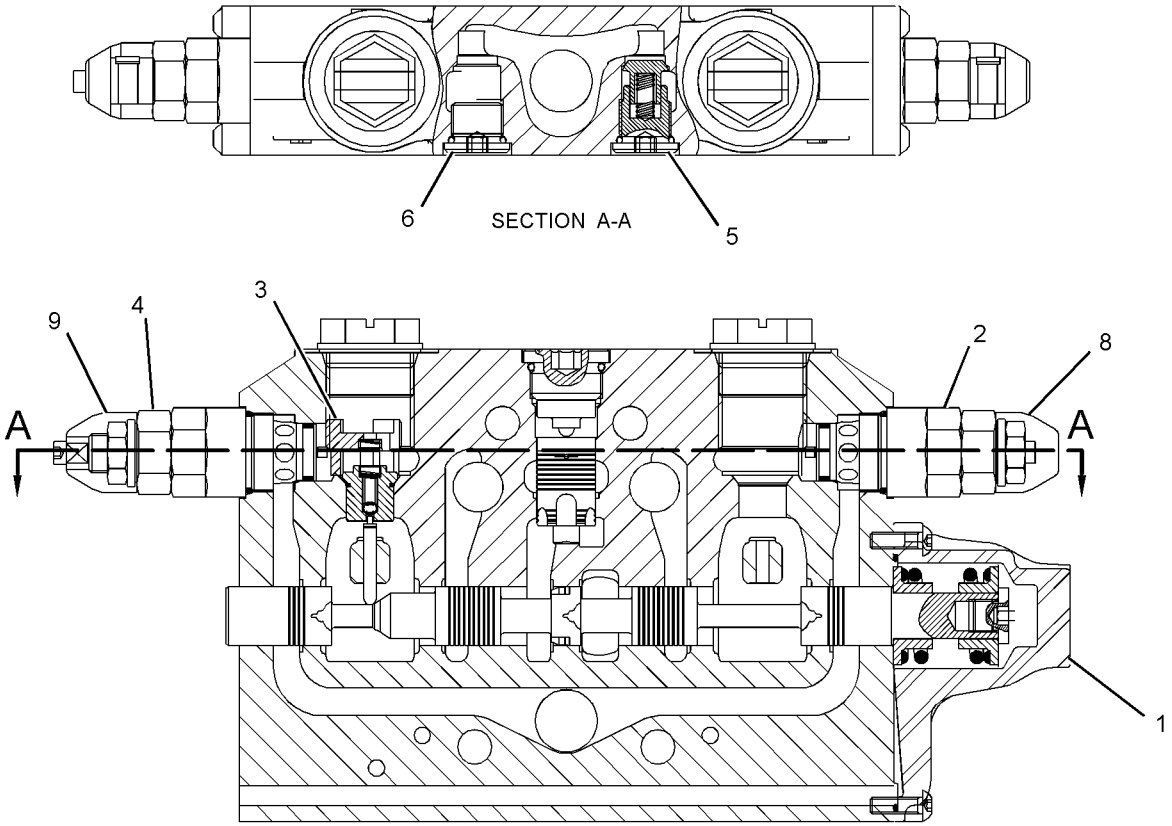

GRAPHIC #1 **<END>** g01301840

269-1063 VALVE GP-CONTROL–STICK

S/N: HLS1-99999
PART OF 266-2556 VALVE GP-BANK 6, 266-2557 VALVE GP-BANK 7, 266-2558 VALVE GP-BANK 8
AN ATTACHMENT
TYPE 2

SMCS-5051 **i02646100**

NOTE	REF NO	GRAPHIC REF	PART NUMBER	QTY	PART NAME 1 2 3 4 5 6 (PRODUCT LEVEL)	SEE PAGE
	1	1	**257-7734**	1	KIT-COVER (CONTROL VALVE)	
					(INCLUDES BOLTS, SEAL, COVER, PLUG, SPRING & RETAINERS)	
C	2	1	**266-3590**	2	VALVE GP-RELIEF	
					(EACH INCLUDES)	
		1	**8J-2413**	1	SEAL-O-RING	
		1	**095-1751**	1	SEAL-O-RING	
		1	**169-1616**	1	RING-BACKUP	
	3	1	**257-7730**	1	KIT-POPPET (CONTROL VALVE)	
					(INCLUDES POPPET AS & RODS)	
	5	1	**257-7733**	1	VALVE GP-CHECK	
		1	**122-9250**	1	SEAL-O-RING	
	6	1	**257-7729**	1	PLUG GP-CONTROL VALVE	
		1	**122-9250**	1	SEAL-O-RING	
C	8	1	**257-0468**	2	CAP-PROTECTION	

C-CHANGE FROM PREVIOUS TYPE

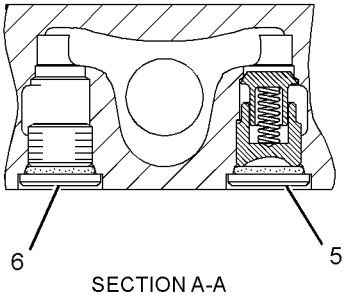

SECTION A-A

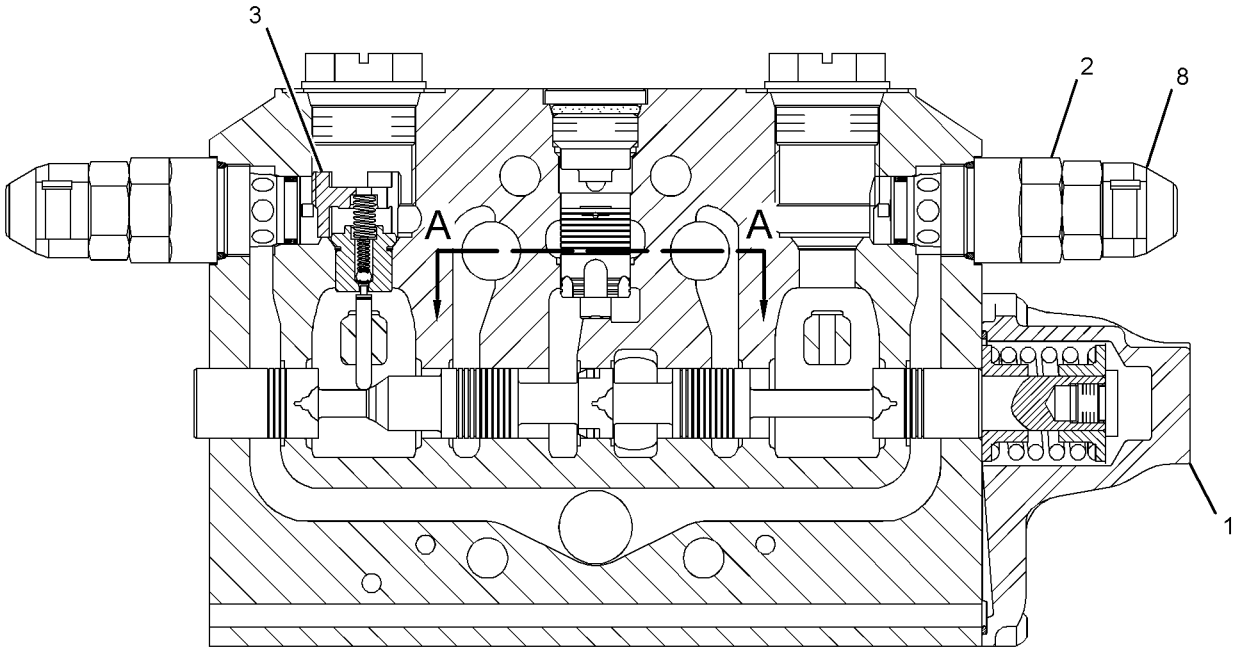

GRAPHIC #1 **<END>** g01338729

HYDRAULIC SYSTEM

269-1064 VALVE GP-CONTROL–SWING

S/N: HLS1-99999

PART OF 266-2556 VALVE GP-BANK 6, 266-2557 VALVE GP-BANK 7, 266-2558 VALVE GP-BANK 8

AN ATTACHMENT

SMCS-5051 **i02447301**

NOTE	REF NO	GRAPHIC REF	PART NUMBER	QTY	PART NAME 1 2 3 4 5 6 (PRODUCT LEVEL)	SEE PAGE
	1	1	**257-5571**	1	KIT-COVER	
					(INCLUDES BOLTS, SEALS, COVER, PLUG, SPRING & RETAINERS)	
	2	1	**266-2588**	2	VALVE GP-RELIEF	
					(EACH INCLUDES)	
		1	**8J-2413**	1	SEAL-O-RING	
		1	**095-1751**	1	SEAL-O-RING	
		1	**169-1616**	1	RING-BACKUP	
	3	1	**227-1186**	2	VALVE AS-CHECK	
	4	1	**257-7731**	1	MANIFOLD GP-HYDRAULIC	
		1	**5D-6543**	1	SEAL-O-RING	
		1	**5F-9144**	3	SEAL-O-RING	
M		1	**8C-8580**	4	BOLT-SOCKET HEAD (M5X0.8X16-MM)	
	5	1	**257-0468**	2	CAP-PROTECTION	

M-METRIC PART

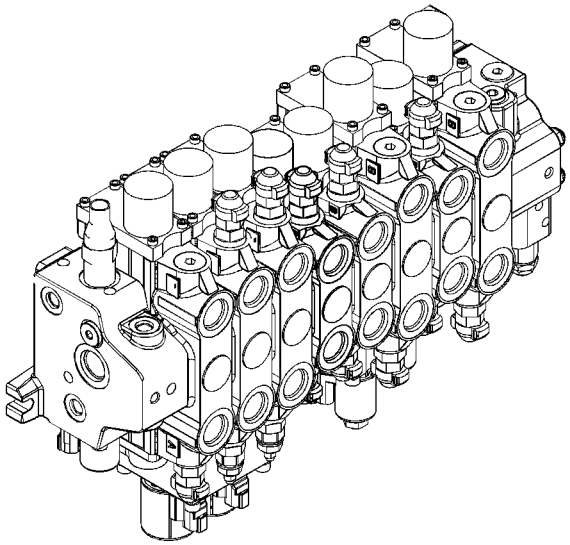

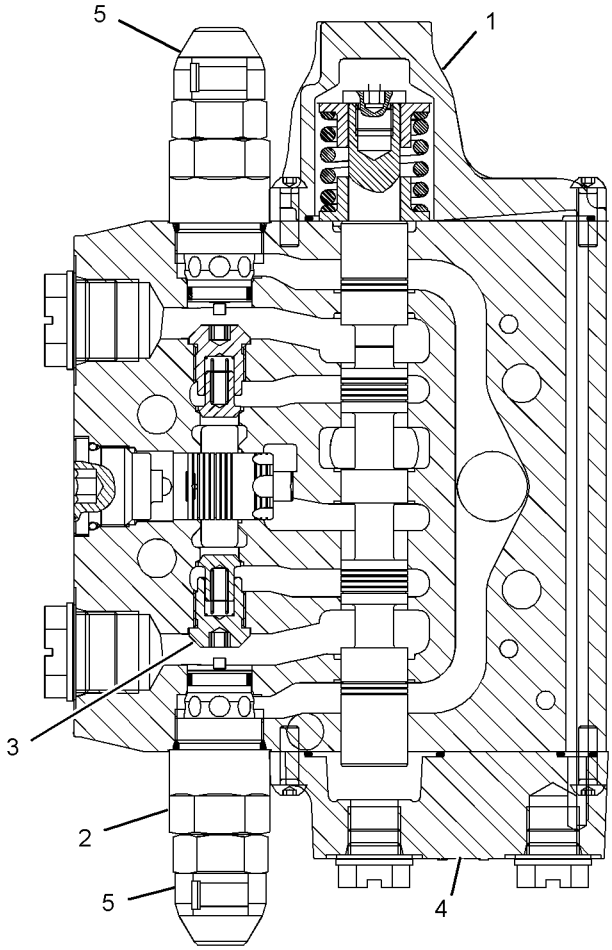

GRAPHIC #1 **<END>** g01225654

269-1065 VALVE GP-CONTROL–BUCKET

S/N: HLS1-99999

PART OF 266-2556 VALVE GP-BANK 6, 266-2557 VALVE GP-BANK 7, 266-2558 VALVE GP-BANK 8

AN ATTACHMENT

SMCS-5051 **i02447303**

NOTE	REF NO	GRAPHIC REF	PART NUMBER	QTY	PART NAME 1 2 3 4 5 6 (PRODUCT LEVEL)	SEE PAGE
	1	1	**257-7734**	1	KIT-COVER (CONTROL VALVE)	
					(INCLUDES BOLT, SEAL, COVER, PLUG, SPRING & RETAINERS)	
	2	1	**266-3591**	2	VALVE GP-RELIEF	
					(EACH INCLUDES)	
		1	**8J-2413**	1	SEAL-O-RING	
		1	**095-1751**	1	SEAL-O-RING	
		1	**169-1616**	1	RING-BACKUP	
	3	1	**227-1186**	2	VALVE AS-CHECK	
	4	1	**257-7731**	1	MANIFOLD GP-HYDRAULIC	
		1	**5D-6543**	1	SEAL-O-RING	
		1	**5F-9144**	3	SEAL-O-RING	
M		1	**8C-8580**	4	BOLT-SOCKET HEAD (M5X0.8X16-MM)	
	5	1	**257-0468**	2	CAP-PROTECTION	

M-METRIC PART

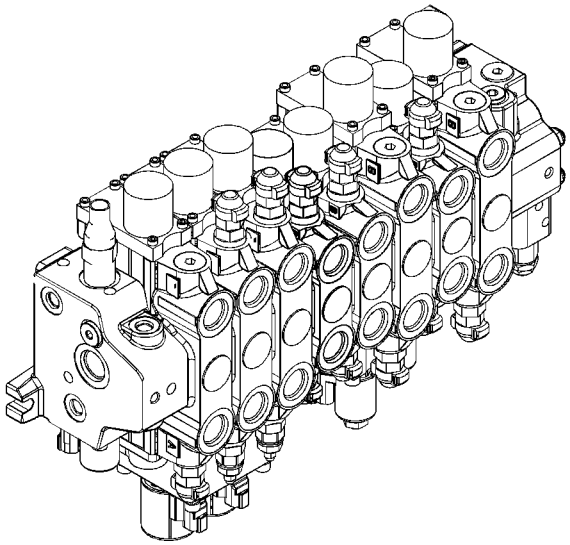

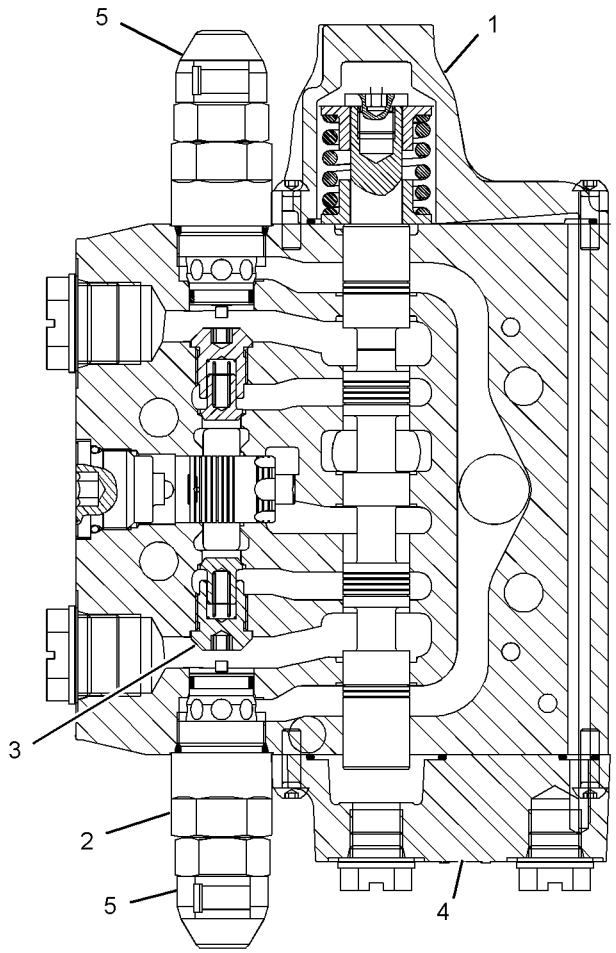

GRAPHIC #1 **<END>** g01225654

HYDRAULIC SYSTEM

269-1066 VALVE GP-CONTROL—EXTENDABLE STICK

S/N: HLS1-99999

PART OF 266-2557 VALVE GP-BANK 7, 266-2558 VALVE GP-BANK 8

AN ATTACHMENT

SMCS-5051 **i02447366**

NOTE	REF NO	GRAPHIC REF	PART NUMBER	QTY	PART NAME 1 2 3 4 5 6 (PRODUCT LEVEL)	SEE PAGE
	1	1	**257-7734**	1	KIT-COVER (CONTROL VALVE)	
					(INCLUDES BOLTS, SEAL, COVER, PLUG, SPRING & RETAINERS)	
	2	1	**227-1191**	1	PLUG AS	
		1	**8J-2413**	1	SEAL-O-RING	
		1	**095-1751**	1	SEAL-O-RING	
		1	**169-1616**	1	RING-BACKUP	
	3	1	**257-7730**	1	KIT-POPPET (CONTROL VALVE)	
					(INCLUDES POPPET AS & RODS)	
	4	1	**257-0475**	1	VALVE GP-RELIEF	
		1	**8J-2413**	1	SEAL-O-RING	
		1	**095-1751**	1	SEAL-O-RING	
		1	**169-1616**	1	RING-BACKUP	
	5	1	**257-7733**	1	VALVE GP-CHECK	
		1	**122-9250**	1	SEAL-O-RING	
	6	1	**257-7729**	1	PLUG GP-CONTROL VALVE	
		1	**122-9250**	1	SEAL-O-RING	
Y	7	1	*179-3543*	1	MANIFOLD & SOLENOID GP-CONTROL	502
	8	1	**5F-9144**	3	SEAL-O-RING	
	9	1	**5D-6543**	1	SEAL-O-RING	
M	10	1	**095-0642**	4	BOLT-SOCKET HEAD (M5X0.8X50-MM)	
	11	1	**257-0468**	1	CAP-PROTECTION	

M-METRIC PART
Y-SEPARATE ILLUSTRATION

269-1066 VALVE GP-CONTROL *(contd.)* **i02447366**

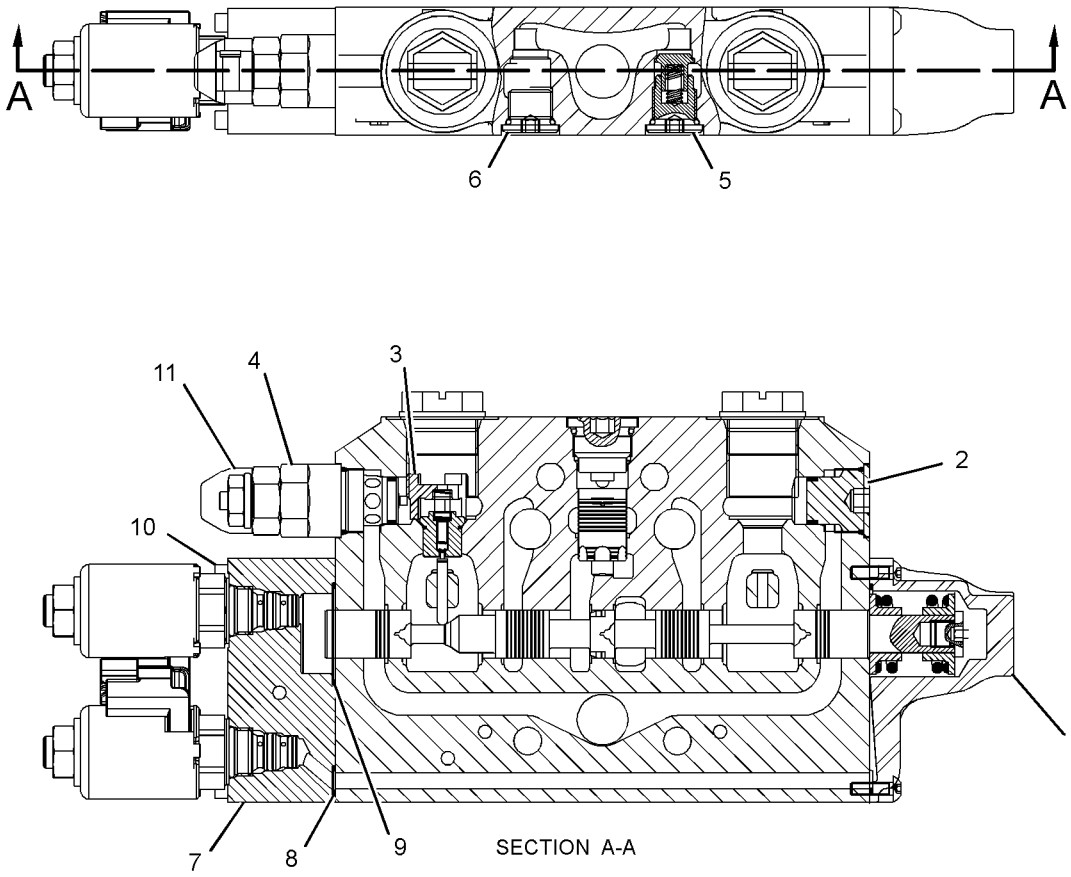

GRAPHIC #1 **<END>** g01234092

HYDRAULIC SYSTEM

269-1067 VALVE GP-CONTROL–AUXILIARY

S/N: HLS1-99999
PART OF 266-2558 VALVE GP-BANK 8
AN ATTACHMENT

SMCS-5051 **i02447424**

NOTE	REF NO	GRAPHIC REF	PART NUMBER	QTY	PART NAME 1 2 3 4 5 6 (PRODUCT LEVEL)	SEE PAGE
	1	1	**257-7734**	1	KIT-COVER (CONTROL VALVE)	
					(INCLUDES BOLTS, SEAL, COVER, PLUG, SPRING & RETAINERS)	
	2	1	**257-0475**	2	VALVE GP-RELIEF	
					(EACH INCLUDES)	
		1	**8J-2413**	1	SEAL-O-RING	
		1	**095-1751**	1	SEAL-O-RING	
		1	**169-1616**	1	RING-BACKUP	
	3	1	**227-1186**	2	VALVE AS-CHECK	
Y	4	1	*179-3543*	1	MANIFOLD & SOLENOID GP-CONTROL	502
	5	1	**5F-9144**	3	SEAL-O-RING	
	6	1	**5D-6543**	1	SEAL-O-RING	
M	7	1	**095-0642**	4	BOLT-SOCKET HEAD (M5X0.8X50-MM)	
	8	1	**257-0468**	2	CAP-PROTECTION	

M-METRIC PART
Y-SEPARATE ILLUSTRATION

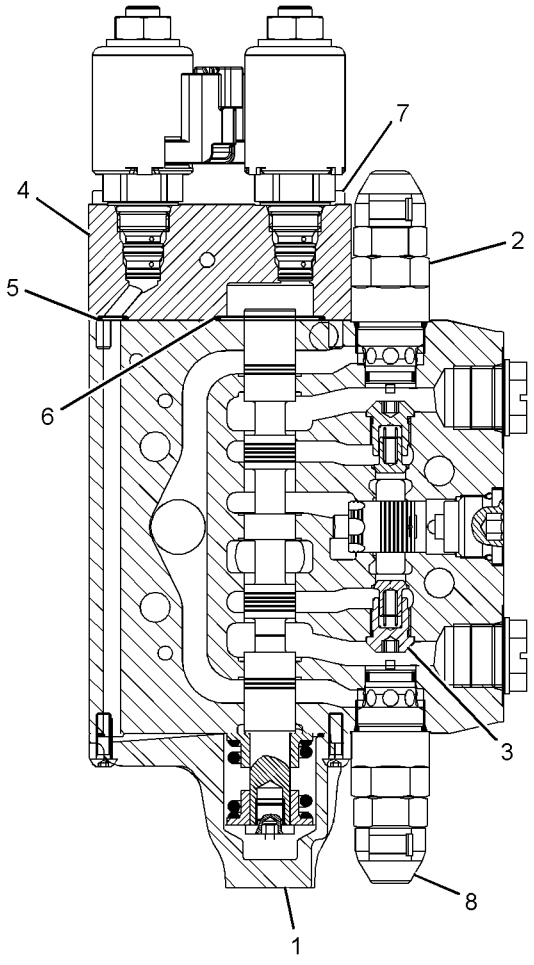

GRAPHIC #1 **<END>** g01225750

269-1091 VALVE GP-CONTROL–LIFT

S/N: HLS1-99999
PART OF 266-2552 VALVE GP-BANK 2, 266-2553 VALVE GP-BANK 3
AN ATTACHMENT

SMCS-5051 **i03514463**

NOTE	REF NO	GRAPHIC REF	PART NUMBER	QTY	PART NAME 1 2 3 4 5 6 (PRODUCT LEVEL)	SEE PAGE
	1	1	**252-5068**	1	KIT-COVER	
					(INCLUDES SEAL-LIP, SPACERS, RETAINERS, SEAL-O-RING, HOUSING, SPRINGS, HOUSING-BALL, BALLS, RINGS, COVER & BOLTS)	
J	2	1	**252-5069**	1	KIT-ACTUATOR	
					(INCLUDES BOOT, RETAINER, BOLTS, SPACER, SEAL-LIP & TANG)	
	3	1	**227-1191**	2	PLUG AS	
					(EACH INCLUDES)	
		1	**8J-2413**	1	SEAL-O-RING	
		1	**095-1751**	1	SEAL-O-RING	
		1	**169-1616**	1	RING-BACKUP	
	4	1	**227-1186**	2	VALVE AS-CHECK	
					AVAILABLE REPAIR KIT(S):	
J			**247-4981**	1	KIT-BOOT	
					(INCLUDES BOOT & RETAINER)	

J-(KIT MARKED J SERVICES PARTS MARKED J)

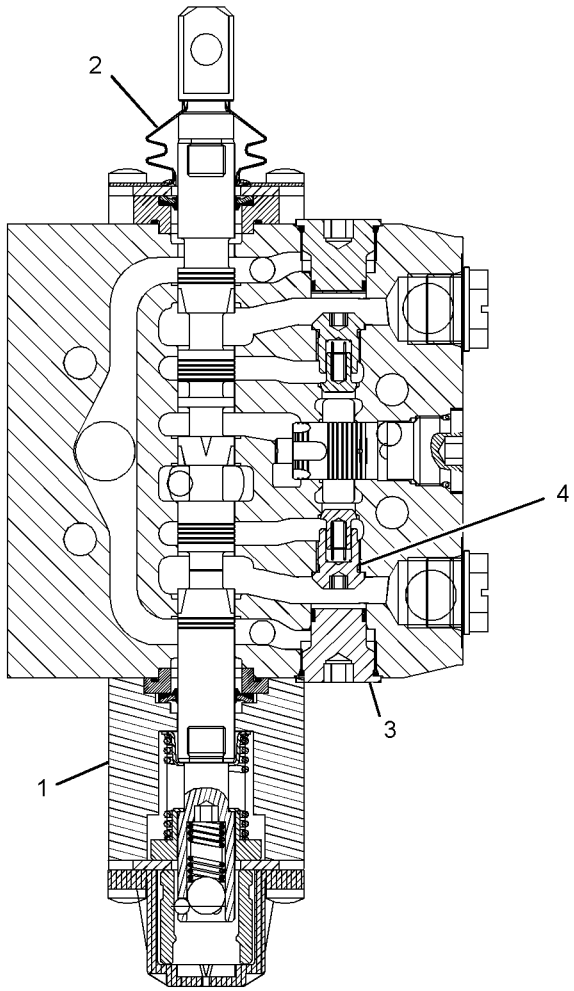

GRAPHIC #1 **<END>** g01232094

HYDRAULIC SYSTEM

269-1092 VALVE GP-CONTROL–TILT

S/N: HLS1-99999

PART OF 266-2552 VALVE GP-BANK 2, 266-2553 VALVE GP-BANK 3

AN ATTACHMENT

SMCS-5051 **i03514481**

NOTE	REF NO	GRAPHIC REF	PART NUMBER	QTY	PART NAME 1 2 3 4 5 6 (PRODUCT LEVEL)	SEE PAGE
	1	1	**257-7737**	1	KIT-SOLENOID	
					(INCLUDES SEAL, SPACER, RETAINER, SPRING, PLUNGER, COIL AS, SCREW, ARMATURE, SNAP-RING & COVER)	
	2	1	**257-7741**	1	KIT-ACTUATOR	
					(INCLUDES KIT-BOOT, SPACER, SEAL, BOLTS & TANG)	
	3	1	**266-2586**	1	VALVE GP-RELIEF	
		1	**8J-2413**	1	SEAL-O-RING	
		1	**095-1751**	1	SEAL-O-RING	
		1	**169-1616**	1	RING-BACKUP	
	4	1	**266-3590**	1	VALVE GP-RELIEF	
		1	**8J-2413**	1	SEAL-O-RING	
		1	**095-1751**	1	SEAL-O-RING	
		1	**169-1616**	1	RING-BACKUP	
	5	1	**227-1186**	2	VALVE AS-CHECK	
	6	1	**257-0468**	2	CAP-PROTECTION	

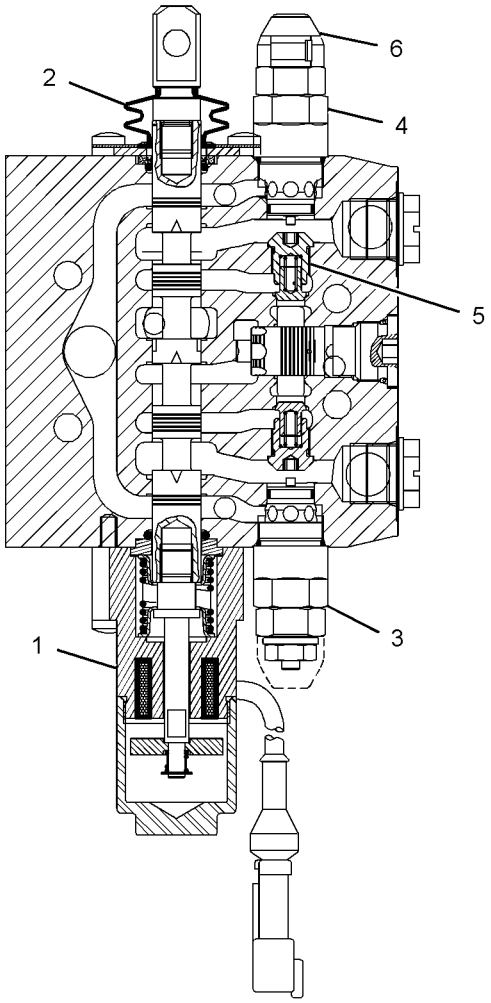

GRAPHIC #1 **<END>** g01234141

269-1093 VALVE GP-CONTROL–AUXILIARY

S/N: HLS1-99999
PART OF 266-2553 VALVE GP-BANK 3
AN ATTACHMENT

SMCS-5051 **i03514483**

NOTE	REF NO	GRAPHIC REF	PART NUMBER	QTY	PART NAME 1 2 3 4 5 6 (PRODUCT LEVEL)	SEE PAGE
	1	1	**257-7739**	1	KIT-COVER	
					(INCLUDES SEAL-LIP, SPACER, SPRING-CENTERING, RETAINER-SPRING, BOLT-RETENTION, COVER & BOLT)	
	2	1	**257-7741**	1	KIT-ACTUATOR	
					(INCLUDES KIT-BOOT, SPACER, SEAL-LIP,BOLT & TANG)	
	3	1	**266-2587**	1	VALVE GP-RELIEF	
		1	**8J-2413**	1	SEAL-O-RING	
		1	**095-1751**	1	SEAL-O-RING	
		1	**169-1616**	1	RING-BACKUP	
	4	1	**227-1191**	1	PLUG AS	
		1	**8J-2413**	1	SEAL-O-RING	
		1	**095-1751**	1	SEAL-O-RING	
		1	**169-1616**	1	RING-BACKUP	
	5	1	**227-1186**	2	VALVE AS-CHECK	
	6	1	**257-0468**	1	CAP-PROTECTION	

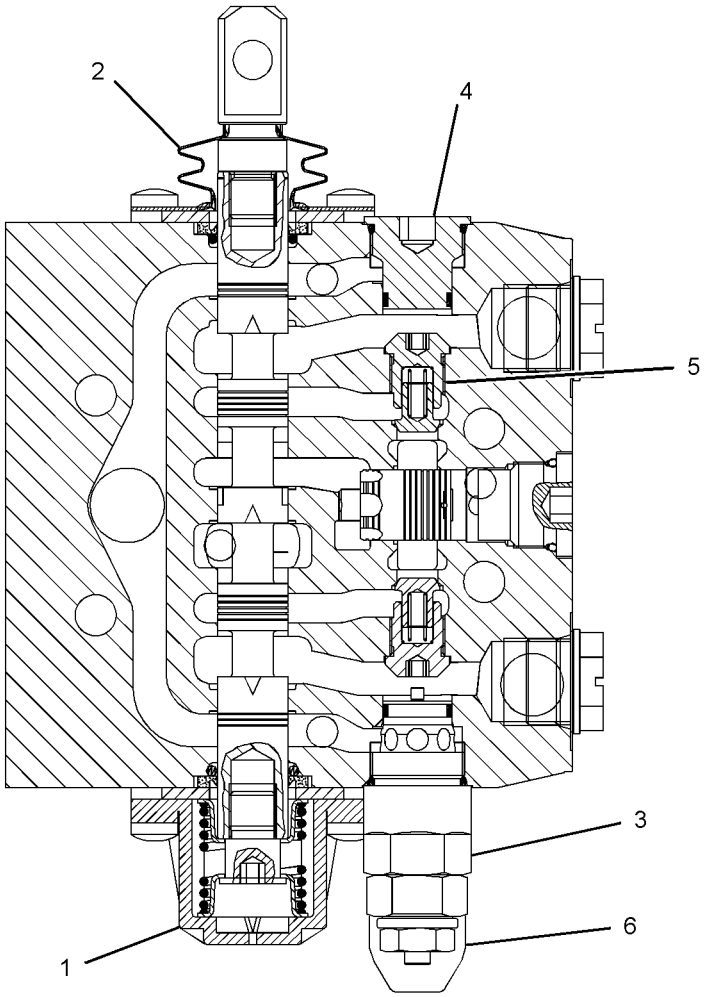

GRAPHIC #1 **<END>** g01233247

HYDRAULIC SYSTEM

223-4713 VALVE GP-PILOT–STABILIZER

S/N: HLS1-99999

PART OF 269-2125 CAB AR-ENCLOSED ROPS, 269-2123, 269-2124 CANOPY AR-OPEN ROPS

AN ATTACHMENT

SMCS-5059 **i03514484**

NOTE	REF NO	GRAPHIC REF	PART NUMBER	QTY	PART NAME 1 2 3 4 5 6 (PRODUCT LEVEL)	SEE PAGE
	1	1	**198-6498**	2	BOOT	
	2	1	**200-4023**	1	KIT-LEVER	
					(INCLUDES LEVER, CAM COVER, PIN & SCREWS)	
	3	1	**158-4466**	2	KIT-SPRING	
					(EACH KIT INCLUDES SPRINGS)	
	4	1	**116-4481**	2	PLATE	
	5	1	**8U-9427**	4	KIT-PLUNGER	
	6	1	**200-4022**	1	KIT-LEVER	
					(INCLUDES LEVER, CAM COVER, PIN & SCREWS)	
	7	1	**198-6515**	1	KIT-SEAL (PILOT VALVE)	
					(INLCUDES O-RINGS)	
M	8	1	**7I-8935**	2	BOLT-SOCKET HEAD (M8X1.25X75-MM)	
M	9	1	**176-8541**	2	NUT (M8X6.5-MM)	

M-METRIC PART

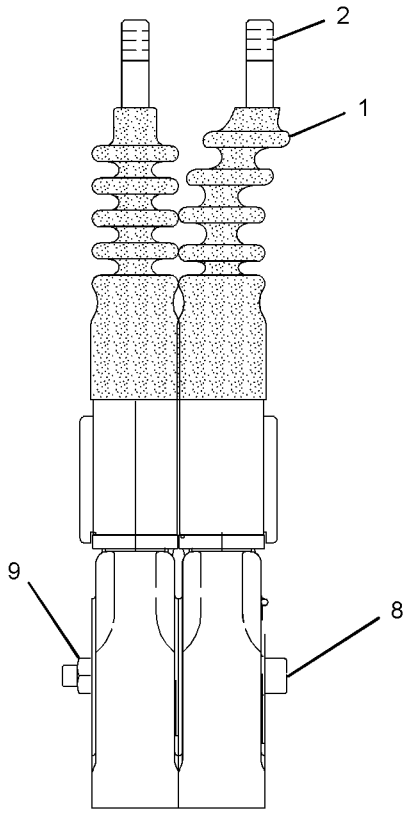

FRONT VIEW

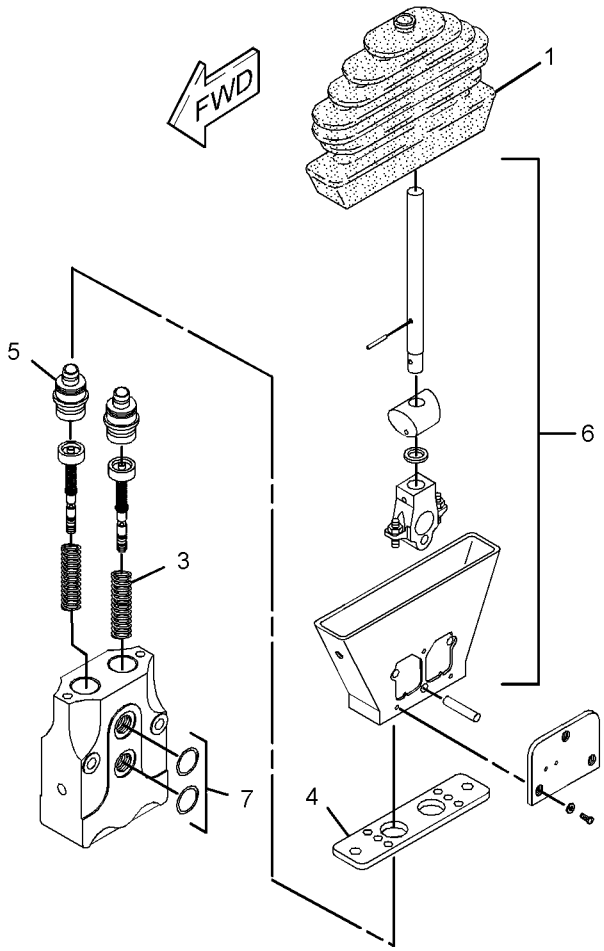

GRAPHIC #1 **<END>** g01233578

223-4715 VALVE GP-PILOT–TRUCK BODY

S/N: HLS1-99999
PART OF 269-2126, 269-2127 CAB AR-ENCLOSED ROPS
AN ATTACHMENT

SMCS-5059 **i02560445**

NOTE	REF NO	GRAPHIC REF	PART NUMBER	QTY	PART NAME 1 2 3 4 5 6 (PRODUCT LEVEL)	SEE PAGE
	1	1	**198-6498**	2	BOOT	
	2	1	**198-6522**	1	KIT-LEVER (PILOT VALVE)	
					(INCLUDES LEVER, CAM , COVER FOR MICROSWITCH, PIN, SCREWS, ARMATURE, SNAP RING & LOCKING PIN)	
	3	1	**198-6516**	2	KIT-SWITCH (PILOT VALVE)	
					(EACH INCLUDES MICROSWITCH, SUPPORT PLATE, SCREWS, WASHERS, CONNECTOR & SOCKETS)	
	4	1	**198-6505**	2	KIT-COIL (PILOT VALVE)	
					(EACH INCLUDES SOLENOID, BOLT & CONNECTOR KIT)	
	5	1	**198-6514**	2	KIT-SENSOR (PILOT VALVE)	
					(EACH INCLUDES SOCKET & SPRINGS)	
	6	1	**116-4481**	2	PLATE	
	7	1	**198-6506**	4	KIT-PLUNGER (PILOT VALVE)	
					(EACH INCLUDES PLUNGER GUIDE, FULL PLUNGER, SNAP RING & RELEASE SWITCH)	
	8	1	**198-6499**	1	KIT-LEVER (PILOT VALVE)	
					(INCLUDES LEVER, LOCKING PIN, CAM COVER FOR MICROSWITCH, PIN, SCREWS, ARMATURE & SNAP RING)	
	9	1	**158-4466**	2	KIT-SPRING (PILOT VALVE)	
					(EACH INCLUDES SPRINGS)	
	10	1	**198-6515**	1	KIT-SEAL (PILOT VALVE)	
					(INCLUDES O-RINGS)	
M	11	1	**7I-8935**	2	BOLT-SOCKET HEAD (M8X1.25X75-MM)	
M	12	1	**176-8541**	2	NUT (M8X6.5-MM)	

M-METRIC PART

223-4715 VALVE GP-PILOT *(contd.)* i02560445

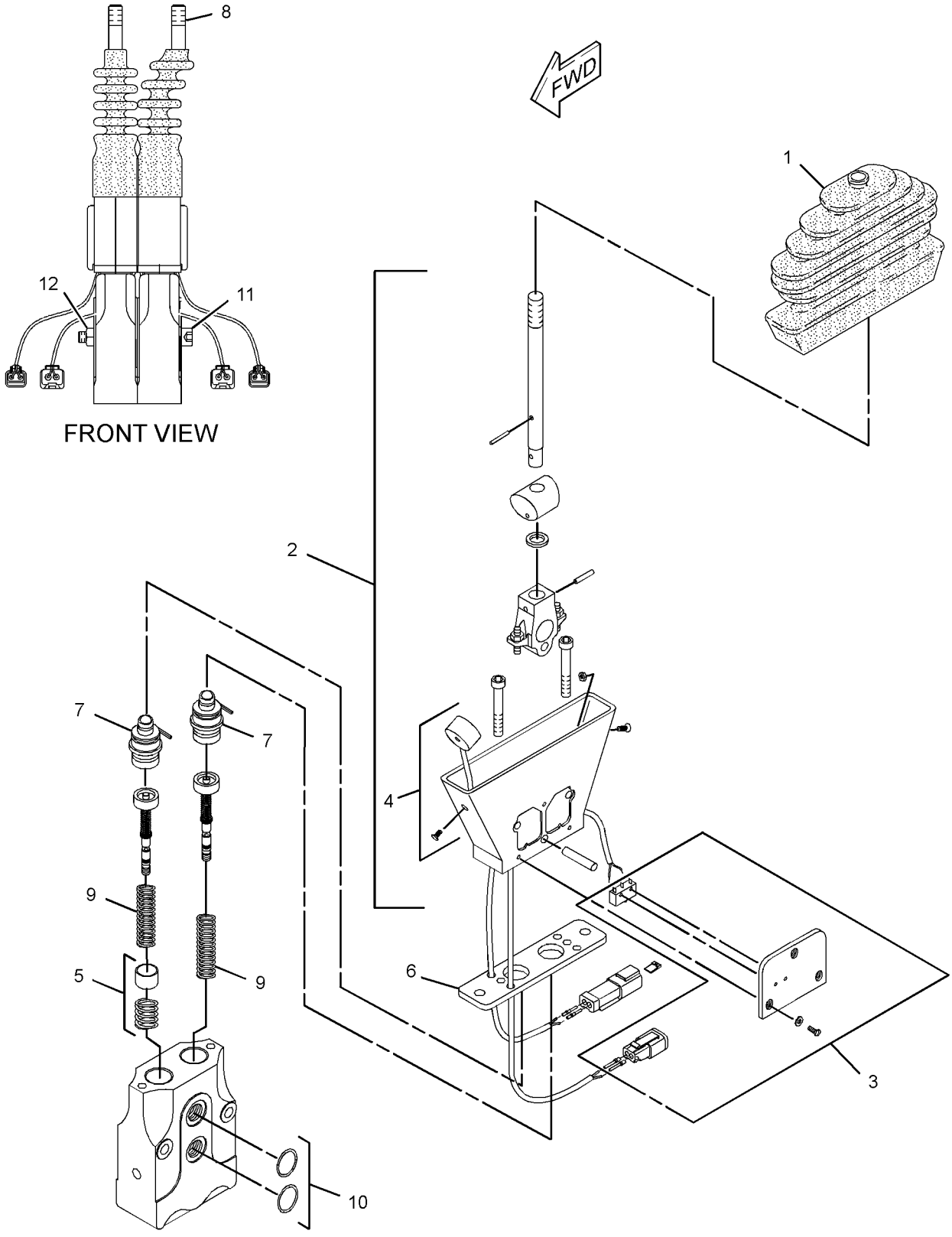

GRAPHIC #1 **<END>** g01268822

299-3932 VALVE GP-PUMP CONTROL–POWER COMPENSATOR

S/N: HLS1-99999

PART OF 267-2755 PUMP GP-PISTON

SMCS-5086, 5455 **i02952660**

NOTE	REF NO	GRAPHIC REF	PART NUMBER	QTY	PART NAME 1 2 3 4 5 6 (PRODUCT LEVEL)	SEE PAGE
	1	1	**103-5520**	1	CARRIER-PIN	
	2	1	**214-0592**	1	GASKET	
M	3	1	**6V-5683**	1	BOLT (M6X1X16-MM)	
M	4	1	**3T-0849**	2	BOLT-SOCKET HEAD (M6X1X25-MM)	
	5	1	**3C-8388**	1	PIN-ROLL	
	6	1	**6V-8236**	1	PIN-SPRING	
	7	1	**105-1440**	1	CAP	
	8	1	**6V-4589**	1	SEAL-O-RING	
	9	1	**033-6044**	1	SEAL-O-RING	

M-METRIC PART

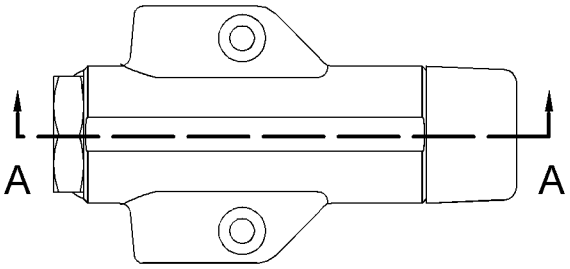

VIEW C-C

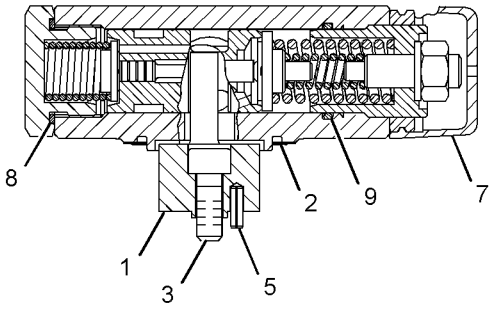

SECTION A-A

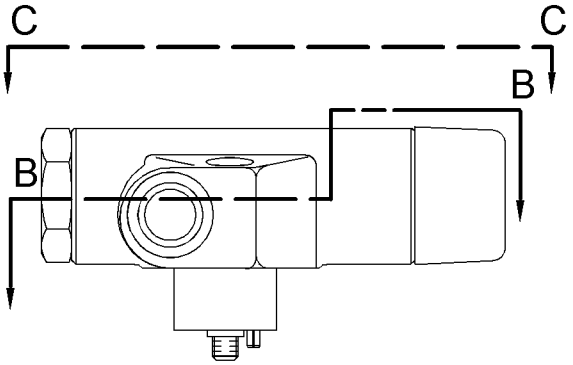

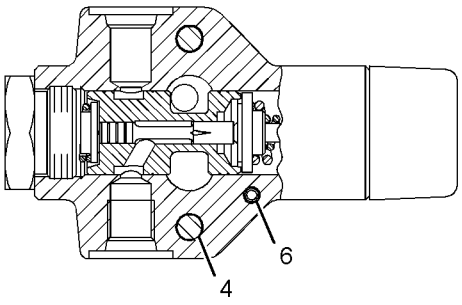

SECTION B-B

GRAPHIC #1 **<END>** g01514009

HYDRAULIC SYSTEM

185-4254 VALVE GP-SOLENOID–12-VOLT

S/N: HLS1-99999
PART OF 179-3543 MANIFOLD & SOLENOID GP-CONTROL
AN ATTACHMENT

SMCS-5132, 5479 **i03437588**

NOTE	REF NO	GRAPHIC REF	PART NUMBER	QTY	PART NAME 1 2 3 4 5 6 (PRODUCT LEVEL)	SEE PAGE
	1	1	**226-9629**	1	COIL AS-SOLENOID (12-VOLT)	
	2	1	**164-2108**	1	WASHER (13.03X25.4X2.38-MM THK)	
	3	1	**218-2373**	1	NUT (1/2-28-THD)	

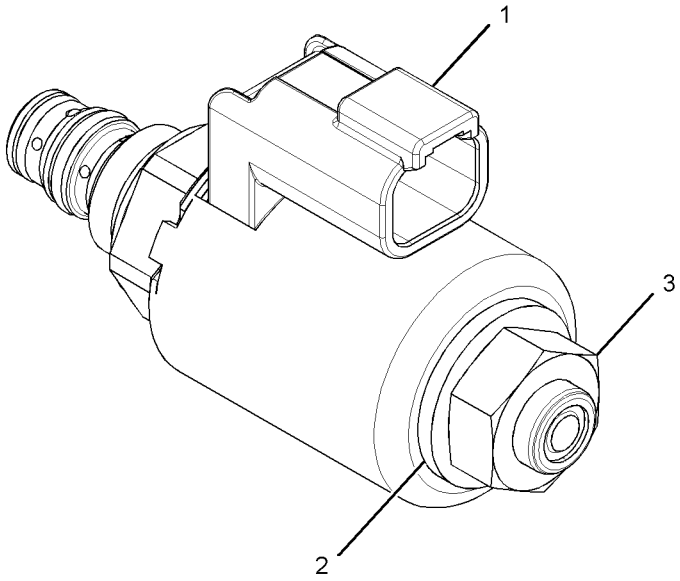

GRAPHIC #1 **<END>** g01794642

227-8378 ARM GP-LIFT

S/N: HLS1-99999
PART OF 213-9300 LOADER AR

SMCS-6118, 6119 **i02639431**

NOTE	REF NO	GRAPHIC REF	PART NUMBER	QTY	PART NAME 1 2 3 4 5 6 (PRODUCT LEVEL)	SEE PAGE
B	1	1	**9R-0109**	10	WASHER (41X64X3-MM THK)	
	2	1	**9R-0158**	2	WASHER (46X69X3-MM THK)	
	3	1	**9R-3182**	2	PIN	
B	4	1	**9R-4066**	2	WASHER (61X98X4-MM THK)	
B	5	1	**9R-8390**	2	SPACER (61X98X1-MM THK)	
	6	1	**9R-9373**	1	PIN AS	
	7	1	**127-8987**	2	RING-RETAINING	
	8	1	**128-5010**	1	PIN	
B	9	1	**128-7903**	2	SPACER (61X114.3X3-MM THK)	
B	10	1	**128-7905**	2	SPACER (61X114.3X1-MM THK)	
	11	1	**130-5451**	2	PIN	
	12	1	**132-6496**	1	PIN AS	
	13	1	**248-2257**	1	ARM AS-LIFT	
		1	*248-2272*	1	ARM AS (RH)	
		1	**9R-0111**	2	BEARING-SLEEVE	
		1	**9R-6690**	2	BEARING-SLEEVE	
		1	*248-2273*	1	ARM AS (LH)	
		1	**9R-0111**	2	BEARING-SLEEVE	
		1	**9R-6690**	2	BEARING-SLEEVE	
	14	1	**3B-8488**	4	FITTING-GREASE	
	15	1	**3B-8489**	5	FITTING-GREASE	
	16	1	**6V-3213**	2	RING-RETAINING	
M	17	1	**6V-7687**	2	LOCKNUT (M12X1.75-THD)	
	18	1	**6V-8144**	6	RING-RETAINING	
M	19	1	**8T-4176**	2	BOLT (M12X1.75X90-MM)	
B	20	1	**111-4337**	6	WASHER (46X70X1-MM THK)	
B	21	1	**119-4594**	4	WASHER (41X64X1-MM THK)	

B-USE AS REQUIRED
M-METRIC PART

227-8378 **ARM GP-LIFT** *(contd.)* **i02639431**

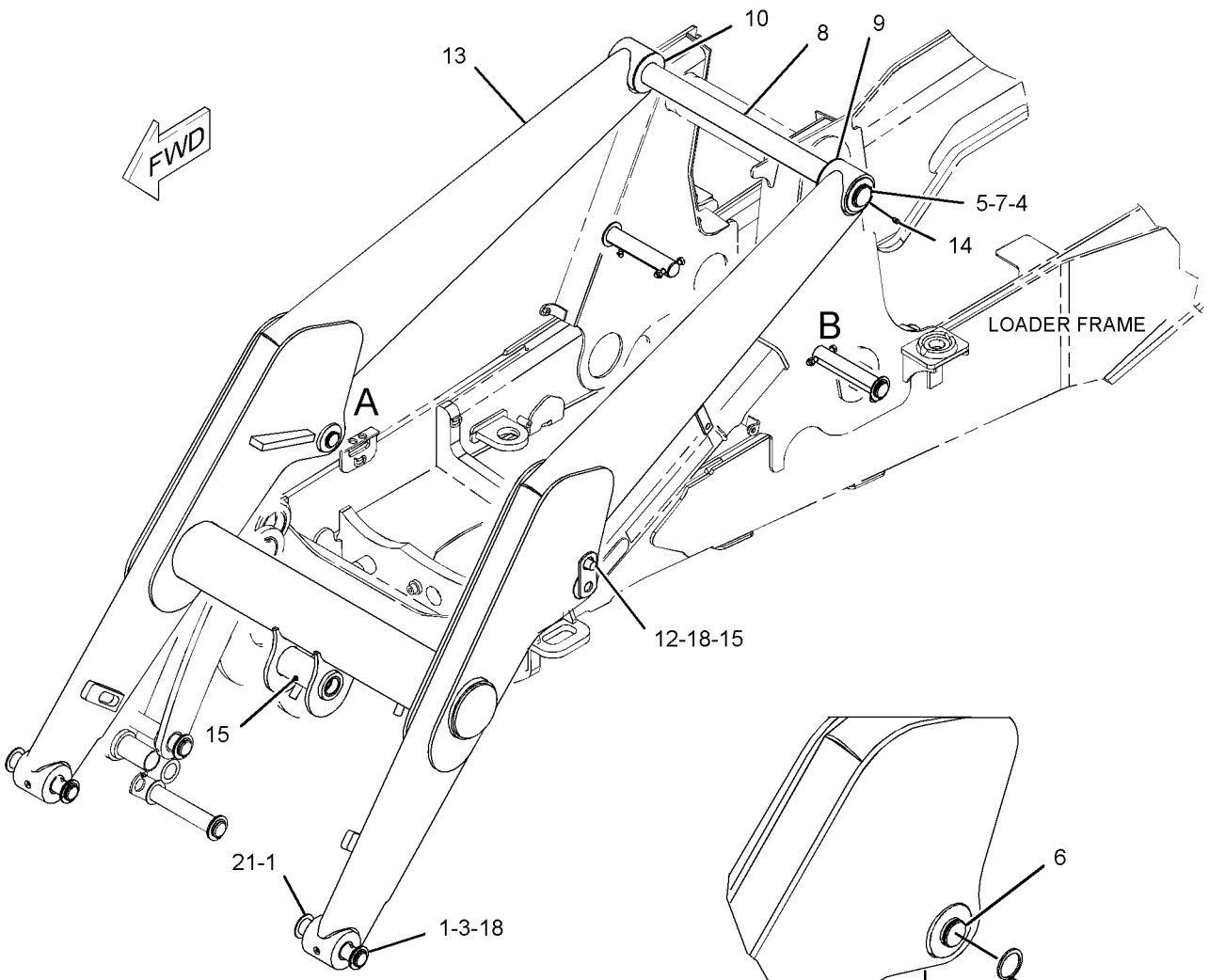

VIEW OF AREA A

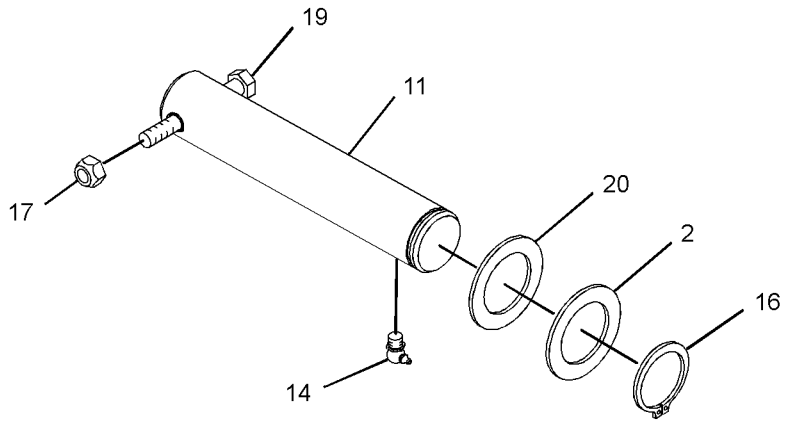

VIEW OF AREA B

GRAPHIC #1 **<END>** g01328523

209-9930 BOOM GP

S/N: HLS1-99999
PART OF 214-2553, 291-9205 BACKHOE AR-EXTENDABLE STICK, 214-2550, 291-9204 BACKHOE AR-STANDARD STICK
AN ATTACHMENT

SMCS-6501 **i02942861**

NOTE	REF NO	GRAPHIC REF	PART NUMBER	QTY	PART NAME 1 2 3 4 5 6 (PRODUCT LEVEL)	SEE PAGE
B	1	1	**9R-0481**	4	WASHER (71X110X4-MM THK)	
	2	1	**316-0040**	1	BOOM AS	
M		1	**9R-9866**	2	BOSS (M10X1.5X45-MM)	
	2A	1	**209-6181**	2	BEARING-SLEEVE	
	2B	1	**220-1012**	2	BEARING-SLEEVE	
	3	1	**213-6693**	1	PIN	
	4	1	**095-7950**	2	RING-RETAINING	
	5	1	**3B-8488**	3	FITTING-GREASE	
	6	1	**3B-8489**	1	FITTING-GREASE	

B-USE AS REQUIRED
M-METRIC PART

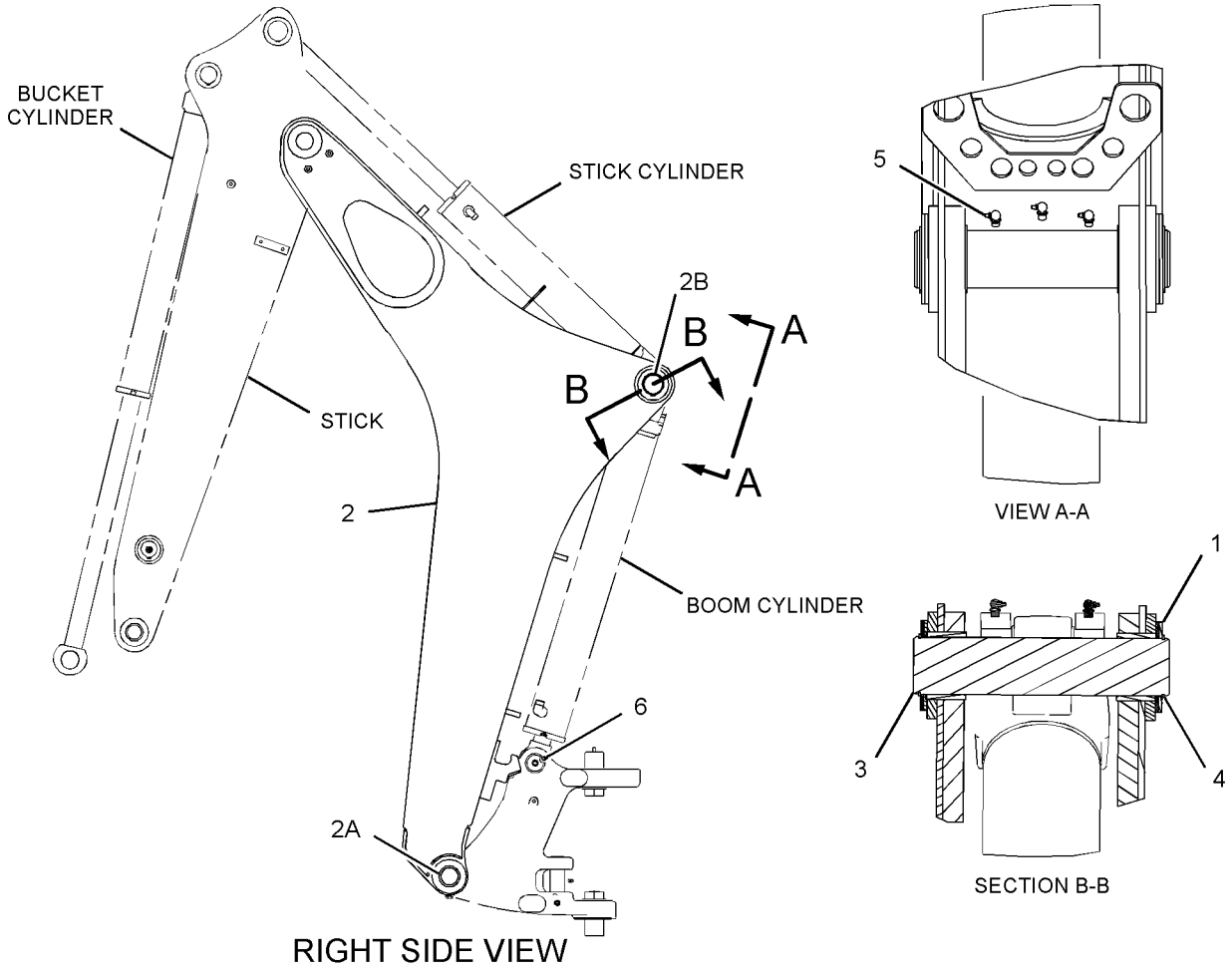

GRAPHIC #1 **<END>** g01521866

218-0745 BRACE GP-LIFT CYLINDER

S/N: HLS1-99999

PART OF 213-9300 LOADER AR

SMCS-7507 **i02531165**

NOTE	REF NO	GRAPHIC REF	PART NUMBER	QTY	PART NAME 1 2 3 4 5 6 (PRODUCT LEVEL)	SEE PAGE
	1	1	**9R-0109**	1	WASHER (41X64X3-MM THK)	
	2	1	**9R-0189**	1	PIN	
	3	1	**132-6497**	1	BRACE AS (LIFT CYLINDER)	
	4	1	**9R-5301**	1	PIN-COTTER	

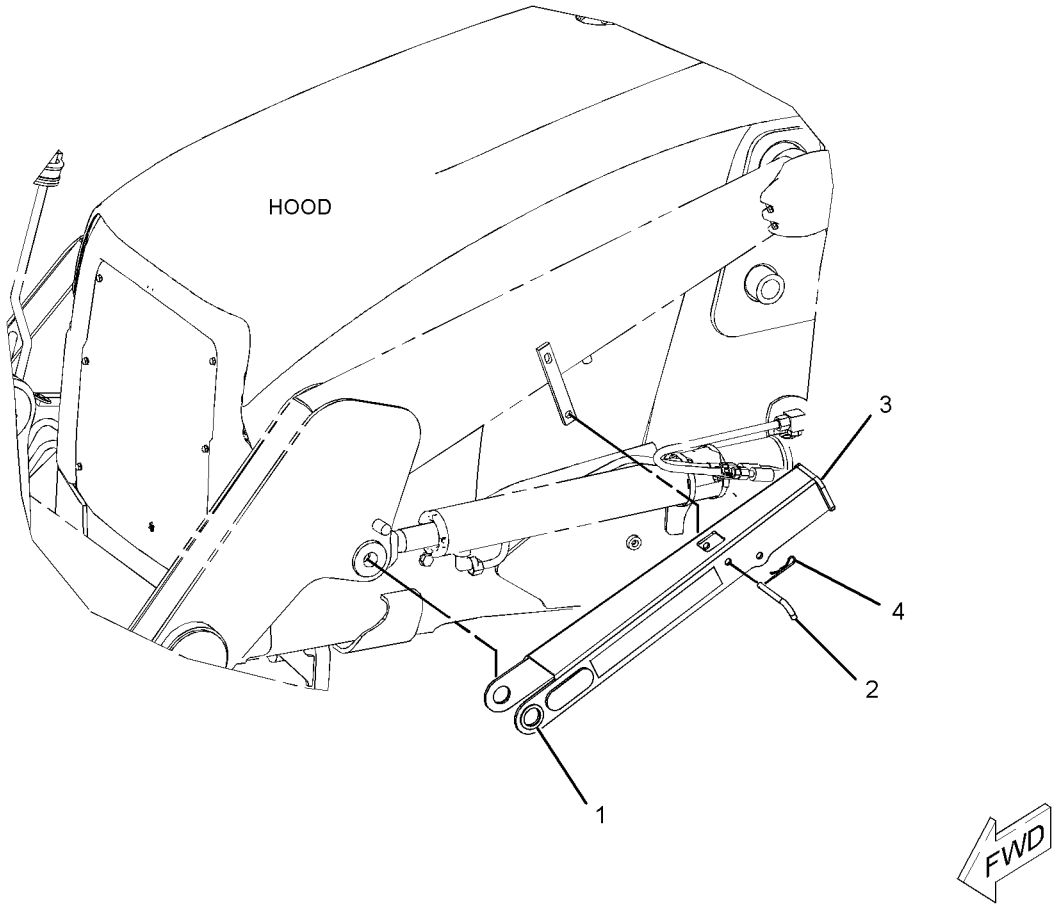

GRAPHIC #1 **<END>** g01183429

IMPLEMENTS

270-3204 GUARD GP-BOOM

S/N: HLS1-6744
AN ATTACHMENT

SMCS-7150 **i02448779**

NOTE	REF NO	GRAPHIC REF	PART NUMBER	QTY	PART NAME 1 2 3 4 5 6 (PRODUCT LEVEL)	SEE PAGE
	1	1	**270-3205**	1	PLATE AS	
M	2	1	**8T-4184**	4	BOLT (M12X1.75X45-MM)	
	3	1	**8T-4223**	16	WASHER-HARD (13.5X25.5X3-MM THK)	

M-METRIC PART

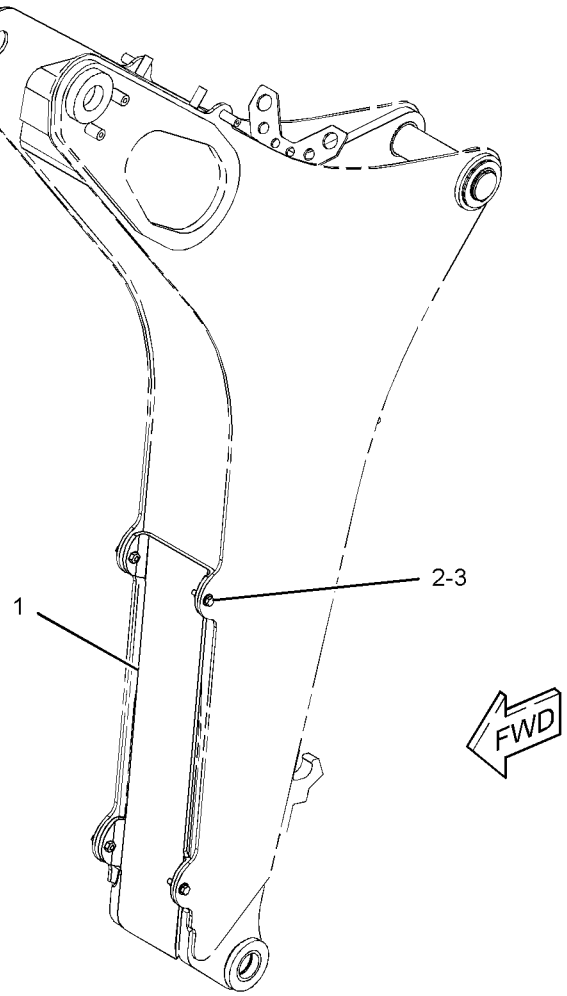

GRAPHIC #1 **<END>** g01230743

270-3204 GUARD GP-BOOM

S/N: HLS6745-99999

AN ATTACHMENT

SMCS-7150 **i02959805**

NOTE	REF NO	GRAPHIC REF	PART NUMBER	QTY	PART NAME 1 2 3 4 5 6 (PRODUCT LEVEL)	SEE PAGE
C	1	1	**294-5792**	1	PLATE AS	
CM	2	1	**8T-4139**	4	BOLT (M12X1.75X30-MM)	
C	3	1	**8T-4223**	4	WASHER-HARD (13.5X25.5X3-MM THK)	

C-CHANGE FROM PREVIOUS TYPE
M-METRIC PART

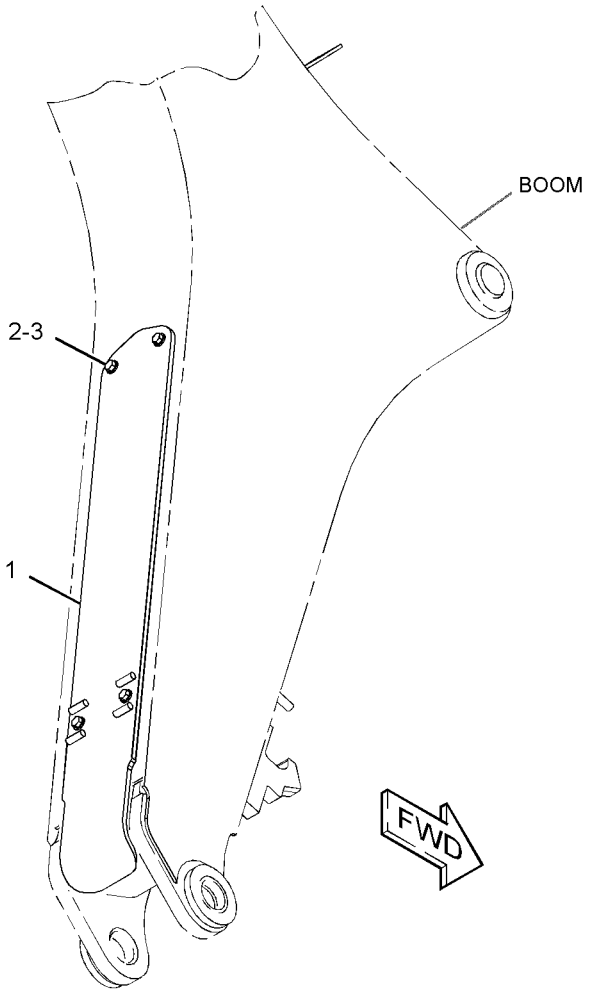

GRAPHIC #1 **<END>** g01514060

221-4276 LINK GP-THUMB–ADJUSTABLE

S/N: HLS1-99999

PART OF 224-6232, 224-6233, 224-6234, 224-6235 THUMB AR

AN ATTACHMENT

SMCS-6547 **i03514485**

NOTE	REF NO	GRAPHIC REF	PART NUMBER	QTY	PART NAME 1 2 3 4 5 6 (PRODUCT LEVEL)	SEE PAGE
	1	1	**221-4271**	1	LINK AS (OUTER)	
	2	1	**221-4272**	1	LINK AS (INNER)	
	3	1	**224-4527**	1	PIN AS	

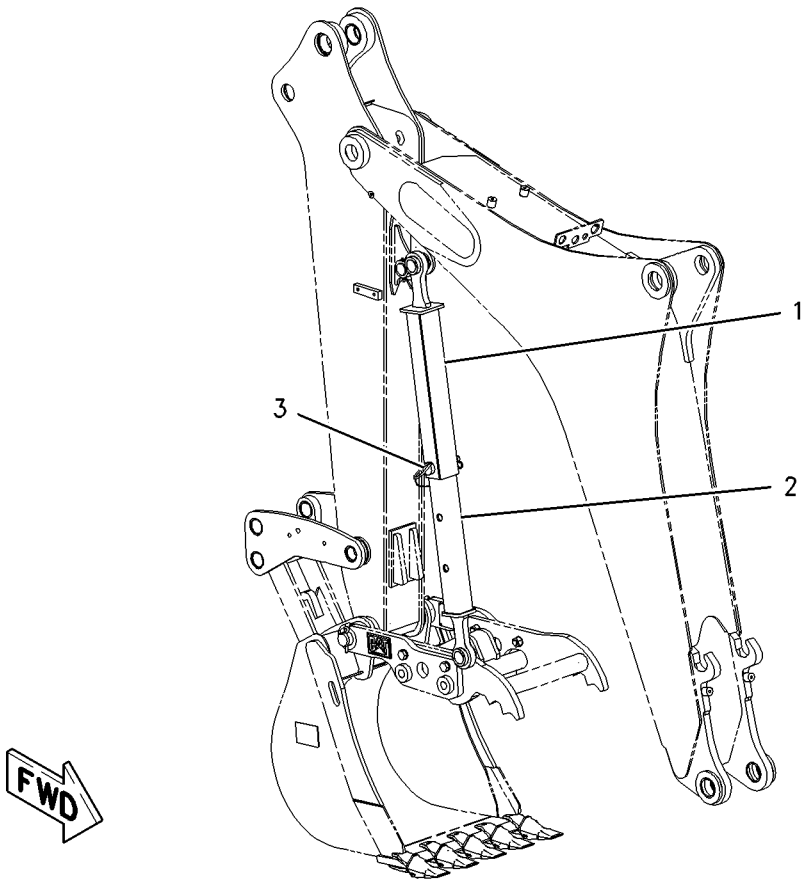

GRAPHIC #1 **<END>** g01003484

213-6692 LINKAGE GP-BACKHOE BUCKET

S/N: HLS1-99999

PART OF 214-2553, 291-9205 BACKHOE AR-EXTENDABLE STICK, 214-2550, 291-9204 BACKHOE AR-STANDARD STICK

AN ATTACHMENT

SMCS-6513 **i02098007**

NOTE	REF NO	GRAPHIC REF	PART NUMBER	QTY	PART NAME 1 2 3 4 5 6 (PRODUCT LEVEL)	SEE PAGE
B	1	1	**9R-0158**	5	WASHER (46X69X3-MM THK)	
B	2	1	**9R-1502**	4	WASHER (56X90X4-MM THK)	
B	3	1	**9R-1510**	9	WASHER (51X82X4-MM THK)	
	4	1	**154-5278**	1	PIN	
	5	1	**154-5279**	1	PIN	
	6	1	**154-5280**	1	PIN	
	7	1	**213-6690**	1	GUIDE AS (RH)	
		1	**9R-0162**	1	BEARING-SLEEVE	
		1	**9R-0170**	1	BEARING	
		1	**213-6687**	1	BEARING-SLEEVE	
	8	1	**213-6691**	1	GUIDE AS (LH)	
		1	**9R-0162**	1	BEARING-SLEEVE	
		1	**9R-0170**	1	BEARING	
		1	**213-6687**	1	BEARING-SLEEVE	
	9	1	**213-6698**	1	PIN	
	10	1	**213-6723**	1	LINK AS	
		1	**9R-0170**	2	BEARING	
		1	**213-6703**	2	BEARING	
	11	1	**239-9435**	1	FILM-INSTRUCTION (LINK)	
	12	1	**3B-5319**	4	PIN-COTTER	
	13	1	**3B-8489**	3	FITTING-GREASE	
	14	1	**6V-4364**	2	RING-RETAINING	
	15	1	**6V-8344**	2	RING-RETAINING	

B-USE AS REQUIRED

213-6692 **LINKAGE GP-BACKHOE BUCKET** *(contd.)* **i02098007**

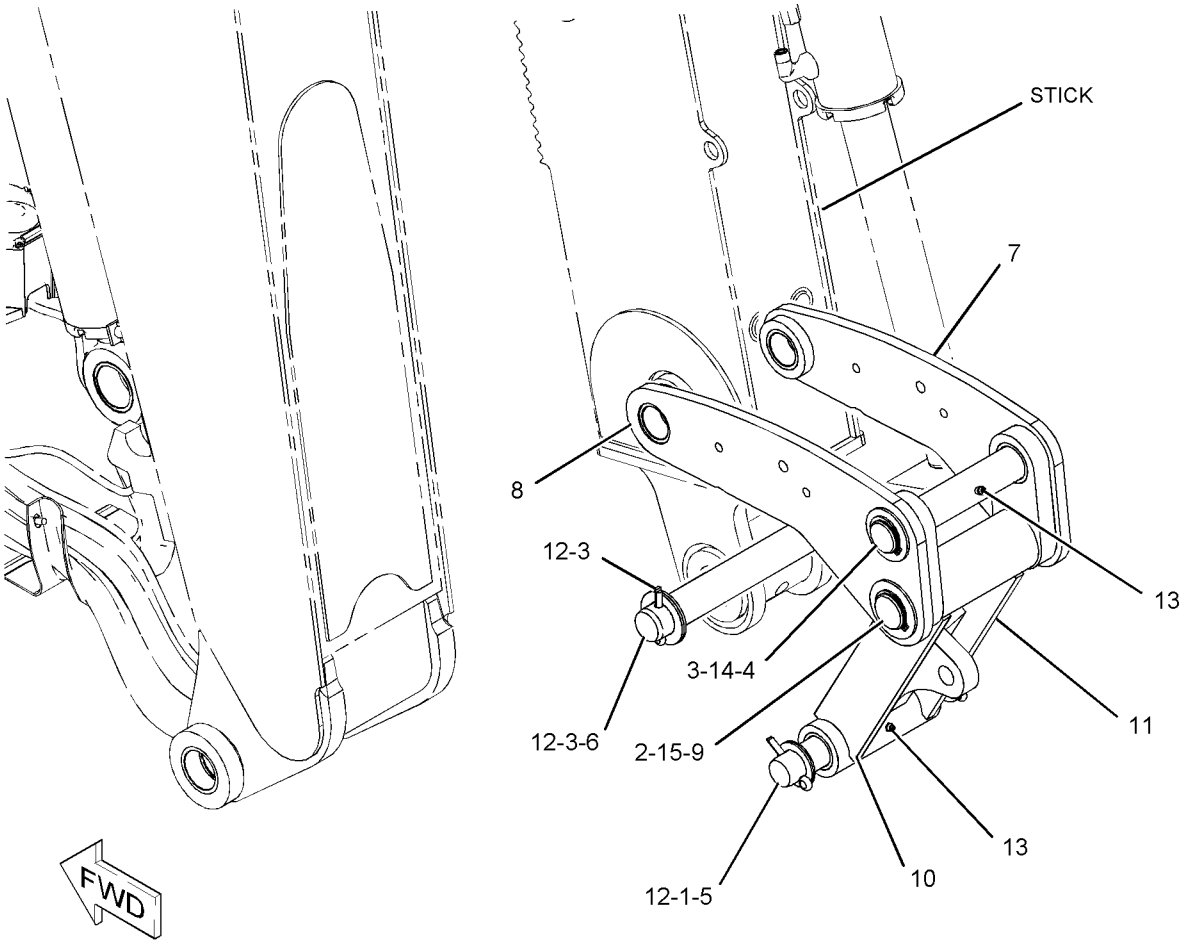

GRAPHIC #1

<END>

g01079508

202-5720 LINKAGE GP-LOADER BUCKET

S/N: HLS1-99999

PART OF 213-9300 LOADER AR

SMCS-6513 **i01643669**

NOTE	REF NO	GRAPHIC REF	PART NUMBER	QTY	PART NAME 1 2 3 4 5 6 (PRODUCT LEVEL)	SEE PAGE
B	1	1	**9R-0158**	8	WASHER (46X69X3-MM THK)	
	2	1	**9R-4482**	1	SPACER (52.7X60.3X99-MM)	
	3	1	**9R-4494**	2	PIN AS	
B	4	1	**111-4337**	10	WASHER (46X70X1-MM THK)	
	5	1	**200-8303**	1	LINK AS (RH)	
		1	**9R-3756**	1	BEARING-SLEEVE	
		1	**9R-5828**	1	BEARING-SLEEVE	
	6	1	**200-8306**	1	LINK AS (LH)	
		1	**9R-3756**	1	BEARING-SLEEVE	
		1	**9R-5828**	1	BEARING-SLEEVE	
	7	1	**200-8309**	1	GUIDE AS (RH)	
		1	**9R-3747**	1	BEARING-SLEEVE	
		1	**200-8308**	1	GUIDE	
		1	**200-8313**	1	PIN	
	8	1	**200-8310**	1	GUIDE AS (LH)	
		1	**9R-3747**	1	BEARING-SLEEVE	
	9	1	**200-8311**	1	PIN AS	
	10	1	**201-1838**	1	PLATE	
	11	1	**201-1840**	1	PLATE	
	12	1	**3B-8489**	7	FITTING-GREASE	
	13	1	**6V-3213**	3	RING-RETAINING	
	14	1	**8T-4121**	4	WASHER-HARD (11X21X2.5-MM THK)	
M	15	1	**8T-4137**	4	BOLT (M10X1.5X20-MM)	

B-USE AS REQUIRED
M-METRIC PART

202-5720 **LINKAGE GP-LOADER BUCKET** *(contd.)* **i01643669**

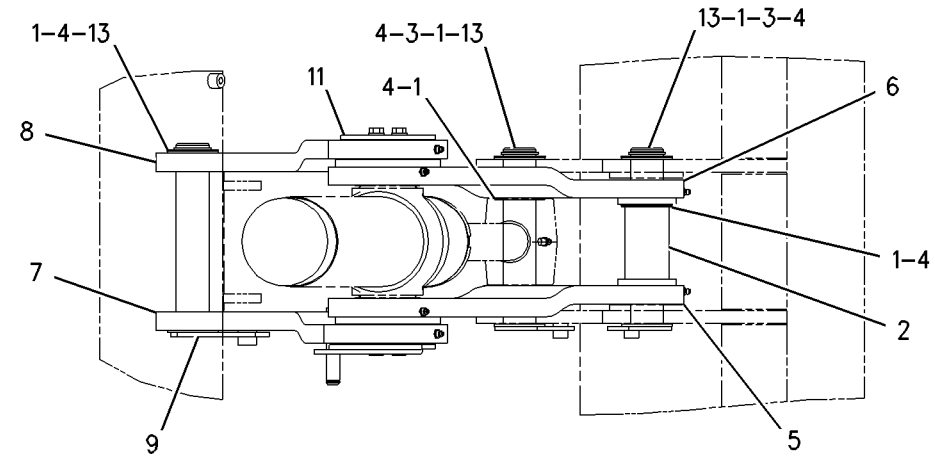

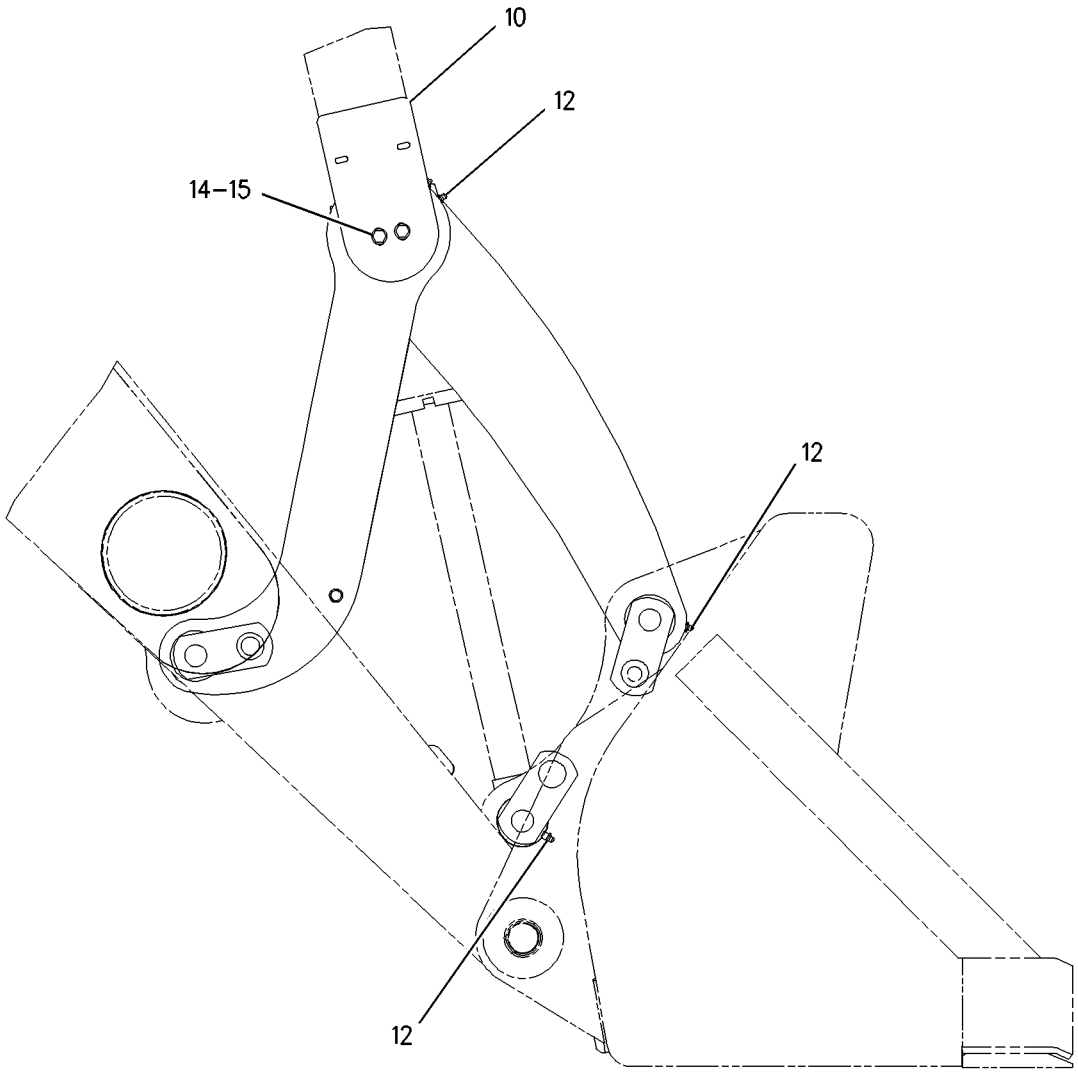

GRAPHIC #1 **<END>** g00849583

206-1641 LOCK GP-TRANSPORT–STABILIZER

S/N: HLS1-99999

PART OF 213-9287 CHASSIS AR

SMCS-7505 **i02431475**

NOTE	REF NO	GRAPHIC REF	PART NUMBER	QTY	PART NAME 1 2 3 4 5 6 (PRODUCT LEVEL)	SEE PAGE
	1	1	**9R-8165**	1	BEARING	
	2	1	**164-1398**	2	KNOB	
	3	1	**183-6084**	1	BEARING	
	4	1	**206-1871**	1	BRACKET AS	
	5	1	**206-1874**	1	LEVER AS	
	6	1	**229-5745**	1	SPACER (8X15.875X11.6-MM THK)	
	7	1	**248-2710**	1	GROMMET	
	8	1	**164-1395**	1	KNOB	
	9	1	**5P-4116**	6	WASHER-HARD (8.8X20.5X2-MM THK)	
B	10	1	**6E-5431**	1	SHIM (0.5-MM THK)	
M	11	1	**8T-4138**	1	BOLT (M6X1X20-MM)	
M	12	1	**8T-4189**	8	BOLT (M8X1.25X20-MM)	
	13	1	**8T-4224**	4	WASHER-HARD (8.8X16X2-MM THK)	
	14	1	**8T-6902**	1	CLIP	
M	15	1	**8T-7547**	1	BOLT (M8X1.25X30-MM)	
	16	1	**9X-8256**	1	WASHER (6.6X12X2-MM THK)	

B-USE AS REQUIRED
M-METRIC PART

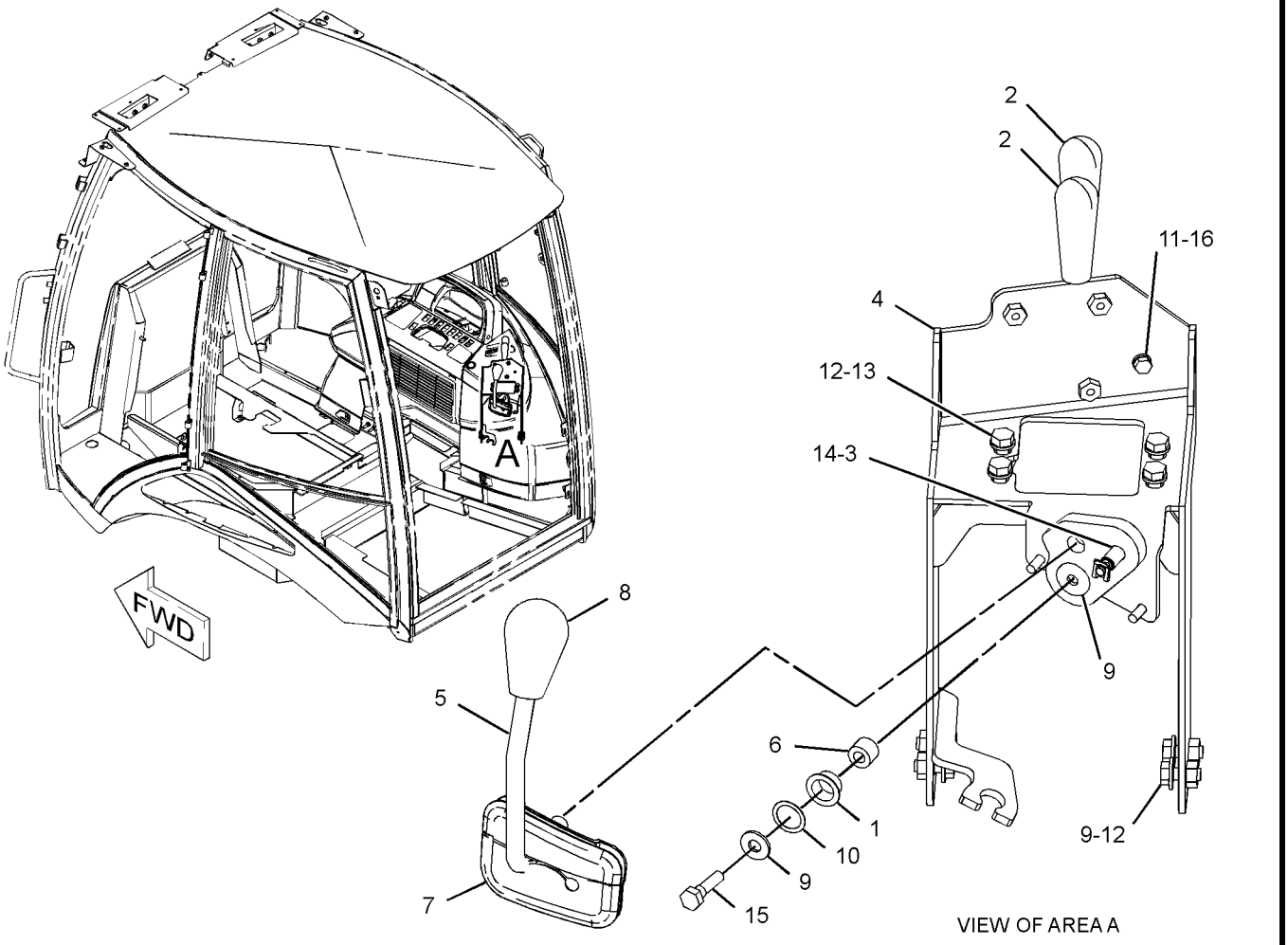

GRAPHIC #1 **<END>** g01207186

211-5182 LOCK GP-TRANSPORT–BOOM

S/N: HLS1-99999

PART OF 213-9287 CHASSIS AR

SMCS-7505 **i03447122**

NOTE	REF NO	GRAPHIC REF	PART NUMBER	QTY	PART NAME 1 2 3 4 5 6 (PRODUCT LEVEL)	SEE PAGE
	1	1	**5P-7958**	1	SLEEVE-CABLE SPLICE	
	2	1	**9R-8594**	1	PIN AS	
	3	1	**131-8775**	1	BRACKET AS	
	4	1	**134-0143**	1	CABLE	
	5	1	**214-4285**	2	PAD AS	
	6	1	**214-6999**	1	HOOK	
	7	1	**214-7043**	1	SPACER (6.15X7.94X10-MM THK)	
	8	1	**225-8227**	1	HOOK	
	9	1	**276-2353**	1	CABLE AS	
		1	**2R-0364**	1	RING-RETAINING	
		1	**4D-9517**	1	CLIP	
		1	**6V-0826**	1	GROMMET	
		1	**279-9452**	1	CLIP	
	10	1	**3B-8489**	2	FITTING-GREASE	
M	11	1	**5A-3604**	2	BOLT-SOCKET HEAD (M8X1.25X25-MM)	
M	12	1	**5C-9553**	1	BOLT (M6X1X16-MM)	
	13	1	**6E-1135**	2	PIN	
	14	1	**8T-4121**	3	WASHER-HARD (11X21X2.5-MM THK)	
M	15	1	**8T-4137**	1	BOLT (M10X1.5X20-MM)	
M	16	1	**8T-4195**	2	BOLT (M10X1.5X30-MM)	
	17	1	**214-4281**	1	PIN	
	18	1	**8T-4224**	1	WASHER-HARD (8.8X16X2-MM THK)	
M	19	1	**8T-4908**	1	BOLT (M8X1.25X25-MM)	
	20	1	**7K-1181**	1	STRAP-CABLE	

M-METRIC PART

211-5182 **LOCK GP-TRANSPORT** *(contd.)* **i03447122**

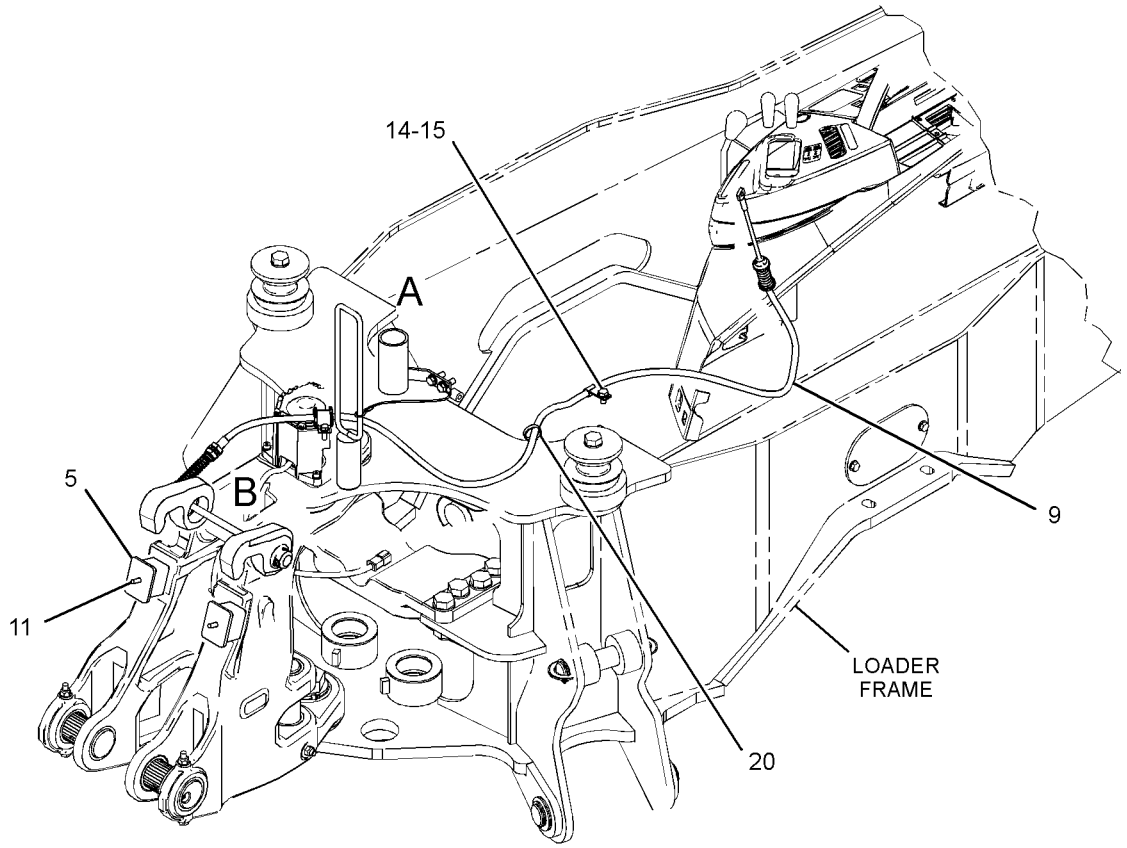



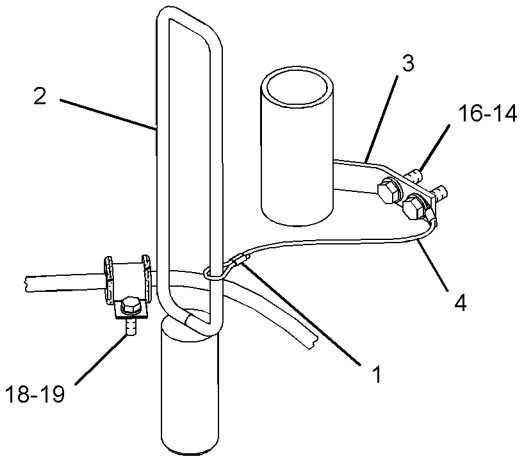

VIEW OF AREA A

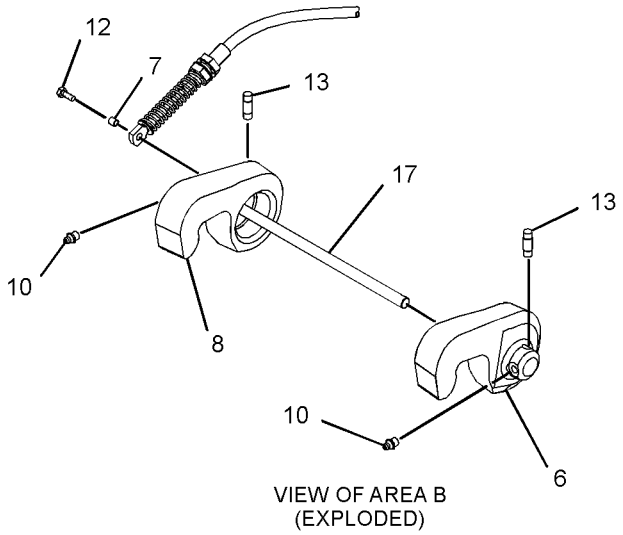

VIEW OF AREA B
(EXPLODED)

GRAPHIC #1 **<END>** g01805480

IMPLEMENTS

252-4660 LOCK GP-TRANSPORT

S/N: HLS1-99999
AN ATTACHMENT

SMCS-7505 **i02333972**

NOTE	REF NO	GRAPHIC REF	PART NUMBER	QTY	PART NAME 1 2 3 4 5 6 (PRODUCT LEVEL)	SEE PAGE
	1	1	**9R-5301**	2	PIN-COTTER	
	2	1	**252-4659**	1	CABLE AS	
	3	1	**9R-9028**	1	PIN	

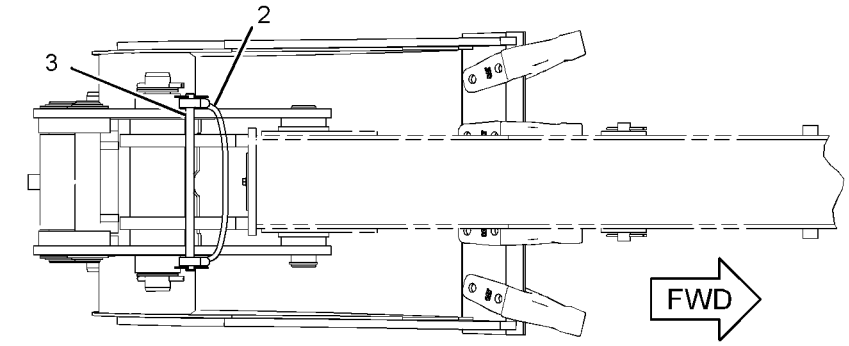

TOP VIEW

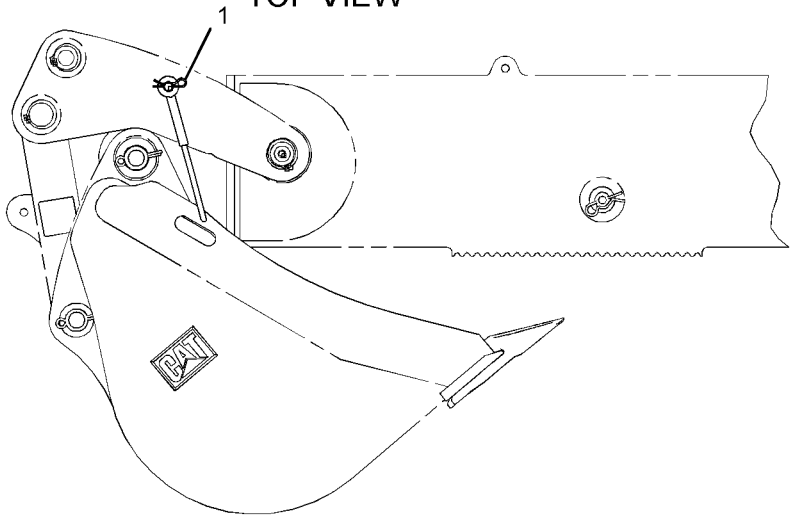

RIGHT SIDE VIEW

GRAPHIC #1 **<END>** g01178751

213-6700 MOUNTING GP-STICK

S/N: HLS1-99999

PART OF 214-2553, 291-9205 BACKHOE AR-EXTENDABLE STICK

AN ATTACHMENT

SMCS-6502 **i02355815**

NOTE	REF NO	GRAPHIC REF	PART NUMBER	QTY	PART NAME 1 2 3 4 5 6 (PRODUCT LEVEL)	SEE PAGE
B	1	1	**9R-5238**	6	SPACER (56X110X3-MM THK)	
B	2	1	**9R-1510**	3	WASHER (51X82X4-MM THK)	
B	3	1	**9R-8292**	3	SPACER (61X135X1-MM THK)	
	4	1	**213-6695**	1	PIN	
	5	1	**215-9448**	1	PIN AS	
B	6	1	**215-9690**	4	WASHER (66X100X4-MM THK)	
	7	1	**220-1019**	1	PIN	
	8	1	**095-0929**	2	RING-RETAINING	
	9	1	**3B-8488**	1	FITTING-GREASE	
	10	1	**3B-8489**	1	FITTING-GREASE	
	11	1	**6V-8344**	2	RING-RETAINING	

B-USE AS REQUIRED

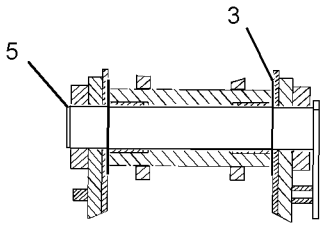

SECTION A-A

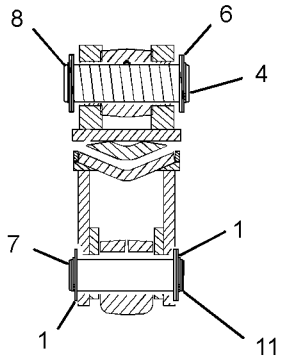

SECTION B-B

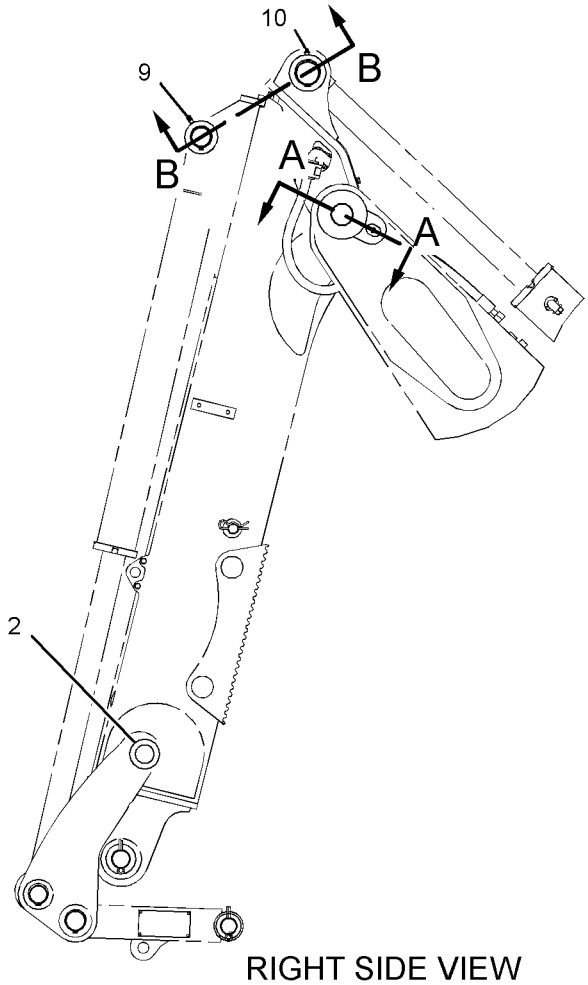

RIGHT SIDE VIEW

GRAPHIC #1 **<END>** g01208134

133-3362 PAD & GUARD GP-STABILIZER—STREET

S/N: HLS1-4801
AN ATTACHMENT

SMCS-7222 **i02650971**

NOTE	REF NO	GRAPHIC REF	PART NUMBER	QTY	PART NAME 1 2 3 4 5 6 (PRODUCT LEVEL)	SEE PAGE
	1	1	**8T-4986**	4	CLAMP-HOSE	
B	2	1	**9R-0109**	12	WASHER (41X64X3-MM THK)	
BC	3	1	**9R-0158**	6	WASHER (46X69X3-MM THK)	
	4	1	**130-1638**	2	PIN	
	5	1	**188-3953**	2	PAD	
	6	1	**201-5810**	2	PLATE	
	7	1	**201-5812**	2	PLATE AS	
					(EACH INCLUDES)	
M		1	**8T-3612**	2	NUT-WELD (M8X1.25-THD)	
		1	**201-5810**	1	PLATE	
C	8	1	**203-7060**	2	SPACER (12.58X15.88X8-MM)	
C	9	1	**238-9546**	2	SHAFT	
CY	10	1	*238-9547*	2	PAD GP-STABILIZER (STREET)	594
C	11	1	**241-0888**	2	PLATE	
C	12	1	**241-0889**	2	GUARD AS	
					(EACH INCLUDES)	
M		1	**8T-3490**	2	NUT-WELD (M10X1.5-THD)	
	13	1	**5P-4116**	2	WASHER-HARD (8.8X20.5X2-MM THK)	
C	14	1	**6V-3213**	4	RING-RETAINING	
	15	1	**6V-8144**	4	RING-RETAINING	
M	16	1	**7X-2537**	2	BOLT (M8X1.25X35-MM)	
C	17	1	**7X-7729**	2	WASHER (11X25X3-MM THK)	
CM	18	1	**8T-4195**	2	BOLT (M10X1.5X30-MM)	
	19	1	**214-4285**	2	PAD AS	
M	20	1	**5A-3604**	2	BOLT-SOCKET HEAD (M8X1.25X25-MM)	

B-USE AS REQUIRED
C-CHANGE FROM PREVIOUS TYPE
M-METRIC PART
Y-SEPARATE ILLUSTRATION

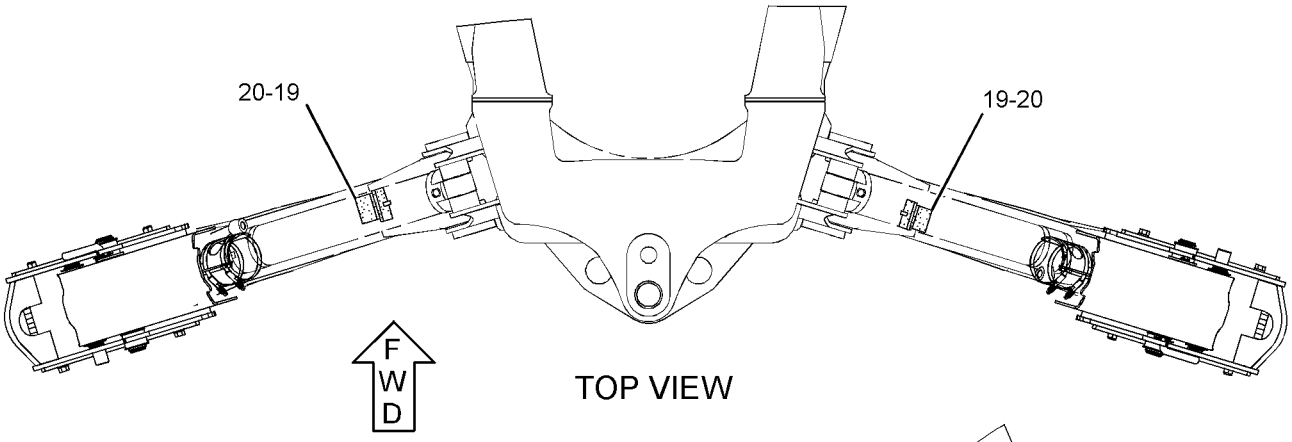

TOP VIEW

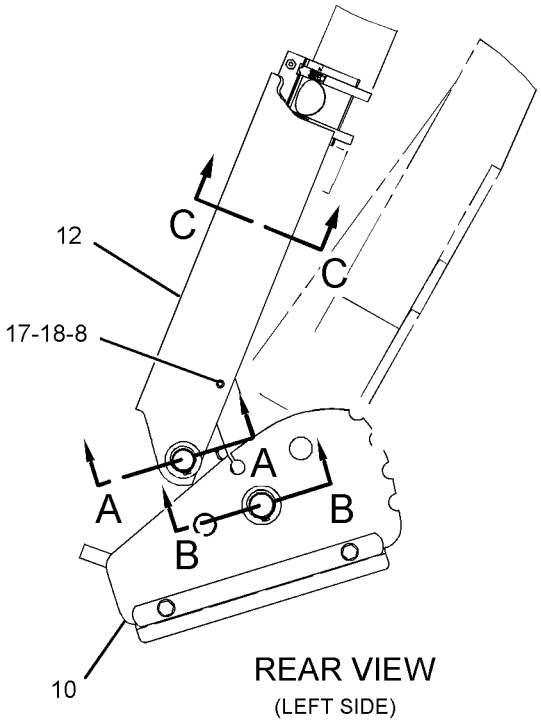

REAR VIEW
(LEFT SIDE)

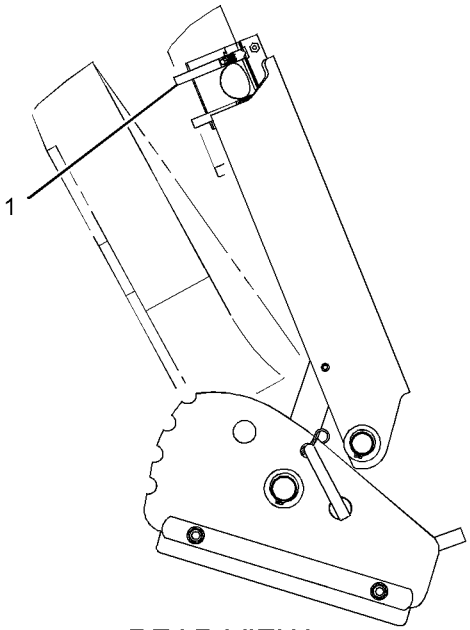

REAR VIEW
(RIGHT SIDE)

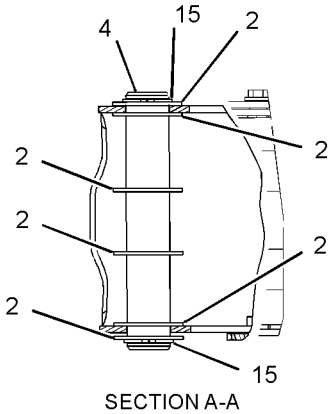

SECTION A-A

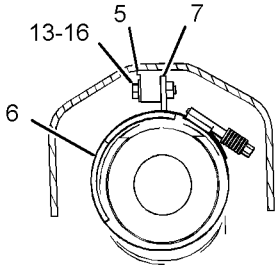

SECTION C-C

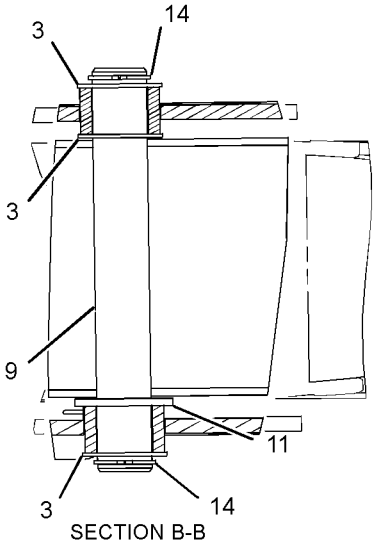

SECTION B-B

GRAPHIC #1

<END>

g01386905

133-3362 PAD & GUARD GP-STABILIZER–STREET

S/N: HLS4802-99999
AN ATTACHMENT
TYPE 1

SMCS-7222 **i02877993**

NOTE	REF NO	GRAPHIC REF	PART NUMBER	QTY	PART NAME 1 2 3 4 5 6 (PRODUCT LEVEL)	SEE PAGE
	1	1	**8T-4986**	4	CLAMP-HOSE	
B	2	1	**9R-0109**	12	WASHER (41X64X3-MM THK)	
B	3	1	**9R-0158**	6	WASHER (46X69X3-MM THK)	
	4	1	**130-1638**	2	PIN	
	5	1	**188-3953**	2	PAD	
	6	1	**201-5810**	2	PLATE	
	7	1	**201-5812**	2	PLATE AS	
					(EACH INCLUDES)	
M		1	**8T-3612**	2	NUT-WELD (M8X1.25-THD)	
		1	**201-5810**	1	PLATE	
	8	1	**3S-8536**	2	SPACER (0.406X0.656X0.38-IN THK)	
	9	1	**238-9546**	2	SHAFT	
Y	10	1	*238-9547*	2	PAD GP-STABILIZER (STREET)	594
	11	1	**241-0888**	2	PLATE	
	12	1	**241-0889**	2	GUARD AS	
					(EACH INCLUDES)	
M		1	**8T-3490**	2	NUT-WELD (M10X1.5-THD)	
	13	1	**5P-4116**	2	WASHER-HARD (8.8X20.5X2-MM THK)	
	14	1	**6V-3213**	4	RING-RETAINING	
	15	1	**6V-8144**	4	RING-RETAINING	
M	16	1	**7X-2537**	2	BOLT (M8X1.25X35-MM)	
	17	1	**7X-7729**	2	WASHER (11X25X3-MM THK)	
M	18	1	**8T-4195**	2	BOLT (M10X1.5X30-MM)	
C	19	1	**194-9487**	2	BUMPER AS	

B-USE AS REQUIRED
C-CHANGE FROM PREVIOUS TYPE
M-METRIC PART
Y-SEPARATE ILLUSTRATION

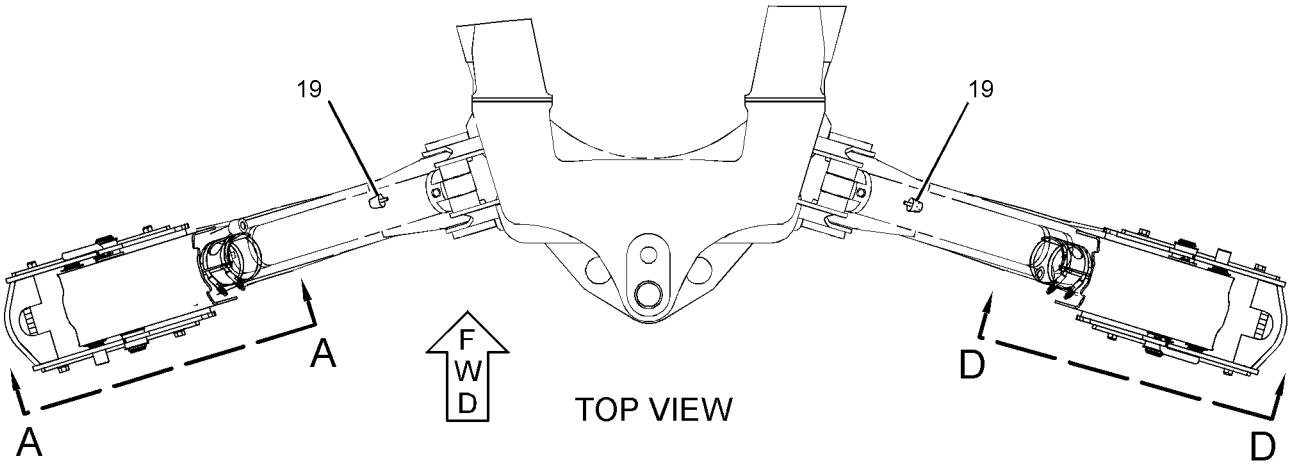

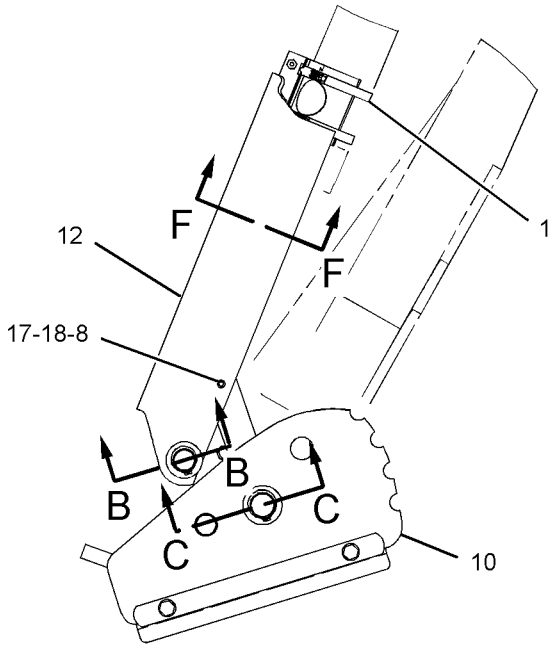

VIEW A-A

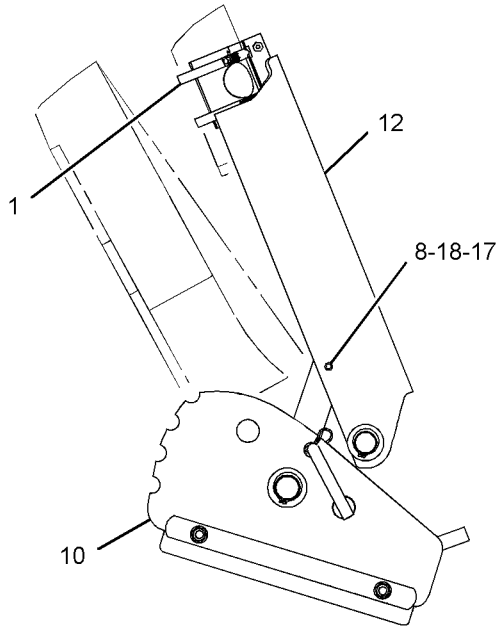

VIEW D-D

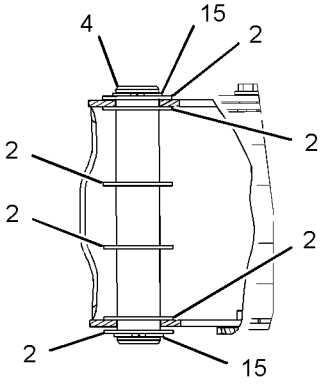

SECTION B-B

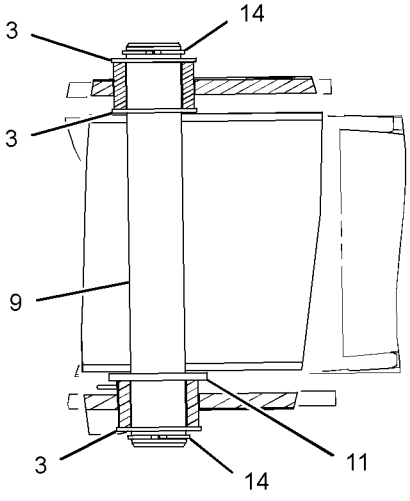

SECTION C-C

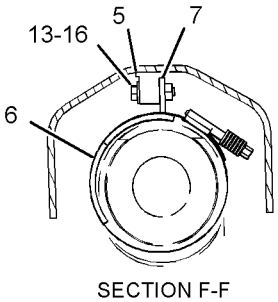

SECTION F-F

GRAPHIC #1

<END>

g01431964

133-3362 PAD & GUARD GP-STABILIZER—STREET

S/N: HLS4802-99999
AN ATTACHMENT
TYPE 2

SMCS-7222 **i03337002**

NOTE	REF NO	GRAPHIC REF	PART NUMBER	QTY	PART NAME 1 2 3 4 5 6 (PRODUCT LEVEL)	SEE PAGE
	1	1	**8T-4986**	4	CLAMP-HOSE	
B	2	1	**9R-0109**	12	WASHER (41X64X3-MM THK)	
B	3	1	**9R-0158**	6	WASHER (46X69X3-MM THK)	
	4	1	**130-1638**	2	PIN	
	5	1	**188-3953**	2	PAD	
	6	1	**194-9487**	2	BUMPER AS	
C	7	1	**318-8228**	2	PLATE AS	
	8	1	**3S-8536**	2	SPACER (0.406X0.656X0.38-IN THK)	
	9	1	**238-9546**	2	SHAFT	
Y	10	1	*238-9547*	2	PAD GP-STABILIZER (STREET)	594
	11	1	**241-0888**	2	PLATE	
	12	1	**241-0889**	2	GUARD AS	
					(EACH INCLUDES)	
M		1	**8T-3490**	2	NUT-WELD (M10X1.5-THD)	
	13	1	**5P-4116**	2	WASHER-HARD (8.8X20.5X2-MM THK)	
	14	1	**6V-3213**	4	RING-RETAINING	
	15	1	**6V-8144**	4	RING-RETAINING	
M	16	1	**7X-2537**	2	BOLT (M8X1.25X35-MM)	
	17	1	**7X-7729**	2	WASHER (11X25X3-MM THK)	
M	18	1	**8T-4195**	2	BOLT (M10X1.5X30-MM)	

B-USE AS REQUIRED
C-CHANGE FROM PREVIOUS TYPE
M-METRIC PART
Y-SEPARATE ILLUSTRATION

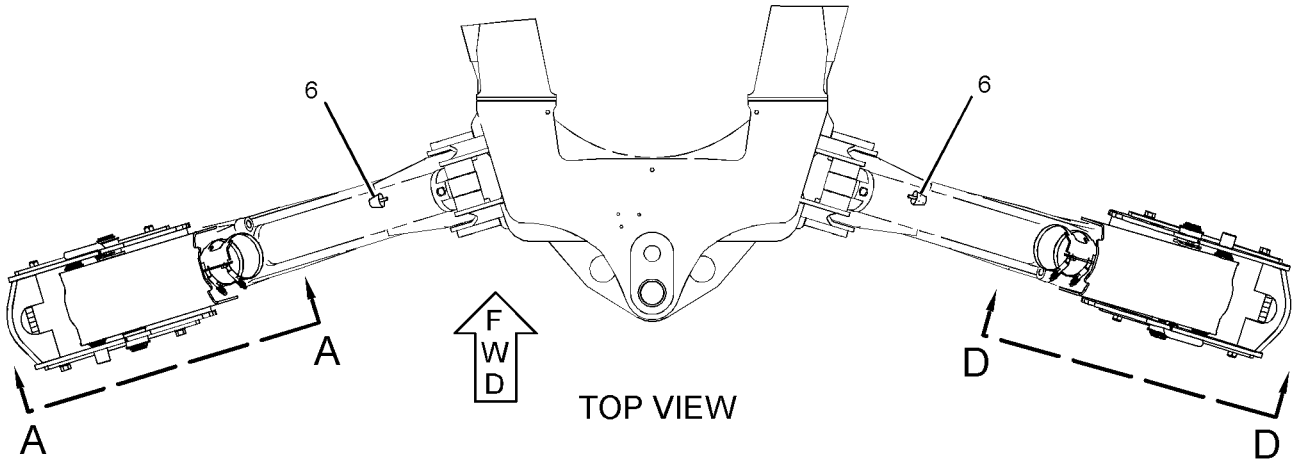

TOP VIEW

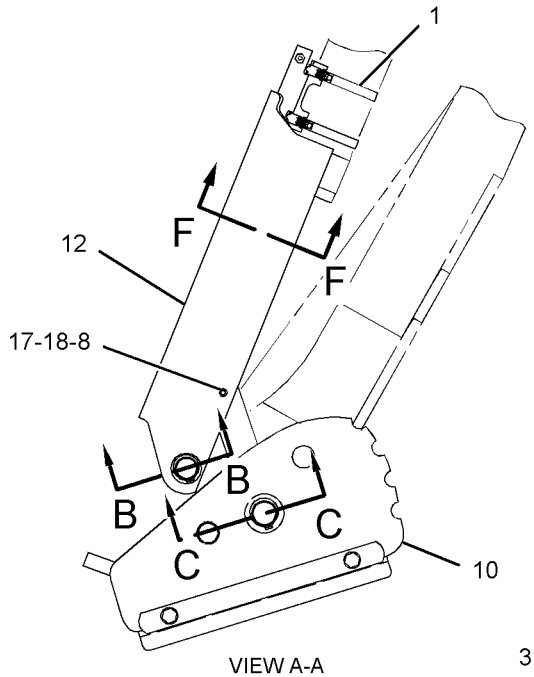

VIEW A-A

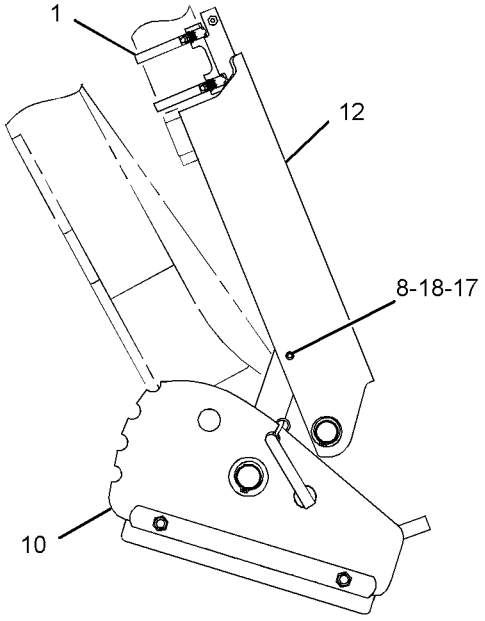

VIEW D-D

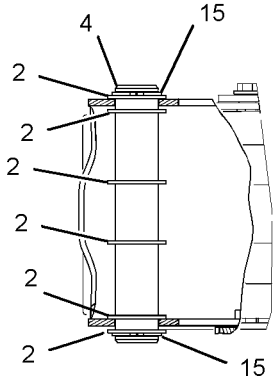

SECTION B-B

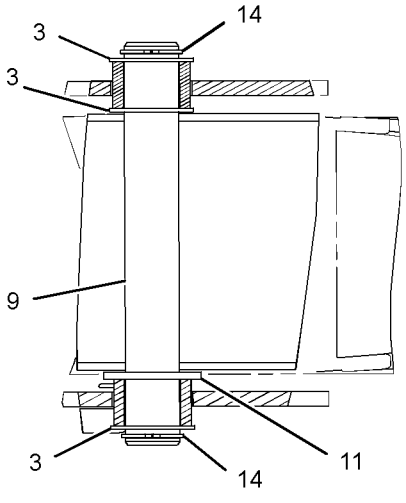

SECTION C-C

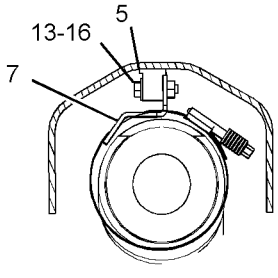

SECTION F-F

GRAPHIC #1

<END>

g01728069

133-3363 PAD & GUARD GP-STABILIZER

S/N: HLS1-4801
AN ATTACHMENT

SMCS-7222 **i02650972**

NOTE	REF NO	GRAPHIC REF	PART NUMBER	QTY	PART NAME 1 2 3 4 5 6 (PRODUCT LEVEL)	SEE PAGE
	1	1	**8T-4986**	4	CLAMP-HOSE	
BC	2	1	**9R-0109**	12	WASHER (41X64X3-MM THK)	
BC	3	1	**9R-0158**	6	WASHER (46X69X3-MM THK)	
	4	1	**130-1638**	2	PIN	
	5	1	**188-3953**	2	PAD	
	6	1	**201-5810**	2	PLATE	
	7	1	**201-5812**	2	PLATE AS	
					(EACH INCLUDES)	
M		1	**8T-3612**	2	NUT-WELD (M8X1.25-THD)	
		1	**201-5810**	1	PLATE	
C	8	1	**203-7060**	2	SPACER (12.58X15.88X8-MM)	
C	9	1	**238-9546**	2	SHAFT	
C	10	1	**239-1416**	2	PAD AS	
C	11	1	**241-0888**	2	PLATE	
C	12	1	**241-0889**	2	GUARD AS	
					(EACH INCLUDES)	
M		1	**8T-3490**	2	NUT-WELD (M10X1.5-THD)	
	13	1	**5P-4116**	2	WASHER-HARD (8.8X20.5X2-MM THK)	
	14	1	**6V-3213**	4	RING-RETAINING	
	15	1	**6V-8144**	4	RING-RETAINING	
M	16	1	**7X-2537**	2	BOLT (M8X1.25X35-MM)	
C	17	1	**7X-7729**	2	WASHER (11X25X3-MM THK)	
CM	18	1	**8T-4195**	2	BOLT (M10X1.5X30-MM)	
	19	1	**214-4285**	2	PAD AS	
M	20	1	**5A-3604**	2	BOLT-SOCKET HEAD (M8X1.25X25-MM)	

B-USE AS REQUIRED
C-CHANGE FROM PREVIOUS TYPE
M-METRIC PART

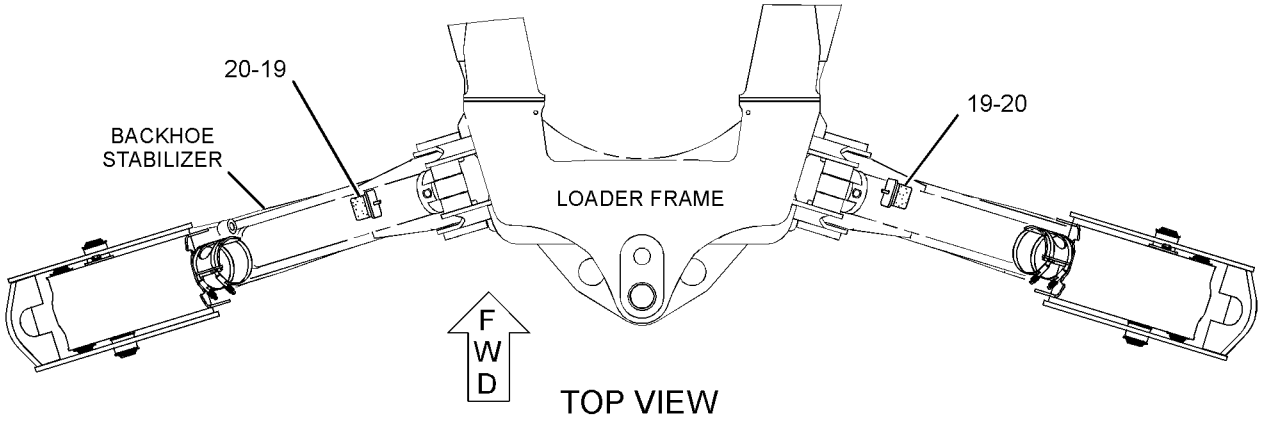

TOP VIEW

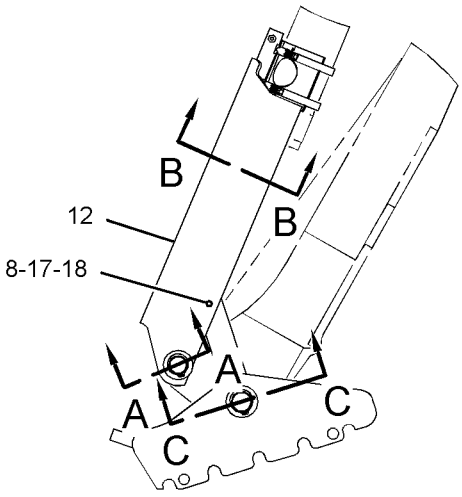

REAR VIEW
(LEFT SIDE)

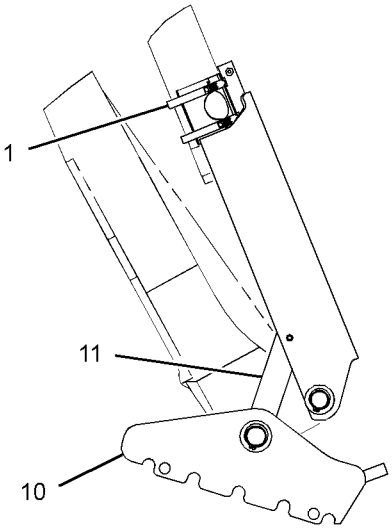

REAR VIEW
(RIGHT SIDE)

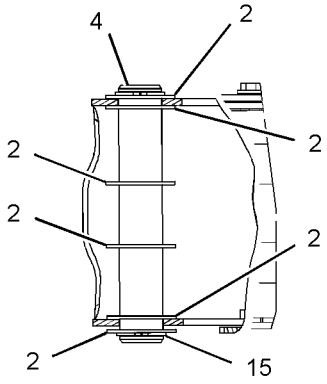

SECTION A-A

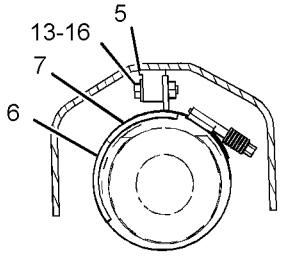

SECTION B-B

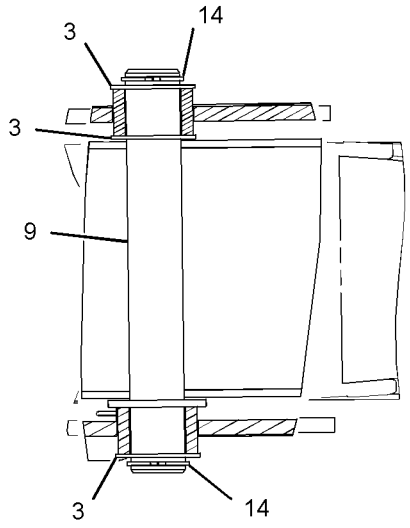

SECTION C-C

GRAPHIC #1

<END>

g01366814

133-3363 PAD & GUARD GP-STABILIZER

S/N: HLS4802-99999
AN ATTACHMENT
TYPE 1

SMCS-7222 **i02875135**

NOTE	REF NO	GRAPHIC REF	PART NUMBER	QTY	PART NAME 1 2 3 4 5 6 (PRODUCT LEVEL)	SEE PAGE
	1	1	**8T-4986**	4	CLAMP-HOSE	
B	2	1	**9R-0109**	12	WASHER (41X64X3-MM THK)	
B	3	1	**9R-0158**	6	WASHER (46X69X3-MM THK)	
	4	1	**130-1638**	2	PIN	
	5	1	**188-3953**	2	PAD	
	6	1	**201-5810**	2	PLATE	
	7	1	**201-5812**	2	PLATE AS	
					(EACH INCLUDES)	
M		1	**8T-3612**	2	NUT-WELD (M8X1.25-THD)	
		1	**201-5810**	1	PLATE	
	8	1	**3S-8536**	2	SPACER (0.406X0.656X0.38-IN THK)	
	9	1	**238-9546**	2	SHAFT	
	10	1	**239-1416**	2	PAD AS	
	11	1	**241-0888**	2	PLATE	
	12	1	**241-0889**	2	GUARD AS	
					(EACH INCLUDES)	
M		1	**8T-3490**	2	NUT-WELD (M10X1.5-THD)	
	13	1	**5P-4116**	2	WASHER-HARD (8.8X20.5X2-MM THK)	
	14	1	**6V-3213**	4	RING-RETAINING	
	15	1	**6V-8144**	4	RING-RETAINING	
M	16	1	**7X-2537**	2	BOLT (M8X1.25X35-MM)	
	17	1	**7X-7729**	2	WASHER (11X25X3-MM THK)	
M	18	1	**8T-4195**	2	BOLT (M10X1.5X30-MM)	
C	19	1	**194-9487**	2	BUMPER AS	

B-USE AS REQUIRED
C-CHANGE FROM PREVIOUS TYPE
M-METRIC PART

133-3363 **PAD & GUARD GP-STABILIZER** *(contd.)* **i02875135**

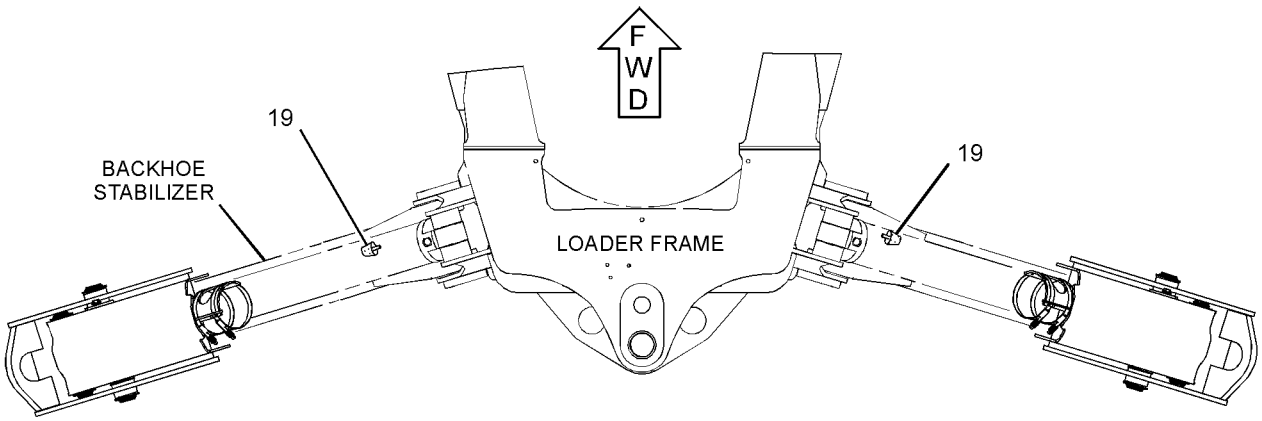

TOP VIEW

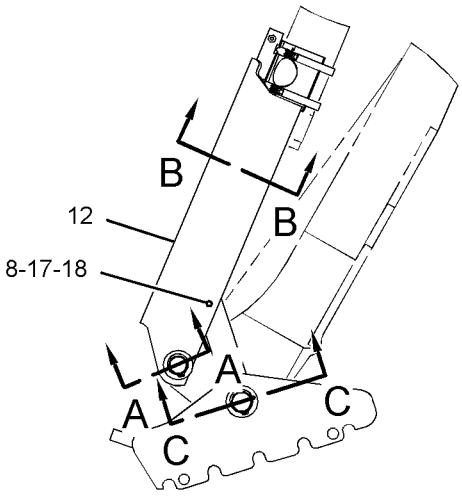

REAR VIEW
(LEFT SIDE)

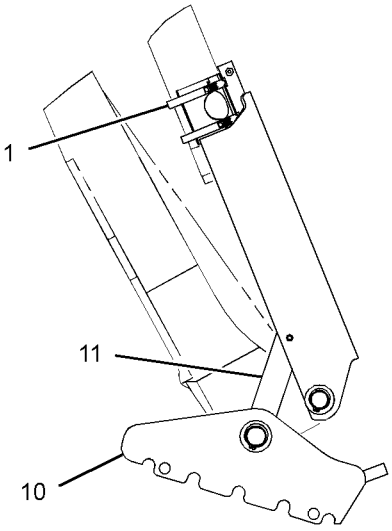

REAR VIEW
(RIGHT SIDE)

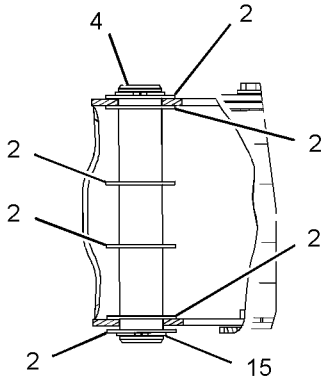

SECTION A-A

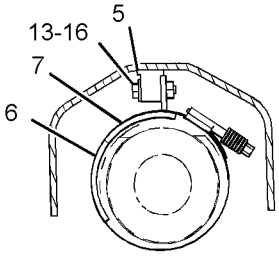

SECTION B-B

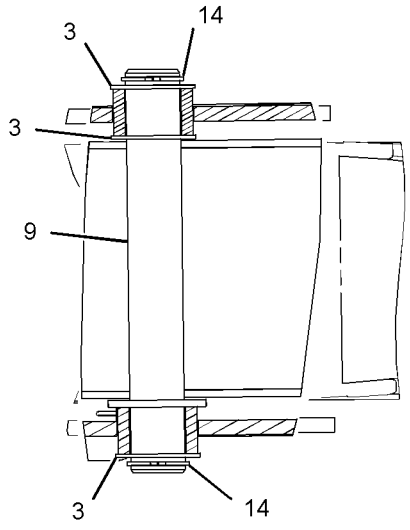

SECTION C-C

GRAPHIC #1

<END>

g01429711

133-3363 PAD & GUARD GP-STABILIZER

S/N: HLS4802-99999
AN ATTACHMENT
TYPE 2

SMCS-7222 **i03337021**

NOTE	REF NO	GRAPHIC REF	PART NUMBER	QTY	PART NAME 1 2 3 4 5 6 (PRODUCT LEVEL)	SEE PAGE
	1	1	**8T-4986**	4	CLAMP-HOSE	
B	2	1	**9R-0109**	12	WASHER (41X64X3-MM THK)	
B	3	1	**9R-0158**	6	WASHER (46X69X3-MM THK)	
	4	1	**130-1638**	2	PIN	
	5	1	**188-3953**	2	PAD	
	6	1	**194-9487**	2	BUMPER AS	
C	7	1	**318-8228**	2	PLATE AS	
	8	1	**3S-8536**	2	SPACER (0.406X0.656X0.38-IN THK)	
	9	1	**238-9546**	2	SHAFT	
	10	1	**239-1416**	2	PAD AS	
	11	1	**241-0888**	2	PLATE	
	12	1	**241-0889**	2	GUARD AS	
	13	1	**5P-4116**	2	WASHER-HARD (8.8X20.5X2-MM THK)	
	14	1	**6V-3213**	4	RING-RETAINING	
	15	1	**6V-8144**	4	RING-RETAINING	
M	16	1	**7X-2537**	2	BOLT (M8X1.25X35-MM)	
	17	1	**7X-7729**	2	WASHER (11X25X3-MM THK)	
M	18	1	**8T-4195**	2	BOLT (M10X1.5X30-MM)	

B-USE AS REQUIRED
C-CHANGE FROM PREVIOUS TYPE
M-METRIC PART

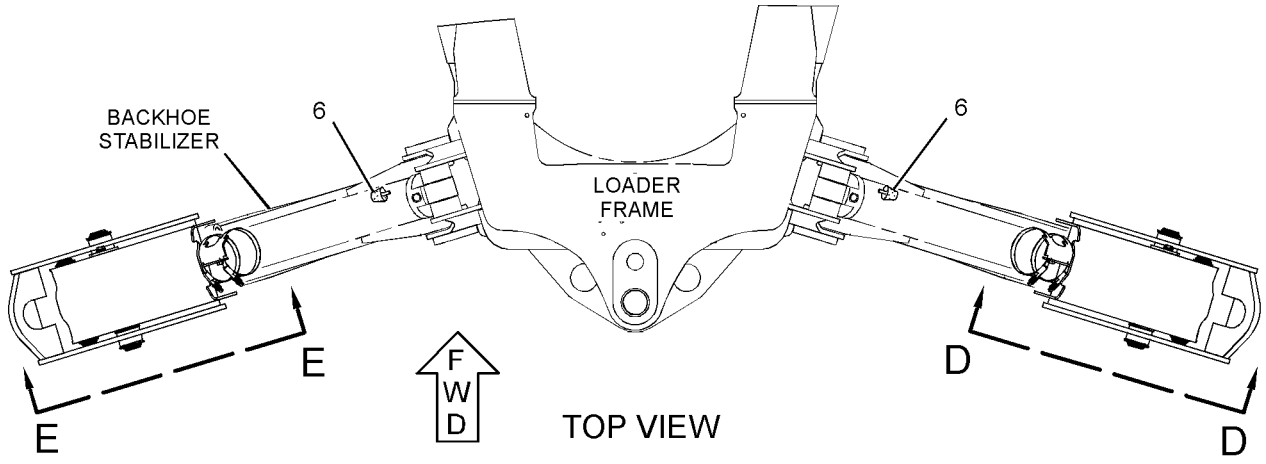

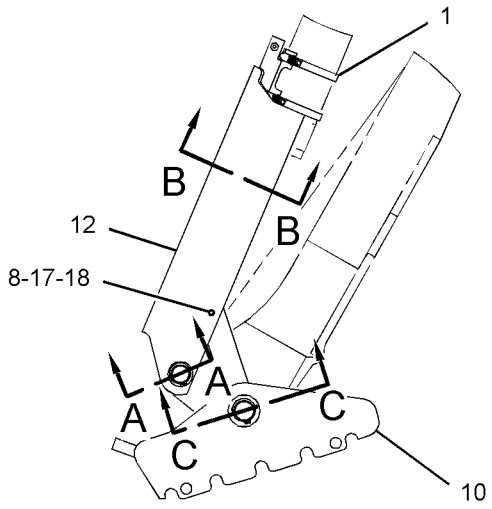

VIEW E-E

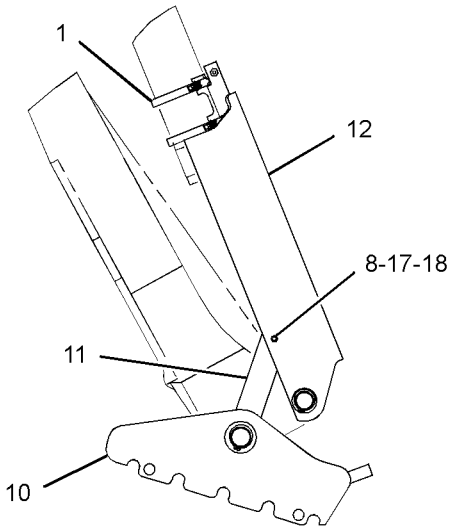

VIEW D-D

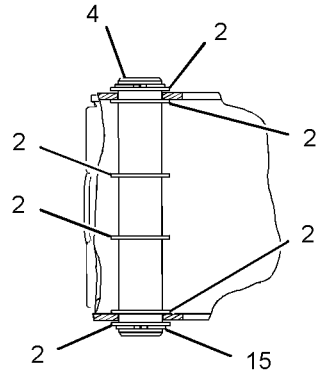

SECTION A-A

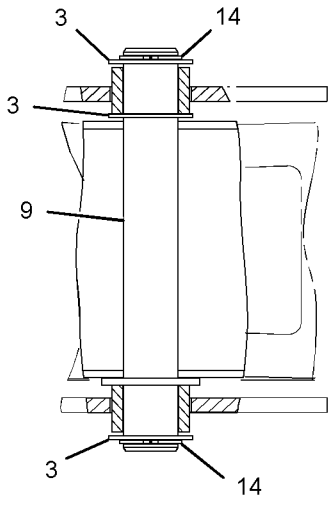

SECTION C-C

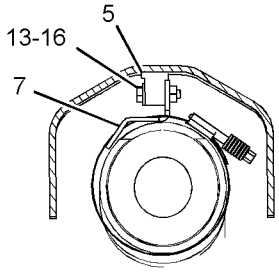

SECTION B-B

GRAPHIC #1

<END>

g01728244

133-3366 PAD & GUARD GP-STABILIZER—STREET

S/N: HLS1-740
AN ATTACHMENT

SMCS-7222 **i02650973**

NOTE	REF NO	GRAPHIC REF	PART NUMBER	QTY	PART NAME 1 2 3 4 5 6 (PRODUCT LEVEL)	SEE PAGE
	1	1	**8T-4986**	4	CLAMP-HOSE	
B	2	1	**9R-0109**	12	WASHER (41X64X3-MM THK)	
BC	3	1	**9R-0158**	6	WASHER (46X69X3-MM THK)	
	4	1	**130-1638**	2	PIN	
	5	1	**188-3953**	2	PAD	
	6	1	**201-5810**	2	PLATE	
	7	1	**201-5812**	2	PLATE AS	
					(EACH INCLUDES)	
M		1	**8T-3612**	2	NUT-WELD (M8X1.25-THD)	
		1	**201-5810**	1	PLATE	
C	8	1	**203-7060**	2	SPACER (12.58X15.88X8-MM)	
C	9	1	**238-9546**	2	SHAFT	
C	10	1	**241-0888**	2	PLATE	
C	11	1	**241-0889**	2	GUARD AS	
					(EACH INCLUDES)	
M		1	**8T-3490**	2	NUT-WELD (M10X1.5-THD)	
CY	12	1	*247-7555*	2	PAD GP-STABILIZER (STREET)	595
	13	1	**5P-4116**	2	WASHER-HARD (8.8X20.5X2-MM THK)	
	14	1	**6V-3213**	4	RING-RETAINING	
	15	1	**6V-8144**	4	RING-RETAINING	
M	16	1	**7X-2537**	2	BOLT (M8X1.25X35-MM)	
C	17	1	**7X-7729**	2	WASHER (11X25X3-MM THK)	
CM	18	1	**8T-4195**	2	BOLT (M10X1.5X30-MM)	
	19	1	**214-4285**	2	PAD AS	
M	20	1	**5A-3604**	2	BOLT-SOCKET HEAD (M8X1.25X25-MM)	

B-USE AS REQUIRED
C-CHANGE FROM PREVIOUS TYPE
M-METRIC PART
Y-SEPARATE ILLUSTRATION

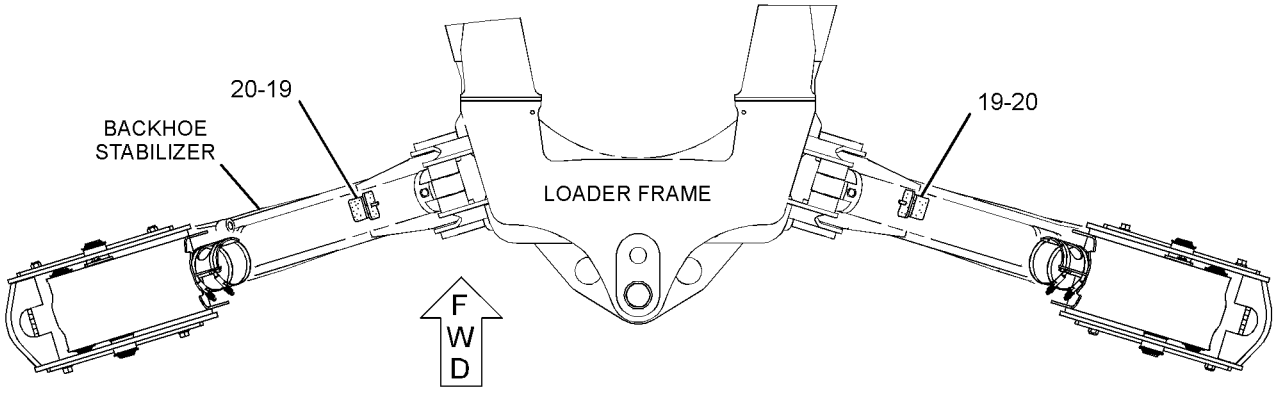

TOP VIEW

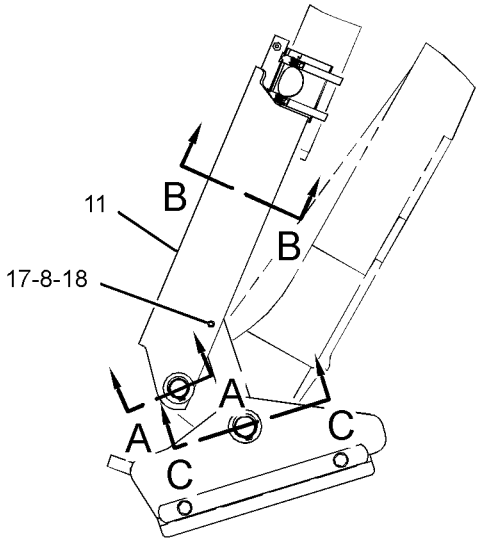

REAR VIEW
(LEFT SIDE)

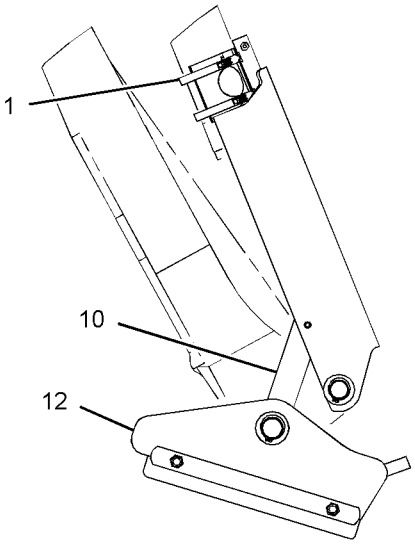

REAR VIEW
(RIGHT SIDE)

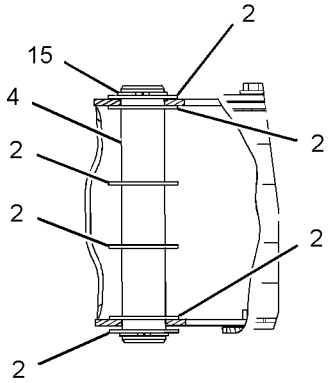

SECTION A-A

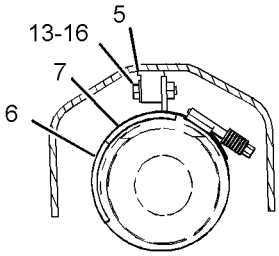

SECTION B-B

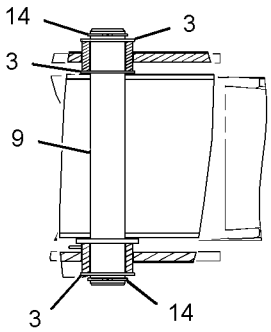

SECTION C-C

GRAPHIC #1 **<END>** g01367194

133-3366 PAD & GUARD GP-STABILIZER—STREET

S/N: HLS741-99999
AN ATTACHMENT
TYPE 1

SMCS-7222 **i02862463**

NOTE	REF NO	GRAPHIC REF	PART NUMBER	QTY	PART NAME 1 2 3 4 5 6 (PRODUCT LEVEL)	SEE PAGE
	1	1	**8T-4986**	4	CLAMP-HOSE	
B	2	1	**9R-0109**	12	WASHER (41X64X3-MM THK)	
B	3	1	**9R-0158**	6	WASHER (46X69X3-MM THK)	
	5	1	**130-1638**	2	PIN	
	6	1	**188-3953**	2	PAD	
	7	1	**201-5810**	2	PLATE	
	8	1	**201-5812**	2	PLATE AS	
					(EACH INCLUDES)	
M		1	**8T-3612**	2	NUT-WELD (M8X1.25-THD)	
		1	**201-5810**	1	PLATE	
	9	1	**3S-8536**	2	SPACER (0.406X0.656X0.38-IN THK)	
	10	1	**238-9546**	2	SHAFT	
	11	1	**241-0888**	2	PLATE	
	12	1	**241-0889**	2	GUARD AS (STABILIZER)	
					(EACH INCLUDES)	
M		1	**8T-3490**	2	NUT-WELD (M10X1.5-THD)	
Y	13	1	*247-7555*	2	PAD GP-STABILIZER (STREET)	595
	14	1	**5P-4116**	2	WASHER-HARD (8.8X20.5X2-MM THK)	
	15	1	**6V-3213**	4	RING-RETAINING	
	16	1	**6V-8144**	4	RING-RETAINING	
M	17	1	**7X-2537**	2	BOLT (M8X1.25X35-MM)	
	18	1	**7X-7729**	2	WASHER (11X25X3-MM THK)	
M	19	1	**8T-4195**	2	BOLT (M10X1.5X30-MM)	
C	20	1	**194-9487**	2	BUMPER AS	

B-USE AS REQUIRED
C-CHANGE FROM PREVIOUS TYPE
M-METRIC PART
Y-SEPARATE ILLUSTRATION

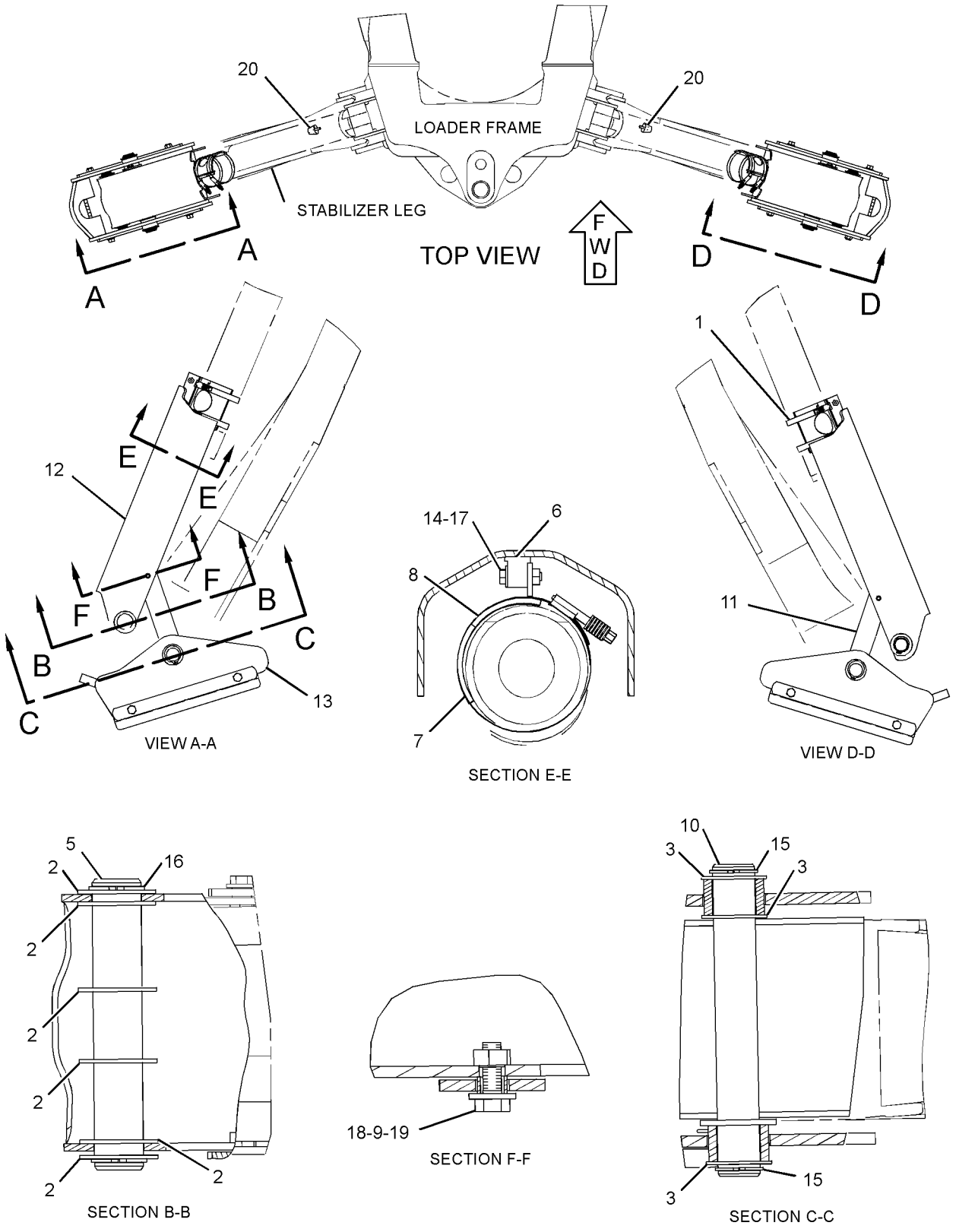

GRAPHIC #1 **<END>** g01428782

133-3366 PAD & GUARD GP-STABILIZER–STREET

S/N: HLS741-99999
AN ATTACHMENT
TYPE 2

SMCS-7222 **i03337042**

NOTE	REF NO	GRAPHIC REF	PART NUMBER	QTY	PART NAME 1 2 3 4 5 6 (PRODUCT LEVEL)	SEE PAGE
	1	1	**8T-4986**	4	CLAMP-HOSE	
B	2	1	**9R-0109**	12	WASHER (41X64X3-MM THK)	
B	3	1	**9R-0158**	6	WASHER (46X69X3-MM THK)	
	5	1	**130-1638**	2	PIN	
	6	1	**188-3953**	2	PAD	
C	8	1	**318-8228**	2	PLATE AS	
	9	1	**3S-8536**	2	SPACER (0.406X0.656X0.38-IN THK)	
	10	1	**238-9546**	2	SHAFT	
	11	1	**241-0888**	2	PLATE	
	12	1	**241-0889**	2	GUARD AS (STABILIZER)	
					(EACH INCLUDES)	
M		1	**8T-3490**	2	NUT-WELD (M10X1.5-THD)	
Y	13	1	*247-7555*	2	PAD GP-STABILIZER (STREET)	595
	14	1	**5P-4116**	2	WASHER-HARD (8.8X20.5X2-MM THK)	
	15	1	**6V-3213**	4	RING-RETAINING	
	16	1	**6V-8144**	4	RING-RETAINING	
M	17	1	**7X-2537**	2	BOLT (M8X1.25X35-MM)	
	18	1	**7X-7729**	2	WASHER (11X25X3-MM THK)	
M	19	1	**8T-4195**	2	BOLT (M10X1.5X30-MM)	
C	20	1	**194-9487**	2	BUMPER AS	

B-USE AS REQUIRED
C-CHANGE FROM PREVIOUS TYPE
M-METRIC PART
Y-SEPARATE ILLUSTRATION

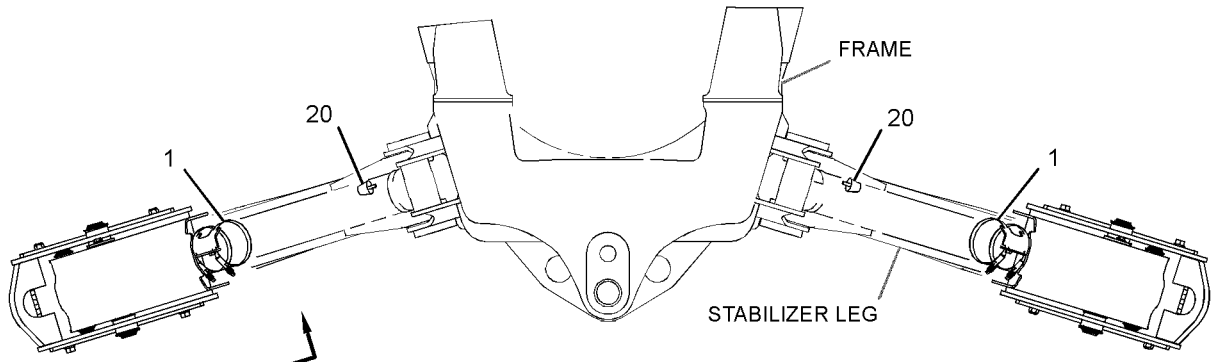

TOP VIEW

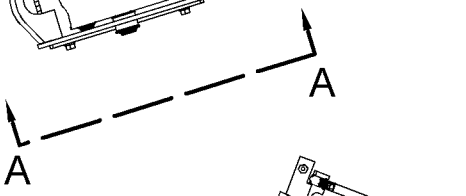

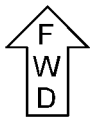

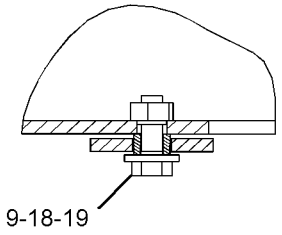

SECTION B-B

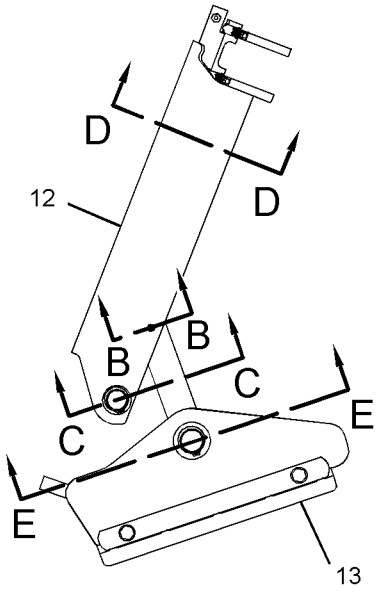

VIEW A-A

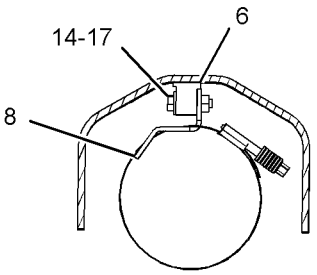

SECTION D-D

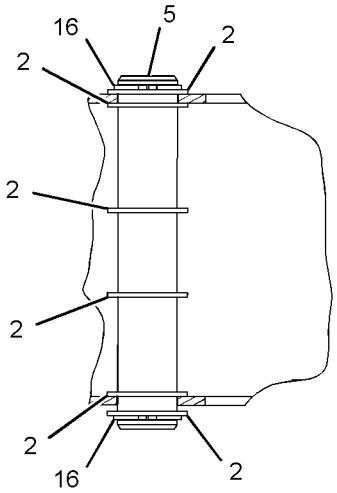

SECTION C-C

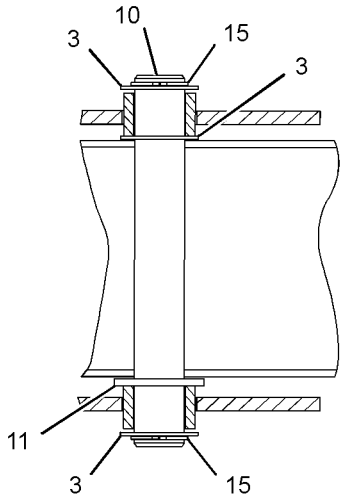

SECTION E-E

GRAPHIC #1 **<END>** g01785277

9R-1085 PAD & MTG GP-STABILIZER–STREET

S/N: HLS1-99999
AN ATTACHMENT

SMCS-7222 **i02593850**

NOTE	REF NO	GRAPHIC REF	PART NUMBER	QTY	PART NAME 1 2 3 4 5 6 (PRODUCT LEVEL)	SEE PAGE
	1	1	**9R-0422**	2	PIN	
C	2	1	**238-9546**	2	SHAFT	
CY	3	1	*247-7555*	2	PAD GP-STABILIZER (STREET)	595
	4	1	**6V-3213**	4	RING-RETAINING	
	5	1	**6V-8144**	4	RING-RETAINING	
B	6	1	**9R-0109**	8	WASHER (41X64X3-MM THK)	
BC	7	1	**9R-0158**	16	WASHER (46X69X3-MM THK)	

B-USE AS REQUIRED
C-CHANGE FROM PREVIOUS TYPE
Y-SEPARATE ILLUSTRATION

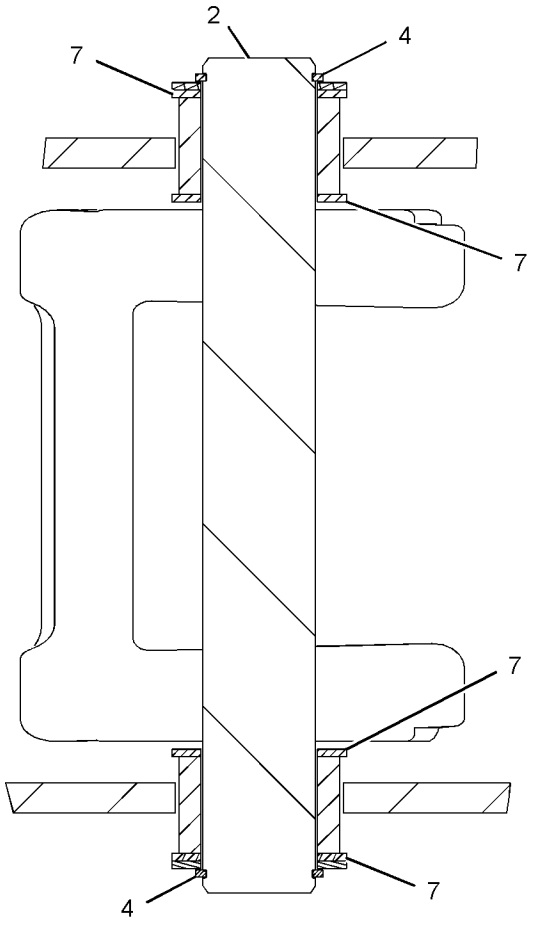

SECTION A-A

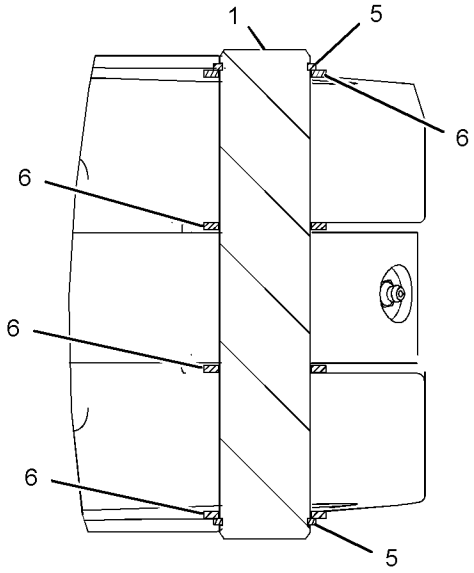

SECTION B-B

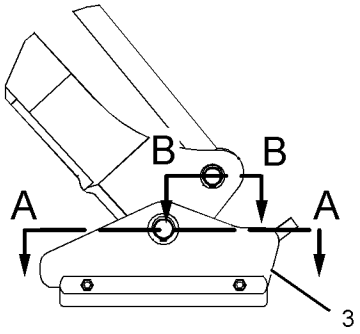

GRAPHIC #1 **<END>** g01084155

9R-6007 PAD & MTG GP-STABILIZER–STREET

S/N: HLS1-99999
AN ATTACHMENT

SMCS-7222 **i02127790**

NOTE	REF NO	GRAPHIC REF	PART NUMBER	QTY	PART NAME 1 2 3 4 5 6 (PRODUCT LEVEL)	SEE PAGE
BC	1	1	**9R-0109**	10	WASHER (41X64X3-MM THK)	
BC	2	1	**9R-0158**	16	WASHER (46X69X3-MM THK)	
C	3	1	**9R-0422**	2	PIN	
C	4	1	**238-9546**	2	SHAFT	
CY	5	1	*238-9547*	2	PAD GP-STABILIZER (STREET)	594
C	6	1	**6V-3213**	4	RING-RETAINING	
	7	1	**6V-8144**	4	RING-RETAINING	

B-USE AS REQUIRED
C-CHANGE FROM PREVIOUS TYPE
Y-SEPARATE ILLUSTRATION

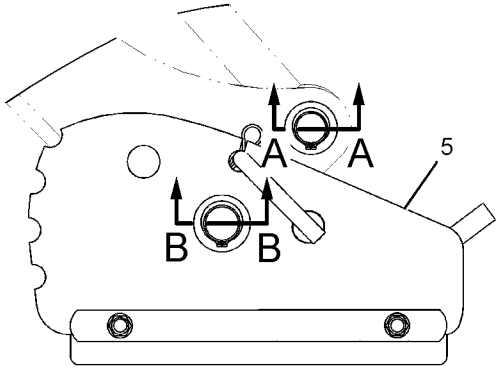

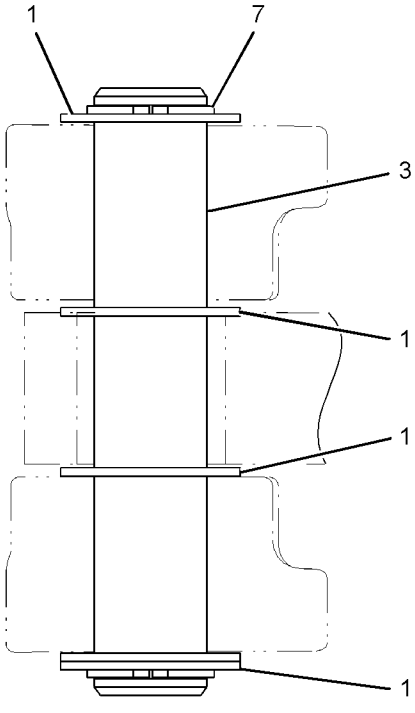

SECTION A-A

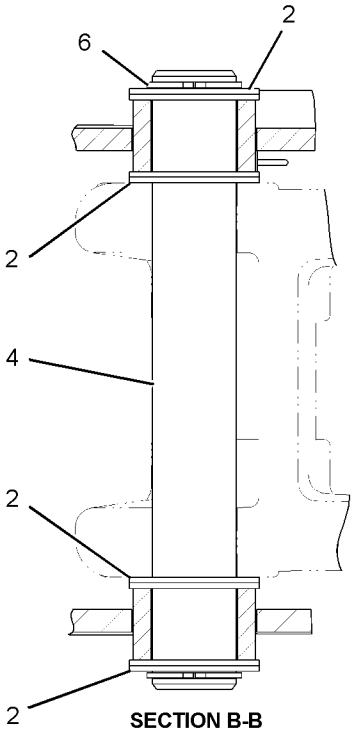

SECTION B-B

GRAPHIC #1

<END>

g01084460

116-4942 PAD & MTG GP-STABILIZER

S/N: HLS1-99999
AN ATTACHMENT

SMCS-7222 **i03291827**

NOTE	REF NO	GRAPHIC REF	PART NUMBER	QTY	PART NAME 1 2 3 4 5 6 (PRODUCT LEVEL)	SEE PAGE
B	1	1	**9R-0109**	8	WASHER (41X64X3-MM THK)	
B	2	1	**9R-0158**	14	WASHER (46X69X3-MM THK)	
	3	1	**9R-0422**	2	PIN	
C	4	1	**238-9546**	2	SHAFT	
C	5	1	**239-1416**	2	PAD AS	
	6	1	**6V-3213**	4	RING-RETAINING	
	7	1	**6V-8144**	4	RING-RETAINING	

B-USE AS REQUIRED
C-CHANGE FROM PREVIOUS TYPE

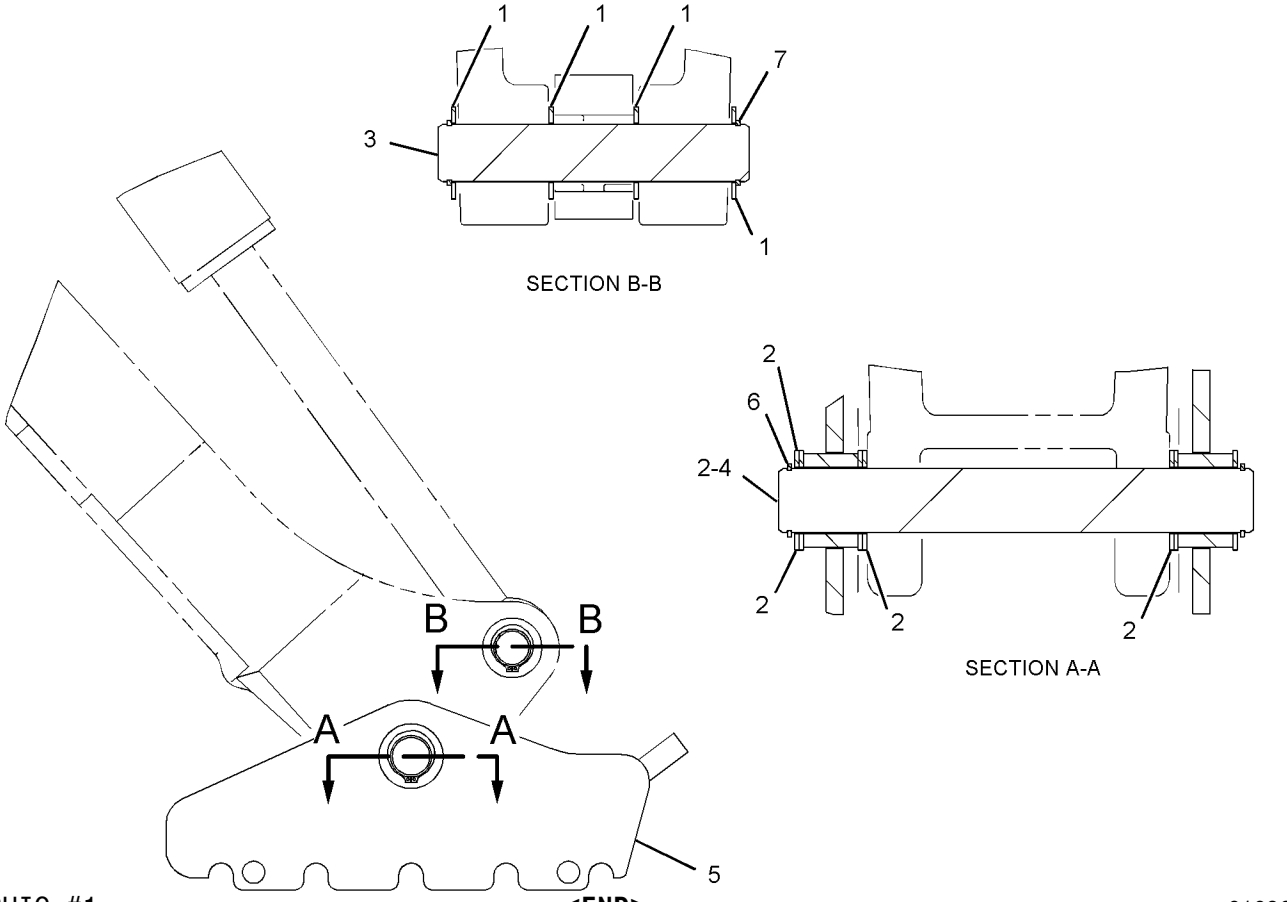

GRAPHIC #1 **<END>** g01096084

238-9547 PAD GP-STABILIZER—STREET

S/N: HLS1-99999

PART OF 133-3362 PAD & GUARD GP-STABILIZER, 9R-6007 PAD & MTG GP-STABILIZER

AN ATTACHMENT

SMCS-7222 **i02202299**

NOTE	REF NO	GRAPHIC REF	PART NUMBER	QTY	PART NAME 1 2 3 4 5 6 (PRODUCT LEVEL)	SEE PAGE
	1	1	**237-9349**	1	PAD AS	
	2	1	**237-9355**	1	PIN AS	
	3	1	**237-9356**	1	PAD AS	
	4	1	**241-0890**	2	SPACER (16.7X22.2X22.2-MM THK)	
	5	1	**241-0891**	2	PLATE	
	6	1	**241-0892**	1	PLATE	
	7	1	**5P-7971**	2	BOLT (5/8-11X12-IN)	
	8	1	**5P-0370**	1	LOCK PIN	
	9	1	**3K-2889**	2	LOCKNUT (5/8-11-THD)	
	10	1	**9X-8257**	2	WASHER (17.5X30X3.5-MM THK)	

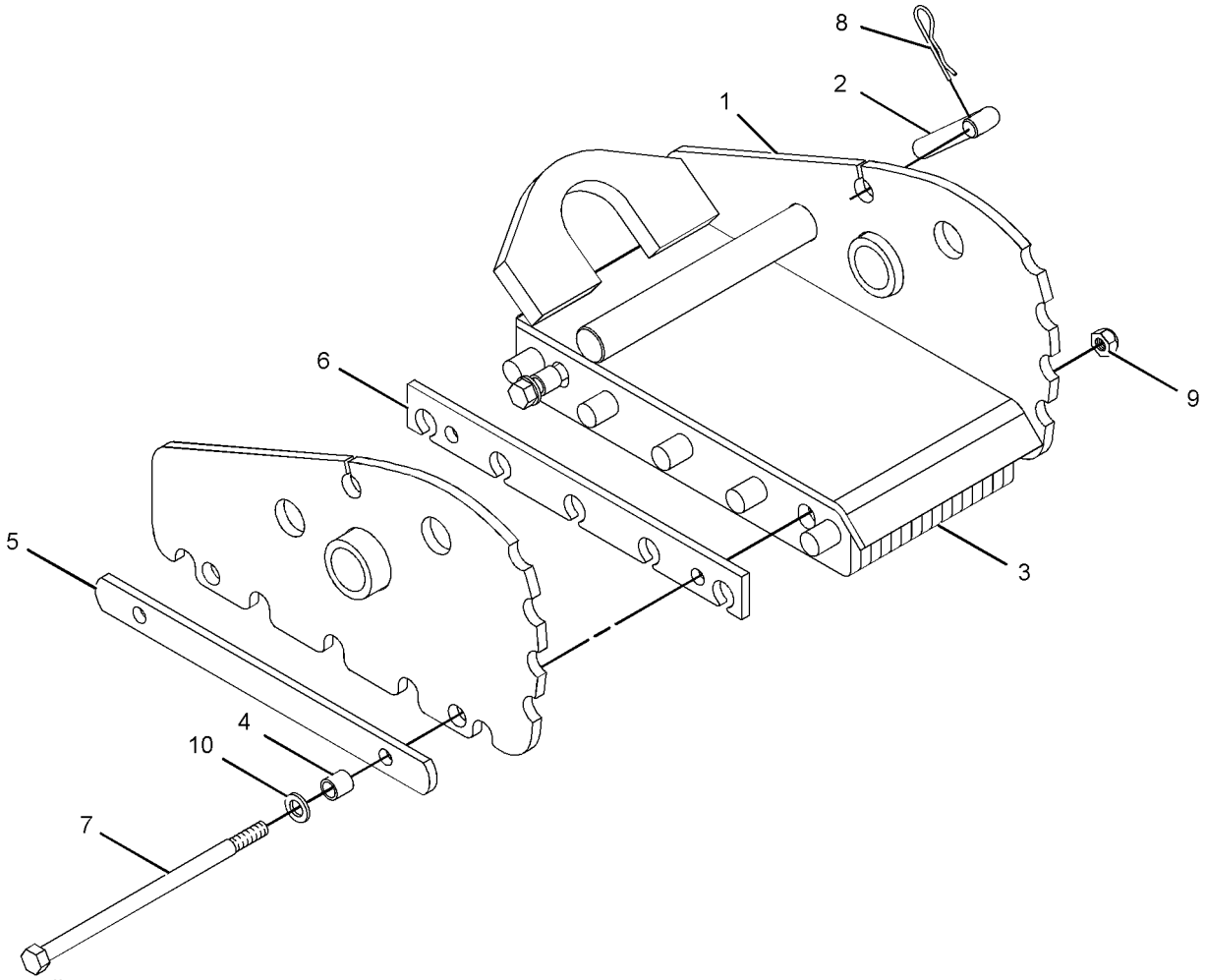

GRAPHIC #1 **<END>** g01084456

247-7555 PAD GP-STABILIZER–STREET

S/N: HLS1-99999

PART OF 133-3366 PAD & GUARD GP-STABILIZER, 9R-1085 PAD & MTG GP-STABILIZER

AN ATTACHMENT

SMCS-7222 **i02202704**

NOTE	REF NO	GRAPHIC REF	PART NUMBER	QTY	PART NAME 1 2 3 4 5 6 (PRODUCT LEVEL)	SEE PAGE
	1	1	**237-9356**	1	PAD AS	
	2	1	**239-1416**	1	PAD AS	
	3	1	**241-0890**	2	SPACER (16.7X22.2X22.2-MM THK)	
	4	1	**241-0891**	2	PLATE	
	5	1	**241-0892**	1	PLATE	
	6	1	**3K-2889**	2	LOCKNUT (5/8-11-THD)	
	7	1	**5P-7971**	2	BOLT (5/8-11X12-IN)	
	8	1	**9X-8257**	2	WASHER (17.5X30X3.5-MM THK)	

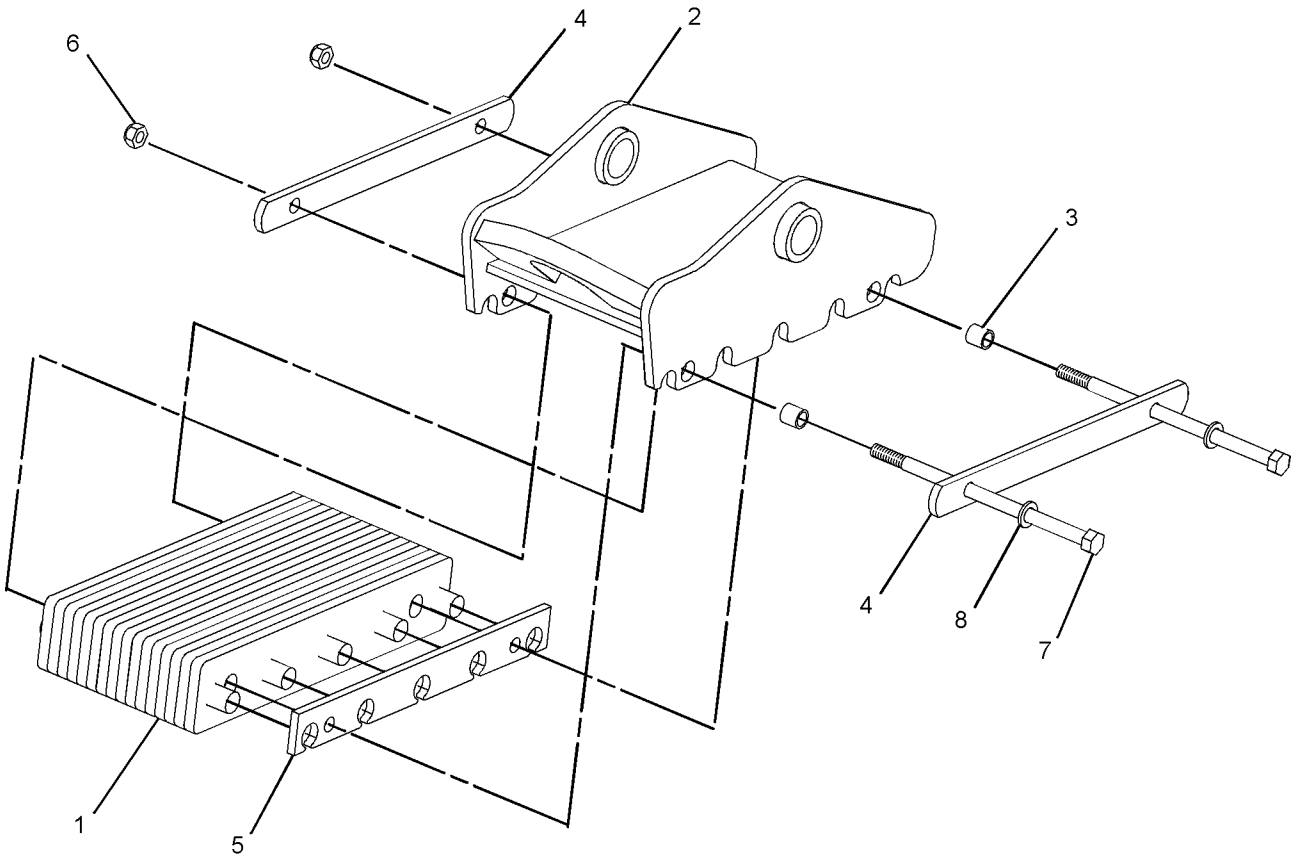

GRAPHIC #1 **<END>** g01113818

IMPLEMENTS

266-5834 STABILIZER GP-BACKHOE

S/N: HLS1-99999

PART OF 213-9287 CHASSIS AR

SMCS-7222 **i02646557**

NOTE	REF NO	GRAPHIC REF	PART NUMBER	QTY	PART NAME 1 2 3 4 5 6 (PRODUCT LEVEL)	SEE PAGE
	1	1	**293-7383**	2	PIN	
B	2	1	**111-4337**	2	WASHER (46X70X1-MM THK)	
B	3	1	**119-4594**	2	WASHER (41X64X1-MM THK)	
	4	1	**130-0777**	2	STABILIZER AS	
					(EACH INCLUDES)	
		1	**9R-0411**	2	BEARING-SLEEVE	
	5	1	**261-6703**	2	PIN	
	6	1	**6V-3213**	4	RING-RETAINING	
	7	1	**6V-8144**	4	RING-RETAINING	
B	8	1	**9R-0109**	8	WASHER (41X64X3-MM THK)	
B	9	1	**9R-0158**	14	WASHER (46X69X3-MM THK)	

B-USE AS REQUIRED

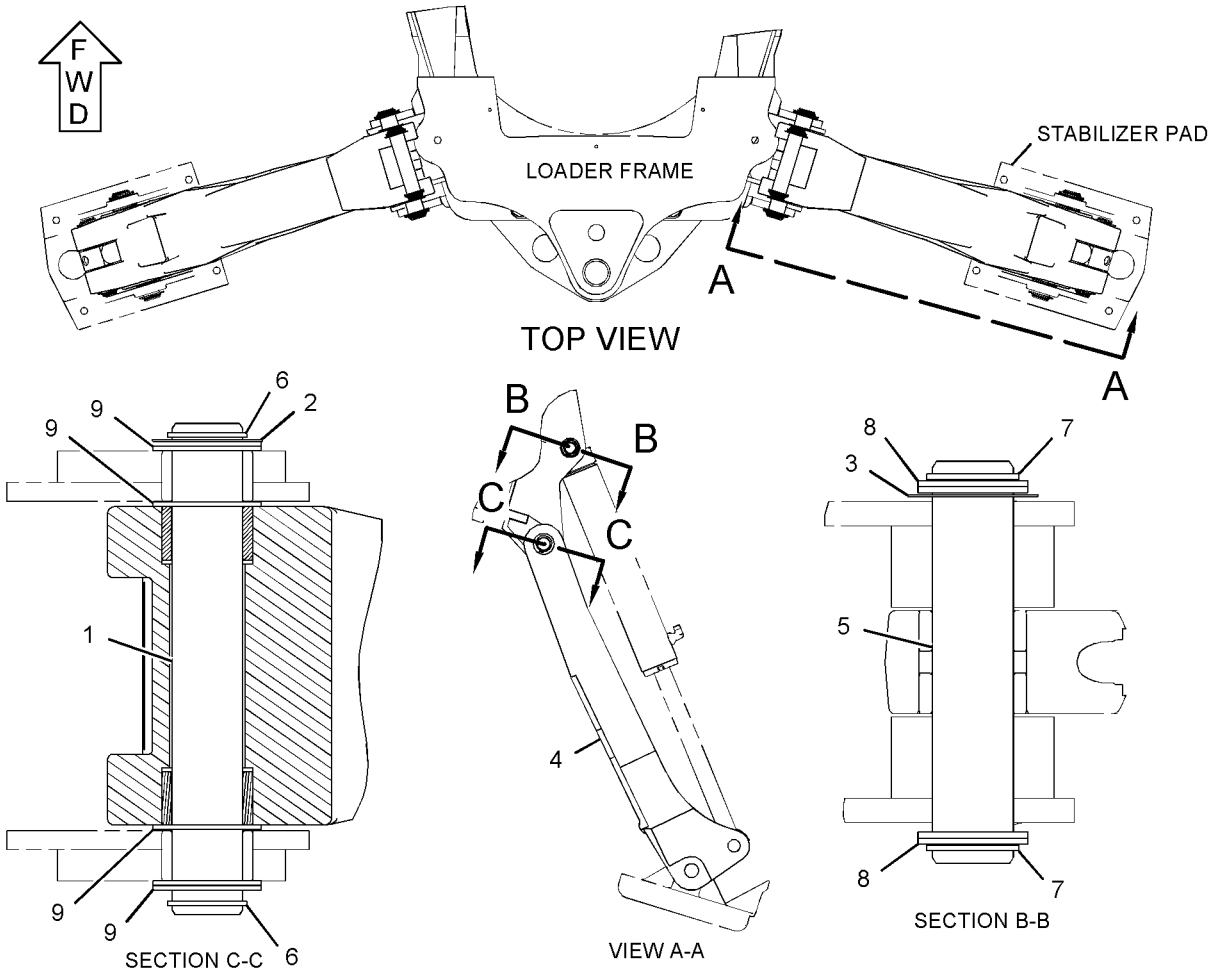

GRAPHIC #1 **<END>** g01335487

271-8670 STICK AS

S/N: HLS1-99999
PART OF 271-8667 STICK GP-HOE
AN ATTACHMENT

SMCS-6502 **i02647278**

NOTE	REF NO	GRAPHIC REF	PART NUMBER	QTY	PART NAME 1 2 3 4 5 6 (PRODUCT LEVEL)	SEE PAGE
	1	1	**299-5421**	1	PLATE	
	2	1	**299-5508**	2	PLATE	
	3	1	**107-6711**	2	BLOCK	
	4	1	**9R-0162**	4	BEARING-SLEEVE	
M	5	1	**9R-2672**	2	BOSS (M10X1.5X20-MM)	
	6	1	**221-4315**	1	STOP AS	
		1	**221-4322**	1	PLATE	
	7	1	**213-6682**	2	BEARING-SLEEVE	
	8	1	**213-6683**	2	BEARING-SLEEVE	

M-METRIC PART

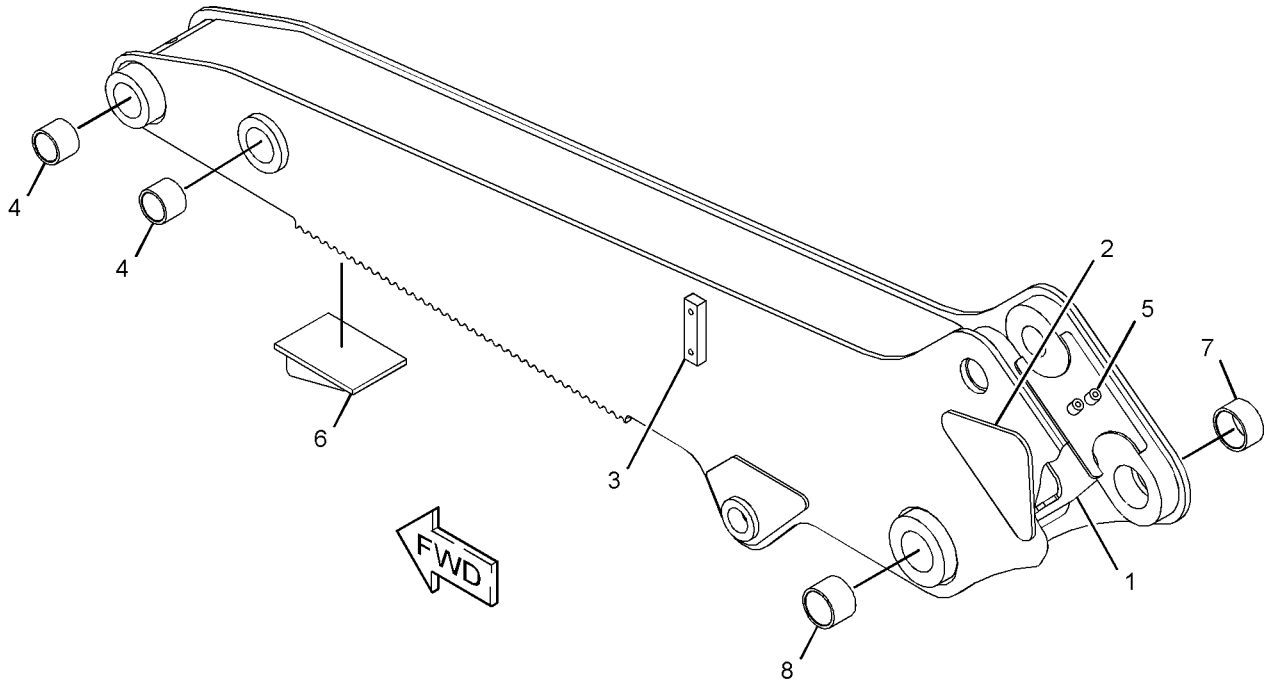

GRAPHIC #1 **<END>** g01329003

271-1402 STICK GP-EXTENDABLE

S/N: HLS1-99999
PART OF 291-9205 BACKHOE AR-EXTENDABLE STICK
AN ATTACHMENT

SMCS-6533 **i02956558**

NOTE	REF NO	GRAPHIC REF	PART NUMBER	QTY	PART NAME 1 2 3 4 5 6 (PRODUCT LEVEL)	SEE PAGE
	1	1,2	**3B-8489**	4	FITTING-GREASE	
	2	1	**9R-2959**	2	CLIP	
	3	1	**305-2696**	1	STICK AS (INNER)	
	3A	1	**213-6682**	2	BEARING-SLEEVE	
	3B	1	**213-6683**	2	BEARING-SLEEVE	
	4	1	**209-2435**	2	BLOCK	
Y	5	1	**210-7097**	1	CYLINDER GP-EXTENDABLE STICK	398
Y	6	1	*211-4260*	1	WIRING GP-EXTENDABLE STICK	160
	7	2	**214-6143**	1	PIN	
	8	2	**216-6295**	1	PLATE	
	9	1	**217-0055**	1	PIN	
	10	1	**217-1577**	2	PAD AS	
	11	2	**220-1018**	1	PIN	
	12	1	**222-5171**	2	SCREW AS (ADJUSTER)	
	13	1	**223-3926**	1	PLATE	
	14	1,2	**226-9764**	2	PAD AS	
	15	1	**233-5165**	4	PLATE	
B	16	1	**233-5166**	4	SHIM (1-MM THK)	
B	17	1	**233-5167**	12	SHIM (2-MM THK)	
	18	2	**233-5169**	4	PAD	
Y	19	1	*247-3267*	1	LINES GP-EXTENDABLE STICK	453
	20	1	**271-1408**	1	STICK AS (OUTER)	
		1	**107-6711**	2	BLOCK	
	20A	2	**286-7166**	2	BEARING-SLEEVE	
	20B	1	**9R-0162**	2	BEARING-SLEEVE	
M	21	1	**297-5510**	16	SCREW-HEX SOCKET (M12X1.75X30-MM)	
	22	2	**1L-3768**	2	RING-RETAINING	
	23	1	**4F-8711**	2	BUTTON-PLUG	
	24	1	**5V-7190**	4	WASHER-HARD (10.5X45.2X6-MM THK)	
	25	2	**6V-4364**	2	RING-RETAINING	
B	26	1,2	**8T-4121**	12	WASHER-HARD (11X21X2.5-MM THK)	
M	27	2	**8T-4136**	2	BOLT (M10X1.5X25-MM)	
M	28	1,2	**8T-4139**	2	BOLT (M12X1.75X30-MM)	
M	29	1	**8T-4183**	2	BOLT (M12X1.75X40-MM)	
M	30	1	**8T-4194**	2	BOLT (M12X1.75X50-MM)	
M	31	1	**8T-4195**	2	BOLT (M10X1.5X30-MM)	
	32	1,2	**8T-4223**	26	WASHER-HARD (13.5X25.5X3-MM THK)	
M	33	1	**8T-4910**	4	BOLT (M12X1.75X60-MM)	
	34	1	**287-5667**	6	SHIM (1-MM THK)	
B	35	1	**293-9882**	4	SHIM (1-MM THK)	
B	36	1	**293-9884**	4	SHIM (0.25-MM THK)	
	37	2	**7X-0603**	2	WASHER-HARD (9.9X35X2.5-MM THK)	

B-USE AS REQUIRED
M-METRIC PART
Y-SEPARATE ILLUSTRATION

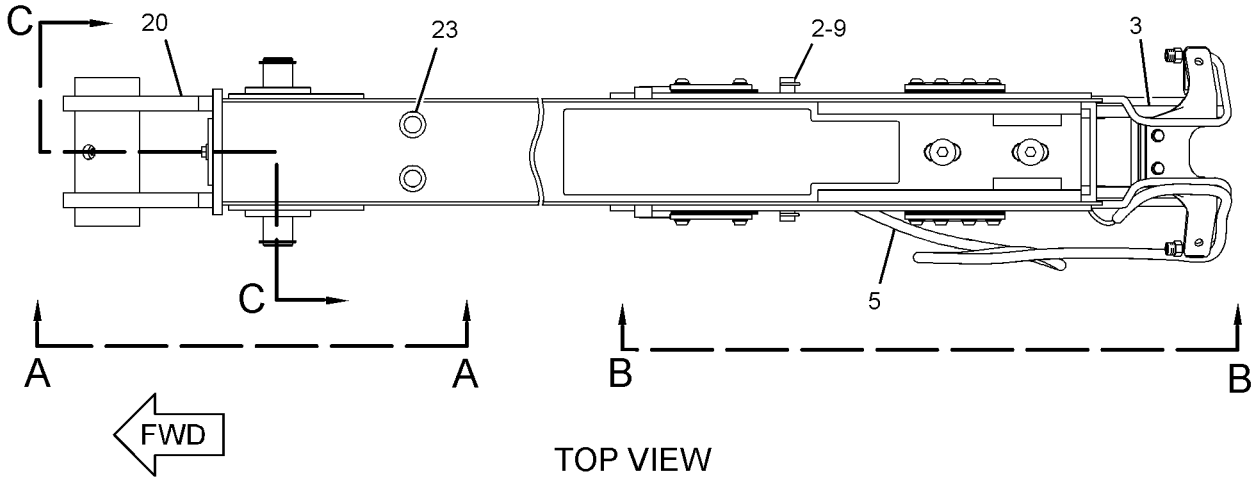

TOP VIEW

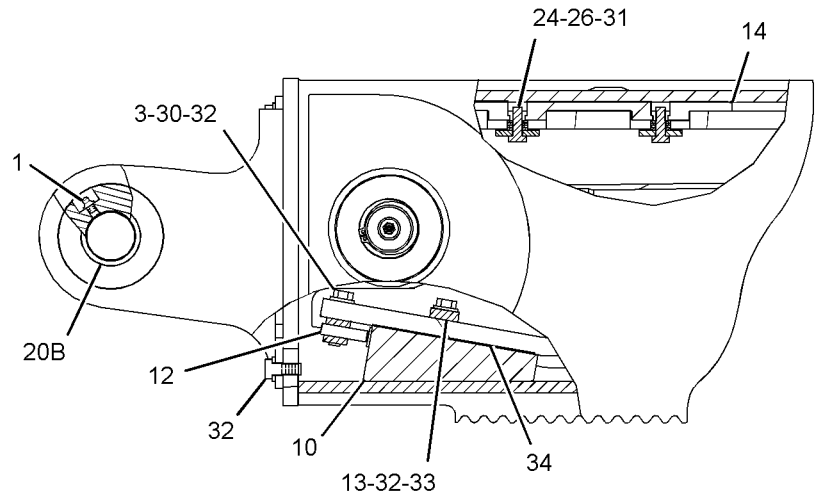

VIEW A-A

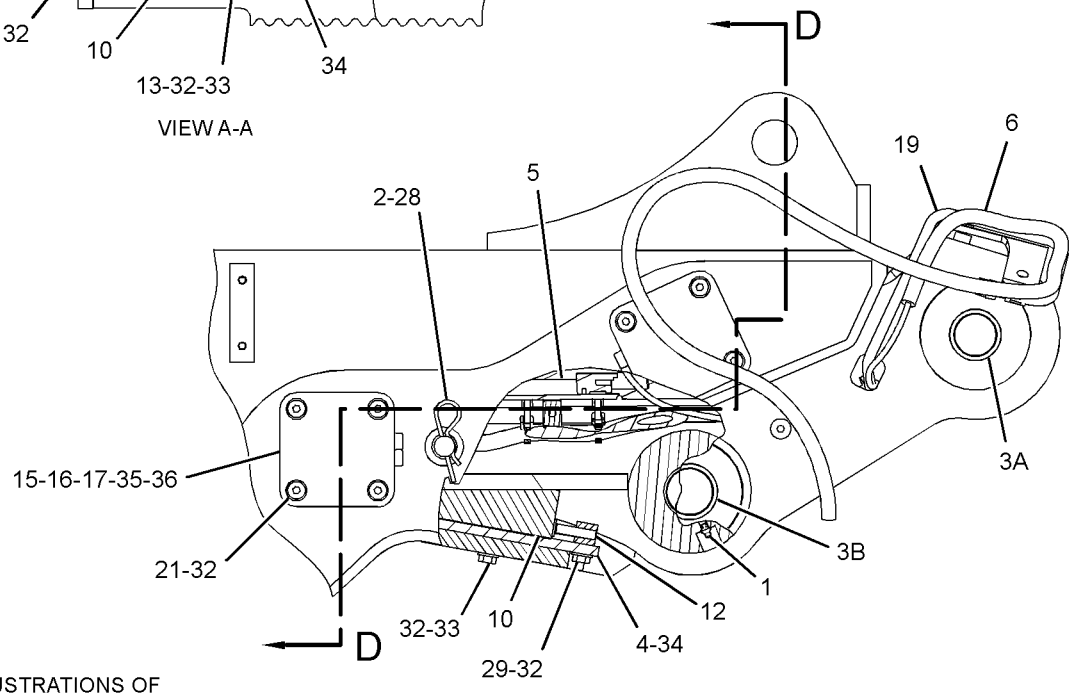

VIEW B-B

REFER TO ALL ILLUSTRATIONS OF THIS GROUP FOR AUXILIARY VIEWS

GRAPHIC #1

g01481257

271-1402 **STICK GP-EXTENDABLE** *(contd.)* **i02956558**

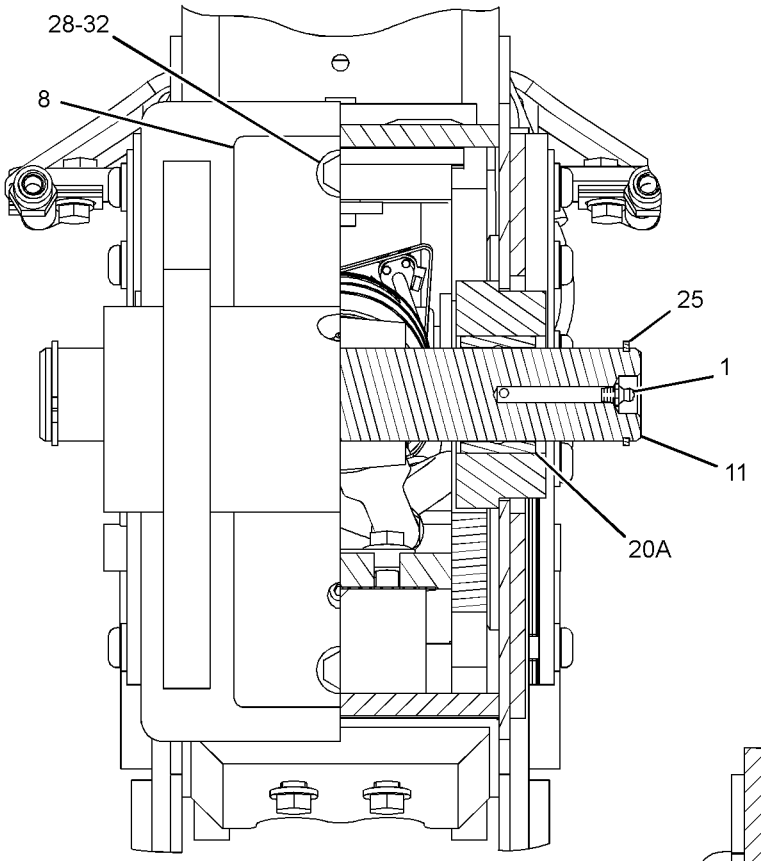

SECTION C-C

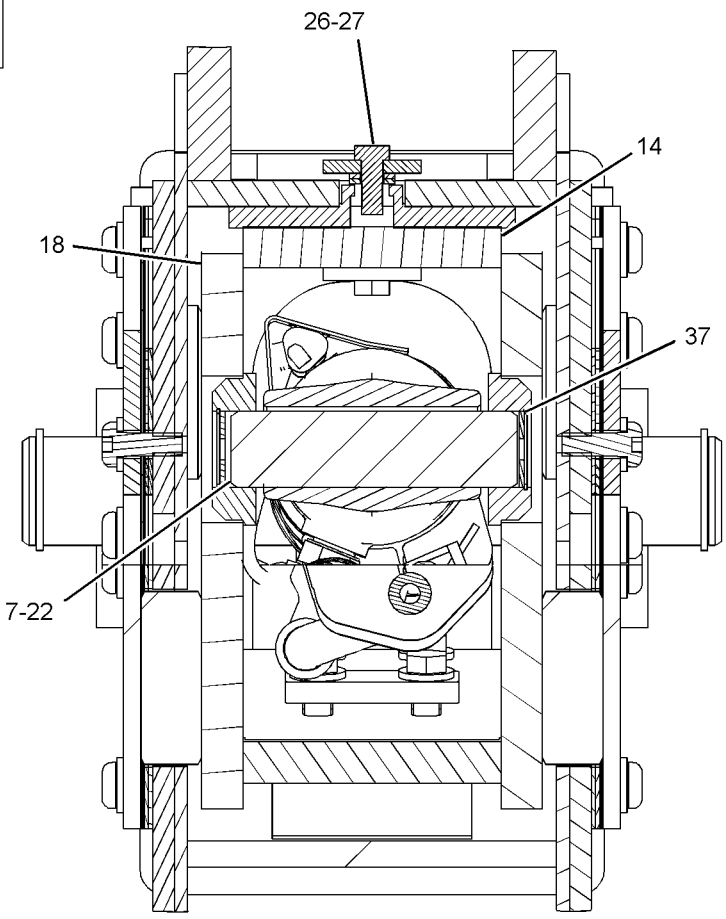

SECTION D-D

GRAPHIC #2 **<END>** g01481259

IMPLEMENTS

271-1405 STICK GP-EXTENDABLE

S/N: HLS1-99999

PART OF 214-2553 BACKHOE AR-EXTENDABLE STICK

AN ATTACHMENT

SMCS-6533 **i02956427**

NOTE	REF NO	GRAPHIC REF	PART NUMBER	QTY	PART NAME 1 2 3 4 5 6 (PRODUCT LEVEL)	SEE PAGE
	1	1,2	**3B-8489**	4	FITTING-GREASE	
	2	1	**9R-2959**	2	CLIP	
	3	1	**305-2696**	1	STICK AS (INNER)	
	3A	1	**213-6682**	2	BEARING-SLEEVE	
	3B	1	**213-6683**	2	BEARING-SLEEVE	
	4	1	**209-2435**	2	BLOCK	
Y	5	1	**210-7098**	1	CYLINDER GP-STICK	409
	6	2	**214-6143**	1	PIN	
	7	2	**216-6295**	1	PLATE	
	8	1	**217-0055**	1	PIN	
	9	1	**217-1577**	2	PAD AS	
	10	2	**220-1018**	1	PIN	
	11	1	**222-5171**	2	SCREW AS (ADJUSTER)	
	12	1	**223-3926**	1	PLATE	
	13	1	**226-9764**	2	PAD AS	
	14	1	**233-5165**	4	PLATE	
B	15	1	**233-5166**	4	SHIM (1-MM THK)	
B	16	1	**233-5167**	12	SHIM (2-MM THK)	
	17	2	**233-5169**	4	PAD	
Y	18	1	*247-3267*	1	LINES GP-EXTENDABLE STICK	453
	19	1	**271-1408**	1	STICK AS (OUTER)	
		1	**107-6711**	2	BLOCK	
	19A	2	**286-7166**	2	BEARING-SLEEVE	
	19B	1	**9R-0162**	2	BEARING-SLEEVE	
	20	2	**1L-3768**	2	RING-RETAINING	
	21	1	**4F-8711**	2	BUTTON-PLUG	
	22	1,2	**5V-7190**	4	WASHER-HARD (10.5X45.2X6-MM THK)	
	23	2	**6V-4364**	2	RING-RETAINING	
B	24	1,2	**8T-4121**	12	WASHER-HARD (11X21X2.5-MM THK)	
M	25	2	**8T-4136**	2	BOLT (M10X1.5X25-MM)	
M	26	2	**8T-4139**	2	BOLT (M12X1.75X30-MM)	
M	27	1	**8T-4183**	2	BOLT (M12X1.75X40-MM)	
M	28	1	**8T-4194**	2	BOLT (M12X1.75X50-MM)	
M	29	1	**8T-4195**	2	BOLT (M10X1.5X30-MM)	
	30	1,2	**8T-4223**	26	WASHER-HARD (13.5X25.5X3-MM THK)	
M	31	1	**8T-4910**	4	BOLT (M12X1.75X60-MM)	
M	32	1	**297-5510**	16	SCREW-HEX SOCKET (M12X1.75X30-MM)	
B	33	1	**293-9882**	4	SHIM (1-MM THK)	
B	34	1	**293-9884**	4	SHIM (0.25-MM THK)	
	35	1	**287-5667**	6	SHIM (1-MM THK)	
	36	2	**7X-0603**	2	WASHER-HARD (9.9X35X2.5-MM THK)	

B-USE AS REQUIRED
M-METRIC PART
Y-SEPARATE ILLUSTRATION

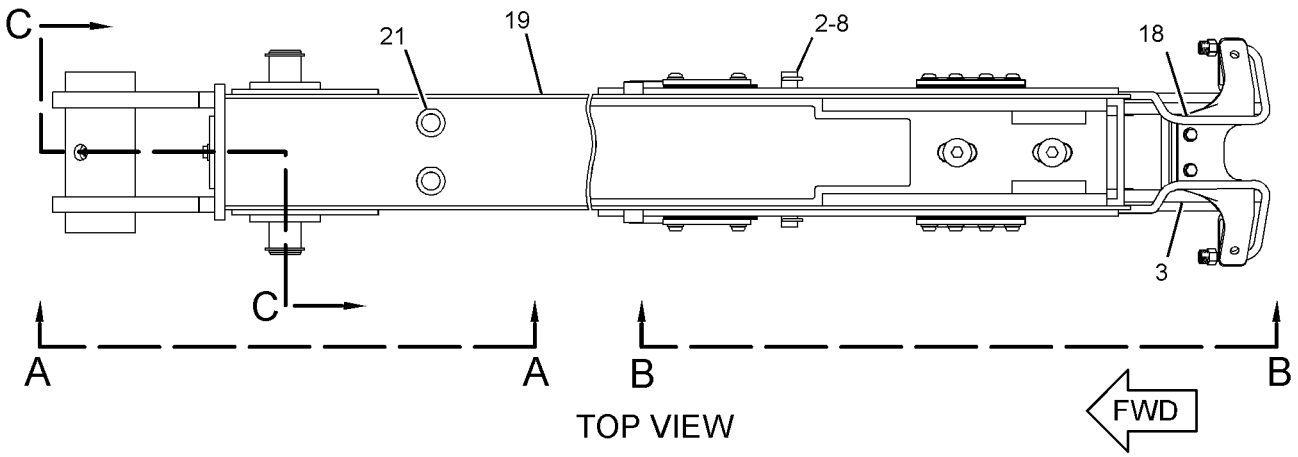

TOP VIEW

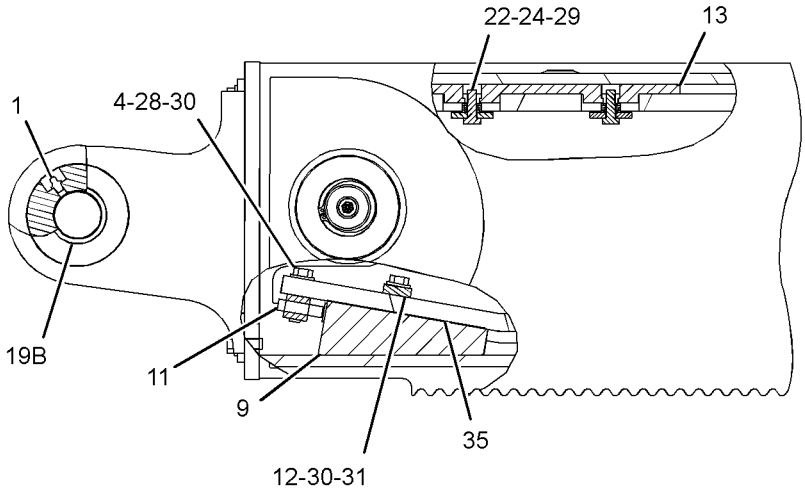

VIEW A-A

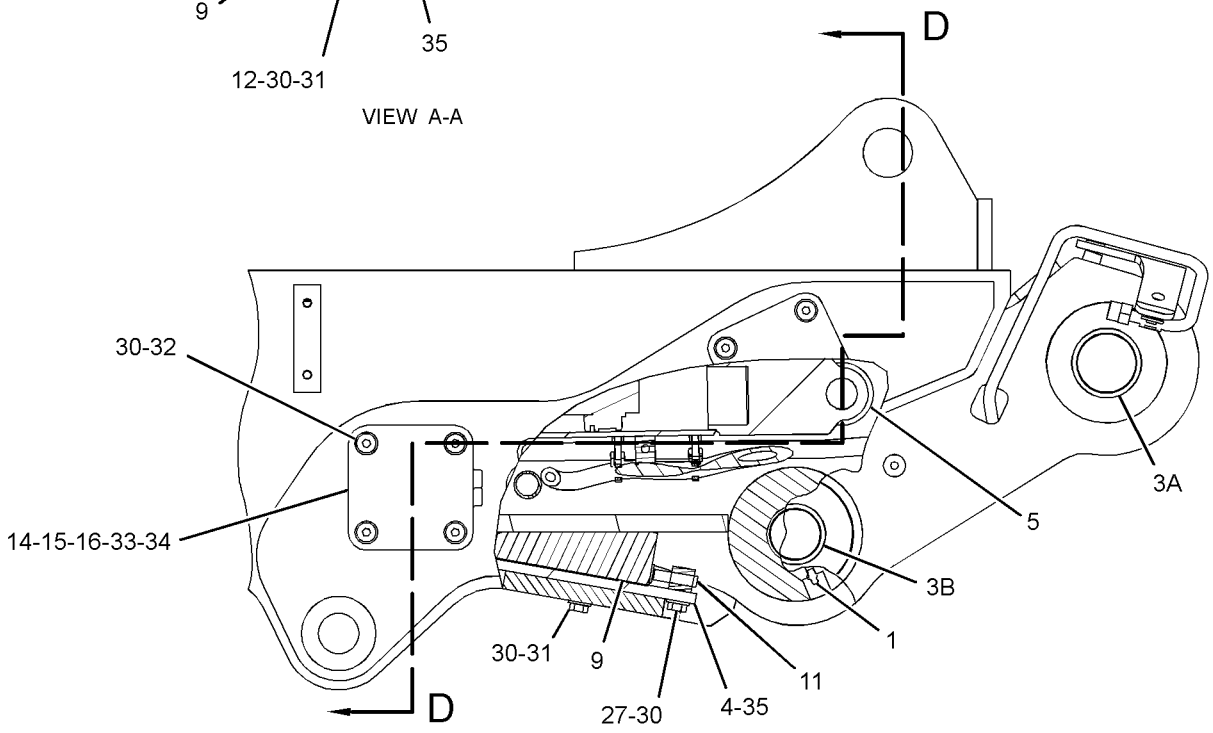

REFER TO ALL ILLUSTRATIONS OF THIS GROUP FOR AUXILIARY VIEWS

VIEW B-B

GRAPHIC #1

g01481283

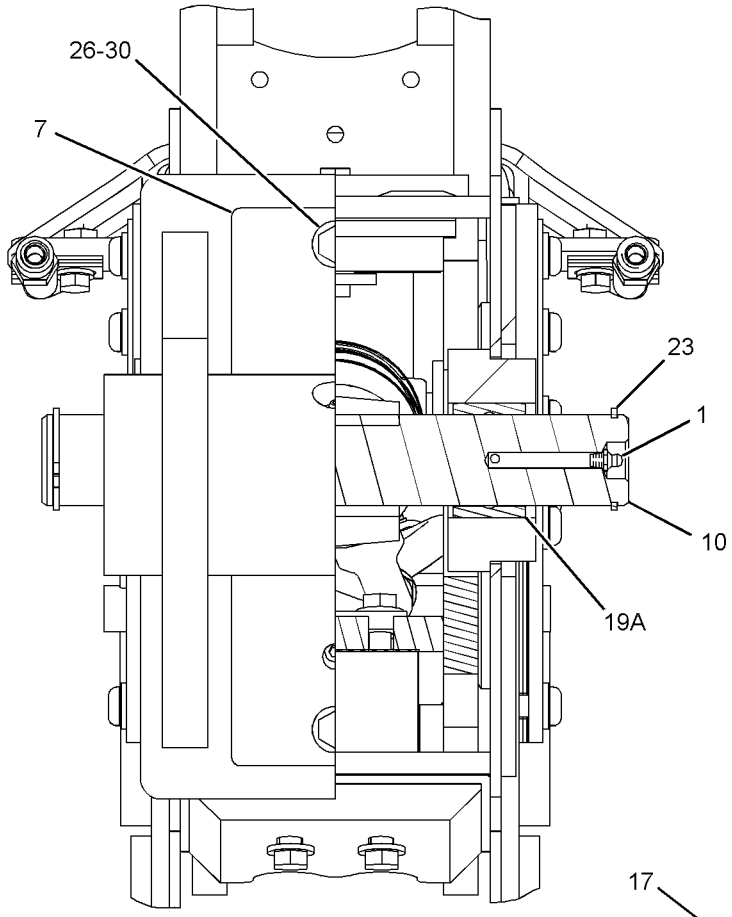

SECTION C-C

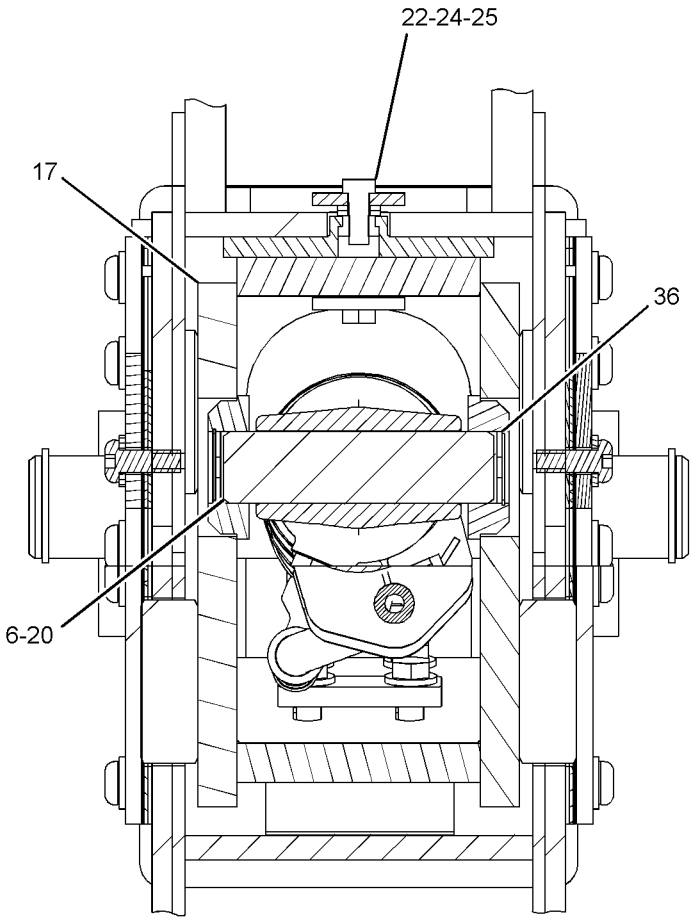

SECTION D-D

GRAPHIC #2 **<END>** g01481287

IMPLEMENTS

271-8667 STICK GP-HOE

S/N: HLS1-99999

PART OF 214-2550, 291-9204 BACKHOE AR-STANDARD STICK

AN ATTACHMENT

SMCS-6502 **i02647281**

NOTE	REF NO	GRAPHIC REF	PART NUMBER	QTY	PART NAME 1 2 3 4 5 6 (PRODUCT LEVEL)	SEE PAGE
	1	1	**9R-1502**	4	WASHER (56X90X4-MM THK)	
	2	1	**9R-1510**	4	WASHER (51X82X4-MM THK)	
	3	1	**9R-8292**	3	SPACER (61X135X1-MM THK)	
	4	1	**213-6695**	1	PIN	
	5	1	**213-6696**	1	PIN	
	6	1	**213-6697**	1	PIN	
	7	1	**215-9448**	1	PIN AS	
	8	1	**215-9690**	4	WASHER (66X100X4-MM THK)	
Y	9	1	**271-8670**	1	STICK AS	597
	10	1	**095-0929**	2	RING-RETAINING	
	11	1	**3B-8488**	1	FITTING-GREASE	
	12	1	**3B-8489**	5	FITTING-GREASE	
	13	1	**6V-4364**	2	RING-RETAINING	
	14	1	**6V-8344**	2	RING-RETAINING	

Y-SEPARATE ILLUSTRATION

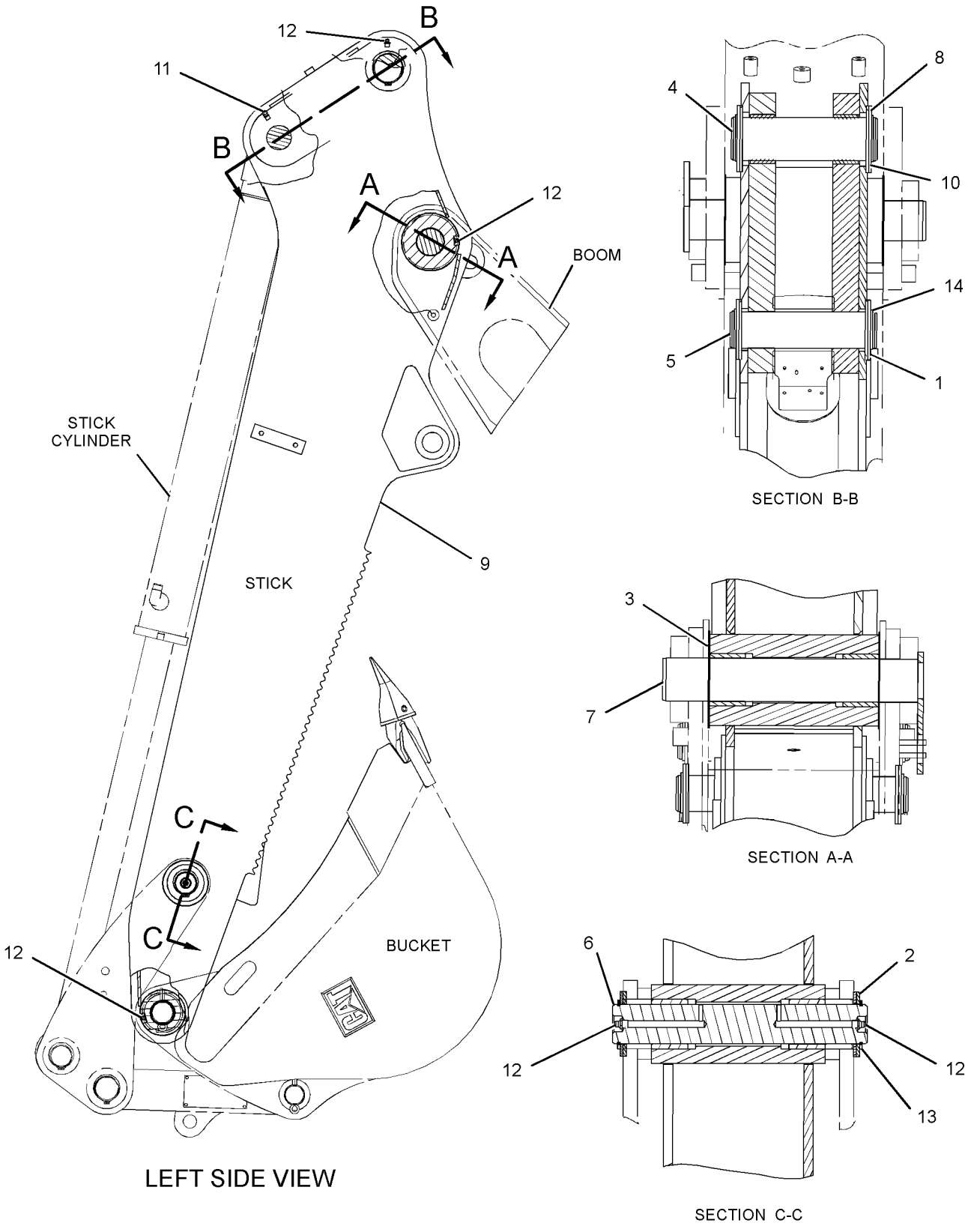

GRAPHIC #1 **<END>** g01232072

WORK TOOLS

251-1776 BUCKET AR-GENERAL PURPOSE

S/N: HLS1-99999
AN ATTACHMENT

SMCS-6101 **i02105044**

NOTE	PART NUMBER	QTY	PART NAME 1 2 3 4 5 6 (PRODUCT LEVEL)	SEE PAGE
Y	**251-1777**	1	BUCKET GP-GENERAL PURPOSE	670
Y	*9R-5866*	1	TOOTH GP-UNI	787
Y-SEPARATE ILLUSTRATION				

<END>

232-2681 BUCKET AR-MULTIPURPOSE

S/N: HLS1-99999
AN ATTACHMENT

SMCS-6104 **i02218649**

NOTE	PART NUMBER	QTY	PART NAME 1 2 3 4 5 6 (PRODUCT LEVEL)	SEE PAGE
Y	**216-8800**	1	BUCKET GP-MULTIPURPOSE	720
Y	*9R-5321*	1	EDGE GP-CUTTING	739
Y-SEPARATE ILLUSTRATION				

<END>

232-2682 BUCKET AR-MULTIPURPOSE

S/N: HLS1-99999
AN ATTACHMENT

SMCS-6104 **i02207479**

NOTE	PART NUMBER	QTY	PART NAME 1 2 3 4 5 6 (PRODUCT LEVEL)	SEE PAGE
Y	**216-8800**	1	BUCKET GP-MULTIPURPOSE	720
Y	*9R-5866*	1	TOOTH GP-UNI	787
Y-SEPARATE ILLUSTRATION				

<END>

232-2683 BUCKET AR-MULTIPURPOSE

S/N: HLS1-99999
AN ATTACHMENT

SMCS-6104 **i02218657**

NOTE	PART NUMBER	QTY	PART NAME 1 2 3 4 5 6 (PRODUCT LEVEL)	SEE PAGE
Y	*232-2685*	1	BUCKET AR-MULTIPURPOSE	607
Y	*9R-5321*	1	EDGE GP-CUTTING	739
Y-SEPARATE ILLUSTRATION				

<END>

WORK TOOLS

232-2684 BUCKET AR-MULTIPURPOSE

S/N: HLS1-99999
AN ATTACHMENT

SMCS-6104 **i02218679**

NOTE	PART NUMBER	QTY	PART NAME 1 2 3 4 5 6 (PRODUCT LEVEL)	SEE PAGE
Y	*232-2685*	1	BUCKET AR-MULTIPURPOSE	607
Y	*9R-5866*	1	TOOTH GP-UNI	787
Y-SEPARATE ILLUSTRATION				

<END>

232-2685 BUCKET AR-MULTIPURPOSE

S/N: HLS1-99999
PART OF 232-2683, 232-2684 BUCKET AR-MULTIPURPOSE
FOR USE WITH 269-2145—PAGE 525
AN ATTACHMENT

SMCS-6104 **i02218717**

NOTE	PART NUMBER	QTY	PART NAME 1 2 3 4 5 6 (PRODUCT LEVEL)	SEE PAGE
Y	**216-8801**	1	BUCKET GP-MULTIPURPOSE	722
Y	**104-6310**	1	FORK GP	741
Y-SEPARATE ILLUSTRATION				

<END>

232-2686 BUCKET AR-MULTIPURPOSE

S/N: HLS1-99999
AN ATTACHMENT

SMCS-6104 **i02218734**

NOTE	PART NUMBER	QTY	PART NAME 1 2 3 4 5 6 (PRODUCT LEVEL)	SEE PAGE
Y	**216-8820**	1	BUCKET GP-MULTIPURPOSE	723
Y	*9R-5320*	1	EDGE GP-CUTTING	738
Y-SEPARATE ILLUSTRATION				

<END>

232-2687 BUCKET AR-MULTIPURPOSE

S/N: HLS1-99999
AN ATTACHMENT

SMCS-6104 **i02218740**

NOTE	PART NUMBER	QTY	PART NAME 1 2 3 4 5 6 (PRODUCT LEVEL)	SEE PAGE
Y	**216-8820**	1	BUCKET GP-MULTIPURPOSE	723
Y	*9R-5866*	1	TOOTH GP-UNI	787
Y-SEPARATE ILLUSTRATION				

<END>

WORK TOOLS

232-2688 BUCKET AR-MULTIPURPOSE

S/N: HLS1-99999

AN ATTACHMENT

SMCS-6104 **i02218761**

NOTE	PART NUMBER	QTY	PART NAME 1 2 3 4 5 6 (PRODUCT LEVEL)	SEE PAGE
Y	*232-2690*	1	BUCKET AR-MULTIPURPOSE	608
Y	*9R-5320*	1	EDGE GP-CUTTING	738
Y-SEPARATE ILLUSTRATION				

<END>

232-2689 BUCKET AR-MULTIPURPOSE

S/N: HLS1-99999

AN ATTACHMENT

SMCS-6104 **i02218829**

NOTE	PART NUMBER	QTY	PART NAME 1 2 3 4 5 6 (PRODUCT LEVEL)	SEE PAGE
Y	*232-2690*	1	BUCKET AR-MULTIPURPOSE	608
Y	*9R-5866*	1	TOOTH GP-UNI	787
Y-SEPARATE ILLUSTRATION				

<END>

232-2690 BUCKET AR-MULTIPURPOSE

S/N: HLS1-99999

PART OF 232-2688, 232-2689 BUCKET AR-MULTIPURPOSE

AN ATTACHMENT

SMCS-6104 **i02218853**

NOTE	PART NUMBER	QTY	PART NAME 1 2 3 4 5 6 (PRODUCT LEVEL)	SEE PAGE
Y	*216-8821*	1	BUCKET GP-MULTIPURPOSE	724
Y	**104-6310**	1	FORK GP	741
Y-SEPARATE ILLUSTRATION				

<END>

251-1156 BUCKET AS-GENERAL PURPOSE

S/N: HLS1-99999
1.25 CU M (1.5 CU YD)
PART OF 251-1777 BUCKET GP-GENERAL PURPOSE
AN ATTACHMENT

SMCS-6101 **i02793578**

NOTE	REF NO	GRAPHIC REF	PART NUMBER	QTY	PART NAME 1 2 3 4 5 6 (PRODUCT LEVEL)	SEE PAGE
	1	1	*251-1168*	2	BRACKET AS-LIFT (RH)	
					(EACH INCLUDES)	
	1A	1	**9R-0111**	1	BEARING-SLEEVE	
	2	1	*251-1169*	2	BRACKET AS-LIFT (LH)	
					(EACH INCLUDES)	
	2A	1	**9R-0111**	1	BEARING-SLEEVE	
	3	1	**9R-0376**	2	EDGE	
	4	1	**9R-5313**	1	EDGE	
	5	1	**9R-5205**	1	EDGE (LH)	
	6	1	**9R-5206**	1	EDGE (RH)	

251-1156 **BUCKET AS-GENERAL PURPOSE** *(contd.)* **i02793578**

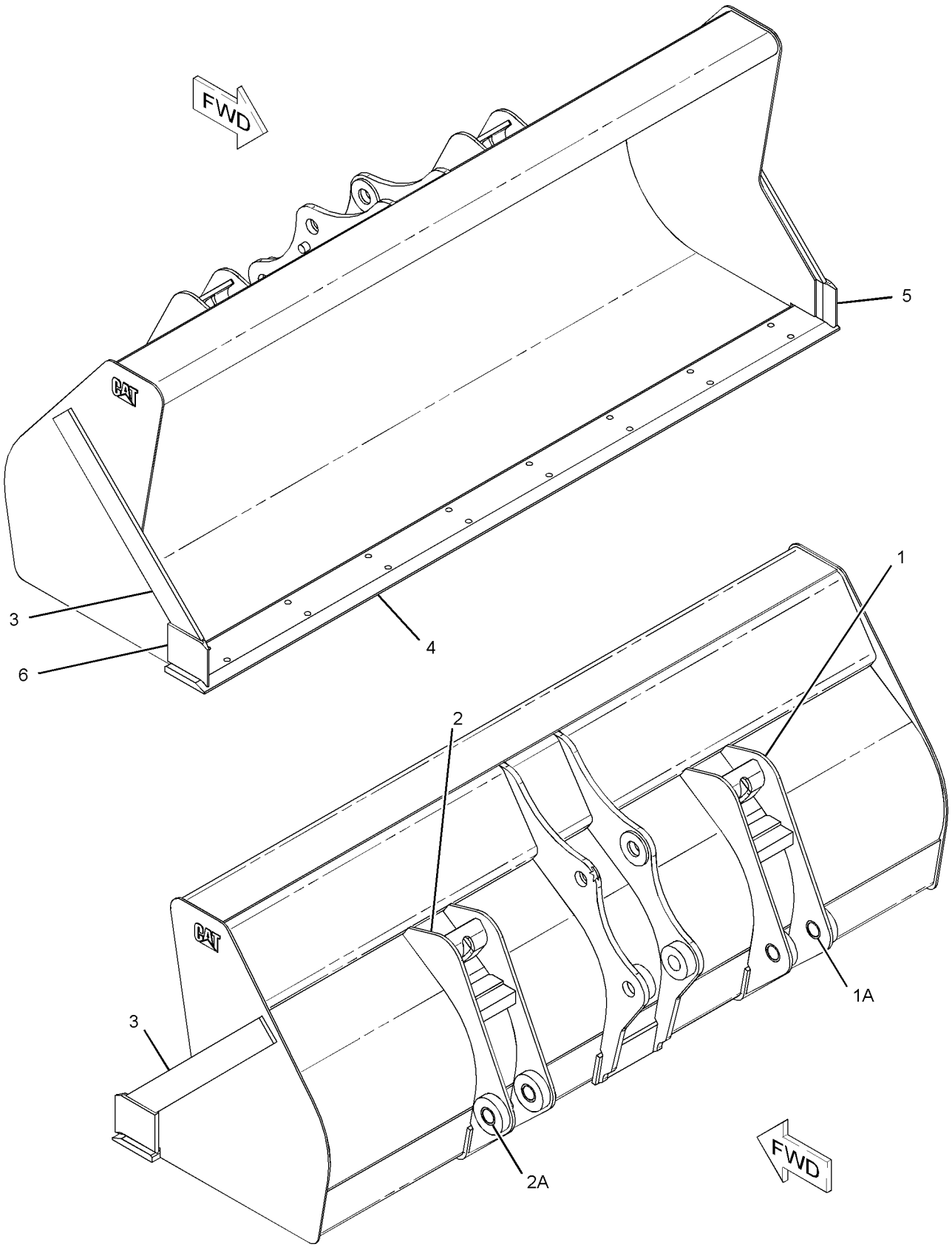

GRAPHIC #1 **<END>** g01395028

WORK TOOLS

251-1157 BUCKET AS-GENERAL PURPOSE

S/N: HLS1-99999
0.76 CU M (1.00 CU YD)
PART OF 251-1780 BUCKET GP-GENERAL PURPOSE
AN ATTACHMENT

SMCS-6101 **i02660182**

NOTE	REF NO	GRAPHIC REF	PART NUMBER	QTY	PART NAME 1 2 3 4 5 6 (PRODUCT LEVEL)	SEE PAGE
	1	1	*251-1172*	2	BRACKET AS-LIFT (RH)	
					(EACH INCLUDES)	
	1A	1	**9R-0111**	1	BEARING-SLEEVE	
	2	1	*251-1173*	2	BRACKET AS-LIFT (LH)	
					(EACH INCLUDES)	
	2A	1	**9R-0111**	1	BEARING-SLEEVE	
	3	1	**9R-0347**	2	EDGE	
	4	1	**9R-4672**	1	EDGE	
	5	1	**9R-5205**	1	EDGE (LH)	
	6	1	**9R-5206**	1	EDGE (RH)	

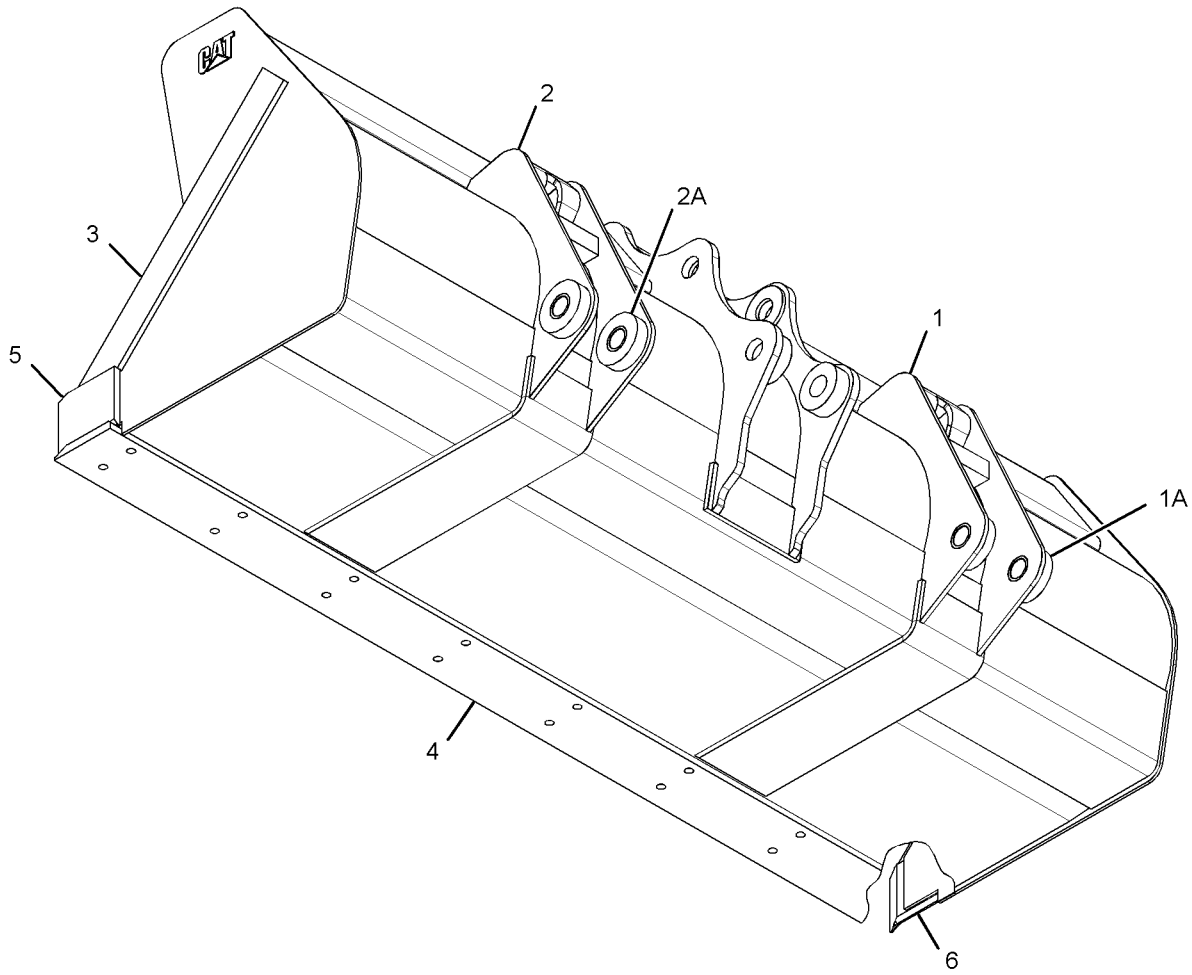

GRAPHIC #1 **<END>** g01342321

251-1158 BUCKET AS-GENERAL PURPOSE

S/N: HLS1-99999
1.0 CU M (1.131 CU YD)
PART OF 251-1783 BUCKET GP-GENERAL PURPOSE
AN ATTACHMENT

SMCS-6101 **i02111684**

NOTE	REF NO	GRAPHIC REF	PART NUMBER	QTY	PART NAME 1 2 3 4 5 6 (PRODUCT LEVEL)	SEE PAGE
	1	1	*9R-0371*	1	BRACKET AS-TILT (LH)	
	1A	1	**9R-4485**	1	BOSS	
	1B	1	**9R-4486**	1	BOSS	
	2	1	*9R-0372*	1	BRACKET AS-TILT (RH)	
	2A	1	**9R-4485**	1	BOSS	
	2B	1	**9R-4486**	1	BOSS	
	3	1	**9R-5832**	2	EDGE	
	4	1	**9R-5313**	1	EDGE	
	5	1	**9R-5205**	1	EDGE (LH)	
	6	1	**9R-5206**	1	EDGE (RH)	
	7	1	*251-1172*	2	BRACKET AS-LIFT (RH)	
					(EACH INCLUDES)	
	7A	1	**9R-0111**	1	BEARING-SLEEVE	
	8	1	*251-1173*	2	BRACKET AS-LIFT (LH)	
					(EACH INCLUDES)	
	8A	1	**9R-0111**	1	BEARING-SLEEVE	

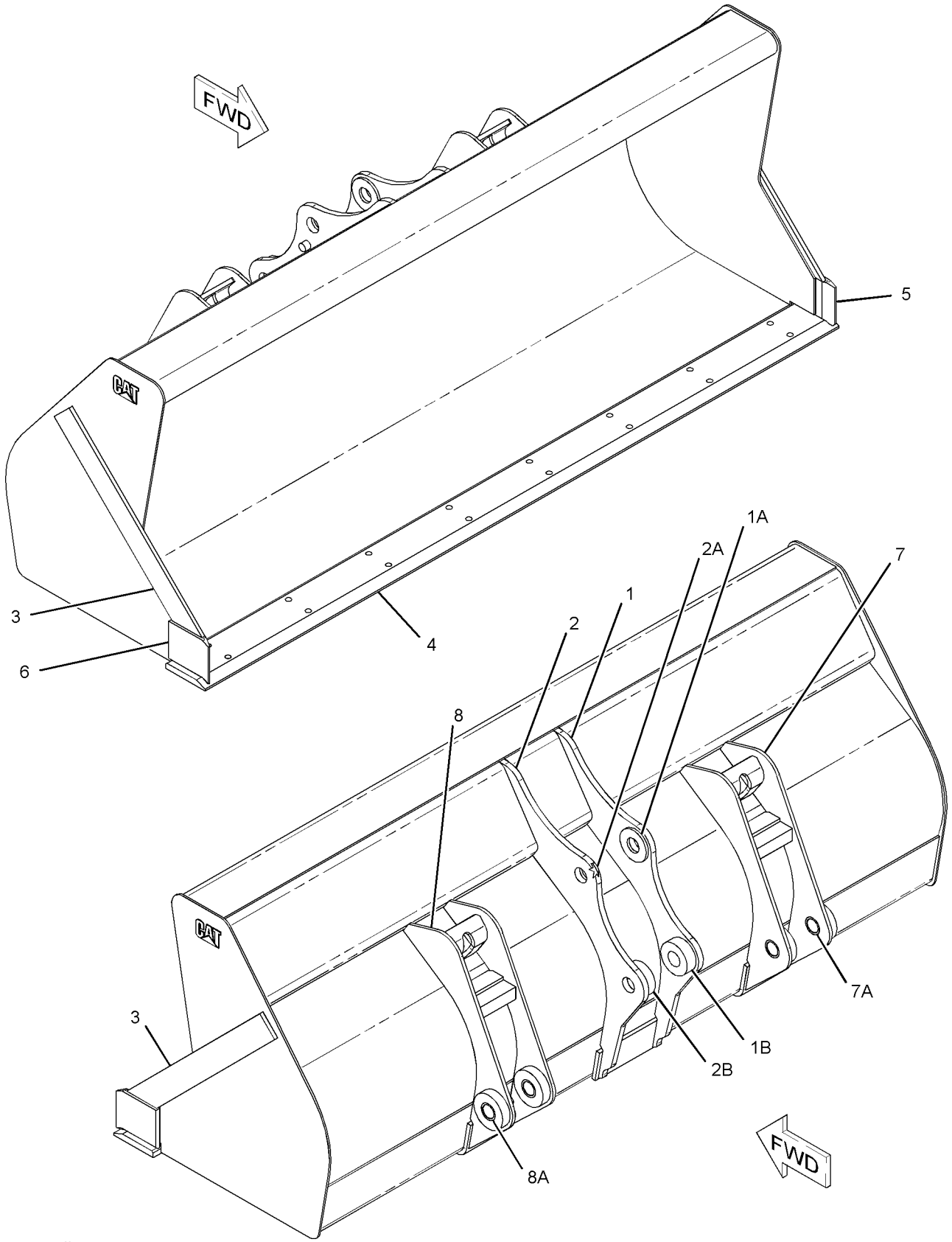

GRAPHIC #1 **<END>** g01074897

251-1159 BUCKET AS-GENERAL PURPOSE

S/N: HLS1-99999
1.17 CU M (1.4 CU YD)
PART OF 251-1786 BUCKET GP-GENERAL PURPOSE
AN ATTACHMENT

SMCS-6101 **i02108904**

NOTE	REF NO	GRAPHIC REF	PART NUMBER	QTY	PART NAME 1 2 3 4 5 6 (PRODUCT LEVEL)	SEE PAGE
	1	1	*9R-5901*	1	BRACKET AS-TILT (RH)	
	1A	1	**9R-4485**	1	BOSS	
	1B	1	**9R-4486**	1	BOSS	
	2	1	*9R-5902*	1	BRACKET AS-TILT (LH)	
	2A	1	**9R-4485**	1	BOSS	
	2B	1	**9R-4486**	1	BOSS	
	3	1	**9R-0376**	2	EDGE	
	4	1	**9R-4672**	1	EDGE	
	5	1	**9R-5205**	1	EDGE (LH)	
	6	1	**9R-5206**	1	EDGE (RH)	
	7	1	*251-1168*	2	BRACKET AS-LIFT (RH)	
					(EACH INCLUDES)	
	7A	1	**9R-0111**	1	BEARING-SLEEVE	
	8	1	*251-1169*	2	BRACKET AS-LIFT (LH)	
					(EACH INCLUDES)	
	8A	1	**9R-0111**	1	BEARING-SLEEVE	

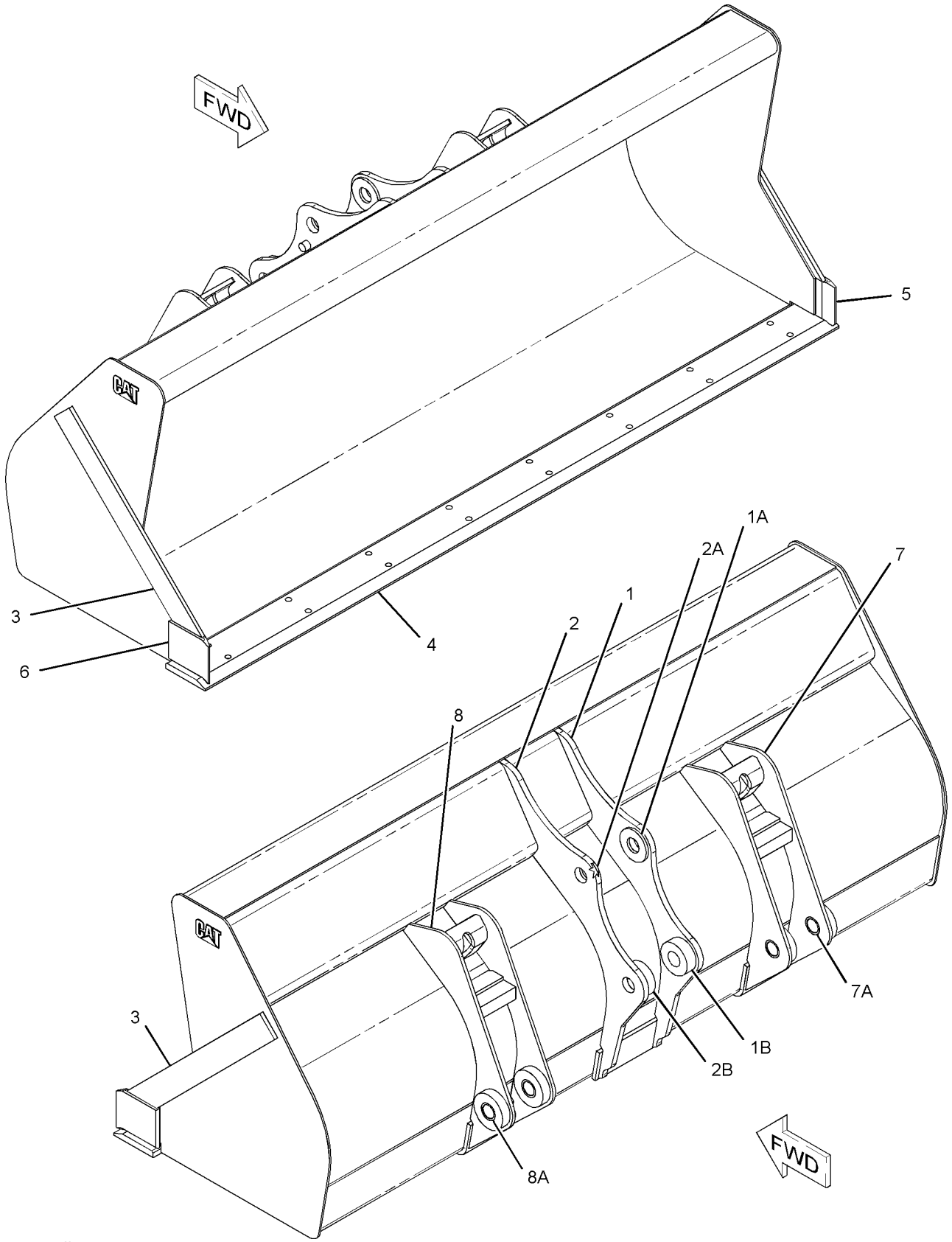

GRAPHIC #1 **<END>** g01074897

WORK TOOLS

251-1160 BUCKET AS-GENERAL PURPOSE

S/N: HLS1-99999
0.96 CU M (1.25 CU YD)
PART OF 251-1789 BUCKET GP-GENERAL PURPOSE
AN ATTACHMENT

SMCS-6101 **i02660184**

NOTE	REF NO	GRAPHIC REF	PART NUMBER	QTY	PART NAME 1 2 3 4 5 6 (PRODUCT LEVEL)	SEE PAGE
	1	1	*251-1172*	2	BRACKET AS-LIFT (RH)	
					(EACH INCLUDES)	
	1A	1	**9R-0111**	1	BEARING-SLEEVE	
	2	1	*251-1173*	2	BRACKET AS-LIFT (LH)	
					(EACH INCLUDES)	
	2A	1	**9R-0111**	1	BEARING-SLEEVE	
	3	1	**9R-0376**	2	EDGE	
	4	1	**9R-4672**	1	EDGE	
	5	1	**9R-5205**	1	EDGE (LH)	
	6	1	**9R-5206**	1	EDGE (RH)	

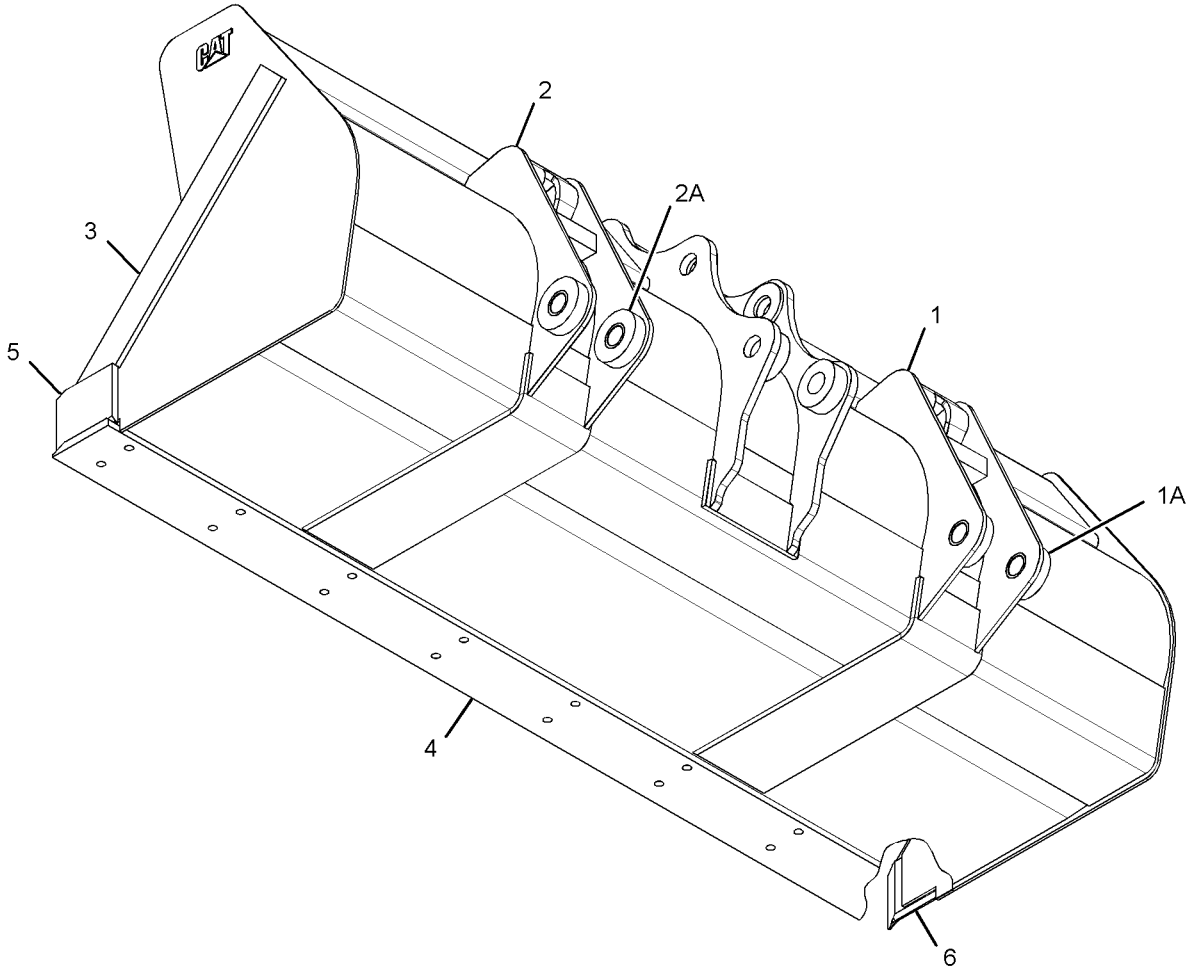

GRAPHIC #1 **<END>** g01342321

WORK TOOLS

219-3355 BUCKET AS-HOE

S/N: HLS1-99999
305-MM (12-IN)
PART OF 219-3379 BUCKET GP-HOE
AN ATTACHMENT
TYPE 1

SMCS-6503 **i02655055**

NOTE	REF NO	GRAPHIC REF	PART NUMBER	QTY	PART NAME 1 2 3 4 5 6 (PRODUCT LEVEL)	SEE PAGE
	1	1	*151-7929*	1	BRACKET AS (LH)	
	1A	1	**9R-0320**	1	BEARING-SLEEVE	
	1B	1	**154-5257**	1	BEARING-SLEEVE	
	3	1	*151-7930*	1	BRACKET AS (RH)	
	3A	1	**9R-0320**	1	BEARING-SLEEVE	
	3B	1	**154-5257**	1	BEARING-SLEEVE	
	4	1	**161-4130**	2	PLATE-IDENTIFICATION (CAT)	
	5	1	**201-1235**	3	ADAPTER (2-STRAP)	
	6	1	**219-9494**	1	EDGE	

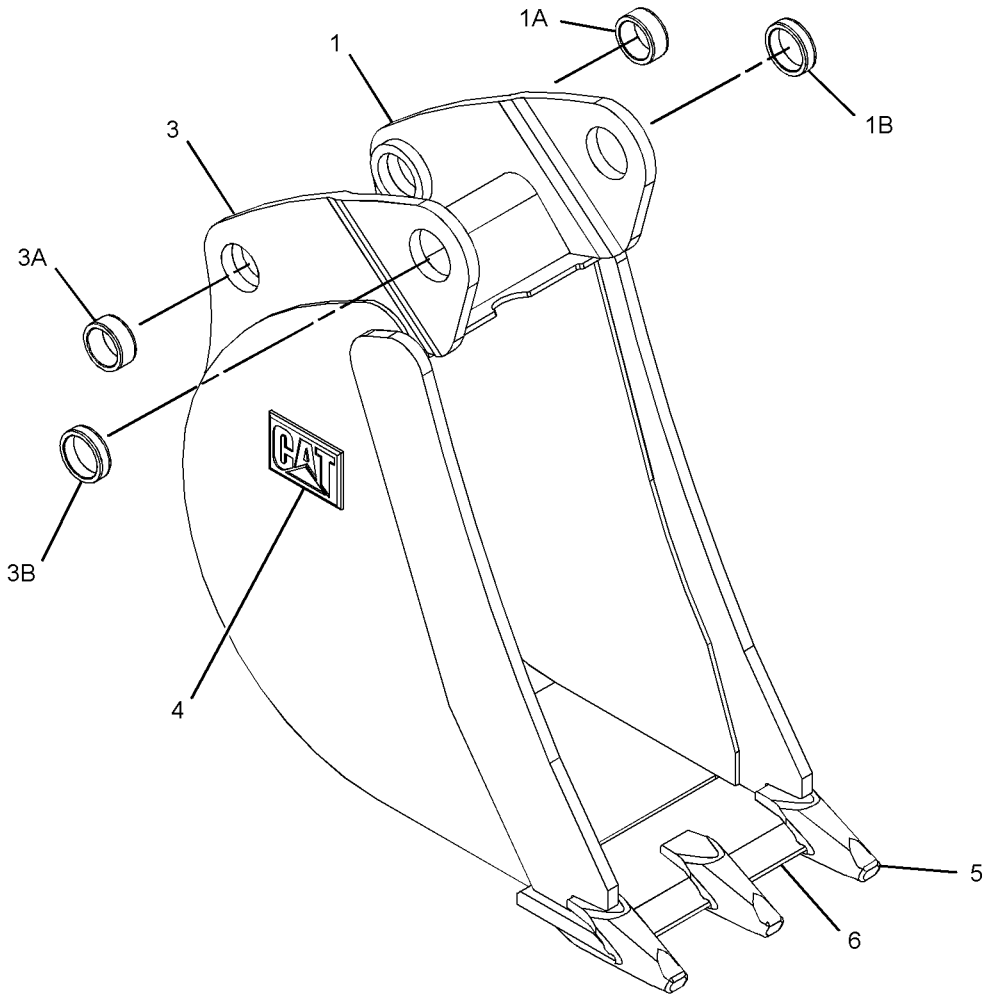

GRAPHIC #1 **<END>** g01341909

WORK TOOLS

219-3355 BUCKET AS-HOE

S/N: HLS1-99999
305-MM (12-IN)
PART OF 219-3379 BUCKET GP-HOE
AN ATTACHMENT
TYPE 2

SMCS-6503 **i03532147**

NOTE	REF NO	GRAPHIC REF	PART NUMBER	QTY	PART NAME 1 2 3 4 5 6 (PRODUCT LEVEL)	SEE PAGE
C	1	1	*286-9338*	1	BRACKET AS (RH)	
	1A	1	**9R-0320**	1	BEARING-SLEEVE	
	1B	1	**154-5257**	1	BEARING-SLEEVE	
C	2	1	*286-9340*	1	BRACKET AS (LH)	
	2A	1	**9R-0320**	1	BEARING-SLEEVE	
	2B	1	**154-5257**	1	BEARING-SLEEVE	
	3	1	*304-8424*	1	EDGE AS	
			201-1235	3	ADAPTER (2-STRAP)	
			219-9494	1	EDGE	

C-CHANGE FROM PREVIOUS TYPE

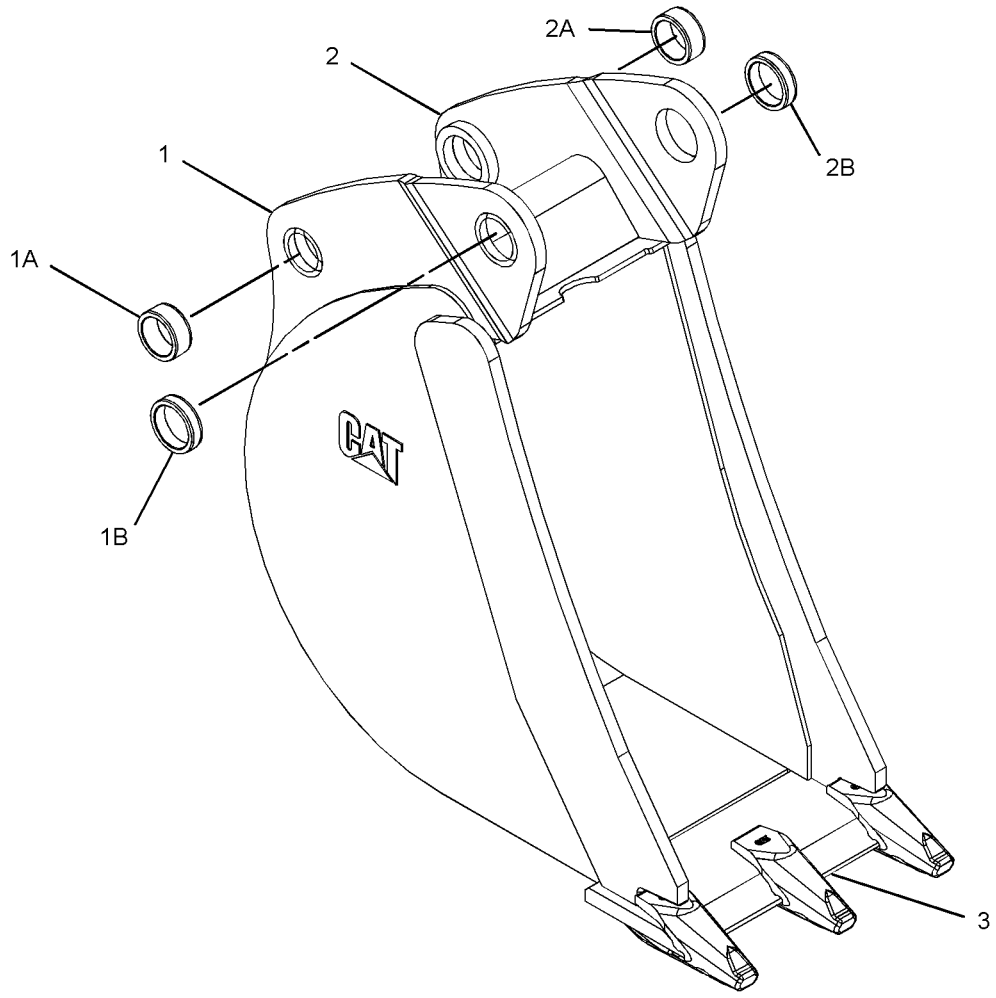

GRAPHIC #1 **<END>** g01381373

219-3356 BUCKET AS-HOE

S/N: HLS1-99999
458-MM (18-IN)
PART OF 219-3380 BUCKET GP-HOE
AN ATTACHMENT
TYPE 1

SMCS-6503 **i02655122**

NOTE	REF NO	GRAPHIC REF	PART NUMBER	QTY	PART NAME 1 2 3 4 5 6 (PRODUCT LEVEL)	SEE PAGE
	1	1	*151-7902*	1	BRACKET AS (LH)	
	1A	1	**9R-0162**	1	BEARING-SLEEVE	
	1B	1	**168-0480**	1	BEARING-SLEEVE	
	2	1	*151-7903*	1	BRACKET AS (RH)	
	2A	1	**9R-0162**	1	BEARING-SLEEVE	
	2B	1	**168-0480**	1	BEARING-SLEEVE	
	3	1	**161-4130**	2	PLATE-IDENTIFICATION (CAT)	
	4	1	**201-1235**	4	ADAPTER (2-STRAP)	
	5	1	**219-9487**	1	EDGE	

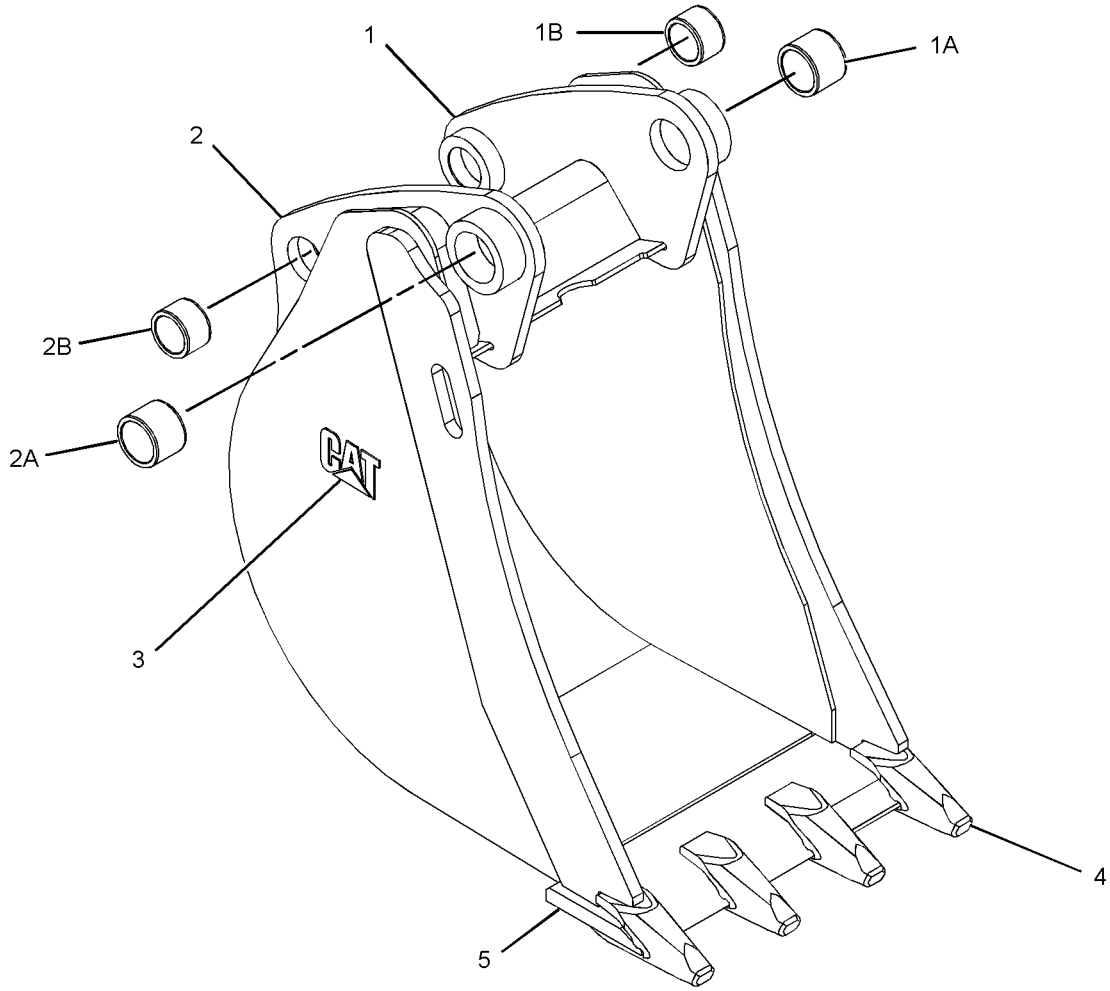

GRAPHIC #1 **<END>** g01335125

219-3356 BUCKET AS-HOE

S/N: HLS1-99999
458-MM (18-IN)
PART OF 219-3380 BUCKET GP-HOE
AN ATTACHMENT
TYPE 2

SMCS-6503 **i03532148**

NOTE	REF NO	GRAPHIC REF	PART NUMBER	QTY	PART NAME 1 2 3 4 5 6 (PRODUCT LEVEL)	SEE PAGE
C	1	1	*286-9336*	1	BRACKET AS (RH)	
	1A	1	**9R-0162**	1	BEARING-SLEEVE	
	1B	1	**168-0480**	1	BEARING-SLEEVE	
C	2	1	*286-9337*	1	BRACKET AS (LH)	
	2A	1	**9R-0162**	1	BEARING-SLEEVE	
	2B	1	**168-0480**	1	BEARING-SLEEVE	
	3	1	*300-4157*	1	EDGE AS	
			201-1235	4	ADAPTER (2-STRAP)	
			219-9487	1	EDGE	

C-CHANGE FROM PREVIOUS TYPE

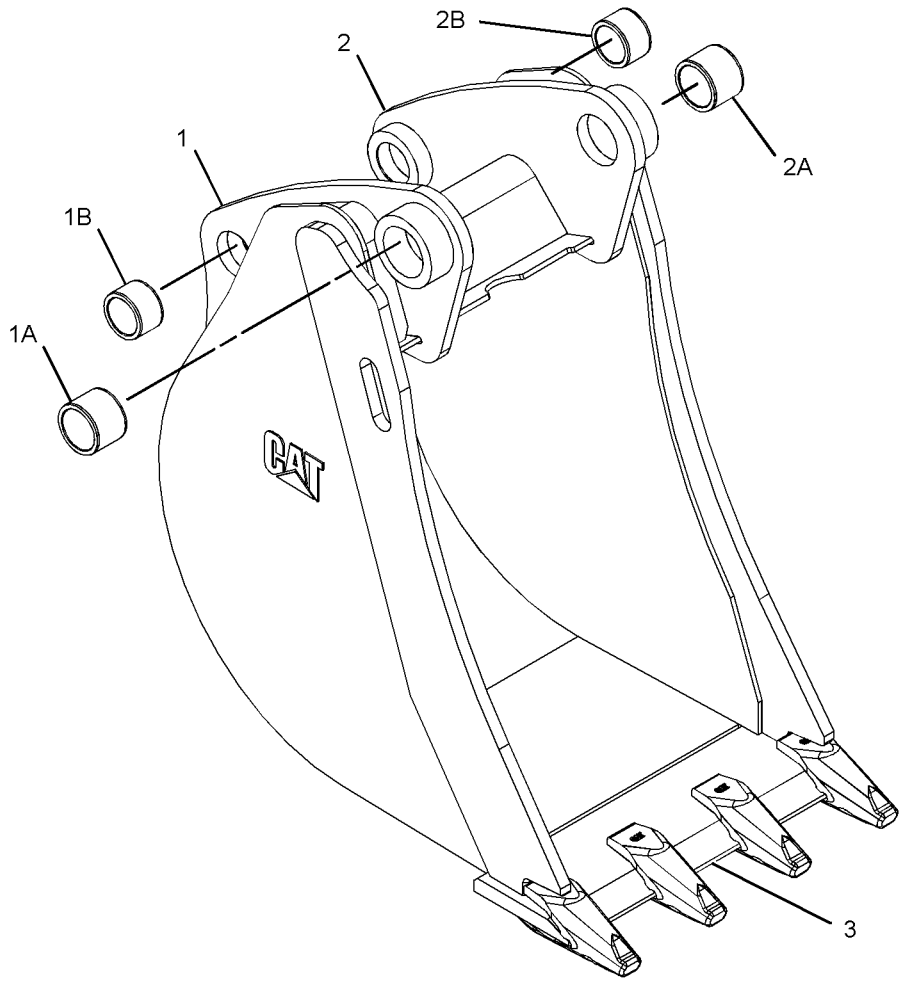

GRAPHIC #1 **<END>** g01382130

219-3357 BUCKET AS-HOE

S/N: HLS1-99999
610-MM (24-IN)
PART OF 219-3381 BUCKET GP-HOE
AN ATTACHMENT
TYPE 1

SMCS-6503 **i02659641**

NOTE	REF NO	GRAPHIC REF	PART NUMBER	QTY	PART NAME 1 2 3 4 5 6 (PRODUCT LEVEL)	SEE PAGE
	1	1	*151-7902*	1	BRACKET AS (LH)	
	1A	1	**9R-0162**	1	BEARING-SLEEVE	
	1B	1	**168-0480**	1	BEARING-SLEEVE	
	2	1	*151-7903*	1	BRACKET AS (RH)	
	2A	1	**9R-0162**	1	BEARING-SLEEVE	
	2B	1	**168-0480**	1	BEARING-SLEEVE	
	3	1	**161-4130**	2	PLATE-IDENTIFICATION (CAT)	
	4	1	**201-1235**	5	ADAPTER (2-STRAP)	
	5	1	**219-9488**	1	EDGE	

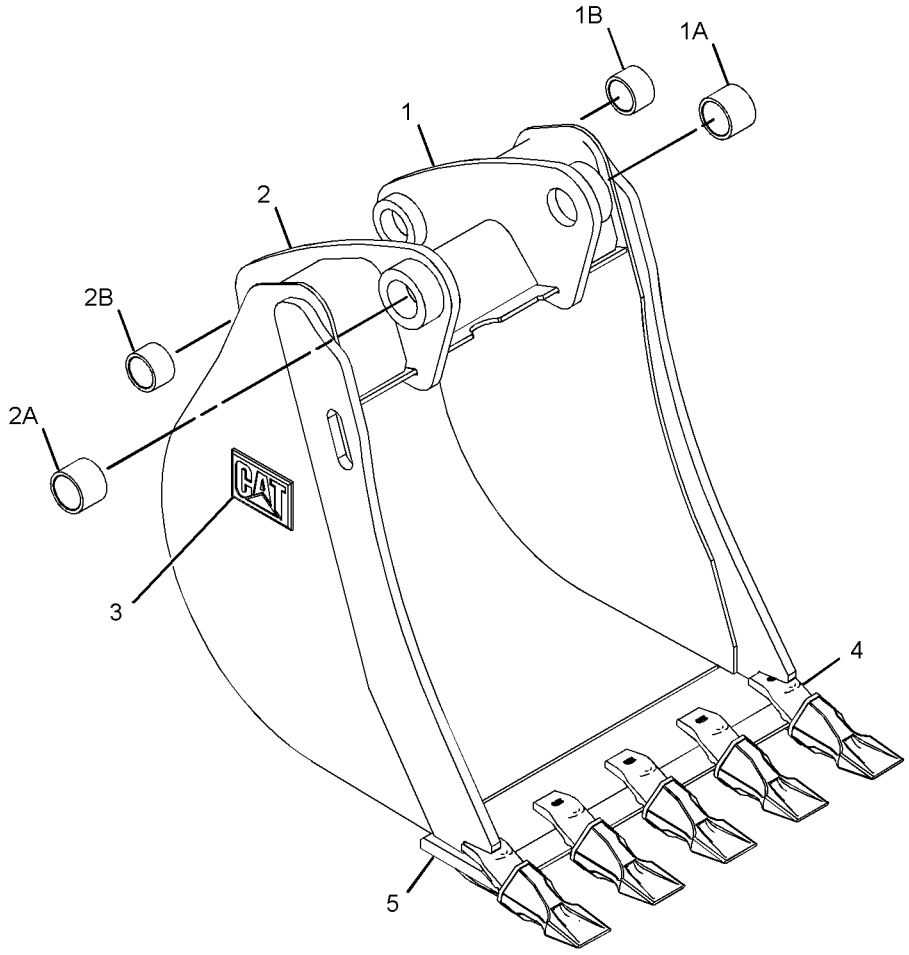

GRAPHIC #1 **<END>** g01336103

219-3357 BUCKET AS-HOE

S/N: HLS1-99999
610-MM (24-IN)
PART OF 219-3381 BUCKET GP-HOE
AN ATTACHMENT
TYPE 2

SMCS-6503 **i03532149**

NOTE	REF NO	GRAPHIC REF	PART NUMBER	QTY	PART NAME 1 2 3 4 5 6 (PRODUCT LEVEL)	SEE PAGE
C	1	1	*286-9336*	1	BRACKET AS (RH)	
	1A	1	**9R-0162**	1	BEARING-SLEEVE	
	1B	1	**168-0480**	1	BEARING-SLEEVE	
C	2	1	*286-9337*	1	BRACKET AS (LH)	
	2A	1	**9R-0162**	1	BEARING-SLEEVE	
	2B	1	**168-0480**	1	BEARING-SLEEVE	
	3	1	*300-4158*	1	EDGE AS	
		1	**201-1235**	5	ADAPTER (2-STRAP)	
		1	**219-9488**	1	EDGE	

C-CHANGE FROM PREVIOUS TYPE

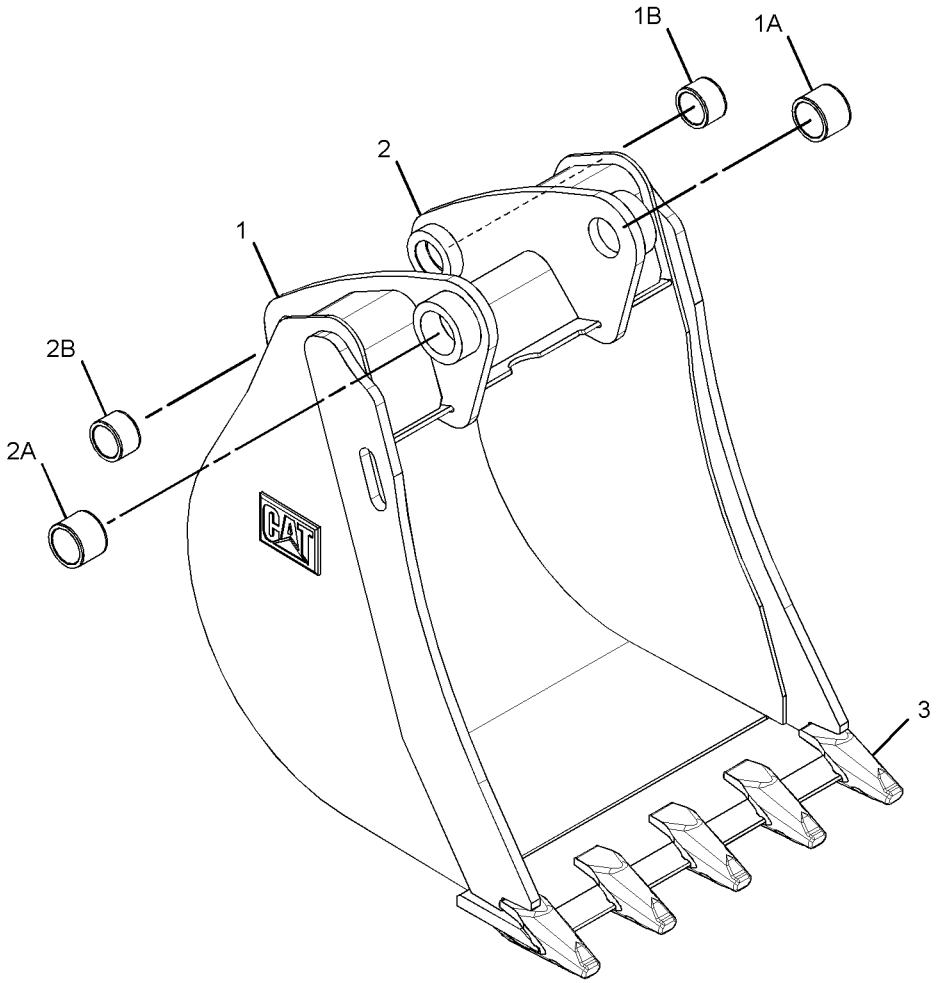

GRAPHIC #1 **<END>** g01382136

219-3358 BUCKET AS-HOE

S/N: HLS1-99999
762-MM (30-IN)
PART OF 219-3382 BUCKET GP-HOE
AN ATTACHMENT
TYPE 1

SMCS-6503 **i02651247**

NOTE	REF NO	GRAPHIC REF	PART NUMBER	QTY	PART NAME 1 2 3 4 5 6 (PRODUCT LEVEL)	SEE PAGE
	1	1	*151-7902*	1	BRACKET AS (LH)	
	1A	1	**9R-0162**	1	BEARING-SLEEVE	
	1B	1	**168-0480**	1	BEARING-SLEEVE	
	2	1	*151-7903*	1	BRACKET AS (RH)	
	2A	1	**9R-0162**	1	BEARING-SLEEVE	
	2B	1	**168-0480**	1	BEARING-SLEEVE	
	3	1	**161-4130**	2	PLATE-IDENTIFICATION (CAT)	
	4	1	**201-1235**	5	ADAPTER (2-STRAP)	
	5	1	**219-9489**	1	EDGE	

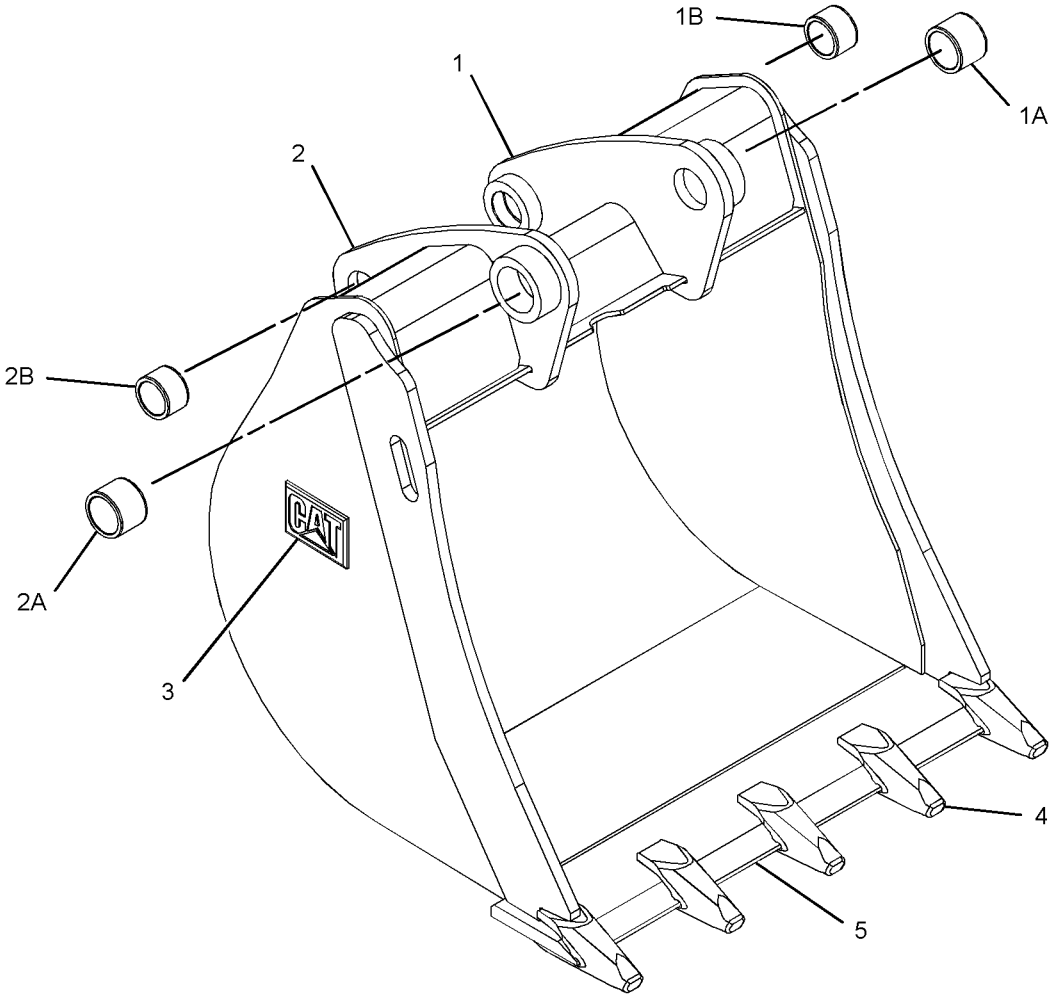

GRAPHIC #1 **<END>** g01341875

WORK TOOLS

219-3358 BUCKET AS-HOE

S/N: HLS1-99999
762-MM (30-IN)
PART OF 219-3382 BUCKET GP-HOE
AN ATTACHMENT
TYPE 2

SMCS-6503 **i03532150**

NOTE	REF NO	GRAPHIC REF	PART NUMBER	QTY	PART NAME 1 2 3 4 5 6 (PRODUCT LEVEL)	SEE PAGE
C	1	1	*286-9336*	1	BRACKET AS (RH)	
	1A	1	**9R-0162**	1	BEARING-SLEEVE	
	1B	1	**168-0480**	1	BEARING-SLEEVE	
C	2	1	*286-9337*	1	BRACKET AS (LH)	
	2A	1	**9R-0162**	1	BEARING-SLEEVE	
	2B	1	**168-0480**	1	BEARING-SLEEVE	
	3	1	*300-4159*	1	EDGE AS	
		1	**201-1235**	5	ADAPTER (2-STRAP)	
		1	**219-9489**	1	EDGE	

C-CHANGE FROM PREVIOUS TYPE

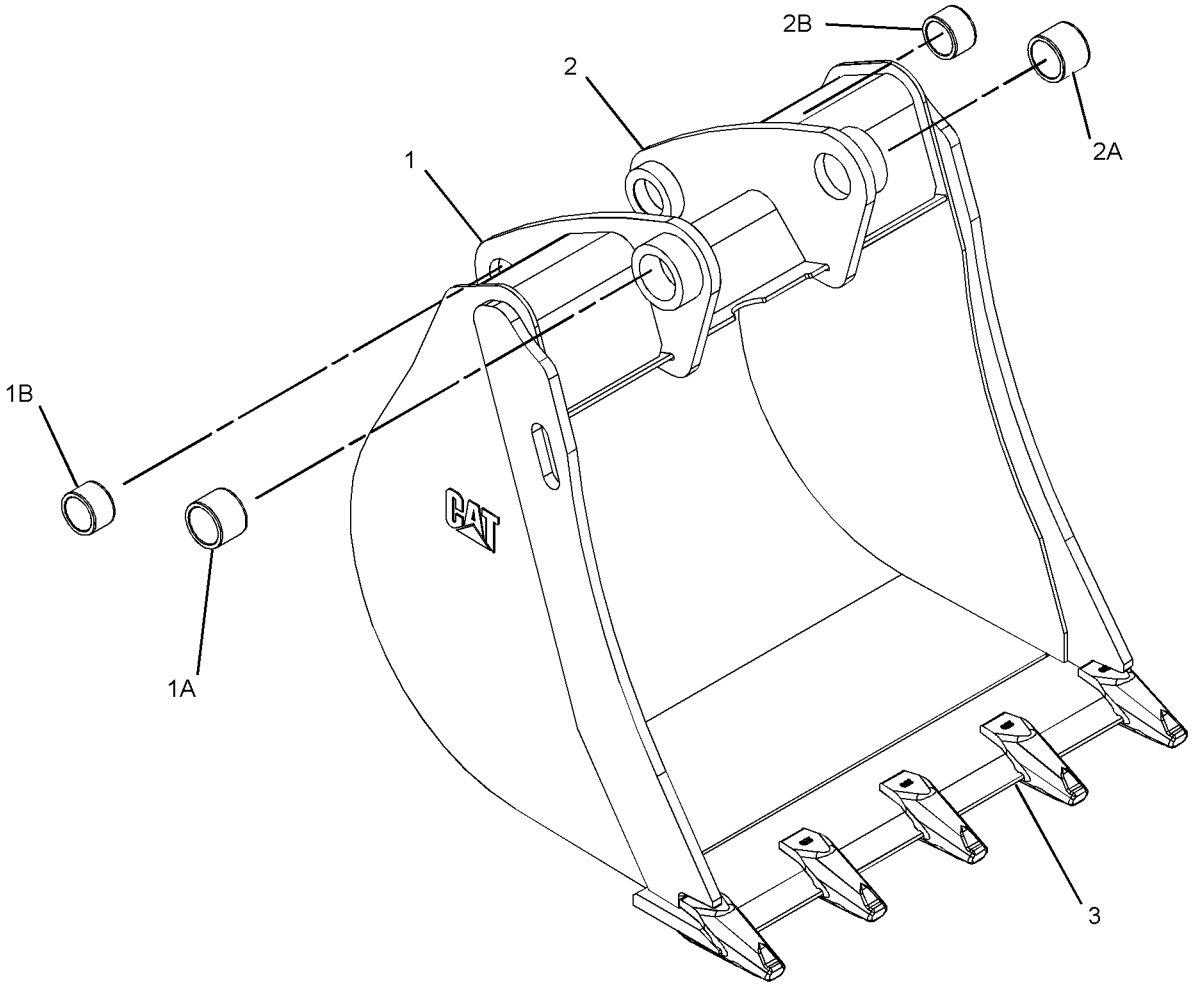

GRAPHIC #1 **<END>** g01382117

219-3359 BUCKET AS-HOE

S/N: HLS1-99999
914-MM (36-IN)
PART OF 219-3383 BUCKET GP-HOE
AN ATTACHMENT
TYPE 1

SMCS-6503 **i02651453**

NOTE	REF NO	GRAPHIC REF	PART NUMBER	QTY	PART NAME 1 2 3 4 5 6 (PRODUCT LEVEL)	SEE PAGE
	1	1	*151-7902*	1	BRACKET AS (LH)	
	1A	1	**9R-0162**	1	BEARING-SLEEVE	
	1B	1	**168-0480**	1	BEARING-SLEEVE	
	2	1	*151-7903*	1	BRACKET AS (RH)	
	2A	1	**9R-0162**	1	BEARING-SLEEVE	
	2B	1	**168-0480**	1	BEARING-SLEEVE	
	3	1	**161-4130**	2	PLATE-IDENTIFICATION (CAT)	
	4	1	**201-1235**	6	ADAPTER (2-STRAP)	
	5	1	**219-9490**	1	EDGE	

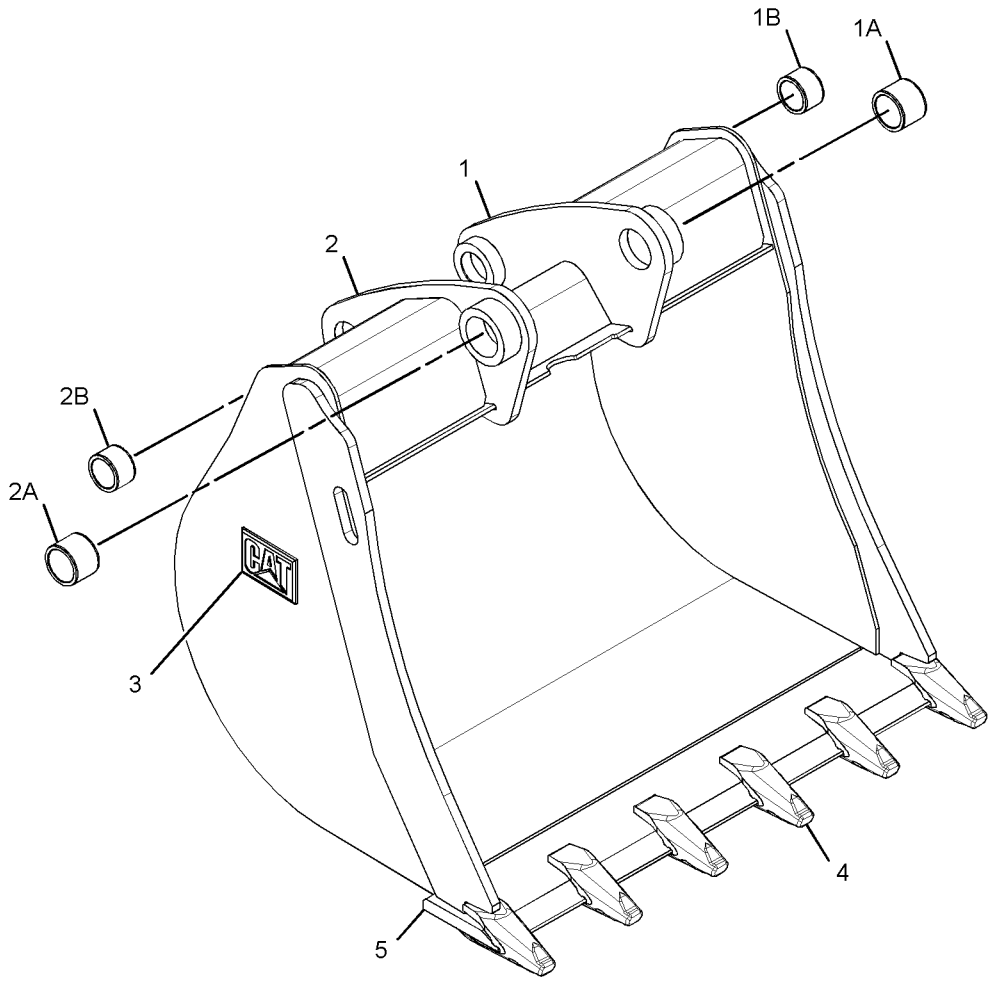

GRAPHIC #1 **<END>** g01341811

219-3359 BUCKET AS-HOE

S/N: HLS1-99999
914-MM (36-IN)
PART OF 219-3383 BUCKET GP-HOE
AN ATTACHMENT
TYPE 2

SMCS-6503 **i03532151**

NOTE	REF NO	GRAPHIC REF	PART NUMBER	QTY	PART NAME 1 2 3 4 5 6 (PRODUCT LEVEL)	SEE PAGE
C	1	1	*286-9336*	1	BRACKET AS (RH)	
	1A	1	**9R-0162**	1	BEARING-SLEEVE	
	1B	1	**168-0480**	1	BEARING-SLEEVE	
C	2	1	*286-9337*	1	BRACKET AS (LH)	
	2A	1	**9R-0162**	1	BEARING-SLEEVE	
	2B	1	**168-0480**	1	BEARING-SLEEVE	
	3	1	*300-4160*	1	EDGE AS	
			201-1235	6	ADAPTER (2-STRAP)	
			219-9490	1	EDGE	

C-CHANGE FROM PREVIOUS TYPE

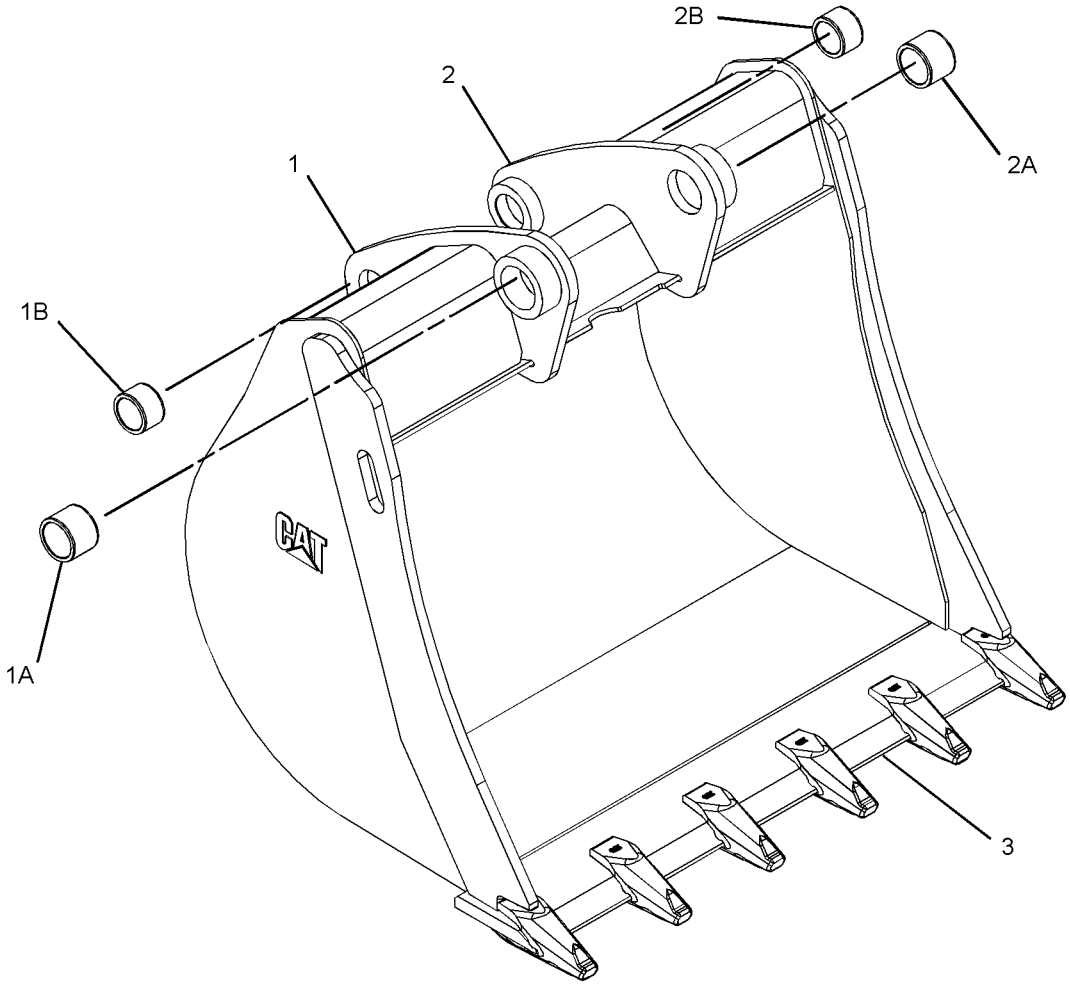

GRAPHIC #1 **<END>** g01382084

219-3360 BUCKET AS-HOE—HEAVY-DUTY

S/N: HLS1-99999
305-MM (12-IN)
PART OF 219-3384 BUCKET GP-HOE
AN ATTACHMENT
TYPE 1

SMCS-6503 **i02651459**

NOTE	REF NO	GRAPHIC REF	PART NUMBER	QTY	PART NAME 1 2 3 4 5 6 (PRODUCT LEVEL)	SEE PAGE
	1	1	**134-5884**	1	EDGE (LH)	
	2	1	**134-5885**	1	EDGE (RH)	
	3	1	**151-7927**	2	PLATE	
	4	1	*151-7929*	1	BRACKET AS (LH)	
	4A	1	**9R-0320**	1	BEARING-SLEEVE	
	4B	1	**154-5257**	1	BEARING-SLEEVE	
	5	1	*151-7930*	1	BRACKET AS (RH)	
	5A	1	**9R-0320**	1	BEARING-SLEEVE	
	5B	1	**154-5257**	1	BEARING-SLEEVE	
	6	1	**161-4130**	2	PLATE-IDENTIFICATION (CAT)	
	7	1	**201-1234**	3	ADAPTER (2-STRAP)	
	8	1	**219-9493**	1	EDGE	

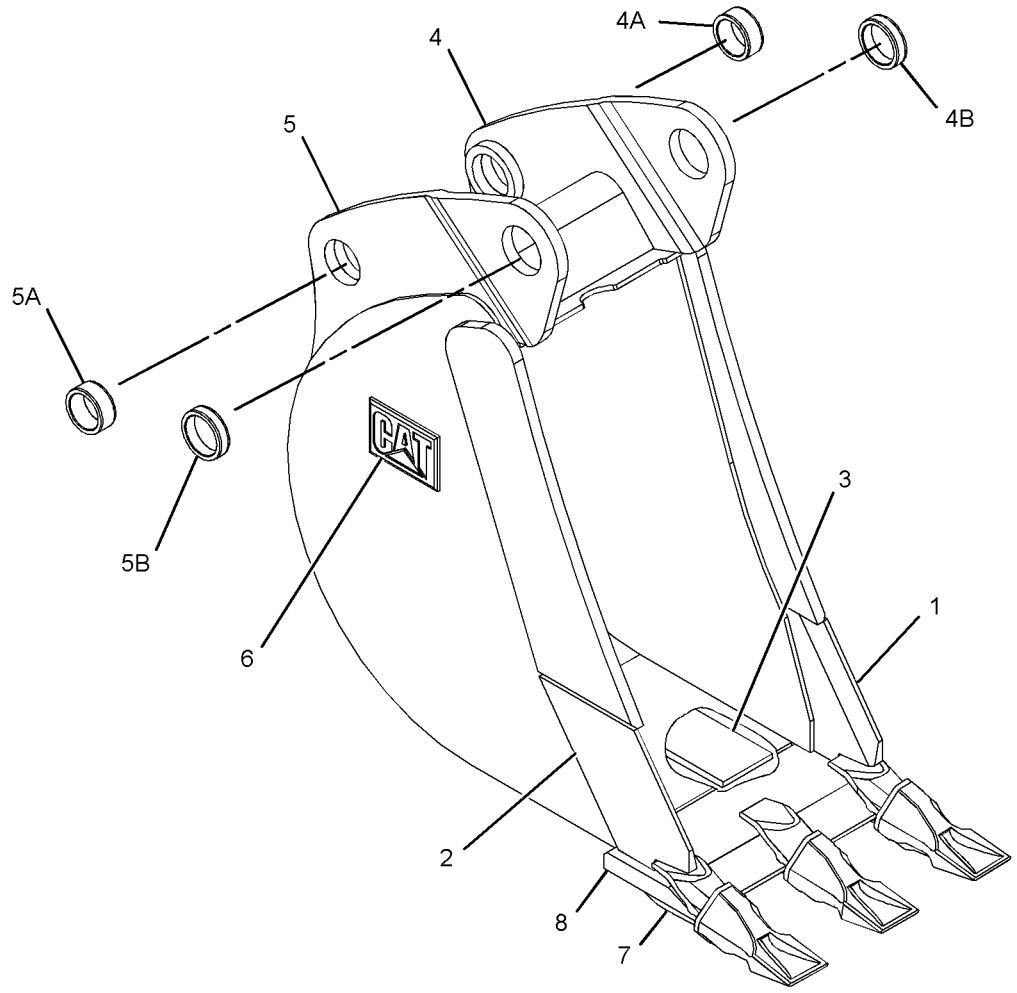

GRAPHIC #1 **<END>** g01335502

219-3360 BUCKET AS-HOE—HEAVY-DUTY

S/N: HLS1-99999
305-MM (12-IN)
PART OF 219-3384 BUCKET GP-HOE
AN ATTACHMENT
TYPE 2

SMCS-6503 **i03532152**

NOTE	REF NO	GRAPHIC REF	PART NUMBER	QTY	PART NAME 1 2 3 4 5 6 (PRODUCT LEVEL)	SEE PAGE
	1	1	**174-3950**	5	PLATE	
C	2	1	*286-9338*	1	BRACKET AS (RH)	
C	3	1	*286-9340*	1	BRACKET AS (LH)	
					(EACH BRACKET AS INCUDES)	
		1	**9R-0320**	1	BEARING-SLEEVE	
		1	**154-5257**	1	BEARING-SLEEVE	
	4	1	*300-4161*	1	EDGE AS	
		1	**201-1234**	3	ADAPTER (2-STRAP)	
		1	**219-9493**	1	EDGE	
	5	1	**304-8420**	1	PLATE AS	
		1	**134-5885**	1	EDGE (RH)	
	6	1	**304-8421**	1	PLATE AS	
		1	**134-5884**	1	EDGE (LH)	

C-CHANGE FROM PREVIOUS TYPE

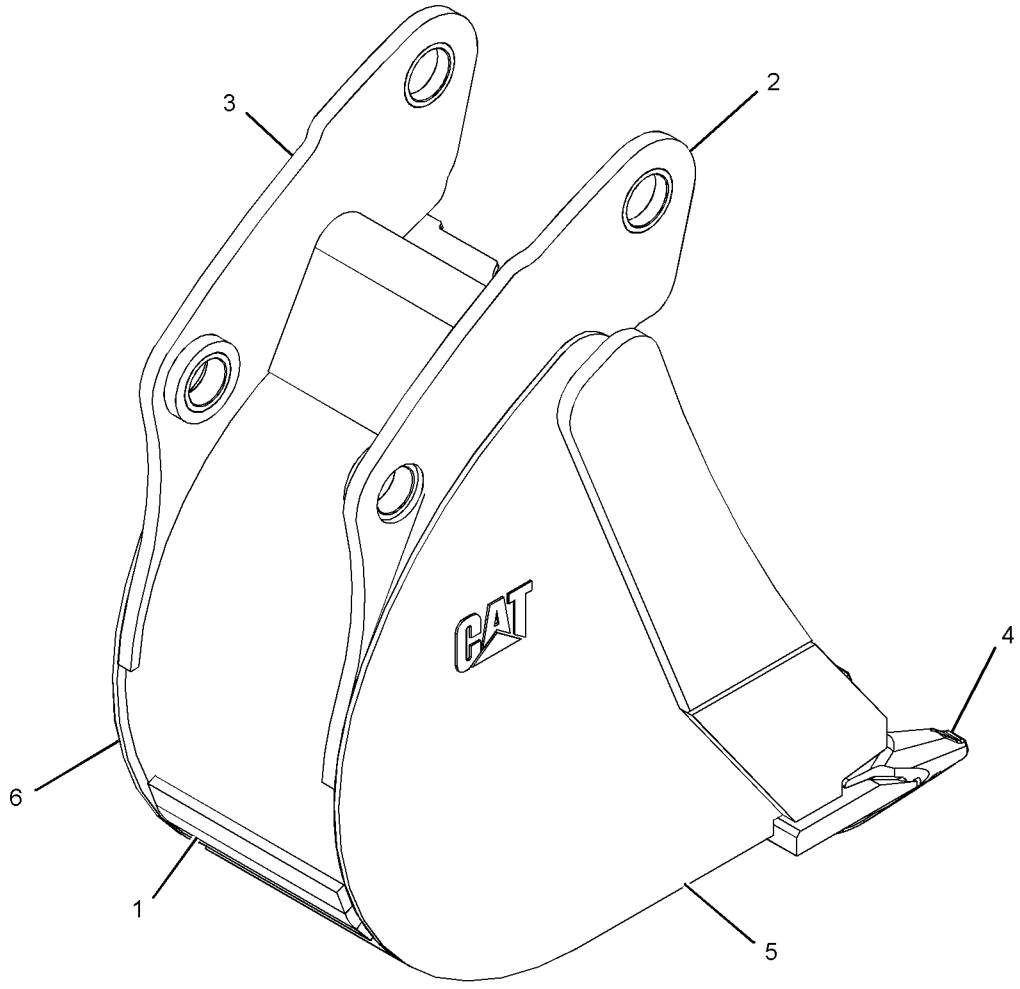

GRAPHIC #1 **<END>** g01860693

219-3361 BUCKET AS-HOE—HEAVY-DUTY

S/N: HLS1-99999
407-MM (16-IN)
PART OF 219-3385 BUCKET GP-HOE
AN ATTACHMENT
TYPE 1

SMCS-6503 **i02651465**

NOTE	REF NO	GRAPHIC REF	PART NUMBER	QTY	PART NAME 1 2 3 4 5 6 (PRODUCT LEVEL)	SEE PAGE
	1	1	**134-5884**	1	EDGE (LH)	
	2	1	**134-5885**	1	EDGE (RH)	
	3	1	*151-7902*	1	BRACKET AS (LH)	
	3A	1	**9R-0162**	1	BEARING-SLEEVE	
	3B	1	**168-0480**	1	BEARING-SLEEVE	
	4	1	*151-7903*	1	BRACKET AS (RH)	
	4A	1	**9R-0162**	1	BEARING-SLEEVE	
	4B	1	**168-0480**	1	BEARING-SLEEVE	
	5	1	**151-7927**	3	PLATE	
	6	1	**161-4130**	2	PLATE-IDENTIFICATION (CAT)	
	7	1	**201-1234**	3	ADAPTER (2-STRAP)	
	8	1	**219-9482**	1	EDGE	

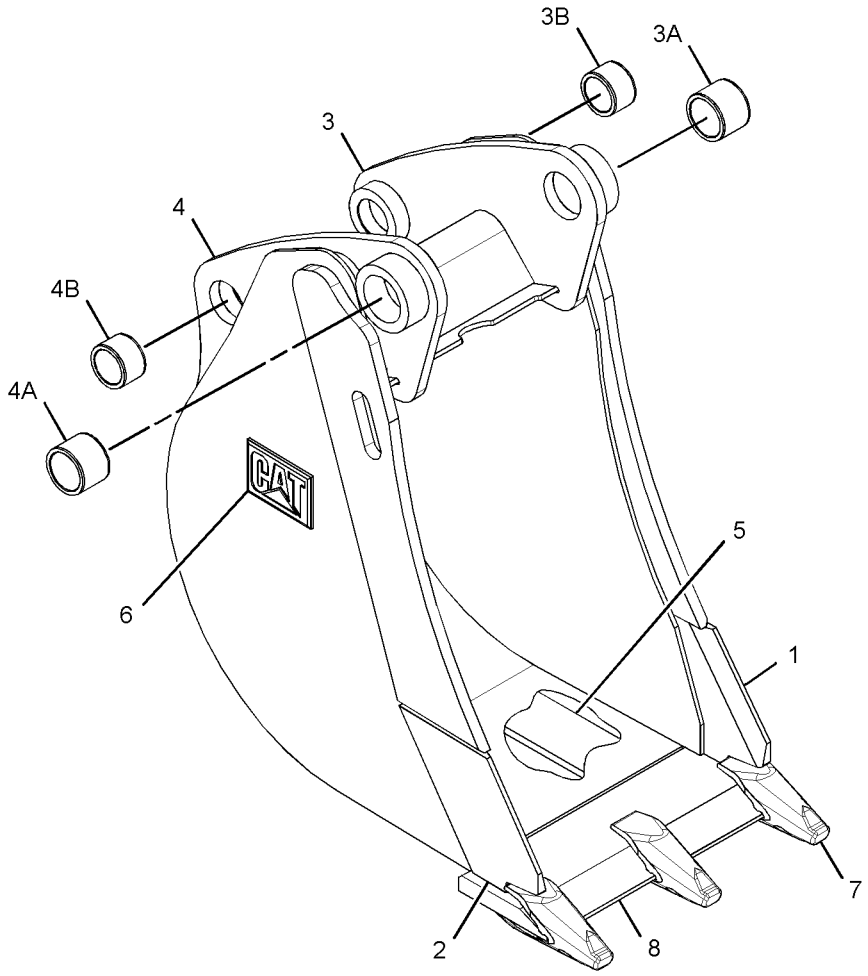

GRAPHIC #1 **<END>** g01341887

WORK TOOLS

219-3361 BUCKET AS-HOE—HEAVY-DUTY

S/N: HLS1-99999
407-MM (16-IN)
PART OF 219-3385 BUCKET GP-HOE
AN ATTACHMENT
TYPE 2

SMCS-6503 **i03345645**

NOTE	REF NO	GRAPHIC REF	PART NUMBER	QTY	PART NAME 1 2 3 4 5 6 (PRODUCT LEVEL)	SEE PAGE
	1	1	**306-8128**	5	PLATE	
C	2	1	*286-9336*	1	BRACKET AS (RH)	
	2A	1	**9R-0162**	1	BEARING-SLEEVE	
	2B	1	**168-0480**	1	BEARING-SLEEVE	
C	3	1	*286-9337*	1	BRACKET AS (LH)	
	3A	1	**9R-0162**	1	BEARING-SLEEVE	
	3B	1	**168-0480**	1	BEARING-SLEEVE	
	4	1	*299-3342*	1	EDGE AS	
		1	**219-9482**	1	EDGE	
		1	**201-1234**	3	ADAPTER (2-STRAP)	
	5	1	*300-7049*	1	PLATE AS	
		1	**134-5885**	1	EDGE (RH)	
	6	1	*300-7051*	1	PLATE AS	
		1	**134-5884**	1	EDGE (LH)	

C-CHANGE FROM PREVIOUS TYPE

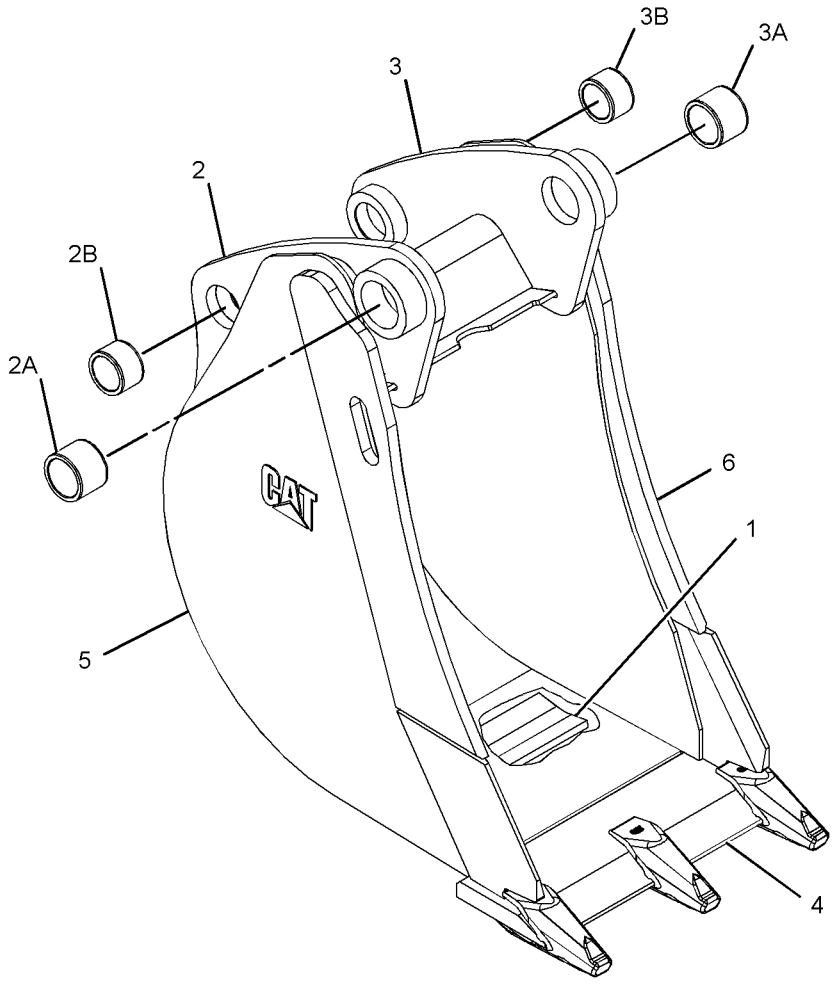

GRAPHIC #1 **<END>** g01381334

219-3362 BUCKET AS-HOE—HEAVY-DUTY

S/N: HLS1-99999
458-MM (18-IN)
PART OF 219-3386 BUCKET GP-HOE
AN ATTACHMENT
TYPE 1

SMCS-6503 **i02655171**

NOTE	REF NO	GRAPHIC REF	PART NUMBER	QTY	PART NAME 1 2 3 4 5 6 (PRODUCT LEVEL)	SEE PAGE
	1	1	**134-5884**	1	EDGE (LH)	
	2	1	**134-5885**	1	EDGE (RH)	
	3	1	*151-7902*	1	BRACKET AS (LH)	
	3A	1	**9R-0162**	1	BEARING-SLEEVE	
	3B	1	**168-0480**	1	BEARING-SLEEVE	
	4	1	*151-7903*	1	BRACKET AS (RH)	
	4A	1	**9R-0162**	1	BEARING-SLEEVE	
	4B	1	**168-0480**	1	BEARING-SLEEVE	
	5	1	**151-7927**	3	PLATE	
	6	1	**161-4130**	2	PLATE-IDENTIFICATION (CAT)	
	7	1	**201-1234**	4	ADAPTER (2-STRAP)	
	8	1	**219-9483**	1	EDGE	

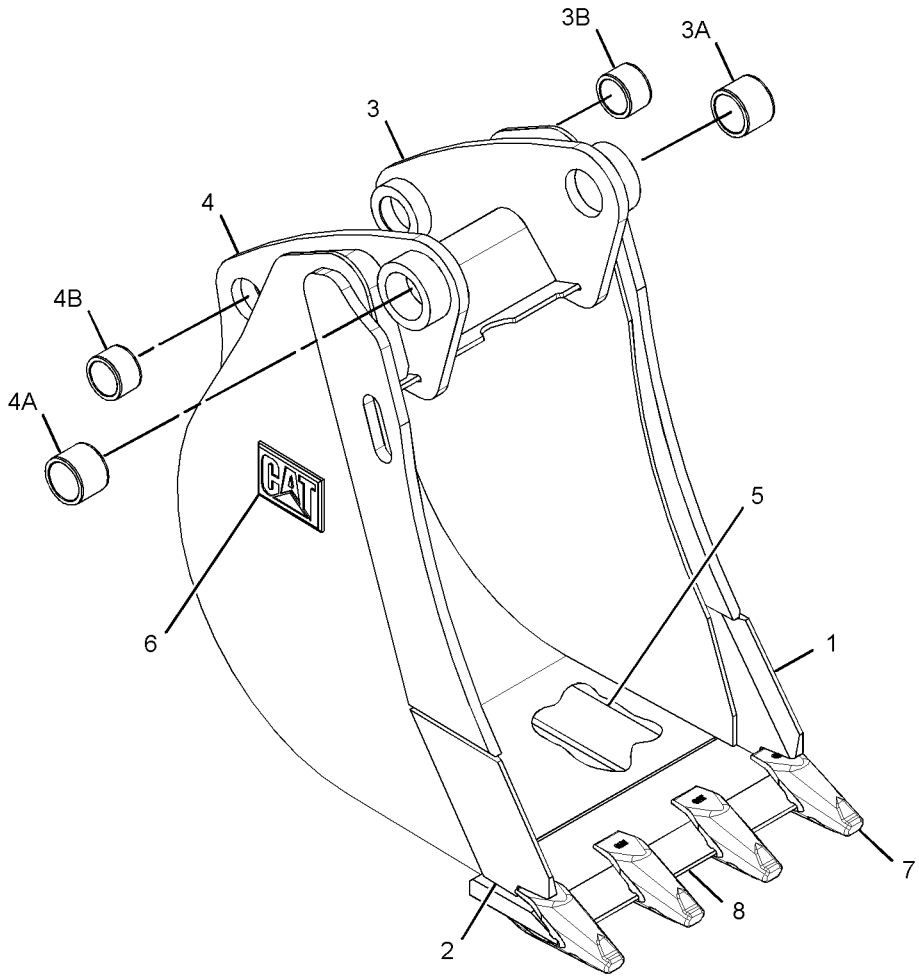

GRAPHIC #1 **<END>** g01341856

WORK TOOLS

219-3362 BUCKET AS-HOE—HEAVY-DUTY

S/N: HLS1-99999
458-MM (18-IN)
PART OF 219-3386 BUCKET GP-HOE
AN ATTACHMENT
TYPE 2

SMCS-6503 **i03532154**

NOTE	REF NO	GRAPHIC REF	PART NUMBER	QTY	PART NAME 1 2 3 4 5 6 (PRODUCT LEVEL)	SEE PAGE
	1	1	**172-8279**	5	PLATE	
C	2	1	*286-9336*	1	BRACKET AS (RH)	
		1	**9R-0162**	1	BEARING-SLEEVE	
		1	**168-0480**	1	BEARING-SLEEVE	
C	3	1	*286-9337*	1	BRACKET AS (LH)	
		1	**9R-0162**	1	BEARING-SLEEVE	
		1	**168-0480**	1	BEARING-SLEEVE	
	4	1	*299-3344*	1	EDGE AS	
		1	**201-1234**	4	ADAPTER (2-STRAP)	
		1	**219-9483**	1	EDGE	
	5	1	*300-7049*	1	PLATE AS	
		1	**134-5885**	1	EDGE (RH)	
	6	1	*300-7051*	1	PLATE AS	
		1	**134-5884**	1	EDGE (LH)	

C-CHANGE FROM PREVIOUS TYPE

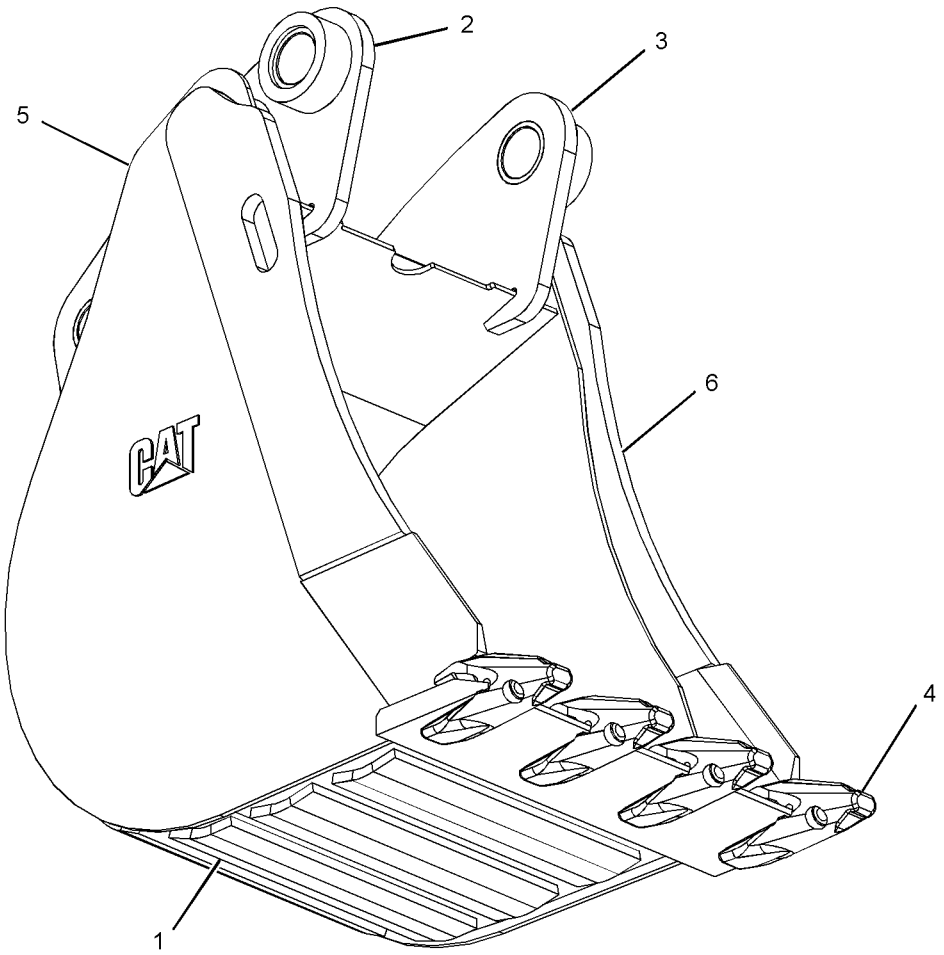

GRAPHIC #1 **<END>** g01381354

219-3363 BUCKET AS-HOE—HEAVY-DUTY

S/N: HLS1-99999
610-MM (24-IN)
PART OF 219-3387 BUCKET GP-HOE
AN ATTACHMENT
TYPE 1

SMCS-6503 **i02655225**

NOTE	REF NO	GRAPHIC REF	PART NUMBER	QTY	PART NAME 1 2 3 4 5 6 (PRODUCT LEVEL)	SEE PAGE
	1	1	**134-5884**	1	EDGE (LH)	
	2	1	**134-5885**	1	EDGE (RH)	
	3	1	*151-7902*	1	BRACKET AS (LH)	
	3A	1	**9R-0162**	1	BEARING-SLEEVE	
	3B	1	**168-0480**	1	BEARING-SLEEVE	
	4	1	*151-7903*	1	BRACKET AS (RH)	
	4A	1	**9R-0162**	1	BEARING-SLEEVE	
	4B	1	**168-0480**	1	BEARING-SLEEVE	
	5	1	**151-7927**	4	PLATE	
	6	1	**161-4130**	2	PLATE-IDENTIFICATION (CAT)	
	7	1	**201-1234**	5	ADAPTER (2-STRAP)	
	8	1	**219-9484**	1	EDGE	

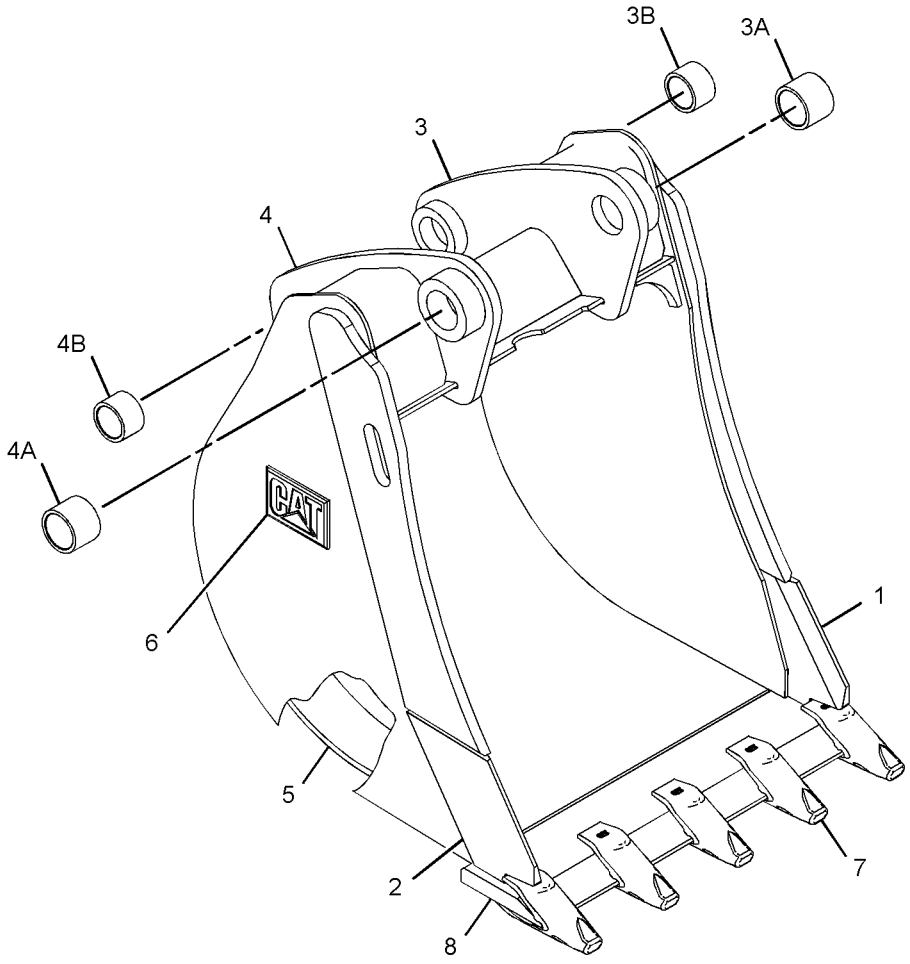

GRAPHIC #1 **<END>** g01335129

WORK TOOLS

219-3363 BUCKET AS-HOE—HEAVY-DUTY

S/N: HLS1-99999
610-MM (24-IN)
PART OF 219-3387 BUCKET GP-HOE
AN ATTACHMENT
TYPE 2

SMCS-6503 **i02674429**

NOTE	REF NO	GRAPHIC REF	PART NUMBER	QTY	PART NAME 1 2 3 4 5 6 (PRODUCT LEVEL)	SEE PAGE
	1	1	**172-8280**	5	PLATE	
C	2	1	*286-9336*	1	BRACKET AS (RH)	
	2A	1	**9R-0162**	1	BEARING-SLEEVE	
	2B	1	**168-0480**	1	BEARING-SLEEVE	
C	3	1	*286-9337*	1	BRACKET AS (LH)	
	3A	1	**9R-0162**	1	BEARING-SLEEVE	
	3B	1	**168-0480**	1	BEARING-SLEEVE	
	4	1	*299-3348*	1	EDGE AS	
		1	**219-9484**	1	EDGE	
		1	**201-1234**	5	ADAPTER (2-STRAP)	
	5	1	*300-7049*	1	PLATE AS	
		1	**134-5885**	1	EDGE (RH)	
	6	1	*300-7051*	1	PLATE AS	
		1	**134-5884**	1	EDGE (LH)	

C-CHANGE FROM PREVIOUS TYPE

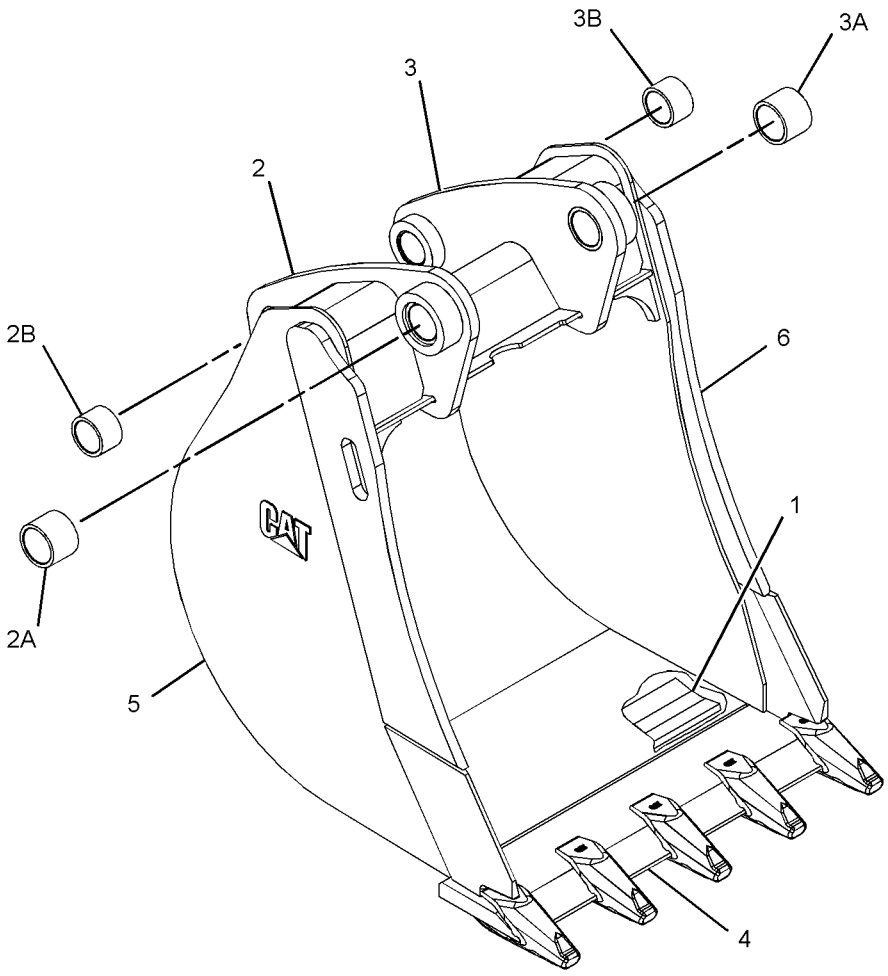

GRAPHIC #1 **<END>** g01381312

219-3364 BUCKET AS-HOE—HEAVY-DUTY

S/N: HLS1-99999
762-MM (30-IN)
PART OF 219-3388 BUCKET GP-HOE
AN ATTACHMENT
TYPE 1

SMCS-6503 **i02651474**

NOTE	REF NO	GRAPHIC REF	PART NUMBER	QTY	PART NAME 1 2 3 4 5 6 (PRODUCT LEVEL)	SEE PAGE
	1	1	**134-5884**	1	EDGE (LH)	
	2	1	**134-5885**	1	EDGE (RH)	
	3	1	*151-7902*	1	BRACKET AS (LH)	
	3A	1	**9R-0162**	1	BEARING-SLEEVE	
	3B	1	**168-0480**	1	BEARING-SLEEVE	
	4	1	*151-7903*	1	BRACKET AS (RH)	
	4A	1	**9R-0162**	1	BEARING-SLEEVE	
	4B	1	**168-0480**	1	BEARING-SLEEVE	
	5	1	**151-7927**	4	PLATE	
	6	1	**161-4130**	2	PLATE-IDENTIFICATION (CAT)	
	7	1	**201-1234**	5	ADAPTER (2-STRAP)	
	8	1	**219-9485**	1	EDGE	

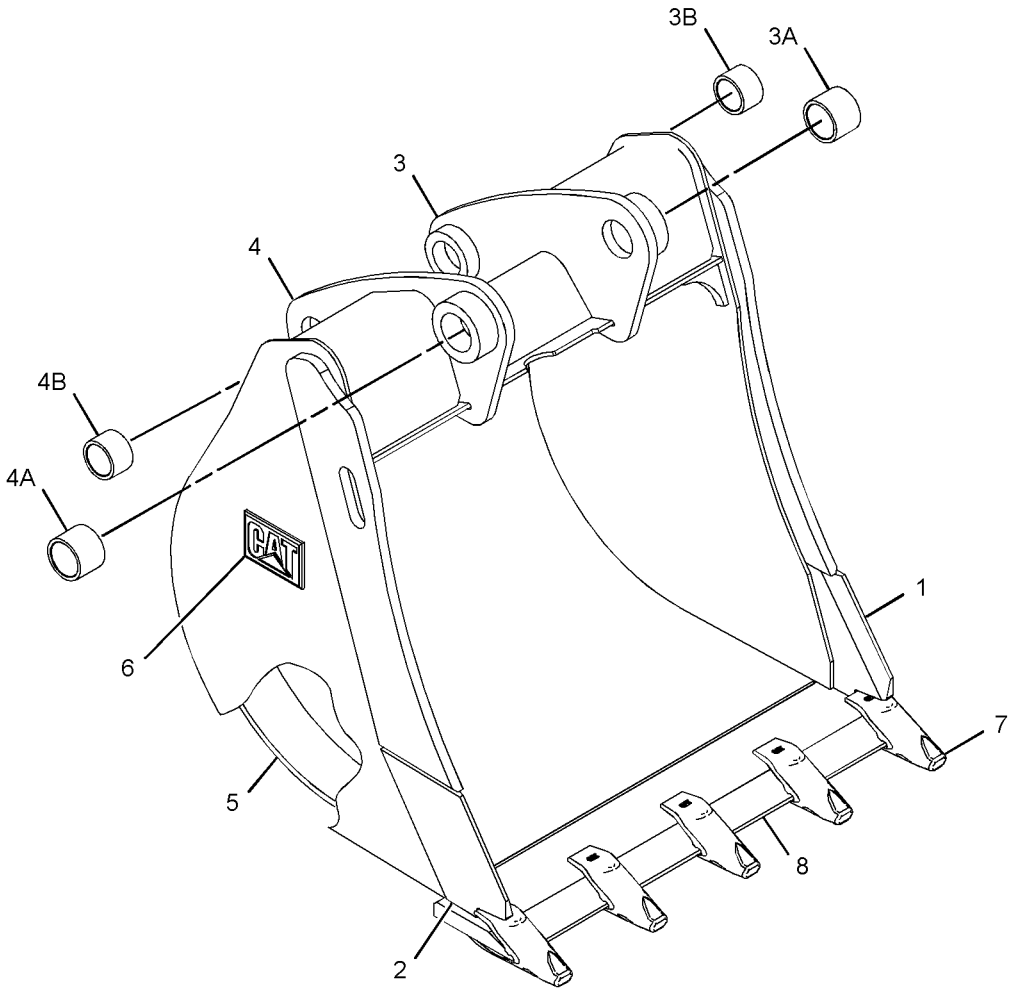

GRAPHIC #1 **<END>** g01337591

WORK TOOLS

219-3364 BUCKET AS-HOE—HEAVY-DUTY

S/N: HLS1-99999
762-MM (30-IN)
PART OF 219-3388 BUCKET GP-HOE
AN ATTACHMENT
TYPE 2

SMCS-6503 **i03463045**

NOTE	REF NO	GRAPHIC REF	PART NUMBER	QTY	PART NAME 1 2 3 4 5 6 (PRODUCT LEVEL)	SEE PAGE
	1	1	**174-4765**	5	PLATE	
C	2	1	*286-9336*	1	BRACKET AS (RH)	
	2A	1	**9R-0162**	1	BEARING-SLEEVE	
	2B	1	**168-0480**	1	BEARING-SLEEVE	
C	3	1	*286-9337*	1	BRACKET AS (LH)	
	3A	1	**9R-0162**	1	BEARING-SLEEVE	
	3B	1	**168-0480**	1	BEARING-SLEEVE	
	4	1	*299-3351*	1	EDGE AS	
		1	**219-9485**	1	EDGE	
		1	**201-1234**	1	ADAPTER (2-STRAP)	
	5	1	*300-7049*	1	PLATE AS	
		1	**134-5885**	1	EDGE (RH)	
	6	1	*300-7051*	1	PLATE AS	
		1	**134-5884**	1	EDGE (LH)	

C-CHANGE FROM PREVIOUS TYPE

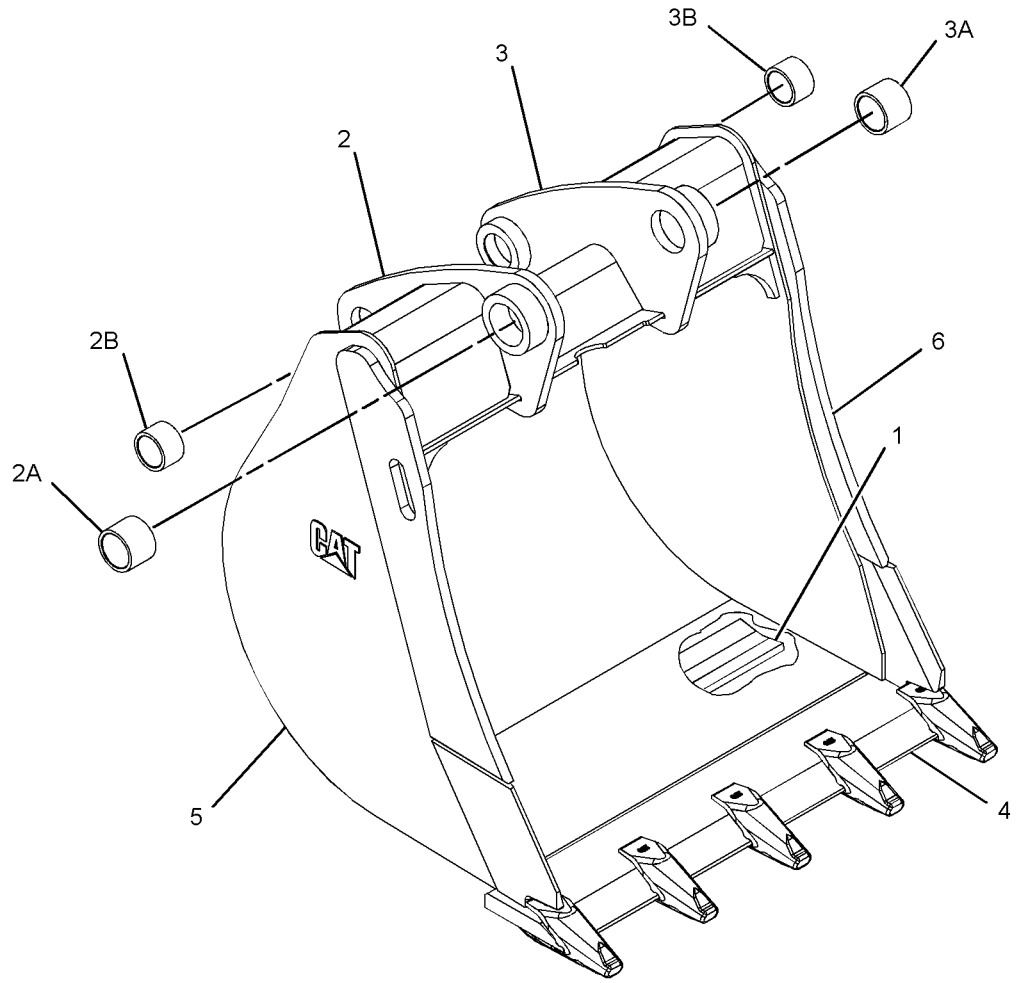

GRAPHIC #1 **<END>** g01381371

WORK TOOLS

219-3365 BUCKET AS-HOE—HEAVY-DUTY

S/N: HLS1-99999
914-MM (36-IN)
PART OF 219-3389 BUCKET GP-HOE
AN ATTACHMENT
TYPE 1

SMCS-6503 **i02655245**

NOTE	REF NO	GRAPHIC REF	PART NUMBER	QTY	PART NAME 1 2 3 4 5 6 (PRODUCT LEVEL)	SEE PAGE
	1	1	**134-5884**	1	EDGE (LH)	
	2	1	**134-5885**	1	EDGE (RH)	
	3	1	*151-7902*	1	BRACKET AS (LH)	
	3A	1	**9R-0162**	1	BEARING-SLEEVE	
	3B	1	**168-0480**	1	BEARING-SLEEVE	
	4	1	*151-7903*	1	BRACKET AS (RH)	
	4A	1	**9R-0162**	1	BEARING-SLEEVE	
	4B	1	**168-0480**	1	BEARING-SLEEVE	
	5	1	**151-7927**	5	PLATE	
	6	1	**161-4130**	2	PLATE-IDENTIFICATION (CAT)	
	7	1	**201-1234**	6	ADAPTER (2-STRAP)	
	8	1	**219-9486**	1	EDGE	

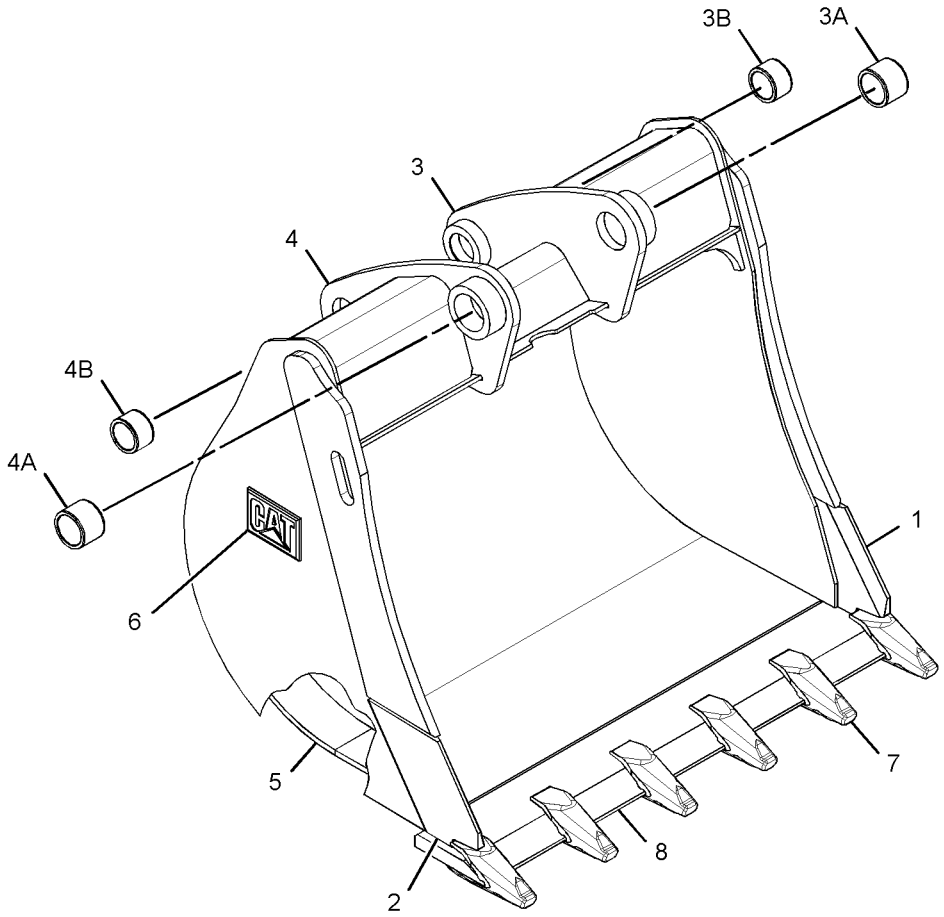

GRAPHIC #1 **<END>** g01341948

WORK TOOLS

219-3365 BUCKET AS-HOE—HEAVY-DUTY

S/N: HLS1-99999
914-MM (36-IN)
PART OF 219-3389 BUCKET GP-HOE
AN ATTACHMENT
TYPE 2

SMCS-6503 **i03532155**

NOTE	REF NO	GRAPHIC REF	PART NUMBER	QTY	PART NAME 1 2 3 4 5 6 (PRODUCT LEVEL)	SEE PAGE
	1	1	**193-5416**	5	PLATE	
C	2	1	*286-9336*	1	BRACKET AS (RH)	
C	3	1	*286-9337*	1	BRACKET AS (LH)	
					(EACH BRACKET AS INCLUDES)	
		1	**9R-0162**	1	BEARING-SLEEVE	
		1	**168-0480**	1	BEARING-SLEEVE	
	4	1	*300-4154*	1	EDGE AS	
		1	**201-1234**	6	ADAPTER (2-STRAP)	
		1	**219-9486**	1	EDGE	
	5	1	*300-7049*	1	PLATE AS	
		1	**134-5885**	1	EDGE (RH)	
	6	1	*300-7051*	1	PLATE AS	
		1	**134-5884**	1	EDGE (LH)	

C-CHANGE FROM PREVIOUS TYPE

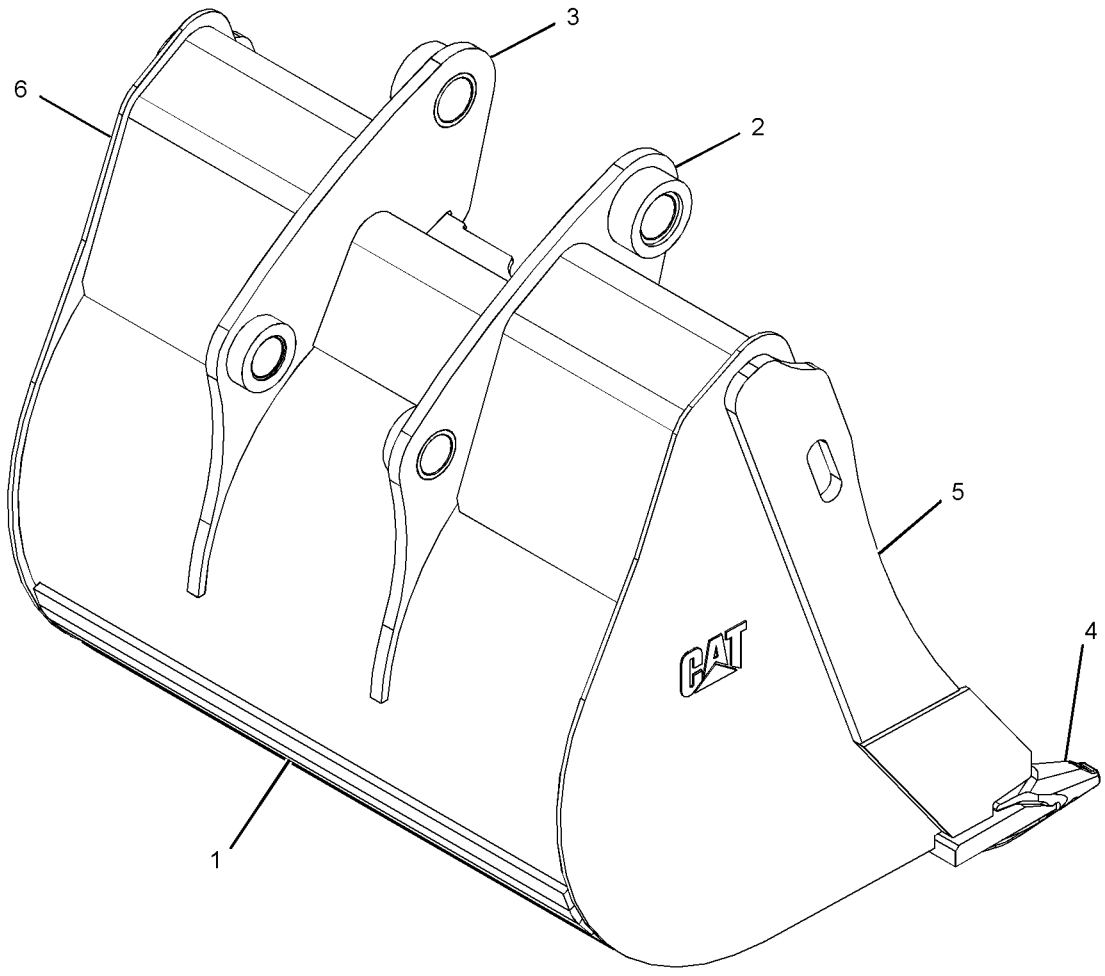

GRAPHIC #1 **<END>** g01381329

219-3366 BUCKET AS-HOE—HIGH CAPACITY

S/N: HLS1-99999
458-MM (18-IN)
PART OF 219-3390 BUCKET GP-HOE
AN ATTACHMENT
TYPE 1

SMCS-6503 **i02651482**

NOTE	REF NO	GRAPHIC REF	PART NUMBER	QTY	PART NAME 1 2 3 4 5 6 (PRODUCT LEVEL)	SEE PAGE
	1	1	**134-5884**	1	EDGE (LH)	
	2	1	**134-5885**	1	EDGE (RH)	
	3	1	*151-7902*	1	BRACKET AS (LH)	
	3A	1	**9R-0162**	1	BEARING-SLEEVE	
	3B	1	**168-0480**	1	BEARING-SLEEVE	
	4	1	*151-7903*	1	BRACKET AS (RH)	
	4A	1	**9R-0162**	1	BEARING-SLEEVE	
	4B	1	**168-0480**	1	BEARING-SLEEVE	
	5	1	**161-4130**	2	PLATE-IDENTIFICATION (CAT)	
	6	1	**201-1234**	4	ADAPTER (2-STRAP)	
	7	1	**219-9483**	1	EDGE	

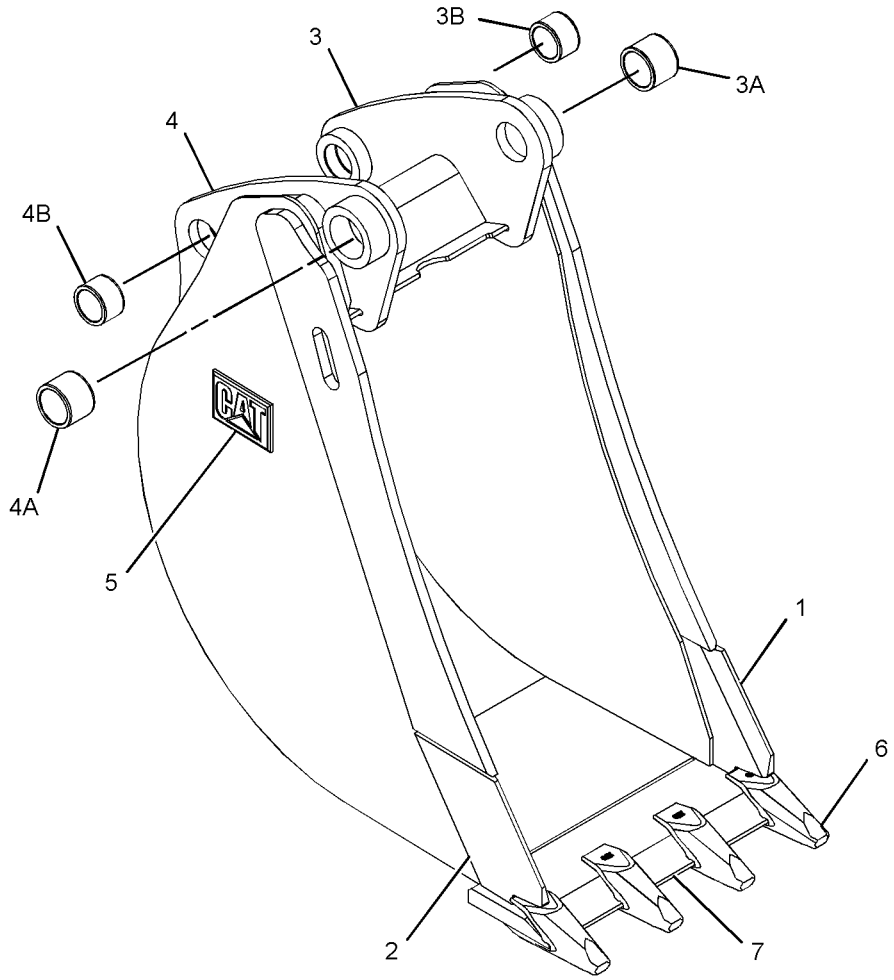

GRAPHIC #1 **<END>** g01334080

WORK TOOLS

219-3366 BUCKET AS-HOE—HIGH CAPACITY

S/N: HLS1-99999
458-MM (18-IN)
PART OF 219-3390 BUCKET GP-HOE
AN ATTACHMENT
TYPE 2

SMCS-6503 **i03516003**

NOTE	REF NO	GRAPHIC REF	PART NUMBER	QTY	PART NAME 1 2 3 4 5 6 (PRODUCT LEVEL)	SEE PAGE
	1	1	**172-8279**	5	PLATE	
C	2	1	*286-9336*	1	BRACKET AS (RH)	
	2A	1	**9R-0162**	1	BEARING-SLEEVE	
	2B	1	**168-0480**	1	BEARING-SLEEVE	
C	3	1	*286-9337*	1	BRACKET AS (LH)	
	3A	1	**9R-0162**	1	BEARING-SLEEVE	
	3B	1	**168-0480**	1	BEARING-SLEEVE	
	4	1	*299-3344*	1	EDGE AS	
			201-1234	4	ADAPTER	
			219-9483	1	EDGE	
	5	1	*300-7054*	1	PLATE AS	
		1	**134-5885**	1	EDGE (RH)	
	6	1	*300-7055*	1	PLATE AS	
		1	**134-5884**	1	EDGE (LH)	

C-CHANGE FROM PREVIOUS TYPE

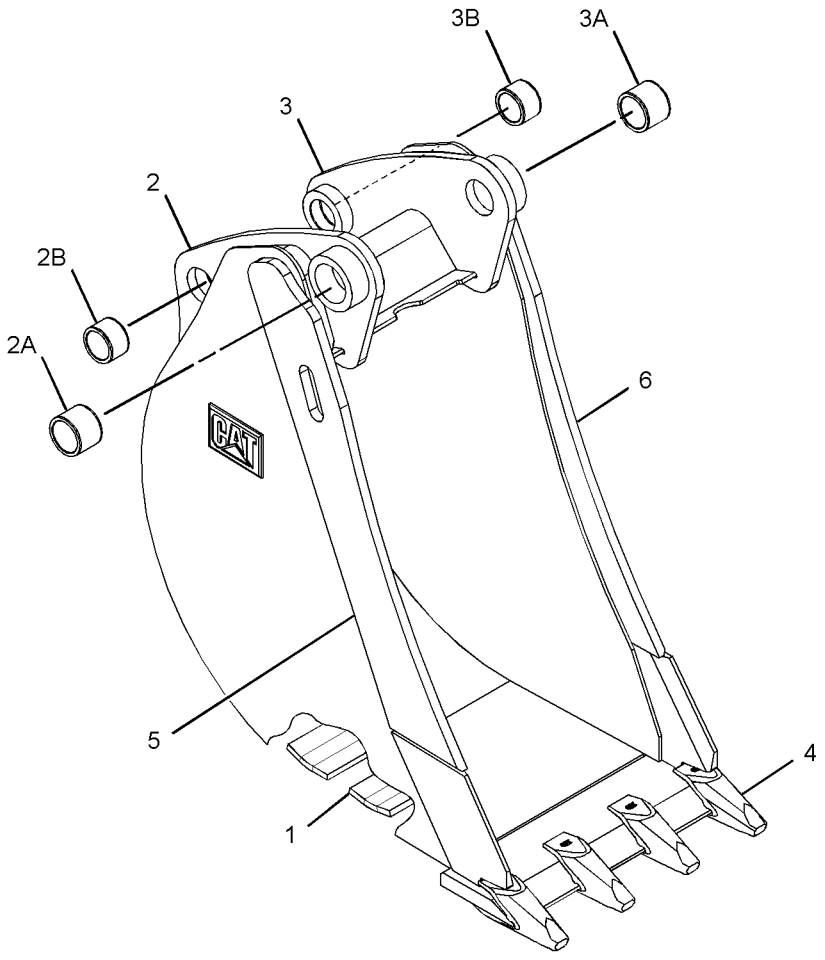

GRAPHIC #1 **<END>** g01381674

219-3367 BUCKET AS-HOE—HIGH CAPACITY

S/N: HLS1-99999
610-MM (24-IN)
PART OF 219-3391 BUCKET GP-HOE
AN ATTACHMENT
TYPE 1

SMCS-6503 **i02651944**

NOTE	REF NO	GRAPHIC REF	PART NUMBER	QTY	PART NAME 1 2 3 4 5 6 (PRODUCT LEVEL)	SEE PAGE
	1	1	**134-5884**	1	EDGE (LH)	
	2	1	**134-5885**	1	EDGE (RH)	
	3	1	*151-7902*	1	BRACKET AS (LH)	
	3A	1	**9R-0162**	1	BEARING-SLEEVE	
	3B	1	**168-0480**	1	BEARING-SLEEVE	
	4	1	*151-7903*	1	BRACKET AS (RH)	
	4A	1	**9R-0162**	1	BEARING-SLEEVE	
	4B	1	**168-0480**	1	BEARING-SLEEVE	
	5	1	**151-7926**	2	PLATE	
	6	1	**161-4130**	2	PLATE-IDENTIFICATION (CAT)	
	7	1	**201-1234**	5	ADAPTER (2-STRAP)	
	8	1	**219-9486**	1	EDGE	

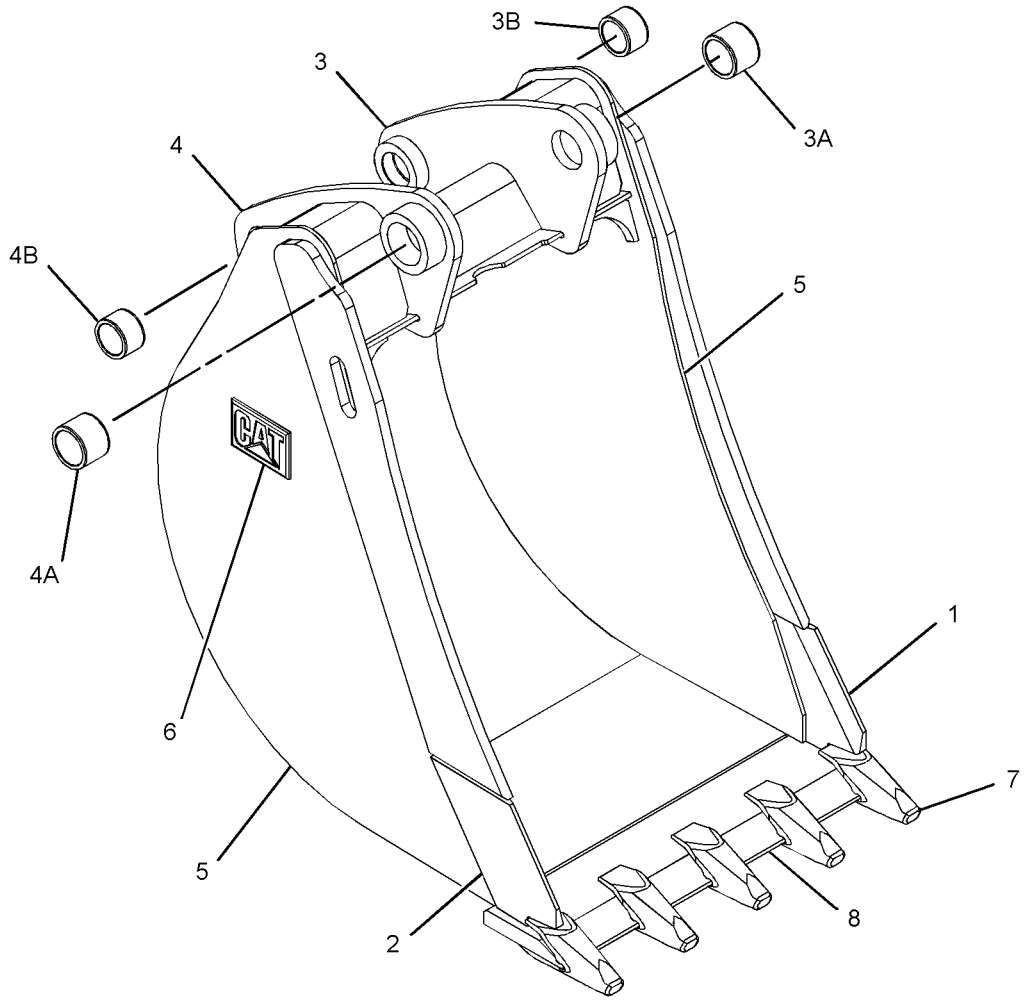

GRAPHIC #1 **<END>** g01342073

219-3367 BUCKET AS-HOE—HIGH CAPACITY

S/N: HLS1-99999
610-MM (24-IN)
PART OF 219-3391 BUCKET GP-HOE
AN ATTACHMENT
TYPE 2

SMCS-6503 **i03532158**

NOTE	REF NO	GRAPHIC REF	PART NUMBER	QTY	PART NAME 1 2 3 4 5 6 (PRODUCT LEVEL)	SEE PAGE
	1	1	**172-8280**	5	PLATE	
C	2	1	*286-9336*	1	BRACKET AS (RH)	
	2A	1	**9R-0162**	1	BEARING-SLEEVE	
	2B	1	**168-0480**	1	BEARING-SLEEVE	
C	3	1	*286-9337*	1	BRACKET AS (LH)	
	3A	1	**9R-0162**	1	BEARING-SLEEVE	
	3B	1	**168-0480**	1	BEARING-SLEEVE	
	4	1	*299-3348*	1	EDGE AS	
		1	**201-1234**	5	ADAPTER	
		1	**219-9483**	1	EDGE	
	5	1	*300-7054*	1	PLATE AS	
		1	**134-5885**	1	EDGE (RH)	
	6	1	*300-7055*	1	PLATE AS	
		1	**134-5884**	1	EDGE (LH)	

C-CHANGE FROM PREVIOUS TYPE

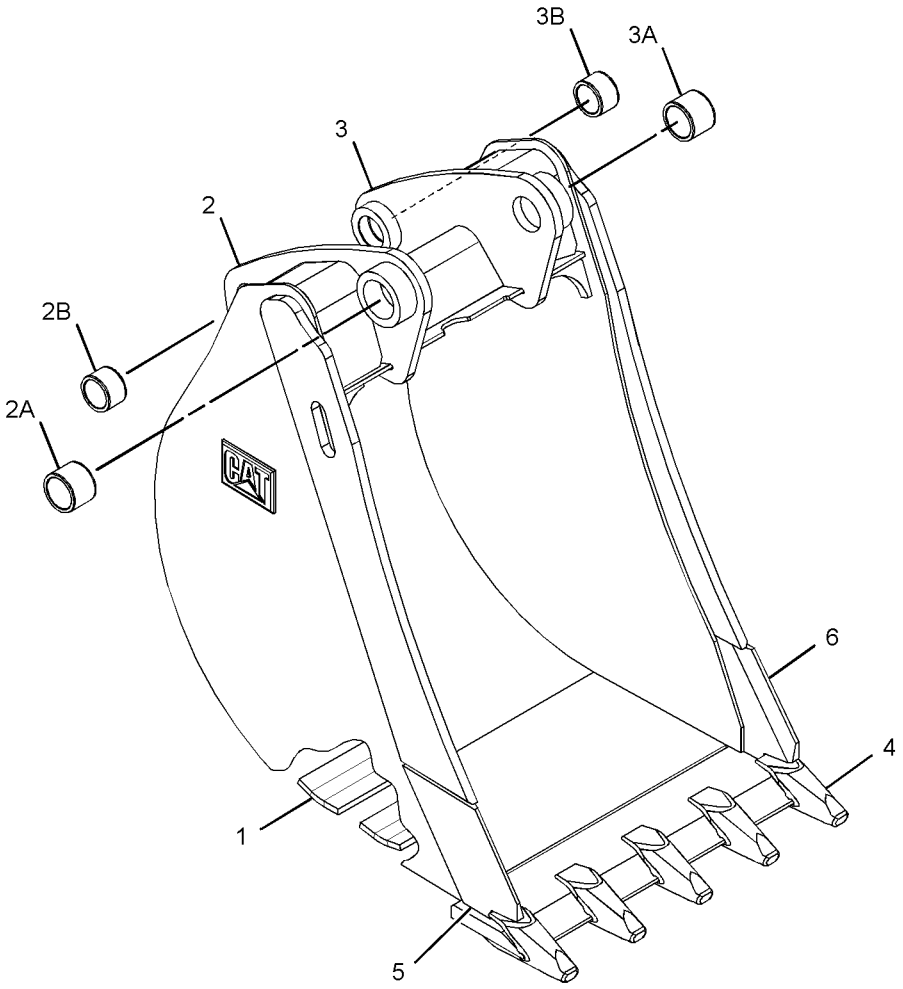

GRAPHIC #1 **<END>** g01382190

219-3368 BUCKET AS-HOE—HIGH CAPACITY

S/N: HLS1-99999
762-MM (30-IN)
PART OF 219-3392 BUCKET GP-HOE
AN ATTACHMENT
TYPE 1

SMCS-6503 **i02651969**

NOTE	REF NO	GRAPHIC REF	PART NUMBER	QTY	PART NAME 1 2 3 4 5 6 (PRODUCT LEVEL)	SEE PAGE
	1	1	**134-5884**	1	EDGE (LH)	
	2	1	**134-5885**	1	EDGE (RH)	
	3	1	*151-7902*	1	BRACKET AS (LH)	
	3A	1	**9R-0162**	1	BEARING-SLEEVE	
	3B	1	**168-0480**	1	BEARING-SLEEVE	
	4	1	*151-7903*	1	BRACKET AS (RH)	
	4A	1	**9R-0162**	1	BEARING-SLEEVE	
	4B	1	**168-0480**	1	BEARING-SLEEVE	
	5	1	**161-4130**	2	PLATE-IDENTIFICATION (CAT)	
	6	1	**201-1234**	5	ADAPTER (2-STRAP)	
	7	1	**219-9485**	1	EDGE	

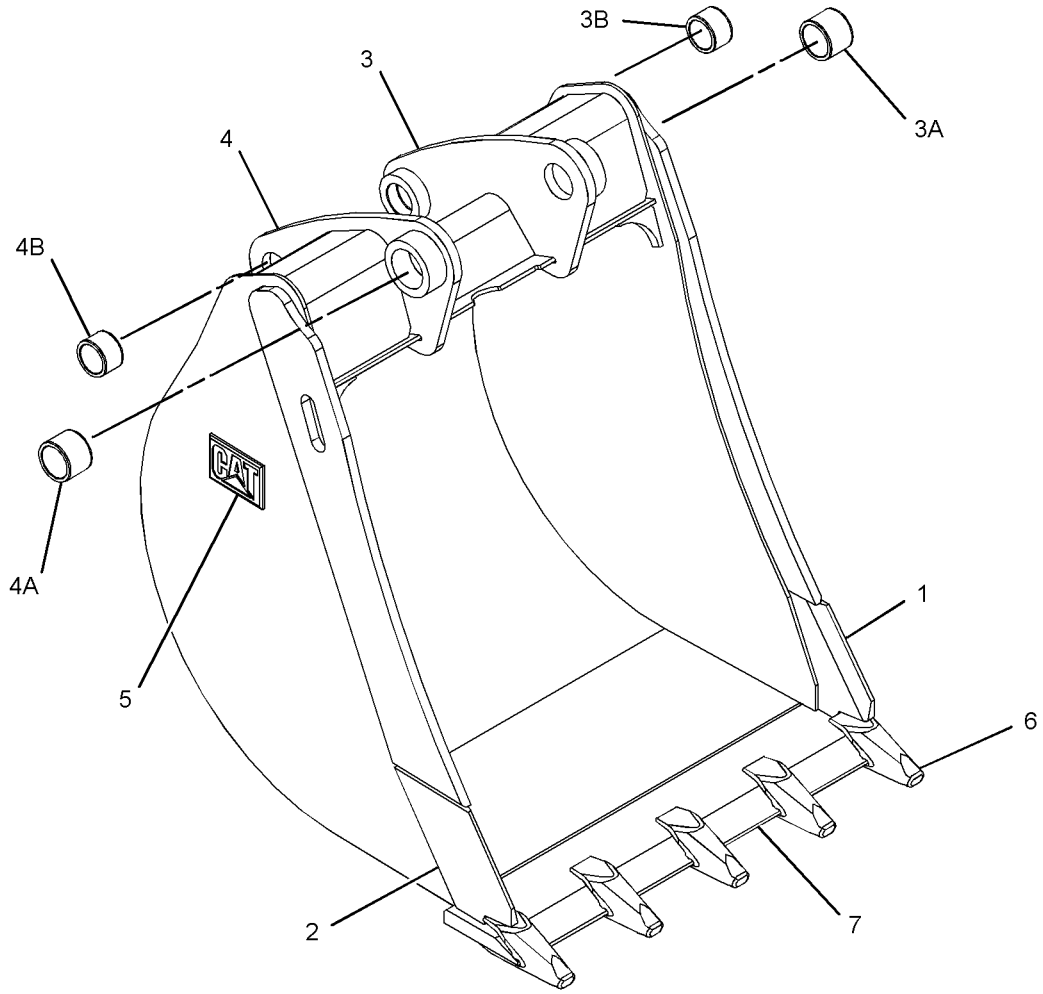

GRAPHIC #1 **<END>** g01341935

WORK TOOLS

219-3368 BUCKET AS-HOE—HIGH CAPACITY

S/N: HLS1-99999
762-MM (30-IN)
PART OF 219-3392 BUCKET GP-HOE
AN ATTACHMENT
TYPE 2

SMCS-6503 **i03532159**

NOTE	REF NO	GRAPHIC REF	PART NUMBER	QTY	PART NAME 1 2 3 4 5 6 (PRODUCT LEVEL)	SEE PAGE
	1	1	**174-4765**	5	PLATE	
C	2	1	*286-9336*	1	BRACKET AS (RH)	
	2A	1	**9R-0162**	1	BEARING-SLEEVE	
	2B	1	**168-0480**	1	BEARING-SLEEVE	
C	3	1	*286-9337*	1	BRACKET AS (LH)	
	3A	1	**9R-0162**	1	BEARING-SLEEVE	
	3B	1	**168-0480**	1	BEARING-SLEEVE	
	4	1	*299-3351*	1	EDGE AS	
			201-1234	5	ADAPTER	
			219-9485	1	EDGE	
	5	1	*300-7054*	1	PLATE AS	
		1	**134-5885**	1	EDGE (RH)	
	6	1	*300-7055*	1	PLATE AS	
		1	**134-5884**	1	EDGE (LH)	

C-CHANGE FROM PREVIOUS TYPE

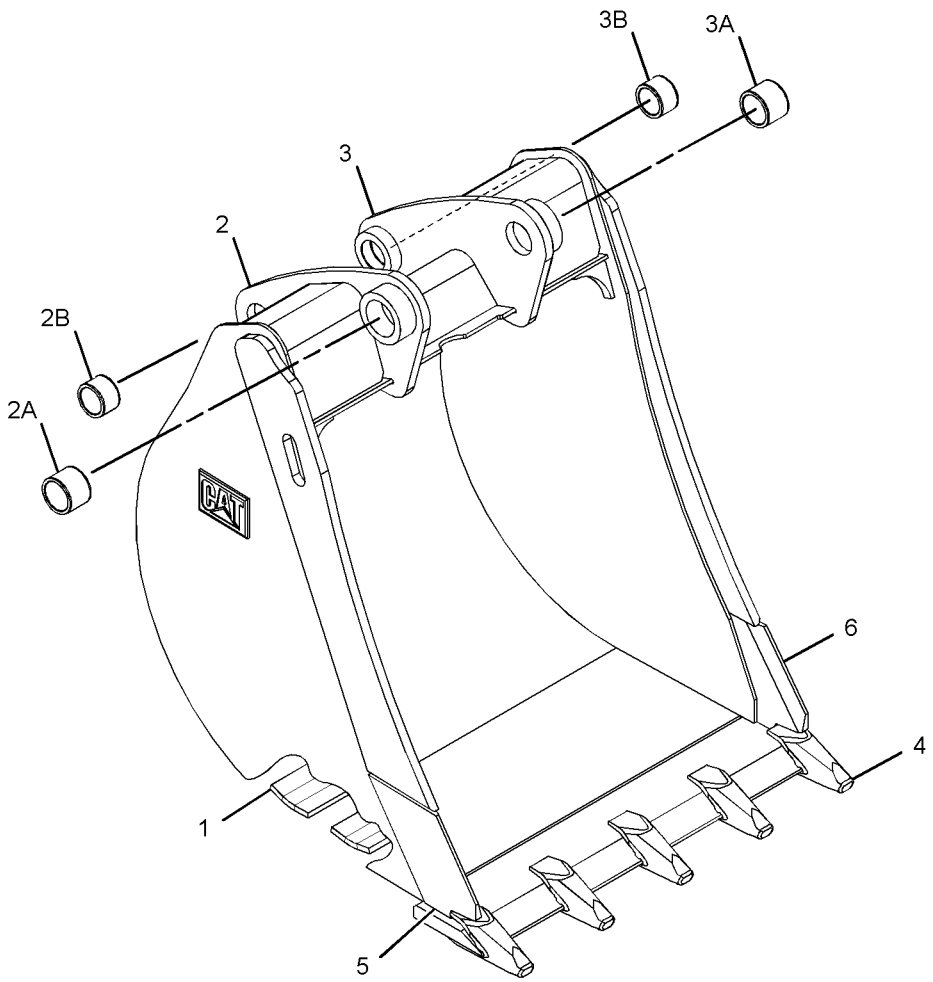

GRAPHIC #1 **<END>** g01381718

219-3369 BUCKET AS-HOE—HIGH CAPACITY

S/N: HLS1-99999
914-MM (36-IN)
PART OF 219-3393 BUCKET GP-HOE
AN ATTACHMENT
TYPE 1

SMCS-6503 **i02651980**

NOTE	REF NO	GRAPHIC REF	PART NUMBER	QTY	PART NAME 1 2 3 4 5 6 (PRODUCT LEVEL)	SEE PAGE
	1	1	**134-5884**	1	EDGE (LH)	
	2	1	**134-5885**	1	EDGE (RH)	
	3	1	*151-7902*	1	BRACKET AS (LH)	
	3A	1	**9R-0162**	1	BEARING-SLEEVE	
	3B	1	**168-0480**	1	BEARING-SLEEVE	
	4	1	*151-7903*	1	BRACKET AS (RH)	
	4A	1	**9R-0162**	1	BEARING-SLEEVE	
	4B	1	**168-0480**	1	BEARING-SLEEVE	
	5	1	**161-4130**	2	PLATE-IDENTIFICATION (CAT)	
	6	1	**201-1234**	6	ADAPTER (2-STRAP)	
	7	1	**219-9486**	1	EDGE	

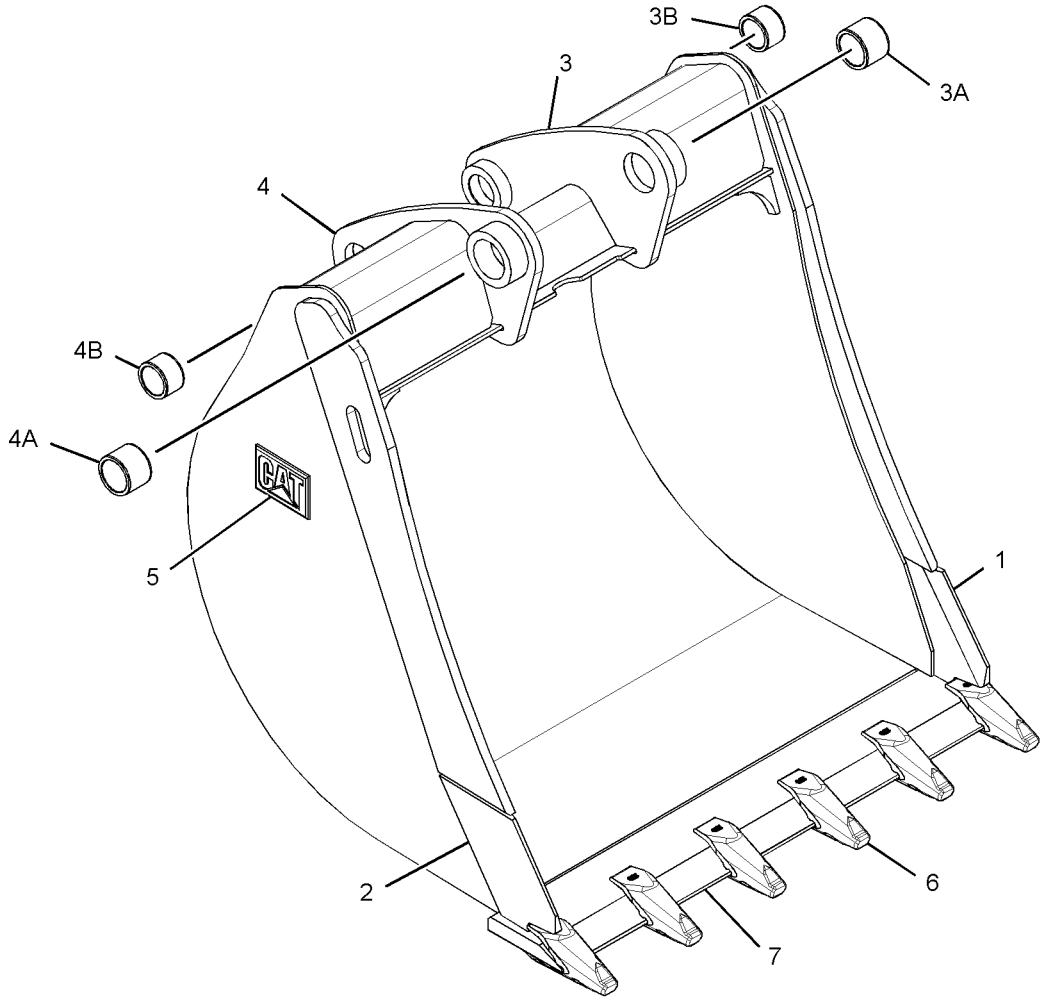

GRAPHIC #1 **<END>** g01335133

WORK TOOLS

219-3369 BUCKET AS-HOE—HIGH CAPACITY

S/N: HLS1-99999
914-MM (36-IN)
PART OF 219-3393 BUCKET GP-HOE
AN ATTACHMENT
TYPE 2

SMCS-6503 **i03516020**

NOTE	REF NO	GRAPHIC REF	PART NUMBER	QTY	PART NAME 1 2 3 4 5 6 (PRODUCT LEVEL)	SEE PAGE
	1	1	**193-5416**	5	PLATE	
C	2	1	*286-9336*	1	BRACKET AS (RH)	
	2A	1	**9R-0162**	1	BEARING-SLEEVE	
	2B	1	**168-0480**	1	BEARING-SLEEVE	
C	3	1	*286-9337*	1	BRACKET AS (LH)	
	3A	1	**9R-0162**	1	BEARING-SLEEVE	
	3B	1	**168-0480**	1	BEARING-SLEEVE	
	4	1	*300-4155*	1	EDGE AS	
		1	**201-1234**	6	ADAPTER	
		1	**219-9486**	1	EDGE	
	5	1	*300-7054*	1	PLATE AS	
		1	**134-5885**	1	EDGE (RH)	
	6	1	*300-7055*	1	PLATE AS	
		1	**134-5884**	1	EDGE (LH)	

C-CHANGE FROM PREVIOUS TYPE

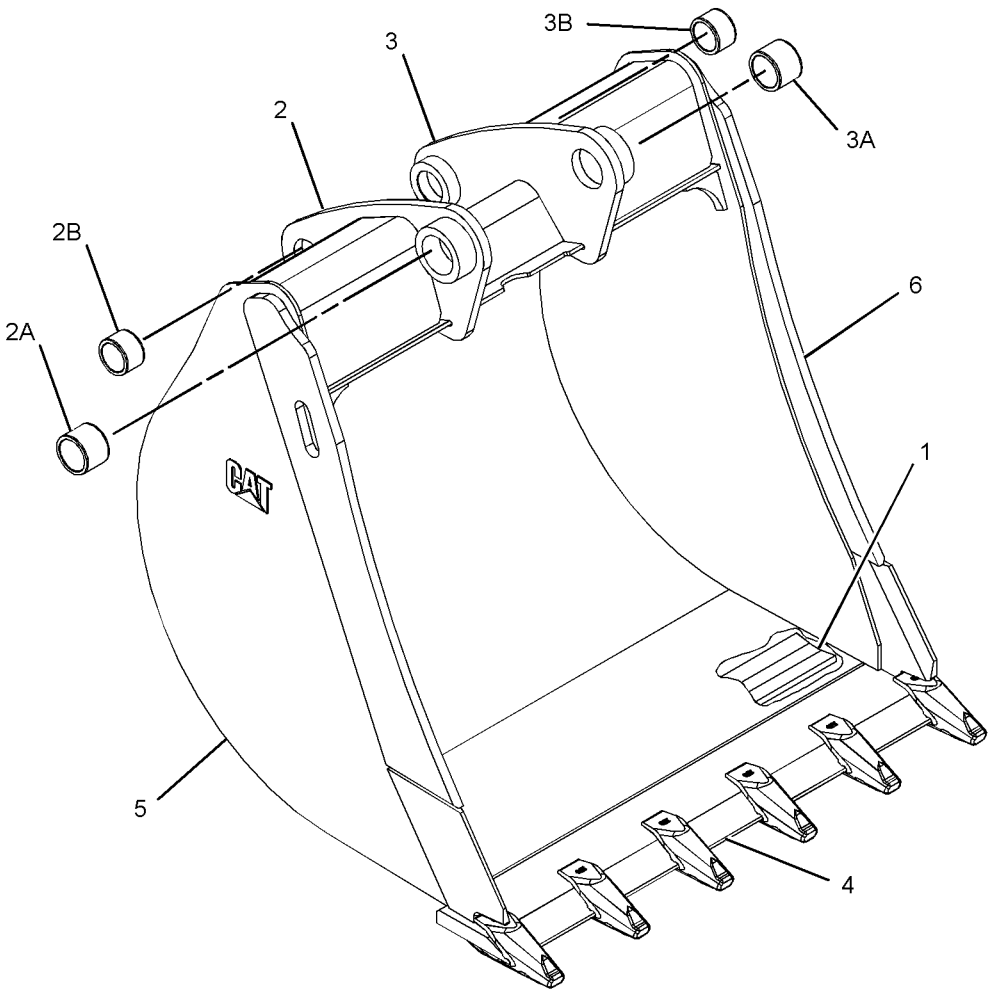

GRAPHIC #1 **<END>** g01382185

219-3370 BUCKET AS-HOE–ROCK

S/N: HLS1-99999
305-MM (12-IN)
PART OF 219-3394 BUCKET GP-HOE
AN ATTACHMENT
TYPE 1

SMCS-6503 **i02659959**

NOTE	REF NO	GRAPHIC REF	PART NUMBER	QTY	PART NAME 1 2 3 4 5 6 (PRODUCT LEVEL)	SEE PAGE
	1	1	*151-7929*	1	BRACKET AS (LH)	
	1A	1	**9R-0320**	1	BEARING-SLEEVE	
	1B	1	**154-5257**	1	BEARING-SLEEVE	
	2	1	*151-7930*	1	BRACKET AS (RH)	
	2A	1	**9R-0320**	1	BEARING-SLEEVE	
	2B	1	**154-5257**	1	BEARING-SLEEVE	
	3	1	**161-4130**	2	PLATE-IDENTIFICATION (CAT)	
	4	1	**174-3949**	2	PLATE	
	5	1	**174-3950**	3	PLATE	
	6	1	**197-6258**	1	EDGE-RH	
	7	1	**197-6259**	1	EDGE-LH	
	8	1	**201-1234**	3	ADAPTER (2-STRAP)	
	9	1	**219-9493**	1	EDGE	

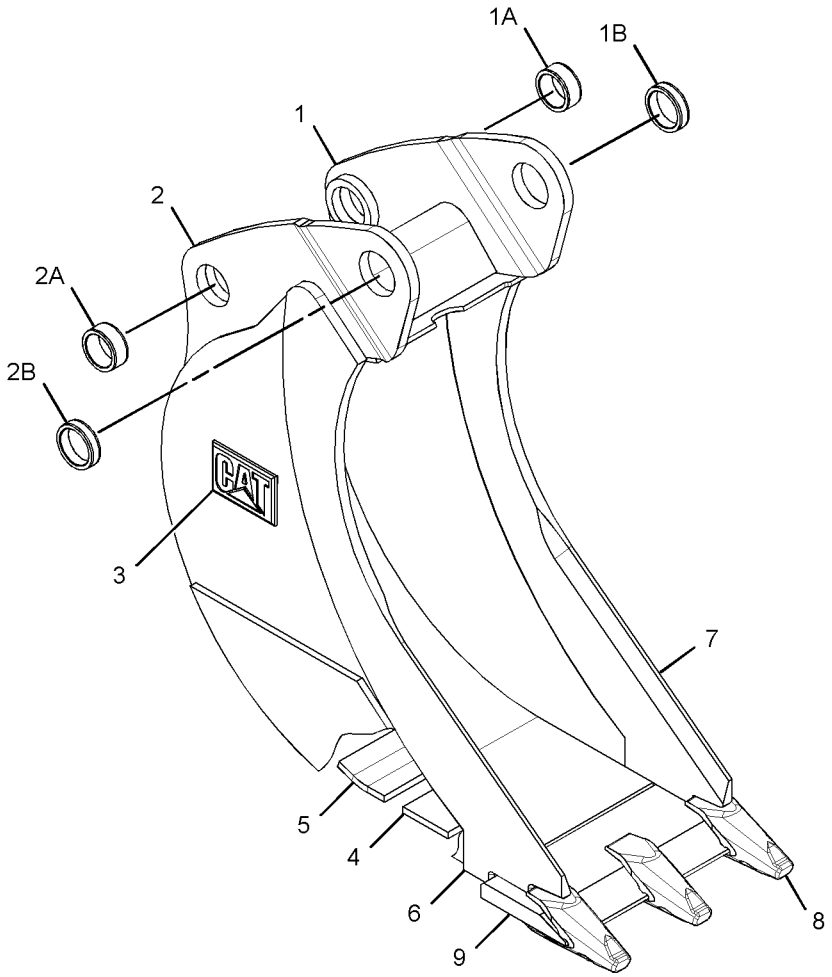

GRAPHIC #1 **<END>** g01342082

WORK TOOLS

219-3370 BUCKET AS-HOE–ROCK

S/N: HLS1-99999
305-MM (12-IN)
PART OF 219-3394 BUCKET GP-HOE
AN ATTACHMENT
TYPE 2

SMCS-6503 **i03511022**

NOTE	REF NO	GRAPHIC REF	PART NUMBER	QTY	PART NAME 1 2 3 4 5 6 (PRODUCT LEVEL)	SEE PAGE
	1	1	**174-3950**	6	PLATE	
C	2	1	*286-9338*	1	BRACKET AS (RH)	
	2A	1	**9R-0320**	1	BEARING-SLEEVE	
	2B	1	**154-5257**	1	BEARING-SLEEVE	
C	3	1	*286-9340*	1	BRACKET AS (LH)	
	3A	1	**9R-0320**	1	BEARING-SLEEVE	
	3B	1	**154-5257**	1	BEARING-SLEEVE	
	4	1	*300-4161*	1	EDGE AS	
		1	**201-1234**	3	ADAPTER	
		1	**219-9485**	1	EDGE	
	5	1	*300-7059*	1	PLATE AS	
		1	**197-6258**	1	EDGE-RH	
	6	1	*300-7061*	1	PLATE AS	
		1	**197-6259**	1	EDGE-LH	

C-CHANGE FROM PREVIOUS TYPE

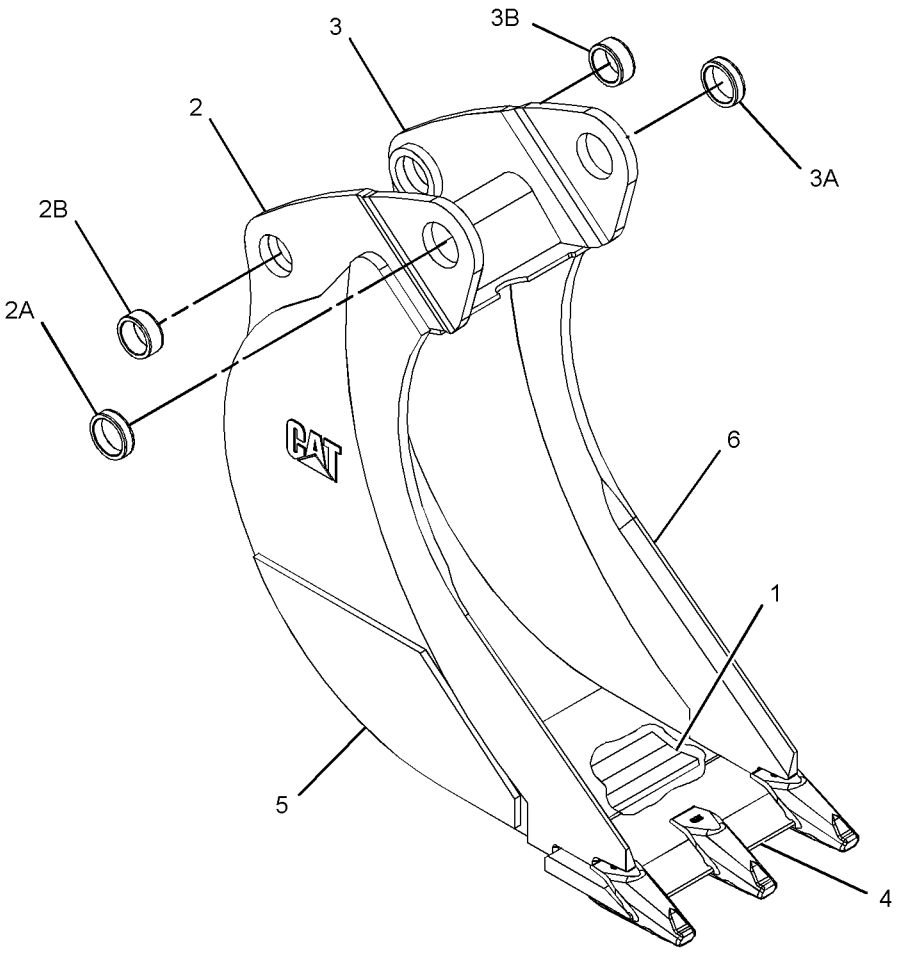

GRAPHIC #1 **<END>** g01382722

WORK TOOLS

219-3371 BUCKET AS-HOE–ROCK

S/N: HLS1-99999
458-MM (18-IN)
PART OF 219-3395 BUCKET GP-HOE
AN ATTACHMENT
TYPE 1

SMCS-6503 **i02651992**

NOTE	REF NO	GRAPHIC REF	PART NUMBER	QTY	PART NAME 1 2 3 4 5 6 (PRODUCT LEVEL)	SEE PAGE
	1	1	*151-7902*	1	BRACKET AS (LH)	
	1A	1	**9R-0162**	1	BEARING-SLEEVE	
	1B	1	**168-0480**	1	BEARING-SLEEVE	
	2	1	*151-7903*	1	BRACKET AS (RH)	
	2A	1	**9R-0162**	1	BEARING-SLEEVE	
	2B	1	**168-0480**	1	BEARING-SLEEVE	
	3	1	**161-4130**	2	PLATE-IDENTIFICATION (CAT)	
	4	1	**172-8276**	2	PLATE	
	5	1	**172-8279**	4	PLATE	
	6	1	**196-8921**	1	EDGE (RH)	
	7	1	**196-8922**	1	EDGE (LH)	
	8	1	**201-1234**	4	ADAPTER (2-STRAP)	
	9	1	**219-9483**	1	EDGE	

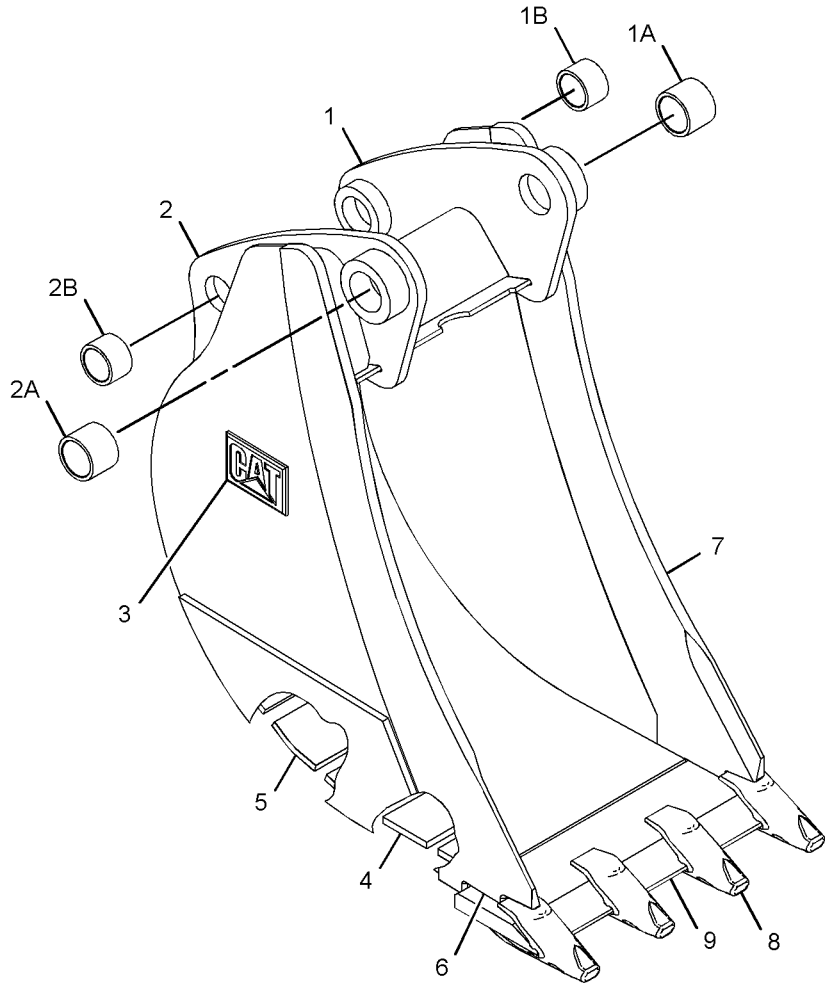

GRAPHIC #1 **<END>** g01340727

WORK TOOLS

219-3371 BUCKET AS-HOE–ROCK

S/N: HLS1-99999
458-MM (18-IN)
PART OF 219-3395 BUCKET GP-HOE
AN ATTACHMENT
TYPE 2

SMCS-6503 **i02756741**

NOTE	REF NO	GRAPHIC REF	PART NUMBER	QTY	PART NAME 1 2 3 4 5 6 (PRODUCT LEVEL)	SEE PAGE
	1	1	**172-8279**	6	PLATE	
C	2	1	*286-9336*	1	BRACKET AS (RH)	
	2A	1	**9R-0162**	1	BEARING-SLEEVE	
	2B	1	**168-0480**	1	BEARING-SLEEVE	
C	3	1	*286-9337*	1	BRACKET AS (LH)	
	3A	1	**9R-0162**	1	BEARING-SLEEVE	
	3B	1	**168-0480**	1	BEARING-SLEEVE	
	4	1	*299-3344*	1	EDGE AS	
		1	**201-1234**	4	ADAPTER	
		1	**219-9483**	1	EDGE	
	5	1	*300-7056*	1	PLATE AS	
		1	**196-8921**	1	EDGE (RH)	
	6	1	*300-7057*	1	PLATE AS	
		1	**196-8922**	1	EDGE (LH)	

C-CHANGE FROM PREVIOUS TYPE

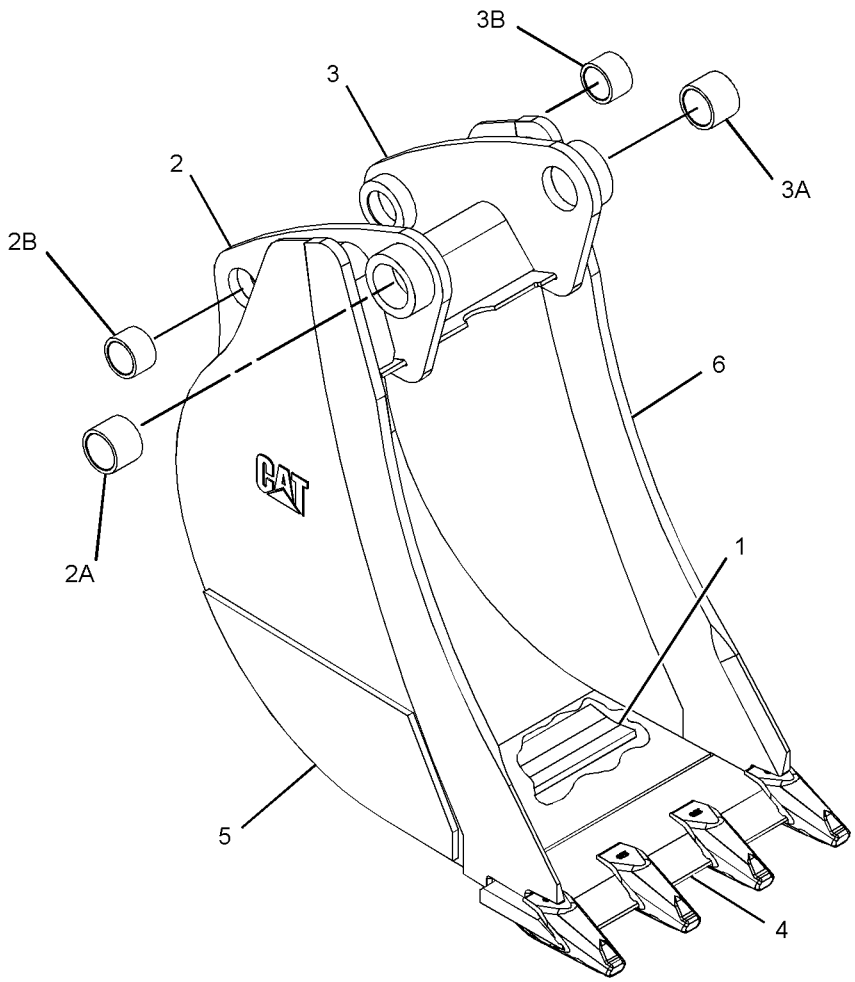

GRAPHIC #1 **<END>** g01382715

219-3372 BUCKET AS-HOE–ROCK

S/N: HLS1-99999
610-MM (24-IN)
PART OF 219-3396 BUCKET GP-HOE
AN ATTACHMENT
TYPE 1

SMCS-6503 **i02652008**

NOTE	REF NO	GRAPHIC REF	PART NUMBER	QTY	PART NAME 1 2 3 4 5 6 (PRODUCT LEVEL)	SEE PAGE
	1	1	*151-7902*	1	BRACKET AS (LH)	
	1A	1	**168-0480**	1	BEARING-SLEEVE	
	1B	1	**9R-0162**	1	BEARING-SLEEVE	
	2	1	*151-7903*	1	BRACKET AS (RH)	
	2A	1	**168-0480**	1	BEARING-SLEEVE	
	2B	1	**9R-0162**	1	BEARING-SLEEVE	
	3	1	**161-4130**	2	PLATE-IDENTIFICATION (CAT)	
	4	1	**172-8277**	2	PLATE	
	5	1	**172-8280**	4	PLATE	
	6	1	**196-8921**	1	EDGE (RH)	
	7	1	**196-8922**	1	EDGE (LH)	
	8	1	**201-1234**	5	ADAPTER (2-STRAP)	
	9	1	**219-9484**	1	EDGE	

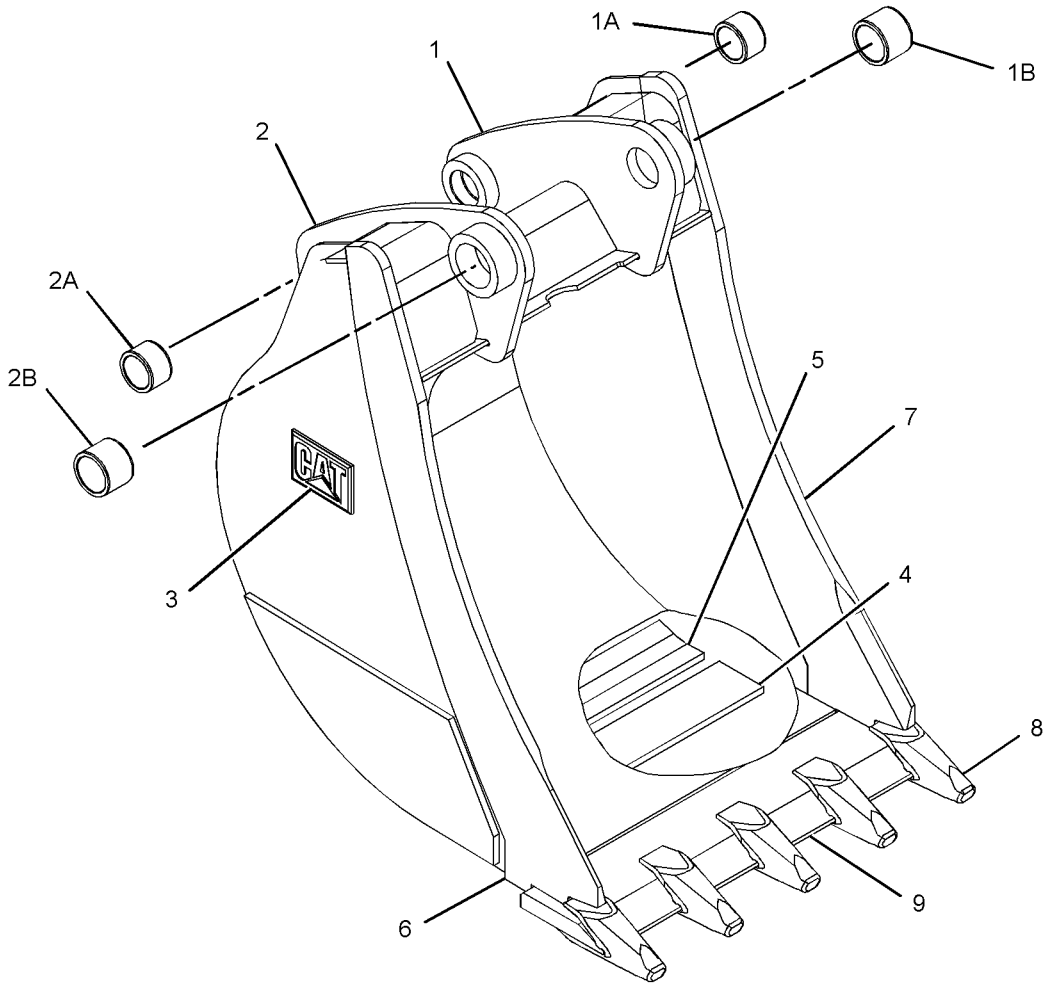

GRAPHIC #1 **<END>** g01341830

WORK TOOLS

219-3372 BUCKET AS-HOE–ROCK

S/N: HLS1-99999
610-MM (24-IN)
PART OF 219-3396 BUCKET GP-HOE
AN ATTACHMENT
TYPE 2

SMCS-6503 **i02756742**

NOTE	REF NO	GRAPHIC REF	PART NUMBER	QTY	PART NAME 1 2 3 4 5 6 (PRODUCT LEVEL)	SEE PAGE
	1	1	**172-8280**	6	PLATE	
C	2	1	*286-9336*	1	BRACKET AS (RH)	
	2A	1	**9R-0162**	1	BEARING-SLEEVE	
	2B	1	**168-0480**	1	BEARING-SLEEVE	
C	3	1	*286-9337*	1	BRACKET AS (LH)	
	3A	1	**9R-0162**	1	BEARING-SLEEVE	
	3B	1	**168-0480**	1	BEARING-SLEEVE	
	4	1	*299-3351*	1	EDGE AS	
		1	**201-1234**	5	ADAPTER	
		1	**219-9485**	1	EDGE	
	5	1	*300-7056*	1	PLATE AS	
		1	**196-8921**	1	EDGE (RH)	
	6	1	*300-7057*	1	PLATE AS	
		1	**196-8922**	1	EDGE (LH)	

C-CHANGE FROM PREVIOUS TYPE

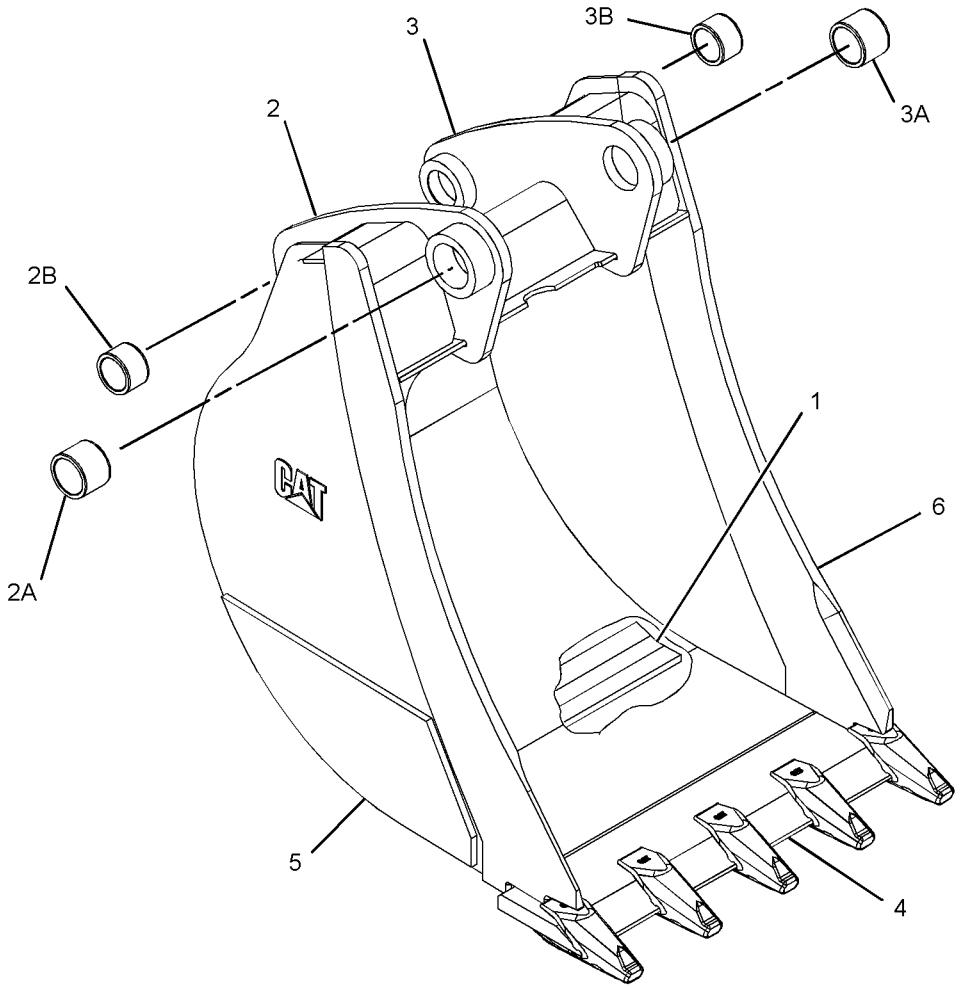

GRAPHIC #1 **<END>** g01382695

219-3373 BUCKET AS-HOE–ROCK

S/N: HLS1-99999
762-MM (30-IN)
PART OF 219-3397 BUCKET GP-HOE
AN ATTACHMENT
TYPE 1

SMCS-6503 **i02652012**

NOTE	REF NO	GRAPHIC REF	PART NUMBER	QTY	PART NAME 1 2 3 4 5 6 (PRODUCT LEVEL)	SEE PAGE
	1	1	*151-7902*	1	BRACKET AS (LH)	
	1A	1	**9R-0162**	1	BEARING-SLEEVE	
	1B	1	**168-0480**	1	BEARING-SLEEVE	
	2	1	*151-7903*	1	BRACKET AS (RH)	
	2A	1	**9R-0162**	1	BEARING-SLEEVE	
	2B	1	**168-0480**	1	BEARING-SLEEVE	
	3	1	**161-4130**	2	PLATE-IDENTIFICATION (CAT)	
	4	1	**172-8278**	2	PLATE	
	5	1	**174-4765**	4	PLATE	
	6	1	**196-8921**	1	EDGE (RH)	
	7	1	**196-8922**	1	EDGE (LH)	
	8	1	**201-1234**	5	ADAPTER (2-STRAP)	
	9	1	**219-9485**	1	EDGE	

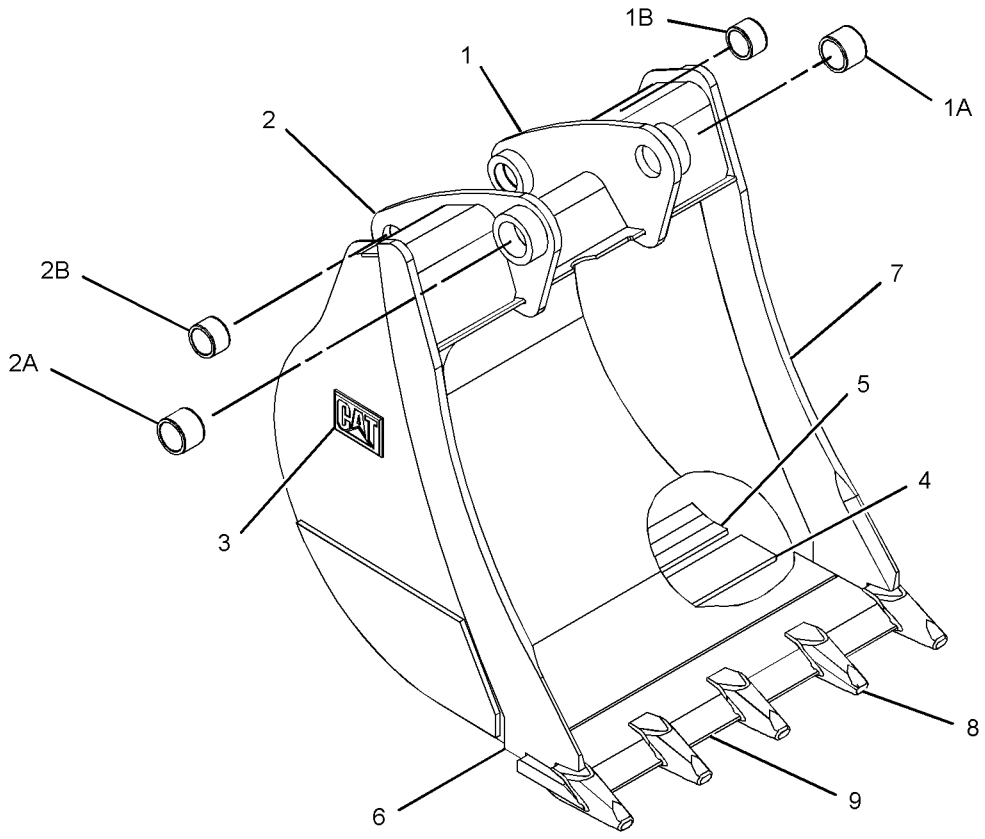

GRAPHIC #1 **<END>** g01334366

WORK TOOLS

219-3373 BUCKET AS-HOE–ROCK

S/N: HLS1-99999
762-MM (30-IN)
PART OF 219-3397 BUCKET GP-HOE
AN ATTACHMENT
TYPE 2

SMCS-6503 **i03463048**

NOTE	REF NO	GRAPHIC REF	PART NUMBER	QTY	PART NAME 1 2 3 4 5 6 (PRODUCT LEVEL)	SEE PAGE
	1	1	**174-4765**	6	PLATE	
C	2	1	*286-9336*	1	BRACKET AS (RH)	
	2A	1	**9R-0162**	1	BEARING-SLEEVE	
	2B	1	**168-0480**	1	BEARING-SLEEVE	
C	3	1	*286-9337*	1	BRACKET AS (LH)	
	3A	1	**9R-0162**	1	BEARING-SLEEVE	
	3B	1	**168-0480**	1	BEARING-SLEEVE	
	4	1	*299-3351*	1	EDGE AS	
		1	**201-1234**	5	ADAPTER	
		1	**219-9485**	1	EDGE	
	5	1	*300-7056*	1	PLATE AS	
		1	**196-8921**	1	EDGE (RH)	
	6	1	*300-7057*	1	PLATE AS	
		1	**196-8922**	1	EDGE (LH)	

C-CHANGE FROM PREVIOUS TYPE

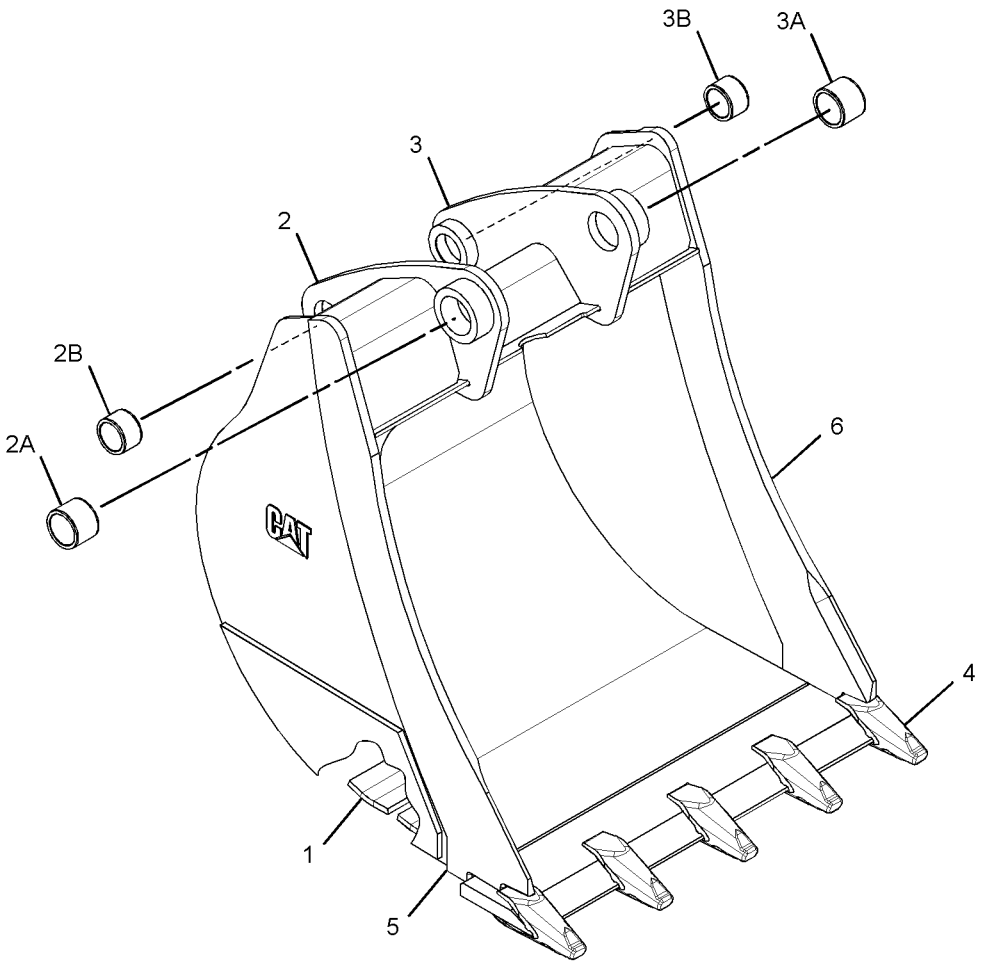

GRAPHIC #1 **<END>** g01383031

219-3374 BUCKET AS-HOE–ROCK

S/N: HLS1-99999
914-MM (36-IN)
PART OF 219-3398 BUCKET GP-HOE
AN ATTACHMENT
TYPE 1

SMCS-6503 **i02660333**

NOTE	REF NO	GRAPHIC REF	PART NUMBER	QTY	PART NAME 1 2 3 4 5 6 (PRODUCT LEVEL)	SEE PAGE
	1	1	*151-7902*	1	BRACKET AS (LH)	
	1A	1	**9R-0162**	1	BEARING-SLEEVE	
	1B	1	**168-0480**	1	BEARING-SLEEVE	
	2	1	*151-7903*	1	BRACKET AS (RH)	
	2A	1	**9R-0162**	1	BEARING-SLEEVE	
	2B	1	**168-0480**	1	BEARING-SLEEVE	
	3	1	**161-4130**	2	PLATE-IDENTIFICATION (CAT)	
	4	1	**196-8921**	1	EDGE (RH)	
	5	1	**196-8922**	1	EDGE (LH)	
	6	1	**201-1234**	6	ADAPTER (2-STRAP)	
	7	1	**219-9486**	1	EDGE	

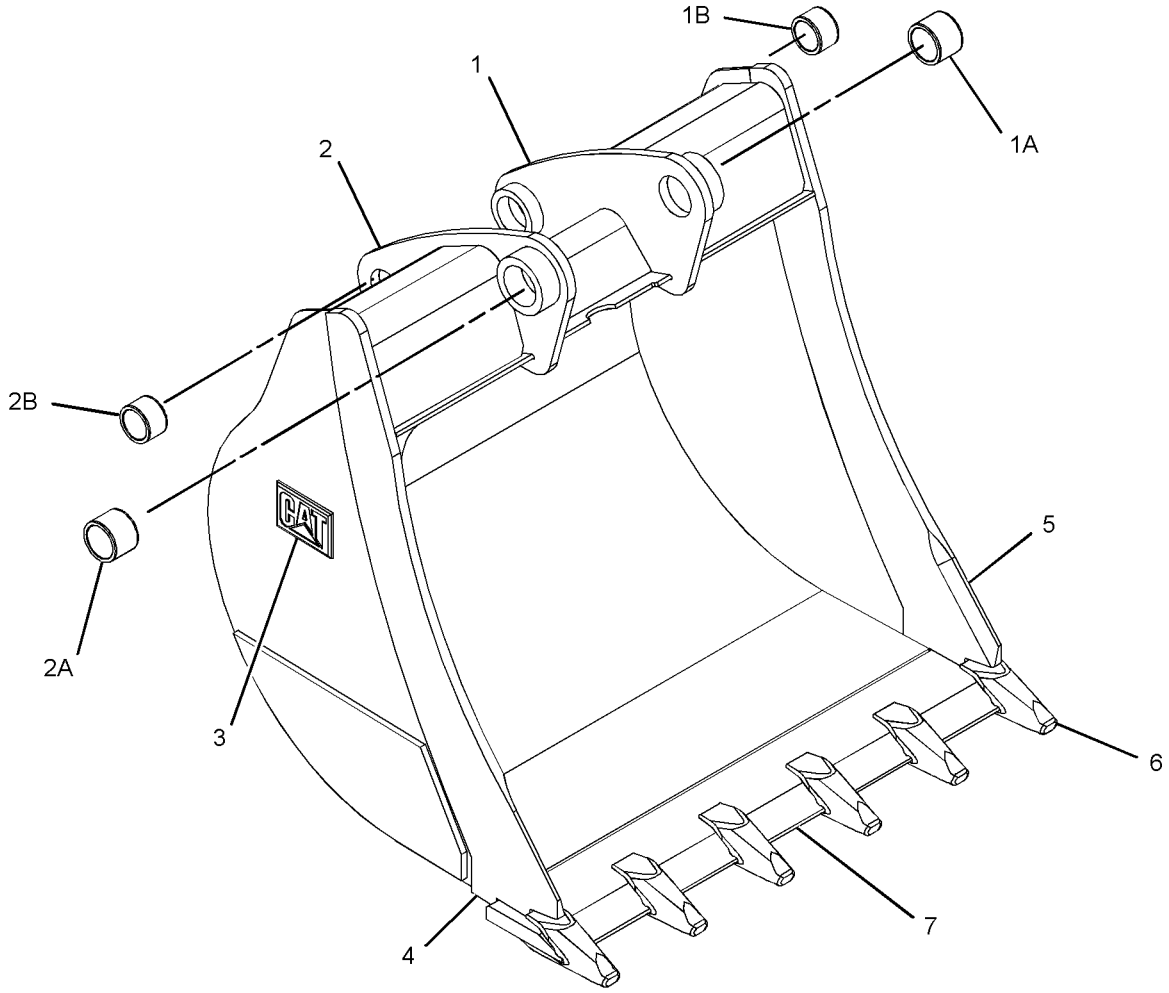

GRAPHIC #1 **<END>** g01342084

WORK TOOLS

219-3374 BUCKET AS-HOE–ROCK

S/N: HLS1-99999
914-MM (36-IN)
PART OF 219-3398 BUCKET GP-HOE
AN ATTACHMENT
TYPE 2

SMCS-6503 **i03505446**

NOTE	REF NO	GRAPHIC REF	PART NUMBER	QTY	PART NAME 1 2 3 4 5 6 (PRODUCT LEVEL)	SEE PAGE
	1	1	**193-5416**	5	PLATE	
C	2	1	*286-9336*	1	BRACKET AS (RH)	
	2A	1	**9R-0162**	1	BEARING-SLEEVE	
	2B	1	**168-0480**	1	BEARING-SLEEVE	
C	3	1	*286-9337*	1	BRACKET AS (LH)	
	3A	1	**9R-0162**	1	BEARING-SLEEVE	
	3B	1	**168-0480**	1	BEARING-SLEEVE	
	4	1	*300-4154*	1	EDGE AS	
			201-1234	6	ADAPTER	
			219-9486	1	EDGE	
	5	1	*300-7054*	1	PLATE AS	
			134-5885	1	EDGE (RH)	
	6	1	*300-7055*	1	PLATE AS	
			134-5884	1	EDGE (LH)	

C-CHANGE FROM PREVIOUS TYPE

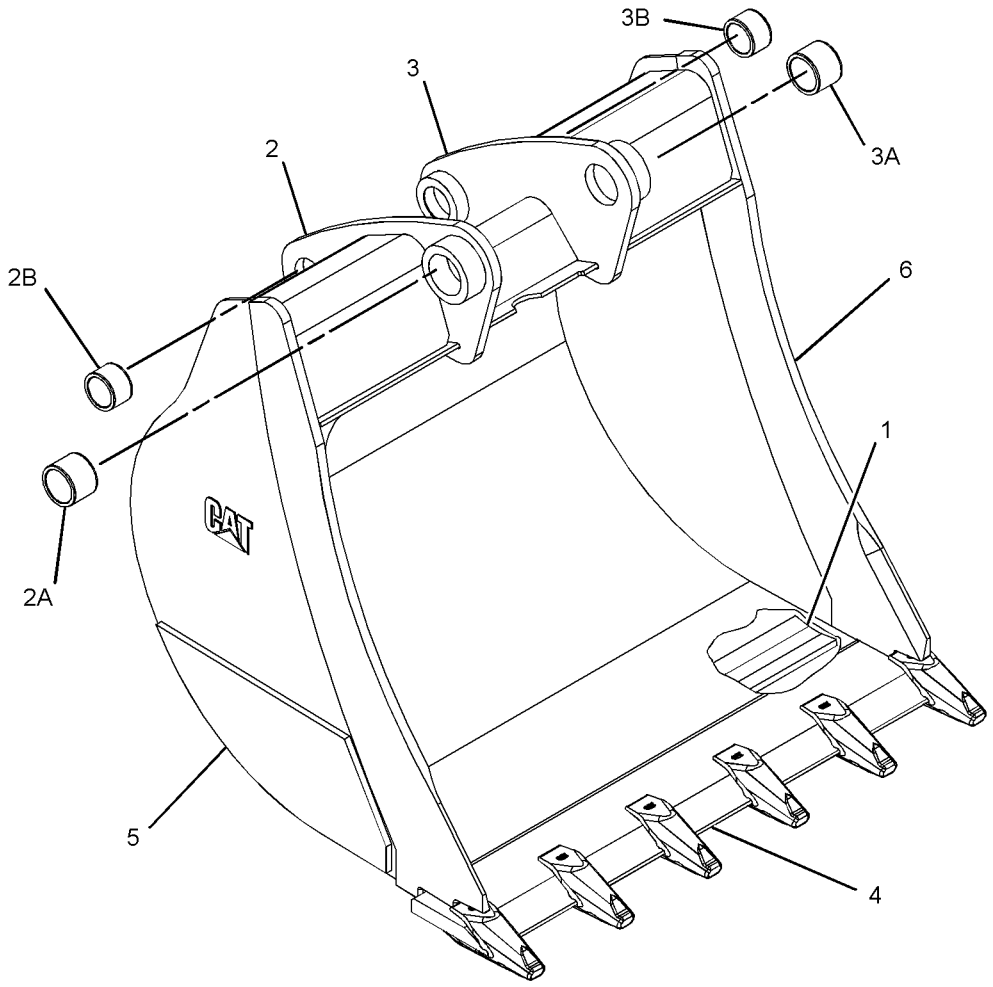

GRAPHIC #1 **<END>** g01382166

219-3375 BUCKET AS-HOE–CORAL

S/N: HLS1-99999
305-MM (12-IN)
PART OF 219-3399 BUCKET GP-HOE
AN ATTACHMENT

SMCS-6503 **i02661574**

NOTE	REF NO	GRAPHIC REF	PART NUMBER	QTY	PART NAME 1 2 3 4 5 6 (PRODUCT LEVEL)	SEE PAGE
	1	1	**161-4130**	2	PLATE-IDENTIFICATION (CAT)	
	2	1	**174-3949**	2	PLATE	
	3	1	**174-3950**	1	PLATE	
	4	1	**197-8914**	1	EDGE-ROUTER (RH)	
	5	1	**197-8915**	1	EDGE-ROUTER (LH)	
	6	1	**201-1234**	4	ADAPTER (2-STRAP)	
	7	1	*202-4162*	1	BRACKET AS (LH)	
	7A	1	**9R-0320**	1	BEARING-SLEEVE	
	7B	1	**154-5257**	1	BEARING-SLEEVE	
	8	1	*202-4163*	1	BRACKET AS (RH)	
	8A	1	**9R-0320**	1	BEARING-SLEEVE	
	8B	1	**154-5257**	1	BEARING-SLEEVE	
	9	1	**219-9496**	1	EDGE	

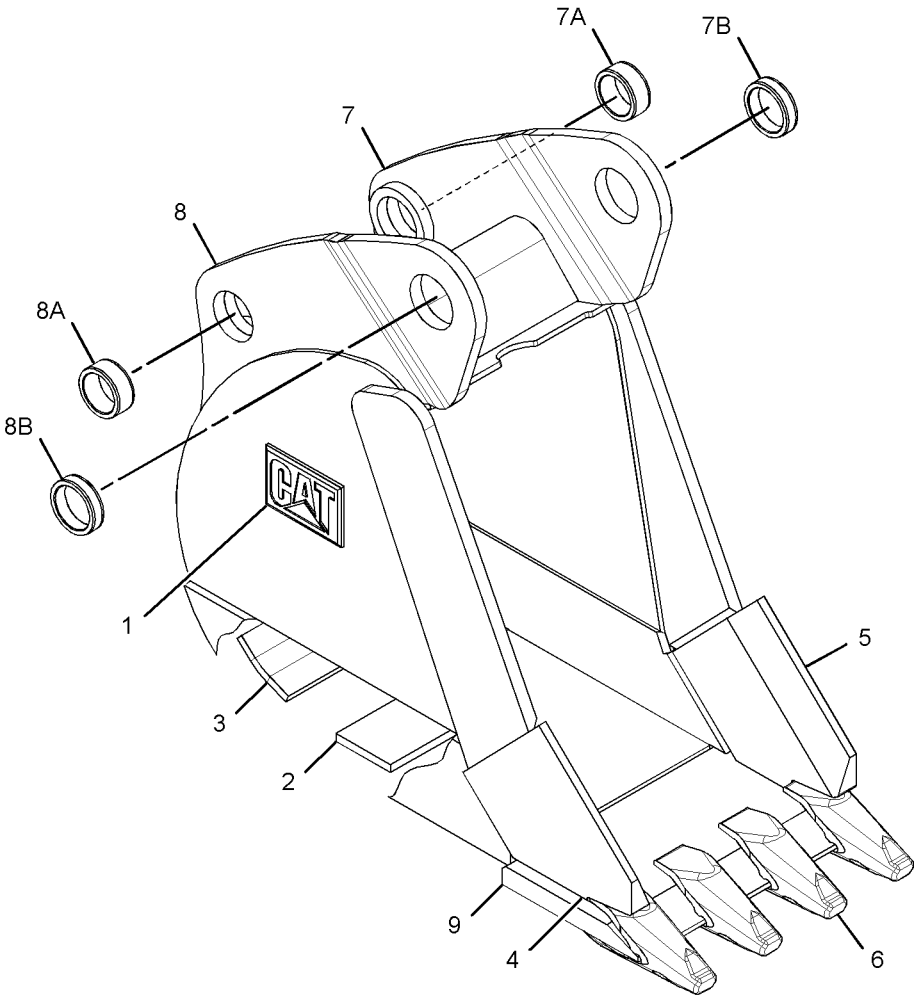

GRAPHIC #1 **<END>** g01342300

WORK TOOLS

219-3376 BUCKET AS-HOE–CORAL

S/N: HLS1-99999
458-MM (18-IN)
PART OF 219-3400 BUCKET GP-HOE
AN ATTACHMENT

SMCS-6503 **i02661611**

NOTE	REF NO	GRAPHIC REF	PART NUMBER	QTY	PART NAME 1 2 3 4 5 6 (PRODUCT LEVEL)	SEE PAGE
	1	1	**136-7049**	1	BIT-ROUTER (LH)	
	2	1	**136-7051**	1	BIT-ROUTER (RH)	
	3	1	**172-8276**	2	PLATE	
	4	1	**161-4130**	2	PLATE-IDENTIFICATION (CAT)	
	5	1	**172-8279**	1	PLATE	
	6	1	**201-1234**	6	ADAPTER (2-STRAP)	
	7	1	*202-0596*	1	BRACKET AS (LH)	
	7A	1	**9R-0162**	1	BEARING-SLEEVE	
	7B	1	**168-0480**	1	BEARING-SLEEVE	
	8	1	*202-0597*	1	BRACKET AS (RH)	
	8A	1	**9R-0162**	1	BEARING-SLEEVE	
	8B	1	**168-0480**	1	BEARING-SLEEVE	
	9	1	**219-9491**	1	EDGE	

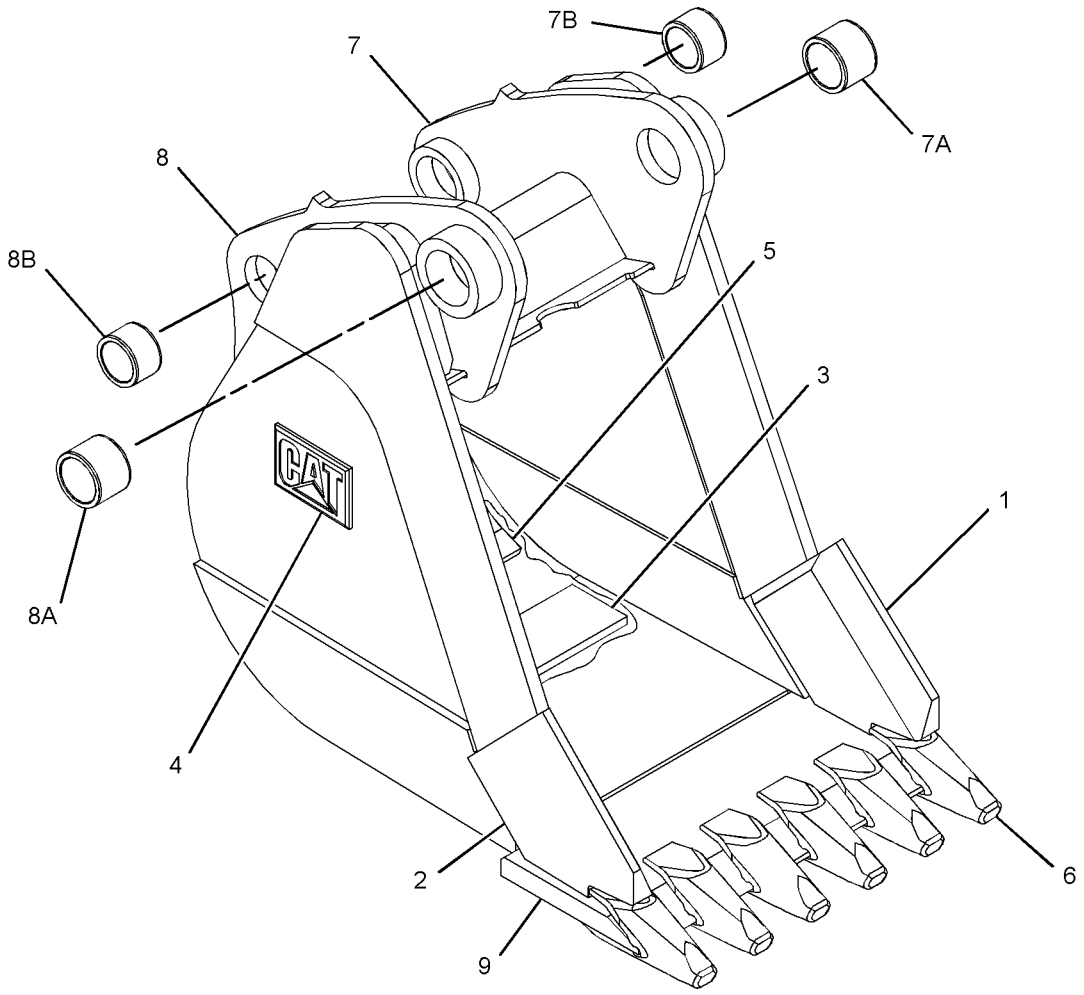

GRAPHIC #1 **<END>** g01342325

219-3377 BUCKET AS-HOE–CORAL

S/N: HLS1-99999
610-MM (24-IN)
PART OF 219-3401 BUCKET GP-HOE
AN ATTACHMENT

SMCS-6503 **i02661614**

NOTE	REF NO	GRAPHIC REF	PART NUMBER	QTY	PART NAME 1 2 3 4 5 6 (PRODUCT LEVEL)	SEE PAGE
	1	1	**172-8277**	2	PLATE	
	2	1	**136-7049**	1	BIT-ROUTER (LH)	
	3	1	**136-7051**	1	BIT-ROUTER (RH)	
	4	1	**172-8280**	1	PLATE	
	5	1	**161-4130**	2	PLATE-IDENTIFICATION (CAT)	
	6	1	**201-1234**	8	ADAPTER (2-STRAP)	
	7	1	*202-0596*	1	BRACKET AS (LH)	
	7A	1	**9R-0162**	1	BEARING-SLEEVE	
	7B	1	**168-0480**	1	BEARING-SLEEVE	
	8	1	*202-0597*	1	BRACKET AS (RH)	
	8A	1	**9R-0162**	1	BEARING-SLEEVE	
	8B	1	**168-0480**	1	BEARING-SLEEVE	
	9	1	**219-9492**	1	EDGE	

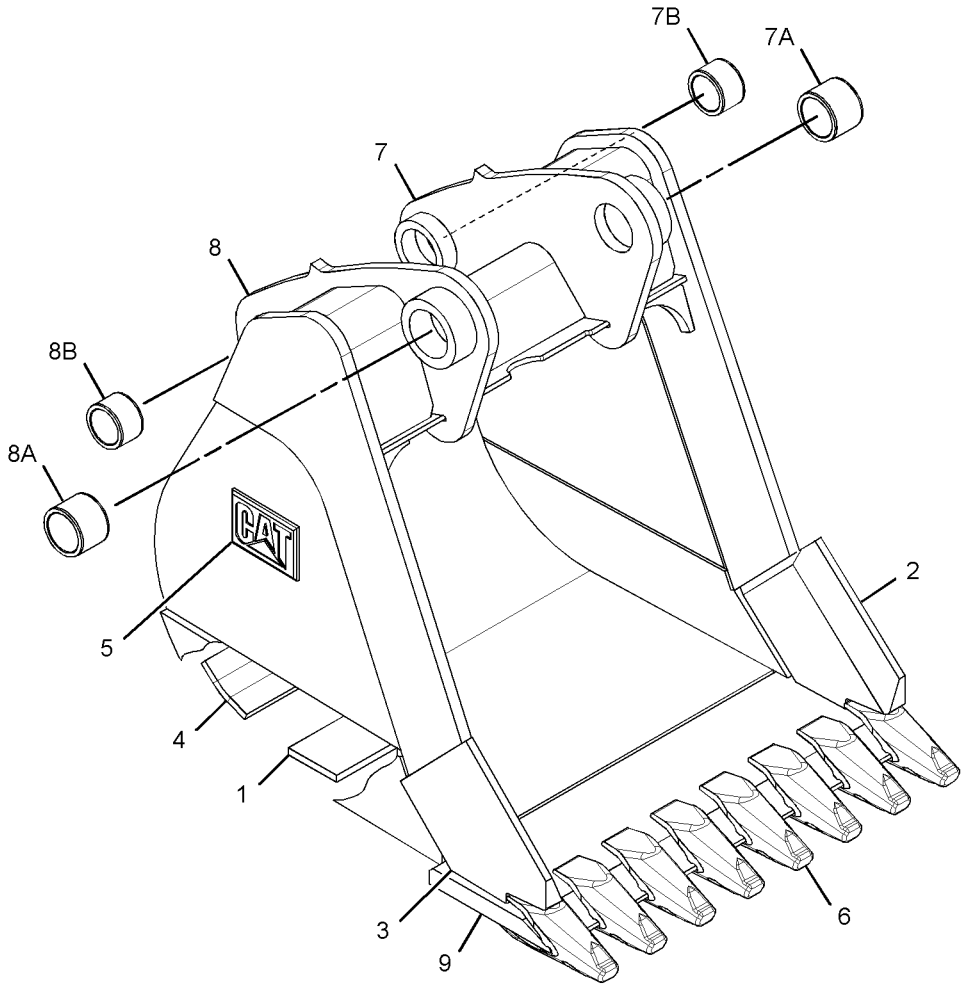

GRAPHIC #1 **<END>** g01342455

WORK TOOLS

219-3378 BUCKET AS-HOE–CORAL

S/N: HLS1-99999
762-MM (30-IN)
PART OF 219-3402 BUCKET GP-HOE
AN ATTACHMENT

SMCS-6503 **i02661618**

NOTE	REF NO	GRAPHIC REF	PART NUMBER	QTY	PART NAME 1 2 3 4 5 6 (PRODUCT LEVEL)	SEE PAGE
	1	1	**136-7049**	1	BIT-ROUTER (LH)	
	2	1	**136-7051**	1	BIT-ROUTER (RH)	
	3	1	**161-4130**	2	PLATE-IDENTIFICATION (CAT)	
	4	1	**172-8278**	2	PLATE	
	5	1	**174-4765**	1	PLATE	
	6	1	**201-1234**	10	ADAPTER (2-STRAP)	
	7	1	*202-0596*	1	BRACKET AS (LH)	
	7A	1	**9R-0162**	1	BEARING-SLEEVE	
	7B	1	**168-0480**	1	BEARING-SLEEVE	
	8	1	*202-0597*	1	BRACKET AS (RH)	
	8A	1	**9R-0162**	1	BEARING-SLEEVE	
	8B	1	**168-0480**	1	BEARING-SLEEVE	
	9	1	**219-9495**	1	EDGE	

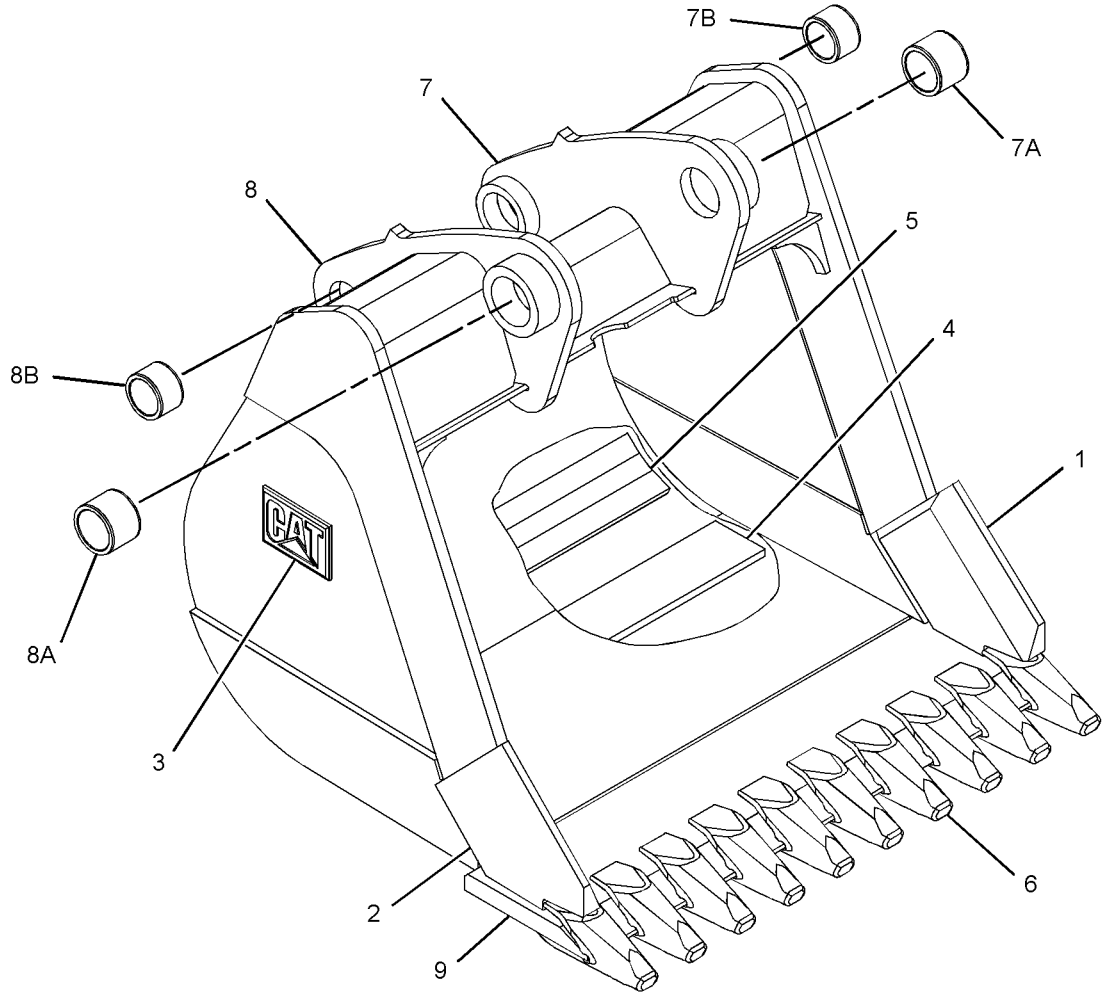

GRAPHIC #1 **<END>** g01342605

254-8939 BUCKET AS-HOE—HIGH CAPACITY, PIN-LOCK

S/N: HLS1-99999
458-MM (18-IN)
PART OF 254-8940 BUCKET GP-HOE
AN ATTACHMENT
TYPE 1

SMCS-6503 **i02284325**

NOTE	REF NO	GRAPHIC REF	PART NUMBER	QTY	PART NAME 1 2 3 4 5 6 (PRODUCT LEVEL)	SEE PAGE
	1	1	**134-5884**	1	EDGE (LH)	
	2	1	**134-5885**	1	EDGE (RH)	
	3	1	*151-7902*	1	BRACKET AS (LH)	
		1	**9R-0162**	1	BEARING-SLEEVE	
		1	**168-0480**	1	BEARING-SLEEVE	
	4	1	*151-7903*	1	BRACKET AS (RH)	
		1	**9R-0162**	1	BEARING-SLEEVE	
		1	**168-0480**	1	BEARING-SLEEVE	
	5	1	**161-4130**	2	PLATE-IDENTIFICATION (CAT)	
	6	1	**219-9483**	1	EDGE	
	7	1	**253-0234**	4	ADAPTER	

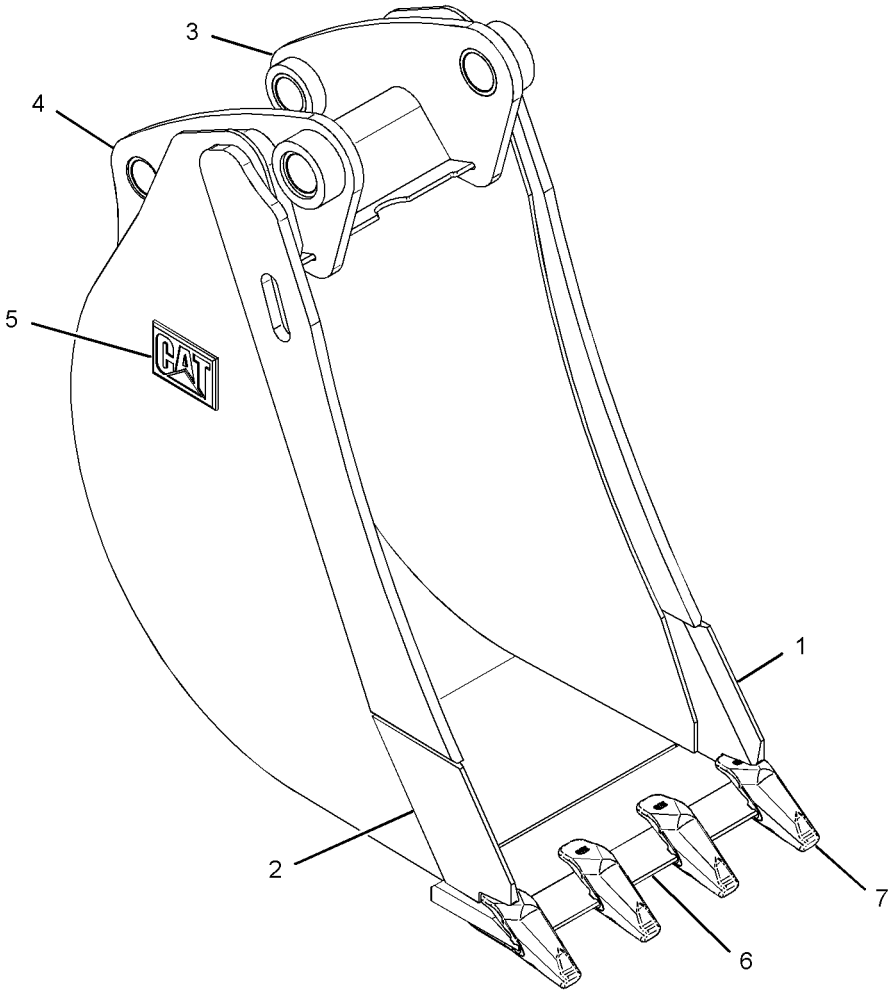

GRAPHIC #1 **<END>** g01150300

254-8939 BUCKET AS-HOE—HIGH CAPACITY, PIN-LOCK

S/N: HLS1-99999
458-MM (18-IN)
PART OF 254-8940 BUCKET GP-HOE
AN ATTACHMENT
TYPE 2

SMCS-6503 **i03505450**

NOTE	REF NO	GRAPHIC REF	PART NUMBER	QTY	PART NAME 1 2 3 4 5 6 (PRODUCT LEVEL)	SEE PAGE
	1	1	**172-8279**	5	PLATE	
C	2	1	*286-9336*	1	BRACKET AS (RH)	
	2A	1	**9R-0162**	1	BEARING-SLEEVE	
	2B	1	**168-0480**	1	BEARING-SLEEVE	
C	3	1	*286-9337*	1	BRACKET AS (LH)	
	3A	1	**9R-0162**	1	BEARING-SLEEVE	
	3B	1	**168-0480**	1	BEARING-SLEEVE	
	4	1	*299-3346*	1	EDGE AS	
		1	**219-9483**	1	EDGE	
		1	**253-0234**	4	ADAPTER	
	5	1	*300-7054*	1	PLATE AS	
		1	**134-5885**	1	EDGE (RH)	
	6	1	*300-7055*	1	PLATE AS	
		1	**134-5884**	1	EDGE (LH)	

C-CHANGE FROM PREVIOUS TYPE

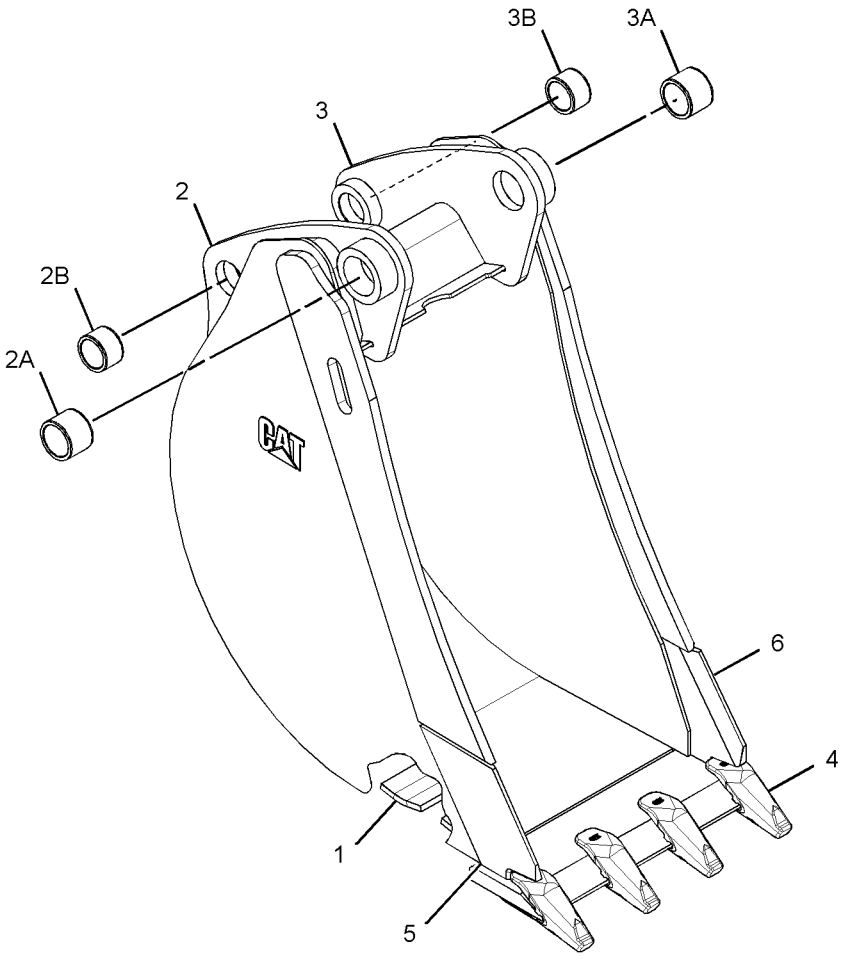

GRAPHIC #1 **<END>** g01382177

254-8944 BUCKET AS-HOE—HIGH CAPACITY, PIN-LOCK

S/N: HLS1-99999
610-MM (24-IN)
PART OF 254-8941 BUCKET GP-HOE
AN ATTACHMENT
TYPE 1

SMCS-6503 **i02284375**

NOTE	REF NO	GRAPHIC REF	PART NUMBER	QTY	PART NAME 1 2 3 4 5 6 (PRODUCT LEVEL)	SEE PAGE
	1	1	**134-5884**	1	EDGE (LH)	
	2	1	**134-5885**	1	EDGE (RH)	
	3	1	*151-7902*	1	BRACKET AS (LH)	
		1	**9R-0162**	1	BEARING-SLEEVE	
		1	**168-0480**	1	BEARING-SLEEVE	
	4	1	*151-7903*	1	BRACKET AS (RH)	
		1	**9R-0162**	1	BEARING-SLEEVE	
		1	**168-0480**	1	BEARING-SLEEVE	
	5	1	**161-4130**	2	PLATE-IDENTIFICATION (CAT)	
	6	1	**219-9484**	1	EDGE	
	7	1	**253-0234**	5	ADAPTER	

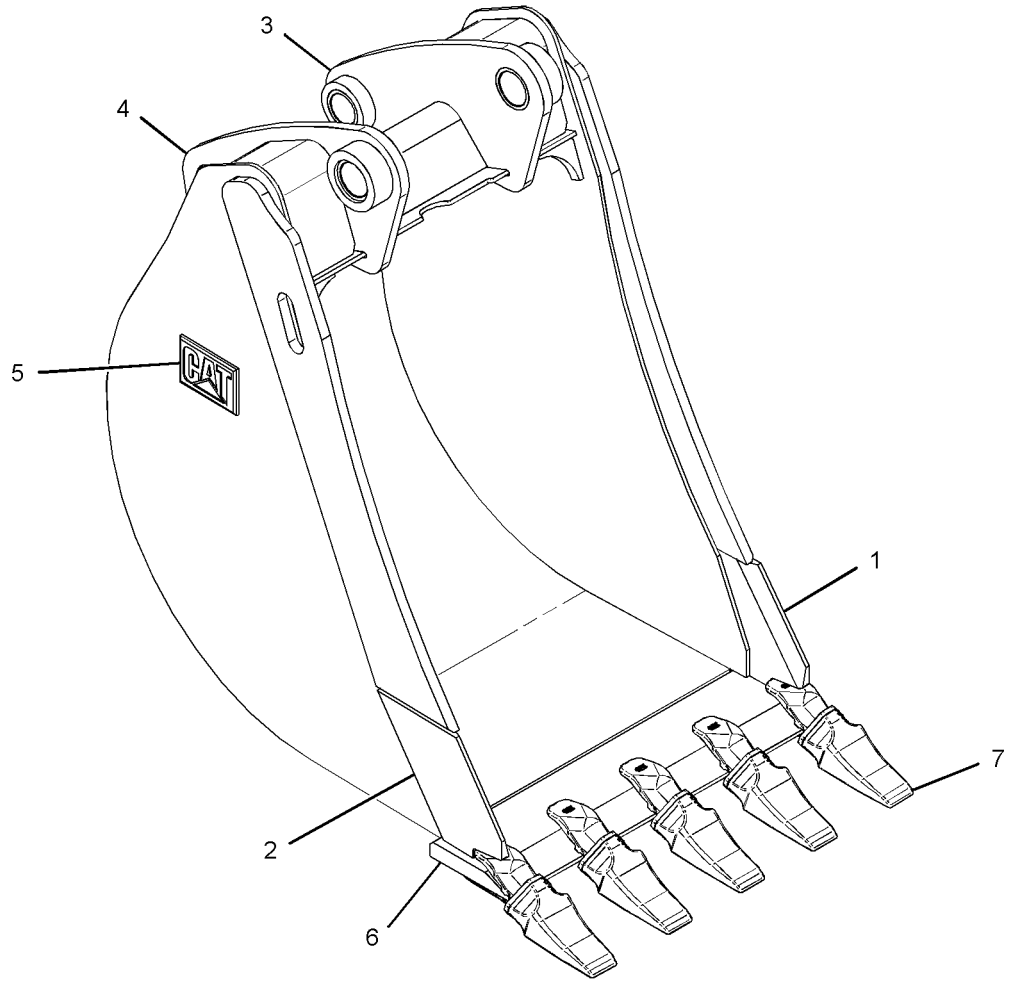

GRAPHIC #1 **<END>** g01150213

254-8944 BUCKET AS-HOE—HIGH CAPACITY, PIN-LOCK

S/N: HLS1-99999
610-MM (24-IN)
PART OF 254-8941 BUCKET GP-HOE
AN ATTACHMENT
TYPE 2

SMCS-6503 **i03505452**

NOTE	REF NO	GRAPHIC REF	PART NUMBER	QTY	PART NAME 1 2 3 4 5 6 (PRODUCT LEVEL)	SEE PAGE
	1	1	**172-8280**	5	PLATE	
C	2	1	*286-9336*	1	BRACKET AS (RH)	
	2A	1	**9R-0162**	1	BEARING-SLEEVE	
	2B	1	**168-0480**	1	BEARING-SLEEVE	
C	3	1	*286-9337*	1	BRACKET AS (LH)	
	3A	1	**9R-0162**	1	BEARING-SLEEVE	
	3B	1	**168-0480**	1	BEARING-SLEEVE	
	4	1	*300-4156*	1	EDGE AS	
			219-9486	1	EDGE	
			253-0234	6	ADAPTER	
	5	1	*300-7054*	1	PLATE AS	
			134-5885	1	EDGE (RH)	
	6	1	*300-7055*	1	PLATE AS	
			134-5884	1	EDGE (LH)	

C-CHANGE FROM PREVIOUS TYPE

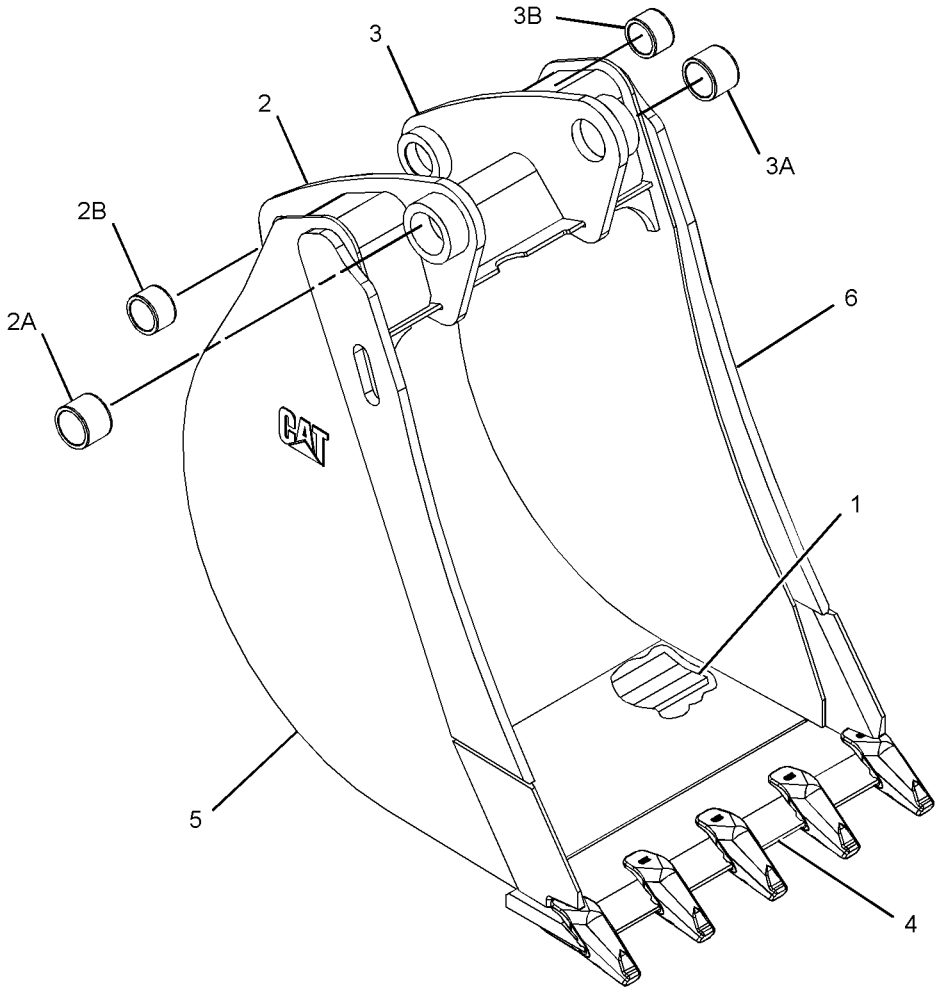

GRAPHIC #1 **<END>** g01382158

254-8945 BUCKET AS-HOE—HIGH CAPACITY, PIN-LOCK

S/N: HLS1-99999
762-MM (30-IN)
PART OF 254-8942 BUCKET GP-HOE
AN ATTACHMENT
TYPE 1

SMCS-6503 **i02284391**

NOTE	REF NO	GRAPHIC REF	PART NUMBER	QTY	PART NAME 1 2 3 4 5 6 (PRODUCT LEVEL)	SEE PAGE
	1	1	**134-5884**	1	EDGE (LH)	
	2	1	**134-5885**	1	EDGE (RH)	
	3	1	*151-7902*	1	BRACKET AS (LH)	
		1	**9R-0162**	1	BEARING-SLEEVE	
		1	**168-0480**	1	BEARING-SLEEVE	
	4	1	*151-7903*	1	BRACKET AS (RH)	
		1	**9R-0162**	1	BEARING-SLEEVE	
		1	**168-0480**	1	BEARING-SLEEVE	
	5	1	**161-4130**	2	PLATE-IDENTIFICATION (CAT)	
	6	1	**219-9485**	1	EDGE	
	7	1	**253-0234**	5	ADAPTER	

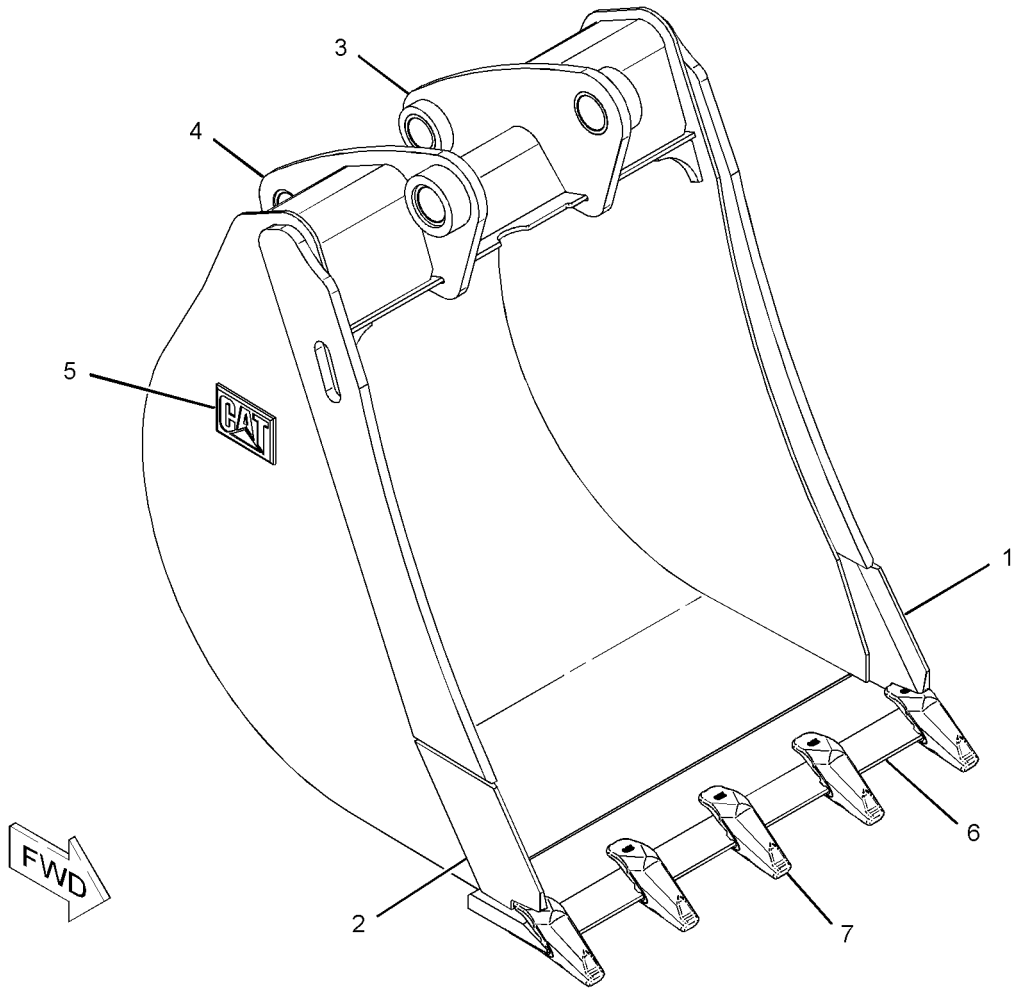

GRAPHIC #1 **<END>** g01144822

WORK TOOLS

254-8945 BUCKET AS-HOE—HIGH CAPACITY, PIN-LOCK

S/N: HLS1-99999
762-MM (30-IN)
PART OF 254-8942 BUCKET GP-HOE
AN ATTACHMENT
TYPE 2

SMCS-6503 **i02503321**

NOTE	REF NO	GRAPHIC REF	PART NUMBER	QTY	PART NAME 1 2 3 4 5 6 (PRODUCT LEVEL)	SEE PAGE
	1	1	**134-5884**	1	EDGE (LH)	
	2	1	**134-5885**	1	EDGE (RH)	
C	3	1	*286-9337*	1	BRACKET AS (LH)	
		1	**9R-0162**	1	BEARING-SLEEVE	
		1	**168-0480**	1	BEARING-SLEEVE	
C	4	1	*286-9336*	1	BRACKET AS (RH)	
		1	**9R-0162**	1	BEARING-SLEEVE	
		1	**168-0480**	1	BEARING-SLEEVE	
	5	1	**161-4130**	2	PLATE-IDENTIFICATION (CAT)	
	6	1	**219-9485**	1	EDGE	
	7	1	**253-0234**	5	ADAPTER	

C-CHANGE FROM PREVIOUS TYPE

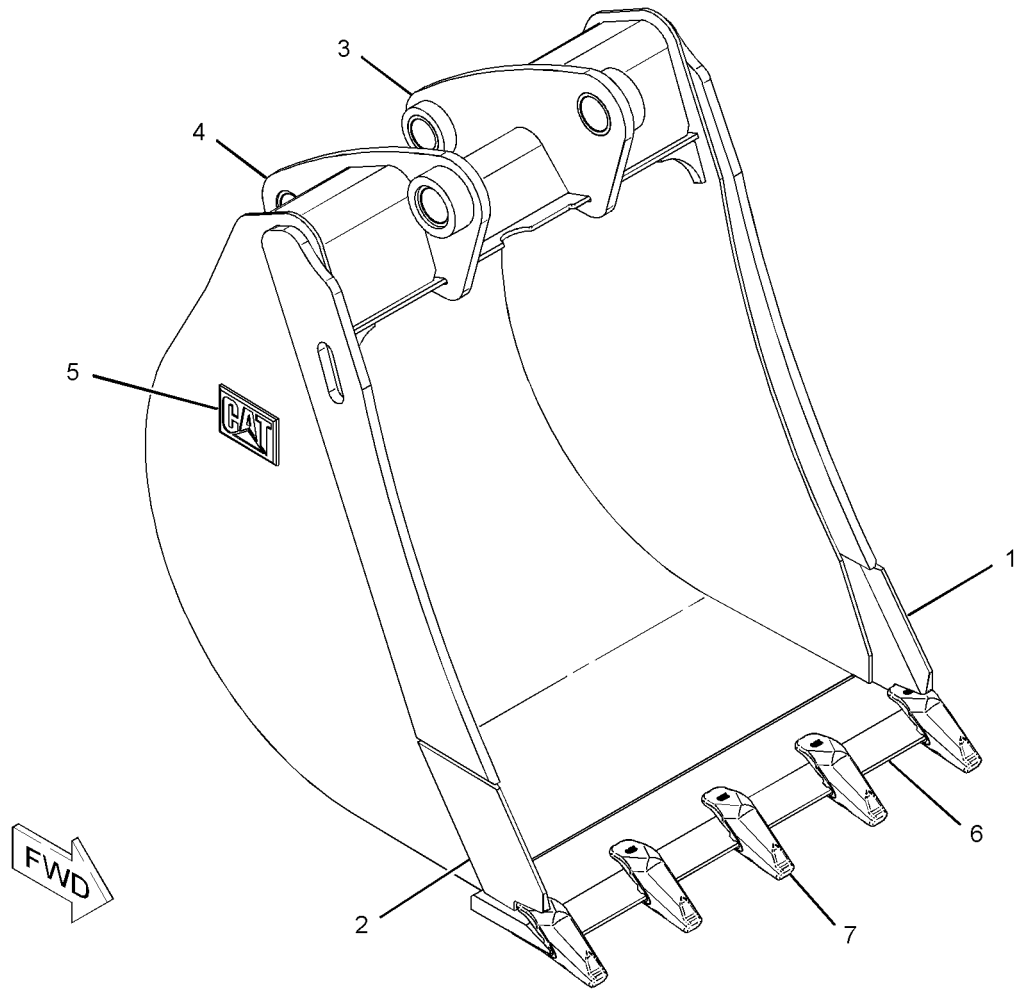

GRAPHIC #1 **<END>** g01144822

254-8946 BUCKET AS-HOE—HIGH CAPACITY, PIN-LOCK

S/N: HLS1-99999
914-MM (36-IN)
PART OF 254-8943 BUCKET GP-HOE
AN ATTACHMENT
TYPE 1

SMCS-6503 **i02284403**

NOTE	REF NO	GRAPHIC REF	PART NUMBER	QTY	PART NAME 1 2 3 4 5 6 (PRODUCT LEVEL)	SEE PAGE
	1	1	**134-5884**	1	EDGE (LH)	
	2	1	**134-5885**	1	EDGE (RH)	
	3	1	*151-7902*	1	BRACKET AS (LH)	
		1	**9R-0162**	1	BEARING-SLEEVE	
		1	**168-0480**	1	BEARING-SLEEVE	
	4	1	*151-7903*	1	BRACKET AS (RH)	
		1	**9R-0162**	1	BEARING-SLEEVE	
		1	**168-0480**	1	BEARING-SLEEVE	
	5	1	**161-4130**	2	PLATE-IDENTIFICATION (CAT)	
	6	1	**219-9486**	1	EDGE	
	7	1	**253-0234**	6	ADAPTER	

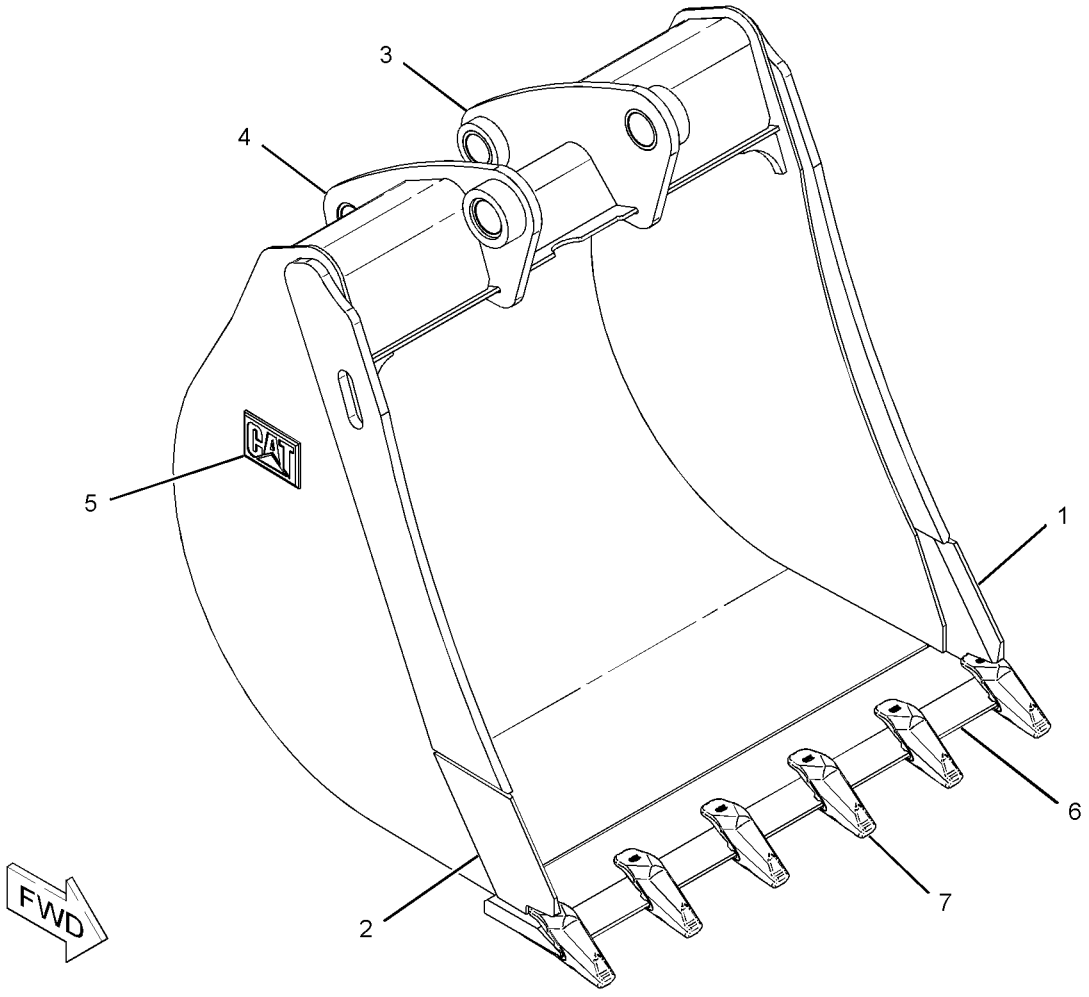

GRAPHIC #1 **<END>** g01144814

254-8946 BUCKET AS-HOE—HIGH CAPACITY, PIN-LOCK

S/N: HLS1-99999
914-MM (36-IN)
PART OF 254-8943 BUCKET GP-HOE
AN ATTACHMENT
TYPE 2

SMCS-6503 **i03505460**

NOTE	REF NO	GRAPHIC REF	PART NUMBER	QTY	PART NAME 1 2 3 4 5 6 (PRODUCT LEVEL)	SEE PAGE
	1	1	**193-5416**	5	PLATE	
C	2	1	*286-9336*	1	BRACKET AS (RH)	
	2A	1	**9R-0162**	1	BEARING-SLEEVE	
	2B	1	**168-0480**	1	BEARING-SLEEVE	
C	3	1	*286-9337*	1	BRACKET AS (LH)	
	3A	1	**9R-0162**	1	BEARING-SLEEVE	
	3B	1	**168-0480**	1	BEARING-SLEEVE	
	4	1	*300-4156*	1	EDGE AS	
		1	**219-9486**	1	EDGE	
		1	**253-0234**	6	ADAPTER	
	5	1	*300-7054*	1	PLATE AS	
		1	**134-5885**	1	EDGE (RH)	
	6	1	*300-7055*	1	PLATE AS	
		1	**134-5884**	1	EDGE (LH)	

C-CHANGE FROM PREVIOUS TYPE

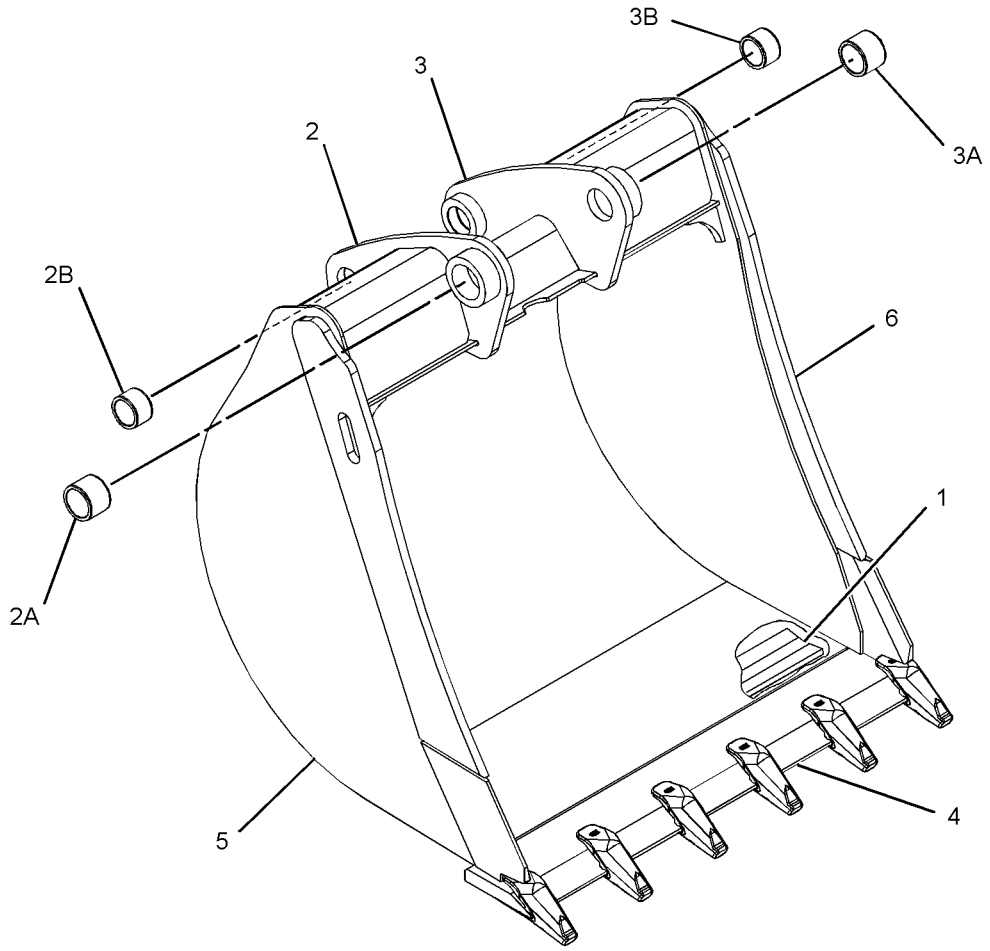

GRAPHIC #1 **<END>** g01382156

WORK TOOLS

251-1775 BUCKET GP-GENERAL PURPOSE

S/N: HLS1-99999
AN ATTACHMENT

SMCS-6101 **i02104816**

NOTE	PART NUMBER	QTY	PART NAME 1 2 3 4 5 6 (PRODUCT LEVEL)	SEE PAGE
Y	**251-1777**	1	BUCKET GP-GENERAL PURPOSE	670
Y	*9R-5320*	1	EDGE GP-CUTTING	738

Y-SEPARATE ILLUSTRATION

<END>

WORK TOOLS

251-1777 BUCKET GP-GENERAL PURPOSE

S/N: HLS1-99999
1.25 CU M (1.5 CU YD)
PART OF 251-1776 BUCKET AR-GENERAL PURPOSE, 251-1775 BUCKET GP-GENERAL PURPOSE
AN ATTACHMENT

SMCS-6101 **i02206249**

NOTE	REF NO	GRAPHIC REF	PART NUMBER	QTY	PART NAME 1 2 3 4 5 6 (PRODUCT LEVEL)	SEE PAGE
	1	1	**137-4234**	1	PLATE-IDENTIFICATION (WORK TOOL)	
	2	1	**168-8389**	4	TACK-FASTENER	
Y	3	1	*251-1156*	1	BUCKET AS-GENERAL PURPOSE	609

Y-SEPARATE ILLUSTRATION

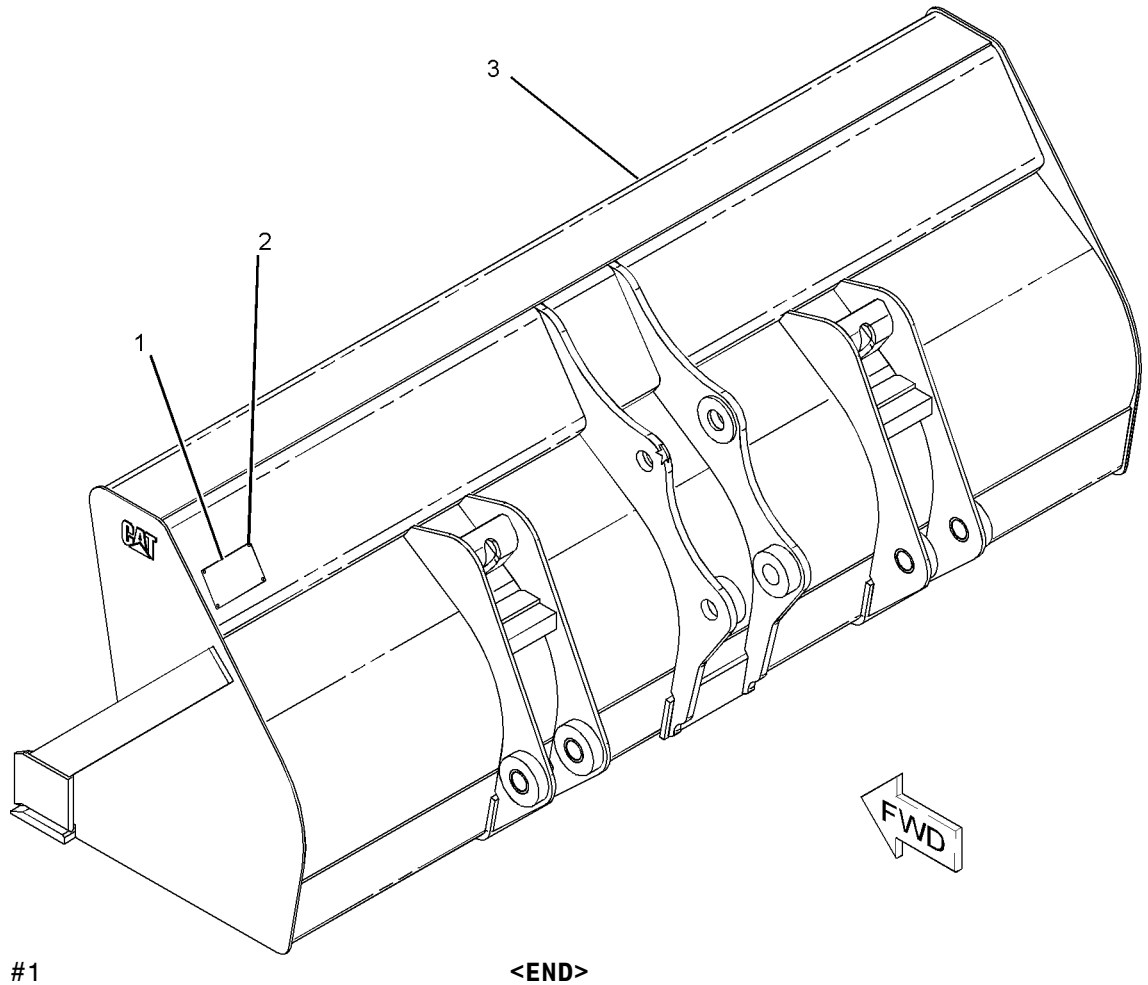

GRAPHIC #1 **<END>** g01114161

251-1778 BUCKET GP-GENERAL PURPOSE

S/N: HLS1-99999
AN ATTACHMENT

SMCS-6101 **i02105045**

NOTE	PART NUMBER	QTY	PART NAME 1 2 3 4 5 6 (PRODUCT LEVEL)	SEE PAGE
Y	**251-1780**	1	BUCKET GP-GENERAL PURPOSE	672
Y	*9R-5321*	1	EDGE GP-CUTTING	739

Y-SEPARATE ILLUSTRATION

<END>

251-1779 BUCKET GP-GENERAL PURPOSE

S/N: HLS1-99999
AN ATTACHMENT

SMCS-6101 **i02105046**

NOTE	PART NUMBER	QTY	PART NAME 1 2 3 4 5 6 (PRODUCT LEVEL)	SEE PAGE
Y	**251-1780**	1	BUCKET GP-GENERAL PURPOSE	672
Y	*9R-5866*	1	TOOTH GP-UNI	787

Y-SEPARATE ILLUSTRATION

<END>

WORK TOOLS

251-1780 BUCKET GP-GENERAL PURPOSE

S/N: HLS1-99999
0.76 CU M (1.0 CU YD)
PART OF 251-1778, 251-1779 BUCKET GP-GENERAL PURPOSE
AN ATTACHMENT

SMCS-6101 **i02206792**

NOTE	REF NO	GRAPHIC REF	PART NUMBER	QTY	PART NAME 1 2 3 4 5 6 (PRODUCT LEVEL)	SEE PAGE
	1	1	**137-4234**	1	PLATE-IDENTIFICATION (WORK TOOL)	
	2	1	**168-8389**	4	TACK-FASTENER	
Y	3	1	*251-1157*	1	BUCKET AS-GENERAL PURPOSE	611

Y-SEPARATE ILLUSTRATION

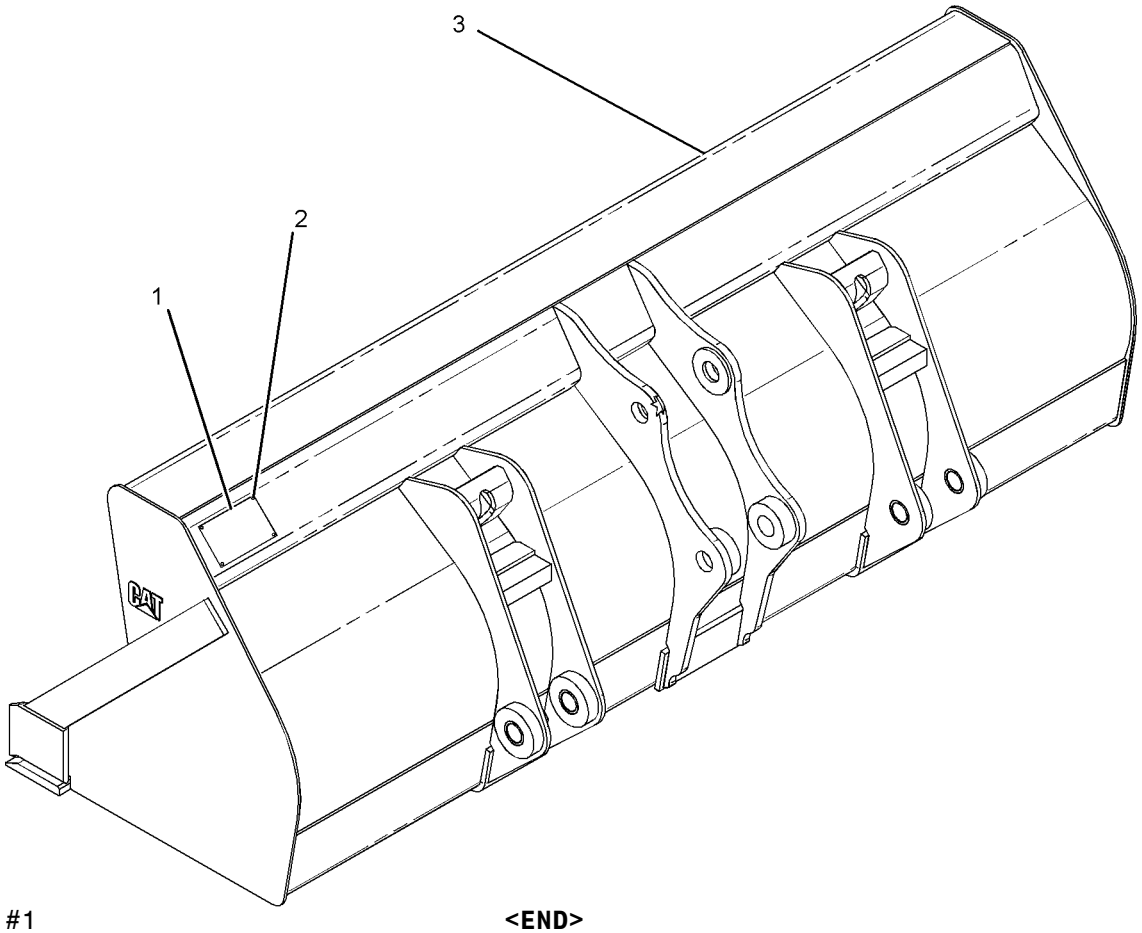

GRAPHIC #1 **<END>** g01114180

251-1781 BUCKET GP-GENERAL PURPOSE

S/N: HLS1-99999
AN ATTACHMENT

SMCS-6101 **i02105047**

NOTE	PART NUMBER	QTY	PART NAME 1 2 3 4 5 6 (PRODUCT LEVEL)	SEE PAGE
Y	**251-1783**	1	BUCKET GP-GENERAL PURPOSE	673
Y	*9R-5320*	1	EDGE GP-CUTTING	738

Y-SEPARATE ILLUSTRATION

<END>

251-1782 BUCKET GP-GENERAL PURPOSE

S/N: HLS1-99999
AN ATTACHMENT

SMCS-6101 **i02105048**

NOTE	PART NUMBER	QTY	PART NAME 1 2 3 4 5 6 (PRODUCT LEVEL)	SEE PAGE
Y	**251-1783**	1	BUCKET GP-GENERAL PURPOSE	673
Y	*9R-5866*	1	TOOTH GP-UNI	787

Y-SEPARATE ILLUSTRATION

<END>

251-1783 BUCKET GP-GENERAL PURPOSE

S/N: HLS1-99999
PART OF 251-1781, 251-1782 BUCKET GP-GENERAL PURPOSE
AN ATTACHMENT

SMCS-6101 **i02106209**

NOTE	PART NUMBER	QTY	PART NAME 1 2 3 4 5 6 (PRODUCT LEVEL)	SEE PAGE
Y	*251-1158*	1	BUCKET AS-GENERAL PURPOSE	612

Y-SEPARATE ILLUSTRATION

<END>

251-1784 BUCKET GP-GENERAL PURPOSE

S/N: HLS1-99999
AN ATTACHMENT

SMCS-6101 **i02105049**

NOTE	PART NUMBER	QTY	PART NAME 1 2 3 4 5 6 (PRODUCT LEVEL)	SEE PAGE
Y	**251-1786**	1	BUCKET GP-GENERAL PURPOSE	674
Y	*9R-5321*	1	EDGE GP-CUTTING	739

Y-SEPARATE ILLUSTRATION

<END>

WORK TOOLS

251-1786 BUCKET GP-GENERAL PURPOSE

S/N: HLS1-99999

PART OF 251-1784, 251-1790 BUCKET GP-GENERAL PURPOSE

AN ATTACHMENT

SMCS-6101 **i02108903**

NOTE	PART NUMBER	QTY	PART NAME 1 2 3 4 5 6 (PRODUCT LEVEL)	SEE PAGE
Y	*251-1159*	1	BUCKET AS-GENERAL PURPOSE	614
Y-SEPARATE ILLUSTRATION				

<END>

251-1787 BUCKET GP-GENERAL PURPOSE

S/N: HLS1-99999

AN ATTACHMENT

SMCS-6101 **i02105050**

NOTE	PART NUMBER	QTY	PART NAME 1 2 3 4 5 6 (PRODUCT LEVEL)	SEE PAGE
Y	**251-1789**	1	BUCKET GP-GENERAL PURPOSE	674
Y	*9R-5321*	1	EDGE GP-CUTTING	739
Y-SEPARATE ILLUSTRATION				

<END>

251-1788 BUCKET GP-GENERAL PURPOSE

S/N: HLS1-99999

AN ATTACHMENT

SMCS-6101 **i02105051**

NOTE	PART NUMBER	QTY	PART NAME 1 2 3 4 5 6 (PRODUCT LEVEL)	SEE PAGE
Y	**251-1789**	1	BUCKET GP-GENERAL PURPOSE	674
Y	*9R-5866*	1	TOOTH GP-UNI	787
Y-SEPARATE ILLUSTRATION				

<END>

251-1789 BUCKET GP-GENERAL PURPOSE

S/N: HLS1-99999

PART OF 251-1787, 251-1788 BUCKET GP-GENERAL PURPOSE

AN ATTACHMENT

SMCS-6101 **i02106210**

NOTE	PART NUMBER	QTY	PART NAME 1 2 3 4 5 6 (PRODUCT LEVEL)	SEE PAGE
Y	*251-1160*	1	BUCKET AS-GENERAL PURPOSE	616
Y-SEPARATE ILLUSTRATION				

<END>

WORK TOOLS

251-1790 BUCKET GP-GENERAL PURPOSE

S/N: HLS1-99999

AN ATTACHMENT

SMCS-6101 **i02105052**

NOTE	PART NUMBER	QTY	PART NAME 1 2 3 4 5 6 (PRODUCT LEVEL)	SEE PAGE
Y	**251-1786**	1	BUCKET GP-GENERAL PURPOSE	674
Y	*9R-5866*	1	TOOTH GP-UNI	787

Y-SEPARATE ILLUSTRATION

<END>

WORK TOOLS

219-3379 BUCKET GP-HOE

S/N: HLS1-99999
PART OF 219-3410 BUCKET GP-HOE
AN ATTACHMENT

SMCS-6503 **i02655046**

NOTE	REF NO	GRAPHIC REF	PART NUMBER	QTY	PART NAME 1 2 3 4 5 6 (PRODUCT LEVEL)	SEE PAGE
	1	1	**137-4234**	1	PLATE-IDENTIFICATION (WORK TOOL)	
	2	1	**168-8389**	1	TACK-FASTENER	
	3	1	*208-5245*	3	TIP GP-PENETRATION	
					(EACH INCLUDES)	
		1	**201-1238**	1	PIN	
		1	**201-1239**	1	RETAINER AS	
		1	**208-5235**	1	TIP-PENETRATION	
Y	4	1	*219-3355*	1	BUCKET AS-HOE	617

Y-SEPARATE ILLUSTRATION

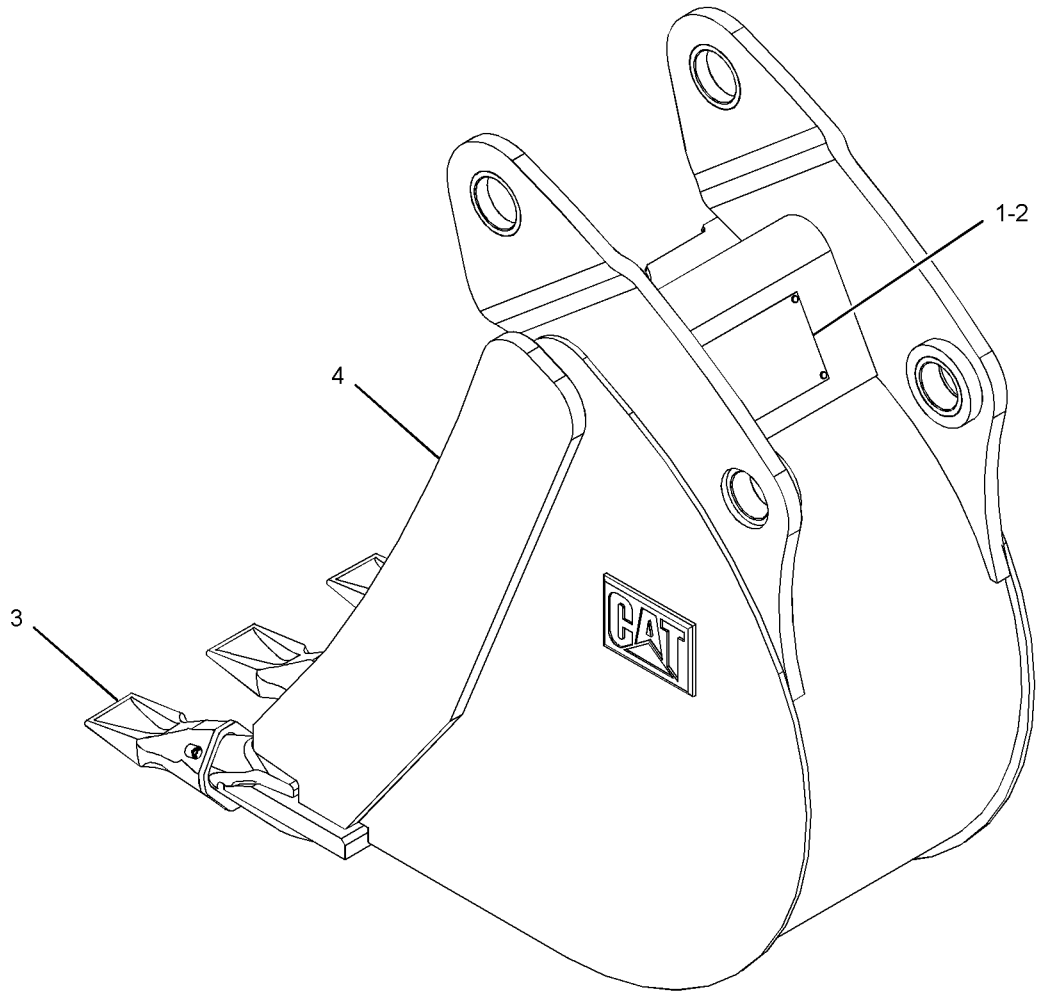

GRAPHIC #1 **<END>** g01341882

WORK TOOLS

219-3380 BUCKET GP-HOE

S/N: HLS1-99999
AN ATTACHMENT

SMCS-6503 **i02655101**

NOTE	REF NO	GRAPHIC REF	PART NUMBER	QTY	PART NAME 1 2 3 4 5 6 (PRODUCT LEVEL)	SEE PAGE
	1	1	**137-4234**	1	PLATE-IDENTIFICATION (WORK TOOL)	
	2	1	**168-8389**	4	TACK-FASTENER	
	3	1	*208-5245*	4	TIP GP-PENETRATION	
					(EACH INCLUDES)	
		1	**201-1238**	1	PIN	
		1	**201-1239**	1	RETAINER AS	
		1	**208-5235**	1	TIP-PENETRATION	
Y	4	1	*219-3356*	1	BUCKET AS-HOE	619

Y-SEPARATE ILLUSTRATION

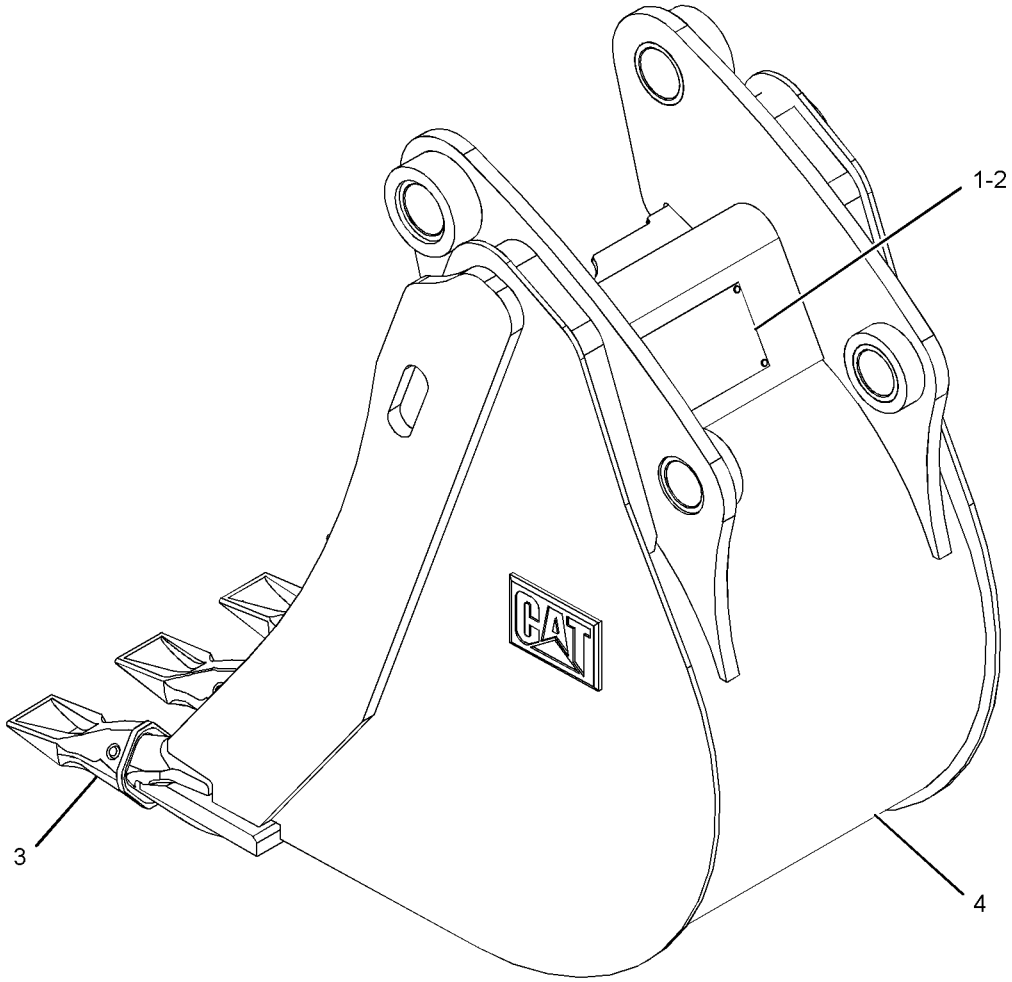

GRAPHIC #1 **<END>** g01339842

WORK TOOLS

219-3381 BUCKET GP-HOE

S/N: HLS1-99999

AN ATTACHMENT

SMCS-6503 **i02651121**

NOTE	REF NO	GRAPHIC REF	PART NUMBER	QTY	PART NAME 1 2 3 4 5 6 (PRODUCT LEVEL)	SEE PAGE
	1	1	**137-4234**	1	PLATE-IDENTIFICATION (WORK TOOL)	
	2	1	**168-8389**	4	TACK-FASTENER	
	3		*208-5245*	5	TIP GP-PENETRATION	
					(EACH INCLUDES)	
		1	**201-1238**	1	PIN	
		1	**201-1239**	1	RETAINER AS	
		1	**208-5235**	1	TIP-PENETRATION	
Y	4	1	*219-3357*	1	BUCKET AS-HOE	621

Y-SEPARATE ILLUSTRATION

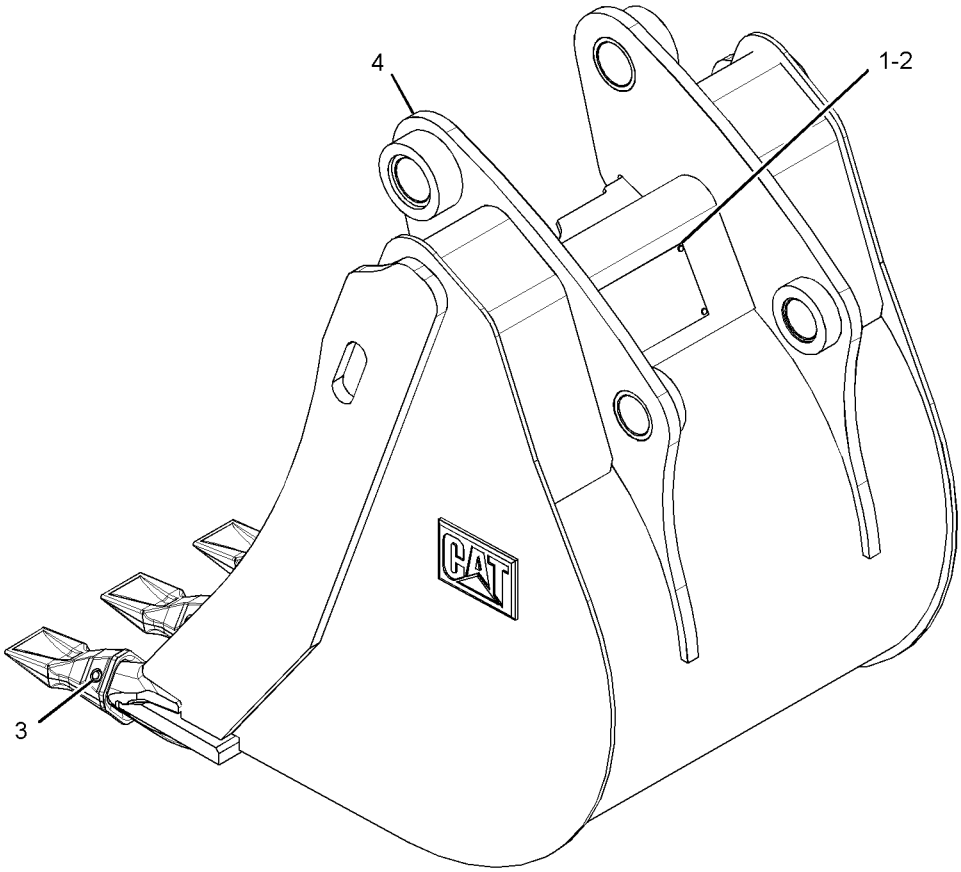

GRAPHIC #1 **<END>** g01340268

WORK TOOLS

219-3382 BUCKET GP-HOE

S/N: HLS1-99999

AN ATTACHMENT

SMCS-6503 **i02651191**

NOTE	REF NO	GRAPHIC REF	PART NUMBER	QTY	PART NAME 1 2 3 4 5 6 (PRODUCT LEVEL)	SEE PAGE
	1	1	**137-4234**	1	PLATE-IDENTIFICATION (WORK TOOL)	
	2	1	**168-8389**	4	TACK-FASTENER	
	3	1	*208-5245*	5	TIP GP-PENETRATION	
					(EACH INCLUDES)	
		1	**201-1238**	1	PIN	
		1	**201-1239**	1	RETAINER AS	
		1	**208-5235**	1	TIP-PENETRATION	
Y	4	1	*219-3358*	1	BUCKET AS-HOE	623

Y-SEPARATE ILLUSTRATION

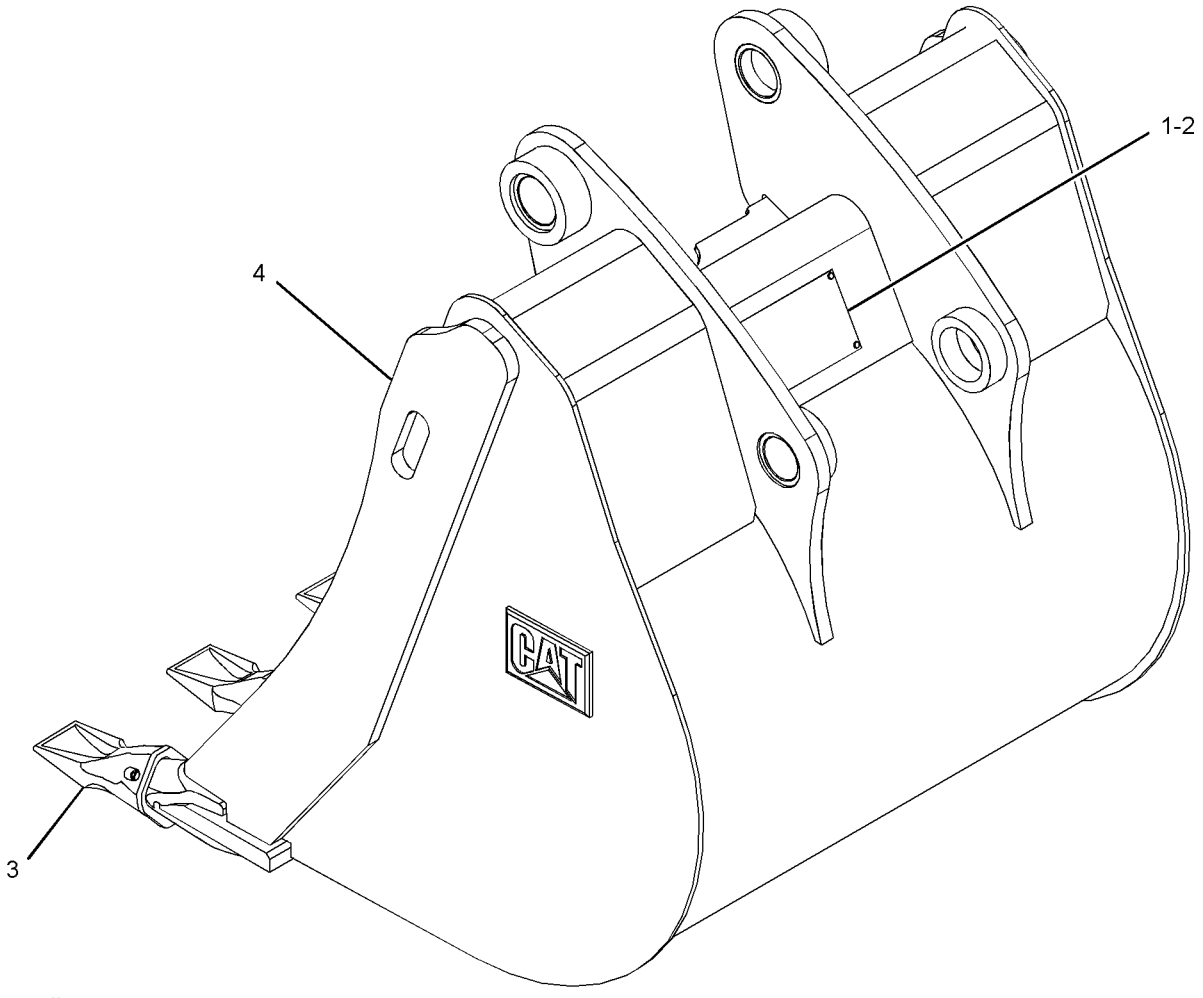

GRAPHIC #1 **<END>** g01341854

WORK TOOLS

219-3383 BUCKET GP-HOE

S/N: HLS1-99999
FOR USE WITH 222-7379—PAGE 731
AN ATTACHMENT

SMCS-6503 **i02651284**

NOTE	REF NO	GRAPHIC REF	PART NUMBER	QTY	PART NAME 1 2 3 4 5 6 (PRODUCT LEVEL)	SEE PAGE
	1	1	**137-4234**	1	PLATE-IDENTIFICATION (WORK TOOL)	
	2	1	**168-8389**	4	TACK-FASTENER	
	3	1	*208-5245*	6	TIP GP-PENETRATION	
					(EACH INCLUDES)	
		1	**201-1238**	1	PIN	
		1	**201-1239**	1	RETAINER AS	
		1	**208-5235**	1	TIP-PENETRATION	
Y	4	1	*219-3359*	1	BUCKET AS-HOE	625

Y-SEPARATE ILLUSTRATION

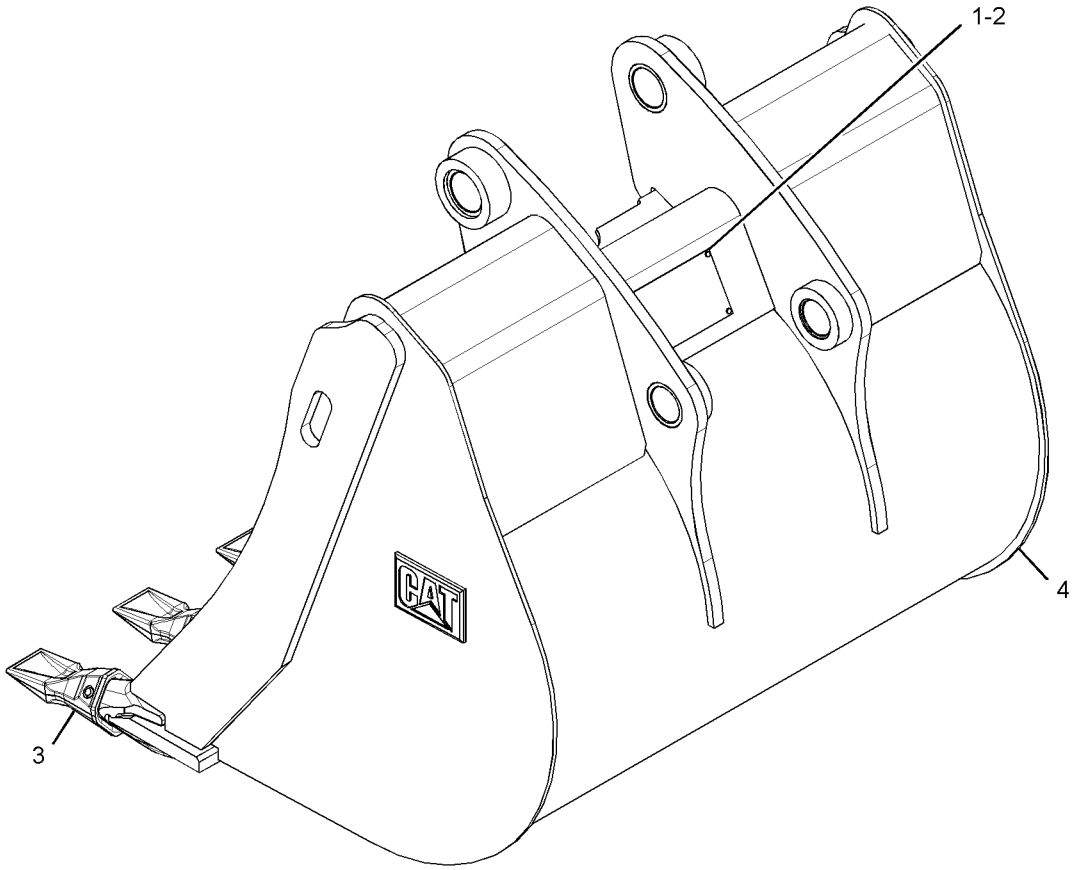

GRAPHIC #1 **<END>** g01341780

219-3384 BUCKET GP-HOE—HEAVY-DUTY

S/N: HLS1-99999
PART OF 219-3411 BUCKET GP-HOE
AN ATTACHMENT

SMCS-6503 **i02837609**

NOTE	REF NO	GRAPHIC REF	PART NUMBER	QTY	PART NAME 1 2 3 4 5 6 (PRODUCT LEVEL)	SEE PAGE
	1	1	**137-4234**	1	PLATE-IDENTIFICATION (WORK TOOL)	
	2	1	**168-8389**	4	TACK-FASTENER	
	3	1	*208-5245*	3	TIP GP-PENETRATION	
					(EACH INCLUDES)	
		1	**201-1238**	1	PIN	
		1	**201-1239**	1	RETAINER AS	
		1	**208-5235**	1	TIP-PENETRATION	
Y	4	1	*219-3360*	1	BUCKET AS-HOE (HEAVY-DUTY)	627

Y-SEPARATE ILLUSTRATION

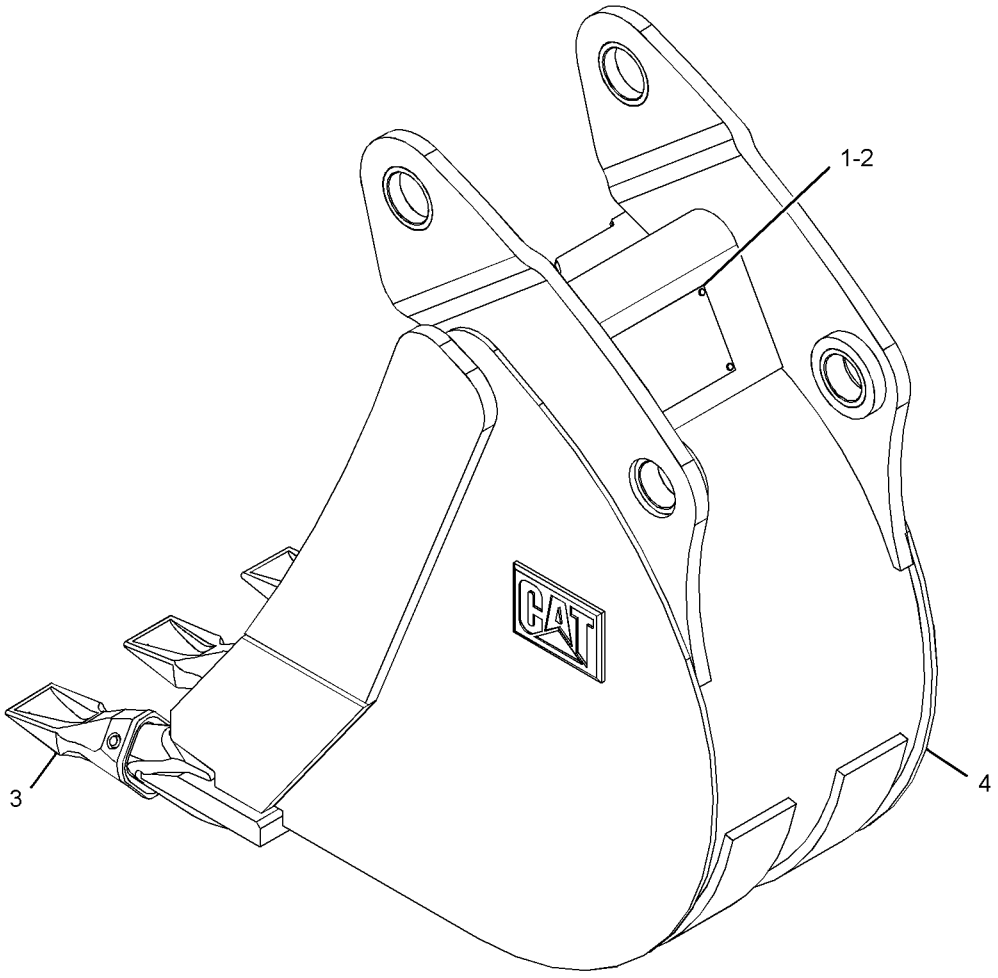

GRAPHIC #1 **<END>** g01335483

WORK TOOLS

219-3385 BUCKET GP-HOE—HEAVY-DUTY

S/N: HLS1-99999

AN ATTACHMENT

SMCS-6503 **i02837617**

NOTE	REF NO	GRAPHIC REF	PART NUMBER	QTY	PART NAME 1 2 3 4 5 6 (PRODUCT LEVEL)	SEE PAGE
	1	1	**137-4234**	1	PLATE-IDENTIFICATION (WORK TOOL)	
	2	1	**168-8389**	4	TACK-FASTENER	
	3	1	*208-5245*	3	TIP GP-PENETRATION	
					(EACH INCLUDES)	
		1	**201-1238**	1	PIN	
		1	**201-1239**	1	RETAINER AS	
		1	**208-5235**	1	TIP-PENETRATION	
Y	4	1	*219-3361*	1	BUCKET AS-HOE (HEAVY-DUTY)	629

Y-SEPARATE ILLUSTRATION

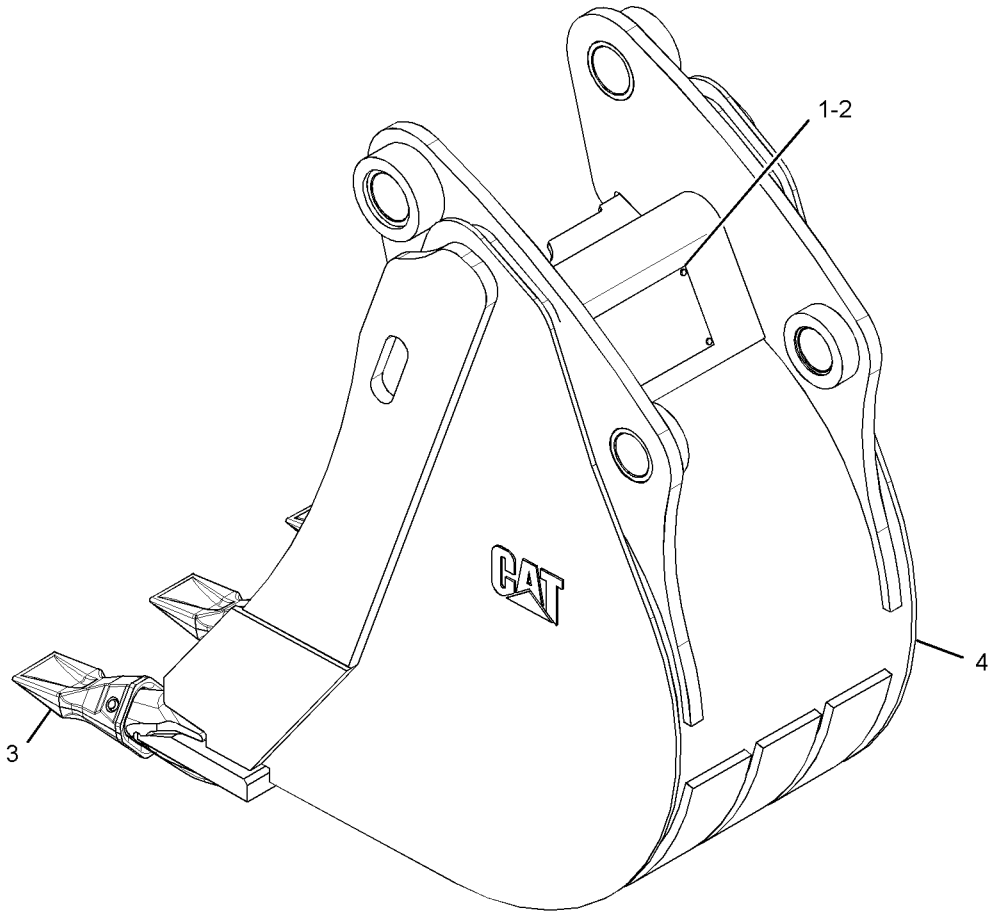

GRAPHIC #1 **<END>** g01341891

WORK TOOLS

219-3386 BUCKET GP-HOE—HEAVY-DUTY

S/N: HLS1-99999
AN ATTACHMENT

SMCS-6503 **i02837618**

NOTE	REF NO	GRAPHIC REF	PART NUMBER	QTY	PART NAME 1 2 3 4 5 6 (PRODUCT LEVEL)	SEE PAGE
	1	1	**137-4234**	1	PLATE-IDENTIFICATION (WORK TOOL)	
	2	1	**168-8389**	4	TACK-FASTENER	
	3	1	*208-5245*	4	TIP GP-PENETRATION	
					(EACH INCLUDES)	
		1	**201-1238**	1	PIN	
		1	**201-1239**	1	RETAINER AS	
		1	**208-5235**	1	TIP-PENETRATION	
Y	4	1	*219-3362*	1	BUCKET AS-HOE (HEAVY-DUTY)	631

Y-SEPARATE ILLUSTRATION

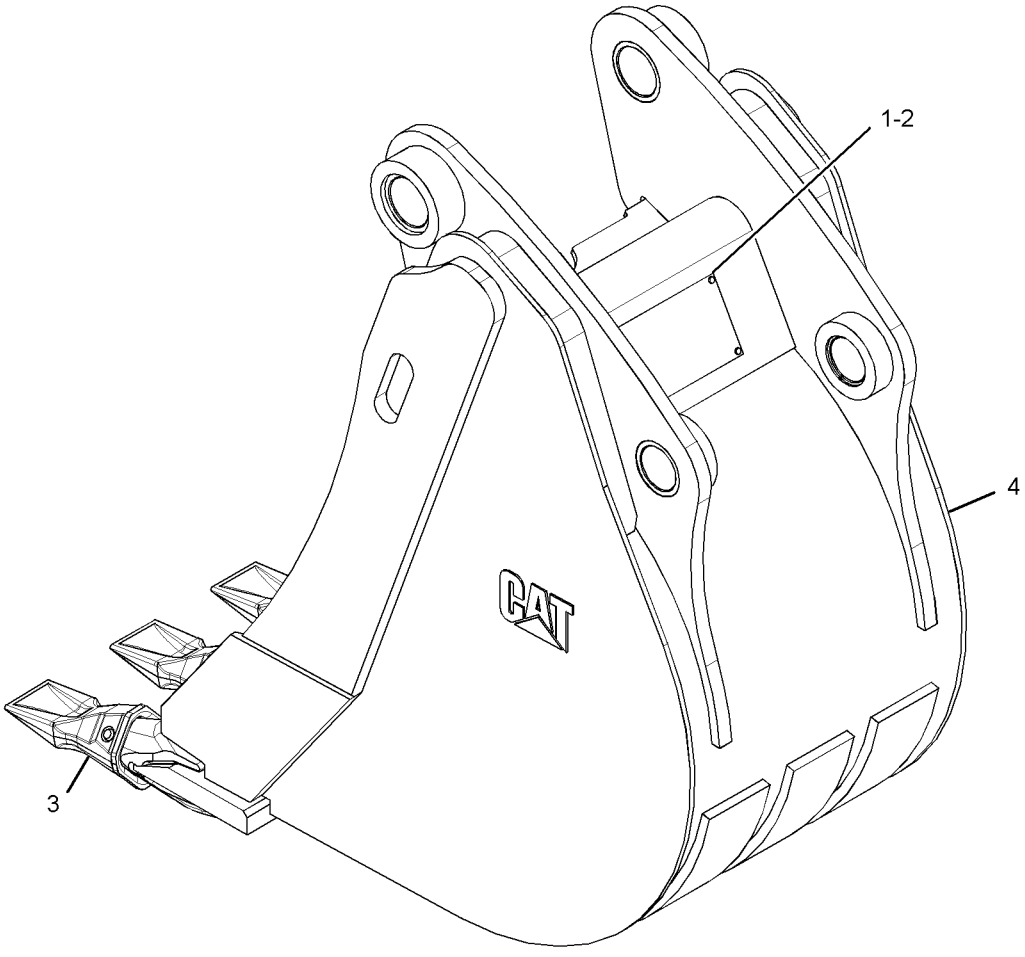

GRAPHIC #1 **<END>** g01341827

WORK TOOLS

219-3387 BUCKET GP-HOE—HEAVY-DUTY

S/N: HLS1-99999

AN ATTACHMENT

SMCS-6503 **i02837622**

NOTE	REF NO	GRAPHIC REF	PART NUMBER	QTY	PART NAME 1 2 3 4 5 6 (PRODUCT LEVEL)	SEE PAGE
	1	1	**137-4234**	1	PLATE-IDENTIFICATION (WORK TOOL)	
	2	1	**168-8389**	4	TACK-FASTENER	
	3		*208-5245*	5	TIP GP-PENETRATION	
					(EACH INCLUDES)	
		1	**201-1238**	1	PIN	
		1	**201-1239**	1	RETAINER AS	
		1	**208-5235**	1	TIP-PENETRATION	
Y	4	1	*219-3363*	1	BUCKET AS-HOE (HEAVY-DUTY)	633

Y-SEPARATE ILLUSTRATION

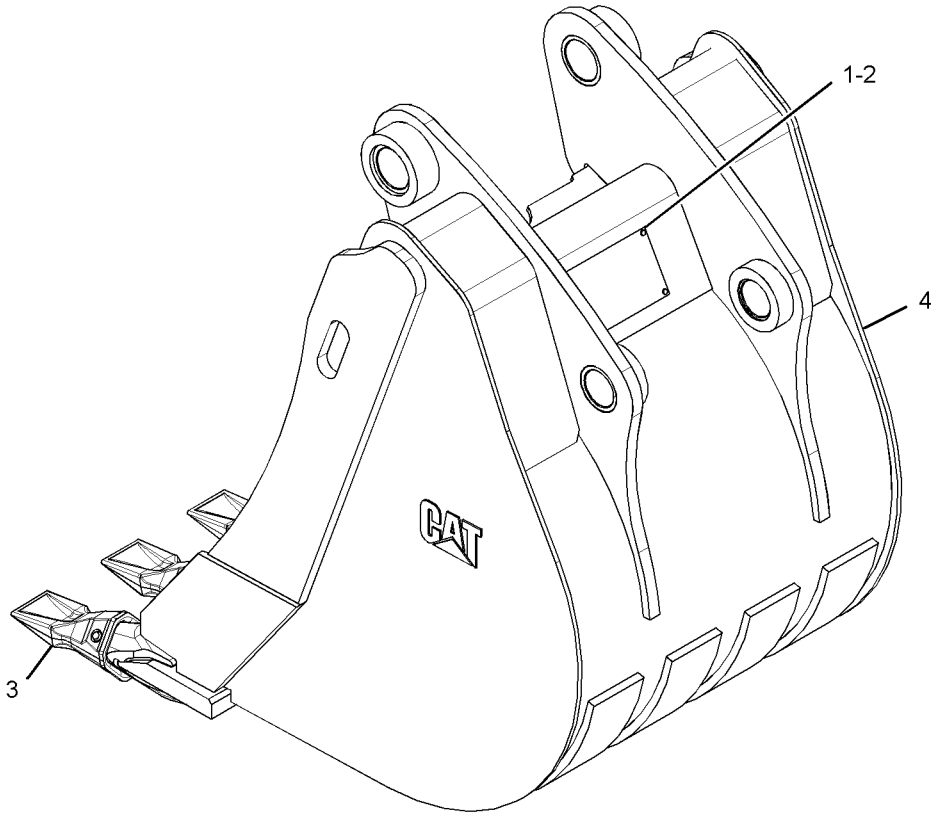

GRAPHIC #1 **<END>** g01336850

WORK TOOLS

219-3388 BUCKET GP-HOE—HEAVY-DUTY

S/N: HLS1-99999
AN ATTACHMENT

SMCS-6503 **i02837624**

NOTE	REF NO	GRAPHIC REF	PART NUMBER	QTY	PART NAME 1 2 3 4 5 6 (PRODUCT LEVEL)	SEE PAGE
	1	1	**137-4234**	1	PLATE-IDENTIFICATION (WORK TOOL)	
	2	1	**168-8389**	4	TACK-FASTENER	
	3	1	*208-5245*	5	TIP GP-PENETRATION	
					(EACH INCLUDES)	
		1	**201-1238**	1	PIN	
		1	**201-1239**	1	RETAINER AS	
		1	**208-5235**	1	TIP-PENETRATION	
Y	4	1	*219-3364*	1	BUCKET AS-HOE (HEAVY-DUTY)	635

Y-SEPARATE ILLUSTRATION

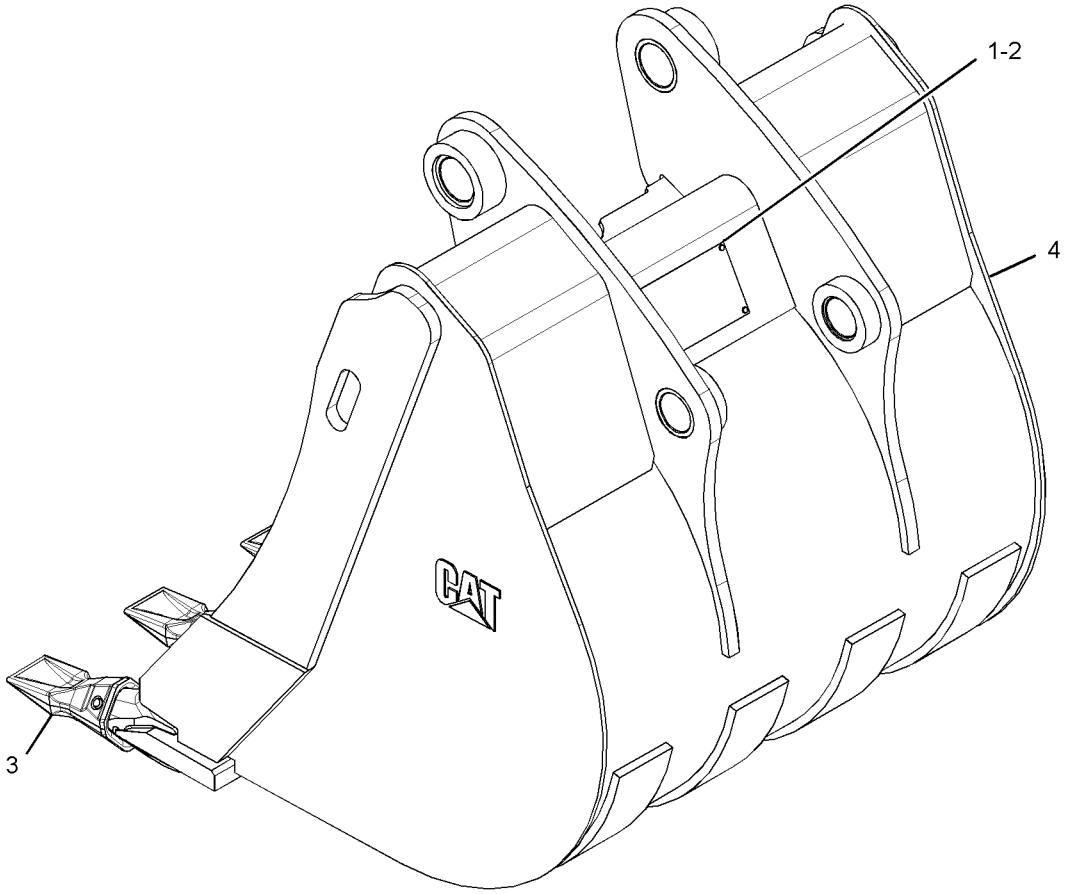

GRAPHIC #1 **<END>** g01337564

WORK TOOLS

219-3389 BUCKET GP-HOE—HEAVY-DUTY

S/N: HLS1-99999

AN ATTACHMENT

SMCS-6503 **i02837625**

NOTE	REF NO	GRAPHIC REF	PART NUMBER	QTY	PART NAME 1 2 3 4 5 6 (PRODUCT LEVEL)	SEE PAGE
	1	1	**137-4234**	1	PLATE-IDENTIFICATION (WORK TOOL)	
	2	1	**168-8389**	4	TACK-FASTENER	
	3	1	*208-5245*	6	TIP GP-PENETRATION	
					(EACH INCLUDES)	
		1	**201-1238**	1	PIN	
		1	**201-1239**	1	RETAINER AS	
		1	**208-5235**	1	TIP-PENETRATION	
Y	4	1	*219-3365*	1	BUCKET AS-HOE (HEAVY-DUTY)	637

Y-SEPARATE ILLUSTRATION

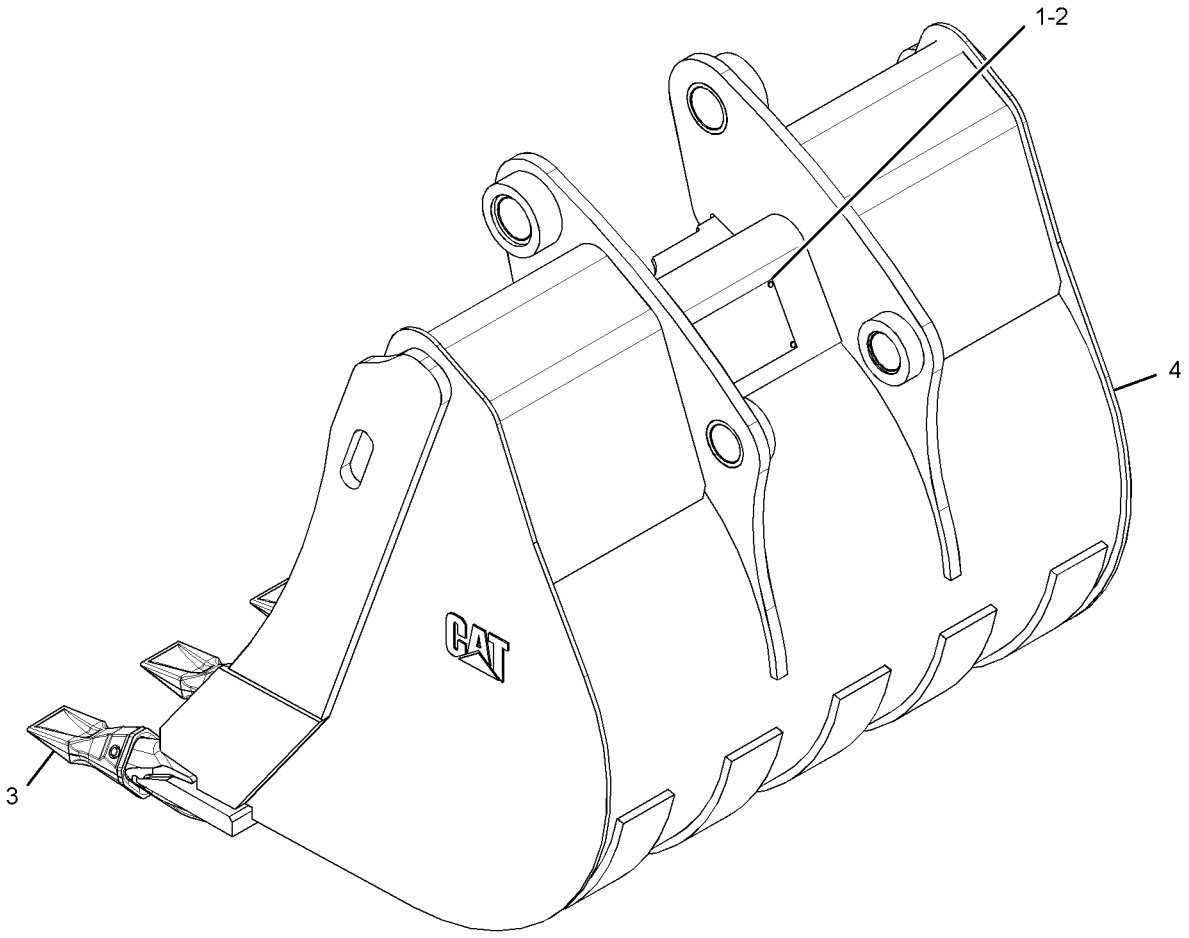

GRAPHIC #1 **<END>** g01341913

219-3390 BUCKET GP-HOE—HIGH CAPACITY

S/N: HLS1-99999
AN ATTACHMENT

SMCS-6503 **i02837628**

NOTE	REF NO	GRAPHIC REF	PART NUMBER	QTY	PART NAME 1 2 3 4 5 6 (PRODUCT LEVEL)	SEE PAGE
	1	1	**137-4234**	1	PLATE-IDENTIFICATION (WORK TOOL)	
	2	1	**168-8389**	4	TACK-FASTENER	
	3		*208-5245*	4	TIP GP-PENETRATION	
					(EACH INCLUDES)	
		1	**201-1238**	1	PIN	
		1	**201-1239**	1	RETAINER AS	
		1	**208-5235**	1	TIP-PENETRATION	
Y	4	1	*219-3366*	1	BUCKET AS-HOE (HIGH CAPACITY)	639

Y-SEPARATE ILLUSTRATION

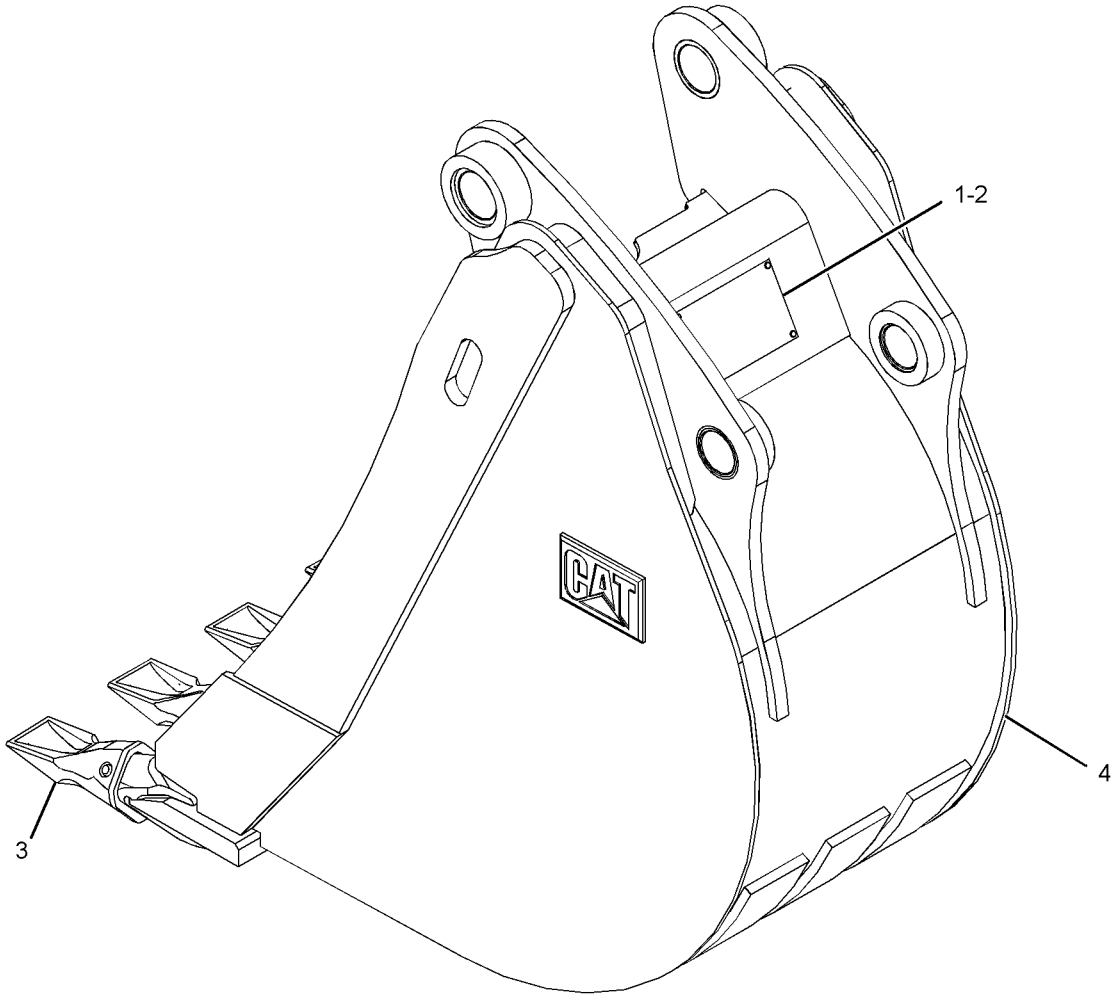

GRAPHIC #1 **<END>** g01337541

WORK TOOLS

219-3391 BUCKET GP-HOE—HIGH CAPACITY

S/N: HLS1-99999

AN ATTACHMENT

SMCS-6503 **i02837631**

NOTE	REF NO	GRAPHIC REF	PART NUMBER	QTY	PART NAME 1 2 3 4 5 6 (PRODUCT LEVEL)	SEE PAGE
	1	1	**137-4234**	1	PLATE-IDENTIFICATION (WORK TOOL)	
	2	1	**168-8389**	4	TACK-FASTENER	
	3	1	*208-5245*	5	TIP GP-PENETRATION	
					(EACH INCLUDES)	
		1	**201-1238**	1	PIN	
		1	**201-1239**	1	RETAINER AS	
		1	**208-5235**	1	TIP-PENETRATION	
Y	4	1	*219-3367*	1	BUCKET AS-HOE (HIGH CAPACITY)	641

Y-SEPARATE ILLUSTRATION

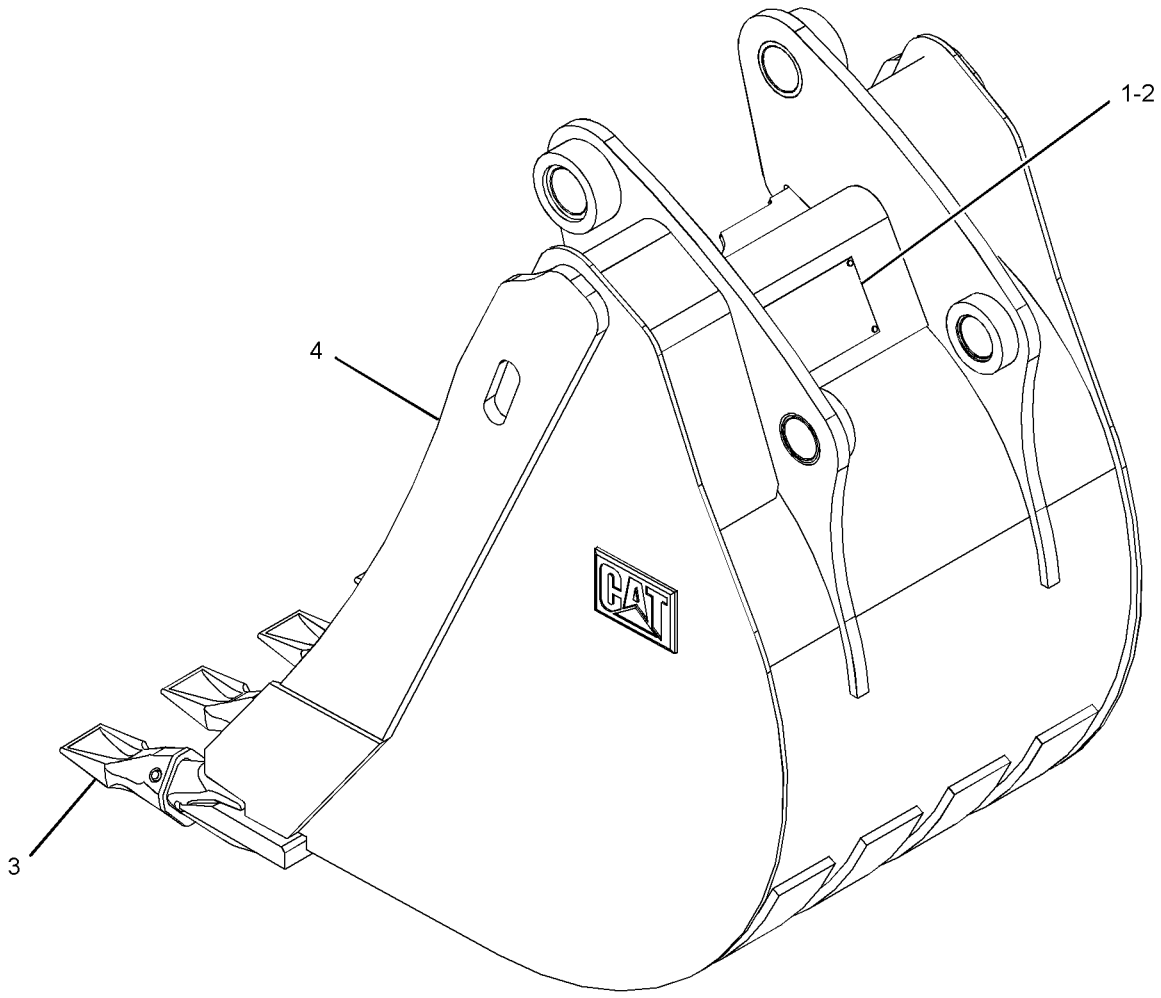

GRAPHIC #1 **<END>** g01341952

219-3392 BUCKET GP-HOE—HIGH CAPACITY

S/N: HLS1-99999
AN ATTACHMENT

SMCS-6503 **i02837637**

NOTE	REF NO	GRAPHIC REF	PART NUMBER	QTY	PART NAME 1 2 3 4 5 6 (PRODUCT LEVEL)	SEE PAGE
	1	1	**137-4234**	1	PLATE-IDENTIFICATION (WORK TOOL)	
	2	1	**168-8389**	4	TACK-FASTENER	
	3	1	*208-5245*	5	TIP GP-PENETRATION	
					(EACH INCLUDES)	
		1	**201-1238**	1	PIN	
		1	**201-1239**	1	RETAINER AS	
		1	**208-5235**	1	TIP-PENETRATION	
Y	4	1	*219-3368*	1	BUCKET AS-HOE (HIGH CAPACITY)	643

Y-SEPARATE ILLUSTRATION

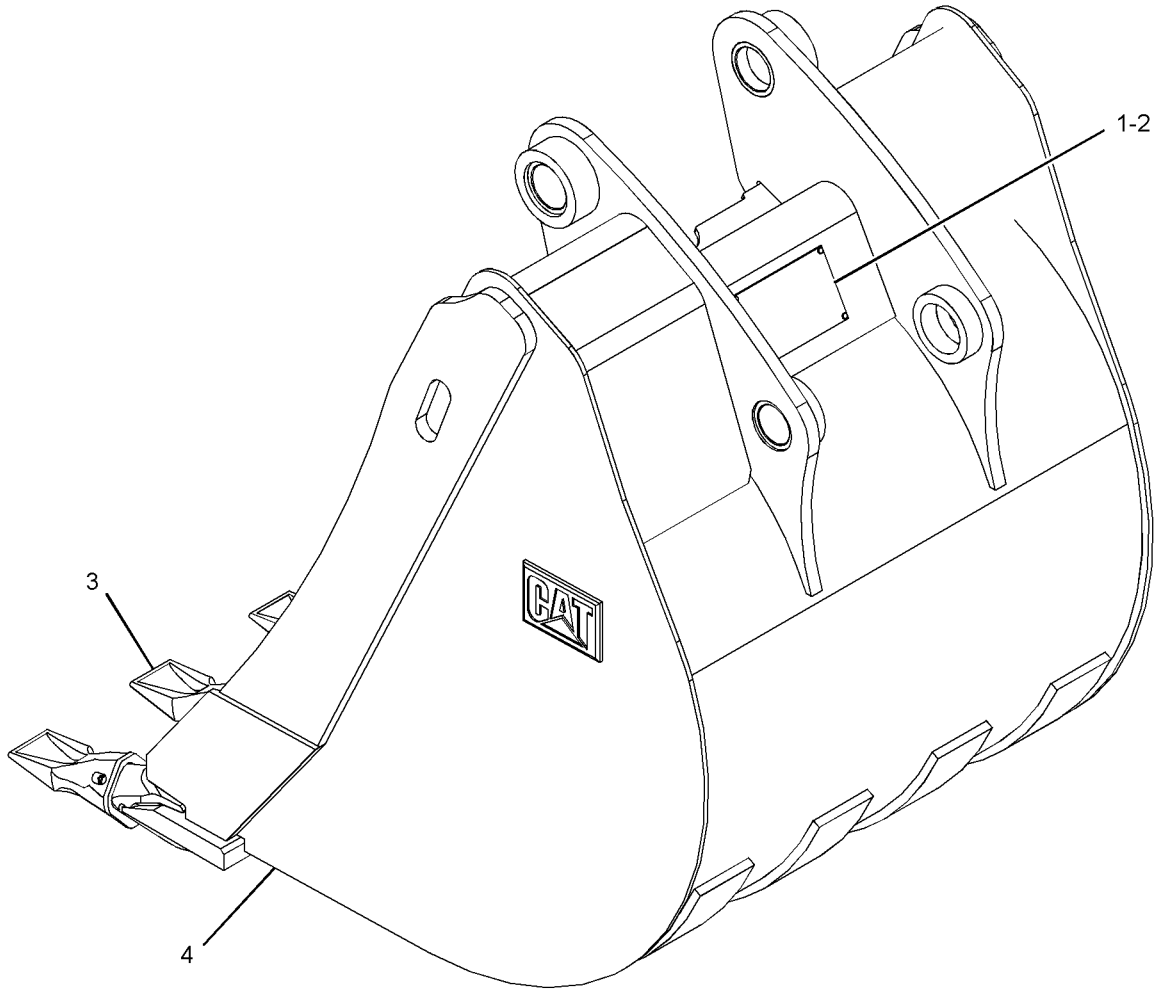

GRAPHIC #1 **<END>** g01341920

WORK TOOLS

219-3393 BUCKET GP-HOE—HIGH CAPACITY

S/N: HLS1-99999

AN ATTACHMENT

SMCS-6503 **i02837640**

NOTE	REF NO	GRAPHIC REF	PART NUMBER	QTY	PART NAME 1 2 3 4 5 6 (PRODUCT LEVEL)	SEE PAGE
	1	1	**137-4234**	1	PLATE-IDENTIFICATION (WORK TOOL)	
	2	1	**168-8389**	4	TACK-FASTENER	
	3		*208-5245*	6	TIP GP-PENETRATION	
					(EACH INCLUDES)	
		1	**201-1238**	1	PIN	
		1	**201-1239**	1	RETAINER AS	
		1	**208-5235**	1	TIP-PENETRATION	
Y	4	1	*219-3369*	1	BUCKET AS-HOE (HIGH CAPACITY)	645

Y-SEPARATE ILLUSTRATION

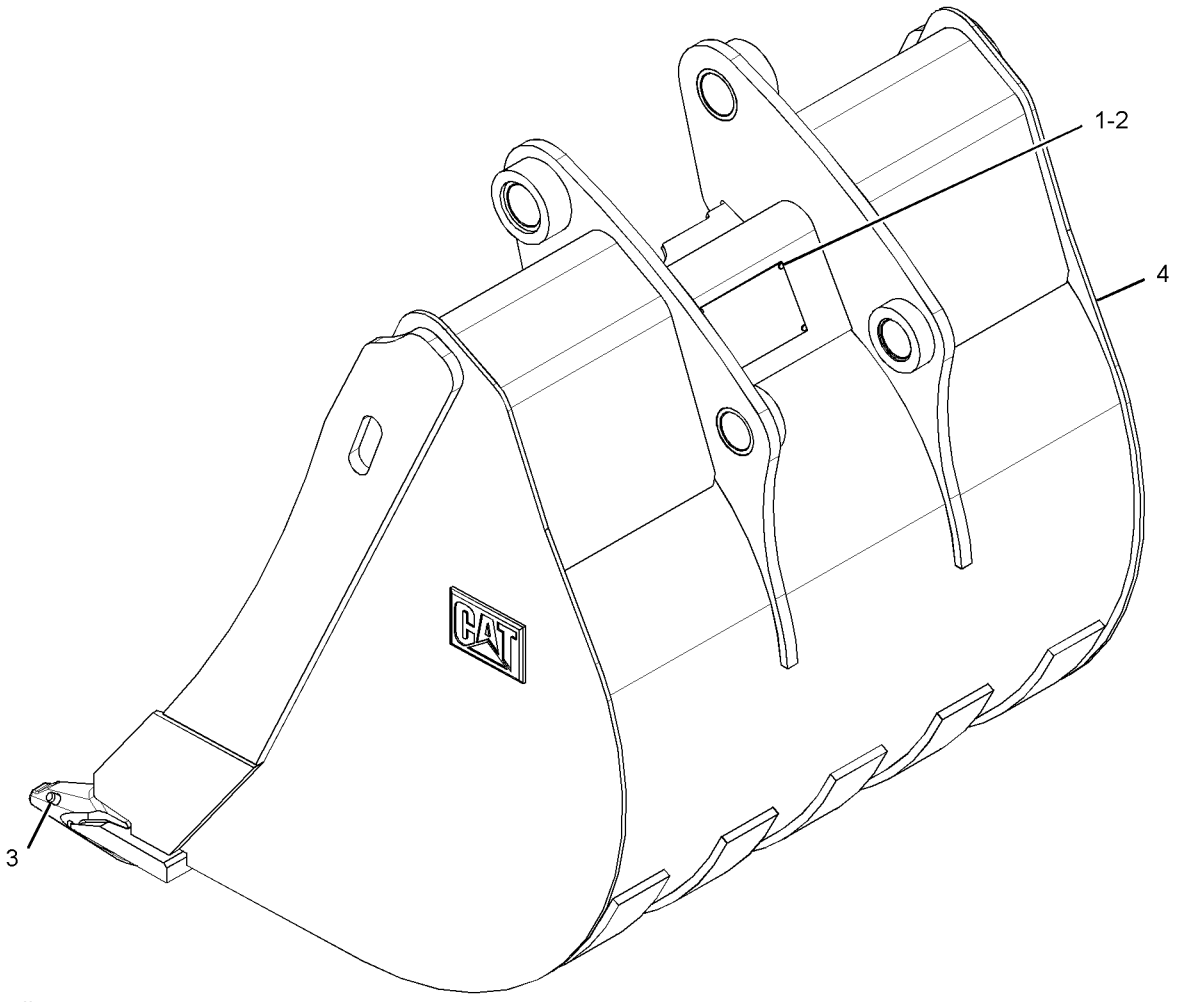

GRAPHIC #1 **<END>** g01336804

219-3394 BUCKET GP-HOE–ROCK

S/N: HLS1-99999
PART OF 219-3412 BUCKET GP-HOE
AN ATTACHMENT

SMCS-6503 **i02659874**

NOTE	REF NO	GRAPHIC REF	PART NUMBER	QTY	PART NAME 1 2 3 4 5 6 (PRODUCT LEVEL)	SEE PAGE
	1	1	**137-4234**	1	PLATE-IDENTIFICATION (WORK TOOL)	
	2	1	**168-8389**	4	TACK-FASTENER	
	3	1	*208-5245*	4	TIP GP-PENETRATION	
					(EACH INCLUDES)	
		1	**201-1238**	1	PIN	
		1	**201-1239**	1	RETAINER AS	
		1	**208-5235**	1	TIP-PENETRATION	
Y	4	1	*219-3370*	1	BUCKET AS-HOE (ROCK)	647

Y-SEPARATE ILLUSTRATION

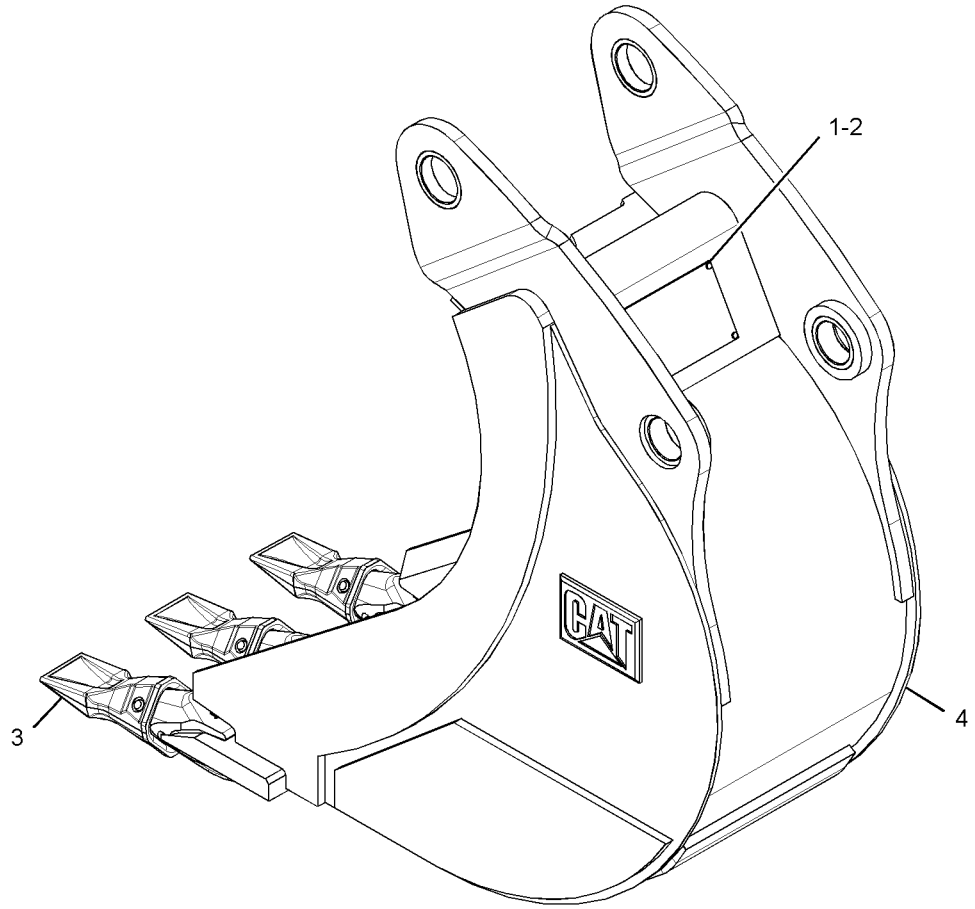

GRAPHIC #1 **<END>** g01342095

WORK TOOLS

219-3395 BUCKET GP-HOE–ROCK

S/N: HLS1-99999

AN ATTACHMENT

SMCS-6503 **i02651589**

NOTE	REF NO	GRAPHIC REF	PART NUMBER	QTY	PART NAME 1 2 3 4 5 6 (PRODUCT LEVEL)	SEE PAGE
	1	1	**137-4234**	1	PLATE-IDENTIFICATION (WORK TOOL)	
	2	1	**168-8389**	4	TACK-FASTENER	
	3	1	*208-5245*	4	TIP GP-PENETRATION	
					(EACH INCLUDES)	
		1	**201-1238**	1	PIN	
		1	**201-1239**	1	RETAINER AS	
		1	**208-5235**	1	TIP-PENETRATION	
Y	4	1	*219-3371*	1	BUCKET AS-HOE (ROCK)	649

Y-SEPARATE ILLUSTRATION

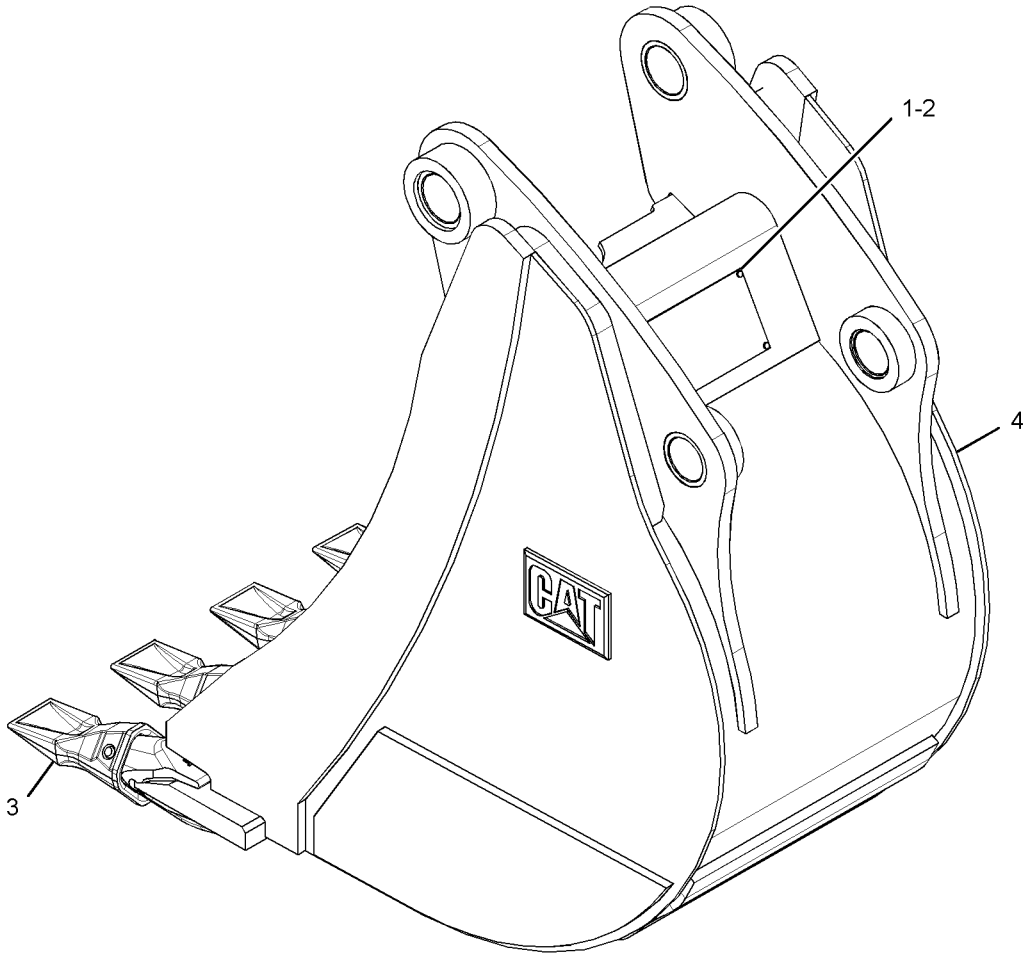

GRAPHIC #1 **<END>** g01340728

WORK TOOLS

219-3396 BUCKET GP-HOE–ROCK

S/N: HLS1-99999
AN ATTACHMENT

SMCS-6503 **i02651591**

NOTE	REF NO	GRAPHIC REF	PART NUMBER	QTY	PART NAME 1 2 3 4 5 6 (PRODUCT LEVEL)	SEE PAGE
	1	1	**137-4234**	1	PLATE-IDENTIFICATION (WORK TOOL)	
	2	1	**168-8389**	4	TACK-FASTENER	
	3	1	*208-5245*	5	TIP GP-PENETRATION	
					(EACH INCLUDES)	
		1	**201-1238**	1	PIN	
		1	**201-1239**	1	RETAINER AS	
		1	**208-5235**	1	TIP-PENETRATION	
Y	4	1	*219-3372*	1	BUCKET AS-HOE (ROCK)	651

Y-SEPARATE ILLUSTRATION

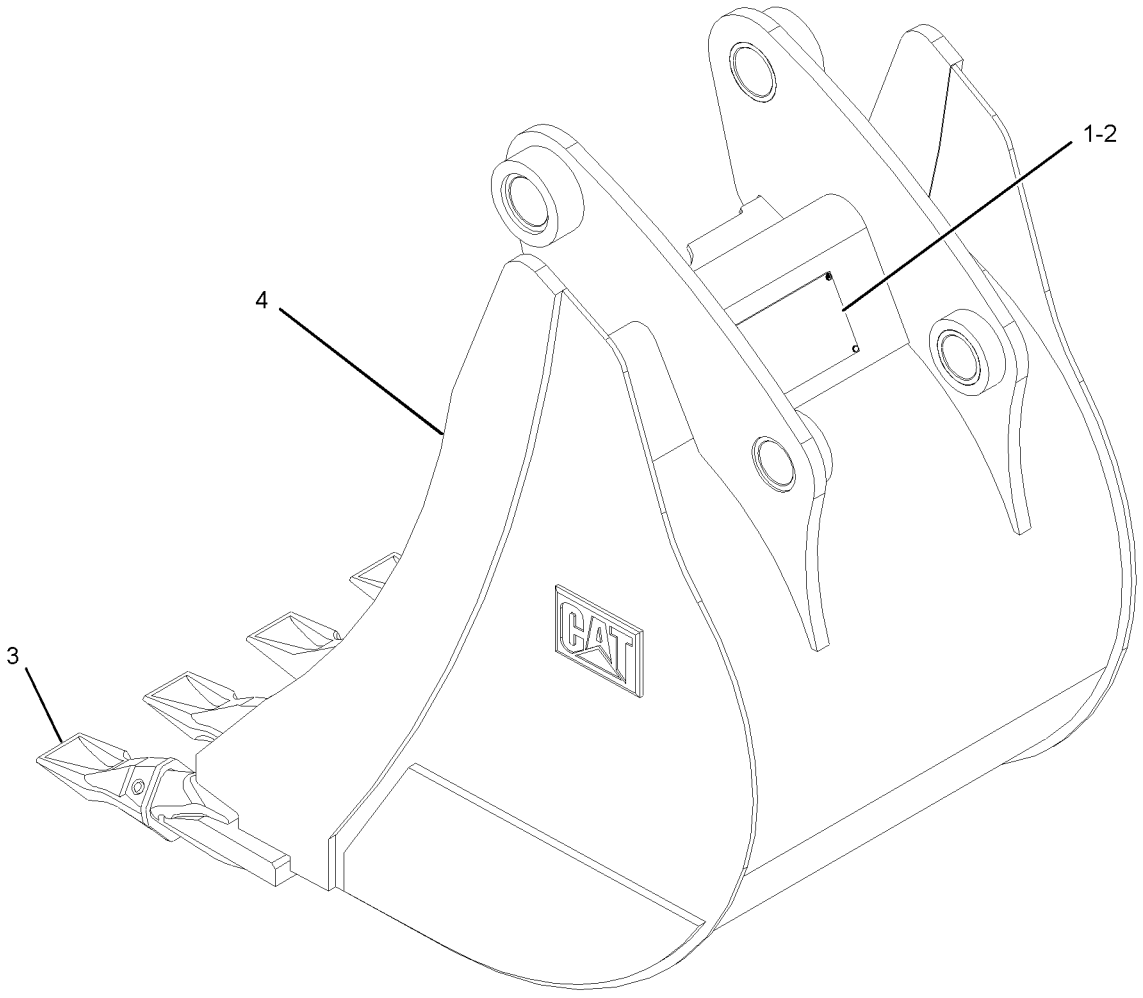

GRAPHIC #1 **<END>** g01341821

WORK TOOLS

219-3397 BUCKET GP-HOE–ROCK

S/N: HLS1-99999

AN ATTACHMENT

SMCS-6503 **i02939959**

NOTE	REF NO	GRAPHIC REF	PART NUMBER	QTY	PART NAME 1 2 3 4 5 6 (PRODUCT LEVEL)	SEE PAGE
	1	1	**137-4234**	1	PLATE-IDENTIFICATION (WORK TOOL)	
	2	1	**168-8389**	4	TACK-FASTENER	
	3	1	*208-5245*	5	TIP GP-PENETRATION	
					(EACH INCLUDES)	
		1	**201-1238**	1	PIN	
		1	**201-1239**	1	RETAINER AS	
		1	**208-5235**	1	TIP-PENETRATION	
Y	4		*219-3373*	1	BUCKET AS-HOE (ROCK)	653

Y-SEPARATE ILLUSTRATION

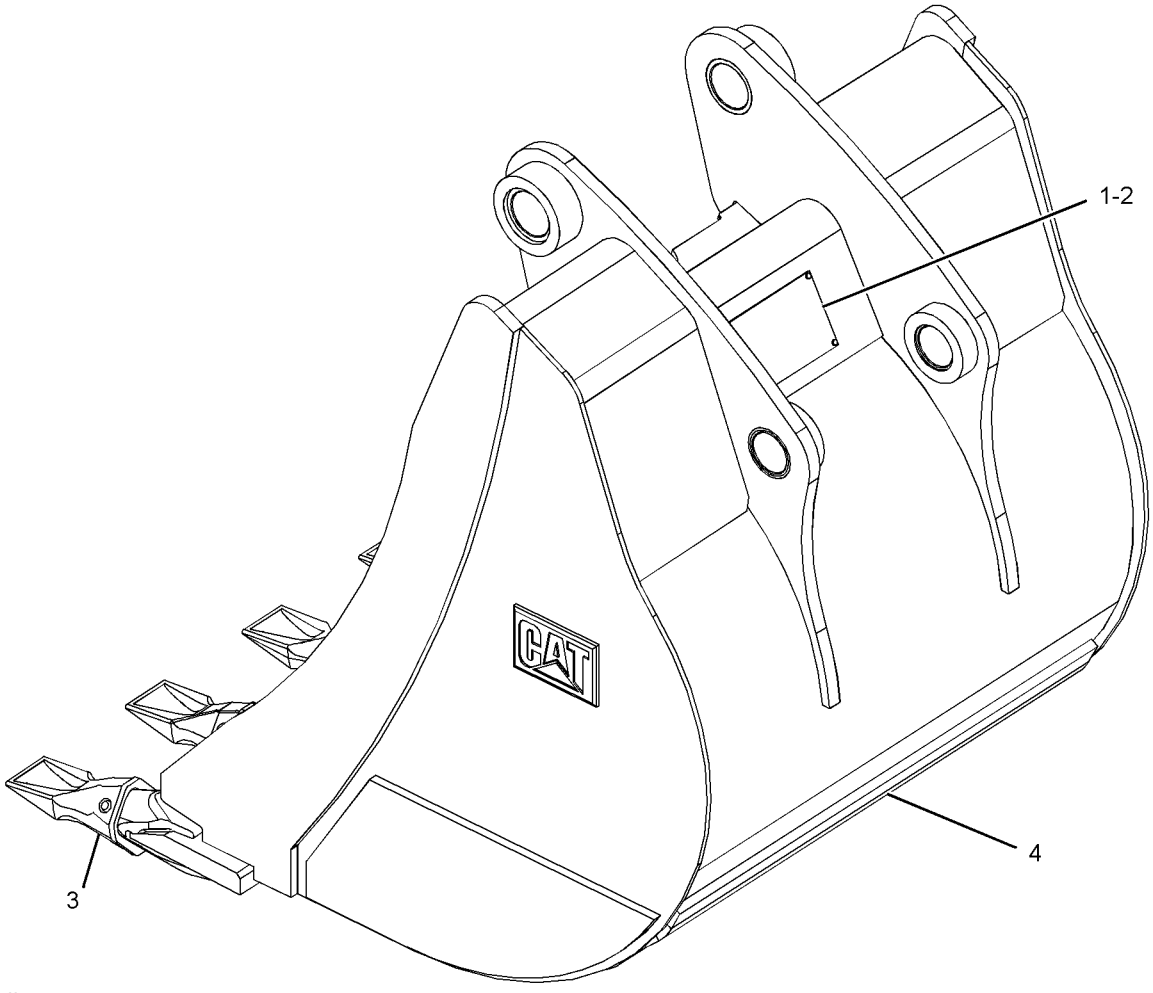

GRAPHIC #1 **<END>** g01341885

WORK TOOLS

219-3398 BUCKET GP-HOE–ROCK

S/N: HLS1-99999
914-MM(36-IN)
AN ATTACHMENT

SMCS-6503 **i02660345**

NOTE	REF NO	GRAPHIC REF	PART NUMBER	QTY	PART NAME 1 2 3 4 5 6 (PRODUCT LEVEL)	SEE PAGE
	1	1	**137-4234**	1	PLATE-IDENTIFICATION (WORK TOOL)	
	2	1	**168-8389**	4	TACK-FASTENER	
	3	1	*208-5245*	6	TIP GP-PENETRATION	
					(EACH INCLUDES)	
		1	**201-1238**	1	PIN	
		1	**201-1239**	1	RETAINER AS	
		1	**208-5235**	1	TIP-PENETRATION	
Y	4	1	*219-3374*	1	BUCKET AS-HOE (ROCK)	655

Y-SEPARATE ILLUSTRATION

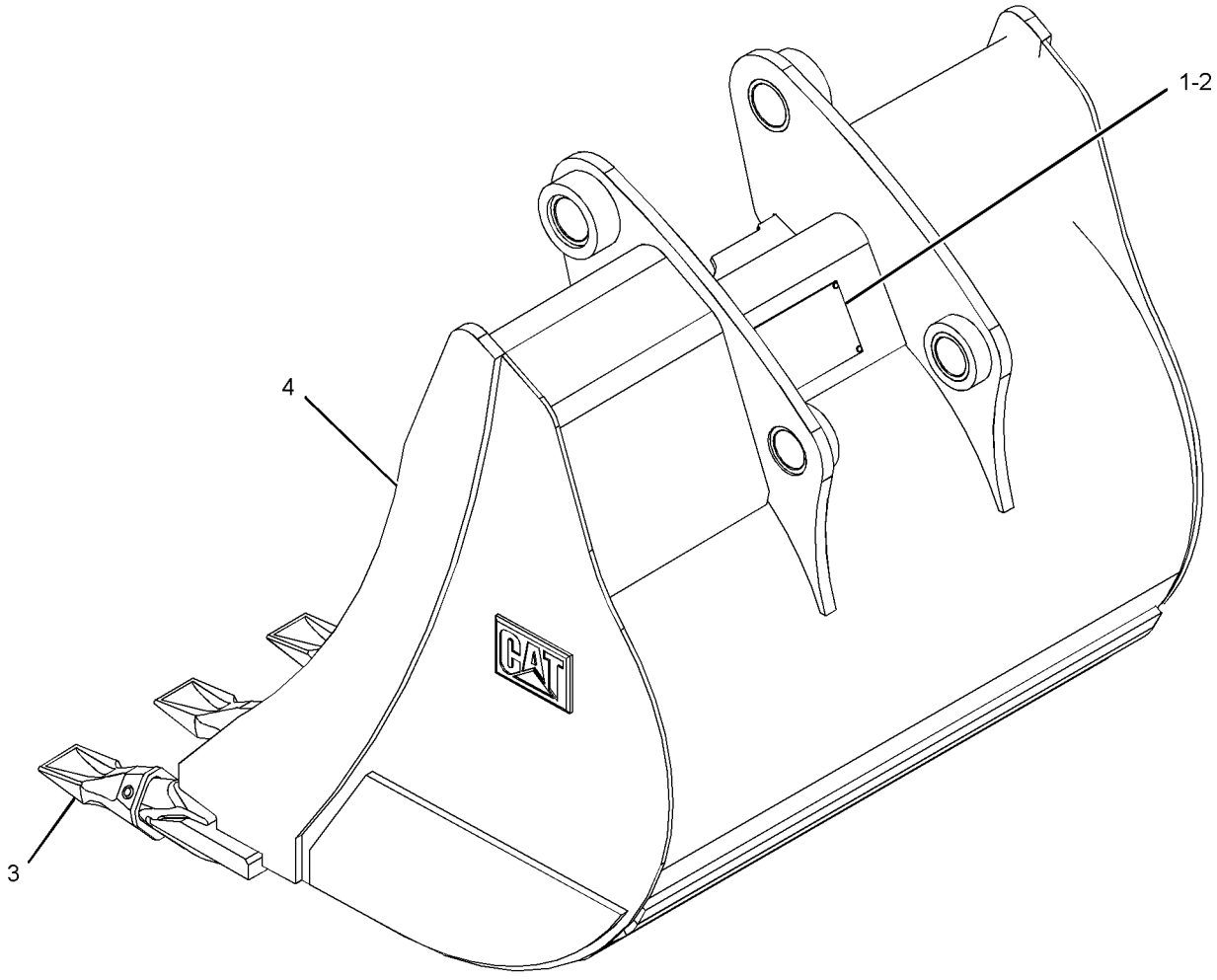

GRAPHIC #1 **<END>** g01342103

WORK TOOLS

219-3399 BUCKET GP-HOE–CORAL

S/N: HLS1-99999
PART OF 219-3413 BUCKET GP-HOE
AN ATTACHMENT

SMCS-6503 **i02837649**

NOTE	REF NO	GRAPHIC REF	PART NUMBER	QTY	PART NAME 1 2 3 4 5 6 (PRODUCT LEVEL)	SEE PAGE
	1	1	**137-4234**	1	PLATE-IDENTIFICATION (WORK TOOL)	
	2	1	**168-8389**	4	TACK-FASTENER	
	3	1	*208-5242*	4	TIP GP-CHISEL	
					(EACH INCLUDES)	
		1	**201-1238**	1	PIN	
		1	**201-1239**	1	RETAINER AS	
		1	**208-5235**	1	TIP-PENETRATION	
Y	4	1	*219-3375*	1	BUCKET AS-HOE (CORAL)	657

Y-SEPARATE ILLUSTRATION

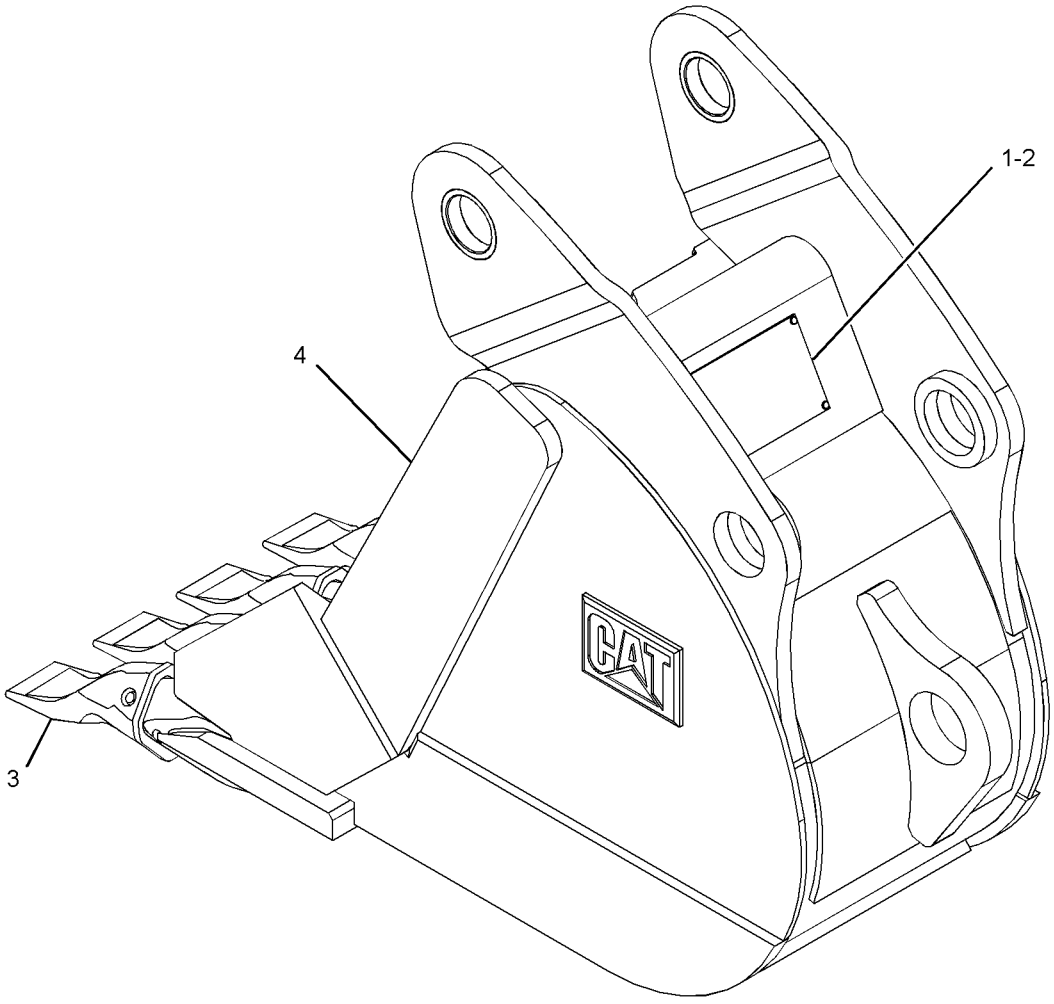

GRAPHIC #1 **<END>** g01342465

WORK TOOLS

219-3400 BUCKET GP-HOE–CORAL

S/N: HLS1-99999
AN ATTACHMENT

SMCS-6503 **i02837652**

NOTE	REF NO	GRAPHIC REF	PART NUMBER	QTY	PART NAME 1 2 3 4 5 6 (PRODUCT LEVEL)	SEE PAGE
	1	1	**137-4234**	1	PLATE-IDENTIFICATION (WORK TOOL)	
	2	1	**168-8389**	4	TACK-FASTENER	
	3	1	*208-5242*	6	TIP GP-CHISEL	
					(EACH INCLUDES)	
		1	**201-1238**	1	PIN	
		1	**201-1239**	1	RETAINER AS	
		1	**208-5232**	1	TIP-CHISEL	
Y	4	1	*219-3376*	1	BUCKET AS-HOE (CORAL)	658

Y-SEPARATE ILLUSTRATION

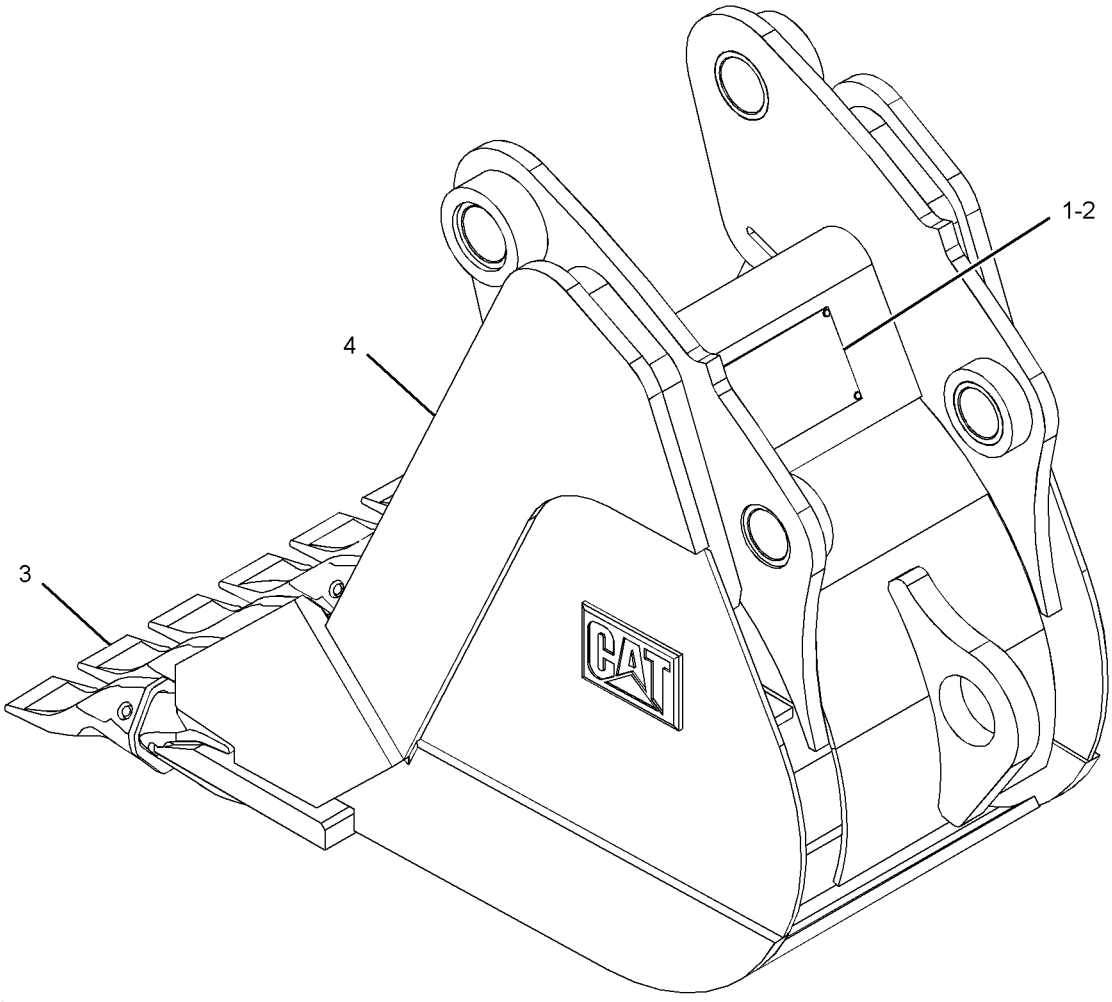

GRAPHIC #1 **<END>** g01342327

WORK TOOLS

219-3401 BUCKET GP-HOE–CORAL

S/N: HLS1-99999

AN ATTACHMENT

SMCS-6503 **i02837655**

NOTE	REF NO	GRAPHIC REF	PART NUMBER	QTY	PART NAME 1 2 3 4 5 6 (PRODUCT LEVEL)	SEE PAGE
	1	1	**137-4234**	1	PLATE-IDENTIFICATION (WORK TOOL)	
	2	1	**168-8389**	4	TACK-FASTENER	
	3	1	*208-5242*	8	TIP GP-CHISEL	
					(EACH INCLUDES)	
		1	**201-1238**	1	PIN	
		1	**201-1239**	1	RETAINER AS	
		1	**208-5232**	1	TIP-CHISEL	
Y	4	1	*219-3377*	1	BUCKET AS-HOE (CORAL)	659

Y-SEPARATE ILLUSTRATION

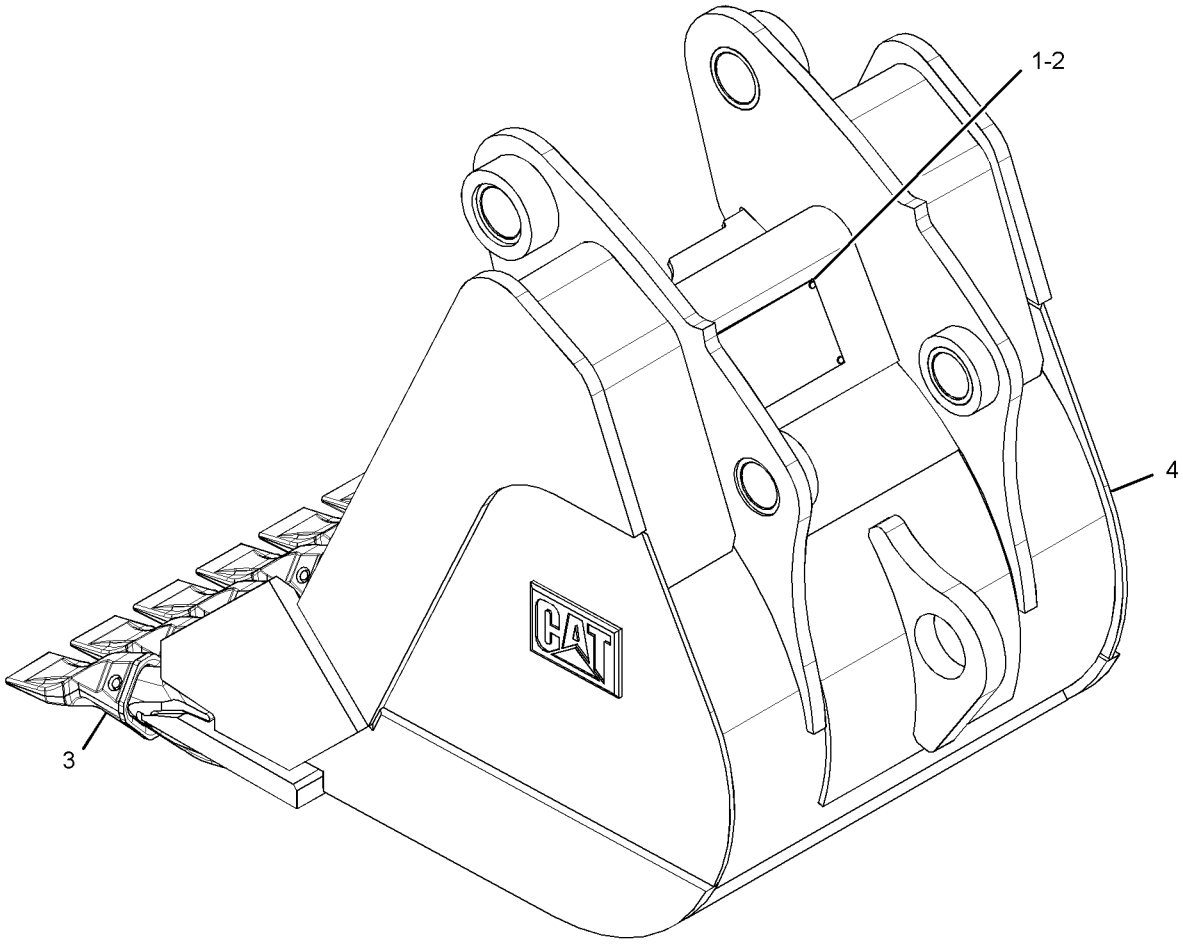

GRAPHIC #1 **<END>** g01342450

WORK TOOLS

219-3402 BUCKET GP-HOE—CORAL

S/N: HLS1-99999
AN ATTACHMENT

SMCS-6503 **i02661605**

NOTE	REF NO	GRAPHIC REF	PART NUMBER	QTY	PART NAME 1 2 3 4 5 6 (PRODUCT LEVEL)	SEE PAGE
	1	1	**137-4234**	1	PLATE-IDENTIFICATION (WORK TOOL)	
	2	1	**168-8389**	4	TACK-FASTENER	
	3	1	*208-5242*	10	TIP GP-CHISEL	
					(EACH INCLUDES)	
		1	**201-1238**	1	PIN	
		1	**201-1239**	1	RETAINER AS	
		1	**208-5235**	1	TIP-PENETRATION	
Y	4	1	*219-3378*	1	BUCKET AS-HOE (CORAL)	660

Y-SEPARATE ILLUSTRATION

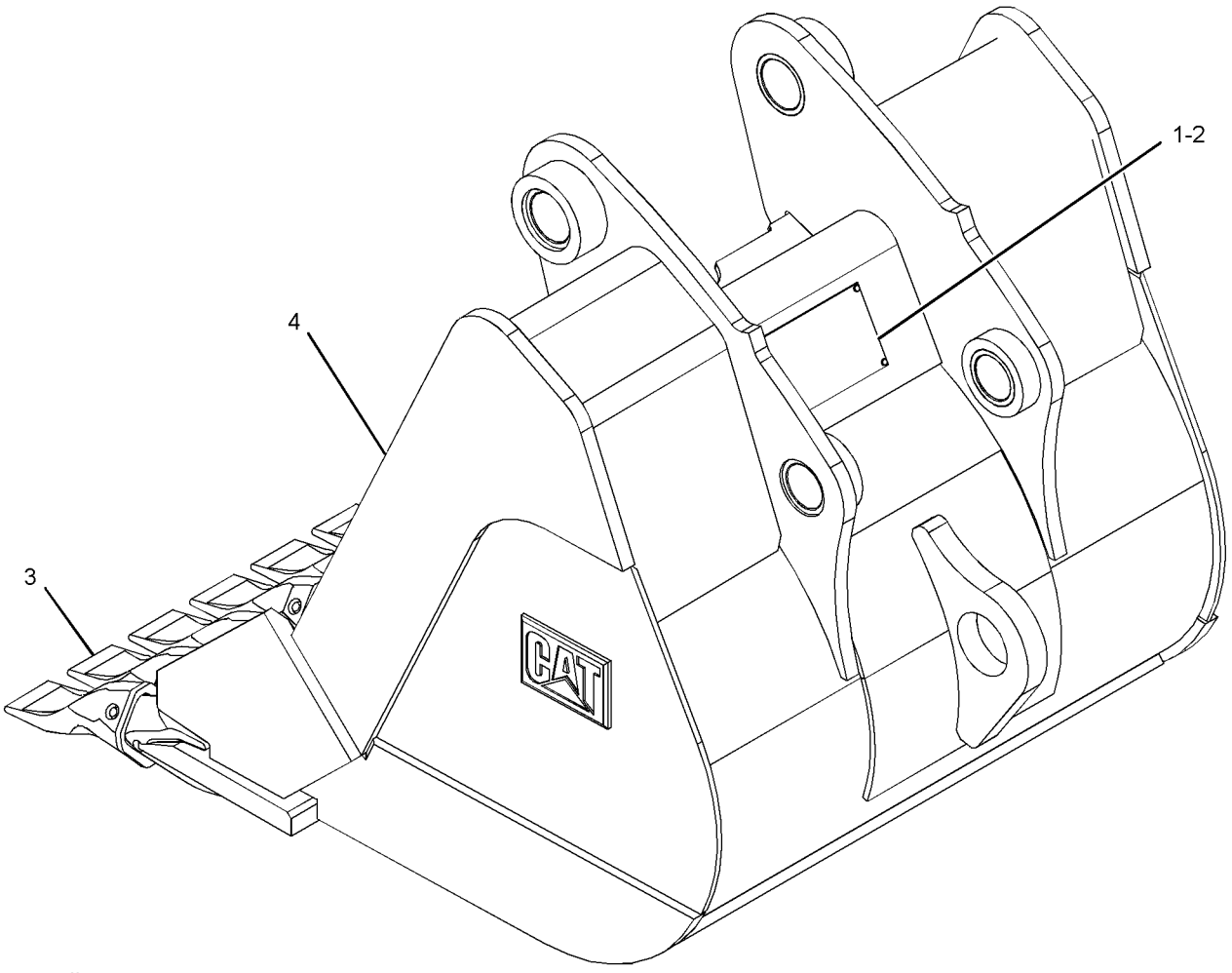

GRAPHIC #1 **<END>** g01342615

WORK TOOLS

219-3410 BUCKET GP-HOE

S/N: HLS1-99999
305-MM (12-IN)
AN ATTACHMENT

SMCS-6503 **i01916048**

NOTE	REF NO	GRAPHIC REF	PART NUMBER	QTY	PART NAME 1 2 3 4 5 6 (PRODUCT LEVEL)	SEE PAGE
	1	1	**6V-3213**	2	RING-RETAINING	
	2	1	**6V-4364**	2	RING-RETAINING	
	3	1	**9R-0158**	5	WASHER (46X69X3-MM THK)	
	4	1	**9R-1510**	3	WASHER (51X82X4-MM THK)	
	5	1	**168-0443**	1	PIN	
	6	1	**168-0444**	1	PIN	
Y	7	1	**219-3379**	1	BUCKET GP-HOE	676

Y-SEPARATE ILLUSTRATION

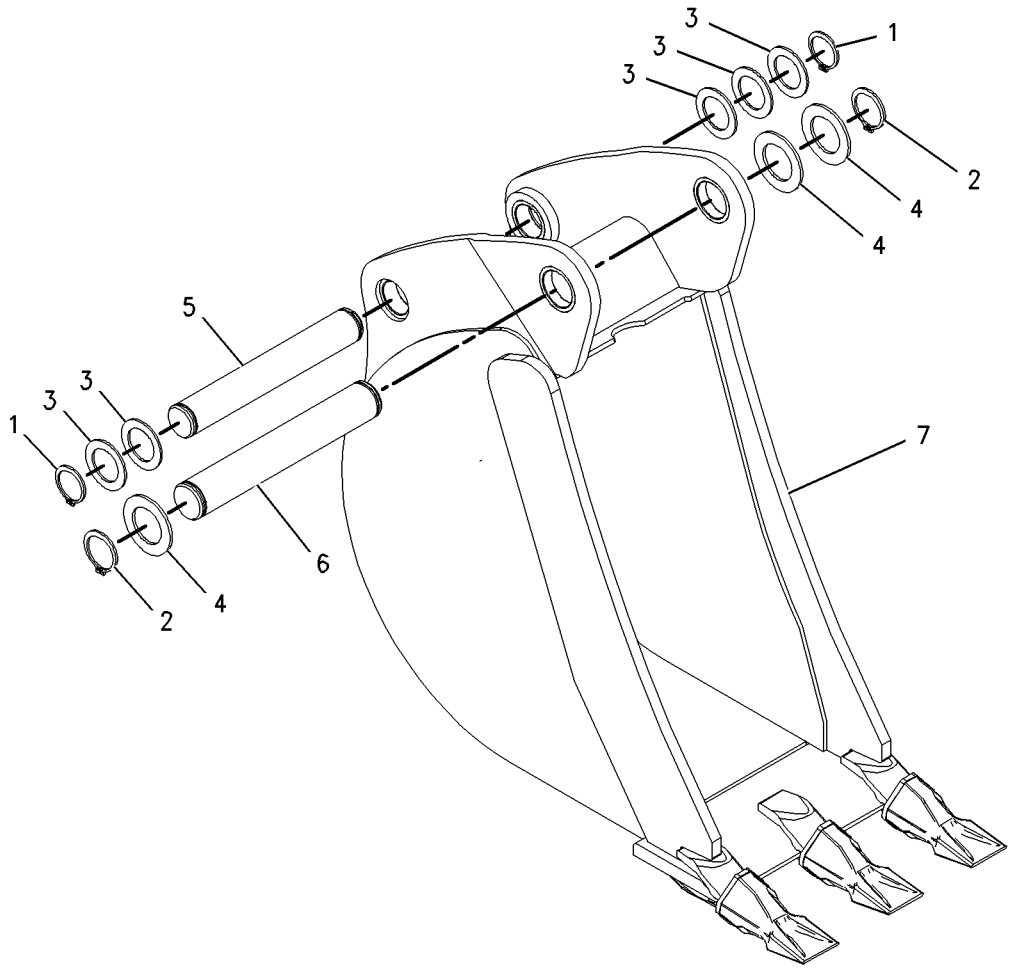

GRAPHIC #1 **<END>** g01001892

WORK TOOLS

219-3411 BUCKET GP-HOE—HEAVY DUTY

S/N: HLS1-99999
305-MM (12-IN)
AN ATTACHMENT

SMCS-6503 **i01916050**

NOTE	REF NO	GRAPHIC REF	PART NUMBER	QTY	PART NAME 1 2 3 4 5 6 (PRODUCT LEVEL)	SEE PAGE
	1	1	**6V-3213**	2	RING-RETAINING	
	2	1	**6V-4364**	2	RING-RETAINING	
	3	1	**9R-0158**	5	WASHER (46X69X3-MM THK)	
	4	1	**9R-1510**	3	WASHER (51X82X4-MM THK)	
	5	1	**168-0443**	1	PIN	
	6	1	**168-0444**	1	PIN	
Y	7	1	**219-3384**	1	BUCKET GP-HOE (HEAVY-DUTY)	681

Y-SEPARATE ILLUSTRATION

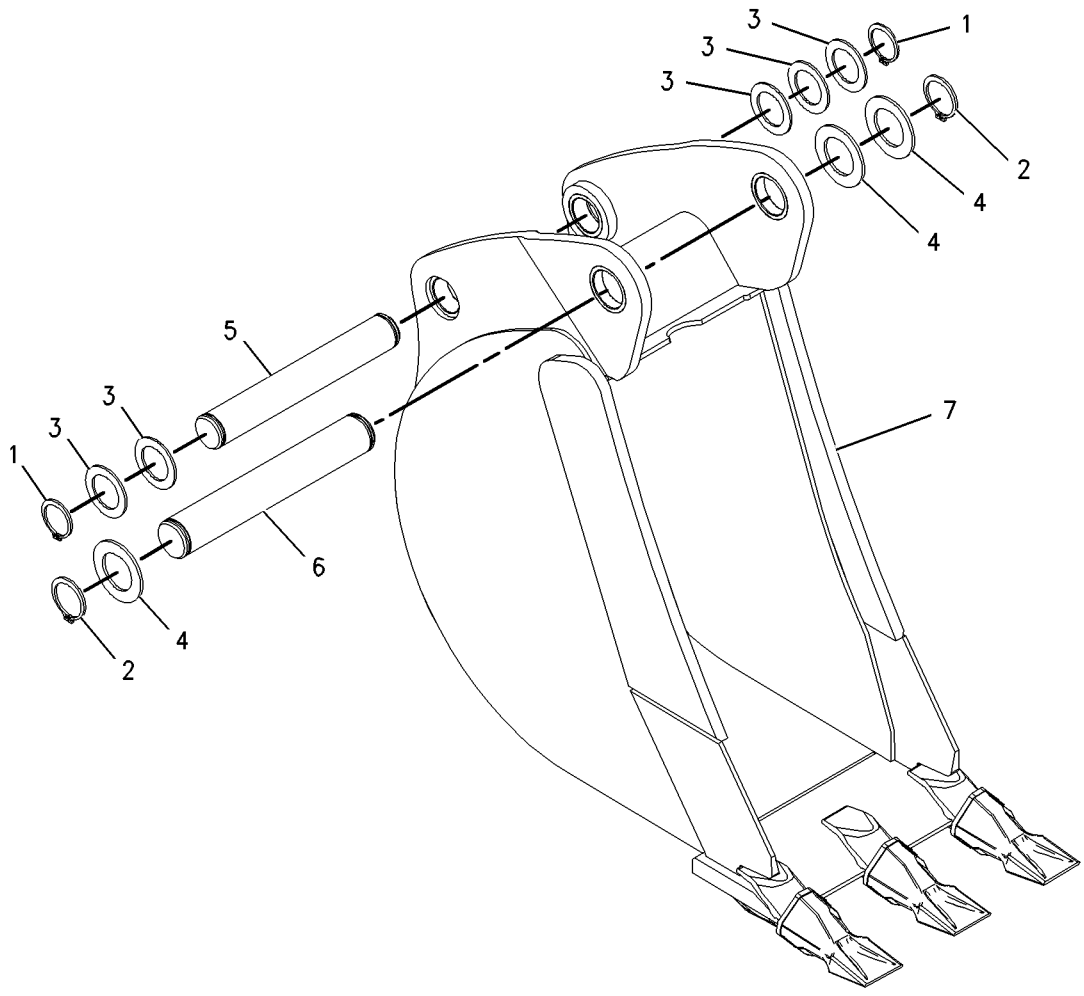

GRAPHIC #1 **<END>** g01001906

WORK TOOLS

219-3412 BUCKET GP-HOE–ROCK

S/N: HLS1-99999
305-MM (12-IN)
AN ATTACHMENT

SMCS-6503 **i02250023**

NOTE	REF NO	GRAPHIC REF	PART NUMBER	QTY	PART NAME 1 2 3 4 5 6 (PRODUCT LEVEL)	SEE PAGE
	1	1	**6V-3213**	2	RING-RETAINING	
	2	1	**6V-4364**	2	RING-RETAINING	
	3	1	**9R-0158**	4	WASHER (46X69X3-MM THK)	
	4	1	**9R-1510**	3	WASHER (51X82X4-MM THK)	
	5	1	**168-0443**	1	PIN	
	6	1	**168-0444**	1	PIN	
Y	7	1	**219-3394**	1	BUCKET GP-HOE (ROCK)	691

Y-SEPARATE ILLUSTRATION

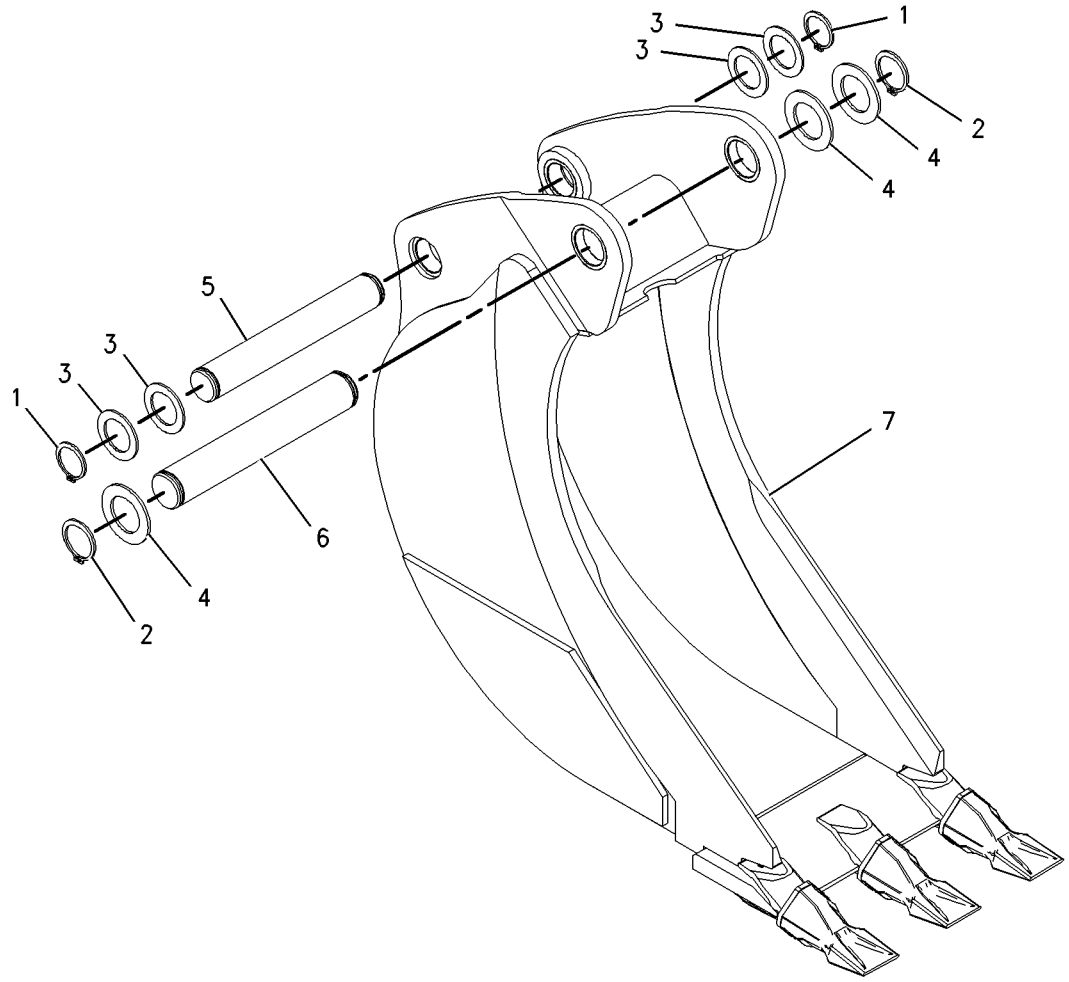

GRAPHIC #1 **<END>** g01001913

WORK TOOLS

219-3413 BUCKET GP-HOE—CORAL

S/N: HLS1-99999
305-MM (12-IN)
AN ATTACHMENT

SMCS-6503 **i02250031**

NOTE	REF NO	GRAPHIC REF	PART NUMBER	QTY	PART NAME 1 2 3 4 5 6 (PRODUCT LEVEL)	SEE PAGE
	1	1	**6V-3213**	2	RING-RETAINING	
	2	1	**6V-4364**	2	RING-RETAINING	
	3	1	**9R-0158**	4	WASHER (46X69X3-MM THK)	
	4	1	**9R-1510**	3	WASHER (51X82X4-MM THK)	
	5	1	**168-0443**	1	PIN	
	6	1	**168-0444**	1	PIN	
Y	7	1	**219-3399**	1	BUCKET GP-HOE (CORAL)	696

Y-SEPARATE ILLUSTRATION

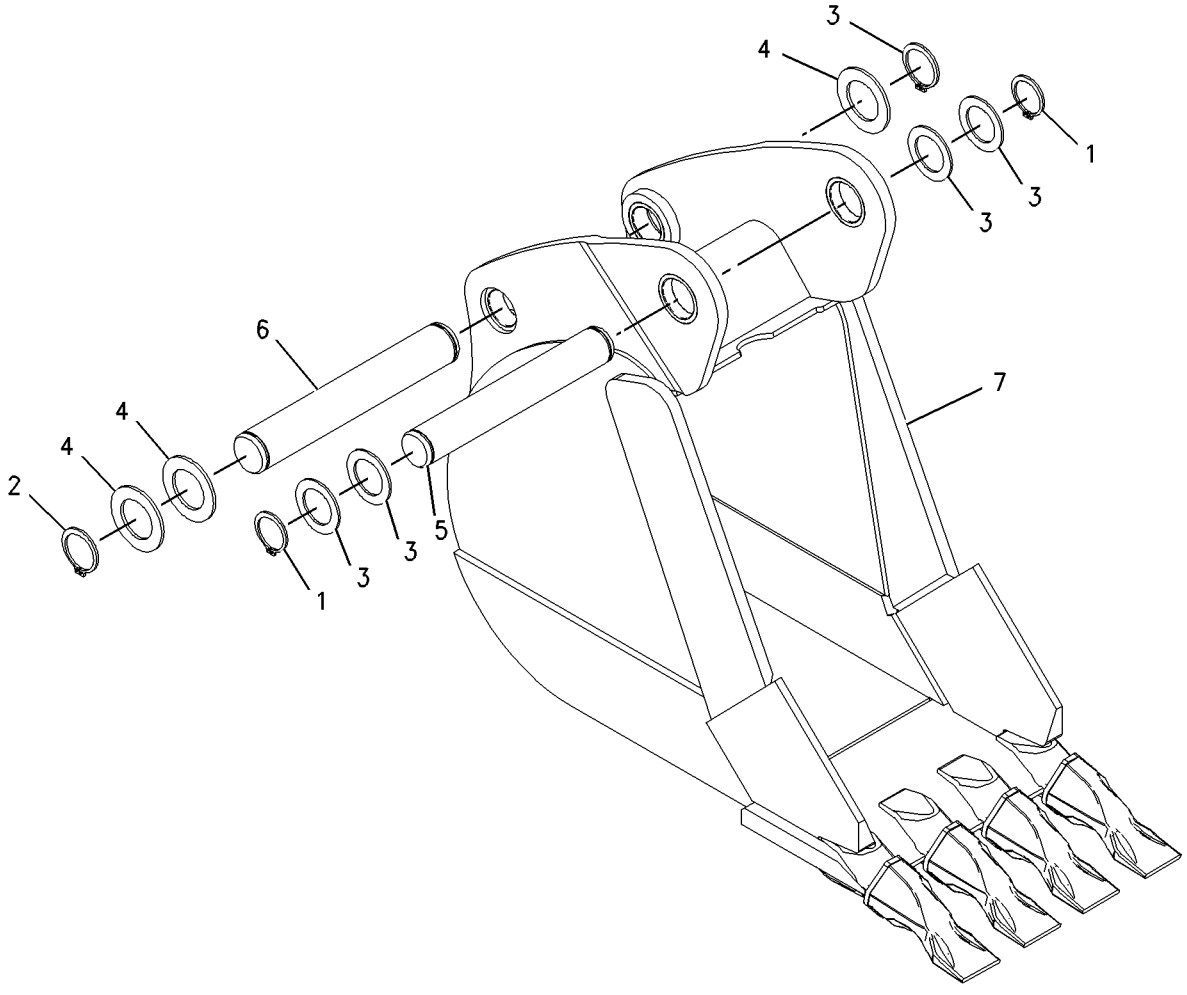

GRAPHIC #1 **<END>** g01001674

247-1947 BUCKET GP-HOE—HEAVY-DUTY, PIN-LOCK

S/N: HLS1-99999
305-MM (12-IN)
AN ATTACHMENT

SMCS-6503 **i02044174**

NOTE	REF NO	GRAPHIC REF	PART NUMBER	QTY	PART NAME 1 2 3 4 5 6 (PRODUCT LEVEL)	SEE PAGE
	1	1	*208-5245*	3	TIP GP-PENETRATION	
					(EACH INCLUDES)	
	1A	1	**201-1238**	1	PIN	
	1B	1	**201-1239**	1	RETAINER AS	
	1C	1	**208-5235**	1	TIP-PENETRATION	
	2	1	*232-2752*	1	BUCKET AS	
	2A	1	**201-1234**	3	ADAPTER	
	2B	1	**9R-0431**	2	BEARING-SLEEVE	

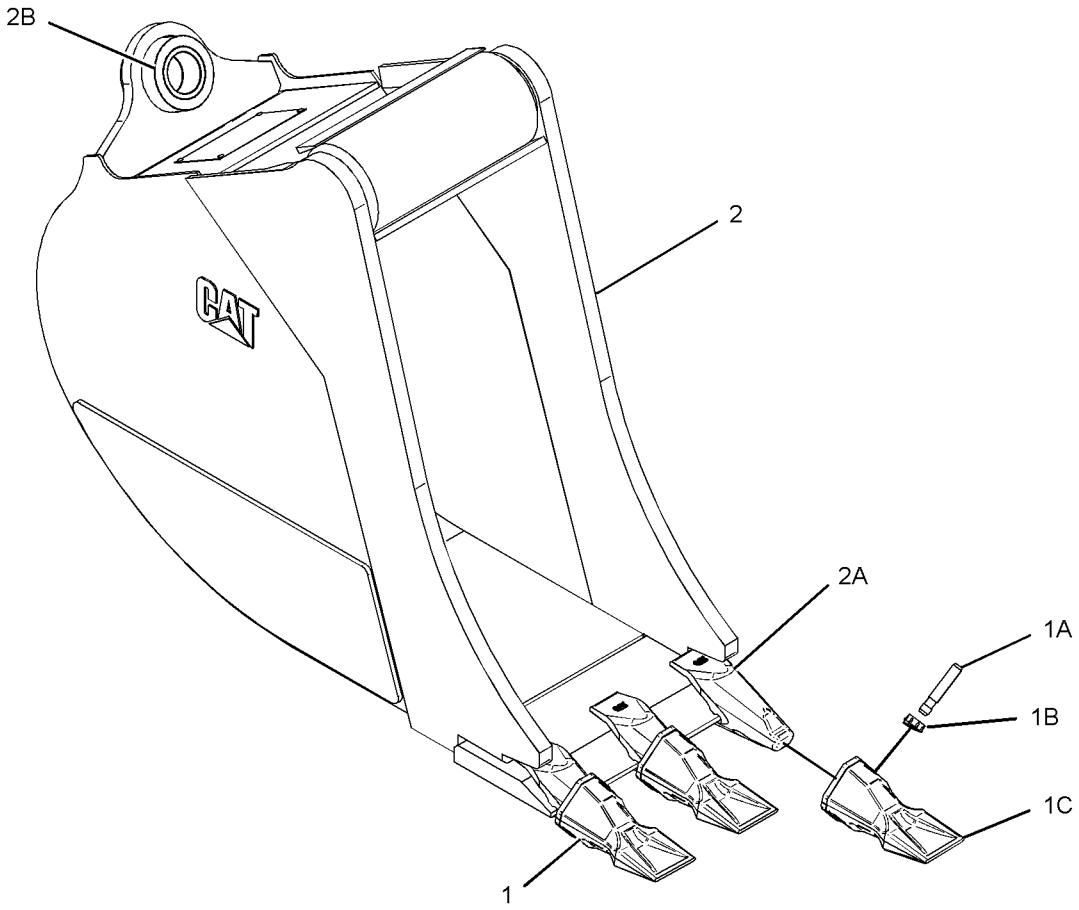

GRAPHIC #1 **<END>** g01071544

WORK TOOLS

247-1948 BUCKET GP-HOE—HEAVY-DUTY, PIN-LOCK

S/N: HLS1-99999
406-MM (16-IN)
AN ATTACHMENT

SMCS-6503 **i02044171**

NOTE	REF NO	GRAPHIC REF	PART NUMBER	QTY	PART NAME 1 2 3 4 5 6 (PRODUCT LEVEL)	SEE PAGE
	1	1	*208-5245*	3	TIP GP-PENETRATION	
					(EACH INCLUDES)	
	1A	1	**201-1238**	1	PIN	
	1B	1	**201-1239**	1	RETAINER AS	
	1C	1	**208-5235**	1	TIP-PENETRATION	
	2	1	*232-2753*	1	BUCKET AS	
	2A	1	**201-1234**	3	ADAPTER	
	2B	1	**9R-0431**	2	BEARING-SLEEVE	

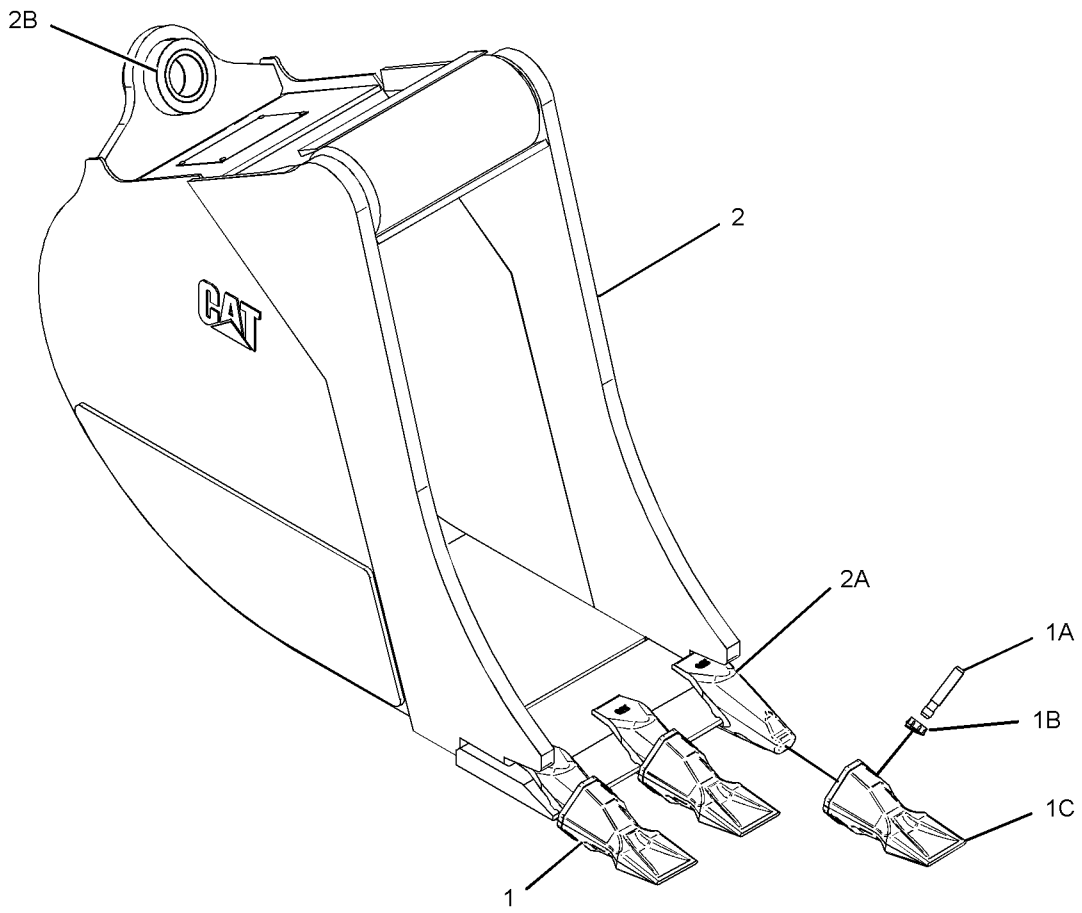

GRAPHIC #1 **<END>** g01071544

WORK TOOLS

247-1949 BUCKET GP-HOE—HEAVY-DUTY, PIN-LOCK

S/N: HLS1-99999
458-MM (18-IN)
AN ATTACHMENT

SMCS-6503 **i02044168**

NOTE	REF NO	GRAPHIC REF	PART NUMBER	QTY	PART NAME 1 2 3 4 5 6 (PRODUCT LEVEL)	SEE PAGE
	1	1	*208-5245*	4	TIP GP-PENETRATION	
					(EACH INCLUDES)	
	1A	1	**201-1238**	1	PIN	
	1B	1	**201-1239**	1	RETAINER AS	
	1C	1	**208-5235**	1	TIP-PENETRATION	
	2	1	*232-2754*	1	BUCKET AS	
	2A	1	**201-1234**	4	ADAPTER	
	2B	1	**9R-0431**	2	BEARING-SLEEVE	
	2C	1	**219-9483**	1	EDGE	

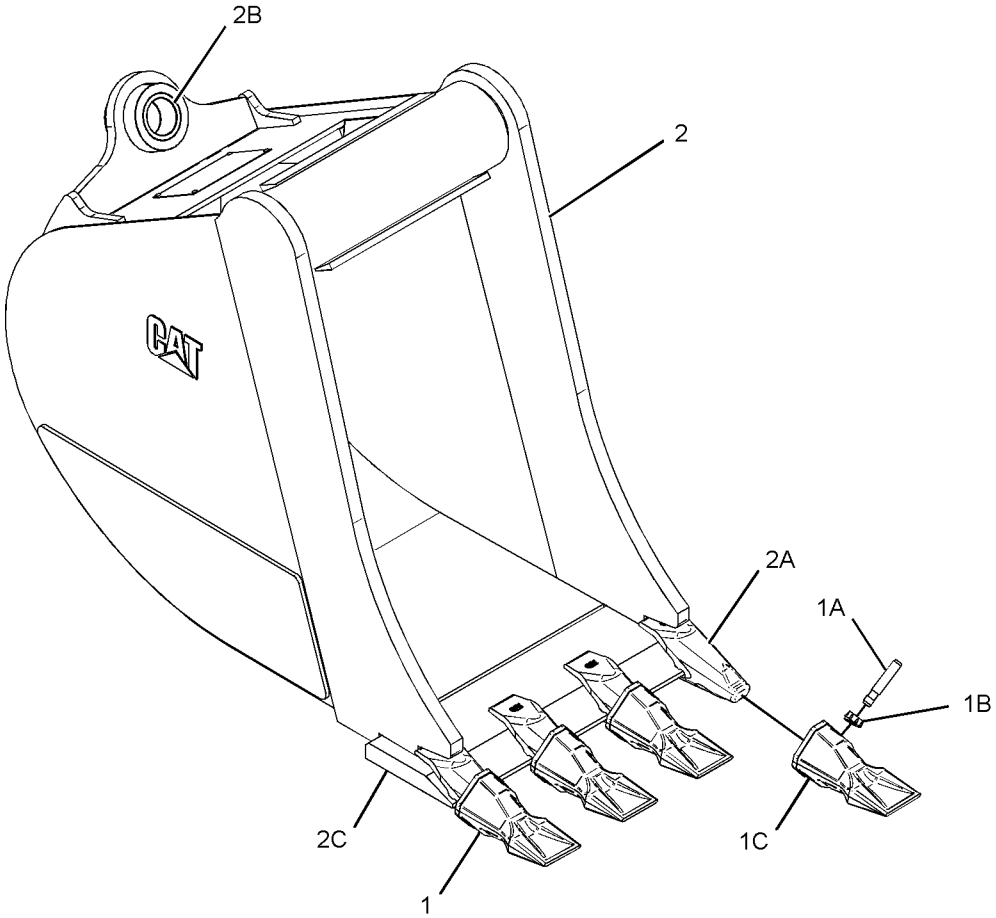

GRAPHIC #1 **<END>** g01071567

WORK TOOLS

247-1950 BUCKET GP-HOE—HEAVY-DUTY, PIN-LOCK

S/N: HLS1-99999
610-MM (24-IN)
AN ATTACHMENT

SMCS-6503 **i02044165**

NOTE	REF NO	GRAPHIC REF	PART NUMBER	QTY	PART NAME 1 2 3 4 5 6 (PRODUCT LEVEL)	SEE PAGE
	1	1	*208-5245*	5	TIP GP-PENETRATION	
					(EACH INCLUDES)	
	1A	1	**201-1238**	1	PIN	
	1B	1	**201-1239**	1	RETAINER AS	
	1C	1	**208-5235**	1	TIP-PENETRATION	
	2	1	*232-2755*	1	BUCKET AS	
	2A	1	**201-1234**	5	ADAPTER	
	2B	1	**9R-0431**	2	BEARING-SLEEVE	
	2C	1	**219-9484**	1	EDGE	

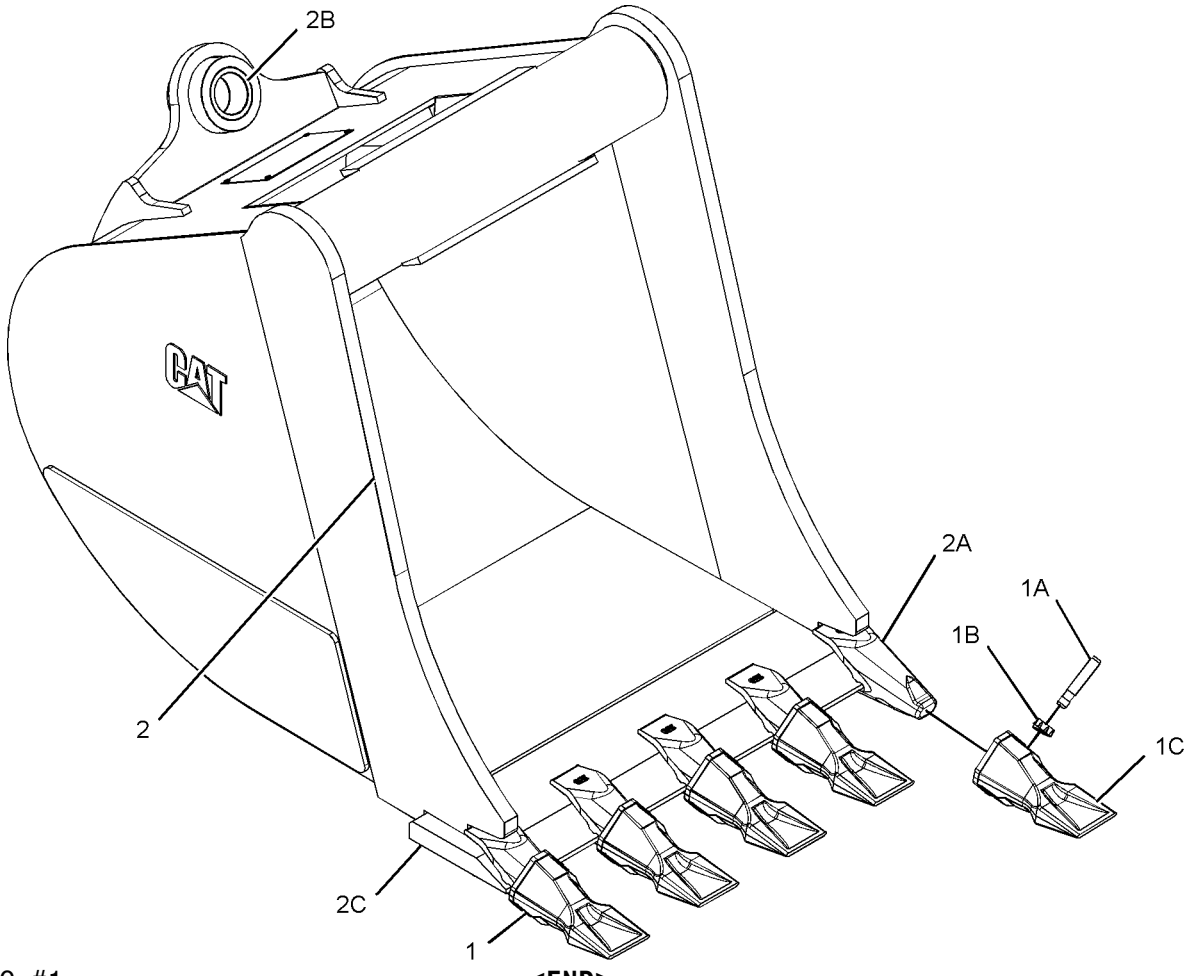

GRAPHIC #1 **<END>** g01071585

247-1951 BUCKET GP-HOE—HEAVY-DUTY, PIN-LOCK

S/N: HLS1-99999
762-MM (30-IN)
AN ATTACHMENT

SMCS-6503 **i02044162**

NOTE	REF NO	GRAPHIC REF	PART NUMBER	QTY	PART NAME 1 2 3 4 5 6 (PRODUCT LEVEL)	SEE PAGE
	1	1	*208-5245*	5	TIP GP-PENETRATION	
					(EACH INCLUDES)	
	1A	1	**201-1238**	1	PIN	
	1B	1	**201-1239**	1	RETAINER AS	
	1C	1	**208-5235**	1	TIP-PENETRATION	
	2	1	*232-2756*	1	BUCKET AS	
	2A	1	**201-1234**	5	ADAPTER	
	2B	1	**9R-0431**	2	BEARING-SLEEVE	
	2C	1	**219-9485**	1	EDGE	

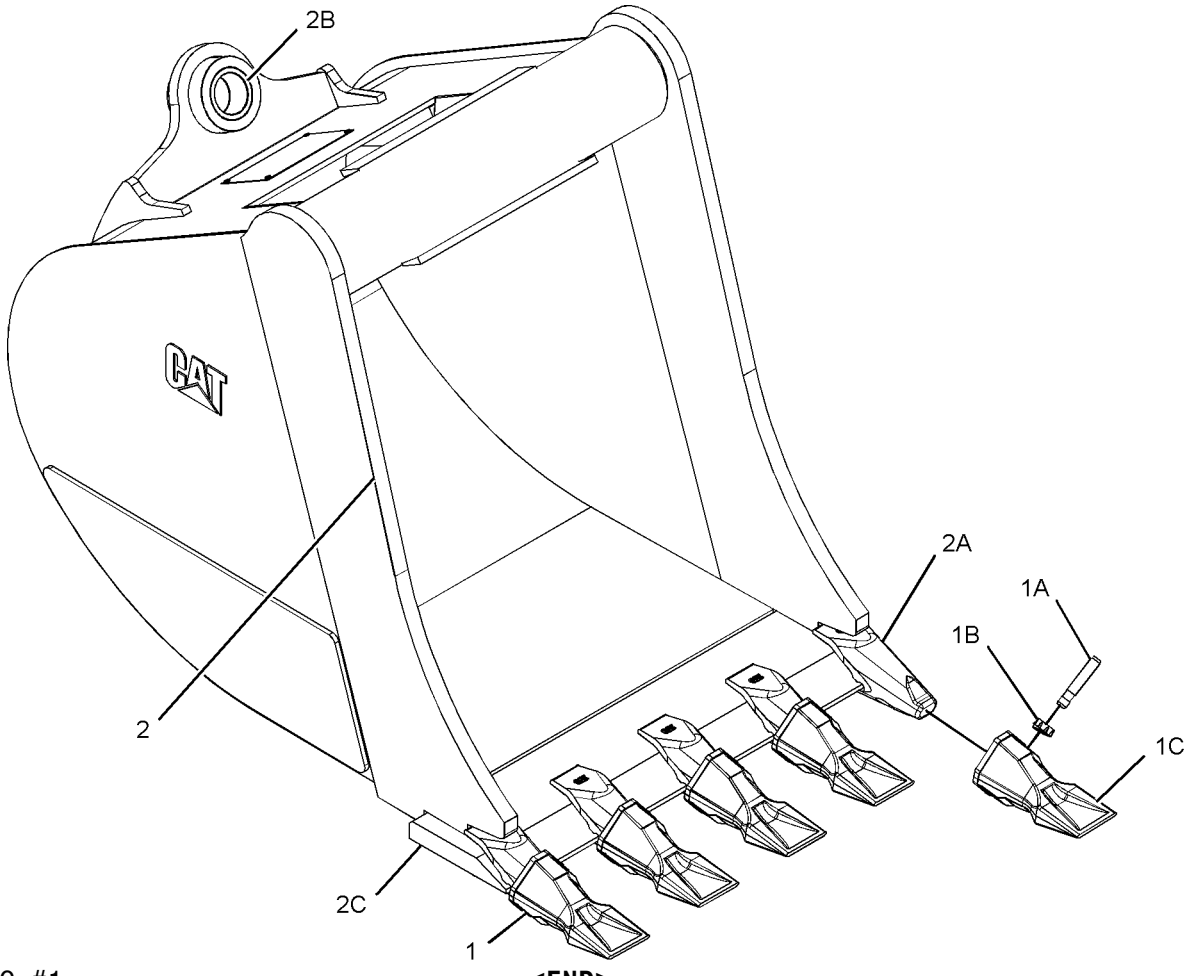

GRAPHIC #1 **<END>** g01071585

247-1952 BUCKET GP-HOE—HEAVY-DUTY, PIN-LOCK

S/N: HLS1-99999
914-MM (36-IN)
AN ATTACHMENT

SMCS-6503 **i02044160**

NOTE	REF NO	GRAPHIC REF	PART NUMBER	QTY	PART NAME 1 2 3 4 5 6 (PRODUCT LEVEL)	SEE PAGE
	1	1	*208-5245*	6	TIP GP-PENETRATION	
					(EACH INCLUDES)	
	1A	1	**201-1238**	1	PIN	
	1B	1	**201-1239**	1	RETAINER AS	
	1C	1	**208-5235**	1	TIP-PENETRATION	
	2	1	*232-2757*	1	BUCKET AS	
	2A	1	**201-1234**	6	ADAPTER	
	2B	1	**9R-0431**	2	BEARING-SLEEVE	
	2C	1	**219-9486**	1	EDGE	

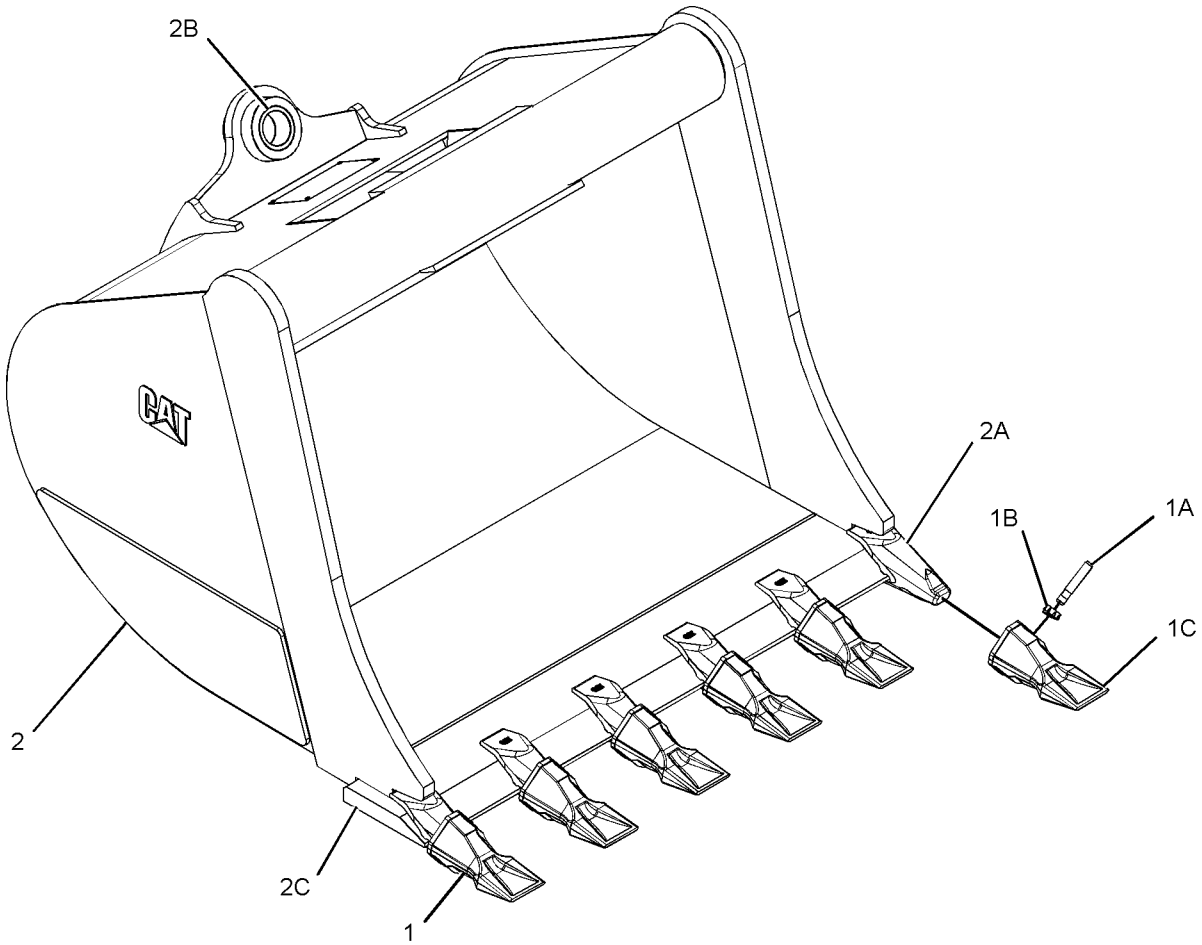

GRAPHIC #1 **<END>** g01071602

WORK TOOLS

247-1953 BUCKET GP-HOE—HIGH CAPACITY, PIN-LOCK

S/N: HLS1-99999
305-MM (12-IN)
AN ATTACHMENT

SMCS-6503 **i02044151**

NOTE	REF NO	GRAPHIC REF	PART NUMBER	QTY	PART NAME 1 2 3 4 5 6 (PRODUCT LEVEL)	SEE PAGE
	1	1	*208-5245*	3	TIP GP-PENETRATION	
					(EACH INCLUDES)	
	1A	1	**201-1238**	1	PIN	
	1B	1	**201-1239**	1	RETAINER AS	
	1C	1	**208-5235**	1	TIP-PENETRATION	
	2	1	*232-2758*	1	BUCKET AS	
	2A	1	**201-1234**	3	ADAPTER	
	2B	1	**9R-0431**	2	BEARING-SLEEVE	

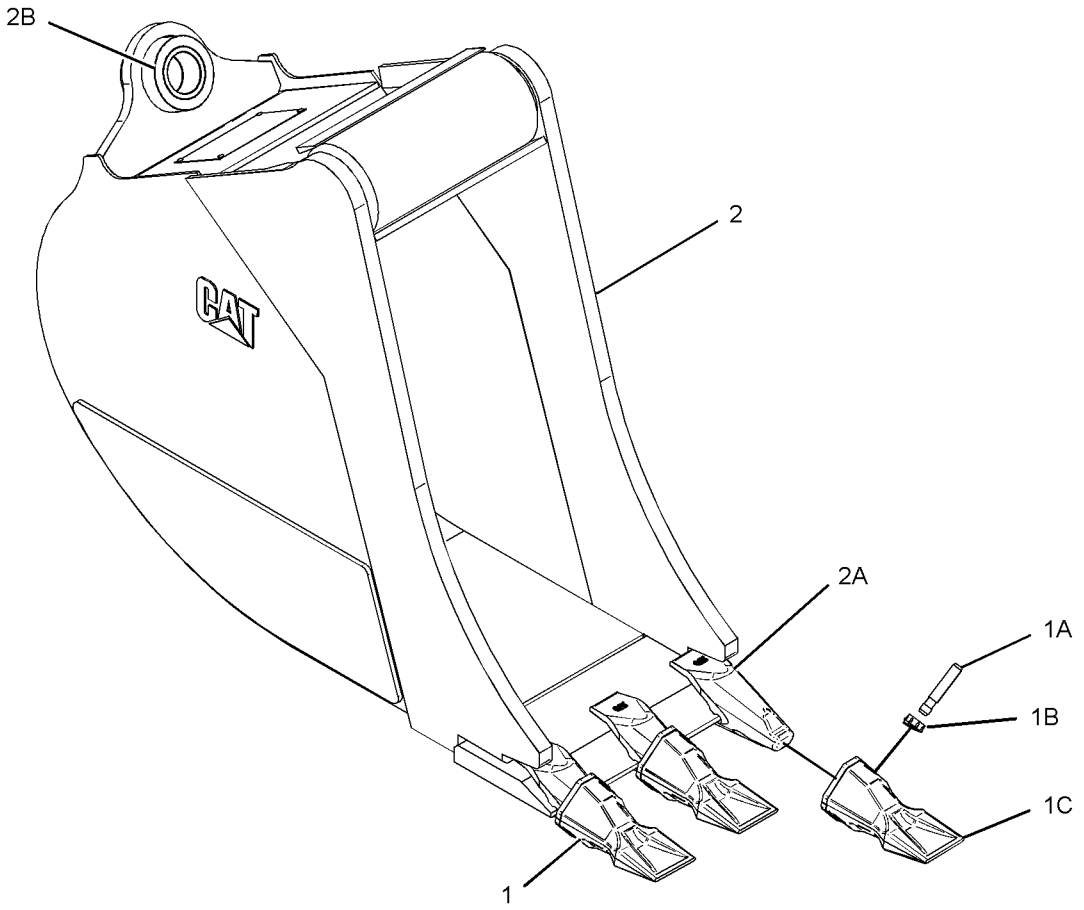

GRAPHIC #1 **<END>** g01071544

WORK TOOLS

247-1954 BUCKET GP-HOE—HIGH CAPACITY, PIN-LOCK

S/N: HLS1-99999
406-MM (16-IN)
AN ATTACHMENT

SMCS-6503 **i03256766**

NOTE	REF NO	GRAPHIC REF	PART NUMBER	QTY	PART NAME 1 2 3 4 5 6 (PRODUCT LEVEL)	SEE PAGE
	1	1	**137-4234**	1	PLATE-IDENTIFICATION (WORK TOOL)	
	2	1	**168-8389**	4	TACK-FASTENER	
	3	1	*208-5245*	3	TIP GP-PENETRATION	
					(EACH INCLUDES)	
	3A	1	**201-1238**	1	PIN	
	3B	1	**201-1239**	1	RETAINER AS	
	3C	1	**208-5235**	1	TIP-PENETRATION	
	4	1	*232-2759*	1	BUCKET AS	
		1	**248-2575**	1	EDGE	
		1	**201-1234**	3	ADAPTER	

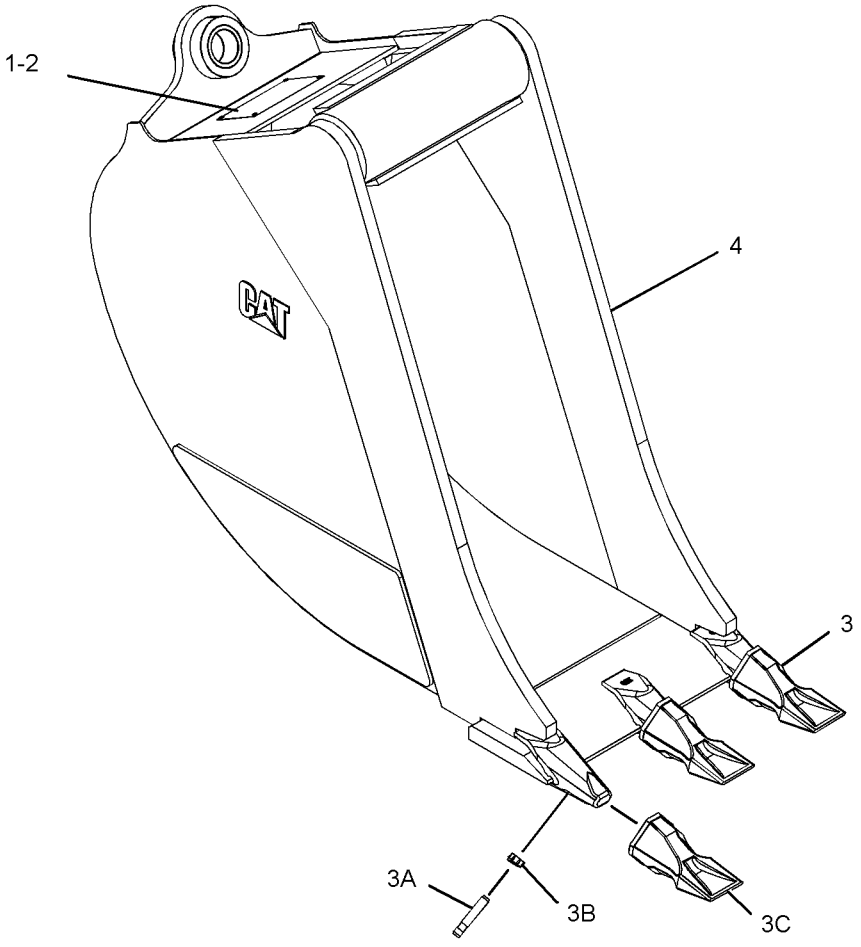

GRAPHIC #1 **<END>** g01161218

WORK TOOLS

247-1955 BUCKET GP-HOE—HIGH CAPACITY, PIN-LOCK

S/N: HLS1-99999
458-MM (18-IN)
AN ATTACHMENT

SMCS-6503 **i02044147**

NOTE	REF NO	GRAPHIC REF	PART NUMBER	QTY	PART NAME 1 2 3 4 5 6 (PRODUCT LEVEL)	SEE PAGE
	1	1	*208-5245*	4	TIP GP-PENETRATION	
					(EACH INCLUDES)	
	1A	1	**201-1238**	1	PIN	
	1B	1	**201-1239**	1	RETAINER AS	
	1C	1	**208-5235**	1	TIP-PENETRATION	
	2	1	*232-2760*	1	BUCKET AS	
	2A	1	**201-1234**	4	ADAPTER	
	2B	1	**9R-0431**	2	BEARING-SLEEVE	
	2C	1	**219-9483**	1	EDGE	

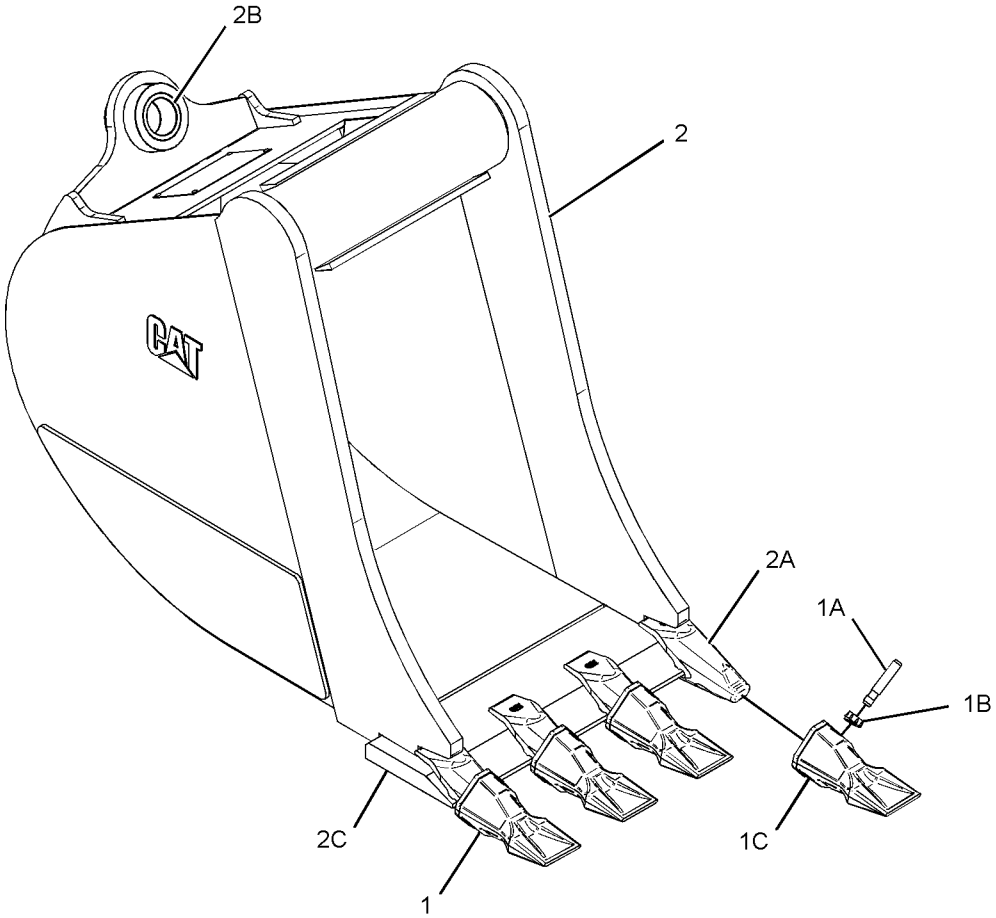

GRAPHIC #1 **<END>** g01071567

247-1956 BUCKET GP-HOE—HIGH CAPACITY, PIN-LOCK

S/N: HLS1-99999
610-MM (24-IN)
AN ATTACHMENT

SMCS-6503 **i02044145**

NOTE	REF NO	GRAPHIC REF	PART NUMBER	QTY	PART NAME 1 2 3 4 5 6 (PRODUCT LEVEL)	SEE PAGE
	1	1	*208-5245*	5	TIP GP-PENETRATION	
					(EACH INCLUDES)	
	1A	1	**201-1238**	1	PIN	
	1B	1	**201-1239**	1	RETAINER AS	
	1C	1	**208-5235**	1	TIP-PENETRATION	
	2	1	*232-2761*	1	BUCKET AS	
	2A	1	**201-1234**	5	ADAPTER	
	2B	1	**9R-0431**	2	BEARING-SLEEVE	
	2C	1	**219-9484**	1	EDGE	

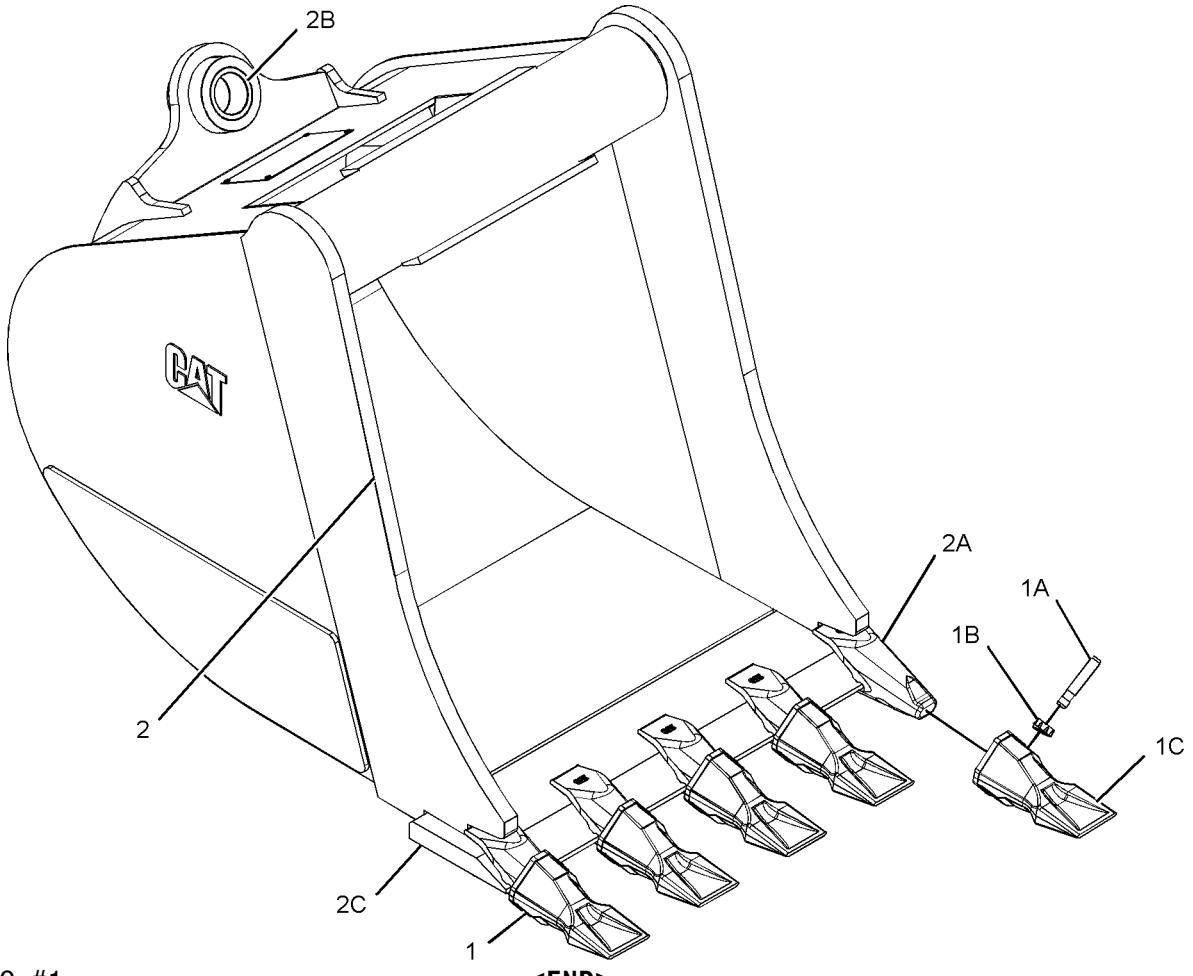

GRAPHIC #1 **<END>** g01071585

247-1957 BUCKET GP-HOE—HIGH CAPACITY, PIN-LOCK

S/N: HLS1-99999
762-MM (30-IN)
AN ATTACHMENT

SMCS-6503 **i02044144**

NOTE	REF NO	GRAPHIC REF	PART NUMBER	QTY	PART NAME 1 2 3 4 5 6 (PRODUCT LEVEL)	SEE PAGE
	1	1	*208-5245*	5	TIP GP-PENETRATION	
					(EACH INCLUDES)	
	1A	1	**201-1238**	1	PIN	
	1B	1	**201-1239**	1	RETAINER AS	
	1C	1	**208-5235**	1	TIP-PENETRATION	
	2	1	*232-2762*	1	BUCKET AS	
	2A	1	**201-1234**	5	ADAPTER	
	2B	1	**9R-0431**	2	BEARING-SLEEVE	
	2C	1	**219-9485**	1	EDGE	

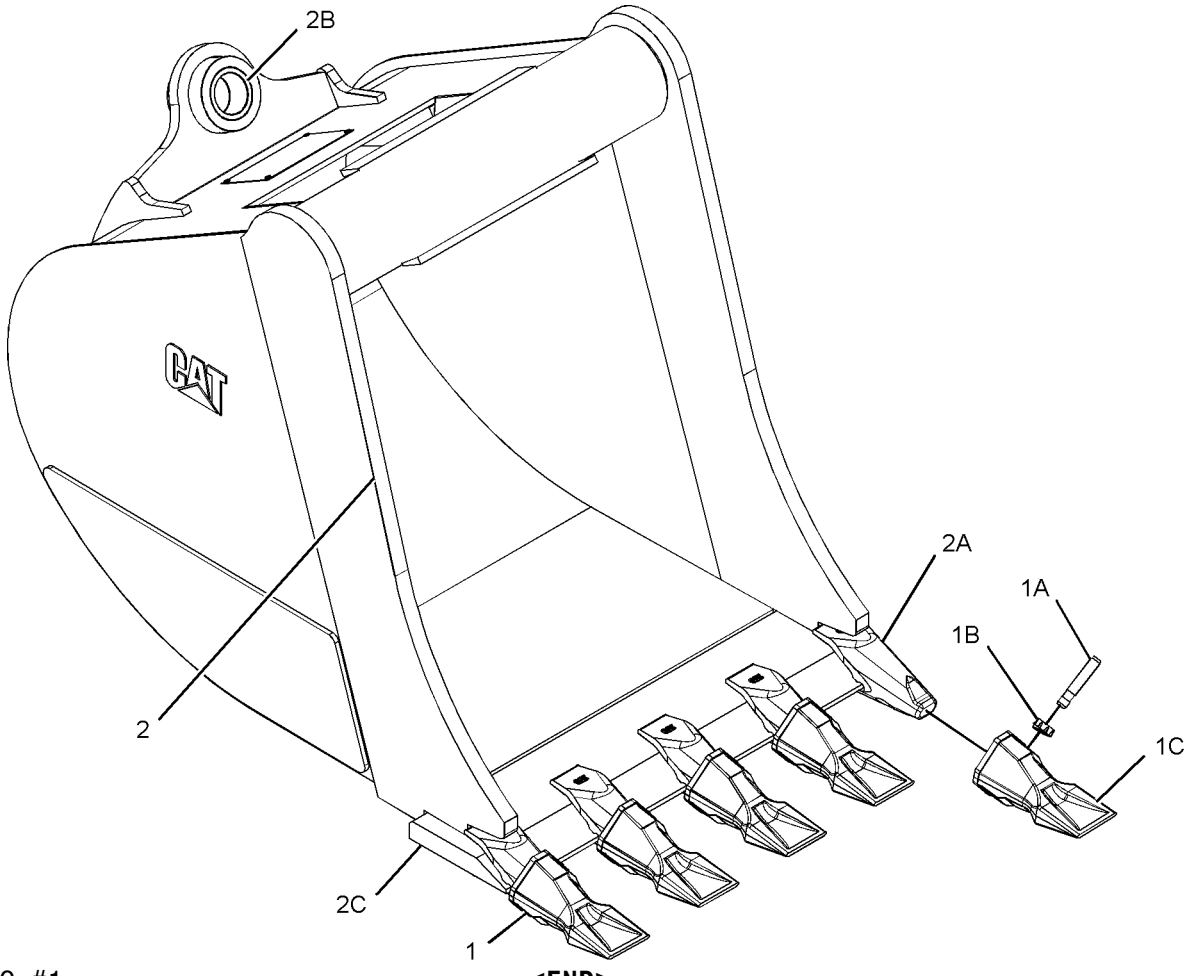

GRAPHIC #1 **<END>** g01071585

247-1958 BUCKET GP-HOE—HIGH CAPACITY, PIN-LOCK

S/N: HLS1-99999
914-MM (36-IN)
AN ATTACHMENT

SMCS-6503 **i03214223**

NOTE	REF NO	GRAPHIC REF	PART NUMBER	QTY	PART NAME 1 2 3 4 5 6 (PRODUCT LEVEL)	SEE PAGE
	1	1	*208-5245*	6	TIP GP-PENETRATION	
					(EACH INCLUDES)	
	1A	1	**201-1238**	1	PIN	
	1B	1	**201-1239**	1	RETAINER AS	
	1C	1	**208-5235**	1	TIP-PENETRATION	
	2	1	*232-2763*	1	BUCKET AS	
	2A	1	**201-1234**	6	ADAPTER	
	2B	1	**9R-0431**	2	BEARING-SLEEVE	
	2C	1	**219-9486**	1	EDGE	

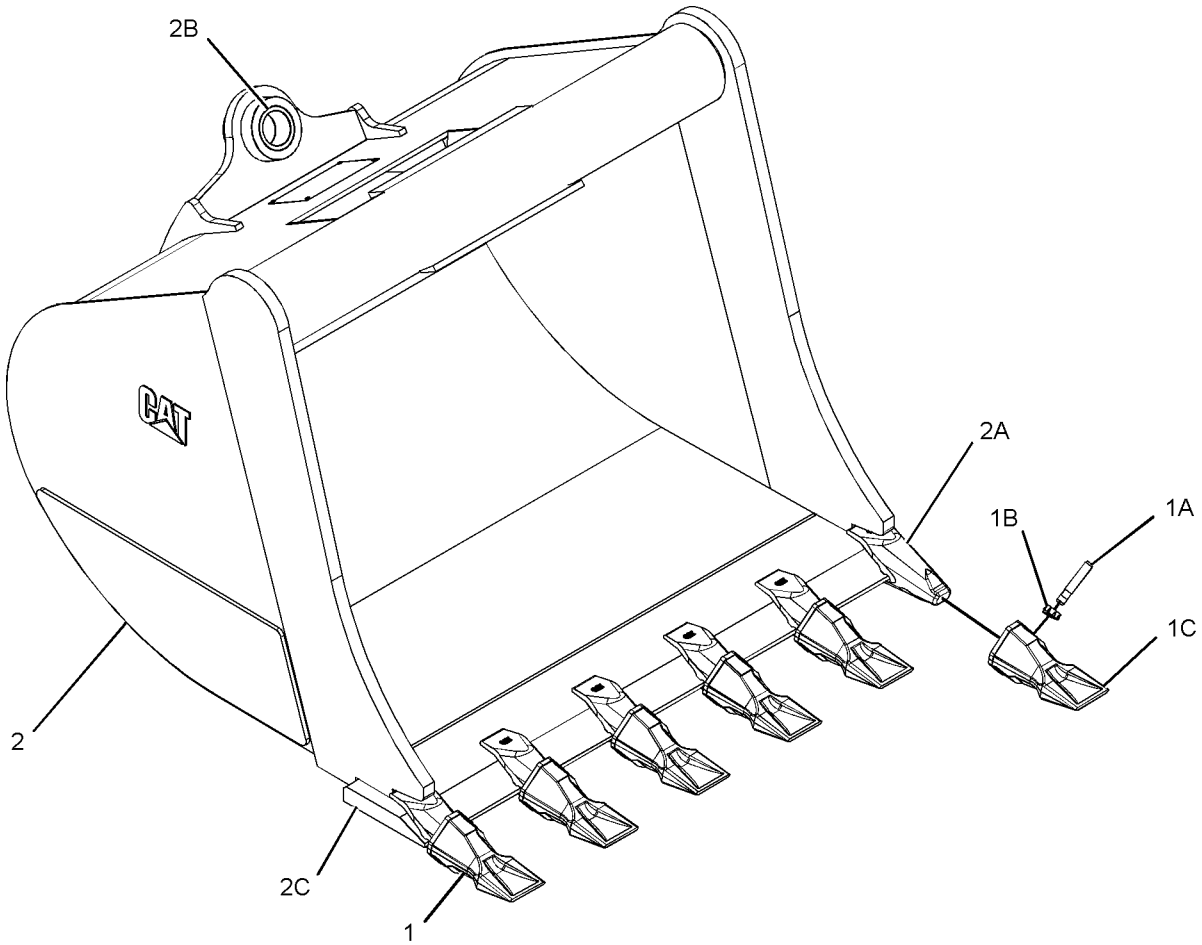

GRAPHIC #1 **<END>** g01071602

WORK TOOLS

254-8940 BUCKET GP-HOE—HIGH CAPACITY

S/N: HLS1-99999
458-MM (18-IN)
AN ATTACHMENT

SMCS-6503 **i02838064**

NOTE	REF NO	GRAPHIC REF	PART NUMBER	QTY	PART NAME 1 2 3 4 5 6 (PRODUCT LEVEL)	SEE PAGE
	1	1	**137-4234**	1	PLATE-IDENTIFICATION (WORK TOOL)	
	2	1	**168-8389**	4	TACK-FASTENER	
	3	1	*208-5244*	4	TIP GP-BUCKET (SOIL)	
					(EACH INCLUDES)	
		1	**201-1238**	1	PIN	
		1	**201-1239**	1	RETAINER AS	
		1	**208-5234**	1	TIP-BUCKET (SOIL)	
Y	4	1	*254-8939*	1	BUCKET AS-HOE (HIGH CAPACITY, PIN-LOCK)	661

Y-SEPARATE ILLUSTRATION

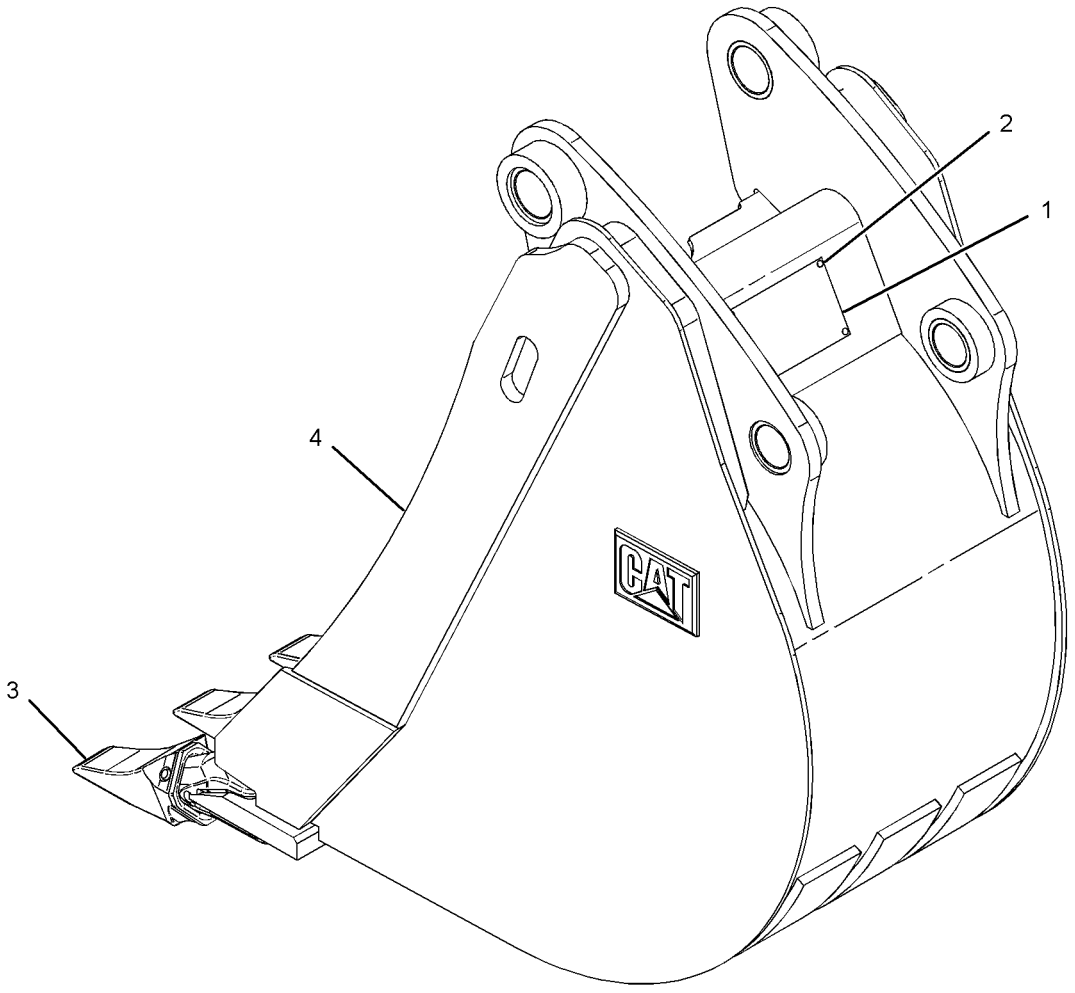

GRAPHIC #1 **<END>** g01150288

254-8941 BUCKET GP-HOE—HIGH CAPACITY, PIN-LOCK

S/N: HLS1-99999
610-MM (24-IN)
AN ATTACHMENT

SMCS-6503 **i02284371**

NOTE	REF NO	GRAPHIC REF	PART NUMBER	QTY	PART NAME 1 2 3 4 5 6 (PRODUCT LEVEL)	SEE PAGE
	1	1	**137-4234**	1	PLATE-IDENTIFICATION (WORK TOOL)	
	2	1	**168-8389**	4	TACK-FASTENER	
	3	1	*208-5244*	5	TIP GP-BUCKET (SOIL)	
					(EACH INCLUDES)	
		1	**201-1238**	1	PIN	
		1	**201-1239**	1	RETAINER AS	
		1	**208-5234**	1	TIP-BUCKET (SOIL)	
Y	4	1	*254-8944*	1	BUCKET AS-HOE (HIGH CAPACITY, PIN-LOCK)	663

Y-SEPARATE ILLUSTRATION

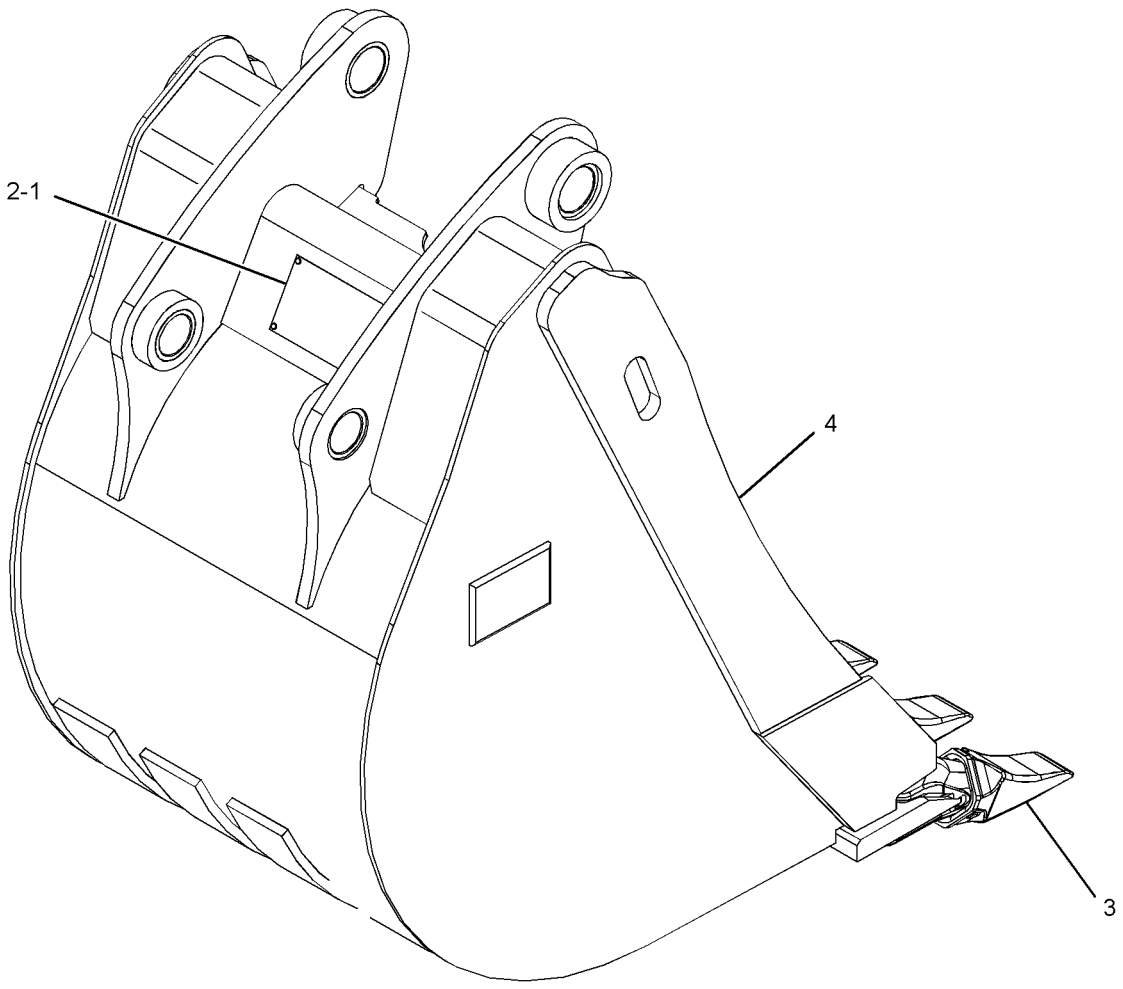

GRAPHIC #1 **<END>** g01150193

WORK TOOLS

254-8942 BUCKET GP-HOE—HIGH CAPACITY, PIN-LOCK

S/N: HLS1-99999
762-MM (30-IN)
AN ATTACHMENT

SMCS-6503 **i02290138**

NOTE	REF NO	GRAPHIC REF	PART NUMBER	QTY	PART NAME 1 2 3 4 5 6 (PRODUCT LEVEL)	SEE PAGE
	1	1	**137-4234**	1	PLATE-IDENTIFICATION (WORK TOOL)	
	2	1	**168-8389**	4	TACK-FASTENER	
	3	1	*208-5244*	5	TIP GP-BUCKET (SOIL)	
					(EACH INCLUDES)	
		1	**201-1238**	1	PIN	
		1	**201-1239**	1	RETAINER AS	
		1	**208-5234**	1	TIP-BUCKET (SOIL)	
Y	4	1	*254-8945*	1	BUCKET AS-HOE (HIGH CAPACITY, PIN-LOCK)	665

Y-SEPARATE ILLUSTRATION

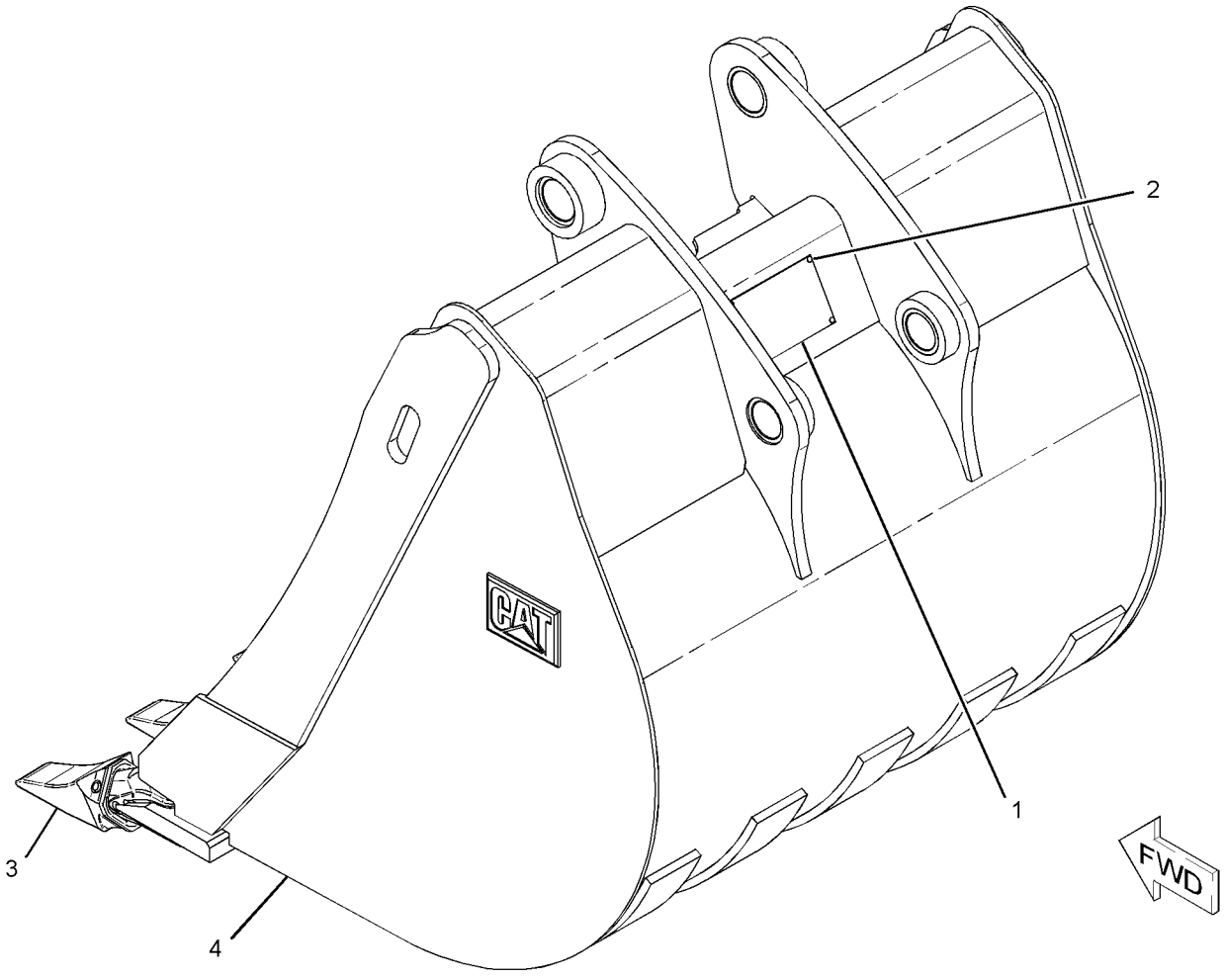

GRAPHIC #1 **<END>** g01144833

WORK TOOLS

254-8943 BUCKET GP-HOE—HIGH CAPACITY, PIN-LOCK

S/N: HLS1-99999
914-MM (36-IN)
AN ATTACHMENT

SMCS-6503 **i02284389**

NOTE	REF NO	GRAPHIC REF	PART NUMBER	QTY	PART NAME 1 2 3 4 5 6 (PRODUCT LEVEL)	SEE PAGE
	1	1	**137-4234**	1	PLATE-IDENTIFICATION (WORK TOOL)	
	2	1	**168-8389**	4	TACK-FASTENER	
	3	1	*208-5244*	6	TIP GP-BUCKET (SOIL)	
					(EACH INCLUDES)	
		1	**201-1238**		PIN	
		1	**201-1239**	1	RETAINER AS	
		1	**208-5234**	1	TIP-BUCKET (SOIL)	
Y	4	1	*254-8946*	1	BUCKET AS-HOE (HIGH CAPACITY, PIN-LOCK)	667

Y-SEPARATE ILLUSTRATION

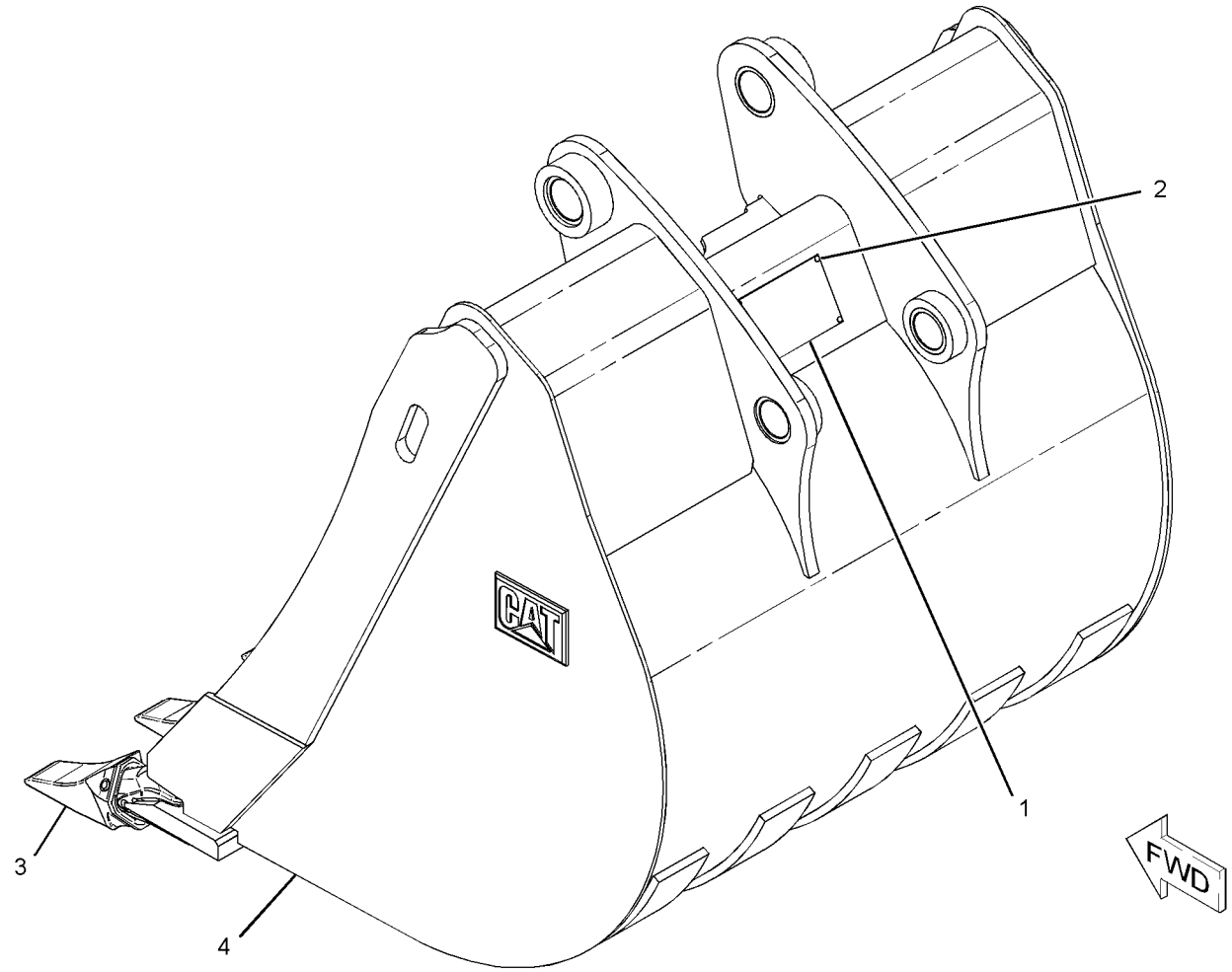

GRAPHIC #1 **<END>** g01144797

WORK TOOLS

216-8800 BUCKET GP-MULTIPURPOSE

S/N: HLS1-99999
1.0 CU(1.31 CU YD)
PART OF 232-2681, 232-2682 BUCKET AR-MULTIPURPOSE
FOR USE WITH 269-2145—PAGE 525
AN ATTACHMENT

SMCS-6104 **i02535101**

NOTE	REF NO	GRAPHIC REF	PART NUMBER	QTY	PART NAME 1 2 3 4 5 6 (PRODUCT LEVEL)	SEE PAGE
	1	1	**9R-4676**	2	PIN	
	2	1	**9R-4677**	2	PIN	
	3	1	**9R-4678**	2	PIN	
	4	1	**095-0865**	4	PIN-COTTER	
	5	1	**096-1820**	2	PIN-COTTER	
	6	1	**137-4234**	1	PLATE-IDENTIFICATION (WORK TOOL)	
	7	1	**168-8389**	4	TACK-FASTENER	
Y	8	1	**216-8802**	1	BULLDOZER AS	726
Y	9	1	**216-8803**	1	CLAM AS-MULTIPURPOSE BUCKET	729
Y	10	1	**226-5540**	2	CYLINDER GP-MULTIPURPOSE BUKT	401
	11	1	**233-3757**	1	EDGE	
Y	12	1	*251-5854*	1	LINES GP-MULTIPURPOSE BUCKET	461
	13	1	**3B-8489**	2	FITTING-GREASE	
	14	1	**3F-5108**	8	BOLT-PLOW (5/8-11X2.25-IN)	
	15	1	**4K-0367**	8	NUT-FULL (5/8-11-THD)	
	16	1	**8T-4122**	8	WASHER-HARD (17X32X3.5-MM THK)	

Y-SEPARATE ILLUSTRATION

216-8800 BUCKET GP-MULTIPURPOSE *(contd.)* **i02535101**

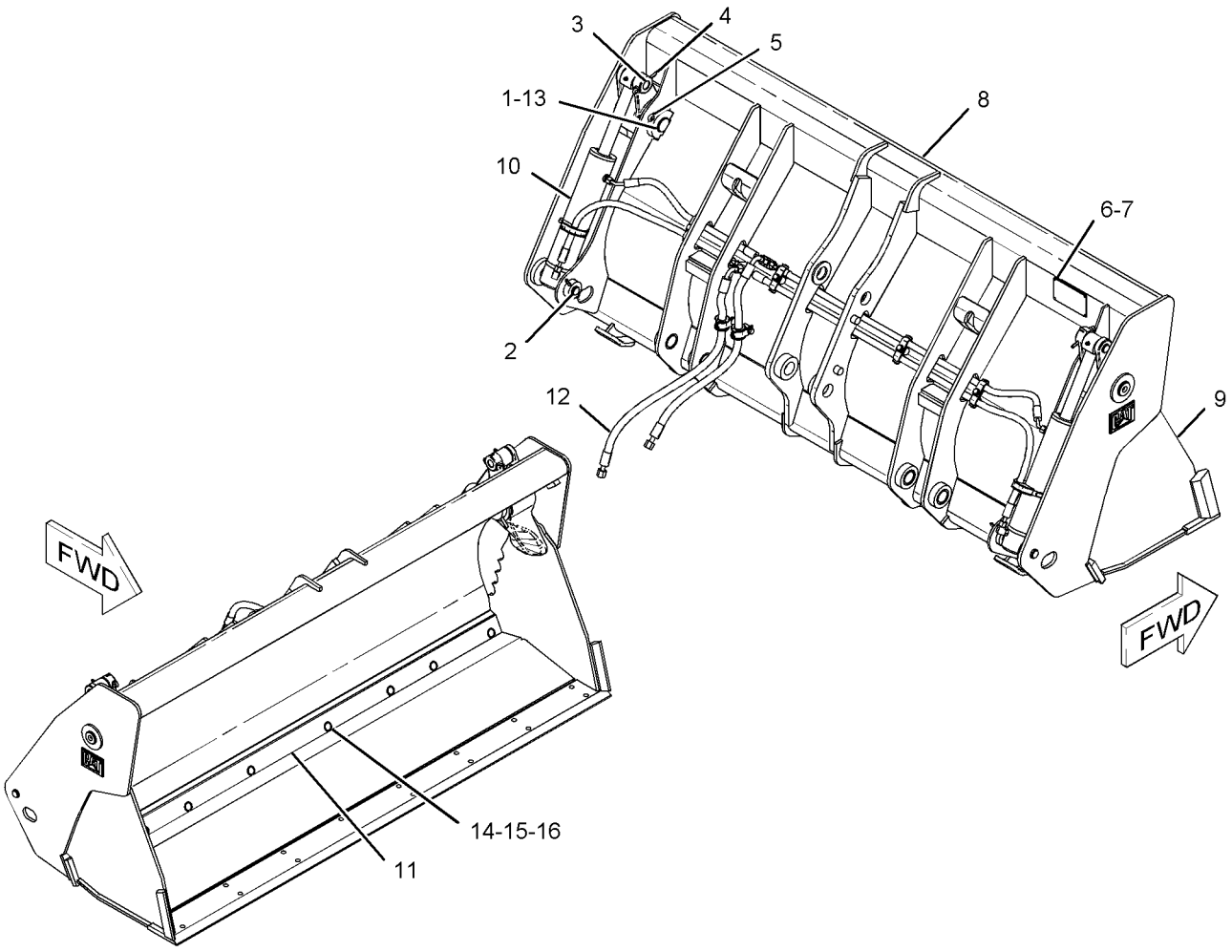

GRAPHIC #1 **<END>** g01131814

WORK TOOLS

216-8801 BUCKET GP-MULTIPURPOSE

S/N: HLS1-99999
1.0 CU M(1.31 CU YD)
PART OF 232-2685 BUCKET AR-MULTIPURPOSE
AN ATTACHMENT

SMCS-6104 **i02356568**

NOTE	REF NO	GRAPHIC REF	PART NUMBER	QTY	PART NAME 1 2 3 4 5 6 (PRODUCT LEVEL)	SEE PAGE
	1	1	**9R-4676**	2	PIN	
	2	1	**137-4234**	1	PLATE-IDENTIFICATION (WORK TOOL)	
	3	1	**168-8389**	4	TACK-FASTENER	
Y	4	1	**216-8803**	1	CLAM AS-MULTIPURPOSE BUCKET	729
Y	5	1	**216-8811**	1	BULLDOZER AS	727
Y	6	1	**226-5540**	2	CYLINDER GP-MULTIPURPOSE BUKT	401
	7	1	**233-3757**	1	EDGE	
Y	8	1	*251-5854*	1	LINES GP-MULTIPURPOSE BUCKET	461
	9	1	**095-0865**	4	PIN-COTTER	
	10	1	**096-1820**	2	PIN-COTTER	
	11	1	**3B-8489**	2	FITTING-GREASE	
	12	1	**3F-5108**	8	BOLT-PLOW (5/8-11X2.25-IN)	
	13	1	**4K-0367**	8	NUT-FULL (5/8-11-THD)	
	14	1	**8T-4122**	8	WASHER-HARD (17X32X3.5-MM THK)	
	15	1	**9R-4677**	2	PIN	
	16	1	**9R-4678**	2	PIN	
Y	17	1	*263-8591*	1	PLATE & FILM GP	929

Y-SEPARATE ILLUSTRATION

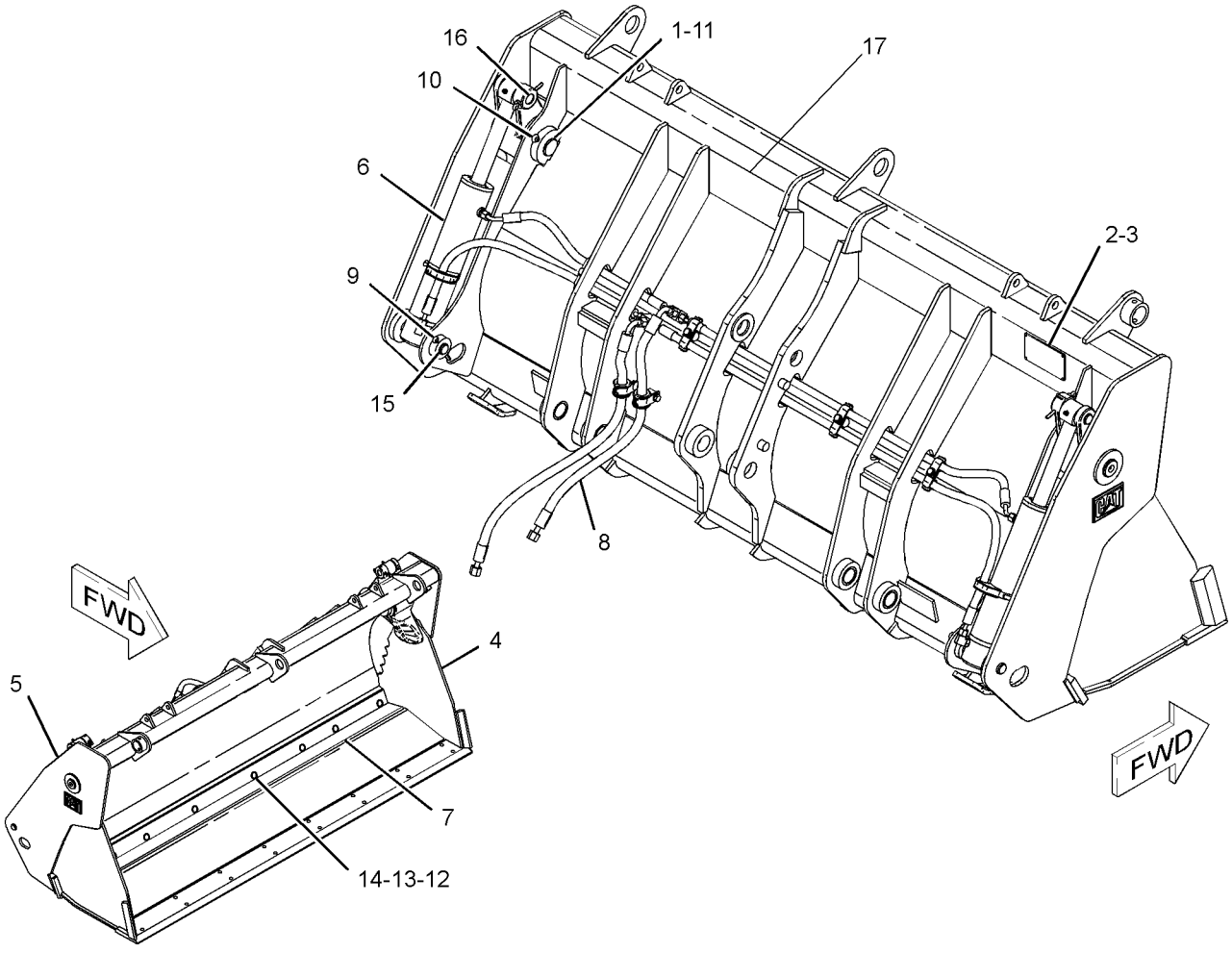

GRAPHIC #1 **<END>** g01239509

WORK TOOLS

216-8820 BUCKET GP-MULTIPURPOSE

S/N: HLS1-99999
1.1 CU M(1.4 CU YD)
PART OF 232-2686, 232-2687 BUCKET AR-MULTIPURPOSE
AN ATTACHMENT

SMCS-6104 **i02747036**

NOTE	REF NO	GRAPHIC REF	PART NUMBER	QTY	PART NAME 1 2 3 4 5 6 (PRODUCT LEVEL)	SEE PAGE
	1	1	**9R-4676**	2	PIN	
	2	1	**9R-4677**	2	PIN	
	3	1	**9R-4678**	2	PIN	
	4	1	**095-0865**	4	PIN-COTTER	
	5	1	**096-1820**	2	PIN-COTTER	
	6	1	**137-4234**	1	PLATE-IDENTIFICATION (WORK TOOL)	
	7	1	**168-8389**	4	TACK-FASTENER	
Y	8	1	**216-8822**	1	BULLDOZER AS	728
Y	9	1	**216-8826**	1	CLAM AS-MULTIPURPOSE BUCKET	730
Y	10	1	**226-5540**	2	CYLINDER GP-MULTIPURPOSE BUKT	401
	11	1	**233-0859**	1	EDGE	
Y	12	1	*251-5855*	1	LINES GP-MULTIPURPOSE BUCKET	463
	13	1	**3B-8489**	2	FITTING-GREASE	
	14	1	**3F-5108**	8	BOLT-PLOW (5/8-11X2.25-IN)	
	15	1	**4K-0367**	8	NUT-FULL (5/8-11-THD)	
	16	1	**8T-4122**	8	WASHER-HARD (17X32X3.5-MM THK)	

Y-SEPARATE ILLUSTRATION

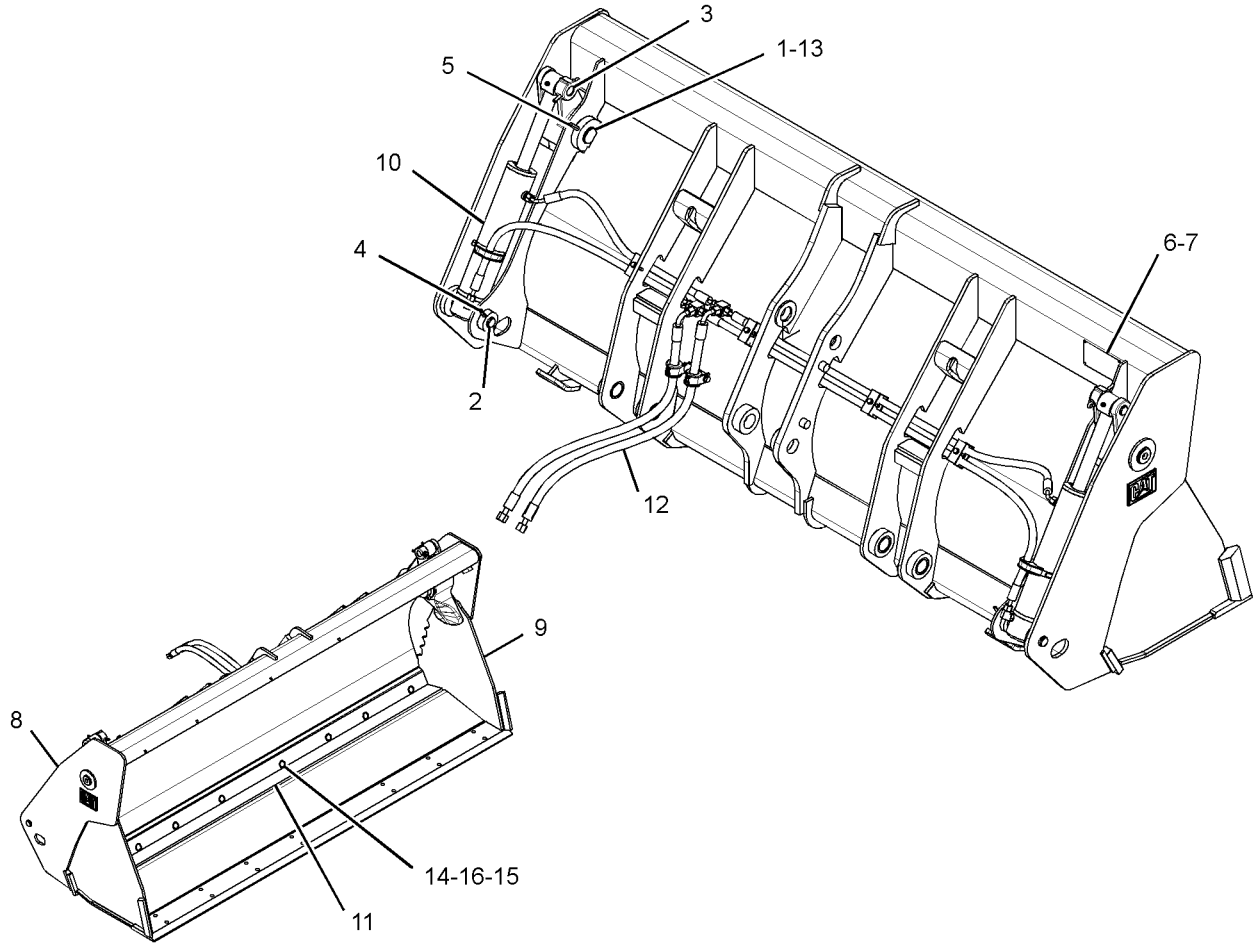

GRAPHIC #1 **<END>** g01392329

WORK TOOLS

216-8821 BUCKET GP-MULTIPURPOSE

S/N: HLS1-99999
1.1 CU M(1.4 CU YD)
PART OF 232-2690 BUCKET AR-MULTIPURPOSE
AN ATTACHMENT

SMCS-6104 **i02747035**

NOTE	REF NO	GRAPHIC REF	PART NUMBER	QTY	PART NAME 1 2 3 4 5 6 (PRODUCT LEVEL)	SEE PAGE
	1	1	**9R-4676**	2	PIN	
	2	1	**137-4234**	1	PLATE-IDENTIFICATION (WORK TOOL)	
	3	1	**168-8389**	4	TACK-FASTENER	
Y	4	1	**216-8762**	1	BULLDOZER AS (FORKS)	725
Y	5	1	**216-8826**	1	CLAM AS-MULTIPURPOSE BUCKET	730
Y	6	1	**226-5540**	2	CYLINDER GP-MULTIPURPOSE BUKT	401
	7	1	**233-0859**	1	EDGE	
Y	8	1	*251-5855*	1	LINES GP-MULTIPURPOSE BUCKET	463
	9	1	**095-0865**	4	PIN-COTTER	
	10	1	**096-1820**	2	PIN-COTTER	
	11	1	**3B-8489**	2	FITTING-GREASE	
	12	1	**3F-5108**	8	BOLT-PLOW (5/8-11X2.25-IN)	
	13	1	**4K-0367**	8	NUT-FULL (5/8-11-THD)	
	14	1	**8T-4122**	8	WASHER-HARD (17X32X3.5-MM THK)	
	15	1	**9R-4677**	2	PIN	
	16	1	**9R-4678**	2	PIN	
Y	17	1	*263-8591*	1	PLATE & FILM GP	929

Y-SEPARATE ILLUSTRATION

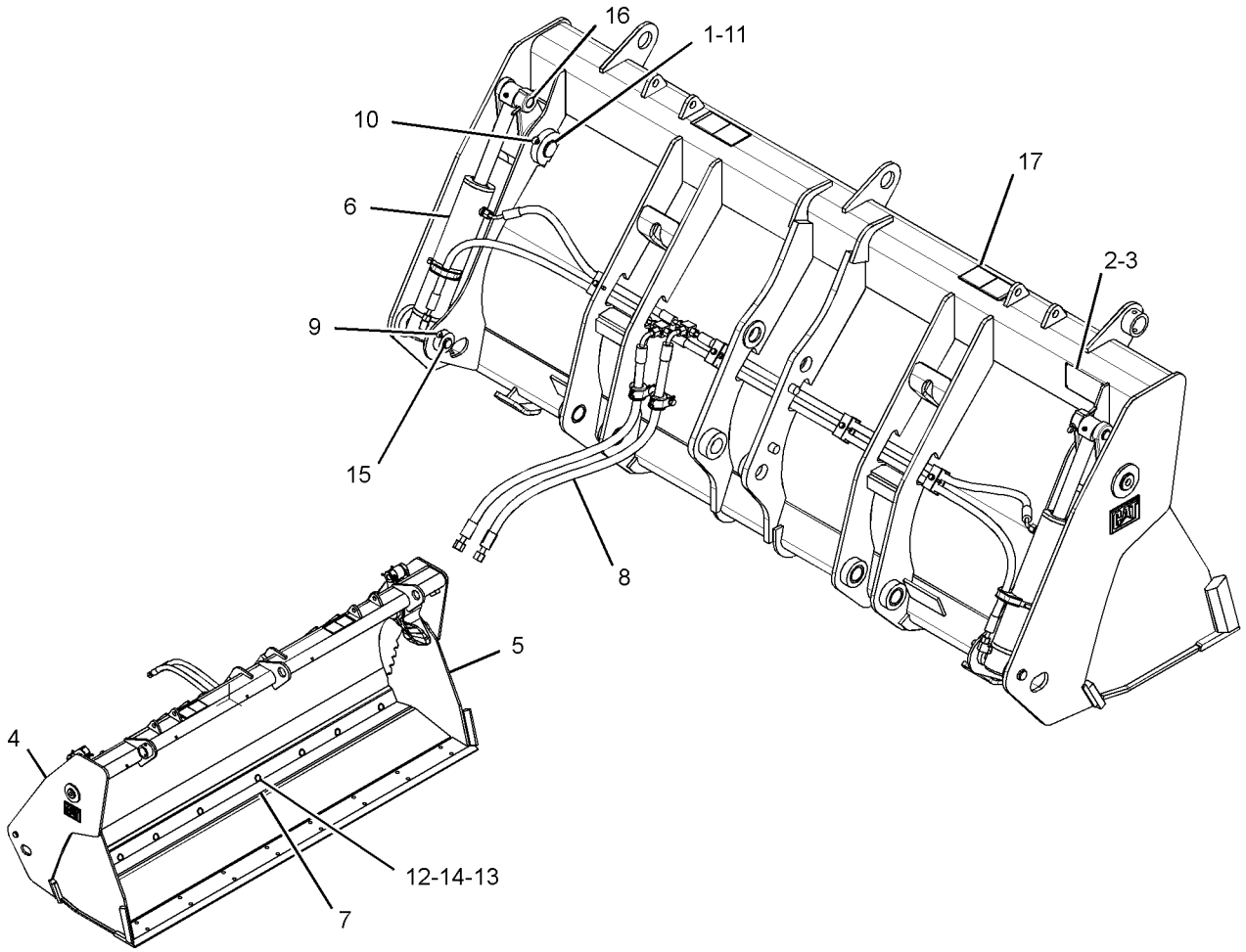

GRAPHIC #1 **<END>** g01392421

216-8762 BULLDOZER AS

S/N: HLS1-99999
PART OF 216-8821 BUCKET GP-MULTIPURPOSE
FIELD REPLACEMENT FOR 216-8822—PAGE 728
AN ATTACHMENT

SMCS-6050 **i02747034**

NOTE	REF NO	GRAPHIC REF	PART NUMBER	QTY	PART NAME 1 2 3 4 5 6 (PRODUCT LEVEL)	SEE PAGE
	1	1	**216-8778**	2	BRACKET	
	2	1	**216-8780**	1	BRACKET AS	
	3	1	**216-8781**	4	BRACKET	
Y	4	1	**216-8822**	1	BULLDOZER AS	728
	5	1	**224-6250**	2	PLATE	

Y-SEPARATE ILLUSTRATION

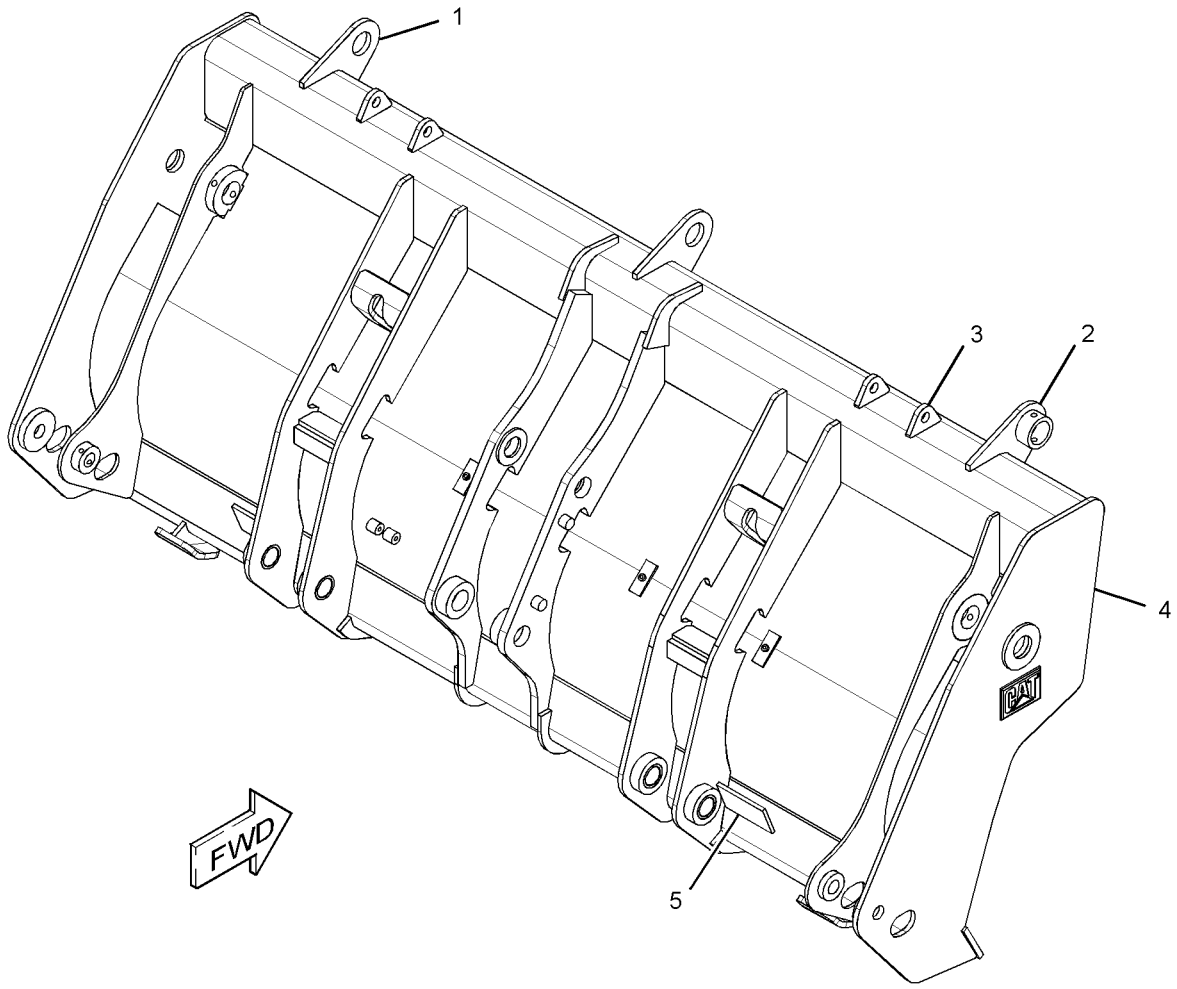

GRAPHIC #1 **<END>** g01384995

WORK TOOLS

216-8802 BULLDOZER AS

S/N: HLS1-99999
PART OF 216-8800 BUCKET GP-MULTIPURPOSE, 216-8811 BULLDOZER AS
FIELD REPLACEMENT ORDER 216-8811—PAGE 727
AN ATTACHMENT

SMCS-6050 **i03256762**

NOTE	REF NO	GRAPHIC REF	PART NUMBER	QTY	PART NAME 1 2 3 4 5 6 (PRODUCT LEVEL)	SEE PAGE
					(NO SERVICEABLE PARTS AT TIME OF PUBLICATION)	

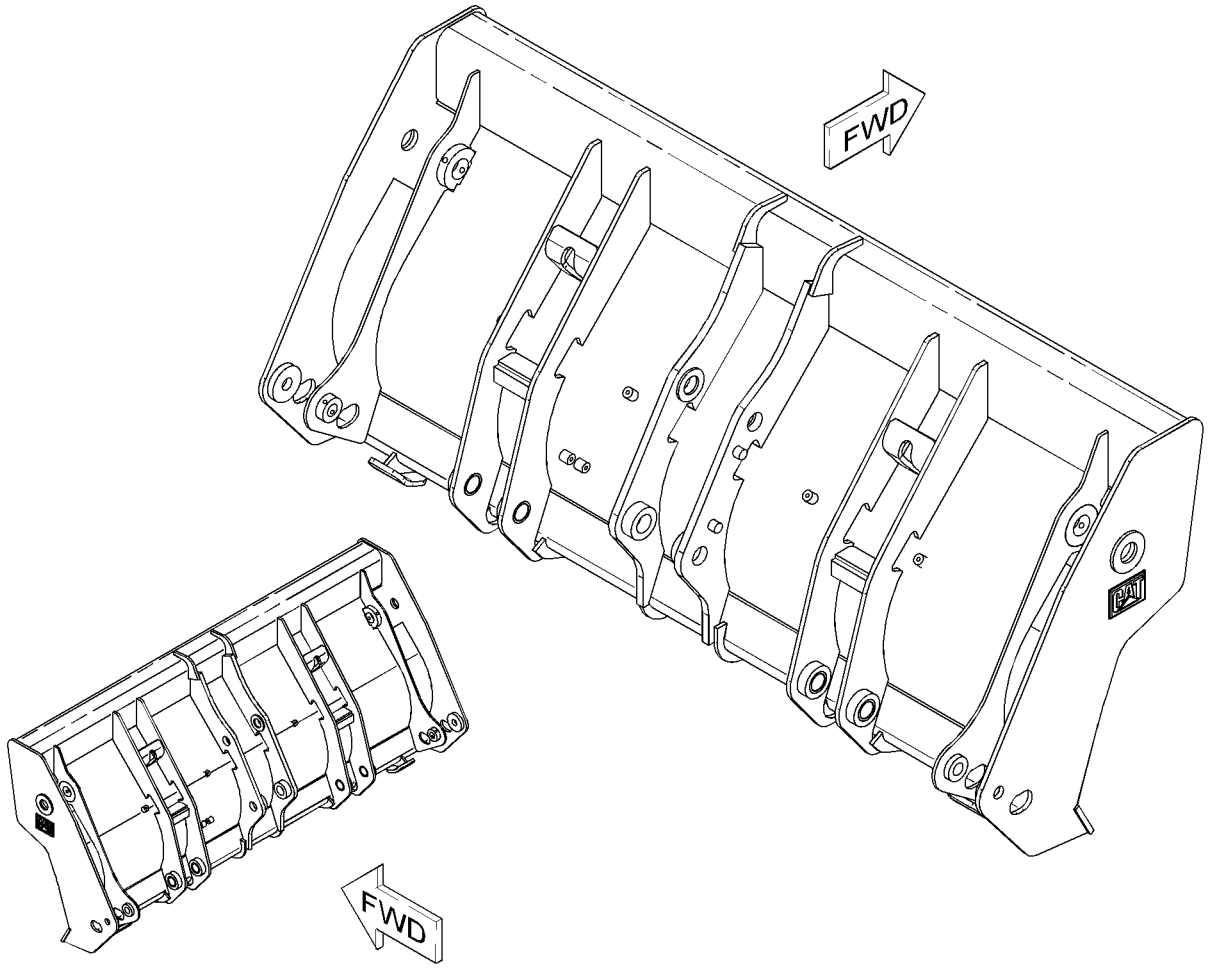

GRAPHIC #1 **<END>** g01657173

216-8811 BULLDOZER AS

S/N: HLS1-99999
PART OF 216-8801 BUCKET GP-MULTIPURPOSE
FIELD REPLACEMENT FOR 216-8802—PAGE 726
AN ATTACHMENT

SMCS-6050 **i02747048**

NOTE	REF NO	GRAPHIC REF	PART NUMBER	QTY	PART NAME 1 2 3 4 5 6 (PRODUCT LEVEL)	SEE PAGE
	1	1	**216-8778**	2	BRACKET	
	2	1	**216-8780**	1	BRACKET AS	
	3	1	**216-8781**	4	BRACKET	
Y	4	1	**216-8802**	1	BULLDOZER AS	726
	5	1	**224-6250**	2	PLATE	

Y-SEPARATE ILLUSTRATION

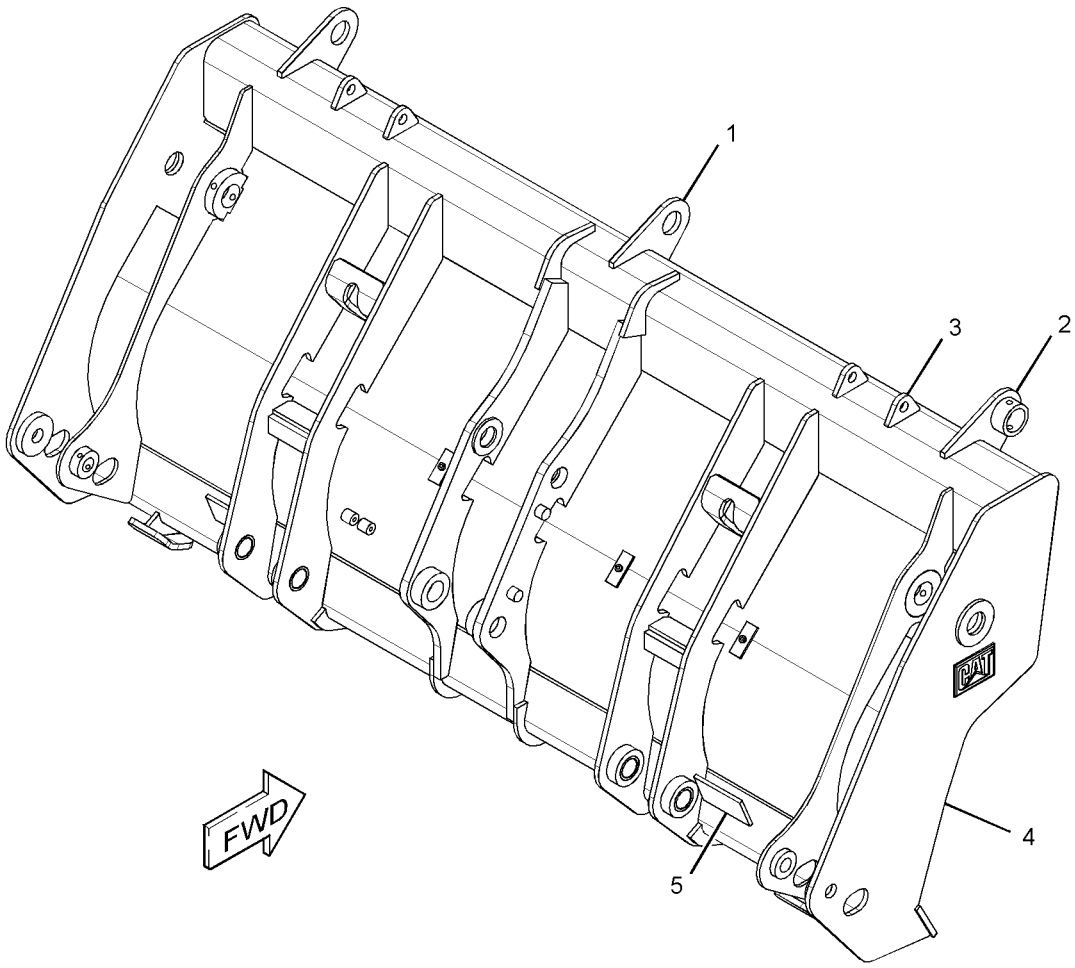

GRAPHIC #1 **<END>** g01385103

216-8822 BULLDOZER AS

S/N: HLS1-99999
PART OF 216-8820 BUCKET GP-MULTIPURPOSE, 216-8762 BULLDOZER AS
FIELD REPLACEMENT ORDER 216-8762—PAGE 725
AN ATTACHMENT

SMCS-6050 **i02236782**

NOTE	REF NO	GRAPHIC REF	PART NUMBER	QTY	PART NAME 1 2 3 4 5 6 (PRODUCT LEVEL)	SEE PAGE
	1	1	**9R-0111**	4	BEARING-SLEEVE	
	2	1	*216-8794*	1	BRACKET AS (LH)	
	2A	1	**161-4130**	1	PLATE-IDENTIFICATION (CAT)	
	3	1	*216-8796*	1	BRACKET AS (RH)	
	3A	1	**161-4130**	1	PLATE-IDENTIFICATION (CAT)	
M	4	1	**9R-5271**	6	BOSS (M10X1.5X25-MM)	

M-METRIC PART

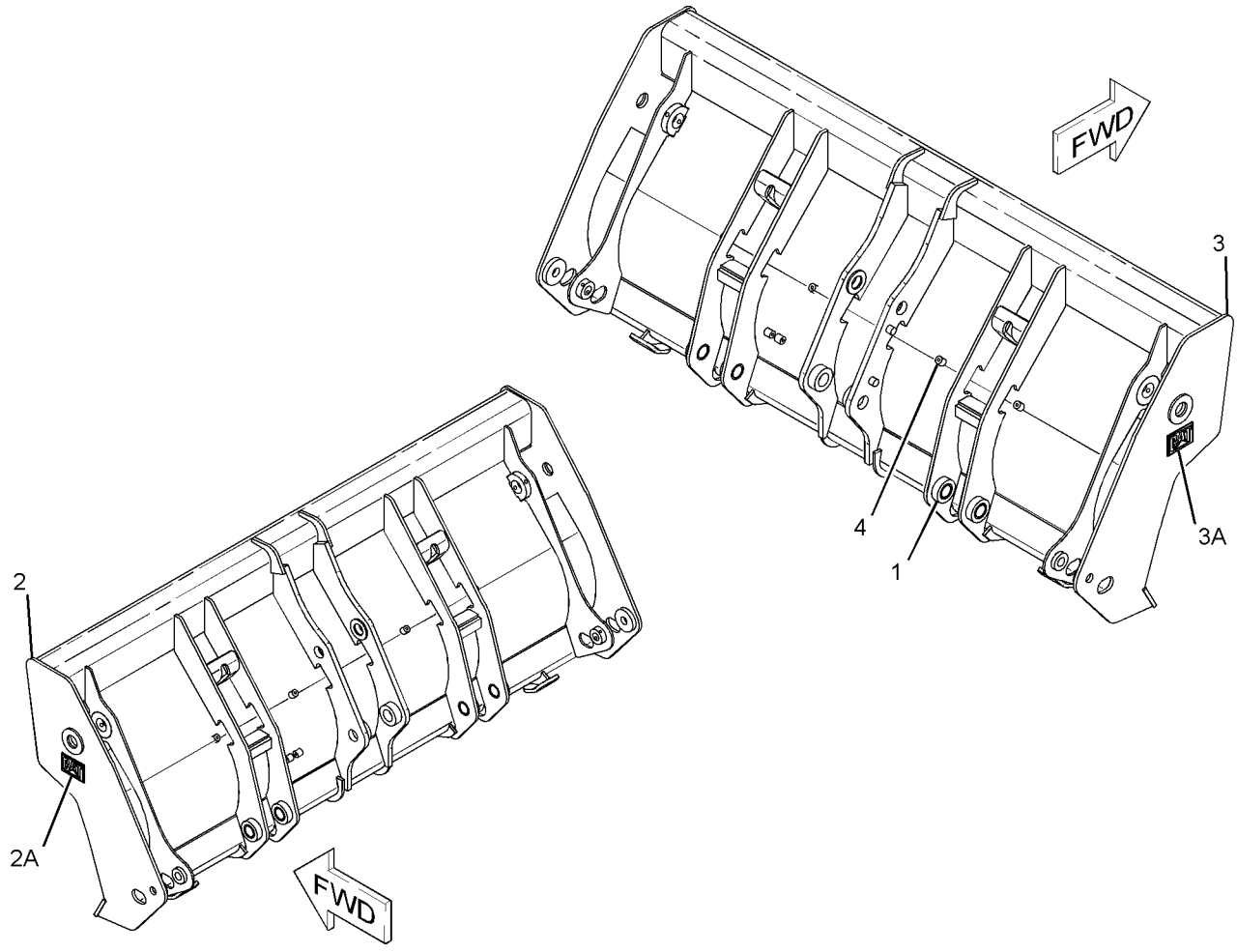

GRAPHIC #1 **<END>** g01134456

216-8803 CLAM AS-MULTIPURPOSE BUCKET

S/N: HLS1-99999
PART OF 216-8800, 216-8801 BUCKET GP-MULTIPURPOSE
AN ATTACHMENT

SMCS-6104 **i02236689**

NOTE	REF NO	GRAPHIC REF	PART NUMBER	QTY	PART NAME 1 2 3 4 5 6 (PRODUCT LEVEL)	SEE PAGE
	1	1	*216-8843*	1	PLATE AS	
		1	**216-8839**	1	PLATE (WEAR)	
		1	**9R-4672**	1	EDGE	

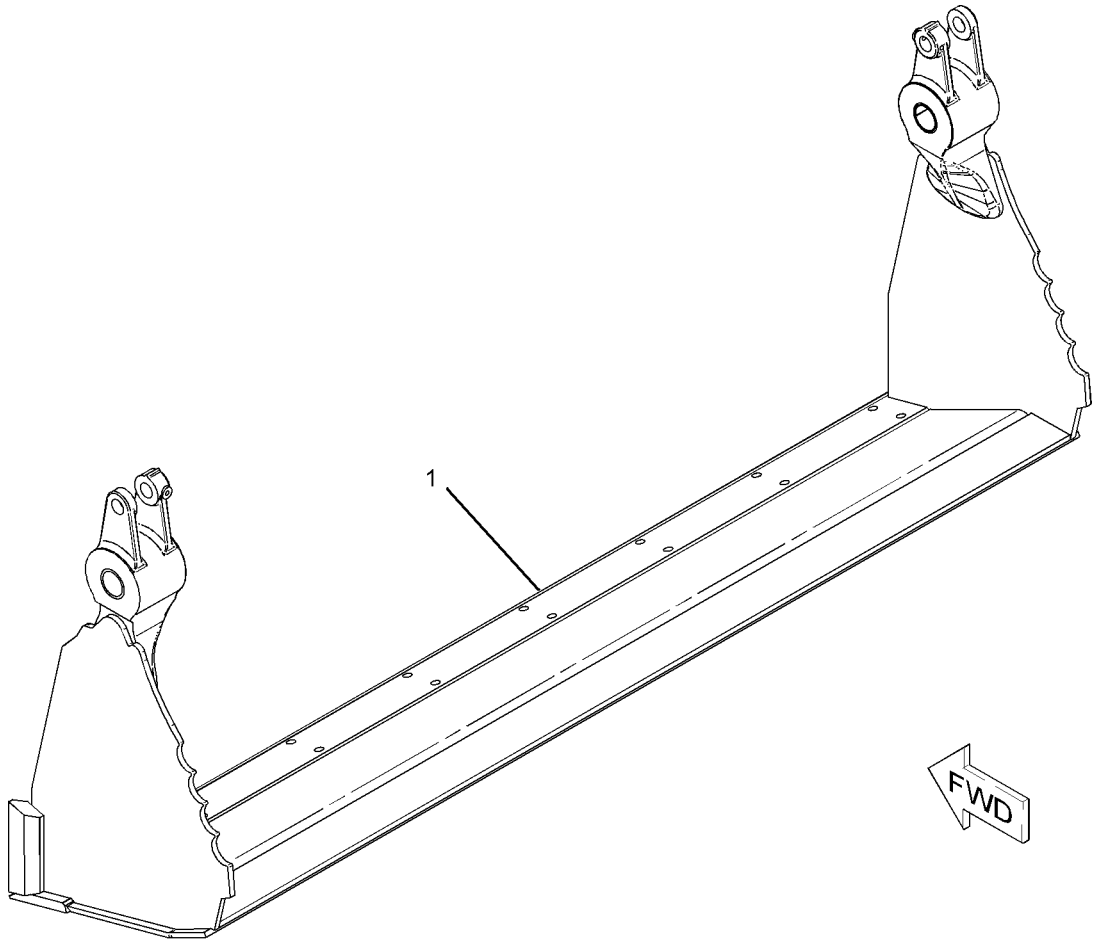

GRAPHIC #1 **<END>** g01134490

WORK TOOLS

216-8826 CLAM AS-MULTIPURPOSE BUCKET

S/N: HLS1-99999
PART OF 216-8820, 216-8821 BUCKET GP-MULTIPURPOSE
AN ATTACHMENT

SMCS-6104 **i02236747**

NOTE	REF NO	GRAPHIC REF	PART NUMBER	QTY	PART NAME 1 2 3 4 5 6 (PRODUCT LEVEL)	SEE PAGE
	1	1	*216-8804*	1	PLATE AS (LH)	
		1	**9R-4675**	1	BUSHING-TERMINAL	
		1	**9R-5294**	1	HINGE	
	2	1	*216-8805*	1	PLATE AS (RH)	
		1	**9R-4675**	1	BUSHING-TERMINAL	
		1	**9R-5294**	1	HINGE	
	3	1	*216-8829*	1	PLATE AS	
		1	**9R-5313**	1	EDGE	

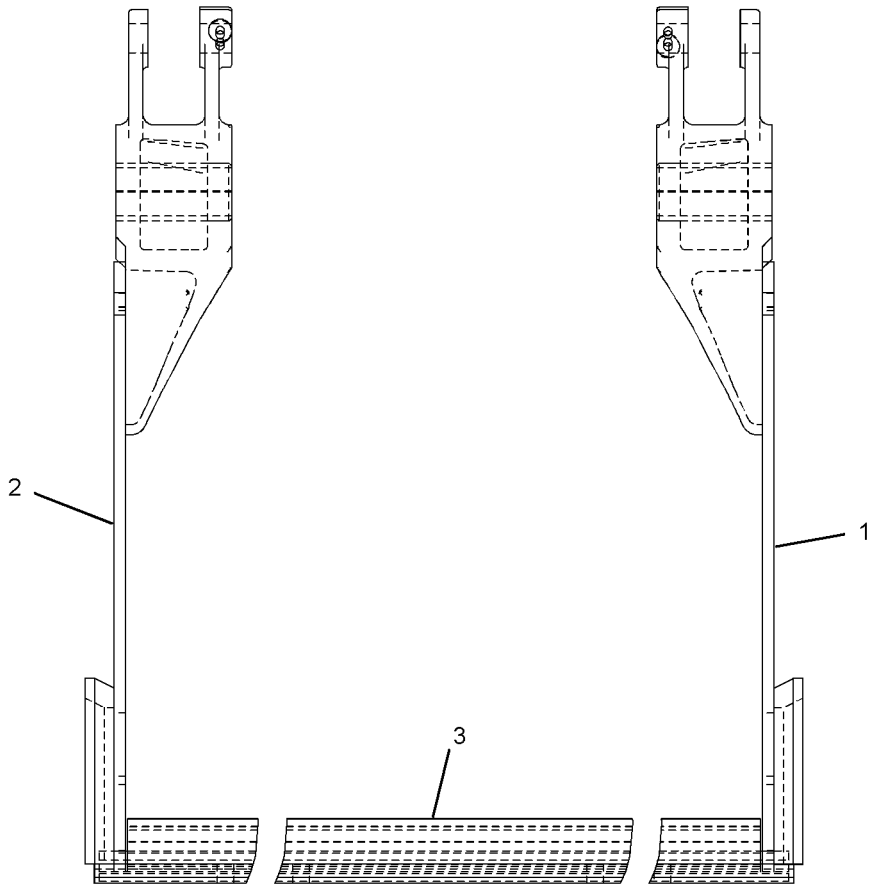

FRONT VIEW

GRAPHIC #1 **<END>** g01135645

WORK TOOLS

222-7379 COUPLER AR-QUICK—PIN-LOCK

S/N: HLS1-99999

AN ATTACHMENT

SMCS-6129 **i03257505**

NOTE	PART NUMBER	QTY	PART NAME 1 2 3 4 5 6 (PRODUCT LEVEL)	SEE PAGE
Y	*222-7464*	1	COUPLER GP-QUICK (PIN-LOCK)	734
Y	*216-0928*	1	PIN GP-COUPLER (PIN-LOCK)	746
Y	*215-9478*	1	PIN GP-COUPLER (MACHINE)	745

Y-SEPARATE ILLUSTRATION

<END>

WORK TOOLS

176-6251 COUPLER GP-QUICK–BACKHOE

S/N: HLS1-99999
PART OF 178-8850 COUPLER GP-QUICK
AN ATTACHMENT

SMCS-6129 **i02534983**

NOTE	REF NO	GRAPHIC REF	PART NUMBER	QTY	PART NAME 1 2 3 4 5 6 (PRODUCT LEVEL)	SEE PAGE
	1	1	**176-6252**	1	COUPLER	
	2	1	**200-5921**	1	HOOK	
	3	1	**132-3725**	1	SPRING	
	4	1	**132-3721**	1	PIN AS (HOOK)	
	5	1	**132-3723**	1	LOCK PIN	
	6	1	**091-5928**	1	FITTING-GREASE	
	7	1	**8T-0144**	1	PIN-SPRING	
F			**132-3821**	1	LEVER-ACTUATING	

F-NOT SHOWN

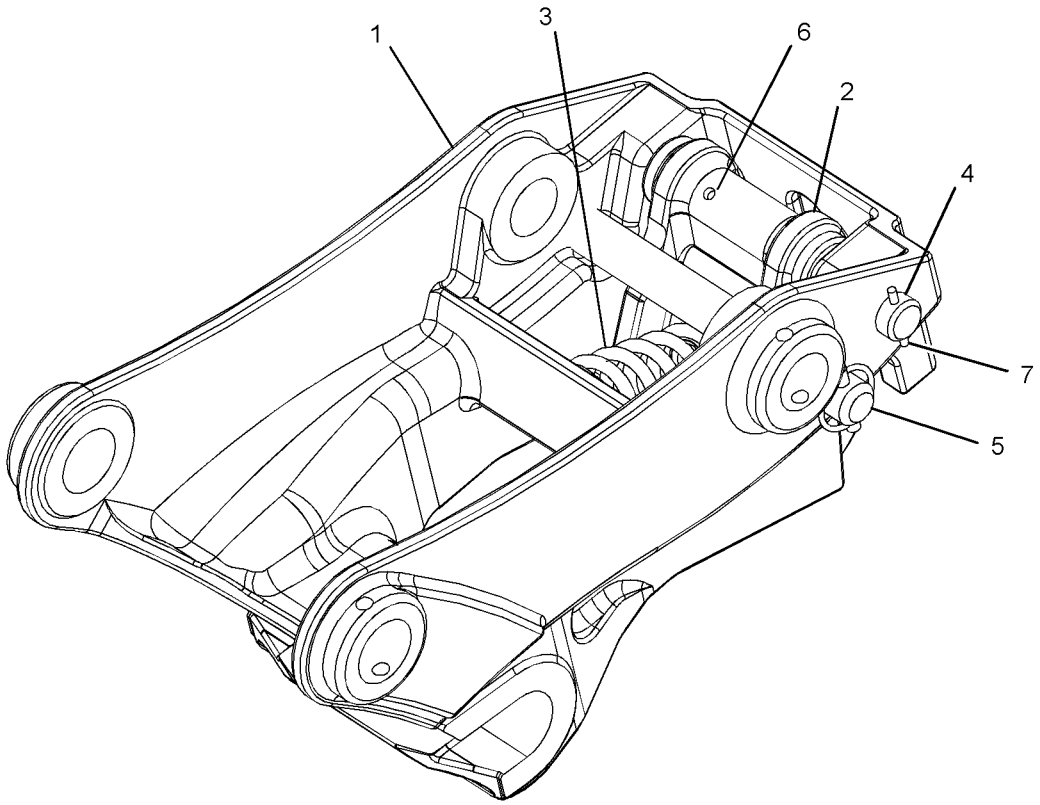

GRAPHIC #1 **<END>** g01268127

178-8850 COUPLER GP-QUICK–BACKHOE

S/N: HLS1-99999
FOR USE WITH 178-3593–PAGE 743
AN ATTACHMENT

SMCS-6129 **i02593679**

NOTE	REF NO	GRAPHIC REF	PART NUMBER	QTY	PART NAME 1 2 3 4 5 6 (PRODUCT LEVEL)	SEE PAGE
	1	1	**4J-1888**	2	PIN-COTTER	
	2	1	**132-3777**	1	PIN	
	3	1	**132-3778**	1	PIN	
Y	4	1	**176-6251**	1	COUPLER GP-QUICK (BACKHOE)	732

Y-SEPARATE ILLUSTRATION

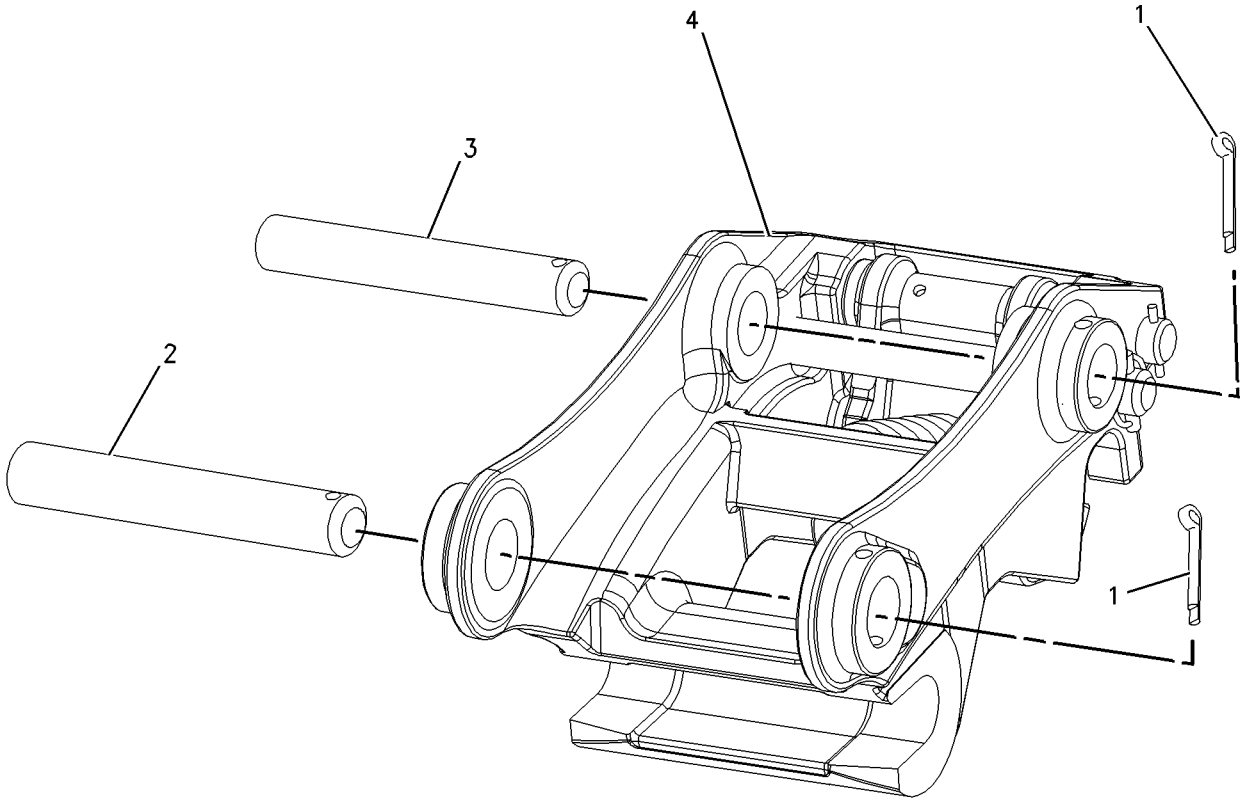

GRAPHIC #1 **<END>** g00904540

222-7464 COUPLER GP-QUICK–PIN-LOCK

S/N: HLS1-99999
PART OF 222-7379 COUPLER AR-QUICK
AN ATTACHMENT

SMCS-6129 **i02409083**

NOTE	REF NO	GRAPHIC REF	PART NUMBER	QTY	PART NAME 1 2 3 4 5 6 (PRODUCT LEVEL)	SEE PAGE
	1	1	**154-2704**	1	PLATE-INSTRUCTION (BUCKET SPECIFICATIONS)	
	2	1	**168-8389**	4	TACK-FASTENER	
	3	1	**276-1368**	2	BEARING-SLEEVE	
	4	1	**232-2735**	1	COUPLER AS	
	4A	1	**161-4130**	2	PLATE-IDENTIFICATION (CAT)	
	5	1	**3B-8489**	1	FITTING-GREASE	
	6	1	**9R-0320**	2	BEARING-SLEEVE	
	7	1	**9R-3700**	2	BEARING-SLEEVE	

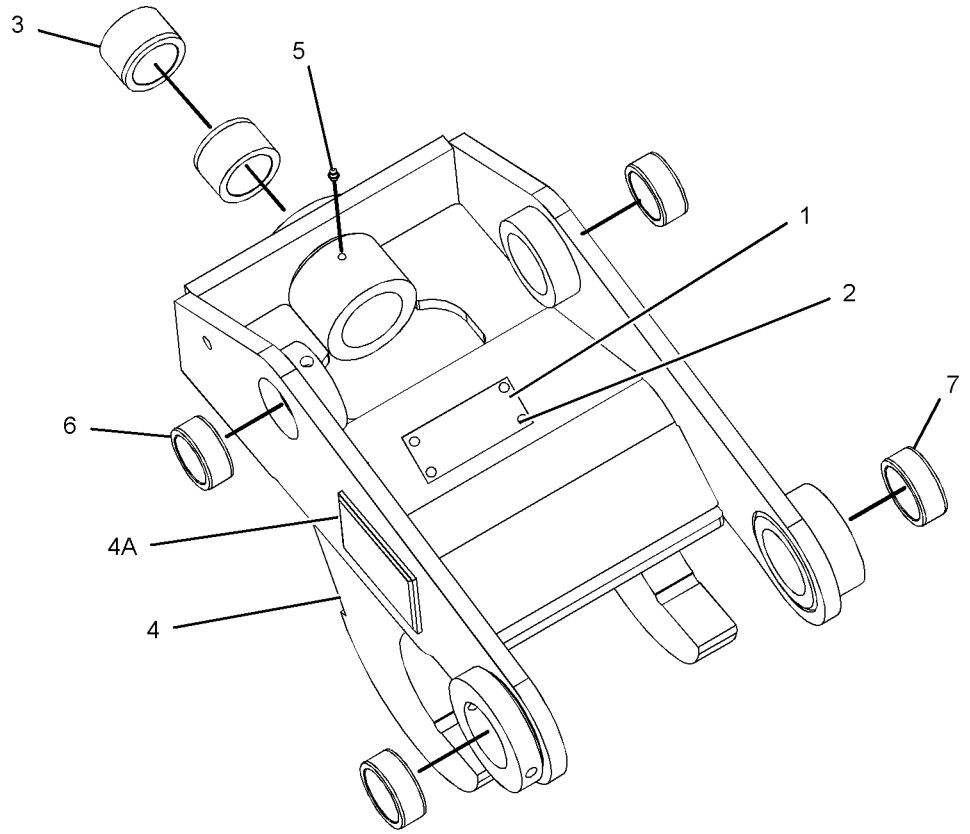

GRAPHIC #1 **<END>** g01072399

WORK TOOLS

229-7226 COUPLER GP-QUICK–CAT, CASE

S/N: HLS1-99999

AN ATTACHMENT

SMCS-6129 **i01889083**

NOTE	REF NO	GRAPHIC REF	PART NUMBER	QTY	PART NAME 1 2 3 4 5 6 (PRODUCT LEVEL)	SEE PAGE
B	1	1	**9R-0158**	15	WASHER (46X69X3-MM THK)	
	2	1	**145-8348**	1	PIN AS	
	3	1	**168-0425**	1	PIN	
	4	1	**168-0446**	1	PIN	
	5	1	**168-0475**	1	PIN AS	
B	6	1	**188-9592**	7	WASHER-THRUST (39X75X2.3-MM THK)	
	7	1	**229-5535**	1	COUPLER AS	
		1	**154-2704**	1	PLATE-INSTRUCTION (BUCKET SPECIFICATIONS)	
		1	**168-8389**	4	TACK-FASTENER	
	8	1	**096-1820**	1	PIN-COTTER	
	9	1	**3B-5319**	2	PIN-COTTER	
	10	1	**6V-3213**	2	RING-RETAINING	

B-USE AS REQUIRED

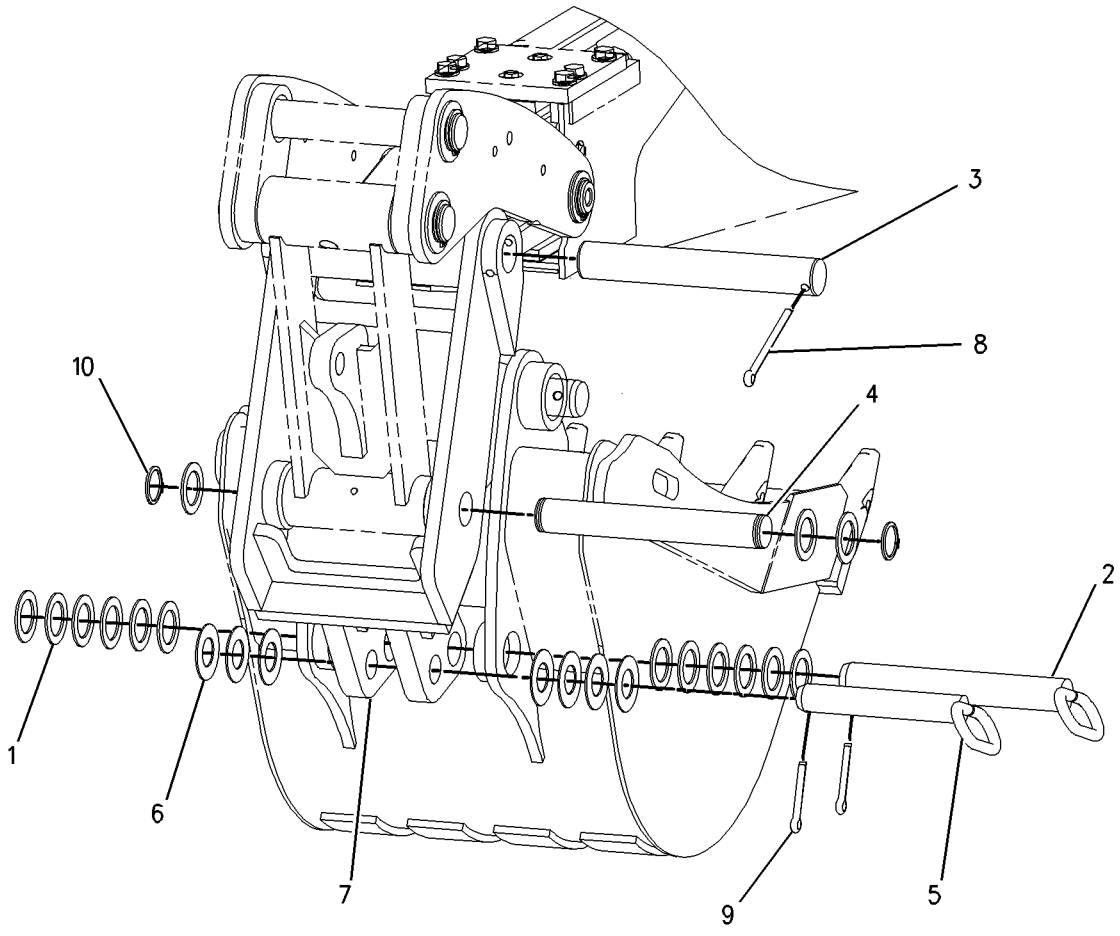

GRAPHIC #1 **<END>** g00981049

WORK TOOLS

229-7227 COUPLER GP-QUICK–CAT, DEERE

S/N: HLS1-99999

AN ATTACHMENT

SMCS-6129 **i02861524**

NOTE	REF NO	GRAPHIC REF	PART NUMBER	QTY	PART NAME 1 2 3 4 5 6 (PRODUCT LEVEL)	SEE PAGE
B	1	1	**9R-0158**	15	WASHER (46X69X3-MM THK)	
	2	1	**145-8348**	1	PIN AS	
	3	1	**168-0425**	1	PIN	
	4	1	**168-0446**	1	PIN	
	5	1	**168-0445**	1	PIN AS	
B	6	1	**9R-1510**	4	WASHER (51X82X4-MM THK)	
	7	1	**229-8253**	1	COUPLER AS	
	7A	1	**154-2704**	1	PLATE-INSTRUCTION (BUCKET SPECIFICATIONS)	
	7B	1	**168-8389**	4	TACK-FASTENER	
	8	1	**096-1820**	1	PIN-COTTER	
	9	1	**3B-5319**	2	PIN-COTTER	
	10	1	**6V-3213**	2	RING-RETAINING	

B-USE AS REQUIRED

229-7227 **COUPLER GP-QUICK** *(contd.)* **i02861524**

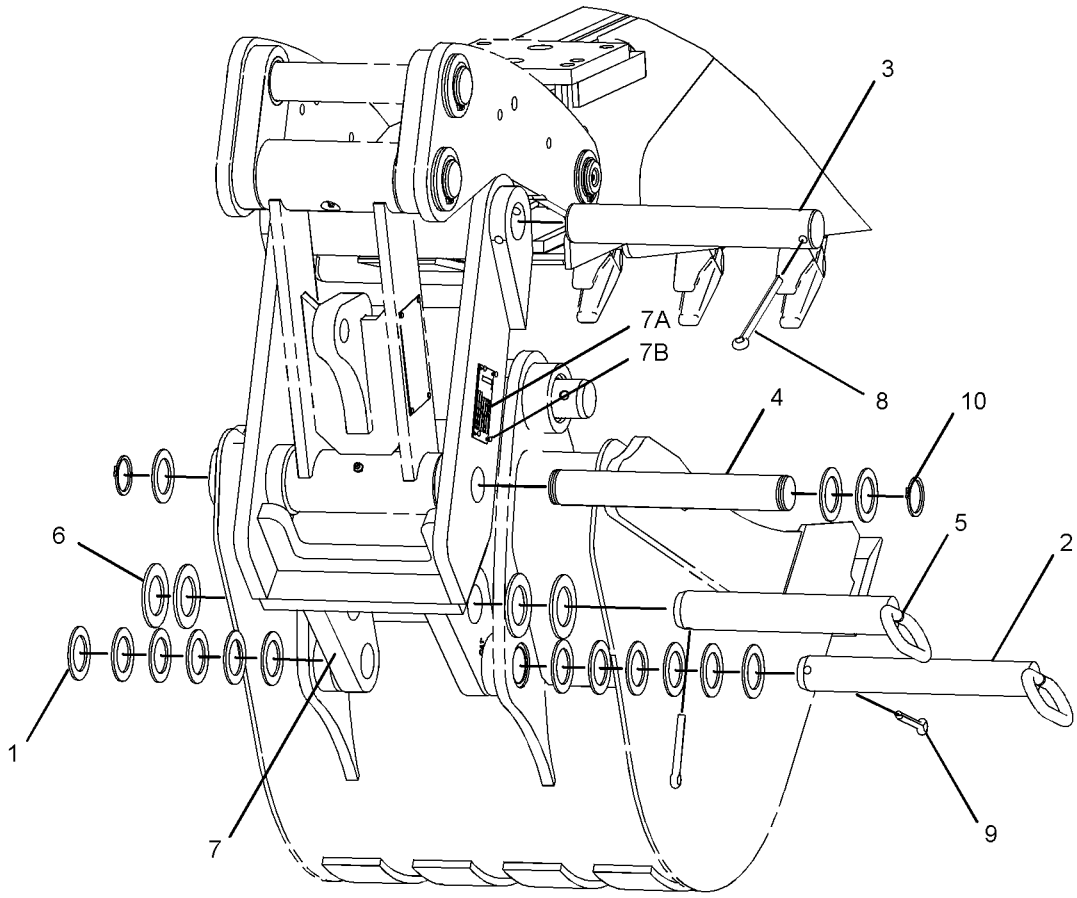

GRAPHIC #1 **<END>** g01425318

WORK TOOLS

9R-5320 EDGE GP-CUTTING

S/N: HLS1-99999

PART OF 232-2686, 232-2688 BUCKET AR-MULTIPURPOSE, 251-1775, 251-1781 BUCKET GP-GENERAL PURPOSE

FOR USE WITH 251-1783—PAGE 673, 216-8820—PAGE 723, 232-2690—PAGE 608, 251-1777—PAGE 670. CANNOT BE USED WITH 9R-5866—PAGE 787

AN ATTACHMENT

SMCS-6801 **i02238662**

NOTE	REF NO	GRAPHIC REF	PART NUMBER	QTY	PART NAME 1 2 3 4 5 6 (PRODUCT LEVEL)	SEE PAGE
	1	1	**118-7110**	2	EDGE-CUTTING	
	2	1	**4F-3657**	8	BOLT-PLOW (5/8-11X2.75-IN)	
	3	1	**4K-0367**	8	NUT-FULL (5/8-11-THD)	
	4	1	**8T-4122**	8	WASHER-HARD (17X32X3.5-MM THK)	

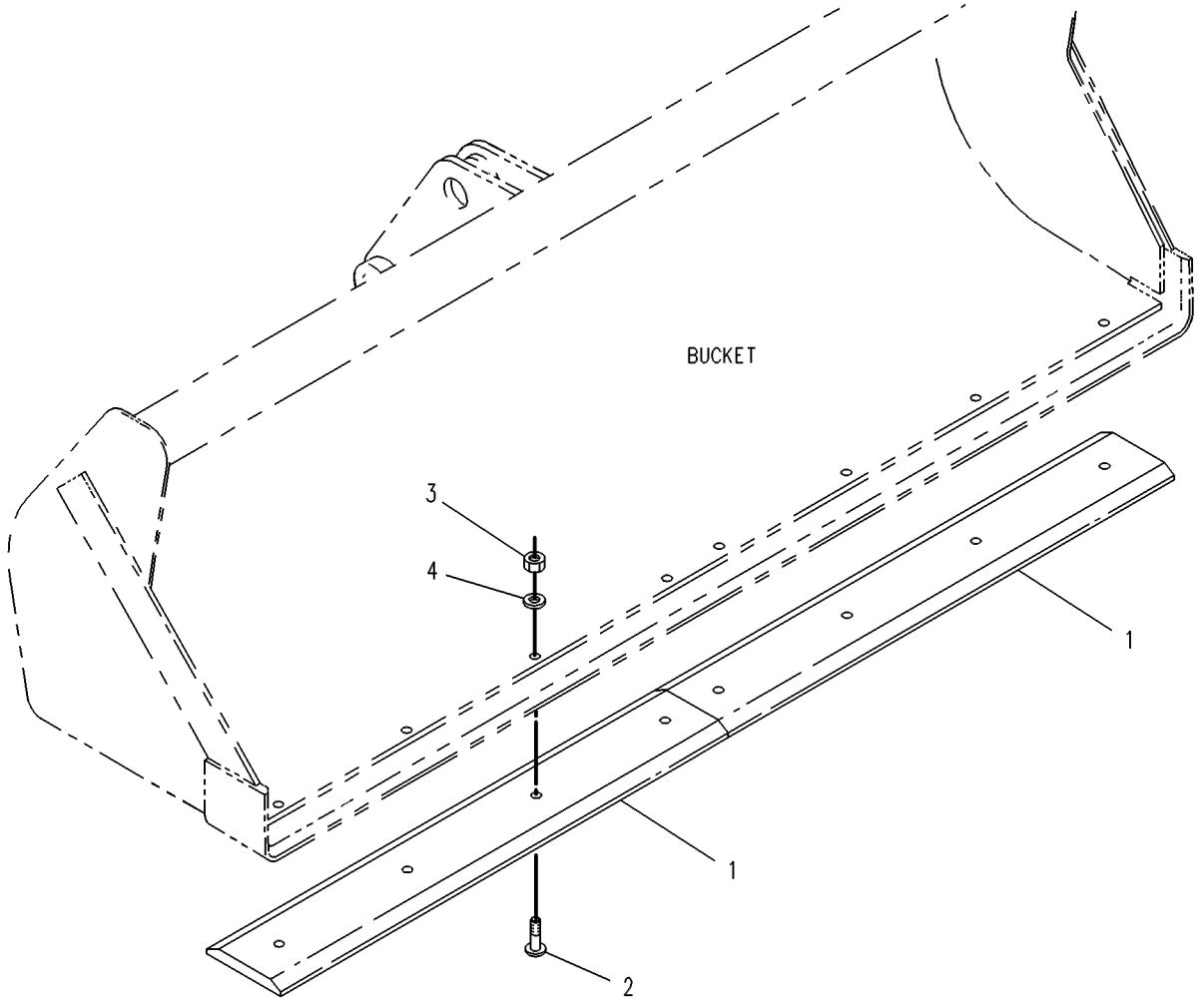

GRAPHIC #1 **<END>** g00131376

WORK TOOLS

9R-5321 EDGE GP-CUTTING

S/N: HLS1-99999

PART OF 232-2681, 232-2683 BUCKET AR-MULTIPURPOSE, 251-1778, 251-1784, 251-1787 BUCKET GP-GENERAL PURPOSE

FOR USE WITH 232-2685—PAGE 607, 251-1789—PAGE 674, 216-8800—PAGE 720, 251-1786—PAGE 674. CANNOT BE USED WITH 9R-5866—PAGE 787 AN ATTACHMENT

SMCS-6801 **i02238663**

NOTE	REF NO	GRAPHIC REF	PART NUMBER	QTY	PART NAME 1 2 3 4 5 6 (PRODUCT LEVEL)	SEE PAGE
	1	1	**9W-8215**	2	EDGE-CUTTING	
	2	1	**3F-5108**	8	BOLT-PLOW (5/8-11X2.25-IN)	
	3	1	**4K-0367**	8	NUT-FULL (5/8-11-THD)	
	4	1	**8T-4122**	8	WASHER-HARD (17X32X3.5-MM THK)	

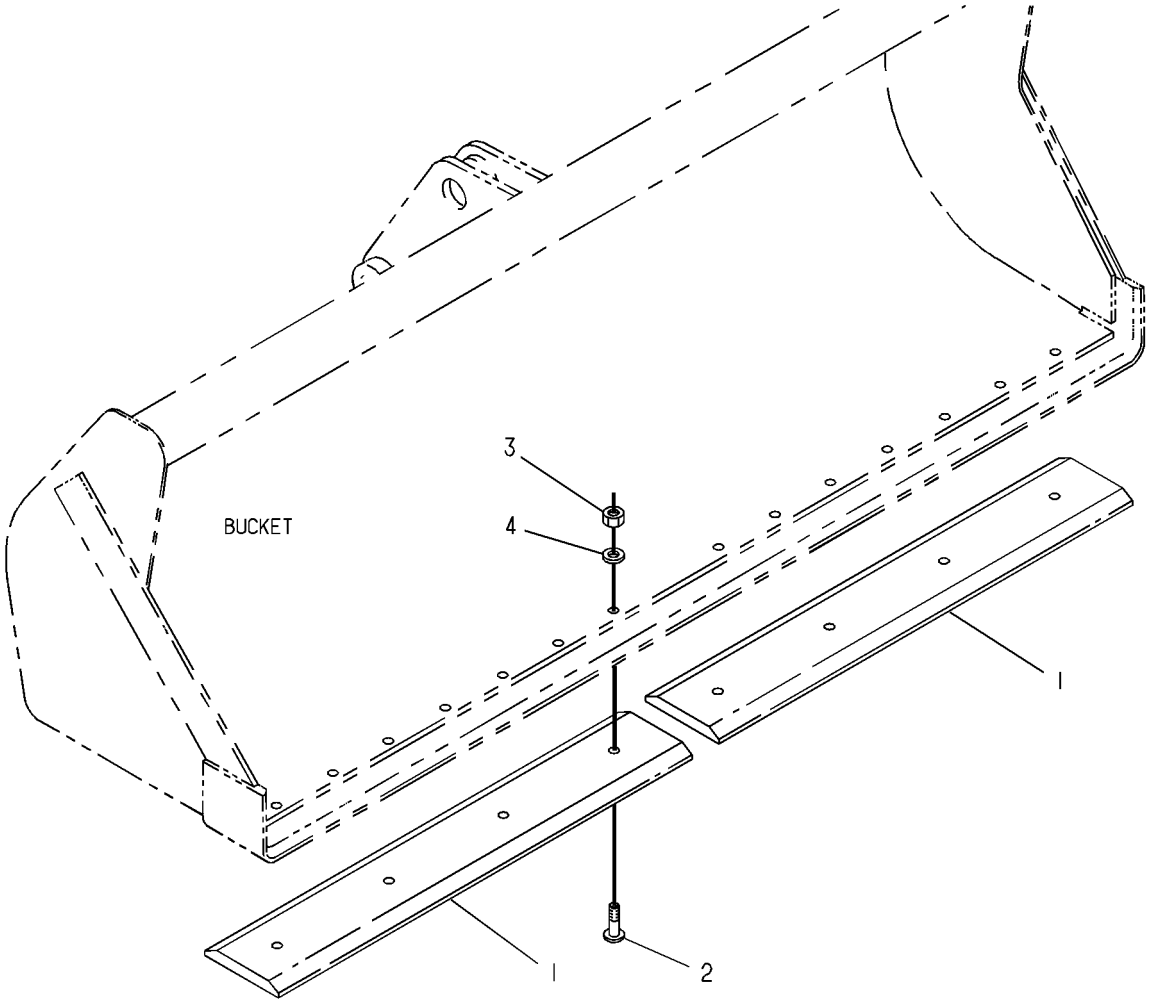

GRAPHIC #1 **<END>** g00130834

WORK TOOLS

286-2149 EDGE-CUTTING

S/N: HLS1-99999

FIELD INSTALLATION

SMCS-6801 **i02960480**

NOTE	REF NO	GRAPHIC REF	PART NUMBER	QTY	PART NAME 1 2 3 4 5 6 (PRODUCT LEVEL)	SEE PAGE
					(NO SERVICED PARTS)	

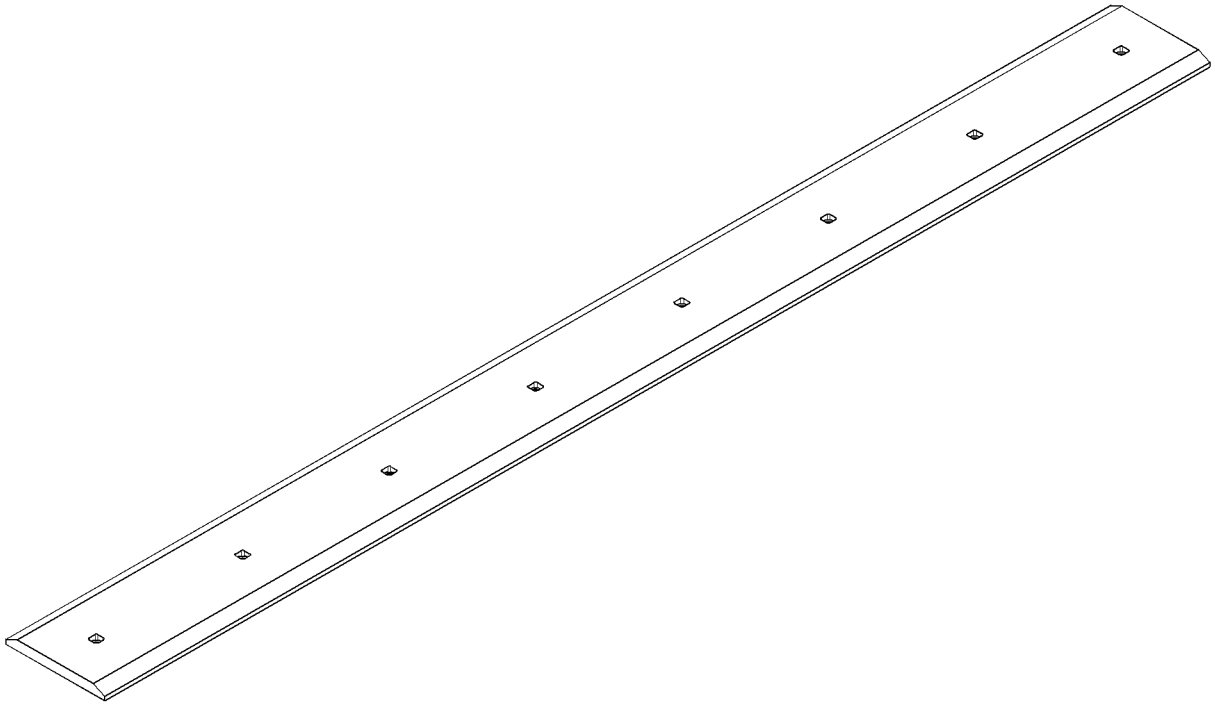

GRAPHIC #1 **<END>** g01501914

104-6310 FORK GP

S/N: HLS1-99999
PART OF 232-2685, 232-2690 BUCKET AR-MULTIPURPOSE
AN ATTACHMENT

SMCS-6405 **i02238666**

NOTE	REF NO	GRAPHIC REF	PART NUMBER	QTY	PART NAME 1 2 3 4 5 6 (PRODUCT LEVEL)	SEE PAGE
	1	1	**104-6311**	2	BRACKET AS	
	2	1	**104-6312**	2	FORK AS	
	3	1	**104-6316**	1	PIN	
	4	1	**104-6317**	2	PIN	
	5	1	**4J-1888**	1	PIN-COTTER	
	6	1	**9R-0109**	4	WASHER (41X64X3-MM THK)	
	7	1	**112-1776**	2	PIN AS	
	8	1	**6V-8144**	4	RING-RETAINING	
	9	1	**5D-8159**	2	PIN AS	

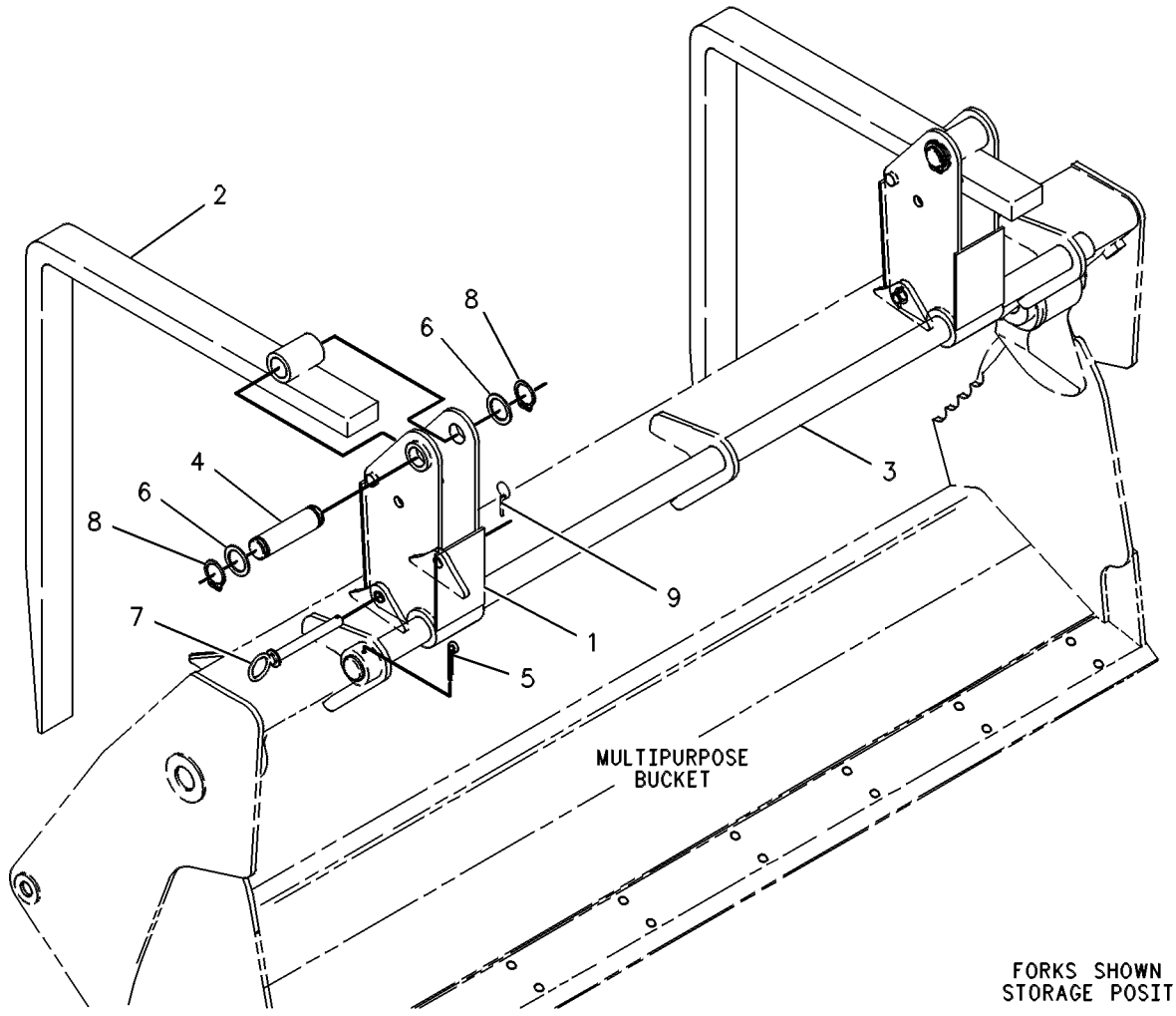

GRAPHIC #1 **<END>** g00131084

WORK TOOLS

270-3203 GUARD GP-WORK TOOL

S/N: HLS1-99999

AN ATTACHMENT

SMCS-6700, 6800 **i02448683**

NOTE	REF NO	GRAPHIC REF	PART NUMBER	QTY	PART NAME 1 2 3 4 5 6 (PRODUCT LEVEL)	SEE PAGE
	1	1	**270-3206**	1	PLATE AS	
M	2	1	**8T-4184**	4	BOLT (M12X1.75X45-MM)	
	3	1	**8T-4223**	16	WASHER-HARD (13.5X25.5X3-MM THK)	

M-METRIC PART

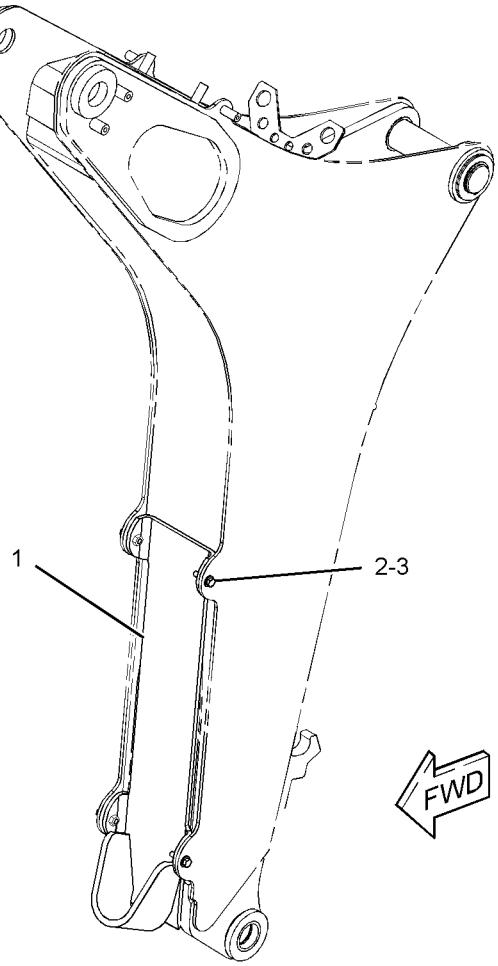

GRAPHIC #1 **<END>** g01230740

WORK TOOLS

178-3593 MOUNTING GP-BUCKET

S/N: HLS1-99999
QUICK COUPLER-BACKHOE
FOR USE WITH HIGH ROTATION BUCKETS, 178-8850—PAGE 733. CANNOT BE USED WITH 12" BUCKETS
AN ATTACHMENT

SMCS-6101 **i02597559**

NOTE	PART NUMBER	QTY	PART NAME 1 2 3 4 5 6 (PRODUCT LEVEL)	SEE PAGE
	154-5279	1	PIN	
	154-5280	1	PIN	
	3B-5319	4	PIN-COTTER	
B	**9R-0158**	5	WASHER (46X69X3-MM THK)	
B	**9R-1510**	5	WASHER (51X82X4-MM THK)	

B-USE AS REQUIRED

<END>

WORK TOOLS

225-4323 MOUNTING GP-MAST—GRADE CONTROL

S/N: HLS1-99999

PART OF 246-8045, 295-3179 GRADE CONTROL AR-LASER

AN ATTACHMENT

SMCS-79NS **i02586808**

NOTE	REF NO	GRAPHIC REF	PART NUMBER	QTY	PART NAME 1 2 3 4 5 6 (PRODUCT LEVEL)	SEE PAGE
	1	1	**9W-4361**	1	MOUNT-FLEXIBLE	
	2	1	**225-4324**	1	PLATE AS	
M		1	**8T-3612**	4	NUT-WELD (M8X1.25-THD)	
		1	**091-4113**	1	SPACER	
	3	1	**225-4326**	1	PLATE	
	4	1	**251-6708**	1	PLATE	
	5	1	**2H-3740**	1	BOLT (3/4-16X1.25-IN)	
	6	1	**5P-8248**	1	WASHER-HARD (20X36.5X3.5-MM THK)	
	7	1	**6V-1869**	1	GROMMET	
	8	1	**6V-8801**	2	NUT (3/8-16-THD)	
	9	1	**8T-4121**	8	WASHER-HARD (11X21X2.5-MM THK)	
M	10	1	**8T-4133**	1	NUT (M10X1.5-THD)	
M	11	1	**8T-4136**	5	BOLT (M10X1.5X25-MM)	
M	12	1	**8T-4137**	2	BOLT (M10X1.5X20-MM)	
	13	1	**8T-4224**	6	WASHER-HARD (8.8X16X2-MM THK)	
M	14	1	**8T-4908**	4	BOLT (M8X1.25X25-MM)	

M-METRIC PART

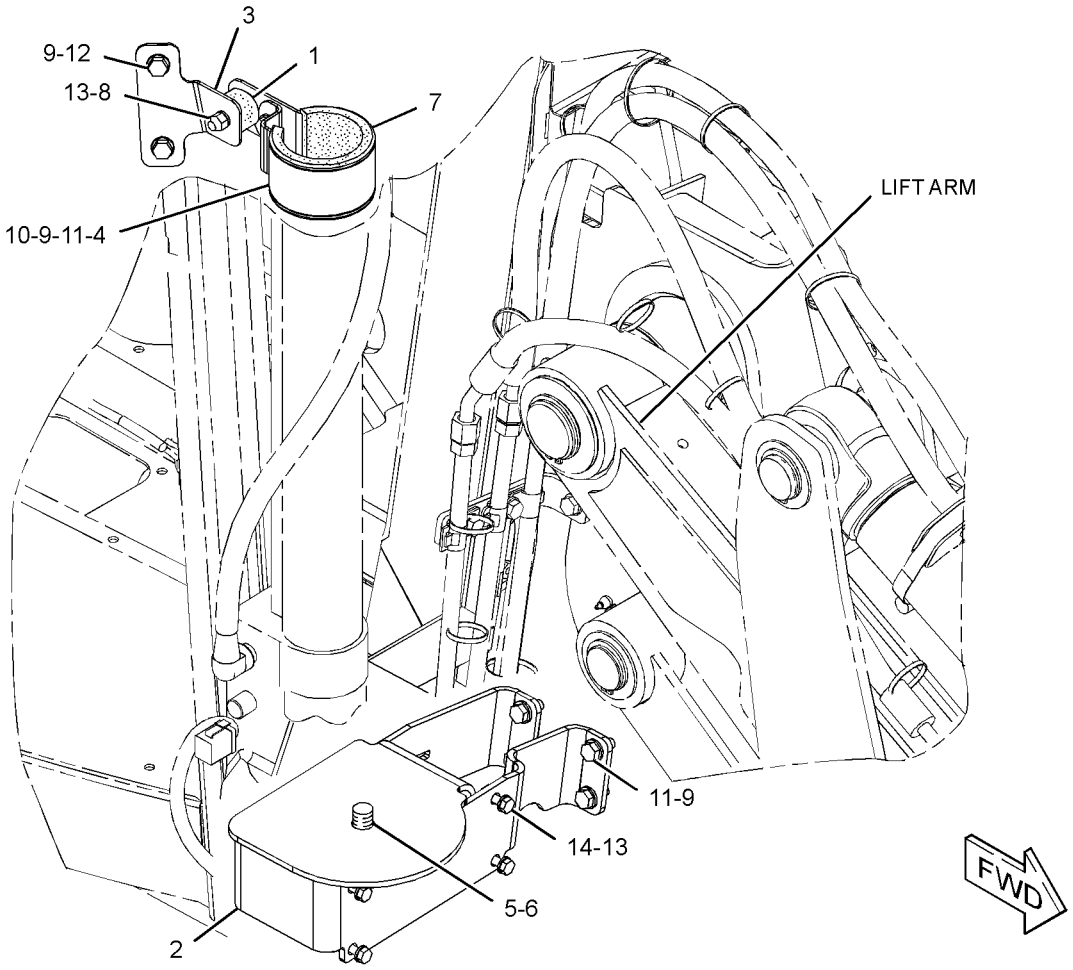

GRAPHIC #1 **<END>** g01302221

WORK TOOLS

215-9478 PIN GP-COUPLER—MACHINE

S/N: HLS1-99999
PART OF 222-7379 COUPLER AR-QUICK
AN ATTACHMENT

SMCS-6129 **i02445881**

NOTE	REF NO	GRAPHIC REF	PART NUMBER	QTY	PART NAME 1 2 3 4 5 6 (PRODUCT LEVEL)	SEE PAGE
	1	1	**215-3373**	1	PIN	
	2	1	**168-0425**	1	PIN	
M	3	1	**6V-7744**	2	LOCKNUT (M10X1.5-THD)	
M	4	1	**8T-4198**	2	BOLT (M10X1.5X100-MM)	

M-METRIC PART

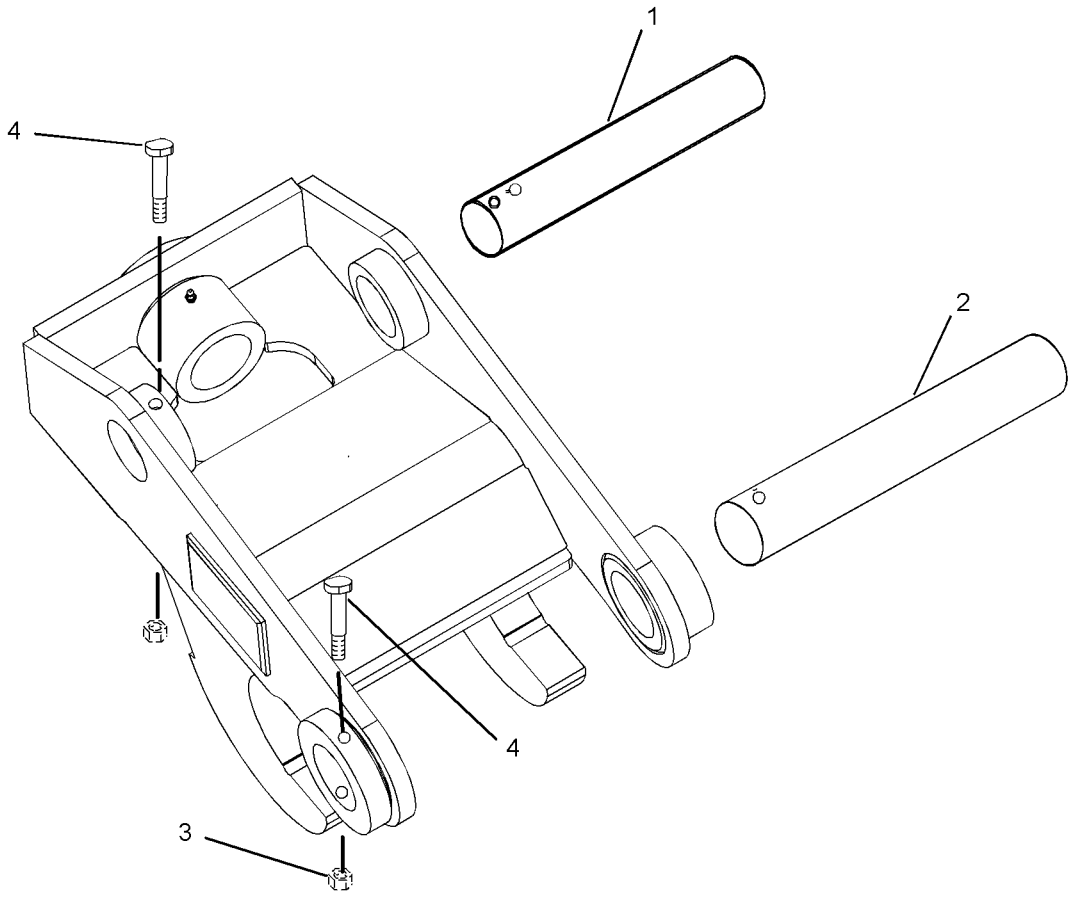

GRAPHIC #1 **<END>** g01224240

WORK TOOLS

216-0928 PIN GP-COUPLER—PIN-LOCK

S/N: HLS1-99999
PART OF 222-7379 COUPLER AR-QUICK
AN ATTACHMENT

SMCS-6129 **i02445882**

NOTE	REF NO	GRAPHIC REF	PART NUMBER	QTY	PART NAME 1 2 3 4 5 6 (PRODUCT LEVEL)	SEE PAGE
	1	1	**222-7411**	1	PIN AS	
	2	1	**216-3712**	1	PIN	

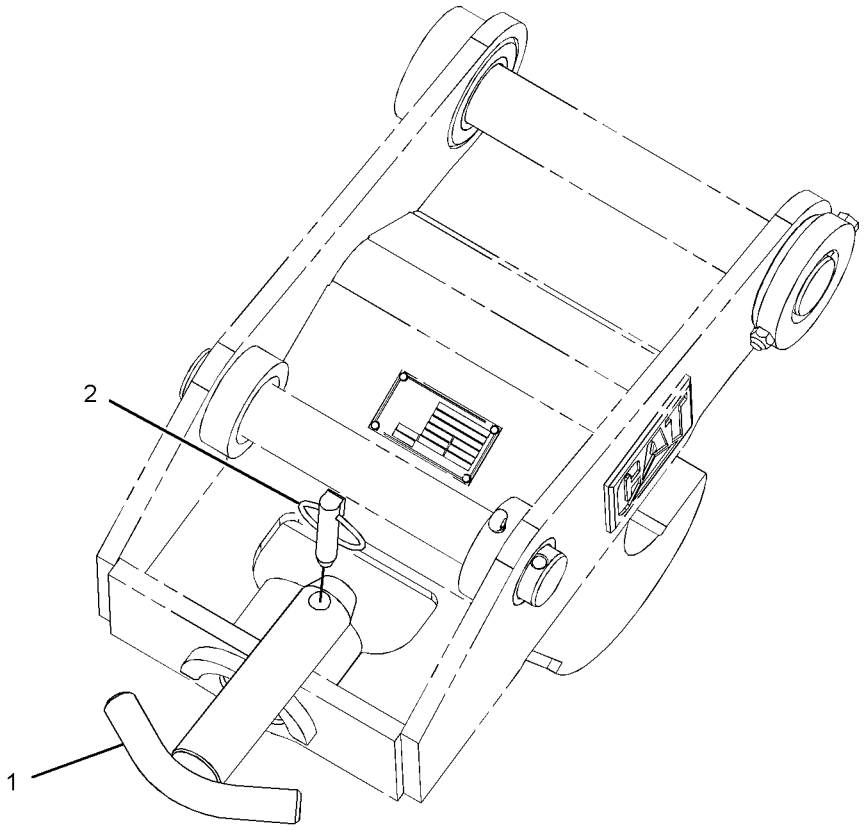

GRAPHIC #1 **<END>** g01239833

WORK TOOLS

221-4260 THUMB AR–BACKHOE

S/N: HLS1-99999
PART OF 224-6232, 224-6233, 224-6234, 224-6235 THUMB AR
AN ATTACHMENT

SMCS-6547 **i02837663**

NOTE	PART NUMBER	QTY	PART NAME 1 2 3 4 5 6 (PRODUCT LEVEL)	SEE PAGE
Y	*221-4265*	1	MOUNTING GP-CYLINDER (THUMB)	509
Y	*221-4267*	1	THUMB GP (BACKHOE)	783
Y-SEPARATE ILLUSTRATION				

<END>

224-6232 THUMB AR–24-IN, MANUAL

S/N: HLS1-99999
AN ATTACHMENT

SMCS-6547 **i02837664**

NOTE	PART NUMBER	QTY	PART NAME 1 2 3 4 5 6 (PRODUCT LEVEL)	SEE PAGE
Y	**221-4276**	1	LINK GP-THUMB (ADJUSTABLE)	563
Y	**221-4260**	1	THUMB AR (BACKHOE)	747
	221-4282	1	TINE AS-THUMB (24-IN)	
Y-SEPARATE ILLUSTRATION				

<END>

224-6233 THUMB AR–24-IN, MANUAL, WITH COUPLER

S/N: HLS1-99999
AN ATTACHMENT

SMCS-6547 **i02837667**

NOTE	PART NUMBER	QTY	PART NAME 1 2 3 4 5 6 (PRODUCT LEVEL)	SEE PAGE
Y	**221-4276**	1	LINK GP-THUMB (ADJUSTABLE)	563
Y	**221-4260**	1	THUMB AR (BACKHOE)	747
	221-4283	1	TINE AS-THUMB (24-IN)	
Y-SEPARATE ILLUSTRATION				

<END>

224-6234 THUMB AR–24-IN, ROCK, MANUAL

S/N: HLS1-99999
AN ATTACHMENT

SMCS-6547 **i02837679**

NOTE	PART NUMBER	QTY	PART NAME 1 2 3 4 5 6 (PRODUCT LEVEL)	SEE PAGE
Y	**221-4276**	1	LINK GP-THUMB (ADJUSTABLE)	563
Y	**221-4260**	1	THUMB AR (BACKHOE)	747
	221-4284	1	TINE AS-THUMB (24-IN, ROCK)	
Y-SEPARATE ILLUSTRATION				

<END>

WORK TOOLS

224-6235 THUMB AR—24-IN, ROCK, MANUAL, WITH COUPLER

S/N: HLS1-99999

AN ATTACHMENT

SMCS-6547 **i02837670**

NOTE	PART NUMBER	QTY	PART NAME 1 2 3 4 5 6 (PRODUCT LEVEL)	SEE PAGE
Y	**221-4276**	1	LINK GP-THUMB (ADJUSTABLE)	563
Y	**221-4260**	1	THUMB AR (BACKHOE)	747
	221-4285	1	TINE AS-THUMB (24-IN, ROCK)	

Y-SEPARATE ILLUSTRATION

<END>

WORK TOOLS

271-3024 THUMB AR–24-IN, HYD, HEAVY-DUTY

S/N: HLS1-99999

AN ATTACHMENT

SMCS-6547 **i03527884**

NOTE	REF NO	GRAPHIC REF	PART NUMBER	QTY	PART NAME 1 2 3 4 5 6 (PRODUCT LEVEL)	SEE PAGE
	1	1	**221-4282**	1	TINE AS-THUMB (24-IN)	
Y	2	1	*224-6237*	1	CYLINDER & LINES GP-THUMB	385
Y	3	1	*271-3023*	1	THUMB GP (BACKHOE, COMMON)	784

Y-SEPARATE ILLUSTRATION

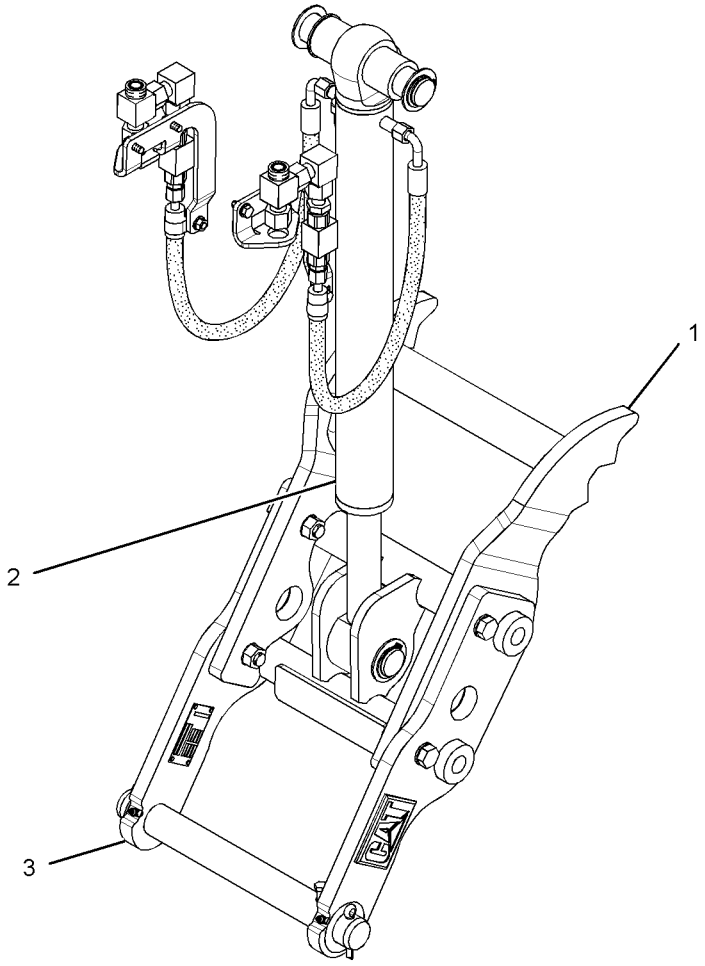

GRAPHIC #1 **<END>** g01383761

271-3025 THUMB AR–24-IN, HYD, HEAVY-DUTY, WITH COUPLER

S/N: HLS1-99999

AN ATTACHMENT

SMCS-6547 **i03527920**

NOTE	REF NO	GRAPHIC REF	PART NUMBER	QTY	PART NAME 1 2 3 4 5 6 (PRODUCT LEVEL)	SEE PAGE
	1	1	**221-4283**	1	TINE AS-THUMB (24-IN)	
Y	2	1	*224-6237*	1	CYLINDER & LINES GP-THUMB	385
Y	3	1	*271-3023*	1	THUMB GP (BACKHOE, COMMON)	784

Y-SEPARATE ILLUSTRATION

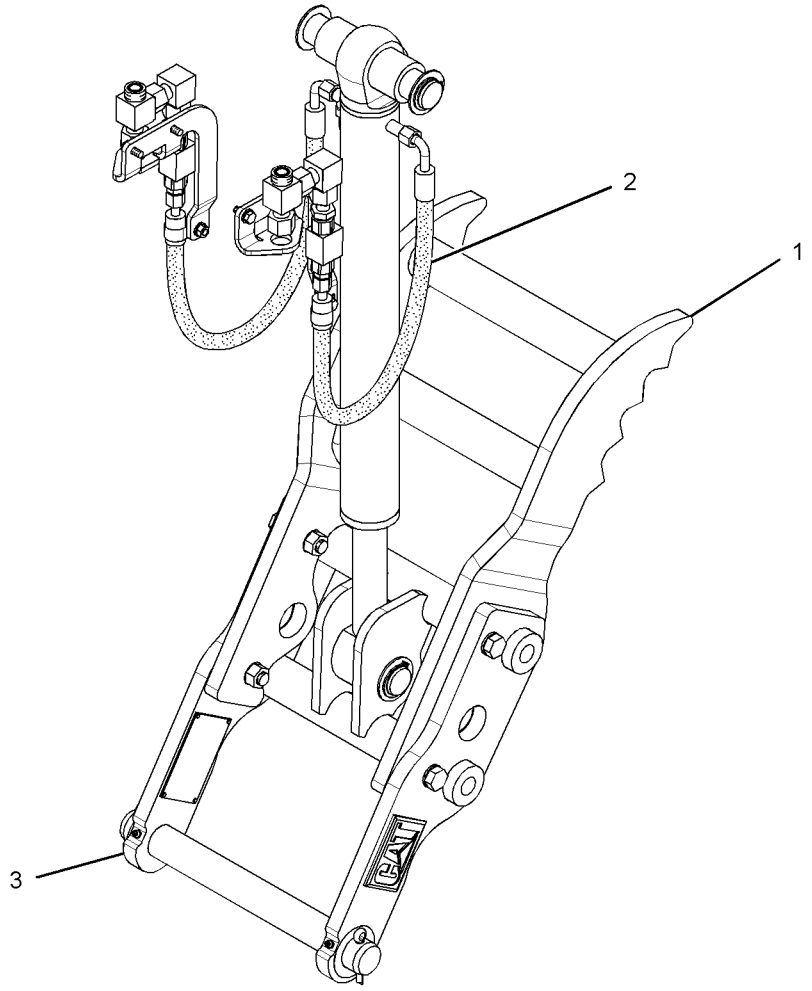

GRAPHIC #1 **<END>** g01384135

WORK TOOLS

271-3026 THUMB AR–24-IN, HYD, ROCK

S/N: HLS1-99999

AN ATTACHMENT

SMCS-6547 **i03527930**

NOTE	REF NO	GRAPHIC REF	PART NUMBER	QTY	PART NAME 1 2 3 4 5 6 (PRODUCT LEVEL)	SEE PAGE
	1	1	**221-4284**	1	TINE AS-THUMB (24-IN, ROCK)	
Y	2	1	*224-6237*	1	CYLINDER & LINES GP-THUMB	385
Y	3	1	*271-3023*	1	THUMB GP (BACKHOE, COMMON)	784

Y-SEPARATE ILLUSTRATION

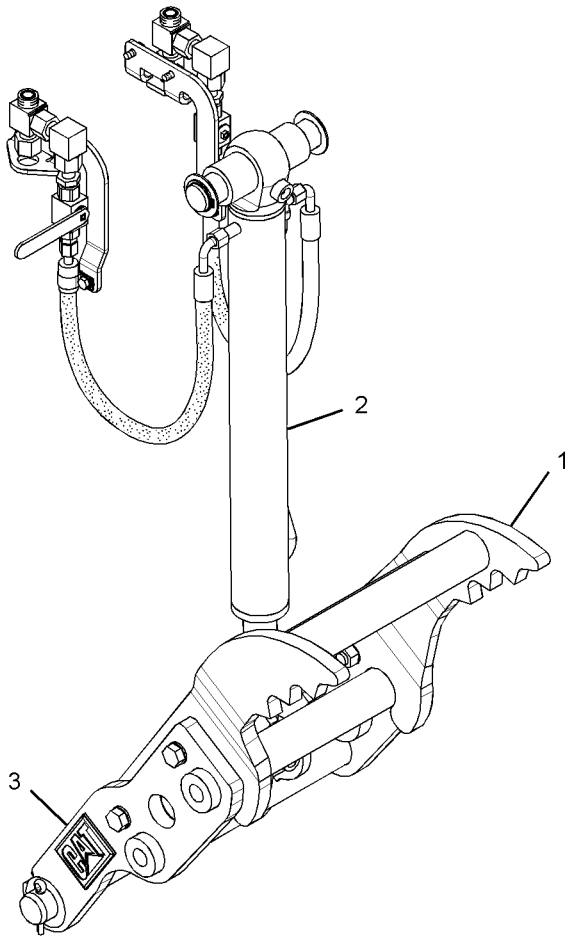

GRAPHIC #1 **<END>** g01370673

WORK TOOLS

271-3027 THUMB AR–24-IN, HYD, ROCK, WITH COUPLER

S/N: HLS1-99999

AN ATTACHMENT

SMCS-6547 **i03527940**

NOTE	REF NO	GRAPHIC REF	PART NUMBER	QTY	PART NAME 1 2 3 4 5 6 (PRODUCT LEVEL)	SEE PAGE
	1	1	**221-4285**	1	TINE AS-THUMB (24-IN, ROCK)	
Y	2	1	*224-6237*	1	CYLINDER & LINES GP-THUMB	385
Y	3	1	*271-3023*	1	THUMB GP (BACKHOE, COMMON)	784

Y-SEPARATE ILLUSTRATION

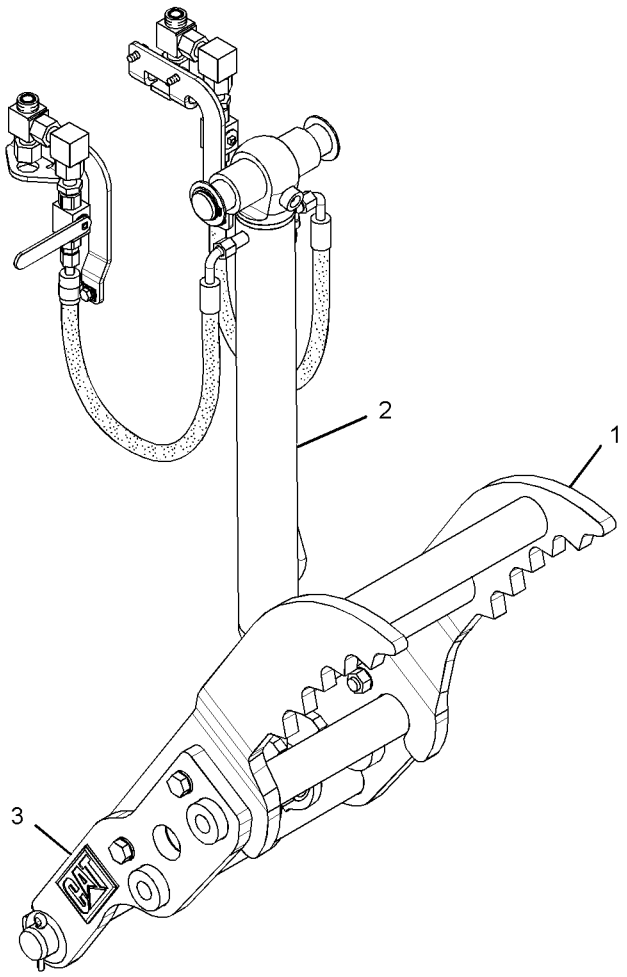

GRAPHIC #1 **<END>** g01370638

WORK TOOLS

271-3028 THUMB AR—24-IN, MANUAL, HEAVY-DUTY

S/N: HLS1-99999

AN ATTACHMENT

SMCS-6547 **i03514489**

NOTE	REF NO	GRAPHIC REF	PART NUMBER	QTY	PART NAME 1 2 3 4 5 6 (PRODUCT LEVEL)	SEE PAGE
	1	1	**221-4282**	1	TINE AS-THUMB (24-IN)	
	2	1	*263-8576*	1	LINK GP-THUMB	
		1	**221-4272**	1	LINK AS (INNER)	
		1	**224-4527**	1	PIN AS	
		1	**263-8575**	1	LINK AS (OUTER)	
Y	3	1	*271-3023*	1	THUMB GP (BACKHOE, COMMON)	784

Y-SEPARATE ILLUSTRATION

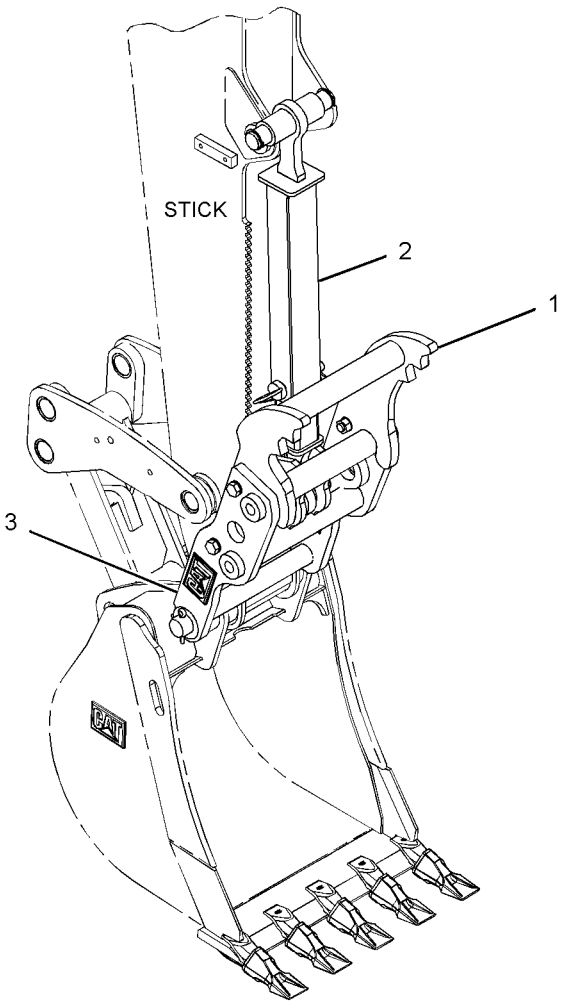

GRAPHIC #1

<END>

g01230547

271-3029 THUMB AR–24-IN, MANUAL, HEAVY-DUTY, WITH COUPLER

S/N: HLS1-99999

AN ATTACHMENT

SMCS-6547 **i03514490**

NOTE	REF NO	GRAPHIC REF	PART NUMBER	QTY	PART NAME 1 2 3 4 5 6 (PRODUCT LEVEL)	SEE PAGE
	1	1	**221-4283**	1	TINE AS-THUMB (24-IN)	
	2	1	*263-8576*	1	LINK GP-THUMB	
		1	**221-4272**	1	LINK AS (INNER)	
		1	**224-4527**	1	PIN AS	
		1	**263-8575**	1	LINK AS (OUTER)	
Y	3	1	*271-3023*	1	THUMB GP (BACKHOE, COMMON)	784

Y-SEPARATE ILLUSTRATION

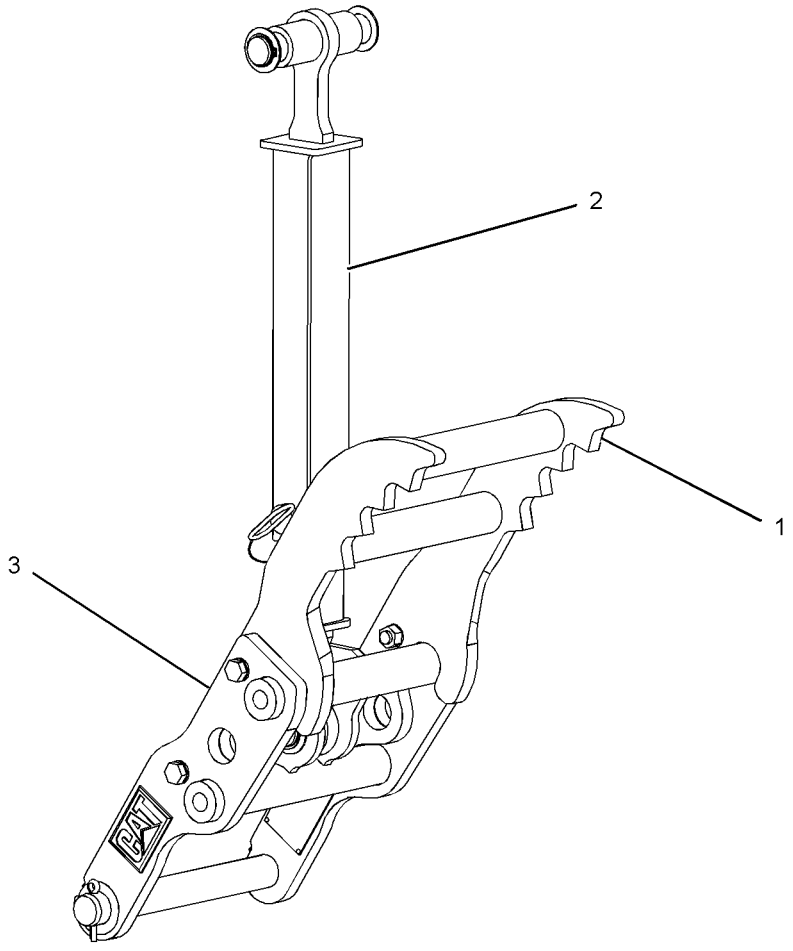

GRAPHIC #1 **<END>** g01230639

WORK TOOLS

271-3030 THUMB AR—24-IN, MANUAL, ROCK

S/N: HLS1-99999

AN ATTACHMENT

SMCS-6547 **i03514492**

NOTE	REF NO	GRAPHIC REF	PART NUMBER	QTY	PART NAME 1 2 3 4 5 6 (PRODUCT LEVEL)	SEE PAGE
	1	1	**221-4284**	1	TINE AS-THUMB (24-IN, ROCK)	
	2	1	*263-8576*	1	LINK GP-THUMB	
		1	**221-4272**	1	LINK AS (INNER)	
		1	**224-4527**	1	PIN AS	
		1	**263-8575**	1	LINK AS (OUTER)	
Y	3	1	*271-3023*	1	THUMB GP (BACKHOE, COMMON)	784

Y-SEPARATE ILLUSTRATION

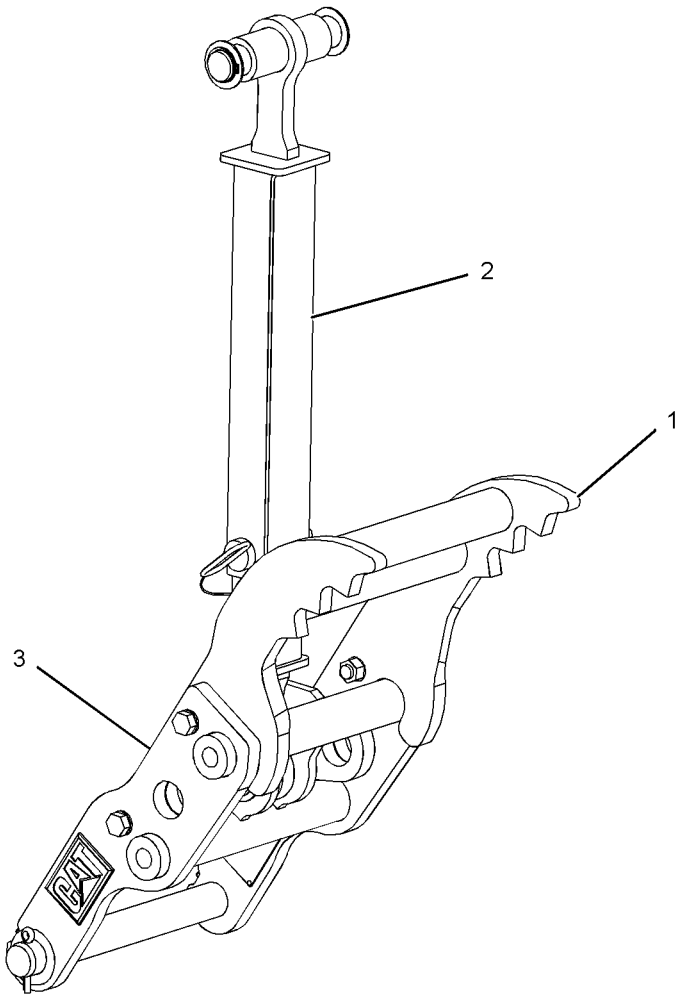

GRAPHIC #1 **<END>** g01232067

WORK TOOLS

271-3031 THUMB AR—24-IN, MANUAL, ROCK, WITH COUPLER

S/N: HLS1-99999

AN ATTACHMENT

SMCS-6547 **i03514493**

NOTE	REF NO	GRAPHIC REF	PART NUMBER	QTY	PART NAME 1 2 3 4 5 6 (PRODUCT LEVEL)	SEE PAGE
	1	1	**221-4285**	1	TINE AS-THUMB (24-IN, ROCK)	
	2	1	*263-8576*	1	LINK GP-THUMB	
		1	**221-4272**	1	LINK AS (INNER)	
		1	**224-4527**	1	PIN AS	
		1	**263-8575**	1	LINK AS (OUTER)	
Y	3	1	*271-3023*	1	THUMB GP (BACKHOE, COMMON)	784

Y-SEPARATE ILLUSTRATION

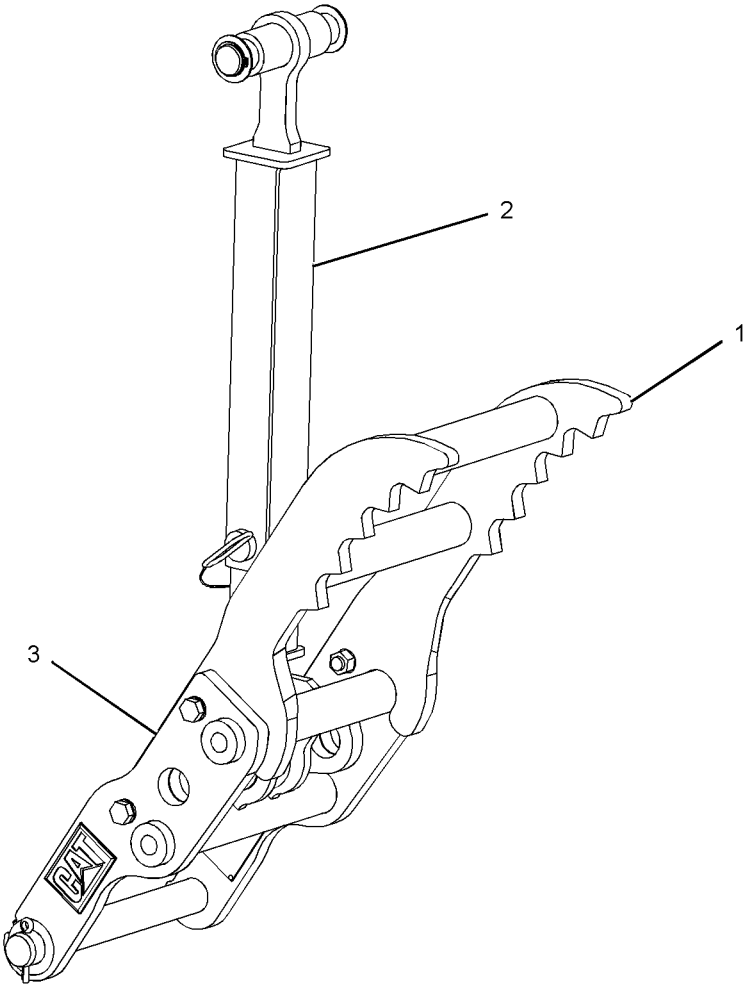

GRAPHIC #1 **<END>** g01232083

WORK TOOLS

281-6716 THUMB AR–24-IN, HYD, WITH COUPLER

S/N: HLS1-99999

AN ATTACHMENT

SMCS-6547 **i03527966**

NOTE	REF NO	GRAPHIC REF	PART NUMBER	QTY	PART NAME 1 2 3 4 5 6 (PRODUCT LEVEL)	SEE PAGE
Y	1	1	*224-6237*	1	CYLINDER & LINES GP-THUMB	385
Y	2	1	*271-3023*	1	THUMB GP (BACKHOE, COMMON)	784
	3	1	**281-6708**	1	TINE AS-THUMB (24-IN)	

Y-SEPARATE ILLUSTRATION

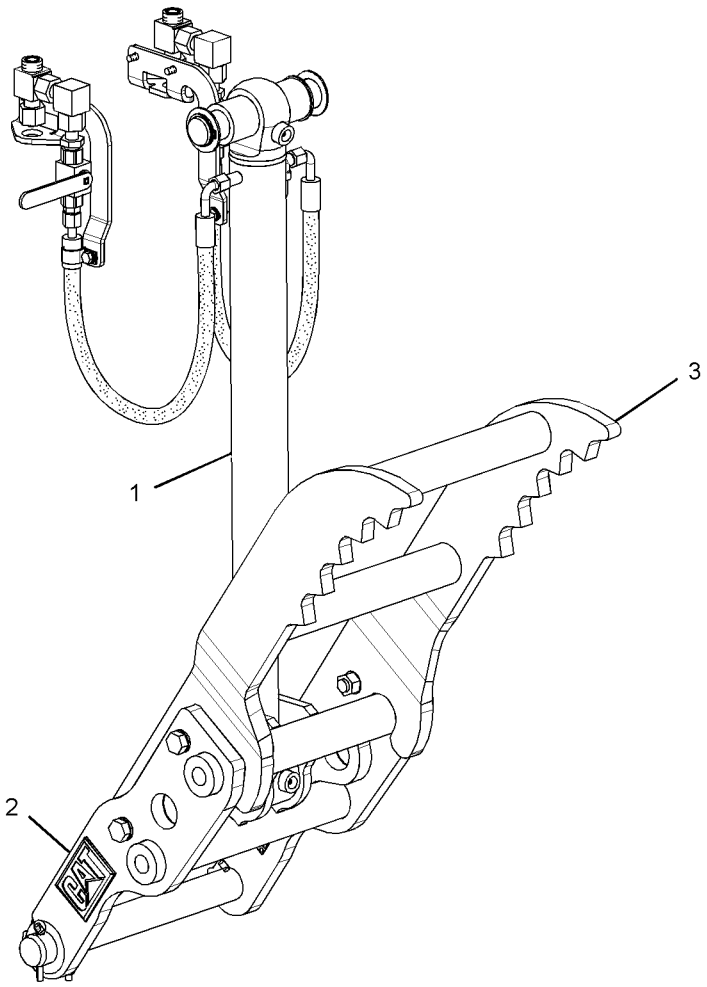

GRAPHIC #1 **<END>** g01370594

282-0865 THUMB AR—30-IN, HYD, WITH COUPLER

S/N: HLS1-99999

AN ATTACHMENT

SMCS-6547 **i03527980**

NOTE	REF NO	GRAPHIC REF	PART NUMBER	QTY	PART NAME 1 2 3 4 5 6 (PRODUCT LEVEL)	SEE PAGE
Y	1	1	*224-6237*	1	CYLINDER & LINES GP-THUMB	385
Y	2	1	*271-3023*	1	THUMB GP (BACKHOE, COMMON)	784
	3	1	**281-6711**	1	TINE AS-THUMB (30-IN)	

Y-SEPARATE ILLUSTRATION

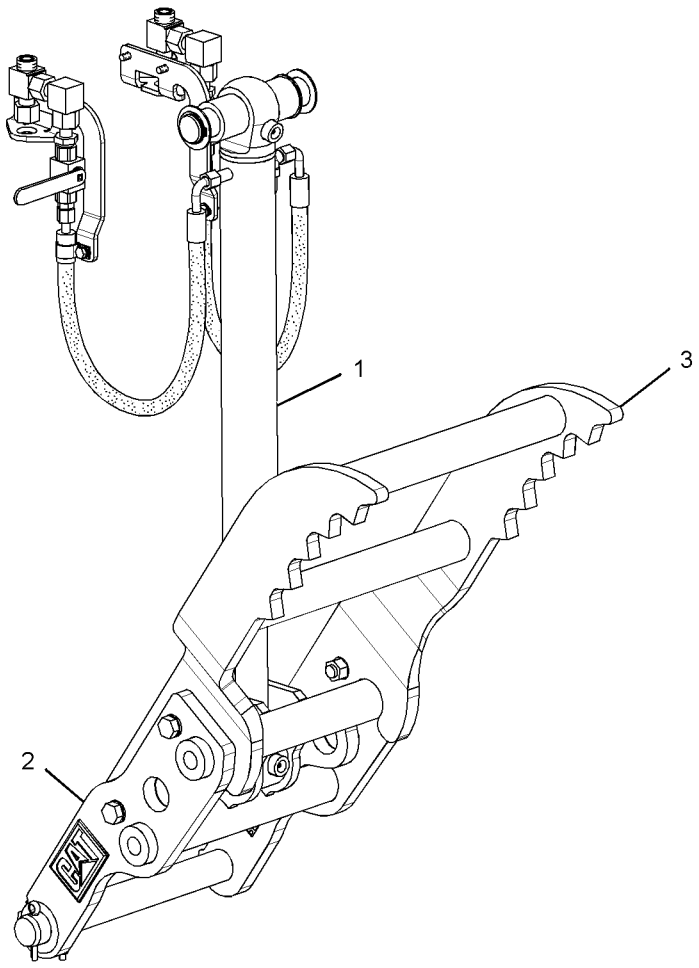

GRAPHIC #1 **<END>** g01371021

WORK TOOLS

282-0866 THUMB AR–36-IN, HYD, WITH COUPLER

S/N: HLS1-99999

AN ATTACHMENT

SMCS-6547 **i03527982**

NOTE	REF NO	GRAPHIC REF	PART NUMBER	QTY	PART NAME 1 2 3 4 5 6 (PRODUCT LEVEL)	SEE PAGE
Y	1	1	*224-6237*	1	CYLINDER & LINES GP-THUMB	385
Y	2	1	*271-3023*	1	THUMB GP (BACKHOE, COMMON)	784
	3	1	**281-6714**	1	TINE AS-THUMB	

Y-SEPARATE ILLUSTRATION

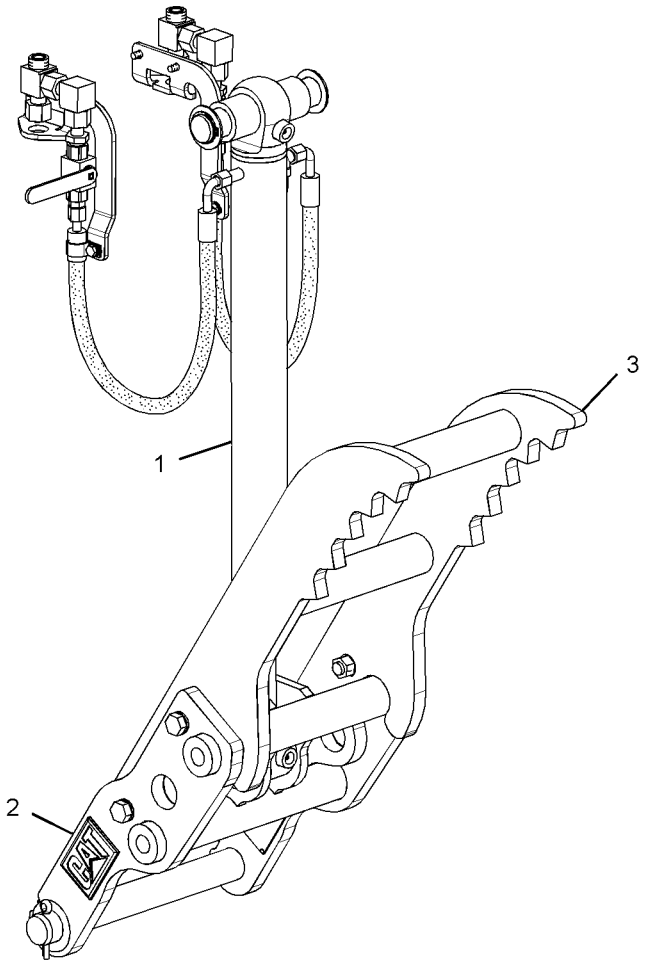

GRAPHIC #1 **<END>** g01370989

WORK TOOLS

282-0887 THUMB AR—30-IN, HYD, HEAVY-DUTY

S/N: HLS1-99999

AN ATTACHMENT

SMCS-6547 **i03527983**

NOTE	REF NO	GRAPHIC REF	PART NUMBER	QTY	PART NAME 1 2 3 4 5 6 (PRODUCT LEVEL)	SEE PAGE
Y	1	1	*224-6237*	1	CYLINDER & LINES GP-THUMB	385
Y	2	1	*271-3023*	1	THUMB GP (BACKHOE, COMMON)	784
	3	1	**274-5819**	1	TINE AS-THUMB (30-IN)	

Y-SEPARATE ILLUSTRATION

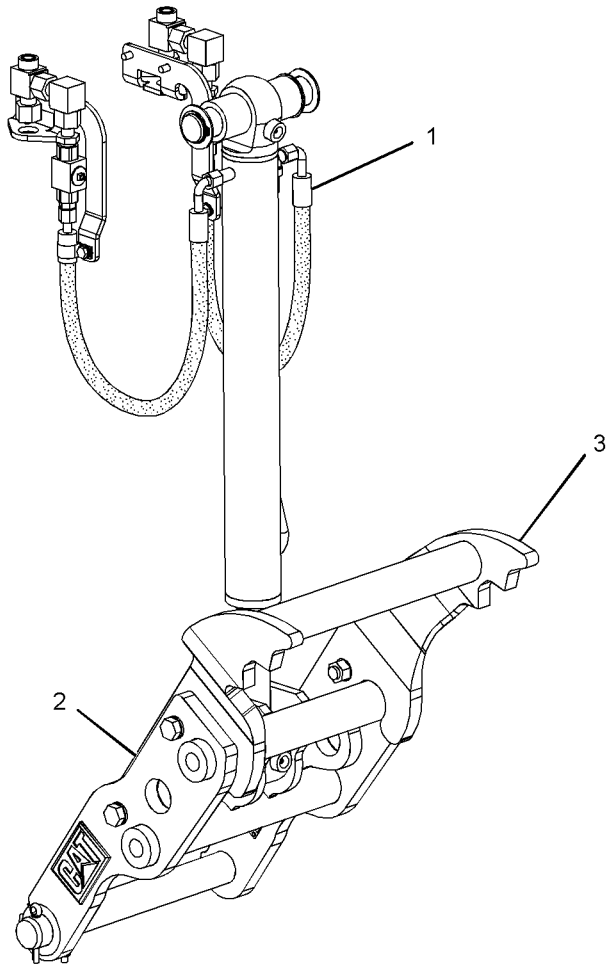

GRAPHIC #1 **<END>** g01370522

WORK TOOLS

282-0888 THUMB AR–30-IN, HYD, HEAVY-DUTY, WITH COUPLER

S/N: HLS1-99999

AN ATTACHMENT

SMCS-6547 **i03527985**

NOTE	REF NO	GRAPHIC REF	PART NUMBER	QTY	PART NAME 1 2 3 4 5 6 (PRODUCT LEVEL)	SEE PAGE
Y	1	1	*224-6237*	1	CYLINDER & LINES GP-THUMB	385
Y	2	1	*271-3023*	1	THUMB GP (BACKHOE, COMMON)	784
	3	1	**274-5823**	1	TINE AS-THUMB (30-IN)	

Y-SEPARATE ILLUSTRATION

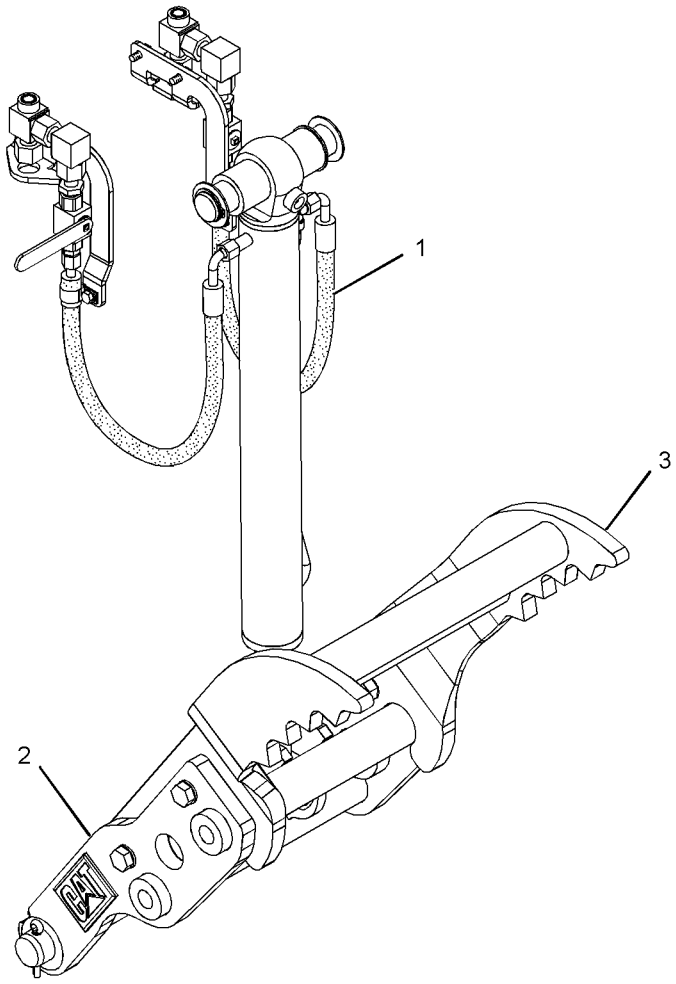

GRAPHIC #1 **<END>** g01370533

WORK TOOLS

282-0889 THUMB AR–30-IN, HYD, ROCK

S/N: HLS1-99999

AN ATTACHMENT

SMCS-6547 **i03527989**

NOTE	REF NO	GRAPHIC REF	PART NUMBER	QTY	PART NAME 1 2 3 4 5 6 (PRODUCT LEVEL)	SEE PAGE
Y	1	1	*224-6237*	1	CYLINDER & LINES GP-THUMB	385
Y	2	1	*271-3023*	1	THUMB GP (BACKHOE, COMMON)	784
	3	1	**274-5826**	1	TINE AS-THUMB (30-IN, ROCK)	

Y-SEPARATE ILLUSTRATION

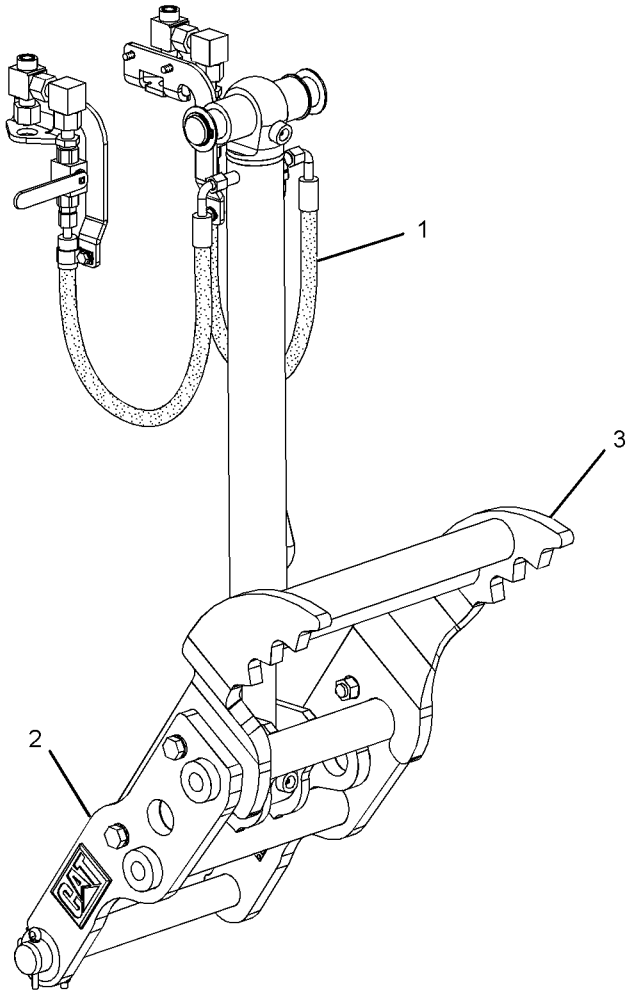

GRAPHIC #1 **<END>** g01370539

282-0890 THUMB AR–30-IN, HYD, ROCK, WITH COUPLER

S/N: HLS1-99999

AN ATTACHMENT

SMCS-6547 **i03527994**

NOTE	REF NO	GRAPHIC REF	PART NUMBER	QTY	PART NAME 1 2 3 4 5 6 (PRODUCT LEVEL)	SEE PAGE
Y	1	1	*224-6237*	1	CYLINDER & LINES GP-THUMB	385
Y	2	1	*271-3023*	1	THUMB GP (BACKHOE, COMMON)	784
	3	1	**274-5829**	1	TINE AS-THUMB (30-IN, ROCK)	

Y-SEPARATE ILLUSTRATION

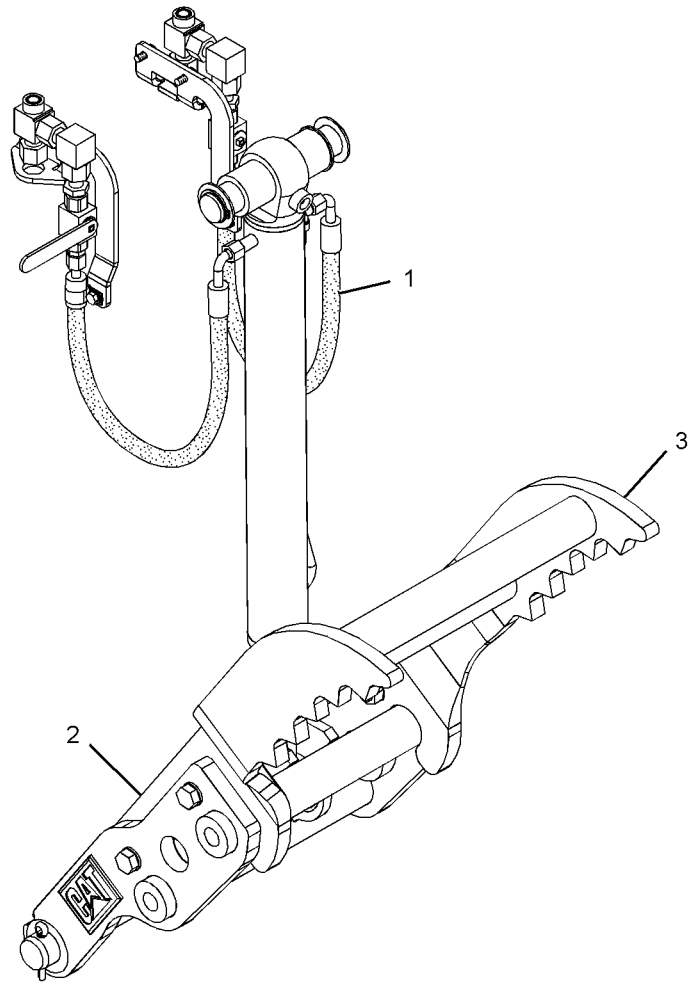

GRAPHIC #1 **<END>** g01370948

282-0891 THUMB AR—36-IN, HYD, HEAVY-DUTY

S/N: HLS1-99999

AN ATTACHMENT

SMCS-6547 **i03527996**

NOTE	REF NO	GRAPHIC REF	PART NUMBER	QTY	PART NAME 1 2 3 4 5 6 (PRODUCT LEVEL)	SEE PAGE
Y	1	1	*224-6237*	1	CYLINDER & LINES GP-THUMB	385
Y	2	1	*271-3023*	1	THUMB GP (BACKHOE, COMMON)	784
	3	1	**274-5832**	1	TINE AS-THUMB (36-IN)	

Y-SEPARATE ILLUSTRATION

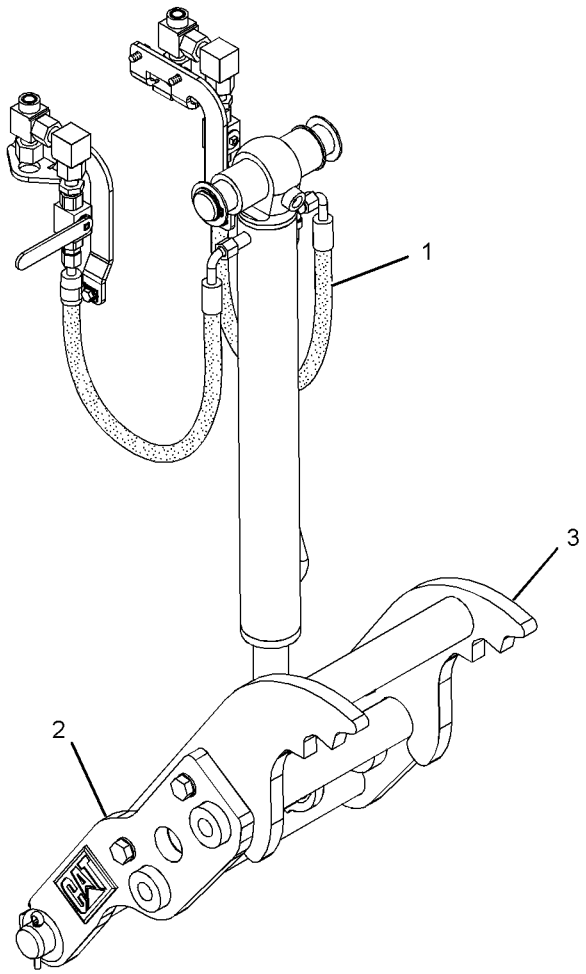

GRAPHIC #1 **<END>** g01370953

282-0892 THUMB AR—36-IN, HYD, HEAVY-DUTY, WITH COUPLER

S/N: HLS1-99999

AN ATTACHMENT

SMCS-6547 **i03527998**

NOTE	REF NO	GRAPHIC REF	PART NUMBER	QTY	PART NAME 1 2 3 4 5 6 (PRODUCT LEVEL)	SEE PAGE
Y	1	1	*224-6237*	1	CYLINDER & LINES GP-THUMB	385
Y	2	1	*271-3023*	1	THUMB GP (BACKHOE, COMMON)	784
	3	1	**274-5835**	1	TINE AS-THUMB (36-IN)	

Y-SEPARATE ILLUSTRATION

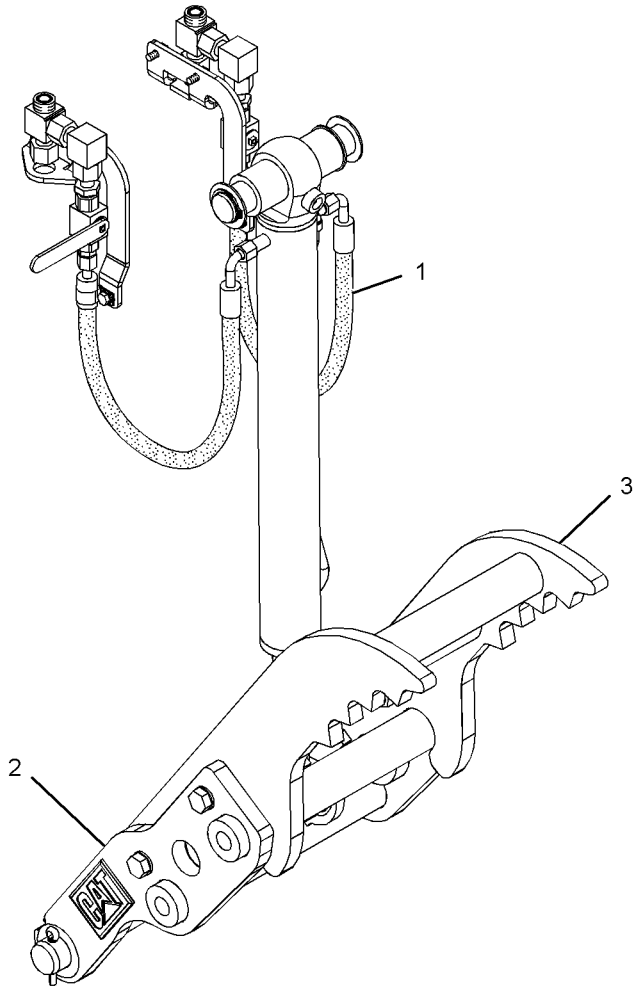

GRAPHIC #1 **<END>** g01370967

WORK TOOLS

282-0893 THUMB AR–36-IN, HYD, ROCK

S/N: HLS1-99999

AN ATTACHMENT

SMCS-6547 **i03528000**

NOTE	REF NO	GRAPHIC REF	PART NUMBER	QTY	PART NAME 1 2 3 4 5 6 (PRODUCT LEVEL)	SEE PAGE
Y	1	1	*224-6237*	1	CYLINDER & LINES GP-THUMB	385
Y	2	1	*271-3023*	1	THUMB GP (BACKHOE, COMMON)	784
	3	1	**274-5837**	1	TINE AS-THUMB (36-IN, ROCK)	

Y-SEPARATE ILLUSTRATION

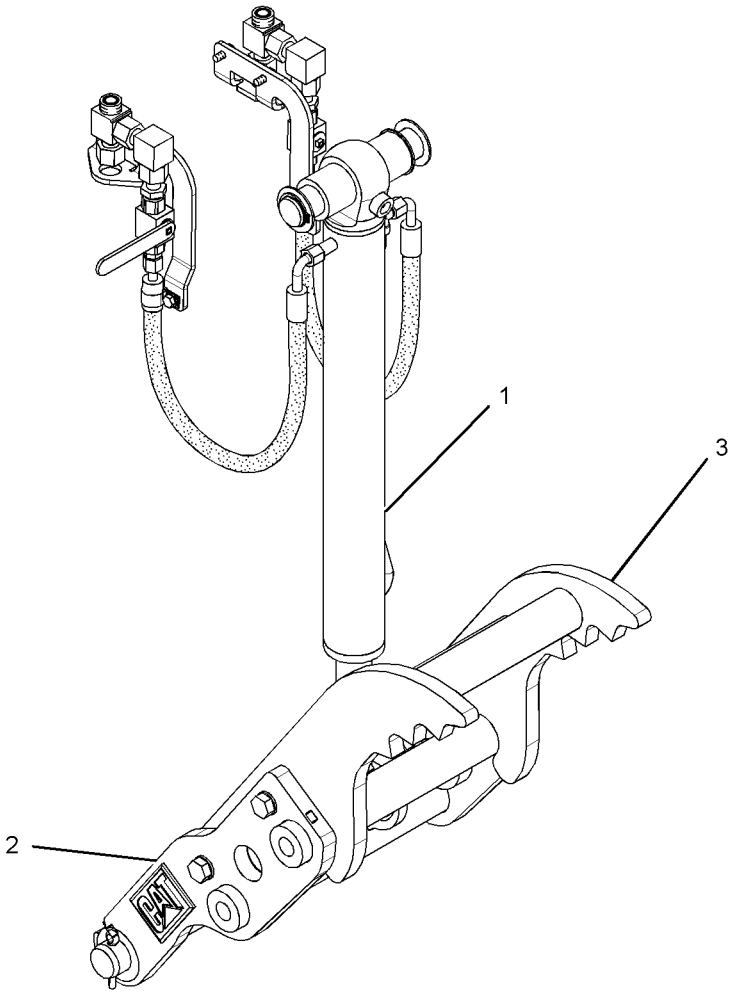

GRAPHIC #1 **<END>** g01370636

WORK TOOLS

282-0894 THUMB AR–36-IN, HYD, ROCK, WITH COUPLER

S/N: HLS1-99999

AN ATTACHMENT

SMCS-6547 **i03528021**

NOTE	REF NO	GRAPHIC REF	PART NUMBER	QTY	PART NAME 1 2 3 4 5 6 (PRODUCT LEVEL)	SEE PAGE
Y	1	1	*224-6237*	1	CYLINDER & LINES GP-THUMB	385
Y	2	1	*271-3023*	1	THUMB GP (BACKHOE, COMMON)	784
	3	1	**274-5839**	1	TINE AS-THUMB (36-IN, ROCK)	

Y-SEPARATE ILLUSTRATION

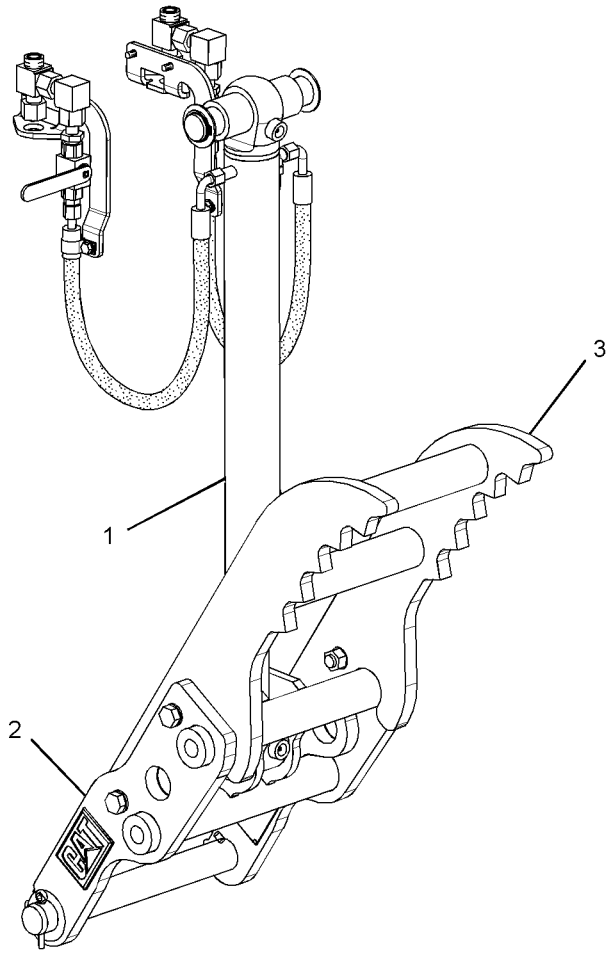

GRAPHIC #1 **<END>** g01371128

282-5398 THUMB AR—24-IN, MANUAL, WITH COUPLER

S/N: HLS1-99999

AN ATTACHMENT

SMCS-6547 **i03514494**

NOTE	REF NO	GRAPHIC REF	PART NUMBER	QTY	PART NAME 1 2 3 4 5 6 (PRODUCT LEVEL)	SEE PAGE
	1	1	*263-8576*	1	LINK GP-THUMB	
		1	**221-4272**	1	LINK AS (INNER)	
		1	**224-4527**	1	PIN AS	
		1	**263-8575**	1	LINK AS (OUTER)	
Y	2	1	*271-3023*	1	THUMB GP (BACKHOE, COMMON)	784
	3	1	**281-6708**	1	TINE AS-THUMB (24-IN)	

Y-SEPARATE ILLUSTRATION

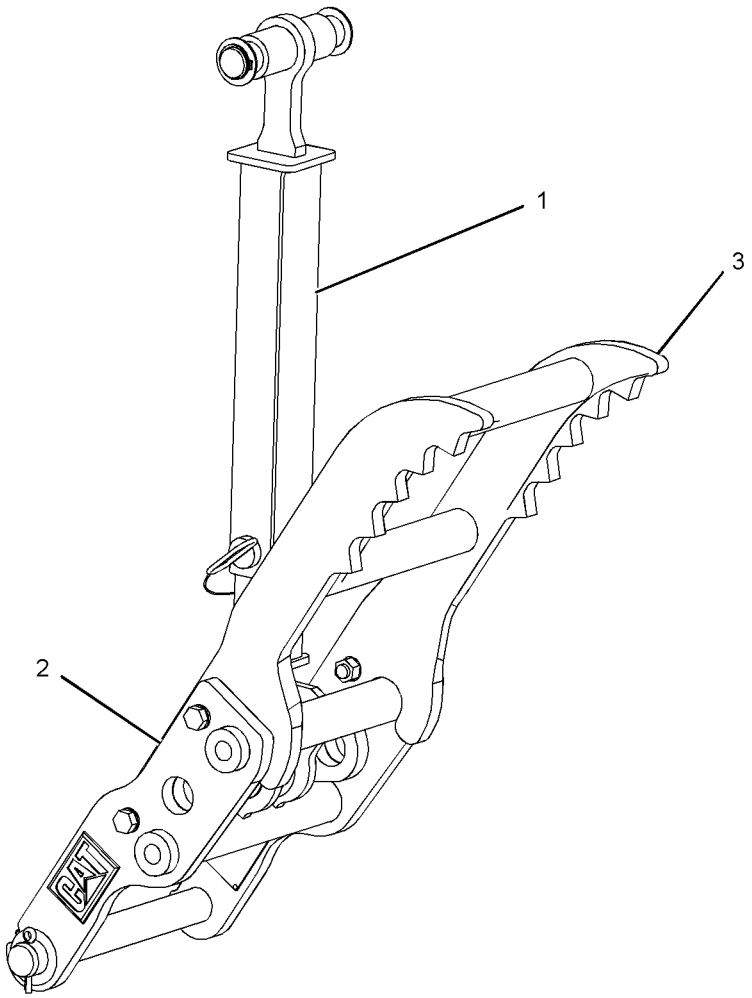

GRAPHIC #1 **<END>** g01232078

282-5399 THUMB AR—30-IN, MANUAL, HEAVY-DUTY

S/N: HLS1-99999

AN ATTACHMENT

SMCS-6547 **i03517286**

NOTE	REF NO	GRAPHIC REF	PART NUMBER	QTY	PART NAME 1 2 3 4 5 6 (PRODUCT LEVEL)	SEE PAGE
	1	1	*263-8576*	1	LINK GP-THUMB	
		1	**221-4272**	1	LINK AS (INNER)	
		1	**224-4527**	1	PIN AS	
		1	**263-8575**	1	LINK AS (OUTER)	
Y	2	1	*271-3023*	1	THUMB GP (BACKHOE, COMMON)	784
	3	1	**274-5819**	1	TINE AS-THUMB (30-IN)	

Y-SEPARATE ILLUSTRATION

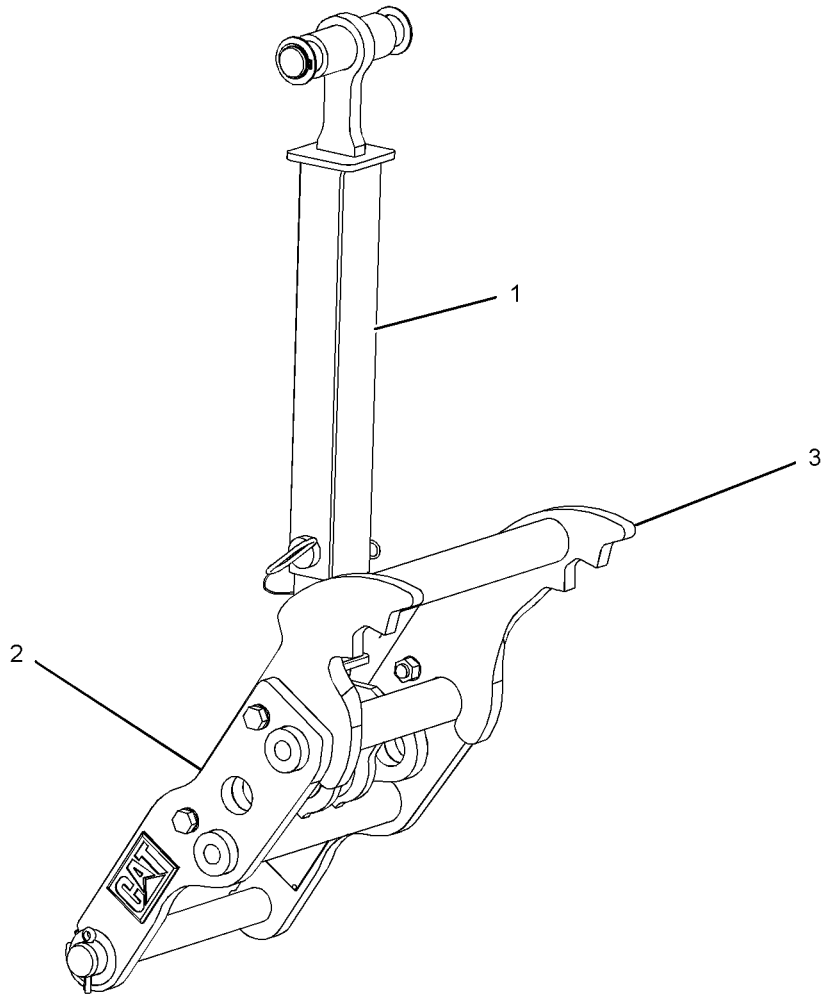

GRAPHIC #1 **<END>** g01232091

WORK TOOLS

282-5400 THUMB AR–30-IN, MANUAL, ROCK

S/N: HLS1-99999

AN ATTACHMENT

SMCS-6547 **i03517287**

NOTE	REF NO	GRAPHIC REF	PART NUMBER	QTY	PART NAME 1 2 3 4 5 6 (PRODUCT LEVEL)	SEE PAGE
	1	1	*263-8576*	1	LINK GP-THUMB	
		1	**221-4272**	1	LINK AS (INNER)	
		1	**224-4527**	1	PIN AS	
		1	**263-8575**	1	LINK AS (OUTER)	
Y	2	1	*271-3023*	1	THUMB GP (BACKHOE, COMMON)	784
	3	1	**274-5826**	1	TINE AS-THUMB (30-IN, ROCK)	

Y-SEPARATE ILLUSTRATION

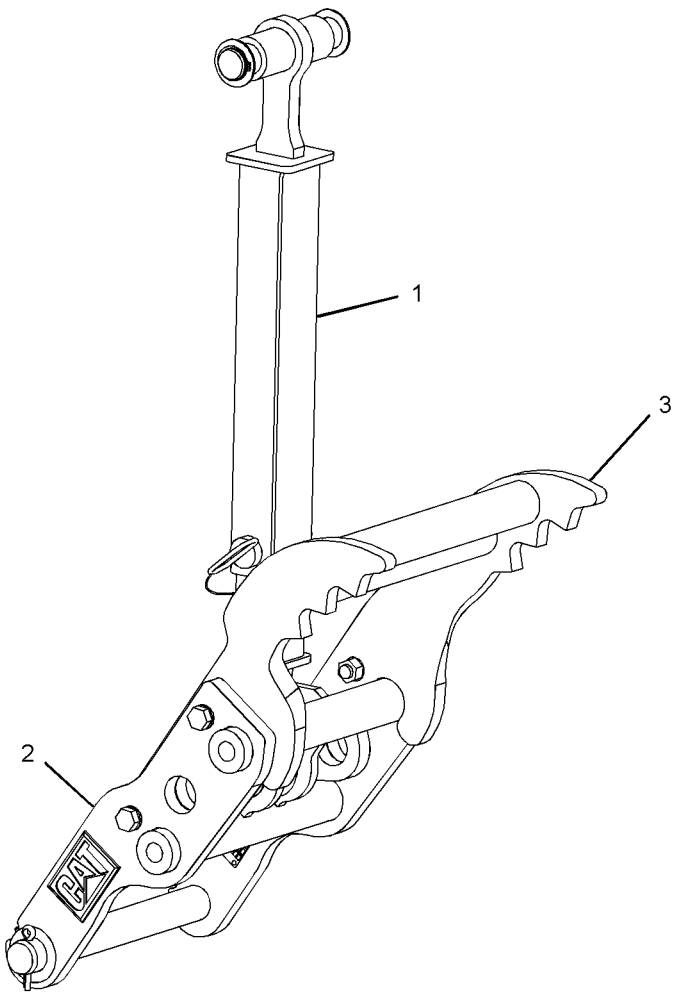

GRAPHIC #1 **<END>** g01234205

WORK TOOLS

282-5401 THUMB AR–30-IN, MANUAL, HEAVY-DUTY, WITH COUPLER

S/N: HLS1-99999

AN ATTACHMENT

SMCS-6547 **i03517316**

NOTE	REF NO	GRAPHIC REF	PART NUMBER	QTY	PART NAME 1 2 3 4 5 6 (PRODUCT LEVEL)	SEE PAGE
	1	1	*263-8576*	1	LINK GP-THUMB	
		1	**263-8575**		LINK AS (OUTER)	
		1	**221-4272**	1	LINK AS (INNER)	
		1	**224-4527**	1	PIN AS	
Y	2	1	*271-3023*	1	THUMB GP (BACKHOE, COMMON)	784
	3	1	**274-5823**	1	TINE AS-THUMB (30-IN)	

Y-SEPARATE ILLUSTRATION

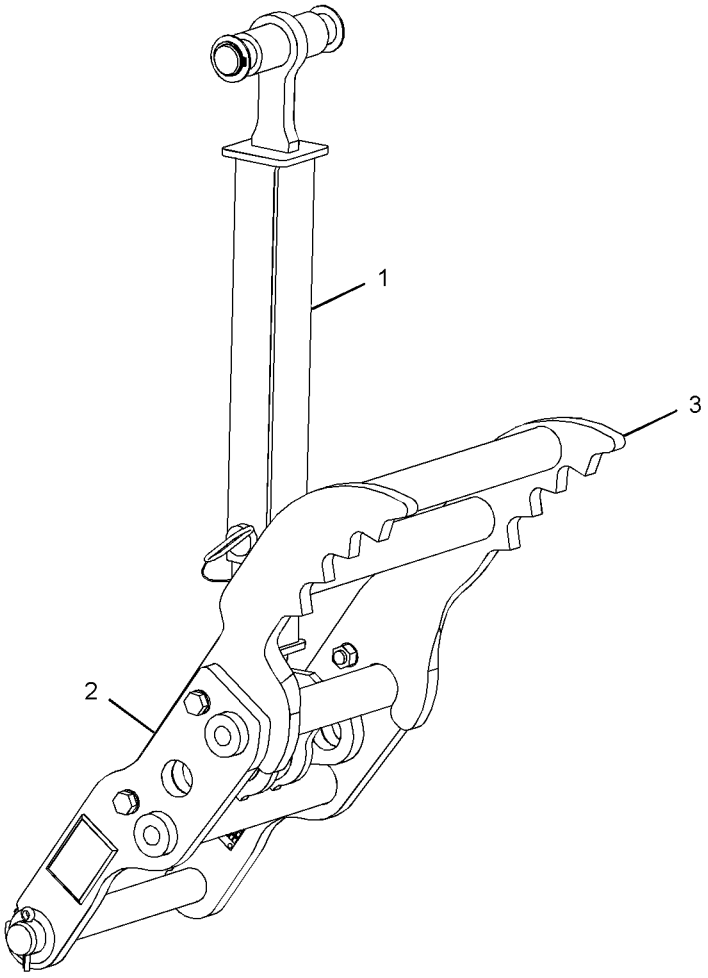

GRAPHIC #1 **<END>** g01234213

282-5402 THUMB AR–30-IN, MANUAL, ROCK, WITH COUPLER

S/N: HLS1-99999

AN ATTACHMENT

SMCS-6547 **i03517288**

NOTE	REF NO	GRAPHIC REF	PART NUMBER	QTY	PART NAME 1 2 3 4 5 6 (PRODUCT LEVEL)	SEE PAGE
	1	1	*263-8576*	1	LINK GP-THUMB	
		1	**263-8575**	1	LINK AS (OUTER)	
		1	**221-4272**	1	LINK AS (INNER)	
		1	**224-4527**	1	PIN AS	
Y	2	1	*271-3023*	1	THUMB GP (BACKHOE, COMMON)	784
	3	1	**274-5829**	1	TINE AS-THUMB (30-IN, ROCK)	

Y-SEPARATE ILLUSTRATION

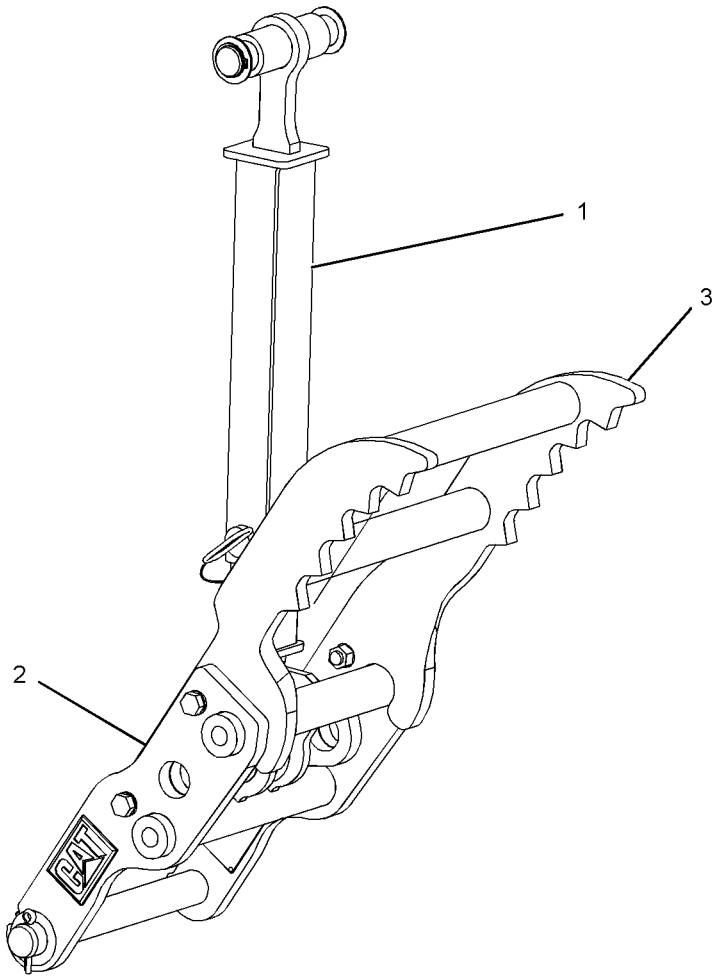

GRAPHIC #1 **<END>** g01234207

WORK TOOLS

282-5403 THUMB AR–30-IN, MANUAL, WITH COUPLER

S/N: HLS1-99999

AN ATTACHMENT

SMCS-6547 **i03514511**

NOTE	REF NO	GRAPHIC REF	PART NUMBER	QTY	PART NAME 1 2 3 4 5 6 (PRODUCT LEVEL)	SEE PAGE
	1	1	*263-8576*	1	LINK GP-THUMB	
		1	**221-4272**	1	LINK AS (INNER)	
		1	**224-4527**	1	PIN AS	
		1	**263-8575**	1	LINK AS (OUTER)	
Y	2	1	*271-3023*	1	THUMB GP (BACKHOE, COMMON)	784
	3	1	**281-6711**	1	TINE AS-THUMB (30-IN)	

Y-SEPARATE ILLUSTRATION

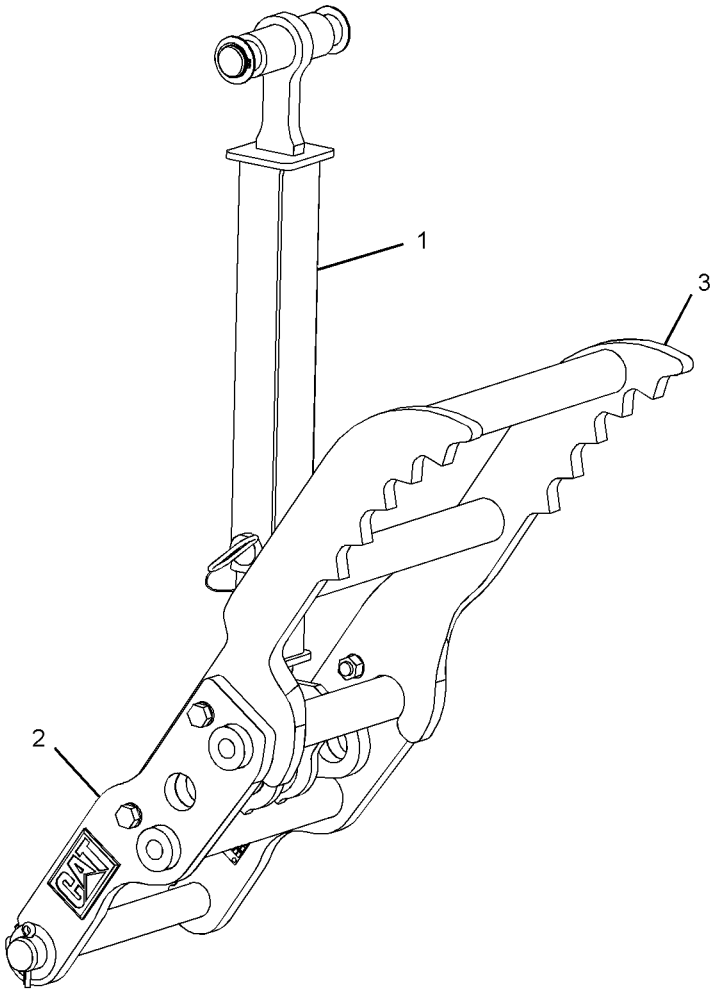

GRAPHIC #1 **<END>** g01234215

WORK TOOLS

282-5404 THUMB AR—36-IN, MANUAL, HEAVY-DUTY

S/N: HLS1-99999

AN ATTACHMENT

SMCS-6547 **i03517289**

NOTE	REF NO	GRAPHIC REF	PART NUMBER	QTY	PART NAME 1 2 3 4 5 6 (PRODUCT LEVEL)	SEE PAGE
	1	1	*263-8576*	1	LINK GP-THUMB	
		1	**221-4272**	1	LINK AS (INNER)	
		1	**224-4527**	1	PIN AS	
		1	**263-8575**	1	LINK AS (OUTER)	
Y	2	1	*271-3023*	1	THUMB GP (BACKHOE, COMMON)	784
	3	1	**274-5832**	1	TINE AS-THUMB (36-IN)	

Y-SEPARATE ILLUSTRATION

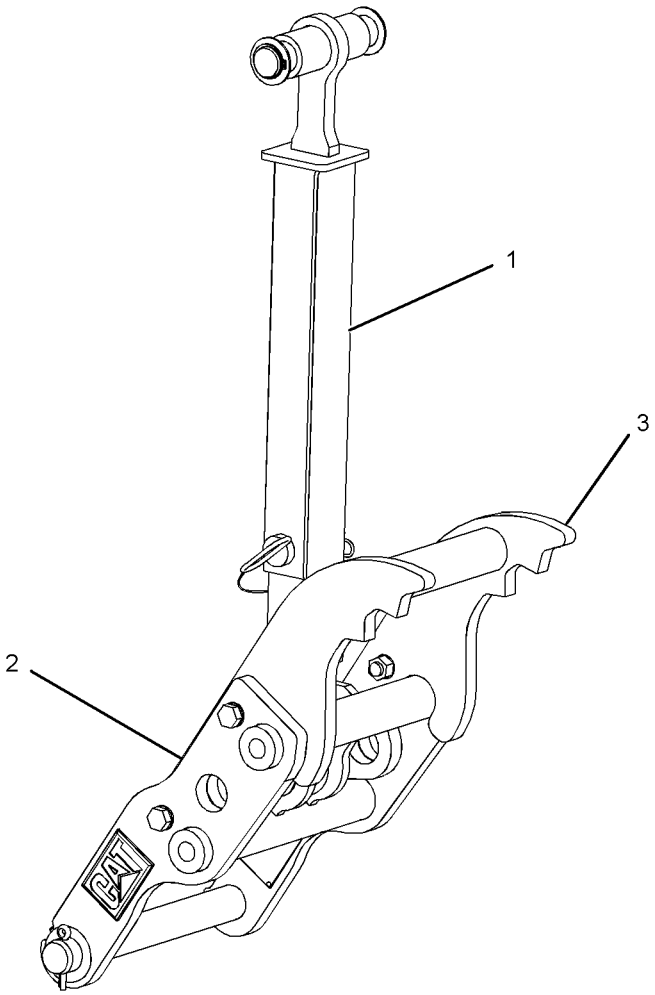

GRAPHIC #1 **<END>** g01232484

WORK TOOLS

282-5405 THUMB AR–36-IN, MANUAL, ROCK

S/N: HLS1-99999

AN ATTACHMENT

SMCS-6547 **i03517290**

NOTE	REF NO	GRAPHIC REF	PART NUMBER	QTY	PART NAME 1 2 3 4 5 6 (PRODUCT LEVEL)	SEE PAGE
	1	1	*263-8576*	1	LINK GP-THUMB	
		1	**221-4272**	1	LINK AS (INNER)	
		1	**224-4527**	1	PIN AS	
		1	**263-8575**	1	LINK AS (OUTER)	
Y	2	1	*271-3023*	1	THUMB GP (BACKHOE, COMMON)	784
	3	1	**274-5837**	1	TINE AS-THUMB (36-IN, ROCK)	

Y-SEPARATE ILLUSTRATION

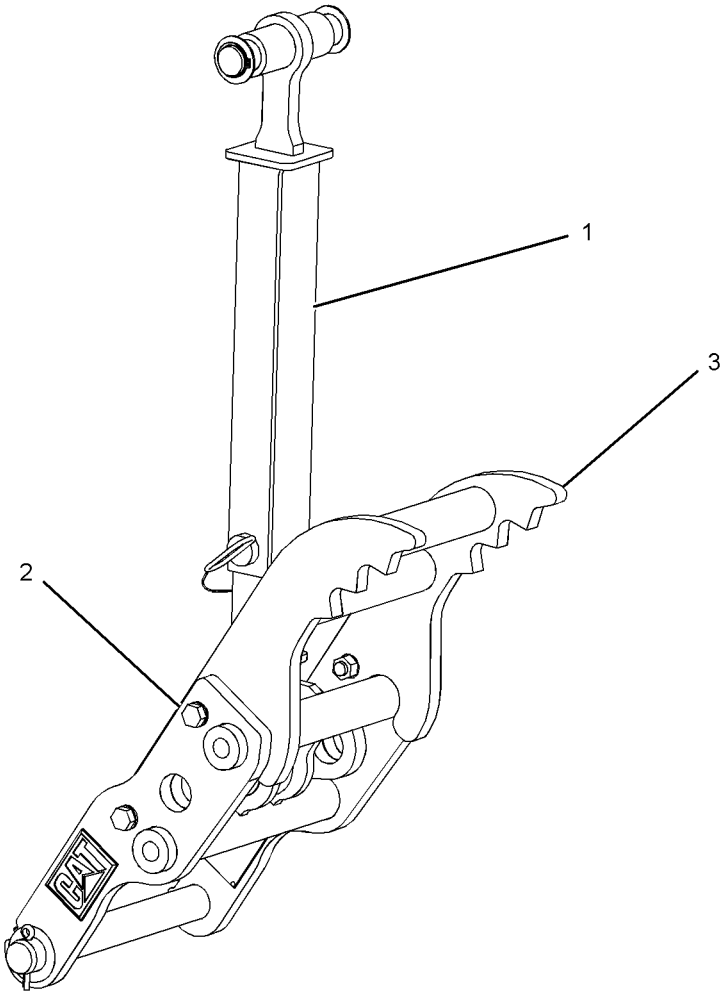

GRAPHIC #1 **<END>** g01232106

WORK TOOLS

282-5406 THUMB AR–36-IN, MANUAL, HEAVY-DUTY, WITH COUPLER

S/N: HLS1-99999

AN ATTACHMENT

SMCS-6547 **i03517291**

NOTE	REF NO	GRAPHIC REF	PART NUMBER	QTY	PART NAME 1 2 3 4 5 6 (PRODUCT LEVEL)	SEE PAGE
	1	1	*263-8576*	1	LINK GP-THUMB	
		1	**221-4272**	1	LINK AS (INNER)	
		1	**224-4527**	1	PIN AS	
		1	**263-8575**	1	LINK AS (OUTER)	
Y	2	1	*271-3023*	1	THUMB GP (BACKHOE, COMMON)	784
	3	1	**274-5835**	1	TINE AS-THUMB (36-IN)	

Y-SEPARATE ILLUSTRATION

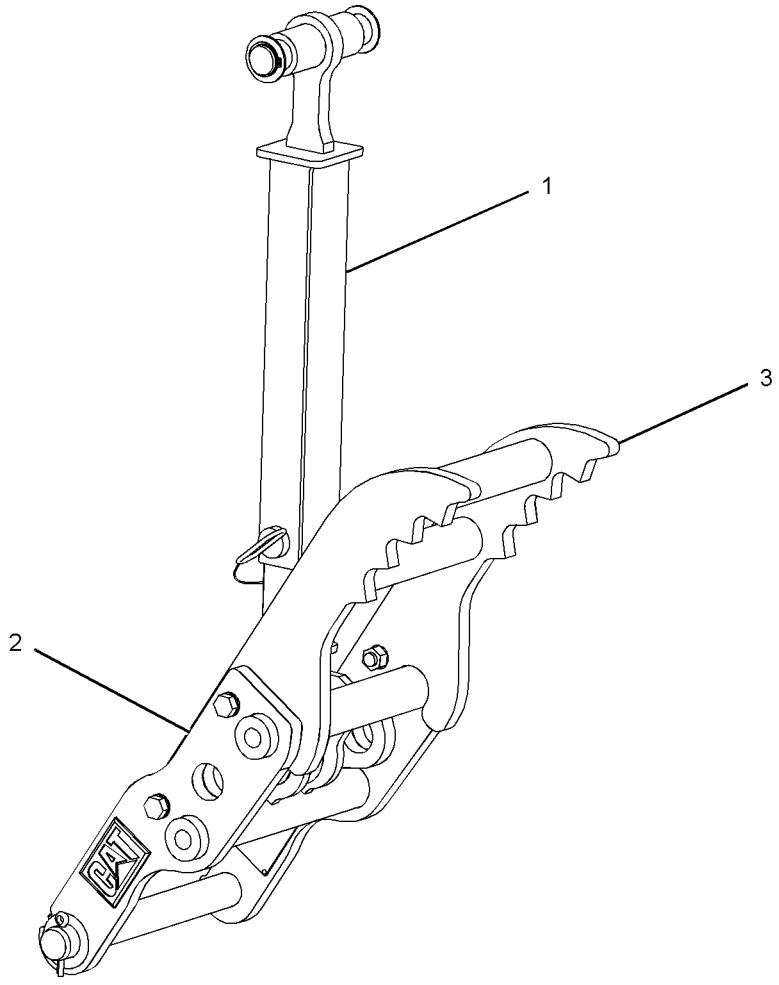

GRAPHIC #1 **<END>** g01230669

WORK TOOLS

282-5407 THUMB AR–36-IN, MANUAL, ROCK, WITH COUPLER

S/N: HLS1-99999

AN ATTACHMENT

SMCS-6547 **i03517292**

NOTE	REF NO	GRAPHIC REF	PART NUMBER	QTY	PART NAME 1 2 3 4 5 6 (PRODUCT LEVEL)	SEE PAGE
	1	1	*263-8576*	1	LINK GP-THUMB	
		1	**221-4272**	1	LINK AS (INNER)	
		1	**224-4527**	1	PIN AS	
		1	**263-8575**	1	LINK AS (OUTER)	
Y	2	1	*271-3023*	1	THUMB GP (BACKHOE, COMMON)	784
	3	1	**274-5839**	1	TINE AS-THUMB (36-IN, ROCK)	

Y-SEPARATE ILLUSTRATION

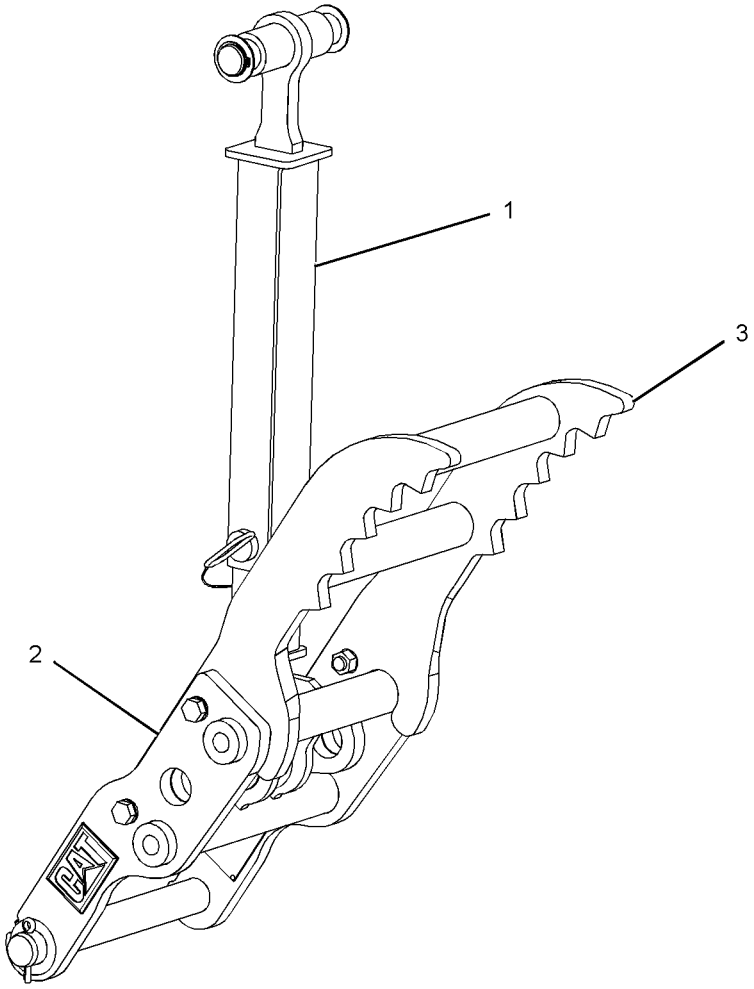

GRAPHIC #1 **<END>** g01232087

WORK TOOLS

282-5408 THUMB AR—36-IN, MANUAL, WITH COUPLER

S/N: HLS1-99999

AN ATTACHMENT

SMCS-6547 **i03514523**

NOTE	REF NO	GRAPHIC REF	PART NUMBER	QTY	PART NAME 1 2 3 4 5 6 (PRODUCT LEVEL)	SEE PAGE
	1	1	*263-8576*	1	LINK GP-THUMB	
		1	**221-4272**	1	LINK AS (INNER)	
		1	**224-4527**	1	PIN AS	
		1	**263-8575**	1	LINK AS (OUTER)	
Y	2	1	*271-3023*	1	THUMB GP (BACKHOE, COMMON)	784
	3	1	**281-6714**	1	TINE AS-THUMB	

Y-SEPARATE ILLUSTRATION

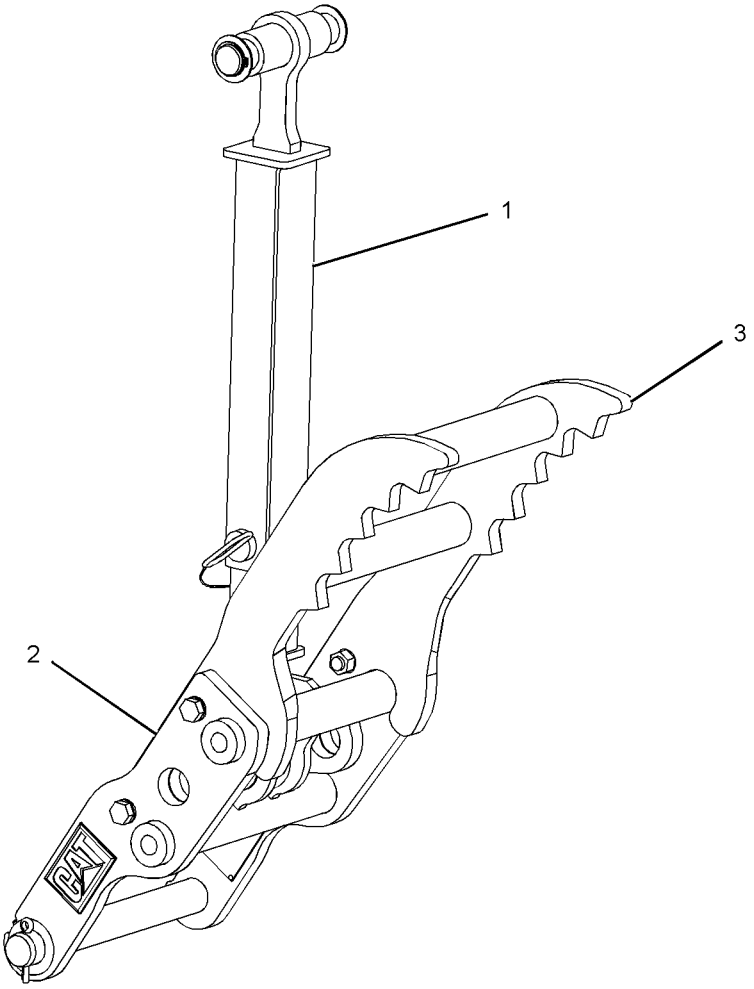

GRAPHIC #1 **<END>** g01232087

WORK TOOLS

282-5409 THUMB AR–BACKHOE, HYDRAULIC COMMON

S/N: HLS1-99999
AN ATTACHMENT
TYPE 1

SMCS-6547 **i02837777**

NOTE	REF NO	GRAPHIC REF	PART NUMBER	QTY	PART NAME 1 2 3 4 5 6 (PRODUCT LEVEL)	SEE PAGE
Y	1	1	*224-6237*	1	CYLINDER & LINES GP-THUMB	385
Y	2	1	*271-3023*	1	THUMB GP (BACKHOE, COMMON)	784

Y-SEPARATE ILLUSTRATION

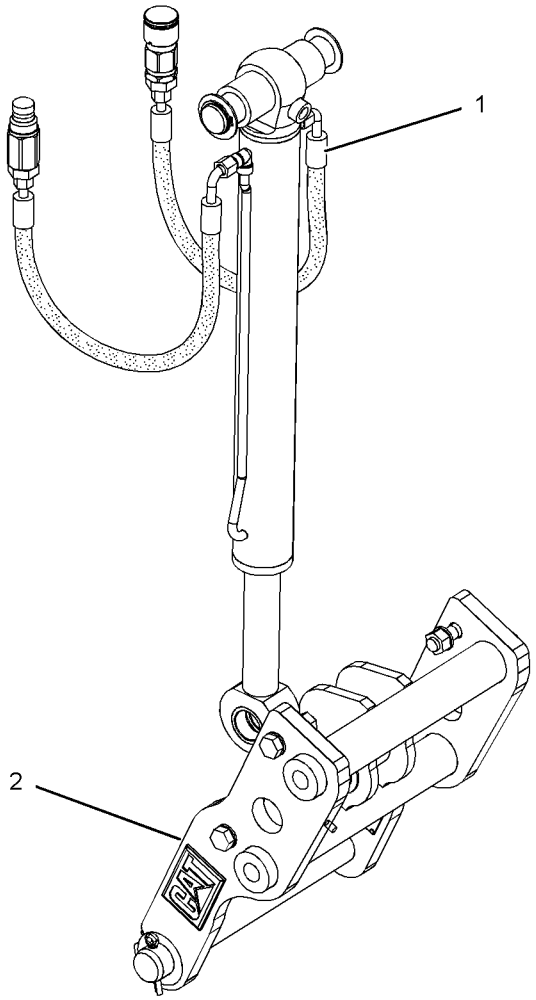

GRAPHIC #1 **<END>** g01232113

WORK TOOLS

282-5409 THUMB AR–BACKHOE, HYDRAULIC COMMON

S/N: HLS1-99999
AN ATTACHMENT
TYPE 2

SMCS-6547 **i02837778**

NOTE	REF NO	GRAPHIC REF	PART NUMBER	QTY	PART NAME 1 2 3 4 5 6 (PRODUCT LEVEL)	SEE PAGE
Y	1	1	*224-6237*	1	CYLINDER & LINES GP-THUMB	385
Y	2	1	*271-3023*	1	THUMB GP (BACKHOE, COMMON)	784

Y-SEPARATE ILLUSTRATION

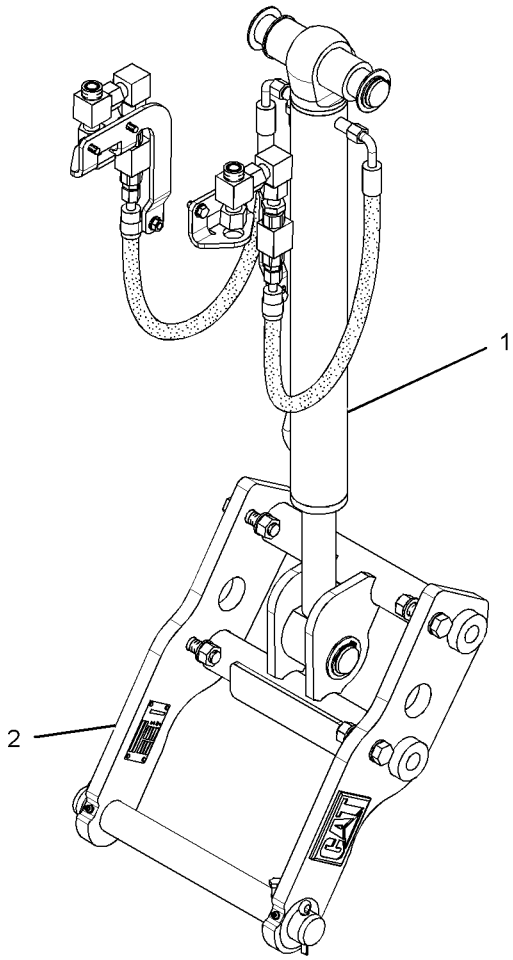

GRAPHIC #1 **<END>** g01379867

WORK TOOLS

282-5409 THUMB AR–BACKHOE, HYDRAULIC COMMON

S/N: HLS1-99999
AN ATTACHMENT
TYPE 3

SMCS-6547 **i02908602**

NOTE	REF NO	GRAPHIC REF	PART NUMBER	QTY	PART NAME 1 2 3 4 5 6 (PRODUCT LEVEL)	SEE PAGE
Y	1	1	*271-3023*	1	THUMB GP (BACKHOE, COMMON)	784
CY	2	1	*299-5362*	1	CYLINDER & LINES GP-THUMB	388

C-CHANGE FROM PREVIOUS TYPE
Y-SEPARATE ILLUSTRATION

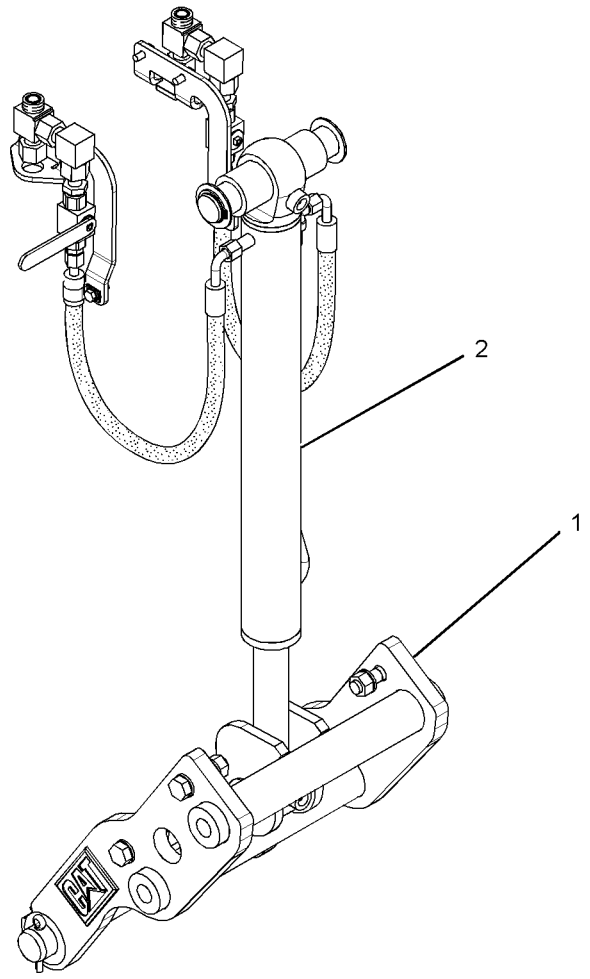

GRAPHIC #1 **<END>** g01454728

282-5410 THUMB AR–BACKHOE, MANUAL COMMON

S/N: HLS1-99999

AN ATTACHMENT

SMCS-6547 **i03514524**

NOTE	REF NO	GRAPHIC REF	PART NUMBER	QTY	PART NAME 1 2 3 4 5 6 (PRODUCT LEVEL)	SEE PAGE
	1	1	*263-8576*	1	LINK GP-THUMB	
		1	**221-4272**	1	LINK AS (INNER)	
		1	**224-4527**	1	PIN AS	
		1	**263-8575**	1	LINK AS (OUTER)	
Y	2	1	*271-3023*	1	THUMB GP (BACKHOE, COMMON)	784

Y-SEPARATE ILLUSTRATION

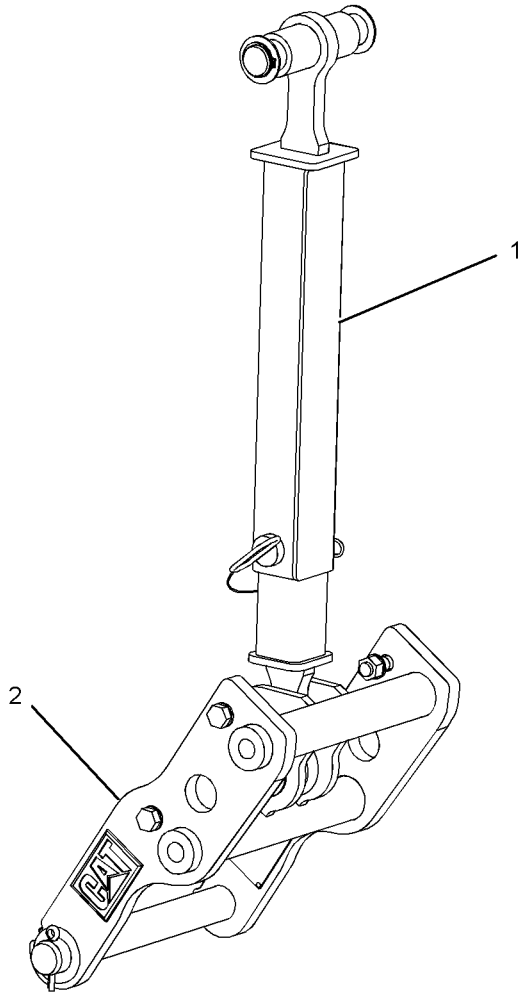

GRAPHIC #1 **<END>** g01232128

221-4267 THUMB GP–BACKHOE

S/N: HLS1-99999
PART OF 221-4260 THUMB AR, 271-3023 THUMB GP
AN ATTACHMENT

SMCS-6547 **i02501588**

NOTE	REF NO	GRAPHIC REF	PART NUMBER	QTY	PART NAME 1 2 3 4 5 6 (PRODUCT LEVEL)	SEE PAGE
	1	1	**221-4263**	1	LINK AS	
	2	1	**3B-8489**	2	FITTING-GREASE	
	3	1	**8T-4123**	8	WASHER (22X35X3.5-MM THK)	
M	4	1	**8T-4131**	4	NUT (M20X2.5-THD)	
M	5	1	**8T-4187**	4	BOLT (M20X2.5X80-MM)	

M-METRIC PART

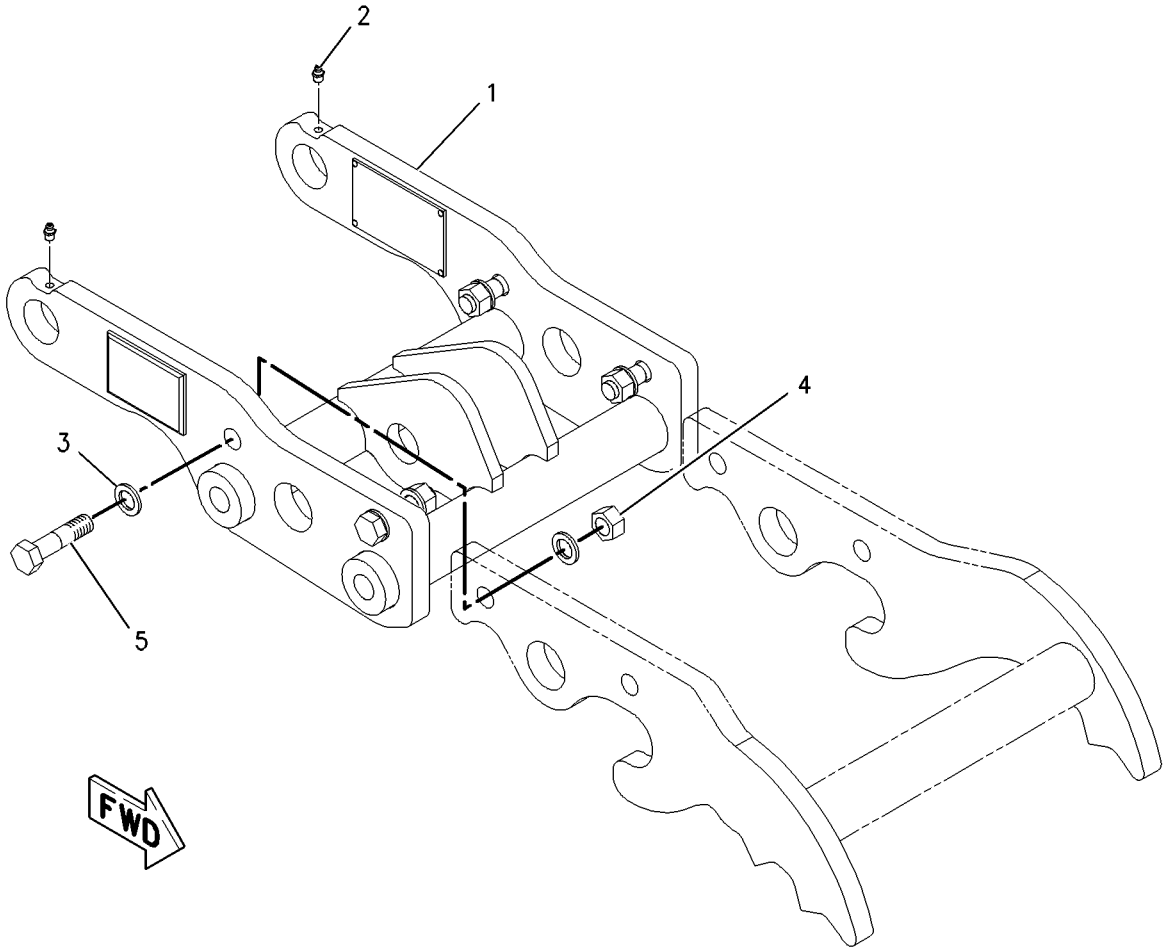

GRAPHIC #1 **<END>** g01003468

271-3023 THUMB GP—BACKHOE, COMMON

S/N: HLS1-99999

PART OF 271-3024, 271-3025, 271-3026, 271-3027, 271-3028, 271-3029, 271-3030, 271-3031, 281-6716, 282-0865, 282-0866, 282-0887, 282-0888, 282-0889, 282-0890, 282-0891, 282-0892, 282-0893, 282-0894, 282-5398, 282-5399, 282-5400, 282-5401, 282-5402, 282-5403, 282-5404, 282-5405, 282-5406, 282-5407, 282-5408, 282-5409, 282-5410 THUMB AR AN ATTACHMENT

SMCS-6547 **i02837681**

NOTE	REF NO	GRAPHIC REF	PART NUMBER	QTY	PART NAME 1 2 3 4 5 6 (PRODUCT LEVEL)	SEE PAGE
Y	1	1	*221-4267*	1	THUMB GP (BACKHOE)	783
Y	2	1	*263-8577*	1	MOUNTING GP-CYLINDER (THUMB)	511

Y-SEPARATE ILLUSTRATION

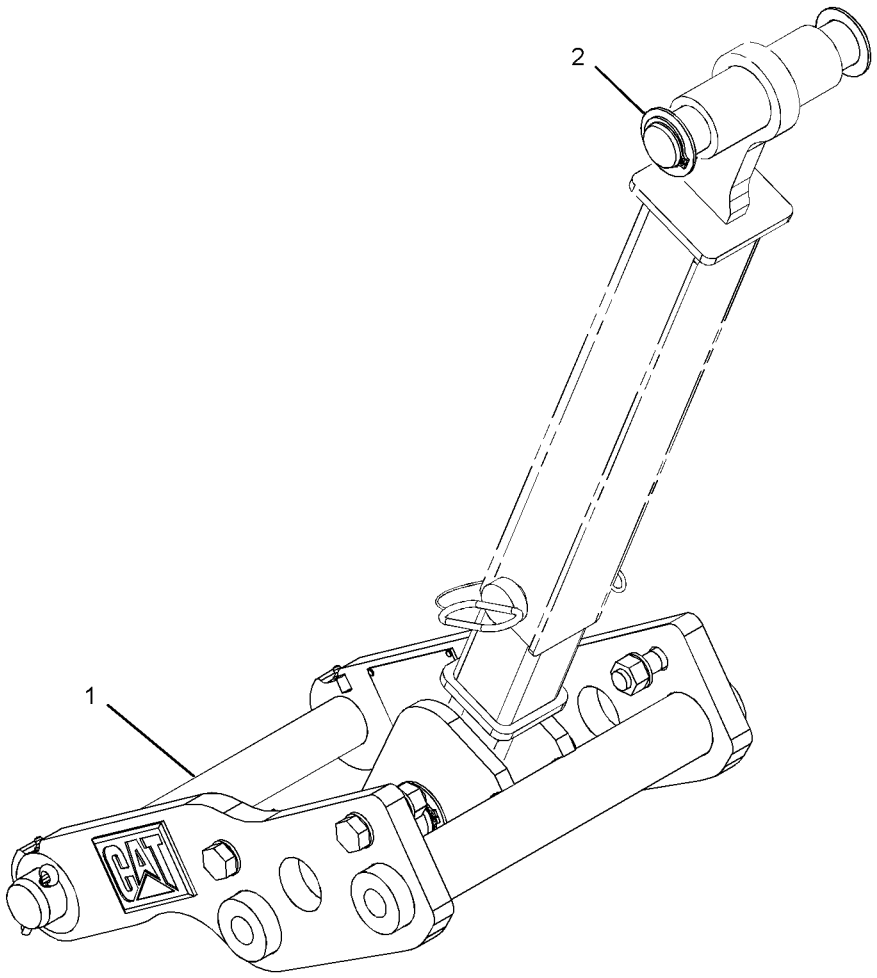

GRAPHIC #1 **<END>** g01234131

WORK TOOLS

274-5819 TINE AS-THUMB

S/N: HLS1-99999
AN ATTACHMENT

SMCS-6547 **i02678231**

NOTE	PART NUMBER	QTY	PART NAME 1 2 3 4 5 6 (PRODUCT LEVEL)	SEE PAGE
			(NO SERVICED PARTS)	

<END>

274-5823 TINE AS-THUMB

S/N: HLS1-99999
AN ATTACHMENT

SMCS-6547 **i02678234**

NOTE	PART NUMBER	QTY	PART NAME 1 2 3 4 5 6 (PRODUCT LEVEL)	SEE PAGE
			(NO SERVICED PARTS)	

<END>

274-5826 TINE AS-THUMB

S/N: HLS1-99999
AN ATTACHMENT

SMCS-6547 **i02678235**

NOTE	PART NUMBER	QTY	PART NAME 1 2 3 4 5 6 (PRODUCT LEVEL)	SEE PAGE
			(NO SERVICED PARTS)	

<END>

274-5829 TINE AS-THUMB

S/N: HLS1-99999
AN ATTACHMENT

SMCS-6547 **i02678236**

NOTE	PART NUMBER	QTY	PART NAME 1 2 3 4 5 6 (PRODUCT LEVEL)	SEE PAGE
			(NO SERVICED PARTS)	

<END>

274-5832 TINE AS-THUMB

S/N: HLS1-99999
AN ATTACHMENT

SMCS-6547 **i02678238**

NOTE	PART NUMBER	QTY	PART NAME 1 2 3 4 5 6 (PRODUCT LEVEL)	SEE PAGE
			(NO SERVICED PARTS)	

<END>

WORK TOOLS

274-5835 TINE AS-THUMB

S/N: HLS1-99999

AN ATTACHMENT

SMCS-6547 **i02678240**

NOTE	PART NUMBER	QTY	PART NAME 1 2 3 4 5 6 (PRODUCT LEVEL)	SEE PAGE
			(NO SERVICED PARTS)	

<END>

274-5837 TINE AS-THUMB

S/N: HLS1-99999

AN ATTACHMENT

SMCS-6547 **i02678243**

NOTE	PART NUMBER	QTY	PART NAME 1 2 3 4 5 6 (PRODUCT LEVEL)	SEE PAGE
			(NO SERVICED PARTS)	

<END>

274-5839 TINE AS-THUMB

S/N: HLS1-99999

AN ATTACHMENT

SMCS-6547 **i02678244**

NOTE	PART NUMBER	QTY	PART NAME 1 2 3 4 5 6 (PRODUCT LEVEL)	SEE PAGE
			(NO SERVICED PARTS)	

<END>

9R-5866 TOOTH GP-UNI

S/N: HLS1-99999
PART OF 251-1776 BUCKET AR-GENERAL PURPOSE, 232-2682, 232-2684, 232-2687, 232-2689 BUCKET AR-MULTIPURPOSE, 251-1779, 251-1782, 251-1788, 251-1790 BUCKET GP-GENERAL PURPOSE
FOR USE WITH LOADER BUCKETS. CANNOT BE USED WITH 9R-5321—PAGE 739, 9R-5320—PAGE 738 AN ATTACHMENT

SMCS-6822 **i02238664**

NOTE	REF NO	GRAPHIC REF	PART NUMBER	QTY	PART NAME 1 2 3 4 5 6 (PRODUCT LEVEL)	SEE PAGE
	1	1	**135-8203**	8	TOOTH-UNI	
	2	1	**4F-3657**	16	BOLT-PLOW (5/8-11X2.75-IN)	
	3	1	**4K-0367**	16	NUT-FULL (5/8-11-THD)	

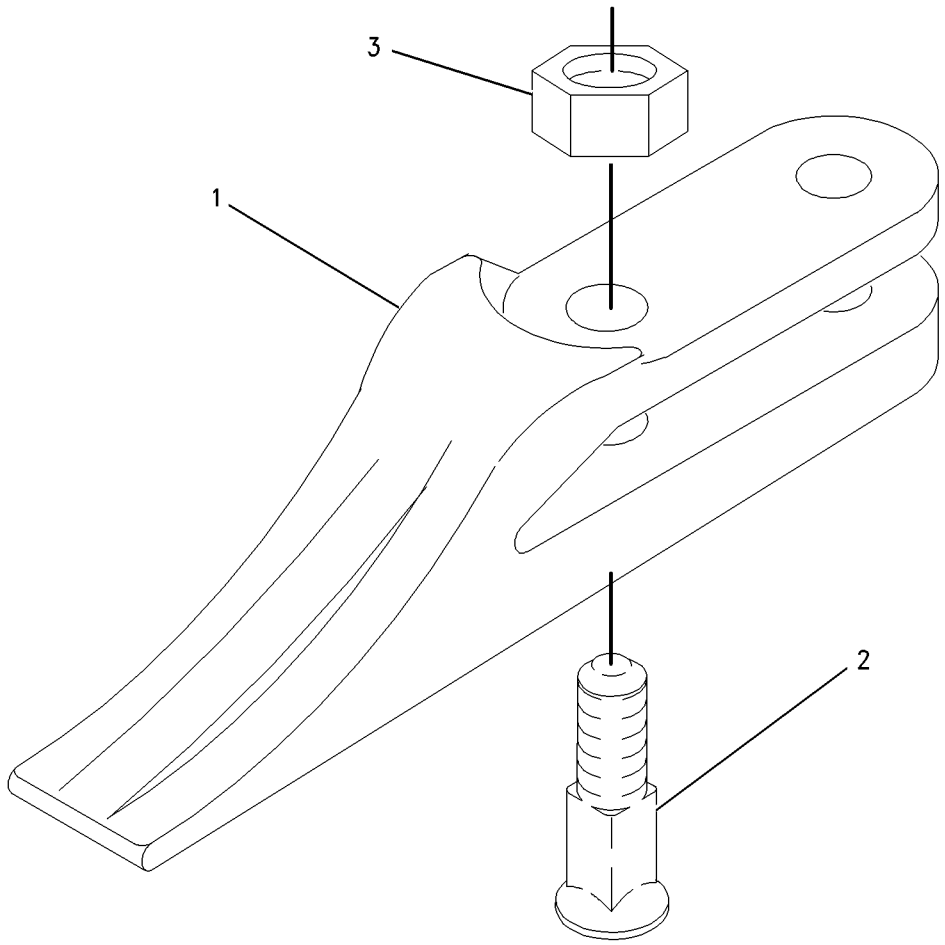

GRAPHIC #1 **<END>** g00915958

OPERATOR STATION

206-1801 AIR CONDITIONER & MOUNTING GP

S/N: HLS1-99999

PART OF 269-2127 CAB AR-ENCLOSED ROPS

AN ATTACHMENT

SMCS-7320 **i03070350**

NOTE	REF NO	GRAPHIC REF	PART NUMBER	QTY	PART NAME 1 2 3 4 5 6 (PRODUCT LEVEL)	SEE PAGE
	1	1	**221-2420**	2	HOSE-AIR	
E	2	1	**6V-6813**		HOSE (28-CM)	
	3	1	**6L-4725**	2	CLAMP-HOSE	
	4	1	**8Y-5737**	1	CLAMP	
	5	1	**8Y-6967**	6	LOUVER AS	
	6	1	**9M-7959**	4	CLAMP-HOSE	
	7	1	**9N-2231**	1	GROMMET AS	
	8	1	**110-6109**	1	KNOB-CONTROL (A/C)	
	9	1	**130-4832**	2	SCREW (8-18X10-MM)	
	10	1	**206-1684**	1	COVER (CAB FILTER)	
	11	1	**164-1368**	4	FASTENER-PANEL	
	12	1	**164-8474**	2	LOUVER AS-VENT	
	13	1	**189-0881**	1	CONTROL AS	
		1	**129-1831**	1	CLAMP	
	14	1	**193-3356**	1	CABLE AS	
	15	1	**194-5622**	1	VALVE AS-WATER	
		1	**6V-6717**	1	SCREW-WASHER HEAD (8-32X9.52-MM)	
		1	**124-0312**	2	SCREW-PAN HEAD (8-16X0.32-IN)	
	16	1	**206-1648**	1	LOUVER	
	17	1	**206-1653**	4	GASKET	
	18	1	**206-1682**	1	PANEL-CONTROL	
	19	1	**206-1803**	2	GASKET	
	20	1	**206-1804**	1	GASKET	
	21	1	**206-1805**	1	GASKET	
E	22	1	**220-0738**		SEAL (87-CM)	
	23	1	**206-1807**	1	GASKET	
	24	1	**206-1808**	1	PLATE	
	25	1	**206-1809**	1	ROD AS	
	26	1	**206-1810**	1	DUCT-AIR	
	27	1	**206-1812**	1	DUCT-AIR	
	28	1	**206-1814**	1	DUCT-AIR	
	29	1	**206-1815**	1	DUCT-AIR	
	30	1	**206-1816**	1	DUCT-AIR	
	31	1	**206-1817**	2	DUCT-AIR	
	32	1	**206-1818**	1	DUCT AS-AIR	
	33	1	**206-1846**	1	INSULATION	
	34	1	**206-1847**	1	INSULATION	
Y	35	1	*210-8363*	1	HEATER GP-CAB	847
	36	1	**211-2661**	1	FILTER ELEMENT AS-AIR (CAB HEATER)	
	37	1	**218-0666**	6	LOUVER AS	
D	38	1	**5P-6129**		TUBE (0.55-M EACH)	
	39	1	**255-0795**	1	FILM (TEMPERATURE CONTROL)	
	40	1	**5P-4116**	1	WASHER-HARD (8.8X20.5X2-MM THK)	
M	41	1	**111-4627**	3	SCREW-MACHINE (M6X1X30-MM)	
	42	1	**8Y-6352**	1	LOUVER AS	
	43	1	**7X-0579**	1	WASHER-HARD (8.8X25.5X2-MM THK)	
M	44	1	**8T-4200**	1	BOLT (M8X1.25X16-MM)	
	45	1	**9X-2038**	4	WASHER (7X19X2-MM THK)	
M	46	1	**9X-2045**	8	SCREW-TRUSS HEAD (M6X1X20-MM)	
	47	1	**3S-2093**	2	STRAP-CABLE	
	48	1	**4H-2558**	2	GROMMET	
	49	1	**8T-4205**	4	WASHER-HARD (7.2X14.5X2-MM THK)	

D-ORDER BY THE METER
E-ORDER BY THE CENTIMETER
M-METRIC PART
Y-SEPARATE ILLUSTRATION

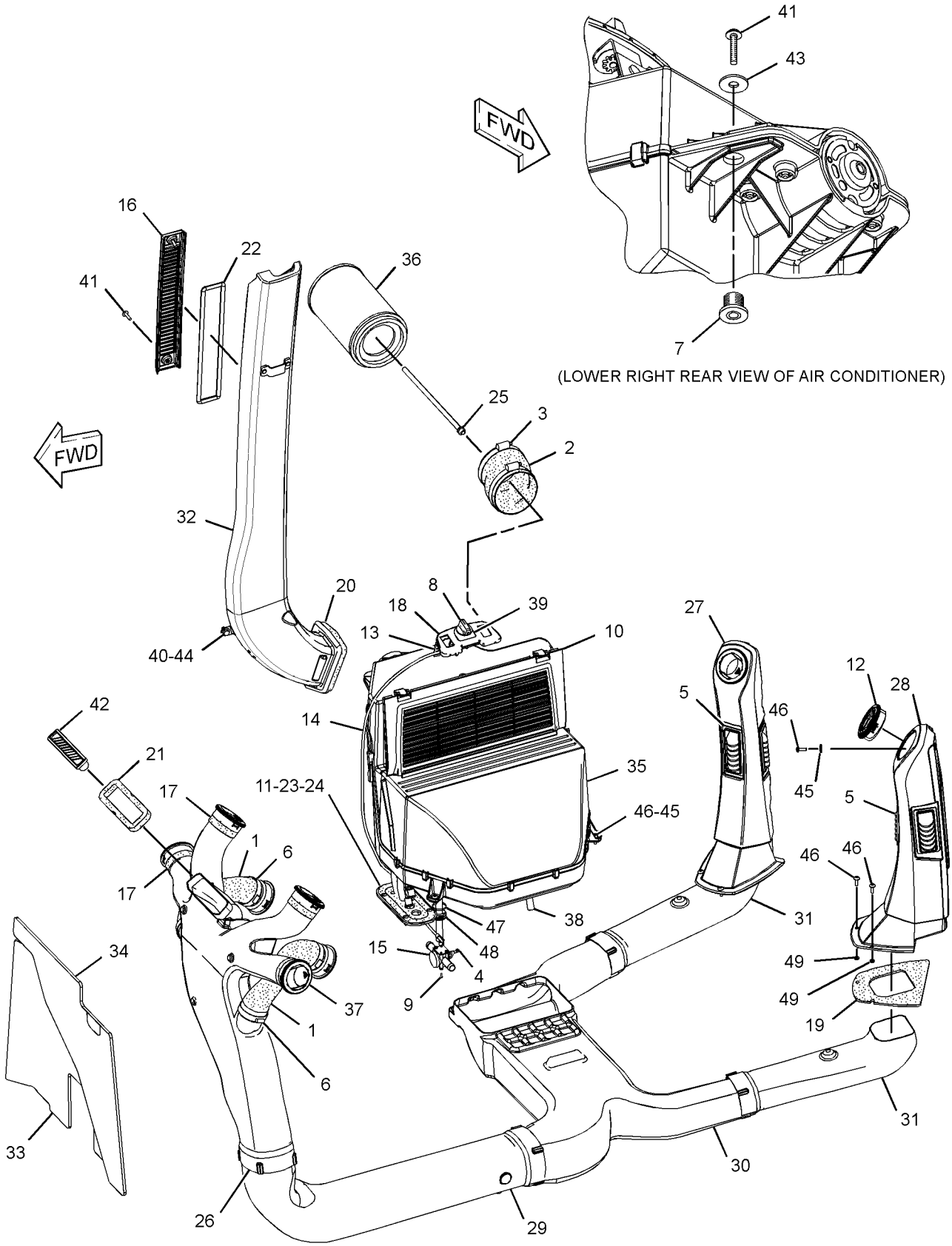

GRAPHIC #1 **<END>** g01576933

229-8743 BRACKET GP-MOUNTING–MONITOR

S/N: HLS1-99999

PART OF 211-4253 INSTALLATION GP-MONITOR

AN ATTACHMENT

SMCS-7301 **i02676133**

NOTE	REF NO	GRAPHIC REF	PART NUMBER	QTY	PART NAME 1 2 3 4 5 6 (PRODUCT LEVEL)	SEE PAGE
	1	1	**9R-8165**	1	BEARING	
	2	1	**7X-0510**	1	WASHER-HARD (15.5X29X3-MM THK)	
	3	1	**248-2284**	1	KNOB-CONTROL	
	4	1	**251-0075**	1	BRACKET	
	5	1	**251-0076**	1	BRACKET AS	
	6	1	**254-6826**	1	SPACER (10.5X14X8.8-MM THK)	
	7	1	**9K-6540**	1	WASHER-SPRING (0.63X1.25X0.04-IN THK)	
	8	1	**9X-2038**	2	WASHER (7X19X2-MM THK)	
M	9	1	**9X-2045**	2	SCREW-TRUSS HEAD (M6X1X20-MM)	
	10	1	**121-1029**	1	CLIP	

M-METRIC PART

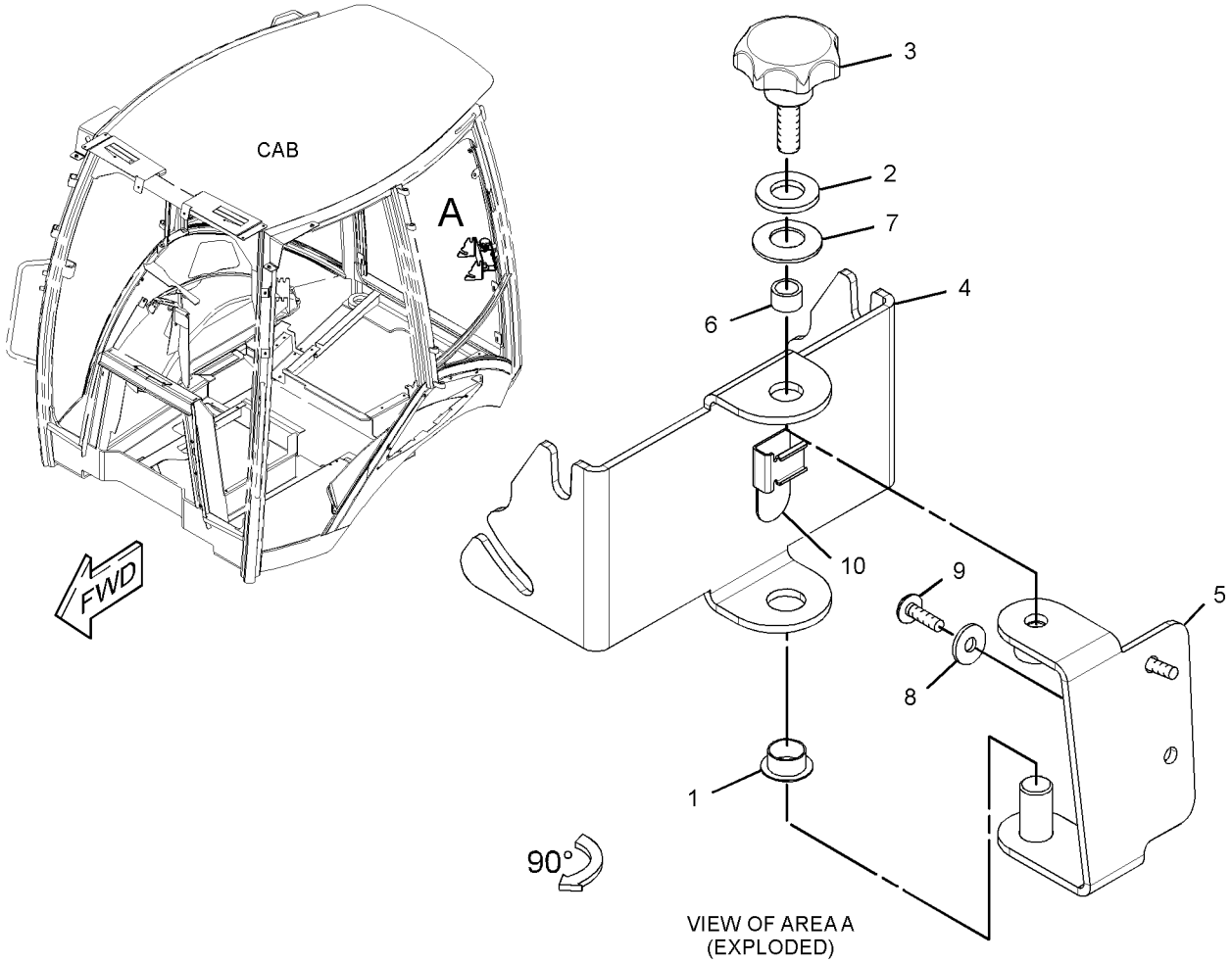

GRAPHIC #1 **<END>** g01350345

OPERATOR STATION

269-2125 CAB AR-ENCLOSED ROPS

S/N: HLS1-99999

AN ATTACHMENT

SMCS-7301, 7325 **i02987868**

NOTE	PART NUMBER	QTY	PART NAME 1 2 3 4 5 6 (PRODUCT LEVEL)	SEE PAGE
Y	**206-1889**	1	CAB GP-ENCLOSED ROPS	796
Y	*206-1700*	1	CONSOLE GP-OPERATOR (RH)	813
Y	*206-1702*	1	CONSOLE GP-OPERATOR (LH)	815
Y	*206-1703*	1	CONSOLE GP-OPERATOR (FRONT)	817
Y	*206-1633*	1	CONTROL GP-STEERING	828
			S/N: HLS1-6426	
Y	*218-4453*	1	CONTROL GP-STEERING	830
			S/N: HLS6427-99999	
Y	*254-6101*	1	FAN GP-SUCTION (WITHOUT AIR CONDITIONER)	54
Y	*213-1891*	1	FENDER GP-REAR	357
Y	*206-1618*	1	FLOOR MAT GP	844
Y	*223-3966*	1	FLOORPLATE GP	360
			S/N: HLS1-6266	
Y	*284-2757*	1	FLOORPLATE GP	361
			S/N: HLS6267-99999	
Y	*206-1800*	1	HEATER GP-CAB	845
Y	*255-2279*	1	INDICATOR GP-AIR FILTER CHANGE	72
Y	*211-4277*	1	LIGHTING GP-FLOOD & SIGNAL (NACD, OPTIONAL)	121
Y	*209-4703*	1	LINER GP-CAB	863
Y	*211-0072*	1	LINES GP-HEATER	867
Y	*205-9578*	1	MIRROR GP-REAR VIEW (INTERIOR)	870
Y	*269-3247*	1	MOUNTING GP-BACKHOE CONTROL (PILOT)	873
Y	*205-9560*	1	MOUNTING GP-CAB	876
Y	*205-9569*	1	ROOF GP-CAB	880
Y	*280-7365*	1	SEAT GP-SUSPENSION (CLOTH)	893
Y	**223-4713**	1	VALVE GP-PILOT (STABILIZER)	552
Y	*206-1727*	1	WASHER GP-WINDOW	905
Y	*206-1725*	1	WIPER GP-WINDOW	923
Y	*211-4240*	1	WIRING GP-PLATFORM	170
			S/N: HLS6427-6945	
Y	*290-6802*	1	WIRING GP-PLATFORM	186
			S/N: HLS6946-99999	
Y	*211-4241*	1	WIRING GP-CONSOLE (SIDE)	147
			S/N: HLS6427-6945	
Y	*290-6803*	1	WIRING GP-CONSOLE	150
			S/N: HLS6946-99999	
Y	*211-4245*	1	WIRING GP-CONSOLE (FRONT)	149
Y	*211-4269*	1	WIRING GP-HEATER	165
	272-5421	1	FILM-CONTROL (BACKHOE, JOYSTICK)	
			(ON LH CONSOLE AROUND PATTERN SWITCHER)	
	250-7912	1	FILM-IDENTIFICATION (CATERPILLAR, FRONT)	
			(ON FRONT WINDSHIELD)	
	251-5628	1	FILM-IDENTIFICATION (STABILIZER CONTROL)	
			(ON RH CONSOLE NEXT TO STABILIZER CONTROLS)	
	285-1207	1	MAT-PROTECTIVE	

Y-SEPARATE ILLUSTRATION

<END>

OPERATOR STATION

269-2126 CAB AR-ENCLOSED ROPS

S/N: HLS1-99999

AN ATTACHMENT

SMCS-7301, 7325 **i03007373**

NOTE	PART NUMBER	QTY	PART NAME 1 2 3 4 5 6 (PRODUCT LEVEL)	SEE PAGE
Y	**206-1889**	1	CAB GP-ENCLOSED ROPS	796
Y	*206-1700*	1	CONSOLE GP-OPERATOR (RH)	813
Y	*206-1702*	1	CONSOLE GP-OPERATOR (LH)	815
Y	*206-1703*	1	CONSOLE GP-OPERATOR (FRONT)	817
Y	*206-1633*	1	CONTROL GP-STEERING	828
			S/N: HLS1-6426	
Y	*218-4453*	1	CONTROL GP-STEERING	830
			S/N: HLS6427-99999	
Y	*254-6101*	1	FAN GP-SUCTION (WITHOUT AIR CONDITIONER)	54
Y	*213-1891*	1	FENDER GP-REAR	357
Y	*206-1618*	1	FLOOR MAT GP	844
Y	*223-3966*	1	FLOORPLATE GP	360
			S/N: HLS1-6266	
Y	*284-2757*	1	FLOORPLATE GP	361
			S/N: HLS6267-99999	
Y	*206-1800*	1	HEATER GP-CAB	845
Y	*255-2279*	1	INDICATOR GP-AIR FILTER CHANGE	72
Y	*211-4277*	1	LIGHTING GP-FLOOD & SIGNAL (NACD, OPTIONAL)	121
Y	*209-4703*	1	LINER GP-CAB	863
Y	*211-0072*	1	LINES GP-HEATER	867
Y	*205-9578*	1	MIRROR GP-REAR VIEW (INTERIOR)	870
Y	*269-3247*	1	MOUNTING GP-BACKHOE CONTROL (PILOT)	873
Y	*205-9560*	1	MOUNTING GP-CAB	876
Y	*205-9569*	1	ROOF GP-CAB	880
Y	*280-7366*	1	SEAT GP-SUSPENSION (DELUXE, CLOTH)	893
Y	**223-4715**	1	VALVE GP-PILOT (STABILIZER)	553
Y	*206-1857*	1	VISOR GP-CAB	903
Y	*206-1727*	1	WASHER GP-WINDOW	905
Y	*206-1725*	1	WIPER GP-WINDOW	923
Y	*211-4240*	1	WIRING GP-PLATFORM	170
			S/N: HLS1-6945	
Y	*290-6802*	1	WIRING GP-PLATFORM	186
			S/N: HLS6946-99999	
Y	*211-4241*	1	WIRING GP-CONSOLE (SIDE)	147
			S/N: HLS1-6945	
Y	*290-6803*	1	WIRING GP-CONSOLE	150
			S/N: HLS6946-99999	
Y	*211-4245*	1	WIRING GP-CONSOLE (FRONT)	149
Y	*263-9483*	1	WIRING GP-ENGINE	159
Y	*211-4269*	1	WIRING GP-HEATER	165
Y	*211-4271*	1	WIRING GP-POWER RECEPTACLE	192
Y	*225-7996*	1	WIRING GP-STABILIZER	199
	251-3306	1	FILM (STABILIZER, AUTO UP)	
			(RH CONSOLE NEXT TO STABILIZER CONTROLS)	
	272-5421	1	FILM-CONTROL (BACKHOE, JOYSTICK)	
			(LH CONSOLE AROUND PATTERN SWITCHER)	
	250-7912	1	FILM-IDENTIFICATION (CATERPILLAR, FRONT)	
			(FRONT WINDSHIELD)	
	285-1207	1	MAT-PROTECTIVE	

Y-SEPARATE ILLUSTRATION

<END>

OPERATOR STATION

269-2127 CAB AR-ENCLOSED ROPS

S/N: HLS1-99999

AN ATTACHMENT

SMCS-7301, 7325 **i03007386**

NOTE	PART NUMBER	QTY	PART NAME 1 2 3 4 5 6 (PRODUCT LEVEL)	SEE PAGE
Y	*206-1801*	1	AIR CONDITIONER & MOUNTING GP	788
Y	**206-1889**	1	CAB GP-ENCLOSED ROPS	796
Y	*248-5025*	1	COMPRESSOR & MTG GP-REFRIG	807
Y	*211-0705*	1	CONDENSER & MTG GP-REFRIGERANT	812
Y	*206-1703*	1	CONSOLE GP-OPERATOR (FRONT)	817
Y	*206-1702*	1	CONSOLE GP-OPERATOR (LH)	815
Y	*206-1700*	1	CONSOLE GP-OPERATOR (RH)	813
Y	*206-1633*	1	CONTROL GP-STEERING (TILT)	828
			S/N: HLS1-6426	
Y	*218-4453*	1	CONTROL GP-STEERING	830
			S/N: HLS6427-99999	
Y	*213-1891*	1	FENDER GP-REAR	357
Y	*213-9314*	1	FAN GP-SUCTION (WITH AIR CONDITIONER)	52
Y	*206-1618*	1	FLOOR MAT GP	844
Y	*223-3966*	1	FLOORPLATE GP	360
			S/N: HLS1-6266	
Y	*284-2757*	1	FLOORPLATE GP	361
			S/N: HLS6267-99999	
Y	*255-2279*	1	INDICATOR GP-AIR FILTER CHANGE	72
Y	*211-4277*	1	LIGHTING GP-FLOOD & SIGNAL (NACD, OPTIONAL)	121
Y	*209-4703*	1	LINER GP-CAB	863
Y	*211-0071*	1	LINES GP-HEATER & AIR COND	868
Y	*205-9578*	1	MIRROR GP-REAR VIEW (INTERIOR)	870
Y	*269-3247*	1	MOUNTING GP-BACKHOE CONTROL (PILOT)	873
Y	*205-9560*	1	MOUNTING GP-CAB	876
Y	*205-9569*	1	ROOF GP-CAB (NACD)	880
Y	*280-7366*	1	SEAT GP-SUSPENSION (DELUXE, CLOTH)	893
Y	**223-4715**	1	VALVE GP-PILOT (STABILIZER)	553
Y	*206-1857*	1	VISOR GP-CAB	903
Y	*206-1727*	1	WASHER GP-WINDOW	905
Y	*206-1725*	1	WIPER GP-WINDOW	923
Y	*211-4268*	1	WIRING GP-AIR CONDITIONER	141
Y	*211-4240*	1	WIRING GP-PLATFORM	170
			S/N: HLS1-6945	
Y	*290-6802*	1	WIRING GP-PLATFORM	186
			S/N: HLS6946-99999	
Y	*211-4245*	1	WIRING GP-CONSOLE (FRONT)	149
Y	*211-4241*	1	WIRING GP-CONSOLE (SIDE)	147
			S/N: HLS1-6945	
Y	*290-6803*	1	WIRING GP-CONSOLE	150
			S/N: HLS6946-99999	
Y	*263-9483*	1	WIRING GP-ENGINE	159
Y	*211-4271*	1	WIRING GP-POWER RECEPTACLE	192
Y	*225-7996*	1	WIRING GP-STABILIZER	199
	251-3306	1	FILM (STABILIZER, AUTO UP)	
			(RH CONSOLE NEXT TO STABILIZER CONTROLS)	
	272-5421	1	FILM-CONTROL (BACKHOE, JOYSTICK)	
			(LH CONSLOLE AROUND PATTERN SWITCHER)	
	250-7912	1	FILM-IDENTIFICATION (CATERPILLAR, FRONT)	
			(FRONT WINDSHIELD)	
	285-1207	1	MAT-PROTECTIVE	

Y-SEPARATE ILLUSTRATION

<END>

OPERATOR STATION

288-8044 CAB AS

S/N: HLS1-99999
PART OF 206-1889 CAB GP-ENCLOSED ROPS
AN ATTACHMENT

SMCS-7301 **i02980658**

NOTE	REF NO	GRAPHIC REF	PART NUMBER	QTY	PART NAME 1 2 3 4 5 6 (PRODUCT LEVEL)	SEE PAGE
	1	1	**5D-9629**	2	ROD	
	2	1	**204-4175**	1	ROPS AS	
	3	1	**205-9566**	1	POST AS	
	4	1	**205-9567**	1	POST AS	
	5	1	**206-1717**	1	BRACKET	
	6	1	**234-0095**	2	INSERT-THREADED (M6X1-THD)	
M	7	1	**6V-9632**	4	NUT-WELD (M6X1-THD)	
	8	1	**7T-1099**	28	LINK	
M	9	1	**8T-3612**	10	NUT-WELD (M8X1.25-THD)	

M-METRIC PART

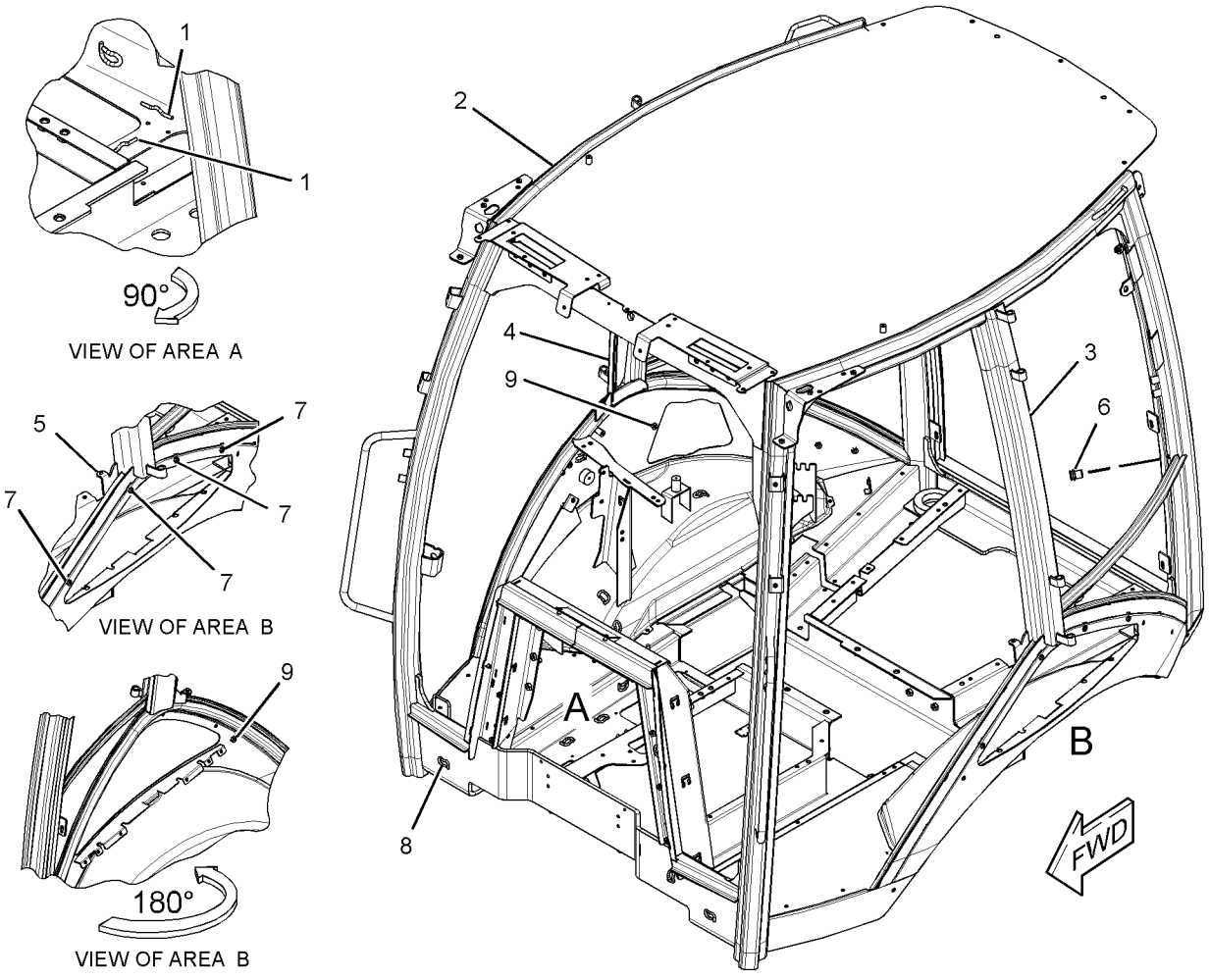

GRAPHIC #1 **<END>** g01352257

OPERATOR STATION

206-1889 CAB GP-ENCLOSED ROPS

S/N: HLS1-99999
PART OF 269-2125, 269-2126, 269-2127 CAB AR-ENCLOSED ROPS
AN ATTACHMENT
TYPE 1

SMCS-7301, 7325 **i03549602**

NOTE	REF NO	GRAPHIC REF	PART NUMBER	QTY	PART NAME 1 2 3 4 5 6 (PRODUCT LEVEL)	SEE PAGE
	1	1	**123-0380**	2	SHIELD-STRIKER	
B	2	1	**177-4877**	4	SHIM (1-MM THK)	
	3	1	**187-0413**	2	STRIKER	
	4	1	**204-4220**	1	CAB AS	
	5	1	**205-9605**	1	GLASS (FRONT, LH)	
	6	1	**205-9606**	1	GLASS (FRONT, RH)	
	7	1	**205-9607**	1	GLASS (FRONT)	
Y	8	1	**205-9619**	1	WINDOW GP-CAB (UPPER, LH)	909
	9	1	**205-9622**	1	GLASS (LOWER, LH)	
Y	10	2	**205-9628**	1	WINDOW GP-CAB (UPPER, RH)	911
	11	2	**205-9631**	1	GLASS (LOWER, RH)	
	12	2	**206-1590**	4	PIN	
Y	13	1	**206-1592**	1	DOOR GP-CAB (LH)	836
Y	14	2	**206-1593**	1	DOOR GP-CAB (RH)	840
	15	1	**206-1647**	1	PLATE	
	16	1	**210-6475**	2	PLATE	
Y	17	2	*229-0300*	1	WINDOW GP-CAB (REAR)	913
	18	2	**129-5256**	12	BUSHING	
	19	2	**129-5257**	8	BUSHING	
M	20	1	**131-3987**	8	SCREW (M4X0.7X12-MM)	
	21	1	**159-4945**	2	KEEPER	
	22	1	**159-4946**	2	KEEPER	
	23	1	**5P-4116**	11	WASHER-HARD (8.8X20.5X2-MM THK)	
	24	2	**8S-7803**	8	RING-RETAINING	
M	25	1	**8T-4189**	9	BOLT (M8X1.25X20-MM)	
M	26	1	**8T-4200**	2	BOLT (M8X1.25X16-MM)	
	27	1	**9R-5616**	3	PLUG	

B-USE AS REQUIRED
M-METRIC PART
Y-SEPARATE ILLUSTRATION

REFER TO ALL ILLUSTRATIONS OF THIS GROUP FOR AUXILIARY VIEWS

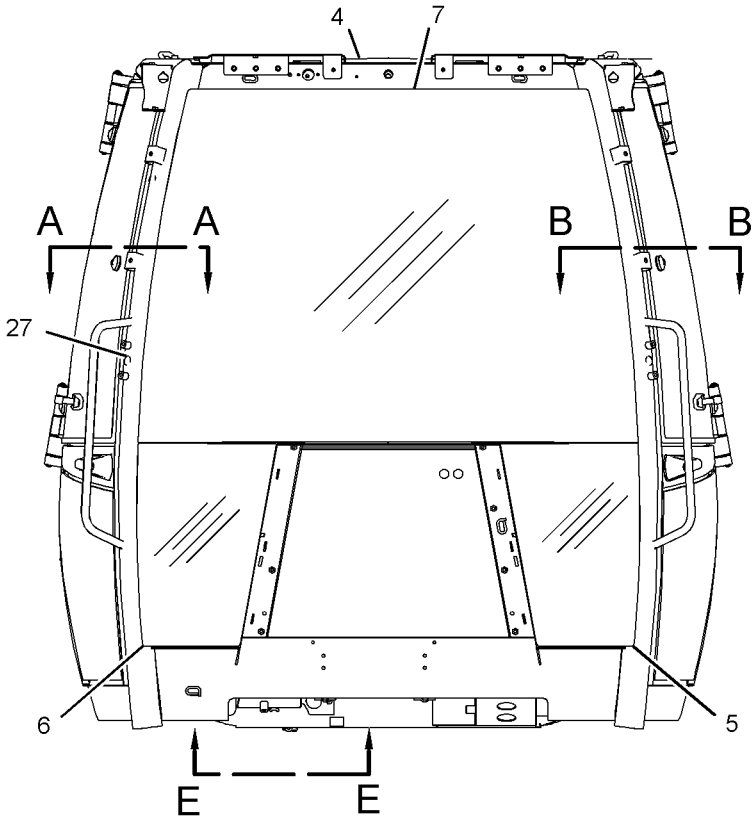

FRONT VIEW

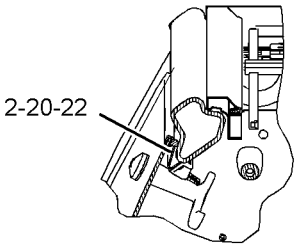

SECTION A-A

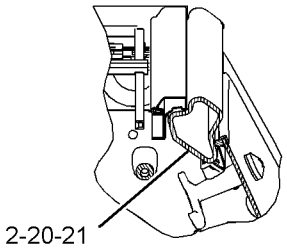

SECTION B-B

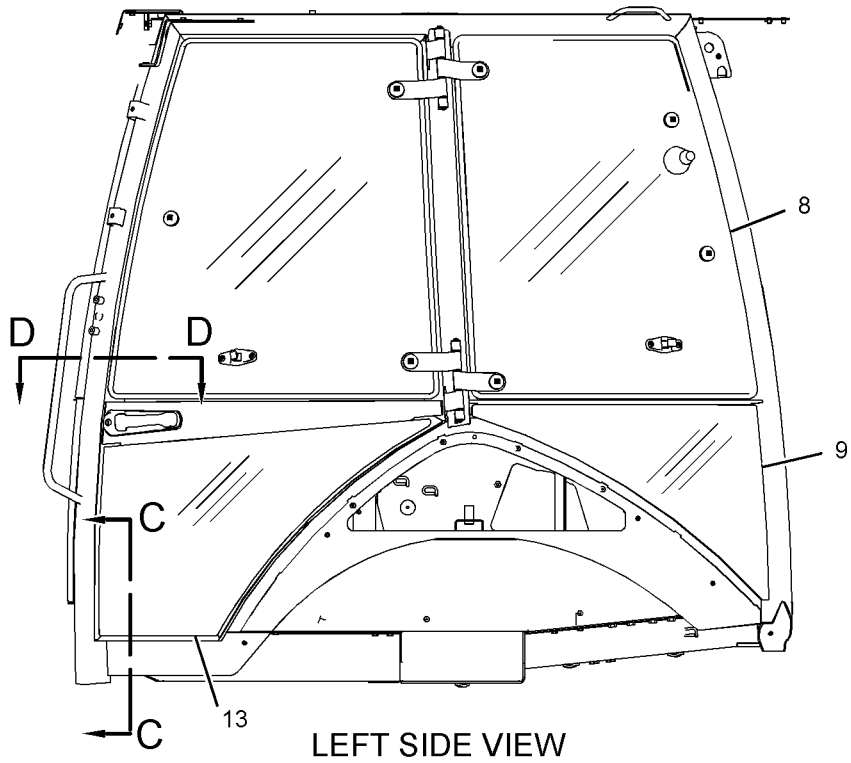

LEFT SIDE VIEW

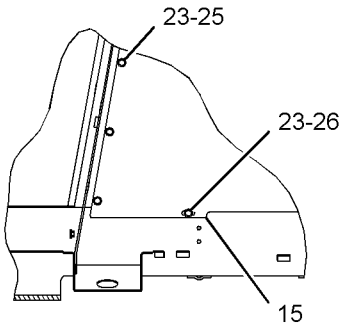

SECTION C-C

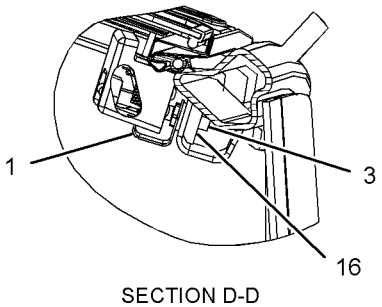

SECTION D-D

GRAPHIC #1

g01334063

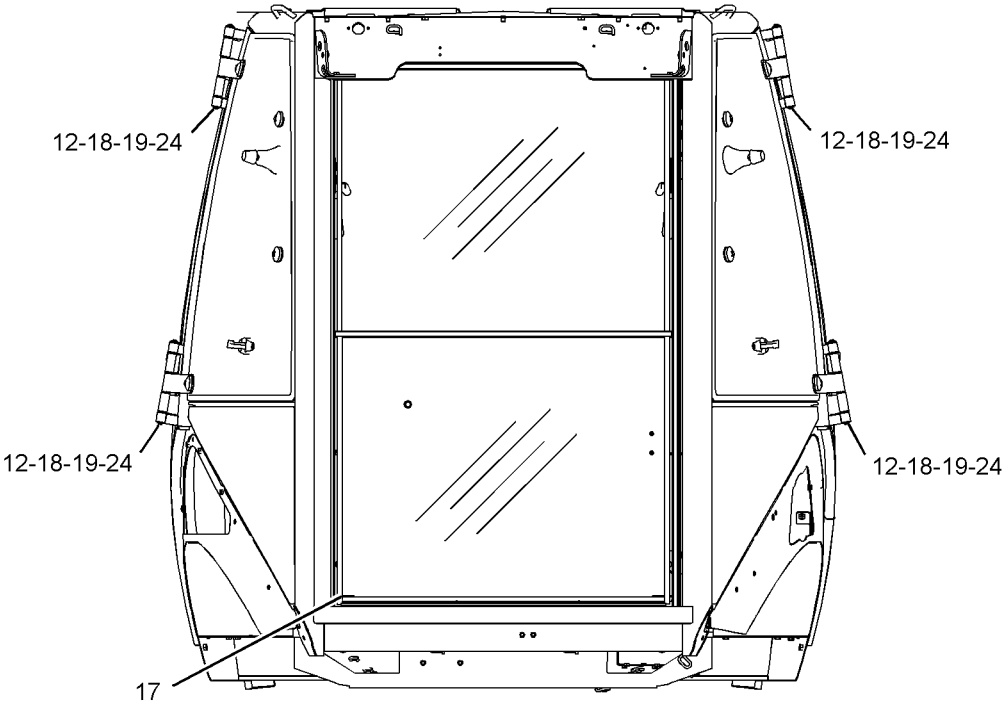

REAR VIEW

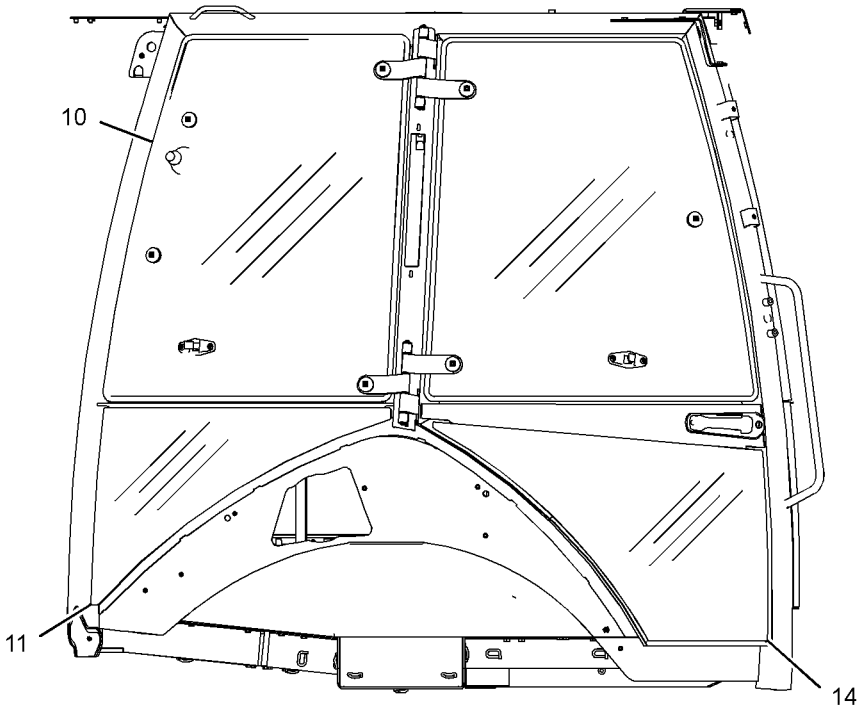

RIGHT SIDE VIEW

GRAPHIC #2 **<END>** g01877114

OPERATOR STATION

206-1889 CAB GP-ENCLOSED ROPS

S/N: HLS1-99999
PART OF 269-2125, 269-2126, 269-2127 CAB AR-ENCLOSED ROPS
AN ATTACHMENT
TYPE 2

SMCS-7301, 7325 **i02657542**

NOTE	REF NO	GRAPHIC REF	PART NUMBER	QTY	PART NAME 1 2 3 4 5 6 (PRODUCT LEVEL)	SEE PAGE
	1	1	**123-0380**	2	SHIELD-STRIKER	
B	2	1	**177-4877**	4	SHIM (1-MM THK)	
	3	1	**187-0413**	2	STRIKER	
CY	4	1	**288-8044**	1	CAB AS	795
	5	1	**205-9605**	1	GLASS (FRONT, LH)	
	6	1	**205-9606**	1	GLASS (FRONT, RH)	
	7	1	**205-9607**	1	GLASS (FRONT)	
Y	8	1	**205-9619**	1	WINDOW GP-CAB (UPPER, LH)	909
	9	1	**205-9622**	1	GLASS (LOWER, LH)	
Y	10	2	**205-9628**	1	WINDOW GP-CAB (UPPER, RH)	911
	11	2	**205-9631**	1	GLASS (LOWER, RH)	
	12	2	**206-1590**	4	PIN	
Y	13	1	**206-1592**	1	DOOR GP-CAB (LH)	836
Y	14	2	**206-1593**	1	DOOR GP-CAB (RH)	840
	15	1	**206-1647**	1	PLATE	
	16	1	**210-6475**	2	PLATE	
Y	17	2	*229-0300*	1	WINDOW GP-CAB (REAR)	913
	18	2	**129-5256**	12	BUSHING	
	19	2	**129-5257**	8	BUSHING	
M	20	1	**131-3987**	8	SCREW (M4X0.7X12-MM)	
	21	1	**159-4945**	2	KEEPER	
	22	1	**159-4946**	2	KEEPER	
	23	1	**5P-4116**	11	WASHER-HARD (8.8X20.5X2-MM THK)	
	24	2	**8S-7803**	8	RING-RETAINING	
CM	25	1	**8T-4200**	11	BOLT (M8X1.25X16-MM)	
	26	1	**9R-5616**	3	PLUG	

B-USE AS REQUIRED
C-CHANGE FROM PREVIOUS TYPE
M-METRIC PART
Y-SEPARATE ILLUSTRATION

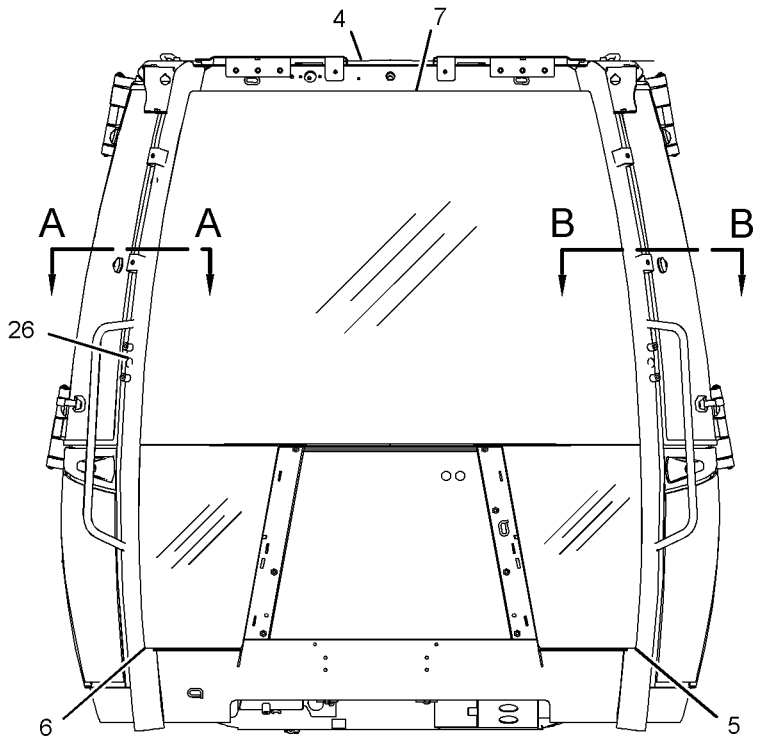

FRONT VIEW

REFER TO ALL ILLUSTRATIONS OF THIS GROUP FOR AUXILIARY VIEWS

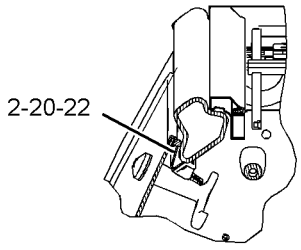

SECTION A-A

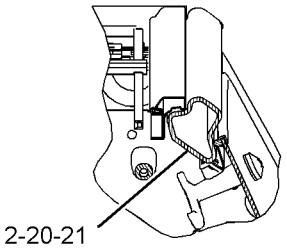

SECTION B-B

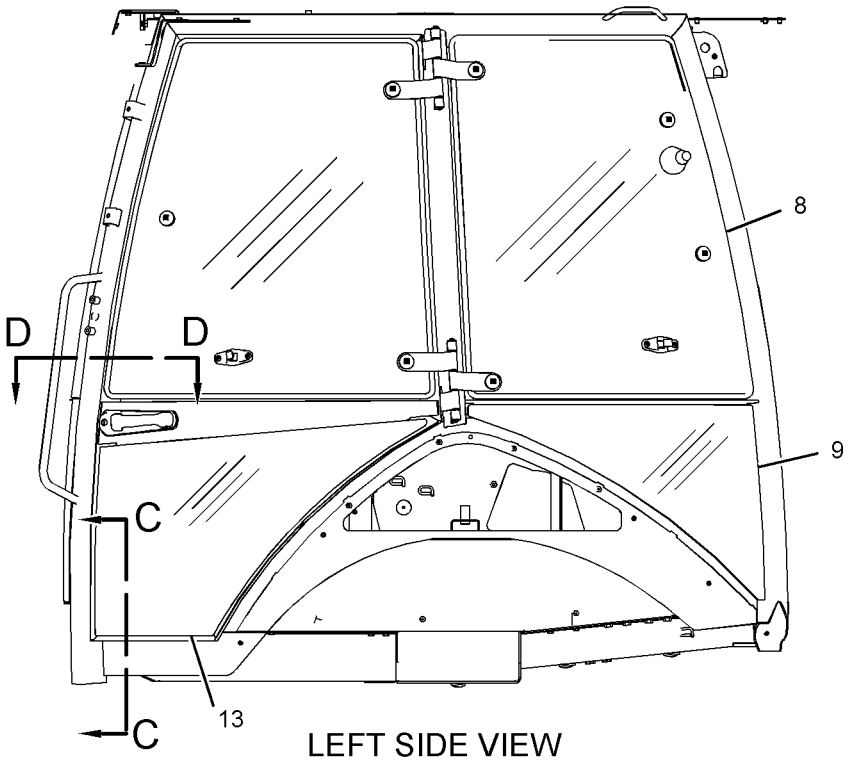

LEFT SIDE VIEW

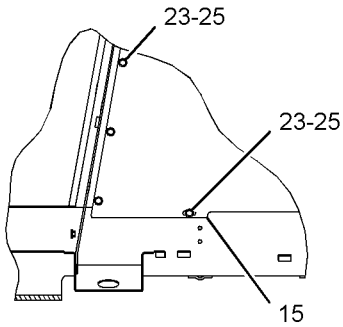

SECTION C-C

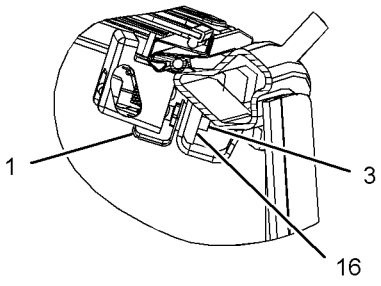

SECTION D-D

GRAPHIC #1

g01343514

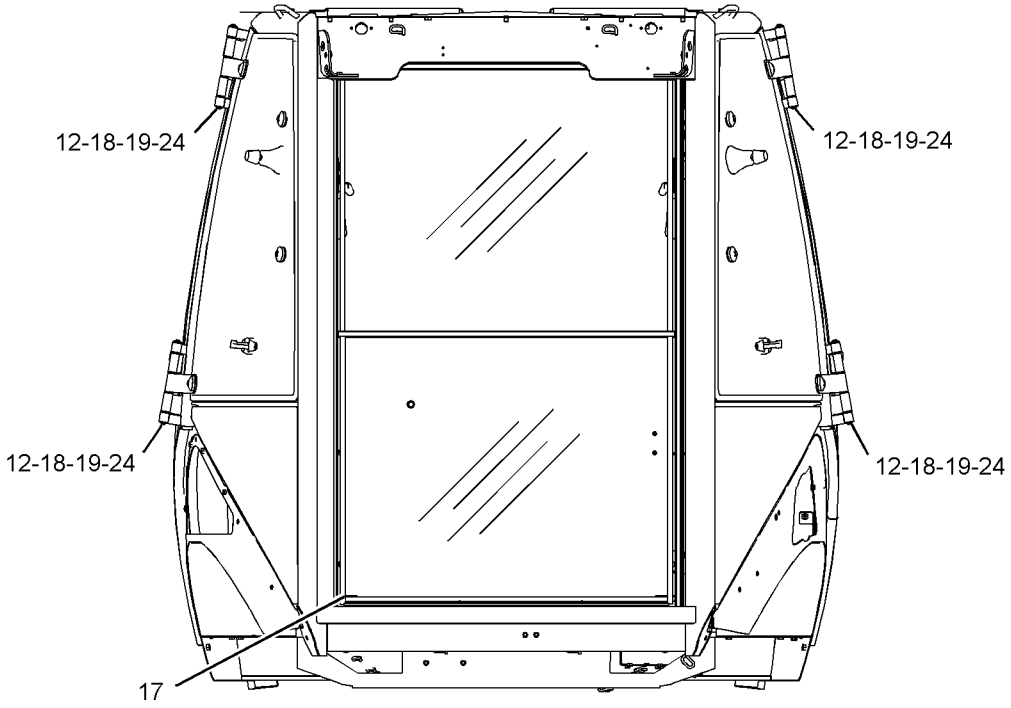

REAR VIEW

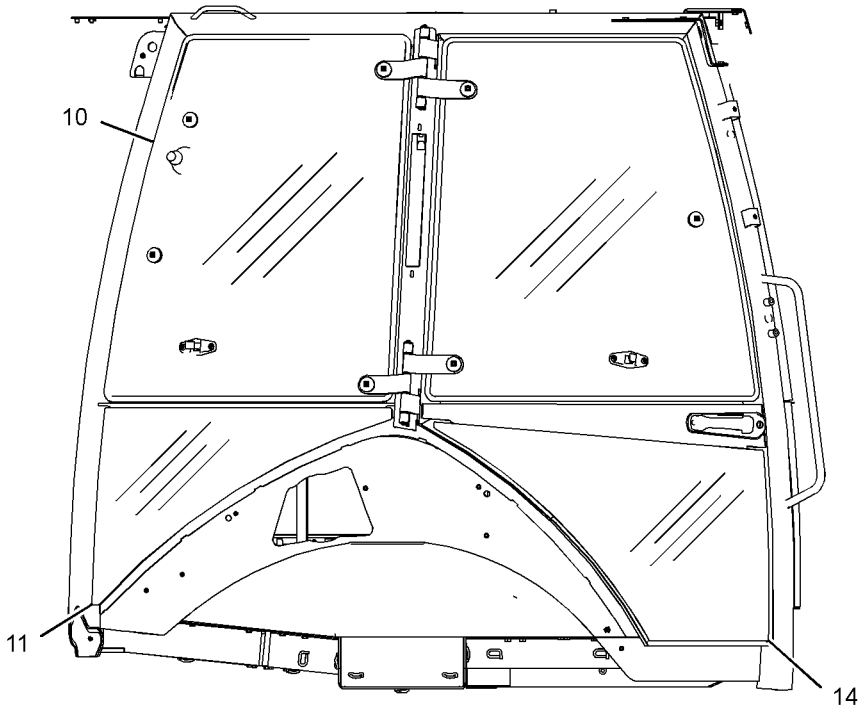

RIGHT SIDE VIEW

GRAPHIC #2 **<END>** g01343515

OPERATOR STATION

269-2123 CANOPY AR-OPEN ROPS

S/N: HLS1-99999

AN ATTACHMENT

SMCS-7302, 7323 **i03007502**

NOTE	PART NUMBER	QTY	PART NAME 1 2 3 4 5 6 (PRODUCT LEVEL)	SEE PAGE
Y	*206-1884*	1	CANOPY GP-OPEN ROPS (WITHOUT FRONT WINDOW)	804
Y	*206-1703*	1	CONSOLE GP-OPERATOR (FRONT)	817
Y	*206-1702*	1	CONSOLE GP-OPERATOR (LH)	815
Y	*206-1700*	1	CONSOLE GP-OPERATOR (RH)	813
Y	*206-1633*	1	CONTROL GP-STEERING (TILT)	828
			S/N: HLS1-6426	
Y	*218-4453*	1	CONTROL GP-STEERING	830
			S/N: HLS6427-99999	
Y	*276-8515*	1	COVER GP-CAB	834
			S/N: HLS6312-99999	
Y	*254-6101*	1	FAN GP-SUCTION (WITHOUT AIR CONDITIONER)	54
Y	*213-1891*	1	FENDER GP-REAR	357
Y	*206-1618*	1	FLOOR MAT GP	844
Y	*223-3965*	1	FLOORPLATE GP	359
			S/N: HLS1-6311	
Y	*284-2757*	1	FLOORPLATE GP	361
			S/N: HLS6312-99999	
Y	*255-2279*	1	INDICATOR GP-AIR FILTER CHANGE	72
Y	*211-4277*	1	LIGHTING GP-FLOOD & SIGNAL (NACD, OPTIONAL)	121
Y	*259-6276*	1	MIRROR GP-REAR VIEW (INTERIOR)	871
Y	*269-3247*	1	MOUNTING GP-BACKHOE CONTROL (PILOT)	873
Y	*205-9560*	1	MOUNTING GP-CAB	876
Y	*206-1701*	1	PROTECTION GP-VANDALISM (ROTATING GUARD)	930
Y	*205-9569*	1	ROOF GP-CAB	880
Y	*280-7364*	1	SEAT GP-SUSPENSION (VINYL)	893
Y	*206-1704*	1	TRIM GP-CAB	901
Y	**223-4713**	1	VALVE GP-PILOT (STABILIZER)	552
Y	*211-4240*	1	WIRING GP-PLATFORM	170
			S/N: HLS1-6945	
Y	*290-6802*	1	WIRING GP-PLATFORM	186
			S/N: HLS6946-99999	
Y	*211-4245*	1	WIRING GP-CONSOLE (FRONT)	149
Y	*211-4241*	1	WIRING GP-CONSOLE (SIDE)	147
			S/N: HLS1-6945	
Y	*290-6803*	1	WIRING GP-CONSOLE (SIDE)	150
			S/N: HLS6946-99999	
Y	*211-4271*	1	WIRING GP-POWER RECEPTACLE	192
	272-5421	1	FILM-CONTROL (BACKHOE, JOYSTICK)	
			(LH CONSOLE AROUND PATTERN SWITCHER)	
	256-5299	1	FILM-IDENTIFICATION (CATERPILLAR)	
			(ON CAB ROOF CENTERED HORIZONTALLY & VERTICALLY)	
	251-5628	1	FILM-IDENTIFICATION (STABILIZER CONTROL)	
			(RH CONSOLE NEXT TO STABILIZER CONTROLS)	
	227-1057	1	PLUG-HOLE	
	273-1474	1	SEAL (CONSOLE, LH)	

Y-SEPARATE ILLUSTRATION

<END>

OPERATOR STATION

269-2124 CANOPY AR-OPEN ROPS

S/N: HLS1-99999

AN ATTACHMENT

SMCS-7302, 7323 **i02987865**

NOTE	PART NUMBER	QTY	PART NAME 1 2 3 4 5 6 (PRODUCT LEVEL)	SEE PAGE
Y	*206-1885*	1	CANOPY GP-OPEN ROPS (WITH FRONT WINDOW)	806
Y	*206-1700*	1	CONSOLE GP-OPERATOR (RH)	813
Y	*206-1702*	1	CONSOLE GP-OPERATOR (LH)	815
Y	*206-1703*	1	CONSOLE GP-OPERATOR (FRONT)	817
Y	*206-1633*	1	CONTROL GP-STEERING (TILT)	828
			S/N: HLS6216-6426	
Y	*218-4453*	1	CONTROL GP-STEERING (TILT)	830
			S/N: HLS6427-99999	
Y	*276-8515*	1	COVER GP-CAB	834
Y	*220-3785*	1	COVER GP-WIPER MOTOR	835
Y	*254-6101*	1	FAN GP-SUCTION (WITHOUT AIR CONDITIONER)	54
Y	*213-1891*	1	FENDER GP-REAR	357
Y	*206-1618*	1	FLOOR MAT GP	844
Y	*223-3965*	1	FLOORPLATE GP	359
			S/N: HLS1-6215	
Y	*284-2757*	1	FLOORPLATE GP	361
			S/N: HLS6216-99999	
Y	*255-2279*	1	INDICATOR GP-AIR FILTER CHANGE	72
Y	*211-4277*	1	LIGHTING GP-FLOOD & SIGNAL (NACD, OPTIONAL)	121
Y	*259-6276*	1	MIRROR GP-REAR VIEW (INTERIOR)	871
Y	*269-3247*	1	MOUNTING GP-BACKHOE CONTROL (PILOT)	873
Y	*205-9560*	1	MOUNTING GP-CAB	876
Y	*206-1701*	1	PROTECTION GP-VANDALISM (ROTATING GUARD)	930
Y	*205-9569*	1	ROOF GP-CAB	880
Y	*280-7364*	1	SEAT GP-SUSPENSION (VINYL)	893
Y	*206-1704*	1	TRIM GP-CAB	901
Y	**223-4713**	1	VALVE GP-PILOT (STABILIZER)	552
Y	*206-1728*	1	WIPER & WASHER GP-WINDOW	919
Y	*211-4240*	1	WIRING GP-PLATFORM	170
			S/N: HLS1-6945	
Y	*290-6802*	1	WIRING GP-PLATFORM	186
			S/N: HLS6946-99999	
Y	*211-4241*	1	WIRING GP-CONSOLE (SIDE)	147
			S/N: HLS1-6945	
Y	*290-6803*	1	WIRING GP-CONSOLE (SIDE)	150
			S/N: HLS6946-99999	
Y	*211-4245*	1	WIRING GP-CONSOLE (FRONT)	149
Y	*211-4271*	1	WIRING GP-POWER RECEPTACLE	192
	272-5421	1	FILM-CONTROL (BACKHOE, JOYSTICK)	
			(ON LH CONSOLE AROUND PATTERN SWITCHER)	
	250-7912	1	FILM-IDENTIFICATION (CATERPILLAR, FRONT)	
			(ON FRONT WINDSHEILD)	
	251-5628	1	FILM-IDENTIFICATION (STABILIZER CONTROL)	
			(RH CONSOLE NEXT TO STABILIZER CONTROLS)	
	227-1057	1	PLUG-HOLE	
	273-1474	1	SEAL (CONSOLE, LH)	

Y-SEPARATE ILLUSTRATION

<END>

OPERATOR STATION

206-1884 CANOPY GP-OPEN ROPS—WITHOUT FRONT WINDOW

S/N: HLS1-99999

PART OF 269-2123 CANOPY AR-OPEN ROPS

AN ATTACHMENT

SMCS-7302, 7323 **i02527301**

NOTE	REF NO	GRAPHIC REF	PART NUMBER	QTY	PART NAME 1 2 3 4 5 6 (PRODUCT LEVEL)	SEE PAGE
E	1	1	**9X-2092**		TRIM-EDGE (40-CM EACH)	
	2	1	**204-4230**	1	CANOPY AS	
	3	1	**205-9605**	1	GLASS (FRONT, LH)	
	4	1	**205-9606**	1	GLASS (FRONT, RH)	
	5	1	**206-1647**	1	PLATE	
	6	1	**5P-4116**	11	WASHER-HARD (8.8X20.5X2-MM THK)	
M	7	1	**8T-4200**	11	BOLT (M8X1.25X16-MM)	
	8	1	**9R-5616**	3	PLUG	

E-ORDER BY THE CENTIMETER
M-METRIC PART

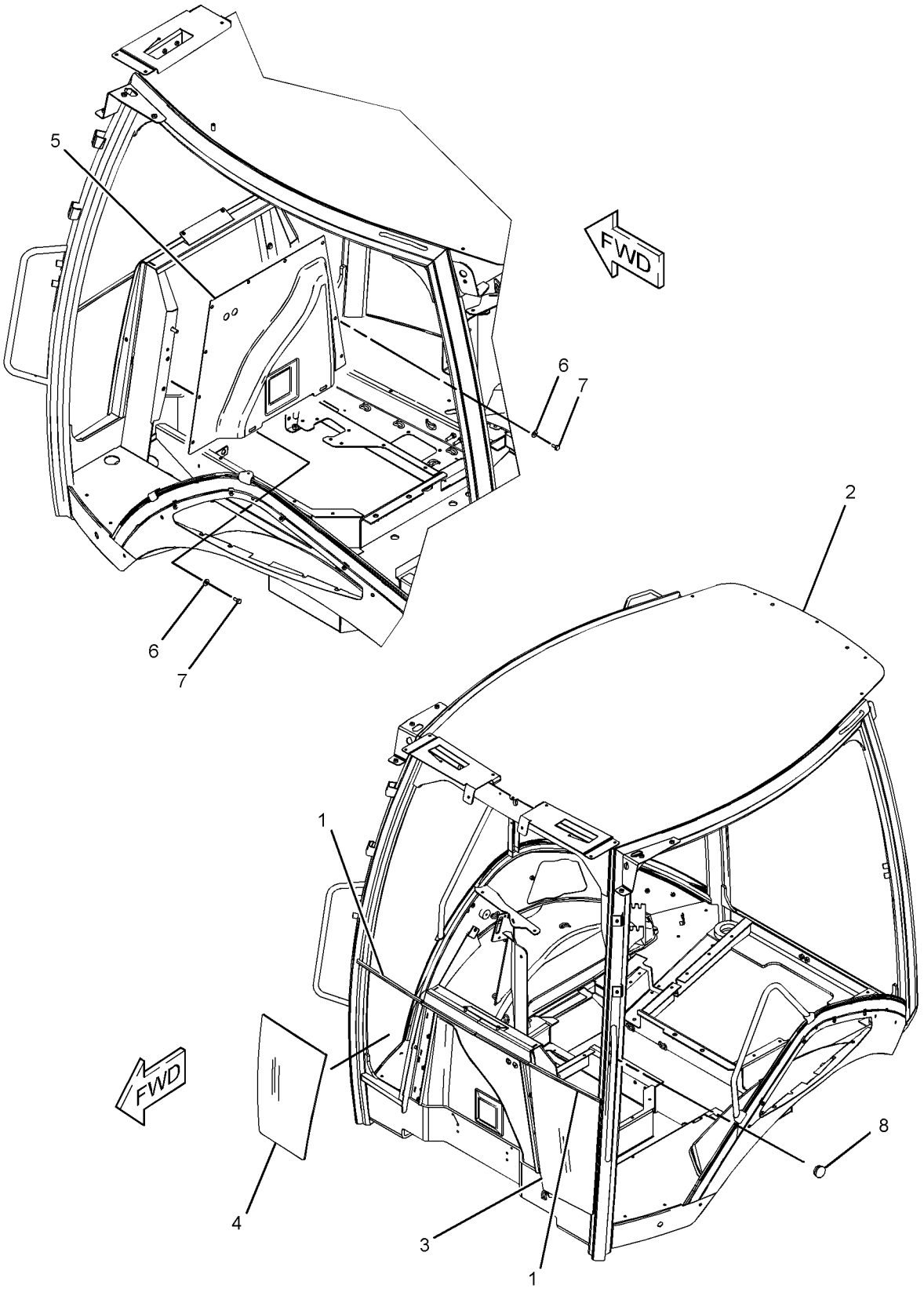

GRAPHIC #1 **<END>** g01272044

OPERATOR STATION

206-1885 CANOPY GP-OPEN ROPS—WITH FRONT WINDOW

S/N: HLS1-99999

PART OF 269-2124 CANOPY AR-OPEN ROPS

AN ATTACHMENT

SMCS-7302, 7323 **i02527302**

NOTE	REF NO	GRAPHIC REF	PART NUMBER	QTY	PART NAME 1 2 3 4 5 6 (PRODUCT LEVEL)	SEE PAGE
	1	1	**204-4240**	1	CANOPY AS	
	2	1	**205-9605**	1	GLASS (FRONT, LH)	
	3	1	**205-9606**	1	GLASS (FRONT, RH)	
	4	1	**205-9607**	1	GLASS (FRONT)	
	5	1	**206-1647**	1	PLATE	
	6	1	**5P-4116**	10	WASHER-HARD (8.8X20.5X2-MM THK)	
M	7	1	**8T-4200**	10	BOLT (M8X1.25X16-MM)	
	8	1	**9R-5616**	3	PLUG	

M-METRIC PART

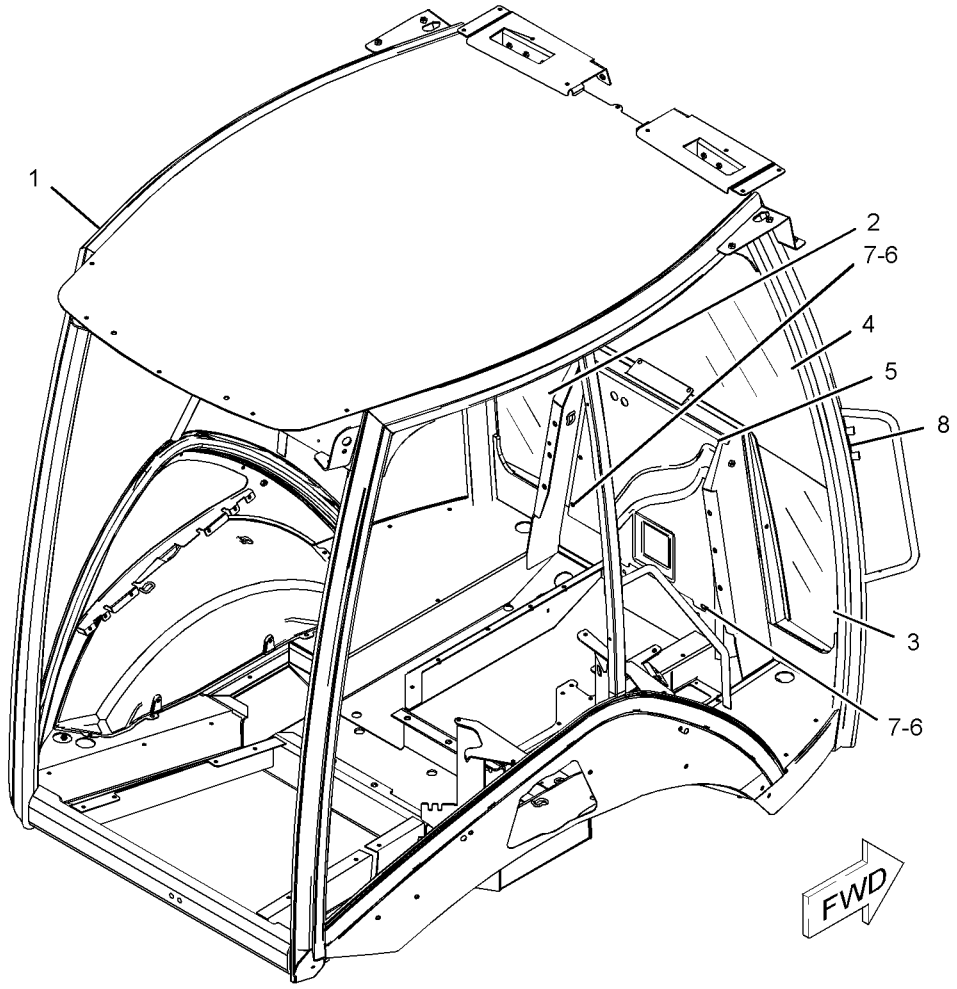

GRAPHIC #1 **<END>** g01272029

OPERATOR STATION

248-5025 COMPRESSOR & MTG GP-REFRIG

S/N: HLS1-6980
PART OF 269-2127 CAB AR-ENCLOSED ROPS
AN ATTACHMENT

SMCS-1802 **i03511041**

NOTE	REF NO	GRAPHIC REF	PART NUMBER	QTY	PART NAME 1 2 3 4 5 6 (PRODUCT LEVEL)	SEE PAGE
	1	1	**9R-5383**	1	BOSS (11X25X20-MM THK)	
Y	2	1	**214-4302**	1	COMPRESSOR GP-REFRIGERANT	811
	3	1	**296-3740**	1	BRACKET AS	
	4	1	**249-2707**	1	BRACKET	
	5	1	**249-9312**	1	PLATE	
	6	1	**5P-4116**	8	WASHER-HARD (8.8X20.5X2-MM THK)	
M	7	1	**6V-7744**	1	LOCKNUT (M10X1.5-THD)	
	8	1	**9Y-0083**	1	SPACER (14.3X16X10-MM THK)	
M	9	1	**108-2989**	2	BOLT (M8X1.25X130-MM)	
M	10	1	**7X-2541**	2	BOLT (M8X1.25X140-MM)	
	11	1	**8T-4121**	6	WASHER-HARD (11X21X2.5-MM THK)	
M	12	1	**8T-4195**	2	BOLT (M10X1.5X30-MM)	
	13	1	**8T-4224**	2	WASHER-HARD (8.8X16X2-MM THK)	
M	14	1	**8T-6466**	1	BOLT (M10X1.5X60-MM)	
M	15	1	**8T-5436**	1	BOLT (M10X1.5X130-MM)	
M	16	1	**8T-7547**	2	BOLT (M8X1.25X30-MM)	
B	17	1	**6J-6517**	3	SHIM (0.12-MM THK)	
B	18	1	**9G-3732**	3	SHIM (0.8-MM THK)	
B	19	1	**9G-3733**	3	SHIM (0.25-MM THK)	
M	20	1	**6V-9189**	4	LOCKNUT (M8X1.25-THD)	

B-USE AS REQUIRED
M-METRIC PART
Y-SEPARATE ILLUSTRATION

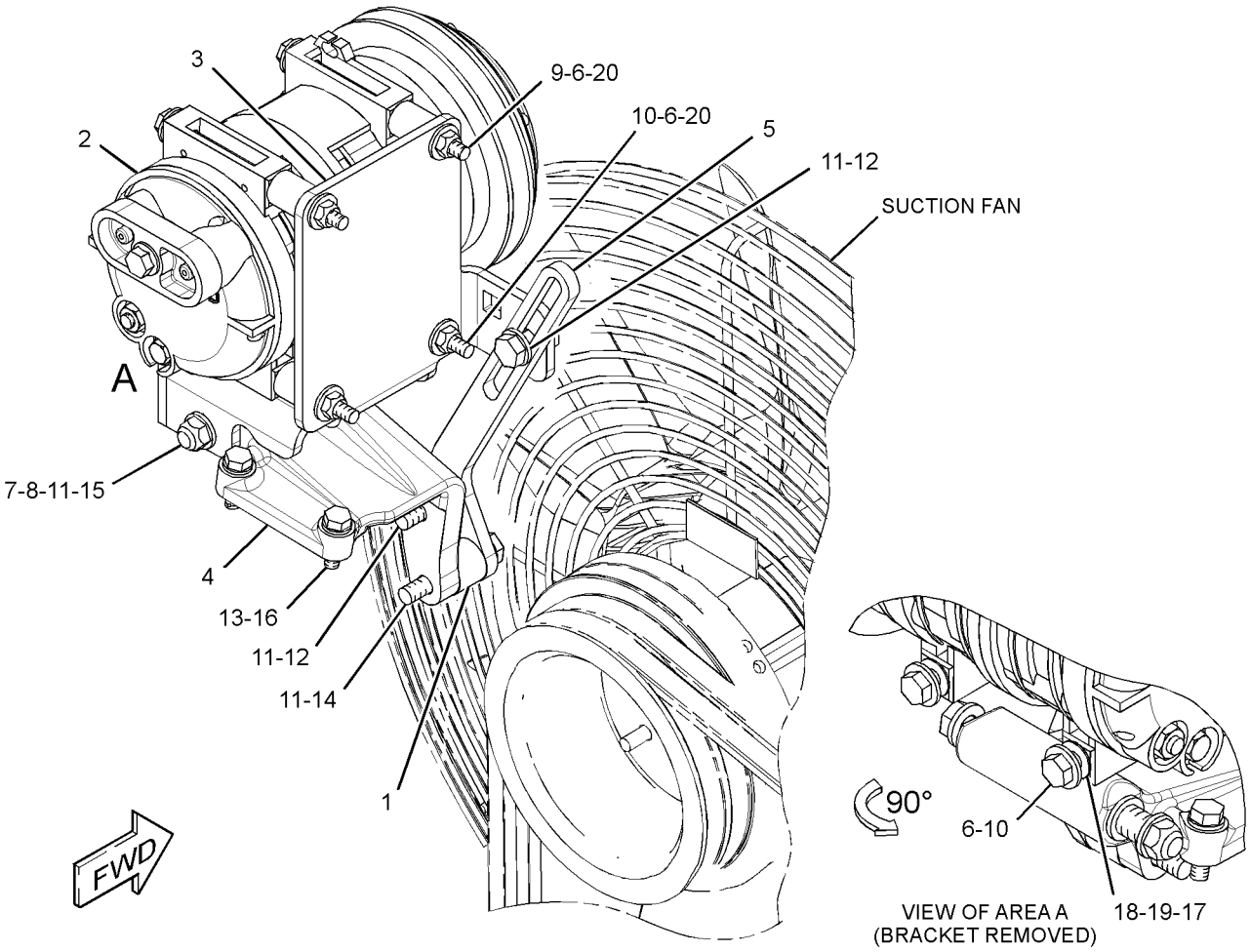

GRAPHIC #1 **<END>** g01342094

OPERATOR STATION

248-5025 COMPRESSOR & MTG GP-REFRIG

S/N: HLS6981-99999
PART OF 269-2127 CAB AR-ENCLOSED ROPS
AN ATTACHMENT

SMCS-1802 **i03532201**

NOTE	REF NO	GRAPHIC REF	PART NUMBER	QTY	PART NAME 1 2 3 4 5 6 (PRODUCT LEVEL)	SEE PAGE
	1	1	**9R-5383**	1	BOSS (11X25X20-MM THK)	
	2	1	**9Y-0083**	1	SPACER (14.3X16X10-MM THK)	
M	3	1	**108-2989**	2	BOLT (M8X1.25X130-MM)	
Y	4	1	**214-4302**	1	COMPRESSOR GP-REFRIGERANT	811
C	5	1	**249-2707**	1	BRACKET	
	6	1	**249-9312**	1	PLATE	
	7	1	**291-4781**	1	BRACKET AS	
	8	1	**291-4785**	1	PLATE	
	9	1	**291-4786**	1	PLATE	
M	10	1	**5C-7261**	4	NUT (M8X1.25-THD)	
	11	1	**5P-4116**	12	WASHER-HARD (8.8X20.5X2-MM THK)	
M	12	1	**6V-7744**	1	LOCKNUT (M10X1.5-THD)	
M	13	1	**7X-2541**	2	BOLT (M8X1.25X140-MM)	
	14	1	**8T-4121**	7	WASHER-HARD (11X21X2.5-MM THK)	
M	15	1	**8T-4195**	3	BOLT (M10X1.5X30-MM)	
M	16	1	**8T-4197**	1	BOLT (M8X1.25X40-MM)	
M	17	1	**8T-4908**	2	BOLT (M8X1.25X25-MM)	
M	18	1	**8T-5436**	1	BOLT (M10X1.5X130-MM)	
M	19	1	**8T-6466**	1	BOLT (M10X1.5X60-MM)	
M	20	1	**8T-7547**	1	BOLT (M8X1.25X30-MM)	

C-CHANGE FROM PREVIOUS TYPE
M-METRIC PART
Y-SEPARATE ILLUSTRATION

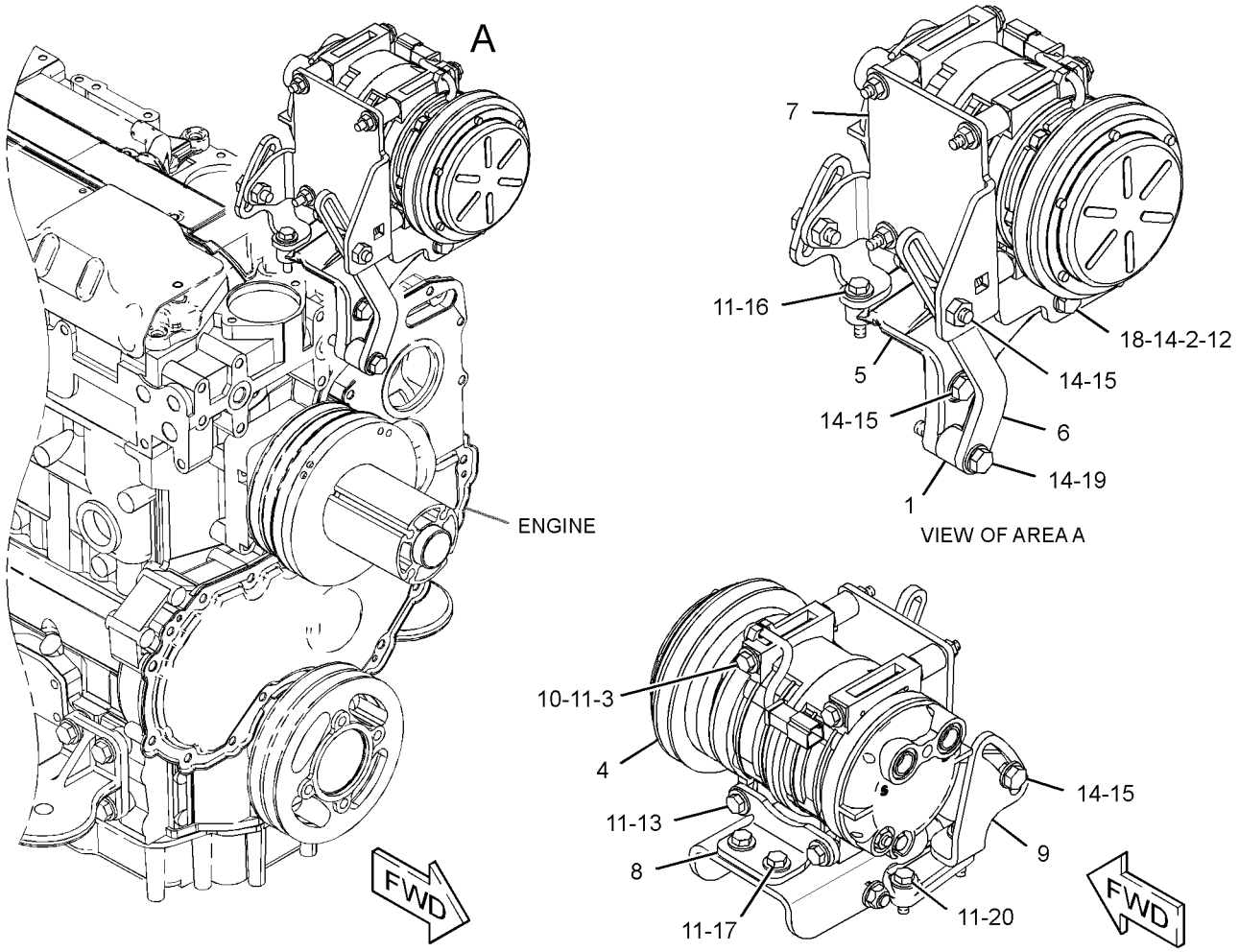

GRAPHIC #1

<END>

g01522167

OPERATOR STATION

214-4302 COMPRESSOR GP-REFRIGERANT

S/N: HLS1-99999
PART OF 248-5025 COMPRESSOR & MTG GP-REFRIG
AN ATTACHMENT

SMCS-1802 **i02504973**

NOTE	REF NO	GRAPHIC REF	PART NUMBER	QTY	PART NAME 1 2 3 4 5 6 (PRODUCT LEVEL)	SEE PAGE
	1	1	**102-8802**	1	KIT-RECEPTACLE (2-PIN)	
					(INCLUDES RECEPTACLE AS & WEDGE)	
	2	1	**229-4896**	2	SEAL-O-RING	
	3	1	**229-7356**	1	VALVE AS-RELIEF	
		1	**9X-7378**	1	SEAL-O-RING	

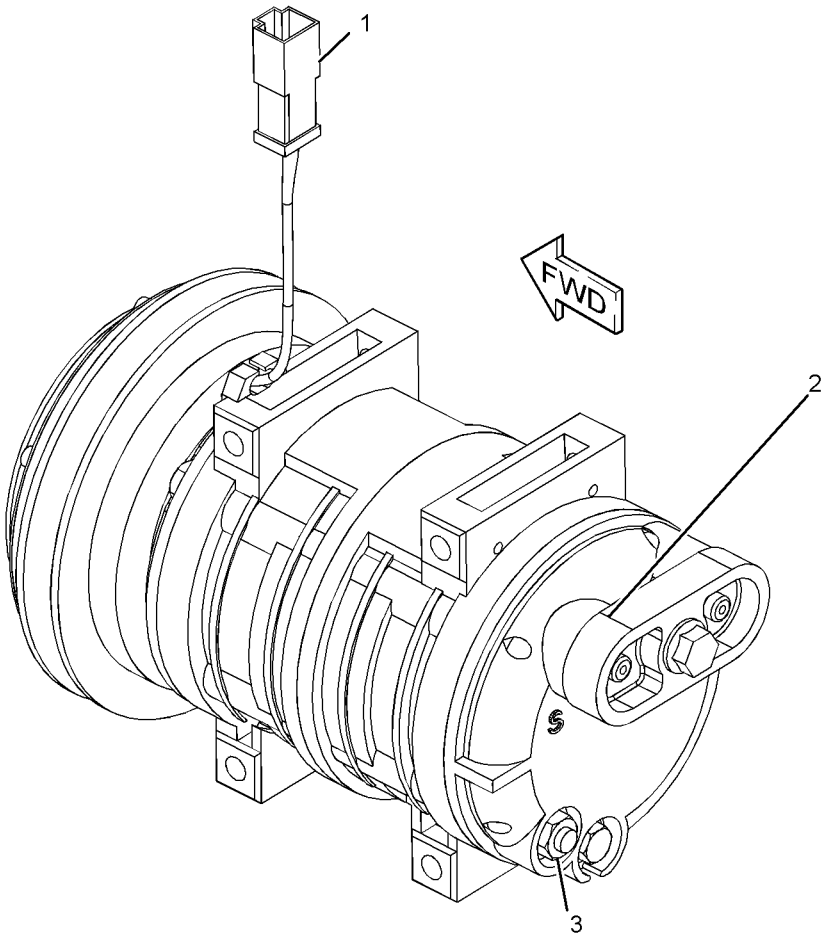

GRAPHIC #1 **<END>** g01239853

OPERATOR STATION

211-0705 CONDENSER & MTG GP-REFRIGERANT

S/N: HLS1-99999
PART OF 269-2127 CAB AR-ENCLOSED ROPS
AN ATTACHMENT

SMCS-1805 **i02445824**

NOTE	REF NO	GRAPHIC REF	PART NUMBER	QTY	PART NAME 1 2 3 4 5 6 (PRODUCT LEVEL)	SEE PAGE
	1	1	**211-1381**	1	CORE AS-CONDENSER	
	2	1	**7X-0579**	4	WASHER-HARD (8.8X25.5X2-MM THK)	
M	3	1	**8T-4189**	4	BOLT (M8X1.25X20-MM)	

M-METRIC PART

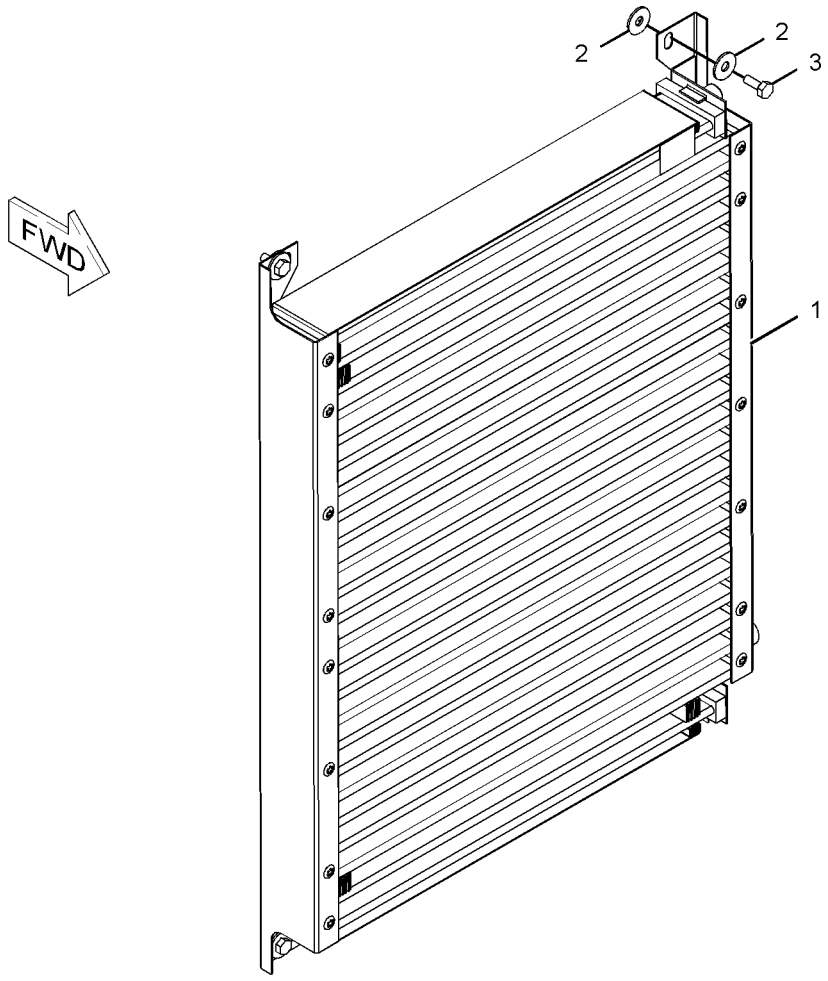

GRAPHIC #1 **<END>** g01080362

OPERATOR STATION

206-1700 CONSOLE GP-OPERATOR—RH

S/N: HLS1-99999

PART OF 269-2125, 269-2126, 269-2127 CAB AR-ENCLOSED ROPS, 269-2123, 269-2124 CANOPY AR-OPEN ROPS

AN ATTACHMENT

SMCS-5258, 7451 **i03532202**

NOTE	REF NO	GRAPHIC REF	PART NUMBER	QTY	PART NAME 1 2 3 4 5 6 (PRODUCT LEVEL)	SEE PAGE
B	1	1	**2S-3163**	1	PLUG	
	2	1	**164-1178**	1	CLIP	
	3	1	**167-8251**	1	FASTENER	
	4	1	**206-1678**	1	HOUSING AS (UPPER)	
	5	1	**206-1679**	1	PANEL AS (UPPER)	
		1	**206-1667**	2	CLIP	
	6	1	**206-1681**	1	PANEL AS (LOWER)	
		1	**172-8591**	5	NUT-SPRING	
	7	1	**261-9645**	1	COVER AS (CONTROLS, FRONT, UPPER)	
		1	**206-1667**	4	CLIP	
	8	1	**261-9644**	1	COVER AS (CONTROLS, FRONT, LOWER)	
		1	**206-1667**	1	CLIP	
	9	1	**269-9115**	1	COVER AS (FENDER, FRONT)	
		1	**172-8591**	1	NUT-SPRING	
	10	1	**206-1690**	1	COVER (FENDER, REAR)	
	11	1	**206-1692**	1	COVER AS (CONTROLS, REAR)	
		1	**206-1667**	3	CLIP	
M	12	1	**9X-2045**	16	SCREW-TRUSS HEAD (M6X1X20-MM)	
B	13	1	**248-2709**	2	PLUG	
	14	1	**9X-2038**	5	WASHER (7X19X2-MM THK)	
	15	1	**206-1687**	1	COVER-FUSE	
E	16	1	**293-1980**		SEAL (78-CM)	
E	16A	1	**293-1980**		SEAL (73-CM)	

B-USE AS REQUIRED
E-ORDER BY THE CENTIMETER
M-METRIC PART

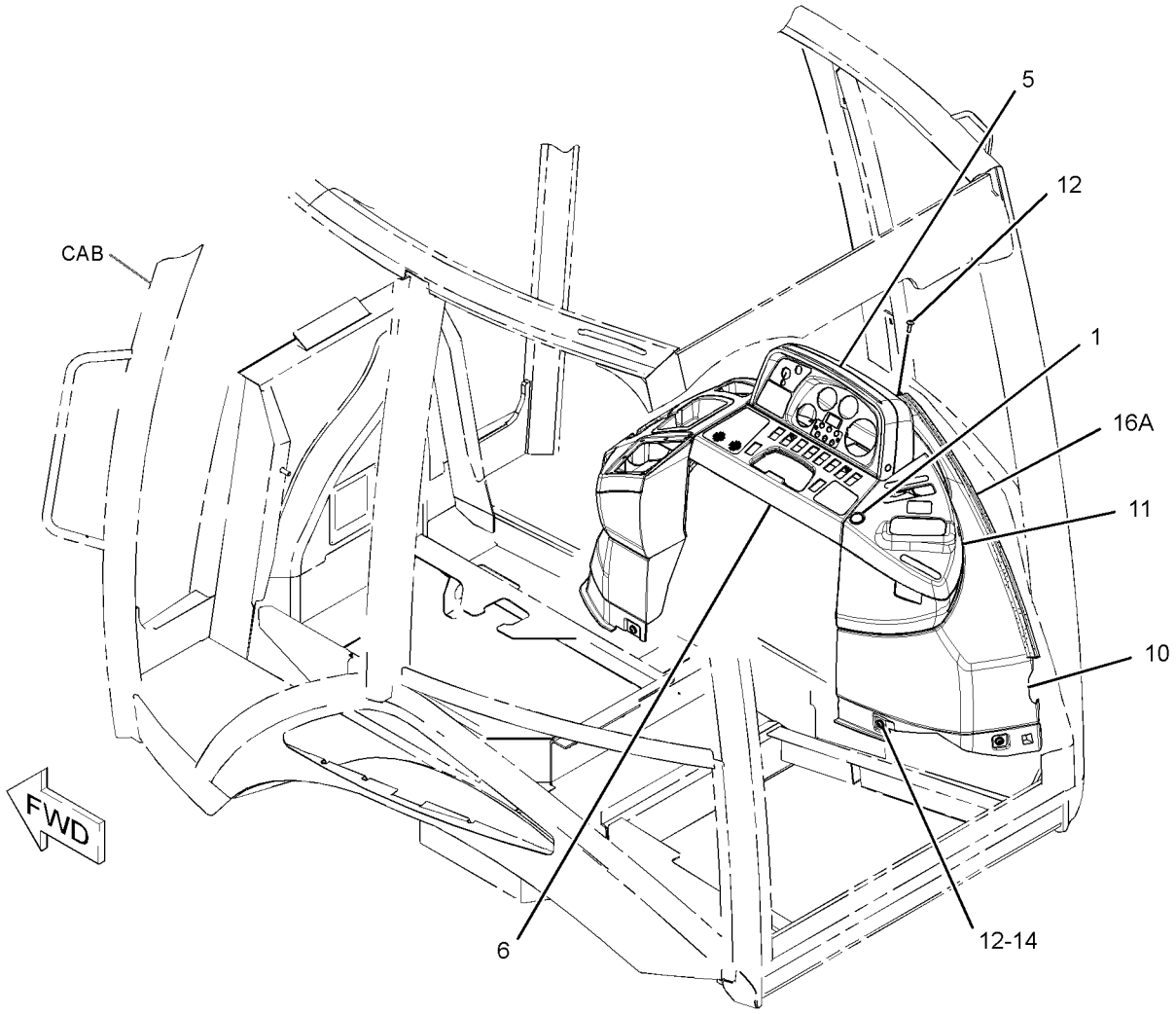

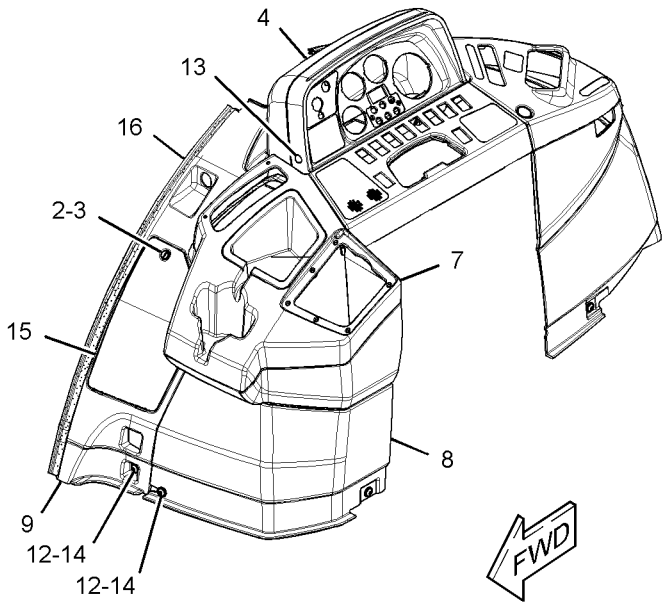

GRAPHIC #1 **<END>** g01860733

OPERATOR STATION

206-1702 CONSOLE GP-OPERATOR—LH

S/N: HLS1-99999
PART OF 269-2125, 269-2126, 269-2127 CAB AR-ENCLOSED ROPS, 269-2123, 269-2124 CANOPY AR-OPEN ROPS
AN ATTACHMENT

SMCS-5258, 7451 **i03122680**

NOTE	REF NO	GRAPHIC REF	PART NUMBER	QTY	PART NAME 1 2 3 4 5 6 (PRODUCT LEVEL)	SEE PAGE
E	1	1	**3E-6600**		SEAL (33-CM)	
D	2	1	**5P-5927**		SEAL (1.7-M)	
	3	1	**206-1696**	1	CONSOLE AS (LH)	
	4	1	**206-1698**	1	DOOR-STORAGE	
	5	1	**206-1699**	1	CUP HOLDER (FRONT)	
	6	1	**206-1706**	1	BOX AS-STORAGE	
J	7	1	**206-1708**	1	LOCK AS	
	8	1	**206-1712**	1	HINGE-DOOR	
	9	1	**210-6491**	1	CUP HOLDER (REAR)	
	10	1	**249-2482**	1	PLATE	
	11	1	**261-9636**	1	BRACKET-SUPPORT	
	12	1	**261-9637**	2	BRACKET AS	
	13	1	**261-9639**	3	SCREW-PAN HEAD (NO 12X0.5-IN)	
E	14	1	**293-1980**		SEAL (71.2-CM)	
E	14A	1	**293-1980**		SEAL (77.4-CM)	
M	15	1	**5C-2890**	3	NUT (M6X1-THD)	
	16	1	**8T-4205**	3	WASHER-HARD (7.2X14.5X2-MM THK)	
	17	1	**9X-2038**	6	WASHER (7X19X2-MM THK)	
M	18	1	**9X-2044**	19	SCREW-TRUSS HEAD (M6X1X16-MM)	

D-ORDER BY THE METER
E-ORDER BY THE CENTIMETER
J-REQUIRES CORPORATE KEY
M-METRIC PART

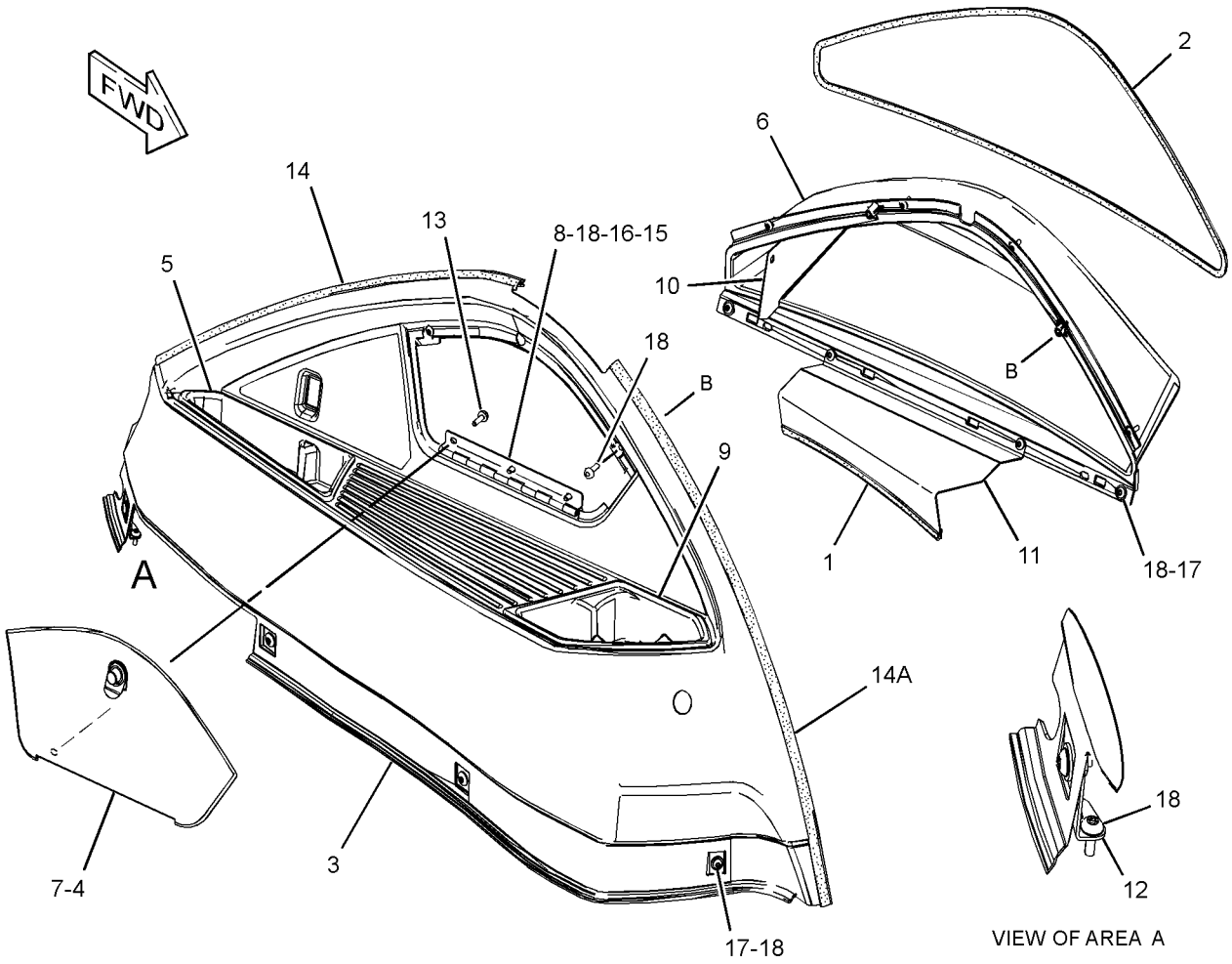

GRAPHIC #1 **<END>** g01520782

OPERATOR STATION

206-1703 CONSOLE GP-OPERATOR–FRONT

S/N: HLS1-99999
PART OF 269-2125, 269-2126, 269-2127 CAB AR-ENCLOSED ROPS, 269-2123, 269-2124 CANOPY AR-OPEN ROPS
AN ATTACHMENT

SMCS-5258, 7451 **i02928300**

NOTE	REF NO	GRAPHIC REF	PART NUMBER	QTY	PART NAME 1 2 3 4 5 6 (PRODUCT LEVEL)	SEE PAGE
B	1	1	**184-5293**	1	PLUG	
	2	1	**206-1658**	1	COVER AS-STEERING COLUMN (UPPER)	
		1	**206-1667**	2	CLIP	
	3	1	**206-1659**	1	DOOR-STORAGE	
	4	1	**206-1660**	1	COVER AS-STEERING COLUMN (FRONT)	
		1	**206-1667**	4	CLIP	
	5	1	**206-1661**	1	COVER AS-STEERING COLUMN (REAR)	
		1	**206-1667**	4	CLIP	
	6	1	**206-1662**	1	CONSOLE AS-FRONT (UPPER)	
		1	**206-1667**	8	CLIP	
	7	1	**206-1663**	1	CONSOLE-FRONT (MIDDLE)	
J	8	1	**206-1708**	1	LOCK AS	
	9	1	**261-9639**	10	SCREW-PAN HEAD (NO 12X0.5-IN)	
E	10	1	**220-0738**		SEAL (22-CM)	
	11	1	**224-2147**	1	CONSOLE AS-FRONT (LOWER, LH)	
	12	1	**224-2149**	1	CONSOLE AS-FRONT (LOWER, RH)	
	13	1	**233-5260**	2	LANYARD	
M	14	1	**120-9027**	2	SCREW-PAN HEAD (M3X0.5X16-MM)	
	15	1	**206-1854**	1	HINGE	
M	16	1	**8T-2658**	2	LOCKNUT (M3X0.5-THD)	
M	17	1	**9X-2044**	2	SCREW-TRUSS HEAD (M6X1X16-MM)	
M	18	1	**9X-2045**	16	SCREW-TRUSS HEAD (M6X1X20-MM)	
	19	1	**258-2354**	1	BRACKET-LATCH	
	20	1	**9X-2038**	3	WASHER (7X19X2-MM THK)	
	21	1	**4I-3038**	2	WASHER (3.3X8X0.5-MM THK)	
D	22	1	**5P-7070**		INSULATION-STRIP (0.03-M EACH)	

B-USE AS REQUIRED
D-ORDER BY THE METER
E-ORDER BY THE CENTIMETER
J-REQUIRES CORPORATE KEY
M-METRIC PART

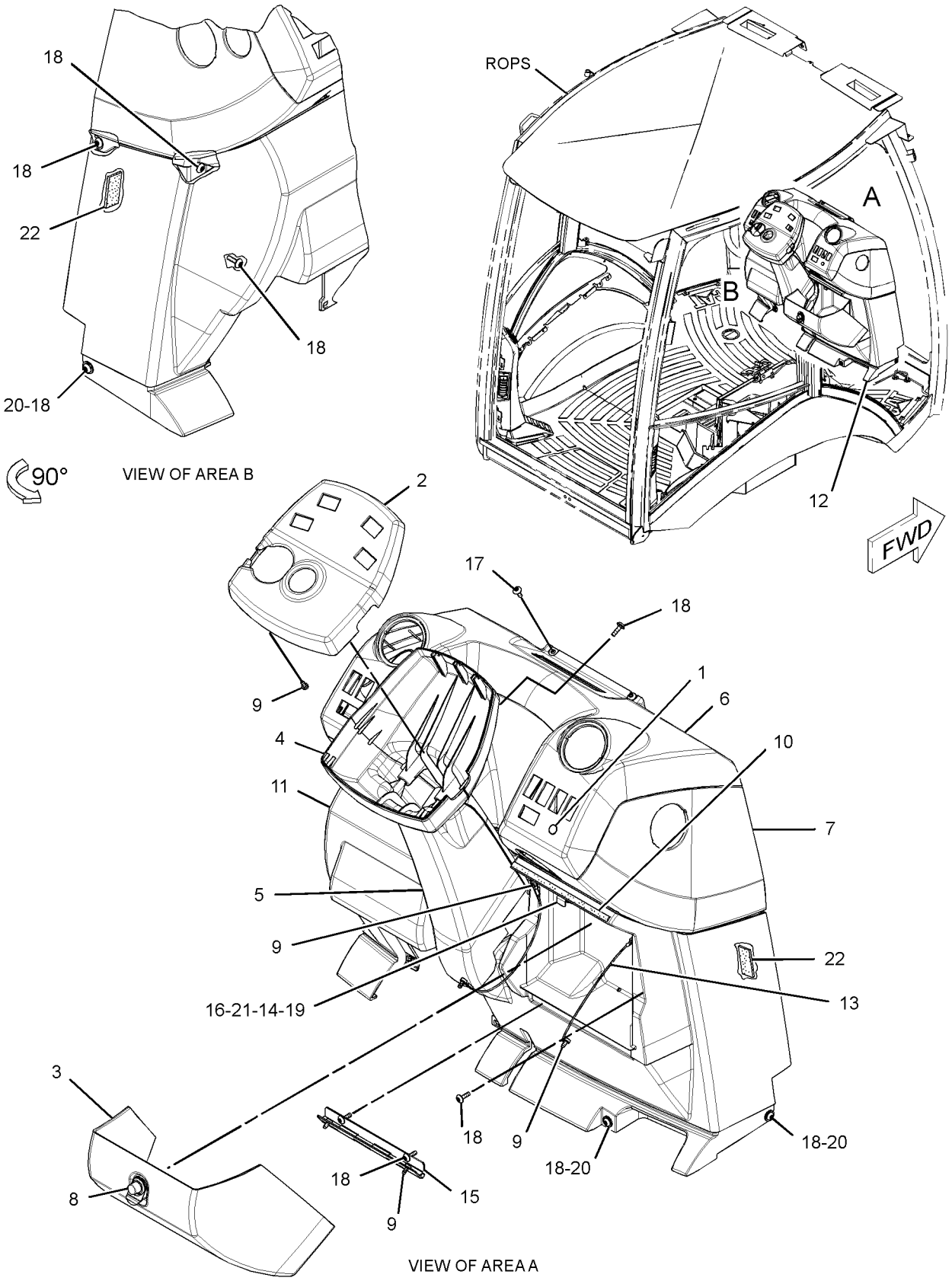

GRAPHIC #1 **<END>** g01522089

OPERATOR STATION

206-1645 CONTROL GP-HYDRAULIC HAND–LOADER

S/N: HLS1-99999
SINGLE TILT
PART OF 269-2144 VALVE AR-BANK 2
AN ATTACHMENT

SMCS-5063 **i03257741**

NOTE	REF NO	GRAPHIC REF	PART NUMBER	QTY	PART NAME 1 2 3 4 5 6 (PRODUCT LEVEL)	SEE PAGE
	1	1	**1K-0502**	7	WASHER (16.3X25.4X1.2-MM THK)	
	2	1	**2R-0364**	3	RING-RETAINING	
M	3	1	**9X-2040**	2	SCREW-TRUSS HEAD (M10X1.5X25-MM)	
	4	1	**5H-3193**	1	PIN-SPRING	
	5	1	**9R-1765**	1	COVER-TOP (TOP)	
	6	1	**9R-1766**	1	COVER-BOTTOM	
	7	1	**9R-1767**	1	BOOT	
	8	1	**9R-9868**	1	SWITCH GP-PUSH BUTTON (NEUTRALIZER, DOWNSHIFT)	
		1	**9W-0625**	1	SWITCH AS (PUSH BUTTON)	
		1	**9X-3401**	2	PIN-CONNECTOR (16-GA TO 18-GA)	
M	9	1	**9X-2065**	2	NUT (M10X1.5-THD, LH)	
	10	1	**107-5591**	1	NUT-JAM (3/4-16-THD)	
M	11	1	**134-0453**	2	TURNBUCKLE	
	12	1	**164-1368**	12	FASTENER-PANEL	
	13	1	**183-3135**	1	JOINT AS	
	14	1	**183-3137**	1	PIN	
	15	1	**206-1695**	1	BOOT	
	16	1	**209-3363**	1	ROD	
	17	1	**216-3351**	1	ROD	
	18	1	**216-3358**	1	DAMPER AS (SPRING)	
		1	**095-9230**	1	PIN-SPRING	
		1	**183-3132**	1	CYLINDER	
	19	1	**291-5108**	1	GASKET	
	20	1	**220-0269**	1	SHAFT	
	21	1	**230-2510**	1	LEVER AS	
	22	1	**269-8129**	1	BRACKET AS	
	23	1	**269-8817**	1	PLATE	
	24	1	**270-2795**	1	PLATE	
	25	1	**272-7104**	1	ROD	
	26	1	**275-8869**	1	BRACKET AS	
	27	1	**179-8235**	1	LOCK PIN	
	28	1	**102-8802**	1	KIT-RECEPTACLE (2-PIN)	
					(INCLUDES RECEPTACLE AS & WEDGE)	
M	29	1	**6V-7744**	4	LOCKNUT (M10X1.5-THD)	
	30	1	**7X-7729**	4	WASHER (11X25X3-MM THK)	
	31	1	**8C-4987**	1	PIN-CLEVIS	
	32	1	**8T-4121**	3	WASHER-HARD (11X21X2.5-MM THK)	
M	33	1,1	**8T-4133**	6	NUT (M10X1.5-THD)	
M	34	1	**8T-4136**	1	BOLT (M10X1.5X25-MM)	
M	35	1	**8T-4137**	2	BOLT (M10X1.5X20-MM)	
M	36	1	**8T-4189**	4	BOLT (M8X1.25X20-MM)	
	37	1	**5P-4116**	4	WASHER-HARD (8.8X20.5X2-MM THK)	
	38	1	**8T-4773**	2	BALL JOINT	
	39	1	**8T-4815**	2	ROD END	
	40	1	**8T-9501**	2	SCREW (10-16X0.75-IN)	
	41	1	**9R-2807**	1	CLIP	
	42	1	**9R-3067**	1	PIN	
E	43	1	**3E-6600**		SEAL (7-CM)	

E-ORDER BY THE CENTIMETER
M-METRIC PART

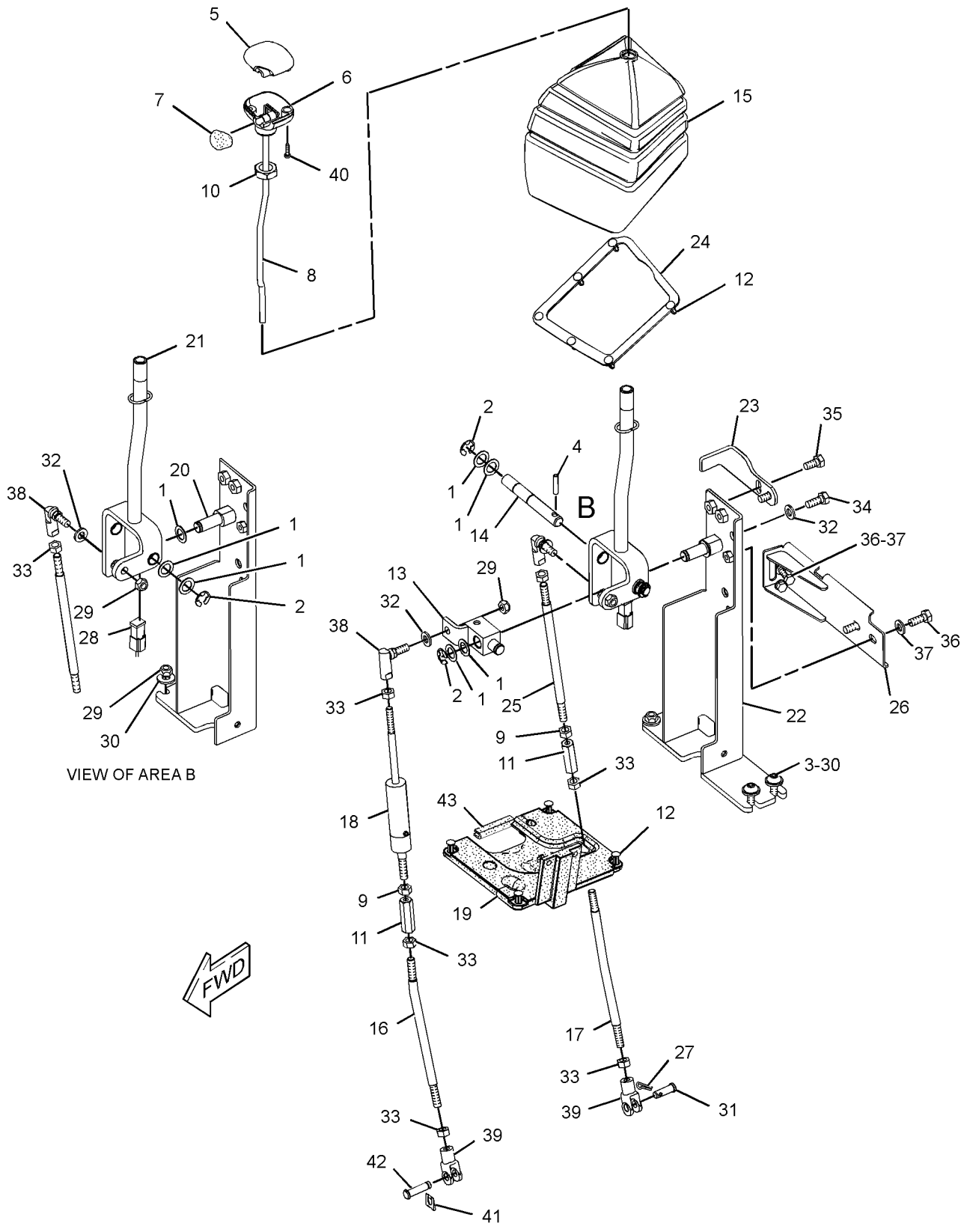

GRAPHIC #1 **<END>** g01312659

OPERATOR STATION

209-3364 CONTROL GP-HYDRAULIC HAND–LOADER

S/N: HLS1-99999
PART OF 269-2145 VALVE AR-BANK 3
AN ATTACHMENT

SMCS-5063 **i03514525**

NOTE	REF NO	GRAPHIC REF	PART NUMBER	QTY	PART NAME 1 2 3 4 5 6 (PRODUCT LEVEL)	SEE PAGE
B	1	1	**1K-0502**	10	WASHER (16.3X25.4X1.2-MM THK)	
	2	1	**2R-0364**	4	RING-RETAINING	
M	3	1	**9X-2040**	2	SCREW-TRUSS HEAD (M10X1.5X25-MM)	
	4	1	**5H-3193**	1	PIN-SPRING	
	5	1	**9R-1765**	1	COVER-TOP	
	6	1	**9R-1766**	1	COVER-BOTTOM	
	7	1	**9R-1767**	1	BOOT	
	8	1	**9R-9868**	1	SWITCH GP-PUSH BUTTON (NEUTRALIZER, DOWNSHIFT)	
BD		1	**6V-2689**		TUBE-HEAT SHRINK (6.35-MM DIA)	
		1	**9W-0625**	1	SWITCH AS (PUSH BUTTON)	
M	9	1	**9X-2065**	3	NUT (M10X1.5-THD, LH)	
	10	1	**107-5591**	1	NUT-JAM (3/4-16-THD)	
M	11	1	**134-0453**	3	TURNBUCKLE	
	12	1	**164-1368**	12	FASTENER-PANEL	
	13	1	**183-3135**	1	JOINT AS	
	14	1	**183-3137**	1	PIN	
	15	1	**206-1668**	1	BOOT	
	16	1	**209-3363**	1	ROD	
	17	1	**216-3350**	1	ROD	
	18	1	**216-3351**	1	ROD	
	19	1	**216-3358**	1	DAMPER AS (SPRING)	
		1	**095-9230**	1	PIN-SPRING	
		1	**183-3132**	1	CYLINDER	
	20	1	**291-5108**	1	GASKET	
	21	1	**220-0269**	1	SHAFT	
	22	1	**220-3251**	1	ROD	
	23	1	**230-2510**	1	LEVER AS	
	24	1	**230-3038**	1	LEVER AS	
	25	1	**269-8129**	1	BRACKET AS	
	26	1	**269-8817**	1	PLATE	
	27	1	**270-2795**	1	PLATE	
	28	1	**272-7104**	1	ROD	
	29	1	**275-8869**	1	BRACKET AS	
	30	1	**164-1395**	1	KNOB	
	31	1	**179-8235**	2	LOCK PIN	
	32	1	**102-8802**	1	KIT-RECEPTACLE (2-PIN)	
					(INCLUDES RECEPTACLE AS & WEDGE)	
M	33	1	**6V-7744**	4	LOCKNUT (M10X1.5-THD)	
	34	1	**7X-7729**	4	WASHER (11X25X3-MM THK)	
	35	1	**8C-4987**	2	PIN-CLEVIS	
	36	1	**8T-4121**	4	WASHER-HARD (11X21X2.5-MM THK)	
M	37	1	**8T-4133**	9	NUT (M10X1.5-THD)	
M	38	1	**8T-4136**	1	BOLT (M10X1.5X25-MM)	
M	39	1	**8T-4137**	2	BOLT (M10X1.5X20-MM)	
M	40	1	**8T-4189**	4	BOLT (M8X1.25X20-MM)	
	41	1	**5P-4116**	4	WASHER-HARD (8.8X20.5X2-MM THK)	
	42	1	**8T-4773**	3	BALL JOINT	
	43	1	**8T-4815**	3	ROD END	
	44	1	**8T-9501**	2	SCREW (10-16X0.75-IN)	
	45	1	**9R-2807**	1	CLIP	
	46	1	**9R-3067**	1	PIN	
E	47	1	**3E-6600**		SEAL (7-CM)	

B-USE AS REQUIRED
D-ORDER BY THE METER
E-ORDER BY THE CENTIMETER
M-METRIC PART

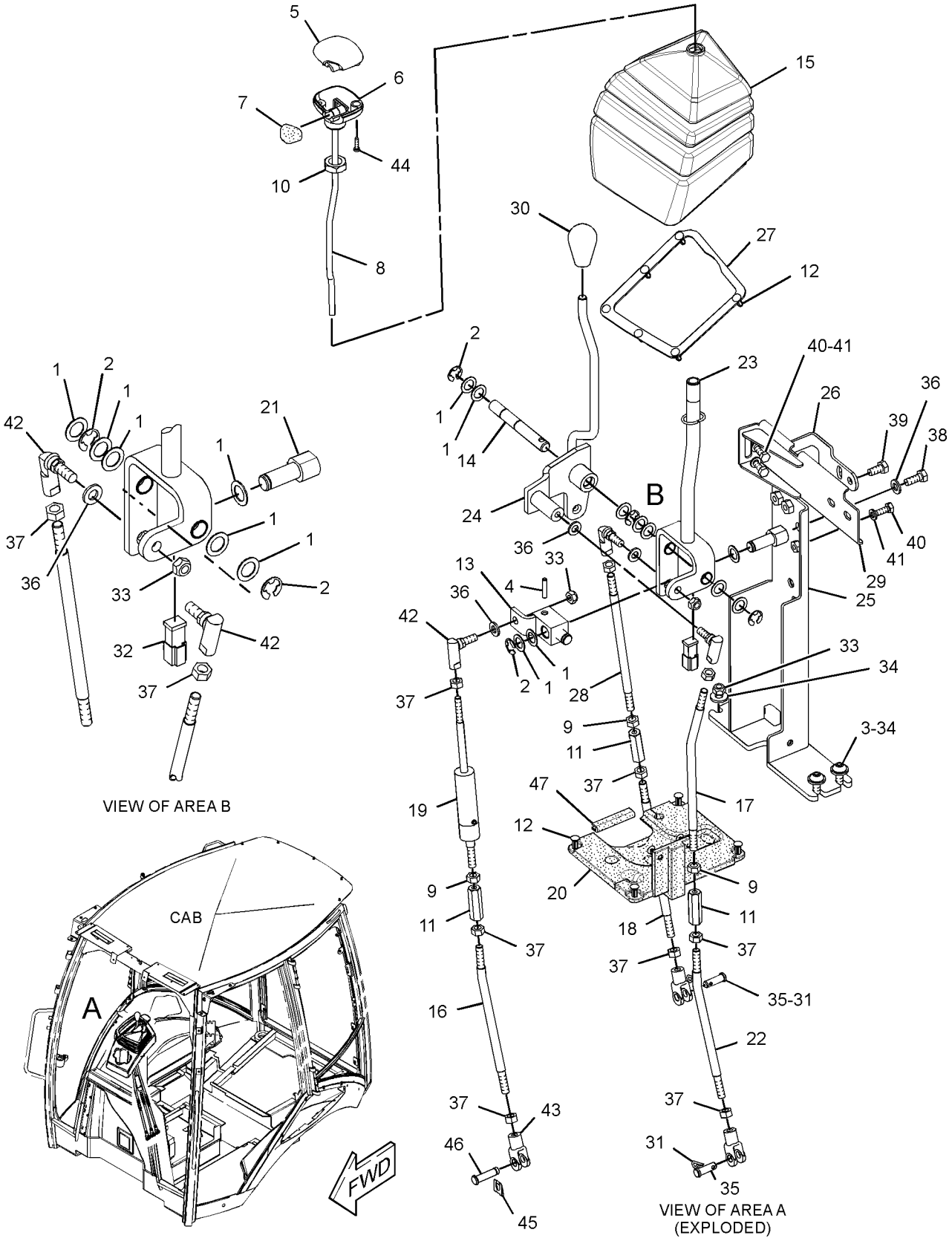

GRAPHIC #1 **<END>** g01314431

OPERATOR STATION

271-3095 CONTROL GP-JOYSTICK–RH

S/N: HLS1-99999
PART OF 269-2146 VALVE AR-BANK 6
AN ATTACHMENT

SMCS-5705 **i03256780**

NOTE	REF NO	GRAPHIC REF	PART NUMBER	QTY	PART NAME 1 2 3 4 5 6 (PRODUCT LEVEL)	SEE PAGE
	1	1	**271-3100**	1	HANDLE GP-MODULAR (RH)	
	2	1	**272-9701**	1	ADAPTER (RH)	
	3	1	**254-3437**	1	BOOT	

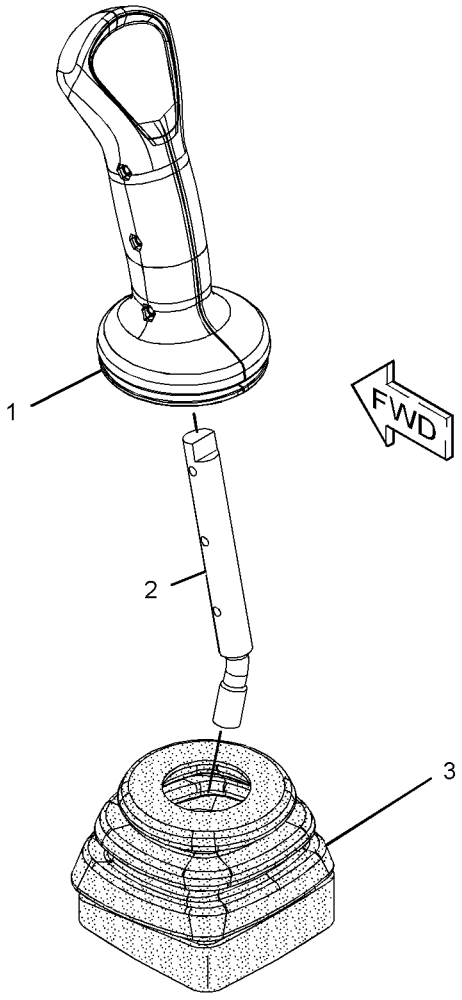

GRAPHIC #1 **<END>** g01214863

OPERATOR STATION

271-3096 CONTROL GP-JOYSTICK–RH

S/N: HLS1-99999
PART OF 269-2147 VALVE AR-BANK 7, 269-2148 VALVE AR-BANK 8
AN ATTACHMENT

SMCS-5705 **i02884598**

NOTE	REF NO	GRAPHIC REF	PART NUMBER	QTY	PART NAME 1 2 3 4 5 6 (PRODUCT LEVEL)	SEE PAGE
	1	1	**271-3101**	1	HANDLE GP-MODULAR (RH)	
		1	**8T-8737**	8	PLUG-SEAL	
		1	**174-3091**	1	KIT-RECEPTACLE (12-PIN)	
					(INCLUDES RECEPTACLE AS & WEDGE)	
		1	**186-3735**	4	PIN-CONNECTOR (16-GA TO 18-GA)	
	2	1	**272-9701**	1	ADAPTER (RH)	
	3	1	**254-3437**	1	BOOT	

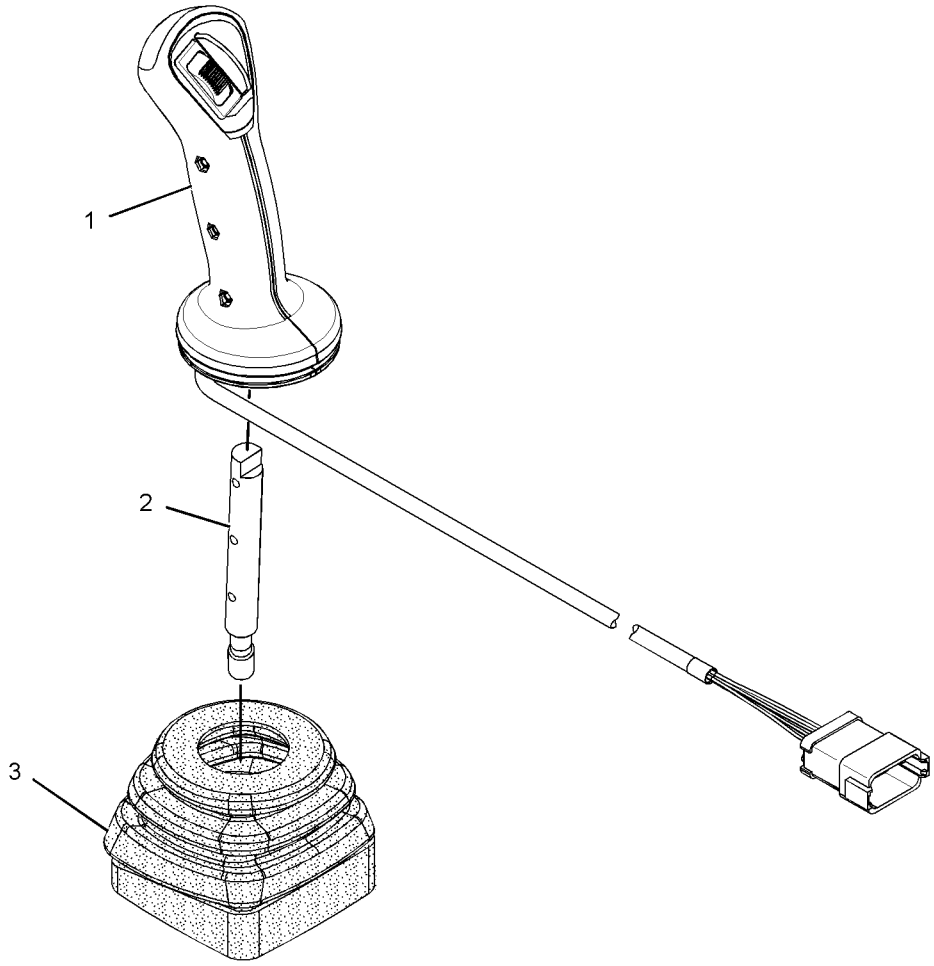

GRAPHIC #1 **<END>** g01436506

OPERATOR STATION

271-3097 CONTROL GP-JOYSTICK–LH

S/N: HLS1-99999

PART OF 269-2146 VALVE AR-BANK 6, 269-2147 VALVE AR-BANK 7

AN ATTACHMENT

SMCS-5705 **i03214242**

NOTE	REF NO	GRAPHIC REF	PART NUMBER	QTY	PART NAME 1 2 3 4 5 6 (PRODUCT LEVEL)	SEE PAGE
	1	1	**271-3103**	1	HANDLE GP-MODULAR (LH)	
		1	**8T-8737**	10	PLUG-SEAL	
		1	**174-3091**	1	KIT-RECEPTACLE (12-PIN)	
					(INCLUDES RECEPTACLE AS & WEDGE)	
		1	**186-3735**	2	PIN-CONNECTOR (16-GA TO 18-GA)	
	2	1	**278-7469**	1	ADAPTER (LH)	
	3	1	**254-3437**	1	BOOT	

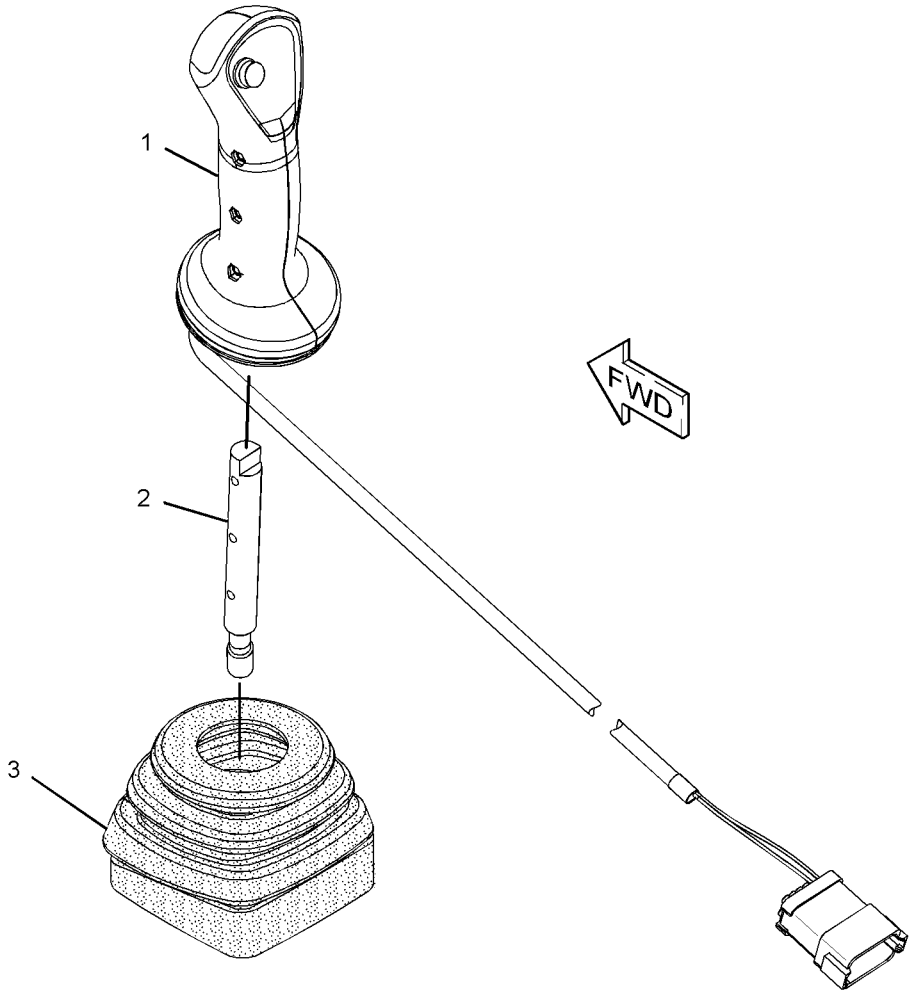

GRAPHIC #1 **<END>** g01432702

OPERATOR STATION

271-3099 CONTROL GP-JOYSTICK–LH

S/N: HLS1-99999
PART OF 269-2148 VALVE AR-BANK 8
AN ATTACHMENT

SMCS-5705 **i02875404**

NOTE	REF NO	GRAPHIC REF	PART NUMBER	QTY	PART NAME 1 2 3 4 5 6 (PRODUCT LEVEL)	SEE PAGE
	1	1	**271-3105**	1	HANDLE GP-MODULAR (LH)	
		1	**8T-8737**	6	PLUG-SEAL	
		1	**174-3091**	1	KIT-RECEPTACLE (12-PIN)	
					(INCLUDES RECEPTACLE AS & WEDGE)	
		1	**186-3735**	6	PIN-CONNECTOR (16-GA TO 18-GA)	
	2	1	**278-7469**	1	ADAPTER (LH)	
	3	1	**254-3437**	1	BOOT	

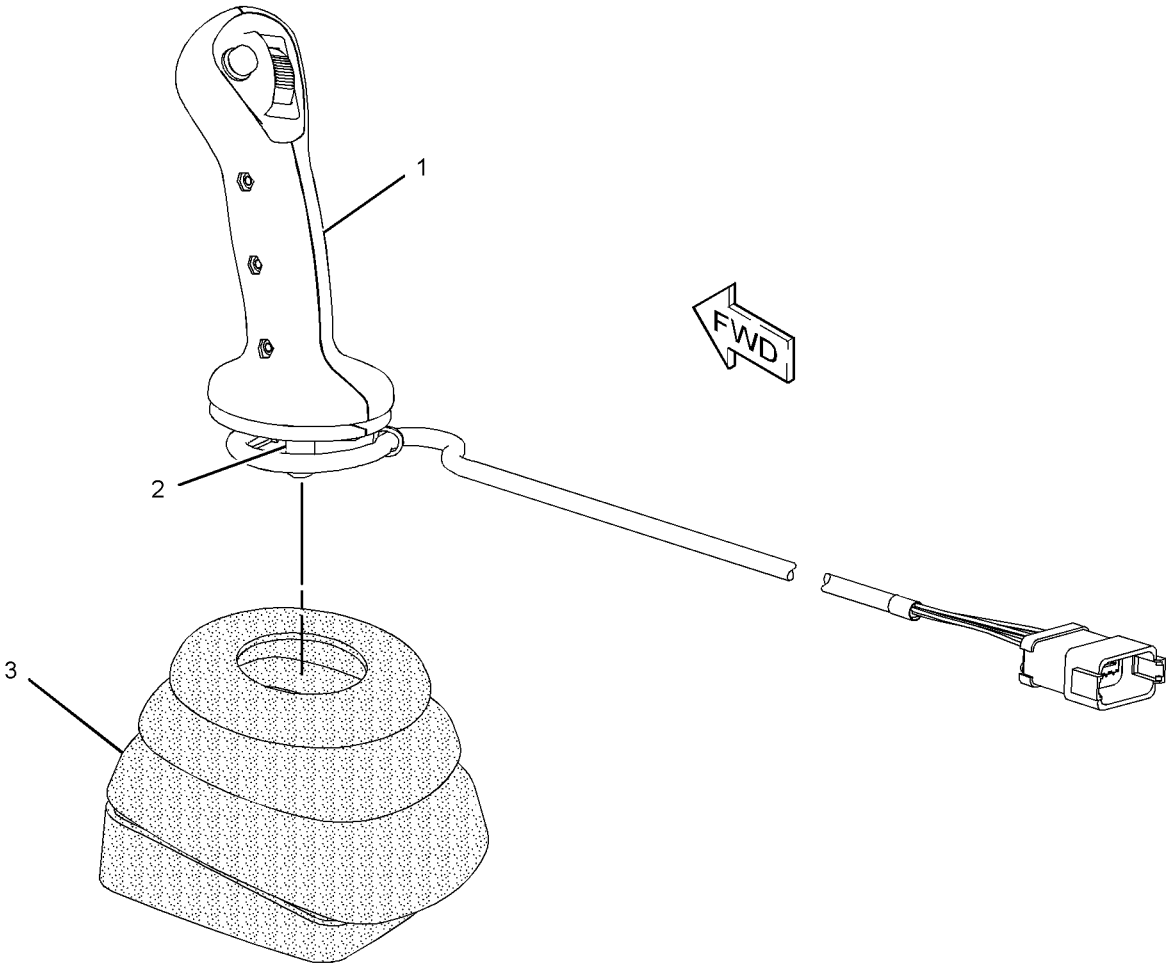

GRAPHIC #1 **<END>** g01433605

OPERATOR STATION

206-1633 CONTROL GP-STEERING–TILT

S/N: HLS1-6426
PART OF 269-2125, 269-2126, 269-2127 CAB AR-ENCLOSED ROPS, 269-2123, 269-2124 CANOPY AR-OPEN ROPS
AN ATTACHMENT

SMCS-4309, 4310, 4338 **i02515694**

NOTE	REF NO	GRAPHIC REF	PART NUMBER	QTY	PART NAME 1 2 3 4 5 6 (PRODUCT LEVEL)	SEE PAGE
	1	1	**2T-3360**	1	BUTTON AS-HORN	
	2	1	**153-7368**	1	PLUG	
Y	3	1	**153-7369**	1	KNOB GP-STEERING	339
	4	1	**206-1632**	1	PLATE AS	
J	5	1	**206-1635**	1	COLUMN AS-STEERING	
M		1	**6V-8227**	1	NUT (M18X1.5-THD)	
	6	1	**217-8058**	1	WIRE AS	
	7	1	**227-1057**	1	PLUG-HOLE	
	8	1	**145-9291**	1	STEERING WHEEL AS	
	9	1	**7X-7729**	6	WASHER (11X25X3-MM THK)	
	10	1	**8T-4121**	4	WASHER-HARD (11X21X2.5-MM THK)	
M	11	1	**8T-4133**	2	NUT (M10X1.5-THD)	
M	12	1	**8T-4136**	4	BOLT (M10X1.5X25-MM)	
M	13	1	**8T-4195**	4	BOLT (M10X1.5X30-MM)	
M	14	1	**8T-6411**	1	SCREW-MACHINE (M6X1X12-MM)	
M	15	1	**8T-8894**	1	BOLT-SOCKET HEAD (M10X1.5X20-MM)	
					AVAILABLE REPAIR KIT(S):	
J			**254-9926**	1	KIT-TILT PEDAL	
					(INCLUDES SPRING, RING, BOLT, NUT & TILT LEVER)	
J			**254-9927**	1	KIT-PIVOT	
					(INCLUDES BUSHINGS, NUTS, PINS & WASHERS)	
J			**254-9925**	1	KIT-GAS SPRING	
					(INCLUDES PINS, RINGS & SPRING AS)	
J			**252-8059**	1	KIT-HORN	
					(INCLUDES HORN CONTACT AS, SCREWS & LOCKWASHERS)	

J-KITS MARKED J AVAILABLE FOR PART(S) MARKED J
M-METRIC PART
Y-SEPARATE ILLUSTRATION

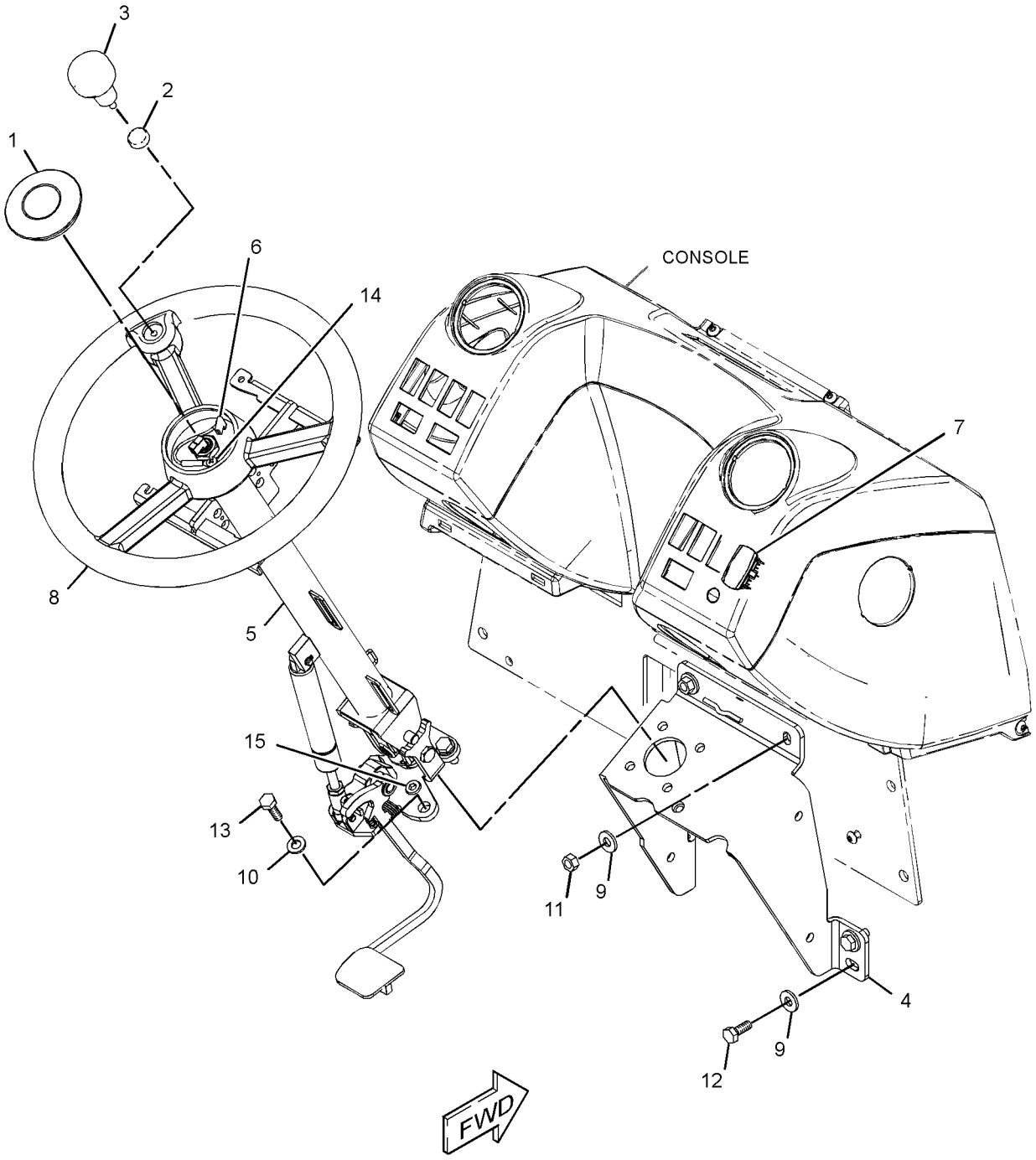

GRAPHIC #1 **<END>** g01233577

OPERATOR STATION

218-4453 CONTROL GP-STEERING–TILT

S/N: HLS6427-99999
PART OF 269-2125, 269-2126, 269-2127 CAB AR-ENCLOSED ROPS, 269-2123, 269-2124 CANOPY AR-OPEN ROPS
AN ATTACHMENT

SMCS-4309, 4310, 4338 **i03516060**

NOTE	REF NO	GRAPHIC REF	PART NUMBER	QTY	PART NAME 1 2 3 4 5 6 (PRODUCT LEVEL)	SEE PAGE
	1	1	**153-7368**	1	PLUG	
Y	2	1	**153-7369**	1	KNOB GP-STEERING	339
	3	1	**206-1632**	1	PLATE AS	
	4	1	**214-4701**	1	SWITCH AS-ROCKER (HORN)	
		1	**111-7899**	1	GASKET	
	5	1	**218-4454**	1	STEERING COLUMN GP (TILT)	
		1	**254-9925**	1	KIT-GAS SPRING	
					(INCLUDES RINGS, PINS, & SPRING AS)	
		1	**254-9927**	1	KIT-PIVOT	
					(INCLUDES BUSHINGS, NUTS, PINS, & WASHERS)	
		1	**254-9926**	1	KIT-TILT PEDAL	
					(INCLUDES SPRING. BOLT, RING, NUT & TILT LEVER)	
M		1	**6V-8227**	1	NUT (M18X1.5-THD)	
	6	1	**145-9291**	1	STEERING WHEEL AS	
	7	1	**7X-7729**	6	WASHER (11X25X3-MM THK)	
	8	1	**8R-2916**	1	COVER AS (CAT STEERING WHEEL)	
	9	1	**8T-4121**	4	WASHER-HARD (11X21X2.5-MM THK)	
M	10	1	**8T-4133**	2	NUT (M10X1.5-THD)	
M	11	1	**8T-4136**	4	BOLT (M10X1.5X25-MM)	
M	12	1	**8T-4195**	4	BOLT (M10X1.5X30-MM)	
M	13	1	**8T-8894**	1	BOLT-SOCKET HEAD (M10X1.5X20-MM)	

M-METRIC PART
Y-SEPARATE ILLUSTRATION

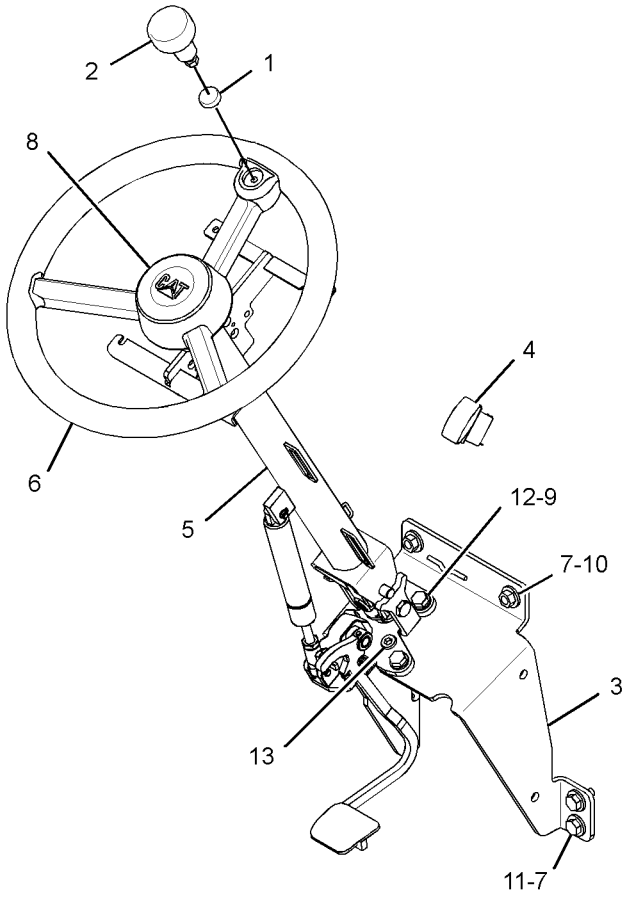

VIEW OF AREA A
(EXPLODED)

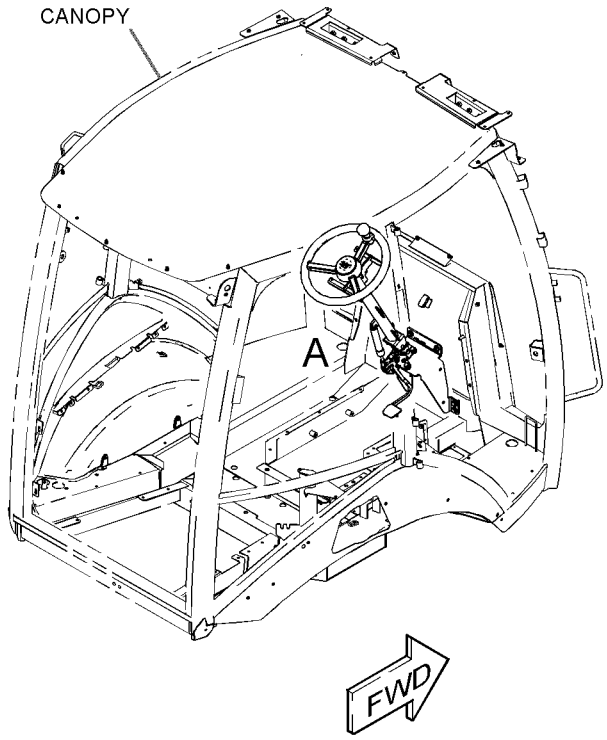

GRAPHIC #1 **<END>** g01433102

OPERATOR STATION

206-1643 CONTROL GP-TRANSMISSION

S/N: HLS1-99999

PART OF 216-3314, 216-3315 POWER TRAIN AR

AN ATTACHMENT

SMCS-3065, 3168 **i02512424**

NOTE	REF NO	GRAPHIC REF	PART NUMBER	QTY	PART NAME 1 2 3 4 5 6 (PRODUCT LEVEL)	SEE PAGE
	1	1	**102-8802**	1	KIT-RECEPTACLE (2-PIN)	
					(INCLUDES RECEPTACLE AS & WEDGE)	
	2	1	**9R-1766**	1	COVER-BOTTOM	
	3	1	**9R-1767**	1	BOOT	
	4	1	**107-5591**	1	NUT-JAM (3/4-16-THD)	
	5	1	**164-1153**	1	KNOB (UPPER)	
	6	1	**164-1368**	8	FASTENER-PANEL	
	7	1	**206-1669**	1	BOOT	
	8	1	**220-3469**	1	ROD AS	
	9	1	**220-3470**	1	BOOT-SEAL	
	10	1	**230-2389**	1	PLATE	
	11	1	**230-2390**	1	PLATE	
	12	1	**261-2207**	1	CONTROL GP-TRANSMISSION (FORWARD, NEUTRAL, REVERSE)	
	13	1	**263-7261**	1	SWITCH GP-PUSH BUTTON (NEUTRALIZER, DOWNSHIFT)	
M	14	1	**095-0756**	4	SCREW-MACHINE (M5X0.8X16-MM)	
	15	1	**8T-4223**	1	WASHER-HARD (13.5X25.5X3-MM THK)	
M	16	1	**8T-4956**	1	BOLT (M12X1.75X35-MM)	
	17	1	**8T-9501**	2	SCREW (10-16X0.75-IN)	

M-METRIC PART

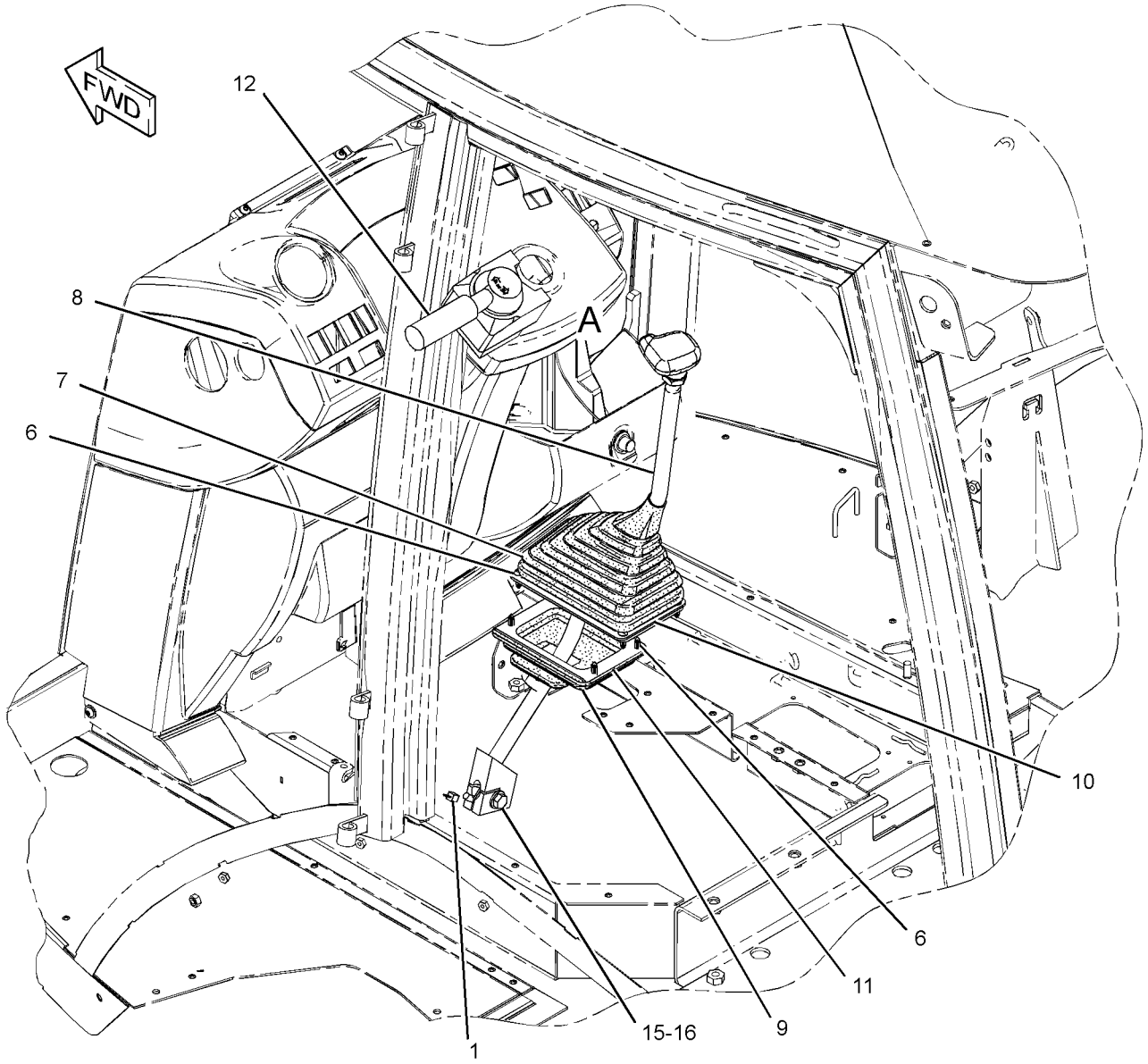

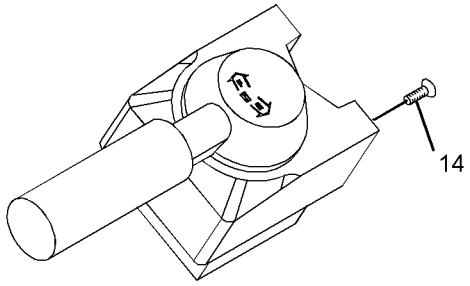

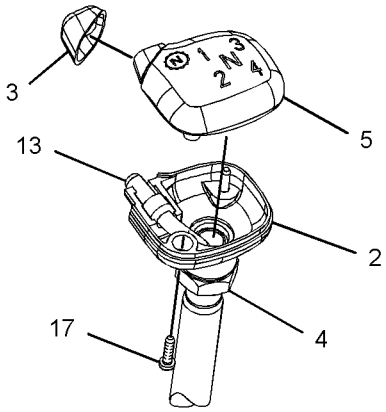

VIEW OF AREA A

GRAPHIC #1 **<END>** g01212489

OPERATOR STATION

276-8515 COVER GP-CAB

S/N: HLS6216-99999
PART OF 269-2123, 269-2124 CANOPY AR-OPEN ROPS
AN ATTACHMENT

SMCS-7301 **i02819560**

NOTE	REF NO	GRAPHIC REF	PART NUMBER	QTY	PART NAME 1 2 3 4 5 6 (PRODUCT LEVEL)	SEE PAGE
	1	1	**276-4070**	1	PLATE	
M	2	1	**9X-2042**	2	SCREW-TRUSS HEAD (M6X1X12-MM)	

M-METRIC PART

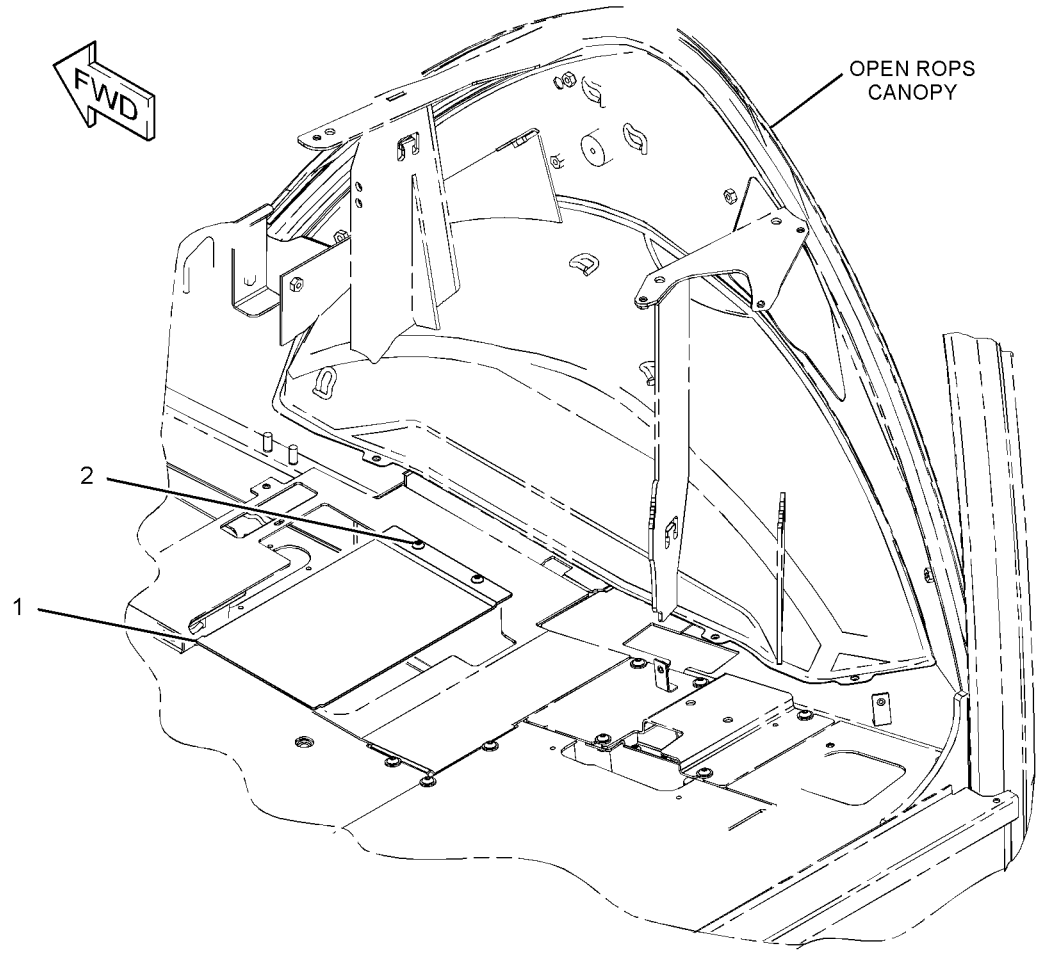

GRAPHIC #1 **<END>** g01413755

OPERATOR STATION

220-3785 COVER GP-WIPER MOTOR

S/N: HLS1-99999
PART OF 269-2124 CANOPY AR-OPEN ROPS
AN ATTACHMENT

SMCS-7305 **i02639355**

NOTE	REF NO	GRAPHIC REF	PART NUMBER	QTY	PART NAME 1 2 3 4 5 6 (PRODUCT LEVEL)	SEE PAGE
	1	1	**226-5635**	1	COVER	
M	2	1	**9X-2043**	3	SCREW-TRUSS HEAD (M6X1X14-MM)	
	3	1	**282-7835**	1	PLATE	
M	4	1	**8C-3798**	2	BOLT-LOCKING (M6X1X30)	
	5	1	**282-7833**	1	GROMMET	
	6	1	**9X-8256**	2	WASHER (6.6X12X2-MM THK)	
	7	1	**9X-2038**	3	WASHER (7X19X2-MM THK)	

M-METRIC PART

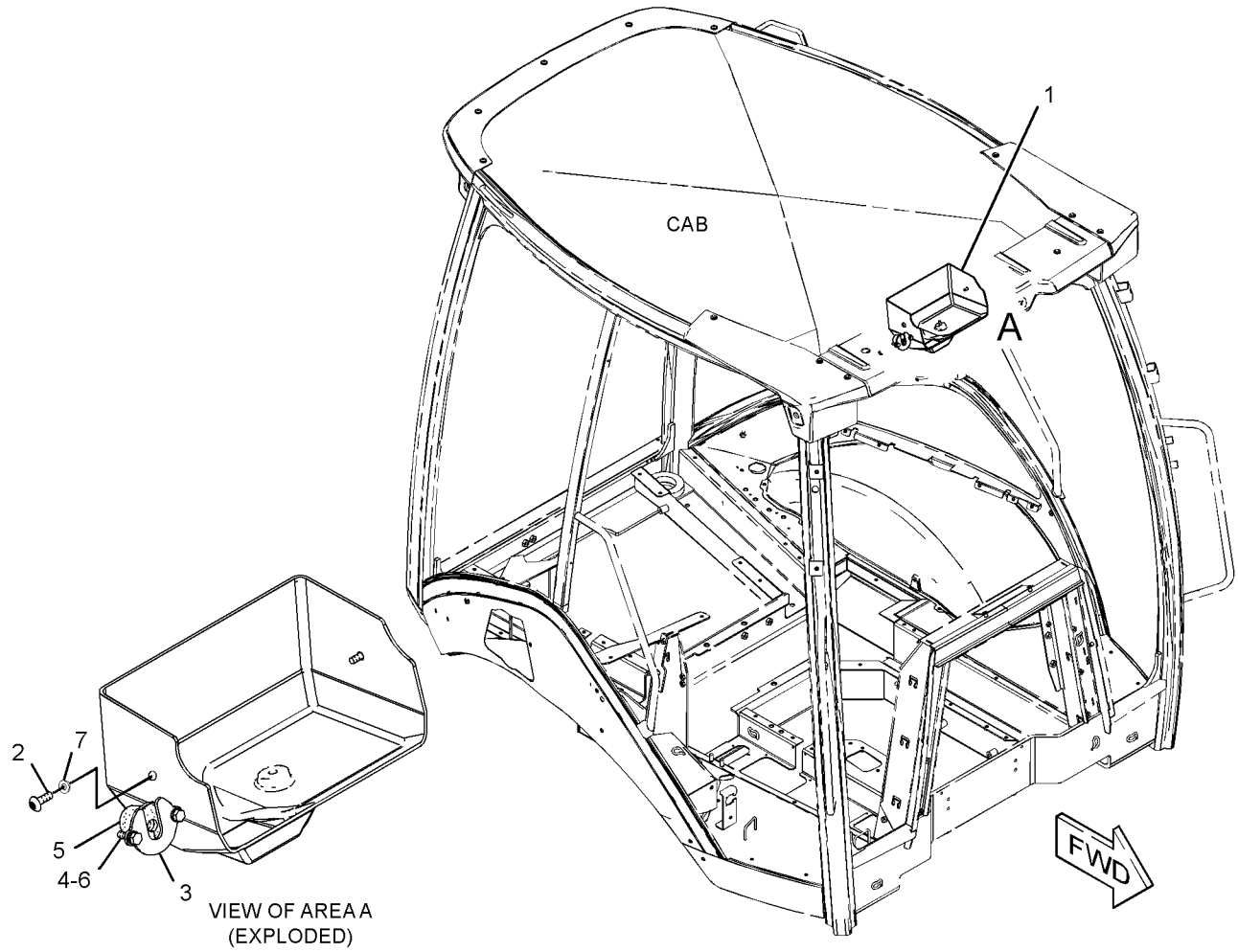

GRAPHIC #1 **<END>** g01328104

OPERATOR STATION

206-1592 DOOR GP-CAB—LH

S/N: HLS1-99999
PART OF 206-1889 CAB GP-ENCLOSED ROPS
AN ATTACHMENT
TYPE 1

SMCS-7308 **i02530997**

NOTE	REF NO	GRAPHIC REF	PART NUMBER	QTY	PART NAME 1 2 3 4 5 6 (PRODUCT LEVEL)	SEE PAGE
	1	1	**132-2249**	2	SPACER (7.4X12.7X24-MM THK)	
J	2	1	**159-4269**	1	SPRING GP-GAS	
B	3	1	**177-4877**	1	SHIM (1-MM THK)	
Y	4	1	**205-9585**	1	WINDOW GP-DOOR (LH)	917
	5	1	**205-9588**	1	GLASS (LH)	
	6	1	**206-1594**	1	DOOR AS (LH)	
	7	1	**223-2028**	1	SEAL AS (LH)	
	8	1	**248-2714**	2	NUT-ACORN	
L	9	1	**252-1862**	1	HANDLE AS	
	10	1	**252-1863**	1	GASKET	
	11	1	**252-1864**	1	LATCH AS (LH)	
	12	1	**253-1817**	1	SPACER (6.5X14.5X12-MM THK)	
	13	1	**253-1857**	1	PLATE	
	14	1	**253-1858**	1	COVER (LATCH)	
	15	1	**254-1126**	1	PLATE	
	16	1	**254-1127**	1	PLATE	
M	17	1	**131-3987**	2	SCREW (M4X0.7X12-MM)	
	18	1	**159-4946**	1	KEEPER (B)	
	19	1	**197-5107**	2	SCREW-TRUSS HEAD (M6X1X60-MM)	
	20	1	**205-7048**	2	INSERT-THREADED (M6X1-THD)	
M	21	1	**5C-9553**	3	BOLT (M6X1X16-MM)	
M	22	1	**5Y-0660**	1	NUT (M6X1-THD)	
	23	1	**287-8257**	1	BOLT (M6X1X65-MM)	
	24	1	**9X-2038**	4	WASHER (7X19X2-MM THK)	
M	25	1	**9X-2045**	4	SCREW-TRUSS HEAD (M6X1X20-MM)	
	26	1	**258-3697**	1	WASHER-NYLON (7X20X2-MM THK)	
					AVAILABLE REPAIR KIT(S):	
J			**161-9044**	1	KIT-FITTING (BALL STUD)	
					(INCLUDES NUT & FITTING AS)	

B-USE AS REQUIRED
J-KIT MARKED J AVAILABLE FOR PART MARKED J
L-REQUIRES 5P8500 KEY
M-METRIC PART
Y-SEPARATE ILLUSTRATION

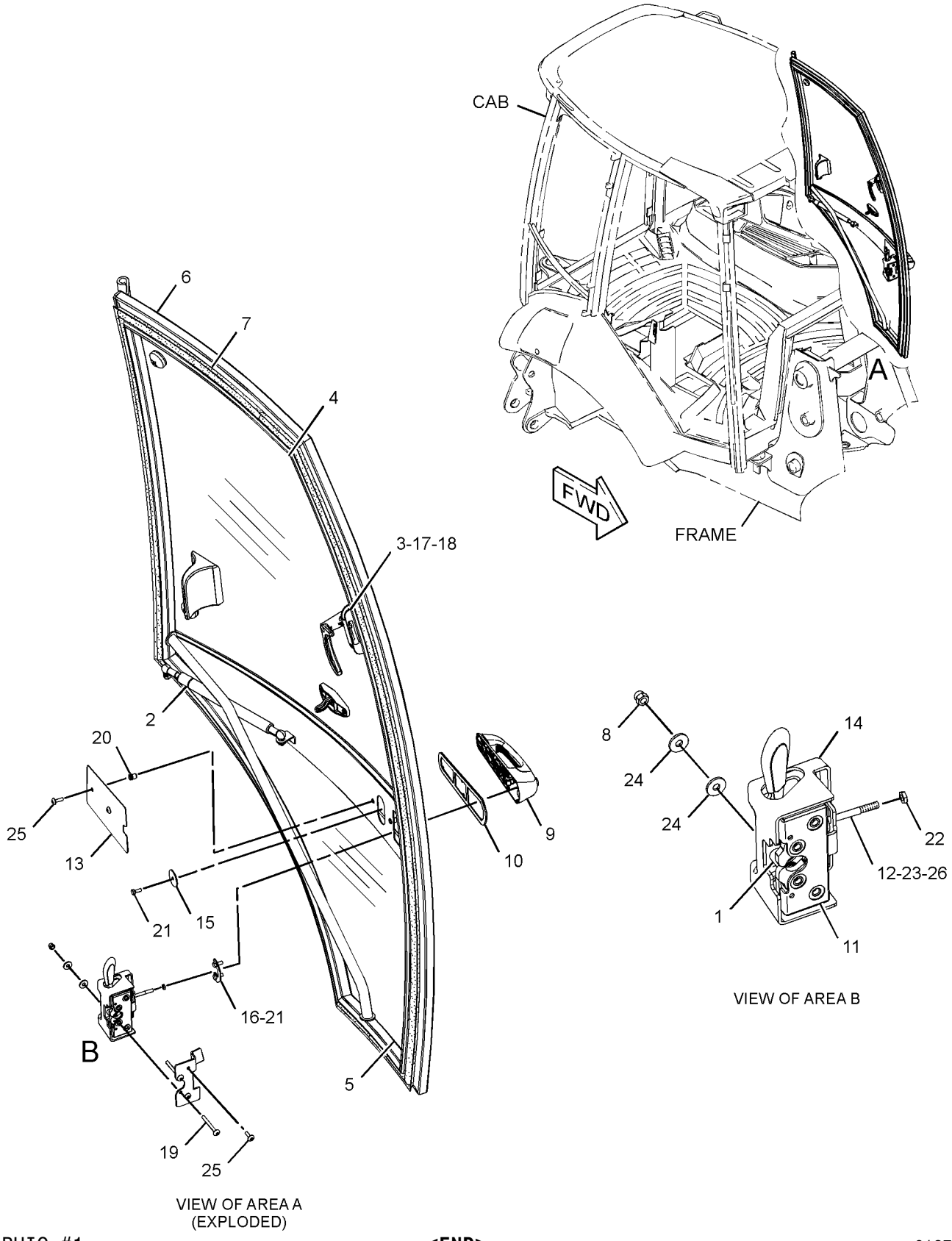

GRAPHIC #1 **<END>** g01274276

OPERATOR STATION

206-1592 DOOR GP-CAB—LH

S/N: HLS1-99999
PART OF 206-1889 CAB GP-ENCLOSED ROPS
AN ATTACHMENT
TYPE 2

SMCS-7308 **i03405780**

NOTE	REF NO	GRAPHIC REF	PART NUMBER	QTY	PART NAME 1 2 3 4 5 6 (PRODUCT LEVEL)	SEE PAGE
	1	1	**132-2249**	2	SPACER (7.4X12.7X24-MM THK)	
J	2	1	**159-4269**	1	SPRING GP-GAS	
B	3	1	**177-4877**	1	SHIM (1-MM THK)	
Y	4	1	**205-9585**	1	WINDOW GP-DOOR (LH)	917
	5	1	**205-9588**	1	GLASS (LH)	
	6	1	**206-1594**	1	DOOR AS (LH)	
C	7	1	**307-9936**	1	SEAL AS (LH)	
E		1	**315-4123**		SEAL (463-CM)	
	8	1	**248-2714**	2	NUT-ACORN	
L	9	1	**252-1862**	1	HANDLE AS	
	10	1	**252-1863**	1	GASKET	
	11	1	**252-1864**	1	LATCH AS (LH)	
	12	1	**253-1817**	1	SPACER (6.5X14.5X12-MM THK)	
	13	1	**253-1857**	1	PLATE	
	14	1	**253-1858**	1	COVER (LATCH)	
	15	1	**254-1126**	1	PLATE	
	16	1	**254-1127**	1	PLATE	
M	17	1	**131-3987**	2	SCREW (M4X0.7X12-MM)	
	18	1	**159-4946**	1	KEEPER (B)	
	19	1	**197-5107**	2	SCREW-TRUSS HEAD (M6X1X60-MM)	
	20	1	**205-7048**	2	INSERT-THREADED (M6X1-THD)	
M	21	1	**5C-9553**	3	BOLT (M6X1X16-MM)	
M	22	1	**5Y-0660**	1	NUT (M6X1-THD)	
	23	1	**287-8257**	1	BOLT (M6X1X65-MM)	
	24	1	**9X-2038**	4	WASHER (7X19X2-MM THK)	
M	25	1	**9X-2045**	4	SCREW-TRUSS HEAD (M6X1X20-MM)	
	26	1	**258-3697**	1	WASHER-NYLON (7X20X2-MM THK)	
E	27	1	**9X-6383**		SEAL (60-CM)	
					AVAILABLE REPAIR KIT(S):	
J			**161-9044**	1	KIT-FITTING (BALL STUD)	
					(INCLUDES NUT & FITTING AS)	

B-USE AS REQUIRED
C-CHANGE FROM PREVIOUS TYPE
E-ORDER BY THE CENTIMETER
J-KIT MARKED J AVAILABLE FOR PART MARKED J
L-REQUIRES 5P8500 KEY
M-METRIC PART
Y-SEPARATE ILLUSTRATION

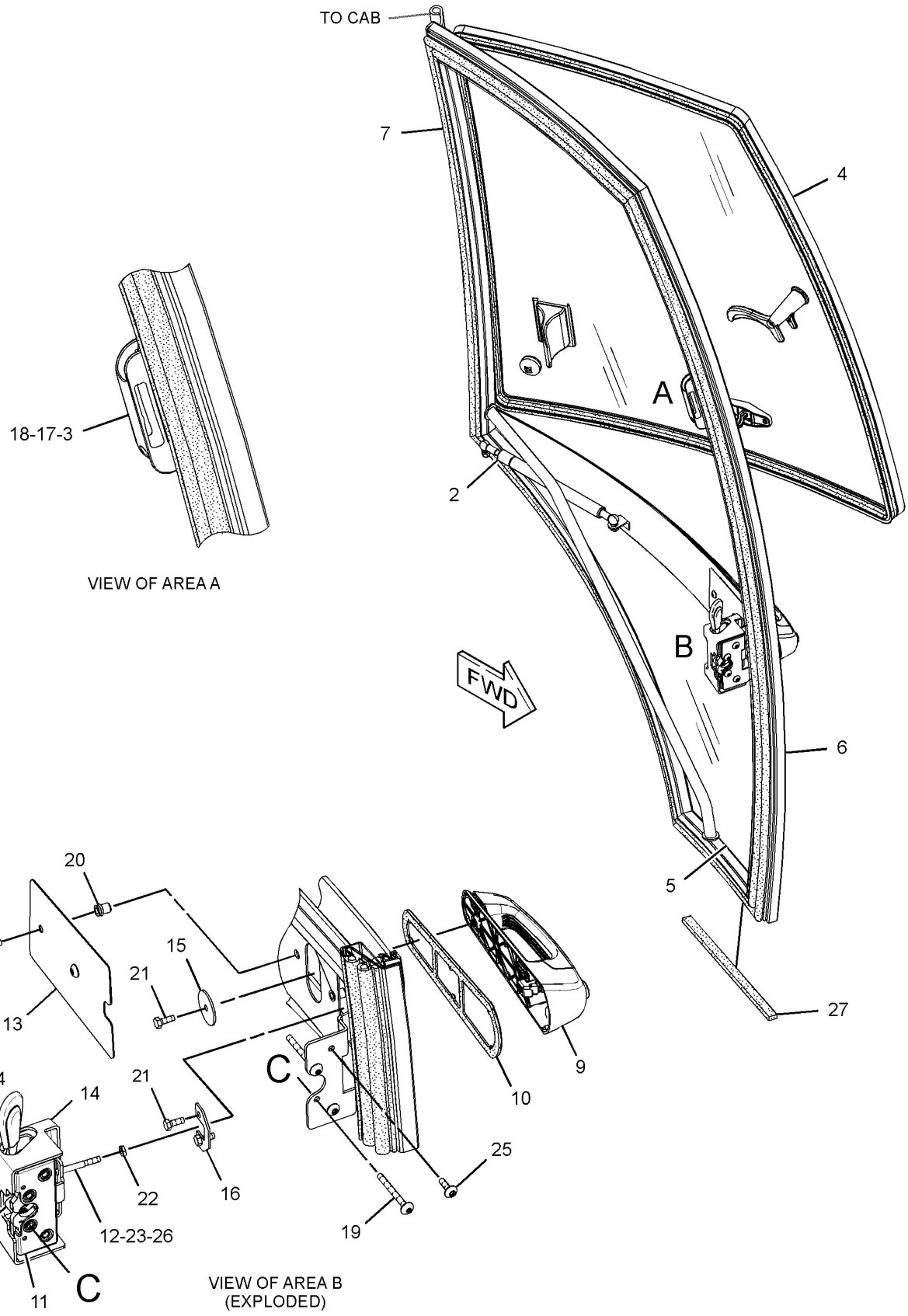

GRAPHIC #1 **<END>** g01778816

OPERATOR STATION

206-1593 DOOR GP-CAB—RH

S/N: HLS1-99999
PART OF 206-1889 CAB GP-ENCLOSED ROPS
AN ATTACHMENT
TYPE 1

SMCS-7308 **i02527227**

NOTE	REF NO	GRAPHIC REF	PART NUMBER	QTY	PART NAME 1 2 3 4 5 6 (PRODUCT LEVEL)	SEE PAGE
	1	1	**132-2249**	2	SPACER (7.4X12.7X24-MM THK)	
J	2	1	**159-4269**	1	SPRING GP-GAS	
B	3	1	**177-4877**	1	SHIM (1-MM THK)	
Y	4	1	**205-9595**	1	WINDOW GP-DOOR (RH)	918
	5	1	**205-9598**	1	GLASS (RH)	
	6	1	**206-1606**	1	DOOR AS (RH)	
	7	1	**223-2029**	1	SEAL AS (RH)	
	8	1	**248-2714**	2	NUT-ACORN	
L	9	1	**252-1862**	1	HANDLE AS	
	10	1	**252-1863**	1	GASKET	
	11	1	**252-1865**	1	LATCH AS (RH)	
	12	1	**253-1817**	1	SPACER (6.5X14.5X12-MM THK)	
	13	1	**253-1857**	1	PLATE	
	14	1	**253-1858**	1	COVER (LATCH)	
	15	1	**254-1126**	1	PLATE	
	16	1	**254-1127**	1	PLATE	
M	17	1	**131-3987**	2	SCREW (M4X0.7X12-MM)	
	18	1	**159-4945**	1	KEEPER	
	19	1	**197-5107**	2	SCREW-TRUSS HEAD (M6X1X60-MM)	
	20	1	**205-7048**	2	INSERT-THREADED (M6X1-THD)	
M	21	1	**5C-9553**	3	BOLT (M6X1X16-MM)	
M	22	1	**5Y-0660**	1	NUT (M6X1-THD)	
	23	1	**287-8257**	1	BOLT (M6X1X65-MM)	
	24	1	**9X-2038**	4	WASHER (7X19X2-MM THK)	
M	25	1	**9X-2045**	4	SCREW-TRUSS HEAD (M6X1X20-MM)	
	26	1	**258-3697**	1	WASHER-NYLON (7X20X2-MM THK)	
					AVAILABLE REPAIR KIT(S):	
J			**161-9044**	1	KIT-FITTING	
					(INCLUDES NUT & FITTING AS)	

B-USE AS REQUIRED
J-KIT MARKED J AVAILABLE FOR PART MARKED J
L-REQUIRES 5P8500 KEY
M-METRIC PART
Y-SEPARATE ILLUSTRATION

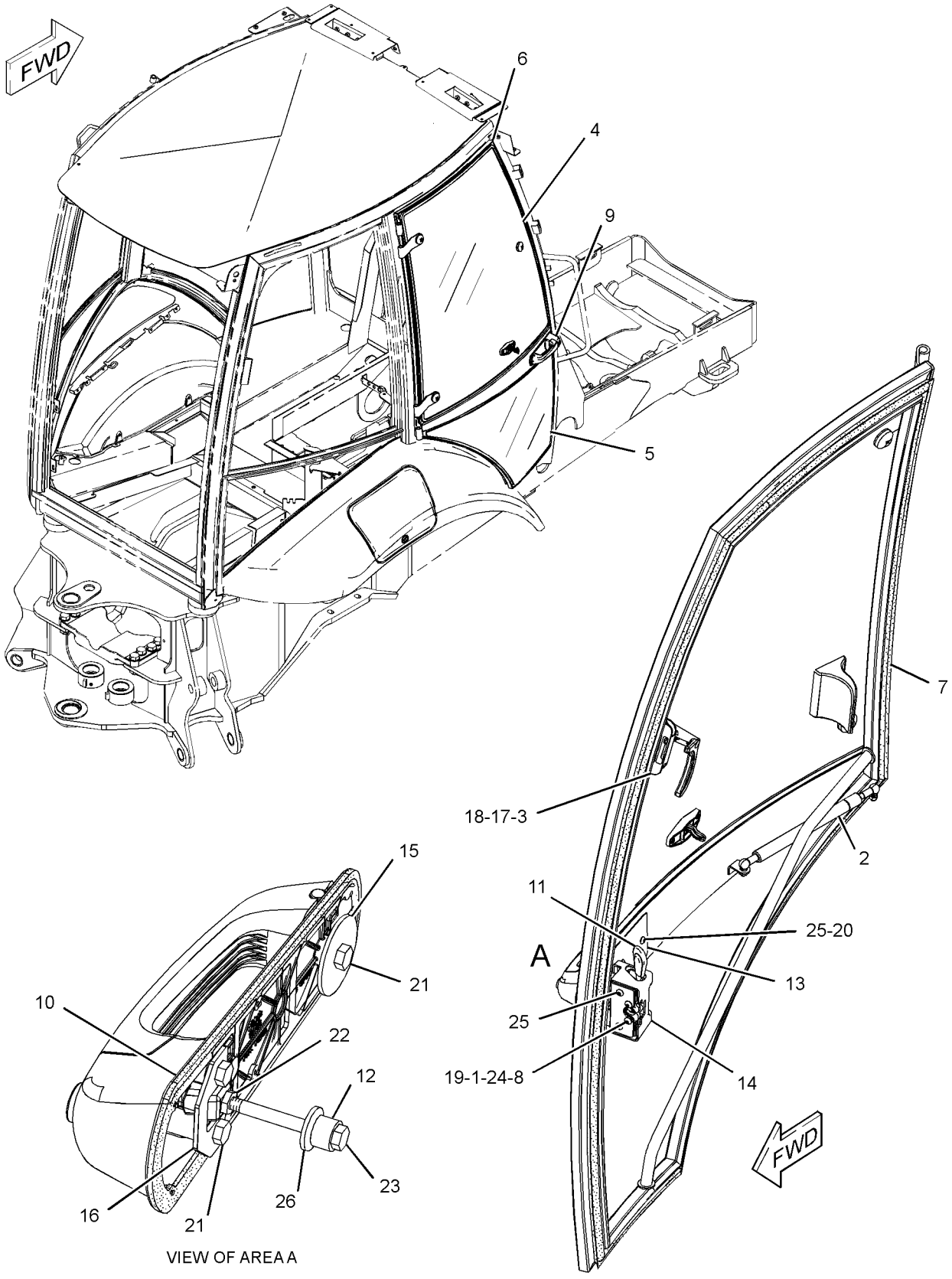

GRAPHIC #1 **<END>** g01270233

OPERATOR STATION

206-1593 DOOR GP-CAB—RH

S/N: HLS1-99999
PART OF 206-1889 CAB GP-ENCLOSED ROPS
AN ATTACHMENT
TYPE 2

SMCS-7308 **i03405800**

NOTE	REF NO	GRAPHIC REF	PART NUMBER	QTY	PART NAME 1 2 3 4 5 6 (PRODUCT LEVEL)	SEE PAGE
	1	1	**132-2249**	2	SPACER (7.4X12.7X24-MM THK)	
J	2	1	**159-4269**	1	SPRING GP-GAS	
B	3	1	**177-4877**	1	SHIM (1-MM THK)	
Y	4	1	**205-9595**	1	WINDOW GP-DOOR (RH)	918
	5	1	**205-9598**	1	GLASS (RH)	
	6	1	**206-1606**	1	DOOR AS (RH)	
C	7	1	**307-9937**	1	SEAL AS (RH)	
E		1	**315-4123**		SEAL (463-CM)	
	8	1	**248-2714**	2	NUT-ACORN	
L	9	1	**252-1862**	1	HANDLE AS	
	10	1	**252-1863**	1	GASKET	
	11	1	**252-1865**	1	LATCH AS (RH)	
	12	1	**253-1817**	1	SPACER (6.5X14.5X12-MM THK)	
	13	1	**253-1857**	1	PLATE	
	14	1	**253-1858**	1	COVER (LATCH)	
	15	1	**254-1126**	1	PLATE	
	16	1	**254-1127**	1	PLATE	
M	17	1	**131-3987**	2	SCREW (M4X0.7X12-MM)	
	18	1	**159-4945**	1	KEEPER	
	19	1	**197-5107**	2	SCREW-TRUSS HEAD (M6X1X60-MM)	
	20	1	**205-7048**	2	INSERT-THREADED (M6X1-THD)	
M	21	1	**5C-9553**	3	BOLT (M6X1X16-MM)	
M	22	1	**5Y-0660**	1	NUT (M6X1-THD)	
	23	1	**287-8257**	1	BOLT (M6X1X65-MM)	
	24	1	**9X-2038**	4	WASHER (7X19X2-MM THK)	
M	25	1	**9X-2045**	4	SCREW-TRUSS HEAD (M6X1X20-MM)	
	26	1	**258-3697**	1	WASHER-NYLON (7X20X2-MM THK)	
BE	27	1	**9X-6383**		SEAL (60-CM)	
					AVAILABLE REPAIR KIT(S):	
J			**161-9044**	1	KIT-FITTING	
					(INCLUDES FITTING AS & NUT)	

B-USE AS REQUIRED
C-CHANGE FROM PREVIOUS TYPE
E-ORDER BY THE CENTIMETER
J-KIT MARKED J AVAILABLE FOR PART MARKED J
L-REQUIRES 5P8500 KEY
M-METRIC PART
Y-SEPARATE ILLUSTRATION

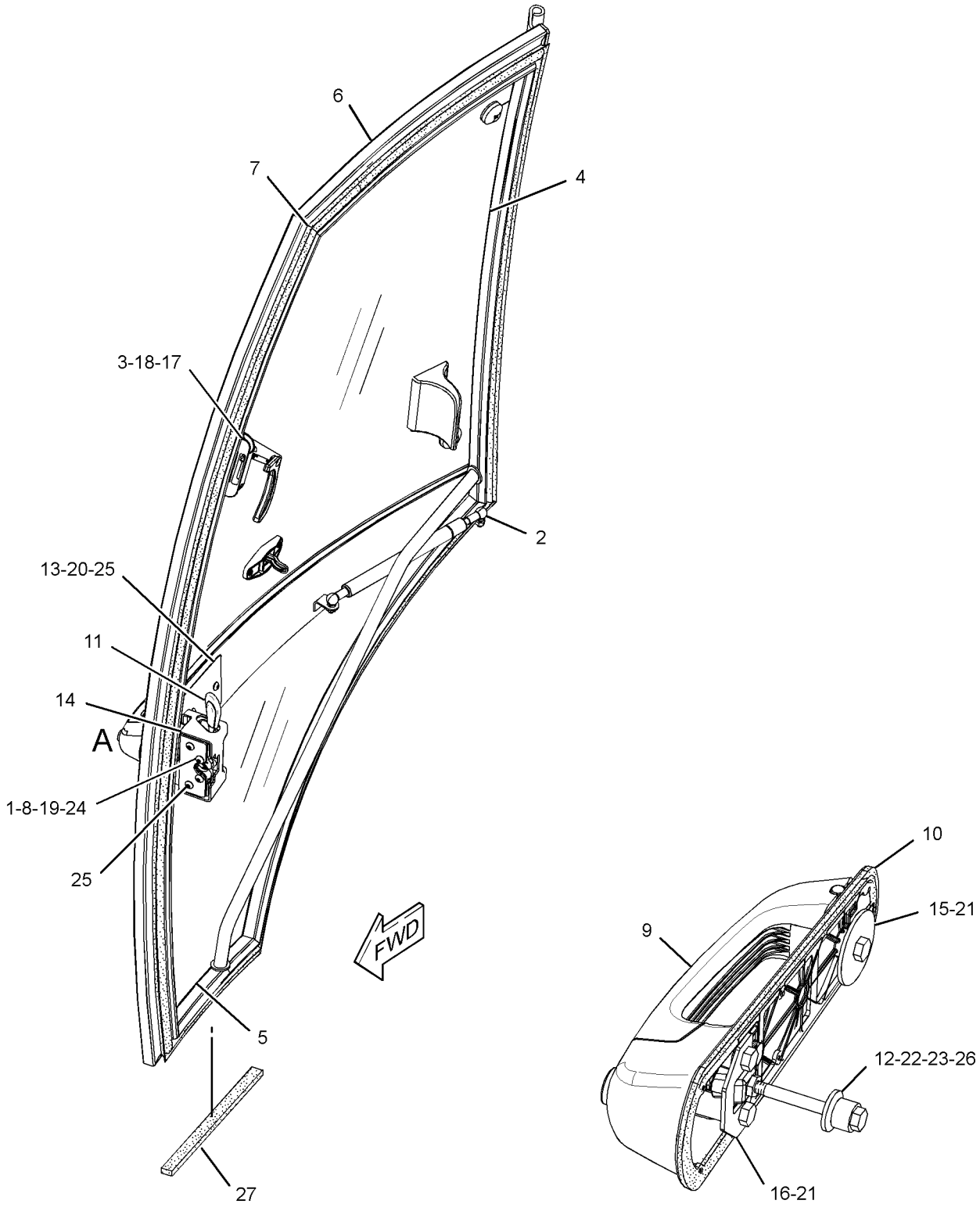

VIEW OF AREA A
(PARTS REMOVED FOR CLARITY)

GRAPHIC #1 **<END>** g01784733

OPERATOR STATION

206-1618 FLOOR MAT GP

S/N: HLS1-99999
PART OF 269-2125, 269-2126, 269-2127 CAB AR-ENCLOSED ROPS, 269-2123, 269-2124 CANOPY AR-OPEN ROPS
AN ATTACHMENT

SMCS-7265 **i02460066**

NOTE	REF NO	GRAPHIC REF	PART NUMBER	QTY	PART NAME 1 2 3 4 5 6 (PRODUCT LEVEL)	SEE PAGE
	1	1	**247-8179**	2	PLATE	
	2	1	**284-1602**	1	FLOOR MAT	
	3	1	**1H-3244**	4	LOCKWASHER	
M	4	1	**9X-2045**	4	SCREW-TRUSS HEAD (M6X1X20-MM)	

M-METRIC PART

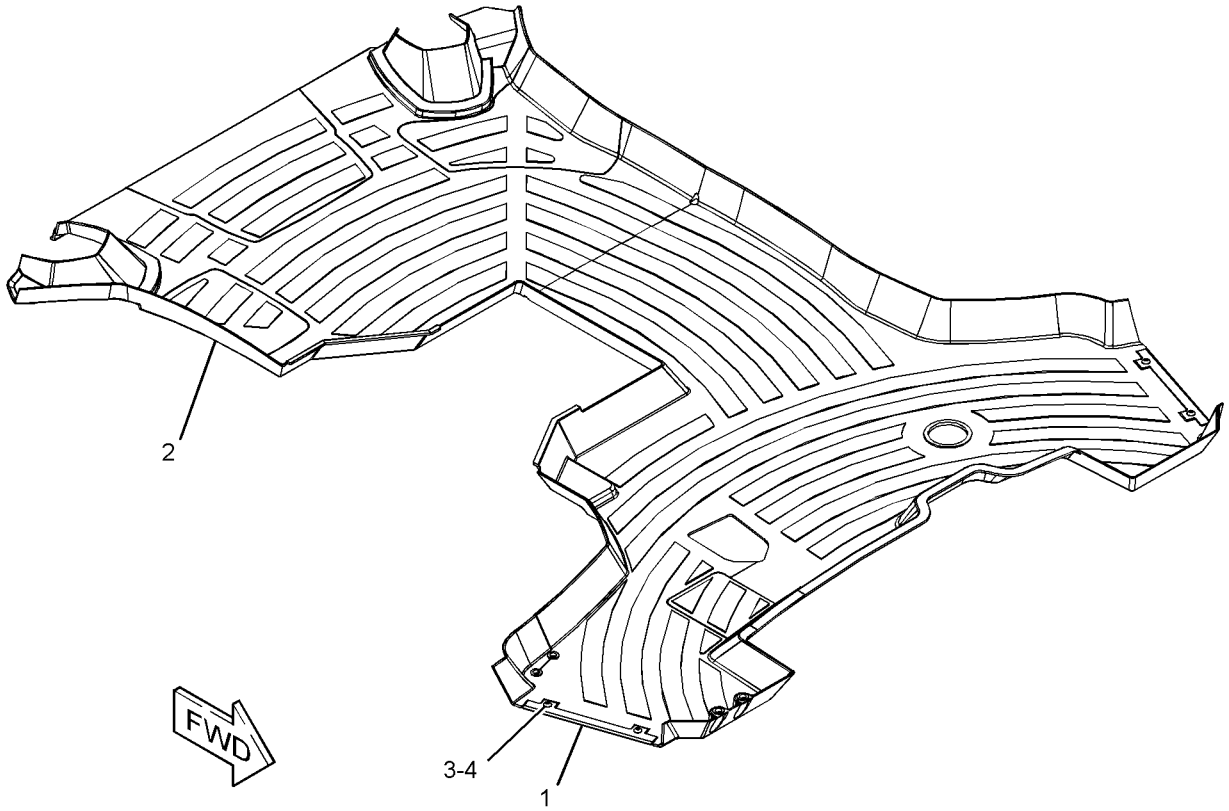

GRAPHIC #1 **<END>** g01228081

OPERATOR STATION

206-1800 HEATER GP-CAB

S/N: HLS1-99999
PART OF 269-2125, 269-2126 CAB AR-ENCLOSED ROPS
AN ATTACHMENT

SMCS-7304 **i02753190**

NOTE	REF NO	GRAPHIC REF	PART NUMBER	QTY	PART NAME 1 2 3 4 5 6 (PRODUCT LEVEL)	SEE PAGE
	1	1	**221-2420**	2	HOSE-AIR	
E	2	1	**6V-6813**		HOSE (28-CM)	
	3	1	**6L-4725**	2	CLAMP-HOSE	
	4	1	**8Y-5737**	1	CLAMP	
	5	1	**8Y-6967**	6	LOUVER AS	
	6	1	**9M-7959**	4	CLAMP-HOSE	
	7	1	**9N-2231**	1	GROMMET AS	
	8	1	**110-6109**	1	KNOB-CONTROL (TEMPERATURE)	
	9	1	**130-4832**	2	SCREW (8-18X10-MM)	
	10	1	**164-1368**	4	FASTENER-PANEL	
	11	1	**164-8474**	2	LOUVER AS-VENT	
	12	1	**189-0881**	1	CONTROL AS (PANEL)	
		1	**129-1831**	1	CLAMP	
	13	1	**193-3356**	1	CABLE AS	
	14	1	**194-5622**	1	VALVE AS-WATER	
		1	**6V-6717**	1	SCREW-WASHER HEAD (8-32X9.52-MM)	
		1	**124-0312**	2	SCREW-PAN HEAD (8-16X0.32-IN)	
	15	1	**206-1648**	1	LOUVER	
	16	1	**206-1653**	4	GASKET	
	17	1	**206-1682**	1	PANEL-CONTROL (INSERT)	
	18	1	**206-1684**	1	COVER (CAB FILTER)	
	19	1	**206-1803**	2	GASKET	
	20	1	**206-1804**	1	GASKET	
	21	1	**206-1805**	1	GASKET	
E	22	1	**220-0738**		SEAL (87-CM)	
	23	1	**206-1807**	1	GASKET	
	24	1	**206-1808**	1	PLATE	
	25	1	**206-1809**	1	ROD AS	
	26	1	**206-1810**	1	DUCT-AIR	
	27	1	**206-1812**	1	DUCT-AIR	
	28	1	**206-1814**	1	DUCT-AIR	
	29	1	**206-1815**	1	DUCT-AIR	
	30	1	**206-1816**	1	DUCT-AIR	
	31	1	**206-1817**	2	DUCT-AIR	
	32	1	**206-1818**	1	DUCT AS-AIR	
Y	33	1	*210-8364*	1	HEATER GP-CAB	851
	34	1	**211-2661**	1	FILTER ELEMENT AS-AIR (CAB HEATER)	
	35	1	**218-0666**	6	LOUVER AS	
	36	1	**255-0795**	1	FILM (TEMPERATURE CONTROL)	
M	37	1	**111-4627**	3	SCREW-MACHINE (M6X1X30-MM)	
	38	1	**5P-4116**	1	WASHER-HARD (8.8X20.5X2-MM THK)	
	39	1	**7X-0579**	1	WASHER-HARD (8.8X25.5X2-MM THK)	
M	40	1	**8T-4200**	1	BOLT (M8X1.25X16-MM)	
	41	1	**8Y-6352**	1	LOUVER AS	
	42	1	**9X-2038**	4	WASHER (7X19X2-MM THK)	
M	43	1	**9X-2045**	8	SCREW-TRUSS HEAD (M6X1X20-MM)	
	44	1	**8T-4205**	4	WASHER-HARD (7.2X14.5X2-MM THK)	

E-ORDER BY THE CENTIMETER
M-METRIC PART
Y-SEPARATE ILLUSTRATION

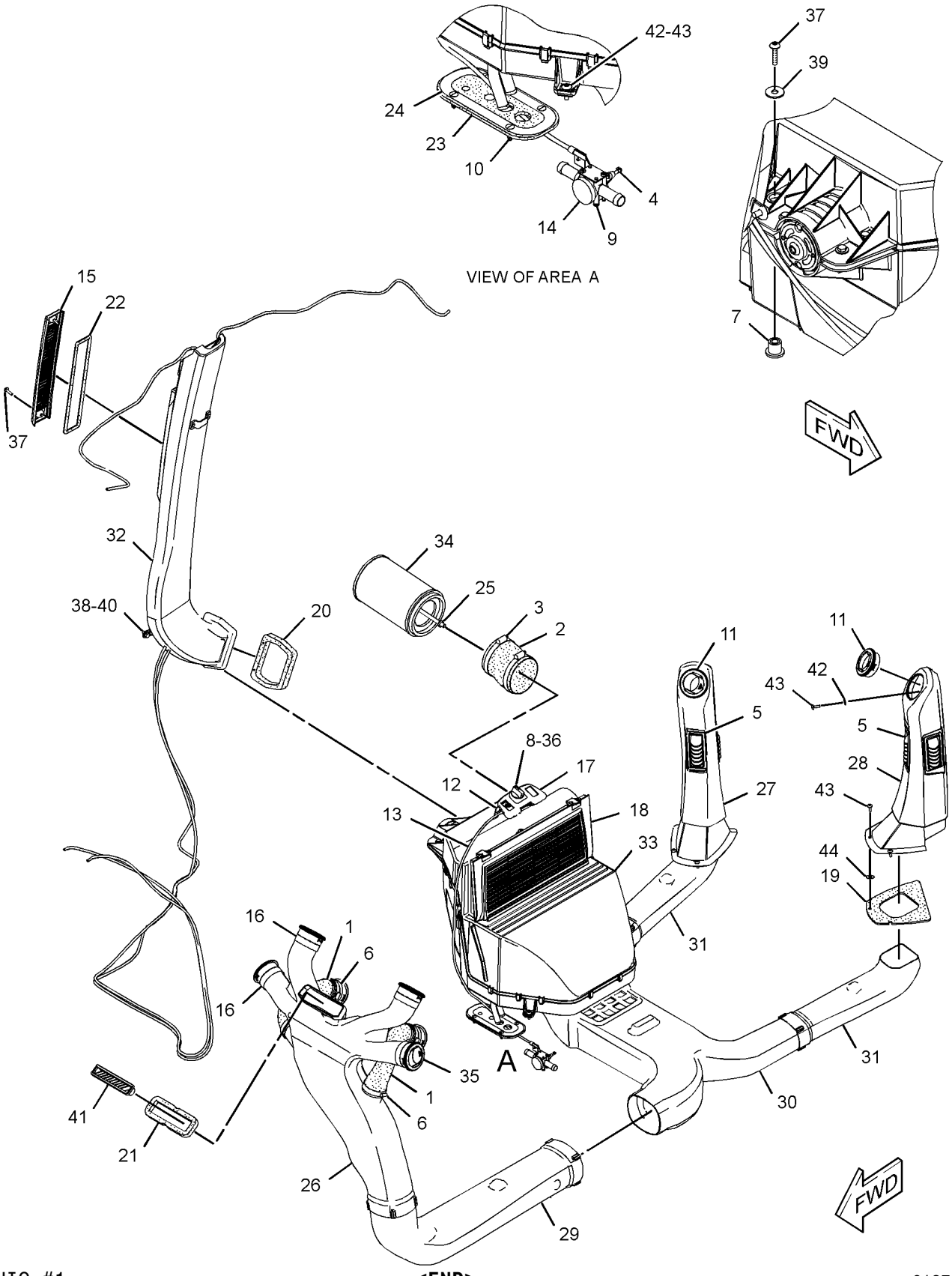

GRAPHIC #1

<END>

g01379893

OPERATOR STATION

210-8363 HEATER GP-CAB

S/N: HLS1-4911

PART OF 206-1801 AIR CONDITIONER & MOUNTING GP

AN ATTACHMENT

SMCS-7304 **i03532205**

NOTE	REF NO	GRAPHIC REF	PART NUMBER	QTY	PART NAME 1 2 3 4 5 6 (PRODUCT LEVEL)	SEE PAGE
	1	1	**8C-3756**	1	FILM-IDENTIFICATION (CATERPILLAR)	
	2	1	**119-9631**	1	SWITCH-TEMPERATURE (AIR CONDITIONER)	
	3	1	**168-2313**	1	BLOWER GP-CAB (HEATER)	
		1	**7T-0093**	2	PIN-CONNECTOR	
		1	**177-9645**	1	KIT-RECEPTACLE (2-PIN)	
					(INCLUDES RECEPTACLE AS & WEDGE)	
	4	1	**185-4015**	11	CLIP	
	5	1	**204-9921**	1	RESISTOR AS (HEATER)	
	6	1	**210-7665**	1	HOUSING-TOP	
	7	1	**210-7666**	1	BAFFLE	
	8	1	**210-8401**	1	COIL AS-EVAPORATOR	
J		1	**219-6288**	1	GASKET	
DJ		1	**5P-5688**		SEAL (1-M)	
	9	1	**211-2660**	1	FILTER ELEMENT-AIR (RECIRCULATION)	
	10	1	**212-3416**	1	SCREW-PAN HEAD (8-16XO.5-IN)	
	11	1	**219-6281**	1	COVER AS (FILTER)	
		1	**6C-3680**	1	RIVET-POP	
J	12	1	**219-6284**	2	GASKET	
J	13	1	**219-6285**	1	GASKET	
J	14	1	**219-6286**	1	GASKET	
J	15	1	**219-6287**	2	GASKET	
	16	1	**219-6292**	1	HOUSING AS (BOTTOM)	
		1	**7H-3937**	4	LOCKWASHER (2-M)	
M		1	**129-3178**	4	LOCKNUT (M6X1-THD)	
J	17	1	**219-6294**	2	SEAL (DRAIN TUBE)	
	18	1	**220-3762**	1	HARNESS AS-HEATER & AIR COND	
	19	1	**253-9510**	1	GUARD (RESISTOR)	
	20	1	**2S-3745**	4	SCREW-TAPPING (10-16XO.5-IN)	
M	21	1	**6V-7357**	4	BOLT (M6X1X25-MM)	
	22	1	**8T-4205**	5	WASHER-HARD (7.2X14.5X2-MM THK)	
D	23	1	**5P-5655**		SEAL (O.5-M)	
DJ	24	1	**5P-5637**		SEAL (O.8-M)	
EJ	25	1	**8C-7524**		SEAL (35-CM)	
					AVAILABLE REPAIR KIT(S):	
J			**285-9109**	1	KIT-SEAL (HVAC)	

D-ORDER BY THE METER
E-ORDER BY THE CENTIMETER
J-KIT MARKED J SERVICES PARTS MARKED J
M-METRIC PART

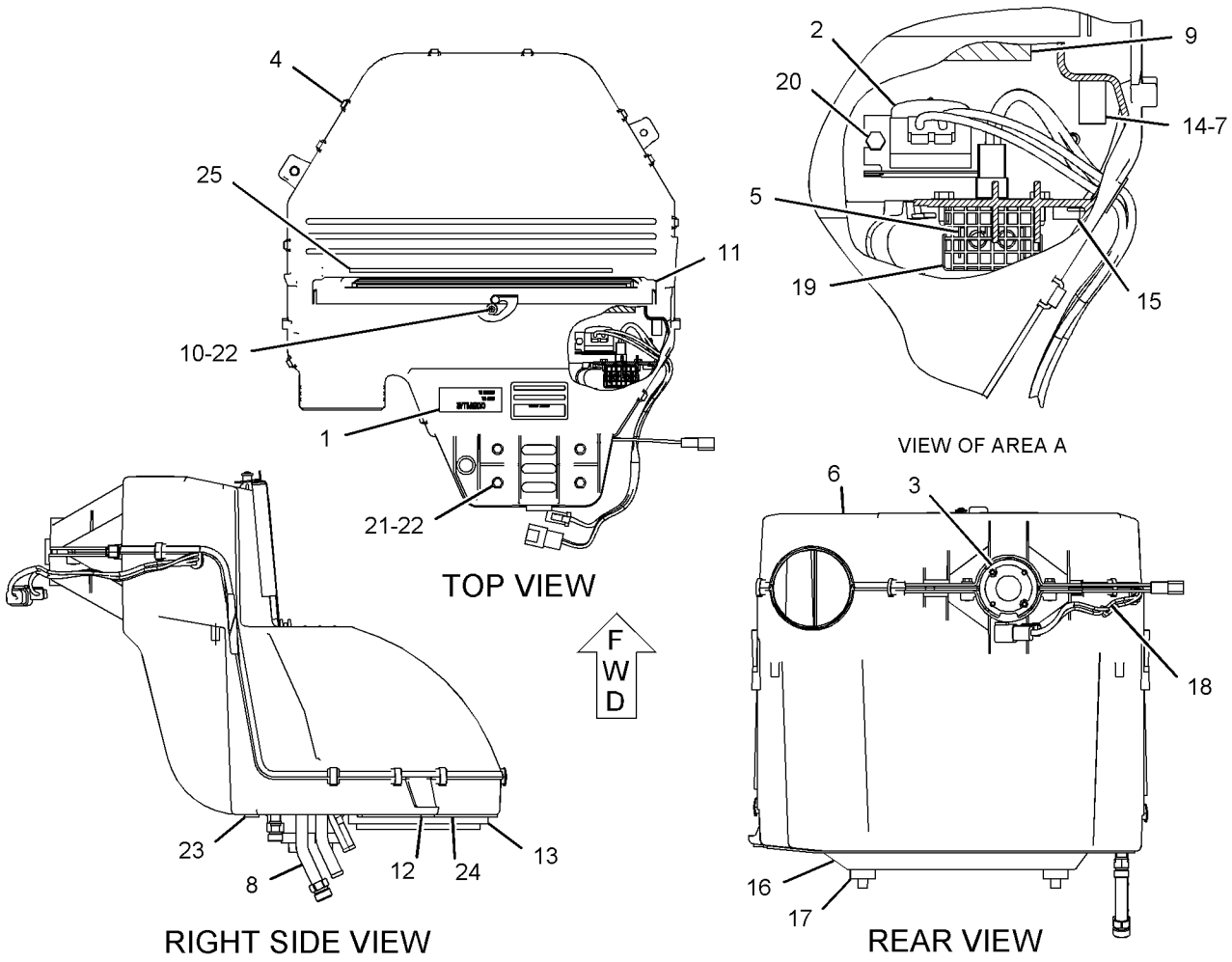

GRAPHIC #1 **<END>** g01095421

OPERATOR STATION

210-8363 HEATER GP-CAB

S/N: HLS4912-99999

PART OF 206-1801 AIR CONDITIONER & MOUNTING GP

AN ATTACHMENT

SMCS-7304 **i03256784**

NOTE	REF NO	GRAPHIC REF	PART NUMBER	QTY	PART NAME 1 2 3 4 5 6 (PRODUCT LEVEL)	SEE PAGE
	1	1	**8C-3756**	1	FILM-IDENTIFICATION (CATERPILLAR)	
	2	1	**119-9631**	1	SWITCH-TEMPERATURE (AIR CONDITIONER)	
C	3	1	**304-8965**	1	BLOWER GP-CAB (HEATER)	
		1	**7T-0093**	2	PIN-CONNECTOR	
		1	**177-9645**	1	KIT-RECEPTACLE (2-PIN)	
					(INCLUDES RECEPTACLE AS & WEDGE)	
	4	1	**185-4015**	11	CLIP	
	5	1	**204-9921**	1	RESISTOR AS (HEATER)	
	6	1	**210-7665**	1	HOUSING-TOP	
	7	1	**210-7666**	1	BAFFLE	
	8	1	**210-8401**	1	COIL AS-EVAPORATOR	
J		1	*219-6288*	1	GASKET	
DJ		1	**5P-5688**		SEAL (1-M)	
	9	1	**211-2660**	1	FILTER ELEMENT-AIR (RECIRCULATION)	
	10	1	**212-3416**	3	SCREW-PAN HEAD (8-16XO.5-IN)	
	11	1	**219-6281**	1	COVER AS (FILTER)	
		1	**6C-3680**	1	RIVET-POP	
J	12	1	*219-6284*	2	GASKET	
J	13	1	*219-6285*	1	GASKET	
J	14	1	*219-6286*	1	GASKET	
J	15	1	*219-6287*	2	GASKET	
	16	1	**219-6292**	1	HOUSING AS (BOTTOM)	
		1	**7H-3937**	4	LOCKWASHER	
M		1	**129-3178**	4	LOCKNUT (M6X1-THD)	
	18	1	**220-3762**	1	HARNESS AS-HEATER & AIR COND	
	19	1	**253-9510**	1	GUARD (RESISTOR)	
	20	1	**2S-3745**	4	SCREW-TAPPING (10-16XO.5-IN)	
M	21	1	**6V-7357**	4	BOLT (M6X1X25-MM)	
	22	1	**8T-4205**	5	WASHER-HARD (7.2X14.5X2-MM THK)	
D	23	1	**5P-5655**		SEAL (O.5-M)	
DJ	24	1	**5P-5637**		SEAL (O.8-M)	
EJ	25	1	**8C-7524**		SEAL (35-CM)	
					AVAILABLE REPAIR KIT(S):	
J			**285-9109**	1	KIT-SEAL (HVAC)	

C-CHANGE FROM PREVIOUS TYPE
D-ORDER BY THE METER
E-ORDER BY THE CENTIMETER
J-KIT MARKED J SERVICES PARTS MARKED J
M-METRIC PART

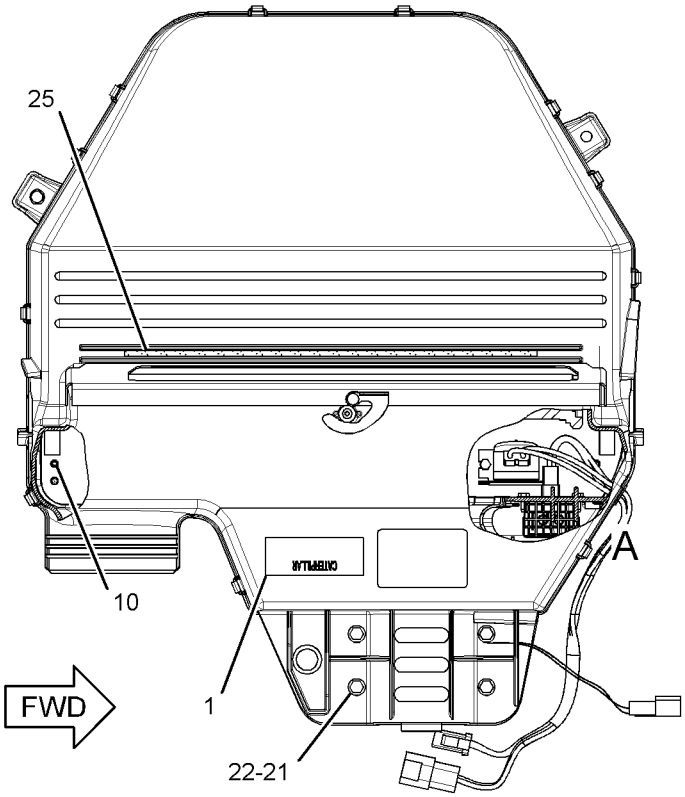

TOP VIEW

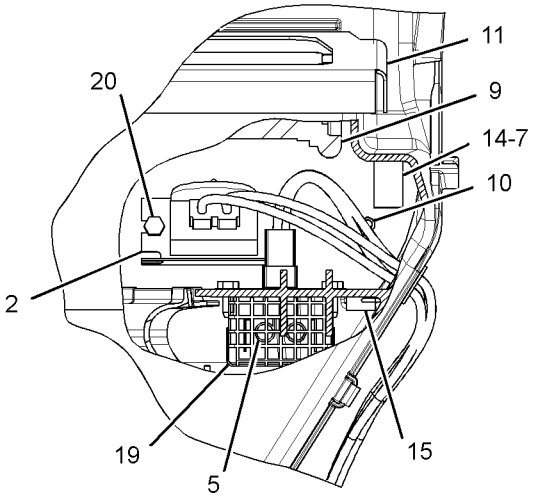

VIEW OF AREA A

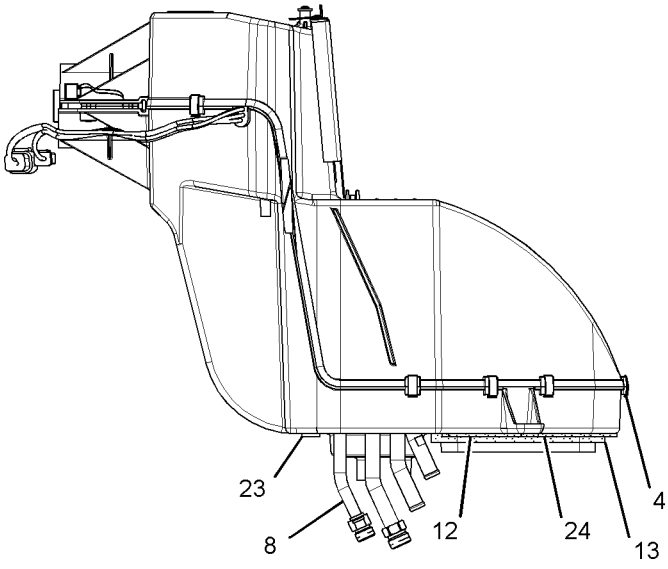

FRONT VIEW

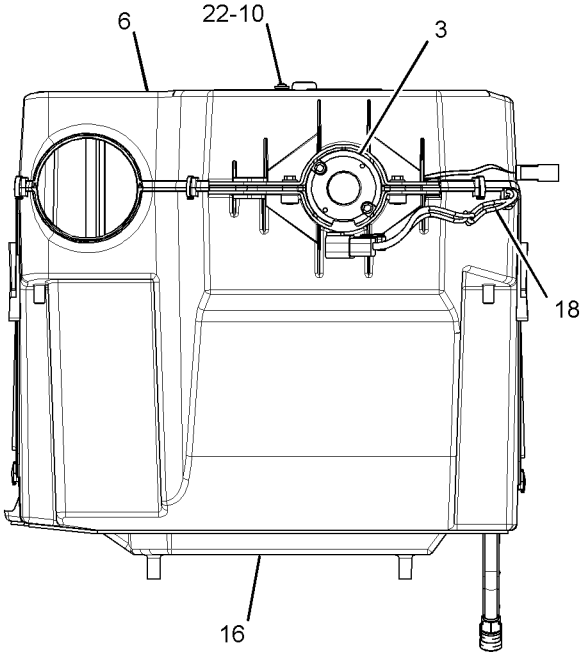

RIGHT SIDE VIEW

GRAPHIC #1 **<END>** g01460871

OPERATOR STATION

210-8364 HEATER GP-CAB

S/N: HLS1-5112
PART OF 206-1800 HEATER GP-CAB
AN ATTACHMENT

SMCS-7304 **i03516082**

NOTE	REF NO	GRAPHIC REF	PART NUMBER	QTY	PART NAME 1 2 3 4 5 6 (PRODUCT LEVEL)	SEE PAGE
	1	1	**8C-3756**	1	FILM-IDENTIFICATION (CATERPILLAR)	
	2	1	**168-2313**	1	BLOWER GP-CAB (HEATER)	
		1	**177-9645**	1	KIT-RECEPTACLE (2-PIN)	
					(INCLUDES RECEPTACLE AS & WEDGE)	
		1	**7T-0093**	2	PIN-CONNECTOR	
	3	1	**185-4015**	11	CLIP	
	4	1	**204-9921**	1	RESISTOR AS (HEATER)	
	5	1	**210-7665**	1	HOUSING-TOP	
	6	1	**210-7666**	1	BAFFLE	
	7	1	**210-8402**	1	COIL AS-HEATER	
JZ		1		1	GASKET	
DJ		1	**5P-5688**		SEAL (1-M)	
	8	1	**211-2660**	1	FILTER ELEMENT-AIR (RECIRCULATION)	
	9	1	**212-3416**	1	SCREW-PAN HEAD (8-16XO.5-IN)	
	10	1	**219-6281**	1	COVER AS (FILTER)	
		1	**6C-3680**	1	RIVET-POP	
JZ	11	1		2	GASKET	
JZ	12	1		1	GASKET	
JZ	13	1		1	GASKET	
JZ	14	1		2	GASKET	
	15	1	**219-6292**	1	HOUSING AS	
		1	**7H-3937**	4	LOCKWASHER	
M		1	**129-3178**	4	LOCKNUT (M6X1-THD)	
JZ	16	1		2	SEAL (DRAIN TUBE)	
	17	1	**253-2470**	1	HARNESS AS-HEATER	
	18	1	**253-9510**	1	GUARD	
	19	1	**2S-3745**	2	SCREW-TAPPING (10-16XO.5-IN)	
M	20	1	**6V-7357**	4	BOLT (M6X1X25-MM)	
	21	1	**8T-4205**	5	WASHER-HARD (7.2X14.5X2-MM THK)	
D	22	1	**5P-5655**		SEAL (O.5-M)	
DJ	23	1	**5P-5637**		SEAL (O.8-M)	
EJ	24	1	**8C-7524**		SEAL (35-CM)	
					AVAILABLE REPAIR KIT(S):	
J			**285-9109**	1	KIT-SEAL (HVAC)	

D-ORDER BY THE METER
E-ORDER BY THE CENTIMETER
J-KIT MARKED J SERVICES PARTS MARKED J
M-METRIC PART
Z-NOT SERVICED SEPARATELY

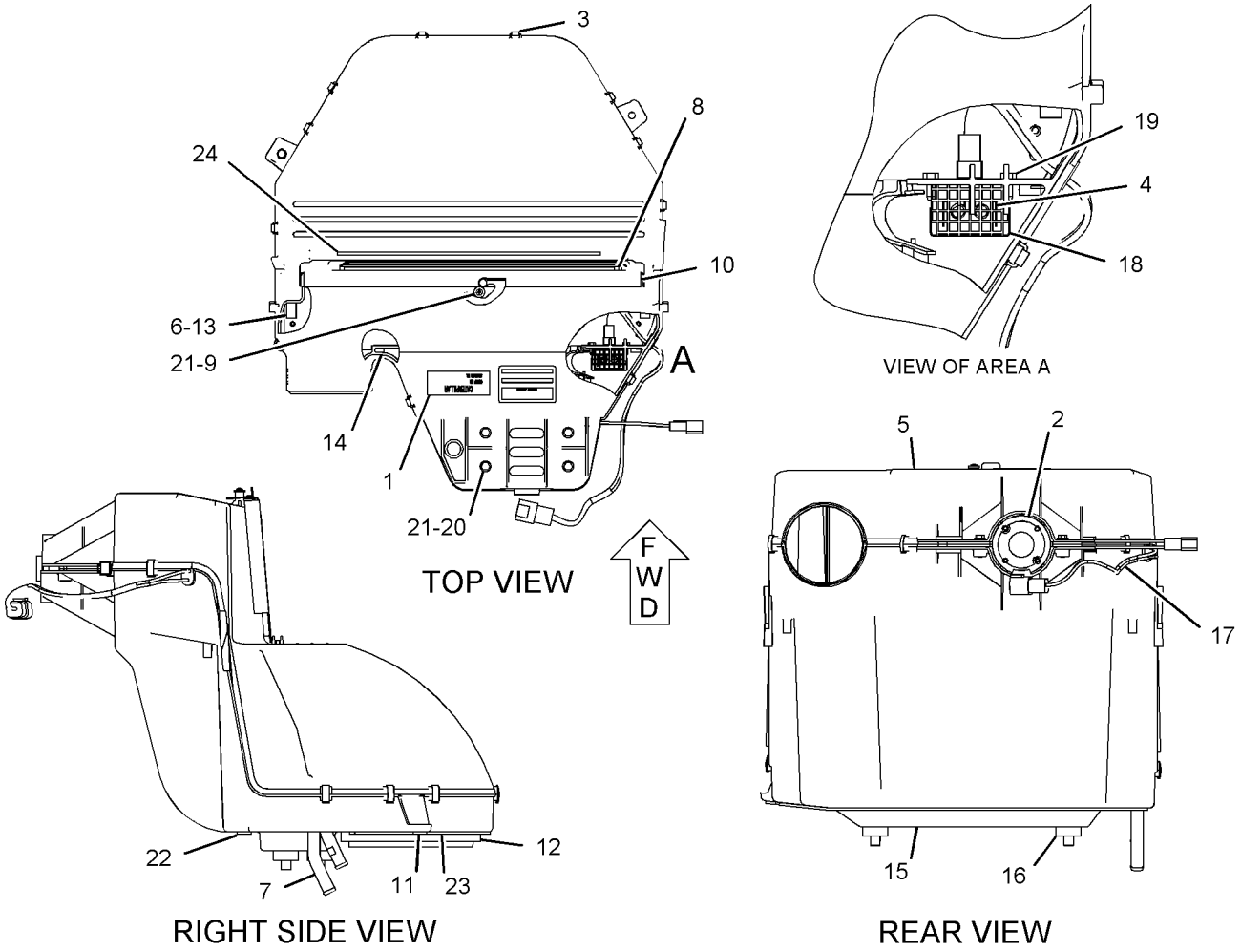

GRAPHIC #1 **<END>** g01091609

OPERATOR STATION

210-8364 HEATER GP-CAB

S/N: HLS5113-99999
PART OF 206-1800 HEATER GP-CAB
AN ATTACHMENT

SMCS-7304 **i03516083**

NOTE	REF NO	GRAPHIC REF	PART NUMBER	QTY	PART NAME 1 2 3 4 5 6 (PRODUCT LEVEL)	SEE PAGE
	1	1	**8C-3756**	1	FILM-IDENTIFICATION (CATERPILLAR)	
	2	1	**304-8965**	1	BLOWER GP-CAB	
		1	**177-9645**	1	KIT-RECEPTACLE (2-PIN)	
					(INCLUDES RECEPTACLE AS & WEDGE)	
		1	**7T-0093**	2	PIN-CONNECTOR	
	3	1	**185-4015**	11	CLIP	
	4	1	**204-9921**	1	RESISTOR AS	
	5	1	**210-7665**	1	HOUSING-TOP	
	6	1	**210-7666**	1	BAFFLE	
	7	1	**210-8402**	1	COIL AS-HEATER	
DJ		1	**5P-5688**		SEAL (1-M)	
J		1	*219-6288*	1	GASKET	
	8	1	**211-2660**	1	FILTER ELEMENT-AIR (RECIRCULATION)	
	9	1	**212-3416**	3	SCREW-PAN HEAD (8-16XO.5-IN)	
	10	1	**219-6281**	1	COVER AS	
		1	**219-6283**	1	LATCH	
		1	**6C-3680**	1	RIVET-POP	
J	11	1	*219-6284*	2	GASKET	
J	12	1	*219-6285*	1	GASKET	
J	13	1	*219-6286*	1	GASKET	
J	14	1	*219-6287*	2	GASKET	
	15	1	**219-6292**	1	HOUSING AS	
		1	**7H-3937**	4	LOCKWASHER	
M		1	**129-3178**	4	LOCKNUT (M6X1-THD)	
	17	1	**253-2470**	1	HARNESS AS-HEATER	
	18	1	**253-9510**	1	GUARD	
	19	1	**2S-3745**	2	SCREW-TAPPING (10-16XO.5-IN)	
M	20	1	**6V-7357**	4	BOLT (M6X1X25-MM)	
	21	1	**8T-4205**	5	WASHER-HARD (7.2X14.5X2-MM THK)	
D	22	1	**5P-5655**		SEAL (0.5-M)	
DJ	23	1	**5P-5637**		SEAL (0.8-M)	
EJ	24	1	**8C-7524**		SEAL (35-CM)	
					AVAILABLE REPAIR KIT(S):	
J			**285-9109**	1	KIT-SEAL (HVAC)	

D-ORDER BY THE METER
E-ORDER BY THE CENTIMETER
J-KIT MARKED J SERVICES PARTS MARKED J
M-METRIC PART

210-8364 HEATER GP-CAB *(contd.)* i03516083

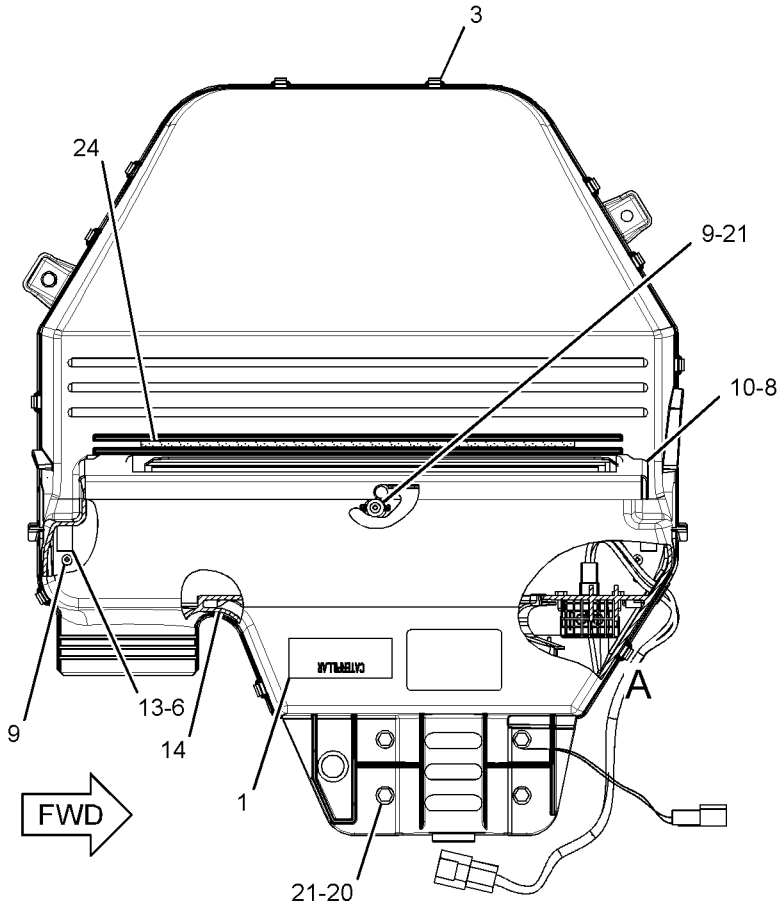

TOP VIEW

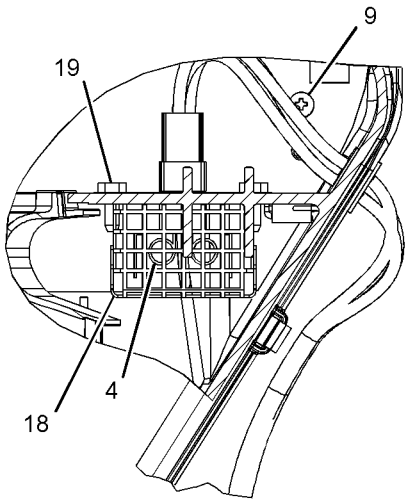

VIEW OF AREA A

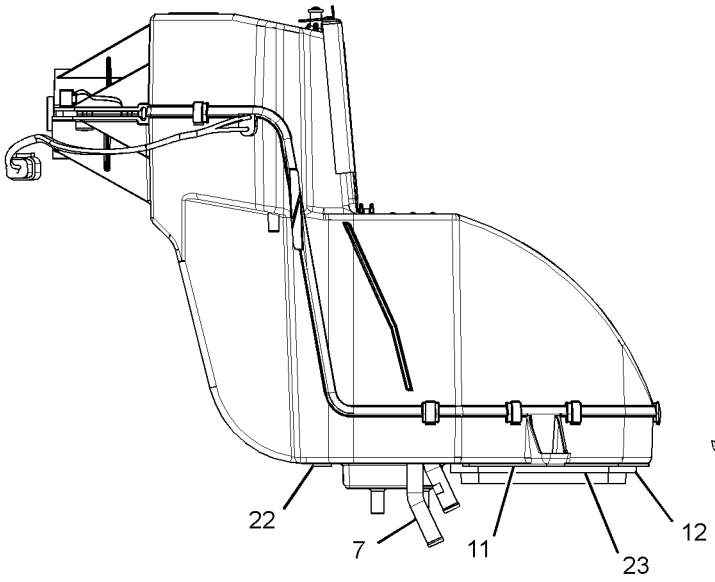

FRONT VIEW

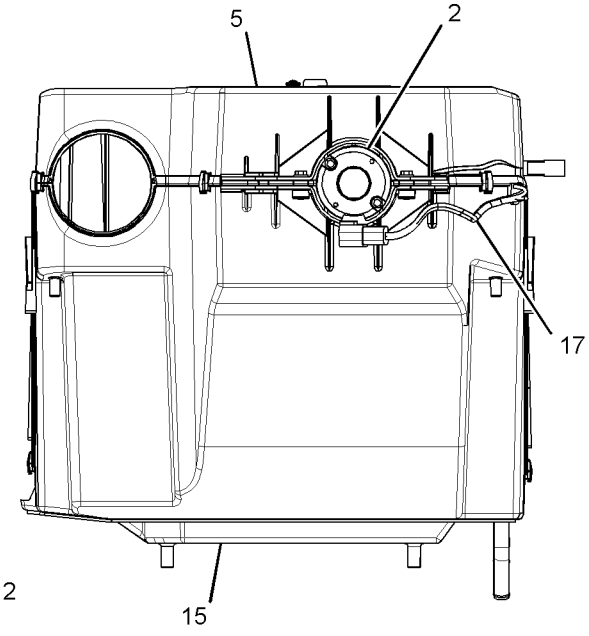

RIGHT SIDE VIEW

GRAPHIC #1 **<END>** g01460989

OPERATOR STATION

211-4253 INSTALLATION GP-MONITOR–ADVISOR

S/N: HLS1-99999

PART OF 291-9205 BACKHOE AR-EXTENDABLE STICK, 291-9204 BACKHOE AR-STANDARD STICK, 246-8045 GRADE CONTROL AR-LASER AN ATTACHMENT

SMCS-1408, 7490 **i03400770**

NOTE	REF NO	GRAPHIC REF	PART NUMBER	QTY	PART NAME 1 2 3 4 5 6 (PRODUCT LEVEL)	SEE PAGE
M	1	1	**136-4184**	4	BOLT-SOCKET HEAD (M8X1.25X40-MM)	
	3	1	**214-4293**	1	SENSOR AS-POSITION (BOOM SWING)	
	4	1	**217-8432**	1	COUPLING	
Y	5	1	*227-7374*	1	ELECTRONICS GP-MONITOR (ADVISOR)	107
Y	6	1	*229-8743*	1	BRACKET GP-MOUNTING (MONITOR)	791
	7	1	**246-8046**	1	HARNESS AS-CONTROL (ACCUGRADE, SITE REFERENCE)	
	8	1	**249-5652**	1	SENSOR AS-ANGLE (AS410TC)	
Y	9	1	*251-1222*	1	MOUNTING GP-MONITOR (GRADE CONTROL)	877
Y	10	1	*251-3200*	1	MOUNTING GP-SENSOR (ANGLE)	127
	11	1	**3S-2093**	1	STRAP-CABLE	
M	12	1	**8T-4171**	4	BOLT (M6X1X12-MM)	
	13	1	**8T-4205**	4	WASHER-HARD (7.2X14.5X2-MM THK)	
	14	1	**8T-4224**	4	WASHER-HARD (8.8X16X2-MM THK)	
	16	1	**4P-8134**	1	CLIP	
	17	1	**5P-7958**	1	SLEEVE-CABLE SPLICE	
	18	1	**134-0143**	1	CABLE	
	19	1	**155-2255**	1	KIT-CONNECTING PLUG (12-PIN)	
					(INCLUDES PLUG AS & WEDGE)	
	20	1	**102-8801**	1	KIT-RECEPTACLE (12-PIN)	
					'(INCLUDES RECEPTACLE AS & WEDGE)	
	21	1	**8T-8737**	24	PLUG-SEAL	
FJ			*260-1447*	1	CONFIGURATION-PREMIUM	

F-NOT SHOWN
J-DLR INSTALL CONFIG:SEE IRM:EES03-01
M-METRIC PART
Y-SEPARATE ILLUSTRATION

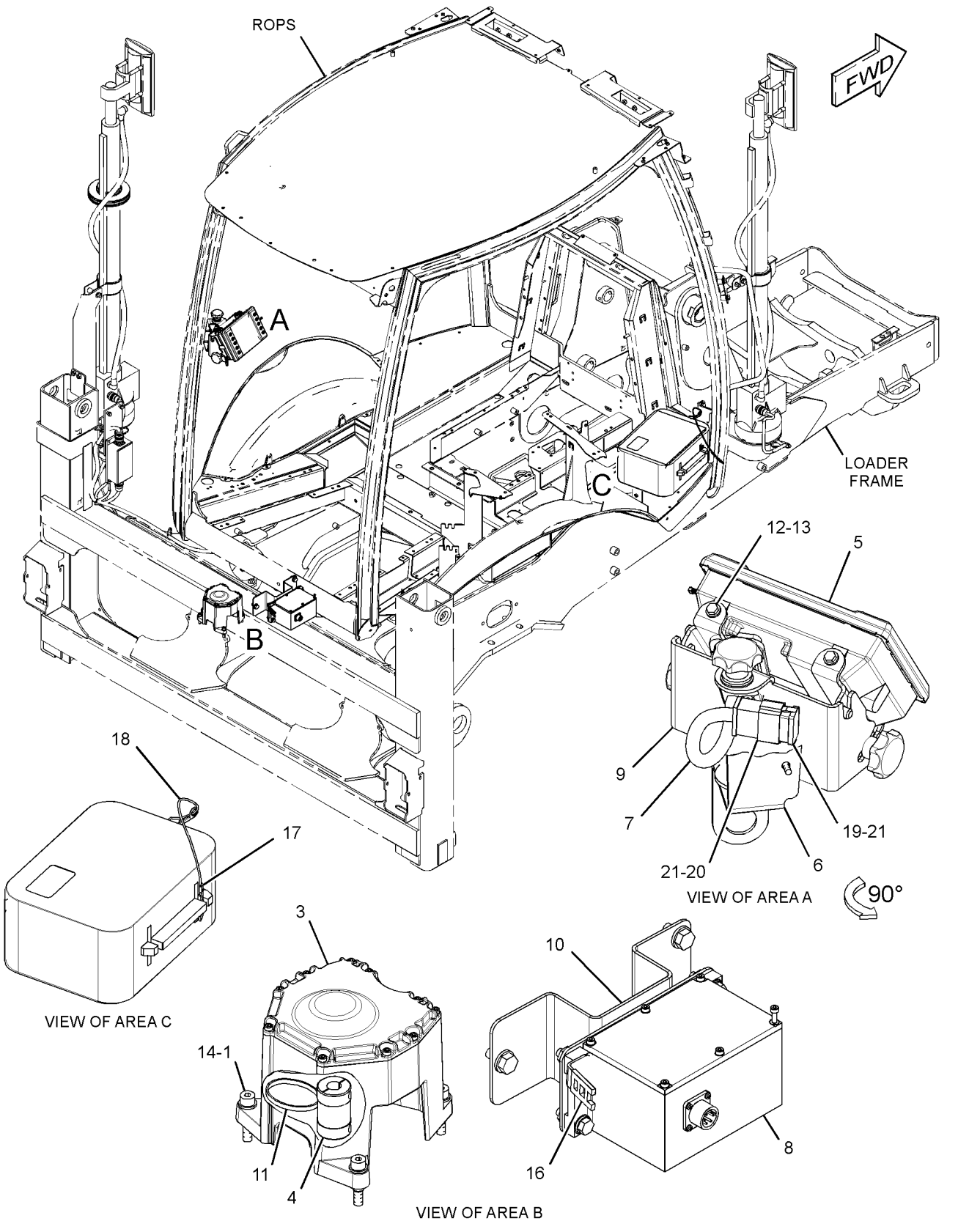

GRAPHIC #1

<END>

g01628096

OPERATOR STATION

281-7219 KIT-CAB WINDOW

S/N: HLS1-99999
AN ATTACHMENT

SMCS-7310 **i03551047**

NOTE	REF NO	GRAPHIC REF	PART NUMBER	QTY	PART NAME 1 2 3 4 5 6 (PRODUCT LEVEL)	SEE PAGE
	1	1	**8S-7803**	2	RING-RETAINING	
	2	1	**172-4211**	8	SPACER (10.5X22X50.8-MM THK)	
Y	3	1	*229-0300*	1	WINDOW GP-CAB (REAR)	913
	4	1	**129-5256**	4	BUSHING	
	5	1	**129-5257**	8	BUSHING	
M	6	1	**131-3987**	8	SCREW (M4X0.7X12-MM)	
	7	1	**159-4945**	2	KEEPER	
Y	8	1	**205-9619**	1	WINDOW GP-CAB (UPPER, LH)	909
	9	1	**205-9622**	1	GLASS (LOWER, LH)	
Y	10	1	**205-9628**	1	WINDOW GP-CAB (UPPER, RH)	911
	11	1	**205-9631**	1	GLASS (LOWER, RH)	
	12	1	**206-1590**	4	PIN	
	13	1	**159-4946**	2	KEEPER	

M-METRIC PART
Y-SEPARATE ILLUSTRATION

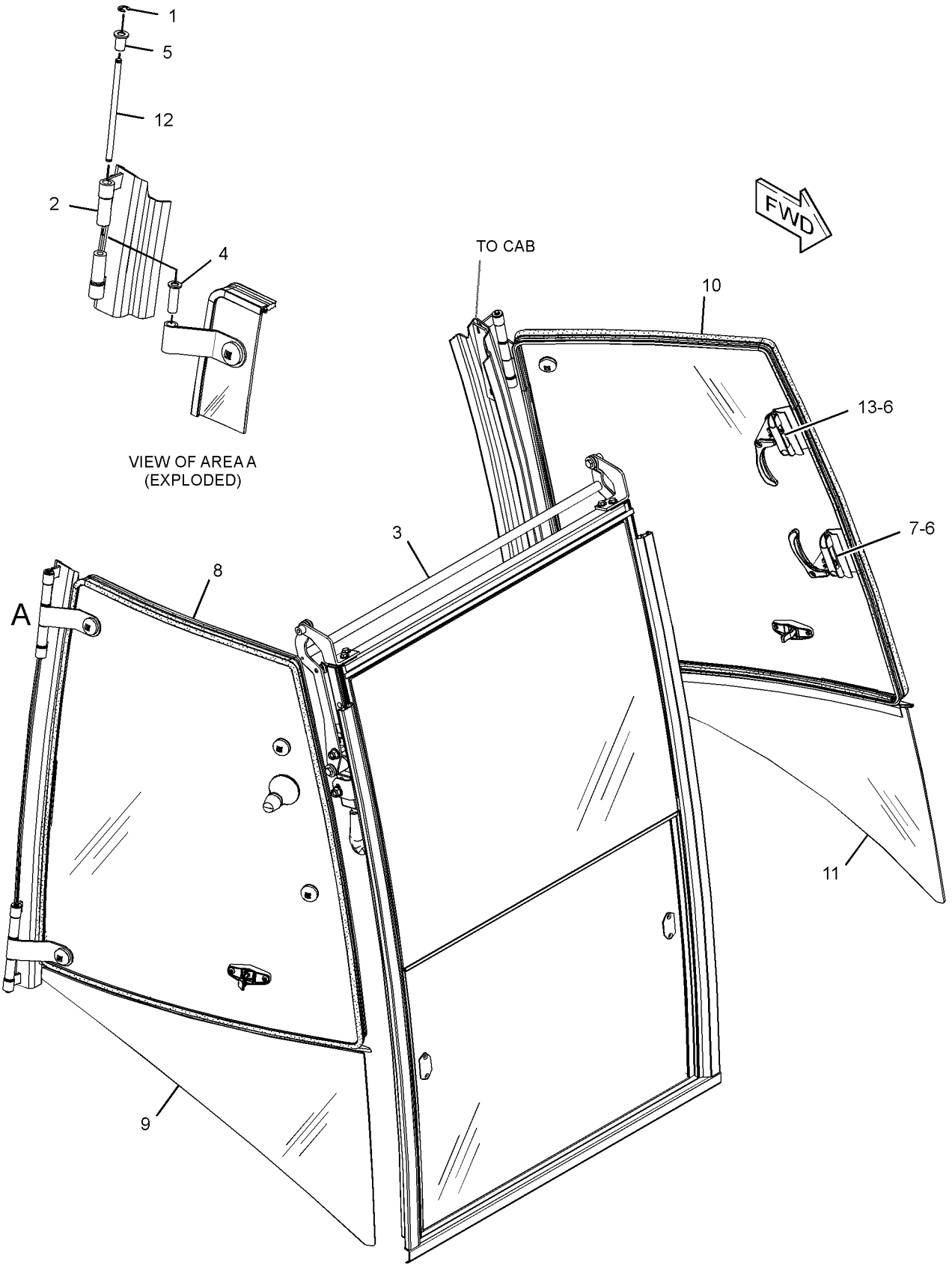

GRAPHIC #1

<END>

g01861653

OPERATOR STATION

299-6985 LATCH GP-CAB DOOR & WINDOW–RH

S/N: HLS1-99999

PART OF 205-9619, 205-9628 WINDOW GP-CAB, 205-9595 WINDOW GP-DOOR

AN ATTACHMENT

SMCS-7308, 7310 **i02752222**

NOTE	REF NO	GRAPHIC REF	PART NUMBER	QTY	PART NAME 1 2 3 4 5 6 (PRODUCT LEVEL)	SEE PAGE
M	1	1	**161-6984**	1	SCREW-TRUSS HEAD (M5X0.8X20-MM)	
	2	1	**161-6987**	1	WASHER-HARD (5.2X16X1.5-MM THK)	
	3	1	**161-9294**	1	SPRING-FLAT WIRE	
M	4	1	**162-6556**	1	LOCKNUT (M6X1-THD)	
M	5	1	**5C-2874**	1	NUT (M5X0.8-THD)	
					PARTS SHOWN IN GRAPHIC(S) WITHOUT A REFERENCE NUMBER ARE NOT SERVICED SEPARATELY	

M-METRIC PART

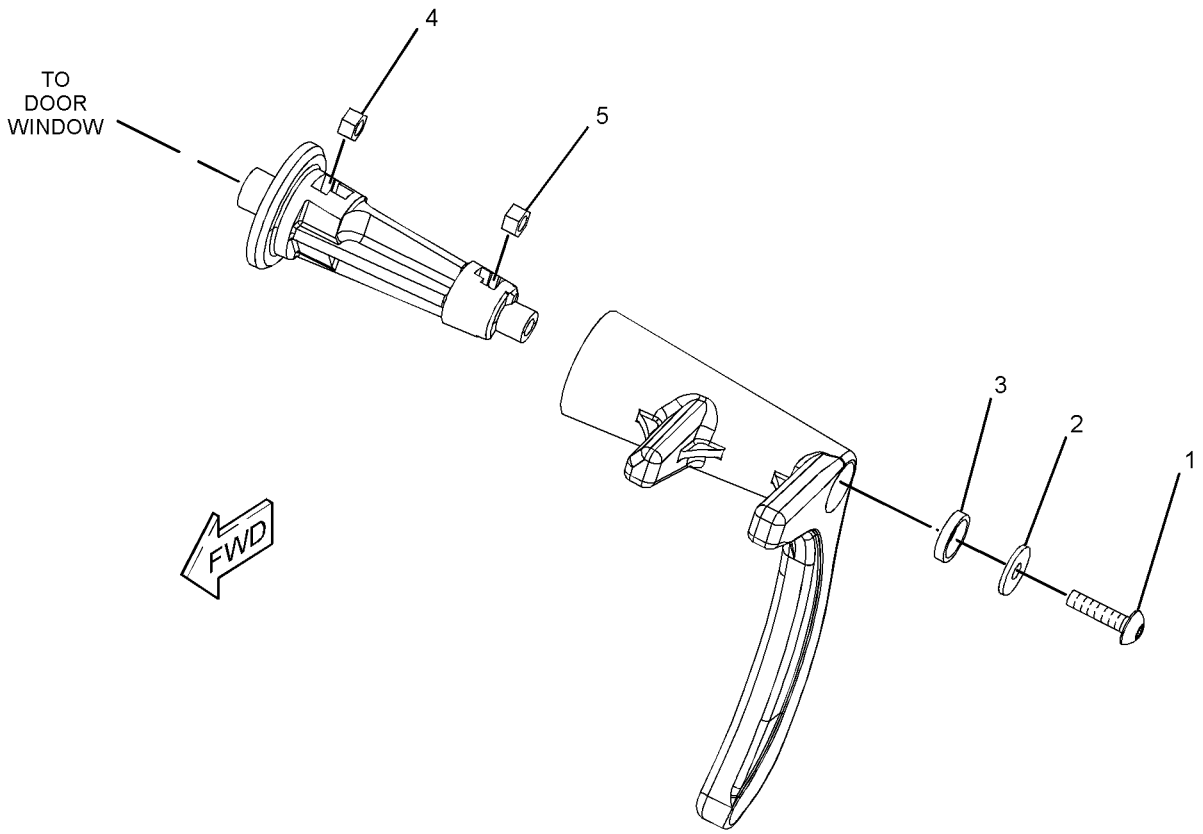

GRAPHIC #1 **<END>** g01384222

OPERATOR STATION

299-6986 LATCH GP-CAB DOOR & WINDOW

S/N: HLS1-99999

PART OF 205-9619, 205-9628 WINDOW GP-CAB, 205-9585 WINDOW GP-DOOR

AN ATTACHMENT

SMCS-7308, 7310 **i02752226**

NOTE	REF NO	GRAPHIC REF	PART NUMBER	QTY	PART NAME 1 2 3 4 5 6 (PRODUCT LEVEL)	SEE PAGE
M	1	1	**161-6984**	1	SCREW-TRUSS HEAD (M5X0.8X20-MM)	
	2	1	**161-6987**	1	WASHER-HARD (5.2X16X1.5-MM THK)	
	3	1	**161-9294**	1	SPRING-FLAT WIRE	
M	4	1	**162-6556**	1	LOCKNUT (M6X1-THD)	
M	5	1	**5C-2874**	1	NUT (M5X0.8-THD)	
					PARTS SHOWN IN GRAPHIC(S) WITHOUT A REFERENCE NUMBER ARE NOT SERVICED SEPARATELY	

M-METRIC PART

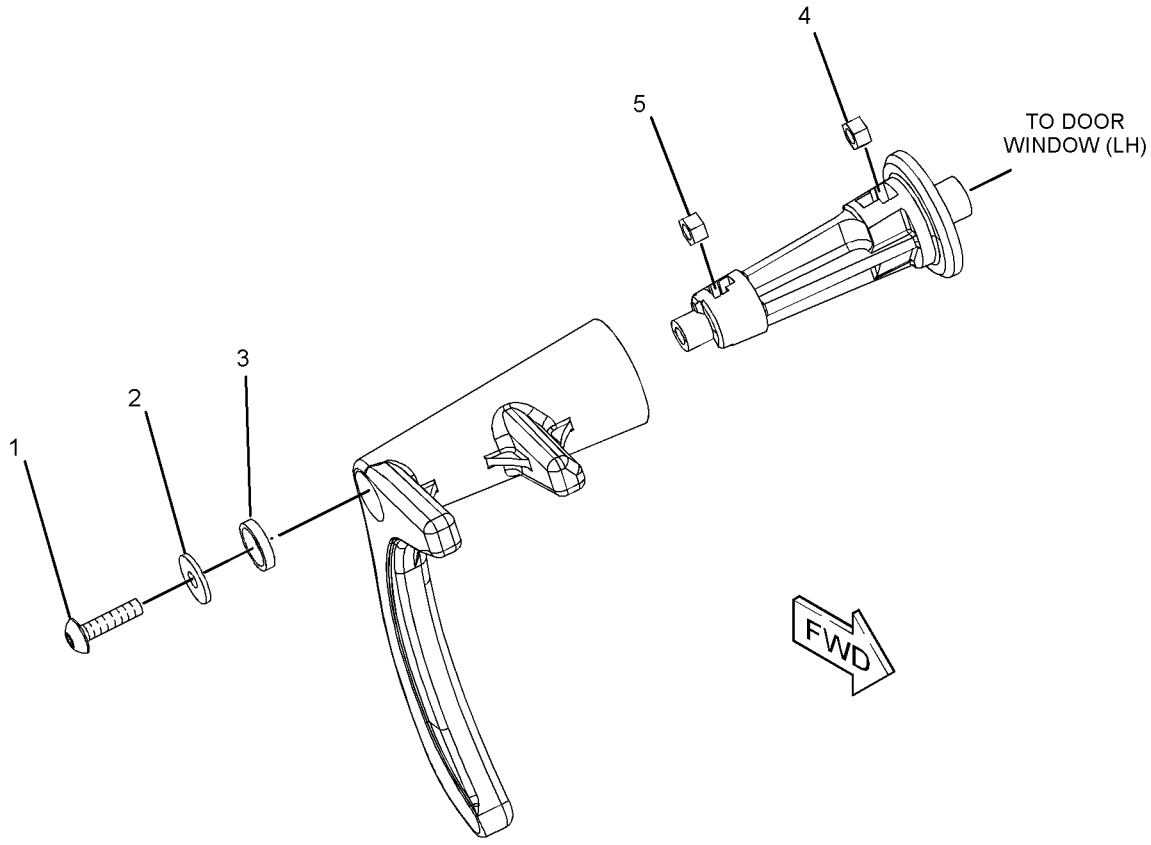

GRAPHIC #1 **<END>** g01384201

OPERATOR STATION

269-3248 LATCH GP-CONSOLE

S/N: HLS1-99999
PART OF 269-3247 MOUNTING GP-BACKHOE CONTROL
AN ATTACHMENT

SMCS-5258 **i02446496**

NOTE	REF NO	GRAPHIC REF	PART NUMBER	QTY	PART NAME 1 2 3 4 5 6 (PRODUCT LEVEL)	SEE PAGE
	1	1	**8T-4742**	2	END-YOKE ROD	
	2	1	**8T-4744**	2	PIN AS-SPRING	
	3	1	**110-5602**	1	KNOB	
	4	1	**180-9160**	1	LATCH AS	
	5	1	**183-4911**	2	PLATE	
	6	1	**183-5443**	1	LATCH AS	
	7	1	**183-6085**	2	BEARING	
	8	1	**268-5902**	1	LEVER AS	
	9	1	**268-5903**	2	ROD	
M	10	1	**099-3649**	1	BOLT (M8X1.25X40-MM)	
	11	1	**156-0283**	3	WASHER-HARD (8.4X35X2.5-MM THK)	
	12	1	**183-4912**	1	SLEEVE	
M	13	1	**5C-2890**	2	NUT (M6X1-THD)	

M-METRIC PART

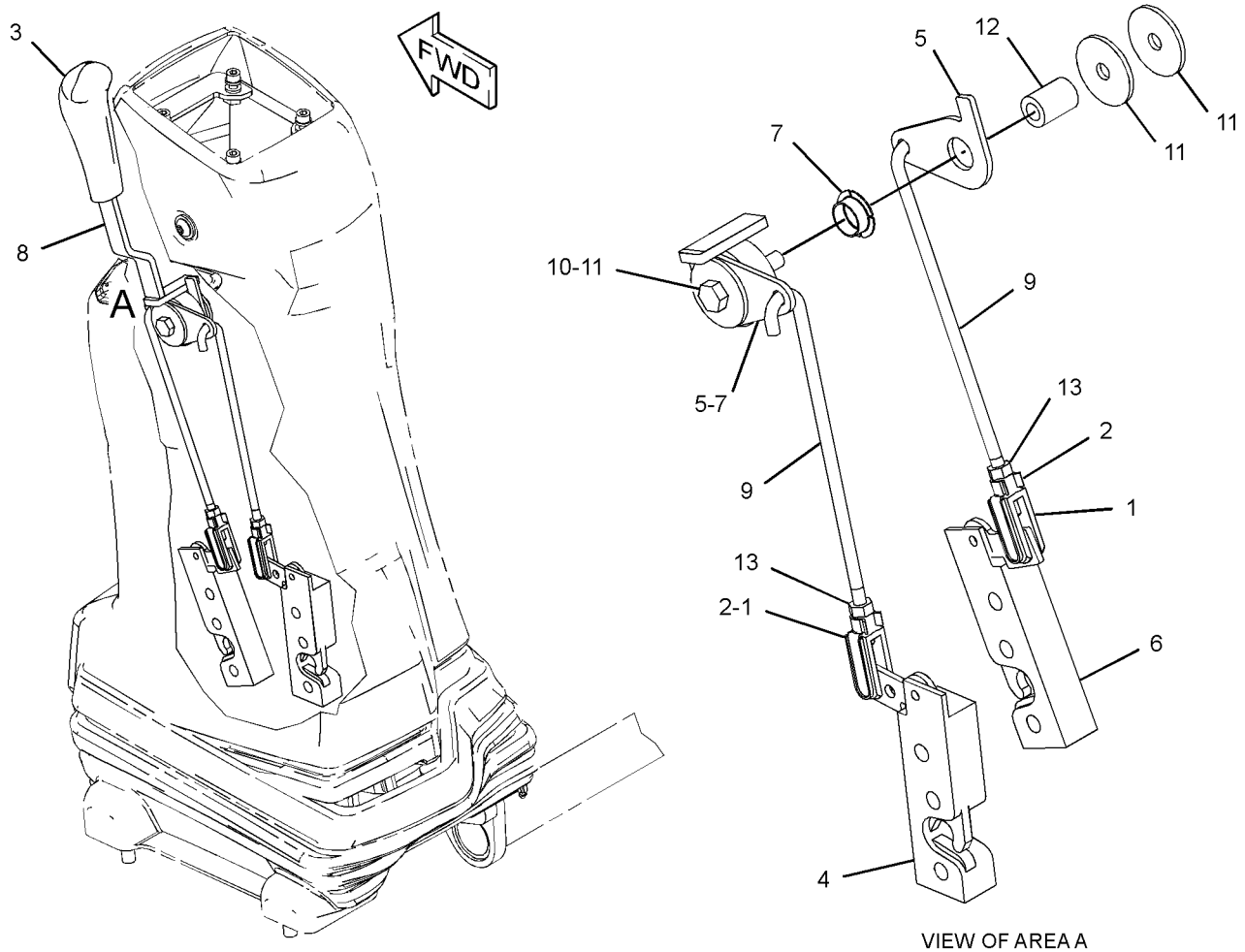

VIEW OF AREA A

GRAPHIC #1 **<END>** g01211340

OPERATOR STATION

209-3367 LEVER GP-GOVERNOR–HANDHELD

S/N: HLS1-99999

PART OF 206-1640 CONTROL GP-GOVERNOR

SMCS-1265 **i02124988**

NOTE	REF NO	GRAPHIC REF	PART NUMBER	QTY	PART NAME 1 2 3 4 5 6 (PRODUCT LEVEL)	SEE PAGE
	1	1	**8T-4742**	1	END-YOKE ROD	
	2	1	**8T-4744**	1	PIN AS-SPRING	
	3	1	**209-3366**	1	CABLE AS	
	4	1	**219-0343**	1	LEVER AS	
M	5	1	**8T-4971**	1	BOLT (M6X1X30-MM)	
M	6	1	**129-3178**	1	LOCKNUT (M6X1-THD)	

M-METRIC PART

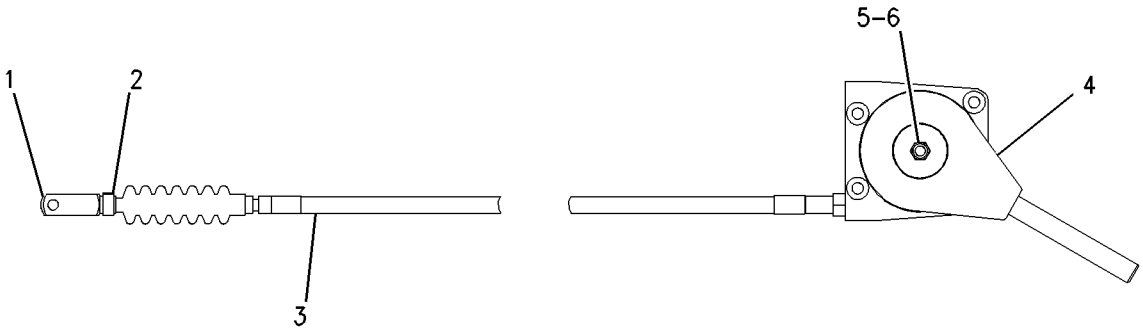

GRAPHIC #1 **<END>** g00743371

OPERATOR STATION

209-4703 LINER GP-CAB

S/N: HLS1-1615

PART OF 269-2125, 269-2126, 269-2127 CAB AR-ENCLOSED ROPS

AN ATTACHMENT

SMCS-7329 **i03528069**

NOTE	REF NO	GRAPHIC REF	PART NUMBER	QTY	PART NAME 1 2 3 4 5 6 (PRODUCT LEVEL)	SEE PAGE
	1	1	**8E-1118**	1	ANTENNA AS	
	2	1	**8R-6111**	1	CABLE AS-COAXIAL	
	3	1	**9U-8263**	1	COVER	
	4	1	**084-4277**	1	LAMP GP-DOME (12-VOLT)	
		1	**210-8754**	1	LAMP (12-VOLT)	
M	5	1	**113-0920**	8	BOLT-SOCKET HEAD (M4X0.7X35-MM)	
	6	1	**169-7291**	2	COVER-SPEAKER	
	7	1	**209-4704**	1	LINER AS-CAB	
	8	1	**209-4705**	1	COVER	
	9	1	**209-4716**	2	PLATE	
	10	1	**229-6052**	2	SPACER (9.7X12.7X7.5-MM THK)	
	11	1	**262-9567**	2	SPEAKER	
	12	1	**282-7832**	1	GROMMET	
	13	1	**282-7835**	1	PLATE	
M	14	1	**121-9870**	5	SCREW-MACHINE (M6X1X40-MM)	
M	15	1	**123-0707**	8	SCREW-HEX SOCKET (M4X0.7X20-MM)	
M	16	1	**8T-4181**	2	BOLT (M6X1X20-MM)	
	17	1	**9X-2038**	2	WASHER (7X19X2-MM THK)	
	18	1	**9X-8256**	2	WASHER (6.6X12X2-MM THK)	
	19	1	**132-2249**	1	SPACER (7.4X12.7X24-MM THK)	

M-METRIC PART

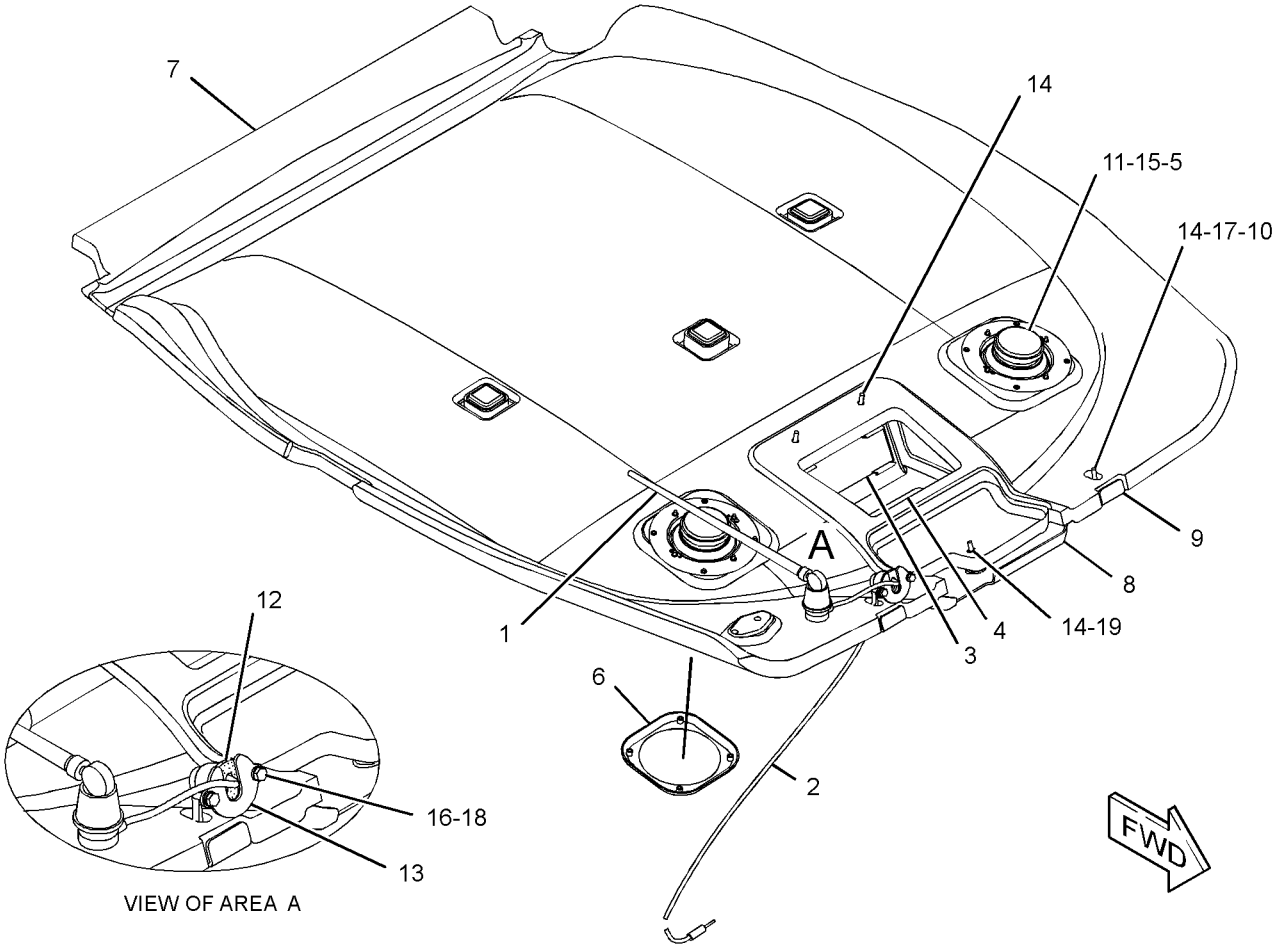

GRAPHIC #1 **<END>** g01282191

OPERATOR STATION

209-4703 LINER GP-CAB

S/N: HLS1616-99999

PART OF 269-2125, 269-2126, 269-2127 CAB AR-ENCLOSED ROPS AN ATTACHMENT

SMCS-7329 **i03070260**

NOTE	REF NO	GRAPHIC REF	PART NUMBER	QTY	PART NAME 1 2 3 4 5 6 (PRODUCT LEVEL)	SEE PAGE
	1	1	**8E-1118**	1	ANTENNA AS	
	2	1	**8R-6111**	1	CABLE AS-COAXIAL	
	3	1	**9U-8263**	1	COVER	
	4	1	**084-4277**	1	LAMP GP-DOME (12-VOLT)	
		1	**210-8754**	1	LAMP (12-VOLT)	
M	5	1	**113-0920**	8	BOLT-SOCKET HEAD (M4X0.7X35-MM)	
	6	1	**169-7291**	2	COVER-SPEAKER	
	7	1	**209-4704**	1	LINER AS-CAB	
		1	**263-5781**	2	PLATE AS	
					(EACH INCLUDES)	
		1	**205-7047**	8	INSERT-THREADED (M4X0.7-THD)	
C	8	1	**292-5773**	1	COVER	
	9	1	**209-4716**	2	PLATE	
C	10	1	**145-0981**	4	SPACER (8.5X12.7X18-MM)	
	11	1	**262-9567**	2	SPEAKER	
	12	1	**282-7832**	1	GROMMET	
	13	1	**282-7835**	1	PLATE	
M	14	1	**121-9870**	5	SCREW-MACHINE (M6X1X40-MM)	
M	15	1	**123-0707**	8	SCREW-HEX SOCKET (M4X0.7X20-MM)	
M	16	1	**8C-3798**	2	BOLT-LOCKING (M6X1X30-MM)	
	17	1	**9X-2038**	3	WASHER (7X19X2-MM THK)	
	18	1	**9X-8256**	2	WASHER (6.6X12X2-MM THK)	
	19	1	**132-2249**	1	SPACER (7.4X12.7X24-MM THK)	
	20	1	**124-6569**	1	FASTENER	

C-CHANGE FROM PREVIOUS TYPE
M-METRIC PART

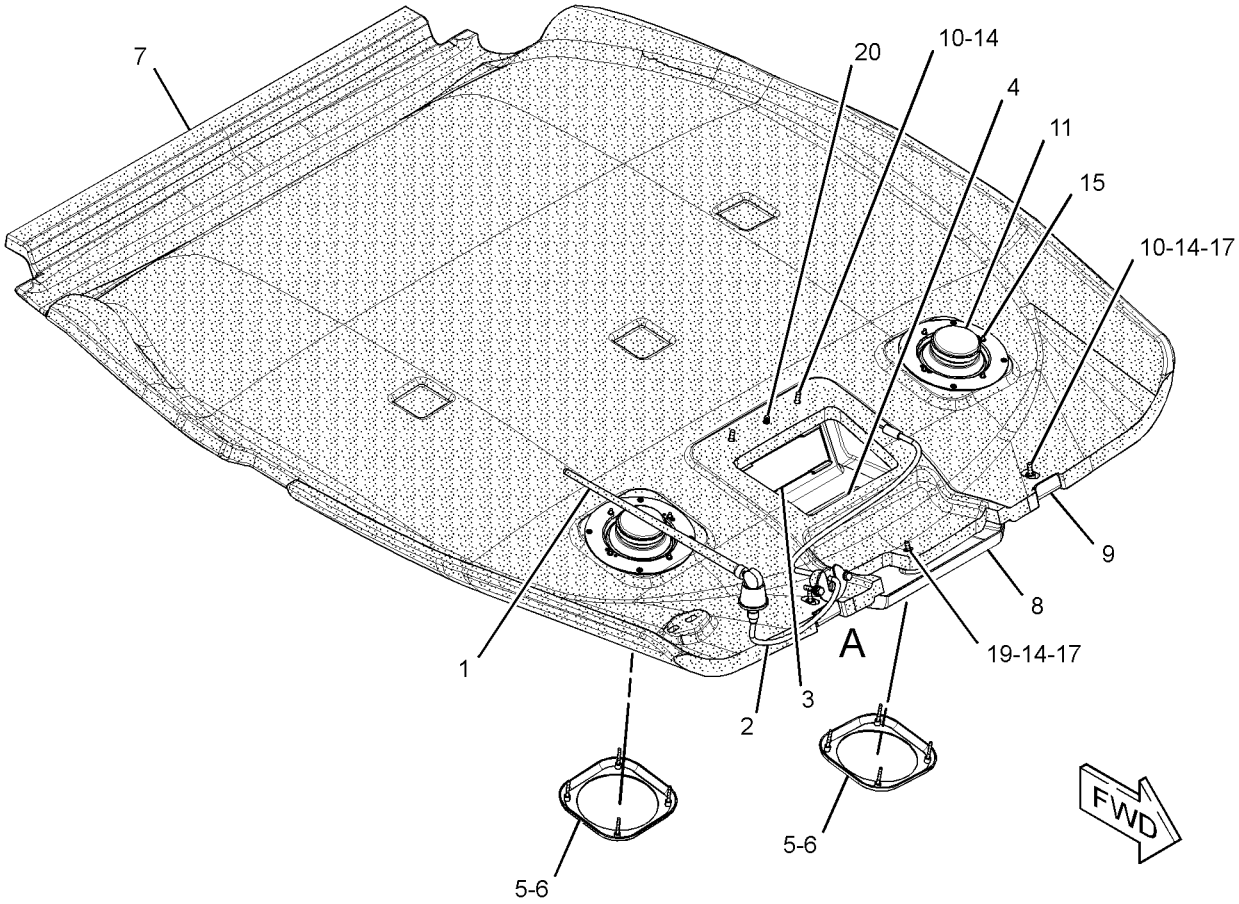

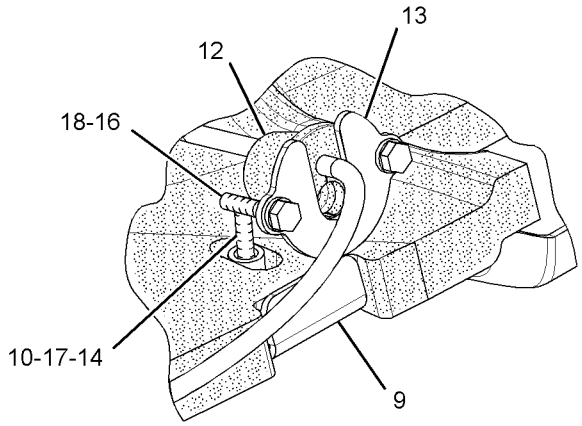

VIEW OF AREA A

GRAPHIC #1 **<END>** g01595675

OPERATOR STATION

211-0072 LINES GP-HEATER

S/N: HLS1-99999

PART OF 269-2125, 269-2126 CAB AR-ENCLOSED ROPS

AN ATTACHMENT

SMCS-1812 **i03532220**

NOTE	REF NO	GRAPHIC REF	PART NUMBER	QTY	PART NAME 1 2 3 4 5 6 (PRODUCT LEVEL)	SEE PAGE
M	1	1	**8T-4137**	3	BOLT (M10X1.5X20-MM)	
	2	1	**5D-1026**	8	CLAMP-HOSE	
	3	1	**6P-8855**	1	TUBE	
	4	1	**9M-4814**	1	CONNECTOR-HOSE	
	5	1	**134-3856**	1	ELBOW	
	6	1	**3E-4321**	4	CLIP	
	7	1	**7K-1181**	3	STRAP-CABLE	
	8	1	**8T-4121**	3	WASHER-HARD (11X21X2.5-MM THK)	
E	9	1	**5P-0767**		HOSE (22-CM)	
E	9A	1	**5P-0767**		HOSE (65-CM)	
E	9B	1	**5P-0767**		HOSE (205-CM)	
E	9C	1	**5P-0767**		HOSE (260-CM)	

E-ORDER BY THE CENTIMETER
M-METRIC PART

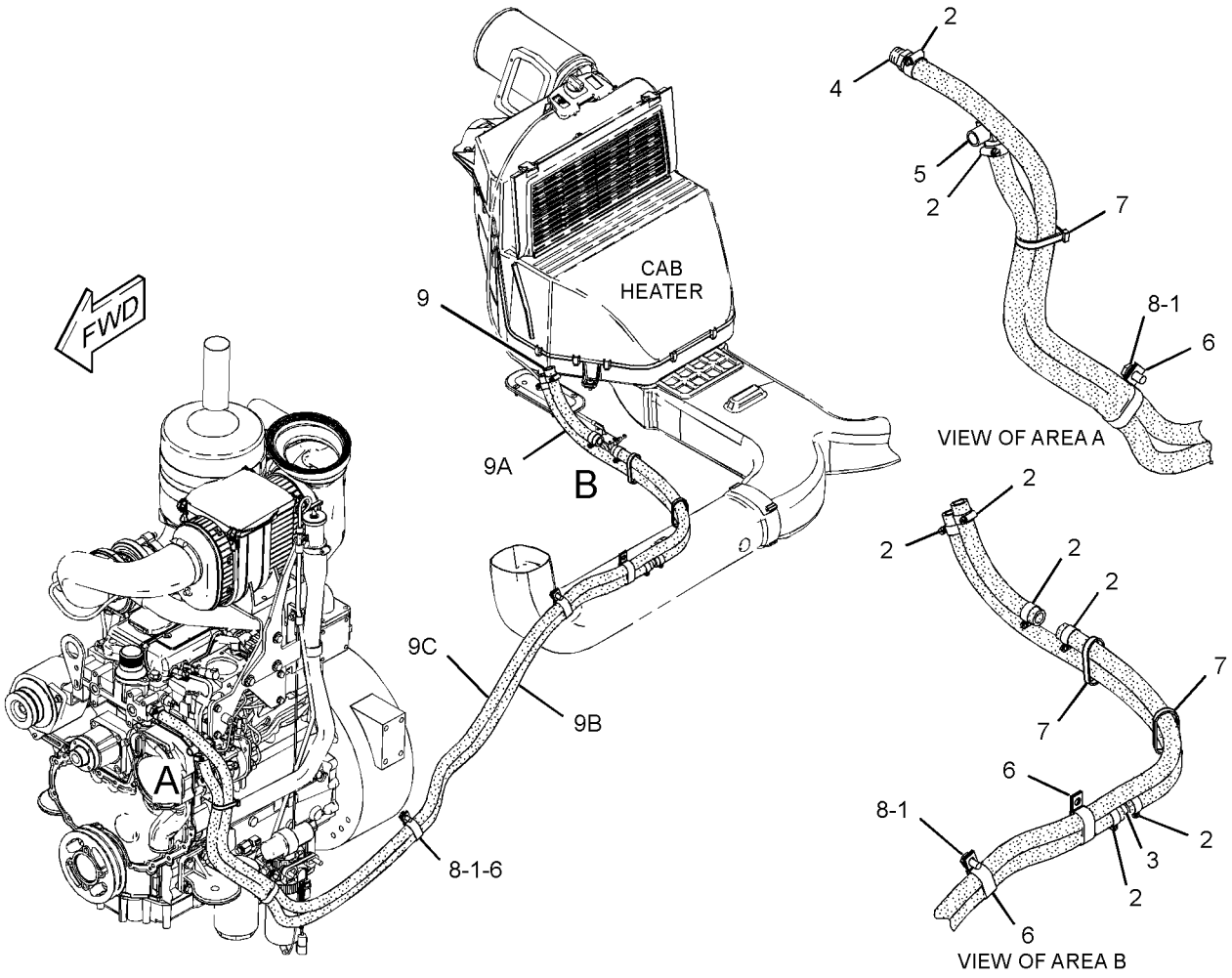

GRAPHIC #1 **<END>** g01860754

OPERATOR STATION

211-0071 LINES GP-HEATER & AIR COND

S/N: HLS1-99999
PART OF 269-2127 CAB AR-ENCLOSED ROPS
AN ATTACHMENT

SMCS-1380, 1808, 1812 **i03516084**

NOTE	REF NO	GRAPHIC REF	PART NUMBER	QTY	PART NAME 1 2 3 4 5 6 (PRODUCT LEVEL)	SEE PAGE
E	1	1	**5P-0767**		HOSE (22-CM)	
E	1A	1	**5P-0767**		HOSE (65-CM)	
E	1B	1	**5P-0767**		HOSE (205-CM)	
E	1C	1	**5P-0767**		HOSE (260-CM)	
	5	1	**3S-2093**	1	STRAP-CABLE	
	6	1	**6P-8855**	1	TUBE	
	7	1	**7K-1181**	8	STRAP-CABLE	
	8	1	**9M-4814**	1	CONNECTOR-HOSE	
	9	1	**105-9411**	1	SUPPORT	
	10	1	**130-9984**	2	CLIP	
	11	1	**134-3856**	1	ELBOW	
	12	1	**289-6021**	1	PLATE	
	13	1	**289-6018**	2	U-BOLT	
	14	1	**170-0235**	1	ACCUMULATOR-REFRIGERANT (AIR CONDITIONER)	
I	15	1	**214-3735**	1	HOSE AS	
I	16	1	**214-3736**	1	HOSE AS	
I	17	1	**214-3737**	1	HOSE AS	
I	18	1	**214-3738**	1	HOSE AS	
	19	1	**214-3739**	1	HOSE AS	
	21	1	**255-0800**	1	PLATE	
	22	1	**283-4237**	1	RECEIVER-REFRIGERANT DRYER	
		1	**3E-0068**	1	TUBE AS-REFRIGERANT ORIFICE	
	23	1	**109-1633**	1	CLIP (SLOT)	
	24	1	**109-1634**	1	CLIP (TAB)	
M	25	1	**208-9293**	2	BOLT-FLANGE HEAD (M10X1.5X30-MM)	
	26	1	**3E-4321**	4	CLIP	
	27	1	**5D-1026**	8	CLAMP-HOSE	
	28	1	**5K-5338**	1	CLIP	
	29	1	**2K-4973**	4	LOCKNUT (3/8-16-THD)	
	30	1	**8T-4121**	9	WASHER-HARD (11X21X2.5-MM THK)	
M	31	1	**8T-4136**	2	BOLT (M10X1.5X25-MM)	
M	32	1	**8T-4137**	3	BOLT (M10X1.5X20-MM)	
M	33	1	**8T-4139**	1	BOLT (M12X1.75X30-MM)	
M	34	1	**8T-4189**	1	BOLT (M8X1.25X20-MM)	
	35	1	**8T-4223**	1	WASHER-HARD (13.5X25.5X3-MM THK)	
	36	1	**8T-4224**	1	WASHER-HARD (8.8X16X2-MM THK)	
	37	1	**9M-8406**	1	CLIP	
	38	1	**9X-7380**	2	SEAL-O-RING	
	39	1	**9X-7381**	3	SEAL-O-RING	
	40	1	**9X-7382**	1	SEAL-O-RING	
	41	1	**9X-7383**	2	SEAL-O-RING	
	42	1	**132-5789**	1	CLIP	

E-ORDER BY THE CENTIMETER
I-REFER TO HYDRAULIC INFORMATION SYSTEM
M-METRIC PART

211-0071 **LINES GP-HEATER & AIR COND** *(contd.)* **i03516084**

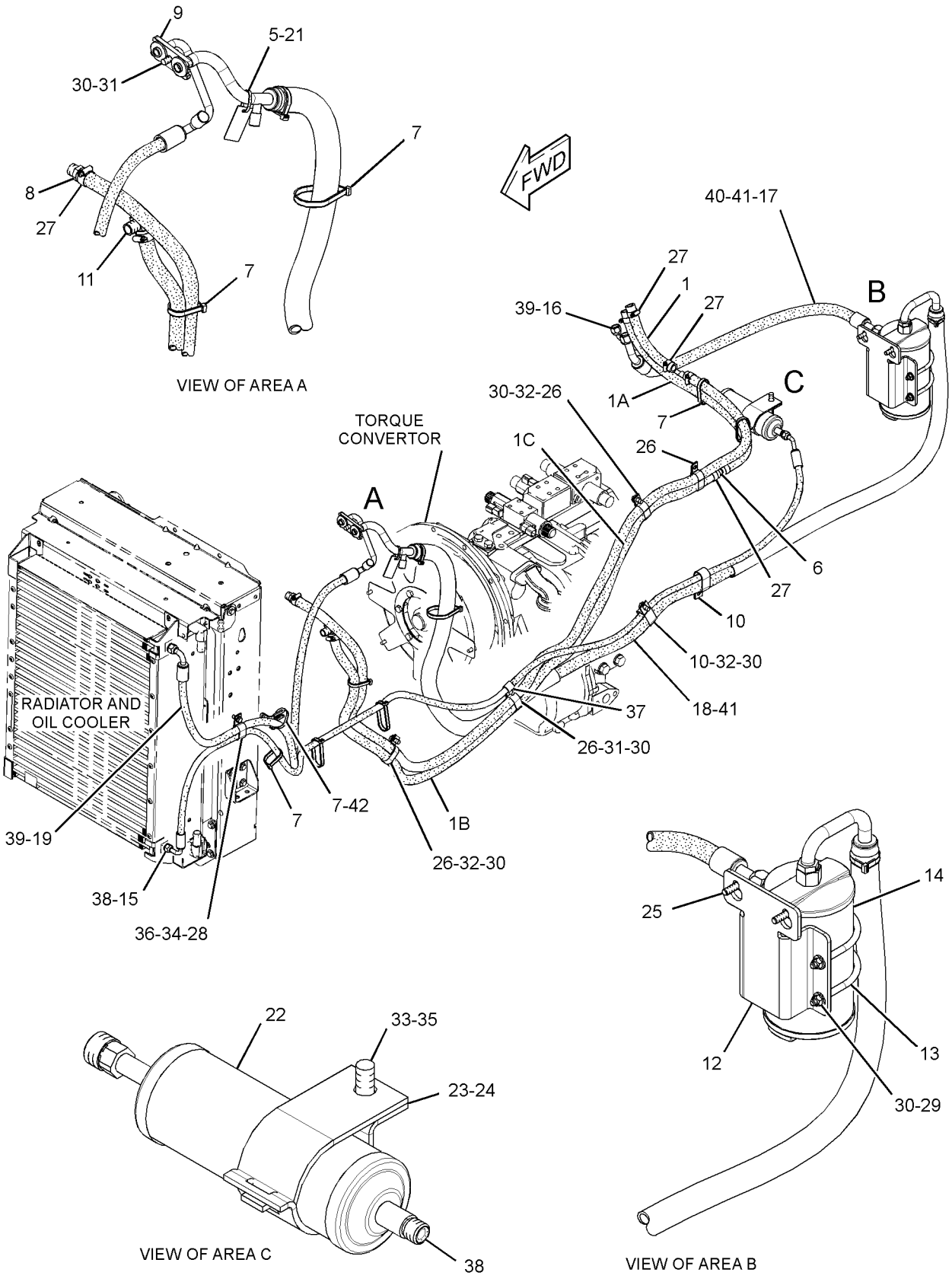

GRAPHIC #1 **<END>** g01343470

OPERATOR STATION

205-9578 MIRROR GP-REAR VIEW—INTERIOR

S/N: HLS1-99999

PART OF 269-2125, 269-2126, 269-2127 CAB AR-ENCLOSED ROPS

AN ATTACHMENT

SMCS-7319 **i02357018**

NOTE	REF NO	GRAPHIC REF	PART NUMBER	QTY	PART NAME 1 2 3 4 5 6 (PRODUCT LEVEL)	SEE PAGE
	1	1	**199-0929**	1	MIRROR AS	
	2	1	**096-6166**	2	WASHER-HARD (4.5X9X1-MM THK)	
M	3	1	**153-8004**	2	BOLT-SOCKET HEAD (M4X0.7X35-MM)	

M-METRIC PART

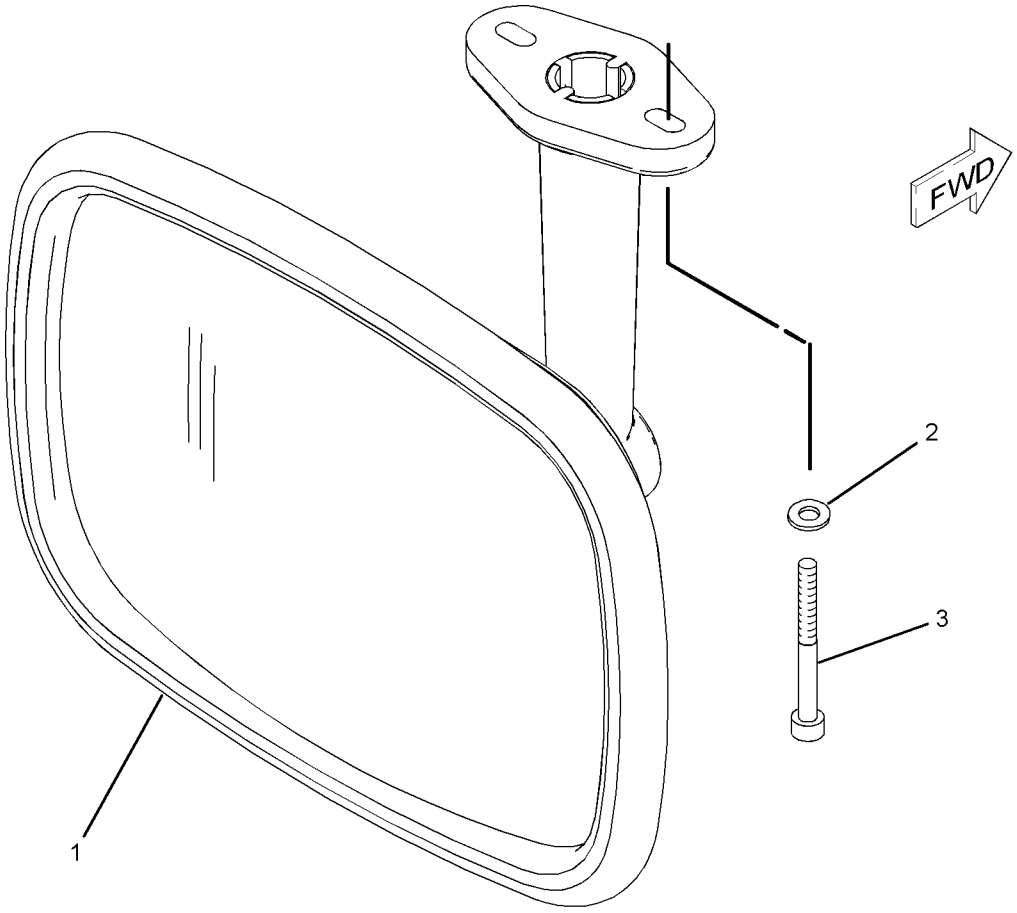

GRAPHIC #1 **<END>** g01080519

OPERATOR STATION

259-6276 MIRROR GP-REAR VIEW—INTERIOR

S/N: HLS1-99999
PART OF 269-2123, 269-2124 CANOPY AR-OPEN ROPS
AN ATTACHMENT

SMCS-7319 **i02380434**

NOTE	REF NO	GRAPHIC REF	PART NUMBER	QTY	PART NAME 1 2 3 4 5 6 (PRODUCT LEVEL)	SEE PAGE
M	1	1	**8C-4982**	2	BOLT-SOCKET HEAD (M4X0.7X20-MM)	
	2	1	**199-0929**	1	MIRROR AS	
	3	1	**096-6166**	2	WASHER-HARD (4.5X9X1-MM THK)	

M-METRIC PART

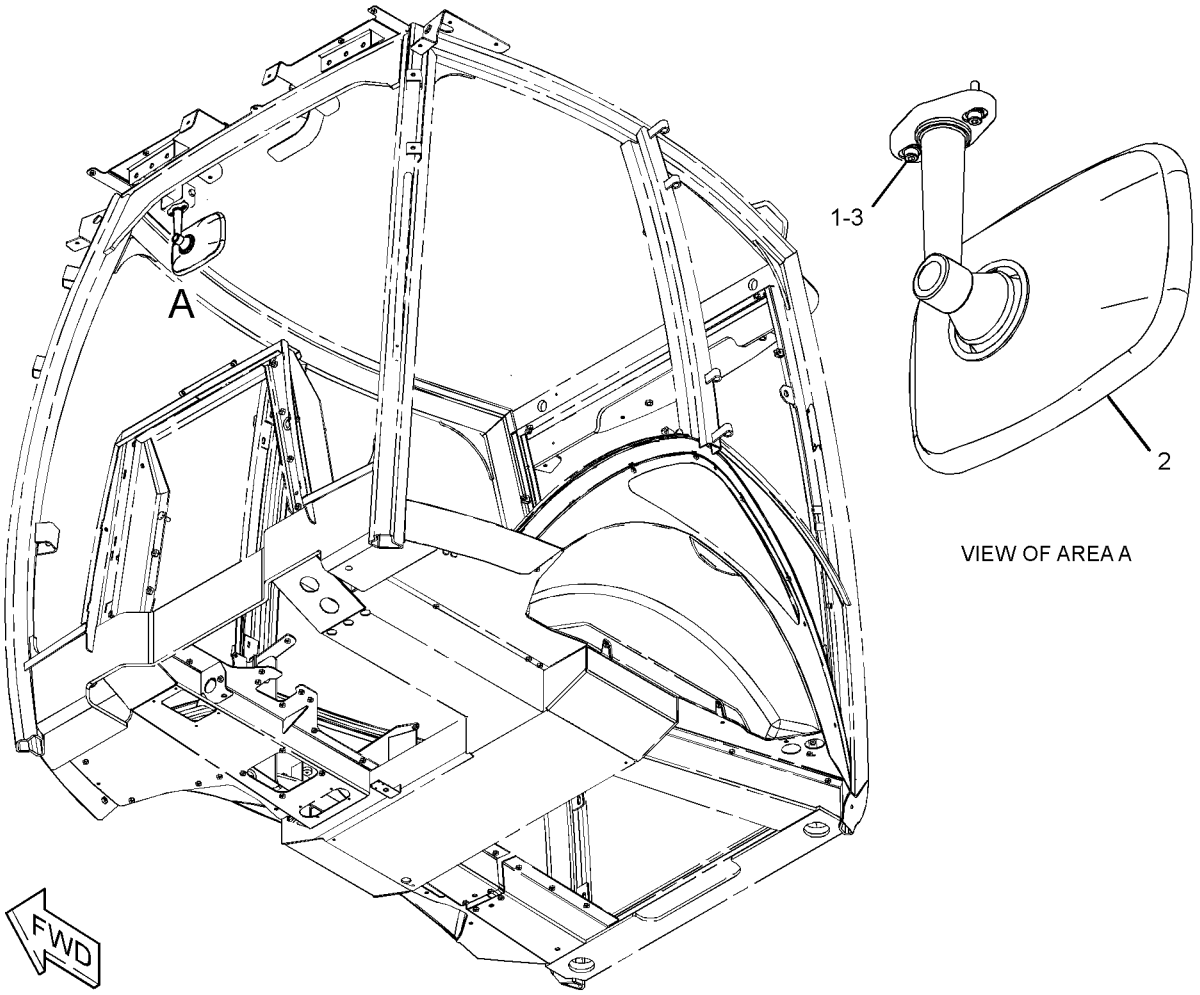

GRAPHIC #1 **<END>** g01190426

OPERATOR STATION

186-2589 MOTOR GP-WINDOW WIPER—FRONT

S/N: HLS1-99999
12 VOLT
PART OF 206-1728 WIPER & WASHER GP-WINDOW, 206-1725 WIPER GP-WINDOW
AN ATTACHMENT

SMCS-7305 **i03257567**

NOTE	REF NO	GRAPHIC REF	PART NUMBER	QTY	PART NAME 1 2 3 4 5 6 (PRODUCT LEVEL)	SEE PAGE
M	1	1	**5C-7261**	1	NUT (M8X1.25-THD)	
	2	1	**3F-9556**	1	LOCKWASHER	
	3	1	**152-7691**	1	MOTOR GP-WINDOW WIPER (FRONT)	
		1	**9G-3695**	1	PLUG	
		1	**102-8805**	1	KIT-RECEPTACLE (6-PIN)	
					(INCLUDES RECEPTACLE AS & WEDGE)	
		1	**186-3735**	5	PIN-CONNECTOR (16-GA TO 18-GA)	
	4	1	**206-5823**	1	CAP	

M-METRIC PART

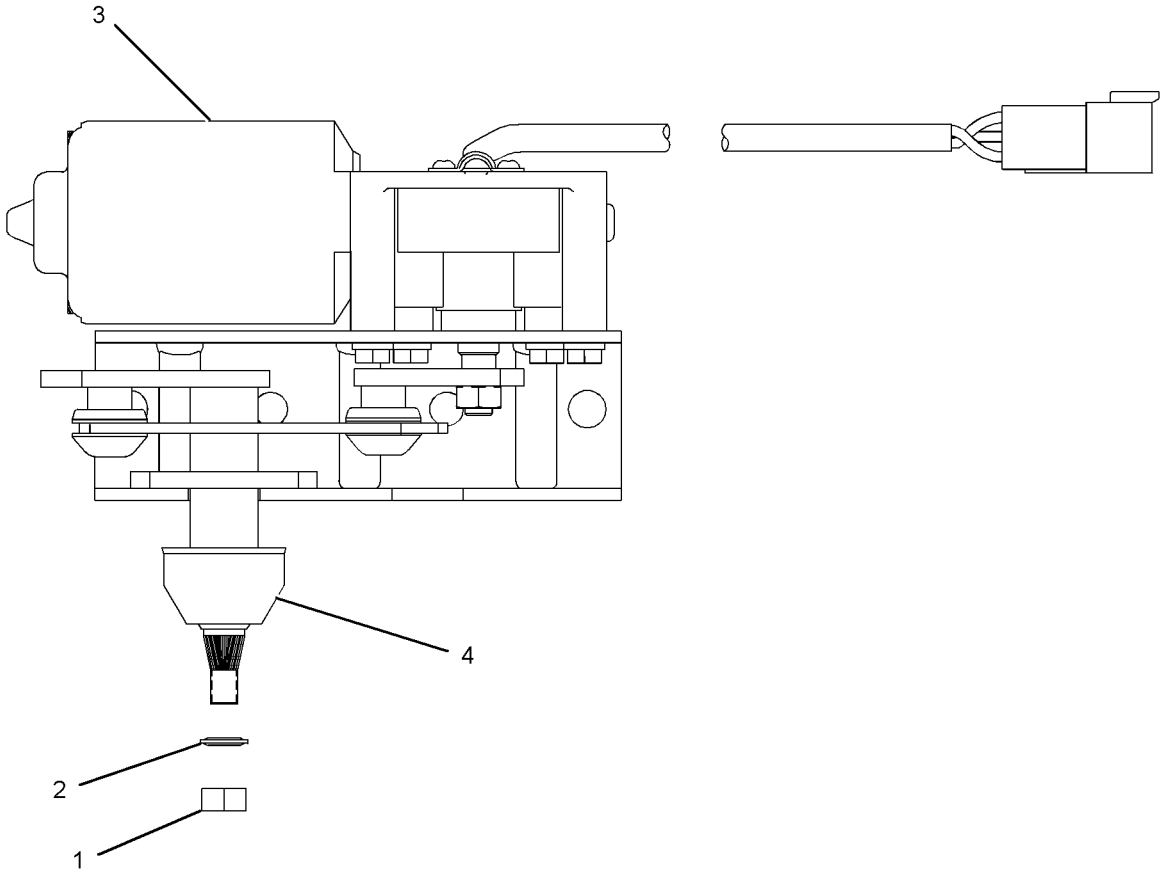

GRAPHIC #1 **<END>** g01120206

OPERATOR STATION

269-3247 MOUNTING GP-BACKHOE CONTROL—PILOT

S/N: HLS1-99999

PART OF 269-2125, 269-2126, 269-2127 CAB AR-ENCLOSED ROPS, 269-2123, 269-2124 CANOPY AR-OPEN ROPS

AN ATTACHMENT

SMCS-5063, 5258, 5705 **i02502858**

NOTE	REF NO	GRAPHIC REF	PART NUMBER	QTY	PART NAME 1 2 3 4 5 6 (PRODUCT LEVEL)	SEE PAGE
	1	1,2	**7K-1181**	2	STRAP-CABLE	
	2	1,2	**164-1368**	15	FASTENER-PANEL	
	3	1,2	**183-4934**	2	BEARING-SELF-ALIGNING	
B	4	1,2	**195-7602**	3	SHIM (1.6-MM THK)	
E	5	1	**261-9634**		SEAL-BULK (8.5-CM EACH)	
	6	2	**261-9642**	1	COVER-CONSOLE (LH)	
	7	2	**267-5225**	1	BOOT	
Y	8	1	*269-3248*	1	LATCH GP-CONSOLE	861
	9	2	**269-3254**	1	SUPPORT AS (LH)	
B	10	2	**269-3262**	4	SHIM (1-MM THK)	
	11	1,2	**270-2794**	2	INSULATION	
	12	2	**270-5161**	1	GASKET	
	13	2	**272-7079**	1	PLATE	
	14	1	**273-1473**	1	GROMMET	
	15	1	**273-1475**	1	COVER-CONSOLE (RH)	
	16	1	**273-1476**	1	BOOT	
	17	1	**273-1477**	1	PLATE	
	18	1	**273-1478**	1	BUMPER AS	
	19	1	**283-3467**	1	PLATE AS	
M		1	**6V-9632**	7	NUT-WELD (M6X1-THD)	
M		1	**8T-3490**	3	NUT-WELD (M10X1.5-THD)	
M		1	**8T-3612**	1	NUT-WELD (M8X1.25-THD)	
	20	2	**283-3477**	1	TUBE AS	
	21	1	**283-7981**	1	PLATE AS	
	22	1	**283-8053**	2	STRIKER	
	23	1	**039-8557**	2	WASHER (13X26X6-MM THK)	
M	24	1,2	**3T-0849**	8	BOLT-SOCKET HEAD (M6X1X25-MM)	
M	25	1	**7X-2533**	6	BOLT (M6X1X35-MM)	
	26	1,2	**8T-4121**	9	WASHER-HARD (11X21X2.5-MM THK)	
M	27	1	**8T-4134**	6	NUT (M6X1-THD)	
M	28	1,2	**8T-4138**	2	BOLT (M6X1X20-MM)	
M	29	2	**8T-4186**	5	BOLT (M10X1.5X40-MM)	
M	30	1	**8T-4189**	2	BOLT (M8X1.25X20-MM)	
M	31	1	**8T-4195**	4	BOLT (M10X1.5X30-MM)	
	32	1,2	**8T-4224**	4	WASHER-HARD (8.8X16X2-MM THK)	
M	33	1,2	**8T-4244**	2	NUT (M12X1.75-THD)	
M	34	1	**8T-4956**	2	BOLT (M12X1.75X35-MM)	
M	35	1	**8T-4971**	2	BOLT (M6X1X30-MM)	
M	36	2	**8T-7547**	2	BOLT (M8X1.25X30-MM)	
	37	1,2	**9X-2038**	14	WASHER (7X19X2-MM THK)	
M	38	1,2	**9X-2045**	8	SCREW-TRUSS HEAD (M6X1X20-MM)	
	39	1,2	**9X-8256**	26	WASHER (6.6X12X2-MM THK)	

B-USE AS REQUIRED
E-ORDER BY THE CENTIMETER
M-METRIC PART
Y-SEPARATE ILLUSTRATION

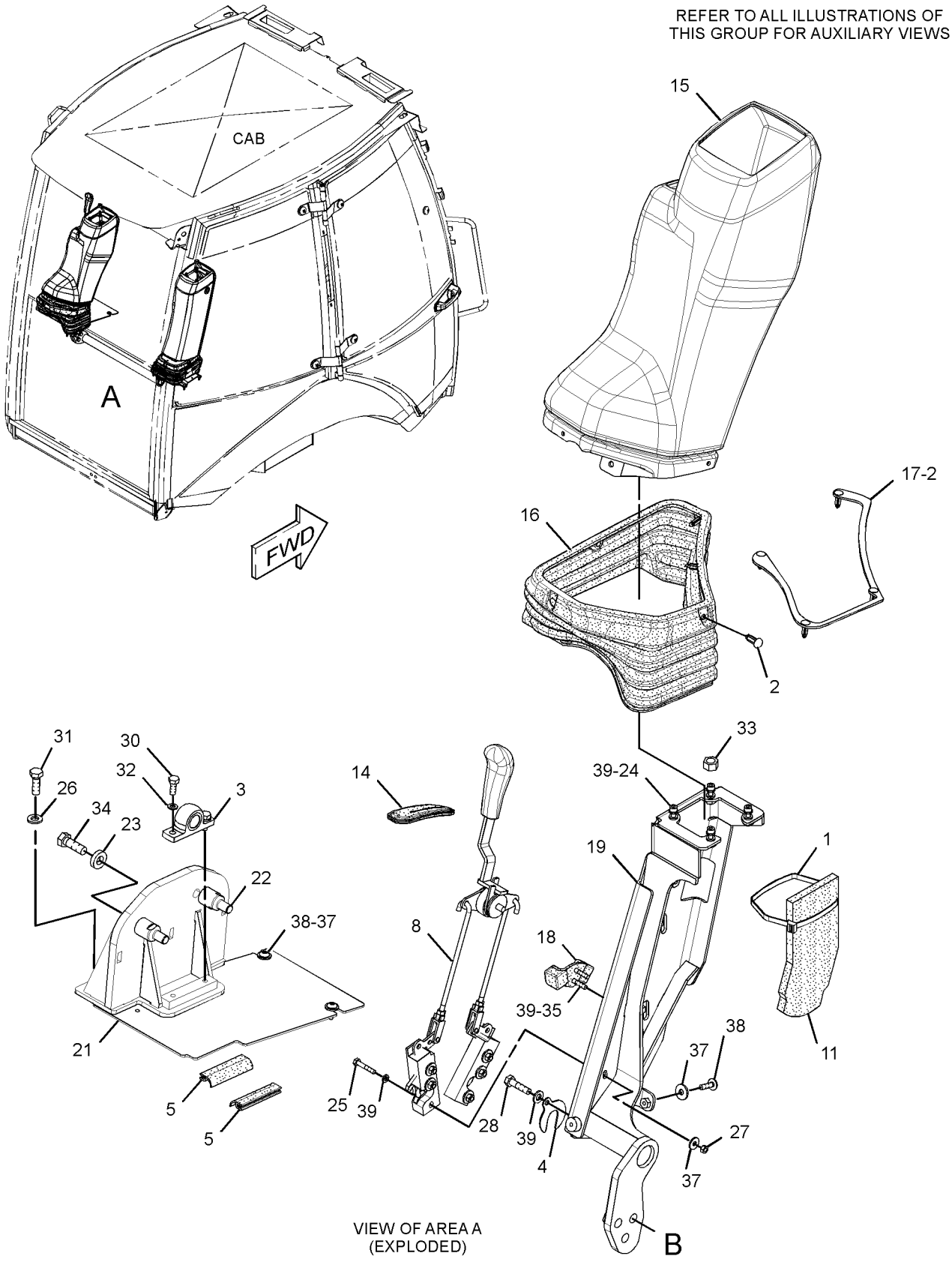

GRAPHIC #1

g01316012

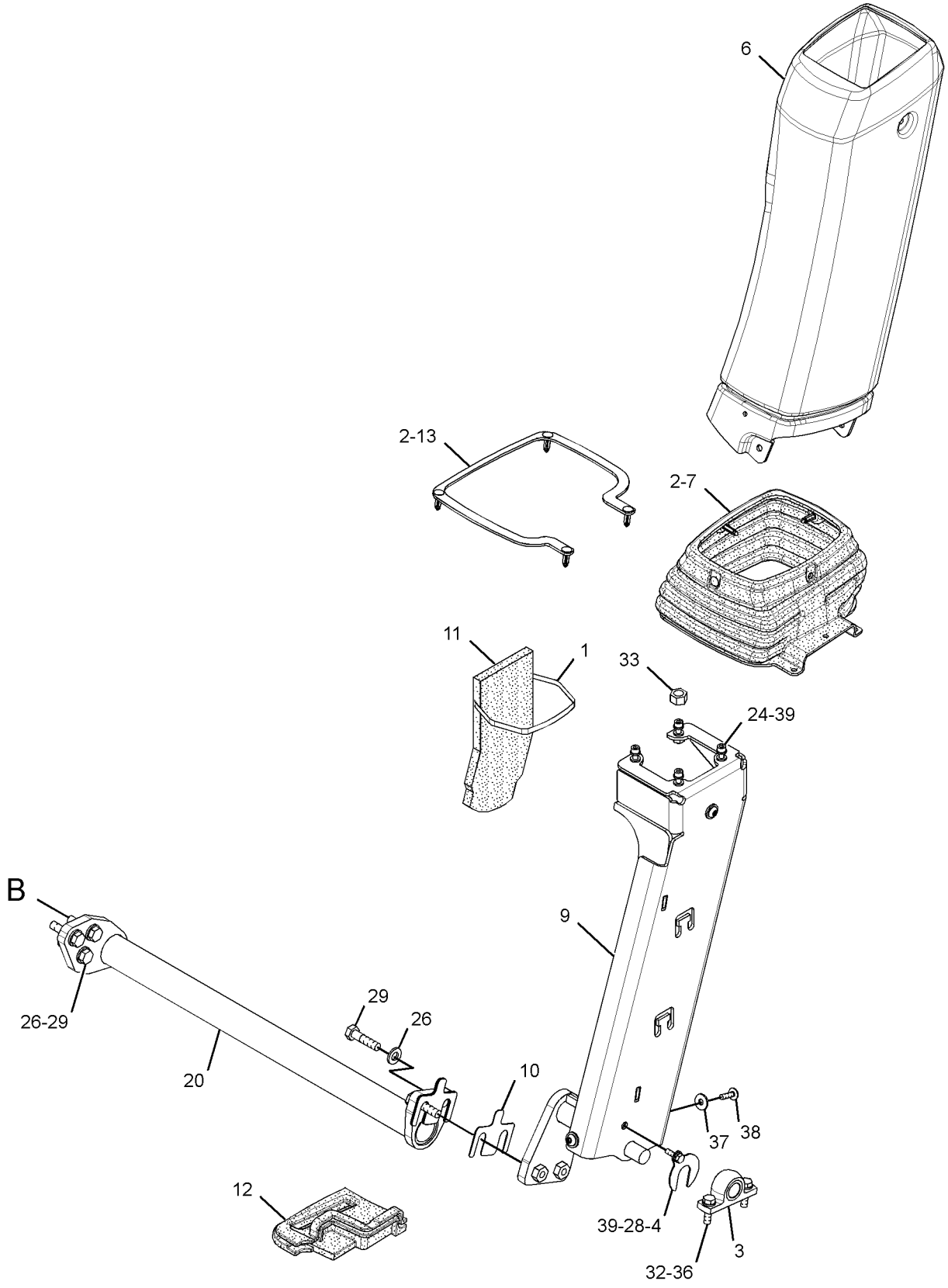

GRAPHIC #2 **<END>** g01316018

OPERATOR STATION

205-9560 MOUNTING GP-CAB

S/N: HLS1-99999

PART OF 269-2125, 269-2126, 269-2127 CAB AR-ENCLOSED ROPS, 269-2123, 269-2124 CANOPY AR-OPEN ROPS

AN ATTACHMENT

SMCS-7301 **i02700059**

NOTE	REF NO	GRAPHIC REF	PART NUMBER	QTY	PART NAME 1 2 3 4 5 6 (PRODUCT LEVEL)	SEE PAGE
	1	1	**6Y-9930**	2	MOUNT AS	
	2	1	**118-2990**	2	MOUNT AS	
	3	1	**9W-6582**	2	SLEEVE	
M	4	1	**7X-2568**	2	BOLT (M20X2.5X180-MM)	
	5	1	**297-5849**	2	WASHER-HARD (17X75X10-MM THK)	
	6	1	**8T-4123**	4	WASHER (22X35X3.5-MM THK)	
M	7	1	**8T-4131**	2	NUT (M20X2.5-THD)	
M	8	1	**8T-4132**	2	NUT (M16X2-THD)	
M	9	1	**8T-4173**	2	BOLT (M16X2X110-MM)	
	10	1	**9W-6584**	2	WASHER (20.5X114X10-MM THK)	
	11	1	**9X-8257**	4	WASHER (17.5X30X3.5-MM THK)	
	12	1	**1L-6377**	2	BUTTON-PLUG	

M-METRIC PART

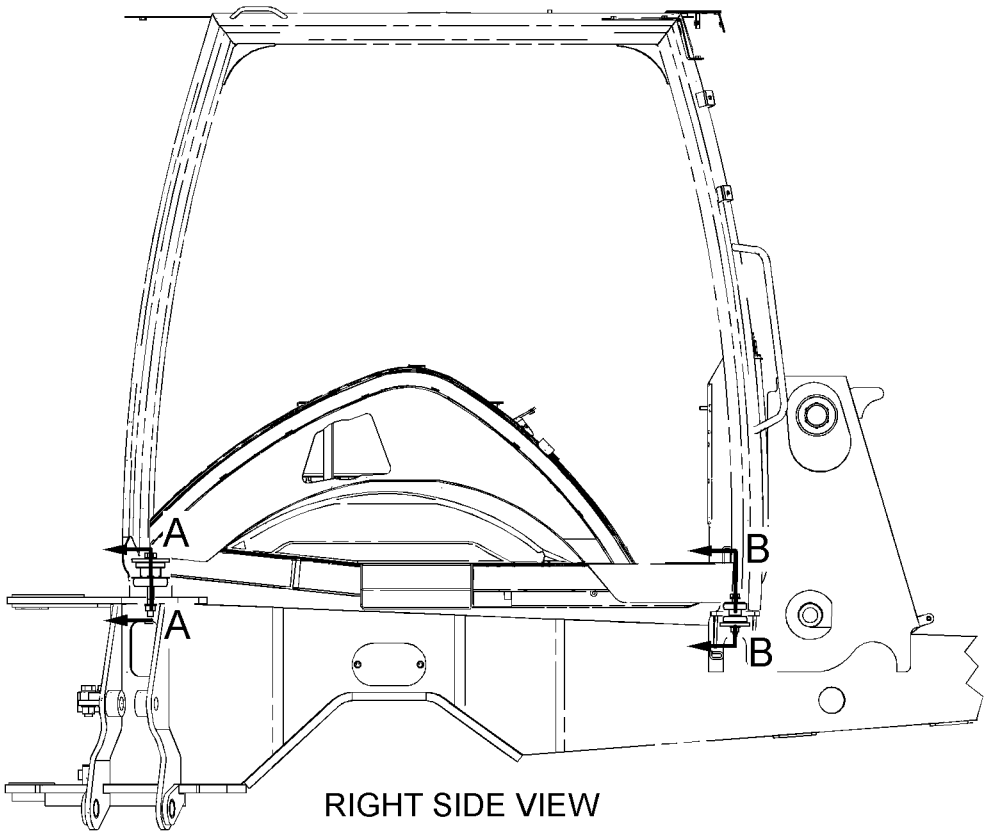

RIGHT SIDE VIEW

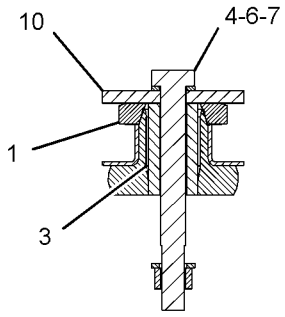

SECTION A-A

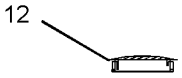

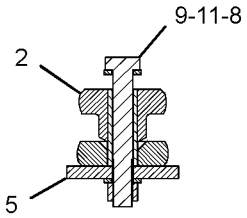

SECTION B-B

GRAPHIC #1 **<END>** g01189655

251-1222 MOUNTING GP-MONITOR–ACCUGRADE

S/N: HLS1-99999

PART OF 211-4253 INSTALLATION GP-MONITOR

AN ATTACHMENT

SMCS-7490 **i02755948**

NOTE	REF NO	GRAPHIC REF	PART NUMBER	QTY	PART NAME 1 2 3 4 5 6 (PRODUCT LEVEL)	SEE PAGE
	1	1	**248-2284**	2	KNOB-CONTROL	
	2	1	**251-0077**	1	BRACKET AS	
M		1	**8T-3490**	1	NUT-WELD (M10X1.5-THD)	
	3	1	**251-9571**	1	BRACKET AS	
M		1	**8T-3490**	1	NUT-WELD (M10X1.5-THD)	

M-METRIC PART

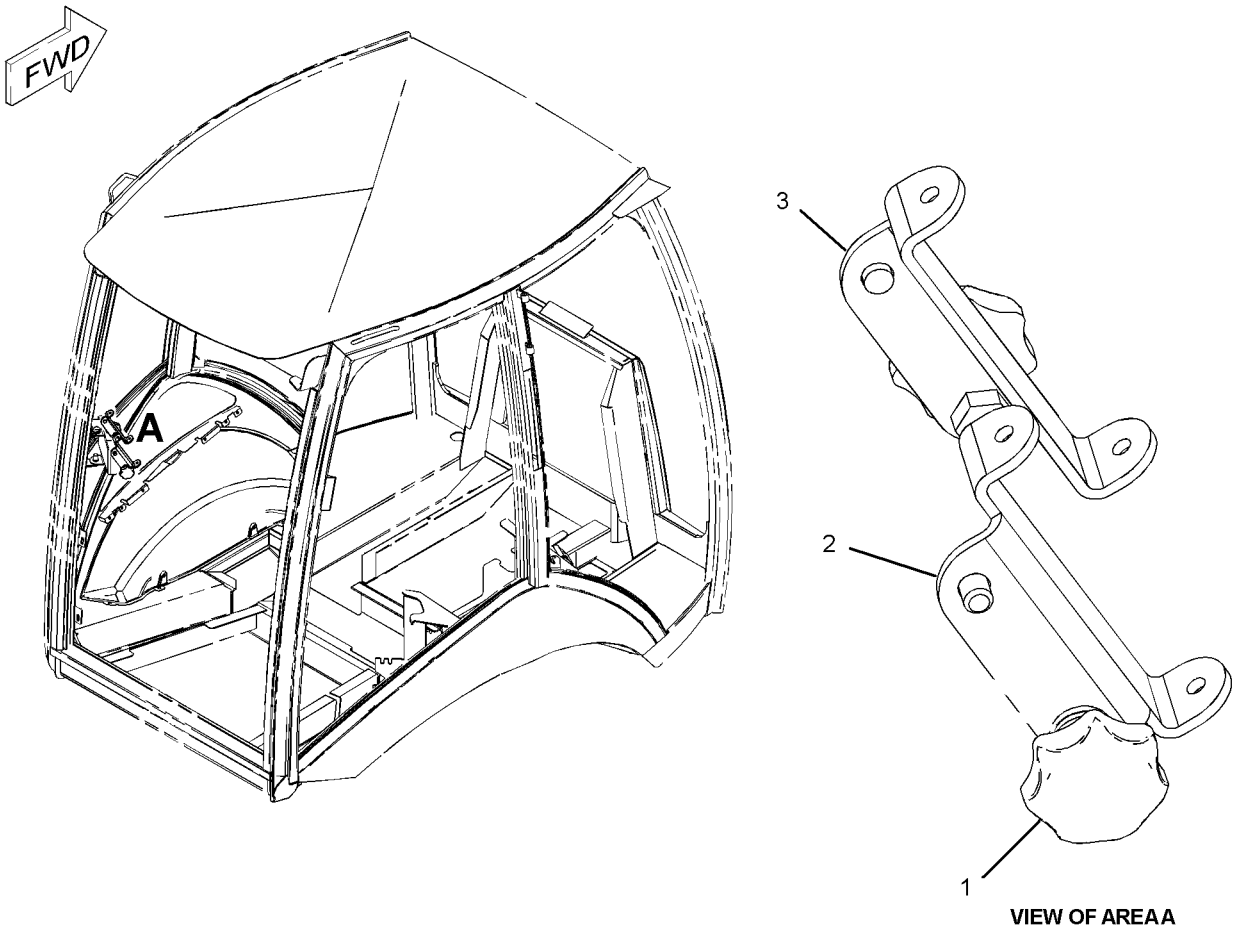

VIEW OF AREA A

GRAPHIC #1 **<END>** g01381138

OPERATOR STATION

209-3378 PEDAL GP-GOVERNOR

S/N: HLS1-99999

PART OF 206-1640 CONTROL GP-GOVERNOR

SMCS-1265 **i03528071**

NOTE	REF NO	GRAPHIC REF	PART NUMBER	QTY	PART NAME 1 2 3 4 5 6 (PRODUCT LEVEL)	SEE PAGE
M	1	1	**129-3178**	1	LOCKNUT (M6X1-THD)	
M	2	1	**5C-7261**	1	NUT (M8X1.25-THD)	
M	3	1	**5C-9553**	1	BOLT (M6X1X16-MM)	
	4	1	**8T-4205**	1	WASHER-HARD (7.2X14.5X2-MM THK)	
M	5	1	**095-0641**	4	BOLT-SOCKET HEAD (M4X0.7X10-MM)	
	6	1	**243-0063**	1	BOOT	
	7	1	**3F-9556**	2	LOCKWASHER	
	8	1	**6V-8186**	2	NUT-FULL (5/16-24-THD)	
	9	1	**8T-6902**	3	CLIP	
M	10	1	**9X-2842**	1	BOLT (M8X1.25X45-MM)	
					AVAILABLE REPAIR KIT(S):	
			164-1154	1	KIT-SERVICE	
					(INCLUDES CLAMP & SCREWS)	
			243-0062	1	KIT-REPAIR (GOVERNOR PEDAL)	
					(INCLUDES SHAFT, CLIPS & BEARINGS)	

M-METRIC PART

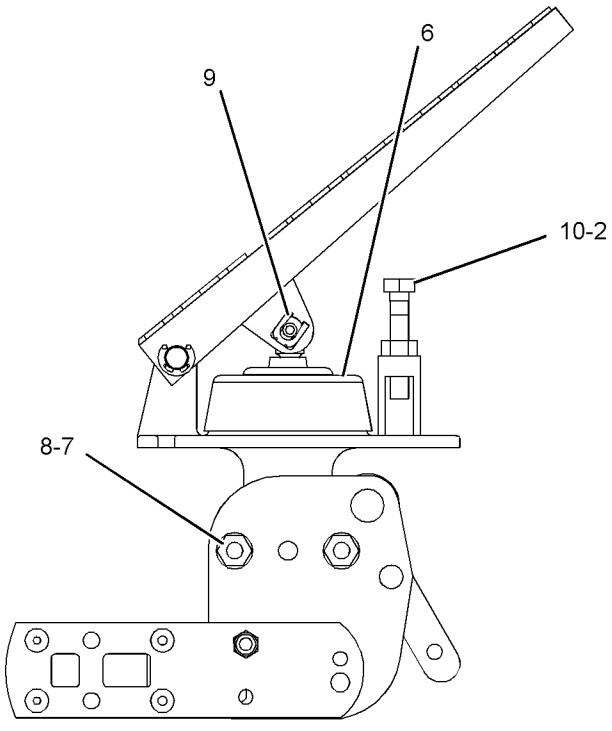

RIGHT SIDE VIEW

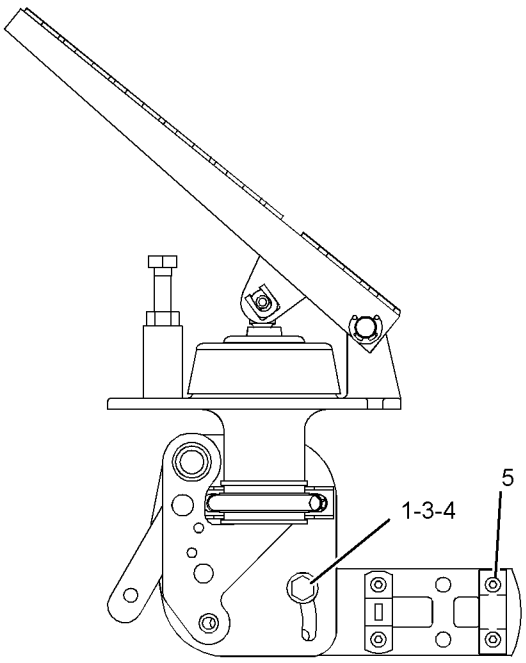

LEFT SIDE VIEW

GRAPHIC #1 **<END>** g01081364

OPERATOR STATION

263-9088 RADIO GP-COMMUNICATION–PRODUCT LINK 121SR

S/N: HLS1-99999

PART OF 225-7994 INSTALLATION GP-COMMUNICATION

AN ATTACHMENT

SMCS-733T **i03121722**

NOTE	PART NUMBER	QTY	PART NAME 1 2 3 4 5 6 (PRODUCT LEVEL)	SEE PAGE
			(NO SERVICED PARTS)	

<END>

OPERATOR STATION

205-9569 ROOF GP-CAB

S/N: HLS1-99999

PART OF 269-2125, 269-2126, 269-2127 CAB AR-ENCLOSED ROPS, 269-2123, 269-2124 CANOPY AR-OPEN ROPS

AN ATTACHMENT

SMCS-7301 **i02527226**

NOTE	REF NO	GRAPHIC REF	PART NUMBER	QTY	PART NAME 1 2 3 4 5 6 (PRODUCT LEVEL)	SEE PAGE
	1	1	**205-9570**	1	COVER-ROOF (CENTER)	
	2	1	**205-9571**	1	COVER-ROOF (REAR)	
	3	1	**205-9576**	1	COVER-ROOF (LH)	
	4	1	**205-9577**	1	COVER-ROOF (RH)	
	5	1	**9X-6165**	16	WASHER (6.5X22X2.5-MM THK)	
M	6	1	**8T-4138**	16	BOLT (M6X1X20-MM)	
	7	1	**9X-2038**	7	WASHER (7X19X2-MM THK)	
M	8	1	**9X-2045**	9	SCREW-TRUSS HEAD (M6X1X20-MM)	

M-METRIC PART

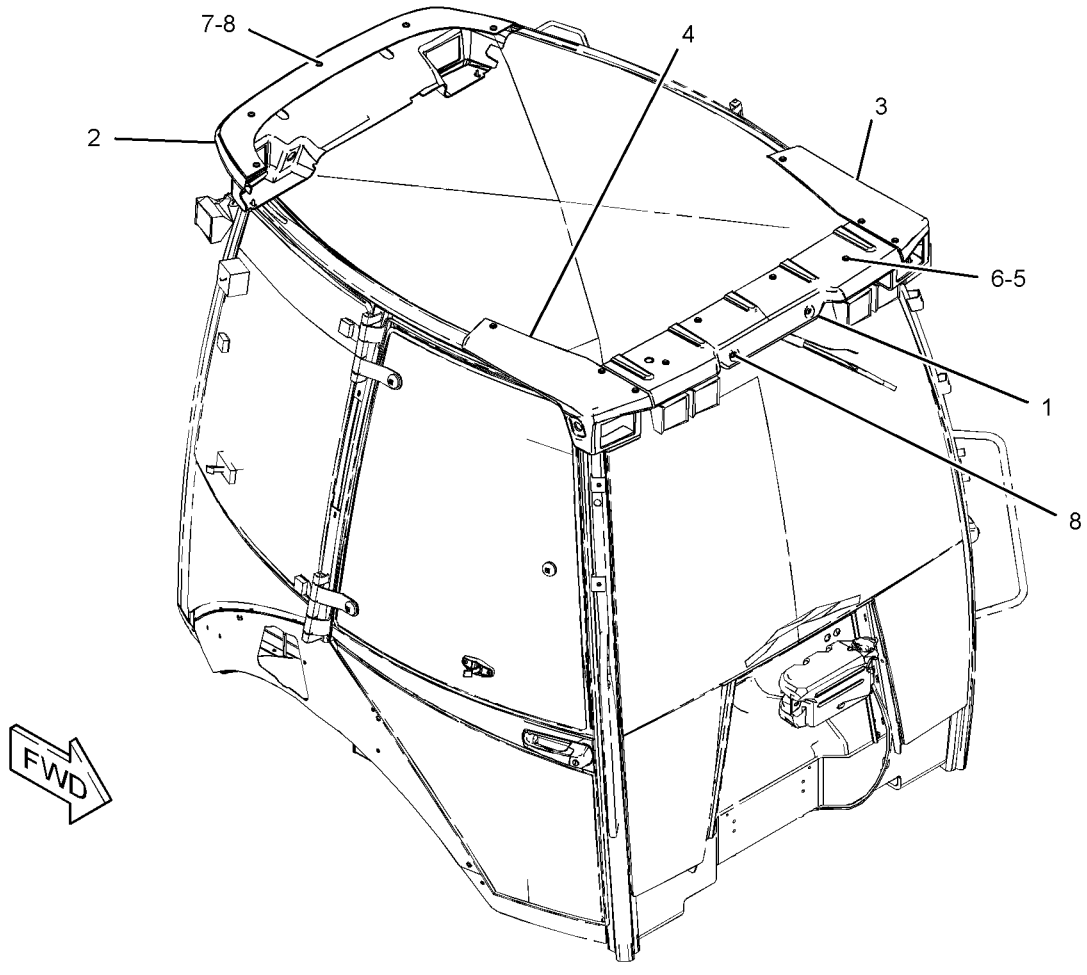

GRAPHIC #1 **<END>** g01233481

OPERATOR STATION

206-1747 SEAT BELT GP—RETRACTABLE, 2-IN

S/N: HLS1-99999

CANNOT BE USED IN CALIFORNIA, OREGON, OR BRITISH COLUMBIA

AN ATTACHMENT

SMCS-7327 **i03528080**

NOTE	REF NO	GRAPHIC REF	PART NUMBER	QTY	PART NAME 1 2 3 4 5 6 (PRODUCT LEVEL)	SEE PAGE
	1	1	**206-1749**	1	SEAT BELT (2-IN)	
	2	1	**8T-4223**	4	WASHER-HARD (13.5X25.5X3-MM THK)	
M	3	1	**8T-4956**	2	BOLT (M12X1.75X35-MM)	

M-METRIC PART

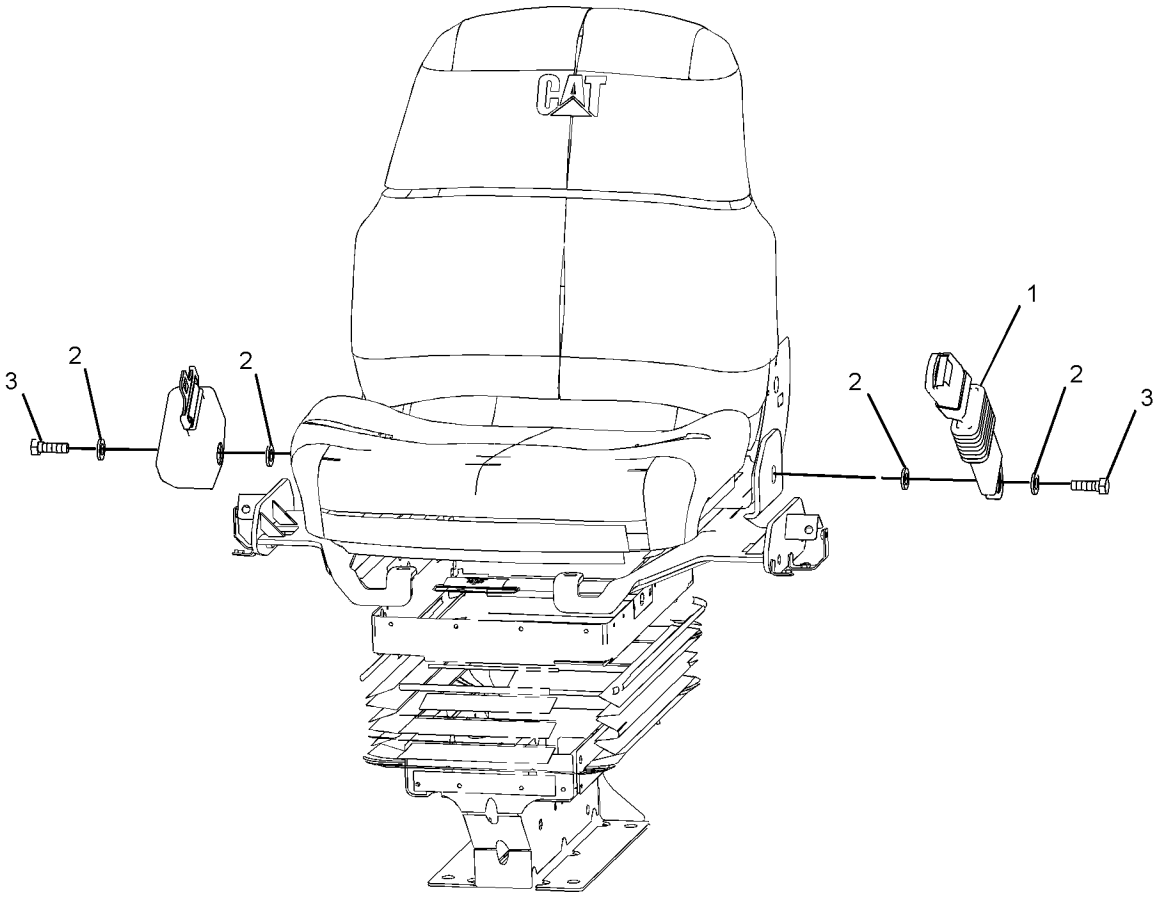

FRONT VIEW
(TOP LEFT)

GRAPHIC #1 **<END>** g01078751

OPERATOR STATION

206-1748 SEAT BELT GP—RETRACTABLE, 3-IN

S/N: HLS1-99999
FOR USE IN CALIFORNIA, OREGON, AND BRITISH COLUMBIA
AN ATTACHMENT

SMCS-7327 **i03516085**

NOTE	REF NO	GRAPHIC REF	PART NUMBER	QTY	PART NAME 1 2 3 4 5 6 (PRODUCT LEVEL)	SEE PAGE
	1	1	**206-1750**	1	SEAT BELT GP	
	2	1	**8T-4223**	4	WASHER-HARD (13.5X25.5X3-MM THK)	
M	3	1	**8T-4956**	2	BOLT (M12X1.75X35-MM)	

M-METRIC PART

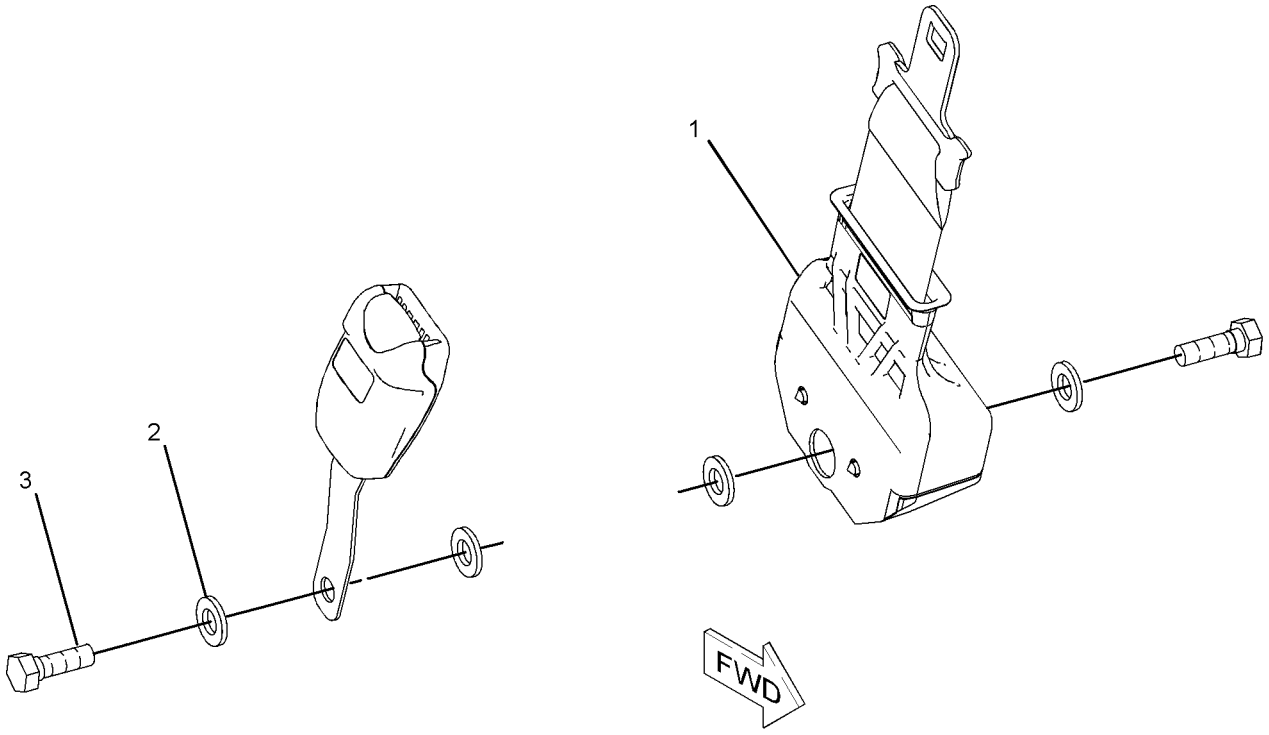

GRAPHIC #1 **<END>** g01078668

OPERATOR STATION

273-5905 SEAT GP–VINYL

S/N: HLS1-99999

PART OF 206-1791 SEAT GP-SUSPENSION

AN ATTACHMENT

SMCS-7312, 7321, 7324, 7336 **i02593694**

NOTE	REF NO	GRAPHIC REF	PART NUMBER	QTY	PART NAME 1 2 3 4 5 6 (PRODUCT LEVEL)	SEE PAGE
M	1	1	**105-3481**	2	BOLT-SOCKET HEAD (M8X1.25X20-MM)	
	2	1	**161-9283**	3	WASHER (19.8X31.8X1.6-MM THK)	
	3	1	**164-1249**	1	LEVER AS	
	4	1	**164-1250**	1	HANDLE	
	5	1	**164-1251**	1	SPRING	
	6	1	**164-1252**	1	SPRING	
M	7	1	**9X-6620**	1	LOCKNUT	
	8	1	**8T-9501**	2	SCREW (10-16X0.75-IN)	
M	9	1	**8T-4189**	2	BOLT (M8X1.25X20-MM)	
	10	1	**164-1258**	1	BRACKET AS (RH)	
	11	1	**164-1259**	1	BRACKET AS (LH)	
	12	1	**164-1266**	1	CUSHION AS-BACK	
	13	1	**5P-8245**	2	WASHER-HARD (13.5X25.5X3-MM THK)	
	14	1	**180-5795**	1	CUSHION AS-SEAT	
	15	1	**180-5797**	1	PAN AS	
	16	1	**195-9223**	2	SCREW-PAN HEAD	
	17	1	**260-0029**	1	PAN	
	18	1	**260-0045**	1	BOLT-SHOULDER (3/8-16X1.18-IN)	
M	19	1	**3T-0852**	8	LOCKNUT (M8X1.25-THD)	
M	20	1	**129-3180**	2	LOCKNUT (M12X1.75-THD)	

M-METRIC PART

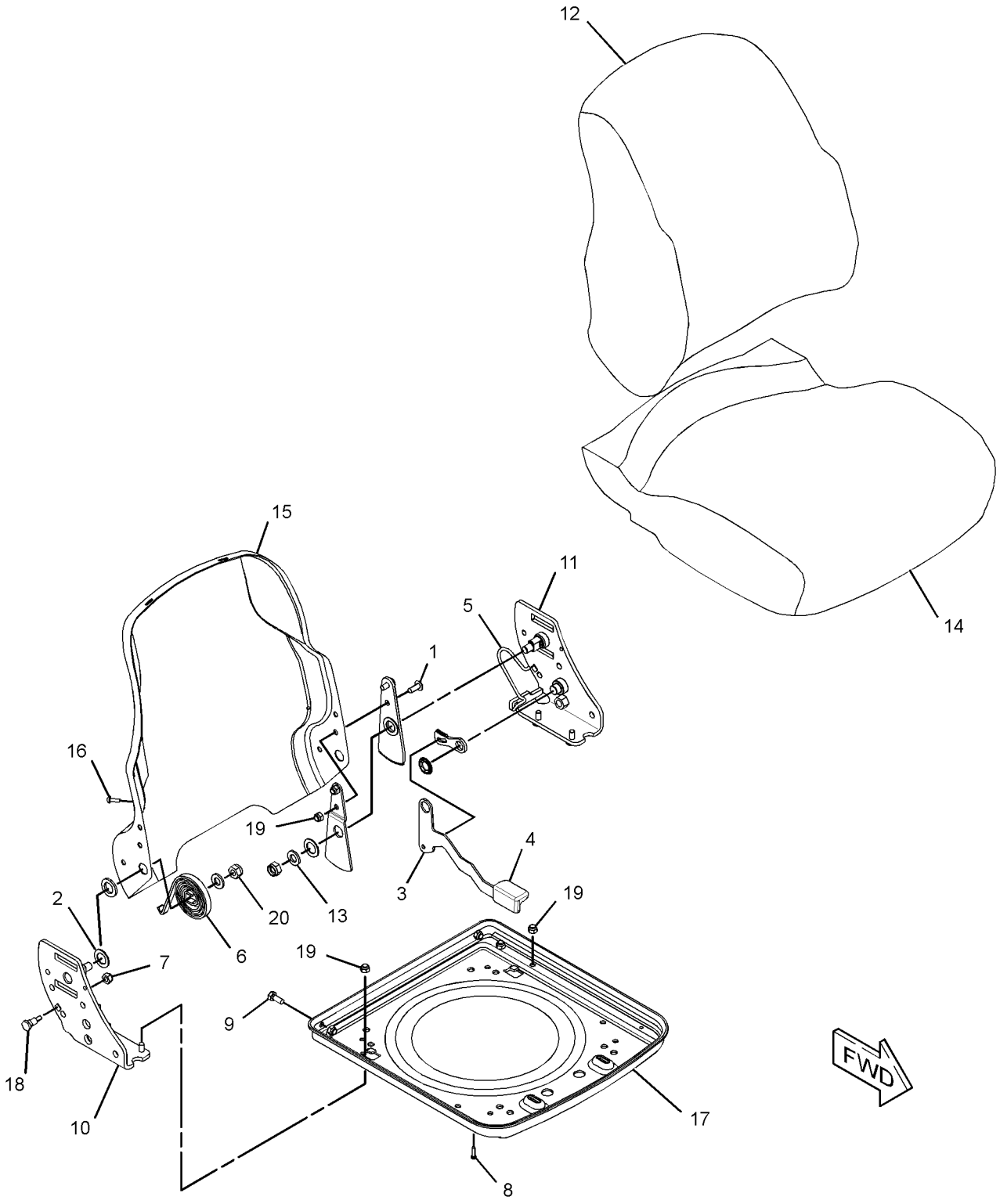

GRAPHIC #1 **<END>** g01283752

OPERATOR STATION

273-6036 SEAT GP–CLOTH

S/N: HLS1-99999

PART OF 206-1792 SEAT GP-SUSPENSION

AN ATTACHMENT

SMCS-7312, 7321, 7324, 7336 **i02593695**

NOTE	REF NO	GRAPHIC REF	PART NUMBER	QTY	PART NAME 1 2 3 4 5 6 (PRODUCT LEVEL)	SEE PAGE
M	1	1	**105-3481**	2	BOLT-SOCKET HEAD (M8X1.25X20-MM)	
	2	1	**161-9283**	3	WASHER (19.8X31.8X1.6-MM THK)	
	3	1	**164-1244**	1	CUSHION AS-BACK	
	4	1	**164-1249**	1	LEVER AS	
	5	1	**164-1250**	1	HANDLE	
	6	1	**164-1251**	1	SPRING	
	7	1	**164-1252**	1	SPRING	
M	8	1	**9X-6620**	1	LOCKNUT	
	9	1	**8T-9501**	2	SCREW (10-16X0.75-IN)	
M	10	1	**8T-4189**	2	BOLT (M8X1.25X20-MM)	
	11	1	**164-1258**	1	BRACKET AS (RH)	
	12	1	**164-1259**	1	BRACKET AS (LH)	
	13	1	**5P-8245**	2	WASHER-HARD (13.5X25.5X3-MM THK)	
	14	1	**180-5796**	1	CUSHION AS-SEAT	
	15	1	**180-5797**	1	PAN AS	
	16	1	**195-9223**	2	SCREW-PAN HEAD	
	17	1	**260-0029**	1	PAN	
	18	1	**260-0045**	1	BOLT-SHOULDER (3/8-16X1.18-IN)	
M	19	1	**3T-0852**	8	LOCKNUT (M8X1.25-THD)	
M	20	1	**129-3180**	2	LOCKNUT (M12X1.75-THD)	

M-METRIC PART

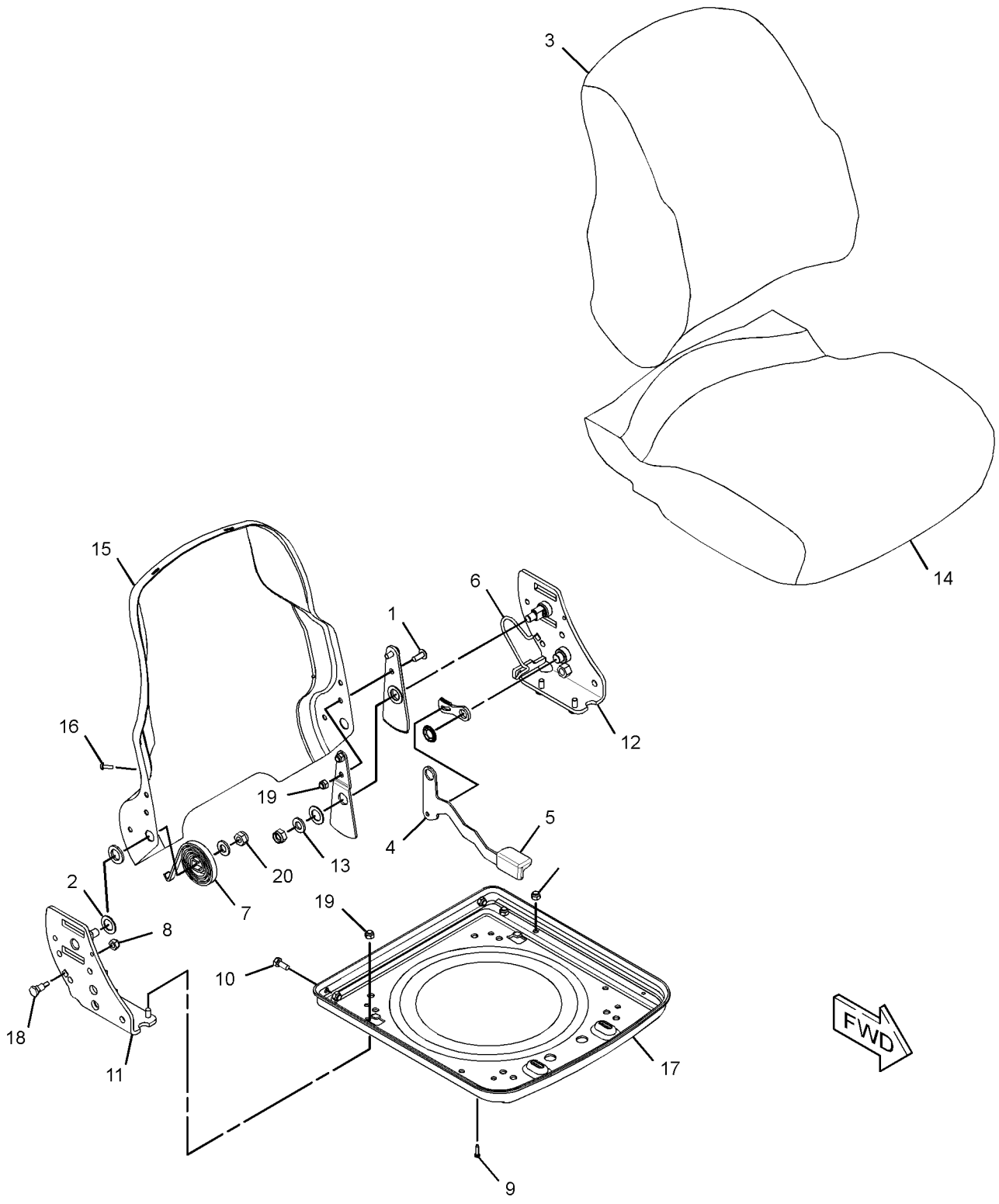

GRAPHIC #1 **<END>** g01283972

OPERATOR STATION

206-1791 SEAT GP-SUSPENSION—VINYL

S/N: HLS1-99999
PART OF 280-7364 SEAT GP-SUSPENSION
AN ATTACHMENT

SMCS-7324, 7336 **i03463081**

NOTE	REF NO	GRAPHIC REF	PART NUMBER	QTY	PART NAME 1 2 3 4 5 6 (PRODUCT LEVEL)	SEE PAGE
	1	1	**2K-4973**	4	LOCKNUT (3/8-16-THD)	
	2	1	**4L-6454**	4	BOLT (3/8-16X1-IN)	
	3	1	**195-7055**	4	WASHER-HARD (9.9X28.5X3.2-MM THK)	
Y	4	1	**273-5905**	1	SEAT GP (VINYL)	883
Y	5	1	**273-6372**	1	SUSPENSION GP-SEAT	894
	6	1	**164-1265**	4	BOLT (3/8-16X1.1-IN)	
	7	1	**4B-5271**	4	WASHER (25.5X11.2X2-MM THK)	
	8	1	**5T-7870**	4	KNOB	
	9	1	**164-1247**	1	BRACKET AS (RH)	
	10	1	**220-3790**	1	ARMREST AS (RH)	
M		1	**6A-9083**	1	SCREW-MACHINE (M6X1X15-MM)	
	11	1	**164-1261**	1	BRACKET AS (LH)	
	12	1	**220-3791**	1	ARMREST AS (LH)	
M		1	**6A-9083**	1	SCREW-MACHINE (M6X1X15-MM)	
	13	1	**1K-6872**	2	LOCKNUT (1/2-13-THD)	
	14	1	**0S-1595**	2	BOLT (1/2-13X1.25-IN)	
	15	1	**5P-8245**	2	WASHER-HARD (13.5X25.5X3-MM THK)	

M-METRIC PART
Y-SEPARATE ILLUSTRATION

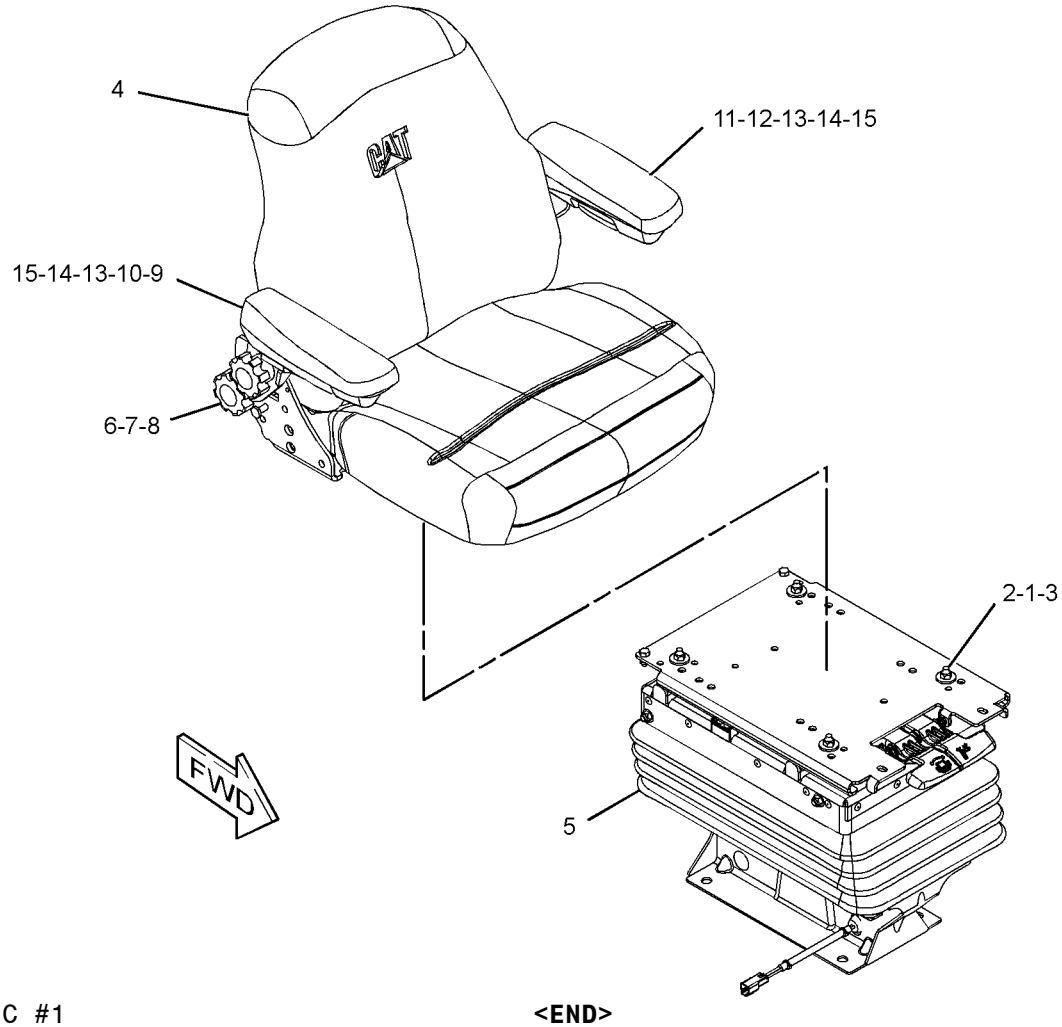

GRAPHIC #1 **<END>** g01298418

OPERATOR STATION

206-1792 SEAT GP-SUSPENSION—CLOTH

S/N: HLS1-99999
PART OF 280-7365 SEAT GP-SUSPENSION
AN ATTACHMENT

SMCS-7324, 7336 **i02838095**

NOTE	REF NO	GRAPHIC REF	PART NUMBER	QTY	PART NAME 1 2 3 4 5 6 (PRODUCT LEVEL)	SEE PAGE
	1	1	**2K-4973**	4	LOCKNUT (3/8-16-THD)	
	2	1	**4L-6454**	4	BOLT (3/8-16X1-IN)	
	3	1	**195-7055**	4	WASHER-HARD (9.9X28.5X3.2-MM THK)	
Y	4	1	**273-6036**	1	SEAT GP (CLOTH)	885
Y	5	1	**273-6372**	1	SUSPENSION GP-SEAT	894
	6	1	**164-1265**	4	BOLT (3/8-16X1.1-IN)	
	7	1	**4B-5271**	4	WASHER (25.5X11.2X2-MM THK)	
	8	1	**164-1214**	4	KNOB	
	9	1	**164-1247**	1	BRACKET AS (RH)	
	10	1	**220-3790**	1	ARMREST AS (RH)	
M		1	**6A-9083**	1	SCREW-MACHINE (M6X1X15-MM)	
	11	1	**164-1261**	1	BRACKET AS (LH)	
	12	1	**220-3791**	1	ARMREST AS (LH)	
M		1	**6A-9083**	1	SCREW-MACHINE (M6X1X15-MM)	
	13	1	**1K-6872**	2	LOCKNUT (1/2-13-THD)	
	14	1	**0S-1595**	2	BOLT (1/2-13X1.25-IN)	
	15	1	**5P-8245**	2	WASHER-HARD (13.5X25.5X3-MM THK)	

M-METRIC PART
Y-SEPARATE ILLUSTRATION

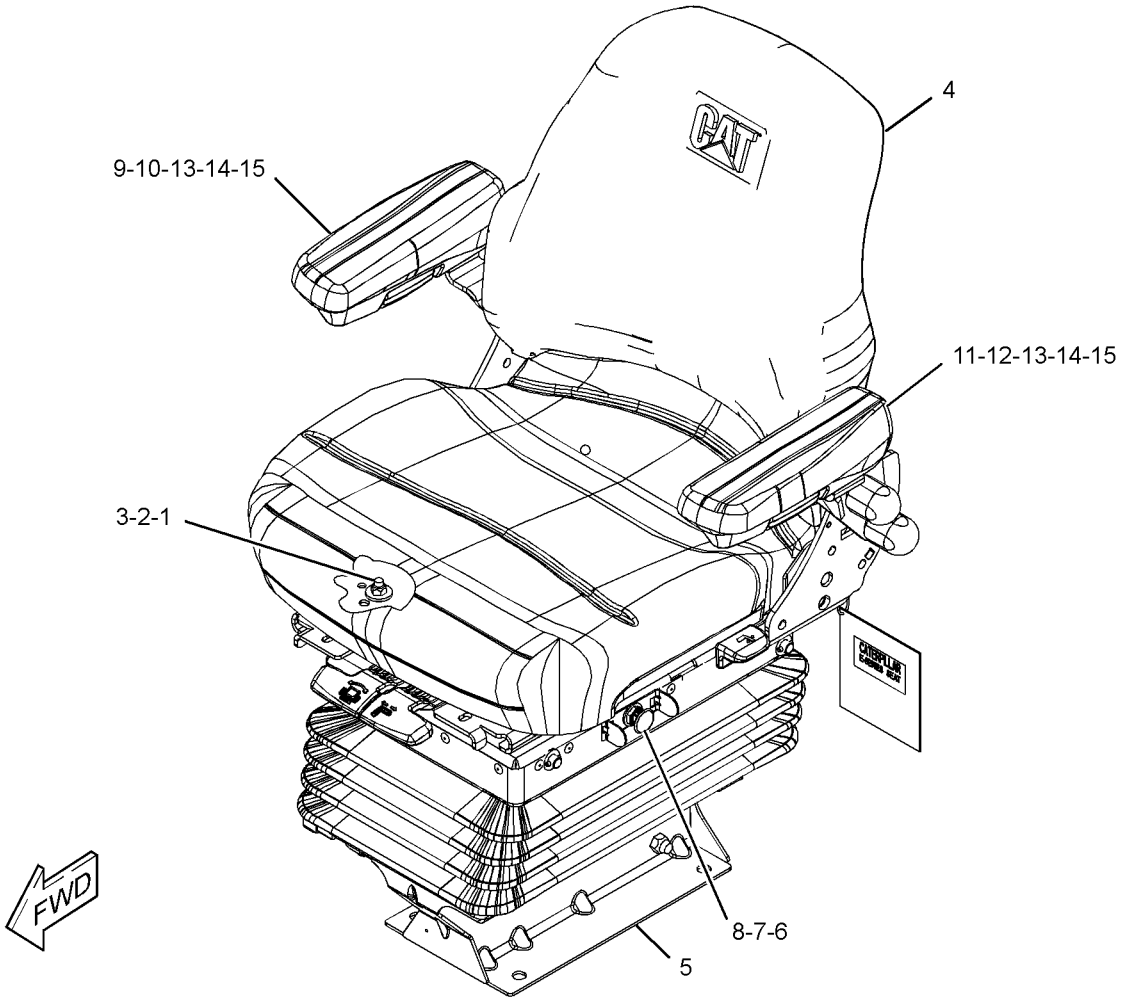

GRAPHIC #1 **<END>** g01225777

OPERATOR STATION

206-1796 SEAT GP-SUSPENSION—DELUXE, CLOTH

S/N: HLS1-99999

PART OF 280-7366 SEAT GP-SUSPENSION

AN ATTACHMENT

SMCS-7324, 7336 **i03505561**

NOTE	REF NO	GRAPHIC REF	PART NUMBER	QTY	PART NAME 1 2 3 4 5 6 (PRODUCT LEVEL)	SEE PAGE
	1	1	**2K-4973**	4	LOCKNUT (3/8-16-THD)	
	2	1	**4L-6454**	2	BOLT (3/8-16X1-IN)	
	3	1	**195-7055**	10	WASHER-HARD (9.9X28.5X3.2-MM THK)	
	4	1	**234-3017**	2	BOLT (3/8-16X0.875-IN)	
Y	5	1	**273-6037**	1	SEAT GP-SUSPENSION (DELUXE, CLOTH)	890
Y	6	1	**273-6372**	1	SUSPENSION GP-SEAT	894
	7	1	**164-1265**	4	BOLT (3/8-16X1.1-IN)	
	8	1	**4B-5271**	4	WASHER (25.5X11.2X2-MM THK)	
	9	1	**5T-7870**	4	KNOB	
	10	1	**164-1247**	1	BRACKET AS (RH)	
	11	1	**220-3790**	1	ARMREST AS (RH)	
M		1	**6A-9083**	1	SCREW-MACHINE (M6X1X15-MM)	
	12	1	**164-1261**	1	BRACKET AS (LH)	
	13	1	**220-3791**	1	ARMREST AS (LH)	
M		1	**6A-9083**	1	SCREW-MACHINE (M6X1X15-MM)	
	14	1	**1K-6872**	2	LOCKNUT (1/2-13-THD)	
	15	1	**0S-1595**	2	BOLT (1/2-13X1.25-IN)	
	16	1	**5P-8245**	2	WASHER-HARD (13.5X25.5X3-MM THK)	

M-METRIC PART
Y-SEPARATE ILLUSTRATION

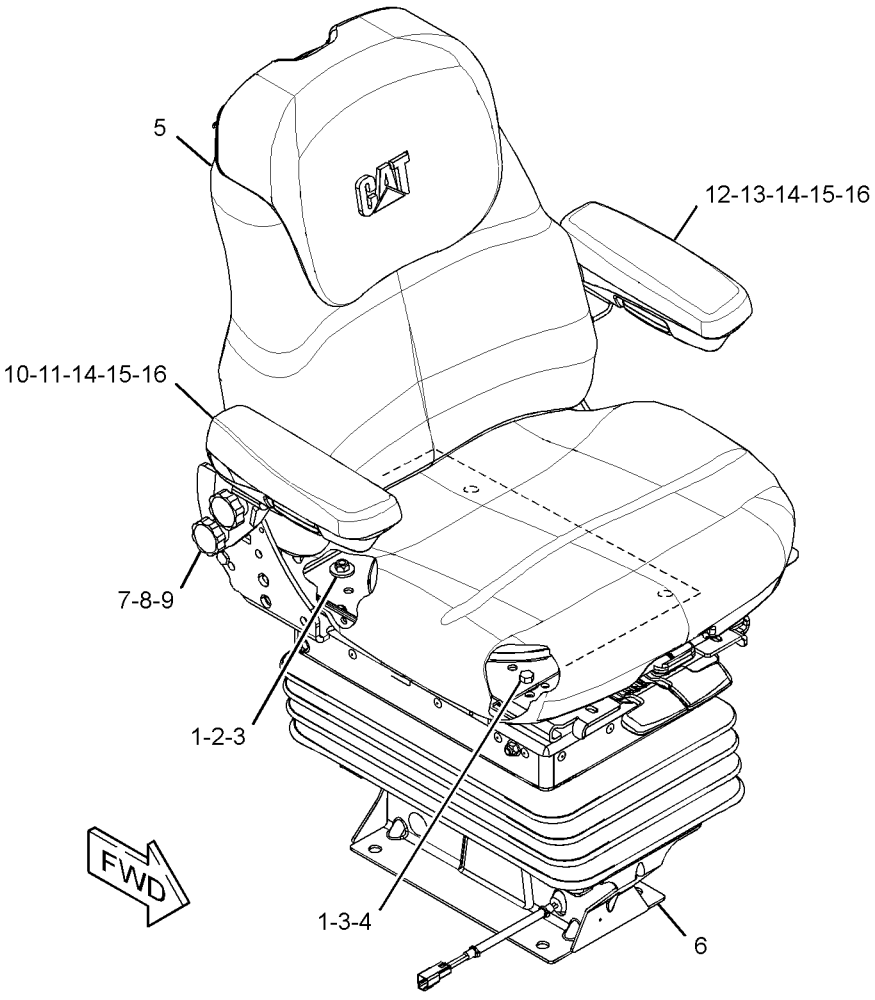

GRAPHIC #1 **<END>** g01309042

OPERATOR STATION

273-6037 SEAT GP-SUSPENSION—DELUXE, CLOTH

S/N: HLS1-99999
PART OF 206-1796 SEAT GP-SUSPENSION
AN ATTACHMENT
TYPE 1

SMCS-7324, 7336 **i03549642**

NOTE	PART NUMBER	QTY	PART NAME 1 2 3 4 5 6 (PRODUCT LEVEL)	SEE PAGE
	164-1275	1	BACKREST AS	
M	**2W-9499**	2	BOLT (M6X1X40-MM)	
	8C-0572	2	WASHER (8.8X25.5X2-MM THK)	
M	**8T-4189**	2	BOLT (M8X1.25X20-MM)	
	164-1265	1	BOLT (3/8-16X1.1-IN)	
	8T-8917	2	BOLT (1/2-13X1.25-IN)	
	260-0045	1	BOLT-SHOULDER (3/8-16X1.18-IN)	
M	**105-3481**	2	BOLT-SOCKET HEAD (M8X1.25X20-MM)	
	164-1259	1	BRACKET AS (LH)	
	164-1258	1	BRACKET AS (RH)	
	164-1244	1	CUSHION AS-BACK	
	260-0053	1	CUSHION GP-SEAT	
	260-0027	1	KNOB-SLIDE	
	164-1249	1	LEVER AS	
	260-0028	1	LEVER-TILT	
M	**3T-0852**	8	LOCKNUT (M8X1.25-THD)	
M	**129-3180**	2	LOCKNUT (M12X1.75-THD)	
M	**9X-6620**	1	LOCKNUT (M10X1.5-THD)	
	260-0029	1	PAN	
	260-0040	1	PAN	
	180-5797	1	PAN AS	
	164-1263	1	PAN AS	
	260-0062	1	PAN AS	
	260-0061	1	PAN AS	
	180-5781	1	ROD	
	8T-9501	2	SCREW (10-16X0.75-IN)	
M	**8T-6412**	2	SCREW-MACHINE (M6X1X20-MM)	
	195-9223	2	SCREW-PAN HEAD	
	164-1256	2	SPACER (19X25.4X12.5-MM THK)	
	164-1252	1	SPRING	
	164-1251	1	SPRING	
	164-1273	1	SPRING-EXTENSION	
	180-5791	1	SUPPORT AS-SEAT (LUMBAR)	
	164-1276	1	TUBE	
	161-9283	1	WASHER (19.8X31.8X1.6-MM THK)	
	5P-8245	2	WASHER-HARD (13.5X25.5X3-MM THK)	

M-METRIC PART

<END>

OPERATOR STATION

273-6037 SEAT GP-SUSPENSION—DELUXE, CLOTH

S/N: HLS1-99999
PART OF 206-1796 SEAT GP-SUSPENSION
AN ATTACHMENT
TYPE 2

SMCS-7324, 7336 **i03516090**

NOTE	REF NO	GRAPHIC REF	PART NUMBER	QTY	PART NAME 1 2 3 4 5 6 (PRODUCT LEVEL)	SEE PAGE
C	1	1	**2M-7819**	1	RING-RETAINING	
C	2	1	**4B-4278**	4	WASHER (10.2X20.5X1.6-MM THK)	
M	3	1	**105-3481**	2	BOLT-SOCKET HEAD (M8X1.25X20-MM)	
C	4	1	**111-5042**	3	FASTENER	
C	5	1	**121-3040**	6	FASTENER-PANEL	
	6	1	**161-9283**	1	WASHER (19.8X31.8X1.6-MM THK)	
C	7	1	**164-1245**	1	CUSHION GP-SEAT	
		1	**101-0003**	3	FASTENER	
		1	**164-1269**	1	BOOT	
		1	**164-1272**	1	ROD AS	
		1	**164-1273**	2	SPRING-EXTENSION	
C	8	1	**164-1246**	1	CUSHION AS (BACK)	
	9	1	**164-1249**	1	LEVER AS	
	10	1	**164-1251**	1	SPRING	
	11	1	**164-1252**	1	SPRING	
C	12	1	**2P-7864**	2	SCREW-TAPPING	
C	13	1	**4H-1641**	2	PIN-SPRING	
	14	1	**5P-8245**	2	WASHER-HARD (13.5X25.5X3-MM THK)	
	15	1	**164-1258**	1	BRACKET AS (RH)	
	16	1	**164-1259**	1	BRACKET AS (LH)	
	17	1	**164-1263**	1	PAN AS	
C	18	1	**164-1269**	1	BOOT	
C	19	1	**164-1271**	2	SPRING	
C	20	1	**164-1272**	1	ROD AS	
C	21	1	**164-1273**	2	SPRING-EXTENSION	
C	22	1	**164-1274**	2	BLOCK	
	23	1	**164-1275**	1	BACKREST AS	
M		1	**2W-9499**	2	BOLT (M6X1X40-MM)	
		1	**8C-0572**	2	WASHER (8.8X25.5X2-MM THK)	
C	24	1	**164-1276**	2	TUBE	
C	25	1	**164-1277**	2	CLIP-SPRING	
	26	1	**180-5781**	1	ROD	
C	27	1	**180-5782**	1	SPRING	
C	28	1	**180-5783**	1	FOLLOWER	
C	29	1	**180-5784**	1	LATCH AS	
C	30	1	**180-5785**	1	SPRING	
M	31	1	**129-3180**	2	LOCKNUT (M12X1.75-THD)	
C	32	1	**180-5787**	1	KNOB	
C	33	1	**180-5788**	1	BLOCK	
M	34	1	**8T-4189**	2	BOLT (M8X1.25X20-MM)	
	35	1	**180-5791**	1	SUPPORT AS-SEAT (LUMBAR)	
C	36	1	**195-9223**	4	SCREW-PAN HEAD	
	37	1	**260-0027**	1	KNOB-SLIDE	
	38	1	**260-0028**	1	LEVER-TILT	
	39	1	**260-0045**	1	BOLT-SHOULDER (3/8-16X1.18-IN)	
C	40	1	**8T-7566**	1	PIN-SPRING	
M	41	1	**9X-6620**	1	LOCKNUT (M10X1.5-THD)	
M	42	1	**3T-0852**	8	LOCKNUT (M8X1.25-THD)	

PARTS SHOWN IN GRAPHIC WITHOUT REFERENCE NUMBER ARE NOT SERVICED SEPARATELY

C-CHANGE FROM PREVIOUS TYPE
M-METRIC PART

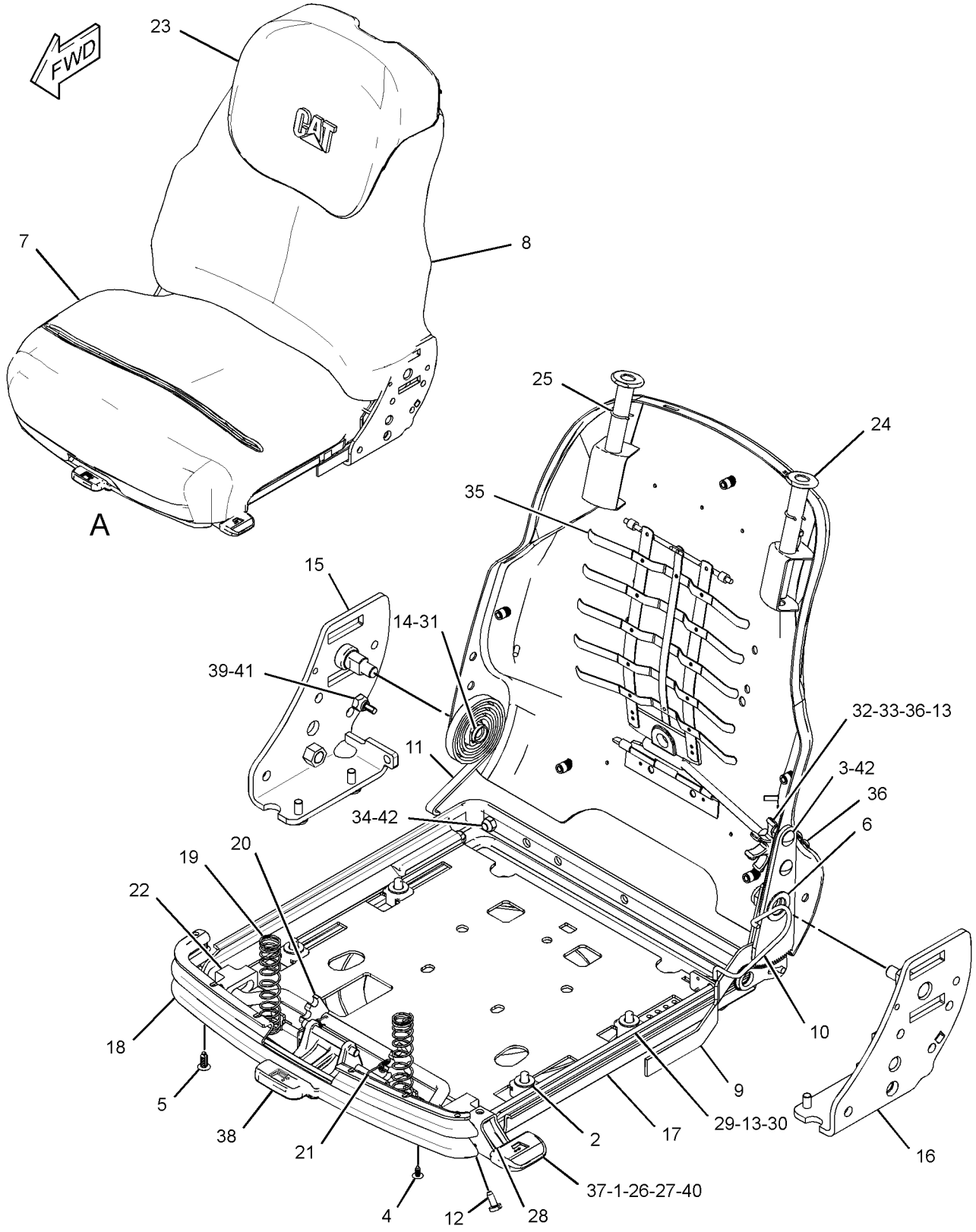

VIEW OF AREA A
(CUSHIONS REMOVED FOR CLARITY)

GRAPHIC #1

<END>

g01299261

280-7364 SEAT GP-SUSPENSION—VINYL

S/N: HLS1-99999
PART OF 269-2123, 269-2124 CANOPY AR-OPEN ROPS
AN ATTACHMENT

SMCS-7324, 7336 **i02837797**

NOTE	PART NUMBER	QTY	PART NAME 1 2 3 4 5 6 (PRODUCT LEVEL)	SEE PAGE
Y	**206-1791**	1	SEAT GP-SUSPENSION (VINYL)	887
M	**8T-4139**	4	BOLT (M12X1.75X30-MM)	
	3S-2093	1	STRAP-CABLE	
	8T-4223	4	WASHER-HARD (13.5X25.5X3-MM THK)	

M-METRIC PART
Y-SEPARATE ILLUSTRATION

<END>

280-7365 SEAT GP-SUSPENSION—CLOTH

S/N: HLS1-99999
PART OF 269-2125 CAB AR-ENCLOSED ROPS
AN ATTACHMENT

SMCS-7324, 7336 **i02837798**

NOTE	PART NUMBER	QTY	PART NAME 1 2 3 4 5 6 (PRODUCT LEVEL)	SEE PAGE
Y	**206-1792**	1	SEAT GP-SUSPENSION (CLOTH)	888
M	**8T-4139**	4	BOLT (M12X1.75X30-MM)	
	3S-2093	1	STRAP-CABLE	
	8T-4223	4	WASHER-HARD (13.5X25.5X3-MM THK)	

M-METRIC PART
Y-SEPARATE ILLUSTRATION

<END>

280-7366 SEAT GP-SUSPENSION—CLOTH

S/N: HLS1-99999
PART OF 269-2126, 269-2127 CAB AR-ENCLOSED ROPS
AN ATTACHMENT

SMCS-7324, 7336 **i02837799**

NOTE	PART NUMBER	QTY	PART NAME 1 2 3 4 5 6 (PRODUCT LEVEL)	SEE PAGE
Y	**206-1796**	1	SEAT GP-SUSPENSION (DELUXE, CLOTH)	889
M	**8T-4139**	4	BOLT (M12X1.75X30-MM)	
	3S-2093	1	STRAP-CABLE	
	8T-4223	4	WASHER-HARD (13.5X25.5X3-MM THK)	

M-METRIC PART
Y-SEPARATE ILLUSTRATION

<END>

OPERATOR STATION

273-6372 SUSPENSION GP-SEAT

S/N: HLS1-99999
PART OF 206-1791, 206-1792, 206-1796 SEAT GP-SUSPENSION
AN ATTACHMENT
TYPE 1

SMCS-7312, 7324 **i02838100**

NOTE	PART NUMBER	QTY	PART NAME 1 2 3 4 5 6 (PRODUCT LEVEL)	SEE PAGE
	260-0059	1	AIR COMPRESSOR GP (SUSPENSION SEAT)	
	164-1215	1	ABSORBER AS-SHOCK (SEAT)	
	164-1218	2	ARM AS-SUSPENSION (OUTER)	
	260-0060	1	ARM AS-SUSPENSION (INNER)	
	164-1219	1	BRACKET AS (FRONT)	
	164-1220	1	BRACKET AS (REAR)	
	260-0036	1	HARNESS AS-RIDE CONTROL	
	260-0057	1	LATCH AS-SLIDE	
	260-0052	1	PLATE AS-SLIDE	
	260-0051	1	PLATE AS-UPPER	
	102-8804	1	KIT-RECEPTACLE (4-PIN)	
			(INCLUDES RECEPTACLE AS & WEDGE)	
	260-0047	2	SHAFT AS	
	218-0235	2	SWITCH AS-LIMIT (SUSPENSION SEAT)	
			(EACH INCLUDES)	
	102-8803	1	KIT-RECEPTACLE (3-PIN)	
			(INCLUDES RECEPTACLE AS & WEDGE)	
	186-3735	3	PIN-CONNECTOR (16-GA TO 18-GA)	
	4B-9784	8	BALL	
	260-0063	1	BASE-SEAT	
	164-1230	12	BEARING	
	260-0067	2	BEARING	
	260-0042	1	BEARING-FLANGED	
	149-4745	2	KIT-SLIDER BLOCK (SUSPENSION SEAT)	
			(EACH INCLUDES BOLT & BLOCKS)	
	161-9289	2	BLOCK-SLIDER	
	260-0043	1	BLOCK-STOP	
	0S-0509	1	BOLT (3/8-16X0.75-IN)	
	1H-3337	4	BOLT (1/4-20X0.875-IN)	
	4M-0061	2	BOLT (5/16-18X0.75-IN)	
	7X-0481	1	BOLT (1/2-13X8-IN)	
	260-0041	1	BOLT (3/4-1-X1.42-IN)	
M	**197-6657**	1	BOLT-ROUND HEAD (M12X1.75X80-MM)	
	164-1240	1	BOOT	
	237-3943	1	BRACKET	
	164-1229	4	BUMPER	
	164-1237	1	BUSHING	
	111-5042	34	FASTENER	
	260-0046	1	HOUSING-UPPER	
	260-0031	1	LEVER	
	260-0032	1	LEVER	
	1K-6872	1	LOCKNUT (1/2-13-THD)	
	2D-6235	4	LOCKNUT (1/4-20-THD)	
	2K-4973	8	LOCKNUT (3/8-16-THD)	
M	**6V-7687**	1	LOCKNUT (M12X1.75-THD)	
M	**096-4882**	2	LOCKNUT (M8X1.25-THD)	
	142-2928	4	LOCKNUT (4-40-THD)	
	3B-4505	2	LOCKWASHER	
	3J-4818	2	LOCKWASHER	
	6V-8185	2	NUT (1/4-20-THD)	
	2L-5893	1	PIN-SPRING	
	4H-8380	4	PIN-SPRING	

273-6372 SUSPENSION GP-SEAT *(contd.)* i02838100

NOTE	PART NUMBER	QTY	PART NAME 1 2 3 4 5 6 (PRODUCT LEVEL)	SEE PAGE
	164-1232	1	PLATE	
	260-0044	1	PLATE-LATCH	
	5V-1497	2	RETAINER	
	215-1242	1	RING	
	8S-7803	3	RING-RETAINING	
	130-8343	1	SCREW-BUTTON HEAD (3/8-16X0.625-IN)	
	6L-7155	2	SCREW-MACHINE (1/4-20X0.5-IN)	
	173-5787	2	SETSCREW (1/4-20-THD)	
	164-1226	2	SHAFT	
	260-0049	2	SHAFT-LOWER	
	161-9288	1	SHAFT-PIVOT	
	260-0030	1	SHAFT-PIVOT	
	164-1233	2	SPACER (13X25.4X20.5-MM THK)	
	164-1238	1	SPACER (12.8X22.2X3.1-MM THK)	
	164-1239	2	SPACER (13.5X19X61.9-MM THK)	
	163-1135	1	SPRING	
	260-0034	1	SPRING-RETURN	
	260-0035	1	SPRING-RETURN	
	260-0033	1	SPRING-TORSION	
	7X-0622	6	WASHER (13X24X2.5-MM THK)	
	9X-1481	2	WASHER (13X25.4X1.6-MM THK)	

M-METRIC PART

<END>

OPERATOR STATION

273-6372 SUSPENSION GP-SEAT

S/N: HLS1-99999
PART OF 206-1791, 206-1792, 206-1796 SEAT GP-SUSPENSION
AN ATTACHMENT
TYPE 2

SMCS-7312, 7324 **i03463100**

NOTE	REF NO	GRAPHIC REF	PART NUMBER	QTY	PART NAME 1 2 3 4 5 6 (PRODUCT LEVEL)	SEE PAGE
C	1	2	**3S-2093**	2	STRAP-CABLE	
	2	1,2	**111-5042**	34	FASTENER	
	3	2	**243-3593**	1	SPRING AS-AIR	
		2	**130-8343**	1	SCREW-BUTTON HEAD (3/8-16X0.625-IN)	
		2	**163-1135**	1	SPRING	
		2	**164-1232**	1	PLATE	
D		2	**5P-6010**		TUBE (1-M)	
	4	1	**149-4745**	2	KIT-SLIDER BLOCK (SUSPENSION SEAT)	
					(EACH INCLUDES BOLT & BLOCKS)	
C	5	1	**161-9283**	1	WASHER (19.8X31.8X1.6-MM THK)	
C	6	1	**161-9285**	1	NUT (3/4-10-THD)	
	7	1	**161-9288**	1	SHAFT-PIVOT	
	8	1	**161-9289**	2	BLOCK-SLIDER	
	9	2	**180-5789**	2	NUT	
	10	2	**164-1215**	1	ABSORBER AS-SHOCK (SEAT)	
	11	2	**164-1218**	2	ARM AS-SUSPENSION (OUTER)	
	12	2	**164-1219**	1	BRACKET AS (FRONT)	
	13	2	**164-1220**	1	BRACKET AS (REAR)	
	14	2	**164-1226**	2	SHAFT	
C	15	2	**164-1228**	1	HARNESS AS-RIDE CONTROL	
	16	2	**164-1229**	4	BUMPER	
	17	2	**164-1230**	12	BEARING	
	19	2	**164-1233**	2	SPACER (13X25.4X20.5-MM THK)	
C	20	1	**164-1234**	1	PLATE	
C	21	1	**164-1235**	1	KNOB	
	22	2	**164-1237**	1	BUSHING	
	23	2	**164-1238**	1	SPACER (12.8X22.2X3.1-MM THK)	
	24	2	**164-1239**	2	SPACER (13.5X19X61.9-MM THK)	
	25	1	**164-1240**	1	BOOT	
	26	1	**173-5787**	2	SETSCREW (1/4-20-THD)	
C	28	2	**185-3890**	2	SCREW-PAN HEAD (8-32X33.3-MM)	
M	29	2	**197-6657**	1	BOLT-ROUND HEAD (M12X1.75X80-MM)	
C	30	1	**215-8196**	1	VALVE AS	
	31	2	**237-3943**	1	BRACKET	
	32	1	**260-0030**	1	SHAFT-PIVOT	
	33	1	**321-6337**	1	LEVER (HANDLE-SWIVEL)	
	34	1	**260-0032**	1	LEVER (HANDLE-SLIDE)	
	35	1	**260-0033**	1	SPRING-TORSION (SWIVEL LATCH)	
	36	1	**260-0034**	1	SPRING-RETURN (SWIVEL)	
	37	1	**260-0035**	1	SPRING-RETURN (SLIDE)	
	38	1	**260-0041**	1	BOLT (3/4-1-X1.42-IN)	
	40	1	**260-0043**	1	BLOCK-STOP	
	41	1	**260-0044**	1	PLATE-LATCH	
	42	1	**317-5309**	1	HOUSING AS	
		1	**260-0046**	1	HOUSING-UPPER	
M		1	**6V-9632**	2	NUT-WELD (M6X1-THD)	
	43	1	**260-0047**	2	SHAFT AS (UPPER)	
	44	2	**260-0049**	2	SHAFT-LOWER	
	45	1	**260-0051**	1	PLATE AS-UPPER	
	46	1	**260-0052**	1	PLATE AS-SLIDE	
	47	1	**260-0057**	1	LATCH AS-SLIDE	
	48	2	**260-0059**	1	AIR COMPRESSOR GP (SUSPENSION SEAT)	
	50	2	**260-0063**	1	BASE-SEAT	
	51	2	**260-0067**	2	BEARING	

273-6372 SUSPENSION GP-SEAT *(contd.)* i03463100

NOTE	REF NO	GRAPHIC REF	PART NUMBER	QTY	PART NAME 1 2 3 4 5 6 (PRODUCT LEVEL)	SEE PAGE
C	52	1	**289-1204**	1	RING	
M	53	1	**096-4882**	2	LOCKNUT (M8X1.25-THD)	
CM	54	2	**129-3180**	1	LOCKNUT (M12X1.75-THD)	
C	55	1,2	**153-0088**	4	WASHER-HARD (10.31X20X1.65-MM THK)	
	56	2	**0S-0509**	1	BOLT (3/8-16X0.75-IN)	
	57	2	**1H-3337**	4	BOLT (1/4-20X0.875-IN)	
	58	2	**1K-6872**	1	LOCKNUT (1/2-13-THD)	
	59	2	**2D-6235**	4	LOCKNUT (1/4-20-THD)	
	60	1,2	**2K-4973**	8	LOCKNUT (3/8-16-THD)	
	61	1	**2L-5893**	1	PIN-SPRING	
	62	1	**3B-4505**	2	LOCKWASHER	
C	63	1	**3B-4631**	1	PIN-COTTER	
	64	2	**3J-4818**	2	LOCKWASHER	
C	65	1	**4B-9784**	12	BALL	
	66	1,2	**4H-8380**	4	PIN-SPRING	
	67	1	**4M-0061**	2	BOLT (5/16-18X0.75-IN)	
	68	1	**6L-7155**	2	SCREW-MACHINE (1/4-20X0.5-IN)	
	69	2	**6V-8185**	4	NUT (1/4-20-THD)	
	70	2	**7X-0481**	1	BOLT (1/2-13X8-IN)	
	71	2	**7X-0622**	6	WASHER (13X24X2.5-MM THK)	
	72	1	**8S-7803**	3	RING-RETAINING	
	73	2	**9X-1481**	2	WASHER (13X25.4X1.6-MM THK)	
	74	1	**8Y-5946**	1	FASTENER	
	75	2	**260-0060**	1	ARM AS-SUSPENSION (INNER)	

C-CHANGE FROM PREVIOUS TYPE
D-ORDER BY THE METER
M-METRIC PART

273-6372 SUSPENSION GP-SEAT *(contd.)* i03463100

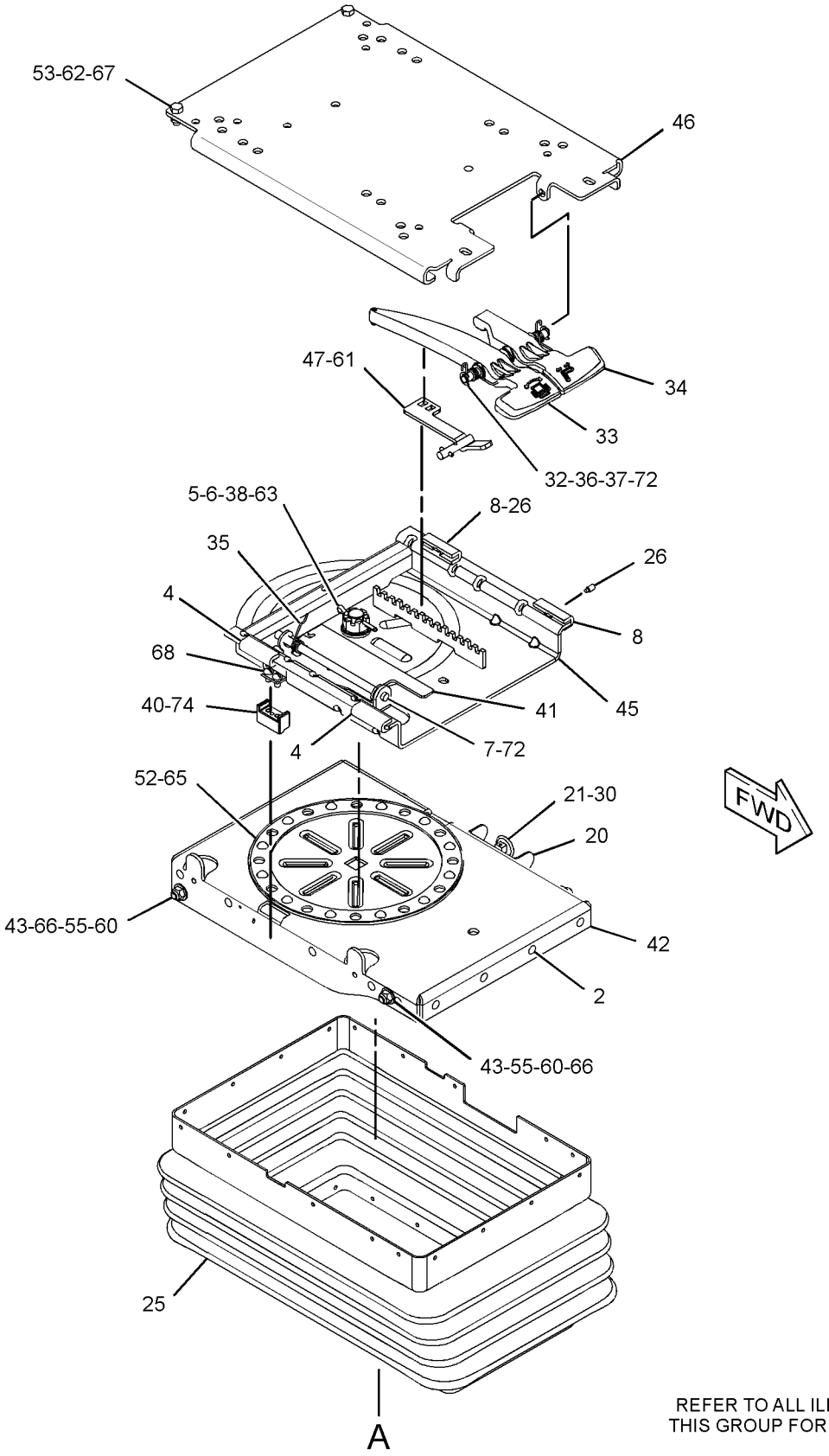

REFER TO ALL ILLUSTRATIONS OF
THIS GROUP FOR AUXILIARY VIEWS

GRAPHIC #1

g01515019

273-6372 SUSPENSION GP-SEAT *(contd.)* i03463100

REFER TO ALL ILLUSTRATIONS OF
THIS GROUP FOR AUXILIARY VIEWS

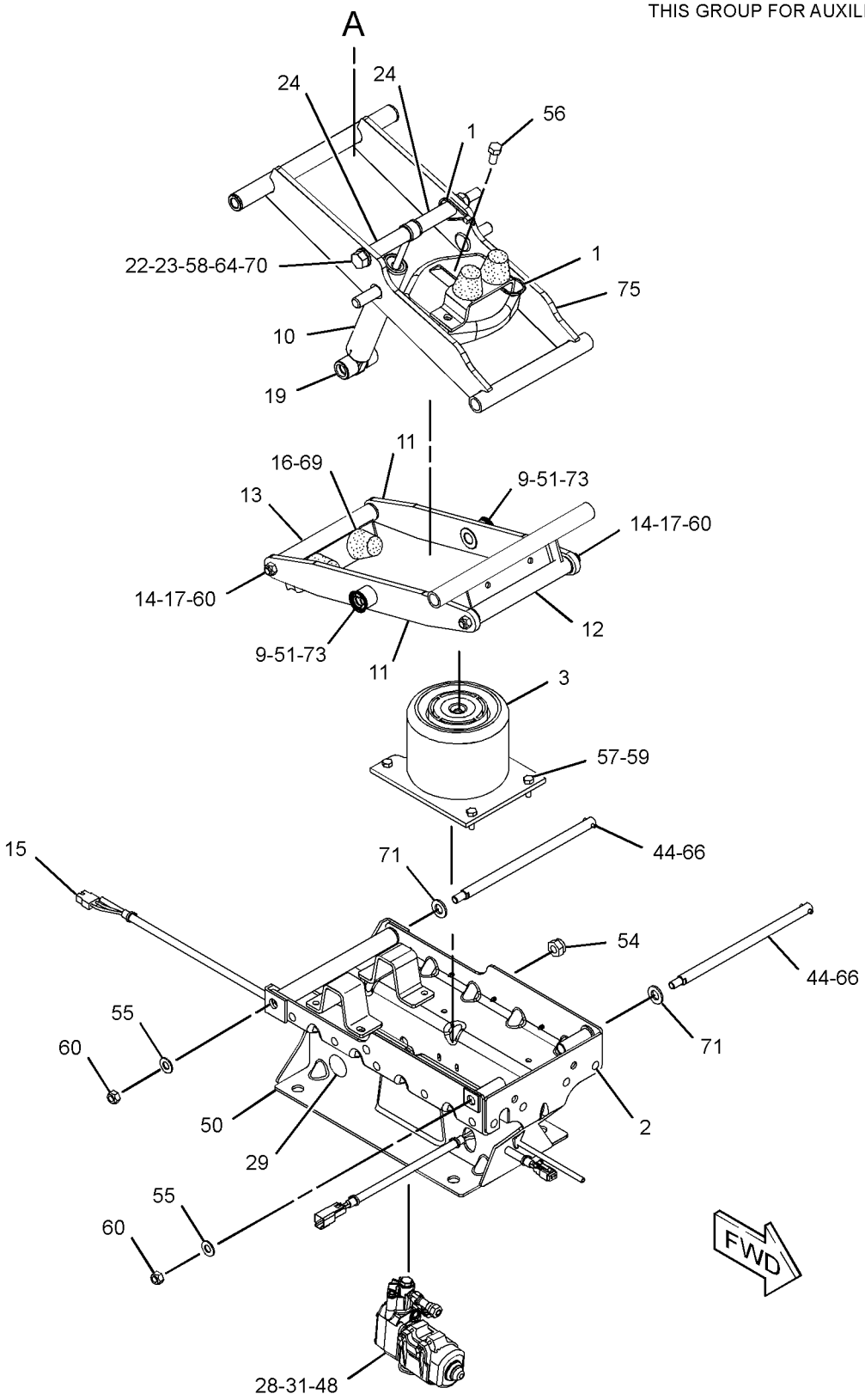

GRAPHIC #2 **<END>** g01517422

OPERATOR STATION

239-1080 TACHOMETER GP-ELECTRIC

S/N: HLS1-99999
PART OF 211-4241, 290-6803 WIRING GP-CONSOLE
AN ATTACHMENT

SMCS-7462 **i01986564**

NOTE	REF NO	GRAPHIC REF	PART NUMBER	QTY	PART NAME 1 2 3 4 5 6 (PRODUCT LEVEL)	SEE PAGE
	1	1	**4B-2043**	7	NUT (8-32-THD)	
	2	1	**9B-7233**	7	LOCKWASHER	
	3	1	**122-7137**	1	LAMP (12-VOLT)	
	4	1	**131-1424**	1	SEAL	

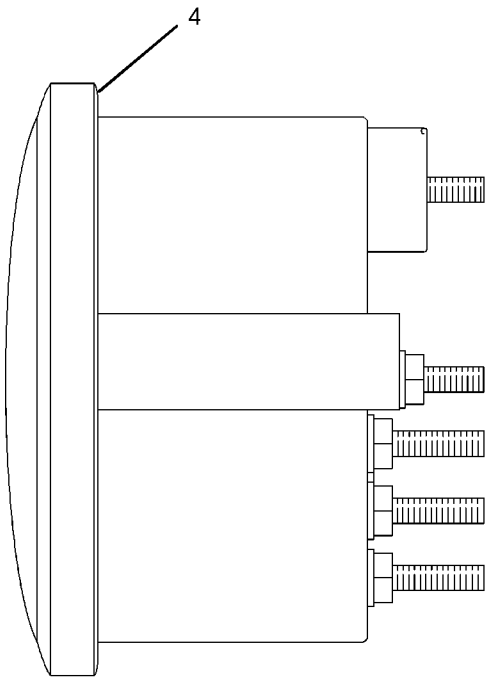

LEFT SIDE VIEW

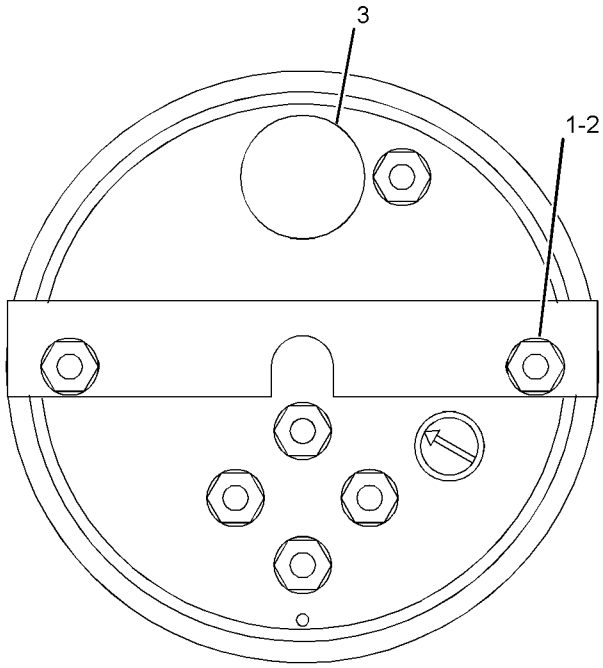

REAR VIEW

GRAPHIC #1 **<END>** g01030658

OPERATOR STATION

206-1704 TRIM GP-CAB

S/N: HLS1-99999
PART OF 269-2123, 269-2124 CANOPY AR-OPEN ROPS
AN ATTACHMENT

SMCS-7329, 7451 **i02787052**

NOTE	REF NO	GRAPHIC REF	PART NUMBER	QTY	PART NAME 1 2 3 4 5 6 (PRODUCT LEVEL)	SEE PAGE
	1	1	**6V-0292**	1	PLUG	
	2	1	**9C-4457**	4	FASTENER	
	3	1	**141-1762**	1	SPACER (21.2X25.4X20-MM THK)	
	4	1	**206-1623**	1	INSERT (LH)	
	5	1	**206-1625**	1	INSERT (RH)	
	6	1	**206-1637**	1	CONSOLE-STORAGE	
	7	1	**206-1665**	2	PLUG	
	8	1	**206-1666**	1	PLUG	
	9	1	**206-1683**	1	INSERT	
	10	1	**206-1798**	1	COVER-POST	
	11	1	**206-1799**	4	PLUG	
	12	1	**213-1888**	1	COVER-FENDER	
	13	1	**261-9632**	1	COVER AS	
		1	**206-1684**	1	COVER (CAB FILTER)	
	14	1	**282-7833**	1	GROMMET	
	15	1	**282-7835**	1	PLATE	
M	16	1	**6V-7744**	1	LOCKNUT (M10X1.5-THD)	
	17	1	**8T-4222**	1	WASHER-PLATED (11X32X2.5-MM THK)	
M	18	1	**8T-4178**	1	BOLT (M10X1.5X90-MM)	
M	19	1	**8C-3798**	2	BOLT-LOCKING (M6X1X30-MM)	
	20	1	**9X-2038**	3	WASHER (7X19X2-MM THK)	
M	21	1	**9X-2044**	7	SCREW-TRUSS HEAD (M6X1X16-MM)	
	22	1	**9X-8256**	2	WASHER (6.6X12X2-MM THK)	
E	23	1	**8C-7524**		SEAL (40-CM)	

E-ORDER BY THE CENTIMETER
M-METRIC PART

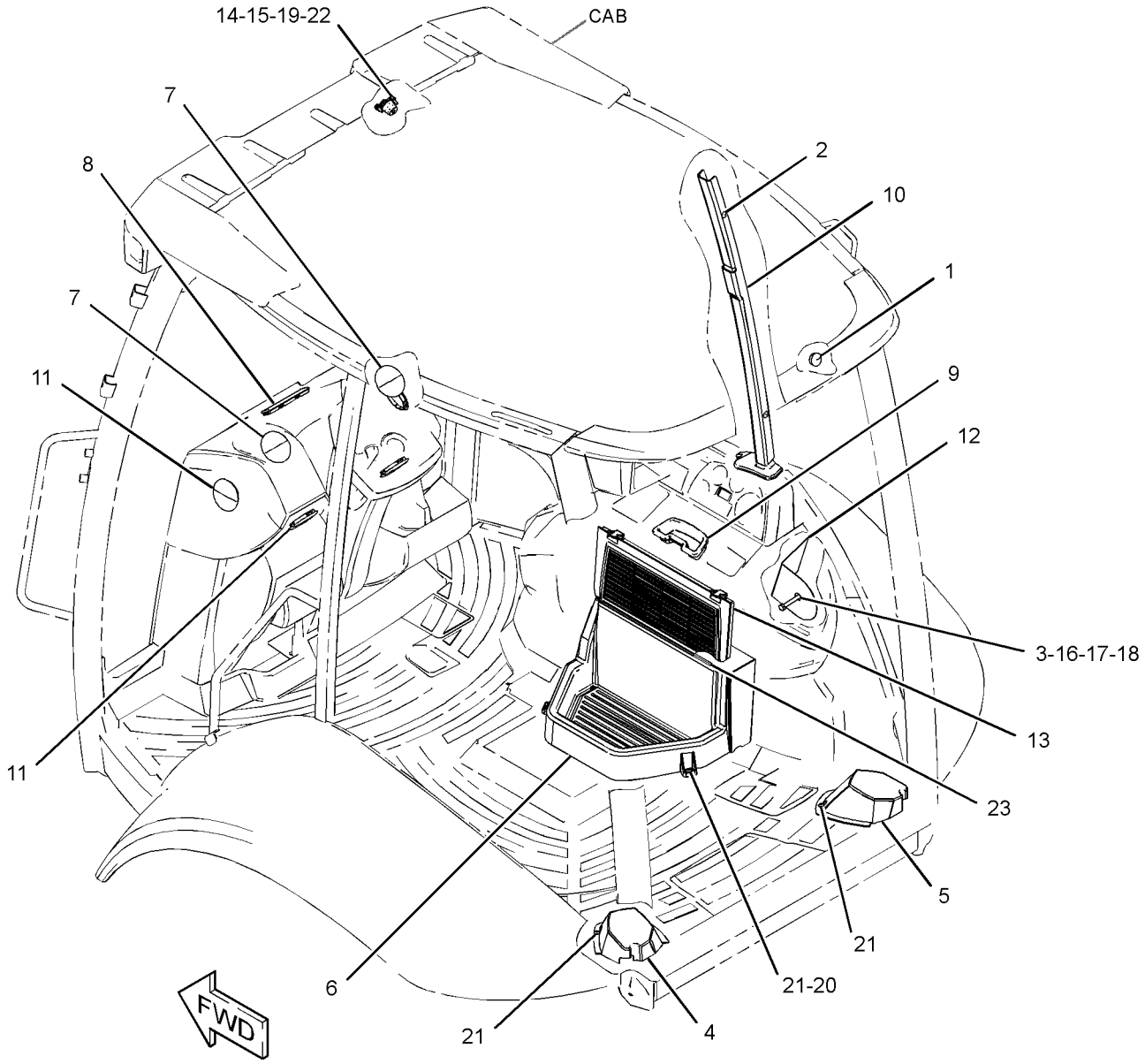

GRAPHIC #1 **<END>** g01274349

OPERATOR STATION

206-1857 VISOR GP-CAB

S/N: HLS1-3124
PART OF 269-2126, 269-2127 CAB AR-ENCLOSED ROPS
AN ATTACHMENT

SMCS-7301 **i02114171**

NOTE	REF NO	GRAPHIC REF	PART NUMBER	QTY	PART NAME 1 2 3 4 5 6 (PRODUCT LEVEL)	SEE PAGE
	1	1	**9R-3205**	1	VISOR AS	
	2	1	**4N-9170**	2	CLIP	



GRAPHIC #1 **<END>** g01077278

OPERATOR STATION

206-1857 VISOR GP-CAB

S/N: HLS3125-99999
PART OF 269-2126, 269-2127 CAB AR-ENCLOSED ROPS
AN ATTACHMENT

SMCS-7301 **i02704687**

NOTE	REF NO	GRAPHIC REF	PART NUMBER	QTY	PART NAME 1 2 3 4 5 6 (PRODUCT LEVEL)	SEE PAGE
CE	1	1	**8C-3681**		HOSE (2.5-CM EACH)	
	2	1	**9R-3205**	1	VISOR AS	
C	3	1	**5P-9297**	2	CLIP	

C-CHANGE FROM PREVIOUS TYPE
E-ORDER BY THE CENTIMETER

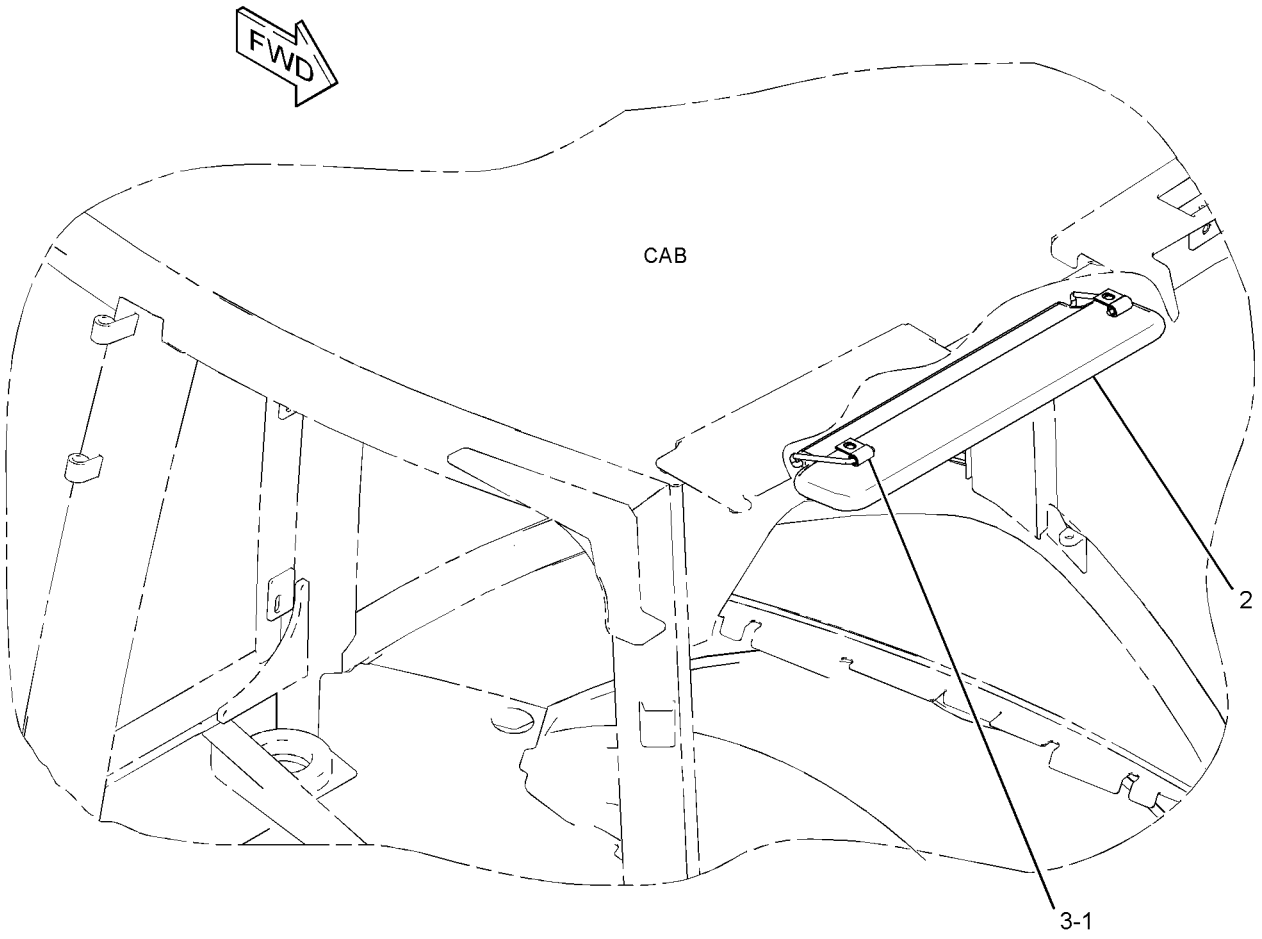

GRAPHIC #1 **<END>** g01384970

OPERATOR STATION

206-1727 WASHER GP-WINDOW

S/N: HLS1-99999
PART OF 269-2125, 269-2126, 269-2127 CAB AR-ENCLOSED ROPS
AN ATTACHMENT
TYPE 1

SMCS-7306 **i03516100**

NOTE	REF NO	GRAPHIC REF	PART NUMBER	QTY	PART NAME 1 2 3 4 5 6 (PRODUCT LEVEL)	SEE PAGE
	1	1	**282-7835**	1	PLATE	
D	2	1	**6V-0505**		SEAL (0.5-M)	
	3	1	**3S-2093**	11	STRAP-CABLE	
	4	1	**8T-1118**	1	NOZZLE AS-WASHER	
	5	1	**9R-3469**	2	DIAPHRAGM	
	6	1	**9X-8372**	1	FILM-INSTRUCTION (WASHER FILL)	
	7	1	**121-6936**	1	CONNECTOR	
	8	1	**213-6051**	1	HARNESS AS-CAB	
	9	1	**214-3763**	1	TANK GP-WINDOW WASHER	
		1	**254-5683**	1	CAP	
		1	**8E-8293**	2	GROMMET	
		1	**6T-1375**	2	PUMP AS-WASHER	
		1	**214-3742**	1	TANK-WASHER	
	10	1	**276-8791**	1	CLIP	
	11	1	**283-3451**	2	CONNECTOR AS	
	12	1	**156-0283**	2	WASHER-HARD (8.4X35X2.5-MM THK)	
M	13	1	**8T-5093**	2	BOLT-LOCKING (M8X1.25X25-MM)	
E	14	1	**144-0195**		HOSE (17-CM)	
E	14A	1	**144-0195**		HOSE (21-CM EACH)	
E	14B	1	**144-0195**		HOSE (81-CM)	
M	15	1	**8C-3798**	2	BOLT-LOCKING (M6X1X30-MM)	
	16	1	**282-7833**	1	GROMMET	
	17	1	**9X-8256**	2	WASHER (6.6X12X2-MM THK)	

D-ORDER BY THE METER
E-ORDER BY THE CENTIMETER
M-METRIC PART

206-1727 **WASHER GP-WINDOW** *(contd.)* **i03516100**

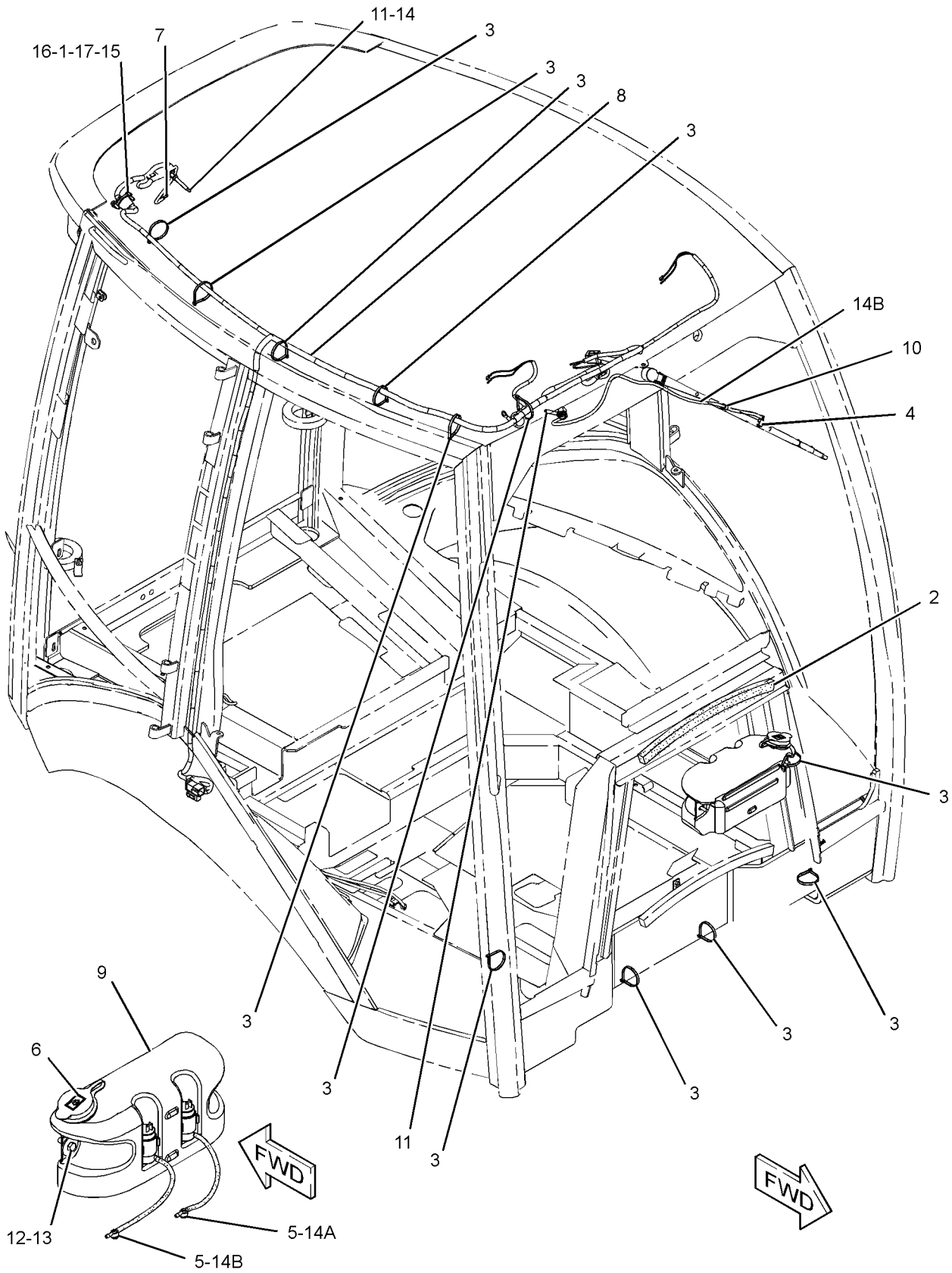

GRAPHIC #1 **<END>** g01847133

206-1727 WASHER GP-WINDOW

S/N: HLS1-99999
PART OF 269-2125, 269-2126, 269-2127 CAB AR-ENCLOSED ROPS
AN ATTACHMENT
TYPE 2

SMCS-7306 **i03399288**

NOTE	REF NO	GRAPHIC REF	PART NUMBER	QTY	PART NAME 1 2 3 4 5 6 (PRODUCT LEVEL)	SEE PAGE
E	1	1	**144-0195**		HOSE (17-CM)	
E	1A	1	**144-0195**		HOSE (21-CM EACH)	
E	1B	1	**144-0195**		HOSE (81-CM)	
	2	1	**3S-2093**	11	STRAP-CABLE	
	3	1	**8T-1118**	1	NOZZLE AS-WASHER	
	4	1	**9R-3469**	2	DIAPHRAGM	
	5	1	**9X-8372**	1	FILM-INSTRUCTION (WASHER FILL)	
	6	1	**121-6936**	1	CONNECTOR	
	7	1	**213-6051**	1	HARNESS AS-CAB	
	8	1	**214-3763**	1	TANK GP-WINDOW WASHER	
		1	**254-5683**	1	CAP	
		1	**8E-8293**	2	GROMMET	
		1	**6T-1375**	2	PUMP AS-WASHER	
		1	**214-3742**	1	TANK-WASHER	
	9	1	**276-8791**	1	CLIP	
	10	1	**282-7833**	1	GROMMET	
	11	1	**282-7835**	1	PLATE	
	12	1	**283-3451**	2	CONNECTOR AS	
	13	1	**156-0283**	2	WASHER-HARD (8.4X35X2.5-MM THK)	
M	14	1	**8C-3798**	2	BOLT-LOCKING (M6X1X30-MM)	
M	15	1	**8T-5093**	2	BOLT-LOCKING (M8X1.25X25-MM)	
	16	1	**9X-8256**	2	WASHER (6.6X12X2-MM THK)	

E-ORDER BY THE CENTIMETER
M-METRIC PART

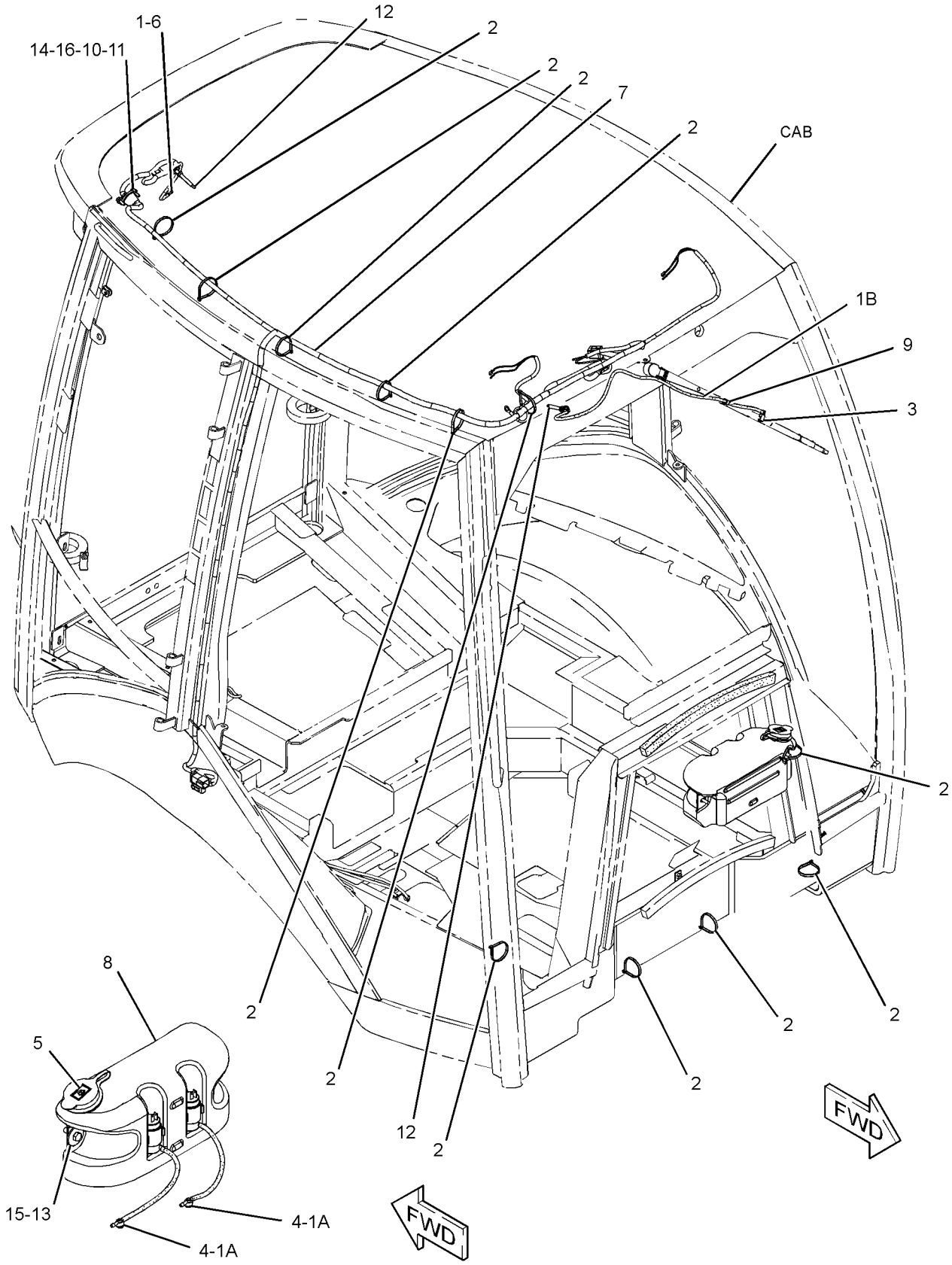

GRAPHIC #1 **<END>** g01794076

205-9619 WINDOW GP-CAB–UPPER, LH

S/N: HLS1-99999

PART OF 206-1889 CAB GP-ENCLOSED ROPS, 281-7219 KIT-CAB WINDOW

AN ATTACHMENT

SMCS-7310 **i02940328**

NOTE	REF NO	GRAPHIC REF	PART NUMBER	QTY	PART NAME 1 2 3 4 5 6 (PRODUCT LEVEL)	SEE PAGE
E	1	1	**317-4423**		SEAL (342-CM)	
	2	1	**8Y-7309**	1	RETAINER	
	3	1	**100-7608**	1	HANDLE	
	4	1	**129-8542**	6	RETAINER (MOUNT)	
	5	1	**129-8545**	8	WASHER (13X40X3-MM THK)	
M	6	1	**136-4192**	4	BOLT (M6X1X35-MM)	
	7	1	**154-5423**	2	SPACER (6.6X12.7X17-MM THK)	
Y	8	1	**299-6985**	1	LATCH GP-CAB DOOR & WINDOW (RH)	859
Y	9	1	**299-6986**	1	LATCH GP-CAB DOOR & WINDOW (LH)	860
	10	1	**205-9621**	1	GLASS (UPPER, LH)	
	11	1	**205-9623**	1	HINGE (LOWER, LH)	
	12	1	**205-9624**	1	HINGE (UPPER, LH)	
	13	1	**223-2030**	1	LATCH AS (HOLD OPEN)	
M		1	**6V-7743**	2	LOCKNUT (M6X1-THD)	
M		1	**9X-2045**	2	SCREW-TRUSS HEAD (M6X1X20-MM)	
		1	**143-2827**	2	SPRING	
M	14	1	**5C-7261**	1	NUT (M8X1.25-THD)	
M	15	1	**6V-7743**	2	LOCKNUT (M6X1-THD)	
	16	1	**7X-2393**	1	BUMPER-CONICAL	

E-ORDER BY THE CENTIMETER
M-METRIC PART
Y-SEPARATE ILLUSTRATION

205-9619 WINDOW GP-CAB *(contd.)* i02940328

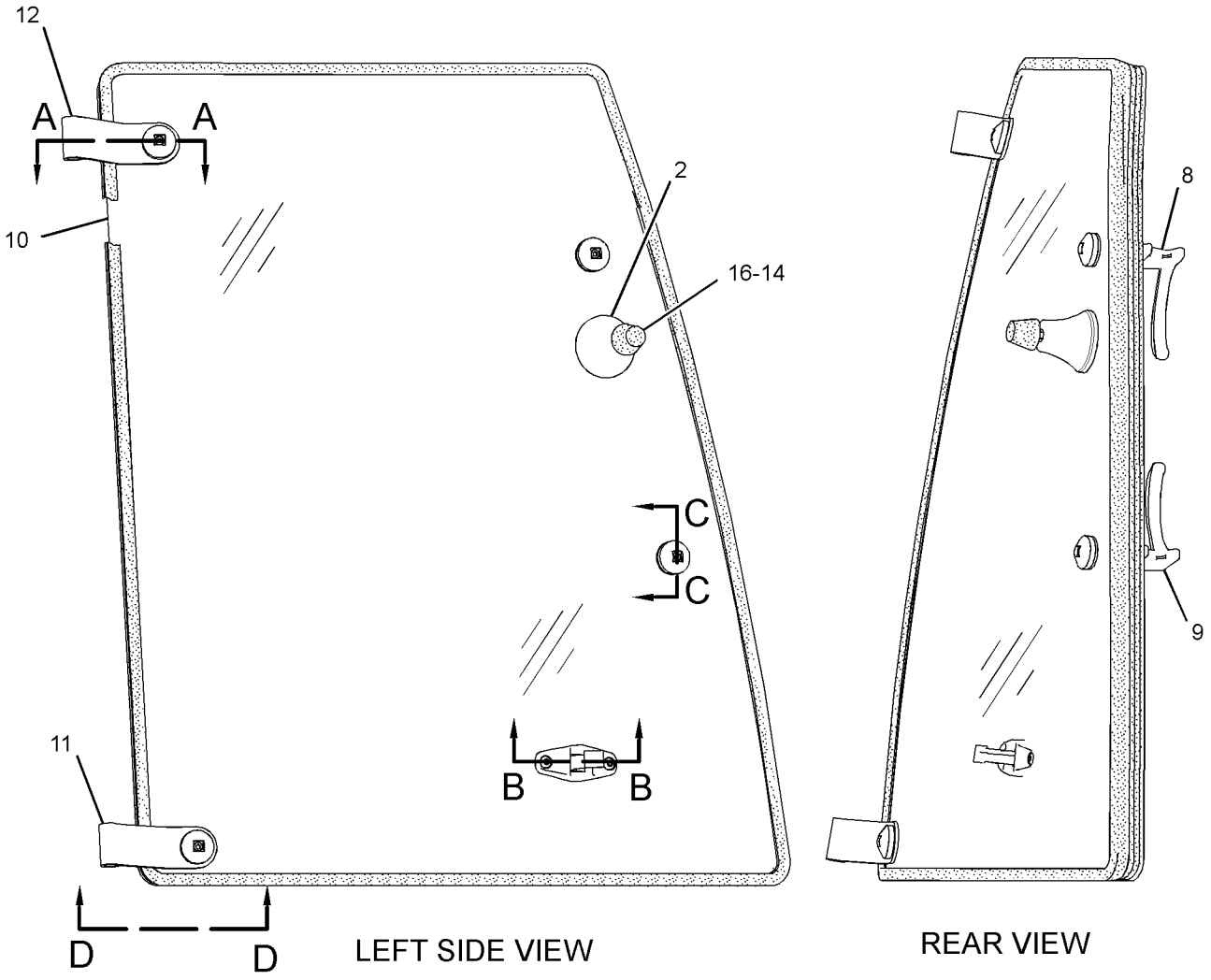

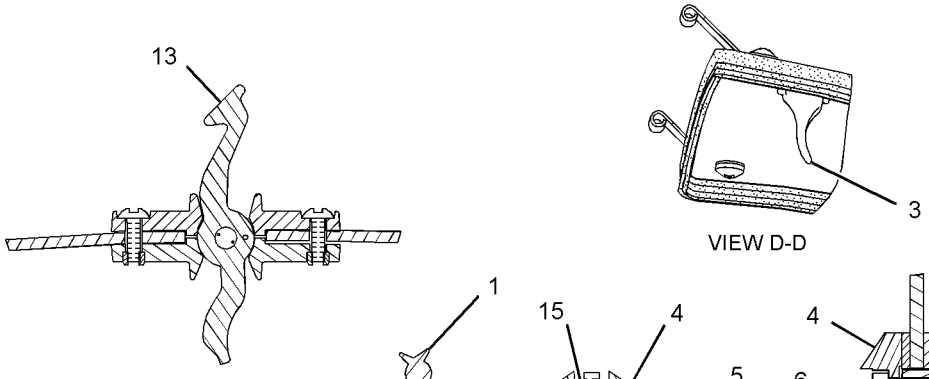

GRAPHIC #1 **<END>** g01522082

205-9628 WINDOW GP-CAB–UPPER, RH

S/N: HLS1-99999

PART OF 206-1889 CAB GP-ENCLOSED ROPS, 281-7219 KIT-CAB WINDOW

AN ATTACHMENT

SMCS-7310 **i02940329**

NOTE	REF NO	GRAPHIC REF	PART NUMBER	QTY	PART NAME 1 2 3 4 5 6 (PRODUCT LEVEL)	SEE PAGE
E	1	1	**317-4423**		SEAL (342-CM)	
	2	1	**8Y-7309**	1	RETAINER	
	3	1	**100-7608**	1	HANDLE	
	4	1	**129-8542**	6	RETAINER	
	5	1	**129-8545**	8	WASHER (13X40X3-MM THK)	
M	6	1	**136-4192**	4	BOLT (M6X1X35-MM)	
	7	1	**154-5423**	2	SPACER (6.6X12.7X17-MM THK)	
Y	8	1	**299-6985**	1	LATCH GP-CAB DOOR & WINDOW (RH)	859
Y	9	1	**299-6986**	1	LATCH GP-CAB DOOR & WINDOW (LH)	860
	10	1	**205-9630**	1	GLASS (UPPER, RH)	
	11	1	**205-9633**	1	HINGE (LOWER, RH)	
	12	1	**205-9634**	1	HINGE (UPPER, RH)	
	13	1	**223-2030**	1	LATCH AS (HOLD OPEN)	
M		1	**6V-7743**	2	LOCKNUT (M6X1-THD)	
M		1	**9X-2045**	2	SCREW-TRUSS HEAD (M6X1X20-MM)	
		1	**143-2827**	2	SPRING	
M	14	1	**5C-7261**	1	NUT (M8X1.25-THD)	
M	15	1	**6V-7743**	2	LOCKNUT (M6X1-THD)	
	16	1	**7X-2393**	1	BUMPER-CONICAL	

E-ORDER BY THE CENTIMETER
M-METRIC PART
Y-SEPARATE ILLUSTRATION

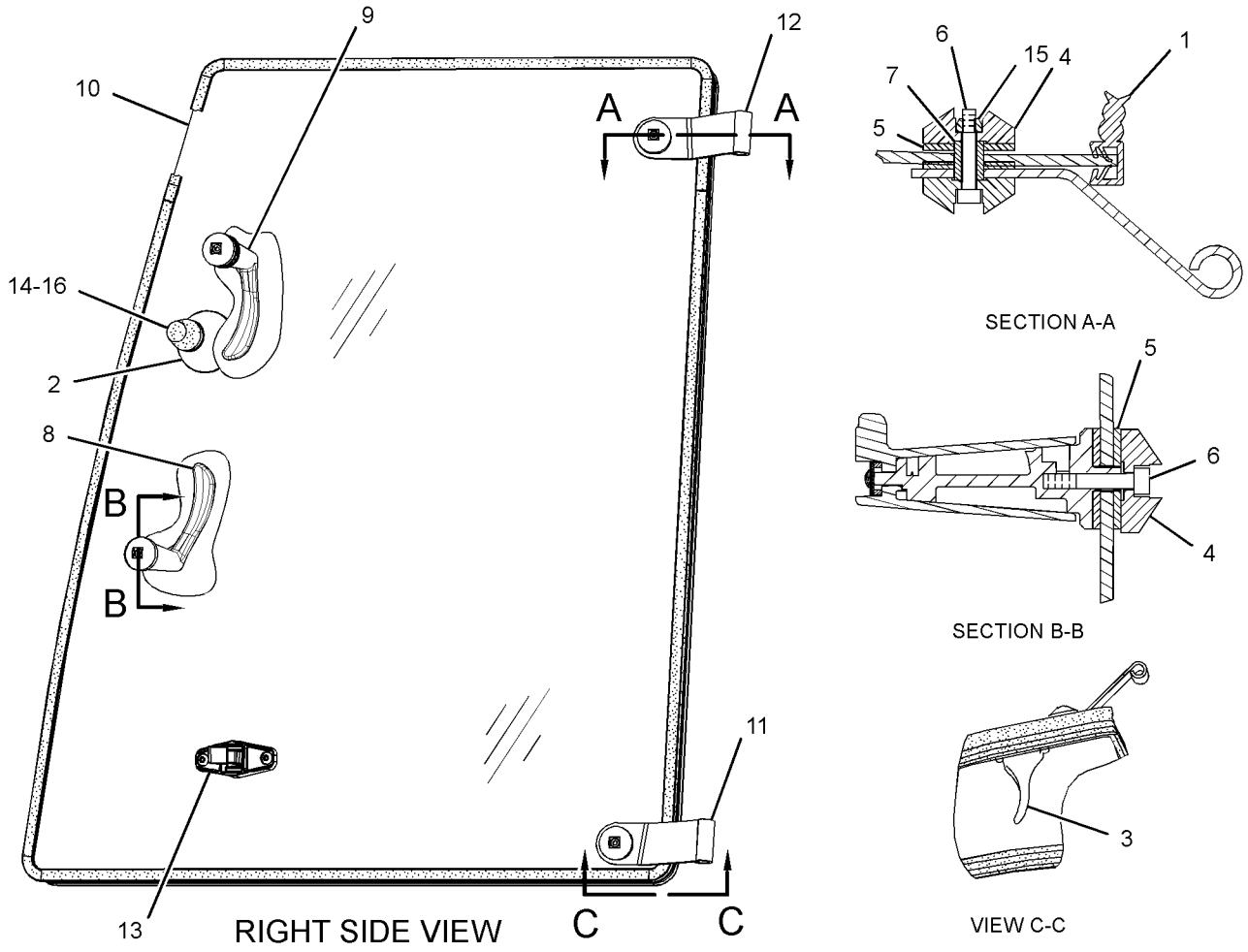

GRAPHIC #1 **<END>** g01522081

OPERATOR STATION

229-0300 WINDOW GP-CAB—REAR

S/N: HLS1-99999
PART OF 206-1889 CAB GP-ENCLOSED ROPS
AN ATTACHMENT
TYPE 1

SMCS-7310 **i03511043**

NOTE	REF NO	GRAPHIC REF	PART NUMBER	QTY	PART NAME 1 2 3 4 5 6 (PRODUCT LEVEL)	SEE PAGE
	1	1	**5P-4115**	6	WASHER-HARD (7.2X19X2-MM THK)	
M	2	1	**9X-2044**	4	SCREW-TRUSS HEAD (M6X1X16-MM)	
	3	1	**9X-2132**	4	RETAINER	
	4	1	**110-5602**	2	KNOB	
	5	1	**119-8349**	2	CAP	
	6	1	**121-9743**	1	SEAL	
M	7	1	**129-3180**	4	LOCKNUT (M12X1.75-THD)	
M	8	1	**131-8203**	4	SCREW-FLAT HEAD (M8X1.25X30-MM)	
	9	1	**146-7744**	1	KIT-LATCH (RH)	
	10	1	**146-7745**	1	KIT-LATCH (LH)	
	11	1	**164-1308**	2	ROLLER	
	12	1	**164-1328**	2	SPRING-GAS	
	13	1	**164-1342**	4	BOLT-SPECIAL	
	14	1	**164-1343**	4	WASHER-THRUST	
	15	1	**164-1344**	4	WASHER-THRUST	
	16	1	**164-1345**	4	BEARING	
	17	1	**164-1346**	4	STRIKER	
	18	1	**164-1351**	2	PIN	
	19	1	**164-1352**	1	LATCH AS (LH)	
	20	1	**164-1353**	1	LATCH AS (RH)	
	21	1	**167-8182**	2	BUMPER	
	22	1	**171-2870**	2	SPACER (7X10X5.4-MM THK)	
B	23	1	**201-9465**	4	SHIM (1-MM THK)	
	24	1	**218-4854**	1	PLATE AS	
	25	1	**218-4856**	1	PLATE AS	
	26	1	**229-0298**	1	LINKAGE AS	
	27	1	**229-0305**	1	FRAME AS	
	28	1	**229-0308**	1	GLASS	
	29	1	**229-0310**	1	WINDOW AS	
		1	**229-0309**	1	GLASS	
M	30	1	**5C-2890**	2	NUT (M6X1-THD)	
	31	1	**5P-4116**	4	WASHER-HARD (8.8X20.5X2-MM THK)	
M	32	1	**8T-4200**	4	BOLT (M8X1.25X16-MM)	
	33	1	**8T-4223**	4	WASHER-HARD (13.5X25.5X3-MM THK)	
D	34	1	**5P-5637**		SEAL (1-M)	
E	35	1	**9X-6383**		SEAL (88-CM)	
E	36	1	**164-1314**		SEAL-BULK (153-CM EACH)	
E	37	1	**164-1354**		CHANNEL-WINDOW (90-CM)	
E	37A	1	**164-1354**		CHANNEL-WINDOW (75-CM)	
E	37B	1	**164-1354**		CHANNEL-WINDOW (74-CM)	

B-USE AS REQUIRED
D-ORDER BY THE METER
E-ORDER BY THE CENTIMETER
M-METRIC PART

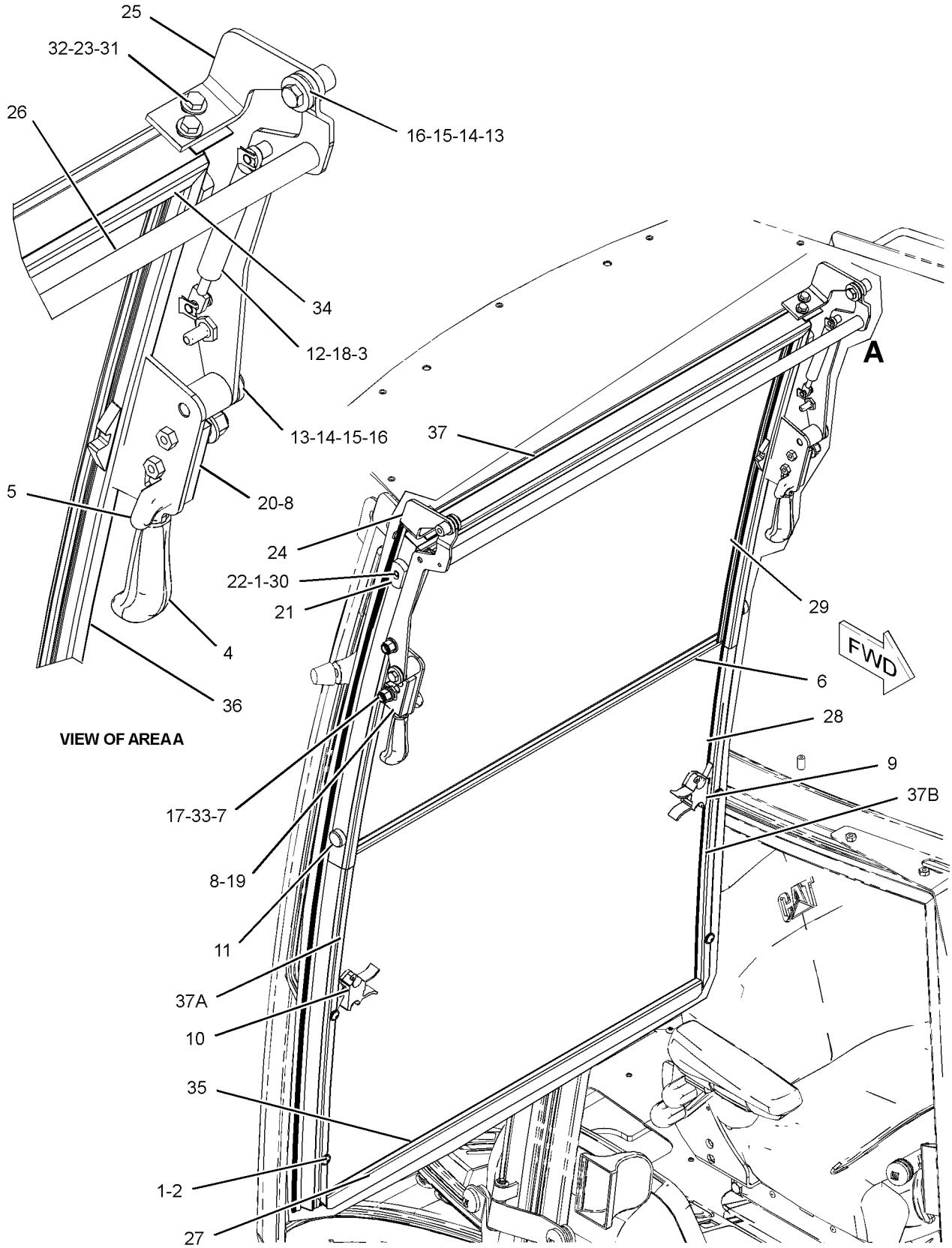

GRAPHIC #1

<END>

g01847073

OPERATOR STATION

229-0300 WINDOW GP-CAB–REAR

S/N: HLS1-99999
PART OF 206-1889 CAB GP-ENCLOSED ROPS, 281-7219 KIT-CAB WINDOW
AN ATTACHMENT
TYPE 2

SMCS-7310 **i02962184**

NOTE	REF NO	GRAPHIC REF	PART NUMBER	QTY	PART NAME 1 2 3 4 5 6 (PRODUCT LEVEL)	SEE PAGE
	1	1	**5P-4115**	6	WASHER-HARD (7.2X19X2-MM THK)	
M	2	1	**9X-2044**	4	SCREW-TRUSS HEAD (M6X1X16-MM)	
	3	1	**9X-2132**	4	RETAINER	
	4	1	**110-5602**	2	KNOB	
	5	1	**119-8349**	2	CAP	
	6	1	**308-1273**	1	SEAL	
M	7	1	**129-3180**	4	LOCKNUT (M12X1.75-THD)	
CM	8	1	**179-7262**	4	SCREW-FLAT HEAD (M8X1.25X40-MM)	
	9	1	**146-7744**	1	KIT-LATCH (RH)	
	10	1	**146-7745**	1	KIT-LATCH (LH)	
	11	1	**164-1308**	2	ROLLER	
	12	1	**164-1328**	2	SPRING-GAS	
	13	1	**164-1342**	4	BOLT-SPECIAL	
	14	1	**164-1343**	4	WASHER-THRUST	
	15	1	**164-1344**	4	WASHER-THRUST	
	16	1	**164-1345**	4	BEARING	
	17	1	**164-1346**	4	STRIKER	
	18	1	**164-1351**	2	PIN	
	19	1	**164-1352**	1	LATCH AS (LH)	
	20	1	**164-1353**	1	LATCH AS (RH)	
	21	1	**167-8182**	2	BUMPER	
	22	1	**171-2870**	2	SPACER (7X10X5.4-MM THK)	
B	23	1	**201-9465**	4	SHIM (1-MM THK)	
	24	1	**218-4854**	1	PLATE AS	
	25	1	**218-4856**	1	PLATE AS	
	26	1	**229-0298**	1	LINKAGE AS	
C	27	1	**290-1273**	1	FRAME AS	
	28	1	**229-0308**	1	GLASS	
	29	1	**229-0310**	1	WINDOW AS	
		1	**229-0309**	1	GLASS	
M	30	1	**5C-2890**	2	NUT (M6X1-THD)	
	31	1	**5P-4116**	4	WASHER-HARD (8.8X20.5X2-MM THK)	
M	32	1	**8T-4200**	4	BOLT (M8X1.25X16-MM)	
	33	1	**8T-4223**	4	WASHER-HARD (13.5X25.5X3-MM THK)	
D	34	1	**5P-5637**		SEAL (1-M)	
E	35	1	**9X-6383**		SEAL (88-CM)	
E	36	1	**164-1314**		SEAL-BULK (153-CM EACH)	
CE	37	1	**164-1354**		CHANNEL-WINDOW (90-CM)	
CE	37A	1	**164-1354**		CHANNEL-WINDOW (75-CM EACH)	
CE	37B	1	**164-1354**		CHANNEL-WINDOW (74-CM EACH)	
C	38	1	**150-8015**	2	GASKET	

B-USE AS REQUIRED
C-CHANGE FROM PREVIOUS TYPE
D-ORDER BY THE METER
E-ORDER BY THE CENTIMETER
M-METRIC PART

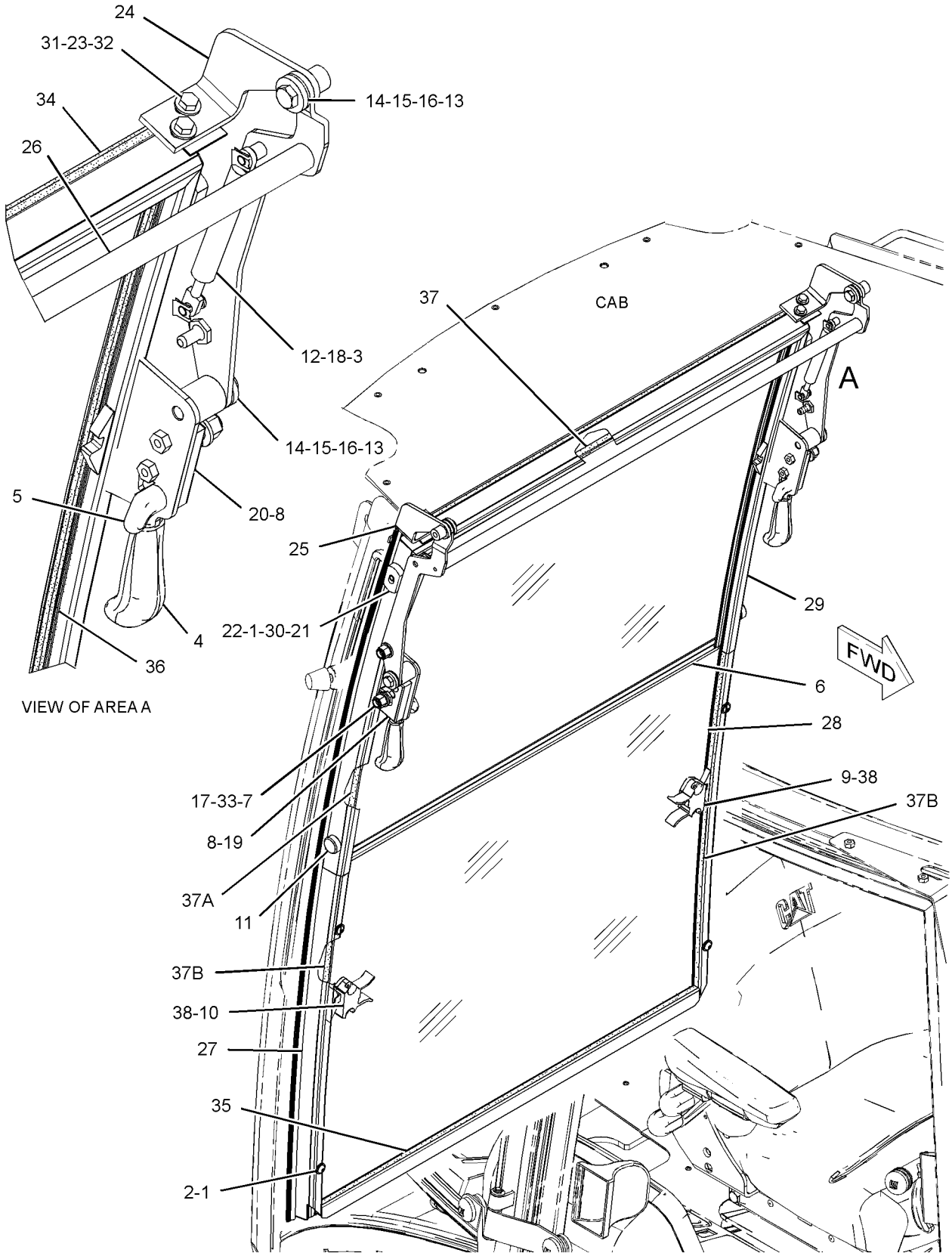

GRAPHIC #1 **<END>** g01366206

OPERATOR STATION

205-9585 WINDOW GP-DOOR–LH

S/N: HLS1-99999
PART OF 206-1592 DOOR GP-CAB
AN ATTACHMENT

SMCS-7308, 7310 **i02940325**

NOTE	REF NO	GRAPHIC REF	PART NUMBER	QTY	PART NAME 1 2 3 4 5 6 (PRODUCT LEVEL)	SEE PAGE
E	1	1	**317-4423**		SEAL (354-CM)	
	2	1	**100-7608**	1	HANDLE	
	3	1	**129-8542**	5	RETAINER (MOUNT)	
	4	1	**129-8545**	6	WASHER (13X40X3-MM THK)	
M	5	1	**136-4192**	3	BOLT (M6X1X35-MM)	
	6	1	**154-5423**	2	SPACER (6.6X12.7X17-MM THK)	
Y	7	1	**299-6986**	1	LATCH GP-CAB DOOR & WINDOW (LH)	860
	8	1	**205-9587**	1	GLASS (LH)	
	9	1	**205-9590**	1	HINGE (UPPER)	
	10	1	**205-9591**	1	HINGE (LOWER)	
	11	1	**223-2030**	1	LATCH AS (HOLD OPEN)	
M		1	**6V-7743**	2	LOCKNUT (M6X1-THD)	
M		1	**9X-2045**	2	SCREW-TRUSS HEAD (M6X1X20-MM)	
		1	**143-2827**	2	SPRING	
M	12	1	**6V-7743**	2	LOCKNUT (M6X1-THD)	

E-ORDER BY THE CENTIMETER
M-METRIC PART
Y-SEPARATE ILLUSTRATION

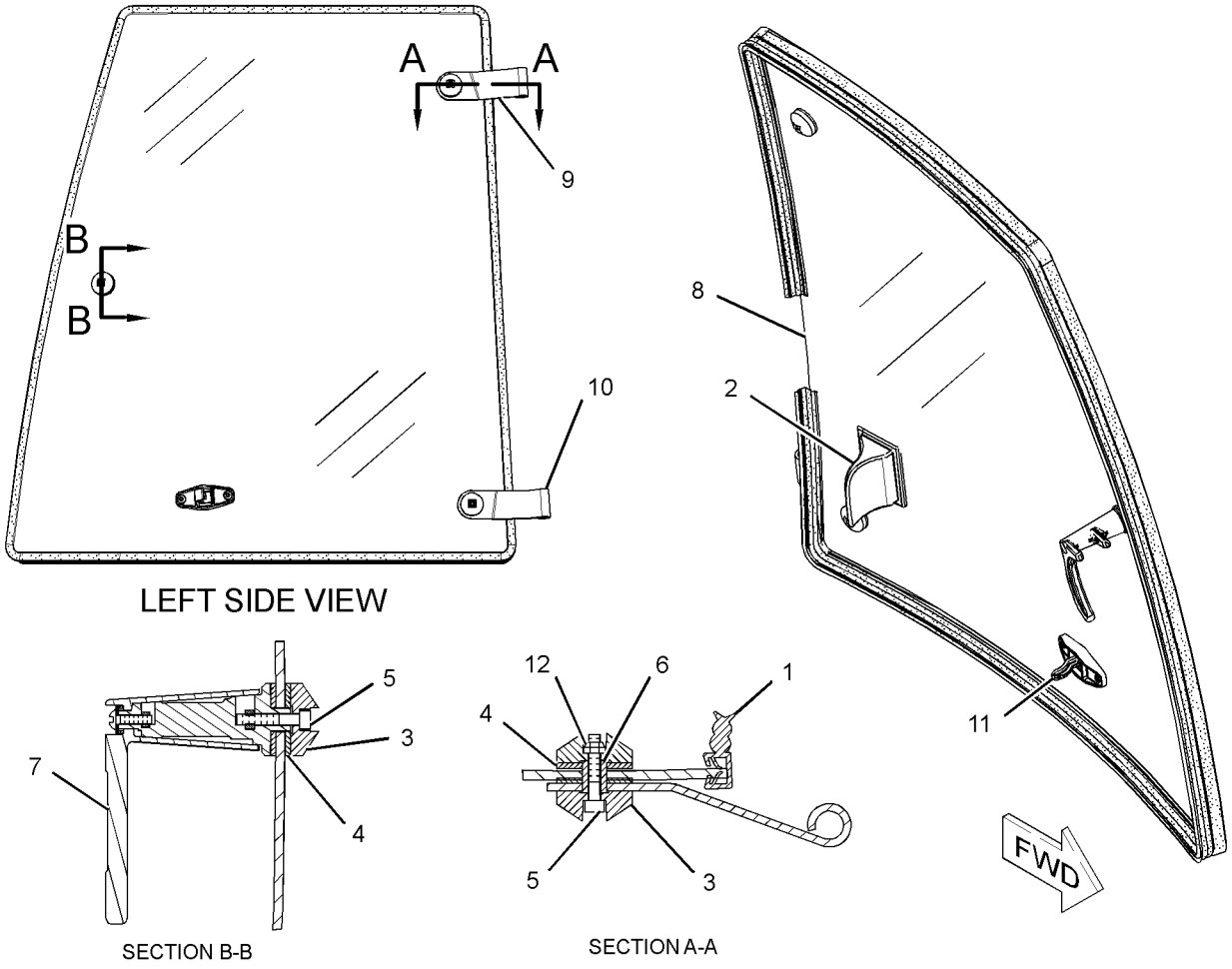

GRAPHIC #1 **<END>** g01519599

OPERATOR STATION

205-9595 WINDOW GP-DOOR–RH

S/N: HLS1-99999
PART OF 206-1593 DOOR GP-CAB
AN ATTACHMENT

SMCS-7308, 7310 **i02940326**

NOTE	REF NO	GRAPHIC REF	PART NUMBER	QTY	PART NAME 1 2 3 4 5 6 (PRODUCT LEVEL)	SEE PAGE
E	1	1	**317-4423**		SEAL (354-CM)	
	2	1	**100-7608**	1	HANDLE	
	3	1	**129-8542**	5	RETAINER (MOUNT)	
	4	1	**129-8545**	6	WASHER (13X40X3-MM THK)	
M	5	1	**136-4192**	3	BOLT (M6X1X35-MM)	
	6	1	**154-5423**	2	SPACER (6.6X12.7X17-MM THK)	
Y	7	1	**299-6985**	1	LATCH GP-CAB DOOR & WINDOW (RH)	859
	8	1	**205-9597**	1	GLASS (RH)	
	9	1	**205-9614**	1	HINGE (LOWER)	
	10	1	**205-9615**	1	HINGE (UPPER)	
	11	1	**223-2030**	1	LATCH AS (HOLD OPEN)	
M		1	**6V-7743**	2	LOCKNUT (M6X1-THD)	
M		1	**9X-2045**	2	SCREW-TRUSS HEAD (M6X1X20-MM)	
		1	**143-2827**	2	SPRING	
M	12	1	**6V-7743**	2	LOCKNUT (M6X1-THD)	

E-ORDER BY THE CENTIMETER
M-METRIC PART
Y-SEPARATE ILLUSTRATION

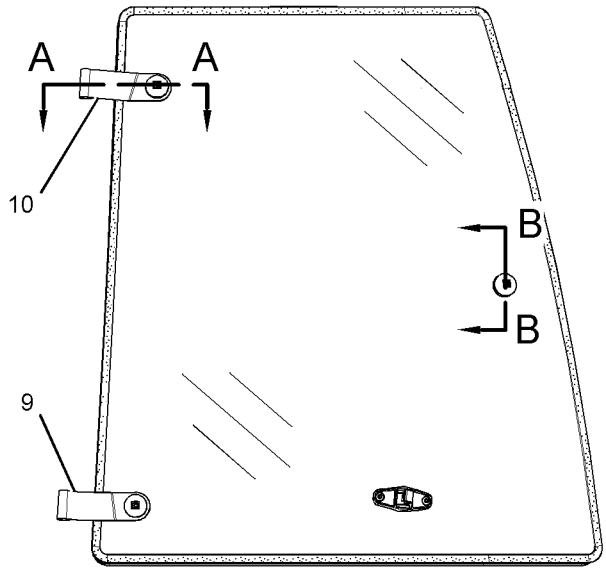

RIGHT SIDE VIEW

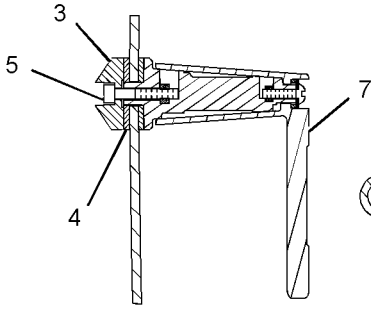

SECTION B-B

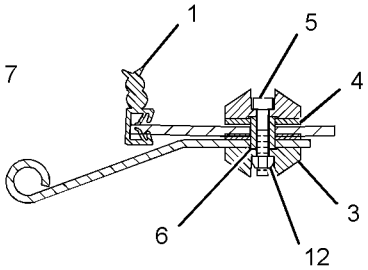

SECTION A-A

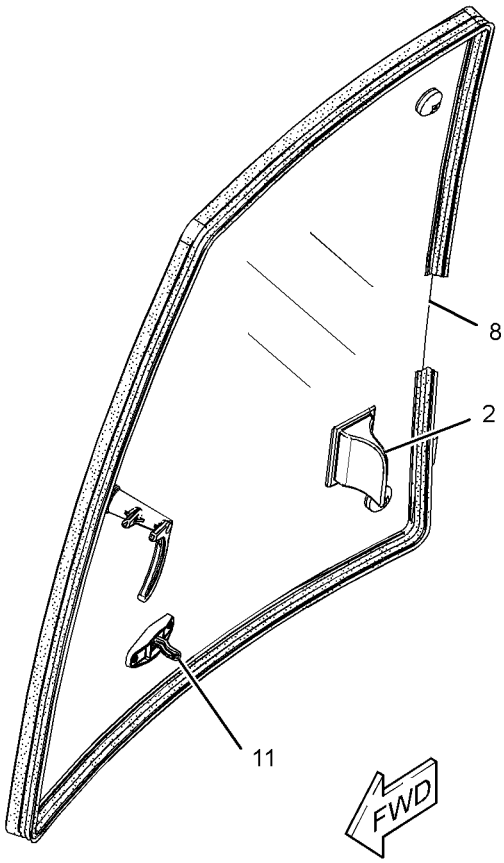

GRAPHIC #1 **<END>** g01521616

OPERATOR STATION

206-1728 WIPER & WASHER GP-WINDOW

S/N: HLS1-99999
PART OF 269-2124 CANOPY AR-OPEN ROPS
AN ATTACHMENT
TYPE 1

SMCS-7305, 7306 **i03505621**

NOTE	REF NO	GRAPHIC REF	PART NUMBER	QTY	PART NAME 1 2 3 4 5 6 (PRODUCT LEVEL)	SEE PAGE
	1	1	**3S-2093**	10	STRAP-CABLE	
	2	1	**276-8791**	1	CLIP	
	3	1	**8T-1118**	1	NOZZLE AS-WASHER	
	4	1	**9R-3469**	1	DIAPHRAGM	
	5	1	**101-0745**	1	BLADE AS-WIPER (600-MM) (FRONT)	
	6	1	**283-3451**	1	CONNECTOR AS	
	7	1	**213-6051**	1	HARNESS AS-CAB (WIPER MOTOR)	
	8	1	**154-5410**	1	ARM-WINDOW WIPER	
Y	9	1	**186-2589**	1	MOTOR GP-WINDOW WIPER (FRONT)	872
	10	1	**214-3763**	1	TANK GP-WINDOW WASHER	
		1	**6T-1375**	2	PUMP AS-WASHER	
		1	**8E-8293**	2	GROMMET	
		1	**214-3742**	1	TANK-WASHER	
		1	**254-5683**	1	CAP	
M	11	1	**6V-7357**	1	BOLT (M6X1X25-MM)	
	12	1	**8T-4205**	1	WASHER-HARD (7.2X14.5X2-MM THK)	
E	13	1	**144-0195**		HOSE (217-CM)	
E	13A	1	**144-0195**		HOSE (79-CM)	
E	13B	1	**144-0195**		HOSE (297-CM)	
E	13C	1	**144-0195**		HOSE (15-CM EACH)	
	16	1	**156-0283**	2	WASHER-HARD (8.4X35X2.5-MM THK)	
	17	1	**9X-8372**	1	FILM-INSTRUCTION (WASHER FILL)	
M	18	1	**8T-5093**	1	BOLT-LOCKING (M8X1.25X25-MM)	
D	19	1	**6V-0505**		SEAL (0.5-M)	
	20	1	**6K-9632**	1	TEE	

D-ORDER BY THE METER
E-ORDER BY THE CENTIMETER
M-METRIC PART
Y-SEPARATE ILLUSTRATION

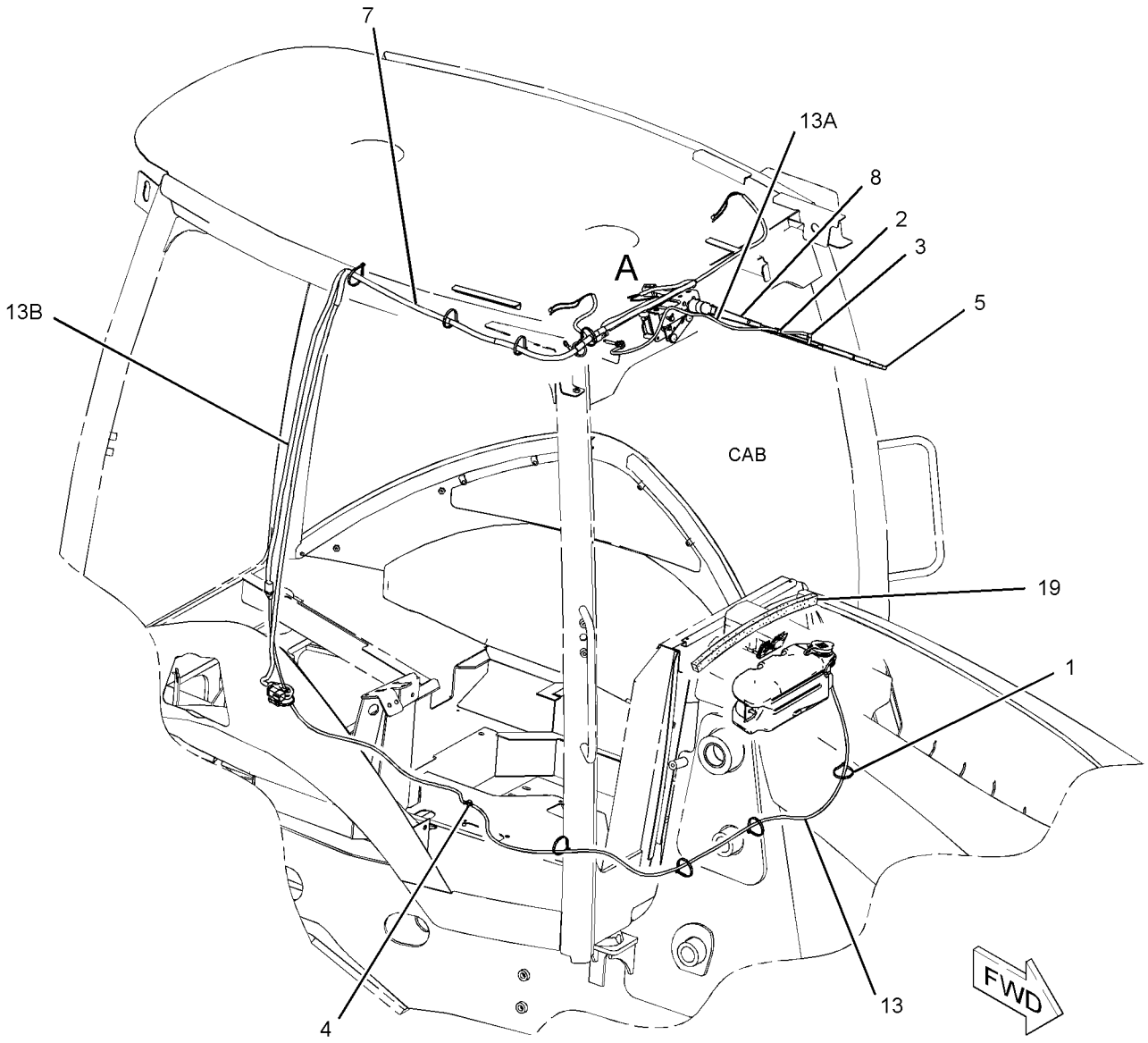

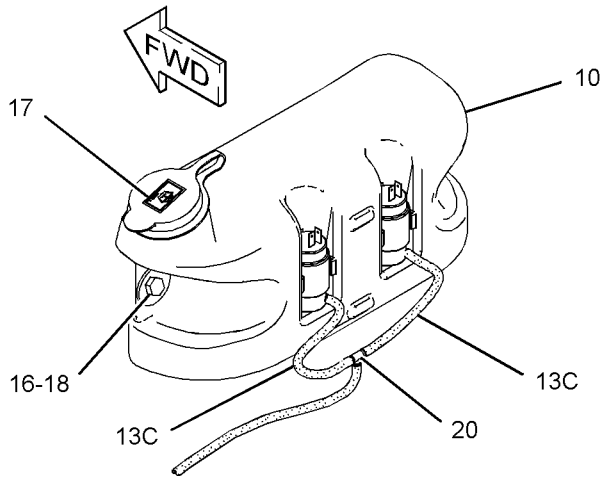

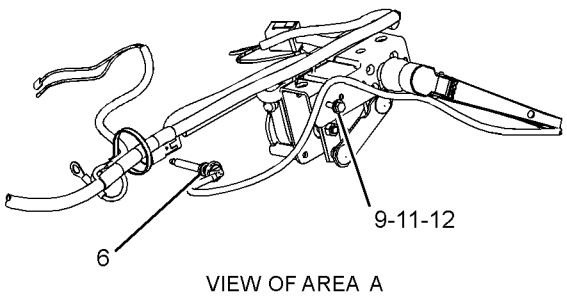

VIEW OF AREA A

GRAPHIC #1 **<END>** g01847053

OPERATOR STATION

206-1728 WIPER & WASHER GP-WINDOW

S/N: HLS1-99999
PART OF 269-2124 CANOPY AR-OPEN ROPS
AN ATTACHMENT
TYPE 2

SMCS-7305, 7306 **i03399321**

NOTE	REF NO	GRAPHIC REF	PART NUMBER	QTY	PART NAME 1 2 3 4 5 6 (PRODUCT LEVEL)	SEE PAGE
	1	1	**3S-2093**	10	STRAP-CABLE	
	2	1	**276-8791**	1	CLIP	
	3	1	**8T-1118**	1	NOZZLE AS-WASHER	
	4	1	**9R-3469**	1	DIAPHRAGM	
	5	1	**101-0745**	1	BLADE AS-WIPER (600-MM)	
	6	1	**283-3451**	1	CONNECTOR AS	
	7	1	**213-6051**	1	HARNESS AS-CAB (WIPER MOTOR)	
	8	1	**154-5410**	1	ARM-WINDOW WIPER	
Y	9	1	**186-2589**	1	MOTOR GP-WINDOW WIPER (FRONT)	872
	10	1	**214-3763**	1	TANK GP-WINDOW WASHER	
		1	**6T-1375**	2	PUMP AS-WASHER	
		1	**8E-8293**	2	GROMMET	
		1	**214-3742**	1	TANK-WASHER	
		1	**254-5683**	1	CAP	
M	11	1	**6V-7357**	1	BOLT (M6X1X25-MM)	
	12	1	**8T-4205**	1	WASHER-HARD (7.2X14.5X2-MM THK)	
E	13	1	**144-0195**		HOSE (217-CM)	
E	13A	1	**144-0195**		HOSE (79-CM)	
E	13B	1	**144-0195**		HOSE (297-CM)	
E	13C	1	**144-0195**		HOSE (15-CM EACH)	
	14	1	**156-0283**	2	WASHER-HARD (8.4X35X2.5-MM THK)	
	15	1	**9X-8372**	1	FILM-INSTRUCTION (WASHER FILL)	
M	16	1	**8T-5093**	1	BOLT-LOCKING (M8X1.25X25-MM)	
	17	1	**6K-9632**	1	TEE	

E-ORDER BY THE CENTIMETER
M-METRIC PART
Y-SEPARATE ILLUSTRATION

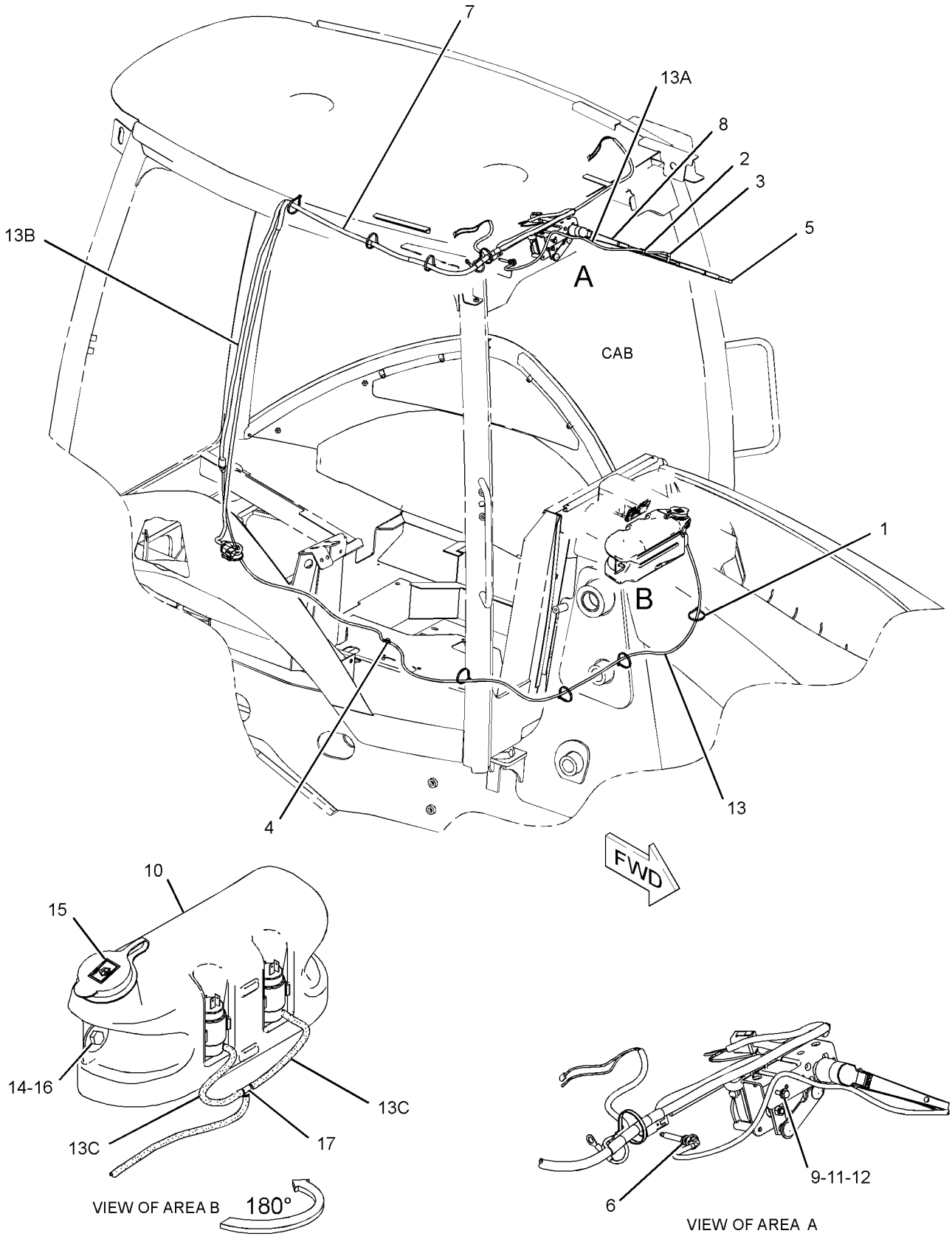

GRAPHIC #1 **<END>** g01761114

OPERATOR STATION

206-1725 WIPER GP-WINDOW

S/N: HLS1-99999

PART OF 269-2125, 269-2126, 269-2127 CAB AR-ENCLOSED ROPS

AN ATTACHMENT

SMCS-7305 **i03505604**

NOTE	REF NO	GRAPHIC REF	PART NUMBER	QTY	PART NAME 1 2 3 4 5 6 (PRODUCT LEVEL)	SEE PAGE
	1	1	**5C-8811**	1	BLADE AS-WIPER (500-MM) (REAR)	
	2	1	**101-0745**	1	BLADE AS-WIPER (600-MM) (FRONT)	
	3	1	**154-5410**	1	ARM-WINDOW WIPER (FRONT)	
	4	1	**160-2169**	2	SPACER (7X11X8.4-MM THK)	
Y	5	1	**186-2589**	1	MOTOR GP-WINDOW WIPER (FRONT)	872
	6	1	**214-4709**	1	SWITCH AS-ROCKER (WIPER, WASHER, REAR)	
		1	**111-7899**	1	GASKET	
	7	1	**220-2000**	1	MOTOR GP-WINDOW WIPER (REAR)	
		1	**186-3735**	5	PIN-CONNECTOR (16-GA TO 18-GA)	
		1	**102-8804**	1	KIT-RECEPTACLE (4-PIN)	
					(INCLUDES RECEPTACLE AS & WEDGE)	
	8	1	**220-2001**	1	ARM AS-WIPER (REAR)	
		1	**136-3194**	1	NOZZLE AS-WASHER	
E		1	**194-5171**		HOSE (35-CM)	
	9	1	**223-8263**	1	PLATE	
	10	1	**229-0306**	1	PLATE	
M	11	1	**6V-7357**	1	BOLT (M6X1X25-MM)	
M	12	1	**8T-4138**	2	BOLT (M6X1X20-MM)	
M	13	1	**8T-4171**	4	BOLT (M6X1X12-MM)	
	14	1	**8T-4205**	9	WASHER-HARD (7.2X14.5X2-MM THK)	
M	15	1	**5C-2890**	1	NUT (M6X1-THD)	
M	16	1	**8T-4971**	1	BOLT (M6X1X30-MM)	

E-ORDER BY THE CENTIMETER
M-METRIC PART
Y-SEPARATE ILLUSTRATION

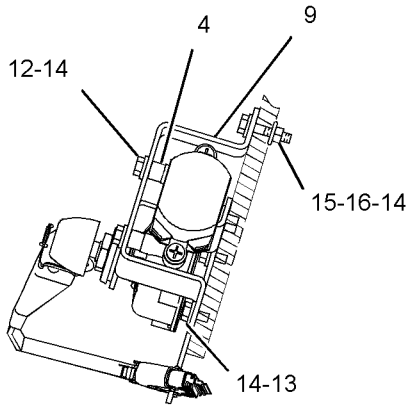

SECTION A-A

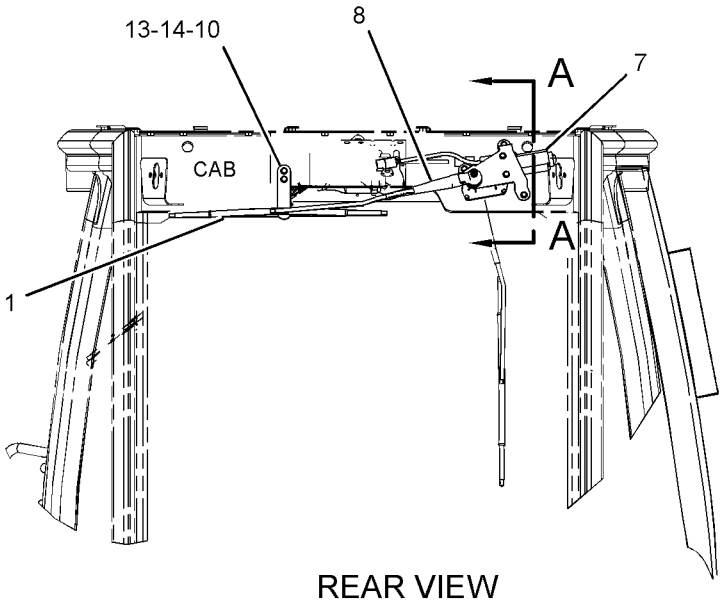

REAR VIEW

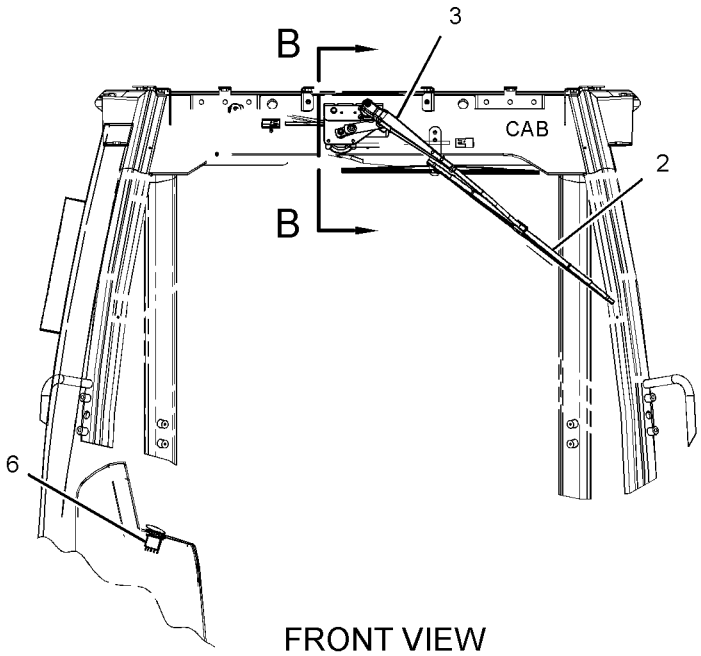

FRONT VIEW

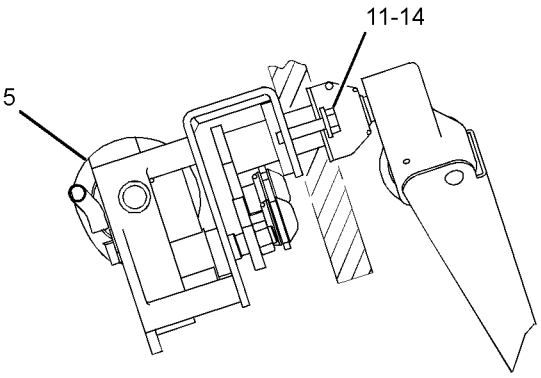

SECTION B-B

GRAPHIC #1 **<END>** g01328113

SERVICE EQUIPMENT AND SUPPLIES

250-7915 FILM GP

S/N: HLS1-99999

PART OF 213-9287 CHASSIS AR

SMCS-7405, 7557 **i02700088**

NOTE	REF NO	GRAPHIC REF	PART NUMBER	QTY	PART NAME 1 2 3 4 5 6 (PRODUCT LEVEL)	SEE PAGE
	1	1	**294-4957**	1	FILM-IDENTIFICATION (420E ST, LH)	
	2	1	**292-2833**	1	FILM (BOOM, RH)	
	3	1	**294-4958**	1	FILM-IDENTIFICATION (420E ST, RH)	
	4	1	**292-2834**	1	FILM (BOOM, LH)	

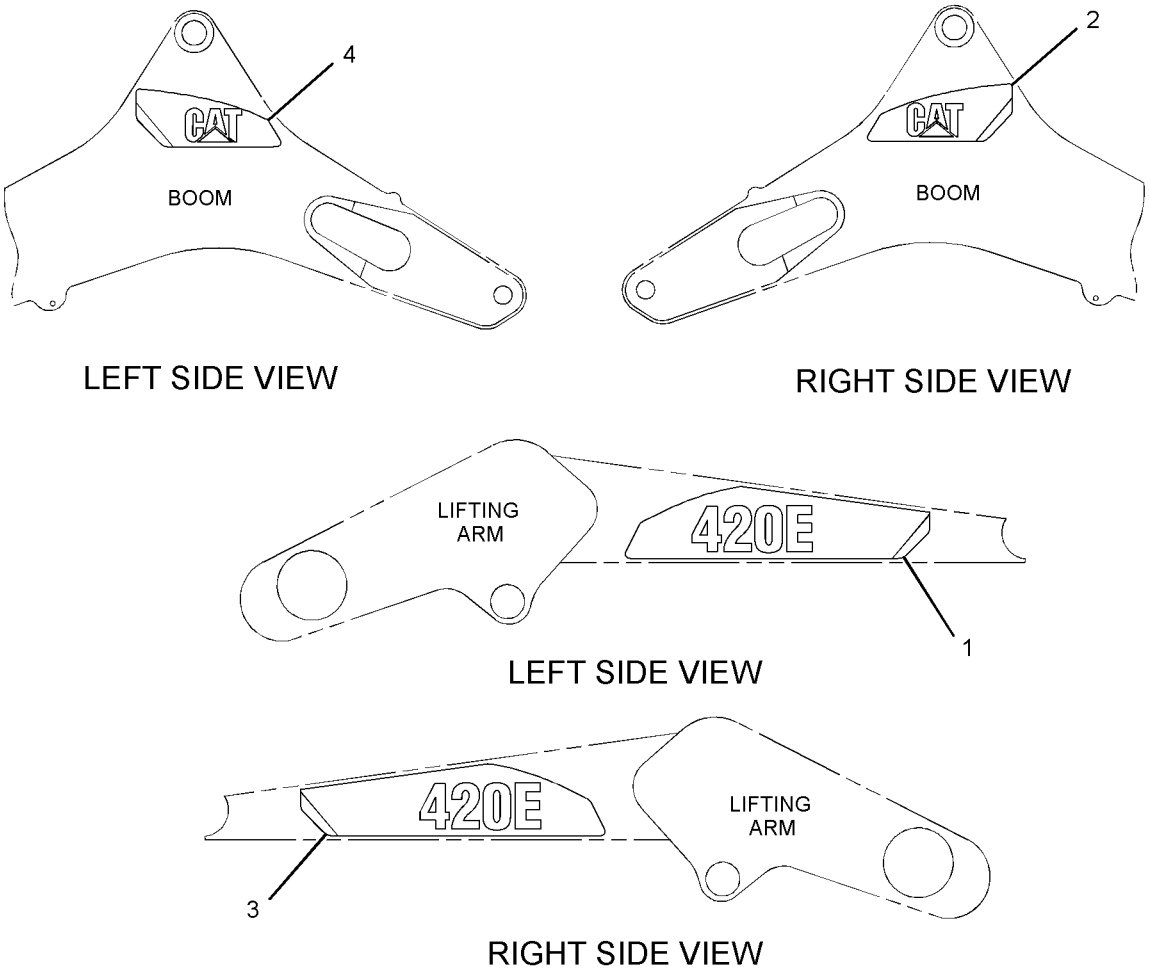

GRAPHIC #1 **<END>** g01366607

SERVICE EQUIPMENT AND SUPPLIES

175-7877 LINK GP-SHIPPING

S/N: HLS1-99999
REQUIRED WHEN NO BACKHOE BUCKET IS INSTALLED
AN ATTACHMENT

SMCS-6513 **i01411821**

NOTE	PART NUMBER	QTY	PART NAME 1 2 3 4 5 6 (PRODUCT LEVEL)	SEE PAGE
	120-9286	1	PLATE	

<END>

216-0909 LOCK GP-VANDALISM

S/N: HLS1-99999
FOR USE WITH SINGLE TILT LOADER
AN ATTACHMENT

SMCS-7315 **i02485595**

NOTE	PART NUMBER	QTY	PART NAME 1 2 3 4 5 6 (PRODUCT LEVEL)	SEE PAGE
J	**246-2641**	1	PADLOCK GP (VANDALISM GUARD)	
J-REQUIRES 5P-8500 KEY				

<END>

248-5711 PLATE & FILM GP

S/N: HLS1-99999
PART OF 213-9287 CHASSIS AR

SMCS-7405 **i02532778**

NOTE	PART NUMBER	QTY	PART NAME 1 2 3 4 5 6 (PRODUCT LEVEL)	SEE PAGE
	225-4150	1	PLATE-SERVICE INFORMATION (MACHINE)	
			(ON SERVICE PLATE ON MAIN FRAME TOWER)	
	239-6989	1	PLATE-SERIAL NUMBER (MACHINE)	
			(ON MAIN FRAME TOWER)	
A	**4P-6236**	1	PLATE-SERIAL NUMBER (ENGINE)	
	231-9361	1	FILM-IDENTIFICATION (FUSE, RELAY)	
			(UNDER RH CONSOLE COVER THAT COVERS THE POWER DISTRUBUTION BLOCK. ORIENT FILM SUCH THAT IT CAN BE READ WHEN THE COVER	
			IS OPEN AND THE BLOCK IS EXPOSED)	
	250-7910	1	FILM (BOOM LOCK)	
			(NEXT TO BOOM LOCK ON RH CONSOLE)	
	250-7911	1	FILM (VARIABLE SPEED)	
			(ON RH CONSOLE NEXT TO GOVERNER CONTROL HANDLE)	
	252-2157	4	FILM-INFORMATION (TIE-DOWN)	
			(APPLY 2 FILMS, ONE ON EACH SIDE OF THE MACHINE ON THE MAIN FRAME ABOVE THE FRONT AXLE, ABOVE THE TIE DOWN MOUNTING	
			PLATE. APPLY THE OTHER 2 FILMS IN THE REAR OF THE MACHINE ON THE MAIN FRAME NEXT TO THE TIE DOWN HOLES UNDER THE	
			SWING CYLINDERS)	
	134-7258	1	FILM-INFORMATION (EXTENDED LIFE COOLANT,READ OMM)	
			(NEXT TO RADIATOR CAP. ORIENT FILM SUCH THAT IT CAN BE READ FROM THE LH SIDE OF THE MACHINE)	
	159-8033	1	FILM-IDENTIFICATION (12-VOLT)	

248-5711 **PLATE & FILM GP** *(contd.)* **i02532778**

NOTE	PART NUMBER	QTY	PART NAME 1 2 3 4 5 6 (PRODUCT LEVEL)	SEE PAGE
			(INSIDE BATTERY BOX DOOR 90 +/-5-MM FROM THE BOTTOM EDGE (SAME AS STACKING THE WARNING BATTERY FILM & THE 12 VOLT	
			FILM ON TOP OF EACH OTHER) & CENTERED BELOW THE WARNING BATTERY FILM)	
	226-1242	2	FILM-WARNING (CRUSH HAZARD, STAY BACK, U.S.)	
			(ON BOOM 700-MM +/-5 UP FROM CENTER LINE OF SWING & BOOM LOWER FOOT PIN & 65-MM +/-5 OVER FROM INSIDE OF THE REAR EDGE	
			OF BOOM WRAPPER PLATE)	
	239-9429	1	FILM-WARNING (ARM BRACE, READ OMM)	
			(ON LH SIDE OF THE MACHINE ON SAFETY BRACE CENTERED FROM TOP TO BOTTOM & FROM SIDE TO SIDE)	
	225-0313	1	FILM-WARNING (JUMP START, READ OMM)	
			(INSIDE OF BATTERY BOX DOOR 150 +/-5-MM FROM THE BOTTOM EDGE (SAME AS STACKING THE NO STEP FILM ON TOP OF THE 12 VOLT	
			FILM) & THE RIGHT EDGE OF THE FILM 210 +/-5-MM FROM LEFT SIDE (SAME AS THE NO STEP FILM PLACED SIDE BY SIDE THE	
			WARNING BATTERY FILM)	
	255-0791	1	FILM-WARNING (READ OMM)	
			(ON RH CONSOLE UNDER KEYSWITCH IN AREA PROVIDED. UNIVERSAL FILM IS LOCATED ON THE UPPER HALF AND THE SEATBELT IS ON THE	
			THE LOWER HALF)	
	255-0792	1	FILM-WARNING (SEAT BELT)	
			(ON RH CONSOLE UNDER KEYSWITCH IN AREA PROVIDED. UNIVERSAL FILM IS LOCATED ON THE UPPER HALF AND THE SEATBELT IS ON THE	
			LOWER HALF)	
	219-0302	1	FILM-WARNING (NO WELD, NO DRILL, READ OMM)	
			(ON LH A-POST 350 +/-5-MM FROM THE FLOOR. THE UPPER FILM SHOULD BE THE NO WELD/NO DRILL & THE ROPS/FOPS FILM IN THE	
			LOWER POSITION)	
	225-0041	1	FILM-INFORMATION (ROPS, FOPS, READ OMM)	
			(ON LH A-POST 350 +/-5-MM FROM THE FLOOR. THE UPPER FILM SHOULD BE THE NO WELD/NO	
			DRILL & THE ROPS/FOPS FILM IN THE LOWER POSITION)	
	124-2456	1	FILM-INSTRUCTION (NO STEP)	
			(POSITION INSIDE BATTERY BOX DOOR 75 +/-5-MM FROM THE RIGHT EDGE & THE TOP EDGE IS EVEN WITH THE 12 VOLT FILM)	
	224-8945	1	FILM-WARNING (DO NOT USE ETHER, U.S)	
			(UNDER HOOD ON THE PRE-CLEANER UNDER THE SERVICE FILM. ORIENT FILM SUCH THAT IT CAN	
			BE READ FROM THE LEFT SIDE OF THE MACHINE)	
	258-9999	4	FILM (LIFT EYE LOCATION)	
			(APPLY A TOTAL OF 4 FILMS. THE FIRST 2 FILMS ARE TO BE APPLIED TO THE FRONT SIDE OF THE FRONT AXLE BETWEEN THE CHASSIS	
			& WHEEL ASSEMBLY ON THE LH & RH SIDE OF THE MACHINE. THE REMAINDER 2 FILMS ARE TO BE APPLIED TO THE STAB PAD CENTERED	
			UNDER THE LIFTING HOLE ORIENTED WITH THE ARROW POINTING UP WHEN THE STABILIZER IS IN THE UPPER WARD POSITION)	
	240-7094	2	FILM-WARNING (NO ENTRANCE, EXIT, READ OMM)	
			(ON THE REAR OF THE CAB STRUCTURE AT THE BOTTOM 50 +/-5-MM FROM THE RED REFLECTOR TOWARD THE CENTER OF THE MACHINE FOR)	
			BOTH FILMS, CENTERED FROM TOP TO BOTTOM)	

248-5711 **PLATE & FILM GP** *(contd.)* **i02532778**

NOTE	PART NUMBER	QTY	PART NAME 1 2 3 4 5 6 (PRODUCT LEVEL)	SEE PAGE
	159-3590	1	FILM-IDENTIFICATION (WATER SEPARATOR)	
			(ON LEFT SIDE OF THE MAIN FRAME NEXT TO THE FUEL TANK. 20-MM +/- 10-MM FROM THE FUEL	
			TANK BRACKET & UP FROM THE BOTTOM EDGE OF THE MAIN FRAME 50-MM +/- 10-MM)	
	231-9358	1	FILM-IDENTIFICATION (FUSE PANEL)	
			(INSIDE RH CONSOLE ACCESS PANEL. ORIENT FILM SUCH THAT IS CAN BE READ WHILE STANDING ON THE GROUND WITH THE ACCESS DOOR	
			OPEN & VIEWING FILM)	
	255-0796	1	FILM-IDENTIFICATION (LUBRICATION POINTS)	
			(UNDER THE HOOD ON PRE-CLEANER, REMOVE SUPPLIER FILM & ORIENT FILM SUCH THAT IT	
			CAN BE READ FROM THE LEFT SIDE OF THE MACHINE)	
	252-8435	1	FILM-IDENTIFICATION (START SWITCH, READ OMM)	
			(ON RH CONSOLE AROUND KEYSWITCH)	
	259-4401	1	FILM-WARNING (HOT FLUID UND PRESS, READ OMM)	
			(ON RADIATOR CAP ORIENTED SUCH THAT IT CAN BE READ FROM THE LH SIDE OF THE MACHINE)	
	289-3412	1	FILM-COVER (PROTECT)	
			IN THE BATTERY BOX ON LEFT HAND SIDE. FILM SHOULD BE 150 +/- 5-MM UP FROM THE BOTTOM OF	
			THE BOX & LEVEL WITH THE BOTTOM OF BOX CENTERED FROM SIDE TO SIDE)	
A-NOT PART OF THIS GROUP				

<END>

SERVICE EQUIPMENT AND SUPPLIES

263-8591 PLATE & FILM GP

S/N: HLS1-99999
PART OF 216-8801, 216-8821 BUCKET GP-MULTIPURPOSE
AN ATTACHMENT

SMCS-7405 **i02444490**

NOTE	REF NO	GRAPHIC REF	PART NUMBER	QTY	PART NAME 1 2 3 4 5 6 (PRODUCT LEVEL)	SEE PAGE
	1	1	**247-6118**	2	FILM-WARNING (CRUSH HAZARD, STAY BACK)	

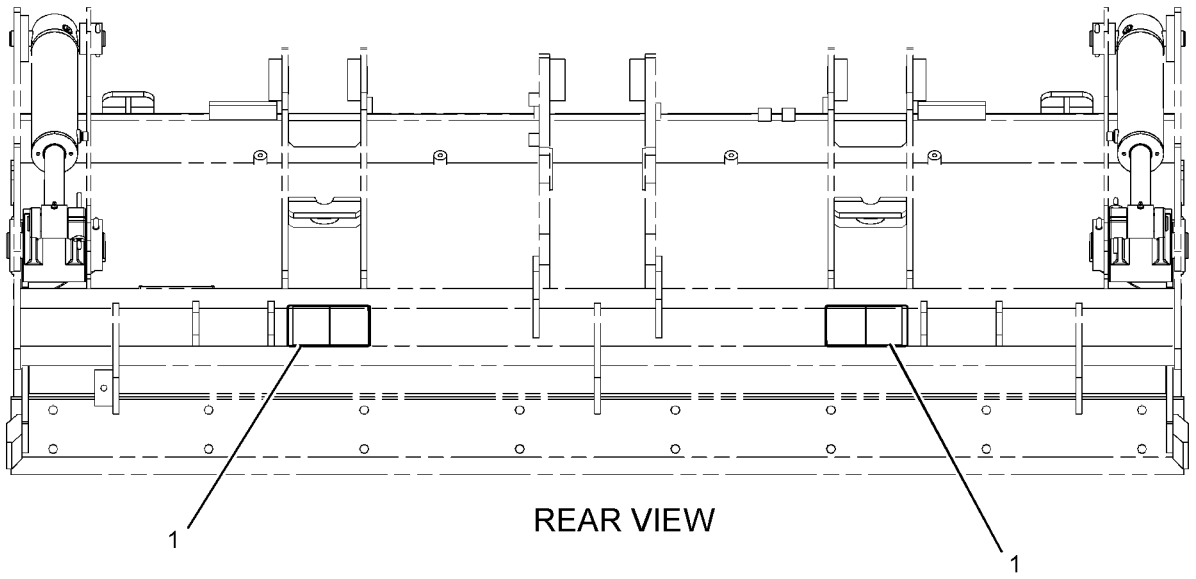

GRAPHIC #1 **<END>** g01231780

SERVICE EQUIPMENT AND SUPPLIES

206-1701 PROTECTION GP-VANDALISM—ROTATING GUARD

S/N: HLS1-99999

PART OF 269-2123, 269-2124 CANOPY AR-OPEN ROPS

AN ATTACHMENT

SMCS-7315 **i02098370**

NOTE	REF NO	GRAPHIC REF	PART NUMBER	QTY	PART NAME 1 2 3 4 5 6 (PRODUCT LEVEL)	SEE PAGE
	1	1	**206-1852**	1	COVER-VANDALISM	
	2	1	**206-1853**	2	BUSHING	
	3	1	**206-1855**	1	PLATE	
	4	1	**206-1856**	1	BRACKET	
J	5	1	**226-0291**	1	LOCK AS	
M	6	1	**129-3178**	2	LOCKNUT (M6X1 THD)	
M	7	1	**174-8131**	1	SCREW-TRUSS HEAD (M4X0.7X12-MM)	
	8	1	**232-4636**	2	BOLT-CARRIAGE (M6X1-MM)	
	9	1	**8C-9660**	1	WASHER (4.6X7.9X0.8-MM THK)	
M	10	1	**8T-2659**	1	LOCKNUT (M4X0.7-THD)	
	11	1	**9X-2038**	2	WASHER (7X19X2-MM THK)	

J-REQUIRES 5P-8500 KEY
M-METRIC PART

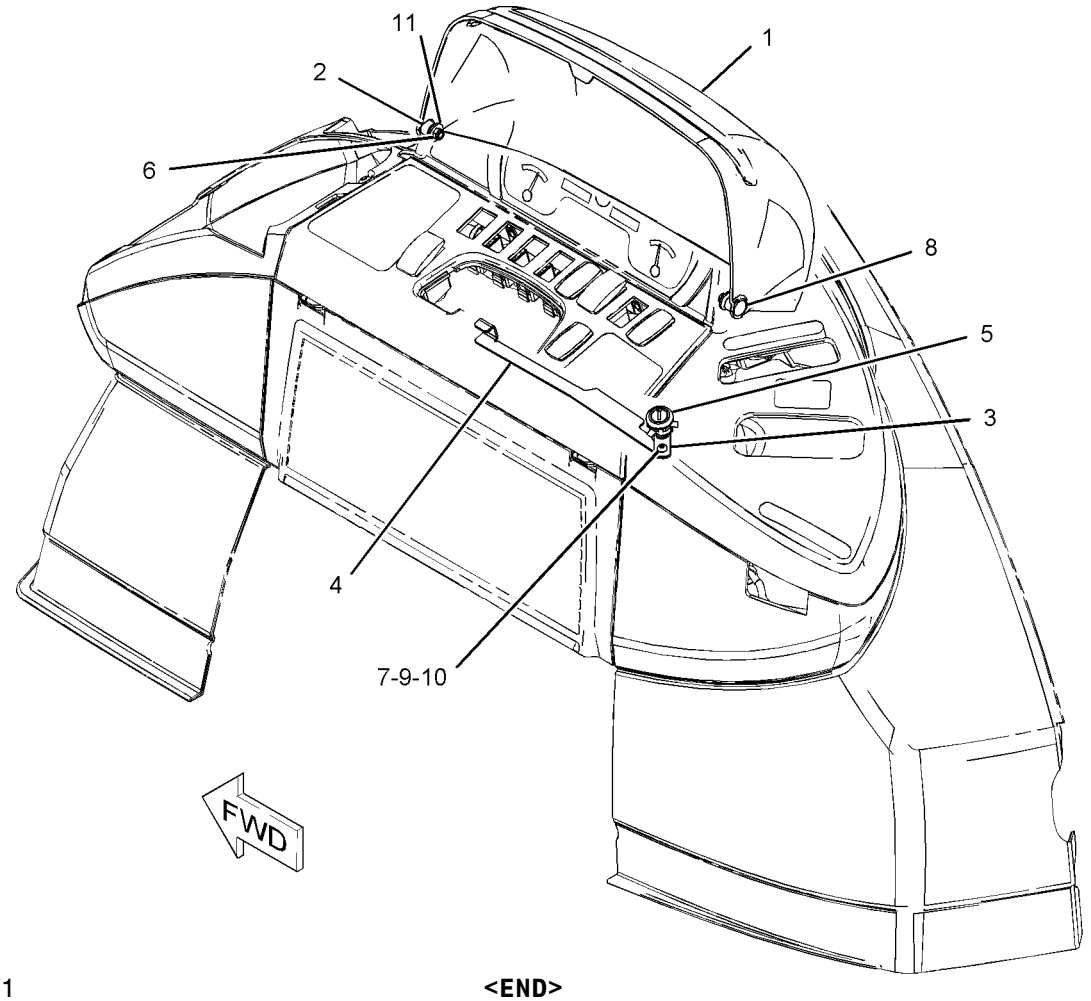

GRAPHIC #1 **<END>** g01083362

SERVICE EQUIPMENT AND SUPPLIES

119-1530 TRANSPORT AR-MACHINE

S/N: HLS1-99999
TRANSPORT (NO BUCKET OPTION)
CANNOT BE USED WITH PARALLEL LIFT LOADER CONFIGURATIONS
AN ATTACHMENT

SMCS-0355 **i00756012**

NOTE	PART NUMBER	QTY	PART NAME 1 2 3 4 5 6 (PRODUCT LEVEL)	SEE PAGE
Y	*120-9289*	1	TRANSPORT GP-MACHINE (WITHOUT BUCKET)	933
Y-SEPARATE ILLUSTRATION				

<END>

SERVICE EQUIPMENT AND SUPPLIES

325-5100 TRANSPORT AR-MACHINE

S/N: HLS1-99999

AN ATTACHMENT

SMCS-0355 **i03101783**

NOTE	REF NO	GRAPHIC REF	PART NUMBER	QTY	PART NAME 1 2 3 4 5 6 (PRODUCT LEVEL)	SEE PAGE
	1	1	**3B-5322**	2	PIN-COTTER	
	2	1	**9R-0109**	2	WASHER (41X64X3-MM THK)	
	3	1	**034-1432**	2	STRAP-CABLE	
	4	1	**120-9333**	1	TUBE	

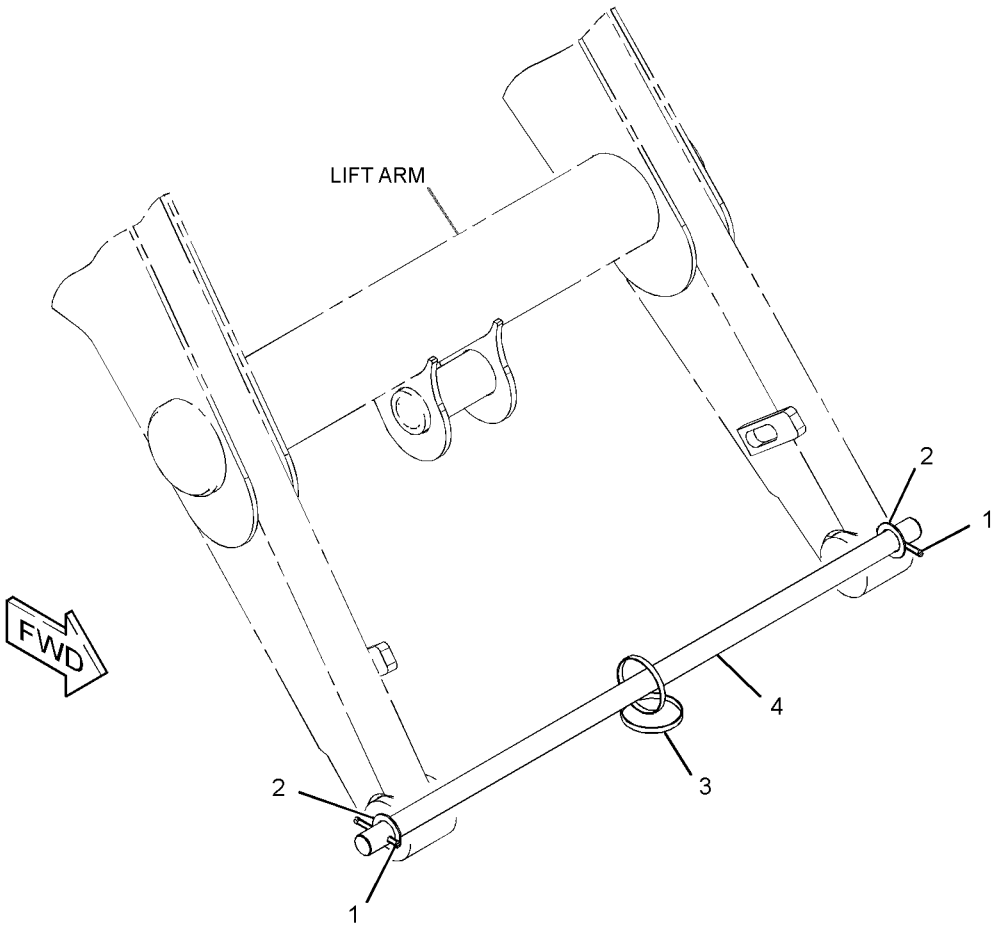

GRAPHIC #1 **<END>** g01584873

SERVICE EQUIPMENT AND SUPPLIES

120-9289 TRANSPORT GP-MACHINE

S/N: HLS1-99999
PART OF 119-1530 TRANSPORT AR-MACHINE
AN ATTACHMENT

SMCS-0355 **i02204843**

NOTE	REF NO	GRAPHIC REF	PART NUMBER	QTY	PART NAME 1 2 3 4 5 6 (PRODUCT LEVEL)	SEE PAGE
	1	1	**3B-5322**	2	PIN-COTTER	
	2	1	**9R-0109**	2	WASHER (41X64X3-MM THK)	
B	3	1	**9R-4066**	6	WASHER (61X98X4-MM THK)	
	4	1	**9R-6014**	4	TUBE	
	5	1	**034-1432**	2	STRAP-CABLE	
	6	1	**120-9332**	2	BLOCK	
	7	1	**120-9333**	1	TUBE	

B-USE AS REQUIRED

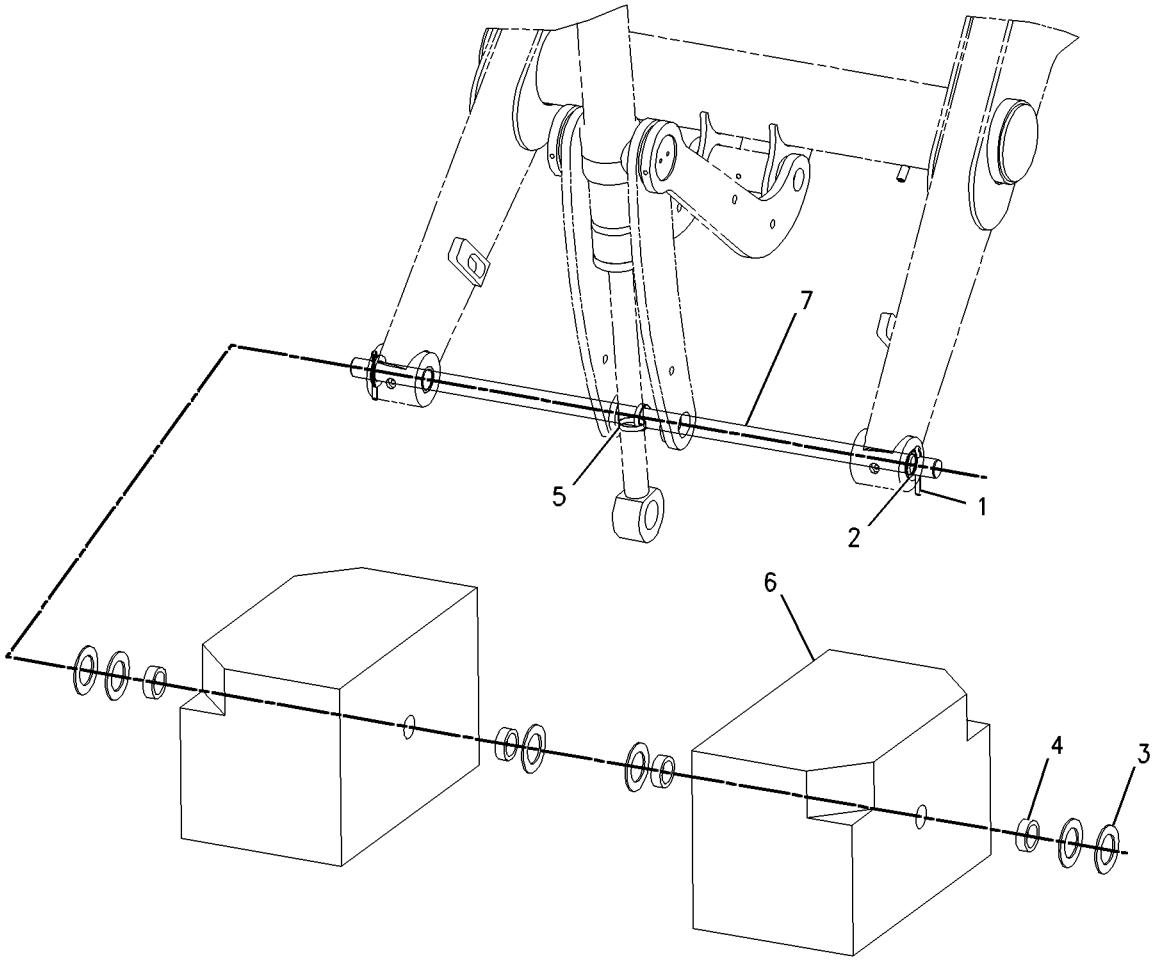

GRAPHIC #1 **<END>** g00778843

MEMORANDA

PART NUMBER INDEX

Part	Page
0	
0S-0509	894
	897
0S-1595	887
	888
	889
0S-1603	26
1	
1B-8736	17
	28
	428
	430
1H-3244	130
	131
	132
	844
1H-3337	894
	897
1H-7339	398
	409
1H-8278	202
1K-0502	819
	821
1K-6872	887
	888
	889
	894
	897
1K-7082	236
1L-3768	598
	601
1L-6377	876
1M-1230	112
1P-0810	101
	103
1P-4278	82
	519
1P-4584	471
1P-6872	515
1R-5396	335
1S-6420	161
	163
1S-7251	98
	101
	103
	155
	157
1S-7252	100
1S-9593	175
	180
	186
1U-8846	202
	204
	232
1V-6585	64
	65
1W-2934	52
2	
2B-0858	23
	36
2B-0941	220
	222
	224
2D-2628	308
2D-2629	308
2D-2630	308
2D-2631	308
2D-2633	308
2D-6235	894
	897
2D-6392	503
2H-3740	744
2H-3922	139
	167
	168
	169
2H-4145	390
	392
2J-0564	408
2J-3950	413
2J-3961	394
	396
	406
	408
2K-4973	868
	887
	888
	889
	894
	897
2K-5986	328
	331
2K-6830	413
2K-7069	67
2L-5893	894
	897
2M-7819	891
2M-9780	420
	422
	425
	457
	465
	467
	468
	473
	475
	477
	479
	481
	483
	485
	487
	489
	491
	493
	500
	515
2P-1293	432
	434
	437
2P-6818	53
2P-7864	891
2P-8104	134
2R-0364	569
	819
	821
2S-3163	813
2S-3745	847
	849
	851
	853
2T-3360	828
2W-9499	890
	891
2W-9710	60
2Y-5821	394
	410
3	
3B-4505	378
	894
	897
3B-4610	336
3B-4631	897
3B-5319	509
	511
	564
	735
	736
	743
3B-5322	932
	933
3B-5790	515
3B-8486	367
	369
3B-8488	363
	365
	557
	559
	572
	604
3B-8489	363
	365
	367
	369
	400
	401
	402
	404
	410
	412
	428
	430
	557
	559
	564
	566
	569
	572
	598
	601
	604
	720
	722
	723
	724
	734
	783
3C-4883	121
	123
3C-8388	555
3D-2824	434
	437
	440
	442
	444
	446
	448
	450
	457
	459
	471
	477
	479
	481
	483
	485
	487
	489
	491
	493
	495
	496
	498
	500
	526
3D-2992	503
3E-0068	868
3E-4321	867
	868
3E-5153	134
3E-5154	134
3E-6600	123
	182
	188
	815
	819
	821
3E-6732	400
3E-6735	402
	404
	410
3E-6769	515
3E-6770	515
3E-7675	328
	331
3E-8299	101
	170
	177
3E-8320	101
	103
3E-9362	141
	144
3F-5108	720
	722
	723
	724
	739
3F-9556	872
	878
3G-6927	293
	299

► **PRIMARY REFERENCE**

PART NUMBER INDEX

Part	Page
3G-8047	448
	450
3G-8054	448
	450
3G-8057	448
	450
3J-1907	92
	93
	159
	197
	204
	220
	222
	224
	235
	262
	267
	271
	272
	276
	277
	281
	282
	286
	287
	292
	293
	298
	299
	304
	328
	329
	331
	340
	342
	344
	346
	401
	417
	420
	422
	425
	461
	463
	465
	467
	468
	470
	473
	475
	498
	504
	523
	527
	528
3J-4818	155
	157
	894
	897
3J-7354	96
	340
	342
	344
	346
	465
3K-0360	159
	328
	329
	331
	340
	342
	344
	346
	388
	420
	422
	425
	452
	453
	468
	473
	475
	498
	505
	519
	521
3K-2889	594
	595
3K-8460	81
3K-8782	120
3N-5739	410
3S-2093	78
	92
	93
	98
	100
	101
	103
	109
	111
	112
	113
	121
	123
	141
	144
	147
	149
	150
	152
	153
	154
	155
	157
	159
	160
	161
	163
	165
	167
	168
	169
	171
	172
	176
	177
	180
	182
	187
	193
	195
	197
	201
	262
	267
	272
	277
	282
	287
	420
	422
	425
	788
	855
	868
	893
	896
	905
	907
	919
	921
3S-6049	100
3S-6050	100
3S-8447	52
	53
	54
3S-8536	456
	575
	577
	581
	583
	587
	589
3T-0849	555
	873
3T-0852	883
	885
	890
	891
3V-2431	390
	396
	406
4	
4B-0418	66
4B-2043	147
	150
	900
4B-4278	891
4B-4863	72
	172
	177
	182
	188
4B-5271	887
	888
	889
4B-9784	894
	897
4D-6466	98
	101
	103
	332
4D-7388	66
4D-9517	569
4F-3657	738
	787
4F-7952	213
4F-8711	598
	601
4F-9029	204
4H-1641	891
4H-2558	788
4H-8380	894
	897
4I-3038	170
	817
4I-6287	420
	473
4I-9521	523
4I-9522	523
4I-9523	523
4I-9524	523
4I-9525	523
4I-9526	523
4I-9527	523
4I-9528	523
4J-0520	215
4J-0522	207
	210
	220
	222
	224
	292
	298
4J-0526	402
	404
4J-1888	733
	741
4J-5309	527
	528
	529
	530
	531
4J-5477	220
	235
	304
	328
	331
	340
	342
	344
	346
	465
	467
	470
	498
	523
4J-9224	390
	392
4K-0367	720
	722
	723
	724
	738
	739
	787

PART NUMBER INDEX

Part	Page
4L-6454	204
	887
	888
	889
4M-0061	894
	897
4N-9170	903
4P-6236	926
4P-7581	98
	101
	103
	155
	157
	159
	161
	163
	193
	195
	197
	420
	422
	425
4P-8134	98
	103
	141
	144
	155
	157
	172
	177
	182
	188
	855
4S-5565	390
	396
	406
4T-5613	413
4T-6780	398
	409
4T-8588	394
	396
	406
	408
4V-0612	461
	463
4W-3753	432
	437
4W-9972	261
	267
	272
	277
	282
	287
	292
	298

5

Part	Page
5A-3604	569
	573
	579
	585
5B-9079	40
5C-2874	155
	157
	159
	161
	163
	172
	177
	182
	188
	329
	332
	815
	861
	913
	915
	923
5C-7261	98
	128
	130
	131
	132
	141
	144
	165
	172
	177
	182
	188
	855
	872
	878
	909
	911
5C-8312	72
5C-8811	923
5C-9553	98
	101
	103
	569
	836
	838
	840
	842
	878
5C-9855	96
5D-1026	11
	13
	15
	340
	342
5D-6543	533
	535
	544
	545
	546
	548
5D-8159	741
5D-9629	795
5E-8557	379
	380
5F-9144	533
	535
	544
	545
	546
	548
5G-2934	349
5H-3193	819
	821
5H-4909	204
5J-4561	398
5J-5402	413
5J-5731	394
5J-7011	390
	392
5J-7012	390
	392
5J-8156	390
	392
5K-5338	868
5K-9090	417
	432
	434
	437
	471
5P-0370	594
5P-0599	161
	163
	440
	442
	444
	446
	448
	450
	498
5P-0743	452
5P-0747	98
	100
	155
	157
5P-0761	98
	100
	103
5P-0767	867
	868
5P-0805	357
5P-1076	365
	367
	369
5P-1420	82
5P-1442	82
	519
	521
5P-1505	43
	340
	342
	344
	346
	465
	467
	519
5P-1506	456
5P-2931	202
5P-3860	161
	163
	495
	496
5P-4115	913
	915
5P-4116	43
	52
	53
	54
	55
	57
	94
	220
	222
	224
	329
	332
	349
	434
	438
	456
	568
	573
	575
	577
	579
	581
	583
	585
	587
	589
	788
	796
	799
	804
	806
	807
	809
	819
	821
	845
	913
	915
5P-4295	340
	342
	344
	346
5P-4868	471
5P-4961	521
5P-5637	847
	849

► **PRIMARY REFERENCE**

PART NUMBER INDEX

Part	Page	Part	Page	Part	Page	Part	Page
	851		281		33	6J-5731	398
	853		287		62		409
	913		292		74	6J-6517	807
	915		298		76	6K-0806	141
5P-5655	847	5P-8112	432		85		144
	849		434		88		152
	851		437	6I-0218	49		153
	853	5P-8245	26	6I-0254	62		169
5P-5688	847		883	6I-0260	11		172
	849		885		13		175
	851		887		15		180
	853		888		33		200
5P-5927	815		889		47		262
5P-6010	896		890		48		267
5P-6129	788		891		49		272
5P-6718	282	5P-8248	744		85		277
	287	5P-9085	82		88		281
5P-7070	817	5P-9297	904		97		286
5P-7462	344	5T-7870	887	6I-0289	33	6K-8178	82
	346		889	6I-0291	85	6K-9632	919
	477	5U-6605	406		88		921
	479	5V-1497	895	6I-0363	33	6L-4725	788
	481	5V-2545	245	6I-0364	73		845
	483	5V-7190	598		136	6L-7155	895
	485		601	6I-0423	27		897
	487	5Y-0660	836	6I-0454	97	6M-5062	503
	489		838	6I-0501	39	6N-6984	60
	491		840	6I-0502	39	6P-6591	113
	493		842	6I-0563	73		114
5P-7463	344				74	6P-8855	867
	346				76		868
	477	**6**		6I-0572	10	6S-3146	396
	479				20	6S-8620	43
	481	6A-9083	887		33		66
	483		888		50	6T-0465	98
	485		889		51		101
	487	6B-0933	97		74		103
	489	6C-3680	847		76	6T-1375	905
	491		849	6I-0594	97		907
	493		851		136		919
5P-7464	444		853	6I-0645	28		921
	446	6D-0337	►308		50	6T-5017	79
	448		309		51	6T-9142	208
	450	6D-0443	308	6I-0650	28		211
5P-7465	444	6D-3479	519	6I-0846	11	6T-9143	208
	446		521		13		211
	448	6D-4246	43		15	6T-9144	208
	450	6E-1135	569	6I-0847	27		211
5P-7466	432	6E-1478	410	6I-0917	11	6T-9145	208
	434	6E-3341	517		13		211
	437	6E-4003	515		15	6T-9146	208
5P-7467	432	6E-4004	515	6I-1418	170		211
	434	6E-4006	515		175	6T-9147	208
	437		►517		180		211
5P-7814	81	6E-4009	517		186	6T-9160	254
5P-7958	182	6E-5431	568	6I-1497	43		256
	186	6E-6154	517		45	6T-9163	208
	569	6E-6155	517	6I-4374	48		211
	855	6E-6158	517		49		292
5P-7971	594	6E-6528	515	6J-1972	398		298
	595	6F-4855	505		409	6T-9164	208
5P-8066	261	6F-7045	139	6J-2680	398		211
	266	6G-2263	43		409		292
	271	6H-3616	31		471		298
	277	6I-0217	28	6J-2797	413	6T-9165	208

► **PRIMARY REFERENCE**

PART NUMBER INDEX

Part	Page	Part	Page	Part	Page	Part	Page
	211		593		329	6V-8186	878
	292		596		332	6V-8202	504
	298		700		847	6V-8210	213
6T-9166	208		701		849	6V-8224	440
	211		702		851		442
	292		703		853	6V-8227	828
	298		735		919		830
6T-9196	250		736		921	6V-8236	555
	255	6V-3341	461		923	6V-8237	409
6T-9202	292		463	6V-7359	444	6V-8335	261
	298	6V-3507	147		446		266
6V-0292	901		150		448		271
6V-0505	905	6V-3940	204		450		281
	919	6V-3965	220	6V-7687	365	6V-8344	564
6V-0683	344		222		367		572
	346		224		369		604
	477		465		557	6V-8363	167
	479		467		894		168
	481	6V-4292	340	6V-7731	261		169
	483		342		266	6V-8370	167
	485		344		271		168
	487		346		281		169
	489		519	6V-7743	354	6V-8378	261
	491	6V-4364	564		909		267
	493		598		911		272
6V-0826	329		601		917		277
	569		604		918		282
6V-0852	220		700	6V-7744	356		287
	222		701		511		292
	224		702		745		298
	465		703		807	6V-8397	96
	467	6V-4589	281		809		328
6V-1249	444		286		819		331
	446		292		821		340
	448		298		901		342
	450		555	6V-7981	276		344
6V-1361	177	6V-5100	250		286		346
6V-1363	72		255	6V-8077	222		420
6V-1580	374	6V-5215	207		224		461
	376		210		465		463
6V-1722	498		292	6V-8097	261		465
6V-1869	744		298		266		467
6V-1889	388	6V-5326	527		271		468
	444		528		276		473
	446		529		281		477
	448		530		286		479
	450		531		292		481
6V-2315	335	6V-5653	465		298		483
6V-2323	515	6V-5683	555	6V-8144	557		485
6V-2689	821	6V-5834	379		573		487
6V-3213	509	6V-5842	276		575		489
	511		286		577		491
	557		292		579		493
	566		298		581	6V-8398	328
	573	6V-6228	202		583		331
	575		204		585		385
	577		215		587		386
	579	6V-6707	390		589		388
	581		392		591		390
	583	6V-6717	788		592		398
	585		845		593		406
	587	6V-6813	788		596		408
	589		845		741		409
	591	6V-7238	452	6V-8185	894		420
	592	6V-7357	114		897		422

► **PRIMARY REFERENCE**

PART NUMBER INDEX

Part	Page
	425
	432
	444
	446
	448
	450
	453
	457
	459
	461
	463
	467
	468
	473
	475
	477
	479
	481
	483
	485
	487
	489
	491
	493
	495
	496
	498
6V-8455	219
6V-8500	254
	256
6V-8624	420
	422
	425
	473
	475
6V-8625	328
	331
	453
	498
6V-8626	457
6V-8627	220
	235
	304
	467
6V-8628	340
	342
	344
	346
6V-8629	500
6V-8633	444
	448
	477
	479
	483
	485
	489
	491
	495
	496
6V-8634	328
	331
	340
	342
	344
	346
6V-8635	417
	434
	437
	471
6V-8636	467
6V-8637	434
	437
6V-8639	386
	388
	420
	422
	425
	473
	475
	498
6V-8641	235
	328
	331
	340
	342
	344
	346
	465
	467
	470
	523
6V-8713	440
	442
	444
	446
	448
	450
	457
	495
	496
	500
	526
6V-8714	471
6V-8716	55
	57
6V-8721	477
	479
	481
	483
	485
	487
	489
	491
	493
6V-8723	340
	342
6V-8724	328
	331
	461
	463
	467
6V-8757	243
	246
	248
	250
	257
6V-8759	327
6V-8782	498
6V-8801	744
6V-8936	477
	479
	483
	485
	489
	491
6V-8978	527
	528
	529
	530
	531
6V-8995	444
	448
6V-8996	444
	446
	448
	450
6V-8998	432
	434
	437
6V-9002	422
	425
	475
6V-9031	457
6V-9169	444
	448
	468
6V-9170	432
	444
	446
	448
	450
6V-9172	432
	434
	437
6V-9178	307
6V-9182	55
	57
6V-9189	509
	807
6V-9632	170
	180
	361
	795
	873
	896
6V-9746	55
	57
	386
	388
	396
	413
	432
	434
	435
	437
	438
	500
6V-9830	417
	457
	459
6V-9831	457
	526
6V-9832	435
6V-9833	417
6V-9836	468
6V-9838	457
6V-9839	386
	388
	435
	437
6V-9840	471
6V-9849	465
6V-9850	340
	342
	344
	346
6V-9851	425
	475
6V-9853	386
	388
	432
6V-9872	96
6V-9990	448
	450
6Y-1192	243
	246
	252
6Y-1341	261
	266
	271
	276
	281
	286
6Y-1896	261
	266
	271
	277
	282
	287
	292
	298
6Y-2035	261
	266
	271
	277
	281
	287
6Y-2736	254
	256
6Y-2737	207
	210
	213
6Y-7929	243
	246
	248
	250
	252
6Y-7957	255
	257
6Y-9930	876
7C-0351	33
7C-1224	33
7C-1281	11

7

► PRIMARY REFERENCE

PART NUMBER INDEX

Part	Page	Part	Page	Part	Page	Part	Page
	13		304		210	7T-6087	134
	15		326		213	7T-6088	134
7C-4354	82		328		292	7T-6090	134
	386		331		298	7T-6092	134
	444		340	7T-3017	254	7T-6093	134
	446		342		256	7T-6099	134
	448		344	7T-3018	254	7T-6655	246
	450		346	7T-3021	254		248
7C-4616	28		420		256	7T-6799	147
7D-7233	45		422	7T-3022	254		150
	456		425		256	7T-9987	100
7E-3870	71		442	7T-3034	208	7W-1176	27
7G-1060	170		446		211	7W-2326	45
	175		450	7T-3051	207	7W-3556	292
	180		453		210		298
7H-3937	847		456		213	7W-4634	39
	849		457	7T-3109	261	7W-4642	27
	851		459		266	7X-0440	461
	853		465		271		463
7I-1036	386		467		276	7X-0481	894
	388		470		281		897
7I-8084	498		473		286	7X-0510	791
7I-8935	552		475	7T-3111	262	7X-0579	60
	553		496		267		172
7J-9108	329		498		272		177
	332		500		277		182
	432		523		282		188
	440		569		287		374
	442		867	7T-3119	261		376
	444		868		266		788
	446		873		271		812
	448	7M-8485	55		276		845
	450		57		281	7X-0586	67
	457		385		286	7X-0603	60
	459		417	7T-3195	261		598
	495		432		266		601
	496		434		271	7X-0608	128
	500		437		276	7X-0618	236
	526		471		281	7X-0620	379
7K-1181	78	7N-0718	101		287	7X-0622	895
	79		103		292		897
	82		▶139		298	7X-0818	79
	98	7N-3718	82	7T-3249	261		220
	101	7N-5274	100		266		222
	103	7R-2750	171		271		224
	111		176		276	7X-0871	467
	113		181		281	7X-2393	909
	114		187		286		911
	142	7R-2751	171	7T-3251	261	7X-2476	353
	145		176		266	7X-2533	873
	149		181		272	7X-2534	142
	155		187		277		172
	157	7R-8239	336		282	7X-2537	379
	161	7S-1912	82		287		380
	163	7T-0093	847		292		573
	169		849		298		575
	170		851	7T-3253	207		577
	175		853		210		579
	180	7T-1099	96		213		581
	186		795		292		583
	193	7T-2646	208		298		585
	195		211	7T-4848	170		587
	200		292		175		589
	201		298		180	7X-2541	807
	235	7T-2651	207		186		809

▶ **PRIMARY REFERENCE**

PART NUMBER INDEX

Part	Page
7X-2549	432
	437
7X-2553	237
	238
7X-2559	204
7X-2564	374
	376
7X-2568	876
7X-2572	373
7X-4741	267
	272
	277
	281
	286
	292
	298
7X-4744	307
7X-6315	105
7X-7729	45
	82
	98
	100
	101
	103
	172
	177
	182
	188
	329
	332
	432
	444
	446
	456
	471
	519
	521
	573
	575
	577
	579
	581
	583
	585
	587
	589
	819
	821
	828
	830
7X-7958	456
7X-9065	147
	150
7Y-0336	428
	430
7Y-3883	155
	157
7Y-9099	357

8

Part	Page
8C-0572	64
	65
	890
	891
8C-3056	98
	101
	103
8C-3290	350
	352
	353
8C-3334	193
8C-3398	172
	177
	182
	188
8C-3446	417
8C-3451	417
8C-3681	60
	66
	904
8C-3756	847
	849
	851
	853
8C-3798	43
	123
	835
	865
	901
	905
	907
8C-4982	871
8C-4987	819
	821
8C-5607	115
8C-5608	115
8C-5748	261
	266
	271
	276
	281
	286
	292
	298
8C-6354	172
	175
	182
	186
8C-6955	428
	430
8C-7505	202
	204
8C-7524	847
	849
	851
	853
	901
8C-8408	498
8C-8522	354
8C-8545	292
	298
8C-8580	533
	535
	544
	545
8C-8989	420
	422
	425
	473
	475
8C-9660	930
8C-9778	134
8C-9783	134
8D-2707	308
8E-1118	863
	865
8E-5707	243
	246
	248
	250
	252
	255
	257
8E-8293	905
	907
	919
	921
8F-1434	134
	155
	157
	167
	168
	169
	262
	267
	272
	277
	282
	287
	292
	298
8F-3590	123
	155
	157
	177
	182
	188
8H-5303	139
8H-5306	139
8H-7521	413
8J-2413	434
	533
	535
	537
	539
	541
	543
	544
	545
	546
	548
	549
	550
	551
8J-4455	134
8L-2746	281
	286
	292
	298
8L-2779	261
	266
	271
	276
	281
	286
	293
	299
8L-2786	293
	299
8L-8413	95
	121
	141
	144
	170
	171
	175
	176
	181
8M-2773	82
8N-0869	98
	103
8R-2916	830
8R-6111	863
	865
8S-0023	220
	222
	224
	432
	434
	438
8S-0024	220
	222
	224
	432
	434
	438
8S-0948	468
8S-3020	100
	101
	103
8S-7803	796
	799
	857
	895
	897
8T-0119	328
	331
8T-0120	495
	496
8T-0131	328
	331
8T-0144	732
8T-0154	452
8T-0164	304
8T-0271	292
	298
8T-0292	204
8T-0328	155
	157
	261
	267
	272
	277
	282
	287
	292
	298
	521

► **PRIMARY REFERENCE**

PART NUMBER INDEX

Part	Page	Part	Page	Part	Page	Part	Page
8T-0352	172		438		92		491
	177		440		93		493
	182		442		98		500
	188		500		101		508
8T-0389	117	8T-1889	328		103		512
	118		432		111		514
	119		435		117		519
8T-0404	440		437		118		521
	442	8T-1890	328		119		566
	444		432		121		569
	446		435		123		598
	448		437		127		601
	450	8T-1891	453		134		744
	459	8T-1892	453		155		807
8T-0643	292	8T-1899	461		157		809
	298		463		172		819
8T-0706	428	8T-1900	461		177		821
	430		463		182		828
8T-0785	390	8T-2658	817		188		830
	392	8T-2659	147		193		867
8T-1118	905		150		195		868
	907		930		220		873
	919	8T-3444	461		222	8T-4122	32
	921		463		224		94
8T-1580	207	8T-3490	67		304		356
	210		73		329		372
	213		459		332		415
	252		573		340		720
8T-1581	252		575		342		722
	261		577		344		723
	266		579		346		724
	271		581		356		738
	276		585		363		739
	281		587		374	8T-4123	374
	286		589		376		376
8T-1683	344		873		386		428
	346		877		388		430
8T-1718	500	8T-3612	66		416		783
8T-1779	465		79		420		876
8T-1885	453		112		422	8T-4131	236
	477		349		425		783
	479		573		432		876
	481		575		435	8T-4132	32
	483		579		437		372
	485		581		440		876
	487		585		442	8T-4133	45
	489		587		444		60
	491		744		446		73
	493		795		448		82
8T-1886	453		873		450		98
	477	8T-3647	509		453		100
	479	8T-3652	365		456		101
	481		367		457		103
	483		369		459		121
	485	8T-4001	351		461		123
	487		353		463		134
	489		363		473		172
	491	8T-4121	32		475		177
	493		43		477		182
8T-1887	434		45		479		188
	438		55		481		329
	440		57		483		332
	442		73		485		354
	500		81		487		386
8T-1888	435		82		489		388

► **PRIMARY REFERENCE**

PART NUMBER INDEX

Part	Page	Part	Page	Part	Page	Part	Page
	422		155		369		432
	428		157		374		435
	430		171		376		438
	432		177		420	8T-4186	416
	435		182		422		873
	438		188		425	8T-4187	783
	457		193		444	8T-4189	43
	744		195		446		55
	819		304		448		57
	821		340		450		60
	828		342		475		67
	830		374		519		82
8T-4134	193		376		521		94
	195		420		562		112
	873		422		598		155
8T-4136	45		425		601		157
	55		435		868		349
	57		437		893		374
	73		440	8T-4167	350		376
	82		442		351		379
	155		459		352		380
	157		473		353		428
	172		475		363		430
	177		477		373		435
	182		479	8T-4171	144		437
	188		481		155		456
	220		483		157		568
	222		485		165		796
	224		487		855		812
	329		489		923		819
	332		491	8T-4172	342		821
	344		493		346		868
	346		519	8T-4173	876		873
	374		521	8T-4174	32		883
	376		566	8T-4176	220		885
	386		569		222		890
	388		744		224		891
	432		819		557	8T-4191	519
	435		821	8T-4178	901		521
	437		867	8T-4179	519	8T-4192	55
	444		868		521		57
	446	8T-4138	43	8T-4181	121		82
	448		78		863		236
	450		79	8T-4182	60	8T-4193	94
	453		109		344	8T-4194	224
	456		111		346		448
	457		113		428		450
	459		167		430		598
	461		168		508		601
	463		169	8T-4183	349	8T-4195	45
	471		172		444		73
	500		177		446		81
	598		182		448		93
	601		188		450		356
	744		329		471		363
	819		332		598		388
	821		568		601		444
	828		873	8T-4184	508		446
	830		880		561		453
	868		923		742		456
8T-4137	98	8T-4139	155	8T-4185	43		500
	100		157		98		508
	101		337		100		569
	103		365		101		573
	127		367		103		575

PART NUMBER INDEX

Part	Page	Part	Page	Part	Page	Part	Page
	577		114		561		448
	579		115		562		450
	581		130		598		873
	583		131		601	8T-4648	378
	585		132		742	8T-4742	79
	587		142		832		861
	589		144		868		862
	598		155		881	8T-4744	79
	601		157		882		861
	807		165		893		862
	809		167		913	8T-4773	819
	828		168		915		821
	830		169	8T-4224	52	8T-4778	356
	873		172		53	8T-4815	819
8T-4196	32		177		54		821
	45		182		67	8T-4821	365
	92		188		78		367
	340		329		79		369
	342		332		82	8T-4837	365
	344		354		94		367
	346		468		98		369
	432		788		112	8T-4908	52
	435		815		127		53
	437		845		130		54
	477		847		131		60
	479		849		132		78
	481		851		142		79
	483		853		144		329
	485		855		155		332
	487		878		157		569
	489		919		165		744
	491		921		172		809
	493		923		177	8T-4910	435
	500	8T-4222	60		182		598
	512		356		188		601
	514		901		219	8T-4956	220
8T-4197	809	8T-4223	55		326		222
8T-4198	745		57		329		237
8T-4200	60		82		332		238
	64		155		336		473
	65		157		339		832
	94		220		349		873
	172		222		374		881
	177		224		376		882
	182		237		378	8T-4971	862
	188		238		379		873
	219		349		380		923
	349		374		420	8T-4986	573
	788		376		422		575
	796		378		425		577
	799		420		428		579
	804		422		430		581
	806		425		473		583
	845		432		475		585
	913		437		498		587
	915		444		568		589
8T-4205	43		446		569	8T-5005	304
	78		448		744	8T-5050	468
	79		450		807	8T-5063	428
	98		471		855		430
	101		473		868	8T-5070	390
	103		475		873		398
	109		508	8T-4244	378		406
	111		519		444	8T-5091	357
	113		521		446	8T-5093	155

► **PRIMARY REFERENCE**

PART NUMBER INDEX

Part	Page
	157
	357
	905
	907
	919
	921
8T-5429	481
	487
	493
8T-5436	807
	809
8T-5439	312
	313
	314
	315
	316
	317
	318
	320
	321
	322
	323
	324
	325
8T-6411	828
8T-6412	890
8T-6466	340
	344
	807
	809
8T-6684	471
8T-6685	511
8T-6726	67
	453
	457
	461
	463
8T-6868	365
	367
	369
8T-6869	339
	378
8T-6870	498
8T-6876	422
	425
	475
8T-6902	568
	878
8T-6912	326
8T-6974	468
8T-7004	422
8T-7338	415
8T-7529	43
	55
	57
	456
8T-7547	127
	374
	376
	568
	807
	809
	873
8T-7566	891
8T-7876	50
	51
8T-7930	365
	367
	369
8T-7963	349
8T-7968	477
	479
	481
	483
	485
	487
	489
	491
	493
8T-8390	396
8T-8442	515
8T-8729	420
8T-8737	141
	144
	147
	150
	152
	153
	154
	171
	172
	176
	177
	180
	181
	182
	186
	187
	188
	390
	396
	398
	406
	825
	826
	827
	855
8T-8799	98
	103
	142
	145
	165
	170
	175
	180
	186
8T-8894	92
	93
	828
	830
8T-8917	890
8T-9402	43
8T-9405	72
	415
8T-9501	819
	821
	832
	883
	885
	890
8T-9655	170
	175
	180
	186
8U-9427	552
8W-9230	461
8X-9618	188
8Y-5737	788
	845
8Y-5946	897
8Y-6352	788
	845
8Y-6967	788
	845
8Y-7309	909
	911
8Y-7833	199
	200
8Y-8080	101
8Y-8081	98
	100
	103
9	
9B-7233	147
	150
	900
9C-4457	901
9D-3767	329
	332
9F-2049	365
	367
	369
9F-2247	85
9F-5644	128
	139
	182
9G-3695	872
9G-3732	807
9G-3733	807
9G-4191	98
	101
	103
9K-6540	791
9M-0164	519
	521
9M-1974	261
	266
	271
	276
	281
	286
9M-4814	867
	868
9M-7958	45
	66
9M-7959	788
	845
9M-8406	82
	340
	342
	344
	346
	868
9N-2231	788
	845
9P-9150	261
	266
	271
	276
	281
	286
	292
	298
9R-0109	557
	560
	573
	575
	577
	579
	581
	583
	585
	587
	589
	591
	592
	593
	596
	741
	932
	933
9R-0111	557
	609
	611
	612
	614
	616
	728
9R-0139	390
9R-0153	400
9R-0158	509
	511
	557
	564
	566
	573
	575
	577
	579
	581
	583
	585
	587
	589
	591
	592
	593
	596
	700
	701
	702
	703
	735
	736
	743
9R-0162	390
	392

► **PRIMARY REFERENCE**

PART NUMBER INDEX

Part	Page	Part	Page	Part	Page	Part	Page
	564	9R-0366	362	9R-2807	326	9R-5238	572
	597		365		329	9R-5271	728
	598	9R-0371	612		332	9R-5294	730
	601	9R-0372	612		428	9R-5301	428
	619	9R-0376	609		430		430
	620		614		819		560
	621		616		821		571
	622	9R-0411	596	9R-2959	598	9R-5313	609
	623	9R-0418	461		601		612
	624		463	9R-3067	819		730
	625	9R-0422	591		821	9R-5320	607
	626		592	9R-3135	430		608
	629		593	9R-3182	557		669
	630	9R-0431	363	9R-3205	903		673
	631		704		904		▶738
	632		705	9R-3255	428	9R-5321	606
	633		706		430		671
	634		707	9R-3469	905		673
	635		708		907		674
	636		709		919		▶739
	637		710		921	9R-5383	807
	638		712	9R-3659	317		809
	639		713	9R-3700	734	9R-5616	796
	640		714	9R-3747	566		799
	641		715	9R-3756	566		804
	642	9R-0481	363	9R-3884	340		806
	643		559		344	9R-5828	566
	644	9R-1085	▶591	9R-4066	557	9R-5832	612
	645	9R-1499	121		933	9R-5866	606
	646		123	9R-4110	363		607
	649	9R-1502	564	9R-4482	566		608
	650		604	9R-4485	612		671
	651	9R-1510	509		614		673
	652		511	9R-4486	612		674
	653		564		614		675
	654		572	9R-4494	566		▶787
	655		604	9R-4619	440	9R-5901	614
	656		700		442	9R-5902	614
	658		701	9R-4672	611	9R-5948	444
	659		702		614		446
	660		703		616		448
	661		736		729		450
	662		743	9R-4675	730		495
	663	9R-1765	819	9R-4676	720		496
	664		821		722	9R-6007	▶592
	665	9R-1766	819		723	9R-6014	933
	666		821		724	9R-6481	313
	667		832	9R-4677	720		314
	668	9R-1767	819		722	9R-6690	557
9R-0170	564		821		723	9R-7240	95
9R-0189	560		832		724	9R-7803	457
9R-0320	412	9R-1956	314	9R-4678	720		459
	413	9R-2053	161		722	9R-7882	365
	617		163		723		367
	618		453		724		369
	627		498	9R-5205	609	9R-8165	568
	628	9R-2614	428		611		791
	647		430		612	9R-8291	365
	648	9R-2672	67		614		367
	657		597		616		369
	734	9R-2700	394	9R-5206	609	9R-8292	572
9R-0321	400		396		611		604
	402	9R-2806	326		612	9R-8390	557
	404		428		614	9R-8594	569
9R-0347	611		430		616	9R-8870	461

▶ **PRIMARY REFERENCE**

PART NUMBER INDEX

Part	Page
	463
9R-9005	498
9R-9028	571
9R-9373	557
9R-9702	236
9R-9866	559
9R-9868	819
	821
9R-9925	519
	521
9S-4185	293
	299
9S-4191	92
	93
	261
	266
	271
	276
	281
	286
	293
	299
	417
	468
9S-8004	204
	401
	504
	515
	527
	528
9S-8005	505
9T-2178	394
9T-2883	410
9T-3165	413
9T-4007	401
9U-2277	193
	195
9U-8263	863
	865
9U-8875	250
9U-8886	248
	250
	415
9W-0607	117
	118
	119
9W-0625	819
	821
9W-0717	252
9W-0844	171
	176
	181
	187
9W-0852	171
	176
	181
	187
9W-1951	171
	176
	181
	187
9W-3326	121
	123
9W-4361	744
9W-5460	207
	210
	213
	292
	298
9W-6582	876
9W-6584	876
9W-8215	739
9W-9910	32
9W-9915	32
9W-9952	32
9W-9953	32
9X-0199	167
	168
	169
9X-1054	141
	144
9X-1386	133
	390
	396
	398
	406
9X-1481	895
	897
9X-2036	134
9X-2038	332
	359
	360
	361
	523
	788
	791
	813
	815
	817
	835
	836
	838
	840
	842
	845
	863
	865
	873
	880
	901
	930
9X-2040	819
	821
9X-2042	834
9X-2043	359
	360
	361
	523
	835
9X-2044	329
	815
	817
	901
	913
	915
9X-2045	329
	331
	788
	791
	813
	817
	836
	838
	840
	842
	844
	845
	873
	880
	909
	911
	917
	918
9X-2065	819
	821
9X-2092	804
9X-2132	913
	915
9X-2133	66
9X-2480	115
9X-2842	878
9X-3401	819
9X-3402	171
	176
	181
	186
9X-3982	521
9X-4244	117
	118
	119
9X-4611	413
9X-4813	171
	176
	181
	187
9X-6165	115
	193
	195
	880
9X-6378	204
9X-6383	838
	842
	913
	915
9X-6611	400
	402
	404
	410
9X-6615	261
	266
	271
	276
	281
	286
	292
	298
9X-6620	883
	885
	890
	891
9X-7260	394
	396
9X-7344	167
	168
	169
9X-7378	141
	144
	811
9X-7380	868
9X-7381	868
9X-7382	868
9X-7383	868
9X-7684	204
9X-8118	120
9X-8139	120
9X-8256	121
	123
	568
	835
	863
	865
	873
	901
	905
	907
9X-8257	237
	238
	594
	595
	876
9X-8372	905
	907
	919
	921
9X-8399	392
9X-8408	385
9X-8699	379
	380
9Y-0083	807
	809
9Y-5015	23
0	
005-0469	207
	208
	210
	211
	213
005-0471	261
	266
	271
	276
	281
	286
014-5645	261
	266
	271
	276
	281
	286
031-5644	66
	125
032-9090	17
032-9091	17
033-6028	515
033-6043	515
033-6044	555
033-7687	26

► **PRIMARY REFERENCE**

PART NUMBER INDEX

Part	Page
033-8248	45
034-1432	932
	933
035-8068	20
038-9317	98
	100
	101
	103
039-8557	873
039-9133	336
067-6002	20
067-6006	20
	23
067-6043	20
067-6095	41
067-6179	28
067-6213	33
067-6366	97
067-6873	17
067-6874	17
069-4080	92
	93
084-4277	863
	865
084-4348	121
	123
089-7990	236
091-2436	171
	176
	181
091-4113	744
091-5928	732
092-3635	340
	342
	344
	346
093-8828	232
095-0641	878
095-0642	503
	546
	548
095-0674	232
095-0756	201
	832
095-0865	720
	722
	723
	724
095-0879	390
095-0924	239
095-0927	252
	255
095-0928	252
095-0929	572
	604
095-1041	232
095-1543	396
095-1608	396
095-1751	434
	533
	535
	537
	539
	541
	543
095-7950	559
095-9230	819
	821
096-1820	720
	722
	723
	724
	735
	736
096-4882	894
	897
096-5516	254
	256
096-5866	67
	420
	422
	425
	473
	475
096-5968	306
096-6166	175
	180
	187
	870
	871
099-3649	861
099-8232	505
1	
100-3685	134
100-3751	28
	62
100-4112	134
100-4113	134
100-4115	134
100-4118	134
100-4119	134
100-4461	46
100-4830	30
	85
	88
100-4838	13
	15
100-4841	11
	13
	15
	20
100-5805	175
	180
	186
100-6674	141
	144
100-7608	909
	911
	917
	918
100-8451	97
101-0003	891
101-0745	919
	921
	923
101-1787	465
101-2987	31
101-3617	27
101-3771	33
101-3895	48
	49
102-2244	390
	396
	398
	406
102-3582	410
102-8801	147
	150
	171
	176
	181
	187
	855
102-8802	95
	123
	133
	141
	144
	155
	157
	170
	171
	175
	176
	181
	187
	193
	195
	420
	811
	819
	821
	832
102-8803	141
	144
	197
	328
	331
	398
	420
	422
	425
	894
102-8804	123
	147
	150
	170
	171
	175
	176
	181
	187
	390
	396
	406
102-8805	121
	152
	171
	176
	181
	187
	872
102-8806	121
	153
	154
	172
	176
	180
	186
103-2543	170
	175
	180
	186
103-5520	555
104-3288	208
	292
	298
104-6310	607
	608
	►741
104-6311	741
104-6312	741
104-6316	741
104-6317	741
105-1440	555
105-3481	883
	885
	890
	891
105-8034	328
	331
105-9411	868
106-0401	385
	418
	432
	434
	437
106-0406	385
	418
	432
	434
	437
106-1251	390
106-3108	503
106-7301	428
	430
106-8020	96
106-8704	141
	170
	175
	193
	197
	420
	422
106-8916	74
	76
106-9586	307
106-9861	207

► **PRIMARY REFERENCE**

PART NUMBER INDEX

Part	Page
	210
	213
	292
	298
107-5591	819
	821
	832
107-6279	400
107-6711	597
	598
	601
107-6826	245
108-2989	807
	809
108-3872	432
	434
	437
109-1260	432
109-1633	420
	422
	425
	473
	475
	868
109-1634	420
	422
	425
	473
	475
	868
109-1779	515
109-5825	434
	438
110-0203	171
	176
	180
	187
110-2445	67
110-5602	861
	913
	915
110-6109	788
	845
110-7887	147
	150
111-0859	25
111-4337	557
	566
	596
111-4627	193
	195
	788
	845
111-5042	891
	894
	896
111-6792	171
	176
	181
111-6793	171
	176
	181
111-6795	141
	144
	171
	176
	181
111-6816	141
	144
	171
	176
	181
	187
111-7899	121
	123
	137
	141
	144
	147
	149
	150
	159
	165
	170
	175
	180
	186
	197
	201
	420
	422
	425
	526
	830
	923
111-7906	219
111-7907	▶219
	259
	260
112-1773	413
112-1776	741
112-1826	241
	242
	▶415
112-9338	312
	313
113-0920	863
	865
113-6349	97
113-8129	62
113-8490	128
113-8491	128
113-8492	128
114-2579	10
114-3928	348
114-4363	27
114-6099	363
115-1162	10
115-1615	109
	111
	141
	144
	155
	157
	165
115-1918	415
116-4481	552
	553
116-4942	▶593
116-5763	357
117-1385	292
	298
117-3534	415
117-9713	219
117-9887	245
118-2990	876
118-6842	349
	▶354
118-6854	349
118-7110	738
118-7286	55
	57
118-7790	167
	168
	169
118-8118	81
	91
118-8119	81
119-1530	▶931
119-3662	141
	144
	171
	176
	181
	187
119-4594	557
	596
119-4740	241
	242
119-5025	78
	79
119-8349	913
	915
119-9631	847
	849
120-5724	517
120-9027	817
120-9286	926
120-9289	931
	▶933
120-9332	933
120-9333	932
	933
120-9762	207
	210
	213
	292
	298
120-9809	457
121-0694	246
	248
121-0697	255
121-0714	255
121-0883	27
121-0885	252
	255
121-0904	255
121-1029	791
121-2059	208
	292
	298
121-2060	208
	292
	298
121-2061	208
	292
	298
121-2500	246
	248
	250
121-3040	891
121-6936	905
	907
121-7385	261
	266
	271
	276
	281
	286
	292
	298
121-7389	261
	266
	271
	276
	281
	286
121-7390	261
	266
	271
	276
	281
	286
121-7391	261
	266
	271
	276
	281
	286
121-7396	261
	266
	271
	276
	281
	286
121-7398	208
	211
	292
	298
121-7399	208
	211
	292
	298
121-7400	208
	211
	292
	298
121-7401	208
	211
	292
	298
121-7402	208
	211
	292
	298
121-7403	261
	266

▶ **PRIMARY REFERENCE**

PART NUMBER INDEX

Part	Page
	271
	276
	281
	286
121-7404	261
	266
	271
	276
	281
	286
121-8004	461
	463
121-9743	913
121-9870	863
	865
121-9875	281
	286
122-0668	461
122-1113	467
122-1877	243
	252
	255
	257
122-1878	255
	257
122-1879	208
	292
	298
122-1883	282
	287
	292
	298
122-1884	255
	257
122-1886	248
	250
122-3652	207
	210
	213
122-6785	261
	271
	276
	281
	286
122-6787	261
	267
	271
	277
	282
	287
	292
	298
122-7137	900
122-9250	533
	535
	537
	539
	541
	543
	546
123-0380	796
	799
123-0428	374
	376
123-0707	863
123-0714	250
123-1377	271
	277
	282
	287
	292
	298
123-2899	25
123-2918	282
	287
123-2919	282
	287
123-2920	207
	210
	213
	248
	250
123-4065	60
123-8905	246
	248
	250
	255
	257
123-8906	207
	208
	210
	213
	246
	248
	257
123-8907	243
	252
	254
	256
	261
	266
	271
	276
	281
	286
123-8908	208
	211
	243
	252
123-8909	248
	250
123-8910	208
	211
	248
123-8912	243
	252
	255
	257
123-8913	248
124-0312	788
	845
124-2456	927
124-3536	35
124-3815	28
	85
	88
124-6569	865
125-7874	121
	141
	144
	152
	153
	170
	171
	175
	176
	181
	187
125-7875	121
	171
	176
	181
	186
125-7876	98
	103
126-1817	417
126-7574	105
127-1647	481
	487
	493
127-3017	261
	266
	271
	276
	281
	286
127-4293	315
127-4471	45
	67
	519
	521
127-4834	351
127-8987	557
128-4123	171
	176
	181
	186
128-4249	171
	177
	181
128-5010	557
128-5016	171
	176
	181
	187
128-5596	415
	▶518
128-7902	428
	430
128-7903	428
	430
	557
128-7905	428
	430
	557
129-1831	788
	845
129-3178	67
	113
	114
	115
	847
	849
	851
129-3180	883
	885
	890
	891
	897
	913
	915
129-4741	354
129-5256	796
	799
	857
129-5257	796
	799
	857
129-8542	909
	911
	917
	918
129-8545	909
	911
	917
	918
130-0165	112
130-0777	596
130-1638	573
	575
	577
	579
	581
	583
	585
	587
	589
130-3879	54
130-4832	788
	845
130-5451	557
130-5891	428
	430
130-7282	204
130-7952	428
	430
130-8150	518
130-8343	895
	896
130-9984	55
	57
	456
	868
131-0232	95
131-1424	147
	150
	900
131-3987	796
	799
	836
	838
	840
	842
	857
131-8203	913

▶ **PRIMARY REFERENCE**

PART NUMBER INDEX

Part	Page
131-8775	569
131-9203	420
	422
132-2249	836
	838
	840
	842
	863
	865
132-3056	519
	521
132-3721	732
132-3723	732
132-3725	732
132-3777	733
132-3778	733
132-3821	732
132-5789	187
	868
132-6496	557
132-6497	560
132-8769	▶418
133-0261	299
133-1011	28
133-3362	▶573
	▶575
	▶577
133-3363	▶579
	▶581
	▶583
133-3366	▶585
	▶587
	▶589
133-3413	112
133-5813	467
133-6517	112
134-0143	569
	855
134-0404	159
134-0453	819
	821
134-2540	111
	171
	172
	176
	180
	181
	186
	187
134-3014	417
134-3856	867
	868
134-4126	105
134-5884	627
	628
	629
	630
	631
	632
	633
	634
	635
	636
	637
	638
	639
	640
	641
	642
	643
	644
	645
	646
	656
	661
	662
	663
	664
	665
	666
	667
	668
134-5885	627
	628
	629
	630
	631
	632
	633
	634
	635
	636
	637
	638
	639
	640
	641
	642
	643
	644
	645
	646
	656
	661
	662
	663
	664
	665
	666
	667
	668
134-5930	430
134-7258	926
135-5009	98
	103
135-8203	787
136-1955	43
136-3112	224
136-3194	923
136-4184	855
136-4192	909
	911
	917
	918
136-7049	658
	659
	660
136-7051	658
	659
	660
136-7440	365
	367
	369
136-7728	60
136-7808	215
137-4234	670
	672
	676
	677
	678
	679
	680
	681
	682
	683
	684
	685
	686
	687
	688
	689
	690
	691
	692
	693
	694
	695
	696
	697
	698
	699
	711
	716
	717
	718
	719
	720
	722
	723
	724
137-6645	159
	293
	299
138-2053	41
138-8454	187
140-3640	60
140-6009	428
	430
140-8714	85
	88
140-8718	85
	88
140-8783	97
141-0888	507
141-1667	74
	76
141-1762	901
141-6343	428
	430
141-7684	425
141-8061	171
	176
	181
	187
141-8437	463
142-0485	328
	331
142-1072	442
142-2928	894
142-3388	52
	53
	54
142-3391	52
	53
	54
143-0539	▶134
	136
143-0777	457
143-0779	457
143-1344	134
143-2827	909
	911
	917
	918
143-3158	467
144-0195	905
	907
	919
	921
144-0367	471
144-1636	133
144-8242	467
144-8344	432
	434
	438
145-0981	865
145-2237	467
145-8348	735
	736
145-9291	828
	830
146-0742	406
	408
146-6729	134
146-7744	913
	915
146-7745	913
	915
146-9439	137
	170
	175
	180
	186
	197
	420
	422
	425
147-0201	292
	298
147-0202	246
	248
147-0203	243
	250
	252
	257
147-0205	252
147-0207	257
147-0209	261
	266
	271

▶ **PRIMARY REFERENCE**

PART NUMBER INDEX

Part	Page	Part	Page	Part	Page	Part	Page
	276		344		342		437
	281		346		344	148-8457	444
	286		465		346		448
	292		467	148-8368	220	149-3516	81
	299		470		235	149-4236	74
	▶307		523		304	149-4745	894
147-0210	257	148-8326	96		467		896
147-0211	293	148-8327	434	148-8369	340	149-7372	456
	299		437		342	149-9954	91
147-0215	243	148-8328	444		344	150-3026	340
147-0216	243		448		346		342
147-0218	293		477	148-8370	425		344
	299		479		475		346
147-0224	248		483	148-8372	477		519
147-0226	293		485		479	150-3027	465
	299		489		481	150-3033	304
147-0227	250		491		483	150-3035	500
147-0234	293		495		485	150-3053	432
	299		496		487		434
147-0236	293	148-8335	417		489		437
	299		434		491	150-3060	461
147-0238	243		437		493		463
	246		471	148-8374	340	150-3062	465
	248	148-8336	467		342	150-3063	457
	250	148-8339	55	148-8378	328	150-3757	252
	257		57		331		254
147-0242	252	148-8340	386		461		256
147-0248	252		388		463	150-4044	465
147-0256	246		420		467	150-7732	11
147-0257	248		422	148-8381	481		293
147-0258	243		425		487		299
147-0259	246		473		493	150-8015	915
	248		475	148-8382	440	151-1975	81
147-0260	252		498		442	151-2565	400
147-0261	252	148-8341	440		444	151-2963	354
147-0262	293		442		446	151-4841	78
	299		444		448		79
147-0266	293		446		450		235
	299		448		459		304
147-0268	299		450	148-8383	344		328
147-0270	246		457		346		331
147-1445	171		495	148-8388	500		457
	176		496	148-8390	457		459
	181		500	148-8392	386	151-7902	619
	187		526		388		621
147-1446	171	148-8351	465		432		623
	176	148-8354	422	148-8407	276		625
	181		425		286		629
	187		475		293		631
147-1979	23	148-8358	420		299		633
147-5553	76		422		417		635
148-8317	471		425		467		637
148-8318	328		473	148-8415	477		639
	331		475		479		641
	340	148-8360	55		483		643
	342		57		485		645
	344	148-8362	471		489		649
	346	148-8364	328		491		651
	420		331	148-8428	498		653
	473		453	148-8429	471		655
148-8325	235		498	148-8433	468		661
	328	148-8365	422	148-8446	457		663
	331		425	148-8449	386		665
	340		475		388		667
	342	148-8367	340		435	151-7903	619

▶ **PRIMARY REFERENCE**

PART NUMBER INDEX

Part	Page
	621
	623
	625
	629
	631
	633
	635
	637
	639
	641
	643
	645
	649
	651
	653
	655
	661
	663
	665
	667
151-7926	641
151-7927	627
	629
	631
	633
	635
	637
151-7929	617
	627
	647
151-7930	617
	627
	647
152-0816	461
152-6144	202
	204
	215
152-7691	872
153-0088	897
153-3061	52
	53
	54
153-4906	515
153-6232	495
	496
153-6241	420
	422
	425
	473
	475
153-6252	385
153-6258	468
153-7368	828
	830
153-7369	▶339
	828
	830
153-8004	870
154-2704	734
	735
	736
154-5257	617
	618
	627
	628
	647
154-5278	564
154-5279	564
	743
154-5280	564
	743
154-5404	202
	337
154-5410	919
	921
	923
154-5416	326
154-5423	909
	911
	917
	918
154-5428	193
	195
155-2026	432
	434
	437
155-2255	152
	153
	154
	171
	176
	181
	187
	855
155-2260	171
	172
	176
	180
	181
	186
	398
155-2265	171
	176
	181
155-2270	121
	141
	144
	152
	153
	170
	171
	175
	176
	181
	326
155-2271	121
	171
	176
	177
	181
	182
	187
155-2274	171
	176
	181
	187
155-6258	481
	487
	493
155-7321	498
156-0283	357
	861
	905
	907
	919
	921
156-1200	81
156-3600	328
	331
156-3631	328
	331
156-6175	98
	101
	103
	113
	114
	172
	177
	182
	187
	523
157-1669	92
	93
157-2090	252
158-2306	383
158-3412	457
	459
158-4466	552
	553
159-1503	55
	57
	456
159-3313	467
159-3590	928
159-4269	836
	838
	840
	842
159-4945	796
	799
	840
	842
	857
159-4946	796
	799
	836
	838
	857
159-8033	926
159-8050	101
	103
159-9322	171
	176
	181
	187
160-0496	383
160-2169	923
160-2245	167
160-2246	55
	168
	169
160-2248	470
	523
161-3249	255
	257
161-4130	617
	619
	621
	623
	625
	627
	629
	631
	633
	635
	637
	639
	641
	643
	645
	647
	649
	651
	653
	655
	657
	658
	659
	660
	661
	663
	665
	666
	667
	728
	734
161-6984	859
	860
161-6987	859
	860
161-9044	836
	838
	840
	842
161-9283	883
	885
	890
	891
	896
161-9285	896
161-9288	895
	896
161-9289	894
	896
161-9294	859
	860
162-1565	11
	13
	15
162-1604	515
162-3960	▶383
	384
	420
	422
	473
	475
162-3961	▶384
	425

▶ **PRIMARY REFERENCE**

PART NUMBER INDEX

Part	Page	Part	Page	Part	Page	Part	Page
162-4004	356	164-1258	883	164-1398	568	168-0444	700
162-6556	859		885	164-2108	556		701
	860		890	164-3876	349		702
163-0753	327		891	164-5549	420		703
	▶336	164-1259	883		473	168-0445	736
163-1135	895		885	164-5567	220	168-0446	735
	896		890		222		736
163-9091	243		891		224	168-0475	735
	246	164-1261	887		465	168-0480	619
	299		888		467		620
164-1153	832		889	164-5586	467		621
164-1154	878	164-1263	890	164-7556	117		622
164-1178	813		891		118		623
164-1214	888	164-1265	887		119		624
164-1215	894		888	164-8474	788		625
	896		889		845		626
164-1218	894		890	164-9425	155		629
	896	164-1266	883		157		630
164-1219	894	164-1269	891	164-9598	336		631
	896	164-1271	891	164-9599	336		632
164-1220	894	164-1272	891	164-9640	467		633
	896	164-1273	890	165-2273	452		634
164-1226	895		891	165-4021	43		635
	896	164-1274	891	165-4931	222		636
164-1228	896	164-1275	890		224		637
164-1229	894		891		465		638
	896	164-1276	890	165-6595	328		639
164-1230	894		891		331		640
	896	164-1277	891	165-7951	92		641
164-1232	895	164-1308	913		93		642
	896		915	165-8357	112		643
164-1233	895	164-1314	913	165-8996	236		644
	896		915	166-9413	205		645
164-1234	896	164-1328	913	167-0566	498		646
164-1235	896		915	167-2186	398		649
164-1237	894	164-1342	913		409		650
	896		915	167-2195	413		651
164-1238	895	164-1343	913	167-2201	390		652
	896		915		392		653
164-1239	895	164-1344	913	167-2202	394		654
	896		915		396		655
164-1240	894	164-1345	913	167-2204	406		656
	896		915		408		658
164-1244	885	164-1346	913	167-2294	398		659
	890		915		409		660
164-1245	891	164-1351	913	167-2304	413		661
164-1246	891		915	167-2310	394		662
164-1247	887	164-1352	913		396		663
	888		915	167-2312	390		664
	889	164-1353	913		392		665
164-1249	883		915	167-2314	406		666
	885	164-1354	913		408		667
	890		915	167-3692	171		668
	891	164-1368	201		176	168-2313	847
164-1250	883		326		181		851
	885		788	167-8182	913	168-3379	517
164-1251	883		819		915	168-4511	112
	885		821	167-8251	813	168-8389	670
	890		832	168-0425	735		672
	891		845		736		676
164-1252	883		873		745		677
	885	164-1395	78	168-0443	700		678
	890		79		701		679
	891		568		702		680
164-1256	890		821		703		681

▶ **PRIMARY REFERENCE**

PART NUMBER INDEX

Part	Page	Part	Page	Part	Page	Part	Page
	682	171-5349	133		644		180
	683	172-4211	857		653		186
	684	172-5317	246		654		192
	685		248		660	178-8214	254
	686		250	174-6740	467		256
	687	172-6050	243	174-8131	930	178-8465	5
	688		250	174-9638	74	178-8850	▶733
	689		252		76	178-9566	255
	690		255	174-9711	261	179-3543	▶502
	691		257		266		546
	692	172-6489	121		271		548
	693		123		276	179-5434	120
	694	172-6490	121		281	179-6401	170
	695		123		286		175
	696	172-6743	252	175-0054	261		180
	697	172-8276	649		266		186
	698		658		271	179-7262	915
	699	172-8277	651		276	179-8235	819
	711		659		281		821
	716	172-8278	653		286	179-9392	182
	717		660	175-7877	▶926		186
	718	172-8279	632	175-7902	394	180-3664	▶120
	719		640		396		125
	720		649		406	180-3730	96
	722		650		408	180-5781	890
	723		658	175-7903	394		891
	724		662		396	180-5782	891
	734	172-8280	634		406	180-5783	891
	735		642		408	180-5784	891
	736		651	175-7904	415	180-5785	891
169-1616	434		652	176-0348	121	180-5787	891
	533		659		123	180-5788	891
	535		664	176-0626	365	180-5789	896
	537	172-8591	813		367	180-5791	890
	539	172-9200	172		369		891
	541		175	176-6251	▶732	180-5795	883
	543		180		733	180-5796	885
	544		186	176-6252	732	180-5797	883
	545	173-0332	243	176-8541	552		885
	546	173-0639	515		553		890
	548	173-0641	515	176-9294	471	180-6213	515
	549	173-5787	895	177-2215	161	180-9160	861
	550		896		163	180-9339	141
	551	173-7003	199	177-4877	796		144
169-5861	81		200		799		152
169-7291	863	173-9683	392		836		153
	865	173-9779	409		838		154
169-7409	444	174-0503	171		840		170
	446		176		842		172
	448		181	177-9645	847		175
	450		186		849		180
170-0235	868	174-3091	825		851		186
170-0503	383		826		853	180-9340	141
170-6305	147		827	177-9648	141		144
	150	174-3949	647		144		152
170-6542	147		657	177-9656	141		153
	150	174-3950	628		144		154
170-9360	113		647	178-1304	313		170
	114		648	178-1781	98		172
	172		657		101		175
	177	174-4643	202	178-3593	▶743		176
	182	174-4647	204	178-7539	121		180
	187	174-4650	204		123		186
171-2870	913	174-4671	202		170	180-9900	182
	915	174-4765	636		175		186

▶ **PRIMARY REFERENCE**

PART NUMBER INDEX

Part	Page	Part	Page	Part	Page	Part	Page
183-3132	819	188-2199	390	195-2221	31	198-7811	204
	821		396	195-6341	314		232
183-3135	819		398		320	198-7814	230
	821		406	195-6344	315		231
183-3137	819	188-3953	573		316	198-7823	202
	821		575		319		337
183-4911	861		577		321	198-7825	202
183-4912	861		579		325		337
183-4934	873		581	195-7055	887	198-7838	202
183-5443	861		583		888		337
183-6084	568		585		889	198-7841	202
183-6085	861		587	195-7602	873		337
184-0982	95		589	195-9223	883	198-7842	202
	96	188-9592	735		885		337
184-5293	817	189-0881	788		890	198-7843	202
185-0882	23		845		891		337
185-0884	20	189-3158	144	196-0226	517	198-8645	11
185-1546	40		155	196-2412	171		13
185-3890	896		157		176		15
185-4015	847		180		181	199-0640	334
	849		186		187	199-0645	334
	851		195	196-8921	649	199-0648	230
	853		425		650		231
185-4254	502	189-5746	▶133		651		337
	▶556		261		652	199-0652	204
185-6643	43		266		653	199-0653	240
186-2589	▶872		271		654	199-0656	232
	919		276		655	199-0659	218
	921		282	196-8922	649	199-0663	232
	923		287		650	199-0668	204
186-3735	95	190-7634	96		651	199-0669	240
	121	190-9767	255		652	199-0670	204
	123	191-6159	398		653	199-0672	334
	141		409		654		335
	147	191-8304	293		655	199-0673	218
	150		299	197-5107	145	199-0675	232
	155	193-0618	91		165	199-0676	204
	157	193-3356	788		177	199-0678	232
	170		845		182	199-0679	204
	171	193-5416	638		187	199-0680	232
	176		646		836	199-0681	334
	181		656		838		335
	187		668		840	199-0683	202
	195	193-9055	357		842		337
	197	194-2903	328	197-6258	647	199-0684	232
	328		331		648	199-0685	232
	331	194-4334	475	197-6259	647	199-0686	232
	420	194-5171	923		648	199-0687	232
	422	194-5390	74	197-6657	894	199-0688	232
	425		76		896	199-0689	232
	825	194-5622	788	197-7499	147	199-0690	232
	826		845		150	199-0691	232
	827	194-9487	575	197-8914	657	199-0692	232
	872		577	197-8915	657	199-0693	232
	894		581	197-9155	204	199-0694	218
	923		583	198-6498	552	199-0695	215
186-3736	171		587		553		232
	176		589	198-6499	553	199-0697	232
	181	195-0260	470	198-6505	553	199-0700	334
	187	195-0261	470	198-6506	553		335
187-0413	796	195-0262	470	198-6514	553	199-0701	334
	799	195-0263	470	198-6515	552		335
187-2120	498	195-2132	31		553	199-0702	334
187-3510	390	195-2134	31	198-6516	553		335
	392	195-2136	31	198-6522	553	199-0703	334

▶ **PRIMARY REFERENCE**

PART NUMBER INDEX

Part	Page
	335
199-0706	204
199-0752	334
	335
199-0756	218
199-0759	334
	335
199-0760	240
199-0778	204
199-0783	356
199-0784	218
199-0785	232
199-0786	204
199-0787	204
199-0807	218
199-0808	218
199-0858	215
	232
199-0929	870
	871
199-9267	140
199-9751	23
	38
	155
	157
2	
200-2371	504
200-3946	523
200-3947	523
200-4022	552
200-4023	552
200-5921	732
200-6210	504
200-6971	444
	448
200-7128	4
	▶413
200-8303	566
200-8306	566
200-8308	566
200-8309	566
200-8310	566
200-8311	566
200-8313	566
201-1024	170
	175
	180
	186
201-1234	627
	628
	629
	630
	631
	632
	633
	634
	635
	636
	637
	638
	639
	640
	641
	642
	643
	644
	645
	646
	647
	648
	649
	650
	651
	652
	653
	654
	655
	656
	657
	658
	659
	660
	704
	705
	706
	707
	708
	709
	710
	711
	712
	713
	714
	715
201-1235	617
	618
	619
	620
	621
	622
	623
	624
	625
	626
201-1238	676
	677
	678
	679
	680
	681
	682
	683
	684
	685
	686
	687
	688
	689
	690
	691
	692
	693
	694
	695
	696
	697
	698
	699
	704
	705
	706
	707
	708
	709
	710
	711
	712
	713
	714
	715
	716
	717
	718
	719
201-1239	676
	677
	678
	679
	680
	681
	682
	683
	684
	685
	686
	687
	688
	689
	690
	691
	692
	693
	694
	695
	696
	697
	698
	699
	704
	705
	706
	707
	708
	709
	710
	711
	712
	713
	714
	715
	716
	717
	718
	719
201-1835	96
201-1838	566
201-1840	566
201-1862	309
	310
	▶312
201-1863	▶312
201-1864	312
	▶313
201-1874	309
	310
	▶313
201-1875	313
201-1876	313
	▶314
201-1877	309
	▶314
201-1878	314
201-1879	318
201-1881	309
	311
	▶315
201-1882	▶315
201-1883	315
201-1902	316
201-1911	▶316
201-1912	▶316
201-1913	309
	310
	▶316
201-1915	312
	313
	314
	318
	320
	322
	324
201-1916	315
	316
	317
	319
	321
	323
	325
201-1918	▶309
201-1919	312
	314
	315
	316
	317
	318
	320
	321
	322
	323
	324
	325
201-1920	▶309
	312
	313
	314
	315
	316
	317
	318
	319
	320
	321
	322
	323
	324
	325
201-1923	▶309

PART NUMBER INDEX

Part	Page
201-1925	▶309
201-1940	▶310
201-1941	310
	▶317
201-1942	317
201-1943	317
201-1949	310
	311
	▶318
201-1954	▶310
201-1960	▶318
201-1961	▶318
201-3340	500
201-3341	500
201-3621	477
	479
	481
	483
	485
	487
	489
	491
	493
201-3622	477
	479
	481
	483
	485
	487
	489
	491
	493
201-3623	477
	479
	481
	483
	485
	487
	489
	491
	493
201-3624	477
	479
	481
	483
	485
	487
	489
	491
	493
201-3652	328
201-3954	▶356
201-4756	500
201-4826	413
201-4899	413
201-4902	413
201-5810	573
	575
	579
	581
	585
	587
201-5812	573
	575
	579
	581
	585
	587
	589
	591
	593
201-7659	413
201-9459	138
201-9465	913
	915
202-0596	658
	659
	660
202-0597	658
	659
	660
202-4162	657
202-4163	657
202-5720	4
	▶566
202-5909	43
202-5993	328
	331
202-6009	▶258
	260
202-6010	▶138
	241
	242
202-6029	328
	331
202-6108	141
	144
202-6186	312
	313
	314
	318
	322
	324
202-6611	118
	119
202-6614	117
203-7060	573
	579
	585
204-0317	340
	342
	344
	346
204-0775	138
204-2281	435
	437
204-3080	202
	337
204-4175	795
204-4220	796
204-4230	804
204-4240	806
204-9921	847
	849
	851
	853
205-1627	72
205-2357	477
	479
	481
	483
	485
	487
205-3126	467
205-6298	138
205-7047	865
205-7048	836
	838
	840
	842
205-9244	293
	299
205-9560	792
	793
	794
	802
	803
	▶876
205-9566	795
205-9567	795
205-9569	792
	793
	794
	802
	803
	▶880
205-9570	880
205-9571	880
205-9576	880
205-9577	880
205-9578	792
	793
	794
	▶870
205-9585	836
	838
	▶917
205-9587	917
205-9588	836
	838
205-9590	917
205-9591	917
205-9595	840
	842
	▶918
205-9597	918
205-9598	840
	842
205-9605	796
	799
	804
	806
205-9606	796
	799
	804
	806
205-9607	796
	799
	806
205-9614	918
205-9615	918
205-9619	796
	799
	857
	▶909
205-9621	909
205-9622	796
	799
	857
205-9623	909
205-9624	909
205-9628	796
	799
	840
	842
205-9630	911
205-9631	796
	799
	857
205-9633	911
205-9634	911
206-1345	147
	150
	170
	175
	180
	186
206-1486	167
	168
	169
206-1590	796
	799
	857
206-1592	796
	799
	▶836
	▶838
206-1593	796
	799
	▶840
	▶842
206-1594	836
	838
206-1606	840
	842
206-1618	792
	793
	794
	802
	803
	▶844
206-1623	901
206-1625	901
206-1632	828
	830
206-1633	792
	793
	794
	802
	803
	▶828
206-1634	328
	331
206-1635	828
206-1637	901
206-1639	241
	242
	▶328
	▶331
206-1640	5

▶ **PRIMARY REFERENCE**

PART NUMBER INDEX

Part	Page
	▶78
	▶79
206-1641	3
	▶568
206-1642	241
	242
	▶326
206-1643	241
	▶832
206-1645	525
	▶819
206-1647	796
	799
	804
	806
206-1648	788
	845
206-1649	163
206-1650	328
	331
206-1652	340
	342
	344
	346
206-1653	788
	845
206-1658	817
206-1659	817
206-1660	817
206-1661	817
206-1662	817
206-1663	817
206-1665	901
206-1666	901
206-1667	813
	817
206-1668	821
206-1669	832
206-1678	813
206-1679	813
206-1681	813
206-1682	788
	845
206-1683	901
206-1684	788
	845
	901
206-1687	813
206-1690	813
206-1692	813
206-1695	819
206-1696	815
206-1698	815
206-1699	815
206-1700	792
	793
	794
	802
	803
	▶813
206-1701	802
	803
	▶930
206-1702	792
	793
	794
	802
	803
	▶817
	802
	803
	▶901
206-1706	815
206-1708	815
	817
206-1712	815
206-1717	795
206-1718	170
	175
	180
	186
206-1725	792
	793
	794
	▶923
206-1727	792
	793
	794
	▶905
	▶907
206-1728	803
	▶919
	▶921
206-1747	▶881
206-1748	▶882
206-1749	881
206-1750	882
206-1752	328
	331
206-1766	328
	331
206-1767	328
	331
206-1768	328
	331
206-1791	▶887
	893
206-1792	▶888
	893
206-1796	▶889
	893
206-1798	901
206-1799	901
206-1800	792
	793
	▶845
206-1801	▶788
	794
206-1803	788
	845
206-1804	788
	845
206-1805	788
	845
206-1807	788
	845
206-1808	788
	845
206-1809	788
	845
206-1810	788
	845
206-1812	788
	845
206-1814	788
	845
206-1815	788
	845
206-1816	788
	845
206-1817	788
	845
206-1818	788
	845
206-1832	359
	360
	361
206-1846	788
206-1847	788
206-1850	360
206-1851	470
206-1852	930
206-1853	930
206-1854	817
206-1855	930
206-1856	930
206-1857	793
	794
	▶903
	▶904
206-1871	568
206-1874	568
206-1884	802
	▶804
206-1885	803
	▶806
206-1889	792
	793
	794
	▶796
	▶799
206-2423	152
	153
	154
	201
	453
206-3685	498
206-5823	872
207-4254	337
207-4255	337
207-4257	240
207-4258	202
	337
207-4260	337
207-4262	337
207-4263	227
207-4266	337
207-4267	227
207-4268	337
207-4271	337
207-4272	337
207-5962	240
208-0321	202
208-0322	215
208-5232	697
	698
208-5234	716
	717
	718
	719
208-5235	676
	677
	678
	679
	680
	681
	682
	683
	684
	685
	686
	687
	688
	689
	690
	691
	692
	693
	694
	695
	696
	699
	704
	705
	706
	707
	708
	709
	710
	711
	712
	713
	714
	715
208-5242	696
	697
	698
	699
208-5244	716
	717
	718
	719
208-5245	676
	677
	678
	679
	680
	681
	682
	683
	684
	685
	686
	687

▶ PRIMARY REFERENCE

PART NUMBER INDEX

Part	Page	Part	Page	Part	Page	Part	Page
	688	209-7456	202	210-7076	1	211-3580	471
	689	209-7459	228		2	211-3581	471
	690		229		▶394	211-3583	471
	691	209-7460	230	210-7081	1	211-3607	419
	692		231		2		▶471
	693	209-7461	228		▶406	211-3649	▶350
	694		229	210-7082	1	211-3688	465
	695	209-7462	215		2	211-3689	465
	704	209-7463	215		▶408	211-3783	357
	705	209-7464	202	210-7087	1	211-4240	▶170
	706	209-7465	230		2		▶175
	707		231		▶390		▶180
	708	209-7466	239	210-7088	1		792
	709	209-7472	215		2		793
	710	209-7473	215		▶392		794
	711	209-9219	22	210-7097	▶398		802
	712	209-9875	202		598		803
	713	209-9882	202	210-7098	▶409	211-4241	▶147
	714		▶215		601		792
	715	209-9883	202	210-7302	204		793
208-8240	267	209-9884	202	210-7305	204		794
	271		▶228	210-7665	847		802
	272	209-9885	202		849		803
	276		▶229		851	211-4245	▶149
	281	209-9886	202		853		792
	282	209-9887	202	210-7666	847		793
	286	209-9930	1		849		794
	298		2		851		802
208-9293	868		▶559		853		803
209-0939	523	209-9937	▶384	210-7773	519	211-4248	3
209-2435	598	210-0074	470		521		▶155
	601		523	210-8363	788		▶157
209-3363	819	210-0075	470		▶847	211-4251	3
	821	210-0079	470		▶849		▶193
209-3364	525	210-0082	470	210-8364	845		▶195
	▶821	210-3098	204		▶851	211-4253	1
209-3366	862	210-3099	204		▶853		2
209-3367	78	210-3100	204	210-8401	847		109
	79	210-3106	204		849		▶855
	▶862	210-5924	202	210-8402	851	211-4254	▶201
209-3378	78		▶239		853		242
	79	210-5931	239	210-8754	863	211-4259	▶197
	▶878	210-5932	226		865		384
209-4157	239		228	211-0071	794	211-4260	▶160
209-4703	792		229		▶868		598
	793	210-5937	202	211-0072	792	211-4262	4
	794	210-5942	202		793		▶167
	▶863	210-5946	202		▶867		▶168
	▶865	210-5947	202	211-0073	▶220		▶169
209-4704	863	210-5948	64		242	211-4267	4
	865	210-5949	▶64	211-0092	217		▶137
209-4705	863	210-5951	59	211-0705	794	211-4268	▶141
209-4716	863		▶60		▶812		▶144
	865	210-5953	64	211-1381	812		794
209-4777	363	210-5954	64	211-2660	847	211-4269	▶165
209-6181	559	210-5955	64		849		792
209-6850	365	210-6139	60		851		793
	367	210-6141	60		853	211-4271	▶192
	369	210-6240	▶348	211-2661	788		793
209-6855	365		419		845		794
	367	210-6475	796	211-3207	457		802
	369		799	211-3208	457		803
209-6862	365	210-6491	815	211-3546	3	211-4277	▶121
209-7454	215	210-6807	5		▶374		▶123
209-7455	217		▶71		▶376		792

▶ **PRIMARY REFERENCE**

PART NUMBER INDEX

Part	Page	Part	Page	Part	Page	Part	Page
	793		803	214-2001	363	214-4717	170
	794	213-2491	390	214-2202	3		175
	802	213-4222	240		▶59		180
	803	213-4616	392	214-2550	▶2		186
211-4285	3	213-4620	392	214-2553	▶1	214-4718	141
	▶98	213-4622	390	214-3254	350		144
211-4286	▶100	213-4624	390		353	214-4722	147
211-4292	▶125	213-4625	390	214-3255	351		150
211-4348	471	213-6040	149	214-3647	60	214-4723	170
211-5182	3	213-6049	121	214-3735	868		175
	▶569	213-6051	905	214-3736	868		180
211-6570	4		907	214-3737	868		186
	▶340		919	214-3738	868	214-4740	65
	▶342		921	214-3739	868	214-4745	65
211-6571	4	213-6055	141	214-3740	▶222	214-4746	65
	▶344		144		241	214-4747	65
	▶346		165	214-3742	905	214-4749	▶65
211-6752	243	213-6060	138		907	214-4754	363
211-6753	252	213-6088	98		919	214-5097	202
211-7601	1	213-6089	98		921		337
	2		101	214-3745	220	214-5950	4
	▶440		103	214-3751	▶55		▶465
	▶442	213-6091	100		▶57	214-6143	598
211-7602	1	213-6092	100		59		601
	2	213-6094	98	214-3753	55	214-6471	398
	▶495		101		57	214-6475	398
	▶496		103	214-3763	905	214-6480	398
211-7766	495	213-6096	201		907	214-6879	398
211-7767	495	213-6682	406		919	214-6897	398
211-9286	236		597		921	214-6902	3
212-0061	504		598	214-4281	569		▶5
212-0770	236		601	214-4285	569	214-6999	569
212-0862	170	213-6683	597		573	214-7043	569
	175		598		579	214-7407	60
	180		601		585		▶66
	186	213-6687	564	214-4293	855	214-7457	60
212-0907	390	213-6690	564	214-4302	807	214-7458	60
	396	213-6691	564		809	214-7523	241
	406	213-6692	1		▶811		▶259
212-0929	408		2	214-4691	201	214-7524	241
212-1490	396		▶564	214-4692	137		▶260
212-1493	406	213-6693	559	214-4693	147	214-7568	220
212-3416	163	213-6695	572		150		222
	847		604	214-4694	170		224
	849	213-6696	604		175	215-1242	895
	851	213-6697	604		180	215-1942	390
	853	213-6698	564		186		396
212-5702	232	213-6700	1	214-4695	141		398
212-5712	334		▶572		144		406
	335	213-6702	362		165	215-2023	202
212-5713	204		365	214-4698	121		337
212-6708	394	213-6703	564	214-4700	121	215-2445	▶477
212-7291	394	213-6723	564	214-4701	830		▶479
213-0139	141	213-9273	▶3	214-4702	170		▶481
	144	213-9287	▶3		175		526
213-1881	357	213-9300	3		180	215-3373	745
213-1884	357		▶4		186	215-3507	52
213-1887	357	213-9314	▶52	214-4703	165		53
213-1888	901		▶53	214-4706	526	215-3881	340
213-1889	357		794	214-4709	923		342
213-1891	▶357	214-0592	555	214-4710	197		344
	792	214-0973	5		420		346
	793		▶32		422	215-3882	340
	794	214-2000	3		425		342
	802		▶363	214-4716	149	215-3883	340

▶ **PRIMARY REFERENCE**

PART NUMBER INDEX

Part	Page	Part	Page	Part	Page	Part	Page
	342	216-5981	372	217-2349	334		▶624
215-3884	340	216-6295	598		335		679
	342		601	217-2617	432	219-3359	▶625
	344	216-6891	82	217-2699	432		▶626
	346	216-6892	82	217-2868	215		680
215-7453	459	216-6945	60	217-2876	232	219-3360	▶627
215-7454	459	216-7473	202	217-2877	228		▶628
215-7457	409	216-8314	19		▶230		681
215-7460	409	216-8634	28	217-2878	229	219-3361	▶629
215-7619	459	216-8687	217		▶231		▶630
215-8196	896	216-8689	217	217-2879	228		682
215-8934	398	216-8691	217		229	219-3362	▶631
215-9448	572	216-8700	217	217-2880	215		▶632
	604	216-8762	724	217-2883	202		683
215-9478	731		▶725	217-2885	202	219-3363	▶633
	▶745	216-8778	725	217-2914	204		▶634
215-9515	82		727	217-3311	398		684
215-9690	572	216-8780	725	217-3312	396	219-3364	▶635
	604		727		406		▶636
216-0909	▶926	216-8781	725	217-3875	515		685
216-0928	731		727	217-5776	406	219-3365	▶637
	▶746	216-8794	728	217-8058	828		▶638
216-1600	232	216-8796	728	217-8185	521		686
216-1601	240	216-8800	606	217-8195	344	219-3366	▶639
216-1606	240		▶720		346		▶640
216-1608	204	216-8801	607	217-8197	344		687
216-1609	204		▶722		346	219-3367	▶641
	▶226	216-8802	720	217-8432	855		▶642
216-1610	204		▶726	217-8763	390		688
	▶240		727	217-9672	4	219-3368	▶643
216-1612	232	216-8803	720		▶372		▶644
	▶334		722	218-0235	894		689
216-1613	232		▶729	218-0666	788	219-3369	▶645
	▶335	216-8804	730		845		▶646
216-2267	261	216-8805	730	218-0745	4		690
	266	216-8811	722		▶560	219-3370	▶647
216-2777	498		▶727	218-2373	556		▶648
216-2778	498	216-8820	607	218-3597	293		691
216-3314	▶241		▶723		299	219-3371	▶649
216-3315	▶241	216-8821	608	218-4453	792		▶650
216-3316	▶242		▶724		793		692
216-3350	821	216-8822	723		794	219-3372	▶651
216-3351	819		725		802		▶652
	821		▶728		803		693
216-3358	819	216-8826	723		▶830	219-3373	▶653
	821		724	218-4454	830		▶654
216-3712	746		▶730	218-4854	913		694
216-4457	215	216-8829	730		915	219-3374	▶655
216-4458	215	216-8839	729	218-4856	913		▶656
216-4459	337	216-8843	729		915		695
216-4461	215	216-9069	170	218-6091	467	219-3375	▶657
216-4464	215		175	218-9984	220		696
216-4465	215		180	219-0302	927	219-3376	▶658
216-4475	4		186	219-0343	862		697
	▶245	216-9497	217	219-3273	112	219-3377	▶659
216-4476	241	216-9498	215	219-3355	▶617		698
	▶245		▶217		▶618	219-3378	▶660
216-4739	▶4	217-0055	598		676		699
	241		601	219-3356	▶619	219-3379	▶676
216-4740	▶4	217-1577	598		▶620		700
	241		601		677	219-3380	▶677
	242	217-2308	60	219-3357	▶621	219-3381	▶678
216-5332	419	217-2345	232		▶622	219-3382	▶679
	▶452	217-2347	334		678	219-3383	▶680
216-5515	215		335	219-3358	▶623	219-3384	▶681

▶ **PRIMARY REFERENCE**

PART NUMBER INDEX

Part	Page	Part	Page	Part	Page	Part	Page
	701	219-8835	335	220-0738	357		749
219-3385	▶682	219-8836	232		788		753
219-3386	▶683	219-8839	204		817	221-4283	747
219-3387	▶684	219-9482	629		845		750
219-3388	▶685		630	220-1012	559		754
219-3389	▶686	219-9483	631	220-1018	598	221-4284	747
219-3390	▶687		632		601		751
219-3391	▶688		639	220-1019	572		755
219-3392	▶689		640	220-2000	923	221-4285	748
219-3393	▶690		642	220-2001	923		752
219-3394	▶691		649	220-3251	821		756
	702		650	220-3398	306	221-4295	509
219-3395	▶692		661	220-3469	832		511
219-3396	▶693		662	220-3470	832	221-4296	509
219-3397	▶694		706	220-3762	847		511
219-3398	▶695		712		849	221-4297	509
219-3399	▶696	219-9484	633	220-3785	803	221-4314	385
	703		634		▶835		386
219-3400	▶697		651	220-3790	887		388
219-3401	▶698		663		888	221-4315	509
219-3402	▶699		707		889		597
219-3410	▶700		713	220-3791	887	221-4316	509
219-3411	▶701	219-9485	635		888	221-4322	597
219-3412	▶702		636		889	222-1395	390
219-3413	▶703		643	220-5973	4	222-1801	356
219-6281	847		644		▶428	222-1802	356
	849		648	220-5974	428	222-2690	79
	851		652	220-8226	328	222-4067	519
	853		653		331		521
219-6283	853		654	220-8631	27	222-4732	457
219-6284	847		665	221-0811	4	222-5171	598
	849		666		▶236		601
	853		708	221-2420	788	222-5622	▶483
219-6285	847		714		845		▶485
	849	219-9486	637	221-3234	453		▶487
	853		638	221-4260	▶747		526
219-6286	847		641		748	222-5623	▶489
	849		645	221-4263	783		▶491
	853		646	221-4265	▶509		▶493
219-6287	847		655		747		525
	849		656	221-4267	747	222-7091	5
	853		664		▶783		▶45
219-6288	847		667		784	222-7379	▶731
	849		668	221-4271	563	222-7411	746
	853		709	221-4272	563	222-7464	731
219-6292	847		715		753		▶734
	849	219-9487	619		754	223-2028	836
	851		620		755	223-2029	840
	853	219-9488	621		756	223-2030	909
219-6294	847		622		768		911
219-8751	215	219-9489	623		769		917
219-8752	215		624		770		918
219-8753	215	219-9490	625		771	223-3353	398
219-8754	215		626		772		409
219-8755	215	219-9491	658		773	223-3356	390
219-8756	215	219-9492	659		774		392
219-8757	215	219-9493	627		775	223-3360	394
219-8758	215		628		776		406
219-8759	215		647		777		408
219-8783	239	219-9494	617		778	223-3926	598
219-8795	202		618		782		601
	205	219-9495	660	221-4276	▶563	223-3962	359
219-8798	202	219-9496	657		747	223-3964	360
	337	220-0269	819		748	223-3965	▶359
219-8834	334		821	221-4282	747		802

PART NUMBER INDEX

Part	Page	Part	Page	Part	Page	Part	Page
	803	224-8945	927	225-6478	11		467
223-3966	▶360	224-9473	5		13	226-0449	67
	792		▶67		15	226-1242	927
	793	225-0041	927	225-6479	11	226-2333	109
	794	225-0060	357		13		111
223-4546	359	225-0313	927		15		▶126
	360	225-3145	97	225-6517	11	226-2334	109
	361	225-4150	926	225-6522	11	226-4192	236
223-4713	▶552	225-4317	6		13	226-4346	226
	792		7		15		228
	802		9	225-6817	48		229
	803		▶36		49	226-4364	204
223-4715	▶553	225-4323	109	225-6818	48	226-4365	204
	793		111		49		228
	794		▶744	225-7738	62		229
223-4960	5	225-4324	744	225-7739	62	226-4366	204
	▶73	225-4326	744	225-7741	62		228
223-8263	923	225-5436	35	225-7772	17		229
223-8995	67	225-5437	35	225-7941	50	226-4367	204
224-2147	817	225-5438	35		51	226-4370	204
224-2149	817	225-5439	35	225-7944	20		228
224-4527	563	225-5441	35		50		229
	753	225-5451	35		51	226-5540	▶401
	754	225-5453	35	225-7959	201		720
	755	225-5454	35	225-7970	170		722
	756	225-5458	35		175		723
	768	225-5459	35		180		724
	769	225-5495	23		186	226-5633	498
	770	225-5496	23	225-7988	154	226-5634	498
	771	225-5498	23	225-7992	167	226-5635	835
	772	225-5499	23		168	226-7164	147
	773	225-5501	24	225-7994	▶113		150
	774	225-5502	24		▶114	226-8202	398
	775	225-5625	40		115		409
	776	225-5629	40	225-7995	▶115	226-9167	109
	777	225-5634	40	225-7996	▶199	226-9169	109
	778	225-5638	40		▶200		111
	782	225-5640	40		793	226-9270	109
224-5917	82	225-5959	25		794	226-9629	556
224-6232	▶747		40	225-7997	170	226-9747	▶417
224-6233	▶747	225-5960	40		175		419
224-6234	▶747	225-5961	40		200	226-9764	598
224-6235	▶748	225-5962	40	225-8016	62		601
224-6237	▶385	225-5963	▶40	225-8017	1	227-1057	147
	▶386		41		2		149
	749	225-5967	41		▶105		150
	750	225-6005	33	225-8019	62		170
	751	225-6041	33	225-8227	569		175
	752	225-6451	11	225-8287	28		180
	757		13	225-8329	46		186
	758		15	225-8524	74		802
	759	225-6455	11		76		803
	760		13	225-8526	74		828
	761	225-6456	11		76	227-1148	406
	762		13	225-8533	74		408
	763		15		76	227-1185	505
	764	225-6461	11	225-8534	74	227-1186	544
	765		13		76		545
	766		15	225-8536	74		548
	767	225-6464	11		76		549
	779		13	225-8848	30		550
	780		15	225-8858	20		551
224-6250	725	225-6477	11	226-0291	357	227-1189	504
	727		13		930	227-1191	533
224-7830	420		15	226-0420	▶381		535

▶ **PRIMARY REFERENCE**

PART NUMBER INDEX

Part	Page
	546
	549
	551
227-1192	506
227-1194	506
227-1197	505
227-1202	527
227-3703	417
227-5509	507
227-5556	357
227-5571	430
227-7373	1
	2
	▶105
227-7374	▶107
	855
227-7448	69
227-7449	69
	70
227-8378	4
	▶557
228-3469	390
228-3509	4
	▶400
228-5856	141
	144
228-7391	97
228-8017	408
228-8062	406
228-9129	▶91
	92
	93
228-9130	91
228-9132	91
228-9572	392
229-0298	913
	915
229-0300	796
	799
	857
	▶913
	▶915
229-0305	913
229-0306	923
229-0308	913
	915
229-0309	913
	915
229-0310	913
	915
229-4896	11
	13
	15
	811
229-5085	228
	229
229-5092	226
	228
	229
229-5093	217
229-5535	735
229-5745	568
229-6052	863
229-7226	▶735
229-7227	▶736
229-7356	811
229-8253	736
229-8743	▶791
	855
229-8911	409
229-9382	413
230-2389	832
230-2390	832
230-2510	819
	821
230-2610	222
	224
230-3038	821
230-3489	▶382
230-5579	398
230-5580	398
230-5739	4
	▶204
230-5743	4
	▶202
230-5745	4
	▶337
230-6368	98
	100
	101
	103
230-7300	6
	7
	8
	9
	▶26
230-7353	6
	7
	9
	▶39
230-7355	6
	7
	9
	▶62
230-7569	6
	7
	8
	9
	▶37
230-7578	6
	7
	8
	9
	▶46
230-8094	33
230-8989	85
	88
230-8995	85
	88
230-8996	85
	88
230-8997	85
	88
230-8998	85
	88
230-9127	11
	13
	15
230-9144	11
230-9357	401
231-0033	6
	7
	8
	9
	▶47
231-0046	37
231-0149	6
	7
	8
	9
	▶10
231-0215	446
	450
231-0670	218
231-0671	218
231-0683	▶227
	337
231-0684	337
231-0685	337
231-0687	227
231-0688	227
231-0692	▶218
	232
231-0693	218
231-0694	218
231-0695	218
231-0696	218
231-0697	218
231-0698	204
231-0699	204
231-0700	230
231-0701	231
231-0703	228
	229
231-0719	226
231-0745	228
	229
231-2808	457
231-2809	457
231-3052	112
231-3054	112
231-3528	459
231-3540	394
	396
231-4784	457
231-4785	457
231-9356	147
	150
231-9358	928
231-9361	926
231-9363	374
	376
232-0252	456
232-1322	23
	38
232-1323	85
	88
232-1328	85
	88
232-1545	201
232-1792	161
	163
232-1793	85
	88
232-1794	85
	88
232-2681	▶606
232-2682	▶606
232-2683	▶606
232-2684	▶607
232-2685	606
	607
232-2686	▶607
232-2687	▶607
232-2688	▶608
232-2689	▶608
232-2690	▶608
232-2725	85
	88
232-2726	85
	88
232-2735	734
232-2752	704
232-2753	705
232-2754	706
232-2755	707
232-2756	708
232-2757	709
232-2758	710
232-2759	711
232-2760	712
232-2761	713
232-2762	714
232-2763	715
232-2865	359
	360
	361
232-2869	359
	360
	361
232-2870	359
	360
	361
232-3126	84
	88
	108
232-3149	85
	88
232-3157	85
	88
232-3274	85
	88
232-3277	500
232-3657	28
232-3666	28
232-3722	▶48
	50
232-3751	20
	50
	51
232-4636	930
232-4706	147
	150
232-6204	6
	7
	8
	9
	▶38
232-6661	6
	7

▶ **PRIMARY REFERENCE**

PART NUMBER INDEX

Part	Page
	8
	9
	▶108
232-6662	108
232-7400	▶17
	19
232-7440	20
232-7449	22
232-7519	▶23
	24
232-7596	20
232-7597	20
232-7599	20
232-7600	20
232-7603	20
232-7604	▶20
	22
233-0859	723
	724
233-2571	400
233-2576	402
	404
233-2579	400
233-2582	402
	404
233-2583	410
233-2584	400
233-2585	402
	404
	410
233-2588	402
	404
233-2589	410
233-2594	402
	404
233-2595	410
233-2603	402
	404
	410
233-2606	400
	410
233-2607	402
	404
233-2610	400
	410
233-2611	402
	404
233-2613	400
	410
233-2614	402
	404
233-2615	402
	404
233-2616	410
233-2622	410
233-2623	402
	404
233-2631	410
233-3757	720
	722
233-3784	17
233-3785	17
233-3786	17
233-5165	598
	601
233-5166	598
	601
233-5167	598
	601
233-5169	598
	601
233-5260	817
233-6592	344
	346
233-6738	242
	▶245
233-7132	304
	▶306
233-7432	6
	7
	8
	9
	▶30
233-7977	167
	168
	169
233-9530	97
233-9531	97
234-0095	795
234-1981	67
	▶69
	▶70
234-2622	67
234-3017	889
234-3030	74
	76
234-4328	▶117
	121
	123
234-4329	▶118
	121
	123
234-6927	519
	521
234-7730	117
	118
	119
234-7731	117
	118
	119
235-0128	78
	79
235-1790	85
	88
235-5363	73
235-5729	434
	437
235-5767	517
235-5843	519
	521
235-7091	456
235-8528	471
235-8747	155
	157
236-1583	220
	222
	224
	342
	346
236-1673	85
	88
236-1674	85
	88
236-5753	504
236-6651	45
236-6923	141
	144
236-8238	6
	7
	8
	9
	▶27
237-0022	13
	15
237-0024	6
	7
	8
	9
	▶136
237-0025	6
	7
	8
	9
	▶33
237-0769	11
	13
	15
237-0944	362
	365
237-0975	73
237-3658	6
	7
	8
	9
	▶31
237-3786	74
	76
237-3794	74
	76
237-3797	519
	521
237-3921	74
	76
237-3922	74
	76
237-3924	6
	▶74
237-3943	894
	896
237-4157	69
	70
237-4894	140
237-4896	6
	7
	8
	9
	▶140
237-5188	207
	210
	213
237-5330	365
	367
	369
237-9349	594
237-9355	594
237-9356	594
	595
238-2799	6
	7
	8
	9
	▶50
	▶51
238-4626	503
238-4628	507
238-5228	227
238-5254	202
	337
238-5255	202
	337
238-5256	228
	229
238-5260	299
238-5261	299
238-5289	204
	▶232
238-5290	232
238-5291	204
238-5292	204
238-5293	204
238-5294	204
238-7492	141
	144
238-8671	85
	88
238-9397	155
238-9546	573
	575
	577
	579
	581
	583
	585
	587
	589
	591
	592
	593
238-9547	573
	575
	577
	592
	▶594
239-1080	147
	150
	▶900
239-1416	579
	581
	583
	593
	595
239-1434	78
	79
239-1435	78
239-2270	71
239-4232	500
239-4235	500
239-6989	926
239-9272	109
239-9429	927

▶ **PRIMARY REFERENCE**

PART NUMBER INDEX

Part	Page
239-9435	564
239-9950	111
	▶129
240-4639	98
	100
	101
	103
240-5571	85
	88
240-6866	503
240-7094	927
241-0037	383
241-0888	573
	575
	577
	579
	581
	583
	585
	587
	589
241-0889	573
	575
	577
	579
	581
	583
	585
	587
	589
241-0890	594
	595
241-0891	594
	595
241-0892	594
	595
241-4275	82
241-6225	432
241-6226	432
241-8448	432
	434
	437
241-8450	432
	434
242-9514	398
242-9515	398
242-9751	52
	53
	54
243-0062	878
243-0063	878
243-2276	400
243-3593	896
243-5026	337
243-5027	98
	101
	103
243-6523	523
244-1085	374
	376
244-1086	374
	376
244-2041	374
	376
244-3106	155
	157
244-3113	357
244-3837	400
244-3838	400
244-3957	500
244-7614	374
	376
244-8826	402
	404
	410
245-4747	126
245-4827	237
	238
245-4914	379
245-5728	374
	376
	▶378
245-6098	3
	▶94
245-6101	94
245-6103	94
245-6104	94
	▶95
245-6105	95
	▶96
245-6107	96
245-6108	94
245-6109	349
245-8765	▶508
	525
	526
245-8766	508
245-8769	▶416
	525
245-8777	419
	▶519
	▶521
245-8778	519
	521
245-8780	420
	422
	425
	473
	475
	▶507
245-9828	26
246-1163	11
	13
	15
246-2582	6
	7
	8
	9
	▶11
	▶13
	▶15
246-2641	926
246-2671	171
	175
	180
	186
246-2718	379
	380
246-5286	519
	521
246-5293	4
	▶457
246-5295	4
	▶500
246-8038	197
	420
	422
	425
246-8042	1
	2
	▶161
	▶163
246-8044	109
	111
246-8045	▶109
246-8046	855
246-8051	155
	157
246-8052	201
246-8053	98
	101
	103
246-8478	▶459
	525
246-9113	396
	406
246-9309	1
	2
	▶512
	▶514
246-9321	2
	▶444
	▶446
246-9322	1
	▶448
	▶450
246-9802	384
	▶473
	▶475
247-0144	62
247-0320	420
	422
	425
	473
	475
247-1080	374
	376
247-1385	66
247-1947	▶704
247-1948	▶705
247-1949	▶706
247-1950	▶707
247-1951	▶708
247-1952	▶709
247-1953	▶710
247-1954	▶711
247-1955	▶712
247-1956	▶713
247-1957	▶714
247-1958	▶715
247-3267	▶453
	598
	601
247-4001	73
247-4884	84
247-4885	6
	7
	8
	9
	▶84
247-4981	549
247-5361	5
	▶82
247-6118	929
247-6296	374
	376
247-7054	515
247-7555	585
	587
	589
	591
	▶595
247-7798	11
	13
247-8179	844
247-8199	▶128
	172
	175
	180
	186
247-8222	351
248-0395	379
	380
248-2214	▶112
248-2257	557
248-2272	557
248-2273	557
248-2284	791
	877
248-2575	711
248-2707	78
	79
248-2709	813
248-2710	568
248-2714	836
	838
	840
	842
248-3231	67
248-3290	261
	266
	271
	276
	281
	286
	293
	299
248-4274	512
248-4275	512
248-4276	512
248-4277	512
	514
248-5025	794
	▶807
	▶809
248-5547	444
	446
248-5711	3
	▶926
249-0974	50

▶ **PRIMARY REFERENCE**

PART NUMBER INDEX

Part	Page	Part	Page	Part	Page	Part	Page
	51	251-1156	▶609		▶365		479
249-2482	815		670		▶367	252-5832	408
249-2707	807	251-1157	▶611		▶369	252-5833	406
	809		672	251-4889	355		408
249-3124	507	251-1158	▶612	251-4890	355	252-6256	6
249-3125	507		673	251-4891	355		7
249-4020	457	251-1159	▶614	251-5625	525		8
249-4021	457		674	251-5626	525		9
249-4022	457	251-1160	▶616	251-5628	792		▶97
249-4023	457		674		802	252-6438	23
249-4024	457	251-1168	609		803	252-8059	828
249-4034	459		614	251-5854	▶461	252-8435	928
249-4035	459	251-1169	609		720	252-9206	400
249-5046	45		614		722	252-9725	374
249-5295	45	251-1172	611	251-5855	▶463	252-9732	406
249-5297	45		612		723	252-9983	▶351
249-5512	67		616		724		352
249-5652	855	251-1173	611	251-5859	461	252-9984	▶352
249-7912	▶432		612	251-6354	242	252-9985	353
249-9076	114		616		▶260	252-9986	▶353
249-9312	807	251-1222	855	251-6708	744	253-0234	661
	809		▶877	251-9360	432		662
249-9328	▶355	251-1541	444		434		663
249-9329	355		446		437		664
249-9330	355	251-1746	500	251-9570	155		665
250-0658	440	251-1775	▶669		157		666
	442	251-1776	▶606	251-9571	877		667
250-0741	365	251-1777	606	252-0096	500		668
	367		669	252-0165	444	253-0352	5
	369		▶670		446		▶92
250-0804	440	251-1778	▶671	252-0200	432		▶93
250-1448	159	251-1779	▶671	252-1221	420	253-0354	92
250-1878	379	251-1780	671		422		93
	380		▶672		425	253-0783	349
250-2314	66	251-1781	▶673		473	253-0784	3
250-3330	379	251-1782	▶673		475		▶349
250-3331	374	251-1783	673	252-1862	836	253-1549	328
	376	251-1784	▶673		838		331
250-3344	374	251-1786	673		840	253-1817	836
	376		▶674		842		838
250-4337	55		675	252-1863	836		840
	57	251-1787	▶674		838		842
250-5462	448	251-1788	▶674		840	253-1857	836
	450	251-1789	674		842		838
250-5881	378	251-1790	▶675	252-1864	836		840
250-6755	444	251-2429	515		838		842
	448	251-2432	6	252-1865	840	253-1858	836
250-6850	379		7		842		838
	380		8	252-2157	926		840
250-6855	266		9	252-2422	106		842
250-6858	379		▶25	252-4659	571	253-2470	851
	380	251-2436	25	252-4660	▶571		853
250-7910	926	251-2437	25	252-5068	549	253-4137	67
250-7911	926	251-3200	▶127	252-5069	549	253-4138	67
250-7912	792		855	252-5355	477	253-5024	202
	793	251-3227	66		479	253-5384	378
	794	251-3231	95		483		▶379
	803	251-3306	793		485		▶380
250-7915	3		794		489	253-8295	519
	▶925	251-4336	28		491		521
250-7963	▶43	251-4374	379	252-5356	489	253-8329	129
250-8330	306		380		491	253-9510	847
251-0075	791	251-4375	379	252-5357	483		849
251-0076	791		380		485		851
251-0077	877	251-4519	3	252-5358	477		853

▶ **PRIMARY REFERENCE**

PART NUMBER INDEX

Part	Page
254-1126	836
	838
	840
	842
254-1127	836
	838
	840
	842
254-2187	73
254-2267	47
254-2270	47
254-2463	▶371
254-3437	824
	825
	826
	827
254-3954	23
254-4418	43
254-5683	905
	907
	919
	921
254-5703	▶237
	258
254-6101	▶54
	792
	793
	802
	803
254-6826	791
254-7271	459
	500
254-8939	▶661
	▶662
	716
254-8940	▶716
254-8941	▶717
254-8942	▶718
254-8943	▶719
254-8944	▶663
	▶664
	717
254-8945	▶665
	▶666
	718
254-8946	▶667
	▶668
	719
254-9301	378
254-9925	828
	830
254-9926	828
	830
254-9927	828
	830
255-0791	927
255-0792	927
255-0795	788
	845
255-0796	928
255-0800	868
255-2279	▶72
	792
	793
	794
	802
	803
255-3447	74
	76
255-4692	72
255-5461	328
	331
255-8280	328
	331
256-0143	45
256-0323	373
256-0324	▶373
256-0545	242
	▶304
256-0546	▶235
	241
256-0548	304
256-0549	304
256-0550	235
256-0551	▶224
	241
256-4579	126
256-4580	126
256-4581	126
256-4582	126
256-5299	802
256-5719	126
256-5720	126
256-5721	126
256-5722	126
256-5732	126
256-6803	113
	114
256-6804	115
257-0440	504
257-0446	529
257-0447	530
257-0448	531
257-0453	528
257-0464	504
257-0465	504
257-0466	537
	541
257-0468	505
	506
	533
	535
	537
	539
	541
	543
	544
	545
257-0475	434
	546
	548
257-0476	533
257-1729	129
257-3160	419
	▶456
257-5571	544
257-5605	523
257-5606	523
257-5607	523
257-5608	523
257-7721	506
257-7724	▶503
	529
	530
	531
257-7725	505
257-7729	533
	535
	537
	539
	541
	543
	546
257-7730	533
	535
	537
	539
	541
	543
	546
257-7731	533
	535
	544
	545
257-7733	537
	539
	541
	543
	546
257-7734	533
	535
	537
	539
	541
	543
	545
	546
	548
257-7737	550
257-7739	551
257-7741	550
	551
258-2354	817
258-3697	836
	838
	840
	842
258-4946	24
258-9999	927
259-0127	204
259-0128	205
259-0129	205
259-1802	1
259-1831	254
259-1832	256
259-2940	324
259-4401	928
259-6276	802
	803
	▶871
259-8417	66
260-0027	890
	891
260-0028	890
	891
260-0029	883
	885
	890
260-0030	895
	896
260-0031	894
260-0032	894
	896
260-0033	895
	896
260-0034	895
	896
260-0035	895
	896
260-0036	894
260-0040	890
260-0041	894
	896
260-0042	894
260-0043	894
	896
260-0044	895
	896
260-0045	883
	885
	890
	891
260-0046	894
	896
260-0047	894
	896
260-0049	895
	896
260-0051	894
	896
260-0052	894
	896
	896
260-0053	890
260-0057	894
	896
260-0059	894
	896
260-0060	894
	897
260-0061	890
260-0062	890
260-0063	894
	896
260-0067	894
	896
260-1336	72
260-1447	855
260-3122	72
260-6478	126
260-6480	126
260-7652	113
	114
260-9143	434
	438
261-2207	832
261-2208	201

▶ **PRIMARY REFERENCE**

PART NUMBER INDEX

Part	Page
261-3572	45
261-5517	326
	▶327
261-5519	327
261-6703	596
261-8625	413
261-9632	901
261-9634	873
261-9635	326
261-9636	815
261-9637	815
261-9639	815
	817
261-9642	873
261-9644	813
261-9645	813
262-0347	515
262-1315	448
	450
262-1421	▶105
	115
262-3036	434
	437
262-3038	434
	437
262-3039	434
262-4081	328
	331
262-4084	328
	331
262-4201	▶434
262-4202	▶437
262-4203	434
262-4211	437
262-4217	434
	437
262-4459	432
	437
262-6204	234
262-6227	▶234
262-7043	362
	365
262-7044	363
262-7049	▶402
	419
262-7050	▶404
	419
262-7051	402
262-7052	404
262-7314	453
262-8088	456
262-9567	863
	865
262-9786	69
	70
263-5376	74
	76
263-5516	515
263-5781	865
263-7261	832
263-7802	113
263-8575	753
	754
	755
	756
263-8576	753
263-8577	▶511
	784
263-8591	722
263-9088	113
	114
	▶879
263-9483	▶159
	793
263-9484	159
263-9498	172
	175
	180
	186
263-9499	193
	195
264-0187	▶420
	▶422
	▶425
264-3756	127
264-4297	159
264-4362	186
265-0868	420
	422
	425
	473
	475
265-8182	128
266-2552	525
	▶527
266-2553	525
	▶528
266-2556	525
	▶529
266-2557	526
266-2558	526
	▶531
266-2585	537
	539
266-2586	550
266-2587	551
266-2588	544
266-3590	541
	543
	550
266-3591	537
	539
	545
266-4326	444
	446
266-4360	217
266-4570	448
	450
266-4571	448
	450
266-5834	3
	▶596
267-2701	131
	132
	171
	176
	180
	187
267-2755	419
	▶515
267-2758	523
267-2764	419
	▶498
267-2765	419
	▶467
267-2766	419
	▶470
267-2770	419
	▶523
267-2809	121
	123
267-5211	130
	131
	132
267-5213	130
	131
	132
267-5225	873
267-5633	▶152
	526
267-5634	▶153
	526
267-5635	▶154
	525
	526
267-9385	234
268-0094	467
268-0097	467
268-0099	467
	523
268-0106	467
268-0107	467
268-0108	467
268-0109	523
268-0867	6
	7
	8
	9
268-1547	446
	448
	450
268-1548	446
	448
	450
268-1559	523
268-1709	259
	260
268-1964	149
268-5689	428
	430
268-5902	861
268-5903	861
268-6455	3
	▶419
268-7756	152
268-7757	153
268-7758	147
268-7759	171
	176
	180
	187
268-7760	171
	176
	180
268-7761	161
	163
268-7762	150
268-9049	1
	2
	▶396
268-9418	4
	▶430
269-0471	498
269-0472	498
269-1059	▶505
	529
	530
	531
269-1060	▶504
	529
	530
	531
269-1061	529
	530
	531
	▶533
	▶535
269-1062	529
	530
	531
	▶537
	▶539
269-1063	529
	530
	531
	▶541
	▶543
269-1064	529
	530

▶ **PRIMARY REFERENCE**

PART NUMBER INDEX

Part	Page
	531
	▶544
269-1065	529
	530
	531
	▶545
269-1066	530
	531
	▶546
269-1067	531
	▶548
269-1079	527
	528
269-1080	▶506
	527
	528
269-1091	527
	528
	▶549
269-1092	527
	528
	▶550
269-1093	528
	▶551
269-1104	541
269-2123	▶802
269-2124	▶803
269-2125	▶792
269-2126	▶793
269-2127	▶794
269-2144	▶525
269-2145	▶525
269-2146	▶525
269-2147	▶526
269-2148	▶526
269-3247	792
	793
	794
	802
	803
	▶873
269-3248	▶861
	873
269-3254	873
269-3262	873
269-3269	359
	360
	361
269-8129	819
	821
269-8817	819
	821
269-9115	813
270-2729	147
270-2794	873
270-2795	819
	821
270-3203	▶742
270-3204	▶561
	▶562
270-3205	561
270-3206	742
270-3409	385
	386
	388
270-3410	511
270-5161	873
270-5290	365
	367
	369
270-9176	463
271-1402	1
	▶598
271-1405	1
	▶601
271-1408	598
	601
271-2405	259
271-2406	▶259
	260
271-3023	749
	750
	751
	752
	753
	754
	755
	756
	757
	758
	759
	760
	761
	762
	763
	764
	765
	766
	767
	768
	769
	770
	771
	772
	773
	774
	775
	776
	777
	778
	779
	780
	781
	782
	▶784
271-3024	▶749
271-3025	▶750
271-3026	▶751
271-3027	▶752
271-3028	▶753
271-3029	▶754
271-3030	▶755
271-3031	▶756
271-3095	525
	▶824
271-3096	526
	▶825
271-3097	525
	526
	▶826
271-3099	526
	▶827
271-3100	824
271-3101	825
271-3103	826
271-3105	827
271-3773	259
	▶261
	▶266
	▶271
	▶276
271-3774	259
	▶281
	▶286
271-4487	▶238
	259
271-7167	222
	224
271-7308	237
271-7309	238
271-7389	463
271-8667	2
	▶604
271-8670	▶597
	604
272-0537	96
272-0555	428
	430
272-0557	428
	430
272-1750	463
272-2232	6
	7
	8
	9
272-2265	48
	49
272-5111	317
	323
272-5116	323
272-5421	792
	793
	794
	802
	803
272-7079	873
272-7104	819
	821
272-9701	824
	825
272-9800	120
273-1473	873
273-1474	802
	803
273-1475	873
273-1476	873
273-1477	873
273-1478	873
273-3284	159
273-3610	5
	▶6
273-4210	467
273-4211	467
273-5905	▶883
	887
273-6036	▶885
	888
273-6037	889
	▶890
	▶891
273-6372	887
	888
	889
	▶894
	▶896
273-9412	394
	396
273-9413	396
273-9416	396
273-9418	396
274-3774	155
	177
	181
	187
274-3775	177
	181
	187
274-3776	177
	181
	187
274-3777	177
	181
	187
274-3778	177
	181
	187
274-3779	177
	181
	187
274-3780	177
	181
	187
274-4274	410
274-4553	243
	246
	248
	250
	252
	255
	257
274-4554	293
	299
274-4555	415
274-4556	293
	299
274-4557	261
	266
274-4560	261
	266
274-4561	▶246
	293
	299
274-4569	293
	299
274-4578	▶248
	293
	299
274-4580	▶243
	293
	299

▶ **PRIMARY REFERENCE**

PART NUMBER INDEX

Part	Page
274-4582	▶252
	293
	299
274-4962	85
	88
274-5231	396
274-5819	760
	769
	▶785
274-5823	761
	771
	▶785
274-5826	762
	770
	▶785
274-5829	763
	772
	▶785
274-5832	764
	774
	▶785
274-5835	765
	776
	▶786
274-5837	766
	775
	▶786
274-5839	767
	777
	▶786
274-7409	171
	177
	181
	187
274-8614	261
	266
	271
	276
	281
	286
274-8616	250
274-8617	250
274-8620	254
	256
274-8621	254
	256
274-8622	267
274-8623	261
	266
	271
	276
	281
	286
274-8625	261
	266
	271
	276
	281
	286
274-8628	250
274-8629	250
274-8630	208
274-8632	211
274-8636	250
274-8637	254
	256
274-8638	243
	246
	248
	252
274-8641	258
	▶292
	▶298
274-9993	201
275-0001	378
275-0002	374
	376
275-0468	▶207
	281
	286
275-0469	207
275-0470	▶208
	281
	286
275-0471	210
275-0472	▶210
	261
	271
	276
275-0474	▶211
	261
	266
	271
	276
275-0475	261
	266
	271
	276
	281
	286
275-0476	▶250
	261
	266
	271
	276
	281
	286
275-0477	261
	266
	271
	276
	281
	286
275-0478	▶254
	266
	271
	276
	281
	286
275-0553	171
	177
	181
	187
275-0570	141
	144
	165
275-0652	328
	331
275-0653	328
	331
275-1038	85
	88
275-4243	385
	386
	388
	▶412
275-8869	819
	821
275-9883	33
275-9907	361
276-0764	129
276-1368	734
276-1816	396
	406
276-2334	475
276-2353	569
276-3420	8
276-4070	834
276-4168	412
276-4169	412
276-4170	412
276-4171	412
276-4172	412
276-5021	319
276-5337	▶255
	281
	286
276-5339	▶256
	261
276-5605	20
276-6142	394
276-6820	321
276-7287	▶130
	141
	144
	165
276-7290	▶131
	171
	177
	181
	187
276-7291	▶132
	171
	177
	181
	187
276-7465	▶3
276-7537	394
276-8086	320
276-8515	802
	803
	▶834
276-8791	905
	907
	919
	921
277-1873	103
277-3012	28
277-4543	432
	434
	437
277-5156	6
	7
	9
277-9708	467
278-0205	261
	266
	271
	276
	281
	286
278-0209	293
	299
278-0213	293
	299
278-0215	254
	256
278-0216	254
	256
278-0217	254
	256
278-0218	254
	256
278-0461	172
	177
	181
	187
278-1170	496
278-1971	▶410
	419
278-1972	410
278-4497	386
	388
	434
	437
278-4498	386
	388
	435
	437
278-5454	362
	365
278-6377	130
278-7066	363
278-7469	826
	827
278-7695	363
279-5016	422
	425
	473
	475
279-6052	428
	430
279-9452	569
280-2652	386
	388
280-7007	▶257
	293
	299
280-7009	261
	266
	271
	276
	281
	286
280-7010	293
	299
280-7012	271
	276

▶ **PRIMARY REFERENCE**

PART NUMBER INDEX

Part	Page
	281
	286
	293
	299
280-7364	802
	803
	▶893
280-7365	792
	▶893
280-7366	793
	794
	▶893
280-7868	515
280-7869	515
280-7870	515
280-7872	515
281-4618	448
281-4726	432
281-4770	448
281-6708	757
	768
281-6711	758
	773
281-6714	759
	778
281-6716	▶757
281-7219	▶857
282-0865	▶758
282-0866	▶759
282-0887	▶760
282-0888	▶761
282-0889	▶762
282-0890	▶763
282-0891	▶764
282-0892	▶765
282-0893	▶766
282-0894	▶767
282-3847	▶310
282-3853	▶310
282-3854	▶311
282-3855	▶311
282-3857	▶311
282-3858	▶311
282-3859	310
	▶319
282-3860	▶319
282-3861	▶319
282-3862	310
	▶320
282-3863	▶320
282-3864	320
282-3865	310
	311
	312
	▶321
282-3866	▶321
282-3867	▶321
282-3868	311
	▶322
282-3869	322
282-3870	▶322
282-3871	311
	▶323
282-3872	▶323
282-3873	323
282-5398	▶768
282-5399	▶769
282-5400	▶770
282-5401	▶771
282-5402	▶772
282-5403	▶773
282-5404	▶774
282-5405	▶775
282-5406	▶776
282-5407	▶777
282-5408	▶778
282-5409	▶779
	▶780
	▶781
282-5410	▶782
282-6836	412
282-6944	515
282-7832	863
	865
282-7833	121
	123
	835
	901
	905
	907
282-7835	121
	123
	835
	863
	865
	901
	905
	907
283-1114	448
283-3451	905
	907
	919
	921
283-3467	873
283-3477	873
283-4237	868
283-7981	873
283-8053	873
283-8562	359
	360
283-8563	359
	360
	361
284-1602	844
284-2757	▶361
	792
	793
	794
	802
	803
284-8531	114
284-8905	107
284-9039	96
285-1207	792
	793
	794
285-3557	304
285-3605	5
	▶81
285-5098	81
285-9109	847
	849
	851
	853
286-0689	434
	437
286-0867	293
	299
286-1930	329
	332
286-2149	▶740
286-3592	62
286-4880	108
286-7166	598
	601
286-9087	322
286-9336	620
	622
	624
	626
	630
	632
	634
	636
	638
	640
	642
	644
	646
	650
	652
	654
	656
	662
	664
	666
	668
286-9337	620
	622
	624
	626
	630
	632
	634
	636
	638
	640
	642
	644
	646
	650
	652
	654
	656
	662
	664
	666
	668
286-9338	618
	628
	648
286-9340	618
	628
	648
287-5667	598
	601
287-8257	836
	838
	840
	842
287-8573	13
	15
287-8597	27
288-0422	28
288-1157	378
288-6954	67
288-8044	▶795
	799
288-9954	500
289-1204	897
289-3412	928
289-6018	868
289-6021	868
290-1273	915
290-3347	372
290-4164	202
290-5760	▶119
	123
290-6023	453
290-6700	440
290-6711	432
	434
	437
290-6712	434
	438
290-6790	3
	▶101
	▶103
290-6791	101
	103
290-6792	101
	103
290-6799	123
290-6801	169
290-6802	▶186
	792
	793
	794
	802
	803
290-6803	▶150
	792
	793
	794
	802
	803
290-6804	161
	163
290-6805	161
	163
290-6806	160
290-6808	2
290-6809	1
290-8139	428
	430
290-8140	428
	430
290-8156	365
	367
291-4781	809

▶ **PRIMARY REFERENCE**

PART NUMBER INDEX

Part	Page
291-4785	809
291-4786	809
291-5108	819
	821
291-8379	328
	331
291-9204	▶2
291-9205	▶1
292-2833	925
292-2834	925
292-3462	88
292-5773	865
292-8222	422
	425
	475
292-8989	505
293-1980	813
	815
293-2147	271
	276
	281
	286
293-4053	70
293-4671	519
	521
293-7383	596
293-8761	254
293-9882	598
	601
293-9884	598
	601
294-0288	28
294-0933	535
294-0973	386
	388
294-4957	925
294-4958	925
294-5792	562
294-9808	213
294-9809	▶213
	266
294-9810	243
	246
	248
294-9811	252
294-9812	243
	246
	248
	257
294-9813	252
294-9820	282
	287
294-9821	250
294-9822	266
294-9823	266
294-9824	266
295-1711	28
295-3179	▶111
295-8472	349
295-8495	500
295-8496	500
295-8930	126
295-9893	394
296-3740	807
296-5616	▶49
	51
297-2831	428
297-4081	448
297-5510	598
	601
297-5849	876
297-6898	177
297-6899	177
298-3599	328
	331
298-4524	17
299-3342	630
299-3344	632
	640
	650
299-3346	662
299-3348	634
	642
299-3351	636
	644
	652
	654
299-3442	361
299-3932	515
	▶555
299-4777	361
299-5362	▶388
	781
299-5421	597
299-5508	597
299-6985	▶859
	909
	911
	918
299-6986	▶860
	909
	911
	917
	3
300-1702	79
300-4154	638
	656
300-4155	646
300-4156	664
	668
300-4157	620
300-4158	622
300-4159	624
300-4160	626
300-4161	628
	648
300-4994	147
	150
300-4995	123
300-4996	123
300-5440	365
	367
	369
300-7049	630
	632
	634
	636
	638
300-7051	630
	632
	634
	636
	638
300-7054	640
	642
	644
	646
	656
	662
	664
	668
300-7055	640
	642
	644
	646
	656
	662
	664
	668
300-7056	650
	652
	654
300-7057	650
	652
	654
300-7059	648
300-7061	648
300-7930	396
302-8432	271
	276
	281
	286
	293
	299
303-0418	312
	▶324
303-0428	▶324
303-0429	▶324
304-3262	245
304-3266	245
304-3269	245
304-5687	105
304-5691	105
304-5696	197
	425
304-8420	628
304-8421	628
304-8424	618
304-8764	33
304-8965	849
	853
305-0042	396
305-2696	598
	601
305-3102	161
	163
305-3103	161
305-3104	161
	163
305-3431	257
305-3570	453
305-3571	453
306-8128	630
307-1496	▶106
307-9936	838
307-9937	842
308-1273	915
308-1792	15
308-4728	6
	7
	8
	9
	▶22
308-4729	6
	7
	8
	9
	▶19
308-4730	6
	7
	8
	9
	▶35
308-4731	6
	7
	8
	9
	▶24
308-4732	6
	7
	8
	9
	▶41
308-7376	479
	485
	491
309-6232	396
311-2498	446
	450
311-2501	442
	446
	450
	455
311-2503	496
311-2505	442
311-2509	▶455
	496
311-2510	442
	446
	450
311-2513	514
311-2514	514
311-2515	514
311-2518	455
311-2519	442
	446
	450
311-6094	43
311-6609	150
313-1375	6
	7
	8
	▶85
313-1380	6
	7
	8
	9

▶ **PRIMARY REFERENCE**

PART NUMBER INDEX

Part	Page	Part	Page	Part	Page	Part	Page
	▶28		506				
314-4029	▶111	330-4554	107				
315-3396	17	330-4555	107				
315-3397	17	330-9416	438				
315-3398	17	331-0907	105				
315-4123	838	331-0920	105				
	842	331-0921	105				
316-0040	559						
316-1079	▶362						
	367						
	369						
317-2127	493						
317-2128	493						
317-2129	481						
	487						
	493						
317-2130	481						
	487						
	493						
317-2131	487						
317-2168	481						
317-3111	7						
	8						
	9						
	▶76						
317-4423	909						
	911						
	917						
	918						
317-5309	896						
318-4217	380						
318-4222	380						
318-8228	577						
	583						
	589						
318-9453	378						
319-0755	98						
	103						
320-2384	▶312						
320-2385	▶312						
320-8414	▶7						
320-9655	376						
321-6337	896						
322-4571	312						
	▶325						
322-4572	325						
322-4573	325						
322-4574	325						
322-9615	74						
	76						
322-9616	74						
	76						
322-9663	23						
323-5725	▶8						
323-7311	450						
324-0444	28						
325-5100	▶932						
325-5121	▶9						
328-8308	9						
	▶88						
328-8776	369						
329-6655	23						
330-3409	105						
330-3410	105						
330-3979	505						

▶ PRIMARY REFERENCE



© 2009 CATERPILLAR
ALL RIGHTS
RESERVED

CAT, CATERPILLAR, THEIR RESPECTIVE LOGOS, “CATERPILLAR YELLOW” AND THE POWER EDGE TRADE DRESS, AS WELL AS CORPORATE AND PRODUCT IDENTITY USED HEREIN, ARE TRADEMARKS OF CATERPILLAR AND MAY NOT BE USED WITHOUT PERMISSION.

PRINTED IN
U.S.A.